KOMATSU

PC220-7 S/N 60001-UP (Overseas Version)

PC220-7 S/N 60001-UP (Overseas Version)

Item	Part Name
	SAA6D102E-2D-8 S/N 26274903-UP
B0	ENGINE RELATED PARTS
C0	COOLING SYSTEM
D0	FUEL TANK AND RELATED PARTS
E0	ELECTRICAL SYSTEM
H0	HYDRAULIC SYSTEM
J0	MAIN/REVOLVING FRAME AND RELATED PARTS
K0	OPERATOR'S COMPARTMENT AND CONTROL SYSTEM
M0	GUARD
N0	SWING CIRCLE AND RELATED PARTS
P0	TRAVEL AND LOWER PIPING
R0	UNDER CARRIAGE
T0	WORK EQUIPMENT
U0	MARKS AND PLATES
V0	ACCESSORY
W0	MISCELLANEOUS
Y0	SERVICE KIT AND COMPONENT PARTS

pc220-7c	|000000	|000000	PC220-7 S/N 60001-UP (Overseas Version)
pc220-7c	30000	|030000	ENGINE RELATED PARTS
pc220-7c	30010	B0000-01A0	. DAMPER¤ PUMP AND TUBE
pc220-7c	30020	B0100-01A0	. ENGINE MOUNT (BRACKET AND CUSHION)
pc220-7c	30030	B0100-02A0	. ENGINE MOUNT (FILTER REMOTE)
pc220-7c	30040	B0200-01A0	. AIR CLEANER CONNECTION
pc220-7c	30050	B0200-01A1	. AIR CLEANER CONNECTION (COLD WEATHER A SPEC.)(#60255-)
pc220-7c	30060	B0200-01A2	. AIR CLEANER CONNECTION (WITH PRECLEANER)
pc220-7c	30070	B0400-01A0	. FUEL CONTROL(#60001-65000)
pc220-7c	30080	B0400-01A0A	. FUEL CONTROL(#65001-)
pc220-7c	30090	B0920-01A0	. CORROSION RESIST0R
pc220-7c	30100	B0920-01A1	. CORROSION RESIST0R (HEATER LESS)
pc220-7c	60000	|060000	COOLING SYSTEM
pc220-7c	60010	C0100-01A0	. COOLING (RADIATOR)(#60001-65000)
pc220-7c	60020	C0100-01A0A	. COOLING (RADIATOR)(#65001-)
pc220-7c	60030	C0100-02A0	. COOLING (AFTER COOLER AND CONDENSER) (WITH AIR CONDITIONER)(#60001-65000)
pc220-7c	60040	C0100-02A0A	. COOLING (AFTER COOLER AND CONDENSER) (WITH AIR CONDITIONER)(#65001-)
pc220-7c	60050	C0100-02A1	. COOLING (AFTER COOLER)
pc220-7c	60060	C0100-03A0	. COOLING (PIPING¤ SUB TANK AND RADIATOR MOUNT)(#60001-65000)
pc220-7c	60070	C0100-03A0A	. COOLING (PIPING¤ SUB TANK AND RADIATOR MOUNT)(#65001-)
pc220-7c	60080	C0100-04A0	. COOLING (AFTER COOLER PIPING)(#60001-65000)
pc220-7c	60090	C0100-04A0A	. COOLING (AFTER COOLER PIPING)(#65001-)
pc220-7c	60100	C0310-01A0	. FAN GUARD (WITH AIR CONDITIONER)(#60001-60767)
pc220-7c	60110	C0310-01A0B	. FAN GUARD (WITH AIR CONDITIONER)(#65001-65985)
pc220-7c	60120	C0310-01A1	. FAN GUARD (WITHOUT AIR CONDITIONER)(#60001-60767)
pc220-7c	60130	C0310-01A1B	. FAN GUARD (WITHOUT AIR CONDITIONER)(#65001-65985)
pc220-7c	60140	C0310-01A2	. FAN GUARD (WITH AIR CONDITIONER) (SANDY AND DUSTY TERRAIN SPEC.)(#60001-60767)
pc220-7c	60150	C0310-01A2A	. FAN GUARD (WITH AIR CONDITIONER) (SANDY AND DUSTY TERRAIN SPEC.)(#60768-65000)
pc220-7c	60160	C0310-01A2B	. FAN GUARD (WITH AIR CONDITIONER) (SANDY AND DUSTY TERRAIN SPEC.)(#65001-65985)
pc220-7c	60170	C0310-01A2C	. FAN GUARD (WITH AIR CONDITIONER) (SANDY AND DUSTY TERRAIN SPEC.)(#65986-)
pc220-7c	60180	C0310-01A3	. FAN GUARD (WITHOUT AIR CONDITIONER) (SANDY AND DUSTY TERRAIN SPEC.)(#60001-60767)
pc220-7c	60190	C0310-01A3A	. FAN GUARD (WITHOUT AIR CONDITIONER)(#60768-65000)
pc220-7c	60200	C0310-01A3B	. FAN GUARD (WITHOUT AIR CONDITIONER) (SANDY AND DUSTY TERRAIN SPEC.)(#65001-65985)
pc220-7c	60210	C0310-01A3C	. FAN GUARD (WITHOUT AIR CONDITIONER)(#65986-)
pc220-7c	90000	|090000	FUEL TANK AND RELATED PARTS
pc220-7c	90010	D0100-01A0	. FUEL TANK
pc220-7c	90020	D0100-01A1	. FUEL TANK (WITH FUEL SELF SUPPLY PUMP)
pc220-7c	90030	D0200-01A0	. FUEL PIPING(#60001-60282)
pc220-7c	90040	D0200-01A0A	. FUEL PIPING(#60283-)
pc220-7c	90050	D0200-01A1	. FUEL LINES (WITH PRE-FUEL FILTER AND WATER SEPARATOR)(#60001-60282)
pc220-7c	90060	D0200-01A1A	. FUEL LINES (WITH PRE-FUEL FILTER AND WATER SEPARATOR)(#60283-)
pc220-7c	90070	D0200-01A2	. FUEL LINES (COLD WEATHER A SPEC.)(#60255-68116)
pc220-7c	90080	D0200-01A2A	. FUEL LINES (COLD WEATHER A SPEC.)(#68117-)
pc220-7c	90090	D0200-01A3	. FUEL LINES (WITH PRE-FUEL FILTER AND WATER SEPARATOR) (COLD WEATHER A SPEC.)(#60255-68116)
pc220-7c	90100	D0200-01A3A	. FUEL LINES (WITH PRE-FUEL FILTER AND WATER SEPARATOR) (COLD WEATHER A SPEC.)(#68117-)
pc220-7c	90110	D0200-02A0	. FUEL PIPING (WATER SEPARATOR)
pc220-7c	90120	D0200-02A1	. FUEL LINES (WATER SEPARATOR AND FILTER) (WITH PRE-FUEL FILTER AND WATER SEPARATOR)
pc220-7c	120000	|120000	ELECTRICAL SYSTEM
pc220-7c	120010	E0100-01A0	. BATTERY (115E41R)
pc220-7c	120020	E0100-01A1	. BATTERY (LARGE CAPACITY) (NX300)(#60001-65000)
pc220-7c	120030	E0100-01A1A	. BATTERY (LARGE CAPACITY) (NX300)(#65001-)
pc220-7c	120040	E0200-01A0	. WIRING (STARTING HARNESS)(#60001-65000)
pc220-7c	120050	E0200-01A0A	. WIRING (STARTING HARNESS)(#65001-)
pc220-7c	120060	E0200-01A1	. WIRING (STARTING HARNESS) (COLD WEATHER A SPEC.)(#60255-65000)
pc220-7c	120070	E0200-01A1A	. WIRING (STARTING HARNESS) (COLD WEATHER A SPEC.)(#65001-)
pc220-7c	120080	E0200-02A0	. WIRING (MAIN HARNESS) (HARNESS AND CLIP)(#60001-65000)
pc220-7c	120090	E0200-02A0A	. WIRING (MAIN HARNESS) (HARNESS AND CLIP)(#65001-67441)
pc220-7c	120100	E0200-02A0B	. WIRING (MAIN HARNESS) (HARNESS AND CLIP)(#67442-)
pc220-7c	120110	E0200-02A3	. WIRING (MAIN HARNESS) (HARNESS AND CLIP) (WITH OVER LOAD ALARM)(#60001-65000)
pc220-7c	120120	E0200-02A3A	. WIRING (MAIN HARNESS) (HARNESS AND CLIP) (WITH OVER LOAD ALARM)(#65001-67441)
pc220-7c	120130	E0200-02A3B	. WIRING (MAIN HARNESS) (HARNESS AND CLIP) (WITH OVER LOAD ALARM)(#67442-)
pc220-7c	120140	E0200-03A0	. WIRING (MAIN HARNESS) (CLIP) (1/2)(#60001-65000)
pc220-7c	120150	E0200-03A0A	. WIRING (MAIN HARNESS) (CLIP) (1/2)(#65001-)
pc220-7c	120160	E0200-04A0	. WIRING (MAIN HARNESS) (CLIP) (2/2)(#60001-65000)
pc220-7c	120170	E0200-04A0A	. WIRING (MAIN HARNESS) (CLIP) (2/2)(#65001-)
pc220-7c	120180	E0200-04A2	. WIRING (MAIN HARNESS) (CLIP) (2/2) (SANDY AND DUSTY TERRAIN SPEC.)(#60001-65000)
pc220-7c	120190	E0200-04A2A	. WIRING (MAIN HARNESS) (CLIP) (2/2) (SANDY AND DUSTY TERRAIN SPEC.)(#65001-69862)
pc220-7c	120200	E0200-04A2B	. WIRING (MAIN HARNESS) (CLIP) (2/2) (SANDY AND DUSTY TERRAIN SPEC.)(#69863-)
pc220-7c	120210	E0200-05A0	. WIRING (BATTERY CASE)(#60001-65000)
pc220-7c	120220	E0200-05A0A	. WIRING (BATTERY CASE)(#65001-)
pc220-7c	120230	E0200-06A0	. WIRING (WORKING LAMP¤ FRONT)(#60001-65000)
pc220-7c	120240	E0200-06A0A	. WIRING (WORKING LAMP¤ FRONT)(#65001-)
pc220-7c	120250	E0310-01A0	. ADDITIONAL WORK LAMP
pc220-7c	120260	E0310-01A1	. ADDITIONAL WORK LAMP (FOR LEVEL-1 GUARD)
pc220-7c	120270	E0320-01A0	. REAR WORK LAMP
pc220-7c	120280	E0340-01A0	. BEACON
pc220-7c	120290	E0410-01A0	. HORN

pc220-7c	120300	E0420-01A0	. TRAVEL ALARM(#60001-65000)
pc220-7c	120310	E0420-01A0A	. TRAVEL ALARM(#65001-)
pc220-7c	150000	|150000	HYDRAULIC SYSTEM
pc220-7c	150010	H0110-01A0	. HYDRAULIC TANK
pc220-7c	150020	H0110-01A1	. HYDRAULIC TANK (1 ACTUATOR)
pc220-7c	150030	H0120-01A0	. CONTROL VALVE (CONNECTING PARTS) (1/2)
pc220-7c	150040	H0120-01A1	. CONTROL VALVE (CONNECTING PARTS) (1 ACTUATOR) (1/2)
pc220-7c	150050	H0120-01A2	. CONTROL VALVE (ADDITIONAL SERVICE VALVE KIT) (1 ACTUATOR)
pc220-7c	150060	H0120-01A6	. CONTROL VALVE (CONNECTING PARTS) (2 ACTUATOR) (1/2)
pc220-7c	150070	H0120-01A7	. CONTROL VALVE (ADDITIONAL SERVICE VALVE KIT) (2 ACTUATOR)
pc220-7c	150080	H0120-02A0	. CONTROL VALVE (CONNECTING PARTS) (2/2)
pc220-7c	150090	H0120-02A1	. CONTROL VALVE (CONNECTING PARTS) (1 & 2 ACTUATOR) (2/2)
pc220-7c	150100	H0120-03A0	. CONTROL VALVE (VALVE BRACKET)
pc220-7c	150110	H0120-03A1	. CONTROL VALVE (VALVE BRACKET) (1 ACTUATOR)
pc220-7c	150120	H0120-03A3	. CONTROL VALVE (VALVE BRACKET) (1 ACTUATOR) (PIPING LESS)
pc220-7c	150130	H0120-03A6	. CONTROL VALVE (VALVE BRACKET) (2 ACTUATOR)
pc220-7c	150140	H0210-01A0	. PISTON PUMP (CONNECTING PARTS)
pc220-7c	150150	H0210-01A1	. PISTON PUMP (CONNECTING PARTS) (WITH IN-LINE FILTER)
pc220-7c	150160	H0311-01A0	. SUCTION PIPING
pc220-7c	150170	H0312-01A0	. DELIVERY PIPING
pc220-7c	150180	H0312-01A1	. DELIVERY LINE (WITH INLINE FILTER)(#60001-60223)
pc220-7c	150190	H0312-01A1A	. DELIVERY LINE (WITH INLINE FILTER)(#60224-)
pc220-7c	150200	H0320-01A0	. OIL COOLER PIPING
pc220-7c	150210	H0330-01A0	. RETURN PIPING
pc220-7c	150220	H0330-01A1	. RETURN LINE (1 ACTUATOR)
pc220-7c	150230	H0340-01A0	. DRAIN LINES
pc220-7c	150240	H1210-01A0	. BOOM PIPING
pc220-7c	150250	H1210-02A0	. BOOM PIPING (BOOM HOSE)
pc220-7c	150260	H1220-01A0	. ARM AND BUCKET PIPING
pc220-7c	150270	H1220-01A1	. ARM AND BUCKET LINE (WITH DRIFT PRIVENTIVE)
pc220-7c	150280	H1240-01A0	. ARM DRIFT PRIVENTIVE
pc220-7c	150290	H1250-01A0	. BURST VALVE PIPING (BOOM BURST VALVE)
pc220-7c	150300	H1250-02A0	. BURST VALVE PIPING (BOOM) (CHASSIS SIDE)
pc220-7c	150310	H1250-02A1	. BURST VALVE PIPING (BOOM)
pc220-7c	150320	H1250-03A0	. BURST VALVE PIPING (BOOM CYLINDER SIDE)
pc220-7c	150330	H1270-01A0	. ATTACHMENT PIPING (MAIN L.H.) (1 ACTUATOR)
pc220-7c	150340	H1270-01A1	. RELIEF VALVE (280 KG/CM2) (FOR SERVICE VALVE)
pc220-7c	150350	H1270-01A2	. RELIEF VALVE (210 KG/CM2) (FOR SERVICE VALVE)
pc220-7c	150360	H1270-01A3	. RELIEF VALVE (250 KG/CM2) (FOR SERVICE VALVE)
pc220-7c	150370	H1270-01A4	. RELIEF VALVE (175 KG/CM2) (FOR SERVICE VALVE)
pc220-7c	150380	H1270-02A0	. ATTACHMENT PIPING (MAIN R.H.) (1 ACTUATOR)
pc220-7c	150390	H1270-02A7	. ATTACHMENT PIPING (MAIN R.H.) (1 ACTUATOR) (FOR BREAKER ADAPTER)(#60446-)
pc220-7c	150400	H1270-03A0	. ATTACHMENT PIPING (RETURN) (1 ACTUATOR)
pc220-7c	150410	H1270-04A0	. ATTACHMENT PIPING (ACCUMULATOR AND SOLENOID VALVE) (1 ACTUATOR)
pc220-7c	150420	H1270-04A7	. ATTACHMENT PIPING (ACCUMULATOR AND SOLENOID VALVE) (1 ACTUATOR) (FOR BREAKER ADAPTER)(#60446-)
pc220-7c	150430	H1272-01A0	. ATTACHMENT ADDITIONAL PIPING (2 ACTUATOR)(#60001-65000)
pc220-7c	150440	H1272-01A0A	. ATTACHMENT ADDITIONAL PIPING (2 ACTUATOR)(#65001-)
pc220-7c	150450	H1280-01A0	. MULTI PATTERN VALVE (4 WAY)
pc220-7c	150460	H1280-01A1	. MULTI PATTERN VALVE (MULTI VALVE) (2 WAY)
pc220-7c	150470	H1280-02A0	. MULTI PATTERN VALVE (HOSE) (4 WAY)
pc220-7c	150480	H1280-02A1	. MULTI PATTERN VALVE (HOSE) (2 WAY)
pc220-7c	150490	H1280-03A0	. MULTI PATTERN VALVE (CLAMP) (4 WAY)
pc220-7c	150500	H1310-01A0	. TRAVEL PIPING
pc220-7c	150510	H1340-01A0	. SWING PIPING
pc220-7c	150520	H1810-01A0	. LS PIPING
pc220-7c	150530	H1831-01A0	. SOLENOID VALVE (VALVE)
pc220-7c	150540	H1831-01A1	. SOLENOID VALVE (VALVE) (1 ACTUATOR)
pc220-7c	150550	H1831-02A0	. SOLENOID VALVE (HOSE AND BRACKET)
pc220-7c	150560	H1831-02A2	. SOLENOID VALVE (HOSE AND BRACKET) (2 ACTUATOR)
pc220-7c	150570	H1833-01A0	. PRESSURE SWITCH
pc220-7c	150580	H1840-01A0	. PPC MAIN PIPING (HOSE)
pc220-7c	150590	H1840-02A1	. PPC MAIN PIPING (BLOCK) (1 ACTUATOR)
pc220-7c	150600	H1840-02A3	. PPC MAIN PIPING (BLOCK) (2 ACTUATOR)
pc220-7c	180000	|180000	MAIN/REVOLVING FRAME AND RELATED PARTS
pc220-7c	180010	J1110-01A0	. REVOLVING FRAME (COVER AND BRACKET)(#60001-65000)
pc220-7c	180020	J1110-01A0A	. REVOLVING FRAME (COVER AND BRACKET)(#65001-)
pc220-7c	180030	J1110-01A1	. REVOLVING FRAME (COVER AND BRACKET) (FOR CORROSION RESISTER)(#60001-60254)
pc220-7c	180040	J1110-01A1A	. REVOLVING FRAME (COVER AND BRACKET) (FOR CORROSION RESISTER AND COLD A SPEC.)(#60001-65000)
pc220-7c	180050	J1110-01A1B	. REVOLVING FRAME (COVER AND BRACKET) (FOR CORROSION RESISTER)(#65001-)
pc220-7c	180060	J1110-01A2	. REVOLVING FRAME (COVER AND BRACKET) (FOR CORROSION RESISTER AND DECK GUARD)(#60283-65000)
pc220-7c	180070	J1110-01A2A	. REVOLVING FRAME (COVER AND BRACKET) (FOR CORROSION RESISTER AND DECK GUARD)(#65001-)
pc220-7c	180080	J1110-01A3	. REVOLVING FRAME (COVER AND BRACKET) (FOR CORROSION RESISTER AND HALF DECK GUARD)(#60283-65000)
pc220-7c	180090	J1110-01A3A	. REVOLVING FRAME (COVER AND BRACKET) (FOR CORROSION RESISTER AND HALF DECK GUARD)(#65001-)
pc220-7c	180100	J1110-02A0	. REVOLVING FRAME (SHEET AND GROMMET)(#60001-60254)
pc220-7c	180110	J1110-02A0A	. REVOLVING FRAME (SHEET AND GROMMET)(#60255-)
pc220-7c	180120	J1110-02A1	. REVOLVING FRAME (SHEET AND GROMMET)(#60255-)
pc220-7c	180130	J1310-01A0	. BOOM FOOT PIN

pc220-7c	180140	J1310-01A1	. BOOM FOOT PIN (100 HOURS LUBRICATING)
pc220-7c	210000	|210000	OPERATOR'S COMPARTMENT AND CONTROL SYSTEM
pc220-7c	210010	K0110-01A0	. OPERATOR'S SEAT (FABRIC)
pc220-7c	210020	K0110-01A1	. OPERATOR'S SEAT (SUSPENSION)
pc220-7c	210030	K0110-01A2	. OPERATOR'S SEAT (LEATHER)
pc220-7c	210040	K0160-01A0	. SEAT BELT (48MM WIDE)
pc220-7c	210050	K0160-01A1	. SEAT BELT (78MM WIDE)
pc220-7c	210060	K0160-01A2	. SEAT BELT (78MM WIDE) (NON-CINCHING)(#60309-)
pc220-7c	210070	K0180-01A0	. SEAT REAR COVER (WITH AIR CONDITIONER)(#60001-65000)
pc220-7c	210080	K0180-01A0A	. SEAT REAR COVER (WITH AIR CONDITIONER)(#65001-)
pc220-7c	210090	K0180-01A1	. SEAT REAR COVER (WITH AIR CONDITIONER) (12V POWER SOURCE)(#60001-65000)
pc220-7c	210100	K0180-01A1A	. SEAT REAR COVER (WITH AIR CONDITIONER) (12V POWER SOURCE)(#65001-)
pc220-7c	210110	K0180-01A2	. SEAT REAR COVER(#60001-60316)
pc220-7c	210120	K0180-01A3	. SEAT REAR COVER (WITH BIG WIND AIR CONDITIONER) (1/2)(#65001-)
pc220-7c	210130	K0180-02A3	. SEAT REAR COVER (WITH BIG WIND AIR CONDITIONER) (2/2)(#65001-67089)
pc220-7c	210140	K0180-02A3A	. SEAT REAR COVER (WITH BIG WIND AIR CONDITIONER) (2/2)(#67090-)
pc220-7c	210150	K0190-01A0	. LUGGAGE BOX NET(#60001-65000)
pc220-7c	210160	K0190-01A0A	. LUGGAGE BOX NET(#65001-)
pc220-7c	210170	K0210-01A0	. OPERATOR'S CAB (CAB)(#60001-65000)
pc220-7c	210180	K0210-01A5	. OPERATOR'S CAB (CAB) (FOR VANDALISM PROTECTION)(#60001-65000)
pc220-7c	210190	K0210-01A6	. OPERATOR'S CAB (CAB) (COLD WEATHER A SPEC.)(#60255-65000)
pc220-7c	210200	K0210-02A0	. OPERATOR'S CAB (FRONT WINDOW)(#60001-60274)
pc220-7c	210210	K0210-02A0A	. OPERATOR'S CAB (FRONT WINDOW)(#60275-60282)
pc220-7c	210220	K0210-02A0B	. OPERATOR'S CAB (FRONT WINDOW)(#60283-65000)
pc220-7c	210230	K0210-03A0	. OPERATOR'S CAB (FRONT LOWER WINDOW)(#60001-65000)
pc220-7c	210240	K0210-04A0	. OPERATOR'S CAB (ROOF WINDOW)(#60001-65000)
pc220-7c	210250	K0210-05A0	. OPERATOR'S CAB (DOOR)(#60001-65000)
pc220-7c	210260	K0210-05A5	. OPERATOR'S CAB (DOOR) (FOR VANDALISM PROTECTION)(#60001-65000)
pc220-7c	210270	K0210-06A0	. OPERATOR'S CAB (DOOR LOCK)(#60001-65000)
pc220-7c	210280	K0210-07A0	. OPERATOR'S CAB (OPEN LOCK)(#60001-65000)
pc220-7c	210290	K0210-08A0	. OPERATOR'S CAB (WIPER AND ROOM LAMP)(#60001-65000)
pc220-7c	210300	K0210-09A0	. OPERATOR'S CAB (RADIO)(#60001-65000)
pc220-7c	210310	K0210-09A4	. OPERATOR'S CAB (RADIO LESS)(#60001-65000)
pc220-7c	210320	K0210-10A0	. OPERATOR'S CAB (ACCESSORIES)(#60001-65000)
pc220-7c	210330	K0210-10A4	. OPERATOR'S CAB (ACCESSORIES) (AIR CONDITIONER AND HEATER LESS)(#60001-65000)
pc220-7c	210340	K0210-11A2	. OPERATOR'S CAB (BOLT) (KOMTRAX LESS)(#60001-65000)
pc220-7c	210350	K0210-12A0	. OPERATOR'S CAB (WIRING)(#60001-65000)
pc220-7c	210360	K0210-13A0	. OPERATOR'S CAB (MONITOR SYSTEM)(#60001-65000)
pc220-7c	210370	K0210-13A4	. OPERATOR'S CAB (MONITOR SYSTEM) (7SEGMENT MONITOR) (AIR CONDITIONER AND HEATER LESS)(#60001-65000)
pc220-7c	210380	K0210-13A7	. OPERATOR'S CAB (MONITOR SYSTEM) (7SEGMENT MONITOR)(#60001-65000)
pc220-7c	210390	K0210-13A8	. OPERATOR'S CAB (MONITOR SYSTEM) (AIR CONDITIONER AND HEATER LESS)(#60001-65000)
pc220-7c	210400	K0210-14A0	. OPERATOR'S CAB (COVER)(#60001-65000)
pc220-7c	210410	K0210-15A0	. OPERATOR'S CAB (DUCT)(#60001-65000)
pc220-7c	210420	K0210-15A4	. OPERATOR'S CAB (DUCT) (AIR CONDITIONER AND HEATER LESS)(#60001-65000)
pc220-7c	210430	K0211-01A0	. FLOOR FRAME COVER(#60132-65000)
pc220-7c	210440	K0211-01A0A	. FLOOR FRAME COVER(#65001-66184)
pc220-7c	210450	K0211-01A1	. CAB COVER(#66185-)
pc220-7c	210460	K0220-01A0	. TOP GUARD(#60001-60002)
pc220-7c	210470	K0220-01A0A	. TOP GUARD(#60003-)
pc220-7c	210480	K0220-01A1	. TOP GUARD (LEVEL-1)
pc220-7c	210490	K0230-01A0	. FRONT GUARD (HALF)
pc220-7c	210500	K0230-01A1	. FRONT GUARD (FULL) (LEVEL-1)
pc220-7c	210510	K0230-01A2	. FRONT GUARD (FULL) (LEVEL-2)
pc220-7c	210520	K0310-01A0	. FLOOR MAT(#60001-65000)
pc220-7c	210530	K0310-01A0A	. FLOOR MAT(#65001-)
pc220-7c	210540	K0310-01A1	. FLOOR MAT (1 ACTUATOR)(#60001-65000)
pc220-7c	210550	K0310-01A1A	. FLOOR MAT (1 ACTUATOR)(#65001-)
pc220-7c	210560	K0310-01A2	. FLOOR MAT (2 ACTUATOR)(#60001-65000)
pc220-7c	210570	K0310-01A2A	. FLOOR MAT (2 ACTUATOR)(#65001-)
pc220-7c	210580	K0320-01A0	. RAIN VISOR
pc220-7c	210590	K0330-01A0	. SUN VISOR(#60001-65000)
pc220-7c	210600	K0330-01A0A	. SUN VISOR(#65001-)
pc220-7c	210610	K0350-01A0	. WINDOW WASHER(#60001-60775)
pc220-7c	210620	K0350-01A0A	. WINDOW WASHER(#60776-65000)
pc220-7c	210630	K0350-01A0B	. WINDOW WASHER(#65001-69462)
pc220-7c	210640	K0350-01A0C	. WINDOW WASHER(#69463-)
pc220-7c	210650	K0700-01A0	. AIR CONDITIONER (DUCT)(#60001-60062)
pc220-7c	210660	K0700-01A0A	. AIR CONDITIONER (DUCT)(#60063-65000)
pc220-7c	210670	K0700-01A0B	. AIR CONDITIONER (DUCT)(#65001-)
pc220-7c	210680	K0700-01A1	. AIR CONDITIONER AND HEATER LESS PLUG
pc220-7c	210690	K0700-01A2	. BIG WIND AIR CONDITIONER (DUCT)
pc220-7c	210700	K0700-01A4	. AIR CONDITIONER (DUCT) (COLD WEATHER A SPEC.)(#60255-65000)
pc220-7c	210710	K0700-02A0	. AIR CONDITIONER (HOSE)(#60001-65000)
pc220-7c	210720	K0700-02A0A	. AIR CONDITIONER (HOSE)(#65001-)
pc220-7c	210730	K0700-02A4	. AIR CONDITIONER (CLIPPING) (COLD WEATHER A SPEC.)(#60255-65000)
pc220-7c	210740	K0700-02A4A	. AIR CONDITIONER (CLIPPING) (COLD WEATHER A SPEC.)(#65001-69361)
pc220-7c	210750	K0700-02A4B	. AIR CONDITIONER (CLIPPING) (COLD WEATHER A SPEC.)(#69362-)

pc220-7c	210760	K0700-02A5	. AIR CONDITIONER (CLIPPING)(#60336-65000)
pc220-7c	210770	K0700-02A5A	. AIR CONDITIONER (CLIPPING)(#65001-69361)
pc220-7c	210780	K0700-02A5B	. AIR CONDITIONER (CLIPPING)(#69362-)
pc220-7c	210790	K0700-03A0	. AIR CONDITIONER (REAR DUCT)(#60001-65000)
pc220-7c	210800	K0700-03A2	. BIG WIND AIR CONDITIONER (REAR DUCT)
pc220-7c	210810	K0830-01A1	. FIRE EXTINGUISHER (ENGLISH)(#60001-65000)
pc220-7c	210820	K0830-01A1A	. FIRE EXTINGUISHER (ENGLISH)(#65001-)
pc220-7c	210830	K0830-01A2	. FIRE EXTINGUISHER (ARABIC)(#60001-65000)
pc220-7c	210840	K0830-01A2A	. FIRE EXTINGUISHER (ARABIC)(#65001-)
pc220-7c	210850	K0830-01A3	. FIRE EXTINGUISHER (RUSSIAN)(#60001-65000)
pc220-7c	210860	K0830-01A3A	. FIRE EXTINGUISHER (RUSSIAN)(#65001-)
pc220-7c	210870	K0830-01A4	. FIRE EXTINGUISHER (CHINESE)(#60001-65000)
pc220-7c	210880	K0830-01A4A	. FIRE EXTINGUISHER (CHINESE)(#65001-)
pc220-7c	210890	K0830-01A5	. FIRE EXTINGUISHER (PERSIAN)(#65001-)
pc220-7c	210900	K0840-01A0	. FIRST AID BOX (COLD WEATHER A SPEC.)(#60255-)
pc220-7c	210910	K0850-01A0	. THERMOS BOTTLE (COLD WEATHER A SPEC.)(#60255-)
pc220-7c	210920	K1110-01A0	. FLOOR FRAME (FLOOR FRAME)(#60001-65000)
pc220-7c	210930	K1110-01D0	. FLOOR FRAME (OPERATOR'S CAB) (CAB)(#65001-)
pc220-7c	210940	K1110-01E3	. FLOOR FRAME (OPERATOR'S CAB) (CAB) (FOR VANDALISM PROTECTION)(#65001-)
pc220-7c	210950	K1110-01E4	. FLOOR FRAME (OPERATOR'S CAB) (CAB) (FOR VANDALISM PROTECTION) (WITH BIG WIND AIR CONDITIONER)(#65001-)
pc220-7c	210960	K1110-01E5	. FLOOR FRAME (OPERATOR'S CAB) (CAB) (COLD WEATHER A SPEC.)(#65001-)
pc220-7c	210970	K1110-01M6	. FLOOR FRAME (OPERATOR'S CAB) (CAB) (WITH BIG WIND AIR CONDITIONER)(#65001-)
pc220-7c	210980	K1110-02A0	. FLOOR FRAME (TRAVEL CONTROL)(#60001-65000)
pc220-7c	210990	K1110-02D0	. FLOOR FRAME (OPERATOR'S CAB) (FRONT WINDOW)(#65001-69883)
pc220-7c	211000	K1110-02D0A	. FLOOR FRAME (OPERATOR'S CAB) (FRONT WINDOW)(#69884-)
pc220-7c	211010	K1110-03A0	. FLOOR FRAME (FOOT REST) (L.H.)(#60001-65000)
pc220-7c	211020	K1110-03D0	. FLOOR FRAME (OPERATOR'S CAB) (FRONT LOWER WINDOW)(#65001-)
pc220-7c	211030	K1110-04A0	. FLOOR FRAME (FOOT REST) (R.H.)(#60001-65000)
pc220-7c	211040	K1110-04A1	. FLOOR FRAME (FOOT REST) (R.H.) (1 ACTUATOR)(#60001-65000)
pc220-7c	211050	K1110-04B7	. FLOOR FRAME (FOOT REST) (R.H.) (1 ACTUATOR) (7SEGMENT MONITOR SPEC.)(#60001-65000)
pc220-7c	211060	K1110-04D0	. FLOOR FRAME (OPERATOR'S CAB) (ROOF WINDOW)(#65001-)
pc220-7c	211070	K1110-05D0	. FLOOR FRAME (OPERATOR'S CAB) (DOOR)(#65001-)
pc220-7c	211080	K1110-05E3	. FLOOR FRAME (OPERATOR'S CAB) (DOOR) (FOR VANDALISM PROTECTION)(#65001-)
pc220-7c	211090	K1110-05E5	. FLOOR FRAME (OPERATOR'S CAB) (DOOR) (COLD WEATHER A SPEC.)(#65001-)
pc220-7c	211100	K1110-06A0	. FLOOR FRAME (BASE)(#60001-65000)
pc220-7c	211110	K1110-06D0	. FLOOR FRAME (OPERATOR'S CAB) (DOOR LOCK)(#65001-)
pc220-7c	211120	K1110-07A0	. FLOOR FRAME (ELECTRICAL)(#60001-65000)
pc220-7c	211130	K1110-07B9	. FLOOR FRAME (ELECTRICAL) (OVER LOAD ALARM)
pc220-7c	211140	K1110-07C1	. FLOOR FRAME (ELECTRICAL) (WITH BIG WIND AIR CONDITIONER)(#60001-65000)
pc220-7c	211150	K1110-07D0	. FLOOR FRAME (OPERATOR'S CAB) (OPEN LOCK)(#65001-)
pc220-7c	211160	K1110-08A0	. FLOOR FRAME (CLIP)(#60001-65000)
pc220-7c	211170	K1110-08D0	. FLOOR FRAME (OPERATOR'S CAB) (ELECTRICAL) (WIPER AND ROOM LAMP)(#65001-)
pc220-7c	211180	K1110-09D0	. FLOOR FRAME (OPERATOR'S CAB) (ELECTRICAL) (RADIO)(#65001-)
pc220-7c	211190	K1110-10A0	. FLOOR FRAME (REAR FRAME AND WINDOW WASHER)(#60001-65000)
pc220-7c	211200	K1110-10C1	. FLOOR FRAME (REAR FRAME AND WINDOW WASHER) (WITH BIG WIND AIR CONDITIONER) (FOR CORROSION RESISTER)(#60001-65000)
pc220-7c	211210	K1110-10D0	. FLOOR FRAME (OPERATOR'S CAB) (ACCESSORIES)(#65001-)
pc220-7c	211220	K1110-11A0	. FLOOR FRAME (LEVER AND VALVE) (L.H.)(#60001-65000)
pc220-7c	211230	K1110-11D0	. FLOOR FRAME (OPERATOR'S CAB) (PLUG BOLT AND ANTENNA)(#65001-)
pc220-7c	211240	K1110-11D9	. FLOOR FRAME (OPERATOR'S CAB) (PLUG BOLT)(#65001-)
pc220-7c	211250	K1110-11E5	. FLOOR FRAME (OPERATOR'S CAB) (PLUG BOLT) (COLD WEATHER A SPEC.)(#65001-)
pc220-7c	211260	K1110-12A2	. FLOOR FRAME (CONSOLE) (UPPER) (L.H.) (WITH AIR CONDITIONER AND RADIO) (FOR U.S.A.)(#60001-65000)
pc220-7c	211270	K1110-12A4	. FLOOR FRAME (CONSOLE) (UPPER) (L.H.) (WITHOUT AIR CONDITIONER AND RADIO)(#60001-65000)
pc220-7c	211280	K1110-12B4	. FLOOR FRAME (CONSOLE) (UPPER) (L.H.) (WITH AIR CONDITIONER AND RADIO) (FOR ASIA AND OCEANIA)(#60001-65000)
pc220-7c	211290	K1110-12B8	. FLOOR FRAME (CONSOLE) (UPPER) (L.H.) (WITHOUT RADIO)(#60001-65000)
pc220-7c	211300	K1110-12C1	. FLOOR FRAME (CONSOLE) (UPPER) (L.H.) (WITH BIG WIND AIR CONDITIONER) (FOR ASIA AND OCEANIA)(#60001-65000)
pc220-7c	211310	K1110-12C5	. FLOOR FRAME (CONSOLE) (UPPER) (L.H.) (COLD WEATHER A SPEC.)(#60255-)
pc220-7c	211320	K1110-12C9	. FLOOR FRAME (CONSOLE) (UPPER) (L.H.) (WITH HEATER) (WITHOUT RADIO)
pc220-7c	211330	K1110-12D0	. FLOOR FRAME (OPERATOR'S CAB) (CLAMP AND PLATE)(#65001-)
pc220-7c	211340	K1110-12D9	. FLOOR FRAME (OPERATOR'S CAB) (CLAMP AND PLATE) (WITHOUT AIR CONDITIONER)(#65001-)
pc220-7c	211350	K1110-13A0	. FLOOR FRAME (CONSOLE) (LOWER) (L.H.)(#60001-65000)
pc220-7c	211360	K1110-13D0	. FLOOR FRAME (OPERATOR'S CAB) (MONITOR SYSTEM)(#65001-)
pc220-7c	211370	K1110-13D9	. FLOOR FRAME (OPERATOR'S CAB) (MONITOR SYSTEM) (7SEGMENT MONITOR) (WITHOUT AIR CONDITIONER)(#65001-)
pc220-7c	211380	K1110-13E1	. FLOOR FRAME (OPERATOR'S CAB) (MONITOR SYSTEM) (7SEGMENT MONITOR)(#65001-)
pc220-7c	211390	K1110-14A0	. FLOOR FRAME (CONSOLE) (UNDER) (L.H.)(#60001-65000)
pc220-7c	211400	K1110-14D0	. FLOOR FRAME (OPERATOR'S CAB) (PLATE AND DUCT)(#65001-)
pc220-7c	211410	K1110-14D9	. FLOOR FRAME (OPERATOR'S CAB) (PLATE) (WITHOUT AIR CONDITIONER)(#65001-)
pc220-7c	211420	K1110-14E4	. FLOOR FRAME (OPERATOR'S CAB) (PLATE AND DUCT) (FOR BIG WIND AIR CONDITIONER)(#65001-)
pc220-7c	211430	K1110-15A0	. FLOOR FRAME (LEVER AND VALVE) (R.H.)(#60001-65000)
pc220-7c	211440	K1110-15D0	. FLOOR FRAME (OPERATOR'S CAB) (PARTITION AND FOOT DUCT)(#65001-)
pc220-7c	211450	K1110-15D9	. FLOOR FRAME (OPERATOR'S CAB) (PARTITION) (WITHOUT AIR CONDITIONER)(#65001-)
pc220-7c	211460	K1110-16A7	. FLOOR FRAME (CONSOLE) (MASTER KEY) (R.H.)(#60001-65000)
pc220-7c	211470	K1110-16D0	. FLOOR FRAME (OPERATOR'S CAB) (SUB PANEL)(#65001-68833)
pc220-7c	211480	K1110-16D0A	. FLOOR FRAME (OPERATOR'S CAB) (SUB PANEL)(#68834-)
pc220-7c	211490	K1110-16D9	. FLOOR FRAME (OPERATOR'S CAB) (SUB PANEL) (WITHOUT AIR CONDITIONER)(#65001-)
pc220-7c	211500	K1110-16M0	. FLOOR FRAME (OPERATOR'S CAB) (SUB PANEL) (COLD WEATHER A SPEC.)(#65001-69400)
pc220-7c	211510	K1110-16M0A	. FLOOR FRAME (OPERATOR'S CAB) (SUB PANEL) (COLD WEATHER A SPEC.)(#69401-)
pc220-7c	211520	K1110-17A0	. FLOOR FRAME (AIR CONDITIONER AND FOOT COVER)(#60001-65000)

pc220-7c	211530	K1110-17A4	. FLOOR FRAME (FOOT COVER)(#60001-65000)
pc220-7c	211540	K1110-17C1	. FLOOR FRAME (BIG WIND AIR CONDITIONER AND FOOT COVER)(#60001-65000)
pc220-7c	211550	K1110-17C5	. FLOOR FRAME (HEATER AND FOOT COVER) (COLD WEATHER A SPEC.)(#60255-)
pc220-7c	211560	K1110-17D0	. FLOOR FRAME (OPERATOR'S CAB) (KOMTRAX)(#65001-)
pc220-7c	211570	K1110-18A0	. FLOOR FRAME (AIR CONDITIONER HOSE)(#60001-65000)
pc220-7c	211580	K1110-18D0	. FLOOR FRAME (OPERATOR'S CAB) (CLAMP AND BOLT)(#65001-)
pc220-7c	211590	K1110-18E4	. FLOOR FRAME (OPERATOR'S CAB) (CLAMP AND BOLT) (12V CONVERTER)(#65001-65823)
pc220-7c	211600	K1110-18E4A	. FLOOR FRAME (OPERATOR'S CAB) (CLAMP AND BOLT) (12V CONVERTER)(#65824-)
pc220-7c	211610	K1110-19A0	. FLOOR FRAME (HEATER HOSE AND CLAMP)(#60001-65000)
pc220-7c	211620	K1110-19B4	. FLOOR FRAME (HEATER HOSE AND CLAMP) (FOR CORROSION RESISTER)(#60001-65000)
pc220-7c	211630	K1110-19C5	. FLOOR FRAME (HEATER HOSE AND CLAMP) (COLD WEATHER A SPEC.)(#60255-)
pc220-7c	211640	K1110-19C7	. FLOOR FRAME (HEATER HOSE AND CLAMP) (CAB HEATER) (COLD WEATHER A SPEC.)(#60255-)
pc220-7c	211650	K1110-19C9	. FLOOR FRAME (HEATER HOSE AND CLAMP) (FOR HEATER)
pc220-7c	211660	K1110-19D0	. FLOOR FRAME (OPERATOR'S CAB) (FRAME)(#65001-)
pc220-7c	211670	K1110-19D2	. FLOOR FRAME (OPERATOR'S CAB) (FRAME) (2 ACTUATOR)(#65001-)
pc220-7c	211680	K1110-20A0	. FLOOR FRAME (PPC) (1/2)(#60001-65000)
pc220-7c	211690	K1110-20D0	. FLOOR FRAME (OPERATOR'S CAB) (TRAVEL CONTROL)(#65001-65436)
pc220-7c	211700	K1110-20D0A	. FLOOR FRAME (OPERATOR'S CAB) (TRAVEL CONTROL)(#65437-)
pc220-7c	211710	K1110-21A0	. FLOOR FRAME (PPC) (2/2)(#60001-65000)
pc220-7c	211720	K1110-21D0	. FLOOR FRAME (OPERATOR'S CAB) (FOOT REST) (L.H.)(#65001-)
pc220-7c	211730	K1110-21D2	. FLOOR FRAME (OPERATOR'S CAB) (FOOT REST) (L.H.) (2 ACTUATOR)(#65001-)
pc220-7c	211740	K1110-22A0	. FLOOR FRAME (PPC CLAMP)(#60001-65000)
pc220-7c	211750	K1110-22D0	. FLOOR FRAME (OPERATOR'S CAB) (FOOT REST) (R.H.)(#65001-)
pc220-7c	211760	K1110-22D1	. FLOOR FRAME (OPERATOR'S CAB) (ATTACHMENT CONTROL) (1 ACTUATOR)(#65001-)
pc220-7c	211770	K1110-22E0	. FLOOR FRAME (OPERATOR'S CAB) (ATTACHMENT CONTROL) (1 ACTUATOR) (7SEGMENT MONITOR SPEC.)(#65001-)
pc220-7c	211780	K1110-23A0	. FLOOR FRAME (P¤T BLOCK AND SEAL)(#60001-65000)
pc220-7c	211790	K1110-23A1	. FLOOR FRAME (P¤T BLOCK AND SEAL) (1 ACTUATOR)(#60001-65000)
pc220-7c	211800	K1110-23A4	. FLOOR FRAME (P AND T BLOCK) (WITHOUT AIR CONDITIONER AND RADIO)(#60001-65000)
pc220-7c	211810	K1110-23B7	. FLOOR FRAME (P AND T BLOCK) (1 ACTUATOR) (WITHOUT AIR CONDITIONER) (7SEGMENT MONITOR SPEC.)(#60001-65000)
pc220-7c	211820	K1110-23B8	. FLOOR FRAME (P¤T BLOCK AND SEAL) (1 ACTUATOR) (7SEGMENT MONITOR SPEC.)(#60001-65000)
pc220-7c	211830	K1110-24A3	. FLOOR FRAME (12V CONVERTER)(#60001-65000)
pc220-7c	211840	K1110-24D0	. FLOOR FRAME (OPERATOR'S CAB) (BASE)(#65001-)
pc220-7c	211850	K1110-25A0	. FLOOR FRAME (KOMTRAX)(#60001-65000)
pc220-7c	211860	K1110-25A2	. FLOOR FRAME (KOMTRAX LESS)(#60001-65000)
pc220-7c	211870	K1110-25D0	. FLOOR FRAME (OPERATOR'S CAB) (HARNESS)(#65001-65530)
pc220-7c	211880	K1110-25D0A	. FLOOR FRAME (OPERATOR'S CAB) (HARNESS)(#65531-)
pc220-7c	211890	K1110-25M0	. FLOOR FRAME (OPERATOR'S CAB) (HARNESS) (COLD WEATHER SPEC.)(#65001-65530)
pc220-7c	211900	K1110-25M0A	. FLOOR FRAME (OPERATOR'S CAB) (HARNESS) (COLD WEATHER SPEC.)(#65531-)
pc220-7c	211910	K1110-26A0	. FLOOR FRAME (LEVER KNOB)(#60001-65000)
pc220-7c	211920	K1110-26D0	. FLOOR FRAME (OPERATOR'S CAB) (WINDOW WASHER)(#65001-)
pc220-7c	211930	K1110-27D0	. FLOOR FRAME (OPERATOR'S CAB) (LEVER AND VALVE) (L.H.)(#65001-69252)
pc220-7c	211940	K1110-27D0A	. FLOOR FRAME (OPERATOR'S CAB) (LEVER AND VALVE) (L.H.)(#69253-)
pc220-7c	211950	K1110-27M5	. FLOOR FRAME (OPERATOR'S CAB) (LEVER AND VALVE) (L.H.) (FOR HEATPROOF)(#65001-69252)
pc220-7c	211960	K1110-27M5A	. FLOOR FRAME (OPERATOR'S CAB) (LEVER AND VALVE) (L.H.) (FOR HEATPROOF)(#69253-)
pc220-7c	211970	K1110-28D9	. FLOOR FRAME (OPERATOR'S CAB) (CONSOLE) (UPPER) (WITHOUT AIR CONDITIONER AND RADIO) (L.H.)(#65001-)
pc220-7c	211980	K1110-28E1	. FLOOR FRAME (OPERATOR'S CAB) (CONSOLE) (UPPER) (WITHOUT RADIO) (L.H.)(#65001-)
pc220-7c	211990	K1110-28E2	. FLOOR FRAME (OPERATOR'S CAB) (CONSOLE) (UPPER) (WITH AIR CONDITIONER AND RADIO) (L.H.) (FOR ASIA)(#65001-)
pc220-7c	212000	K1110-28E3	. FLOOR FRAME (OPERATOR'S CAB) (CONSOLE) (UPPER) (WITH AIR CONDITIONER AND RADIO) (FOR U.S.A.) (L.H.)(#65001-)
pc220-7c	212010	K1110-28E4	. FLOOR FRAME (OPERATOR'S CAB) (CONSOLE) (UPPER) (WITH BIG WIND AIR CONDITIONER AND RADIO) (L.H.)(#65001-)
pc220-7c	212020	K1110-28G1	. FLOOR FRAME (OPERATOR'S CAB) (CONSOLE) (UPPER) (WITH RADIO) (L.H.) (FOR ASIA)(#65001-)
pc220-7c	212030	K1110-28M0	. FLOOR FRAME (OPERATOR'S CAB) (CONSOLE) (UPPER) (WITHOUT RADIO) (L.H.) (COLD WEATHER A SPEC.)(#65001-)
pc220-7c	212040	K1110-28M1	. FLOOR FRAME (OPERATOR'S CAB) (CONSOLE) (UPPER) (WITH RADIO) (COLD WEATHER A SPEC.) (L.H.)(#65001-)
pc220-7c	212050	K1110-28M6	. FLOOR FRAME (OPERATOR'S CAB) (CONSOLE) (UPPER) (WITH BIG WIND AIR CON.) (WITHOUT RADIO) (L.H.)(#65001-)
pc220-7c	212060	K1110-28M7	. FLOOR FRAME (OPERATOR'S CAB) (CONSOLE) (UPPER) (WITH HEATER AND BEACON) (WITHOUT RADIO) (L.H.)(#65001-)
pc220-7c	212070	K1110-28M8	. FLOOR FRAME (OPERATOR'S CAB) (CONSOLE) (UPPER) (WITH BIG WIND AIR CON. AND RADIO) (L.H.) (BEACON)(#65001-)
pc220-7c	212080	K1110-28M9	. FLOOR FRAME (OPERATOR'S CAB) (CONSOLE) (UPPER) (WITH AIR CON. AND BEACON) (WITHOUT RADIO) (L.H.)(#65001-)
pc220-7c	212090	K1110-29D0	. FLOOR FRAME (OPERATOR'S CAB) (CONSOLE) (LOWER) (L.H.)(#65001-65518)
pc220-7c	212100	K1110-29D0A	. FLOOR FRAME (OPERATOR'S CAB) (CONSOLE) (LOWER) (L.H.)(#65519-)
pc220-7c	212110	K1110-30D0	. FLOOR FRAME (OPERATOR'S CAB) (LEVER AND VALVE) (R.H.)(#65001-69195)
pc220-7c	212120	K1110-30D0A	. FLOOR FRAME (OPERATOR'S CAB) (LEVER AND VALVE) (R.H.)(#69196-)
pc220-7c	212130	K1110-30M5	. FLOOR FRAME (OPERATOR'S CAB) (LEVER AND VALVE) (R.H.) (FOR HEATPROOF)(#65001-69195)
pc220-7c	212140	K1110-30M5A	. FLOOR FRAME (OPERATOR'S CAB) (LEVER AND VALVE) (R.H.) (FOR HEATPROOF)(#69196-)
pc220-7c	212150	K1110-31D5	. FLOOR FRAME (OPERATOR'S CAB) (CONSOLE) (MASTER KEY) (R.H.)(#65001-)
pc220-7c	212160	K1110-32D0	. FLOOR FRAME (OPERATOR'S CAB) (AIR CONDITIONER AND FOOT COVER)(#65001-)
pc220-7c	212170	K1110-32D9	. FLOOR FRAME (OPERATOR'S CAB) (FOOT COVER) (WITHOUT AIR CONDITIONER)(#65001-)
pc220-7c	212180	K1110-33D0	. FLOOR FRAME (OPERATOR'S CAB) (AIR CONDITIONER HOSE)(#65001-)
pc220-7c	212190	K1110-33M0	. FLOOR FRAME (OPERATOR'S CAB) (BLIND PARTS FOR AIR CONDITIONER HOSE)(#65001-)
pc220-7c	212200	K1110-34F0	. FLOOR FRAME (OPERATOR'S CAB) (HEATER HOSE AND CLAMP)(#65001-)
pc220-7c	212210	K1110-34F1	. FLOOR FRAME (OPERATOR'S CAB) (HEATER HOSE AND CLAMP) (CORROSION RESISTER)(#65001-)
pc220-7c	212220	K1110-34M0	. FLOOR FRAME (OPERATOR'S CAB) (HEATER HOSE AND CLAMP) (COLD WEATHER A SPEC.) (FOR HARD WATER ARRANG)(#65001-)
pc220-7c	212230	K1110-34M3	. FLOOR FRAME (OPERATOR'S CAB) (HEATER HOSE AND CLAMP) (FOR HEATER)(#65001-)
pc220-7c	212240	K1110-35D0	. FLOOR FRAME (OPERATOR'S CAB) (PPC HOSE) (1/2)(#65001-)
pc220-7c	212250	K1110-36D0	. FLOOR FRAME (OPERATOR'S CAB) (PPC HOSE) (2/2)(#65001-)
pc220-7c	212260	K1110-37D0	. FLOOR FRAME (OPERATOR'S CAB) (PPC CLAMP)(#65001-66554)
pc220-7c	212270	K1110-37D0A	. FLOOR FRAME (OPERATOR'S CAB) (PPC CLAMP)(#66555-)
pc220-7c	212280	K1110-37M1	. FLOOR FRAME (OPERATOR'S CAB) (PPC CLAMP)(#65001-)
pc220-7c	212290	K1110-38D0	. FLOOR FRAME (OPERATOR'S CAB) (P¤T BLOCK AND SEAL)(#65001-)

pc220-7c	212300	K1110-38D1	. FLOOR FRAME (OPERATOR'S CAB) (P¤T BLOCK AND SEAL) (1 ACTUATOR)(#65001-)
pc220-7c	212310	K1110-38D2	. FLOOR FRAME (OPERATOR'S CAB) (P¤T BLOCK AND SEAL) (2 ACTUATOR)(#65001-)
pc220-7c	212320	K1110-38D9	. FLOOR FRAME (OPERATOR'S CAB) (P¤T BLOCK) (WITHOUT AIR CONDITIONER)(#65001-)
pc220-7c	212330	K1110-38E0	. FLOOR FRAME (OPERATOR'S CAB) (P¤T BLOCK) (1 ACTUATOR) (WITHOUT AIR CONDITIONER) (7SEG MONITOR SPEC.)(#65001-)
pc220-7c	212340	K1110-38E1	. FLOOR FRAME (OPERATOR'S CAB) (P¤T BLOCK) (1 ACTUATOR) (WITHOUT AIR CONDITIONER) (7SEG MONITOR SPEC.)(#65001-)
pc220-7c	212350	K1120-01A0	. FLOOR MOUNT(#60001-65000)
pc220-7c	212360	K1120-01A0A	. FLOOR MOUNT(#65001-65685)
pc220-7c	212370	K1120-01A1	. FLOOR MOUNT(#65686-)
pc220-7c	212380	K1730-01A0	. SWITCH
pc220-7c	212390	K1740-01A0	. COVER
pc220-7c	240000	|240000	GUARD
pc220-7c	240010	M1110-01A0	. HOOD
pc220-7c	240020	M1120-01A0	. FRAME (MACHINE CAB)
pc220-7c	240030	M1130-01A0	. LEFT SIDE DOOR (MACHINE CAB)(#60001-65000)
pc220-7c	240040	M1130-01A0A	. LEFT SIDE DOOR (MACHINE CAB)(#65001-)
pc220-7c	240050	M1130-01A1	. LEFT SIDE DOOR (MACHINE CAB)(#60001-65000)
pc220-7c	240060	M1130-01A1A	. LEFT SIDE DOOR (MACHINE CAB)(#65001-)
pc220-7c	240070	M1130-01A2	. LEFT SIDE DOOR (MACHINE CAB) (COLD WEATHER A SPEC.)(#60255-65000)
pc220-7c	240080	M1130-01A2A	. LEFT SIDE DOOR (MACHINE CAB) (COLD WEATHER A SPEC.)(#65001-)
pc220-7c	240090	M1140-01A0	. RIGHT SIDE DOOR (MACHINE CAB)(#60001-65000)
pc220-7c	240100	M1140-01A0A	. RIGHT SIDE DOOR (MACHINE CAB)(#65001-)
pc220-7c	240110	M1140-01A1	. RIGHT SIDE DOOR (MACHINE CAB) (COLD WEATHER A SPEC.)(#60255-65000)
pc220-7c	240120	M1140-01A1A	. RIGHT SIDE DOOR (MACHINE CAB) (COLD WEATHER A SPEC.)(#65001-)
pc220-7c	240130	M1150-01A0	. PARTITION (MACHINE CAB)(#60001-65000)
pc220-7c	240140	M1150-01A0A	. PARTITION (MACHINE CAB)(#65001-)
pc220-7c	240150	M1150-01A2	. PARTITION (MACHINE CAB) (COLD WEATHER A SPEC.)(#60255-)
pc220-7c	240160	M1160-01A0	. PARTITION
pc220-7c	240170	M1160-01A1	. PARTITION (WITH PRECLEANER)
pc220-7c	240180	M1160-01A2	. PARTITION (COLD WEATHER A SPEC.)(#60255-)
pc220-7c	240190	M1210-01A0	. COVER (MACHINE CAB) (UPPER)
pc220-7c	240200	M1210-01A1	. COVER (MACHINE CAB) (UPPER) (COLD WEATHER A SPEC.)(#60255-)
pc220-7c	240210	M1220-01A0	. RIGHT SIDE CASE
pc220-7c	240220	M1220-01A1	. RIGHT SIDE CASE
pc220-7c	240230	M1310-01A0	. HANDRAIL
pc220-7c	240240	M1410-01A0	. REAR VIEW MIRROR¤ L.H. (SINGLE)
pc220-7c	240250	M1420-01A0	. REAR VIEW MIRROR¤ R.H.
pc220-7c	240260	M1510-01A0	. COUNTERWEIGHT(#60001-65000)
pc220-7c	240270	M1510-01A0A	. COUNTERWEIGHT(#65001-)
pc220-7c	240280	M1520-01A0	. COUNTERWEIGHT MOUNTING
pc220-7c	240290	M1810-01A0	. UNDER COVER (REVOLVING FRAME) (LEFT SIDE COVER AND TOOL BOX)
pc220-7c	240300	M1810-02A0	. UNDER COVER (REVOLVING FRAME) (ENGINE ROOM)
pc220-7c	240310	M1810-02A1	. UNDER COVER (REVOLVING FRAME) (ENGINE ROOM)(#60283-)
pc220-7c	270000	|270000	SWING CIRCLE AND RELATED PARTS
pc220-7c	270010	N1110-01A0	. SWING CIRCLE (CONCENTRATED GREASING)
pc220-7c	270020	N1110-01A1	. SWING CIRCLE (-30 SPEC.)
pc220-7c	270030	N1210-01A0	. SWING MACHINERY(#60001-60353)
pc220-7c	270040	N1210-01A0A	. SWING MACHINERY(#60354-60600)
pc220-7c	270050	N1210-01A0B	. SWING MACHINERY(#60601-69347)
pc220-7c	270060	N1210-01A0C	. SWING MACHINERY(#69348-)
pc220-7c	270070	N1210-01A1	. SWING MACHINERY (-30 SPEC.)(#60001-69347)
pc220-7c	270080	N1210-01A1A	. SWING MACHINERY (-30 SPEC.)(#69348-)
pc220-7c	270090	N1220-01A0	. SWING MOTOR (CONNECTING PARTS)
pc220-7c	270100	N1310-01A0	. SWIVEL JOINT (CONNECTING PARTS)(#60001-65000)
pc220-7c	270110	N1310-01A0A	. SWIVEL JOINT (CONNECTING PARTS)(#65001-)
pc220-7c	300000	|300000	TRAVEL AND LOWER PIPING
pc220-7c	300010	P1120-01A0	. TRAVEL PIPING
pc220-7c	300020	P1120-01A2	. TRAVEL PIPING (-30 SPEC.)
pc220-7c	300030	P1210-01A1	. FINAL DRIVE
pc220-7c	300040	P1210-01A2	. FINAL DRIVE (COLD WEATHER A SPEC.)(#60255-)
pc220-7c	330000	|330000	UNDER CARRIAGE
pc220-7c	330010	R0110-01A0	. FRONT IDLER(#60001-65000)
pc220-7c	330020	R0110-01A0A	. FRONT IDLER(#65001-)
pc220-7c	330030	R0110-01A1	. FRONT IDLER (COLD WEATHER A SPEC.)(#60255-65000)
pc220-7c	330040	R0110-01A1A	. FRONT IDLER (COLD WEATHER A SPEC.)(#65001-)
pc220-7c	330050	R0110-02A0	. IDLER CUSHION(#60001-60356)
pc220-7c	330060	R0110-02A0A	. IDLER CUSHION(#60357-)
pc220-7c	330070	R0110-02A5	. IDLER CUSHION (FOR NORTH AMERICA)(#65001-)
pc220-7c	330080	R0200-01A0	. TRACK ROLLER
pc220-7c	330090	R0200-01A2	. TRACK ROLLER (COLD WEATHER A SPEC.)(#60255-)
pc220-7c	330100	R0300-01A0	. CARRIER ROLLER(#60001-60761)
pc220-7c	330110	R0300-01A0A	. CARRIER ROLLER(#60762-65000)
pc220-7c	330120	R0300-01A0B	. CARRIER ROLLER(#65001-65616)
pc220-7c	330130	R0300-01A0C	. CARRIER ROLLER(#65617-)
pc220-7c	330140	R0300-01A1	. CARRIER ROLLER (COLD WEATHER A SPEC.)(#60255-60761)
pc220-7c	330150	R0300-01A1A	. CARRIER ROLLER (COLD WEATHER A SPEC.)(#60762-65000)
pc220-7c	330160	R0300-01A1B	. CARRIER ROLLER (COLD WEATHER A SPEC.)(#65001-65616)
pc220-7c	330170	R0300-01A1C	. CARRIER ROLLER (COLD WEATHER A SPEC.)(#65617-)

pc220-7c	330180	R0500-01A0	. TRACK SHOE (FLAT TYPE)(#60001-65000)
pc220-7c	330190	R0500-01A0A	. TRACK SHOE (FLAT TYPE)(#65001-)
pc220-7c	330200	R0500-01A1	. TRACK SHOE (TRIPLE GROUSER WITH HOLE) (600MM WIDE)
pc220-7c	330210	R0500-01A2	. TRACK SHOE (TRIPLE GROUSER WITH HOLE) (700MM WIDE)
pc220-7c	330220	R0500-01A3	. TRACK SHOE (TRIPLE GROUSER WITH HOLE) (800MM WIDE)
pc220-7c	330230	R0500-01A4	. TRACK SHOE (ROADLINER) (600MM WIDE)
pc220-7c	330240	R0500-01B1	. TRACK SHOE (DOUBLE GROUSER WITH HOLE) (600MM WIDE)(#65001-)
pc220-7c	330250	R1100-01A0	. TRACK FRAME
pc220-7c	330260	R1100-01A3	. TRACK FRAME (WITH UNDER COVER)
pc220-7c	330270	R1140-01A0	. UNDER COVER (FOR TRACK FRAME)
pc220-7c	330280	R1200-01A0	. TRACK ROLLER GUARD
pc220-7c	330290	R1200-01A3	. TRACK FULL ROLLER GUARD
pc220-7c	360000	|360000	WORK EQUIPMENT
pc220-7c	360010	T1110-01A0	. BOOM(#60001-60592)
pc220-7c	360020	T1110-01A0A	. BOOM(#60593-65000)
pc220-7c	360030	T1110-01A0B	. BOOM(#65001-)
pc220-7c	360040	T1110-01A1	. BOOM (HD)(#60001-60592)
pc220-7c	360050	T1110-01A1A	. BOOM (HD)(#60593-65000)
pc220-7c	360060	T1110-01A1B	. BOOM (HD)(#65001-)
pc220-7c	360070	T1110-01A3	. BOOM (HD) (100 HOURS LUBRICATING)(#60001-60592)
pc220-7c	360080	T1110-01A3A	. BOOM (HD) (100 HOURS LUBRICATING)(#60593-65000)
pc220-7c	360090	T1110-01A3B	. BOOM (HD) (100 HOURS LUBRICATING)(#65001-)
pc220-7c	360100	T1110-01A6	. BOOM (500 HOURS LUBRICATING) (FOR AUSTRALIA SPEC.)(#60744-)
pc220-7c	360110	T1110-01A7	. BOOM (HD) (100 HOURS LUBRICATING) (-40ßC SPEC.)(#67318-)
pc220-7c	360120	T1110-02A0	. BOOM (TOP PIN AND BOTTOM PIN)(#60001-65000)
pc220-7c	360130	T1110-02A0A	. BOOM (TOP PIN AND BOTTOM PIN)(#65001-)
pc220-7c	360140	T1110-02A3	. BOOM (TOP PIN AND BOTTOM PIN) (100 HOURS LUBRICATING)(#60001-65000)
pc220-7c	360150	T1110-02A3A	. BOOM (TOP PIN AND BOTTOM PIN) (100 HOURS LUBRICATING)(#65001-)
pc220-7c	360160	T1110-03A0	. BOOM (ARM CYLINDER PIPING AND BUCKET CYLINDER PIPING)(#60001-60761)
pc220-7c	360170	T1110-03A0A	. BOOM (ARM CYLINDER PIPING AND BUCKET CYLINDER PIPING)(#60762-65000)
pc220-7c	360180	T1110-03A0B	. BOOM (ARM CYLINDER PIPING AND BUCKET CYLINDER PIPING)(#65001-65530)
pc220-7c	360190	T1110-03A0C	. BOOM (ARM CYLINDER PIPING AND BUCKET CYLINDER PIPING)(#65531-)
pc220-7c	360200	T1110-03A1	. BOOM (HD) (FOR ADDITIONAL PIPING) (ARM CYLINDER PIPIN AND BUCKET CYLINDER PIPING)(#60001-60761)
pc220-7c	360210	T1110-03A1A	. BOOM (HD) (FOR ADDITIONAL PIPING) (ARM CYLINDER PIPIN AND BUCKET CYLINDER PIPING)(#60762-65000)
pc220-7c	360220	T1110-03A1B	. BOOM (HD) (FOR ADDITIONAL PIPING) (ARM CYLINDER PIPIN AND BUCKET CYLINDER PIPING)(#65001-65530)
pc220-7c	360230	T1110-03A1C	. BOOM (HD) (FOR ADDITIONAL PIPING) (ARM CYLINDER PIPIN AND BUCKET CYLINDER PIPING)(#65531-)
pc220-7c	360240	T1110-03A6	. BOOM (ARM CYLINDER LINE) (FOR AUSTRALIA SPEC.)(#60744-)
pc220-7c	360250	T1110-03A7	. BOOM (HD) (FOR ADDITIONAL PIPING) (ARM CYLINDER LINE AND BUCKET CYLINDER LINE) (-40ßC SPEC.)(#67318-)
pc220-7c	360260	T1110-05A0	. BOOM (LUBRICATING PIPING AND WORKING LAMP HARNESS)
pc220-7c	360270	T1110-06A1	. BOOM (HD) (ADDITIONAL LINE) (FOR ADDITIONAL PIPING)(#60001-60592)
pc220-7c	360280	T1110-06A1A	. BOOM (HD) (ADDITIONAL LINE) (FOR ADDITIONAL PIPING)(#60593-60761)
pc220-7c	360290	T1110-06A1B	. BOOM (HD) (ADDITIONAL LINE) (FOR ADDITIONAL PIPING)(#60762-65000)
pc220-7c	360300	T1110-06A1C	. BOOM (HD) (ADDITIONAL LINE) (FOR ADDITIONAL PIPING)(#65001-65530)
pc220-7c	360310	T1110-06A1D	. BOOM (HD) (ADDITIONAL LINE) (FOR ADDITIONAL PIPING)(#65531-)
pc220-7c	360320	T1110-06A7	. BOOM (HD) (ADDITIONAL LINE) (FOR ADDITIONAL PIPING) (-40ßC SPEC.)(#67318-)
pc220-7c	360330	T1110-07A0	. BOOM (WORKING LAMP AND BOOM FOOT LUBRICATING)
pc220-7c	360340	T1110-07A4	. BOOM LESS
pc220-7c	360350	T1110-07A7	. BOOM (WORKING LAMP AND BOOM FOOT LUBRICATING) (-40ßC SPEC.)(#67318-)
pc220-7c	360360	T1120-01A0	. BOOM CYLINDER
pc220-7c	360370	T1120-01A3	. BOOM CYLINDER (100 HOURS LUBRICATING)
pc220-7c	360380	T1120-01A8	. BOOM CYLINDER (COLD AREA ARRANGEMENT (-40))
pc220-7c	360390	T1125-01A0	. BOOM PIN
pc220-7c	360400	T1125-01A2	. BOOM PIN (100 HOURS LUBRICATING)
pc220-7c	360410	T1140-01A0	. ARM CYLINDER
pc220-7c	360420	T1140-01A2	. ARM CYLINDER (100 HOURS LUBRICATING)
pc220-7c	360430	T1140-01A3	. ARM CYLINDER (BLIND PARTS) (FOR COMPONENT)
pc220-7c	360440	T1140-01A6	. ARM CYLINDER (COLD AREA ARRANGEMENT (-40))
pc220-7c	360450	T1190-01A0	. ARM LESS LINK
pc220-7c	360460	T1200-01A0	. ARM (3.05M)(#60001-65000)
pc220-7c	360470	T1200-01A0A	. ARM (3.05M)(#65001-)
pc220-7c	360480	T1200-01A2	. ARM (3.05M) (FOR ADDITIONAL PIPING)(#60001-65000)
pc220-7c	360490	T1200-01A2A	. ARM (3.05M) (FOR ADDITIONAL PIPING)(#65001-)
pc220-7c	360500	T1200-01A4	. ARM (3.05M) (FOR ADDITIONAL PIPING) (100 HOURS LUBRICATING)(#60001-65000)
pc220-7c	360510	T1200-01A4A	. ARM (3.05M) (FOR ADDITIONAL PIPING) (100 HOURS LUBRICATING)(#65001-)
pc220-7c	360520	T1200-01A5	. ARM (3.05M) (HEAVY DUTY) (100 HOURS LUBRICATING)(#60001-65000)
pc220-7c	360530	T1200-01A5A	. ARM (3.05M) (HEAVY DUTY) (100 HOURS LUBRICATING)(#65001-)
pc220-7c	360540	T1200-01A6	. ARM (3.05M) (HEAVY DUTY) (500 HOURS LUBRICATING)(#60001-65000)
pc220-7c	360550	T1200-01A6A	. ARM (3.05M) (HEAVY DUTY) (500 HOURS LUBRICATING)(#65001-)
pc220-7c	360560	T1200-01A7	. ARM (2.5M) (500 HOURS LUBRICATING)(#60001-65000)
pc220-7c	360570	T1200-01A7A	. ARM (2.5M) (500 HOURS LUBRICATING)(#65001-)
pc220-7c	360580	T1200-01A8	. ARM (2.5M) (FOR ADDITIONAL PIPING) (500 HOURS LUBRICATING)(#60001-65000)
pc220-7c	360590	T1200-01A8A	. ARM (2.5M) (FOR ADDITIONAL PIPING) (500 HOURS LUBRICATING)(#65001-)
pc220-7c	360600	T1200-01A9	. ARM (3.5M) (500 HOURS LUBRICATING)(#60001-65000)
pc220-7c	360610	T1200-01A9A	. ARM (3.5M) (500 HOURS LUBRICATING)(#65001-)
pc220-7c	360620	T1200-01B0	. ARM (3.5M) (FOR ADDITIONAL PIPING) (500 HOURS LUBRICATING)(#60001-65000)
pc220-7c	360630	T1200-01B0A	. ARM (3.5M) (FOR ADDITIONAL PIPING) (500 HOURS LUBRICATING)(#65001-)
pc220-7c	360640	T1200-01B1	. ARM LESS

pc220-7c	360650	T1200-01B2	. ARM (2.5M) (FOR ADDITIONAL PIPING) (100 HOURS LUBRICATING)(#60001-65000)
pc220-7c	360660	T1200-01B2A	. ARM (2.5M) (FOR ADDITIONAL PIPING) (100 HOURS LUBRICATING)(#65001-)
pc220-7c	360670	T1200-01B3	. ARM (2.0M) (500 HOURS LUBRICATING)(#60001-65000)
pc220-7c	360680	T1200-01B3A	. ARM (2.0M) (500 HOURS LUBRICATING)(#65001-65888)
pc220-7c	360690	T1200-01B4	. ARM (2.5M) (500 HOURS LUBRICATING)(#60001-65000)
pc220-7c	360700	T1200-01B4A	. ARM (2.5M) (500 HOURS LUBRICATING)(#65001-)
pc220-7c	360710	T1200-01B5	. ARM (2.0M) (500 HOURS LUBRICATING) (FOR SOUTH AFRICA)(#60001-65000)
pc220-7c	360720	T1200-01B5A	. ARM (2.0M) (500 HOURS LUBRICATING) (FOR SOUTH AFRICA)(#65001-)
pc220-7c	360730	T1200-01C3A	. ARM (2.0M) (500 HOURS LUBRICATING)(#65889-)
pc220-7c	360740	T1200-01C4	. ARM (3.05M) (500 HOURS LUBRICATING) (FOR AUSTRALIA SPEC.)(#65202-)
pc220-7c	360750	T1200-01C9	. ARM (3.05M)(#65889-)
pc220-7c	360760	T1200-01D0	. ARM (3.05M) (HEAVY DUTY) (FOR ADDITIONAL PIPING)(#65889-)
pc220-7c	360770	T1200-01D1	. ARM (3.05M) (FOR ADDITIONAL PIPING) (100 HOURS LUBRICATING) (-40ßC SPEC.)(#67318-)
pc220-7c	360780	T1200-01D2	. ARM (3.05M) (HEAVY DUTY) (500 HOURS LUBRICATING)(#65889-)
pc220-7c	360790	T1200-01D3	. ARM (3.05M) (100 HOURS LUBRICATING) (-30 SPEC.)(#67318-)
pc220-7c	360800	T1200-01D4	. ARM (2.5M) (500 HOURS LUBRICATING)(#65889-)
pc220-7c	360810	T1200-01D5	. ARM (2.5M) (FOR ADDITIONAL PIPING) (500 HOURS LUBRICATING)(#65889-)
pc220-7c	360820	T1200-01D6	. ARM (3.5M) (500 HOURS LUBRICATING)(#65889-)
pc220-7c	360830	T1200-01D7	. ARM (3.5M) (FOR ADDITIONAL PIPING) (100 HOURS LUBRICATING)(#65001-)
pc220-7c	360840	T1200-01D8	. ARM (3.5M) (FOR ADDITIONAL PIPING) (500 HOURS LUBRICATING)(#65889-)
pc220-7c	360850	T1200-01D9	. ARM (2.0M) (100 HOURS LUBRICATING)(#65001-)
pc220-7c	360860	T1200-01E0	. ARM (3.5M) (100 HOURS LUBRICATING)(#65001-)
pc220-7c	360870	T1200-02A0	. ARM (BUCKET LINK)
pc220-7c	360880	T1200-02A4	. ARM (BUCKET LINK) (100 HOURS LUBRICATING)
pc220-7c	360890	T1200-02B3	. ARM (BUCKET LINK) (500 HOURS LUBRICATING)(#60001-65888)
pc220-7c	360900	T1200-03A0	. ARM (BUCKET CYLINDER HOSE AND SPACER) (3.05M)
pc220-7c	360910	T1200-03A4	. ARM (BUCKET CYLINDER HOSE) (3.05M) (100 HOURS LUBRICATING)
pc220-7c	360920	T1200-03A9	. ARM (BUCKET CYLINDER HOSE AND SPACER) (3.5M) (500 HOURS LUBRICATING)
pc220-7c	360930	T1200-03D1	. ARM (BUCKET CYLINDER HOSE) (3.05M) (-40ßC SPEC.)(#67318-)
pc220-7c	360940	T1200-03D3	. ARM (BUCKET CYLINDER HOSE AND SPACER) (3.05M) (-40ßC SPEC.)(#67318-)
pc220-7c	360950	T1200-04A2	. ARM (3.05M) (FOR ADDITIONAL PIPING)
pc220-7c	360960	T1200-04A4	. ARM (3.05M) (FOR ADDITIONAL PIPING) (100 HOURS LUBRICATING)
pc220-7c	360970	T1200-04A8	. ARM (2.5M) (FOR ADDITIONAL PIPING) (500 HOURS LUBRICATING) (L.H.)
pc220-7c	360980	T1200-04B0	. ARM (3.05M) (FOR ADDITIONAL PIPING) (500 HOURS LUBRICATING)
pc220-7c	360990	T1200-04D1	. ARM (3.05M) (FOR ADDITIONAL PIPING) (100 HOURS LUBRICATING) (-40ßC SPEC.)(#67318-)
pc220-7c	361000	T1200-05A8	. ARM (2.5M) (FOR ADDITIONAL PIPING) (500 HOURS LUBRICATING) (R.H.)
pc220-7c	361010	T1210-01A0	. ARM (3.5M) (500 HOURS LUBRICATING)(#60001-65000)
pc220-7c	361020	T1210-01A0A	. ARM (3.5M) (500 HOURS LUBRICATING)(#65001-)
pc220-7c	361030	T1210-01A1	. ARM (3.5M) (500 HOURS LUBRICATING)(#65889-)
pc220-7c	361040	T1220-01A0	. BUCKET CYLINDER KIT
pc220-7c	361050	T1220-01A1	. BUCKET CYLINDER KIT(#65889-)
pc220-7c	361060	T1230-01A0	. BUCKET LINK KIT
pc220-7c	361070	T1230-01A1	. BUCKET LINK KIT(#65889-)
pc220-7c	361080	T1290-01A0	. BUCKET LESS
pc220-7c	361090	T1510-01A0	. BUCKET¤ 1.0M3 (CECE 0.9M3)¤ 1140MM (VERTICAL PIN TYPE) (WITH ADJUSTER) (500 HOURS LUBRICATING)
pc220-7c	361100	T1510-01A1	. BUCKET¤ 1.0M3 (CECE 0.9M3)¤ 1148MM (VERTICAL PIN TYPE) (WITH ADJUSTER) (100 HOURS LUBRICATING)
pc220-7c	361110	T1510-01A2	. BUCKET¤ 1.0M3 (CECE 0.9M3)¤ 1148MM (HORIZONTAL PIN TYPE) (WITH ADJUSTER) (100 HOURS LUBRICATING)
pc220-7c	361120	T1510-01A3	. BUCKET¤ 1.17M3 (CECE 1.0M3)¤ 1293MM (VERTICAL PIN TYPE) (WITH ADJUSTER) (100 HOURS LUBRICATING)
pc220-7c	361130	T1510-01A4	. BUCKET¤ 1.17M3 (CECE 1.0M3)¤ 1293MM (HORIZONTAL PIN TYPE) (WITH ADJUSTER) (100 HOURS LUBRICATING)
pc220-7c	361140	T1510-01A5	. BUCKET¤ 1.0M3 (CECE 0.9M3)¤ 1153MM (HORIZONTAL PIN TYPE) (HEAVY DUTY) (WITH ADJUSTER) (100H)
pc220-7c	361150	T1510-01A6	. BUCKET¤ 1.0M3 (CECE 0.9M3)¤ 1153MM (HORIZONTAL PIN TYPE) (HEAVY DUTY) (WITH ADJUSTER) (500H)
pc220-7c	361160	T1510-01A7	. BUCKET¤ 1.17M3 (CECE 1.0M3)¤ 1293MM (VERTICAL PIN TYPE) (WITH ADJUSTER) (500H LUBRICATING)
pc220-7c	361170	T1510-01A8	. BUCKET¤ 1.17M3 (CECE 1.0M3)¤ 1293MM (HORIZONTAL PIN TYPE) (WITH ADJUSTER) (500H LUBRICATING)
pc220-7c	361180	T1510-01A9	. BUCKET¤ 1.0M3 (CECE 0.9M3)¤ 1148MM (HORIZONTAL PIN TYPE) (WITH ADJUSTER) (500H LUBRICATING)
pc220-7c	361190	T1510-01B0	. CLAMSHELL BUCKET
pc220-7c	361200	T1510-01B1	. RIPPER BUCKET¤ 0.61M3 (CECE 0.56M3)¤ 950MM
pc220-7c	361210	T1510-01B2	. SLOPE FINISHING BUCKET
pc220-7c	361220	T1510-01B3	. TRAPEZOIDAL BUCKET
pc220-7c	361230	T1510-01B4	. DITCH CLEANING BUCKET¤ 0.8M3 (CECE 0.7M3)¤ 1800MM
pc220-7c	361240	T1510-01B5	. SINGLE SHANK RIPPER
pc220-7c	361250	T1510-01B6	. THREE SHANK RIPPER
pc220-7c	361260	T1510-01B7	. BUCKET¤ 0.72M3 (CECE 0.65M3)¤ 900MM (VERTICAL PIN TYPE) (100 HOURS LUBRICATING)
pc220-7c	361270	T1510-01B9	. BUCKET¤ 0.72M3 (CECE 0.65M3)¤ 900MM (HORIZONTAL PIN TYPE) (100 OURS LUBRICATING)
pc220-7c	361280	T1510-01C2	. BUCKET¤ 1.26M3 (CECE 1.1M3)¤ 1400MM (VERTICAL PIN TYPE) (100 HOURS LUBRICATING)
pc220-7c	361290	T1510-01C3	. BUCKET¤ 1.26M3 (CECE 1.1M3)¤ 1400MM (HORIZONTAL PIN TYPE) (100 HOURS LUBRICATING)
pc220-7c	361300	T1510-01D0	. BUCKET¤ 0.5M3 (CECE 0.45M3) 860MM (VERTICAL PIN TYPE) (FOR 18M SUPER LONG FRONT)(#65272-)
pc220-7c	361310	T1510-01D6	. BUCKET¤ 1.0M3¤ WIDTH 1260MM (HORIZONTAL PIN TYPE) (FOR ROCK)
pc220-7c	361320	T1510-02A0	. SIDE CUTTER (FOR BUCKET)
pc220-7c	361330	T1510-03B8	. HOOK (FOR BUCKET)
pc220-7c	361340	T1510-03C0	. HOOK (FOR BUCKET)
pc220-7c	361350	T1510-03C4	. HOOK (FOR BUCKET)
pc220-7c	361360	T1510-03C5	. HOOK (FOR BUCKET)
pc220-7c	361370	T1510-04A2	. O-RING AND SPACER
pc220-7c	361380	T1510-04B4	. SPACER
pc220-7c	361390	T1920-01A0	. BREAKER ADAPTER (FOR KRUPP)(#60001-60445)
pc220-7c	361400	T1920-01A0A	. BREAKER ADAPTER (FOR KRUPP)(#60446-60775)
pc220-7c	361410	T1920-01A0B	. BREAKER ADAPTER (FOR KRUPP)(#60776-65000)

pc220-7c	361420	T1920-01A0C	. BREAKER ADAPTER (FOR KRUPP)(#65001-67480)
pc220-7c	361430	T1920-01A0D	. BREAKER ADAPTER (FOR KRUPP)(#67481-)
pc220-7c	361440	T1920-01A1	. BREAKER ADAPTER (FOR NIPPON PNEUMATIC)(#60001-60445)
pc220-7c	361450	T1920-01A1A	. BREAKER ADAPTER (FOR NIPPON PNEUMATIC)(#60446-60775)
pc220-7c	361460	T1920-01A1B	. BREAKER ADAPTER (FOR NIPPON PNEUMATIC)(#60776-65000)
pc220-7c	361470	T1920-01A1C	. BREAKER ADAPTER (FOR NIPPON PNEUMATIC)(#65001-67480)
pc220-7c	361480	T1920-01A1D	. BREAKER ADAPTER (FOR NIPPON PNEUMATIC)(#67481-)
pc220-7c	361490	T1920-01A2	. BREAKER ADAPTER (FOR ATLAS AND OKADA)
pc220-7c	361500	T1920-01A3	. BREAKER ADAPTER (FOR MATUDA AND FURUKAWA)
pc220-7c	361510	T1930-01A0	. PARTS FOR LESS BUCKET
pc220-7c	390000	|390000	MARKS AND PLATES
pc220-7c	390010	U0100-01A3	. DECAL AND PLATE (ENGLISH)(#60001-65000)
pc220-7c	390020	U0100-01A3A	. DECAL AND PLATE (ENGLISH)(#65001-)
pc220-7c	390030	U0100-01A5	. DECAL AND PLATE (ENGLISH) (LETTERING TYPE)(#60001-65000)
pc220-7c	390040	U0100-01A5A	. DECAL AND PLATE (ENGLISH) (LETTERING TYPE)(#65001-)
pc220-7c	390050	U0100-01A6	. DECAL AND PLATE (SPANISH) (LETTERING TYPE)(#60001-65000)
pc220-7c	390060	U0100-01A6A	. DECAL AND PLATE (SPANISH) (LETTERING TYPE)(#65001-)
pc220-7c	390070	U0100-01A8	. DECAL AND PLATE (ARABIC)(#60001-65000)
pc220-7c	390080	U0100-01A8A	. DECAL AND PLATE (ARABIC)(#65001-)
pc220-7c	390090	U0100-01B0	. DECAL AND PLATE (PERSIAN)(#60001-65000)
pc220-7c	390100	U0100-01B0A	. DECAL AND PLATE (PERSIAN)(#65001-)
pc220-7c	390110	U0100-01B1	. DECAL AND PLATE (CHINESE)(#60224-65000)
pc220-7c	390120	U0100-01B1A	. DECAL AND PLATE (CHINESE)(#65001-)
pc220-7c	390130	U0100-01B3	. DECAL AND PLATE (RUSSIAN)(#60224-65000)
pc220-7c	390140	U0100-01B3A	. DECAL AND PLATE (RUSSIAN)(#65001-)
pc220-7c	390150	U0100-01B4	. DECAL AND PLATE (TURKISH)(#60527-65000)
pc220-7c	390160	U0100-01B4A	. DECAL AND PLATE (TURKISH)(#65001-)
pc220-7c	390170	U0100-01D8	. DECAL AND PLATE (TURKMEN)(#65001-)
pc220-7c	390180	U0110-01A0	. PLATE (LUBRICATION STANDARD CHART) (500H)
pc220-7c	390190	U0110-01A1	. PLATE (LUBRICATION STANDARD CHART) (100H)
pc220-7c	390200	U0110-01A2	. PLATE (LUBRICATION STANDARD CHART) (500H)
pc220-7c	390210	U0150-01A0	. LOGO (KOMATSU) (SMALL) (GENERAL)
pc220-7c	390220	U0150-01A1	. KOMATSU LOGO (COUNTERWEIGHT)(#66019-)
pc220-7c	390230	U0150-01A2	. KOMATSU LOGO (BOOM AND COUNTERWEIGHT)
pc220-7c	390240	U0200-01A3	. PLATE (LIFTING CAPACITY) (SPANISH)
pc220-7c	390250	U0200-01A5	. PLATE (LIFTING CAPACITY) (ENGLISH)
pc220-7c	390260	U0200-01A8	. PLATE (LIFTING CAPACITY)(#65001-)
pc220-7c	390270	U0201-01A1	. BATTERY CAUTION (SPANISH)(#60001-65000)
pc220-7c	390280	U0201-01A1A	. BATTERY CAUTION (SPANISH)(#65001-)
pc220-7c	390290	U0201-01A2	. BATTERY CAUTION (ENGLISH AND TURKISH)
pc220-7c	390300	U0300-01A3	. PLATE (SIFT PATTERN¤ ISO)(#60001-60316)
pc220-7c	390310	U0510-01A0	. PLATE (BOOM SIDE¤ R.H.) (LOGO MARK)(#60001-60762)
pc220-7c	390320	U0510-01A2	. CAUTION PLATE (ARM)
pc220-7c	390330	U0520-01A0	. CAUTION PLATE (FOR LV1 GUARD) (FOR EXCEPT JAPAN)(#60001-60035)
pc220-7c	390340	U0520-01A1	. CAUTION PLATE (FOR LV2 GUARD) (FOR EXCEPT JAPAN)(#60001-65000)
pc220-7c	390350	U0520-01A5	. CAUTION PLATE (FOR LV2 GUARD) (FRONT FULL GUARD AND TOP GUARD) (ENGLISH)(#60001-65000)
pc220-7c	390360	U0520-01A9	. CAUTION PLATE (FOR LV2 GUARD) (FOR EXCEPT JAPAN)(#65001-)
pc220-7c	390370	U0520-01B0	. CAUTION PLATE (FOR LV2 GUARD) (FOR EXCEPT JAPAN)(#65001-)
pc220-7c	390380	U0520-01B1	. CAUTION PLATE (FOR LV2 GUARD) (FOR EXCEPT JAPAN)(#65001-)
pc220-7c	390390	U0550-01A1	. PLATE (AIR CLEANER¤ DOUBLE ELEMENT) (FOR NORTH AMERICA)
pc220-7c	390400	U0550-01A2	. PLATE (AIR CLEANER¤ DOUBLE ELEMENT) (SPANISH)
pc220-7c	390410	U0550-01A3	. PLATE (AIR CLEANER¤ DOUBLE ELEMENT) (ARABIC)
pc220-7c	390420	U0550-01A4	. PLATE (AIR CLEANER¤ DOUBLE ELEMENT) (PERSIAN)
pc220-7c	390430	U0550-01A5	. PLATE (AIR CLEANER¤ DOUBLE ELEMENT) (RUSSIAN)
pc220-7c	390440	U0550-01A6	. PLATE (AIR CLEANER¤ DOUBLE ELEMENT) (CHINESE)
pc220-7c	390450	U0550-01A7	. PLATE (AIR CLEANER¤ DOUBLE ELEMENT) (TURKISH)
pc220-7c	390460	U0580-01A2	. PLATE (WITH ACCUMULATOR)
pc220-7c	390470	U0580-01A3	. PLATE (WITH 2 ACCUMULATOR)
pc220-7c	390480	U0580-01A4	. PLATE (WITH ACCUMULATOR) (ENGLISH) (LETTERING TYPE)
pc220-7c	390490	U0580-01A5	. PLATE (WITH 2 ACCUMULATOR) (ENGLISH) (LETTERING TYPE)
pc220-7c	390500	U0580-01A6	. PLATE (WITH ACCUMULATOR) (SPANISH) (LETTERING TYPE)
pc220-7c	390510	U0580-01A7	. PLATE (WITH 2 ACCUMULATOR) (SPANISH) (LETTERING TYPE)
pc220-7c	390520	U0580-01A8	. PLATE (WITH ACCUMULATOR) (KIT)
pc220-7c	390530	U0710-01A0	. PLATE (12V POWER SOURCE)
pc220-7c	390540	U0710-01A7	. PLATE (FOR BREAKER KIT)(#60001-69903)
pc220-7c	390550	U0710-01A8	. PLATE (12V POWER SOURCE)(#60001-69903)
pc220-7c	390560	U0710-01A9	. PLATE (12V POWER SOURCE) (RUSSIAN)(ENGLISH)(#65001-)
pc220-7c	390570	U0710-01B0	. PLATE (FOR BREAKER KIT) (COLOR MULTI MONITOR)(#69904-)
pc220-7c	390580	U0710-01B1	. PLATE (FOR BREAKER KIT) (7-SEGMENT MONITOR)(#69904-)
pc220-7c	390590	U0710-01B2	. PLATE (12V POWER SOURCE) (FOR BREAKER KIT) (COLOR MULTI MONITOR)(#69904-)
pc220-7c	390600	U0710-01B3	. PLATE (12V POWER SOURCE) (FOR BREAKER KIT) (7-SEGMENT MONITOR)(#69904-)
pc220-7c	420000	|420000	ACCESSORY
pc220-7c	420010	V0100-01A0	. SPARE PARTS
pc220-7c	420020	V0100-01A1	. SPARE PARTS (SANDY AND DUSTY TERRAIN SPEC.)
pc220-7c	420030	V0200-01A0	. CAP AND OVERALL
pc220-7c	420040	V0300-01A0	. TOOL KIT
pc220-7c	450000	|450000	MISCELLANEOUS

pc220-7c	450010	W0111-01A0	. PREVENTIVE MAINTENANCE CLINIC PARTS
pc220-7c	450020	W1112-01A0	. PRE HEATER (HEATER AND MOUNTING) (COLD WEATHER A SPEC.)(#60255-)
pc220-7c	450030	W1112-01A1	. PRE HEATER (HEATER AND MOUNTING) (COLD WEATHER A SPEC.) (FOR CAB EATER)(#60255-)
pc220-7c	450040	W1112-02A0	. PRE HEATER (FUEL AND WIRING) (COLD WEATHER A SPEC.)(#60255-)
pc220-7c	450050	W1112-03A0	. PRE HEATER (COOLANT) (COLD WEATHER A SPEC.)(#60255-65000)
pc220-7c	450060	W1112-03A0A	. PRE HEATER (COOLANT) (COLD WEATHER A SPEC.)(#65001-)
pc220-7c	450070	W1112-03A1	. PRE HEATER (COOLANT) (COLD WEATHER A SPEC.) (FOR CAB HEATER)(#60255-65000)
pc220-7c	450080	W1112-03A1A	. PRE HEATER (COOLANT) (COLD WEATHER A SPEC.) (FOR CAB HEATER)(#65001-)
pc220-7c	450090	W1112-04A1	. PRE HEATER (VALVE) (COLD WEATHER A SPEC.) (FOR CAB HEATER)(#60255-65000)
pc220-7c	450100	W1112-04A1A	. PRE HEATER (VALVE) (COLD WEATHER A SPEC.) (FOR CAB HEATER)(#65001-)
pc220-7c	450110	W1112-05A1	. PRE HEATER (CAB HEATER) (COLD WEATHER A SPEC.)(#60255-65000)
pc220-7c	450120	W1112-05A1A	. PRE HEATER (CAB HEATER) (COLD WEATHER A SPEC.)(#65001-)
pc220-7c	450130	W1112-05A2	. PRE HEATER (CAB HEATER) (COLD WEATHER A SPEC.) (WITH CORROSION RESISTOR)(#60255-65000)
pc220-7c	450140	W1112-05A2A	. PRE HEATER (CAB HEATER) (COLD WEATHER A SPEC.) (WITH CORROSION RESISTOR)(#65001-)
pc220-7c	450150	W1112-06A0	. PRE HEATER (DUCT) (COLD WEATHER A SPEC.)(#60255-)
pc220-7c	450160	W1112-06A1	. PRE HEATER (DUCT) (COLD WEATHER A SPEC.) (FOR CAB HEATER)(#60255-)
pc220-7c	450170	W1112-07A0	. PRE HEATER (DUCT AND DECAL) (COLD WEATHER A SPEC.)(#60255-)
pc220-7c	450180	W1113-01A0	. FUEL SELF CHARGE PUMP(#60001-60624)
pc220-7c	450190	W1113-01A0A	. FUEL SELF CHARGE PUMP(#60625-)
pc220-7c	480000	|480000	SERVICE KIT AND COMPONENT PARTS
pc220-7c	480010	Y0260-01A0	. SWING MACHINERY (SUPPLY ONLY)(#60001-60600)
pc220-7c	480020	Y0260-01A0A	. SWING MACHINERY (SUPPLY ONLY)(#60601-)
pc220-7c	480030	Y0270-01A1	. FINAL DRIVE (SUPPLY ONLY)
pc220-7c	480040	Y0270-01A2	. FINAL DRIVE (COLD WEATHER A SPEC.) (SUPPLY ONLY)(#60255-)
pc220-7c	480050	Y0320-01A0	. SHOE BOLT AND NUT SERVICE KIT
pc220-7c	480060	Y0321-01A0	. TRACK LINK ASS'Y (94 SET) (SUPPLY PARTS)
pc220-7c	480070	Y1011-01A0	. AIR CLEANER (INNER PART)
pc220-7c	480080	Y1011-01A1	. PRECLEANER (INNER PART)(#60001-69709)
pc220-7c	480090	Y1011-01A1A	. PRECLEANER (INNER PART)(#69710-)
pc220-7c	480100	Y1011-01A2	. AIR CLEANER (INNER PART)
pc220-7c	480110	Y1040-01A0	. FUEL SELF CHARGE PUMP (INNER PARTS)(#60001-60624)
pc220-7c	480120	Y1040-01A0A	. FUEL SELF CHARGE PUMP (INNER PARTS)(#60625-)
pc220-7c	480130	Y1061-01A0	. WIRING HARNESS (JUNCTION CONNECTOR) (FOR SUPPLY)
pc220-7c	480140	Y1062-01A0	. RUBBER ANTENNA(#60001-68116)
pc220-7c	480150	Y1062-01A0A	. RUBBER ANTENNA(#68117-)
pc220-7c	480160	Y1570-01A1	. OPERATOR'S SEAT ASS'Y (SUSPENSION)
pc220-7c	480170	Y1570-01A2	. OPERATOR'S SEAT ASS'Y (FABRIC SEAT)
pc220-7c	480180	Y1570-01A3	. OPERATOR'S SEAT ASS'Y (LEATHER SEAT)
pc220-7c	480190	Y1600-01A0	. PISTON PUMP (1/11)
pc220-7c	480200	Y1600-02A0	. PISTON PUMP (2/11)
pc220-7c	480210	Y1600-03A0	. PISTON PUMP (3/11)
pc220-7c	480220	Y1600-04A0	. PISTON PUMP (4/11)
pc220-7c	480230	Y1600-05A0	. PISTON PUMP (5/11)
pc220-7c	480240	Y1600-06A0	. PISTON PUMP (6/11)
pc220-7c	480250	Y1600-07A0	. PISTON PUMP (7/11)
pc220-7c	480260	Y1600-08A0	. PISTON PUMP (8/11)
pc220-7c	480270	Y1600-09A0	. PISTON PUMP (9/11)
pc220-7c	480280	Y1600-10A0	. PISTON PUMP (10/11)
pc220-7c	480290	Y1600-11A0	. PISTON PUMP (11/11)
pc220-7c	480300	Y1620-01A0	. BOOM CYLINDER
pc220-7c	480310	Y1620-01A3	. BOOM CYLINDER (100 HOURS LUBRICATING)
pc220-7c	480320	Y1620-01A4	. BOOM CYLINDER (100 HOURS LUBRICATING) (COLD AREA ARRANGEMENT)
pc220-7c	480330	Y1620-11A0	. ARM CYLINDER
pc220-7c	480340	Y1620-11A0A	. ARM CYLINDER(#60767-)
pc220-7c	480350	Y1620-11A2	. ARM CYLINDER (100 HOURS LUBRICATING)
pc220-7c	480360	Y1620-11A4	. ARM CYLINDER(#60767-)
pc220-7c	480370	Y1620-11A5	. ARM CYLINDER (COLD AREA ARRANGEMENT (-40 DEG.))
pc220-7c	480380	Y1620-41A0	. BUCKET CYLINDER
pc220-7c	480390	Y1620-41A0A	. BUCKET CYLINDER(#60759-)
pc220-7c	480400	Y1620-41A0B	. BUCKET CYLINDER(#60767-)
pc220-7c	480410	Y1620-41A1	. BUCKET CYLINDER (100 HOURS LUBRICATING)
pc220-7c	480420	Y1620-41A1A	. BUCKET CYLINDER (100 HOURS LUBRICATING)(#60759-)
pc220-7c	480430	Y1620-41A2	. BUCKET CYLINDER
pc220-7c	480440	Y1620-41A4	. BUCKET CYLINDER(#65889-)
pc220-7c	480450	Y1620-41A6	. BUCKET CYLINDER (500 HOURS LUBRICATING)(#65889-)
pc220-7c	480460	Y1620-41A7	. BUCKET CYLINDER (100 HOURS LUBRICATING) (-40ßC SPEC.)(#67318-)
pc220-7c	480470	Y1620-41A8	. BUCKET CYLINDER (100 HOURS LUBRICATING)(#65001-)
pc220-7c	480480	Y1620-41A9	. BUCKET CYLINDER (500 HOURS LUBRICATING)(#60767-)
pc220-7c	480490	Y1627-01A0	. SWIVEL JOINT(#60001-65058)
pc220-7c	480500	Y1627-01A0A	. SWIVEL JOINT(#65059-)
pc220-7c	480510	Y1640-01A0	. SWING MOTOR (1/3)
pc220-7c	480520	Y1640-02A0	. SWING MOTOR (2/3)
pc220-7c	480530	Y1640-03A0	. SWING MOTOR (3/3)
pc220-7c	480540	Y1641-01A0	. TRAVEL MOTOR (1/3)
pc220-7c	480550	Y1641-02A0	. TRAVEL MOTOR (2/3)
pc220-7c	480560	Y1641-03A0	. TRAVEL MOTOR (3/3)
pc220-7c	480570	Y1660-01A0	. CONTROL VALVE (1/16)

pc220-7c	480580	Y1660-02A0	. CONTROL VALVE (2/16)
pc220-7c	480590	Y1660-03A0	. CONTROL VALVE (3/16)
pc220-7c	480600	Y1660-04A0	. CONTROL VALVE (4/16)
pc220-7c	480610	Y1660-05A0	. CONTROL VALVE (5/16)
pc220-7c	480620	Y1660-06A0	. CONTROL VALVE (6/16)
pc220-7c	480630	Y1660-07A0	. CONTROL VALVE (7/16)(#60001-69810)
pc220-7c	480640	Y1660-08A0	. CONTROL VALVE (8/16)
pc220-7c	480650	Y1660-09A0	. CONTROL VALVE (9/16)
pc220-7c	480660	Y1660-10A0	. CONTROL VALVE (10/16)
pc220-7c	480670	Y1660-11A0	. CONTROL VALVE (11/16)
pc220-7c	480680	Y1660-12A0	. CONTROL VALVE (12/16)
pc220-7c	480690	Y1660-13A0	. CONTROL VALVE (13/16)
pc220-7c	480700	Y1660-14A0	. CONTROL VALVE (14/16)
pc220-7c	480710	Y1660-15A0	. CONTROL VALVE (15/16)
pc220-7c	480720	Y1660-16A0	. CONTROL VALVE (16/16)
pc220-7c	480730	Y1662-01A0	. CONTROL VALVE (1-ACTUATOR) (1/19)
pc220-7c	480740	Y1662-02A0	. CONTROL VALVE (1-ACTUATOR) (2/19)
pc220-7c	480750	Y1662-03A0	. CONTROL VALVE (1-ACTUATOR) (3/19)
pc220-7c	480760	Y1662-04A0	. CONTROL VALVE (1-ACTUATOR) (4/19)
pc220-7c	480770	Y1662-05A0	. CONTROL VALVE (1-ACTUATOR) (5/19)
pc220-7c	480780	Y1662-06A0	. CONTROL VALVE (1-ACTUATOR) (6/19)
pc220-7c	480790	Y1662-07A0	. CONTROL VALVE (1-ACTUATOR) (7/19)(#60001-69810)
pc220-7c	480800	Y1662-07A0A	. CONTROL VALVE (1-ACTUATOR) (7/19)(#69811-)
pc220-7c	480810	Y1662-08A0	. CONTROL VALVE (1-ACTUATOR) (7/19)
pc220-7c	480820	Y1662-09A0	. CONTROL VALVE (1-ACTUATOR) (9/19)
pc220-7c	480830	Y1662-10A0	. CONTROL VALVE (1-ACTUATOR) (10/19)
pc220-7c	480840	Y1662-11A0	. CONTROL VALVE (1-ACTUATOR) (11/19)
pc220-7c	480850	Y1662-12A0	. CONTROL VALVE (1-ACTUATOR) (12/19)
pc220-7c	480860	Y1662-13A0	. CONTROL VALVE (1-ACTUATOR) (13/19)
pc220-7c	480870	Y1662-14A0	. CONTROL VALVE (1-ACTUATOR) (14/19)
pc220-7c	480880	Y1662-15A0	. CONTROL VALVE (1-ACTUATOR) (15/19)
pc220-7c	480890	Y1662-16A0	. CONTROL VALVE (1-ACTUATOR) (16/19)
pc220-7c	480900	Y1662-17A0	. CONTROL VALVE (1-ACTUATOR) (17/19)
pc220-7c	480910	Y1662-18A0	. CONTROL VALVE (1-ACTUATOR) (18/19)
pc220-7c	480920	Y1662-19A0	. CONTROL VALVE (1-ACTUATOR) (19/19)
pc220-7c	480930	Y1664-01A0	. CONTROL VALVE (2-ACTUATOR) (1/21)
pc220-7c	480940	Y1664-02A0	. CONTROL VALVE (2-ACTUATOR) (2/21)
pc220-7c	480950	Y1664-03A0	. CONTROL VALVE (2-ACTUATOR) (3/21)
pc220-7c	480960	Y1664-04A0	. CONTROL VALVE (2-ACTUATOR) (4/21)
pc220-7c	480970	Y1664-05A0	. CONTROL VALVE (2-ACTUATOR) (5/21)
pc220-7c	480980	Y1664-06A0	. CONTROL VALVE (2-ACTUATOR) (6/21)
pc220-7c	480990	Y1664-07A0	. CONTROL VALVE (2-ACTUATOR) (7/21)(#60001-69810)
pc220-7c	481000	Y1664-07A0A	. CONTROL VALVE (2-ACTUATOR) (7/21)(#69811-)
pc220-7c	481010	Y1664-08A0	. CONTOROL VALVE (2-ACTUATOR) (8/21)
pc220-7c	481020	Y1664-09A0	. CONTROL VALVE (2-ACTUATOR) (9/21)
pc220-7c	481030	Y1664-10A0	. CONTROL VALVE (2-ACTUATOR) (10/21)
pc220-7c	481040	Y1664-11A0	. CONTROL VALVE (2-ACTUATOR) (11/21)
pc220-7c	481050	Y1664-12A0	. CONTROL VALVE (2-ACTUATOR) (12/21)
pc220-7c	481060	Y1664-13A0	. CONTROL VALVE (2-ACTUATOR) (13/21)
pc220-7c	481070	Y1664-14A0	. CONTROL VALVE (2-ACTUATOR) (14/21)
pc220-7c	481080	Y1664-15A0	. CONTROL VALVE (2-ACTUATOR) (15/21)
pc220-7c	481090	Y1664-16A0	. CONTROL VALVE (2-ACTUATOR) (16/21)
pc220-7c	481100	Y1664-17A0	. CONTROL VALVE (2-ACTUATOR) (17/21)
pc220-7c	481110	Y1664-18A0	. CONTROL VALVE (2-ACTUATOR) (18/21)
pc220-7c	481120	Y1664-19A0	. CONTROL VALVE (2-ACTUATOR) (19/21)
pc220-7c	481130	Y1664-20A0	. CONTROL VALVE (2-ACTUATOR) (20/21)
pc220-7c	481140	Y1664-21A0	. CONTROL VALVE (2-ACTUATOR) (21/21)
pc220-7c	481150	Y1669-01A0	. SERVICE VALVE (FOR 1-ACTUATOR) (1/3)
pc220-7c	481160	Y1669-02A0	. SERVICE VALVE (FOR 1-ACTUATOR) (2/3)
pc220-7c	481170	Y1669-03A0	. SERVICE VALVE (FOR 1-ACTUATOR) (3/3)
pc220-7c	481180	Y1669-11A0	. SERVICE VALVE (FOR 2-ACTUATOR) (1/3)
pc220-7c	481190	Y1669-12A0	. SERVICE VALVE (FOR 2-ACTUATOR) (2/3)
pc220-7c	481200	Y1669-13A0	. SERVICE VALVE (FOR 2-ACTUATOR) (3/3)
pc220-7c	481210	Y1670-01A0	. PPC VALVE (FOR TRAVEL) (1/2)(#60001-65000)
pc220-7c	481220	Y1670-01A0A	. PPC VALVE (FOR TRAVEL) (1/2)(#65001-65436)
pc220-7c	481230	Y1670-01A0B	. PPC VALVE (FOR TRAVEL) (1/2)(#65437-)
pc220-7c	481240	Y1670-02A0	. PPC VALVE (FOR TRAVEL) (2/2)(#60001-65000)
pc220-7c	481250	Y1670-02A0A	. PPC VALVE (FOR TRAVEL) (2/2)(#65001-65436)
pc220-7c	481260	Y1670-02A0B	. PPC VALVE (FOR TRAVEL) (2/2)(#65437-)
pc220-7c	481270	Y1670-11A0	. PPC VALVE (FOR WORK EQUIPMENT)(#60001-60239)
pc220-7c	481280	Y1670-11A0A	. PPC VALVE (FOR WORK EQUIPMENT)(#60240-)
pc220-7c	481290	Y1670-11A1	. PPC VALVE (FOR WORK EQUIPMENT) (FOR HEATPROOF)(#65001-)
pc220-7c	481300	Y1670-21A0	. PPC VALVE (FOR ATTACHMENT)
pc220-7c	481310	Y1671-01A0	. EPC VALVE
pc220-7c	481320	Y1672-01A0	. SAFETY VALVE
pc220-7c	481330	Y1675-01A0	. LOCK VALVE
pc220-7c	481340	Y1679-01A0	. SELECTOR VALVE

pc220-7c	481350	Y1840-01A0	. ACCUMULATOR (AL300-1) (INNER PARTS)
pc220-7c	481360	Y1851-01A0	. FILTER (INNER PARTS)
pc220-7c	481370	Y1860-01A0	. SOLENOID VALVE (INNER PARTS)(#60001-60308)
pc220-7c	481380	Y1860-01A0A	. SOLENOID VALVE (INNER PARTS)(#60309-)
pc220-7c	481390	Y1861-01A0	. SOLENOID VALVE (INNER PARTS)
pc220-7c	481400	Y1880-01A0	. MULTI PATERN VALVE
pc220-7c	481410	Y1970-01A0	. VALVE (FOR ACCUMULATOR)(#60312-60445)
pc220-7c	481420	Y1970-01A0A	. VALVE (FOR ACCUMULATOR)(#60446-60775)
pc220-7c	481430	Y1970-01A0B	. VALVE (FOR ACCUMULATOR)(#60776-65000)
pc220-7c	481440	Y1970-01A0C	. VALVE (FOR ACCUMULATOR)(#65001-67480)
pc220-7c	481450	Y1970-01A0D	. VALVE (FOR ACCUMULATOR)(#67481-)
pc220-7c	481460	Y1977-01A0	. PRE-HEATER(#60255-)
pc220-7c	481470	Y1977-02A0	. PRE-HEATER (HEATER ASS'Y)(#60255-)
pc220-7c	481480	Y1979-01A0	. COMPRESSOR ASS'Y (FOR AIR CONDITIONER)
pc220-7c	481490	Y1979-11A0	. UNIT ASS'Y (FOR AIR CONDITIONER)
pc220-7c	481500	Y1979-11A1	. UNIT ASS'Y (FOR HEATER)(#60255-)
pc220-7c	481510	Y1979-21A0	. UNIT ASS'Y (COOLING) (FOR AIR CONDITIONER)(#60001-65000)
pc220-7c	481520	Y1979-21A0A	. UNIT ASS'Y (COOLING) (FOR AIR CONDITIONER)(#65001-69862)
pc220-7c	481530	Y1979-21A1	. UNIT ASS'Y (COOLING) (FOR HEATER)(#60255-)
pc220-7c	481540	Y1979-31A0	. BLOWER ASS'Y (FOR AIR CONDITIONER)(#60001-65000)
pc220-7c	481550	Y1979-31A1	. BLOWER ASS'Y (FOR HEATER)(#60255-)

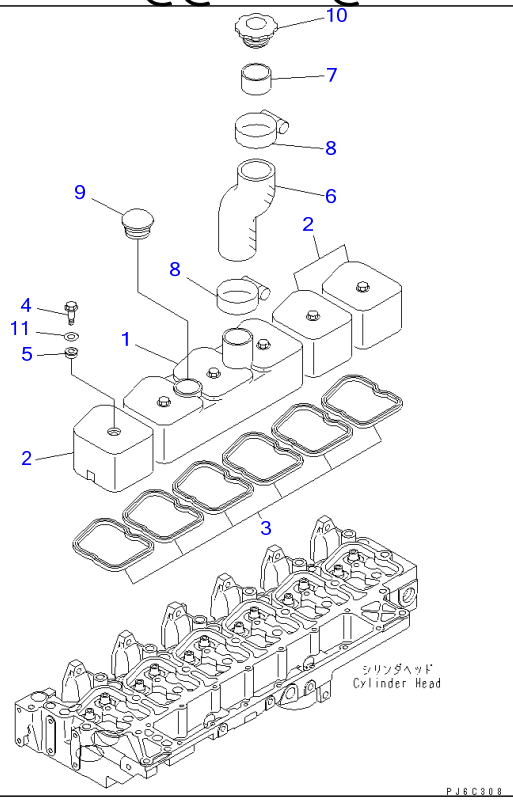

Ref A111P-01B0 **Page 030040**

SAA6D102E-2D-8 S/N 26274903-UP
HEAD COVER(#26274903-26484836)

Item	Part No.	Part Name	Qty	Serial No.
1	6738-11-8111	COVER	1	26321469-26484836
	☐6738-11-8110	COVER	1	26274903-26321468
2	6735-11-8120	COVER	3	26274903-26484836
3	6732-11-8181	GASKET (K1)	6	26274903-26484836
4	6732-11-8130	BOLT	6	26274903-26484836
5	6732-11-8210	GASKET,SEAL (K1)	6	26277761-26484836
	☐6738-11-8210	GROMMET,SEAL	6	26274903-26277760
6	6130-12-8720	HOSE	1	26274903-26484836
7	6130-12-8630	PIPE	1	26274903-26484836
8	07281-00709	CLAMP	2	26274903-26484836
9	6204-11-8610	CAP	1	26274903-26484836
10	6130-12-8610	CAP	1	26274903-26484836
11	6732-11-8150	WASHER	6	26277761-26484836

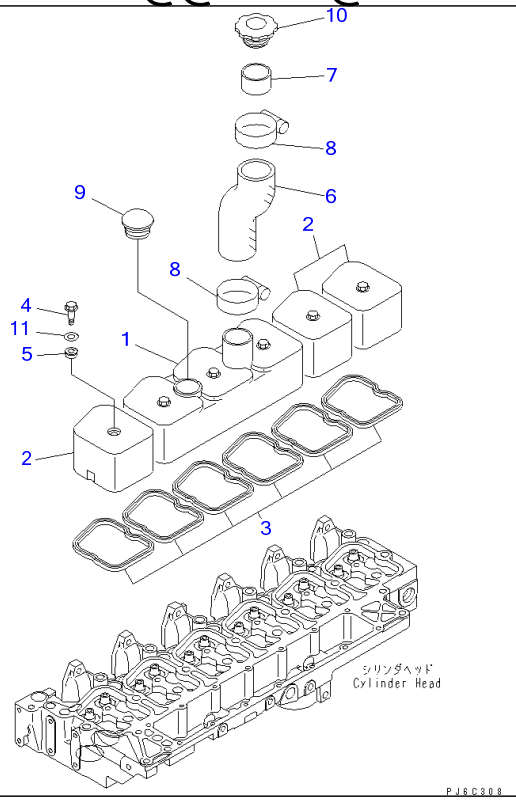

Ref A111P-01B1 **Page 030050**

SAA6D102E-2D-8 S/N 26274903-UP
HEAD COVER(#26484837-)

Item	Part No.	Part Name	Qty	Serial No.
1	6738-11-8111	COVER	1	26484837-
2	6735-11-8120	COVER	3	26484837-
3	6732-11-8181	GASKET (K1)	6	26484837-
4	6732-11-8130	BOLT	6	26484837-
5	6732-11-8210	GASKET,SEAL (K1)	6	26484837-
6	6130-12-8720	HOSE	1	26484837-
7	6130-12-8630	PIPE	1	26484837-
8	07281-00709	CLAMP	2	26484837-
9	6204-11-8610	CAP	1	26484837-
10	6130-12-8610	CAP	1	26484837-
11	6732-11-8150	WASHER	6	26484837-

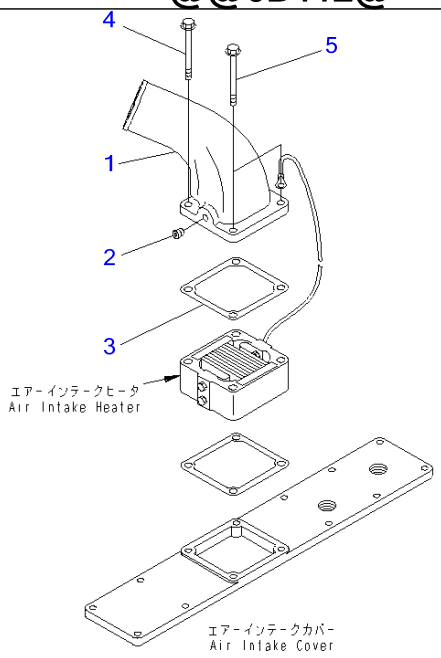

PJ6B412

Ref A131P-01A6 **Page 030060**

SAA6D102E-2D-8 S/N 26274903-UP

AIR CONNECTOR(#26280116-26302311)

Item	Part No.	Part Name	Qty	Serial No.
1	6734-11-4150	CONNECTOR	1	26280116-26302311
2	6732-11-1920	PLUG	1	26280116-26302311
3	6732-11-4811	GASKET (K1)	1	26280116-26302311
4	6734-11-5210	BOLT	2	26280116-26302311
5	6736-81-8730	BOLT	2	26280116-26302311

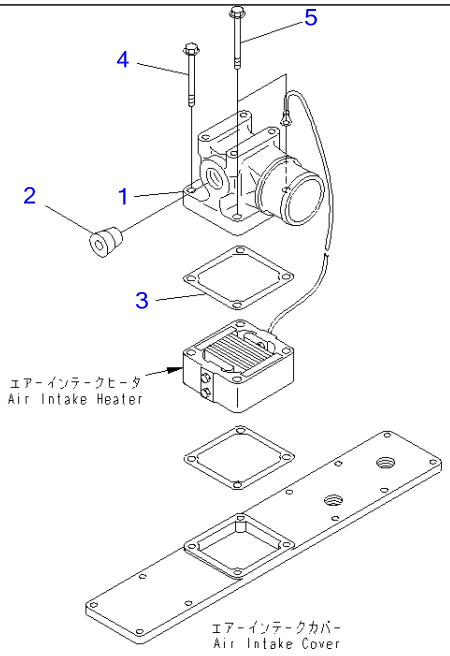

00000169

Ref A131P-01A8 **Page 030070**

SAA6D102E-2D-8 S/N 26274903-UP
AIR CONNECTOR(#26302312-)

Item	Part No.	Part Name	Qty	Serial No.
1	6738-11-4430	CONNECTOR	1	26302312-
2	6732-11-1920	PLUG	1	26302312-
3	6754-11-4120	GASKET	1	26389991-
	6732-11-4811	GASKET (K1)	1	26302312-26389990
4	6732-11-4170	BOLT	2	26302312-
5	01435-60890	BOLT	2	26475310-
	□6732-11-4150	BOLT	2	26302312-26475309

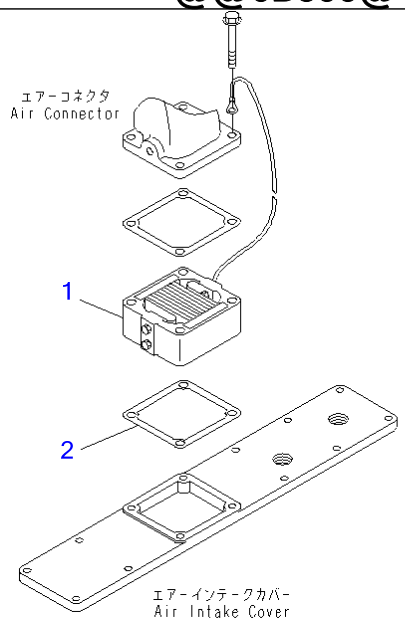

PJ6B399

Ref A131R-01A0 **Page 030080**

SAA6D102E-2D-8 S/N 26274903-UP
AIR INTAKE HEATER

Item	Part No.	Part Name	Qty	Serial No.
1	600-816-3110	HEATER ASS'Y	1	26496398-
	□6732-81-5120	HEATER ASS'Y	1	26274903-26496397
2	6754-11-4120	GASKET	1	26389991-
	6732-11-4811	GASKET (K1)	1	26274903-26389990

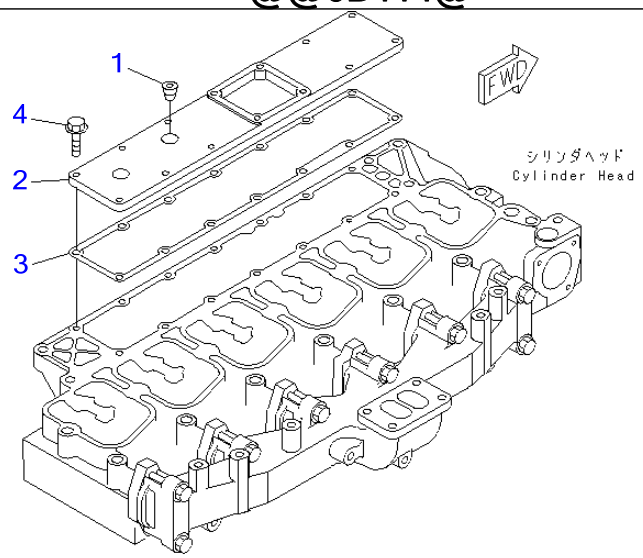

PJ6B414

Ref A131V-01A0 **Page 030090**

SAA6D102E-2D-8 S/N 26274903-UP
AIR INTAKE COVER

Item	Part No.	Part Name	Qty	Serial No.
1	6732-11-1910	PLUG	2	26274903-
2	6735-11-4110	COVER,INTAKE	1	26274903-
3	6735-11-4812	GASKET (K1)	1	26287624-
	□6735-11-4811	GASKET	1	26274903-26287623
4	6732-11-4160	BOLT	8	26274903-

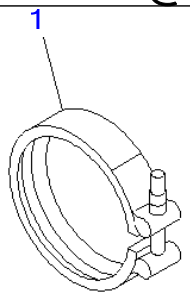

PMD1036

SAA6D102E-2D-8 S/N 26274903-UP

EXHAUST CONNECTOR CLAMP

Item	Part No.	Part Name	Qty	Serial No.
1	6732-81-8220	CLAMP (K1)	1	26274903-

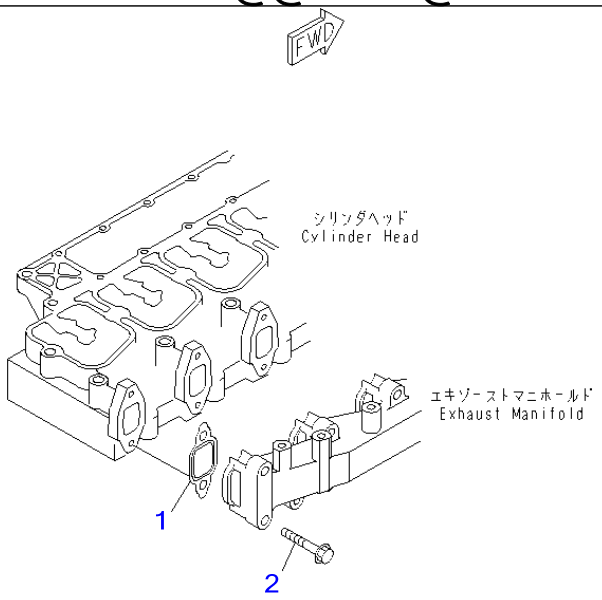

PFD1324

Ref A151T-01A2 **Page 030110**

SAA6D102E-2D-8 S/N 26274903-UP
EXHAUST MANIFOLD GASKET AND BOLT

Item	Part No.	Part Name	Qty	Serial No.
1	6736-11-5830	GASKET	6	26312301-
	□6736-11-5820	GASKET (K1)	6	26274903-26312300
2	6735-11-4150	BOLT	12	26274903-

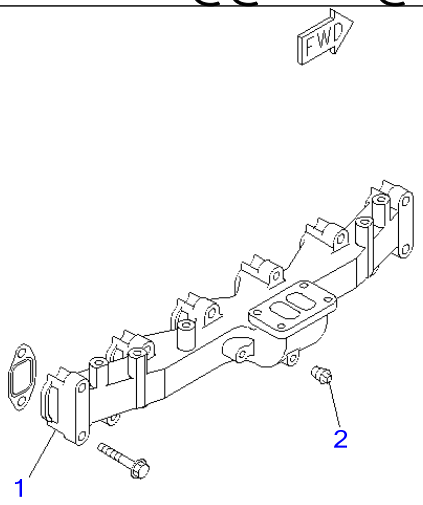

PJ6B423

Ref A151V-01A0 **Page 030120**

SAA6D102E-2D-8 S/N 26274903-UP
EXHAUST MANIFOLD

Item	Part No.	Part Name	Qty	Serial No.
1	6735-11-5120	MANIFOLD,EXHAUST	1	26274903-
2	07042-00108	PLUG	1	26274903-

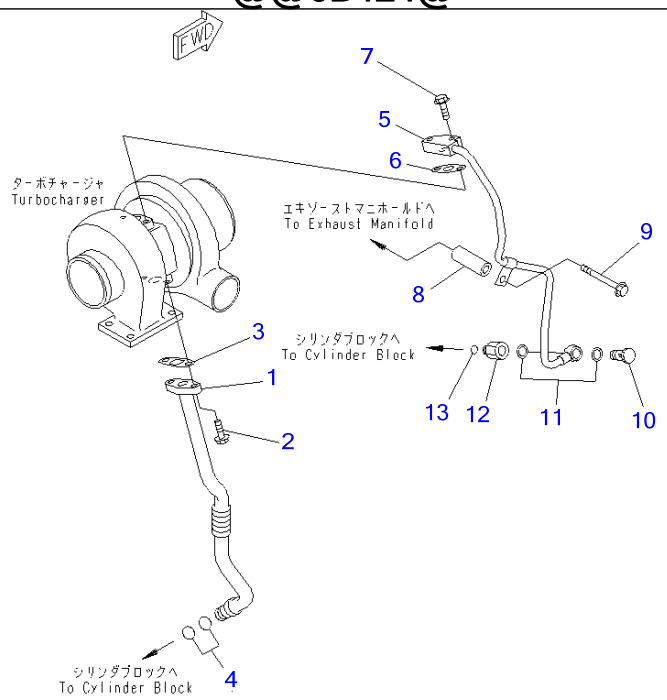

PJ6B424

Ref A153T-01B7 **Page 030130**

SAA6D102E-2D-8 S/N 26274903-UP
TURBOCHARGER OIL PIPING(#26280116-)

Item	Part No.	Part Name	Qty	Serial No.
1	6738-81-8410	TUBE,OIL	1	26280116-
2	01435-60820	BOLT	2	26475310-
	□6732-71-3220	BOLT	2	26280116-26475309
3	6207-51-7690	GASKET (K1)	1	26280116-
4	6732-51-8330	O-RING (K2)	2	26280116-
5	6738-51-8120	TUBE ASS'Y,OIL	1	26280116-
6	6221-51-8160	GASKET (K1)	1	26280116-
7	6735-61-2120	BOLT	2	26280116-
8	6112-23-6971	SPACER	1	26280116-
9	01435-01085	BOLT	1	26280116-
10	6732-71-5620	BOLT,JOINT	1	26280116-
11	07005-01412	SEAL, WASHER (K1)	2	26280116-
12	6732-51-8510	CONNECTOR	1	26280116-
13	6736-51-8710	O-RING (K1)	1	26280116-

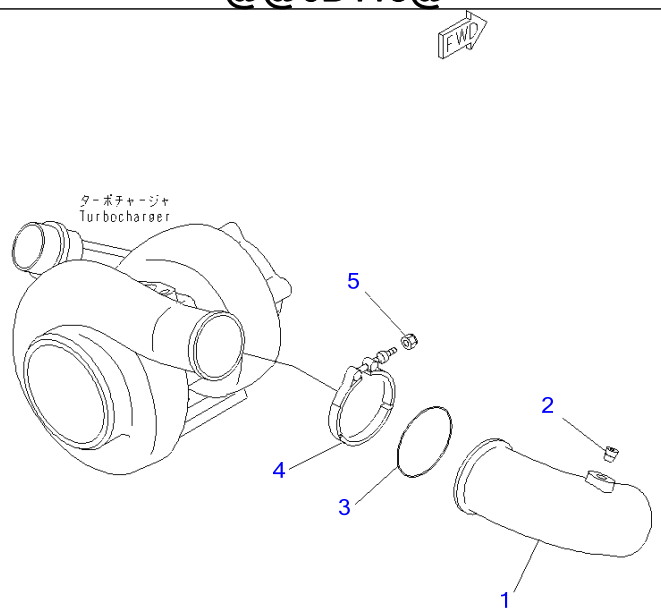

PJ6B413

Ref A153V-01A0 **Page 030140**

SAA6D102E-2D-8 S/N 26274903-UP
TURBOCHARGER OUT CONNECTION

Item	Part No.	Part Name	Qty	Serial No.
1	6738-11-4320	PIPE,AIR	1	26294599-
	□6738-11-4310	PIPE,AIR	1	26274903-26294598
2	07043-70108	PLUG	1	26274903-
3	6738-11-4370	O-RING (K1)	1	26274903-
4	6738-11-4380	CLAMP	1	26274903-
5	6738-11-4390	NUT	1	26274903-

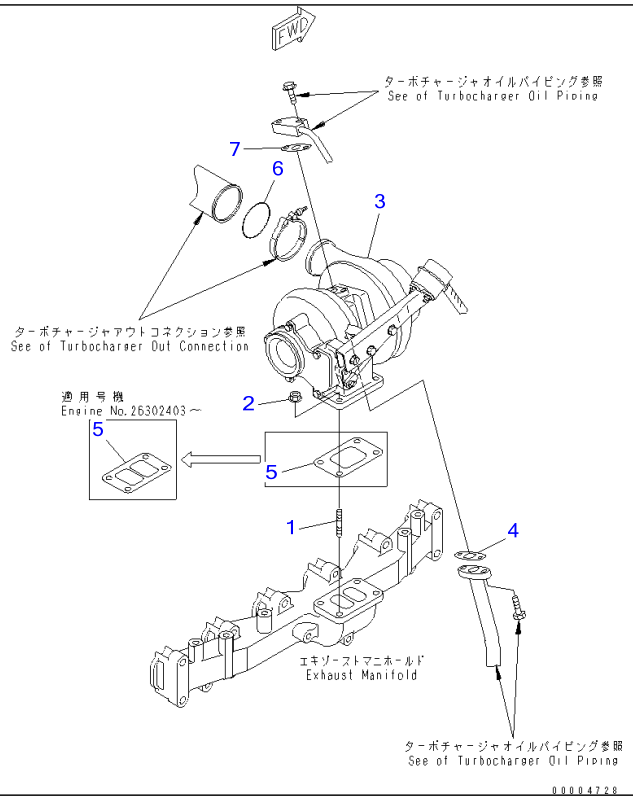

Ref A1539-01B5 **Page 030150**

SAA6D102E-2D-8 S/N 26274903-UP
TURBOCHARGER MOUNTING(#26280116-)

Item	Part No.	Part Name	Qty	Serial No.
1	6732-81-8810	STUD	4	26280116-
2	6732-81-8820	NUT	4	26280116-
	6738-81-8192	KIT,TURBOCHARGER	1	26312970-
	□6738-81-8191	KIT,TURBOCHARGER	1	26302403-26312969
	□6738-81-8190	KIT,TURBOCHARGER	1	26280116-26302402
3	☆	・TURBOCHARGER	1	26312970-
	☆	・TURBOCHARGER	1	26302403-26312969
	☆	・TURBOCHARGER	1	26280116-26302402
4	6207-51-7690	・GASKET (K1)	1	26302403-
	□6736-51-8720	・GASKET	1	26280116-26302402
5	6732-81-8830	・GASKET (K1)	1	26302403-
	□6736-11-5710	・GASKET	1	26280116-26302402
6	6738-11-4370	・O-RING (K1)	1	26302403-
7	6221-51-8160	・GASKET (K1)	1	26302403-

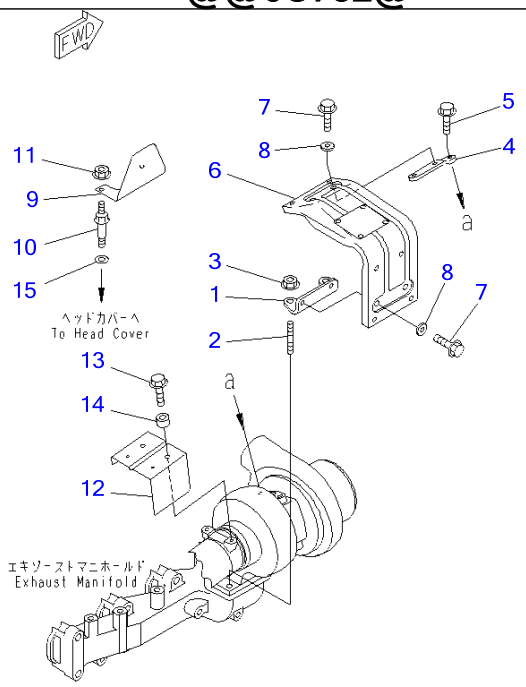

PJ6C732

Ref A1570-01D5B **Page 030160**

SAA6D102E-2D-8 S/N 26274903-UP
HEAT SHIELD(#26286068-)

Item	Part No.	Part Name	Qty	Serial No.
1	6738-81-8450	BRACKET	1	26413110-
	6738-81-8450	BRACKET	1	26286068-26413109
2	01140-61035	STUD	2	26286068-
3	6142-12-5850	NUT	2	26286068-
4	6732-81-8430	BRACKET	1	26286068-
5	01435-00814	BOLT	1	26286068-
6	6732-81-8541	COVER	1	26365530-
	□6732-81-8540	COVER	1	26286068-26365529
7	01435-00816	BOLT	4	26286068-
8	154-61-16570	WASHER	4	26323070-
	□6201-81-6560	SPACER	4	26286068-26323069
9	6738-81-8421	COVER	1	26286068-
10	6732-11-8140	BOLT	2	26286068-
11	01584-00806	NUT	2	26286068-
12	6735-81-8740	COVER	1	26286068-
13	01435-00820	BOLT	2	26286068-
14	6131-12-4570	SPACER	2	26286068-
15	154-61-16570	WASHER	2	26286068-

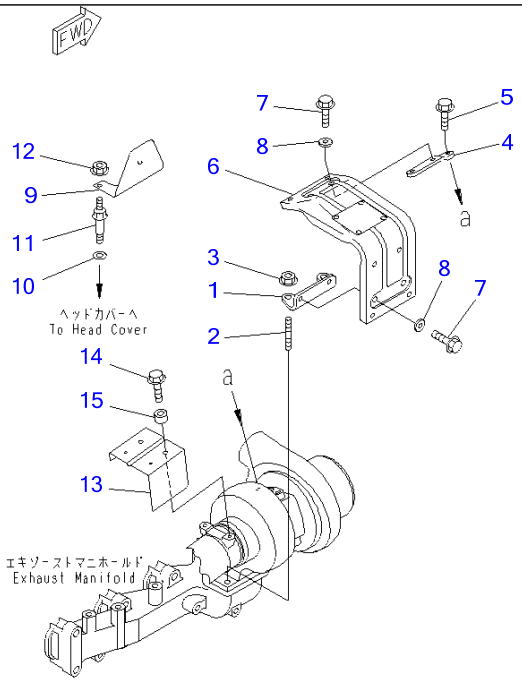

00004729

Ref A1570-01D6A **Page 030170**

SAA6D102E-2D-8 S/N 26274903-UP

HEAT SHIELD (FOR EXCEPT JAPAN)(#26286069-)

Item	Part No.	Part Name	Qty	Serial No.
1	6738-81-8450	BRACKET	1	26413110-
	6738-81-8450	BRACKET	1	26282900-26413109
2	01140-61035	STUD	2	26282900-
3	6142-12-5850	NUT	2	26282900-
4	6732-81-8430	BRACKET	1	26282900-
5	01435-00814	BOLT	1	26282900-
6	6732-81-8412	COVER	1	26369346-
	6732-81-8411	COVER	1	26282900-26369345
7	01435-00816	BOLT	4	26282900-
8	154-61-16570	WASHER	4	26323070-
	□6201-81-6560	SPACER	4	26282900-26323069
9	6738-81-8421	COVER	1	26286069-
10	154-61-16570	WASHER	2	26282900-
11	6732-11-8140	BOLT	2	26282900-
12	01584-00806	NUT	2	26282900-
13	6735-81-8740	COVER	1	26282900-
14	01435-00820	BOLT	2	26282900-
15	6131-12-4570	SPACER	2	26282900-

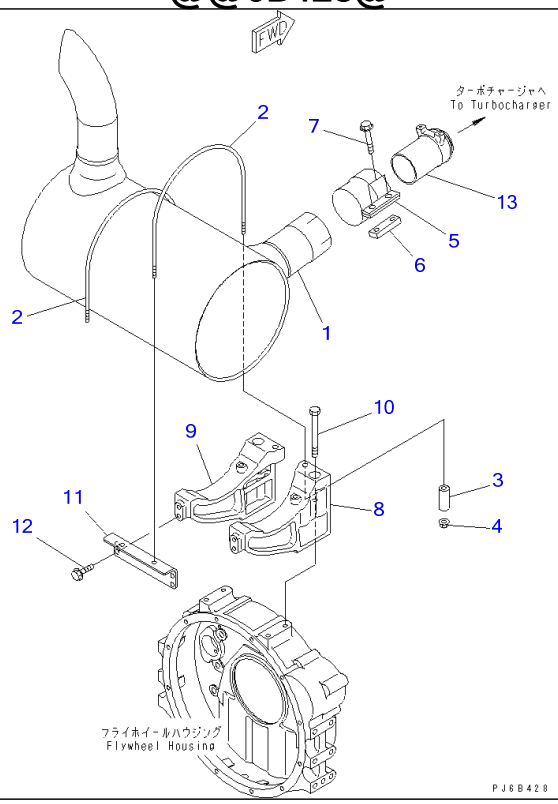

Ref A1610-01G5 **Page 030180**

SAA6D102E-2D-8 S/N 26274903-UP

MUFFLER AND MOUNTING(#26280116-)

Item	Part No.	Part Name	Qty	Serial No.
1	6738-11-5520	MUFFLER	1	26280116-
2	6738-11-5940	U-BOLT	2	26280116-
3	6134-11-5120	SPACER	2	26280116-
4	01594-01008	NUT	4	26280116-
5	6210-11-5232	CLAMP	1	26280116-
6	6206-11-5850	PLATE	1	26280116-
7	01435-01235	BOLT	2	26280116-
8	6738-11-5310	BRACKET	1	26280116-
9	6738-11-5320	BRACKET	1	26280116-
10	01435-01095	BOLT	4	26280116-
11	6738-11-5330	BRACKET	1	26280116-
12	01435-01020	BOLT	4	26280116-
13	6735-11-5611	TUBE	1	26280116-

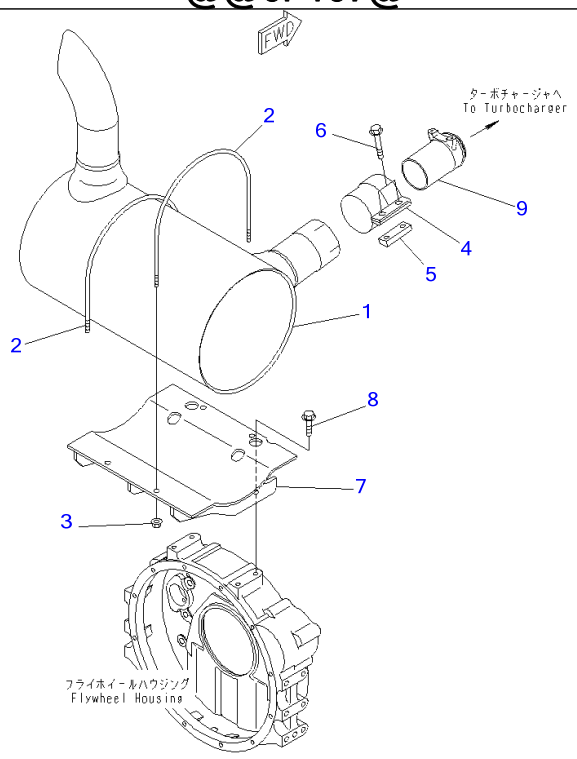

PJ8F167

Ref A1610-01H0 **Page 030190**

SAA6D102E-2D-8 S/N 26274903-UP

MUFFLER AND MOUNTING (COLD TERRAIN SPEC.)(#26298988-)

Item	Part No.	Part Name	Qty	Serial No.
1	6738-11-5520	MUFFLER	1	26298988-
2	6222-11-5940	U-BOLT	2	26298988-
3	01594-01008	NUT	4	26298988-
4	6210-11-5232	CLAMP	1	26298988-
5	6206-11-5850	PLATE	1	26298988-
6	01435-01235	BOLT	2	26298988-
7	6738-11-5380	BRACKET	1	26298988-
8	01435-01025	BOLT	4	26298988-
9	6735-11-5611	TUBE	1	26298988-

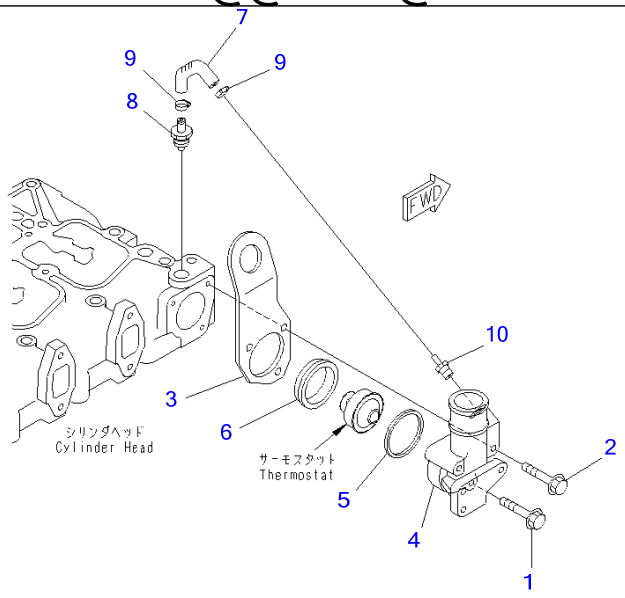

PMD1049

Ref A173P-01A5 **Page 030200**

SAA6D102E-2D-8 S/N 26274903-UP
THERMOSTAT HOUSING

Item	Part No.	Part Name	Qty	Serial No.
1	01435-60835	BOLT	1	26479972-
	6732-61-6140	BOLT	1	26274903-26479971
2	6732-61-6180	BOLT	2	26274903-
3	6735-11-1920	BRACKET	1	26274903-
4	6732-61-6231	HOUSING,THERMOSTAT	1	26274903-
5	6732-61-6250	SEAL,RING (K1)	1	26274903-
6	6732-61-6240	GASKET (K1)	1	26274903-
7	6732-61-6280	HOSE	1	26274903-
8	6732-61-6270	VALVE,CHECK	1	26274903-
9	07285-00125	CLIP	2	26274903-
10	6732-61-6171	COUPLING	1	26274903-

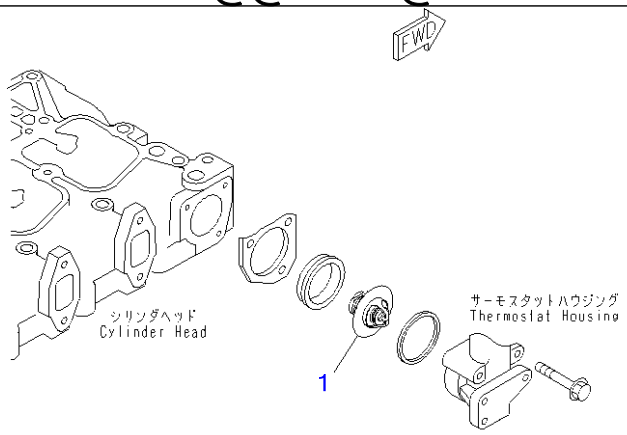

PJ6C418

Ref A173R-01A0 **Page 030210**

SAA6D102E-2D-8 S/N 26274903-UP
THERMOSTAT(#26295864-)

Item	Part No.	Part Name	Qty	Serial No.
1	6735-61-6471	THERMOSTAT	1	26295864-

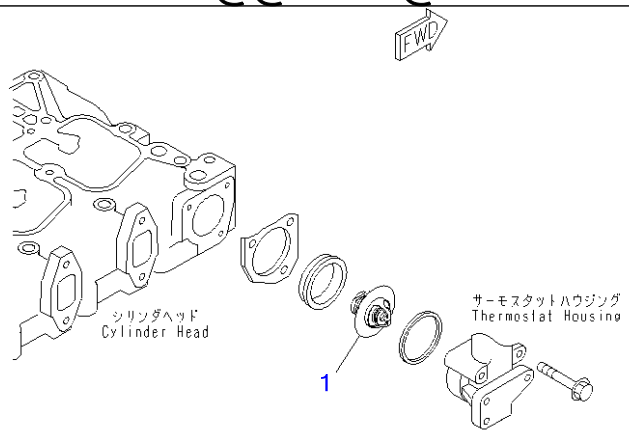

PJ6C418

Ref A173R-01A1 **Page 030220**

SAA6D102E-2D-8 S/N 26274903-UP
THERMOSTAT(#26274903-26295863)

Item	Part No.	Part Name	Qty	Serial No.
1	6735-61-6471	THERMOSTAT	1	26274903-26295863

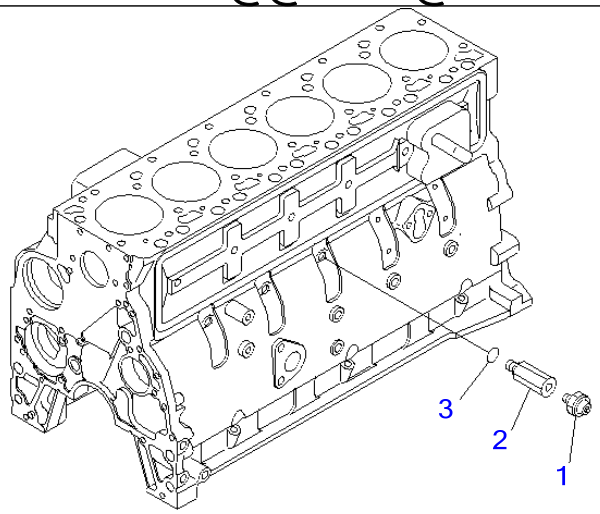

PJ6B403

Ref A201V-01A1 **Page 030230**

SAA6D102E-2D-8 S/N 26274903-UP
OIL PRESSURE SWITCH

Item	Part No.	Part Name	Qty	Serial No.
1	08073-20505	SWITCH,OIL PRESSURE	1	26376667-
	□08073-10505	SWITCH,OIL PRESSURE	1	26274903-26376666
2	6738-81-3170	ADAPTER	1	26274903-
3	6215-81-9710	O-RING	1	26274903-

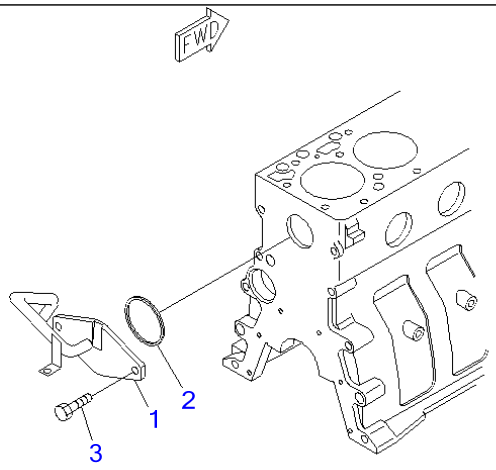

00000212

Ref A2010-01B3 **Page 030240**

SAA6D102E-2D-8 S/N 26274903-UP
CYLINDER BLOCK COVER(#26282900-)

Item	Part No.	Part Name	Qty	Serial No.
1	6735-61-6120	TUBE	1	26282900-
2	6735-61-6140	SEAL	1	26282900-
3	01435-01225	BOLT	2	26282900-

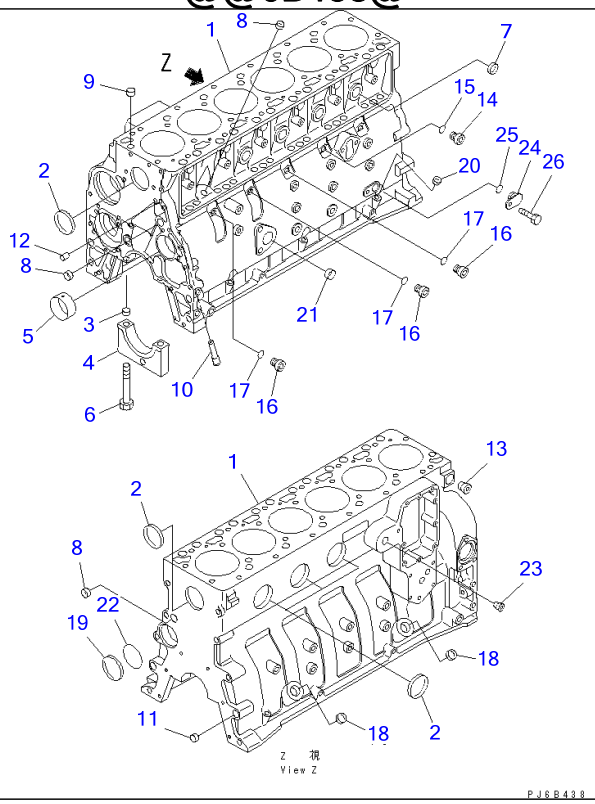

Ref A2019-01A2 **Page 030250**

SAA6D102E-2D-8 S/N 26274903-UP
CYLINDER BLOCK

Item	Part No.	Part Name	Qty	Serial No.
	6731-21-1170	CYLINDER BLOCK ASS'Y	1	26274903-
	☆	・BLOCK ASS'Y	1	26274903-
1	☆	・・BLOCK,CYLINDER	1	26312676-
	☆	・・BLOCK,CYLINDER	1	26274903-26312675
2	6732-21-1831	・・PLUG	5	26483819-
	△6732-21-1830	・・PLUG	5	26274903-26483818
3	6732-21-1910	・・RING	14	26274903-26468569
4	△6754-21-1221	・・CAP ASS'Y	7	26494791-
	△6754-21-1220	・・CAP ASS'Y	7	26468570-26494790
	△6732-21-1210	・・CAP	7	26274903-26468569
5	6732-21-1412	・・BUSHING	1	26450812-
	◆6732-21-1411	・・BUSHING	1	26274903-26450811
6	6732-21-1611	・・BOLT	14	26274903-
7	6732-21-1820	・・PLUG	4	26274903-
8	6732-21-1812	・・PLUG,EXPANSION	3	26312676-
	□6732-21-1811	・・PLUG,EXPANSION	3	26274903-26312675
	6731-21-1210	・BLOCK SERVICE KIT	1	26274903-
9	6732-21-6140	・・RING	2	26274903-
10	6732-21-1191	・・NOZZLE,PISTON COOLING	6	26312676-
	□6731-21-1190	・・NOZZLE,PISTON COOLING	6	26274903-26312675
11	6732-21-1911	・・RING	2	26494791-
	◆6732-21-1910	・・RING	2	26274903-26494790
12	6732-21-6120	・・PIN	2	26274903-
13	6732-11-1910	・・PLUG	1	26274903-
	6735-21-1910	・・PLUG ASS'Y	1	26274903-
14	6735-21-1920	・・・PLUG	1	26274903-
15	6735-21-1930	・・・O-RING (K2)	1	26274903-
	6732-21-1960	・・PLUG ASS'Y	3	26274903-

CYLINDER BLOCK

Item	Part No.	Part Name	Qty	Serial No.
16	6215-81-9510	・・・PLUG	1	26274903-
17	6735-21-1970	・・・O-RING (K2)	1	26496953-
	□6215-81-9710	・・・O-RING (K2)	1	26274903-26496952
18	6735-21-5530	・・PLUG	3	26274903-
19	6732-21-6130	・・PLUG	1	26274903-
20	6732-21-5530	・・PLUG	3	26274903-
21	6732-21-6160	・・PLUG	1	26274903-
22	6732-21-1930	・・O-RING	1	26274903-
23	6732-11-1920	・・PLUG	1	26274903-
	6735-21-1940	・・PLUG	1	26274903-
24	6735-21-1950	・・・PLUG	1	26274903-
25	6216-84-9420	・・・O-RING (K2)	1	26274903-
26	01435-60816	・・BOLT	1	26483819-
	□6732-21-3120	・・BOLT	1	26274903-26483818
		REFER TO FIG. NOS. OF REPAIR PARTS FOR O.S., U.S., AND SERVICE PARTS.		

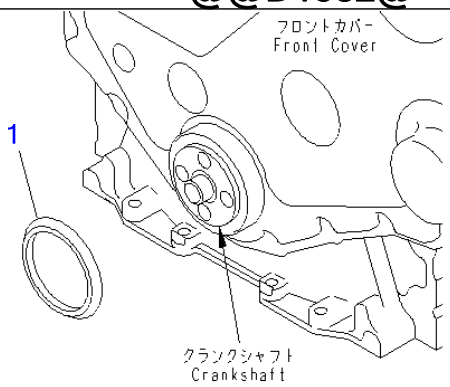

PFD1582

Ref A204R-01A0 **Page 030260**

SAA6D102E-2D-8 S/N 26274903-UP
DUST SEAL(#26277757-)

Item	Part No.	Part Name	Qty	Serial No.
1	6731-81-8710	SEAL,DUST	1	26277757-

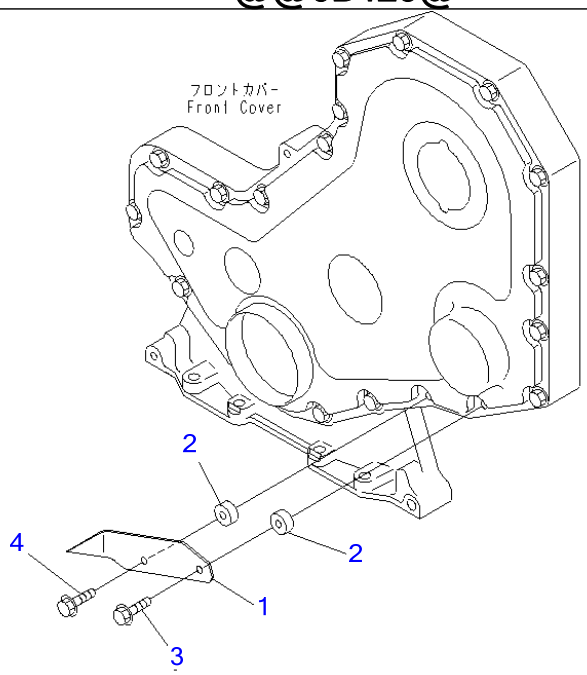

PJ6B429

Ref A2040-01A0 **Page 030270**

SAA6D102E-2D-8 S/N 26274903-UP
FRONT COVER POINTER

Item	Part No.	Part Name	Qty	Serial No.
1	6738-21-3910	POINTER	1	26274903-
2	6130-12-1961	SPACER	2	26274903-
3	01435-60825	BOLT	1	26479680-
	6732-21-5160	BOLT	1	26274903-26479679
4	6736-21-3230	BOLT	1	26274903-

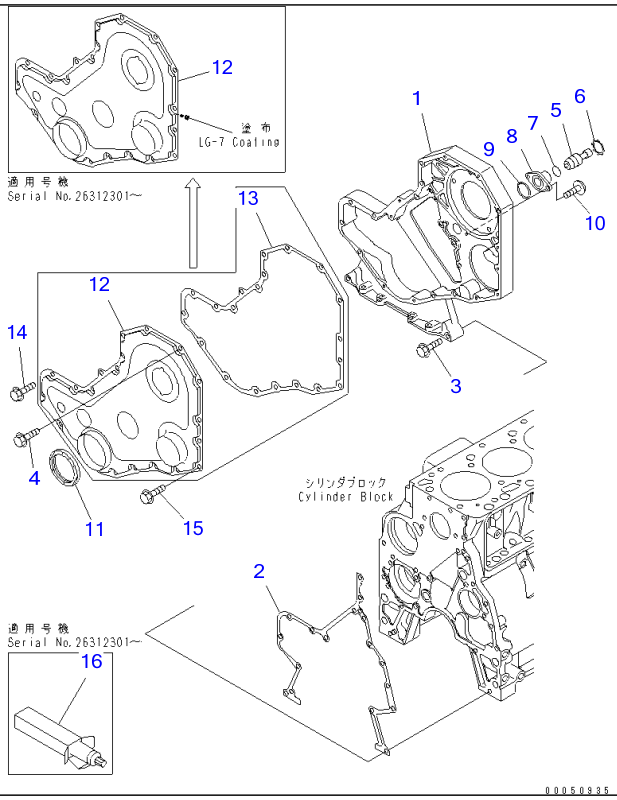

Ref A2049-01A1 **Page 030280**

SAA6D102E-2D-8 S/N 26274903-UP
FRONT COVER

Item	Part No.	Part Name	Qty	Serial No.
1	6738-21-3110	HOUSING,GEAR	1	26274903-
2	6732-21-3811	GASKET (K2)	1	26274903-
3	01435-60850	BOLT	2	26483819-
	□6736-21-3210	BOLT	2	26274903-26483818
4	01435-60816	BOLT	2	26483819-
	□6736-21-5310	BOLT	5	26274903-26483818
5	6732-21-3140	PIN	1	26274903-
6	6732-21-3150	RING	1	26274903-
7	6732-21-3870	O-RING (K2)	1	26274903-
8	6732-21-3180	HOUSING	1	26274903-
9	6732-21-3880	GASKET (K2)	1	26274903-
10	6732-21-3160	BOLT	2	26274903-
11	6735-21-3511	SEAL	1	26274903-
12	6736-21-3310	COVER,GEAR	1	26274903-
	(☒6735-21-3310)	COVER,GEAR	1	(26274903-26312300)
13	6736-21-3450	GASKET (K2)	1	26274903-26312300
14	01435-60850	BOLT	9	26483819-
	□6736-21-3210	BOLT	9	26274903-26483818
15	01435-60816	BOLT	11	26483819-
	□6736-21-5310	BOLT	11	26274903-26483818
16	09920-00150	LIQUID GASKET	AR	26274903-

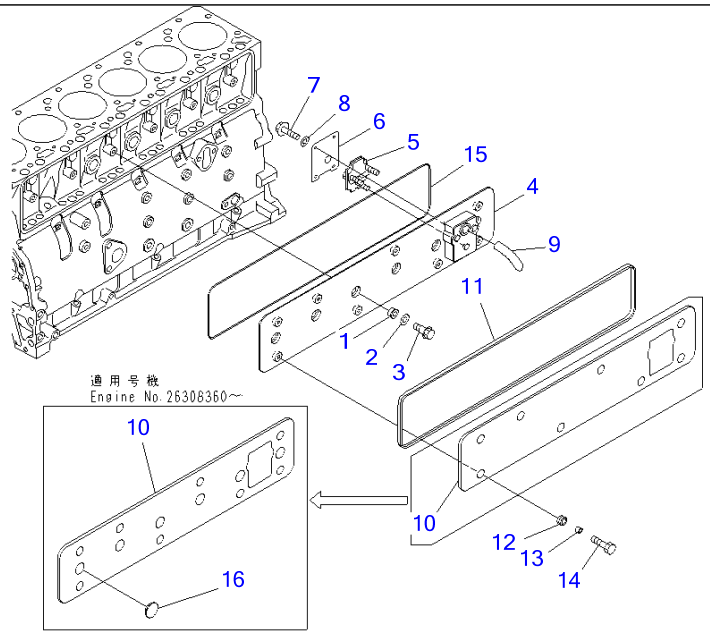

00009801

Ref A206P-01A7 **Page 030290**

SAA6D102E-2D-8 S/N 26274903-UP
CAMFOLLOWER COVER

Item	Part No.	Part Name	Qty	Serial No.
1	6732-11-8210	GASKET,SEAL (K2)	6	26277761-
	□6738-11-8210	GROMMET,SEAL	6	26274903-26277760
2	6732-11-8150	WASHER	6	26277761-
3	6738-21-6280	BOLT	6	26274903-
	6738-21-6100	COVER ASS'Y	1	26274903-
4	☆	・COVER	1	26274903-
5	6738-21-7710	・BREATHER	1	26274903-
6	6738-21-7780	・COVER	1	26274903-
7	01435-00616	・BOLT	4	26274903-
8	01640-20610	・WASHER	4	26274903-
9	6738-21-7810	・TUBE	1	26274903-
10	6738-21-6620	PANEL	1	26308360-
	6738-21-6610	COVER	1	26274903-26308539
11	6738-21-6650	GASKET (K2)	1	26274903-
12	6738-21-6660	GASKET (K2)	8	26274903-
13	6738-21-6670	SPACER	8	26274903-
14	01435-60820	BOLT	8	26475310-
	□6732-71-3220	BOLT	8	26274903-26475309
15	6738-21-6180	O-RING (K2)	1	26274903-
16	6738-21-6680	GROMMET	6	26308360-

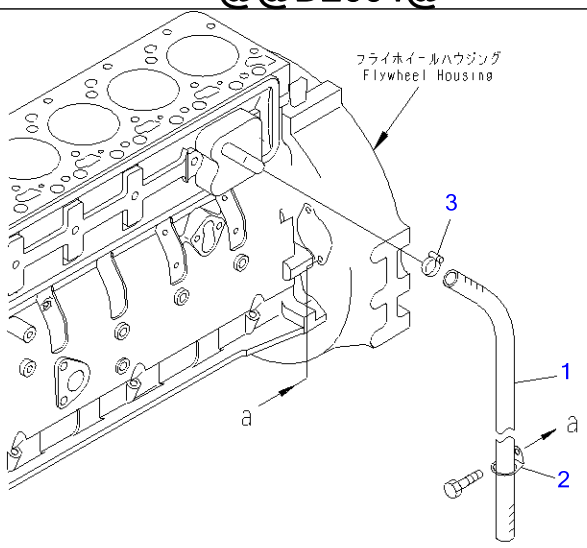

PQD2604

Ref A2060-01B2 **Page 030300**

SAA6D102E-2D-8 S/N 26274903-UP
BREATHER HOSE(#26285649-)

Item	Part No.	Part Name	Qty	Serial No.
1	07286-01971	HOSE	1	26285649-
2	6735-21-4250	CLIP	1	26338651-
	□6735-21-4240	CLIP	1	26285649-26338650
3	07285-00220	CLIP	1	26285649-

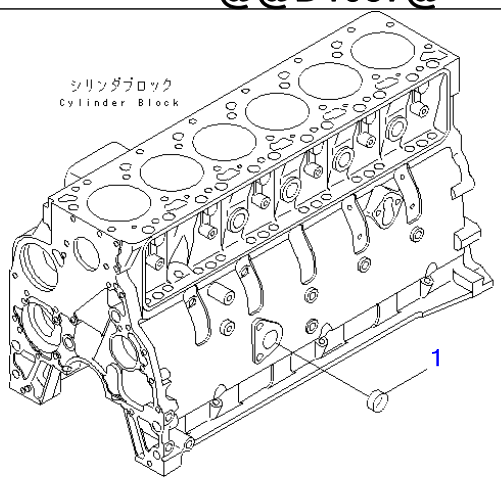

PMD1057

Ref A207P-01A0Z **Page 030310**

SAA6D102E-2D-8 S/N 26274903-UP
CYLINDER BLOCK BLIND PLUG

Item	Part No.	Part Name	Qty	Serial No.
1	6732-21-6160	PLUG	1	26274903-

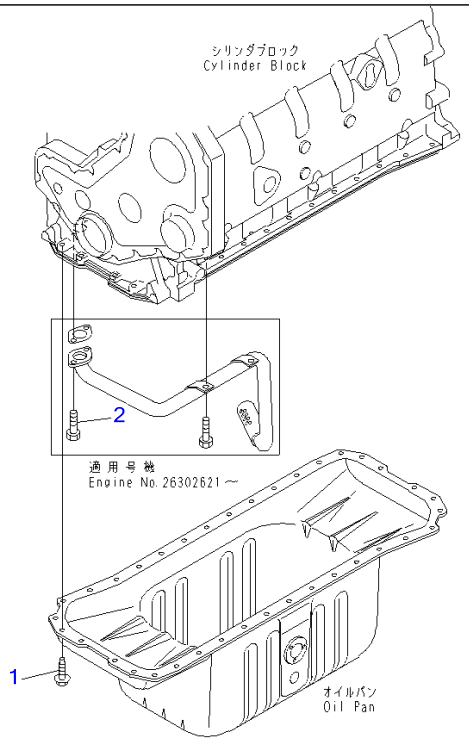

00004730

Ref A211R-01A1 **Page 030320**

SAA6D102E-2D-8 S/N 26274903-UP
OIL PAN BOLT

Item	Part No.	Part Name	Qty	Serial No.
1	6732-21-6610	BOLT	36	26274903-
2	01435-60825	BOLT	2	26479680-
	6732-21-5160	BOLT	2	26302621-26479679

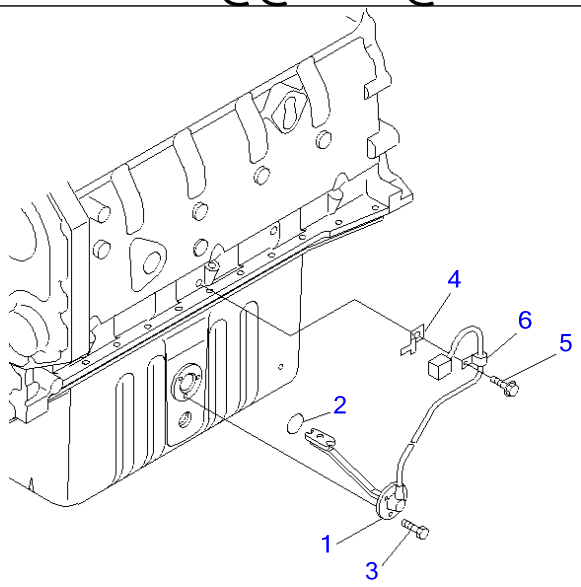

PJ6B421

Ref A211V-01A1 **Page 030330**

SAA6D102E-2D-8 S/N 26274903-UP
OIL LEVEL SENSOR(#26282903-)

Item	Part No.	Part Name	Qty	Serial No.
1	6741-81-9220	SENSOR	1	26306697-
	7861-93-4210	SENSOR	1	26282903-26306696
2	7861-91-4220	▪ O-RING	1	26282903-
3	01435-60612	BOLT	3	26479680-
	6733-71-5680	BOLT	3	26282903-26479679
4	08193-20010	CLIP	1	26282903-
5	6216-74-6180	BOLT	1	26282903-
6	04434-50508	CLIP	1	26363407-
	□04434-50608	CLIP	1	26282903-26363406

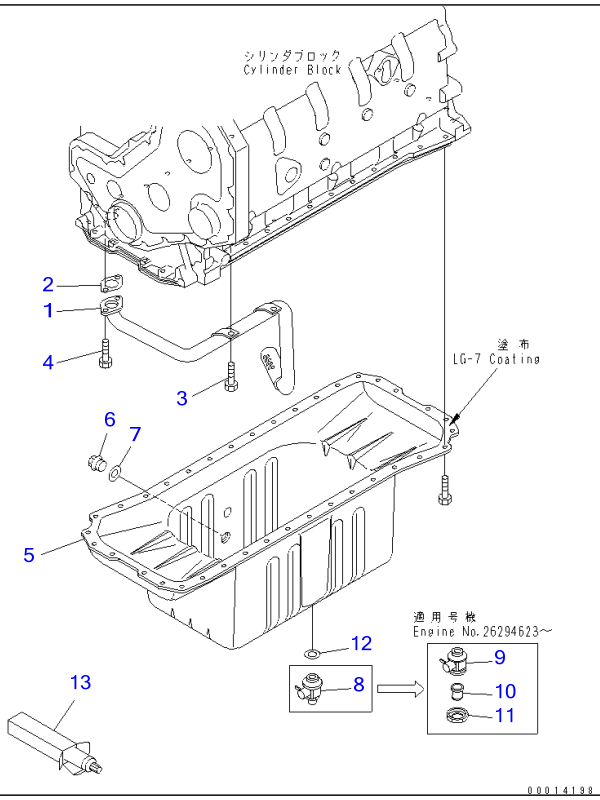

Ref A2119-01B2 **Page 030340**

SAA6D102E-2D-8 S/N 26274903-UP
OIL PAN AND SUCTION TUBE(#26282900-)

Item	Part No.	Part Name	Qty	Serial No.
1	6735-51-5521	TUBE,SUCTION	1	26282900-
2	6732-21-5510	GASKET	1	26282900-
3	6732-71-3220	BOLT	2	26282900-
4	6732-21-5160	BOLT	2	26282900-
5	6735-21-5120	PAN,OIL	1	26282900-
6	6204-21-5180	PLUG	1	26282900-
7	07005-02216	SEAL, WASHER (K2)	1	26282900-
8	6732-21-5610	VALVE	1	26282900-26294622
	6738-21-5611	VALVE ASS'Y	1	26345460-
	□6738-21-5610	COCK ASS'Y	1	26294623-26345459
9	6738-21-5621	・VALVE	1	26324882-
	□6738-21-5620	・COCK	1	26294623-26324881
10	6738-21-5630	・JOINT	1	26294623-
11	6738-21-5640	・NUT	1	26294623-
12	07005-02216	SEAL, WASHER (K2)	1	26282900-
13	09920-00150	LIQUID GASKET,LG-7, 150G	AR	26282900-

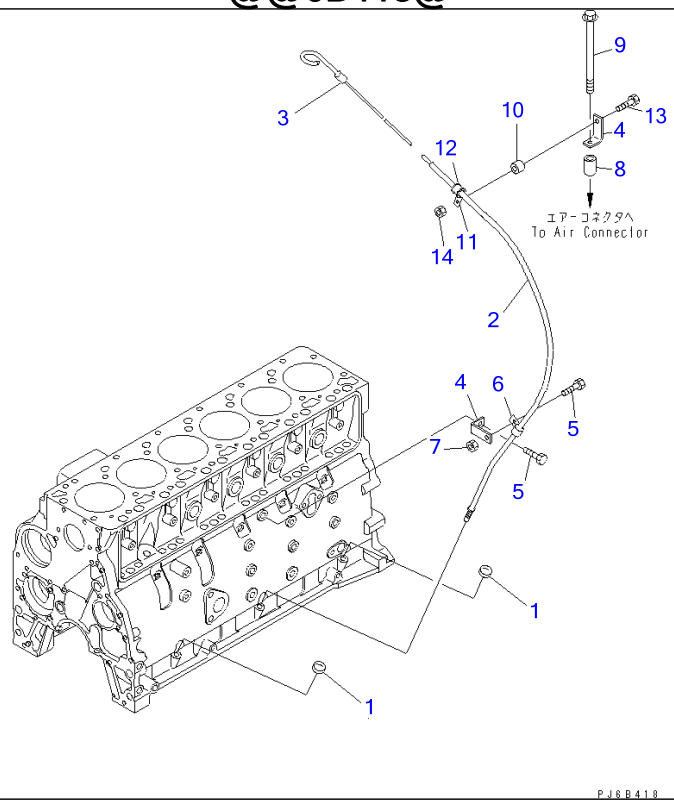

Ref A219P-01A1Z **Page 030350**

SAA6D102E-2D-8 S/N 26274903-UP

OIL LEVEL GAUGE(#26274903-26312966)

Item	Part No.	Part Name	Qty	Serial No.
1	6732-21-5530	PLUG	2	26274903-26312966
2	6732-21-5490	GUIDE	1	26274903-26312966
3	6732-21-5642	GAUGE	1	26306697-26312966
	□6732-21-5641	GAUGE	1	26274903-26306696
4	6205-51-8380	BRACKET	2	26274903-26312966
5	6732-21-3120	BOLT	2	26274903-26312966
6	04434-51208	CLIP	1	26274903-26312966
7	6732-71-3210	NUT	1	26274903-26312966
8	203-54-11170	SPACER	1	26274903-26312966
9	6222-11-4910	BOLT	1	26274903-26312966
10	6141-64-2560	SPACER	1	26274903-26312966
11	04434-51708	CLIP	1	26274903-26312966
12	07095-20211	CUSHION	1	26274903-26312966
13	6732-61-6140	BOLT	1	26274903-26312966
14	6732-71-3210	NUT	1	26274903-26312966

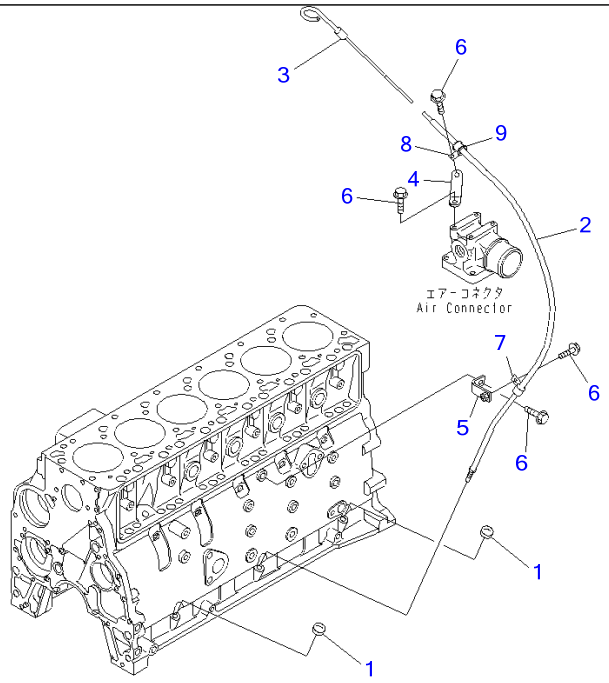

00009790

Ref A219P-01A8 **Page 030360**

SAA6D102E-2D-8 S/N 26274903-UP
OIL LEVEL GAUGE(#26312967-)

Item	Part No.	Part Name	Qty	Serial No.
1	6732-21-5530	PLUG	2	26312967-
2	6732-21-5491	GUIDE	1	26357053-
	□6732-21-5490	GUIDE	1	26312967-26357052
3	6732-21-5642	GAUGE	1	26312967-
4	6738-21-5860	BRACKET	1	26312967-
5	6738-21-5870	BRACKET	1	26312967-
6	01435-60816	BOLT	4	26479680-
	6732-21-3120	BOLT	4	26312967-26479679
7	04434-51208	CLIP	1	26312967-
8	04434-51708	CLIP	1	26312967-
9	07095-40211	CUSHION	1	26465373-
	□07095-20211	CUSHION	1	26312967-26465372

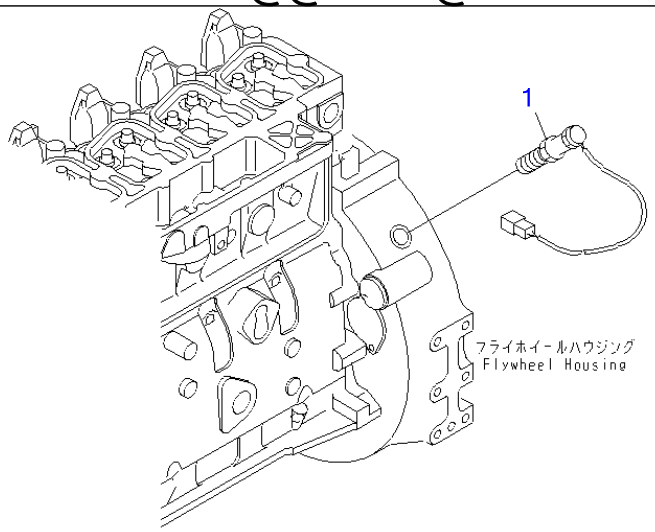

PJ6B402

Ref A221V-01A0 **Page 030370**

SAA6D102E-2D-8 S/N 26274903-UP
REVOLUTION SENSOR

Item	Part No.	Part Name	Qty	Serial No.
1	7861-93-2310	SENSOR,REVOLUTION	1	26274903-

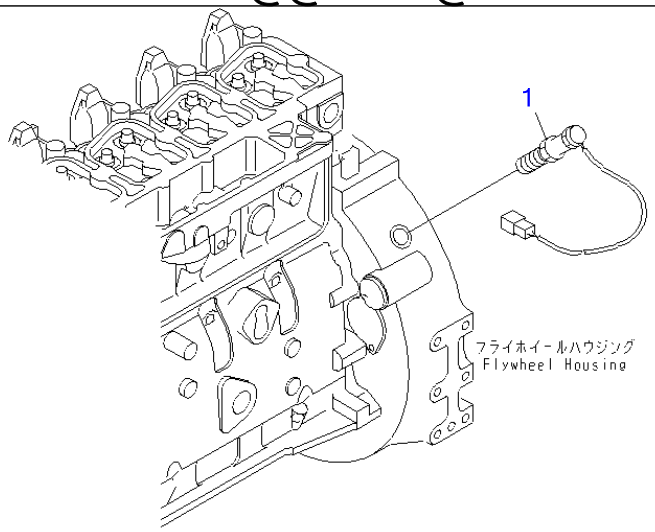

PJ6B402

Ref A221V-01A2 **Page 030380**

SAA6D102E-2D-8 S/N 26274903-UP
REVOLUTION SENSOR (AFTER M/C)(#26307088-)

Item	Part No.	Part Name	Qty	Serial No.
1	7861-93-2330	SENSOR,REVOLUTION	1	26307088-

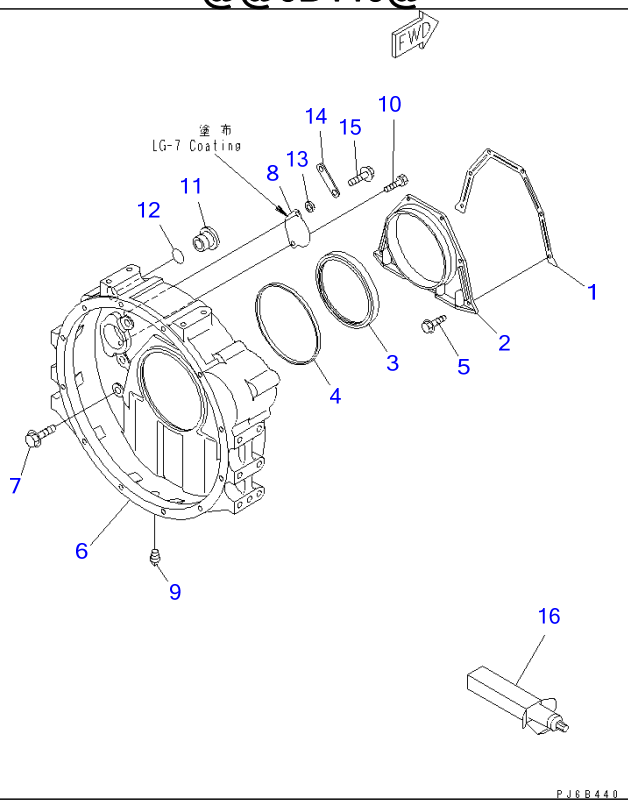

Ref A2219-01B2 **Page 030390**

SAA6D102E-2D-8 S/N 26274903-UP
FLYWHEEL HOUSING

Item	Part No.	Part Name	Qty	Serial No.
1	6735-21-4191	GASKET (K2)	1	26274903-
2	6731-21-4240	COVER,REAR	1	26274903-
3	6736-21-4221	SEAL (K2)	1	26395661-
	(☒6736-21-4220)	SEAL (K2)	1	(26274903-26395660)
4	6732-21-4171	GASKET (K2)	1	26274903-
5	6732-21-4290	BOLT	6	26274903-
6	6732-21-4111	HOUSING,FLYWHEEL	1	26274903-
7	6732-21-4220	BOLT	8	26274903-
8	6732-21-4130	PLATE	1	26274903-
9	02721-00813	PLUG	1	26274903-
10	6732-21-4120	BOLT	2	26274903-
11	6732-21-4150	PLUG	1	26274903-
12	6732-21-4161	O-RING (K2)	1	26274903-
13	6110-23-6490	SPACER	1	26274903-
14	6301-11-4630	PLATE	1	26274903-
15	01435-60825	BOLT	1	26483819-
	☐6732-21-5160	BOLT	1	26274903-26483818
16	(09920-00150)	LIQUID GASKET,LG-7, 150G	AR	26274903-

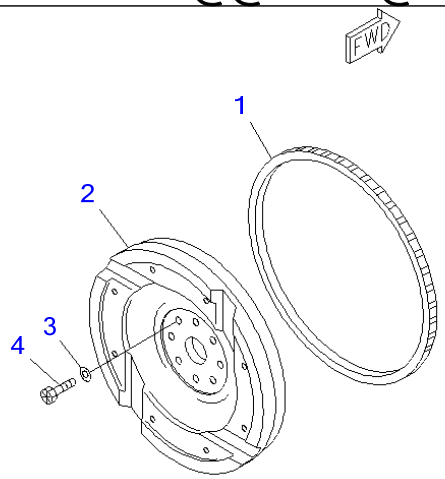

PMD1070

Ref A223P-01B1 **Page 030400**

SAA6D102E-2D-8 S/N 26274903-UP
FLYWHEEL

Item	Part No.	Part Name	Qty	Serial No.
	6738-31-4200	FLYWHEEL ASS'Y	1	26274903-
1	6732-31-4180	▪ GEAR,RING	1	26274903-
2	☆	▪ FLYWHEEL	1	26274903-
3	6732-31-4120	WASHER	8	26274903-
4	6732-31-4130	BOLT	8	26274903-

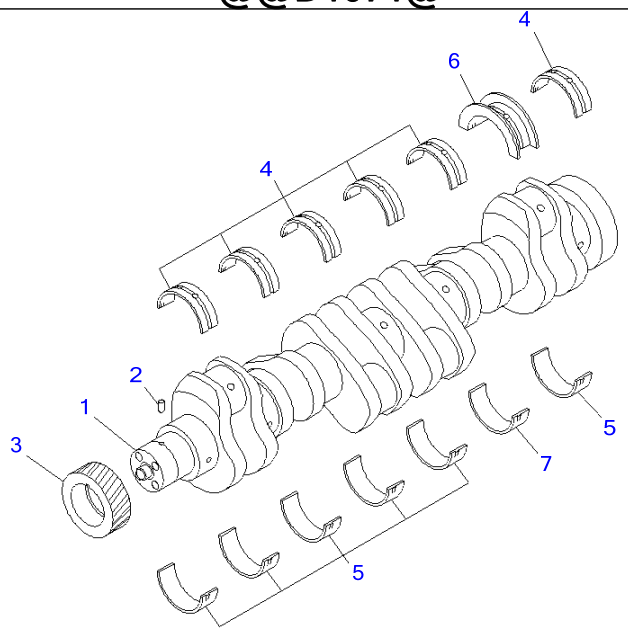

PMD1071

Ref A2319-01A0 **Page 030410**

SAA6D102E-2D-8 S/N 26274903-UP
CRANKSHAFT

Item	Part No.	Part Name	Qty	Serial No.
	6735-01-1310	CRANKSHAFT ASS'Y	1	26274903-
1	☆	・CRANKSHAFT	1	26274903-
2	6732-21-6150	・PIN	1	26274903-
3	6732-31-1211	・GEAR	1	26274903-
	6754-22-8320	MAIN METAL ASS'Y	6	26444153-
	6736-21-8110	MAIN METAL ASS'Y	6	26274903-26444152
4	☆	・BEARING,UPPER	1	26444153-
	☆	・METAL,UPPER	1	26274903-26444152
5	☆	・BEARING,LOWER	1	26444153-
	☆	・METAL,LOWER	1	26274903-26444152
	6754-22-8310	THRUST METAL ASS'Y	1	26444153-
	6736-21-8610	THRUST METAL ASS'Y	1	26274903-26444152
6	☆	・BEARING,THRUST	1	26444153-
	☆	・METAL,THRUST	1	26274903-26444152
7	☆	・BEARING,LOWER	1	26444153-
	☆	・METAL,LOWER	1	26274903-26444152
		REFER TO FIG. NOS. OF REPAIR PARTS FOR O.S., U.S., AND SERVICE PARTS.		

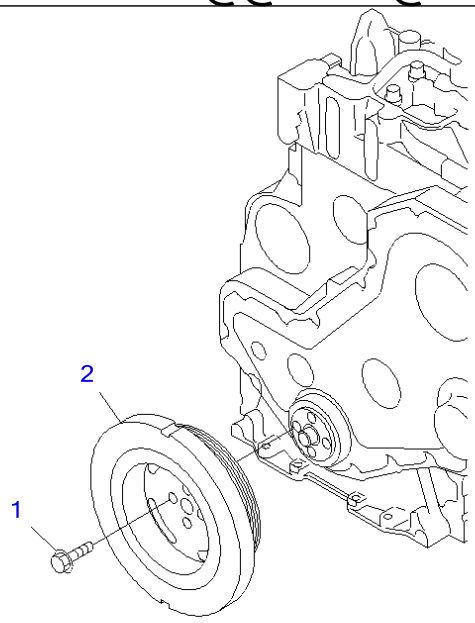

PMD1072

Ref A233P-01A0 **Page 030420**

SAA6D102E-2D-8 S/N 26274903-UP
DAMPER

Item	Part No.	Part Name	Qty	Serial No.
1	6732-31-8120	BOLT	4	26274903-
2	6735-31-8120	DAMPER,VIBRATION	1	26274903-

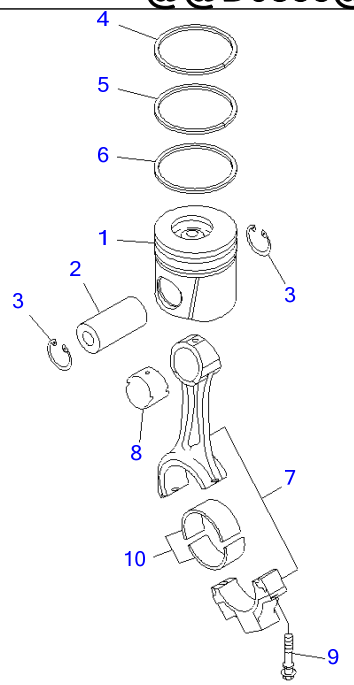

PMD0835

Ref A2359-01A2 **Page 030430**

SAA6D102E-2D-8 S/N 26274903-UP
PISTON

Item	Part No.	Part Name	Qty	Serial No.
1	6738-31-2111	PISTON	6	26292269-
	☐6738-31-2110	PISTON	6	26274903-26292268
2	6732-31-2410	PIN	6	26274903-
3	6732-31-2420	RING,SNAP	12	26274903-
	6738-31-2031	PISTON RING ASS'Y	6	26292269-
	☐6738-31-2030	PISTON RING ASS'Y	6	26274903-26292268
4	☆	・RING,TOP	1	26292269-
	☆	・RING,TOP	1	26274903-26292268
5	☆	・RING,SECOND	1	26274903-
6	☆	・RING,OIL	1	26274903-
	6737-32-3121	ROD ASS'Y	6	26486717-
	6732-31-3101	CONNECTING ROD A.	6	26274903-26486716
7	☆	・ROD	1	26486717-
	☆	・ROD	1	26274903-26486716
8	6732-31-3132	・BUSHING	1	26359095-
	☐6732-31-3131	・BUSHING	1	26274903-26359094
9	6732-31-3320	・SCREW	2	26486717-
	6732-31-3311	・BOLT	2	26299827-26486716
	☐6732-31-3310	・BOLT	2	26274903-26299826
10	6732-31-3410	METAL	12	26274903-
		REFER TO FIG. NOS. OF REPAIR PARTS FOR O.S., U.S., AND SERVICE PARTS.		

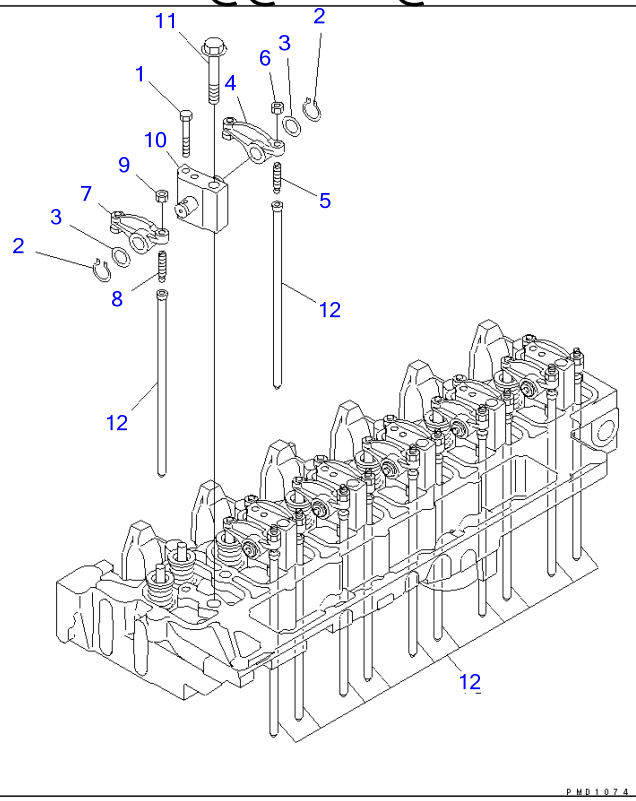

Ref A241P-01A0 **Page 030440**

SAA6D102E-2D-8 S/N 26274903-UP
ROCKER ARM

Item	Part No.	Part Name	Qty	Serial No.
1	6732-41-5180	BOLT	6	26274903-
2	6732-41-5170	RING,SNAP	12	26274903-
3	6732-41-5160	WASHER	12	26274903-
4	6732-41-5400	ARM ASS'Y	6	26274903-
5	6735-41-5560	・SCREW	1	26296416-
	□6731-41-5270	・SCREW	1	26274903-26296415
6	6735-41-5550	・NUT	1	26274903-
7	6732-41-5200	ARM ASS'Y	6	26274903-
8	6735-41-5560	・SCREW	1	26296416-
	□6731-41-5270	・SCREW	1	26274903-26296415
9	6735-41-5550	・NUT	1	26274903-
10	6736-41-5110	BRACKET ASS'Y	6	26274903-
11	6732-11-1640	BOLT	6	26274903-
12	6732-41-3111	ROD,PUSH	12	26274903-

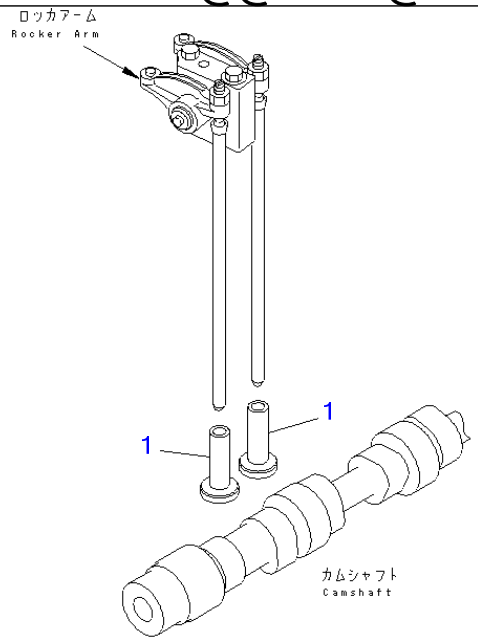

PMD0838

Ref A241R-01A0 **Page 030450**

SAA6D102E-2D-8 S/N 26274903-UP
TAPPET

Item	Part No.	Part Name	Qty	Serial No.
1	6732-41-2112	TAPPET	12	26274903-

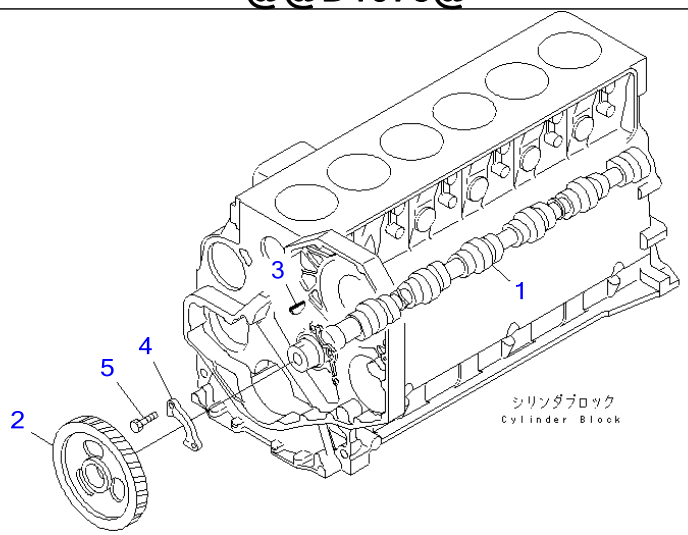

PMD1075

Ref A2419-01A0 **Page 030460**

SAA6D102E-2D-8 S/N 26274903-UP
CAMSHAFT

Item	Part No.	Part Name	Qty	Serial No.
1	6735-41-1111	CAMSHAFT	1	26274903-
2	6732-41-1231	GEAR	1	26274903-
3	6732-41-1280	KEY	1	26274903-
4	6732-41-1220	SUPPORT,THRUST	1	26274903-
5	6732-41-1260	BOLT	2	26274903-

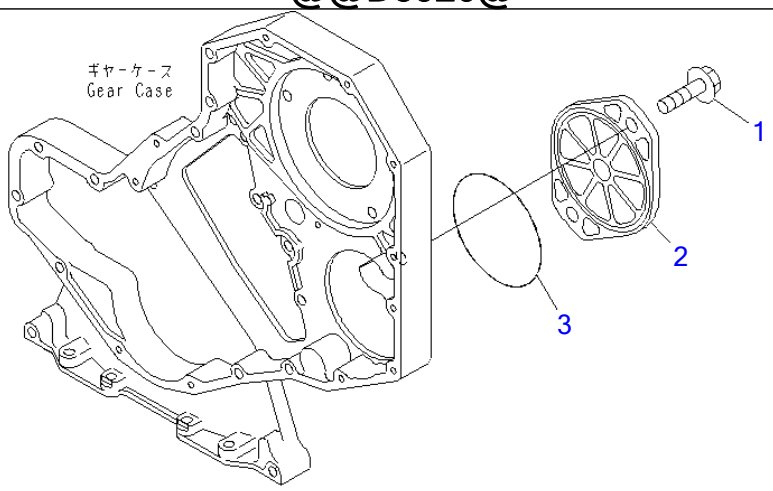

PJD5920

Ref A261P-01A1 **Page 030470**

SAA6D102E-2D-8 S/N 26274903-UP
FRONT GEAR TRAIN COVER

Item	Part No.	Part Name	Qty	Serial No.
1	6732-51-5130	BOLT	2	26274903-
2	6732-21-9330	COVER	1	26274903-
3	07000-72110	O-RING (K2)	1	26274903-

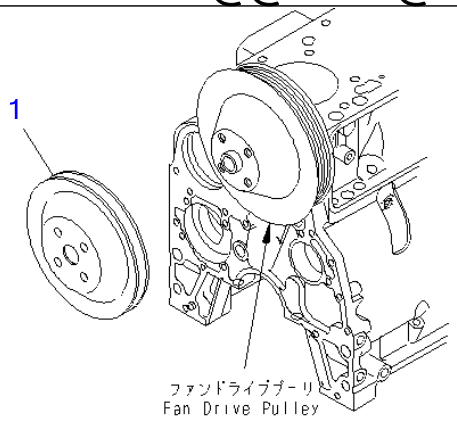

PJ6B398

Ref A267P-01A1 **Page 030480**

SAA6D102E-2D-8 S/N 26274903-UP
FAN PULLEY(#26282900-)

Item	Part No.	Part Name	Qty	Serial No.
1	6738-91-1510	PULLEY	1	26282900-

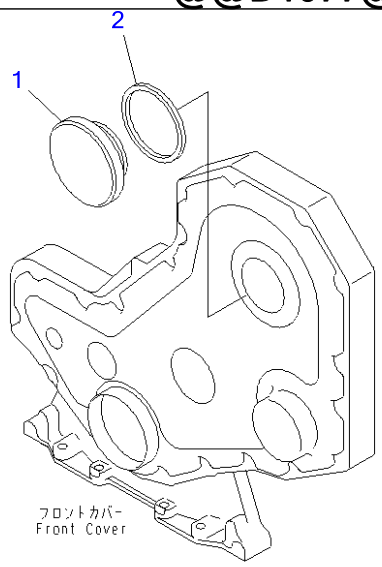

PMD1077

Ref A281P-01A0 **Page 030490**

SAA6D102E-2D-8 S/N 26274903-UP
TACHOMETER DRIVE COVER

Item	Part No.	Part Name	Qty	Serial No.
1	6732-21-3190	COVER	1	26274903-
2	6732-21-3220	SEAL (K2)	1	26274903-

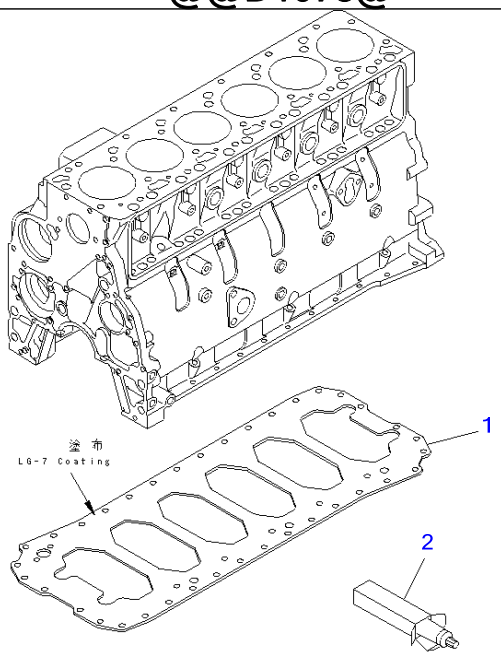

PMD1078

Ref A283P-01A0 **Page 030500**

SAA6D102E-2D-8 S/N 26274903-UP
UNDER PLATE

Item	Part No.	Part Name	Qty	Serial No.
1	6735-21-5151	PLATE	1	26274903-
2	(09920-00150)	LIQUID GASKET,LG-7, 150G	AR	26274903-

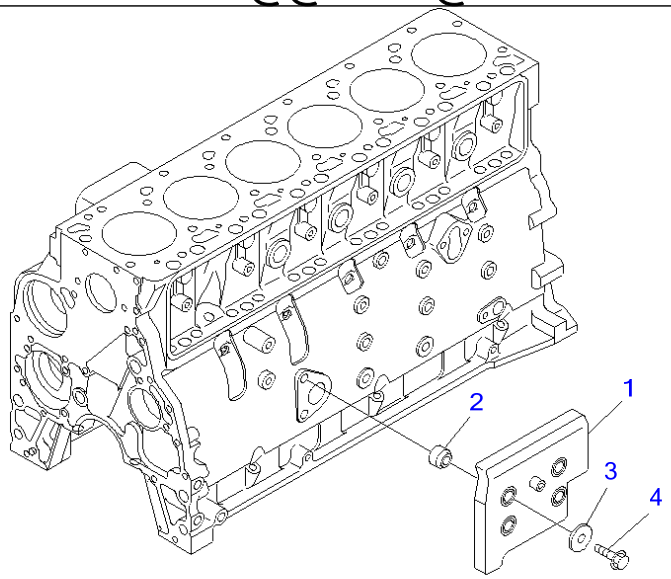

PJ6B419

Ref A283V-01A0 **Page 030510**

SAA6D102E-2D-8 S/N 26274903-UP
NOISE PANEL CYLINDER BLOCK

Item	Part No.	Part Name	Qty	Serial No.
1	6738-21-6810	PANEL	1	26274903-
2	6738-21-6890	SPACER	4	26274903-
3	6144-21-2420	WASHER	4	26274903-
4	01435-01240	BOLT	4	26274903-

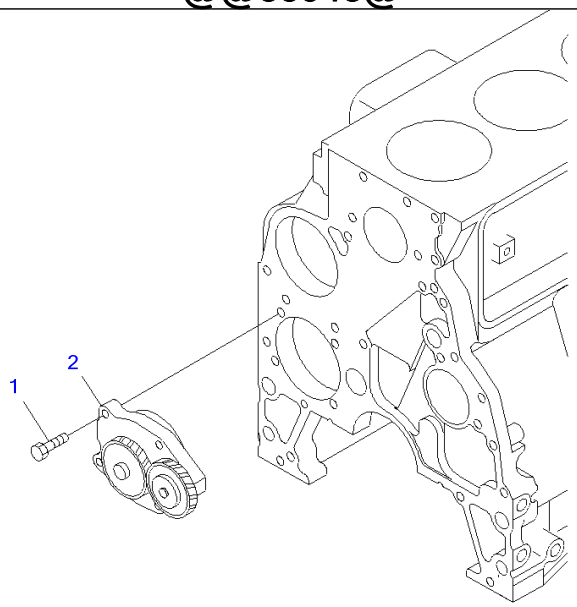

PM35943

Ref A301P-01A2 **Page 030520**

SAA6D102E-2D-8 S/N 26274903-UP
OIL PUMP

Item	Part No.	Part Name	Qty	Serial No.
1	01010-80830	BOLT	4	26479680-
	6735-51-1120	BOLT	4	26274903-26479679
2	6738-51-1100	OIL PUMP ASS'Y	1	26407885-
	□6731-51-1111	OIL PUMP ASS'Y	1	26274903-26407884

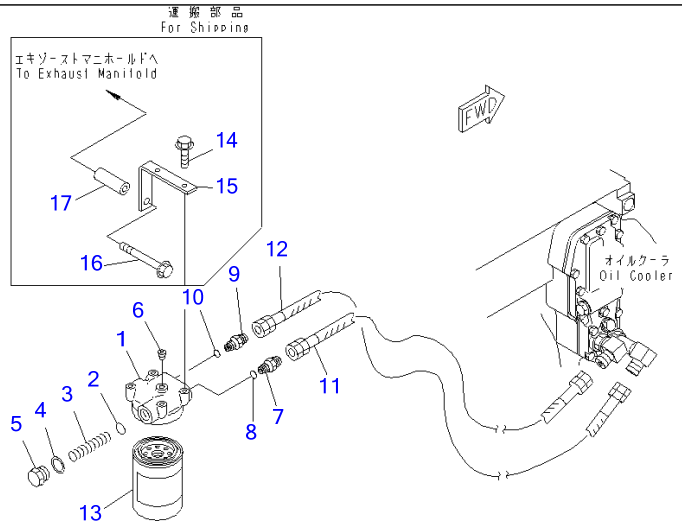

JY035552

Ref A311P-01A1 **Page 030530**

SAA6D102E-2D-8 S/N 26274903-UP
OIL FILTER AND PIPING(#26282900-)

Item	Part No.	Part Name	Qty	Serial No.
	6731-51-5203	HEAD ASS'Y	1	26490896-
	☐6731-51-5202	HEAD ASS'Y	1	26477414-26490895
	☐6731-51-5201	HEAD ASS'Y	1	26282900-26477413
1	6731-51-5211	・HEAD	1	26282900-26477413
2	6162-53-5450	・PACKING (K2)	1	26282900-26477413
3	600-211-1870	・SPRING	1	26282900-26477413
4	6162-53-5430	・PACKING (K2)	1	26282900-26477413
5	6162-53-5420	・CAP	1	26282900-26477413
6	07043-A0108	・PLUG	1	26282900-26477413
7	6731-51-5260	NIPPLE	1	26282900-
8	6731-51-5290	・O-RING (K2)	1	26282900-
9	6738-51-5260	NIPPLE	1	26282900-
10	6731-51-5290	・O-RING (K2)	1	26282900-
11	6731-51-9930	HOSE	1	26282900-
12	6738-51-9820	HOSE	1	26282900-
13	6736-51-5142	CARTRIDGE	1	26302322-
	6736-51-5141	CARTRIDGE	1	26282900-26302321
14	01435-60820	BOLT,(FOR SHIPPING)	2	26469807-
	☐6732-71-3220	BOLT,(FOR SHIPPING)	2	26282900-26469806
15	6738-51-9950	BRACKET,(FOR SHIPPING)	1	26282900-
16	01435-01095	BOLT,(FOR SHIPPING)	1	26282900-
17	6136-11-5120	SPACER,(FOR SHIPPING)	1	26282900-

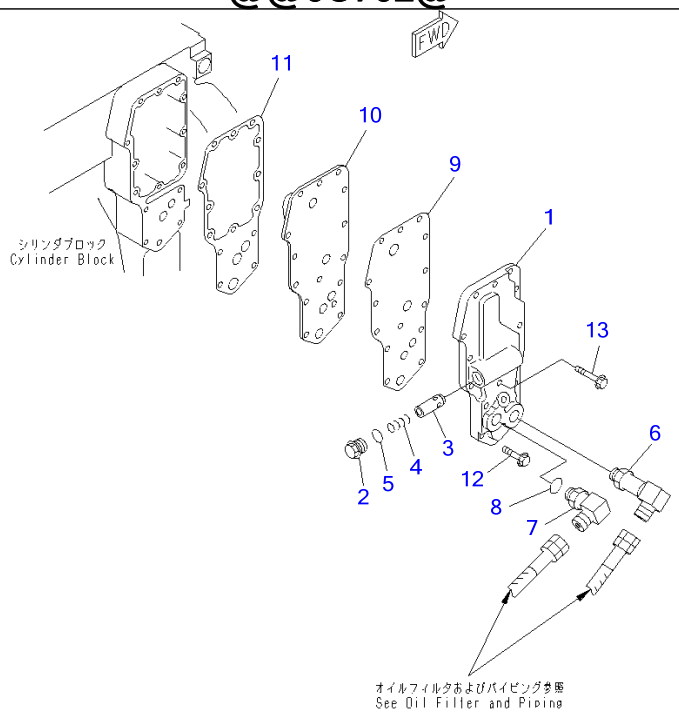

SAA6D102E-2D-8 S/N 26274903-UP

OIL COOLER COVER (WITHOUT COOLER)(#26282900-)

Item	Part No.	Part Name	Qty	Serial No.
1	6735-61-2220	COVER	1	26282900-
2	6735-61-2140	PLUG	1	26282900-
3	6735-61-2160	PLUNGER	1	26282900-
4	6735-61-2190	SPRING	1	26282900-
5	6732-51-4420	O-RING (K2)	1	26282900-
6	6731-51-5250	ELBOW	1	26282900-
7	6738-51-5240	ELBOW	1	26282900-
8	6731-51-5290	▪ O-RING (K2)	1	26282900-
9	6732-51-4432	GASKET (K2)	1	26282900-
10	6735-62-2110	CORE	1	26477413-
	6735-61-2110	CORE	1	26282900-26477412
11	6732-61-2312	GASKET (K2)	1	26383636-
	□6732-61-2311	GASKET (K2)	1	26282900-26383635
12	01435-60835	BOLT	13	26479972-
	6732-61-6140	BOLT	13	26282900-26479971
13	6735-61-2120	BOLT	1	26282900-

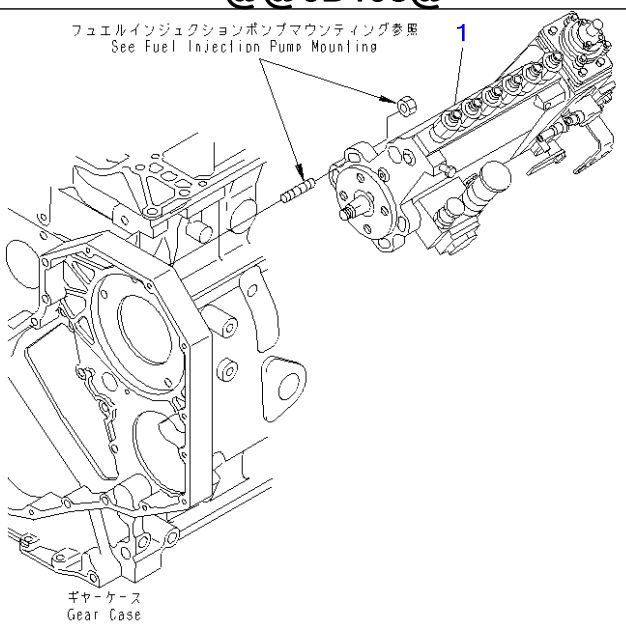

PJ6B408

Ref A401P-01G1 **Page 030550**

SAA6D102E-2D-8 S/N 26274903-UP
FUEL INJECTION PUMP(#26287716-)

Item	Part No.	Part Name	Qty	Serial No.
1	(6738-71-1210)	INJECTION PUMP ASS'Y,(SEE FIG.A401P-02G1)	1	26287716-

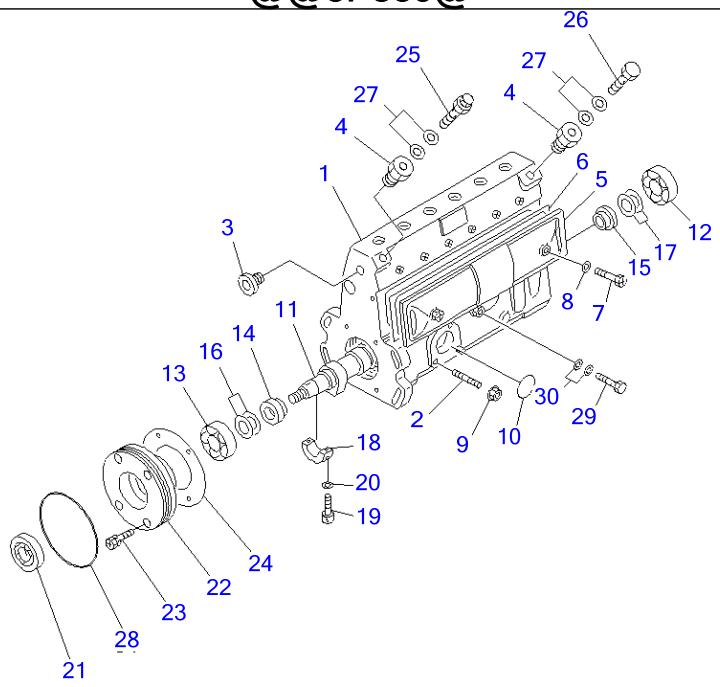

P63P839

Ref A401P-02G1 **Page 030560**

SAA6D102E-2D-8 S/N 26274903-UP
FUEL INJECTION PUMP (PUMP) (1/2) (INNER PARTS)(#26287716-)

Item	Part No.	Part Name	Qty	Serial No.
	6738-71-1210	INJECTION PUMP ASS'Y THIS ASSEMBLY CONSISTS OF ALL PARTS SHOWN IN FIGS.A401P-02G1 TO A401P-07G1.	1	26287716-
	DK101062-9310	・PUMP ASS'Y THIS ASSEMBLY CONSISTS OF ALL PARTS SHOWN IN FIGS.A401P-02G1 AND A401P-03G1.	1	26287716-
1	DK131073-9120	・・HOUSING	1	26287716-
2	DK029040-6020	・・・STUD	3	26287716-
3	DK134026-0000	・・・PLUG	1	26287716-
4	DK131002-2000	・・・ADAPTER	2	26287716-
5	DK131028-6020	・・COVER	1	26287716-
6	DK131011-0800	・・・GASKET	1	26287716-
7	DK131017-1000	・・SCREW	2	26287716-
8	DK029340-6020	・・GASKET	2	26287716-
9	DK139206-0400	・・NUT	3	26287716-
10	DK029633-1010	・・O-RING	1	26287716-
11	DK131371-4900	・・CAMSHAFT	1	26287716-
12	DK016630-2030	・・BEARING	AR	26287716-
	DK028201-7020	・・BEARING	AR	26287716-
13	DK016640-2030	・・BEARING	AR	26287716-
	DK028202-0020	・・BEARING	AR	26287716-
14	DK131302-1300	・・RING	1	26287716-
15	DK131302-1700	・・RING	1	26287716-
16	DK029312-0310	・・SHIM, 0.10MM	AR	26287716-
	DK029312-0320	・・SHIM, 0.12MM	AR	26287716-
	DK029312-0330	・・SHIM, 0.14MM	AR	26287716-
	DK029312-0340	・・SHIM, 0.16MM	AR	26287716-
	DK029312-0350	・・SHIM, 0.18MM	AR	26287716-

FUEL INJECTION PUMP (PUMP) (1/2) (INNER PARTS)(#26287716-)

Item	Part No.	Part Name	Qty	Serial No.
	DK029312-0360	・・SHIM, 0.3MM	AR	26287716-
	DK029312-0370	・・SHIM, 0.5MM	AR	26287716-
	DK029312-0380	・・SHIM, 1.0MM	AR	26287716-
17	DK029311-7010	・・SHIM, 0.1MM	AR	26287716-
	DK029311-7020	・・SHIM, 0.12MM	AR	26287716-
	DK029311-7030	・・SHIM, 0.14MM	AR	26287716-
	DK029311-7040	・・SHIM, 0.16MM	AR	26287716-
	DK029311-7050	・・SHIM, 0.18MM	AR	26287716-
	DK029311-7090	・・SHIM, 0.3MM	AR	26287716-
	DK029311-7060	・・SHIM, 0.5MM	AR	26287716-
	DK029311-7210	・・SHIM, 0.7MM	AR	26287716-
	DK029311-7070	・・SHIM, 1.0MM	AR	26287716-
	DK029311-7220	・・SHIM, 1.4MM	AR	26287716-
	DK139417-0000	・・SHIM, 2.40MM	AR	26287716-
18	DK131306-1000	・・BEARING,CENTER	1	26287716-
19	DK029050-5010	・・SCREW	2	26287716-
20	DK026505-0940	・・GASKET	2	26287716-
21	DK029622-0190	・・SEAL,OIL	1	26287716-
22	DK131330-6400	・・COVER	1	26287716-
23	DK029010-6810	・・BOLT	4	26287716-
24	DK131321-1900	・・GASKET	1	26287716-
25	DK131424-3420	・・VALVE	1	26287716-
26	DK131401-0020	・・BOLT,EYE	1	26287716-
27	DK029341-4130	・・GASKET	4	26287716-
28	DK029637-5030	・・O-RING	1	26287716-
29	DK029731-0120	・・BOLT,EYE	1	26287716-
30	DK029341-0110	・・GASKET	2	26287716-

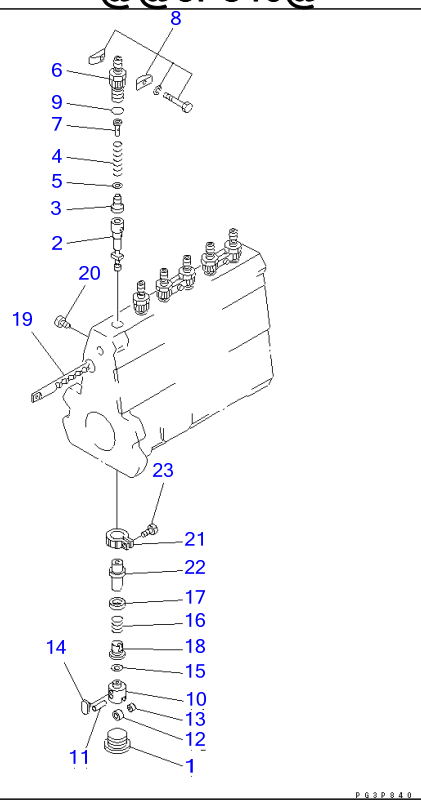

Ref A401P-03G1 **Page 030570**

SAA6D102E-2D-8 S/N 26274903-UP

FUEL INJECTION PUMP (PUMP) (2/2) (INNER PARTS)(#26287716-)

Item	Part No.	Part Name	Qty	Serial No.
	(6738-71-1210)	INJECTION PUMP ASS'Y THIS ASSEMBLY CONSISTS OF ALL PARTS SHOWN IN FIGS.A401P-02G1 TO A401P-07G1.	1	26287716-
	(DK101062-9310)	・PUMP ASS'Y THIS ASSEMBLY CONSISTS OF ALL PARTS SHOWN IN FIGS.A401P-02G1 AND A401P-03G1.	1	26287716-
1	DK131034-1401	・・PLUG	6	26287716-
2	DK131154-5620	・・PLUNGER ASS'Y	6	26287716-
3	DK131110-7720	・・VALVE,DELIVERY	6	26287716-
4	DK131112-5600	・・SPRING	6	26287716-
5	DK131115-1600	・・GASKET	6	26287716-
6	DK131116-8420	・・HOLDER	6	26287716-
7	DK131117-3100	・・STOPPER	6	26287716-
8	DK131122-0520	・・PLATE ASS'Y	3	26287716-
9	DK029632-0030	・・O-RING	6	26287716-
10	DK131200-2820	・・TAPPET ASS'Y	6	26287716-
11	DK131203-0800	・・・PIN	1	26287716-
12	DK131204-1000	・・・ROLLER	1	26287716-
13	DK131205-0500	・・・BUSHING	1	26287716-
14	DK131206-0200	・・・GUIDE	1	26287716-
15	DK029311-0580	・・SHIM, 0.2MM	AR	26287716-
	DK029311-0590	・・SHIM, 0.25MM	AR	26287716-
	DK029311-0020	・・SHIM, 0.30MM	AR	26287716-
	DK029311-0600	・・SHIM, 0.35MM	AR	26287716-
	DK029311-0030	・・SHIM, 0.40MM	AR	26287716-
	DK029311-0610	・・SHIM, 0.45MM	AR	26287716-
	DK029311-0040	・・SHIM, 0.50MM	AR	26287716-
	DK029311-0270	・・SHIM, 0.55MM	AR	26287716-

FUEL INJECTION PUMP (PUMP) (2/2) (INNER PARTS)(#26287716-)

Item	Part No.	Part Name	Qty	Serial No.
	DK029311-0050	・・SHIM, 0.6MM	AR	26287716-
	DK029311-0280	・・SHIM, 0.65MM	AR	26287716-
	DK029311-0060	・・SHIM, 0.7MM	AR	26287716-
	DK029311-0290	・・SHIM, 0.75MM	AR	26287716-
	DK029311-0070	・・SHIM, 0.8MM	AR	26287716-
	DK029311-0310	・・SHIM, 0.85MM	AR	26287716-
	DK029311-0080	・・SHIM, 0.9MM	AR	26287716-
	DK029311-0320	・・SHIM, 0.95MM	AR	26287716-
	DK029311-0090	・・SHIM, 1.0MM	AR	26287716-
	DK029311-0330	・・SHIM, 1.05MM	AR	26287716-
	DK029311-0110	・・SHIM, 1.1MM	AR	26287716-
	DK029311-0340	・・SHIM, 1.15MM	AR	26287716-
	DK029311-0120	・・SHIM, 1.2MM	AR	26287716-
	DK029311-0350	・・SHIM, 1.25MM	AR	26287716-
	DK029311-0130	・・SHIM, 1.3MM	AR	26287716-
	DK029311-0620	・・SHIM, 1.35MM	AR	26287716-
	DK029311-0140	・・SHIM, 1.4MM	AR	26287716-
	DK029311-0630	・・SHIM, 1.45MM	AR	26287716-
	DK029311-0490	・・SHIM, 1.5MM	AR	26287716-
	DK029311-0710	・・SHIM, 1.55MM	AR	26287716-
	DK029311-0500	・・SHIM, 1.6MM	AR	26287716-
16	DK131215-2500	・・SPRING	6	26287716-
17	DK131216-0100	・・SEAT,SPRING	6	26287716-
18	DK131217-0200	・・SEAT,SPRING	6	26287716-
19	DK131256-0900	・・RACK,CONTROL	1	26287716-
20	DK131226-0300	・・SCREW	1	26287716-
21	DK131240-0100	・・PINION	6	26287716-
22	DK131241-0100	・・SLEEVE,CONTROL	6	26287716-
23	DK131242-0100	・・SCREW	6	26287716-

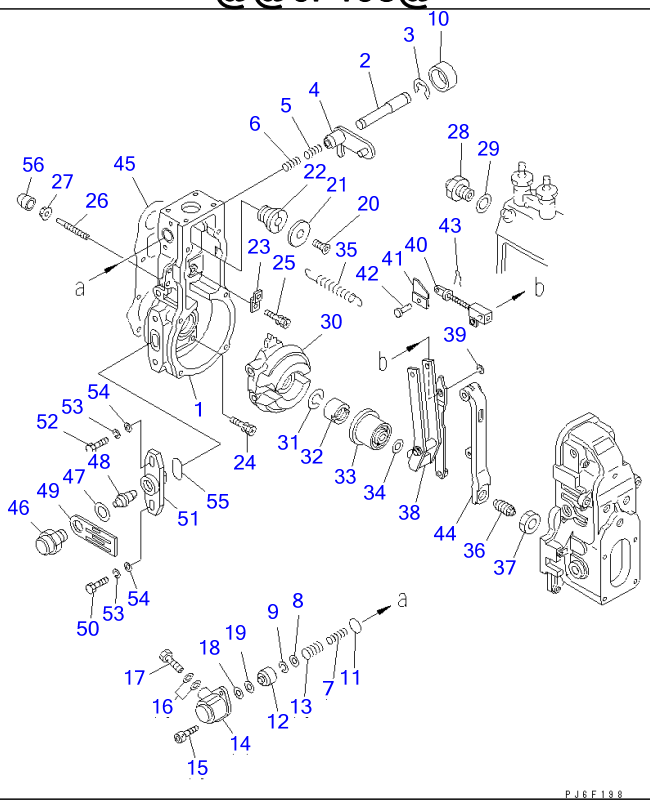

Ref A401P-04G1 **Page 030580**

SAA6D102E-2D-8 S/N 26274903-UP

FUEL INJECTION PUMP (GOVERNOR) (1/3) (INNER PARTS)(#26287716-)

Item	Part No.	Part Name	Qty	Serial No.
	(6738-71-1210)	INJECTION PUMP ASS'Y THIS ASSEMBLY CONSISTS OF ALL PARTS SHOWN IN FIGS.A401P-02G1 TO A401P-07G1.	1	26287716-
	DK105404-5890	・GOVERNOR ASS'Y THIS ASSEMBLY CONSISTS OF ALL PARTS SHOWN IN FIGS.A401P-04G1 TO A401P-06G1.	1	26287716-
	DK154620-0720	・・HOUSING ASS'Y	1	26287716-
1	DK154620-0020	・・・HOUSING	1	26287716-
2	DK154621-3701	・・・SHAFT	1	26287716-
3	DK016010-0740	・・・RING,SNAP	1	26287716-
4	DK154415-3320	・・・LEVER	1	26287716-
5	DK154415-3400	・・・SPRING	1	26287716-
6	DK154621-3800	・・・SPRING	1	26287716-
7	DK154621-4400	・・・SPRING	1	26287716-
8	DK139406-1300	・・・SHIM	1	26287716-
9	DK160100-0540	・・・RING,SNAP	1	26287716-
10	DK154621-3600	・・・CAP	1	26287716-
11	DK016520-2210	・・・O-RING	1	26287716-
12	DK154621-3500	・・・BUSHING	1	26287716-
13	DK154621-3900	・・・SPRING	1	26287716-
14	DK154620-1600	・・・COVER	1	26287716-
15	DK010235-1640	・・・BOLT,SOCKET	2	26287716-
16	DK026510-1440	・・・GASKET	1	26287716-
17	DK029111-0010	・・・PLUG	1	26287716-
18	DK139308-1500	・・・WASHER	1	26287716-
19	DK029300-7020	・・・WASHER	4	26287716-
20	DK154621-4300	・・BOLT	1	26287716-
21	DK154621-4100	・・WASHER	1	26287716-

FUEL INJECTION PUMP (GOVERNOR) (1/3) (INNER PARTS)(#26287716-)

Item	Part No.	Part Name	Qty	Serial No.
22	DK154620-7900	・・ADAPTER	1	26287716-
23	DK154375-9020	・・PLATE	1	26287716-
24	DK029010-6810	・・BOLT	5	26287716-
25	DK020106-1840	・・BOLT	1	26287716-
26	DK154013-4000	・・SCREW	26	26287716-
27	DK154011-4900	・・NUT,LOCK	1	26287716-
28	DK153020-5220	・・LIMITER	1	26287716-
29	DK026518-2240	・・GASKET	1	26287716-
30	DK154621-2520	・・FLYWEIGHT ASS'Y	1	26287716-
31	DK029321-2020	・・WASHER,SPRING	1	26287716-
32	DK029231-2030	・・NUT	1	26287716-
33	DK154123-2320	・・SLEEVE	1	26287716-
34	DK029311-0010	・・SHIM, 0.20MM	AR	26287716-
	DK029311-0180	・・SHIM, 0.30MM	AR	26287716-
	DK029311-0190	・・SHIM, 0.40MM	AR	26287716-
	DK139410-0000	・・SHIM, 0.50MM	AR	26287716-
	DK029311-0210	・・SHIM, 1.00MM	AR	26287716-
	DK139410-0100	・・SHIM, 1.50MM	AR	26287716-
	DK139410-3000	・・SHIM, 2.00MM	AR	26287716-
	DK139410-3100	・・SHIM, 3.00MM	AR	26287716-
	DK139410-3200	・・SHIM, 4.00MM	AR	26287716-
35	DK154154-5200	・・SPRING	1	26287716-
36	DK154177-2920	・・CAPSULE,SPRING	1	26287716-
37	DK029201-6010	・・NUT	1	26287716-
38	DK154218-7320	・・GUIDE LEVER ASS'Y	1	26287716-
39	DK016010-0540	・・RING,SNAP	1	26287716-
40	DK154235-4720	・・LINK	1	26287716-
41	DK154232-3200	・・CONNECTOR	1	26287716-
42	DK154222-5800	・・PIN	1	26287716-
43	DK155402-3800	・・PIN	1	26287716-
44	DK154239-5120	・・TENSION PULLEY ASS'Y	1	26287716-
45	DK154390-0000	・・GASKET	1	26287716-
46	DK154621-3000	・・PLUG	1	26287716-
47	DK026518-2240	・・GASKET	1	26287716-
48	DK154620-8800	・・PIN	1	26287716-
49	DK154620-8901	・・PLATE	1	26287716-
50	DK010038-1840	・・BOLT	1	26287716-
51	DK154620-1500	・・FLANGE	1	26287716-
52	DK154620-4700	・・BOLT	1	26287716-
53	DK014110-8440	・・WASHER,SPRING	2	26287716-
54	DK014010-8140	・・WASHER	2	26287716-
55	DK154621-3200	・・O-RING	1	26287716-
56	DK154062-3520	・・CAP	1	26287716-

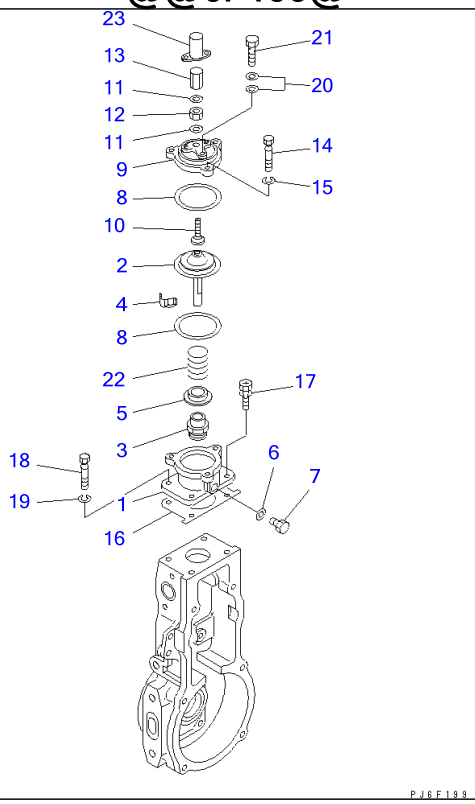

Ref A401P-05G1 **Page 030590**

SAA6D102E-2D-8 S/N 26274903-UP

FUEL INJECTION PUMP (GOVERNOR) (2/3) (INNER PARTS)(#26287716-)

Item	Part No.	Part Name	Qty	Serial No.
	(6738-71-1210)	INJECTION PUMP ASS'Y THIS ASSEMBLY CONSISTS OF ALL PARTS SHOWN IN FIGS.A401P-02G1 TO A401P-07G1.	1	26287716-
	(DK105404-5890)	・GOVERNOR ASS'Y THIS ASSEMBLY CONSISTS OF ALL PARTS SHOWN IN FIGS.A401P-04G1 TO A401P-06G1.	1	26287716-
	DK154423-0420	・・BOOST COMPENSATOR	1	26287716-
1	DK154422-7101	・・・HOUSING	1	26287716-
2	DK154400-9520	・・・DIAGRAM	1	26287716-
3	DK154413-3600	・・・BUSHING	1	26287716-
4	DK146711-0000	・・・PLATE	1	26287716-
5	DK146716-0000	・・・NUT	1	26287716-
6	DK029331-2130	・・・GASKET	1	26287716-
7	DK029111-2090	・・・PLUG	1	26287716-
8	DK154413-2600	・・・GASKET	2	26287716-
9	DK154404-5600	・・・COVER	1	26287716-
10	DK154415-1800	・・・SCREW	1	26287716-
11	DK026506-1040	・・・GASKET	2	26287716-
12	DK013030-6040	・・・NUT	1	26287716-
13	DK154035-1600	・・・NUT	1	26287716-
14	DK154062-2900	・・・BOLT	3	26287716-
15	DK014110-6440	・・・WASHER,SPRING	3	26287716-
16	DK154620-3200	・・・GASKET	1	26287716-
17	DK020106-1640	・・・BOLT	3	26287716-
18	DK154062-5001	・・・BOLT	1	26287716-
19	DK014110-6440	・・・WASHER,SPRING	1	26287716-
20	DK029341-0110	・・・GASKET	2	26287716-
21	DK029731-0120	・・・BOLT,EYE	1	26287716-

FUEL INJECTION PUMP (GOVERNOR) (2/3) (INNER PARTS)(#26287716-)

Item	Part No.	Part Name	Qty	Serial No.
22	DK154403-7200	・・SPRING	1	26287716-
23	DK154062-2720	・・CAP	1	26287716-

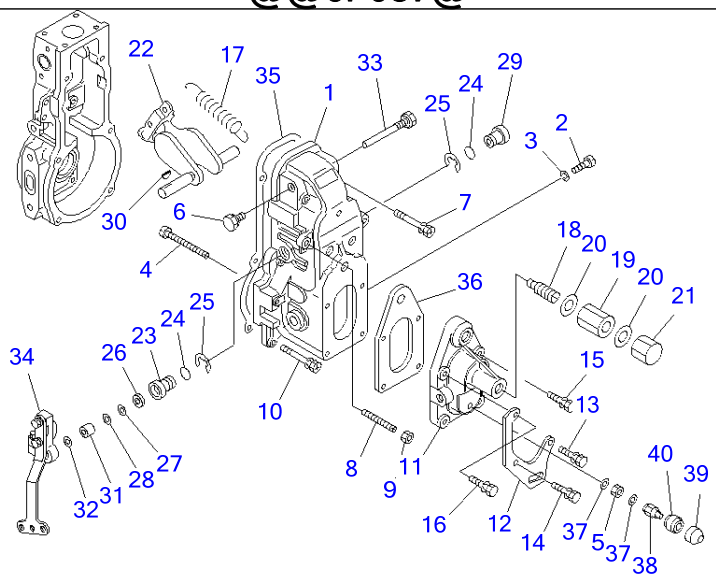

PJ6F087

Ref A401P-06G1 **Page 030600**

SAA6D102E-2D-8 S/N 26274903-UP

FUEL INJECTION PUMP (GOVERNOR) (3/3) (INNER PARTS)(#26287716-)

Item	Part No.	Part Name	Qty	Serial No.
	(6738-71-1210)	INJECTION PUMP ASS'Y THIS ASSEMBLY CONSISTS OF ALL PARTS SHOWN IN FIGS.A401P-02G1 TO A401P-07G1.	1	26287716-
	(DK105404-5890)	・GOVERNOR ASS'Y THIS ASSEMBLY CONSISTS OF ALL PARTS SHOWN IN FIGS.A401P-04G1 TO A401P-06G1.	1	26287716-
1	DK154022-8720	・・COVER	1	26287716-
2	DK154222-2700	・・SCREW	1	26287716-
3	DK014110-3440	・・・WASHER,SPRING	1	26287716-
4	DK154031-4700	・・SCREW	1	26287716-
5	DK139208-0400	・・NUT	1	26287716-
6	DK154036-0300	・・PLUG	1	26287716-
7	DK139006-7100	・・BOLT	2	26287716-
8	DK154010-0200	・・SCREW	1	26287716-
9	DK154011-4900	・・NUT	1	26287716-
10	DK020106-3840	・・BOLT	4	26287716-
11	DK154064-4200	・・COVER	1	26287716-
12	DK154376-3000	・・BRACKET	1	26287716-
13	DK020006-2040	・・BOLT	1	26287716-
14	DK020006-2040	・・BOLT	1	26287716-
15	DK020006-1640	・・BOLT	1	26287716-
16	DK020006-2040	・・BOLT	1	26287716-
17	DK154151-1300	・・SPRING,GOVERNOR	1	26287716-
18	DK154158-5820	・・CAPSULE,SPRING	1	26287716-
19	DK029201-2290	・・NUT	1	26287716-
20	DK026512-1540	・・GASKET	2	26287716-
21	DK154159-1200	・・NUT,CAP	1	26287716-
22	DK154200-7020	・・LEVER ASS'Y,SWIVEL	1	26287716-

FUEL INJECTION PUMP (GOVERNOR) (3/3) (INNER PARTS)(#26287716-)

Item	Part No.	Part Name	Qty	Serial No.
23	DK154204-4300	・・BUSHING	1	26287716-
24	DK029631-8020	・・O-RING	2	26287716-
25	DK016010-1640	・・RING,SNAP	2	26287716-
26	DK139611-0000	・・SEAL,OIL	1	26287716-
27	DK139411-0000	・・SHIM, 0.40MM	1	26287716-
28	DK029311-1070	・・SHIM, 0.50MM	AR	26287716-
29	DK154204-4400	・・BUSHING	1	26287716-
30	DK025803-1310	・・KEY, 13MM,WOODRUFF	1	26287716-
31	DK154206-2800	・・COLLAR	1	26287716-
32	DK154206-0200	・・WASHER, 1.0MM	AR	26287716-
33	DK154237-1100	・・PIN	1	26287716-
34	DK154395-8620	・・LEVER	1	26287716-
35	DK154390-0300	・・GASKET	1	26287716-
36	DK154390-5000	・・GASKET	1	26287716-
37	DK026508-1140	・・GASKET	2	26287716-
38	DK154035-2900	・・NUT,CAP	1	26287716-
39	DK154062-4020	・・CAP	1	26287716-
40	DK154062-3900	・・ADAPTER	1	26287716-

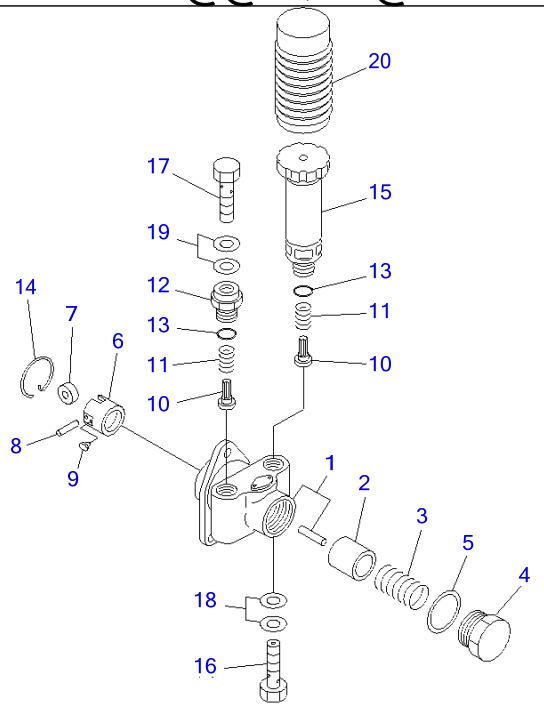

Ref A401P-07G1 **Page 030610**

SAA6D102E-2D-8 S/N 26274903-UP
FUEL INJECTION PUMP (FEED PUMP) (INNER PARTS)(#26287716-)

Item	Part No.	Part Name	Qty	Serial No.
	(6738-71-1210)	INJECTION PUMP ASS'Y THIS ASSEMBLY CONSISTS OF ALL PARTS SHOWN IN FIGS.A401P-02G1 TO A401P-07G1.	1	26287716-
	DK105220-5960	・FEED PUMP ASS'Y	1	26287716-
1	DK152003-1020	・・HOUSING	1	26287716-
2	DK152100-1120	・・PISTON	1	26287716-
3	DK152102-1600	・・SPRING	1	26287716-
4	DK152105-1600	・・PLUG	1	26287716-
5	DK029332-6030	・・GASKET	1	26287716-
6	DK152111-2820	・・TAPPET ASS'Y	1	26287716-
7	DK152112-0100	・・・ROLLER	1	26287716-
8	DK152113-0700	・・・PIN	1	26287716-
9	DK152114-0400	・・・GUIDE	2	26287716-
10	DK152115-0500	・・VALVE	2	26287716-
11	DK152116-0200	・・SPRING	2	26287716-
12	DK152118-0900	・・ADAPTER	1	26287716-
13	DK029631-6060	・・O-RING	2	26287716-
14	DK152121-0200	・・RING,SNAP	1	26287716-
15	DK152200-5420	・・PUMP,PRIMING	1	26287716-
16	DK152300-5920	・・BOLT,JOINT	1	26287716-
17	DK029731-4680	・・BOLT,JOINT	1	26287716-
18	DK029341-4130	・・GASKET	2	26287716-
19	DK029341-4130	・・GASKET	2	26287716-
20	DK152320-0100	・・COVER	1	26287716-

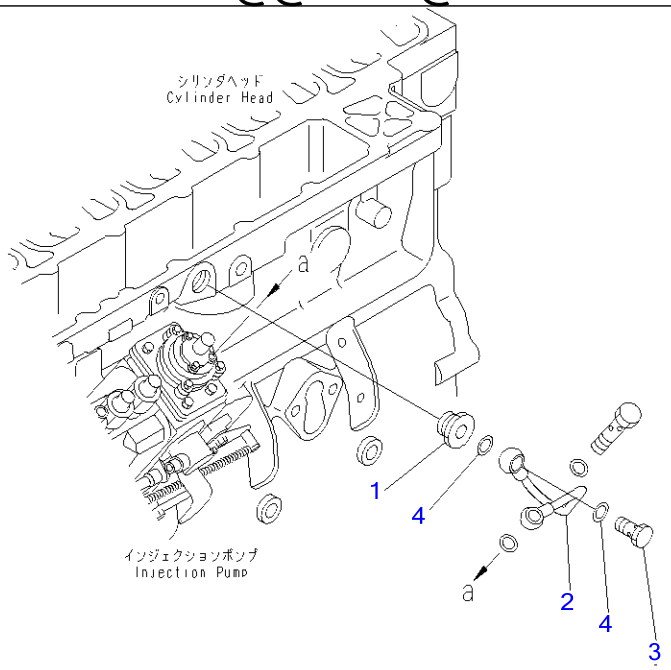

PJ6B405

Ref A401R-01B2Z **Page 030620**

SAA6D102E-2D-8 S/N 26274903-UP
BOOST TUBE(#26305480-26315463)

Item	Part No.	Part Name	Qty	Serial No.
1	6735-71-5460	NIPPLE	1	26305480-26315463
2	6738-71-5450	TUBE	1	26305480-26315463
3	6732-71-6510	BOLT,JOINT	1	26305480-26315463
4	07005-01212	SEAL, WASHER (K1)	2	26305480-26315463

SAA6D102E-2D-8 S/N 26274903-UP
00003059

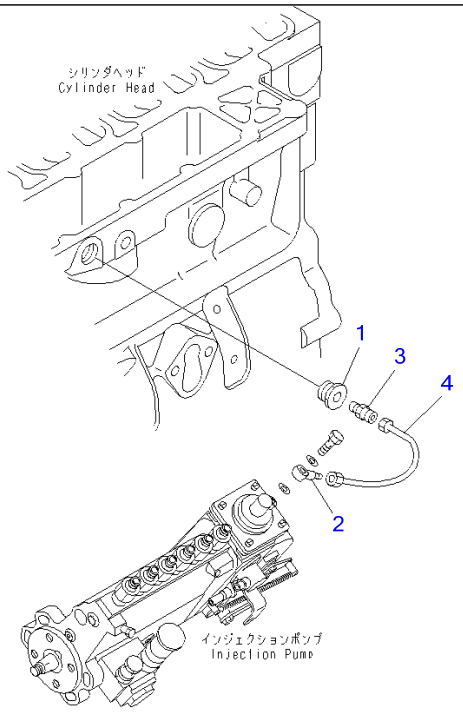

00003059

Ref A401R-01B5 **Page 030630**

SAA6D102E-2D-8 S/N 26274903-UP
BOOST TUBE(#26315464-)

Item	Part No.	Part Name	Qty	Serial No.
1	6733-81-8910	PLUG	1	26315464-
2	6738-81-8220	JOINT	1	26315464-
3	6736-11-4530	CONNECTOR	1	26315464-
4	6742-11-4360	TUBE	1	26315464-

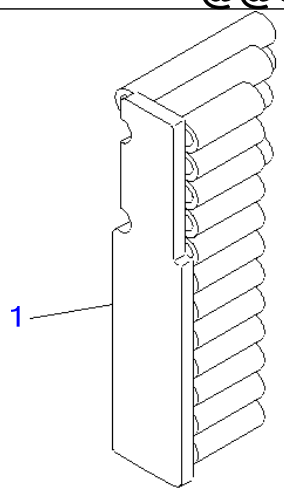

PJ6B420

Ref A401V-01A0Z **Page 030640**

SAA6D102E-2D-8 S/N 26274903-UP

NOISE PANEL INJECTION PUMP(#26274903-26325461)

Item	Part No.	Part Name	Qty	Serial No.
1	6738-21-6710	ISOLATOR	1	26274903-26325461

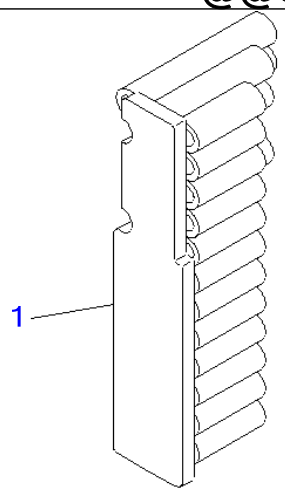

PJ6B420

Ref A401V-01A1 **Page 030650**

SAA6D102E-2D-8 S/N 26274903-UP

NOISE PANEL INJECTION PUMP(#26325462-)

Item	Part No.	Part Name	Qty	Serial No.
1	6738-21-6711	ISOLATOR	1	26325462-

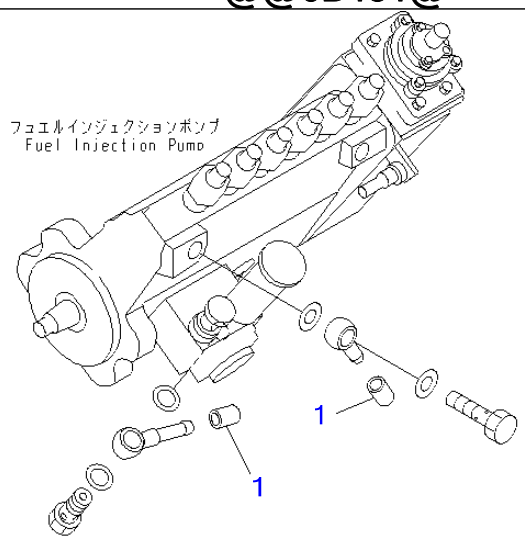

PJ6B431

Ref A4010-01B0Z **Page 030660**

SAA6D102E-2D-8 S/N 26274903-UP

FUEL INLET AND OUTLET JOINT CAP

Item	Part No.	Part Name	Qty	Serial No.
1	6732-71-5740	CAP,(FOR SHIPPING)	2	26274903-

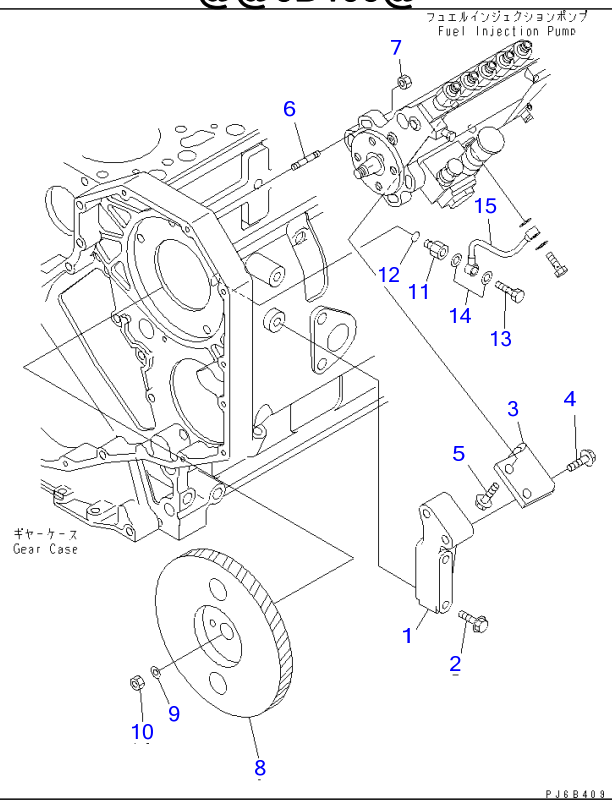

Ref A408P-01A7Z **Page 030670**

SAA6D102E-2D-8 S/N 26274903-UP

FUEL INJECTION PUMP MOUNTING(#26274903-26325461)

Item	Part No.	Part Name	Qty	Serial No.
1	6738-71-3620	BRACKET	1	26274903-26325461
2	6732-61-3110	BOLT	2	26274903-26325461
3	6738-71-3610	BRACKET	1	26274903-26325461
4	6735-71-3220	BOLT	2	26274903-26325461
5	6734-71-5610	BOLT	2	26274903-26325461
6	6738-71-3120	STUD	4	26287632-26325461
	□6735-71-3120	STUD	4	26274903-26287631
7	6736-81-6170	NUT	4	26274903-26325461
8	6738-71-3100	GEAR ASS'Y	1	26274903-26325461
9	6130-32-1361	WASHER	1	26274903-26325461
10	01582-01411	NUT	1	26274903-26325461
11	6732-71-5450	NIPPLE	1	26274903-26325461
12	6215-81-9710	O-RING	1	26274903-26325461
13	07206-30710	BOLT,JOINT	1	26274903-26325461
14	07005-01012	SEAL, WASHER (K2)	2	26274903-26325461
15	6735-71-5411	TUBE,OIL	1	26274903-26325461

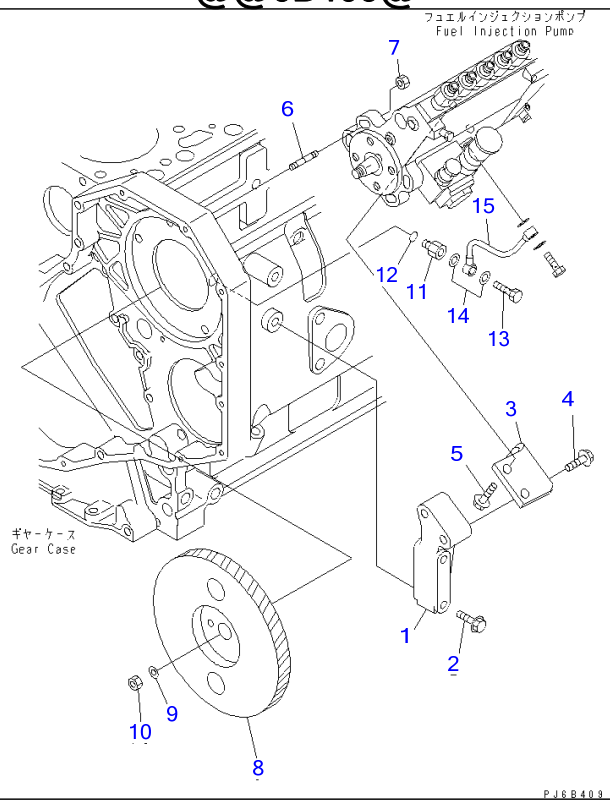

Ref A408P-01B4 **Page 030680**

SAA6D102E-2D-8 S/N 26274903-UP

FUEL INJECTION PUMP MOUNTING(#26325462-)

Item	Part No.	Part Name	Qty	Serial No.
1	6738-71-3620	BRACKET	1	26325462-
2	6732-61-3110	BOLT	2	26325462-
3	6738-71-3610	BRACKET	1	26325462-
4	01435-61025	BOLT	2	26469807-
	□6735-71-3220	BOLT	2	26325462-26469806
5	6734-71-5610	BOLT	2	26325462-
6	6738-71-3120	STUD	4	26325462-
7	6736-81-6170	NUT	4	26325462-
8	6737-71-3110	GEAR	1	26325462-
9	6130-32-1361	WASHER	1	26325462-
10	01582-01411	NUT	1	26325462-
11	6732-71-5450	NIPPLE	1	26325462-
12	6215-81-9710	O-RING	1	26325462-
13	07206-30710	BOLT,JOINT	1	26325462-
14	07005-01012	SEAL, WASHER (K2)	2	26325462-
15	6735-71-5411	TUBE,OIL	1	26325462-

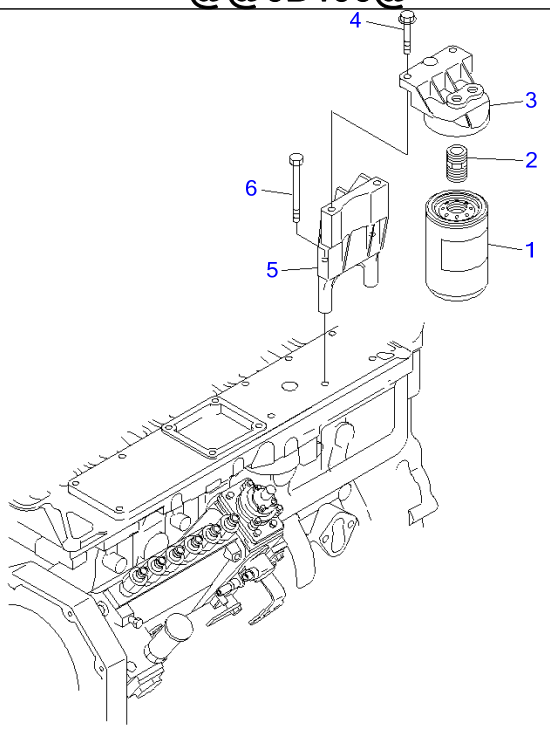

Ref A411P-01A4 **Page 030690**

SAA6D102E-2D-8 S/N 26274903-UP
FUEL FILTER(#26282900-)

Item	Part No.	Part Name	Qty	Serial No.
1	6732-71-6112	CARTRIDGE,FUEL	1	26307174-
	☐6732-71-6111	CARTRIDGE,FUEL	1	26282900-26307173
2	6732-71-6340	ADAPTER	1	26319085-
	☐6732-71-6650	ADAPTER	1	26282900-26319084
3	6732-71-6220	HEAD	1	26282900-
4	01435-60825	BOLT	2	26469807-
	☐6732-21-5160	BOLT	2	26282900-26469806
5	6738-71-6720	BRACKET	1	26282900-
6	01436-60800	BOLT	3	26475644-
	6742-01-4460	BOLT	3	26282900-26475643

SAA6D102E-2D-8 S/N 26274903-UP

00040074

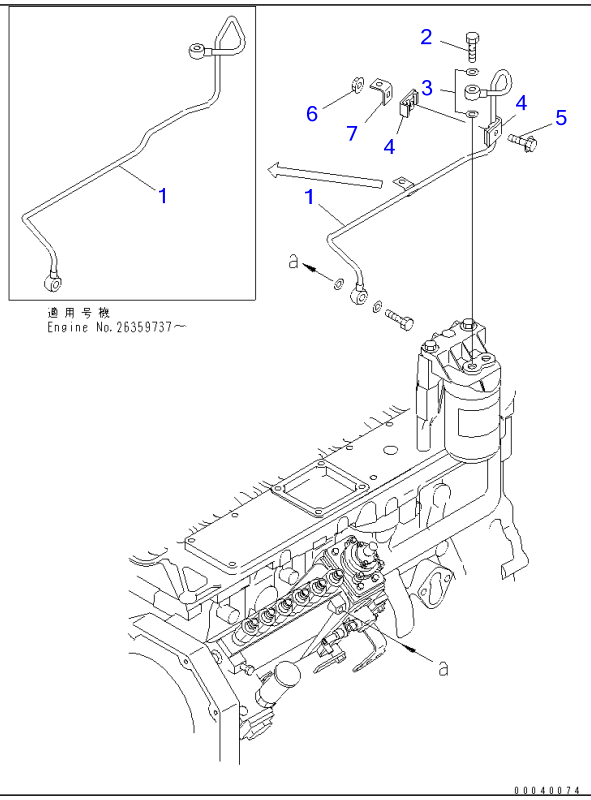

Ref A411R-01A6 **Page 030700**

SAA6D102E-2D-8 S/N 26274903-UP

FUEL FILTER PIPING(#26282900-)

Item	Part No.	Part Name	Qty	Serial No.
1	6738-71-5690	TUBE	1	26359737-
	□6738-71-5640	TUBE	1	26282900-26359736
2	6732-71-6510	BOLT,JOINT	1	26282900-
3	07005-01212	SEAL, WASHER (K1)	2	26282900-
4	6162-75-5820	CLAMP	2	26282900-
5	6742-01-2630	BOLT	1	26282900-
6	6742-01-2660	NUT	1	26282900-
7	6211-21-5490	BRACKET	1	26282900-

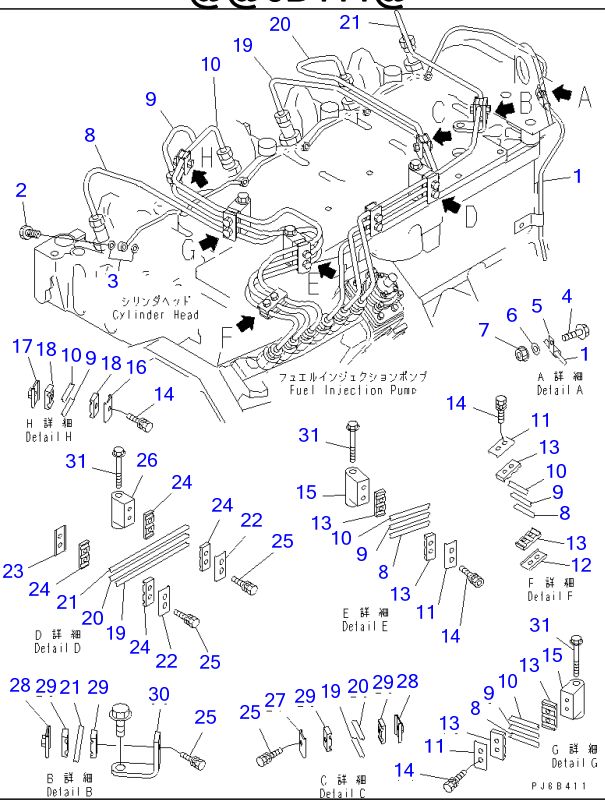

Ref A411S-01A9 Page 030710

FUEL PIPING

Item	Part No.	Part Name	Qty	Serial No.
1	6738-71-5520	MANIFOLD	1	26274903-
2	6732-71-6240	BOLT,JOINT	6	26274903-
3	6732-71-6260	GASKET (K1)	12	26274903-
4	01435-60825	BOLT	1	26479680-
	6732-21-5160	BOLT	1	26274903-26479679
5	04434-50508	CLIP	1	26274903-
6	01643-30823	WASHER	1	26274903-
7	6732-71-3210	NUT	1	26274903-
8	6738-71-5110	TUBE,NO.1	1	26274903-
9	6738-71-5120	TUBE,NO.2	1	26274903-
10	6738-71-5130	TUBE,NO.3	1	26274903-
11	6734-71-5710	BRACKET	3	26274903-
12	6735-71-5830	BRACKET	1	26274903-
13	6734-71-5720	ISOLATOR	6	26274903-
14	6734-71-5520	BOLT	7	26274903-
15	6734-71-5741	BRACKET	2	26274903-
16	6735-71-5820	BRACKET	1	26274903-
17	6735-71-5840	BRACKET	1	26274903-
18	6735-71-5860	ISOLATOR	2	26274903-
19	6735-71-5643	TUBE,NO.4	1	26274903-
20	6735-71-5653	TUBE,NO.5	1	26274903-
21	6735-71-5663	TUBE,NO.6	1	26274903-
22	6734-71-5710	BRACKET	2	26274903-
23	6735-71-5830	BRACKET	1	26274903-
24	6734-71-5720	ISOLATOR	4	26274903-
25	6734-71-5520	BOLT	6	26274903-
26	6734-71-5741	BRACKET	1	26274903-
27	6735-71-5820	BRACKET	1	26274903-

FUEL PIPING

Item	Part No.	Part Name	Qty	Serial No.
28	6735-71-5840	BRACKET	2	26274903-
29	6735-71-5860	ISOLATOR	4	26274903-
30	6732-71-5760	BRACKET	1	26274903-
31	6734-11-5210	BOLT	3	26274903-

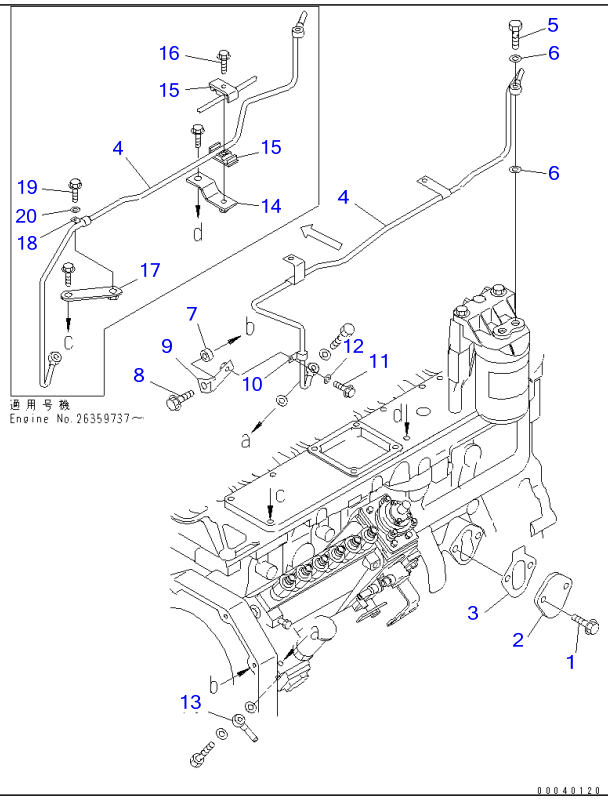

Ref A417P-01A8 **Page 030720**

SAA6D102E-2D-8 S/N 26274903-UP

CYLINDER BLOCK BLIND COVER AND PIPING(#26282900-)

Item	Part No.	Part Name	Qty	Serial No.
1	01435-60820	BOLT	2	26469807-
	☐6732-71-3220	BOLT	2	26282900-26469806
2	6736-71-5811	PLATE	1	26282900-
3	6735-61-6411	GASKET (K2)	1	26282900-
4	6738-71-5671	TUBE	1	26359737-
	☐6738-71-5630	TUBE	1	26282900-26359736
5	6732-71-6510	BOLT,JOINT	1	26282900-
6	07005-01212	SEAL, WASHER (K1)	2	26282900-
7	6354-81-6310	SPACER	1	26282900-
8	6732-21-6630	BOLT	1	26282900-
9	6738-71-5590	BRACKET	1	26311571-
	☐6736-71-5530	BRACKET	1	26282900-26311570
10	6736-71-5540	CLAMP	1	26282900-
11	01435-60816	BOLT	1	26479680-
	6732-21-3120	BOLT	1	26359737-26476979
	☐6731-71-6270	SCREW	1	26282900-26359736
12	154-61-16570	WASHER	1	26359737-
13	6141-71-1710	JOINT	1	26282900-
14	6735-71-6470	BRACKET	1	26359737-
15	6162-75-5820	CLAMP	2	26359737-
16	6742-01-2630	BOLT	1	26359737-
17	6735-71-6460	BRACKET	1	26359737-
18	6736-71-5540	CLAMP	1	26359737-
19	01435-60816	BOLT	1	26469807-
	☐6732-21-3120	BOLT	1	26359737-26469806
20	154-61-16570	WASHER	1	26359737-

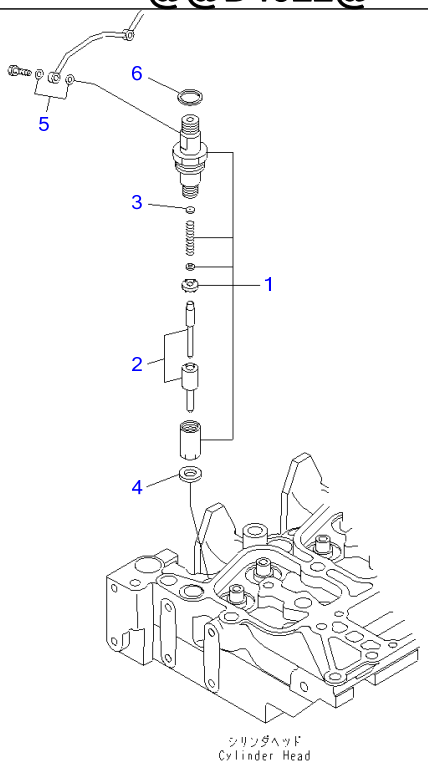

Ref A4219-01A6 **Page 030730**

SAA6D102E-2D-8 S/N 26274903-UP
INJECTION NOZZLE

Item	Part No.	Part Name	Qty	Serial No.
	6738-11-3090	KIT,NOZZLE HOLDER	6	26274903-
1	6738-11-3100	・NOZZLE HOLDER ASS'Y	1	26274903-
2	6738-11-3120	・・NOZZLE	1	26274903-
3	6734-11-3610	・・SHIM, 1.00MM	1	26274903-
	6734-11-3620	・・SHIM, 1.04MM	1	26274903-
	6734-11-3630	・・SHIM, 1.08MM	1	26274903-
	6734-11-3640	・・SHIM, 1.10MM	1	26274903-
	6734-11-3650	・・SHIM, 1.14MM	1	26274903-
	6734-11-3660	・・SHIM, 1.18MM	1	26274903-
	6734-11-3670	・・SHIM, 1.20MM	1	26274903-
	6734-11-3680	・・SHIM, 1.24MM	1	26274903-
	6734-11-3690	・・SHIM, 1.28MM	1	26274903-
	6734-11-3710	・・SHIM, 1.30MM	1	26274903-
	6734-11-3720	・・SHIM, 1.34MM	1	26274903-
	6734-11-3730	・・SHIM, 1.38MM	1	26274903-
	6734-11-3740	・・SHIM, 1.40MM	1	26274903-
	6734-11-3750	・・SHIM, 1.44MM	1	26274903-
	6734-11-3760	・・SHIM, 1.48MM	1	26274903-
	6734-11-3770	・・SHIM, 1.50MM	1	26274903-
	6734-11-3780	・・SHIM, 1.54MM	1	26274903-
	6734-11-3790	・・SHIM, 1.58MM	1	26274903-
	6734-11-3810	・・SHIM, 1.60MM	1	26274903-
	6734-11-3820	・・SHIM, 1.64MM	1	26274903-
	6734-11-3830	・・SHIM, 1.68MM	1	26274903-
	6734-11-3840	・・SHIM, 1.70MM	1	26274903-
	6734-11-3850	・・SHIM, 1.74MM	1	26274903-
	6734-11-3860	・・SHIM, 1.78MM	1	26274903-
	6734-11-3870	・・SHIM, 1.80MM	1	26274903-

INJECTION NOZZLE

Item	Part No.	Part Name	Qty	Serial No.
	6734-11-3880	・・SHIM, 1.84MM	1	26274903-
	6734-11-3890	・・SHIM, 1.88MM	1	26274903-
	6734-11-3910	・・SHIM, 1.90MM	1	26274903-
	6734-11-3920	・・SHIM, 1.94MM	1	26274903-
	6734-11-3930	・・SHIM, 1.98MM	1	26274903-
4	6736-11-3430	・・GASKET (K1)	1	26274903-
5	6732-71-6260	・GASKET (K1)	2	26274903-
6	6732-11-3850	・SEAL (K1)	1	26274903-

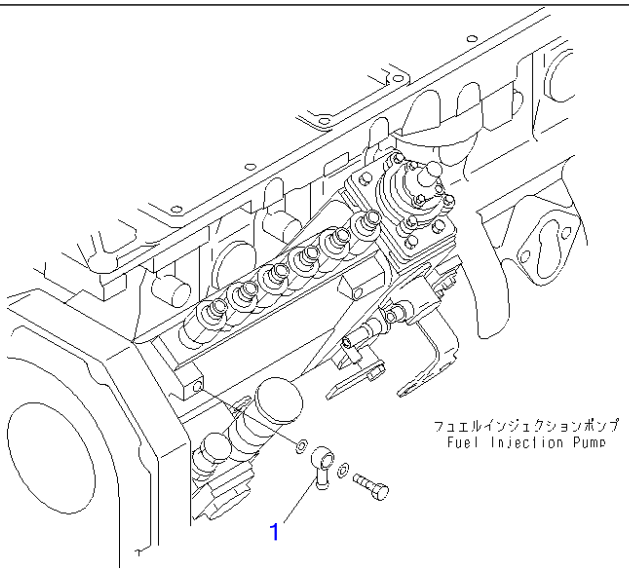

00012111

Ref A423V-01A0 **Page 030740**

SAA6D102E-2D-8 S/N 26274903-UP
FUEL JOINT

Item	Part No.	Part Name	Qty	Serial No.
1	6144-71-5750	JOINT	1	26274903-

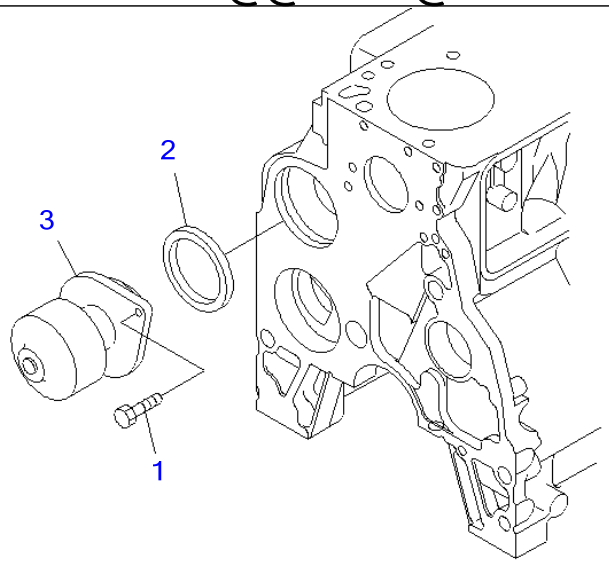

PMD0854

Ref A501P-01A2 **Page 030750**

SAA6D102E-2D-8 S/N 26274903-UP
WATER PUMP(#26300902-)

Item	Part No.	Part Name	Qty	Serial No.
1	01435-00825	BOLT	2	26485392-
	☐6732-41-1260	BOLT	2	26300902-26485391
2	6736-61-1520	SEAL (K2)	1	26300902-
3	6735-61-1101	WATER PUMP ASS'Y	1	26483819-
	☐6735-61-1501	WATER PUMP ASS'Y	1	26316018-26483818
	☐6735-61-1502	WATER PUMP ASS'Y	1	26300902-26316017

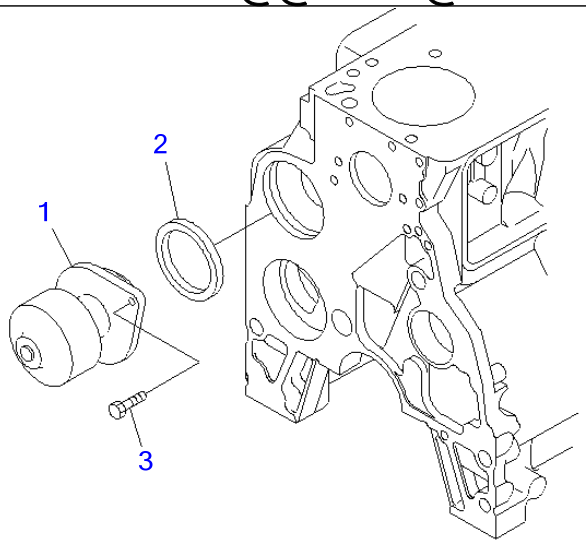

PJ6B451

Ref A501P-01A3 **Page 030760**

SAA6D102E-2D-8 S/N 26274903-UP
WATER PUMP (FOR EXCEPT JAPAN)(#26302312-)

Item	Part No.	Part Name	Qty	Serial No.
1	6754-61-1102	WATER PUMP ASS'Y	1	26498581-
	☐6754-61-1101	WATER PUMP ASS'Y	1	26482605-26498580
	☐6735-61-1101	WATER PUMP ASS'Y	1	26323434-26482604
	☐6735-61-1102	WATER PUMP ASS'Y	1	26302312-26323433
2	6736-61-1520	SEAL (K2)	1	26302312-
3	01435-00825	BOLT	2	26484886-
	☐6732-41-1260	BOLT	2	26302312-26484885

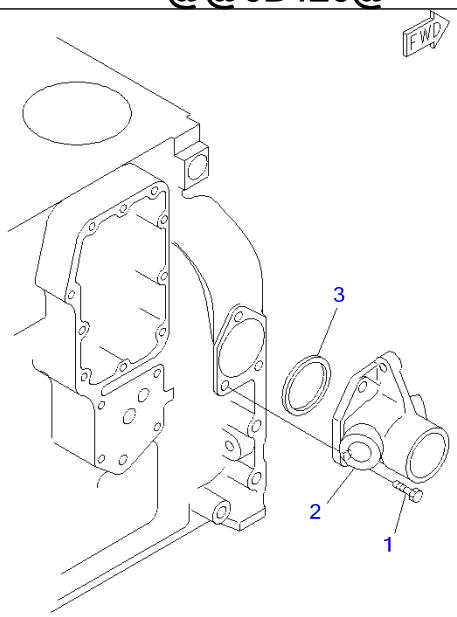

PJ6B426

Ref A501R-01A3 **Page 030770**

SAA6D102E-2D-8 S/N 26274903-UP
WATER CONNECTOR

Item	Part No.	Part Name	Qty	Serial No.
1	01435-61025	BOLT	3	26479972-
	6735-71-3220	BOLT	3	26274903-26479971
2	6734-61-6110	CONNECTOR	1	26274903-
3	6732-61-6131	SEAL	1	26441558-
	6732-61-6130	SEAL (K2)	1	26274903-26441557

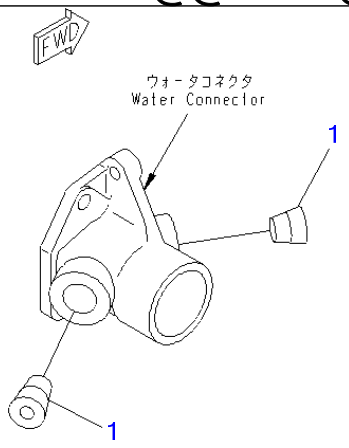

PJ6B427

Ref A501S-01A0 **Page 030780**

SAA6D102E-2D-8 S/N 26274903-UP
WATER CONNECTOR PLUG

Item	Part No.	Part Name	Qty	Serial No.
1	6732-21-1981	PLUG	2	26473555-
	☐6732-21-1980	PLUG	2	26328998-26473554
	☐6732-11-1910	PLUG	2	26274903-26328997

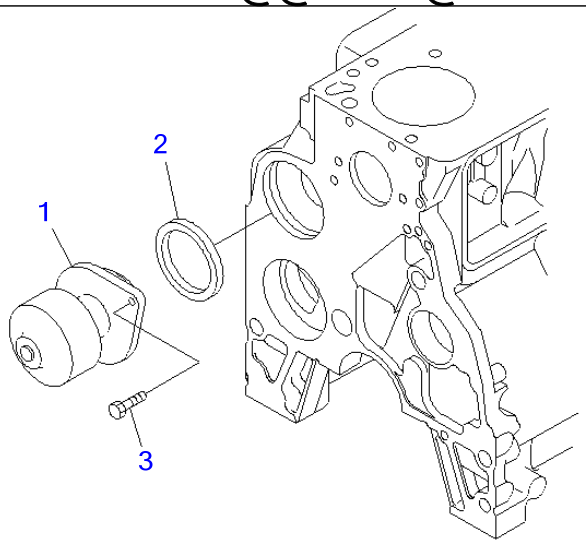

PJ6B451

Ref A5019-01A0 **Page 030790**

SAA6D102E-2D-8 S/N 26274903-UP
WATER PUMP

Item	Part No.	Part Name	Qty	Serial No.
	6754-61-1211	KIT,WATER PUMP	1	26498582-
	☐6754-61-1210	PUMP KIT,WATER PUMP	1	26341698-26498581
	☐6736-61-1700	KIT,WATER PUMP	1	26341343-26341697
	☐6731-62-1110	KIT,WATER PUMP	1	26340280-26341342
	☐6736-61-1202	KIT,WATER PUMP	1	26281447-26340279
	☐6736-61-1201	KIT,WATER PUMP	1	26274903-26281446
1	☆	・WATER PUMP ASS'Y	1	26498582-
	☆	・WATER PUMP ASS'Y	1	26341698-26498581
	☆	・WATER PUMP ASS'Y	1	26341343-26341697
	☆	・WATER PUMP ASS'Y	1	26340280-26341342
	☆	・WATER PUMP ASS'Y	1	26281447-26340279
	☆	・WATER PUMP ASS'Y	1	26274903-26281446
2	6736-61-1520	・SEAL (K2)	1	26274903-
3	6732-41-1260	BOLT	2	26274903-

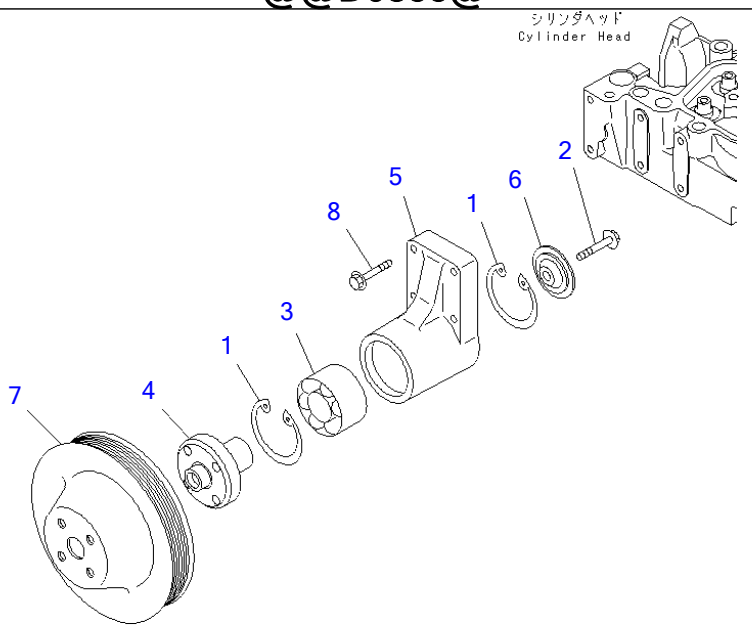

Ref A502P-01B7 **Page 030800**

SAA6D102E-2D-8 S/N 26274903-UP

FAN DRIVE PULLEY (DIAMETER 172.4MM) (HIGH SPEED FAN)(#26287716-)

Item	Part No.	Part Name	Qty	Serial No.
	6732-61-3120	SUPPORT ASS'Y	1	26287716-
1	6732-61-3450	・RING,SNAP	2	26287716-
2	6732-61-3440	・BOLT	1	26287716-
3	6732-61-3420	・BEARING,BALL	1	26287716-
4	6732-61-3410	・HUB	1	26287716-
5	☆	・SUPPORT	1	26287716-
6	6732-61-3430	・RETAINER	1	26287716-
7	6738-61-3170	PULLEY	1	26287716-
8	6732-61-3170	BOLT	4	26287716-

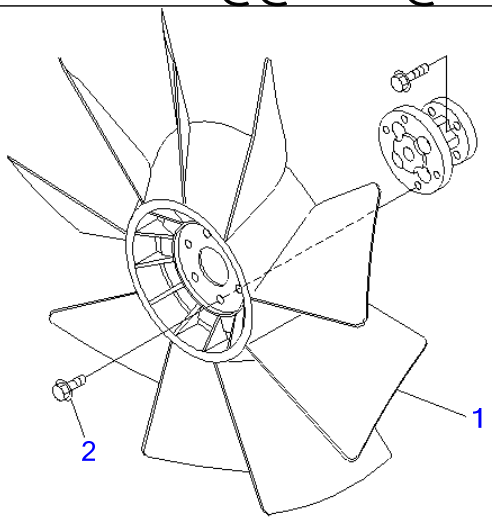

PJ6B432

Ref A5030-01C0 **Page 030810**

SAA6D102E-2D-8 S/N 26274903-UP
COOLING FAN

Item	Part No.	Part Name	Qty	Serial No.
1	600-625-7620	FAN,COOLING	1	26274903-
2	01435-01020	BOLT	4	26274903-

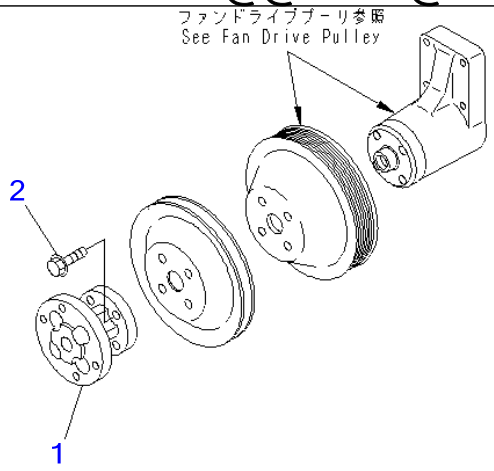

PJ6B422

Ref A504P-01A1 **Page 030820**

SAA6D102E-2D-8 S/N 26274903-UP
FAN PILOT SPACER

Item	Part No.	Part Name	Qty	Serial No.
1	6732-61-3610	SPACER	1	26274903-
2	01435-01035	BOLT	4	26274903-

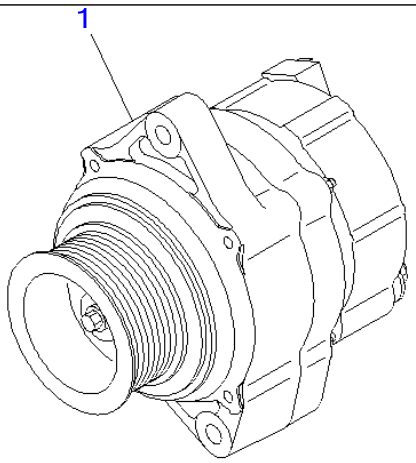

00009792

Ref A601P-01A1 **Page 030830**

SAA6D102E-2D-8 S/N 26274903-UP
ALTERNATOR (35A)(#26315053-26328689)

Item	Part No.	Part Name	Qty	Serial No.
1	(600-861-3411)	ALTERNATOR A. (35A),(SEE FIG.A601P-02A1)	1	26315053-26328689

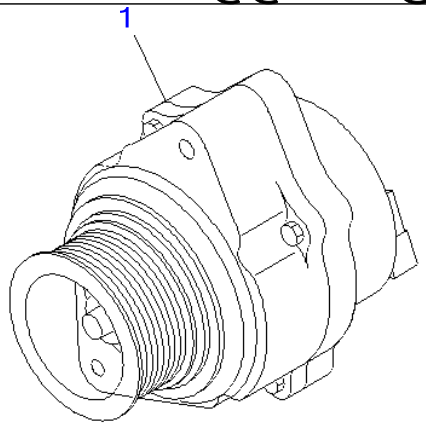

PMD1097

Ref A601P-01A2 Page 030840

SAA6D102E-2D-8 S/N 26274903-UP
ALTERNATOR (60A)(#26274903-26328689)

Item	Part No.	Part Name	Qty	Serial No.
1	(600-861-6410)	ALTERNATOR A. (60A),(SEE FIG.A601P-02A2)	1	26274903-26328689

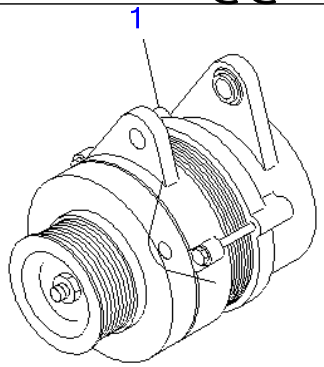

PM35778

SAA6D102E-2D-8 S/N 26274903-UP

ALTERNATOR (35A) (SHIELD ALTERNATOR)(#26277757-)

Item	Part No.	Part Name	Qty	Serial No.
1	(600-861-3111)	ALTERNATOR A. (35A),(SEE FIG.A601P-02A6)	1	26277757-

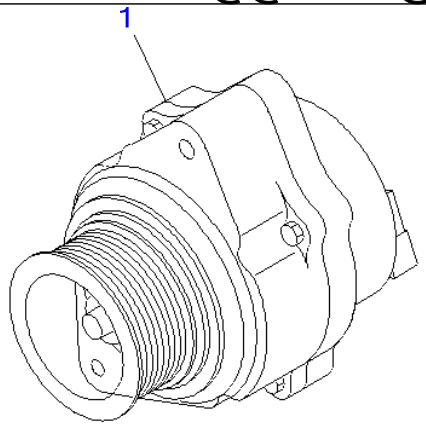

PMD1097

Ref A601P-01A9 **Page 030860**

SAA6D102E-2D-8 S/N 26274903-UP
ALTERNATOR (35A)(#26274903-26328689)

Item	Part No.	Part Name	Qty	Serial No.
1	(600-861-3411)	ALTERNATOR A. (35A),(SEE FIG.A601P-03A9)	1	26320646-26328689
	(□600-861-3410)	ALTERNATOR A. (35A),(SEE FIG.A601P-02A9)	1	26274903-26320645

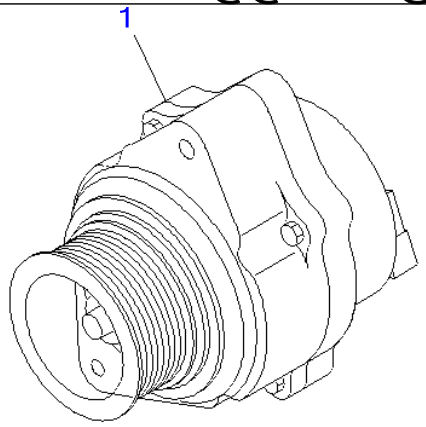

PMD1097

Ref A601P-01A9Z **Page 030870**

SAA6D102E-2D-8 S/N 26274903-UP
ALTERNATOR (60A)(#26328690-)

Item	Part No.	Part Name	Qty	Serial No.
1	(600-861-6410)	ALTERNATOR A. (60A),(SEE FIG.A601P-02A9Z)	1	26328690-

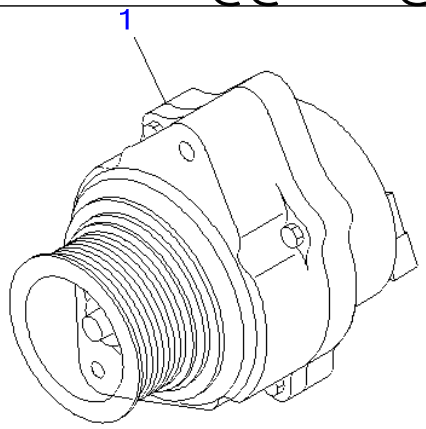

PMD1097

Ref A601P-01B0Z **Page 030880**

SAA6D102E-2D-8 S/N 26274903-UP

ALTERNATOR (35A) (AFTER M/C)(#26307088-)

Item	Part No.	Part Name	Qty	Serial No.
1	(600-861-3421)	ALTERNATOR A. (35A),(SEE FIG.A601P-04B0Z)	1	26497966-
	(600-861-3420)	ALTERNATOR A. (35A),(SEE FIG.A601P-04B0Z)	1	26315328-26497965
	(600-861-3411)	ALTERNATOR A. (35A),(SEE FIG.A601P-03B0Z)	1	26311024-26315327
	(□600-861-3410)	ALTERNATOR A. (35A),(SEE FIG.A601P-02B0Z)	1	26307088-26311023

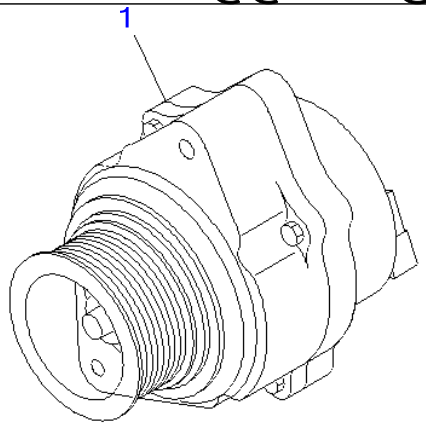

PMD1097

Ref A601P-01B1Z **Page 030890**

SAA6D102E-2D-8 S/N 26274903-UP

ALTERNATOR (60A) (AFTER M/C)(#26307088-)

Item	Part No.	Part Name	Qty	Serial No.
1	(600-861-6420)	ALTERNATOR A. (60A),(SEE FIG.A601P-02B1Z)	1	26307088-

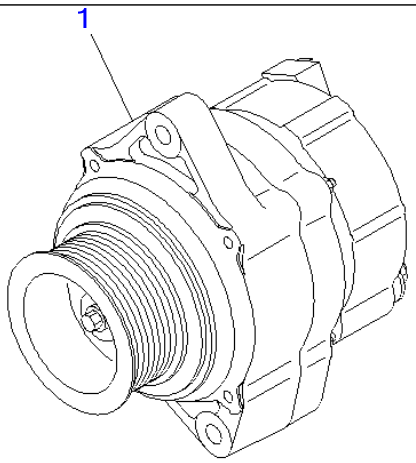

00009792

Ref A601P-01B2 **Page 030900**

SAA6D102E-2D-8 S/N 26274903-UP
ALTERNATOR (35A)(#26302312-)

Item	Part No.	Part Name	Qty	Serial No.
1	(600-861-3412)	ALTERNATOR A. (35A),(SEE FIG.A601P-02B2)	1	26497966-
	(600-861-3411)	ALTERNATOR A. (35A),(SEE FIG.A601P-02B2)	1	26302312-26497965

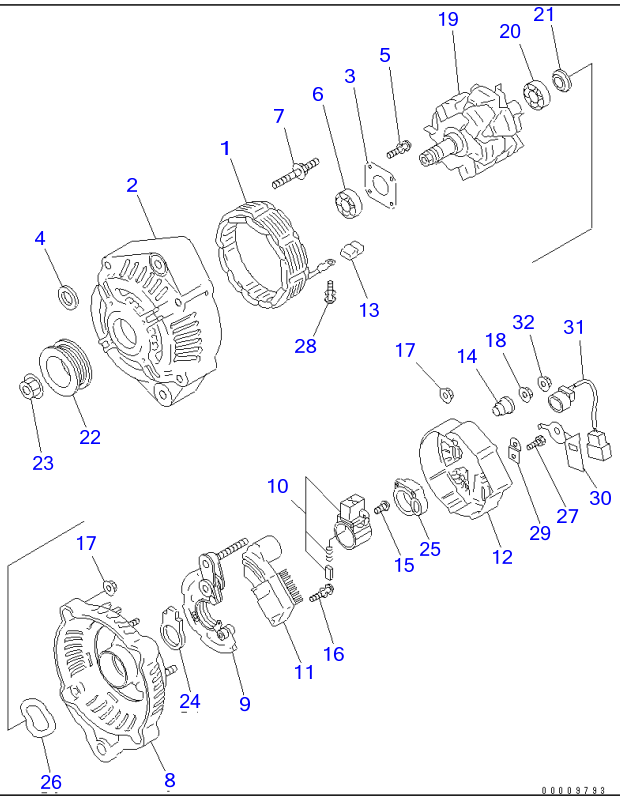

Ref A601P-02A1 Page 030910

SAA6D102E-2D-8 S/N 26274903-UP

ALTERNATOR (35A) (INNER PARTS)(#26315053-26328689)

Item	Part No.	Part Name	Qty	Serial No.
	600-861-3411	ALTERNATOR A. (35A)	1	26315053-26328689
	ND121400-4840	・FRAME ASS'Y	1	26315053-26328689
1	ND021100-5060	・・STATOR ASS'Y	1	26315053-26328689
2	ND121401-1620	・・FRAME	1	26315053-26328689
3	ND021411-0570	・・PLATE	1	26315053-26328689
4	ND021045-0530	・・COLLAR	1	26315053-26328689
5	ND949006-5590	・・SCREW	4	26315053-26328689
6	ND949100-5010	・・BEARING,BALL	1	26315053-26328689
7	ND949043-2000	・・BOLT	4	26315053-26328689
8	ND021501-2920	・FRAME,REAR	1	26315053-26328689
9	ND021580-4670	・RECTIFIER ASS'Y	1	26315053-26328689
10	ND021620-2720	・BRUSH HOLDER ASS'Y	1	26315053-26328689
11	ND126000-3730	・REGULATOR ASS'Y	1	26315053-26328689
12	ND021551-2360	・COVER,REAR	1	26315053-26328689
13	ND021605-1970	・BUSHING	4	26315053-26328689
14	ND021605-2950	・BUSHING	1	26315053-26328689
15	ND949006-5460	・SCREW	3	26315053-26328689
16	ND91310-04251	・SCREW	2	26315053-26328689
	ND949007-5110	・SCREW	2	26315053-26328689
17	ND949056-2481	・NUT	7	26315053-26328689
18	ND949056-1001	・NUT	1	26315053-26328689
19	ND021200-8610	・ROTOR ASS'Y	1	26315053-26328689
20	ND949100-2790	・・BEARING,BALL	1	26315053-26328689
21	ND021506-0070	・・COVER	1	26315053-26328689
22	ND021041-8620	・PULLEY	1	26315053-26328689
23	ND949056-2520	・NUT	1	26315053-26328689
24	ND021626-0190	・SEAL,RING	1	26315053-26328689
25	ND021626-0250	・SEAL,RING	1	26315053-26328689

ALTERNATOR (35A) (INNER PARTS)(#26315053-26328689)

Item	Part No.	Part Name	Qty	Serial No.
26	ND021542-0160	・WASHER	1	26315053-26328689
27	ND949006-6401	・SCREW	1	26315053-26328689
28	ND949007-6280	・SCREW	1	26315053-26328689
29	ND021602-5230	・PLATE	1	26315053-26328689
30	ND021751-1990	・CLIP	1	26315053-26328689
31	ND021700-2680	・WIRE	1	26315053-26328689
32	ND92150-06061	・NUT	1	26315053-26328689

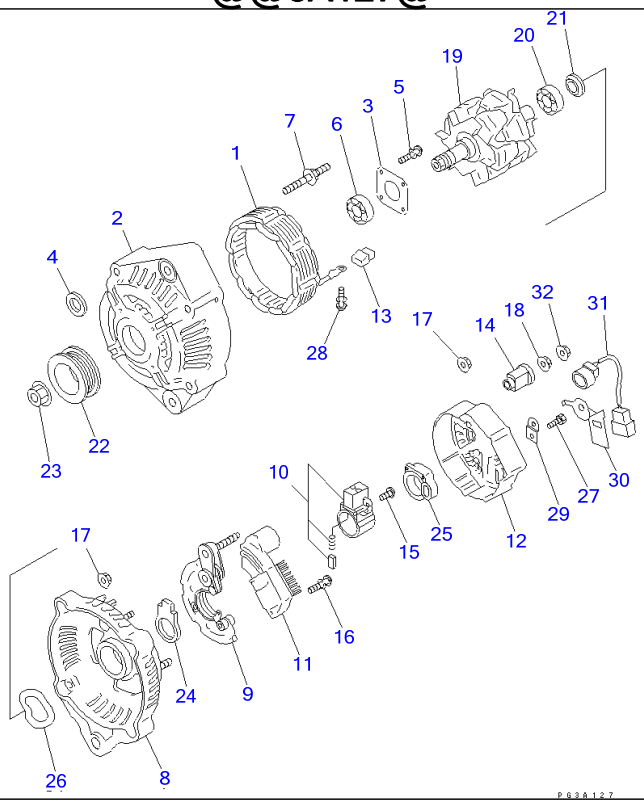

Ref A601P-02A2 Page 030920

SAA6D102E-2D-8 S/N 26274903-UP

ALTERNATOR (60A) (INNER PARTS)(#26274903-26328689)

Item	Part No.	Part Name	Qty	Serial No.
	600-861-6410	ALTERNATOR A. (60A)	1	26274903-26328689
	ND121400-0800	・FRAME ASS'Y	1	26274903-26328689
1	ND021100-4210	・・STATOR ASS'Y	1	26274903-26328689
2	ND021401-4980	・・FRAME	1	26274903-26328689
3	ND021411-0570	・・PLATE	1	26274903-26328689
4	ND021045-0530	・・COLLAR	1	26274903-26328689
5	ND949006-5590	・・SCREW	4	26274903-26328689
6	ND949100-5010	・・BEARING,BALL	1	26274903-26328689
7	ND949043-2000	・・BOLT	4	26274903-26328689
8	ND021501-8050	・FRAME,REAR	1	26274903-26328689
9	ND021580-4820	・RECTIFIER ASS'Y	1	26274903-26328689
10	ND021620-2720	・BRUSH HOLDER ASS'Y	1	26274903-26328689
11	ND126000-2320	・REGULATOR ASS'Y	1	26274903-26328689
12	ND021551-2480	・COVER	1	26274903-26328689
13	ND021605-1970	・BUSHING	4	26274903-26328689
14	ND021605-2480	・BUSHING	1	26274903-26328689
15	ND949006-5460	・SCREW	3	26274903-26328689
16	ND91310-04251	・SCREW	2	26274903-26328689
	ND949007-5110	・SCREW	2	26274903-26328689
17	ND949056-2481	・NUT	7	26274903-26328689
18	ND949056-3080	・NUT	1	26274903-26328689
19	ND021200-4141	・ROTOR ASS'Y	1	26274903-26328689
20	ND949100-2790	・・BEARING,BALL	1	26274903-26328689
21	ND021506-0070	・・COVER	1	26274903-26328689
22	ND021041-8620	・PULLEY	1	26274903-26328689
23	ND949056-2520	・NUT	1	26274903-26328689
24	ND021626-0190	・SEAL	1	26274903-26328689
25	ND021626-0250	・SEAL	1	26274903-26328689

ALTERNATOR (60A) (INNER PARTS)(#26274903-26328689)

Item	Part No.	Part Name	Qty	Serial No.
26	ND021542-0160	・WASHER	1	26274903-26328689
27	ND949006-6401	・SCREW	1	26274903-26328689
28	ND949007-6280	・SCREW	4	26274903-26328689
29	ND021602-5230	・PLATE	1	26274903-26328689
30	ND021751-1990	・CLIP	1	26274903-26328689
31	ND021700-2680	・WIRE	1	26274903-26328689
32	ND92150-06061	・NUT	1	26274903-26328689

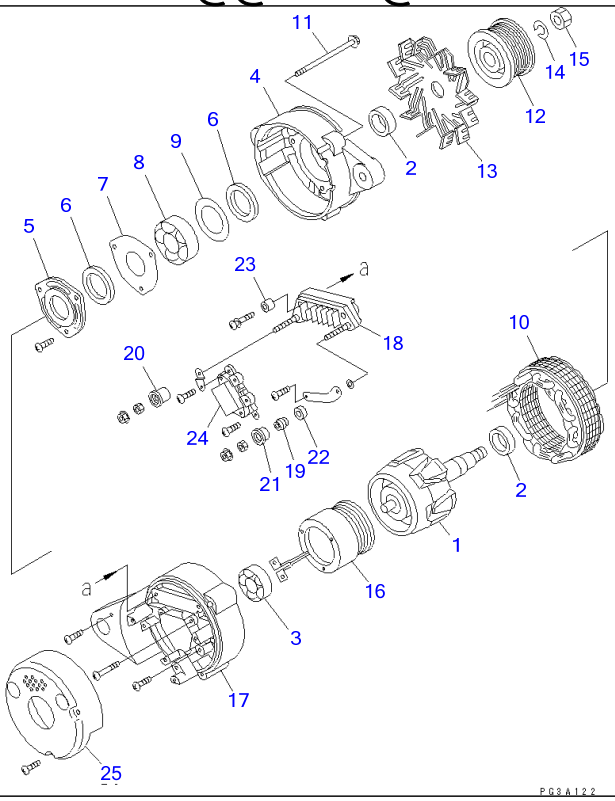

Ref A601P-02A6 Page 030930

SAA6D102E-2D-8 S/N 26274903-UP

ALTERNATOR (35A) (SHIELD ALTERNATOR) (INNER PARTS)(#26277757-)

Item	Part No.	Part Name	Qty	Serial No.
	600-861-3111	ALTERNATOR A. (35A)	1	26277757-
1	KD0-35100-0280	・ROTOR ASS'Y	1	26277757-
2	KD1-33923-0790	・COLLAR	2	26277757-
3	KD0-09201-0870	・BEARING,BALL	1	26277757-
4	KD0-35300-0160	・FRONT BRACKET ASS'Y	1	26277757-
5	KD0-35926-0070	・・RETAINER	1	26277757-
6	KD0-35951-0060	・・PACKING	2	26277757-
7	KD0-35926-0090	・・RETAINER	1	26277757-
8	KD0-09201-0880	・・BEARING,BALL	1	26277757-
9	KD1-33926-0730	・・RETAINER	1	26277757-
10	KD0-35200-0400	・STATOR ASS'Y	1	26277757-
11	KD0-0275-06802	・BOLT	3	26277757-
12	KD0-35411-0640	・PULLEY	1	26277757-
13	KD0-35421-0140	・FAN	1	26277757-
14	KD1-0335-16002	・WASHER,SPRING	1	26277757-
15	KD0-0280-16022	・NUT	1	26277757-
16	KD0-35120-0450	・FIELD COIL	1	26277757-
	KD0-35700-0701	・REAR BRACKET ASS'Y	1	26277757-
17	KD0-35710-0810	・・BRACKET	1	26277757-
18	KD0-35730-0510	・・RECTIFIER ASS'Y	1	26277757-
19	KD0-35923-0130	・・COLLAR	1	26277757-
20	KD0-35943-0140	・・BUSHING,INSULATE	1	26277757-
21	KD0-35943-0150	・・BUSHING,INSULATE	1	26277757-
22	KD0-35943-0160	・・BUSHING,INSULATE	1	26277757-
23	KD0-35943-0170	・・BUSHING,INSULATE	1	26277757-
24	KD0-35719-1850	・・REGULATOR ASS'Y	1	26277757-
25	KD0-35761-0200	・COVER	1	26277757-

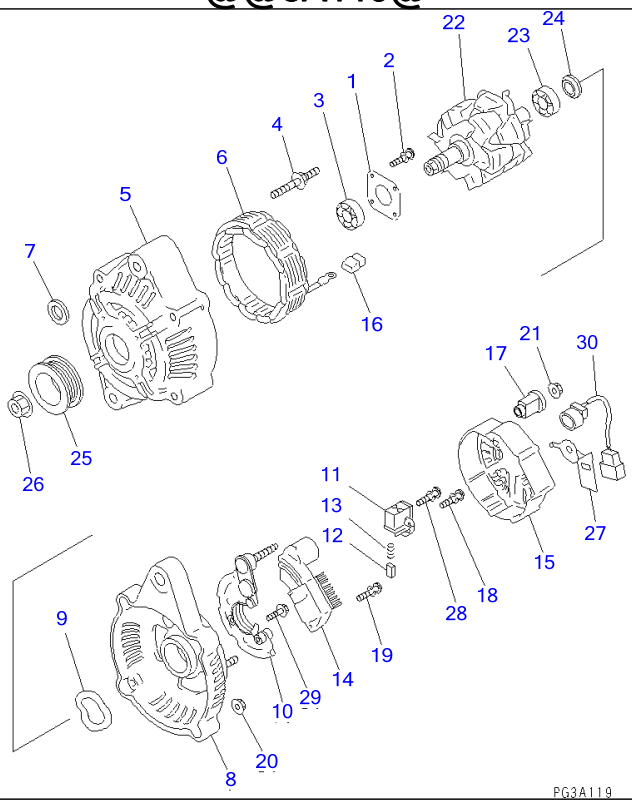

Ref A601P-02A9 **Page 030940**

SAA6D102E-2D-8 S/N 26274903-UP

ALTERNATOR (35A) (INNER PARTS)(#26274903-26320645)

Item	Part No.	Part Name	Qty	Serial No.
	600-861-3410	ALTERNATOR A. (35A)	1	26274903-26320645
	ND121400-0840	・FRAME ASS'Y	1	26274903-26320645
1	ND021411-0450	・・PLATE	1	26274903-26320645
2	ND949006-6970	・・SCREW	4	26274903-26320645
3	ND949100-3361	・・BEARING,BALL	1	26274903-26320645
4	ND949043-2000	・・BOLT	4	26274903-26320645
5	ND021401-3671	・・FRAME	1	26274903-26320645
6	ND021100-4360	・・STATOR ASS'Y	1	26274903-26320645
7	ND021045-0530	・・COLLAR	1	26274903-26320645
8	ND021501-9560	・FRAME,REAR	1	26274903-26320645
9	ND021542-0220	・・WASHER	1	26274903-26320645
10	ND021580-5060	・HOLDER	1	26274903-26320645
	ND021620-2201	・BRUSH HOLDER ASS'Y	1	26274903-26320645
11	ND021626-0240	・・BRUSH HOLDER	1	26274903-26320645
12	ND021660-0510	・・BRUSH	2	26274903-26320645
13	ND949170-6990	・・SPRING	2	26274903-26320645
14	ND126000-2310	・REGULATOR ASS'Y	1	26274903-26320645
15	ND021551-2910	・COVER,REAR	1	26274903-26320645
16	ND021605-1360	・BUSHING	4	26274903-26320645
17	ND021605-2490	・BUSHING	1	26274903-26320645
18	ND949006-5460	・SCREW	6	26274903-26320645
19	ND91310-04251	・SCREW	2	26274903-26320645
20	ND949056-2481	・NUT	8	26274903-26320645
21	ND949056-1001	・NUT	1	26274903-26320645
22	ND021200-4132	・ROTOR ASS'Y	1	26274903-26320645
23	ND949100-2790	・・BEARING,BALL	1	26274903-26320645
24	ND021506-0070	・・COVER	1	26274903-26320645
25	ND021041-8680	・PULLEY	1	26274903-26320645

ALTERNATOR (35A) (INNER PARTS)(#26274903-26320645)

Item	Part No.	Part Name	Qty	Serial No.
26	ND949056-2520	・NUT	1	26274903-26320645
27	ND021751-1990	・CLIP	1	26274903-26320645
28	ND949007-7000	・SCREW	1	26274903-26320645
29	ND949047-7870	・BOLT	1	26274903-26320645
30	ND021700-2680	・WIRE	1	26274903-26320645

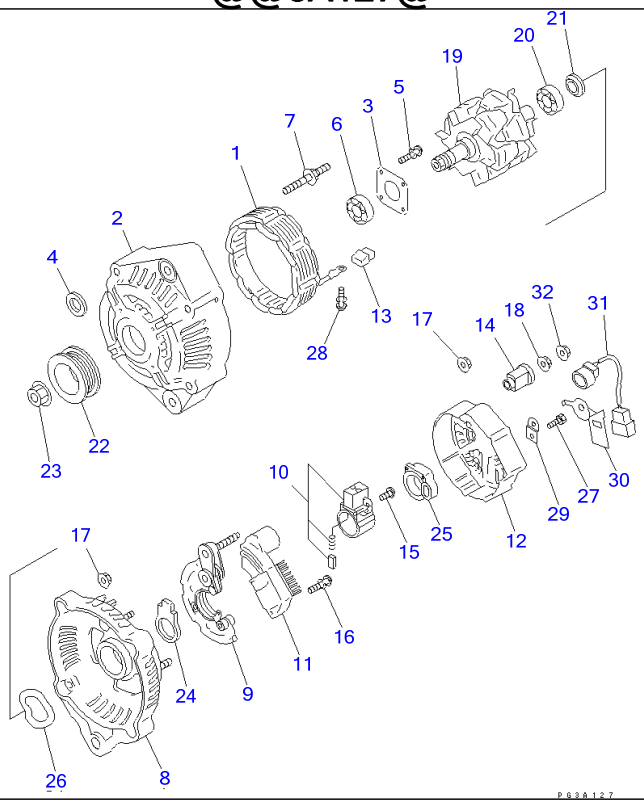

Ref A601P-02A9Z **Page 030950**

SAA6D102E-2D-8 S/N 26274903-UP

ALTERNATOR (60A) (INNER PARTS)(#26328690-)

Item	Part No.	Part Name	Qty	Serial No.
	600-861-6410	ALTERNATOR A. (60A)	1	26328690-
	ND121400-0800	・FRAME ASS'Y	1	26328690-
1	ND021100-4210	・・STATOR ASS'Y	1	26328690-
2	ND021401-4980	・・FRAME	1	26328690-
3	ND021411-0570	・・PLATE	1	26328690-
4	ND021045-0530	・・COLLAR	1	26328690-
5	ND949006-5590	・・SCREW	4	26328690-
6	ND949100-5010	・・BEARING,BALL	1	26328690-
7	ND949043-2000	・・BOLT	4	26328690-
8	ND021501-8050	・FRAME,REAR	1	26328690-
9	ND021580-4820	・RECTIFIER ASS'Y	1	26328690-
10	ND021620-2720	・BRUSH HOLDER ASS'Y	1	26328690-
11	ND126000-2320	・REGULATOR ASS'Y	1	26328690-
12	ND021551-2480	・COVER	1	26328690-
13	ND021605-1970	・BUSHING	4	26328690-
14	ND021605-2480	・BUSHING	1	26328690-
15	ND949006-5460	・SCREW	3	26328690-
16	ND91310-04251	・SCREW	2	26328690-
	ND949007-5110	・SCREW	2	26328690-
17	ND949056-2481	・NUT	7	26328690-
18	ND949056-3080	・NUT	1	26328690-
19	ND021200-4141	・ROTOR ASS'Y	1	26328690-
20	ND949100-2790	・・BEARING,BALL	1	26328690-
21	ND021506-0070	・・COVER	1	26328690-
22	ND021041-8620	・PULLEY	1	26328690-
23	ND949056-2520	・NUT	1	26328690-
24	ND021626-0190	・SEAL	1	26328690-
25	ND021626-0250	・SEAL	1	26328690-

ALTERNATOR (60A) (INNER PARTS)(#26328690-)

Item	Part No.	Part Name	Qty	Serial No.
26	ND021542-0160	・WASHER	1	26328690-
27	ND949006-6401	・SCREW	1	26328690-
28	ND949007-6280	・SCREW	4	26328690-
29	ND021602-5230	・PLATE	1	26328690-
30	ND021751-1990	・CLIP	1	26328690-
31	ND021700-2680	・WIRE	1	26328690-
32	ND92150-06061	・NUT	1	26328690-

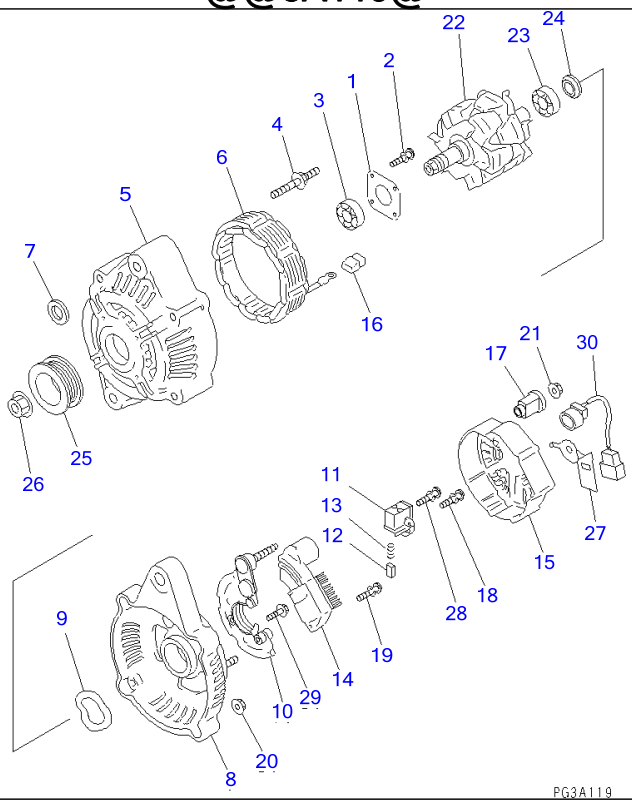

Ref A601P-02B0Z **Page 030960**

SAA6D102E-2D-8 S/N 26274903-UP

ALTERNATOR (35A) (AFTER M/C) (INNER PARTS)(#26307088-26311023)

Item	Part No.	Part Name	Qty	Serial No.
	600-861-3410	ALTERNATOR A. (35A)	1	26307088-26311023
	ND121400-0840	・FRAME ASS'Y	1	26307088-26311023
1	ND021411-0450	・・PLATE	1	26307088-26311023
2	ND949006-6970	・・SCREW	4	26307088-26311023
3	ND949100-3361	・・BEARING,BALL	1	26307088-26311023
4	ND949043-2000	・・BOLT	4	26307088-26311023
5	ND021401-3671	・・FRAME	1	26307088-26311023
6	ND021100-4360	・・STATOR ASS'Y	1	26307088-26311023
7	ND021045-0530	・・COLLAR	1	26307088-26311023
8	ND021501-9560	・FRAME,REAR	1	26307088-26311023
9	ND021542-0220	・・WASHER	1	26307088-26311023
10	ND021580-5060	・HOLDER	1	26307088-26311023
	ND021620-2201	・BRUSH HOLDER ASS'Y	1	26307088-26311023
11	ND021626-0240	・・BRUSH HOLDER	1	26307088-26311023
12	ND021660-0510	・・BRUSH	2	26307088-26311023
13	ND949170-6990	・・SPRING	2	26307088-26311023
14	ND126000-2310	・REGULATOR ASS'Y	1	26307088-26311023
15	ND021551-2910	・COVER,REAR	1	26307088-26311023
16	ND021605-1360	・BUSHING	4	26307088-26311023
17	ND021605-2490	・BUSHING	1	26307088-26311023
18	ND949006-5460	・SCREW	6	26307088-26311023
19	ND91310-04251	・SCREW	2	26307088-26311023
20	ND949056-2481	・NUT	8	26307088-26311023
21	ND949056-1001	・NUT	1	26307088-26311023
22	ND021200-4132	・ROTOR ASS'Y	1	26307088-26311023
23	ND949100-2790	・・BEARING,BALL	1	26307088-26311023
24	ND021506-0070	・・COVER	1	26307088-26311023
25	ND021041-8680	・PULLEY	1	26307088-26311023

ALTERNATOR (35A) (AFTER M/C) (INNER PARTS)(#26307088-26311023)

Item	Part No.	Part Name	Qty	Serial No.
26	ND949056-2520	・NUT	1	26307088-26311023
27	ND021751-1990	・CLIP	1	26307088-26311023
28	ND949007-7000	・SCREW	1	26307088-26311023
29	ND949047-7870	・BOLT	1	26307088-26311023
30	ND021700-2680	・WIRE	1	26307088-26311023

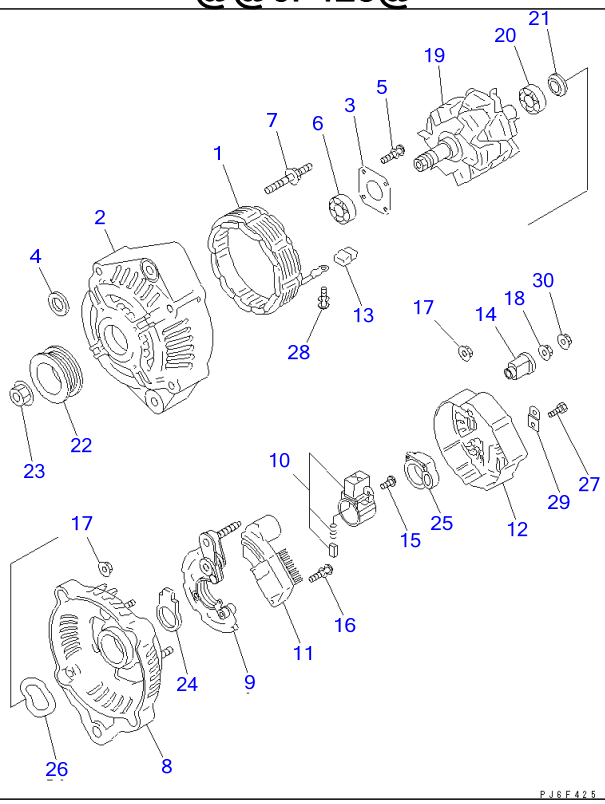

Ref A601P-02B1Z

Page 030970

SAA6D102E-2D-8 S/N 26274903-UP

ALTERNATOR (60A) (AFTER M/C) (INNER PARTS)(#26307088-)

Item	Part No.	Part Name	Qty	Serial No.
	600-861-6420	ALTERNATOR A. (60A)	1	26307088-
	ND121400-0800	・FRAME ASS'Y	1	26307088-
1	ND021100-4210	・・STATOR ASS'Y	1	26307088-
2	ND021401-4980	・・FRAME	1	26307088-
3	ND021411-0570	・・PLATE	1	26307088-
4	ND021045-0530	・・COLLAR	1	26307088-
5	ND949006-5590	・・SCREW	4	26307088-
6	ND949100-5010	・・BEARING,BALL	1	26307088-
7	ND949043-2000	・・BOLT	4	26307088-
8	ND021501-8050	・FRAME,REAR	1	26307088-
9	ND021580-4820	・RECTIFIER ASS'Y	1	26307088-
10	ND021620-2720	・BRUSH HOLDER ASS'Y	1	26307088-
11	ND126000-2320	・REGULATOR ASS'Y	1	26307088-
12	ND021551-2480	・COVER	1	26307088-
13	ND021605-1970	・BUSHING	4	26307088-
14	ND021605-2481	・BUSHING	1	26307088-
15	ND949006-5460	・SCREW	3	26307088-
16	ND91310-04251	・SCREW	2	26307088-
	ND949007-5110	・SCREW	2	26307088-
17	ND949056-2481	・NUT	7	26307088-
18	ND949056-3080	・NUT	1	26307088-
19	ND021200-8380	・ROTOR ASS'Y	1	26307088-
20	ND949100-2790	・・BEARING,BALL	1	26307088-
21	ND021506-0070	・・COVER	1	26307088-
22	ND021041-8620	・PULLEY	1	26307088-
23	ND949056-2520	・NUT	1	26307088-
24	ND021626-0190	・SEAL	1	26307088-
25	ND021626-0250	・SEAL	1	26307088-

ALTERNATOR (60A) (AFTER M/C) (INNER PARTS)(#26307088-)

Item	Part No.	Part Name	Qty	Serial No.
26	ND021542-0160	・WASHER	1	26307088-
27	ND949006-6401	・SCREW	1	26307088-
28	ND949007-6280	・SCREW	4	26307088-
29	ND021602-5230	・PLATE	1	26307088-
30	ND92150-06061	・NUT	1	26307088-

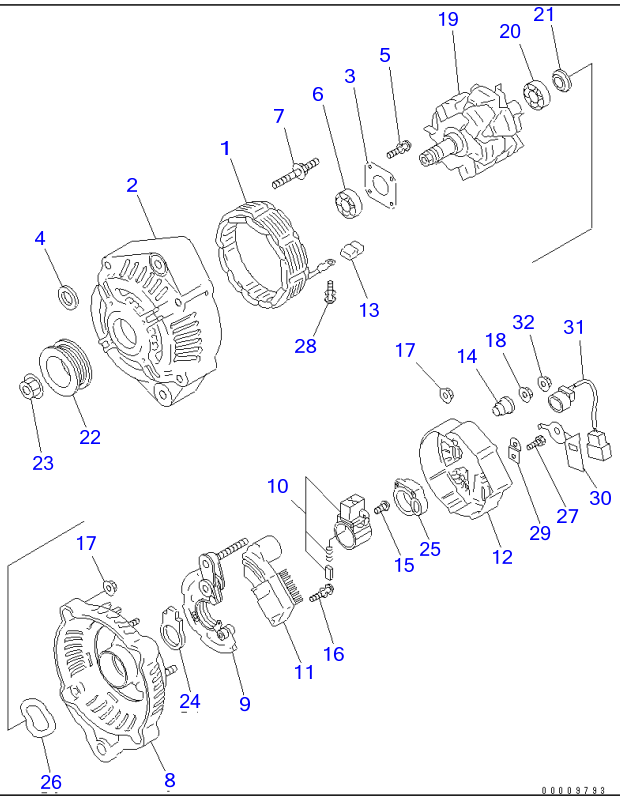

Ref A601P-02B2 Page 030980

SAA6D102E-2D-8 S/N 26274903-UP

ALTERNATOR (35A) (INNER PARTS)(#26302312-)

Item	Part No.	Part Name	Qty	Serial No.
	600-861-3412	ALTERNATOR A. (35A)	1	26497966-
	600-861-3411	ALTERNATOR A. (35A)	1	26302312-26497965
	ND121400-4840	・FRAME ASS'Y	1	26302312-
1	ND021100-5060	・・STATOR ASS'Y	1	26302312-
2	ND121401-1620	・・FRAME	1	26302312-
3	ND021411-0570	・・PLATE	1	26302312-
4	ND021045-0530	・・COLLAR	1	26302312-
5	ND949006-5590	・・SCREW	4	26302312-
6	ND949100-5010	・・BEARING,BALL	1	26302312-
7	ND949043-2000	・・BOLT	4	26302312-
8	ND021501-2920	・FRAME,REAR	1	26302312-
9	ND021580-4670	・RECTIFIER ASS'Y	1	26302312-
10	ND021620-2720	・BRUSH HOLDER ASS'Y	1	26302312-
11	ND126000-3730	・REGULATOR ASS'Y	1	26302312-
12	ND021551-2360	・COVER,REAR	1	26302312-
13	ND021605-1970	・BUSHING	4	26302312-
14	ND021605-2950	・BUSHING	1	26302312-
15	ND949006-5460	・SCREW	3	26302312-
16	ND91310-04251	・SCREW	2	26302312-
	ND949007-5110	・SCREW	2	26302312-
17	ND949056-2481	・NUT	7	26302312-
18	ND949056-1001	・NUT	1	26302312-
19	ND021200-8610	・ROTOR ASS'Y	1	26302312-
20	ND949100-2790	・・BEARING,BALL	1	26302312-
21	ND021506-0070	・・COVER	1	26302312-
22	ND021041-8620	・PULLEY	1	26302312-
23	ND949056-2520	・NUT	1	26302312-
24	ND021626-0190	・SEAL,RING	1	26302312-

ALTERNATOR (35A) (INNER PARTS)(#26302312-)

Item	Part No.	Part Name	Qty	Serial No.
25	ND021626-0250	・SEAL,RING	1	26302312-
26	ND021542-0160	・WASHER	1	26302312-
27	ND949006-6401	・SCREW	1	26302312-
28	ND949007-6280	・SCREW	1	26302312-
29	ND021602-5230	・PLATE	1	26302312-
30	ND021751-1990	・CLIP	1	26302312-
31	ND021700-2680	・WIRE	1	26302312-
32	ND92150-06061	・NUT	1	26302312-

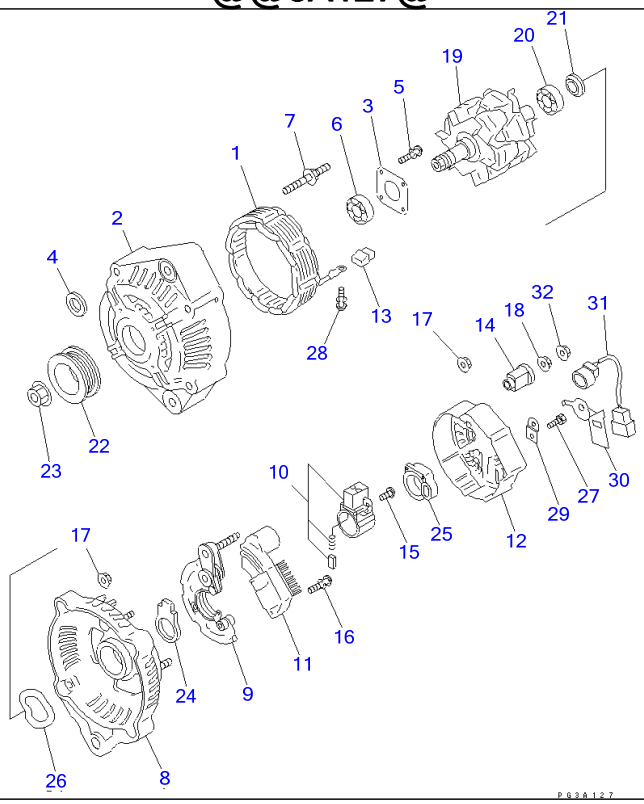

Ref A601P-03A9 **Page 030990**

SAA6D102E-2D-8 S/N 26274903-UP

ALTERNATOR (35A) (INNER PARTS)(#26320646-26328689)

Item	Part No.	Part Name	Qty	Serial No.
	600-861-3411	ALTERNATOR A. (35A)	1	26320646-26328689
	ND121400-4840	・FRAME ASS'Y	1	26320646-26328689
1	ND021100-5060	・・STATOR ASS'Y	1	26320646-26328689
2	ND121401-1620	・・FRAME	1	26320646-26328689
3	ND021411-0570	・・PLATE	1	26320646-26328689
4	ND021045-0530	・・COLLAR	1	26320646-26328689
5	ND949006-5590	・・SCREW	4	26320646-26328689
6	ND949100-5010	・・BEARING,BALL	1	26320646-26328689
7	ND949043-2000	・・BOLT	4	26320646-26328689
8	ND021501-2920	・FRAME,REAR	1	26320646-26328689
9	ND021580-4670	・RECTIFIER ASS'Y	1	26320646-26328689
10	ND021620-2720	・BRUSH HOLDER ASS'Y	1	26320646-26328689
11	ND126000-3730	・REGULATOR ASS'Y	1	26320646-26328689
12	ND021551-2360	・COVER	1	26320646-26328689
13	ND021605-1970	・BUSHING	4	26320646-26328689
14	ND021605-2950	・BUSHING	1	26320646-26328689
15	ND949006-5460	・SCREW	3	26320646-26328689
16	ND91310-04251	・SCREW	2	26320646-26328689
17	ND949056-2481	・NUT	7	26320646-26328689
18	ND949056-1001	・NUT	1	26320646-26328689
19	ND021200-8610	・ROTOR ASS'Y	1	26320646-26328689
20	ND949100-2790	・・BEARING,BALL	1	26320646-26328689
21	ND021506-0070	・・COVER	1	26320646-26328689
22	ND021041-8620	・PULLEY	1	26320646-26328689
23	ND949056-2520	・NUT	1	26320646-26328689
24	ND021626-0190	・SEAL	1	26320646-26328689
25	ND021626-0250	・SEAL	1	26320646-26328689
26	ND021542-0160	・WASHER	1	26320646-26328689

ALTERNATOR (35A) (INNER PARTS)(#26320646-26328689)

Item	Part No.	Part Name	Qty	Serial No.
27	ND949006-6401	・SCREW	1	26320646-26328689
28	ND949007-6280	・SCREW	4	26320646-26328689
29	ND021602-5230	・PLATE	1	26320646-26328689
30	ND021751-1990	・CLIP	1	26320646-26328689
31	ND021700-2680	・WIRE	1	26320646-26328689
32	ND92150-06061	・NUT	1	26320646-26328689

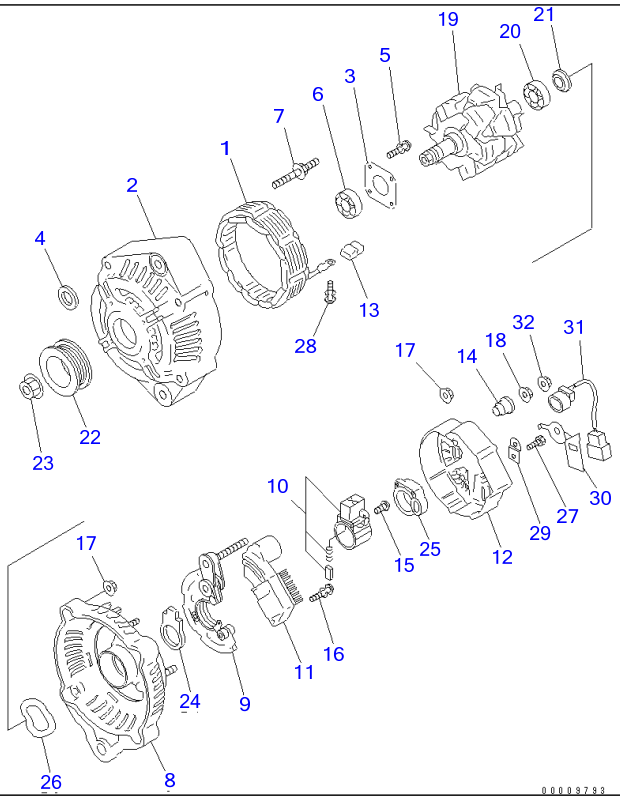

Ref A601P-03B0Z **Page 031000**

SAA6D102E-2D-8 S/N 26274903-UP

ALTERNATOR (35A) (AFTER M/C) (INNER PARTS)(#26311024-26320682)

Item	Part No.	Part Name	Qty	Serial No.
	600-861-3411	ALTERNATOR A. (35A)	1	26311024-26320682
	ND121400-4840	・FRAME ASS'Y	1	26311024-26320682
1	ND021100-5060	・・STATOR ASS'Y	1	26311024-26320682
2	ND121401-1620	・・FRAME	1	26311024-26320682
3	ND021411-0570	・・PLATE	1	26311024-26320682
4	ND021045-0530	・・COLLAR	1	26311024-26320682
5	ND949006-5590	・・SCREW	4	26311024-26320682
6	ND949100-5010	・・BEARING,BALL	1	26311024-26320682
7	ND949043-2000	・・BOLT	4	26311024-26320682
8	ND021501-2920	・FRAME,REAR	1	26311024-26320682
9	ND021580-4670	・RECTIFIER ASS'Y	1	26311024-26320682
10	ND021620-2720	・BRUSH HOLDER ASS'Y	1	26311024-26320682
11	ND126000-3730	・REGULATOR ASS'Y	1	26311024-26320682
12	ND021551-2360	・COVER,REAR	1	26311024-26320682
13	ND021605-1970	・BUSHING	4	26311024-26320682
14	ND021605-2950	・BUSHING	1	26311024-26320682
15	ND949006-5460	・SCREW	3	26311024-26320682
16	ND91310-04251	・SCREW	2	26311024-26320682
	ND949007-5110	・SCREW	2	26311024-26320682
17	ND949056-2481	・NUT	7	26311024-26320682
18	ND949056-1001	・NUT	1	26311024-26320682
19	ND021200-8610	・ROTOR ASS'Y	1	26311024-26320682
20	ND949100-2790	・・BEARING,BALL	1	26311024-26320682
21	ND021506-0070	・・COVER	1	26311024-26320682
22	ND021041-8620	・PULLEY	1	26311024-26320682
23	ND949056-2520	・NUT	1	26311024-26320682
24	ND021626-0190	・SEAL,RING	1	26311024-26320682
25	ND021626-0250	・SEAL,RING	1	26311024-26320682

ALTERNATOR (35A) (AFTER M/C) (INNER PARTS)(#26311024-26320682)

Item	Part No.	Part Name	Qty	Serial No.
26	ND021542-0160	・WASHER	1	26311024-26320682
27	ND949006-6401	・SCREW	1	26311024-26320682
28	ND949007-6280	・SCREW	4	26311024-26320682
29	ND021602-5230	・PLATE	1	26311024-26320682
30	ND021751-1990	・CLIP	1	26311024-26320682
31	ND021700-2680	・WIRE	1	26311024-26320682
32	ND92150-06061	・NUT	1	26311024-26320682

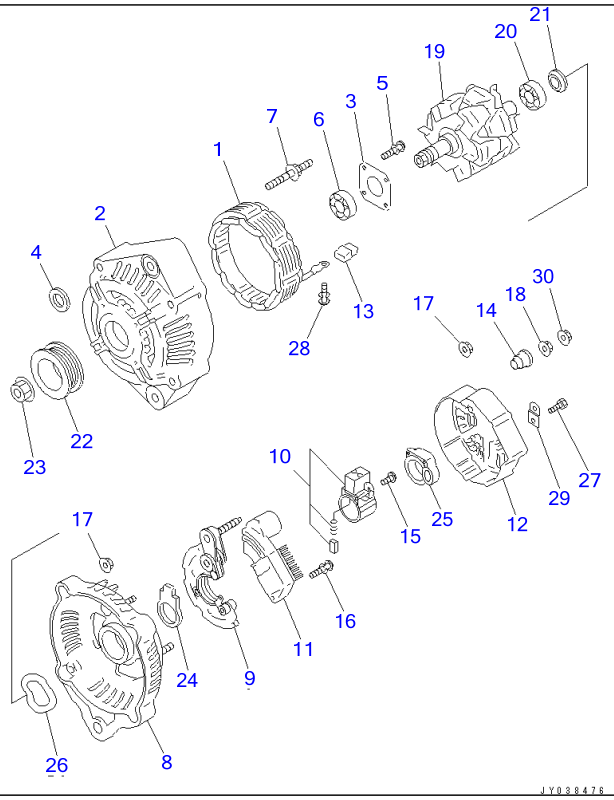

Ref A601P-04B0Z **Page 031010**

SAA6D102E-2D-8 S/N 26274903-UP
ALTERNATOR (35A) (AFTER M/C) (INNER PARTS)(#26320683-)

Item	Part No.	Part Name	Qty	Serial No.
	600-861-3421	ALTERNATOR A. (35A)	1	26497966-
	600-861-3420	ALTERNATOR A. (35A)	1	26320683-26497965
	ND121400-4840	・FRAME ASS'Y	1	26320683-
1	ND021100-5060	・・STATOR ASS'Y	1	26320683-
2	ND121401-1620	・・FRAME	1	26320683-
3	ND021411-0570	・・PLATE	1	26320683-
4	ND021045-0530	・・COLLAR	1	26320683-
5	ND949006-5590	・・SCREW	4	26320683-
6	ND949100-5010	・・BEARING,BALL	1	26320683-
7	ND949043-2000	・・BOLT	4	26320683-
8	ND121501-2920	・FRAME,REAR	1	26320683-
9	ND021580-4670	・RECTIFIER ASS'Y	1	26320683-
10	ND021620-2720	・BRUSH HOLDER ASS'Y	1	26320683-
11	ND126000-3730	・REGULATOR ASS'Y	1	26320683-
12	ND021551-2360	・COVER	1	26320683-
13	ND021605-1970	・BUSHING	4	26320683-
14	ND021605-2950	・BUSHING	1	26320683-
15	ND949006-5460	・SCREW	3	26320683-
16	ND91310-04251	・SCREW	2	26320683-
	ND949007-5110	・SCREW	2	26320683-
17	ND949056-2481	・NUT	7	26320683-
18	ND949056-1001	・NUT	1	26320683-
19	ND021200-8610	・ROTOR ASS'Y	1	26320683-
20	ND949100-2790	・・BEARING,BALL	1	26320683-
21	ND021506-0070	・・COVER	1	26320683-
22	ND021041-8620	・PULLEY	1	26320683-
23	ND949056-2520	・NUT	1	26320683-
24	ND021626-0190	・SEAL	1	26320683-

ALTERNATOR (35A) (AFTER M/C) (INNER PARTS)(#26320683-)

Item	Part No.	Part Name	Qty	Serial No.
25	ND021626-0250	・SEAL	1	26320683-
26	ND021542-0160	・WASHER	1	26320683-
27	ND949006-6401	・SCREW	1	26320683-
28	ND949007-6280	・SCREW	4	26320683-
29	ND021602-5230	・PLATE	1	26320683-
30	ND92150-06061	・NUT	1	26320683-

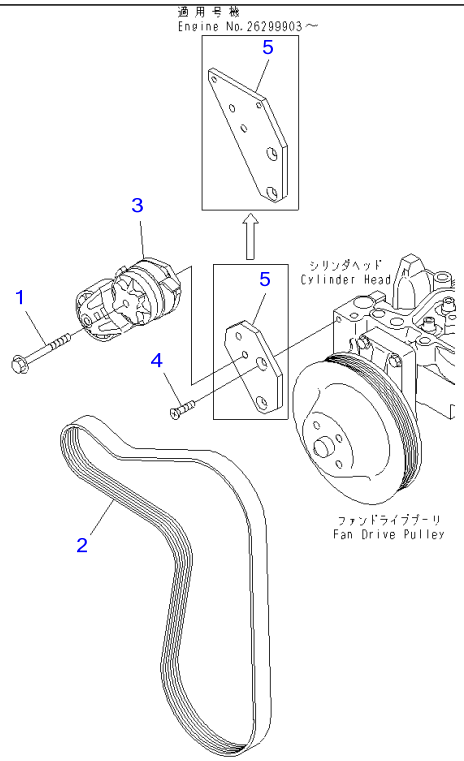

Ref A601S-01C3 **Page 031020**

SAA6D102E-2D-8 S/N 26274903-UP
BELT TENSIONER (FOR 60A ALTERNATOR) (FOR HIGH SPEED FAN)(#26287716-)

Item	Part No.	Part Name	Qty	Serial No.
1	6732-61-4120	BOLT	1	26287716-
2	6732-61-4170	BELT	1	26287716-
3	6736-61-4120	TENSIONER,BELT	1	26348517-
	□6736-61-4110	TENSIONER,BELT	1	26287716-26348516
4	6732-61-4220	SCREW	2	26287716-
5	6738-61-3920	BRACKET	1	26299903-
	6732-61-3910	PLATE	1	26287716-26299902

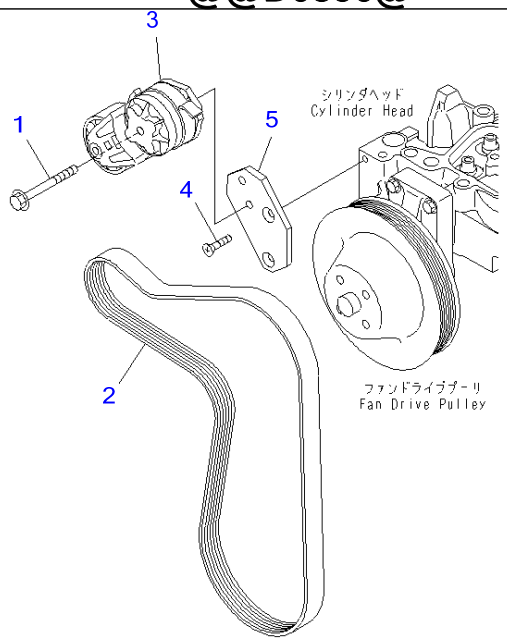

PMD0856

Ref A601S-01F0Z **Page 031030**

SAA6D102E-2D-8 S/N 26274903-UP

BELT TENSIONER (FOR 35A SHIELD ALTERNATOR)(#26296736-)

Item	Part No.	Part Name	Qty	Serial No.
1	6732-61-4120	BOLT	1	26296736-
2	6732-61-4190	BELT	1	26296736-
3	6736-61-4150	TENSIONER,BELT	1	26379056-
	□6731-61-4141	TENSIONER,BELT	1	26296736-26379055
4	6732-61-4220	SCREW	2	26296736-
5	6732-61-4420	PLATE	1	26296736-

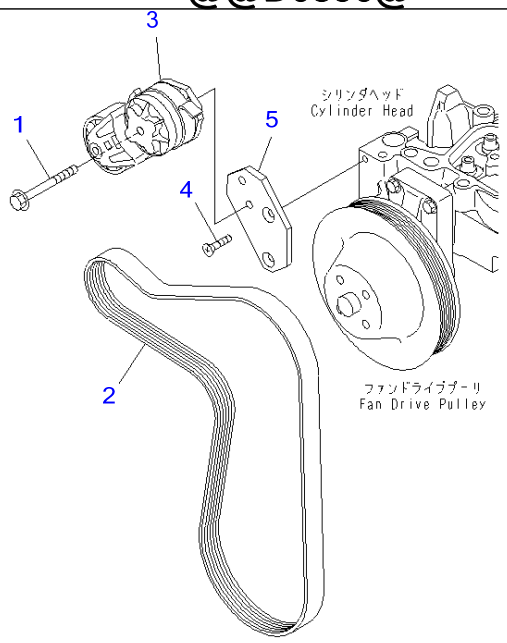

PMD0856

Ref A601S-01F7Z **Page 031040**

SAA6D102E-2D-8 S/N 26274903-UP

BELT TENSIONER (FOR 35A ALTERNATOR)(#26287717-)

Item	Part No.	Part Name	Qty	Serial No.
1	6732-61-4120	BOLT	1	26287717-
2	6732-61-4170	BELT	1	26287717-
3	6736-61-4120	TENSIONER	1	26338051-
	□6736-61-4110	TENSIONER	1	26287717-26338050
4	6732-61-4220	SCREW	2	26287717-
5	6732-61-3910	PLATE	1	26287717-

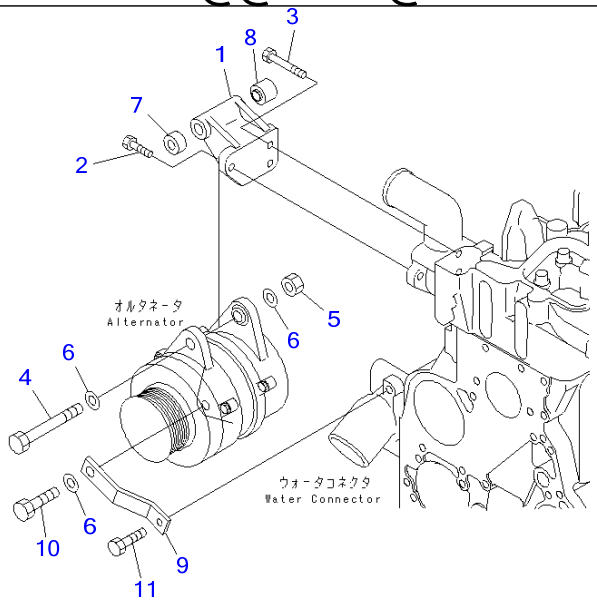

PMD1100

Ref A601T-01A6 **Page 031050**

SAA6D102E-2D-8 S/N 26274903-UP

ALTERNATOR MOUNTING (FOR 35A SHIELD ALTERNATOR)(#26294623-)

Item	Part No.	Part Name	Qty	Serial No.
1	6732-81-6650	BRACKET	1	26294623-
2	01435-60825	BOLT	2	26469807-
	□6732-21-5160	BOLT	2	26294623-26469806
3	6735-61-2120	BOLT	1	26294623-
4	6207-81-6980	BOLT	1	26294623-
5	01580-11210	NUT	1	26294623-
6	01641-21223	WASHER	3	26294623-
7	6732-81-6490	SPACER	1	26294623-
8	6732-81-6530	SPACER	1	26294623-
9	6732-81-6540	PLATE	1	26294623-
10	01050-31230	BOLT	1	26294623-
11	01435-60820	BOLT	1	26469807-
	□6732-71-3220	BOLT	1	26294623-26469806

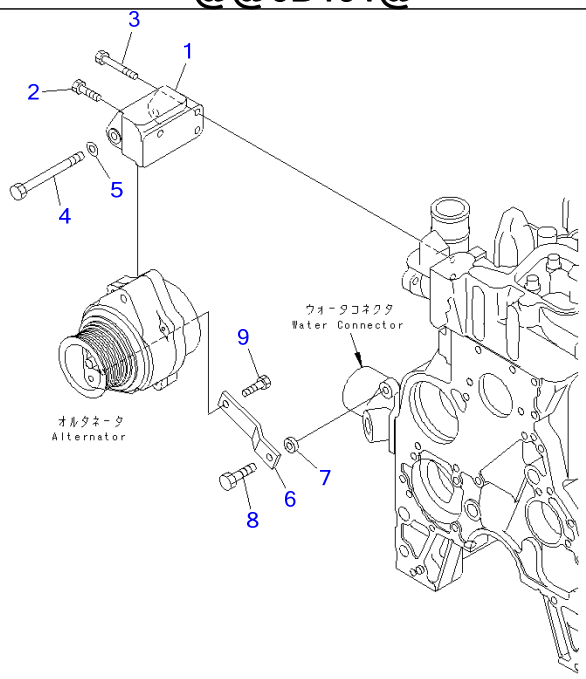

PJ6B401

Ref A601T-01B1 **Page 031060**

SAA6D102E-2D-8 S/N 26274903-UP
ALTERNATOR MOUNTING (FOR 35A¤ 60A ALTERNATOR)

Item	Part No.	Part Name	Qty	Serial No.
1	6754-81-6110	SUPPORT ASS'Y	1	26365525-
	□6732-81-6611	SUPPORT ASS'Y	1	26274903-26365524
2	01435-60825	BOLT	1	26475310-
	□6732-21-5160	BOLT	1	26274903-26475309
3	01435-60850	BOLT	2	26479972-
	□6736-21-3210	BOLT	2	26274903-26479971
4	01018-31095	BOLT	1	26274903-
5	01641-01016	WASHER	1	26274903-
6	6732-81-6560	PLATE	1	26274903-
7	6732-81-6690	SPACER	1	26274903-
8	01435-60825	BOLT	1	26475310-
	□6732-21-5160	BOLT	1	26274903-26475309
9	6732-21-6630	BOLT	1	26274903-

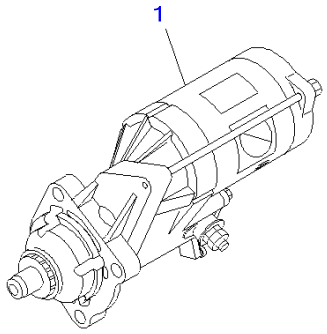

00017681

Ref A621P-01A1 **Page 031070**

SAA6D102E-2D-8 S/N 26274903-UP
STARTING MOTOR (5.5KW)

Item	Part No.	Part Name	Qty	Serial No.
1	(600-863-5112)	STARTING MOTOR ASS'Y,(5.5KW) (SEE FIG.A621P-02A1)	1	26483462-
	(◆600-863-5111)	STARTING MOTOR ASS'Y,(5.5KW) (SEE FIG.A621P-02A1)	1	26298939-26483461
	(□600-863-5110)	STARTING MOTOR ASS'Y,(5.5KW) (SEE FIG.A621P-02A1)	1	26274903-26298938

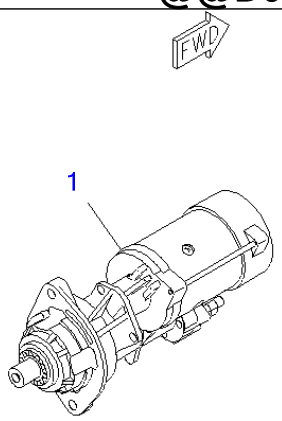

PMD0858

Ref A621P-01A4 **Page 031090**

SAA6D102E-2D-8 S/N 26274903-UP

STARTING MOTOR (4.5KW) (WITH PROTECT COVER)(#26302287-)

Item	Part No.	Part Name	Qty	Serial No.
1	(600-863-4211)	STARTING MOTOR ASS'Y,(4.5KW) (SEE FIG.A621P-03A4)	1	26496522-
	(□600-863-4210)	STARTING MOTOR ASS'Y,(4.5KW) (SEE FIG.A621P-02A4)	1	26302287-26496521

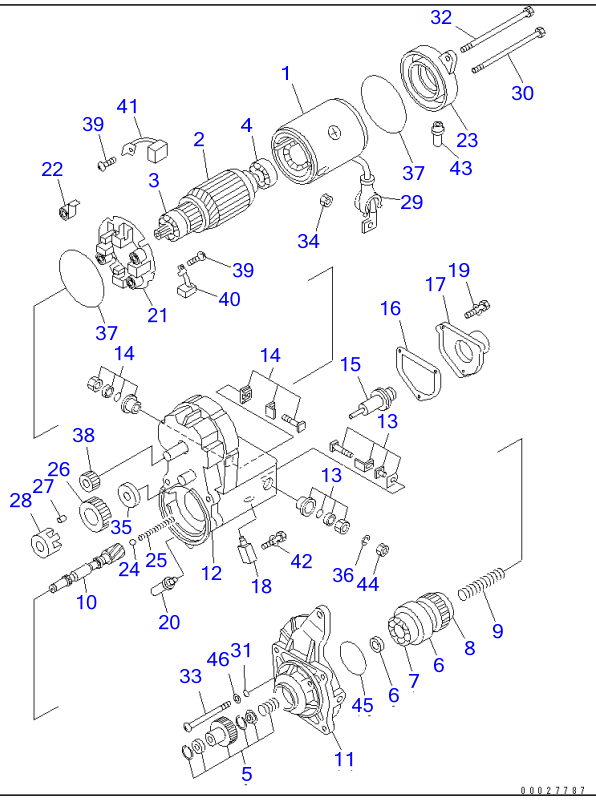

Ref A621P-02A1 **Page 031100**

SAA6D102E-2D-8 S/N 26274903-UP
STARTING MOTOR (5.5KW) (INNER PARTS)

Item	Part No.	Part Name	Qty	Serial No.
	600-863-5112	STARTING MOTOR ASS'Y,(5.5KW)	1	26483462-
	◆600-863-5111	STARTING MOTOR ASS'Y,(5.5KW)	1	26298939-26483461
	□600-863-5110	STARTING MOTOR ASS'Y,(5.5KW)	1	26274903-26298938
1	ND028100-5410	・YOKE ASS'Y	1	26274903-
2	ND028200-5250	・ARMATURE ASS'Y	1	26274903-
3	ND949100-3161	・・BEARING,BALL	1	26274903-
	ND949100-5290	・・BEARING,BALL	1	26274903-
4	ND949100-3540	・・BEARING,BALL	1	26274903-
	ND028300-6551	・CLUTCH ASS'Y	1	26274903-
5	ND028099-3270	・・STARTER KIT	1	26274903-
6	ND028300-6751	・・CLUTCH ASS'Y	1	26274903-
7	ND949100-4501	・・・BEARING,BALL, FRONT	1	26274903-
8	ND949100-1920	・・・BEARING,BALL, REAR	1	26274903-
9	ND949170-4040	・・SPRING	1	26274903-
10	ND028381-0071	・・SHAFT	1	26274903-
11	ND128401-5621	・HOUSING	1	26274903-
12	ND153400-6740	・SWITCH ASS'Y,MAGNETIC	1	26298939-
	ND153400-2600	・SWITCH ASS'Y,MAGNETIC	1	26274903-26298938
13	ND128099-5770	・・KIT,STARTER	1	26298939-
	ND028099-5090	・・KIT,STARTER	1	26274903-26298938
14	ND028099-5100	・・KIT,STARTER	1	26274903-
15	ND053660-0443	・・PLUNGER	1	26274903-
16	ND053404-0240	・・GASKET	1	26274903-
17	ND053505-0290	・・COVER,SOLENOID	1	26274903-
18	ND053480-7560	・・BOLT ASS'Y,TERMINAL	1	26274903-
19	ND949047-4440	・・BOLT	3	26274903-
20	ND028065-0250	・・BUSHING,DRAIN	1	26274903-
21	ND028510-0880	・HOLDER ASS'Y,BRUSH	1	26274903-

STARTING MOTOR (5.5KW) (INNER PARTS)

Item	Part No.	Part Name	Qty	Serial No.
22	ND028520-0011	・・SPRING,BRUSH	4	26274903-
23	ND028501-7711	・FRAME	1	26274903-
24	ND128961-0010	・BALL,STEEL	1	26298939-
	ND949120-0240	・BALL,STEEL	1	26274903-26298938
25	ND949170-4070	・SPRING	1	26274903-
26	ND028371-3210	・PINION,STARTER	1	26274903-
27	ND028306-0070	・ROLLER,CLUTCH	5	26274903-
28	ND028063-0030	・RETAINER	1	26274903-
29	ND028062-0130	・COVER	1	26274903-
30	ND949042-3680	・BOLT	1	26274903-
31	ND90801-10050	・O-RING	3	26274903-
32	ND949042-3690	・BOLT	1	26274903-
33	ND949006-4720	・SCREW	3	26274903-
34	ND949056-4480	・NUT	1	26274903-
35	ND028327-0171	・RETAINER,SNAP	1	26274903-
36	ND90258-10001	・WASHER,SPRING	1	26274903-
37	ND028901-0361	・SEAL	2	26274903-
38	ND028371-3200	・PINION	1	26274903-
39	ND949007-6530	・SCREW	4	26274903-
40	ND028530-1090	・BRUSH ASS'Y	2	26274903-
41	ND028530-1100	・BRUSH ASS'Y	2	26274903-
42	ND949007-6850	・SCREW	1	26274903-
43	ND028062-5790	・COVER	1	26274903-
44	ND90170-10061	・NUT	1	26274903-
45	ND028901-5190	・SEAL	1	26298939-
	ND90801-20470	・O-RING	1	26274903-26298938
46	ND90200-06241	・WASHER	3	26274903-

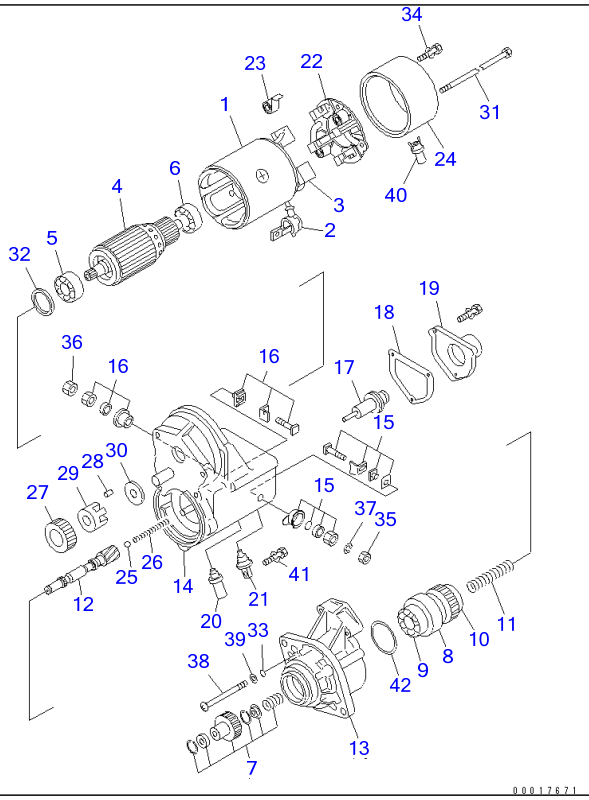

Ref A621P-02A2Z

Page 031110

SAA6D102E-2D-8 S/N 26274903-UP

STARTING MOTOR (4.5KW) (INNER PARTS)(#26274903-26302286)

Item	Part No.	Part Name	Qty	Serial No.
	600-863-4110	STARTING MOTOR ASS'Y,(4.5KW)	1	26274903-26302286
1	ND028100-2882	・YOKE ASS'Y	1	26274903-26302286
2	ND028062-0130	・・COVER	1	26274903-26302286
3	ND028099-3570	・・STARTER KIT	2	26274903-26302286
4	ND028200-1590	・ARMATURE ASS'Y	1	26274903-26302286
5	ND949100-1930	・・BEARING,BALL	1	26274903-26302286
6	ND949100-1750	・・BEARING,BALL	1	26274903-26302286
	ND028300-6551	・CLUTCH ASS'Y	1	26274903-26302286
7	ND028099-3270	・・STARTER KIT	1	26274903-26302286
8	ND028300-6751	・・CLUTCH ASS'Y	1	26274903-26302286
9	ND949100-4500	・・・BEARING,BALL, FRONT	1	26274903-26302286
10	ND949100-1920	・・・BEARING,BALL, REAR	1	26274903-26302286
11	ND949170-4040	・・SPRING	1	26274903-26302286
12	ND028381-0071	・・SHAFT	1	26274903-26302286
13	ND228401-0633	・HOUSING ASS'Y	1	26274903-26302286
14	ND153400-6700	・MAGNETIC SWITCH A.	1	26274903-26302286
15	ND128099-5620	・・STARTER KIT	1	26274903-26302286
16	ND028099-3160	・・STARTER KIT	1	26274903-26302286
17	ND053660-7170	・・PLUNGER	1	26274903-26302286
18	ND053404-0240	・・GASKET	1	26274903-26302286
19	ND053505-0290	・・COVER	1	26274903-26302286
20	ND053480-0110	・・BOLT	1	26274903-26302286
21	ND028065-0250	・・BUSHING	1	26274903-26302286
22	ND028510-5390	・BRUSH HOLDER ASS'Y	1	26274903-26302286
23	ND949173-0571	・・SPRING	4	26274903-26302286
24	ND028501-8091	・FRAME	1	26274903-26302286
25	ND128961-0010	・BALL	1	26274903-26302286
26	ND949170-4070	・SPRING	1	26274903-26302286

STARTING MOTOR (4.5KW) (INNER PARTS)(#26274903-26302286)

Item	Part No.	Part Name	Qty	Serial No.
27	ND028371-1500	・PINION	1	26274903-26302286
28	ND028306-0070	・ROLLER	5	26274903-26302286
29	ND028063-0030	・RETAINER	1	26274903-26302286
30	ND028327-0171	・RETAINER	1	26274903-26302286
31	ND128950-0520	・BOLT	2	26274903-26302286
32	ND949020-0600	・WASHER,FELT	1	26274903-26302286
33	ND90801-10050	・O-RING	3	26274903-26302286
34	ND949007-6530	・SCREW	2	26274903-26302286
35	ND90170-10061	・NUT	1	26274903-26302286
36	ND949056-4480	・NUT	1	26274903-26302286
37	ND90258-10001	・WASHER	1	26274903-26302286
38	ND949006-4720	・SCREW	3	26274903-26302286
39	ND90200-06241	・WASHER	3	26274903-26302286
40	ND028062-5790	・COVER	1	26274903-26302286
41	ND949007-6850	・SCREW	1	26274903-26302286
42	ND028901-5190	・SEAL	1	26274903-26302286

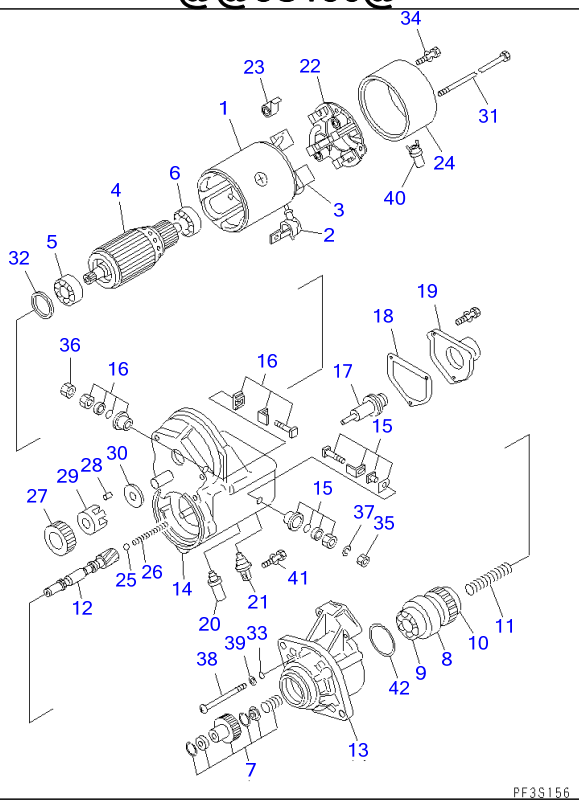

Ref A621P-02A4 Page 031120

SAA6D102E-2D-8 S/N 26274903-UP

STARTING MOTOR (4.5KW) (WITH PROTECT COVER) (INNER PARTS)(#26302287-26496521)

Item	Part No.	Part Name	Qty	Serial No.
	600-863-4210	STARTING MOTOR ASS'Y,(4.5KW)	1	26302287-26496521
1	ND028100-2882	・YOKE ASS'Y	1	26302287-26496521
2	ND028062-0130	・・COVER	1	26302287-@
3	ND028099-3570	・・STARTER KIT	2	26302287-@
4	ND028200-1590	・ARMATURE ASS'Y	1	26302287-@
5	ND949100-1930	・・BEARING,BALL	1	26302287-26496521
6	ND949100-1750	・・BEARING,BALL	1	26302287-26496521
	ND028300-6551	・CLUTCH ASS'Y	1	26302287-@
7	ND028099-3270	・・STARTER KIT	1	26302287-@
8	ND028300-6751	・・CLUTCH ASS'Y	1	26302287-@
9	ND949100-4500	・・・BEARING,BALL, FRONT	1	26302287-@
10	ND949100-1920	・・・BEARING,BALL, REAR	1	26302287-26496521
11	ND949170-4040	・・SPRING	1	26302287-@
12	ND028381-0071	・・SHAFT	1	26302287-@
13	ND228401-0633	・HOUSING ASS'Y	1	26302287-@
14	ND153400-8530	・MAGNETIC SWITCH A.	1	26302287-@
15	ND128099-5620	・・STARTER KIT	1	26302287-@
16	ND028099-3160	・・STARTER KIT	1	26302287-@
17	ND053660-7170	・・PLUNGER	1	26302287-@
18	ND053404-0240	・・GASKET	1	26302287-@
19	ND053505-0290	・・COVER	1	26302287-@
20	ND053480-7560	・・BOLT ASS'Y	1	26302287-@
21	ND028065-0250	・・BUSHING	1	26302287-@
22	ND028510-5390	・BRUSH HOLDER ASS'Y	1	26302287-26496521
23	ND949173-0571	・・SPRING	4	26302287-@
24	ND028501-8091	・FRAME	1	26302287-@

STARTING MOTOR (4.5KW) (WITH PROTECT COVER) (INNER PARTS)(#26302287-26496521)

Item	Part No.	Part Name	Qty	Serial No.
25	ND128961-0010	・BALL	1	26302287-@
26	ND949170-4070	・SPRING	1	26302287-@
27	ND028371-1500	・PINION	1	26302287-@
28	ND028306-0070	・ROLLER	5	26302287-@
29	ND028063-0030	・RETAINER	1	26302287-@
30	ND028327-0171	・RETAINER	1	26302287-@
31	ND128950-0520	・BOLT	2	26302287-@
32	ND949020-0600	・WASHER,FELT	1	26302287-@
33	ND90801-10050	・O-RING	3	26302287-@
34	ND949007-6530	・SCREW	2	26302287-@
35	ND90170-10061	・NUT	1	26302287-@
36	ND949056-4480	・NUT	1	26302287-@
37	ND90258-10001	・WASHER	1	26302287-@
38	ND949006-4720	・SCREW	3	26302287-@
39	ND90200-06241	・WASHER	3	26302287-@
40	ND028062-5790	・COVER	1	26302287-@
41	ND949007-6850	・SCREW	1	26302287-@
42	ND028901-5190	・SEAL	1	26302287-@

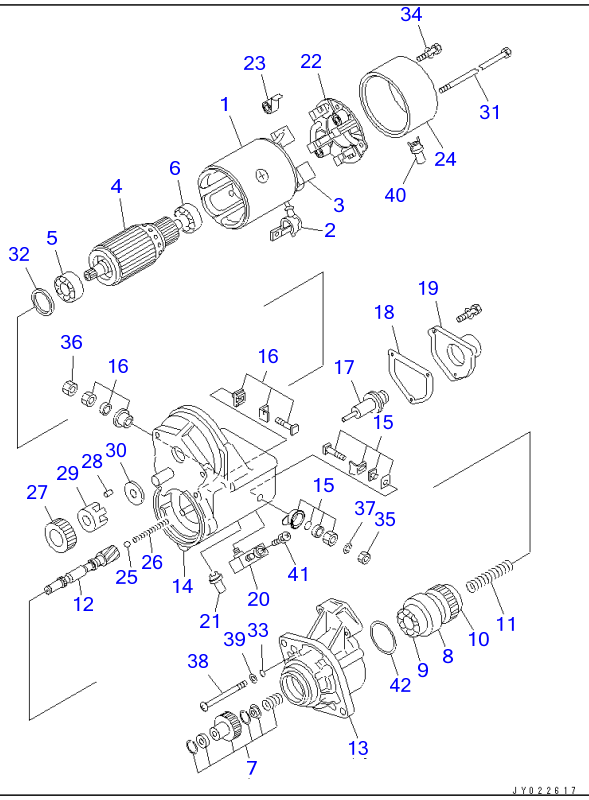

Ref A621P-03A4 Page 031130

SAA6D102E-2D-8 S/N 26274903-UP

STARTING MOTOR (4.5KW) (WITH PROTECT COVER) (INNER PARTS)(#26496522-)

Item	Part No.	Part Name	Qty	Serial No.
	600-863-4211	STARTING MOTOR ASS'Y,(4.5KW)	1	26496522-
1	ND028100-2883	・YOKE ASS'Y	1	26496522-
2	ND028062-0130	・・COVER	1	26302287-
3	ND028099-3570	・・STARTER KIT	2	26302287-
4	ND028200-1590	・ARMATURE ASS'Y	1	26302287-
5	ND128955-1150	・・BEARING,BALL	1	26496522-
6	ND128955-1050	・・BEARING,BALL	1	26496522-
	ND028300-6551	・CLUTCH ASS'Y	1	26302287-
7	ND028099-3270	・・STARTER KIT	1	26302287-
8	ND028300-6751	・・CLUTCH ASS'Y	1	26302287-
9	ND949100-4500	・・・BEARING,BALL, FRONT	1	26302287-
10	ND128955-1140	・・・BEARING,BALL, REAR	1	26496522-
11	ND949170-4040	・・SPRING	1	26302287-
12	ND028381-0071	・・SHAFT	1	26302287-
13	ND228401-0633	・HOUSING ASS'Y	1	26302287-
14	ND153400-8530	・MAGNETIC SWITCH A.	1	26302287-
15	ND128099-5620	・・STARTER KIT	1	26302287-
16	ND028099-3160	・・STARTER KIT	1	26302287-
17	ND053660-7170	・・PLUNGER	1	26302287-
18	ND053404-0240	・・GASKET	1	26302287-
19	ND053505-0290	・・COVER	1	26302287-
20	ND053480-7560	・・BOLT ASS'Y	1	26302287-
21	ND028065-0250	・・BUSHING	1	26302287-
22	ND028510-5391	・BRUSH HOLDER ASS'Y	1	26496522-
23	ND949173-0571	・・SPRING	4	26302287-
24	ND028501-8091	・FRAME	1	26302287-

SAA6D102E-2D-8 S/N 26274903-UP

STARTING MOTOR (4.5KW) (WITH PROTECT COVER) (INNER PARTS)(#26496522-)

Item	Part No.	Part Name	Qty	Serial No.
25	ND128961-0010	・BALL	1	26302287-
26	ND949170-4070	・SPRING	1	26302287-
27	ND028371-1500	・PINION	1	26302287-
28	ND028306-0070	・ROLLER	5	26302287-
29	ND028063-0030	・RETAINER	1	26302287-
30	ND028327-0171	・RETAINER	1	26302287-
31	ND128950-0520	・BOLT	2	26302287-
32	ND949020-0600	・WASHER,FELT	1	26302287-
33	ND90801-10050	・O-RING	3	26302287-
34	ND949007-6530	・SCREW	2	26302287-
35	ND90170-10061	・NUT	1	26302287-
36	ND949056-4480	・NUT	1	26302287-
37	ND90258-10001	・WASHER	1	26302287-
38	ND949006-4720	・SCREW	3	26302287-
39	ND90200-06241	・WASHER	3	26302287-
40	ND028062-5790	・COVER	1	26302287-
41	ND949007-6850	・SCREW	1	26302287-
42	ND028901-5190	・SEAL	1	26302287-

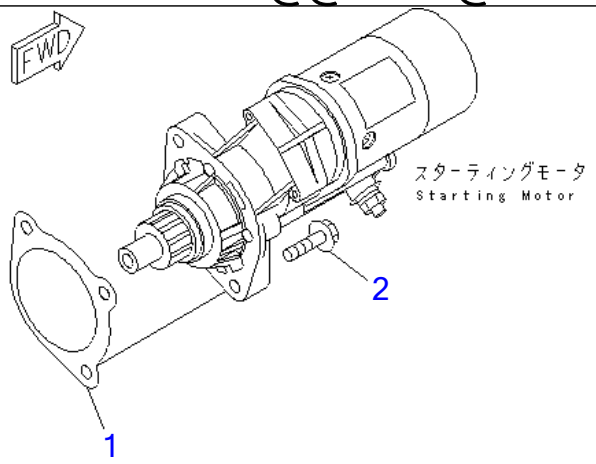

PMD1104

Ref A621S-01A7 **Page 031140**

SAA6D102E-2D-8 S/N 26274903-UP
STARTING MOTOR MOUNTING (4.5KW)

Item	Part No.	Part Name	Qty	Serial No.
1	6732-81-6811	GASKET (K2)	1	26274903-
2	01435-01035	BOLT	2	26274903-

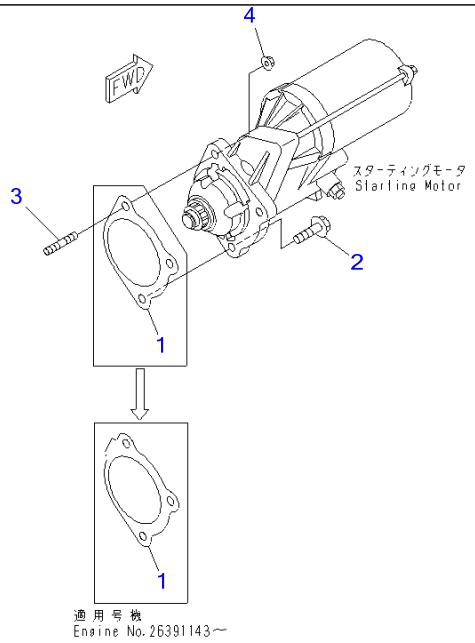

00057270

Ref A621S-01A8 **Page 031150**

SAA6D102E-2D-8 S/N 26274903-UP
STARTING MOTOR MOUNTING (5.5KW)

Item	Part No.	Part Name	Qty	Serial No.
1	6754-81-6810	GASKET (K2)	1	26391143-
	6732-81-6811	GASKET (K2)	1	26274903-26391142
2	01435-01035	BOLT	2	26274903-
3	6735-81-6170	STUD	1	26274903-
4	01584-01008	NUT	1	26274903-

PMD0861

Ref A8110-01A9 **Page 031160**

SAA6D102E-2D-8 S/N 26274903-UP

REPAIR PARTS (1/4) (CYLINDER HEAD)

Item	Part No.	Part Name	Qty	Serial No.
1	6736-19-1310	GUIDE, 60.50MM	6	26274903-
2	6736-19-1410	GUIDE, 51.75MM	6	26274903-
3	6736-18-1310	GUIDE, 61.00MM	12	26274903-
		OVERSIZE PARTS		
4	6735-11-1870	GASKET, 0.25MM	1	26274903-
	6735-11-1840	GASKET, 0.50MM	1	26274903-

PMD0861

Ref A8110-02A9 **Page 031170**

SAA6D102E-2D-8 S/N 26274903-UP
REPAIR PARTS (2/4) (CYLINDER BLOCK)

Item	Part No.	Part Name	Qty	Serial No.
		OVERSIZE PARTS		
1	6736-29-1410	BUSHING,CAM, NO.1	1	26274903-
2	6736-29-1420	BUSHING,CAM, NO.2,3,4,5,6,7	1	26274903-
		STANDARD		
3	6736-29-2110	LINER,(SERVICE PARTS)	6	26274903-

PMD0861

Ref A8110-03A9 **Page 031180**

SAA6D102E-2D-8 S/N 26274903-UP
REPAIR PARTS (3/4) (CRANKSHAFT)

Item	Part No.	Part Name	Qty	Serial No.
1	6736-39-1220	SLEEVE,WEAR, FRONT	1	26274903-
2	6736-39-1130	SLEEVE,WEAR, REAR (DOUBLE LIP TYPE)	1	26274903-
		UNDERSIZE 0.25MM		
	6735-29-8100	MAIN METAL ASS'Y	6	26274903-
3	☆	・METAL,UPPER	1	26274903-
4	☆	・METAL,LOWER	1	26274903-
		UNDERSIZE 0.50MM		
3	6735-28-8100	MAIN METAL ASS'Y	6	26274903-
	☆	・METAL,UPPER	1	26274903-
4	☆	・METAL,LOWER	1	26274903-
		UNDERSIZE 0.75MM		
3	6735-27-8100	MAIN METAL ASS'Y	6	26274903-
	☆	・METAL,UPPER	1	26274903-
4	☆	・METAL,LOWER	1	26274903-
		UNDERSIZE 1.00MM		
3	6735-26-8100	MAIN METAL ASS'Y	6	26274903-
	☆	・METAL,UPPER	1	26274903-
4	☆	・METAL,LOWER	1	26274903-
		UNDERSIZE 0.25MM		
	6736-29-8610	THRUST METAL ASS'Y	1	26274903-
5	☆	・METAL,THRUST	1	26274903-
6	☆	・METAL,LOWER	1	26274903-
		UNDERSIZE 0.50MM		
5	6735-28-8200	THRUST METAL ASS'Y	1	26274903-
	☆	・METAL,THRUST	1	26274903-
6	☆	・METAL,LOWER	1	26274903-
		UNDERSIZE 0.75MM		
5	6736-28-8620	THRUST METAL ASS'Y	1	26274903-

REPAIR PARTS (3/4) (CRANKSHAFT)

Item	Part No.	Part Name	Qty	Serial No.
	☆	・METAL,THRUST	1	26274903-
6	☆	・METAL,LOWER UNDERSIZE 1.00MM	1	26274903-
5	6736-27-8620	THRUST METAL ASS'Y	1	26274903-
	☆	・METAL,THRUST	1	26274903-
6	☆	・METAL,LOWER UNDERSIZE 0.50MM	1	26274903-
5	6736-29-8700	THRUST METAL ASS'Y	1	26274903-
	☆	・METAL,THRUST 0.5MM/0.5MM	1	26274903-
6	☆	・METAL,LOWER UNDERSIZE 1.00MM	1	26274903-
5	6736-28-8700	THRUST METAL ASS'Y	1	26274903-
	☆	・METAL,THRUST 1.0MM/1.0MM	1	26274903-
6	☆	・METAL,LOWER	1	26274903-

PMD0861

Ref A8110-04A9 **Page 031190**

SAA6D102E-2D-8 S/N 26274903-UP
REPAIR PARTS (4/4) (PISTON)

Item	Part No.	Part Name	Qty	Serial No.
		OVERSIZE PARTS		
1	6736-39-3400	METAL	12	26274903-
	6736-38-3400	METAL	12	26274903-
	6736-37-3400	METAL	12	26274903-
	6736-36-3400	METAL	12	26274903-
		OVERSIZE 0.5MM		
	6738-39-2031	PISTON RING ASS'Y	6	26292269-
	□6738-39-2030	PISTON RING ASS'Y	6	26274903-26292268
2	☆	・RING,TOP	1	26292269-
	☆	・RING,TOP	1	26274903-26292268
	6738-38-2031	PISTON RING ASS'Y	6	26292269-
	□6738-38-2030	PISTON RING ASS'Y	6	26274903-26292268
	☆	・RING,TOP	1	26292269-
	☆	・RING,TOP	1	26274903-26292268
3	☆	・RING,SECOND	1	26274903-
	☆	・RING,SECOND	1	26274903-
4	☆	・RING,OIL	1	26274903-
		OVERSIZE 1.0MM		
4	☆	・RING,OIL	1	26274903-
		OVERSIZE PARTS		
5	6738-39-2111	PISTON, 0.5MM	6	26292269-
	□6738-39-2110	PISTON, 0.5MM	6	26274903-26292268
6	6738-38-2111	PISTON, 1.0MM	6	26292269-
	□6738-38-2110	PISTON, 1.0MM	6	26274903-26292268

KIT 詳細については次のページを参照して下さい。
See subsequent pages for details.

K-1 6738-K1-1100 シリンダ ヘッド ガスケット キット
CYLINDER HEAD GASKET KIT

このガスケットキットは、キット区分ごとの基本セットです。
部品明細書中、キットの記号が付いていない消耗部品は、お手数ですが単品にて手配下さい。

This kit basis to the gasket kit.
Thers not kit mark parts articles of consumption single order.

SAA6D102E-2D-8 S/N 26274903-UP
CYLINDER HEAD GASKET KIT(#26287717-)

Item	Part No.	Part Name	Qty	Serial No.
1	6738-K1-1100	GASKET KIT,CYLINDER HEAD	1	26287717-
	6732-11-4811	・GASKET,AIR INTAKE HEATER	2	26287717-
	07005-01212	・SEAL, WASHER,AIR TUBE	2	26287717-
	07005-01012	・SEAL, WASHER,AIR TUBE	2	26287717-
	07005-01212	・SEAL, WASHER,FUEL TUBE (FILTER)	4	26287717-
	07005-01412	・SEAL, WASHER,FUEL TUBE (INJECTION PUMP)	8	26287717-
	6732-71-6260	・GASKET,INJECTOR - SPILL	12	26287717-
	6738-11-4370	・O-RING,TURBOCHARGER CONNECTOR	1	26287717-
	6735-11-4812	・GASKET,INTAKE MANIFOLD COVER	1	26287717-
	6732-11-3850	・SEAL,INJECTOR	6	26287717-
	6736-11-3430	・GASKET,INJECTOR SHIM	6	26287717-
	6732-81-8830	・GASKET,TURBOCHARGER GASKET	1	26287717-
	6732-41-4540	・SEAL,VALVE STEM	12	26287717-
	6735-11-1821	・GASKET,CYLINDER HEAD	1	26287717-
	6736-11-5820	・GASKET,EXHAUST MANIFOLD	6	26287717-
	6732-61-6250	・SEAL,THERMOSTAT	1	26287717-
	6732-61-6240	・GASKET,THERMOSTAT	1	26287717-
	6207-51-7690	・GASKET,TURBOCHARGER OIL DRAIN	1	26287717-
	6221-51-8160	・GASKET,TURBOCHARGER OIL SUPPLY	1	26287717-
	07005-01412	・SEAL, WASHER,TURBOCHARGER OIL SUPPLY TUBE	2	26287717-
	6736-51-8710	・O-RING,TURBOCHARGER OIL SUPPLY NIPPLE	1	26287717-
	6732-11-8181	・GASKET,HEAD COVER	6	26287717-
	6732-11-8210	・GASKET,CAMFOLLOWER COVER BOLT	6	26287717-
	6732-81-8220	・CLAMP,TURBOCHARGER OUTLET PIPE	1	26287717-

KIT 詳細については次のページを参照して下さい。
See subsequent pages for details.

K-2 6738-K2-1100 シリンダ ブロック ガスケット キット
CYLINDER BLOCK GASKET KIT

このガスケットキットは、キット区分ごとの基本セットです。
部品明細書中、キットの記号が付いていない消耗部品は、お手数ですが単品にて手配下さい。

This kit basis to the gasket kit.
Thers not kit mark parts articles of consumption single order.

SAA6D102E-2D-8 S/N 26274903-UP

CYLINDER BLOCK GASKET KIT(#26287717-)

Item	Part No.	Part Name	Qty	Serial No.
2	6738-K2-1100	GASKET KIT,CYLINDER BLOCK	1	26287717-
	6216-84-9420	・O-RING,SPEED SENSOR	1	26287717-
	6215-81-9710	・O-RING,M10 PLUG	3	26287717-
	6735-21-1930	・O-RING,M14 PLUG	1	26287717-
	6731-21-1190	・NOZZLE,COOLING NOZZLE	6	26287717-
	6732-21-3811	・GASKET,GEAR CASE	1	26287717-
	6732-21-3870	・O-RING,GEAR CASE	1	26287717-
	6732-21-3880	・GASKET,GEAR HOUSING	1	26287717-
	6731-21-4220	・SEAL,FRONT SEAL KIT	1	26287717-
	6736-21-3450	・GASKET,FRONT COVER	1	26287717-
	6732-11-8210	・GASKET,PUSH ROD COVER BOLT	6	26287717-
	6738-21-6180	・O-RING,PUSH ROD COVER	1	26287717-
	6738-21-6650	・GASKET,PUSH ROD COVER	1	26287717-
	6738-21-6660	・GASKET,PUSH ROD COVER BOLT	8	26287717-
	07000-72110	・O-RING,PTO COVER	1	26287717-
	6732-21-3380	・GASKET,PTO HOUSING	2	26287717-
	6732-21-3220	・SEAL,FRONT COVER	1	26287717-
	6735-21-4191	・GASKET,REAR COVER	1	26287717-
	6736-21-4221	・SEAL,REAR SEAL KIT (SINGLE)	1	26287717-
	6732-21-4171	・GASKET,REAR COVER	1	26287717-
	6732-21-4161	・O-RING,BEARING CAP	1	26287717-
	07005-01012	・SEAL, WASHER,INJECTION PUMP OIL PIPING	7	26287717-
	6735-61-6411	・GASKET	1	26287717-
	6732-51-4420	・O-RING,OIL PRESSURE PLUG	1	26287717-
	6731-51-5290	・O-RING,OIL FILTER AND PIPING	2	26287717-
	6732-51-4432	・GASKET,OIL PRESSURE PLUG	1	26287717-
	6732-61-2312	・GASKET,OIL COOLER CORE	1	26287717-
	6162-53-5450	・PACKING,OIL FILTER AND PIPING	1	26287717-

SAA6D102E-2D-8 S/N 26274903-UP
CYLINDER BLOCK GASKET KIT(#26287717-)

Item	Part No.	Part Name	Qty	Serial No.
	6162-53-5430	・PACKING,OIL FILTER AND PIPING	1	26287717-
	6731-51-5290	・O-RING,OIL FILTER AND PIPING	2	26287717-
	6733-21-5520	・GASKET,SUCTION TUBE	1	26287717-
	07005-02216	・SEAL, WASHER,OIL PAN DRAIN	2	26287717-
	6732-81-6811	・GASKET,STARTER	1	26287717-
	6732-51-8330	・O-RING,TURBOCHARGER DRAIN	2	26287717-
	6732-61-6131	・SEAL,WATER INLET CONNECTION	1	26287717-
	6736-61-1520	・SEAL,WATER PUMP	1	26287717-

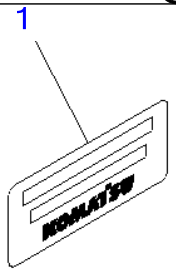

PJ6C721

SAA6D102E-2D-8 S/N 26274903-UP

CAUTION PLATE (JAPANESE-ENGLISH)(#26287716-)

Item	Part No.	Part Name	Qty	Serial No.
1	6738-81-2531	PLATE	1	26287716-

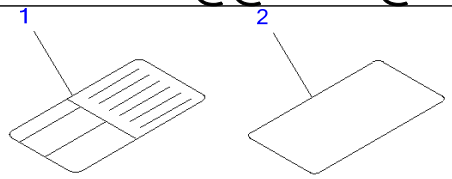

PJ6A211

Ref A9850-Z1A0A **Page 031230**

SAA6D102E-2D-8 S/N 26274903-UP

CAUTION PLATE (FOR REGULATION OF EPA)(#26282900-26308190)

Item	Part No.	Part Name	Qty	Serial No.
1	6732-81-5870	PLATE	1	26282900-26308190
2	6732-81-2190	DECAL	1	26293535-26308190
	☐6732-81-2121	DECAL	1	26282900-26293534

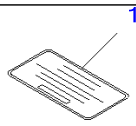

PMD1188

Ref A9850-01A2 **Page 031240**

SAA6D102E-2D-8 S/N 26274903-UP
CAUTION PLATE(#26374701-)

Item	Part No.	Part Name	Qty	Serial No.
1	6732-81-2611	PLATE, NAME	1	26374701-

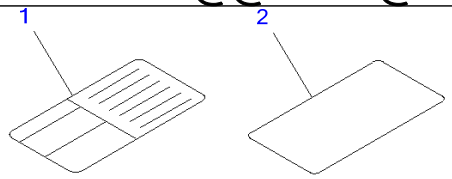

PJ6A211

Ref A9850-01A5 **Page 031250**

SAA6D102E-2D-8 S/N 26274903-UP

CAUTION PLATE (FOR REGULATION OF EPA)(#26308191-26374700)

Item	Part No.	Part Name	Qty	Serial No.
1	6732-81-5870	PLATE	1	26308191-26374700
2	6735-83-2120	DECAL	1	26325462-26374700
	☐6738-81-2110	DECAL	1	26308191-26325461

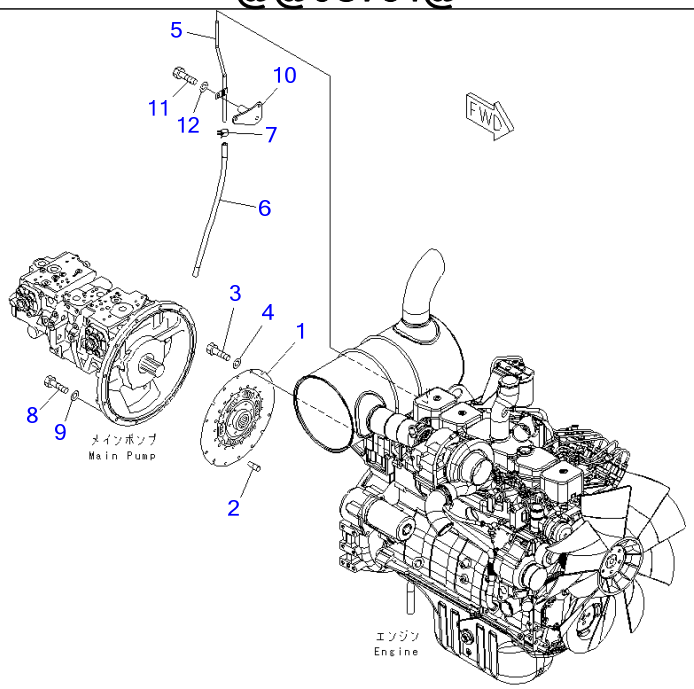

Ref A9999-01B3 **Page 031260**

SAA6D102E-2D-8 S/N 26274903-UP

MAIN PUMP CONNECTING PARTS(#26282900-)

Item	Part No.	Part Name	Qty	Serial No.
1	22U-01-21310	DISK DAMPER	1	26282900-
2	203-01-51120	PIN	2	26282900-
3	01010-81020	BOLT	8	26282900-
4	01643-31032	WASHER	8	26282900-
5	6209-11-5480	TUBE,MUFFLER DRAIN	1	26282900-
6	07260-20945	HOSE	1	26282900-
7	07285-00155	CLIP	1	26282900-
8	01010-81040	BOLT	10	26282900-
9	01643-31032	WASHER	10	26282900-
10	20Y-62-41572	BRACKET	1	26282900-
11	01010-81045	BOLT	1	26282900-
12	01643-31032	WASHER	1	26282900-

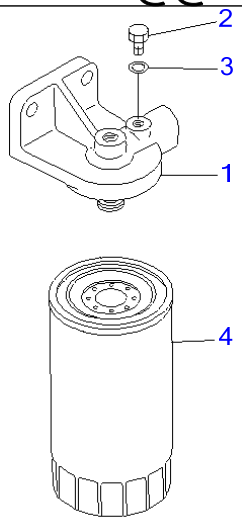

PE31615

Ref B9999-01D1 **Page 031270**

SAA6D102E-2D-8 S/N 26274903-UP
PRE-FUEL FILTER(#26288679-)

Item	Part No.	Part Name	Qty	Serial No.
	600-311-9101	FUEL FILTER ASS'Y	1	26288679-
1	6138-71-6110	・BRACKET	1	26288679-
2	6110-73-6231	・PLUG	1	26288679-
3	07005-00812	・SEAL, WASHER	1	26288679-
4	600-311-9121	・CARTRIDGE	1	26288679-
	6110-73-6231	・・PLUG,(NOT SHOWN)	1	26288679-
	07005-00812	・・SEAL, WASHER,(NOT SHOWN)	1	26288679-

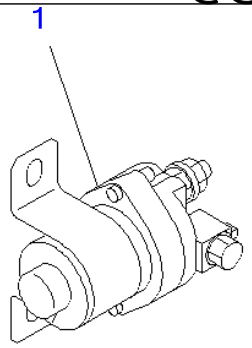

PJ6F064

SAA6D102E-2D-8 S/N 26274903-UP

HEATER SWITCH

Item	Part No.	Part Name	Qty	Serial No.
1	600-815-2170	SWITCH	1	26274903-

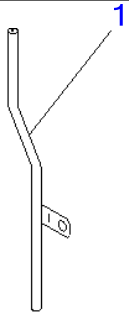

PJ6F063

SAA6D102E-2D-8 S/N 26274903-UP

MUFFLER DRAIN TUBE

Item	Part No.	Part Name	Qty	Serial No.
1	6209-11-5480	TUBE	1	26274903-

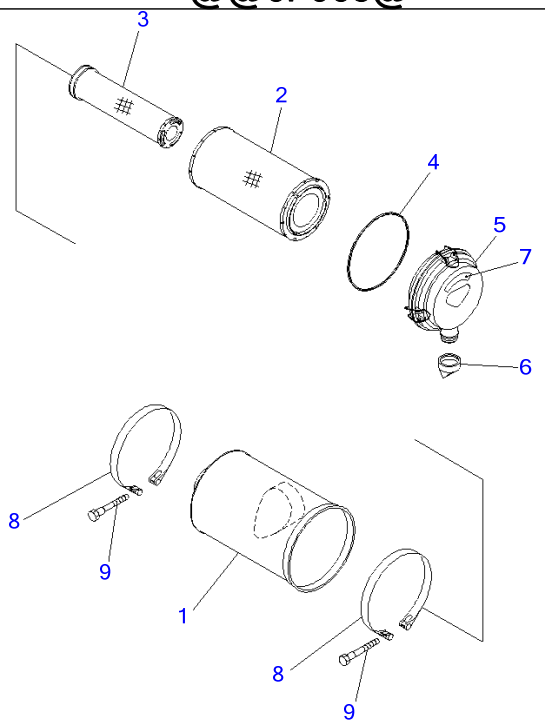

PJ6F065

Ref B9999-01L8 **Page 031300**

SAA6D102E-2D-8 S/N 26274903-UP
AIR CLEANER(#26280116-)

Item	Part No.	Part Name	Qty	Serial No.
	6738-81-7200	AIR CLEANER ASS'Y	1	26280116-
1	6738-81-7210	・BODY	1	26280116-
	600-185-4100	・ELEMENT ASS'Y	1	26280116-
2	600-185-4110	・・ELEMENT,OUTER	1	26280116-
3	☆	・・ELEMENT,INNER	1	26280116-
4	600-184-1470	・・O-RING	1	26280116-
5	600-184-1420	・COVER ASS'Y	1	26280116-
6	600-184-1350	・VALVE	1	26280116-
7	600-181-1930	・PLATE, INSTRUCTION	1	26280116-
8	6222-81-7190	BAND ASS'Y	2	26280116-
9	6643-11-4641	BOLT	2	26280116-

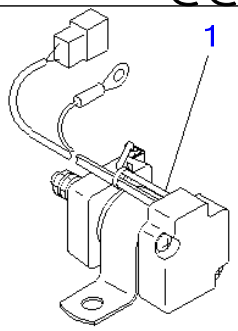

PJ6F066

Ref B9999-01N2 **Page 031310**

SAA6D102E-2D-8 S/N 26274903-UP

SWITCH (FOR STARTER)(#26282900-)

Item	Part No.	Part Name	Qty	Serial No.
1	600-815-8941	RELAY	1	26302322-
	600-815-8940	RELAY	1	26282900-26302321

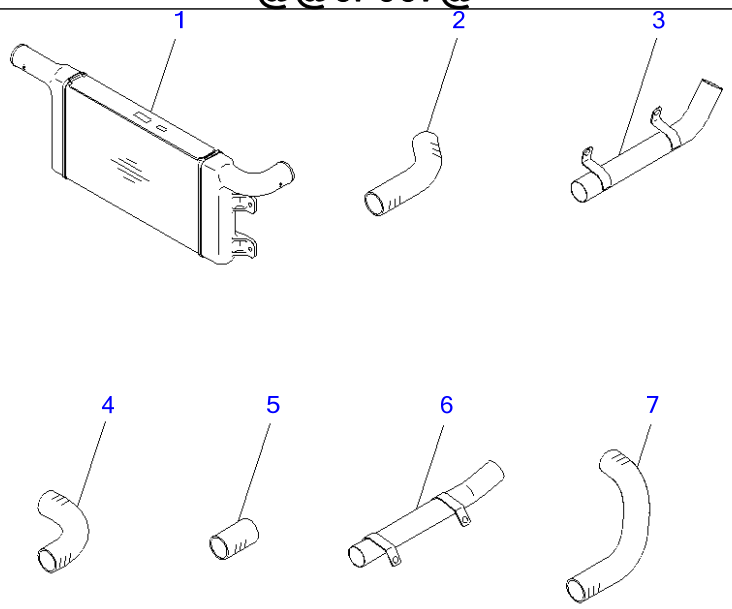

PJ6F067

Ref B9999-01N3 **Page 031320**

SAA6D102E-2D-8 S/N 26274903-UP
AFTER COOLER(#26287717-)

Item	Part No.	Part Name	Qty	Serial No.
1	6738-61-4123	AIR COOLER ASS'Y	1	26287717-
2	6738-11-4810	HOSE	1	26287717-
3	6738-11-4880	TUBE	1	26287717-
4	6738-11-4840	HOSE	1	26287717-
5	6738-11-4720	HOSE	1	26287717-
6	6738-11-4890	TUBE	1	26287717-
7	6738-11-4870	HOSE	1	26287717-

SAA6D102E-2D-8 S/N 26274903-UP

@@6F068@

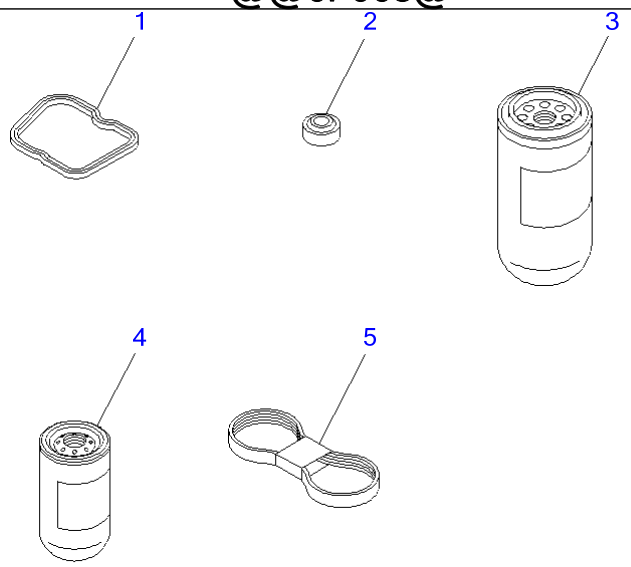

PJ6F068

Ref B9999-01N4 **Page 031330**

SAA6D102E-2D-8 S/N 26274903-UP

SPARE PARTS(#26287717-)

Item	Part No.	Part Name	Qty	Serial No.
1	6732-11-8181	GASKET	6	26287717-
2	6732-11-8210	GASKET	6	26287717-
3	6736-51-5142	CARTRIDGE	1	26302403-
	6736-51-5141	CARTRIDGE	1	26287717-26302402
4	6732-71-6112	CARTRIDGE,FUEL	1	26306784-
	6732-71-6111	CARTRIDGE,FUEL	1	26287717-26306783
5	6732-61-4170	BELT	1	26287717-

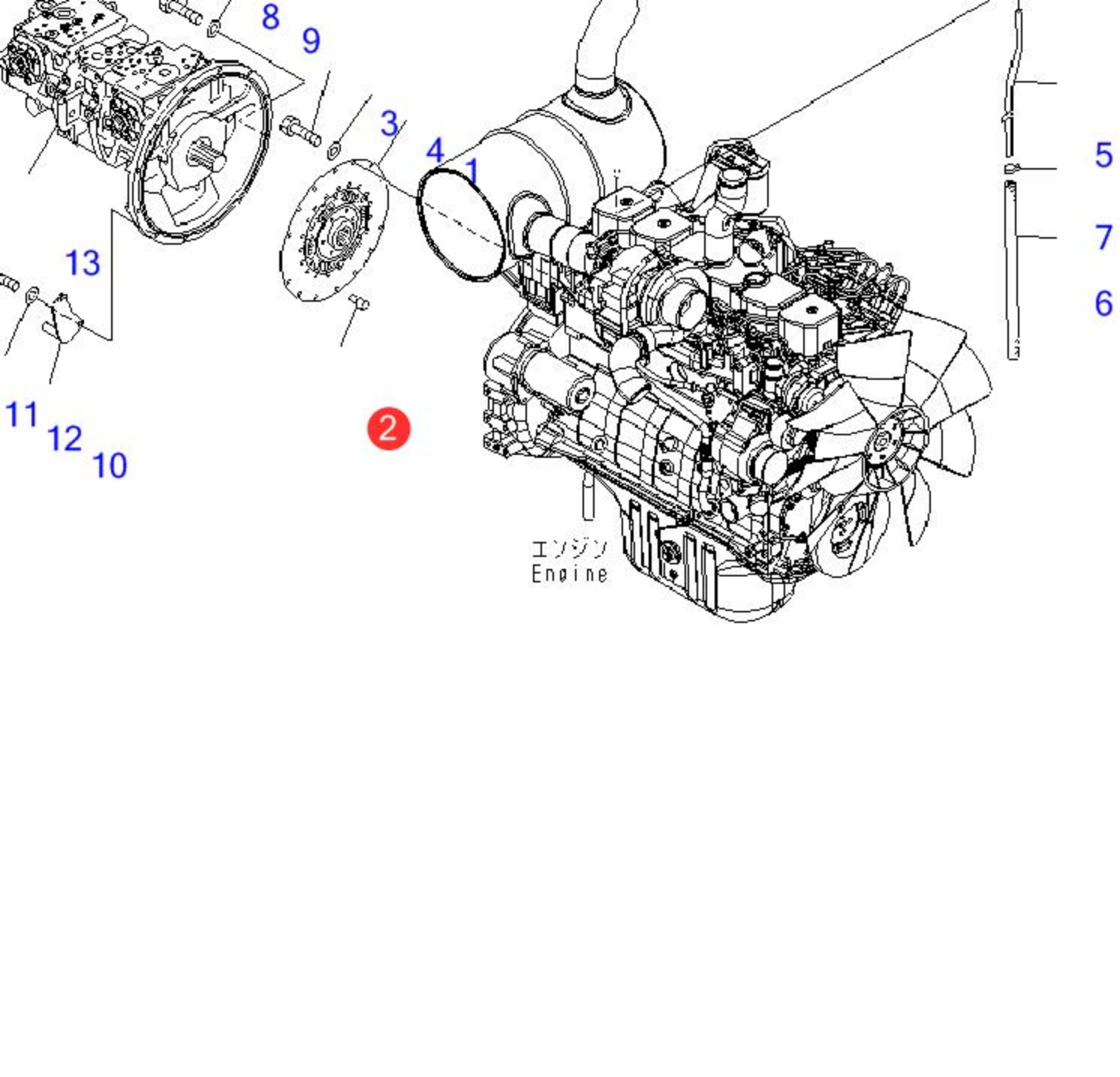
8
9
3
4
1
5
7
6
13
11
12
10
2
エンジン
Engine

DAMPER¤ PUMP AND TUBE

Item	Part No.	Part Name	Qty	Serial No.
1	22U-01-21310	DISK DAMPER	1	60001-
2	203-01-51120	PIN	2	60001-
3	01010-81020	BOLT	8	60001-
4	01643-31032	WASHER	8	60001-
5	6209-11-5480	TUBE	1	60001-
6	07260-20945	HOSE	1	60001-
7	07285-00155	CLIP	1	60001-
8	01010-81040	BOLT	10	60001-
9	01643-31032	WASHER	10	60001-
10	20Y-62-41572	BRACKET	1	60001-
11	01010-81045	BOLT	2	60001-
12	01643-31032	WASHER	2	60001-
13	(708-2L-00112)	PUMP ASS'Y	1	60001-

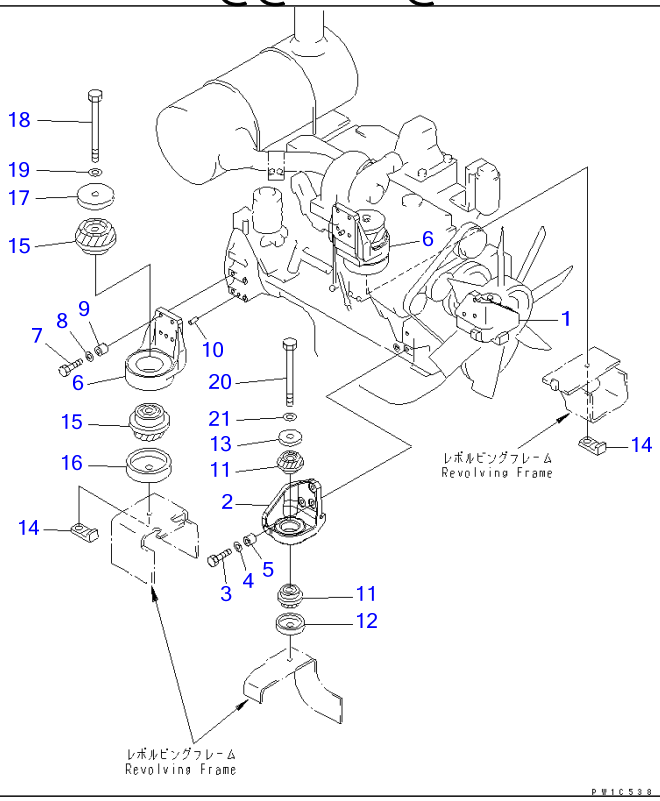

Ref B0100-01A0 **Page 030020**

PC220-7 S/N 60001-UP (Overseas Version)
ENGINE MOUNT (BRACKET AND CUSHION)

Item	Part No.	Part Name	Qty	Serial No.
1	20Y-01-29231	BRACKET	1	60001-
2	20Y-01-31220	BRACKET	1	60001-
3	01010-81265	BOLT	6	60001-
4	01643-31232	WASHER	6	60001-
5	20Y-01-21260	SPACER	6	60001-
6	20Y-01-22121	BRACKET	2	60001-
7	01010-81265	BOLT	8	60001-
8	01643-31232	WASHER	8	60001-
9	20Y-01-21260	SPACER	8	60001-
10	04020-01228	PIN	2	60001-
11	20Y-01-12210	CUSHION	4	60001-
12	20Y-01-12141	STOPPER	2	60001-
13	20Y-01-11141	WASHER	2	60001-
14	20Y-01-22111	NUT	3	60001-
15	20Y-01-12222	CUSHION	4	60001-
16	20Y-01-12161	STOPPER	2	60001-
17	20Y-01-11141	WASHER	2	60283-
	20Y-01-12180	WASHER	2	60001-60282
18	01011-81655	BOLT	2	60001-
19	01643-31645	WASHER	2	60001-
20	20Y-01-12270	BOLT	2	60001-
21	01643-31645	WASHER	2	60001-

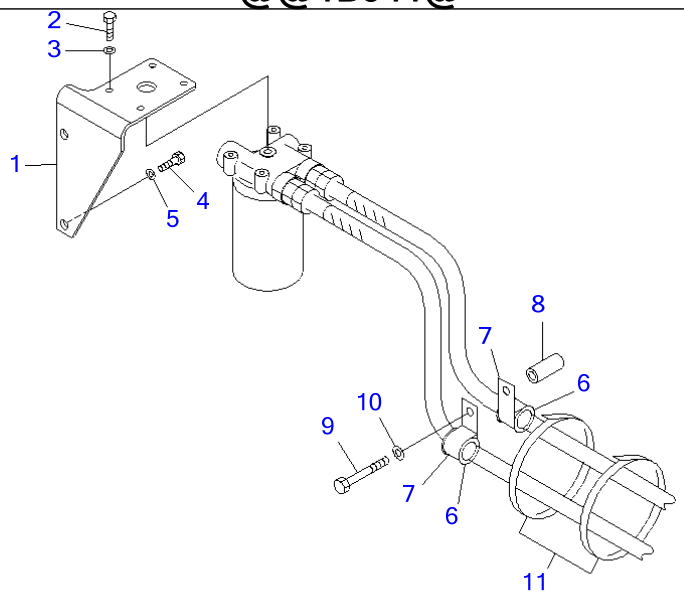

PW1B941

Ref B0100-02A0 **Page 030030**

PC220-7 S/N 60001-UP (Overseas Version)
ENGINE MOUNT (FILTER REMOTE)

Item	Part No.	Part Name	Qty	Serial No.
1	20Y-01-31161	BRACKET	1	60001-
2	01010-80825	BOLT	4	60001-
3	01643-30823	WASHER	4	60001-
4	01010-81230	BOLT	2	60001-
5	01643-31232	WASHER	2	60001-
6	07095-20627	CUSHION	2	60001-
7	04434-53412	CLIP	2	60001-
8	195-979-5190	COLLAR	1	60001-
9	01010-81275	BOLT	1	60001-
10	01643-31232	WASHER	1	60001-
11	08034-20536	BAND	2	60001-

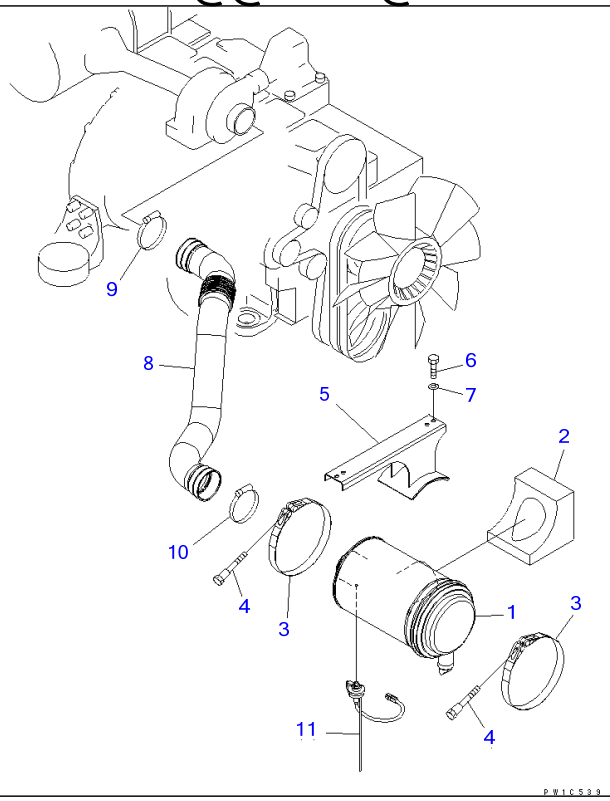

Ref B0200-01A0 **Page 030040**

PC220-7 S/N 60001-UP (Overseas Version)
AIR CLEANER CONNECTION

Item	Part No.	Part Name	Qty	Serial No.
1	(6738-81-7200)	AIR CLEANER ASS'Y	1	60001-
2	206-54-71141	SEAL	1	60001-
3	6222-81-7190	BAND ASS'Y	2	60001-
4	6643-11-4641	BOLT	2	60001-
5	206-54-71131	FRAME	1	60001-
6	01010-81230	BOLT	4	60001-
7	01643-31232	WASHER	4	60001-
8	206-01-61111	HOSE	1	60001-
9	07299-00105	CLAMP	1	60001-
10	07299-00130	CLAMP	1	60001-
11	20Y-06-42910	SENSOR	1	69459-
	7861-93-1422	SENSOR	1	69444-69458
	7861-93-1421	SENSOR	1	68844-69443
	7861-93-1420	SENSOR	1	65001-68843
	20Y-06-42910	SENSOR	1	60776-65000
	7861-93-1420	SENSOR	1	60001-60775

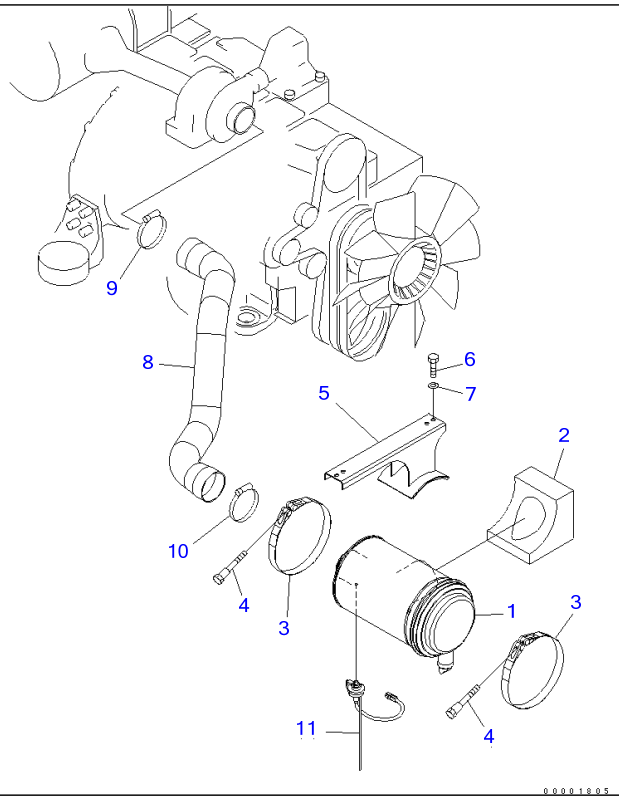

Ref B0200-01A1 **Page 030050**

PC220-7 S/N 60001-UP (Overseas Version)

AIR CLEANER CONNECTION (COLD WEATHER A SPEC.)(#60255-)

Item	Part No.	Part Name	Qty	Serial No.
1	(6738-81-7200)	AIR CLEANER ASS'Y	1	60255-
2	206-54-71141	SEAL	1	60255-
3	6222-81-7190	BAND ASS'Y	2	60255-
4	6643-11-4641	BOLT	2	60255-
5	206-54-71131	FRAME	1	60255-
6	01010-81230	BOLT	4	60255-
7	01643-31232	WASHER	4	60255-
8	206-01-61120	HOSE	1	60255-
9	07299-00120	CLAMP	1	60255-
10	07299-00130	CLAMP	1	60740-
	07299-00145	CLAMP	1	60255-60739
11	20Y-06-42910	SENSOR	1	69459-
	7861-93-1422	SENSOR	1	69444-69458
	7861-93-1421	SENSOR	1	68844-69443
	7861-93-1420	SENSOR	1	65001-68843
	20Y-06-42910	SENSOR	1	60776-65000
	7861-93-1420	SENSOR	1	60255-60775

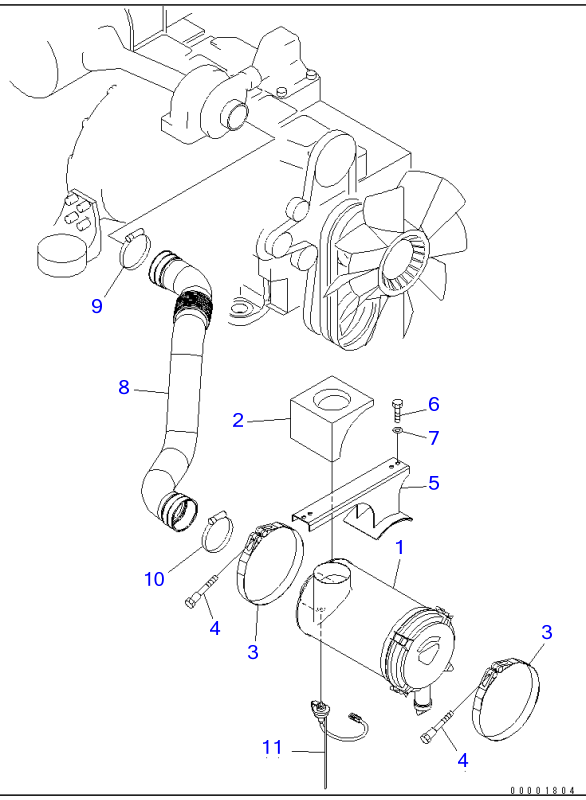

Ref B0200-01A2 **Page 030060**

PC220-7 S/N 60001-UP (Overseas Version)

AIR CLEANER CONNECTION (WITH PRECLEANER)

Item	Part No.	Part Name	Qty	Serial No.
1	(6738-81-7500)	AIR CLEANER ASS'Y	1	60001-
2	206-54-71141	SEAL	1	60001-
3	6222-81-7190	BAND ASS'Y	2	60001-
4	6643-11-4641	BOLT	2	60001-
5	206-54-71131	FRAME	1	60001-
6	01010-81230	BOLT	4	60001-
7	01643-31232	WASHER	4	60001-
8	206-01-61111	HOSE	1	60001-
9	07299-00105	CLAMP	1	60001-
10	07299-00130	CLAMP	1	60001-
11	20Y-06-42910	SENSOR	1	69459-
	7861-93-1422	SENSOR	1	69444-69458
	7861-93-1421	SENSOR	1	68844-69443
	7861-93-1420	SENSOR	1	65001-68843
	20Y-06-42910	SENSOR	1	60776-65000
	7861-93-1420	SENSOR	1	60001-60775

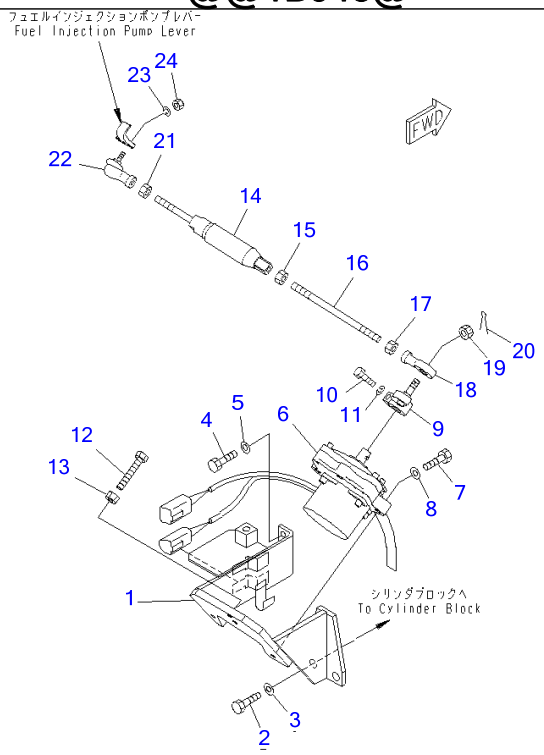

Ref B0400-01A0 **Page 030070**

PC220-7 S/N 60001-UP (Overseas Version)
FUEL CONTROL(#60001-65000)

Item	Part No.	Part Name	Qty	Serial No.
1	20Y-43-31310	BRACKET	1	60001-65000
2	01010-81230	BOLT	1	60001-@
3	01643-31232	WASHER	1	60001-@
4	01010-80820	BOLT	2	60001-@
5	01643-30823	WASHER	2	60001-@
6	7834-41-2001	MOTOR ASS'Y	1	60357-@
	7834-41-2000	MOTOR ASS'Y	1	60001-60356
7	01010-81040	BOLT	3	60001-@
8	01643-31032	WASHER	3	60001-@
9	20Y-43-12143	LEVER	1	60001-@
10	01010-81030	BOLT	1	60001-@
11	01602-21030	WASHER	1	60001-@
12	01016-51070	BOLT	1	60001-@
13	01580-11008	NUT	1	60001-@
14	20Y-43-23441	SPRING ASS'Y	1	60001-@
15	01582-11008	NUT	1	60001-@
16	04248-31018	ROD	1	60001-@
17	01508-41006	NUT	1	60001-@
18	04250-91056	END	1	60001-@
19	01593-31008	NUT	1	60001-@
20	04050-12018	PIN	1	60001-@
21	01582-11008	NUT	1	60001-@
22	20Y-43-12180	JOINT	1	60001-@
23	01602-20619	WASHER	1	60001-@
24	01580-10605	NUT	1	60001-@

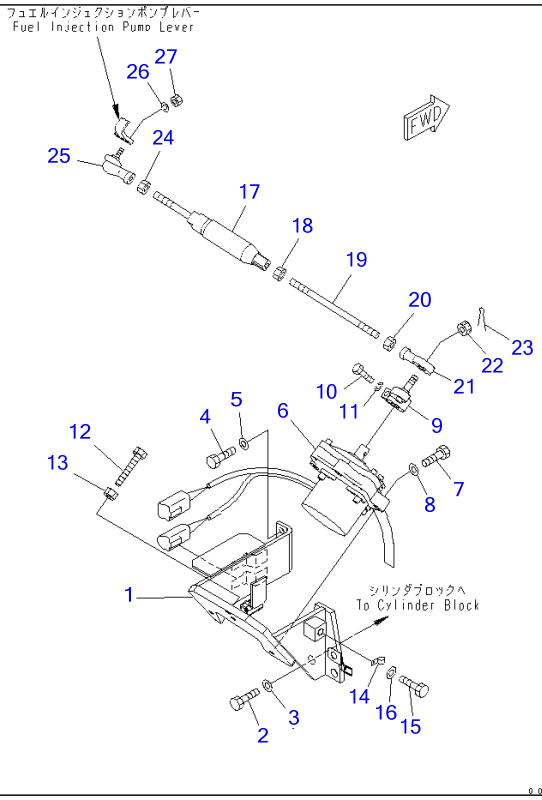

Ref B0400-01A0A **Page 030080**

PC220-7 S/N 60001-UP (Overseas Version)
FUEL CONTROL(#65001-)

Item	Part No.	Part Name	Qty	Serial No.
1	20Y-43-31311	BRACKET	1	65001-
2	01010-81230	BOLT	1	60001-
3	01643-31232	WASHER	1	60001-
4	01010-80820	BOLT	2	60001-
5	01643-30823	WASHER	2	60001-
6	7834-41-2003	MOTOR ASS'Y	1	69327-
	7834-41-2002	MOTOR ASS'Y	1	65060-69326
	7834-41-2001	MOTOR ASS'Y	1	60357-65059
7	01010-81040	BOLT	3	60001-
8	01643-31032	WASHER	3	60001-
9	20Y-43-12143	LEVER	1	60001-
10	01010-81030	BOLT	1	60001-
11	01602-21030	WASHER	1	60001-
12	01016-51070	BOLT	1	60001-
13	01580-11008	NUT	1	60001-
14	04434-50812	CLIP	1	65001-
15	01010-81220	BOLT	1	65001-
16	01643-31232	WASHER	1	65001-
17	20Y-43-23441	SPRING ASS'Y	1	60001-
18	01582-11008	NUT	1	60001-
19	04248-31018	ROD	1	60001-
20	01508-41006	NUT	1	60001-
21	04250-91056	END	1	60001-
22	01593-31008	NUT	1	60001-
23	04050-12018	PIN	1	60001-
24	01582-11008	NUT	1	60001-
25	20Y-43-12180	JOINT	1	60001-
26	01602-20619	WASHER	1	60001-

FUEL CONTROL(#65001-)

Item	Part No.	Part Name	Qty	Serial No.
27	01580-10605	NUT	1	60001-

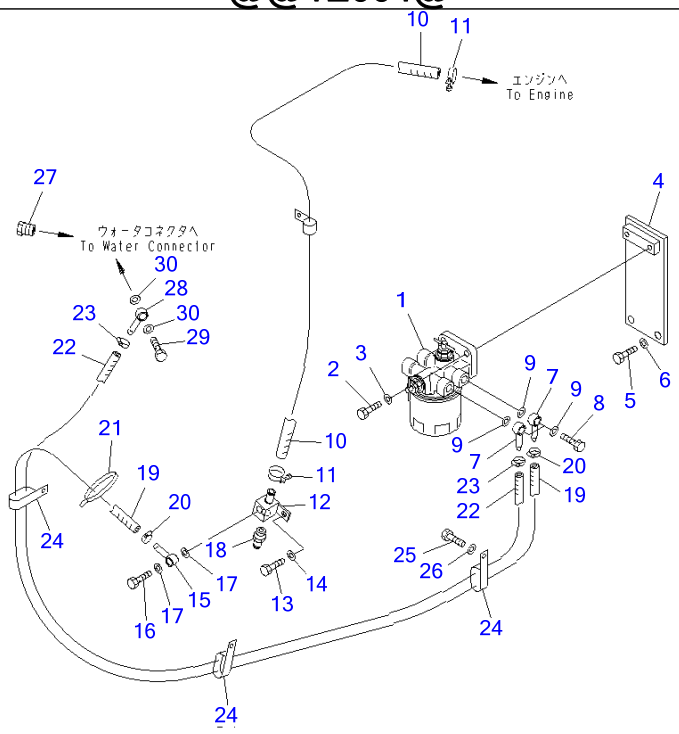

Ref B0920-01A0 Page 030090

PC220-7 S/N 60001-UP (Overseas Version)

CORROSION RESIST0R

Item	Part No.	Part Name	Qty	Serial No.
1	6738-61-8100	CORROSION ASS'Y	1	60001-
	600-411-1191	▪ CARTRIDGE	1	60001-
2	01010-81030	BOLT	2	60001-
3	01643-31032	WASHER	2	60001-
4	20Y-01-31230	BRACKET	1	60001-
5	01010-81230	BOLT	2	60001-
6	01643-31232	WASHER	2	60001-
7	205-04-62150	JOINT	2	60001-
8	07206-31014	BOLT	2	60001-
9	07005-01412	SEAL, WASHER	4	60001-
10	09483-10414	HOSE	1	60001-
11	11Y-09-11160	CLIP	2	60224-
	09480-10100	CLAMP	2	60001-60223
12	20Y-01-31240	BLOCK	1	60001-
13	01010-81025	BOLT	1	60001-
14	01643-31032	WASHER	1	60001-
15	205-04-62150	JOINT	1	60001-
16	07206-31014	BOLT	1	60001-
17	07005-01412	SEAL, WASHER	2	60001-
18	20T-54-42510	NIPPLE	1	60001-
19	09483-10314	HOSE	1	60001-
20	07281-00197	CLAMP	2	60001-
21	08034-20536	BAND	1	60001-
22	09483-10313	HOSE	1	60001-
23	07281-00197	CLAMP	2	60001-
24	04435-51812	CLIP	3	60001-
25	01010-81230	BOLT	3	60001-
26	01643-31232	WASHER	3	60001-

CORROSION RESIST0R

Item	Part No.	Part Name	Qty	Serial No.
27	6151-71-5910	CONNECTOR	1	60001-
28	205-04-62150	JOINT	1	60001-
29	07206-31014	BOLT	1	60001-
30	07005-01412	SEAL, WASHER	2	60001-

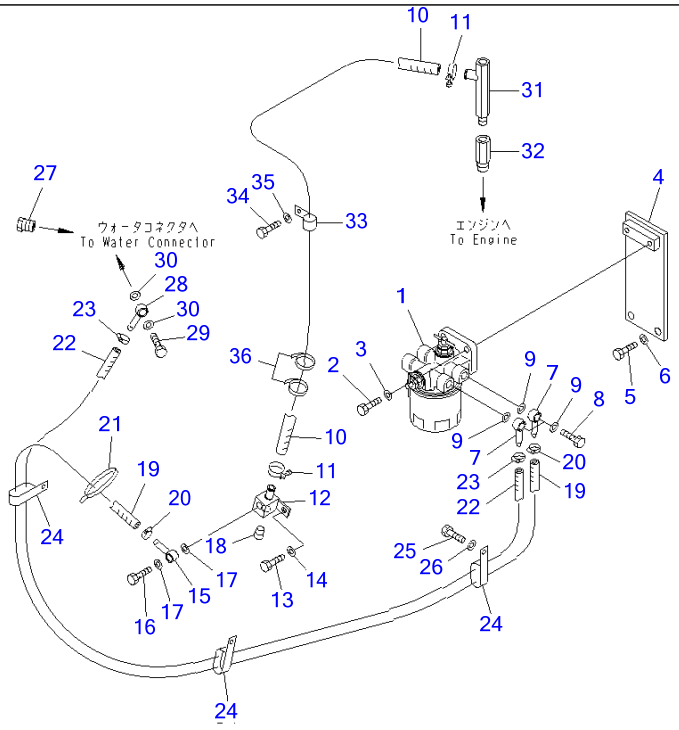

Ref B0920-01A1 **Page 030100**

PC220-7 S/N 60001-UP (Overseas Version)
CORROSION RESIST0R (HEATER LESS)

Item	Part No.	Part Name	Qty	Serial No.
1	6738-61-8100	CORROSION ASS'Y	1	60001-
	600-411-1191	▪ CARTRIDGE	1	60001-
2	01010-81030	BOLT	2	60001-
3	01643-31032	WASHER	2	60001-
4	20Y-01-31230	BRACKET	1	60001-
5	01010-81230	BOLT	2	60001-
6	01643-31232	WASHER	2	60001-
7	205-04-62150	JOINT	2	60001-
8	07206-31014	BOLT	2	60001-
9	07005-01412	SEAL, WASHER	4	60001-
10	09483-10414	HOSE	1	60001-
11	11Y-09-11160	CLIP	2	60001-
12	20Y-01-31240	BLOCK	1	60001-
13	01010-81025	BOLT	1	60001-
14	01643-31032	WASHER	1	60001-
15	205-04-62150	JOINT	1	60001-
16	07206-31014	BOLT	1	60001-
17	07005-01412	SEAL, WASHER	2	60001-
18	07043-70312	PLUG	1	60001-
19	09483-10314	HOSE	1	60001-
20	07281-00197	CLAMP	2	60001-
21	08034-20536	BAND	1	60001-
22	09483-10313	HOSE	1	60001-
23	07281-00197	CLAMP	2	60001-
24	04435-51812	CLIP	3	60001-
25	01010-81230	BOLT	3	60001-
26	01643-31232	WASHER	3	60001-
27	6151-71-5910	CONNECTOR	1	60001-

CORROSION RESIST0R (HEATER LESS)

Item	Part No.	Part Name	Qty	Serial No.
28	205-04-62150	JOINT	1	60001-
29	07206-31014	BOLT	1	60001-
30	07005-01412	SEAL, WASHER	2	60001-
31	09482-50000	VALVE	1	60001-
32	6732-11-6130	ADAPTER	1	60001-
33	04434-52110	CLIP	1	60001-
34	01010-81025	BOLT	1	60001-
35	01643-31032	WASHER	1	60001-
36	08034-20536	BAND	2	60001-

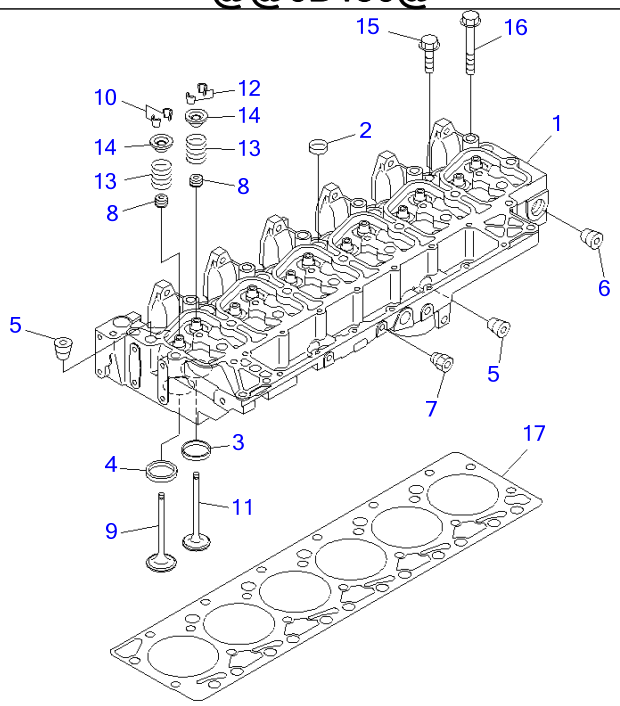

PJ6B436

Ref A1009-01A4 **Page 030010**

SAA6D102E-2D-8 S/N 26274903-UP
CYLINDER HEAD

Item	Part No.	Part Name	Qty	Serial No.
	6731-11-1371	HEAD ASS'Y	1	26317355-
	□6731-11-1370	HEAD ASS'Y	1	26274903-26317354
1	☆	・HEAD	1	26317355-
	☆	・HEAD	1	26274903-26317354
2	6736-11-1150	・PLUG	5	26274903-
3	6732-11-1170	・INSERT,EXHAUST	6	26274903-
4	6732-11-1180	・INSERT,INTAKE	6	26274903-
5	6732-11-1910	・PLUG	2	26274903-
6	6732-11-1920	・PLUG	1	26274903-
7	6732-11-1930	・PLUG	2	26274903-
8	6732-41-4541	SEAL (K1)	12	26317355-
	6732-41-4540	SEAL (K1)	12	26274903-26317354
	6736-41-4110	INTAKE VALVE ASS'Y	6	26274903-
9	☆	・VALVE	1	26274903-
10	6732-41-4520	・COTTER	2	26274903-
	6736-41-4210	EXHAUST VALVE ASS'Y	6	26274903-
11	☆	・VALVE	1	26274903-
12	6732-41-4520	・COTTER	2	26274903-
13	6732-41-4431	SPRING	12	26493998-
	◆6732-41-4430	SPRING	12	26274903-26493997
14	6731-41-4511	RETAINER	12	26317355-
	□6731-41-4510	RETAINER	12	26274903-26317354
15	6732-11-1610	BOLT	6	26274903-
16	6732-11-1620	BOLT	14	26274903-
17	6735-11-1821	GASKET (K1)	1	26274903-
		REFER TO FIG. NOS. OF REPAIR PARTS FOR O.S., U.S., AND SERVICE PARTS.		

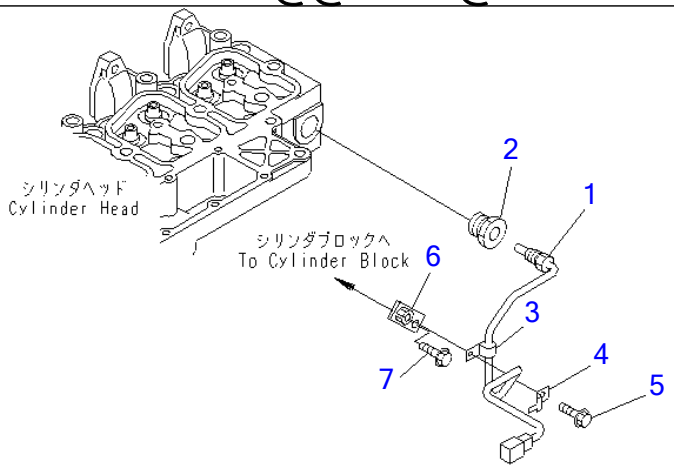

PJ6B404

Ref A101V-01A1 **Page 030020**

SAA6D102E-2D-8 S/N 26274903-UP

WATER TEMPERATURE SENSOR(#26282903-)

Item	Part No.	Part Name	Qty	Serial No.
1	7861-93-3320	SENSOR,WATER TEMPERATURE	1	26282903-
2	6732-11-6140	ADAPTER	1	26296451-
	□512-06-11281	ADAPTER	1	26282903-26296450
3	04434-50610	CLIP	1	26282903-
4	08193-20010	CLIP	1	26282903-
5	6734-71-5610	BOLT	1	26282903-
6	6136-11-8510	BRACKET	1	26282903-
7	01435-60825	BOLT	1	26479680-
	6732-21-5160	BOLT	1	26282903-26479679

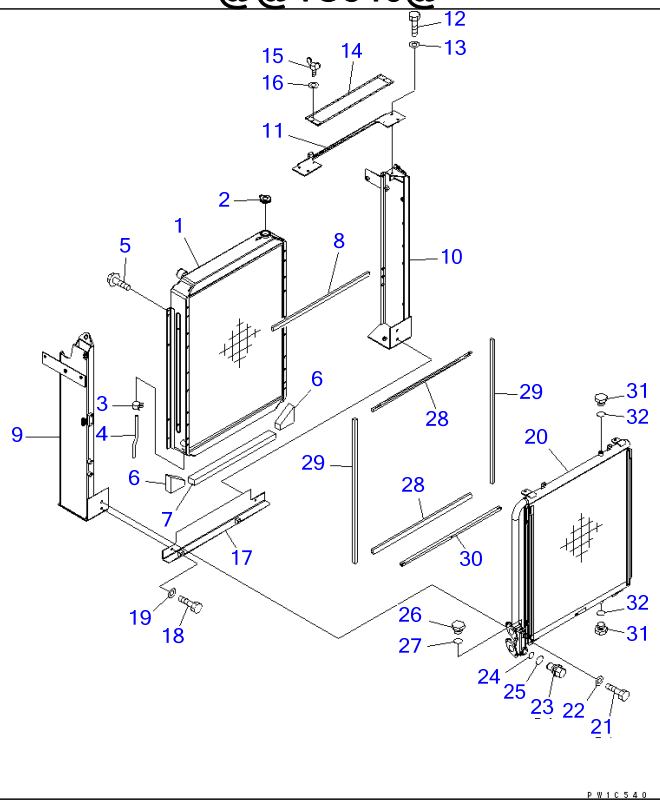

Ref C0100-01A0 Page 060010

PC220-7 S/N 60001-UP (Overseas Version)
COOLING (RADIATOR)(#60001-65000)

Item	Part No.	Part Name	Qty	Serial No.
1	206-03-71111	RADIATOR CORE ASS'Y	1	60001-@
2	20Y-03-22110	CAP	1	60001-@
3	203-03-41410	HOSE	1	60001-@
4	20Y-03-11330	CLIP	1	60001-@
5	01435-20816	BOLT	10	60001-@
6	206-03-71231	SEAL	2	60001-@
7	206-03-71241	SEAL	1	60001-@
8	20Y-03-31260	SEAL	1	60001-@
9	206-03-71140	FRAME	1	60001-@
10	206-03-71150	FRAME	1	60001-@
11	20Y-03-31170	FRAME	1	60001-@
12	01010-81025	BOLT	1	60001-@
13	01643-31032	WASHER	1	60001-@
14	22U-03-21190	PLATE	1	60001-@
15	01434-10616	BOLT, WING	2	60001-@
16	01643-30623	WASHER	2	60001-@
17	206-03-72161	BRACKET	1	60001-@
18	01010-81025	BOLT	2	60001-@
19	01643-31032	WASHER	2	60001-@
20	206-03-71120	OIL COOLER ASS'Y	1	60001-@
21	01010-81030	BOLT	4	60001-@
22	01643-31032	WASHER	4	60001-@
23	20Y-03-31480	VALVE ASS'Y	1	60001-@
24	07000-12020	• O-RING	1	60001-@
25	07002-13034	O-RING	1	60001-@
26	07040-11812	PLUG	1	60001-@
27	07002-11823	O-RING	1	60001-@
28	22U-03-21740	SHEET	2	60001-@

COOLING (RADIATOR)(#60001-65000)

Item	Part No.	Part Name	Qty	Serial No.
29	206-03-72171	SEAL	2	60001-@
30	22U-03-21760	SHEET	1	60001-@
31	07040-11409	PLUG	2	60001-@
32	07002-11423	O-RING	2	60001-@

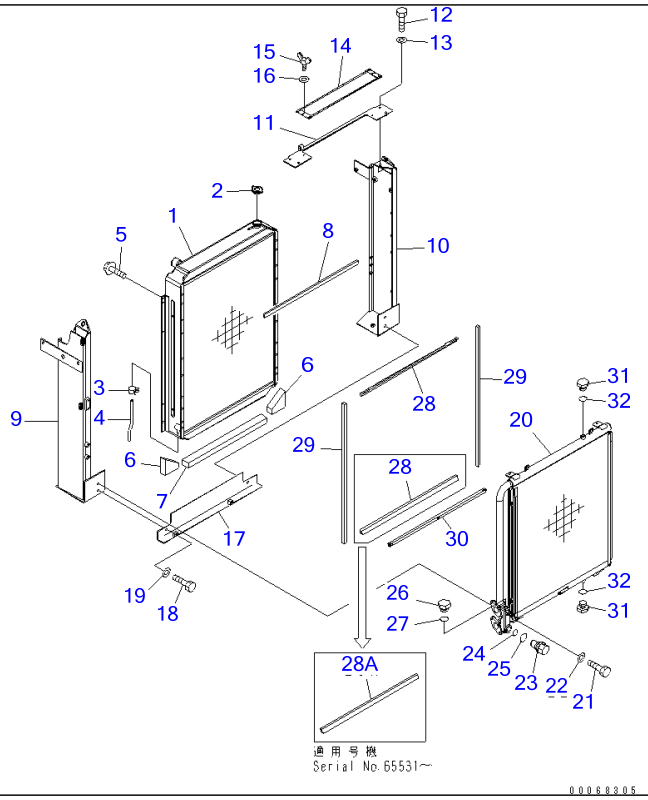

Ref C0100-01A0A

Page 060020

PC220-7 S/N 60001-UP (Overseas Version)

COOLING (RADIATOR)(#65001-)

Item	Part No.	Part Name	Qty	Serial No.
1	206-03-71112	RADIATOR CORE ASS'Y	1	68796-
	206-03-71111	RADIATOR CORE ASS'Y	1	60001-68795
2	20Y-03-22110	CAP	1	60001-
3	203-03-41410	HOSE	1	60001-
4	20Y-03-11330	CLIP	1	60001-
5	01435-20816	BOLT	10	60001-
6	206-03-71231	SEAL	2	60001-
7	206-03-71241	SEAL	1	60001-
8	20Y-03-31260	SEAL	1	60001-
9	206-03-71270	FRAME	1	68796-
	206-03-71140	FRAME	1	60001-68795
10	206-03-71280	FRAME	1	68796-
	206-03-71150	FRAME	1	60001-68795
11	20Y-03-31170	FRAME	1	60001-
12	01010-81025	BOLT	1	60001-
13	01643-31032	WASHER	1	60001-
14	22U-03-21190	PLATE	1	60001-
15	01434-10616	BOLT, WING	2	60001-
16	01643-30623	WASHER	2	60001-
17	206-03-72162	BRACKET	1	65531-
	206-03-72161	BRACKET	1	60001-65530
18	01010-81025	BOLT	2	60001-
19	01643-31032	WASHER	2	60001-
20	206-03-71120	OIL COOLER ASS'Y	1	60001-
21	01010-81030	BOLT	4	60001-
22	01643-31032	WASHER	4	60001-
23	20Y-03-31480	VALVE ASS'Y	1	60001-
24	07000-12020	▪ O-RING	1	60001-

COOLING (RADIATOR)(#65001-)

Item	Part No.	Part Name	Qty	Serial No.
25	07002-13034	O-RING	1	60001-
26	07040-11812	PLUG	1	60001-
27	07002-11823	O-RING	1	60001-
28	22U-03-21740	SHEET	1	65531-
	22U-03-21740	SHEET	2	60001-65530
28A	22U-03-21741	SHEET	1	65531-
29	206-03-72171	SEAL	2	60001-
30	22U-03-21760	SHEET	1	60001-
31	07040-11409	PLUG	2	60001-
32	07002-11423	O-RING	2	60001-

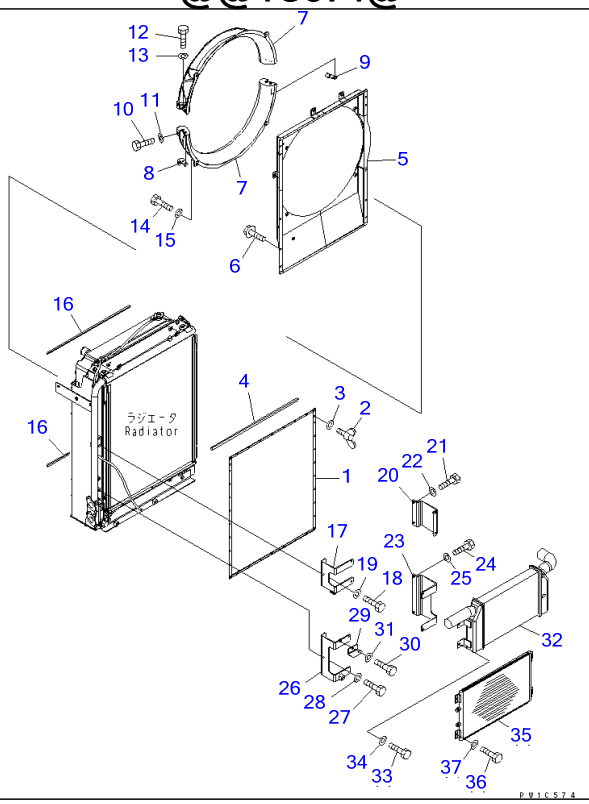

PC220-7 S/N 60001-UP (Overseas Version)

COOLING (AFTER COOLER AND CONDENSER) (WITH AIR CONDITIONER)(#60001-65000)

Item	Part No.	Part Name	Qty	Serial No.
1	206-03-72131	NET	1	60001-@
2	01434-10616	BOLT, WING	2	60001-@
3	01643-30623	WASHER	2	60001-@
4	20Y-03-31310	SEAL	1	60001-@
5	206-03-71131	SHROUD	1	60001-@
6	01435-20816	BOLT	10	60001-@
7	22U-03-21321	SHROUD	2	60001-@
8	22U-03-21770	BRACKET	1	60001-@
9	22U-03-21780	BRACKET	1	60001-@
10	01010-81020	BOLT	2	60001-@
11	01643-31032	WASHER	2	60001-@
12	01010-81030	BOLT	4	60001-@
13	01643-31032	WASHER	4	60001-@
14	01010-81020	BOLT	4	60001-@
15	203-54-56970	WASHER	4	60001-@
16	20Y-03-14110	SEAL	2	60001-@
17	206-03-71221	BRACKET	1	60001-@
18	01010-81020	BOLT	2	60001-@
19	01643-31032	WASHER	2	60001-@
20	20Y-03-31361	BRACKET	1	60001-@
21	01010-81025	BOLT	2	60001-@
22	01643-31032	WASHER	2	60001-@
23	20Y-979-6511	BRACKET	1	60001-65000
24	01010-81025	BOLT	2	60001-@
25	01643-31032	WASHER	2	60001-@
26	20Y-979-6521	BRACKET	1	60001-65000

COOLING (AFTER COOLER AND CONDENSER) (WITH AIR CONDITIONER)(#60001-65000)

Item	Part No.	Part Name	Qty	Serial No.
27	01010-81020	BOLT	2	60001-@
28	01643-31032	WASHER	2	60001-@
29	20Y-979-6670	BRACKET	1	60001-60223
30	01010-81025	BOLT	1	60001-60223
31	01643-31032	WASHER	1	60001-60223
32	6738-61-4123	AIR COOLER ASS'Y	1	60001-@
33	01010-81030	BOLT	4	60001-@
34	01643-31032	WASHER	4	60001-@
35	20Y-979-6131	CONDENSER ASS'Y	1	60001-65000
36	01010-80820	BOLT	4	60001-65000
37	01643-30823	WASHER	4	60001-65000

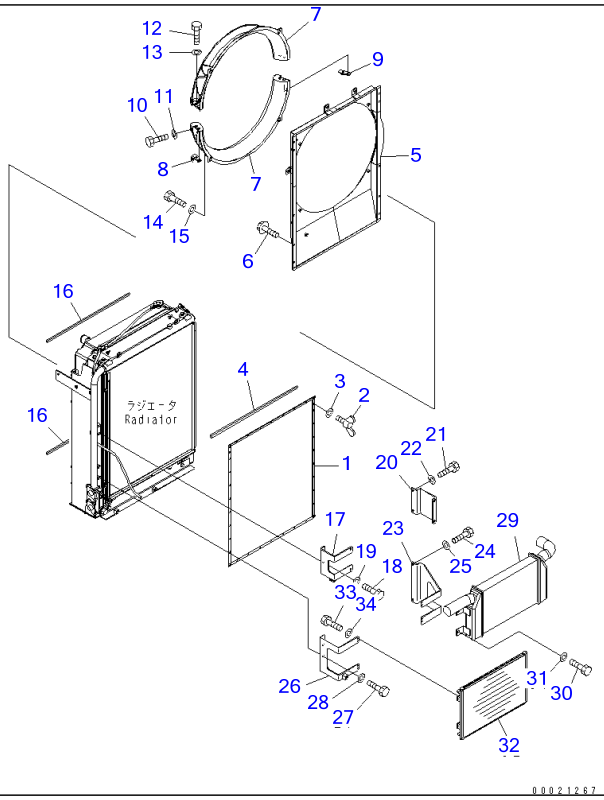

Ref C0100-02A0A Page 060040

PC220-7 S/N 60001-UP (Overseas Version)

COOLING (AFTER COOLER AND CONDENSER) (WITH AIR CONDITIONER)(#65001-)

Item	Part No.	Part Name	Qty	Serial No.
1	206-03-72131	NET	1	60001-
2	01434-10616	BOLT, WING	2	60001-
3	01643-30623	WASHER	2	60001-
4	20Y-03-31310	SEAL	1	60001-
5	206-03-71131	SHROUD	1	60001-
6	01435-20816	BOLT	10	60001-
7	22U-03-21321	SHROUD	2	60001-
8	22U-03-21770	BRACKET	1	60001-
9	22U-03-21780	BRACKET	1	60001-
10	01010-81020	BOLT	2	60001-
11	01643-31032	WASHER	2	60001-
12	01010-81030	BOLT	4	60001-
13	01643-31032	WASHER	4	60001-
14	01010-81020	BOLT	4	60001-
15	203-54-56970	WASHER	4	60001-
16	20Y-03-14110	SEAL	2	60001-
17	206-03-71221	BRACKET	1	60001-
18	01010-81020	BOLT	2	60001-
19	01643-31032	WASHER	2	60001-
20	20Y-03-31361	BRACKET	1	60001-
21	01010-81025	BOLT	2	60001-
22	01643-31032	WASHER	2	60001-
23	20Y-979-7390	BRACKET	1	65001-
24	01010-81025	BOLT	2	60001-
25	01643-31032	WASHER	2	60001-
26	20Y-979-7380	BRACKET	1	65001-

COOLING (AFTER COOLER AND CONDENSER) (WITH AIR CONDITIONER)(#65001-)

Item	Part No.	Part Name	Qty	Serial No.
27	01010-81020	BOLT	2	60001-
28	01643-31032	WASHER	2	60001-
29	6738-61-4123	AIR COOLER ASS'Y	1	60001-
30	01010-81030	BOLT	4	60001-
31	01643-31032	WASHER	4	60001-
32	208-979-7520	CONDENSER ASS'Y	1	65001-
33	01010-80616	BOLT	8	65001-
34	01643-30623	WASHER	8	65001-

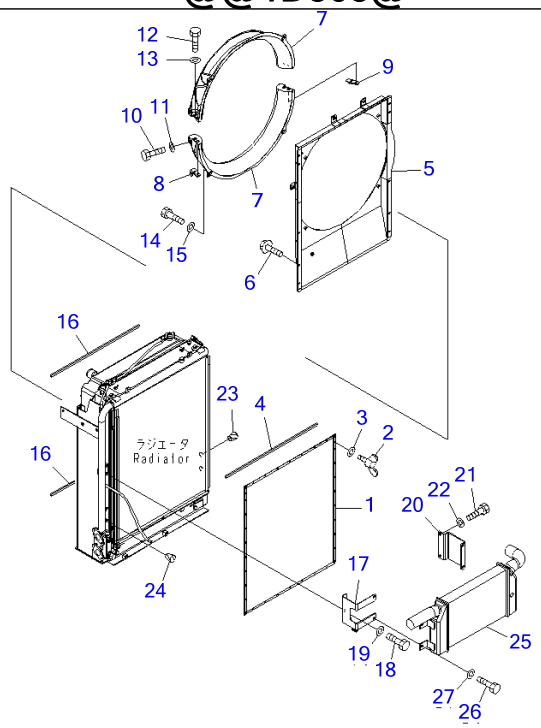

P W I D 3 0 5

PC220-7 S/N 60001-UP (Overseas Version)

COOLING (AFTER COOLER)

Item	Part No.	Part Name	Qty	Serial No.
1	206-03-72131	NET	1	60001-
2	01434-10616	BOLT, WING	2	60001-
3	01643-30623	WASHER	2	60001-
4	20Y-03-31310	SEAL	1	60001-
5	206-03-71131	SHROUD	1	60001-
6	01435-20816	BOLT	10	60001-
7	22U-03-21321	SHROUD	2	60001-
8	22U-03-21770	BRACKET	1	60001-
9	22U-03-21780	BRACKET	1	60001-
10	01010-81020	BOLT	2	60001-
11	01643-31032	WASHER	2	60001-
12	01010-81030	BOLT	4	60001-
13	01643-31032	WASHER	4	60001-
14	01010-81020	BOLT	4	60001-
15	203-54-56970	WASHER	4	60001-
16	20Y-03-14110	SEAL	2	60001-
17	206-03-71221	BRACKET	1	60001-
18	01010-81020	BOLT	2	60001-
19	01643-31032	WASHER	2	60001-
20	20Y-03-31361	BRACKET	1	60001-
21	01010-81025	BOLT	2	60001-
22	01643-31032	WASHER	2	60001-
23	07049-01012	PLUG	1	60001-
24	07049-01012	PLUG,SEMS	2	60001-
25	6738-61-4123	AIR COOLER ASS'Y	1	60001-
26	01010-81030	BOLT	4	60001-
27	01643-31032	WASHER	4	60001-

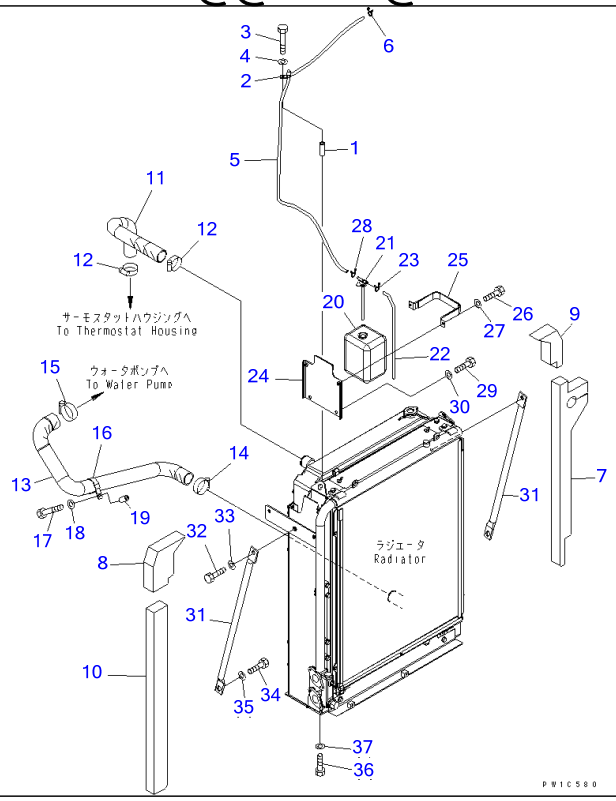

Ref C0100-03A0 Page 060060

PC220-7 S/N 60001-UP (Overseas Version)

COOLING (PIPING¤ SUB TANK AND RADIATOR MOUNT)(#60001-65000)

Item	Part No.	Part Name	Qty	Serial No.
1	175-61-17240	COLLAR	1	60001-@
2	04434-51210	CLIP	1	60001-@
3	01010-81090	BOLT	1	60001-@
4	01643-31032	WASHER	1	60001-@
5	22B-03-11340	HOSE	1	60001-@
6	206-03-43340	CLIP	1	60001-@
7	20Y-03-31332	SEAL	1	60093-@
	20Y-03-31331	SEAL	1	60001-60092
8	206-03-71250	SHEET	1	60001-@
9	206-03-71260	SHEET	1	60001-@
10	20Y-03-31460	SHEET	1	60001-@
11	206-03-71190	HOSE	1	60001-@
12	07289-00055	CLAMP	2	60001-@
13	206-03-71211	HOSE	1	60001-@
14	07289-00055	CLAMP	1	60001-@
15	07289-00070	CLAMP	1	60001-@
16	208-62-38370	CLIP	1	60001-@
17	01010-81055	BOLT	1	60001-@
18	01643-31032	WASHER	1	60001-@
19	22D-62-18450	SPACER	1	60001-@
20	20Y-06-15240	TANK ASS'Y	1	60001-@
21	205-03-71532	・CAP	1	60001-@
	205-03-71540	・・PACKING	1	60001-@
22	208-03-58290	HOSE, 500MM	1	60001-@
23	206-03-43340	CLIP	1	60001-@
24	20Y-03-31341	BRACKET	1	60001-@
25	203-03-56650	BRACKET	1	60001-@
26	01010-80820	BOLT	2	60001-@

COOLING (PIPING¤ SUB TANK AND RADIATOR MOUNT)(#60001-65000)

Item	Part No.	Part Name	Qty	Serial No.
27	01643-30823	WASHER	2	60001-@
28	206-03-43340	CLIP	1	60001-@
29	01010-81225	BOLT	2	60001-@
30	01643-31232	WASHER	2	60001-@
31	20Y-03-31210	STAY	2	60001-@
32	01010-81635	BOLT	2	60001-@
33	01643-31645	WASHER	2	60001-@
34	01010-81635	BOLT	2	60001-@
35	21T-54-16150	WASHER	2	60001-@
36	01016-51250	BOLT	4	60001-@
37	01643-31232	WASHER	4	60001-@

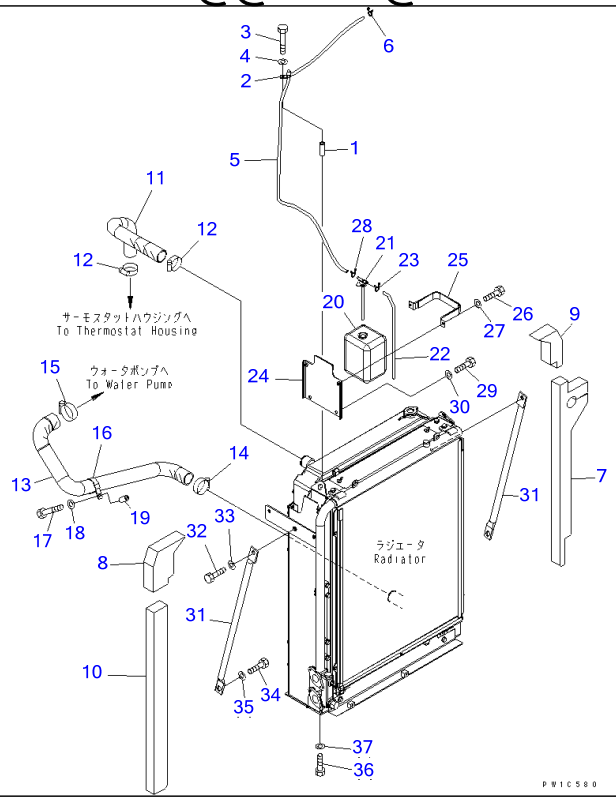

COOLING (PIPING¤ SUB TANK AND RADIATOR MOUNT)(#65001-)

Item	Part No.	Part Name	Qty	Serial No.
1	175-61-17240	COLLAR	1	60001-
2	04434-51210	CLIP	1	60001-
3	01010-81090	BOLT	1	60001-
4	01643-31032	WASHER	1	60001-
5	22B-03-11340	HOSE	1	60001-
6	206-03-43340	CLIP	1	60001-
7	20Y-03-31332	SEAL	1	60093-
8	206-03-71250	SHEET	1	60001-
9	206-03-71260	SHEET	1	60001-
10	20Y-03-31460	SHEET	1	60001-
11	206-03-71190	HOSE	1	60001-
12	07289-00055	CLAMP	2	60001-
13	206-03-71211	HOSE	1	60001-
14	07289-00055	CLAMP	1	60001-
15	07289-00070	CLAMP	1	60001-
16	208-62-38370	CLIP	1	60001-
17	01010-81055	BOLT	1	60001-
18	01643-31032	WASHER	1	60001-
19	22D-62-18450	SPACER	1	60001-
20	20Y-06-15240	TANK ASS'Y	1	60001-
21	205-03-71532	・CAP	1	60001-
	205-03-71540	・・PACKING	1	60001-
22	208-03-58290	HOSE, 500MM	1	60001-
23	206-03-43340	CLIP	1	60001-
24	20Y-03-31341	BRACKET	1	60001-
25	203-03-56650	BRACKET	1	60001-
26	01010-80820	BOLT	2	60001-
27	01643-30823	WASHER	2	60001-

COOLING (PIPING¤ SUB TANK AND RADIATOR MOUNT)(#65001-)

Item	Part No.	Part Name	Qty	Serial No.
28	206-03-43340	CLIP	1	60001-
29	01010-81225	BOLT	2	60001-
30	01643-31232	WASHER	2	60001-
31	20Y-03-31210	STAY	2	60001-
32	01010-81635	BOLT	2	60001-
33	01643-31645	WASHER	2	60001-
34	01010-81635	BOLT	2	60001-
35	21T-54-16150	WASHER	2	60001-
36	01016-51250	BOLT	4	60001-
37	01643-31232	WASHER	4	60001-

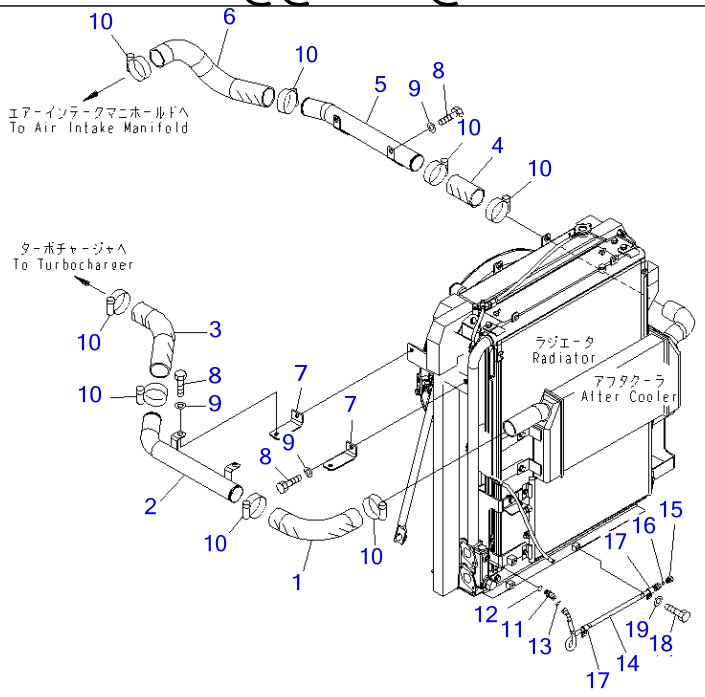

Ref C0100-04A0 Page 060080

PC220-7 S/N 60001-UP (Overseas Version)
COOLING (AFTER COOLER PIPING)(#60001-65000)

Item	Part No.	Part Name	Qty	Serial No.
1	6738-11-4840	HOSE	1	60001-@
2	6738-11-4880	TUBE	1	60001-@
3	6738-11-4810	HOSE	1	60001-@
4	6738-11-4720	HOSE	1	60001-@
5	6738-11-4890	TUBE	1	60001-@
6	6738-11-4870	HOSE	1	60001-@
7	20Y-01-31131	BRACKET	2	60001-@
8	01010-81230	BOLT	6	60001-@
9	01643-31232	WASHER	6	60001-@
10	07299-00070	CLAMP	8	60001-@
11	11Y-62-12240	ELBOW	1	60003-@
	02783-10210	ELBOW	1	60001-60002
12	07002-11423	O-RING	1	60001-@
13	02896-11008	O-RING	1	60001-@
14	02764-002A7	HOSE	1	60001-@
15	07376-70210	PLUG	1	60001-@
16	02896-11008	O-RING	1	60001-@
17	04434-51310	CLIP	2	60001-@
18	01010-81025	BOLT	2	60001-@
19	01643-31032	WASHER	2	60001-@

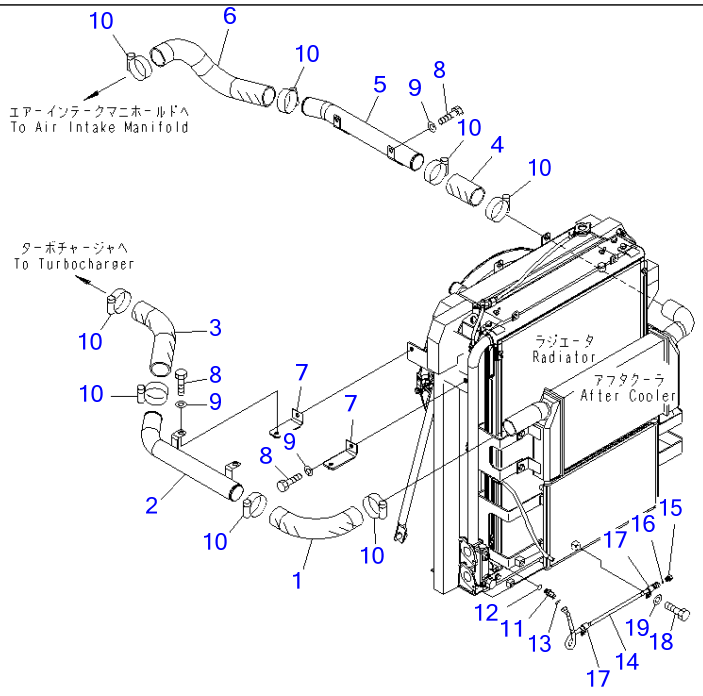

Ref C0100-04A0A **Page 060090**

PC220-7 S/N 60001-UP (Overseas Version)
COOLING (AFTER COOLER PIPING)(#65001-)

Item	Part No.	Part Name	Qty	Serial No.
1	6738-11-4840	HOSE	1	60001-
2	6738-11-4880	TUBE	1	60001-
3	6738-11-4810	HOSE	1	60001-
4	6738-11-4720	HOSE	1	60001-
5	6738-11-4890	TUBE	1	60001-
6	6738-11-4870	HOSE	1	60001-
7	20Y-01-31131	BRACKET	2	60001-
8	01010-81230	BOLT	6	60001-
9	01643-31232	WASHER	6	60001-
10	07299-00070	CLAMP	8	60001-
11	11Y-62-12240	ELBOW	1	60001-
12	07002-11423	O-RING	1	60001-
13	02896-11008	O-RING	1	60001-
14	02764-002A7	HOSE	1	60001-
15	07376-70210	PLUG	1	60001-
16	02896-11008	O-RING	1	60001-
17	04434-51310	CLIP	2	60001-
18	01010-81025	BOLT	2	60001-
19	01643-31032	WASHER	2	60001-

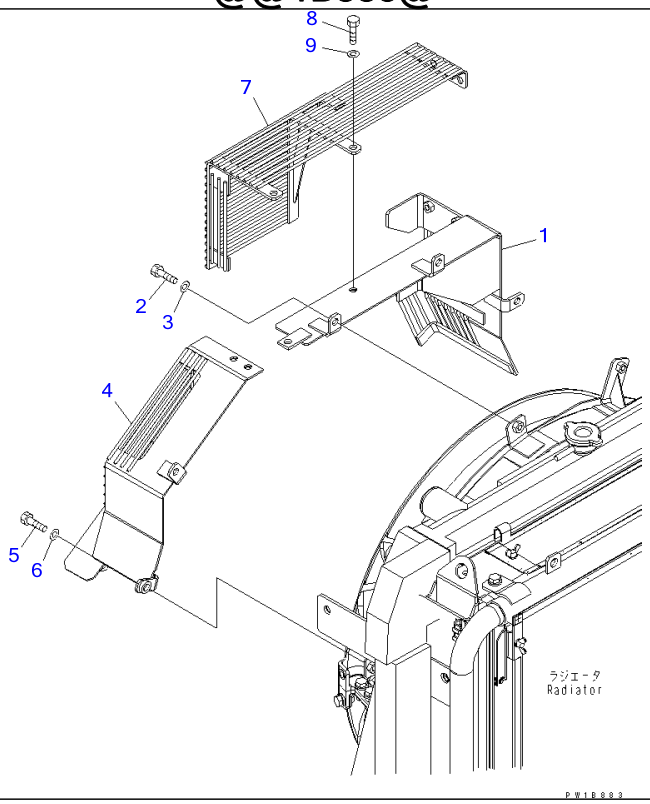

Ref C0310-01A0 **Page 060100**

PC220-7 S/N 60001-UP (Overseas Version)

FAN GUARD (WITH AIR CONDITIONER)(#60001-60767)

Item	Part No.	Part Name	Qty	Serial No.
1	20Y-03-31382	GUARD	1	60001-@
2	01010-81030	BOLT	4	60001-@
3	01643-31032	WASHER	4	60001-@
4	20Y-03-31392	GUARD	1	60001-60767
5	01010-81030	BOLT	2	60001-@
6	01643-31032	WASHER	2	60001-@
7	20Y-03-31372	GUARD	1	60001-60767
8	01010-81030	BOLT	4	60001-@
9	01643-31032	WASHER	4	60001-@

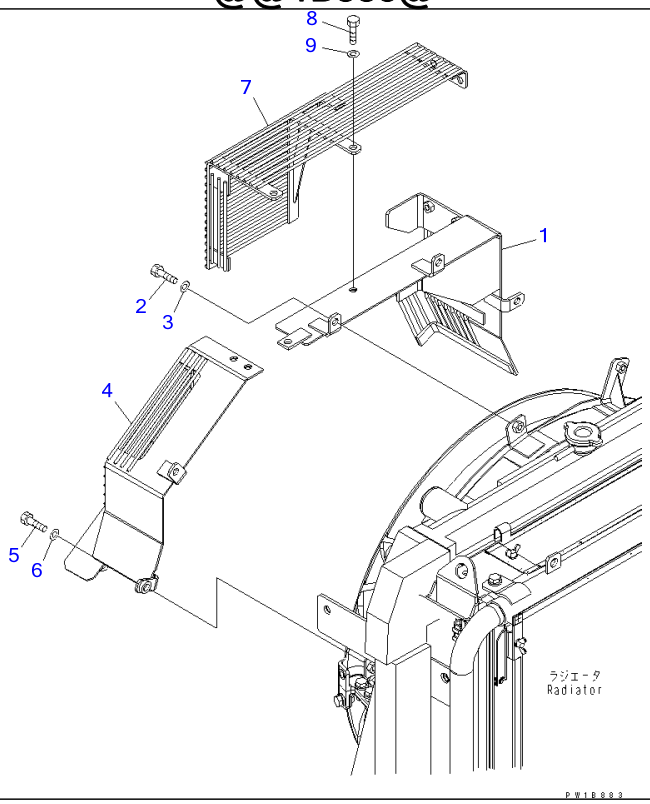

Ref C0310-01A0B **Page 060110**

PC220-7 S/N 60001-UP (Overseas Version)

FAN GUARD (WITH AIR CONDITIONER)(#65001-65985)

Item	Part No.	Part Name	Qty	Serial No.
1	20Y-03-31382	GUARD	1	60001-@
2	01010-81030	BOLT	4	60001-@
3	01643-31032	WASHER	4	60001-@
4	20Y-03-31392	GUARD	1	65001-65985
5	01010-81030	BOLT	2	60001-@
6	01643-31032	WASHER	2	60001-@
7	20Y-03-31372	GUARD	1	65001-65985
8	01010-81030	BOLT	4	60001-@
9	01643-31032	WASHER	4	60001-@

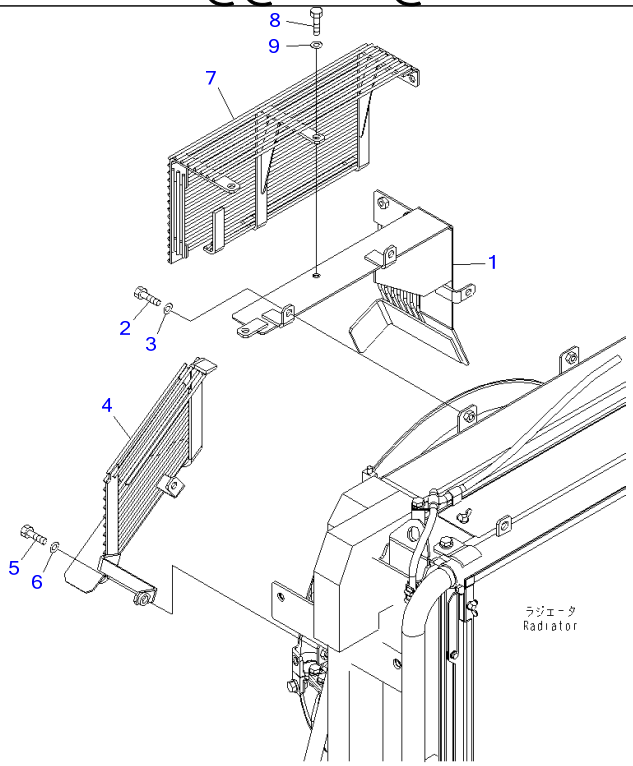

Ref C0310-01A1 **Page 060120**

PC220-7 S/N 60001-UP (Overseas Version)

FAN GUARD (WITHOUT AIR CONDITIONER)(#60001-60767)

Item	Part No.	Part Name	Qty	Serial No.
1	20Y-03-31520	GUARD	1	60001-@
2	01010-81030	BOLT	4	60001-@
3	01643-31032	WASHER	4	60001-@
4	20Y-03-31392	GUARD	1	60001-60767
5	01010-81030	BOLT	2	60001-@
6	01643-31032	WASHER	2	60001-@
7	20Y-03-31551	GUARD	1	60767-60767
	20Y-03-31510	GUARD	1	60001-60766
8	01010-81030	BOLT	4	60001-@
9	01643-31032	WASHER	4	60001-@

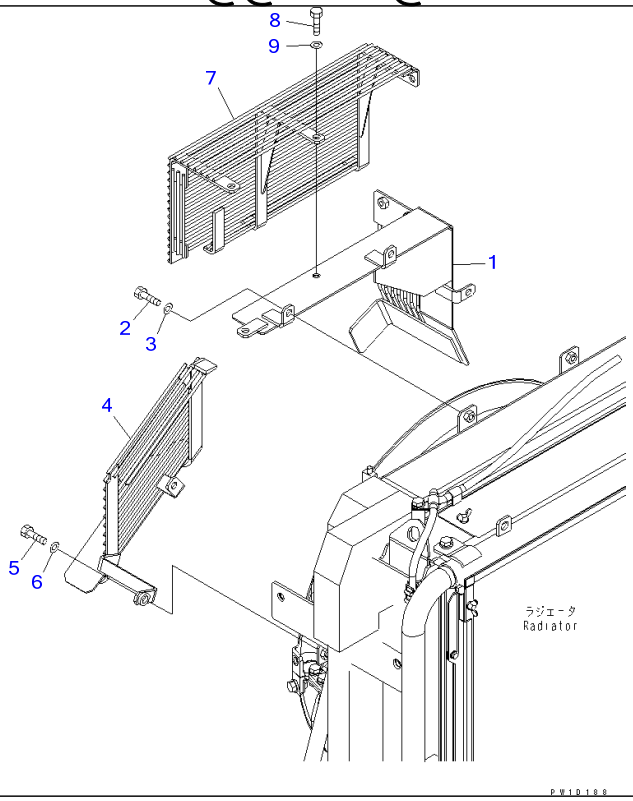

Ref C0310-01A1B **Page 060130**

PC220-7 S/N 60001-UP (Overseas Version)

FAN GUARD (WITHOUT AIR CONDITIONER)(#65001-65985)

Item	Part No.	Part Name	Qty	Serial No.
1	20Y-03-31520	GUARD	1	60001-@
2	01010-81030	BOLT	4	60001-@
3	01643-31032	WASHER	4	60001-@
4	20Y-03-31392	GUARD	1	65001-65985
5	01010-81030	BOLT	2	60001-@
6	01643-31032	WASHER	2	60001-@
7	20Y-03-31551	GUARD	1	65927-65985
	20Y-03-31510	GUARD	1	65001-65926
8	01010-81030	BOLT	4	60001-@
9	01643-31032	WASHER	4	60001-@

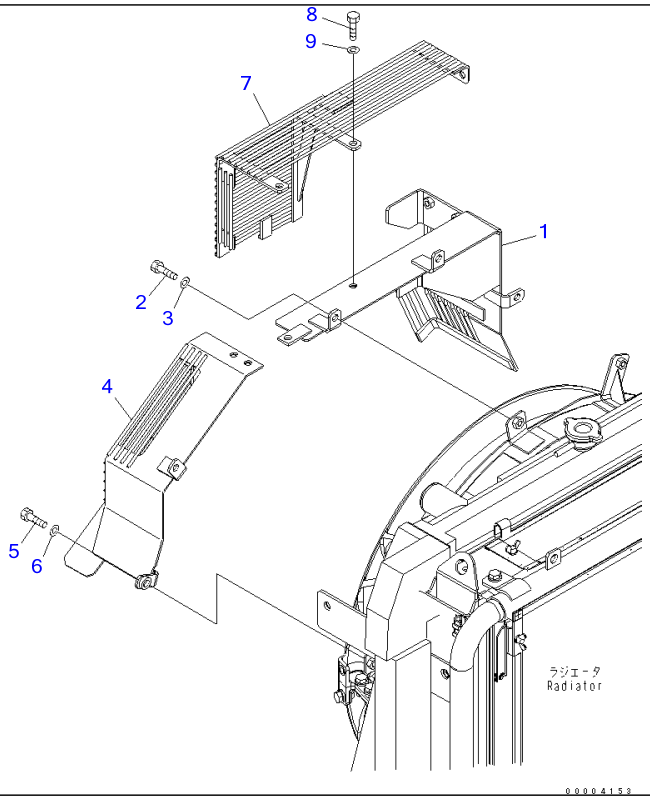

Ref C0310-01A2 **Page 060140**

PC220-7 S/N 60001-UP (Overseas Version)

FAN GUARD (WITH AIR CONDITIONER) (SANDY AND DUSTY TERRAIN SPEC.)(#60001-60767)

Item	Part No.	Part Name	Qty	Serial No.
1	20Y-03-31382	GUARD	1	60001-@
2	01010-81030	BOLT	4	60001-@
3	01643-31032	WASHER	4	60001-@
4	20Y-03-31530	GUARD	1	60001-60767
5	01010-81030	BOLT	2	60001-@
6	01643-31032	WASHER	2	60001-@
7	20Y-03-31540	GUARD	1	60001-@
8	01010-81030	BOLT	4	60001-@
9	01643-31032	WASHER	4	60001-@

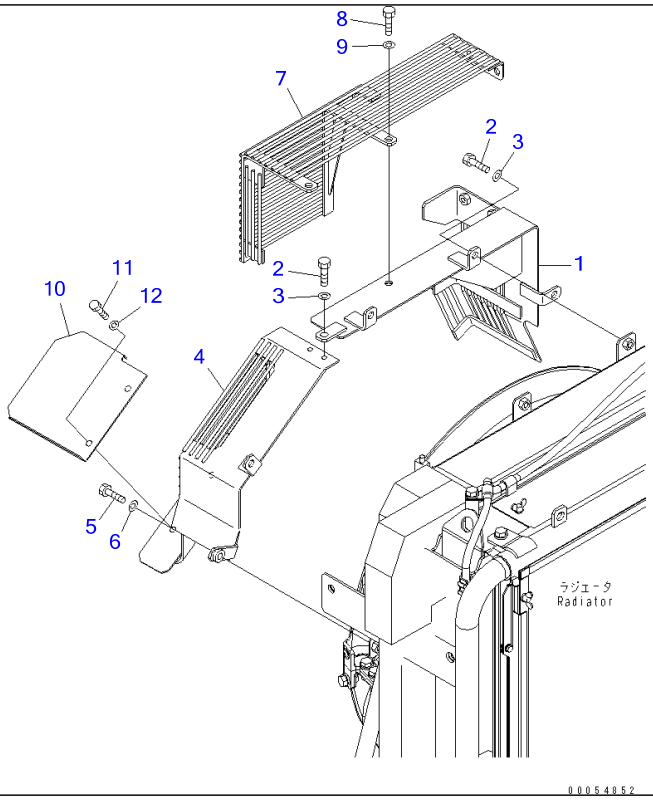

PC220-7 S/N 60001-UP (Overseas Version)

FAN GUARD (WITH AIR CONDITIONER) (SANDY AND DUSTY TERRAIN SPEC.)(#60768-65000)

Item	Part No.	Part Name	Qty	Serial No.
1	20Y-03-31382	GUARD	1	60001-@
2	01010-81030	BOLT	4	60001-@
3	01643-31032	WASHER	4	60001-@
4	20Y-03-31580	GUARD	1	60768-65000
5	01010-81030	BOLT	2	60001-@
6	01643-31032	WASHER	2	60001-@
7	20Y-03-31540	GUARD	1	60001-@
8	01010-81030	BOLT	4	60001-@
9	01643-31032	WASHER	4	60001-@
10	20Y-03-31590	COVER	1	60768-65000
11	01010-80816	BOLT	2	60768-65000
12	01643-30823	WASHER	2	60768-65000

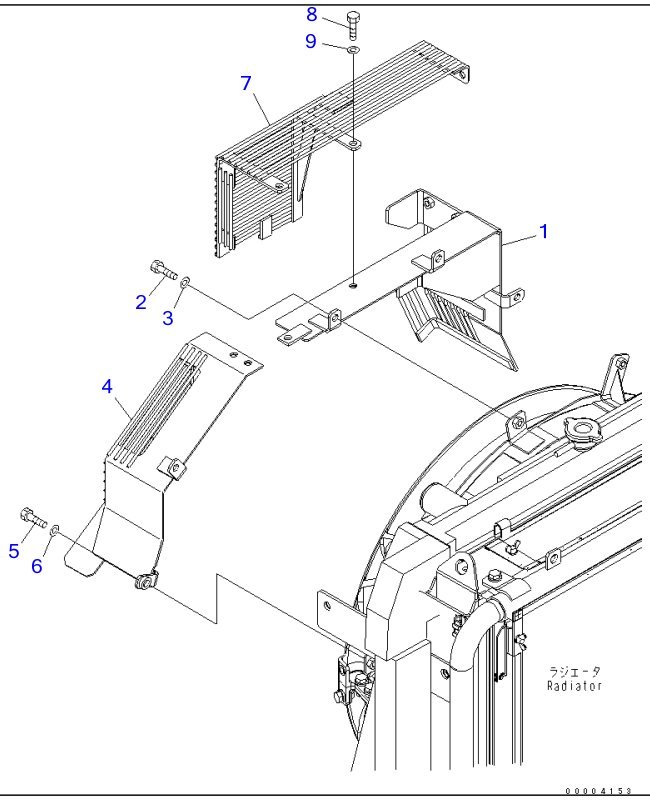

Ref C0310-01A2B **Page 060160**

PC220-7 S/N 60001-UP (Overseas Version)

FAN GUARD (WITH AIR CONDITIONER) (SANDY AND DUSTY TERRAIN SPEC.)(#65001-65985)

Item	Part No.	Part Name	Qty	Serial No.
1	20Y-03-31382	GUARD	1	60001-@
2	01010-81030	BOLT	4	60001-@
3	01643-31032	WASHER	4	60001-@
4	20Y-03-31530	GUARD	1	65001-65985
5	01010-81030	BOLT	2	60001-@
6	01643-31032	WASHER	2	60001-@
7	20Y-03-31540	GUARD	1	60001-@
8	01010-81030	BOLT	4	60001-@
9	01643-31032	WASHER	4	60001-@

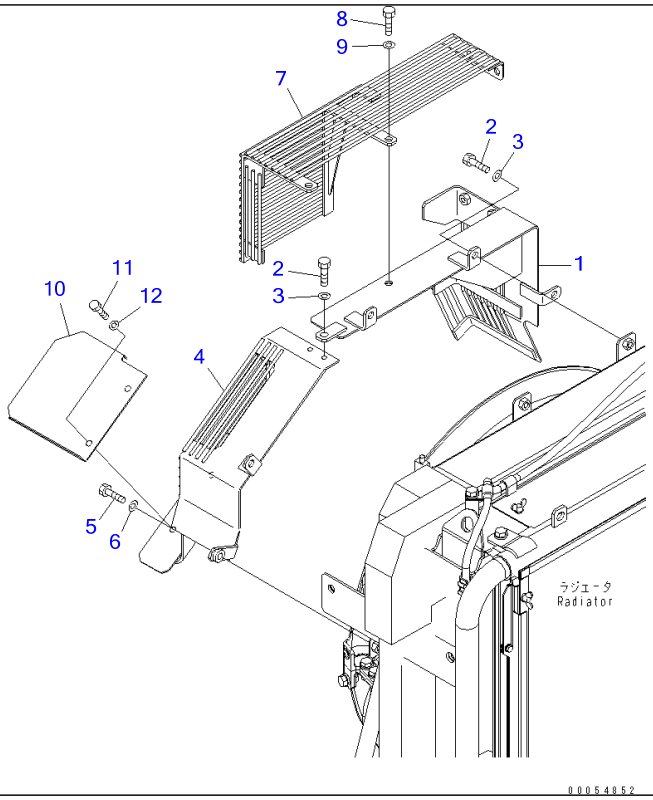

Ref C0310-01A2C **Page 060170**

PC220-7 S/N 60001-UP (Overseas Version)

FAN GUARD (WITH AIR CONDITIONER) (SANDY AND DUSTY TERRAIN SPEC.)(#65986-)

Item	Part No.	Part Name	Qty	Serial No.
1	20Y-03-31382	GUARD	1	60001-
2	01010-81030	BOLT	4	60001-
3	01643-31032	WASHER	4	60001-
4	20Y-03-31580	GUARD	1	65986-
5	01010-81030	BOLT	2	60001-
6	01643-31032	WASHER	2	60001-
7	20Y-03-31540	GUARD	1	60001-
8	01010-81030	BOLT	4	60001-
9	01643-31032	WASHER	4	60001-
10	20Y-03-31590	COVER	1	65986-
11	01010-80816	BOLT	2	65986-
12	01643-30823	WASHER	2	65986-

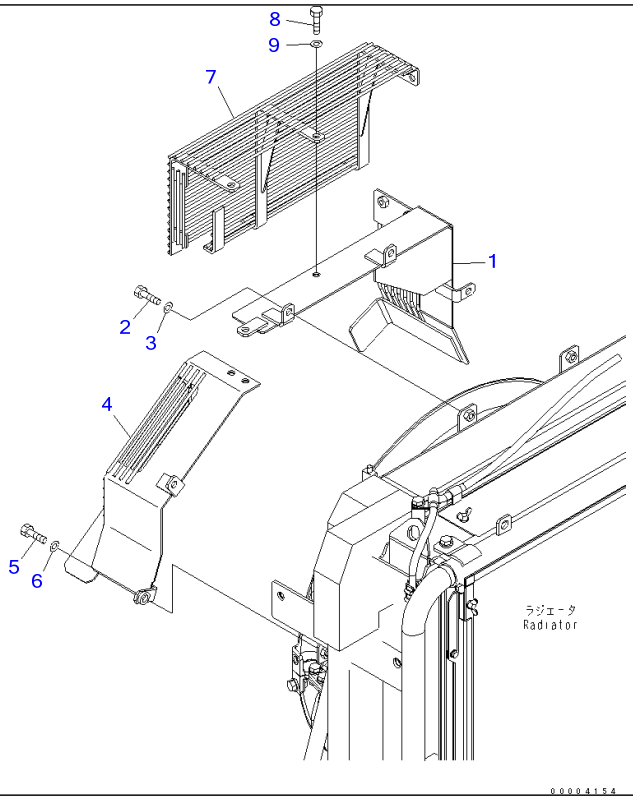

Ref C0310-01A3 **Page 060180**

PC220-7 S/N 60001-UP (Overseas Version)

FAN GUARD (WITHOUT AIR CONDITIONER) (SANDY AND DUSTY TERRAIN SPEC.)(#60001-60767)

Item	Part No.	Part Name	Qty	Serial No.
1	20Y-03-31520	GUARD	1	60001-@
2	01010-81030	BOLT	4	60001-@
3	01643-31032	WASHER	4	60001-@
4	20Y-03-31530	GUARD	1	60001-60767
5	01010-81030	BOLT	2	60001-@
6	01643-31032	WASHER	2	60001-@
7	20Y-03-31551	GUARD	1	60767-60767
	20Y-03-31550	GUARD	1	60001-60766
8	01010-81030	BOLT	4	60001-@
9	01643-31032	WASHER	4	60001-@

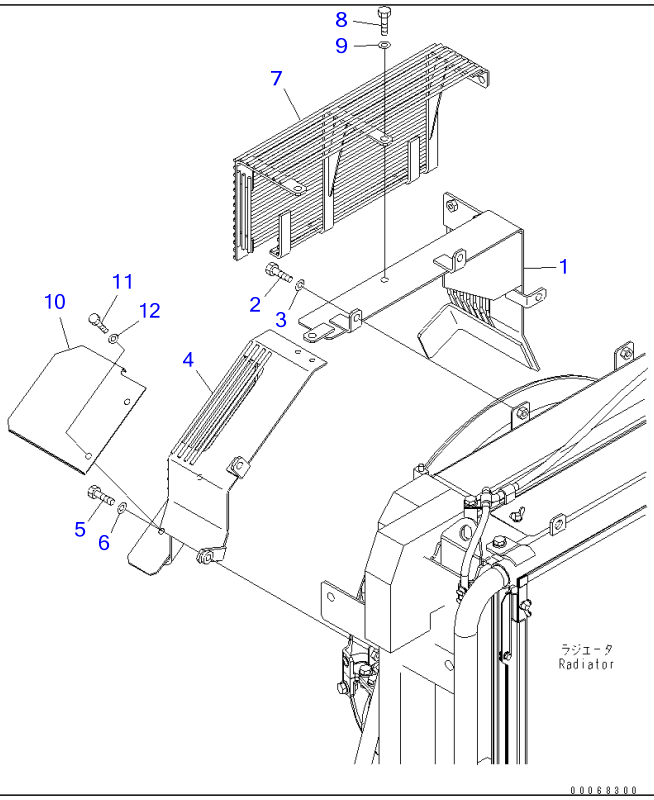

Ref C0310-01A3A

Page 060190

PC220-7 S/N 60001-UP (Overseas Version)

FAN GUARD (WITHOUT AIR CONDITIONER)(#60768-65000)

Item	Part No.	Part Name	Qty	Serial No.
1	20Y-03-31520	GUARD	1	60001-@
2	01010-81030	BOLT	4	60001-@
3	01643-31032	WASHER	4	60001-@
4	20Y-03-31580	GUARD	1	60768-65000
5	01010-81030	BOLT	2	60001-@
6	01643-31032	WASHER	2	60001-@
7	20Y-03-31551	GUARD	1	60767-65000
8	01010-81030	BOLT	4	60001-@
9	01643-31032	WASHER	4	60001-@
10	20Y-03-31590	COVER	1	60768-65000
11	01010-80816	BOLT	2	60768-65000
12	01643-30823	WASHER	2	60768-65000

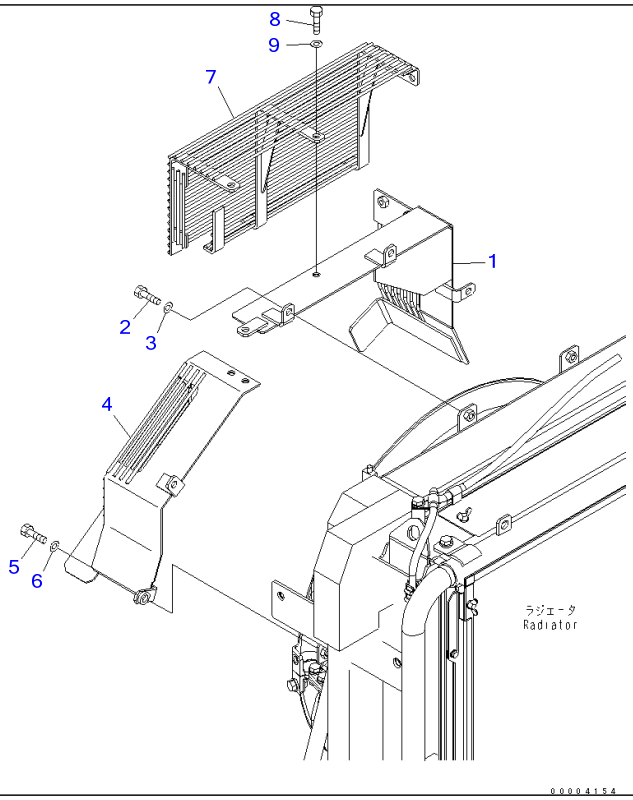

Ref C0310-01A3B **Page 060200**

PC220-7 S/N 60001-UP (Overseas Version)

FAN GUARD (WITHOUT AIR CONDITIONER) (SANDY AND DUSTY TERRAIN SPEC.)(#65001-65985)

Item	Part No.	Part Name	Qty	Serial No.
1	20Y-03-31520	GUARD	1	60001-@
2	01010-81030	BOLT	4	60001-@
3	01643-31032	WASHER	4	60001-@
4	20Y-03-31530	GUARD	1	65001-65985
5	01010-81030	BOLT	2	60001-@
6	01643-31032	WASHER	2	60001-@
7	20Y-03-31551	GUARD	1	65853-@
	20Y-03-31550	GUARD	1	60001-65852
8	01010-81030	BOLT	4	60001-@
9	01643-31032	WASHER	4	60001-@

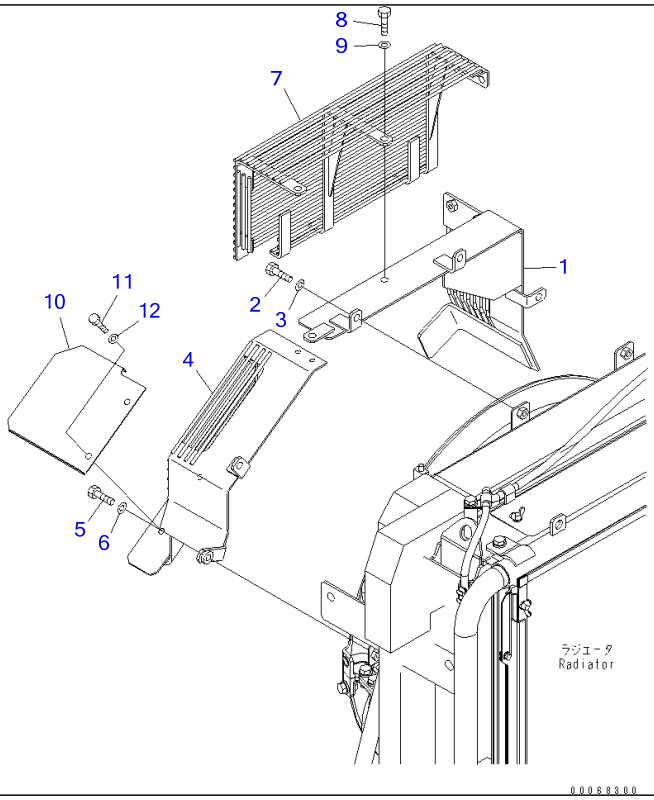

Ref C0310-01A3C **Page 060210**

PC220-7 S/N 60001-UP (Overseas Version)

FAN GUARD (WITHOUT AIR CONDITIONER)(#65986-)

Item	Part No.	Part Name	Qty	Serial No.
1	20Y-03-31520	GUARD	1	60001-
2	01010-81030	BOLT	4	60001-
3	01643-31032	WASHER	4	60001-
4	20Y-03-31580	GUARD	1	65986-
5	01010-81030	BOLT	2	60001-
6	01643-31032	WASHER	2	60001-
7	20Y-03-31551	GUARD	1	65853-
8	01010-81030	BOLT	4	60001-
9	01643-31032	WASHER	4	60001-
10	20Y-03-31590	COVER	1	65986-
11	01010-80816	BOLT	2	65986-
12	01643-30823	WASHER	2	65986-

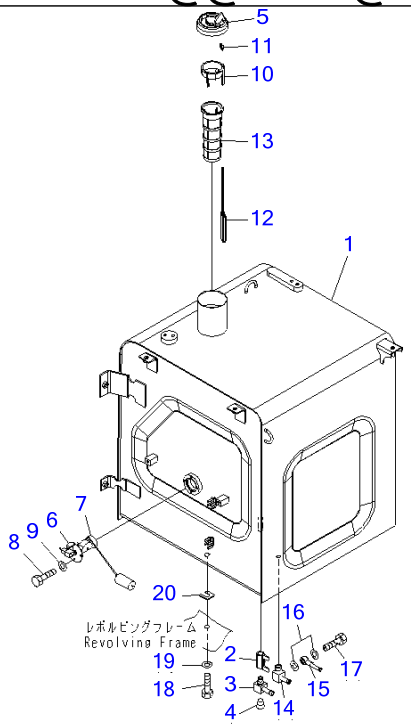

PW1B959

Ref D0100-01A0 **Page 090010**

PC220-7 S/N 60001-UP (Overseas Version)
FUEL TANK

Item	Part No.	Part Name	Qty	Serial No.
1	20Y-04-31222	TANK	1	60001-
2	07700-50240	VALVE	1	60001-
3	22U-04-21120	TEE	1	60001-
4	07043-A0108	PLUG	1	60001-
5	20Y-04-11161	CAP	1	67090-
	20Y-04-11160	CAP	1	65001-67089
	20Y-04-11161	CAP	1	60776-65000
	20Y-04-11160	CAP	1	60001-60775
6	7861-92-5810	SENSOR	1	60001-
7	07000-13050	O-RING	1	60001-
8	01010-80612	BOLT	4	60001-
9	01643-30623	WASHER	4	60001-
	22U-04-21241	STRAINER ASS'Y	1	60336-
	22U-04-21240	STRAINER ASS'Y	1	60001-60335
	22U-04-21200	・FLOAT ASS'Y	1	60001-
10	22U-04-21210	・・GUIDE	1	60001-
11	20Y-04-21580	・・CAP	1	60001-
12	22U-04-21220	・・FLOAT	1	60001-
13	07056-18425	・STRAINER	1	60336-
	22U-04-21231	・STRAINER	1	60001-60335
14	20Y-04-21131	ELBOW	1	60001-
15	20Y-04-21141	TUBE	1	60001-
16	07005-00812	SEAL, WASHER	2	60001-
17	07206-30508	BOLT, JOINT	1	60001-
18	01010-81635	BOLT	6	60001-
19	01643-31645	WASHER	6	60001-
20	195-03-11570	SHIM, 1.0MM	6	60001-

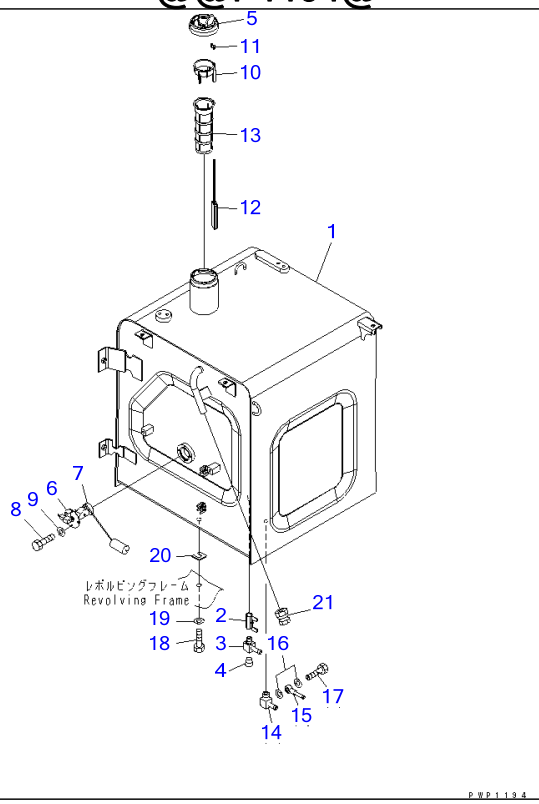

Ref D0100-01A1 **Page 090020**

PC220-7 S/N 60001-UP (Overseas Version)
FUEL TANK (WITH FUEL SELF SUPPLY PUMP)

Item	Part No.	Part Name	Qty	Serial No.
1	206-04-71110	TANK	1	60001-
2	07700-50240	VALVE	1	60001-
3	22U-04-21120	TEE	1	60001-
4	07043-A0108	PLUG	1	60001-
5	20Y-04-11161	CAP	1	67090-
	20Y-04-11160	CAP	1	65001-67089
	20Y-04-11161	CAP	1	60776-65000
	20Y-04-11160	CAP	1	60001-60775
6	7861-92-5810	SENSOR	1	60001-
7	07000-13050	O-RING	1	60001-
8	01010-80612	BOLT	4	60001-
9	01643-30623	WASHER	4	60001-
	22U-04-21241	STRAINER ASS'Y	1	60001-
	22U-04-21200	・FLOAT ASS'Y	1	60001-
10	22U-04-21210	・・GUIDE	1	60001-
11	20Y-04-21580	・・CAP	1	60001-
12	22U-04-21220	・・FLOAT	1	60001-
13	07056-18425	・STRAINER	1	60001-
14	20Y-04-21131	ELBOW	1	60001-
15	20Y-04-21141	TUBE	1	60001-
16	07005-00812	SEAL, WASHER	2	60001-
17	07206-30508	BOLT, JOINT	1	60001-
18	01010-81635	BOLT	6	60001-
19	01643-31645	WASHER	6	60001-
20	195-03-11570	SHIM, 1.0MM	6	60001-
21	203-04-K1140	END	1	60001-

PC220-7 S/N 60001-UP (Overseas Version)
@@1B958@

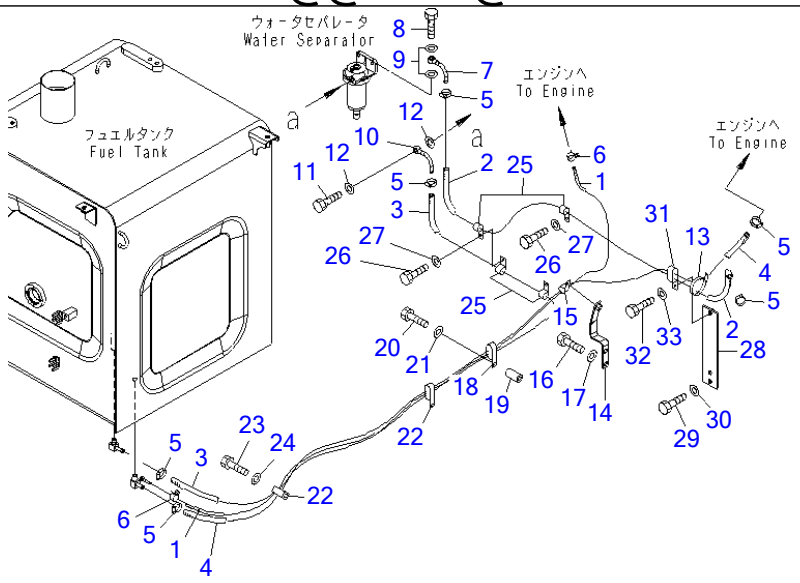

P W 1 B 9 5 8

Ref D0200-01A0 **Page 090030**

PC220-7 S/N 60001-UP (Overseas Version)
FUEL PIPING(#60001-60282)

Item	Part No.	Part Name	Qty	Serial No.
1	07270-50424	TUBE	1	60001-60282
2	07288-01017	HOSE	1	60001-60282
3	07288-01028	HOSE	1	60001-60282
4	07288-01029	HOSE	1	60001-60282
5	07281-00197	CLAMP	6	60001-@
6	07285-00080	CLIP	2	60001-@
7	203-04-56150	JOINT	1	60001-@
8	07206-31014	BOLT	1	60001-@
9	07005-01412	SEAL, WASHER	2	60001-@
10	22U-04-21170	JOINT	1	60001-@
11	07206-31014	BOLT	1	60001-@
12	07005-01412	SEAL, WASHER	2	60001-@
13	08034-20536	BAND	1	60001-@
14	20Y-04-31120	BRACKET	1	60001-@
15	04434-52312	CLIP	1	60001-@
16	01010-81225	BOLT	3	60001-@
17	01643-31232	WASHER	3	60001-@
18	04435-51912	CLIP	1	60001-@
19	154-979-1480	COLLAR	1	60001-@
20	01010-81275	BOLT	1	60001-@
21	01643-31232	WASHER	1	60001-@
22	04435-51912	CLIP	2	60001-@
23	01010-81225	BOLT	2	60001-@
24	01643-31232	WASHER	2	60001-@
25	04434-51912	CLIP	4	60001-60282
26	01010-81225	BOLT	3	60001-60282
27	01643-31232	WASHER	3	60001-60282
28	20Y-04-31161	BRACKET	1	60063-60282

FUEL PIPING(#60001-60282)

Item	Part No.	Part Name	Qty	Serial No.
	20Y-04-31160	BRACKET	1	60001-60062
29	01010-81235	BOLT	2	60063-60282
	01010-81225	BOLT	2	60001-60062
30	01643-31232	WASHER	2	60001-60282
31	04435-51812	CLIP	1	60001-@
32	01010-81235	BOLT	1	60063-@
	01010-81225	BOLT	1	60001-60062
33	01643-31232	WASHER	1	60001-@

PC220-7 S/N 60001-UP (Overseas Version)
00003925

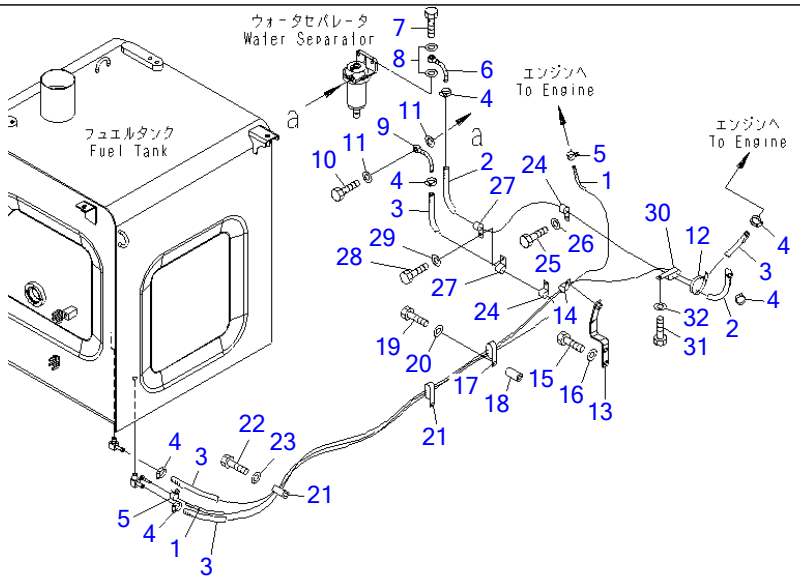

00003925

Ref D0200-01A0A **Page 090040**

PC220-7 S/N 60001-UP (Overseas Version)
FUEL PIPING(#60283-)

Item	Part No.	Part Name	Qty	Serial No.
1	07270-50422	HOSE	1	60283-
2	07288-01016	HOSE	1	60283-
3	07288-01028	HOSE	2	60283-
4	07281-00197	CLAMP	6	60001-
5	07285-00080	CLIP	2	60001-
6	203-04-56150	JOINT	1	60001-
7	07206-31014	BOLT	1	60001-
8	07005-01412	SEAL, WASHER	2	60001-
9	22U-04-21170	JOINT	1	60001-
10	07206-31014	BOLT	1	60001-
11	07005-01412	SEAL, WASHER	2	60001-
12	08034-20536	BAND	1	60001-
13	20Y-04-31120	BRACKET	1	60001-
14	04434-52312	CLIP	1	60001-
15	01010-81225	BOLT	3	60001-
16	01643-31232	WASHER	3	60001-
17	04435-51912	CLIP	1	60001-
18	154-979-1480	COLLAR	1	60001-
19	01010-81275	BOLT	1	60001-
20	01643-31232	WASHER	1	60001-
21	04435-51912	CLIP	2	60001-
22	01010-81225	BOLT	2	60001-
23	01643-31232	WASHER	2	60001-
24	04434-51912	CLIP	2	60283-
25	01010-81225	BOLT	2	60283-
26	01643-31232	WASHER	2	60283-
27	04434-51612	CLIP	2	60283-
28	01010-81225	BOLT	1	60283-

FUEL PIPING(#60283-)

Item	Part No.	Part Name	Qty	Serial No.
29	01643-31232	WASHER	1	60283-
30	04435-51812	CLIP	1	60001-
31	01010-81220	BOLT	1	60063-
32	01643-31232	WASHER	1	60001-

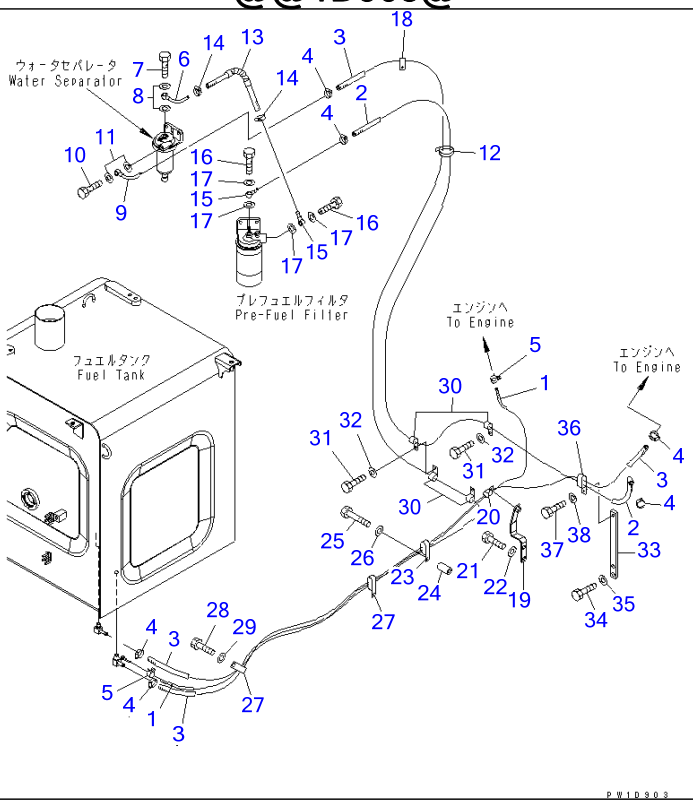

Ref D0200-01A1 Page 090050

PC220-7 S/N 60001-UP (Overseas Version)

FUEL LINES (WITH PRE-FUEL FILTER AND WATER SEPARATOR)(#60001-60282)

Item	Part No.	Part Name	Qty	Serial No.
1	07270-50424	TUBE	1	60001-60282
2	07288-01016	HOSE	1	60001-60282
3	07288-01029	HOSE	2	60001-60282
4	07281-00197	CLAMP	6	60001-@
5	07285-00080	CLIP	2	60001-@
6	22U-04-21170	JOINT	1	60001-@
7	07206-31014	BOLT	1	60001-@
8	07005-01412	SEAL, WASHER	2	60001-@
9	203-04-56150	JOINT	1	60001-@
10	07206-31014	BOLT	1	60001-@
11	07005-01412	SEAL, WASHER	2	60001-@
12	08034-20536	BAND	1	60001-@
13	20Y-04-31190	HOSE ASS'Y	1	60001-@
14	07281-00197	CLAMP	2	60001-@
15	205-04-62150	JOINT	2	60001-@
16	07206-31014	BOLT	2	60001-@
17	07005-01412	SEAL, WASHER	4	60001-@
18	04434-51910	CLIP	1	60001-@
19	20Y-04-31120	BRACKET	1	60001-@
20	04434-52312	CLIP	1	60001-@
21	01010-81225	BOLT	3	60001-@
22	01643-31232	WASHER	3	60001-@
23	04435-51912	CLIP	1	60001-@
24	154-979-1480	COLLAR	1	60001-@
25	01010-81275	BOLT	1	60001-@
26	01643-31232	WASHER	1	60001-@

FUEL LINES (WITH PRE-FUEL FILTER AND WATER SEPARATOR)(#60001-60282)

Item	Part No.	Part Name	Qty	Serial No.
27	04435-51912	CLIP	2	60001-@
28	01010-81225	BOLT	2	60001-@
29	01643-31232	WASHER	2	60001-@
30	04434-51912	CLIP	4	60001-60282
31	01010-81225	BOLT	3	60001-60282
32	01643-31232	WASHER	3	60001-60282
33	20Y-04-31161	BRACKET	1	60001-60282
34	01010-81235	BOLT	2	60001-60282
35	01643-31232	WASHER	2	60001-60282
36	04435-51812	CLIP	1	60001-@
37	01010-81220	BOLT	1	60001-@
38	01643-31232	WASHER	1	60001-@

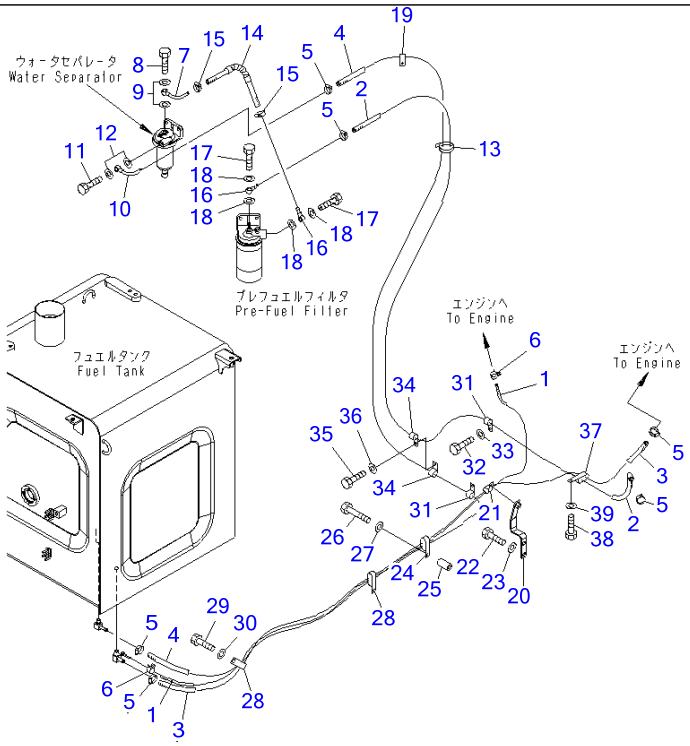

Ref D0200-01A1A

Page 090060

PC220-7 S/N 60001-UP (Overseas Version)

FUEL LINES (WITH PRE-FUEL FILTER AND WATER SEPARATOR)(#60283-)

Item	Part No.	Part Name	Qty	Serial No.
1	07270-50422	HOSE	1	60283-
2	07288-01015	HOSE	1	60283-
3	07288-01028	HOSE	1	60283-
4	07288-01029	HOSE	1	60283-
5	07281-00197	CLAMP	6	60001-
6	07285-00080	CLIP	2	60001-
7	22U-04-21170	JOINT	1	60001-
8	07206-31014	BOLT	1	60001-
9	07005-01412	SEAL, WASHER	2	60001-
10	203-04-56150	JOINT	1	60001-
11	07206-31014	BOLT	1	60001-
12	07005-01412	SEAL, WASHER	2	60001-
13	08034-20536	BAND	1	60001-
14	20Y-04-31190	HOSE ASS'Y	1	60001-
15	07281-00197	CLAMP	2	60001-
16	205-04-62150	JOINT	2	60001-
17	07206-31014	BOLT	2	60001-
18	07005-01412	SEAL, WASHER	4	60001-
19	04434-51910	CLIP	1	60001-
20	20Y-04-31120	BRACKET	1	60001-
21	04434-52312	CLIP	1	60001-
22	01010-81225	BOLT	3	60001-
23	01643-31232	WASHER	3	60001-
24	04435-51912	CLIP	1	60001-
25	154-979-1480	COLLAR	1	60001-
26	01010-81275	BOLT	1	60001-
27	01643-31232	WASHER	1	60001-
28	04435-51912	CLIP	2	60001-

FUEL LINES (WITH PRE-FUEL FILTER AND WATER SEPARATOR)(#60283-)

Item	Part No.	Part Name	Qty	Serial No.
29	01010-81225	BOLT	2	60001-
30	01643-31232	WASHER	2	60001-
31	04434-51912	CLIP	2	60283-
32	01010-81225	BOLT	2	60283-
33	01643-31232	WASHER	2	60283-
34	04434-51612	CLIP	2	60283-
35	01010-81225	BOLT	1	60283-
36	01643-31232	WASHER	1	60283-
37	04435-51812	CLIP	1	60001-
38	01010-81220	BOLT	1	60001-
39	01643-31232	WASHER	1	60001-

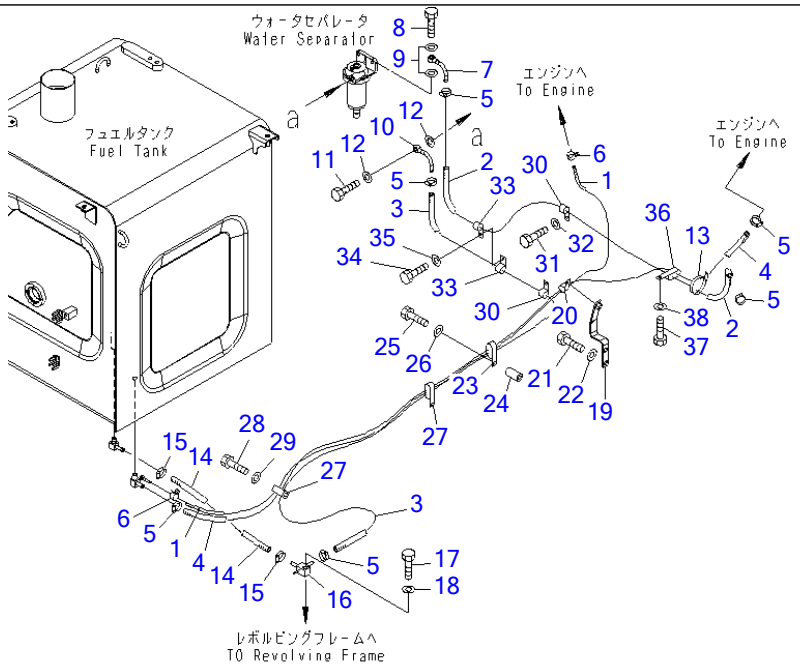

00003643

Ref D0200-01A2 **Page 090070**

PC220-7 S/N 60001-UP (Overseas Version)

FUEL LINES (COLD WEATHER A SPEC.)(#60255-68116)

Item	Part No.	Part Name	Qty	Serial No.
1	07270-50422	HOSE	1	60255-@
2	07288-01016	HOSE	1	60255-@
3	07288-01024	HOSE	1	60255-@
4	07288-01028	HOSE	1	60255-@
5	07281-00197	CLAMP	6	60255-@
6	07285-00080	CLIP	2	60255-@
7	203-04-56150	JOINT	1	60255-@
8	07206-31014	BOLT	1	60255-@
9	07005-01412	SEAL, WASHER	2	60255-@
10	22U-04-21170	JOINT	1	60255-@
11	07206-31014	BOLT	1	60255-@
12	07005-01412	SEAL, WASHER	2	60255-@
13	08034-20536	BAND	1	60255-@
14	07288-01004	HOSE	1	60255-@
15	07281-00197	CLAMP	2	60255-@
16	20Y-04-11280	TEE	1	60255-@
17	01010-81245	BOLT	1	60255-68116
18	01643-31232	WASHER	1	60255-@
19	20Y-04-31120	BRACKET	1	60255-@
20	04434-52312	CLIP	1	60255-@
21	01010-81225	BOLT	3	60255-@
22	01643-31232	WASHER	3	60255-@
23	04435-51912	CLIP	1	60255-@
24	154-979-1480	COLLAR	1	60255-@
25	01010-81275	BOLT	1	60255-@
26	01643-31232	WASHER	1	60255-@
27	04435-51912	CLIP	2	60255-@
28	01010-81225	BOLT	2	60255-@

FUEL LINES (COLD WEATHER A SPEC.)(#60255-68116)

Item	Part No.	Part Name	Qty	Serial No.
29	01643-31232	WASHER	2	60255-@
30	04434-51912	CLIP	2	60255-@
31	01010-81225	BOLT	2	60255-@
32	01643-31232	WASHER	2	60255-@
33	04434-51612	CLIP	2	60255-@
34	01010-81225	BOLT	1	60255-@
35	01643-31232	WASHER	1	60255-@
36	04435-51812	CLIP	1	60255-@
37	01010-81220	BOLT	1	60255-@
38	01643-31232	WASHER	1	60255-@

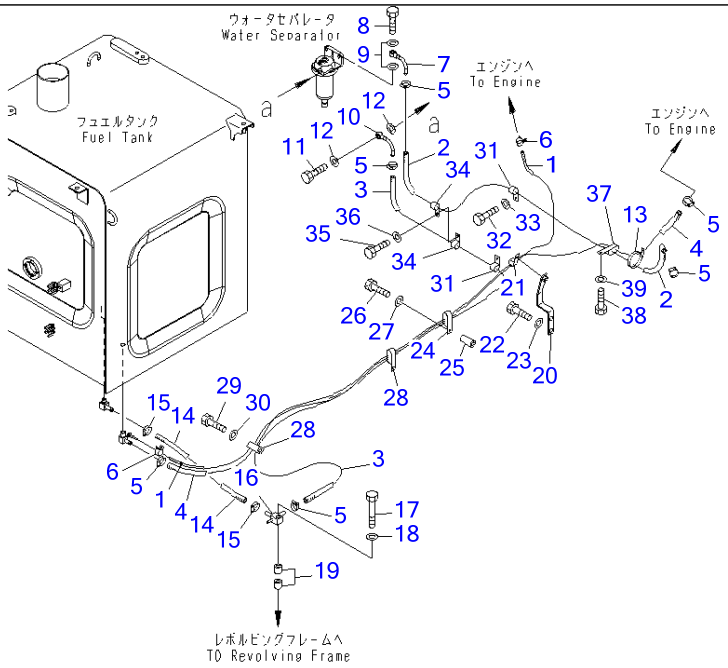

Ref D0200-01A2A **Page 090080**

PC220-7 S/N 60001-UP (Overseas Version)

FUEL LINES (COLD WEATHER A SPEC.)(#68117-)

Item	Part No.	Part Name	Qty	Serial No.
1	07270-50422	HOSE	1	60255-
2	07288-01016	HOSE	1	60255-
3	07288-01024	HOSE	1	60255-
4	07288-01028	HOSE	1	60255-
5	07281-00197	CLAMP	6	60255-
6	07285-00080	CLIP	2	60255-
7	203-04-56150	JOINT	1	60255-
8	07206-31014	BOLT	1	60255-
9	07005-01412	SEAL, WASHER	2	60255-
10	22U-04-21170	JOINT	1	60255-
11	07206-31014	BOLT	1	60255-
12	07005-01412	SEAL, WASHER	2	60255-
13	08034-20536	BAND	1	60255-
14	07288-01004	HOSE	1	60255-
15	07281-00197	CLAMP	2	60255-
16	20Y-04-11280	TEE	1	60255-
17	01010-81295	BOLT	1	68117-
18	01643-31232	WASHER	1	60255-
19	195-33-11220	SPACER	2	68117-
20	20Y-04-31120	BRACKET	1	60255-
21	04434-52312	CLIP	1	60255-
22	01010-81225	BOLT	3	60255-
23	01643-31232	WASHER	3	60255-
24	04435-51912	CLIP	1	60255-
25	154-979-1480	COLLAR	1	60255-
26	01010-81275	BOLT	1	60255-
27	01643-31232	WASHER	1	60255-
28	04435-51912	CLIP	2	60255-

FUEL LINES (COLD WEATHER A SPEC.)(#68117-)

Item	Part No.	Part Name	Qty	Serial No.
29	01010-81225	BOLT	2	60255-
30	01643-31232	WASHER	2	60255-
31	04434-51912	CLIP	2	60255-
32	01010-81225	BOLT	2	60255-
33	01643-31232	WASHER	2	60255-
34	04434-51612	CLIP	2	60255-
35	01010-81225	BOLT	1	60255-
36	01643-31232	WASHER	1	60255-
37	04435-51812	CLIP	1	60255-
38	01010-81220	BOLT	1	60255-
39	01643-31232	WASHER	1	60255-

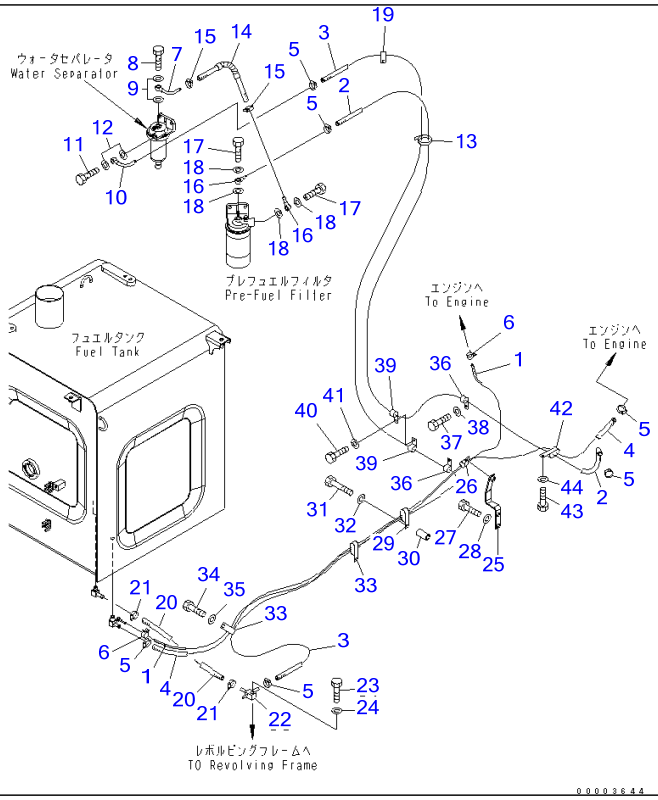

Ref D0200-01A3 Page 090090

FUEL LINES (WITH PRE-FUEL FILTER AND WATER SEPARATOR) (COLD WEATHER A SPEC.)(#60255-68116)

Item	Part No.	Part Name	Qty	Serial No.
1	07270-50422	HOSE	1	60255-@
2	07288-01015	HOSE	1	60255-@
3	07288-01025	HOSE	1	60255-@
4	07288-01028	HOSE	1	60255-@
5	07281-00197	CLAMP	6	60255-@
6	07285-00080	CLIP	2	60255-@
7	22U-04-21170	JOINT	1	60255-@
8	07206-31014	BOLT	1	60255-@
9	07005-01412	SEAL, WASHER	2	60255-@
10	203-04-56150	JOINT	1	60255-@
11	07206-31014	BOLT	1	60255-@
12	07005-01412	SEAL, WASHER	2	60255-@
13	08034-20536	BAND	1	60255-@
14	20Y-04-31190	HOSE ASS'Y	1	60255-@
15	07281-00197	CLAMP	2	60255-@
16	205-04-62150	JOINT	2	60255-@
17	07206-31014	BOLT	2	60255-@
18	07005-01412	SEAL, WASHER	4	60255-@
19	04434-51910	CLIP	1	60255-@
20	07288-01004	HOSE	1	60255-@
21	07281-00197	CLAMP	2	60255-@
22	20Y-04-11280	TEE	1	60255-@
23	01010-81245	BOLT	1	60255-68116
24	01643-31232	WASHER	1	60255-@
25	20Y-04-31120	BRACKET	1	60255-@
26	04434-52312	CLIP	1	60255-@

FUEL LINES (WITH PRE-FUEL FILTER AND WATER SEPARATOR) (COLD WEATHER A SPEC.)(#60255-68116)

Item	Part No.	Part Name	Qty	Serial No.
27	01010-81225	BOLT	3	60255-@
28	01643-31232	WASHER	3	60255-@
29	04435-51912	CLIP	1	60255-@
30	154-979-1480	COLLAR	1	60255-@
31	01010-81275	BOLT	1	60255-@
32	01643-31232	WASHER	1	60255-@
33	04435-51912	CLIP	2	60255-@
34	01010-81225	BOLT	2	60255-@
35	01643-31232	WASHER	2	60255-@
36	04434-51912	CLIP	2	60255-@
37	01010-81225	BOLT	2	60255-@
38	01643-31232	WASHER	2	60255-@
39	04434-51612	CLIP	2	60255-@
40	01010-81225	BOLT	1	60255-@
41	01643-31232	WASHER	1	60255-@
42	04435-51812	CLIP	1	60255-@
43	01010-81220	BOLT	1	60255-@
44	01643-31232	WASHER	1	60255-@

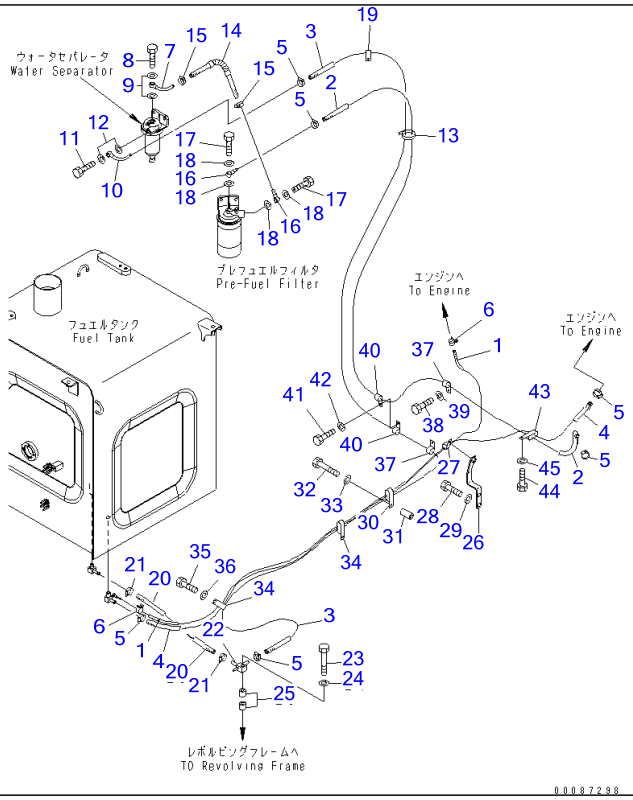

Ref D0200-01A3A

Page 090100

PC220-7 S/N 60001-UP (Overseas Version)

FUEL LINES (WITH PRE-FUEL FILTER AND WATER SEPARATOR) (COLD WEATHER A SPEC.)(#68117-)

Item	Part No.	Part Name	Qty	Serial No.
1	07270-50422	HOSE	1	60255-
2	07288-01015	HOSE	1	60255-
3	07288-01025	HOSE	1	60255-
4	07288-01028	HOSE	1	60255-
5	07281-00197	CLAMP	6	60255-
6	07285-00080	CLIP	2	60255-
7	22U-04-21170	JOINT	1	60255-
8	07206-31014	BOLT	1	60255-
9	07005-01412	SEAL, WASHER	2	60255-
10	203-04-56150	JOINT	1	60255-
11	07206-31014	BOLT	1	60255-
12	07005-01412	SEAL, WASHER	2	60255-
13	08034-20536	BAND	1	60255-
14	20Y-04-31190	HOSE ASS'Y	1	60255-
15	07281-00197	CLAMP	2	60255-
16	205-04-62150	JOINT	2	60255-
17	07206-31014	BOLT	2	60255-
18	07005-01412	SEAL, WASHER	4	60255-
19	04434-51910	CLIP	1	60255-
20	07288-01004	HOSE	1	60255-
21	07281-00197	CLAMP	2	60255-
22	20Y-04-11280	TEE	1	60255-
23	01010-81295	BOLT	1	68117-
24	01643-31232	WASHER	1	60255-
25	195-33-11220	SPACER	2	68117-
26	20Y-04-31120	BRACKET	1	60255-

FUEL LINES (WITH PRE-FUEL FILTER AND WATER SEPARATOR) (COLD WEATHER A SPEC.)(#68117-)

Item	Part No.	Part Name	Qty	Serial No.
27	04434-52312	CLIP	1	60255-
28	01010-81225	BOLT	3	60255-
29	01643-31232	WASHER	3	60255-
30	04435-51912	CLIP	1	60255-
31	154-979-1480	COLLAR	1	60255-
32	01010-81275	BOLT	1	60255-
33	01643-31232	WASHER	1	60255-
34	04435-51912	CLIP	2	60255-
35	01010-81225	BOLT	2	60255-
36	01643-31232	WASHER	2	60255-
37	04434-51912	CLIP	2	60255-
38	01010-81225	BOLT	2	60255-
39	01643-31232	WASHER	2	60255-
40	04434-51612	CLIP	2	60255-
41	01010-81225	BOLT	1	60255-
42	01643-31232	WASHER	1	60255-
43	04435-51812	CLIP	1	60255-
44	01010-81220	BOLT	1	60255-
45	01643-31232	WASHER	1	60255-

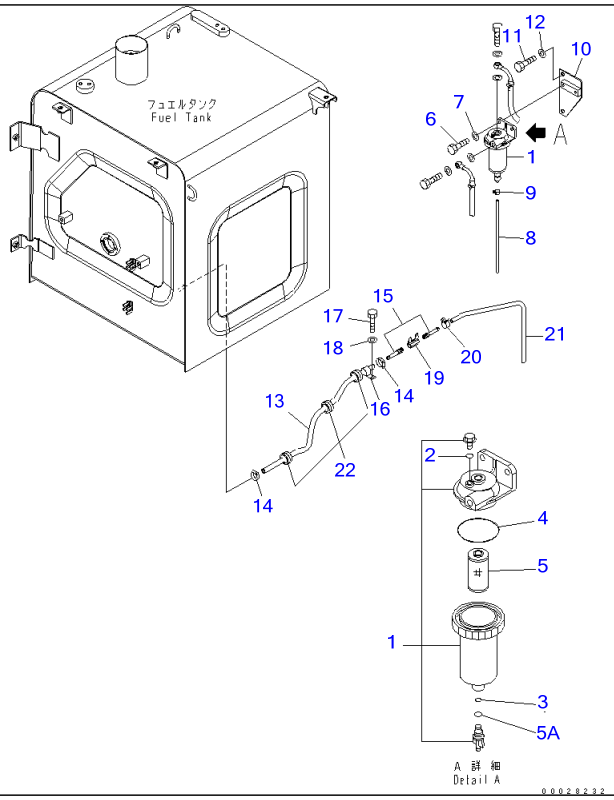

Ref D0200-02A0 **Page 090110**

PC220-7 S/N 60001-UP (Overseas Version)
FUEL PIPING (WATER SEPARATOR)

Item	Part No.	Part Name	Qty	Serial No.
1	22U-04-21131	WATER SEPARATOR	1	60001-
2	07000-11006	・O-RING	1	60001-
3	07000-11007	・O-RING	1	60001-
4	07000-12065	・O-RING	1	60001-
5	22U-04-21260	・ELEMENT	1	60001-
5A	22U-04-21330	・O-RING	1	60746-
6	01010-81025	BOLT	2	60001-
7	01643-31032	WASHER	2	60001-
8	07270-00630	TUBE	1	60001-
9	07285-00080	CLIP	1	60001-
10	20Y-04-31131	BRACKET	1	60001-
11	01010-81225	BOLT	2	60001-
12	01643-31232	WASHER	2	60001-
13	07288-01008	HOSE	1	60001-
14	07281-00197	CLAMP	2	60001-
15	20Y-04-31170	NIPPLE	2	60001-
16	04434-51612	CLIP	1	60001-
17	01010-81225	BOLT	1	60001-
18	01643-31232	WASHER	1	60001-
19	07700-50240	VALVE	1	60001-
20	07285-00115	CLIP	1	60001-
21	07270-01070	TUBE	1	60001-
22	205-977-7310	GROMMET	3	60001-

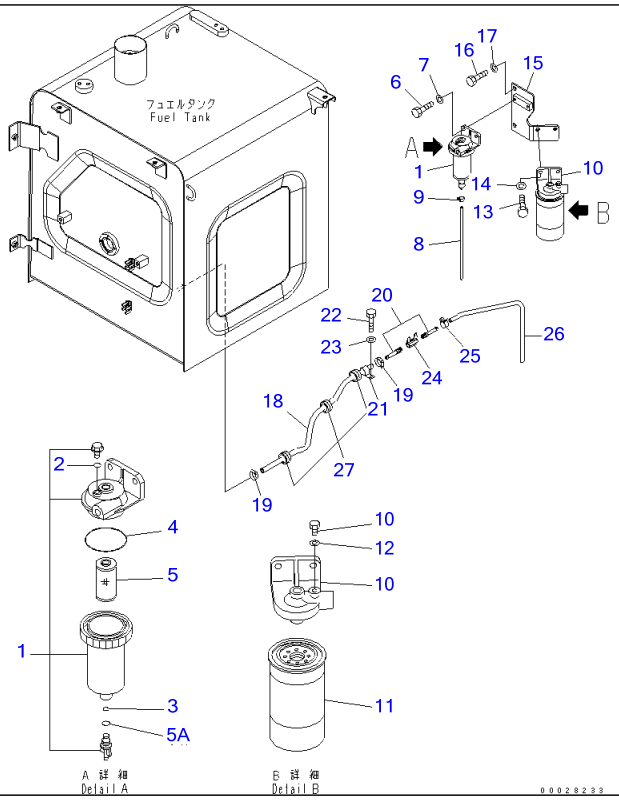

Ref D0200-02A1 **Page 090120**

PC220-7 S/N 60001-UP (Overseas Version)

FUEL LINES (WATER SEPARATOR AND FILTER) (WITH PRE-FUEL FILTER AND WATER SEPARATOR)

Item	Part No.	Part Name	Qty	Serial No.
1	22U-04-21131	WATER SEPARATOR	1	60001-
2	07000-11006	・O-RING	1	60001-
3	07000-11007	・O-RING	1	60001-
4	07000-12065	・O-RING	1	60001-
5	22U-04-21260	・ELEMENT	1	60001-
5A	22U-04-21330	・O-RING	1	60746-
6	01010-81025	BOLT	2	60001-
7	01643-31032	WASHER	2	60001-
8	07270-00630	TUBE	1	60001-
9	07285-00080	CLIP	1	60001-
10	600-311-9101	FUEL FILTER ASS'Y	1	60001-
11	600-311-9121	・CARTRIDGE	1	60001-
12	07005-00812	・SEAL, WASHER	1	60001-
13	01010-81035	BOLT	2	60001-
14	01643-31032	WASHER	2	60001-
15	20Y-04-31240	BRACKET	1	60001-
16	01010-81225	BOLT	2	60001-
17	01643-31232	WASHER	2	60001-
18	07288-01008	HOSE	1	60001-
19	07281-00197	CLAMP	2	60001-
20	20Y-04-31170	NIPPLE	2	60001-
21	04434-51612	CLIP	1	60001-
22	01010-81225	BOLT	1	60001-
23	01643-31232	WASHER	1	60001-
24	07700-50240	VALVE	1	60001-
25	07285-00115	CLIP	1	60001-

FUEL LINES (WATER SEPARATOR AND FILTER) (WITH PRE-FUEL FILTER AND WATER SEPARATOR)

Item	Part No.	Part Name	Qty	Serial No.
26	07270-01070	TUBE	1	60001-
27	205-977-7310	GROMMET	3	60001-

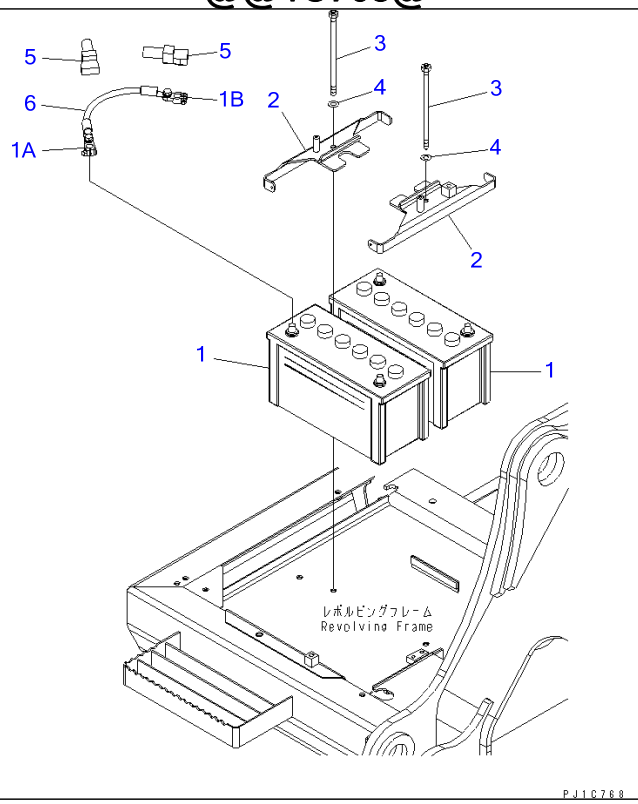

Ref E0100-01A0 **Page 120010**

PC220-7 S/N 60001-UP (Overseas Version)
BATTERY (115E41R)

Item	Part No.	Part Name	Qty	Serial No.
1	08001-0115E	BATTERY, WET(115E41R	2	66960-
	◆20Y-06-24840	BATTERY, WET(115E41R	2	65001-66959
	08001-0115E	BATTERY, WET(115E41R	2	60776-
	◆20Y-06-24840	BATTERY, WET(115E41R	2	60001-60775
1A	08000-00000	TERMINAL, (+)	2	60001-
1B	08000-00001	TERMINAL, (-)	2	60001-
2	22U-06-21151	HOLDER	2	60001-
3	22U-06-21130	BOLT	2	60001-
4	01643-31232	WASHER	2	60001-
5	08038-42511	CAP	2	60001-
6	08028-63035	CABLE, BATTERY	1	60001-

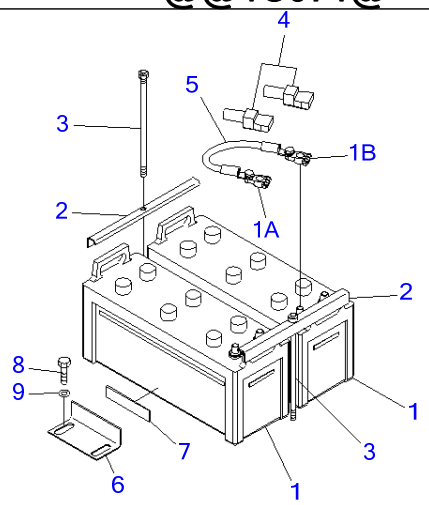

PJ1C071

Ref E0100-01A1 **Page 120020**

PC220-7 S/N 60001-UP (Overseas Version)
BATTERY (LARGE CAPACITY) (NX300)(#60001-65000)

Item	Part No.	Part Name	Qty	Serial No.
1	08000-3222Z	BATTERY, WET(195G51)	2	60776-65000
	◆207-06-11790	BATTERY, WET(NX300-1	2	60298-60775
	◆22U-06-21210	BATTERY, WET(170F51)	2	60001-60297
1A	08000-00000	TERMINAL, (+)	2	60001-@
1B	08000-00001	TERMINAL, (-)	2	60001-@
2	205-06-51380	CLAMP	2	60001-@
3	202-09-11120	BOLT	2	60001-@
4	08038-42511	CAP	2	60001-@
5	08028-63035	CABLE, BATTERY	1	60001-@
6	207-06-61461	BRACKET	1	60001-@
7	207-06-51330	▪ SHEET	1	60001-@
8	01010-81225	BOLT	2	60001-@
9	175-54-34170	WASHER	2	60776-65000
	01643-31232	WASHER	2	60001-60775

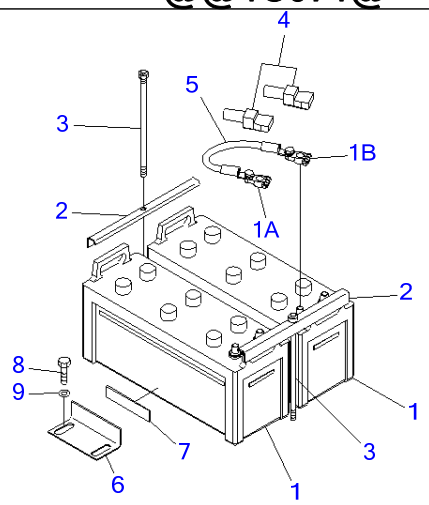

PJ1C071

Ref E0100-01A1A **Page 120030**

PC220-7 S/N 60001-UP (Overseas Version)
BATTERY (LARGE CAPACITY) (NX300)(#65001-)

Item	Part No.	Part Name	Qty	Serial No.
1	08000-3222Z	BATTERY, WET(195G51)	2	66960-
	◆207-06-11790	BATTERY, WET(NX300-1	2	65001-66959
1A	08000-00000	TERMINAL, (+)	2	60001-
1B	08000-00001	TERMINAL, (-)	2	60001-
2	205-06-51380	CLAMP	2	60001-
3	202-09-11120	BOLT	2	60001-
4	08038-42511	CAP	2	60001-
5	08028-63035	CABLE, BATTERY	1	60001-
6	207-06-61461	BRACKET	1	60001-
7	207-06-51330	▪ SHEET	1	60001-
8	01010-81225	BOLT	2	60001-
9	175-54-34170	WASHER	2	65802-
	01643-31232	WASHER	2	65001-65801

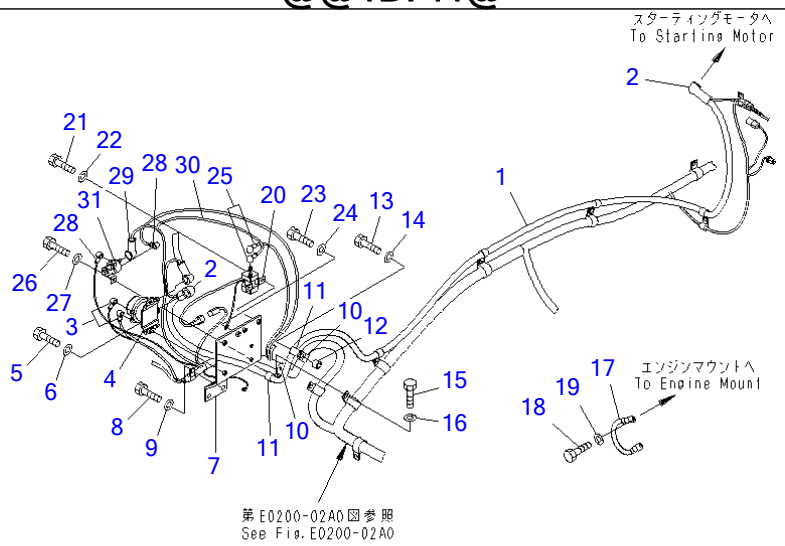

PW1B741

Ref E0200-01A0 **Page 120040**

PC220-7 S/N 60001-UP (Overseas Version)
WIRING (STARTING HARNESS)(#60001-65000)

Item	Part No.	Part Name	Qty	Serial No.
1	20Y-06-31620	CABLE	1	60001-@
2	08038-00035	CAP	2	60001-@
3	08038-00519	CAP	2	60001-@
4	08088-30000	SWITCH	1	60001-@
5	01010-80830	BOLT	2	60001-@
6	01643-30823	WASHER	2	60001-@
7	20Y-06-31640	BRACKET	1	60001-@
8	01010-81225	BOLT	2	60001-@
9	01643-31232	WASHER	2	60001-@
10	04434-52512	CLIP	2	60001-@
11	04434-51912	CLIP	2	60001-@
12	144-947-3490	SPACER	1	60001-@
13	01010-81245	BOLT	1	60001-@
14	01643-31232	WASHER	1	60001-@
15	01010-81225	BOLT	1	60001-@
16	01643-31232	WASHER	1	60001-@
17	08028-43030	CABLE, GROUND	1	60001-@
18	01010-81020	BOLT	2	60001-@
19	01643-31032	WASHER	2	60001-@
20	600-815-8941	RELAY	1	60283-@
	600-815-8940	RELAY	1	60001-60282
21	01010-80820	BOLT	2	60001-@
22	01643-30823	WASHER	2	60001-@
23	01010-80820	BOLT	1	60001-@
24	01643-30823	WASHER	1	60001-@
25	08038-00519	CAP	2	60001-@
26	01010-80620	BOLT	2	60001-@
27	01643-30623	WASHER	2	60001-@

WIRING (STARTING HARNESS)(#60001-65000)

Item	Part No.	Part Name	Qty	Serial No.
28	08038-00519	CAP	2	60001-@
29	08038-06031	CAP	1	60001-@
30	20Y-06-22872	CABLE	1	60001-@
31	600-815-2170	SWITCH	1	60001-@

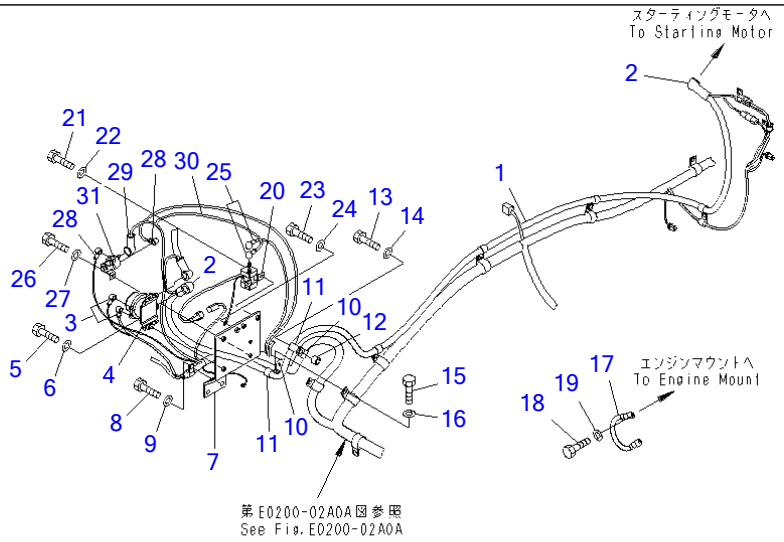

00018021

Ref E0200-01A0A **Page 120050**

PC220-7 S/N 60001-UP (Overseas Version)
WIRING (STARTING HARNESS)(#65001-)

Item	Part No.	Part Name	Qty	Serial No.
1	20Y-06-31621	CABLE	1	67442-
	□20Y-06-31620	CABLE	1	60001-67441
2	08038-00035	CAP	2	60001-
3	08038-00519	CAP	2	60001-
4	08088-30000	SWITCH	1	60001-
5	01010-80830	BOLT	2	60001-
6	01643-30823	WASHER	2	60001-
7	20Y-06-31640	BRACKET	1	60001-
8	01010-81225	BOLT	2	60001-
9	01643-31232	WASHER	2	60001-
10	04434-52512	CLIP	2	60001-
11	04434-51912	CLIP	2	60001-
12	144-947-3490	SPACER	1	60001-
13	01010-81245	BOLT	1	60001-
14	01643-31232	WASHER	1	60001-
15	01010-81225	BOLT	1	60001-
16	01643-31232	WASHER	1	60001-
17	08028-43030	CABLE, GROUND	1	60001-
18	01010-81020	BOLT	2	60001-
19	01643-31032	WASHER	2	60001-
20	600-815-8941	RELAY	1	60283-
21	01010-80820	BOLT	2	60001-
22	01643-30823	WASHER	2	60001-
23	01010-80820	BOLT	1	60001-
24	01643-30823	WASHER	1	60001-
25	08038-00519	CAP	2	60001-
26	01010-80620	BOLT	2	60001-
27	01643-30623	WASHER	2	60001-

WIRING (STARTING HARNESS)(#65001-)

Item	Part No.	Part Name	Qty	Serial No.
28	08038-00519	CAP	2	60001-
29	08038-06031	CAP	1	60001-
30	20Y-06-22872	CABLE	1	60001-
31	600-815-2170	SWITCH	1	60001-

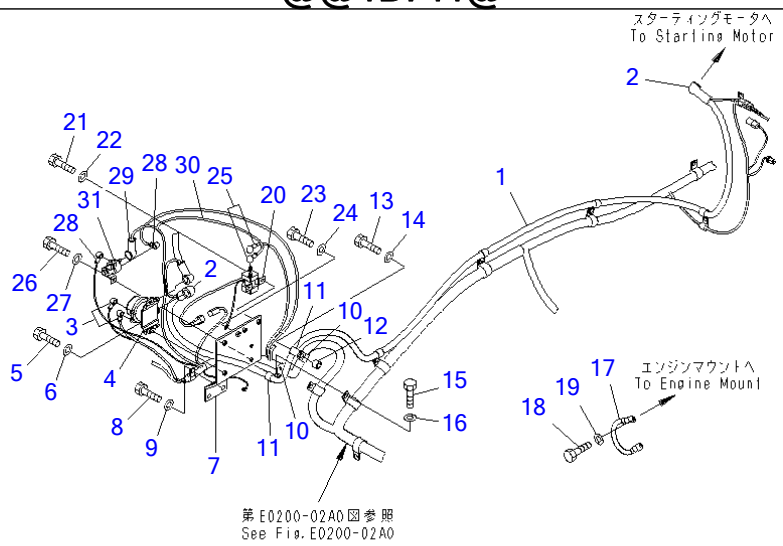

P W 1 B 7 4 1

Ref E0200-01A1 **Page 120060**

PC220-7 S/N 60001-UP (Overseas Version)

WIRING (STARTING HARNESS) (COLD WEATHER A SPEC.)(#60255-65000)

Item	Part No.	Part Name	Qty	Serial No.
1	20Y-06-31620	CABLE	1	60255-@
2	08038-00035	CAP	2	60255-@
3	08038-00519	CAP	2	60255-@
4	08088-30000	SWITCH	1	60255-@
5	01010-80830	BOLT	2	60255-@
6	01643-30823	WASHER	2	60255-@
7	20Y-06-31640	BRACKET	1	60255-@
8	01010-81225	BOLT	2	60255-@
9	01643-31232	WASHER	2	60255-@
10	04434-52512	CLIP	2	60255-@
11	04434-51912	CLIP	2	60255-@
12	144-947-3490	SPACER	1	60255-@
13	01010-81245	BOLT	1	60255-@
14	01643-31232	WASHER	1	60255-@
15	01010-81225	BOLT	1	60255-@
16	01643-31232	WASHER	1	60255-@
17	08028-53030	CABLE, GROUND	1	60255-@
18	01010-81020	BOLT	2	60255-@
19	01643-31032	WASHER	2	60255-@
20	600-815-8941	RELAY	1	60255-@
21	01010-80820	BOLT	2	60255-@
22	01643-30823	WASHER	2	60255-@
23	01010-80820	BOLT	1	60255-@
24	01643-30823	WASHER	1	60255-@
25	08038-00519	CAP	2	60255-@
26	01010-80620	BOLT	2	60255-@
27	01643-30623	WASHER	2	60255-@
28	08038-00519	CAP	2	60255-@

WIRING (STARTING HARNESS) (COLD WEATHER A SPEC.)(#60255-65000)

Item	Part No.	Part Name	Qty	Serial No.
29	08038-06031	CAP	1	60255-@
30	20Y-06-22872	CABLE	1	60255-@
31	600-815-2170	SWITCH	1	60255-@

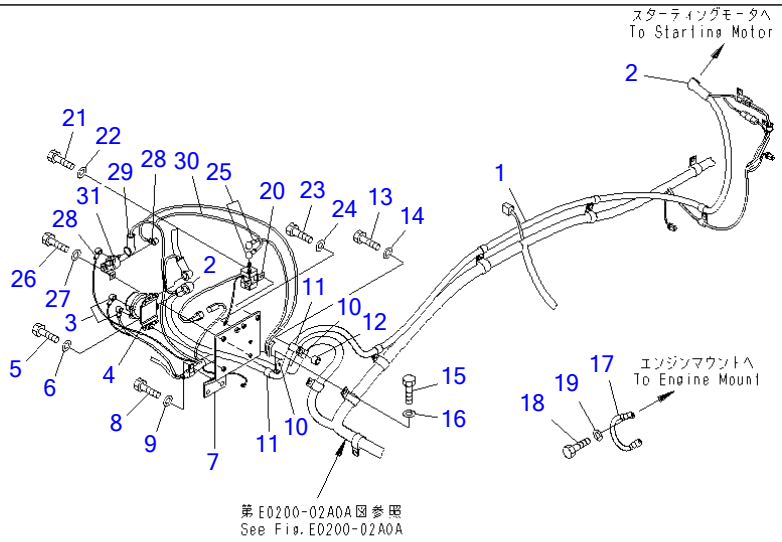

00018021

Ref E0200-01A1A **Page 120070**

PC220-7 S/N 60001-UP (Overseas Version)

WIRING (STARTING HARNESS) (COLD WEATHER A SPEC.)(#65001-)

Item	Part No.	Part Name	Qty	Serial No.
1	20Y-06-31621	CABLE	1	67442-
	□20Y-06-31620	CABLE	1	60255-67441
2	08038-00035	CAP	2	60255-
3	08038-00519	CAP	2	60255-
4	08088-30000	SWITCH	1	60255-
5	01010-80830	BOLT	2	60255-
6	01643-30823	WASHER	2	60255-
7	20Y-06-31640	BRACKET	1	60255-
8	01010-81225	BOLT	2	60255-
9	01643-31232	WASHER	2	60255-
10	04434-52512	CLIP	2	60255-
11	04434-51912	CLIP	2	60255-
12	144-947-3490	SPACER	1	60255-
13	01010-81245	BOLT	1	60255-
14	01643-31232	WASHER	1	60255-
15	01010-81225	BOLT	1	60255-
16	01643-31232	WASHER	1	60255-
17	08028-53030	CABLE, GROUND	1	60255-
18	01010-81020	BOLT	2	60255-
19	01643-31032	WASHER	2	60255-
20	600-815-8941	RELAY	1	60255-
21	01010-80820	BOLT	2	60255-
22	01643-30823	WASHER	2	60255-
23	01010-80820	BOLT	1	60255-
24	01643-30823	WASHER	1	60255-
25	08038-00519	CAP	2	60255-
26	01010-80620	BOLT	2	60255-
27	01643-30623	WASHER	2	60255-

WIRING (STARTING HARNESS) (COLD WEATHER A SPEC.)(#65001-)

Item	Part No.	Part Name	Qty	Serial No.
28	08038-00519	CAP	2	60255-
29	08038-06031	CAP	1	60255-
30	20Y-06-22872	CABLE	1	60255-
31	600-815-2170	SWITCH	1	60255-

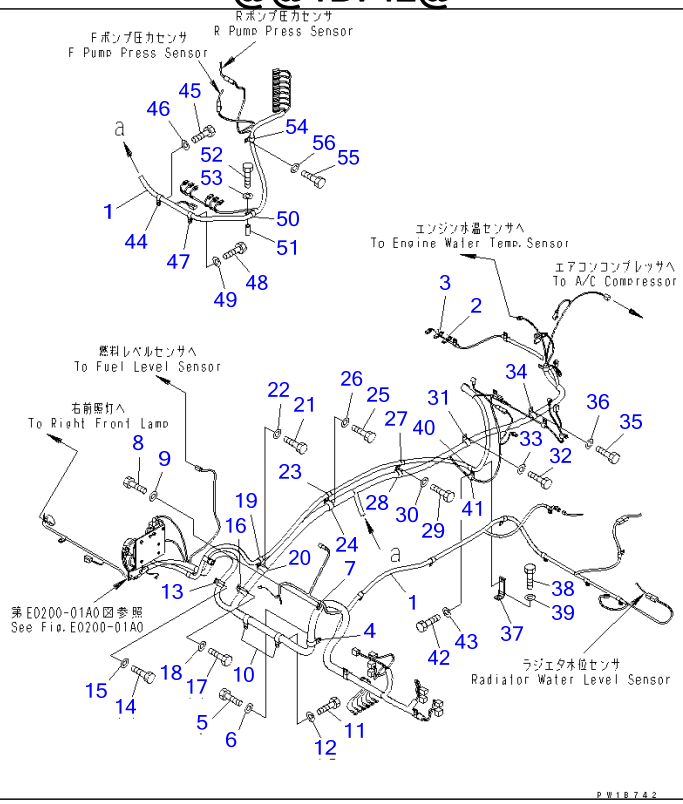

Ref E0200-02A0 **Page 120080**

PC220-7 S/N 60001-UP (Overseas Version)
WIRING (MAIN HARNESS) (HARNESS AND CLIP)(#60001-65000)

Item	Part No.	Part Name	Qty	Serial No.
1	20Y-06-31950	WIRING HARNESS	1	60767-65000
	20Y-06-31611	WIRING HARNESS	1	60001-60766
	22U-06-11270	・FUSIBLE LINK, 65A	1	60001-@
	20Y-06-31660	・FUSIBLE LINK, 30A	1	60001-@
2	20Y-62-22790	・BAND, RED	1	60001-@
3	20Y-62-22830	・BAND, WHITE	1	60001-@
4	04434-53412	CLIP	1	60001-@
5	01010-81225	BOLT	1	60001-@
6	01643-31232	WASHER	1	60001-@
7	04434-51012	CLIP	1	60001-@
8	01010-81225	BOLT	1	60001-@
9	01643-31232	WASHER	1	60001-@
10	04434-53412	CLIP	2	60001-@
11	01010-81225	BOLT	2	60001-@
12	01643-31232	WASHER	2	60001-@
13	04434-52512	CLIP	1	60001-@
14	01010-81225	BOLT	1	60001-@
15	01643-31232	WASHER	1	60001-@
16	04434-53412	CLIP	1	60001-@
17	01010-81225	BOLT	1	60001-@
18	01643-31232	WASHER	1	60001-@
19	04434-51912	CLIP	1	60001-@
20	04434-53412	CLIP	1	60001-@
21	01010-81225	BOLT	1	60001-@
22	01643-31232	WASHER	1	60001-@
23	04434-51912	CLIP	1	60001-@
24	04434-53412	CLIP	1	60001-@
25	01010-81225	BOLT	1	60001-@

WIRING (MAIN HARNESS) (HARNESS AND CLIP)(#60001-65000)

Item	Part No.	Part Name	Qty	Serial No.
26	01643-31232	WASHER	1	60001-@
27	04434-51912	CLIP	1	60001-@
28	04434-52712	CLIP	1	60001-@
29	01010-81225	BOLT	1	60001-@
30	01643-31232	WASHER	1	60001-@
31	04434-52712	CLIP	1	60001-@
32	01010-81225	BOLT	1	60001-@
33	01643-31232	WASHER	1	60001-@
34	04434-52712	CLIP	1	60001-@
35	01010-81225	BOLT	1	60001-@
36	01643-31232	WASHER	1	60001-@
37	203-06-61730	BRACKET	1	60001-@
38	01010-81225	BOLT	1	60001-@
39	01643-31232	WASHER	1	60001-@
40	04434-51912	CLIP	1	60001-@
41	04434-51412	CLIP	1	60001-@
42	01010-81225	BOLT	1	60001-@
43	01643-31232	WASHER	1	60001-@
44	04434-52112	CLIP	1	60001-@
45	01010-81225	BOLT	1	60001-@
46	01643-31232	WASHER	1	60001-@
47	04434-52112	CLIP	1	60001-@
48	01010-81225	BOLT	1	60001-@
49	01643-31232	WASHER	1	60001-@
50	04434-52112	CLIP	1	60001-@
51	154-979-1480	COLLAR	1	60001-@
52	01010-81275	BOLT	1	60001-@
53	01643-31232	WASHER	1	60001-@
54	04434-51912	CLIP	1	60001-@
55	01010-81225	BOLT	1	60001-@
56	01643-31232	WASHER	1	60001-@

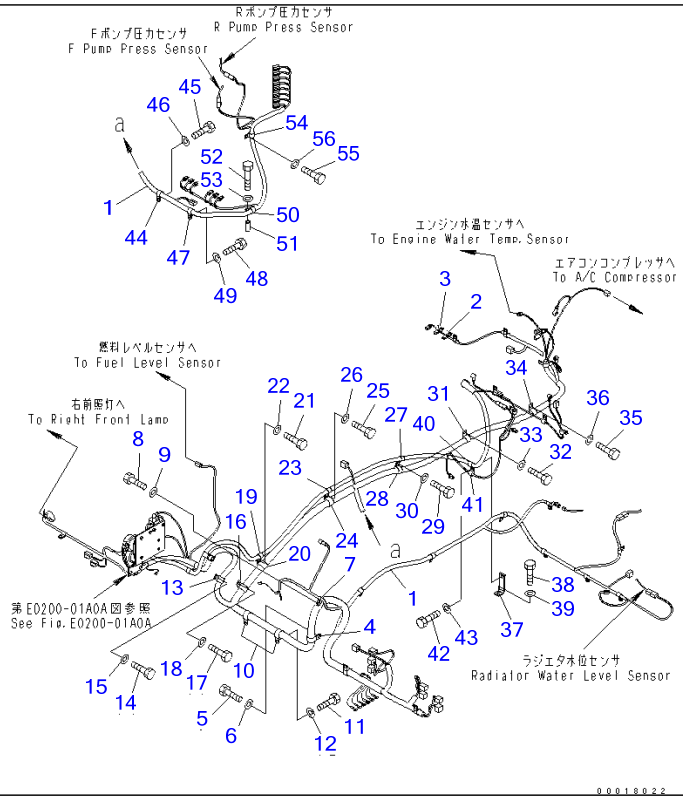

Ref E0200-02A0A **Page 120090**

PC220-7 S/N 60001-UP (Overseas Version)
WIRING (MAIN HARNESS) (HARNESS AND CLIP)(#65001-67441)

Item	Part No.	Part Name	Qty	Serial No.
1	20Y-06-31614	WIRING HARNESS	1	66052-@
	20Y-06-31613	WIRING HARNESS	1	65889-66051
	20Y-06-31612	WIRING HARNESS	1	65001-65888
	22U-06-11270	・FUSIBLE LINK, 65A	1	60001-@
	20Y-06-31660	・FUSIBLE LINK, 30A	1	60001-@
2	20Y-62-22790	・BAND, RED	1	60001-@
3	20Y-62-22830	・BAND, WHITE	1	60001-@
4	04434-53412	CLIP	1	60001-@
5	01010-81225	BOLT	1	60001-@
6	01643-31232	WASHER	1	60001-@
7	04434-51012	CLIP	1	60001-@
8	01010-81225	BOLT	1	60001-@
9	01643-31232	WASHER	1	60001-@
10	04434-53412	CLIP	2	60001-@
11	01010-81225	BOLT	2	60001-@
12	01643-31232	WASHER	2	60001-@
13	04434-52512	CLIP	1	60001-@
14	01010-81225	BOLT	1	60001-@
15	01643-31232	WASHER	1	60001-@
16	04434-53412	CLIP	1	60001-@
17	01010-81225	BOLT	1	60001-@
18	01643-31232	WASHER	1	60001-@
19	04434-51912	CLIP	1	60001-@
20	04434-53412	CLIP	1	60001-@
21	01010-81225	BOLT	1	60001-@
22	01643-31232	WASHER	1	60001-@
23	04434-51912	CLIP	1	60001-@
24	04434-53412	CLIP	1	60001-@

WIRING (MAIN HARNESS) (HARNESS AND CLIP)(#65001-67441)

Item	Part No.	Part Name	Qty	Serial No.
25	01010-81225	BOLT	1	60001-@
26	01643-31232	WASHER	1	60001-@
27	04434-51912	CLIP	1	60001-@
28	04434-52712	CLIP	1	60001-@
29	01010-81225	BOLT	1	60001-@
30	01643-31232	WASHER	1	60001-@
31	04434-52712	CLIP	1	60001-@
32	01010-81225	BOLT	1	60001-@
33	01643-31232	WASHER	1	60001-@
34	04434-52712	CLIP	1	60001-@
35	01010-81225	BOLT	1	60001-@
36	01643-31232	WASHER	1	60001-@
37	203-06-61730	BRACKET	1	60001-67441
38	01010-81225	BOLT	1	60001-@
39	01643-31232	WASHER	1	60001-@
40	04434-51912	CLIP	1	60001-@
41	04434-51412	CLIP	1	60001-@
42	01010-81225	BOLT	1	60001-67441
43	01643-31232	WASHER	1	60001-67441
44	04434-52112	CLIP	1	60001-@
45	01010-81225	BOLT	1	60001-@
46	01643-31232	WASHER	1	60001-@
47	04434-52112	CLIP	1	60001-@
48	01010-81225	BOLT	1	60001-@
49	01643-31232	WASHER	1	60001-@
50	04434-52112	CLIP	1	60001-@
51	154-979-1480	COLLAR	1	60001-@
52	01010-81275	BOLT	1	60001-@
53	01643-31232	WASHER	1	60001-@
54	04434-51912	CLIP	1	60001-@
55	01010-81225	BOLT	1	60001-@
56	01643-31232	WASHER	1	60001-@

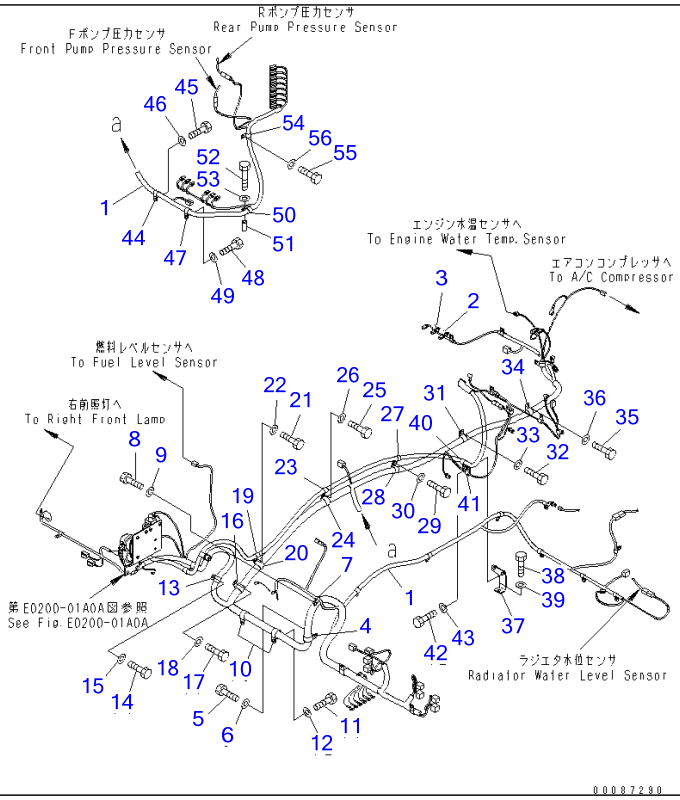

Ref E0200-02A0B **Page 120100**

PC220-7 S/N 60001-UP (Overseas Version)

WIRING (MAIN HARNESS) (HARNESS AND CLIP)(#67442-)

Item	Part No.	Part Name	Qty	Serial No.
1	20Y-06-31615	WIRING HARNESS	1	69463-
	20Y-06-31614	WIRING HARNESS	1	66052-69462
	22U-06-11270	・FUSIBLE LINK, 65A	1	60001-
	20Y-06-31660	・FUSIBLE LINK, 30A	1	60001-
2	20Y-62-22790	・BAND, RED	1	60001-
3	20Y-62-22830	・BAND, WHITE	1	60001-
4	04434-53412	CLIP	1	60001-
5	01010-81225	BOLT	1	60001-
6	01643-31232	WASHER	1	60001-
7	04434-51012	CLIP	1	60001-
8	01010-81225	BOLT	1	60001-
9	01643-31232	WASHER	1	60001-
10	04434-53412	CLIP	2	60001-
11	01010-81225	BOLT	2	60001-
12	01643-31232	WASHER	2	60001-
13	04434-52512	CLIP	1	60001-
14	01010-81225	BOLT	1	60001-
15	01643-31232	WASHER	1	60001-
16	04434-53412	CLIP	1	60001-
17	01010-81225	BOLT	1	60001-
18	01643-31232	WASHER	1	60001-
19	04434-51912	CLIP	1	60001-
20	04434-53412	CLIP	1	60001-
21	01010-81225	BOLT	1	60001-
22	01643-31232	WASHER	1	60001-
23	04434-51912	CLIP	1	60001-
24	04434-53412	CLIP	1	60001-
25	01010-81225	BOLT	1	60001-

WIRING (MAIN HARNESS) (HARNESS AND CLIP)(#67442-)

Item	Part No.	Part Name	Qty	Serial No.
26	01643-31232	WASHER	1	60001-
27	04434-51912	CLIP	1	60001-
28	04434-52712	CLIP	1	60001-
29	01010-81225	BOLT	1	60001-
30	01643-31232	WASHER	1	60001-
31	04434-52712	CLIP	1	60001-
32	01010-81225	BOLT	1	60001-
33	01643-31232	WASHER	1	60001-
34	04434-52712	CLIP	1	60001-
35	01010-81225	BOLT	1	60001-
36	01643-31232	WASHER	1	60001-
37	20Y-06-42520	BRACKET	1	67442-
38	01010-81225	BOLT	1	60001-
39	01643-31232	WASHER	1	60001-
40	04434-51912	CLIP	1	60001-
41	04434-51412	CLIP	1	60001-
42	01010-81225	BOLT	2	67442-
43	01643-31232	WASHER	2	67442-
44	04434-52112	CLIP	1	60001-
45	01010-81225	BOLT	1	60001-
46	01643-31232	WASHER	1	60001-
47	04434-52112	CLIP	1	60001-
48	01010-81225	BOLT	1	60001-
49	01643-31232	WASHER	1	60001-
50	04434-52112	CLIP	1	60001-
51	154-979-1480	COLLAR	1	60001-
52	01010-81275	BOLT	1	60001-
53	01643-31232	WASHER	1	60001-
54	04434-51912	CLIP	1	60001-
55	01010-81225	BOLT	1	60001-
56	01643-31232	WASHER	1	60001-

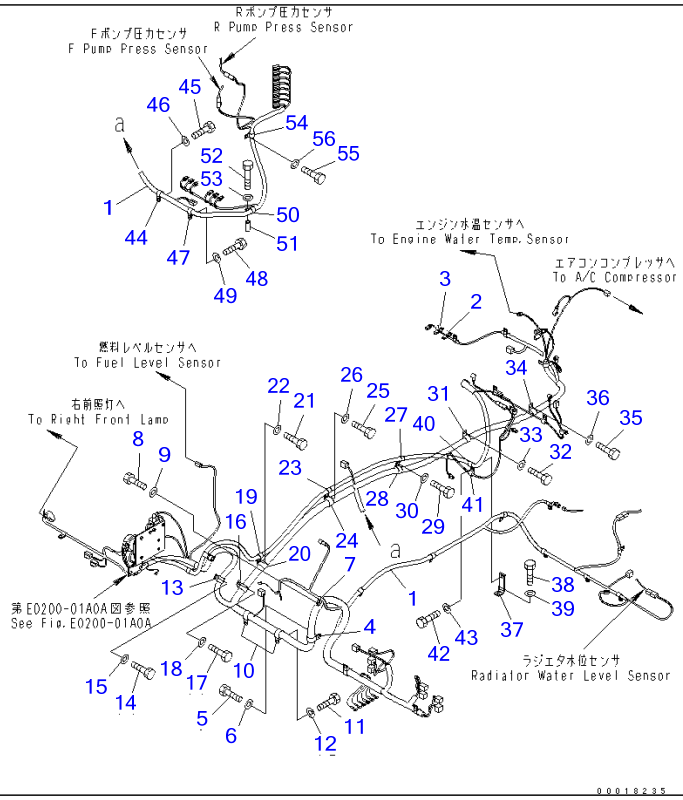

Ref E0200-02A3 Page 120110

PC220-7 S/N 60001-UP (Overseas Version)
WIRING (MAIN HARNESS) (HARNESS AND CLIP) (WITH OVER LOAD ALARM)(#60001-65000)

Item	Part No.	Part Name	Qty	Serial No.
1	20Y-06-31850	WIRING HARNESS	1	60001-65000
	22U-06-11270	・FUSIBLE LINK, 65A	1	60001-@
	20Y-06-31660	・FUSIBLE LINK, 30A	1	60001-@
2	20Y-62-22790	・BAND, RED	1	60001-@
3	20Y-62-22830	・BAND, WHITE	1	60001-@
4	04434-53412	CLIP	1	60001-@
5	01010-81225	BOLT	1	60001-@
6	01643-31232	WASHER	1	60001-@
7	04434-51012	CLIP	1	60001-@
8	01010-81225	BOLT	1	60001-@
9	01643-31232	WASHER	1	60001-@
10	04434-53412	CLIP	2	60001-@
11	01010-81225	BOLT	2	60001-@
12	01643-31232	WASHER	2	60001-@
13	04434-52512	CLIP	1	60001-@
14	01010-81225	BOLT	1	60001-@
15	01643-31232	WASHER	1	60001-@
16	04434-53412	CLIP	1	60001-@
17	01010-81225	BOLT	1	60001-@
18	01643-31232	WASHER	1	60001-@
19	04434-51912	CLIP	1	60001-@
20	04434-53412	CLIP	1	60001-@
21	01010-81225	BOLT	1	60001-@
22	01643-31232	WASHER	1	60001-@
23	04434-51912	CLIP	1	60001-@
24	04434-53412	CLIP	1	60001-@

WIRING (MAIN HARNESS) (HARNESS AND CLIP) (WITH OVER LOAD ALARM)(#60001-65000)

Item	Part No.	Part Name	Qty	Serial No.
25	01010-81225	BOLT	1	60001-@
26	01643-31232	WASHER	1	60001-@
27	04434-51912	CLIP	1	60001-@
28	04434-52712	CLIP	1	60001-@
29	01010-81225	BOLT	1	60001-@
30	01643-31232	WASHER	1	60001-@
31	04434-52712	CLIP	1	60001-@
32	01010-81225	BOLT	1	60001-@
33	01643-31232	WASHER	1	60001-@
34	04434-52712	CLIP	1	60001-@
35	01010-81225	BOLT	1	60001-@
36	01643-31232	WASHER	1	60001-@
37	203-06-61730	BRACKET	1	60001-@
38	01010-81225	BOLT	1	60001-@
39	01643-31232	WASHER	1	60001-@
40	04434-51912	CLIP	1	60001-@
41	04434-51412	CLIP	1	60001-@
42	01010-81225	BOLT	1	60001-@
43	01643-31232	WASHER	1	60001-@
44	04434-52112	CLIP	1	60001-@
45	01010-81225	BOLT	1	60001-@
46	01643-31232	WASHER	1	60001-@
47	04434-52112	CLIP	1	60001-@
48	01010-81225	BOLT	1	60001-@
49	01643-31232	WASHER	1	60001-@
50	04434-52112	CLIP	1	60001-@
51	154-979-1480	COLLAR	1	60001-@
52	01010-81275	BOLT	1	60001-@
53	01643-31232	WASHER	1	60001-@
54	04434-51912	CLIP	1	60001-@
55	01010-81225	BOLT	1	60001-@
56	01643-31232	WASHER	1	60001-@

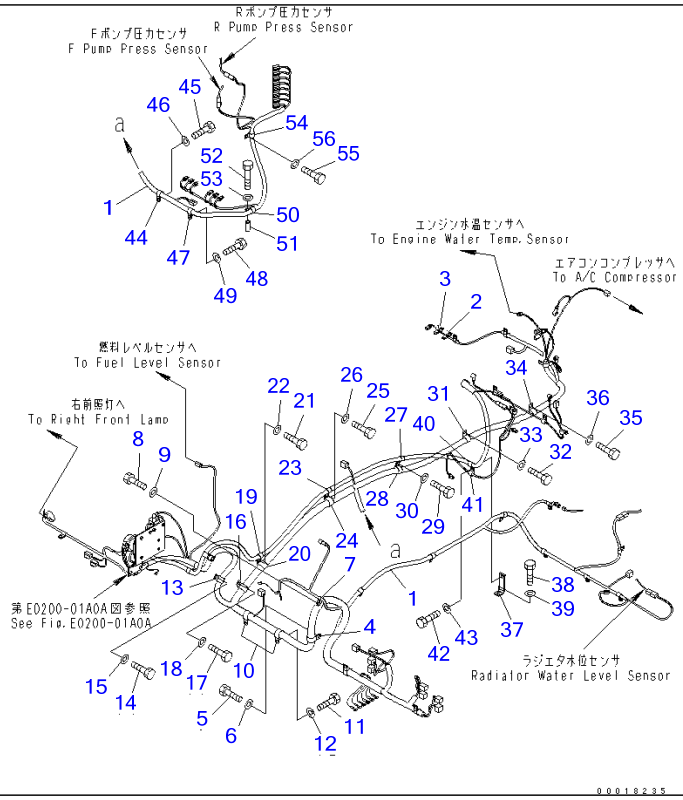

Ref E0200-02A3A **Page 120120**

PC220-7 S/N 60001-UP (Overseas Version)
WIRING (MAIN HARNESS) (HARNESS AND CLIP) (WITH OVER LOAD ALARM)(#65001-67441)

Item	Part No.	Part Name	Qty	Serial No.
1	20Y-06-31862	WIRING HARNESS	1	66052-@
	20Y-06-31861	WIRING HARNESS	1	65889-66051
	20Y-06-31860	WIRING HARNESS	1	65001-65888
	22U-06-11270	・FUSIBLE LINK, 65A	1	60001-@
	20Y-06-31660	・FUSIBLE LINK, 30A	1	60001-@
2	20Y-62-22790	・BAND, RED	1	60001-@
3	20Y-62-22830	・BAND, WHITE	1	60001-@
4	04434-53412	CLIP	1	60001-@
5	01010-81225	BOLT	1	60001-@
6	01643-31232	WASHER	1	60001-@
7	04434-51012	CLIP	1	60001-@
8	01010-81225	BOLT	1	60001-@
9	01643-31232	WASHER	1	60001-@
10	04434-53412	CLIP	2	60001-@
11	01010-81225	BOLT	2	60001-@
12	01643-31232	WASHER	2	60001-@
13	04434-52512	CLIP	1	60001-@
14	01010-81225	BOLT	1	60001-@
15	01643-31232	WASHER	1	60001-@
16	04434-53412	CLIP	1	60001-@
17	01010-81225	BOLT	1	60001-@
18	01643-31232	WASHER	1	60001-@
19	04434-51912	CLIP	1	60001-@
20	04434-53412	CLIP	1	60001-@
21	01010-81225	BOLT	1	60001-@
22	01643-31232	WASHER	1	60001-@

WIRING (MAIN HARNESS) (HARNESS AND CLIP) (WITH OVER LOAD ALARM)(#65001-67441)

Item	Part No.	Part Name	Qty	Serial No.
23	04434-51912	CLIP	1	60001-@
24	04434-53412	CLIP	1	60001-@
25	01010-81225	BOLT	1	60001-@
26	01643-31232	WASHER	1	60001-@
27	04434-51912	CLIP	1	60001-@
28	04434-52712	CLIP	1	60001-@
29	01010-81225	BOLT	1	60001-@
30	01643-31232	WASHER	1	60001-@
31	04434-52712	CLIP	1	60001-@
32	01010-81225	BOLT	1	60001-@
33	01643-31232	WASHER	1	60001-@
34	04434-52712	CLIP	1	60001-@
35	01010-81225	BOLT	1	60001-@
36	01643-31232	WASHER	1	60001-@
37	20Y-06-42520	BRACKET	1	67442-@
	□203-06-61730	BRACKET	1	60001-67441
38	01010-81225	BOLT	1	60001-@
39	01643-31232	WASHER	1	60001-@
40	04434-51912	CLIP	1	60001-@
41	04434-51412	CLIP	1	60001-@
42	01010-81225	BOLT	1	60001-67441
43	01643-31232	WASHER	1	60001-67441
44	04434-52112	CLIP	1	60001-@
45	01010-81225	BOLT	1	60001-@
46	01643-31232	WASHER	1	60001-@
47	04434-52112	CLIP	1	60001-@
48	01010-81225	BOLT	1	60001-@
49	01643-31232	WASHER	1	60001-@
50	04434-52112	CLIP	1	60001-@
51	154-979-1480	COLLAR	1	60001-@
52	01010-81275	BOLT	1	60001-@
53	01643-31232	WASHER	1	60001-@
54	04434-51912	CLIP	1	60001-@
55	01010-81225	BOLT	1	60001-@
56	01643-31232	WASHER	1	60001-@

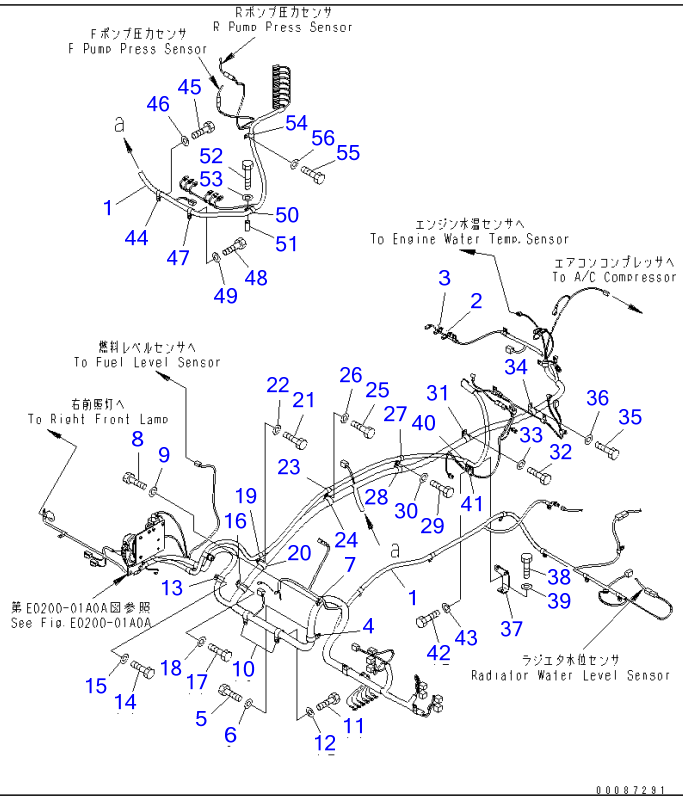

Ref E0200-02A3B **Page 120130**

PC220-7 S/N 60001-UP (Overseas Version)
WIRING (MAIN HARNESS) (HARNESS AND CLIP) (WITH OVER LOAD ALARM)(#67442-)

Item	Part No.	Part Name	Qty	Serial No.
1	20Y-06-31862	WIRING HARNESS	1	66052-
	22U-06-11270	・FUSIBLE LINK, 65A	1	60001-
	20Y-06-31660	・FUSIBLE LINK, 30A	1	60001-
2	20Y-62-22790	・BAND, RED	1	60001-
3	20Y-62-22830	・BAND, WHITE	1	60001-
4	04434-53412	CLIP	1	60001-
5	01010-81225	BOLT	1	60001-
6	01643-31232	WASHER	1	60001-
7	04434-51012	CLIP	1	60001-
8	01010-81225	BOLT	1	60001-
9	01643-31232	WASHER	1	60001-
10	04434-53412	CLIP	2	60001-
11	01010-81225	BOLT	2	60001-
12	01643-31232	WASHER	2	60001-
13	04434-52512	CLIP	1	60001-
14	01010-81225	BOLT	1	60001-
15	01643-31232	WASHER	1	60001-
16	04434-53412	CLIP	1	60001-
17	01010-81225	BOLT	1	60001-
18	01643-31232	WASHER	1	60001-
19	04434-51912	CLIP	1	60001-
20	04434-53412	CLIP	1	60001-
21	01010-81225	BOLT	1	60001-
22	01643-31232	WASHER	1	60001-
23	04434-51912	CLIP	1	60001-
24	04434-53412	CLIP	1	60001-

WIRING (MAIN HARNESS) (HARNESS AND CLIP) (WITH OVER LOAD ALARM)(#67442-)

Item	Part No.	Part Name	Qty	Serial No.
25	01010-81225	BOLT	1	60001-
26	01643-31232	WASHER	1	60001-
27	04434-51912	CLIP	1	60001-
28	04434-52712	CLIP	1	60001-
29	01010-81225	BOLT	1	60001-
30	01643-31232	WASHER	1	60001-
31	04434-52712	CLIP	1	60001-
32	01010-81225	BOLT	1	60001-
33	01643-31232	WASHER	1	60001-
34	04434-52712	CLIP	1	60001-
35	01010-81225	BOLT	1	60001-
36	01643-31232	WASHER	1	60001-
37	20Y-06-42520	BRACKET	1	67442-
38	01010-81225	BOLT	1	60001-
39	01643-31232	WASHER	1	60001-
40	04434-51912	CLIP	1	60001-
41	04434-51412	CLIP	1	60001-
42	01010-81225	BOLT	2	67442-
43	01643-31232	WASHER	2	67442-
44	04434-52112	CLIP	1	60001-
45	01010-81225	BOLT	1	60001-
46	01643-31232	WASHER	1	60001-
47	04434-52112	CLIP	1	60001-
48	01010-81225	BOLT	1	60001-
49	01643-31232	WASHER	1	60001-
50	04434-52112	CLIP	1	60001-
51	154-979-1480	COLLAR	1	60001-
52	01010-81275	BOLT	1	60001-
53	01643-31232	WASHER	1	60001-
54	04434-51912	CLIP	1	60001-
55	01010-81225	BOLT	1	60001-
56	01643-31232	WASHER	1	60001-

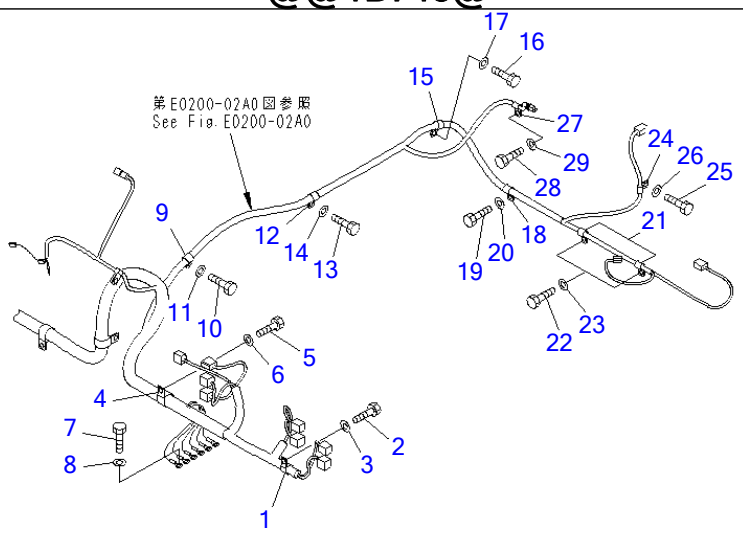

P W 1 B 7 4 3

Ref E0200-03A0 Page 120140

PC220-7 S/N 60001-UP (Overseas Version)

WIRING (MAIN HARNESS) (CLIP) (1/2)(#60001-65000)

Item	Part No.	Part Name	Qty	Serial No.
1	04434-52312	CLIP	1	60001-@
2	01010-81225	BOLT	1	60001-@
3	01643-31232	WASHER	1	60001-@
4	04434-53412	CLIP	1	60001-@
5	01010-81225	BOLT	1	60001-@
6	01643-31232	WASHER	1	60001-@
7	01010-81020	BOLT	6	60001-@
8	01643-31032	WASHER	6	60001-@
9	04434-51912	CLIP	1	60001-@
10	01010-81225	BOLT	1	60001-@
11	01643-31232	WASHER	1	60001-@
12	04434-51912	CLIP	1	60001-@
13	01010-81225	BOLT	1	60001-@
14	01643-31232	WASHER	1	60001-@
15	04434-51712	CLIP	1	60001-@
16	01010-81225	BOLT	1	60001-@
17	01643-31232	WASHER	1	60001-@
18	04434-51712	CLIP	1	60001-@
19	01010-81225	BOLT	1	60001-@
20	01643-31232	WASHER	1	60001-@
21	04434-51412	CLIP	2	60001-@
22	01010-81225	BOLT	2	60001-@
23	01643-31232	WASHER	2	60001-@
24	04434-51012	CLIP	1	60001-@
25	01010-81225	BOLT	1	60001-@
26	01643-31232	WASHER	1	60001-@
27	04434-51012	CLIP	1	60001-@
28	01010-81225	BOLT	1	60001-@

WIRING (MAIN HARNESS) (CLIP) (1/2)(#60001-65000)

Item	Part No.	Part Name	Qty	Serial No.
29	01643-31232	WASHER	1	60001-@

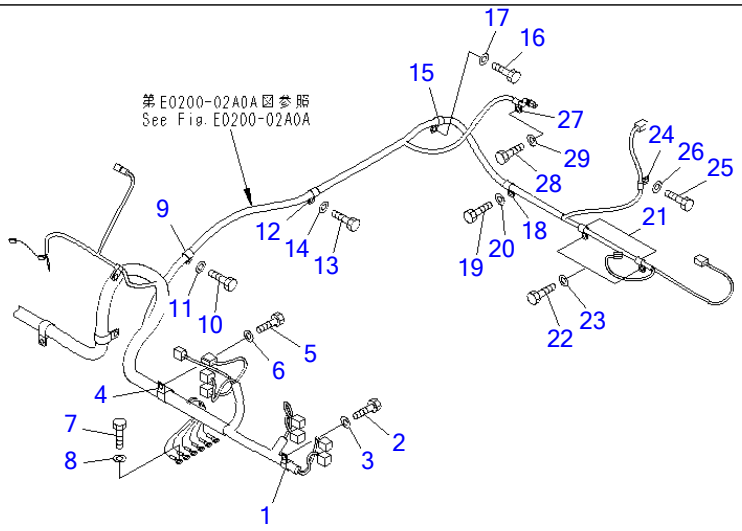

00018023

Ref E0200-03A0A **Page 120150**

PC220-7 S/N 60001-UP (Overseas Version)

WIRING (MAIN HARNESS) (CLIP) (1/2)(#65001-)

Item	Part No.	Part Name	Qty	Serial No.
1	04434-52312	CLIP	1	60001-
2	01010-81225	BOLT	1	60001-
3	01643-31232	WASHER	1	60001-
4	04434-53412	CLIP	1	60001-
5	01010-81225	BOLT	1	60001-
6	01643-31232	WASHER	1	60001-
7	01010-81020	BOLT	6	60001-
8	01643-31032	WASHER	6	60001-
9	04434-51912	CLIP	1	60001-
10	01010-81225	BOLT	1	60001-
11	01643-31232	WASHER	1	60001-
12	04434-51912	CLIP	1	60001-
13	01010-81225	BOLT	1	60001-
14	01643-31232	WASHER	1	60001-
15	04434-51712	CLIP	1	60001-
16	01010-81225	BOLT	1	60001-
17	01643-31232	WASHER	1	60001-
18	04434-51712	CLIP	1	60001-
19	01010-81225	BOLT	1	60001-
20	01643-31232	WASHER	1	60001-
21	04434-51412	CLIP	2	60001-
22	01010-81225	BOLT	2	60001-
23	01643-31232	WASHER	2	60001-
24	04434-51012	CLIP	1	60001-
25	01010-81225	BOLT	1	60001-
26	01643-31232	WASHER	1	60001-
27	04434-51012	CLIP	1	60001-
28	01010-81225	BOLT	1	60001-

WIRING (MAIN HARNESS) (CLIP) (1/2)(#65001-)

Item	Part No.	Part Name	Qty	Serial No.
29	01643-31232	WASHER	1	60001-

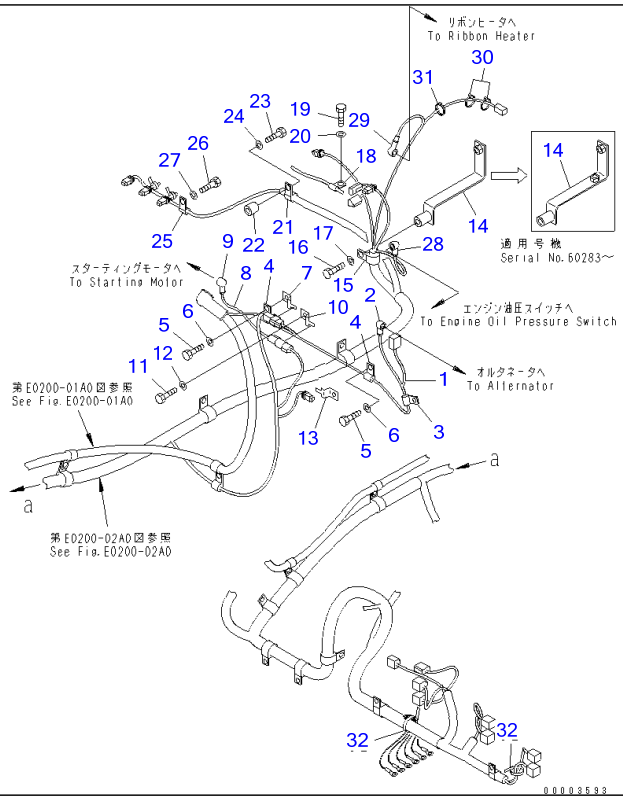

Ref E0200-04A0 **Page 120160**

PC220-7 S/N 60001-UP (Overseas Version)
WIRING (MAIN HARNESS) (CLIP) (2/2)(#60001-65000)

Item	Part No.	Part Name	Qty	Serial No.
1	22U-06-21420	WIRING HARNESS	1	60001-65000
2	08038-00519	CAP	1	60001-@
3	04434-51010	CLIP	1	60001-65000
4	04434-51012	CLIP	2	60001-65000
5	01010-81220	BOLT	2	60001-@
6	01643-31232	WASHER	2	60001-@
7	08053-01512	CLIP	1	60001-@
8	20Y-06-31630	CABLE	1	60001-@
9	08038-00519	CAP	1	60001-@
10	08193-21012	CLIP	1	60001-@
11	01010-81220	BOLT	1	60001-65000
12	01643-31232	WASHER	1	60001-@
13	08193-21012	CLIP	1	60001-@
14	20Y-06-31182	BRACKET	1	60283-@
	20Y-06-31181	BRACKET	1	60001-60282
15	04434-52112	CLIP	1	60001-@
16	01010-81265	BOLT	1	60001-@
17	01643-31232	WASHER	1	60001-@
18	04434-50612	CLIP	1	60001-@
19	01010-81225	BOLT	1	60001-@
20	01643-31232	WASHER	1	60001-@
21	04434-51712	CLIP	1	60001-@
22	20Y-03-11220	COLLAR	1	60001-@
23	01010-81265	BOLT	1	60001-@
24	01643-31232	WASHER	1	60001-@
25	04434-51712	CLIP	1	60001-@
26	01010-81225	BOLT	1	60001-@
27	01643-31232	WASHER	1	60001-@

WIRING (MAIN HARNESS) (CLIP) (2/2)(#60001-65000)

Item	Part No.	Part Name	Qty	Serial No.
28	08038-00519	CAP	1	60001-@
29	08038-00519	CAP	1	60001-@
30	08034-20536	BAND	2	60003-@
	08034-20414	BAND	2	60001-60002
31	08034-20536	BAND	1	60003-@
32	08034-20536	BAND	2	60478-@

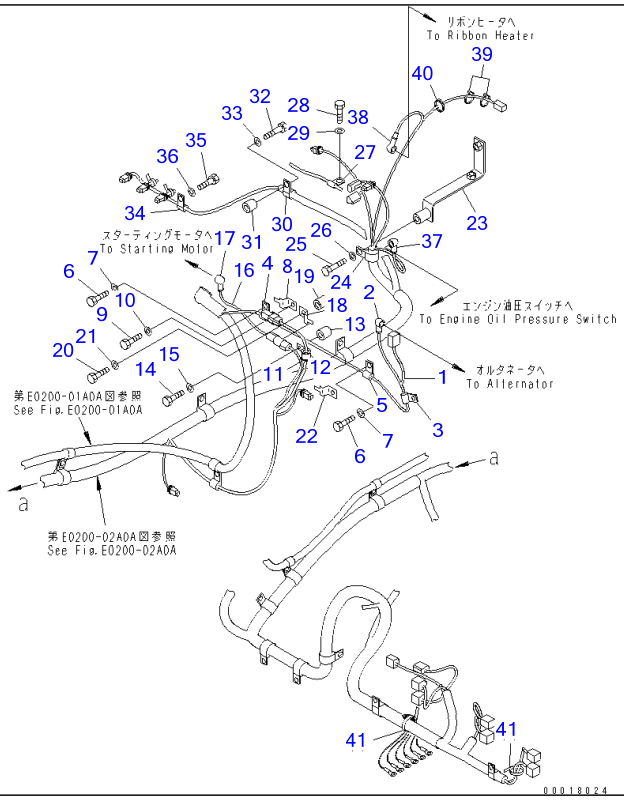

Ref E0200-04A0A **Page 120170**

PC220-7 S/N 60001-UP (Overseas Version)

WIRING (MAIN HARNESS) (CLIP) (2/2)(#65001-)

Item	Part No.	Part Name	Qty	Serial No.
1	21K-06-71261	WIRING HARNESS	1	65001-
2	08038-00519	CAP	1	60001-
3	04434-51410	CLIP	1	65001-
4	04434-51012	CLIP	1	65001-
5	04434-51212	CLIP	1	65001-
6	01010-81220	BOLT	2	60001-
7	01643-31232	WASHER	2	60001-
8	08053-01512	CLIP	1	60001-
9	01010-81220	BOLT	1	65001-
10	01643-31232	WASHER	1	65001-
11	07095-20211	CUSHION	1	65001-
12	04434-51712	CLIP	1	65001-
13	195-33-11220	SPACER	1	65001-
14	01010-81245	BOLT	1	65001-
15	01643-31232	WASHER	1	65001-
16	20Y-06-31630	CABLE	1	60001-
17	08038-00519	CAP	1	60001-
18	08193-21012	CLIP	1	60001-
19	195-33-11220	SPACER	1	65001-
20	01010-81245	BOLT	1	65001-
21	01643-31232	WASHER	1	60001-
22	08193-21012	CLIP	1	60001-
23	20Y-06-31182	BRACKET	1	60283-
24	04434-52112	CLIP	1	60001-
25	01010-81265	BOLT	1	60001-
26	01643-31232	WASHER	1	60001-
27	04434-50612	CLIP	1	60001-
28	01010-81225	BOLT	1	60001-

WIRING (MAIN HARNESS) (CLIP) (2/2)(#65001-)

Item	Part No.	Part Name	Qty	Serial No.
29	01643-31232	WASHER	1	60001-
30	04434-51712	CLIP	1	60001-
31	20Y-03-11220	COLLAR	1	60001-
32	01010-81265	BOLT	1	60001-
33	01643-31232	WASHER	1	60001-
34	04434-51712	CLIP	1	60001-
35	01010-81225	BOLT	1	60001-
36	01643-31232	WASHER	1	60001-
37	08038-00519	CAP	1	60001-
38	08038-00519	CAP	1	60001-
39	08034-20536	BAND	2	60003-
40	08034-20536	BAND	1	60003-
41	08034-20536	BAND	2	60478-

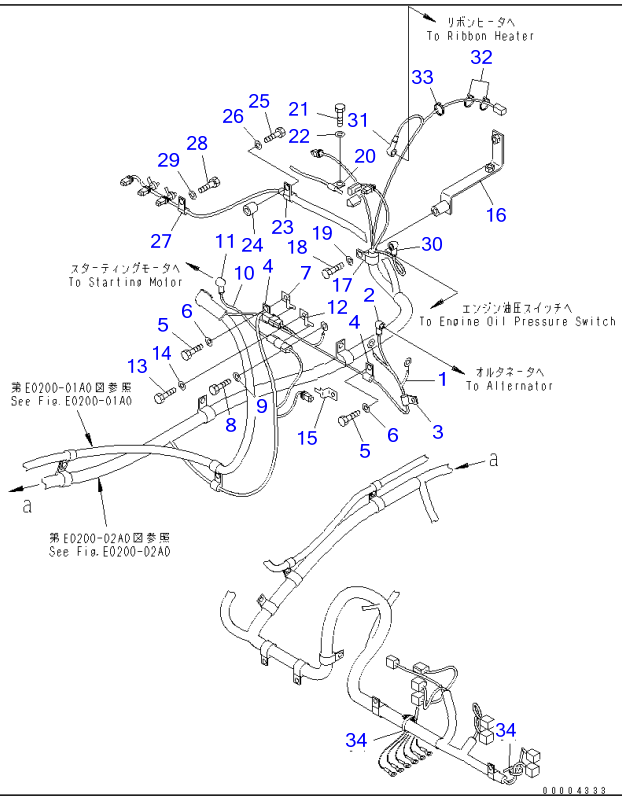

Ref E0200-04A2 Page 120180

PC220-7 S/N 60001-UP (Overseas Version)

WIRING (MAIN HARNESS) (CLIP) (2/2) (SANDY AND DUSTY TERRAIN SPEC.)(#60001-65000)

Item	Part No.	Part Name	Qty	Serial No.
1	20Y-06-31470	WIRING HARNESS	1	60001-@
2	08038-00519	CAP	1	60001-@
3	04434-51410	CLIP	1	60001-@
4	04434-51012	CLIP	2	60001-@
5	01010-81220	BOLT	2	60001-@
6	01643-31232	WASHER	2	60001-@
7	08053-01512	CLIP	1	60001-@
8	01010-81220	BOLT	1	60001-@
9	01643-31232	WASHER	1	60001-@
10	20Y-06-31630	CABLE	1	60001-@
11	08038-00519	CAP	1	60001-@
12	08193-21012	CLIP	1	60001-@
13	01010-81220	BOLT	1	60001-@
14	01643-31232	WASHER	1	60001-@
15	08193-21012	CLIP	1	60001-@
16	20Y-06-31182	BRACKET	1	60001-@
17	04434-52112	CLIP	1	60001-@
18	01010-81265	BOLT	1	60001-@
19	01643-31232	WASHER	1	60001-@
20	04434-50612	CLIP	1	60001-@
21	01010-81225	BOLT	1	60001-@
22	01643-31232	WASHER	1	60001-@
23	04434-51712	CLIP	1	60001-@
24	20Y-03-11220	COLLAR	1	60001-@
25	01010-81265	BOLT	1	60001-@
26	01643-31232	WASHER	1	60001-@

WIRING (MAIN HARNESS) (CLIP) (2/2) (SANDY AND DUSTY TERRAIN SPEC.)(#60001-65000)

Item	Part No.	Part Name	Qty	Serial No.
27	04434-51712	CLIP	1	60001-@
28	01010-81225	BOLT	1	60001-@
29	01643-31232	WASHER	1	60001-@
30	08038-00519	CAP	1	60001-@
31	08038-00519	CAP	1	60001-@
32	08034-20536	BAND	2	60001-@
33	08034-20536	BAND	1	60001-@
34	08034-20536	BAND	2	60478-@

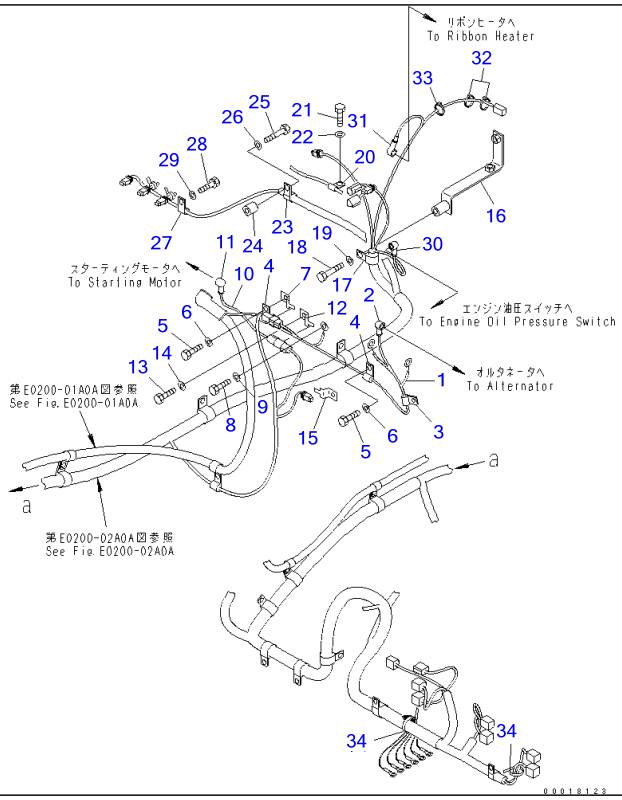

Ref E0200-04A2A **Page 120190**

PC220-7 S/N 60001-UP (Overseas Version)
WIRING (MAIN HARNESS) (CLIP) (2/2) (SANDY AND DUSTY TERRAIN SPEC.)(#65001-69862)

Item	Part No.	Part Name	Qty	Serial No.
1	20Y-06-31470	WIRING HARNESS	1	60001-@
2	08038-00519	CAP	1	60001-@
3	04434-51410	CLIP	1	60001-@
4	04434-51012	CLIP	2	60001-@
5	01010-81220	BOLT	2	60001-69862
6	01643-31232	WASHER	2	60001-69862
7	08053-01512	CLIP	1	60001-@
8	01010-81220	BOLT	1	60001-@
9	01643-31232	WASHER	1	60001-@
10	20Y-06-31630	CABLE	1	60001-@
11	08038-00519	CAP	1	60001-@
12	08193-21012	CLIP	1	60001-@
13	01010-81220	BOLT	1	60001-@
14	01643-31232	WASHER	1	60001-@
15	08193-21012	CLIP	1	60001-@
16	20Y-06-31182	BRACKET	1	60001-@
17	04434-52112	CLIP	1	60001-@
18	01010-81265	BOLT	1	60001-@
19	01643-31232	WASHER	1	60001-@
20	04434-50612	CLIP	1	60001-@
21	01010-81225	BOLT	1	60001-@
22	01643-31232	WASHER	1	60001-@
23	04434-51712	CLIP	1	60001-@
24	20Y-03-11220	COLLAR	1	60001-@
25	01010-81265	BOLT	1	60001-@
26	01643-31232	WASHER	1	60001-@

WIRING (MAIN HARNESS) (CLIP) (2/2) (SANDY AND DUSTY TERRAIN SPEC.)(#65001-69862)

Item	Part No.	Part Name	Qty	Serial No.
27	04434-51712	CLIP	1	60001-@
28	01010-81225	BOLT	1	60001-@
29	01643-31232	WASHER	1	60001-@
30	08038-00519	CAP	1	60001-@
31	08038-00519	CAP	1	60001-@
32	08034-20536	BAND	2	60001-@
33	08034-20536	BAND	1	60001-@
34	08034-20536	BAND	2	60478-@

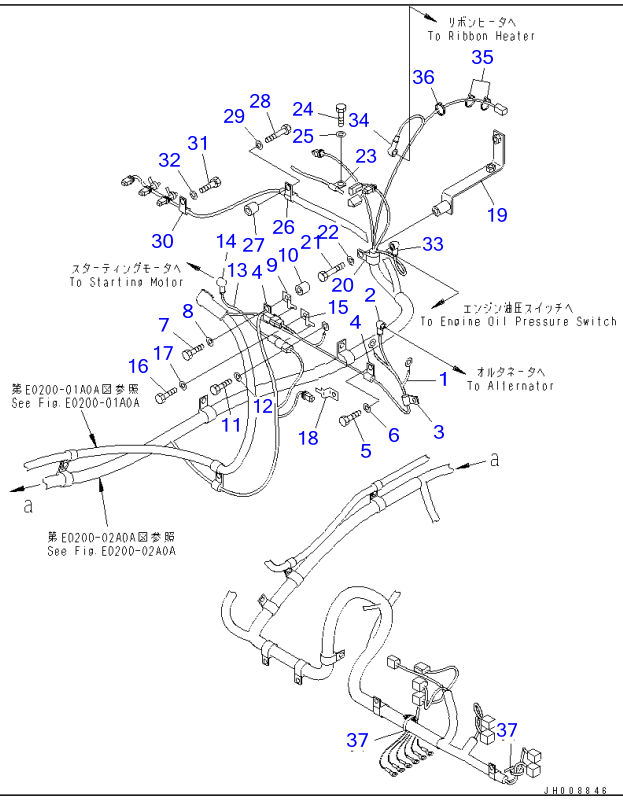

Ref E0200-04A2B **Page 120200**

PC220-7 S/N 60001-UP (Overseas Version)

WIRING (MAIN HARNESS) (CLIP) (2/2) (SANDY AND DUSTY TERRAIN SPEC.)(#69863-)

Item	Part No.	Part Name	Qty	Serial No.
1	20Y-06-31470	WIRING HARNESS	1	60001-
2	08038-00519	CAP	1	60001-
3	04434-51410	CLIP	1	60001-
4	04434-51012	CLIP	2	60001-
5	01010-81220	BOLT	1	69863-
6	01643-31232	WASHER	1	69863-
7	01010-81260	BOLT	1	69863-
8	01643-31232	WASHER	1	69863-
9	08053-01512	CLIP	1	60001-
10	20Y-03-11220	COLLAR	1	69863-
11	01010-81220	BOLT	1	60001-
12	01643-31232	WASHER	1	60001-
13	20Y-06-31630	CABLE	1	60001-
14	08038-00519	CAP	1	60001-
15	08193-21012	CLIP	1	60001-
16	01010-81220	BOLT	1	60001-
17	01643-31232	WASHER	1	60001-
18	08193-21012	CLIP	1	60001-
19	20Y-06-31182	BRACKET	1	60001-
20	04434-52112	CLIP	1	60001-
21	01010-81265	BOLT	1	60001-
22	01643-31232	WASHER	1	60001-
23	04434-50612	CLIP	1	60001-
24	01010-81225	BOLT	1	60001-
25	01643-31232	WASHER	1	60001-
26	04434-51712	CLIP	1	60001-

WIRING (MAIN HARNESS) (CLIP) (2/2) (SANDY AND DUSTY TERRAIN SPEC.)(#69863-)

Item	Part No.	Part Name	Qty	Serial No.
27	20Y-03-11220	COLLAR	1	60001-
28	01010-81265	BOLT	1	60001-
29	01643-31232	WASHER	1	60001-
30	04434-51712	CLIP	1	60001-
31	01010-81225	BOLT	1	60001-
32	01643-31232	WASHER	1	60001-
33	08038-00519	CAP	1	60001-
34	08038-00519	CAP	1	60001-
35	08034-20536	BAND	2	60001-
36	08034-20536	BAND	1	60001-
37	08034-20536	BAND	2	60478-

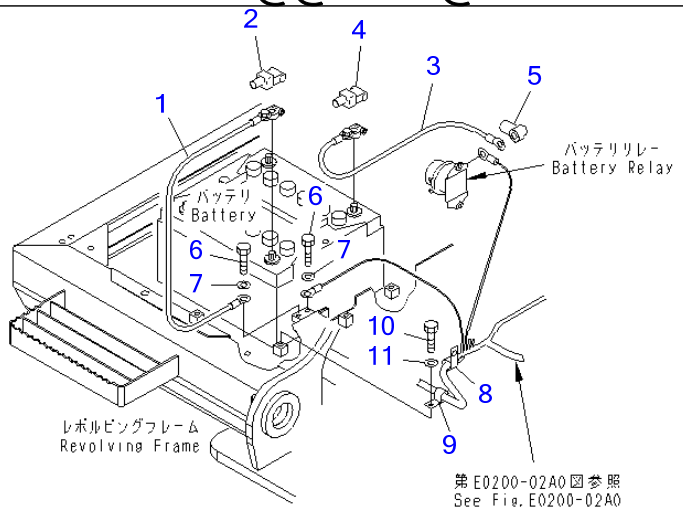

PW1B745

Ref E0200-05A0 **Page 120210**

PC220-7 S/N 60001-UP (Overseas Version)
WIRING (BATTERY CASE)(#60001-65000)

Item	Part No.	Part Name	Qty	Serial No.
1	08028-43030	CABLE, GROUND	1	60001-@
2	08038-22511	CAP	1	60001-@
3	08028-CC065	CABLE, BATTERY	1	60001-@
4	08038-42511	CAP	1	60001-@
5	08038-06031	CAP	1	60001-@
6	01010-81025	BOLT	2	60001-@
7	01643-31032	WASHER	2	60001-@
8	04434-51812	CLIP	1	60001-@
9	04434-51012	CLIP	1	60001-@
10	01010-81225	BOLT	1	60001-@
11	01643-31232	WASHER	1	60001-@

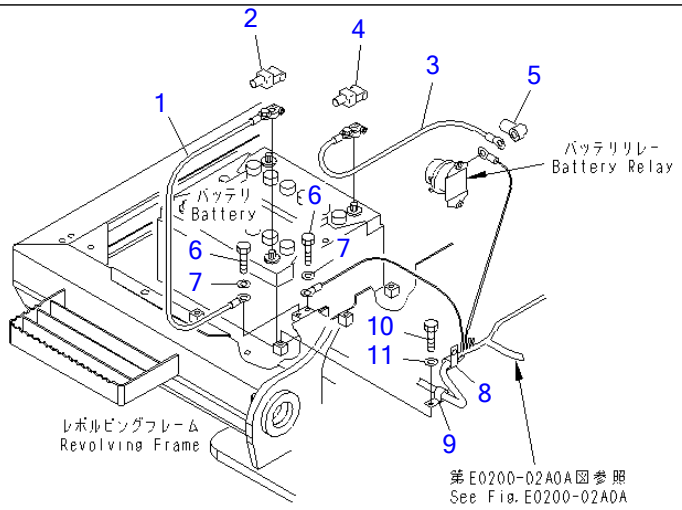

00018025

Ref E0200-05A0A **Page 120220**

PC220-7 S/N 60001-UP (Overseas Version)
WIRING (BATTERY CASE)(#65001-)

Item	Part No.	Part Name	Qty	Serial No.
1	08028-43030	CABLE, GROUND	1	60001-
2	08038-22511	CAP	1	60001-
3	08028-CC065	CABLE, BATTERY	1	60001-
4	08038-42511	CAP	1	60001-
5	08038-06031	CAP	1	60001-
6	01010-81025	BOLT	2	60001-
7	01643-31032	WASHER	2	60001-
8	04434-51812	CLIP	1	60001-
9	04434-51012	CLIP	1	60001-
10	01010-81225	BOLT	1	60001-
11	01643-31232	WASHER	1	60001-

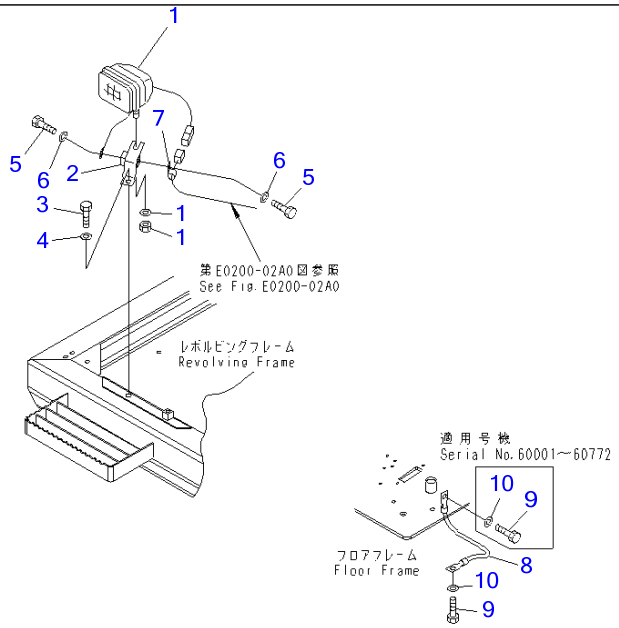

00069225

Ref E0200-06A0 **Page 120230**

PC220-7 S/N 60001-UP (Overseas Version)
WIRING (WORKING LAMP¤ FRONT)(#60001-65000)

Item	Part No.	Part Name	Qty	Serial No.
1	20Y-06-25310	WORKING LAMP ASS'Y	1	60001-@
	421-06-23330	▪ BULB, 70W,24V 70W	1	60001-@
2	20Y-06-31680	BRACKET	1	60001-@
3	01010-81230	BOLT	1	60001-@
4	01643-31232	WASHER	1	60001-@
5	01010-81220	BOLT	2	60001-@
6	01643-31232	WASHER	2	60001-@
7	04434-51012	CLIP	1	60001-@
8	08028-43030	CABLE, GROUND	1	60001-60772
9	01010-81020	BOLT	1	60773-65000
	01010-81020	BOLT	2	60767-60772
	01010-81016	BOLT	2	60001-60766
10	01643-31032	WASHER	1	60773-65000
	01643-31032	WASHER	2	60001-60072

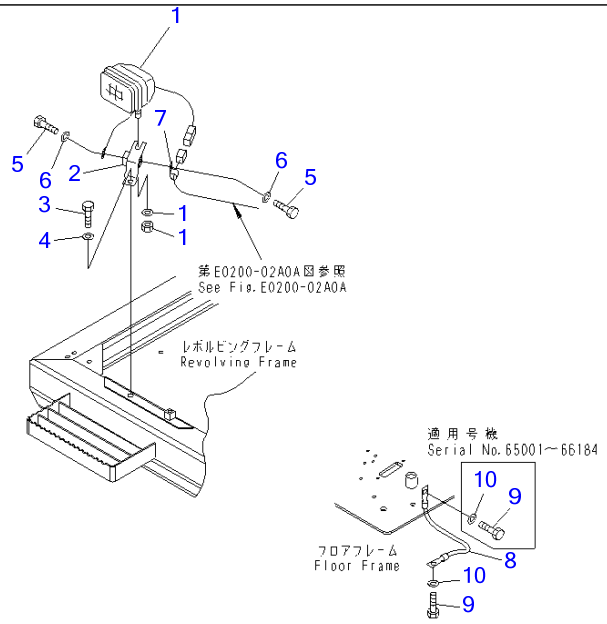

00069229

Ref E0200-06A0A **Page 120240**

PC220-7 S/N 60001-UP (Overseas Version)
WIRING (WORKING LAMP¤ FRONT)(#65001-)

Item	Part No.	Part Name	Qty	Serial No.
1	20Y-06-25310	WORKING LAMP ASS'Y	1	60001-
	421-06-23330	▪ BULB, 70W	1	60001-
2	20Y-06-31680	BRACKET	1	60001-
3	01010-81230	BOLT	1	60001-
4	01643-31232	WASHER	1	60001-
5	01010-81220	BOLT	2	60001-
6	01643-31232	WASHER	2	60001-
7	04434-51012	CLIP	1	60001-
8	08028-43030	CABLE, GROUND	1	65001-66184
9	01010-81020	BOLT	1	66185-
	01010-81020	BOLT	2	65927-66184
	01010-81016	BOLT	2	65001-65926
10	01643-31032	WASHER	1	66185-
	01643-31032	WASHER	2	65001-66184

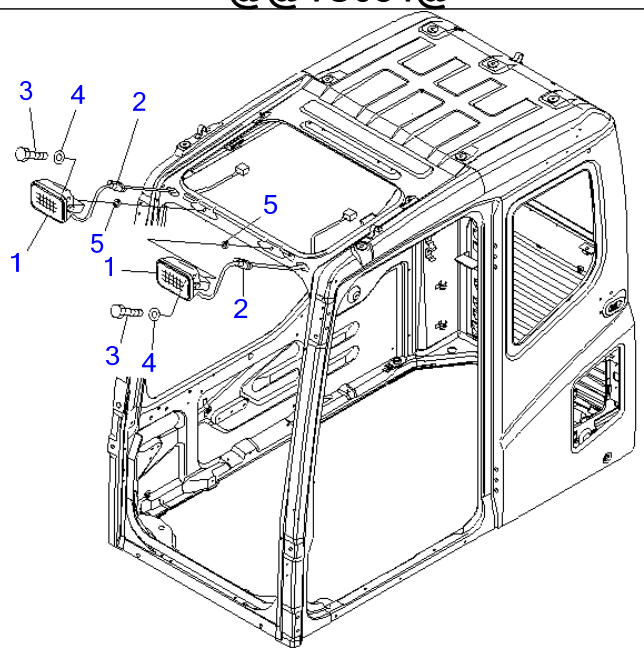

PW1C054

Ref E0310-01A0 **Page 120250**

PC220-7 S/N 60001-UP (Overseas Version)
ADDITIONAL WORK LAMP

Item	Part No.	Part Name	Qty	Serial No.
1	22B-54-17511	WORKING LAMP ASS'Y	2	60001-
2	22B-54-17271	▪ GROMMET	1	60001-
	421-06-23330	▪ BULB, 70W,24V	1	60001-
3	01010-D1050	BOLT	2	60063-
	01010-D1030	BOLT	2	60003-60062
	01010-D1016	BOLT	2	60001-60002
4	01643-71032	WASHER	2	60001-
5	205-970-2410	PIPE	2	60063-
	560-43-15220	WASHER	2	60001-60062

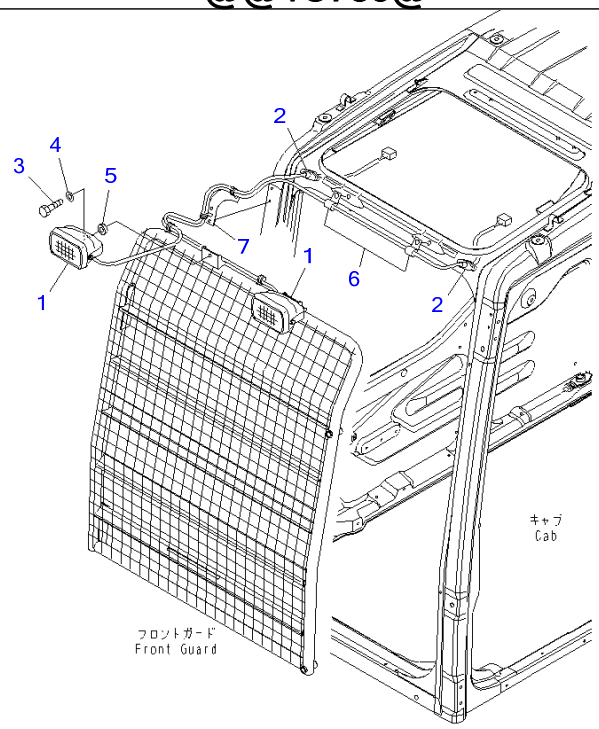

Ref E0310-01A1 **Page 120260**

PC220-7 S/N 60001-UP (Overseas Version)

ADDITIONAL WORK LAMP (FOR LEVEL-1 GUARD)

Item	Part No.	Part Name	Qty	Serial No.
1	20Y-54-54490	WORKING LAMP ASS'Y	2	60001-
2	22B-54-17271	・GROMMET	1	60001-
	421-06-23330	・BULB, 70W	1	60001-
3	01010-D1030	BOLT	2	66426-
	01010-D1016	BOLT	2	65001-66425
	01010-D1030	BOLT	2	60777-65000
	01010-D1016	BOLT	2	60001-60776
4	01643-71032	WASHER	2	60001-
5	560-43-15220	WASHER	2	60001-
6	08036-10810	CLIP	2	60001-
7	20Y-54-54480	PLATE	1	60001-

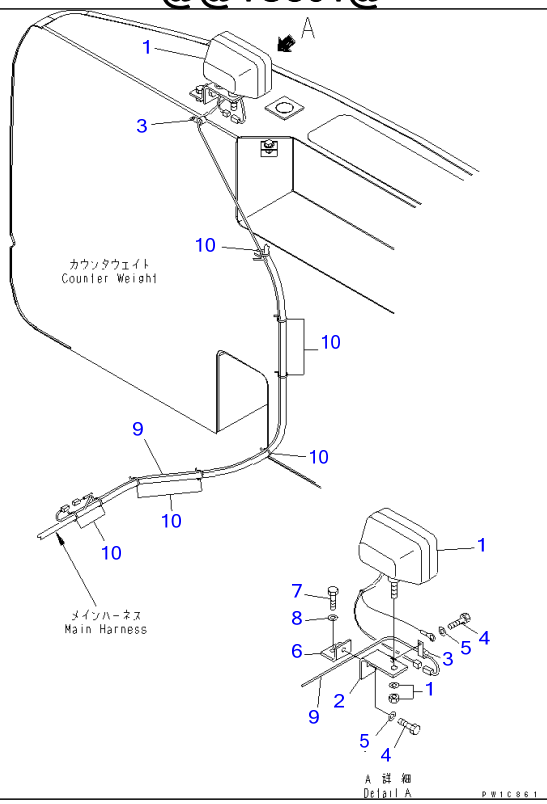

Ref E0320-01A0 **Page 120270**

PC220-7 S/N 60001-UP (Overseas Version)
REAR WORK LAMP

Item	Part No.	Part Name	Qty	Serial No.
1	20Y-06-25310	WORKING LAMP ASS'Y	1	60001-
	421-06-23330	▪ BULB, 70W	1	60001-
2	20Y-06-21551	BRACKET	1	60001-
3	21T-38-12270	CLIP	2	60001-
4	01010-81225	BOLT	2	60001-
5	01643-31232	WASHER	2	60001-
6	20Y-06-21590	BRACKET	1	60001-
7	01010-81225	BOLT	1	60001-
8	01643-31232	WASHER	1	60001-
9	20Y-06-31670	WIRE	1	60001-
10	08034-20536	BAND	8	60001-

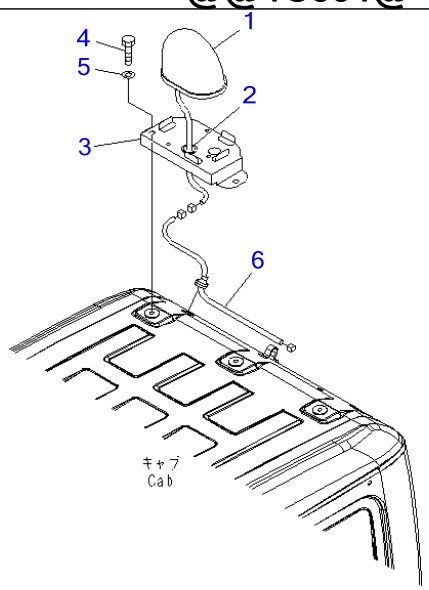

P W 1 C 5 9 1

Ref E0340-01A0 **Page 120280**

PC220-7 S/N 60001-UP (Overseas Version)
BEACON

Item	Part No.	Part Name	Qty	Serial No.
1	22B-54-17612	LAMP,BEACON	1	60001-
	22B-54-17660	・BULB	1	60001-
2	08037-02512	GROMMET	1	60001-
3	20Y-54-51782	BRACKET	1	60001-
4	01010-D1220	BOLT	2	60001-
5	01643-71232	WASHER	2	60001-
6	22B-54-17640	WIRING HARNESS	1	60001-

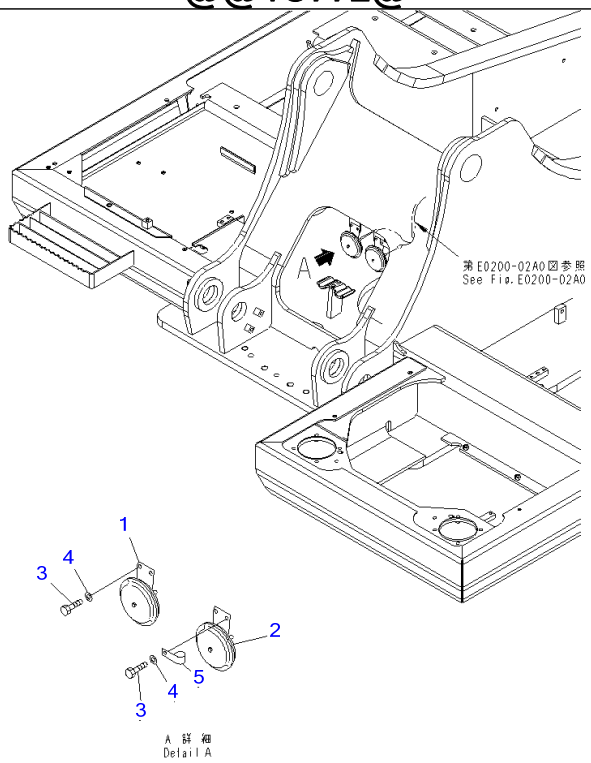

Ref E0410-01A0 **Page 120290**

PC220-7 S/N 60001-UP (Overseas Version)
HORN

Item	Part No.	Part Name	Qty	Serial No.
1	08160-62420	HORN	1	60001-
2	08160-62430	HORN	1	60001-
3	01010-80825	BOLT	4	60001-
4	01643-30823	WASHER	4	60001-
5	08036-01014	CLIP	1	60001-

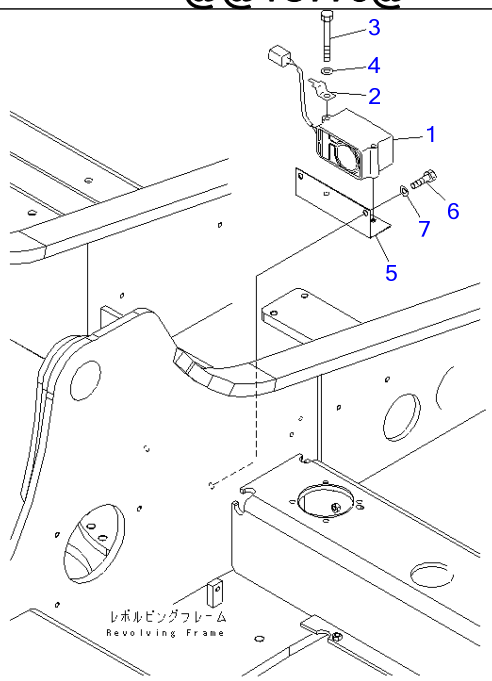

PW1C773

Ref E0420-01A0 **Page 120300**

PC220-7 S/N 60001-UP (Overseas Version)
TRAVEL ALARM(#60001-65000)

Item	Part No.	Part Name	Qty	Serial No.
1	21Y-06-17610	BUZZER	1	60275-65000
	20Y-06-21730	BUZZER	1	60001-60274
2	08053-01510	CLIP	1	60001-65000
3	01011-81000	BOLT	2	60001-@
4	01643-31032	WASHER	2	60001-@
5	20Y-06-31710	BRACKET	1	60001-@
6	01010-81225	BOLT	1	60001-@
7	01643-31232	WASHER	1	60001-@

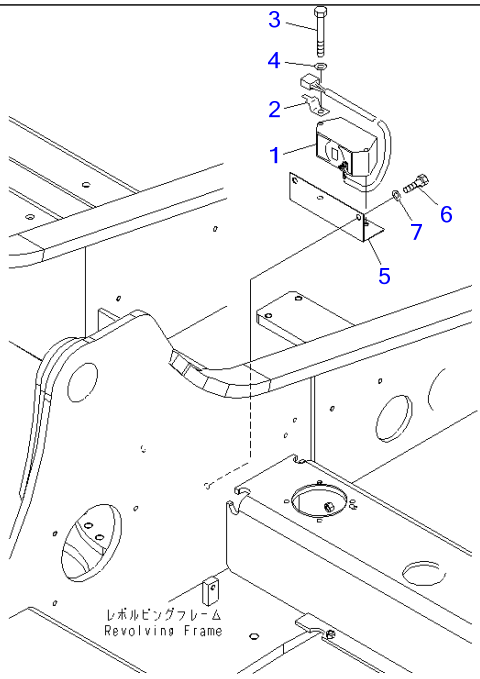

00021354

Ref E0420-01A0A **Page 120310**

PC220-7 S/N 60001-UP (Overseas Version)

TRAVEL ALARM(#65001-)

Item	Part No.	Part Name	Qty	Serial No.
1	08164-B1100	BUZZER	1	65001-
2	08193-20010	CLIP	1	65001-
3	01011-81000	BOLT	2	60001-
4	01643-31032	WASHER	2	60001-
5	20Y-06-31710	BRACKET	1	60001-
6	01010-81225	BOLT	1	60001-
7	01643-31232	WASHER	1	60001-

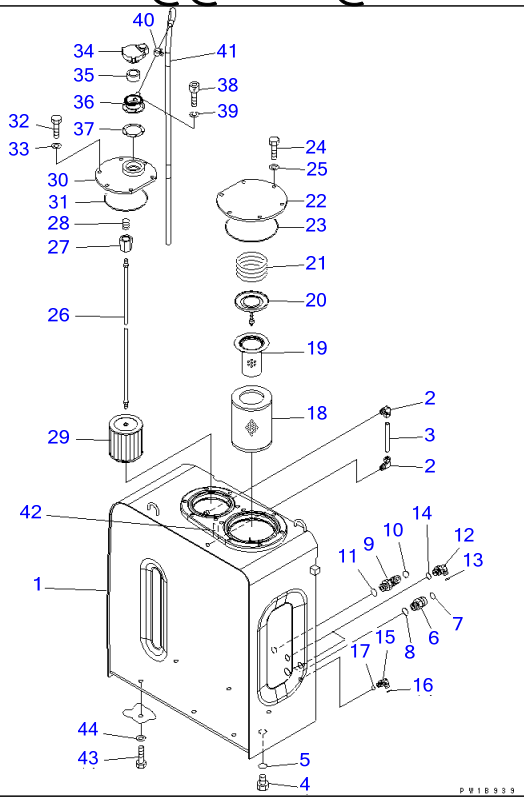

Ref H0110-01A0 Page 150010

PC220-7 S/N 60001-UP (Overseas Version)

HYDRAULIC TANK

Item	Part No.	Part Name	Qty	Serial No.
1	206-60-61110	TANK	1	60001-
2	203-60-31100	ELBOW ASS'Y	2	60001-
3	203-60-31160	TUBE	1	60001-
4	07044-12412	PLUG	1	60001-
5	07002-02434	O-RING	1	60001-
6	02781-00628	UNION	1	60001-
7	02896-11018	O-RING	1	60001-
8	07002-12434	O-RING	1	60001-
9	02782-10522	ELBOW	1	60001-
10	02896-11015	O-RING	1	60001-
11	07002-12434	O-RING	1	60001-
12	02782-10315	ELBOW	2	60001-
13	02896-11009	O-RING	2	60001-
14	07002-12034	O-RING	2	60001-
15	11Y-62-12160	ELBOW	1	60003-
	02782-10210	ELBOW	1	60001-60002
16	02896-11008	O-RING	1	60001-
17	07002-11423	O-RING	1	60001-
18	207-60-71182	ELEMENT	1	67280-
	□207-60-71181	ELEMENT	1	65001-67279
	207-60-71182	ELEMENT	1	60766-65000
	□207-60-71181	ELEMENT	1	60759-60765
	□20Y-60-31121	ELEMENT	1	60001-60758
19	20Y-60-31140	STRAINER	1	60001-
20	20Y-60-31131	VALVE ASS'Y	1	60001-
21	20Y-60-21240	SPRING	1	60001-
22	22U-60-21231	COVER	1	60001-
23	07000-15195	O-RING	1	60001-

HYDRAULIC TANK

Item	Part No.	Part Name	Qty	Serial No.
24	01010-81230	BOLT	6	60001-
25	01643-31232	WASHER	6	60001-
	20Y-60-31171	STRAINER ASS'Y	1	60001-
26	207-60-61150	・ROD ASS'Y	1	60001-
27	20Y-60-21320	・・HOLDER	1	60001-
28	12R-60-11230	・・SPRING	1	60001-
29	22B-60-11160	・STRAINER	1	60001-
30	20Y-60-31161	COVER	1	60001-
31	07000-15160	O-RING	1	60001-
32	01010-81230	BOLT	6	60001-
33	01643-31232	WASHER	6	60001-
34	17A-60-11310	CAP ASS'Y	1	60001-
35	20Y-60-21470	・ELEMENT	1	60001-
36	208-60-71180	FILLER NECK	1	65230-
	□20Y-60-21460	NECK	1	65001-65229
	208-60-71180	FILLER NECK	1	60753-65000
	□20Y-60-21460	NECK	1	60001-60752
37	20Y-60-21340	GASKET	1	60001-
38	01252-70516	BOLT	6	60001-
39	01601-20513	WASHER	6	60001-
40	07285-00155	CLIP	1	60001-
41	07270-61411	TUBE	1	60001-
42	205-00-73360	PLATE, OIL LEVEL	1	60001-
43	01010-81635	BOLT	6	60001-
44	01643-31645	WASHER	6	60001-

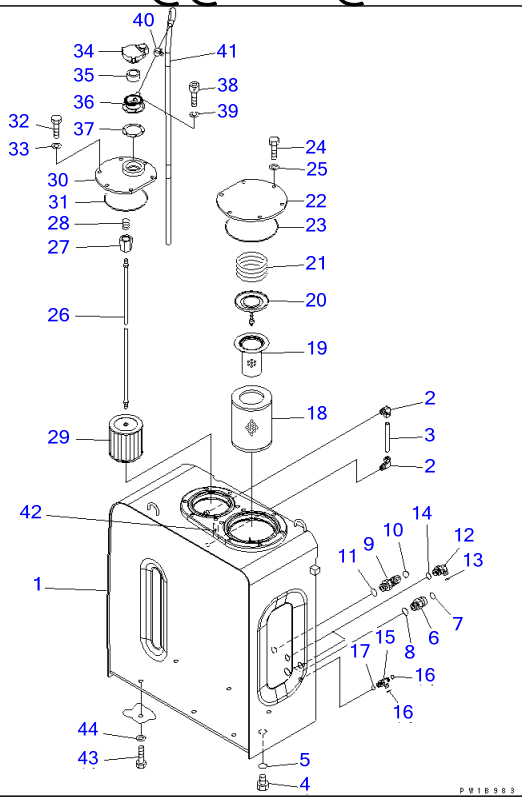

Ref H0110-01A1 **Page 150020**

PC220-7 S/N 60001-UP (Overseas Version)
HYDRAULIC TANK (1 ACTUATOR)

Item	Part No.	Part Name	Qty	Serial No.
1	206-60-61110	TANK	1	60001-
2	203-60-31100	ELBOW ASS'Y	2	60001-
3	203-60-31160	TUBE	1	60001-
4	07044-12412	PLUG	1	60001-
5	07002-02434	O-RING	1	60001-
6	02781-00628	UNION	1	60001-
7	02896-11018	O-RING	1	60001-
8	07002-12434	O-RING	1	60001-
9	02782-10522	ELBOW	1	60001-
10	02896-11015	O-RING	1	60001-
11	07002-12434	O-RING	1	60001-
12	02782-10315	ELBOW	2	60001-
13	02896-11009	O-RING	2	60001-
14	07002-12034	O-RING	2	60001-
15	11Y-62-12330	ELBOW	1	60001-
16	02896-11008	O-RING	2	60001-
17	07002-11423	O-RING	1	60001-
18	207-60-71182	ELEMENT	1	67280-
	□207-60-71181	ELEMENT	1	65001-67279
	207-60-71182	ELEMENT	1	60766-65000
	□207-60-71181	ELEMENT	1	60759-60765
	□20Y-60-31121	ELEMENT	1	60001-60758
19	20Y-60-31140	STRAINER	1	60001-
20	20Y-60-31131	VALVE ASS'Y	1	60001-
21	20Y-60-21240	SPRING	1	60001-
22	22U-60-21231	COVER	1	60001-
23	07000-15195	O-RING	1	60001-
24	01010-81230	BOLT	6	60001-

HYDRAULIC TANK (1 ACTUATOR)

Item	Part No.	Part Name	Qty	Serial No.
25	01643-31232	WASHER	6	60001-
	20Y-60-31171	STRAINER ASS'Y	1	60001-
26	207-60-61150	・ROD ASS'Y	1	60001-
27	20Y-60-21320	・・HOLDER	1	60001-
28	12R-60-11230	・・SPRING	1	60001-
29	22B-60-11160	・STRAINER	1	60001-
30	20Y-60-31161	COVER	1	60001-
31	07000-15160	O-RING	1	60001-
32	01010-81230	BOLT	6	60001-
33	01643-31232	WASHER	6	60001-
34	17A-60-11310	CAP ASS'Y	1	60001-
35	20Y-60-21470	・ELEMENT	1	60001-
36	208-60-71180	FILLER NECK	1	65230-
	□20Y-60-21460	NECK	1	65001-65229
	208-60-71180	FILLER NECK	1	60753-65000
	□20Y-60-21460	NECK	1	60001-60752
37	20Y-60-21340	GASKET	1	60001-
38	01252-70516	BOLT	6	60001-
39	01601-20513	WASHER	6	60001-
40	07285-00155	CLIP	1	60001-
41	07270-61411	TUBE	1	60001-
42	205-00-73360	PLATE, OIL LEVEL	1	60001-
43	01010-81635	BOLT	6	60001-
44	01643-31645	WASHER	6	60001-

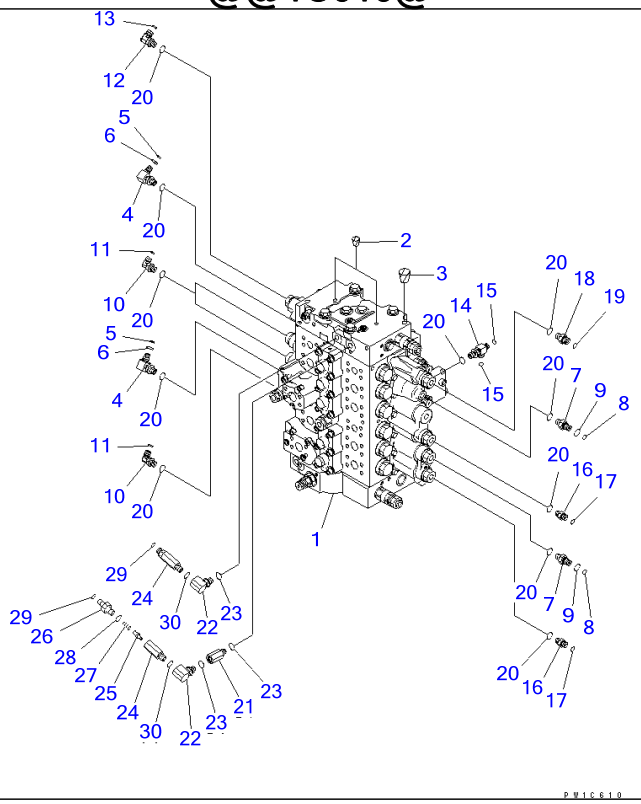

Ref H0120-01A0 **Page 150030**

PC220-7 S/N 60001-UP (Overseas Version)
CONTROL VALVE (CONNECTING PARTS) (1/2)

Item	Part No.	Part Name	Qty	Serial No.
1	(723-46-20502)	VALVE ASS'Y	1	60561-
	(□723-46-20501)	VALVE ASS'Y	1	60109-60560
	(□723-46-20500)	VALVE ASS'Y	1	60001-60108
2	07049-01012	PLUG	2	60001-
3	07049-01215	PLUG	2	60001-
4	22U-62-22480	ELBOW	2	60001-
5	201-60-11390	▪ O-RING	1	60001-
6	20Y-62-19560	▪ O-RING	1	60001-
7	20Y-62-41820	NIPPLE	2	60001-
8	201-60-11390	▪ O-RING	1	60001-
9	20Y-62-19560	▪ O-RING	1	60001-
10	11Y-62-12160	ELBOW	3	60003-
	02782-10210	ELBOW	3	60001-60002
11	02896-11008	O-RING	3	60001-
12	02782-10311	ELBOW	1	60001-
13	02896-11009	O-RING	1	60001-
14	11Y-62-12330	ELBOW	1	60001-
15	02896-11008	O-RING	2	60001-
16	11Y-62-12130	NIPPLE	1	60003-
	02781-00210	UNION	2	60001-60002
17	02896-11008	O-RING	2	60001-
18	11Y-62-12520	NIPPLE	1	60001-
19	02896-11009	O-RING	1	60001-
20	07002-11423	O-RING	12	60001-
21	20Y-62-22160	ADAPTER	1	60001-
22	20F-61-12460	ELBOW	2	60001-
23	07002-11423	O-RING	3	60001-
	20Y-62-41602	VALVE ASS'Y	2	65531-

CONTROL VALVE (CONNECTING PARTS) (1/2)

Item	Part No.	Part Name	Qty	Serial No.
	20Y-62-41601	VALVE ASS'Y	2	65001-65530
	20Y-62-41602	VALVE ASS'Y	2	60762-65000
	20Y-62-41601	VALVE ASS'Y	2	60001-60761
24	☆	・BODY	1	60001-
25	20Y-60-22270	・POPPET	1	60001-
26	20Y-62-41971	・NIPPLE	1	65531-
	20Y-62-41970	・NIPPLE	1	65001-65530
	20Y-62-41971	・NIPPLE	1	60762-65000
	20Y-62-41970	・NIPPLE	1	60001-60761
27	701-20-61230	・SPRING	1	60001-
28	07002-11423	・O-RING	1	60001-
29	02896-11008	O-RING	2	60001-
30	07002-11423	O-RING	2	60001-

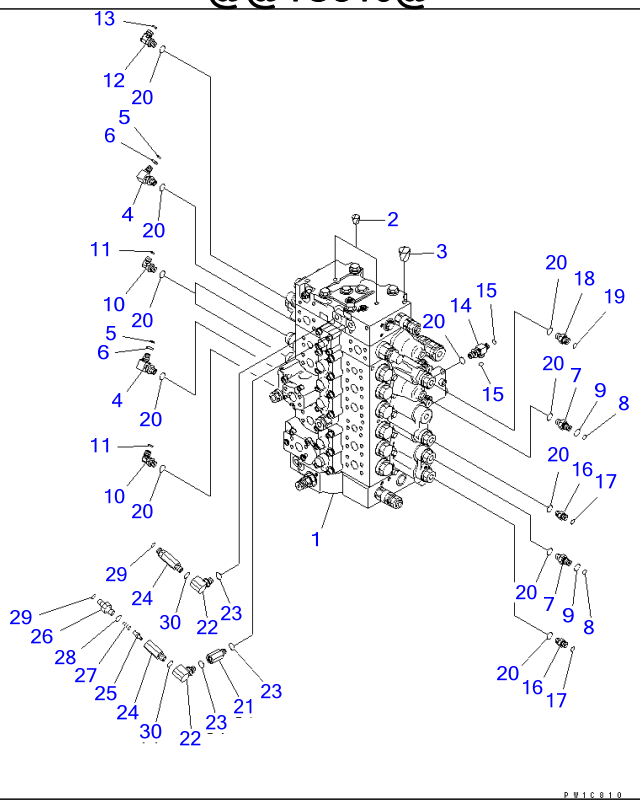

Ref H0120-01A1 **Page 150040**

PC220-7 S/N 60001-UP (Overseas Version)

CONTROL VALVE (CONNECTING PARTS) (1 ACTUATOR) (1/2)

Item	Part No.	Part Name	Qty	Serial No.
1	(723-47-20502)	VALVE ASS'Y	1	60561-
	(□723-47-20501)	VALVE ASS'Y	1	60109-60560
	(□723-47-20500)	VALVE ASS'Y	1	60001-60108
2	07049-01012	PLUG	2	60001-
3	07049-01215	PLUG	2	60001-
4	22U-62-22480	ELBOW	2	60001-
5	201-60-11390	▪ O-RING	1	60001-
6	20Y-62-19560	▪ O-RING	1	60001-
7	20Y-62-41820	NIPPLE	2	60001-
8	201-60-11390	▪ O-RING	1	60001-
9	20Y-62-19560	▪ O-RING	1	60001-
10	11Y-62-12160	ELBOW	3	60001-
11	02896-11008	O-RING	3	60001-
12	02782-10311	ELBOW	1	60001-
13	02896-11009	O-RING	1	60001-
14	11Y-62-12330	ELBOW	1	60001-
15	02896-11008	O-RING	2	60001-
16	11Y-62-12130	NIPPLE	1	60001-
17	02896-11008	O-RING	2	60001-
18	11Y-62-12520	NIPPLE	1	60001-
19	02896-11009	O-RING	1	60001-
20	07002-11423	O-RING	12	60001-
21	20Y-62-22160	ADAPTER	1	60001-
22	20F-61-12460	ELBOW	2	60001-
23	07002-11423	O-RING	3	60001-
	20Y-62-41602	VALVE ASS'Y	2	65531-
	20Y-62-41601	VALVE ASS'Y	2	65001-65530
	20Y-62-41602	VALVE ASS'Y	2	60762-65000

CONTROL VALVE (CONNECTING PARTS) (1 ACTUATOR) (1/2)

Item	Part No.	Part Name	Qty	Serial No.
	20Y-62-41601	VALVE ASS'Y	2	60001-60761
24	☆	・BODY	1	60001-
25	20Y-60-22270	・POPPET	1	60001-
26	20Y-62-41971	・NIPPLE	1	65531-
	20Y-62-41970	・NIPPLE	1	65001-65530
	20Y-62-41971	・NIPPLE	1	60762-65000
	20Y-62-41970	・NIPPLE	1	60001-60761
27	701-20-61230	・SPRING	1	60001-
28	07002-11423	・O-RING	1	60001-
29	02896-11008	O-RING	2	60001-
30	07002-11423	O-RING	2	60001-

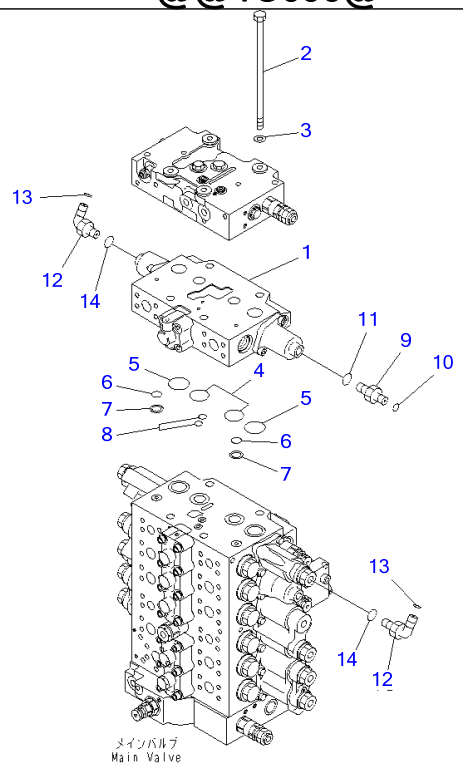

Ref H0120-01A2 **Page 150050**

PC220-7 S/N 60001-UP (Overseas Version)

CONTROL VALVE (ADDITIONAL SERVICE VALVE KIT) (1 ACTUATOR)

Item	Part No.	Part Name	Qty	Serial No.
1	(723-41-07600)	VALVE SUB ASS'Y,KIT	1	60001-
2	01011-61455	BOLT	4	60001-
3	01643-31445	WASHER	4	60001-
4	(07000-13032)	O-RING	2	60001-
5	(723-46-17510)	O-RING	2	60001-
6	(723-11-19130)	O-RING	2	60001-
7	(723-46-17520)	RING	2	60001-
8	(723-46-17530)	O-RING	2	60001-
9	11Y-62-12130	NIPPLE	1	60001-
10	02896-11008	O-RING	1	60001-
11	07002-11423	O-RING	1	60001-
12	11Y-62-12160	ELBOW	2	60001-
13	02896-11008	O-RING	2	60001-
14	07002-11423	O-RING	2	60001-

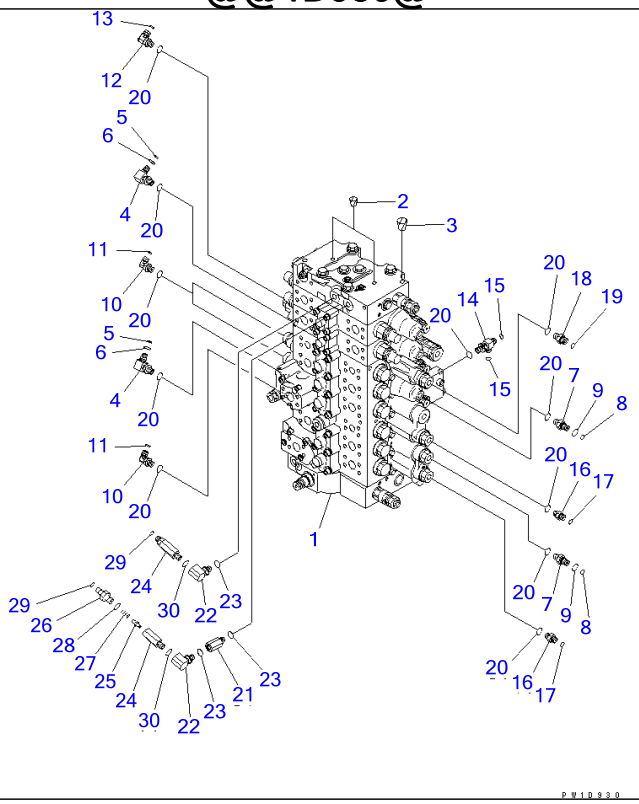

Ref H0120-01A6 Page 150060

PC220-7 S/N 60001-UP (Overseas Version)

CONTROL VALVE (CONNECTING PARTS) (2 ACTUATOR) (1/2)

Item	Part No.	Part Name	Qty	Serial No.
1	(723-48-20502)	VALVE ASS'Y	1	60561-
	(□723-48-20501)	VALVE ASS'Y	1	60109-60560
	(□723-48-20500)	VALVE ASS'Y	1	60001-60108
2	07049-01012	PLUG	2	60001-
3	07049-01215	PLUG	2	60001-
4	22U-62-22480	ELBOW	2	60001-
5	201-60-11390	▪ O-RING	1	60001-
6	20Y-62-19560	▪ O-RING	1	60001-
7	20Y-62-41820	NIPPLE	2	60001-
8	201-60-11390	▪ O-RING	1	60001-
9	20Y-62-19560	▪ O-RING	1	60001-
10	11Y-62-12160	ELBOW	3	60001-
11	02896-11008	O-RING	3	60001-
12	02782-10311	ELBOW	1	60001-
13	02896-11009	O-RING	1	60001-
14	11Y-62-12330	ELBOW	1	60001-
15	02896-11008	O-RING	2	60001-
16	11Y-62-12130	NIPPLE	1	60001-
17	02896-11008	O-RING	2	60001-
18	11Y-62-12520	NIPPLE	1	60001-
19	02896-11009	O-RING	1	60001-
20	07002-11423	O-RING	12	60001-
21	20Y-62-22160	ADAPTER	1	60001-
22	20F-61-12460	ELBOW	2	60001-
23	07002-11423	O-RING	3	60001-
	20Y-62-41602	VALVE ASS'Y	2	65531-
	20Y-62-41601	VALVE ASS'Y	2	65001-65530
	20Y-62-41602	VALVE ASS'Y	2	60762-65000

CONTROL VALVE (CONNECTING PARTS) (2 ACTUATOR) (1/2)

Item	Part No.	Part Name	Qty	Serial No.
	20Y-62-41601	VALVE ASS'Y	2	60001-60761
24	☆	・BODY	1	60001-
25	20Y-60-22270	・POPPET	1	60001-
26	20Y-62-41971	・NIPPLE	1	65531-
	20Y-62-41970	・NIPPLE	1	65001-65530
	20Y-62-41971	・NIPPLE	1	60762-65000
	20Y-62-41970	・NIPPLE	1	60001-60761
27	701-20-61230	・SPRING	1	60001-
28	07002-11423	・O-RING	1	60001-
29	02896-11008	O-RING	2	60001-
30	07002-11423	O-RING	2	60001-

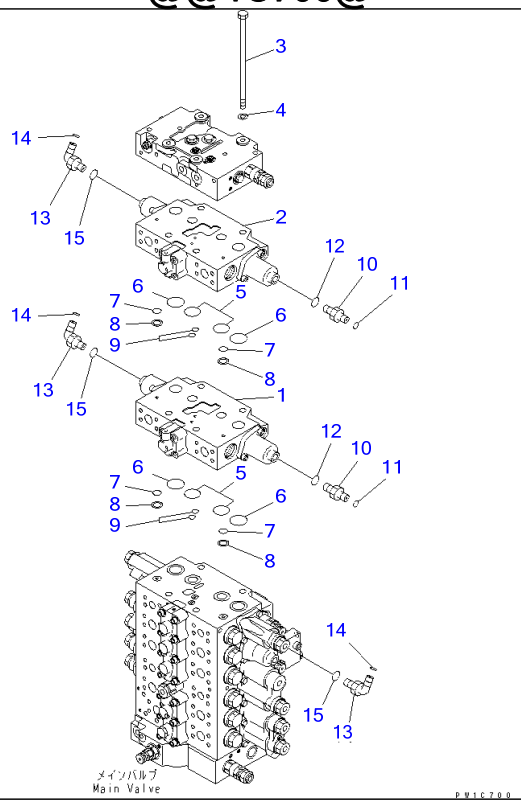

Ref H0120-01A7 **Page 150070**

PC220-7 S/N 60001-UP (Overseas Version)

CONTROL VALVE (ADDITIONAL SERVICE VALVE KIT) (2 ACTUATOR)

Item	Part No.	Part Name	Qty	Serial No.
1	(723-41-07600)	VALVE SUB ASS'Y	1	60001-
2	(723-41-07400)	VALVE ASS'Y,KIT	1	60001-
3	723-46-15220	BOLT	4	60001-
4	01643-31445	WASHER	4	60001-
5	(07000-13032)	O-RING	4	60001-
6	(723-46-17510)	O-RING	4	60001-
7	(723-11-19130)	O-RING	4	60001-
8	(723-46-17520)	RING	4	60001-
9	(723-46-17530)	O-RING	4	60001-
10	11Y-62-12130	NIPPLE	2	60001-
11	02896-11008	O-RING	2	60001-
12	07002-11423	O-RING	2	60001-
13	11Y-62-12160	ELBOW	3	60001-
14	02896-11008	O-RING	3	60001-
15	07002-11423	O-RING	3	60001-

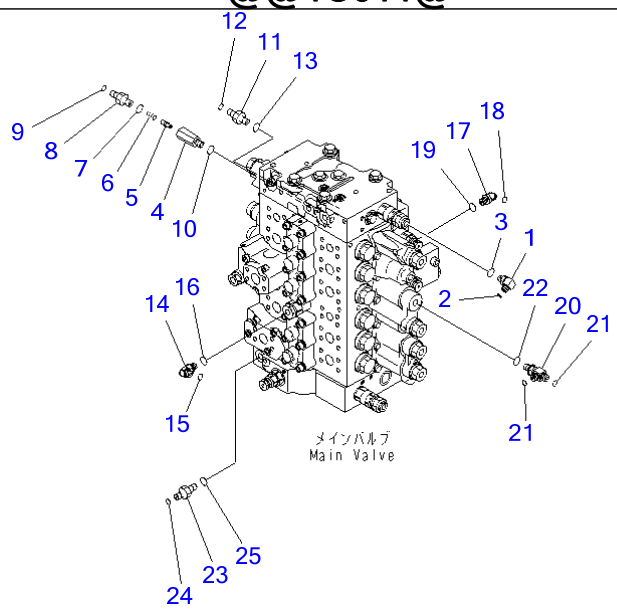

P W 1 C 6 1 1

Ref H0120-02A0 **Page 150080**

PC220-7 S/N 60001-UP (Overseas Version)

CONTROL VALVE (CONNECTING PARTS) (2/2)

Item	Part No.	Part Name	Qty	Serial No.
1	20Y-62-41920	ELBOW	2	60001-
2	02896-11008	O-RING	2	60001-
3	07002-11223	O-RING	2	60001-
	20Y-62-41701	VALVE ASS'Y	1	65531-
	20Y-62-41700	VALVE ASS'Y	1	65001-65530
	20Y-62-41701	VALVE ASS'Y	1	60762-65000
	20Y-62-41700	VALVE ASS'Y	1	60001-60761
4	☆	・BODY	1	60001-
5	20Y-60-22270	・POPPET	1	60001-
6	701-20-61230	・SPRING	1	60001-
7	07002-11423	・O-RING	1	60001-
8	20Y-62-47630	・NIPPLE	1	65531-
	11Y-62-12130	・NIPPLE	1	65001-65530
	20Y-62-47630	・NIPPLE	1	60762-65000
	11Y-62-12130	・NIPPLE	1	60001-60761
9	02896-11008	O-RING	1	60001-
10	07002-11423	O-RING	1	60001-
11	11Y-62-12130	NIPPLE	1	60003-
	02781-00210	UNION	1	60001-60002
12	02896-11008	O-RING	1	60001-
13	07002-11423	O-RING	1	60001-
14	11Y-62-12160	ELBOW	1	60003-
	02782-10210	ELBOW	1	60001-60002
15	02896-11008	O-RING	1	60001-
16	07002-11423	O-RING	1	60001-
17	11Y-62-12240	ELBOW	1	60003-
	02783-10210	ELBOW	1	60001-60002
18	02896-11008	O-RING	1	60001-

CONTROL VALVE (CONNECTING PARTS) (2/2)

Item	Part No.	Part Name	Qty	Serial No.
19	07002-11423	O-RING	1	60001-
20	11Y-62-12330	ELBOW	1	60001-
21	02896-11008	O-RING	2	60001-
22	07002-11423	O-RING	1	60001-
23	11Y-62-12130	NIPPLE	1	60003-
	02781-00210	UNION	1	60001-60002
24	02896-11008	O-RING	1	60001-
25	07002-11423	O-RING	1	60001-

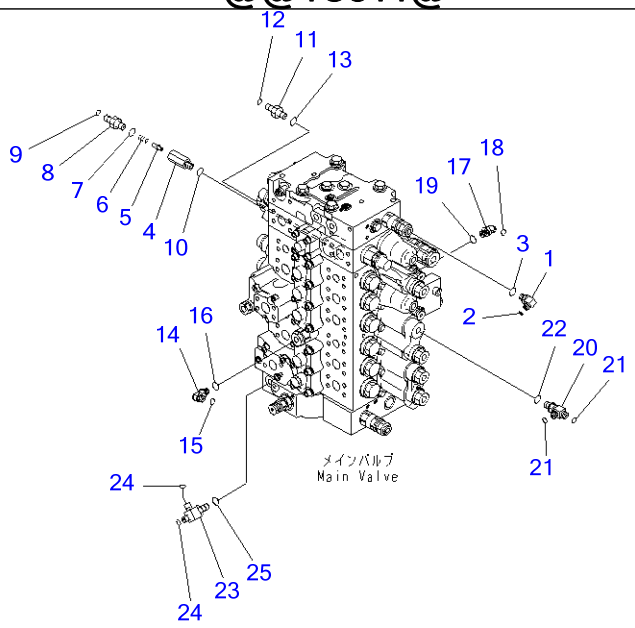

P W 1 C 8 1 1

Ref H0120-02A1 **Page 150090**

PC220-7 S/N 60001-UP (Overseas Version)

CONTROL VALVE (CONNECTING PARTS) (1 & 2 ACTUATOR) (2/2)

Item	Part No.	Part Name	Qty	Serial No.
1	20Y-62-41920	ELBOW	2	60001-
2	02896-11008	O-RING	2	60001-
3	07002-11223	O-RING	2	60001-
	20Y-62-41701	VALVE ASS'Y	1	65531-
	20Y-62-41700	VALVE ASS'Y	1	65001-65530
	20Y-62-41701	VALVE ASS'Y	1	60762-65000
	20Y-62-41700	VALVE ASS'Y	1	60001-60761
4	20Y-60-22210	・BODY	1	60001-
5	20Y-60-22270	・POPPET	1	60001-
6	701-20-61230	・SPRING	1	60001-
7	07002-11423	・O-RING	1	60001-
8	20Y-62-47630	・NIPPLE	1	65531-
	11Y-62-12130	・NIPPLE	1	65001-65530
	20Y-62-47630	・NIPPLE	1	60762-65000
	11Y-62-12130	・NIPPLE	1	60001-60761
9	02896-11008	O-RING	1	60001-
10	07002-11423	O-RING	1	60001-
11	11Y-62-12130	NIPPLE	1	60001-
12	02896-11008	O-RING	1	60001-
13	07002-11423	O-RING	1	60001-
14	11Y-62-12160	ELBOW	1	60001-
15	02896-11008	O-RING	1	60001-
16	07002-11423	O-RING	1	60001-
17	11Y-62-12240	ELBOW	1	60001-
18	02896-11008	O-RING	1	60001-
19	07002-11423	O-RING	1	60001-
20	11Y-62-12330	ELBOW	1	60001-
21	02896-11008	O-RING	2	60001-

CONTROL VALVE (CONNECTING PARTS) (1 & 2 ACTUATOR) (2/2)

Item	Part No.	Part Name	Qty	Serial No.
22	07002-11423	O-RING	1	60001-
23	11Y-62-12330	ELBOW	1	60001-
24	02896-11008	O-RING	2	60001-
25	07002-11423	O-RING	1	60001-

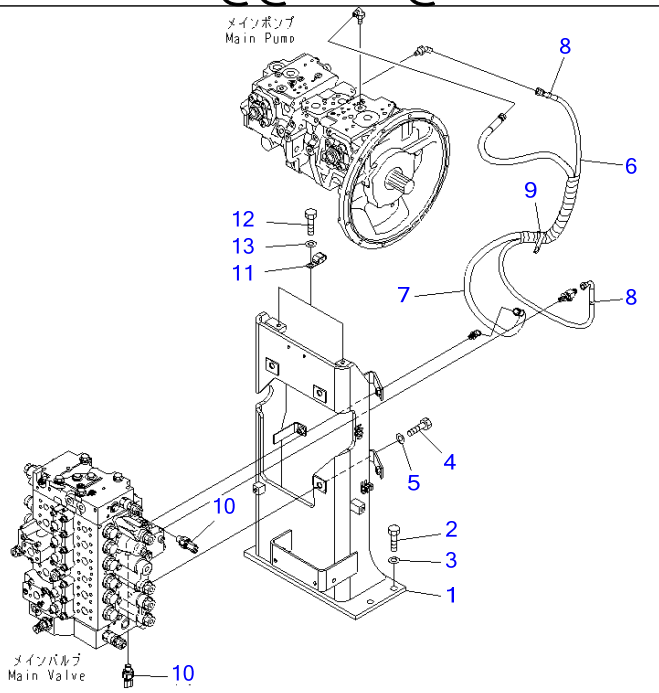

P W 1 C 6 1 3

Ref H0120-03A0 **Page 150100**

PC220-7 S/N 60001-UP (Overseas Version)
CONTROL VALVE (VALVE BRACKET)

Item	Part No.	Part Name	Qty	Serial No.
1	20Y-62-41112	BRACKET	1	60001-
2	01010-81640	BOLT	6	60001-
3	01643-31645	WASHER	6	60001-
4	01010-81645	BOLT	3	60001-
5	01643-31645	WASHER	3	60001-
6	02761-00217	HOSE	1	60001-
7	20Y-62-53681	HOSE	1	69884-
	□20Y-62-53680	HOSE	1	67321-69883
	□02777-00218	HOSE	1	65001-67320
	20Y-62-53680	HOSE	1	60756-65000
	□02777-00218	HOSE	1	60001-60755
8	20Y-62-22810	BAND, YELLOW	2	60001-
9	04435-51612	CLIP	1	60001-
10	7861-93-1652	SENSOR	1	69463-
	7861-93-1650	SENSOR	1	65001-69462
	7861-93-1652	SENSOR	1	60776-65000
	7861-93-1650	SENSOR	1	60001-60775
	07002-61823	・O-RING	1	69463-
	07002-11823	・O-RING	1	65001-69462
	07002-61823	・O-RING	1	60776-65000
	07002-11823	・O-RING	1	60001-60775
11	04435-51512	CLIP	2	60001-
12	01010-81225	BOLT	2	60001-
13	01643-31232	WASHER	2	60001-

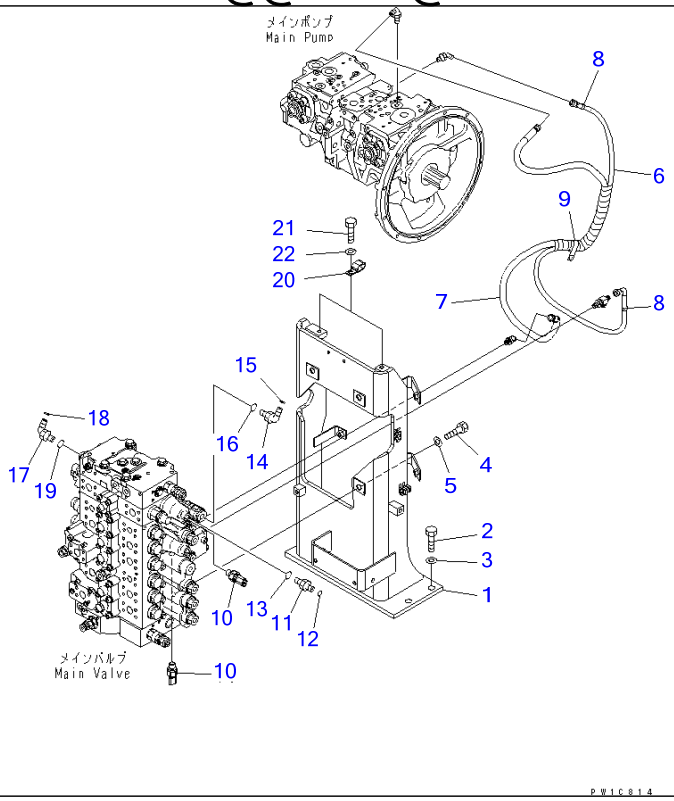

Ref H0120-03A1 **Page 150110**

PC220-7 S/N 60001-UP (Overseas Version)
CONTROL VALVE (VALVE BRACKET) (1 ACTUATOR)

Item	Part No.	Part Name	Qty	Serial No.
1	20Y-62-41112	BRACKET	1	60001-
2	01010-81640	BOLT	6	60001-
3	01643-31645	WASHER	6	60001-
4	01010-81645	BOLT	3	60001-
5	01643-31645	WASHER	3	60001-
6	02761-00217	HOSE	1	60001-
7	20Y-62-53681	HOSE	1	69884-
	□20Y-62-53680	HOSE	1	67321-69883
	□02777-00218	HOSE	1	65001-67320
	20Y-62-53680	HOSE	1	60756-65000
	□02777-00218	HOSE	1	60001-60755
8	20Y-62-22810	BAND, YELLOW	2	60001-
9	04435-51612	CLIP	1	60001-
10	7861-93-1652	SENSOR	1	69463-
	7861-93-1650	SENSOR	1	65001-69462
	7861-93-1652	SENSOR	1	60776-65000
	7861-93-1650	SENSOR	1	60001-60775
	07002-61823	・O-RING	1	69463-
	07002-11823	・O-RING	1	65001-69462
	07002-61823	・O-RING	1	60776-65000
	07002-11823	・O-RING	1	60001-60775
11	11Y-62-12130	NIPPLE	1	60001-
12	02896-11008	O-RING	1	60001-
13	07002-11423	O-RING	1	60224-
	07002-01423	O-RING	1	60001-60223
14	11Y-62-12160	ELBOW	1	60003-
	02782-10210	ELBOW	1	60001-60002
15	02896-11008	O-RING	1	60001-

CONTROL VALVE (VALVE BRACKET) (1 ACTUATOR)

Item	Part No.	Part Name	Qty	Serial No.
16	07002-11423	O-RING	1	60224-
	07002-01423	O-RING	1	60001-60223
17	11Y-62-12160	ELBOW	1	60003-
	02782-10210	ELBOW	1	60001-60002
18	02896-11008	O-RING	1	60001-
19	07002-11423	O-RING	1	60224-
	07002-01423	O-RING	1	60001-60223
20	04435-51512	CLIP	4	60001-
21	01010-81225	BOLT	2	60001-
22	01643-31232	WASHER	2	60001-

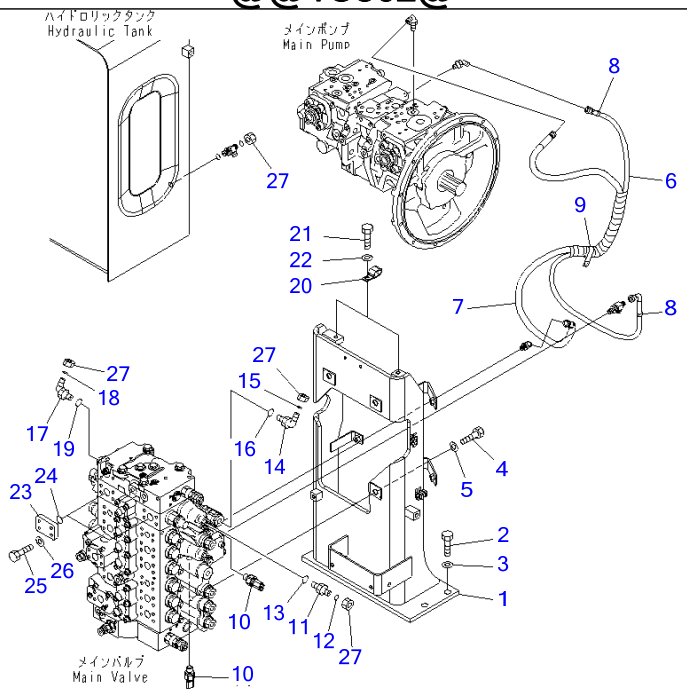

Ref H0120-03A3 Page 150120

PC220-7 S/N 60001-UP (Overseas Version)

CONTROL VALVE (VALVE BRACKET) (1 ACTUATOR) (PIPING LESS)

Item	Part No.	Part Name	Qty	Serial No.
1	20Y-62-41112	BRACKET	1	60001-
2	01010-81640	BOLT	6	60001-
3	01643-31645	WASHER	6	60001-
4	01010-81645	BOLT	3	60001-
5	01643-31645	WASHER	3	60001-
6	02761-00217	HOSE	1	60001-
7	20Y-62-53681	HOSE	1	69884-
	□20Y-62-53680	HOSE	1	67321-69883
	□02777-00218	HOSE	1	65001-67320
	20Y-62-53680	HOSE	1	60756-65000
	□02777-00218	HOSE	1	60001-60755
8	20Y-62-22810	BAND, YELLOW	2	60001-
9	04435-51612	CLIP	1	60001-
10	7861-93-1652	SENSOR	1	69463-
	7861-93-1650	SENSOR	1	65001-69462
	7861-93-1652	SENSOR	1	60776-65000
	7861-93-1650	SENSOR	1	60001-60775
	07002-61823	・O-RING	1	69463-
	07002-11823	・O-RING	1	65001-69462
	07002-61823	・O-RING	1	60776-65000
	07002-11823	・O-RING	1	60001-60775
11	11Y-62-12130	NIPPLE	1	60001-
12	02896-11008	O-RING	1	60001-
13	07002-11423	O-RING	1	60224-
	07002-01423	O-RING	1	60001-60223
14	11Y-62-12160	ELBOW	1	60003-
	02782-10210	ELBOW	1	60001-60002
15	02896-11008	O-RING	1	60001-

CONTROL VALVE (VALVE BRACKET) (1 ACTUATOR) (PIPING LESS)

Item	Part No.	Part Name	Qty	Serial No.
16	07002-11423	O-RING	1	60224-
	07002-01423	O-RING	1	60001-60223
17	11Y-62-12160	ELBOW	1	60003-
	02782-10210	ELBOW	1	60001-60002
18	02896-11008	O-RING	1	60001-
19	07002-11423	O-RING	1	60224-
	07002-01423	O-RING	1	60001-60223
20	04435-51512	CLIP	4	60001-
21	01010-81225	BOLT	2	60001-
22	01643-31232	WASHER	2	60001-
23	207-62-56190	FLANGE	2	60001-
24	21T-09-11470	O-RING	2	60001-
25	07372-21040	BOLT	8	60001-
26	01643-51032	WASHER	8	60001-
27	02789-00210	PLUG	4	60001-

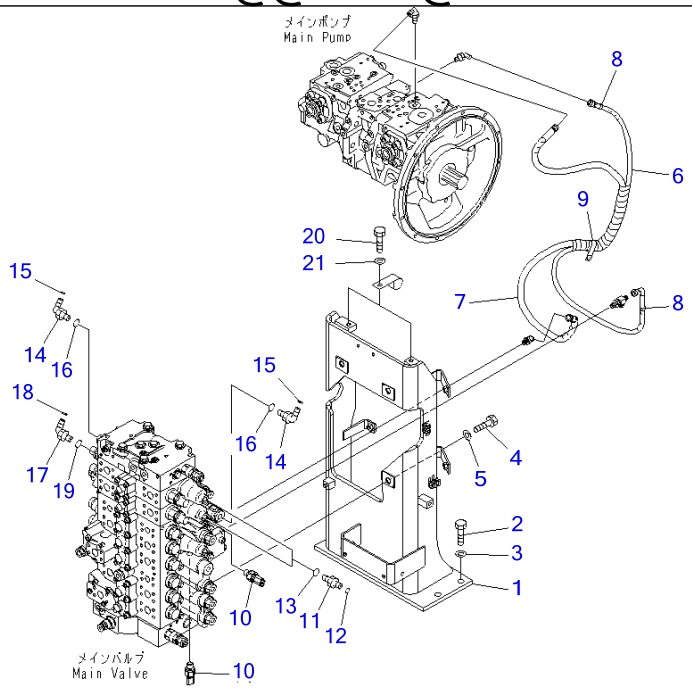

Ref H0120-03A6 **Page 150130**

PC220-7 S/N 60001-UP (Overseas Version)
CONTROL VALVE (VALVE BRACKET) (2 ACTUATOR)

Item	Part No.	Part Name	Qty	Serial No.
1	20Y-62-41112	BRACKET	1	60001-
2	01010-81640	BOLT	6	60001-
3	01643-31645	WASHER	6	60001-
4	01010-81645	BOLT	3	60001-
5	01643-31645	WASHER	3	60001-
6	02761-00217	HOSE	1	60001-
7	20Y-62-53681	HOSE	1	69884-
	□20Y-62-53680	HOSE	1	67321-69883
	□02777-00218	HOSE	1	65001-67320
	20Y-62-53680	HOSE	1	60756-65000
	□02777-00218	HOSE	1	60001-60755
8	20Y-62-22810	BAND, YELLOW	2	60001-
9	04435-51612	CLIP	1	60001-
10	7861-93-1652	SENSOR	1	69463-
	7861-93-1650	SENSOR	1	65001-69462
	7861-93-1652	SENSOR	1	60776-65000
	7861-93-1650	SENSOR	1	60001-60775
	07002-61823	・O-RING	1	69463-
	07002-11823	・O-RING	1	65001-69462
	07002-61823	・O-RING	1	60776-65000
	07002-11823	・O-RING	1	60001-60775
11	11Y-62-12130	NIPPLE	2	60001-
12	02896-11008	O-RING	2	60001-
13	07002-11423	O-RING	2	60001-
14	11Y-62-12160	ELBOW	2	60001-
15	02896-11008	O-RING	2	60001-
16	07002-11423	O-RING	2	60001-
17	11Y-62-12160	ELBOW	1	60001-

CONTROL VALVE (VALVE BRACKET) (2 ACTUATOR)

Item	Part No.	Part Name	Qty	Serial No.
18	02896-11008	O-RING	1	60001-
19	07002-11423	O-RING	1	60001-
20	01010-81225	BOLT	2	60001-
21	01643-31232	WASHER	2	60001-

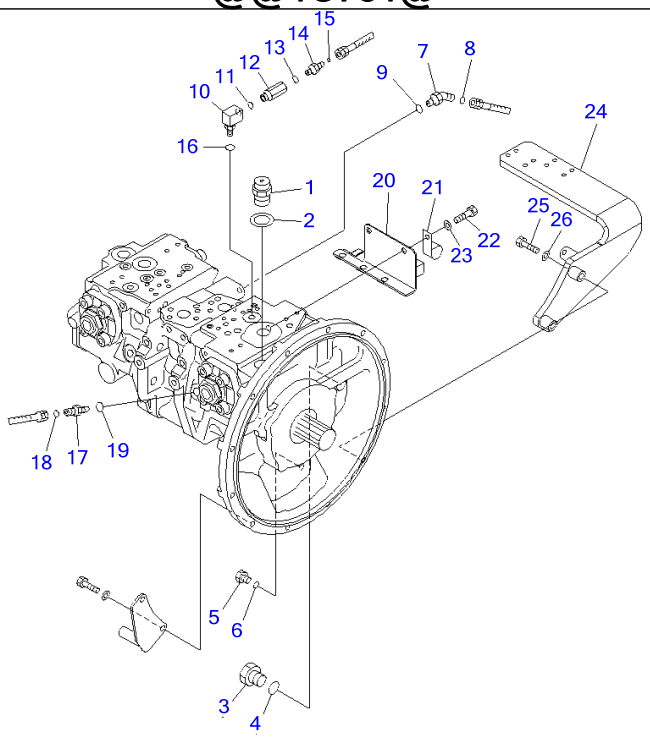

Ref H0210-01A0 **Page 150140**

PC220-7 S/N 60001-UP (Overseas Version)
PISTON PUMP (CONNECTING PARTS)

Item	Part No.	Part Name	Qty	Serial No.
1	07030-03034	BREATHER	1	60001-
2	07005-03016	SEAL, WASHER	1	60001-
3	07040-12412	PLUG	1	60001-
4	07002-12434	O-RING	1	69025-
	(⊙07002-02434)	O-RING	1	69024-
5	07040-11209	PLUG	1	60001-
6	07002-11223	O-RING	1	60001-
7	11Y-62-12240	ELBOW	1	60003-
	02783-10210	ELBOW	1	60001-60002
8	02896-11008	O-RING	1	60001-
9	07002-11423	O-RING	1	60001-
10	20F-61-12460	ELBOW	1	60001-
11	07002-11423	O-RING	1	60001-
12	20Y-62-22160	ADAPTER	1	60001-
13	07002-11423	O-RING	1	60001-
14	11Y-62-12130	NIPPLE	1	60003-
	02781-00210	UNION	1	60001-60002
15	02896-11008	O-RING	1	60001-
16	07002-11423	O-RING	1	60001-
17	11Y-62-12130	NIPPLE	2	60003-
	02781-00210	UNION	2	60001-60002
18	02896-11008	O-RING	2	60001-
19	07002-11423	O-RING	2	60001-
20	20Y-06-31171	BRACKET	1	60001-
21	04434-50810	CLIP	1	60001-
22	01010-81020	BOLT	2	60001-
23	01643-31032	WASHER	2	60001-
24	20Y-62-43860	BRACKET	1	60001-

PISTON PUMP (CONNECTING PARTS)

Item	Part No.	Part Name	Qty	Serial No.
25	01010-81080	BOLT	2	60001-
26	01643-31032	WASHER	2	60001-

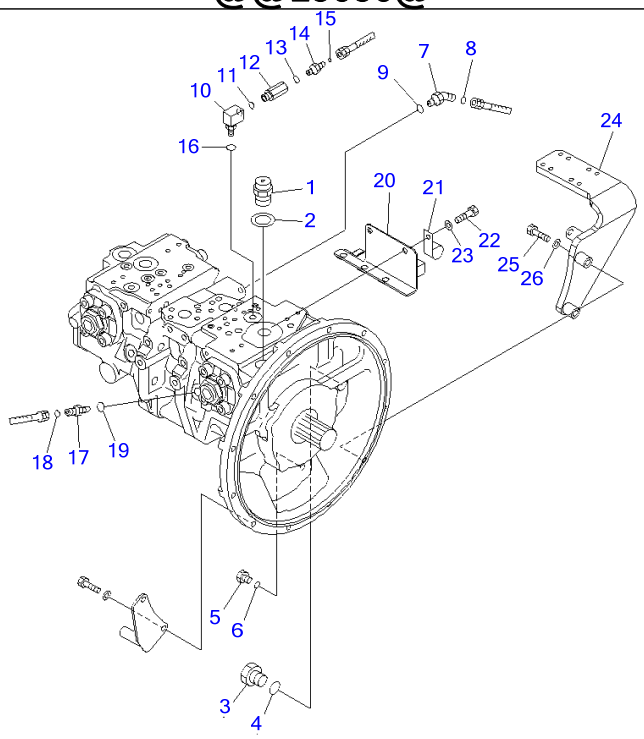

Ref H0210-01A1 **Page 150150**

PC220-7 S/N 60001-UP (Overseas Version)
PISTON PUMP (CONNECTING PARTS) (WITH IN-LINE FILTER)

Item	Part No.	Part Name	Qty	Serial No.
1	07030-03034	BREATHER	1	60001-
2	07005-03016	SEAL, WASHER	1	60001-
3	07040-12412	PLUG	1	60001-
4	07002-12434	O-RING	1	69025-
	(⊙07002-02434)	O-RING	1	60001-69024
5	07040-11209	PLUG	1	60001-
6	07002-11223	O-RING	1	60001-
7	11Y-62-12240	ELBOW	1	60001-
8	02896-11008	O-RING	1	60001-
9	07002-11423	O-RING	1	60001-
10	20F-61-12460	ELBOW	1	60001-
11	07002-11423	O-RING	1	60001-
12	20Y-62-22160	ADAPTER	1	60001-
13	07002-11423	O-RING	1	60001-
14	11Y-62-12130	NIPPLE	1	60001-
15	02896-11008	O-RING	1	60001-
16	07002-11423	O-RING	1	60001-
17	11Y-62-12130	NIPPLE	2	60001-
18	02896-11008	O-RING	2	60001-
19	07002-11423	O-RING	2	60001-
20	20Y-06-31171	BRACKET	1	60001-
21	04434-50810	CLIP	1	60001-
22	01010-81020	BOLT	2	60001-
23	01643-31032	WASHER	2	60001-
24	20Y-62-43910	BRACKET	1	60001-
25	01010-81080	BOLT	2	60001-
26	01643-31032	WASHER	2	60001-

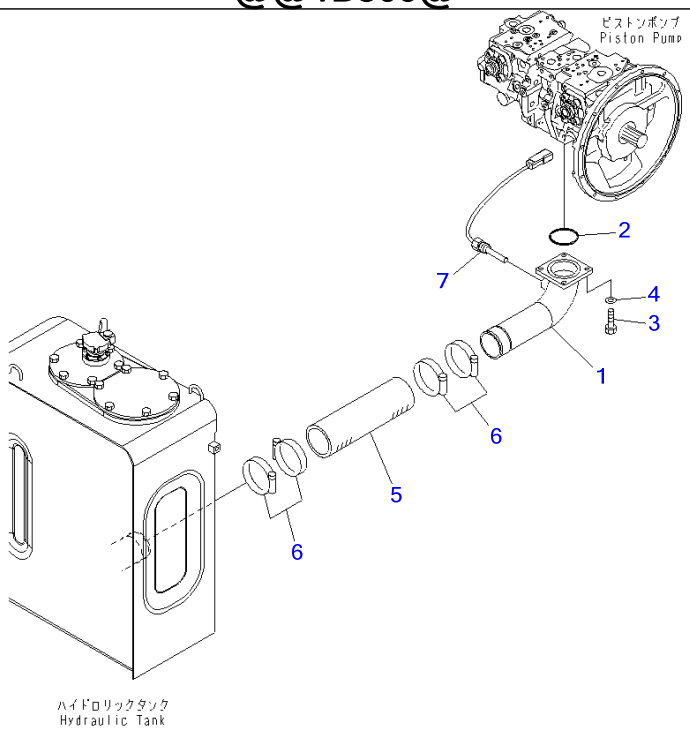

Ref H0311-01A0 **Page 150160**

PC220-7 S/N 60001-UP (Overseas Version)
SUCTION PIPING

Item	Part No.	Part Name	Qty	Serial No.
1	20Y-62-41321	TUBE	1	60001-
2	07000-12100	O-RING	1	60001-
3	01010-81235	BOLT	4	60001-
4	01643-31232	WASHER	4	60001-
5	07260-08732	HOSE	1	60001-
6	07289-00105	CLAMP	4	60001-
7	7861-93-3320	SENSOR	1	60001-

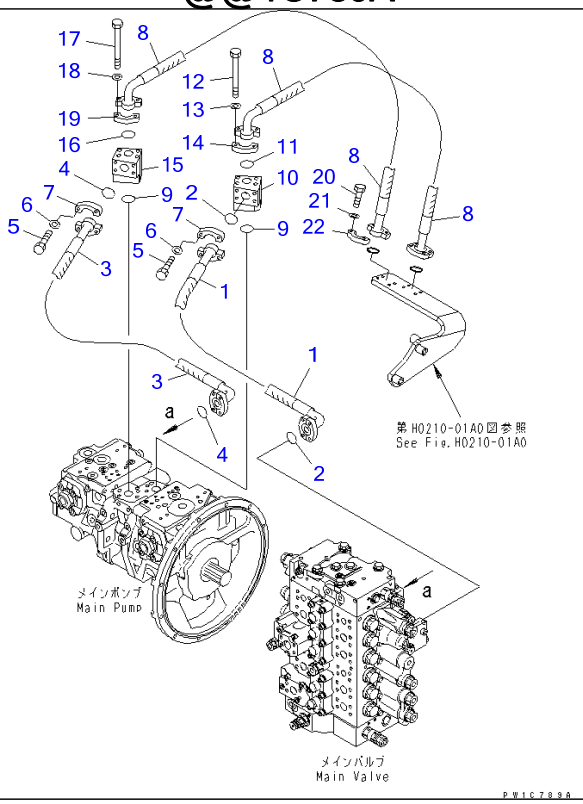

Ref H0312-01A0 **Page 150170**

PC220-7 S/N 60001-UP (Overseas Version)
DELIVERY PIPING

Item	Part No.	Part Name	Qty	Serial No.
1	20Y-62-43810	HOSE, 990MM	1	60001-
2	21T-09-11460	O-RING	2	60001-
3	20Y-62-43820	HOSE, 920MM	1	60001-
4	21T-09-11460	O-RING	2	60001-
5	07372-21035	BOLT	16	60001-
6	01643-51032	WASHER	16	60001-
7	07371-31049	FLANGE	8	60001-
8	20Y-62-43830	HOSE, 740MM	2	60001-
9	21T-09-11460	O-RING	2	60001-
10	20Y-62-43840	BLOCK	1	60001-
11	21T-09-11460	O-RING	1	60001-
12	417-875-1670	BOLT	4	60001-
13	01643-51032	WASHER	4	60001-
14	07371-31049	FLANGE	2	60001-
15	20Y-62-43850	BLOCK	1	60001-
16	21T-09-11460	O-RING	1	60001-
17	417-875-1670	BOLT	4	60001-
18	01643-51032	WASHER	4	60001-
19	07371-31049	FLANGE	2	60001-
20	07372-21035	BOLT	8	60001-
21	01643-51032	WASHER	8	60001-
22	07371-30640	FLANGE	4	60001-

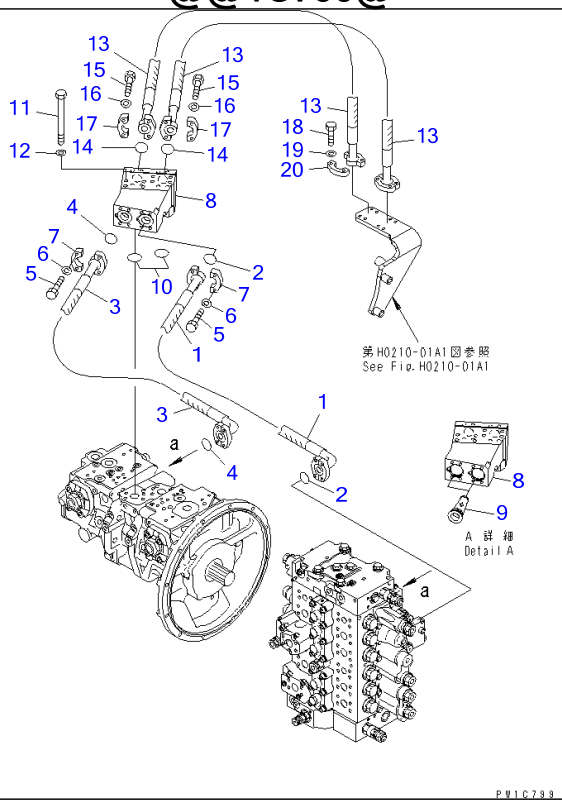

Ref H0312-01A1 **Page 150180**

PC220-7 S/N 60001-UP (Overseas Version)

DELIVERY LINE (WITH INLINE FILTER)(#60001-60223)

Item	Part No.	Part Name	Qty	Serial No.
1	20Y-62-43920	HOSE, 870MM	1	60001-@
2	21T-09-11460	O-RING	2	60001-@
3	07073-01AA8	HOSE	1	60001-@
4	21T-09-11460	O-RING	2	60001-@
5	07372-21035	BOLT	16	60001-@
6	01643-51032	WASHER	16	60001-@
7	07371-31049	FLANGE	8	60001-@
8	20Y-60-31310	FILTER ASS'Y	1	60001-60223
	☆	・CASE	1	60001-60223
9	20Y-60-A1240	・ELEMENT	2	60001-60223
10	21T-09-11470	O-RING	2	60001-@
11	01011-81030	BOLT	8	60001-@
12	01643-31032	WASHER	8	60001-@
13	20Y-62-43930	HOSE, 800MM	2	60001-@
14	21T-09-11460	O-RING	2	60001-@
15	07372-21035	BOLT	8	60001-@
16	01643-51032	WASHER	8	60001-@
17	07371-31049	FLANGE	4	60001-@
18	07372-21035	BOLT	8	60001-@
19	01643-51032	WASHER	8	60001-@
20	07371-30640	FLANGE	4	60001-@

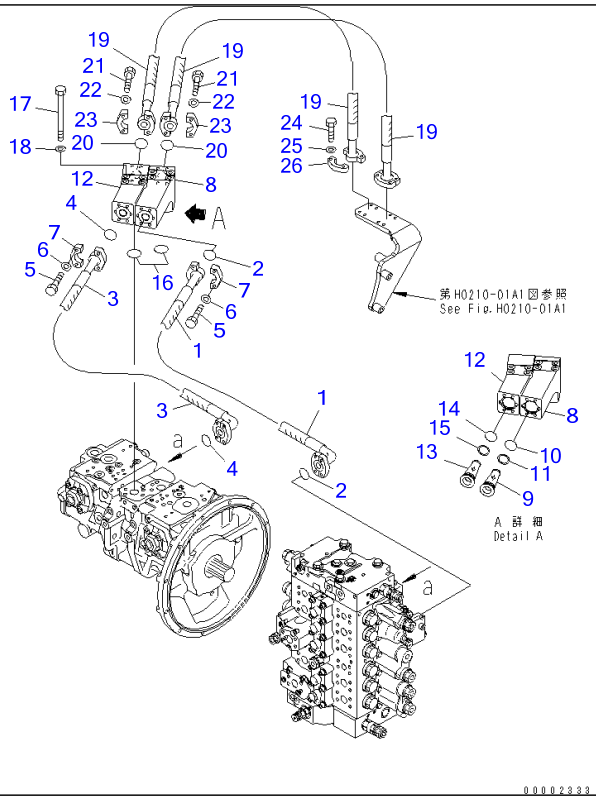

Ref H0312-01A1A **Page 150190**

PC220-7 S/N 60001-UP (Overseas Version)
DELIVERY LINE (WITH INLINE FILTER)(#60224-)

Item	Part No.	Part Name	Qty	Serial No.
1	20Y-62-43920	HOSE, 870MM	1	60001-
2	21T-09-11460	O-RING	2	60001-
3	07073-01AA8	HOSE	1	60001-
4	21T-09-11460	O-RING	2	60001-
5	07372-21035	BOLT	16	60001-
6	01643-51032	WASHER	16	60001-
7	07371-31049	FLANGE	8	60001-
8	20Y-60-31410	FILTER ASS'Y	1	60224-
9	20Y-60-31430	・ELEMENT	1	60224-
10	07000-12035	・・O-RING	1	60224-
11	21K-62-72790	・・RING,BACK-UP	1	60224-
12	20Y-60-31420	FILTER ASS'Y	1	60224-
13	20Y-60-31430	・ELEMENT	1	60224-
14	07000-12035	・・O-RING	1	60224-
15	21K-62-72790	・・RING,BACK-UP	1	60224-
16	21T-09-11470	O-RING	2	60001-
17	01011-81030	BOLT	8	60001-
18	01643-31032	WASHER	8	60001-
19	20Y-62-43930	HOSE, 800MM	2	60001-
20	21T-09-11460	O-RING	2	60001-
21	07372-21035	BOLT	8	60001-
22	01643-51032	WASHER	8	60001-
23	07371-31049	FLANGE	4	60001-
24	07372-21035	BOLT	8	60001-
25	01643-51032	WASHER	8	60001-
26	07371-30640	FLANGE	4	60001-

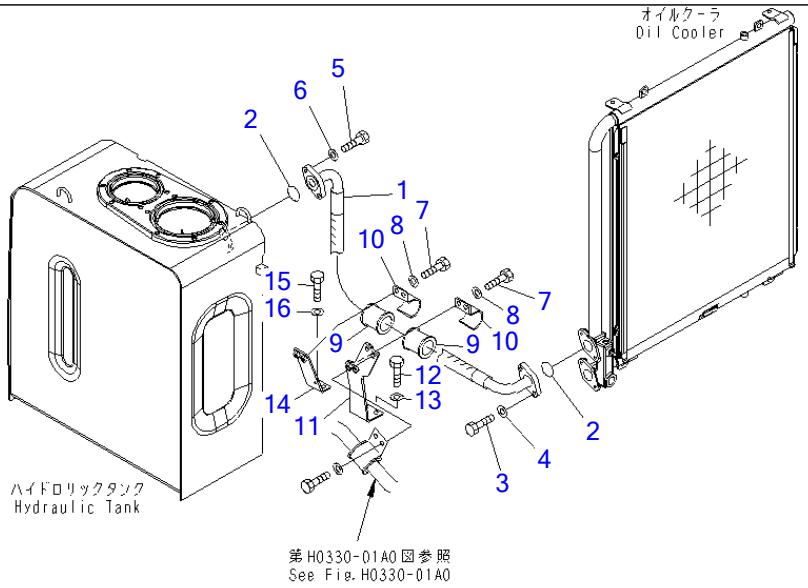

00015007

Ref H0320-01A0 **Page 150200**

PC220-7 S/N 60001-UP (Overseas Version)
OIL COOLER PIPING

Item	Part No.	Part Name	Qty	Serial No.
1	20Y-62-41271	HOSE, 2350MM	1	60001-
2	07000-13048	O-RING	2	60001-
3	01010-81240	BOLT	2	60001-
4	01643-31232	WASHER	2	60001-
5	01010-81235	BOLT	2	60001-
6	01643-31232	WASHER	2	60001-
7	01010-81225	BOLT	4	60001-
8	01643-31232	WASHER	4	60001-
9	07095-01245	CUSHION	2	60321-
	07095-01449	CUSHION	2	60001-60320
10	22U-62-21551	CLAMP	2	60321-
	20Y-62-41350	CLAMP	2	60001-60320
11	20Y-62-41371	BRACKET	1	60001-
12	01010-81225	BOLT	2	60001-
13	01643-31232	WASHER	2	60001-
14	20Y-62-41380	BRACKET	1	60001-
15	01010-81225	BOLT	2	60001-
16	01643-31232	WASHER	2	60001-

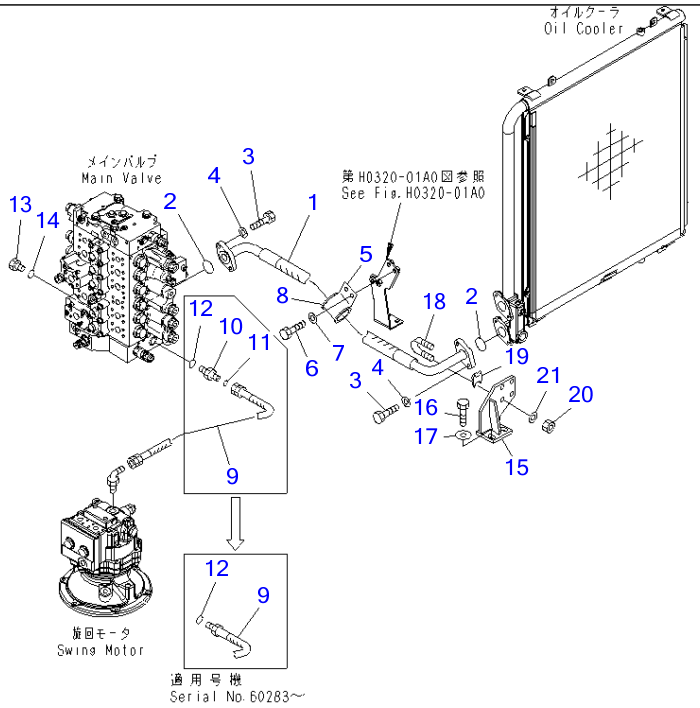

Ref H0330-01A0 **Page 150210**

PC220-7 S/N 60001-UP (Overseas Version)
RETURN PIPING

Item	Part No.	Part Name	Qty	Serial No.
1	20Y-62-41261	HOSE, 1100MM	1	60001-
2	07000-13048	O-RING	2	60001-
3	01010-81240	BOLT	4	60001-
4	01643-31232	WASHER	4	60001-
5	22U-62-21551	CLAMP	1	60321-
	20Y-62-41350	CLAMP	1	60001-60320
6	01010-81225	BOLT	2	60001-
7	01643-31232	WASHER	2	60001-
8	07095-01245	CUSHION	1	60321-
	07095-01449	CUSHION	1	60001-60320
9	20Y-62-44520	HOSE, 875MM	1	60283-
	02762-006A8	HOSE	1	60003-60282
	□02762-006A9	HOSE	1	60001-60002
10	02781-00628	UNION	1	60001-60282
11	02896-11018	O-RING	1	60001-60282
12	07002-12434	O-RING	1	60001-
13	07040-12412	PLUG	1	60001-
14	07002-12434	O-RING	1	60001-
15	206-62-76181	BRACKET	1	65096-
	206-62-76180	BRACKET	1	60064-65095
16	01010-81235	BOLT	2	60064-
17	175-54-34170	WASHER	2	60064-
18	07283-34354	CLIP	2	60064-
19	07283-54353	SEAT	2	60064-
20	01597-01009	NUT	4	60064-
21	01643-31032	WASHER	4	60064-

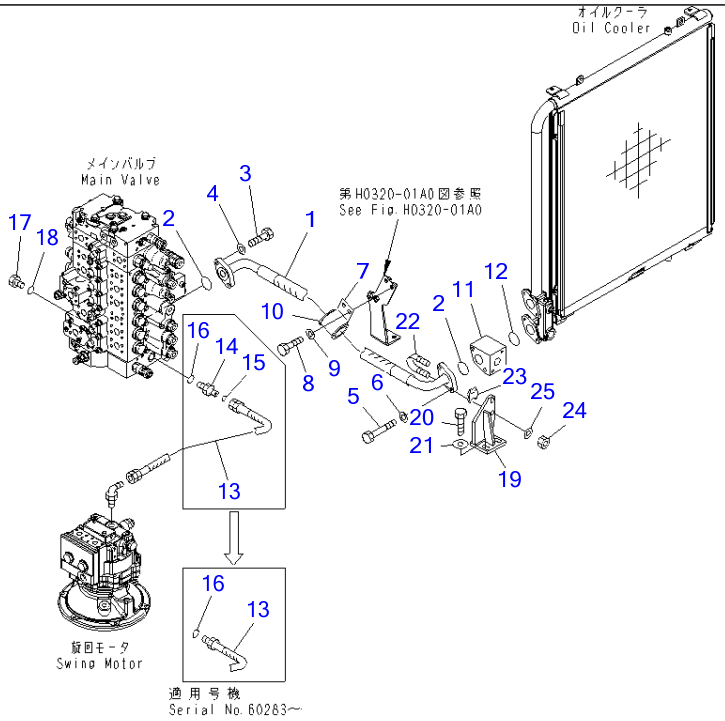

Ref H0330-01A1 **Page 150220**

PC220-7 S/N 60001-UP (Overseas Version)
RETURN LINE (1 ACTUATOR)

Item	Part No.	Part Name	Qty	Serial No.
1	20Y-62-43390	HOSE, 1100MM	1	60001-
2	07000-13048	O-RING	2	60001-
3	01010-81240	BOLT	2	60001-
4	01643-31232	WASHER	2	60001-
5	01011-81220	BOLT	2	60001-
6	01643-31232	WASHER	2	60001-
7	22U-62-21551	CLAMP	1	60321-
	20Y-62-41350	CLAMP	1	60001-60320
8	01010-81225	BOLT	2	60001-
9	01643-31232	WASHER	2	60001-
10	07095-01245	CUSHION	1	60321-
	07095-01449	CUSHION	1	60001-60320
11	20Y-62-43371	BLOCK	1	60001-
12	07000-13048	O-RING	1	60001-
13	20Y-62-44520	HOSE, 875MM	1	60283-
	02762-006A8	HOSE	1	60003-60282
	□02762-006A9	HOSE	1	60001-60002
14	02781-00628	UNION	1	60001-60282
15	02896-11018	O-RING	1	60001-60282
16	07002-12434	O-RING	1	60001-
17	07040-12412	PLUG	1	60001-
18	07002-12434	O-RING	1	60001-
19	206-62-76191	BRACKET	1	65096-
	206-62-76190	BRACKET	1	60064-65095
20	01010-81235	BOLT	2	60064-
21	175-54-34170	WASHER	2	60064-
22	07283-34354	CLIP	1	60064-
23	07283-54353	SEAT	1	60064-

RETURN LINE (1 ACTUATOR)

Item	Part No.	Part Name	Qty	Serial No.
24	01597-01009	NUT	2	60064-
25	01643-31032	WASHER	2	60064-

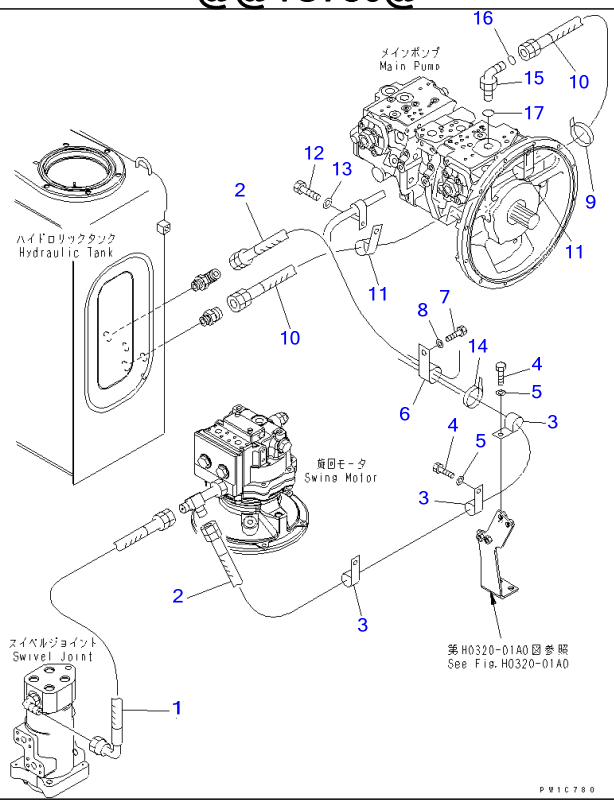

Ref H0340-01A0 **Page 150230**

PC220-7 S/N 60001-UP (Overseas Version)
DRAIN LINES

Item	Part No.	Part Name	Qty	Serial No.
1	02763-00508	HOSE	1	60001-
2	20Y-62-42471	HOSE, 2200MM	1	60003-
	206-62-71210	HOSE	1	60001-60002
3	04434-52312	CLIP	3	60001-
4	01010-81225	BOLT	3	60001-
5	01643-31232	WASHER	3	60001-
6	581-04-22290	CLIP	1	60001-
7	01010-81225	BOLT	1	60001-
8	01643-31232	WASHER	1	60001-
9	08034-20536	BAND	1	60001-
10	20Y-62-43870	HOSE, 1300MM	1	60001-
11	04434-52712	CLIP	2	60001-
12	01010-81225	BOLT	2	60001-
13	01643-31232	WASHER	2	60001-
14	08034-20536	BAND	1	60001-
15	02782-10628	ELBOW	1	60001-
16	02896-11018	O-RING	1	60001-
17	07002-12434	O-RING	1	60001-

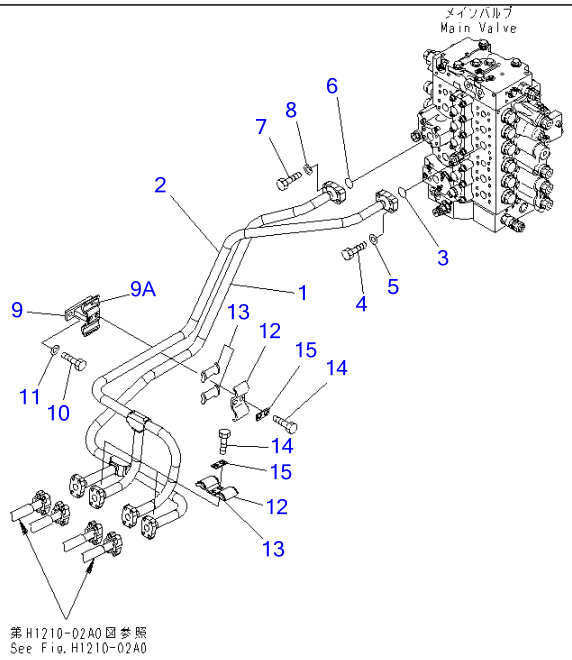

00002440

Ref H1210-01A0 **Page 150240**

PC220-7 S/N 60001-UP (Overseas Version)
BOOM PIPING

Item	Part No.	Part Name	Qty	Serial No.
1	20Y-62-41140	TUBE	1	60001-
2	20Y-62-41150	TUBE	1	60001-
3	21T-09-11460	O-RING	1	60001-
4	07372-21040	BOLT	4	60001-
5	01643-51032	WASHER	4	60001-
6	21T-09-11460	O-RING	1	60001-
7	07372-21040	BOLT	4	60001-
8	01643-51032	WASHER	4	60001-
9	206-62-71180	CLAMP	1	60001-
9A	20Y-62-13760	・SEAT	2	60001-
10	01010-81235	BOLT	2	60001-
11	01643-31232	WASHER	2	60001-
12	20Y-62-13230	CLAMP	3	60001-
13	20Y-62-13760	・SEAT	2	60001-
14	01010-81235	BOLT	6	60001-
15	20Y-62-13450	PLATE	3	60001-

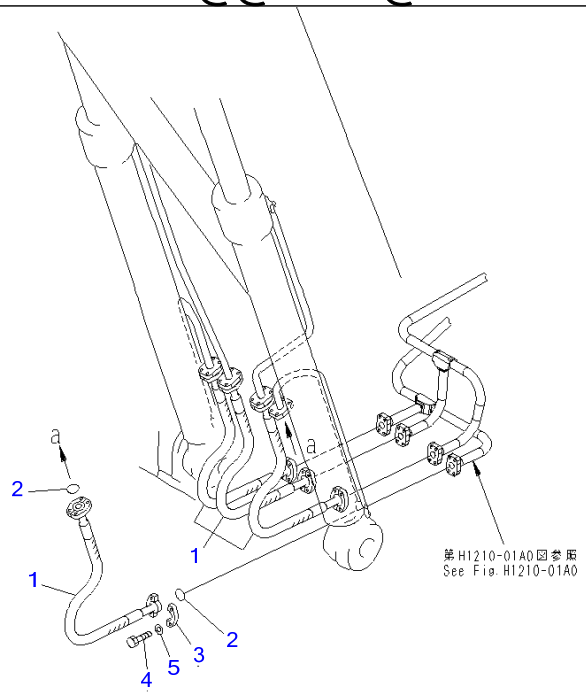

PW1B825

Ref H1210-02A0 **Page 150250**

PC220-7 S/N 60001-UP (Overseas Version)
BOOM PIPING (BOOM HOSE)

Item	Part No.	Part Name	Qty	Serial No.
1	20Y-62-17480	HOSE	4	60001-
2	07000-13025	O-RING	8	60001-
3	07371-30640	FLANGE	16	60001-
4	07372-21035	BOLT	32	60001-
5	01643-51032	WASHER	32	60001-

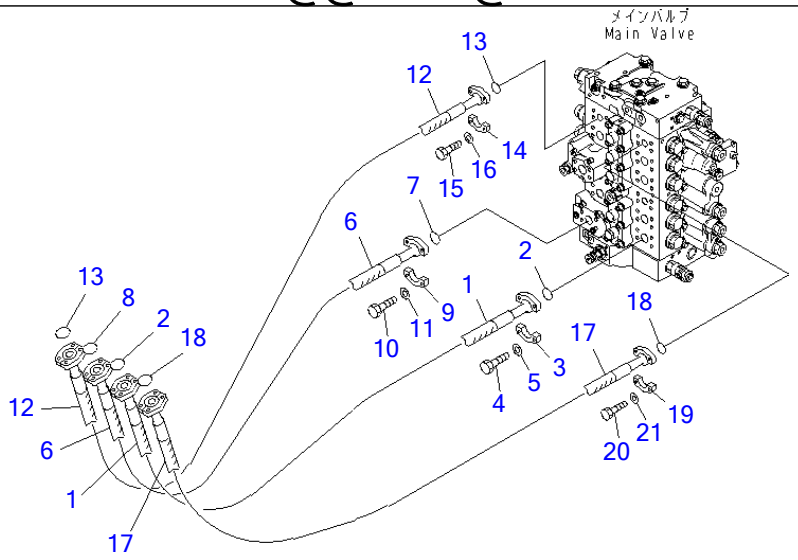

P W 1 C 7 8 2

Ref H1220-01A0 **Page 150260**

PC220-7 S/N 60001-UP (Overseas Version)

ARM AND BUCKET PIPING

Item	Part No.	Part Name	Qty	Serial No.
1	20Y-62-41171	HOSE, 1400MM	1	60001-
2	21T-09-11460	O-RING	2	60001-
3	07371-31049	FLANGE	2	60001-
4	07372-21035	BOLT	4	60001-
5	01643-51032	WASHER	4	60001-
6	20Y-62-41161	HOSE, 1400MM	1	60001-
7	21T-09-11430	O-RING	1	60001-
8	21T-09-11460	O-RING	1	60001-
9	07371-31049	FLANGE	2	60001-
10	07372-21035	BOLT	4	60001-
11	01643-51032	WASHER	4	60001-
12	20Y-62-41181	HOSE, 1300MM	1	60001-
13	21T-09-11430	O-RING	2	60001-
14	07371-30640	FLANGE	2	60001-
15	07372-21035	BOLT	4	60001-
16	01643-51032	WASHER	4	60001-
17	20Y-62-41181	HOSE, 1300MM	1	60001-
18	21T-09-11430	O-RING	2	60001-
19	07371-30640	FLANGE	2	60001-
20	07372-21035	BOLT	4	60001-
21	01643-51032	WASHER	4	60001-

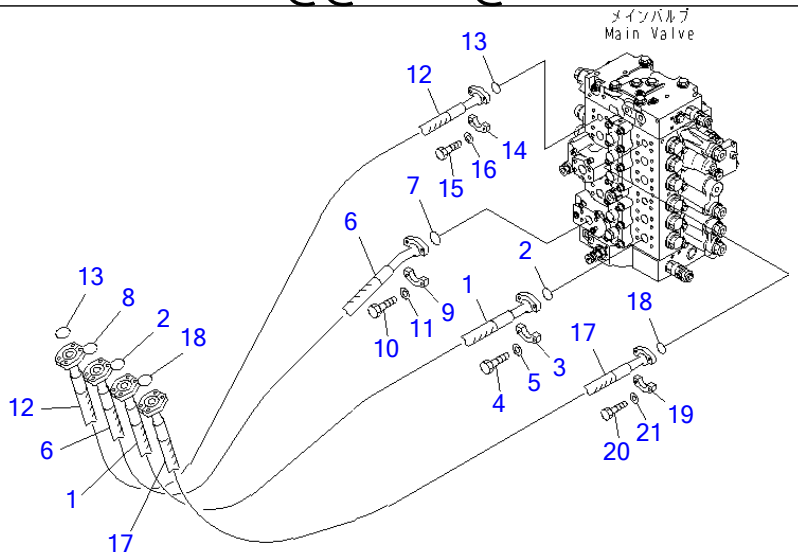

PW1C973

Ref H1220-01A1 **Page 150270**

PC220-7 S/N 60001-UP (Overseas Version)
ARM AND BUCKET LINE (WITH DRIFT PRIVENTIVE)

Item	Part No.	Part Name	Qty	Serial No.
1	20Y-62-41171	HOSE, 1400MM	1	60001-
2	21T-09-11460	O-RING	2	60001-
3	07371-31049	FLANGE	2	60001-
4	07372-21035	BOLT	4	60001-
5	01643-51032	WASHER	4	60001-
6	20Y-62-41860	HOSE, 1350MM	1	60001-
7	21T-09-11430	O-RING	1	60001-
8	21T-09-11460	O-RING	1	60001-
9	07371-31049	FLANGE	2	60001-
10	07372-21035	BOLT	4	60001-
11	01643-51032	WASHER	4	60001-
12	20Y-62-41181	HOSE, 1300MM	1	60001-
13	21T-09-11430	O-RING	2	60001-
14	07371-30640	FLANGE	2	60001-
15	07372-21035	BOLT	4	60001-
16	01643-51032	WASHER	4	60001-
17	20Y-62-41181	HOSE, 1300MM	1	60001-
18	21T-09-11430	O-RING	2	60001-
19	07371-30640	FLANGE	2	60001-
20	07372-21035	BOLT	4	60001-
21	01643-51032	WASHER	4	60001-

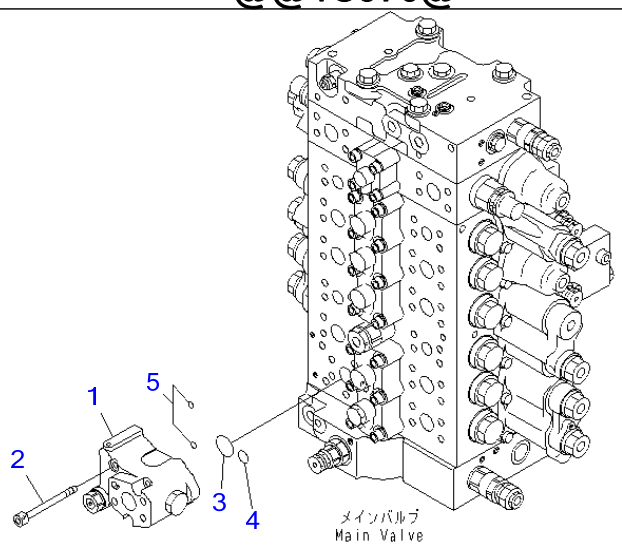

P W 1 C 9 7 0

Ref H1240-01A0 **Page 150280**

PC220-7 S/N 60001-UP (Overseas Version)
ARM DRIFT PRIVENTIVE

Item	Part No.	Part Name	Qty	Serial No.
1	(723-40-82601)	VALVE	1	66791-
	(□723-40-82600)	LOCK VALVE	1	60001-66790
2	01252-61075	BOLT	4	60001-
3	07000-13032	O-RING	1	60001-
4	07000-12021	O-RING	1	60001-
5	702-16-53920	O-RING	2	60001-

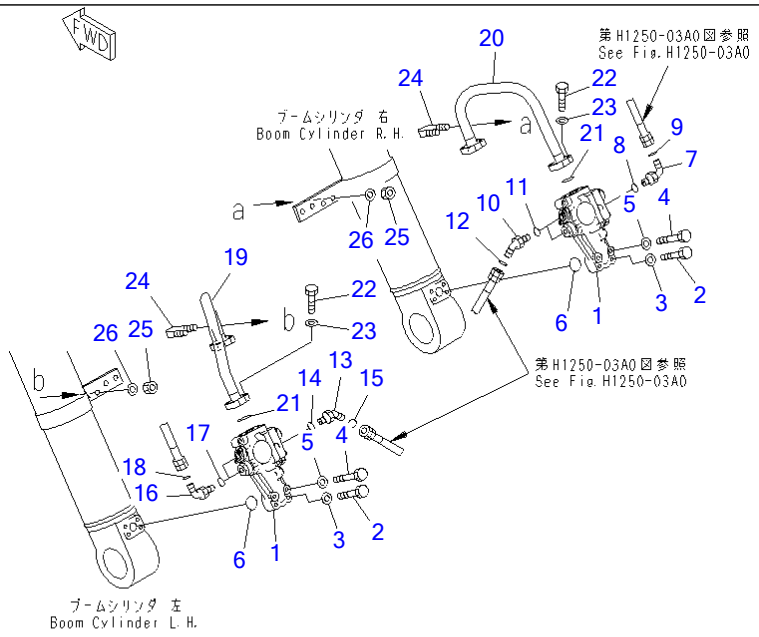

00022713

Ref H1250-01A0 **Page 150290**

PC220-7 S/N 60001-UP (Overseas Version)
BURST VALVE PIPING (BOOM BURST VALVE)

Item	Part No.	Part Name	Qty	Serial No.
1	(702-21-08330)	PILOT VALVE	2	60001-
2	07372-21050	BOLT	4	60001-
3	01643-51032	WASHER	4	60001-
4	07372-21060	BOLT	4	60001-
5	01643-51032	WASHER	4	60001-
6	07000-13030	O-RING	2	60001-
7	20Y-62-42890	ELBOW	1	60001-
8	07002-12034	O-RING	1	60001-
9	02896-11012	O-RING	1	60001-
10	11Y-62-12240	ELBOW	2	60001-
11	07002-11423	O-RING	2	60001-
12	02896-11008	O-RING	2	60001-
13	20Y-62-42910	ELBOW	1	60001-
14	07002-12034	O-RING	1	60001-
15	02896-11012	O-RING	1	60001-
16	11Y-62-12160	ELBOW	2	60001-
17	07002-11423	O-RING	2	60001-
18	02896-11008	O-RING	2	60001-
19	206-62-73460	TUBE	1	60001-
20	206-62-73450	TUBE	1	60001-
21	07000-13030	O-RING	2	60001-
22	07372-21035	BOLT	8	60001-
23	01643-51032	WASHER	8	60001-
24	07283-22738	CLIP	2	60001-
25	01599-01011	NUT	4	60001-
26	01643-31032	WASHER	4	60001-

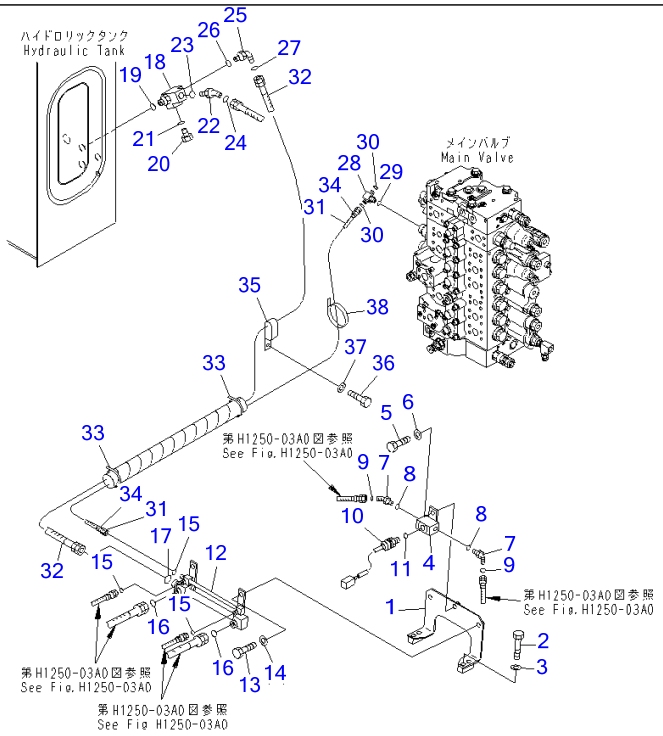

Ref H1250-02A0 **Page 150300**

PC220-7 S/N 60001-UP (Overseas Version)
BURST VALVE PIPING (BOOM) (CHASSIS SIDE)

Item	Part No.	Part Name	Qty	Serial No.
1	22U-62-27290	BRACKET	1	60001-
2	01010-81255	BOLT	4	60001-
3	01643-31232	WASHER	4	60001-
4	22U-62-27280	BLOCK	1	60001-
5	01010-81230	BOLT	1	60001-
6	01643-31232	WASHER	1	60001-
7	11Y-62-12240	ELBOW	2	60001-
8	07002-11423	O-RING	2	60001-
9	02896-11008	O-RING	2	60001-
10	7861-93-1652	SENSOR	1	69463-
	7861-93-1650	SENSOR	1	65001-69462
	7861-93-1652	SENSOR	1	60776-65000
	7861-93-1650	SENSOR	1	60001-60775
11	07002-61823	・O-RING	1	69463-
	07002-11823	・O-RING	1	65001-69462
	07002-61823	・O-RING	1	60776-65000
	07002-11823	・O-RING	1	60001-60775
12	20Y-62-42730	TUBE	1	60001-
13	01010-81230	BOLT	2	60001-
14	01643-31232	WASHER	2	60001-
15	02896-11008	O-RING	3	60001-
16	02896-11012	O-RING	2	60001-
17	02896-11015	O-RING	1	60001-
18	20Y-62-15660	ADAPTER	1	60001-
19	07002-12034	O-RING	1	60001-
20	07040-12012	PLUG	1	60001-
21	07002-12034	O-RING	1	60001-
22	02783-10315	ELBOW	1	60001-

BURST VALVE PIPING (BOOM) (CHASSIS SIDE)

Item	Part No.	Part Name	Qty	Serial No.
23	07002-12034	O-RING	1	60001-
24	02896-11009	O-RING	1	60001-
25	02782-10516	ELBOW	1	60001-
26	07002-12034	O-RING	1	60001-
27	02896-11015	O-RING	1	60001-
28	11Y-62-12250	TEE	1	60001-
29	07002-11423	O-RING	1	60001-
30	02896-11008	O-RING	2	60001-
31	02760-00217	HOSE	1	60001-
32	02762-00521	HOSE	1	60001-
33	08034-20823	BAND	2	60001-
34	20Y-62-22860	BAND, BROWN	2	60001-
35	198-61-14180	CLIP	1	60001-
36	01010-81220	BOLT	1	60001-
37	01643-31232	WASHER	1	60001-
38	08034-20414	BAND	1	60001-

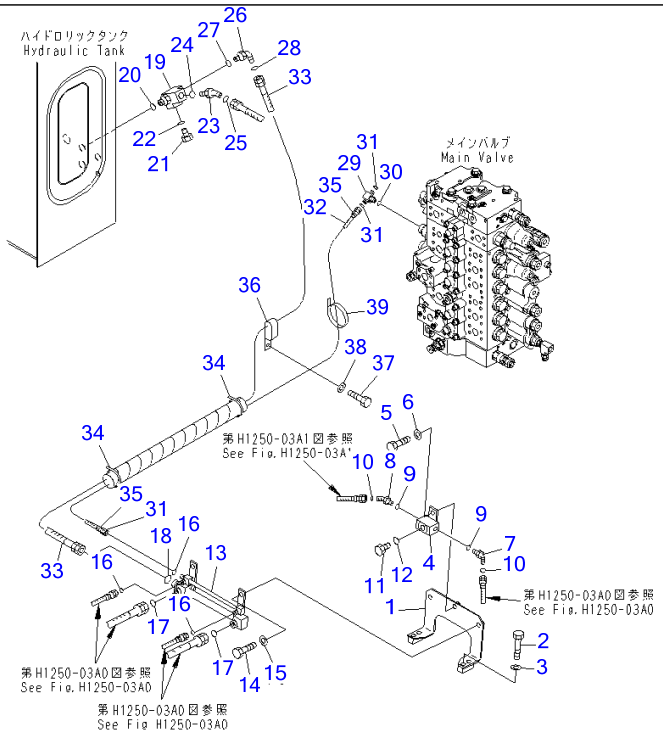

Ref H1250-02A1 **Page 150310**

PC220-7 S/N 60001-UP (Overseas Version)
BURST VALVE PIPING (BOOM)

Item	Part No.	Part Name	Qty	Serial No.
1	22U-62-27290	BRACKET	1	60001-
2	01010-81255	BOLT	4	60001-
3	01643-31232	WASHER	4	60001-
4	22U-62-27280	BLOCK	1	60001-
5	01010-81230	BOLT	1	60001-
6	01643-31232	WASHER	1	60001-
7	11Y-62-12240	ELBOW	1	60001-
8	11Y-62-12160	ELBOW	1	60001-
9	07002-11423	O-RING	2	60001-
10	02896-11008	O-RING	2	60001-
11	07040-11812	PLUG	1	60001-
12	07002-11823	O-RING	1	60001-
13	20Y-62-42730	TUBE	1	60001-
14	01010-81230	BOLT	2	60001-
15	01643-31232	WASHER	2	60001-
16	02896-11008	O-RING	3	60001-
17	02896-11012	O-RING	2	60001-
18	02896-11015	O-RING	1	60001-
19	20Y-62-15660	ADAPTER	1	60001-
20	07002-12034	O-RING	1	60001-
21	07040-12012	PLUG	1	60001-
22	07002-12034	O-RING	1	60001-
23	02783-10315	ELBOW	1	60001-
24	07002-12034	O-RING	1	60001-
25	02896-11009	O-RING	1	60001-
26	02782-10516	ELBOW	1	60001-
27	07002-12034	O-RING	1	60001-
28	02896-11015	O-RING	1	60001-

BURST VALVE PIPING (BOOM)

Item	Part No.	Part Name	Qty	Serial No.
29	11Y-62-12250	TEE	1	60001-
30	07002-11423	O-RING	1	60001-
31	02896-11008	O-RING	2	60001-
32	02760-00217	HOSE	1	60001-
33	02762-00521	HOSE	1	60001-
34	08034-20823	BAND	2	60001-
35	20Y-62-22860	BAND, BROWN	2	60001-
36	198-61-14180	CLIP	1	60001-
37	01010-81220	BOLT	1	60001-
38	01643-31232	WASHER	1	60001-
39	08034-20414	BAND	1	60001-

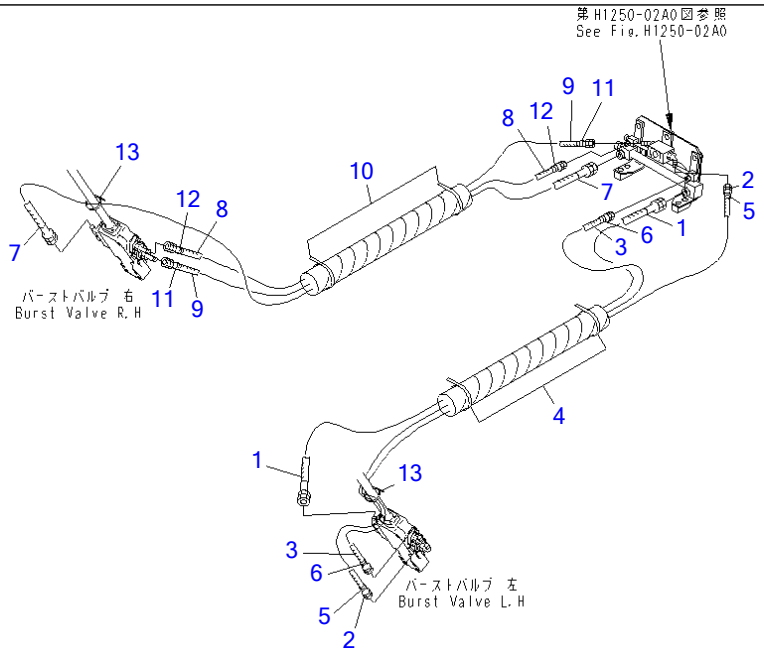

Ref H1250-03A0 **Page 150320**

PC220-7 S/N 60001-UP (Overseas Version)
BURST VALVE PIPING (BOOM CYLINDER SIDE)

Item	Part No.	Part Name	Qty	Serial No.
1	02762-004A5	HOSE	1	60001-
2	02777-00210	HOSE	1	60001-
3	02760-002A9	HOSE	1	60001-
4	08034-20823	BAND	3	60001-
5	20Y-62-22790	BAND, RED	2	60001-
6	20Y-62-22850	BAND, GREEN	2	60001-
7	02762-004A9	HOSE	1	60001-
8	02760-00206	HOSE	1	60001-
9	02777-00206	HOSE	1	60001-
10	08034-20823	BAND	2	60001-
11	20Y-62-22790	BAND, RED	2	60001-
12	20Y-62-22850	BAND, GREEN	2	60001-
13	08034-20823	BAND	2	60001-

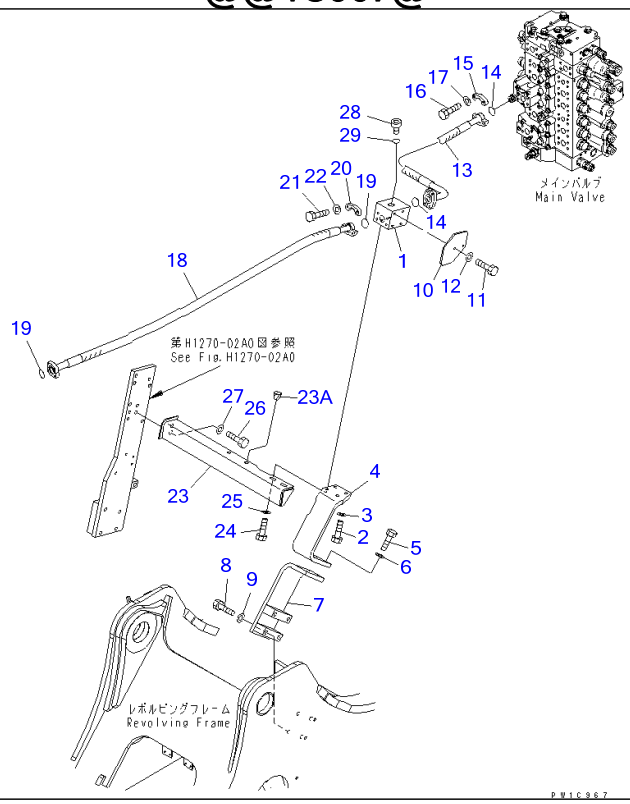

Ref H1270-01A0 **Page 150330**

PC220-7 S/N 60001-UP (Overseas Version)

ATTACHMENT PIPING (MAIN L.H.) (1 ACTUATOR)

Item	Part No.	Part Name	Qty	Serial No.
1	20Y-62-43210	BLOCK	1	60001-
2	01010-81240	BOLT	2	60001-
3	01643-31232	WASHER	2	60001-
4	20Y-62-43222	BRACKET	1	60001-
5	01010-81240	BOLT	4	60001-
6	01643-31232	WASHER	4	60001-
7	20Y-62-43230	BRACKET	1	60001-
8	01010-81285	BOLT	4	60001-
9	01643-31232	WASHER	4	60001-
10	20Y-62-43240	COVER	1	60001-
11	01010-81025	BOLT	2	60001-
12	01643-31032	WASHER	2	60001-
13	07098-01007	HOSE	1	60001-
14	21T-09-11460	O-RING	2	60001-
15	07371-31049	FLANGE	4	60001-
16	07372-21035	BOLT	8	60001-
17	01643-51032	WASHER	8	60001-
18	07097-21017	HOSE	1	60001-
19	07000-13032	O-RING	2	60001-
20	07371-31049	FLANGE	4	60001-
21	07372-21035	BOLT	8	60001-
22	01643-51032	WASHER	8	60001-
23	20Y-62-43263	FRAME	1	60109-
	20Y-62-43262	FRAME	1	60001-60108
23A	07049-01215	PLUG	2	60084-
24	01010-81250	BOLT	2	60001-
25	175-54-34170	WASHER	2	60001-
26	01010-81250	BOLT	2	60001-

ATTACHMENT PIPING (MAIN L.H.) (1 ACTUATOR)

Item	Part No.	Part Name	Qty	Serial No.
27	01643-31232	WASHER	2	60001-
28	07040-12412	PLUG	1	60001-
29	07002-12434	O-RING	1	60001-

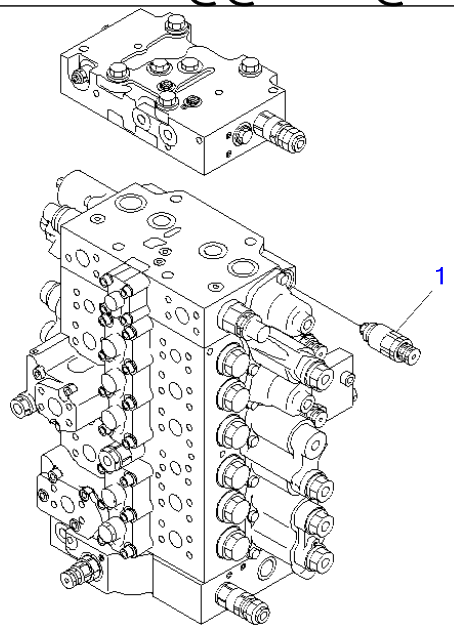

P W 1 C 8 2 8

Ref H1270-01A1 **Page 150340**

PC220-7 S/N 60001-UP (Overseas Version)

RELIEF VALVE (280 KG/CM2) (FOR SERVICE VALVE)

Item	Part No.	Part Name	Qty	Serial No.
1	(723-90-61400)	VALVE ASS'Y	1	60001-

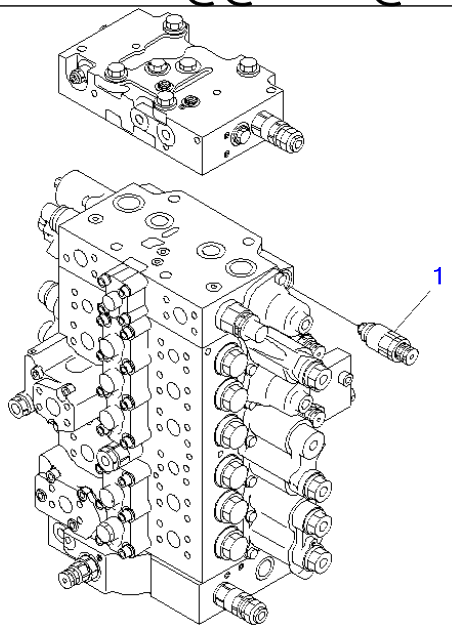

PW1C828

Ref H1270-01A2 **Page 150350**

PC220-7 S/N 60001-UP (Overseas Version)

RELIEF VALVE (210 KG/CM2) (FOR SERVICE VALVE)

Item	Part No.	Part Name	Qty	Serial No.
1	(723-90-61200)	VALVE ASS'Y	1	60001-

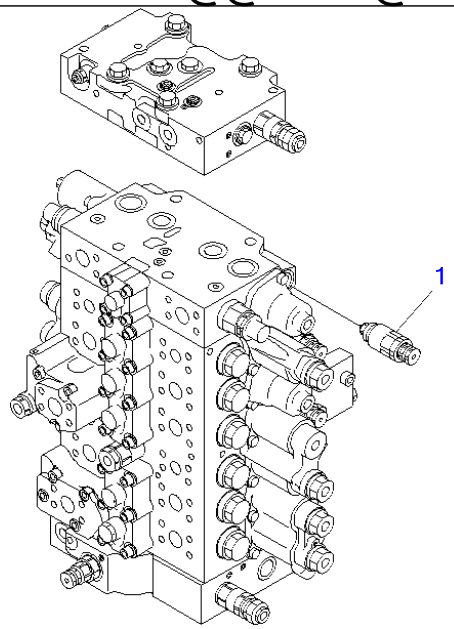

PW1C828

Ref H1270-01A3 **Page 150360**

PC220-7 S/N 60001-UP (Overseas Version)

RELIEF VALVE (250 KG/CM2) (FOR SERVICE VALVE)

Item	Part No.	Part Name	Qty	Serial No.
1	(723-90-61300)	VALVE ASS'Y	1	60001-

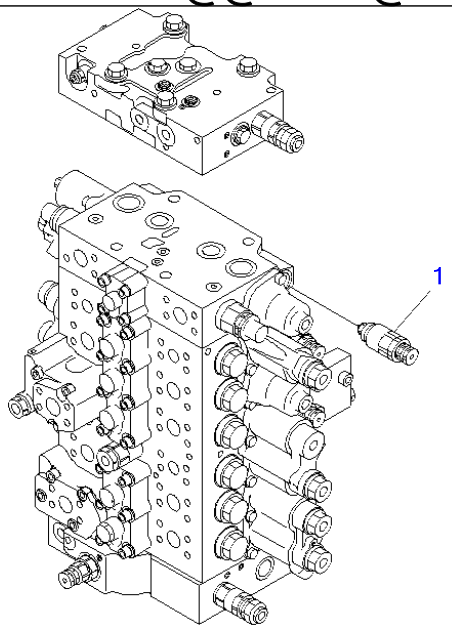

PW1C828

Ref H1270-01A4 **Page 150370**

PC220-7 S/N 60001-UP (Overseas Version)

RELIEF VALVE (175 KG/CM2) (FOR SERVICE VALVE)

Item	Part No.	Part Name	Qty	Serial No.
1	(723-90-61100)	VALVE ASS'Y	1	60001-

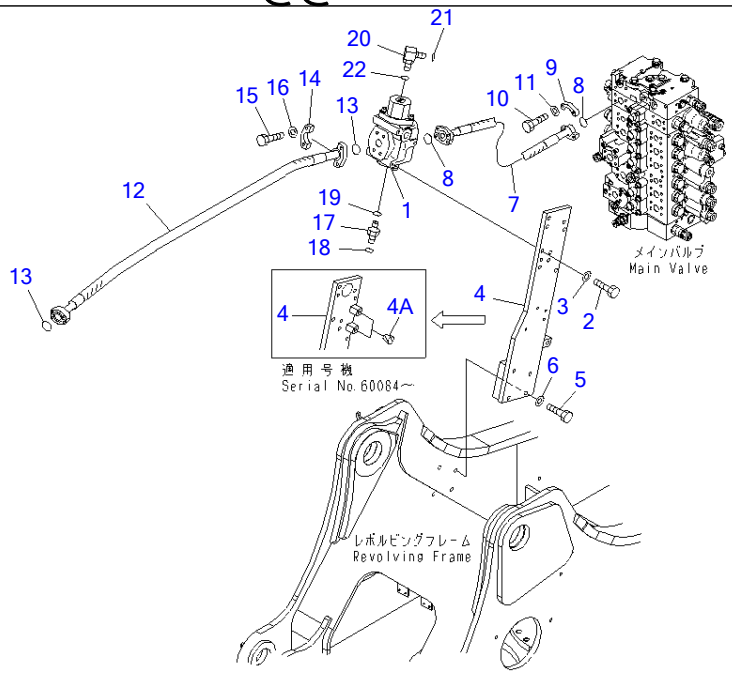

P W 1 C 0 3 8 B

Ref H1270-02A0 Page 150380

PC220-7 S/N 60001-UP (Overseas Version)

ATTACHMENT PIPING (MAIN R.H.) (1 ACTUATOR)

Item	Part No.	Part Name	Qty	Serial No.
1	(702-21-01910)	VALVE ASS'Y	1	60001-
2	01010-81040	BOLT	3	60001-
3	01643-31032	WASHER	3	60001-
4	20Y-62-43270	BRACKET	1	60001-
4A	07049-01215	PLUG	2	60084-
5	01010-81285	BOLT	4	60001-
6	01643-31232	WASHER	4	60001-
7	07097-01005	HOSE	1	60001-
8	21T-09-11460	O-RING	2	60001-
9	07371-31049	FLANGE	4	60001-
10	07372-21035	BOLT	8	60001-
11	01643-51032	WASHER	8	60001-
12	07097-21218	HOSE	1	60001-
13	07000-13038	O-RING	2	60001-
14	07371-51260	FLANGE	4	60001-
15	01010-81245	BOLT	8	60063-
	07372-21245	BOLT	8	60001-60062
16	01643-51232	WASHER	8	60001-
17	20Y-62-43460	NIPPLE	1	60001-
18	02896-11008	O-RING	1	60001-
19	07002-12034	O-RING	1	60084-
	07002-02034	O-RING	1	60001-60083
20	11Y-62-12160	ELBOW	1	60001-
21	02896-11008	O-RING	1	60001-
22	07002-11423	O-RING	1	60084-
	07002-01423	O-RING	1	60001-60083

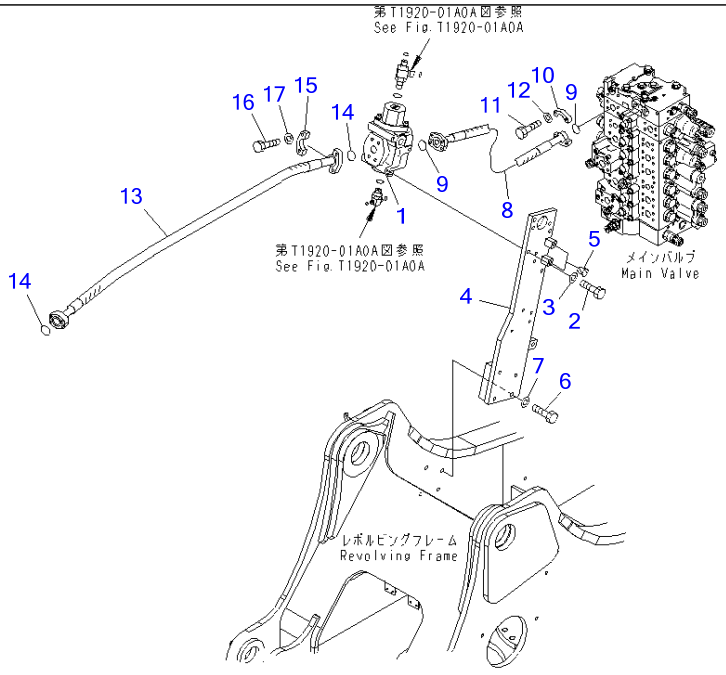

00029038

Ref H1270-02A7 Page 150390

PC220-7 S/N 60001-UP (Overseas Version)

ATTACHMENT PIPING (MAIN R.H.) (1 ACTUATOR) (FOR BREAKER ADAPTER)(#60446-)

Item	Part No.	Part Name	Qty	Serial No.
1	(702-21-01910)	VALVE ASS'Y	1	60446-
2	01010-81040	BOLT	3	60446-
3	01643-31032	WASHER	3	60446-
4	20Y-62-43270	BRACKET	1	60446-
5	07049-01215	PLUG	2	60446-
6	01010-81285	BOLT	4	60446-
7	01643-31232	WASHER	4	60446-
8	07097-01005	HOSE	1	60446-
9	21T-09-11460	O-RING	2	60446-
10	07371-31049	FLANGE	4	60446-
11	07372-21035	BOLT	8	60446-
12	01643-51032	WASHER	8	60446-
13	07097-21218	HOSE	1	60446-
14	07000-13038	O-RING	2	60446-
15	07371-51260	FLANGE	4	60446-
16	01010-81245	BOLT	8	60446-
17	01643-31232	WASHER	8	60446-

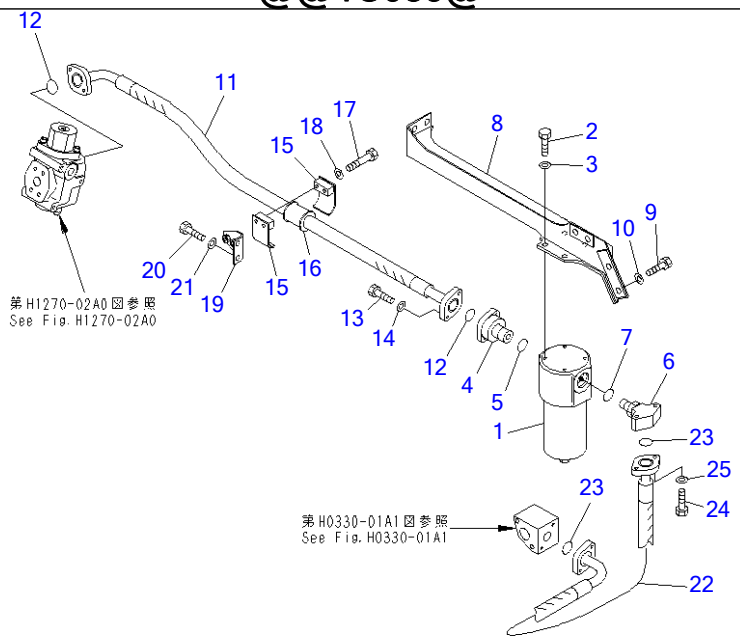

Ref H1270-03A0 **Page 150400**

PC220-7 S/N 60001-UP (Overseas Version)

ATTACHMENT PIPING (RETURN) (1 ACTUATOR)

Item	Part No.	Part Name	Qty	Serial No.
1	(20Y-970-2700)	FILTER ASS'Y	1	60001-
2	01010-81230	BOLT	4	60001-
3	01643-31232	WASHER	4	60001-
4	20Y-62-43351	FLANGE	1	60001-
5	07002-14234	O-RING	1	60001-
6	20Y-62-43361	ELBOW	1	60001-
7	07002-14234	O-RING	1	60001-
8	20Y-62-43331	FRAME	1	60001-
9	01010-81230	BOLT	4	60001-
10	01643-31232	WASHER	4	60001-
11	20Y-62-43311	HOSE, 1450MM	1	60001-
12	07000-13038	O-RING	2	60001-
13	01010-81035	BOLT	4	60001-
14	01643-31032	WASHER	4	60001-
15	07094-11024	CLAMP	2	60001-
16	07095-01038	CUSHION	1	60001-
17	01010-81280	BOLT	2	60001-
18	01643-31232	WASHER	2	60001-
19	20Y-62-43320	BRACKET	1	60001-
20	01010-81225	BOLT	2	60001-
21	01643-31232	WASHER	2	60001-
22	20Y-62-43382	HOSE, 900MM	1	60084-
	20Y-62-43381	HOSE, 1000MM	1	60001-60083
23	07000-13038	O-RING	2	60001-
24	01010-81035	BOLT	4	60001-
25	01643-31032	WASHER	4	60001-

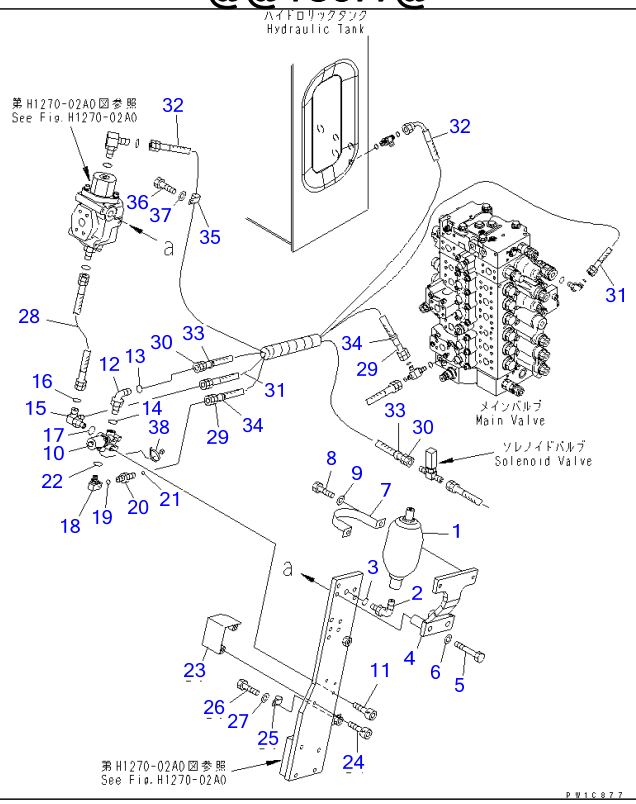

Ref H1270-04A0 Page 150410

PC220-7 S/N 60001-UP (Overseas Version)

ATTACHMENT PIPING (ACCUMULATOR AND SOLENOID VALVE) (1 ACTUATOR)

Item	Part No.	Part Name	Qty	Serial No.
1	(20Y-970-6450)	ACCUMULATOR	1	60001-
2	20Y-62-43290	ELBOW	1	60001-
3	07002-12434	O-RING	1	60001-
4	20Y-62-43280	BRACKET	1	60001-
5	01010-81295	BOLT	2	60001-
6	01643-31232	WASHER	2	60001-
7	175-61-51750	PLATE	1	60001-
8	01010-81225	BOLT	2	60001-
9	01643-31232	WASHER	2	60001-
10	(20Y-60-32110)	VALVE ASS'Y	1	60001-
11	01252-80825	BOLT	2	60001-
12	21W-62-43960	ELBOW	1	60001-
13	02896-11008	O-RING	1	60001-
14	07002-11423	O-RING	1	60084-
	07002-01423	O-RING	1	60001-60083
15	20Y-62-43580	ELBOW	1	60001-
16	02896-11008	O-RING	2	60001-
17	07002-11423	O-RING	1	60084-
	07000-01423	O-RING	1	60001-60083
18	20F-61-12460	ELBOW	1	60001-
19	07002-11423	O-RING	1	60001-
20	11Y-62-12130	NIPPLE	1	60003-
	02781-00210	UNION	1	60001-60002
21	02896-11008	O-RING	1	60001-
22	07002-11423	O-RING	1	60084-
	07000-01423	O-RING	1	60001-60083

ATTACHMENT PIPING (ACCUMULATOR AND SOLENOID VALVE) (1 ACTUATOR)

Item	Part No.	Part Name	Qty	Serial No.
23	20Y-62-43530	COVER	1	60001-
24	01252-80825	BOLT	2	60001-
25	04434-50612	CLIP	1	60001-
26	01010-81225	BOLT	1	60001-
27	01643-31232	WASHER	1	60001-
28	21W-62-42240	HOSE	1	60001-
29	02760-002A6	HOSE	1	60001-
30	02760-00212	HOSE, 1200MM	1	60001-
31	02760-00216	HOSE	1	60001-
32	02761-00221	HOSE	1	60001-
33	20Y-62-22790	BAND, RED	2	60001-
34	20Y-62-22820	BAND, BLUE	2	60001-
35	04434-51212	CLIP	1	60001-
36	01010-81225	BOLT	1	60001-
37	01643-31232	WASHER	1	60001-
38	08034-20536	BAND	2	60001-

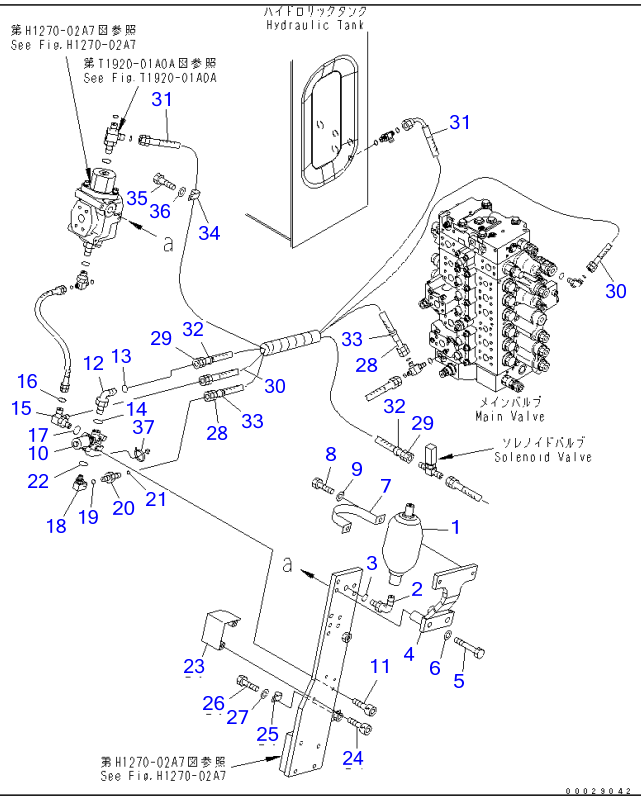

Ref H1270-04A7 **Page 150420**

PC220-7 S/N 60001-UP (Overseas Version)
ATTACHMENT PIPING (ACCUMULATOR AND SOLENOID VALVE) (1 ACTUATOR) (FOR BREAKER ADAPTER)(#60446-)

Item	Part No.	Part Name	Qty	Serial No.
1	(20Y-970-6450)	ACCUMULATOR	1	60446-
2	20Y-62-43290	ELBOW	1	60446-
3	07002-12434	O-RING	1	60446-
4	20Y-62-43280	BRACKET	1	60446-
5	01010-81295	BOLT	2	60446-
6	01643-31232	WASHER	2	60446-
7	175-61-51750	PLATE	1	60446-
8	01010-81225	BOLT	2	60446-
9	01643-31232	WASHER	2	60446-
10	(20Y-60-32110)	VALVE ASS'Y	1	60446-
11	01252-80825	BOLT	2	60446-
12	21W-62-43960	ELBOW	1	60446-
13	02896-11008	O-RING	1	60446-
14	07002-11423	O-RING	1	60446-
15	20Y-62-43580	ELBOW	1	60446-
16	02896-11008	O-RING	2	60446-
17	07002-11423	O-RING	1	60446-
18	20F-61-12460	ELBOW	1	60446-
19	07002-11423	O-RING	1	60446-
20	11Y-62-12130	NIPPLE	1	60446-
21	02896-11008	O-RING	1	60446-
22	07002-11423	O-RING	1	60446-
23	20Y-62-43530	COVER	1	60446-
24	01252-80825	BOLT	2	60446-
25	04434-50612	CLIP	1	60446-
26	01010-81225	BOLT	1	60446-

ATTACHMENT PIPING (ACCUMULATOR AND SOLENOID VALVE) (1 ACTUATOR) (FOR BREAKER ADAPTER)(#60446-)

Item	Part No.	Part Name	Qty	Serial No.
27	01643-31232	WASHER	1	60446-
28	02760-002A6	HOSE	1	60446-
29	02760-00212	HOSE, 1200MM	1	60446-
30	02760-00216	HOSE	1	60446-
31	02761-00221	HOSE	1	60446-
32	20Y-62-22790	BAND, RED	2	60446-
33	20Y-62-22820	BAND, BLUE	2	60446-
34	04434-51212	CLIP	1	60446-
35	01010-81225	BOLT	1	60446-
36	01643-31232	WASHER	1	60446-
37	08034-20536	BAND	1	60446-

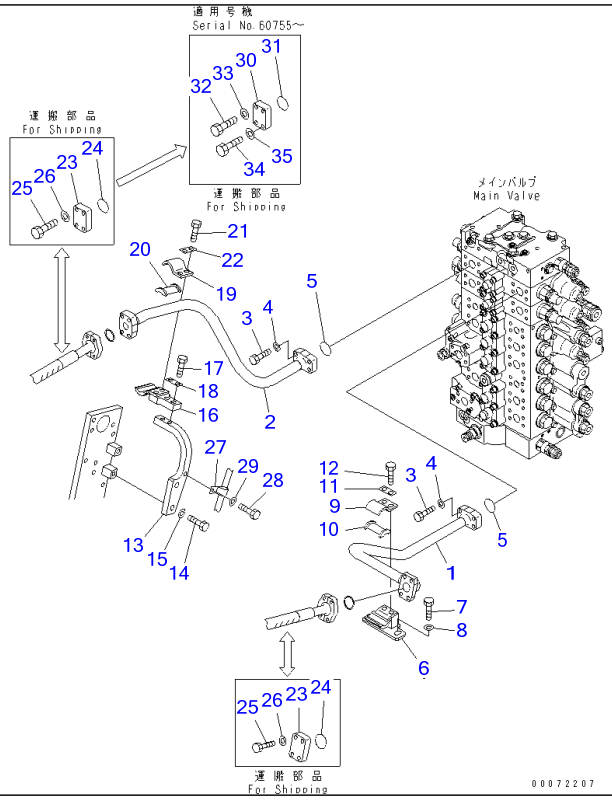

Ref H1272-01A0 Page 150430

PC220-7 S/N 60001-UP (Overseas Version)

ATTACHMENT ADDITIONAL PIPING (2 ACTUATOR)(#60001-65000)

Item	Part No.	Part Name	Qty	Serial No.
1	20Y-62-43942	TUBE	1	60755-65000
	20Y-62-43941	TUBE	1	60224-60754
	20Y-62-43940	TUBE	1	60001-60223
2	20Y-62-43951	TUBE	1	60001-@
3	07372-21040	BOLT	8	60001-@
4	01643-51032	WASHER	8	60001-@
5	21T-09-11460	O-RING	2	60001-@
6	20Y-62-43960	BRACKET	1	60001-@
7	01010-81230	BOLT	2	60001-@
8	01643-31232	WASHER	2	60001-@
9	20Y-62-13220	CLAMP	1	60001-@
10	20Y-62-13760	▪ SEAT	1	60001-@
11	20Y-62-13450	PLATE	1	60001-@
12	01010-81235	BOLT	2	60001-@
13	20Y-62-43590	BRACKET	1	60001-@
14	01010-81250	BOLT	2	60001-@
15	01643-31232	WASHER	2	60001-@
16	20Y-62-43970	BRACKET	1	60001-@
17	01010-81240	BOLT	2	60001-@
18	20Y-62-13450	PLATE	1	60001-@
19	20Y-62-13220	CLAMP	1	60001-@
20	20Y-62-13760	▪ SEAT	1	60001-@
21	01010-81235	BOLT	2	60001-@
22	20Y-62-13450	PLATE	1	60001-@
23	207-62-56190	FLANGE	1	60755-65000
	207-62-56190	FLANGE	2	60001-60754
24	07000-13032	O-RING	1	60755-65000
	07000-13032	O-RING	2	60001-60754

ATTACHMENT ADDITIONAL PIPING (2 ACTUATOR)(#60001-65000)

Item	Part No.	Part Name	Qty	Serial No.
25	07372-21040	BOLT	4	60755-65000
	07372-21040	BOLT	8	60001-60754
26	01643-51032	WASHER	4	60755-65000
	01643-51032	WASHER	8	60001-60754
27	04434-51212	CLIP	1	60001-@
28	01010-81225	BOLT	1	60001-@
29	01643-31232	WASHER	1	60001-@
30	07379-00640	FLANGE	1	60755-65000
31	07000-13030	O-RING	1	60755-65000
32	07372-21045	BOLT	2	60755-65000
33	01643-51032	WASHER	2	60755-65000
34	07372-21060	BOLT	2	60755-65000
35	01643-51032	WASHER	2	60755-65000

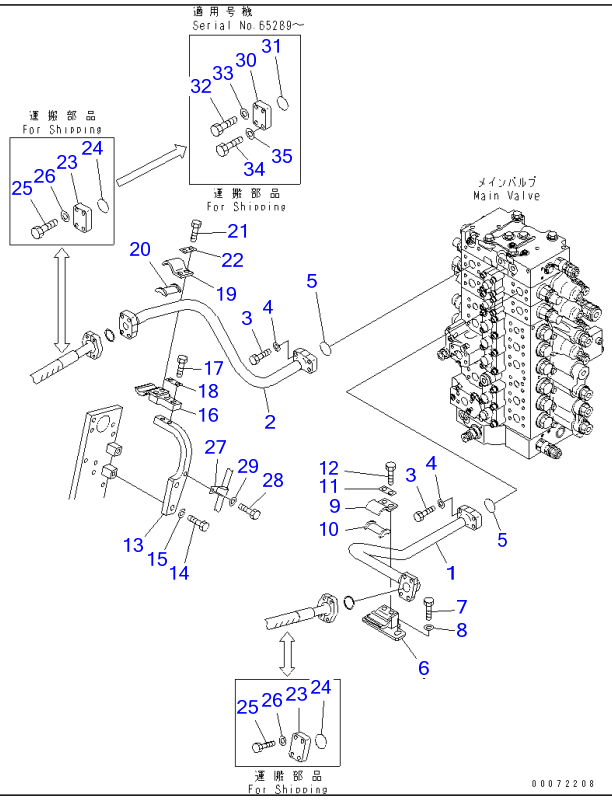

Ref H1272-01A0A

Page 150440

PC220-7 S/N 60001-UP (Overseas Version)

ATTACHMENT ADDITIONAL PIPING (2 ACTUATOR)(#65001-)

Item	Part No.	Part Name	Qty	Serial No.
1	20Y-62-43942	TUBE	1	65289-
	20Y-62-43941	TUBE	1	65001-65288
2	20Y-62-43951	TUBE	1	60224-
3	07372-21040	BOLT	8	60001-
4	01643-51032	WASHER	8	60001-
5	21T-09-11460	O-RING	2	60001-
6	20Y-62-43960	BRACKET	1	60001-
7	01010-81230	BOLT	2	60001-
8	01643-31232	WASHER	2	60001-
9	20Y-62-13220	CLAMP	1	60001-
10	20Y-62-13760	▪ SEAT	1	60001-
11	20Y-62-13450	PLATE	1	60001-
12	01010-81235	BOLT	2	60001-
13	20Y-62-43590	BRACKET	1	60001-
14	01010-81250	BOLT	2	60001-
15	01643-31232	WASHER	2	60001-
16	20Y-62-43970	BRACKET	1	60001-
17	01010-81240	BOLT	2	60001-
18	20Y-62-13450	PLATE	1	60001-
19	20Y-62-13220	CLAMP	1	60001-
20	20Y-62-13760	▪ SEAT	1	60001-
21	01010-81235	BOLT	2	60001-
22	20Y-62-13450	PLATE	1	60001-
23	207-62-56190	FLANGE	1	65289-
	207-62-56190	FLANGE	2	65001-65288
24	07000-13032	O-RING	1	65289-
	07000-13032	O-RING	2	65001-65288
25	07372-21040	BOLT	4	65289-

ATTACHMENT ADDITIONAL PIPING (2 ACTUATOR)(#65001-)

Item	Part No.	Part Name	Qty	Serial No.
	07372-21040	BOLT	8	65001-65288
26	01643-51032	WASHER	4	65289-
	01643-51032	WASHER	8	65001-65288
27	04434-51212	CLIP	1	60001-
28	01010-81225	BOLT	1	60001-
29	01643-31232	WASHER	1	60001-
30	07379-00640	FLANGE	1	65289-
	07379-00640	FLANGE	1	65001-65288
31	07000-13030	O-RING	1	65289-
	07000-13030	O-RING	1	65001-65288
32	07372-21045	BOLT	2	65289-
	07372-21045	BOLT	2	65001-65288
33	01643-51032	WASHER	2	65289-
	01643-51032	WASHER	2	65001-65288
34	07372-21060	BOLT	2	65289-
	07372-21060	BOLT	2	65001-65288
35	01643-51032	WASHER	2	65289-
	01643-51032	WASHER	2	65001-65288

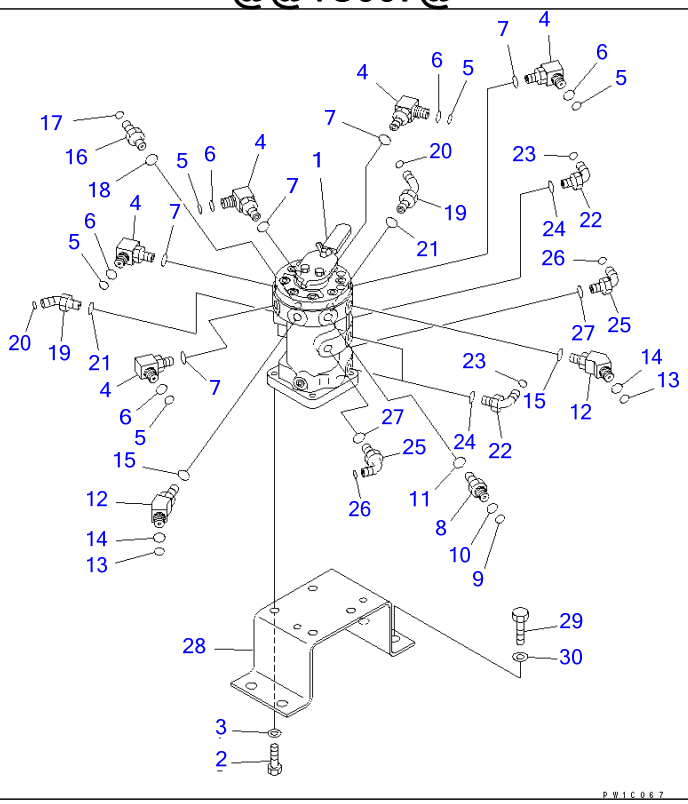

Ref H1280-01A0 **Page 150450**

PC220-7 S/N 60001-UP (Overseas Version)
MULTI PATTERN VALVE (4 WAY)

Item	Part No.	Part Name	Qty	Serial No.
1	(203-62-62501)	VALVE ASS'Y	1	60001-
2	01010-81025	BOLT	4	60001-
3	01643-31032	WASHER	4	60001-
4	20Y-62-22271	ELBOW	5	60001-
5	201-60-11390	▪ O-RING	5	60001-
6	20Y-62-19560	▪ O-RING	5	60001-
7	07002-11423	O-RING	5	60001-
8	20Y-62-16630	NIPPLE	1	60001-
9	201-60-11390	▪ O-RING	1	60001-
10	20Y-62-19560	▪ O-RING	1	60001-
11	07002-11423	O-RING	1	60001-
12	20Y-62-25720	ELBOW	2	60001-
13	201-60-11390	▪ O-RING	2	60001-
14	20Y-62-19560	▪ O-RING	2	60001-
15	07002-11423	O-RING	2	60001-
16	11Y-62-12130	NIPPLE	1	60003-
	02781-00210	UNION	1	60001-60002
17	02896-11008	O-RING	1	60001-
18	07002-11423	O-RING	1	60001-
19	11Y-62-12240	ELBOW	2	60003-
	02783-10210	ELBOW	2	60001-60002
20	02896-11008	O-RING	2	60001-
21	07002-11423	O-RING	2	60001-
22	11Y-62-12160	ELBOW	3	60003-
	02782-10210	ELBOW	3	60001-60002
23	02896-11008	O-RING	3	60001-
24	07002-11423	O-RING	3	60001-
25	02782-10311	ELBOW	2	60001-

MULTI PATTERN VALVE (4 WAY)

Item	Part No.	Part Name	Qty	Serial No.
26	02896-11009	O-RING	2	60001-
27	07002-11423	O-RING	2	60001-
28	20Y-62-41560	BRACKET	1	60001-
29	01010-81230	BOLT	4	60001-
30	01643-31232	WASHER	4	60001-

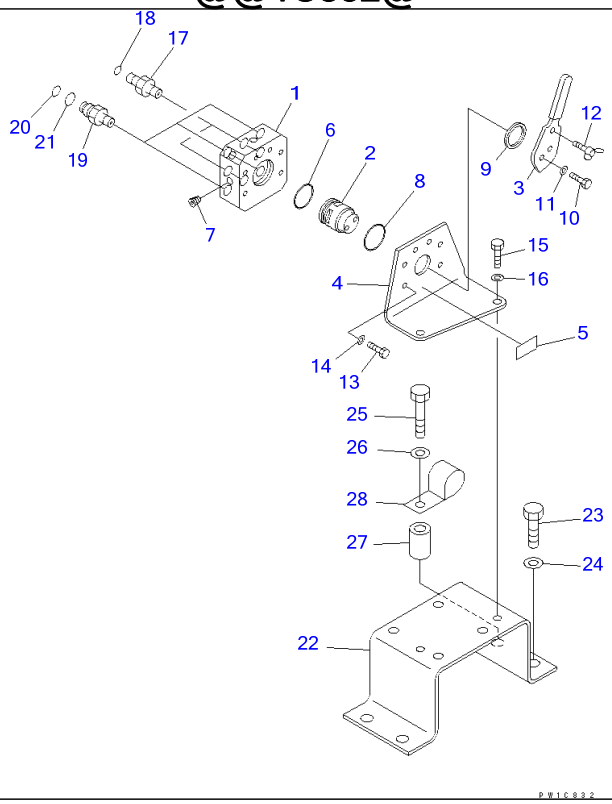

Ref H1280-01A1 **Page 150460**

PC220-7 S/N 60001-UP (Overseas Version)

MULTI PATTERN VALVE (MULTI VALVE) (2 WAY)

Item	Part No.	Part Name	Qty	Serial No.
	20T-62-74900	VALVE ASS'Y	1	60001-
1	☆	・BODY	1	60001-
2	☆	・SHAFT	1	60001-
3	20T-62-74930	・LEVER	1	60001-
4	20T-62-74940	・BRACKET	1	60001-
5	09822-00810	・PLATE, OPERATING	1	60001-
6	07000-13025	・O-RING	1	60001-
7	07043-00108	・PLUG	8	60001-
8	07000-13032	・O-RING	1	60001-
9	07003-12733	・GASKET	1	60001-
10	01010-80616	・BOLT	1	60001-
11	01643-30623	・WASHER	1	60001-
12	01434-10620	・BOLT, WING	1	60001-
13	01010-80616	・BOLT	1	60001-
14	01643-30623	・WASHER	1	60001-
15	01010-80825	BOLT	2	60001-
16	01643-30823	WASHER	2	60001-
17	56B-43-17210	NIPPLE	4	60001-
18	02896-11008	O-RING	4	60001-
19	20Y-62-25690	NIPPLE	4	60001-
20	201-60-11390	・O-RING	1	60001-
21	20Y-62-19560	・O-RING	1	60001-
22	20Y-62-41560	BRACKET	1	60001-
23	01010-81230	BOLT	3	60001-
24	01643-31232	WASHER	3	60001-
25	01010-81265	BOLT	1	60001-
26	01643-31232	WASHER	1	60001-
27	20Y-03-11220	COLLAR	1	60001-

MULTI PATTERN VALVE (MULTI VALVE) (2 WAY)

Item	Part No.	Part Name	Qty	Serial No.
28	04434-53412	CLIP	1	60001-

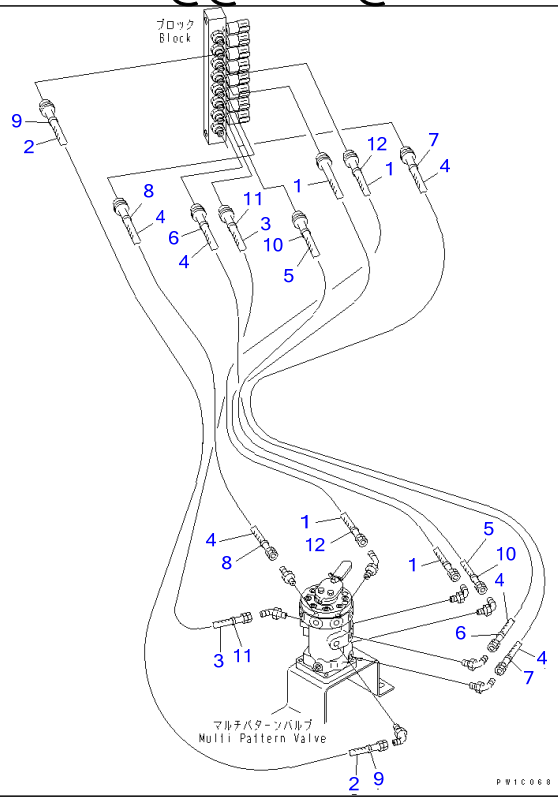

Ref H1280-02A0 **Page 150470**

PC220-7 S/N 60001-UP (Overseas Version)
MULTI PATTERN VALVE (HOSE) (4 WAY)

Item	Part No.	Part Name	Qty	Serial No.
1	207-62-72720	HOSE, 1400MM	2	60001-
2	20Y-62-42520	HOSE, 1600MM	1	60001-
3	20Y-62-42570	HOSE, 3400MM	1	60001-
4	20Y-62-42580	HOSE, 1200MM	3	60001-
5	20Y-62-42590	HOSE, 1350MM	1	60001-
6	20Y-62-22790	BAND, RED	2	60001-
7	20Y-62-22810	BAND, YELLOW	2	60001-
8	20Y-62-22820	BAND, BLUE	2	60001-
9	20Y-62-22830	BAND, WHITE	2	60001-
10	20Y-62-22840	BAND, BLACK	2	60001-
11	20Y-62-22850	BAND, GREEN	2	60001-
12	20Y-62-22860	BAND, BROWN	2	60001-

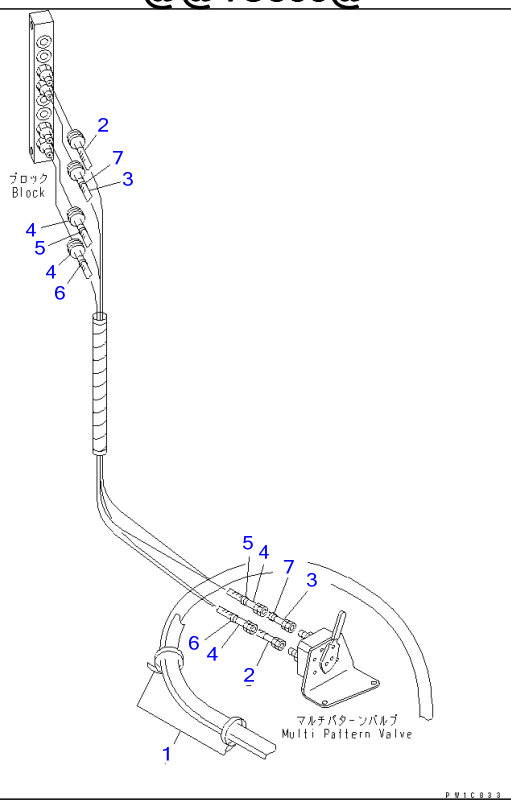

Ref H1280-02A1 **Page 150480**

PC220-7 S/N 60001-UP (Overseas Version)
MULTI PATTERN VALVE (HOSE) (2 WAY)

Item	Part No.	Part Name	Qty	Serial No.
1	08034-20536	BAND	2	60001-
2	207-62-72550	HOSE, 1250MM	1	60001-
3	207-62-72560	HOSE, 1300MM	1	60001-
4	20Y-62-41990	HOSE, 1100MM	2	60001-
5	20Y-62-22790	BAND, RED	2	60001-
6	20Y-62-22810	BAND, YELLOW	2	60001-
7	20Y-62-22820	BAND, BLUE	2	60001-

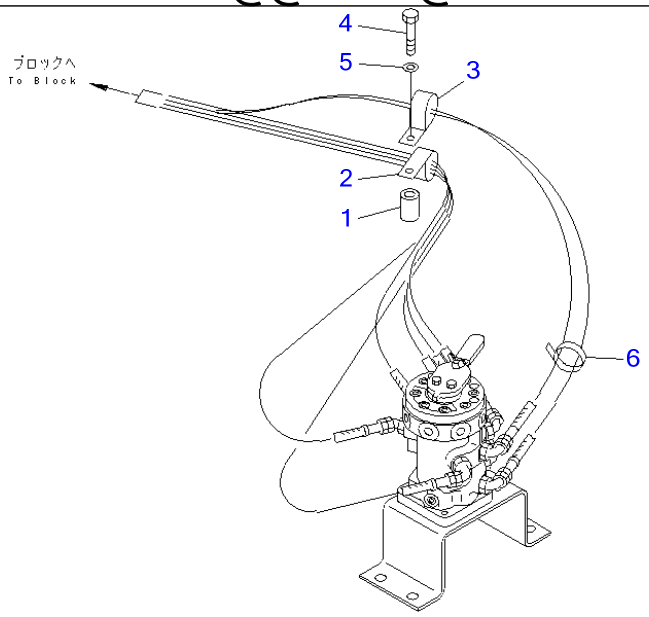

Ref H1280-03A0 **Page 150490**

PC220-7 S/N 60001-UP (Overseas Version)

MULTI PATTERN VALVE (CLAMP) (4 WAY)

Item	Part No.	Part Name	Qty	Serial No.
1	20Y-03-11220	COLLAR	1	60001-
2	113-899-7950	CLIP	1	60001-
3	04434-53412	CLIP	1	60001-
4	01010-81265	BOLT	1	60001-
5	01643-31232	WASHER	1	60001-
6	08034-20536	BAND	7	60001-

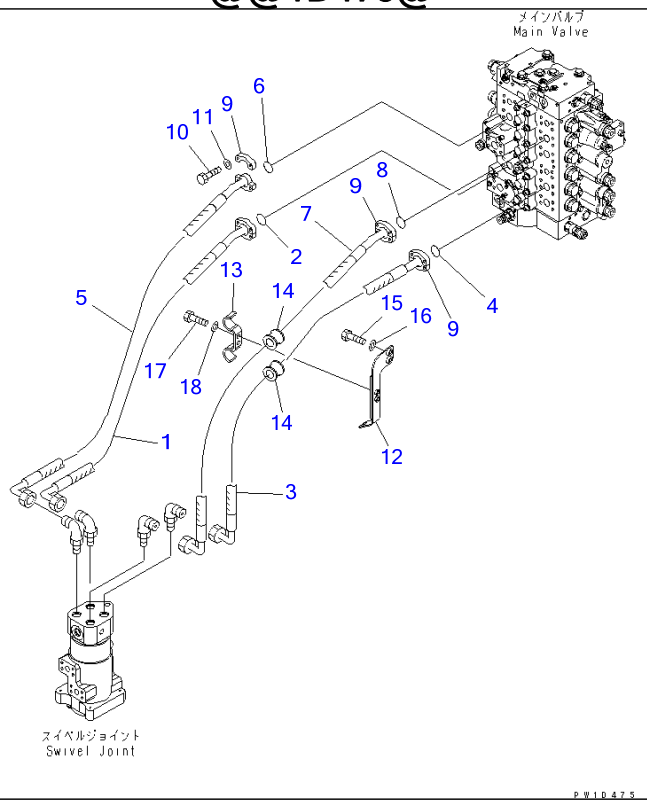

Ref H1310-01A0 **Page 150500**

PC220-7 S/N 60001-UP (Overseas Version)

TRAVEL PIPING

Item	Part No.	Part Name	Qty	Serial No.
1	20Y-62-41191	HOSE, 1100MM	1	60001-
2	21T-09-11460	O-RING	1	60001-
3	20Y-62-41211	HOSE, 1250MM	1	60001-
4	21T-09-11460	O-RING	1	60001-
5	20Y-62-41221	HOSE, 1250MM	1	60001-
6	21T-09-11460	O-RING	1	60001-
7	20Y-62-41232	HOSE, 1350MM	1	60001-
8	21T-09-11460	O-RING	1	60001-
9	07371-31049	FLANGE	8	60001-
10	07372-21035	BOLT	16	60001-
11	01643-51032	WASHER	16	60001-
12	206-62-71170	BRACKET	1	60001-
13	206-62-71141	CLAMP	1	60001-
14	07095-00628	CUSHION	2	60001-
15	01010-81040	BOLT	2	60001-
16	01643-31032	WASHER	2	60001-
17	01010-81035	BOLT	2	60001-
18	01643-31032	WASHER	2	60001-

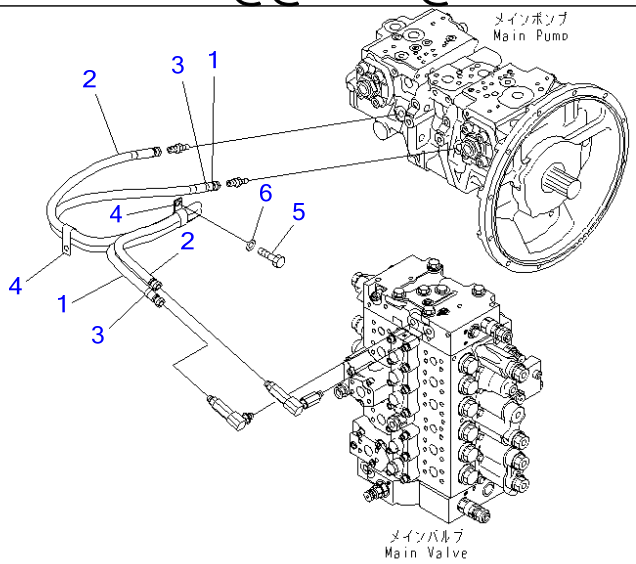

PJ1C624

Ref H1810-01A0 **Page 150520**

PC220-7 S/N 60001-UP (Overseas Version)

LS PIPING

Item	Part No.	Part Name	Qty	Serial No.
1	02756-00215	HOSE	1	60001-
2	02756-00216	HOSE	1	60001-
3	20Y-62-22790	BAND, RED	2	60001-
4	04435-51612	CLIP	2	60001-
5	01010-81225	BOLT	2	60001-
6	01643-31232	WASHER	2	60001-

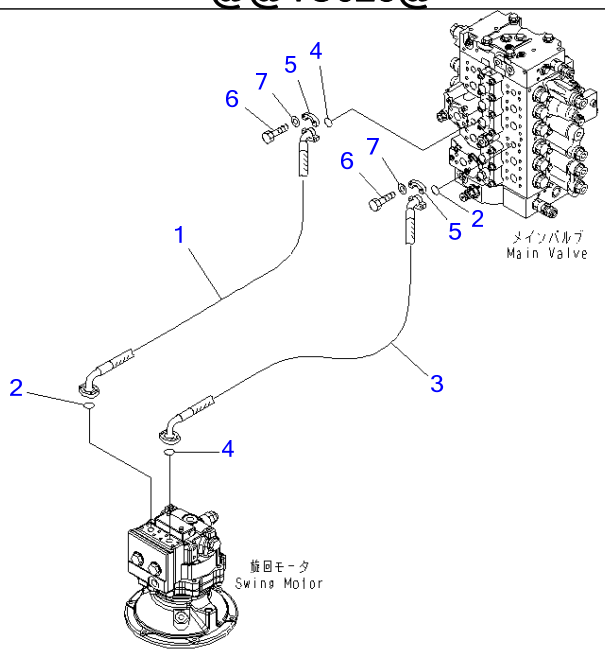

PJ1C623

Ref H1340-01A0 **Page 150510**

PC220-7 S/N 60001-UP (Overseas Version)

SWING PIPING

Item	Part No.	Part Name	Qty	Serial No.
1	206-62-71111	HOSE	1	60001-
2	21T-09-11430	O-RING	2	60001-
3	206-62-71120	HOSE	1	60001-
4	21T-09-11430	O-RING	2	60001-
5	07371-30640	FLANGE	8	60001-
6	07372-21035	BOLT	16	60001-
7	01643-51032	WASHER	16	60001-

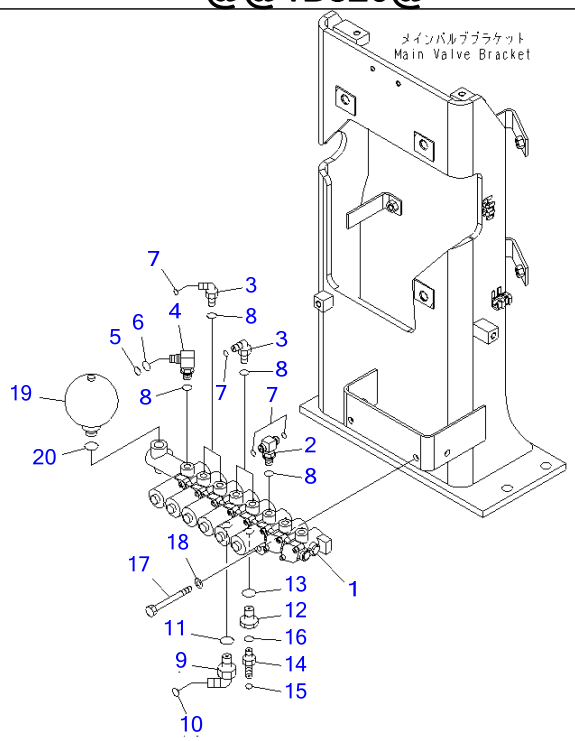

Ref H1831-01A0 **Page 150530**

PC220-7 S/N 60001-UP (Overseas Version)
SOLENOID VALVE (VALVE)

Item	Part No.	Part Name	Qty	Serial No.
1	(20Y-60-31212)	VALVE ASS'Y	1	60309-
	(20Y-60-31211)	VALVE ASS'Y	1	60001-60308
2	20Y-62-43690	TEE	1	60001-
3	11Y-62-12160	ELBOW	4	60003-
	02782-10210	ELBOW	4	60001-60002
4	20Y-62-22271	ELBOW	1	60001-
5	201-60-11390	▪ O-RING	1	60001-
6	20Y-62-19560	▪ O-RING	1	60001-
7	02896-11008	O-RING	6	60001-
8	07002-11423	O-RING	6	60001-
9	02782-10315	ELBOW	1	60001-
10	02896-11009	O-RING	1	60001-
11	07002-12034	O-RING	1	60001-
12	20Y-62-21940	FILTER ASS'Y	1	60001-
13	07002-12034	O-RING	1	60001-
14	11Y-62-12160	ELBOW	1	60003-
	02782-10210	ELBOW	1	60001-60002
15	02896-11008	O-RING	1	60001-
16	07002-11423	O-RING	1	60001-
17	01010-81095	BOLT	2	60001-
18	01643-31032	WASHER	2	60001-
19	22U-60-21330	ACCUMULATOR	1	60001-
20	07002-12034	O-RING	1	60001-

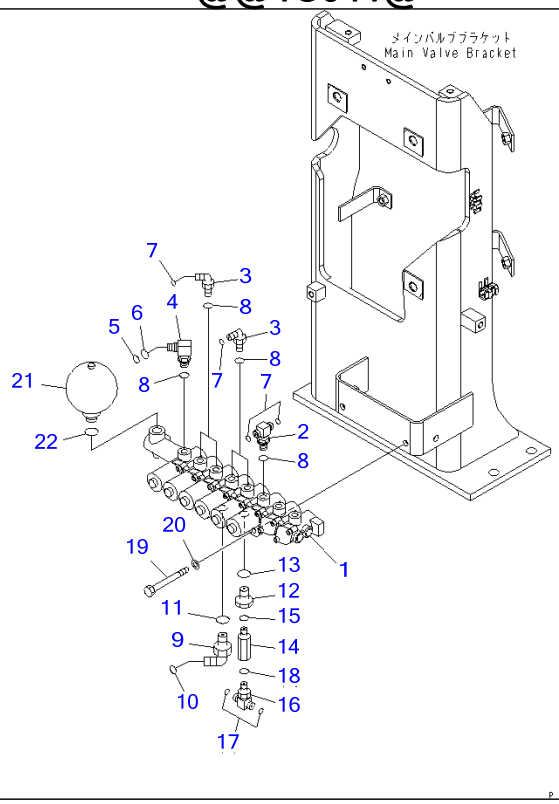

Ref H1831-01A1 **Page 150540**

PC220-7 S/N 60001-UP (Overseas Version)
SOLENOID VALVE (VALVE) (1 ACTUATOR)

Item	Part No.	Part Name	Qty	Serial No.
1	(20Y-60-31212)	VALVE ASS'Y	1	60309-
	(20Y-60-31211)	VALVE ASS'Y	1	60001-60308
2	20Y-62-43690	TEE	1	60001-
3	11Y-62-12160	ELBOW	4	60003-
	02782-10210	ELBOW	4	60001-60002
4	20Y-62-22271	ELBOW	1	60001-
5	201-60-11390	▪ O-RING	1	60001-
6	20Y-62-19560	▪ O-RING	1	60001-
7	02896-11008	O-RING	6	60001-
8	07002-11423	O-RING	6	60001-
9	02782-10315	ELBOW	1	60001-
10	02896-11009	O-RING	1	60001-
11	07002-12034	O-RING	1	60001-
12	20Y-62-21940	FILTER ASS'Y	1	60001-
13	07002-12034	O-RING	1	60001-
14	20Y-60-22210	BODY	1	60001-
15	07002-11423	O-RING	1	60001-
16	11Y-62-12250	TEE	1	60001-
17	02896-11008	O-RING	2	60001-
18	07002-11423	O-RING	1	60001-
19	01010-81095	BOLT	2	60001-
20	01643-31032	WASHER	2	60001-
21	22U-60-21330	ACCUMULATOR	1	60001-
22	07002-12034	O-RING	1	60001-

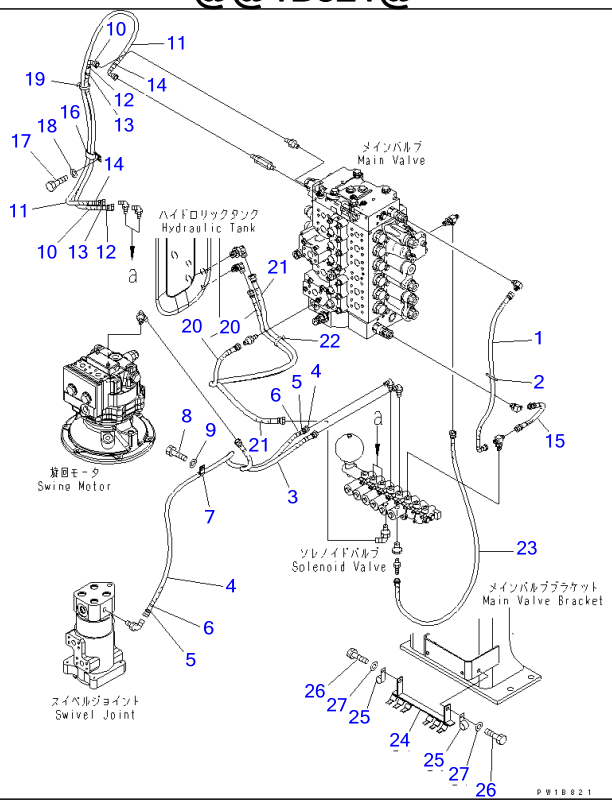

Ref H1831-02A0 Page 150550

SOLENOID VALVE (HOSE AND BRACKET)

Item	Part No.	Part Name	Qty	Serial No.
1	02761-002A7	HOSE	1	60001-
2	08034-20536	BAND	1	60001-
3	02760-002A5	HOSE	1	60001-
4	02760-00213	HOSE	1	60001-
5	20Y-62-22790	BAND, RED	2	60001-
6	20Y-62-22810	BAND, YELLOW	2	60001-
7	04434-51210	CLIP	1	60001-
8	01010-81030	BOLT	1	60001-
9	01643-31032	WASHER	1	60001-
10	02761-00208	HOSE	1	60001-
11	02761-00213	HOSE	1	60001-
12	20Y-62-22810	BAND, YELLOW	2	60001-
13	20Y-62-22820	BAND, BLUE	2	60001-
14	20Y-62-22860	BAND, BROWN	2	60001-
15	02760-00203	HOSE	1	60001-
16	04435-51512	CLIP	1	60001-
17	01010-81225	BOLT	1	60001-
18	01643-31232	WASHER	1	60001-
19	08034-20536	BAND	2	60001-
20	02760-00211	HOSE	1	60001-
21	02760-00312	HOSE	1	60001-
22	08034-00519	BAND	1	60001-
23	02760-00211	HOSE	1	60001-
24	20Y-06-31162	BRACKET	1	60001-
25	04434-51010	CLIP	2	60001-
26	01010-81025	BOLT	2	60001-
27	01643-31032	WASHER	2	60001-

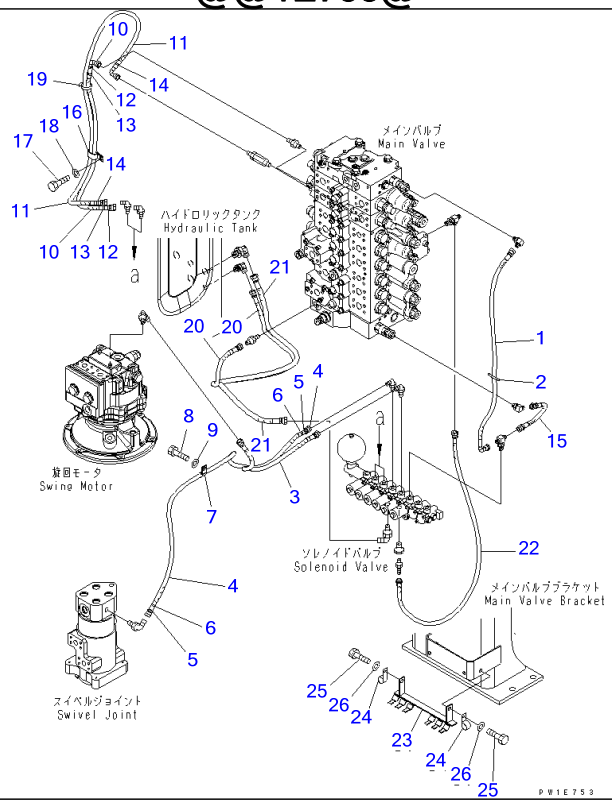

Ref H1831-02A2 Page 150560

PC220-7 S/N 60001-UP (Overseas Version)

SOLENOID VALVE (HOSE AND BRACKET) (2 ACTUATOR)

Item	Part No.	Part Name	Qty	Serial No.
1	02761-002A8	HOSE	1	60001-
2	08034-20536	BAND	1	60001-
3	02760-002A5	HOSE	1	60001-
4	02760-00213	HOSE	1	60001-
5	20Y-62-22790	BAND, RED	2	60001-
6	20Y-62-22810	BAND, YELLOW	2	60001-
7	04434-51210	CLIP	1	60001-
8	01010-81030	BOLT	1	60001-
9	01643-31032	WASHER	1	60001-
10	02761-00208	HOSE	1	60001-
11	02761-00213	HOSE	1	60001-
12	20Y-62-22810	BAND, YELLOW	2	60001-
13	20Y-62-22820	BAND, BLUE	2	60001-
14	20Y-62-22860	BAND, BROWN	2	60001-
15	02760-00203	HOSE	1	60001-
16	04435-51512	CLIP	1	60001-
17	01010-81225	BOLT	1	60001-
18	01643-31232	WASHER	1	60001-
19	08034-20536	BAND	2	60001-
20	02760-00211	HOSE	1	60001-
21	02760-00312	HOSE	1	60001-
22	02760-00211	HOSE	1	60001-
23	20Y-06-31162	BRACKET	1	60001-
24	04434-51010	CLIP	2	60001-
25	01010-81025	BOLT	2	60001-
26	01643-31032	WASHER	2	60001-

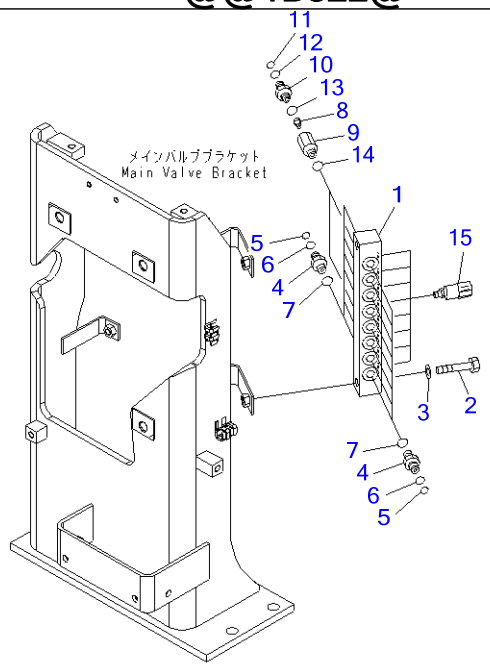

PW1B822

Ref H1833-01A0 **Page 150570**

PC220-7 S/N 60001-UP (Overseas Version)
PRESSURE SWITCH

Item	Part No.	Part Name	Qty	Serial No.
1	20Y-62-41550	BLOCK	1	60001-
2	01010-81260	BOLT	2	60001-
3	01643-31232	WASHER	2	60001-
4	20Y-62-16630	NIPPLE	14	60001-
5	201-60-11390	・O-RING	1	60001-
6	20Y-62-19560	・O-RING	1	60001-
7	07002-11423	O-RING	14	60001-
	20Y-60-32200	VALVE ASS'Y	2	60001-
8	20Y-62-41830	・POPPET	1	60001-
9	☆	・BODY	1	60001-
10	20Y-62-22410	・NIPPLE	1	60001-
11	201-60-11390	・・O-RING	1	60001-
12	20Y-62-19560	・・O-RING	1	60001-
13	07002-11423	・O-RING	1	60001-
14	07002-11423	O-RING	2	60001-
15	206-06-61130	SWITCH	8	60001-

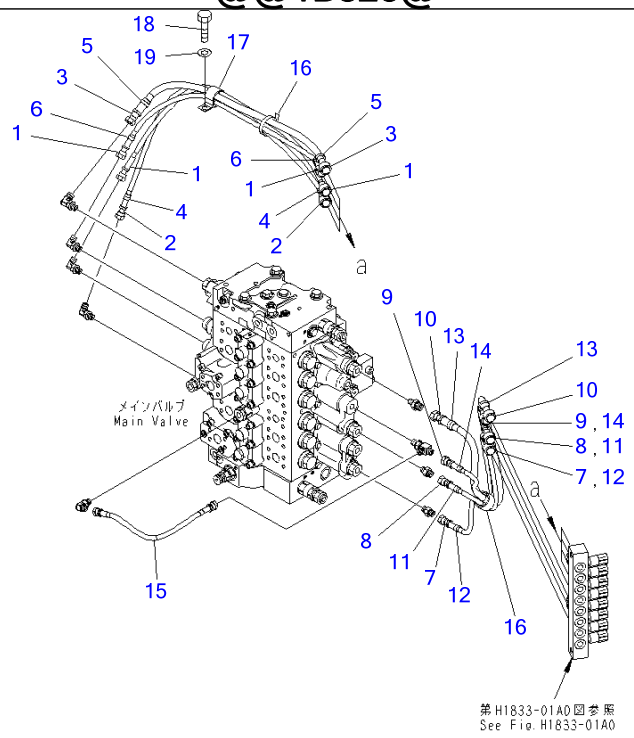

Ref H1840-01A0 **Page 150580**

PC220-7 S/N 60001-UP (Overseas Version)
PPC MAIN PIPING (HOSE)

Item	Part No.	Part Name	Qty	Serial No.
1	20Y-62-42140	HOSE, 750MM	2	60001-
2	20Y-62-42170	HOSE, 900MM	1	60001-
3	20Y-62-42530	HOSE, 700MM	1	60001-
4	20Y-62-22820	BAND, BLUE	2	60001-
5	20Y-62-22830	BAND, WHITE	2	60001-
6	20Y-62-22860	BAND, BROWN	2	60001-
7	20Y-62-42150	HOSE, 800MM	1	60001-
8	20Y-62-42160	HOSE, 850MM	1	60001-
9	20Y-62-42180	HOSE, 950MM	1	60001-
10	20Y-62-42540	HOSE, 1050MM	1	60001-
11	20Y-62-22790	BAND, RED	2	60001-
12	20Y-62-22810	BAND, YELLOW	2	60001-
13	20Y-62-22840	BAND, BLACK	2	60001-
14	20Y-62-22850	BAND, GREEN	2	60001-
15	02760-00204	HOSE	1	60001-
16	08034-20536	BAND	2	60001-
17	113-899-7950	CLIP	1	60001-
18	01010-81225	BOLT	1	60001-
19	01643-31232	WASHER	1	60001-

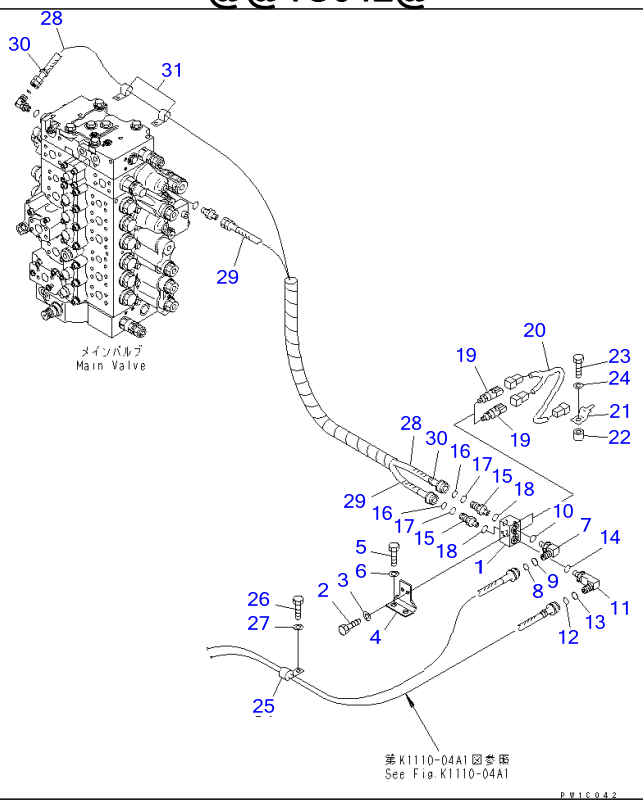

Ref H1840-02A1 Page 150590

PC220-7 S/N 60001-UP (Overseas Version)
PPC MAIN PIPING (BLOCK) (1 ACTUATOR)

Item	Part No.	Part Name	Qty	Serial No.
1	20Y-62-43430	BLOCK	1	60001-
2	01010-80820	BOLT	2	60001-
3	01643-30823	WASHER	2	60001-
4	20Y-62-43440	BRACKET	1	60001-
5	01010-81025	BOLT	2	60001-
6	01643-31032	WASHER	2	60001-
7	20Y-62-22271	ELBOW	1	60001-
8	201-60-11390	・O-RING	1	60001-
9	20Y-62-19560	・O-RING	1	60001-
10	07002-01423	O-RING	1	60001-
11	14X-43-14840	ELBOW	1	60001-
12	201-60-11390	・O-RING	1	60001-
13	20Y-62-19560	・O-RING	1	60001-
14	07002-01423	O-RING	1	60001-
15	20Y-62-16630	NIPPLE	2	60001-
16	201-60-11390	・O-RING	1	60001-
17	20Y-62-19560	・O-RING	1	60001-
18	07002-01423	O-RING	2	60001-
19	206-06-61130	SWITCH	2	60001-
20	20Y-06-21330	WIRING HARNESS	1	60001-
21	08053-01512	CLIP	1	60001-
22	195-33-11220	SPACER	1	60001-
23	01010-81045	BOLT	1	60001-
24	01643-31032	WASHER	1	60001-
25	04434-51612	CLIP	1	60001-
26	01010-81225	BOLT	1	60001-
27	01643-31232	WASHER	1	60001-
28	20Y-62-43520	HOSE, 2100MM	1	60001-

PPC MAIN PIPING (BLOCK) (1 ACTUATOR)

Item	Part No.	Part Name	Qty	Serial No.
29	207-62-72720	HOSE, 1400MM	1	60001-
30	20Y-62-22810	BAND, YELLOW	2	60001-
31	04435-51612	CLIP	2	60001-

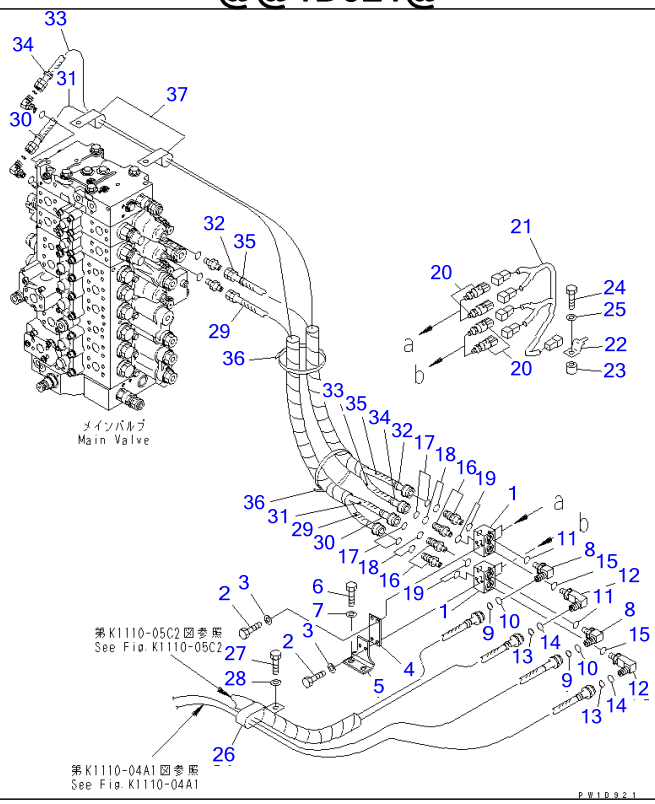

Ref H1840-02A3 **Page 150600**

PC220-7 S/N 60001-UP (Overseas Version)
PPC MAIN PIPING (BLOCK) (2 ACTUATOR)

Item	Part No.	Part Name	Qty	Serial No.
1	20Y-62-43430	BLOCK	2	60001-
2	01010-80820	BOLT	4	60001-
3	01643-30823	WASHER	4	60001-
4	20Y-62-43450	PLATE	1	60001-
5	20Y-62-43440	BRACKET	1	60001-
6	01010-81225	BOLT	2	60001-
7	01643-31232	WASHER	2	60001-
8	20Y-62-22271	ELBOW	2	60001-
9	201-60-11390	O-RING	1	60001-
10	20Y-62-19560	O-RING	1	60001-
11	07002-11423	O-RING	2	60001-
12	14X-43-14840	ELBOW	2	60001-
13	201-60-11390	O-RING	1	60001-
14	20Y-62-19560	O-RING	1	60001-
15	07002-11423	O-RING	2	60001-
16	20Y-62-16630	NIPPLE	4	60001-
17	201-60-11390	▪ O-RING	1	60001-
18	20Y-62-19560	▪ O-RING	1	60001-
19	07002-11423	O-RING	4	60001-
20	206-06-61130	SWITCH	4	60001-
21	20Y-06-22430	WIRING HARNESS	1	60001-
22	08053-01512	CLIP	1	60001-
23	195-33-11220	SPACER	1	60001-
24	01010-81045	BOLT	1	60001-
25	01643-31032	WASHER	1	60001-
26	04434-53412	CLIP	1	60001-
27	01010-81225	BOLT	1	60001-
28	01643-31232	WASHER	1	60001-

PPC MAIN PIPING (BLOCK) (2 ACTUATOR)

Item	Part No.	Part Name	Qty	Serial No.
29	207-62-72720	HOSE, 1400MM	1	60001-
30	20Y-62-22810	BAND, YELLOW	2	60001-
31	20Y-62-43520	HOSE, 2100MM	1	60001-
32	20Y-62-43980	HOSE, 1450MM	1	60001-
33	20Y-62-43990	HOSE, 2150MM	1	60001-
34	20Y-62-22840	BAND, BLACK	2	60001-
35	20Y-62-22860	BAND, BROWN	2	60001-
36	08034-20536	BAND	2	60001-
37	04434-53412	CLIP	2	60001-

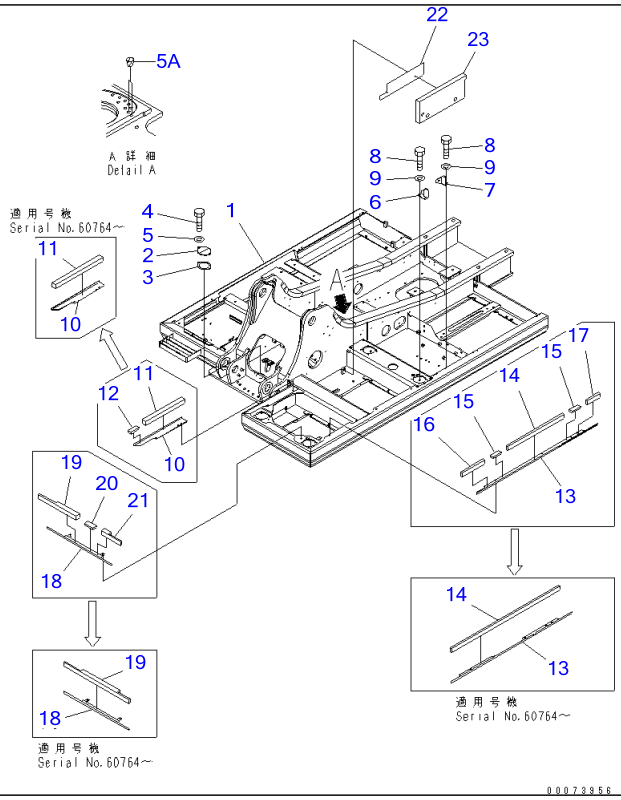

Ref J1110-01A0 **Page 180010**

PC220-7 S/N 60001-UP (Overseas Version)
REVOLVING FRAME (COVER AND BRACKET)(#60001-65000)

Item	Part No.	Part Name	Qty	Serial No.
1	206-46-71103	FRAME	1	60746-65000
	□206-46-71102	FRAME	1	60283-60745
	206-46-71101	FRAME	1	60001-60282
2	205-30-71181	COVER	1	60001-@
3	205-30-71191	GASKET	1	60001-@
4	01010-81230	BOLT	2	60001-@
5	01643-31232	WASHER	2	60001-@
5A	20Y-46-41280	PLUG	2	60132-@
6	20Y-54-61670	BRACKET	1	60001-@
7	20Y-54-61680	BRACKET	1	60001-@
8	01010-81230	BOLT	4	60001-@
9	01643-31232	WASHER	4	60001-@
	20Y-46-42412	COVER	1	60764-65000
	20Y-46-42411	COVER	1	60001-60763
10	☆	・COVER	1	60764-65000
	☆	・COVER	1	60001-60763
11	20Y-46-42232	・SEAL	1	60764-65000
	20Y-46-42231	・SEAL	1	60001-60763
12	20Y-46-42460	・SHEET	1	60001-60763
	20Y-46-42427	COVER	1	60773-65000
	20Y-46-42423	COVER	1	60764-60772
	20Y-46-42422	COVER	1	60063-60763
	20Y-46-42421	COVER	1	60001-60062
13	☆	・COVER	1	60773-65000
	☆	・COVER	1	60764-60772
	☆	・COVER	1	60063-60763
	☆	・COVER	1	60001-60062
14	20Y-46-42253	・SEAL	1	60773-65000

REVOLVING FRAME (COVER AND BRACKET)(#60001-65000)

Item	Part No.	Part Name	Qty	Serial No.
	20Y-46-42252	・SEAL	1	60764-60772
	20Y-46-42251	・SEAL	1	60001-60763
15	20Y-46-42460	・SHEET	2	60001-60763
16	20Y-46-42470	・SEAL	1	60001-60763
17	20Y-46-42480	・SEAL	1	60001-60763
	20Y-46-42433	COVER	1	60773-65000
	□20Y-46-42432	COVER	1	60764-60772
	20Y-46-42431	COVER	1	60001-60763
18	☆	・COVER	1	60773-65000
	☆	・COVER	1	60764-60772
	☆	・COVER	1	60001-60763
19	20Y-46-42243	・SEAL	1	60773-65000
	20Y-46-42242	・SEAL	1	60764-60772
	20Y-46-42241	・SEAL	1	60001-60763
20	20Y-46-42460	・SHEET	1	60001-60763
21	20Y-46-42490	・SEAL	1	60001-60763
	20Y-46-42440	COVER	1	60001-@
22	☆	・COVER	1	60767-65000
	☆	・COVER	1	60001-60766
23	20Y-46-42260	・SHEET	1	60001-@

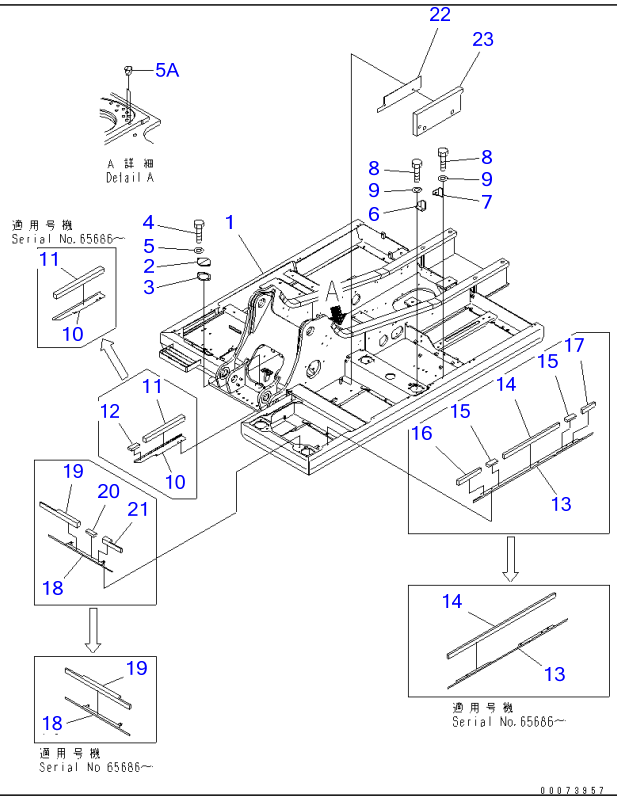

Ref J1110-01A0A

Page 180020

PC220-7 S/N 60001-UP (Overseas Version)

REVOLVING FRAME (COVER AND BRACKET)(#65001-)

Item	Part No.	Part Name	Qty	Serial No.
1	206-46-71103	FRAME	1	65106-
	□206-46-71102	FRAME	1	65001-65015
2	205-30-71181	COVER	1	60001-
3	205-30-71191	GASKET	1	60001-
4	01010-81230	BOLT	2	60001-
5	01643-31232	WASHER	2	60001-
5A	20Y-46-41280	PLUG	2	60132-
6	20Y-54-61670	BRACKET	1	60001-
7	20Y-54-61680	BRACKET	1	60001-
8	01010-81230	BOLT	4	60001-
9	01643-31232	WASHER	4	60001-
	20Y-46-42412	COVER	1	65686-
	20Y-46-42411	COVER	1	65001-65685
10	☆	・COVER	1	65686-
	☆	・COVER	1	65001-65685
11	20Y-46-42232	・SEAL	1	65686-
	20Y-46-42231	・SEAL	1	65001-65685
12	20Y-46-42460	・SHEET	1	60001-65685
	20Y-46-42427	・COVER	1	66271-
	20Y-46-42423	・COVER	1	65686-66270
	20Y-46-42422	・COVER	1	65001-65685
13	☆	・COVER	1	66271-
	☆	・COVER	1	65686-66270
	☆	・COVER	1	65001-65685
14	20Y-46-42253	・SEAL	1	66271-
	20Y-46-42252	・SEAL	1	65686-66270
	20Y-46-42251	・SEAL	1	65001-65685
15	20Y-46-42460	・SHEET	1	65001-65685

REVOLVING FRAME (COVER AND BRACKET)(#65001-)

Item	Part No.	Part Name	Qty	Serial No.
16	20Y-46-42470	・SEAL	1	65001-65685
17	20Y-46-42480	・SEAL	1	65001-65685
	20Y-46-42433	COVER	1	66271-
	□20Y-46-42432	COVER	1	65686-66270
	20Y-46-42431	COVER	1	65001-65685
18	☆	・COVER	1	66271-
	☆	・COVER	1	65686-66270
	☆	・COVER	1	65001-65685
19	20Y-46-42243	・SEAL	1	66271-
	20Y-46-42242	・SEAL	1	65686-66270
	20Y-46-42241	・SEAL	1	65001-65685
20	20Y-46-42460	・SHEET	2	65001-65685
21	20Y-46-42490	・SEAL	1	65001-65685
	20Y-46-42440	COVER	1	60001-
22	☆	・COVER	1	65927-
	☆	・COVER	1	65001-65926
23	20Y-46-42260	・SHEET	1	60001-

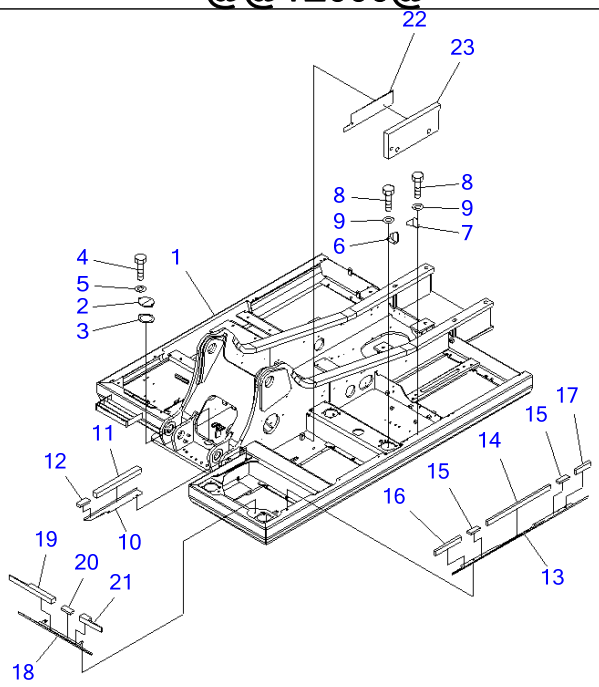

P W 1 E 0 0 6

Ref J1110-01A1 **Page 180030**

PC220-7 S/N 60001-UP (Overseas Version)
REVOLVING FRAME (COVER AND BRACKET) (FOR CORROSION RESISTER)(#60001-60254)

Item	Part No.	Part Name	Qty	Serial No.
1	206-46-71300	FRAME	1	60001-60254
2	205-30-71181	COVER	1	60001-@
3	205-30-71191	GASKET	1	60001-@
4	01010-81230	BOLT	2	60001-@
5	01643-31232	WASHER	2	60001-@
6	20Y-54-61670	BRACKET	1	60001-@
7	20Y-54-61680	BRACKET	1	60001-@
8	01010-81230	BOLT	4	60001-@
9	01643-31232	WASHER	4	60001-@
	20Y-46-42411	COVER	1	60001-@
10	☆	・COVER	1	60001-@
11	20Y-46-42231	・SEAL	1	60001-@
12	20Y-46-42460	・SHEET	1	60001-@
	20Y-46-42422	COVER	1	60001-@
13	☆	・COVER	1	60001-@
14	20Y-46-42251	・SEAL	1	60001-@
15	20Y-46-42460	・SHEET	2	60001-@
16	20Y-46-42470	・SEAL	1	60001-@
17	20Y-46-42480	・SEAL	1	60001-@
	20Y-46-42431	COVER	1	60001-@
18	☆	・COVER	1	60001-@
19	20Y-46-42241	・SEAL	1	60001-@
20	20Y-46-42460	・SHEET	1	60001-@
21	20Y-46-42490	・SEAL	1	60001-@
	20Y-46-42440	COVER	1	60001-@
22	☆	・COVER	1	60001-@

REVOLVING FRAME (COVER AND BRACKET) (FOR CORROSION RESISTER)(#60001-60254)

Item	Part No.	Part Name	Qty	Serial No.
23	20Y-46-42260	・SHEET	1	60001-@

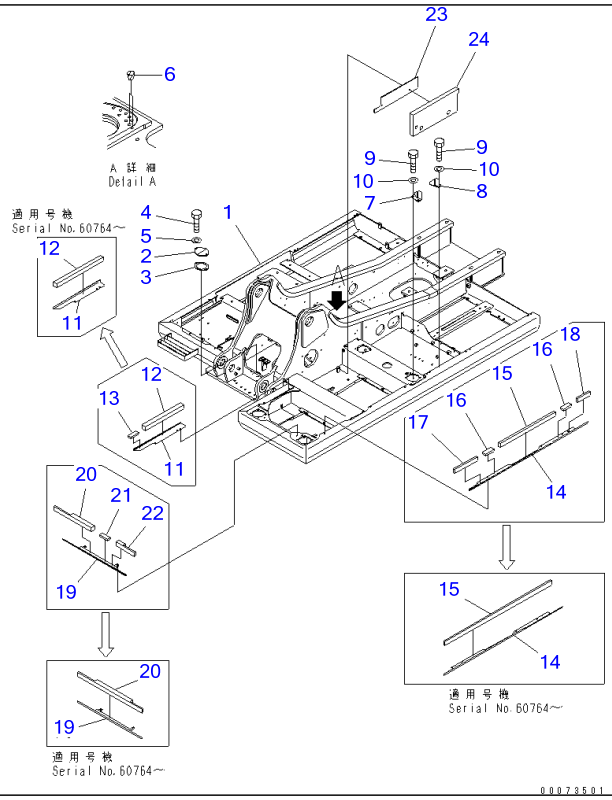

Ref J1110-01A1A

Page 180040

PC220-7 S/N 60001-UP (Overseas Version)

REVOLVING FRAME (COVER AND BRACKET) (FOR CORROSION RESISTER AND COLD A SPEC.)(#60001-65000)

Item	Part No.	Part Name	Qty	Serial No.
1	206-46-71323	FRAME	1	60746-65000
	□206-46-71322	FRAME	1	60255-60745
2	205-30-71181	COVER	1	60001-@
3	205-30-71191	GASKET	1	60001-@
4	01010-81230	BOLT	2	60001-@
5	01643-31232	WASHER	2	60001-@
6	20Y-46-41280	PLUG	2	60132-@
7	20Y-54-61670	BRACKET	1	60001-@
8	20Y-54-61680	BRACKET	1	60001-@
9	01010-81230	BOLT	4	60001-@
10	01643-31232	WASHER	4	60001-@
	20Y-46-42412	COVER	1	60764-65000
	20Y-46-42411	COVER	1	60001-60763
11	☆	・COVER	1	60764-65000
	☆	・COVER	1	60001-60763
12	20Y-46-42232	・SEAL	1	60764-65000
	20Y-46-42231	・SEAL	1	60001-60763
13	20Y-46-42460	・SHEET	1	60001-60763
	20Y-46-42427	COVER	1	60773-65000
	20Y-46-42423	COVER	1	60764-60772
	20Y-46-42422	COVER	1	60001-60763
14	☆	・COVER	1	60773-65000
	☆	・COVER	1	60764-60772
	☆	・COVER	1	60001-60763
15	20Y-46-42253	・SEAL	1	60773-65000
	20Y-46-42252	・SEAL	1	60764-60772

REVOLVING FRAME (COVER AND BRACKET) (FOR CORROSION RESISTER AND COLD A SPEC.)(#60001-65000)

Item	Part No.	Part Name	Qty	Serial No.
	20Y-46-42251	・SEAL	1	60001-60763
16	20Y-46-42460	・SHEET	1	60001-60763
17	20Y-46-42470	・SEAL	1	60001-60763
18	20Y-46-42480	・SEAL	1	60001-60763
	20Y-46-42433	COVER	1	60773-65000
	□20Y-46-42432	COVER	1	60764-60772
	20Y-46-42431	COVER	1	60001-60763
19	☆	・COVER	1	60773-65000
	☆	・COVER	1	60764-60772
	☆	・COVER	1	60001-60763
20	20Y-46-42243	・SEAL	1	60773-65000
	20Y-46-42242	・SEAL	1	60764-60772
	20Y-46-42241	・SEAL	1	60001-60763
21	20Y-46-42460	・SHEET	1	60001-60763
22	20Y-46-42490	・SEAL	1	60001-60763
	20Y-46-42440	COVER	1	60001-@
23	☆	・COVER	1	60767-65000
	☆	・COVER	1	60001-60766
24	20Y-46-42260	・SHEET	1	60001-@

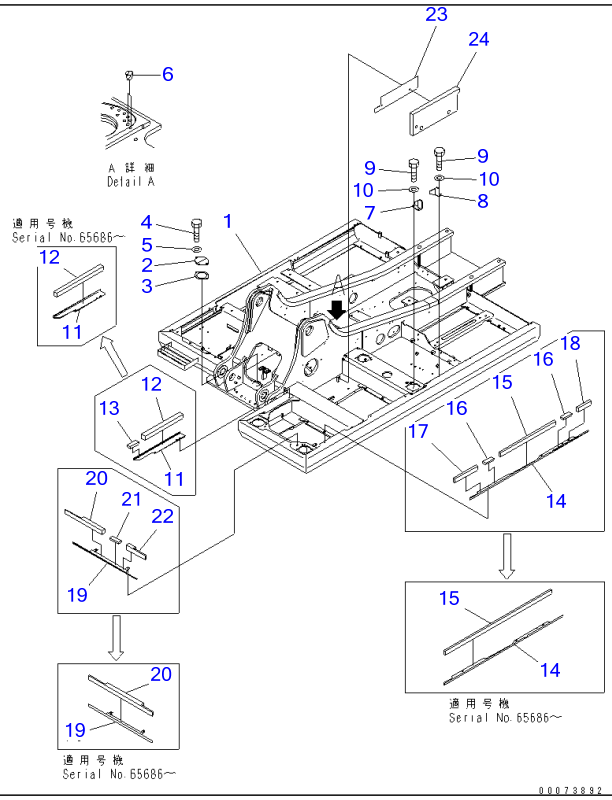

Ref J1110-01A1B **Page 180050**

PC220-7 S/N 60001-UP (Overseas Version)
REVOLVING FRAME (COVER AND BRACKET) (FOR CORROSION RESISTER)(#65001-)

Item	Part No.	Part Name	Qty	Serial No.
1	206-46-71324	FRAME	1	68117-
	206-46-71323	FRAME	1	65106-68116
	□206-46-71322	FRAME	1	65001-65105
2	205-30-71181	COVER	1	60001-
3	205-30-71191	GASKET	1	60001-
4	01010-81230	BOLT	2	60001-
5	01643-31232	WASHER	2	60001-
6	20Y-46-41280	PLUG	2	60132-
7	20Y-54-61670	BRACKET	1	60001-
8	20Y-54-61680	BRACKET	1	60001-
9	01010-81230	BOLT	4	60001-
10	01643-31232	WASHER	4	60001-
	20Y-46-42412	COVER	1	65686-
	20Y-46-42411	COVER	1	65001-65685
11	☆	・COVER	1	65686-
	☆	・COVER	1	65001-65685
12	20Y-46-42232	・SEAL	1	65686-
	20Y-46-42231	・SEAL	1	65001-65685
13	20Y-46-42460	・SHEET	1	65001-65685
	20Y-46-42427	COVER	1	66271-
	20Y-46-42423	COVER	1	65686-66270
	20Y-46-42422	COVER	1	65001-65685
14	☆	・COVER	1	66271-
	☆	・COVER	1	65686-66270
	☆	・COVER	1	65001-65685
15	20Y-46-42253	・SEAL	1	66271-

REVOLVING FRAME (COVER AND BRACKET) (FOR CORROSION RESISTER)(#65001-)

Item	Part No.	Part Name	Qty	Serial No.
	20Y-46-42252	・SEAL	1	65686-66270
	20Y-46-42251	・SEAL	1	65001-65685
16	20Y-46-42460	・SHEET	1	65001-65685
17	20Y-46-42470	・SEAL	1	65001-65685
18	20Y-46-42480	・SEAL	1	65001-65686
	20Y-46-42433	COVER	1	66271-
	□20Y-46-42432	COVER	1	65686-66270
	20Y-46-42431	COVER	1	65001-65685
19	☆	・COVER	1	66271-
	☆	・COVER	1	65686-66270
	☆	・COVER	1	65001-65685
20	20Y-46-42243	・SEAL	1	66271-
	20Y-46-42242	・SEAL	1	65686-66270
	20Y-46-42241	・SEAL	1	65001-65685
21	20Y-46-42460	・SHEET	1	65001-65685
22	20Y-46-42490	・SEAL	1	65001-65685
	20Y-46-42440	COVER	1	60001-
23	☆	・COVER	1	65927-
	☆	・COVER	1	65001-65926
24	20Y-46-42260	・SHEET	1	60001-

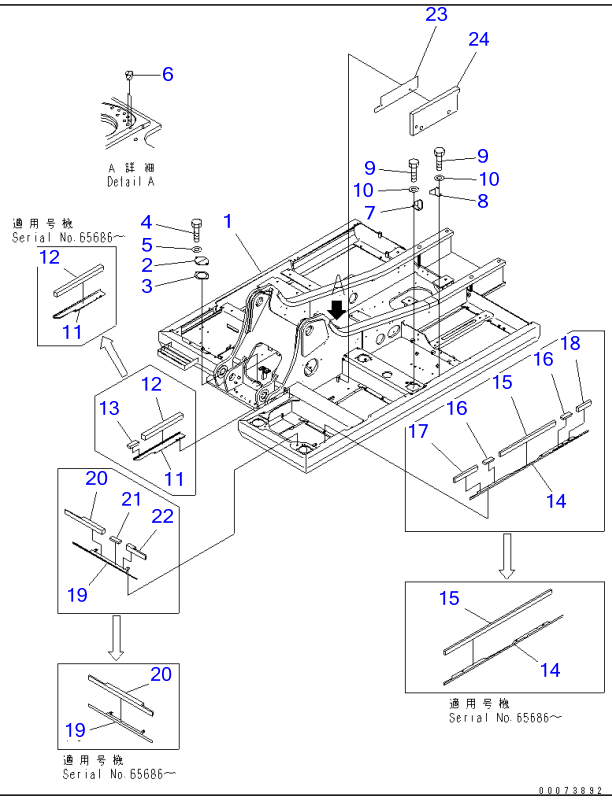

Ref J1110-01A1B **Page 180050**

PC220-7 S/N 60001-UP (Overseas Version)
REVOLVING FRAME (COVER AND BRACKET) (FOR CORROSION RESISTER)(#65001-)

Item	Part No.	Part Name	Qty	Serial No.
1	206-46-71324	FRAME	1	68117-
	206-46-71323	FRAME	1	65106-68116
	□206-46-71322	FRAME	1	65001-65105
2	205-30-71181	COVER	1	60001-
3	205-30-71191	GASKET	1	60001-
4	01010-81230	BOLT	2	60001-
5	01643-31232	WASHER	2	60001-
6	20Y-46-41280	PLUG	2	60132-
7	20Y-54-61670	BRACKET	1	60001-
8	20Y-54-61680	BRACKET	1	60001-
9	01010-81230	BOLT	4	60001-
10	01643-31232	WASHER	4	60001-
	20Y-46-42412	COVER	1	65686-
	20Y-46-42411	COVER	1	65001-65685
11	☆	・COVER	1	65686-
	☆	・COVER	1	65001-65685
12	20Y-46-42232	・SEAL	1	65686-
	20Y-46-42231	・SEAL	1	65001-65685
13	20Y-46-42460	・SHEET	1	65001-65685
	20Y-46-42427	COVER	1	66271-
	20Y-46-42423	COVER	1	65686-66270
	20Y-46-42422	COVER	1	65001-65685
14	☆	・COVER	1	66271-
	☆	・COVER	1	65686-66270
	☆	・COVER	1	65001-65685
15	20Y-46-42253	・SEAL	1	66271-

REVOLVING FRAME (COVER AND BRACKET) (FOR CORROSION RESISTER)(#65001-)

Item	Part No.	Part Name	Qty	Serial No.
	20Y-46-42252	・SEAL	1	65686-66270
	20Y-46-42251	・SEAL	1	65001-65685
16	20Y-46-42460	・SHEET	1	65001-65685
17	20Y-46-42470	・SEAL	1	65001-65685
18	20Y-46-42480	・SEAL	1	65001-65686
	20Y-46-42433	COVER	1	66271-
	□20Y-46-42432	COVER	1	65686-66270
	20Y-46-42431	COVER	1	65001-65685
19	☆	・COVER	1	66271-
	☆	・COVER	1	65686-66270
	☆	・COVER	1	65001-65685
20	20Y-46-42243	・SEAL	1	66271-
	20Y-46-42242	・SEAL	1	65686-66270
	20Y-46-42241	・SEAL	1	65001-65685
21	20Y-46-42460	・SHEET	1	65001-65685
22	20Y-46-42490	・SEAL	1	65001-65685
	20Y-46-42440	COVER	1	60001-
23	☆	・COVER	1	65927-
	☆	・COVER	1	65001-65926
24	20Y-46-42260	・SHEET	1	60001-

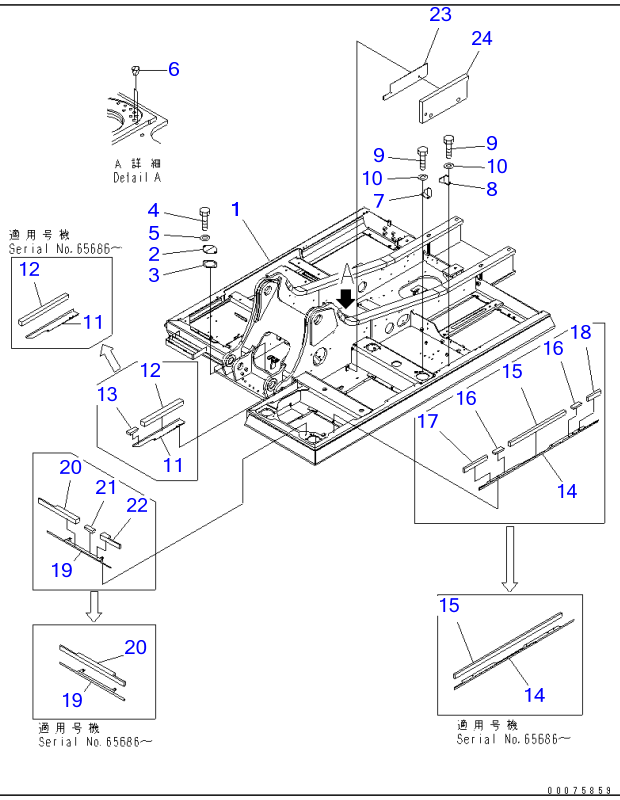

Ref J1110-01A2A **Page 180070**

PC220-7 S/N 60001-UP (Overseas Version)
REVOLVING FRAME (COVER AND BRACKET) (FOR CORROSION RESISTER AND DECK GUARD)(#65001-)

Item	Part No.	Part Name	Qty	Serial No.
1	206-46-71312	FRAME	1	65106-
	□206-46-71311	FRAME	1	65001-65105
2	205-30-71181	COVER	1	60283-
3	205-30-71191	GASKET	1	60283-
4	01010-81230	BOLT	2	60283-
5	01643-31232	WASHER	2	60283-
6	20Y-46-41280	PLUG	2	60283-
7	20Y-54-61670	BRACKET	1	60283-
8	20Y-54-61680	BRACKET	1	60283-
9	01010-81230	BOLT	4	60283-
10	01643-31232	WASHER	4	60283-
	20Y-46-42412	COVER	1	65686-
	20Y-46-42411	COVER	1	65001-65685
11	☆	・COVER	1	65686-
	☆	・COVER	1	65001-65685
12	20Y-46-42232	・SEAL	1	65686-
	20Y-46-42231	・SEAL	1	65001-65685
13	20Y-46-42460	・SHEET	1	65001-65685
	20Y-46-42427	COVER	1	66271-
	20Y-46-42423	COVER	1	65686-66270
	20Y-46-42422	COVER	1	65001-65685
14	☆	・COVER	1	66271-
	☆	・COVER	1	65686-66270
	☆	・COVER	1	65001-65685
15	20Y-46-42253	・SEAL	1	66271-
	20Y-46-42252	・SEAL	1	65686-66270

REVOLVING FRAME (COVER AND BRACKET) (FOR CORROSION RESISTER AND DECK GUARD)(#65001-)

Item	Part No.	Part Name	Qty	Serial No.
	20Y-46-42251	・SEAL	1	65001-65685
16	20Y-46-42460	・SHEET	1	65001-65685
17	20Y-46-42470	・SEAL	1	65001-65685
18	20Y-46-42480	・SEAL	1	65001-65685
	20Y-46-42433	COVER	1	66271-
	□20Y-46-42432	COVER	1	65686-66270
	20Y-46-42431	COVER	1	65001-65685
19	☆	・COVER	1	66271-
	☆	・COVER	1	65686-66270
	☆	・COVER	1	65001-65685
20	20Y-46-42243	・SEAL	1	66271-
	20Y-46-42242	・SEAL	1	65686-66270
	20Y-46-42241	・SEAL	1	65001-65685
21	20Y-46-42460	・SHEET	1	65001-65685
22	20Y-46-42490	・SEAL	1	65001-65685
	20Y-46-42440	COVER	1	60283-
23	☆	・COVER	1	65927-
	☆	・COVER	1	65001-65926
24	20Y-46-42260	・SHEET	1	60283-

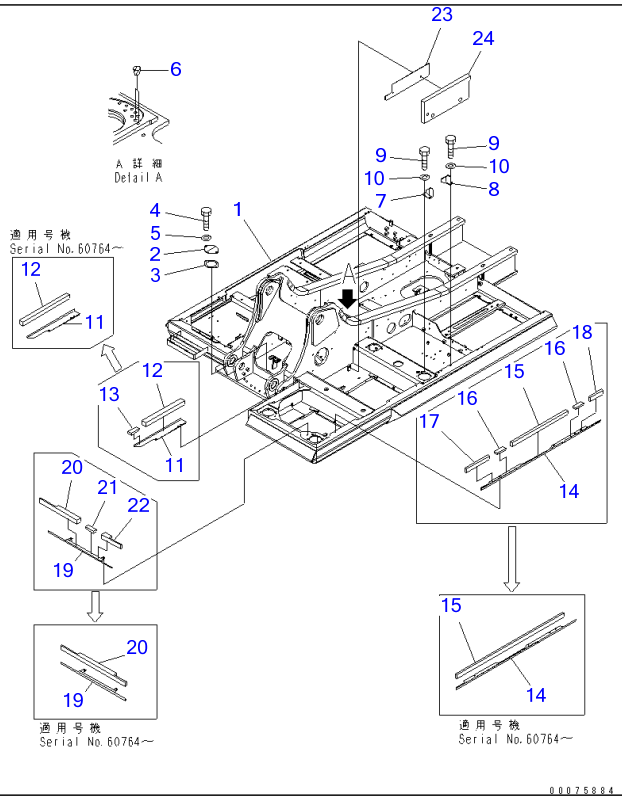

Ref J1110-01A3 Page 180080

PC220-7 S/N 60001-UP (Overseas Version)

REVOLVING FRAME (COVER AND BRACKET) (FOR CORROSION RESISTER AND HALF DECK GUARD)(#60283-65000)

Item	Part No.	Part Name	Qty	Serial No.
1	206-46-71331	FRAME	1	60746-65000
	□206-46-71330	FRAME	1	60283-60745
2	205-30-71181	COVER	1	60283-@
3	205-30-71191	GASKET	1	60283-@
4	01010-81230	BOLT	2	60283-@
5	01643-31232	WASHER	2	60283-@
6	20Y-46-41280	PLUG	2	60283-@
7	20Y-54-61670	BRACKET	1	60283-@
8	20Y-54-61680	BRACKET	1	60283-@
9	01010-81230	BOLT	4	60283-@
10	01643-31232	WASHER	4	60283-@
	20Y-46-42412	COVER	1	60764-65000
	20Y-46-42411	COVER	1	60283-60763
11	☆	・COVER	1	60764-65000
	☆	・COVER	1	60283-60763
12	20Y-46-42232	・SEAL	1	60764-65000
	20Y-46-42231	・SEAL	1	60283-60763
13	20Y-46-42460	・SHEET	1	60283-60763
	20Y-46-42427	COVER	1	60773-65000
	20Y-46-42423	COVER	1	60764-60772
	20Y-46-42422	COVER	1	60283-60763
14	☆	・COVER	1	60773-65000
	☆	・COVER	1	60764-60772
	☆	・COVER	1	60283-60763
15	20Y-46-42253	・SEAL	1	60773-65000
	20Y-46-42252	・SEAL	1	60764-60772

PC220-7 S/N 60001-UP (Overseas Version)

REVOLVING FRAME (COVER AND BRACKET) (FOR CORROSION RESISTER AND HALF DECK GUARD)(#60283-65000)

Item	Part No.	Part Name	Qty	Serial No.
	20Y-46-42251	・SEAL	1	60283-60763
16	20Y-46-42460	・SHEET	1	60283-60763
17	20Y-46-42470	・SEAL	1	60283-60763
18	20Y-46-42480	・SEAL	1	60283-60763
	20Y-46-42433	COVER	1	60773-65000
	□20Y-46-42432	COVER	1	60764-60772
	20Y-46-42431	COVER	1	60283-60763
19	☆	・COVER	1	60773-65000
	☆	・COVER	1	60764-60772
	☆	・COVER	1	60283-60763
20	20Y-46-42243	・SEAL	1	60773-65000
	20Y-46-42242	・SEAL	1	60764-60772
	20Y-46-42241	・SEAL	1	60283-60763
21	20Y-46-42460	・SHEET	1	60283-60763
22	20Y-46-42490	・SEAL	1	60283-60763
	20Y-46-42440	COVER	1	60283-@
23	☆	・COVER	1	60767-65000
	☆	・COVER	1	60283-60766
24	20Y-46-42260	・SHEET	1	60283-@

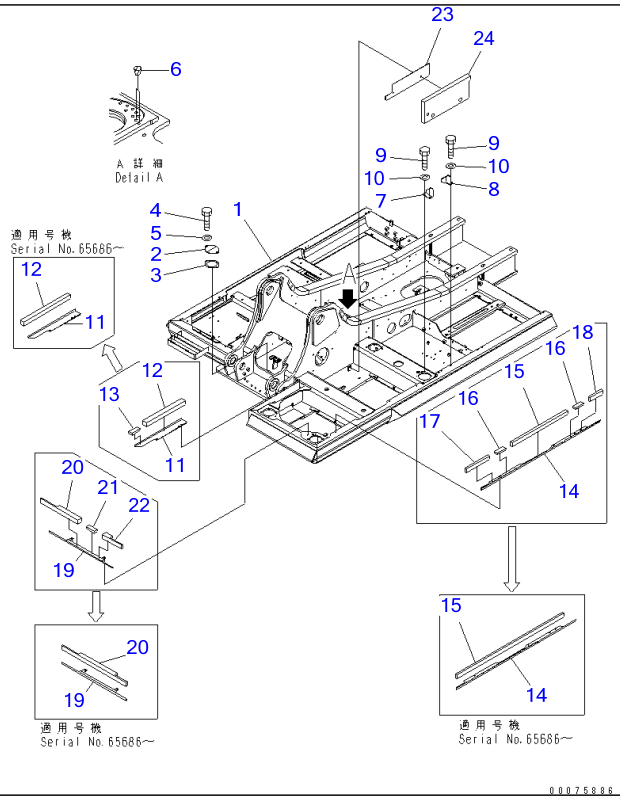

Ref J1110-01A3A

Page 180090

PC220-7 S/N 60001-UP (Overseas Version)

REVOLVING FRAME (COVER AND BRACKET) (FOR CORROSION RESISTER AND HALF DECK GUARD)(#65001-)

Item	Part No.	Part Name	Qty	Serial No.
1	206-46-71331	FRAME	1	65106-
	□206-46-71330	FRAME	1	65001-65105
2	205-30-71181	COVER	1	60283-
3	205-30-71191	GASKET	1	60283-
4	01010-81230	BOLT	2	60283-
5	01643-31232	WASHER	2	60283-
6	20Y-46-41280	PLUG	2	60283-
7	20Y-54-61670	BRACKET	1	60283-
8	20Y-54-61680	BRACKET	1	60283-
9	01010-81230	BOLT	4	60283-
10	01643-31232	WASHER	4	60283-
	20Y-46-42412	COVER	1	65686-
	20Y-46-42411	COVER	1	65001-65685
11	☆	・COVER	1	65686-
	☆	・COVER	1	65001-65685
12	20Y-46-42232	・SEAL	1	65686-
	20Y-46-42231	・SEAL	1	65001-65685
13	20Y-46-42460	・SHEET	1	65001-65685
	20Y-46-42427	COVER	1	66271-
	20Y-46-42423	COVER	1	65686-66270
	20Y-46-42422	COVER	1	65001-65685
14	☆	・COVER	1	66271-
	☆	・COVER	1	65686-66270
	☆	・COVER	1	65001-65685
15	20Y-46-42253	・SEAL	1	66271-
	20Y-46-42252	・SEAL	1	65686-66270

REVOLVING FRAME (COVER AND BRACKET) (FOR CORROSION RESISTER AND HALF DECK GUARD)(#65001-)

Item	Part No.	Part Name	Qty	Serial No.
	20Y-46-42251	・SEAL	1	65001-65685
16	20Y-46-42460	・SHEET	1	65001-65685
17	20Y-46-42470	・SEAL	1	65001-65685
18	20Y-46-42480	・SEAL	1	65001-65685
	20Y-46-42433	COVER	1	66271-
	□20Y-46-42432	COVER	1	65686-66270
	20Y-46-42431	COVER	1	65001-65685
19	☆	・COVER	1	66271-
	☆	・COVER	1	65686-66270
	☆	・COVER	1	65001-65685
20	20Y-46-42243	・SEAL	1	66271-
	20Y-46-42242	・SEAL	1	65686-66270
	20Y-46-42241	・SEAL	1	65001-65685
21	20Y-46-42460	・SHEET	1	65001-65685
22	20Y-46-42490	・SEAL	1	65001-65685
	20Y-46-42440	COVER	1	60283-
23	☆	・COVER	1	65927-
	☆	・COVER	1	65001-65926
24	20Y-46-42260	・SHEET	1	60283-

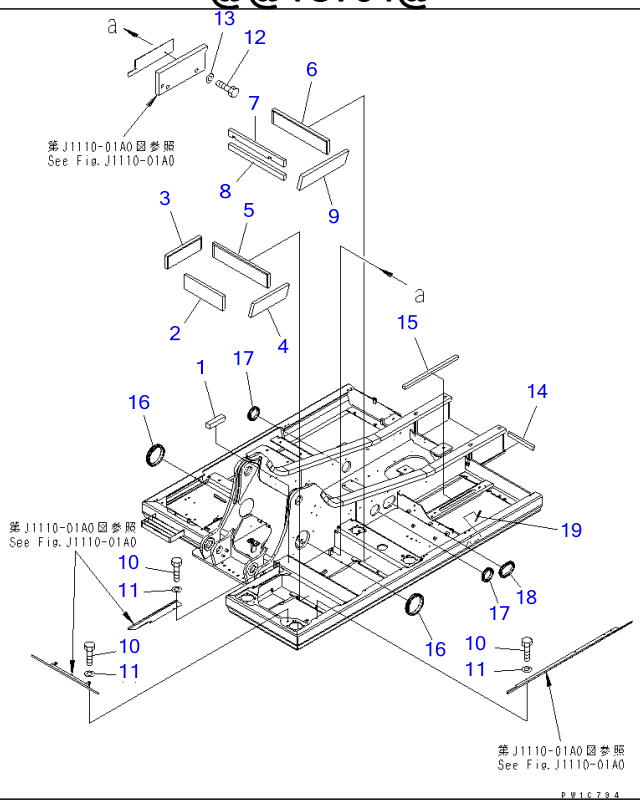

Ref J1110-02A0 **Page 180100**

PC220-7 S/N 60001-UP (Overseas Version)

REVOLVING FRAME (SHEET AND GROMMET)(#60001-60254)

Item	Part No.	Part Name	Qty	Serial No.
1	20Y-46-42210	SEAL	1	60001-@
2	20Y-46-42310	SHEET	1	60001-@
3	20Y-46-42320	SHEET	1	60001-@
4	20Y-46-42330	SHEET	1	60001-@
5	20Y-46-42340	SHEET	1	60001-@
6	20Y-46-42340	SHEET	1	60001-@
7	20Y-46-42350	SHEET	1	60001-@
8	20Y-46-42360	SHEET	1	60001-@
9	20Y-46-42370	SHEET	1	60001-@
10	01010-81035	BOLT	7	60001-@
11	01643-31032	WASHER	7	60001-@
12	01010-81225	BOLT	2	60001-@
13	01643-31232	WASHER	2	60001-@
14	20Y-46-21890	SHEET	1	60001-@
15	20Y-46-41150	SHEET	1	60001-@
16	206-46-71170	GROMMET	2	60001-@
17	206-46-71190	GROMMET	2	60001-@
18	206-46-71180	GROMMET	1	60001-@
19	20Y-43-11281	GROMMET	1	60001-@

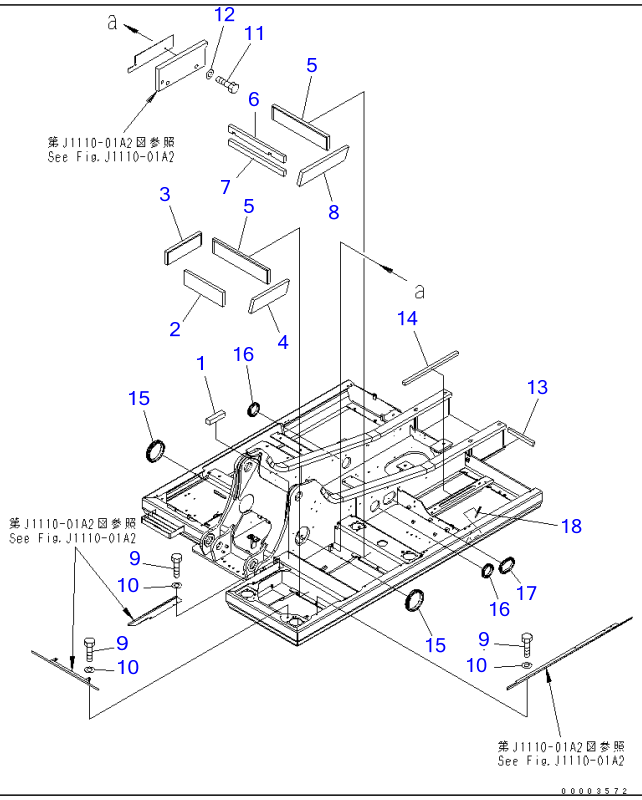

Ref J1110-02A0A **Page 180110**

PC220-7 S/N 60001-UP (Overseas Version)

REVOLVING FRAME (SHEET AND GROMMET)(#60255-)

Item	Part No.	Part Name	Qty	Serial No.
1	20Y-46-42210	SEAL	1	60001-
2	20Y-46-42310	SHEET	1	60001-
3	20Y-46-42320	SHEET	1	60001-
4	20Y-46-42330	SHEET	1	60001-
5	20Y-46-42340	SHEET	2	60001-
6	20Y-46-42350	SHEET	1	60001-
7	20Y-46-42360	SHEET	1	60001-
8	20Y-46-42370	SHEET	1	60001-
9	01010-81035	BOLT	7	60001-
10	01643-31032	WASHER	7	60001-
11	01010-81225	BOLT	2	60001-
12	01643-31232	WASHER	2	60001-
13	20Y-46-21890	SHEET	1	60001-
14	20Y-46-41150	SHEET	1	60001-
15	206-46-71170	GROMMET	2	60001-
16	206-46-71190	GROMMET	2	60001-
17	206-46-71180	GROMMET	1	60001-
18	20Y-43-11281	GROMMET	1	60001-

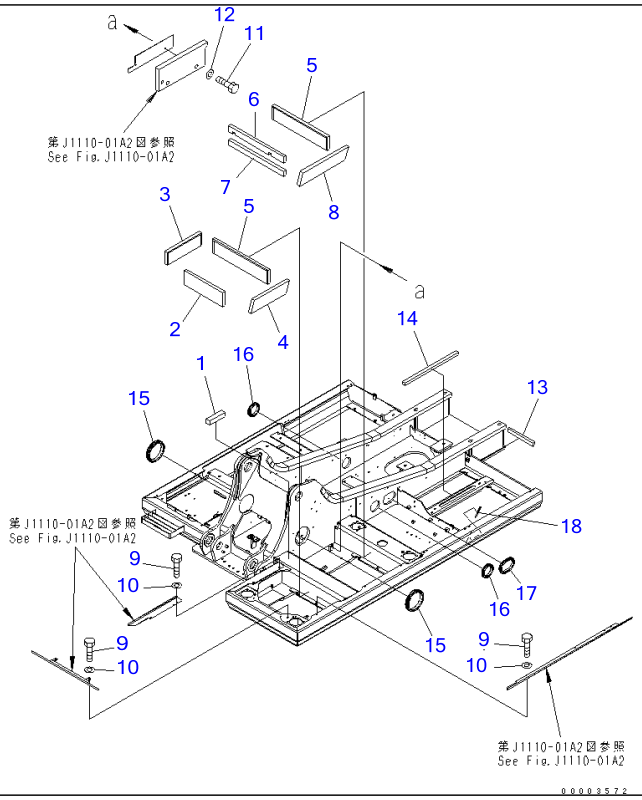

Ref J1110-02A1 **Page 180120**

PC220-7 S/N 60001-UP (Overseas Version)

REVOLVING FRAME (SHEET AND GROMMET)(#60255-)

Item	Part No.	Part Name	Qty	Serial No.
1	20Y-46-42210	SEAL	1	60255-
2	20Y-46-42310	SHEET	1	60255-
3	20Y-46-42320	SHEET	1	60255-
4	20Y-46-42330	SHEET	1	60255-
5	20Y-46-42340	SHEET	2	60255-
6	20Y-46-42350	SHEET	1	60255-
7	20Y-46-42360	SHEET	1	60255-
8	20Y-46-42370	SHEET	1	60255-
9	01010-81035	BOLT	7	60255-
10	01643-31032	WASHER	7	60255-
11	01010-81225	BOLT	2	60255-
12	01643-31232	WASHER	2	60255-
13	20Y-46-21890	SHEET	1	60255-
14	20Y-46-41150	SHEET	1	60255-
15	206-46-71170	GROMMET	2	60255-
16	206-46-71190	GROMMET	2	60255-
17	206-46-71180	GROMMET	1	60255-
18	20Y-43-11281	GROMMET	1	60255-

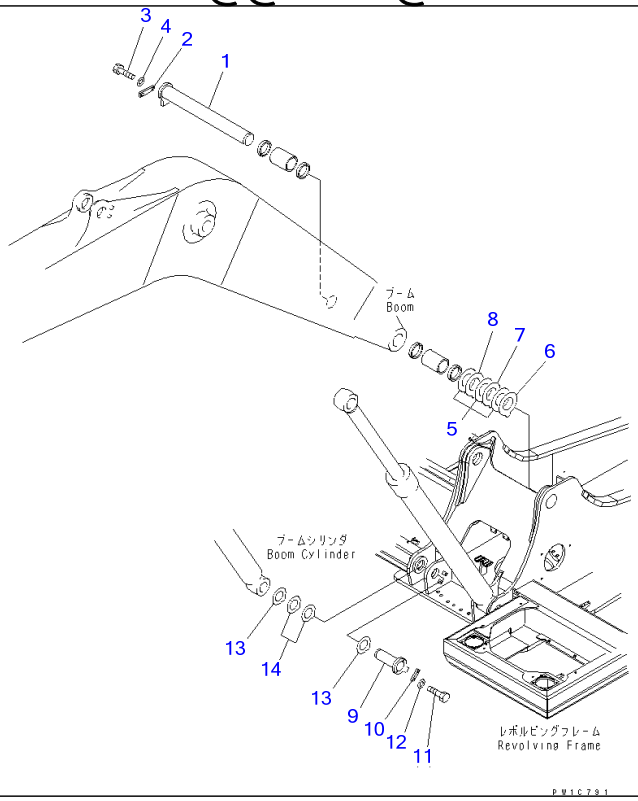

Ref J1310-01A0 Page 180130

BOOM FOOT PIN

Item	Part No.	Part Name	Qty	Serial No.
1	206-70-55270	PIN	1	60001-
2	20Y-70-11190	PLATE	1	60001-
3	01010-81640	BOLT	2	60001-
4	01643-31645	WASHER	2	60001-
5	206-70-31330	SPACER, 2.0MM	3	69185-
	◆206-70-71441	SPACER, 2.0MM	3	66138-69184
	□206-70-71440	SPACER, 2.0MM	3	65001-66137
	206-70-71441	SPACER, 2.0MM	3	60773-65000
	□206-70-71440	SPACER, 2.0MM	3	60001-60772
6	206-70-31340	SPACER, 2.5MM	1	69185-
	◆206-70-71431	SPACER, 2.5MM	1	66138-69184
	□206-70-71430	SPACER, 2.5MM	1	65001-66137
	206-70-71431	SPACER, 2.5MM	1	60773-65000
	□206-70-71430	SPACER, 2.5MM	1	60001-60772
7	206-70-31350	SPACER, 3.0MM	1	69185-
	◆206-70-71491	SPACER, 3.0MM	1	66138-69184
	□206-70-71490	SPACER, 3.0MM	1	65001-66137
	206-70-71491	SPACER, 3.0MM	1	60773-65000
	□206-70-71490	SPACER, 3.0MM	1	60001-60772
8	206-70-31360	SPACER, 3.5MM	1	69185-
	◆206-70-71571	SPACER, 3.5MM	1	66138-69184
	□206-70-71570	SPACER, 3.5MM	1	65001-66137
	206-70-71571	SPACER, 3.5MM	1	60773-65000
	□206-70-71570	SPACER, 3.5MM	1	60001-60772
9	205-70-65750	PIN	2	60001-
10	205-70-66580	PLATE	2	60001-
11	01010-81235	BOLT	4	60001-
12	01643-31232	WASHER	4	60001-

BOOM FOOT PIN

Item	Part No.	Part Name	Qty	Serial No.
13	21K-70-71650	SPACER, 1.0MM	2	69185-
	◆20Y-70-31431	SPACER, 1.0MM	2	66138-69184
	□20Y-70-31430	SPACER, 1.0MM	2	65001-66137
	20Y-70-31431	SPACER, 1.0MM	2	60773-65000
	□20Y-70-31430	SPACER, 1.0MM	2	60001-60772
14	21K-70-71660	SPACER, 2.0MM	2	69185-
	◆206-70-71451	SPACER, 2.0MM	2	66138-69184
	□206-70-71450	SPACER, 2.0MM	2	65001-66137
	206-70-71451	SPACER, 2.0MM	2	60773-65000
	□206-70-71450	SPACER, 2.0MM	2	60001-60772

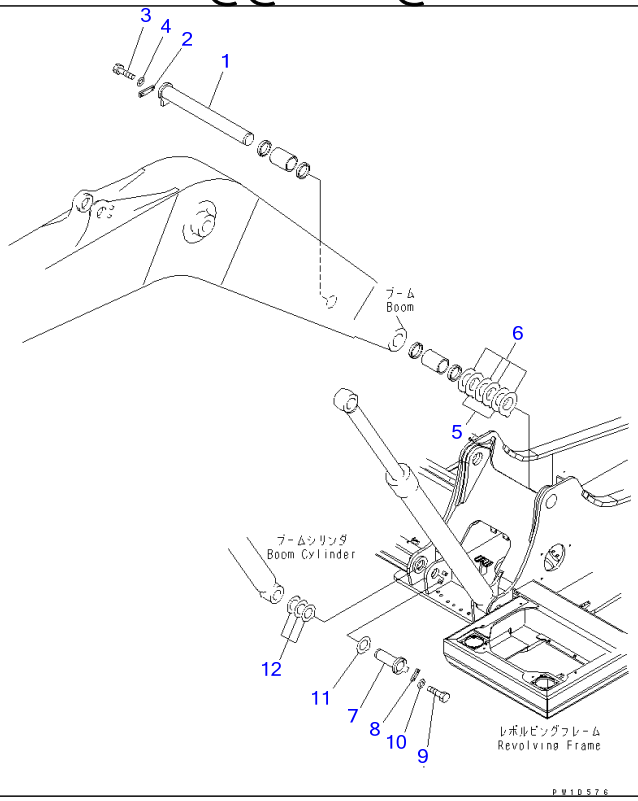

Ref J1310-01A1 **Page 180140**

PC220-7 S/N 60001-UP (Overseas Version)

BOOM FOOT PIN (100 HOURS LUBRICATING)

Item	Part No.	Part Name	Qty	Serial No.
1	206-70-55270	PIN	1	60001-
2	20Y-70-11190	PLATE	1	60001-
3	01010-81640	BOLT	2	60001-
4	01643-31645	WASHER	2	60001-
5	206-70-55250	SPACER, 0.8MM	2	60001-
6	206-70-55260	SPACER, 1.5MM	4	60001-
7	205-70-65750	PIN	2	60001-
8	205-70-66580	PLATE	2	60001-
9	01010-81235	BOLT	4	60001-
10	01643-31232	WASHER	4	60001-
11	20Y-70-11350	SPACER, 0.8MM	1	60001-
12	206-70-55290	SPACER, 1.5MM	3	60001-

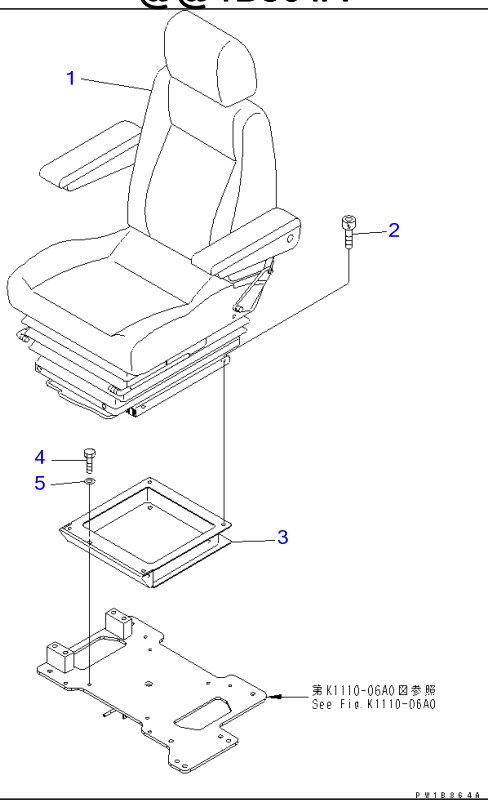

Ref K0110-01A0 **Page 210010**

PC220-7 S/N 60001-UP (Overseas Version)

OPERATOR'S SEAT (FABRIC)

Item	Part No.	Part Name	Qty	Serial No.
1	(20Y-57-31201)	SEAT ASS'Y,(WITH HEAD REST COVER)	1	68831-
	(□20Y-57-31200)	SEAT ASS'Y	1	60001-68830
2	01252-80825	BOLT	4	60001-
3	20Y-57-31212	BRACKET	1	60001-
4	01010-D0825	BOLT	4	60001-
5	01643-70823	WASHER	4	60001-

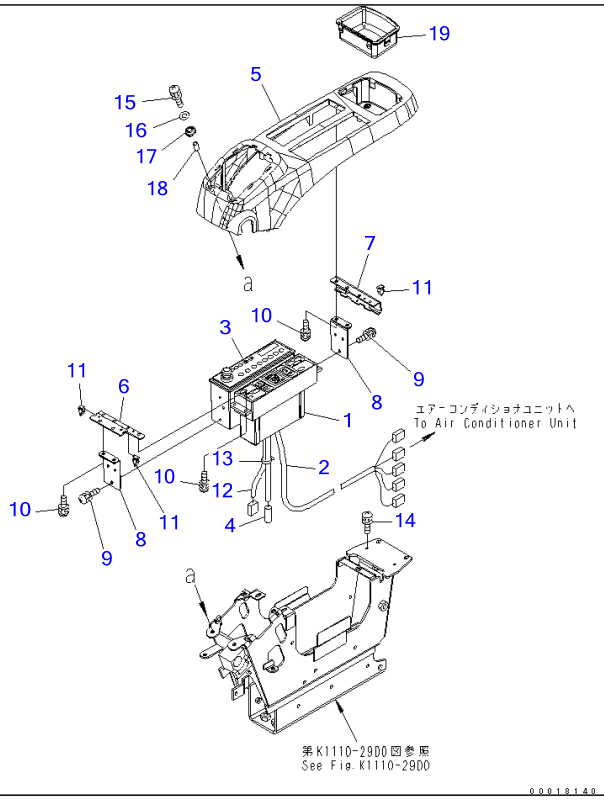

Ref K1110-28E2 **Page 211990**

PC220-7 S/N 60001-UP (Overseas Version)

FLOOR FRAME (OPERATOR'S CAB) (CONSOLE) (UPPER) (WITH AIR CONDITIONER AND RADIO) (L.H.) (FOR ASIA)(#65001-)

Item	Part No.	Part Name	Qty	Serial No.
1	208-979-7630	PANEL ASS'Y	1	65001-
2	208-979-7550	WIRING HARNESS	1	65001-
3	20Y-06-42430	RADIO	1	69253-
	☐20Y-06-41239	RADIO	1	69082-69252
	☐20Y-06-41238	RADIO	1	67442-69081
	☐20Y-06-41237	RADIO	1	67319-67441
	☐20Y-06-41235	RADIO	1	66780-67318
	☐20Y-06-41233	RADIO	1	66185-66779
	☐20Y-06-41232	RADIO	1	65986-66184
	☐20Y-06-41230	RADIO	1	65375-65985
	☐20Y-06-22730	RADIO	1	60001-65374
4	08912-51600	CORD	1	60001-
5	208-43-71680	COVER	1	65001-
6	22U-43-22220	PLATE	1	60001-
7	22U-43-22230	STAY	1	60001-
8	22U-06-22510	BRACKET	2	60001-
9	01023-60510	SCREW	4	60001-
10	01023-60516	SCREW	10	60001-
11	20Y-06-23770	CLIP	3	60001-
12	22U-06-22350	WIRING HARNESS	1	60001-
13	08034-00310	BAND	1	60001-
14	01023-60620	SCREW	2	65001-
15	01023-60630	SCREW	2	65001-
16	01640-20610	WASHER	2	65001-
17	208-43-71610	CUSHION	2	65001-
18	208-43-71620	PIPE	2	65001-

FLOOR FRAME (OPERATOR'S CAB) (CONSOLE) (UPPER) (WITH AIR CONDITIONER AND RADIO) (L.H.) (FOR ASIA)(#65001-)

Item	Part No.	Part Name	Qty	Serial No.
19	22U-43-22110	TRAY	1	60001-

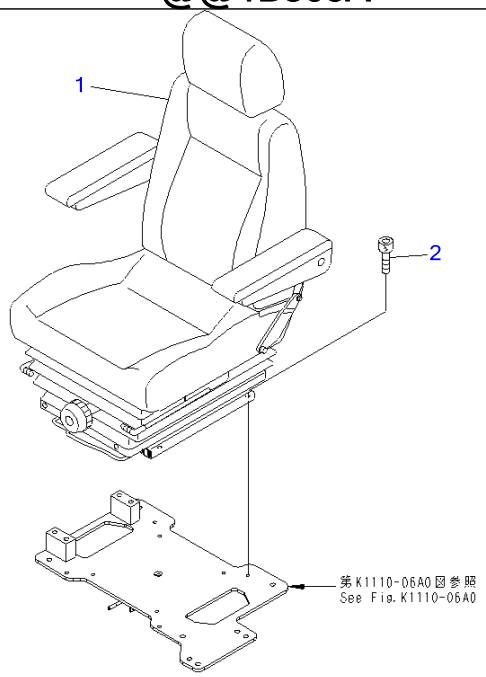

P@1B863A

Ref K0110-01A1 **Page 210020**

PC220-7 S/N 60001-UP (Overseas Version)
OPERATOR'S SEAT (SUSPENSION)

Item	Part No.	Part Name	Qty	Serial No.
1	(20Y-57-31100)	SEAT ASS'Y	1	60001-
2	01252-80825	BOLT	4	60001-

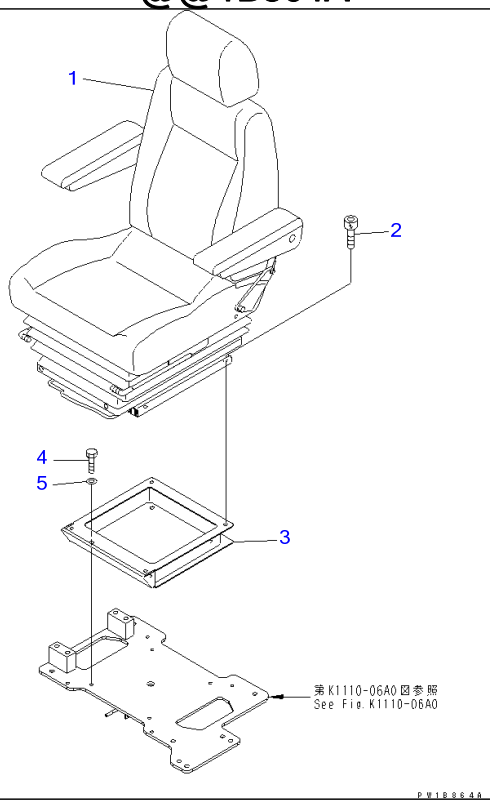

Ref K0110-01A2 **Page 210030**

PC220-7 S/N 60001-UP (Overseas Version)

OPERATOR'S SEAT (LEATHER)

Item	Part No.	Part Name	Qty	Serial No.
1	(20Y-57-31400)	SEAT ASS'Y	1	60001-
2	01252-80825	BOLT	4	60001-
3	20Y-57-31212	BRACKET	1	60001-
4	01010-D0825	BOLT	4	60001-
5	01643-70823	WASHER	4	60001-

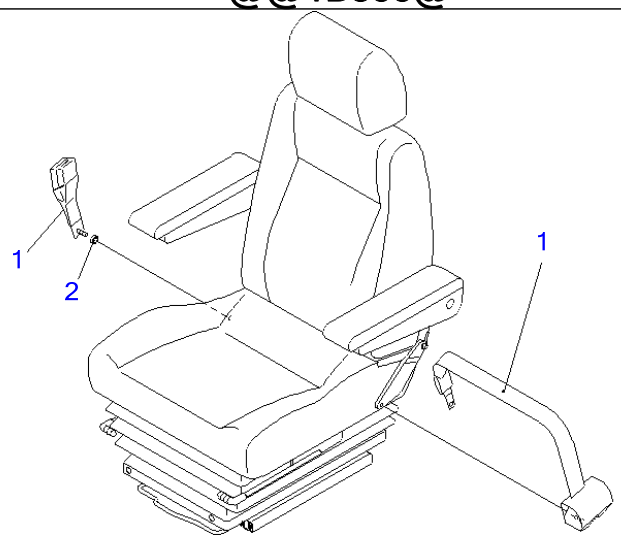

PW1B855

Ref K0160-01A0 **Page 210040**

PC220-7 S/N 60001-UP (Overseas Version)

SEAT BELT (48MM WIDE)

Item	Part No.	Part Name	Qty	Serial No.
1	22B-57-11812	BELT, LAP	1	60093-
	22B-57-11811	BELT, LAP	1	60001-60092
2	22B-57-11830	▪ SPACER	1	60001-

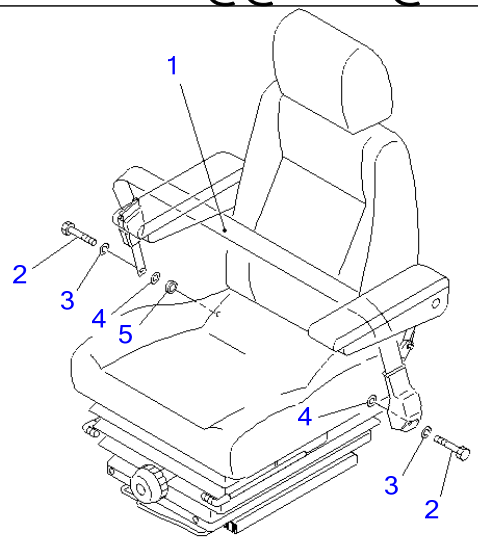

PW1B862

Ref K0160-01A1 **Page 210050**

PC220-7 S/N 60001-UP (Overseas Version)

SEAT BELT (78MM WIDE)

Item	Part No.	Part Name	Qty	Serial No.
1	22B-57-11911	BELT, LAP	1	60093-
	22B-57-11910	BELT, LAP	1	60001-60092
2	02030-70751	▪ BOLT	2	60093-
	02030-70757	▪ BOLT	2	60001-60092
3	09409-00002	▪ WASHER	2	60001-
4	01643-11232	WASHER	2	60093-
	01643-11232	WASHER	1	60001-60092
5	208-01-11270	WASHER	1	60001-

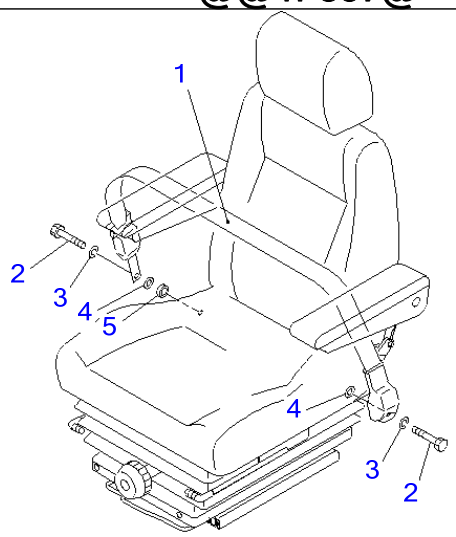

PW1F837

Ref K0160-01A2 **Page 210060**

PC220-7 S/N 60001-UP (Overseas Version)

SEAT BELT (78MM WIDE) (NON-CINCHING)(#60309-)

Item	Part No.	Part Name	Qty	Serial No.
1	20Y-57-A1661	BELT,LAP	1	60309-
2	02030-70757	・BOLT	2	60309-
3	09409-00002	・WASHER	2	60309-
4	01643-11232	WASHER	2	60309-
5	208-01-11270	WASHER	1	60309-

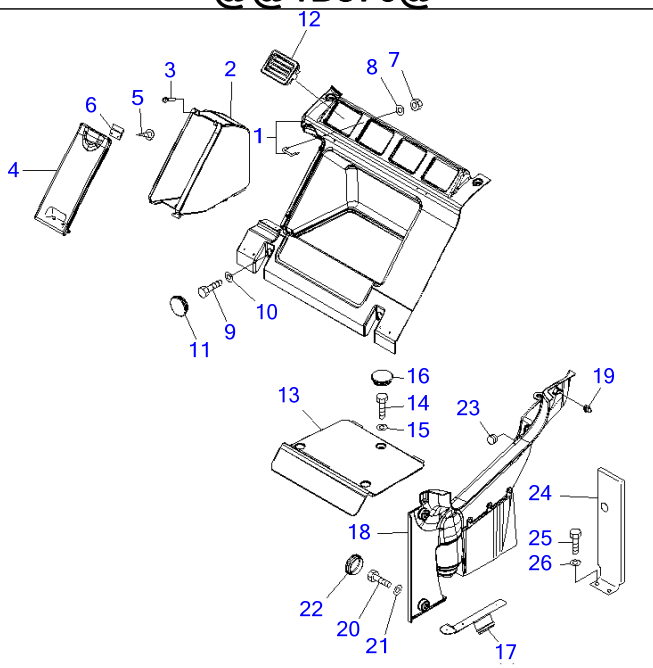

P W 1 B 8 7 6

Ref K0180-01A0 **Page 210070**

PC220-7 S/N 60001-UP (Overseas Version)

SEAT REAR COVER (WITH AIR CONDITIONER)(#60001-65000)

Item	Part No.	Part Name	Qty	Serial No.
	20Y-54-65250	COVER ASS'Y	1	60001-65000
1	☆	・COVER	1	60001-65000
2	20Y-54-65370	・BOX	1	60001-65000
3	14X-54-18450	・・CUSHION	2	60001-65000
4	20Y-54-65350	・COVER	1	60001-65000
5	01370-00512	・・SCREW	2	60001-65000
6	14X-54-18540	・・LOCK ASS'Y	1	60001-65000
7	01580-10403	・NUT	8	60001-65000
8	01601-20410	・WASHER	8	60001-65000
9	01010-80825	BOLT	4	60001-65000
10	01643-30823	WASHER	4	60001-65000
11	22U-54-25331	CAP	4	60001-65000
12	201-979-7820	GRILLE	4	60001-65000
13	20Y-54-65380	COVER	1	60001-65000
14	01010-80820	BOLT	3	60001-65000
15	01643-30823	WASHER	3	60001-65000
16	22U-54-25331	CAP	3	60001-65000
	20Y-54-65260	COVER ASS'Y,L.H.	1	60001-65000
17	20Y-54-65270	・BRACKET	1	60001-65000
18	☆	・COVER	1	60001-65000
19	22U-54-25360	・・CLIP	1	60001-65000
20	01010-80820	BOLT	2	60001-65000
21	01643-30823	WASHER	2	60001-65000
22	22U-54-25331	CAP	2	60001-65000
23	09415-02110	CAP	1	60001-65000
24	20Y-54-65440	COVER	1	60001-65000
25	01010-D0816	BOLT	3	60001-65000
26	01643-70823	WASHER	3	60001-65000

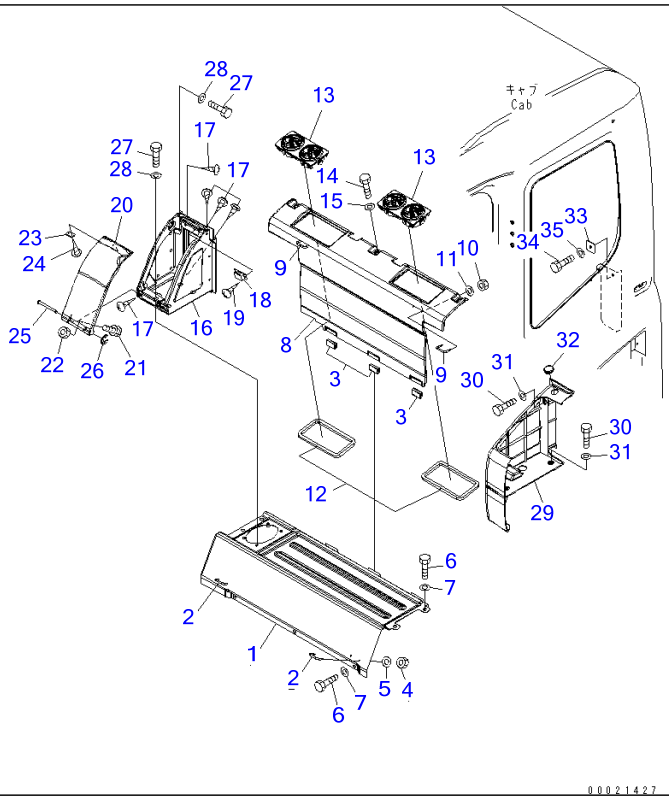

Ref K0180-01A0A **Page 210080**

PC220-7 S/N 60001-UP (Overseas Version)

SEAT REAR COVER (WITH AIR CONDITIONER)(#65001-)

Item	Part No.	Part Name	Qty	Serial No.
	208-53-13610	COVER ASS'Y	1	65001-
1	☆	・COVER	1	65001-
2	208-53-12290	・HOOK	2	65001-
3	208-53-12460	・SEAT	3	65001-
4	01580-10403	・NUT	4	65001-
5	01601-20410	・WASHER	4	65001-
6	01010-D0820	BOLT	7	65001-
7	01643-70823	WASHER	7	65001-
	208-53-13620	COVER	1	65001-
8	☆	・COVER	1	65001-
9	208-53-12290	・・HOOK	2	65001-
10	01580-10403	・・NUT	4	65001-
11	01601-20410	・・WASHER	4	65001-
12	208-53-13710	・SEAL	2	65001-
13	208-979-7560	GRILLE	2	65001-
14	01010-D0820	BOLT	3	65001-
15	01643-70823	WASHER	3	65001-
	208-53-12350	COVER ASS'Y	1	65001-
16	☆	・COVER	1	65001-
17	01370-00408	・・SCREW	10	65001-
18	09452-14503	・CATCHER	1	65001-
19	01370-10308	・SCREW	2	65001-
20	208-53-12390	・COVER	1	65001-
21	01023-10406	・・SCREW	2	65001-
22	01580-00403	・・NUT	2	65001-
23	208-53-12410	・PLATE	1	65001-
24	01370-20308	・SCREW	2	65001-
25	208-53-12320	・PIN	1	65001-

SEAT REAR COVER (WITH AIR CONDITIONER)(#65001-)

Item	Part No.	Part Name	Qty	Serial No.
26	208-53-12330	・RING	1	65001-
27	01010-D0820	BOLT	5	65001-
28	208-53-11330	WASHER	5	65001-
29	208-53-12730	COVER	1	65001-
30	01010-D0820	BOLT	3	65001-
31	208-53-11330	WASHER	3	65001-
32	09415-02110	CAP	1	65001-
33	208-53-12750	PLATE	1	65001-
34	01010-D0820	BOLT	1	65001-
35	01643-70823	WASHER	1	65001-

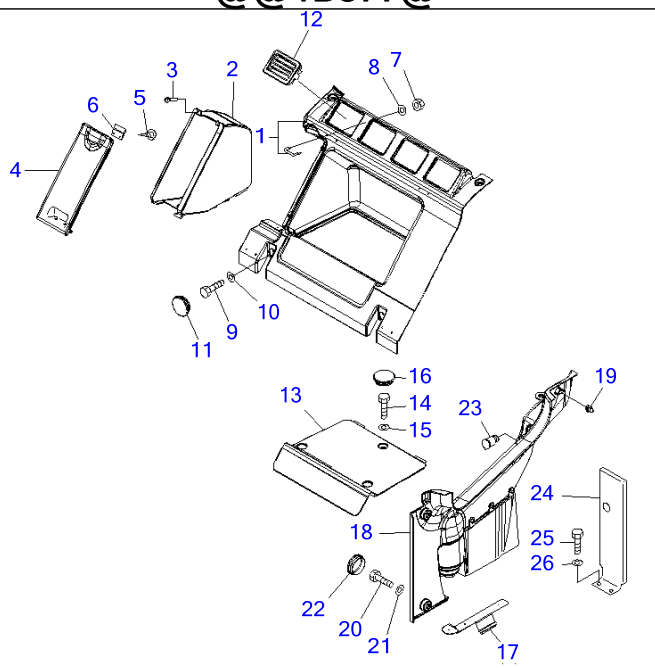

PW1B877

Ref K0180-01A1 **Page 210090**

PC220-7 S/N 60001-UP (Overseas Version)
SEAT REAR COVER (WITH AIR CONDITIONER) (12V POWER SOURCE)(#60001-65000)

Item	Part No.	Part Name	Qty	Serial No.
	20Y-54-65250	COVER ASS'Y	1	60001-65000
1	☆	・COVER	1	60001-65000
2	20Y-54-65370	・BOX	1	60001-65000
3	14X-54-18450	・・CUSHION	2	60001-65000
4	20Y-54-65350	・COVER	1	60001-65000
5	01370-00512	・・SCREW	2	60001-65000
6	14X-54-18540	・・LOCK ASS'Y	1	60001-65000
7	01580-10403	・NUT	8	60001-65000
8	01601-20410	・WASHER	8	60001-65000
9	01010-80825	BOLT	4	60001-65000
10	01643-30823	WASHER	4	60001-65000
11	22U-54-25331	CAP	4	60001-65000
12	201-979-7820	GRILLE	4	60001-65000
13	20Y-54-65380	COVER	1	60001-65000
14	01010-80820	BOLT	3	60001-65000
15	01643-30823	WASHER	3	60001-65000
16	22U-54-25331	CAP	3	60001-65000
	20Y-54-65260	COVER ASS'Y,L.H.	1	60001-65000
17	20Y-54-65270	・BRACKET	1	60001-65000
18	☆	・COVER	1	60001-65000
19	22U-54-25360	・・CLIP	1	60001-65000
20	01010-80820	BOLT	2	60001-65000
21	01643-30823	WASHER	2	60001-65000
22	22U-54-25331	CAP	2	60001-65000
23	198-Z11-2640	SOCKET ASS'Y	1	60001-65000
24	20Y-54-65440	COVER	1	60001-65000

SEAT REAR COVER (WITH AIR CONDITIONER) (12V POWER SOURCE)(#60001-65000)

Item	Part No.	Part Name	Qty	Serial No.
25	01010-D0816	BOLT	3	60001-65000
26	01643-70823	WASHER	3	60001-65000

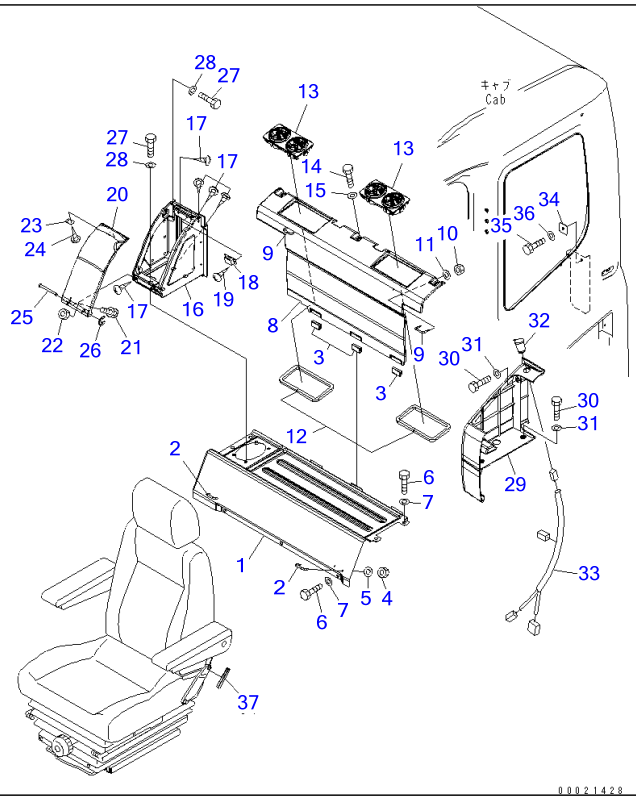

Ref K0180-01A1A **Page 210100**

PC220-7 S/N 60001-UP (Overseas Version)
SEAT REAR COVER (WITH AIR CONDITIONER) (12V POWER SOURCE)(#65001-)

Item	Part No.	Part Name	Qty	Serial No.
	208-53-13610	COVER ASS'Y	1	65001-
1	☆	・COVER	1	65001-
2	208-53-12290	・HOOK	2	65001-
3	208-53-12460	・SEAT	3	65001-
4	01580-10403	・NUT	4	65001-
5	01601-20410	・WASHER	4	65001-
6	01010-D0820	BOLT	7	65001-
7	01643-70823	WASHER	7	65001-
	208-53-13620	COVER	1	65001-
8	☆	・COVER	1	65001-
9	208-53-12290	・・HOOK	2	65001-
10	01580-10403	・・NUT	4	65001-
11	01601-20410	・・WASHER	4	65001-
12	208-53-13710	・SEAL	2	65001-
13	208-979-7560	GRILLE	2	65001-
14	01010-D0820	BOLT	3	65001-
15	01643-70823	WASHER	3	65001-
	208-53-12350	COVER ASS'Y	1	65001-
16	☆	・COVER	1	65001-
17	01370-00408	・・SCREW	1	65001-
18	09452-14503	・CATCHER	1	65001-
19	01370-10308	・SCREW	2	65001-
20	208-53-12390	・COVER	1	65001-
21	01023-10406	・・SCREW	2	65001-
22	01580-00403	・・NUT	2	65001-
23	208-53-12410	・PLATE	1	65001-

SEAT REAR COVER (WITH AIR CONDITIONER) (12V POWER SOURCE)(#65001-)

Item	Part No.	Part Name	Qty	Serial No.
24	01370-20308	▪ SCREW	2	65001-
25	208-53-12320	▪ PIN	1	65001-
26	208-53-12330	▪ RING	1	65001-
27	01010-D0820	BOLT	5	65001-
28	208-53-11330	WASHER	5	65001-
29	208-53-12730	COVER	1	65001-
30	01010-D0820	BOLT	3	65001-
31	208-53-11330	WASHER	3	65001-
32	198-Z11-2640	SOCKET ASS'Y	1	65001-
33	208-53-12850	WIRING HARNESS	1	65001-
34	208-53-12750	PLATE	1	65001-
35	01010-D0820	BOLT	1	65001-
36	01643-70823	WASHER	1	65001-
37	208-53-11780	TRIM	2	65001-

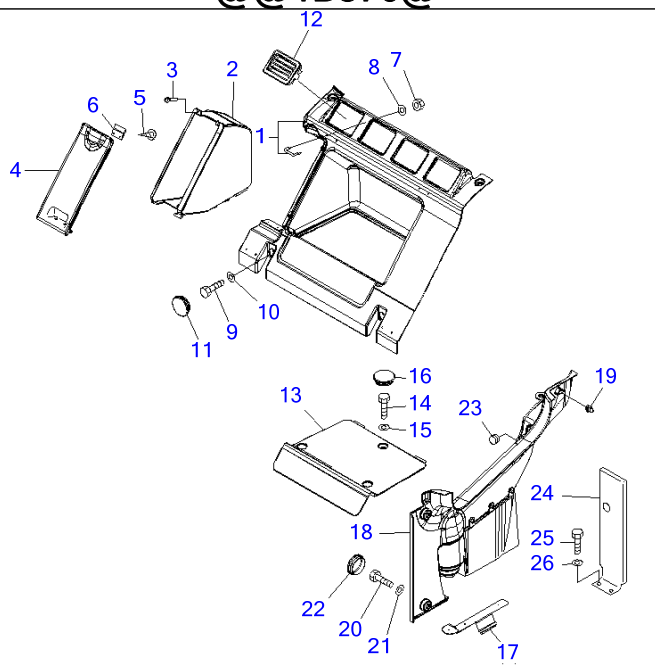

P W 1 B 8 7 6

PC220-7 S/N 60001-UP (Overseas Version)

SEAT REAR COVER(#60001-60316)

Item	Part No.	Part Name	Qty	Serial No.
	20Y-54-65250	COVER ASS'Y	1	60001-60316
1	☆	・COVER	1	60001-60316
2	20Y-54-65370	・BOX	1	60001-60316
3	14X-54-18450	・・CUSHION	2	60001-60316
4	20Y-54-65350	・COVER	1	60001-60316
5	01370-00512	・・SCREW	2	60001-60316
6	14X-54-18540	・・LOCK ASS'Y	1	60001-60316
7	01580-10403	・NUT	8	60001-60316
8	01601-20410	・WASHER	8	60001-60316
9	01010-80825	BOLT	4	60001-60316
10	01643-30823	WASHER	4	60001-60316
11	22U-54-25331	CAP	4	60001-60316
12	201-979-7820	GRILLE	4	60124-60316
	421-925-3540	COVER	4	60001-60123
13	20Y-54-65380	COVER	1	60001-60316
14	01010-80820	BOLT	3	60001-60316
15	01643-30823	WASHER	3	60001-60316
16	22U-54-25331	CAP	3	60001-60316
	20Y-54-65260	COVER ASS'Y,L.H.	1	60001-60316
17	20Y-54-65270	・BRACKET	1	60001-60316
18	☆	・COVER	1	60001-60316
19	22U-54-25360	・・CLIP	1	60001-60316
20	01010-80820	BOLT	2	60001-60316
21	01643-30823	WASHER	2	60001-60316
22	22U-54-25331	CAP	2	60001-60316
23	09415-02110	CAP	1	60001-60316
24	20Y-54-65440	COVER	1	60001-60316
25	01010-D0816	BOLT	3	60001-60316

SEAT REAR COVER(#60001-60316)

Item	Part No.	Part Name	Qty	Serial No.
26	01643-70823	WASHER	3	60001-60316

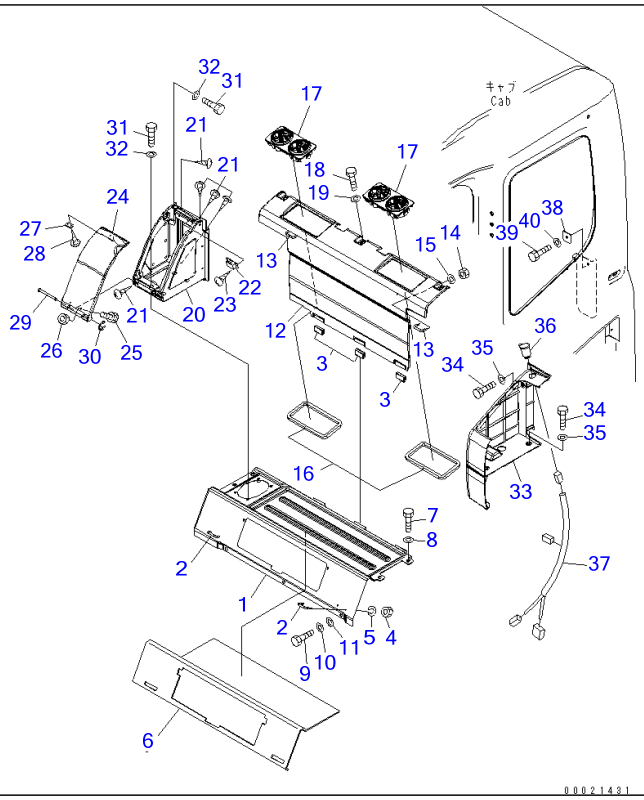

Ref K0180-01A3 **Page 210120**

PC220-7 S/N 60001-UP (Overseas Version)

SEAT REAR COVER (WITH BIG WIND AIR CONDITIONER) (1/2)(#65001-)

Item	Part No.	Part Name	Qty	Serial No.
	208-979-7962	COVER ASS'Y	1	65001-
1	☆	COVER	1	65001-
2	208-53-12290	・HOOK	2	65001-
3	208-53-12460	・SEAT	3	65001-
4	01580-10403	・NUT	4	65001-
5	01601-20410	・WASHER	4	65001-
6	208-979-7591	・SEAL	1	65001-
7	01010-D0830	BOLT	4	65001-
8	01643-70823	WASHER	4	65001-
9	01010-D0820	BOLT	3	65001-
10	01643-70823	WASHER	3	65001-
11	01643-70823	WASHER	3	65001-
	208-53-13620	COVER	1	65001-
12	☆	・COVER	1	65001-
13	208-53-12290	・・HOOK	2	65001-
14	01580-10403	・・NUT	4	65001-
15	01601-20410	・・WASHER	4	65001-
16	208-53-13710	・SEAL	2	65001-
17	208-979-7560	GRILLE	2	65001-
18	01010-D0820	BOLT	3	65001-
19	01643-70823	WASHER	3	65001-
	208-53-12350	COVER ASS'Y	1	65001-
20	☆	・COVER	1	65001-
21	01370-00408	・・SCREW	1	65001-
22	09452-14503	・CATCHER	1	65001-
23	01370-10308	・SCREW	2	65001-
24	208-53-12390	・COVER	1	65001-
25	01023-10406	・・SCREW	2	65001-

SEAT REAR COVER (WITH BIG WIND AIR CONDITIONER) (1/2)(#65001-)

Item	Part No.	Part Name	Qty	Serial No.
26	01580-00403	・・NUT	2	65001-
27	208-53-12410	・PLATE	1	65001-
28	01370-20308	・SCREW	2	65001-
29	208-53-12320	・PIN	1	65001-
30	208-53-12330	・RING	1	65001-
31	01010-D0820	BOLT	5	65001-
32	208-53-11330	WASHER	5	65001-
33	208-53-12730	COVER	1	65001-
34	01010-D0820	BOLT	3	65001-
35	208-53-11330	WASHER	3	65001-
36	198-Z11-2640	SOCKET ASS'Y	1	65001-
37	208-53-12850	WIRING HARNESS	1	65001-
38	208-53-12750	PLATE	1	65001-
39	01010-D0820	BOLT	1	65001-
40	01643-70823	WASHER	1	65001-

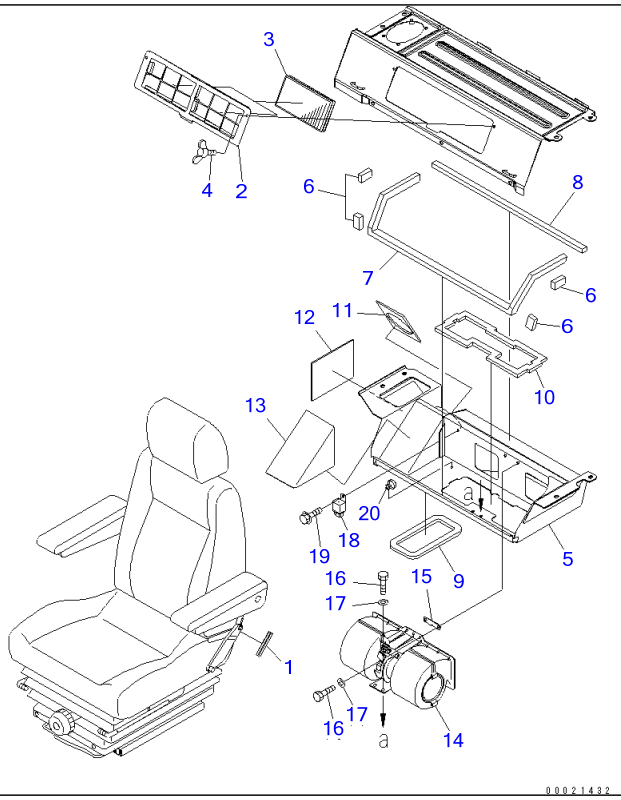

Ref K0180-02A3 **Page 210130**

PC220-7 S/N 60001-UP (Overseas Version)

SEAT REAR COVER (WITH BIG WIND AIR CONDITIONER) (2/2)(#65001-67089)

Item	Part No.	Part Name	Qty	Serial No.
1	208-53-11780	TRIM	2	65001-@
2	208-979-7752	COVER	1	65001-@
3	208-979-7740	FILTER	2	65001-@
4	20Y-54-65790	BOLT	2	65001-@
	208-979-7920	BRACKET	1	65001-67089
5	☆	・BRACKET	1	65001-67089
6	208-979-7811	・SEAL	4	65001-@
7	208-979-7821	・SEAL	1	65001-@
8	208-979-7841	・SEAL	1	65001-@
9	208-979-7850	・SEAL	1	65001-@
10	208-979-7860	・SEAL	1	65001-@
11	208-979-7930	・SEAL	1	65001-67089
12	208-979-7940	・SEAL	1	65001-67089
13	208-979-7950	・SEAL	1	65001-67089
14	208-979-7710	BLOWER ASS'Y	1	65001-@
15	208-979-7731	PLATE	1	65001-@
16	01010-80816	BOLT	4	65001-@
17	01643-30823	WASHER	4	65001-@
18	20Y-979-6771	RELAY	1	65001-@
19	01435-00610	BOLT	1	65001-@
20	08059-00310	CLIP	1	65001-@

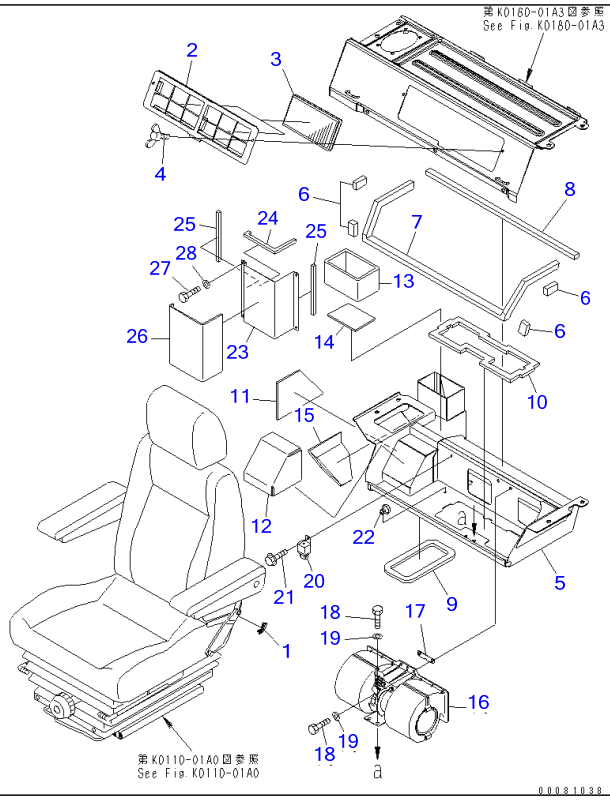

Ref K0180-02A3A **Page 210140**

PC220-7 S/N 60001-UP (Overseas Version)

SEAT REAR COVER (WITH BIG WIND AIR CONDITIONER) (2/2)(#67090-)

Item	Part No.	Part Name	Qty	Serial No.
1	208-53-11780	TRIM	2	65001-
2	208-979-7752	COVER	1	65001-
3	208-979-7740	FILTER	2	65001-
4	20Y-54-65790	BOLT	2	65001-
	208-979-7921	BRACKET ASS'Y	1	67090-
5	☆	・BRACKET	1	67090-
6	208-979-7811	・SEAL	4	65001-
7	208-979-7821	・SEAL	1	65001-
8	208-979-7841	・SEAL	1	65001-
9	208-979-7850	・SEAL	1	65001-
10	208-979-7860	・SEAL	1	65001-
11	208-979-7941	・SEAL	1	67090-
12	208-979-7951	・SEAL	1	67090-
13	208-979-8620	・SEAL	1	67090-
14	208-979-8630	・SEAL	1	67090-
15	208-979-8640	・SEAL	1	67090-
16	208-979-7710	BLOWER ASS'Y	1	65001-
17	208-979-7731	PLATE	1	65001-
18	01010-80816	BOLT	4	65001-
19	01643-30823	WASHER	4	65001-
20	20Y-979-6771	RELAY	1	65001-
21	01435-00610	BOLT	1	65001-
22	08059-00310	CLIP	1	65001-
23	208-979-8610	DUCT	1	67090-
24	208-979-8650	・SEAL	1	67090-
25	208-979-8660	・SEAL	2	67090-
26	208-979-8670	・SEAL	1	67090-
27	01010-D0616	BOLT	4	67090-

SEAT REAR COVER (WITH BIG WIND AIR CONDITIONER) (2/2)(#67090-)

Item	Part No.	Part Name	Qty	Serial No.
28	01643-70623	WASHER	4	67090-

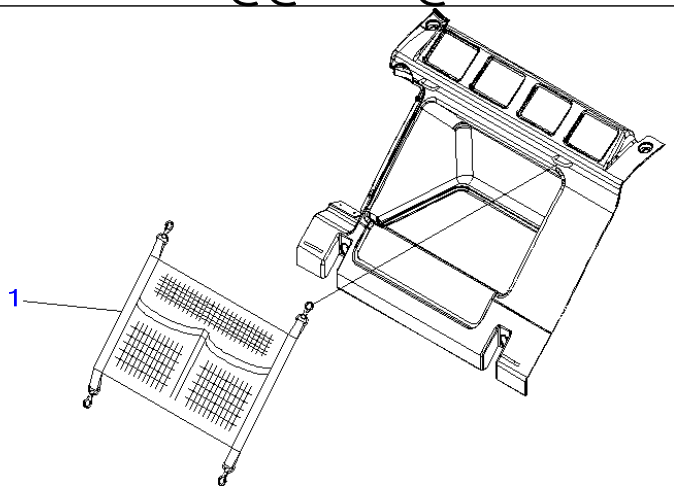

PW1C788

Ref K0190-01A0 **Page 210150**

PC220-7 S/N 60001-UP (Overseas Version)
LUGGAGE BOX NET(#60001-65000)

Item	Part No.	Part Name	Qty	Serial No.
1	20Y-54-65640	NET	1	60001-65000

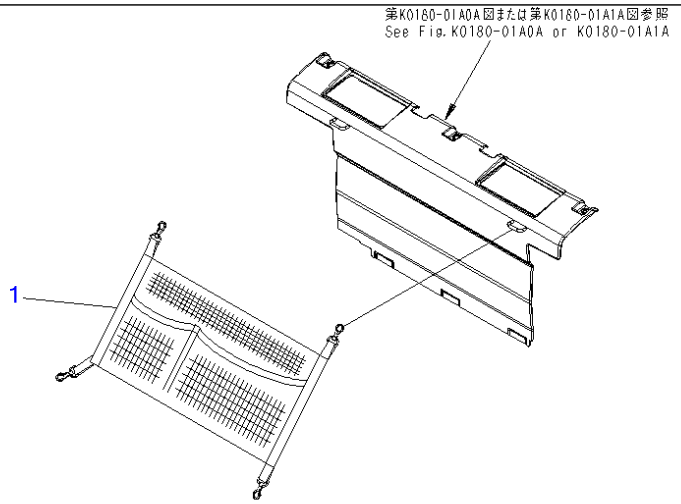

00018555

Ref K0190-01A0A **Page 210160**

PC220-7 S/N 60001-UP (Overseas Version)

LUGGAGE BOX NET(#65001-)

Item	Part No.	Part Name	Qty	Serial No.
1	208-53-13720	NET	1	65001-

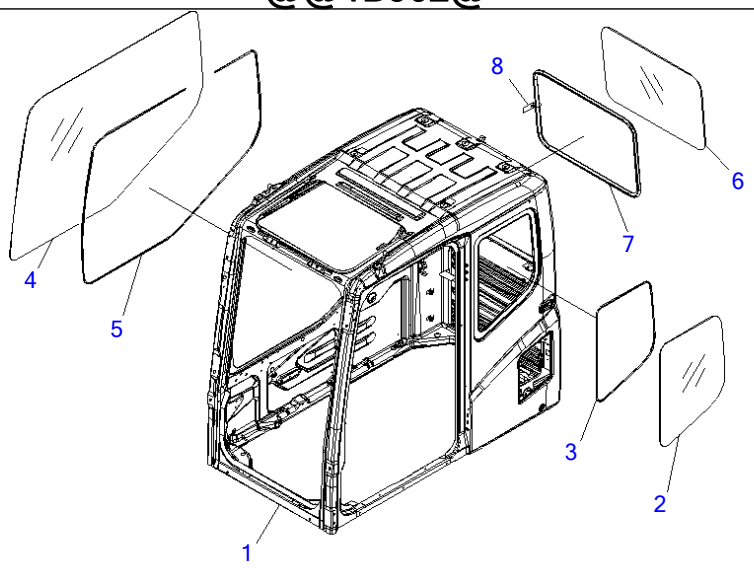

PW1B902

Ref K0210-01A0 **Page 210170**

PC220-7 S/N 60001-UP (Overseas Version)
OPERATOR'S CAB (CAB)(#60001-65000)

Item	Part No.	Part Name	Qty	Serial No.
	20Y-54-01113	CAB ASS'Y,(KOMTRAX)	1	60262-65000
	☐20Y-54-01112	CAB ASS'Y,(KOMTRAX)	1	60001-60261
	20Y-54-01141	CAB ASS'Y,(KOMTRAX LESS)	1	60262-65000
	☐20Y-54-01140	CAB ASS'Y,(KOMTRAX LESS)	1	60001-60261
	20Y-54-01341	CAB ASS'Y,(W/O SPEAKER, RELEASE LEVER)	1	60262-65000
	☐20Y-54-01340	CAB ASS'Y,(W/O SPEAKER, RELEASE LEVER)	1	60001-60261
	20Y-54-01331	CAB ASS'Y,(WITHOUT SPEAKER)	1	60262-65000
	☐20Y-54-01330	CAB ASS'Y,(WITHOUT SPEAKER)	1	60001-60261
	20Y-54-01351	CAB ASS'Y,(WITHOUT RELEASE LEVER)	1	60262-65000
	☐20Y-54-01350	CAB ASS'Y,(WITHOUT RELEASE LEVER)	1	60001-60261
1	☆	・CAB	1	60001-65000
2	20Y-54-51241	・GLASS,REAR, L.H.	1	60001-@
3	20Y-54-51261	・SEAL,REAR, L.H.	1	60001-@
4	20Y-54-51842	・GLASS,R.H.	1	60001-@
5	20Y-54-51851	・DAM,R.H.	1	60001-@
6	20Y-54-51272	・GLASS,REAR	1	60001-65000
7	20Y-54-51251	・WEATHER STRIP,REAR	1	60001-@
8	20T-54-75250	・TAG	1	60001-@

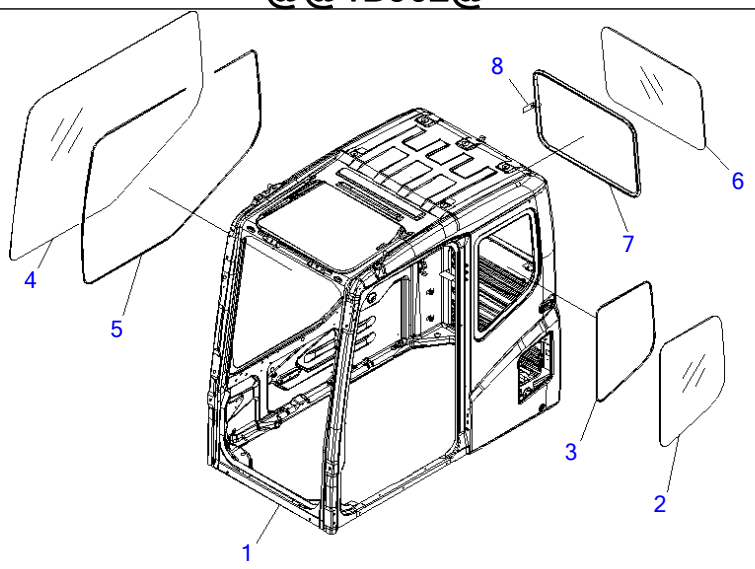

P W 1 B 9 0 2

Ref K0210-01A5 **Page 210180**

PC220-7 S/N 60001-UP (Overseas Version)

OPERATOR'S CAB (CAB) (FOR VANDALISM PROTECTION)(#60001-65000)

Item	Part No.	Part Name	Qty	Serial No.
	20Y-54-01172	CAB ASS'Y,(VANDALISM PROTECTION)	1	60262-65000
	☐20Y-54-01171	CAB ASS'Y,(VANDALISM PROTECTION)	1	60224-60261
	☐20Y-54-01170	CAB ASS'Y,(VANDALISM PROTECTION)	1	60001-60223
1	☆	・CAB	1	60224-65000
	☆	・CAB	1	60001-60223
2	20Y-54-51241	・GLASS,L.H.	1	60001-@
3	20Y-54-51261	・SEAL,L.H.	1	60001-@
4	20Y-54-51842	・GLASS,R.H.	1	60001-@
5	20Y-54-51851	・DAM,R.H.	1	60001-@
6	20Y-54-51272	・GLASS,REAR	1	60001-65000
7	20Y-54-51251	・WEATHER STRIP	1	60001-@
8	20T-54-75250	・TAG	1	60001-@

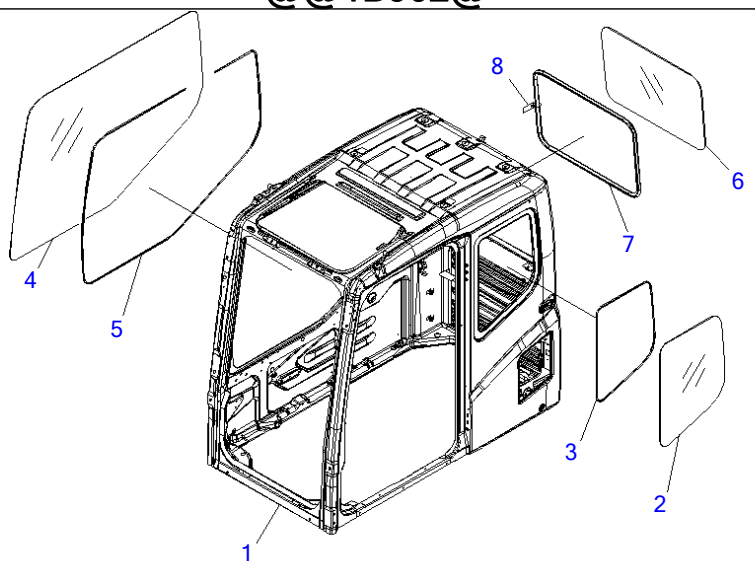

PW1B902

Ref K0210-01A6 **Page 210190**

PC220-7 S/N 60001-UP (Overseas Version)
OPERATOR'S CAB (CAB) (COLD WEATHER A SPEC.)(#60255-65000)

Item	Part No.	Part Name	Qty	Serial No.
	20Y-54-01181	CAB ASS'Y,(COLD WEATHER (A) SPEC.)	1	60262-65000
	□20Y-54-01180	CAB ASS'Y,(COLD WEATHER (A) SPEC.)	1	60255-60261
1	☆	・CAB,RUSSIA	1	60255-65000
2	20Y-54-51241	・GLASS	1	60255-65000
3	20Y-54-51261	・SEAL	1	60255-65000
4	20Y-54-51842	・GLASS	1	60255-65000
5	20Y-54-51851	・DAM	1	60255-65000
6	20Y-54-51272	・GLASS	1	60255-65000
7	20Y-54-51251	・WEATHER STRIP	1	60255-65000
8	20T-54-75250	・TAG	1	60255-65000

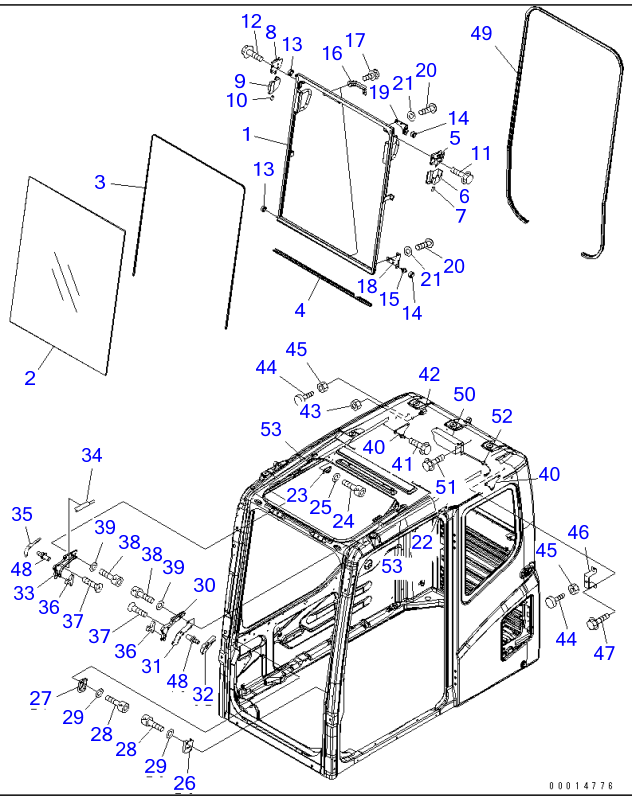

PC220-7 S/N 60001-UP (Overseas Version)

OPERATOR'S CAB (FRONT WINDOW)(#60001-60274)

Item	Part No.	Part Name	Qty	Serial No.
	(20Y-54-01113)	CAB ASS'Y,(KOMTRAX)	1	60262-@
	(☐20Y-54-01112)	CAB ASS'Y,(KOMTRAX)	1	60001-60261
	(20Y-54-01141)	CAB ASS'Y,(KOMTRAX LESS)	1	60262-@
	(☐20Y-54-01140)	CAB ASS'Y,(KOMTRAX LESS)	1	60001-60261
	(20Y-54-01331)	CAB ASS'Y,(WITHOUT SPEAKER)	1	60262-@
	(☐20Y-54-01330)	CAB ASS'Y,(WITHOUT SPEAKER)	1	60001-60261
	(20Y-54-01341)	CAB ASS'Y,(W/O SPEAKER, RELEASE LEVER)	1	60262-@
	(☐20Y-54-01340)	CAB ASS'Y,(W/O SPEAKER, RELEASE LEVER)	1	60001-60261
	(20Y-54-01351)	CAB ASS'Y,(WITHOUT RELEASE LEVER)	1	60262-@
	(☐20Y-54-01350)	CAB ASS'Y,(WITHOUT RELEASE LEVER)	1	60001-60261
	(20Y-54-01321)	CAB ASS'Y,(DEMOLITION SPEC.)	1	60262-@
	(☐20Y-54-01320)	CAB ASS'Y,(DEMOLITION SPEC.)	1	60158-60261
	(20Y-54-01172)	CAB ASS'Y,(VANDALISM PROTECTION)	1	60262-@
	(☐20Y-54-01171)	CAB ASS'Y,(VANDALISM PROTECTION)	1	60224-60261
	(☐20Y-54-01170)	CAB ASS'Y,(VANDALISM PROTECTION)	1	60001-60223
	(20Y-54-01181)	CAB ASS'Y,(COLD WEATHER (A) SPEC.)	1	60262-@
	(☐20Y-54-01180)	CAB ASS'Y,(COLD WEATHER (A) SPEC.)	1	60255-60261
	20Y-54-01132	・WINDOW ASS'Y	1	60001-@
1	☆	・・FRAME, FRONT,WINDOW	1	60001-60274
2	20Y-54-51522	・・GLASS,FRONT	1	60001-60274
3	20Y-54-51531	・・SEAL,FRONT WINDOW	1	60001-60274
4	20Y-54-51551	・・SEAL,FRONT, LOWER	1	60001-60274
5	22B-54-15411	・・LOCK ASS'Y,L.H.	1	60001-@
6	22B-54-15440	・・CASE,L.H.	1	60001-@
7	22B-54-15470	・・KNOB,L.H.	1	60001-@
8	22B-54-15421	・・LOCK ASS'Y,R.H.	1	60001-@
9	22B-54-15450	・・CASE,R.H.	1	60001-@
10	22B-54-15480	・・KNOB,R.H.	1	60001-@

OPERATOR'S CAB (FRONT WINDOW)(#60001-60274)

Item	Part No.	Part Name	Qty	Serial No.
11	01435-40812	・・BOLT	2	60001-60274
12	01435-40820	・・BOLT	2	60001-60274
13	20Y-54-52621	・・ROLLER	2	60001-@
14	20Y-54-52681	・・ROLLER	2	60001-@
15	20Y-54-52691	・・PIN,UNDER, L.H.	1	60001-@
16	20Y-54-14590	・・HANDLE	2	60001-60274
17	01023-10616	・・SCREW	4	60001-60274
18	20Y-54-52632	・・BRACKET	1	60001-60274
19	20Y-54-52642	・・BRACKET	1	60001-60274
20	01245-00616	・・SCREW	6	60001-60274
21	01643-70623	・・WASHER	6	60001-60274
22	20Y-54-51670	・STOPPER	1	60001-@
23	20Y-54-51680	・STOPPER	1	60001-@
24	01252-80616	・BOLT	4	60001-@
25	01643-70623	・WASHER	4	60001-@
26	20Y-54-51633	・BLOCK,UNDER, L.H.	1	60001-@
27	20Y-54-52192	・BLOCK,UNDER, R.H.	1	60001-@
28	01252-80620	・BOLT	4	60001-@
29	01641-50608	・WASHER	4	60001-@
30	20Y-54-51652	・BLOCK,L.H.	1	60001-@
31	20Y-54-52282	・BLOCK,L.H.	1	60001-@
32	20Y-54-53531	・COVER	1	60262-@
33	20Y-54-51663	・BLOCK,CORNER, R.H.	1	60003-@
	20Y-54-51662	・BLOCK,CORNER, R.H.	1	60001-60002
34	20Y-54-52940	・PLATE	1	60003-@
35	20Y-54-53541	・COVER	1	60262-@
36	22B-54-15621	・STOPPER	2	60003-@
	22B-54-15620	・STOPPER	2	60001-60002
37	01224-70612	・SCREW	3	60001-@
38	01252-80616	・BOLT	4	60001-@
39	01641-50608	・WASHER	4	60001-@
40	22B-54-15432	・STRIKER,SASH	2	60001-@
41	01435-40616	・BOLT	4	60001-@
42	21J-06-12440	・SWITCH	1	60001-@
43	01583-11811	・NUT	1	60001-@
44	20Y-54-11611	・STOPPER	2	60001-@
45	01580-11008	・NUT	2	60001-@
46	20Y-54-52491	・PLATE	1	60001-@
47	01435-40612	・BOLT	2	60001-@
48	20Y-54-51622	・STRIKER	2	60262-@
	20Y-54-51621	・STRIKER	2	60001-60261
49	20Y-54-51541	・TRIM,FRONT	1	60001-@
50	20Y-54-51591	・SPRING ASS'Y	1	60001-@
51	01435-00616	・BOLT	2	60001-@
52	20Y-54-51640	・HOLDER	1	60001-@
53	20Y-54-51420	・SEAL	2	60001-@

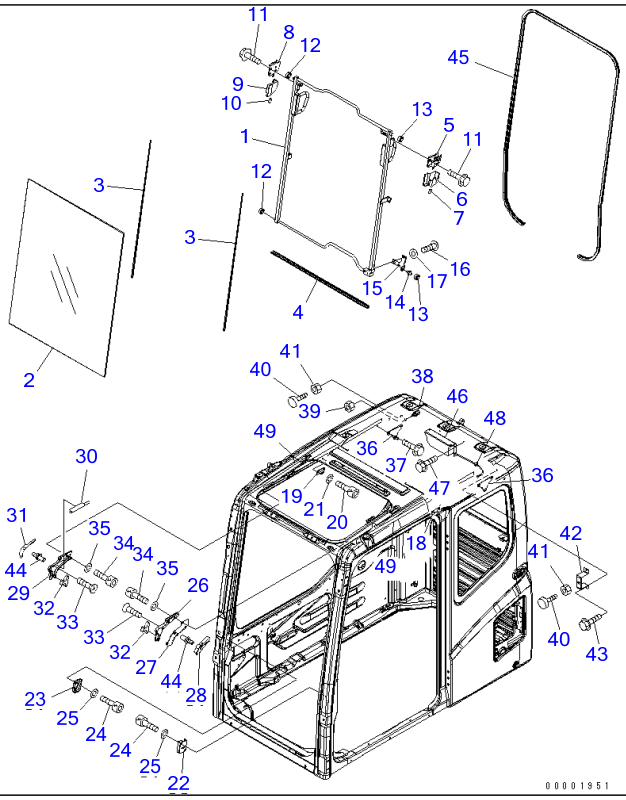

Ref K0210-02A0A

Page 210210

PC220-7 S/N 60001-UP (Overseas Version)

OPERATOR'S CAB (FRONT WINDOW)(#60275-60282)

Item	Part No.	Part Name	Qty	Serial No.
	(20Y-54-01113)	CAB ASS'Y,(KOMTRAX)	1	60262-@
	(20Y-54-01141)	CAB ASS'Y,(KOMTRAX LESS)	1	60262-@
	(20Y-54-01331)	CAB ASS'Y,(WITHOUT SPEAKER)	1	60262-@
	(20Y-54-01341)	CAB ASS'Y,(W/O SPEAKER, RELEASE LEVER)	1	60262-@
	(20Y-54-01351)	CAB ASS'Y,(WITHOUT RELEASE LEVER)	1	60262-@
	(20Y-54-01321)	CAB ASS'Y,(DEMOLITION SPEC.)	1	60262-@
	(20Y-54-01172)	CAB ASS'Y,(VANDALISM PROTECTION)	1	60262-@
	(20Y-54-01181)	CAB ASS'Y,(COLD WEATHER (A) SPEC.)	1	60262-@
	20Y-54-01132	・WINDOW ASS'Y	1	60001-@
1	☆	・・FRAME, FRONT,WINDOW	1	60275-60282
2	20Y-54-51523	・・GLASS,FRONT	1	60275-60282
3	20Y-54-51532	・・SEAL,FRONT WINDOW	2	60275-60282
4	20Y-54-51552	・・SEAL,FRONT, LOWER	1	60275-60282
5	22B-54-15411	・・LOCK ASS'Y,L.H.	1	60001-@
6	22B-54-15440	・・CASE,L.H.	1	60001-@
7	22B-54-15470	・・KNOB,L.H.	1	60001-@
8	22B-54-15421	・・LOCK ASS'Y,R.H.	1	60001-@
9	22B-54-15450	・・CASE,R.H.	1	60001-@
10	22B-54-15480	・・KNOB,R.H.	1	60001-@
11	01435-40812	・・BOLT	4	60275-@
12	20Y-54-52621	・・ROLLER	2	60001-@
13	20Y-54-52681	・・ROLLER	2	60001-@
14	20Y-54-52691	・・PIN,UNDER, L.H.	1	60001-@
15	20Y-54-52633	・・BRACKET	1	60275-60282
16	01245-00816	・・SCREW	3	60275-60282
17	01643-70823	・・WASHER	3	60275-60282
18	20Y-54-51670	・STOPPER	1	60001-@
19	20Y-54-51680	・STOPPER	1	60001-@

OPERATOR'S CAB (FRONT WINDOW)(#60275-60282)

Item	Part No.	Part Name	Qty	Serial No.
20	01252-80616	・BOLT	4	60001-@
21	01643-70623	・WASHER	4	60001-@
22	20Y-54-51633	・BLOCK,UNDER, L.H.	1	60001-@
23	20Y-54-52192	・BLOCK,UNDER, R.H.	1	60001-@
24	01252-80620	・BOLT	4	60001-@
25	01641-50608	・WASHER	4	60001-@
26	20Y-54-51652	・BLOCK,L.H.	1	60001-@
27	20Y-54-52282	・BLOCK,L.H.	1	60001-@
28	20Y-54-53531	・COVER	1	60262-@
29	20Y-54-51663	・BLOCK,CORNER, R.H.	1	60003-@
30	20Y-54-52940	・PLATE	1	60003-@
31	20Y-54-53541	・COVER	1	60262-@
32	22B-54-15621	・STOPPER	2	60003-@
33	01224-70612	・SCREW	3	60001-@
34	01252-80616	・BOLT	4	60001-@
35	01641-50608	・WASHER	4	60001-@
36	22B-54-15432	・STRIKER,SASH	2	60001-@
37	01435-40616	・BOLT	4	60001-@
38	21J-06-12440	・SWITCH	1	60001-@
39	01583-11811	・NUT	1	60001-@
40	20Y-54-11611	・STOPPER	2	60001-@
41	01580-11008	・NUT	2	60001-@
42	20Y-54-52491	・PLATE	1	60001-@
43	01435-40612	・BOLT	2	60001-@
44	20Y-54-51622	・STRIKER	2	60262-@
45	20Y-54-51541	・TRIM,FRONT	1	60001-@
46	20Y-54-51591	・SPRING ASS'Y	1	60001-@
47	01435-00616	・BOLT	2	60001-@
48	20Y-54-51640	・HOLDER	1	60001-@
49	20Y-54-51420	・SEAL	2	60001-@

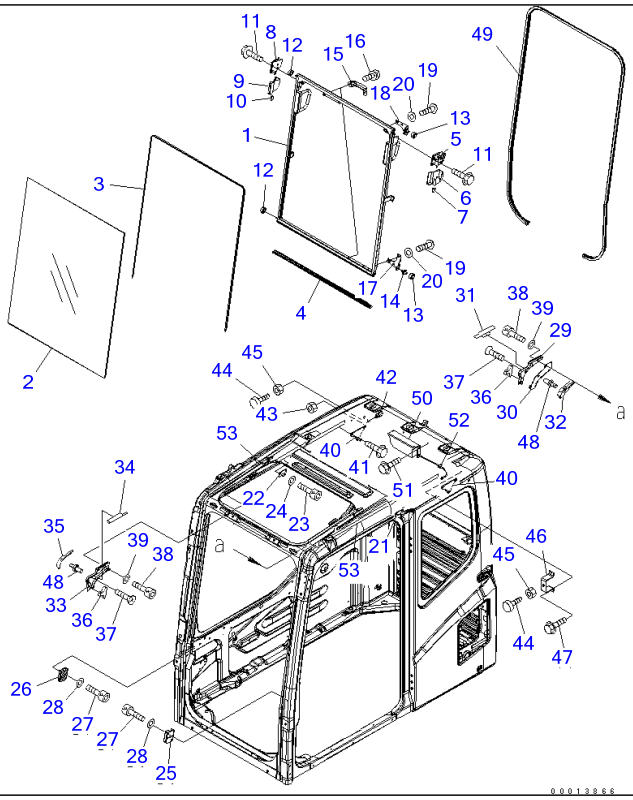

Ref K0210-02A0B

Page 210220

PC220-7 S/N 60001-UP (Overseas Version)

OPERATOR'S CAB (FRONT WINDOW)(#60283-65000)

Item	Part No.	Part Name	Qty	Serial No.
	(20Y-54-01113)	CAB ASS'Y,(KOMTRAX)	1	60262-65000
	(20Y-54-01141)	CAB ASS'Y,(KOMTRAX LESS)	1	60262-65000
	(20Y-54-01331)	CAB ASS'Y,(WITHOUT SPEAKER)	1	60262-65000
	(20Y-54-01341)	CAB ASS'Y,(W/O SPEAKER, RELEASE LEVER)	1	60262-65000
	(20Y-54-01351)	CAB ASS'Y,(WITHOUT RELEASE LEVER)	1	60262-65000
	(20Y-54-01321)	CAB ASS'Y,(DEMOLITION SPEC.)	1	60262-65000
	(20Y-54-01172)	CAB ASS'Y,(VANDALISM PROTECTION)	1	60262-65000
	(20Y-54-01181)	CAB ASS'Y,(COLD WEATHER (A) SPEC.)	1	60262-65000
	20Y-54-01132	・WINDOW ASS'Y	1	60001-65000
1	☆	・・FRAME, FRONT	1	60547-65000
	☆	・・FRAME, FRONT,WINDOW	1	60283-60546
2	20Y-54-51522	・・GLASS,FRONT	1	60283-@
3	20Y-54-51531	・・SEAL,FRONT WINDOW	2	60283-@
4	20Y-54-51551	・・SEAL,FRONT, LOWER	1	60283-@
5	22B-54-15411	・・LOCK ASS'Y,L.H.	1	60001-@
6	22B-54-15440	・・CASE,L.H.	1	60001-@
7	22B-54-15470	・・KNOB,L.H.	1	60001-@
8	22B-54-15421	・・LOCK ASS'Y,R.H.	1	60001-@
9	22B-54-15450	・・CASE,R.H.	1	60001-@
10	22B-54-15480	・・KNOB,R.H.	1	60001-@
11	01435-40812	・・BOLT	4	60275-@
12	20Y-54-52621	・・ROLLER	2	60001-@
13	20Y-54-52681	・・ROLLER	2	60001-@
14	20Y-54-52691	・・PIN,UNDER, L.H.	1	60001-65000
15	20Y-54-14590	・・HANDLE	2	60283-@
16	01023-10616	・・SCREW	4	60283-@
17	20Y-54-52632	・・BRACKET	1	60283-65000
18	20Y-54-52643	・・BRACKET	1	60547-65000

OPERATOR'S CAB (FRONT WINDOW)(#60283-65000)

Item	Part No.	Part Name	Qty	Serial No.
	20Y-54-52642	・・BRACKET	1	60283-60546
19	01245-00616	・・SCREW	6	60283-65000
20	01643-70623	・・WASHER	6	60283-65000
21	20Y-54-51670	・STOPPER	1	60001-@
22	20Y-54-51680	・STOPPER	1	60001-@
23	01252-80616	・BOLT	4	60001-@
24	01643-70623	・WASHER	4	60001-@
25	20Y-54-51633	・BLOCK,UNDER, L.H.	1	60001-@
26	20Y-54-52192	・BLOCK,UNDER, R.H.	1	60001-@
27	01252-80620	・BOLT	4	60001-65000
28	01641-50608	・WASHER	4	60001-@
29	20Y-54-51652	・BLOCK,L.H.	1	60001-65000
30	20Y-54-52282	・BLOCK,L.H.	1	60001-65000
31	20Y-54-53570	・PLATE	1	60316-65000
32	20Y-54-53531	・COVER	1	60262-65000
33	20Y-54-51663	・BLOCK,CORNER, R.H.	1	60003-65000
34	20Y-54-52940	・PLATE	1	60003-65000
35	20Y-54-53541	・COVER	1	60262-65000
36	22B-54-15621	・STOPPER	2	60003-@
37	01224-70612	・SCREW	3	60001-65000
38	01252-80616	・BOLT	4	60001-65000
39	01641-50608	・WASHER	4	60001-65000
40	22B-54-15432	・STRIKER,SASH	2	60001-@
41	01435-40616	・BOLT	4	60001-65000
42	21J-06-12440	・SWITCH	1	60001-@
43	01583-11811	・NUT	1	60001-@
44	20Y-54-11611	・STOPPER	2	60001-@
45	01580-11008	・NUT	2	60001-@
46	20Y-54-52491	・PLATE	1	60001-@
47	01435-40612	・BOLT	2	60001-65000
48	20Y-54-51622	・STRIKER	2	60262-65000
49	20Y-54-51541	・TRIM,FRONT	1	60001-65000
50	20Y-54-51591	・SPRING ASS'Y	1	60001-65000
51	01435-00616	・BOLT	2	60001-@
52	20Y-54-51640	・HOLDER	1	60001-@
53	20Y-54-51420	・SEAL	2	60001-65000

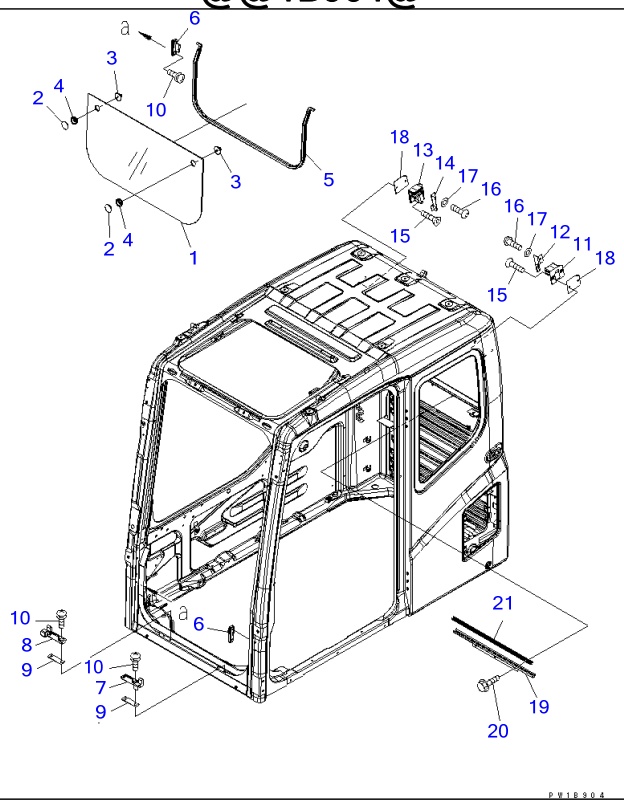

Ref K0210-03A0 Page 210230

PC220-7 S/N 60001-UP (Overseas Version)

OPERATOR'S CAB (FRONT LOWER WINDOW)(#60001-65000)

Item	Part No.	Part Name	Qty	Serial No.
	(20Y-54-01113)	CAB ASS'Y,(KOMTRAX)	1	60262-65000
	(☐20Y-54-01112)	CAB ASS'Y,(KOMTRAX)	1	60001-60261
	(20Y-54-01141)	CAB ASS'Y,(KOMTRAX LESS)	1	60262-65000
	(☐20Y-54-01140)	CAB ASS'Y,(KOMTRAX LESS)	1	60001-60261
	(20Y-54-01331)	CAB ASS'Y,(WITHOUT SPEAKER)	1	60262-65000
	(☐20Y-54-01330)	CAB ASS'Y,(WITHOUT SPEAKER)	1	60001-60261
	(20Y-54-01341)	CAB ASS'Y,(W/O SPEAKER, RELEASE LEVER)	1	60262-65000
	(☐20Y-54-01340)	CAB ASS'Y,(W/O SPEAKER, RELEASE LEVER)	1	60001-60261
	(20Y-54-01351)	CAB ASS'Y,(WITHOUT RELEASE LEVER)	1	60262-65000
	(☐20Y-54-01350)	CAB ASS'Y,(WITHOUT RELEASE LEVER)	1	60001-60261
	(20Y-54-01321)	CAB ASS'Y,(DEMOLITION SPEC.)	1	60262-65000
	(☐20Y-54-01320)	CAB ASS'Y,(DEMOLITION SPEC.)	1	60158-60261
	(20Y-54-01172)	CAB ASS'Y,(VANDALISM PROTECTION)	1	60262-65000
	(☐20Y-54-01171)	CAB ASS'Y,(VANDALISM PROTECTION)	1	60224-60261
	(☐20Y-54-01170)	CAB ASS'Y,(VANDALISM PROTECTION)	1	60001-60223
	(20Y-54-01181)	CAB ASS'Y,(COLD WEATHER (A) SPEC.)	1	60262-65000
	(☐20Y-54-01180)	CAB ASS'Y,(COLD WEATHER (A) SPEC.)	1	60255-60261
	20Y-54-51601	・GLASS ASS'Y,FRONT, LOWER	1	60001-@
1	20Y-54-51812	・・GLASS,FRONT, LOWER	1	60001-@
2	22B-54-15970	・・RETAINER	2	60001-@
3	22B-54-15980	・・KNOB	2	60001-@
4	08037-02512	・・GROMMET	2	60001-@
5	20Y-54-51862	・SEAL,FRONT, LOWER	1	60001-65000
6	22B-54-15832	・SEAT,GLASS	2	60001-65000
7	22B-54-15781	・SEAT,L.H.	1	60001-@
8	22B-54-15791	・SEAT,R.H.	1	60001-@
9	22B-54-15580	・PLATE	1	60001-@
10	01023-20616	・SCREW	8	60001-@

OPERATOR'S CAB (FRONT LOWER WINDOW)(#60001-65000)

Item	Part No.	Part Name	Qty	Serial No.
11	20Y-54-52161	・LOCK,L.H.	1	60001-@
12	20Y-54-52361	・BRACKET,L.H.	1	60001-@
13	20Y-54-52171	・LOCK,R.H.	1	60001-@
14	20Y-54-52371	・BRACKET,R.H.	1	60001-@
15	01240-00620	・SCREW	2	60001-@
16	01245-00625	・SCREW	2	60001-@
17	01641-50608	・WASHER	2	60001-@
18	20Y-54-52380	・PLATE	1	60001-@
19	20Y-54-52122	・PLATE,FRONT, LOWER	1	60001-65000
20	01435-00616	・BOLT	3	60001-65000
21	20Y-54-52131	・SEAL	1	60001-65000

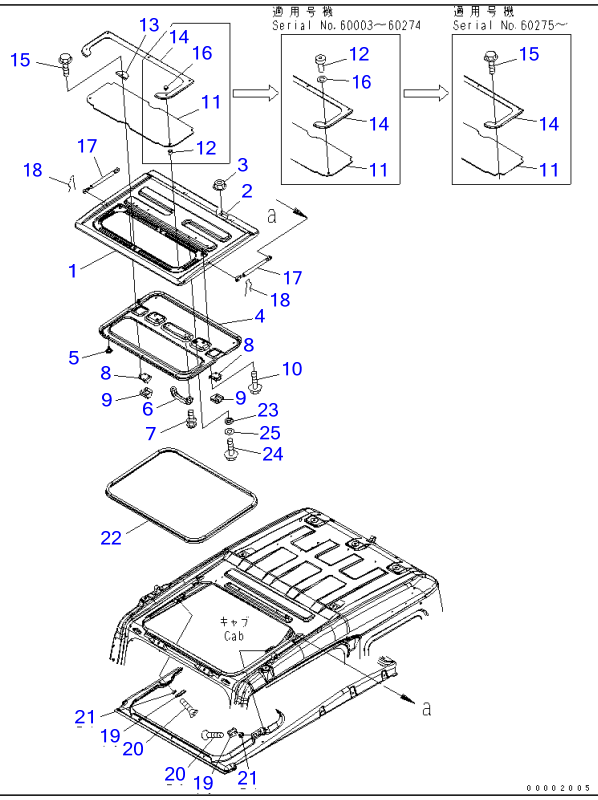

Ref K0210-04A0 **Page 210240**

PC220-7 S/N 60001-UP (Overseas Version)

OPERATOR'S CAB (ROOF WINDOW)(#60001-65000)

Item	Part No.	Part Name	Qty	Serial No.
	(20Y-54-01113)	CAB ASS'Y,(KOMTRAX)	1	60262-65000
	(☐20Y-54-01112)	CAB ASS'Y,(KOMTRAX)	1	60001-60261
	(20Y-54-01141)	CAB ASS'Y,(KOMTRAX LESS)	1	60262-65000
	(☐20Y-54-01140)	CAB ASS'Y,(KOMTRAX LESS)	1	60001-60261
	(20Y-54-01331)	CAB ASS'Y,(WITHOUT SPEAKER)	1	60262-65000
	(☐20Y-54-01330)	CAB ASS'Y,(WITHOUT SPEAKER)	1	60001-60261
	(20Y-54-01341)	CAB ASS'Y,(W/O SPEAKER, RELEASE LEVER)	1	60262-65000
	(☐20Y-54-01340)	CAB ASS'Y,(W/O SPEAKER, RELEASE LEVER)	1	60001-60261
	(20Y-54-01351)	CAB ASS'Y,(WITHOUT RELEASE LEVER)	1	60262-65000
	(☐20Y-54-01350)	CAB ASS'Y,(WITHOUT RELEASE LEVER)	1	60001-60261
	(20Y-54-01172)	CAB ASS'Y,(VANDALISM PROTECTION)	1	60262-65000
	(☐20Y-54-01171)	CAB ASS'Y,(VANDALISM PROTECTION)	1	60224-60261
	(☐20Y-54-01170)	CAB ASS'Y,(VANDALISM PROTECTION)	1	60001-60223
	(20Y-54-01181)	CAB ASS'Y,(COLD WEATHER (A) SPEC.)	1	60262-65000
	(☐20Y-54-01180)	CAB ASS'Y,(COLD WEATHER (A) SPEC.)	1	60255-60261
1	20Y-54-51713	・ROOF	1	60275-65000
	20Y-54-51712	・ROOF	1	60001-60274
2	22B-54-15M50	・・HINGE	2	60001-65000
3	01584-30806	・NUT	4	60001-@
4	20Y-54-51922	・COVER	1	60001-@
5	20Y-54-18690	・RIVET	6	60001-@
6	20Y-54-14590	・HANDLE	1	60001-@
7	01023-10616	・SCREW	2	60001-@
8	22B-54-15990	・LOCK ASS'Y	2	60001-@
9	20Y-54-36360	・COVER	2	60001-@
10	01435-40610	・BOLT	8	60001-65000
11	20Y-54-51744	・CLEAR PLATE	1	60275-@
	20Y-54-51743	・CLEAR PLATE	1	60003-60274

OPERATOR'S CAB (ROOF WINDOW)(#60001-65000)

Item	Part No.	Part Name	Qty	Serial No.
	20Y-54-51742	・CLEAR PLATE	1	60001-60002
12	20Y-54-52482	・NUT	2	60003-60274
	20Y-54-52481	・PIPE	2	60001-60002
13	20Y-54-51720	・PLATE	1	60001-@
14	20Y-54-51733	・PLATE	1	60275-@
	20Y-54-51732	・PLATE	1	60003-60274
	20Y-54-51731	・PLATE	1	60001-60002
15	01435-40612	BOLT	6	60275-65000
	01435-40612	・BOLT	4	60001-60274
16	01641-51223	・WASHER	2	60003-60274
	363-54-22140	・CAP	2	60001-60002
17	20Y-54-36342	・SPRING, GAS	2	60001-@
18	04052-10833	・PIN	4	60001-@
19	22B-54-15921	・STRIKER	2	60001-65000
20	01240-00816	・SCREW	4	60001-65000
21	20Y-54-52651	・SPACER	4	60001-@
22	20Y-54-51760	・SEAL,ROOF	1	60001-@
23	20Y-54-52651	・SPACER	4	60001-@
24	01245-00620	・SCREW	4	60001-@
25	01643-70623	・WASHER	4	60001-@

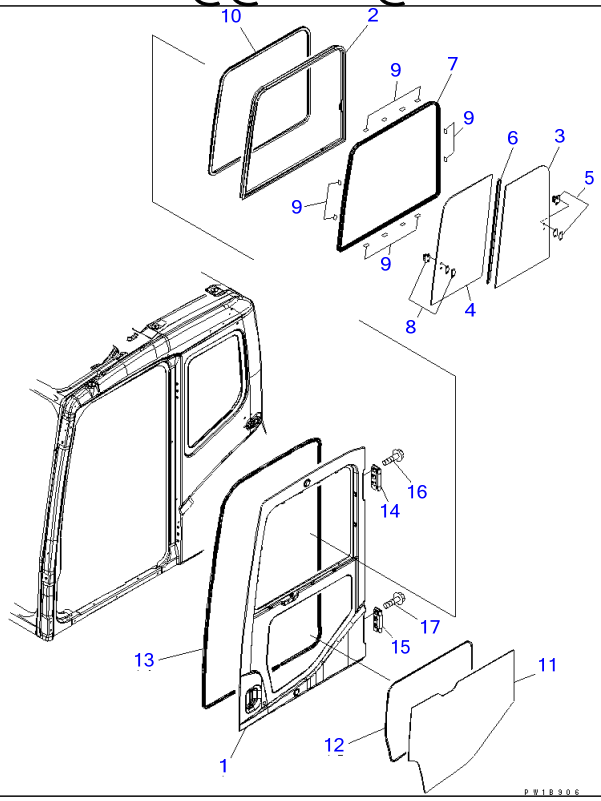

Ref K0210-05A0 **Page 210250**

PC220-7 S/N 60001-UP (Overseas Version)

OPERATOR'S CAB (DOOR)(#60001-65000)

Item	Part No.	Part Name	Qty	Serial No.
	(20Y-54-01113)	CAB ASS'Y,(KOMTRAX)	1	60262-65000
	(☐20Y-54-01112)	CAB ASS'Y,(KOMTRAX)	1	60001-60261
	(20Y-54-01141)	CAB ASS'Y,(KOMTRAX LESS)	1	60262-65000
	(☐20Y-54-01140)	CAB ASS'Y,(KOMTRAX LESS)	1	60001-60261
	(20Y-54-01341)	CAB ASS'Y,(W/O SPEAKER, RELEASE LEVER)	1	60262-65000
	(☐20Y-54-01340)	CAB ASS'Y,(W/O SPEAKER, RELEASE LEVER)	1	60001-60261
	(20Y-54-01331)	CAB ASS'Y,(WITHOUT SPEAKER)	1	60262-65000
	(☐20Y-54-01330)	CAB ASS'Y,(WITHOUT SPEAKER)	1	60001-60261
	(20Y-54-01351)	CAB ASS'Y,(WITHOUT RELEASE LEVER)	1	60262-65000
	(☐20Y-54-01350)	CAB ASS'Y,(WITHOUT RELEASE LEVER)	1	60001-60261
	(20Y-54-01321)	CAB ASS'Y,(DEMOLITION SPEC.)	1	60262-65000
	(☐20Y-54-01320)	CAB ASS'Y,(DEMOLITION SPEC.)	1	60158-60261
	(20Y-54-01181)	CAB ASS'Y,(COLD WEATHER (A) SPEC.)	1	60262-65000
	(☐20Y-54-01180)	CAB ASS'Y,(COLD WEATHER (A) SPEC.)	1	60255-60261
	208-53-00010	・DOOR ASS'Y	1	60760-@
	20Y-54-01122	・DOOR ASS'Y	1	60001-60759
1	☆	・・DOOR	1	60760-@
	☆	・・DOOR	1	60001-60759
	20Y-54-51401	・・SASH ASS'Y	1	60001-@
2	☆	・・・SASH FRAME	1	60001-@
3	20Y-54-52840	・・・GLASS	1	60001-@
4	20Y-54-52850	・・・GLASS	1	60001-@
5	20Y-54-52860	・・・LOCK ASS'Y	1	60001-@
6	20Y-54-52870	・・・SEAL	1	60001-@
7	20Y-54-52880	・・・SEAL	1	60001-@
8	20Y-54-13322	・・・LOCK ASS'Y	1	60001-@
9	20Y-54-13180	・・SEAT	9	60275-@
	20Y-54-13180	・・SEAT	12	60001-60274

OPERATOR'S CAB (DOOR)(#60001-65000)

Item	Part No.	Part Name	Qty	Serial No.
10	20Y-54-51470	・・TRIM	1	60001-@
11	20Y-54-51451	・・GLASS	1	60001-@
12	20Y-54-51461	・・SEAL,DOOR, LOWER	1	60001-@
13	20Y-54-51482	・・SEAL,DOOR, WITH CLIP (36)	1	60001-@
14	20Y-54-51330	・・HINGE	1	60001-@
15	14X-911-1330	・・HINGE	1	60001-@
16	01435-41225	・・BOLT	6	60001-@
17	01435-01225	・・BOLT	6	60001-@

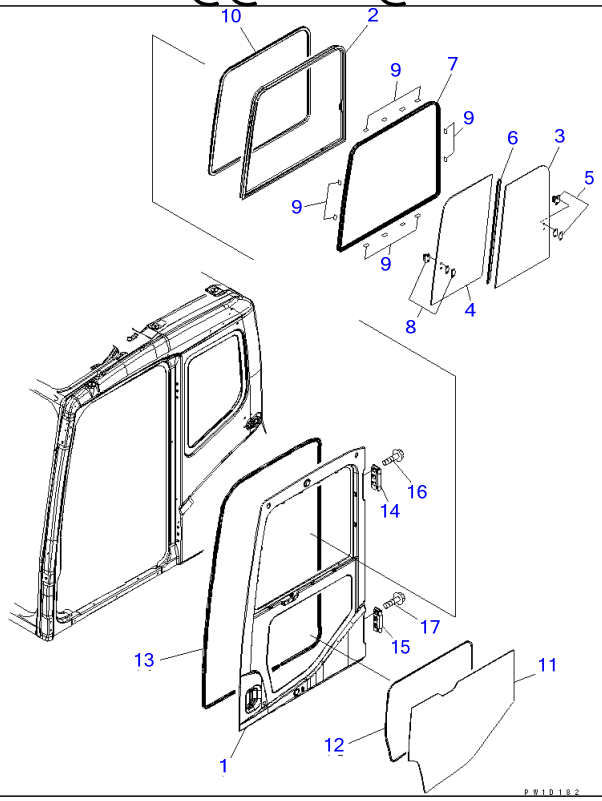

Ref K0210-05A5 **Page 210260**

PC220-7 S/N 60001-UP (Overseas Version)

OPERATOR'S CAB (DOOR) (FOR VANDALISM PROTECTION)(#60001-65000)

Item	Part No.	Part Name	Qty	Serial No.
	(20Y-54-01172)	CAB ASS'Y,(VANDALISM PROTECTION)	1	60262-65000
	(☐20Y-54-01171)	CAB ASS'Y,(VANDALISM PROTECTION)	1	60224-60261
	(☐20Y-54-01170)	CAB ASS'Y,(VANDALISM PROTECTION)	1	60001-60223
	208-53-00070	・DOOR ASS'Y,(VANDALISM PROTECTION)	1	60760-@
	20Y-54-01161	・DOOR ASS'Y,(VANDALISM PROTECTION)	1	60224-60759
	20Y-54-01160	・DOOR ASS'Y,(VANDALISM PROTECTION)	1	60001-60223
1	☆	・・DOOR	1	60760-@
	☆	・・DOOR	1	60224-60759
	☆	・・DOOR	1	60001-60223
	20Y-54-51401	・・SASH ASS'Y	1	60001-@
2	☆	・・・SASH FRAME	1	60001-@
3	20Y-54-52840	・・・GLASS	1	60001-@
4	20Y-54-52850	・・・GLASS	1	60001-@
5	20Y-54-52860	・・・LOCK ASS'Y	1	60001-@
6	20Y-54-52870	・・・SEAL	1	60001-@
7	20Y-54-52880	・・・SEAL	1	60001-@
8	20Y-54-13322	・・・LOCK ASS'Y	1	60001-@
9	20Y-54-13180	・・SEAT	12	60001-@
10	20Y-54-51470	・・TRIM	1	60001-@
11	20Y-54-51451	・・GLASS	1	60001-@
12	20Y-54-51461	・・SEAL	1	60001-@
13	20Y-54-51482	・・SEAL,DOOR, WITH CLIP (36)	1	60001-@
14	20Y-54-51330	・・HINGE	1	60001-@
15	14X-911-1330	・・HINGE	1	60001-@
16	01435-41225	・・BOLT	6	60001-@
17	01435-01225	・・BOLT	6	60001-@

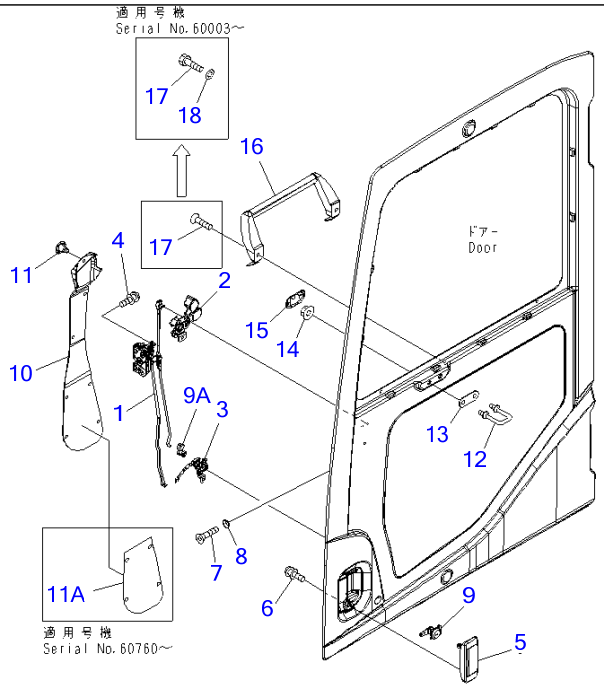

00073527

Ref K0210-06A0 **Page 210270**

PC220-7 S/N 60001-UP (Overseas Version)
OPERATOR'S CAB (DOOR LOCK)(#60001-65000)

Item	Part No.	Part Name	Qty	Serial No.
	(20Y-54-01113)	CAB ASS'Y,(KOMTRAX)	1	60262-65000
	(☐20Y-54-01112)	CAB ASS'Y,(KOMTRAX)	1	60001-60261
	(20Y-54-01141)	CAB ASS'Y,(KOMTRAX LESS)	1	60262-65000
	(☐20Y-54-01140)	CAB ASS'Y,(KOMTRAX LESS)	1	60001-60261
	(20Y-54-01331)	CAB ASS'Y,(WITHOUT SPEAKER)	1	60262-65000
	(☐20Y-54-01330)	CAB ASS'Y,(WITHOUT SPEAKER)	1	60001-60261
	(20Y-54-01341)	CAB ASS'Y,(W/O SPEAKER, RELEASE LEVER)	1	60262-65000
	(☐20Y-54-01340)	CAB ASS'Y,(W/O SPEAKER, RELEASE LEVER)	1	60001-60261
	(20Y-54-01351)	CAB ASS'Y,(WITHOUT RELEASE LEVER)	1	60262-65000
	(☐20Y-54-01350)	CAB ASS'Y,(WITHOUT RELEASE LEVER)	1	60001-60261
	(20Y-54-01321)	CAB ASS'Y,(DEMOLITION SPEC.)	1	60262-65000
	(☐20Y-54-01320)	CAB ASS'Y,(DEMOLITION SPEC.)	1	60158-60261
	(20Y-54-01172)	CAB ASS'Y,(VANDALISM PROTECTION)	1	60262-65000
	(☐20Y-54-01171)	CAB ASS'Y,(VANDALISM PROTECTION)	1	60224-60261
	(☐20Y-54-01170)	CAB ASS'Y,(VANDALISM PROTECTION)	1	60001-60223
	(20Y-54-01181)	CAB ASS'Y,(COLD WEATHER (A) SPEC.)	1	60262-65000
	(☐20Y-54-01180)	CAB ASS'Y,(COLD WEATHER (A) SPEC.)	1	60255-60261
	(208-53-00010)	・DOOR ASS'Y	1	60760-@
	(20Y-54-01122)	・DOOR ASS'Y	1	60001-60759
	(208-53-00070)	・DOOR ASS'Y	1	60760-@
	(20Y-54-01161)	・DOOR ASS'Y	1	60224-60759
	(20Y-54-01160)	・DOOR ASS'Y	1	60001-60223
1	20Y-54-52200	・・LATCH ASS'Y	1	60001-@
2	20Y-54-52300	・・HANDLE ASS'Y	1	60001-@
3	20Y-54-52400	・・BELL CRANK ASS'Y	1	60001-@
4	01023-10612	・・SCREW	5	60760-@
	01023-10612	・・SCREW	8	60001-60759
5	20Y-54-52990	・・HANDLE	1	60001-@

OPERATOR'S CAB (DOOR LOCK)(#60001-65000)

Item	Part No.	Part Name	Qty	Serial No.
6	01023-10612	・・SCREW	2	60001-@
7	01240-00616	・・SCREW	3	60001-@
8	195-Z11-1690	・・WASHER	3	60001-@
9	20Y-54-52820	・・LOCK ASS'Y	1	60001-@
9A	22B-54-16330	・・SNAP	1	60001-@
10	20Y-54-51441	・・COVER	1	60001-@
11	22B-54-16461	・・RIVET	7	60001-@
11A	208-53-11320	・・SEAL	1	60760-@
12	20Y-54-51321	・・STRIKER	1	60001-@
13	20Y-54-51341	・・PLATE	1	60001-@
14	01584-01008	・・NUT	2	60001-@
15	20Y-54-51490	・・COVER,STRIKER	1	60001-@
16	20Y-54-51393	・・GRIP	1	60071-@
	20Y-54-51392	・・GRIP,DOOR	1	60001-60070
17	01010-80820	・・BOLT	2	60071-@
	01010-80820	・・BOLT	2	60003-60070
	01240-00820	・・SCREW	2	60001-60002
18	01643-30823	・・WASHER	2	60071-@
	01643-70823	・・WASHER	2	60003-60070

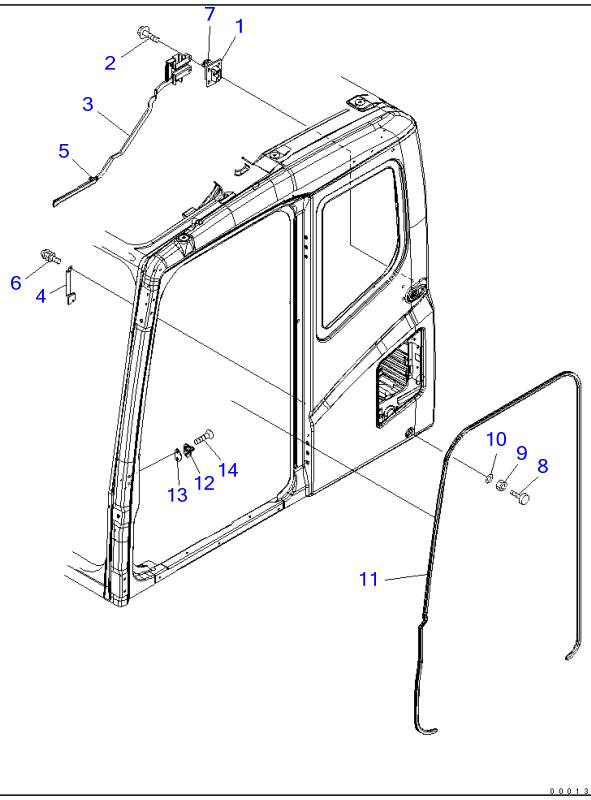

Ref K0210-07A0 **Page 210280**

PC220-7 S/N 60001-UP (Overseas Version)
OPERATOR'S CAB (OPEN LOCK)(#60001-65000)

Item	Part No.	Part Name	Qty	Serial No.
	(20Y-54-01113)	CAB ASS'Y,(KOMTRAX)	1	60262-65000
	(☐20Y-54-01112)	CAB ASS'Y,(KOMTRAX)	1	60001-60261
	(20Y-54-01141)	CAB ASS'Y,(KOMTRAX LESS)	1	60262-65000
	(☐20Y-54-01140)	CAB ASS'Y,(KOMTRAX LESS)	1	60001-60261
	(20Y-54-01331)	CAB ASS'Y,(WITHOUT SPEAKER)	1	60262-65000
	(☐20Y-54-01330)	CAB ASS'Y,(WITHOUT SPEAKER)	1	60001-60261
	(20Y-54-01341)	CAB ASS'Y,(W/O SPEAKER, RELEASE LEVER)	1	60262-65000
	(☐20Y-54-01340)	CAB ASS'Y,(W/O SPEAKER, RELEASE LEVER)	1	60001-60261
	(20Y-54-01351)	CAB ASS'Y,(WITHOUT RELEASE LEVER)	1	60262-65000
	(☐20Y-54-01350)	CAB ASS'Y,(WITHOUT RELEASE LEVER)	1	60001-60261
	(20Y-54-01321)	CAB ASS'Y,(DEMOLITION SPEC.)	1	60262-65000
	(☐20Y-54-01320)	CAB ASS'Y,(DEMOLITION SPEC.)	1	60158-60261
	(20Y-54-01172)	CAB ASS'Y,(VANDALISM PROTECTION)	1	60262-65000
	(☐20Y-54-01171)	CAB ASS'Y,(VANDALISM PROTECTION)	1	60224-60261
	(☐20Y-54-01170)	CAB ASS'Y,(VANDALISM PROTECTION)	1	60001-60223
	(20Y-54-01181)	CAB ASS'Y,(COLD WEATHER (A) SPEC.)	1	60262-65000
	(☐20Y-54-01180)	CAB ASS'Y,(COLD WEATHER (A) SPEC.)	1	60255-60261
1	20Y-54-36380	・LOCK	1	60001-65000
2	01435-30820	・BOLT	4	60001-65000
3	20Y-54-51801	・LEVER	1	60001-65000
4	20Y-54-51972	・PLATE	1	60001-65000
5	20Y-54-51941	・STOPPER	1	60001-65000
6	01023-70616	・SCREW	2	60001-65000
7	20Y-54-51930	・COVER,LOCK	1	60001-65000
8	20Y-54-11611	・STOPPER	2	60001-@
9	01580-11008	・NUT	2	60001-@
10	01643-31032	・WASHER	2	60001-@
11	20Y-54-51910	・TRIM	1	60001-@

OPERATOR'S CAB (OPEN LOCK)(#60001-65000)

Item	Part No.	Part Name	Qty	Serial No.
12	20Y-54-35470	・STRIKER	1	60001-@
13	20Y-54-35480	・SHIM	1	60001-@
14	01240-01025	・SCREW	2	60001-65000

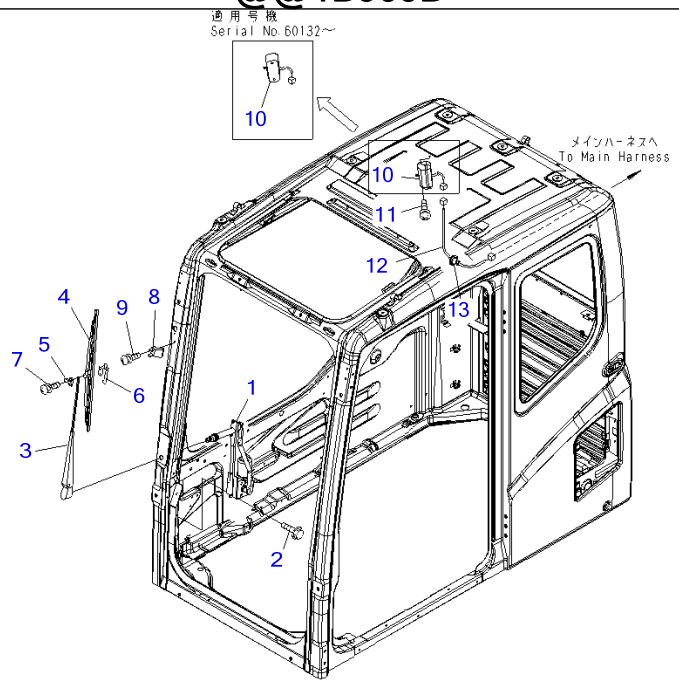

PW1B909B

Ref K0210-08A0 **Page 210290**

PC220-7 S/N 60001-UP (Overseas Version)
OPERATOR'S CAB (WIPER AND ROOM LAMP)(#60001-65000)

Item	Part No.	Part Name	Qty	Serial No.
	(20Y-54-01113)	CAB ASS'Y,(KOMTRAX)	1	60262-65000
	(□20Y-54-01112)	CAB ASS'Y,(KOMTRAX)	1	60001-60261
	(20Y-54-01141)	CAB ASS'Y,(KOMTRAX LESS)	1	60262-65000
	(□20Y-54-01140)	CAB ASS'Y,(KOMTRAX LESS)	1	60001-60261
	(20Y-54-01331)	CAB ASS'Y,(WITHOUT SPEAKER)	1	60262-65000
	(□20Y-54-01330)	CAB ASS'Y,(WITHOUT SPEAKER)	1	60001-60261
	(20Y-54-01341)	CAB ASS'Y,(W/O SPEAKER, RELEASE LEVER)	1	60262-65000
	(□20Y-54-01340)	CAB ASS'Y,(W/O SPEAKER, RELEASE LEVER)	1	60001-60261
	(20Y-54-01351)	CAB ASS'Y,(WITHOUT RELEASE LEVER)	1	60262-65000
	(□20Y-54-01350)	CAB ASS'Y,(WITHOUT RELEASE LEVER)	1	60001-60261
	(20Y-54-01321)	CAB ASS'Y,(DEMOLITION SPEC.)	1	60262-65000
	(□20Y-54-01320)	CAB ASS'Y,(DEMOLITION SPEC.)	1	60158-60261
	(20Y-54-01172)	CAB ASS'Y,(VANDALISM PROTECTION)	1	60262-65000
	(□20Y-54-01171)	CAB ASS'Y,(VANDALISM PROTECTION)	1	60224-60261
	(□20Y-54-01170)	CAB ASS'Y,(VANDALISM PROTECTION)	1	60001-60223
	(20Y-54-01181)	CAB ASS'Y,(COLD WEATHER (A) SPEC.)	1	60262-65000
	(□20Y-54-01180)	CAB ASS'Y,(COLD WEATHER (A) SPEC.)	1	60255-60261
1	20Y-54-52211	・WIPER MOTOR ASS'Y	1	60001-65000
2	01435-00616	・BOLT	6	60001-65000
	20Y-54-52221	・WIPER ASS'Y	1	60001-@
3	20Y-54-52350	・・WIPER ARM	1	60001-@
4	20Y-54-39450	・・WIPER BLADE	1	60001-@
5	20Y-54-39460	・・SLIDER	1	60001-@
6	20Y-54-39480	・・PLATE	1	60001-@
7	ND949007-2350	・・SCREW AND WASHER	2	60001-@
8	20Y-54-52231	・STOPPER	1	60001-@
9	01023-20620	・SCREW	1	60001-@
10	20Y-54-53520	・LAMP	1	60132-65000

OPERATOR'S CAB (WIPER AND ROOM LAMP)(#60001-65000)

Item	Part No.	Part Name	Qty	Serial No.
	08141-02400	・LAMP	1	60001-60131
	08116-02410	・・BULB, 10W	1	60001-@
11	01370-00420	・SCREW	2	60275-@
	01023-10410	・SCREW	2	60001-60274
12	20Y-54-52332	・WIRING HARNESS	1	60001-60131
13	08037-11025	・GROMMET	1	60001-@

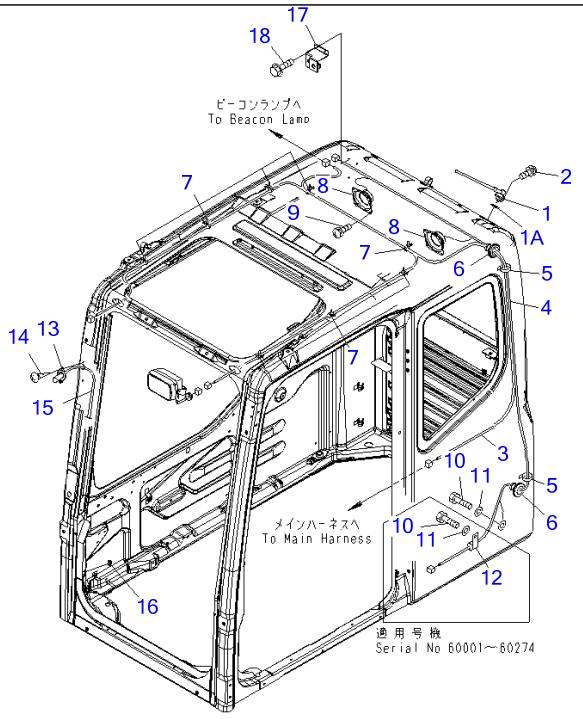

PC220-7 S/N 60001-UP (Overseas Version)

OPERATOR'S CAB (RADIO)(#60001-65000)

Item	Part No.	Part Name	Qty	Serial No.
	(20Y-54-01113)	CAB ASS'Y,(KOMTRAX)	1	60262-65000
	(□20Y-54-01112)	CAB ASS'Y,(KOMTRAX)	1	60001-60261
	(20Y-54-01141)	CAB ASS'Y,(KOMTRAX LESS)	1	60262-65000
	(□20Y-54-01140)	CAB ASS'Y,(KOMTRAX LESS)	1	60001-60261
	(20Y-54-01351)	CAB ASS'Y,(WITHOUT RELEASE LEVER)	1	60262-65000
	(□20Y-54-01350)	CAB ASS'Y,(WITHOUT RELEASE LEVER)	1	60001-60261
	(20Y-54-01172)	CAB ASS'Y,(VANDALISM PROTECTION)	1	60262-65000
	(□20Y-54-01171)	CAB ASS'Y,(VANDALISM PROTECTION)	1	60224-60261
	(□20Y-54-01170)	CAB ASS'Y,(VANDALISM PROTECTION)	1	60001-60223
	(20Y-54-01181)	CAB ASS'Y,(COLD WEATHER (A) SPEC.)	1	60262-65000
	(□20Y-54-01180)	CAB ASS'Y,(COLD WEATHER (A) SPEC.)	1	60255-60261
1	(198-Z11-4610)	・ RUBBER ANTENNA,(SEE FIG. Y1062-01A0)	1	60003-@
	(362-56-42261)	・ RUBBER ANTENNA,(SEE FIG. Y1062-01A0)	1	60001-60002
1A	01643-30623	・ WASHER	1	60003-@
2	01023-20412	・ SCREW	2	60001-@
3	20Y-54-52310	・ WIRING HARNESS,LAMP	1	60001-@
4	20Y-54-52320	・ WIRING HARNESS,SPEAKER	1	60001-@
5	08034-00414	・ BAND	2	60001-@
6	08037-12536	・ GROMMET	2	60001-@
7	08059-00413	・ CLIP	8	60001-@
8	08910-10000	・ SPEAKER	2	60001-@
9	01023-10412	・ SCREW	8	60001-65000
10	01010-81020	・ BOLT	1	60275-@
11	01643-31032	・ WASHER	1	60275-@
12	04434-52310	・ CLIP	1	60001-65000
13	20Y-54-39511	・ NOZZLE	1	60001-@
14	01370-40412	・ SCREW	2	60001-@
15	17M-911-2670	・ HOSE	1	60001-@

OPERATOR'S CAB (RADIO)(#60001-65000)

Item	Part No.	Part Name	Qty	Serial No.
16	08037-01008	・GROMMET	1	60001-65000
17	20Y-54-51880	・BRACKET	1	60001-65000
18	01435-40612	・BOLT	3	60001-65000

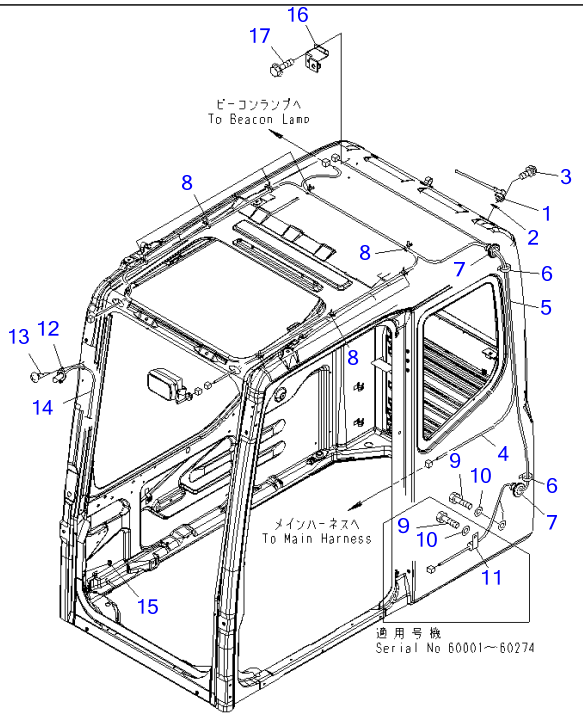

00002007

Ref K0210-09A4 **Page 210310**

PC220-7 S/N 60001-UP (Overseas Version)
OPERATOR'S CAB (RADIO LESS)(#60001-65000)

Item	Part No.	Part Name	Qty	Serial No.
	(20Y-54-01341)	CAB ASS'Y,(W/O SPEAKER, RELEASE LEVER)	1	60262-65000
	(□20Y-54-01340)	CAB ASS'Y,(W/O SPEAKER, RELEASE LEVER)	1	60001-60261
	(20Y-54-01331)	CAB ASS'Y,(WITHOUT SPEAKER)	1	60262-65000
	(□20Y-54-01330)	CAB ASS'Y,(WITHOUT SPEAKER)	1	60001-60261
1	(198-Z11-4610)	・RUBBER ANTENNA,(SEE FIG. Y1062-01A0)	1	60003-65000
	(362-56-42261)	・RUBBER ANTENNA,(SEE FIG. Y1062-01A0)	1	60001-60002
2	01643-30623	・WASHER	1	60003-65000
3	01023-20412	・SCREW	2	60001-65000
4	20Y-54-52310	・WIRING HARNESS,LAMP	1	60001-65000
5	20Y-54-52320	・WIRING HARNESS,SPEAKER	1	60001-65000
6	08034-00414	・BAND	2	60001-65000
7	08037-12536	・GROMMET	2	60001-65000
8	08059-00413	・CLIP	8	60001-65000
9	01010-81020	・BOLT	1	60001-65000
10	01643-31032	・WASHER	1	60001-65000
11	04434-52310	・CLIP	1	60001-65000
12	20Y-54-39511	・NOZZLE	1	60001-65000
13	01370-40412	・SCREW	2	60001-65000
14	17M-911-2670	・HOSE	1	60001-65000
15	08037-01008	・GROMMET	1	60001-65000
16	20Y-54-51880	・BRACKET	1	60001-65000
17	01435-40612	・BOLT	3	60001-65000

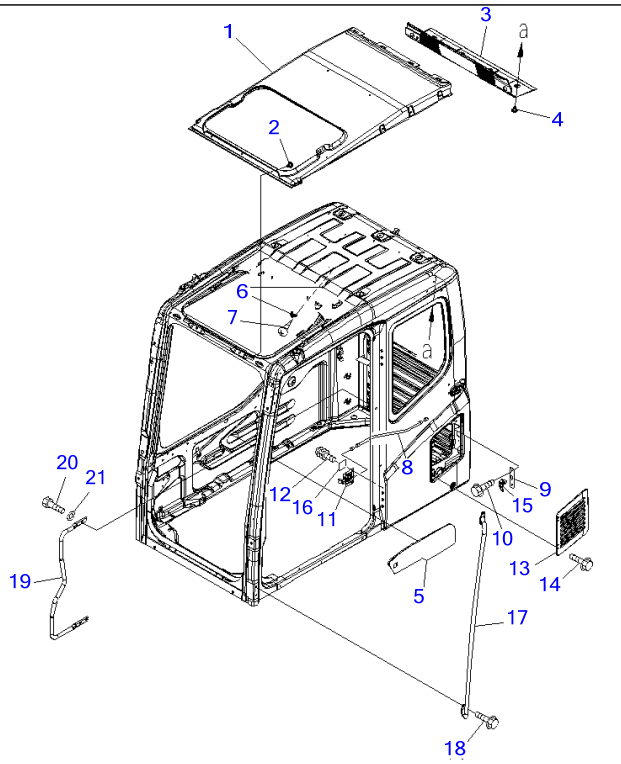

Ref K0210-10A0 **Page 210320**

PC220-7 S/N 60001-UP (Overseas Version)

OPERATOR'S CAB (ACCESSORIES)(#60001-65000)

Item	Part No.	Part Name	Qty	Serial No.
	(20Y-54-01113)	CAB ASS'Y,(KOMTRAX)	1	60262-65000
	(☐20Y-54-01112)	CAB ASS'Y,(KOMTRAX)	1	60001-60261
	(20Y-54-01141)	CAB ASS'Y,(KOMTRAX LESS)	1	60262-65000
	(☐20Y-54-01140)	CAB ASS'Y,(KOMTRAX LESS)	1	60001-60261
	(20Y-54-01331)	CAB ASS'Y,(WITHOUT SPEAKER)	1	60262-65000
	(☐20Y-54-01330)	CAB ASS'Y,(WITHOUT SPEAKER)	1	60001-60261
	(20Y-54-01172)	CAB ASS'Y,(VANDALISM PROTECTION)	1	60262-65000
	(☐20Y-54-01171)	CAB ASS'Y,(VANDALISM PROTECTION)	1	60224-60261
	(☐20Y-54-01170)	CAB ASS'Y,(VANDALISM PROTECTION)	1	60001-60223
	(20Y-54-01181)	CAB ASS'Y,(COLD WEATHER (A) SPEC.)	1	60262-65000
	(☐20Y-54-01180)	CAB ASS'Y,(COLD WEATHER (A) SPEC.)	1	60255-60261
1	20Y-54-52412	・ COVER,ROOF	1	60001-@
2	20Y-54-18690	・ RIVET	13	60001-65000
3	20Y-54-52422	・ LINING,R.H.	1	60001-65000
4	20Y-54-18690	・ RIVET	8	60001-@
5	20Y-54-52432	・ LINING,R.H.	1	60001-@
6	205-54-51250	・ HANGER	1	60001-@
7	01370-30412	・ SCREW	2	60001-@
8	20Y-54-52740	・ CABLE	1	60001-65000
9	20Y-54-52781	・ PLATE	1	60001-65000
10	01435-40610	・ BOLT	2	60001-65000
11	20Y-54-52731	・ LEVER ASS'Y	4	60001-65000
12	01023-70616	・ SCREW	2	60036-65000
	01023-70614	・ SCREW	2	60001-60035
13	20Y-54-52751	・ COVER	1	60001-65000
14	01435-40610	・ BOLT	4	60001-@
15	20Y-54-52720	・ LOCK ASS'Y	1	60001-65000
16	20Y-54-52910	・ DECAL	1	60001-65000

OPERATOR'S CAB (ACCESSORIES)(#60001-65000)

Item	Part No.	Part Name	Qty	Serial No.
17	20Y-54-51820	・GRIP	1	60001-@
18	01435-40820	・BOLT	4	60001-@
19	20Y-54-51832	・GRIP	1	60001-@
20	01010-D1025	・BOLT	3	60001-@
21	01643-71032	・WASHER	3	60001-@

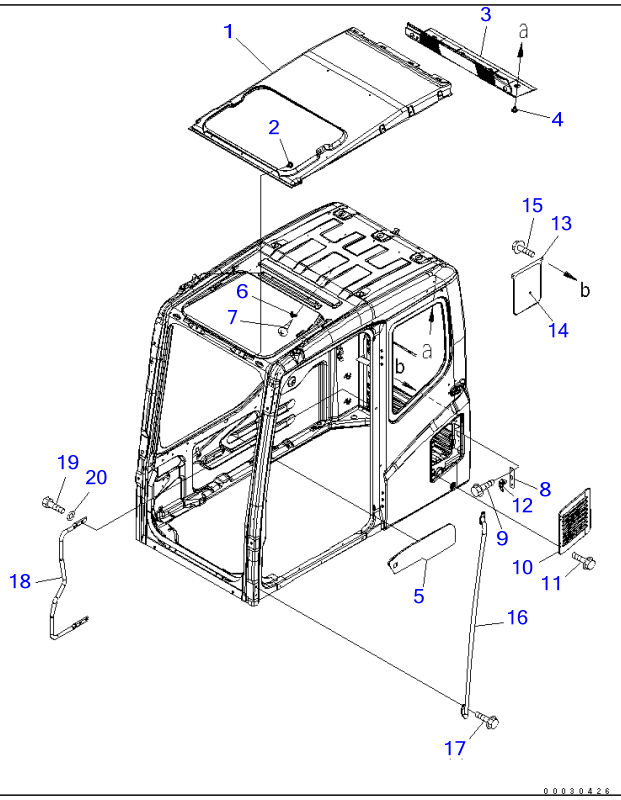

Ref K0210-10A4 **Page 210330**

PC220-7 S/N 60001-UP (Overseas Version)

OPERATOR'S CAB (ACCESSORIES) (AIR CONDITIONER AND HEATER LESS)(#60001-65000)

Item	Part No.	Part Name	Qty	Serial No.
	(20Y-54-01341)	CAB ASS'Y,(W/O SPEAKER, RELEASE LEVER)	1	60262-65000
	(☐20Y-54-01340)	CAB ASS'Y,(W/O SPEAKER, RELEASE LEVER)	1	60001-60261
	(20Y-54-01351)	CAB ASS'Y,(WITHOUT RELEASE LEVER)	1	60262-65000
	(☐20Y-54-01350)	CAB ASS'Y,(WITHOUT RELEASE LEVER)	1	60001-60261
1	20Y-54-52412	・COVER,ROOF	1	60001-65000
2	20Y-54-18690	・RIVET	13	60001-65000
3	20Y-54-52423	・LINING	1	60275-65000
	20Y-54-52422	・LINING,R.H.	1	60001-60274
4	20Y-54-18690	・RIVET	8	60001-65000
5	20Y-54-52432	・LINING,R.H.	1	60001-65000
6	205-54-51250	・HANGER	1	60001-65000
7	01370-30412	・SCREW	2	60001-65000
8	20Y-54-52781	・PLATE	1	60001-65000
9	01435-40610	・BOLT	2	60001-65000
10	20Y-54-52751	・COVER	1	60001-65000
11	01435-40610	・BOLT	4	60001-65000
12	20Y-54-52720	・LOCK ASS'Y	1	60001-65000
13	20Y-979-6910	・COVER	1	60001-65000
14	20Y-979-6920	・SEAL	1	60001-65000
15	01435-40816	・BOLT	2	60001-65000
16	20Y-54-51820	・GRIP	1	60001-65000
17	01435-40820	・BOLT	4	60001-65000
18	20Y-54-51832	・GRIP	1	60001-65000
19	01010-D1025	・BOLT	3	60001-65000
20	01643-71032	・WASHER	3	60001-65000

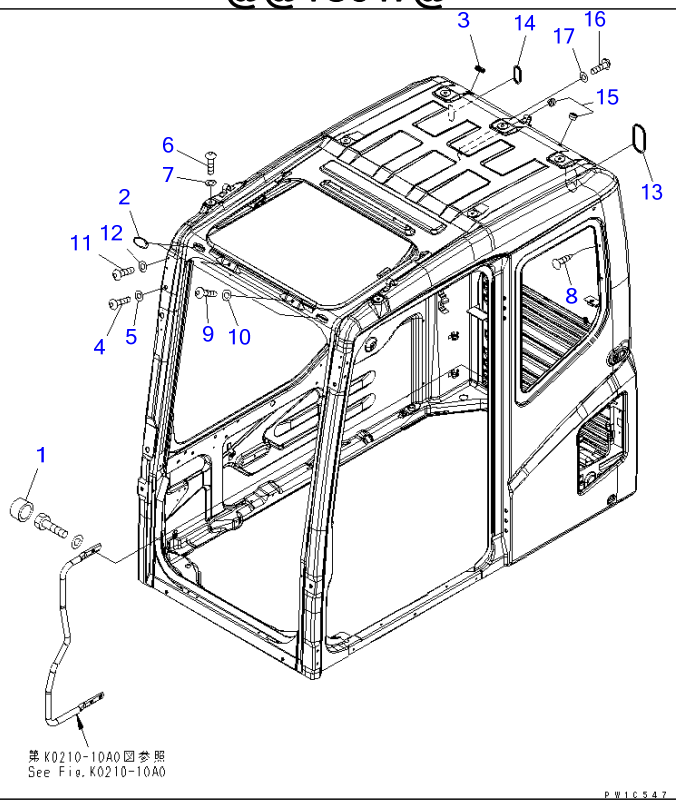

Ref K0210-11A2 **Page 210340**

PC220-7 S/N 60001-UP (Overseas Version)

OPERATOR'S CAB (BOLT) (KOMTRAX LESS)(#60001-65000)

Item	Part No.	Part Name	Qty	Serial No.
	(20Y-54-01141)	CAB ASS'Y,(KOMTRAX LESS)	1	60262-65000
	(☐20Y-54-01140)	CAB ASS'Y,(KOMTRAX LESS)	1	60001-60261
	(20Y-54-01331)	CAB ASS'Y,(WITHOUT SPEAKER)	1	60262-65000
	(☐20Y-54-01330)	CAB ASS'Y,(WITHOUT SPEAKER)	1	60001-60261
	(20Y-54-01341)	CAB ASS'Y,(W/O SPEAKER, RELEASE LEVER)	1	60262-65000
	(☐20Y-54-01340)	CAB ASS'Y,(W/O SPEAKER, RELEASE LEVER)	1	60001-60261
	(20Y-54-01351)	CAB ASS'Y,(WITHOUT RELEASE LEVER)	1	60262-65000
	(☐20Y-54-01350)	CAB ASS'Y,(WITHOUT RELEASE LEVER)	1	60001-60261
	(20Y-54-01172)	CAB ASS'Y,(VANDALISM PROTECTION)	1	60262-65000
	(☐20Y-54-01171)	CAB ASS'Y,(VANDALISM PROTECTION)	1	60224-60261
	(☐20Y-54-01170)	CAB ASS'Y,(VANDALISM PROTECTION)	1	60001-60223
	(20Y-54-01181)	CAB ASS'Y,(COLD WEATHER (A) SPEC.)	1	60262-65000
	(☐20Y-54-01180)	CAB ASS'Y,(COLD WEATHER (A) SPEC.)	1	60255-60261
1	20Y-54-52440	・CAP	1	60275-@
	20Y-54-52440	・CAP	3	60001-60274
2	22B-54-17282	・CAP	2	60001-@
3	09415-02512	・CAP	1	60001-@
4	01245-01220	・SCREW	6	60001-@
5	01643-71232	・WASHER	6	60001-@
6	01245-01220	・SCREW	7	60001-@
7	01643-71232	・WASHER	7	60001-@
8	124-911-5750	・RIVET	2	60001-@
9	01245-01016	・SCREW	2	60001-@
10	01643-71032	・WASHER	2	60001-@
11	01245-00612	・SCREW	4	60001-@
12	01643-70623	・WASHER	4	60001-@
13	20Y-54-52470	・GROMMET	1	60001-@
14	20Y-54-36150	・GROMMET	1	60001-@

OPERATOR'S CAB (BOLT) (KOMTRAX LESS)(#60001-65000)

Item	Part No.	Part Name	Qty	Serial No.
15	09415-01008	・CAP	2	60001-@
16	01245-00616	・SCREW	2	60003-@
17	01641-50608	・WASHER	2	60003-@

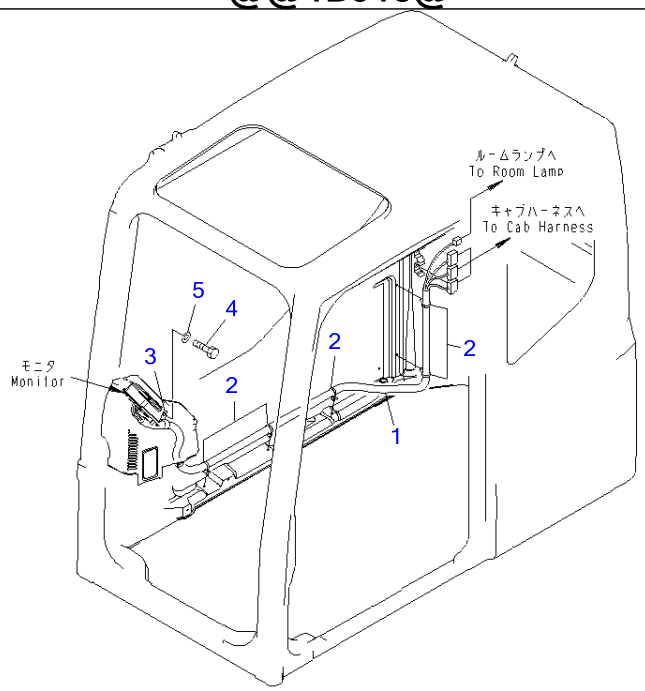

Ref K0210-12A0 **Page 210350**

PC220-7 S/N 60001-UP (Overseas Version)
OPERATOR'S CAB (WIRING)(#60001-65000)

Item	Part No.	Part Name	Qty	Serial No.
1	20Y-06-31120	WIRING HARNESS	1	60001-65000
2	08059-00413	CLIP	5	60001-65000
3	04434-51910	CLIP	1	60001-65000
4	01010-81020	BOLT	1	60001-65000
5	01643-31032	WASHER	1	60001-65000

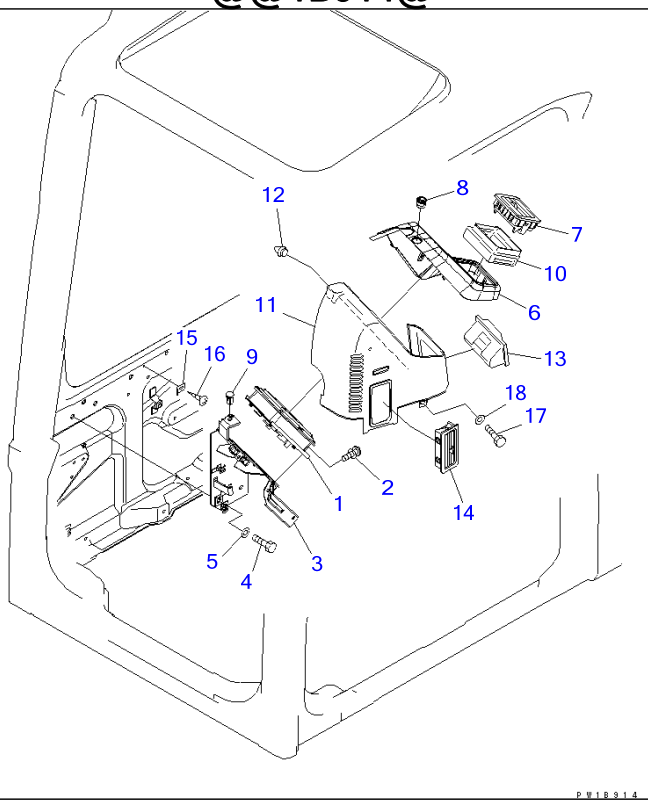

Ref K0210-13A0 **Page 210360**

PC220-7 S/N 60001-UP (Overseas Version)
OPERATOR'S CAB (MONITOR SYSTEM)(#60001-65000)

Item	Part No.	Part Name	Qty	Serial No.
1	(7835-12-1012)	MONITOR	1	60766-65000
	(7835-12-1009)	MONITOR	1	60759-60765
	(□7835-12-1008)	MONITOR	1	60744-60758
	(7835-12-1007)	MONITOR	1	60501-60743
	(□7835-12-1005)	MONITOR	1	60132-60500
	(7835-12-1004)	MONITOR	1	60001-60131
2	01023-10616	SCREW	3	60001-@
3	22U-06-22151	BRACKET	1	60001-65000
4	01010-81020	BOLT	3	60001-65000
5	01643-31032	WASHER	3	60001-65000
6	20Y-54-65580	COVER ASS'Y,A/C	1	60001-@
	20K-54-31590	▪ CLIP	2	60001-@
7	201-979-7820	GRILLE	1	60001-@
8	20Y-54-65310	ADAPTER	1	60001-@
9	20Y-979-6161	SENSOR	1	60001-@
10	20Y-979-6420	DUCT	1	60001-65000
11	22U-54-25221	COVER	1	60001-65000
12	22U-54-25340	▪ CLIP	2	60001-65000
13	22U-54-25371	▪ ASHTRAY	1	60001-65000
14	22U-979-2381	GRILLE	1	60001-65000
15	22U-06-22590	BRACKET	1	60001-65000
16	01370-00508	SCREW	1	60001-65000
17	01010-80616	BOLT	1	60001-65000
18	01643-30623	WASHER	1	60001-65000

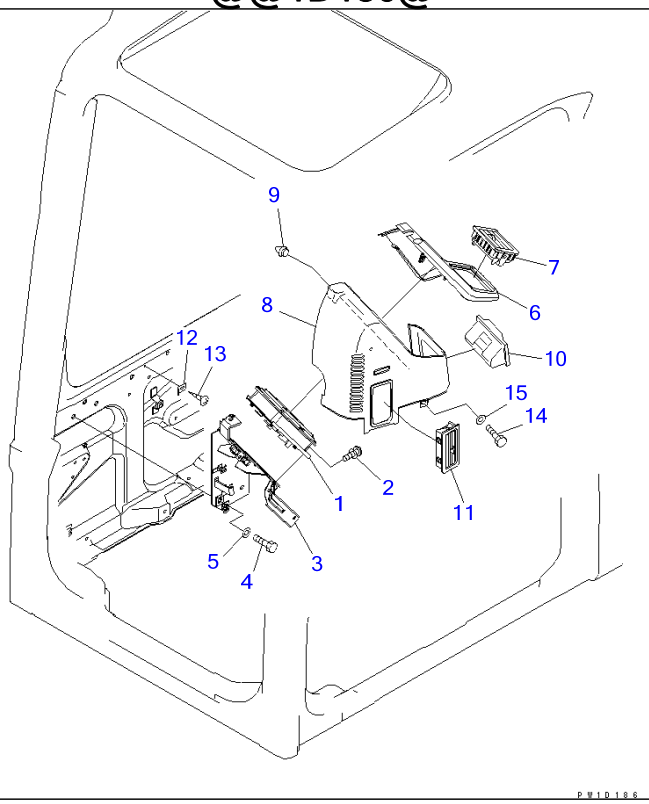

Ref K0210-13A4 Page 210370

PC220-7 S/N 60001-UP (Overseas Version)

OPERATOR'S CAB (MONITOR SYSTEM) (7SEGMENT MONITOR) (AIR CONDITIONER AND HEATER LESS)(#60001-65000)

Item	Part No.	Part Name	Qty	Serial No.
1	7835-10-2005	MONITOR	1	60767-65000
	7835-10-2004	MONITOR	1	60746-60766
	7835-10-2003	MONITOR	1	60124-60745
	(7835-10-2002)	MONITOR	1	60081-60123
	(7835-10-2001)	MONITOR	1	60001-60080
2	01023-10616	SCREW	3	60001-@
3	22U-06-22151	BRACKET	1	60001-65000
4	01010-81020	BOLT	3	60001-65000
5	01643-31032	WASHER	3	60001-65000
6	22U-54-25910	COVER	1	60001-@
7	201-979-7820	GRILLE	1	60093-@
	421-925-3540	COVER	1	60001-60092
8	22U-54-25221	COVER	1	60001-65000
9	22U-54-25340	・CLIP	2	60001-65000
10	22U-54-25371	・ASHTRAY	1	60001-65000
11	22U-979-2381	GRILLE	1	60001-65000
12	22U-06-22590	BRACKET	1	60001-65000
13	01370-00508	SCREW	1	60001-65000
14	01010-80616	BOLT	1	60001-65000
15	01643-30623	WASHER	1	60001-65000

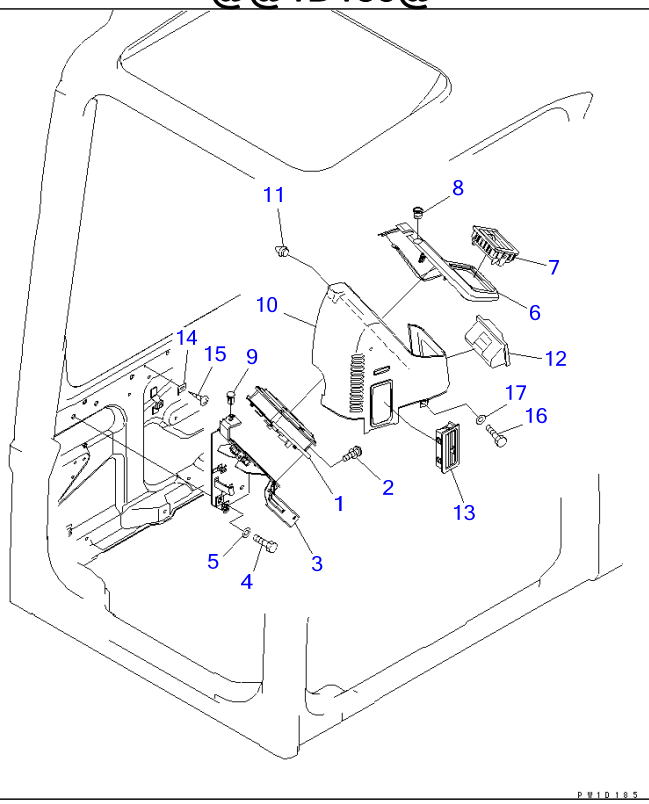

Ref K0210-13A7 Page 210380

PC220-7 S/N 60001-UP (Overseas Version)

OPERATOR'S CAB (MONITOR SYSTEM) (7SEGMENT MONITOR)(#60001-65000)

Item	Part No.	Part Name	Qty	Serial No.
1	7835-10-2005	MONITOR	1	60767-65000
	☐7835-10-2004	MONITOR	1	60746-60766
	☐7835-10-2003	MONITOR	1	60001-60745
2	01023-10616	SCREW	3	60001-@
3	22U-06-22151	BRACKET	1	60001-65000
4	01010-81020	BOLT	3	60001-65000
5	01643-31032	WASHER	3	60001-65000
6	22U-54-25211	COVER,AA/C	1	60001-@
7	201-979-7820	GRILLE	1	60001-@
8	20Y-54-65310	ADAPTER	1	60001-@
9	20Y-979-6161	SENSOR	1	60001-@
10	22U-54-25221	COVER	1	60001-65000
11	22U-54-25340	・CLIP	2	60001-65000
12	22U-54-25371	・ASHTRAY	1	60001-65000
13	22U-979-2381	GRILLE	1	60001-65000
14	22U-06-22590	BRACKET	1	60001-65000
15	01370-00508	SCREW	1	60001-65000
16	01010-80616	BOLT	1	60001-65000
17	01643-30623	WASHER	1	60001-65000

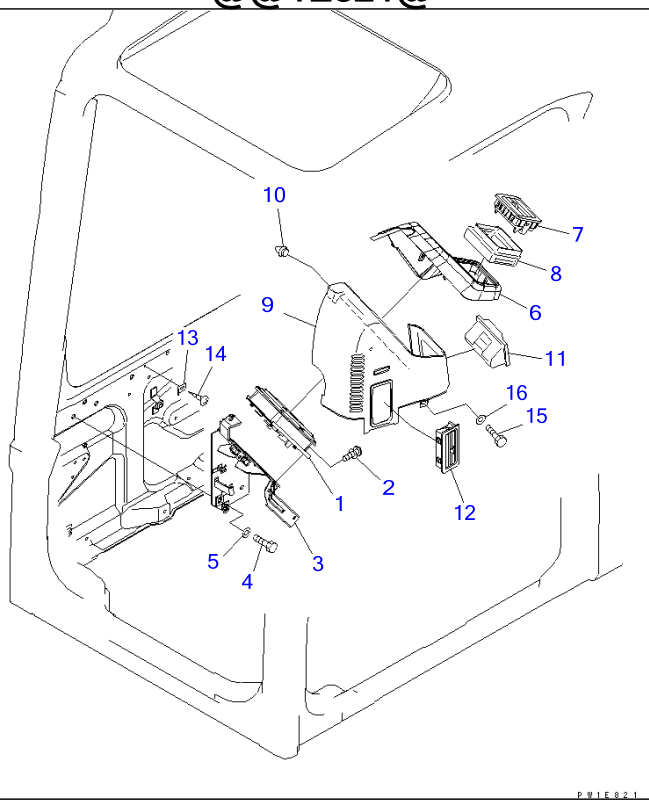

Ref K0210-13A8 Page 210390

PC220-7 S/N 60001-UP (Overseas Version)

OPERATOR'S CAB (MONITOR SYSTEM) (AIR CONDITIONER AND HEATER LESS)(#60001-65000)

Item	Part No.	Part Name	Qty	Serial No.
1	(7835-12-1012)	MONITOR	1	60766-65000
	(7835-12-1009)	MONITOR	1	60759-60765
	(□7835-12-1008)	MONITOR	1	60744-60758
	(7835-12-1007)	MONITOR	1	60001-60073
2	01023-10616	SCREW	3	60001-65000
3	22U-06-22151	BRACKET	1	60001-65000
4	01010-81020	BOLT	3	60001-65000
5	01643-31032	WASHER	3	60001-65000
6	20Y-54-65210	COVER ASS'Y	1	60001-65000
7	201-979-7820	GRILLE	1	60001-65000
8	20Y-979-6420	DUCT	1	60001-65000
9	22U-54-25221	COVER	1	60001-65000
10	22U-54-25340	▪ CLIP	2	60001-65000
11	22U-54-25371	▪ ASHTRAY	1	60001-65000
12	22U-979-2381	GRILLE	1	60001-65000
13	22U-06-22590	BRACKET	1	60001-65000
14	01370-00508	SCREW	1	60001-65000
15	01010-80616	BOLT	1	60001-65000
16	01643-30623	WASHER	1	60001-65000

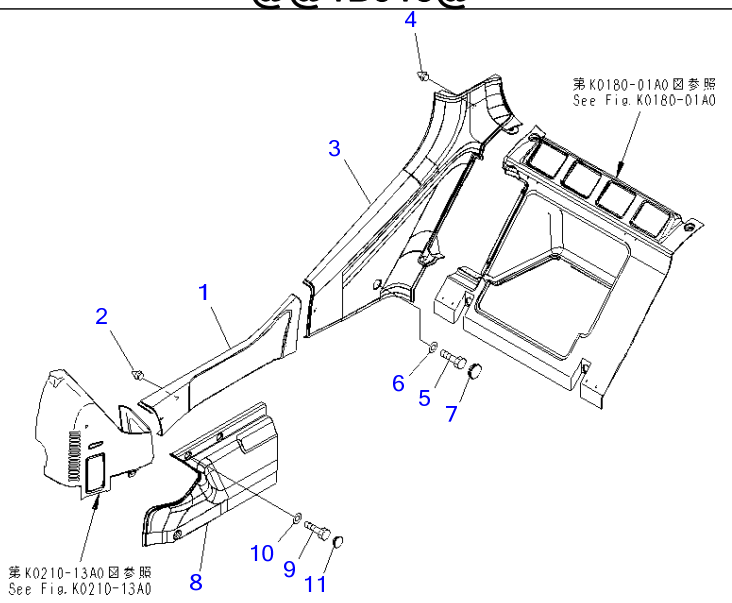

PW1B915

Ref K0210-14A0 **Page 210400**

PC220-7 S/N 60001-UP (Overseas Version)

OPERATOR'S CAB (COVER)(#60001-65000)

Item	Part No.	Part Name	Qty	Serial No.
1	20Y-54-65230	COVER	1	60001-65000
2	22U-54-25360	CLIP	4	60001-65000
3	20Y-54-65240	COVER	1	60001-65000
4	22U-54-25360	CLIP	2	60001-65000
5	01010-80820	BOLT	1	60001-65000
6	01643-30823	WASHER	1	60001-65000
7	22U-54-25331	CAP	1	60001-65000
8	20Y-54-65220	COVER	1	60001-65000
9	01010-80616	BOLT	3	60001-65000
10	01643-30623	WASHER	3	60001-65000
11	22U-54-25351	CAP	2	60001-65000

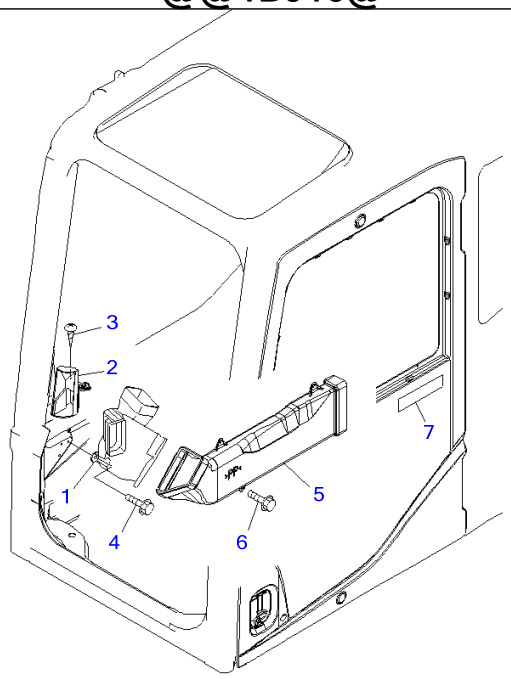

P W 1 B 9 1 6

Ref K0210-15A0 **Page 210410**

PC220-7 S/N 60001-UP (Overseas Version)
OPERATOR'S CAB (DUCT)(#60001-65000)

Item	Part No.	Part Name	Qty	Serial No.
	22U-979-2300	DUCT ASS'Y	1	60001-65000
1	☆	・DUCT	1	60001-65000
2	22U-979-2351	・DEFROSTER ASS'Y	1	60001-65000
3	01370-40408	・SCREW	4	60001-65000
4	01435-00612	BOLT	2	60001-65000
5	20Y-979-6222	DUCT	1	60001-65000
6	01435-40612	BOLT	3	60001-65000
7	09970-00230	PLATE	1	60001-@

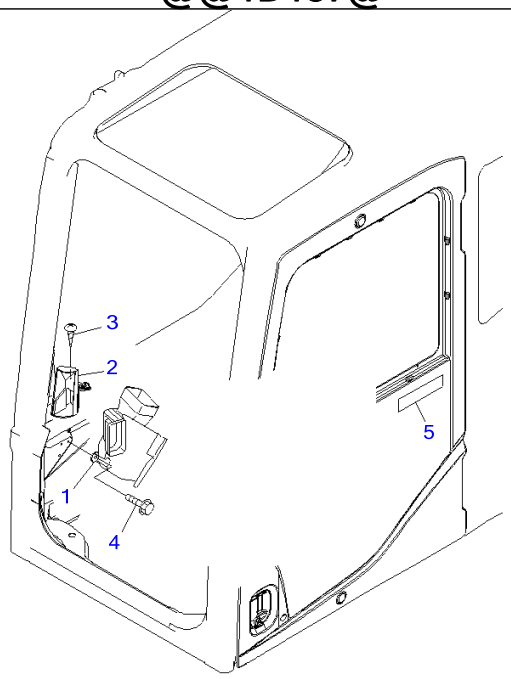

P W 1 D 1 8 7

Ref K0210-15A4 **Page 210420**

PC220-7 S/N 60001-UP (Overseas Version)
OPERATOR'S CAB (DUCT) (AIR CONDITIONER AND HEATER LESS)(#60001-65000)

Item	Part No.	Part Name	Qty	Serial No.
	22U-979-2300	DUCT ASS'Y	1	60001-65000
1	☆	・DUCT	1	60001-65000
2	22U-979-2351	・DEFROSTER ASS'Y	1	60001-65000
3	01370-40408	・SCREW	4	60001-65000
4	01435-00612	BOLT	2	60001-65000
5	09970-00230	PLATE	1	60001-65000

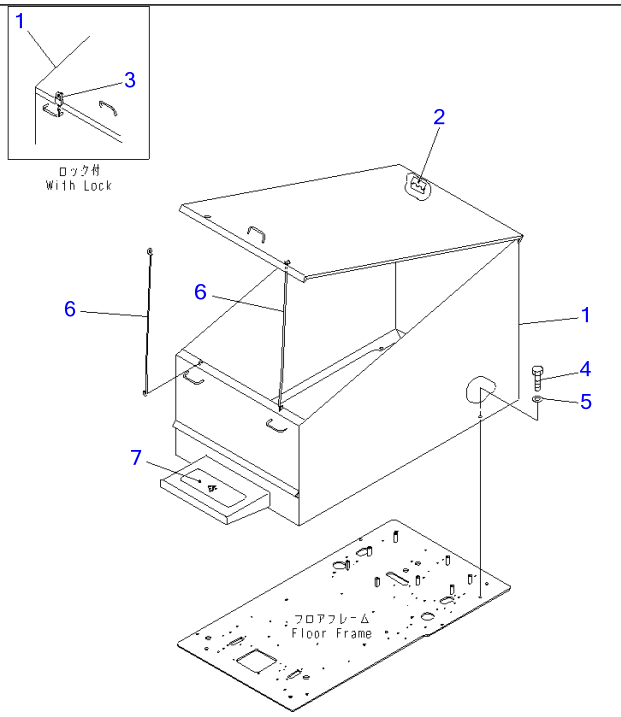

Ref K0211-01A0 **Page 210430**

PC220-7 S/N 60001-UP (Overseas Version)

FLOOR FRAME COVER(#60132-65000)

Item	Part No.	Part Name	Qty	Serial No.
1	20Y-54-61290	COVER	1	60132-65000
2	09455-17019	・HINGE	2	60132-@
3	09460-00002	・LOCK	1	60132-@
4	01010-81230	BOLT	4	60132-@
5	01643-31232	WASHER	4	60132-@
6	208-54-38280	BAR	2	60132-@
7	154-54-23260	SEAT	1	60132-@

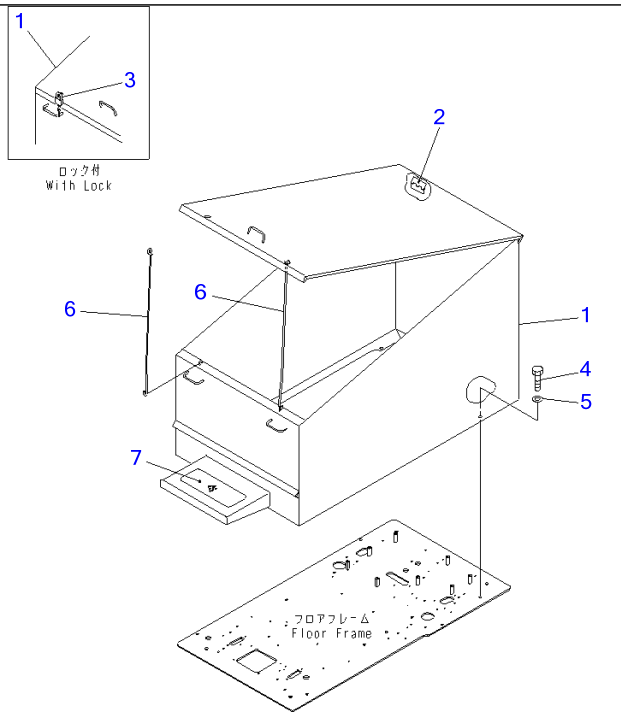

Ref K0211-01A0A **Page 210440**

PC220-7 S/N 60001-UP (Overseas Version)

FLOOR FRAME COVER(#65001-66184)

Item	Part No.	Part Name	Qty	Serial No.
1	208-53-11290	COVER	1	65001-66184
2	09455-17019	・HINGE	2	60132-66184
3	09460-00002	・LOCK	1	60132-66184
4	01010-81230	BOLT	4	60132-66184
5	01643-31232	WASHER	4	60132-66184
6	208-54-38280	BAR	2	60132-66184
7	154-54-23260	SEAT	1	60132-66184

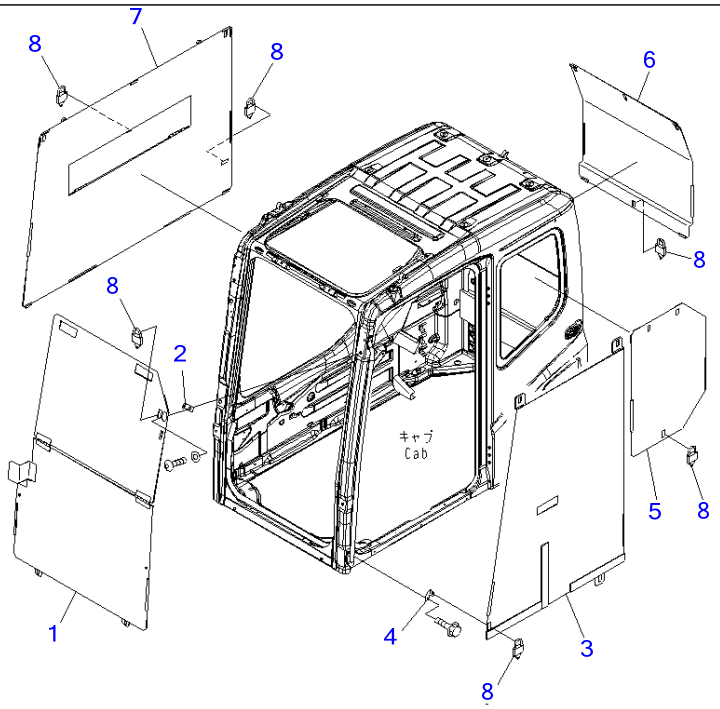

00054272

Ref K0211-01A1 **Page 210450**

PC220-7 S/N 60001-UP (Overseas Version)
CAB COVER(#66185-)

Item	Part No.	Part Name	Qty	Serial No.
1	208-53-11342	COVER	1	66185-
2	208-53-11531	BRACKET	1	66185-
3	208-53-11352	COVER	1	66185-
4	208-53-11440	BRACKET	1	66185-
5	208-53-11361	COVER	1	66185-
6	208-53-11372	COVER	1	66185-
7	208-53-11382	COVER	1	66185-
8	09460-00006	LOCK	1	66185-

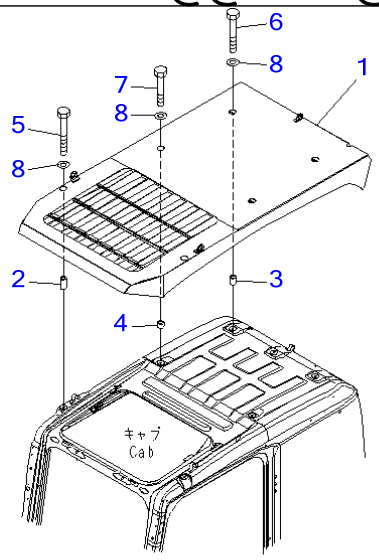

PW1B830

Ref K0220-01A0 **Page 210460**

PC220-7 S/N 60001-UP (Overseas Version)
TOP GUARD(#60001-60002)

Item	Part No.	Part Name	Qty	Serial No.
1	20Y-954-4211	GUARD	1	60001-@
2	20Y-954-4220	PIPE	2	60001-@
3	20Y-954-4230	PIPE	2	60001-@
4	20Y-954-4240	PIPE	2	60001-@
5	01011-D1210	BOLT	2	60001-60002
6	01010-D1290	BOLT	2	60001-60002
7	01010-D1275	BOLT	2	60001-60002
8	01643-71232	WASHER	6	60001-60002

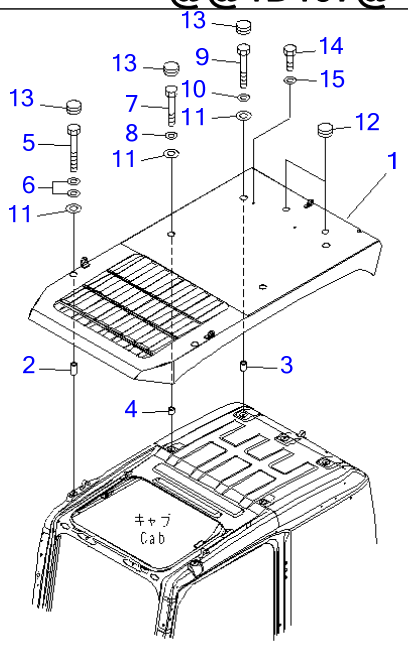

P W 1 D 1 9 7

Ref K0220-01A0A **Page 210470**

PC220-7 S/N 60001-UP (Overseas Version)
TOP GUARD(#60003-)

Item	Part No.	Part Name	Qty	Serial No.
1	20Y-954-4211	GUARD	1	60001-
2	20Y-954-4220	PIPE	2	60001-
3	20Y-954-4230	PIPE	2	60001-
4	20Y-954-4240	PIPE	2	60001-
5	01011-81220	BOLT	2	60003-
6	01643-31232	WASHER	4	60003-
7	01010-81280	BOLT	2	60003-
8	01643-31232	WASHER	2	60003-
9	01010-81295	BOLT	2	60003-
10	01643-31232	WASHER	2	60003-
11	130-43-64260	COLLAR	6	60003-
12	195-Z11-2970	CAP	6	60003-
13	09415-02512	CAP	2	60003-
14	01010-D1220	BOLT	2	60003-
15	01643-71232	WASHER	2	60003-

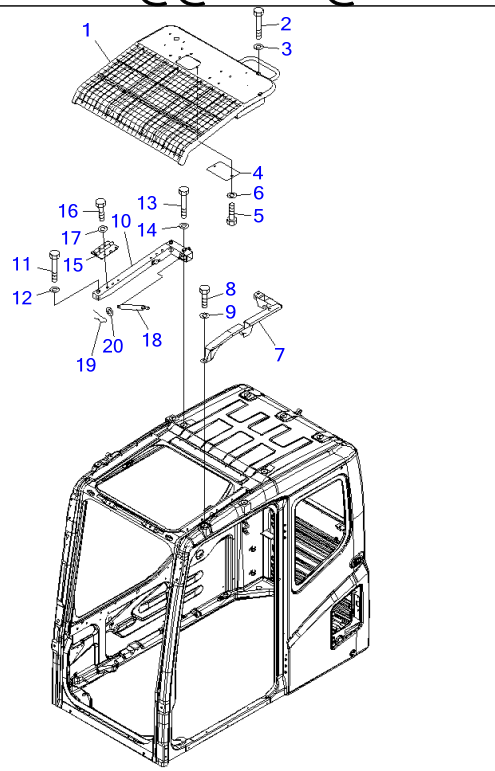

PC220-7 S/N 60001-UP (Overseas Version)

TOP GUARD (LEVEL-1)

Item	Part No.	Part Name	Qty	Serial No.
1	20Y-954-5110	GUARD,ROOF	1	60001-
2	01010-D1285	BOLT	2	60001-
3	01643-71232	WASHER	2	60001-
4	22B-954-1630	PLATE	1	60001-
5	01010-D1020	BOLT	2	60001-
6	01643-71032	WASHER	2	60001-
7	20Y-954-5120	BRACKET	1	60001-
8	01010-D1220	BOLT	3	60001-
9	01643-71232	WASHER	3	60001-
10	20Y-954-5130	BRACKET	1	60001-
11	01010-D1270	BOLT	1	60001-
12	01643-71232	WASHER	1	60001-
13	01010-D1285	BOLT	2	60001-
14	01643-71232	WASHER	2	60001-
15	14X-911-1330	HINGE	2	60001-
16	01010-D1025	BOLT	12	60001-
17	01643-71032	WASHER	12	60001-
18	22B-954-1851	SPRING, GAS	1	60001-
19	04052-10833	PIN	2	60001-
20	01643-70823	WASHER	2	60001-

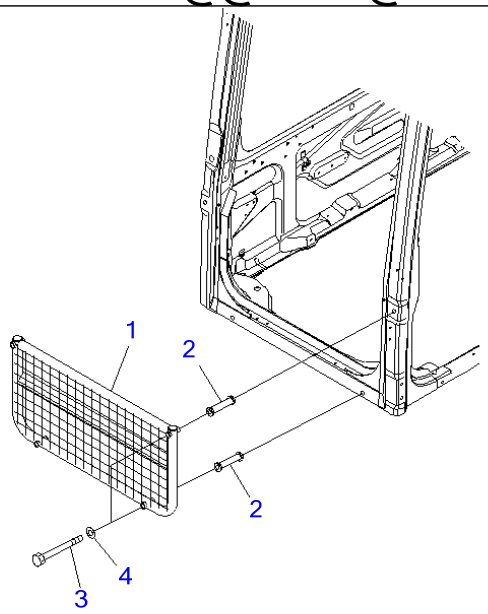

PW1B831

Ref K0230-01A0 **Page 210490**

PC220-7 S/N 60001-UP (Overseas Version)
FRONT GUARD (HALF)

Item	Part No.	Part Name	Qty	Serial No.
1	20Y-954-5140	GUARD,HALF	1	60001-
2	22B-954-1760	SPACER	4	60001-
3	01011-D1260	BOLT	4	60001-
4	01643-71232	WASHER	4	60001-

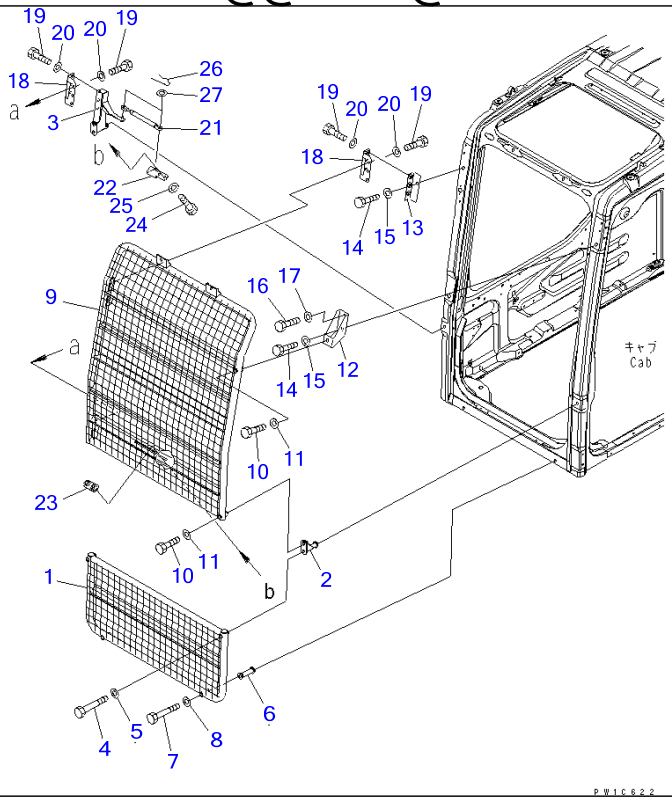

Ref K0230-01A1 **Page 210500**

PC220-7 S/N 60001-UP (Overseas Version)
FRONT GUARD (FULL) (LEVEL-1)

Item	Part No.	Part Name	Qty	Serial No.
1	20Y-954-5140	GUARD,HALF	1	60001-
2	22B-954-1720	BRACKET	1	60001-
3	20Y-954-5150	BRACKET	1	60001-
4	01011-D1260	BOLT	2	60001-
5	01643-71232	WASHER	2	60001-
6	22B-954-1760	SPACER	2	60001-
7	01011-D1260	BOLT	2	60001-
8	01643-71232	WASHER	2	60001-
9	20Y-954-5161	GUARD,FRONT, FULL	1	60001-
10	01010-D1275	BOLT	2	60001-
11	01643-71232	WASHER	2	60001-
12	20Y-954-5190	BRACKET	1	60001-
13	22B-954-1750	BRACKET	1	60001-
14	01010-D1225	BOLT	2	60001-
15	01643-71232	WASHER	2	60001-
16	01010-D0625	BOLT	1	60001-
17	01643-70623	WASHER	1	60001-
18	14X-911-1330	HINGE	2	60001-
19	01010-D1025	BOLT	12	60001-
20	01643-71032	WASHER	12	60001-
21	20Y-54-36342	SPRING, GAS	1	60001-
22	22B-954-1840	PLATE	1	60001-
23	22B-954-1660	PLATE	1	60001-
24	01010-D0820	BOLT	2	60001-
25	01643-70823	WASHER	2	60001-
26	04052-10833	PIN	2	60001-
27	01643-70823	WASHER	2	60001-

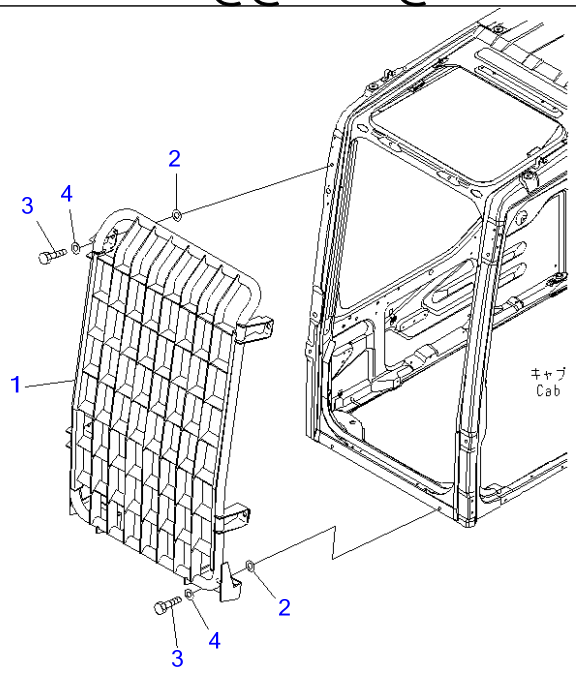

PW1B875

Ref K0230-01A2 **Page 210510**

PC220-7 S/N 60001-UP (Overseas Version)
FRONT GUARD (FULL) (LEVEL-2)

Item	Part No.	Part Name	Qty	Serial No.
1	20Y-954-4310	GUARD	1	60001-
2	130-43-64260	COLLAR	6	60001-
3	01010-D1240	BOLT	6	60001-
4	01643-71232	WASHER	6	60001-

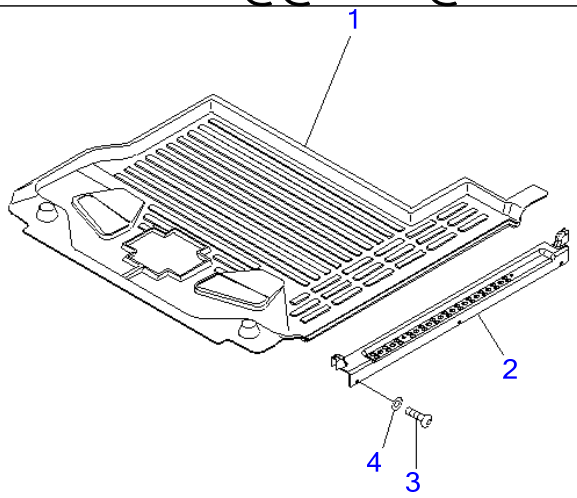

PW1B866

Ref K0310-01A0 **Page 210520**

PC220-7 S/N 60001-UP (Overseas Version)
FLOOR MAT(#60001-65000)

Item	Part No.	Part Name	Qty	Serial No.
1	20Y-54-65610	MAT	1	60001-65000
2	20Y-54-51952	COVER	1	60001-@
3	01245-00612	SCREW	5	60001-65000
4	01643-70623	WASHER	5	60001-@

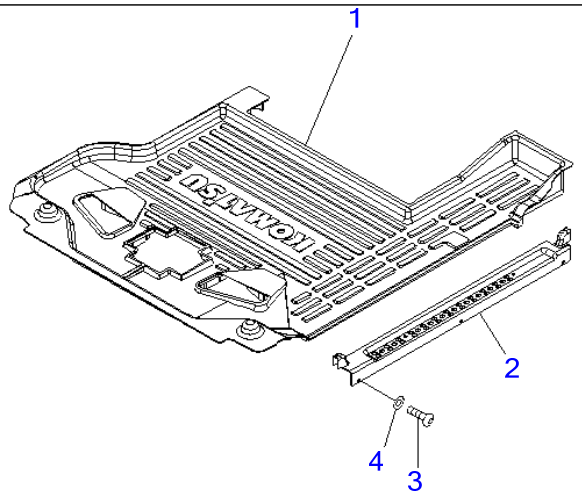

00011594

Ref K0310-01A0A **Page 210530**

PC220-7 S/N 60001-UP (Overseas Version)
FLOOR MAT(#65001-)

Item	Part No.	Part Name	Qty	Serial No.
1	208-53-12611	MAT	1	65437-
	208-53-12610	MAT	1	65001-65436
2	20Y-54-51952	COVER	1	60001-
3	01245-00616	SCREW	5	65001-
4	01643-70623	WASHER	5	60001-

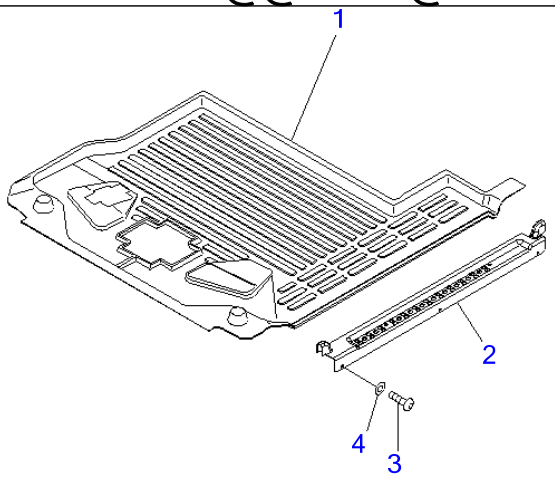

PW1B867

Ref K0310-01A1 **Page 210540**

PC220-7 S/N 60001-UP (Overseas Version)
FLOOR MAT (1 ACTUATOR)(#60001-65000)

Item	Part No.	Part Name	Qty	Serial No.
1	20Y-54-65710	MAT	1	60001-65000
2	20Y-54-51952	COVER	1	60001-@
3	01245-00612	SCREW	5	60001-65000
4	01643-70623	WASHER	5	60001-@

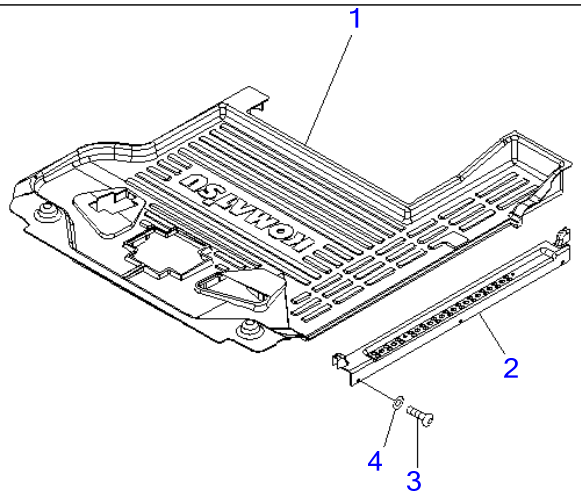

00012729

Ref K0310-01A1A **Page 210550**

PC220-7 S/N 60001-UP (Overseas Version)
FLOOR MAT (1 ACTUATOR)(#65001-)

Item	Part No.	Part Name	Qty	Serial No.
1	208-53-12711	MAT	1	65437-
	208-53-12710	MAT	1	65001-65436
2	20Y-54-51952	COVER	1	60001-
3	01245-00616	SCREW	5	65001-
4	01643-70623	WASHER	5	60001-

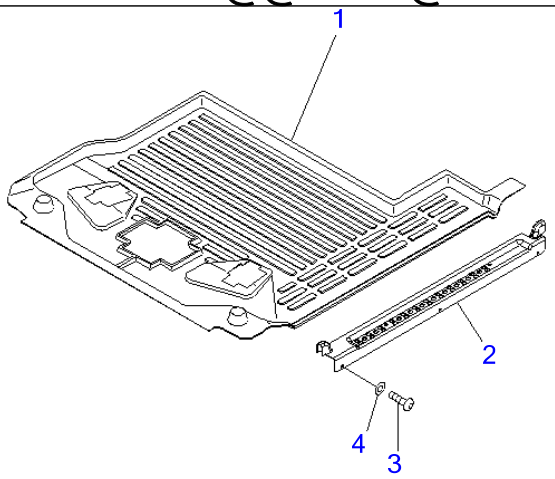

PW1E763

Ref K0310-01A2 **Page 210560**

PC220-7 S/N 60001-UP (Overseas Version)
FLOOR MAT (2 ACTUATOR)(#60001-65000)

Item	Part No.	Part Name	Qty	Serial No.
1	20Y-54-65720	MAT,2ATT	1	60001-65000
2	20Y-54-51952	COVER	1	60001-@
3	01245-00612	SCREW	5	60001-65000
4	01643-70623	WASHER	5	60001-@

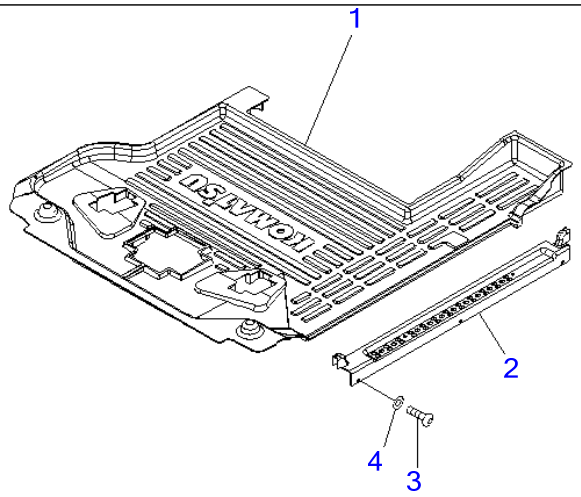

00018019

Ref K0310-01A2A **Page 210570**

PC220-7 S/N 60001-UP (Overseas Version)
FLOOR MAT (2 ACTUATOR)(#65001-)

Item	Part No.	Part Name	Qty	Serial No.
1	208-53-12721	MAT	1	65437-
	208-53-12720	MAT	1	65001-65436
2	20Y-54-51952	COVER	1	60001-
3	01245-00616	SCREW	5	65001-
4	01643-70623	WASHER	5	60001-

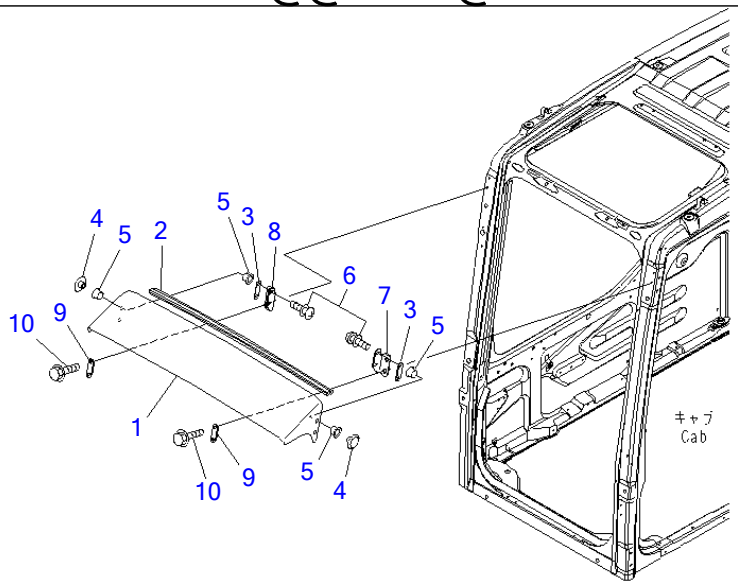

P W 1 C 9 2 7

Ref K0320-01A0 **Page 210580**

PC220-7 S/N 60001-UP (Overseas Version)
RAIN VISOR

Item	Part No.	Part Name	Qty	Serial No.
1	20Y-54-52552	VISOR	1	60001-
2	20Y-54-52950	▪ SEAL	1	60001-
3	20Y-54-52530	PLATE	2	60001-
4	205-54-51720	RETAINER	4	60001-
5	205-54-51730	PACKING	8	60001-
6	01023-20612	SCREW	4	60001-
7	20Y-54-52562	PLATE	1	60001-
8	20Y-54-52572	PLATE	1	60001-
9	20Y-54-52530	PLATE	2	60001-
10	01435-40616	BOLT	4	60001-

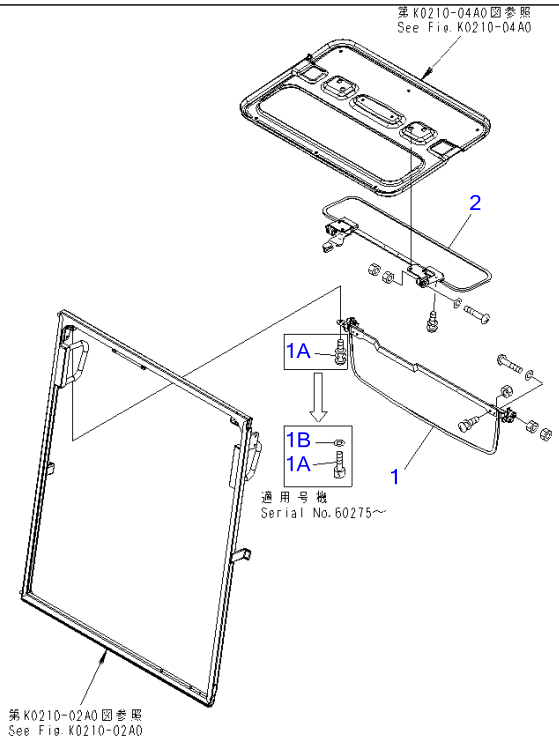

Ref K0330-01A0 **Page 210590**

PC220-7 S/N 60001-UP (Overseas Version)
SUN VISOR(#60001-65000)

Item	Part No.	Part Name	Qty	Serial No.
1	20Y-54-52510	SUNVISOR,FRONT	1	60001-@
1A	01252-80616	BOLT	4	60275-@
	01023-70512	SCREW	4	60003-60274
1B	01643-70623	WASHER	4	60275-@
2	20Y-54-52521	SUNVISOR,ROOF	1	60001-@

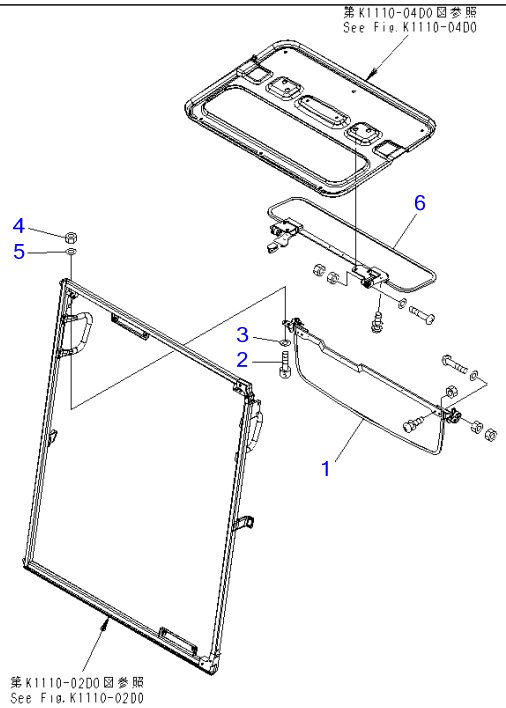

00031212

Ref K0330-01A0A **Page 210600**

PC220-7 S/N 60001-UP (Overseas Version)
SUN VISOR(#65001-)

Item	Part No.	Part Name	Qty	Serial No.
1	20Y-54-52510	SUNVISOR	1	60001-
2	01252-80616	BOLT	4	60275-
3	01643-70623	WASHER	4	60275-
4	01580-10605	NUT	4	65001-
5	01640-20610	WASHER	4	65001-
6	20Y-54-52522	SUNVISOR	1	68840-
	◆20Y-54-52521	SUNVISOR	1	60001-68839

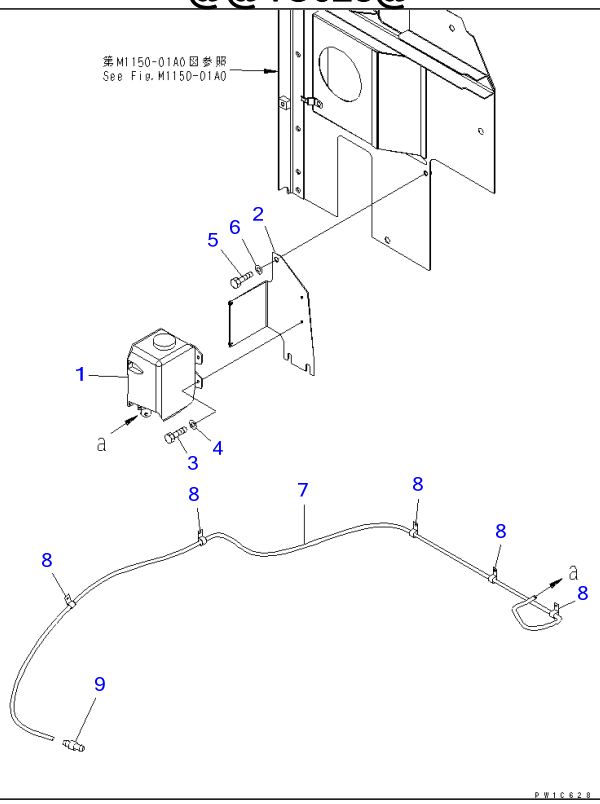

Ref K0350-01A0 **Page 210610**

PC220-7 S/N 60001-UP (Overseas Version)
WINDOW WASHER(#60001-60775)

Item	Part No.	Part Name	Qty	Serial No.
1	21T-06-11350	WASHER TANK ASS'Y	1	60001-60775
2	206-54-71160	BRACKET	1	60001-@
3	01010-80616	BOLT	4	60001-60775
4	01643-30623	WASHER	4	60001-60775
5	01010-81225	BOLT	3	60001-@
6	01643-31232	WASHER	3	60001-@
7	22U-06-11660	HOSE	1	60001-@
8	21T-38-12270	CLIP	5	60001-@
9	195-979-8590	VALVE	1	60001-@

PC220-7 S/N 60001-UP (Overseas Version)
00093591

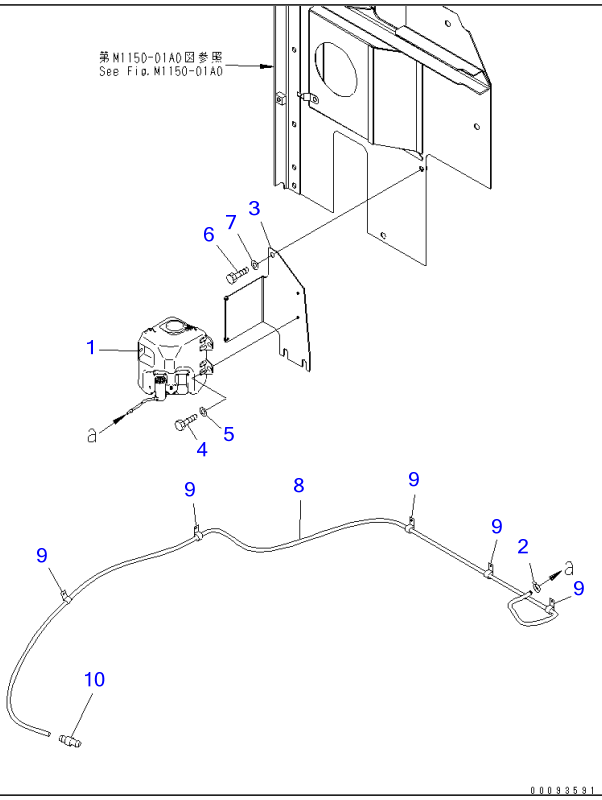

Ref K0350-01A0A **Page 210620**

PC220-7 S/N 60001-UP (Overseas Version)
WINDOW WASHER(#60776-65000)

Item	Part No.	Part Name	Qty	Serial No.
1	21T-06-11480	WASHER TANK ASS'Y	1	60776-65000
2	08034-40521	BAND	1	60776-65000
3	206-54-71160	BRACKET	1	60001-@
4	01010-80616	BOLT	3	60776-65000
5	209-72-12230	WASHER	3	60776-65000
6	01010-81225	BOLT	3	60001-@
7	01643-31232	WASHER	3	60001-@
8	22U-06-11660	HOSE	1	60001-@
9	21T-38-12270	CLIP	5	60001-@
10	195-979-8590	VALVE	1	60001-@

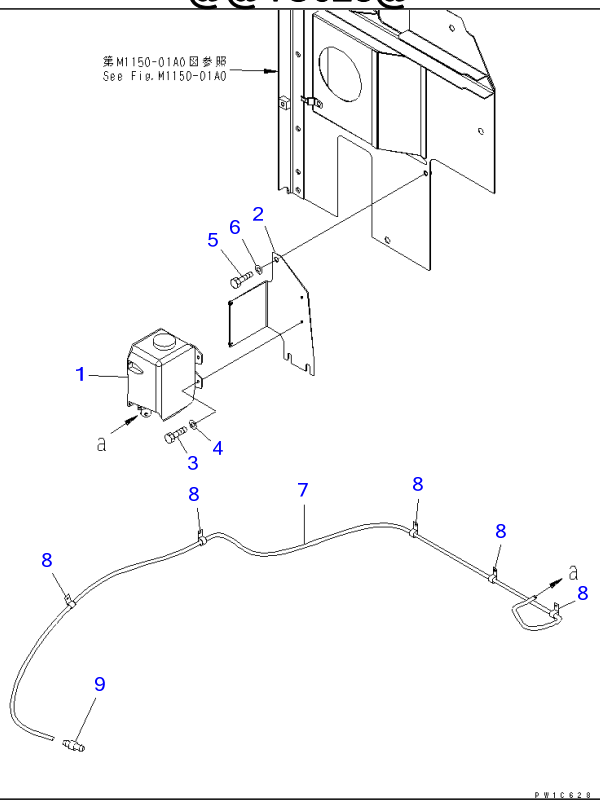

Ref K0350-01A0B **Page 210630**

PC220-7 S/N 60001-UP (Overseas Version)
WINDOW WASHER(#65001-69462)

Item	Part No.	Part Name	Qty	Serial No.
1	21T-06-11350	WASHER TANK ASS'Y	1	65001-69462
2	206-54-71160	BRACKET	1	60001-@
3	01010-80616	BOLT	4	65001-69462
4	01643-30623	WASHER	4	65001-69462
5	01010-81225	BOLT	3	60001-@
6	01643-31232	WASHER	3	60001-@
7	22U-06-11660	HOSE	1	60001-@
8	21T-38-12270	CLIP	5	60001-@
9	195-979-8590	VALVE	1	60001-@

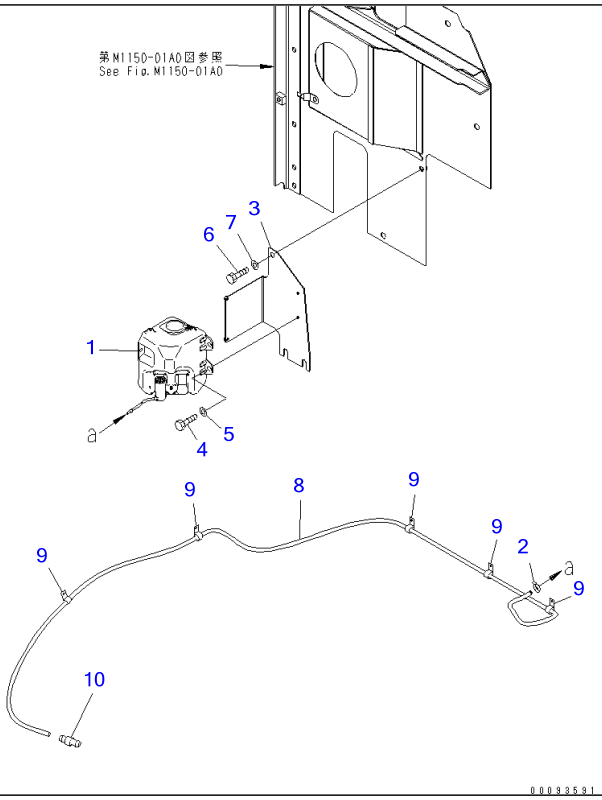

Ref K0350-01A0C

Page 210640

PC220-7 S/N 60001-UP (Overseas Version)
WINDOW WASHER(#69463-)

Item	Part No.	Part Name	Qty	Serial No.
1	21T-06-11480	WASHER TANK ASS'Y	1	69463-
2	08034-40521	BAND	1	69463-
3	206-54-71160	BRACKET	1	60001-
4	01010-80616	BOLT	3	69463-
5	209-72-12230	WASHER	3	69463-
6	01010-81225	BOLT	3	60001-
7	01643-31232	WASHER	3	60001-
8	22U-06-11660	HOSE	1	60001-
9	21T-38-12270	CLIP	5	60001-
10	195-979-8590	VALVE	1	60001-

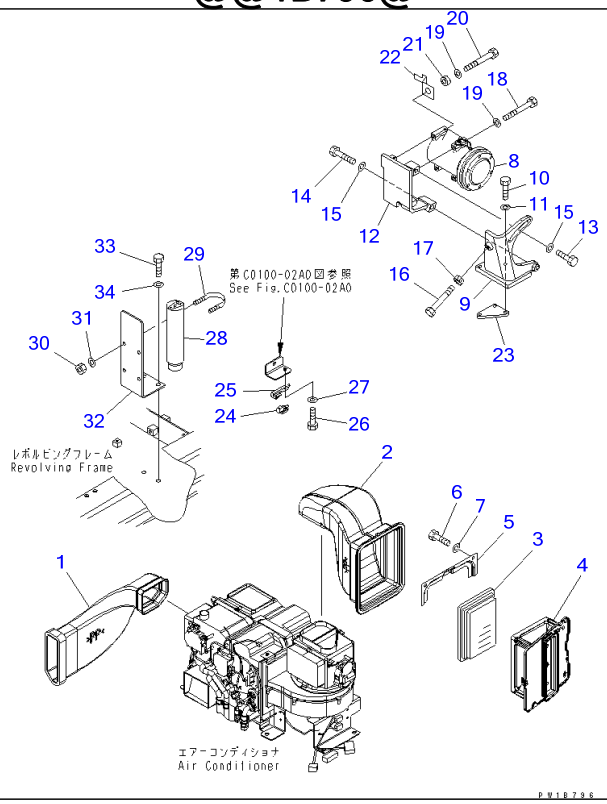

Ref K0700-01A0 Page 210650

PC220-7 S/N 60001-UP (Overseas Version)

AIR CONDITIONER (DUCT)(#60001-60062)

Item	Part No.	Part Name	Qty	Serial No.
1	20Y-979-6212	DUCT	1	60001-@
2	20Y-979-6252	DUCT	1	60001-@
3	17M-911-3530	ELEMENT	1	60001-@
4	20Y-54-52761	HOLDER	1	60001-@
5	20Y-54-52771	PLATE	1	60001-@
6	01010-80812	BOLT	2	60001-60062
7	01643-30823	WASHER	2	60001-@
8	20Y-979-6121	COMPRESSOR ASS'Y	1	60001-@
9	20Y-979-6640	BRACKET	1	60001-60080
10	01010-81045	BOLT	3	60001-60080
11	01643-31032	WASHER	3	60001-@
12	20Y-979-6611	BRACKET	1	60001-60080
13	01010-81435	BOLT	1	60001-60080
14	01010-81485	BOLT	1	60001-60080
15	01643-31445	WASHER	2	60001-60080
16	195-33-11760	BOLT	1	60001-60080
17	01580-11411	NUT	1	60001-@
18	01010-80875	BOLT	3	60001-@
19	01643-30823	WASHER	4	60001-@
20	01010-80885	BOLT	1	60001-@
21	6204-81-6740	SPACER	1	60001-@
22	08053-01510	CLIP	1	60001-@
23	20Y-979-6680	SPACER	1	60001-@
24	20Y-979-6191	SENSOR	1	60001-@
25	20Y-979-6271	BRACKET	1	60001-@
26	01010-80620	BOLT	1	60001-@
27	01643-30623	WASHER	1	60001-@
28	20Y-979-3120	TANK	1	60001-@

AIR CONDITIONER (DUCT)(#60001-60062)

Item	Part No.	Part Name	Qty	Serial No.
29	07283-36155	CLIP	2	60001-@
30	01597-01009	NUT	4	60001-@
31	01643-31032	WASHER	4	60001-@
32	20Y-979-6621	PLATE	1	60001-@
33	01010-81230	BOLT	2	60001-@
34	01643-31232	WASHER	2	60001-@

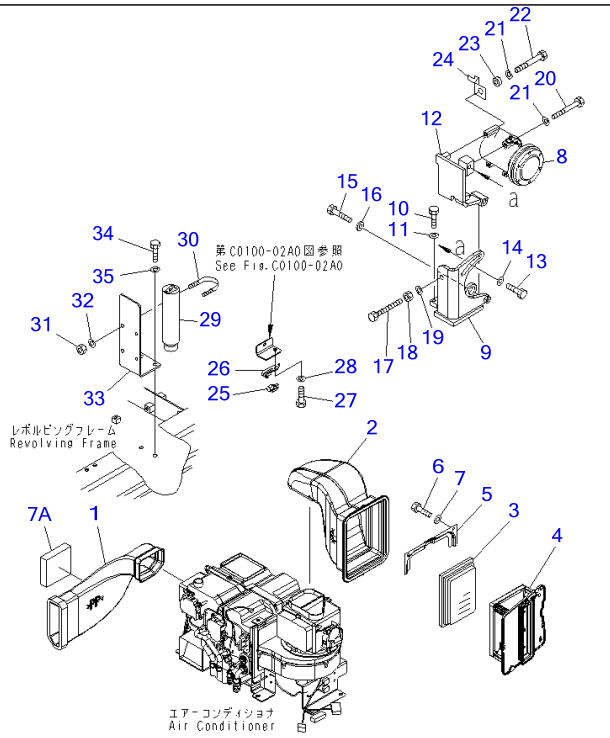

Ref K0700-01A0A **Page 210660**

PC220-7 S/N 60001-UP (Overseas Version)
AIR CONDITIONER (DUCT)(#60063-65000)

Item	Part No.	Part Name	Qty	Serial No.
1	20Y-979-6212	DUCT	1	60001-65000
2	20Y-979-6252	DUCT	1	60001-65000
3	17M-911-3530	ELEMENT	1	60001-65000
4	20Y-54-52761	HOLDER	1	60001-65000
5	20Y-54-52771	PLATE	1	60001-65000
6	01010-80816	BOLT	2	60063-65000
7	01643-30823	WASHER	2	60001-65000
7A	20Y-979-7250	SEAL	1	60275-65000
8	20Y-979-6121	COMPRESSOR ASS'Y	1	60001-@
9	20Y-979-6641SG	BRACKET	1	60081-@
	20Y-979-6641	BRACKET	1	60081-@
10	01010-81035	BOLT	3	60081-@
11	01643-31032	WASHER	3	60001-@
12	20Y-979-6612	BRACKET	1	60081-@
13	01010-81440	BOLT	1	60081-@
14	195-71-32220	WASHER	1	60081-@
15	01019-31400	BOLT	1	60081-@
16	198-38-12460	SPACER	1	60081-@
17	01017-51420	BOLT	1	60081-@
18	01580-11411	NUT	1	60001-@
19	01643-31445	WASHER	1	60081-@
20	01010-80875	BOLT	3	60001-@
21	01643-30823	WASHER	4	60001-@
22	01010-80885	BOLT	1	60001-@
23	6204-81-6740	SPACER	1	60001-@
24	08053-01510	CLIP	1	60001-@
25	20Y-979-6191	SENSOR	1	60001-65000
26	20Y-979-6271	BRACKET	1	60001-65000

AIR CONDITIONER (DUCT)(#60063-65000)

Item	Part No.	Part Name	Qty	Serial No.
27	01010-80620	BOLT	1	60001-65000
28	01643-30623	WASHER	1	60001-65000
29	20Y-979-3120	TANK	1	60001-@
30	07283-36155	CLIP	2	60001-@
31	01597-01009	NUT	4	60001-@
32	01643-31032	WASHER	4	60001-@
33	20Y-979-6621	PLATE	1	60001-@
34	01010-81230	BOLT	2	60001-@
35	01643-31232	WASHER	2	60001-@

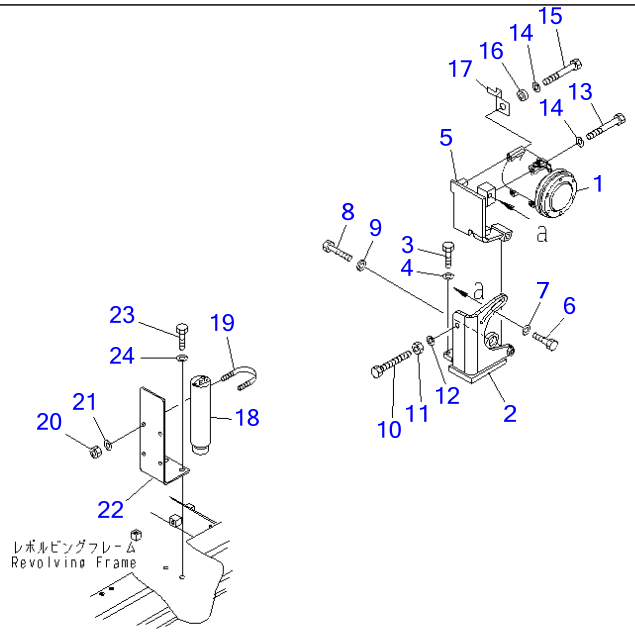

00017943

Ref K0700-01A0B **Page 210670**

PC220-7 S/N 60001-UP (Overseas Version)
AIR CONDITIONER (DUCT)(#65001-)

Item	Part No.	Part Name	Qty	Serial No.
1	(20Y-810-1260)	COMPRESSOR ASS'Y	1	69767-
	(20Y-979-6121)	COMPRESSOR ASS'Y	1	60001-69766
2	20Y-979-6641	BRACKET	1	60081-
3	01010-81035	BOLT	3	60081-
4	01643-31032	WASHER	3	60001-
5	20Y-979-6612	BRACKET	1	60081-
6	01010-81440	BOLT	1	60081-
7	195-71-32220	WASHER	1	60081-
8	01019-31400	BOLT	1	60081-
9	198-38-12460	SPACER	1	60081-
10	01017-51420	BOLT	1	60081-
11	01580-11411	NUT	1	60001-
12	01643-31445	WASHER	1	60081-
13	01010-80875	BOLT	3	60001-
14	01643-30823	WASHER	4	60001-
15	01010-80885	BOLT	1	60001-
16	6204-81-6740	SPACER	1	60001-
17	08053-01510	CLIP	1	60001-
18	20Y-979-3120	TANK	1	60001-
19	07283-36155	CLIP	2	60001-
20	01597-01009	NUT	4	60001-
21	01643-31032	WASHER	4	60001-
22	20Y-979-6621	PLATE	1	60001-
23	01010-81230	BOLT	2	60001-
24	01643-31232	WASHER	2	60001-

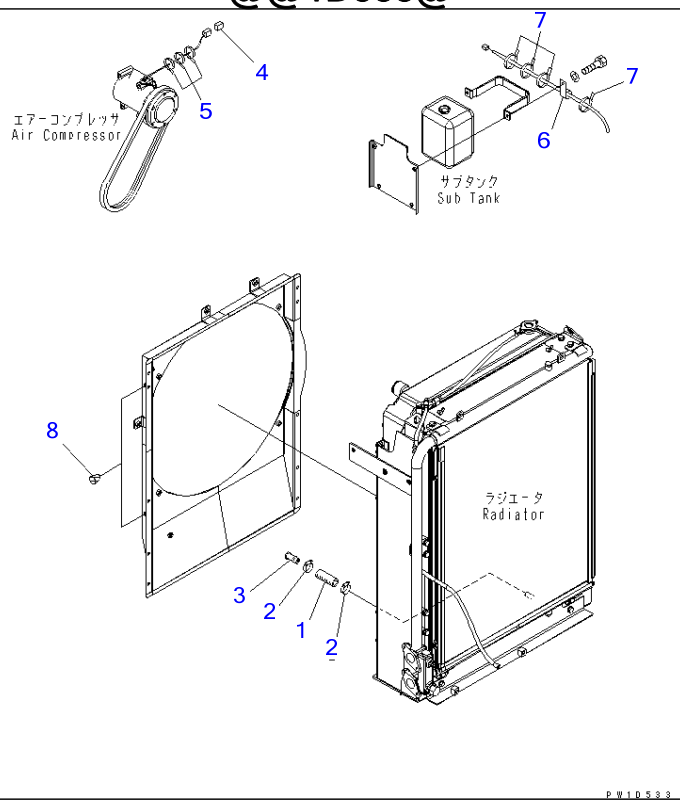

Ref K0700-01A1 **Page 210680**

PC220-7 S/N 60001-UP (Overseas Version)
AIR CONDITIONER AND HEATER LESS PLUG

Item	Part No.	Part Name	Qty	Serial No.
1	195-979-4830	HOSE	1	60001-
2	07281-00259	CLAMP	2	60001-
3	205-03-62720	PLUG	1	60001-
4	08055-00181	CONNECTOR	1	60001-
5	08034-20536	BAND	3	60001-
6	04434-51012	CLIP	1	60001-
7	08034-20536	BAND	4	60001-
8	07049-01012	PLUG	2	60001-

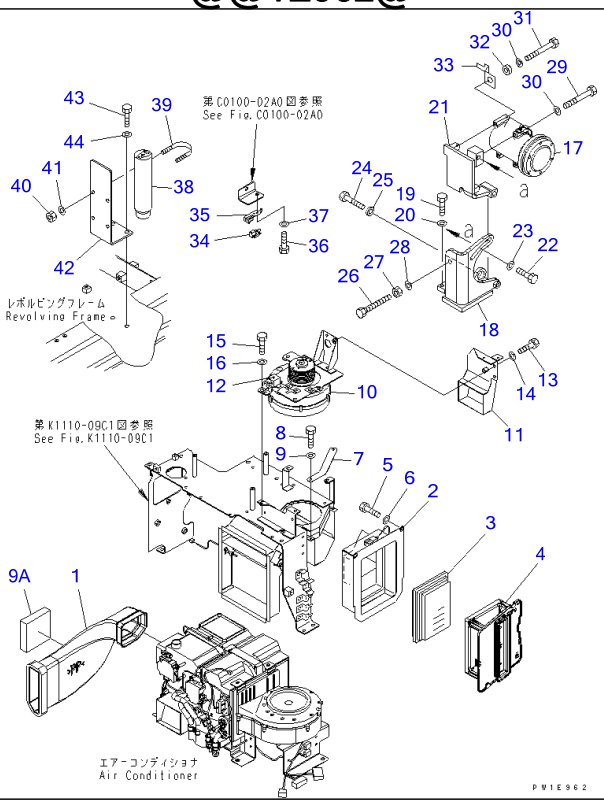

Ref K0700-01A2 **Page 210690**

PC220-7 S/N 60001-UP (Overseas Version)

BIG WIND AIR CONDITIONER (DUCT)

Item	Part No.	Part Name	Qty	Serial No.
1	20Y-979-6212	DUCT	1	60001-
2	20Y-979-6731	DUCT	1	60001-
3	17M-911-3530	ELEMENT	1	60001-
4	20Y-54-52761	HOLDER	1	60001-
5	01010-80812	BOLT	2	60001-
6	01643-30823	WASHER	2	60001-
7	20Y-979-6720	PLATE	1	60001-
8	01010-80612	BOLT	2	60001-
9	01643-30623	WASHER	2	60001-
9A	20Y-979-7250	SEAL	1	60275-
10	20Y-979-6741	BLOWER	1	60001-
11	20Y-979-6761	DUCT	1	60001-
12	20Y-979-6771	RELAY	1	60001-
13	01010-80820	BOLT	3	60001-
14	01643-30823	WASHER	3	60001-
15	01010-80820	BOLT	4	60001-
16	01643-30823	WASHER	4	60001-
17	(20Y-810-1260)	COMPRESSOR ASS'Y	1	69767-
	(20Y-979-6121)	COMPRESSOR ASS'Y	1	60001-69766
18	20Y-979-6641	BRACKET	1	60001-
19	01010-81035	BOLT	3	60001-
20	01643-31032	WASHER	3	60001-
21	20Y-979-6612	BRACKET	1	60001-
22	01010-81440	BOLT	1	60001-
23	195-71-32220	WASHER	1	60001-
24	01019-31400	BOLT	1	60001-
25	198-38-12460	SPACER	1	60001-
26	01017-51420	BOLT	1	60001-

BIG WIND AIR CONDITIONER (DUCT)

Item	Part No.	Part Name	Qty	Serial No.
27	01580-11411	NUT	1	60001-
28	01643-31445	WASHER	1	60001-
29	01010-80875	BOLT	3	60001-
30	01643-30823	WASHER	4	60001-
31	01010-80885	BOLT	1	60001-
32	6204-81-6740	SPACER	1	60001-
33	08053-01510	CLIP	1	60001-
34	20Y-979-6191	SENSOR	1	60001-
35	20Y-979-6271	BRACKET	1	60001-
36	01010-80620	BOLT	1	60001-
37	01643-30623	WASHER	1	60001-
38	20Y-979-3120	TANK	1	60001-
39	07283-36155	CLIP	2	60001-
40	01597-01009	NUT	4	60001-
41	01643-31032	WASHER	4	60001-
42	20Y-979-6621	PLATE	1	60001-
43	01010-81230	BOLT	2	60001-
44	01643-31232	WASHER	2	60001-

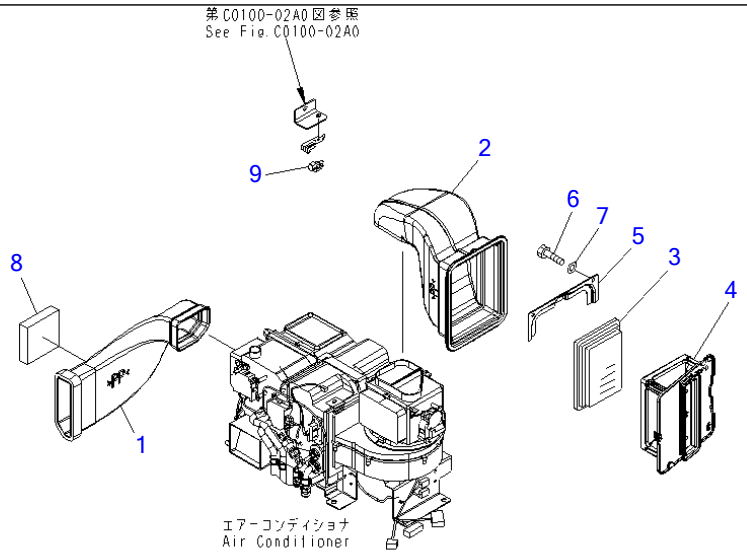

00002258

Ref K0700-01A4 **Page 210700**

PC220-7 S/N 60001-UP (Overseas Version)

AIR CONDITIONER (DUCT) (COLD WEATHER A SPEC.)(#60255-65000)

Item	Part No.	Part Name	Qty	Serial No.
1	20Y-979-6212	DUCT	1	60255-65000
2	20Y-979-6252	DUCT	1	60255-65000
3	17M-911-3530	ELEMENT	1	60255-65000
4	20Y-54-52761	HOLDER	1	60255-65000
5	20Y-54-52771	PLATE	1	60255-65000
6	01010-80816	BOLT	2	60255-65000
7	01643-30823	WASHER	2	60255-65000
8	20Y-979-7250	SEAL	1	60255-65000
9	20Y-979-6191	SENSOR	1	60255-65000

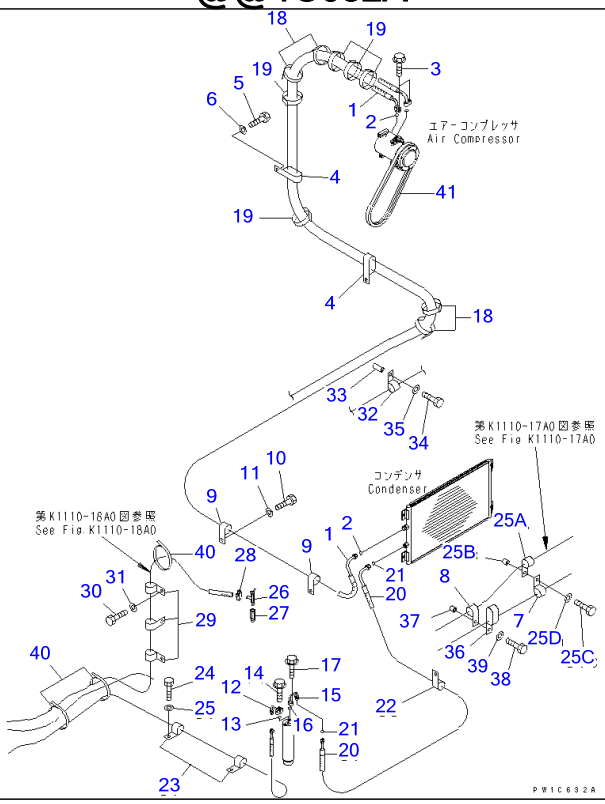

Ref K0700-02A0 **Page 210710**

PC220-7 S/N 60001-UP (Overseas Version)
AIR CONDITIONER (HOSE)(#60001-65000)

Item	Part No.	Part Name	Qty	Serial No.
1	20Y-979-6531	HOSE	1	60001-65000
2	20Y-979-3140	▪ O-RING	2	60001-@
3	01435-00630	BOLT	2	60001-@
4	141-06-11220	CLIP	2	60001-@
5	01010-81225	BOLT	2	60001-@
6	01643-31232	WASHER	2	60001-@
7	20Y-62-15951	CLIP	1	60036-@
	20Y-62-15891	CLIP	1	60001-60035
8	04434-52712	CLIP	1	60001-@
9	04434-52312	CLIP	2	60001-@
10	01010-81225	BOLT	2	60001-@
11	01643-31232	WASHER	2	60001-@
12	20Y-979-6650	TUBE	1	60001-@
13	20Y-979-3150	▪ O-RING	1	60001-@
14	01435-00625	BOLT	1	60001-@
15	20Y-979-6542	TUBE	1	60001-@
16	20Y-979-3150	▪ O-RING	1	60001-@
17	01435-00625	BOLT	1	60001-@
18	08034-20536	BAND	4	60001-@
19	08034-20536	BAND	5	60001-@
20	20Y-979-6660	HOSE	1	60001-65000
21	20Y-979-3150	▪ O-RING	2	60001-@
22	04434-51912	CLIP	1	60001-65000
23	04434-51910	CLIP	2	60001-@
24	01010-81020	BOLT	2	60001-@
25	01643-31032	WASHER	2	60001-@
25A	20Y-62-15951	CLIP	1	60036-@
	20Y-62-15891	CLIP	1	60003-60035

AIR CONDITIONER (HOSE)(#60001-65000)

Item	Part No.	Part Name	Qty	Serial No.
25B	195-33-11220	SPACER	1	60003-@
25C	01010-81250	BOLT	1	60003-@
25D	01643-31232	WASHER	1	60003-@
26	09482-50000	VALVE	1	60001-@
27	6732-11-6130	ADAPTER	1	60001-@
28	11Y-09-11160	CLIP	2	60081-@
	09480-10100	CLAMP	2	60001-60080
29	04434-52110	CLIP	3	60001-@
30	01010-81025	BOLT	2	60001-@
31	01643-31032	WASHER	2	60001-@
32	04434-52112	CLIP	1	60001-@
33	203-62-44510	SPACER	1	60001-@
34	01010-81285	BOLT	1	60001-@
35	01643-31232	WASHER	1	60001-@
36	141-06-11220	CLIP	1	60001-@
37	142-03-11160	SPACER	1	60001-@
38	01010-81260	BOLT	1	60001-@
39	01643-31232	WASHER	1	60001-@
40	08034-20536	BAND	4	60001-@
41	04120-21748	V-BELT	1	60001-@

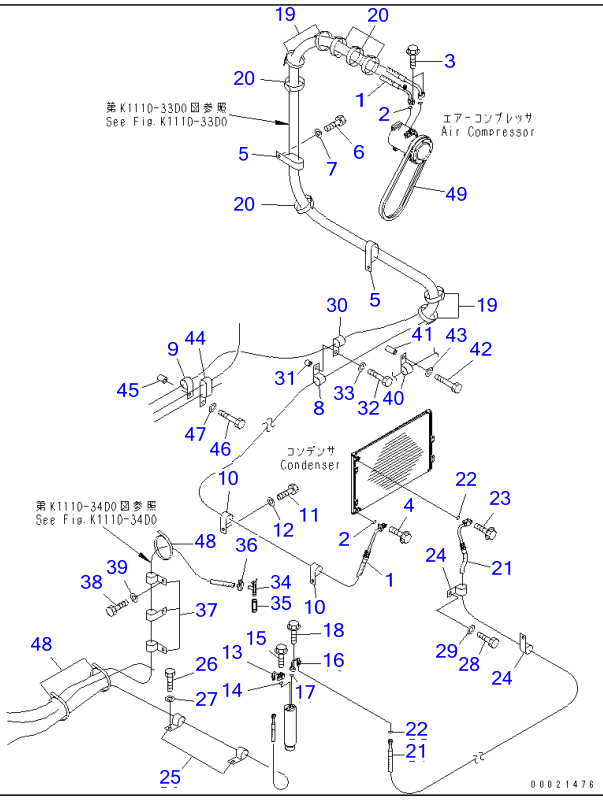

Ref K0700-02A0A **Page 210720**

PC220-7 S/N 60001-UP (Overseas Version)

AIR CONDITIONER (HOSE)(#65001-)

Item	Part No.	Part Name	Qty	Serial No.
1	20Y-979-7321	HOSE	1	65001-
2	20Y-979-3140	・O-RING	2	60001-
3	01435-00630	BOLT	2	60001-
4	01435-00625	BOLT	1	65001-
5	141-06-11220	CLIP	2	60001-
6	01010-81225	BOLT	2	60001-
7	01643-31232	WASHER	2	60001-
8	20Y-62-15951	CLIP	1	60036-
9	04434-52712	CLIP	1	60001-
10	04434-52312	CLIP	2	60001-
11	01010-81225	BOLT	2	60001-
12	01643-31232	WASHER	2	60001-
13	20Y-979-6650	TUBE	1	60001-
14	20Y-979-3150	・O-RING	1	60001-
15	01435-00625	BOLT	1	60001-
16	20Y-979-6542	TUBE	1	60001-
17	20Y-979-3150	・O-RING	1	60001-
18	01435-00625	BOLT	1	60001-
19	08034-20536	BAND	4	60001-
20	08034-20536	BAND	5	60001-
21	20Y-979-7331	HOSE	1	65001-
22	20Y-979-3150	・O-RING	2	60001-
23	01435-00630	BOLT	1	65001-
24	04434-51912	CLIP	2	65001-
25	04434-51910	CLIP	2	60001-
26	01010-81020	BOLT	2	60001-
27	01643-31032	WASHER	2	60001-
28	01010-81220	BOLT	1	65001-

AIR CONDITIONER (HOSE)(#65001-)

Item	Part No.	Part Name	Qty	Serial No.
29	01643-31232	WASHER	1	65001-
30	20Y-62-15951	CLIP	1	60036-
31	195-33-11220	SPACER	1	60003-
32	01010-81250	BOLT	1	60003-
33	01643-31232	WASHER	1	60003-
34	09482-50000	VALVE	1	60001-
35	6732-11-6130	ADAPTER	1	60001-
36	11Y-09-11160	CLIP	2	60081-
37	04434-52110	CLIP	3	60001-
38	01010-81025	BOLT	2	60001-
39	01643-31032	WASHER	2	60001-
40	04434-52112	CLIP	1	60001-
41	203-62-44510	SPACER	1	60001-
42	01010-81285	BOLT	1	60001-
43	01643-31232	WASHER	1	60001-
44	141-06-11220	CLIP	1	60001-
45	142-03-11160	SPACER	1	60001-
46	01010-81260	BOLT	1	60001-
47	01643-31232	WASHER	1	60001-
48	08034-20536	BAND	4	60001-
49	04120-21748	V-BELT	1	60001-

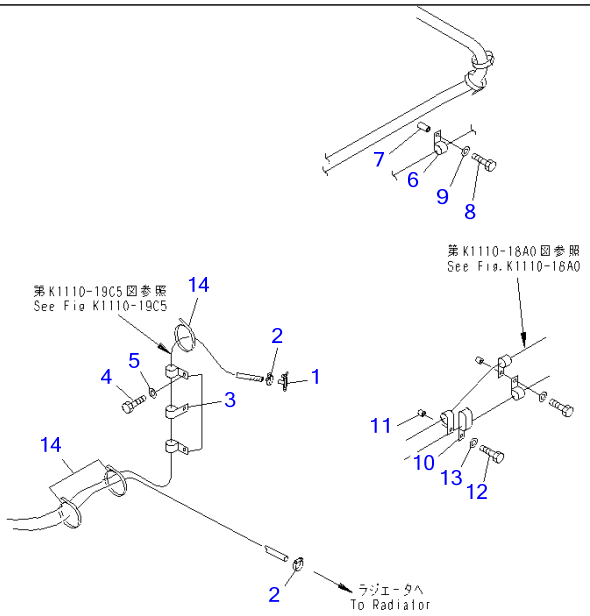

00002324

PC220-7 S/N 60001-UP (Overseas Version)

AIR CONDITIONER (CLIPPING) (COLD WEATHER A SPEC.)(#60255-65000)

Item	Part No.	Part Name	Qty	Serial No.
1	09482-50000	VALVE	1	60255-@
2	11Y-09-11160	CLIP	2	60255-@
3	04434-52110	CLIP	3	60255-@
4	01010-81025	BOLT	2	60255-@
5	01643-31032	WASHER	2	60255-@
6	04434-52112	CLIP	1	60254-@
7	203-62-44510	SPACER	1	60255-@
8	01010-81285	BOLT	1	60255-@
9	01643-31232	WASHER	1	60255-@
10	141-06-11220	CLIP	1	60255-@
11	142-03-11160	SPACER	1	60255-@
12	01010-81260	BOLT	1	60255-@
13	01643-31232	WASHER	1	60255-@
14	08034-20536	BAND	4	60255-@

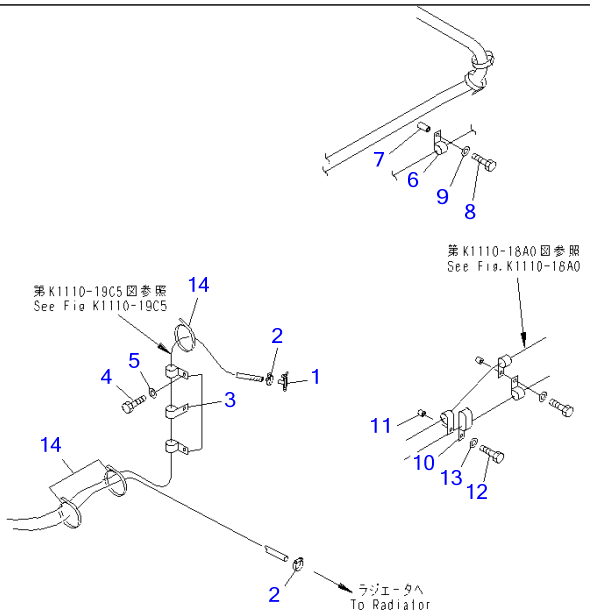

00002324

Ref K0700-02A4A **Page 210740**

PC220-7 S/N 60001-UP (Overseas Version)
AIR CONDITIONER (CLIPPING) (COLD WEATHER A SPEC.)(#65001-69361)

Item	Part No.	Part Name	Qty	Serial No.
1	09482-50000	VALVE	1	60255-@
2	11Y-09-11160	CLIP	2	60255-@
3	04434-52110	CLIP	3	60255-@
4	01010-81025	BOLT	2	60255-@
5	01643-31032	WASHER	2	60255-@
6	04434-52112	CLIP	1	60255-@
7	203-62-44510	SPACER	1	60255-@
8	01010-81285	BOLT	1	60255-@
9	01643-31232	WASHER	1	60255-@
10	141-06-11220	CLIP	1	60255-@
11	142-03-11160	SPACER	1	60255-@
12	01010-81260	BOLT	1	60255-@
13	01643-31232	WASHER	1	60255-@
14	08034-20536	BAND	4	60255-@

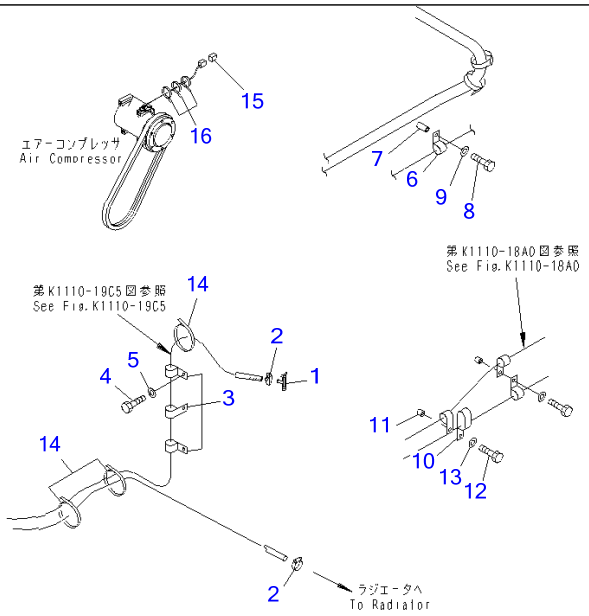

00092688

PC220-7 S/N 60001-UP (Overseas Version)

AIR CONDITIONER (CLIPPING) (COLD WEATHER A SPEC.)(#69362-)

Item	Part No.	Part Name	Qty	Serial No.
1	09482-50000	VALVE	1	60255-
2	11Y-09-11160	CLIP	2	60255-
3	04434-52110	CLIP	3	60255-
4	01010-81025	BOLT	2	60255-
5	01643-31032	WASHER	2	60255-
6	04434-52112	CLIP	1	60255-
7	203-62-44510	SPACER	1	60255-
8	01010-81285	BOLT	1	60255-
9	01643-31232	WASHER	1	60255-
10	141-06-11220	CLIP	1	60255-
11	142-03-11160	SPACER	1	60255-
12	01010-81260	BOLT	1	60255-
13	01643-31232	WASHER	1	60255-
14	08034-20536	BAND	4	60255-
15	08055-00181	CONNECTOR	1	69362-
16	08034-20536	BAND	3	69362-

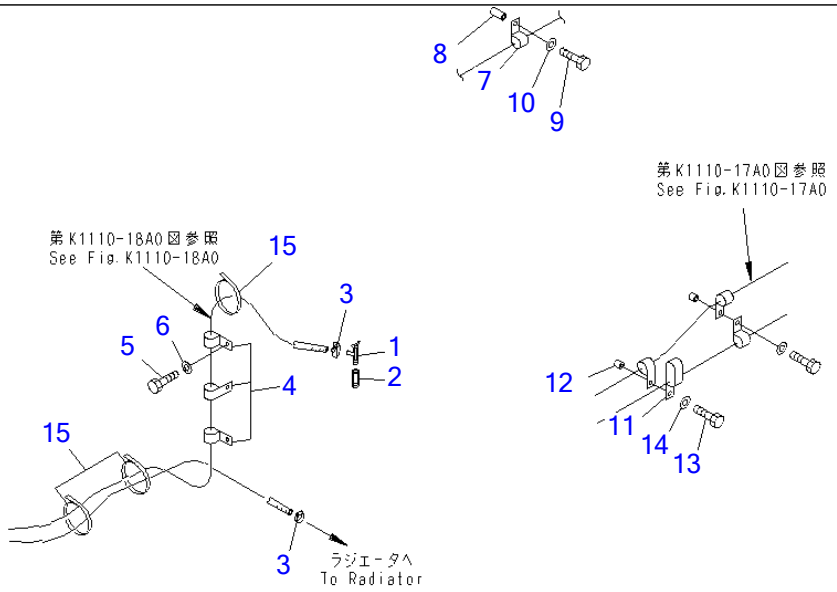

00015275

Ref K0700-02A5 Page 210760

PC220-7 S/N 60001-UP (Overseas Version)

AIR CONDITIONER (CLIPPING)(#60336-65000)

Item	Part No.	Part Name	Qty	Serial No.
1	09482-50000	VALVE	1	60336-@
2	6732-11-6130	ADAPTER	1	60336-@
3	11Y-09-11160	CLIP	2	60336-@
4	04434-52110	CLIP	3	60336-@
5	01010-81025	BOLT	2	60336-@
6	01643-31032	WASHER	2	60336-@
7	04434-52112	CLIP	1	60336-@
8	203-62-44510	SPACER	1	60336-@
9	01010-81285	BOLT	1	60336-@
10	01643-31232	WASHER	1	60336-@
11	141-06-11220	CLIP	1	60336-@
12	142-03-11160	SPACER	1	60336-@
13	01010-81260	BOLT	1	60336-@
14	01643-31232	WASHER	1	60336-@
15	08034-20536	BAND	4	60336-@

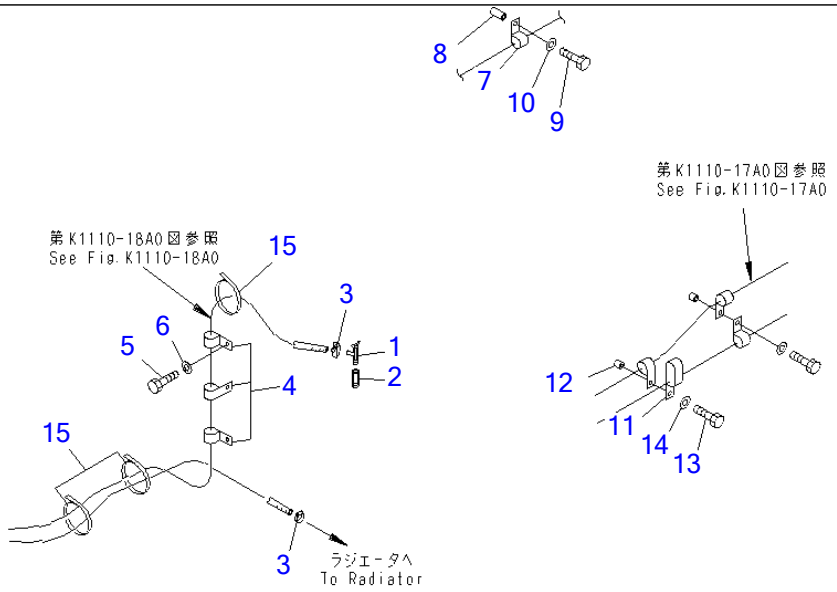

00015275

Ref K0700-02A5A

Page 210770

PC220-7 S/N 60001-UP (Overseas Version)

AIR CONDITIONER (CLIPPING)(#65001-69361)

Item	Part No.	Part Name	Qty	Serial No.
1	09482-50000	VALVE	1	60336-@
2	6732-11-6130	ADAPTER	1	60336-@
3	11Y-09-11160	CLIP	2	60336-@
4	04434-52110	CLIP	3	60336-@
5	01010-81025	BOLT	2	60336-@
6	01643-31032	WASHER	2	60336-@
7	04434-52112	CLIP	1	60336-@
8	203-62-44510	SPACER	1	60336-@
9	01010-81285	BOLT	1	60336-@
10	01643-31232	WASHER	1	60336-@
11	141-06-11220	CLIP	1	60336-@
12	142-03-11160	SPACER	1	60336-@
13	01010-81260	BOLT	1	60336-@
14	01643-31232	WASHER	1	60336-@
15	08034-20536	BAND	4	60336-@

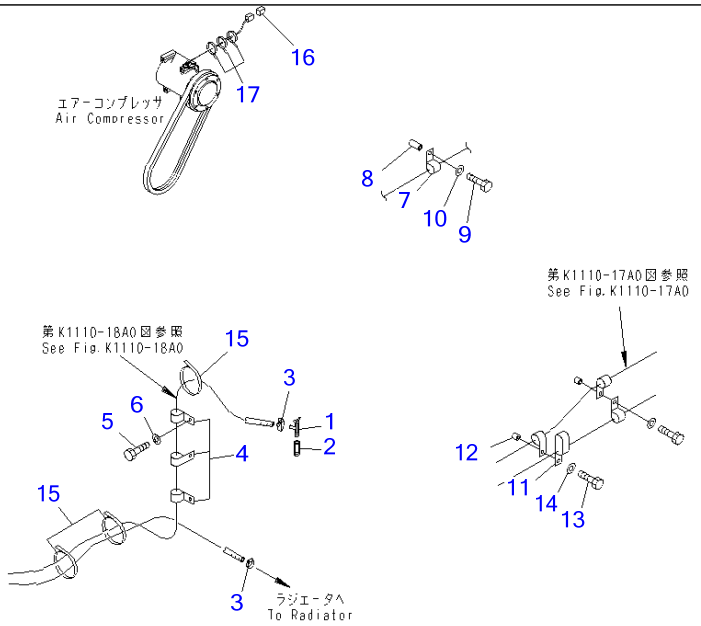

00092689

Ref K0700-02A5B **Page 210780**

PC220-7 S/N 60001-UP (Overseas Version)
AIR CONDITIONER (CLIPPING)(#69362-)

Item	Part No.	Part Name	Qty	Serial No.
1	09482-50000	VALVE	1	60336-
2	6732-11-6130	ADAPTER	1	60336-
3	11Y-09-11160	CLIP	2	60336-
4	04434-52110	CLIP	3	60336-
5	01010-81025	BOLT	2	60336-
6	01643-31032	WASHER	2	60336-
7	04434-52112	CLIP	1	60336-
8	203-62-44510	SPACER	1	60336-
9	01010-81285	BOLT	1	60336-
10	01643-31232	WASHER	1	60336-
11	141-06-11220	CLIP	1	60336-
12	142-03-11160	SPACER	1	60336-
13	01010-81260	BOLT	1	60336-
14	01643-31232	WASHER	1	60336-
15	08034-20536	BAND	4	60336-
16	08055-00181	CONNECTOR	1	69362-
17	08034-20536	BAND	3	69362-

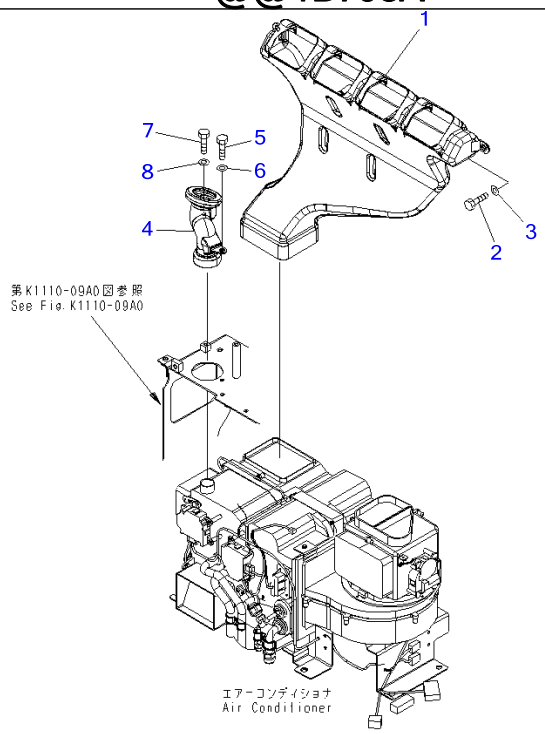

PC220-7 S/N 60001-UP (Overseas Version)

AIR CONDITIONER (REAR DUCT)(#60001-65000)

Item	Part No.	Part Name	Qty	Serial No.
1	20Y-979-6410	DUCT	1	60001-65000
2	01010-80820	BOLT	2	60001-65000
3	01643-30823	WASHER	2	60001-65000
4	20Y-979-6430	DUCT	1	60001-65000
5	01010-80820	BOLT	1	60001-65000
6	01643-30823	WASHER	1	60001-65000
7	01016-50845	BOLT	1	60001-65000
8	01643-30823	WASHER	1	60001-65000

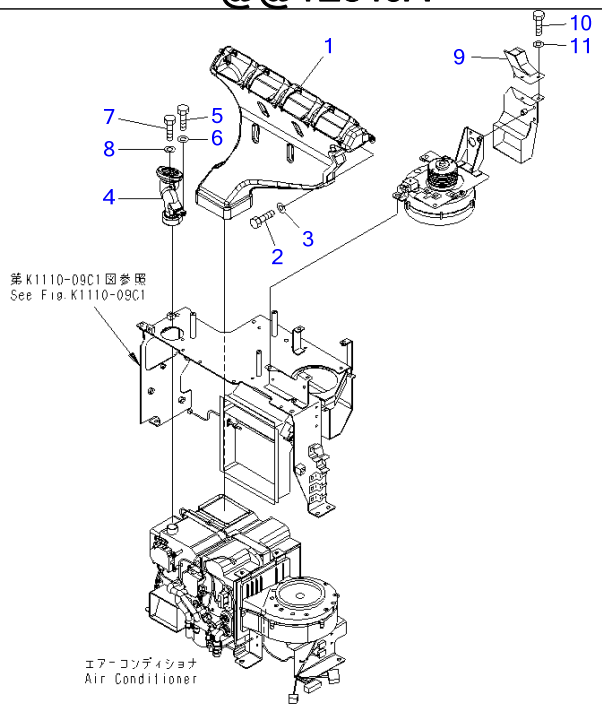

Ref K0700-03A2 **Page 210800**

PC220-7 S/N 60001-UP (Overseas Version)
BIG WIND AIR CONDITIONER (REAR DUCT)

Item	Part No.	Part Name	Qty	Serial No.
1	20Y-979-6791	DUCT	1	60001-
2	01010-80820	BOLT	2	60001-
3	01643-30823	WASHER	2	60001-
4	20Y-979-6430	DUCT	1	60001-
5	01010-80820	BOLT	1	60001-
6	01643-30823	WASHER	1	60001-
7	01016-50845	BOLT	1	60001-
8	01643-30823	WASHER	1	60001-
9	20Y-979-6751	DUCT	1	60001-
10	01010-80612	BOLT	2	60001-
11	01643-30623	WASHER	2	60001-

PC220-7 S/N 60001-UP (Overseas Version)

@@1B799@

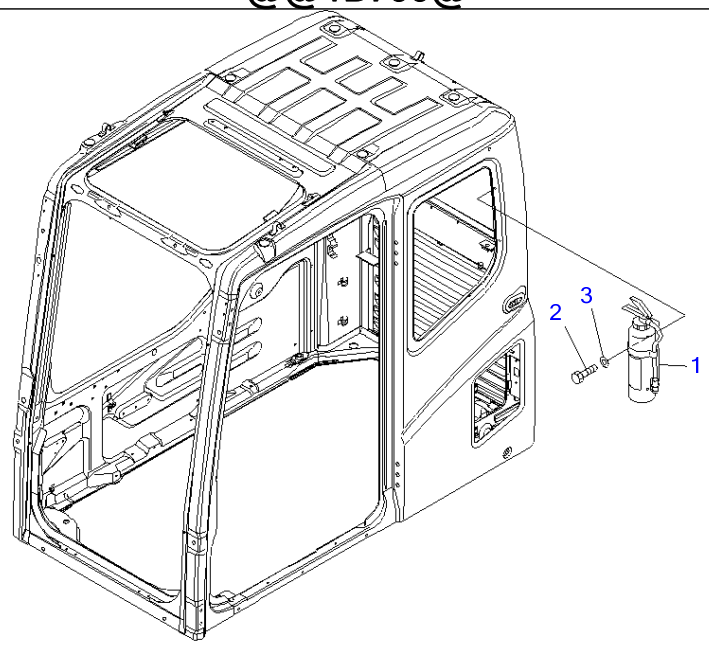

P W 1 B 7 9 9

Ref K0830-01A1 **Page 210810**

PC220-7 S/N 60001-UP (Overseas Version)

FIRE EXTINGUISHER (ENGLISH)(#60001-65000)

Item	Part No.	Part Name	Qty	Serial No.
1	22B-98-11120	EXTINGUISHER	1	60001-@
2	01010-D0820	BOLT	2	60001-65000
3	01643-70823	WASHER	2	60001-65000

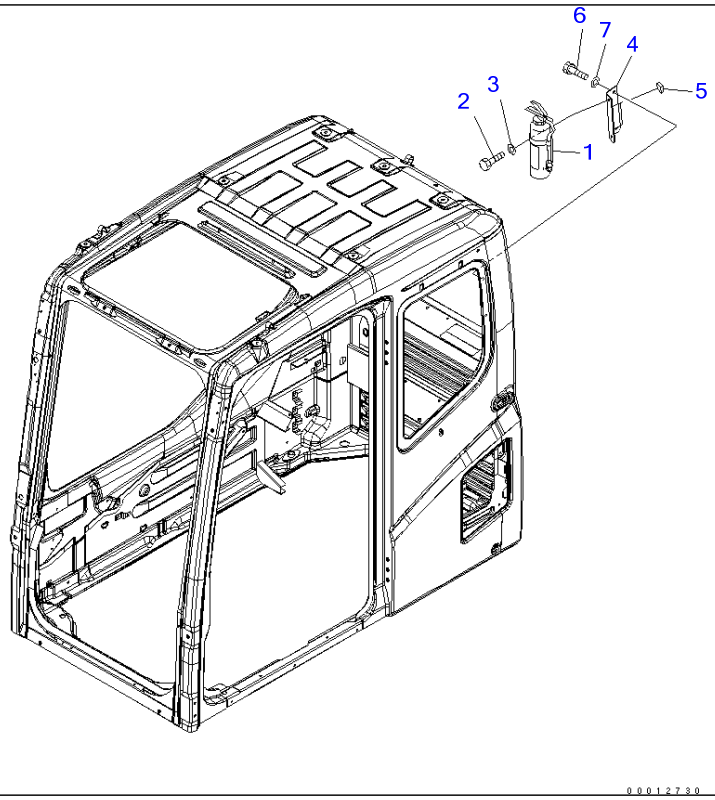

Ref K0830-01A1A **Page 210820**

PC220-7 S/N 60001-UP (Overseas Version)

FIRE EXTINGUISHER (ENGLISH)(#65001-)

Item	Part No.	Part Name	Qty	Serial No.
1	22B-98-11120	EXTINGUISHER	1	60001-
2	01010-D0816	BOLT	2	65001-
3	01643-70823	WASHER	2	65001-
	208-53-11840	PLATE	1	65001-
4	☆	・PLATE	1	65001-
5	208-53-11740	・SEAT	2	65001-
6	01010-D0820	BOLT	2	65001-
7	01643-70823	WASHER	2	65001-

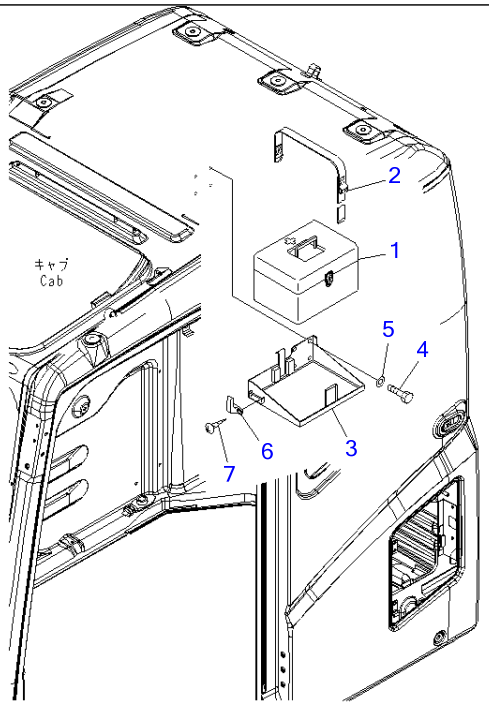

00003638

Ref K0840-01A0 **Page 210900**

PC220-7 S/N 60001-UP (Overseas Version)

FIRST AID BOX (COLD WEATHER A SPEC.)(#60255-)

Item	Part No.	Part Name	Qty	Serial No.
1	195-911-6531	BOX	1	60255-
2	195-911-6562	BAND	1	60255-
3	20Y-54-53370	BRACKET	1	60255-
4	01010-80816	BOLT	4	60255-
5	01643-30823	WASHER	4	60255-
6	205-54-51250	HANGER	1	60255-
7	01370-30412	SCREW	2	60255-

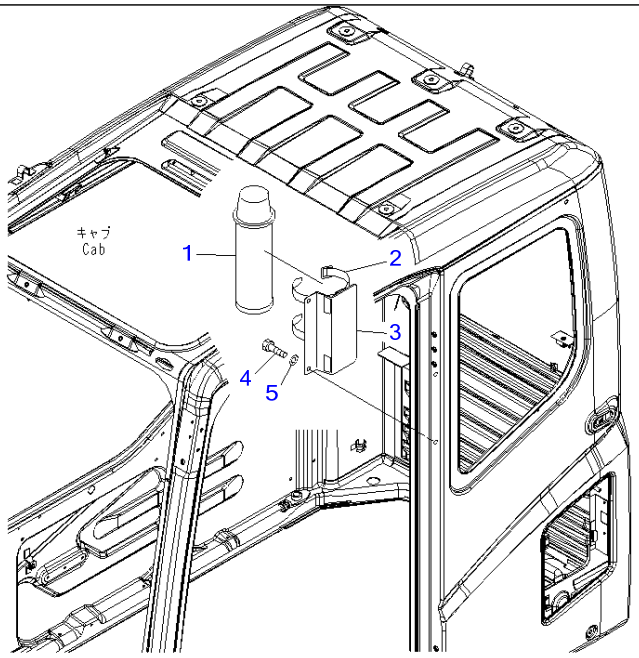

00003640

Ref K0850-01A0 **Page 210910**

PC220-7 S/N 60001-UP (Overseas Version)

THERMOS BOTTLE (COLD WEATHER A SPEC.)(#60255-)

Item	Part No.	Part Name	Qty	Serial No.
1	195-911-1722	FLASK	1	60255-
2	195-911-1330	BAND	2	60255-
3	20Y-54-39930	BRACKET	1	60255-
4	01010-D1020	BOLT	2	60255-
5	01643-71032	WASHER	2	60255-

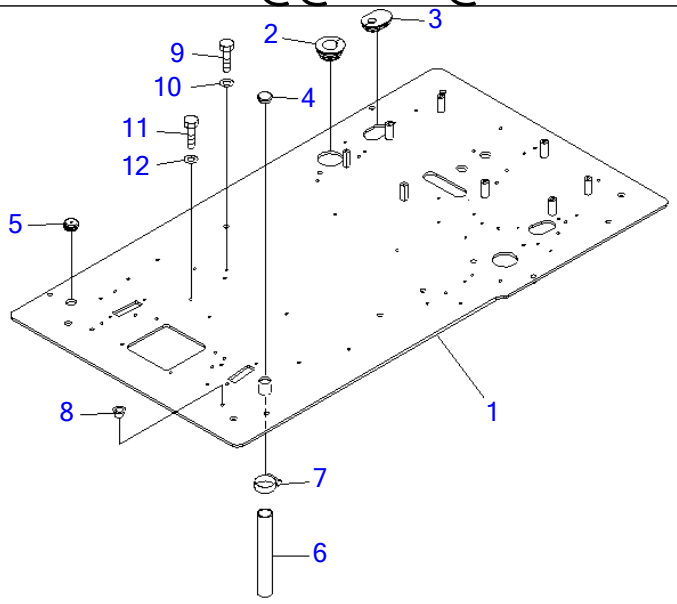

P W 1 C 6 4 2

Ref K1110-01A0 **Page 210920**

PC220-7 S/N 60001-UP (Overseas Version)
FLOOR FRAME (FLOOR FRAME)(#60001-65000)

Item	Part No.	Part Name	Qty	Serial No.
1	20Y-54-65111	FLOOR FRAME	1	60001-65000
2	20Y-54-65121	GROMMET	2	60001-@
3	20Y-54-65170	GROMMET	2	60001-65000
4	22U-54-25581	GROMMET	1	60001-@
5	22U-54-25590	GROMMET	1	60001-@
6	07286-03828	HOSE	1	60001-@
7	07280-04726	CLAMP	1	60001-@
8	07048-01310	PLUG	2	60001-@
9	01010-81030	BOLT	2	60001-@
10	01643-31032	WASHER	2	60001-@
11	01010-81020	BOLT	1	60001-@
12	01643-31032	WASHER	1	60001-@

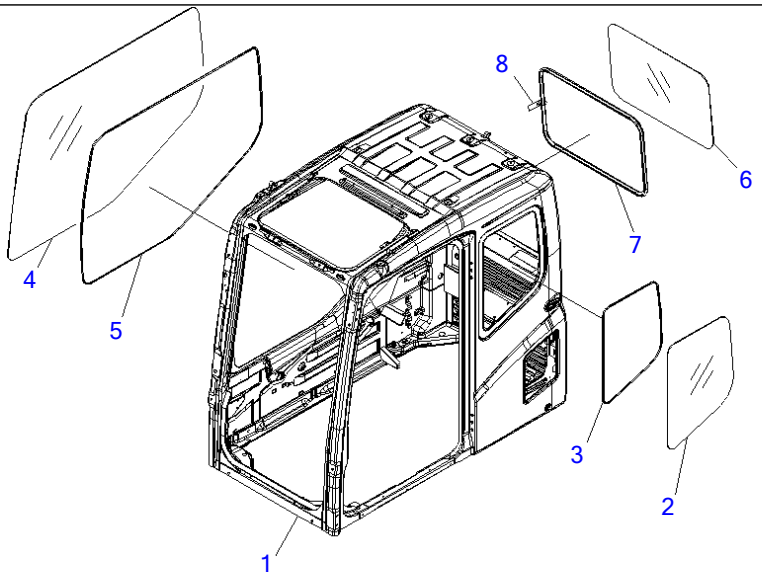

00011346

Ref K1110-01D0 **Page 210930**

PC220-7 S/N 60001-UP (Overseas Version)

FLOOR FRAME (OPERATOR'S CAB) (CAB)(#65001-)

Item	Part No.	Part Name	Qty	Serial No.
	208-53-00032	CAB ASS'Y,(WITH KOMTRAX)	1	65776-
	208-53-00031	CAB ASS'Y,(WITH KOMTRAX)	1	65686-65775
	208-53-00030	CAB ASS'Y,(WITH KOMTRAX)	1	65001-65685
	208-53-00122	CAB ASS'Y	1	65776-
	208-53-00121	CAB ASS'Y	1	65686-65775
	208-53-00120	CAB ASS'Y	1	65001-65685
	208-53-00132	CAB ASS'Y,(WITHOUT RELEASE LEVER)	1	65776-
	208-53-00131	CAB ASS'Y,(WITHOUT RELEASE LEVER)	1	65686-65775
	208-53-00130	CAB ASS'Y,(WITHOUT RELEASE LEVER)	1	65001-65685
1	☆	・CAB	1	65776-
	☆	・CAB	1	65001-65775
2	20Y-54-51241	・GLASS	1	60001-
3	20Y-54-51261	・SEAL	1	60001-
4	20Y-54-51842	・GLASS	1	60001-
5	20Y-54-51851	・DAM	1	60001-
6	208-53-11270	・GLASS	1	65001-
7	20Y-54-51251	・WEATHER STRIP	1	60001-
8	20T-54-75250	・TAG	1	60001-

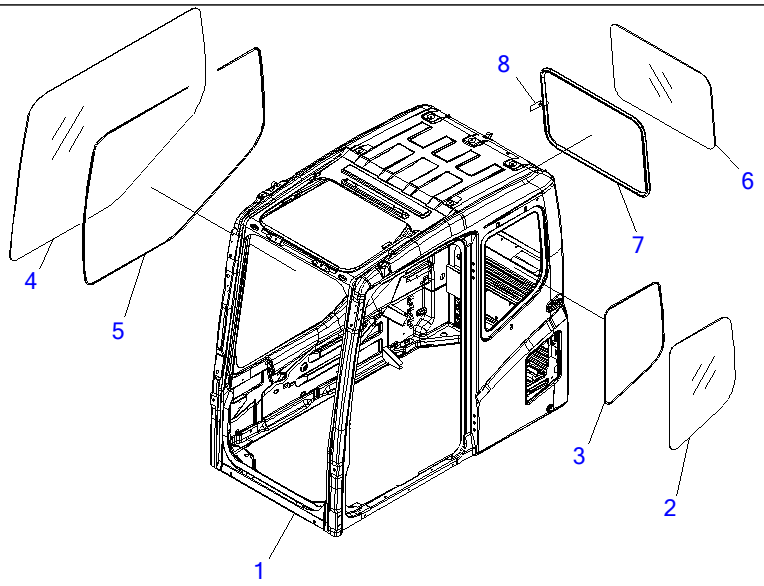

00013352

Ref K1110-01E3 **Page 210940**

PC220-7 S/N 60001-UP (Overseas Version)
FLOOR FRAME (OPERATOR'S CAB) (CAB) (FOR VANDALISM PROTECTION)(#65001-)

Item	Part No.	Part Name	Qty	Serial No.
	208-53-00062	CAB ASS'Y,(FOR VANDALISM PROTECTION)	1	65776-
	208-53-00061	CAB ASS'Y,(FOR VANDALISM PROTECTION)	1	65686-65775
	208-53-00060	CAB ASS'Y,(FOR VANDALISM PROTECTION)	1	65001-65685
1	☆	・CAB	1	65776-
	☆	・CAB	1	65001-65775
2	20Y-54-51241	・GLASS	1	60001-
3	20Y-54-51261	・SEAL	1	60001-
4	20Y-54-51842	・GLASS	1	60001-
5	20Y-54-51851	・DAM	1	60001-
6	208-53-11270	・GLASS	1	65001-
7	20Y-54-51251	・WEATHER STRIP	1	60001-
8	20T-54-75250	・TAG	1	60001-

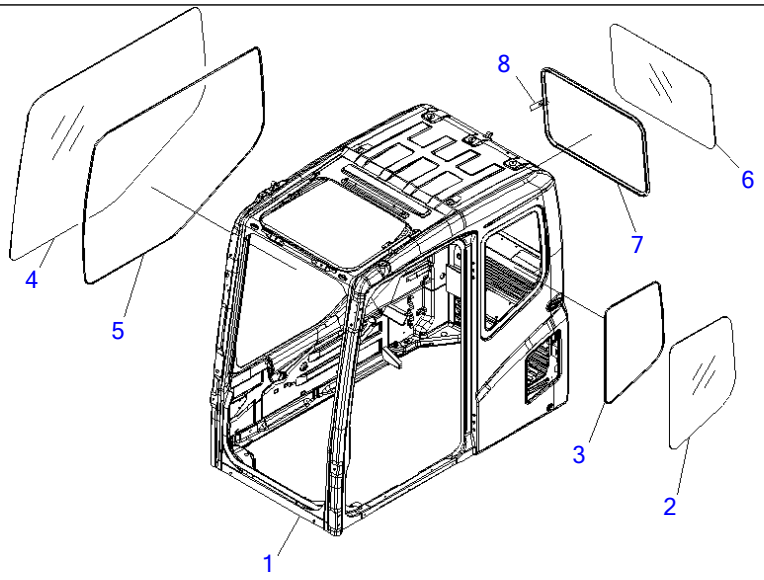

00011346

Ref K1110-01E4 **Page 210950**

PC220-7 S/N 60001-UP (Overseas Version)

FLOOR FRAME (OPERATOR'S CAB) (CAB) (FOR VANDALISM PROTECTION) (WITH BIG WIND AIR CONDITIONER)(#65001-)

Item	Part No.	Part Name	Qty	Serial No.
	208-53-00182	CAB ASS'Y,(BIG WIND A/CON.)(12V)(VANDA)	1	65776-
	208-53-00181	CAB ASS'Y,(BIG WIND A/CON.)(12V)(VANDA)	1	65686-65775
	208-53-00180	CAB ASS'Y,(BIG WIND A/CON.)(12V)(VANDA)	1	65001-65685
1	☆	・CAB	1	65776-
	☆	・CAB	1	65001-65775
2	20Y-54-51241	・GLASS	1	60001-
3	20Y-54-51261	・SEAL	1	60001-
4	20Y-54-51842	・GLASS	1	60001-
5	20Y-54-51851	・DAM	1	60001-
6	208-53-11270	・GLASS	1	65001-
7	20Y-54-51251	・WEATHER STRIP	1	60001-
8	20T-54-75250	・TAG	1	60001-

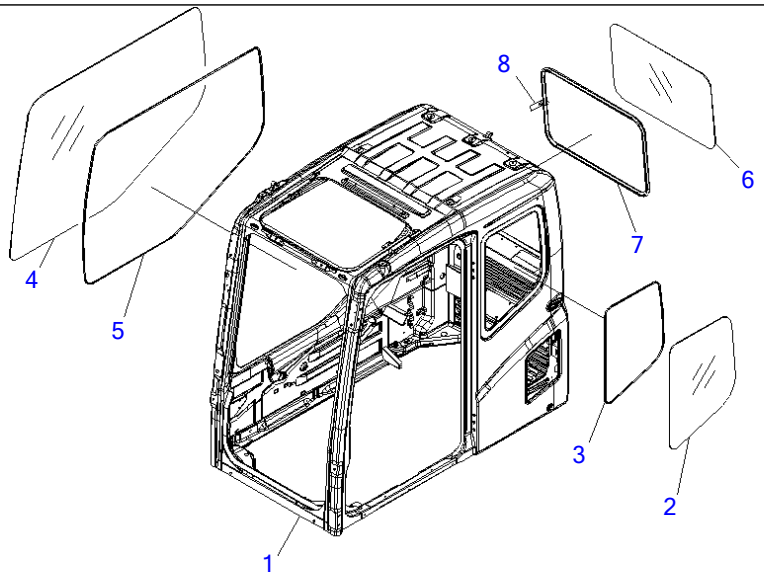

00011346

Ref K1110-01E5 **Page 210960**

PC220-7 S/N 60001-UP (Overseas Version)

FLOOR FRAME (OPERATOR'S CAB) (CAB) (COLD WEATHER A SPEC.)(#65001-)

Item	Part No.	Part Name	Qty	Serial No.
	208-53-00193	CAB ASS'Y,(COLD WEATHER (A) SPEC.)	1	66185-
	208-53-00192	CAB ASS'Y,(COLD WEATHER (A) SPEC.)	1	65776-66184
	208-53-00191	CAB ASS'Y,(COLD WEATHER (A) SPEC.)	1	65686-65775
	208-53-00190	CAB ASS'Y,(COLD WEATHER (A) SPEC.)	1	65001-65685
1	☆	・CAB	1	66185-
	☆	・CAB	1	65776-66184
	☆	・CAB	1	65001-65775
2	20Y-54-51241	・GLASS	1	60001-
3	20Y-54-51261	・SEAL	1	60001-
4	20Y-54-51842	・GLASS	1	60001-
5	20Y-54-51851	・DAM	1	60001-
6	208-53-11270	・GLASS	1	65001-
7	20Y-54-51251	・WEATHER STRIP	1	60001-
8	20T-54-75250	・TAG	1	60001-

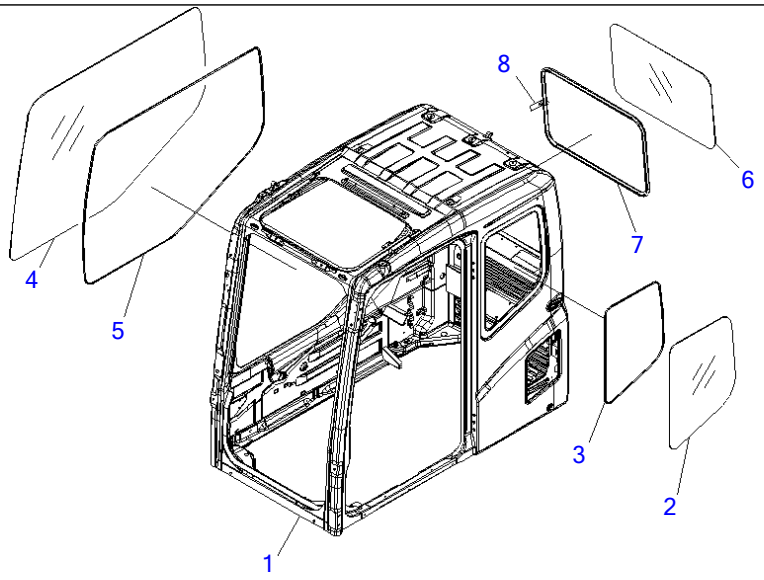

00011346

Ref K1110-01M6 **Page 210970**

PC220-7 S/N 60001-UP (Overseas Version)

FLOOR FRAME (OPERATOR'S CAB) (CAB) (WITH BIG WIND AIR CONDITIONER)(#65001-)

Item	Part No.	Part Name	Qty	Serial No.
	208-53-00112	CAB ASS'Y	1	65686-
	208-53-00110	CAB ASS'Y	1	65001-65685
1	☆	・CAB	1	65686-
	☆	・CAB	1	65001-65685
2	20Y-54-51241	・GLASS	1	65001-
3	20Y-54-51261	・SEAL	1	65001-
4	20Y-54-51842	・GLASS	1	65001-
5	20Y-54-51851	・DAM	1	65001-
6	208-53-11270	・GLASS	1	65001-
7	20Y-54-51251	・WEATHER STRIP	1	65001-
8	20T-54-75250	・TAG	1	65001-

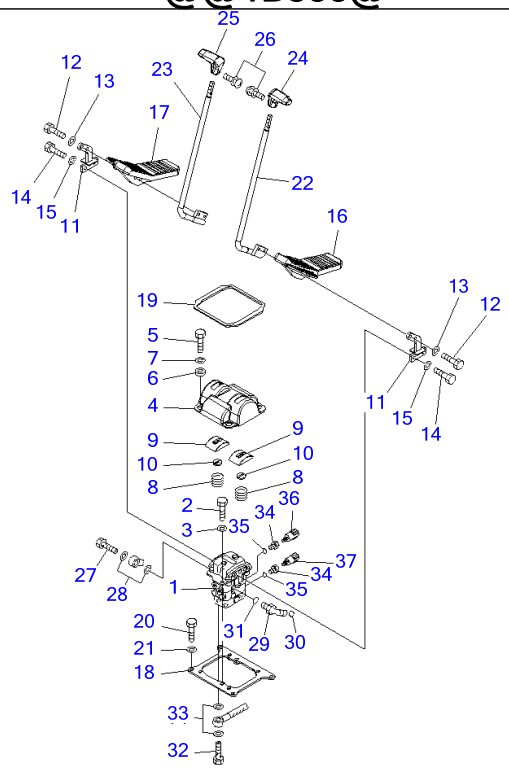

Ref K1110-02A0 Page 210980

PC220-7 S/N 60001-UP (Overseas Version)

FLOOR FRAME (TRAVEL CONTROL)(#60001-65000)

Item	Part No.	Part Name	Qty	Serial No.
1	(702-16-01861)	PILOT VALVE	1	60001-65000
2	01010-81025	BOLT	2	60001-65000
3	01643-31032	WASHER	2	60001-65000
4	20Y-43-21151	COVER	1	60001-@
5	01010-81025	BOLT	4	60001-65000
6	20Y-43-21260	COLLAR	4	60001-@
7	203-54-56970	WASHER	4	60001-@
8	203-43-51620	SPRING	2	60001-@
	22U-43-21350	COVER ASS'Y	2	60001-@
9	☆	・COVER	1	60001-@
10	22U-43-21360	・SEAL	1	60001-@
11	22U-43-21150	LEVER	2	60001-65000
12	01010-D1045	BOLT	4	60001-@
13	01643-71032	WASHER	4	60001-@
14	01010-81030	BOLT	4	60001-@
15	01643-31032	WASHER	4	60001-@
16	22U-43-21111	PEDAL,L.H.	1	60001-@
17	22U-43-21121	PEDAL,R.H.	1	60001-@
18	20Y-43-21161	PLATE	1	60001-65000
19	22U-43-21380	SEAL	1	60001-@
20	01010-81025	BOLT	4	60001-65000
21	01643-31032	WASHER	4	60001-65000
22	22U-43-21130	LEVER,L.H.	1	60001-65000
23	22U-43-21140	LEVER,R.H.	1	60001-65000
24	20Y-43-21231	KNOB,L.H.	1	60001-@
25	20Y-43-21241	KNOB,R.H.	1	60001-@
26	01023-20416	SCREW	2	60001-@
27	20Y-62-18910	PLUG	1	60001-@

FLOOR FRAME (TRAVEL CONTROL)(#60001-65000)

Item	Part No.	Part Name	Qty	Serial No.
28	07000-12018	O-RING	2	60001-@
29	11Y-62-12160	ELBOW	1	60003-@
	02782-10210	ELBOW	1	60001-60002
30	02896-11008	O-RING	1	60001-@
31	07002-11423	O-RING	1	60001-@
32	20Y-62-18890	BOLT, JOINT	4	60001-@
33	07000-12015	O-RING	8	60001-@
34	20Y-62-41390	ADAPTER	2	60003-@
	421-35-11671	ADAPTER	2	60001-60002
35	07002-11423	O-RING	2	60001-@
36	20Y-06-21710	SWITCH	1	60001-@
37	206-06-61130	SWITCH	1	60001-@

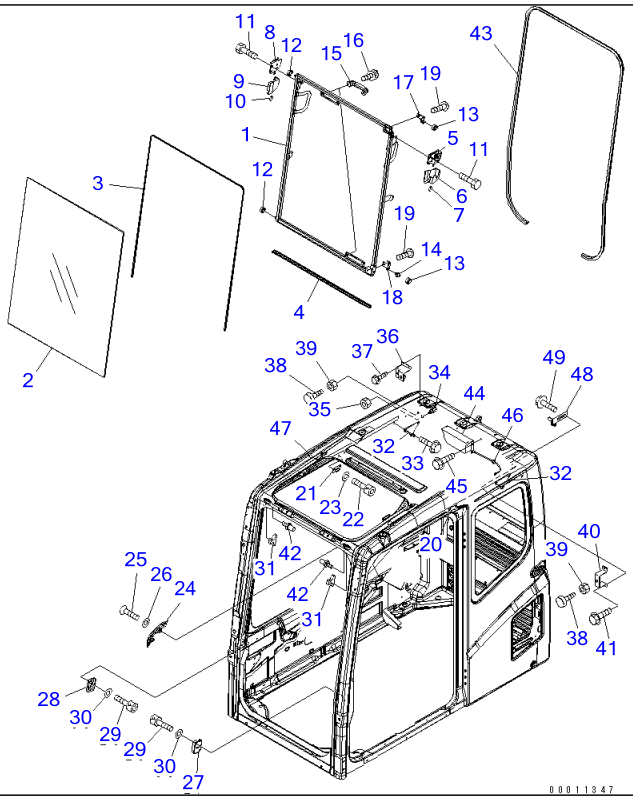

Ref K1110-02D0 Page 210990

PC220-7 S/N 60001-UP (Overseas Version)

FLOOR FRAME (OPERATOR'S CAB) (FRONT WINDOW)(#65001-69883)

Item	Part No.	Part Name	Qty	Serial No.
	(208-53-00032)	CAB ASS'Y,(WITH KOMTRAX)	1	65776-@
	(208-53-00031)	CAB ASS'Y,(WITH KOMTRAX)	1	65686-65775
	(208-53-00030)	CAB ASS'Y,(WITH KOMTRAX)	1	65001-65685
	(208-53-00053)	CAB ASS'Y	1	65776-@
	(208-53-00052)	CAB ASS'Y	1	65686-65775
	(208-53-00051)	CAB ASS'Y	1	65001-65685
	(208-53-00062)	CAB ASS'Y,(FOR VANDALISM PROTECTION)	1	65776-@
	(208-53-00061)	CAB ASS'Y,(FOR VANDALISM PROTECTION)	1	65686-65775
	(208-53-00060)	CAB ASS'Y,(FOR VANDALISM PROTECTION)	1	65001-65685
	(208-53-00112)	CAB ASS'Y	1	65686-@
	(208-53-00110)	CAB ASS'Y	1	65001-65685
	(208-53-00122)	CAB ASS'Y	1	65776-@
	(208-53-00121)	CAB ASS'Y	1	65686-65775
	(208-53-00120)	CAB ASS'Y	1	65001-65685
	(208-53-00132)	CAB ASS'Y,(WITHOUT RELEASE LEVER)	1	65776-@
	(208-53-00131)	CAB ASS'Y,(WITHOUT RELEASE LEVER)	1	65686-65775
	(208-53-00130)	CAB ASS'Y,(WITHOUT RELEASE LEVER)	1	65001-65685
	(208-53-00182)	CAB ASS'Y,(BIG WIND A/CON.)(12V)(VANDA)	1	65776-@
	(208-53-00181)	CAB ASS'Y,(BIG WIND A/CON.)(12V)(VANDA)	1	65686-65775
	(208-53-00180)	CAB ASS'Y,(BIG WIND A/CON.)(12V)(VANDA)	1	65001-65685
	(208-53-00193)	CAB ASS'Y	1	66185-@
	(208-53-00192)	CAB ASS'Y,(COLD WEATHER (A) SPEC.)	1	65776-66184
	(208-53-00191)	CAB ASS'Y,(COLD WEATHER (A) SPEC.)	1	65686-65775
	(208-53-00190)	CAB ASS'Y,(COLD WEATHER (A) SPEC.)	1	65001-65685
	208-53-00020	・FRONT WINDOW ASS'Y	1	65001-@
1	208-53-11510	・・FRAME	1	65001-@
2	20Y-54-51522	・・GLASS	1	60283-@
3	20Y-54-51531	・・SEAL	1	60283-@

FLOOR FRAME (OPERATOR'S CAB) (FRONT WINDOW)(#65001-69883)

Item	Part No.	Part Name	Qty	Serial No.
4	20Y-54-51551	・・SEAL	1	60283-@
5	22B-54-15411	・・LOCK ASS'Y	1	60001-@
6	22B-54-15440	・・CASE	1	60001-@
7	22B-54-15470	・・KNOB	1	60001-@
8	22B-54-15421	・・LOCK ASS'Y	1	60001-@
9	22B-54-15450	・・CASE	1	60001-@
10	22B-54-15480	・・KNOB	1	60001-@
11	01435-40812	・・BOLT	4	60275-69883
12	20Y-54-52621	・・ROLLER	2	60001-@
13	20Y-54-52681	・・ROLLER	2	60001-@
14	208-53-12690	・・PIN	1	65001-@
15	20Y-54-14590	・・HANDLE	2	60283-@
16	01023-10616	・・SCREW	4	60283-@
17	208-53-12630	・・BRACKET	1	65001-@
18	20Y-53-12830	・・BRACKET	1	68614-@
	208-53-12830	・・BRACKET	1	65001-68613
19	01245-00816	・・SCREW	4	65001-@
20	20Y-54-51670	・STOPPER	1	60001-@
21	20Y-54-51680	・STOPPER	1	60001-@
22	01252-80616	・BOLT	4	60001-@
23	01643-70623	・WASHER	4	60001-@
24	208-53-11560	・BLOCK	1	65001-@
25	01245-00816	・SCREW	2	65001-@
26	01643-70823	・WASHER	2	65001-@
27	20Y-54-51633	・BLOCK	1	60001-@
28	20Y-54-52192	・BLOCK	1	60001-@
29	01252-80616	・BOLT	4	65001-@
30	01641-50608	・WASHER	4	60001-@
31	22B-54-15621	・STOPPER	2	60003-@
32	22B-54-15432	・STRIKER	2	60001-@
33	01435-40616	・BOLT	4	60001-@
34	21J-06-12440	・SWITCH	1	60001-@
35	01583-11811	・NUT	1	60001-@
36	20Y-54-51880	・BRACKET	1	65001-@
37	01435-40616	・BOLT	3	65001-@
38	20Y-54-11611	・STOPPER	2	60001-@
39	01580-11008	・NUT	2	60001-@
40	20Y-54-52491	・PLATE	1	60001-@
41	01435-40616	・BOLT	2	65001-@
42	20Y-54-51621	・STRIKER	2	65001-@
43	208-53-11540	・SEAL	1	65001-@
44	20Y-54-51591	・SPRING ASS'Y	1	65001-@
45	01435-00616	・BOLT	2	60001-@
46	20Y-54-51640	・HOLDER	1	60001-@
47	20Y-54-51420	・SEAL	1	65001-@
48	208-53-11470	・BRACKET	1	65001-@
49	01435-40616	・BOLT	2	65001-@

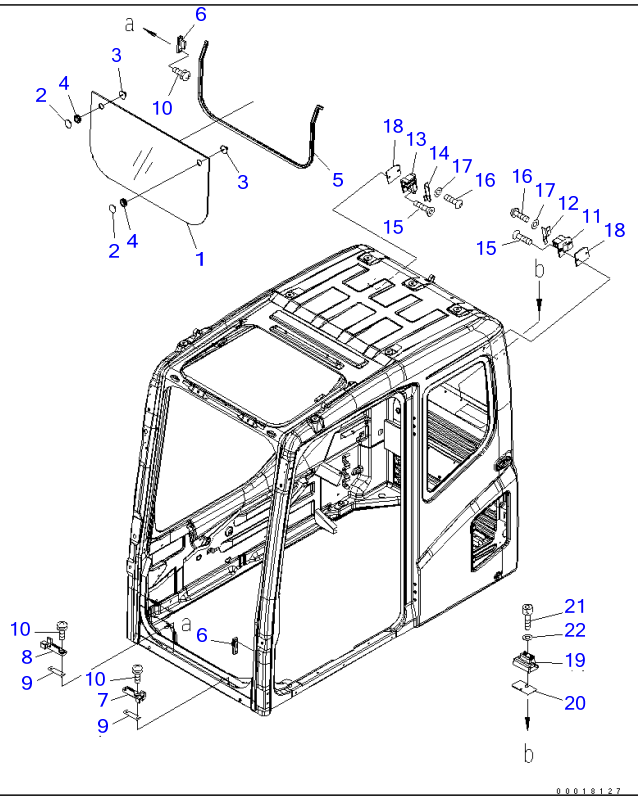

Ref K1110-03D0 Page 211020

PC220-7 S/N 60001-UP (Overseas Version)

FLOOR FRAME (OPERATOR'S CAB) (FRONT LOWER WINDOW)(#65001-)

Item	Part No.	Part Name	Qty	Serial No.
	(208-53-00032)	CAB ASS'Y,(WITH KOMTRAX)	1	65776-
	(208-53-00031)	CAB ASS'Y,(WITH KOMTRAX)	1	65686-65775
	(208-53-00030)	CAB ASS'Y,(WITH KOMTRAX)	1	65001-65685
	(208-53-00053)	CAB ASS'Y	1	65776-
	(208-53-00052)	CAB ASS'Y	1	65686-65775
	(208-53-00051)	CAB ASS'Y	1	65001-65685
	(208-53-00062)	CAB ASS'Y,(FOR VANDALISM PROTECTION)	1	65776-
	(208-53-00061)	CAB ASS'Y,(FOR VANDALISM PROTECTION)	1	65686-65775
	(208-53-00060)	CAB ASS'Y,(FOR VANDALISM PROTECTION)	1	65001-65685
	(208-53-00112)	CAB ASS'Y	1	65686-
	(208-53-00110)	CAB ASS'Y	1	65001-65685
	(208-53-00122)	CAB ASS'Y	1	65776-
	(208-53-00121)	CAB ASS'Y	1	65686-65775
	(208-53-00120)	CAB ASS'Y	1	65001-65685
	(208-53-00132)	CAB ASS'Y,(WITHOUT RELEASE LEVER)	1	65776-
	(208-53-00131)	CAB ASS'Y,(WITHOUT RELEASE LEVER)	1	65686-65775
	(208-53-00130)	CAB ASS'Y,(WITHOUT RELEASE LEVER)	1	65001-65685
	(208-53-00182)	CAB ASS'Y,(BIG WIND A/CON.)(12V)(VANDA)	1	65776-
	(208-53-00181)	CAB ASS'Y,(BIG WIND A/CON.)(12V)(VANDA)	1	65686-65775
	(208-53-00180)	CAB ASS'Y,(BIG WIND A/CON.)(12V)(VANDA)	1	65001-65685
	(208-53-00193)	CAB ASS'Y	1	66185-
	(208-53-00192)	CAB ASS'Y,(COLD WEATHER (A) SPEC.)	1	65776-66184
	(208-53-00191)	CAB ASS'Y,(COLD WEATHER (A) SPEC.)	1	65686-65775
	(208-53-00190)	CAB ASS'Y,(COLD WEATHER (A) SPEC.)	1	65001-65685
	20Y-54-51601	・GLASS ASS'Y	1	60001-
1	20Y-54-51812	・・GLASS	1	60001-
2	22B-54-15970	・・RETAINER	2	60001-
3	22B-54-15980	・・KNOB	2	60001-

FLOOR FRAME (OPERATOR'S CAB) (FRONT LOWER WINDOW)(#65001-)

Item	Part No.	Part Name	Qty	Serial No.
4	08037-02512	･･ GROMMET	2	60001-
5	208-53-11860	･ TRIM	1	65001-
6	208-53-11830	･ SEAT	2	65001-
7	22B-54-15781	･ SEAT	1	60001-
8	22B-54-15791	･ SEAT	1	60001-
9	22B-54-15580	･ PLATE	2	60001-
10	01023-20616	･ SCREW	8	60001-
11	20Y-54-52161	･ LOCK	1	60001-
12	20Y-54-52361	･ BRACKET	1	60001-
13	20Y-54-52171	･ LOCK	1	60001-
14	20Y-54-52371	･ BRACKET	1	60001-
15	01240-00620	･ SCREW	2	60001-
16	01245-00625	･ SCREW	2	60001-
17	01641-50608	･ WASHER	2	60001-
18	20Y-54-52380	･ PLATE	2	60001-
19	208-53-12110	･ SEAT	2	65001-
20	208-53-12160	･ SHIM, 1.2MM	2	65001-
21	01252-80620	･ BOLT	2	65001-
22	01643-70623	･ WASHER	2	65001-

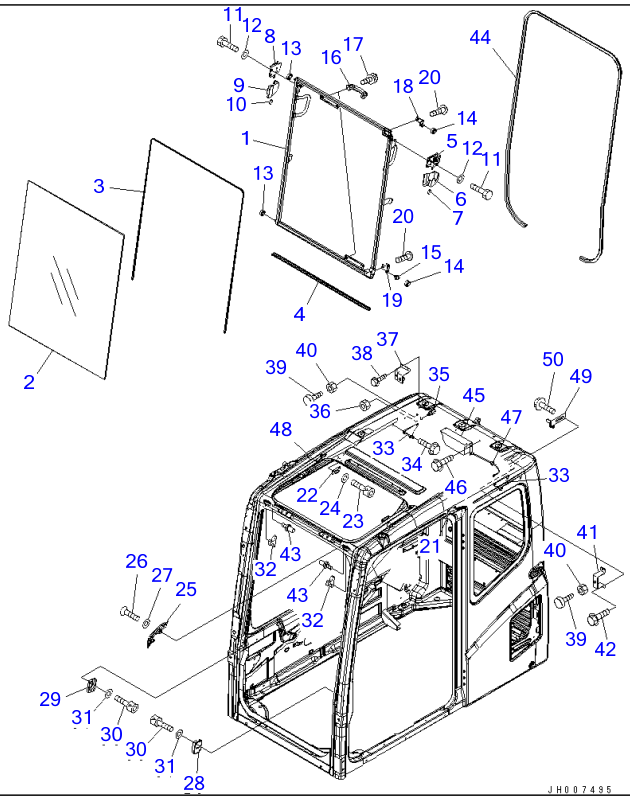

Ref K1110-02D0A

Page 211000

PC220-7 S/N 60001-UP (Overseas Version)

FLOOR FRAME (OPERATOR'S CAB) (FRONT WINDOW)(#69884-)

Item	Part No.	Part Name	Qty	Serial No.
	(208-53-00032)	CAB ASS'Y,(WITH KOMTRAX)	1	65776-
	(208-53-00031)	CAB ASS'Y,(WITH KOMTRAX)	1	65686-65775
	(208-53-00030)	CAB ASS'Y,(WITH KOMTRAX)	1	65001-65685
	(208-53-00053)	CAB ASS'Y	1	65776-
	(208-53-00052)	CAB ASS'Y	1	65686-65775
	(208-53-00051)	CAB ASS'Y	1	65001-65685
	(208-53-00062)	CAB ASS'Y,(FOR VANDALISM PROTECTION)	1	65776-
	(208-53-00061)	CAB ASS'Y,(FOR VANDALISM PROTECTION)	1	65686-65775
	(208-53-00060)	CAB ASS'Y,(FOR VANDALISM PROTECTION)	1	65001-65685
	(208-53-00112)	CAB ASS'Y	1	65686-
	(208-53-00110)	CAB ASS'Y	1	65001-65685
	(208-53-00122)	CAB ASS'Y	1	65776-
	(208-53-00121)	CAB ASS'Y	1	65686-65775
	(208-53-00120)	CAB ASS'Y	1	65001-65685
	(208-53-00132)	CAB ASS'Y,(WITHOUT RELEASE LEVER)	1	65776-
	(208-53-00131)	CAB ASS'Y,(WITHOUT RELEASE LEVER)	1	65686-65775
	(208-53-00130)	CAB ASS'Y,(WITHOUT RELEASE LEVER)	1	65001-65685
	(208-53-00182)	CAB ASS'Y,(BIG WIND A/CON.)(12V)(VANDA)	1	65776-
	(208-53-00181)	CAB ASS'Y,(BIG WIND A/CON.)(12V)(VANDA)	1	65686-65775
	(208-53-00180)	CAB ASS'Y,(BIG WIND A/CON.)(12V)(VANDA)	1	65001-65685
	(208-53-00193)	CAB ASS'Y	1	66185-
	(208-53-00192)	CAB ASS'Y,(COLD WEATHER (A) SPEC.)	1	65776-66184
	(208-53-00191)	CAB ASS'Y,(COLD WEATHER (A) SPEC.)	1	65686-65775
	(208-53-00190)	CAB ASS'Y,(COLD WEATHER (A) SPEC.)	1	65001-65685
	208-53-00020	・FRONT WINDOW ASS'Y	1	65001-
1	208-53-11510	・・FRAME	1	65001-
2	20Y-54-51522	・・GLASS	1	60283-
3	20Y-54-51531	・・SEAL	1	60283-

FLOOR FRAME (OPERATOR'S CAB) (FRONT WINDOW)(#69884-)

Item	Part No.	Part Name	Qty	Serial No.
4	20Y-54-51551	・・SEAL	1	60283-
5	22B-54-15411	・・LOCK ASS'Y	1	60001-
6	22B-54-15440	・・CASE	1	60001-
7	22B-54-15470	・・KNOB	1	60001-
8	22B-54-15421	・・LOCK ASS'Y	1	60001-
9	22B-54-15450	・・CASE	1	60001-
10	22B-54-15480	・・KNOB	1	60001-
11	01010-D0816	・・BOLT	4	60275-
12	418-54-35450	・・WASHER	4	69884-
13	20Y-54-52621	・・ROLLER	2	60001-
14	20Y-54-52681	・・ROLLER	2	60001-
15	208-53-12690	・・PIN	1	65001-
16	20Y-54-14590	・・HANDLE	2	60283-
17	01023-10616	・・SCREW	4	60283-
18	208-53-12630	・・BRACKET	1	65001-
19	20Y-53-12830	・・BRACKET	1	68614-
20	01245-00816	・・SCREW	4	65001-
21	20Y-54-51670	・STOPPER	1	60001-
22	20Y-54-51680	・STOPPER	1	60001-
23	01252-80616	・BOLT	4	60001-
24	01643-70623	・WASHER	4	60001-
25	208-53-11560	・BLOCK	1	65001-
26	01245-00816	・SCREW	2	65001-
27	01643-70823	・WASHER	2	65001-
28	20Y-54-51633	・BLOCK	1	60001-
29	20Y-54-52192	・BLOCK	1	60001-
30	01252-80616	・BOLT	4	65001-
31	01641-50608	・WASHER	4	60001-
32	22B-54-15621	・STOPPER	2	60003-
33	22B-54-15432	・STRIKER	2	60001-
34	01435-40616	・BOLT	4	60001-
35	21J-06-12440	・SWITCH	1	60001-
36	01583-11811	・NUT	1	60001-
37	20Y-54-51880	・BRACKET	1	65001-
38	01435-40616	・BOLT	3	65001-
39	20Y-54-11611	・STOPPER	2	60001-
40	01580-11008	・NUT	2	60001-
41	20Y-54-52491	・PLATE	1	60001-
42	01435-40616	・BOLT	2	65001-
43	20Y-54-51621	・STRIKER	2	65001-
44	208-53-11540	・SEAL	1	65001-
45	20Y-54-51591	・SPRING ASS'Y	1	65001-
46	01435-00616	・BOLT	2	60001-
47	20Y-54-51640	・HOLDER	1	60001-
48	20Y-54-51420	・SEAL	1	65001-
49	208-53-11470	・BRACKET	1	65001-
50	01435-40616	・BOLT	2	65001-

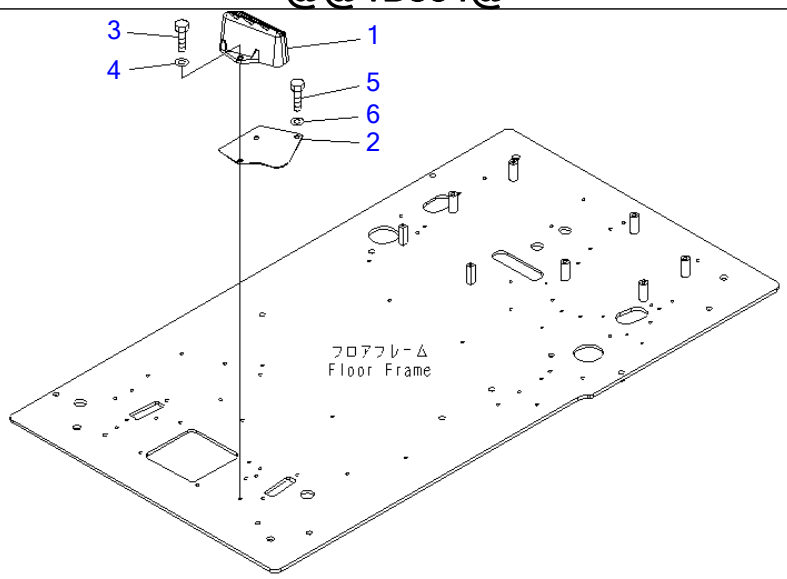

PW1B834

Ref K1110-03A0 **Page 211010**

PC220-7 S/N 60001-UP (Overseas Version)

FLOOR FRAME (FOOT REST) (L.H.)(#60001-65000)

Item	Part No.	Part Name	Qty	Serial No.
1	22U-54-25110	FOOTREST,L.H.	1	60001-@
2	22U-54-25521	PLATE	1	60001-@
3	01010-81025	BOLT	2	60001-@
4	01643-31032	WASHER	2	60001-@
5	01010-81020	BOLT	1	60001-@
6	01643-31032	WASHER	1	60001-@

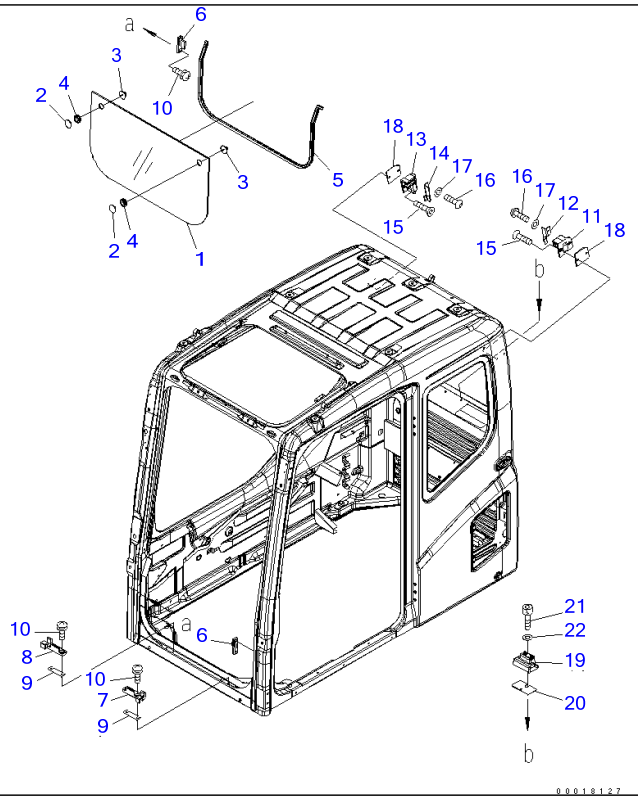

Ref K1110-03D0 Page 211020

PC220-7 S/N 60001-UP (Overseas Version)

FLOOR FRAME (OPERATOR'S CAB) (FRONT LOWER WINDOW)(#65001-)

Item	Part No.	Part Name	Qty	Serial No.
	(208-53-00032)	CAB ASS'Y,(WITH KOMTRAX)	1	65776-
	(208-53-00031)	CAB ASS'Y,(WITH KOMTRAX)	1	65686-65775
	(208-53-00030)	CAB ASS'Y,(WITH KOMTRAX)	1	65001-65685
	(208-53-00053)	CAB ASS'Y	1	65776-
	(208-53-00052)	CAB ASS'Y	1	65686-65775
	(208-53-00051)	CAB ASS'Y	1	65001-65685
	(208-53-00062)	CAB ASS'Y,(FOR VANDALISM PROTECTION)	1	65776-
	(208-53-00061)	CAB ASS'Y,(FOR VANDALISM PROTECTION)	1	65686-65775
	(208-53-00060)	CAB ASS'Y,(FOR VANDALISM PROTECTION)	1	65001-65685
	(208-53-00112)	CAB ASS'Y	1	65686-
	(208-53-00110)	CAB ASS'Y	1	65001-65685
	(208-53-00122)	CAB ASS'Y	1	65776-
	(208-53-00121)	CAB ASS'Y	1	65686-65775
	(208-53-00120)	CAB ASS'Y	1	65001-65685
	(208-53-00132)	CAB ASS'Y,(WITHOUT RELEASE LEVER)	1	65776-
	(208-53-00131)	CAB ASS'Y,(WITHOUT RELEASE LEVER)	1	65686-65775
	(208-53-00130)	CAB ASS'Y,(WITHOUT RELEASE LEVER)	1	65001-65685
	(208-53-00182)	CAB ASS'Y,(BIG WIND A/CON.)(12V)(VANDA)	1	65776-
	(208-53-00181)	CAB ASS'Y,(BIG WIND A/CON.)(12V)(VANDA)	1	65686-65775
	(208-53-00180)	CAB ASS'Y,(BIG WIND A/CON.)(12V)(VANDA)	1	65001-65685
	(208-53-00193)	CAB ASS'Y	1	66185-
	(208-53-00192)	CAB ASS'Y,(COLD WEATHER (A) SPEC.)	1	65776-66184
	(208-53-00191)	CAB ASS'Y,(COLD WEATHER (A) SPEC.)	1	65686-65775
	(208-53-00190)	CAB ASS'Y,(COLD WEATHER (A) SPEC.)	1	65001-65685
	20Y-54-51601	・GLASS ASS'Y	1	60001-
1	20Y-54-51812	・・GLASS	1	60001-
2	22B-54-15970	・・RETAINER	2	60001-
3	22B-54-15980	・・KNOB	2	60001-

FLOOR FRAME (OPERATOR'S CAB) (FRONT LOWER WINDOW)(#65001-)

Item	Part No.	Part Name	Qty	Serial No.
4	08037-02512	･･ GROMMET	2	60001-
5	208-53-11860	･ TRIM	1	65001-
6	208-53-11830	･ SEAT	2	65001-
7	22B-54-15781	･ SEAT	1	60001-
8	22B-54-15791	･ SEAT	1	60001-
9	22B-54-15580	･ PLATE	2	60001-
10	01023-20616	･ SCREW	8	60001-
11	20Y-54-52161	･ LOCK	1	60001-
12	20Y-54-52361	･ BRACKET	1	60001-
13	20Y-54-52171	･ LOCK	1	60001-
14	20Y-54-52371	･ BRACKET	1	60001-
15	01240-00620	･ SCREW	2	60001-
16	01245-00625	･ SCREW	2	60001-
17	01641-50608	･ WASHER	2	60001-
18	20Y-54-52380	･ PLATE	2	60001-
19	208-53-12110	･ SEAT	2	65001-
20	208-53-12160	･ SHIM, 1.2MM	2	65001-
21	01252-80620	･ BOLT	2	65001-
22	01643-70623	･ WASHER	2	65001-

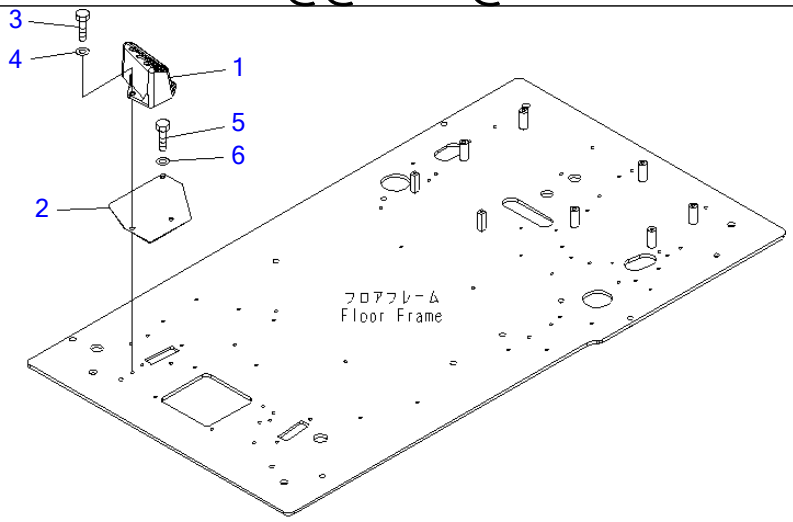

PW1B835

Ref K1110-04A0 **Page 211030**

PC220-7 S/N 60001-UP (Overseas Version)

FLOOR FRAME (FOOT REST) (R.H.)(#60001-65000)

Item	Part No.	Part Name	Qty	Serial No.
1	22U-54-25120	FOOTREST,R.H.	1	60001-@
2	22U-54-25531	PLATE	1	60001-@
3	01010-81025	BOLT	2	60001-@
4	01643-31032	WASHER	2	60001-@
5	01010-81020	BOLT	1	60001-@
6	01643-31032	WASHER	1	60001-@

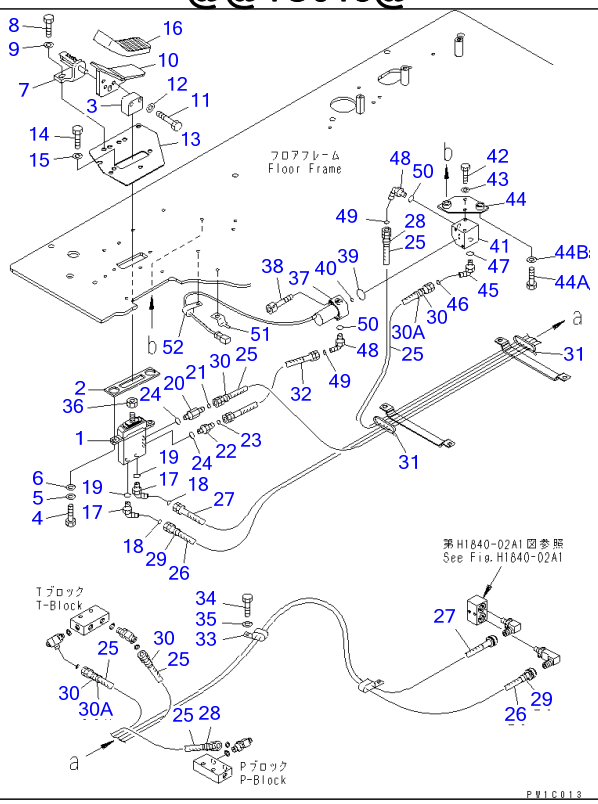

Ref K1110-04A1 **Page 211040**

PC220-7 S/N 60001-UP (Overseas Version)

FLOOR FRAME (FOOT REST) (R.H.) (1 ACTUATOR)(#60001-65000)

Item	Part No.	Part Name	Qty	Serial No.
1	(702-16-01230)	PILOT VALVE	1	60001-@
2	22U-54-25660	SEAL	1	60001-@
3	22U-43-21470	SEAT	1	60001-@
4	01010-81025	BOLT	2	60001-@
5	01643-31032	WASHER	2	60001-@
6	01643-31032	WASHER	2	60001-@
7	20Y-62-25360	BRACKET	1	60001-@
8	01010-D1025	BOLT	2	60001-@
9	01643-71032	WASHER	2	60001-@
10	20Y-43-31220	PEDAL	1	60001-@
11	01010-D1045	BOLT	2	60001-@
12	01643-71032	WASHER	2	60001-@
13	22U-54-25541	PLATE	1	60001-@
14	01010-81020	BOLT	3	60001-@
15	01643-31032	WASHER	3	60001-@
16	22U-54-25670	CAP	1	60001-@
17	21W-62-43980	ELBOW	2	60001-@
18	02896-11008	O-RING	2	60001-@
19	07000-12011	O-RING	2	60001-@
20	20Y-62-43470	NIPPLE	1	60001-@
21	02896-11008	O-RING	1	60001-@
22	11Y-62-12140	NIPPLE	1	60001-@
23	02896-11008	O-RING	1	60001-@
24	07000-12011	O-RING	2	60001-@
25	02760-00212	HOSE, 1200MM	3	60001-65000
26	20Y-62-43490	HOSE, 2400MM	1	60001-@
27	20Y-62-43510	HOSE, 2350MM	1	60001-@
28	20Y-62-22790	BAND, RED	2	60001-@

FLOOR FRAME (FOOT REST) (R.H.) (1 ACTUATOR)(#60001-65000)

Item	Part No.	Part Name	Qty	Serial No.
29	20Y-62-22810	BAND, YELLOW	2	60001-@
30	20Y-62-22820	BAND, BLUE	4	60001-@
30A	20Y-62-22830	BAND, WHITE	2	60001-@
31	08034-00519	BAND	2	60001-@
32	21W-62-42240	HOSE	1	60001-@
33	04435-51210	CLIP	1	60001-@
34	01010-81016	BOLT	1	60001-65000
35	01643-31032	WASHER	1	60001-65000
36	01583-51408	NUT	1	60001-@
37	(702-21-07010)	VALVE ASS'Y,EPC	1	60001-@
38	203-60-62220	BOLT	2	60001-@
39	700-93-11320	O-RING	1	60001-@
40	07000-02011	O-RING	1	60001-65000
41	20Y-62-43410	BLOCK	1	60001-@
42	01010-80820	BOLT	2	60001-@
43	01643-30823	WASHER	2	60001-@
44	20Y-62-43420	BRACKET	1	60001-@
44A	01010-81030	BOLT	2	60092-65000
44B	01643-31032	WASHER	2	60092-65000
45	11Y-62-12160	ELBOW	1	60001-@
46	02896-11008	O-RING	1	60001-@
47	07002-11423	O-RING	1	60001-@
48	21W-62-43960	ELBOW	2	60001-@
49	02896-11008	O-RING	2	60001-@
50	07002-11423	O-RING	2	60001-@
51	08053-01510	CLIP	1	60001-@
52	04434-51010	CLIP	1	60001-65000

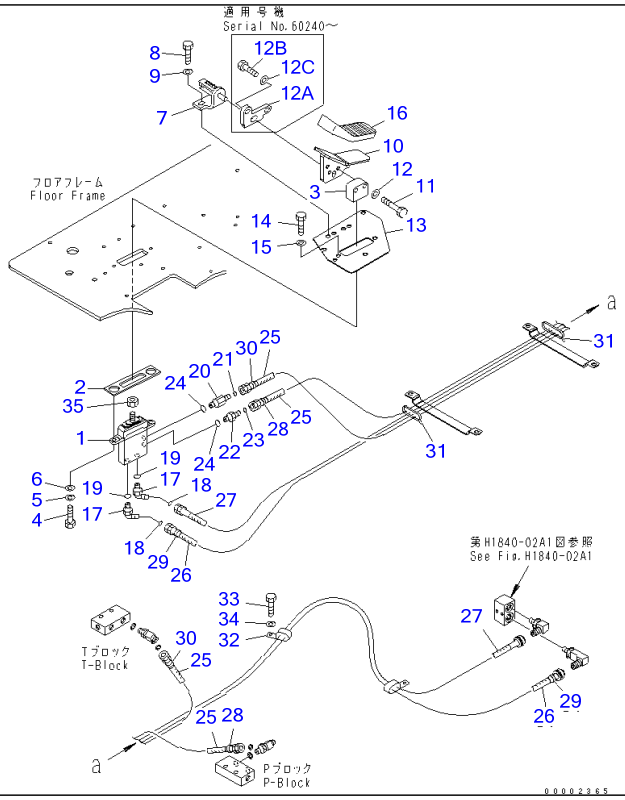

Ref K1110-04B7 Page 211050

PC220-7 S/N 60001-UP (Overseas Version)

FLOOR FRAME (FOOT REST) (R.H.) (1 ACTUATOR) (7SEGMENT MONITOR SPEC.)(#60001-65000)

Item	Part No.	Part Name	Qty	Serial No.
1	(702-16-01230)	PILOT VALVE	1	60001-@
2	22U-54-25660	SEAL	1	60001-@
3	22U-43-21470	SEAT	1	60001-@
4	01010-81025	BOLT	2	60001-@
5	01643-31032	WASHER	2	60001-@
6	01643-31032	WASHER	2	60001-@
7	20Y-62-25360	BRACKET	1	60001-@
8	01010-D1025	BOLT	2	60001-@
9	01643-71032	WASHER	2	60001-@
10	22U-43-21461	PEDAL	1	60240-@
	20Y-43-31220	PEDAL	1	60001-60239
11	01010-D1045	BOLT	2	60001-@
12	01643-71032	WASHER	2	60001-@
12A	22U-43-21480	PLATE	1	60240-@
12B	01010-D1030	BOLT	2	60240-@
12C	01643-71032	WASHER	2	60240-@
13	22U-54-25541	PLATE	1	60001-@
14	01010-81020	BOLT	3	60001-@
15	01643-31032	WASHER	3	60001-@
16	22U-54-25670	CAP	1	60001-@
17	21W-62-43980	ELBOW	2	60001-@
18	02896-11008	O-RING	2	60001-@
19	07000-12011	O-RING	2	60001-@
20	20Y-62-43470	NIPPLE	1	60001-@
21	02896-11008	O-RING	1	60001-@
22	11Y-62-12140	NIPPLE	1	60001-@

FLOOR FRAME (FOOT REST) (R.H.) (1 ACTUATOR) (7SEGMENT MONITOR SPEC.)(#60001-65000)

Item	Part No.	Part Name	Qty	Serial No.
23	02896-11008	O-RING	1	60001-@
24	07000-12011	O-RING	2	60001-@
25	02760-00212	HOSE, 1200MM	2	60001-65000
26	20Y-62-43490	HOSE, 2400MM	1	60001-@
27	20Y-62-43510	HOSE, 2350MM	1	60001-@
28	20Y-62-22790	BAND, RED,RED	2	60001-@
29	20Y-62-22810	BAND, YELLOW,YELLOW	2	60001-@
30	20Y-62-22820	BAND, BLUE,BLUE	2	60001-@
31	08034-00519	BAND	2	60001-@
32	04435-51210	CLIP	1	60001-@
33	01010-81016	BOLT	1	60001-65000
34	01643-31032	WASHER	1	60001-65000
35	01583-51408	NUT	1	60001-@

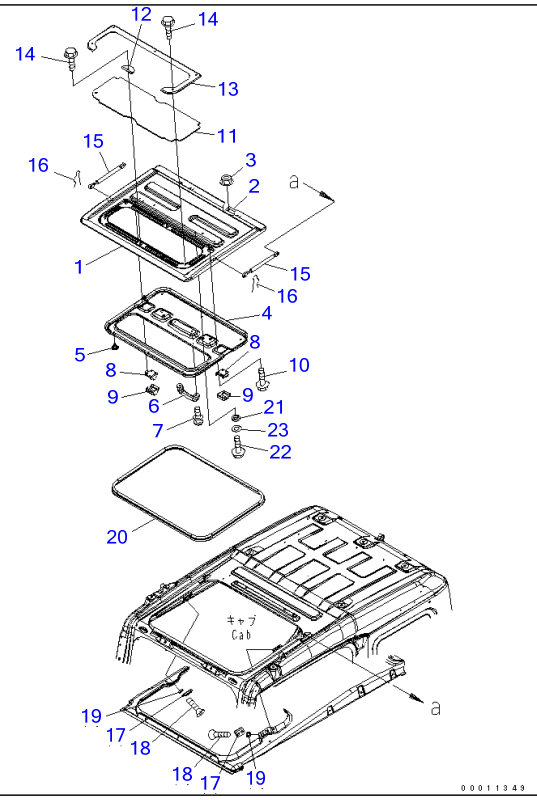

Ref K1110-04D0 Page 211060

PC220-7 S/N 60001-UP (Overseas Version)

FLOOR FRAME (OPERATOR'S CAB) (ROOF WINDOW)(#65001-)

Item	Part No.	Part Name	Qty	Serial No.
	(208-53-00032)	CAB ASS'Y,(WITH KOMTRAX)	1	65776-
	(208-53-00031)	CAB ASS'Y,(WITH KOMTRAX)	1	65686-65775
	(208-53-00030)	CAB ASS'Y,(WITH KOMTRAX)	1	65001-65685
	(208-53-00062)	CAB ASS'Y,(FOR VANDALISM PROTECTION)	1	65776-
	(208-53-00061)	CAB ASS'Y,(FOR VANDALISM PROTECTION)	1	65686-65775
	(208-53-00060)	CAB ASS'Y,(FOR VANDALISM PROTECTION)	1	65001-65685
	(208-53-00112)	CAB ASS'Y	1	65686-
	(208-53-00110)	CAB ASS'Y	1	65001-65685
	(208-53-00122)	CAB ASS'Y	1	65776-
	(208-53-00121)	CAB ASS'Y	1	65686-65775
	(208-53-00120)	CAB ASS'Y	1	65001-65685
	(208-53-00132)	CAB ASS'Y,(WITHOUT RELEASE LEVER)	1	65776-
	(208-53-00131)	CAB ASS'Y,(WITHOUT RELEASE LEVER)	1	65686-65775
	(208-53-00130)	CAB ASS'Y,(WITHOUT RELEASE LEVER)	1	65001-65685
	(208-53-00182)	CAB ASS'Y,(BIG WIND A/CON.)(12V)(VANDA)	1	65776-
	(208-53-00181)	CAB ASS'Y,(BIG WIND A/CON.)(12V)(VANDA)	1	65686-65775
	(208-53-00180)	CAB ASS'Y,(BIG WIND A/CON.)(12V)(VANDA)	1	65001-65685
	(208-53-00193)	CAB ASS'Y	1	66185-
	(208-53-00192)	CAB ASS'Y,(COLD WEATHER (A) SPEC.)	1	65776-66184
	(208-53-00191)	CAB ASS'Y,(COLD WEATHER (A) SPEC.)	1	65686-65775
	(208-53-00190)	CAB ASS'Y,(COLD WEATHER (A) SPEC.)	1	65001-65685
1	208-53-11710	・ROOF	1	65001-
2	208-53-11M50	・・HINGE (WELDED)	2	65001-
3	01584-30806	・NUT	4	60001-
4	20Y-54-51922	・COVER	1	60001-
5	20Y-54-18690	・RIVET	6	60001-
6	20Y-54-14590	・HANDLE	1	60001-
7	01023-10616	・SCREW	2	60001-

FLOOR FRAME (OPERATOR'S CAB) (ROOF WINDOW)(#65001-)

Item	Part No.	Part Name	Qty	Serial No.
8	22B-54-15990	・LOCK ASS'Y	2	60001-
9	20Y-54-36360	・COVER	2	60001-
10	01435-40616	・BOLT	8	65001-
11	20Y-54-51744	・CLEAR PLATE	1	60275-
12	20Y-54-51720	・PLATE	1	60001-
13	20Y-54-51733	・PLATE	1	60275-
14	01435-40610	・BOLT	6	65001-
15	20Y-54-36342	・SPRING, GAS	2	60001-
16	04052-10833	・PIN	4	60001-
17	22U-54-28920	・STRIKER	2	65001-
18	01245-00820	・SCREW	4	65001-
19	20Y-54-52651	・SPACER	4	60001-
20	20Y-54-51760	・SEAL	1	60001-
21	20Y-54-52651	・SPACER	4	60001-
22	01245-00620	・SCREW	4	60001-
23	01643-70623	・WASHER	4	60001-

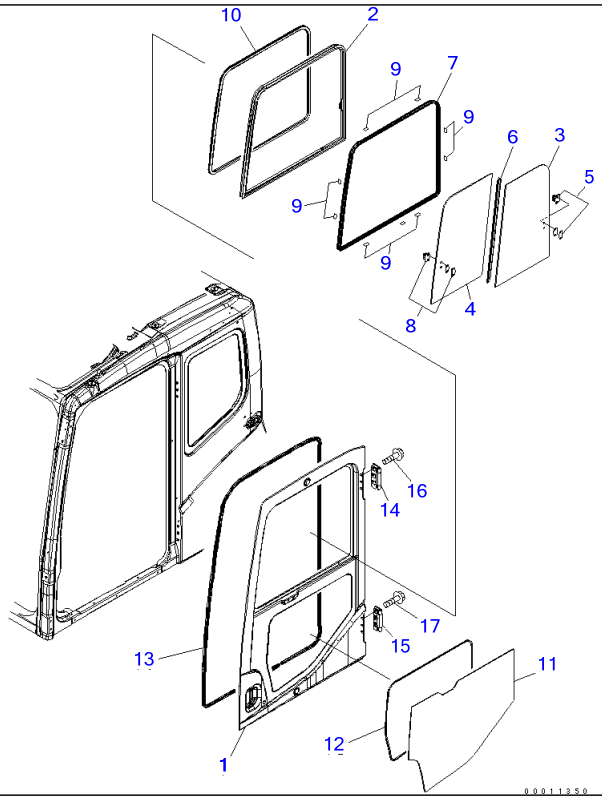

PC220-7 S/N 60001-UP (Overseas Version)

FLOOR FRAME (OPERATOR'S CAB) (DOOR)(#65001-)

Item	Part No.	Part Name	Qty	Serial No.
	(208-53-00032)	CAB ASS'Y,(WITH KOMTRAX)	1	65776-
	(208-53-00031)	CAB ASS'Y,(WITH KOMTRAX)	1	65686-65775
	(208-53-00030)	CAB ASS'Y,(WITH KOMTRAX)	1	65001-65685
	(208-53-00053)	CAB ASS'Y	1	65776-
	(208-53-00052)	CAB ASS'Y	1	65686-65775
	(208-53-00051)	CAB ASS'Y	1	65001-65685
	(208-53-00112)	CAB ASS'Y	1	65686-
	(208-53-00110)	CAB ASS'Y	1	65001-65685
	(208-53-00122)	CAB ASS'Y	1	65776-
	(208-53-00121)	CAB ASS'Y	1	65686-65775
	(208-53-00120)	CAB ASS'Y	1	65001-65685
	(208-53-00132)	CAB ASS'Y,(WITHOUT RELEASE LEVER)	1	65776-
	(208-53-00131)	CAB ASS'Y,(WITHOUT RELEASE LEVER)	1	65686-65775
	(208-53-00130)	CAB ASS'Y,(WITHOUT RELEASE LEVER)	1	65001-65685
	(208-53-00010)	・DOOR ASS'Y	1	65001-
1	☆	・・DOOR	1	65001-
	20Y-54-51401	・・SASH ASS'Y	1	60001-
2	☆	・・・SASH FRAME	1	60001-
3	20Y-54-52840	・・・GLASS	1	60001-
4	20Y-54-52850	・・・GLASS	1	60001-
5	20Y-54-52860	・・・LOCK ASS'Y	1	60001-
6	20Y-54-52870	・・・SEAL	1	60001-
7	20Y-54-52880	・・・SEAL	1	60001-
8	20Y-54-13322	・・・LOCK ASS'Y	1	60001-
9	20Y-54-13180	・・SEAT	9	60275-
10	20Y-54-51470	・・TRIM	1	60001-
11	20Y-54-51451	・・GLASS	1	60001-
12	20Y-54-51461	・・SEAL	1	60001-

FLOOR FRAME (OPERATOR'S CAB) (DOOR)(#65001-)

Item	Part No.	Part Name	Qty	Serial No.
13	20Y-54-51482	・・SEAL	1	60001-
14	20Y-54-51330	・・HINGE	1	60001-
15	14X-911-1330	・・HINGE	1	60001-
16	01435-41225	・・BOLT	6	60001-
17	01435-01225	・・BOLT	6	60001-

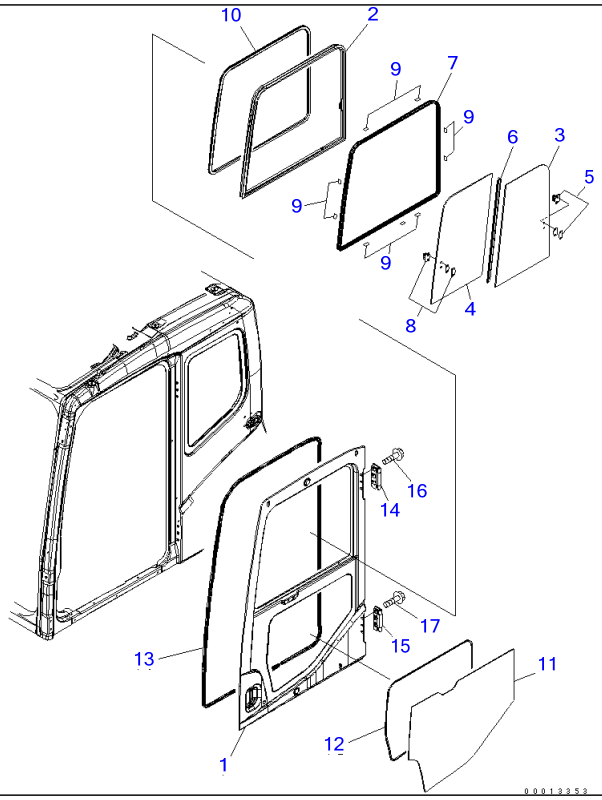

Ref K1110-05E3 **Page 211080**

PC220-7 S/N 60001-UP (Overseas Version)

FLOOR FRAME (OPERATOR'S CAB) (DOOR) (FOR VANDALISM PROTECTION)(#65001-)

Item	Part No.	Part Name	Qty	Serial No.
	(208-53-00062)	CAB ASS'Y,(FOR VANDALISM PROTECTION)	1	65776-
	(208-53-00061)	CAB ASS'Y,(FOR VANDALISM PROTECTION)	1	65686-65775
	(208-53-00060)	CAB ASS'Y,(FOR VANDALISM PROTECTION)	1	65001-65685
	(208-53-00182)	CAB ASS'Y,(BIG WIND A/CON.)(12V)(VANDA)	1	65776-
	(208-53-00181)	CAB ASS'Y,(BIG WIND A/CON.)(12V)(VANDA)	1	65686-65775
	(208-53-00180)	CAB ASS'Y,(BIG WIND A/CON.)(12V)(VANDA)	1	65001-65685
	208-53-00070	・DOOR ASS'Y,(VANDALISM PROTECTION)	1	65001-
1	☆	・・DOOR	1	65001-
	20Y-54-51401	・・SASH ASS'Y	1	60001-
2	☆	・・・SASH FRAME	1	60001-
3	20Y-54-52840	・・・GLASS	1	60001-
4	20Y-54-52850	・・・GLASS	1	60001-
5	20Y-54-52860	・・・LOCK ASS'Y	1	60001-
6	20Y-54-52870	・・・SEAL	1	60001-
7	20Y-54-52880	・・・SEAL	1	60001-
8	20Y-54-13322	・・・LOCK ASS'Y	1	60001-
9	20Y-54-13180	・・SEAT	9	60001-
10	20Y-54-51470	・・TRIM	1	60001-
11	20Y-54-51451	・・GLASS	1	60001-
12	20Y-54-51461	・・SEAL	1	60001-
13	20Y-54-51482	・・SEAL	1	60001-
14	20Y-54-51330	・・HINGE	1	60001-
15	14X-911-1330	・・HINGE	1	60001-
16	01435-41225	・・BOLT	6	60001-
17	01435-01225	・・BOLT	6	60001-

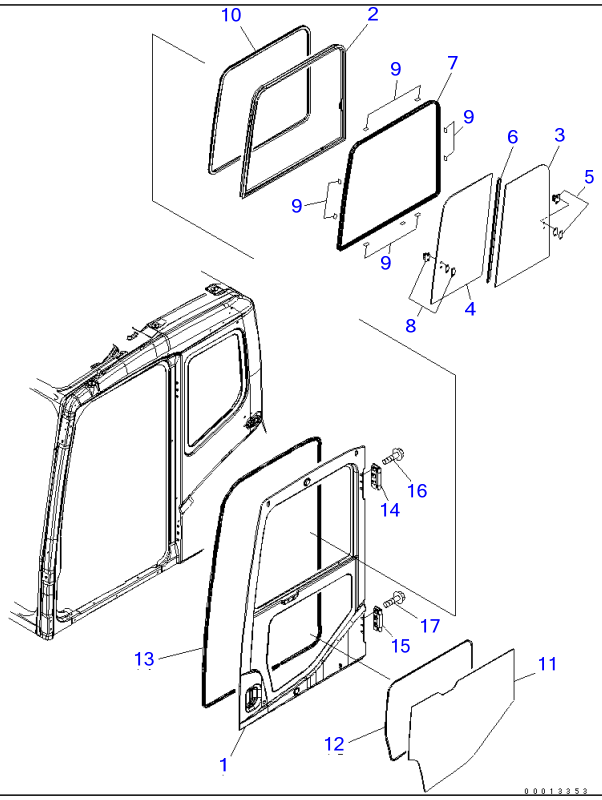

Ref K1110-05E5 Page 211090

PC220-7 S/N 60001-UP (Overseas Version)

FLOOR FRAME (OPERATOR'S CAB) (DOOR) (COLD WEATHER A SPEC.)(#65001-)

Item	Part No.	Part Name	Qty	Serial No.
	(208-53-00193)	CAB ASS'Y,(COLD WEATHER (A) SPEC.)	1	66185-
	(208-53-00192)	CAB ASS'Y,(COLD WEATHER (A) SPEC.)	1	65776-66184
	(208-53-00191)	CAB ASS'Y,(COLD WEATHER (A) SPEC.)	1	65686-65775
	(208-53-00190)	CAB ASS'Y,(COLD WEATHER (A) SPEC.)	1	65001-65685
	208-53-00071	・DOOR ASS'Y	1	66185-
	208-53-00010	・DOOR ASS'Y	1	65001-66184
	208-53-11221	・・DOOR	1	60001-
1	☆	・・・DOOR	1	60001-
	20Y-54-51401	・・SASH ASS'Y	1	60001-
2	☆	・・・SASH FRAME	1	60001-
3	20Y-54-52840	・・・GLASS	1	60001-
4	20Y-54-52850	・・・GLASS	1	60001-
5	20Y-54-52860	・・・LOCK ASS'Y	1	60001-
6	20Y-54-52870	・・・SEAL	1	60001-
7	20Y-54-52880	・・・SEAL	1	60001-
8	20Y-54-13322	・・・LOCK ASS'Y	1	60001-
9	20Y-54-13180	・・SEAT	9	60001-
10	20Y-54-51470	・・TRIM	1	60001-
11	20Y-54-51451	・・GLASS	1	60001-
12	20Y-54-51461	・・SEAL	1	60001-
13	20Y-54-51482	・・SEAL	1	60001-
14	20Y-54-51330	・・HINGE	1	60001-
15	14X-911-1330	・・HINGE	1	60001-
16	01435-41225	・・BOLT	6	60001-
17	01435-01225	・・BOLT	6	60001-

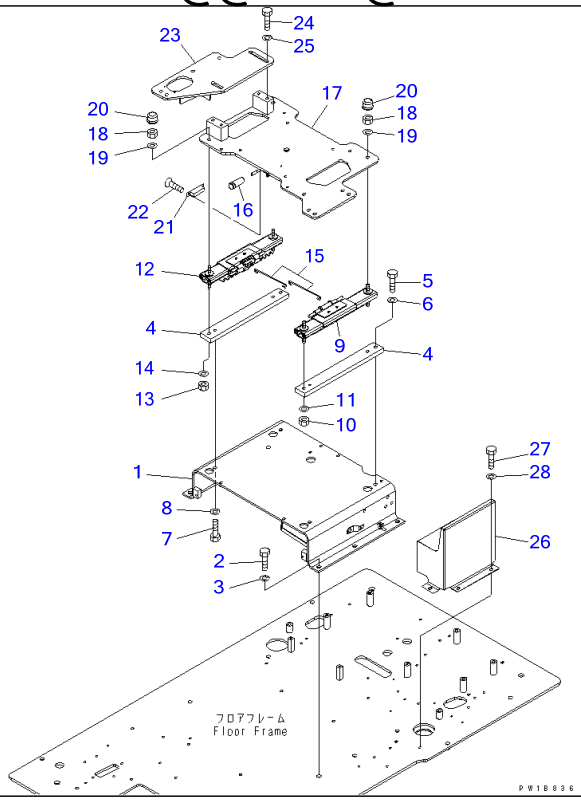

PC220-7 S/N 60001-UP (Overseas Version)

FLOOR FRAME (BASE)(#60001-65000)

Item	Part No.	Part Name	Qty	Serial No.
1	20Y-43-31121	BRACKET	1	60001-65000
2	01010-D1235	BOLT	5	60001-65000
3	01643-71232	WASHER	5	60001-65000
4	20Y-43-31260	PLATE	2	60001-65000
5	01010-D1035	BOLT	2	60001-65000
6	01643-71032	WASHER	2	60001-65000
7	01010-81025	BOLT	2	60001-65000
8	01643-31032	WASHER	2	60001-65000
9	20Y-43-31141	ADJUSTER	1	60746-65000
	20Y-43-31140	ADJUSTER,L.H.	1	60001-60745
10	20Y-54-65340	NUT	2	60001-65000
11	01643-71032	WASHER	2	60001-65000
12	20Y-43-31151	ADJUSTER	1	60746-65000
	20Y-43-31150	ADJUSTER,R.H.	1	60001-60745
13	20Y-54-65340	NUT	2	60001-65000
14	01643-71032	WASHER	2	60001-65000
15	22U-43-21260	WIRE	2	60001-@
16	20Y-54-43150	KNOB	1	60001-65000
17	20Y-43-31181	FRAME	1	60001-65000
18	20Y-54-65340	NUT	4	60001-@
19	01643-71032	WASHER	4	60001-@
20	20Y-54-65540	CAP	2	60001-@
21	09452-06506	CATCHER	1	60001-65000
22	01224-40410	SCREW	2	60001-65000
23	20Y-43-31191	FRAME	1	60001-65000
24	01010-D1230	BOLT	4	60001-@
25	22U-54-25170	WASHER	4	60001-@
26	20Y-43-31231	COVER	1	60001-65000

FLOOR FRAME (BASE)(#60001-65000)

Item	Part No.	Part Name	Qty	Serial No.
27	01010-D1016	BOLT	3	60001-65000
28	01643-71032	WASHER	3	60001-65000

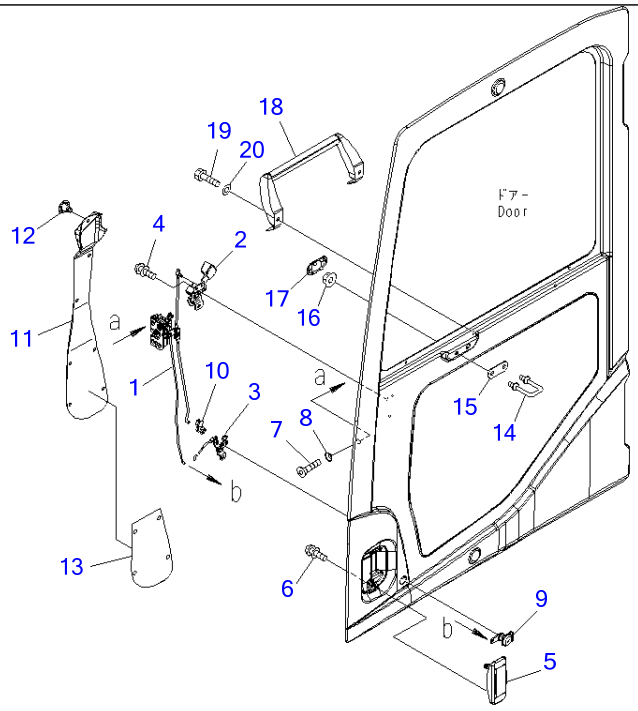

00011351

Ref K1110-06D0 **Page 211110**

PC220-7 S/N 60001-UP (Overseas Version)

FLOOR FRAME (OPERATOR'S CAB) (DOOR LOCK)(#65001-)

Item	Part No.	Part Name	Qty	Serial No.
	(208-53-00032)	CAB ASS'Y,(WITH KOMTRAX)	1	65776-
	(208-53-00031)	CAB ASS'Y,(WITH KOMTRAX)	1	65686-65775
	(208-53-00030)	CAB ASS'Y,(WITH KOMTRAX)	1	65001-65685
	(208-53-00053)	CAB ASS'Y	1	65776-
	(208-53-00052)	CAB ASS'Y	1	65686-65775
	(208-53-00051)	CAB ASS'Y	1	65001-65685
	(208-53-00062)	CAB ASS'Y,(FOR VANDALISM PROTECTION)	1	65776-
	(208-53-00061)	CAB ASS'Y,(FOR VANDALISM PROTECTION)	1	65686-65775
	(208-53-00060)	CAB ASS'Y,(FOR VANDALISM PROTECTION)	1	65001-65685
	(208-53-00112)	CAB ASS'Y	1	65686-
	(208-53-00110)	CAB ASS'Y	1	65001-65685
	(208-53-00122)	CAB ASS'Y	1	65776-
	(208-53-00121)	CAB ASS'Y	1	65686-65775
	(208-53-00120)	CAB ASS'Y	1	65001-65685
	(208-53-00132)	CAB ASS'Y,(WITHOUT RELEASE LEVER)	1	65776-
	(208-53-00131)	CAB ASS'Y,(WITHOUT RELEASE LEVER)	1	65686-65775
	(208-53-00130)	CAB ASS'Y,(WITHOUT RELEASE LEVER)	1	65001-65685
	(208-53-00182)	CAB ASS'Y,(BIG WIND A/CON.)(12V)(VANDA)	1	65776-
	(208-53-00181)	CAB ASS'Y,(BIG WIND A/CON.)(12V)(VANDA)	1	65686-65775
	(208-53-00180)	CAB ASS'Y,(BIG WIND A/CON.)(12V)(VANDA)	1	65001-65685
	(208-53-00193)	CAB ASS'Y	1	66185-
	(208-53-00192)	CAB ASS'Y,(COLD WEATHER (A) SPEC.)	1	65776-66184
	(208-53-00191)	CAB ASS'Y,(COLD WEATHER (A) SPEC.)	1	65686-65775
	(208-53-00190)	CAB ASS'Y,(COLD WEATHER (A) SPEC.)	1	65001-65685
	(208-53-00010)	・DOOR ASS'Y	1	65001-
	(208-53-00071)	・DOOR ASS'Y	1	66185-
	(208-53-00070)	・DOOR ASS'Y,(VANDALISM PROTECTION)	1	65001-66184
1	20Y-54-52200	・・LATCH ASS'Y	1	60001-

FLOOR FRAME (OPERATOR'S CAB) (DOOR LOCK)(#65001-)

Item	Part No.	Part Name	Qty	Serial No.
2	20Y-54-52300	・・HANDLE ASS'Y	1	60001-
3	20Y-54-52400	・・BELL CRANK ASS'Y	1	60001-
4	01023-10612	・・SCREW	5	65001-
5	20Y-54-52990	・・HANDLE	1	60001-
6	01023-10612	・・SCREW	2	60001-
7	01240-00616	・・SCREW	3	60001-
8	195-Z11-1690	・・WASHER	3	60001-
9	20Y-54-52820	・・LOCK ASS'Y	1	60001-
10	22B-54-16330	・・SNAP	1	60001-
11	20Y-54-51441	・・COVER	1	60001-
12	22B-54-16461	・・RIVET	7	60001-
13	208-53-11320	・・SEAL	1	65001-
14	20Y-54-51321	・・STRIKER	1	60001-
15	20Y-54-51341	・・PLATE	1	60001-
16	01584-01008	・・NUT	2	60001-
17	20Y-54-51490	・・COVER	1	60001-
18	2A5-53-13130	・・GRIP	1	69864-
	◆20Y-54-51393	・・GRIP	1	60001-69863
19	01010-80820	・・BOLT	2	60071-
20	01643-30823	・・WASHER	2	60071-

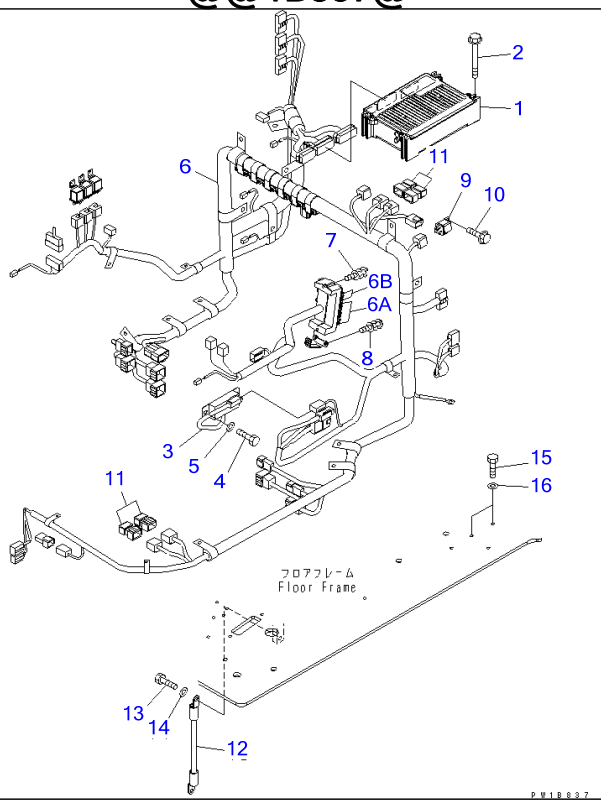

Ref K1110-07A0 **Page 211120**

PC220-7 S/N 60001-UP (Overseas Version)

FLOOR FRAME (ELECTRICAL)(#60001-65000)

Item	Part No.	Part Name	Qty	Serial No.
1	7835-26-1009	CONTROLLER	1	60740-65000
	☐7835-26-1008	CONTROLLER	1	60527-60739
	☐7835-26-1007	CONTROLLER	1	60443-60526
	☐7835-26-1006	CONTROLLER	1	60237-60442
	☐7835-26-1005	CONTROLLER	1	60093-60236
	☐7835-26-1004	CONTROLLER	1	60063-60092
	☐7835-26-1003	CONTROLLER	1	60003-60062
	☐7835-26-1002	CONTROLLER	1	60001-60002
2	01435-00880	BOLT	4	60001-65000
3	7861-94-3000	RESISTOR	1	60001-@
4	01010-80820	BOLT	2	60001-65000
5	01643-30823	WASHER	2	60001-65000
6	20Y-06-31110	WIRING HARNESS	1	60001-65000
6A	08041-01000	・FUSE, 10A	16	60001-@
6B	08041-02000	・FUSE, 20A	4	60001-@
7	01023-60620	SCREW	2	60001-65000
8	01023-60620	SCREW	2	60001-65000
9	569-06-61960	RELAY	1	60001-65000
10	01435-00612	BOLT	1	60001-65000
11	8233-06-3350	DIODE	4	60001-65000
12	08028-43030	CABLE, GROUND	1	60001-@
13	01010-81020	BOLT	1	60001-@
14	01643-31032	WASHER	1	60001-@
15	01010-81020	BOLT	2	60001-65000
16	01643-31032	WASHER	2	60001-65000

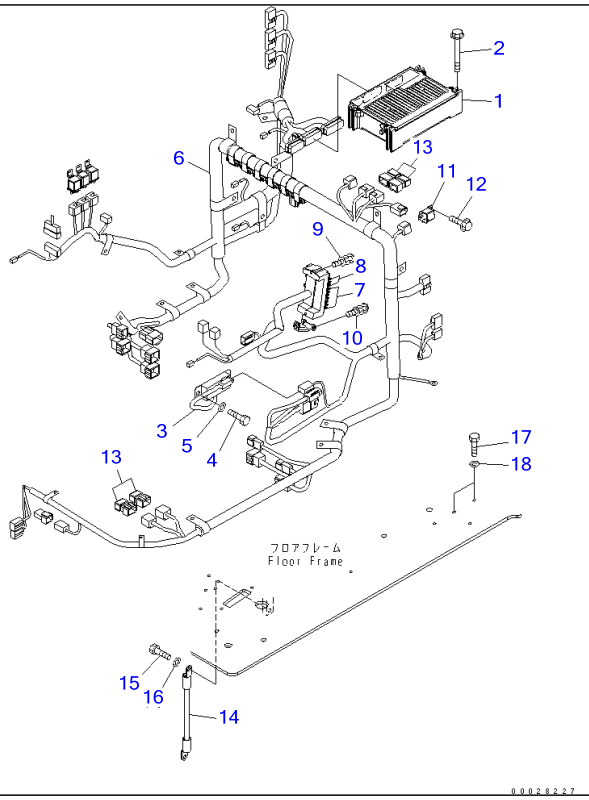

Ref K1110-07B9 **Page 211130**

PC220-7 S/N 60001-UP (Overseas Version)

FLOOR FRAME (ELECTRICAL) (OVER LOAD ALARM)

Item	Part No.	Part Name	Qty	Serial No.
1	7835-26-1009	CONTROLLER	1	60001-
2	01435-00880	BOLT	4	60001-
3	7861-94-3000	RESISTOR	1	60001-
4	01010-80820	BOLT	2	60001-
5	01643-30823	WASHER	2	60001-
6	20Y-06-31590	WIRING HARNESS	1	60001-
7	08041-01000	▪ FUSE, 10A	16	60001-
8	08041-02000	▪ FUSE, 20A	4	60001-
9	01023-60620	SCREW	2	60001-
10	01023-60620	SCREW	2	60001-
11	569-06-61960	RELAY	1	60001-
12	01435-00612	BOLT	1	60001-
13	8233-06-3350	DIODE	4	60001-
14	08028-43030	CABLE, GROUND	1	60001-
15	01010-81020	BOLT	1	60001-
16	01643-31032	WASHER	1	60001-
17	01010-81020	BOLT	2	60001-
18	01643-31032	WASHER	2	60001-

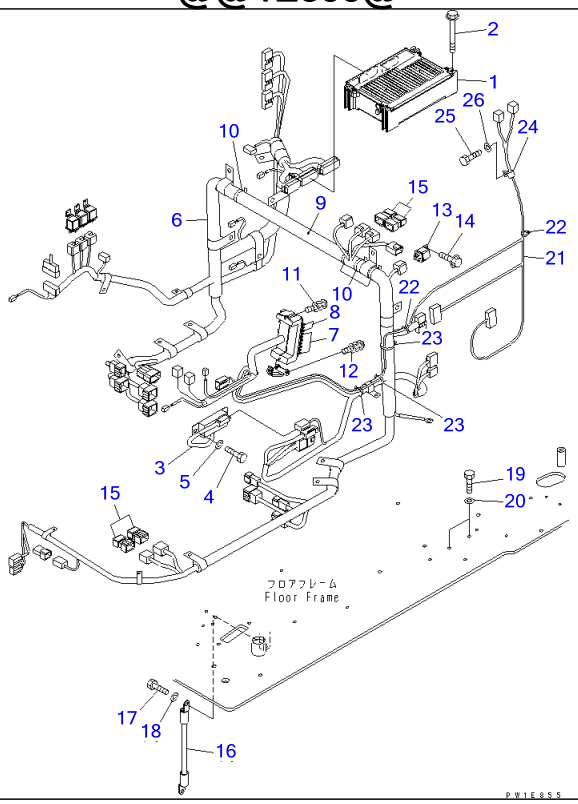

Ref K1110-07C1 Page 211140

PC220-7 S/N 60001-UP (Overseas Version)

FLOOR FRAME (ELECTRICAL) (WITH BIG WIND AIR CONDITIONER)(#60001-65000)

Item	Part No.	Part Name	Qty	Serial No.
1	7835-26-1009	CONTROLLER	1	60740-65000
	☐7835-26-1008	CONTROLLER	1	60527-60739
	☐7835-26-1007	CONTROLLER	1	60443-60526
	☐7835-26-1006	CONTROLLER	1	60237-60442
	☐7835-26-1005	CONTROLLER	1	60001-60236
2	01435-00880	BOLT	4	60001-65000
3	7861-94-3000	RESISTOR	1	60001-@
4	01010-80820	BOLT	2	60001-65000
5	01643-30823	WASHER	2	60001-65000
6	20Y-06-31371	WIRING HARNESS	1	60001-65000
7	08041-01000	・FUSE, 10A	16	60001-@
8	08041-02000	・FUSE, 20A	4	60001-@
9	20Y-979-6870	SHEET	1	60001-65000
10	08034-20519	BAND	4	60001-65000
11	01023-60620	SCREW	2	60001-65000
12	01023-60620	SCREW	2	60001-65000
13	569-06-61960	RELAY	1	60001-65000
14	01435-00612	BOLT	1	60001-65000
15	8233-06-3350	DIODE	4	60001-65000
16	08028-43030	CABLE, GROUND	1	60001-@
17	01010-81020	BOLT	1	60001-@
18	01643-31032	WASHER	1	60001-@
19	01010-81020	BOLT	2	60001-65000
20	01643-31032	WASHER	2	60001-65000
21	20Y-979-6861	WIRING HARNESS	1	60535-65000
	20Y-979-6860	WIRING HARNESS	1	60001-60534

FLOOR FRAME (ELECTRICAL) (WITH BIG WIND AIR CONDITIONER)(#60001-65000)

Item	Part No.	Part Name	Qty	Serial No.
22	08034-20414	BAND	2	60001-65000
23	08034-20823	BAND	3	60001-65000
24	04434-51408	CLIP	1	60001-65000
25	01010-80820	BOLT	1	60001-65000
26	01643-30823	WASHER	1	60001-65000

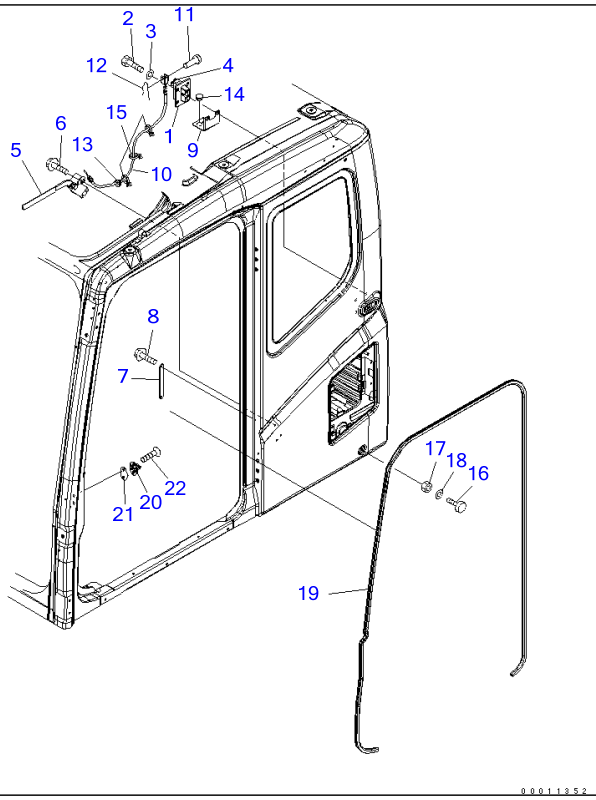

Ref K1110-07D0 **Page 211150**

PC220-7 S/N 60001-UP (Overseas Version)

FLOOR FRAME (OPERATOR'S CAB) (OPEN LOCK)(#65001-)

Item	Part No.	Part Name	Qty	Serial No.
	(208-53-00032)	CAB ASS'Y,(WITH KOMTRAX)	1	65776-
	(208-53-00031)	CAB ASS'Y,(WITH KOMTRAX)	1	65686-65775
	(208-53-00030)	CAB ASS'Y,(WITH KOMTRAX)	1	65001-65685
	(208-53-00053)	CAB ASS'Y	1	65776-
	(208-53-00052)	CAB ASS'Y	1	65686-65775
	(208-53-00051)	CAB ASS'Y	1	65001-65685
	(208-53-00062)	CAB ASS'Y,(FOR VANDALISM PROTECTION)	1	65776-
	(208-53-00061)	CAB ASS'Y,(FOR VANDALISM PROTECTION)	1	65686-65775
	(208-53-00060)	CAB ASS'Y,(FOR VANDALISM PROTECTION)	1	65001-65685
	(208-53-00112)	CAB ASS'Y	1	65686-
	(208-53-00110)	CAB ASS'Y	1	65001-65685
	(208-53-00122)	CAB ASS'Y	1	65776-
	(208-53-00121)	CAB ASS'Y	1	65686-65775
	(208-53-00120)	CAB ASS'Y	1	65001-65685
	(208-53-00132)	CAB ASS'Y,(WITHOUT RELEASE LEVER)	1	65776-
	(208-53-00131)	CAB ASS'Y,(WITHOUT RELEASE LEVER)	1	65686-65775
	(208-53-00130)	CAB ASS'Y,(WITHOUT RELEASE LEVER)	1	65001-65685
	(208-53-00182)	CAB ASS'Y,(BIG WIND A/CON.)(12V)(VANDA)	1	65776-
	(208-53-00181)	CAB ASS'Y,(BIG WIND A/CON.)(12V)(VANDA)	1	65686-65775
	(208-53-00180)	CAB ASS'Y,(BIG WIND A/CON.)(12V)(VANDA)	1	65001-65685
	(208-53-00193)	CAB ASS'Y	1	66185-
	(208-53-00192)	CAB ASS'Y,(COLD WEATHER (A) SPEC.)	1	65776-66184
	(208-53-00191)	CAB ASS'Y,(COLD WEATHER (A) SPEC.)	1	65686-65775
	(208-53-00190)	CAB ASS'Y,(COLD WEATHER (A) SPEC.)	1	65001-65685
1	20Y-54-36380	・LOCK	1	60001-
2	01010-D0825	・BOLT	4	65001-
3	01643-70823	・WASHER	4	65001-
4	20Y-53-12280	・COVER	1	65776-

FLOOR FRAME (OPERATOR'S CAB) (OPEN LOCK)(#65001-)

Item	Part No.	Part Name	Qty	Serial No.
	20Y-54-51930	・COVER	1	65001-65775
5	208-53-14540	・LEVER ASS'Y	1	65001-
6	01435-40616	・BOLT	3	65001-
7	208-53-14720	・BRACKET	1	65001-
8	01435-40616	・BOLT	2	65001-
9	208-53-11980	・PLATE	1	65001-
10	208-53-11990	・CABLE	1	65001-
11	04205-10520	・PIN	1	65001-
12	04052-10530	・PIN	1	65001-
13	08037-01610	・GROMMET	1	65001-
14	09415-01610	・CAP	1	65001-
15	08059-00413	・CLIP	3	65001-
16	20Y-54-11611	・STOPPER	2	60001-
17	01580-11008	・NUT	2	60001-
18	01643-31032	・WASHER	2	60001-
19	20Y-54-51910	・TRIM	1	60001-
20	20Y-54-35470	・STRIKER	1	60001-
21	20Y-54-35480	・SHIM	1	60001-
22	01240-01025	・SCREW	2	65001-

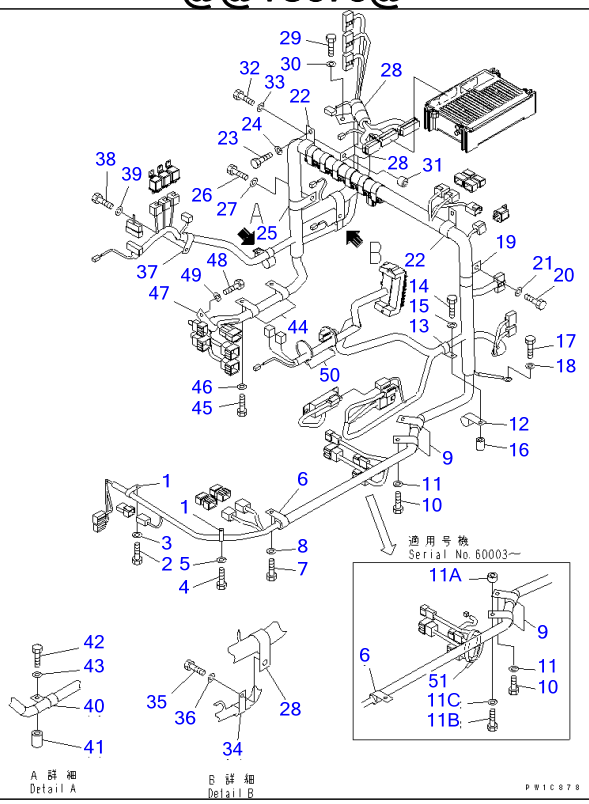

Ref K1110-08A0 **Page 211160**

PC220-7 S/N 60001-UP (Overseas Version)
FLOOR FRAME (CLIP)(#60001-65000)

Item	Part No.	Part Name	Qty	Serial No.
1	04434-51410	CLIP	2	60001-65000
2	01010-81020	BOLT	1	60001-65000
3	01643-31032	WASHER	1	60001-65000
4	01010-81016	BOLT	1	60001-65000
5	01643-31032	WASHER	1	60001-65000
6	04434-51710	CLIP	1	60001-65000
7	01010-81016	BOLT	1	60001-65000
8	01643-31032	WASHER	1	60001-65000
9	04434-52310	CLIP	2	60001-65000
10	01010-81016	BOLT	1	60003-65000
	01010-81016	BOLT	2	60001-60002
11	01643-31032	WASHER	1	60003-65000
	01643-31032	WASHER	2	60001-60002
11A	103-21-21260	BOSS	1	60003-65000
11B	01010-81030	BOLT	1	60003-65000
11C	01643-31032	WASHER	1	60003-65000
12	04434-52310	CLIP	1	60001-65000
13	04434-51910	CLIP	1	60001-60062
14	01010-D1050	BOLT	1	60001-65000
15	01643-71032	WASHER	1	60001-65000
16	6202-83-6760	SPACER	1	60001-65000
17	01010-81020	BOLT	1	60001-65000
18	01643-31032	WASHER	1	60001-65000
19	04434-53211	CLIP	1	60001-65000
20	01010-81020	BOLT	1	60001-65000
21	01643-31032	WASHER	1	60001-65000
22	04434-53411	CLIP	2	60001-65000
23	01010-81020	BOLT	2	60001-65000

FLOOR FRAME (CLIP)(#60001-65000)

Item	Part No.	Part Name	Qty	Serial No.
24	01643-31032	WASHER	2	60001-65000
25	04434-53411	CLIP	1	60001-65000
26	01010-81020	BOLT	1	60001-65000
27	01643-31032	WASHER	1	60001-65000
28	04434-53411	CLIP	3	60001-65000
29	01010-81020	BOLT	1	60001-65000
30	01643-31032	WASHER	1	60001-65000
31	103-21-21260	BOSS	1	60001-65000
32	01010-81030	BOLT	1	60001-65000
33	01643-31032	WASHER	1	60001-65000
34	04434-51910	CLIP	1	60003-65000
	04434-51710	CLIP	1	60001-60002
35	01010-81030	BOLT	1	60001-@
36	01643-31032	WASHER	1	60001-@
37	04434-51910	CLIP	1	60001-65000
38	01010-81020	BOLT	1	60001-65000
39	01643-31032	WASHER	1	60001-65000
40	04434-51910	CLIP	1	60001-65000
41	6202-83-6760	SPACER	1	60001-65000
42	01010-D1050	BOLT	1	60001-65000
43	01643-71032	WASHER	1	60001-65000
44	04434-52310	CLIP	2	60001-65000
45	01010-81016	BOLT	2	60001-65000
46	01643-31032	WASHER	2	60001-65000
47	04434-52310	CLIP	1	60001-65000
48	01010-81016	BOLT	1	60001-65000
49	01643-31032	WASHER	1	60001-65000
50	08034-00519	BAND	2	60001-65000
51	08034-20519	BAND	1	60003-65000

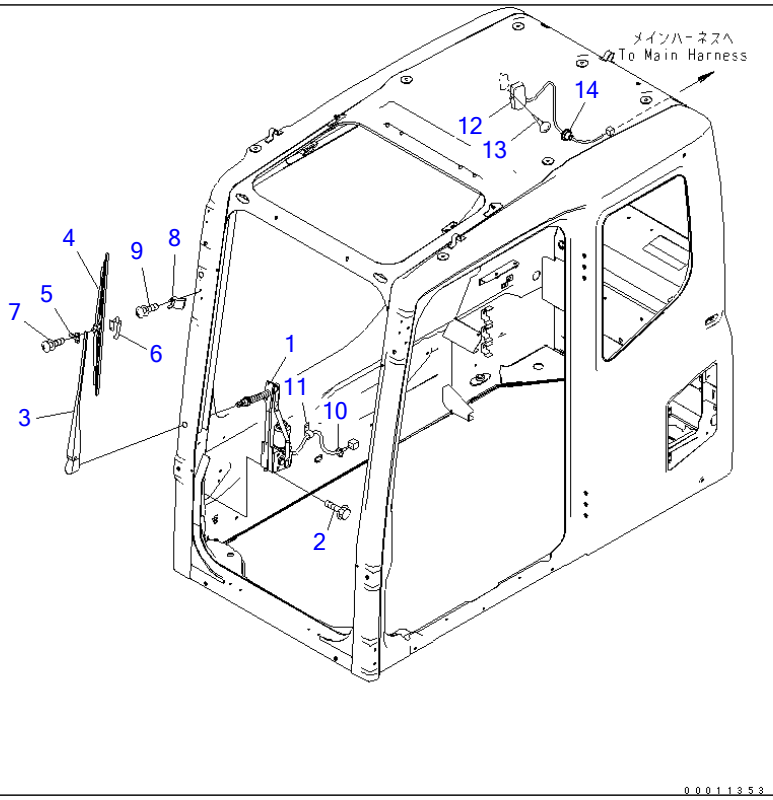

PC220-7 S/N 60001-UP (Overseas Version)

FLOOR FRAME (OPERATOR'S CAB) (ELECTRICAL) (WIPER AND ROOM LAMP)(#65001-)

Item	Part No.	Part Name	Qty	Serial No.
	(208-53-00032)	CAB ASS'Y,(WITH KOMTRAX)	1	65776-
	(208-53-00031)	CAB ASS'Y,(WITH KOMTRAX)	1	65686-65775
	(208-53-00030)	CAB ASS'Y,(WITH KOMTRAX)	1	65001-65685
	(208-53-00053)	CAB ASS'Y	1	65776-
	(208-53-00052)	CAB ASS'Y	1	65686-65775
	(208-53-00051)	CAB ASS'Y	1	65001-65685
	(208-53-00062)	CAB ASS'Y,(FOR VANDALISM PROTECTION)	1	65776-
	(208-53-00061)	CAB ASS'Y,(FOR VANDALISM PROTECTION)	1	65686-65775
	(208-53-00060)	CAB ASS'Y,(FOR VANDALISM PROTECTION)	1	65001-65685
	(208-53-00112)	CAB ASS'Y	1	65686-
	(208-53-00110)	CAB ASS'Y	1	65001-65685
	(208-53-00122)	CAB ASS'Y	1	65776-
	(208-53-00121)	CAB ASS'Y	1	65686-65775
	(208-53-00120)	CAB ASS'Y	1	65001-65685
	(208-53-00132)	CAB ASS'Y,(WITHOUT RELEASE LEVER)	1	65776-
	(208-53-00131)	CAB ASS'Y,(WITHOUT RELEASE LEVER)	1	65686-65775
	(208-53-00130)	CAB ASS'Y,(WITHOUT RELEASE LEVER)	1	65001-65685
	(208-53-00182)	CAB ASS'Y,(BIG WIND A/CON.)(12V)(VANDA)	1	65776-
	(208-53-00181)	CAB ASS'Y,(BIG WIND A/CON.)(12V)(VANDA)	1	65686-65775
	(208-53-00180)	CAB ASS'Y,(BIG WIND A/CON.)(12V)(VANDA)	1	65001-65685
	(208-53-00193)	CAB ASS'Y	1	66185-
	(208-53-00192)	CAB ASS'Y,(COLD WEATHER (A) SPEC.)	1	65776-66184
	(208-53-00191)	CAB ASS'Y,(COLD WEATHER (A) SPEC.)	1	65686-65775
	(208-53-00190)	CAB ASS'Y,(COLD WEATHER (A) SPEC.)	1	65001-65685
1	208-53-12780	・WIPER MOTOR ASS'Y	1	65001-
2	01435-40616	・BOLT	6	65001-

FLOOR FRAME (OPERATOR'S CAB) (ELECTRICAL) (WIPER AND ROOM LAMP)(#65001-)

Item	Part No.	Part Name	Qty	Serial No.
	20Y-54-52221	・WIPER ASS'Y	1	60001-
3	20Y-54-52350	・・WIPER ARM	1	60001-
4	20Y-54-39450	・・WIPER BLADE	1	60001-
5	20Y-54-39460	・・SLIDER	1	60001-
6	20Y-54-39480	・・PLATE	1	60001-
7	ND949007-2350	・・SCREW AND WASHER	2	60001-
8	20Y-54-52231	・STOPPER	1	60001-
9	01023-20620	・SCREW	1	60001-
10	08034-20414	・BAND	1	65001-
11	08059-00310	・CLIP	1	65001-
12	208-53-12790	・ROOM LAMP	1	65001-
	08116-02410	・・BULB, 10W	1	60001-
13	01370-00420	・SCREW	2	60275-
14	08037-11025	・GROMMET	1	60001-

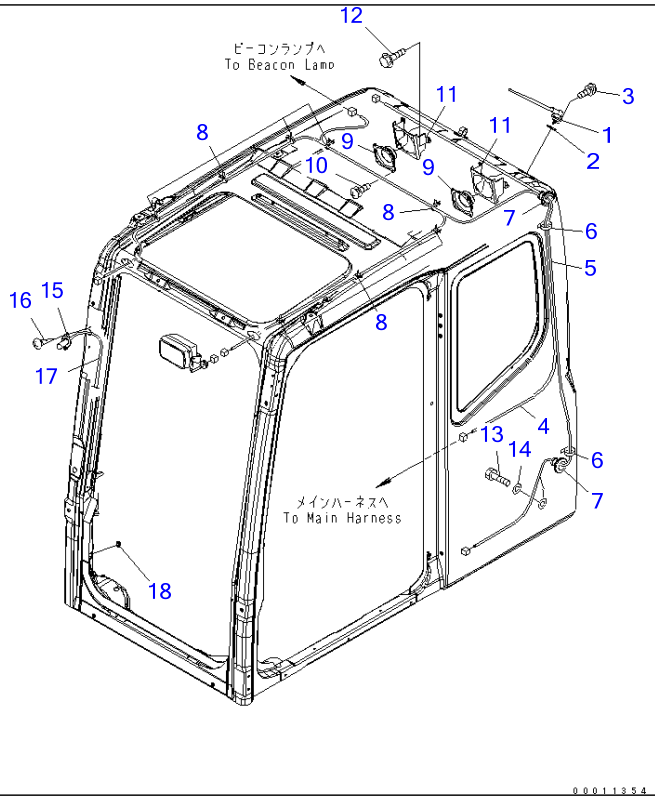

FLOOR FRAME (OPERATOR'S CAB) (ELECTRICAL) (RADIO)(#65001-)

Item	Part No.	Part Name	Qty	Serial No.
	(208-53-00032)	CAB ASS'Y,(WITH KOMTRAX)	1	65776-
	(208-53-00031)	CAB ASS'Y,(WITH KOMTRAX)	1	65686-65775
	(208-53-00030)	CAB ASS'Y,(WITH KOMTRAX)	1	65001-65685
	(208-53-00062)	CAB ASS'Y,(FOR VANDALISM PROTECTION)	1	65776-
	(208-53-00061)	CAB ASS'Y,(FOR VANDALISM PROTECTION)	1	65686-65775
	(208-53-00060)	CAB ASS'Y,(FOR VANDALISM PROTECTION)	1	65001-65685
	(208-53-00112)	CAB ASS'Y	1	65686-
	(208-53-00110)	CAB ASS'Y	1	65001-65685
	(208-53-00122)	CAB ASS'Y	1	65776-
	(208-53-00121)	CAB ASS'Y	1	65686-65775
	(208-53-00120)	CAB ASS'Y	1	65001-65685
	(208-53-00132)	CAB ASS'Y,(WITHOUT RELEASE LEVER)	1	65776-
	(208-53-00131)	CAB ASS'Y,(WITHOUT RELEASE LEVER)	1	65686-65775
	(208-53-00130)	CAB ASS'Y,(WITHOUT RELEASE LEVER)	1	65001-65685
	(208-53-00182)	CAB ASS'Y,(BIG WIND A/CON.)(12V)(VANDA)	1	65776-
	(208-53-00181)	CAB ASS'Y,(BIG WIND A/CON.)(12V)(VANDA)	1	65686-65775
	(208-53-00180)	CAB ASS'Y,(BIG WIND A/CON.)(12V)(VANDA)	1	65001-65685
	(208-53-00193)	CAB ASS'Y	1	66185-
	(208-53-00192)	CAB ASS'Y,(COLD WEATHER (A) SPEC.)	1	65776-66184
	(208-53-00191)	CAB ASS'Y,(COLD WEATHER (A) SPEC.)	1	65686-65775
	(208-53-00190)	CAB ASS'Y,(COLD WEATHER (A) SPEC.)	1	65001-65685
1	(20Y-06-41990)	・RUBBER ANTENNA	1	68117-
	(198-Z11-4610)	・RUBBER ANTENNA	1	60003-68116
2	01643-30623	・WASHER	1	60003-
3	01023-20412	・SCREW	2	60001-
4	20Y-54-52310	・WIRING HARNESS	1	60001-
5	20Y-54-52320	・WIRING HARNESS	1	60001-
6	08034-20414	・BAND	2	60001-

FLOOR FRAME (OPERATOR'S CAB) (ELECTRICAL) (RADIO)(#65001-)

Item	Part No.	Part Name	Qty	Serial No.
7	08037-12536	・GROMMET	2	60001-
8	08059-00413	・CLIP	8	60001-
9	08910-10000	・SPEAKER	2	60001-
10	01023-20412	・SCREW	8	65001-
11	208-53-11480	・PLATE	2	65001-
12	01435-40616	・BOLT	6	65001-
13	01010-81020	・BOLT	1	60275-
14	01643-31032	・WASHER	1	60275-
15	20Y-54-39511	・NOZZLE	1	60001-
16	01370-40412	・SCREW	2	60001-
17	17M-911-2670	・HOSE	1	60001-
18	08037-01610	・GROMMET	1	65001-

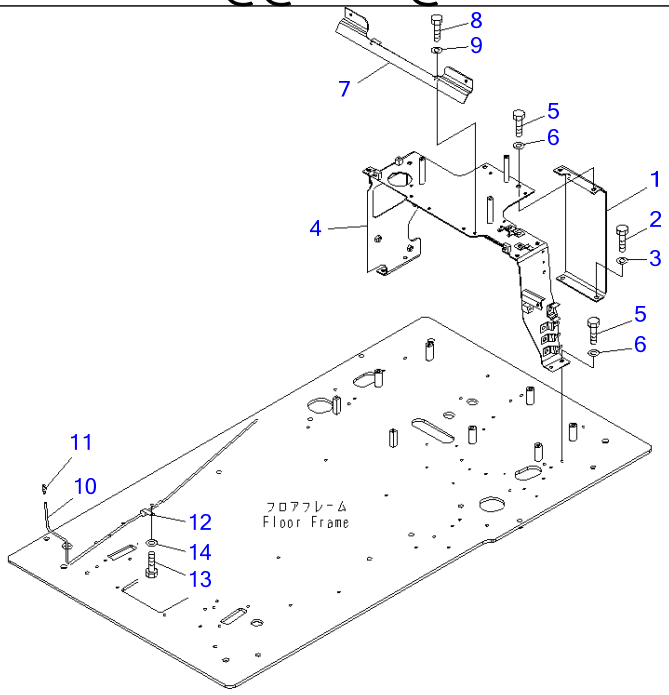

Ref K1110-10A0 **Page 211190**

PC220-7 S/N 60001-UP (Overseas Version)

FLOOR FRAME (REAR FRAME AND WINDOW WASHER)(#60001-65000)

Item	Part No.	Part Name	Qty	Serial No.
1	20Y-54-65141	BRACKET	1	60001-65000
2	01010-81016	BOLT	2	60001-65000
3	01643-31032	WASHER	2	60001-65000
4	20Y-54-65161	BRACKET	1	60001-65000
5	01010-81025	BOLT	6	60001-65000
6	01643-31032	WASHER	6	60001-65000
7	20Y-54-65151	BRACKET	1	60001-65000
8	01010-80820	BOLT	2	60001-65000
9	113-43-23230	WASHER	2	60001-65000
10	21T-06-71250	HOSE	1	60001-@
11	207-06-61490	VALVE	1	60001-65000
12	21T-38-12270	CLIP	1	60001-65000
13	01010-81016	BOLT	1	60001-65000
14	01643-31032	WASHER	1	60001-65000

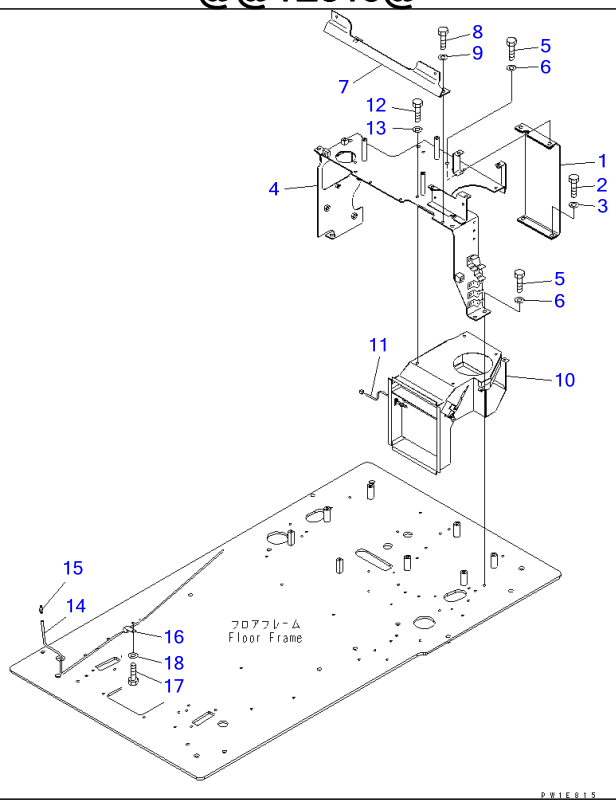

Ref K1110-10C1 Page 211200

PC220-7 S/N 60001-UP (Overseas Version)

FLOOR FRAME (REAR FRAME AND WINDOW WASHER) (WITH BIG WIND AIR CONDITIONER) (FOR CORROSION RESISTER)(#60001-65000)

Item	Part No.	Part Name	Qty	Serial No.
1	20Y-54-65141	BRACKET	1	60001-65000
2	01010-81016	BOLT	2	60001-65000
3	01643-31032	WASHER	2	60001-65000
4	20Y-54-65911	BRACKET	1	60001-65000
5	01010-81025	BOLT	6	60001-65000
6	01643-31032	WASHER	6	60001-65000
7	20Y-54-65920	BRACKET	1	60001-65000
8	01010-80820	BOLT	2	60001-65000
9	113-43-23230	WASHER	2	60001-65000
10	20Y-979-6781	DUCT	1	60001-65000
11	20Y-979-6341	▪ SENSOR	1	60001-65000
12	01010-80820	BOLT	4	60001-65000
13	01643-30823	WASHER	4	60001-65000
14	21T-06-71250	HOSE	1	60001-@
15	207-06-61490	VALVE	1	60001-65000
16	21T-38-12270	CLIP	1	60001-65000
17	01010-81016	BOLT	1	60001-65000
18	01643-31032	WASHER	1	60001-65000

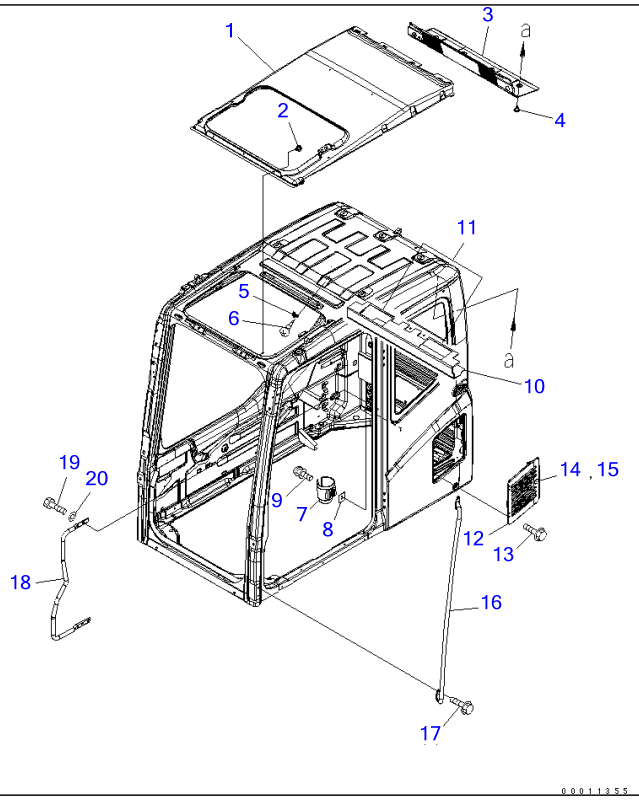

PC220-7 S/N 60001-UP (Overseas Version)

FLOOR FRAME (OPERATOR'S CAB) (ACCESSORIES)(#65001-)

Item	Part No.	Part Name	Qty	Serial No.
	(208-53-00032)	CAB ASS'Y,(WITH KOMTRAX)	1	65776-
	(208-53-00031)	CAB ASS'Y,(WITH KOMTRAX)	1	65686-65775
	(208-53-00030)	CAB ASS'Y,(WITH KOMTRAX)	1	65001-65685
	(208-53-00062)	CAB ASS'Y,(FOR VANDALISM PROTECTION)	1	65776-
	(208-53-00061)	CAB ASS'Y,(FOR VANDALISM PROTECTION)	1	65686-65775
	(208-53-00060)	CAB ASS'Y,(FOR VANDALISM PROTECTION)	1	65001-65685
	(208-53-00112)	CAB ASS'Y	1	65686-
	(208-53-00110)	CAB ASS'Y	1	65001-65685
	(208-53-00122)	CAB ASS'Y	1	65776-
	(208-53-00121)	CAB ASS'Y	1	65686-65775
	(208-53-00120)	CAB ASS'Y	1	65001-65685
	(208-53-00132)	CAB ASS'Y,(WITHOUT RELEASE LEVER)	1	65776-
	(208-53-00131)	CAB ASS'Y,(WITHOUT RELEASE LEVER)	1	65686-65775
	(208-53-00130)	CAB ASS'Y,(WITHOUT RELEASE LEVER)	1	65001-65685
	(208-53-00182)	CAB ASS'Y,(BIG WIND A/CON.)(12V)(VANDA)	1	65776-
	(208-53-00181)	CAB ASS'Y,(BIG WIND A/CON.)(12V)(VANDA)	1	65686-65775
	(208-53-00180)	CAB ASS'Y,(BIG WIND A/CON.)(12V)(VANDA)	1	65001-65685
	(208-53-00193)	CAB ASS'Y	1	66185-
	(208-53-00192)	CAB ASS'Y,(COLD WEATHER (A) SPEC.)	1	65776-66184
	(208-53-00191)	CAB ASS'Y,(COLD WEATHER (A) SPEC.)	1	65686-65775
	(208-53-00190)	CAB ASS'Y,(COLD WEATHER (A) SPEC.)	1	65001-65685
1	20Y-54-52412	・COVER	1	60001-
2	20Y-54-18690	・RIVET	15	65001-
3	20Y-54-52423	・LINING	1	60275-
4	20Y-54-18690	・RIVET	8	60001-
5	205-54-51250	・HANGER	1	60001-
6	01370-30412	・SCREW	2	60001-
7	208-53-12991	・HOLDER	1	65001-

FLOOR FRAME (OPERATOR'S CAB) (ACCESSORIES)(#65001-)

Item	Part No.	Part Name	Qty	Serial No.
8	208-53-12980	・PLATE	1	65001-
9	01023-20616	・SCREW	2	65001-
10	208-53-12470	・SEAL	1	65001-
11	208-53-12810	・SEAT	2	65001-
12	208-53-11750	・COVER	1	65001-
13	01435-40610	・BOLT	4	60001-
14	208-53-11760	・LOCK ASS'Y	1	65001-
15	205-54-76280	・・ROTOR ASS'Y	1	65001-
16	20Y-54-51820	・GRIP	1	60001-
17	01435-40820	・BOLT	4	60001-
18	20Y-54-51832	・GRIP	1	60001-
19	01010-D1025	・BOLT	3	60001-
20	01643-71032	・WASHER	3	60001-

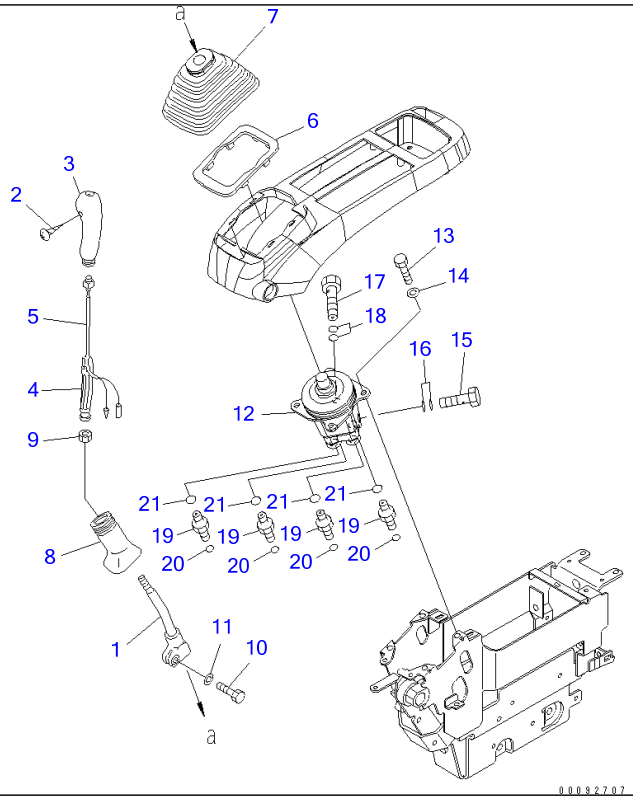

Ref K1110-11A0 **Page 211220**

PC220-7 S/N 60001-UP (Overseas Version)
FLOOR FRAME (LEVER AND VALVE) (L.H.)(#60001-65000)

Item	Part No.	Part Name	Qty	Serial No.
1	20Y-43-22211	LEVER,L.H.	1	60001-@
	22U-43-21181	KNOB,L.H.	1	60001-@
2	01370-10308	▪ SCREW	1	60001-@
3	20Y-43-22381	▪ KNOB,L.H.	1	60001-@
4	20Y-43-22421	▪ INSERT	1	60001-@
5	22U-43-21211	▪ SWITCH	1	60001-@
6	20Y-43-22250	PLATE	1	60001-@
7	20Y-43-22261	BOOT	1	60001-@
8	20Y-43-22370	BOOT	1	60001-@
9	600-411-1280	NUT	1	60001-@
10	01252-41025	BOLT	1	60001-@
11	01643-51032	WASHER	1	60001-@
12	(702-16-03530)	PILOT VALVE,PC120	1	60240-@
	(702-16-01651)	VALVE ASS'Y	1	60001-60239
13	01010-80820	BOLT	4	60001-@
14	01643-30823	WASHER	4	60001-@
15	20Y-62-18910	PLUG	1	60001-@
16	07000-12018	O-RING	2	60001-@
17	20Y-62-18890	BOLT, JOINT	1	60001-@
18	07000-12015	O-RING	2	60001-@
19	11Y-62-12130	NIPPLE	4	60001-@
20	02896-11008	O-RING	4	60001-@
21	07002-11423	O-RING	4	60001-@

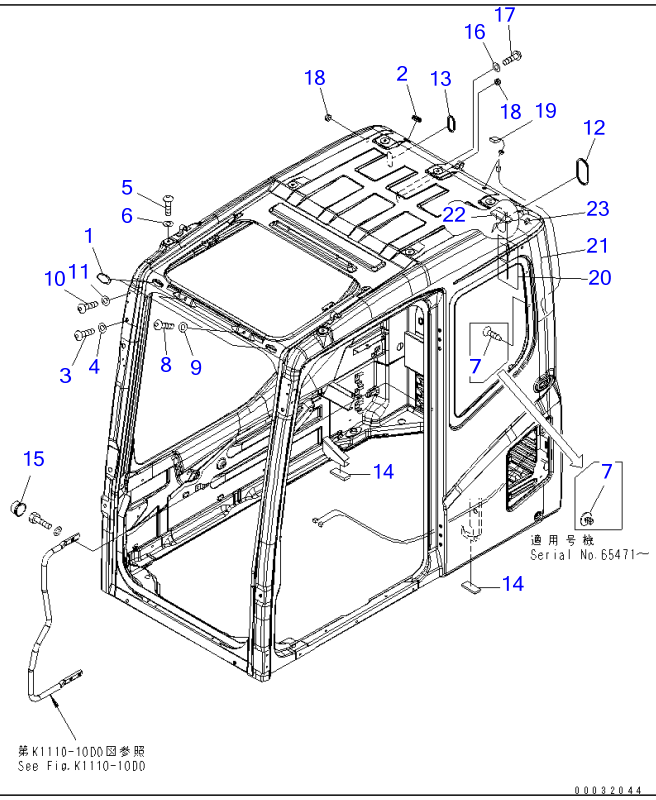

Ref K1110-11D0 **Page 211230**

PC220-7 S/N 60001-UP (Overseas Version)

FLOOR FRAME (OPERATOR'S CAB) (PLUG BOLT AND ANTENNA)(#65001-)

Item	Part No.	Part Name	Qty	Serial No.
	(208-53-00032)	CAB ASS'Y,(WITH KOMTRAX)	1	65776-
	(208-53-00031)	CAB ASS'Y,(WITH KOMTRAX)	1	65686-65775
	(208-53-00030)	CAB ASS'Y,(WITH KOMTRAX)	1	65001-65685
1	22B-54-17282	・CAP	2	60001-
2	09415-02512	・CAP	1	60001-
3	01245-01220	・SCREW	6	60001-
4	01643-71232	・WASHER	6	60001-
5	01245-01220	・SCREW	7	60001-
6	01643-71232	・WASHER	7	60001-
7	208-53-13270	・RIVET	2	65471-
	124-911-5750	・RIVET	2	60001-65470
8	01245-01016	・SCREW	2	60001-
9	01643-71032	・WASHER	2	60001-
10	01245-00612	・SCREW	4	60001-
11	01643-70623	・WASHER	4	60001-
12	20Y-54-52470	・GROMMET	1	60001-
13	20Y-54-36150	・GROMMET	1	60001-
14	208-53-12580	・SEAL	2	65001-
15	20Y-54-52440	・CAP	1	60275-
16	01641-50608	・WASHER	2	60283-
17	01245-00616	・SCREW	2	60283-
18	09415-01008	・CAP	2	60283-
19	8A13-10-1320	・ANTENNA	1	69358-
	8A13-10-1310	・ANTENNA	1	60283-69357
20	7836-10-2910	・ANTENNA	1	60283-
21	7836-10-2920	・CABLE	1	65001-
22	20Y-54-37150	・SHEET	1	60283-
23	08034-20414	・BAND	1	65001-

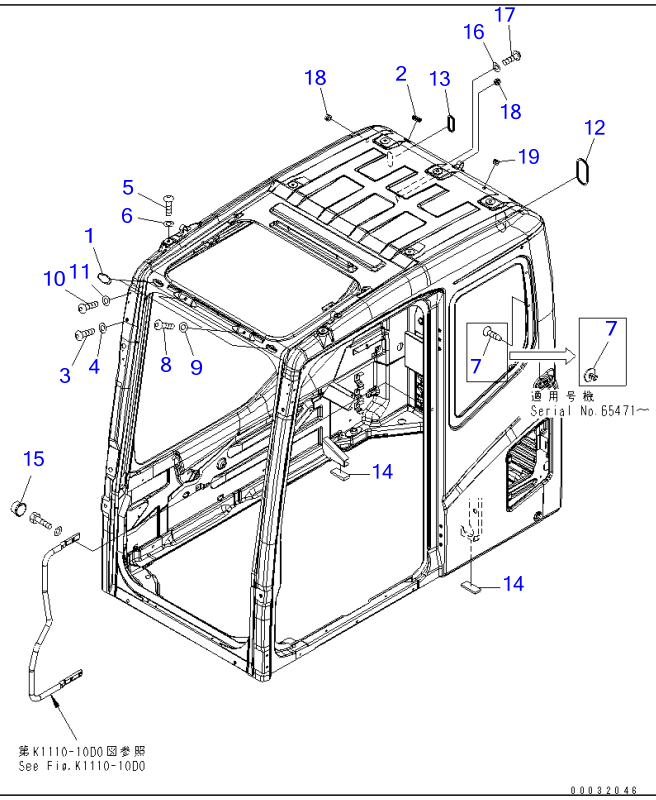

Ref K1110-11D9 **Page 211240**

PC220-7 S/N 60001-UP (Overseas Version)

FLOOR FRAME (OPERATOR'S CAB) (PLUG BOLT)(#65001-)

Item	Part No.	Part Name	Qty	Serial No.
	(208-53-00062)	CAB ASS'Y,(FOR VANDALISM PROTECTION)	1	65776-
	(208-53-00061)	CAB ASS'Y,(FOR VANDALISM PROTECTION)	1	65686-65775
	(208-53-00060)	CAB ASS'Y,(FOR VANDALISM PROTECTION)	1	65001-65685
	(208-53-00112)	CAB ASS'Y	1	65686-
	(208-53-00110)	CAB ASS'Y	1	65001-65685
	(208-53-00122)	CAB ASS'Y	1	65776-
	(208-53-00121)	CAB ASS'Y	1	65686-65775
	(208-53-00120)	CAB ASS'Y	1	65001-65685
	(208-53-00132)	CAB ASS'Y,(WITHOUT RELEASE LEVER)	1	65776-
	(208-53-00131)	CAB ASS'Y,(WITHOUT RELEASE LEVER)	1	65686-65775
	(208-53-00130)	CAB ASS'Y,(WITHOUT RELEASE LEVER)	1	65001-65685
	(208-53-00182)	CAB ASS'Y,(BIG WIND A/CON.)(12V)(VANDA)	1	65776-
	(208-53-00181)	CAB ASS'Y,(BIG WIND A/CON.)(12V)(VANDA)	1	65686-65775
	(208-53-00180)	CAB ASS'Y,(BIG WIND A/CON.)(12V)(VANDA)	1	65001-65685
1	22B-54-17282	・CAP	2	60001-
2	09415-02512	・CAP	1	60001-
3	01245-01220	・SCREW	6	60001-
4	01643-71232	・WASHER	6	60001-
5	01245-01220	・SCREW	7	60001-
6	01643-71232	・WASHER	7	60001-
7	208-53-13270	・RIVET	2	65471-
	124-911-5750	・RIVET	2	60001-65470
8	01245-01016	・SCREW	2	60001-
9	01643-71032	・WASHER	2	60001-
10	01245-00612	・SCREW	4	60001-
11	01643-70623	・WASHER	4	60001-
12	20Y-54-52470	・GROMMET	1	60001-
13	20Y-54-36150	・GROMMET	1	60001-

FLOOR FRAME (OPERATOR'S CAB) (PLUG BOLT)(#65001-)

Item	Part No.	Part Name	Qty	Serial No.
14	208-53-12580	・SEAL	2	65001-
15	20Y-54-52440	・CAP	1	60275-
16	01641-50608	・WASHER	2	60003-
17	01245-00616	・SCREW	2	60003-
18	09415-01008	・CAP	2	60001-
19	09415-01008	・CAP	1	65001-

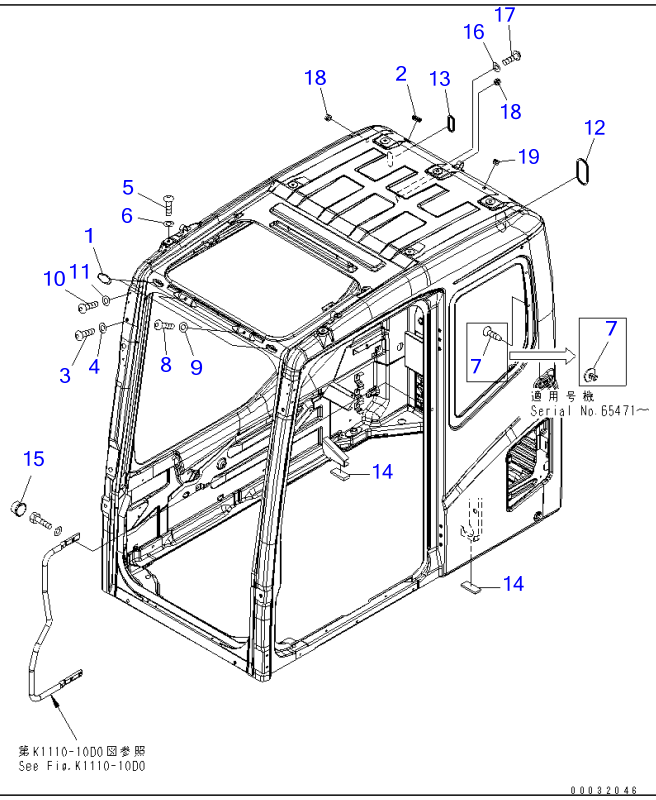

Ref K1110-11E5 **Page 211250**

PC220-7 S/N 60001-UP (Overseas Version)

FLOOR FRAME (OPERATOR'S CAB) (PLUG BOLT) (COLD WEATHER A SPEC.)(#65001-)

Item	Part No.	Part Name	Qty	Serial No.
	(208-53-00193)	CAB ASS'Y,(COLD WEATHER (A) SPEC.)	1	66185-
	(208-53-00192)	CAB ASS'Y,(COLD WEATHER (A) SPEC.)	1	65776-66184
	(208-53-00191)	CAB ASS'Y,(COLD WEATHER (A) SPEC.)	1	65686-65775
	(208-53-00190)	CAB ASS'Y,(COLD WEATHER (A) SPEC.)	1	65001-65685
1	22B-54-17282	・CAP	2	60001-
2	09415-02512	・CAP	1	60001-
3	01245-01220	・SCREW	6	60001-
4	01643-71232	・WASHER	6	60001-
5	01245-01220	・SCREW	7	60001-
6	01643-71232	・WASHER	7	60001-
7	208-53-13270	・RIVET	2	65471-
	124-911-5750	・RIVET	2	60001-65470
8	01245-01016	・SCREW	2	60001-
9	01643-71032	・WASHER	2	60001-
10	01245-00612	・SCREW	4	60001-
11	01643-70623	・WASHER	4	60001-
12	20Y-54-52470	・GROMMET	1	60001-
13	20Y-54-36150	・GROMMET	1	60001-
14	208-53-12580	・SEAL	2	65001-
15	20Y-54-52440	・CAP	1	60275-
16	01641-50608	・WASHER	2	60003-
17	01245-00616	・SCREW	2	60003-
18	09415-01008	・CAP	2	60001-
19	09415-01008	・CAP	2	66185-
	09415-01008	・CAP	1	65001-66184

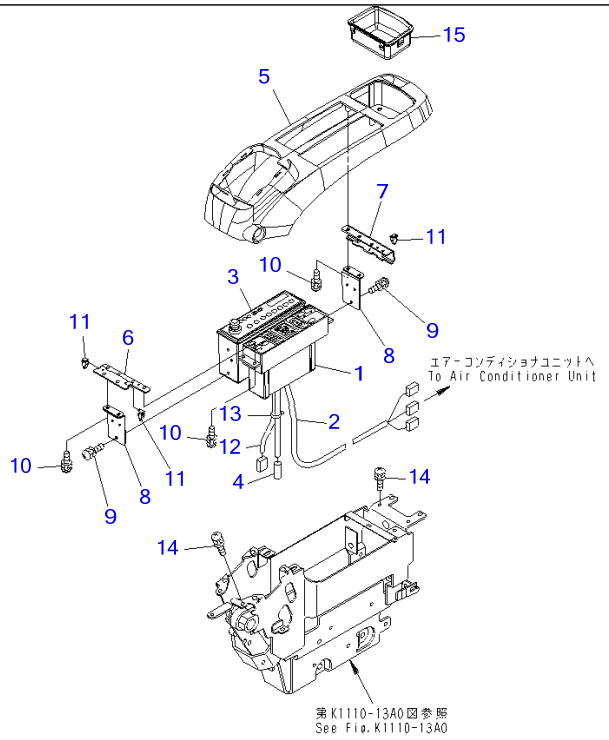

00002273

Ref K1110-12A2 **Page 211260**

PC220-7 S/N 60001-UP (Overseas Version)

FLOOR FRAME (CONSOLE) (UPPER) (L.H.) (WITH AIR CONDITIONER AND RADIO) (FOR U.S.A.)(#60001-65000)

Item	Part No.	Part Name	Qty	Serial No.
1	20Y-979-6141	CONTROL PANEL ASS'Y	1	60001-65000
2	20Y-979-6151	WIRING HARNESS	1	60001-65000
3	20Y-06-41240	RADIO	1	60759-65000
	□20Y-06-22741	RADIO	1	60001-60758
4	08912-51600	CORD	1	60001-@
5	22U-43-22210	COVER	1	60001-65000
6	22U-43-22220	PLATE	1	60001-@
7	22U-43-22230	STAY	1	60001-@
8	22U-06-22510	BRACKET	2	60001-@
9	01023-60510	SCREW	4	60001-@
10	01023-60516	SCREW	10	60001-@
11	20Y-06-23770	CLIP	3	60001-@
12	22U-06-22350	WIRING HARNESS	1	60001-@
13	08034-00310	BAND	1	60001-@
14	01023-60620	SCREW	4	60001-@
15	22U-43-22110	TRAY	1	60001-@

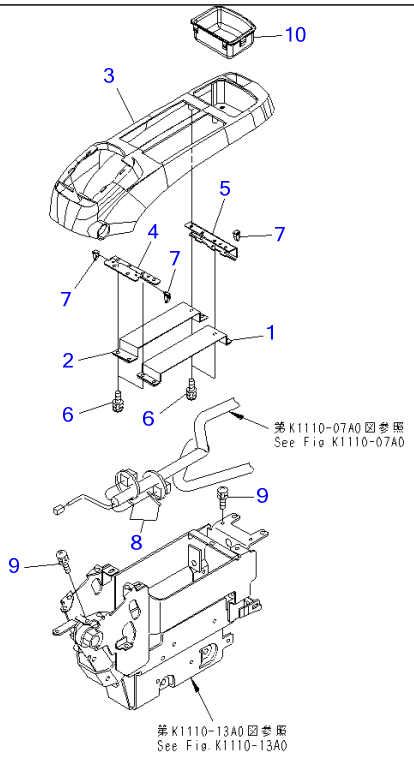

00002319

Ref K1110-12A4 **Page 211270**

PC220-7 S/N 60001-UP (Overseas Version)

FLOOR FRAME (CONSOLE) (UPPER) (L.H.) (WITHOUT AIR CONDITIONER AND RADIO)(#60001-65000)

Item	Part No.	Part Name	Qty	Serial No.
1	20Y-43-31460	COVER	1	60001-@
2	20Y-43-31470	COVER	1	60001-@
3	22U-43-22210	COVER	1	60001-65000
4	22U-43-22220	PLATE	1	60001-@
5	22U-43-22230	STAY	1	60001-@
6	01023-60516	SCREW	10	60001-@
7	20Y-06-23770	CLIP	3	60001-@
8	08034-00414	BAND	2	60001-@
9	01023-60620	SCREW	4	60001-65000
10	22U-43-22110	TRAY	1	60001-@

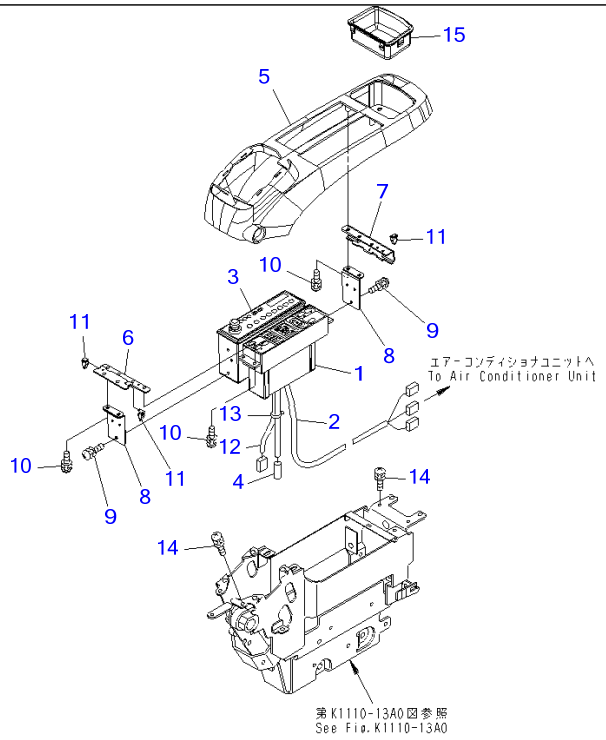

00002273

Ref K1110-12B4 **Page 211280**

PC220-7 S/N 60001-UP (Overseas Version)

FLOOR FRAME (CONSOLE) (UPPER) (L.H.) (WITH AIR CONDITIONER AND RADIO) (FOR ASIA AND OCEANIA)(#60001-65000)

Item	Part No.	Part Name	Qty	Serial No.
1	20Y-979-6141	CONTROL PANEL ASS'Y	1	60001-65000
2	20Y-979-6151	WIRING HARNESS	1	60001-65000
3	20Y-06-41230	RADIO	1	60759-65000
	□20Y-06-22730	RADIO	1	60001-60758
4	08912-51600	CORD	1	60001-@
5	22U-43-22210	COVER	1	60001-65000
6	22U-43-22220	PLATE	1	60001-@
7	22U-43-22230	STAY	1	60001-@
8	22U-06-22510	BRACKET	2	60001-@
9	01023-60512	SCREW	4	60001-@
10	01023-60516	SCREW	10	60001-@
11	20Y-06-23770	CLIP	3	60001-@
12	22U-06-22350	WIRING HARNESS	1	60001-@
13	08034-00310	BAND	1	60001-@
14	01023-60620	SCREW	4	60001-65000
15	22U-43-22110	TRAY	1	60001-@

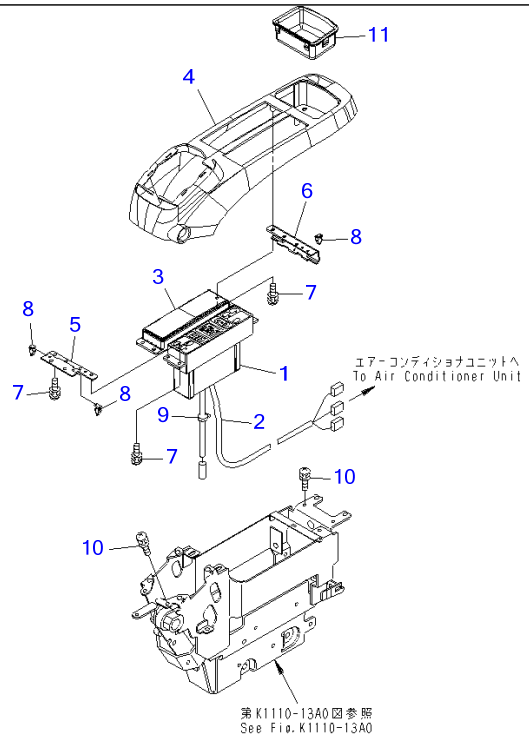

00002320

Ref K1110-12B8 **Page 211290**

PC220-7 S/N 60001-UP (Overseas Version)

FLOOR FRAME (CONSOLE) (UPPER) (L.H.) (WITHOUT RADIO)(#60001-65000)

Item	Part No.	Part Name	Qty	Serial No.
1	20Y-979-6141	CONTROL PANEL ASS'Y	1	60001-65000
2	20Y-979-6151	WIRING HARNESS	1	60001-65000
3	22U-43-22550	COVER	1	60001-@
4	22U-43-22210	COVER	1	60001-65000
5	22U-43-22220	PLATE	1	60001-@
6	22U-43-22230	STAY	1	60001-@
7	01023-60516	SCREW	10	60001-@
8	20Y-06-23770	CLIP	3	60001-@
9	08034-00414	BAND	2	60001-65000
10	01023-60620	SCREW	4	60001-65000
11	22U-43-22110	TRAY	1	60001-@

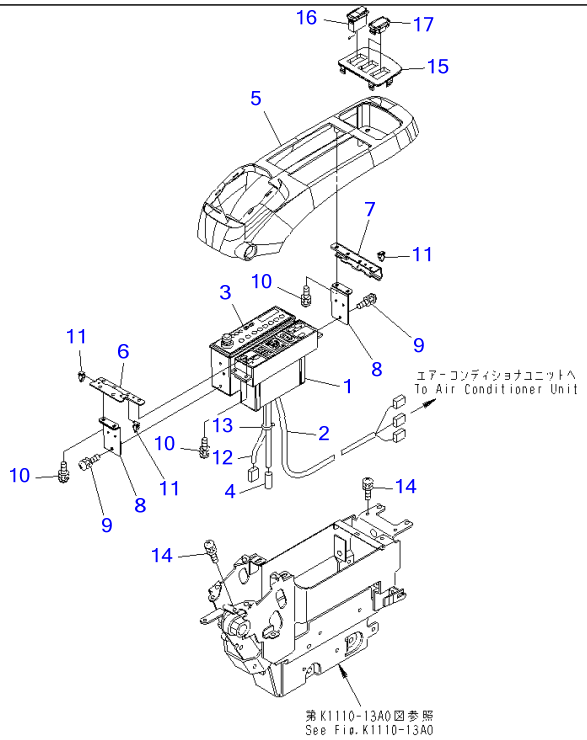

00002322

Ref K1110-12C1 **Page 211300**

PC220-7 S/N 60001-UP (Overseas Version)

FLOOR FRAME (CONSOLE) (UPPER) (L.H.) (WITH BIG WIND AIR CONDITIONER) (FOR ASIA AND OCEANIA)(#60001-65000)

Item	Part No.	Part Name	Qty	Serial No.
1	20Y-979-6141	CONTROL PANEL ASS'Y	1	60001-65000
2	20Y-979-6151	WIRING HARNESS	1	60001-65000
3	20Y-06-41230	RADIO	1	60759-65000
	□20Y-06-22730	RADIO	1	60001-60758
4	08912-51600	CORD	1	60001-@
5	22U-43-22210	COVER	1	60001-65000
6	22U-43-22220	PLATE	1	60001-@
7	22U-43-22230	STAY	1	60001-@
8	22U-06-22510	BRACKET	2	60001-@
9	01023-60512	SCREW	4	60001-@
10	01023-60516	SCREW	10	60001-@
11	20Y-06-23770	CLIP	3	60001-@
12	22U-06-22350	WIRING HARNESS	1	60001-@
13	08034-00310	BAND	1	60001-@
14	01023-60620	SCREW	4	60001-65000
15	22U-43-22120	PANEL	1	60001-@
16	23A-952-1510	SWITCH,BLOWER	1	60001-@
17	22U-06-22320	COVER	2	60001-@

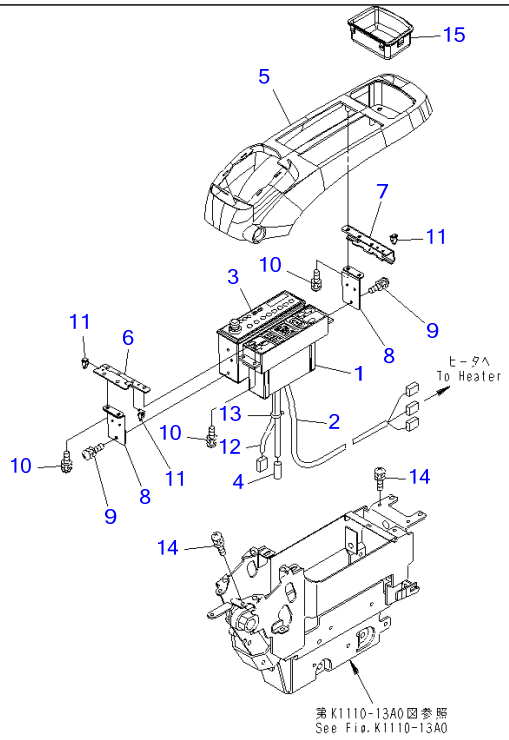

00002262

Ref K1110-12C5 **Page 211310**

PC220-7 S/N 60001-UP (Overseas Version)

FLOOR FRAME (CONSOLE) (UPPER) (L.H.) (COLD WEATHER A SPEC.)(#60255-)

Item	Part No.	Part Name	Qty	Serial No.
1	21K-979-7320	PANEL,HEATER	1	60255-
2	20Y-979-6151	WIRING HARNESS	1	60255-
3	20Y-06-41238	RADIO	1	67422-
	□20Y-06-41237	RADIO	1	67420-67421
	□20Y-06-41236	RADIO	1	67182-67419
	□20Y-06-41235	RADIO	1	66494-67181
	□20Y-06-41233	RADIO	1	60255-66493
	□20Y-06-41232	RADIO	1	60769-66779
	□20Y-06-41230	RADIO,FM KAIGAI	1	60759-60768
	□20Y-06-22730	RADIO,FM KAIGAI	1	60255-60758
4	08912-51600	CORD	1	60255-
5	22U-43-22210	COVER	1	60255-
6	22U-43-22220	PLATE	1	60255-
7	22U-43-22230	STAY	1	60255-
8	22U-06-22510	BRACKET	2	60255-
9	01023-60512	SCREW	4	60255-
10	01023-60516	SCREW	10	60255-
11	20Y-06-23770	CLIP	3	60255-
12	22U-06-22350	WIRING HARNESS	1	60255-
13	08034-00310	BAND	1	60255-
14	01023-60620	SCREW	4	60255-
15	22U-43-22110	TRAY	1	60255-

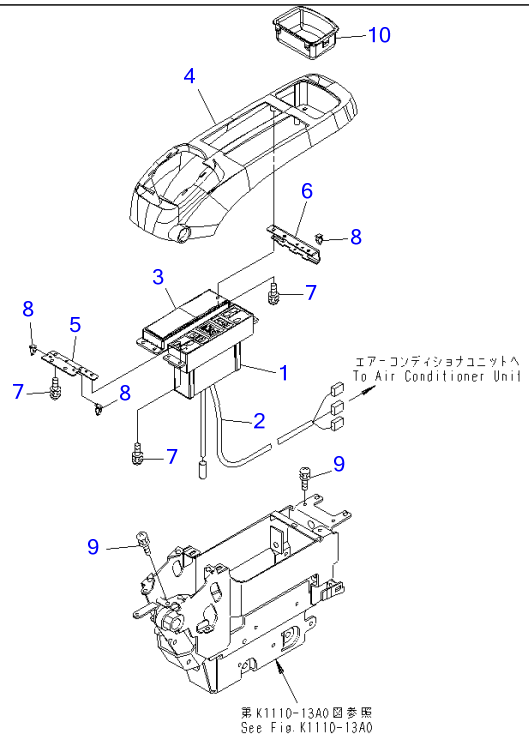

00015223

Ref K1110-12C9 **Page 211320**

PC220-7 S/N 60001-UP (Overseas Version)

FLOOR FRAME (CONSOLE) (UPPER) (L.H.) (WITH HEATER) (WITHOUT RADIO)

Item	Part No.	Part Name	Qty	Serial No.
1	21K-979-7320	PANEL	1	60001-
2	20Y-979-6151	WIRING HARNESS	1	60001-
3	22U-43-22550	COVER	1	60001-
4	22U-43-22210	COVER	1	60001-
5	22U-43-22220	PLATE	1	60001-
6	22U-43-22230	STAY	1	60001-
7	01023-60516	SCREW	10	60001-
8	20Y-06-23770	CLIP	3	60001-
9	01023-60620	SCREW	4	60001-
10	22U-43-22110	TRAY	1	60001-

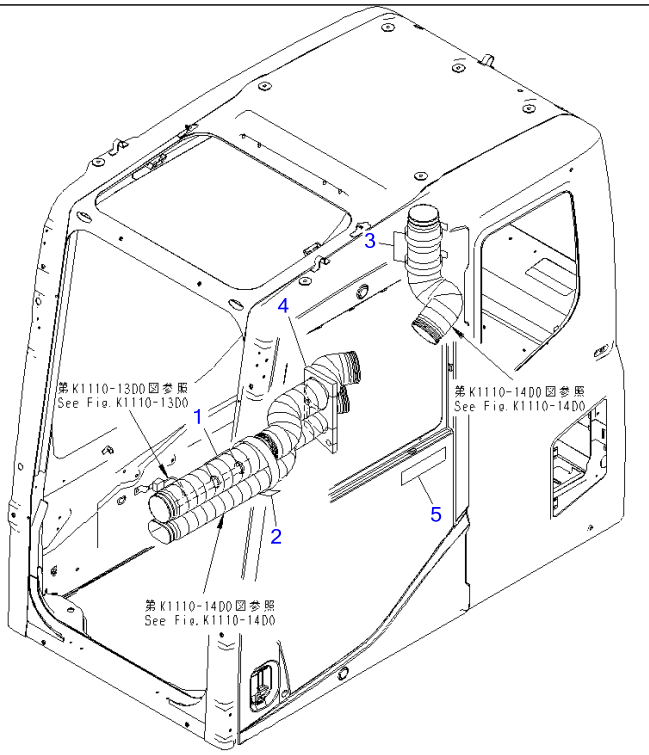

Ref K1110-12D0 **Page 211330**

PC220-7 S/N 60001-UP (Overseas Version)

FLOOR FRAME (OPERATOR'S CAB) (CLAMP AND PLATE)(#65001-)

Item	Part No.	Part Name	Qty	Serial No.
	(208-53-00032)	CAB ASS'Y,(WITH KOMTRAX)	1	65776-
	(208-53-00031)	CAB ASS'Y,(WITH KOMTRAX)	1	65686-65775
	(208-53-00030)	CAB ASS'Y,(WITH KOMTRAX)	1	65001-65685
	(208-53-00053)	CAB ASS'Y	1	65776-
	(208-53-00052)	CAB ASS'Y	1	65686-65775
	(208-53-00051)	CAB ASS'Y	1	65001-65685
	(208-53-00062)	CAB ASS'Y,(FOR VANDALISM PROTECTION)	1	65776-
	(208-53-00061)	CAB ASS'Y,(FOR VANDALISM PROTECTION)	1	65686-65775
	(208-53-00060)	CAB ASS'Y,(FOR VANDALISM PROTECTION)	1	65001-65685
	(208-53-00112)	CAB ASS'Y	1	65686-
	(208-53-00110)	CAB ASS'Y	1	65001-65685
	(208-53-00122)	CAB ASS'Y	1	65776-
	(208-53-00121)	CAB ASS'Y	1	65686-65775
	(208-53-00120)	CAB ASS'Y	1	65001-65685
	(208-53-00182)	CAB ASS'Y,(BIG WIND A/CON.)(12V)(VANDA)	1	65776-
	(208-53-00181)	CAB ASS'Y,(BIG WIND A/CON.)(12V)(VANDA)	1	65686-65775
	(208-53-00180)	CAB ASS'Y,(BIG WIND A/CON.)(12V)(VANDA)	1	65001-65685
	(208-53-00193)	CAB ASS'Y	1	66185-
	(208-53-00192)	CAB ASS'Y,(COLD WEATHER (A) SPEC.)	1	65776-66184
	(208-53-00191)	CAB ASS'Y,(COLD WEATHER (A) SPEC.)	1	65686-65775
	(208-53-00190)	CAB ASS'Y,(COLD WEATHER (A) SPEC.)	1	65001-65685
1	08034-20414	・BAND	2	65001-
2	08034-20876	・BAND	1	65001-
3	08034-20876	・BAND	2	65001-
4	208-53-12620	・SEAL	1	65001-
5	09970-00230	・PLATE	1	60001-67874

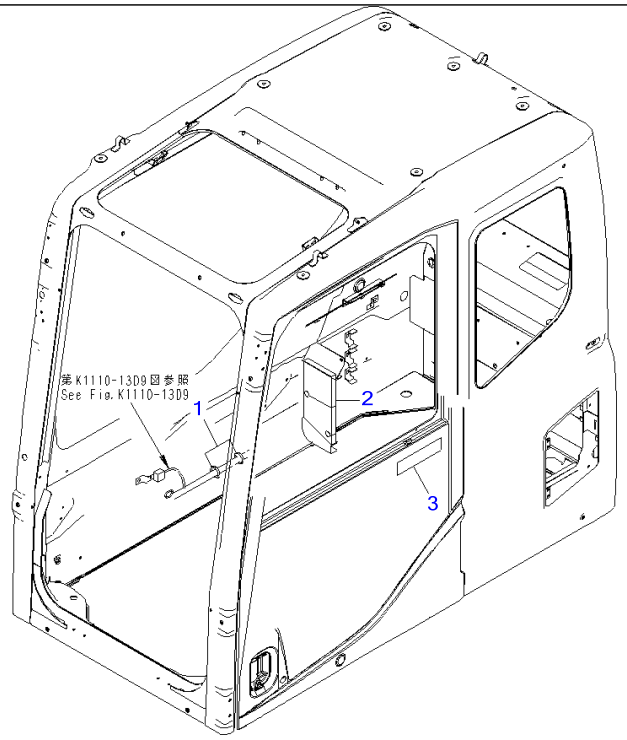

Ref K1110-12D9 **Page 211340**

PC220-7 S/N 60001-UP (Overseas Version)

FLOOR FRAME (OPERATOR'S CAB) (CLAMP AND PLATE) (WITHOUT AIR CONDITIONER)(#65001-)

Item	Part No.	Part Name	Qty	Serial No.
	(208-53-00132)	CAB ASS'Y,(WITHOUT RELEASE LEVER)	1	65776-
	(208-53-00131)	CAB ASS'Y,(WITHOUT RELEASE LEVER)	1	65686-65775
	(208-53-00130)	CAB ASS'Y,(WITHOUT RELEASE LEVER)	1	65001-65685
1	08034-20414	・BAND	2	65001-
2	208-53-15620	・SEAL	1	65001-
3	09970-00230	・PLATE	1	65001-67874

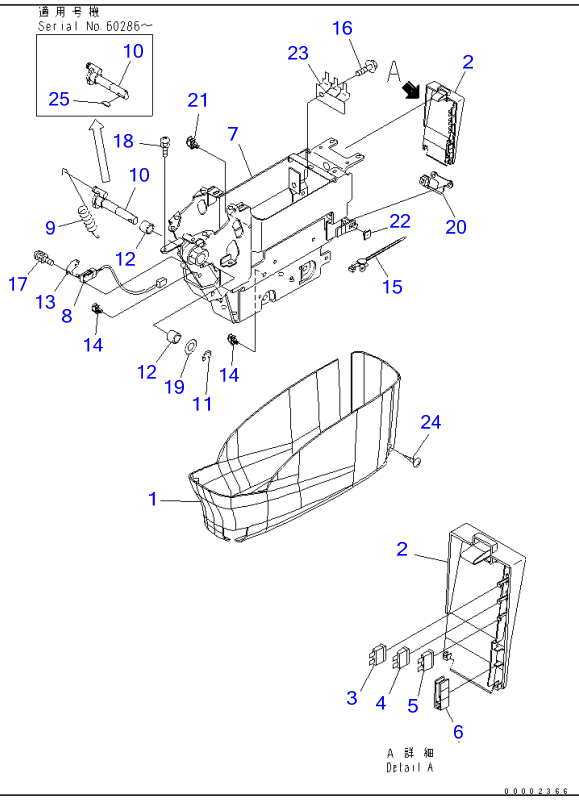

Ref K1110-13A0 Page 211350

PC220-7 S/N 60001-UP (Overseas Version)

FLOOR FRAME (CONSOLE) (LOWER) (L.H.)(#60001-65000)

Item	Part No.	Part Name	Qty	Serial No.
1	22U-43-22310	COVER	1	60001-@
	22U-43-22320	COVER ASS'Y	1	60001-@
2	☆	・COVER	1	60001-@
3	08041-01000	・FUSE, 10A	1	60001-@
4	08041-02000	・FUSE, 20A	1	60001-@
5	08041-02500	・FUSE, 25A	1	60001-@
6	22U-43-22340	・PULLER	1	60001-@
7	20Y-43-31410	FRAME	1	60001-65000
8	22U-06-22360	SWITCH ASS'Y	1	60001-@
9	20Y-43-31420	SPRING	1	60001-65000
10	20Y-43-31431	SHAFT	1	60286-65000
	20Y-43-31430	SHAFT	1	60001-60285
11	20Y-43-31440	RING	1	60001-@
12	06124-01616	BEARING	2	60081-@
	06124-01616	BEARING	4	60001-60080
13	22U-06-22490	PLATE	1	60001-@
14	22U-43-22410	CLIP	4	60001-65000
15	22U-43-22430	CLIP	1	60001-@
16	01435-01020	BOLT	1	60001-65000
17	01023-60320	SCREW	2	60001-65000
18	01023-60616	SCREW	4	60081-@
	01023-10616	SCREW	4	60001-60080
19	20Y-43-31450	RING	1	60001-@
20	22U-06-22440	BRACKET	1	60001-65000
21	22U-43-23260	CLIP	1	60001-65000
22	22U-43-23270	BASE	2	60001-65000
23	22U-43-22450	BRACKET	1	60001-65000
24	01370-00512	SCREW	2	60001-65000

FLOOR FRAME (CONSOLE) (LOWER) (L.H.)(#60001-65000)

Item	Part No.	Part Name	Qty	Serial No.
25	04010-00519	KEY	1	60286-65000

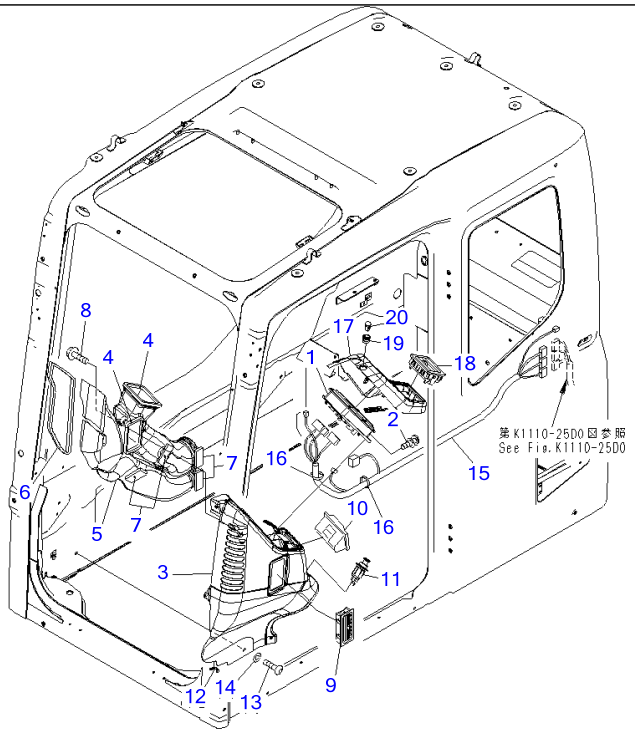

00018130

Ref K1110-13D0 **Page 211360**

PC220-7 S/N 60001-UP (Overseas Version)

FLOOR FRAME (OPERATOR'S CAB) (MONITOR SYSTEM)(#65001-)

Item	Part No.	Part Name	Qty	Serial No.
1	7835-12-1014	MONITOR	1	67321-
	☐7835-12-1013	MONITOR	1	66185-67320
	☐7835-12-1012	MONITOR	1	65819-66184
	☐7835-12-1009	MONITOR	1	65386-65818
	☐7835-12-1008	MONITOR	1	65060-65385
	☐7835-12-1007	MONITOR	1	65001-65059
2	01023-10616	SCREW	3	60312-
3	208-53-12152	COVER	1	65001-
4	208-53-11941	SEAL	2	65001-
5	208-53-12310	DUCT	1	65001-
6	208-53-11920	SEAL	1	65001-
7	208-53-12440	SEAL	7	65001-
8	01435-00612	BOLT	2	65001-
9	421-07-33870	GRILLE ASS'Y	1	65001-
10	22U-54-25371	ASHTRAY	1	65001-
11	20Y-06-23472	CIGARETTE LIGHTER	1	65001-
12	208-53-11850	GROMMET	1	65001-
13	01245-00816	SCREW	5	65001-
14	01643-70823	WASHER	5	65001-
15	208-53-12920	WIRING HARNESS	1	65001-
	19M-06-31720	・RESISTOR	1	65001-
16	08034-20876	BAND	2	65001-
17	20Y-54-65580	COVER ASS'Y	1	60001-
	20K-54-31590	・CLIP	2	60001-
18	201-979-7820	GRILLE	1	60001-
19	20Y-54-65310	ADAPTER	1	60001-
20	20Y-979-6161	SENSOR	1	60001-

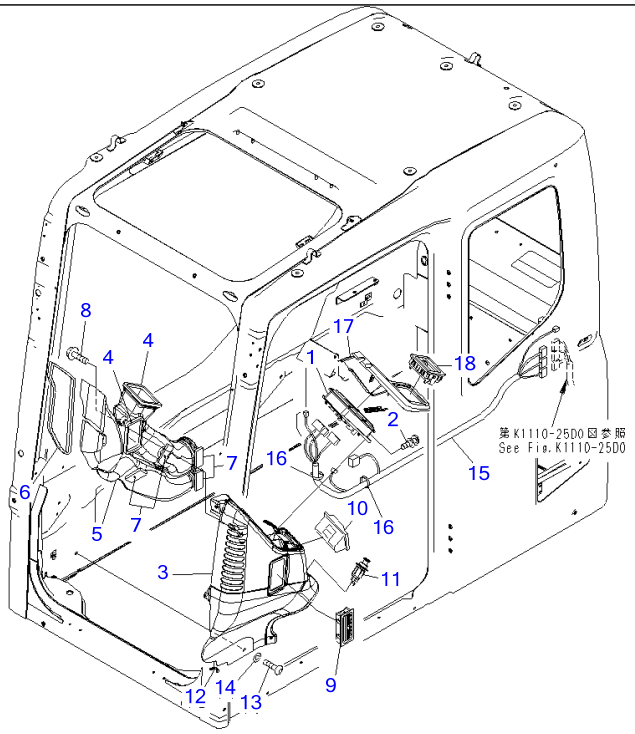

Ref K1110-13D9 **Page 211370**

PC220-7 S/N 60001-UP (Overseas Version)

FLOOR FRAME (OPERATOR'S CAB) (MONITOR SYSTEM) (7SEGMENT MONITOR) (WITHOUT AIR CONDITIONER)(#65001-)

Item	Part No.	Part Name	Qty	Serial No.
1	7835-10-2005	MONITOR	1	65912-
	□7835-10-2004	MONITOR	1	65096-65911
	□7835-10-2003	MONITOR	1	65001-65095
2	01023-10616	SCREW	3	60001-
3	208-53-12152	COVER	1	65001-
4	208-53-11941	SEAL	2	65001-
5	208-53-13670	DUCT	1	65001-
6	208-53-11920	SEAL	1	65001-
7	208-53-12440	SEAL	7	65001-
8	01435-00612	BOLT	2	65001-
9	421-07-33870	GRILLE ASS'Y	1	65001-
10	22U-54-25371	ASHTRAY	1	65001-
11	20Y-06-23472	CIGARETTE LIGHTER	1	65001-
12	208-53-11850	GROMMET	1	65001-
13	01245-00816	SCREW	5	65001-
14	01643-70823	WASHER	5	65001-
15	208-53-12920	WIRING HARNESS	1	65001-
	19M-06-31720	▪ RESISTOR	1	65001-
16	08034-20876	BAND	2	65001-
17	22U-54-25910	COVER	1	60001-
18	201-979-7820	GRILLE	1	60093-

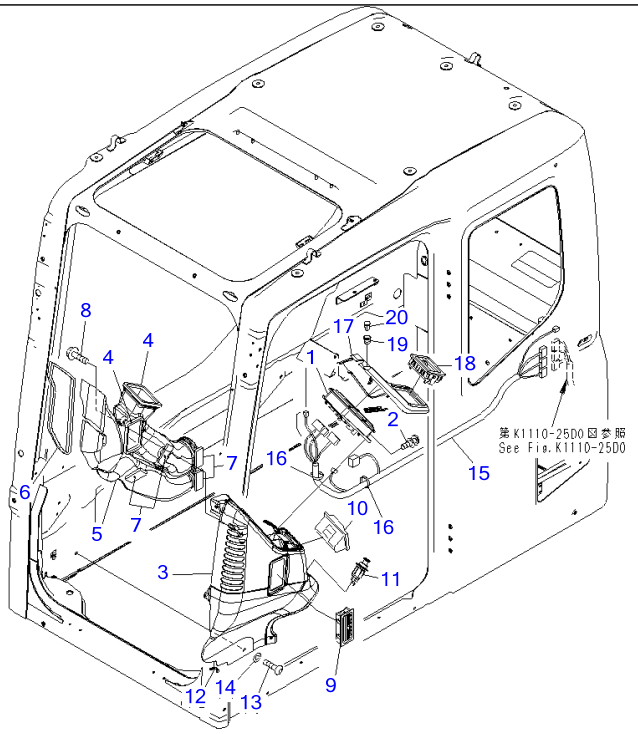

Ref K1110-13E1 **Page 211380**

PC220-7 S/N 60001-UP (Overseas Version)

FLOOR FRAME (OPERATOR'S CAB) (MONITOR SYSTEM) (7SEGMENT MONITOR)(#65001-)

Item	Part No.	Part Name	Qty	Serial No.
1	7835-10-2005	MONITOR	1	65912-
	☐7835-10-2004	MONITOR	1	65096-65911
	☐7835-10-2003	MONITOR	1	65001-65095
2	01023-10616	SCREW	3	60001-
3	208-53-12152	COVER	1	65001-
4	208-53-11941	SEAL	2	65001-
5	208-53-13670	DUCT	1	65001-
6	208-53-11920	SEAL	1	65001-
7	208-53-12440	SEAL	7	65001-
8	01435-00612	BOLT	2	65001-
9	421-07-33870	GRILLE ASS'Y	1	65001-
10	22U-54-25371	ASHTRAY	1	65001-
11	20Y-06-23472	CIGARETTE LIGHTER	1	65001-
12	208-53-11850	GROMMET	1	65001-
13	01245-00816	SCREW	5	65001-
14	01643-70823	WASHER	5	65001-
15	208-53-12920	WIRING HARNESS	1	65001-
	19M-06-31720	▪ RESISTOR	1	65001-
16	08034-20876	BAND	2	65001-
17	22U-54-25211	COVER	1	60001-
18	201-979-7820	GRILLE	1	60001-
19	20Y-54-65310	ADAPTER	1	60001-
20	20Y-979-6161	SENSOR	1	60001-

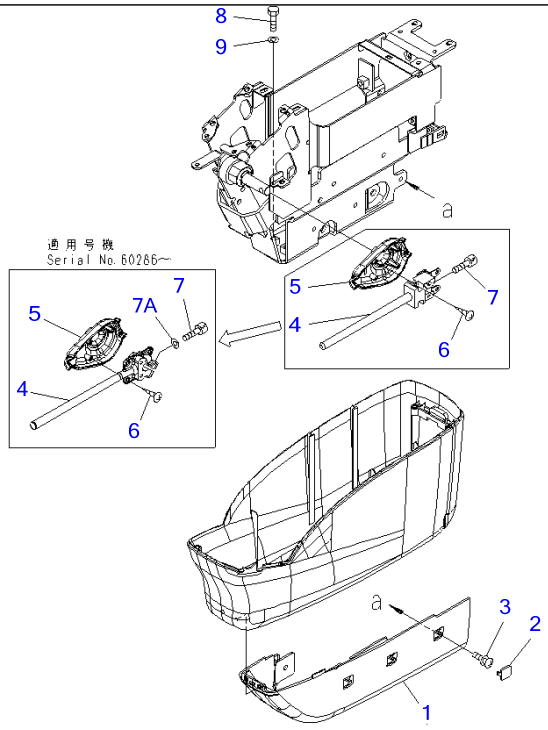

Ref K1110-14A0 **Page 211390**

PC220-7 S/N 60001-UP (Overseas Version)

FLOOR FRAME (CONSOLE) (UNDER) (L.H.)(#60001-65000)

Item	Part No.	Part Name	Qty	Serial No.
1	20Y-43-31690	COVER	1	60001-@
2	22U-43-22830	CAP	3	60001-65000
3	01023-20614	SCREW	4	60001-@
4	20Y-43-31511	LEVER	1	60286-65000
	20Y-43-31510	LEVER	1	60001-60285
5	20Y-43-31521	COVER	1	60286-65000
	20Y-43-31520	COVER	1	60001-60285
6	01370-00410	SCREW	3	60286-@
	01370-00410	SCREW	4	60001-60285
7	01252-70830	BOLT	1	60286-65000
	01252-70825	BOLT	1	60001-60285
7A	01643-30823	WASHER	1	60286-65000
8	01010-81030	BOLT	4	60001-@
9	01643-31032	WASHER	4	60001-@

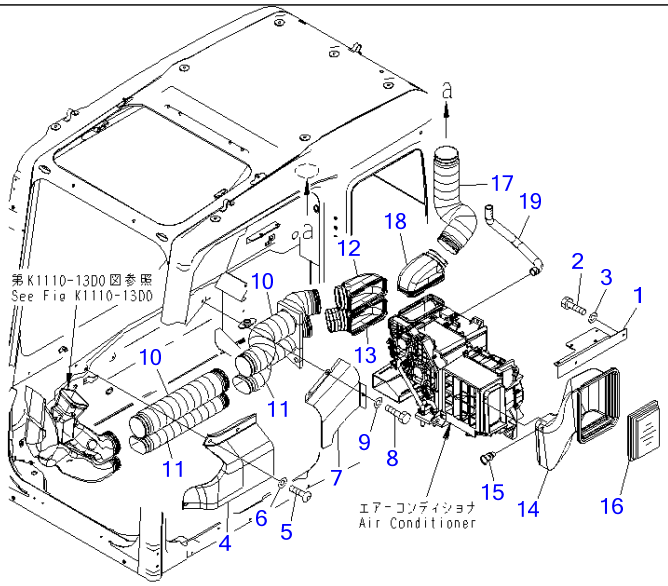

00018131

Ref K1110-14D0 **Page 211400**

PC220-7 S/N 60001-UP (Overseas Version)

FLOOR FRAME (OPERATOR'S CAB) (PLATE AND DUCT)(#65001-)

Item	Part No.	Part Name	Qty	Serial No.
1	208-53-12770	PLATE	1	65001-
2	01010-D0820	BOLT	2	65001-
3	01643-70823	WASHER	2	65001-
4	208-53-12180	COVER	1	65001-
5	01245-00816	SCREW	3	65001-
6	01643-70823	WASHER	3	65001-
7	208-53-12190	COVER	1	65001-
8	01010-D0820	BOLT	3	65001-
9	01643-70823	WASHER	3	65001-
10	208-53-12220	DUCT	2	65001-
11	208-53-12260	DUCT	2	65001-
12	208-53-12120	DUCT	1	65001-
13	208-53-12170	DUCT	1	65001-
14	208-53-12521	DUCT	1	69401-
	208-53-12520	DUCT	1	65001-69400
15	208-53-12680	CLIP	1	65001-
16	17M-911-3530	ELEMENT	1	65001-
17	208-53-12220	DUCT	1	65001-
18	208-53-12120	DUCT	1	65001-
19	208-53-12432	HOSE	1	65001-

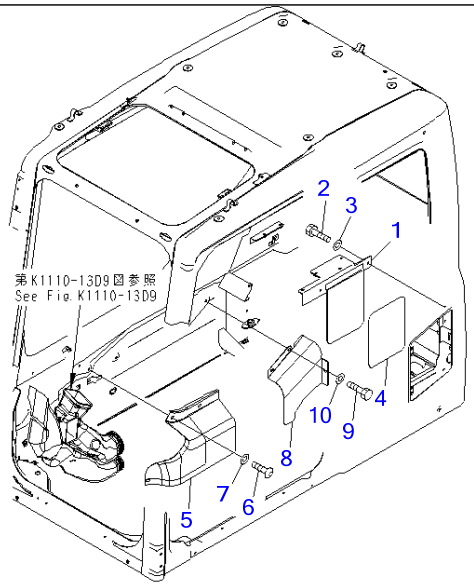

00018345

Ref K1110-14D9 **Page 211410**

PC220-7 S/N 60001-UP (Overseas Version)

FLOOR FRAME (OPERATOR'S CAB) (PLATE) (WITHOUT AIR CONDITIONER)(#65001-)

Item	Part No.	Part Name	Qty	Serial No.
1	208-53-15910	PLATE ASS'Y	1	65001-
2	01010-D0820	BOLT	2	65001-
3	01643-70823	WASHER	2	65001-
4	208-53-15920	SEAL	1	65001-
5	208-53-12180	COVER	1	65001-
6	01245-00816	SCREW	3	65001-
7	01643-70823	WASHER	3	65001-
8	208-53-12190	COVER	1	65001-
9	01010-D0820	BOLT	3	65001-
10	01643-70823	WASHER	3	65001-

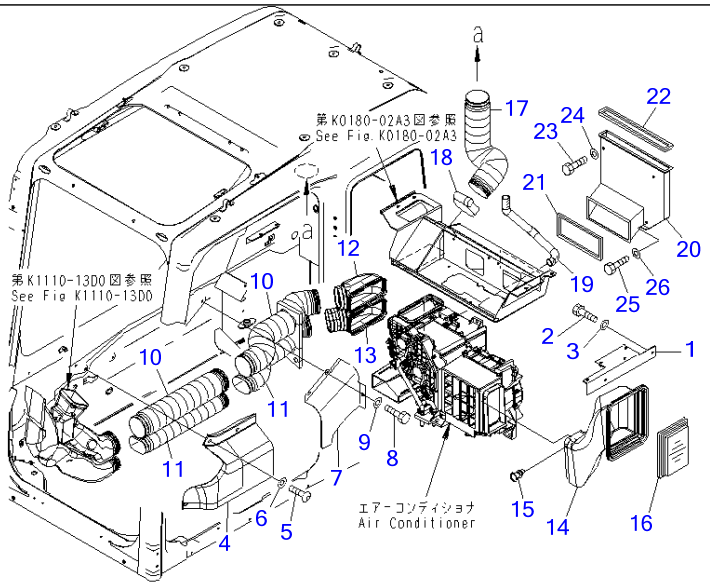

00018549

Ref K1110-14E4 **Page 211420**

PC220-7 S/N 60001-UP (Overseas Version)

FLOOR FRAME (OPERATOR'S CAB) (PLATE AND DUCT) (FOR BIG WIND AIR CONDITIONER)(#65001-)

Item	Part No.	Part Name	Qty	Serial No.
1	208-53-13341	PLATE	1	65001-
2	01010-D0820	BOLT	2	65001-
3	01643-70823	WASHER	2	65001-
4	208-53-12180	COVER	1	65001-
5	01245-00816	SCREW	3	65001-
6	01643-70823	WASHER	3	65001-
7	208-53-12190	COVER	1	65001-
8	01010-D0820	BOLT	3	65001-
9	01643-70823	WASHER	3	65001-
10	208-53-12220	DUCT	2	65001-
11	208-53-12260	DUCT	2	65001-
12	208-53-12120	DUCT	1	65001-
13	208-53-12170	DUCT	1	65001-
14	208-53-12520	DUCT	1	65001-
15	208-53-12680	CLIP	1	65001-
16	17M-911-3530	ELEMENT	1	65001-
17	208-53-12220	DUCT	1	65001-
18	07281-01159	CLAMP	1	65001-
19	208-53-12432	HOSE	1	65001-
20	208-979-7990	DUCT ASS'Y	1	65001-
21	208-979-7970	・SEAL	1	65001-
22	208-979-7980	・SEAL	1	65001-
23	01010-80845	BOLT	3	65001-
24	01643-30823	WASHER	3	65001-
25	01010-80816	BOLT	1	65001-
26	01643-30823	WASHER	1	65001-

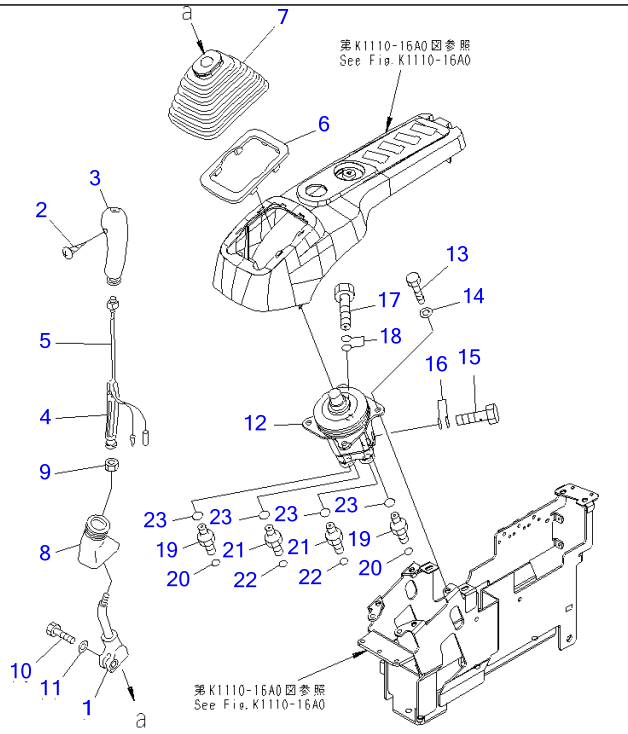

Ref K1110-15A0 **Page 211430**

PC220-7 S/N 60001-UP (Overseas Version)

FLOOR FRAME (LEVER AND VALVE) (R.H.)(#60001-65000)

Item	Part No.	Part Name	Qty	Serial No.
1	20Y-43-22221	LEVER,R.H.	1	60001-@
	22U-43-21192	KNOB	1	60776-65000
	22U-43-21191	KNOB,R.H.	1	60001-60775
2	☆	・SCREW	1	60776-65000
	01370-10308	・SCREW	1	60001-60775
3	20Y-43-22390	・KNOB,R.H.	1	60001-@
4	20Y-43-22421	・INSERT	1	60001-@
5	22U-43-21211	・SWITCH	1	60001-@
6	20Y-43-22250	PLATE	1	60001-@
7	20Y-43-22261	BOOT	1	60001-@
8	20Y-43-22370	BOOT	1	60001-@
9	600-411-1280	NUT	1	60001-@
10	01252-41025	BOLT	1	60001-@
11	01643-51032	WASHER	1	60001-@
12	(702-16-03530)	PILOT VALVE,PC120	1	60240-@
	(702-16-01651)	VALVE ASS'Y	1	60001-60239
13	01010-80820	BOLT	4	60001-@
14	01643-30823	WASHER	4	60001-@
15	20Y-62-18910	PLUG	1	60001-@
16	07000-12018	O-RING	2	60001-@
17	20Y-62-18890	BOLT, JOINT	1	60001-@
18	07000-12015	O-RING	2	60001-@
19	11Y-62-12130	NIPPLE	2	60001-@
	02781-00210	UNION	2	60001-60001
20	02896-11008	O-RING	2	60001-@
21	11Y-62-12520	NIPPLE	2	60001-@
22	02896-11009	O-RING	2	60001-@
23	07002-11423	O-RING	4	60001-@

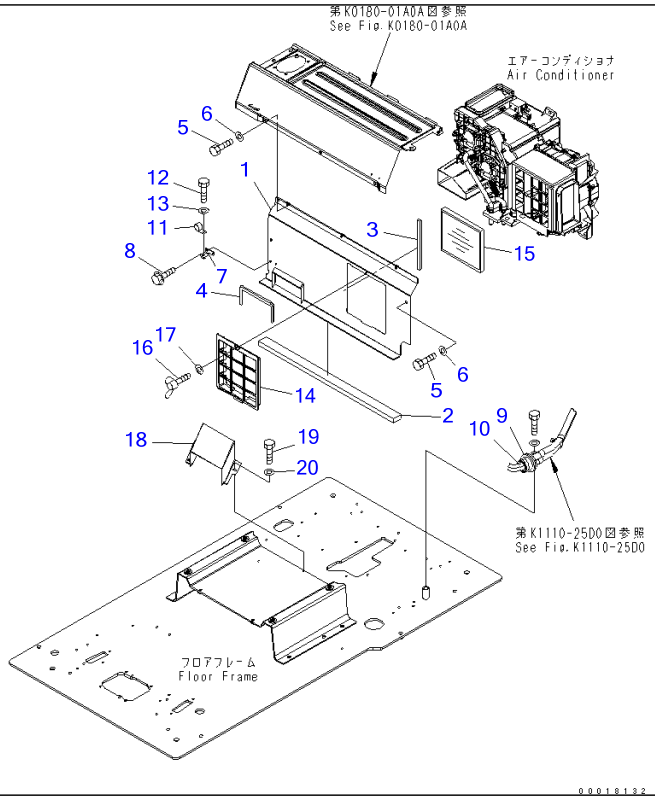

Ref K1110-15D0 **Page 211440**

PC220-7 S/N 60001-UP (Overseas Version)

FLOOR FRAME (OPERATOR'S CAB) (PARTITION AND FOOT DUCT)(#65001-)

Item	Part No.	Part Name	Qty	Serial No.
1	208-53-12561	BRACKET	1	65001-
2	208-53-11871	SEAL	1	65001-
3	208-53-11890	SEAL	1	65001-
4	208-53-12230	SEAL	1	65001-
5	01010-D0820	BOLT	2	65001-
6	01643-70823	WASHER	2	65001-
7	208-53-11790	PLATE	1	65001-
8	01435-40616	BOLT	2	65001-
9	21T-06-71870	GROMMET	1	65001-
10	08034-20519	BAND	1	65471-
	□08034-00414	BAND	1	65001-65470
11	04434-51908	CLIP	1	65001-
12	01010-D0820	BOLT	1	65001-
13	01643-70823	WASHER	1	65001-
14	208-979-7530	HOLDER	1	65001-
15	208-979-7620	FILTER	1	65001-
16	20Y-54-65790	BOLT	1	65001-
17	20Y-54-65690	WASHER	1	65001-
18	208-53-12551	DUCT	1	65001-
19	01010-D0820	BOLT	2	65001-
20	01643-70823	WASHER	2	65001-

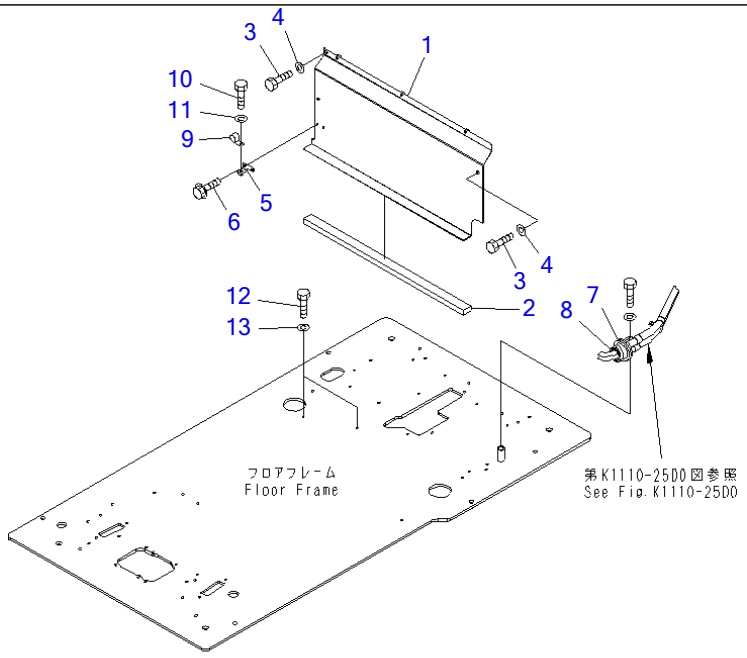

00018346

Ref K1110-15D9 **Page 211450**

PC220-7 S/N 60001-UP (Overseas Version)

FLOOR FRAME (OPERATOR'S CAB) (PARTITION) (WITHOUT AIR CONDITIONER)(#65001-)

Item	Part No.	Part Name	Qty	Serial No.
1	208-53-15560	BRACKET	1	65001-
2	208-53-11871	SEAL	1	65001-
3	01010-D0820	BOLT	2	65001-
4	01643-70823	WASHER	2	65001-
5	208-53-11790	PLATE	1	65001-
6	01435-40616	BOLT	2	65001-
7	21T-06-71870	GROMMET	1	65001-
8	08034-20519	BAND	1	65471-
	□08034-00414	BAND	1	65001-65470
9	04434-51908	CLIP	1	65001-
10	01010-D0820	BOLT	1	65001-
11	01643-70823	WASHER	1	65001-
12	01010-D0820	BOLT	2	65001-
13	01643-70823	WASHER	2	65001-

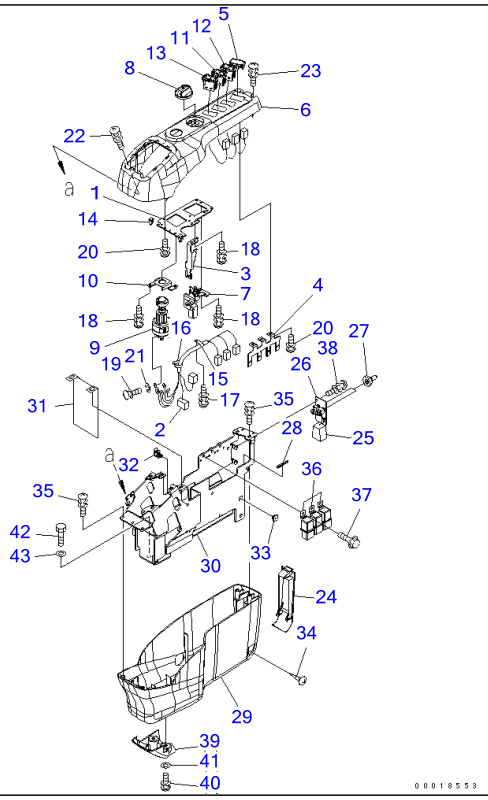

Ref K1110-16A7 Page 211460

PC220-7 S/N 60001-UP (Overseas Version)

FLOOR FRAME (CONSOLE) (MASTER KEY) (R.H.)(#60001-65000)

Item	Part No.	Part Name	Qty	Serial No.
1	22U-43-23110	STAY	1	60001-65000
2	22U-06-22330	WIRING HARNESS	1	60001-@
3	22U-43-23120	BRACKET	1	60001-@
4	22U-43-23130	STAY	1	60001-@
5	22U-06-22320	COVER	1	60001-@
6	22U-43-23140	COVER	1	60001-65000
7	22U-06-22420	POTENTIOMETER ASS'Y	1	60001-@
8	22U-06-22470	KNOB	1	60001-@
9	08086-20000	SWITCH	1	60001-@
10	22U-06-22480	PLATE	1	60001-@
11	22U-06-22190	SWITCH,BUZZER	1	60001-@
12	22U-06-22290	SWITCH,SWING	1	60001-@
13	22U-06-22390	SWITCH,LIGHT	1	60001-@
14	20Y-06-23770	CLIP	2	60001-@
15	20Y-06-23920	CLAMP	1	60001-@
16	08034-10414	BAND	2	60001-@
17	01023-60410	SCREW	1	60001-65000
18	01023-60512	SCREW	6	60001-@
19	01023-10508	SCREW	5	60001-@
20	01023-10512	SCREW	6	60001-@
21	01601-20513	WASHER	5	60001-@
22	01023-60620	SCREW	2	60001-@
23	01023-70514	SCREW	2	60001-@
24	22U-43-23210	COVER	1	60001-@
	20Y-06-31320	SWITCH ASS'Y	1	60001-@
25	20Y-06-31330	・WIRING HARNESS	1	60001-@
26	☆	・PLATE	1	60001-@
27	208-43-71420	・CAP	2	60001-@

FLOOR FRAME (CONSOLE) (MASTER KEY) (R.H.)(#60001-65000)

Item	Part No.	Part Name	Qty	Serial No.
28	22U-43-23220	TRIM	1	60001-65000
29	22U-43-23230	COVER	1	60001-@
30	22U-43-23240	FRAME	1	60001-65000
31	22U-43-23250	SHEET	1	60001-@
32	22U-43-23260	CLIP	1	60001-65000
33	22U-43-23270	BASE	2	60001-65000
34	01370-00512	SCREW	2	60001-65000
35	01023-60616	SCREW	4	60001-@
36	569-06-61960	RELAY	3	60001-@
37	01435-00612	BOLT	3	60001-@
38	01023-60410	SCREW	3	60001-65000
39	22U-43-23711	COVER	1	60001-@
40	01023-10614	SCREW	2	60001-@
41	01643-30623	WASHER	2	60001-@
42	01010-81030	BOLT	4	60001-@
43	01643-31032	WASHER	4	60001-@

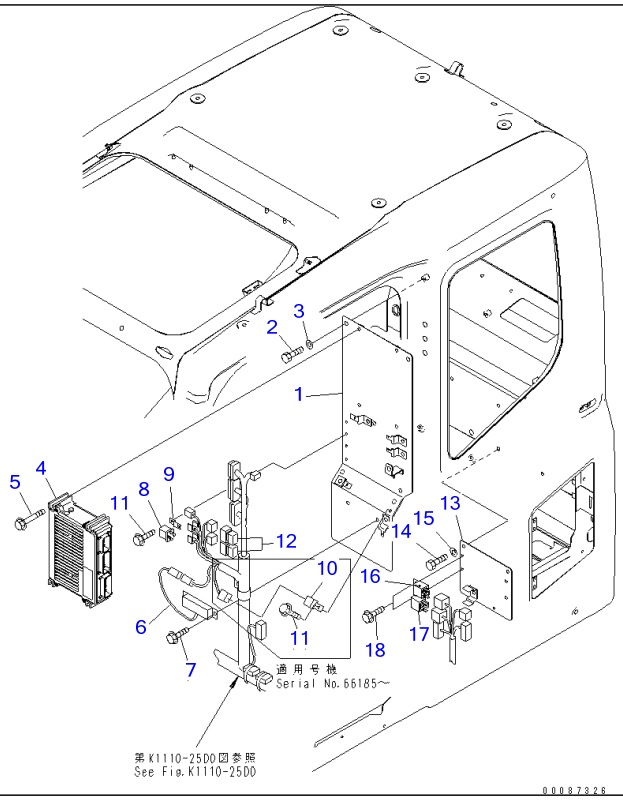

Ref K1110-16D0 **Page 211470**

PC220-7 S/N 60001-UP (Overseas Version)

FLOOR FRAME (OPERATOR'S CAB) (SUB PANEL)(#65001-68833)

Item	Part No.	Part Name	Qty	Serial No.
1	208-53-12860	PLATE	1	65001-@
2	01010-80816	BOLT	5	65001-@
3	01643-30823	WASHER	5	65001-@
4	7835-26-1009	CONTROLLER	1	65001-@
5	01435-00885	BOLT	4	65001-@
6	7861-94-3000	RESISTOR	1	60001-@
7	01435-00816	BOLT	2	65001-@
8	569-06-61960	RELAY	1	65001-@
9	287-06-16420	BRACKET	1	65001-@
10	7861-74-5100	RELAY	1	66185-@
11	01435-00610	BOLT	2	66185-@
	01435-00610	BOLT	1	65001-66184
12	8233-06-3350	DIODE	2	65001-@
13	208-53-12880	BRACKET	1	65001-@
14	01010-80816	BOLT	2	65001-@
15	01643-30823	WASHER	2	65001-@
16	198-911-9240	RELAY, 4-TERMINAL	1	65001-@
17	20Y-979-6771	RELAY	1	65001-@
18	01435-00610	BOLT	2	65001-@

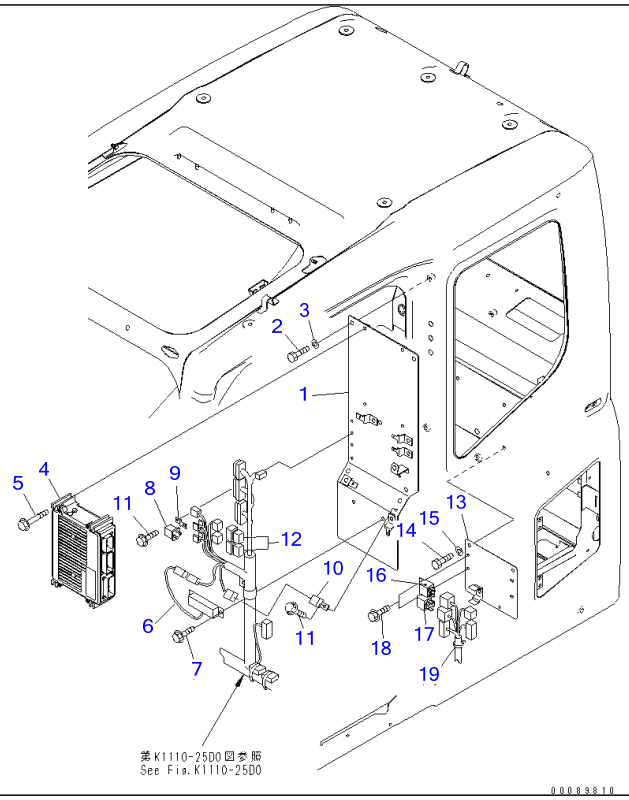

Ref K1110-16D0A **Page 211480**

PC220-7 S/N 60001-UP (Overseas Version)

FLOOR FRAME (OPERATOR'S CAB) (SUB PANEL)(#68834-)

Item	Part No.	Part Name	Qty	Serial No.
1	208-53-12860	PLATE	1	65001-
2	01010-80816	BOLT	5	65001-
3	01643-30823	WASHER	5	65001-
4	7835-26-1009	CONTROLLER	1	65001-
5	01435-00885	BOLT	4	65001-
6	7861-94-3000	RESISTOR	1	60001-
7	01435-00816	BOLT	2	65001-
8	569-06-61960	RELAY	1	65001-
9	287-06-16420	BRACKET	1	65001-
10	7861-74-5100	RELAY	1	66185-
11	01435-00610	BOLT	2	66185-
12	8233-06-3350	DIODE	2	65001-
13	208-53-12880	BRACKET	1	65001-
14	01010-80816	BOLT	2	65001-
15	01643-30823	WASHER	2	65001-
16	198-911-9240	RELAY, 4-TERMINAL	1	65001-
17	20Y-979-6771	RELAY	1	65001-
18	01435-00610	BOLT	2	65001-
19	08059-00515	CLIP	1	68834-

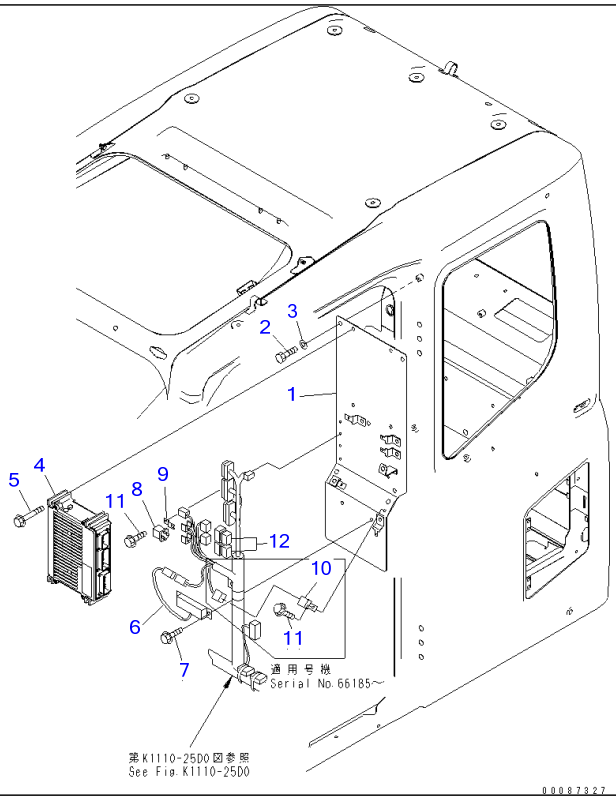

Ref K1110-16D9 **Page 211490**

PC220-7 S/N 60001-UP (Overseas Version)

FLOOR FRAME (OPERATOR'S CAB) (SUB PANEL) (WITHOUT AIR CONDITIONER)(#65001-)

Item	Part No.	Part Name	Qty	Serial No.
1	208-53-12860	PLATE	1	65001-
2	01010-80816	BOLT	5	65001-
3	01643-30823	WASHER	5	65001-
4	7835-26-1009	CONTROLLER	1	65001-
5	01435-00885	BOLT	4	65001-
6	7861-94-3000	RESISTOR	1	60001-
7	01435-00816	BOLT	2	65001-
8	569-06-61960	RELAY	1	65001-
9	287-06-16420	BRACKET	1	65001-
10	7861-74-5100	RELAY	1	66185-
11	01435-00610	BOLT	2	66185-
	01435-00610	BOLT	1	65001-66184
12	8233-06-3350	DIODE	2	65001-

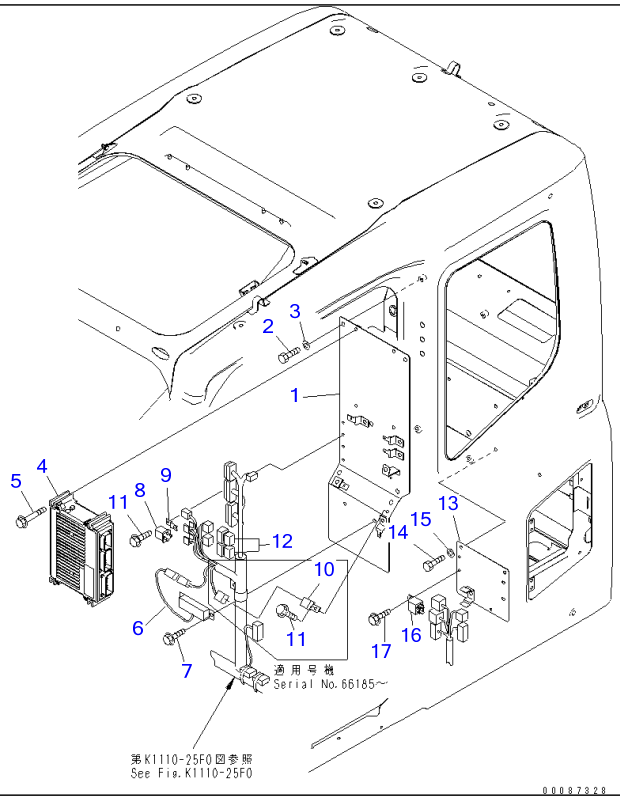

Ref K1110-16M0 **Page 211500**

PC220-7 S/N 60001-UP (Overseas Version)

FLOOR FRAME (OPERATOR'S CAB) (SUB PANEL) (COLD WEATHER A SPEC.)(#65001-69400)

Item	Part No.	Part Name	Qty	Serial No.
1	208-53-12860	PLATE	1	65001-@
2	01010-80816	BOLT	5	65001-@
3	01643-30823	WASHER	5	65001-@
4	7835-26-1009	CONTROLLER	1	65001-@
5	01435-00885	BOLT	4	65001-@
6	7861-94-3000	RESISTOR	1	65001-@
7	01435-00816	BOLT	2	65001-@
8	569-06-61960	RELAY	1	65001-@
9	287-06-16420	BRACKET	1	65001-@
10	7861-74-5100	RELAY	1	65001-@
11	01435-00610	BOLT	2	65001-@
12	8233-06-3350	DIODE	2	65001-@
13	208-53-12880	BRACKET	1	65001-@
14	01010-80816	BOLT	2	65001-@
15	01643-30823	WASHER	2	65001-@
16	20Y-979-6771	RELAY	1	65001-@
17	01435-00610	BOLT	1	65001-@

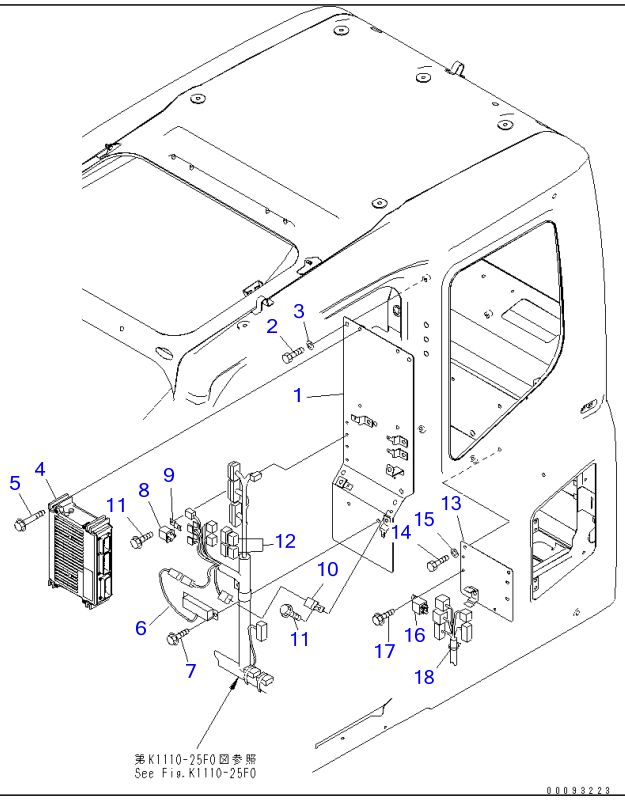

Ref K1110-16M0A **Page 211510**

PC220-7 S/N 60001-UP (Overseas Version)

FLOOR FRAME (OPERATOR'S CAB) (SUB PANEL) (COLD WEATHER A SPEC.)(#69401-)

Item	Part No.	Part Name	Qty	Serial No.
1	208-53-12860	PLATE	1	65001-
2	01010-80816	BOLT	5	65001-
3	01643-30823	WASHER	5	65001-
4	7835-26-1009	CONTROLLER	1	65001-
5	01435-00885	BOLT	4	65001-
6	7861-94-3000	RESISTOR	1	65001-
7	01435-00816	BOLT	2	65001-
8	569-06-61960	RELAY	1	65001-
9	287-06-16420	BRACKET	1	65001-
10	7861-74-5100	RELAY	1	65001-
11	01435-00610	BOLT	2	65001-
12	8233-06-3350	DIODE	2	65001-
13	208-53-12880	BRACKET	1	65001-
14	01010-80816	BOLT	2	65001-
15	01643-30823	WASHER	2	65001-
16	20Y-979-6771	RELAY	1	65001-
17	01435-00610	BOLT	1	65001-
18	08059-00515	CLIP	1	69401-

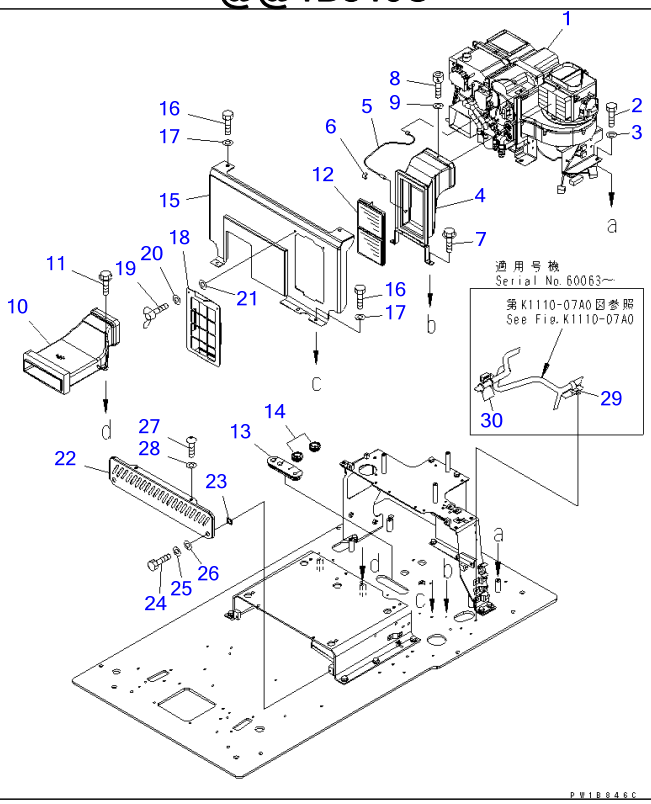

Ref K1110-17A0 **Page 211520**

PC220-7 S/N 60001-UP (Overseas Version)

FLOOR FRAME (AIR CONDITIONER AND FOOT COVER)(#60001-65000)

Item	Part No.	Part Name	Qty	Serial No.
1	20Y-979-6111	UNIT ASS'Y	1	60001-65000
2	01010-81020	BOLT	6	60001-65000
3	01643-31032	WASHER	6	60001-65000
4	20Y-979-6241	DUCT ASS'Y	1	60001-65000
5	20Y-979-6341	SENSOR	1	60001-65000
6	20Y-979-6351	CLAMP	1	60001-65000
7	01435-00612	BOLT	2	60001-65000
8	01252-70516	BOLT	1	60001-65000
9	01640-20508	WASHER	1	60001-65000
10	20Y-979-6231	DUCT	1	60001-65000
11	01435-40612	BOLT	2	60001-65000
12	20Y-979-6261	FILTER	1	60001-65000
13	20Y-54-65130	GROMMET	1	60001-65000
14	20Y-54-65180	GROMMET	2	60001-65000
15	20Y-54-65190	COVER	1	60001-65000
16	01010-D1016	BOLT	5	60001-65000
17	01643-71032	WASHER	5	60001-65000
18	20Y-979-6481	COVER	1	60001-65000
19	20Y-54-65790	BOLT	2	60001-65000
20	01643-70623	WASHER	2	60001-65000
21	20Y-54-65690	WASHER	2	60001-65000
22	20Y-979-6591	COVER	1	60001-65000
23	22U-43-21340	SHEET	2	60001-65000
24	01010-80820	BOLT	2	60001-65000
25	01643-30823	WASHER	2	60001-65000
26	102-60-15240	SEAT	2	60001-65000
27	01245-00820	SCREW	2	60001-@
28	01643-70823	WASHER	2	60001-@

FLOOR FRAME (AIR CONDITIONER AND FOOT COVER)(#60001-65000)

Item	Part No.	Part Name	Qty	Serial No.
29	04434-51910	CLIP	1	60063-65000
30	08034-00519	BAND	2	60063-65000

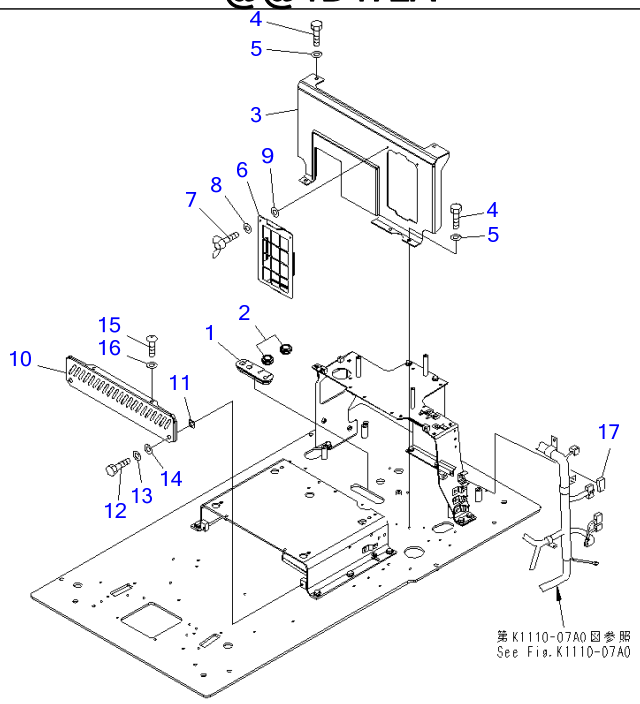

P W 1 D 4 7 2 A

Ref K1110-17A4 **Page 211530**

PC220-7 S/N 60001-UP (Overseas Version)

FLOOR FRAME (FOOT COVER)(#60001-65000)

Item	Part No.	Part Name	Qty	Serial No.
1	20Y-54-65130	GROMMET	1	60001-65000
2	20Y-54-65180	GROMMET	2	60001-65000
3	20Y-54-65190	COVER	1	60001-65000
4	01010-D1016	BOLT	5	60001-65000
5	01643-71032	WASHER	5	60001-65000
6	20Y-979-6481	COVER	1	60001-65000
7	20Y-54-65790	BOLT	2	60001-65000
8	01643-70623	WASHER	2	60001-65000
9	20Y-54-65690	WASHER	2	60001-65000
10	20Y-979-6591	COVER	1	60001-65000
11	22U-43-21340	SHEET	2	60001-65000
12	01010-80820	BOLT	2	60001-65000
13	01643-30823	WASHER	2	60001-65000
14	102-60-15240	SEAT	2	60001-65000
15	01245-00820	SCREW	2	60001-@
16	01643-70823	WASHER	2	60001-@
17	08056-11271	CONNECTOR	1	60001-65000

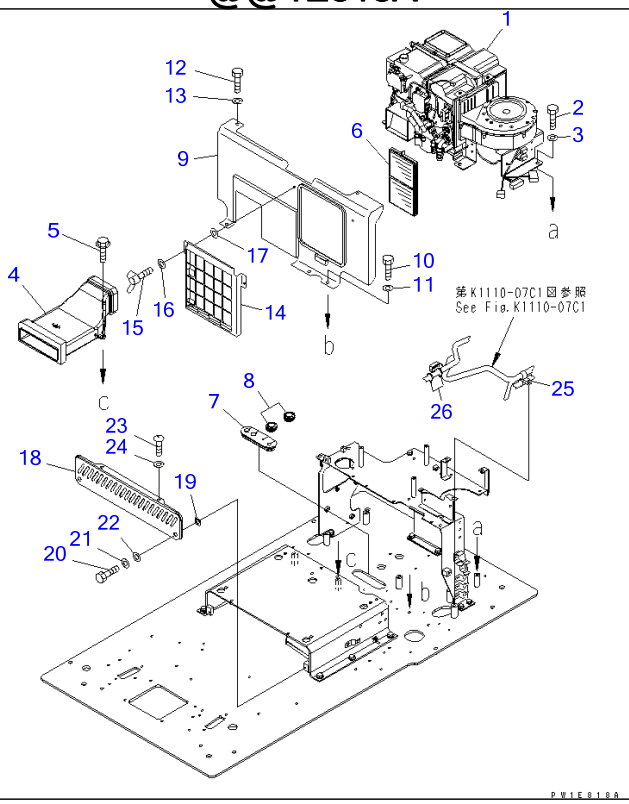

Ref K1110-17C1 Page 211540

PC220-7 S/N 60001-UP (Overseas Version)

FLOOR FRAME (BIG WIND AIR CONDITIONER AND FOOT COVER)(#60001-65000)

Item	Part No.	Part Name	Qty	Serial No.
1	20Y-979-6821	UNIT ASS'Y	1	60001-65000
2	01010-81020	BOLT	6	60001-65000
3	01643-31032	WASHER	6	60001-65000
4	20Y-979-6231	DUCT	1	60001-65000
5	01435-40612	BOLT	2	60001-65000
6	20Y-979-6261	FILTER	2	60001-65000
7	20Y-54-65130	GROMMET	1	60001-65000
8	20Y-54-65180	GROMMET	2	60001-65000
9	20Y-54-65930	COVER	1	60001-65000
10	01010-D1016	BOLT	3	60001-65000
11	01643-71032	WASHER	3	60001-65000
12	01010-D1016	BOLT	2	60001-65000
13	417-43-16210	WASHER	2	60001-65000
14	20Y-979-6810	COVER	1	60001-65000
15	20Y-54-65790	BOLT	2	60001-65000
16	01643-70623	WASHER	2	60001-65000
17	20Y-54-65690	WASHER	2	60001-65000
18	20Y-979-6591	COVER	1	60001-65000
19	22U-43-21340	SHEET	2	60001-65000
20	01010-80820	BOLT	2	60001-65000
21	01643-30823	WASHER	2	60001-65000
22	102-60-15240	SEAT	2	60001-65000
23	01245-00820	SCREW	2	60001-@
24	01643-70823	WASHER	2	60001-@
25	04434-51910	CLIP	1	60001-65000
26	08034-00519	BAND	2	60001-65000

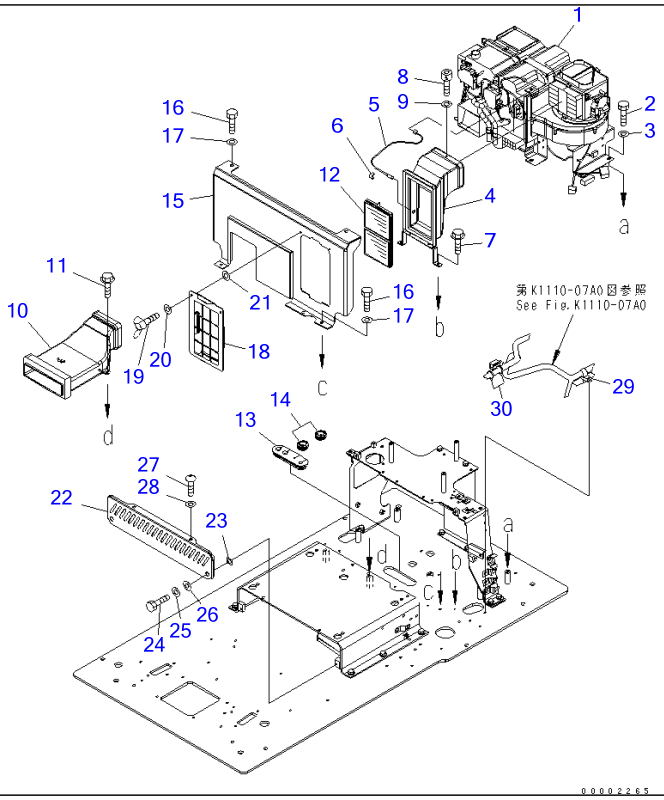

Ref K1110-17C5 **Page 211550**

PC220-7 S/N 60001-UP (Overseas Version)

FLOOR FRAME (HEATER AND FOOT COVER) (COLD WEATHER A SPEC.)(#60255-)

Item	Part No.	Part Name	Qty	Serial No.
1	21K-979-7310	UNIT,HEATER	1	60255-
2	01010-81020	BOLT	6	60255-
3	01643-31032	WASHER	6	60255-
4	20Y-979-6241	DUCT ASS'Y	1	60255-
5	20Y-979-6341	・SENSOR	1	60255-
6	20Y-979-6351	・CLAMP	1	60255-
7	01435-00612	BOLT	2	60255-
8	01252-70516	BOLT	1	60255-
9	01640-20508	WASHER	1	60255-
10	20Y-979-6231	DUCT	1	60255-
11	01435-40612	BOLT	2	60255-
12	20Y-979-6261	FILTER	1	60255-
13	20Y-54-65130	GROMMET	1	60255-
14	09415-02520	CAP	2	60255-
15	20Y-54-65190	COVER	1	60255-
16	01010-D1016	BOLT	5	60255-
17	01643-71032	WASHER	5	60255-
18	20Y-979-6481	COVER	1	60255-
19	20Y-54-65790	BOLT	2	60255-
20	01643-70623	WASHER	2	60255-
21	20Y-54-65690	WASHER	2	60255-
22	20Y-979-6591	COVER	1	60255-
23	22U-43-21340	SHEET	2	60255-
24	01010-80820	BOLT	2	60255-
25	01643-30823	WASHER	2	60255-
26	102-60-15240	SEAT	2	60255-

FLOOR FRAME (HEATER AND FOOT COVER) (COLD WEATHER A SPEC.)(#60255-)

Item	Part No.	Part Name	Qty	Serial No.
27	01245-00820	SCREW	2	60255-
28	01643-70823	WASHER	2	60255-
29	04434-51910	CLIP	1	60255-
30	08034-00519	BAND	2	60255-

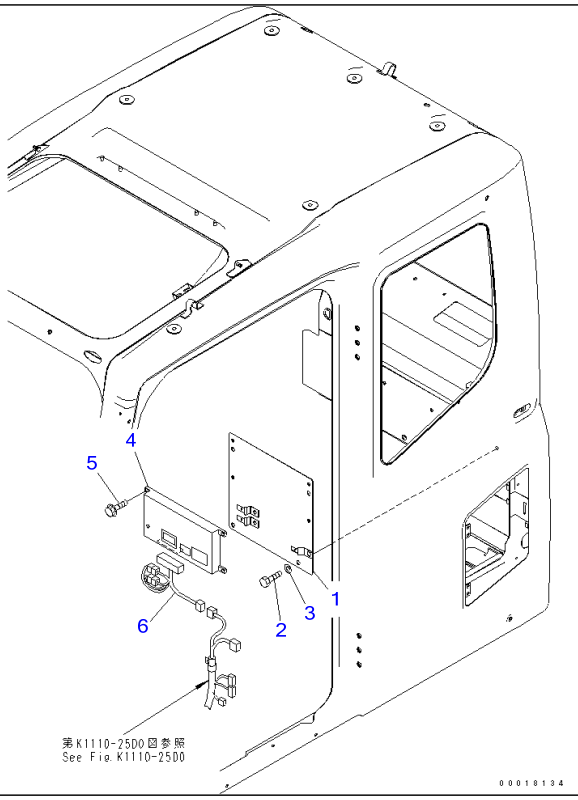

Ref K1110-17D0 **Page 211560**

PC220-7 S/N 60001-UP (Overseas Version)

FLOOR FRAME (OPERATOR'S CAB) (KOMTRAX)(#65001-)

Item	Part No.	Part Name	Qty	Serial No.
1	208-53-12870	PLATE	1	65001-
2	01010-80816	BOLT	4	65001-
3	01643-30823	WASHER	4	65001-
4	7826-20-5062	CONTROLLER	1	66139-
	□7826-20-5061	CONTROLLER	1	65001-66138
5	01435-00825	BOLT	4	65001-
6	208-06-71530	WIRING HARNESS	1	65001-

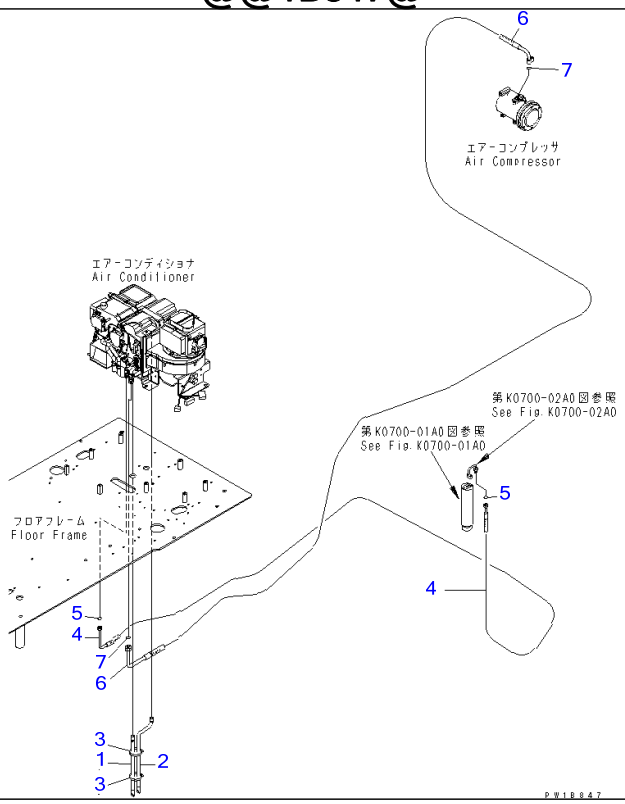

Ref K1110-18A0 **Page 211570**

PC220-7 S/N 60001-UP (Overseas Version)

FLOOR FRAME (AIR CONDITIONER HOSE)(#60001-65000)

Item	Part No.	Part Name	Qty	Serial No.
1	20Y-979-6281	HOSE	1	60001-65000
2	20Y-979-6291	HOSE	1	60001-65000
3	08034-00519	BAND	2	60001-65000
4	20Y-979-6551	HOSE	1	60001-65000
5	20Y-979-3150	・O-RING	2	60001-65000
6	20Y-979-6561	HOSE	1	60001-65000
7	20Y-979-3130	・O-RING	2	60001-65000

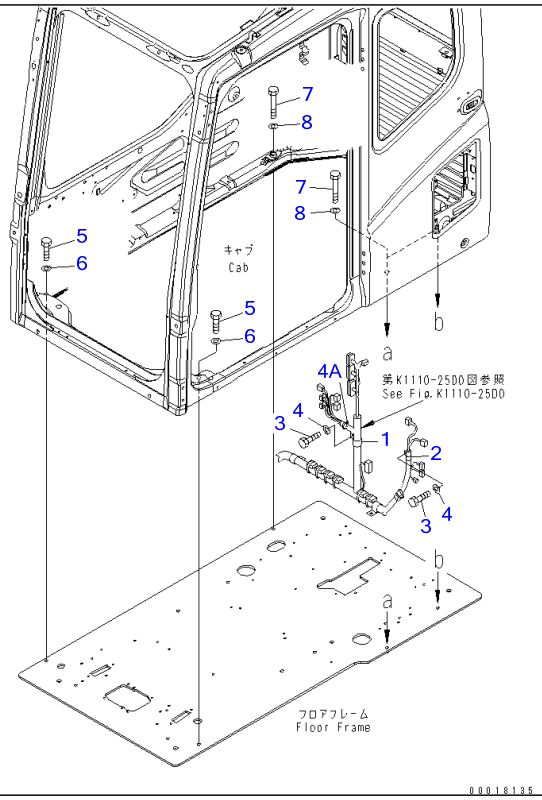

Ref K1110-18D0 **Page 211580**

PC220-7 S/N 60001-UP (Overseas Version)

FLOOR FRAME (OPERATOR'S CAB) (CLAMP AND BOLT)(#65001-)

Item	Part No.	Part Name	Qty	Serial No.
1	04434-53411	CLIP	1	65001-
2	04434-52208	CLIP	1	65001-
3	01010-81020	BOLT	2	65001-
4	01643-31032	WASHER	2	65001-
4A	08059-00515	CLIP	2	65001-
5	01010-81240	BOLT	2	60001-
6	01643-31232	WASHER	2	60001-
7	01010-81285	BOLT	3	60298-
8	01643-31232	WASHER	3	60298-

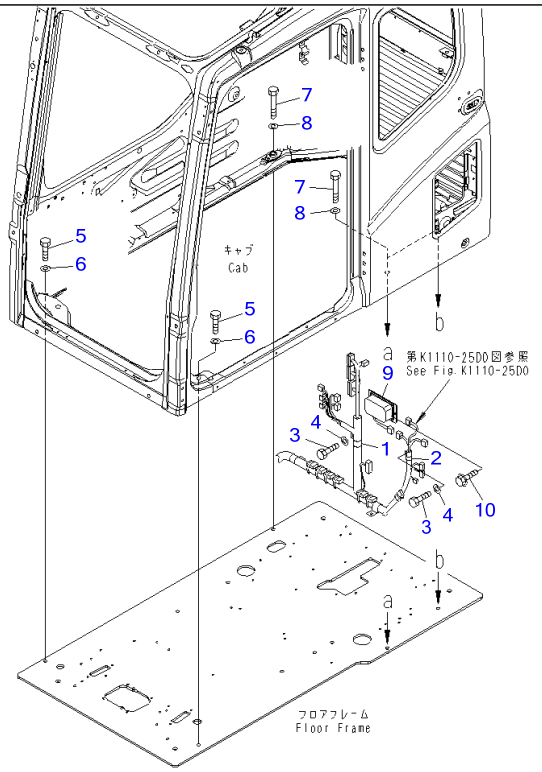

Ref K1110-18E4 Page 211590

PC220-7 S/N 60001-UP (Overseas Version)

FLOOR FRAME (OPERATOR'S CAB) (CLAMP AND BOLT) (12V CONVERTER)(#65001-65823)

Item	Part No.	Part Name	Qty	Serial No.
1	04434-53411	CLIP	1	65001-@
2	04434-52208	CLIP	1	65001-@
3	01010-81020	BOLT	2	65001-@
4	01643-31032	WASHER	2	65001-@
5	01010-81240	BOLT	2	60001-@
6	01643-31232	WASHER	2	60001-@
7	01010-81285	BOLT	3	60298-@
8	01643-31232	WASHER	3	60298-@
9	22U-06-22250	CONVERTER	1	60001-@
10	01435-00610	BOLT	2	65001-@

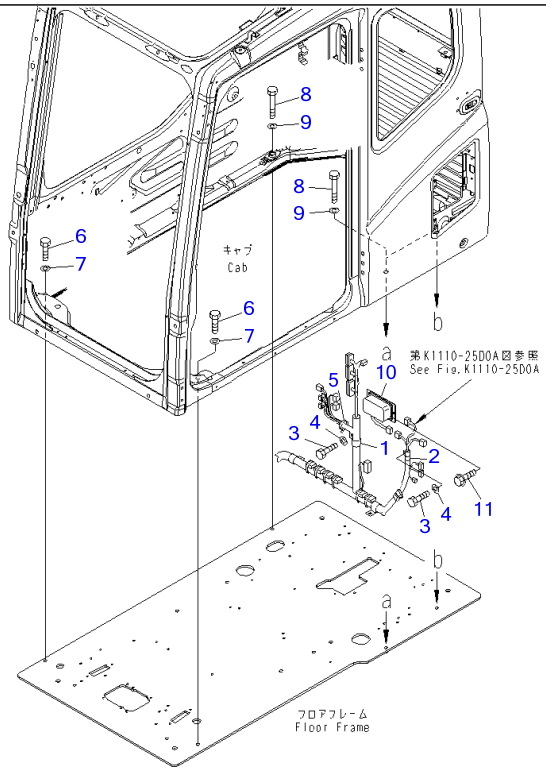

Ref K1110-18E4A

Page 211600

PC220-7 S/N 60001-UP (Overseas Version)

FLOOR FRAME (OPERATOR'S CAB) (CLAMP AND BOLT) (12V CONVERTER)(#65824-)

Item	Part No.	Part Name	Qty	Serial No.
1	04434-53411	CLIP	1	65001-
2	04434-52208	CLIP	1	65001-
3	01010-81020	BOLT	2	65001-
4	01643-31032	WASHER	2	65001-
5	08059-00515	CLIP	2	65824-
6	01010-81240	BOLT	2	60001-
7	01643-31232	WASHER	2	60001-
8	01010-81285	BOLT	3	60298-
9	01643-31232	WASHER	3	60298-
10	22U-06-22251	CONVERTER	1	66298-
	□22U-06-22250	CONVERTER	1	60001-66297
11	01435-00610	BOLT	2	65001-

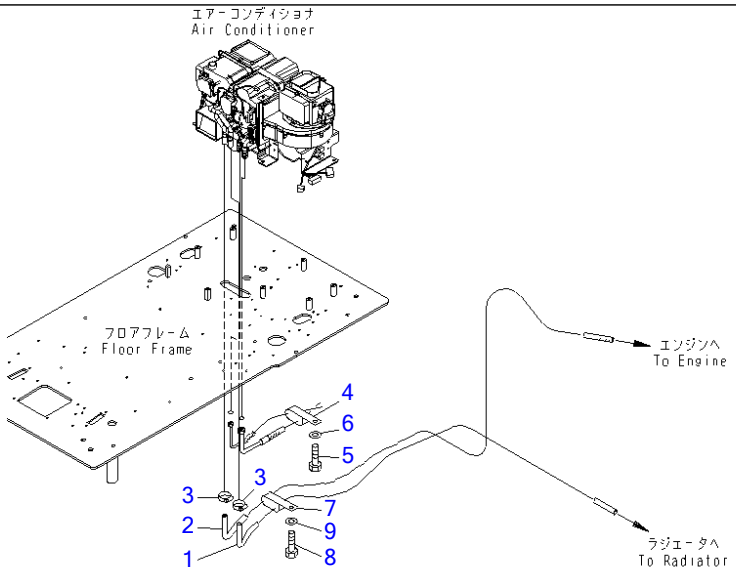

00002270

Ref K1110-19A0 **Page 211610**

PC220-7 S/N 60001-UP (Overseas Version)

FLOOR FRAME (HEATER HOSE AND CLAMP)(#60001-65000)

Item	Part No.	Part Name	Qty	Serial No.
1	206-979-7110	HOSE ASS'Y	1	60001-65000
2	20Y-979-6710	HOSE ASS'Y	1	60001-65000
3	11Y-09-11160	CLIP	2	60093-65000
	09480-10100	CLAMP	2	60001-60092
4	141-06-11220	CLIP	1	60001-65000
5	01010-81016	BOLT	1	60001-65000
6	01643-31032	WASHER	1	60001-65000
7	141-06-11220	CLIP	1	60001-@
8	01010-81016	BOLT	1	60001-@
9	01643-31032	WASHER	1	60001-@

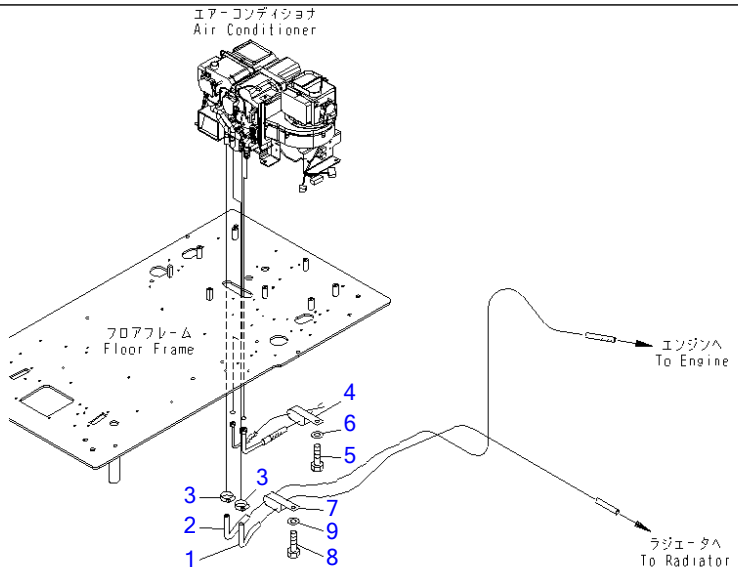

00002270

Ref K1110-19B4 **Page 211620**

PC220-7 S/N 60001-UP (Overseas Version)
FLOOR FRAME (HEATER HOSE AND CLAMP) (FOR CORROSION RESISTER)(#60001-65000)

Item	Part No.	Part Name	Qty	Serial No.
1	206-979-7110	HOSE ASS'Y	1	60001-65000
2	20Y-979-6830	HOSE	1	60001-65000
3	11Y-09-11160	CLIP	2	60001-65000
4	141-06-11220	CLIP	1	60001-65000
5	01010-81016	BOLT	1	60001-65000
6	01643-31032	WASHER	1	60001-65000
7	141-06-11220	CLIP	1	60001-@
8	01010-81016	BOLT	1	60001-@
9	01643-31032	WASHER	1	60001-@

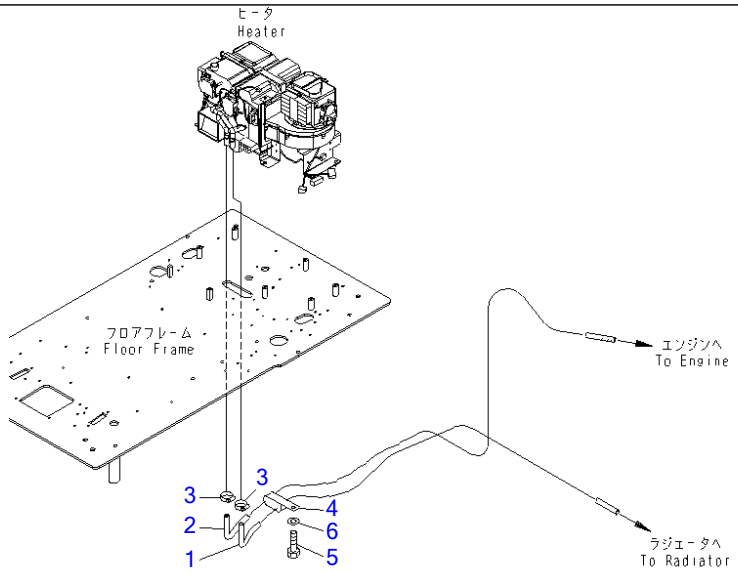

00002734

Ref K1110-19C5 **Page 211630**

PC220-7 S/N 60001-UP (Overseas Version)
FLOOR FRAME (HEATER HOSE AND CLAMP) (COLD WEATHER A SPEC.)(#60255-)

Item	Part No.	Part Name	Qty	Serial No.
1	206-979-7110	HOSE ASS'Y	1	60255-
2	20Y-979-6830	HOSE	1	60255-
3	11Y-09-11160	CLIP	2	60255-
4	141-06-11220	CLIP	1	60255-
5	01010-81016	BOLT	1	60255-
6	01643-31032	WASHER	1	60255-

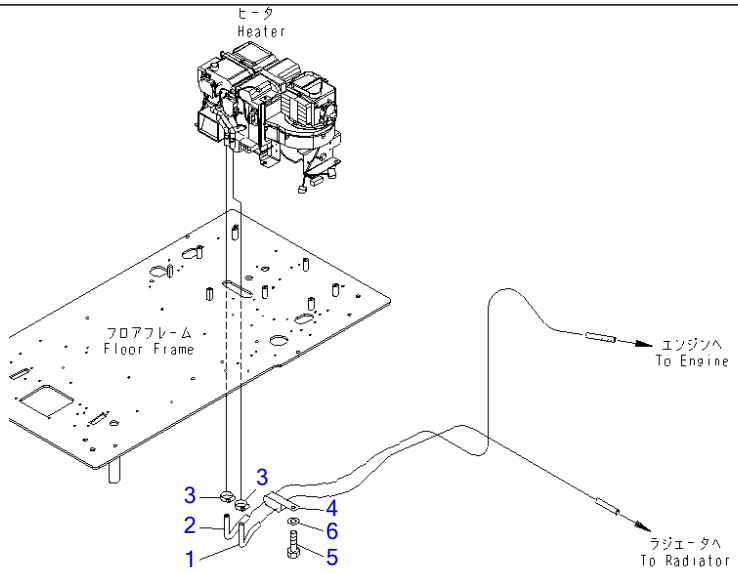

00002734

Ref K1110-19C7 **Page 211640**

PC220-7 S/N 60001-UP (Overseas Version)

FLOOR FRAME (HEATER HOSE AND CLAMP) (CAB HEATER) (COLD WEATHER A SPEC.)(#60255-)

Item	Part No.	Part Name	Qty	Serial No.
1	206-979-7110	HOSE ASS'Y	1	60255-
2	20Y-979-7210	HOSE ASS'Y	1	60255-
3	11Y-09-11160	CLIP	2	60255-
4	141-06-11220	CLIP	1	60255-
5	01010-81016	BOLT	1	60255-
6	01643-31032	WASHER	1	60255-

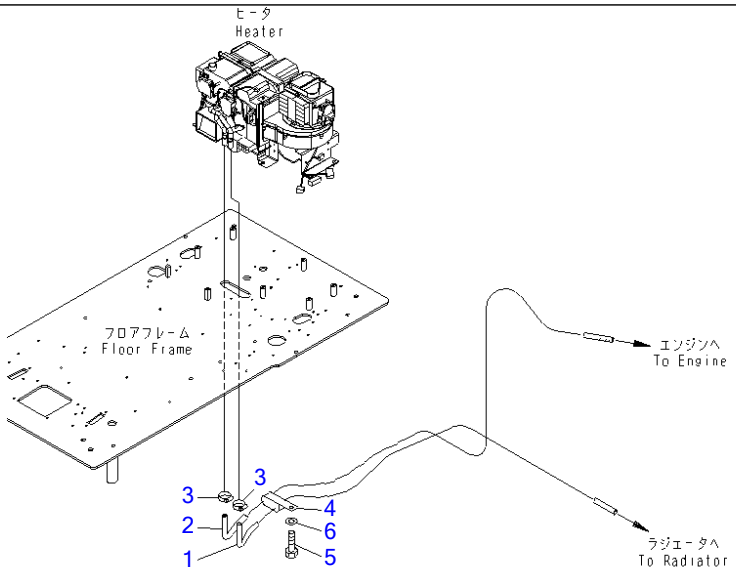

00002734

Ref K1110-19C9 **Page 211650**

PC220-7 S/N 60001-UP (Overseas Version)

FLOOR FRAME (HEATER HOSE AND CLAMP) (FOR HEATER)

Item	Part No.	Part Name	Qty	Serial No.
1	206-979-7110	HOSE ASS'Y	1	60001-
2	20Y-979-6710	HOSE ASS'Y	1	60001-
3	11Y-09-11160	CLIP	2	60001-
4	141-06-11220	CLIP	1	60001-
5	01010-81016	BOLT	1	60001-
6	01643-31032	WASHER	1	60001-

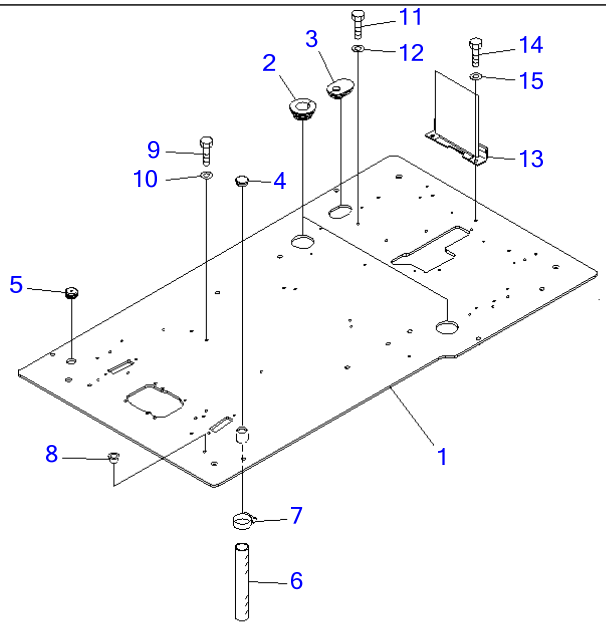

00018136

Ref K1110-19D0 **Page 211660**

PC220-7 S/N 60001-UP (Overseas Version)

FLOOR FRAME (OPERATOR'S CAB) (FRAME)(#65001-)

Item	Part No.	Part Name	Qty	Serial No.
1	208-53-14810	FLOOR FRAME	1	65001-
2	20Y-54-65121	GROMMET	2	60001-
3	208-53-12970	GROMMET	1	65001-
4	22U-54-25581	GROMMET	1	60001-
5	22U-54-25590	GROMMET	1	60001-
6	07286-03828	HOSE	1	60001-
7	07280-04726	CLAMP	1	60001-
8	07048-01310	PLUG	2	60001-
9	01010-81030	BOLT	2	60001-
10	01643-31032	WASHER	2	60001-
11	01010-81016	BOLT	1	65001-
12	01643-31032	WASHER	1	65001-
13	208-53-12891	BRACKET	1	65001-
	22U-06-22661	・SHEET	1	65001-
14	01010-81020	BOLT	2	65001-
15	01643-31032	WASHER	2	65001-

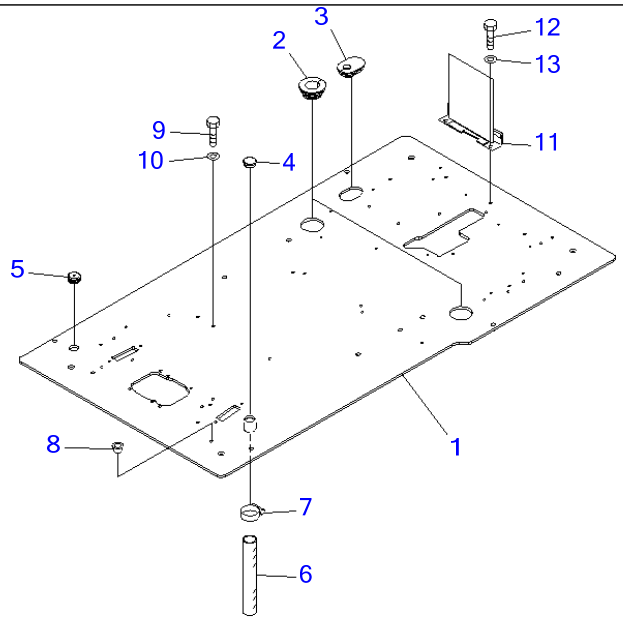

00018157

Ref K1110-19D2 **Page 211670**

PC220-7 S/N 60001-UP (Overseas Version)

FLOOR FRAME (OPERATOR'S CAB) (FRAME) (2 ACTUATOR)(#65001-)

Item	Part No.	Part Name	Qty	Serial No.
1	208-53-14810	FLOOR FRAME	1	65001-
2	20Y-54-65121	GROMMET	2	60001-
3	208-53-12970	GROMMET	1	65001-
4	22U-54-25581	GROMMET	1	60001-
5	22U-54-25590	GROMMET	1	60001-
6	07286-03828	HOSE	1	60001-
7	07280-04726	CLAMP	1	60001-
8	07048-01310	PLUG	2	60001-
9	01010-81030	BOLT	2	60001-
10	01643-31032	WASHER	2	60001-
11	208-53-12891	BRACKET	1	65001-
	22U-06-22261	・SHEET	1	65001-
12	01010-81020	BOLT	2	65001-
13	01643-31032	WASHER	2	65001-

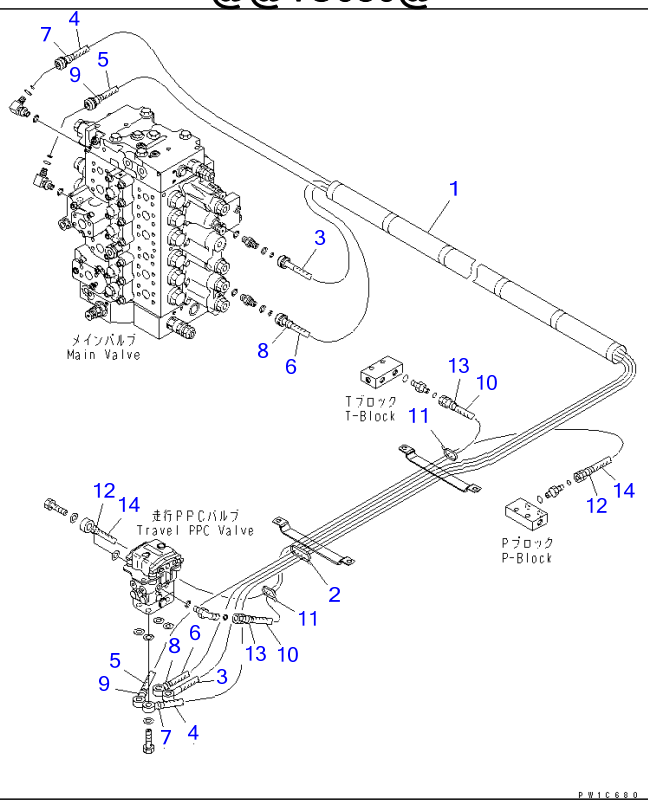

Ref K1110-20A0 **Page 211680**

PC220-7 S/N 60001-UP (Overseas Version)
FLOOR FRAME (PPC) (1/2)(#60001-65000)

Item	Part No.	Part Name	Qty	Serial No.
1	08017-32810	CONDUIT	1	60001-@
2	08034-00536	BAND	1	60001-@
3	207-62-62741	HOSE, 3050MM	1	60001-@
4	20Y-62-41580	HOSE, 4050MM	1	60001-@
5	20Y-62-41590	HOSE, 4200MM	1	60001-@
6	20Y-62-41690	HOSE, 2900MM	1	60001-@
7	20Y-62-22790	BAND, RED	2	60001-@
8	20Y-62-22820	BAND, BLUE	2	60001-@
9	20Y-62-22850	BAND, GREEN	2	60001-@
10	02760-00211	HOSE	1	60001-65000
11	08034-00519	BAND	2	60001-65000
12	20Y-62-22790	BAND, RED	2	60001-65000
13	20Y-62-22820	BAND, BLUE	2	60001-65000
14	20Y-62-42251	HOSE, 1250MM	1	60001-65000

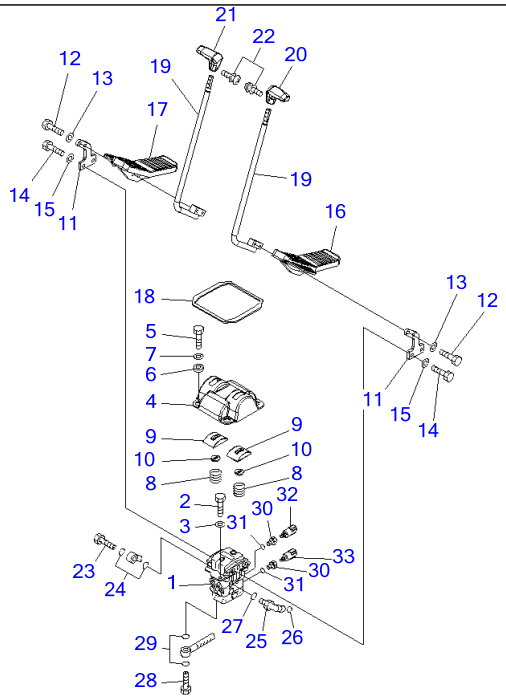

00011365

Ref K1110-20D0 **Page 211690**

PC220-7 S/N 60001-UP (Overseas Version)

FLOOR FRAME (OPERATOR'S CAB) (TRAVEL CONTROL)(#65001-65436)

Item	Part No.	Part Name	Qty	Serial No.
1	(702-16-04160)	PILOT VALVE	1	65001-65436
2	01010-81020	BOLT	2	65001-@
3	01643-31032	WASHER	2	65001-@
4	20Y-43-21151	COVER	1	60001-65436
5	01010-81020	BOLT	4	65001-@
6	20Y-43-21260	COLLAR	4	60001-65436
7	203-54-56970	WASHER	4	60001-65436
8	203-43-51620	SPRING	2	60001-@
	22U-43-21350	COVER ASS'Y	2	60001-@
9	☆	COVER	1	60001-@
10	22U-43-21360	SEAL	1	60001-@
11	22U-43-21151	LEVER	2	65001-65436
12	01010-D1045	BOLT	4	60001-@
13	01643-71032	WASHER	4	60001-@
14	01010-81030	BOLT	4	60001-@
15	01643-31032	WASHER	4	60001-@
16	22U-43-21111	PEDAL	1	60001-@
17	22U-43-21121	PEDAL	1	60001-@
18	22U-43-21380	SEAL	1	60001-65436
19	22U-43-21131	LEVER	2	65001-@
20	20Y-43-21231	KNOB	1	60001-@
21	20Y-43-21241	KNOB	1	60001-@
22	01023-20416	SCREW	2	60001-@
23	20Y-62-18910	PLUG	1	60001-@
24	07000-12018	O-RING	2	60001-@
25	11Y-62-12160	ELBOW	1	60003-@
26	02896-11008	O-RING	1	60001-@
27	07002-11423	O-RING	1	60001-@

FLOOR FRAME (OPERATOR'S CAB) (TRAVEL CONTROL)(#65001-65436)

Item	Part No.	Part Name	Qty	Serial No.
28	20Y-62-18890	BOLT, JOINT	4	60001-@
29	07000-12015	O-RING	8	60001-@
30	20Y-62-41390	ADAPTER	2	60003-@
31	07002-11423	O-RING	2	60001-@
32	20Y-06-21710	SWITCH	1	60001-@
33	206-06-61130	SWITCH	1	65001-@

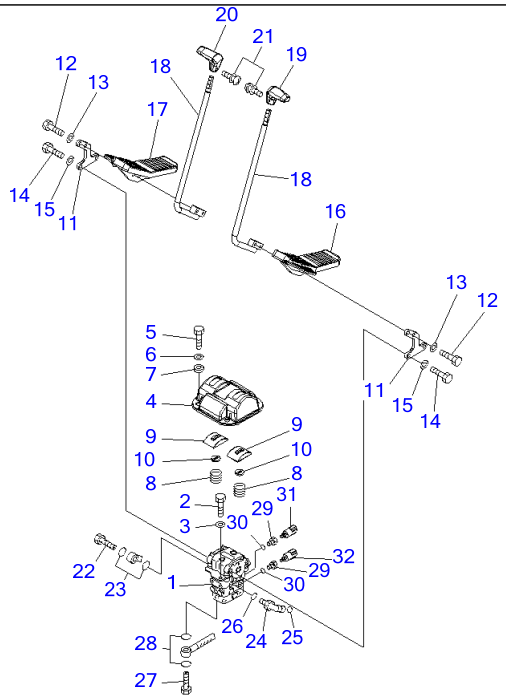

Ref K1110-20D0A

Page 211700

PC220-7 S/N 60001-UP (Overseas Version)

FLOOR FRAME (OPERATOR'S CAB) (TRAVEL CONTROL)(#65437-)

Item	Part No.	Part Name	Qty	Serial No.
1	(702-16-04250)	PILOT VALVE	1	65437-
2	01010-81020	BOLT	2	65001-
3	01643-31032	WASHER	2	65001-
4	20Y-43-41121	COVER	1	65437-
5	01010-81020	BOLT	4	65001-
6	01643-31032	WASHER	4	65437-
7	20Y-43-41361	COLLAR	4	65776-
	20Y-43-41360	COLLAR	4	65437-65775
8	203-43-51620	SPRING	2	60001-
	22U-43-21350	COVER ASS'Y	2	60001-
9	☆	COVER	1	60001-
10	22U-43-21360	SEAL	1	60001-
11	20Y-43-41111	LEVER	2	65437-
12	01010-D1045	BOLT	4	60001-
13	01643-71032	WASHER	4	60001-
14	01010-81030	BOLT	4	60001-
15	01643-31032	WASHER	4	60001-
16	22U-43-21111	PEDAL	1	60001-
17	22U-43-21121	PEDAL	1	60001-
18	22U-43-21131	LEVER	2	65001-
19	20Y-43-21231	KNOB	1	60001-
20	20Y-43-21241	KNOB	1	60001-
21	01023-20416	SCREW	2	60001-
22	20Y-62-18910	PLUG	1	60001-
23	07000-12018	O-RING	2	60001-
24	11Y-62-12160	ELBOW	1	60003-
25	02896-11008	O-RING	1	60001-
26	07002-11423	O-RING	1	60001-

FLOOR FRAME (OPERATOR'S CAB) (TRAVEL CONTROL)(#65437-)

Item	Part No.	Part Name	Qty	Serial No.
27	20Y-62-18890	BOLT, JOINT	4	60001-
28	07000-12015	O-RING	8	60001-
29	20Y-62-41390	ADAPTER	2	60003-
30	07002-11423	O-RING	2	60001-
31	20Y-06-21710	SWITCH	1	60001-
32	206-06-61130	SWITCH	1	65001-

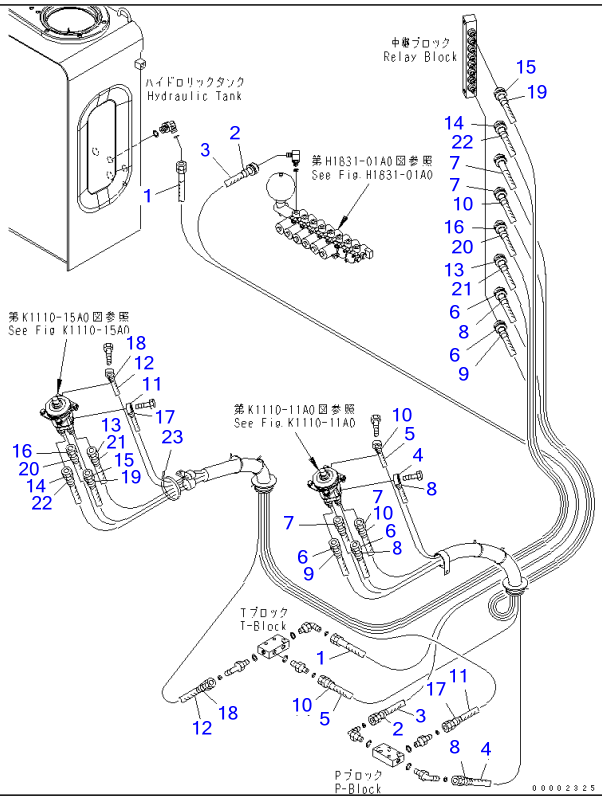

Ref K1110-21A0 **Page 211710**

PC220-7 S/N 60001-UP (Overseas Version)
FLOOR FRAME (PPC) (2/2)(#60001-65000)

Item	Part No.	Part Name	Qty	Serial No.
1	02760-00334	HOSE	1	60001-65000
2	20Y-62-22790	BAND, RED	2	60001-65000
3	20Y-62-42320	HOSE, 2300MM	1	60001-65000
4	20Y-62-42230	HOSE, 1350MM	1	60001-65000
5	20Y-62-42240	HOSE, 1450MM	1	60001-65000
6	20Y-62-42261	HOSE, 3050MM	2	60001-@
7	20Y-62-42271	HOSE, 3150MM	2	60001-@
8	20Y-62-22790	BAND, RED	4	60001-@
9	20Y-62-22810	BAND, YELLOW	2	60001-@
10	20Y-62-22820	BAND, BLUE	4	60001-@
11	20Y-62-42210	HOSE, 1600MM	1	60001-65000
12	20Y-62-42220	HOSE, 1300MM	1	60001-65000
13	20Y-62-42290	HOSE, 3300MM	1	60001-@
14	20Y-62-42311	HOSE, 3500MM	1	60001-@
15	20Y-62-42550	HOSE, 3500MM	1	60001-@
16	20Y-62-42560	HOSE, 3300MM	1	60001-@
17	20Y-62-22790	BAND, RED	2	60001-@
18	20Y-62-22820	BAND, BLUE	2	60001-@
19	20Y-62-22830	BAND, WHITE	2	60001-@
20	20Y-62-22840	BAND, BLACK	2	60001-@
21	20Y-62-22850	BAND, GREEN	2	60001-@
22	20Y-62-22860	BAND, BROWN	2	60001-@
23	08034-00519	BAND	1	60001-65000

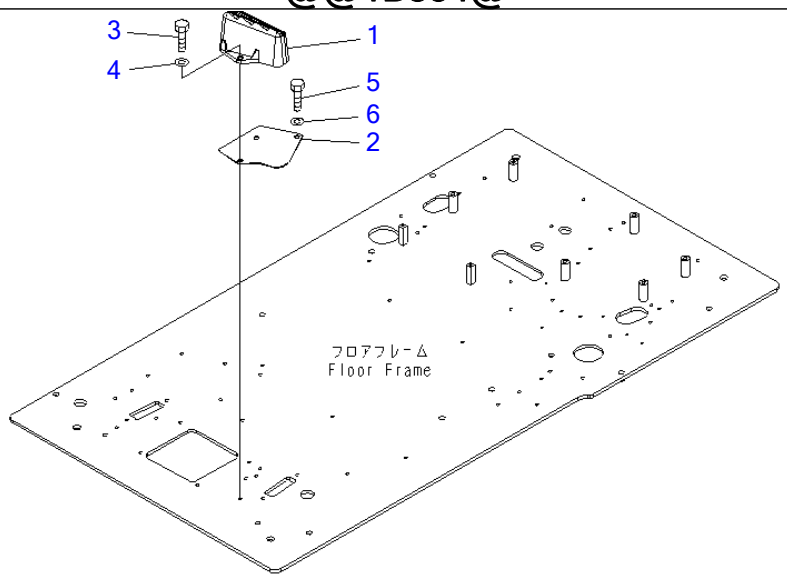

PW1B834

Ref K1110-21D0 **Page 211720**

PC220-7 S/N 60001-UP (Overseas Version)

FLOOR FRAME (OPERATOR'S CAB) (FOOT REST) (L.H.)(#65001-)

Item	Part No.	Part Name	Qty	Serial No.
1	22U-54-25110	FOOTREST	1	60001-
2	22U-54-25521	PLATE	1	60001-
3	01010-81025	BOLT	2	60001-
4	01643-31032	WASHER	2	60001-
5	01010-81020	BOLT	1	60001-
6	01643-31032	WASHER	1	60001-

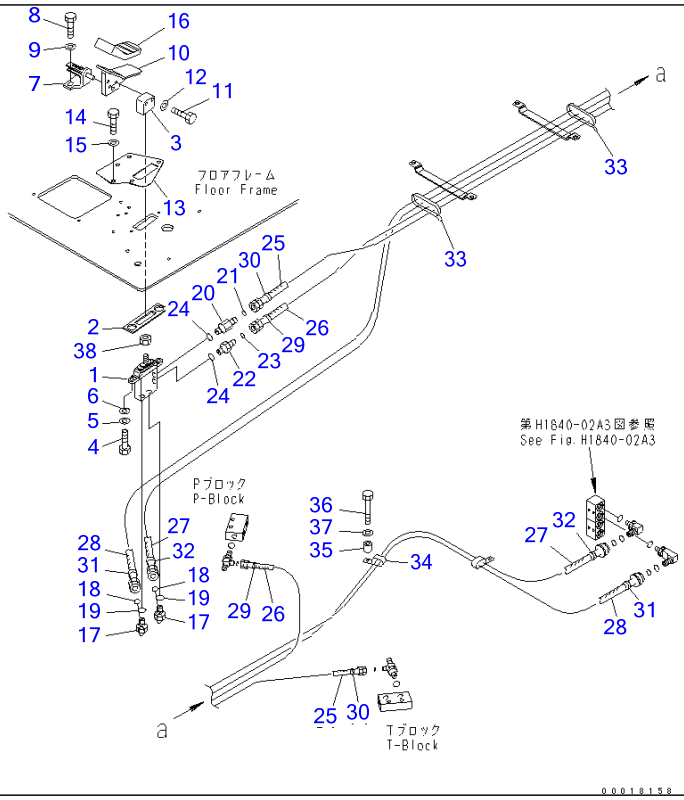

Ref K1110-21D2 **Page 211730**

PC220-7 S/N 60001-UP (Overseas Version)

FLOOR FRAME (OPERATOR'S CAB) (FOOT REST) (L.H.) (2 ACTUATOR)(#65001-)

Item	Part No.	Part Name	Qty	Serial No.
1	(702-16-01230)	PILOT VALVE	1	60001-
2	22U-54-25660	SEAL	1	60001-
3	22U-43-21470	SEAT	1	60001-
4	01010-81025	BOLT	2	60001-
5	01643-31032	WASHER	2	60001-
6	01643-31032	WASHER	2	60001-
7	20Y-62-25360	BRACKET	1	60001-
8	01010-D1025	BOLT	2	60001-
9	01643-71032	WASHER	2	60001-
10	20Y-43-31220	PEDAL	1	60001-
11	01010-D1045	BOLT	2	60001-
12	01643-71032	WASHER	2	60001-
13	22U-54-25180	PLATE	1	60001-
14	01010-81020	BOLT	1	60001-
15	01643-31032	WASHER	1	60001-
16	22U-54-25670	CAP	1	60001-
17	21W-62-43980	ELBOW	2	60001-
18	02896-11008	O-RING	2	60001-
19	07000-12011	O-RING	2	60001-
20	20Y-62-43470	NIPPLE	1	60001-
21	02896-11008	O-RING	1	60001-
22	11Y-62-12140	NIPPLE	1	60001-
23	02896-11008	O-RING	1	60001-
24	07000-12011	O-RING	2	60001-
25	02760-00211	HOSE	1	60001-
26	02760-00212	HOSE, 1200MM	1	60001-

FLOOR FRAME (OPERATOR'S CAB) (FOOT REST) (L.H.) (2 ACTUATOR)(#65001-)

Item	Part No.	Part Name	Qty	Serial No.
27	20Y-62-43490	HOSE, 2400MM	1	60001-
28	20Y-62-43790	HOSE, 2450MM	1	60001-
29	20Y-62-22790	BAND, RED	2	60001-
30	20Y-62-22820	BAND, BLUE	2	60001-
31	20Y-62-22840	BAND, BLACK	2	60001-
32	20Y-62-22860	BAND, BROWN	2	60001-
33	08034-20536	BAND	2	60001-
34	04435-51210	CLIP	1	60001-
35	195-33-11220	SPACER	1	60001-
36	01010-81050	BOLT	1	65001-
37	01643-31032	WASHER	1	60001-
38	01583-51408	NUT	1	60001-

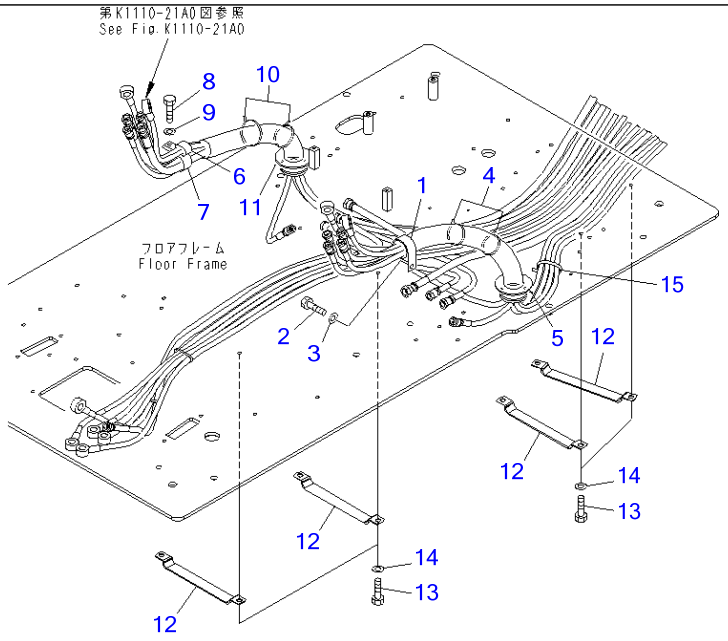

00002326

Ref K1110-22A0 **Page 211740**

PC220-7 S/N 60001-UP (Overseas Version)

FLOOR FRAME (PPC CLAMP)(#60001-65000)

Item	Part No.	Part Name	Qty	Serial No.
1	04434-53211	CLIP	1	60001-@
2	01010-81020	BOLT	1	60001-@
3	01643-31032	WASHER	1	60001-@
4	08034-20536	BAND	2	60001-@
5	08034-20536	BAND	1	60001-@
6	04435-51310	CLIP	1	60001-@
7	04434-53411	CLIP	1	60001-@
8	01010-81020	BOLT	1	60001-@
9	01643-31032	WASHER	1	60001-@
10	08034-20536	BAND	2	60001-@
11	08034-20536	BAND	1	60001-@
12	20Y-62-27770	CLAMP	4	60001-@
13	01010-81016	BOLT	8	60001-@
14	01643-31032	WASHER	8	60001-@
15	08034-00519	BAND	1	60001-65000

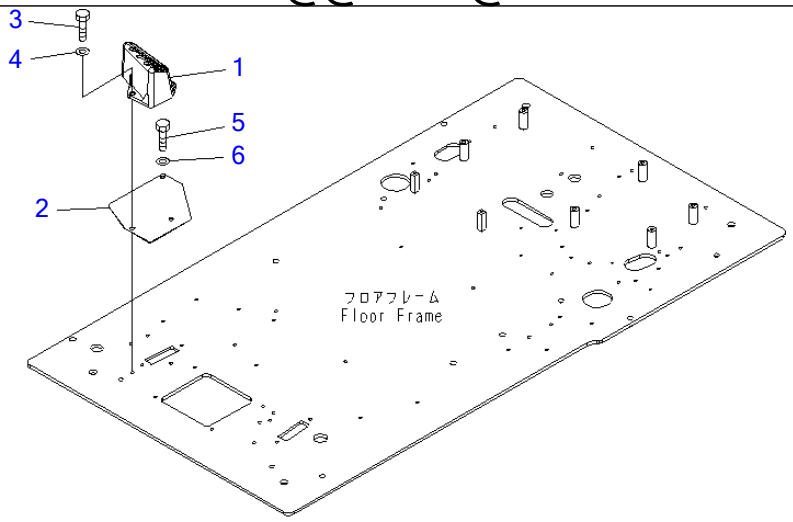

PW1B835

Ref K1110-22D0 **Page 211750**

PC220-7 S/N 60001-UP (Overseas Version)

FLOOR FRAME (OPERATOR'S CAB) (FOOT REST) (R.H.)(#65001-)

Item	Part No.	Part Name	Qty	Serial No.
1	22U-54-25120	FOOTREST	1	60001-
2	22U-54-25531	PLATE	1	60001-
3	01010-81025	BOLT	2	60001-
4	01643-31032	WASHER	2	60001-
5	01010-81020	BOLT	1	60001-
6	01643-31032	WASHER	1	60001-

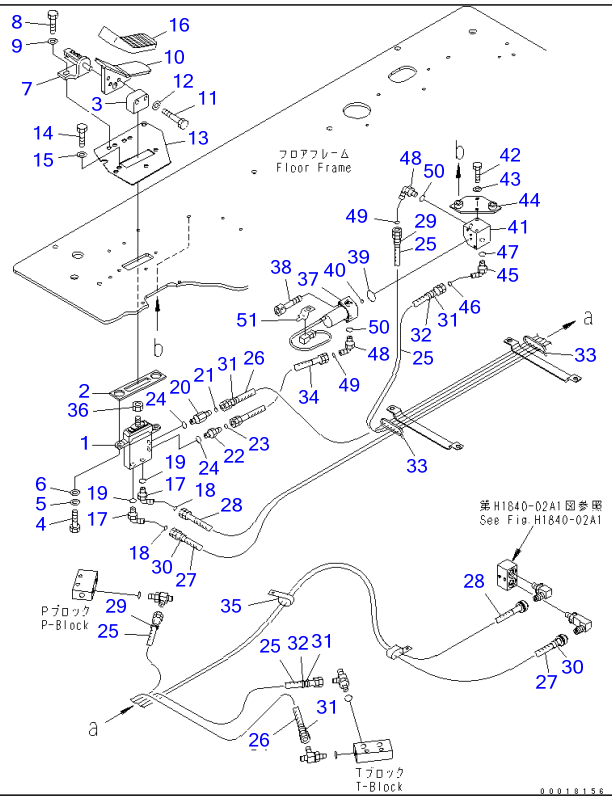

Ref K1110-22D1 **Page 211760**

PC220-7 S/N 60001-UP (Overseas Version)

FLOOR FRAME (OPERATOR'S CAB) (ATTACHMENT CONTROL) (1 ACTUATOR)(#65001-)

Item	Part No.	Part Name	Qty	Serial No.
1	(702-16-01230)	PILOT VALVE	1	60001-
2	22U-54-25660	SEAL	1	60001-
3	22U-43-21470	SEAT	1	60001-
4	01010-81025	BOLT	2	60001-
5	01643-31032	WASHER	2	60001-
6	01643-31032	WASHER	2	60001-
7	20Y-62-25360	BRACKET	1	60001-
8	01010-D1025	BOLT	2	60001-
9	01643-71032	WASHER	2	60001-
10	20Y-43-31220	PEDAL	1	60001-
11	01010-D1045	BOLT	2	60001-
12	01643-71032	WASHER	2	60001-
13	22U-54-25541	PLATE	1	60001-
14	01010-81020	BOLT	3	60001-
15	01643-31032	WASHER	3	60001-
16	22U-54-25670	CAP	1	60001-
17	21W-62-43980	ELBOW	2	60001-
18	02896-11008	O-RING	2	60001-
19	07000-12011	O-RING	2	60001-
20	20Y-62-43470	NIPPLE	1	60001-
21	02896-11008	O-RING	1	60001-
22	11Y-62-12140	NIPPLE	1	60001-
23	02896-11008	O-RING	1	60001-
24	07000-12011	O-RING	2	60001-
25	02760-00211	HOSE	2	65001-
26	02760-00212	HOSE, 1200MM	1	65001-

FLOOR FRAME (OPERATOR'S CAB) (ATTACHMENT CONTROL) (1 ACTUATOR)(#65001-)

Item	Part No.	Part Name	Qty	Serial No.
27	20Y-62-43490	HOSE, 2400MM	1	65001-
28	20Y-62-43510	HOSE, 2350MM	1	60001-
29	20Y-62-22790	BAND, RED	2	60001-
30	20Y-62-22810	BAND, YELLOW	2	60001-
31	20Y-62-22820	BAND, BLUE	4	60001-
32	20Y-62-22830	BAND, WHITE	2	60001-
33	08034-00519	BAND	2	60001-
34	21W-62-42240	HOSE	1	60001-
35	04435-51210	CLIP	1	60001-
36	01583-51408	NUT	1	60001-
37	(702-21-07010)	VALVE ASS'Y	1	60001-
38	203-60-62220	BOLT	2	60001-
39	700-93-11320	O-RING	1	60001-
40	07000-12011	O-RING	1	65001-
41	20Y-62-43410	BLOCK	1	60001-
42	01010-80820	BOLT	2	60001-
43	01643-30823	WASHER	2	60001-
44	20Y-62-43420	BRACKET	1	60001-
45	11Y-62-12160	ELBOW	1	60001-
46	02896-11008	O-RING	1	60001-
47	07002-11423	O-RING	1	60001-
48	21W-62-43960	ELBOW	2	60001-
49	02896-11008	O-RING	2	60001-
50	07002-11423	O-RING	2	60001-
51	08053-01510	CLIP	1	60001-

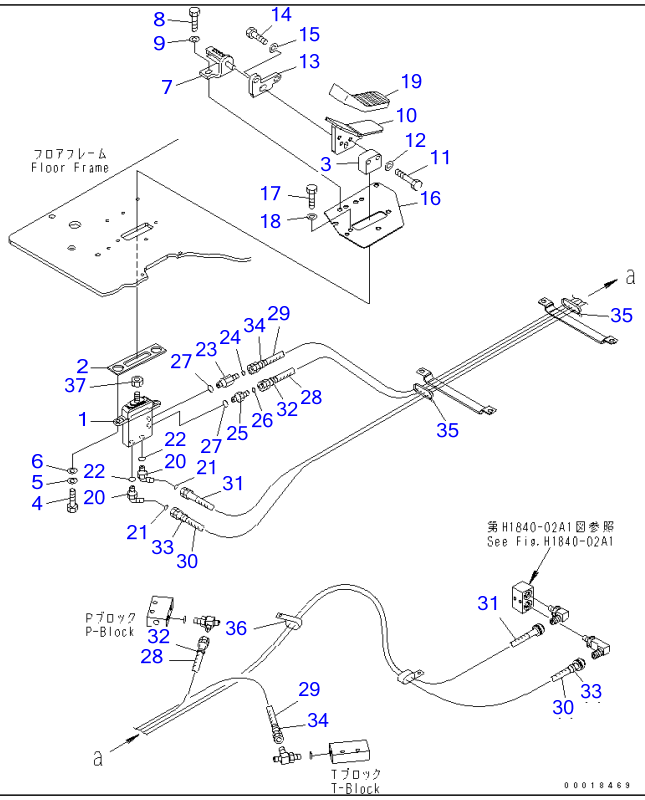

Ref K1110-22E0 **Page 211770**

PC220-7 S/N 60001-UP (Overseas Version)

FLOOR FRAME (OPERATOR'S CAB) (ATTACHMENT CONTROL) (1 ACTUATOR) (7SEGMENT MONITOR SPEC.)(#65001-)

Item	Part No.	Part Name	Qty	Serial No.
1	(702-16-01230)	PILOT VALVE	1	60001-
2	22U-54-25660	SEAL	1	60001-
3	22U-43-21470	SEAT	1	60001-
4	01010-81025	BOLT	2	60001-
5	01643-31032	WASHER	2	60001-
6	01643-31032	WASHER	2	60001-
7	20Y-62-25360	BRACKET	1	60001-
8	01010-D1025	BOLT	2	60001-
9	01643-71032	WASHER	2	60001-
10	22U-43-21461	PEDAL	1	60240-
11	01010-D1045	BOLT	2	60001-
12	01643-71032	WASHER	2	60001-
13	22U-43-21480	PLATE	1	60240-
14	01010-D1030	BOLT	2	60240-
15	01643-71032	WASHER	2	60240-
16	22U-54-25541	PLATE	1	60001-
17	01010-81020	BOLT	3	60001-
18	01643-31032	WASHER	3	60001-
19	22U-54-25670	CAP	1	60001-
20	21W-62-43980	ELBOW	2	60001-
21	02896-11008	O-RING	2	60001-
22	07000-12011	O-RING	2	60001-
23	20Y-62-43470	NIPPLE	1	60001-
24	02896-11008	O-RING	1	60001-
25	11Y-62-12140	NIPPLE	1	60001-
26	02896-11008	O-RING	1	60001-

FLOOR FRAME (OPERATOR'S CAB) (ATTACHMENT CONTROL) (1 ACTUATOR) (7SEGMENT MONITOR SPEC.)(#65001-)

Item	Part No.	Part Name	Qty	Serial No.
27	07000-12011	O-RING	2	60001-
28	02760-002A9	HOSE	1	65001-
29	02760-00212	HOSE, 1200MM	1	65001-
30	20Y-62-43490	HOSE, 2400MM	1	60001-
31	20Y-62-43510	HOSE, 2350MM	1	60001-
32	20Y-62-22790	BAND, RED	2	60001-
33	20Y-62-22810	BAND, YELLOW	2	60001-
34	20Y-62-22820	BAND, BLUE	2	60001-
35	08034-00519	BAND	2	60001-
36	04435-51210	CLIP	1	60001-
37	01583-51408	NUT	1	60001-

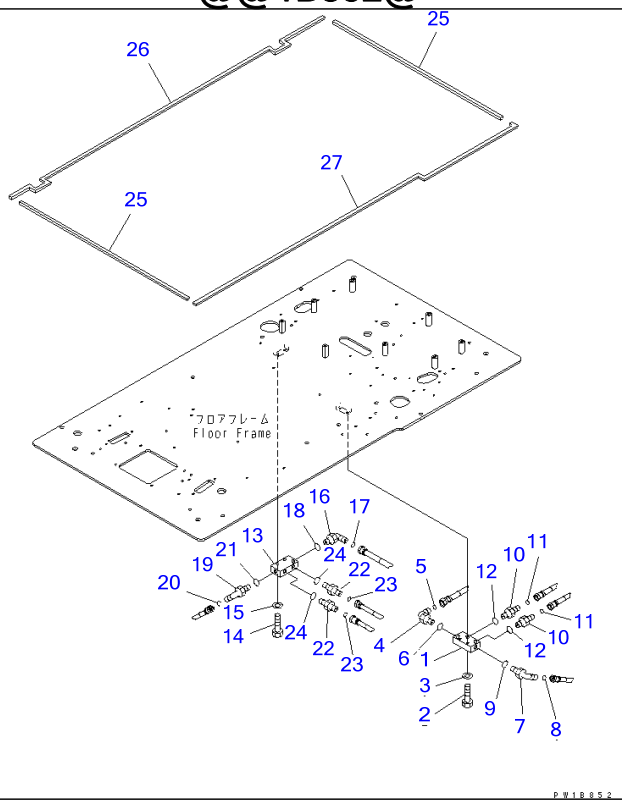

Ref K1110-23A0 Page 211780

PC220-7 S/N 60001-UP (Overseas Version)

FLOOR FRAME (P¤T BLOCK AND SEAL)(#60001-65000)

Item	Part No.	Part Name	Qty	Serial No.
1	20Y-62-15831	BLOCK	1	60001-@
2	01010-81045	BOLT	2	60001-@
3	01643-31032	WASHER	2	60001-@
4	21W-62-42490	ELBOW	1	60003-65000
	02782-10311	ELBOW	1	60001-60002
5	02896-11009	O-RING	1	60001-@
6	07002-11423	O-RING	1	60001-@
7	11Y-62-12160	ELBOW	1	60003-65000
	02782-10210	ELBOW	1	60001-60002
8	02896-11008	O-RING	1	60001-65000
9	07002-11423	O-RING	1	60001-65000
10	11Y-62-12130	NIPPLE	2	60003-65000
	02781-00210	UNION	2	60001-60002
11	02896-11008	O-RING	2	60001-65000
12	07002-11423	O-RING	2	60001-65000
13	20Y-62-15831	BLOCK	1	60001-@
14	01010-81045	BOLT	2	60001-@
15	01643-31032	WASHER	2	60001-@
16	21W-62-42490	ELBOW	1	60003-65000
	02782-10311	ELBOW	1	60001-60002
17	02896-11009	O-RING	1	60001-@
18	07002-11423	O-RING	1	60001-@
19	11Y-62-12160	ELBOW	1	60003-65000
	02782-10210	ELBOW	1	60001-60002
20	02896-11008	O-RING	1	60001-65000
21	07002-11423	O-RING	1	60001-65000
22	11Y-62-12130	NIPPLE	2	60003-65000
	02781-00210	UNION	2	60001-60002

FLOOR FRAME (P¤T BLOCK AND SEAL)(#60001-65000)

Item	Part No.	Part Name	Qty	Serial No.
23	02896-11008	O-RING	2	60001-65000
24	07002-11423	O-RING	2	60001-65000
25	20Y-54-65750	SEAL	2	60001-65000
26	20Y-54-65760	SEAL	1	60001-65000
27	20Y-54-65770	SEAL	1	60001-65000

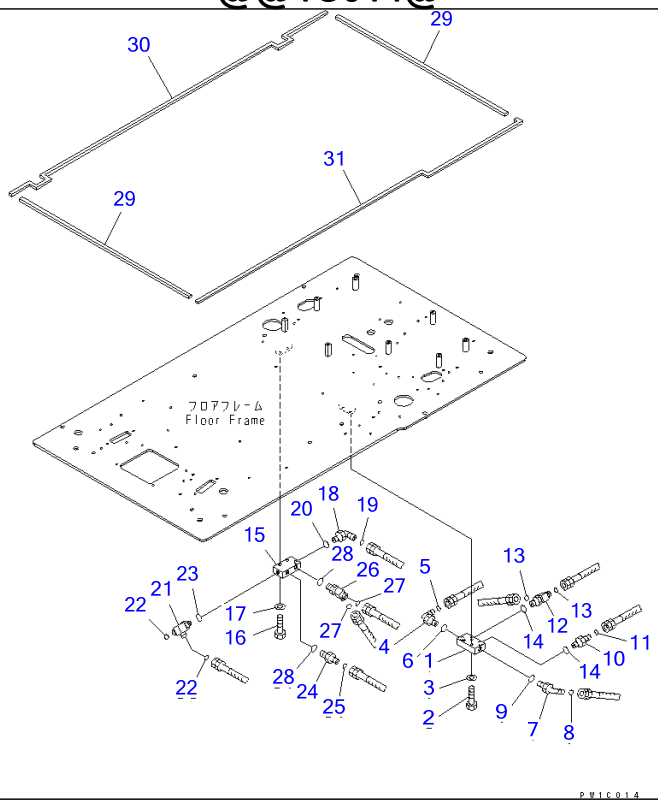

PC220-7 S/N 60001-UP (Overseas Version)

FLOOR FRAME (P¤T BLOCK AND SEAL) (1 ACTUATOR)(#60001-65000)

Item	Part No.	Part Name	Qty	Serial No.
1	20Y-62-15831	BLOCK	1	60001-@
2	01010-81045	BOLT	2	60001-@
3	01643-31032	WASHER	2	60001-@
4	21W-62-42490	ELBOW	1	60003-65000
	02782-10311	ELBOW	1	60001-60002
5	02896-11009	O-RING	1	60001-@
6	07002-11423	O-RING	1	60001-@
7	11Y-62-12160	ELBOW	1	60003-65000
	02782-10210	ELBOW	1	60001-60002
8	02896-11008	O-RING	1	60001-65000
9	07002-11423	O-RING	1	60001-65000
10	11Y-62-12130	NIPPLE	1	60003-65000
	02781-00210	UNION	1	60001-60002
11	02896-11008	O-RING	1	60001-65000
12	11Y-62-12330	ELBOW	1	60001-@
13	02896-11008	O-RING	2	60001-65000
14	07002-11423	O-RING	2	60001-65000
15	20Y-62-15831	BLOCK	1	60001-@
16	01010-81045	BOLT	2	60001-@
17	01643-31032	WASHER	2	60001-@
18	21W-62-42490	ELBOW	1	60003-65000
	02782-10311	ELBOW	1	60001-60002
19	02896-11009	O-RING	1	60001-@
20	07002-11423	O-RING	1	60001-@
21	207-62-72141	ELBOW	1	60001-65000
22	02896-11008	O-RING	2	60001-65000
23	07002-11423	O-RING	1	60001-65000
24	11Y-62-12130	NIPPLE	1	60003-65000

FLOOR FRAME (P¤T BLOCK AND SEAL) (1 ACTUATOR)(#60001-65000)

Item	Part No.	Part Name	Qty	Serial No.
	02781-00210	UNION	1	60001-60002
25	02896-11008	O-RING	1	60001-65000
26	11Y-62-12330	ELBOW	1	60001-65000
27	02896-11008	O-RING	2	60001-65000
28	07002-11423	O-RING	2	60001-65000
29	20Y-54-65750	SEAL	2	60001-65000
30	20Y-54-65760	SEAL	1	60001-65000
31	20Y-54-65770	SEAL	1	60001-65000

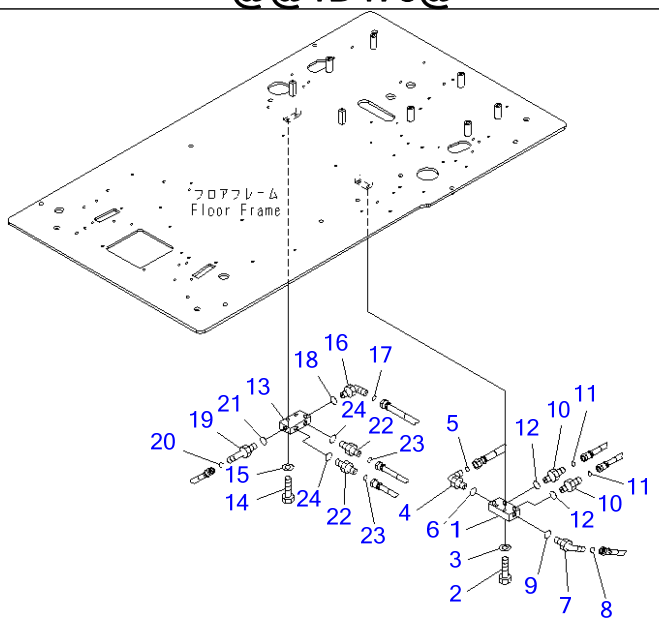

Ref K1110-23A4

Page 211800

PC220-7 S/N 60001-UP (Overseas Version)

FLOOR FRAME (P AND T BLOCK) (WITHOUT AIR CONDITIONER AND RADIO)(#60001-65000)

Item	Part No.	Part Name	Qty	Serial No.
1	20Y-62-15831	BLOCK	1	60001-@
2	01010-81045	BOLT	2	60001-@
3	01643-31032	WASHER	2	60001-@
4	21W-62-42490	ELBOW	1	60001-65000
5	02896-11009	O-RING	1	60001-@
6	07002-11423	O-RING	1	60001-65000
7	11Y-62-12160	ELBOW	1	60001-65000
8	02896-11008	O-RING	1	60001-65000
9	07002-11423	O-RING	1	60001-65000
10	11Y-62-12130	NIPPLE	2	60001-65000
11	02896-11008	O-RING	2	60001-65000
12	07002-11423	O-RING	2	60001-65000
13	20Y-62-15831	BLOCK	1	60001-@
14	01010-81045	BOLT	2	60001-@
15	01643-31032	WASHER	2	60001-@
16	21W-62-42490	ELBOW	1	60001-65000
17	02896-11009	O-RING	1	60001-@
18	07002-11423	O-RING	1	60001-@
19	11Y-62-12160	ELBOW	1	60001-65000
20	02896-11008	O-RING	1	60001-65000
21	07002-11423	O-RING	1	60001-65000
22	11Y-62-12130	NIPPLE	2	60001-65000
23	02896-11008	O-RING	2	60001-65000
24	07002-11423	O-RING	2	60001-65000

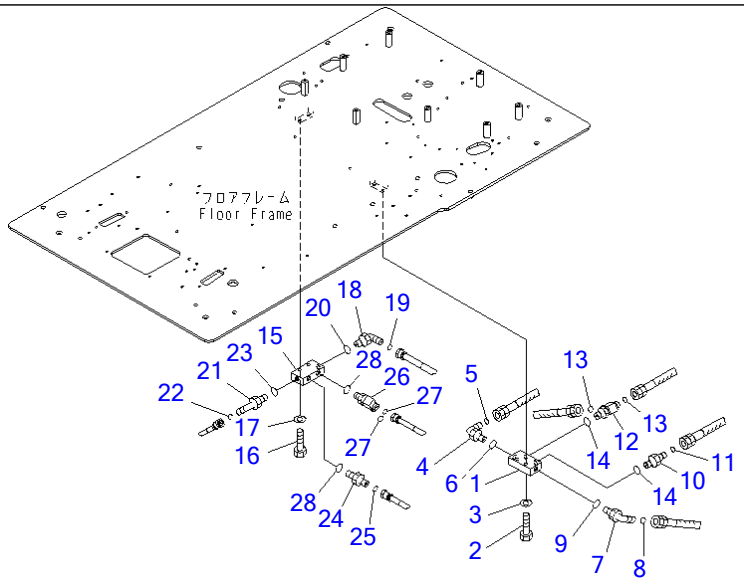

00002917

PC220-7 S/N 60001-UP (Overseas Version)

FLOOR FRAME (P AND T BLOCK) (1 ACTUATOR) (WITHOUT AIR CONDITIONER) (7SEGMENT MONITOR SPEC.)(#60001-65000)

Item	Part No.	Part Name	Qty	Serial No.
1	20Y-62-15831	BLOCK	1	60001-@
2	01010-81045	BOLT	2	60001-@
3	01643-31032	WASHER	2	60001-@
4	21W-62-42490	ELBOW	1	60001-65000
5	02896-11009	O-RING	1	60001-@
6	07002-11423	O-RING	1	60001-@
7	11Y-62-12160	ELBOW	1	60001-65000
8	02896-11008	O-RING	1	60001-65000
9	07002-11423	O-RING	1	60001-65000
10	11Y-62-12130	NIPPLE	1	60001-65000
11	02896-11008	O-RING	1	60001-65000
12	11Y-62-12330	ELBOW	1	60001-@
13	02896-11008	O-RING	2	60001-65000
14	07002-11423	O-RING	1	60001-65000
15	20Y-62-15831	BLOCK	1	60001-@
16	01010-81045	BOLT	2	60001-@
17	01643-31032	WASHER	2	60001-@
18	21W-62-42490	ELBOW	1	60001-65000
19	02896-11009	O-RING	1	60001-@
20	07002-11423	O-RING	1	60001-65000
21	11Y-62-12160	ELBOW	1	60001-65000
22	02896-11008	O-RING	1	60001-65000
23	07002-11423	O-RING	1	60001-65000
24	11Y-62-12130	NIPPLE	1	60001-65000
25	02896-11008	O-RING	1	60001-65000
26	11Y-62-12330	ELBOW	1	60001-@

FLOOR FRAME (P AND T BLOCK) (1 ACTUATOR) (WITHOUT AIR CONDITIONER) (7SEGMENT MONITOR SPEC.)(#60001-65000)

Item	Part No.	Part Name	Qty	Serial No.
27	02896-11008	O-RING	2	60001-65000
28	07002-11423	O-RING	2	60001-65000

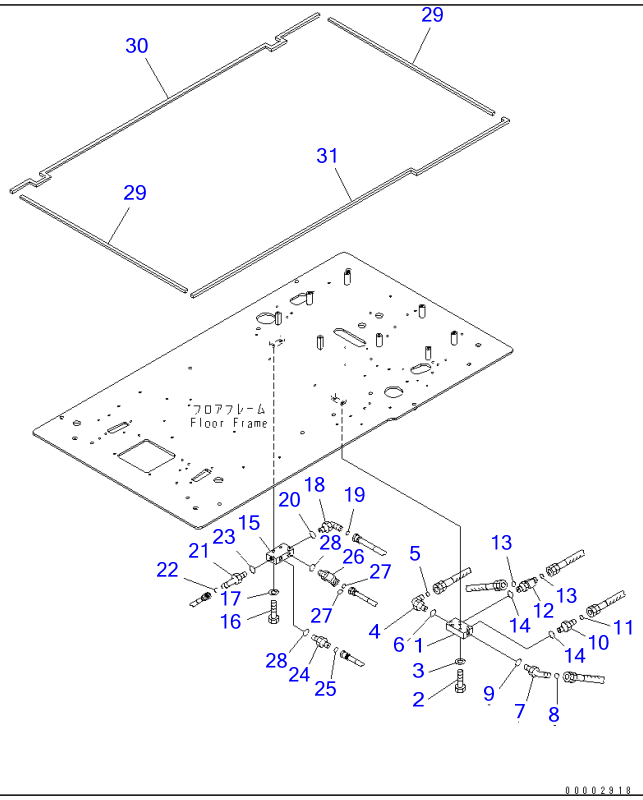

Ref K1110-23B8 Page 211820

PC220-7 S/N 60001-UP (Overseas Version)

FLOOR FRAME (P¤T BLOCK AND SEAL) (1 ACTUATOR) (7SEGMENT MONITOR SPEC.)(#60001-65000)

Item	Part No.	Part Name	Qty	Serial No.
1	20Y-62-15831	BLOCK	1	60001-@
2	01010-81045	BOLT	2	60001-@
3	01643-31032	WASHER	2	60001-@
4	21W-62-42490	ELBOW	1	60001-65000
5	02896-11009	O-RING	1	60001-@
6	07002-11423	O-RING	1	60001-@
7	11Y-62-12160	ELBOW	1	60001-65000
8	02896-11008	O-RING	1	60001-65000
9	07002-11423	O-RING	1	60001-65000
10	11Y-62-12130	NIPPLE	1	60001-@
11	02896-11008	O-RING	1	60001-65000
12	11Y-62-12330	ELBOW	1	60001-65000
13	02896-11008	O-RING	2	60001-65000
14	07002-11423	O-RING	1	60001-65000
15	20Y-62-15831	BLOCK	1	60001-@
16	01010-81045	BOLT	2	60001-@
17	01643-31032	WASHER	2	60001-@
18	21W-62-42490	ELBOW	1	60001-65000
19	02896-11009	O-RING	1	60001-@
20	07002-11423	O-RING	1	60001-@
21	11Y-62-12160	ELBOW	1	60001-65000
22	02896-11008	O-RING	1	60001-65000
23	07002-11423	O-RING	1	60001-65000
24	11Y-62-12130	NIPPLE	1	60001-65000
25	02896-11008	O-RING	1	60001-65000
26	11Y-62-12330	ELBOW	1	60001-65000

FLOOR FRAME (P¤T BLOCK AND SEAL) (1 ACTUATOR) (7SEGMENT MONITOR SPEC.)(#60001-65000)

Item	Part No.	Part Name	Qty	Serial No.
27	02896-11008	O-RING	2	60001-65000
28	07002-11423	O-RING	1	60001-65000
29	20Y-54-65750	SEAL	2	60001-65000
30	20Y-54-65760	SEAL	1	60001-65000
31	20Y-54-65770	SEAL	1	60001-65000

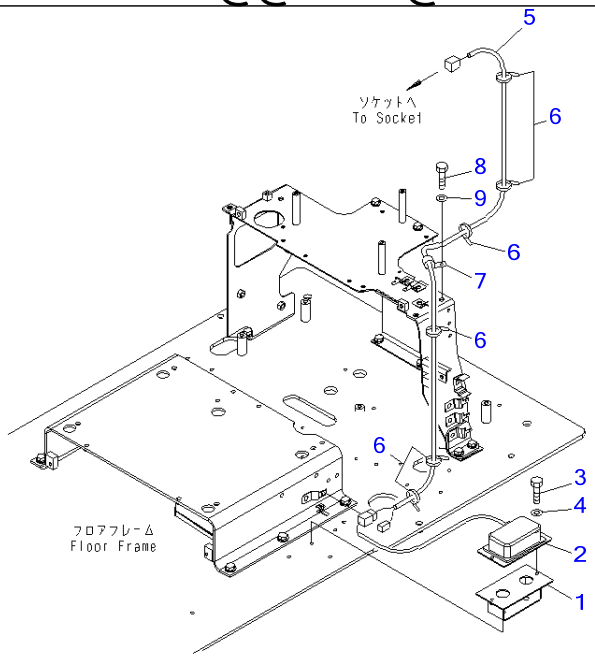

P W 1 C 0 1 5

Ref K1110-24A3 **Page 211830**

PC220-7 S/N 60001-UP (Overseas Version)

FLOOR FRAME (12V CONVERTER)(#60001-65000)

Item	Part No.	Part Name	Qty	Serial No.
1	20Y-06-31190	BRACKET	1	60001-65000
2	22U-06-22250	CONVERTER	1	60001-@
3	01010-80620	BOLT	2	60001-65000
4	01643-30623	WASHER	2	60001-65000
5	20Y-06-31150	WIRING HARNESS	1	60001-65000
6	08034-20519	BAND	6	60001-65000
7	04434-51010	CLIP	1	60001-65000
8	01010-81020	BOLT	1	60001-65000
9	01643-31032	WASHER	1	60001-65000

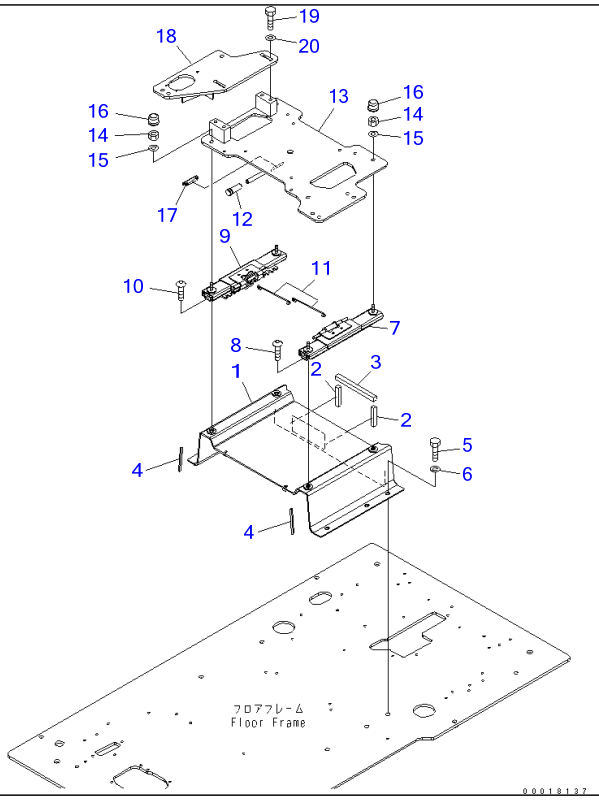

Ref K1110-24D0 **Page 211840**

PC220-7 S/N 60001-UP (Overseas Version)

FLOOR FRAME (OPERATOR'S CAB) (BASE)(#65001-)

Item	Part No.	Part Name	Qty	Serial No.
1	208-43-71512	FRAME	1	69749-
	208-43-71511	FRAME	1	65001-69748
2	208-43-71520	・SEAL	2	65001-
3	208-43-71530	・SEAL	1	65001-
4	208-43-71590	・SEAL	2	65001-
5	01010-81230	BOLT	5	65001-
6	01643-31232	WASHER	5	65001-
7	208-43-71541	ADJUSTER	1	65001-
8	01245-01025	SCREW	2	65001-
9	208-43-71551	ADJUSTER	1	65001-
10	01245-01025	SCREW	2	65001-
11	22U-43-21260	WIRE	2	60001-
12	22U-43-21390	CAP	1	65001-
13	208-43-71560	FRAME	1	65001-
14	20Y-54-65340	NUT	4	60001-
15	01643-71032	WASHER	4	60001-
16	20Y-54-65540	CAP	2	60001-
17	20Y-979-6630	CATCHER	1	65001-
18	208-43-71570	FRAME	1	65001-
19	01010-D1230	BOLT	4	60001-
20	22U-54-25170	WASHER	4	60001-

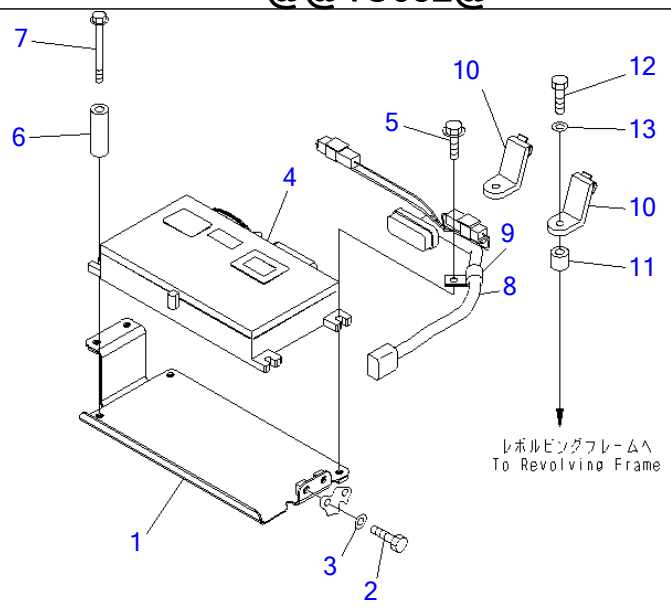

PW1C652

Ref K1110-25A0 **Page 211850**

PC220-7 S/N 60001-UP (Overseas Version)

FLOOR FRAME (KOMTRAX)(#60001-65000)

Item	Part No.	Part Name	Qty	Serial No.
1	20Y-43-31241	BRACKET	1	60001-65000
2	01010-D0825	BOLT	3	60001-65000
3	01643-70823	WASHER	3	60001-65000
4	(7826-20-5061)	CONTROLLER	1	60571-65000
	(□7826-20-5060)	CONTROLLER	1	60501-60570
	(7826-20-5003)	CONTROLLER	1	60224-60500
	(7826-20-5002)	CONTROLLER	1	60063-60223
	(7826-20-5001)	CONTROLLER	1	60001-60062
5	01435-40825	BOLT	2	60001-65000
6	6204-81-9560	SPACER	1	60001-65000
7	01435-00890	BOLT	1	60001-65000
8	20Y-06-31250	WIRING HARNESS	1	60001-65000
9	04434-51408	CLIP	1	60001-65000
10	08058-10840	CLIP	2	60001-65000
11	175-79-83760	SPACER	2	60001-65000
12	01010-80845	BOLT	2	60001-65000
13	01643-30823	WASHER	2	60001-65000

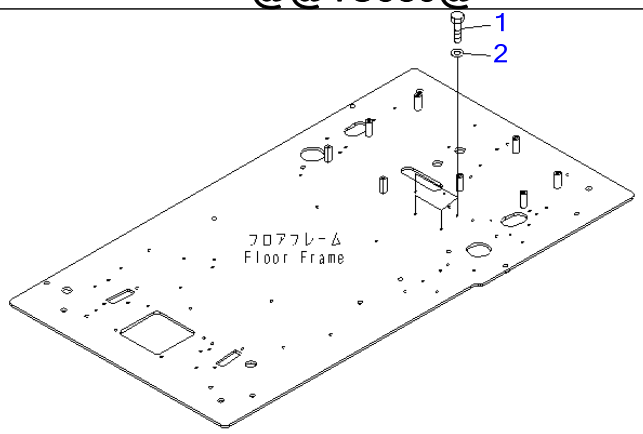

PW1C589

Ref K1110-25A2 **Page 211860**

PC220-7 S/N 60001-UP (Overseas Version)

FLOOR FRAME (KOMTRAX LESS)(#60001-65000)

Item	Part No.	Part Name	Qty	Serial No.
1	01010-D0816	BOLT	4	60001-65000
2	01643-70823	WASHER	4	60001-65000

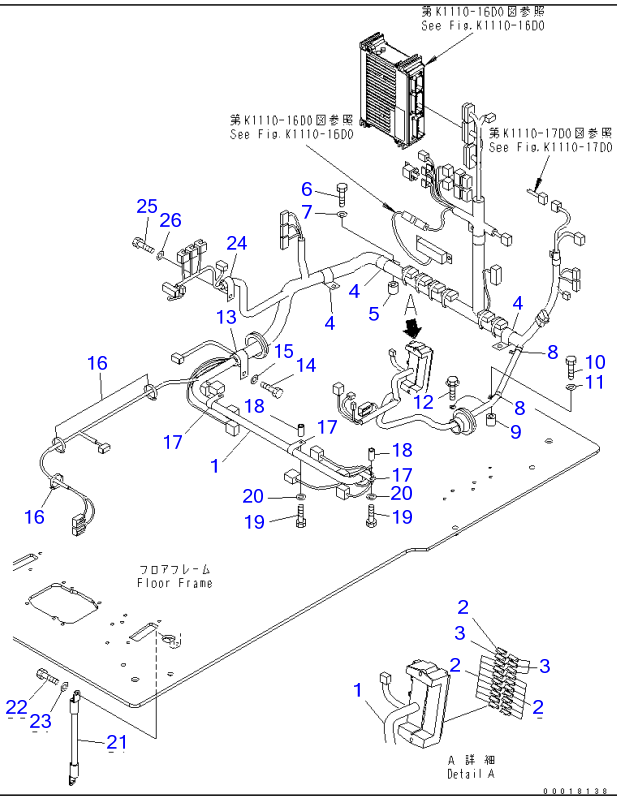

Ref K1110-25D0 **Page 211870**

PC220-7 S/N 60001-UP (Overseas Version)

FLOOR FRAME (OPERATOR'S CAB) (HARNESS)(#65001-65530)

Item	Part No.	Part Name	Qty	Serial No.
1	20Y-06-71510	WIRING HARNESS	1	65001-65530
2	08041-01000	▪ FUSE, 10A	16	60001-@
3	08041-02000	▪ FUSE, 20A	4	60001-@
4	04434-53411	CLIP	3	65001-@
5	195-33-11220	SPACER	3	65001-@
6	01010-81040	BOLT	3	65001-@
7	01643-31032	WASHER	3	65001-@
8	04434-51710	CLIP	2	65001-@
9	195-33-11220	SPACER	2	65001-@
10	01010-81040	BOLT	2	65001-@
11	01643-31032	WASHER	2	65001-@
12	01435-01016	BOLT	1	65001-65530
13	04434-53411	CLIP	1	65001-@
14	01010-81020	BOLT	1	65001-@
15	01643-31032	WASHER	1	65001-@
16	08034-20519	BAND	3	65001-@
17	04434-52310	CLIP	3	65001-@
18	195-33-11220	SPACER	3	65001-@
19	01010-81040	BOLT	3	65001-@
20	01643-31032	WASHER	3	65001-@
21	08028-43030	CABLE, GROUND	1	60001-@
22	01010-81020	BOLT	1	60001-@
23	01643-31032	WASHER	1	60001-@
24	04434-51910	CLIP	1	65001-@
25	01010-81020	BOLT	1	65001-@
26	01643-31032	WASHER	1	65001-@

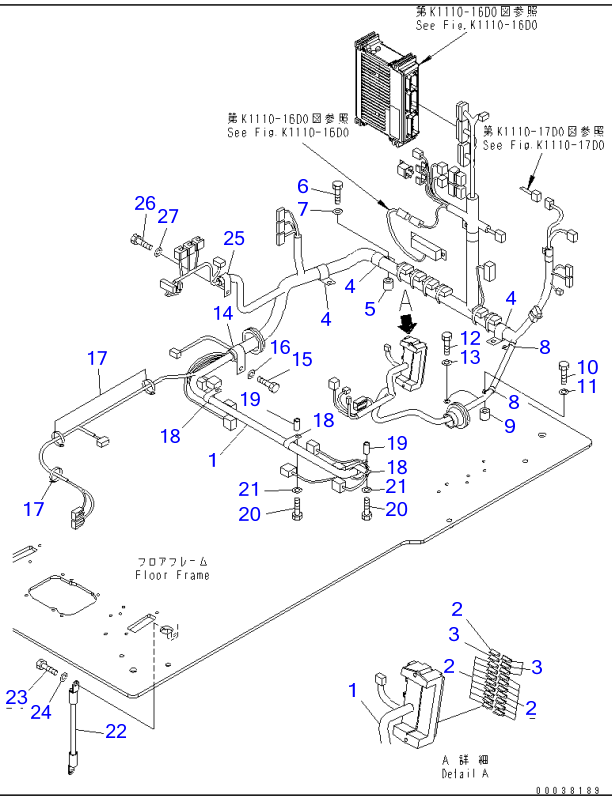

Ref K1110-25D0A **Page 211880**

PC220-7 S/N 60001-UP (Overseas Version)

FLOOR FRAME (OPERATOR'S CAB) (HARNESS)(#65531-)

Item	Part No.	Part Name	Qty	Serial No.
1	20Y-06-71512	WIRING HARNESS	1	66185-
	20Y-06-71511	WIRING HARNESS	1	65531-66184
2	08041-01000	▪ FUSE, 10A	16	60001-
3	08041-02000	▪ FUSE, 20A	4	60001-
4	04434-53411	CLIP	3	65001-
5	195-33-11220	SPACER	3	65001-
6	01010-81040	BOLT	3	65001-
7	01643-31032	WASHER	3	65001-
8	04434-51710	CLIP	2	65001-
9	195-33-11220	SPACER	2	65001-
10	01010-81040	BOLT	2	65001-
11	01643-31032	WASHER	2	65001-
12	01010-81016	BOLT	1	65531-
13	01643-31032	WASHER	1	65531-
14	04434-53411	CLIP	1	65001-
15	01010-81020	BOLT	1	65001-
16	01643-31032	WASHER	1	65001-
17	08034-20519	BAND	3	65001-
18	04434-52310	CLIP	3	65001-
19	195-33-11220	SPACER	3	65001-
20	01010-81040	BOLT	3	65001-
21	01643-31032	WASHER	3	65001-
22	08028-43030	CABLE, GROUND	1	60001-
23	01010-81020	BOLT	1	60001-
24	01643-31032	WASHER	1	60001-
25	04434-51910	CLIP	1	65001-
26	01010-81020	BOLT	1	65001-
27	01643-31032	WASHER	1	65001-

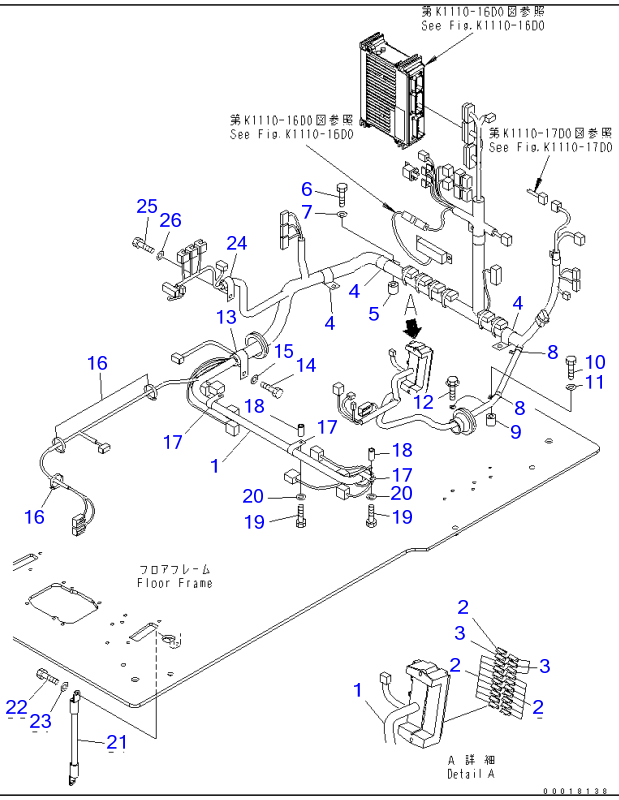

Ref K1110-25M0 Page 211890

PC220-7 S/N 60001-UP (Overseas Version)

FLOOR FRAME (OPERATOR'S CAB) (HARNESS) (COLD WEATHER SPEC.)(#65001-65530)

Item	Part No.	Part Name	Qty	Serial No.
1	20Y-06-71520	WIRING HARNESS	1	65001-65530
2	08041-01000	▪ FUSE, 10A 10A	16	60001-@
3	08041-02000	▪ FUSE, 20A 20A	4	60001-@
4	04434-53411	CLIP	3	65001-@
5	195-33-11220	SPACER	3	65001-@
6	01010-81040	BOLT	3	65001-@
7	01643-31032	WASHER	3	65001-@
8	04434-51710	CLIP	2	65001-@
9	195-33-11220	SPACER	2	65001-@
10	01010-81040	BOLT	2	65001-@
11	01643-31032	WASHER	2	65001-@
12	01435-01016	BOLT	1	65001-65530
13	04434-53411	CLIP	1	65001-@
14	01010-81020	BOLT	1	65001-@
15	01643-31032	WASHER	1	65001-@
16	08034-20519	BAND	3	65001-@
17	04434-52310	CLIP	3	65001-@
18	195-33-11220	SPACER	3	65001-@
19	01010-81040	BOLT	3	65001-@
20	01643-31032	WASHER	3	65001-@
21	08028-43030	CABLE, GROUND	1	60001-@
22	01010-81020	BOLT	1	60001-@
23	01643-31032	WASHER	1	60001-@
24	04434-51910	CLIP	1	65001-@
25	01010-81020	BOLT	1	65001-@
26	01643-31032	WASHER	1	65001-@

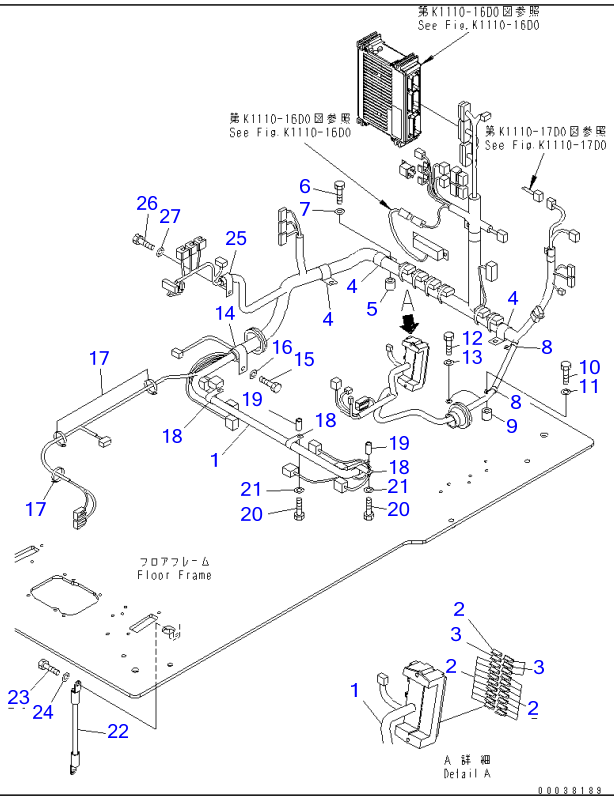

Ref K1110-25M0A **Page 211900**

PC220-7 S/N 60001-UP (Overseas Version)

FLOOR FRAME (OPERATOR'S CAB) (HARNESS) (COLD WEATHER SPEC.)(#65531-)

Item	Part No.	Part Name	Qty	Serial No.
1	20Y-06-71522	WIRING HARNESS	1	66185-
	20Y-06-71521	WIRING HARNESS	1	65531-66184
2	08041-01000	▪ FUSE, 10A 10A	16	60001-
3	08041-02000	▪ FUSE, 20A 20A	4	60001-
4	04434-53411	CLIP	3	65001-
5	195-33-11220	SPACER	3	65001-
6	01010-81040	BOLT	3	65001-
7	01643-31032	WASHER	3	65001-
8	04434-51710	CLIP	2	65001-
9	195-33-11220	SPACER	2	65001-
10	01010-81040	BOLT	2	65001-
11	01643-31032	WASHER	2	65001-
12	01010-81016	BOLT	1	65531-
13	01643-31032	WASHER	1	65531-
14	04434-53411	CLIP	1	65001-
15	01010-81020	BOLT	1	65001-
16	01643-31032	WASHER	1	65001-
17	08034-20519	BAND	3	65001-
18	04434-52310	CLIP	3	65001-
19	195-33-11220	SPACER	3	65001-
20	01010-81040	BOLT	3	65001-
21	01643-31032	WASHER	3	65001-
22	08028-43030	CABLE, GROUND	1	60001-
23	01010-81020	BOLT	1	60001-
24	01643-31032	WASHER	1	65001-
25	04434-51910	CLIP	1	65001-

FLOOR FRAME (OPERATOR'S CAB) (HARNESS) (COLD WEATHER SPEC.)(#65531-)

Item	Part No.	Part Name	Qty	Serial No.
26	01010-81020	BOLT	1	65001-
27	01643-31032	WASHER	1	65001-

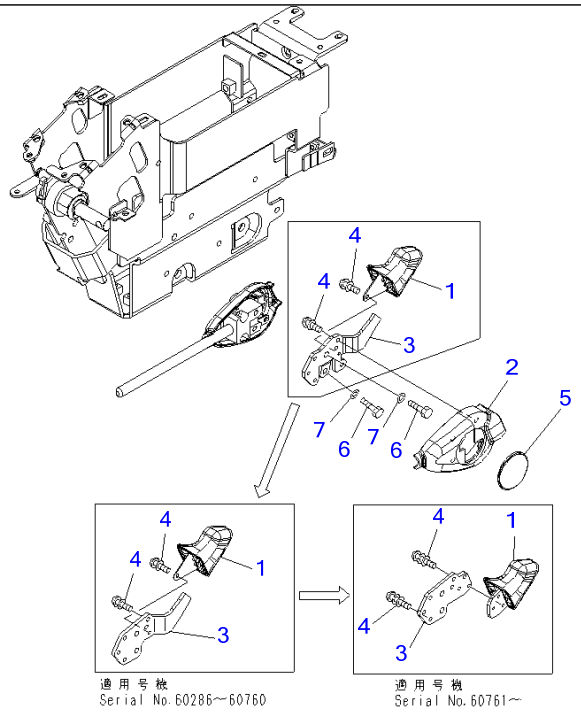

00004335

Ref K1110-26A0 **Page 211910**

PC220-7 S/N 60001-UP (Overseas Version)
FLOOR FRAME (LEVER KNOB)(#60001-65000)

Item	Part No.	Part Name	Qty	Serial No.
	20Y-43-31602	KNOB ASS'Y	1	60761-65000
	20Y-43-31601	KNOB ASS'Y	1	60286-60760
	20Y-43-31600	KNOB ASS'Y	1	60001-60285
1	20Y-43-31611	・KNOB	1	60761-65000
	20Y-43-31610	・KNOB	1	60001-60760
2	20Y-43-31620	・COVER	1	60001-65000
3	20Y-43-31632	・PLATE	1	60762-65000
	20Y-43-31631	・PLATE	1	60286-60760
	20Y-43-31630	・PLATE	1	60001-60285
4	01023-60412	・SCREW	6	60761-65000
	01023-60412	・SCREW	4	60286-60760
	01023-60412	・SCREW	5	60001-60285
5	20Y-43-31640	CAP	1	60001-65000
6	01010-80616	BOLT	2	60001-65000
7	01643-30623	WASHER	2	60001-65000

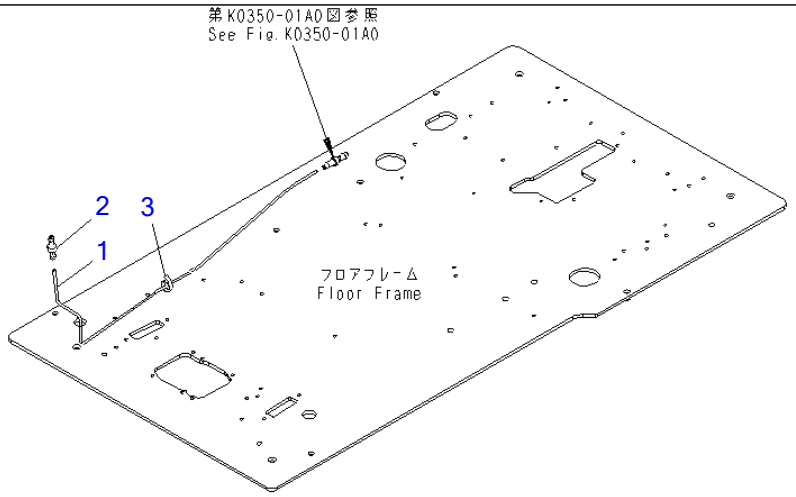

00011368

Ref K1110-26D0 **Page 211920**

PC220-7 S/N 60001-UP (Overseas Version)

FLOOR FRAME (OPERATOR'S CAB) (WINDOW WASHER)(#65001-)

Item	Part No.	Part Name	Qty	Serial No.
1	21T-06-71250	HOSE	1	60001-
2	207-06-61490	VALVE	1	60001-
3	08034-20519	BAND	1	65001-

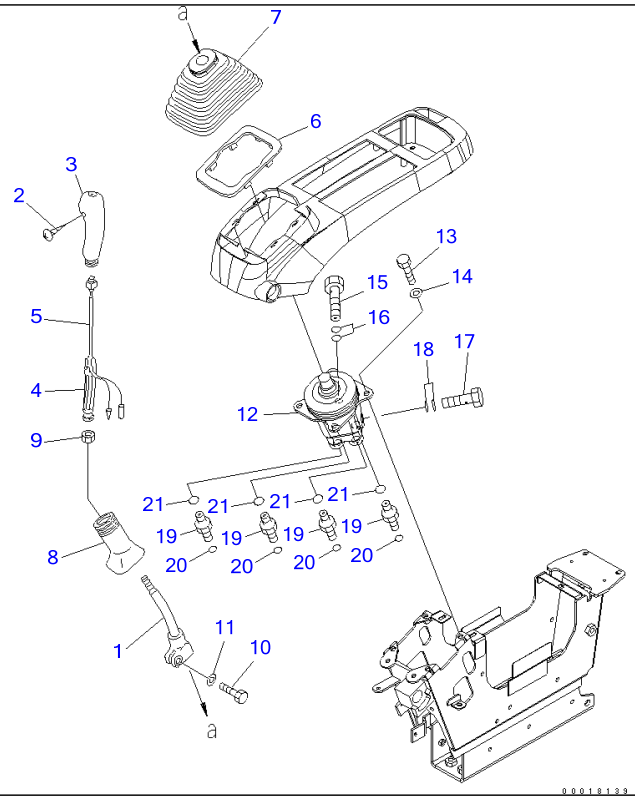

Ref K1110-27D0 **Page 211930**

PC220-7 S/N 60001-UP (Overseas Version)

FLOOR FRAME (OPERATOR'S CAB) (LEVER AND VALVE) (L.H.)(#65001-69252)

Item	Part No.	Part Name	Qty	Serial No.
1	20Y-43-22211	LEVER	1	60001-@
	22U-43-21181	KNOB	1	60001-69252
2	01370-10308	▪ SCREW	1	60001-69252
3	20Y-43-22381	▪ KNOB	1	60001-@
4	20Y-43-22421	▪ INSERT	1	60001-@
5	22U-43-21211	▪ SWITCH	1	60001-@
6	20Y-43-22250	PLATE	1	60001-@
7	20Y-43-22261	BOOT	1	60001-@
8	20Y-43-22370	BOOT	1	60001-@
9	600-411-1280	NUT	1	60001-@
10	01252-41025	BOLT	1	60001-@
11	01643-51032	WASHER	1	60001-@
12	(702-16-03530)	PILOT VALVE	1	60240-@
13	01010-80820	BOLT	4	60001-@
14	01643-30823	WASHER	4	60001-@
15	20Y-62-18910	PLUG	1	60001-@
16	07000-12018	O-RING	2	60001-@
17	20Y-62-18890	BOLT, JOINT	1	60001-@
18	07000-12015	O-RING	2	60001-@
19	11Y-62-12130	NIPPLE	4	60001-@
20	02896-11008	O-RING	4	60001-@
21	07002-11423	O-RING	4	60001-@

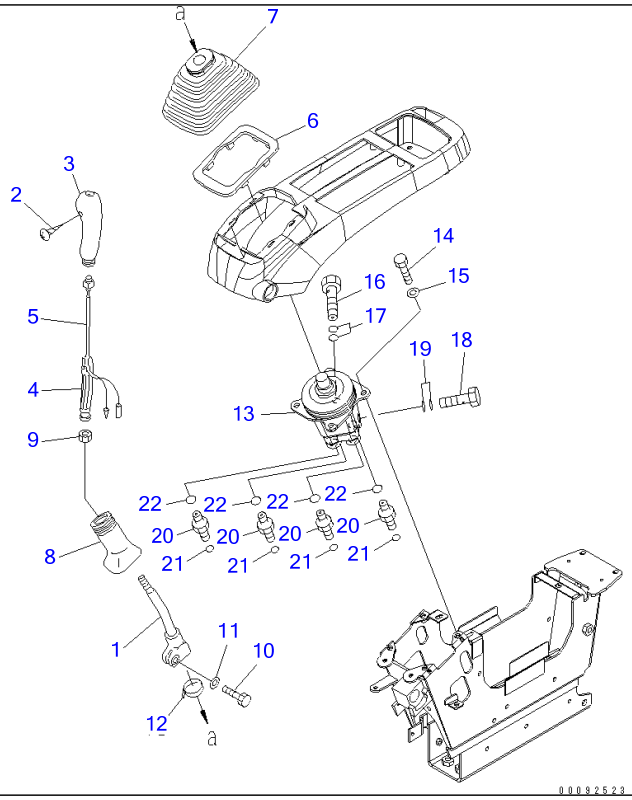

Ref K1110-27D0A **Page 211940**

PC220-7 S/N 60001-UP (Overseas Version)

FLOOR FRAME (OPERATOR'S CAB) (LEVER AND VALVE) (L.H.)(#69253-)

Item	Part No.	Part Name	Qty	Serial No.
1	20Y-43-22211	LEVER	1	60001-
	22U-43-21182	KNOB	1	69253-
2	☆	▪ SCREW	1	69253-
3	20Y-43-22381	▪ KNOB	1	60001-
4	20Y-43-22421	▪ INSERT	1	60001-
5	22U-43-21211	▪ SWITCH	1	60001-
6	20Y-43-22250	PLATE	1	60001-
7	20Y-43-22261	BOOT	1	60001-
8	20Y-43-22370	BOOT	1	60001-
9	600-411-1280	NUT	1	60001-
10	01252-41025	BOLT	1	60001-
11	01643-51032	WASHER	1	60001-
12	08034-20536	BAND	1	69253-69515
13	(702-16-03530)	PILOT VALVE	1	60240-
14	01010-80820	BOLT	4	60001-
15	01643-30823	WASHER	4	60001-
16	20Y-62-18910	PLUG	1	60001-
17	07000-12018	O-RING	2	60001-
18	20Y-62-18890	BOLT, JOINT	1	60001-
19	07000-12015	O-RING	2	60001-
20	11Y-62-12130	NIPPLE	4	60001-
21	02896-11008	O-RING	4	60001-
22	07002-11423	O-RING	4	60001-

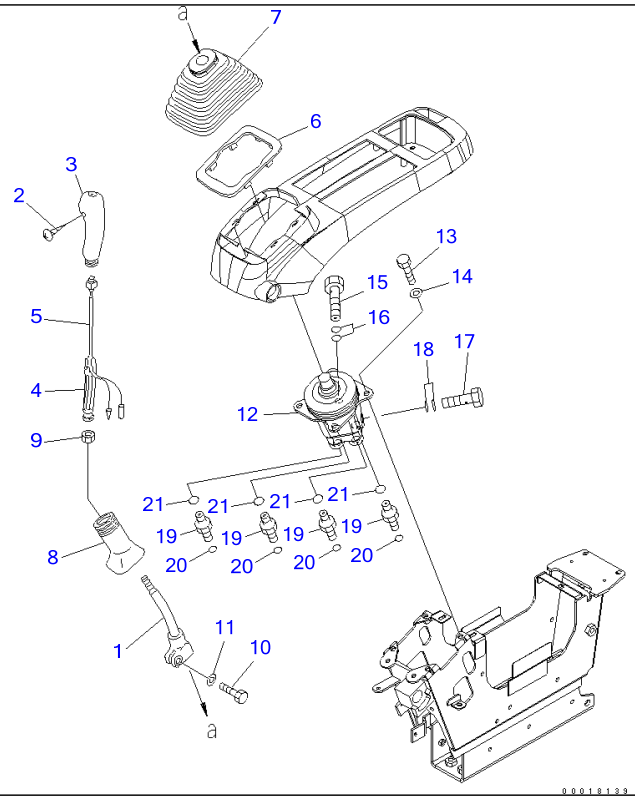

Ref K1110-27M5 **Page 211950**

PC220-7 S/N 60001-UP (Overseas Version)

FLOOR FRAME (OPERATOR'S CAB) (LEVER AND VALVE) (L.H.) (FOR HEATPROOF)(#65001-69252)

Item	Part No.	Part Name	Qty	Serial No.
1	20Y-43-22211	LEVER	1	65001-@
	22U-43-21181	KNOB	1	65001-69252
2	01370-10308	▪ SCREW	1	65001-69252
3	20Y-43-22381	▪ KNOB	1	65001-@
4	20Y-43-22421	▪ INSERT	1	65001-@
5	22U-43-21211	▪ SWITCH	1	65001-@
6	20Y-43-22250	PLATE	1	65001-@
7	20Y-43-22261	BOOT	1	65001-@
8	20Y-43-22370	BOOT	1	65001-@
9	600-411-1280	NUT	1	65001-@
10	01252-41025	BOLT	1	65001-@
11	01643-51032	WASHER	1	65001-@
12	(702-16-03910)	PILOT VALVE	1	65001-@
13	01010-80820	BOLT	4	65001-@
14	01643-30823	WASHER	4	65001-@
15	20Y-62-18910	PLUG	1	65001-@
16	07000-12018	O-RING	2	65001-@
17	20Y-62-18890	BOLT, JOINT	1	65001-@
18	07000-12015	O-RING	2	65001-@
19	11Y-62-12130	NIPPLE	4	65001-@
20	02896-11008	O-RING	4	65001-@
21	07002-11423	O-RING	4	65001-@

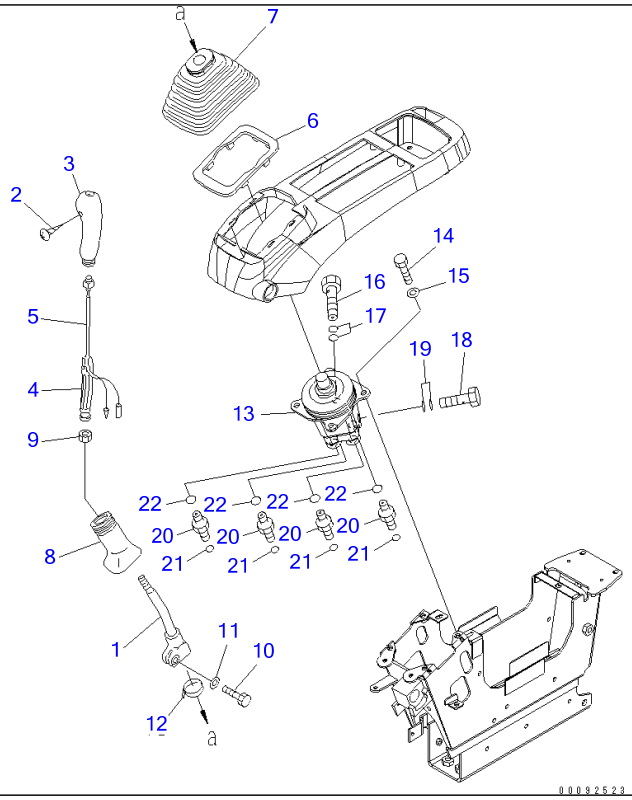

Ref K1110-27M5A **Page 211960**

PC220-7 S/N 60001-UP (Overseas Version)
FLOOR FRAME (OPERATOR'S CAB) (LEVER AND VALVE) (L.H.) (FOR HEATPROOF)(#69253-)

Item	Part No.	Part Name	Qty	Serial No.
1	20Y-43-22211	LEVER	1	65001-
	22U-43-21182	KNOB	1	69253-
2	☆	・SCREW	1	69253-
3	20Y-43-22381	・KNOB	1	65001-
4	20Y-43-22421	・INSERT	1	65001-
5	22U-43-21211	・SWITCH	1	65001-
6	20Y-43-22250	PLATE	1	65001-
7	20Y-43-22261	BOOT	1	65001-
8	20Y-43-22370	BOOT	1	65001-
9	600-411-1280	NUT	1	65001-
10	01252-41025	BOLT	1	65001-
11	01643-51032	WASHER	1	65001-
12	08034-20536	BAND	1	69253-69515
13	(702-16-03910)	PILOT VALVE	1	65001-
14	01010-80820	BOLT	4	65001-
15	01643-30823	WASHER	4	65001-
16	20Y-62-18910	PLUG	1	65001-
17	07000-12018	O-RING	2	65001-
18	20Y-62-18890	BOLT, JOINT	1	65001-
19	07000-12015	O-RING	2	65001-
20	11Y-62-12130	NIPPLE	4	65001-
21	02896-11008	O-RING	4	65001-
22	07002-11423	O-RING	4	65001-

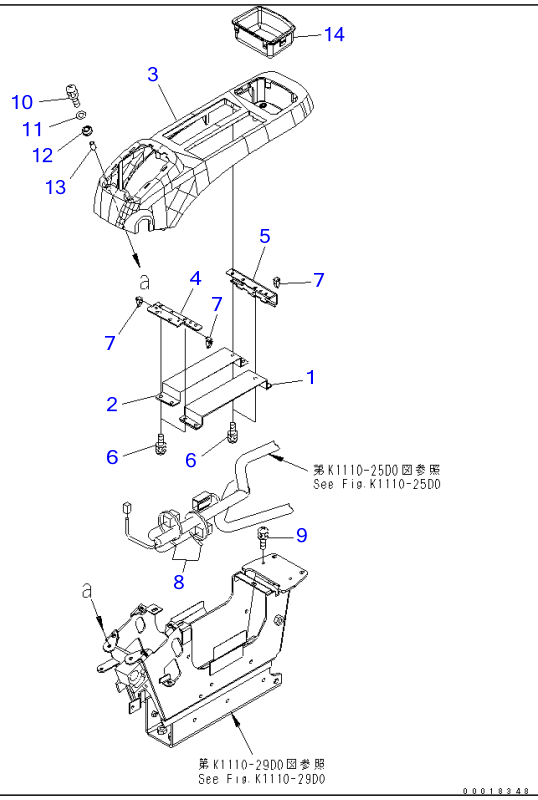

Ref K1110-28D9 **Page 211970**

PC220-7 S/N 60001-UP (Overseas Version)

FLOOR FRAME (OPERATOR'S CAB) (CONSOLE) (UPPER) (WITHOUT AIR CONDITIONER AND RADIO) (L.H.)(#65001-)

Item	Part No.	Part Name	Qty	Serial No.
1	20Y-43-31460	COVER	1	60001-
2	20Y-43-31470	COVER	1	60001-
3	208-43-71680	COVER	1	65001-
4	22U-43-22220	PLATE	1	60001-
5	22U-43-22230	STAY	1	60001-
6	01023-60516	SCREW	10	60001-
7	20Y-06-23770	CLIP	3	60001-
8	08034-20414	BAND	2	60001-
9	01023-60620	SCREW	2	65001-
10	01023-60630	SCREW	2	65001-
11	01640-20610	WASHER	2	65001-
12	208-43-71610	CUSHION	2	65001-
13	208-43-71620	PIPE	2	65001-
14	22U-43-22110	TRAY	1	60001-

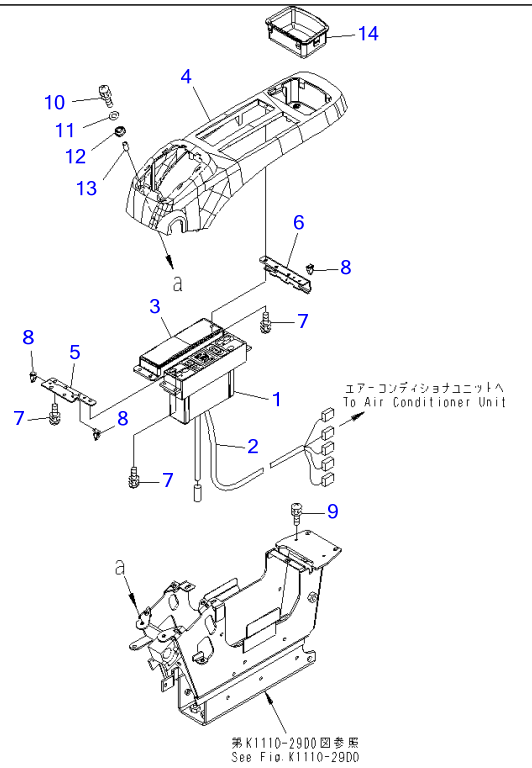

PC220-7 S/N 60001-UP (Overseas Version)

FLOOR FRAME (OPERATOR'S CAB) (CONSOLE) (UPPER) (WITHOUT RADIO) (L.H.)(#65001-)

Item	Part No.	Part Name	Qty	Serial No.
1	208-979-7630	PANEL ASS'Y	1	65001-
2	208-979-7550	WIRING HARNESS	1	65001-
3	22U-43-22550	COVER	1	60001-
4	208-43-71680	COVER	1	65001-
5	22U-43-22220	PLATE	1	60001-
6	22U-43-22230	STAY	1	60001-
7	01023-60516	SCREW	10	60001-
8	20Y-06-23770	CLIP	3	60001-
9	01023-60620	SCREW	2	65001-
10	01023-60630	SCREW	2	65001-
11	01640-20610	WASHER	2	65001-
12	208-43-71610	CUSHION	2	65001-
13	208-43-71620	PIPE	2	65001-
14	22U-43-22110	TRAY	1	60001-

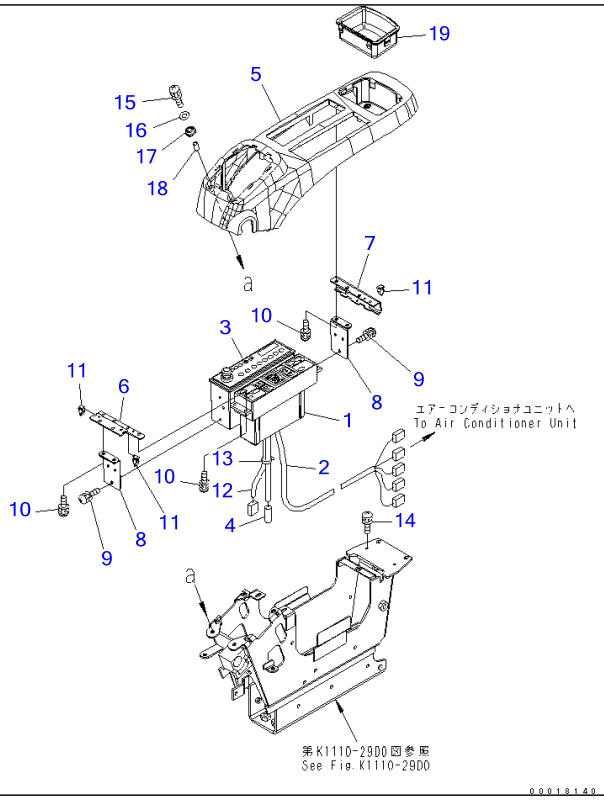

Ref K1110-28E2 **Page 211990**

PC220-7 S/N 60001-UP (Overseas Version)

FLOOR FRAME (OPERATOR'S CAB) (CONSOLE) (UPPER) (WITH AIR CONDITIONER AND RADIO) (L.H.) (FOR ASIA)(#65001-)

Item	Part No.	Part Name	Qty	Serial No.
1	208-979-7630	PANEL ASS'Y	1	65001-
2	208-979-7550	WIRING HARNESS	1	65001-
3	20Y-06-42430	RADIO	1	69253-
	☐20Y-06-41239	RADIO	1	69082-69252
	☐20Y-06-41238	RADIO	1	67442-69081
	☐20Y-06-41237	RADIO	1	67319-67441
	☐20Y-06-41235	RADIO	1	66780-67318
	☐20Y-06-41233	RADIO	1	66185-66779
	☐20Y-06-41232	RADIO	1	65986-66184
	☐20Y-06-41230	RADIO	1	65375-65985
	☐20Y-06-22730	RADIO	1	60001-65374
4	08912-51600	CORD	1	60001-
5	208-43-71680	COVER	1	65001-
6	22U-43-22220	PLATE	1	60001-
7	22U-43-22230	STAY	1	60001-
8	22U-06-22510	BRACKET	2	60001-
9	01023-60510	SCREW	4	60001-
10	01023-60516	SCREW	10	60001-
11	20Y-06-23770	CLIP	3	60001-
12	22U-06-22350	WIRING HARNESS	1	60001-
13	08034-00310	BAND	1	60001-
14	01023-60620	SCREW	2	65001-
15	01023-60630	SCREW	2	65001-
16	01640-20610	WASHER	2	65001-
17	208-43-71610	CUSHION	2	65001-
18	208-43-71620	PIPE	2	65001-

FLOOR FRAME (OPERATOR'S CAB) (CONSOLE) (UPPER) (WITH AIR CONDITIONER AND RADIO) (L.H.) (FOR ASIA)(#65001-)

Item	Part No.	Part Name	Qty	Serial No.
19	22U-43-22110	TRAY	1	60001-

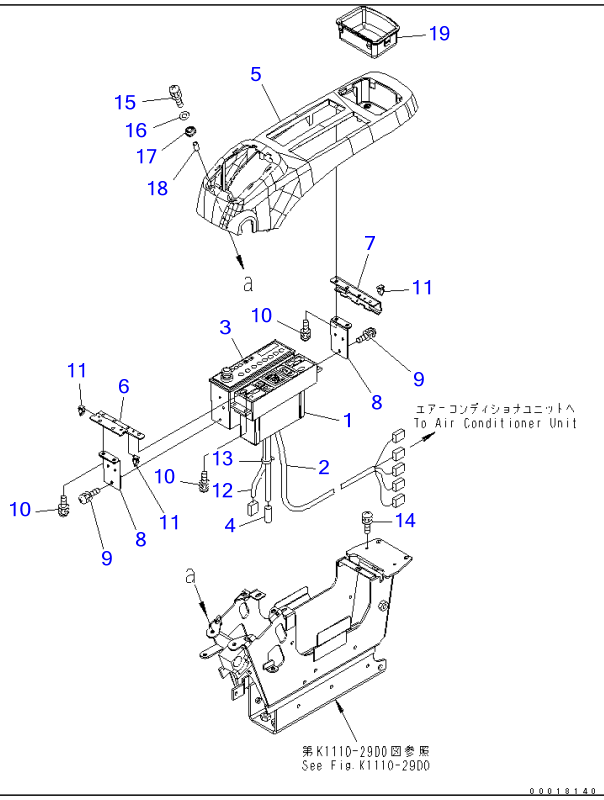

PC220-7 S/N 60001-UP (Overseas Version)

FLOOR FRAME (OPERATOR'S CAB) (CONSOLE) (UPPER) (WITH AIR CONDITIONER AND RADIO) (FOR U.S.A.) (L.H.)(#65001-)

Item	Part No.	Part Name	Qty	Serial No.
1	208-979-7630	PANEL ASS'Y	1	65001-
2	208-979-7550	WIRING HARNESS	1	65001-
3	20Y-06-42440	RADIO	1	69253-
	☐20Y-06-41249	RADIO	1	69185-69252
	☐20Y-06-41248	RADIO	1	67518-69184
	☐20Y-06-41247	RADIO	1	67354-67517
	☐20Y-06-41246	RADIO	1	67321-67353
	☐20Y-06-41245	RADIO	1	66791-67320
	☐20Y-06-41243	RADIO	1	66185-66790
	☐20Y-06-41242	RADIO	1	65986-66184
	☐20Y-06-41240	RADIO	1	65375-65985
	☐20Y-06-22741	RADIO	1	60001-65374
4	08912-51600	CORD	1	60001-
5	208-43-71680	COVER	1	65001-
6	22U-43-22220	PLATE	1	60001-
7	22U-43-22230	STAY	1	60001-
8	22U-06-22510	BRACKET	2	60001-
9	01023-60510	SCREW	4	60001-
10	01023-60516	SCREW	10	60001-
11	20Y-06-23770	CLIP	3	60001-
12	22U-06-22350	WIRING HARNESS	1	60001-
13	08034-00310	BAND	1	60001-
14	01023-60620	SCREW	2	65001-
15	01023-60630	SCREW	2	65001-
16	01640-20610	WASHER	2	65001-
17	208-43-71610	CUSHION	2	65001-

FLOOR FRAME (OPERATOR'S CAB) (CONSOLE) (UPPER) (WITH AIR CONDITIONER AND RADIO) (FOR U.S.A.) (L.H.)(#65001-)

Item	Part No.	Part Name	Qty	Serial No.
18	208-43-71620	PIPE	2	65001-
19	22U-43-22110	TRAY	1	60001-

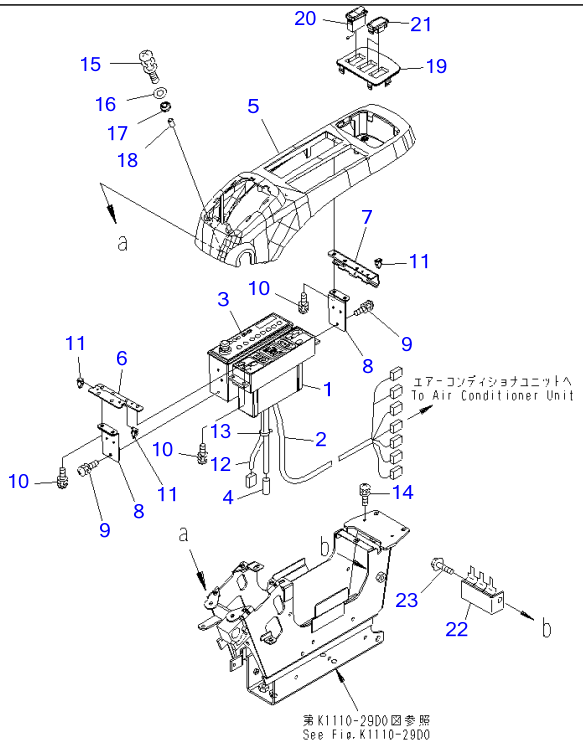

Ref K1110-28E4 **Page 212010**

PC220-7 S/N 60001-UP (Overseas Version)

FLOOR FRAME (OPERATOR'S CAB) (CONSOLE) (UPPER) (WITH BIG WIND AIR CONDITIONER AND RADIO) (L.H.)(#65001-)

Item	Part No.	Part Name	Qty	Serial No.
1	208-979-7630	PANEL ASS'Y	1	65001-
2	208-979-7891	WIRING HARNESS	1	65001-
3	20Y-06-42430	RADIO	1	69082-
	☐20Y-06-41236	RADIO	1	67319-69081
	☐20Y-06-41235	RADIO	1	66780-67318
	☐20Y-06-41233	RADIO	1	66185-66779
	☐20Y-06-41232	RADIO	1	65986-66184
	☐20Y-06-41230	RADIO	1	65375-65985
	☐20Y-06-22730	RADIO	1	60001-65374
4	08912-51600	CORD	1	60001-
5	208-43-71680	COVER	1	65001-
6	22U-43-22220	PLATE	1	60001-
7	22U-43-22230	STAY	1	60001-
8	22U-06-22510	BRACKET	2	60001-
9	01023-60510	SCREW	4	60001-
10	01023-60516	SCREW	10	60001-
11	20Y-06-23770	CLIP	3	60001-
12	22U-06-22350	WIRING HARNESS	1	60001-
13	08034-00310	BAND	1	60001-
14	01023-60620	SCREW	2	65001-
15	01023-60630	SCREW	2	65001-
16	01640-20610	WASHER	2	65001-
17	208-43-71610	CUSHION	2	65001-
18	208-43-71620	PIPE	2	65001-
19	22U-43-22120	PANEL	1	60001-
20	23A-952-1510	SWITCH	1	60001-

FLOOR FRAME (OPERATOR'S CAB) (CONSOLE) (UPPER) (WITH BIG WIND AIR CONDITIONER AND RADIO) (L.H.)(#65001-)

Item	Part No.	Part Name	Qty	Serial No.
21	22U-06-22320	COVER	2	60001-
22	22U-43-22451	BRACKET	1	65001-
23	01435-01020	BOLT	1	60001-

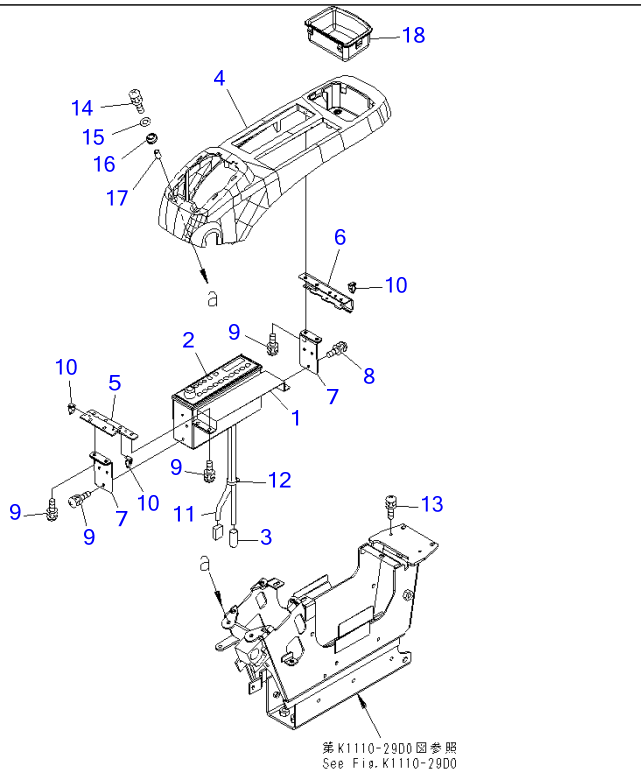

Ref K1110-28G1 **Page 212020**

PC220-7 S/N 60001-UP (Overseas Version)

FLOOR FRAME (OPERATOR'S CAB) (CONSOLE) (UPPER) (WITH RADIO) (L.H.) (FOR ASIA)(#65001-)

Item	Part No.	Part Name	Qty	Serial No.
1	20Y-43-31460	COVER	1	65001-
2	20Y-06-42430	RADIO	1	69253-
	☐20Y-06-41239	RADIO	1	69082-69252
	☐20Y-06-41238	RADIO	1	67422-69081
	☐20Y-06-41237	RADIO	1	67420-67421
	☐20Y-06-41236	RADIO	1	67182-67419
	☐20Y-06-41235	RADIO	1	66494-67181
	☐20Y-06-41233	RADIO	1	66185-66493
	☐20Y-06-41232	RADIO	1	65986-66184
	☐20Y-06-41230	RADIO	1	65375-65985
	☐20Y-06-22730	RADIO	1	60001-65374
3	08912-51600	CORD	1	60001-
4	208-43-71680	COVER	1	65001-
5	22U-43-22220	PLATE	1	60001-
6	22U-43-22230	STAY	1	60001-
7	22U-06-22510	BRACKET	2	60001-
8	01023-60510	SCREW	4	60001-
9	01023-60516	SCREW	10	60001-
10	20Y-06-23770	CLIP	3	60001-
11	22U-06-22350	WIRING HARNESS	1	65001-
12	08034-00310	BAND	1	65001-
13	01023-60620	SCREW	2	65001-
14	01023-60630	SCREW	2	65001-
15	01640-20610	WASHER	2	65001-
16	208-43-71610	CUSHION	2	65001-
17	208-43-71620	PIPE	2	65001-

FLOOR FRAME (OPERATOR'S CAB) (CONSOLE) (UPPER) (WITH RADIO) (L.H.) (FOR ASIA)(#65001-)

Item	Part No.	Part Name	Qty	Serial No.
18	22U-43-22110	TRAY	1	60001-

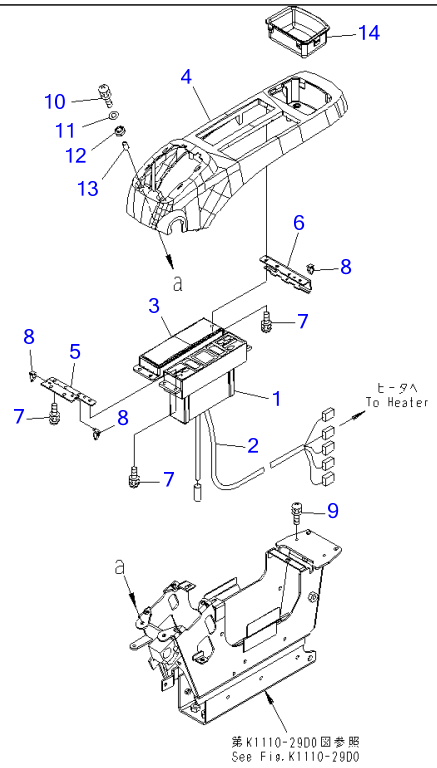

Ref K1110-28M0 **Page 212030**

PC220-7 S/N 60001-UP (Overseas Version)

FLOOR FRAME (OPERATOR'S CAB) (CONSOLE) (UPPER) (WITHOUT RADIO) (L.H.) (COLD WEATHER A SPEC.)(#65001-)

Item	Part No.	Part Name	Qty	Serial No.
1	20Y-979-7450	CONTROL ASS'Y	1	65001-
2	20Y-979-7490	WIRING HARNESS	1	65001-
3	22U-43-22550	COVER	1	60001-
4	208-43-71680	COVER	1	65001-
5	22U-43-22220	PLATE	1	60001-
6	22U-43-22230	STAY	1	60001-
7	01023-60516	SCREW	10	60001-
8	20Y-06-23770	CLIP	3	60001-
9	01023-60620	SCREW	2	65001-
10	01023-60630	SCREW	2	65001-
11	01640-20610	WASHER	2	65001-
12	208-43-71610	CUSHION	2	65001-
13	208-43-71620	PIPE	2	65001-
14	22U-43-22110	TRAY	1	60001-

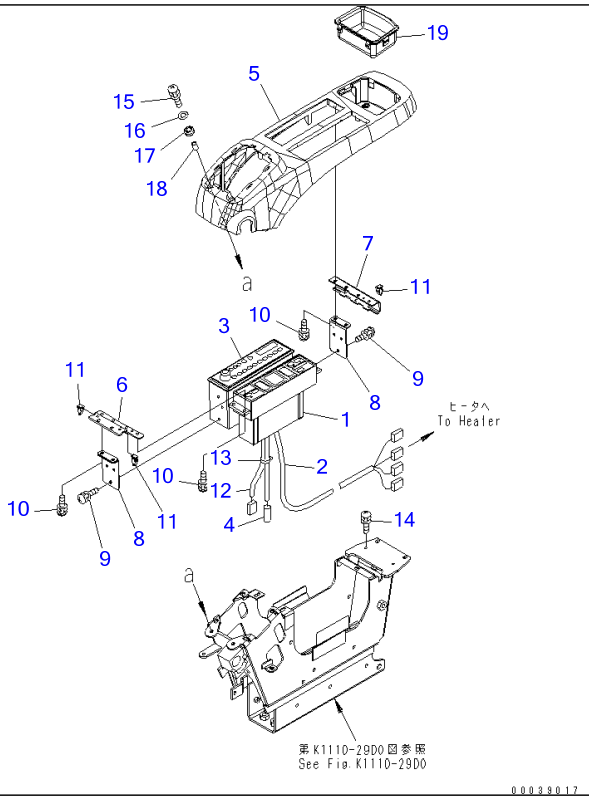

Ref K1110-28M1 Page 212040

PC220-7 S/N 60001-UP (Overseas Version)

FLOOR FRAME (OPERATOR'S CAB) (CONSOLE) (UPPER) (WITH RADIO) (COLD WEATHER A SPEC.) (L.H.)(#65001-)

Item	Part No.	Part Name	Qty	Serial No.
1	20Y-979-7450	CONTROL ASS'Y	1	65001-
2	208-979-7550	WIRING HARNESS	1	65001-
3	20Y-06-42430	RADIO	1	69253-
	☐20Y-06-41239	RADIO	1	69065-69252
	☐20Y-06-41238	RADIO	1	67442-69064
	☐20Y-06-41237	RADIO	1	67319-67441
	☐20Y-06-41236	RADIO	1	67182-67318
	☐20Y-06-41235	RADIO	1	66494-67181
	☐20Y-06-41233	RADIO	1	66185-66493
	☐20Y-06-41232	RADIO	1	65986-66184
	☐20Y-06-41230	RADIO	1	65375-65985
	☐20Y-06-22730	RADIO	1	60001-65374
4	08912-51600	CORD	1	60001-
5	208-43-71680	COVER	1	65001-
6	22U-43-22220	PLATE	1	60001-
7	22U-43-22230	STAY	1	60001-
8	22U-06-22510	BRACKET	2	60001-
9	01023-60510	SCREW	4	60001-
10	01023-60516	SCREW	10	60001-
11	20Y-06-23770	CLIP	3	60001-
12	22U-06-22350	WIRING HARNESS	1	60001-
13	08034-00310	BAND	1	60001-
14	01023-60620	SCREW	2	65001-
15	01023-60630	SCREW	2	65001-
16	01640-20610	WASHER	2	65001-
17	208-43-71610	CUSHION	2	65001-

FLOOR FRAME (OPERATOR'S CAB) (CONSOLE) (UPPER) (WITH RADIO) (COLD WEATHER A SPEC.) (L.H.)(#65001-)

Item	Part No.	Part Name	Qty	Serial No.
18	208-43-71620	PIPE	2	65001-
19	22U-43-22110	TRAY	1	60001-

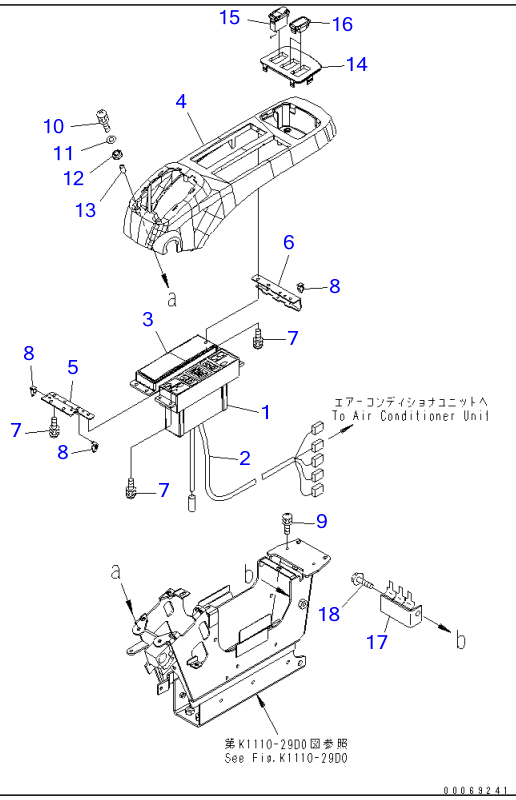

Ref K1110-28M6 Page 212050

PC220-7 S/N 60001-UP (Overseas Version)

FLOOR FRAME (OPERATOR'S CAB) (CONSOLE) (UPPER) (WITH BIG WIND AIR CON.) (WITHOUT RADIO) (L.H.)(#65001-)

Item	Part No.	Part Name	Qty	Serial No.
1	208-979-7630	PANEL ASS'Y	1	65001-
2	208-979-7891	WIRING HARNESS	1	65001-
3	22U-43-22550	COVER	1	65001-
4	208-43-71680	COVER	1	65001-
5	22U-43-22220	PLATE	1	65001-
6	22U-43-22230	STAY	1	65001-
7	01023-60516	SCREW	10	65001-
8	20Y-06-23770	CLIP	3	65001-
9	01023-60620	SCREW	2	65001-
10	01023-60630	SCREW	2	65001-
11	01640-20610	WASHER	2	65001-
12	208-43-71610	CUSHION	2	65001-
13	208-43-71620	PIPE	2	65001-
14	22U-43-22120	PANEL	1	65001-
15	23A-952-1510	SWITCH	1	65001-
16	22U-06-22320	COVER	2	65001-
17	22U-43-22451	BRACKET	1	65001-
18	01435-01020	BOLT	1	65001-

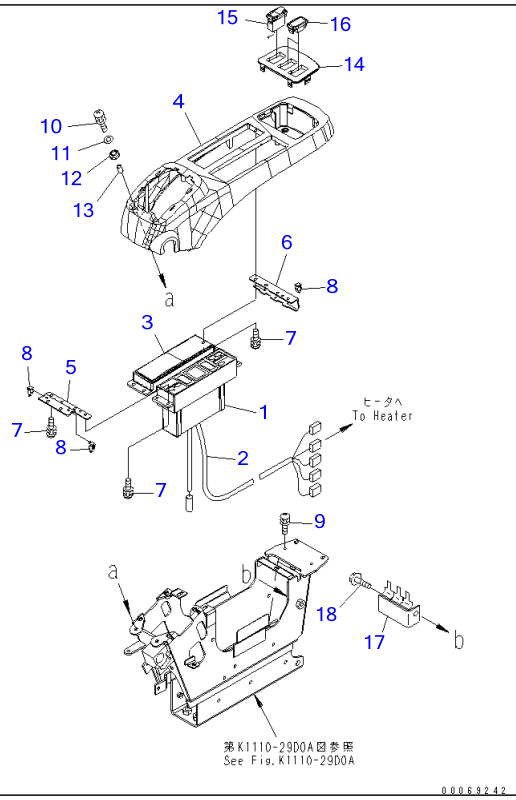

Ref K1110-28M7 **Page 212060**

PC220-7 S/N 60001-UP (Overseas Version)

FLOOR FRAME (OPERATOR'S CAB) (CONSOLE) (UPPER) (WITH HEATER AND BEACON) (WITHOUT RADIO) (L.H.)(#65001-)

Item	Part No.	Part Name	Qty	Serial No.
1	20Y-979-7450	CONTROL ASS'Y	1	65001-
2	20Y-979-7490	WIRING HARNESS	1	65001-
3	22U-43-22550	COVER	1	65001-
4	208-43-71680	COVER	1	65001-
5	22U-43-22220	PLATE	1	65001-
6	22U-43-22230	STAY	1	65001-
7	01023-60516	SCREW	10	65001-
8	20Y-06-23770	CLIP	3	65001-
9	01023-60620	SCREW	2	65001-
10	01023-60630	SCREW	2	65001-
11	01640-20610	WASHER	2	65001-
12	208-43-71610	CUSHION	2	65001-
13	208-43-71620	PIPE	2	65001-
14	22U-43-22120	PANEL	1	65001-
15	22U-06-22310	SWITCH ASS'Y	1	65001-
16	22U-06-22320	COVER	2	65001-
17	22U-43-22451	BRACKET	1	65001-
18	01435-01020	BOLT	1	65001-

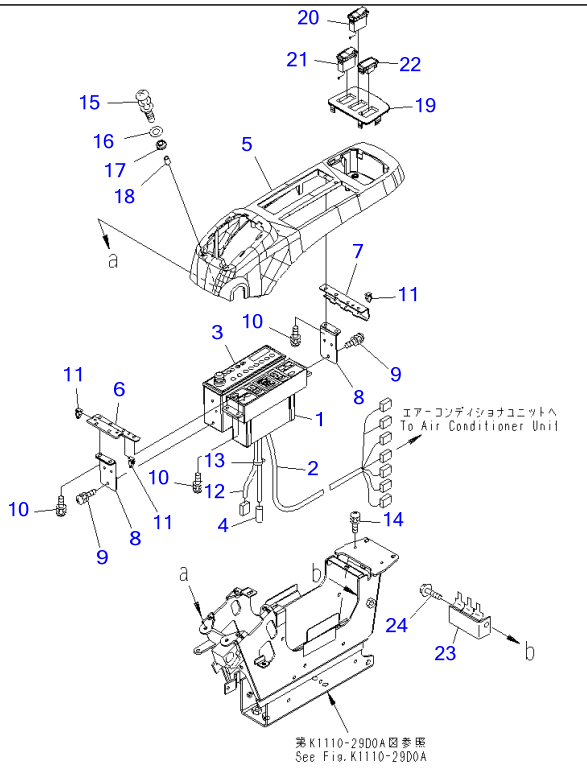

Ref K1110-28M8 **Page 212070**

PC220-7 S/N 60001-UP (Overseas Version)

FLOOR FRAME (OPERATOR'S CAB) (CONSOLE) (UPPER) (WITH BIG WIND AIR CON. AND RADIO) (L.H.) (BEACON)(#65001-)

Item	Part No.	Part Name	Qty	Serial No.
1	208-979-7630	PANEL ASS'Y	1	65001-
2	208-979-7891	WIRING HARNESS	1	65001-
3	20Y-06-41238	RADIO	1	67442-
	□20Y-06-41237	RADIO	1	67319-67441
	□20Y-06-41236	RADIO	1	67182-67318
	□20Y-06-41235	RADIO	1	66494-67181
	□20Y-06-41233	RADIO	1	66185-66493
	20Y-06-41232	RADIO	1	65986-66184
	20Y-06-41230	RADIO	1	65375-65985
	20Y-06-22730	RADIO	1	65375-65985
4	08912-51600	CORD	1	60001-
5	208-43-71680	COVER	1	65001-
6	22U-43-22220	PLATE	1	60001-
7	22U-43-22230	STAY	1	60001-
8	22U-06-22510	BRACKET	2	60001-
9	01023-60510	SCREW	4	60001-
10	01023-60516	SCREW	10	60001-
11	20Y-06-23770	CLIP	3	60001-
12	22U-06-22350	WIRING HARNESS	1	60001-
13	08034-00310	BAND	1	60001-
14	01023-60620	SCREW	2	65001-
15	01023-60630	SCREW	2	65001-
16	01640-20610	WASHER	2	65001-
17	208-43-71610	CUSHION	2	65001-
18	208-43-71620	PIPE	2	65001-
19	22U-43-22120	PANEL	1	60001-

FLOOR FRAME (OPERATOR'S CAB) (CONSOLE) (UPPER) (WITH BIG WIND AIR CON. AND RADIO) (L.H.) (BEACON)(#65001-)

Item	Part No.	Part Name	Qty	Serial No.
20	22U-06-22310	SWITCH ASS'Y	1	65001-
21	23A-952-1510	SWITCH	1	60001-
22	22U-06-22320	COVER	1	65001-
23	22U-43-22451	BRACKET	1	65001-
24	01435-01020	BOLT	1	65001-

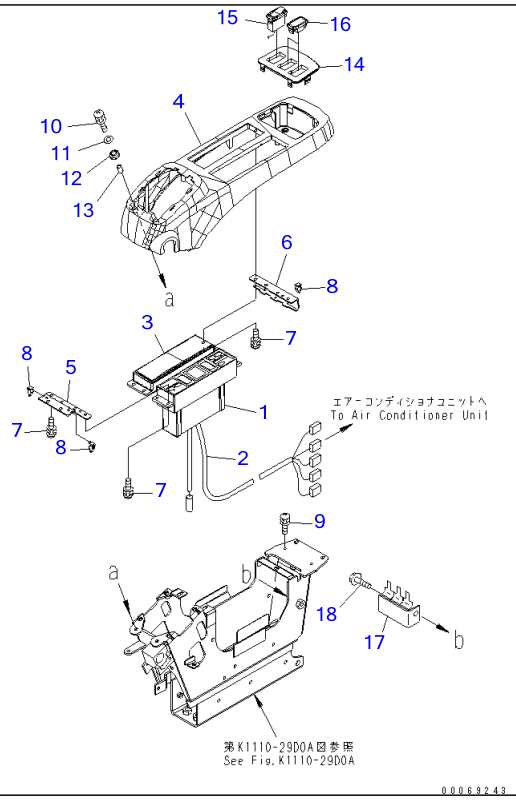

Ref K1110-28M9 Page 212080

PC220-7 S/N 60001-UP (Overseas Version)

FLOOR FRAME (OPERATOR'S CAB) (CONSOLE) (UPPER) (WITH AIR CON. AND BEACON) (WITHOUT RADIO) (L.H.)(#65001-)

Item	Part No.	Part Name	Qty	Serial No.
1	208-979-7630	PANEL ASS'Y	1	65001-
2	208-979-7550	WIRING HARNESS	1	65001-
3	22U-43-22550	COVER	1	65001-
4	208-43-71680	COVER	1	65001-
5	22U-43-22220	PLATE	1	65001-
6	22U-43-22230	STAY	1	65001-
7	01023-60516	SCREW	10	65001-
8	20Y-06-23770	CLIP	3	65001-
9	01023-60620	SCREW	2	65001-
10	01023-60630	SCREW	2	65001-
11	01640-20610	WASHER	2	65001-
12	208-43-71610	CUSHION	2	65001-
13	208-43-71620	PIPE	2	65001-
14	22U-43-22120	PANEL	1	65001-
15	22U-06-22310	SWITCH ASS'Y	1	65001-
16	22U-06-22320	COVER	2	65001-
17	22U-43-22451	BRACKET	1	65001-
18	01435-01020	BOLT	1	65001-

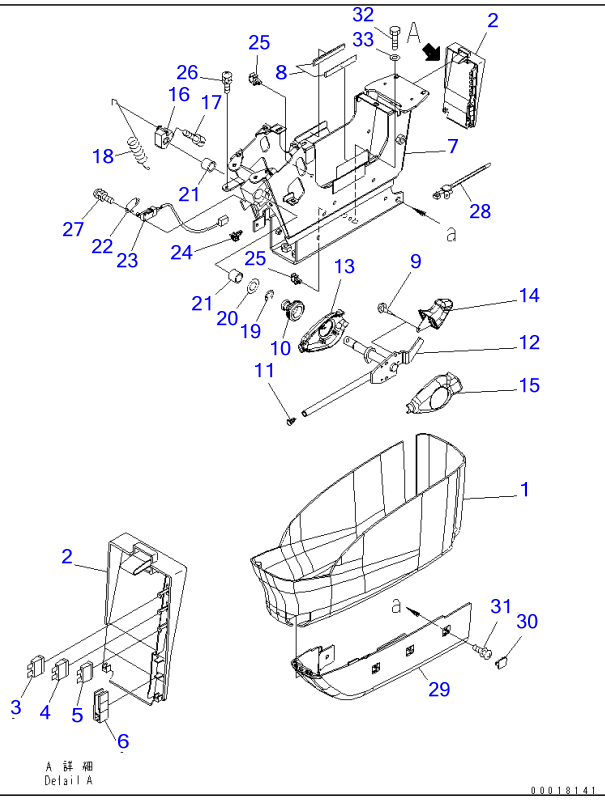

Ref K1110-29D0 **Page 212090**

PC220-7 S/N 60001-UP (Overseas Version)

FLOOR FRAME (OPERATOR'S CAB) (CONSOLE) (LOWER) (L.H.)(#65001-65518)

Item	Part No.	Part Name	Qty	Serial No.
1	22U-43-22310	COVER	1	60001-@
	22U-43-22320	COVER ASS'Y	1	60001-@
2	☆	・COVER	1	60001-@
3	08041-01000	・FUSE, 10A	1	60001-@
4	08041-02000	・FUSE, 20A	1	60001-@
5	08041-02500	・FUSE, 25A	1	60001-@
6	22U-43-22340	・PULLER	1	60001-@
7	20Y-43-31412	FRAME	1	65235-@
	20Y-43-31411	FRAME	1	65001-65234
8	208-43-71410	・SHEET	2	65001-@
9	01023-60410	SCREW	4	65001-65518
10	08037-11425	GROMMET	1	65001-@
11	208-53-12280	CAP	1	65001-@
12	20Y-43-31512	LEVER	1	65001-65518
13	20Y-43-31522	COVER	1	65001-@
14	20Y-43-31610	・KNOB	1	60001-@
15	20Y-43-31621	COVER	1	65001-@
16	20Y-43-31432	CAM	1	65001-@
17	01252-70816	BOLT	1	65001-@
18	20Y-43-31421	SPRING	1	65001-@
19	20Y-43-31440	RING	1	60001-@
20	20Y-43-31450	RING	1	60001-@
21	06124-01616	BEARING	2	60081-@
22	22U-06-22490	PLATE	1	60001-@
23	22U-06-22360	SWITCH ASS'Y	1	60001-@
24	22U-43-22410	CLIP	1	65001-@
25	22U-43-23260	CLIP	2	65001-@
26	01023-60616	SCREW	4	60081-@

FLOOR FRAME (OPERATOR'S CAB) (CONSOLE) (LOWER) (L.H.)(#65001-65518)

Item	Part No.	Part Name	Qty	Serial No.
27	01023-60316	SCREW	2	65001-@
28	22U-43-22430	CLIP	1	60001-@
29	20Y-43-31690	COVER	1	60001-@
30	22U-43-22830	CAP	3	60001-@
31	01023-20614	SCREW	4	60001-@
32	01010-81030	BOLT	4	60001-@
33	01643-31032	WASHER	4	60001-@

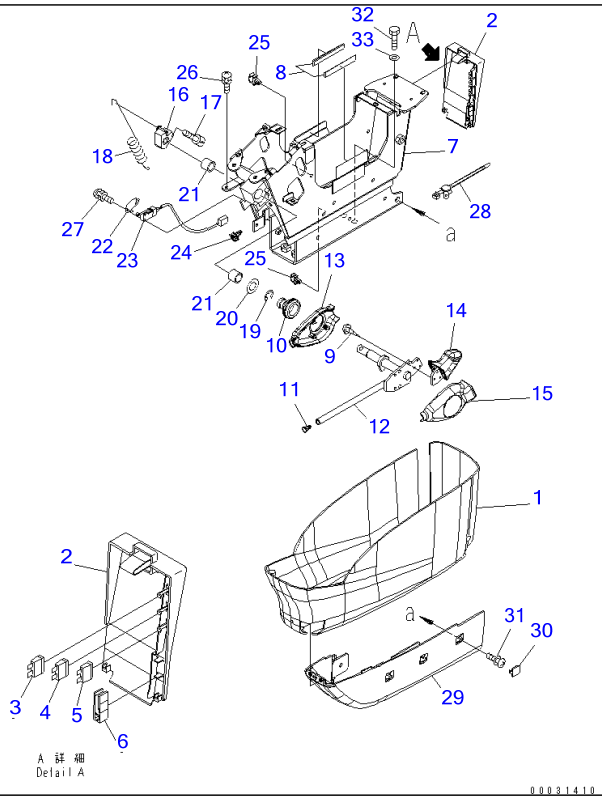

Ref K1110-29D0A

Page 212100

PC220-7 S/N 60001-UP (Overseas Version)

FLOOR FRAME (OPERATOR'S CAB) (CONSOLE) (LOWER) (L.H.)(#65519-)

Item	Part No.	Part Name	Qty	Serial No.
1	22U-43-22310	COVER	1	60001-
	22U-43-22320	COVER ASS'Y	1	60001-
2	☆	・COVER	1	60001-
3	08041-01000	・FUSE, 10A	1	60001-
4	08041-02000	・FUSE, 20A	1	60001-
5	08041-02500	・FUSE, 25A	1	60001-
6	22U-43-22340	・PULLER	1	60001-
7	20Y-43-31412	FRAME	1	65235-
8	208-43-71410	・SHEET	2	65001-
	20Y-43-31504	LEVER ASS'Y	1	66185-
	20Y-43-31503	LEVER	1	65519-66184
9	01023-60410	・SCREW	6	65519-
10	08037-11425	・GROMMET	1	65001-
11	208-53-12280	・CAP	1	65001-
12	20Y-43-31513	・LEVER	1	65519-
13	20Y-43-31522	・COVER	1	65001-
14	20Y-43-31611	・KNOB	1	65519-
15	20Y-43-31621	・COVER	AR	65001-
16	20Y-43-31432	CAM	1	65001-
17	01252-70816	BOLT	1	65001-
18	20Y-43-31421	SPRING	1	65001-
19	20Y-43-31440	RING	1	60001-
20	20Y-43-31450	RING	1	60001-
21	06124-01616	BEARING	2	60081-
22	22U-06-22490	PLATE	1	60001-
23	22U-06-22360	SWITCH ASS'Y	1	60001-
24	22U-43-22410	CLIP	1	65001-
25	22U-43-23260	CLIP	2	65001-

FLOOR FRAME (OPERATOR'S CAB) (CONSOLE) (LOWER) (L.H.)(#65519-)

Item	Part No.	Part Name	Qty	Serial No.
26	01023-60616	SCREW	4	60081-
27	01023-60316	SCREW	2	65001-
28	22U-43-22430	CLIP	1	60001-
29	20Y-43-31690	COVER	1	60001-
30	22U-43-22830	CAP	3	60001-
31	01023-20614	SCREW	4	60001-
32	01010-81030	BOLT	4	60001-
33	01643-31032	WASHER	4	60001-

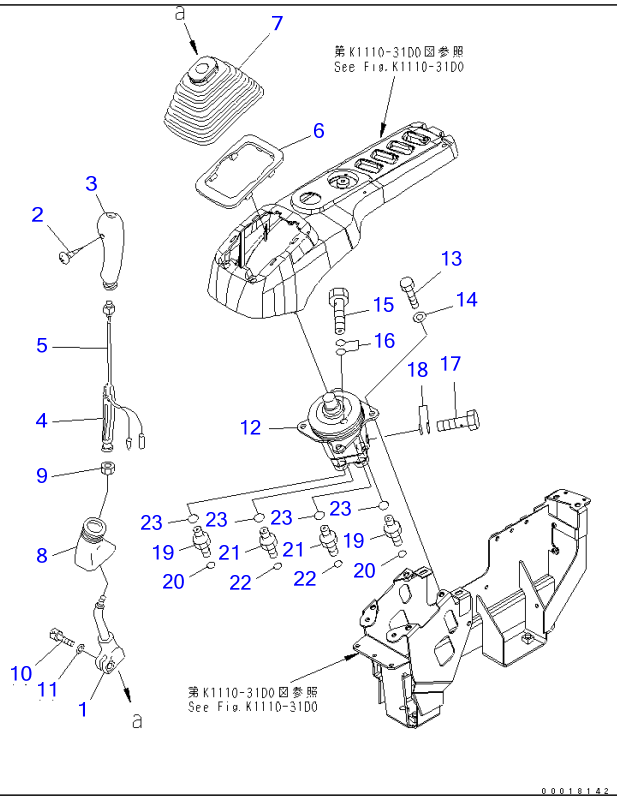

Ref K1110-30D0 **Page 212110**

PC220-7 S/N 60001-UP (Overseas Version)

FLOOR FRAME (OPERATOR'S CAB) (LEVER AND VALVE) (R.H.)(#65001-69195)

Item	Part No.	Part Name	Qty	Serial No.
1	20Y-43-22221	LEVER	1	60001-@
	22U-43-21192	KNOB	1	66965-@
	22U-43-21191	KNOB	1	60001-66964
2	☆	・SCREW	1	66965-@
	01370-10308	・SCREW	1	60001-66964
3	20Y-43-22390	・KNOB	1	60001-@
4	20Y-43-22421	・INSERT	1	60001-@
5	22U-43-21211	・SWITCH	1	60001-@
6	20Y-43-22250	PLATE	1	60001-@
7	20Y-43-22261	BOOT	1	60001-@
8	20Y-43-22370	BOOT	1	60001-@
9	600-411-1280	NUT	1	60001-@
10	01252-41025	BOLT	1	60001-@
11	01643-51032	WASHER	1	60001-@
12	(702-16-03530)	PILOT VALVE	1	60240-@
13	01010-80820	BOLT	4	60001-@
14	01643-30823	WASHER	4	60001-@
15	20Y-62-18910	PLUG	1	60001-@
16	07000-12018	O-RING	2	60001-@
17	20Y-62-18890	BOLT, JOINT	1	60001-@
18	07000-12015	O-RING	2	60001-@
19	11Y-62-12130	NIPPLE	2	60001-@
20	02896-11008	O-RING	2	60001-@
21	11Y-62-12520	NIPPLE	2	60001-@
22	02896-11009	O-RING	2	60001-@
23	07002-11423	O-RING	4	60001-@

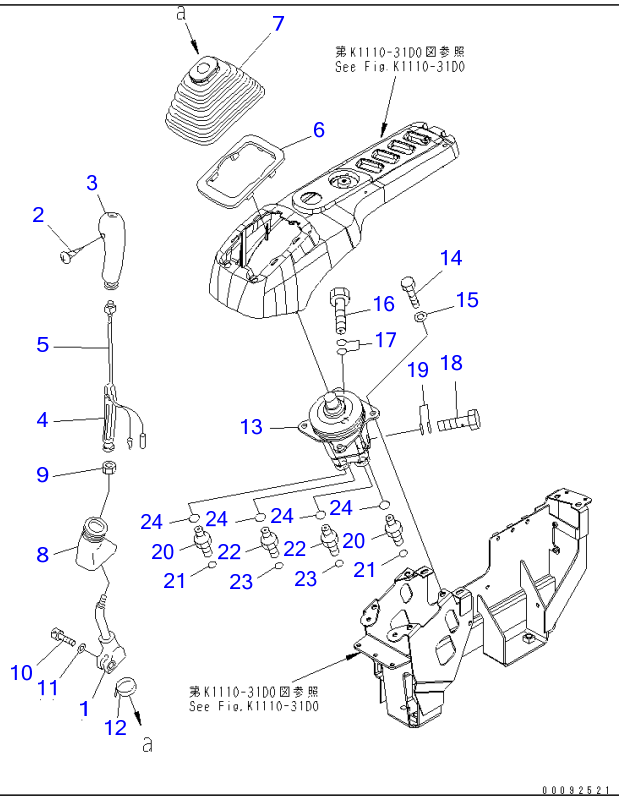

Ref K1110-30D0A

Page 212120

PC220-7 S/N 60001-UP (Overseas Version)

FLOOR FRAME (OPERATOR'S CAB) (LEVER AND VALVE) (R.H.)(#69196-)

Item	Part No.	Part Name	Qty	Serial No.
1	20Y-43-22221	LEVER	1	60001-
	22U-43-21192	KNOB	1	66965-
	22U-43-21191	KNOB	1	60001-66964
2	☆	・SCREW	1	66965-
	01370-10308	・SCREW	1	60001-66964
3	20Y-43-22390	・KNOB	1	60001-
4	20Y-43-22421	・INSERT	1	60001-
5	22U-43-21211	・SWITCH	1	60001-
6	20Y-43-22250	PLATE	1	60001-
7	20Y-43-22261	BOOT	1	60001-
8	20Y-43-22370	BOOT	1	60001-
9	600-411-1280	NUT	1	60001-
10	01252-41025	BOLT	1	60001-
11	01643-51032	WASHER	1	60001-
12	08034-20536	BAND	1	69196-69443
13	(702-16-03530)	PILOT VALVE	1	60240-
14	01010-80820	BOLT	4	60001-
15	01643-30823	WASHER	4	60001-
16	20Y-62-18910	PLUG	1	60001-
17	07000-12018	O-RING	2	60001-
18	20Y-62-18890	BOLT, JOINT	1	60001-
19	07000-12015	O-RING	2	60001-
20	11Y-62-12130	NIPPLE	2	60001-
21	02896-11008	O-RING	2	60001-
22	11Y-62-12520	NIPPLE	2	60001-
23	02896-11009	O-RING	2	60001-
24	07002-11423	O-RING	4	60001-

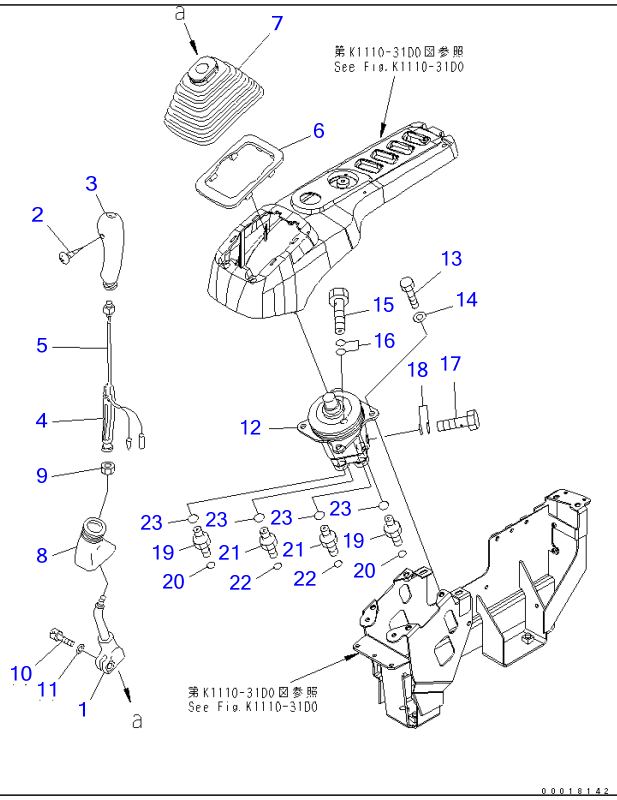

Ref K1110-30M5 Page 212130

PC220-7 S/N 60001-UP (Overseas Version)

FLOOR FRAME (OPERATOR'S CAB) (LEVER AND VALVE) (R.H.) (FOR HEATPROOF)(#65001-69195)

Item	Part No.	Part Name	Qty	Serial No.
1	20Y-43-22221	LEVER	1	65001-@
	22U-43-21192	KNOB	1	65001-@
2	☆	・SCREW	1	65001-@
3	20Y-43-22390	・KNOB	1	65001-@
4	20Y-43-22421	・INSERT	1	65001-@
5	22U-43-21211	・SWITCH	1	65001-@
6	20Y-43-22250	PLATE	1	65001-@
7	20Y-43-22261	BOOT	1	65001-@
8	20Y-43-22370	BOOT	1	65001-@
9	600-411-1280	NUT	1	65001-@
10	01252-41025	BOLT	1	65001-@
11	01643-51032	WASHER	1	65001-@
12	(702-16-03910)	PILOT VALVE	1	65001-@
13	01010-80820	BOLT	4	65001-@
14	01643-30823	WASHER	4	65001-@
15	20Y-62-18910	PLUG	1	65001-@
16	07000-12018	O-RING	2	65001-@
17	20Y-62-18890	BOLT, JOINT	1	65001-@
18	07000-12015	O-RING	2	65001-@
19	11Y-62-12130	NIPPLE	2	65001-@
20	02896-11008	O-RING	2	65001-@
21	11Y-62-12520	NIPPLE	2	65001-@
22	02896-11009	O-RING	2	65001-@
23	07002-11423	O-RING	4	65001-@

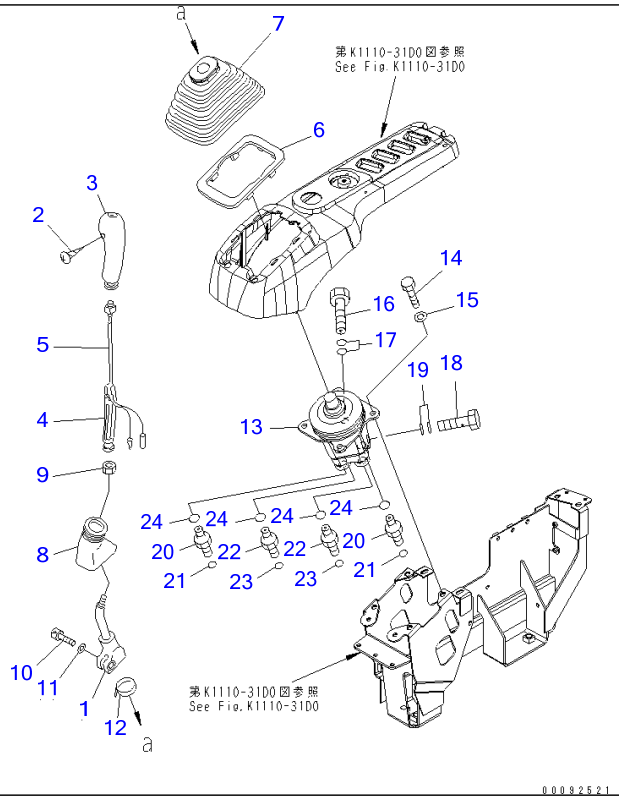

Ref K1110-30M5A **Page 212140**

PC220-7 S/N 60001-UP (Overseas Version)
FLOOR FRAME (OPERATOR'S CAB) (LEVER AND VALVE) (R.H.) (FOR HEATPROOF)(#69196-)

Item	Part No.	Part Name	Qty	Serial No.
1	20Y-43-22221	LEVER	1	65001-
	22U-43-21192	KNOB	1	65001-
2	☆	・SCREW	1	65001-
3	20Y-43-22390	・KNOB	1	65001-
4	20Y-43-22421	・INSERT	1	65001-
5	22U-43-21211	・SWITCH	1	65001-
6	20Y-43-22250	PLATE	1	65001-
7	20Y-43-22261	BOOT	1	65001-
8	20Y-43-22370	BOOT	1	65001-
9	600-411-1280	NUT	1	65001-
10	01252-41025	BOLT	1	65001-
11	01643-51032	WASHER	1	65001-
12	08034-20536	BAND	1	69196-69443
13	(702-16-03910)	PILOT VALVE	1	65001-
14	01010-80820	BOLT	4	65001-
15	01643-30823	WASHER	4	65001-
16	20Y-62-18910	PLUG	1	65001-
17	07000-12018	O-RING	2	65001-
18	20Y-62-18890	BOLT, JOINT	1	65001-
19	07000-12015	O-RING	2	65001-
20	11Y-62-12130	NIPPLE	2	65001-
21	02896-11008	O-RING	2	65001-
22	11Y-62-12520	NIPPLE	2	65001-
23	02896-11009	O-RING	2	65001-
24	07002-11423	O-RING	4	65001-

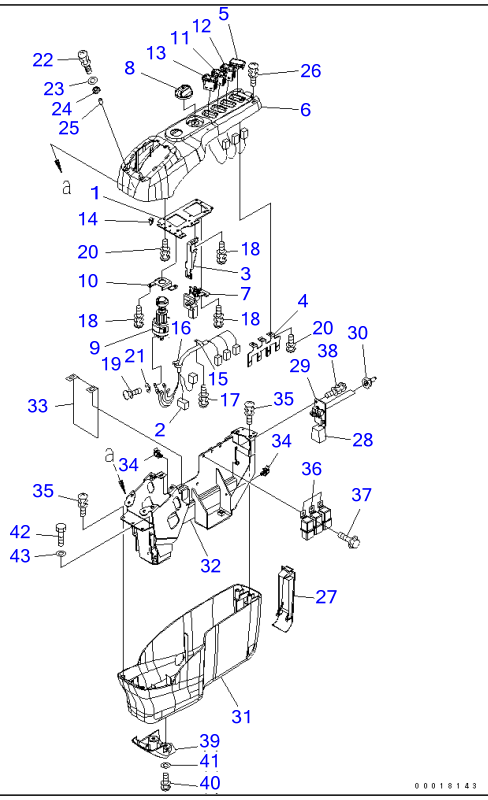

Ref K1110-31D5 Page 212150

PC220-7 S/N 60001-UP (Overseas Version)

FLOOR FRAME (OPERATOR'S CAB) (CONSOLE) (MASTER KEY) (R.H.)(#65001-)

Item	Part No.	Part Name	Qty	Serial No.
1	22U-43-23111	PLATE	1	65001-
2	22U-06-22330	WIRING HARNESS	1	60001-
3	22U-43-23120	BRACKET	1	60001-
4	22U-43-23130	STAY	1	60001-
5	22U-06-22320	COVER	1	60001-
6	208-43-71690	COVER	1	65001-
7	22U-06-22420	POTENTIOMETER ASS'Y	1	60001-
8	22U-06-22470	KNOB	1	60001-
9	08086-20000	SWITCH	1	60001-
10	22U-06-22480	PLATE	1	60001-
11	22U-06-22190	SWITCH	1	60001-
12	22U-06-22290	SWITCH	1	60001-
13	22U-06-22390	SWITCH	1	60001-
14	20Y-06-23770	CLIP	2	60001-
15	20Y-06-23920	CLAMP	1	60001-
16	08034-10414	BAND	2	60001-
17	01023-60408	SCREW	1	65001-
18	01023-60512	SCREW	6	60001-
19	01023-10508	SCREW	5	60001-
20	01023-10512	SCREW	6	60001-
21	01601-20513	WASHER	5	60001-
22	01023-60630	SCREW	2	65001-
23	01640-20610	WASHER	2	65001-
24	208-43-71610	CUSHION	2	65001-
25	208-43-71620	PIPE	2	65001-
26	01023-70514	SCREW	2	60001-
27	22U-43-23210	COVER	1	60001-
	20Y-06-31320	SWITCH ASS'Y	1	60001-

FLOOR FRAME (OPERATOR'S CAB) (CONSOLE) (MASTER KEY) (R.H.)(#65001-)

Item	Part No.	Part Name	Qty	Serial No.
28	20Y-06-31330	・WIRING HARNESS	1	60001-
29	☆	・PLATE	1	60001-
30	208-43-71420	・CAP	2	60001-
31	22U-43-23230	COVER	1	60001-
32	208-43-71670	FRAME	1	65001-
33	22U-43-23250	SHEET	1	60001-
34	22U-43-23260	CLIP	2	65001-
35	01023-60616	SCREW	4	60001-
36	569-06-61960	RELAY	3	60001-
37	01435-00612	BOLT	3	60001-
38	01023-60410	SCREW	2	65001-
39	22U-43-23711	COVER	1	60001-
40	01023-10614	SCREW	2	60001-
41	01643-30623	WASHER	2	60001-
42	01010-81030	BOLT	4	60001-
43	01643-31032	WASHER	4	60001-

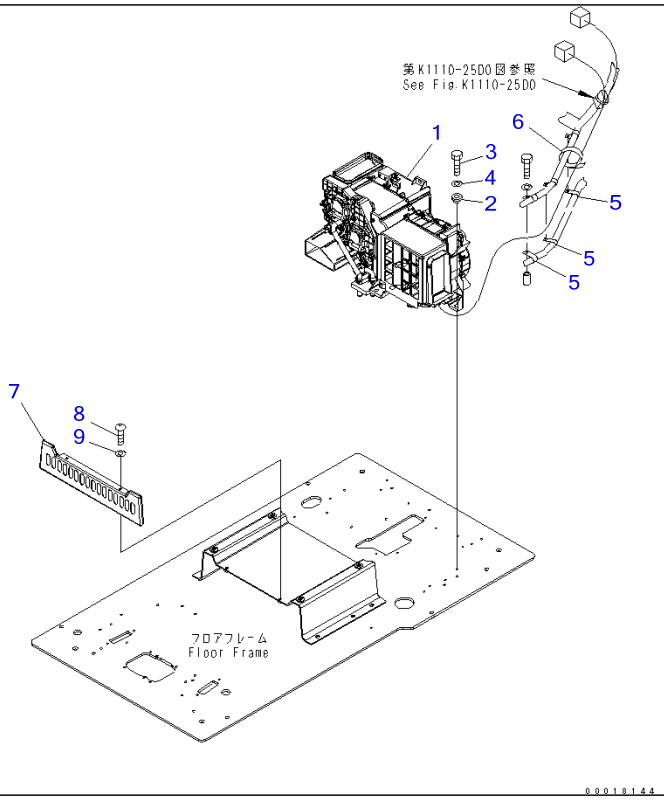

Ref K1110-32D0 **Page 212160**

PC220-7 S/N 60001-UP (Overseas Version)

FLOOR FRAME (OPERATOR'S CAB) (AIR CONDITIONER AND FOOT COVER)(#65001-)

Item	Part No.	Part Name	Qty	Serial No.
1	(208-979-7611)	AIR CONDITIONER	1	69863-
	(208-979-7610)	AIR CONDITIONER	1	65001-69862
2	208-979-7540	COLLAR	7	65001-
3	01010-80825	BOLT	7	65001-
4	01643-30823	WASHER	7	65001-
5	04434-51410	CLIP	2	65001-
6	08034-20536	BAND	1	65001-
7	208-43-71580	COVER	1	65001-
8	01245-00820	SCREW	2	60001-
9	01643-70823	WASHER	2	60001-

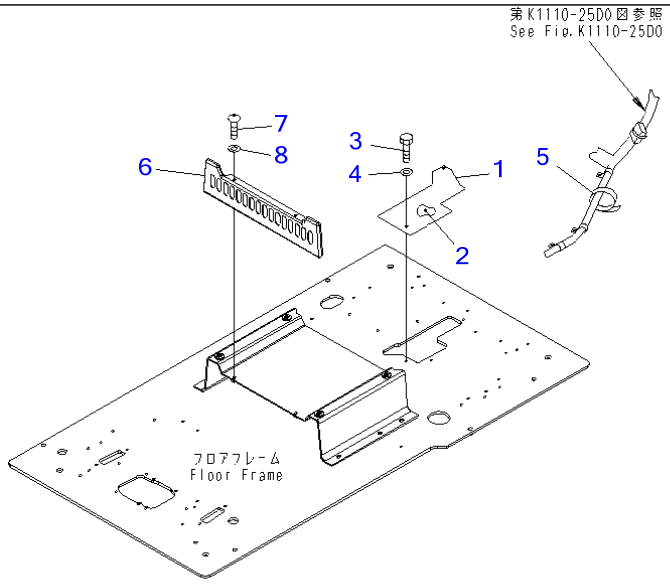

00018349

Ref K1110-32D9 **Page 212170**

PC220-7 S/N 60001-UP (Overseas Version)

FLOOR FRAME (OPERATOR'S CAB) (FOOT COVER) (WITHOUT AIR CONDITIONER)(#65001-)

Item	Part No.	Part Name	Qty	Serial No.
1	208-53-15820	PLATE	1	65001-
2	208-53-15830	SEAL	1	65001-
3	01010-80816	BOLT	2	65001-
4	01643-30823	WASHER	2	65001-
5	08034-20536	BAND	1	65001-
6	208-43-71580	COVER	1	65001-
7	01245-00820	SCREW	2	65001-
8	01643-70823	WASHER	2	65001-

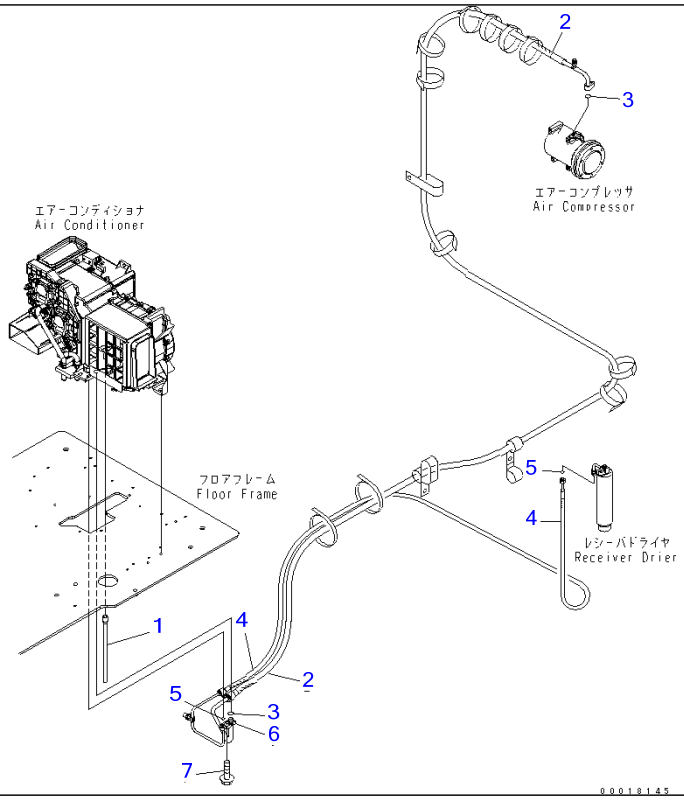

Ref K1110-33D0 Page 212180

PC220-7 S/N 60001-UP (Overseas Version)

FLOOR FRAME (OPERATOR'S CAB) (AIR CONDITIONER HOSE)(#65001-)

Item	Part No.	Part Name	Qty	Serial No.
1	208-979-7640	HOSE, 300MM	1	65001-
2	20Y-979-7351	HOSE	1	65001-
3	20Y-979-3130	・O-RING	2	65001-
4	20Y-979-7341	HOSE	1	65001-
5	20Y-979-3150	・O-RING	2	65001-
6	208-979-7650	CONNECTOR	1	65001-
7	01435-40620	BOLT	1	65001-

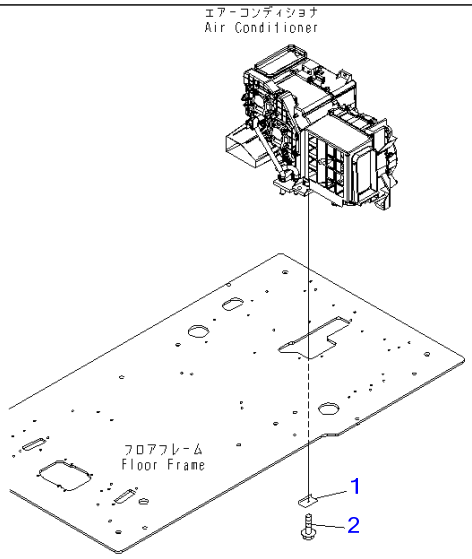

00031419

Ref K1110-33M0 **Page 212190**

PC220-7 S/N 60001-UP (Overseas Version)

FLOOR FRAME (OPERATOR'S CAB) (BLIND PARTS FOR AIR CONDITIONER HOSE)(#65001-)

Item	Part No.	Part Name	Qty	Serial No.
1	203-979-7290	PLATE	1	65001-
2	01435-40612	BOLT	1	65001-

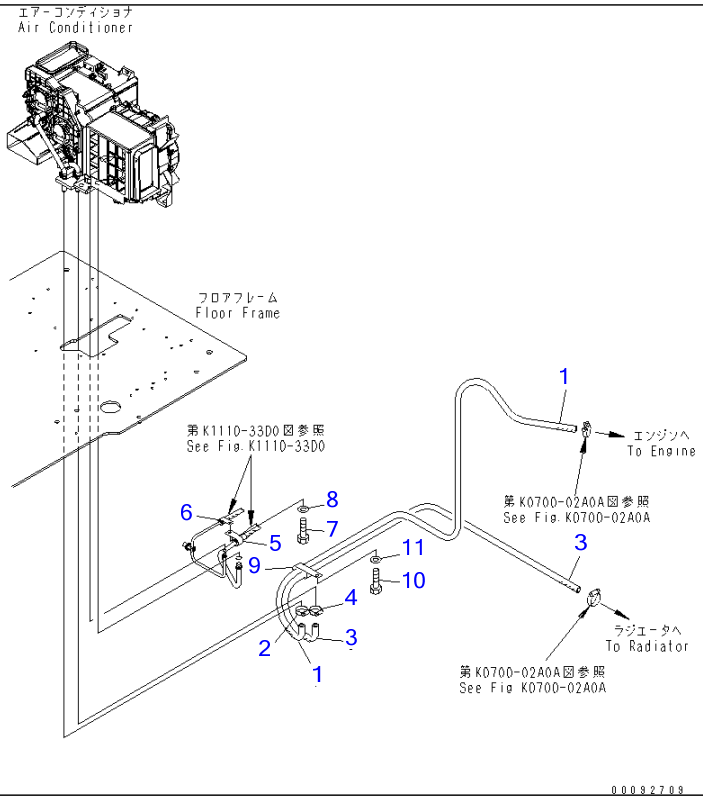

Ref K1110-34F0 **Page 212200**

PC220-7 S/N 60001-UP (Overseas Version)

FLOOR FRAME (OPERATOR'S CAB) (HEATER HOSE AND CLAMP)(#65001-)

Item	Part No.	Part Name	Qty	Serial No.
1	20Y-979-7372	HOSE ASS'Y	1	68833-
	☐20Y-979-7371	HOSE ASS'Y	1	65807-68832
	☐20Y-979-7370	HOSE ASS'Y	1	65060-65806
	206-979-7210	HOSE ASS'Y	1	65001-65059
2	09479-02400	CLAMP	1	65001-
3	206-979-7232	HOSE ASS'Y	1	68833-
	☐206-979-7231	HOSE ASS'Y	1	65807-68832
	☐206-979-7230	HOSE ASS'Y	1	65060-65806
	☐20Y-979-7360	HOSE ASS'Y	1	65001-65059
4	09479-02400	CLAMP	1	65001-
5	04434-52511	CLIP	1	65001-
6	04434-51810	CLIP	1	67467-
	04434-52110	CLIP	1	65001-67466
7	01010-81020	BOLT	1	65001-
8	01643-31032	WASHER	1	65001-
9	141-06-11220	CLIP	1	60001-
10	01010-81016	BOLT	1	60001-
11	01643-31032	WASHER	1	60001-

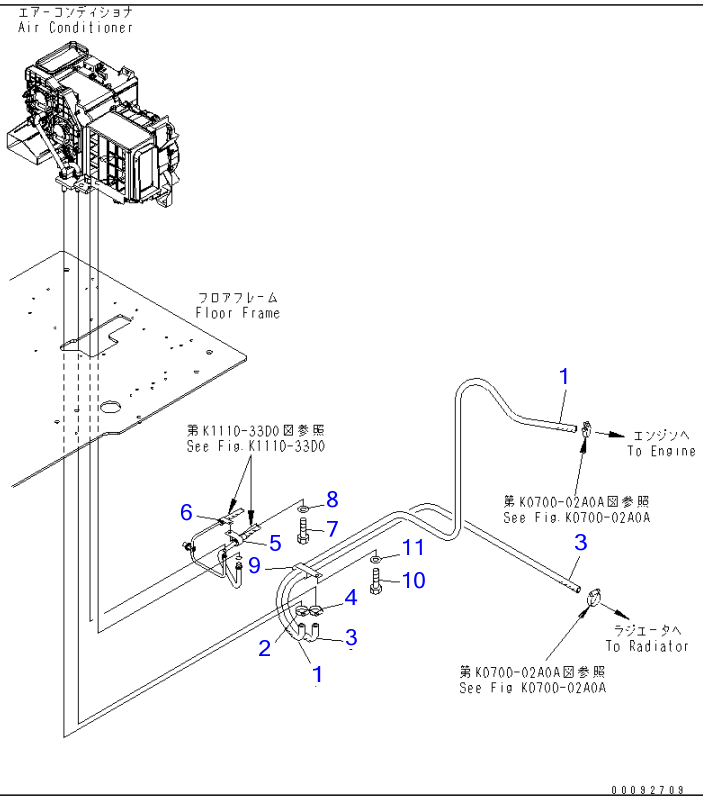

Ref K1110-34F1 **Page 212210**

PC220-7 S/N 60001-UP (Overseas Version)
FLOOR FRAME (OPERATOR'S CAB) (HEATER HOSE AND CLAMP) (CORROSION RESISTER)(#65001-)

Item	Part No.	Part Name	Qty	Serial No.
1	20Y-979-7412	HOSE ASS'Y	1	68833-
	☐20Y-979-7411	HOSE ASS'Y	1	65778-68832
	☐20Y-979-7410	HOSE ASS'Y	1	65060-65777
	206-979-7220	HOSE ASS'Y	1	65001-65059
2	09479-02400	CLAMP	1	65001-
3	206-979-7232	HOSE ASS'Y	1	68833-
	☐206-979-7231	HOSE ASS'Y	1	65807-68832
	☐206-979-7230	HOSE ASS'Y	1	65060-65806
	☐20Y-979-7360	HOSE ASS'Y	1	65001-65059
4	09479-02400	CLAMP	1	65001-
5	04434-52511	CLIP	1	65001-
6	04434-51810	CLIP	1	65548-
	04434-52110	CLIP	1	65001-65547
7	01010-81020	BOLT	1	65001-
8	01643-31032	WASHER	1	65001-
9	141-06-11220	CLIP	1	60001-
10	01010-81016	BOLT	1	60001-
11	01643-31032	WASHER	1	60001-

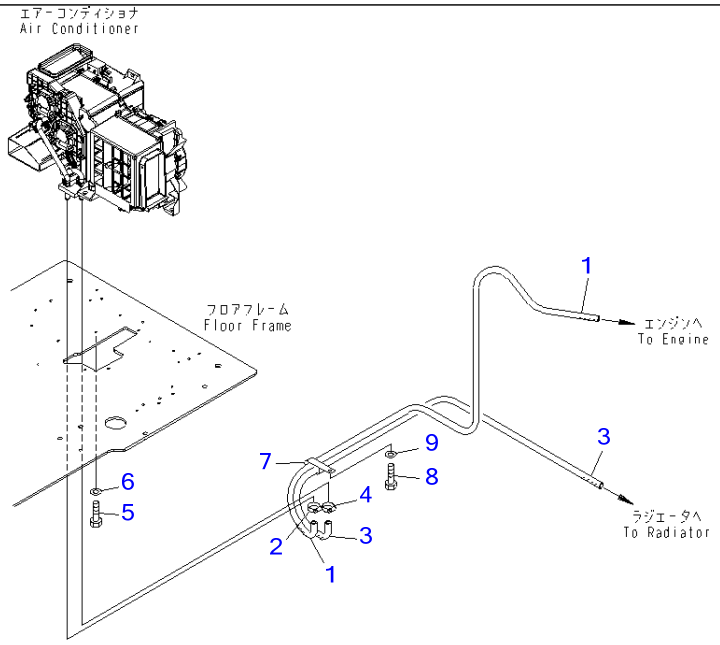

Ref K1110-34M0 **Page 212220**

PC220-7 S/N 60001-UP (Overseas Version)

FLOOR FRAME (OPERATOR'S CAB) (HEATER HOSE AND CLAMP) (COLD WEATHER A SPEC.) (FOR HARD WATER ARRANG)(#65001-)

Item	Part No.	Part Name	Qty	Serial No.
1	20Y-979-7412	HOSE ASS'Y	1	68833-
	□20Y-979-7411	HOSE ASS'Y	1	65778-68832
	□20Y-979-7410	HOSE ASS'Y	1	65001-65777
2	09479-02400	CLAMP	1	65001-
3	206-979-7232	HOSE ASS'Y	1	68833-
	□206-979-7231	HOSE ASS'Y	1	65807-68832
	□206-979-7230	HOSE ASS'Y	1	65001-65806
4	09479-02400	CLAMP	1	65001-
5	01010-81020	BOLT	1	60001-
6	01643-31032	WASHER	1	60001-
7	141-06-11220	CLIP	1	60001-
8	01010-81016	BOLT	1	60001-
9	01643-31032	WASHER	1	60001-

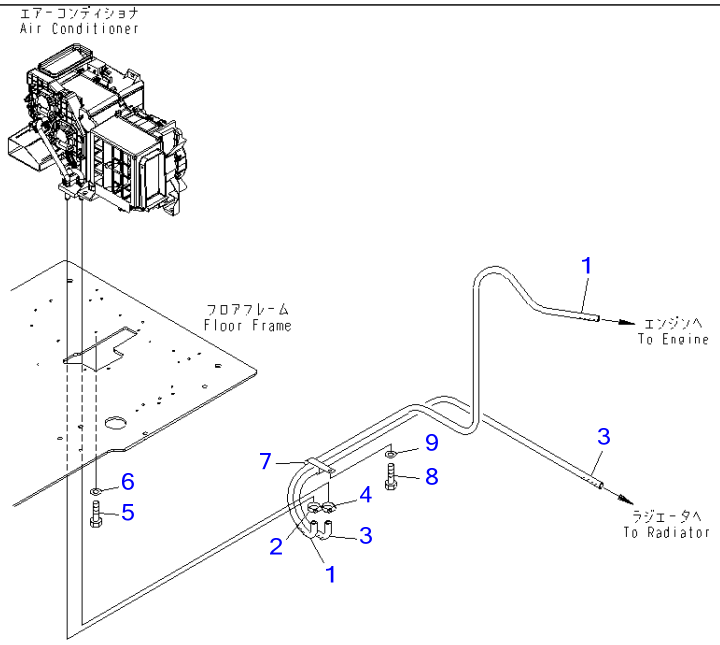

Ref K1110-34M3 **Page 212230**

PC220-7 S/N 60001-UP (Overseas Version)
FLOOR FRAME (OPERATOR'S CAB) (HEATER HOSE AND CLAMP) (FOR HEATER)(#65001-)

Item	Part No.	Part Name	Qty	Serial No.
1	20Y-979-7372	HOSE ASS'Y	1	68833-
	□20Y-979-7371	HOSE ASS'Y	1	65778-68832
	20Y-979-7370	HOSE ASS'Y	1	65001-65777
2	09479-02400	CLAMP	1	65001-
3	206-979-7232	HOSE ASS'Y	1	68833-
	□206-979-7231	HOSE ASS'Y	1	65807-68832
	206-979-7230	HOSE ASS'Y	1	65001-65806
4	09479-02400	CLAMP	1	65001-
5	01010-81020	BOLT	1	65001-
6	01643-31032	WASHER	1	65001-
7	141-06-11220	CLIP	1	60001-
8	01010-81016	BOLT	1	60001-
9	01643-31032	WASHER	1	60001-

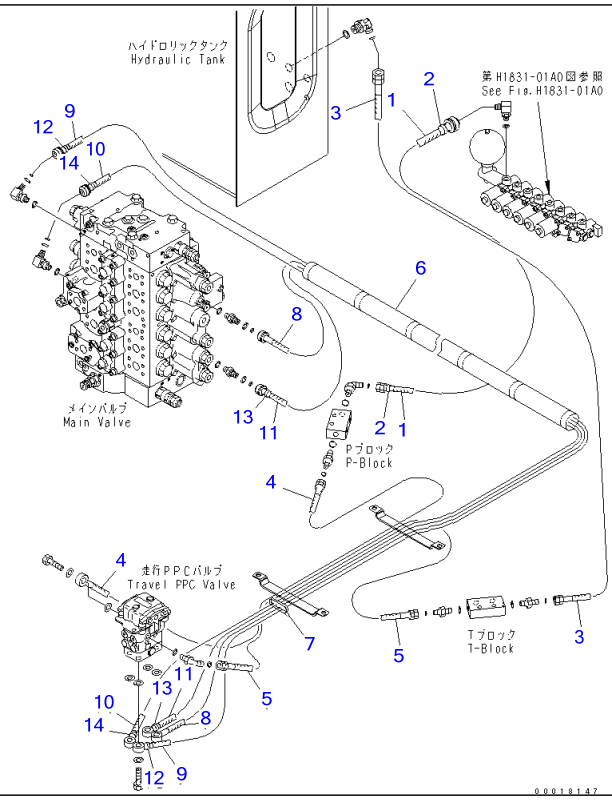

Ref K1110-35D0 Page 212240

PC220-7 S/N 60001-UP (Overseas Version)

FLOOR FRAME (OPERATOR'S CAB) (PPC HOSE) (1/2)(#65001-)

Item	Part No.	Part Name	Qty	Serial No.
1	20Y-62-44620	HOSE, 2650MM	1	65001-
2	20Y-62-22790	BAND, RED	2	65001-
3	02760-00332	HOSE	1	65001-
4	20Y-62-44630	HOSE, 950MM	1	65001-
5	02760-002A9	HOSE	1	65001-
6	08017-32810	CONDUIT	1	60001-
7	08034-00536	BAND	1	60001-
8	207-62-62741	HOSE, 3050MM	1	60001-
9	20Y-62-41580	HOSE, 4050MM	1	60001-
10	20Y-62-41590	HOSE, 4200MM	1	60001-
11	20Y-62-41690	HOSE, 2900MM	1	60001-
12	20Y-62-22790	BAND, RED	2	60001-
13	20Y-62-22820	BAND, BLUE	2	60001-
14	20Y-62-22850	BAND, GREEN	2	60001-

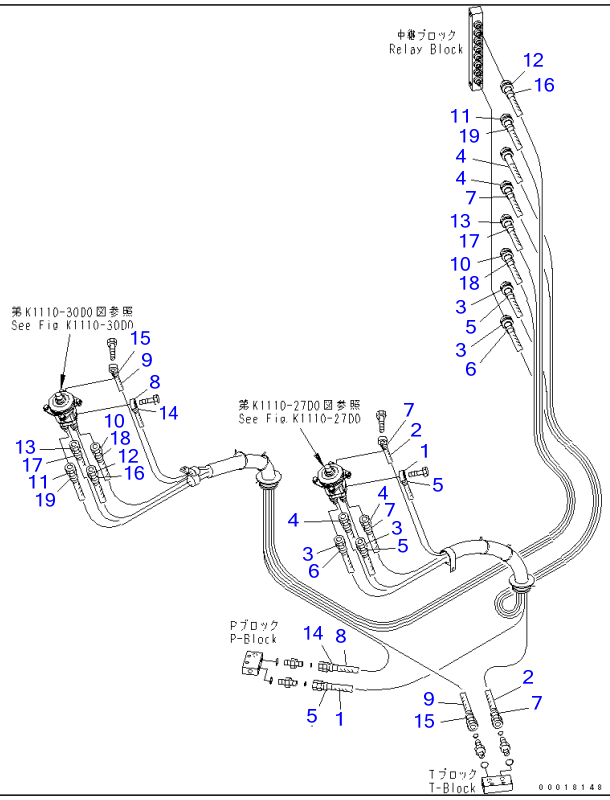

Ref K1110-36D0 **Page 212250**

PC220-7 S/N 60001-UP (Overseas Version)

FLOOR FRAME (OPERATOR'S CAB) (PPC HOSE) (2/2)(#65001-)

Item	Part No.	Part Name	Qty	Serial No.
1	208-62-72770	HOSE, 1450MM	1	65001-
2	208-62-72780	HOSE, 1400MM	1	65001-
3	20Y-62-42261	HOSE, 3050MM	2	60001-
4	20Y-62-42271	HOSE, 3150MM	2	60001-
5	20Y-62-22790	BAND, RED	4	60001-
6	20Y-62-22810	BAND, YELLOW	2	60001-
7	20Y-62-22820	BAND, BLUE	4	60001-
8	208-62-72860	HOSE, 1400MM	1	65001-
9	208-62-72870	HOSE, 1500MM	1	65001-
10	20Y-62-42290	HOSE, 3300MM	1	60001-
11	20Y-62-42311	HOSE, 3500MM	1	60001-
12	20Y-62-42550	HOSE, 3500MM	1	60001-
13	20Y-62-42560	HOSE, 3300MM	1	60001-
14	20Y-62-22790	BAND, RED	2	60001-
15	20Y-62-22820	BAND, BLUE	2	60001-
16	20Y-62-22830	BAND, WHITE	2	60001-
17	20Y-62-22840	BAND, BLACK	2	60001-
18	20Y-62-22850	BAND, GREEN	2	60001-
19	20Y-62-22860	BAND, BROWN	2	60001-

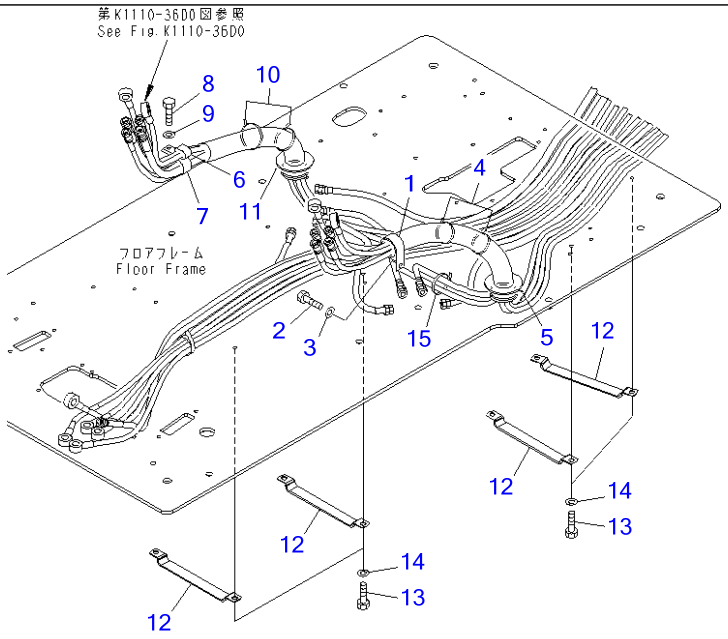

00018149

Ref K1110-37D0 **Page 212260**

PC220-7 S/N 60001-UP (Overseas Version)

FLOOR FRAME (OPERATOR'S CAB) (PPC CLAMP)(#65001-66554)

Item	Part No.	Part Name	Qty	Serial No.
1	04434-53211	CLIP	1	60001-@
2	01010-81020	BOLT	1	60001-@
3	01643-31032	WASHER	1	60001-@
4	08034-20536	BAND	2	60001-@
5	08034-20536	BAND	1	60001-@
6	04435-51310	CLIP	1	60001-66554
7	04434-53411	CLIP	1	60001-@
8	01010-81020	BOLT	1	60001-@
9	01643-31032	WASHER	1	60001-@
10	08034-20536	BAND	2	60001-@
11	08034-20536	BAND	1	60001-@
12	20Y-62-27770	CLAMP	4	60001-@
13	01010-81016	BOLT	8	60001-@
14	01643-31032	WASHER	8	60001-@
15	08034-20536	BAND	2	65548-@
	08034-20536	BAND	1	65001-66554

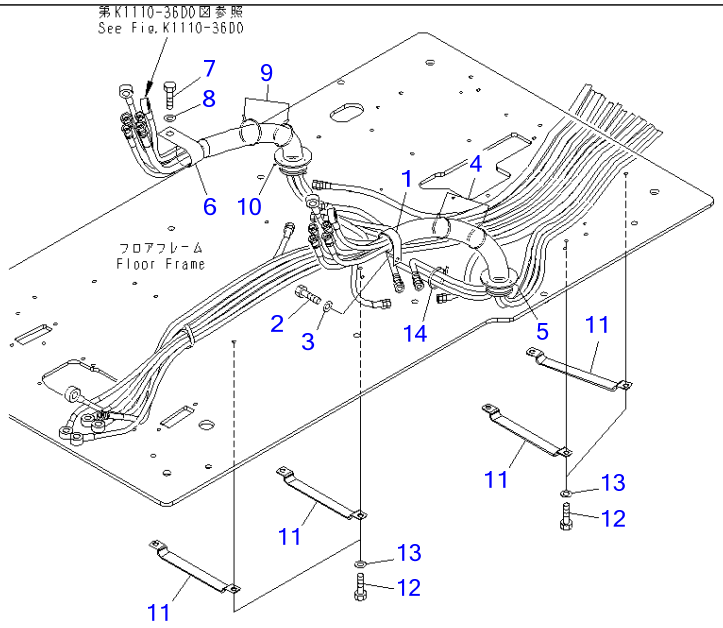

00039515

Ref K1110-37D0A **Page 212270**

PC220-7 S/N 60001-UP (Overseas Version)

FLOOR FRAME (OPERATOR'S CAB) (PPC CLAMP)(#66555-)

Item	Part No.	Part Name	Qty	Serial No.
1	04434-53211	CLIP	1	60001-
2	01010-81020	BOLT	1	60001-
3	01643-31032	WASHER	1	60001-
4	08034-20536	BAND	2	60001-
5	08034-20536	BAND	1	60001-
6	04434-53411	CLIP	1	60001-
7	01010-81020	BOLT	1	60001-
8	01643-31032	WASHER	1	60001-
9	08034-20536	BAND	2	60001-
10	08034-20536	BAND	1	60001-
11	20Y-62-27770	CLAMP	4	60001-
12	01010-81016	BOLT	8	60001-
13	01643-31032	WASHER	8	60001-
14	08034-20536	BAND	2	65548-

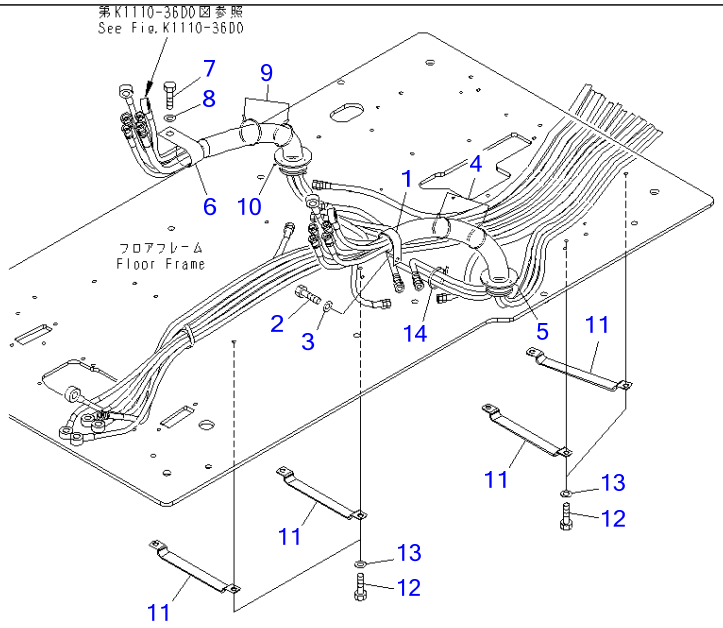

00039515

Ref K1110-37M1 **Page 212280**

PC220-7 S/N 60001-UP (Overseas Version)

FLOOR FRAME (OPERATOR'S CAB) (PPC CLAMP)(#65001-)

Item	Part No.	Part Name	Qty	Serial No.
1	04434-53211	CLIP	1	60001-
2	01010-81020	BOLT	1	60001-
3	01643-31032	WASHER	1	60001-
4	08034-20536	BAND	2	60001-
5	08034-20536	BAND	1	60001-
6	04434-53411	CLIP	1	60001-
7	01010-81020	BOLT	1	60001-
8	01643-31032	WASHER	1	60001-
9	08034-20536	BAND	2	60001-
10	08034-20536	BAND	1	60001-
11	20Y-62-27770	CLAMP	4	60001-
12	01010-81016	BOLT	8	60001-
13	01643-31032	WASHER	8	60001-
14	08034-20536	BAND	1	65001-

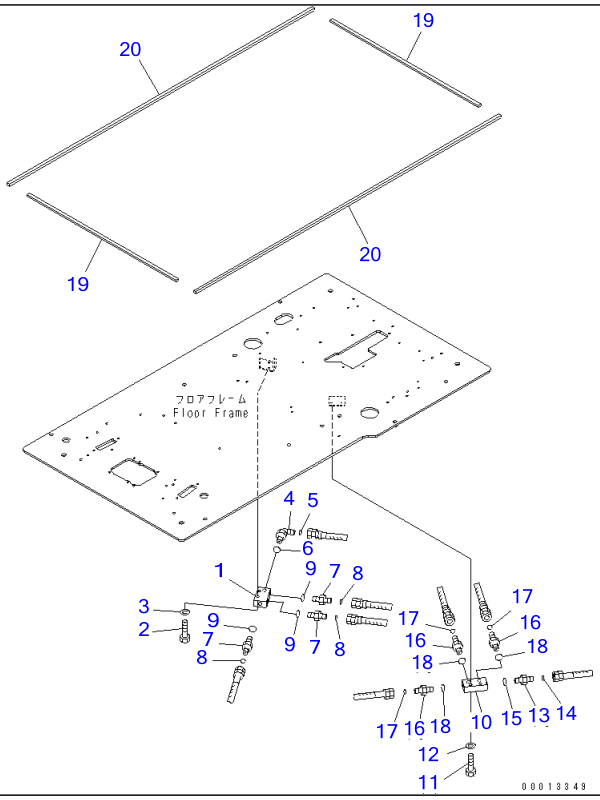

Ref K1110-38D0 Page 212290

PC220-7 S/N 60001-UP (Overseas Version)

FLOOR FRAME (OPERATOR'S CAB) (P¤T BLOCK AND SEAL)(#65001-)

Item	Part No.	Part Name	Qty	Serial No.
1	20Y-62-15831	BLOCK	1	60001-
2	01010-81045	BOLT	2	60001-
3	01643-31032	WASHER	2	60001-
4	02782-10311	ELBOW	1	65001-
5	02896-11009	O-RING	1	60001-
6	07002-11423	O-RING	1	60001-
7	02781-0021D	UNION	3	65001-
8	02896-11008	O-RING	3	65001-
9	07002-11423	O-RING	3	65001-
10	20Y-62-15831	BLOCK	1	60001-
11	01010-81045	BOLT	2	60001-
12	01643-31032	WASHER	2	60001-
13	02781-0031D	UNION	1	65001-
14	02896-11009	O-RING	1	60001-
15	07002-11423	O-RING	1	60001-
16	02781-0021D	UNION	3	65001-
17	02896-11008	O-RING	3	65001-
18	07002-11423	O-RING	3	65001-
19	208-53-11810	SEAL	2	65001-
20	208-53-11820	SEAL	2	65001-

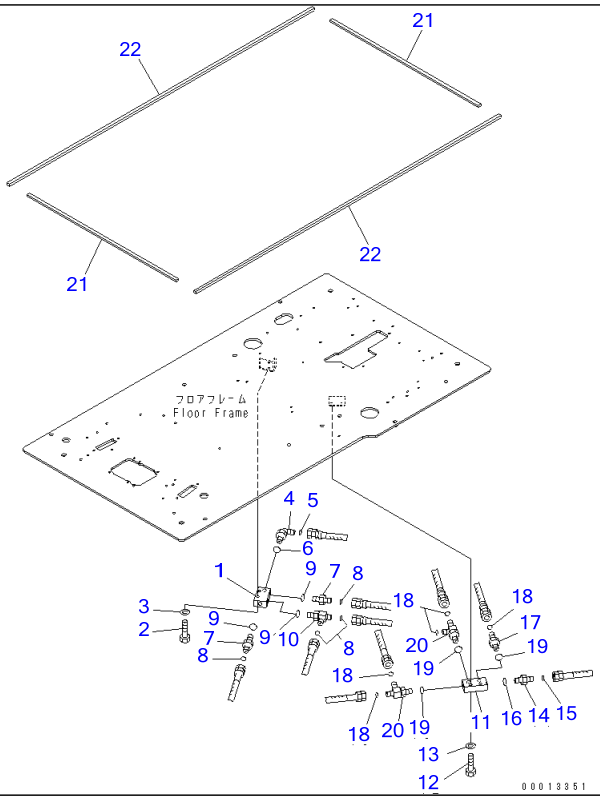

Ref K1110-38D1 Page 212300

PC220-7 S/N 60001-UP (Overseas Version)

FLOOR FRAME (OPERATOR'S CAB) (P¤T BLOCK AND SEAL) (1 ACTUATOR)(#65001-)

Item	Part No.	Part Name	Qty	Serial No.
1	20Y-62-15831	BLOCK	1	60001-
2	01010-81045	BOLT	2	60001-
3	01643-31032	WASHER	2	60001-
4	02782-10311	ELBOW	1	65001-
5	02896-11009	O-RING	1	60001-
6	07002-11423	O-RING	1	60001-
7	02781-0021D	UNION	2	65001-
8	02896-11008	O-RING	4	65001-
9	07002-11423	O-RING	3	65001-
10	11Y-62-12330	ELBOW	1	60001-
11	20Y-62-15831	BLOCK	1	60001-
12	01010-81045	BOLT	2	60001-
13	01643-31032	WASHER	2	60001-
14	02781-0031D	UNION	1	65001-
15	02896-11009	O-RING	1	60001-
16	07002-11423	O-RING	1	60001-
17	02781-0021D	UNION	1	65001-
18	02896-11008	O-RING	5	65001-
19	07002-11423	O-RING	3	65001-
20	11Y-62-12330	ELBOW	2	65001-
21	208-53-11810	SEAL	2	65001-
22	208-53-11820	SEAL	2	65001-

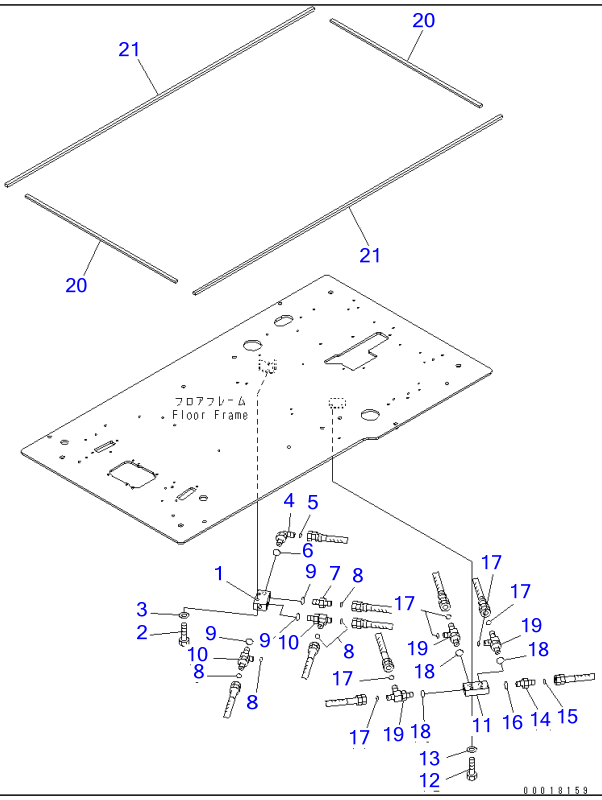

Ref K1110-38D2 Page 212310

PC220-7 S/N 60001-UP (Overseas Version)

FLOOR FRAME (OPERATOR'S CAB) (P¤T BLOCK AND SEAL) (2 ACTUATOR)(#65001-)

Item	Part No.	Part Name	Qty	Serial No.
1	20Y-62-15831	BLOCK	1	65001-
2	01010-81045	BOLT	2	60001-
3	01643-31032	WASHER	2	60001-
4	02782-10311	ELBOW	1	65001-
5	02896-11009	O-RING	1	60001-
6	07002-11423	O-RING	1	60001-
7	02781-0021D	UNION	1	65001-
8	02896-11008	O-RING	5	65001-
9	07002-11423	O-RING	3	65001-
10	11Y-62-12330	ELBOW	2	60001-
11	20Y-62-15831	BLOCK	1	60001-
12	01010-81045	BOLT	2	60001-
13	01643-31032	WASHER	2	60001-
14	02781-0031D	UNION	1	65001-
15	02896-11009	O-RING	1	60001-
16	07002-11423	O-RING	1	60001-
17	02896-11008	O-RING	6	65001-
18	07002-11423	O-RING	3	65001-
19	11Y-62-12330	ELBOW	3	65001-
20	208-53-11810	SEAL	2	65001-
21	208-53-11820	SEAL	2	65001-

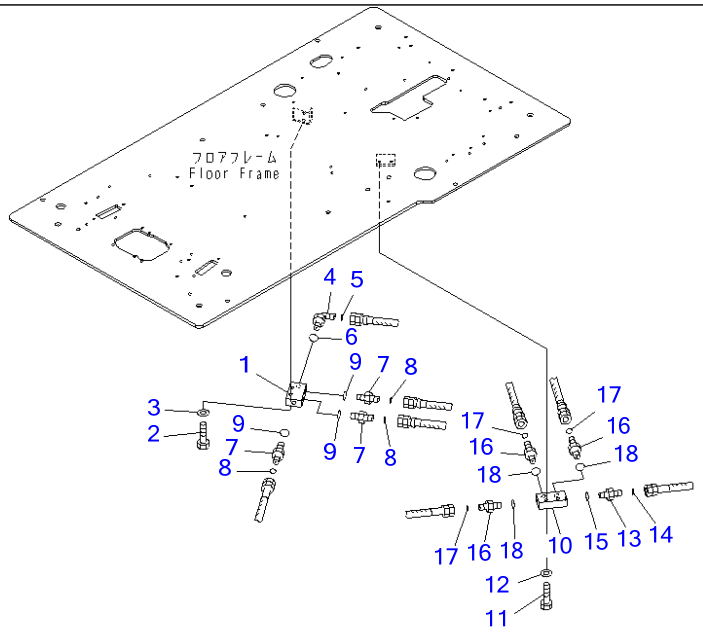

00014602

Ref K1110-38D9 **Page 212320**

PC220-7 S/N 60001-UP (Overseas Version)

FLOOR FRAME (OPERATOR'S CAB) (P¤T BLOCK) (WITHOUT AIR CONDITIONER)(#65001-)

Item	Part No.	Part Name	Qty	Serial No.
1	20Y-62-15831	BLOCK	1	60001-
2	01010-81045	BOLT	2	60001-
3	01643-31032	WASHER	2	60001-
4	02782-10311	ELBOW	1	65001-
5	02896-11009	O-RING	1	60001-
6	07002-11423	O-RING	1	60001-
7	02781-0021D	UNION	3	65001-
8	02896-11008	O-RING	3	65001-
9	07002-11423	O-RING	3	65001-
10	20Y-62-15831	BLOCK	1	60001-
11	01010-81045	BOLT	2	60001-
12	01643-31032	WASHER	2	60001-
13	02781-0031D	UNION	1	65001-
14	02896-11009	O-RING	1	60001-
15	07002-11423	O-RING	1	60001-
16	02781-0021D	UNION	3	65001-
17	02896-11008	O-RING	3	65001-
18	07002-11423	O-RING	3	65001-

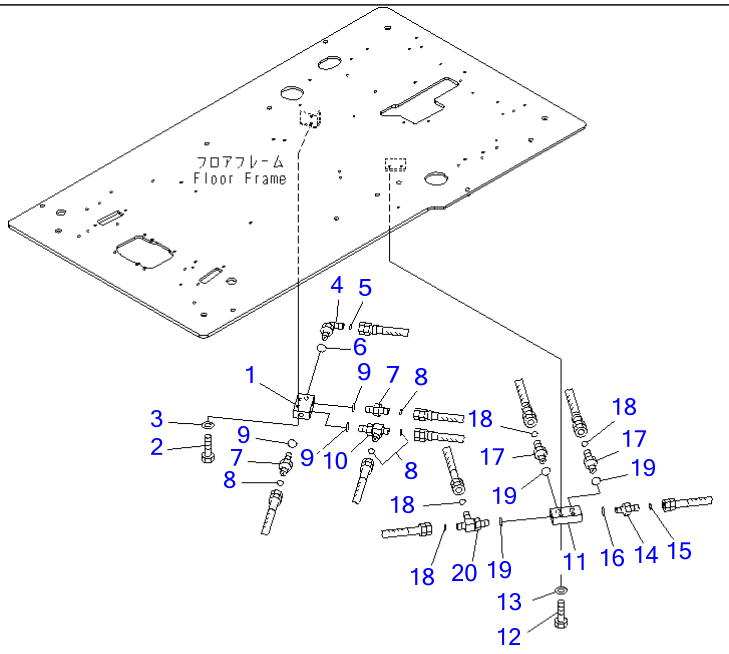

00018350

Ref K1110-38E0 Page 212330

PC220-7 S/N 60001-UP (Overseas Version)

FLOOR FRAME (OPERATOR'S CAB) (P¤T BLOCK) (1 ACTUATOR) (WITHOUT AIR CONDITIONER) (7SEG MONITOR SPEC.)(#65001-)

Item	Part No.	Part Name	Qty	Serial No.
1	20Y-62-15831	BLOCK	1	60001-
2	01010-81045	BOLT	2	60001-
3	01643-31032	WASHER	2	60001-
4	02782-10311	ELBOW	1	65001-
5	02896-11009	O-RING	1	60001-
6	07002-11423	O-RING	1	60001-
7	02781-0021D	UNION	2	65001-
8	02896-11008	O-RING	4	65001-
9	07002-11423	O-RING	3	65001-
10	11Y-62-12330	ELBOW	1	60001-
11	20Y-62-15831	BLOCK	1	60001-
12	01010-81045	BOLT	2	60001-
13	01643-31032	WASHER	2	60001-
14	02781-0031D	UNION	1	65001-
15	02896-11009	O-RING	1	60001-
16	07002-11423	O-RING	1	60001-
17	02781-0021D	UNION	2	65001-
18	02896-11008	O-RING	4	65001-
19	07002-11423	O-RING	3	65001-
20	11Y-62-12330	ELBOW	1	60001-

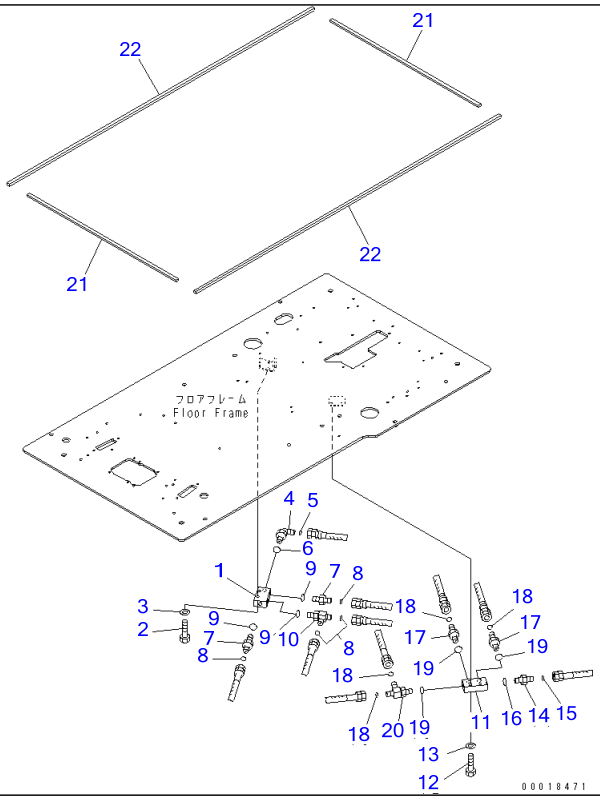

Ref K1110-38E1 Page 212340

PC220-7 S/N 60001-UP (Overseas Version)

FLOOR FRAME (OPERATOR'S CAB) (P¤T BLOCK) (1 ACTUATOR) (WITHOUT AIR CONDITIONER) (7SEG MONITOR SPEC.)(#65001-)

Item	Part No.	Part Name	Qty	Serial No.
1	20Y-62-15831	BLOCK	1	60001-
2	01010-81045	BOLT	2	60001-
3	01643-31032	WASHER	2	60001-
4	02782-10311	ELBOW	1	65001-
5	02896-11009	O-RING	1	60001-
6	07002-11423	O-RING	1	60001-
7	02781-0021D	UNION	2	65001-
8	02896-11008	O-RING	4	65001-
9	07002-11423	O-RING	3	65001-
10	11Y-62-12330	ELBOW	1	60001-
11	20Y-62-15831	BLOCK	1	60001-
12	01010-81045	BOLT	2	60001-
13	01643-31032	WASHER	2	60001-
14	02781-0031D	UNION	1	65001-
15	02896-11009	O-RING	1	60001-
16	07002-11423	O-RING	1	60001-
17	02781-0021D	UNION	2	65001-
18	02896-11008	O-RING	4	65001-
19	07002-11423	O-RING	3	65001-
20	11Y-62-12330	ELBOW	1	65001-
21	208-53-11810	SEAL	2	65001-
22	208-53-11820	SEAL	2	65001-

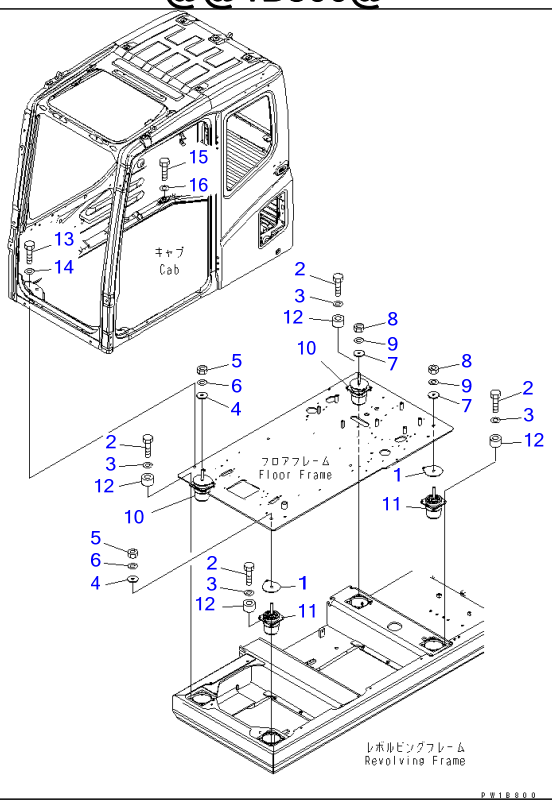

Ref K1120-01A0 **Page 212350**

PC220-7 S/N 60001-UP (Overseas Version)

FLOOR MOUNT(#60001-65000)

Item	Part No.	Part Name	Qty	Serial No.
1	207-54-65130	SPACER	4	60001-@
2	01010-81035	BOLT	16	60001-@
3	01643-31032	WASHER	16	60001-@
4	113-01-21120	WASHER	2	60001-@
5	01580-11613	NUT	2	60001-@
6	01643-31645	WASHER	2	60001-@
7	21T-27-71220	HOLDER	2	60001-@
8	01580-11613	NUT	2	60001-@
9	01643-31645	WASHER	2	60001-@
10	20Y-54-65810	CUSHION	2	60001-@
11	20Y-54-65820	CUSHION	2	60001-@
12	20Y-54-65860	SPACER	4	60001-65000
13	01010-81240	BOLT	2	60001-65000
14	01643-31232	WASHER	2	60001-65000
15	01010-81285	BOLT	3	60298-65000
	01010-D1285	BOLT	3	60001-60297
16	01643-31232	WASHER	3	60298-65000
	01643-71232	WASHER	3	60001-60297

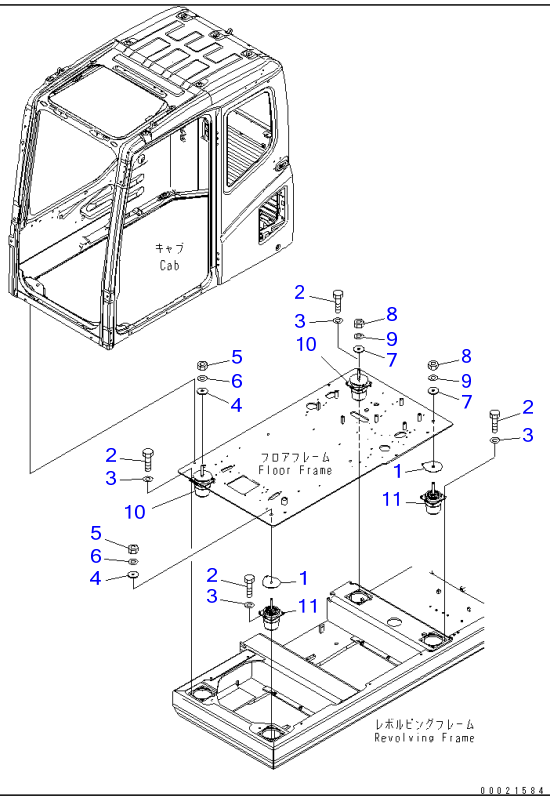

Ref K1120-01A0A **Page 212360**

PC220-7 S/N 60001-UP (Overseas Version)
FLOOR MOUNT(#65001-65685)

Item	Part No.	Part Name	Qty	Serial No.
1	207-54-65130	SPACER	4	60001-65685
2	01010-81035	BOLT	16	60001-@
3	01643-31032	WASHER	16	60001-@
4	113-01-21120	WASHER	2	60001-@
5	01580-11613	NUT	2	60001-@
6	01643-31645	WASHER	2	60001-@
7	21T-27-71220	HOLDER	2	60001-@
8	01580-11613	NUT	2	60001-@
9	01643-31645	WASHER	2	60001-@
10	20Y-54-65810	CUSHION	2	60001-65685
11	20Y-54-65820	CUSHION	2	60001-65685

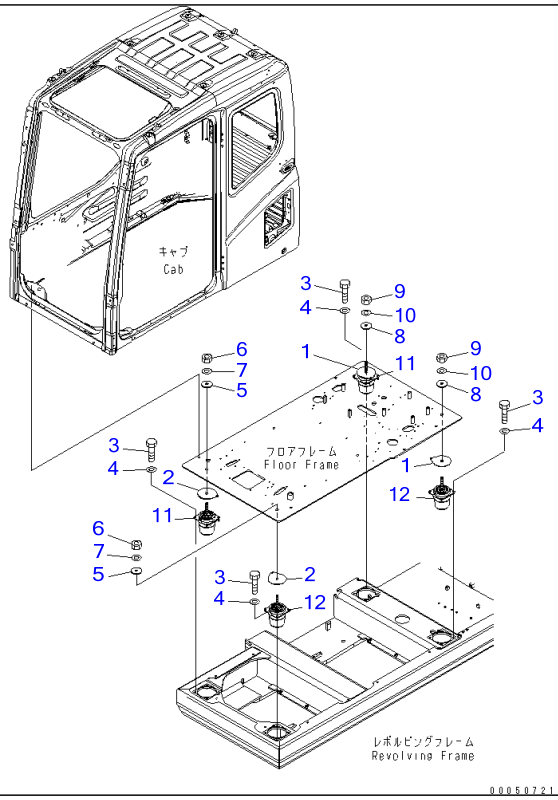

Ref K1120-01A1 **Page 212370**

PC220-7 S/N 60001-UP (Overseas Version)
FLOOR MOUNT(#65686-)

Item	Part No.	Part Name	Qty	Serial No.
1	207-54-65132	SPACER	2	65686-
2	207-54-65260	SPACER	2	65686-
3	01010-81035	BOLT	16	60001-
4	01643-31032	WASHER	16	60001-
5	113-01-21120	WASHER	2	60001-
6	01580-11613	NUT	2	60001-
7	01643-31645	WASHER	2	60001-
8	21T-27-71220	HOLDER	2	60001-
9	01580-11613	NUT	2	60001-
10	01643-31645	WASHER	2	60001-
11	20Y-54-65811	CUSHION	2	65686-
12	20Y-54-65821	CUSHION	2	65686-

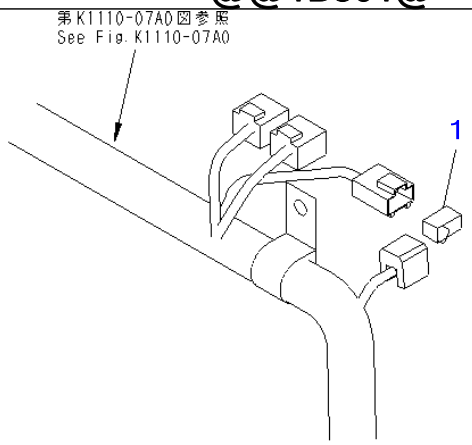

PW1B801

Ref K1730-01A0 Page 212380

PC220-7 S/N 60001-UP (Overseas Version)

SWITCH

Item	Part No.	Part Name	Qty	Serial No.
1	20Y-06-21441	SWITCH	1	60001-

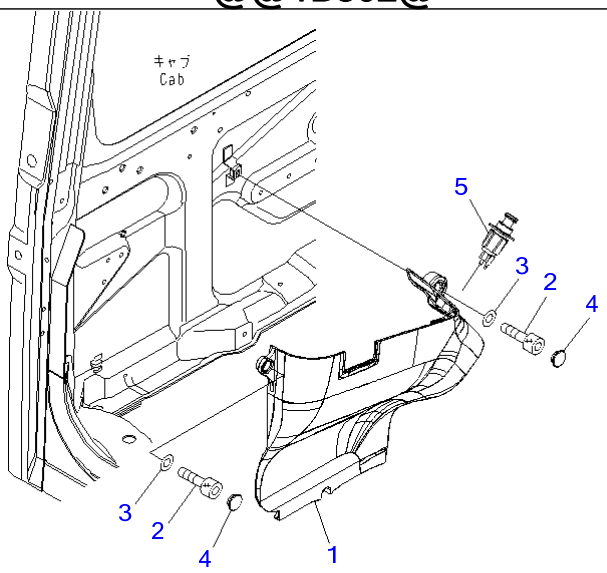

PW1B802

Ref K1740-01A0 **Page 212390**

PC220-7 S/N 60001-UP (Overseas Version)
COVER

Item	Part No.	Part Name	Qty	Serial No.
1	22U-54-25231	COVER	1	60001-
2	01252-70616	BOLT	3	60001-
3	01643-30623	WASHER	3	60001-
4	22U-54-25351	CAP	2	60001-
5	20Y-06-23472	CIGARETTE LIGHTER	1	60001-

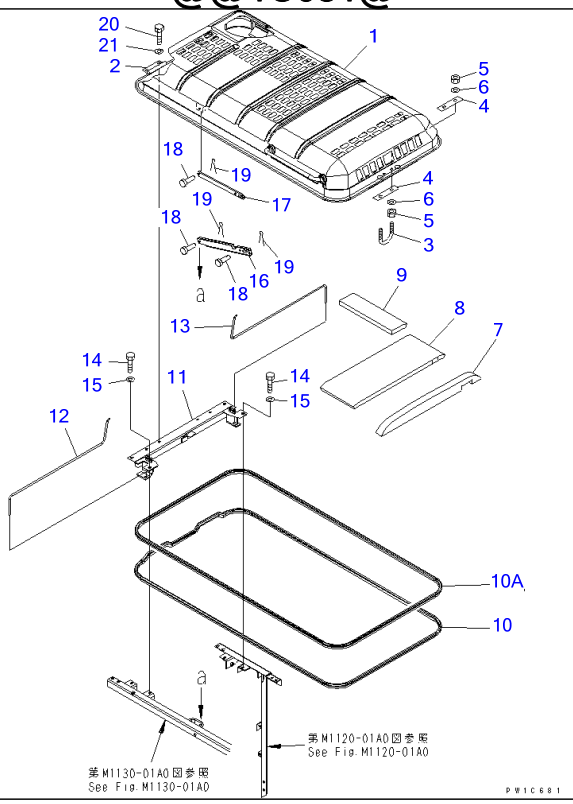

Ref M1110-01A0 **Page 240010**

PC220-7 S/N 60001-UP (Overseas Version)
HOOD

Item	Part No.	Part Name	Qty	Serial No.
1	206-54-71111	HOOD	1	60446-
	206-54-71110	HOOD	1	60001-60445
2	20Y-54-27123	▪ HINGE (WELDED)	2	60001-
3	20Y-54-27172	U-BOLT	1	60001-
4	20Y-54-27330	PLATE	2	60001-
5	01580-11210	NUT	4	60001-
6	01643-31232	WASHER	4	60001-
7	206-54-71320	SHEET	1	60001-
8	206-54-71330	SHEET	1	60001-
9	20Y-54-25681	SHEET	1	60001-
10	20Y-54-29291	SEAL	1	60001-
10A	20Y-54-29470	SEAL	1	60001-
11	20Y-54-61240	FRAME	1	60001-
12	20Y-54-27141	SPRING	1	60001-
13	20Y-54-27131	SPRING	1	60001-
14	01010-81230	BOLT	2	60001-
15	01643-31232	WASHER	2	60001-
16	20Y-54-27370	STAY	1	60001-
17	20Y-54-27290	STAY	1	60001-
18	04205-11230	PIN	3	60001-
19	04050-13022	PIN	3	60001-
20	01010-81230	BOLT	4	60001-
21	01643-31232	WASHER	4	60001-

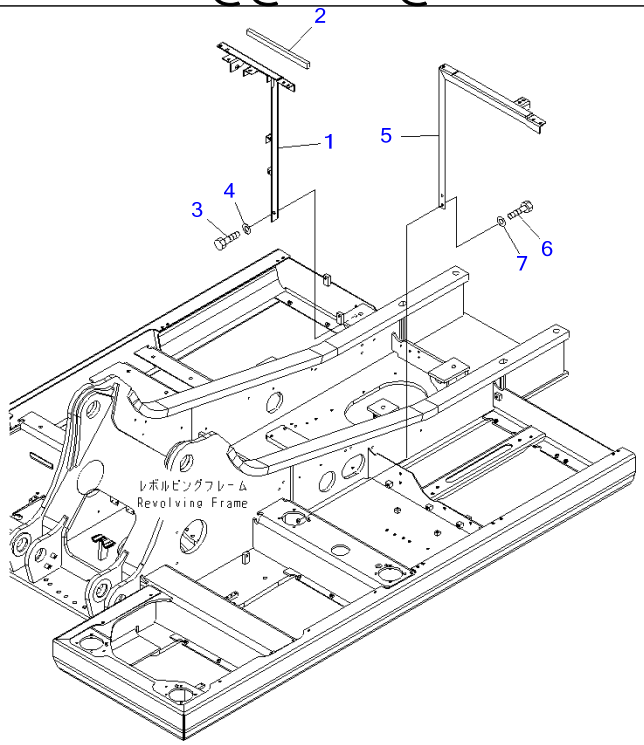

Ref M1120-01A0 **Page 240020**

PC220-7 S/N 60001-UP (Overseas Version)

FRAME (MACHINE CAB)

Item	Part No.	Part Name	Qty	Serial No.
	20Y-54-62210	FRAME	1	60001-
1	☆	・FRAME	1	60001-
2	20Y-54-63131	・SHEET	1	60003-
	20Y-54-63130	・SHEET	1	60001-60002
3	01010-81230	BOLT	3	60001-
4	01643-31232	WASHER	3	60001-
5	206-54-71150	FRAME	1	60001-
6	01010-81230	BOLT	2	60001-
7	01643-31232	WASHER	2	60001-

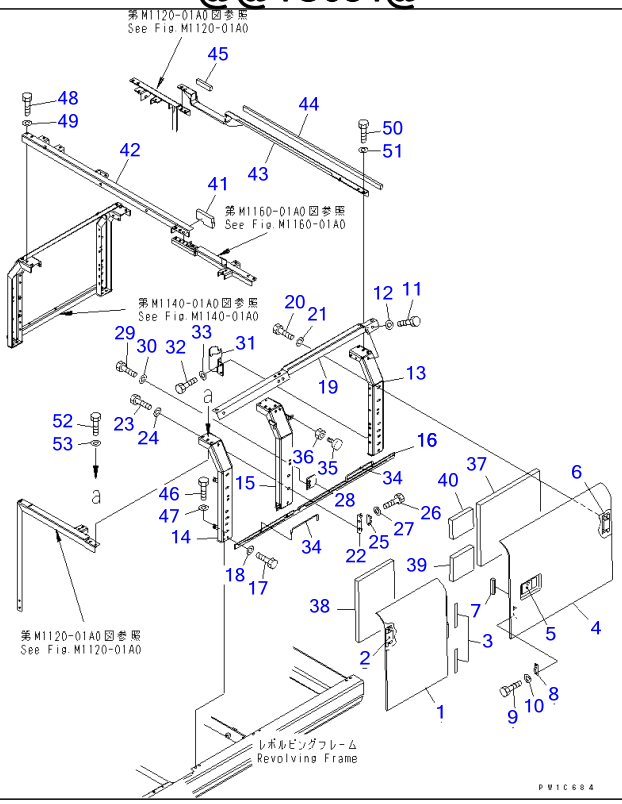

Ref M1130-01A0 **Page 240030**

LEFT SIDE DOOR (MACHINE CAB)(#60001-65000)

Item	Part No.	Part Name	Qty	Serial No.
1	20Y-54-61143	COVER	1	60283-@
	20Y-54-61142	COVER	1	60001-60282
2	20Y-54-63410	・HINGE (WELDED)	2	60283-@
	207-54-61870	・HINGE (WELDED)	2	60001-60282
3	20Y-54-63390	・SHEET	2	60001-@
4	20Y-54-61132	COVER	1	60283-@
	20Y-54-61131	COVER	1	60001-60282
5	198-54-41982	・LOCK ASS'Y (WELDED)	1	60001-@
6	20Y-54-63410	・HINGE (WELDED)	2	60283-@
	207-54-61870	・HINGE (WELDED)	2	60001-60282
7	20Y-54-61482	SHEET	1	60001-@
8	205-54-53550	DOVE TAIL	1	60001-@
9	01010-80612	BOLT	2	60001-@
10	01643-30623	WASHER	2	60001-@
11	01010-81230	BOLT	8	60001-@
12	01643-31232	WASHER	8	60001-@
13	20Y-54-61311	FRAME	1	60001-@
14	20Y-54-61323	FRAME	1	60744-65000
	20Y-54-61322	FRAME	1	60001-60743
15	20Y-54-61331	FRAME	1	60001-@
16	20Y-54-61342	PLATE	1	60744-65000
	20Y-54-61341	PLATE	1	60001-60743
17	01010-81225	BOLT	4	60001-@
18	01643-31232	WASHER	4	60001-@
19	20Y-54-61361	FRAME	1	60001-@
20	01010-81230	BOLT	4	60001-@
21	01643-31232	WASHER	4	60001-@
22	20Y-54-28170	BRACKET	1	60001-@

LEFT SIDE DOOR (MACHINE CAB)(#60001-65000)

Item	Part No.	Part Name	Qty	Serial No.
23	01010-81230	BOLT	2	60001-@
24	01643-31232	WASHER	2	60001-@
25	205-54-51970	DOVE TAIL	1	60001-@
26	01010-80616	BOLT	2	60001-@
27	01643-30623	WASHER	2	60001-@
28	20Y-54-61470	PLATE	1	60001-@
29	01010-81230	BOLT	2	60001-@
30	01643-31232	WASHER	2	60001-@
31	20Y-54-61371	BRACKET	1	60001-@
32	01010-81230	BOLT	2	60001-@
33	01643-31232	WASHER	2	60001-@
34	20Y-54-29231	BAR	2	60001-@
35	20Y-54-11611	STOPPER	2	60001-@
36	01580-11008	NUT	2	60001-@
37	20Y-54-61451	SHEET	1	60001-65000
38	20Y-54-61461	SHEET	1	60001-@
39	20Y-54-63360	SHEET	1	60001-60282
40	20Y-54-63370	SHEET	1	60001-60282
	20Y-54-62240	FRAME	1	60001-@
41	206-54-71480	▪ SHEET	1	60001-@
42	☆	▪ FRAME	1	60001-@
	20Y-54-62230	FRAME	1	60001-@
43	☆	▪ FRAME	1	60001-@
44	20Y-54-63341	▪ SHEET	1	60003-@
	20Y-54-63340	▪ SHEET	1	60001-60002
45	20Y-54-63351	▪ SHEET	1	60003-@
	20Y-54-63350	▪ SHEET	1	60001-60002
46	01010-81230	BOLT	6	60001-@
47	01643-31232	WASHER	6	60001-@
48	01010-81230	BOLT	3	60001-@
49	01643-31232	WASHER	3	60001-@
50	01010-81230	BOLT	3	60001-@
51	01643-31232	WASHER	3	60001-@
52	01010-81230	BOLT	2	60001-@
53	01643-31232	WASHER	2	60001-@

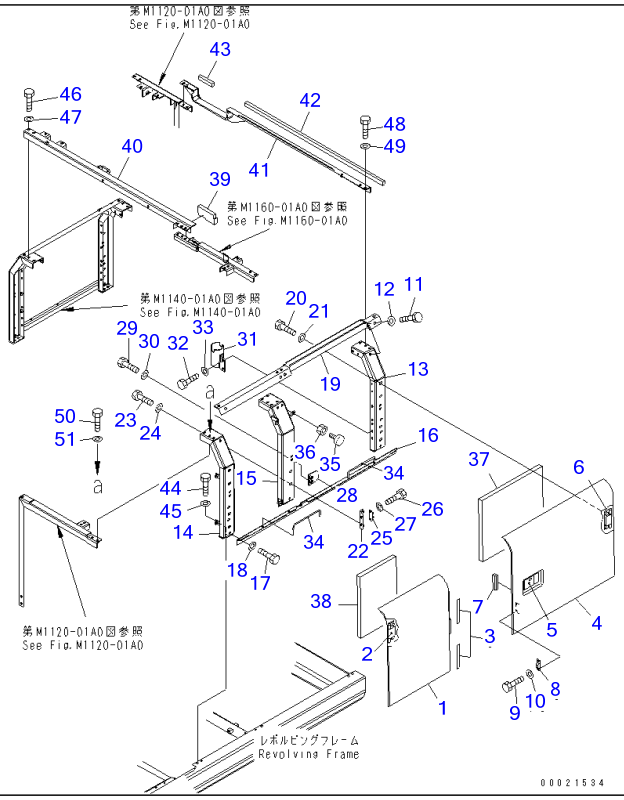

Ref M1130-01A0A **Page 240040**

PC220-7 S/N 60001-UP (Overseas Version)
LEFT SIDE DOOR (MACHINE CAB)(#65001-)

Item	Part No.	Part Name	Qty	Serial No.
1	20Y-54-61143	COVER	1	60283-
2	20Y-54-63410	・HINGE (WELDED)	2	60283-
3	20Y-54-63390	・SHEET	2	60001-
4	20Y-54-61132	COVER	1	60283-
5	198-54-41982	・LOCK ASS'Y (WELDED)	1	60001-
6	20Y-54-63410	・HINGE (WELDED)	2	60283-
7	20Y-54-61482	SHEET	1	60001-
8	205-54-53550	DOVE TAIL	1	60001-
9	01010-80612	BOLT	2	60001-
10	01643-30623	WASHER	2	60001-
11	01010-81230	BOLT	8	60001-
12	01643-31232	WASHER	8	60001-
13	20Y-54-61311	FRAME	1	60001-
14	20Y-54-61323	FRAME	1	65001-
15	20Y-54-61331	FRAME	1	60001-
16	20Y-54-61342	PLATE	1	65001-
17	01010-81225	BOLT	4	60001-
18	01643-31232	WASHER	4	60001-
19	20Y-54-61361	FRAME	1	60001-
20	01010-81230	BOLT	4	60001-
21	01643-31232	WASHER	4	60001-
22	20Y-54-28170	BRACKET	1	60001-
23	01010-81230	BOLT	2	60001-
24	01643-31232	WASHER	2	60001-
25	205-54-51971	DOVE TAIL	2	69839-
	□205-54-51970	DOVE TAIL	2	60001-69838
26	01010-80616	BOLT	2	60001-
27	01643-30623	WASHER	2	60001-

LEFT SIDE DOOR (MACHINE CAB)(#65001-)

Item	Part No.	Part Name	Qty	Serial No.
28	20Y-54-61470	PLATE	1	60001-
29	01010-81230	BOLT	2	60001-
30	01643-31232	WASHER	2	60001-
31	20Y-54-61371	BRACKET	1	60001-
32	01010-81230	BOLT	2	60001-
33	01643-31232	WASHER	2	60001-
34	20Y-54-29231	BAR	2	60001-
35	20Y-54-11611	STOPPER	2	60001-
36	01580-11008	NUT	2	60001-
37	20Y-54-61452	SHEET	1	65001-
38	20Y-54-61461	SHEET	1	60001-
	20Y-54-62240	FRAME	1	60001-
39	206-54-71480	▪ SHEET	1	60001-
40	☆	▪ FRAME	1	60001-
	20Y-54-62230	FRAME	1	60001-
41	☆	▪ FRAME	1	60001-
42	20Y-54-63341	▪ SHEET	1	60003-
43	20Y-54-63351	▪ SHEET	1	60003-
44	01010-81230	BOLT	6	60001-
45	01643-31232	WASHER	6	60001-
46	01010-81230	BOLT	3	60001-
47	01643-31232	WASHER	3	60001-
48	01010-81230	BOLT	3	60001-
49	01643-31232	WASHER	3	60001-
50	01010-81230	BOLT	2	60001-
51	01643-31232	WASHER	2	60001-

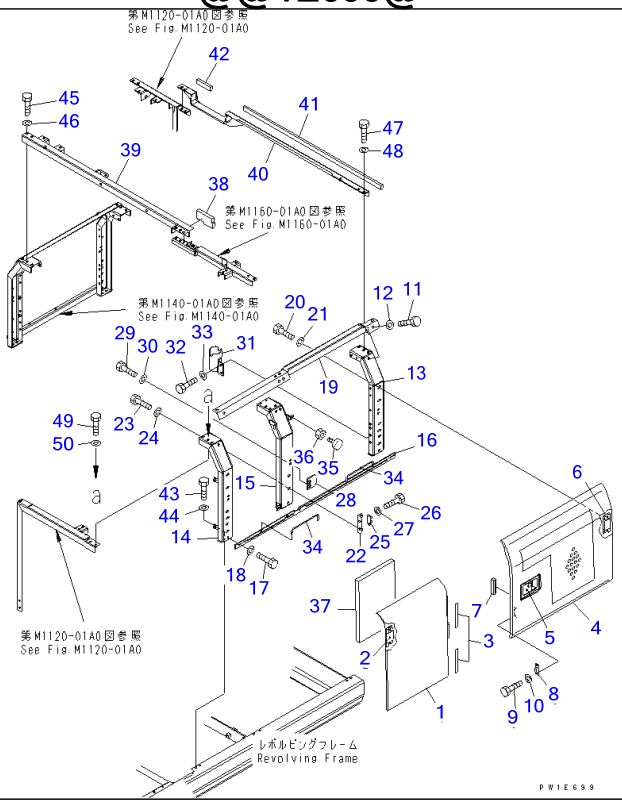

Ref M1130-01A1 **Page 240050**

PC220-7 S/N 60001-UP (Overseas Version)

LEFT SIDE DOOR (MACHINE CAB)(#60001-65000)

Item	Part No.	Part Name	Qty	Serial No.
1	20Y-54-61143	COVER	1	60283-@
	20Y-54-61142	COVER	1	60001-60282
2	20Y-54-63410	・HINGE (WELDED)	2	60283-@
	207-54-61870	・HINGE (WELDED)	2	60001-60282
3	20Y-54-63390	・SHEET	2	60001-@
4	20Y-54-61191	COVER	1	60283-@
	20Y-54-61190	COVER	1	60001-60282
5	198-54-41982	・LOCK ASS'Y (WELDED)	1	60001-@
6	20Y-54-63410	・HINGE (WELDED)	2	60283-@
	207-54-61870	・HINGE (WELDED)	2	60001-60282
7	20Y-54-61482	・SHEET	1	60001-@
8	205-54-53550	DOVE TAIL	1	60001-@
9	01010-80612	BOLT	2	60001-@
10	01643-30623	WASHER	2	60001-@
11	01010-81230	BOLT	8	60001-@
12	01643-31232	WASHER	8	60001-@
13	20Y-54-61311	FRAME	1	60001-@
14	20Y-54-61323	FRAME	1	60744-65000
	20Y-54-61322	FRAME	1	60001-60743
15	20Y-54-61331	FRAME	1	60001-@
16	20Y-54-61342	PLATE	1	60744-65000
	20Y-54-61341	PLATE	1	60001-60743
17	01010-81225	BOLT	4	60001-@
18	01643-31232	WASHER	4	60001-@
19	20Y-54-61361	FRAME	1	60001-@
20	01010-81230	BOLT	4	60001-@
21	01643-31232	WASHER	4	60001-@
22	20Y-54-28170	BRACKET	1	60001-@

LEFT SIDE DOOR (MACHINE CAB)(#60001-65000)

Item	Part No.	Part Name	Qty	Serial No.
23	01010-81230	BOLT	2	60001-@
24	01643-31232	WASHER	2	60001-@
25	205-54-51970	DOVE TAIL	1	60001-@
26	01010-80616	BOLT	2	60001-@
27	01643-30623	WASHER	2	60001-@
28	20Y-54-61470	PLATE	1	60001-@
29	01010-81230	BOLT	2	60001-@
30	01643-31232	WASHER	2	60001-@
31	20Y-54-61371	BRACKET	1	60001-@
32	01010-81230	BOLT	2	60001-@
33	01643-31232	WASHER	2	60001-@
34	20Y-54-29231	BAR	2	60001-@
35	20Y-54-11611	STOPPER	2	60001-@
36	01580-11008	NUT	2	60001-@
37	20Y-54-61461	SHEET	1	60001-@
	20Y-54-62240	FRAME	1	60001-@
38	206-54-71480	▪ SHEET	1	60001-@
39	☆	▪ FRAME	1	60001-@
	20Y-54-62230	FRAME	1	60001-@
40	☆	▪ FRAME	1	60001-@
41	20Y-54-63341	▪ SHEET	1	60001-@
42	20Y-54-63351	▪ SHEET	1	60001-@
43	01010-81230	BOLT	6	60001-@
44	01643-31232	WASHER	6	60001-@
45	01010-81230	BOLT	3	60001-@
46	01643-31232	WASHER	3	60001-@
47	01010-81230	BOLT	3	60001-@
48	01643-31232	WASHER	3	60001-@
49	01010-81230	BOLT	2	60001-@
50	01643-31232	WASHER	2	60001-@

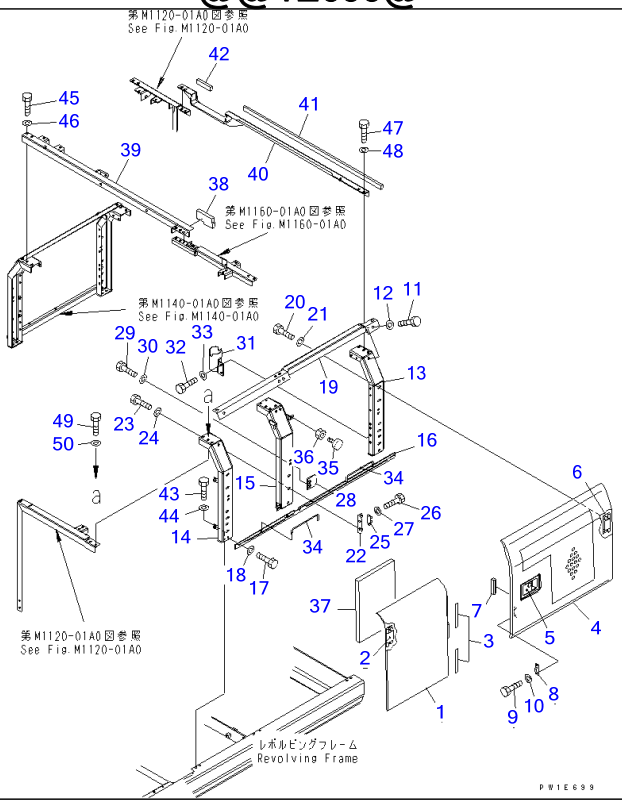

Ref M1130-01A1A **Page 240060**

PC220-7 S/N 60001-UP (Overseas Version)
LEFT SIDE DOOR (MACHINE CAB)(#65001-)

Item	Part No.	Part Name	Qty	Serial No.
1	20Y-54-61143	COVER	1	60283-
	20Y-54-61142	COVER	1	60001-60282
2	20Y-54-63410	・HINGE (WELDED)	2	60283-
	207-54-61870	・HINGE (WELDED)	2	60001-60282
3	20Y-54-63390	・SHEET	2	60001-
4	20Y-54-61191	COVER	1	60283-
	20Y-54-61190	COVER	1	60001-60282
5	198-54-41984	・LOCK (WELDED)	1	69904-
	198-54-41982	・LOCK ASS'Y (WELDED)	1	60001-69903
6	20Y-54-63410	・HINGE (WELDED)	2	60283-
	207-54-61870	・HINGE (WELDED)	2	60001-60282
7	20Y-54-61482	・SHEET	1	60001-
8	205-54-53550	DOVE TAIL	1	60001-
9	01010-80612	BOLT	2	60001-
10	01643-30623	WASHER	2	60001-
11	01010-81230	BOLT	8	60001-
12	01643-31232	WASHER	8	60001-
13	20Y-54-61311	FRAME	1	60001-
14	20Y-54-61323	FRAME	1	65096-
	20Y-54-61322	FRAME	1	60001-65095
15	20Y-54-61331	FRAME	1	60001-
16	20Y-54-61342	PLATE	1	65096-
	20Y-54-61341	PLATE	1	60001-65095
17	01010-81225	BOLT	4	60001-
18	01643-31232	WASHER	4	60001-
19	20Y-54-61361	FRAME	1	60001-
20	01010-81230	BOLT	4	60001-
21	01643-31232	WASHER	4	60001-

LEFT SIDE DOOR (MACHINE CAB)(#65001-)

Item	Part No.	Part Name	Qty	Serial No.
22	20Y-54-28170	BRACKET	1	60001-
23	01010-81230	BOLT	2	60001-
24	01643-31232	WASHER	2	60001-
25	205-54-51971	DOVE TAIL	2	69839-
	□205-54-51970	DOVE TAIL	2	60001-69838
26	01010-80616	BOLT	2	60001-
27	01643-30623	WASHER	2	60001-
28	20Y-54-61470	PLATE	1	60001-
29	01010-81230	BOLT	2	60001-
30	01643-31232	WASHER	2	60001-
31	20Y-54-61371	BRACKET	1	60001-
32	01010-81230	BOLT	2	60001-
33	01643-31232	WASHER	2	60001-
34	20Y-54-29231	BAR	2	60001-
35	20Y-54-11611	STOPPER	2	60001-
36	01580-11008	NUT	2	60001-
37	20Y-54-61461	SHEET	1	60001-
	20Y-54-62240	FRAME	1	60001-
38	206-54-71480	▪ SHEET	1	60001-
39	☆	▪ FRAME	1	60001-
	20Y-54-62230	FRAME	1	60001-
40	☆	▪ FRAME	1	60001-
41	20Y-54-63341	▪ SHEET	1	60001-
42	20Y-54-63351	▪ SHEET	1	60001-
43	01010-81230	BOLT	6	60001-
44	01643-31232	WASHER	6	60001-
45	01010-81230	BOLT	3	60001-
46	01643-31232	WASHER	3	60001-
47	01010-81230	BOLT	3	60001-
48	01643-31232	WASHER	3	60001-
49	01010-81230	BOLT	2	60001-
50	01643-31232	WASHER	2	60001-

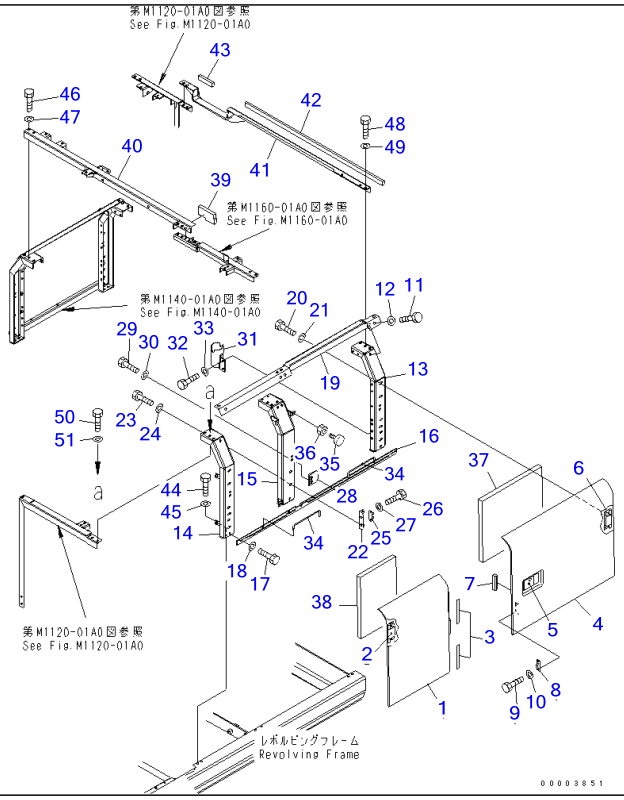

Ref M1130-01A2 **Page 240070**

PC220-7 S/N 60001-UP (Overseas Version)

LEFT SIDE DOOR (MACHINE CAB) (COLD WEATHER A SPEC.)(#60255-65000)

Item	Part No.	Part Name	Qty	Serial No.
1	20Y-54-61143	COVER	1	60255-@
2	20Y-54-63410	・HINGE	2	60255-@
3	20Y-54-63390	・SHEET	2	60255-@
4	20Y-54-61132	COVER	1	60255-@
5	198-54-41982	・LOCK ASS'Y (WELDED)	1	60255-@
6	20Y-54-63410	・HINGE (WELDED)	2	60255-@
7	20Y-54-61482	SHEET	1	60255-@
8	205-54-53550	DOVE TAIL	1	60255-@
9	01010-80612	BOLT	2	60255-@
10	01643-30623	WASHER	2	60255-@
11	01010-81230	BOLT	8	60255-@
12	01643-31232	WASHER	8	60255-@
13	20Y-54-61311	FRAME	1	60255-@
14	20Y-54-61323	FRAME	1	60744-65000
	20Y-54-61322	FRAME	1	60255-60743
15	20Y-54-61331	FRAME	1	60255-@
16	20Y-54-61342	PLATE	1	60744-65000
	20Y-54-61341	PLATE	1	60255-60743
17	01010-81225	BOLT	4	60255-@
18	01643-31232	WASHER	4	60255-@
19	20Y-54-61361	FRAME	1	60255-@
20	01010-81230	BOLT	4	60255-@
21	01643-31232	WASHER	4	60255-@
22	20Y-54-28170	BRACKET	1	60255-@
23	01010-81230	BOLT	2	60255-@
24	01643-31232	WASHER	2	60255-@
25	205-54-51970	DOVE TAIL	1	60255-@
26	01010-80616	BOLT	2	60255-@

LEFT SIDE DOOR (MACHINE CAB) (COLD WEATHER A SPEC.)(#60255-65000)

Item	Part No.	Part Name	Qty	Serial No.
27	01643-30623	WASHER	2	60255-@
28	20Y-54-61470	PLATE	1	60255-@
29	01010-81230	BOLT	2	60255-@
30	01643-31232	WASHER	2	60255-@
31	20Y-54-61371	BRACKET	1	60255-@
32	01010-81230	BOLT	2	60255-@
33	01643-31232	WASHER	2	60255-@
34	20Y-54-29231	BAR	2	60255-@
35	20Y-54-11611	STOPPER	2	60255-@
36	01580-11008	NUT	2	60255-@
37	20Y-54-61451	SHEET	1	60255-65000
38	20Y-54-61461	SHEET	1	60255-@
	206-54-71490	FRAME	1	60255-@
39	206-54-71480	▪ SHEET	1	60255-@
40	☆	▪ FRAME	1	60255-@
	20Y-54-62230	FRAME	1	60255-@
41	☆	FRAME	1	60255-@
42	20Y-54-63341	SHEET	1	60255-@
43	20Y-54-63351	SHEET	1	60255-@
44	01010-81230	BOLT	6	60255-@
45	01643-31232	WASHER	6	60255-@
46	01010-81230	BOLT	3	60255-@
47	01643-31232	WASHER	3	60255-@
48	01010-81230	BOLT	3	60255-@
49	01643-31232	WASHER	3	60255-@
50	01010-81230	BOLT	2	60255-@
51	01643-31232	WASHER	2	60255-@

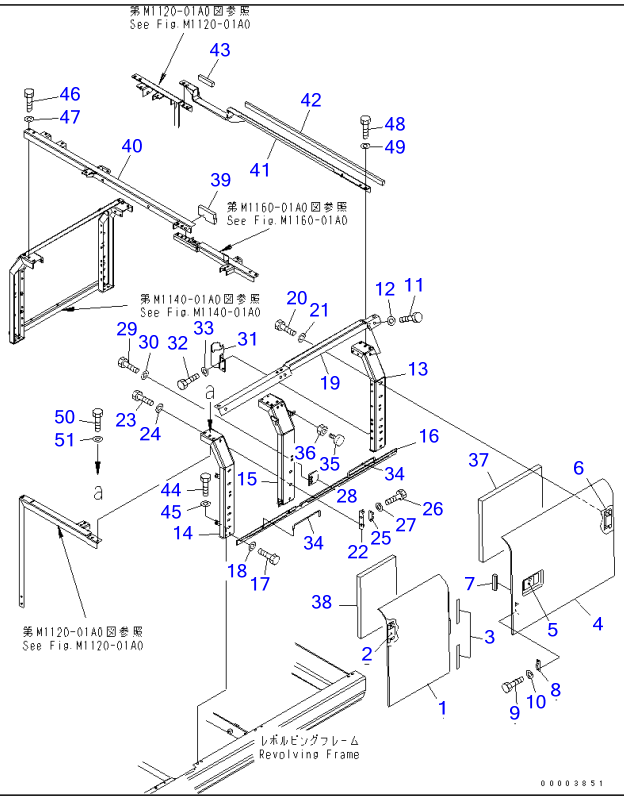

Ref M1130-01A2A **Page 240080**

PC220-7 S/N 60001-UP (Overseas Version)

LEFT SIDE DOOR (MACHINE CAB) (COLD WEATHER A SPEC.)(#65001-)

Item	Part No.	Part Name	Qty	Serial No.
1	20Y-54-61143	COVER	1	60255-
2	20Y-54-63410	・HINGE	2	60255-
3	20Y-54-63390	・SHEET	2	60255-
4	20Y-54-61132	COVER	1	60255-
5	198-54-41982	・LOCK ASS'Y (WELDED)	1	60255-
6	20Y-54-63410	・HINGE (WELDED)	2	60255-
7	20Y-54-61482	SHEET	1	60255-
8	205-54-53550	DOVE TAIL	1	60255-
9	01010-80612	BOLT	2	60255-
10	01643-30623	WASHER	2	60255-
11	01010-81230	BOLT	8	60255-
12	01643-31232	WASHER	8	60255-
13	20Y-54-61311	FRAME	1	60255-
14	20Y-54-61323	FRAME	1	65001-
15	20Y-54-61331	FRAME	1	60255-
16	20Y-54-61342	PLATE	1	65001-
17	01010-81225	BOLT	4	60255-
18	01643-31232	WASHER	4	60255-
19	20Y-54-61361	FRAME	1	60255-
20	01010-81230	BOLT	4	60255-
21	01643-31232	WASHER	4	60255-
22	20Y-54-28170	BRACKET	1	60255-
23	01010-81230	BOLT	2	60255-
24	01643-31232	WASHER	2	60255-
25	205-54-51971	DOVE TAIL	2	69839-
	□205-54-51970	DOVE TAIL	2	60255-69838
26	01010-80616	BOLT	2	60255-
27	01643-30623	WASHER	2	60255-

LEFT SIDE DOOR (MACHINE CAB) (COLD WEATHER A SPEC.)(#65001-)

Item	Part No.	Part Name	Qty	Serial No.
28	20Y-54-61470	PLATE	1	60255-
29	01010-81230	BOLT	2	60255-
30	01643-31232	WASHER	2	60255-
31	20Y-54-61371	BRACKET	1	60255-
32	01010-81230	BOLT	2	60255-
33	01643-31232	WASHER	2	60255-
34	20Y-54-29231	BAR	2	60255-
35	20Y-54-11611	STOPPER	2	60255-
36	01580-11008	NUT	2	60255-
37	20Y-54-61452	SHEET	1	65001-
38	20Y-54-61461	SHEET	1	60255-
	206-54-71490	FRAME	1	60255-
39	206-54-71480	・SHEET	1	60255-
40	☆	・FRAME	1	60255-
	20Y-54-62230	FRAME	1	60255-
41	☆	・FRAME	1	60255-
42	20Y-54-63341	・SHEET	1	60255-
43	20Y-54-63351	・SHEET	1	60255-
44	01010-81230	BOLT	6	60255-
45	01643-31232	WASHER	6	60255-
46	01010-81230	BOLT	3	60255-
47	01643-31232	WASHER	3	60255-
48	01010-81230	BOLT	3	60255-
49	01643-31232	WASHER	3	60255-
50	01010-81230	BOLT	2	60255-
51	01643-31232	WASHER	2	60255-

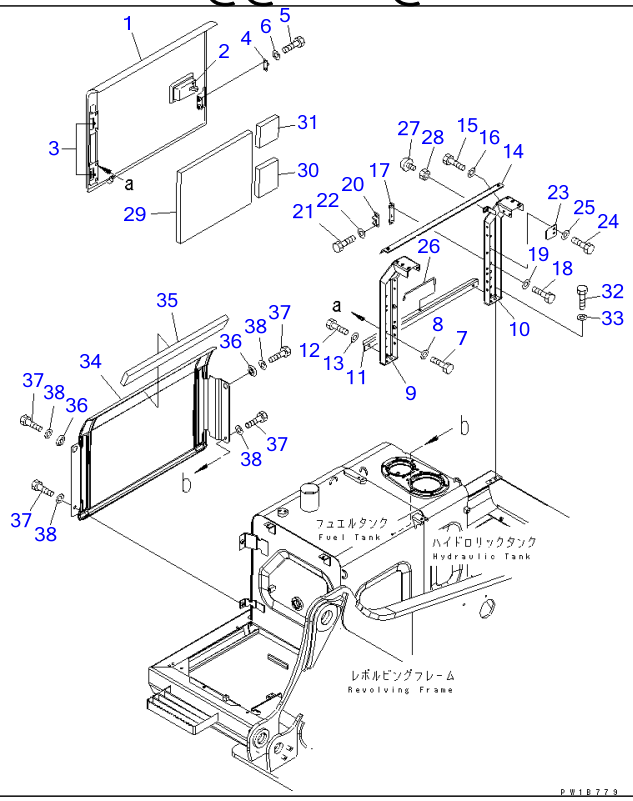

Ref M1140-01A0 Page 240090

PC220-7 S/N 60001-UP (Overseas Version)

RIGHT SIDE DOOR (MACHINE CAB)(#60001-65000)

Item	Part No.	Part Name	Qty	Serial No.
1	20Y-54-61132	COVER	1	60283-@
	20Y-54-61131	COVER	1	60001-60282
2	198-54-41982	・LOCK ASS'Y (WELDED)	1	60001-@
3	20Y-54-63410	・HINGE (WELDED)	2	60283-@
	207-54-61870	・HINGE (WELDED)	2	60001-60282
4	205-54-53550	DOVE TAIL	1	60001-@
5	01010-80612	BOLT	2	60001-@
6	01643-30623	WASHER	2	60001-@
7	01010-81230	BOLT	4	60001-@
8	01643-31232	WASHER	4	60001-@
9	20Y-54-61411	FRAME	1	60001-@
10	20Y-54-61421	FRAME	1	60001-@
11	20Y-54-61431	PLATE	1	60001-@
12	01010-81225	BOLT	2	60001-@
13	01643-31232	WASHER	2	60001-@
14	20Y-54-61441	PLATE	1	60001-@
15	01010-81230	BOLT	2	60001-@
16	01643-31232	WASHER	2	60001-@
17	20Y-54-28170	BRACKET	1	60001-@
18	01010-81230	BOLT	2	60001-@
19	01643-31232	WASHER	2	60001-@
20	205-54-51970	DOVE TAIL	1	60001-@
21	01010-80616	BOLT	2	60001-@
22	01643-30623	WASHER	2	60001-@
23	20Y-54-61470	PLATE	1	60001-@
24	01010-81230	BOLT	2	60001-@
25	01643-31232	WASHER	2	60001-@
26	20Y-54-29231	BAR	1	60001-@

RIGHT SIDE DOOR (MACHINE CAB)(#60001-65000)

Item	Part No.	Part Name	Qty	Serial No.
27	20Y-54-11611	STOPPER	1	60001-@
28	01580-11008	NUT	1	60001-@
29	20Y-54-61451	SHEET	1	60001-65000
30	20Y-54-63360	SHEET	1	60001-60282
31	20Y-54-63370	SHEET	1	60001-60282
32	01010-81230	BOLT	4	60001-@
33	01643-31232	WASHER	4	60001-@
34	20Y-54-61162	COVER	1	60001-@
35	20Y-54-61391	SHEET	1	60001-@
36	208-54-57180	COLLAR	2	60001-@
37	01010-81230	BOLT	4	60001-@
38	01643-31232	WASHER	4	60001-@

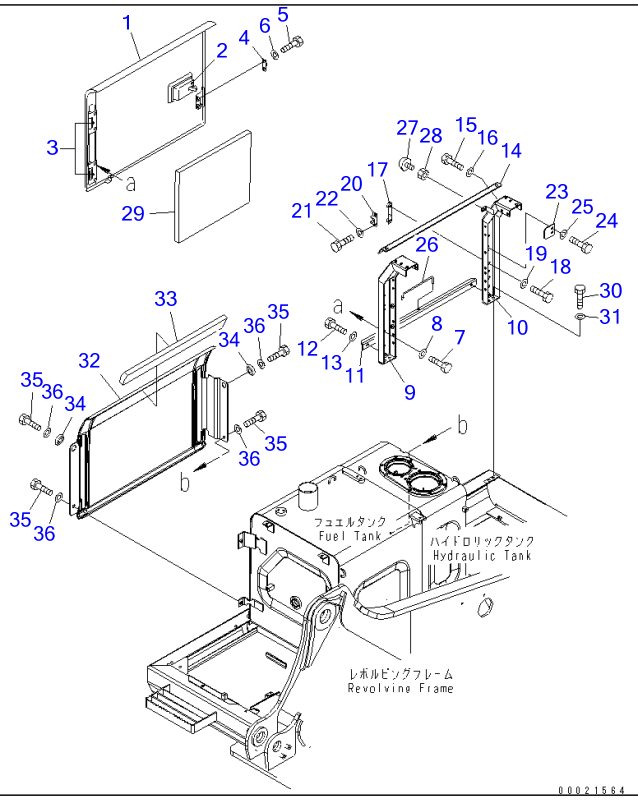

Ref M1140-01A0A **Page 240100**

PC220-7 S/N 60001-UP (Overseas Version)
RIGHT SIDE DOOR (MACHINE CAB)(#65001-)

Item	Part No.	Part Name	Qty	Serial No.
1	20Y-54-61132	COVER	1	60283-
2	198-54-41984	・LOCK (WELDED)	1	69904-
	198-54-41982	・LOCK ASS'Y (WELDED)	1	60001-69903
3	20Y-54-63410	・HINGE (WELDED)	2	60283-
4	205-54-53550	DOVE TAIL	1	60001-
5	01010-80612	BOLT	2	60001-
6	01643-30623	WASHER	2	60001-
7	01010-81230	BOLT	4	60001-
8	01643-31232	WASHER	4	60001-
9	20Y-54-61411	FRAME	1	60001-
10	20Y-54-61421	FRAME	1	60001-
11	20Y-54-61431	PLATE	1	60001-
12	01010-81225	BOLT	2	60001-
13	01643-31232	WASHER	2	60001-
14	20Y-54-61441	PLATE	1	60001-
15	01010-81230	BOLT	2	60001-
16	01643-31232	WASHER	2	60001-
17	20Y-54-28170	BRACKET	1	60001-
18	01010-81230	BOLT	2	60001-
19	01643-31232	WASHER	2	60001-
20	205-54-51971	DOVE TAIL	2	69839-
	□205-54-51970	DOVE TAIL	2	60001-69838
21	01010-80616	BOLT	2	60001-
22	01643-30623	WASHER	2	60001-
23	20Y-54-61470	PLATE	1	60001-
24	01010-81230	BOLT	2	60001-
25	01643-31232	WASHER	2	60001-
26	20Y-54-29231	BAR	1	60001-

RIGHT SIDE DOOR (MACHINE CAB)(#65001-)

Item	Part No.	Part Name	Qty	Serial No.
27	20Y-54-11611	STOPPER	1	60001-
28	01580-11008	NUT	1	60001-
29	20Y-54-61452	SHEET	1	65001-
30	01010-81230	BOLT	4	60001-
31	01643-31232	WASHER	4	60001-
32	20Y-54-61162	COVER	1	60001-
33	20Y-54-61391	SHEET	1	60001-
34	208-54-57180	COLLAR	2	60001-
35	01010-81230	BOLT	4	60001-
36	01643-31232	WASHER	4	60001-

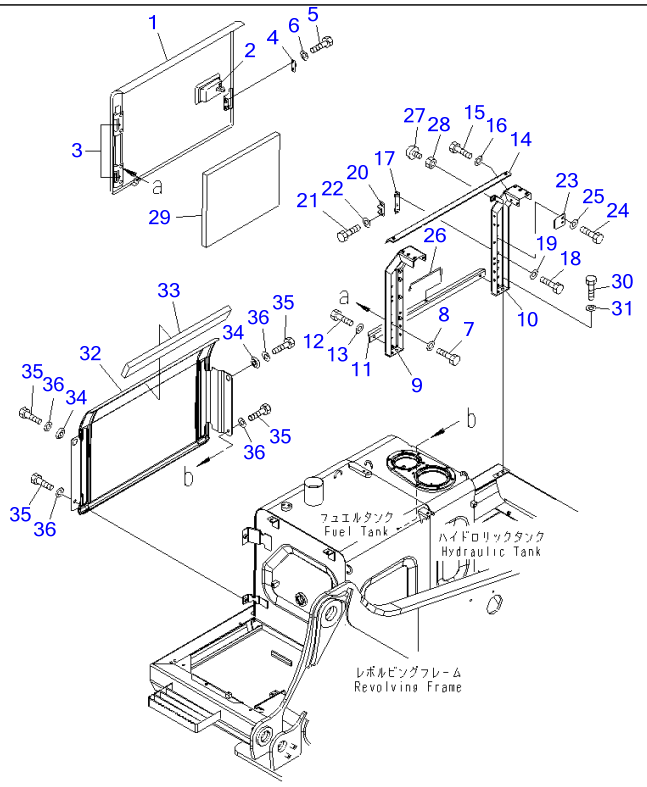

Ref M1140-01A1 Page 240110

PC220-7 S/N 60001-UP (Overseas Version)

RIGHT SIDE DOOR (MACHINE CAB) (COLD WEATHER A SPEC.)(#60255-65000)

Item	Part No.	Part Name	Qty	Serial No.
1	20Y-54-61132	COVER	1	60255-@
2	198-54-41982	▪ LOCK ASS'Y (WELDED)	1	60255-@
3	20Y-54-63410	▪ HINGE (WELDED)	2	60255-@
4	205-54-53550	DOVE TAIL	1	60255-@
5	01010-80612	BOLT	2	60255-@
6	01643-30623	WASHER	2	60255-@
7	01010-81230	BOLT	4	60255-@
8	01643-31232	WASHER	4	60255-@
9	20Y-54-62160	FRAME	1	60255-@
10	20Y-54-61421	FRAME	1	60255-@
11	20Y-54-61431	PLATE	1	60255-@
12	01010-81225	BOLT	2	60255-@
13	01643-31232	WASHER	2	60255-@
14	20Y-54-61441	PLATE	1	60255-@
15	01010-81230	BOLT	2	60255-@
16	01643-31232	WASHER	2	60255-@
17	20Y-54-28170	BRACKET	1	60255-@
18	01010-81230	BOLT	2	60255-@
19	01643-31232	WASHER	2	60255-@
20	205-54-51970	DOVE TAIL	1	60255-@
21	01010-80616	BOLT	2	60255-@
22	01643-30623	WASHER	2	60255-@
23	20Y-54-61470	PLATE	1	60255-@
24	01010-81230	BOLT	2	60255-@
25	01643-31232	WASHER	2	60255-@
26	20Y-54-29231	BAR	1	60255-@
27	20Y-54-11611	STOPPER	1	60255-@
28	01580-11008	NUT	1	60255-@

RIGHT SIDE DOOR (MACHINE CAB) (COLD WEATHER A SPEC.)(#60255-65000)

Item	Part No.	Part Name	Qty	Serial No.
29	20Y-54-61451	SHEET	1	60255-65000
30	01010-81230	BOLT	4	60255-@
31	01643-31232	WASHER	4	60255-@
32	20Y-54-61162	COVER	1	60255-@
33	20Y-54-61391	SHEET	1	60255-@
34	208-54-57180	COLLAR	2	60255-@
35	01010-81230	BOLT	4	60255-@
36	01643-31232	WASHER	4	60255-@

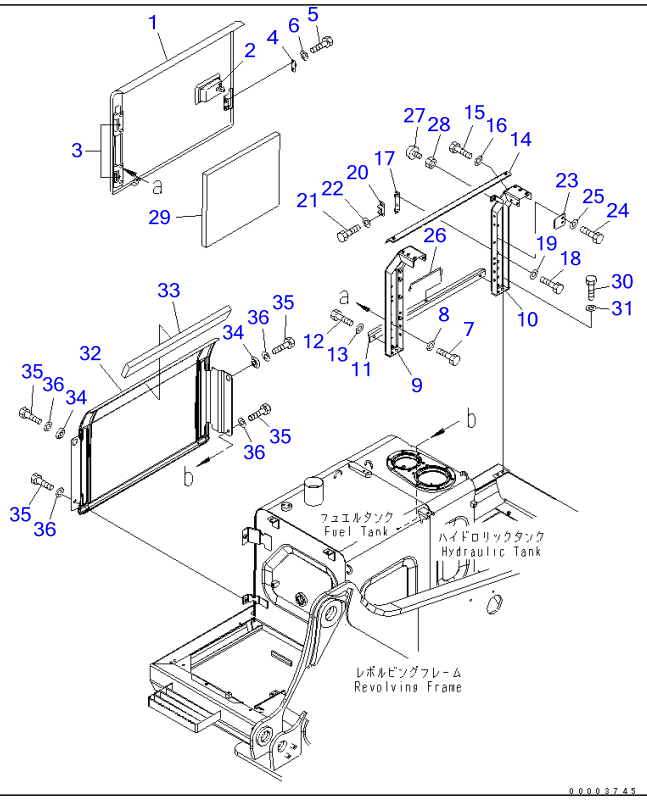

Ref M1140-01A1A **Page 240120**

PC220-7 S/N 60001-UP (Overseas Version)

RIGHT SIDE DOOR (MACHINE CAB) (COLD WEATHER A SPEC.)(#65001-)

Item	Part No.	Part Name	Qty	Serial No.
1	20Y-54-61132	COVER	1	60255-
2	198-54-41982	・LOCK ASS'Y (WELDED)	1	60255-
3	20Y-54-63410	・HINGE (WELDED)	2	60255-
4	205-54-53550	DOVE TAIL	1	60255-
5	01010-80612	BOLT	2	60255-
6	01643-30623	WASHER	2	60255-
7	01010-81230	BOLT	4	60255-
8	01643-31232	WASHER	4	60255-
9	20Y-54-62160	FRAME	1	60255-
10	20Y-54-61421	FRAME	1	60255-
11	20Y-54-61431	PLATE	1	60255-
12	01010-81225	BOLT	2	60255-
13	01643-31232	WASHER	2	60255-
14	20Y-54-61441	PLATE	1	60255-
15	01010-81230	BOLT	2	60255-
16	01643-31232	WASHER	2	60255-
17	20Y-54-28170	BRACKET	1	60255-
18	01010-81230	BOLT	2	60255-
19	01643-31232	WASHER	2	60255-
20	205-54-51971	DOVE TAIL	2	69839-
	□205-54-51970	DOVE TAIL	2	60255-69838
21	01010-80616	BOLT	2	60255-
22	01643-30623	WASHER	2	60255-
23	20Y-54-61470	PLATE	1	60255-
24	01010-81230	BOLT	2	60255-
25	01643-31232	WASHER	2	60255-
26	20Y-54-29231	BAR	1	60255-
27	20Y-54-11611	STOPPER	1	60255-

RIGHT SIDE DOOR (MACHINE CAB) (COLD WEATHER A SPEC.)(#65001-)

Item	Part No.	Part Name	Qty	Serial No.
28	01580-11008	NUT	1	60255-
29	20Y-54-61452	SHEET	1	65001-
30	01010-81230	BOLT	4	60255-
31	01643-31232	WASHER	4	60255-
32	20Y-54-61162	COVER	1	60255-
33	20Y-54-61391	SHEET	1	60255-
34	208-54-57180	COLLAR	2	60255-
35	01010-81230	BOLT	4	60255-
36	01643-31232	WASHER	4	60255-

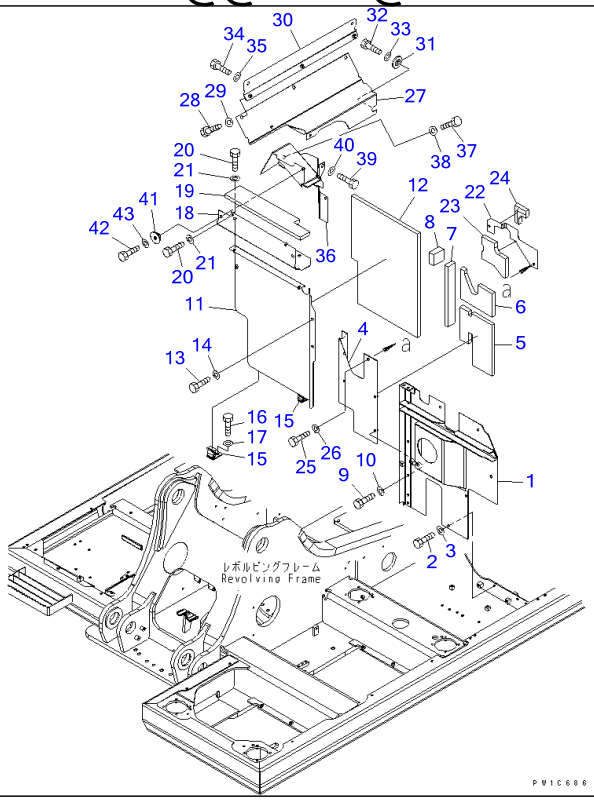

Ref M1150-01A0 **Page 240130**

PC220-7 S/N 60001-UP (Overseas Version)

PARTITION (MACHINE CAB)(#60001-65000)

Item	Part No.	Part Name	Qty	Serial No.
1	206-54-71121	COVER	1	60001-@
2	01010-81230	BOLT	7	60001-@
3	01643-31232	WASHER	7	60001-@
	206-54-71510	COVER	1	60001-@
4	☆	・COVER	1	60001-@
5	206-54-71530	・SHEET	1	60001-@
6	20Y-54-63241	・SHEET	1	60001-@
7	20Y-54-63281	・SHEET	1	60001-@
8	20Y-54-63290	・SHEET	1	60001-@
9	01010-81230	BOLT	2	60001-@
10	01643-31232	WASHER	2	60001-@
	20Y-54-61931	COVER	1	60001-65000
11	☆	・COVER	1	60001-@
12	20Y-54-63211	・SHEET	1	60001-65000
13	01010-81230	BOLT	2	60001-@
14	01643-31232	WASHER	2	60001-@
15	20Y-54-12320	CATCH	2	60001-@
16	01010-81225	BOLT	2	60001-@
17	01643-31232	WASHER	2	60001-@
	20Y-54-61971	COVER	1	60001-@
18	☆	・COVER	1	60001-@
19	20Y-54-63221	・SHEET	1	60001-@
20	01010-81230	BOLT	4	60001-@
21	01643-31232	WASHER	4	60001-@
	20Y-54-61961	COVER	1	60001-@
22	☆	・COVER	1	60001-@
23	20Y-54-63261	・SHEET	1	60001-@
24	20Y-54-63270	・SHEET	1	60001-@

PARTITION (MACHINE CAB)(#60001-65000)

Item	Part No.	Part Name	Qty	Serial No.
25	01010-81230	BOLT	2	60001-@
26	01643-31232	WASHER	2	60001-@
27	20Y-54-61551	COVER	1	60001-@
28	01010-81230	BOLT	3	60001-@
29	01643-31232	WASHER	3	60001-@
30	20Y-54-61591	COVER	1	60001-@
31	20Y-54-12550	COLLAR	1	60001-@
32	01010-81230	BOLT	1	60001-@
33	01643-31232	WASHER	1	60001-@
34	01010-81230	BOLT	2	60001-@
35	01643-31232	WASHER	2	60001-@
36	20Y-54-61541	COVER	1	60001-@
37	01010-81230	BOLT	1	60001-@
38	01643-31232	WASHER	1	60001-@
39	01010-81220	BOLT	1	60001-@
40	01643-31232	WASHER	1	60001-@
41	20Y-54-12550	COLLAR	2	60001-@
42	01010-81230	BOLT	2	60001-@
43	01643-31232	WASHER	2	60001-@

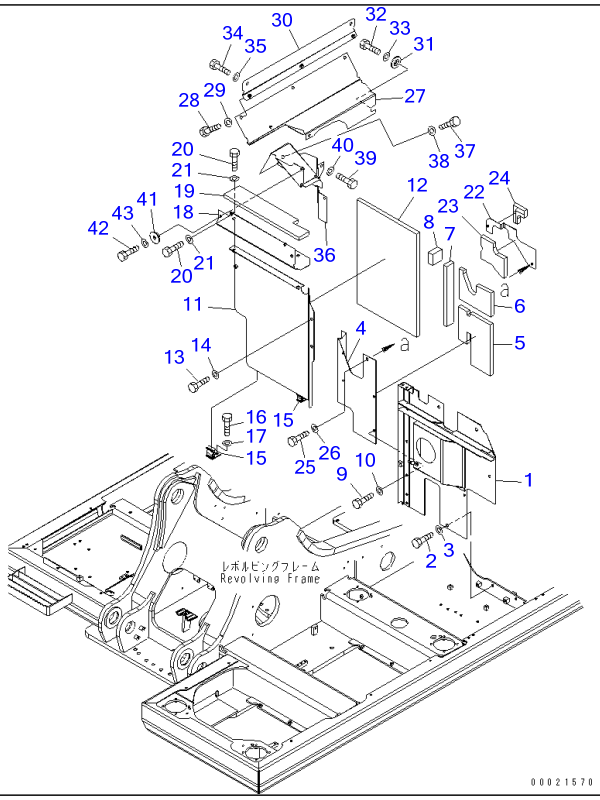

Ref M1150-01A0A

Page 240140

PC220-7 S/N 60001-UP (Overseas Version)

PARTITION (MACHINE CAB)(#65001-)

Item	Part No.	Part Name	Qty	Serial No.
1	206-54-71121	COVER	1	60001-
2	01010-81230	BOLT	7	60001-
3	01643-31232	WASHER	7	60001-
	206-54-71510	COVER	1	60001-
4	☆	・COVER	1	60001-
5	206-54-71530	・SHEET	1	60001-
6	20Y-54-63241	・SHEET	1	60001-
7	20Y-54-63281	・SHEET	1	60001-
8	20Y-54-63290	・SHEET	1	60001-
9	01010-81230	BOLT	2	60001-
10	01643-31232	WASHER	2	60001-
	20Y-54-61932	COVER	1	65001-
11	☆	・COVER	1	60001-
12	20Y-54-63212	・SHEET	1	65001-
13	01010-81230	BOLT	2	60001-
14	01643-31232	WASHER	2	60001-
15	20Y-54-12320	CATCH	2	60001-
16	01010-81225	BOLT	2	60001-
17	01643-31232	WASHER	2	60001-
	20Y-54-61971	COVER	1	60001-
18	☆	・COVER	1	60001-
19	20Y-54-63221	・SHEET	1	60001-
20	01010-81230	BOLT	4	60001-
21	01643-31232	WASHER	4	60001-
	20Y-54-61961	COVER	1	60001-
22	☆	・COVER	1	60001-
23	20Y-54-63261	・SHEET	1	60001-
24	20Y-54-63270	・SHEET	1	60001-

PARTITION (MACHINE CAB)(#65001-)

Item	Part No.	Part Name	Qty	Serial No.
25	01010-81230	BOLT	2	60001-
26	01643-31232	WASHER	2	60001-
27	20Y-54-61551	COVER	1	60001-
28	01010-81230	BOLT	3	60001-
29	01643-31232	WASHER	3	60001-
30	20Y-54-61591	COVER	1	60001-
31	20Y-54-12550	COLLAR	1	60001-
32	01010-81230	BOLT	1	60001-
33	01643-31232	WASHER	1	60001-
34	01010-81230	BOLT	2	60001-
35	01643-31232	WASHER	2	60001-
36	20Y-54-61541	COVER	1	60001-
37	01010-81230	BOLT	1	60001-
38	01643-31232	WASHER	1	60001-
39	01010-81220	BOLT	1	60001-
40	01643-31232	WASHER	1	60001-
41	20Y-54-12550	COLLAR	2	60001-
42	01010-81230	BOLT	2	60001-
43	01643-31232	WASHER	2	60001-

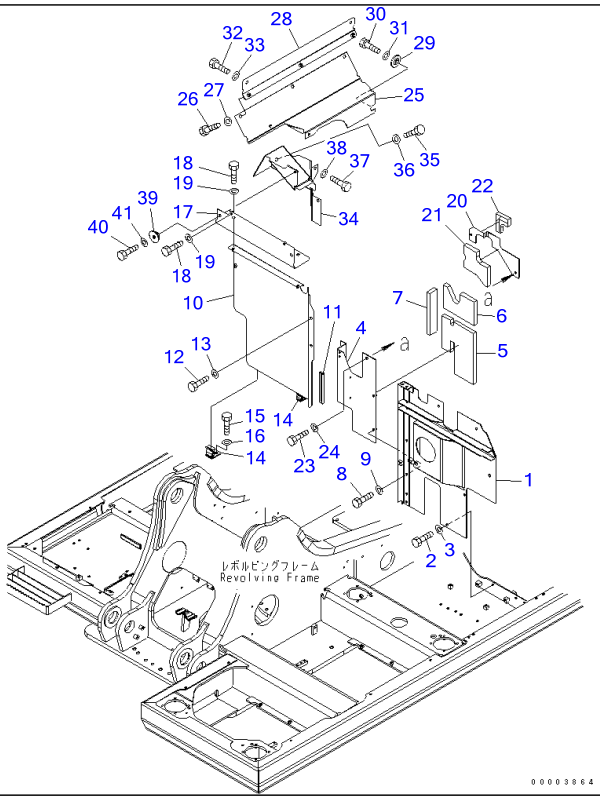

Ref M1150-01A2 Page 240150

PC220-7 S/N 60001-UP (Overseas Version)

PARTITION (MACHINE CAB) (COLD WEATHER A SPEC.)(#60255-)

Item	Part No.	Part Name	Qty	Serial No.
1	206-54-71121	COVER	1	60255-
2	01010-81230	BOLT	7	60255-
3	01643-31232	WASHER	7	60255-
	206-977-7120	COVER	1	60255-
4	☆	・PLATE	1	60255-
5	20Y-977-6650	・SHEET	1	60255-
6	206-54-71530	・SHEET	1	60255-
7	20Y-977-6640	・SHEET	1	60255-
8	01010-81230	BOLT	2	60255-
9	01643-31232	WASHER	2	60255-
	20Y-977-6691	COVER	1	60255-
10	☆	・COVER	1	60255-
11	203-54-63340	・SEAL	1	60255-
12	01010-81230	BOLT	2	60255-
13	01643-31232	WASHER	2	60255-
14	20Y-54-12320	CATCH	2	60255-
15	01010-81225	BOLT	2	60255-
16	01643-31232	WASHER	2	60255-
17	20Y-977-6630	COVER	1	60255-
18	01010-81230	BOLT	4	60255-
19	01643-31232	WASHER	4	60255-
	20Y-54-61961	COVER	1	60255-
20	☆	・COVER	1	60255-
21	20Y-54-63261	・SHEET	1	60255-
22	20Y-54-63270	・SHEET	1	60255-
23	01010-81230	BOLT	2	60255-
24	01643-31232	WASHER	2	60255-
25	20Y-54-61551	COVER	1	60255-

PARTITION (MACHINE CAB) (COLD WEATHER A SPEC.)(#60255-)

Item	Part No.	Part Name	Qty	Serial No.
26	01010-81230	BOLT	3	60255-
27	01643-31232	WASHER	3	60255-
28	20Y-54-61591	COVER	1	60255-
29	20Y-54-12550	COLLAR	1	60255-
30	01010-81230	BOLT	1	60255-
31	01643-31232	WASHER	1	60255-
32	01010-81230	BOLT	2	60255-
33	01643-31232	WASHER	2	60255-
34	20Y-54-61541	COVER	1	60255-
35	01010-81230	BOLT	1	60255-
36	01643-31232	WASHER	1	60255-
37	01010-81220	BOLT	1	60255-
38	01643-31232	WASHER	1	60255-
39	20Y-54-12550	COLLAR	2	60255-
40	01010-81230	BOLT	2	60255-
41	01643-31232	WASHER	2	60255-

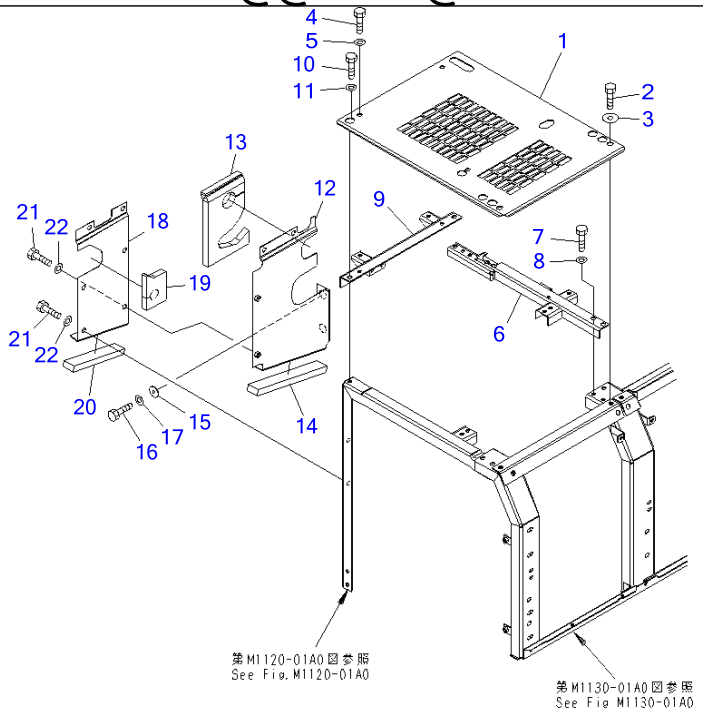

Ref M1160-01A0 **Page 240160**

PC220-7 S/N 60001-UP (Overseas Version)
PARTITION

Item	Part No.	Part Name	Qty	Serial No.
1	206-54-71170	COVER	1	60001-
2	01010-81230	BOLT	2	60001-
3	175-54-34170	WASHER	2	60001-
4	01010-81230	BOLT	2	60001-
5	01643-31232	WASHER	2	60001-
6	20Y-54-61261	FRAME	1	60001-
7	01010-81230	BOLT	4	60001-
8	01643-31232	WASHER	4	60001-
9	20Y-54-61273	FRAME	1	60001-
10	01010-81230	BOLT	2	60001-
11	01643-31232	WASHER	2	60001-
12	206-54-71410	COVER	1	60001-
13	206-54-71440	・SHEET	1	60001-
14	206-54-71450	・SHEET	1	60001-
15	203-54-62670	COLLAR	2	60001-
16	01010-81230	BOLT	4	60001-
17	01643-31232	WASHER	4	60001-
18	206-54-71420	COVER	1	60001-
19	206-54-71460	・SHEET	1	60001-
20	206-54-71470	・SHEET	1	60001-
21	01010-81230	BOLT	6	60001-
22	01643-31232	WASHER	6	60001-

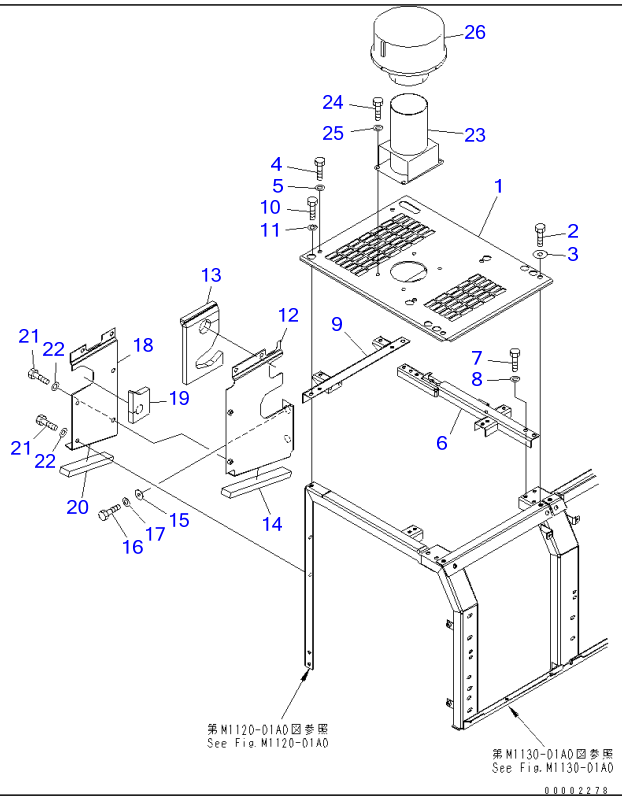

Ref M1160-01A1 **Page 240170**

PC220-7 S/N 60001-UP (Overseas Version)
PARTITION (WITH PRECLEANER)

Item	Part No.	Part Name	Qty	Serial No.
1	206-54-71270	COVER	1	60001-
2	01010-81230	BOLT	2	60001-
3	175-54-34170	WASHER	2	60001-
4	01010-81230	BOLT	2	60001-
5	01643-31232	WASHER	2	60001-
6	20Y-54-61261	FRAME	1	60001-
7	01010-81230	BOLT	4	60001-
8	01643-31232	WASHER	4	60001-
9	20Y-54-61273	FRAME	1	60001-
10	01010-81230	BOLT	2	60001-
11	01643-31232	WASHER	2	60001-
12	206-54-71410	COVER	1	60001-
13	206-54-71440	・SHEET	1	60001-
14	206-54-71450	・SHEET	1	60001-
15	203-54-62670	COLLAR	2	60001-
16	01010-81230	BOLT	4	60001-
17	01643-31232	WASHER	4	60001-
18	206-54-71420	COVER	1	60001-
19	206-54-71460	・SHEET	1	60001-
20	206-54-71470	・SHEET	1	60001-
21	01010-81230	BOLT	6	60001-
22	01643-31232	WASHER	6	60001-
23	206-01-61130	DUCT	1	60001-
24	01010-81225	BOLT	4	60001-
25	01643-31232	WASHER	4	60001-
26	423-U12-3101	PRE-CLEANER ASS'Y	1	69710-
	(□423-U12-3100)	PRE-CLEANER	1	60001-69709

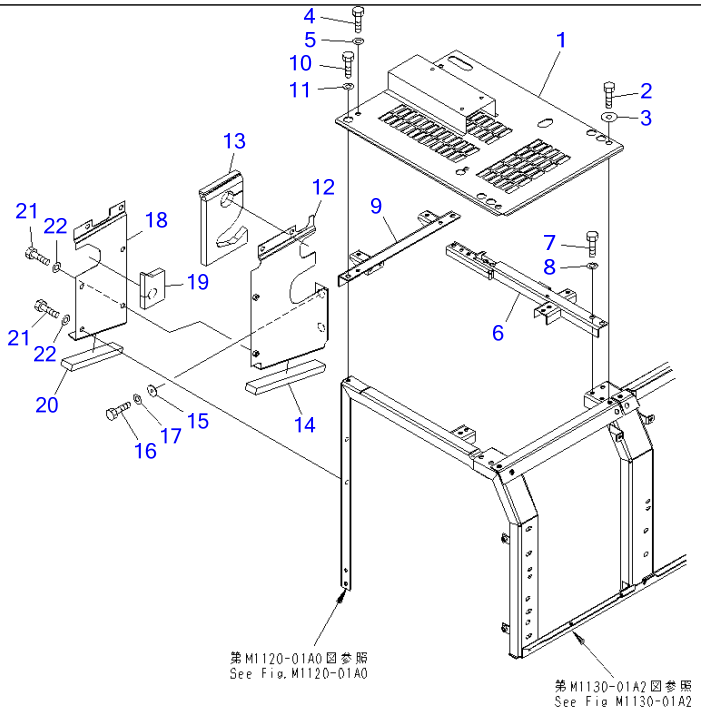

Ref M1160-01A2 **Page 240180**

PC220-7 S/N 60001-UP (Overseas Version)

PARTITION (COLD WEATHER A SPEC.)(#60255-)

Item	Part No.	Part Name	Qty	Serial No.
1	206-977-7110	COVER	1	60255-
2	01010-81230	BOLT	2	60255-
3	175-54-34170	WASHER	2	60255-
4	01010-81230	BOLT	2	60255-
5	01643-31232	WASHER	2	60255-
6	20Y-54-61261	FRAME	1	60255-
7	01010-81230	BOLT	4	60255-
8	01643-31232	WASHER	4	60255-
9	20Y-54-61273	FRAME	1	60255-
10	01010-81230	BOLT	2	60255-
11	01643-31232	WASHER	2	60255-
12	206-54-71410	COVER	1	60255-
13	206-54-71440	・SHEET	1	60255-
14	206-54-71450	・SHEET	1	60255-
15	203-54-62670	COLLAR	2	60255-
16	01010-81230	BOLT	4	60255-
17	01643-31232	WASHER	4	60255-
18	206-54-71420	COVER	1	60255-
19	206-54-71460	・SHEET	1	60255-
20	206-54-71470	・SHEET	1	60255-
21	01010-81230	BOLT	6	60255-
22	01643-31232	WASHER	6	60255-

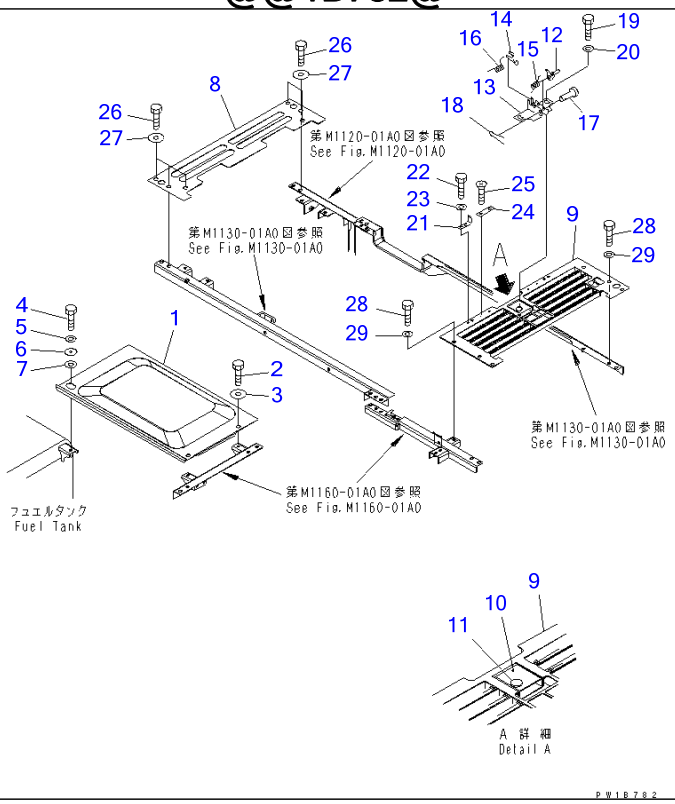

Ref M1210-01A0 **Page 240190**

PC220-7 S/N 60001-UP (Overseas Version)

COVER (MACHINE CAB) (UPPER)

Item	Part No.	Part Name	Qty	Serial No.
1	20Y-54-61721	COVER	1	60001-
2	01010-81230	BOLT	2	60001-
3	175-54-34170	WASHER	2	60001-
4	01010-81230	BOLT	1	60001-
5	01643-31232	WASHER	1	60001-
6	20Y-54-61990	COLLAR	1	60001-
7	20Y-54-61790	PLATE	1	60001-
8	20Y-54-61731	COVER	1	60001-
9	20Y-54-61742	COVER	1	60001-
10	20Y-54-25850	・LOCK	1	60001-
11	20Y-54-27540	・・LOCK ASS'Y	1	60001-
12	20Y-54-27511	PLATE	1	60001-
13	20Y-54-27523	BRACKET	1	60001-
14	21K-54-26341	LEVER	1	60001-
15	21K-54-26351	SPRING	1	60001-
16	20X-54-21460	SPRING	1	60001-
17	04205-11038	PIN	2	60001-
18	04050-13020	PIN	2	60001-
19	01010-81025	BOLT	2	60001-
20	01643-31032	WASHER	2	60001-
21	20Y-54-27182	BRACKET	2	60001-
22	01010-81025	BOLT	4	60001-
23	01643-31032	WASHER	4	60001-
24	205-54-68440	PLATE	2	60001-
25	01224-40616	SCREW	4	60001-
26	01010-81230	BOLT	6	60001-
27	175-54-34170	WASHER	6	60001-
28	01010-81230	BOLT	6	60001-

COVER (MACHINE CAB) (UPPER)

Item	Part No.	Part Name	Qty	Serial No.
29	01643-31232	WASHER	6	60001-

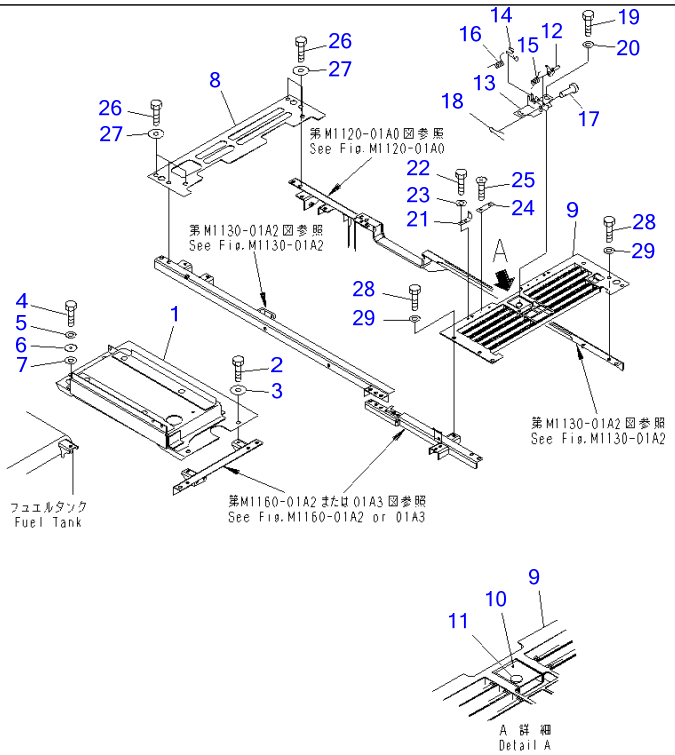

Ref M1210-01A1 **Page 240200**

PC220-7 S/N 60001-UP (Overseas Version)

COVER (MACHINE CAB) (UPPER) (COLD WEATHER A SPEC.)(#60255-)

Item	Part No.	Part Name	Qty	Serial No.
1	20Y-977-6541	COVER	1	60255-
2	01010-81230	BOLT	3	60255-
3	175-54-34170	WASHER	3	60255-
4	01010-81230	BOLT	1	60255-
5	01643-31232	WASHER	1	60255-
6	20Y-54-61990	COLLAR	1	60255-
7	20Y-54-61790	PLATE	1	60255-
8	20Y-54-62150	COVER	1	60255-
9	20Y-54-61742	COVER	1	60255-
10	20Y-54-25850	・LOCK	1	60255-
11	20Y-54-27540	・・LOCK ASS'Y	1	60255-
12	20Y-54-27511	PLATE	1	60255-
13	20Y-54-27523	BRACKET	1	60255-
14	21K-54-26341	LEVER	1	60255-
15	21K-54-26351	SPRING	1	60255-
16	20X-54-21460	SPRING	1	60255-
17	04205-11038	PIN	2	60255-
18	04050-13020	PIN	2	60255-
19	01010-81025	BOLT	2	60255-
20	01643-31032	WASHER	2	60255-
21	20Y-54-27182	BRACKET	2	60255-
22	01010-81025	BOLT	4	60255-
23	01643-31032	WASHER	4	60255-
24	205-54-68440	PLATE	2	60255-
25	01224-40616	SCREW	4	60255-
26	01010-81230	BOLT	6	60255-
27	175-54-34170	WASHER	6	60255-
28	01010-81230	BOLT	6	60255-

COVER (MACHINE CAB) (UPPER) (COLD WEATHER A SPEC.)(#60255-)

Item	Part No.	Part Name	Qty	Serial No.
29	01643-31232	WASHER	6	60255-

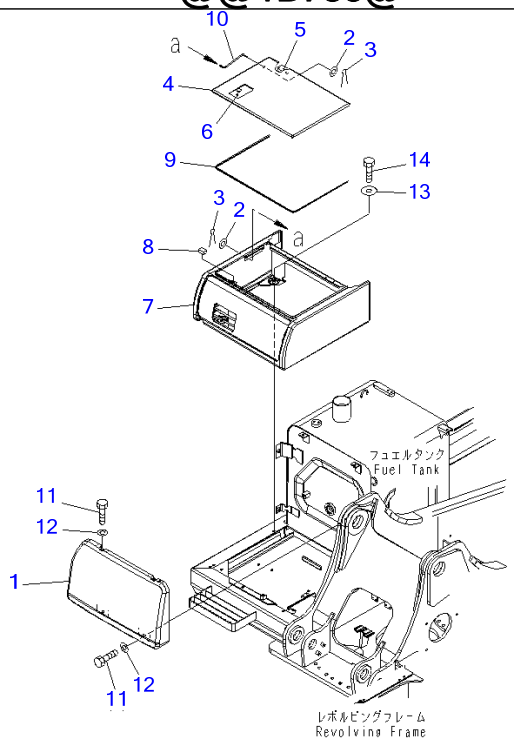

Ref M1220-01A0 **Page 240210**

PC220-7 S/N 60001-UP (Overseas Version)

RIGHT SIDE CASE

Item	Part No.	Part Name	Qty	Serial No.
1	20Y-54-66131	COVER	1	60001-
	20Y-54-66101	CASE ASS'Y	1	60001-
2	01643-30623	・WASHER	2	60001-
3	04050-11612	・PIN	2	60001-
	☆	・COVER	1	60001-
4	20Y-54-26360	・・COVER	1	60001-
5	20Y-54-29711	・・・HINGE (WELDED)	2	60001-
6	421-54-11372	・・・LOCK ASS'Y (WELDED)	1	60001-
7	☆	・・COVER	1	60001-
8	20Y-54-29680	・SHEET	1	60001-
9	20Y-54-29660	・SEAL	1	60001-
10	203-54-56630	・ROD	1	60001-
11	01010-81230	BOLT	4	60001-
12	01643-31232	WASHER	4	60001-
13	175-54-34170	WASHER	4	60001-
14	01010-81230	BOLT	4	60001-

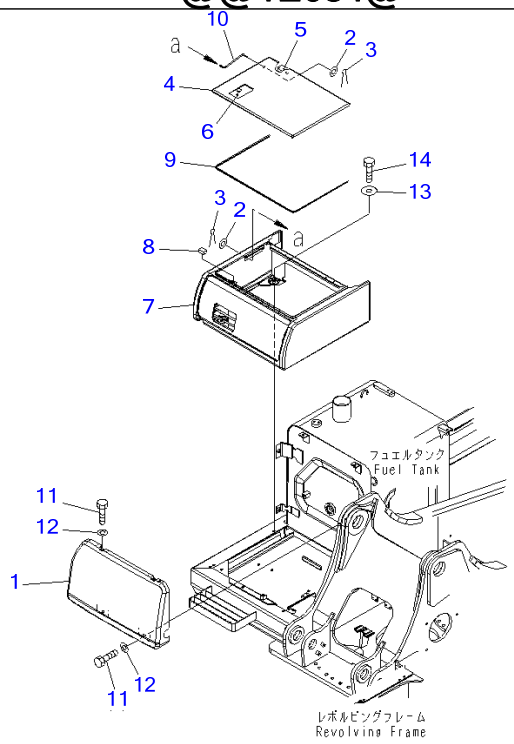

Ref M1220-01A1 **Page 240220**

PC220-7 S/N 60001-UP (Overseas Version)
RIGHT SIDE CASE

Item	Part No.	Part Name	Qty	Serial No.
1	206-54-71260	COVER	1	60001-
	20Y-54-66101	CASE ASS'Y	1	60001-
2	01643-30623	・WASHER	2	60001-
3	04050-11612	・PIN	2	60001-
	☆	・COVER	1	60001-
4	20Y-54-26360	・・COVER	1	60001-
5	20Y-54-29711	・・・HINGE (WELDED)	2	60001-
6	421-54-11372	・・・LOCK ASS'Y	1	60001-
7	☆	・・COVER	1	60001-
8	20Y-54-29680	・SHEET	1	60001-
9	20Y-54-29660	・SEAL	1	60001-
10	203-54-56630	・ROD	1	60001-
11	01010-81230	BOLT	4	60001-
12	01643-31232	WASHER	4	60001-
13	175-54-34170	WASHER	4	60001-
14	01010-81230	BOLT	4	60001-

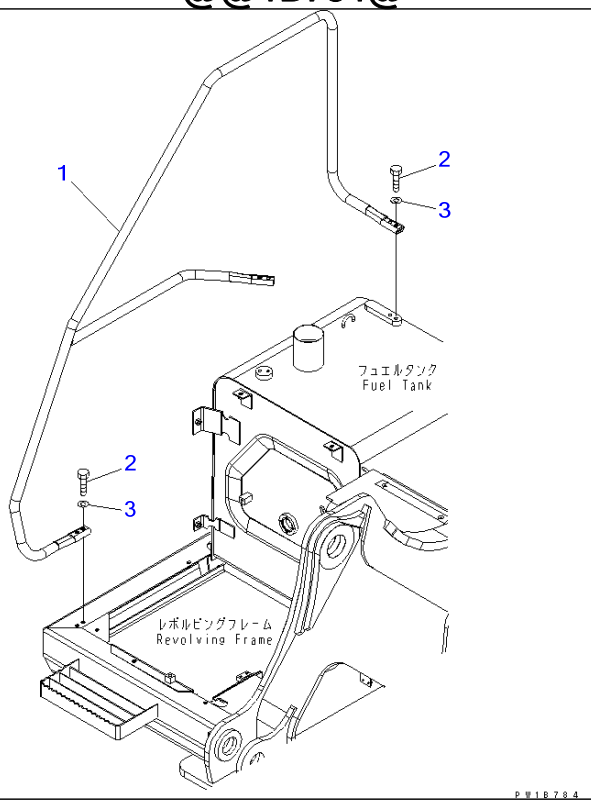

Ref M1310-01A0 **Page 240230**

PC220-7 S/N 60001-UP (Overseas Version)
HANDRAIL

Item	Part No.	Part Name	Qty	Serial No.
1	20Y-54-61611	HANDRAIL	1	60001-
2	01010-81240	BOLT	6	60001-
3	01643-31232	WASHER	6	60001-

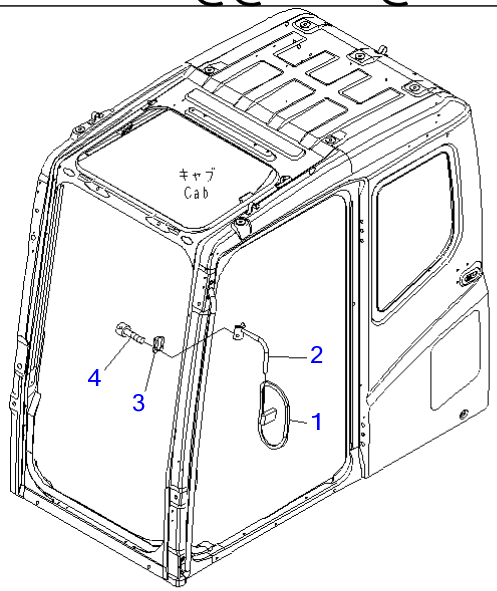

PW1B785

Ref M1410-01A0 **Page 240240**

PC220-7 S/N 60001-UP (Overseas Version)
REAR VIEW MIRROR¤ L.H. (SINGLE)

Item	Part No.	Part Name	Qty	Serial No.
1	08174-13118	MIRROR	1	60001-
2	20Y-54-35420	SUPPORT	1	60001-
3	20Y-54-35430	CLAMP	1	60001-
4	01252-41030	BOLT	2	60001-

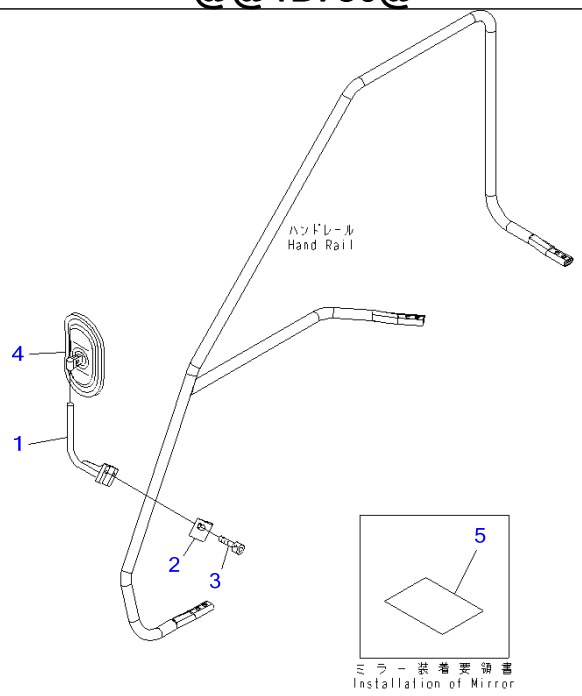

PW18786

Ref M1420-01A0 **Page 240250**

PC220-7 S/N 60001-UP (Overseas Version)
REAR VIEW MIRROR¤ R.H.

Item	Part No.	Part Name	Qty	Serial No.
1	20Y-54-61621	SUPPORT	1	60001-
2	20Y-54-61630	CLAMP	1	60001-
3	01252-71030	BOLT	2	60001-
4	20Y-54-28911	MIRROR	1	60001-
5	20Y-98-31112	PLATE	1	65986-
	20Y-98-31111	PLATE	1	60001-65985
	20Y-98-31112	PLATE	1	60768-65000
	20Y-98-31111	PLATE	1	60001-60767

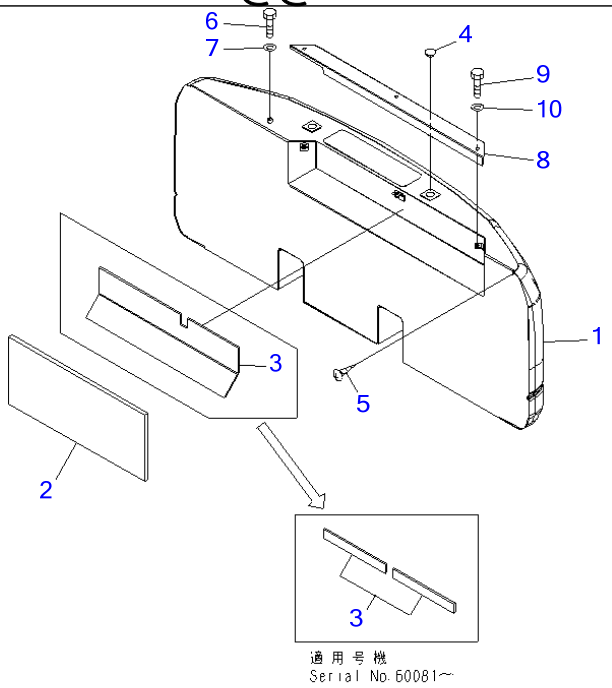

PW1B787A

PC220-7 S/N 60001-UP (Overseas Version)
COUNTERWEIGHT(#60001-65000)

Item	Part No.	Part Name	Qty	Serial No.
	206-46-74110	WEIGHT	1	60001-65000
1	☆	・WEIGHT	1	60001-@
2	20Y-46-44171	・SHEET	1	60001-@
3	20Y-46-44192	・SHEET	2	60081-@
	20Y-46-44191	・SHEET	1	60001-60080
4	20Y-46-11270	CAP	2	60001-@
5	01370-00508	SCREW	1	60001-@
6	01010-81220	BOLT	1	60001-@
7	01643-31232	WASHER	1	60001-@
8	20Y-46-44141	COVER	1	60001-@
9	01010-81225	BOLT	3	60001-@
10	01643-31232	WASHER	3	60001-@

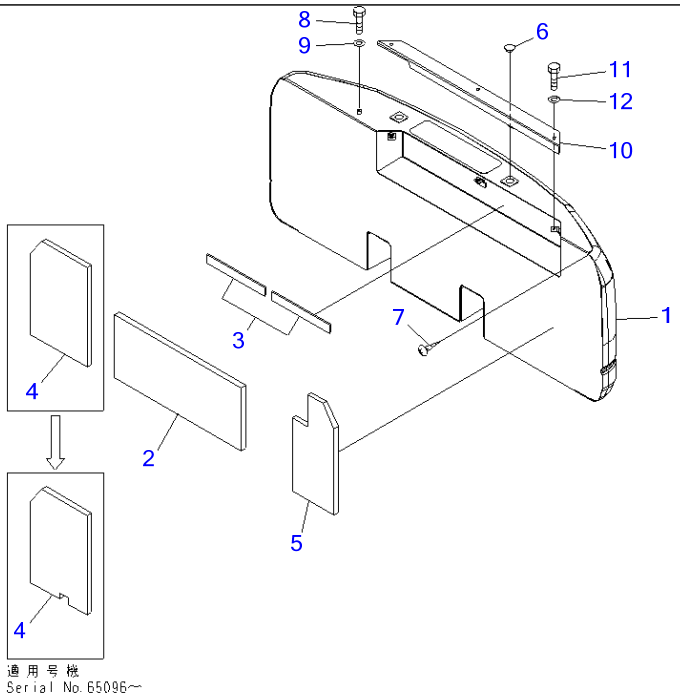

00021577

Ref M1510-01A0A **Page 240270**

PC220-7 S/N 60001-UP (Overseas Version)
COUNTERWEIGHT(#65001-)

Item	Part No.	Part Name	Qty	Serial No.
	206-46-74111	WEIGHT	1	65001-
1	☆	・WEIGHT	1	60001-
2	20Y-46-44171	・SHEET	1	60001-
3	20Y-46-44192	・SHEET	2	60081-
4	20Y-54-63780	・SHEET	1	65001-
5	206-46-71230	・SHEET	1	65001-
6	20Y-46-11270	CAP	2	60001-
7	01370-00508	SCREW	1	60001-
8	01010-81220	BOLT	1	60001-
9	01643-31232	WASHER	1	60001-
10	20Y-46-44141	COVER	1	60001-
11	01010-81225	BOLT	3	60001-
12	01643-31232	WASHER	3	60001-

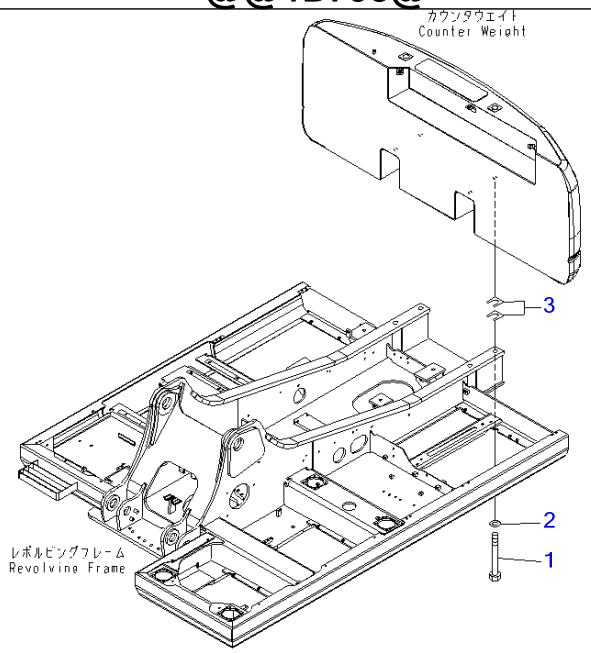

Ref M1520-01A0 **Page 240280**

PC220-7 S/N 60001-UP (Overseas Version)
COUNTERWEIGHT MOUNTING

Item	Part No.	Part Name	Qty	Serial No.
1	20Y-46-44250	BOLT	4	60001-
2	207-46-32220	WASHER	4	60001-
3	20Y-46-11410	PLATE, 1.6MM	2	60001-

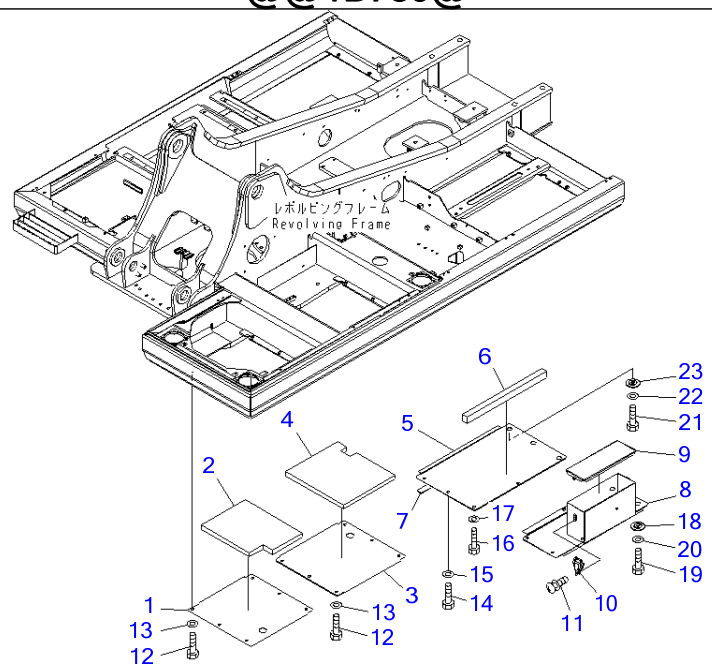

PW18789

Ref M1810-01A0 **Page 240290**

PC220-7 S/N 60001-UP (Overseas Version)

UNDER COVER (REVOLVING FRAME) (LEFT SIDE COVER AND TOOL BOX)

Item	Part No.	Part Name	Qty	Serial No.
	20Y-54-73791	COVER	1	69767-
	□20Y-54-62110	COVER	1	60001-69766
1	☆	・COVER	1	69767-
	☆	・COVER	1	60001-69766
2	20Y-54-61770	・SHEET	1	60001-
	20Y-54-62120	COVER	1	60001-
3	☆	・COVER	1	60001-
4	20Y-54-61780	・SHEET	1	60001-
5	20Y-54-61852	COVER	1	60001-
6	20Y-54-61861	・SHEET	1	60001-
7	20Y-54-61890	・SHEET	1	60001-
	20Y-54-62140	COVER	1	60001-
8	☆	・COVER	1	60001-
9	22U-54-23620	・COVER	1	60001-
10	195-57-11530	・CATCH CLIP	1	60001-
11	01023-20512	・SCREW	3	60001-
12	01010-81230	BOLT	12	60001-
13	01643-31232	WASHER	12	60001-
14	01010-81230	BOLT	2	60001-
15	01643-31232	WASHER	2	60001-
16	01010-81230	BOLT	2	60001-
17	01643-31232	WASHER	2	60001-
18	20Y-54-12550	COLLAR	2	60001-
19	01010-81230	BOLT	4	60001-
20	01643-31232	WASHER	4	60001-
21	01010-81230	BOLT	3	60001-
22	01643-31232	WASHER	3	60001-
23	20Y-54-12550	COLLAR	3	60001-

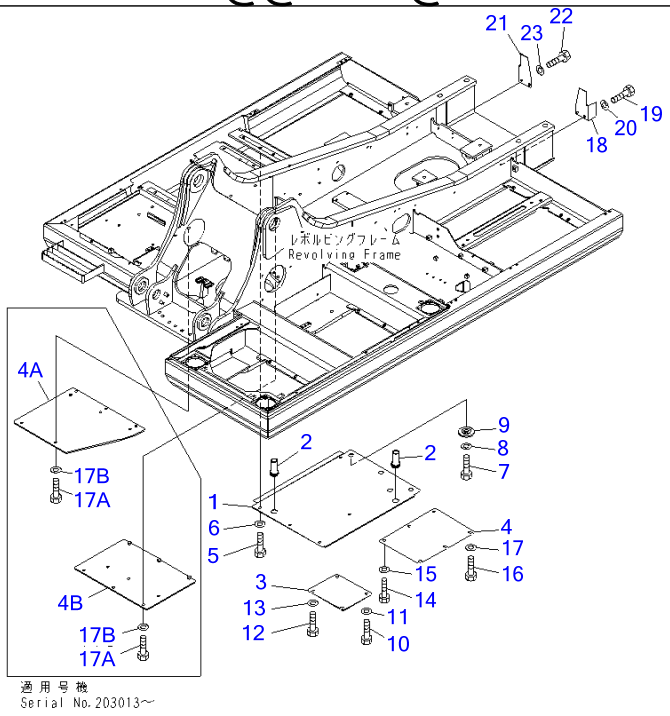

P W 1 B 7 9 0

Ref M1810-02A0 **Page 240300**

PC220-7 S/N 60001-UP (Overseas Version)

UNDER COVER (REVOLVING FRAME) (ENGINE ROOM)

Item	Part No.	Part Name	Qty	Serial No.
	20Y-54-62131	COVER	1	60001-
1	☆	・COVER	1	60001-
2	22U-54-24760	・GROMMET	2	60001-
3	20Y-54-61870	COVER	1	60001-
4	20Y-54-61980	COVER	1	60001-
4A	20Y-54-62250	COVER	1	60283-
4B	20Y-54-62260	COVER	1	60283-
5	01010-81230	BOLT	3	60001-
6	01643-31232	WASHER	3	60001-
7	01010-81230	BOLT	3	60001-
8	01643-31232	WASHER	3	60001-
9	20Y-54-12550	COLLAR	3	60001-
10	01010-81230	BOLT	2	60001-
11	01643-31232	WASHER	2	60001-
12	01010-81230	BOLT	2	60001-
13	175-54-34170	WASHER	2	60001-
14	01010-81230	BOLT	3	60001-
15	01643-31232	WASHER	3	60001-
16	01010-81230	BOLT	3	60001-
17	175-54-34170	WASHER	3	60001-
17A	01010-81230	BOLT	14	60283-
17B	01643-31232	WASHER	14	60283-
18	20Y-54-28872	COVER	1	60001-
19	01010-81225	BOLT	2	60001-
20	01643-31232	WASHER	2	60001-
21	20Y-54-28882	COVER	1	60001-
22	01010-81225	BOLT	2	60001-
23	01643-31232	WASHER	2	60001-

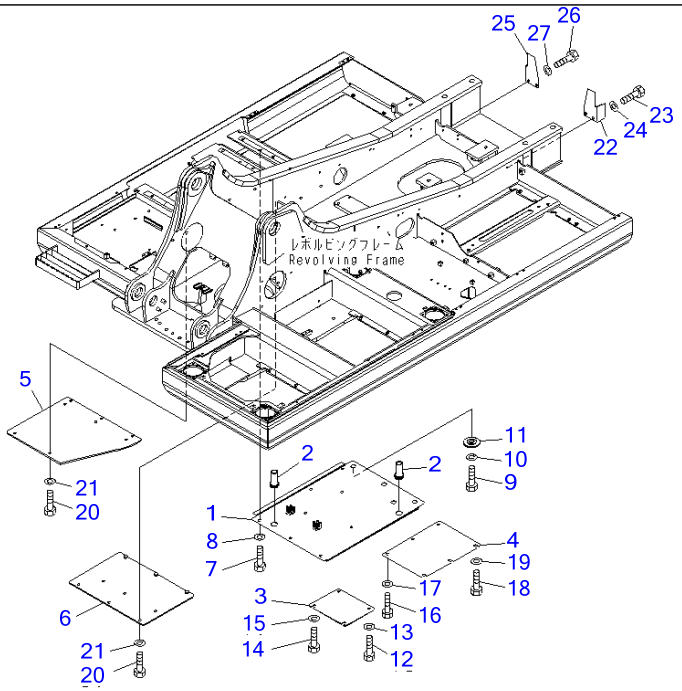

00004123

Ref M1810-02A1 **Page 240310**

PC220-7 S/N 60001-UP (Overseas Version)

UNDER COVER (REVOLVING FRAME) (ENGINE ROOM)(#60283-)

Item	Part No.	Part Name	Qty	Serial No.
	206-54-72170	COVER	1	60283-
1	206-54-72180	COVER	1	60283-
2	22U-54-24760	GROMMET	2	60283-
3	20Y-54-61870	COVER	1	60283-
4	20Y-54-61980	COVER	1	60283-
5	20Y-54-62250	COVER	1	60283-
6	20Y-54-62260	COVER	1	60283-
7	01010-81230	BOLT	3	60283-
8	01643-31232	WASHER	3	60283-
9	01010-81230	BOLT	3	60283-
10	01643-31232	WASHER	3	60283-
11	20Y-54-12550	COLLAR	3	60283-
12	01010-81230	BOLT	2	60283-
13	01643-31232	WASHER	2	60283-
14	01010-81230	BOLT	2	60283-
15	175-54-34170	WASHER	2	60283-
16	01010-81230	BOLT	3	60283-
17	01643-31232	WASHER	3	60283-
18	01010-81230	BOLT	3	60283-
19	175-54-34170	WASHER	3	60283-
20	01010-81230	BOLT	14	60283-
21	01643-31232	WASHER	14	60283-
22	20Y-54-28872	COVER	1	60283-
23	01010-81225	BOLT	2	60283-
24	01643-31232	WASHER	2	60283-
25	20Y-54-28882	COVER	1	60283-
26	01010-81225	BOLT	2	60283-
27	01643-31232	WASHER	2	60283-

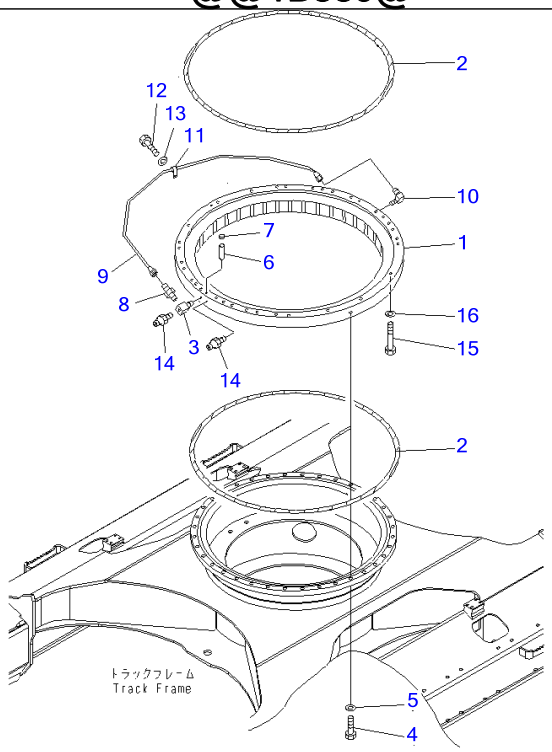

Ref N1110-01A0 **Page 270010**

PC220-7 S/N 60001-UP (Overseas Version)

SWING CIRCLE (CONCENTRATED GREASING)

Item	Part No.	Part Name	Qty	Serial No.
1	206-25-00301	CIRCLE ASS'Y	1	60001-
2	205-25-71152	▪ SEAL	2	60001-
3	205-25-71280	NIPPLE	1	60001-
4	206-25-71130	BOLT	36	60001-
5	01643-72260	WASHER	36	60001-
6	04020-01842	PIN	2	60001-
7	20Y-46-21520	CAP	1	60001-
8	07214-50813	CONNECTOR	1	60001-
9	20Y-25-21123	TUBE	1	60001-
10	20Y-25-11270	ELBOW	1	60001-
11	08036-00814	CLIP	1	60001-
12	01010-81016	BOLT	1	60001-
13	01643-31032	WASHER	1	60001-
14	07020-00000	FITTING	2	60001-
15	206-25-61110	BOLT	32	60001-
16	01643-72260	WASHER	32	60001-

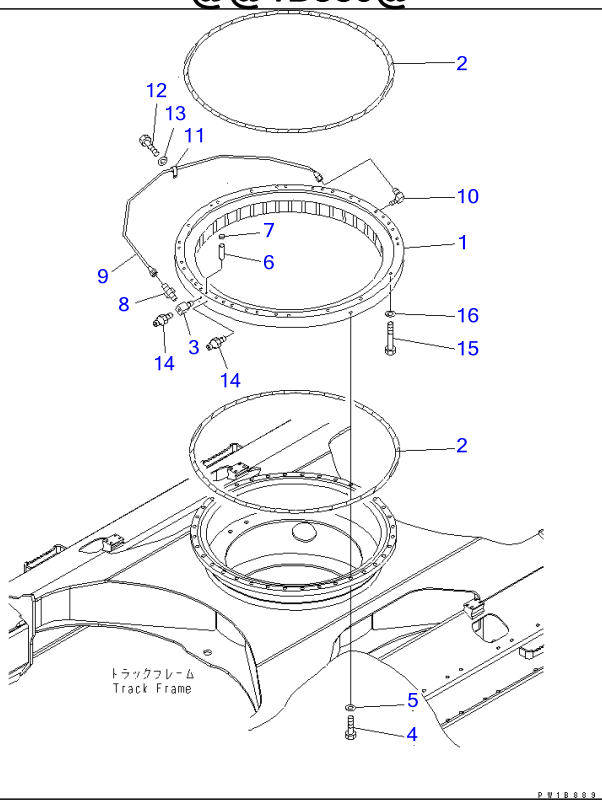

Ref N1110-01A1 **Page 270020**

PC220-7 S/N 60001-UP (Overseas Version)
SWING CIRCLE (-30 SPEC.)

Item	Part No.	Part Name	Qty	Serial No.
1	206-25-00320	SWING CIRCLE ASS'Y	1	60001-
2	20Y-25-31350	▪ SEAL	2	60001-
3	205-25-71280	NIPPLE	1	60001-
4	206-25-71130	BOLT	36	60001-
5	01643-72260	WASHER	36	60001-
6	04020-01842	PIN	2	60001-
7	20Y-46-21520	CAP	1	60001-
8	07214-50813	CONNECTOR	1	60001-
9	20Y-25-21123	TUBE	1	60001-
10	20Y-25-11270	ELBOW	1	60001-
11	08036-00814	CLIP	1	60001-
12	01010-81016	BOLT	1	60001-
13	01643-31032	WASHER	1	60001-
14	07020-00000	FITTING	2	60001-
15	206-25-61110	BOLT	32	60001-
16	01643-72260	WASHER	32	60001-

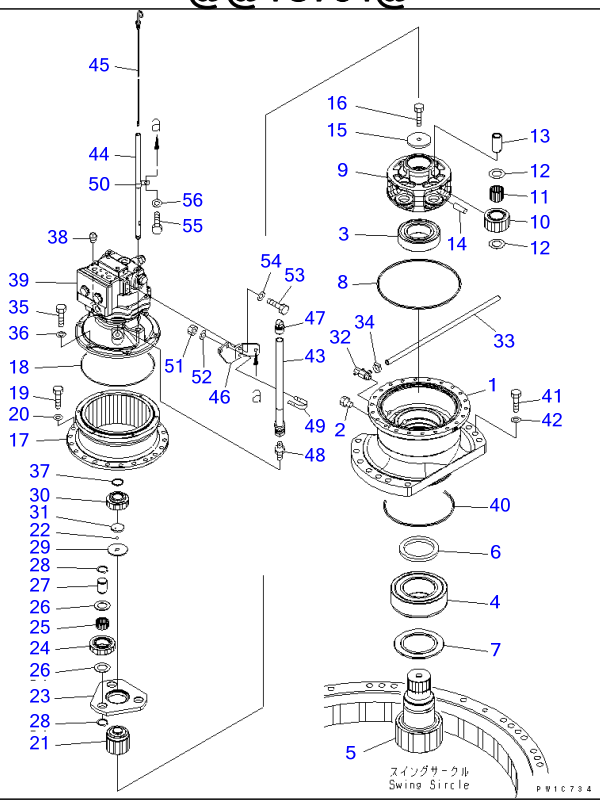

Ref N1210-01A0 Page 270030

PC220-7 S/N 60001-UP (Overseas Version)
SWING MACHINERY(#60001-60353)

Item	Part No.	Part Name	Qty	Serial No.
1	206-26-71490	CASE	1	60001-@
2	07029-00000	VALVE	1	60001-60353
3	20Y-26-22330	BEARING	1	60001-@
4	206-26-71240	BEARING	1	60001-@
5	206-26-71460	SHAFT	1	60001-@
6	07012-00115	SEAL	1	60001-@
7	206-26-71310	SPACER	1	60001-@
8	07000-15310	O-RING	1	60001-@
9	206-26-71480	CARRIER	1	60001-@
10	206-26-71440	GEAR	4	60001-@
11	22U-26-21320	BEARING	8	60036-@
	22U-26-21330	BEARING	8	60001-60035
12	206-26-71520	THRUST WASHER	8	60001-@
13	206-26-71510	PIN	4	60001-@
14	20Y-26-21330	PIN	4	60001-@
15	20Y-26-21240	PLATE	1	60001-@
16	112-32-11211	BOLT	1	60001-@
17	206-26-71452	GEAR	1	60283-@
	206-26-71450	GEAR	1	60001-60282
18	20K-22-11190	O-RING	1	60001-@
19	01010-81440	BOLT	22	60001-@
20	01643-31445	WASHER	22	60001-@
21	206-26-71430	GEAR	1	60001-@
22	04260-01270	BALL	1	60001-@
23	206-26-71470	CARRIER	1	60001-@
24	206-26-71420	GEAR	3	60001-@
25	20Y-27-22210	BEARING	3	60001-@
26	22U-26-21230	WASHER	6	60001-@

SWING MACHINERY(#60001-60353)

Item	Part No.	Part Name	Qty	Serial No.
27	206-26-71210	PIN	3	60001-@
28	04064-03515	RING	6	60001-@
29	206-26-71350	HOLDER	1	60001-@
30	206-26-71410	GEAR	1	60001-@
31	206-26-71340	PLATE	1	60001-@
32	195-03-13241	VALVE	1	60001-@
33	07270-21560	TUBE	1	60001-@
34	07281-00197	CLAMP	1	60001-@
35	01010-81035	BOLT	6	60001-@
36	01643-51032	WASHER	6	60001-@
37	22U-26-21280	RING	1	60001-@
38	07043-00312	PLUG	1	60001-@
39	(706-7G-01040)	MOTOR ASS'Y	1	60001-@
40	07000-15250	O-RING	1	60001-@
41	01010-82070	BOLT	14	60001-@
42	01643-32060	WASHER	14	60001-@
43	20Y-26-31410	TUBE	1	60001-@
44	20Y-26-31420	FILLER	1	60001-@
45	20Y-26-31430	GAUGE	1	60001-@
46	20Y-26-31441	BRACKET	1	60001-@
47	22U-26-21460	CAP	1	60001-@
48	07238-10630	CONNECTOR	1	60001-@
49	07283-32738	CLIP	1	60001-@
50	04434-51710	CLIP	1	60001-@
51	01597-01009	NUT	2	60001-@
52	01643-31032	WASHER	2	60001-@
53	01010-81030	BOLT	2	60001-@
54	01643-31032	WASHER	2	60001-@
55	01010-81025	BOLT	1	60001-@
56	01643-31032	WASHER	1	60001-@

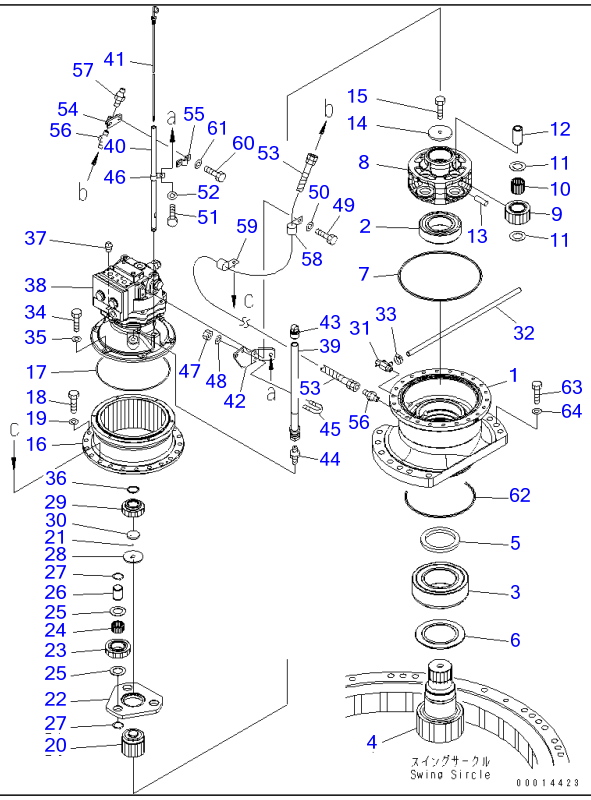

Ref N1210-01A0A **Page 270040**

PC220-7 S/N 60001-UP (Overseas Version)
SWING MACHINERY(#60354-60600)

Item	Part No.	Part Name	Qty	Serial No.
1	206-26-71490	CASE	1	60001-60600
2	20Y-26-22330	BEARING	1	60001-60600
3	206-26-71240	BEARING	1	60001-60600
4	206-26-71460	SHAFT	1	60001-60600
5	07012-00115	SEAL	1	60001-60600
6	206-26-71310	SPACER	1	60001-60600
7	07000-15310	O-RING	1	60001-@
8	206-26-71480	CARRIER	1	60001-@
9	206-26-71440	GEAR	4	60001-@
10	22U-26-21320	BEARING	8	60036-@
11	206-26-71520	THRUST WASHER	8	60001-@
12	206-26-71510	PIN	4	60001-@
13	20Y-26-21330	PIN	4	60001-@
14	20Y-26-21240	PLATE	1	60001-@
15	112-32-11211	BOLT	1	60001-@
16	206-26-71452	GEAR	1	60283-@
17	20K-22-11190	O-RING	1	60001-@
18	01010-81440	BOLT	22	60001-@
19	01643-31445	WASHER	22	60001-@
20	206-26-71430	GEAR	1	60001-@
21	04260-01270	BALL	1	60001-@
22	206-26-71470	CARRIER	1	60001-@
23	206-26-71420	GEAR	3	60001-@
24	20Y-27-22210	BEARING	3	60001-@
25	22U-26-21230	WASHER	6	60001-@
26	206-26-71210	PIN	3	60001-@
27	04064-03515	RING	6	60001-@
28	206-26-71350	HOLDER	1	60001-@

SWING MACHINERY(#60354-60600)

Item	Part No.	Part Name	Qty	Serial No.
29	206-26-71410	GEAR	1	60001-@
30	206-26-71340	PLATE	1	60001-@
31	195-03-13241	VALVE	1	60001-@
32	07270-21560	TUBE	1	60001-@
33	07281-00197	CLAMP	1	60001-@
34	01010-81035	BOLT	6	60001-@
35	01643-51032	WASHER	6	60001-@
36	22U-26-21280	RING	1	60001-@
37	07043-00312	PLUG	1	60001-@
38	(706-7G-01040)	MOTOR ASS'Y	1	60001-@
39	20Y-26-31410	TUBE	1	60001-@
40	20Y-26-31420	FILLER	1	60001-@
41	20Y-26-31430	GAUGE	1	60001-@
42	20Y-26-31441	BRACKET	1	60001-@
43	22U-26-21460	CAP	1	60001-@
44	07238-10630	CONNECTOR	1	60001-@
45	07283-32738	CLIP	1	60001-@
46	04434-51710	CLIP	1	60001-@
47	01597-01009	NUT	2	60001-@
48	01643-31032	WASHER	2	60001-@
49	01010-81030	BOLT	2	60001-@
50	01643-31032	WASHER	2	60001-@
51	01010-81025	BOLT	1	60001-@
52	01643-31032	WASHER	1	60001-@
53	22U-26-21370	HOSE	1	60354-60600
54	22U-26-21380	PLATE	1	60354-60600
55	22U-26-21390	CLAMP	1	60354-60600
56	205-70-51390	NIPPLE	2	60354-60600
57	07020-00000	FITTING	1	60354-60600
58	04434-51210	CLIP	1	60354-60600
59	130-802-5110	CLIP	1	60354-60600
60	01010-81020	BOLT	2	60354-60600
61	01643-31032	WASHER	2	60354-60600
62	07000-15250	O-RING	1	60001-@
63	01010-82070	BOLT	14	60001-@
64	01643-32060	WASHER	14	60001-@

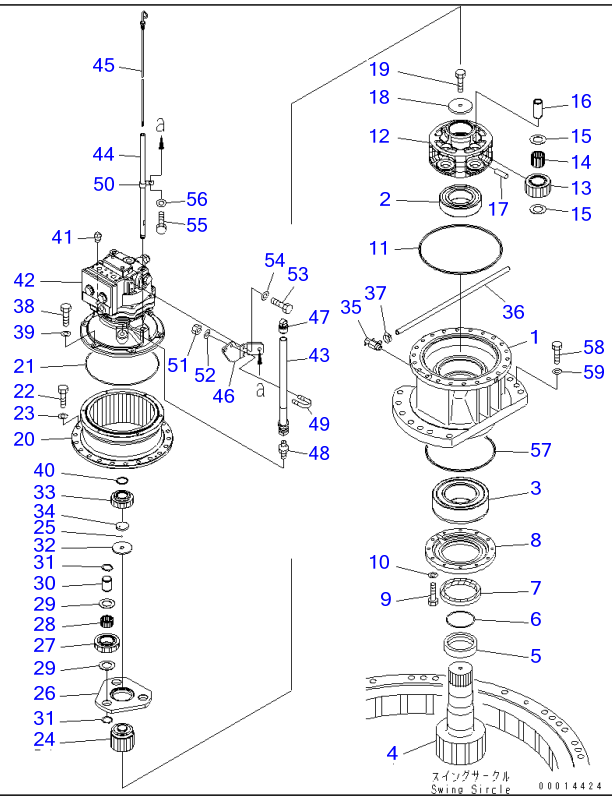

Ref N1210-01A0B **Page 270050**

PC220-7 S/N 60001-UP (Overseas Version)
SWING MACHINERY(#60601-69347)

Item	Part No.	Part Name	Qty	Serial No.
1	206-26-73110	CASE	1	60601-@
2	206-26-73150	BEARING	1	60601-@
3	206-26-73160	BEARING	1	60601-@
4	206-26-73130	SHAFT	1	60601-@
5	206-26-73140	SPACER	1	60601-@
6	07000-15100	O-RING	1	60601-@
7	20Y-26-22420	SEAL	1	60601-@
8	206-26-73120	COVER	1	60601-@
9	01010-81040	BOLT	12	60601-@
10	01643-31032	WASHER	12	60601-@
11	07000-15310	O-RING	1	60001-@
12	206-26-71480	CARRIER	1	60001-@
13	206-26-71440	GEAR	4	60001-@
14	22U-26-21320	BEARING	8	60036-@
15	206-26-71520	THRUST WASHER	8	60001-@
16	206-26-71510	PIN	4	60001-@
17	20Y-26-21330	PIN	4	60001-@
18	20Y-26-21240	PLATE	1	60001-@
19	112-32-11211	BOLT	1	60001-@
20	206-26-71452	GEAR	1	60283-@
21	20K-22-11190	O-RING	1	60001-@
22	01010-81440	BOLT	22	60001-@
23	01643-31445	WASHER	22	60001-@
24	206-26-71430	GEAR	1	60001-@
25	04260-01270	BALL	1	60001-@
26	206-26-71470	CARRIER	1	60001-@
27	206-26-71420	GEAR	3	60001-@
28	20Y-27-22210	BEARING	3	60001-@

SWING MACHINERY(#60601-69347)

Item	Part No.	Part Name	Qty	Serial No.
29	22U-26-21230	WASHER	6	60001-@
30	206-26-71210	PIN	3	60001-@
31	04064-03515	RING	6	60001-@
32	206-26-71350	HOLDER	1	60001-@
33	206-26-71410	GEAR	1	60001-@
34	206-26-71341	PLATE	1	60593-@
	206-26-71340	PLATE	1	60001-60592
35	195-03-13241	VALVE	1	60001-@
36	07270-21560	TUBE	1	60001-@
37	07281-00197	CLAMP	1	60001-@
38	01010-81035	BOLT	6	60001-@
39	01643-51032	WASHER	6	60001-@
40	22U-26-21280	RING	1	60001-@
41	07043-00312	PLUG	1	60001-@
42	(706-7G-01040)	MOTOR ASS'Y	1	60001-69347
43	20Y-26-31410	TUBE	1	60001-@
44	20Y-26-31421	FILLER	1	60714-@
	20Y-26-31420	FILLER	1	60001-60713
45	20Y-26-31431	GAUGE	1	60714-@
	20Y-26-31430	GAUGE	1	60001-60713
46	20Y-26-31441	BRACKET	1	60001-@
47	22U-26-21460	CAP	1	60001-69347
48	07238-10630	CONNECTOR	1	60001-@
49	07283-32738	CLIP	1	60001-@
50	04434-51710	CLIP	1	60001-@
51	01597-01009	NUT	2	60001-@
52	01643-31032	WASHER	2	60001-@
53	01010-81030	BOLT	2	60001-@
54	01643-31032	WASHER	2	60001-@
55	01010-81025	BOLT	1	60001-@
56	01643-31032	WASHER	1	60001-@
57	07000-15250	O-RING	1	60001-@
58	01010-82070	BOLT	14	60001-@
59	01643-32060	WASHER	14	60001-@

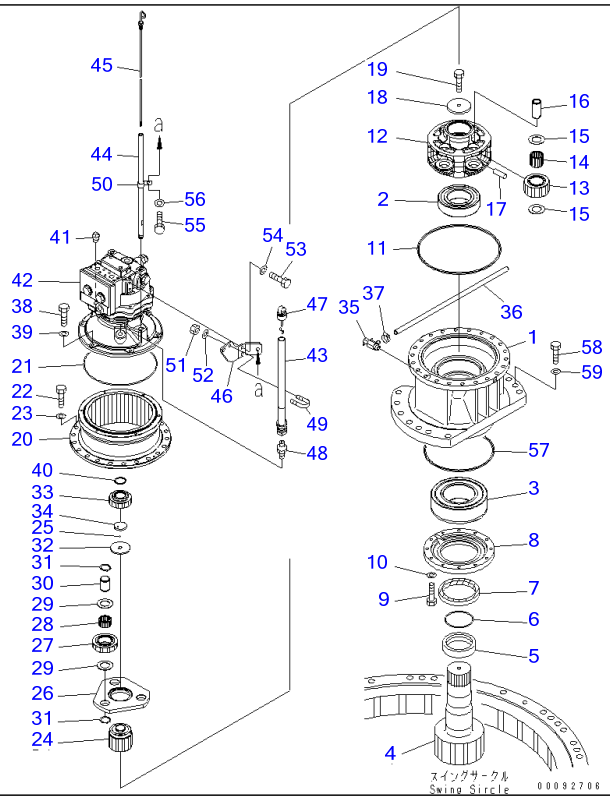

Ref N1210-01A0C

Page 270060

SWING MACHINERY(#69348-)

Item	Part No.	Part Name	Qty	Serial No.
1	206-26-73110	CASE	1	60601-
2	206-26-73150	BEARING	1	60601-
3	206-26-73160	BEARING	1	60601-
4	206-26-73130	SHAFT	1	60601-
5	206-26-73140	SPACER	1	60601-
6	07000-15100	O-RING	1	60601-
7	20Y-26-22420	SEAL	1	60601-
8	206-26-73120	COVER	1	60601-
9	01010-81040	BOLT	12	60601-
10	01643-31032	WASHER	12	60601-
11	07000-15310	O-RING	1	60001-
12	206-26-71480	CARRIER	1	60001-
13	206-26-71440	GEAR	4	60001-
14	22U-26-21320	BEARING	8	60036-
15	206-26-71520	THRUST WASHER	8	60001-
16	206-26-71510	PIN	4	60001-
17	20Y-26-21330	PIN	4	60001-
18	20Y-26-21240	PLATE	1	60001-
19	112-32-11211	BOLT	1	60001-
20	206-26-71452	GEAR	1	60283-
21	20K-22-11190	O-RING	1	60001-
22	01010-81440	BOLT	22	60001-
23	01643-31445	WASHER	22	60001-
24	206-26-71430	GEAR	1	60001-
25	04260-01270	BALL	1	60001-
26	206-26-71470	CARRIER	1	60001-
27	206-26-71420	GEAR	3	60001-
28	20Y-27-22210	BEARING	3	60001-

SWING MACHINERY(#69348-)

Item	Part No.	Part Name	Qty	Serial No.
29	22U-26-21230	WASHER	6	60001-
30	206-26-71210	PIN	3	60001-
31	04064-03515	RING	6	60001-
32	206-26-71350	HOLDER	1	60001-
33	206-26-71410	GEAR	1	60001-
34	206-26-71341	PLATE	1	60593-
35	195-03-13241	VALVE	1	60001-
36	07270-21560	TUBE	1	60001-
37	07281-00197	CLAMP	1	60001-
38	01010-81035	BOLT	6	60001-
39	01643-51032	WASHER	6	60001-
40	22U-26-21280	RING	1	60001-
41	07043-00312	PLUG	1	60001-
42	(706-7G-01041)	MOTOR ASS'Y	1	69348-
43	20Y-26-31410	TUBE	1	60001-
44	20Y-26-31421	FILLER	1	60714-
45	20Y-26-31431	GAUGE	1	60714-
46	20Y-26-31441	BRACKET	1	60001-
47	22U-26-21920	CAP	1	69348-
48	07238-10630	CONNECTOR	1	60001-
49	07283-32738	CLIP	1	60001-
50	04434-51710	CLIP	1	60001-
51	01597-01009	NUT	2	60001-
52	01643-31032	WASHER	2	60001-
53	01010-81030	BOLT	2	60001-
54	01643-31032	WASHER	2	60001-
55	01010-81025	BOLT	1	60001-
56	01643-31032	WASHER	1	60001-
57	07000-15250	O-RING	1	60001-
58	01010-82070	BOLT	14	60001-
59	01643-32060	WASHER	14	60001-

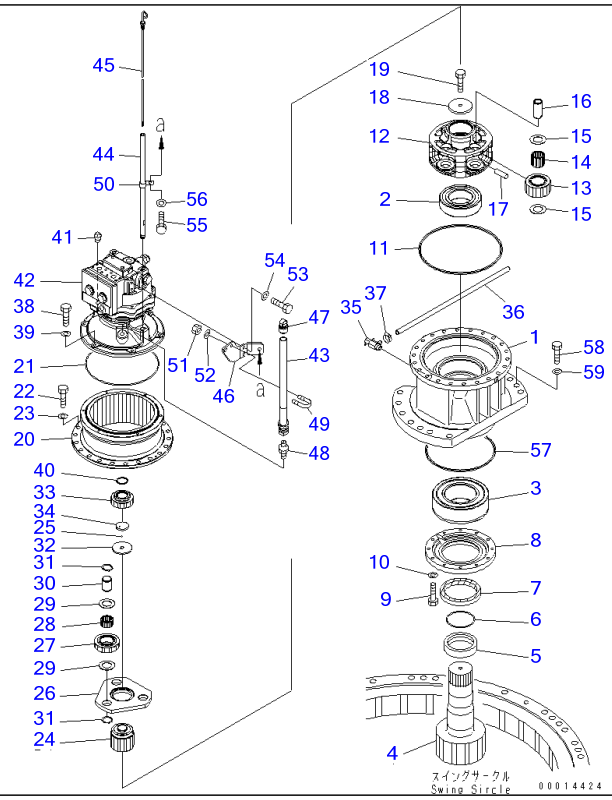

Ref N1210-01A1 **Page 270070**

PC220-7 S/N 60001-UP (Overseas Version)

SWING MACHINERY (-30 SPEC.)(#60001-69347)

Item	Part No.	Part Name	Qty	Serial No.
1	206-26-73110	CASE	1	60001-@
2	206-26-73150	BEARING	1	60001-@
3	206-09-73110	BEARING	1	60001-@
4	206-26-73130	SHAFT	1	60001-@
5	206-26-73140	SPACER	1	60001-@
6	07000-55100	O-RING	1	60001-@
7	20Y-09-31120	SEAL	1	60001-@
8	206-26-73120	COVER	1	60001-@
9	01010-81040	BOLT	12	60001-@
10	01643-31032	WASHER	12	60001-@
11	07000-55310	O-RING	1	60001-@
12	206-26-71480	CARRIER	1	60001-@
13	206-26-71440	GEAR	4	60001-@
14	22U-26-21470	BEARING	8	60001-@
15	206-26-71520	THRUST WASHER	8	60001-@
16	206-26-71510	PIN	4	60001-@
17	20Y-26-21330	PIN	4	60001-@
18	20Y-26-21240	PLATE	1	60001-@
19	112-32-11211	BOLT	1	60001-@
20	206-26-71452	GEAR	1	60001-@
21	20Y-09-31110	O-RING	1	60001-@
22	01010-81440	BOLT	22	60001-@
23	01643-31445	WASHER	22	60001-@
24	206-26-71430	GEAR	1	60001-@
25	04260-01270	BALL	1	60001-@
26	206-26-71471	CARRIER	1	60001-@
27	206-26-71420	GEAR	3	60001-@
28	20Y-27-21260	BEARING	3	60001-@

SWING MACHINERY (-30 SPEC.)(#60001-69347)

Item	Part No.	Part Name	Qty	Serial No.
29	22U-26-21230	WASHER	6	60001-@
30	206-26-71210	PIN	3	60001-@
31	04064-03515	RING	6	60001-@
32	206-26-71350	HOLDER	1	60001-@
33	206-26-71410	GEAR	1	60001-@
34	206-26-71341	PLATE	1	60001-@
35	195-03-13241	VALVE	1	60001-@
36	07270-31560	TUBE	1	60001-@
37	07281-00197	CLAMP	1	60001-@
38	01010-81035	BOLT	6	60001-@
39	01643-51032	WASHER	6	60001-@
40	22U-26-21280	RING	1	60001-@
41	07043-00312	PLUG	1	60001-@
42	(706-7G-01040)	MOTOR ASS'Y	1	60001-69347
43	20Y-26-31410	TUBE	1	60001-@
44	20Y-26-31421	FILLER	1	60001-@
45	20Y-26-31431	GAUGE	1	60001-@
46	20Y-26-31441	BRACKET	1	60001-@
47	22U-26-21460	CAP	1	60001-69347
48	07238-10630	CONNECTOR	1	60001-@
49	07283-32738	CLIP	1	60001-@
50	04434-51710	CLIP	1	60001-@
51	01597-01009	NUT	2	60001-@
52	01643-31032	WASHER	2	60001-@
53	01010-81030	BOLT	2	60001-@
54	01643-31032	WASHER	2	60001-@
55	01010-81025	BOLT	1	60001-@
56	01643-31032	WASHER	1	60001-@
57	07000-55250	O-RING	1	60001-@
58	01010-82070	BOLT	14	60001-@
59	01643-32060	WASHER	14	60001-@

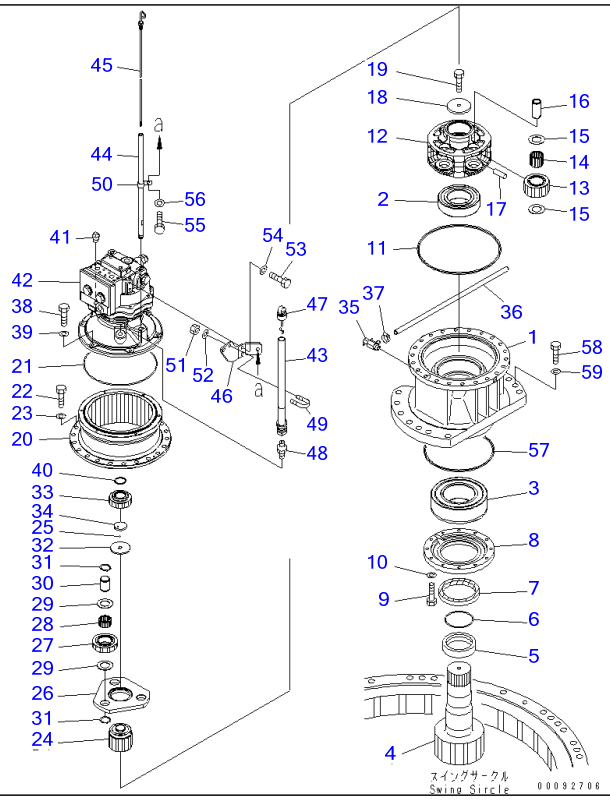

Ref N1210-01A1A

Page 270080

SWING MACHINERY (-30 SPEC.)(#69348-)

Item	Part No.	Part Name	Qty	Serial No.
1	206-26-73110	CASE	1	60001-
2	206-26-73150	BEARING	1	60001-
3	206-09-73110	BEARING	1	60001-
4	206-26-73130	SHAFT	1	60001-
5	206-26-73140	SPACER	1	60001-
6	07000-55100	O-RING	1	60001-
7	20Y-09-31120	SEAL	1	60001-
8	206-26-73120	COVER	1	60001-
9	01010-81040	BOLT	12	60001-
10	01643-31032	WASHER	12	60001-
11	07000-55310	O-RING	1	60001-
12	206-26-71480	CARRIER	1	60001-
13	206-26-71440	GEAR	4	60001-
14	22U-26-21470	BEARING	8	60001-
15	206-26-71520	THRUST WASHER	8	60001-
16	206-26-71510	PIN	4	60001-
17	20Y-26-21330	PIN	4	60001-
18	20Y-26-21240	PLATE	1	60001-
19	112-32-11211	BOLT	1	60001-
20	206-26-71452	GEAR	1	60001-
21	20Y-09-31110	O-RING	1	60001-
22	01010-81440	BOLT	22	60001-
23	01643-31445	WASHER	22	60001-
24	206-26-71430	GEAR	1	60001-
25	04260-01270	BALL	1	60001-
26	206-26-71471	CARRIER	1	60001-
27	206-26-71420	GEAR	3	60001-
28	20Y-27-21260	BEARING	3	60001-

SWING MACHINERY (-30 SPEC.)(#69348-)

Item	Part No.	Part Name	Qty	Serial No.
29	22U-26-21230	WASHER	6	60001-
30	206-26-71210	PIN	3	60001-
31	04064-03515	RING	6	60001-
32	206-26-71350	HOLDER	1	60001-
33	206-26-71410	GEAR	1	60001-
34	206-26-71341	PLATE	1	60001-
35	195-03-13241	VALVE	1	60001-
36	07270-31560	TUBE	1	60001-
37	07281-00197	CLAMP	1	60001-
38	01010-81035	BOLT	6	60001-
39	01643-51032	WASHER	6	60001-
40	22U-26-21280	RING	1	60001-
41	07043-00312	PLUG	1	60001-
42	(706-7G-01040)	MOTOR ASS'Y	1	69348-
43	20Y-26-31410	TUBE	1	60001-
44	20Y-26-31421	FILLER	1	60001-
45	20Y-26-31431	GAUGE	1	60001-
46	20Y-26-31441	BRACKET	1	60001-
47	22U-26-21460	CAP	1	69348-
48	07238-10630	CONNECTOR	1	60001-
49	07283-32738	CLIP	1	60001-
50	04434-51710	CLIP	1	60001-
51	01597-01009	NUT	2	60001-
52	01643-31032	WASHER	2	60001-
53	01010-81030	BOLT	2	60001-
54	01643-31032	WASHER	2	60001-
55	01010-81025	BOLT	1	60001-
56	01643-31032	WASHER	1	60001-
57	07000-55250	O-RING	1	60001-
58	01010-82070	BOLT	14	60001-
59	01643-32060	WASHER	14	60001-

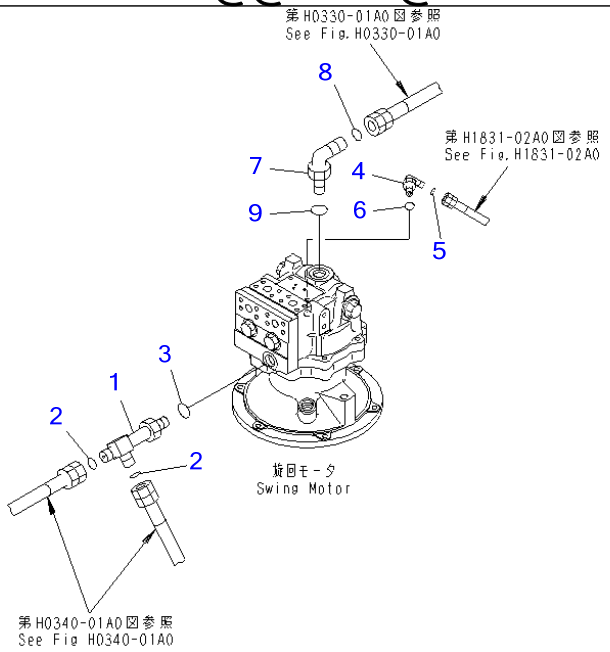

PW1B817

Ref N1220-01A0 **Page 270090**

PC220-7 S/N 60001-UP (Overseas Version)
SWING MOTOR (CONNECTING PARTS)

Item	Part No.	Part Name	Qty	Serial No.
1	20Y-62-41940	ELBOW	1	60001-
2	02896-11015	O-RING	2	60001-
3	07002-12434	O-RING	1	60001-
4	11Y-62-12160	ELBOW	1	60003-
	02782-10210	ELBOW	1	60001-60002
5	02896-11008	O-RING	1	60001-
6	07002-11423	O-RING	1	60001-
7	02782-10630	ELBOW	1	60001-
8	02896-11018	O-RING	1	60001-
9	07002-12434	O-RING	1	60001-

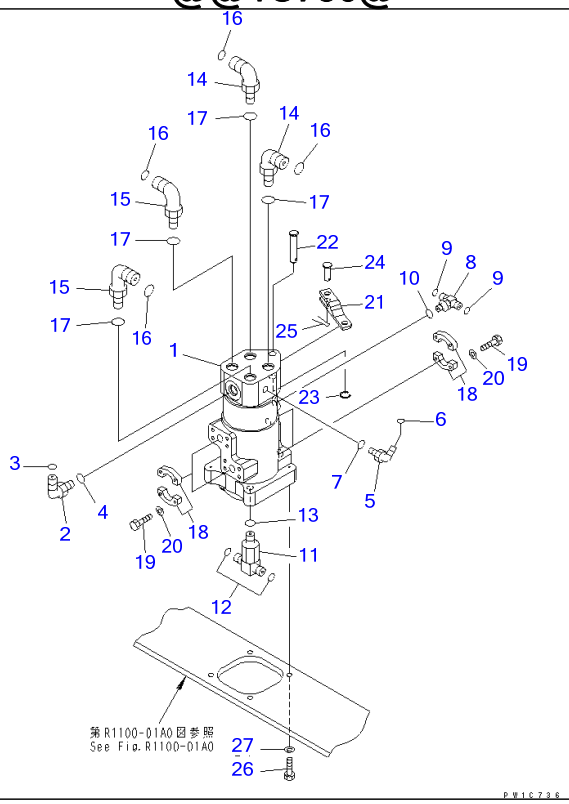

Ref N1310-01A0 **Page 270100**

PC220-7 S/N 60001-UP (Overseas Version)

SWIVEL JOINT (CONNECTING PARTS)(#60001-65000)

Item	Part No.	Part Name	Qty	Serial No.
1	(703-08-33630)	SWIVEL JOINT ASS'Y	1	60744-65000
	(703-08-33610)	SWIVEL JOINT ASS'Y	1	60001-60743
2	02782-10522	ELBOW	1	60001-@
3	02896-11015	O-RING	1	60001-@
4	07002-12434	O-RING	1	60001-@
5	11Y-62-12160	ELBOW	1	60003-@
	02782-10210	ELBOW	1	60001-60002
6	02896-11008	O-RING	1	60001-@
7	07002-11423	O-RING	1	60001-@
8	11Y-62-12250	TEE	1	60001-@
9	02896-11008	O-RING	2	60001-@
10	07002-11423	O-RING	1	60001-@
11	20Y-62-41930	TEE	1	60001-@
12	02896-11012	O-RING	2	60001-@
13	07002-12434	O-RING	1	60001-@
14	02782-10628	ELBOW	2	60001-@
15	02782-10630	ELBOW	2	60001-@
16	02896-11018	O-RING	4	60001-@
17	07002-12434	O-RING	4	60001-@
18	07371-30640	FLANGE	8	60001-@
19	07372-21035	BOLT	16	60001-@
20	01643-51032	WASHER	16	60001-@
21	22U-62-21583	BRACKET	1	60762-65000
	□22U-62-21582	BRACKET	1	60001-60761
22	22U-62-21870	PIN	1	60001-@
23	22U-62-24420	PIN	1	60001-@
24	04205-11648	PIN	1	60001-@
25	04050-14028	PIN	1	60001-@

SWIVEL JOINT (CONNECTING PARTS)(#60001-65000)

Item	Part No.	Part Name	Qty	Serial No.
26	01010-81255	BOLT	4	60001-@
27	01643-31232	WASHER	4	60001-@

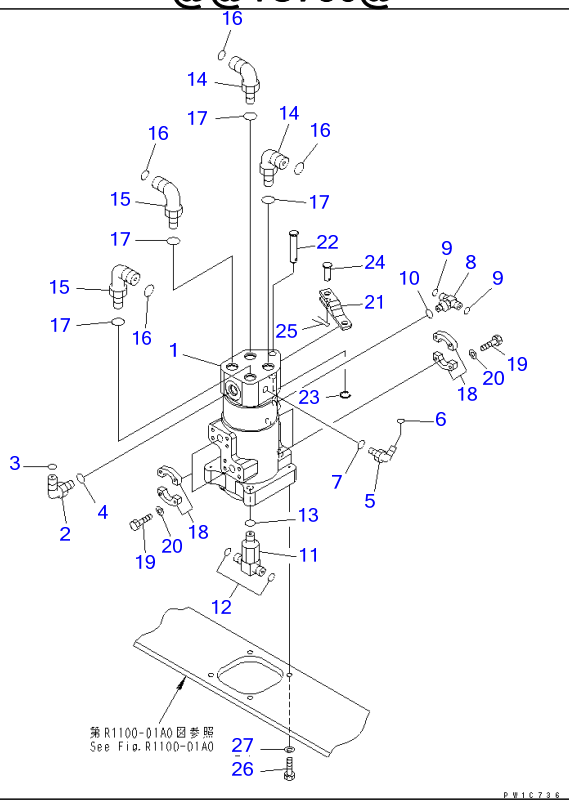

Ref N1310-01A0A **Page 270110**

PC220-7 S/N 60001-UP (Overseas Version)

SWIVEL JOINT (CONNECTING PARTS)(#65001-)

Item	Part No.	Part Name	Qty	Serial No.
1	(703-08-33631)	SWIVEL JOINT ASS'Y	1	67532-
	(□703-08-33630)	SWIVEL JOINT ASS'Y	1	65059-67531
	(703-08-33610)	SWIVEL JOINT ASS'Y	1	65001-65058
2	02782-10522	ELBOW	1	60001-
3	02896-11015	O-RING	1	60001-
4	07002-12434	O-RING	1	60001-
5	11Y-62-12160	ELBOW	1	60003-
	02782-10210	ELBOW	1	60001-60002
6	02896-11008	O-RING	1	60001-
7	07002-11423	O-RING	1	60001-
8	11Y-62-12250	TEE	1	60001-
9	02896-11008	O-RING	2	60001-
10	07002-11423	O-RING	1	60001-
11	20Y-62-41930	TEE	1	60001-
12	02896-11012	O-RING	2	60001-
13	07002-12434	O-RING	1	60001-
14	02782-10628	ELBOW	2	60001-
15	02782-10630	ELBOW	2	60001-
16	02896-11018	O-RING	4	60001-
17	07002-12434	O-RING	4	60001-
18	07371-30640	FLANGE	8	60001-
19	07372-21035	BOLT	16	60001-
20	01643-51032	WASHER	16	60001-
21	22U-62-21583	BRACKET	1	65572-
	□22U-62-21582	BRACKET	1	65001-65571
22	22U-62-21870	PIN	1	60001-
23	22U-62-24420	PIN	1	60001-
24	04205-11648	PIN	1	60001-

SWIVEL JOINT (CONNECTING PARTS)(#65001-)

Item	Part No.	Part Name	Qty	Serial No.
25	04050-14028	PIN	1	60001-
26	01010-81255	BOLT	4	60001-
27	01643-31232	WASHER	4	60001-

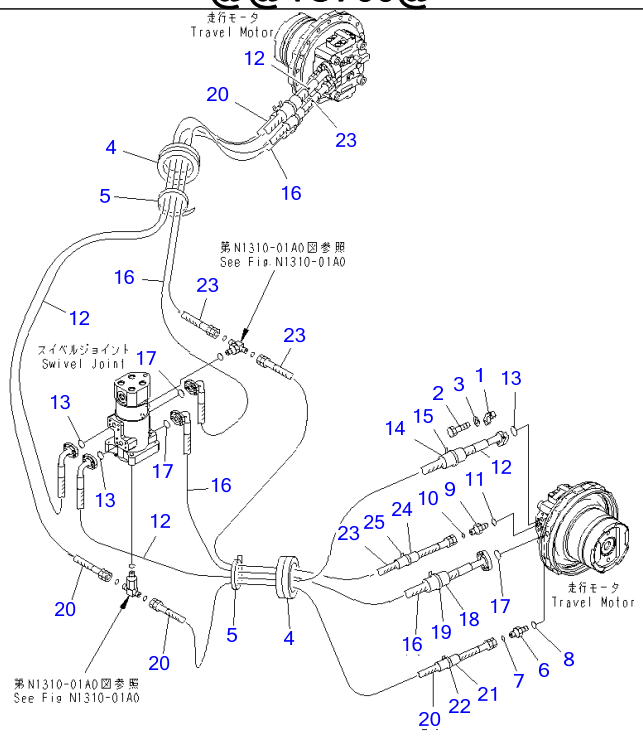

Ref P1120-01A0 Page 300010

PC220-7 S/N 60001-UP (Overseas Version)

TRAVEL PIPING

Item	Part No.	Part Name	Qty	Serial No.
1	07371-30640	FLANGE	8	60001-
2	07372-21035	BOLT	16	60001-
3	01643-51032	WASHER	16	60001-
4	20Y-62-12560	GROMMET	2	60001-
5	08034-20536	BAND	2	60001-
6	02781-00422	UNION	2	60001-
7	02896-11012	O-RING	2	60001-
8	07002-12034	O-RING	2	60001-
9	11Y-62-12130	NIPPLE	2	60003-
	02781-00210	UNION	2	60001-60002
10	02896-11008	O-RING	2	60001-
11	07002-11423	O-RING	2	60001-
12	07098-00624	HOSE	2	60001-
13	07000-13025	O-RING	4	60001-
14	205-62-72240	COVER	2	60001-
15	08034-00536	BAND	2	60001-
16	20Y-62-12520	HOSE	2	60001-
17	07000-13025	O-RING	4	60001-
18	205-62-72240	COVER	2	60001-
19	08034-00536	BAND	2	60001-
20	02762-00421	HOSE	2	60001-
21	205-62-72240	COVER	2	60001-
22	08034-00536	BAND	2	60001-
23	02760-00222	HOSE	2	60001-
24	205-62-72140	COVER	2	60001-
25	08034-00536	BAND	2	60001-

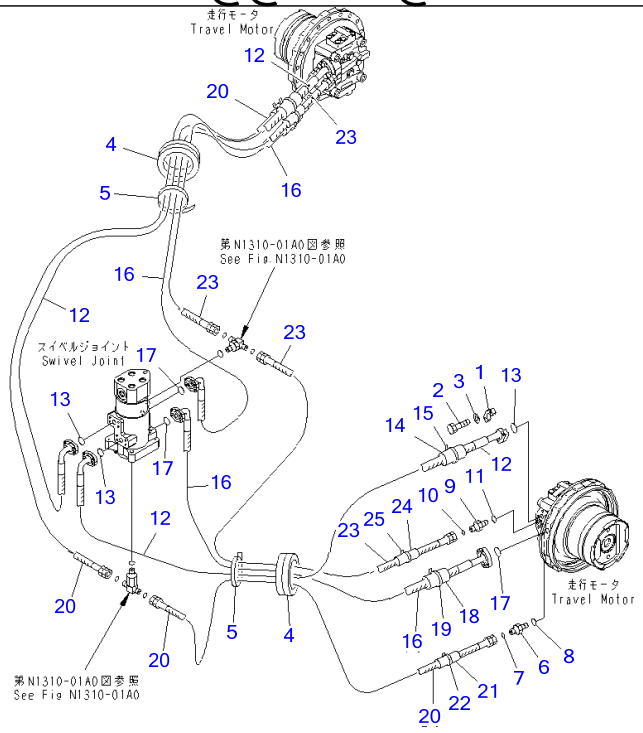

PC220-7 S/N 60001-UP (Overseas Version)
TRAVEL PIPING (-30 SPEC.)

Item	Part No.	Part Name	Qty	Serial No.
1	07371-30640	FLANGE	8	60001-
2	07372-21035	BOLT	16	60001-
3	01643-51032	WASHER	16	60001-
4	20Y-62-12560	GROMMET	2	60001-
5	08034-20834	BAND	2	60001-
6	02781-00422	UNION	2	60001-
7	02896-51012	O-RING	2	60001-
8	07002-52034	O-RING	2	60001-
9	11Y-62-12130	NIPPLE	2	60001-
10	02896-51008	O-RING	2	60001-
11	07002-51423	O-RING	2	60001-
12	07098-00624	HOSE	2	60001-
13	07000-53025	O-RING	4	60001-
14	205-62-72240	COVER	2	60001-
15	08034-20536	BAND	2	60001-
16	20Y-62-12520	HOSE	2	60001-
17	07000-53025	O-RING	4	60001-
18	205-62-72240	COVER	2	60001-
19	08034-20536	BAND	2	60001-
20	02762-00421	HOSE	2	60001-
21	205-62-72240	COVER	2	60001-
22	08034-00536	BAND	2	60001-
23	02760-00222	HOSE	2	60001-
24	205-62-72140	COVER	2	60001-
25	08034-00536	BAND	2	60001-

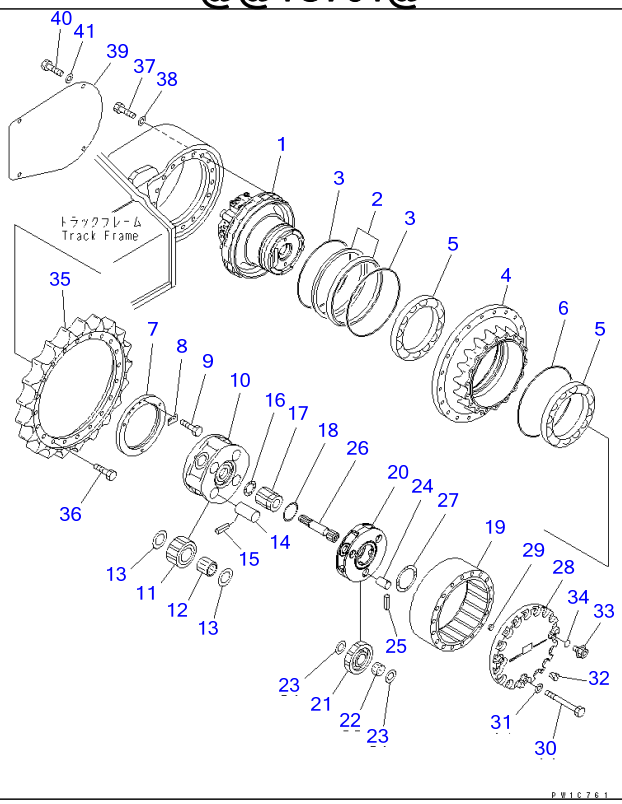

Ref P1210-01A1 **Page 300030**

PC220-7 S/N 60001-UP (Overseas Version)

FINAL DRIVE

Item	Part No.	Part Name	Qty	Serial No.
1	(708-8F-00192)	MOTOR ASS'Y	2	60262-
	(□708-8F-00191)	MOTOR ASS'Y	2	60003-60261
	(□708-8F-00190)	MOTOR ASS'Y	2	60001-60002
	150-27-00410	FLOATING SEAL ASS'Y	2	60283-
	150-27-00330	FLOATING SEAL ASS'Y	2	60001-60282
2	☆	・RING	2	60001-
3	☆	・O-RING	2	60283-
	☆	・O-RING	2	60001-60282
4	22U-27-21182	HUB	2	60001-
5	20Y-27-22230	BEARING	4	60001-
6	22U-27-21220	O-RING	2	60001-
7	20Y-27-22261	LOCK	2	60001-
8	20Y-27-22270	LOCK	2	60001-
9	01010-81020	BOLT	4	60001-
10	22U-27-21171	CARRIER	2	69463-
	22U-27-21170	CARRIER	2	65001-69462
	22U-27-21171	CARRIER	2	60776-65000
	22U-27-21170	CARRIER	2	60001-60775
11	22U-27-21140	GEAR	8	60001-
12	20Y-27-22220	BEARING	8	60001-
13	20Y-27-21250	WASHER	16	60001-
14	22U-27-21230	PIN	8	60001-
15	20Y-27-21290	PIN	8	60001-
16	20Y-27-13310	WASHER	2	60001-
17	22U-27-21130	GEAR	2	60001-
18	22U-27-21210	THRUST WASHER	2	60001-
19	22U-27-21153	GEAR	2	60283-
	22U-27-21152	GEAR	2	60001-60282

FINAL DRIVE

Item	Part No.	Part Name	Qty	Serial No.
20	22U-27-21161	CARRIER	2	60001-
21	22U-27-21120	GEAR	6	60001-
22	20Y-27-22210	BEARING	6	60001-
23	22U-27-21240	THRUST WASHER	12	60001-
24	20Y-27-21220	PIN	6	60001-
25	20Y-27-21280	PIN	6	60001-
26	22U-27-21110	SHAFT	2	60001-
27	20Y-27-21310	WASHER	2	60001-
28	22U-27-21192	COVER	2	60001-
29	20Y-27-22250	BUTTON	2	60001-
30	20Y-27-13281	BOLT	40	60001-
31	01643-31645	WASHER	40	60001-
32	07049-01012	PLUG	4	60001-
33	07044-12412	PLUG	6	60001-
34	07002-02434	O-RING	6	60001-
35	20Y-27-11582	SPROCKET	2	60001-
36	20Y-27-11561	BOLT	40	60001-
37	01010-61660	BOLT	36	60001-
38	01643-31645	WASHER	36	60001-
39	20Y-30-21192	COVER	2	69401-
	20Y-30-21191	COVER	2	65001-69400
	20Y-30-21192	COVER	2	60776-65000
	20Y-30-21191	COVER	2	60001-60775
40	01010-81230	BOLT	8	60001-
41	01643-31232	WASHER	8	60001-

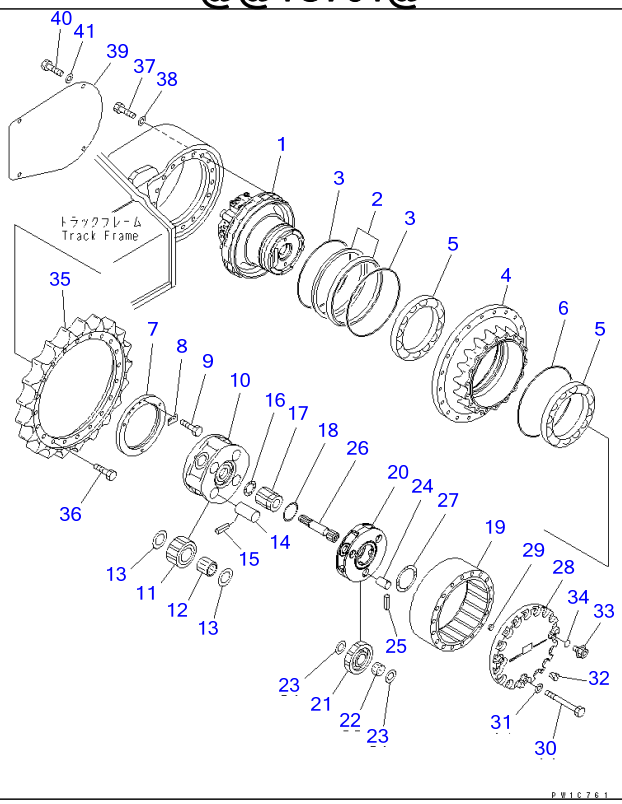

Ref P1210-01A2 **Page 300040**

PC220-7 S/N 60001-UP (Overseas Version)

FINAL DRIVE (COLD WEATHER A SPEC.)(#60255-)

Item	Part No.	Part Name	Qty	Serial No.
1	(708-8F-00192)	MOTOR ASS'Y	2	60255-
	20Y-27-00450	FLOATING SEAL ASS'Y	2	60255-
2	☆	▪ SEAL	2	60255-
3	☆	▪ O-RING	2	60255-
4	22U-27-21182	HUB	2	60255-
5	20Y-27-31320	BEARING	4	67164-
	20Y-27-22230	BEARING	4	65001-67163
	20Y-27-31320	BEARING	4	60776-65000
	20Y-27-22230	BEARING	4	60255-60775
6	22U-09-21110	O-RING	2	60255-
7	20Y-27-22261	LOCK	2	60255-
8	20Y-27-22270	LOCK	2	60255-
9	01010-81020	BOLT	4	60255-
10	22U-27-21171	CARRIER	2	69463-
	22U-27-21170	CARRIER	2	65001-69462
	22U-27-21171	CARRIER	2	60776-65000
	22U-27-21170	CARRIER	2	60255-60775
11	22U-27-21140	GEAR	8	60255-
12	20Y-27-21270	BEARING	8	67164-
	□20Y-27-22220	BEARING	8	65001-67163
	20Y-27-21270	BEARING	8	60776-65000
	□20Y-27-22220	BEARING	8	60255-60775
13	20Y-27-21250	WASHER	16	60255-
14	22U-27-21230	PIN	8	60255-
15	20Y-27-21290	PIN	8	60255-
16	20Y-27-13310	WASHER	2	60255-
17	22U-27-21130	GEAR	2	60255-
18	22U-27-21210	THRUST WASHER	2	60255-

FINAL DRIVE (COLD WEATHER A SPEC.)(#60255-)

Item	Part No.	Part Name	Qty	Serial No.
19	22U-27-21153	GEAR	2	60255-
20	22U-27-21161	CARRIER	2	60255-
21	22U-27-21120	GEAR	6	60255-
22	20Y-27-21260	BEARING	6	67164-
	□20Y-27-22210	BEARING	6	65001-67163
	20Y-27-21260	BEARING	6	60776-65000
	□20Y-27-22210	BEARING	6	60255-60775
23	22U-27-21240	THRUST WASHER	12	60255-
24	20Y-27-21220	PIN	6	60255-
25	20Y-27-21280	PIN	6	60255-
26	22U-27-21110	SHAFT	2	60255-
27	20Y-27-21310	WASHER	2	60255-
28	22U-27-21192	COVER	2	60255-
29	20Y-27-22250	BUTTON	2	60255-
30	20Y-27-13281	BOLT	40	60255-
31	01643-31645	WASHER	40	60255-
32	07049-01012	PLUG	4	60255-
33	07044-12412	PLUG	6	60255-
34	07002-52434	O-RING	6	60255-
35	20Y-27-11582	SPROCKET	2	60255-
36	20Y-27-11561	BOLT	40	60255-
37	01010-61660	BOLT	36	60255-
38	01643-31645	WASHER	36	60255-
39	20Y-30-21192	COVER	2	69401-
	20Y-30-21191	COVER	2	65001-69400
	20Y-30-21192	COVER	2	60776-65000
	20Y-30-21191	COVER	2	60255-60775
40	01010-81230	BOLT	8	60255-
41	01643-31232	WASHER	8	60255-

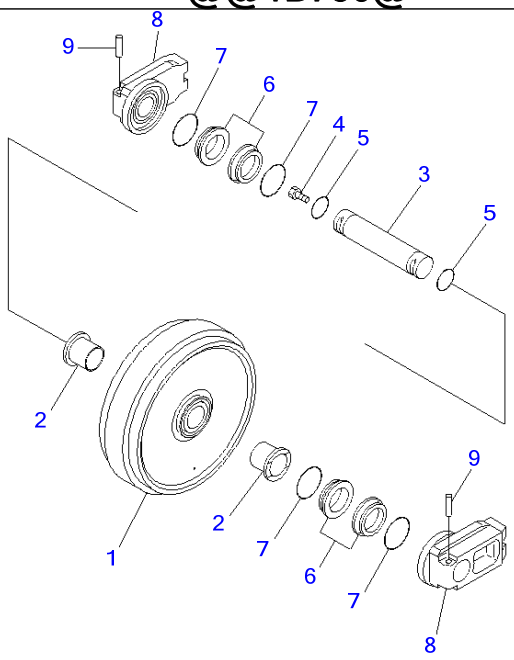

P W 1 B 7 5 0

Ref R0110-01A0 **Page 330010**

PC220-7 S/N 60001-UP (Overseas Version)
FRONT IDLER(#60001-65000)

Item	Part No.	Part Name	Qty	Serial No.
	20Y-30-00322	FRONT IDLER ASS'Y	2	60767-65000
	20Y-30-00321	FRONT IDLER ASS'Y	2	60093-60766
	20Y-30-00320	FRONT IDLER ASS'Y	2	60001-60092
1	20Y-30-43310	・IDLER	1	60767-65000
	20Y-30-33211	・IDLER	1	60093-60766
	20Y-30-33210	・IDLER	1	60001-60092
2	20Y-30-43340	・BUSHING	2	60767-65000
	□207-30-56140	・BUSHING	2	60001-60766
3	20Y-30-13131	・SHAFT	1	60767-65000
	□20Y-30-13130	・SHAFT	1	60001-60766
4	07052-31624	・PLUG	1	60001-@
5	07000-12060	・O-RING	2	60001-@
	195-30-00302	・FLOATING SEAL ASS'Y	2	60767-65000
	20Y-30-00100	・FLOATING SEAL ASS'Y	2	60001-60766
6	☆	・・SEAL	2	60767-65000
	☆	・・RING	2	60001-60766
7	☆	・・O-RING	2	60767-65000
	☆	・・O-RING	2	60001-60766
8	20Y-30-31750	・SUPPORT	2	60767-65000
	20Y-30-13150	・SUPPORT	2	60001-60766
9	205-30-76190	・PIN	2	60001-@

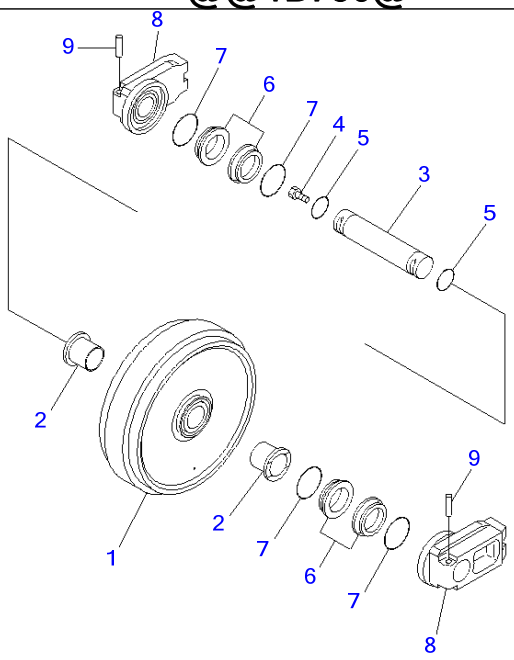

P W 1 B 7 5 0

Ref R0110-01A0A **Page 330020**

PC220-7 S/N 60001-UP (Overseas Version)
FRONT IDLER(#65001-)

Item	Part No.	Part Name	Qty	Serial No.
	20Y-30-00322	FRONT IDLER ASS'Y	2	65927-
	20Y-30-00321	FRONT IDLER ASS'Y	2	65001-65926
1	20Y-30-43310	・IDLER	1	65927-
	20Y-30-33211	・IDLER	1	65001-65926
2	20Y-30-43340	・BUSHING	2	65927-
	□207-30-56140	・BUSHING	2	65001-65926
3	20Y-30-13131	・SHAFT	1	65927-
	□20Y-30-13130	・SHAFT	1	65001-65926
4	07052-31624	・PLUG	1	60001-
5	07000-12060	・O-RING	2	60001-
	195-30-00302	・FLOATING SEAL ASS'Y	2	65927-
	20Y-30-00100	・FLOATING SEAL ASS'Y	2	65001-65926
6	☆	・・SEAL	2	65927-
	☆	・・RING	2	65001-65926
7	☆	・・O-RING	2	65927-
	☆	・・O-RING	2	65001-65926
8	20Y-30-31750	・SUPPORT	2	65927-
	20Y-30-13150	・SUPPORT	2	65001-65926
9	205-30-76190	・PIN	2	60001-

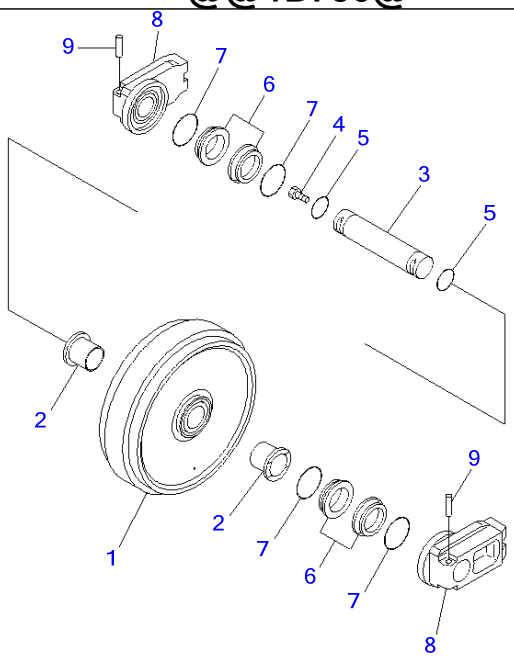

P W 1 B 7 5 0

Ref R0110-01A1 **Page 330030**

PC220-7 S/N 60001-UP (Overseas Version)
FRONT IDLER (COLD WEATHER A SPEC.)(#60255-65000)

Item	Part No.	Part Name	Qty	Serial No.
	20Y-30-00441	IDLER ASS'Y	2	60766-65000
	□20Y-30-00440	IDLER ASS'Y	2	60255-60765
1	20Y-30-43310	・IDLER	1	60766-65000
	20Y-30-33211	・IDLER	1	60255-60765
2	20Y-30-43340	・BUSHING	2	60766-65000
	□207-30-56140	・BUSHING	2	60255-60765
3	20Y-30-13131	・SHAFT	1	60766-65000
	□20Y-30-13130	・SHAFT	1	60255-60765
4	07052-31624	・PLUG	1	60255-@
5	07000-52060	・O-RING	2	60255-@
	195-30-00203	・FLOATING SEAL ASS'Y	2	60766-65000
	20Y-30-00370	・FLOATING SEAL ASS'Y	2	60255-60765
6	☆	・・SEAL	2	60766-65000
	☆	・・RING	2	60255-60765
7	☆	・・O-RING	2	60766-65000
	☆	・・O-RING	2	60255-60765
8	20Y-30-31750	・SUPPORT	2	60766-65000
	20Y-30-13150	・SUPPORT	2	60255-60765
9	205-30-76190	・PIN	2	60255-@

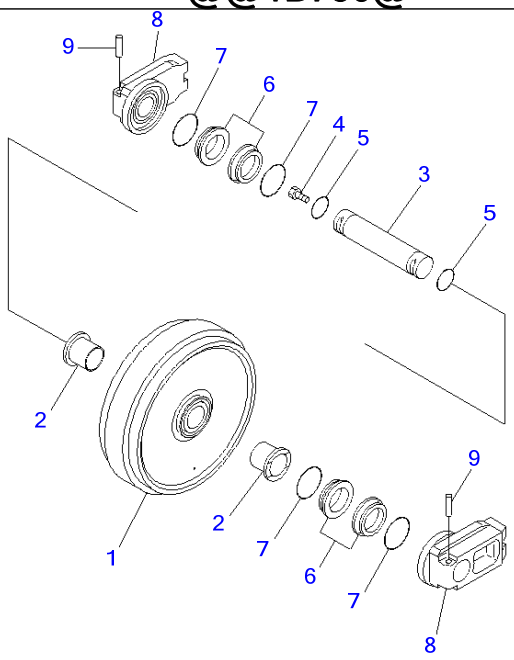

P W 1 B 7 5 0

Ref R0110-01A1A **Page 330040**

PC220-7 S/N 60001-UP (Overseas Version)

FRONT IDLER (COLD WEATHER A SPEC.)(#65001-)

Item	Part No.	Part Name	Qty	Serial No.
	20Y-30-00441	IDLER ASS'Y	2	65824-
	□20Y-30-00440	IDLER ASS'Y	2	65001-65823
1	20Y-30-43310	・IDLER	1	65824-
	20Y-30-33211	・IDLER	1	65001-65823
2	20Y-30-43340	・BUSHING	2	65824-
	□207-30-56140	・BUSHING	2	65001-65823
3	20Y-30-13131	・SHAFT	1	65824-
	□20Y-30-13130	・SHAFT	1	65001-65823
4	07052-31624	・PLUG	1	60255-
5	07000-52060	・O-RING	2	60255-
	195-30-00203	・FLOATING SEAL ASS'Y	2	65824-
	20Y-30-00370	・FLOATING SEAL ASS'Y	2	65001-65823
6	☆	・・SEAL	2	65824-
	☆	・・RING	2	65001-65823
7	☆	・・O-RING	2	65824-
	☆	・・O-RING	2	65001-65823
8	20Y-30-31750	・SUPPORT	2	65824-
	20Y-30-13150	・SUPPORT	2	65001-65823
9	205-30-76190	・PIN	2	60255-

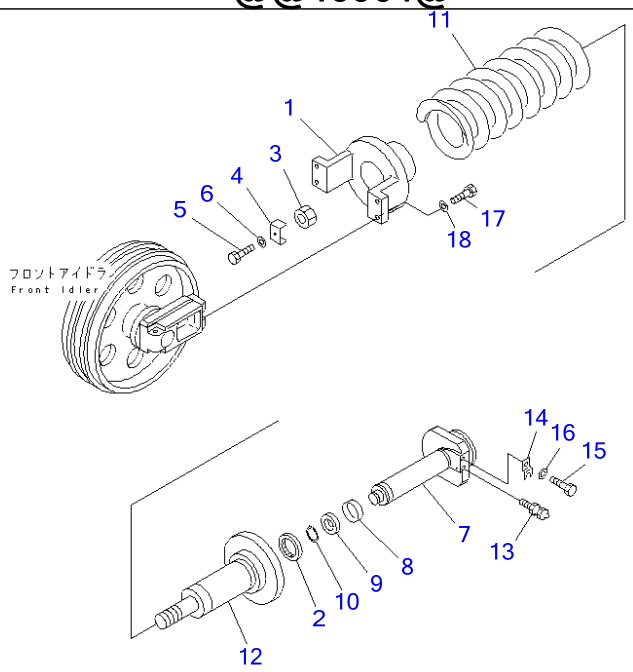

PC220-7 S/N 60001-UP (Overseas Version)

IDLER CUSHION(#60001-60356)

Item	Part No.	Part Name	Qty	Serial No.
1	20Y-30-32110	YOKE	2	60001-@
2	206-30-55150	SEAL	2	60001-60356
3	206-30-45381	NUT	2	60001-@
4	206-30-45262	LOCK	2	60001-@
5	01010-81225	BOLT	2	60001-@
6	01643-31232	WASHER	2	60001-@
7	206-30-55122	SHAFT	2	60001-60356
8	07155-00720	RING	2	60001-60356
9	09370-00070	U-PACKING	2	60001-@
10	04064-04518	RING	2	60001-@
11	206-30-55172	SPRING	2	60093-@
	206-30-55171	SPRING	2	60001-60092
12	206-30-65181	CYLINDER	2	60001-60356
13	07959-20001	VALVE	2	60001-@
14	205-30-72170	PLATE	2	60001-@
15	01010-81225	BOLT	2	60001-@
16	01643-31232	WASHER	2	60001-@
17	01010-61655	BOLT	8	60001-@
18	01643-31645	WASHER	8	60001-@

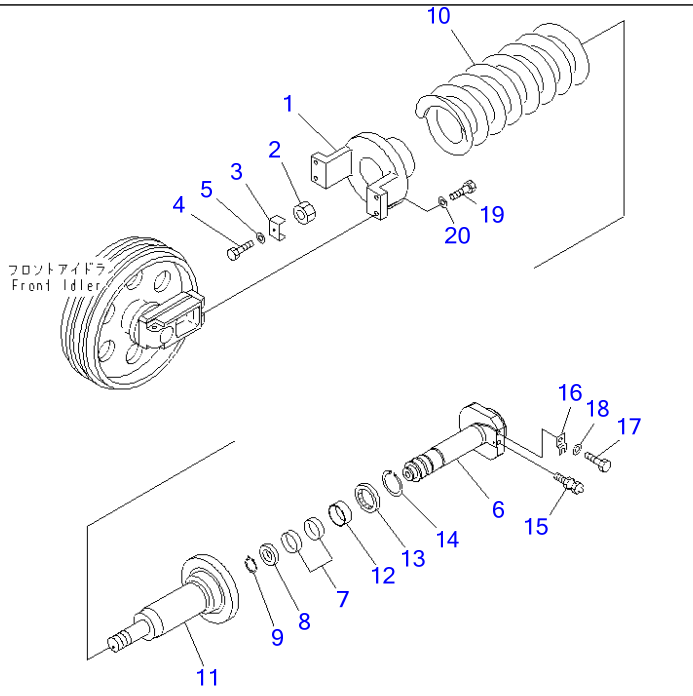

00005261

Ref R0110-02A0A **Page 330060**

PC220-7 S/N 60001-UP (Overseas Version)
IDLER CUSHION(#60357-)

Item	Part No.	Part Name	Qty	Serial No.
1	20Y-30-32110	YOKE	2	60001-
2	206-30-45381	NUT	2	60001-
3	206-30-45262	LOCK	2	60001-
4	01010-81225	BOLT	2	60001-
5	01643-31232	WASHER	2	60001-
6	206-30-72140	SHAFT	2	60357-
7	07155-00720	RING	4	60357-
8	09370-00070	U-PACKING	2	60001-
9	04064-04518	RING	2	60001-
10	206-30-55172	SPRING	2	60093-
11	206-30-72130	CYLINDER	2	60357-
12	07177-07030	BUSHING	2	60357-
13	707-56-70540	SEAL	2	60357-
14	04077-00085	RING	2	60357-
15	07959-20001	VALVE	2	60001-
16	205-30-72170	PLATE	2	60001-
17	01010-81225	BOLT	2	60001-
18	01643-31232	WASHER	2	60001-
19	01010-61655	BOLT	8	60001-
20	01643-31645	WASHER	8	60001-

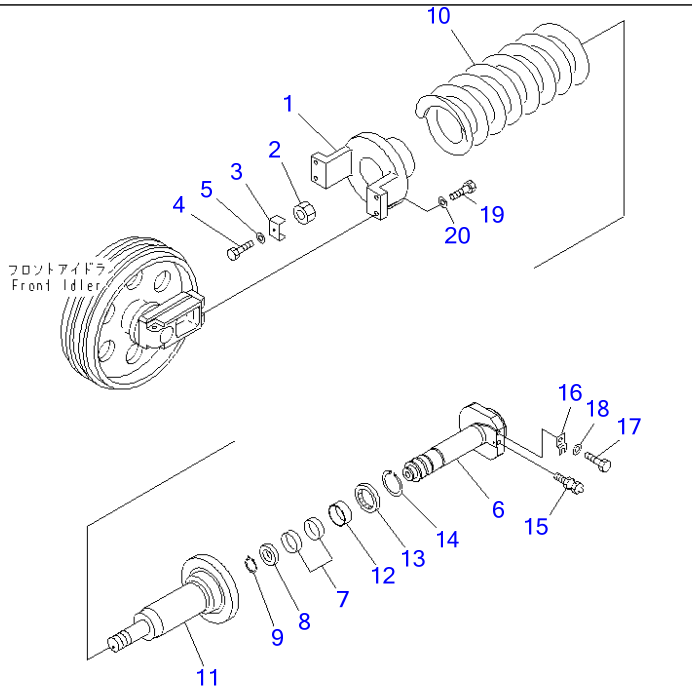

00005261

PC220-7 S/N 60001-UP (Overseas Version)

IDLER CUSHION (FOR NORTH AMERICA)(#65001-)

Item	Part No.	Part Name	Qty	Serial No.
1	20Y-30-32110	YOKE	2	65001-
2	206-30-45381	NUT	2	65001-
3	206-30-45262	LOCK	2	65001-
4	01010-81225	BOLT	2	65001-
5	01643-31232	WASHER	2	65001-
6	206-30-72140	SHAFT	2	65001-
7	07155-00720	RING	4	65001-
8	09370-00070	U-PACKING	2	65001-
9	04064-04518	RING	2	65001-
10	206-30-72111	SPRING	2	65001-
11	206-30-72130	CYLINDER	2	65001-
12	07177-07030	BUSHING	2	65001-
13	707-56-70540	SEAL	2	65001-
14	04077-00085	RING	2	65001-
15	07959-20001	VALVE	2	65001-
16	205-30-72170	PLATE	2	65001-
17	01010-81225	BOLT	2	65001-
18	01643-31232	WASHER	2	65001-
19	01010-61655	BOLT	8	65001-
20	01643-31645	WASHER	8	65001-

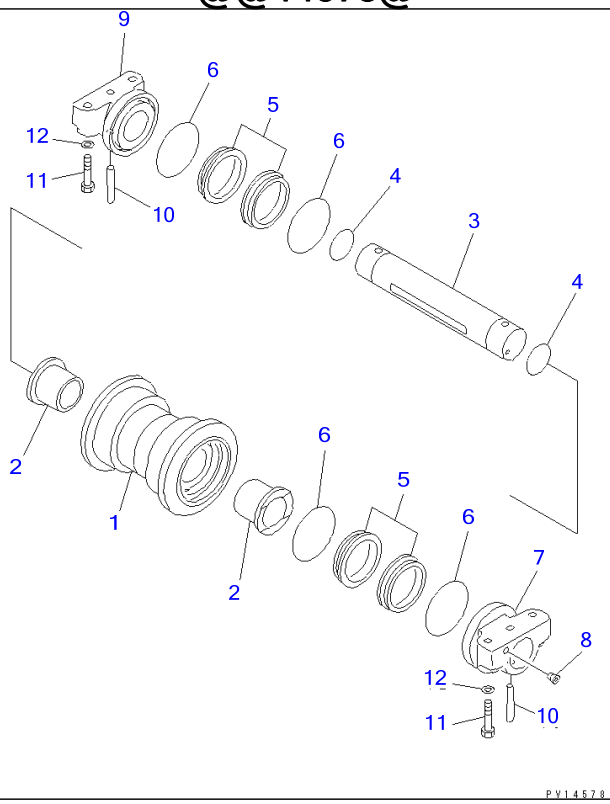

Ref R0200-01A0 **Page 330080**

PC220-7 S/N 60001-UP (Overseas Version)
TRACK ROLLER

Item	Part No.	Part Name	Qty	Serial No.
	20Y-30-00018	TRACK ROLLER ASS'Y	16	69362-
	20Y-30-00016	TRACK ROLLER ASS'Y	16	60158-69361
	□20Y-30-00015	TRACK ROLLER ASS'Y	16	60001-60157
1	20Y-30-16411	・ROLLER	1	60001-
2	22U-30-11450	・BUSHING	2	60001-
3	22U-30-11420	・SHAFT	1	60001-
4	205-30-76260	・O-RING	2	60001-
	22U-30-00060	・FLOATING SEAL ASS'Y	2	69362-
	20Y-30-00430	・FLOATING SEAL ASS'Y	2	60158-69361
	□22B-30-00030	・FLOATING SEAL ASS'Y	2	60001-60157
5	☆	・・SEAL	2	69362-
	☆	・・SEAL	2	60158-69361
	☆	・・SEAL	2	60001-60157
6	☆	・・O-RING	2	60158-
	☆	・・O-RING	2	60001-60157
7	22U-30-11430	・COLLAR	1	60001-
8	20Y-30-16330	・PLUG	1	60001-
9	22U-30-11440	・COLLAR	1	60001-
10	20Y-30-16170	・PIN	2	60001-
11	20Y-30-11340	BOLT	64	60001-
12	01643-31845	WASHER	64	60001-

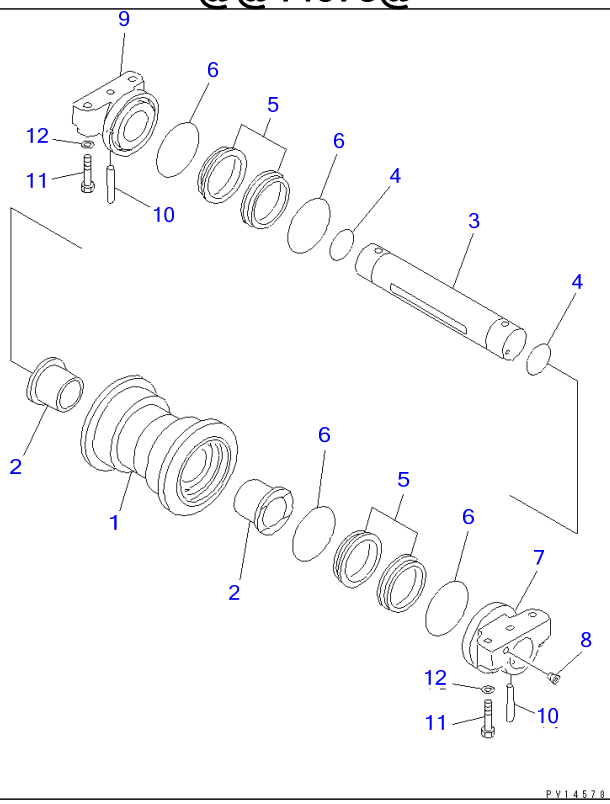

Ref R0200-01A2 **Page 330090**

PC220-7 S/N 60001-UP (Overseas Version)

TRACK ROLLER (COLD WEATHER A SPEC.)(#60255-)

Item	Part No.	Part Name	Qty	Serial No.
	20Y-30-00283	TRACK ROLLER ASS'Y	16	69397-
	20Y-30-00282	TRACK ROLLER ASS'Y	16	68335-69396
	20Y-30-00281	TRACK ROLLER ASS'Y	16	60255-68334
1	20Y-30-16411	・ROLLER	1	60255-
2	22U-30-11450	・BUSHING	2	60255-
3	22U-30-11460	・SHAFT	1	68335-
	22U-30-11420	・SHAFT	1	60255-68334
4	20Y-30-13170	・O-RING	2	60255-
	20Y-30-00630	・FLOATING SEAL ASS'Y	2	69397-
	20Y-30-00381	・FLOATING SEAL ASS'Y	2	60255-69396
5	☆	・・SEAL	2	69397-
	☆	・・SEAL	2	60255-69396
6	☆	・・O-RING	2	60255-
7	22U-30-11430	・COLLAR	1	60255-
8	20Y-30-16330	・PLUG	1	60255-
9	22U-30-11440	・COLLAR	1	60255-
10	20Y-30-16170	・PIN	2	60255-
11	20Y-30-11340	BOLT	64	60255-
12	01643-31845	WASHER	64	60255-

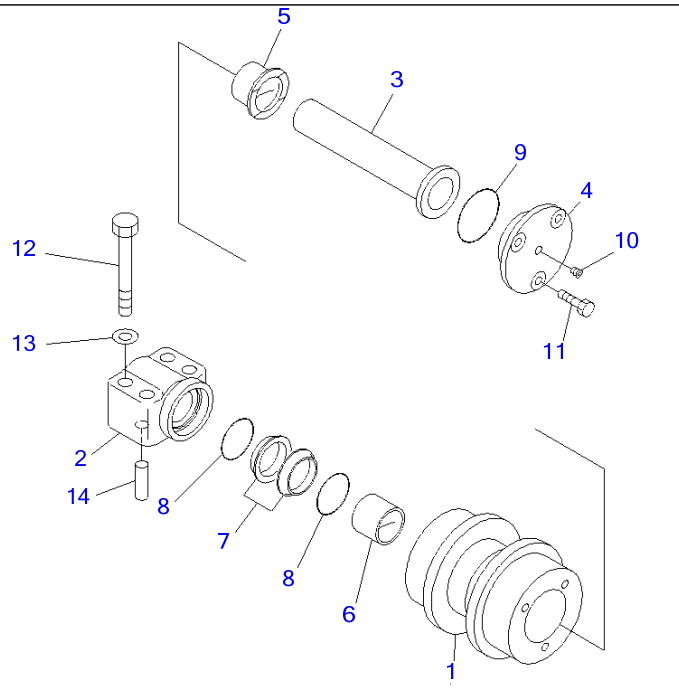

00028838

Ref R0300-01A0A **Page 330110**

PC220-7 S/N 60001-UP (Overseas Version)
CARRIER ROLLER(#60762-65000)

Item	Part No.	Part Name	Qty	Serial No.
	22U-30-00022	CARRIER ROLLER	4	60762-65000
1	22U-30-25110	・ROLLER	1	60001-@
2	22U-30-25121	・SUPPORT	1	60762-65000
3	22U-30-25130	・SHAFT	1	60001-@
4	22U-30-25140	・COVER	1	60001-@
5	22U-30-25150	・BUSHING	1	60001-@
6	22U-30-25160	・BUSHING	1	60001-@
	110-30-00086	・FLOATING SEAL ASS'Y	1	60001-@
7	☆	・・SEAL	2	60001-@
8	☆	・・O-RING	2	60001-@
9	07000-12060	・O-RING	1	60001-@
10	20Y-30-16330	・PLUG	1	60001-@
11	01010-81025	・BOLT	3	60001-@
12	01010-81485	BOLT	16	60063-@
13	01643-31445	WASHER	16	60001-@
14	20Y-30-16550	PIN	8	60762-65000

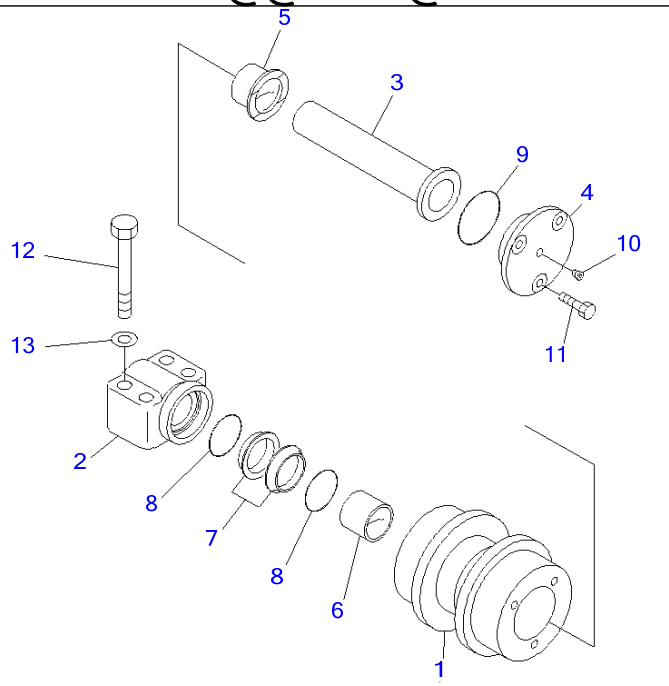

PJL4287

Ref R0300-01A0B **Page 330120**

PC220-7 S/N 60001-UP (Overseas Version)
CARRIER ROLLER(#65001-65616)

Item	Part No.	Part Name	Qty	Serial No.
	22U-30-00021	CARRIER ROLLER ASS'Y	4	65001-65616
1	22U-30-25110	・ROLLER	1	60001-@
2	22U-30-25120	・SUPPORT	1	65001-65616
3	22U-30-25130	・SHAFT	1	60001-@
4	22U-30-25140	・COVER	1	60001-@
5	22U-30-25150	・BUSHING	1	60001-@
6	22U-30-25160	・BUSHING	1	60001-@
	110-30-00086	・FLOATING SEAL ASS'Y	1	60001-@
7	☆	・・SEAL	2	60001-@
8	☆	・・O-RING	2	60001-@
9	07000-12060	・O-RING	1	60001-@
10	20Y-30-16330	・PLUG	1	60001-@
11	01010-81025	・BOLT	3	60001-@
12	01010-81485	BOLT	16	60063-@
13	01643-31445	WASHER	16	60001-@

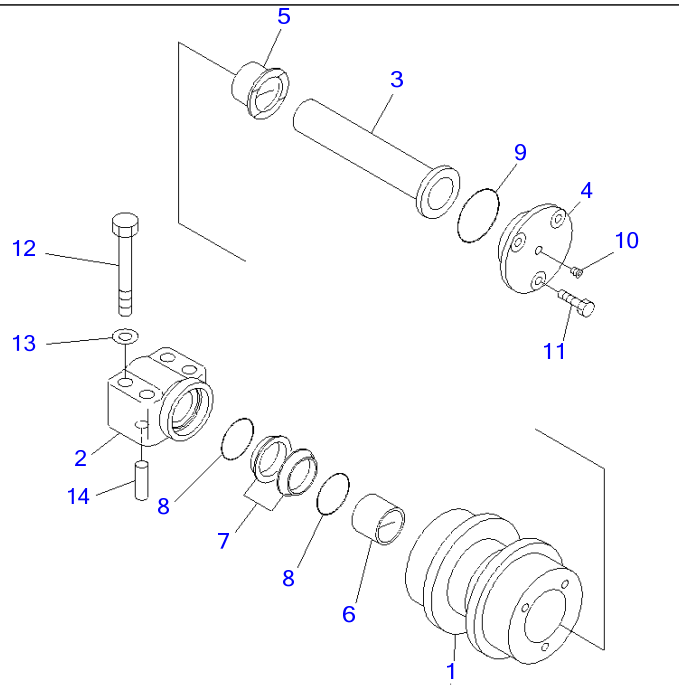

00028838

Ref R0300-01A0C **Page 330130**

PC220-7 S/N 60001-UP (Overseas Version)
CARRIER ROLLER(#65617-)

Item	Part No.	Part Name	Qty	Serial No.
	22U-30-00022	CARRIER ROLLER	4	65617-
1	22U-30-25110	・ROLLER	1	60001-
2	22U-30-25121	・SUPPORT	1	65617-
3	22U-30-25130	・SHAFT	1	60001-
4	22U-30-25140	・COVER	1	60001-
5	22U-30-25150	・BUSHING	1	60001-
6	22U-30-25160	・BUSHING	1	60001-
	110-30-00086	・FLOATING SEAL ASS'Y	1	60001-
7	☆	・・SEAL	2	60001-
8	☆	・・O-RING	2	60001-
9	07000-12060	・O-RING	1	60001-
10	20Y-30-16330	・PLUG	1	60001-
11	01010-81025	・BOLT	3	60001-
12	01010-81485	BOLT	16	60063-
13	01643-31445	WASHER	16	60001-
14	20Y-30-16550	PIN	8	65617-

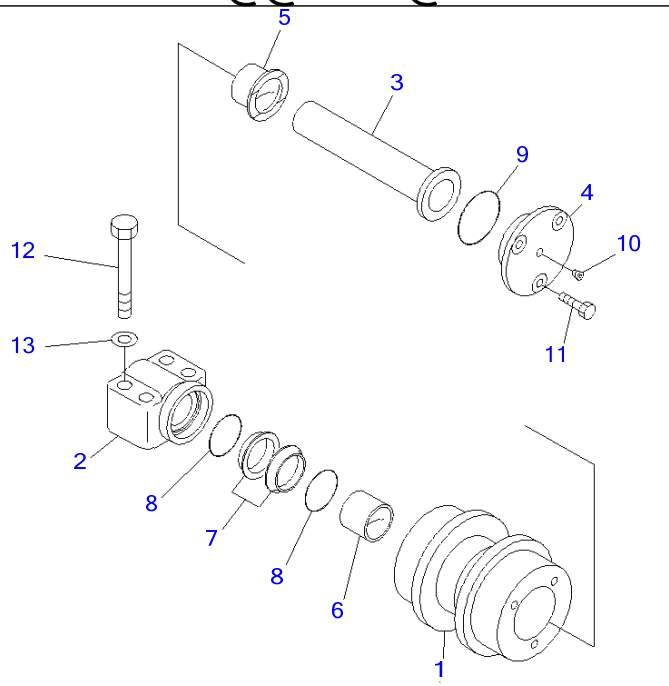

PJL4287

Ref R0300-01A1 **Page 330140**

PC220-7 S/N 60001-UP (Overseas Version)

CARRIER ROLLER (COLD WEATHER A SPEC.)(#60255-60761)

Item	Part No.	Part Name	Qty	Serial No.
	20Y-30-00291	CARRIER ROLLER	4	60255-60761
1	22U-30-25110	・ROLLER	1	60255-@
2	22U-30-25120	・SUPPORT	1	60255-60761
3	22U-30-25130	・SHAFT	1	60255-@
4	22U-30-25140	・COVER	1	60255-@
5	22U-30-25150	・BUSHING	1	60255-@
6	22U-30-25160	・BUSHING	1	60255-@
	20Y-30-00391	・FLOATING SEAL ASS'Y	1	60255-@
7	☆	・・SEAL	2	60255-@
8	☆	・・O-RING	2	60255-@
9	07000-52060	・O-RING	1	60255-@
10	20Y-30-16330	・PLUG	1	60255-@
11	01010-81025	・BOLT	3	60255-@
12	01010-81485	BOLT	16	60255-@
13	01643-31445	WASHER	16	60255-@

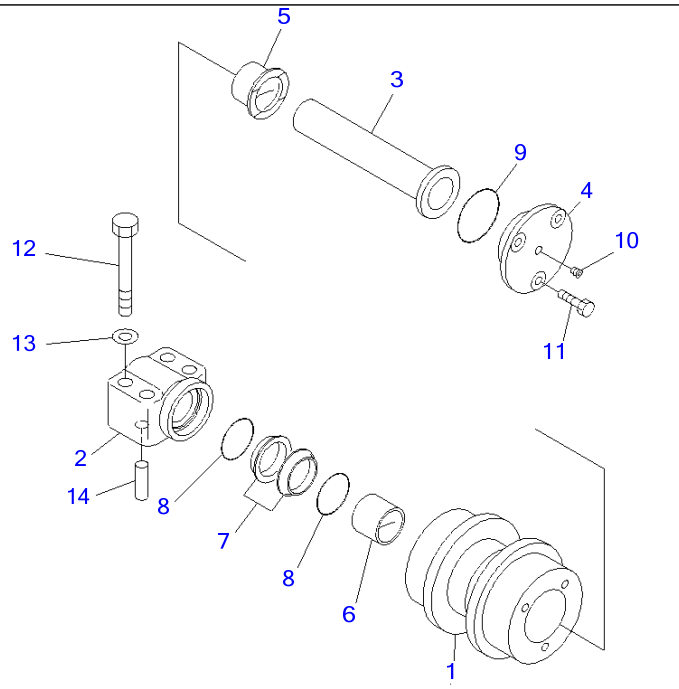

00028838

Ref R0300-01A1A **Page 330150**

PC220-7 S/N 60001-UP (Overseas Version)

CARRIER ROLLER (COLD WEATHER A SPEC.)(#60762-65000)

Item	Part No.	Part Name	Qty	Serial No.
	20Y-30-00292	CARRIER ROLLER	4	60762-65000
1	22U-30-25110	・ROLLER	1	60255-@
2	22U-30-25121	・SUPPORT	1	60762-65000
3	22U-30-25130	・SHAFT	1	60255-@
4	22U-30-25140	・COVER	1	60255-@
5	22U-30-25150	・BUSHING	1	60255-@
6	22U-30-25160	・BUSHING	1	60255-@
	20Y-30-00391	・FLOATING SEAL ASS'Y	1	60255-@
7	☆	・・SEAL	2	60255-@
8	☆	・・O-RING	2	60255-@
9	07000-52060	・O-RING	1	60255-@
10	20Y-30-16330	・PLUG	1	60255-@
11	01010-81025	・BOLT	3	60255-@
12	01010-81485	BOLT	16	60255-@
13	01643-31445	WASHER	16	60255-@
14	20Y-30-16550	PIN	8	60762-65000

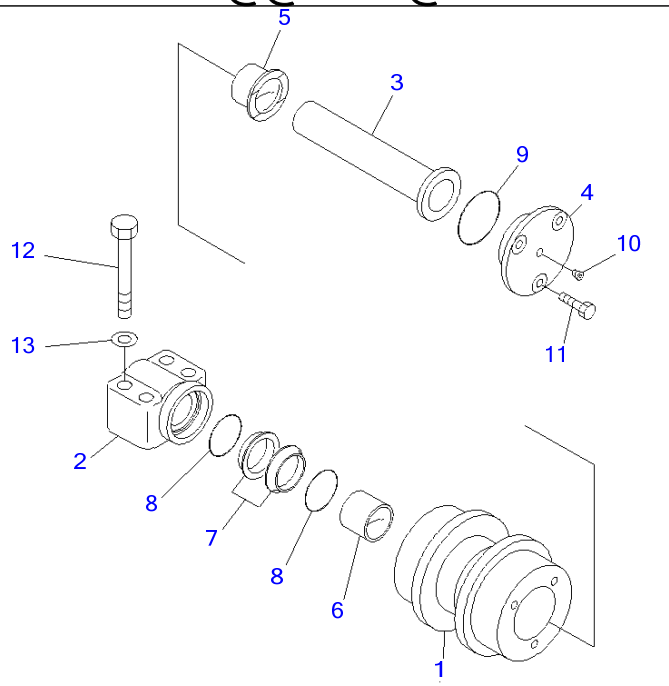

PJL4287

Ref R0300-01A1B **Page 330160**

PC220-7 S/N 60001-UP (Overseas Version)

CARRIER ROLLER (COLD WEATHER A SPEC.)(#65001-65616)

Item	Part No.	Part Name	Qty	Serial No.
	20Y-30-00291	CARRIER ROLLER	4	65001-65616
1	22U-30-25110	・ROLLER	1	60255-@
2	22U-30-25120	・SUPPORT	1	65001-65616
3	22U-30-25130	・SHAFT	1	60255-@
4	22U-30-25140	・COVER	1	60255-@
5	22U-30-25150	・BUSHING	1	60255-@
6	22U-30-25160	・BUSHING	1	60255-@
	20Y-30-00391	・FLOATING SEAL ASS'Y	1	60255-@
7	☆	・・SEAL	2	60255-@
8	☆	・・O-RING	2	60255-@
9	07000-52060	・O-RING	1	60255-@
10	20Y-30-16330	・PLUG	1	60255-@
11	01010-81025	・BOLT	3	60255-@
12	01010-81485	BOLT	16	60255-@
13	01643-31445	WASHER	16	60255-@

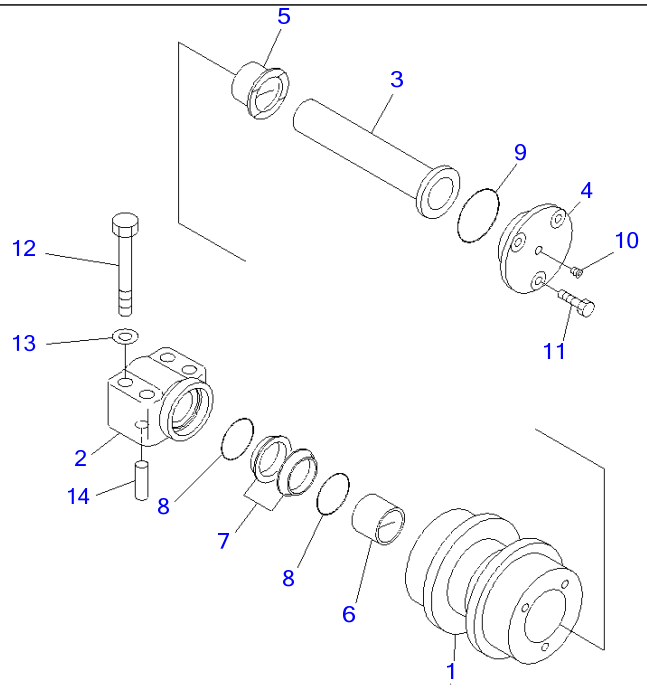

00028838

Ref R0300-01A1C **Page 330170**

PC220-7 S/N 60001-UP (Overseas Version)

CARRIER ROLLER (COLD WEATHER A SPEC.)(#65617-)

Item	Part No.	Part Name	Qty	Serial No.
	20Y-30-00292	CARRIER ROLLER	4	65617-
1	22U-30-25110	・ROLLER	1	60255-
2	22U-30-25121	・SUPPORT	1	65617-
3	22U-30-25130	・SHAFT	1	60255-
4	22U-30-25140	・COVER	1	60255-
5	22U-30-25150	・BUSHING	1	60255-
6	22U-30-25160	・BUSHING	1	60255-
	20Y-30-00391	・FLOATING SEAL ASS'Y	1	60255-
7	☆	・・SEAL	2	60255-
8	☆	・・O-RING	2	60255-
9	07000-52060	・O-RING	1	60255-
10	20Y-30-16330	・PLUG	1	60255-
11	01010-81025	・BOLT	3	60255-
12	01010-81485	BOLT	16	60255-
13	01643-31445	WASHER	16	60255-
14	20Y-30-16550	PIN	8	65617-

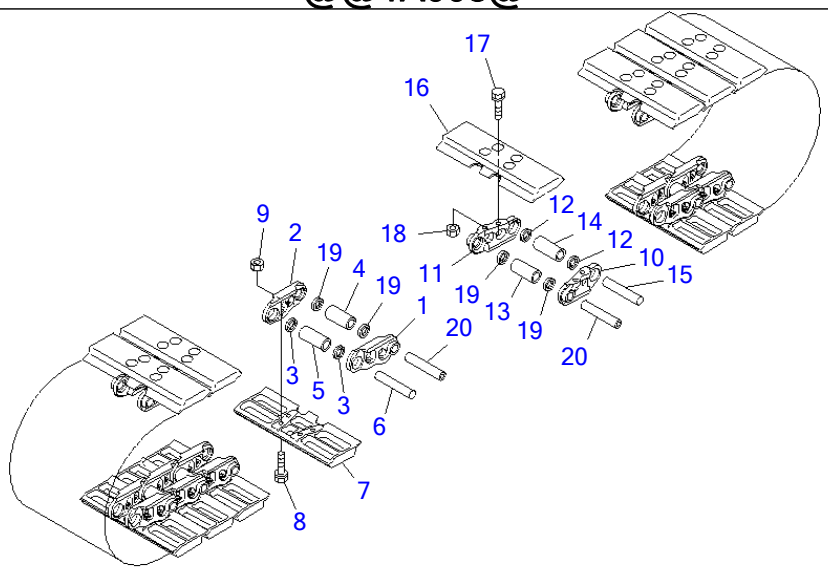

PW1A008

Ref R0500-01A0 **Page 330180**

PC220-7 S/N 60001-UP (Overseas Version)
TRACK SHOE (FLAT TYPE)(#60001-65000)

Item	Part No.	Part Name	Qty	Serial No.
	20Y-32-02211	TRACK SHOE ASS'Y	1	60767-65000
	☐20Y-32-02210	TRACK SHOE ASS'Y	1	60001-60766
1	20Y-32-31120	・LINK,L.H.	46	60001-@
2	20Y-32-31130	・LINK,R.H.	46	60001-@
3	20Y-32-11240	・SEAL	88	60001-@
4	20Y-32-11171	・BUSHING, MASTER	2	60001-@
5	20Y-32-11141	・BUSHING, REGULAR	44	60001-@
6	20Y-32-31150	・PIN, REGULAR	44	60001-@
7	20Y-32-11351	・SHOE	46	60767-65000
	☐20Y-32-11350	・SHOE	46	60001-60766
8	20Y-32-11220	・BOLT (Y0320-K02	184	60001-@
9	134-32-61221	・NUT (Y0320-K02	184	60001-@
10	20Y-32-31120	・LINK,L.H.	48	60001-@
11	20Y-32-31130	・LINK,R.H.	48	60001-@
12	20Y-32-11240	・SEAL	92	60001-@
13	20Y-32-11171	・BUSHING, MASTER	2	60001-@
14	20Y-32-11141	・BUSHING, REGULAR	46	60001-@
15	20Y-32-31150	・PIN, REGULAR	46	60001-@
16	20Y-32-11351	・SHOE	48	60767-65000
	☐20Y-32-11350	・SHOE	48	60001-60766
17	20Y-32-11220	・BOLT (Y0320-K02	192	60001-@
18	134-32-61221	・NUT (Y0320-K02	192	60001-@
19	20Y-32-11260	・SEAL	8	60001-@
20	20Y-32-31190	・PIN, MASTER	4	60001-@

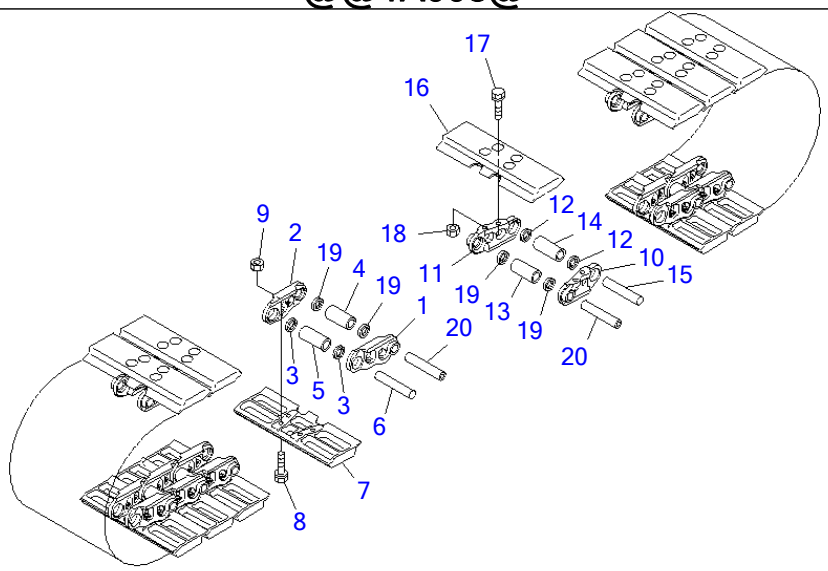

P W 1 A 0 0 8

Ref R0500-01A0A **Page 330190**

PC220-7 S/N 60001-UP (Overseas Version)
TRACK SHOE (FLAT TYPE)(#65001-)

Item	Part No.	Part Name	Qty	Serial No.
	20Y-32-02211	TRACK SHOE ASS'Y	1	65889-
	☐20Y-32-02210	TRACK SHOE ASS'Y	1	65001-65888
1	20Y-32-31120	・LINK	46	60001-
2	20Y-32-31130	・LINK	46	60001-
3	20Y-32-11240	・SEAL	88	60001-
4	20Y-32-11171	・BUSHING, MASTER	2	60001-
5	20Y-32-11141	・BUSHING, REGULAR	44	60001-
6	20Y-32-31150	・PIN, REGULAR	44	60001-
7	20Y-32-11351	・SHOE	46	65889-
	☐20Y-32-11350	・SHOE	46	65001-66888
8	20Y-32-11220	・BOLT (Y0320-K02	184	60001-
9	134-32-61221	・NUT (Y0320-K02	184	60001-
10	20Y-32-31120	・LINK	48	60001-
11	20Y-32-31130	・LINK	48	60001-
12	20Y-32-11240	・SEAL	92	60001-
13	20Y-32-11171	・BUSHING, MASTER	2	60001-
14	20Y-32-11141	・BUSHING, REGULAR	46	60001-
15	20Y-32-31150	・PIN, REGULAR	46	60001-
16	20Y-32-11351	・SHOE	48	65889-
	☐20Y-32-11350	・SHOE	48	65001-65888
17	20Y-32-11220	・BOLT (Y0320-K02	192	60001-
18	134-32-61221	・NUT (Y0320-K02	192	60001-
19	20Y-32-11260	・SEAL	8	60001-
20	20Y-32-31190	・PIN, MASTER	4	60001-

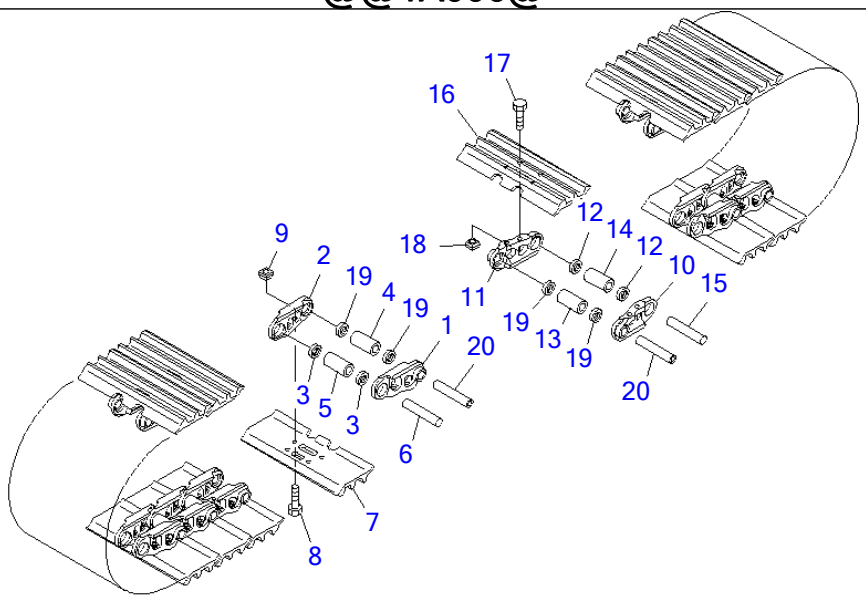

P W 1 A 0 0 6

Ref R0500-01A1 **Page 330200**

PC220-7 S/N 60001-UP (Overseas Version)

TRACK SHOE (TRIPLE GROUSER WITH HOLE) (600MM WIDE)

Item	Part No.	Part Name	Qty	Serial No.
	20Y-32-02171	TRACK SHOE ASS'Y,60	1	60001-
1	20Y-32-31120	・LINK	46	60001-
2	20Y-32-31130	・LINK	46	60001-
3	20Y-32-11240	・SEAL	88	60001-
4	20Y-32-11171	・BUSHING, MASTER	2	60001-
5	20Y-32-11141	・BUSHING, REGULAR	44	60001-
6	20Y-32-31150	・PIN, REGULAR	44	60001-
7	206-32-61110	・SHOE	46	60001-
8	20Y-32-31210	・BOLT (Y0320-K01	184	60001-
9	134-32-61221	・NUT (Y0320-K01	184	60001-
10	20Y-32-31120	・LINK	48	60001-
11	20Y-32-31130	・LINK	48	60001-
12	20Y-32-11240	・SEAL	92	60001-
13	20Y-32-11171	・BUSHING, MASTER	2	60001-
14	20Y-32-11141	・BUSHING, REGULAR	46	60001-
15	20Y-32-31150	・PIN, REGULAR	46	60001-
16	206-32-61110	・SHOE	48	60001-
17	20Y-32-31210	・BOLT (Y0320-K01	192	60001-
18	134-32-61221	・NUT (Y0320-K01	192	60001-
19	20Y-32-11260	・SEAL	8	60001-
20	20Y-32-31190	・PIN, MASTER	4	60001-

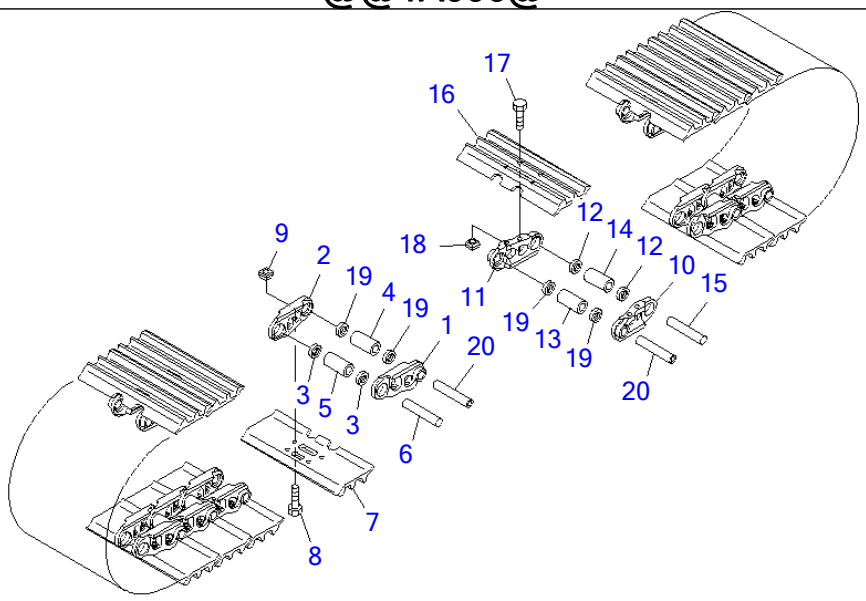

P W 1 A 0 0 6

PC220-7 S/N 60001-UP (Overseas Version)

TRACK SHOE (TRIPLE GROUSER WITH HOLE) (700MM WIDE)

Item	Part No.	Part Name	Qty	Serial No.
	20Y-32-02181	TRACK SHOE ASS'Y,70	1	60001-
1	20Y-32-31120	・LINK	46	60001-
2	20Y-32-31130	・LINK	46	60001-
3	20Y-32-11240	・SEAL	88	60001-
4	20Y-32-11171	・BUSHING, MASTER	2	60001-
5	20Y-32-11141	・BUSHING, REGULAR	44	60001-
6	20Y-32-31150	・PIN, REGULAR	44	60001-
7	20Y-32-31310	・SHOE	46	60001-
8	20Y-32-31210	・BOLT (Y0320-K01	184	60001-
9	134-32-61221	・NUT (Y0320-K01	184	60001-
10	20Y-32-31120	・LINK	48	60001-
11	20Y-32-31130	・LINK	48	60001-
12	20Y-32-11240	・SEAL	92	60001-
13	20Y-32-11171	・BUSHING, MASTER	2	60001-
14	20Y-32-11141	・BUSHING, REGULAR	46	60001-
15	20Y-32-31150	・PIN, REGULAR	46	60001-
16	20Y-32-31310	・SHOE	48	60001-
17	20Y-32-31210	・BOLT (Y0320-K01	192	60001-
18	134-32-61221	・NUT (Y0320-K01	192	60001-
19	20Y-32-11260	・SEAL	8	60001-
20	20Y-32-31190	・PIN, MASTER	4	60001-

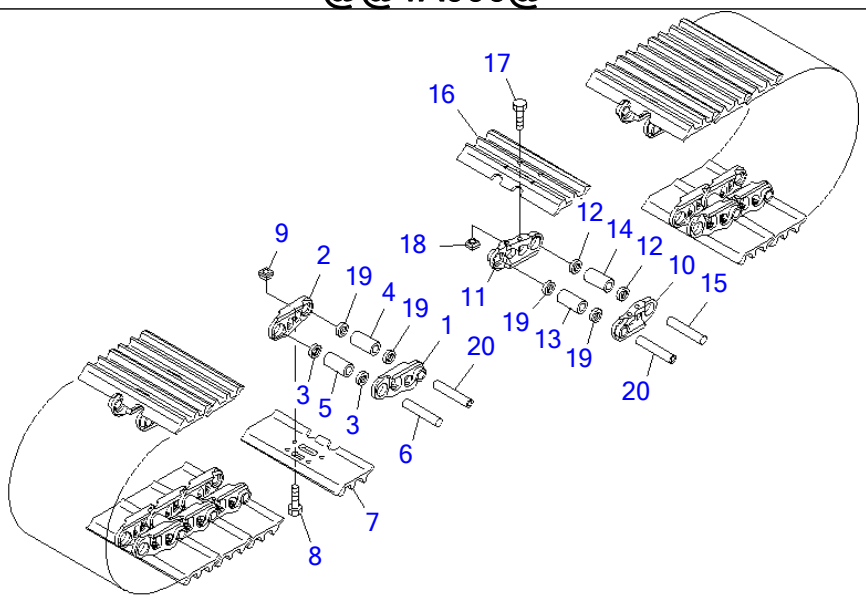

PW1A006

Ref R0500-01A3 **Page 330220**

PC220-7 S/N 60001-UP (Overseas Version)

TRACK SHOE (TRIPLE GROUSER WITH HOLE) (800MM WIDE)

Item	Part No.	Part Name	Qty	Serial No.
	20Y-32-02191	TRACK SHOE ASS'Y	1	60001-
1	20Y-32-31120	・LINK	46	60001-
2	20Y-32-31130	・LINK	46	60001-
3	20Y-32-11240	・SEAL	88	60001-
4	20Y-32-11171	・BUSHING, MASTER	2	60001-
5	20Y-32-11141	・BUSHING, REGULAR	44	60001-
6	20Y-32-31150	・PIN, REGULAR	44	60001-
7	20Y-32-31320	・SHOE	46	60001-
8	20Y-32-31210	・BOLT (Y0320-K01	184	60001-
9	134-32-61221	・NUT (Y0320-K01	184	60001-
10	20Y-32-31120	・LINK	48	60001-
11	20Y-32-31130	・LINK	48	60001-
12	20Y-32-11240	・SEAL	92	60001-
13	20Y-32-11171	・BUSHING, MASTER	2	60001-
14	20Y-32-11141	・BUSHING, REGULAR	46	60001-
15	20Y-32-31150	・PIN, REGULAR	46	60001-
16	20Y-32-31320	・SHOE	48	60001-
17	20Y-32-31210	・BOLT (Y0320-K01	192	60001-
18	134-32-61221	・NUT (Y0320-K01	192	60001-
19	20Y-32-11260	・SEAL	8	60001-
20	20Y-32-31190	・PIN, MASTER	4	60001-

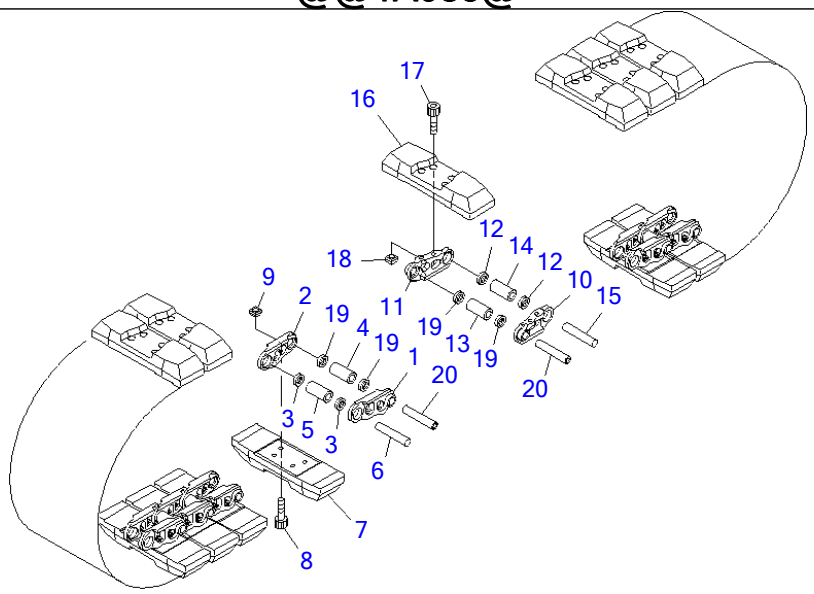

P W 1 A 0 8 5

Ref R0500-01A4 **Page 330230**

PC220-7 S/N 60001-UP (Overseas Version)
TRACK SHOE (ROADLINER) (600MM WIDE)

Item	Part No.	Part Name	Qty	Serial No.
	20Y-32-02270	TRACK SHOE ASS'Y,60	1	60001-
1	20Y-32-31120	・LINK	46	60001-
2	20Y-32-31130	・LINK	46	60001-
3	20Y-32-11240	・SEAL	88	60001-
4	20Y-32-11171	・BUSHING, MASTER	2	60001-
5	20Y-32-11141	・BUSHING, REGULAR	44	60001-
6	20Y-32-31150	・PIN, REGULAR	44	60001-
7	20Y-32-11510	・SHOE, RUBBER	46	60001-
8	20Y-32-31231	・BOLT (Y0320-K03	184	60001-
9	134-32-61221	・NUT (Y0320-K03	184	60001-
10	20Y-32-31120	・LINK	48	60001-
11	20Y-32-31130	・LINK	48	60001-
12	20Y-32-11240	・SEAL	92	60001-
13	20Y-32-11171	・BUSHING, MASTER	2	60001-
14	20Y-32-11141	・BUSHING, REGULAR	46	60001-
15	20Y-32-31150	・PIN, REGULAR	46	60001-
16	20Y-32-11510	・SHOE, RUBBER	48	60001-
17	20Y-32-31231	・BOLT (Y0320-K03	192	60001-
18	134-32-61221	・NUT (Y0320-K03	192	60001-
19	20Y-32-11260	・SEAL	8	60001-
20	20Y-32-31190	・PIN, MASTER	4	60001-

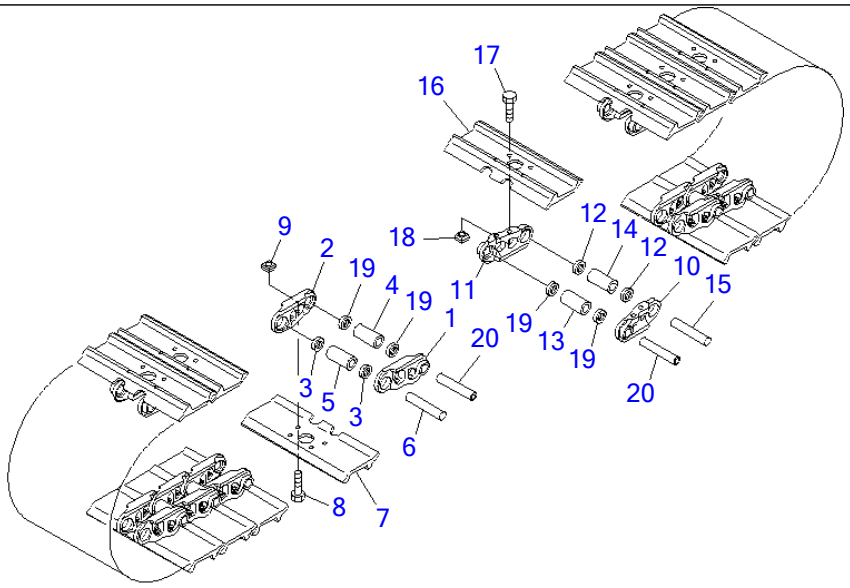

00028242

Ref R0500-01B1 **Page 330240**

PC220-7 S/N 60001-UP (Overseas Version)

TRACK SHOE (DOUBLE GROUSER WITH HOLE) (600MM WIDE)(#65001-)

Item	Part No.	Part Name	Qty	Serial No.
	20Y-32-02470	TRACK SHOE ASS'Y	1	65001-
1	20Y-32-31120	・LINK	46	65001-
2	20Y-32-31130	・LINK	46	65001-
3	20Y-32-11240	・SEAL	88	65001-
4	20Y-32-11171	・BUSHING, MASTER	2	65001-
5	20Y-32-11141	・BUSHING, REGULAR	44	65001-
6	20Y-32-31150	・PIN, REGULAR	44	65001-
7	20Y-32-31340	・SHOE	46	65001-
8	14X-32-11210	・BOLT (Y0320-K01	184	65001-
9	134-32-61221	・NUT (Y0320-K01	184	65001-
10	20Y-32-31120	・LINK	48	65001-
11	20Y-32-31130	・LINK	48	65001-
12	20Y-32-11240	・SEAL	92	65001-
13	20Y-32-11171	・BUSHING, MASTER	2	65001-
14	20Y-32-11141	・BUSHING, REGULAR	46	65001-
15	20Y-32-31150	・PIN, REGULAR	46	65001-
16	20Y-32-31340	・SHOE	48	65001-
17	14X-32-11210	・BOLT (Y0320-K01	192	65001-
18	134-32-61221	・NUT (Y0320-K01	192	65001-
19	20Y-32-11260	・SEAL	8	65001-
20	20Y-32-31190	・PIN, MASTER	4	65001-

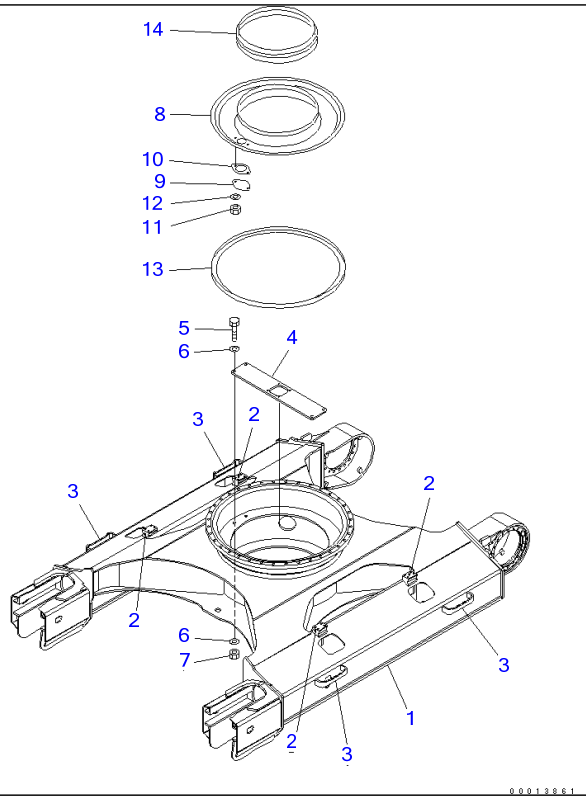

Ref R1100-01A0 **Page 330250**

PC220-7 S/N 60001-UP (Overseas Version)

TRACK FRAME

Item	Part No.	Part Name	Qty	Serial No.
1	206-30-71112	FRAME	1	65617-
	206-30-71111	TRACK FRAME	1	65001-65616
	206-30-71112	FRAME	1	60762-65000
	206-30-71111	TRACK FRAME	1	60001-60761
2	20Y-30-31D22	▪ BRACKET (WELDED)	4	65617-
	20Y-30-31D21	▪ BRACKET (WELDED)	4	65001-65616
	20Y-30-31D22	▪ BRACKET (WELDED)	4	60762-65000
	20Y-30-31D21	▪ BRACKET (WELDED)	4	60001-60761
3	203-30-61C51	▪ PLATE (WELDED)	4	60001-
4	206-30-71E81	BRACKET	1	60001-
5	01010-82065	BOLT	4	60001-
6	01643-32060	WASHER	8	60001-
7	01580-12016	NUT	4	60001-
8	206-30-71160	COVER	1	60001-
9	205-30-71181	COVER	1	60001-
10	205-30-71191	GASKET	1	60001-
11	01580-11008	NUT	2	60001-
12	01643-31032	WASHER	2	60001-
13	20Y-30-11370	SEAL	1	60001-
14	205-30-71171	SEAL	1	60001-

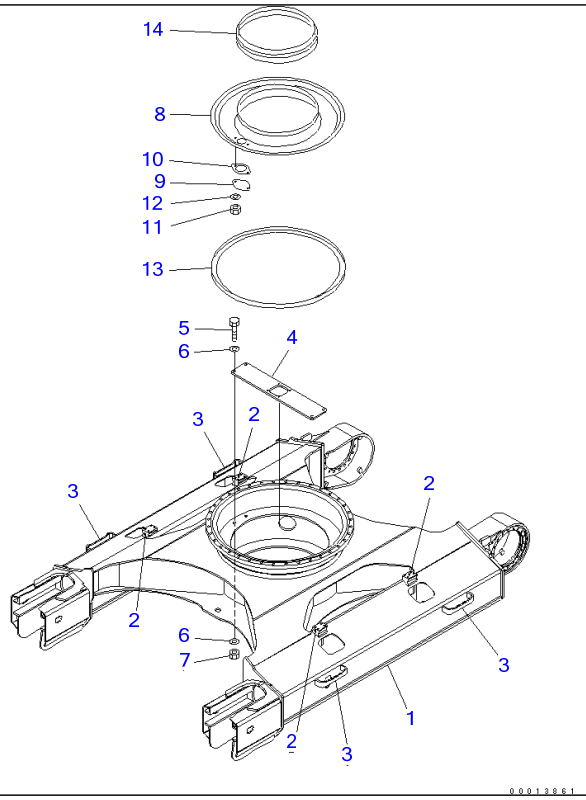

Ref R1100-01A3 **Page 330260**

PC220-7 S/N 60001-UP (Overseas Version)
TRACK FRAME (WITH UNDER COVER)

Item	Part No.	Part Name	Qty	Serial No.
1	206-30-71411	TRACK FRAME	1	65617-
	206-30-71410	TRACK FRAME	1	65001-65616
	206-30-71411	TRACK FRAME	1	60762-65000
	206-30-71410	TRACK FRAME	1	60001-60761
2	20Y-30-31D22	▪ BRACKET (WELDED)	4	65617-
	20Y-30-31D21	▪ BRACKET (WELDED)	4	65001-65616
	20Y-30-31D22	▪ BRACKET (WELDED)	4	60762-65000
	20Y-30-31D21	▪ BRACKET (WELDED)	4	60001-60761
3	203-30-61C51	▪ PLATE (WELDED)	4	60001-
4	206-30-71E81	BRACKET	1	60001-
5	01010-82065	BOLT	4	60001-
6	01643-32060	WASHER	8	60001-
7	01580-12016	NUT	4	60001-
8	206-30-71160	COVER	1	60001-
9	205-30-71181	COVER	1	60001-
10	205-30-71191	GASKET	1	60001-
11	01580-11008	NUT	2	60001-
12	01643-31032	WASHER	2	60001-
13	20Y-30-11370	SEAL	1	60001-
14	205-30-71171	SEAL	1	60001-

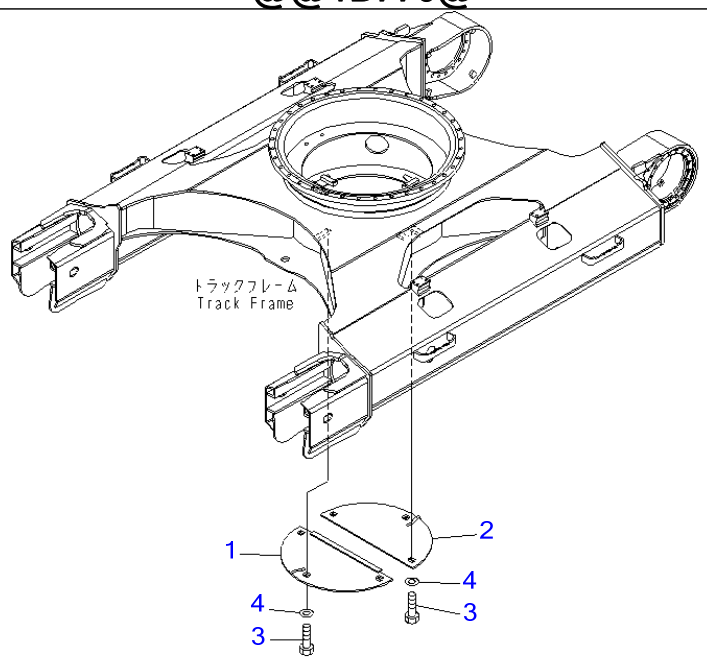

PW1B770

Ref R1140-01A0 **Page 330270**

PC220-7 S/N 60001-UP (Overseas Version)
UNDER COVER (FOR TRACK FRAME)

Item	Part No.	Part Name	Qty	Serial No.
1	20Y-973-2220	COVER	1	60001-
2	20Y-973-2230	COVER	1	60001-
3	01010-81235	BOLT	6	60001-
4	20Y-54-12670	WASHER	6	69843-
	01643-31232	WASHER	6	60001-69842

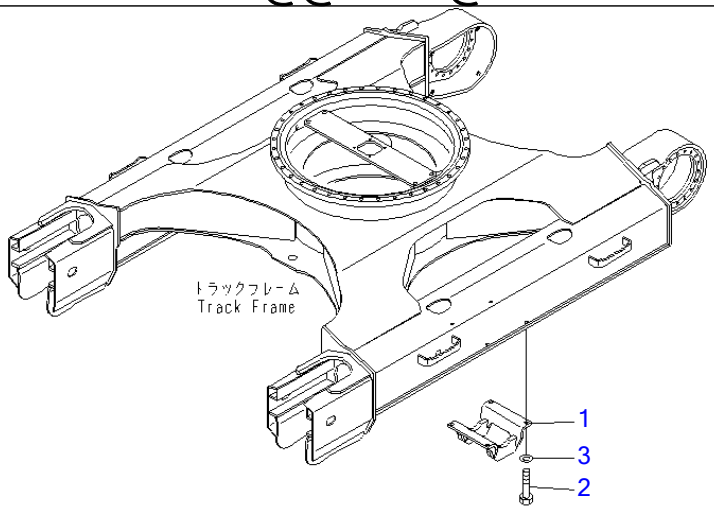

PW1B774

Ref R1200-01A0 **Page 330280**

PC220-7 S/N 60001-UP (Overseas Version)
TRACK ROLLER GUARD

Item	Part No.	Part Name	Qty	Serial No.
1	20Y-30-31160	GUARD	2	60001-
2	01010-62050	BOLT	8	60001-
3	01643-32060	WASHER	8	60001-

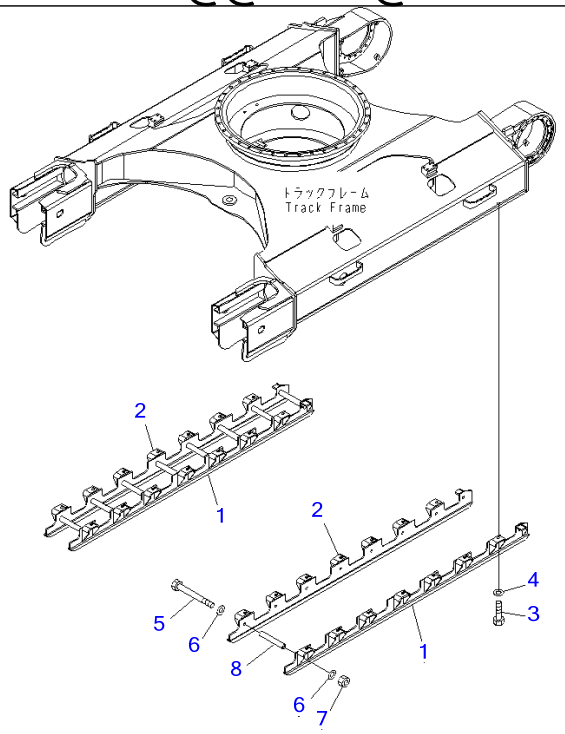

Ref R1200-01A3 **Page 330290**

PC220-7 S/N 60001-UP (Overseas Version)
TRACK FULL ROLLER GUARD

Item	Part No.	Part Name	Qty	Serial No.
1	206-30-71170	GUARD,L.H.	2	60001-
2	206-30-71180	GUARD,R.H.	2	60001-
3	01010-62050	BOLT	28	60001-
4	01643-32060	WASHER	28	60001-
5	09205-18295	BOLT	16	60001-
6	01643-31845	WASHER	32	60001-
7	01580-11815	NUT	16	60001-
8	20Y-30-23140	COLLAR	16	60001-

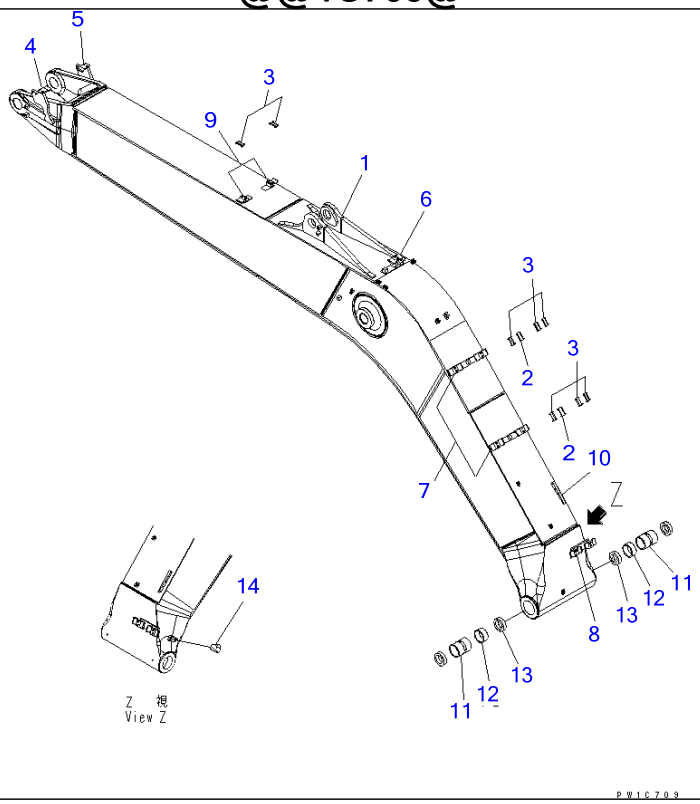

Ref T1110-01A0 **Page 360010**

PC220-7 S/N 60001-UP (Overseas Version)
BOOM(#60001-60592)

Item	Part No.	Part Name	Qty	Serial No.
1	206-70-71121	BOOM	1	60281-60592
	206-70-71120	BOOM	1	60001-60280
2	205-62-73430	・SEAT	2	60001-60592
3	20Y-62-13760	・SEAT	8	60001-60592
4	206-62-73571	・BRACKET (WELDED)	1	60003-@
	206-62-73570	・BRACKET (WELDED)	1	60001-60002
5	206-62-73581	・BRACKET (WELDED)	1	60003-@
	206-62-73580	・BRACKET (WELDED)	1	60001-60002
6	206-62-73110	・BRACKET (WELDED)	1	60001-@
7	20Y-62-45182	・BRACKET (WELDED)	2	60224-@
	20Y-62-45181	・BRACKET (WELDED)	2	60001-60223
8	206-62-73120	・BRACKET (WELDED)	1	60001-@
9	20Y-62-45371	・BRACKET (WELDED)	2	60224-@
	20Y-62-45370	・BRACKET (WELDED)	2	60001-60223
10	20Y-70-11651	・SEAT	1	60001-@
11	206-70-71272	BUSHING	2	60357-@
	206-70-71271	BUSHING	2	60274-60356
	206-70-71270	BUSHING	2	60001-60273
12	206-70-71560	BUSHING	2	60001-60273
13	07145-00100	SEAL,DUST	2	60001-@
14	07049-01215	PLUG	2	60001-@

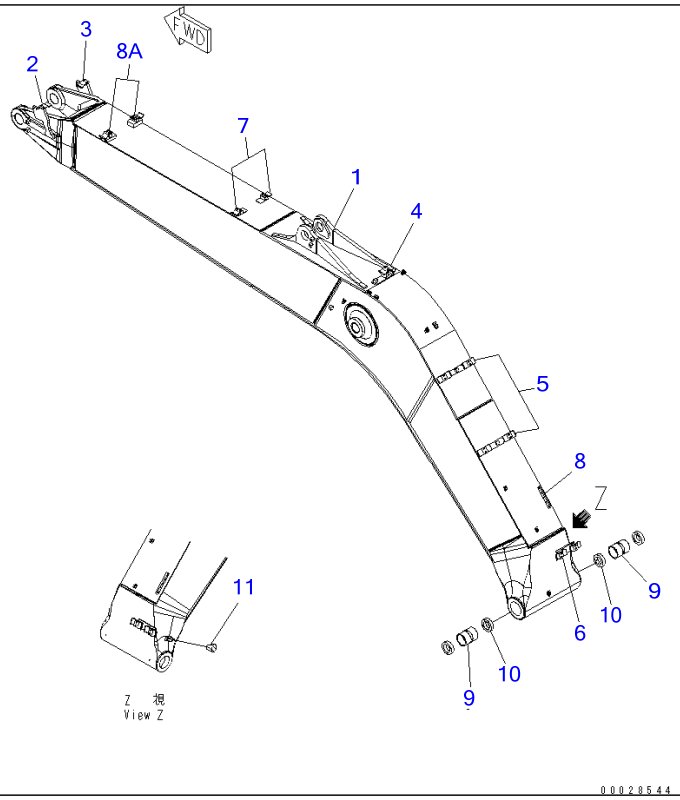

Ref T1110-01A0A **Page 360020**

PC220-7 S/N 60001-UP (Overseas Version)
BOOM(#60593-65000)

Item	Part No.	Part Name	Qty	Serial No.
1	206-70-71123	BOOM	1	60762-65000
	206-70-71122	BOOM	1	60593-60761
2	206-62-73571	・BRACKET (WELDED)	1	60003-@
3	206-62-73581	・BRACKET (WELDED)	1	60003-@
4	206-62-73110	・BRACKET (WELDED)	1	60001-@
5	20Y-62-45182	・BRACKET (WELDED)	2	60224-@
6	206-62-73120	・BRACKET (WELDED)	1	60001-@
7	20Y-62-45371	・BRACKET (WELDED)	2	60224-@
8	20Y-70-11651	・SEAT (WELDED)	1	60001-@
8A	20Y-62-47320	・BRACKET (WELDED)	2	60762-65000
9	206-70-71272	BUSHING	2	60357-@
10	07145-00100	SEAL,DUST	2	60001-@
11	07049-01215	PLUG	2	60001-@

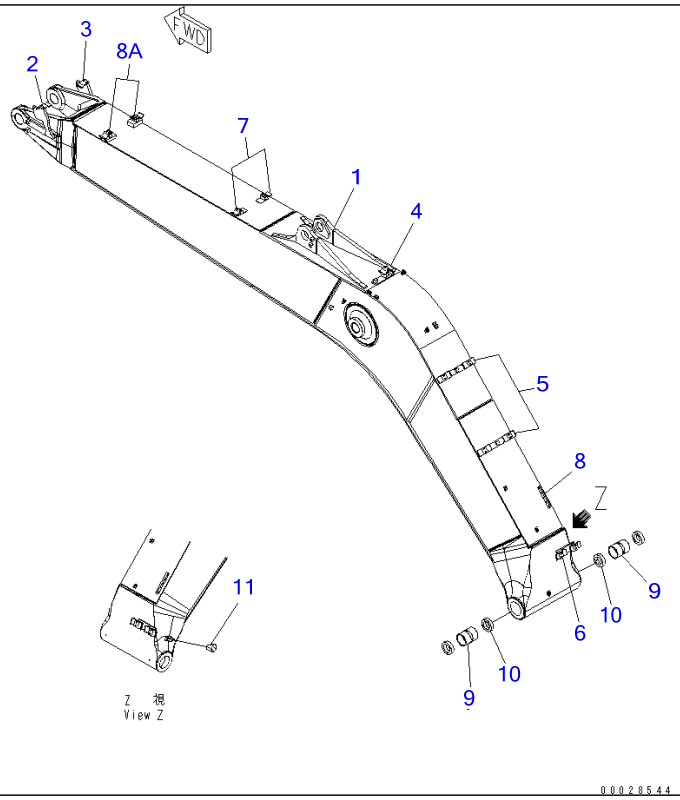

Ref T1110-01A0B **Page 360030**

PC220-7 S/N 60001-UP (Overseas Version)
BOOM(#65001-)

Item	Part No.	Part Name	Qty	Serial No.
1	206-70-71123	BOOM	1	65531-
	206-70-71122	BOOM	1	65001-65530
2	206-62-73571	・BRACKET (WELDED)	1	60003-
3	206-62-73581	・BRACKET (WELDED)	1	60003-
4	206-62-73110	・BRACKET (WELDED)	1	60001-
5	20Y-62-45182	・BRACKET (WELDED)	2	60224-
6	206-62-73120	・BRACKET (WELDED)	1	60001-
7	20Y-62-45371	・BRACKET (WELDED)	2	60224-
8	20Y-70-11651	・SEAT (WELDED)	1	60001-
8A	20Y-62-47320	・BRACKET (WELDED)	2	65531-
9	206-70-71272	BUSHING	2	60357-
10	07145-00100	SEAL,DUST	2	60001-
11	07049-01215	PLUG	2	60001-

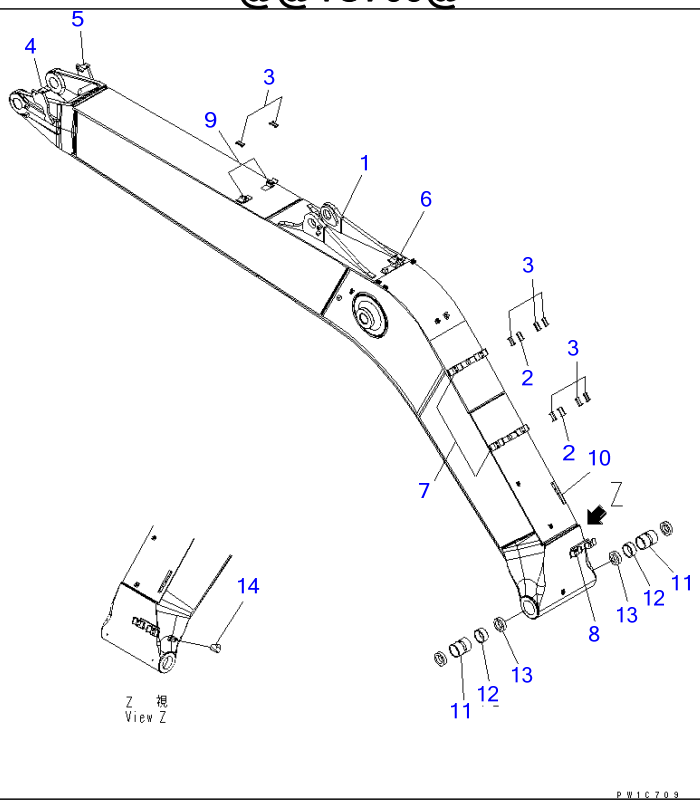

Ref T1110-01A1 **Page 360040**

PC220-7 S/N 60001-UP (Overseas Version)
BOOM (HD)(#60001-60592)

Item	Part No.	Part Name	Qty	Serial No.
1	206-70-71141	BOOM	1	60281-60592
	206-70-71140	BOOM	1	60001-60280
2	205-62-73430	・SEAT (WELDED)	2	60001-60592
3	20Y-62-13760	・SEAT (WELDED)	8	60001-60592
4	206-62-73571	・BRACKET (WELDED)	1	60003-@
	206-62-73570	・BRACKET (WELDED)	1	60001-60002
5	206-62-73581	・BRACKET (WELDED)	1	60003-@
	206-62-73580	・BRACKET (WELDED)	1	60001-60002
6	206-62-73110	・BRACKET (WELDED)	1	60001-@
7	20Y-62-45182	・BRACKET (WELDED)	2	60224-@
	20Y-62-45181	・BRACKET (WELDED)	2	60001-60223
8	206-62-73120	・BRACKET (WELDED)	1	60001-@
9	20Y-62-45371	・BRACKET (WELDED)	2	60224-@
	20Y-62-45370	・BRACKET (WELDED)	2	60001-60223
10	20Y-70-11651	・SEAT (WELDED)	1	60001-@
11	206-70-71272	BUSHING	2	60357-@
	206-70-71271	BUSHING	2	60274-60356
	206-70-71270	BUSHING	2	60001-60273
12	206-70-71560	BUSHING	2	60001-60273
13	07145-00100	SEAL,DUST	2	60001-@
14	07049-01215	PLUG	2	60001-@

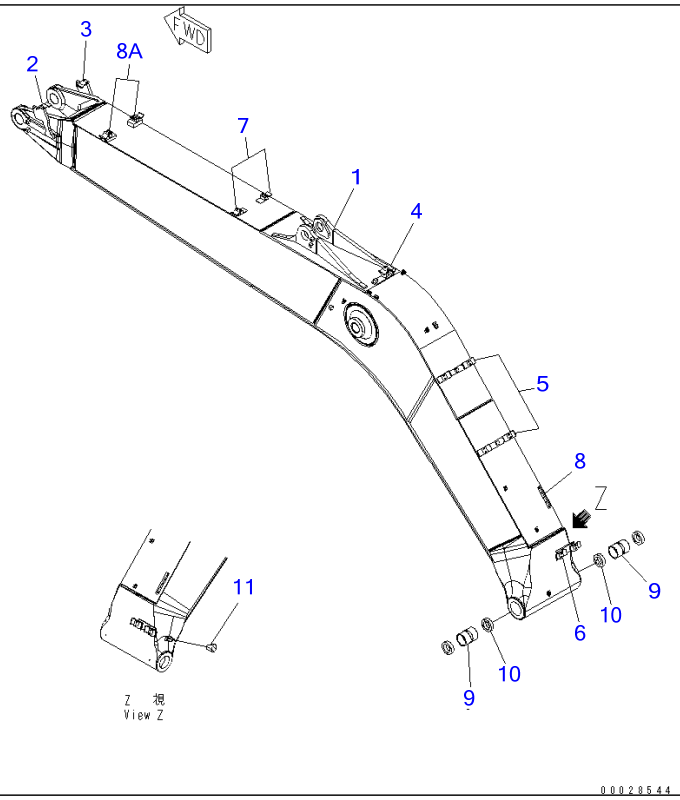

Ref T1110-01A1A **Page 360050**

PC220-7 S/N 60001-UP (Overseas Version)
BOOM (HD)(#60593-65000)

Item	Part No.	Part Name	Qty	Serial No.
1	206-70-71143	BOOM	1	60762-65000
	206-70-71142	BOOM	1	60593-60761
2	206-62-73571	・BRACKET (WELDED)	1	60003-@
3	206-62-73581	・BRACKET (WELDED)	1	60003-@
4	206-62-73110	・BRACKET (WELDED)	1	60001-@
5	20Y-62-45182	・BRACKET (WELDED)	2	60224-@
6	206-62-73120	・BRACKET (WELDED)	1	60001-@
7	20Y-62-45371	・BRACKET (WELDED)	2	60224-@
8	20Y-70-11651	・SEAT (WELDED)	1	60001-@
8A	20Y-62-47320	・BRACKET (WELDED)	2	60762-65000
9	206-70-71272	BUSHING	2	60357-@
10	07145-00100	SEAL,DUST	2	60001-@
11	07049-01215	PLUG	2	60001-@

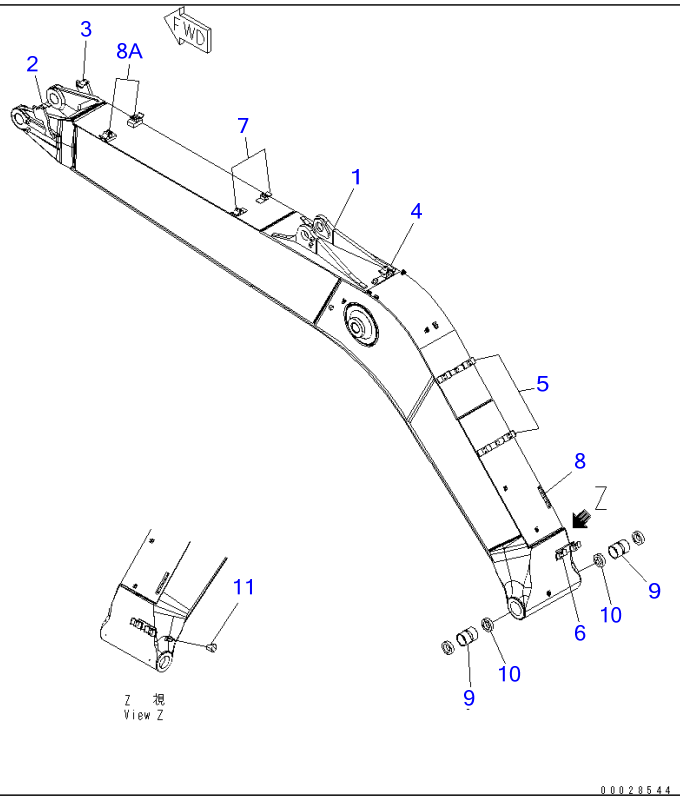

Ref T1110-01A1B **Page 360060**

PC220-7 S/N 60001-UP (Overseas Version)
BOOM (HD)(#65001-)

Item	Part No.	Part Name	Qty	Serial No.
1	206-70-71143	BOOM	1	65531-
	206-70-71142	BOOM	1	65001-65530
2	206-62-73571	・BRACKET (WELDED)	1	60003-
3	206-62-73581	・BRACKET (WELDED)	1	60003-
4	206-62-73110	・BRACKET (WELDED)	1	60001-
5	20Y-62-45182	・BRACKET (WELDED)	2	60224-
6	206-62-73120	・BRACKET (WELDED)	1	60001-
7	20Y-62-45371	・BRACKET (WELDED)	2	60224-
8	20Y-70-11651	・SEAT (WELDED)	1	60001-
8A	20Y-62-47320	・BRACKET (WELDED)	2	65531-
9	206-70-71272	BUSHING	2	60357-
10	07145-00100	SEAL,DUST	2	60001-
11	07049-01215	PLUG	2	60001-

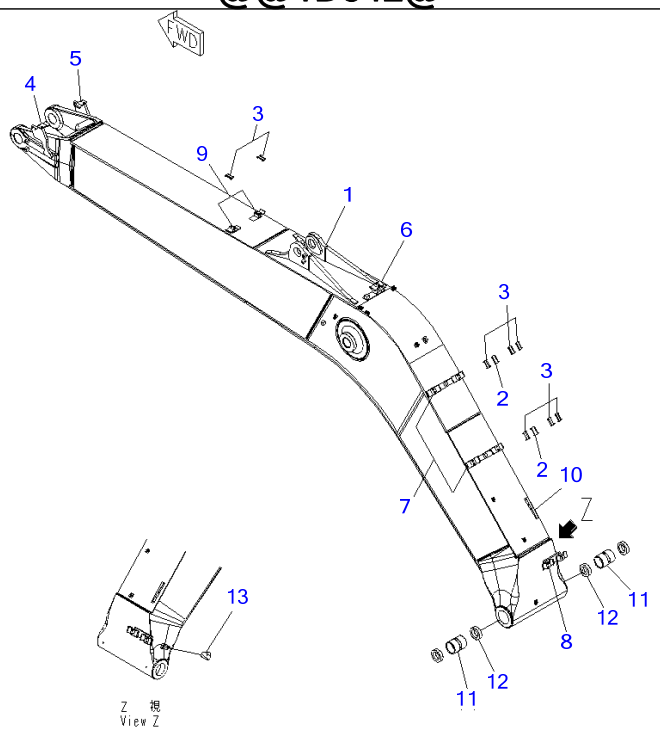

Ref T1110-01A3 **Page 360070**

PC220-7 S/N 60001-UP (Overseas Version)

BOOM (HD) (100 HOURS LUBRICATING)(#60001-60592)

Item	Part No.	Part Name	Qty	Serial No.
1	206-70-71141	BOOM	1	60281-60591
	206-70-71140	BOOM	1	60001-60280
2	205-62-73430	・SEAT	2	60001-60592
3	20Y-62-13760	・SEAT	8	60001-60592
4	206-62-73571	・BRACKET (WELDED)	1	60001-@
5	206-62-73581	・BRACKET (WELDED)	1	60001-@
6	206-62-73110	・BRACKET (WELDED)	1	60001-@
7	20Y-62-45182	・BRACKET (WELDED)	2	60224-@
	20Y-62-45181	・BRACKET (WELDED)	2	60001-60223
8	206-62-73120	・BRACKET (WELDED)	1	60001-@
9	20Y-62-45371	・BRACKET (WELDED)	2	60224-@
	20Y-62-45370	・BRACKET (WELDED)	2	60001-60223
10	20Y-70-11651	・SEAT (WELDED)	1	60001-@
11	206-70-61310	BUSHING	2	60001-@
12	07145-00100	SEAL,DUST	2	60001-@
13	07049-01215	PLUG	2	60001-@

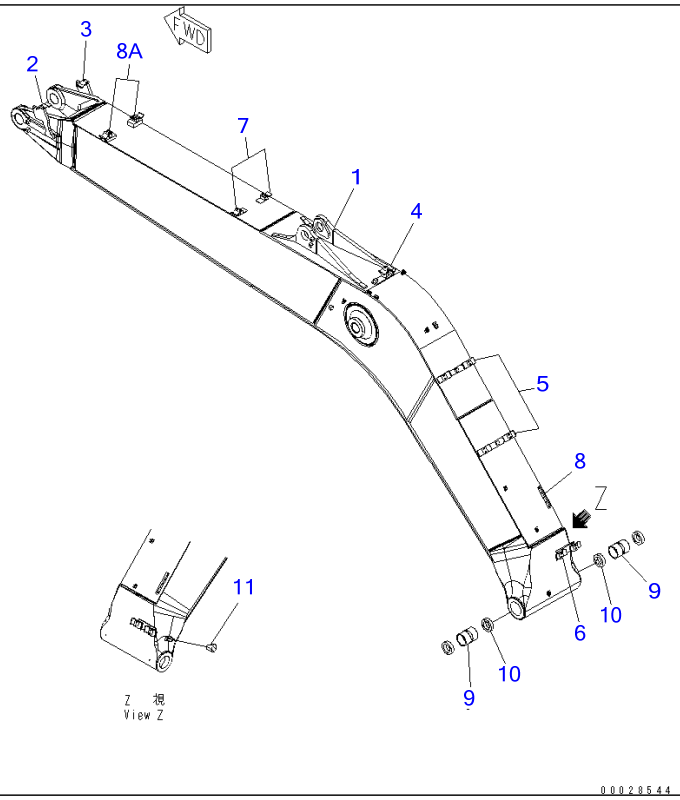

Ref T1110-01A3A **Page 360080**

PC220-7 S/N 60001-UP (Overseas Version)

BOOM (HD) (100 HOURS LUBRICATING)(#60593-65000)

Item	Part No.	Part Name	Qty	Serial No.
1	206-70-71143	BOOM	1	60762-65000
	206-70-71142	BOOM	1	60593-60761
2	206-62-73571	・BRACKET (WELDED)	1	60001-@
3	206-62-73581	・BRACKET (WELDED)	1	60001-@
4	206-62-73110	・BRACKET (WELDED)	1	60001-@
5	20Y-62-45182	・BRACKET (WELDED)	2	60224-@
6	206-62-73120	・BRACKET (WELDED)	1	60001-@
7	20Y-62-45371	・BRACKET (WELDED)	2	60224-@
8	20Y-70-11651	・SEAT (WELDED)	1	60001-@
8A	20Y-62-47320	・BRACKET (WELDED)	2	60762-65000
9	206-70-61310	BUSHING	2	60001-@
10	07145-00100	SEAL,DUST	2	60001-@
11	07049-01215	PLUG	2	60001-@

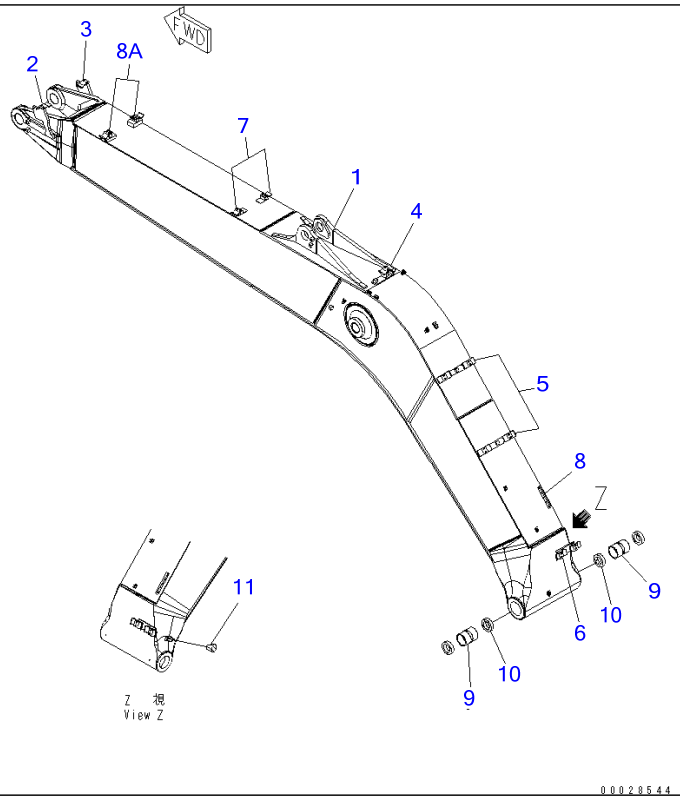

Ref T1110-01A3B **Page 360090**

PC220-7 S/N 60001-UP (Overseas Version)

BOOM (HD) (100 HOURS LUBRICATING)(#65001-)

Item	Part No.	Part Name	Qty	Serial No.
1	206-70-71143	BOOM	1	65531-
	206-70-71142	BOOM	1	65001-65530
2	206-62-73571	・BRACKET (WELDED)	1	60001-
3	206-62-73581	・BRACKET (WELDED)	1	60001-
4	206-62-73110	・BRACKET (WELDED)	1	60001-
5	20Y-62-45182	・BRACKET (WELDED)	2	60224-
6	206-62-73120	・BRACKET (WELDED)	1	60001-
7	20Y-62-45371	・BRACKET (WELDED)	2	60224-
8	20Y-70-11651	・SEAT (WELDED)	1	60001-
8A	20Y-62-47320	・BRACKET (WELDED)	2	65531-
9	206-70-61310	BUSHING	2	60001-
10	07145-00100	SEAL,DUST	2	60001-
11	07049-01215	PLUG	2	60001-

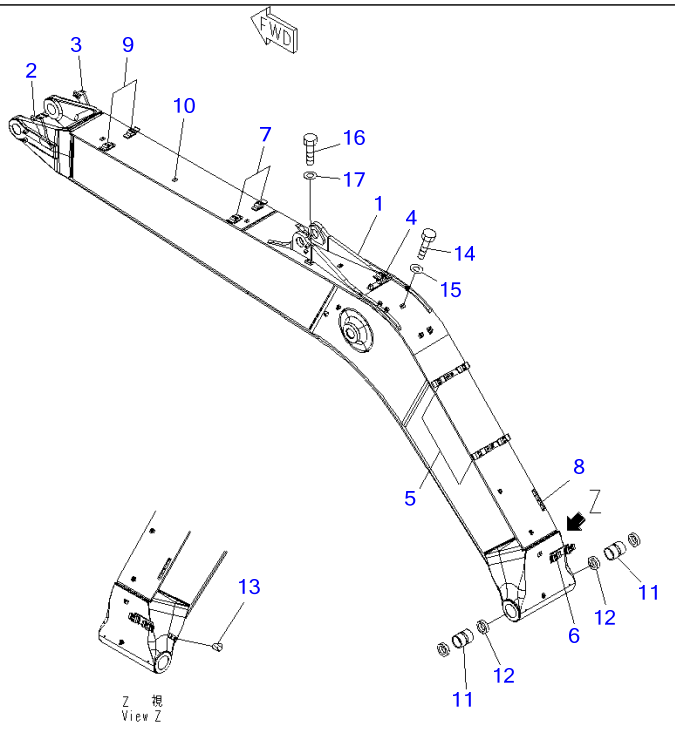

PC220-7 S/N 60001-UP (Overseas Version)

BOOM (500 HOURS LUBRICATING) (FOR AUSTRALIA SPEC.)(#60744-)

Item	Part No.	Part Name	Qty	Serial No.
1	206-70-71731	BOOM	1	60744-
2	206-62-73571	・BRACKET (WELDED)	1	60744-
3	206-62-73581	・BRACKET (WELDED)	1	60744-
4	206-62-73110	・BRACKET (WELDED)	1	60744-
5	20Y-62-45182	・BRACKET (WELDED)	2	60744-
6	206-62-73120	・BRACKET (WELDED)	1	60744-
7	20Y-62-45371	・BRACKET (WELDED)	2	60744-
8	20Y-70-11651	・SEAT (WELDED)	1	60744-
9	20Y-62-45371	・BRACKET (WELDED)	2	60744-
10	206-62-71320	・PLATE (WELDED)	8	60744-
11	206-70-71272	BUSHING	2	60744-
12	07145-00100	SEAL	2	60744-
13	07049-01215	PLUG	2	60744-
14	01010-80610	BOLT	8	60744-
15	01643-30623	WASHER	8	60744-
16	01010-81220	BOLT	8	60744-
17	01643-31232	WASHER	8	60744-

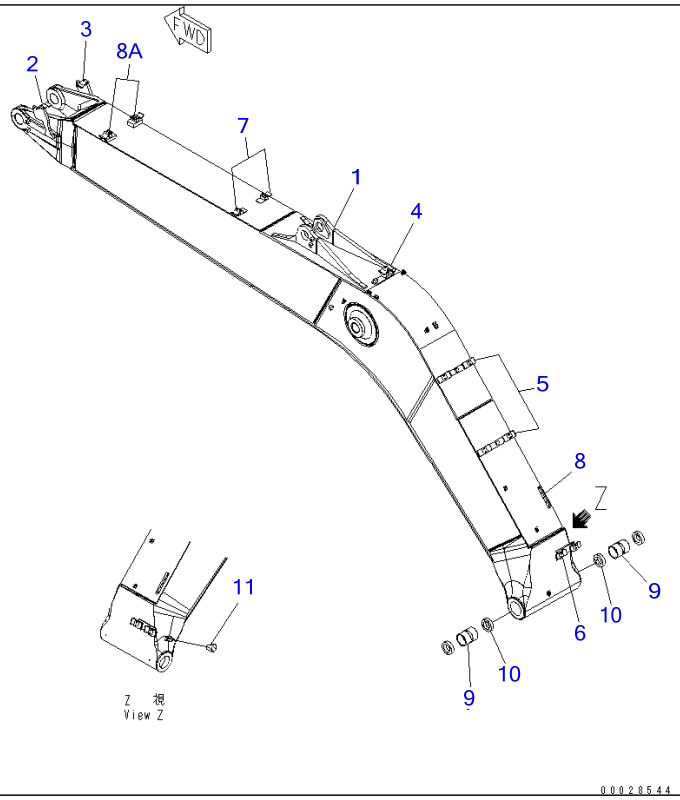

Ref T1110-01A7 **Page 360110**

PC220-7 S/N 60001-UP (Overseas Version)

BOOM (HD) (100 HOURS LUBRICATING) (-40ßC SPEC.)(#67318-)

Item	Part No.	Part Name	Qty	Serial No.
1	206-70-71143	BOOM	1	67318-
2	206-62-73571	・BRACKET (WELDED)	1	67318-
3	206-62-73581	・BRACKET (WELDED)	1	67318-
4	206-62-73110	・BRACKET (WELDED)	1	67318-
5	20Y-62-45182	・BRACKET (WELDED)	2	67318-
6	206-62-73120	・BRACKET (WELDED)	1	67318-
7	20Y-62-45371	・BRACKET (WELDED)	2	67318-
8	20Y-70-11651	・SEAT (WELDED)	1	67318-
8A	20Y-62-47320	・BRACKET (WELDED)	2	67318-
9	206-70-61310	BUSHING	2	67318-
10	07145-10100	SEAL	2	67318-
11	07049-01215	PLUG	2	67318-

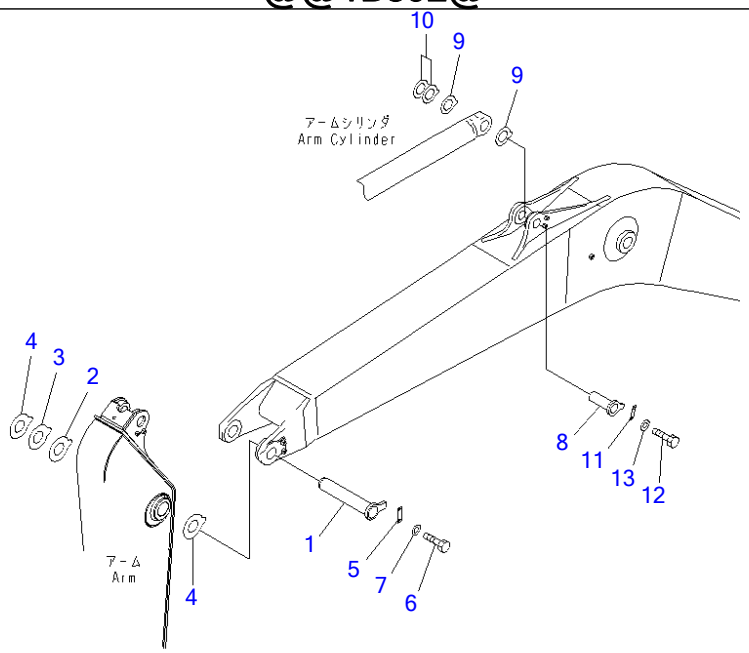

Ref T1110-02A0 **Page 360120**

PC220-7 S/N 60001-UP (Overseas Version)
BOOM (TOP PIN AND BOTTOM PIN)(#60001-65000)

Item	Part No.	Part Name	Qty	Serial No.
1	20Y-70-31252	PIN	1	60593-@
	☐20Y-70-31251	PIN	1	60436-60592
	☐20Y-70-31250	PIN	1	60001-60435
2	20Y-70-31521	SPACER, 2.5MM	1	60773-65000
	☐20Y-70-31520	SPACER, 2.5MM	1	60001-60772
3	20Y-70-31531	SPACER, 3.0MM	1	60773-65000
	☐20Y-70-31530	SPACER, 3.0MM	1	60001-60772
4	20Y-70-31372	SPACER, 2.0MM	2	60773-65000
	☐20Y-70-31371	SPACER, 2.0MM	2	60001-60772
5	205-70-71312	PLATE	1	60593-@
	205-70-71310	PLATE	1	60001-60592
6	01010-81235	BOLT	2	60001-@
7	01643-31232	WASHER	2	60001-@
8	206-70-51171	PIN	1	60762-65000
	206-70-51170	PIN	1	60001-60761
9	206-70-71521	SPACER, 1.0MM	2	60773-65000
	☐206-70-71520	SPACER, 1.0MM	2	60001-60772
10	206-70-71531	SPACER, 2.0MM	2	60773-65000
	☐206-70-71530	SPACER, 2.0MM	2	60001-60772
11	205-70-66580	PLATE	1	60001-@
12	01010-81230	BOLT	2	60001-@
13	01643-31232	WASHER	2	60001-@

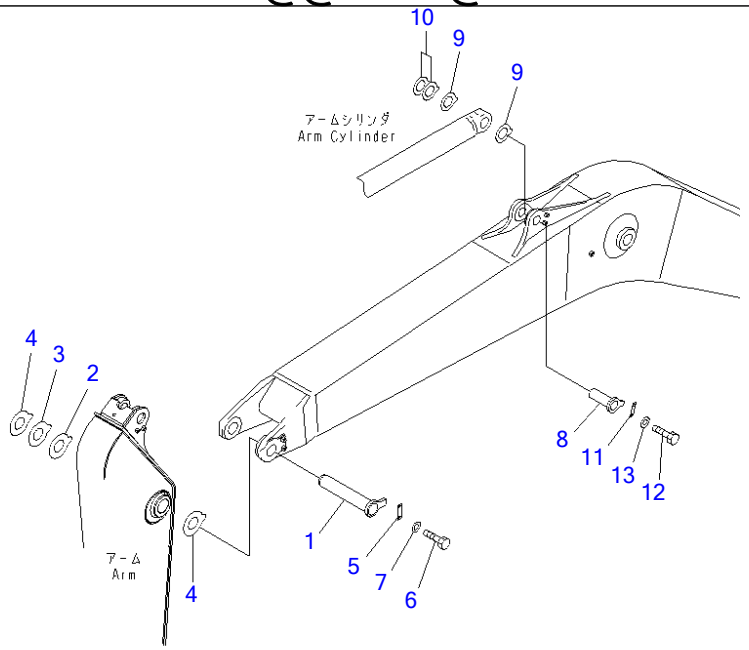

Ref T1110-02A0A **Page 360130**

PC220-7 S/N 60001-UP (Overseas Version)
BOOM (TOP PIN AND BOTTOM PIN)(#65001-)

Item	Part No.	Part Name	Qty	Serial No.
1	20Y-70-31252	PIN	1	60593-
2	22U-70-31340	SPACER, 2.5MM	1	69185-
	◆20Y-70-31521	SPACER, 2.5MM	1	66138-69184
	□20Y-70-31520	SPACER, 2.5MM	1	65001-66137
3	22U-70-31350	SPACER, 3.0MM	1	69185-
	◆20Y-70-31531	SPACER, 3.0MM	1	66138-69184
	□20Y-70-31530	SPACER, 3.0MM	1	65001-66137
4	22U-70-31280	SPACER, 2.0MM	2	69185-
	◆20Y-70-31372	SPACER, 2.0MM	2	66138-69184
	□20Y-70-31371	SPACER, 2.0MM	2	65001-66137
5	205-70-71312	PLATE	1	60593-
6	01010-81235	BOLT	2	60001-
7	01643-31232	WASHER	2	60001-
8	206-70-51171	PIN	1	65531-
	206-70-51170	PIN	1	65001-65530
9	206-70-31370	SPACER, 1.0MM	4	69185-
	◆206-70-71521	SPACER, 1.0MM	4	66138-69184
	□206-70-71520	SPACER, 1.0MM	2	65001-66137
10	206-70-31380	SPACER, 2.0MM	2	69185-
	◆206-70-71531	SPACER, 2.0MM	2	66138-69184
	□206-70-71530	SPACER, 2.0MM	2	65001-66137
11	205-70-66580	PLATE	1	60001-
12	01010-81230	BOLT	2	60001-
13	01643-31232	WASHER	2	60001-

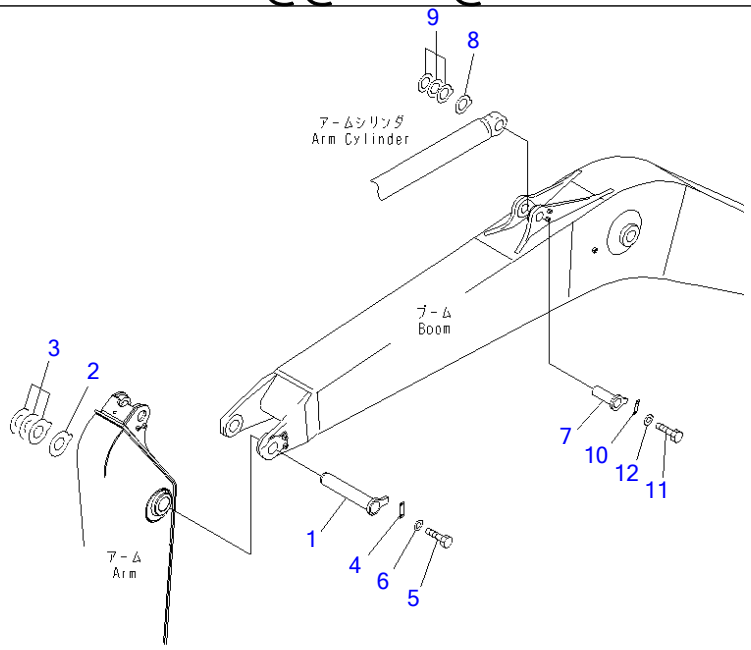

P W 1 D 5 5 4

PC220-7 S/N 60001-UP (Overseas Version)

BOOM (TOP PIN AND BOTTOM PIN) (100 HOURS LUBRICATING)(#60001-65000)

Item	Part No.	Part Name	Qty	Serial No.
1	205-70-65681	PIN	1	60592-@
	205-70-65680	PIN	1	60001-60591
2	20Y-70-11360	SPACER, 0.8MM	1	60001-@
3	206-70-45210	SPACER, 1.5MM	3	60001-@
4	205-70-71312	PLATE	1	60592-@
	◆205-70-71310	PLATE	1	60001-60591
5	01010-81235	BOLT	2	60001-@
6	01643-31232	WASHER	2	60001-@
7	206-70-51171	PIN	1	60762-65000
	206-70-51170	PIN	1	60001-60761
8	20Y-70-11340	SPACER, 0.8MM	1	60001-@
9	205-70-51530	SPACER, 1.5MM	3	60001-@
10	205-70-66580	PLATE	1	60001-@
11	01010-81230	BOLT	2	60001-@
12	01643-31232	WASHER	2	60001-@

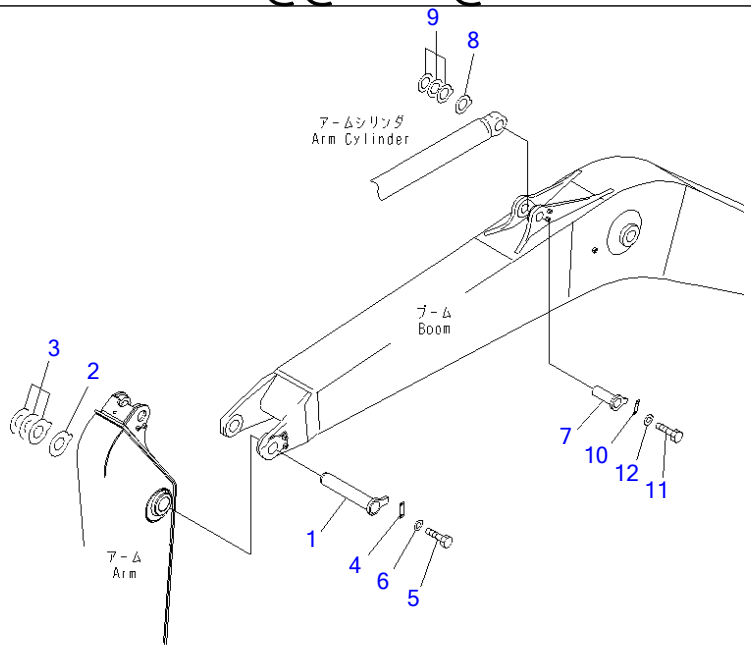

P W 1 D 5 5 4

Ref T1110-02A3A **Page 360150**

PC220-7 S/N 60001-UP (Overseas Version)
BOOM (TOP PIN AND BOTTOM PIN) (100 HOURS LUBRICATING)(#65001-)

Item	Part No.	Part Name	Qty	Serial No.
1	205-70-65682	PIN	1	69664-
	205-70-65681	PIN	1	60592-69663
2	20Y-70-11360	SPACER, 0.8MM	1	60001-
3	206-70-45210	SPACER, 1.5MM	3	60001-
4	205-70-71312	PLATE	1	60592-
5	01010-81235	BOLT	2	60001-
6	01643-31232	WASHER	2	60001-
7	206-70-51171	PIN	1	65531-
	206-70-51170	PIN	1	60001-65530
8	20Y-70-11340	SPACER, 0.8MM	1	60001-
9	205-70-51530	SPACER, 1.5MM	3	60001-
10	205-70-66580	PLATE	1	60001-
11	01010-81230	BOLT	2	60001-
12	01643-31232	WASHER	2	60001-

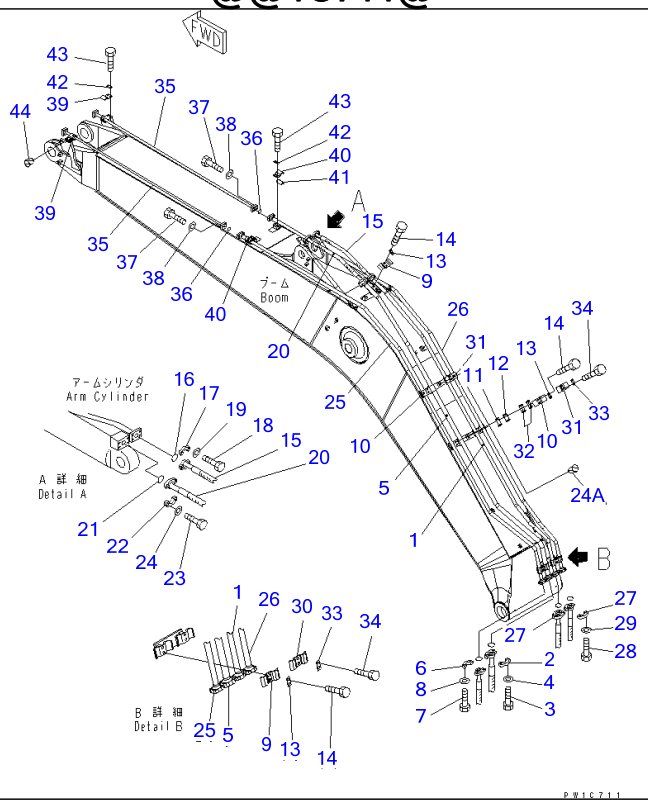

Ref T1110-03A0 Page 360160

PC220-7 S/N 60001-UP (Overseas Version)

BOOM (ARM CYLINDER PIPING AND BUCKET CYLINDER PIPING)(#60001-60761)

Item	Part No.	Part Name	Qty	Serial No.
1	206-62-73140	TUBE	1	60001-@
2	07371-30640	FLANGE	2	60001-@
3	07372-21035	BOLT	4	60001-@
4	01643-51032	WASHER	4	60001-@
5	206-62-73130	TUBE	1	60001-@
6	07371-31049	FLANGE	2	60001-@
7	07372-21035	BOLT	4	60001-@
8	01643-51032	WASHER	4	60001-@
9	20Y-62-13690	CLAMP	2	60001-@
10	20Y-62-13730	CLAMP	2	60593-@
	20Y-62-13740	CLAMP	2	60001-60592
11	20Y-62-13761	SEAT	2	60593-@
	20Y-62-13760	・SEAT	1	60001-60592
12	205-62-73431	SEAT	2	60593-@
	205-62-73430	・SEAT	1	60001-60592
13	20Y-62-13450	PLATE	4	60001-@
14	01010-81230	BOLT	8	60001-@
15	20Y-62-13570	HOSE, 750MM	1	60001-@
16	07000-13025	O-RING	2	60001-@
17	07371-30640	FLANGE	4	60001-@
18	07372-21035	BOLT	8	60001-@
19	01643-51032	WASHER	8	60001-@
20	20Y-62-13560	HOSE	1	60001-@
21	07000-13032	O-RING	2	60001-@
22	07371-31049	FLANGE	4	60001-@
23	07372-21035	BOLT	8	60001-@

PC220-7 S/N 60001-UP (Overseas Version)

BOOM (ARM CYLINDER PIPING AND BUCKET CYLINDER PIPING)(#60001-60761)

Item	Part No.	Part Name	Qty	Serial No.
24	01643-51032	WASHER	8	60001-@
24A	07049-01215	PLUG	2	60003-60761
25	206-62-73150	TUBE	1	60001-@
26	206-62-73160	TUBE	1	60001-@
27	07371-30640	FLANGE	4	60001-@
28	07372-21035	BOLT	8	60001-@
29	01643-51032	WASHER	8	60001-@
30	20Y-62-13710	CLAMP	1	60001-@
31	20Y-62-13190	CLAMP	2	60593-@
	20Y-62-13230	CLAMP	2	60001-60592
32	20Y-62-13761	SEAT	4	60593-@
	20Y-62-13760	▪ SEAT	1	60001-60592
33	20Y-62-13450	PLATE	3	60001-@
34	01010-81230	BOLT	6	60001-@
35	20Y-62-13580	TUBE	2	60001-60761
36	07000-13030	O-RING	2	60001-@
37	07372-21035	BOLT	8	60001-@
38	01643-51032	WASHER	8	60001-@
39	206-62-73560	CLAMP	2	60001-@
40	20Y-62-13180	CLAMP	2	60593-60761
	20Y-62-13220	CLAMP	2	60001-60592
41	20Y-62-13761	SEAT	2	60593-60761
	20Y-62-13760	▪ SEAT	1	60001-60592
42	20Y-62-13450	PLATE	4	60001-60761
43	01010-81230	BOLT	8	60001-60761
44	07049-01215	PLUG	4	60001-@

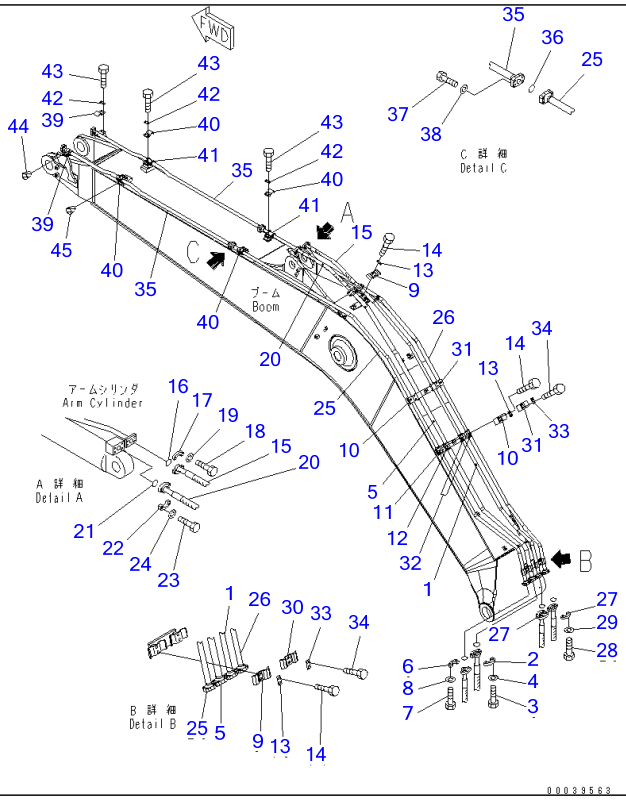

Ref T1110-03A0A **Page 360170**

PC220-7 S/N 60001-UP (Overseas Version)
BOOM (ARM CYLINDER PIPING AND BUCKET CYLINDER PIPING)(#60762-65000)

Item	Part No.	Part Name	Qty	Serial No.
1	206-62-73140	TUBE	1	60001-@
2	07371-30640	FLANGE	2	60001-@
3	07372-21035	BOLT	4	60001-@
4	01643-51032	WASHER	4	60001-@
5	206-62-73130	TUBE	1	60001-@
6	07371-31049	FLANGE	2	60001-@
7	07372-21035	BOLT	4	60001-@
8	01643-51032	WASHER	4	60001-@
9	20Y-62-13690	CLAMP	2	60001-@
10	20Y-62-13730	CLAMP	2	60593-@
11	20Y-62-13761	SEAT	2	60593-@
12	205-62-73431	SEAT	2	60593-@
13	20Y-62-13450	PLATE	4	60001-@
14	01010-81230	BOLT	8	60001-@
15	20Y-62-13570	HOSE, 750MM	1	60001-@
16	07000-13025	O-RING	2	60001-@
17	07371-30640	FLANGE	4	60001-@
18	07372-21035	BOLT	8	60001-@
19	01643-51032	WASHER	8	60001-@
20	20Y-62-13560	HOSE	1	60001-@
21	07000-13032	O-RING	2	60001-@
22	07371-31049	FLANGE	4	60001-@
23	07372-21035	BOLT	8	60001-@
24	01643-51032	WASHER	8	60001-@
25	206-62-73150	TUBE	1	60001-@
26	206-62-73160	TUBE	1	60001-@

PC220-7 S/N 60001-UP (Overseas Version)

BOOM (ARM CYLINDER PIPING AND BUCKET CYLINDER PIPING)(#60762-65000)

Item	Part No.	Part Name	Qty	Serial No.
27	07371-30640	FLANGE	4	60001-@
28	07372-21035	BOLT	8	60001-@
29	01643-51032	WASHER	8	60001-@
30	20Y-62-13710	CLAMP	1	60001-@
31	20Y-62-13190	CLAMP	2	60593-@
32	20Y-62-13761	SEAT	4	60593-@
33	20Y-62-13450	PLATE	3	60001-@
34	01010-81230	BOLT	6	60001-@
35	20Y-62-13581	TUBE	2	60762-65000
36	07000-13030	O-RING	2	60001-@
37	07372-21035	BOLT	8	60001-@
38	01643-51032	WASHER	8	60001-@
39	206-62-73560	CLAMP	2	60001-@
40	20Y-62-13180	CLAMP	4	60762-65000
41	20Y-62-13761	SEAT	4	60762-65000
42	20Y-62-13450	PLATE	6	60762-65000
43	01010-81230	BOLT	12	60762-65000
44	07049-01215	PLUG	4	60001-@
45	07049-01620	PLUG	4	60762-65000

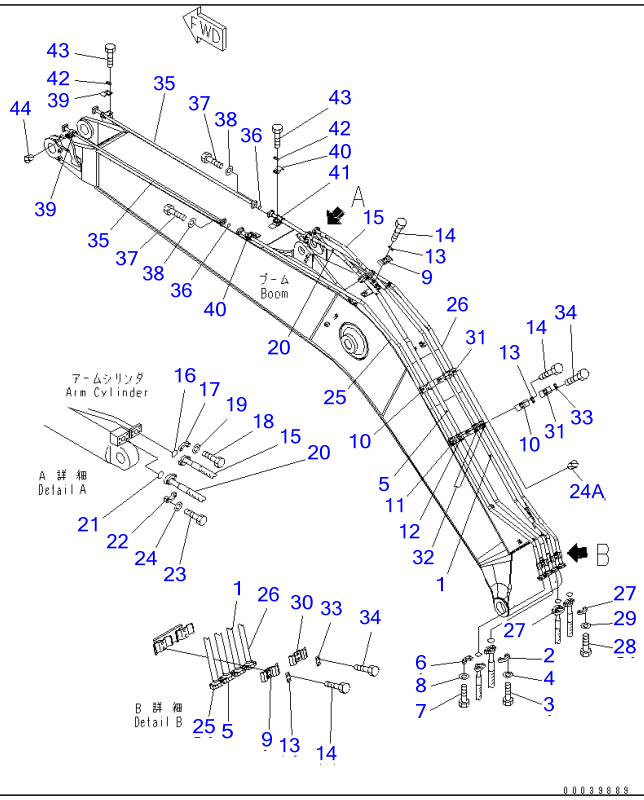

Ref T1110-03A0B **Page 360180**

PC220-7 S/N 60001-UP (Overseas Version)
BOOM (ARM CYLINDER PIPING AND BUCKET CYLINDER PIPING)(#65001-65530)

Item	Part No.	Part Name	Qty	Serial No.
1	206-62-73140	TUBE	1	60001-@
2	07371-30640	FLANGE	2	60001-@
3	07372-21035	BOLT	4	60001-@
4	01643-51032	WASHER	4	60001-@
5	206-62-73130	TUBE	1	60001-@
6	07371-31049	FLANGE	2	60001-@
7	07372-21035	BOLT	4	60001-@
8	01643-51032	WASHER	4	60001-@
9	20Y-62-13690	CLAMP	2	60001-@
10	20Y-62-13730	CLAMP	2	60593-@
11	20Y-62-13761	SEAT	2	60593-@
12	205-62-73431	SEAT	2	60593-@
13	20Y-62-13450	PLATE	4	60001-@
14	01010-81230	BOLT	8	60001-@
15	20Y-62-13570	HOSE, 750MM	1	60001-@
16	07000-13025	O-RING	2	60001-@
17	07371-30640	FLANGE	4	60001-@
18	07372-21035	BOLT	8	60001-@
19	01643-51032	WASHER	8	60001-@
20	20Y-62-13560	HOSE	1	60001-@
21	07000-13032	O-RING	2	60001-@
22	07371-31049	FLANGE	4	60001-@
23	07372-21035	BOLT	8	60001-@
24	01643-51032	WASHER	8	60001-@
24A	07049-01215	PLUG	2	65001-65530
25	206-62-73150	TUBE	1	60001-@

BOOM (ARM CYLINDER PIPING AND BUCKET CYLINDER PIPING)(#65001-65530)

Item	Part No.	Part Name	Qty	Serial No.
26	206-62-73160	TUBE	1	60001-@
27	07371-30640	FLANGE	4	60001-@
28	07372-21035	BOLT	8	60001-@
29	01643-51032	WASHER	8	60001-@
30	20Y-62-13710	CLAMP	1	60001-@
31	20Y-62-13190	CLAMP	2	60593-@
32	20Y-62-13761	SEAT	4	60593-@
33	20Y-62-13450	PLATE	3	60001-@
34	01010-81230	BOLT	6	60001-@
35	20Y-62-13580	TUBE	2	65001-65530
36	07000-13030	O-RING	2	60001-@
37	07372-21035	BOLT	8	60001-@
38	01643-51032	WASHER	8	60001-@
39	206-62-73560	CLAMP	2	60001-@
40	20Y-62-13180	CLAMP	2	65001-65530
41	20Y-62-13761	SEAT	2	65001-65530
42	20Y-62-13450	PLATE	4	65001-65530
43	01010-81230	BOLT	8	65001-65530
44	07049-01215	PLUG	4	60001-@

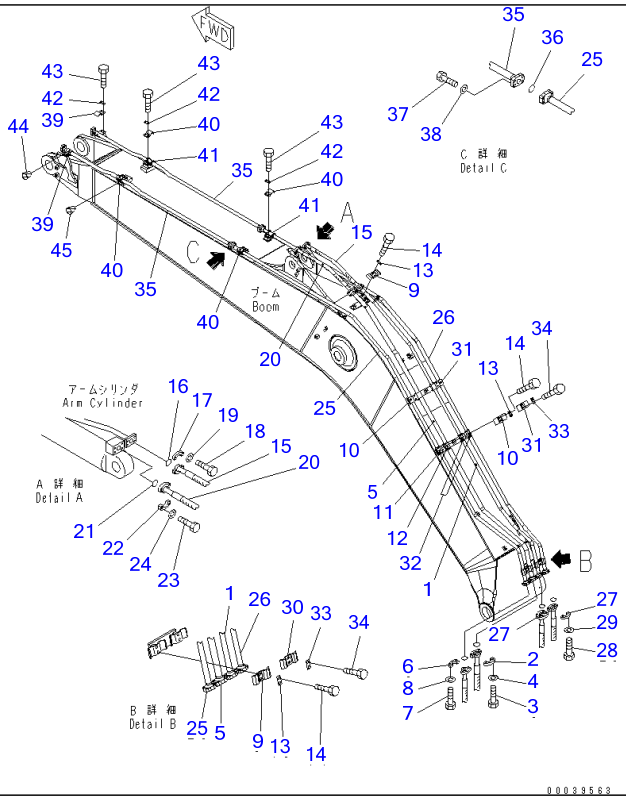

Ref T1110-03A0C

Page 360190

PC220-7 S/N 60001-UP (Overseas Version)

BOOM (ARM CYLINDER PIPING AND BUCKET CYLINDER PIPING)(#65531-)

Item	Part No.	Part Name	Qty	Serial No.
1	206-62-73140	TUBE	1	60001-
2	07371-30640	FLANGE	2	60001-
3	07372-21035	BOLT	4	60001-
4	01643-51032	WASHER	4	60001-
5	206-62-73130	TUBE	1	60001-
6	07371-31049	FLANGE	2	60001-
7	07372-21035	BOLT	4	60001-
8	01643-51032	WASHER	4	60001-
9	20Y-62-13690	CLAMP	2	60001-
10	20Y-62-13730	CLAMP	2	60593-
11	20Y-62-13761	SEAT	2	60593-
12	205-62-73431	SEAT	2	60593-
13	20Y-62-13450	PLATE	4	60001-
14	01010-81230	BOLT	8	60001-
15	20Y-62-13570	HOSE, 750MM	1	60001-
16	07000-13025	O-RING	2	60001-
17	07371-30640	FLANGE	4	60001-
18	07372-21035	BOLT	8	60001-
19	01643-51032	WASHER	8	60001-
20	20Y-62-13560	HOSE	1	60001-
21	07000-13032	O-RING	2	60001-
22	07371-31049	FLANGE	4	60001-
23	07372-21035	BOLT	8	60001-
24	01643-51032	WASHER	8	60001-
25	206-62-73150	TUBE	1	60001-
26	206-62-73160	TUBE	1	60001-
27	07371-30640	FLANGE	4	60001-
28	07372-21035	BOLT	8	60001-

BOOM (ARM CYLINDER PIPING AND BUCKET CYLINDER PIPING)(#65531-)

Item	Part No.	Part Name	Qty	Serial No.
29	01643-51032	WASHER	8	60001-
30	20Y-62-13710	CLAMP	1	60001-
31	20Y-62-13190	CLAMP	2	60593-
32	20Y-62-13761	SEAT	4	60593-
33	20Y-62-13450	PLATE	3	60001-
34	01010-81230	BOLT	6	60001-
35	20Y-62-13581	TUBE	2	65531-
36	07000-13030	O-RING	2	60001-
37	07372-21035	BOLT	8	60001-
38	01643-51032	WASHER	8	60001-
39	206-62-73560	CLAMP	2	60001-
40	20Y-62-13180	CLAMP	4	65531-
41	20Y-62-13761	SEAT	4	65531-
42	20Y-62-13450	PLATE	6	65531-
43	01010-81230	BOLT	12	65531-
44	07049-01215	PLUG	4	60001-
45	07049-01620	PLUG	4	65531-

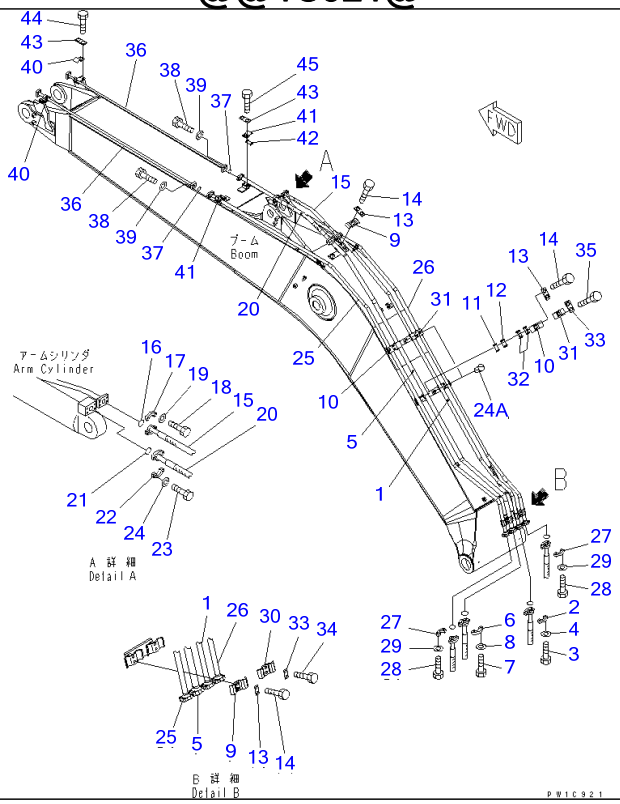

Ref T1110-03A1 Page 360200

PC220-7 S/N 60001-UP (Overseas Version)

BOOM (HD) (FOR ADDITIONAL PIPING) (ARM CYLINDER PIPIN AND BUCKET CYLINDER PIPING)(#60001-60761)

Item	Part No.	Part Name	Qty	Serial No.
1	206-62-73140	TUBE	1	60001-@
2	07371-30640	FLANGE	2	60001-@
3	07372-21035	BOLT	4	60001-@
4	01643-51032	WASHER	4	60001-@
5	206-62-73130	TUBE	1	60001-@
6	07371-31049	FLANGE	2	60001-@
7	07372-21035	BOLT	4	60001-@
8	01643-51032	WASHER	4	60001-@
9	20Y-62-13690	CLAMP	2	60001-@
10	20Y-62-13730	CLAMP	2	60593-@
	20Y-62-13740	CLAMP	2	60001-60592
11	20Y-62-13761	SEAT	2	60593-@
	20Y-62-13760	・SEAT	1	60001-60592
12	205-62-73431	SEAT	2	60593-@
	205-62-73430	・SEAT	1	60001-60592
13	20Y-62-13450	PLATE	4	60001-60761
14	01010-81230	BOLT	8	60001-@
15	20Y-62-13570	HOSE, 750MM	1	60001-@
16	07000-13025	O-RING	2	60001-@
17	07371-30640	FLANGE	4	60001-@
18	07372-21035	BOLT	8	60001-@
19	01643-51032	WASHER	8	60001-@
20	20Y-62-13560	HOSE	1	60001-@
21	07000-13032	O-RING	2	60001-@
22	07371-31049	FLANGE	4	60001-@
23	07372-21035	BOLT	8	60001-@

BOOM (HD) (FOR ADDITIONAL PIPING) (ARM CYLINDER PIPIN AND BUCKET CYLINDER PIPING)(#60001-60761)

Item	Part No.	Part Name	Qty	Serial No.
24	01643-51032	WASHER	8	60001-@
24A	07049-01215	PLUG	2	60001-60761
25	206-62-73150	TUBE	1	60001-@
26	206-62-73160	TUBE	1	60001-@
27	07371-30640	FLANGE	4	60001-@
28	07372-21035	BOLT	8	60001-@
29	01643-51032	WASHER	8	60001-@
30	20Y-62-13710	CLAMP	1	60001-@
31	20Y-62-13190	CLAMP	2	60593-@
	20Y-62-13230	CLAMP	2	60001-60592
32	20Y-62-13761	SEAT	4	60593-@
	20Y-62-13760	▪ SEAT	1	60001-60592
33	20Y-62-13450	PLATE	3	60001-60761
34	01010-81230	BOLT	2	60001-@
35	01010-81285	BOLT	4	60001-60761
36	20Y-62-13580	TUBE	2	60001-60761
37	07000-13030	O-RING	2	60001-@
38	07372-21035	BOLT	8	60001-@
39	01643-51032	WASHER	8	60001-@
40	206-62-73560	CLAMP	2	60001-@
41	20Y-62-13180	CLAMP	2	60593-60761
	20Y-62-13220	CLAMP	2	60001-60592
42	20Y-62-13761	SEAT	2	60593-60761
	20Y-62-13760	▪ SEAT	1	60001-60592
43	20Y-62-13450	PLATE	4	60001-@
44	01010-81230	BOLT	4	60001-60761
45	01010-81285	BOLT	4	60001-60761

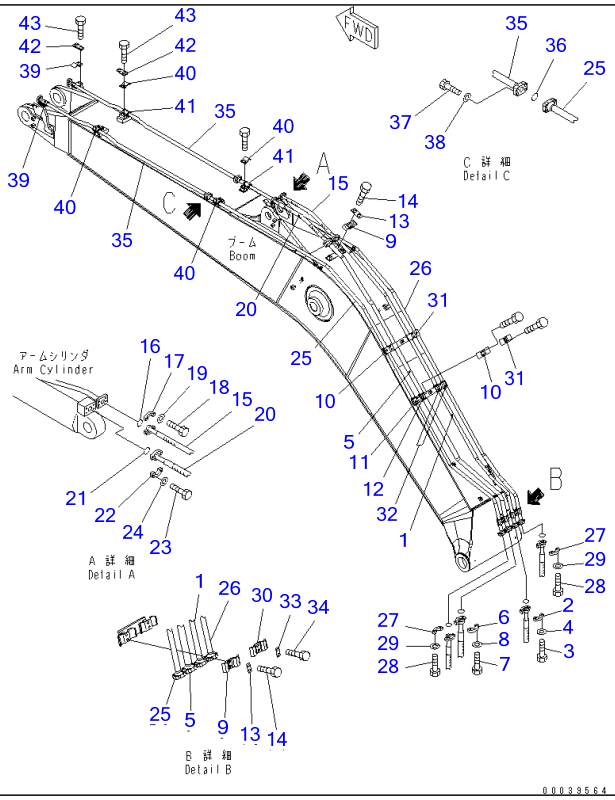

Ref T1110-03A1A **Page 360210**

PC220-7 S/N 60001-UP (Overseas Version)

BOOM (HD) (FOR ADDITIONAL PIPING) (ARM CYLINDER PIPIN AND BUCKET CYLINDER PIPING)(#60762-65000)

Item	Part No.	Part Name	Qty	Serial No.
1	206-62-73140	TUBE	1	60001-@
2	07371-30640	FLANGE	2	60001-@
3	07372-21035	BOLT	4	60001-@
4	01643-51032	WASHER	4	60001-@
5	206-62-73130	TUBE	1	60001-@
6	07371-31049	FLANGE	2	60001-@
7	07372-21035	BOLT	4	60001-@
8	01643-51032	WASHER	4	60001-@
9	20Y-62-13690	CLAMP	2	60001-@
10	20Y-62-13730	CLAMP	2	60593-@
11	20Y-62-13761	SEAT	2	60593-@
12	205-62-73431	SEAT	2	60593-@
13	20Y-62-13450	PLATE	2	60762-65000
14	01010-81230	BOLT	8	60001-@
15	20Y-62-13570	HOSE, 750MM	1	60001-@
16	07000-13025	O-RING	2	60001-@
17	07371-30640	FLANGE	4	60001-@
18	07372-21035	BOLT	8	60001-@
19	01643-51032	WASHER	8	60001-@
20	20Y-62-13560	HOSE	1	60001-@
21	07000-13032	O-RING	2	60001-@
22	07371-31049	FLANGE	4	60001-@
23	07372-21035	BOLT	8	60001-@
24	01643-51032	WASHER	8	60001-@
25	206-62-73150	TUBE	1	60001-@
26	206-62-73160	TUBE	1	60001-@

BOOM (HD) (FOR ADDITIONAL PIPING) (ARM CYLINDER PIPIN AND BUCKET CYLINDER PIPING)(#60762-65000)

Item	Part No.	Part Name	Qty	Serial No.
27	07371-30640	FLANGE	4	60001-@
28	07372-21035	BOLT	8	60001-@
29	01643-51032	WASHER	8	60001-@
30	20Y-62-13710	CLAMP	1	60001-@
31	20Y-62-13190	CLAMP	2	60593-@
32	20Y-62-13761	SEAT	4	60593-@
33	20Y-62-13450	PLATE	1	60762-65000
34	01010-81230	BOLT	2	60001-@
35	20Y-62-13581	TUBE	2	60762-65000
36	07000-13030	O-RING	2	60001-@
37	07372-21035	BOLT	8	60001-@
38	01643-51032	WASHER	8	60001-@
39	206-62-73560	CLAMP	2	60001-@
40	20Y-62-13180	CLAMP	4	60762-65000
41	20Y-62-13761	SEAT	4	60762-65000
42	20Y-62-13450	PLATE	4	60001-@
43	01010-81230	BOLT	8	60762-65000

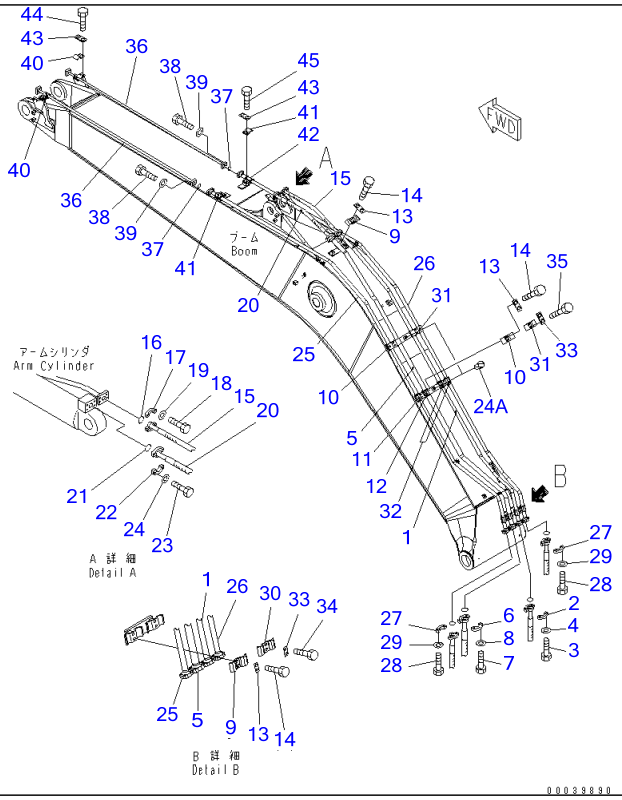

Ref T1110-03A1B

Page 360220

PC220-7 S/N 60001-UP (Overseas Version)

BOOM (HD) (FOR ADDITIONAL PIPING) (ARM CYLINDER PIPIN AND BUCKET CYLINDER PIPING)(#65001-65530)

Item	Part No.	Part Name	Qty	Serial No.
1	206-62-73140	TUBE	1	60001-@
2	07371-30640	FLANGE	2	60001-@
3	07372-21035	BOLT	4	60001-@
4	01643-51032	WASHER	4	60001-@
5	206-62-73130	TUBE	1	60001-@
6	07371-31049	FLANGE	2	60001-@
7	07372-21035	BOLT	4	60001-@
8	01643-51032	WASHER	4	60001-@
9	20Y-62-13690	CLAMP	2	60001-@
10	20Y-62-13730	CLAMP	2	60593-@
11	20Y-62-13761	SEAT	2	60593-@
12	205-62-73431	SEAT	2	60593-@
13	20Y-62-13450	PLATE	4	65001-65530
14	01010-81230	BOLT	8	60001-@
15	20Y-62-13570	HOSE, 750MM	1	60001-@
16	07000-13025	O-RING	2	60001-@
17	07371-30640	FLANGE	4	60001-@
18	07372-21035	BOLT	8	60001-@
19	01643-51032	WASHER	8	60001-@
20	20Y-62-13560	HOSE	1	60001-@
21	07000-13032	O-RING	2	60001-@
22	07371-31049	FLANGE	4	60001-@
23	07372-21035	BOLT	8	60001-@
24	01643-51032	WASHER	8	60001-@
24A	07049-01215	PLUG	2	65001-65530
25	206-62-73150	TUBE	1	60001-@

BOOM (HD) (FOR ADDITIONAL PIPING) (ARM CYLINDER PIPIN AND BUCKET CYLINDER PIPING)(#65001-65530)

Item	Part No.	Part Name	Qty	Serial No.
26	206-62-73160	TUBE	1	60001-@
27	07371-30640	FLANGE	4	60001-@
28	07372-21035	BOLT	8	60001-@
29	01643-51032	WASHER	8	60001-@
30	20Y-62-13710	CLAMP	1	60001-@
31	20Y-62-13190	CLAMP	2	60593-@
32	20Y-62-13761	SEAT	4	60593-@
33	20Y-62-13450	PLATE	3	65001-65530
34	01010-81230	BOLT	2	60001-@
35	01010-81285	BOLT	4	65001-65530
36	20Y-62-13580	TUBE	2	65001-65530
37	07000-13030	O-RING	2	60001-@
38	07372-21035	BOLT	8	60001-@
39	01643-51032	WASHER	8	60001-@
40	206-62-73560	CLAMP	2	60001-@
41	20Y-62-13180	CLAMP	2	65001-65530
42	20Y-62-13761	SEAT	2	65001-65530
43	20Y-62-13450	PLATE	4	60001-@
44	01010-81230	BOLT	4	65001-65530
45	01010-81285	BOLT	4	65001-65530

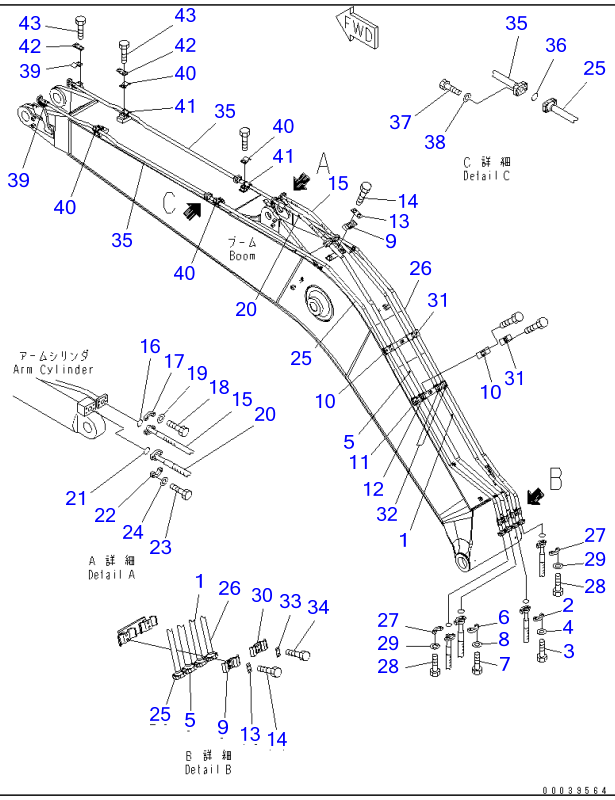

Ref T1110-03A1C **Page 360230**

PC220-7 S/N 60001-UP (Overseas Version)
BOOM (HD) (FOR ADDITIONAL PIPING) (ARM CYLINDER PIPIN AND BUCKET CYLINDER PIPING)(#65531-)

Item	Part No.	Part Name	Qty	Serial No.
1	206-62-73140	TUBE	1	60001-
2	07371-30640	FLANGE	2	60001-
3	07372-21035	BOLT	4	60001-
4	01643-51032	WASHER	4	60001-
5	206-62-73130	TUBE	1	60001-
6	07371-31049	FLANGE	2	60001-
7	07372-21035	BOLT	4	60001-
8	01643-51032	WASHER	4	60001-
9	20Y-62-13690	CLAMP	2	60001-
10	20Y-62-13730	CLAMP	2	60593-
11	20Y-62-13761	SEAT	2	60593-
12	205-62-73431	SEAT	2	60593-
13	20Y-62-13450	PLATE	2	65531-
14	01010-81230	BOLT	8	60001-
15	20Y-62-13570	HOSE, 750MM	1	60001-
16	07000-13025	O-RING	2	60001-
17	07371-30640	FLANGE	4	60001-
18	07372-21035	BOLT	8	60001-
19	01643-51032	WASHER	8	60001-
20	20Y-62-13560	HOSE	1	60001-
21	07000-13032	O-RING	2	60001-
22	07371-31049	FLANGE	4	60001-
23	07372-21035	BOLT	8	60001-
24	01643-51032	WASHER	8	60001-
25	206-62-73150	TUBE	1	60001-
26	206-62-73160	TUBE	1	60001-

BOOM (HD) (FOR ADDITIONAL PIPING) (ARM CYLINDER PIPIN AND BUCKET CYLINDER PIPING)(#65531-)

Item	Part No.	Part Name	Qty	Serial No.
27	07371-30640	FLANGE	4	60001-
28	07372-21035	BOLT	8	60001-
29	01643-51032	WASHER	8	60001-
30	20Y-62-13710	CLAMP	1	60001-
31	20Y-62-13190	CLAMP	2	60593-
32	20Y-62-13761	SEAT	4	60593-
33	20Y-62-13450	PLATE	1	65531-
34	01010-81230	BOLT	2	60001-
35	20Y-62-13581	TUBE	2	65531-
36	07000-13030	O-RING	2	60001-
37	07372-21035	BOLT	8	60001-
38	01643-51032	WASHER	8	60001-
39	206-62-73560	CLAMP	2	60001-
40	20Y-62-13180	CLAMP	4	65531-
41	20Y-62-13761	SEAT	4	65531-
42	20Y-62-13450	PLATE	4	60001-
43	01010-81230	BOLT	8	65531-

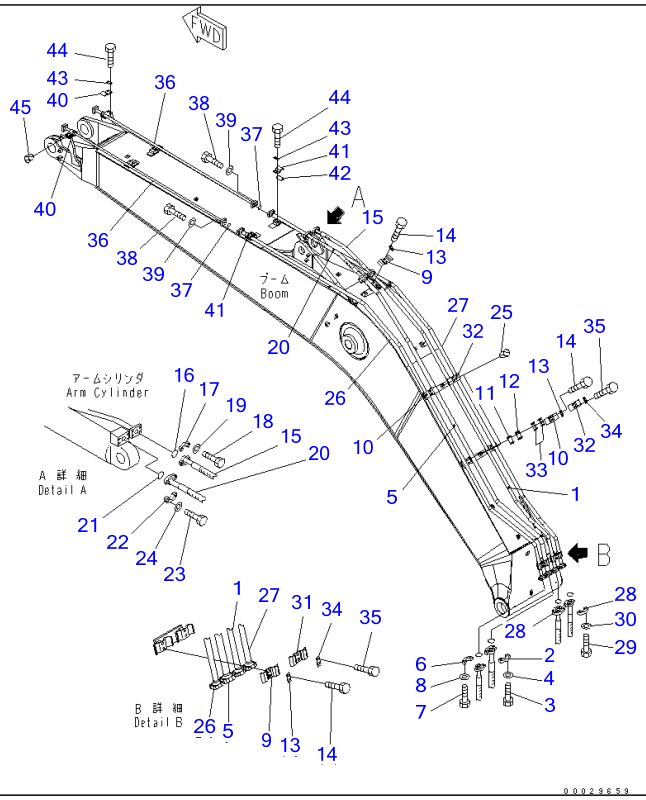

Ref T1110-03A6 **Page 360240**

PC220-7 S/N 60001-UP (Overseas Version)

BOOM (ARM CYLINDER LINE) (FOR AUSTRALIA SPEC.)(#60744-)

Item	Part No.	Part Name	Qty	Serial No.
1	206-62-73140	TUBE	1	60744-
2	07371-30640	FLANGE	2	60744-
3	07372-21035	BOLT	4	60744-
4	01643-51032	WASHER	4	60744-
5	206-62-73130	TUBE	1	60744-
6	07371-31049	FLANGE	2	60744-
7	07372-21035	BOLT	4	60744-
8	01643-51032	WASHER	4	60744-
9	20Y-62-13690	CLAMP	2	60744-
10	20Y-62-13730	CLAMP	2	60744-
11	205-62-73431	SEAT	2	60744-
12	20Y-62-13761	SEAT	2	60744-
13	20Y-62-13450	PLATE	4	60744-
14	01010-81230	BOLT	8	60744-
15	20Y-62-13570	HOSE, 750MM	1	60744-
16	07000-13025	O-RING	2	60744-
17	07371-30640	FLANGE	4	60744-
18	07372-21035	BOLT	8	60744-
19	01643-51032	WASHER	8	60744-
20	20Y-62-13560	HOSE	1	60744-
21	07000-13032	O-RING	2	60744-
22	07371-31049	FLANGE	4	60744-
23	07372-21035	BOLT	8	60744-
24	01643-51032	WASHER	8	60744-
25	07049-01215	PLUG	2	60744-
26	206-62-73150	TUBE	1	60744-
27	206-62-73160	TUBE	1	60744-
28	07371-30640	FLANGE	4	60744-

BOOM (ARM CYLINDER LINE) (FOR AUSTRALIA SPEC.)(#60744-)

Item	Part No.	Part Name	Qty	Serial No.
29	07372-21035	BOLT	8	60744-
30	01643-51032	WASHER	8	60744-
31	20Y-62-13710	CLAMP	1	60744-
32	20Y-62-13190	CLAMP	2	60744-
33	20Y-62-13761	SEAT	4	60744-
34	20Y-62-13450	PLATE	3	60744-
35	01010-81230	BOLT	6	60744-
36	20Y-62-13580	TUBE	2	60744-
37	07000-13030	O-RING	2	60744-
38	07372-21035	BOLT	8	60744-
39	01643-51032	WASHER	8	60744-
40	206-62-73560	CLAMP	2	60744-
41	20Y-62-13180	CLAMP	2	60744-
42	20Y-62-13761	SEAT	2	60744-
43	20Y-62-13450	PLATE	4	60744-
44	01010-81230	BOLT	8	60744-
45	07049-01215	PLUG	4	60744-

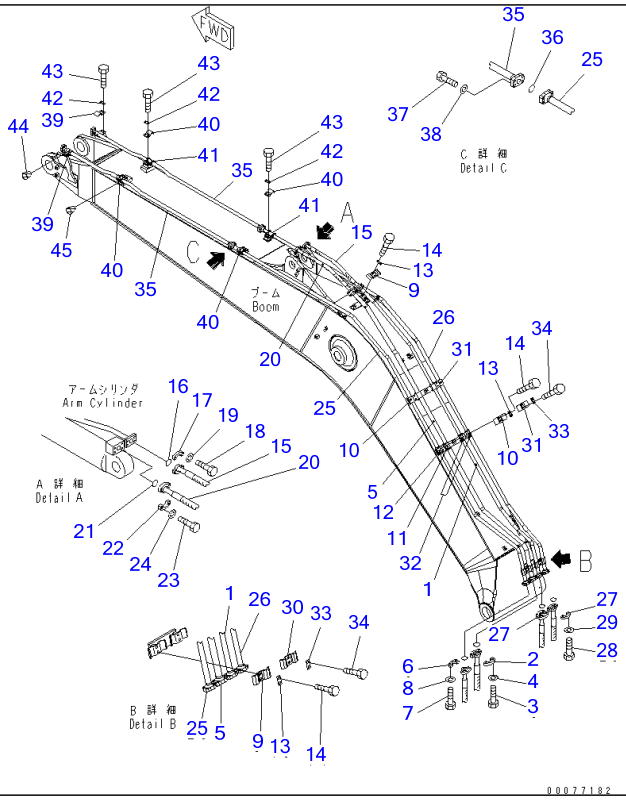

Ref T1110-03A7 Page 360250

PC220-7 S/N 60001-UP (Overseas Version)

BOOM (HD) (FOR ADDITIONAL PIPING) (ARM CYLINDER LINE AND BUCKET CYLINDER LINE) (-40ßC SPEC.)(#67318-)

Item	Part No.	Part Name	Qty	Serial No.
1	206-62-73140	TUBE	1	67318-
2	07371-30640	FLANGE	2	67318-
3	07372-21035	BOLT	4	67318-
4	01643-51032	WASHER	4	67318-
5	206-62-73130	TUBE	1	67318-
6	07371-31049	FLANGE	2	67318-
7	07372-21035	BOLT	4	67318-
8	01643-51032	WASHER	4	67318-
9	20Y-62-13690	CLAMP	2	67318-
10	20Y-62-13730	CLAMP	2	67318-
11	208-62-73330	SEAT	2	67318-
12	20Y-62-47880	CUSHION	2	67318-
13	20Y-62-13450	PLATE	4	67318-
14	01010-81230	BOLT	8	67318-
15	20Y-62-13570	HOSE, 750MM	1	67318-
16	07000-53025	O-RING	2	67318-
17	07371-30640	FLANGE	4	67318-
18	07372-21035	BOLT	8	67318-
19	01643-51032	WASHER	8	67318-
20	206-62-21210	HOSE	1	67318-
21	07000-53032	O-RING	2	67318-
22	07371-31049	FLANGE	4	67318-
23	07372-21035	BOLT	8	67318-
24	01643-51032	WASHER	8	67318-
25	206-62-73150	TUBE	1	67318-
26	206-62-73160	TUBE	1	67318-

BOOM (HD) (FOR ADDITIONAL PIPING) (ARM CYLINDER LINE AND BUCKET CYLINDER LINE) (-40ßC SPEC.)(#67318-)

Item	Part No.	Part Name	Qty	Serial No.
27	07371-30640	FLANGE	4	67318-
28	07372-21035	BOLT	8	67318-
29	01643-51032	WASHER	8	67318-
30	20Y-62-13710	CLAMP	1	67318-
31	20Y-62-13190	CLAMP	2	67318-
32	20Y-62-47880	CUSHION	4	67318-
33	20Y-62-13450	PLATE	3	67318-
34	01010-81230	BOLT	6	67318-
35	20Y-62-13581	TUBE	2	67318-
36	07000-53030	O-RING	2	67318-
37	07372-21035	BOLT	8	67318-
38	01643-51032	WASHER	8	67318-
39	206-62-73560	CLAMP	2	67318-
40	20Y-62-13180	CLAMP	4	67318-
41	20Y-62-47880	CUSHION	4	67318-
42	20Y-62-13450	PLATE	6	67318-
43	01010-81230	BOLT	12	67318-
44	07049-01215	PLUG	4	67318-
45	07049-01620	PLUG	4	67318-

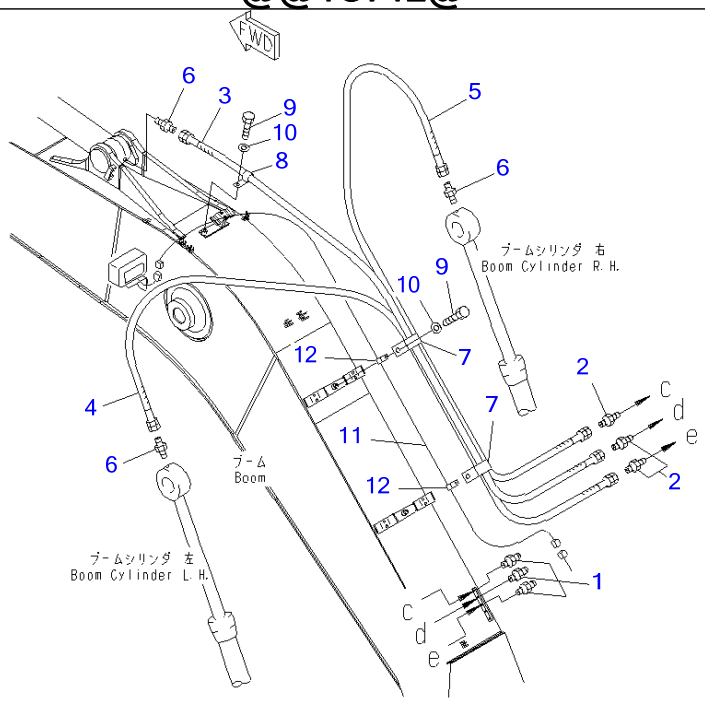

PC220-7 S/N 60001-UP (Overseas Version)

BOOM (LUBRICATING PIPING AND WORKING LAMP HARNESS)

Item	Part No.	Part Name	Qty	Serial No.
1	07020-00000	FITTING	3	60001-
2	205-70-51390	NIPPLE	3	60001-
3	206-70-71460	HOSE	1	60001-
4	206-70-71470	HOSE	1	60001-
5	206-70-71480	HOSE	1	60001-
6	205-70-51390	NIPPLE	3	60001-
7	04434-52212	CLIP	2	60001-
8	04434-51012	CLIP	1	60001-
9	01010-81220	BOLT	3	60001-
10	01643-31232	WASHER	3	60001-
11	22U-06-21350	WIRE	1	60001-
12	04434-51012	CLIP	2	60001-

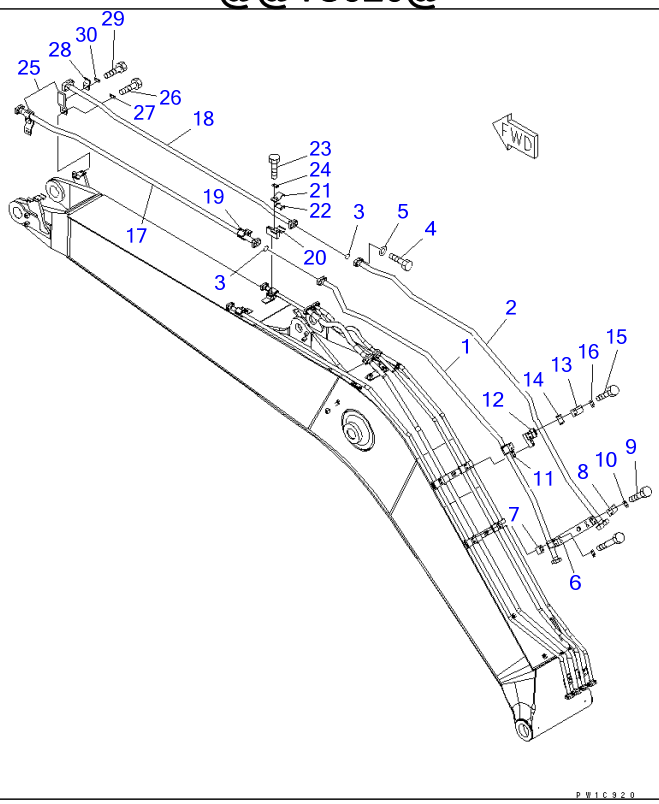

Ref T1110-06A1 Page 360270

PC220-7 S/N 60001-UP (Overseas Version)

BOOM (HD) (ADDITIONAL LINE) (FOR ADDITIONAL PIPING)(#60001-60592)

Item	Part No.	Part Name	Qty	Serial No.
1	206-62-73170	TUBE	1	60001-@
2	206-62-73180	TUBE	1	60001-@
3	07000-13035	O-RING	2	60001-@
4	07372-21040	BOLT	8	60001-@
5	01643-51032	WASHER	8	60001-@
6	20Y-62-45270	BRACKET	1	60001-@
7	20Y-62-45280	PLATE	2	60001-@
8	207-62-31330	CLAMP	2	60001-@
9	01010-81250	BOLT	4	60001-@
10	20Y-62-13450	PLATE	2	60001-@
11	206-62-73610	BRACKET	1	60001-60592
12	206-62-73620	BRACKET	1	60001-60592
13	207-62-52430	CLAMP	2	60001-60592
14	205-62-73430	▪ SEAT	1	60001-60592
15	01010-81230	BOLT	4	60001-@
16	20Y-62-13450	PLATE	2	60001-@
17	20Y-62-45290	TUBE	1	60001-@
18	20Y-62-45310	TUBE	1	60001-@
19	206-62-73610	BRACKET	1	60001-60592
20	206-62-73620	BRACKET	1	60001-60592
21	207-62-52430	CLAMP	2	60001-60592
22	205-62-73430	▪ SEAT	1	60001-60592
23	01010-81230	BOLT	4	60001-@
24	20Y-62-13450	PLATE	2	60001-@
25	206-62-73591	BRACKET	2	60109-@
	206-62-73590	BRACKET	2	60001-60108
26	01010-81235	BOLT	4	60109-@
	01010-81230	BOLT	4	60001-60108

BOOM (HD) (ADDITIONAL LINE) (FOR ADDITIONAL PIPING)(#60001-60592)

Item	Part No.	Part Name	Qty	Serial No.
27	20Y-62-13450	PLATE	2	60001-@
28	207-62-31330	CLAMP	2	60001-@
29	01010-81235	BOLT	4	60109-@
	01010-81225	BOLT	4	60001-60108
30	20Y-62-13450	PLATE	2	60001-@

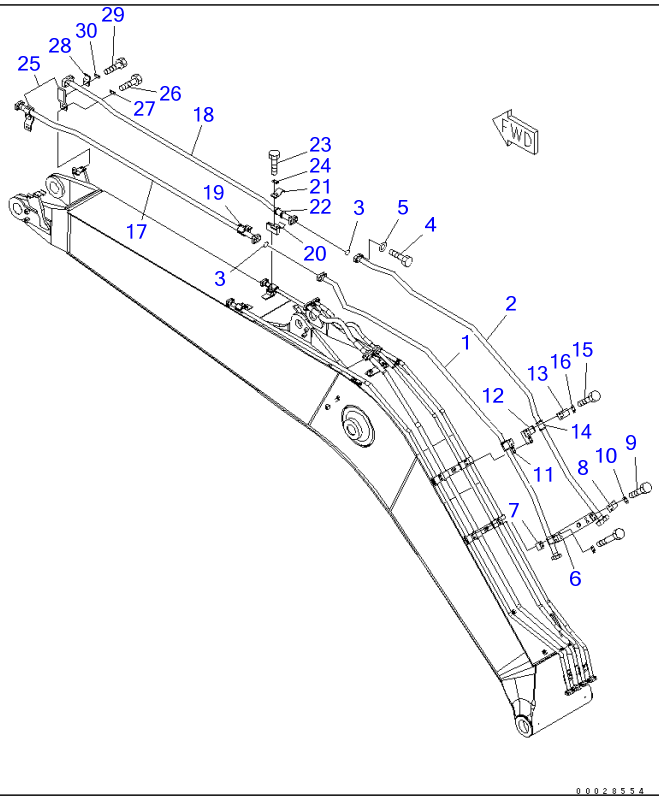

Ref T1110-06A1A

Page 360280

PC220-7 S/N 60001-UP (Overseas Version)

BOOM (HD) (ADDITIONAL LINE) (FOR ADDITIONAL PIPING)(#60593-60761)

Item	Part No.	Part Name	Qty	Serial No.
1	206-62-73170	TUBE	1	60001-@
2	206-62-73180	TUBE	1	60001-@
3	07000-13035	O-RING	2	60001-@
4	07372-21040	BOLT	8	60001-@
5	01643-51032	WASHER	8	60001-@
6	20Y-62-45270	BRACKET	1	60001-60761
7	20Y-62-45280	PLATE	2	60001-@
8	207-62-31330	CLAMP	2	60001-60761
9	01010-81250	BOLT	4	60001-60761
10	20Y-62-13450	PLATE	2	60001-60761
11	206-62-73611	BRACKET	1	60593-@
12	206-62-73621	BRACKET	1	60593-@
13	207-62-52350	CLAMP	2	60593-@
14	205-62-73431	SEAT	2	60593-@
15	01010-81230	BOLT	4	60001-@
16	20Y-62-13450	PLATE	2	60001-@
17	20Y-62-45290	TUBE	1	60001-60761
18	20Y-62-45310	TUBE	1	60001-60761
19	206-62-73611	BRACKET	1	60593-@
20	206-62-73621	BRACKET	1	60593-@
21	207-62-52350	CLAMP	2	60593-60761
22	205-62-73431	SEAT	2	60593-60761
23	01010-81230	BOLT	4	60001-60761
24	20Y-62-13450	PLATE	2	60001-60761
25	206-62-73591	BRACKET	2	60109-60761
26	01010-81235	BOLT	4	60109-@
27	20Y-62-13450	PLATE	2	60001-@
28	207-62-31330	CLAMP	2	60001-60761

BOOM (HD) (ADDITIONAL LINE) (FOR ADDITIONAL PIPING)(#60593-60761)

Item	Part No.	Part Name	Qty	Serial No.
29	01010-81235	BOLT	4	60109-60761
30	20Y-62-13450	PLATE	2	60001-60761

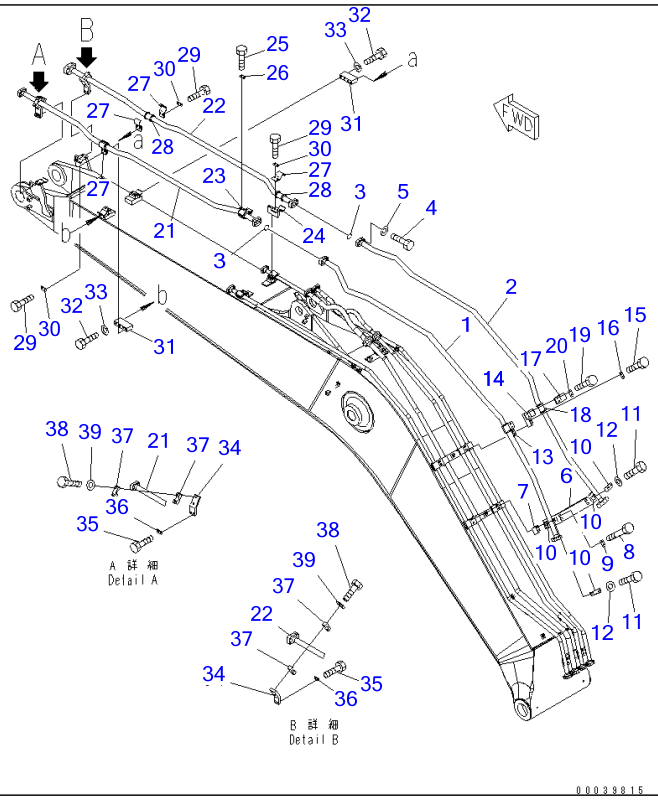

Ref T1110-06A1B

Page 360290

PC220-7 S/N 60001-UP (Overseas Version)

BOOM (HD) (ADDITIONAL LINE) (FOR ADDITIONAL PIPING)(#60762-65000)

Item	Part No.	Part Name	Qty	Serial No.
1	206-62-73170	TUBE	1	60001-@
2	206-62-73180	TUBE	1	60001-@
3	07000-13035	O-RING	2	60001-@
4	07372-21040	BOLT	8	60001-@
5	01643-51032	WASHER	8	60001-@
6	20Y-62-45271	BRACKET	1	60762-65000
7	20Y-62-45280	PLATE	2	60001-@
8	01010-81290	BOLT	4	60762-65000
9	20Y-62-13450	PLATE	2	60762-65000
10	205-62-54460	CLAMP	4	60762-65000
11	01010-81275	BOLT	4	60762-65000
12	01643-31232	WASHER	4	60762-65000
13	206-62-73611	BRACKET	1	60593-@
14	206-62-73621NK	BRACKET	1	60593-@
	206-62-73621	BRACKET	1	60593-@
15	01010-81285	BOLT	4	60762-65000
16	20Y-62-13450	PLATE	2	60762-65000
17	207-62-52350	CLAMP	2	60593-@
18	205-62-73431	SEAT	2	60593-@
19	01010-81230	BOLT	4	60001-@
20	20Y-62-13450	PLATE	2	60001-@
21	20Y-62-45291	TUBE	1	60762-65000
22	20Y-62-45311	TUBE	1	60762-65000
23	206-62-73611	BRACKET	1	60593-@
24	206-62-73621	BRACKET	1	60593-@
25	01010-81285	BOLT	4	60762-65000
26	20Y-62-13450	PLATE	2	60762-65000
27	207-62-52350	CLAMP	6	60762-65000

BOOM (HD) (ADDITIONAL LINE) (FOR ADDITIONAL PIPING)(#60762-65000)

Item	Part No.	Part Name	Qty	Serial No.
28	205-62-73431	SEAT	4	60762-65000
29	01010-81230	BOLT	8	60762-65000
30	20Y-62-13450	PLATE	4	60762-65000
31	207-970-7171	BRACKET	2	60762-65000
32	01010-81685	BOLT	4	60762-65000
33	01643-31645	WASHER	4	60762-65000
34	206-62-73592	BRACKET	2	60762-65000
35	01010-81235	BOLT	4	60109-@
36	20Y-62-13450	PLATE	2	60001-@
37	205-62-54460	CLAMP	4	60762-65000
38	01010-81275	BOLT	4	60762-65000
39	01643-31232	WASHER	4	60762-65000

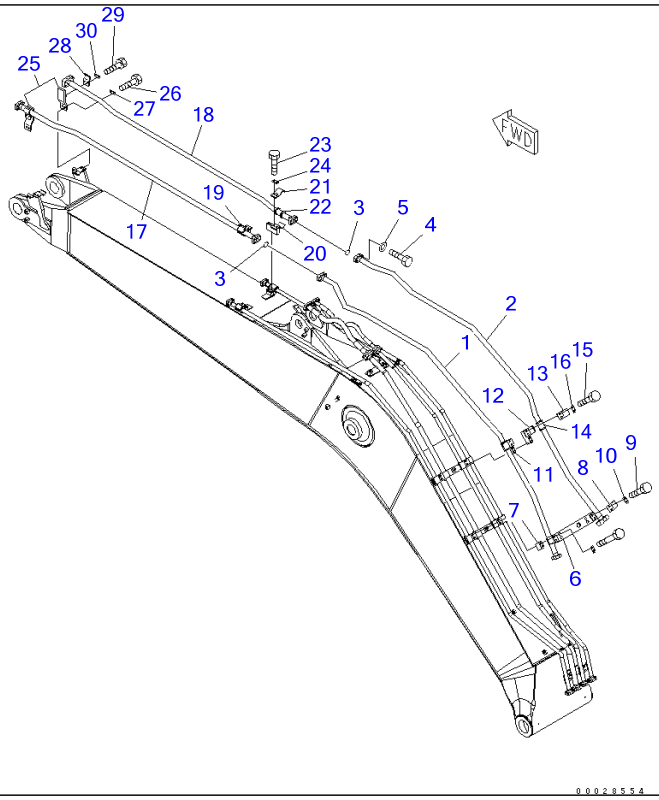

Ref T1110-06A1C

Page 360300

PC220-7 S/N 60001-UP (Overseas Version)

BOOM (HD) (ADDITIONAL LINE) (FOR ADDITIONAL PIPING)(#65001-65530)

Item	Part No.	Part Name	Qty	Serial No.
1	206-62-73170	TUBE	1	60001-@
2	206-62-73180	TUBE	1	60001-@
3	07000-13035	O-RING	2	60001-@
4	07372-21040	BOLT	8	60001-@
5	01643-51032	WASHER	8	60001-@
6	20Y-62-45270	BRACKET	1	65001-65530
7	20Y-62-45280	PLATE	2	60001-@
8	207-62-31330	CLAMP	2	65001-65530
9	01010-81250	BOLT	4	65001-65530
10	20Y-62-13450	PLATE	2	65001-65530
11	206-62-73611	BRACKET	1	60593-@
12	206-62-73621	BRACKET	1	60593-@
13	207-62-52350	CLAMP	2	60593-@
14	205-62-73431	SEAT	2	60593-@
15	01010-81230	BOLT	4	60001-@
16	20Y-62-13450	PLATE	2	60001-@
17	20Y-62-45290	TUBE	1	65001-65530
18	20Y-62-45310	TUBE	1	65001-65530
19	206-62-73611	BRACKET	1	60593-@
20	206-62-73621	BRACKET	1	60593-@
21	207-62-52350	CLAMP	2	65001-65530
22	205-62-73431	SEAT	2	65001-65530
23	01010-81230	BOLT	4	65001-65530
24	20Y-62-13450	PLATE	2	65001-65530
25	206-62-73591	BRACKET	2	65001-65530
26	01010-81235	BOLT	4	60109-@
27	20Y-62-13450	PLATE	2	60001-@
28	207-62-31330	CLAMP	2	65001-65530

BOOM (HD) (ADDITIONAL LINE) (FOR ADDITIONAL PIPING)(#65001-65530)

Item	Part No.	Part Name	Qty	Serial No.
29	01010-81235	BOLT	4	65001-65530
30	20Y-62-13450	PLATE	2	65001-65530

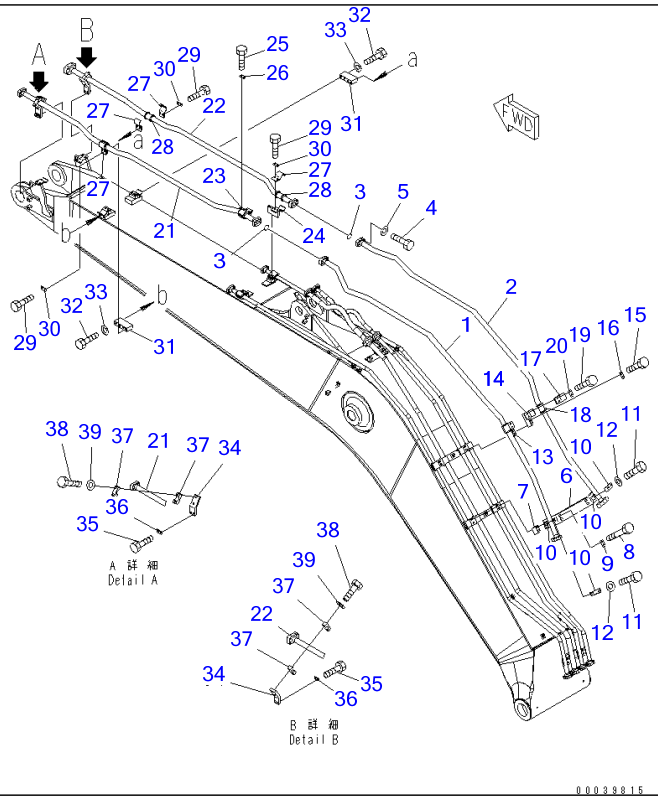

Ref T1110-06A1D **Page 360310**

PC220-7 S/N 60001-UP (Overseas Version)

BOOM (HD) (ADDITIONAL LINE) (FOR ADDITIONAL PIPING)(#65531-)

Item	Part No.	Part Name	Qty	Serial No.
1	206-62-73170	TUBE	1	60001-
2	206-62-73180	TUBE	1	60001-
3	07000-13035	O-RING	2	60001-
4	07372-21040	BOLT	8	60001-
5	01643-51032	WASHER	8	60001-
6	20Y-62-45271	BRACKET	1	65531-
7	20Y-62-45280	PLATE	2	60001-
8	01010-81290	BOLT	4	65531-
9	20Y-62-13450	PLATE	2	65531-
10	205-62-54460	CLAMP	4	65531-
11	01010-81275	BOLT	4	65531-
12	01643-31232	WASHER	4	65531-
13	206-62-73611	BRACKET	1	60593-
14	206-62-73621	BRACKET	1	60593-
15	01010-81285	BOLT	4	65531-
16	20Y-62-13450	PLATE	2	65531-
17	207-62-52350	CLAMP	2	60593-
18	205-62-73431	SEAT	2	60593-
19	01010-81230	BOLT	4	60001-
20	20Y-62-13450	PLATE	2	60001-
21	20Y-62-45291	TUBE	1	65531-
22	20Y-62-45311	TUBE	1	65531-
23	206-62-73611	BRACKET	1	60593-
24	206-62-73621	BRACKET	1	60593-
25	01010-81285	BOLT	4	65531-
26	20Y-62-13450	PLATE	2	65531-
27	207-62-52350	CLAMP	6	65531-
28	205-62-73431	SEAT	4	65531-

BOOM (HD) (ADDITIONAL LINE) (FOR ADDITIONAL PIPING)(#65531-)

Item	Part No.	Part Name	Qty	Serial No.
29	01010-81230	BOLT	8	65531-
30	20Y-62-13450	PLATE	4	65531-
31	207-970-7171	BRACKET	2	65531-
32	01010-81685	BOLT	4	65531-
33	01643-31645	WASHER	4	65531-
34	206-62-73592	BRACKET	2	65531-
35	01010-81235	BOLT	4	60109-
36	20Y-62-13450	PLATE	2	60001-
37	205-62-54460	CLAMP	4	65531-
38	01010-81275	BOLT	4	65531-
39	01643-31232	WASHER	4	65531-

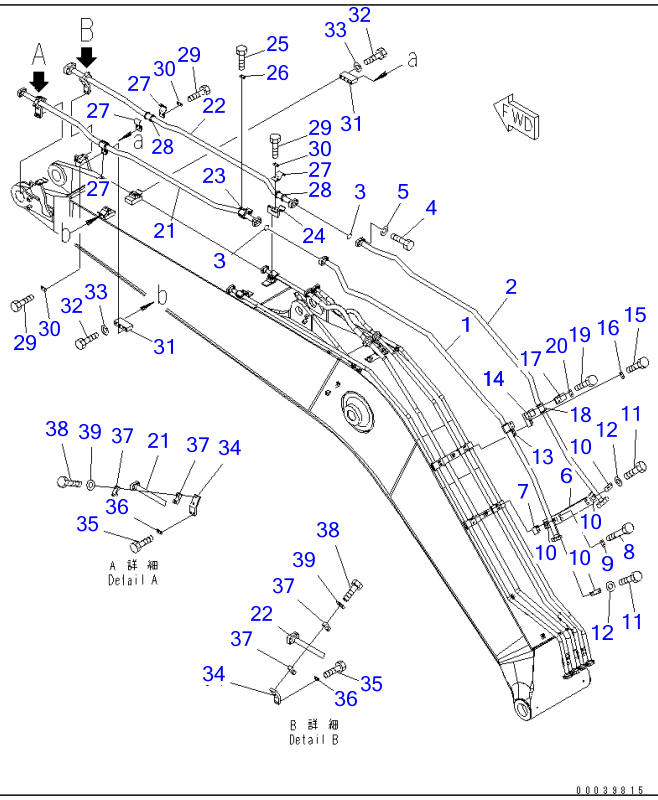

Ref T1110-06A7 **Page 360320**

PC220-7 S/N 60001-UP (Overseas Version)

BOOM (HD) (ADDITIONAL LINE) (FOR ADDITIONAL PIPING) (-40ßC SPEC.)(#67318-)

Item	Part No.	Part Name	Qty	Serial No.
1	206-62-73170	TUBE	1	67318-
2	206-62-73180	TUBE	1	67318-
3	07000-53035	O-RING	2	67318-
4	07372-21040	BOLT	8	67318-
5	01643-51032	WASHER	8	67318-
6	20Y-62-45271	BRACKET	1	67318-
7	20Y-62-45280	PLATE	2	67318-
8	01010-81290	BOLT	4	67318-
9	20Y-62-13450	PLATE	2	67318-
10	205-62-54460	CLAMP	4	67318-
11	01010-81275	BOLT	4	67318-
12	01643-31232	WASHER	4	67318-
13	206-62-73611	BRACKET	1	67318-
14	206-62-73621	BRACKET	1	67318-
15	01010-81285	BOLT	4	67318-
16	20Y-62-13450	PLATE	2	67318-
17	207-62-52350	CLAMP	2	67318-
18	208-62-73330	SEAT	2	67318-
19	01010-81230	BOLT	4	67318-
20	20Y-62-13450	PLATE	2	67318-
21	20Y-62-45291	TUBE	1	67318-
22	20Y-62-45311	TUBE	1	67318-
23	206-62-73611	BRACKET	1	67318-
24	206-62-73621	BRACKET	1	67318-
25	01010-81285	BOLT	4	67318-
26	20Y-62-13450	PLATE	2	67318-

BOOM (HD) (ADDITIONAL LINE) (FOR ADDITIONAL PIPING) (-40ßC SPEC.)(#67318-)

Item	Part No.	Part Name	Qty	Serial No.
27	207-62-52350	CLAMP	6	67318-
28	208-62-73330	SEAT	4	67318-
29	01010-81230	BOLT	8	67318-
30	20Y-62-13450	PLATE	4	67318-
31	207-970-7171	BRACKET	2	67318-
32	01010-81685	BOLT	4	67318-
33	01643-31645	WASHER	4	67318-
34	206-62-73592	BRACKET	2	67318-
35	01010-81235	BOLT	4	67318-
36	20Y-62-13450	PLATE	2	67318-
37	205-62-54460	CLAMP	4	67318-
38	01010-81275	BOLT	4	67318-
39	01643-31232	WASHER	4	67318-

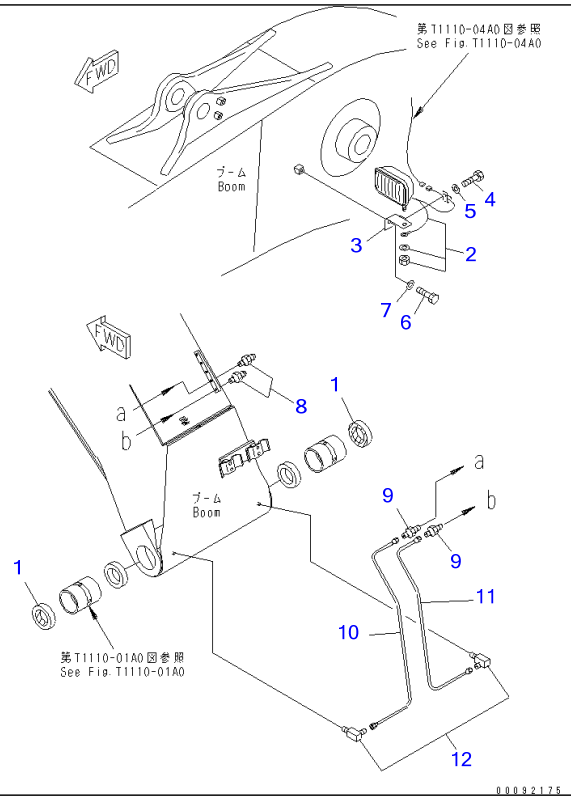

Ref T1110-07A0 **Page 360330**

PC220-7 S/N 60001-UP (Overseas Version)

BOOM (WORKING LAMP AND BOOM FOOT LUBRICATING)

Item	Part No.	Part Name	Qty	Serial No.
1	07145-00100	SEAL,DUST	2	60001-
2	20Y-06-25310	WORKING LAMP ASS'Y	1	60001-
	421-06-23330	▪ BULB, 70W	1	60001-
3	20Y-06-21551	BRACKET	1	60001-
4	01010-81220	BOLT	1	60001-
5	01643-31232	WASHER	1	60001-
6	01010-81230	BOLT	1	60001-
7	01643-31232	WASHER	1	60001-
8	07020-00000	FITTING	2	60001-
9	20Y-70-11540	CONNECTOR	2	60001-
10	206-70-71250	TUBE	1	60001-
11	206-70-71260	TUBE	1	60001-
12	20Y-25-11270	ELBOW	2	60001-

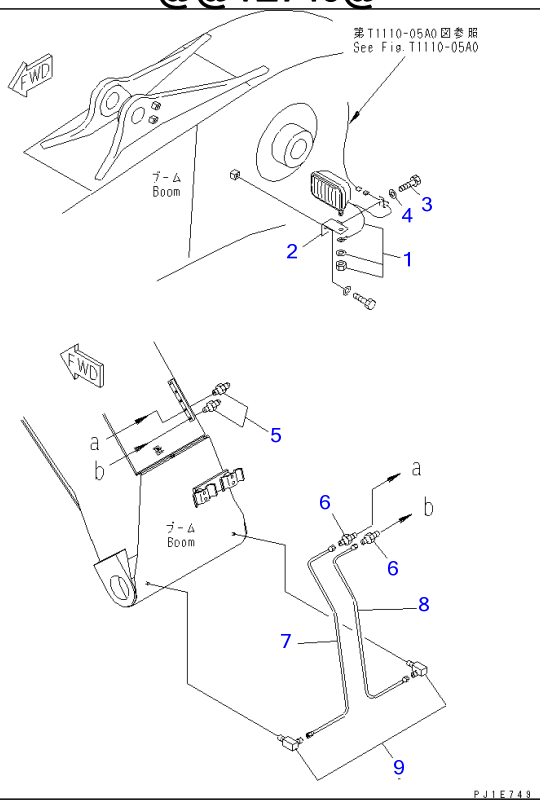

Ref T1110-07A4 **Page 360340**

PC220-7 S/N 60001-UP (Overseas Version)

BOOM LESS

Item	Part No.	Part Name	Qty	Serial No.
1	20Y-06-25310	WORKING LAMP ASS'Y	1	60001-
	421-06-23330	▪ BULB, 70W	1	60001-
2	20Y-06-21551	BRACKET	1	60001-
3	01010-81220	BOLT	1	60001-
4	01643-31232	WASHER	1	60001-
5	07020-00000	FITTING	2	60001-
6	20Y-70-11540	CONNECTOR	2	60001-
7	206-70-71250	TUBE	1	60001-
8	206-70-71260	TUBE	1	60001-
9	20Y-25-11270	ELBOW	2	60001-

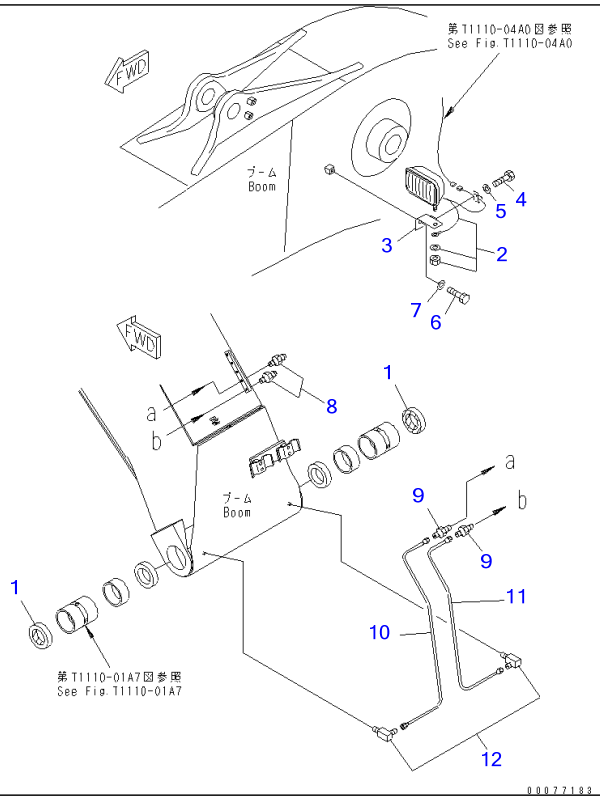

Ref T1110-07A7 **Page 360350**

PC220-7 S/N 60001-UP (Overseas Version)
BOOM (WORKING LAMP AND BOOM FOOT LUBRICATING) (-40ßC SPEC.)(#67318-)

Item	Part No.	Part Name	Qty	Serial No.
1	07145-10100	SEAL	2	67318-
2	20Y-06-25310	WORKING LAMP ASS'Y	1	67318-
	421-06-23330	▪ BULB, 70W	1	67318-
3	20Y-06-21551	BRACKET	1	67318-
4	01010-81220	BOLT	1	67318-
5	01643-31232	WASHER	1	67318-
6	01010-81230	BOLT	1	67318-
7	01643-31232	WASHER	1	67318-
8	07020-00000	FITTING	2	67318-
9	20Y-70-11540	CONNECTOR	2	67318-
10	206-70-71250	TUBE	1	67318-
11	206-70-71260	TUBE	1	67318-
12	20Y-25-11270	ELBOW	2	67318-

PC220-7 S/N 60001-UP (Overseas Version)

00049927

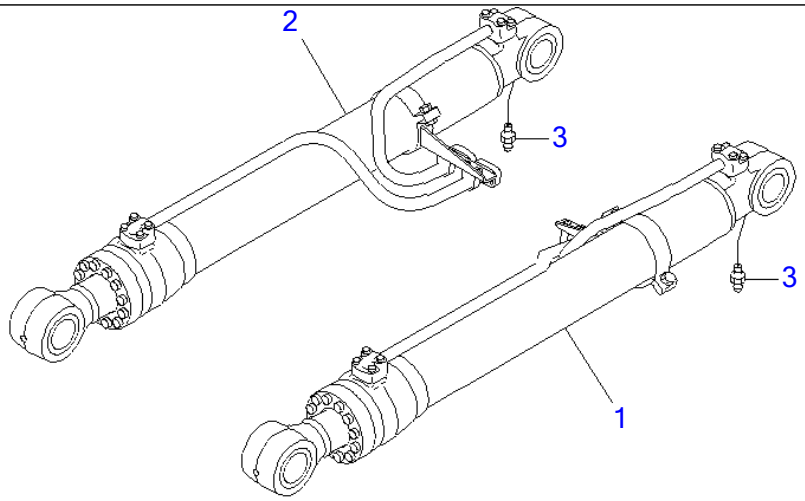

00049927

Ref T1120-01A0 **Page 360360**

PC220-7 S/N 60001-UP (Overseas Version)

BOOM CYLINDER

Item	Part No.	Part Name	Qty	Serial No.
1	(⊙707-01-XZ880)	BOOM CYLINDER GROUP	1	60001-
2	(⊙707-01-XZ890)	BOOM CYLINDER GROUP	1	60001-
3	07020-00000	FITTING	2	60001-

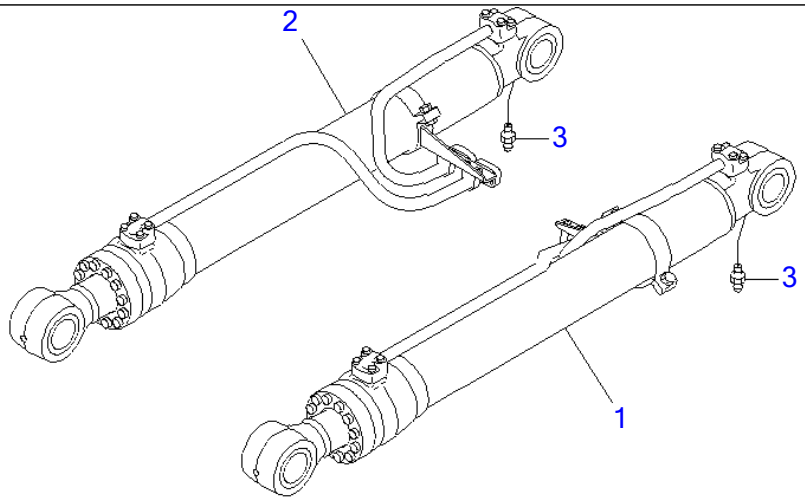

00049927

Ref T1120-01A3 **Page 360370**

PC220-7 S/N 60001-UP (Overseas Version)

BOOM CYLINDER (100 HOURS LUBRICATING)

Item	Part No.	Part Name	Qty	Serial No.
1	(⊙707-01-XX070)	CYLINDER GROUP,L.H.	1	60001-
2	(⊙707-01-XX080)	CYLINDER GROUP,R.H.	1	60001-
3	07020-00000	FITTING	2	60001-

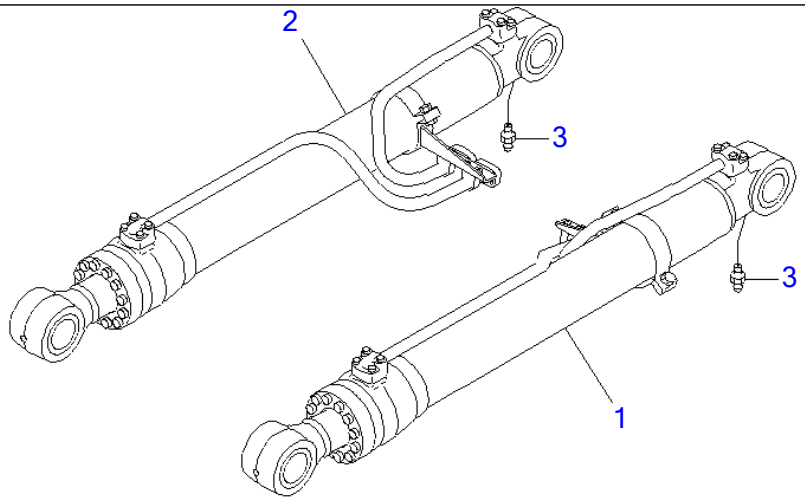

00049927

Ref T1120-01A8 **Page 360380**

PC220-7 S/N 60001-UP (Overseas Version)

BOOM CYLINDER (COLD AREA ARRANGEMENT (-40))

Item	Part No.	Part Name	Qty	Serial No.
1	(⊙707-01-XP560)	CYLINDER GROUP	1	60001-
2	(⊙707-01-XP570)	CYLINDER GROUP	1	60001-
3	07020-00000	FITTING	2	60001-

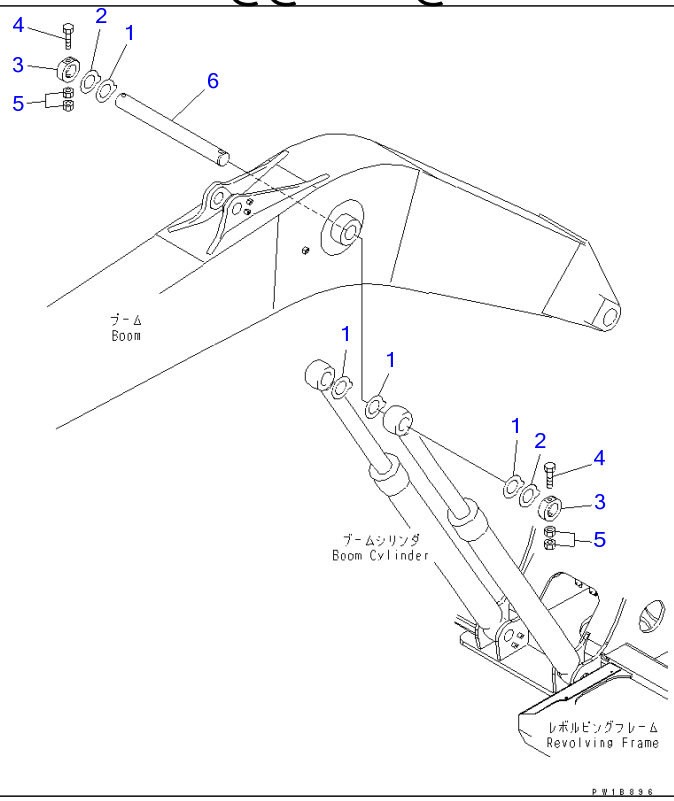

Ref T1125-01A0 **Page 360390**

PC220-7 S/N 60001-UP (Overseas Version)
BOOM PIN

Item	Part No.	Part Name	Qty	Serial No.
1	206-70-71521	SPACER, 1.0MM	4	66138-
	☐206-70-71520	SPACER, 1.0MM	4	65001-66137
	206-70-71521	SPACER, 1.0MM	4	60773-65000
	☐206-70-71520	SPACER, 1.0MM	4	60001-60772
2	206-70-71531	SPACER, 2.0MM	2	66138-
	☐206-70-71530	SPACER, 2.0MM	2	65001-66137
	206-70-71531	SPACER, 2.0MM	2	60773-65000
	☐206-70-71530	SPACER, 2.0MM	2	60001-60772
3	20Y-70-11170	PLATE	2	60001-
4	20Y-70-11380	BOLT	2	60001-
5	01580-12016	NUT	4	60001-
6	20Y-70-23410	PIN	1	60109-
	206-70-51190	PIN	1	60001-60108

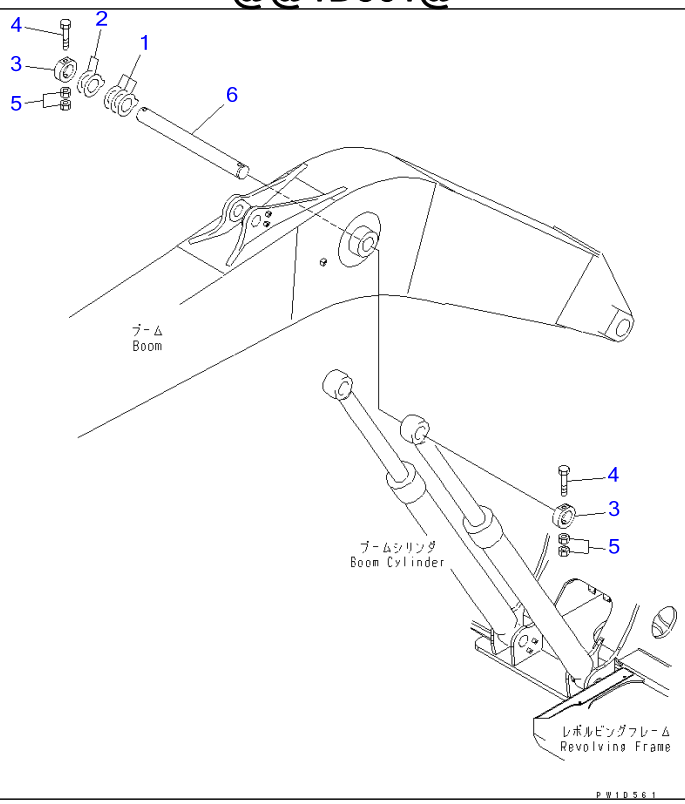

Ref T1125-01A2 **Page 360400**

PC220-7 S/N 60001-UP (Overseas Version)
BOOM PIN (100 HOURS LUBRICATING)

Item	Part No.	Part Name	Qty	Serial No.
1	20Y-70-11370	SPACER, 1.5MM	7	60001-
2	20Y-70-11390	SPACER, 0.8MM	2	60001-
3	20Y-70-11170	PLATE	2	60001-
4	20Y-70-11380	BOLT	2	60001-
5	01580-12016	NUT	4	60001-
6	20Y-70-23410	PIN	1	60109-
	206-70-51190	PIN	1	60001-60108

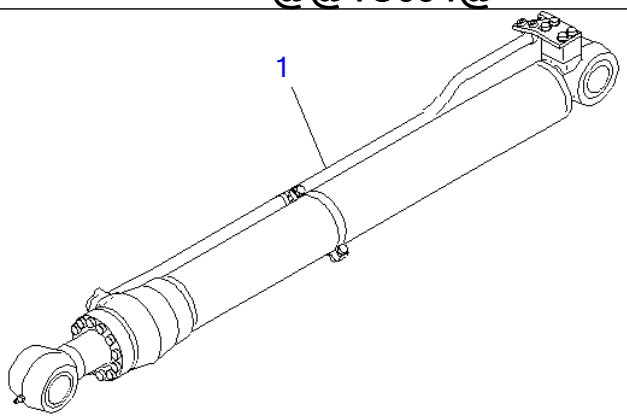

P W 1 C 6 9 4

Ref T1140-01A0 **Page 360410**

PC220-7 S/N 60001-UP (Overseas Version)
ARM CYLINDER

Item	Part No.	Part Name	Qty	Serial No.
1	(⊙707-01-XZ902)	CYLINDER	1	65889-
	(⊙707-01-XZ901)	CYLINDER GROUP	1	65001-65888
	(⊙707-01-XZ902)	CYLINDER	1	60767-65000
	(⊙707-01-XZ901)	CYLINDER GROUP	1	60274-60766
	(⊙707-01-XZ900)	ARM CYLINDER GROUP	1	60001-60273

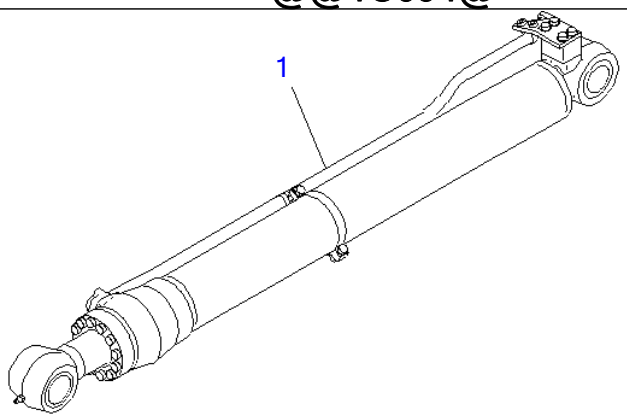

P W 1 C 6 9 4

Ref T1140-01A2 **Page 360420**

PC220-7 S/N 60001-UP (Overseas Version)

ARM CYLINDER (100 HOURS LUBRICATING)

Item	Part No.	Part Name	Qty	Serial No.
1	(⊙707-01-XX091)	CYLINDER GROUP	1	60274-
	(⊙707-01-XX090)	CYLINDER GROUP	1	60001-60273

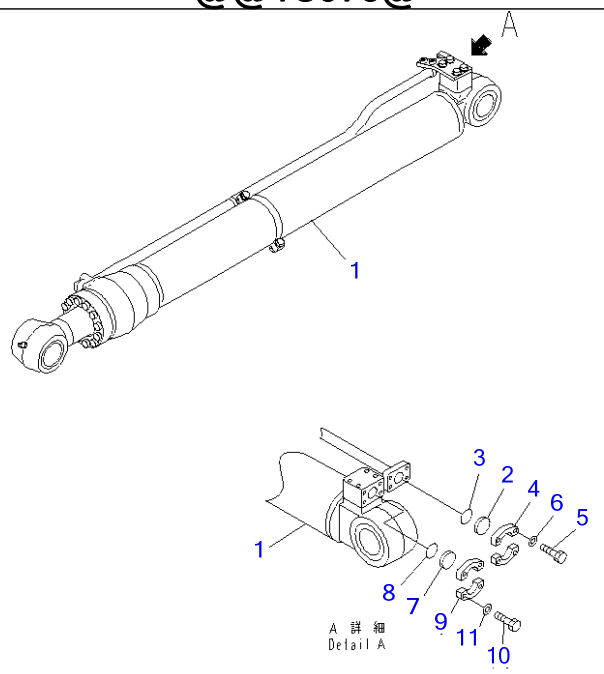

P W 1 C 9 7 5

Ref T1140-01A3 **Page 360430**

PC220-7 S/N 60001-UP (Overseas Version)

ARM CYLINDER (BLIND PARTS) (FOR COMPONENT)

Item	Part No.	Part Name	Qty	Serial No.
1	(⊙707-01-XZ902)	CYLINDER	1	65889-
	(⊙707-01-XZ901)	CYLINDER GROUP	1	65001-65888
	(⊙707-01-XZ902)	CYLINDER	1	60767-65000
	(⊙707-01-XZ901)	CYLINDER GROUP	1	60274-60766
	(⊙707-01-XZ900)	ARM CYLINDER GROUP	1	60001-60273
2	07378-10600	HEAD	1	60001-
3	07000-13025	O-RING	1	60001-
4	07371-30640	FLANGE	2	60001-
5	07372-21035	BOLT	4	60001-
6	01643-51032	WASHER	4	60001-
7	07378-11000	HEAD	1	60001-
8	07000-13032	O-RING	1	60001-
9	07371-31049	FLANGE	2	60001-
10	07372-21035	BOLT	4	60001-
11	01643-51032	WASHER	4	60001-

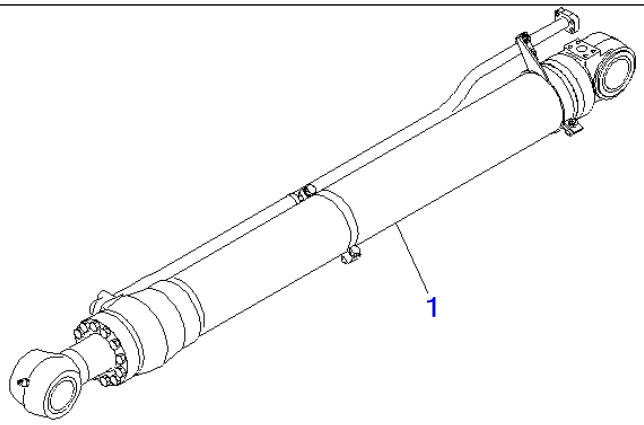

00049931

Ref T1140-01A6 **Page 360440**

PC220-7 S/N 60001-UP (Overseas Version)

ARM CYLINDER (COLD AREA ARRANGEMENT (-40))

Item	Part No.	Part Name	Qty	Serial No.
1	(⊙707-01-XP580)	CYLINDER GROUP	1	60001-

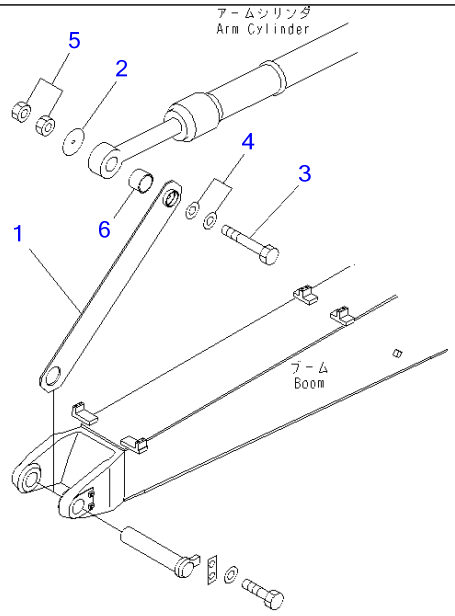

00029220

Ref T1190-01A0 **Page 360450**

PC220-7 S/N 60001-UP (Overseas Version)

ARM LESS LINK

Item	Part No.	Part Name	Qty	Serial No.
1	20Y-70-13160	LINK	1	60001-
2	207-70-53170	PLATE	1	60001-
3	01011-81250	BOLT	1	60001-
4	01643-31232	WASHER	2	60001-
5	01580-11210	NUT	2	60001-
6	20Y-70-13150	COLLAR	3	65686-
	20Y-70-13150	COLLAR	1	65001-65685
	20Y-70-13150	COLLAR	3	60740-65000
	20Y-70-13150	COLLAR	1	60001-60739

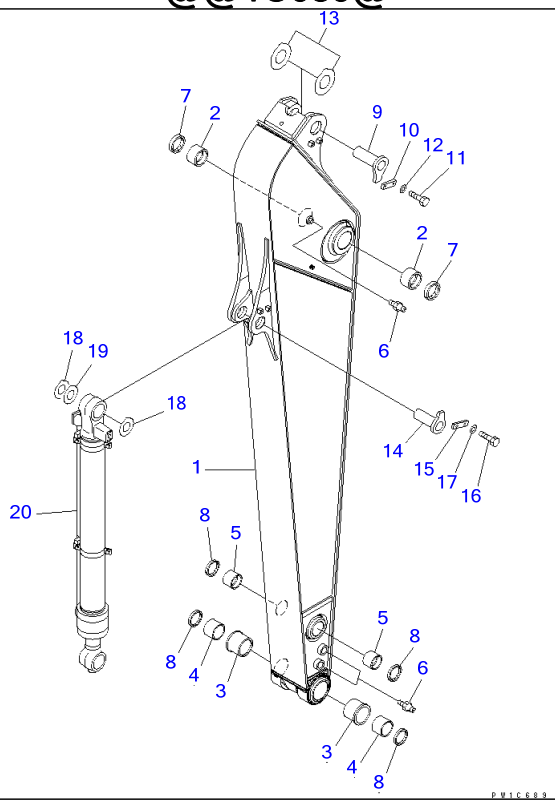

Ref T1200-01A0 **Page 360460**

PC220-7 S/N 60001-UP (Overseas Version)
ARM (3.05M)(#60001-65000)

Item	Part No.	Part Name	Qty	Serial No.
	206-70-00401	ARM ASS'Y	1	60762-65000
	206-70-00400	ARM ASS'Y	1	60001-60761
1	☆	・ARM	1	60762-65000
	☆	・ARM	1	60001-60761
2	20Y-70-31272	・BUSHING	2	60746-65000
	□20Y-70-31271	・BUSHING	2	60001-60745
3	20Y-70-32321	・BUSHING	2	60001-@
4	20Y-70-32331	・BUSHING	2	60001-@
5	20Y-70-32351	・BUSHING	2	60001-@
6	07020-00000	FITTING	3	60001-@
7	07145-00090	SEAL	2	60001-@
8	20Y-70-23230	SEAL	4	60001-@
9	20Y-70-31161	PIN	1	60762-65000
	20Y-70-31160	PIN	1	60001-60761
10	205-70-66581	PLATE	1	60762-65000
	205-70-66580	PLATE	1	60001-60761
11	01010-81230	BOLT	2	60001-@
12	01643-31232	WASHER	2	60001-@
13	20Y-70-31431	SPACER, 1.0MM	2	60773-65000
	□20Y-70-31430	SPACER, 1.0MM	2	60001-60772
14	205-70-71321	PIN	1	60762-65000
	205-70-71320	PIN	1	60001-60761
15	205-70-66581	PLATE	1	60762-65000
	205-70-66580	PLATE	1	60001-60761
16	01010-81230	BOLT	2	60001-@
17	01643-31232	WASHER	2	60001-@
18	20Y-70-31431	SPACER, 1.0MM	2	60773-65000
	□20Y-70-31430	SPACER, 1.0MM	2	60001-60772

ARM (3.05M)(#60001-65000)

Item	Part No.	Part Name	Qty	Serial No.
19	206-70-71451	SPACER, 2.0MM	2	60773-65000
	□206-70-71450	SPACER, 2.0MM	2	60001-60772
20	(⊙707-01-XZ912)	CYLINDER GROUP	1	60767-65000
	(⊙707-01-XZ911)	CYLINDER GROUP	1	60759-60766
	(⊙707-01-XZ910)	CYLINDER GROUP	1	60001-60758

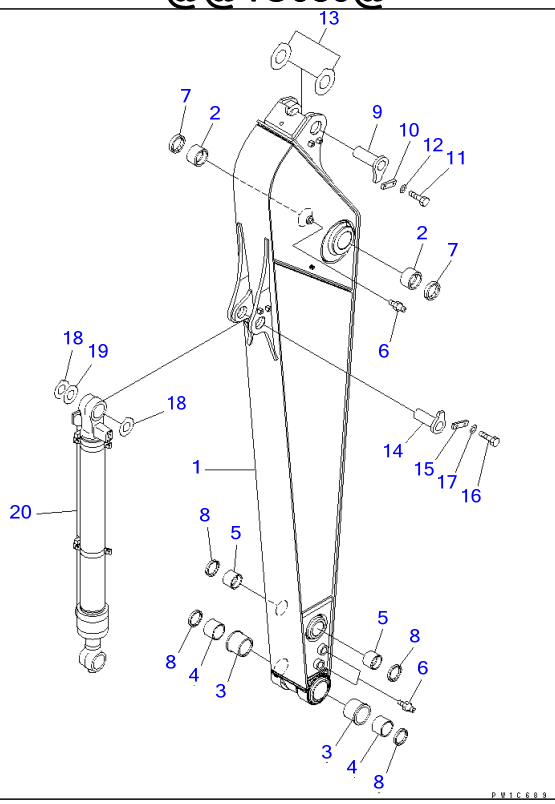

Ref T1200-01A0A **Page 360470**

PC220-7 S/N 60001-UP (Overseas Version)

ARM (3.05M)(#65001-)

Item	Part No.	Part Name	Qty	Serial No.
	206-70-00401	ARM ASS'Y	1	65531-
	206-70-00400	ARM ASS'Y	1	65001-65530
1	☆	・ARM	1	65531-
	☆	・ARM	1	65001-65530
2	20Y-70-31272	・BUSHING	2	65096-
	□20Y-70-31271	・BUSHING	2	65001-65095
3	20Y-70-32321	・BUSHING	2	60001-
4	20Y-70-32331	・BUSHING	2	60001-
5	20Y-70-32351	・BUSHING	2	60001-
6	07020-00000	・FITTING	3	60001-
7	07145-00090	SEAL	2	60001-
8	20Y-70-23230	SEAL	4	60001-
9	20Y-70-31161	PIN	1	65531-
	20Y-70-31160	PIN	1	65001-65530
10	205-70-66581	PLATE	1	65531-
	205-70-66580	PLATE	1	65001-65530
11	01010-81230	BOLT	2	60001-
12	01643-31232	WASHER	2	60001-
13	21K-70-71650	SPACER, 1.0MM	4	69185-
	◆20Y-70-31431	SPACER, 1.0MM	4	66138-69184
	□20Y-70-31430	SPACER, 1.0MM	2	65001-66137
14	205-70-71321	PIN	1	65531-
	205-70-71320	PIN	1	65001-65530
15	205-70-66581	PLATE	1	65531-
	205-70-66580	PLATE	1	65001-65530
16	01010-81230	BOLT	2	60001-
17	01643-31232	WASHER	2	60001-
18	21K-70-71650	SPACER, 1.0MM	4	69185-

ARM (3.05M)(#65001-)

Item	Part No.	Part Name	Qty	Serial No.
	◆20Y-70-31431	SPACER, 1.0MM	4	66138-69184
	□20Y-70-31430	SPACER, 1.0MM	2	65001-66137
19	21K-70-71660	SPACER, 2.0MM	2	69185-
	◆206-70-71451	SPACER, 2.0MM	2	66138-69184
	□206-70-71450	SPACER, 2.0MM	2	65001-66137
20	(⊙707-01-XZ912)	CYLINDER GROUP	1	65889-
	(⊙707-01-XZ911)	CYLINDER GROUP	1	65358-65888
	(⊙707-01-XZ910)	CYLINDER GROUP	1	65001-65357

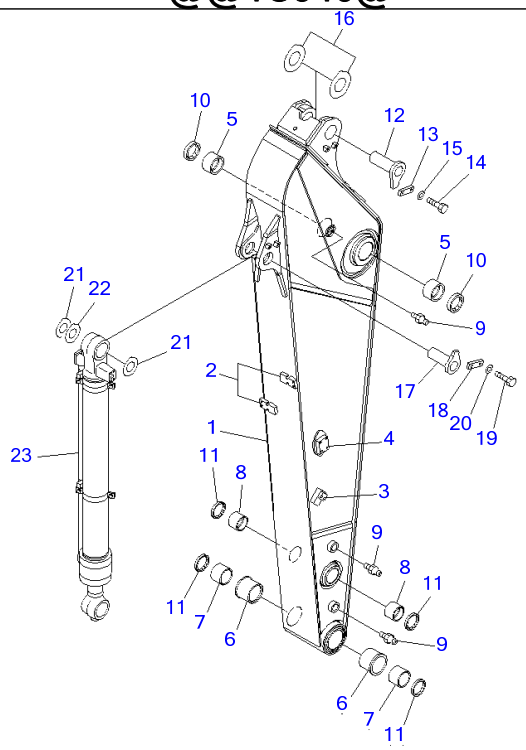

Ref T1200-01A2 **Page 360480**

PC220-7 S/N 60001-UP (Overseas Version)

ARM (3.05M) (FOR ADDITIONAL PIPING)(#60001-65000)

Item	Part No.	Part Name	Qty	Serial No.
	206-70-00411	ARM ASS'Y	1	60762-65000
	206-70-00410	ARM ASS'Y	1	60001-60761
1	☆	・ARM	1	60762-65000
	☆	・ARM	1	60001-60761
2	20Y-70-32E50	・・SEAT (WELDED)	2	60001-@
3	20Y-970-3560	・・BRACKET (WELDED)	2	60001-@
4	20Y-970-3570	・・BRACKET (WELDED)	2	60001-@
5	20Y-70-31272	・BUSHING	2	60746-65000
	□20Y-70-31271	・BUSHING	2	60001-60745
6	20Y-70-32321	・BUSHING	2	60001-@
7	20Y-70-32331	・BUSHING	2	60001-@
8	20Y-70-32351	・BUSHING	2	60001-@
9	07020-00000	FITTING	3	60001-@
10	07145-00090	SEAL	2	60001-@
11	20Y-70-23230	SEAL	4	60001-@
12	20Y-70-31161	PIN	1	60762-65000
	20Y-70-31160	PIN	1	60001-60761
13	205-70-66581	PLATE	1	60762-65000
	205-70-66580	PLATE	1	60001-60761
14	01010-81230	BOLT	2	60001-@
15	01643-31232	WASHER	2	60001-@
16	20Y-70-31431	SPACER, 1.0MM	2	60773-65000
	□20Y-70-31430	SPACER, 1.0MM	2	60001-60772
17	205-70-71321	PIN	1	60762-65000
	205-70-71320	PIN	1	60001-60761
18	205-70-66581	PLATE	1	60762-65000
	205-70-66580	PLATE	1	60001-60761
19	01010-81230	BOLT	2	60001-@

ARM (3.05M) (FOR ADDITIONAL PIPING)(#60001-65000)

Item	Part No.	Part Name	Qty	Serial No.
20	01643-31232	WASHER	2	60001-@
21	20Y-70-31431	SPACER, 1.0MM	2	60773-65000
	□20Y-70-31430	SPACER, 1.0MM	2	60001-60772
22	206-70-71451	SPACER, 2.0MM	2	60773-65000
	□206-70-71450	SPACER, 2.0MM	2	60001-60772
23	(⊙707-01-XZ912)	CYLINDER GROUP	1	60767-65000
	(⊙707-01-XZ911)	CYLINDER GROUP	1	60759-60766
	(⊙707-01-XZ910)	CYLINDER GROUP	1	60001-60758

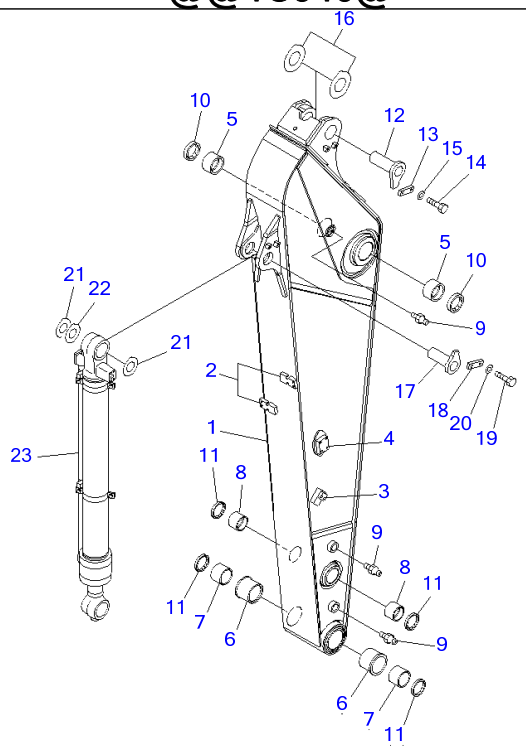

P W 1 C 9 4 0

Ref T1200-01A2A **Page 360490**

PC220-7 S/N 60001-UP (Overseas Version)

ARM (3.05M) (FOR ADDITIONAL PIPING)(#65001-)

Item	Part No.	Part Name	Qty	Serial No.
	206-70-00411	ARM ASS'Y	1	65531-
	206-70-00410	ARM ASS'Y	1	65001-65530
1	☆	・ARM	1	65531-
	☆	・ARM	1	65001-65530
2	20Y-70-32E50	・・SEAT (WELDED)	2	60001-
3	20Y-970-3560	・・BRACKET (WELDED)	2	60001-
4	20Y-970-3570	・・BRACKET (WELDED)	2	60001-
5	20Y-70-31272	・BUSHING	2	65096-
	□20Y-70-31271	・BUSHING	2	65001-65095
6	20Y-70-32321	・BUSHING	2	60001-
7	20Y-70-32331	・BUSHING	2	60001-
8	20Y-70-32351	・BUSHING	2	60001-
9	07020-00000	・FITTING	3	60001-
10	07145-00090	SEAL	2	60001-
11	20Y-70-23230	SEAL	4	60001-
12	20Y-70-31161	PIN	1	65531-
	20Y-70-31160	PIN	1	65001-65530
13	205-70-66581	PLATE	1	65531-
	205-70-66580	PLATE	1	65001-65530
14	01010-81230	BOLT	2	60001-
15	01643-31232	WASHER	2	60001-
16	21K-70-71650	SPACER, 1.0MM	4	69185-
	◆20Y-70-31431	SPACER, 1.0MM	4	66138-69184
	□20Y-70-31430	SPACER, 1.0MM	2	65001-66137
17	205-70-71321	PIN	1	65531-
	205-70-71320	PIN	1	65001-65530
18	205-70-66581	PLATE	1	65531-
	205-70-66580	PLATE	1	65001-65530

ARM (3.05M) (FOR ADDITIONAL PIPING)(#65001-)

Item	Part No.	Part Name	Qty	Serial No.
19	01010-81230	BOLT	2	60001-
20	01643-31232	WASHER	2	60001-
21	21K-70-71650	SPACER, 1.0MM	4	69185-
	◆20Y-70-31431	SPACER, 1.0MM	4	66138-69184
	□20Y-70-31430	SPACER, 1.0MM	2	65001-66137
22	21K-70-71660	SPACER, 2.0MM	2	69185-
	◆206-70-71451	SPACER, 2.0MM	2	66138-69184
	□206-70-71450	SPACER, 2.0MM	2	65001-66137
23	(⊙707-01-XZ912)	CYLINDER GROUP	1	65889-
	(⊙707-01-XZ911)	CYLINDER GROUP	1	65358-65888
	(⊙707-01-XZ910)	CYLINDER GROUP	1	65001-65357

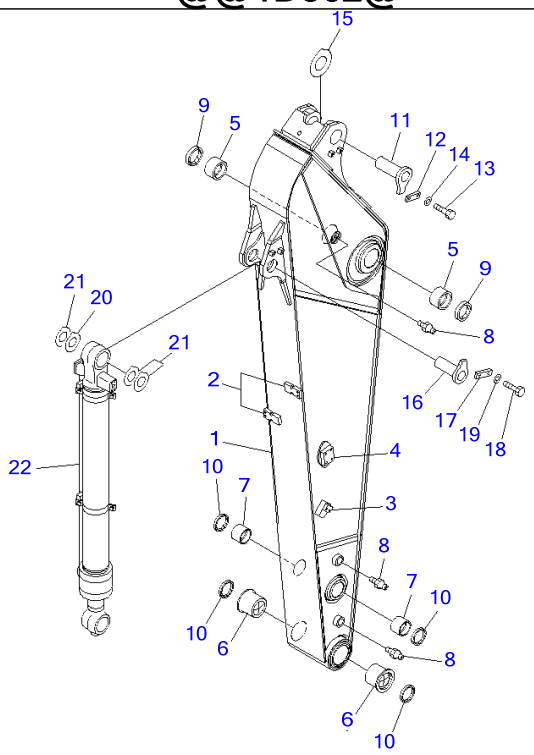

PC220-7 S/N 60001-UP (Overseas Version)

ARM (3.05M) (FOR ADDITIONAL PIPING) (100 HOURS LUBRICATING)(#60001-65000)

Item	Part No.	Part Name	Qty	Serial No.
1	206-970-7121	ARM	1	60762-65000
	206-970-7120	ARM	1	60001-60761
	☆	・ARM	1	60762-65000
	☆	・ARM	1	60001-60761
2	20Y-70-32E50	・SEAT (WELDED)	2	60001-@
3	20Y-970-3560	・BRACKET (WELDED)	2	60001-@
4	20Y-970-3570	・BRACKET (WELDED)	2	60001-@
5	205-70-72180	BUSHING	2	60001-@
6	20Y-70-32410	BUSHING	2	60001-@
7	21K-70-12161	BUSHING	2	60001-@
8	07020-00000	FITTING	3	60001-@
9	07145-00090	SEAL	2	60001-@
10	20Y-70-23230	SEAL	4	60001-@
11	20Y-70-31161	PIN	1	60762-65000
	20Y-70-31160	PIN	1	60001-60761
12	205-70-66581	PLATE	1	60762-65000
	205-70-66580	PLATE	1	60001-60761
13	01010-81230	BOLT	2	60001-@
14	01643-31232	WASHER	2	60001-@
15	205-70-51530	SPACER, 1.5MM	1	60001-@
16	205-70-71321	PIN	1	60762-65000
	205-70-71320	PIN	1	60001-60761
17	205-70-66581	PLATE	1	60762-65000
	205-70-66580	PLATE	1	60001-60761
18	01010-81230	BOLT	2	60001-@
19	01643-31232	WASHER	2	60001-@

PC220-7 S/N 60001-UP (Overseas Version)
ARM (3.05M) (FOR ADDITIONAL PIPING) (100 HOURS LUBRICATING)(#60001-65000)

Item	Part No.	Part Name	Qty	Serial No.
20	20Y-70-11340	SPACER, 0.8MM	1	60001-@
21	205-70-51530	SPACER, 1.5MM	3	60001-@
22	(⊙707-01-XX101)	CYLINDER GROUP	1	60759-65000
	(⊙707-01-XX100)	CYLINDER GROUP	1	60001-60758

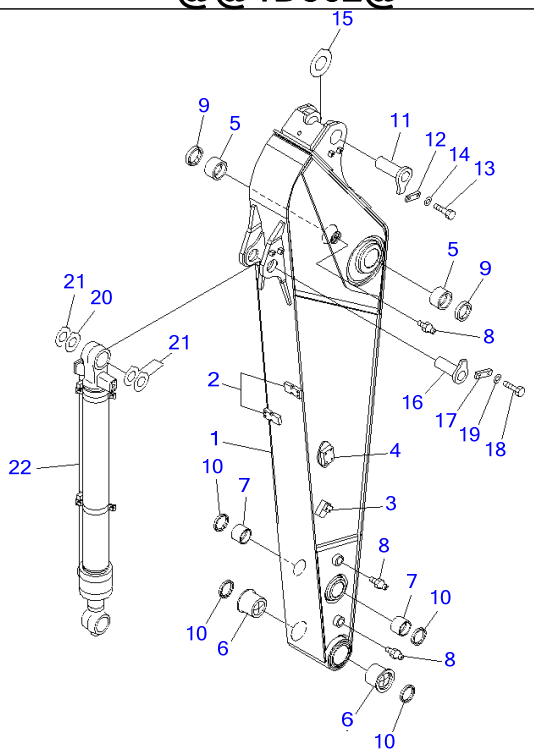

Ref T1200-01A4A

Page 360510

PC220-7 S/N 60001-UP (Overseas Version)

ARM (3.05M) (FOR ADDITIONAL PIPING) (100 HOURS LUBRICATING)(#65001-)

Item	Part No.	Part Name	Qty	Serial No.
1	206-970-7121	ARM	1	65531-
	206-970-7120	ARM	1	60001-65530
2	20Y-70-32E50	・SEAT (WELDED)	2	60001-
3	20Y-970-3560	・BRACKET (WELDED)	2	60001-
4	20Y-970-3570	・BRACKET (WELDED)	2	60001-
5	205-70-72180	BUSHING	2	60001-
6	20Y-70-32410	BUSHING	2	60001-
7	21K-70-12161	BUSHING	2	60001-
8	07020-00000	FITTING	3	60001-
9	07145-00090	SEAL	2	60001-
10	20Y-70-23230	SEAL	4	60001-
11	20Y-70-31161	PIN	1	65531-
	20Y-70-31160	PIN	1	60001-65530
12	205-70-66581	PLATE	1	65531-
	205-70-66580	PLATE	1	60001-65530
13	01010-81230	BOLT	2	60001-
14	01643-31232	WASHER	2	60001-
15	205-70-51530	SPACER, 1.5MM	1	60001-
16	205-70-71321	PIN	1	65531-
	205-70-71320	PIN	1	60001-65530
17	205-70-66581	PLATE	1	65531-
	205-70-66580	PLATE	1	60001-65530
18	01010-81230	BOLT	2	60001-
19	01643-31232	WASHER	2	60001-
20	20Y-70-11340	SPACER, 0.8MM	1	60001-
21	205-70-51530	SPACER, 1.5MM	3	60001-
22	(⊙707-01-XX101)	CYLINDER GROUP	1	65358-
	(⊙707-01-XX100)	CYLINDER GROUP	1	65001-65357

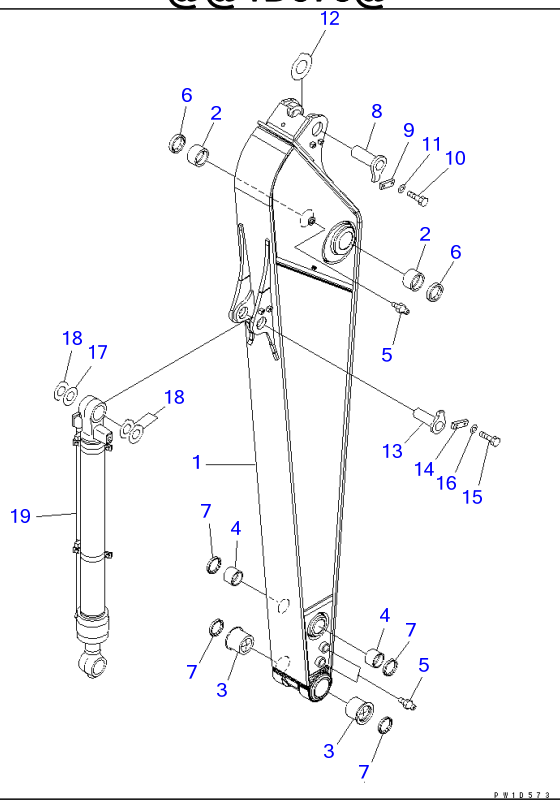

Ref T1200-01A5 **Page 360520**

PC220-7 S/N 60001-UP (Overseas Version)

ARM (3.05M) (HEAVY DUTY) (100 HOURS LUBRICATING)(#60001-65000)

Item	Part No.	Part Name	Qty	Serial No.
1	206-70-72122	ARM	1	60762-65000
	206-70-72121	ARM	1	60001-60761
2	205-70-72180	BUSHING	2	60001-@
3	20Y-70-32410	BUSHING	2	60001-@
4	21K-70-12161	BUSHING	2	60001-@
5	07020-00000	FITTING	3	60001-@
6	07145-00090	SEAL	2	60001-@
7	20Y-70-23230	SEAL	4	60001-@
8	20Y-70-31161	PIN	1	60762-65000
	20Y-70-31160	PIN	1	60001-60761
9	205-70-66581	PLATE	1	60762-65000
	205-70-66580	PLATE	1	60001-60761
10	01010-81230	BOLT	2	60001-@
11	01643-31232	WASHER	2	60001-@
12	205-70-51530	SPACER, 1.5MM	1	60001-@
13	205-70-71321	PIN	1	60762-65000
	205-70-71320	PIN	1	60001-60761
14	205-70-66581	PLATE	1	60762-65000
	205-70-66580	PLATE	1	60001-60761
15	01010-81230	BOLT	2	60001-@
16	01643-31232	WASHER	2	60001-@
17	20Y-70-11340	SPACER, 0.8MM	1	60001-@
18	205-70-51530	SPACER, 1.5MM	3	60001-@
19	(⊙707-01-XX101)	CYLINDER GROUP	1	60759-65000
	(⊙707-01-XX100)	CYLINDER GROUP	1	60001-60758

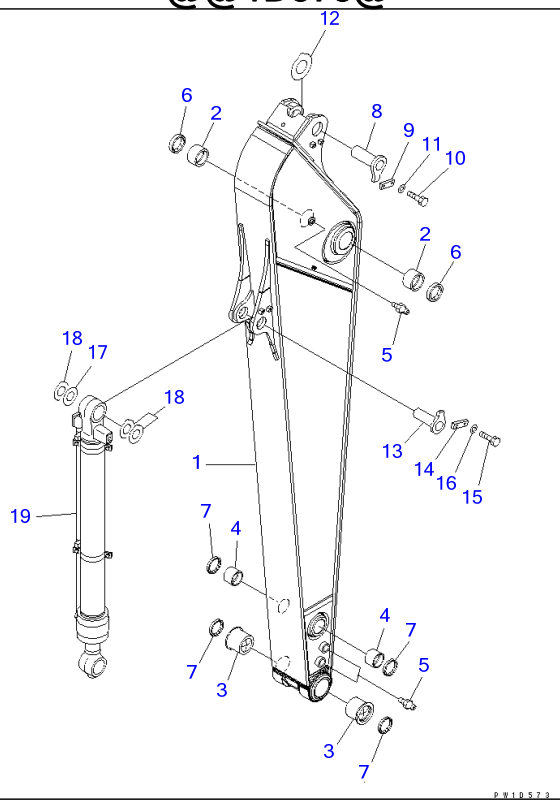

Ref T1200-01A5A **Page 360530**

PC220-7 S/N 60001-UP (Overseas Version)

ARM (3.05M) (HEAVY DUTY) (100 HOURS LUBRICATING)(#65001-)

Item	Part No.	Part Name	Qty	Serial No.
1	206-70-72122	ARM	1	65531-
	206-70-72121	ARM	1	60001-65530
2	205-70-72180	BUSHING	2	60001-
3	20Y-70-32410	BUSHING	2	60001-
4	21K-70-12161	BUSHING	2	60001-
5	07020-00000	FITTING	3	60001-
6	07145-00090	SEAL	2	60001-
7	20Y-70-23230	SEAL	4	60001-
8	20Y-70-31161	PIN	1	65531-
	20Y-70-31160	PIN	1	60001-65530
9	205-70-66581	PLATE	1	65531-
	205-70-66580	PLATE	1	60001-65530
10	01010-81230	BOLT	2	60001-
11	01643-31232	WASHER	2	60001-
12	205-70-51530	SPACER, 1.5MM	1	60001-
13	205-70-71321	PIN	1	65531-
	205-70-71320	PIN	1	60001-65530
14	205-70-66581	PLATE	1	65531-
	205-70-66580	PLATE	1	60001-65530
15	01010-81230	BOLT	2	60001-
16	01643-31232	WASHER	2	60001-
17	20Y-70-11340	SPACER, 0.8MM	1	60001-
18	205-70-51530	SPACER, 1.5MM	3	60001-
19	(⊙707-01-XX101)	CYLINDER GROUP	1	65358-
	(⊙707-01-XX100)	CYLINDER GROUP	1	65001-65357

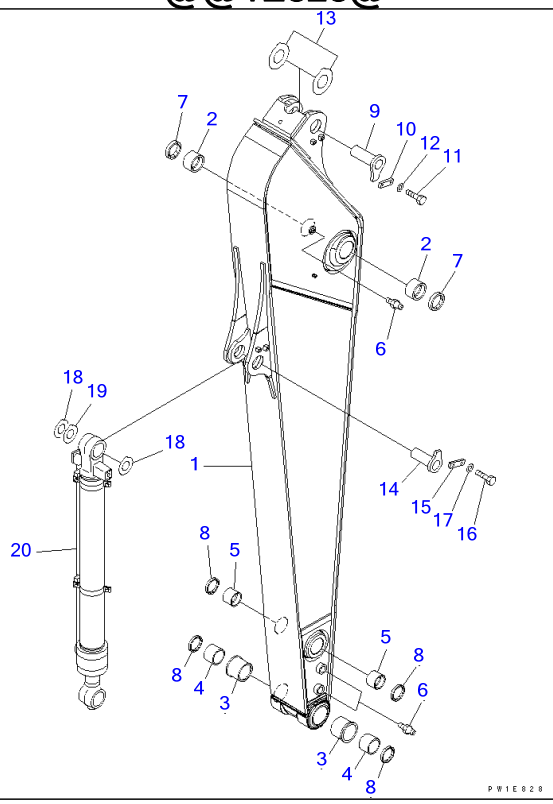

PC220-7 S/N 60001-UP (Overseas Version)

ARM (3.05M) (HEAVY DUTY) (500 HOURS LUBRICATING)(#60001-65000)

Item	Part No.	Part Name	Qty	Serial No.
	206-70-00431	ARM ASS'Y	1	60762-65000
	206-70-00430	ARM ASS'Y	1	60001-60761
1	☆	・ARM	1	60762-65000
	☆	・ARM	1	60001-60761
2	20Y-70-31272	・BUSHING	2	60746-65000
	□20Y-70-31271	・BUSHING	2	60001-60745
3	20Y-70-32321	・BUSHING	2	60001-@
4	20Y-70-32331	・BUSHING	2	60001-@
5	20Y-70-32351	・BUSHING	2	60001-@
6	07020-00000	・FITTING	3	60001-@
7	07145-00090	SEAL	2	60001-@
8	20Y-70-23230	SEAL	4	60001-@
9	20Y-70-31161	PIN	1	60762-65000
	20Y-70-31160	PIN	1	60001-60761
10	205-70-66581	PLATE	1	60762-65000
	205-70-66580	PLATE	1	60001-60761
11	01010-81230	BOLT	2	60001-@
12	01643-31232	WASHER	2	60001-@
13	20Y-70-31431	SPACER, 1.0MM	2	60773-65000
	□20Y-70-31430	SPACER, 1.0MM	2	60001-60772
14	205-70-71321	PIN	1	60762-65000
	205-70-71320	PIN	1	60001-60761
15	205-70-66581	PLATE	1	60762-65000
	205-70-66580	PLATE	1	60001-60761
16	01010-81230	BOLT	2	60001-@
17	01643-31232	WASHER	2	60001-@
18	20Y-70-31431	SPACER, 1.0MM	2	60773-65000
	□20Y-70-31430	SPACER, 1.0MM	2	60001-60772

ARM (3.05M) (HEAVY DUTY) (500 HOURS LUBRICATING)(#60001-65000)

Item	Part No.	Part Name	Qty	Serial No.
19	206-70-71451	SPACER, 2.0MM	2	60773-65000
	□206-70-71450	SPACER, 2.0MM	2	60001-60772
20	(⊙707-01-XZ912)	CYLINDER GROUP	1	60767-65000
	(⊙707-01-XZ911)	CYLINDER GROUP	1	60759-60766
	(⊙707-01-XZ910)	CYLINDER GROUP	1	60001-60758

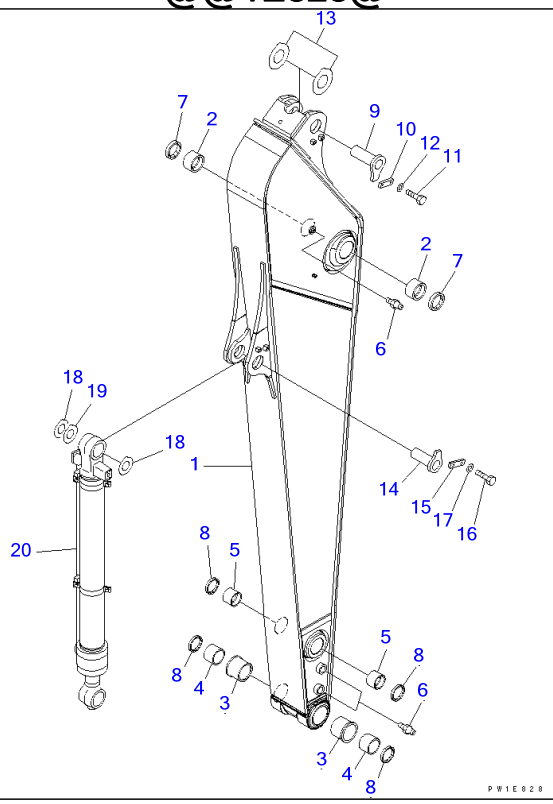

Ref T1200-01A6A **Page 360550**

PC220-7 S/N 60001-UP (Overseas Version)

ARM (3.05M) (HEAVY DUTY) (500 HOURS LUBRICATING)(#65001-)

Item	Part No.	Part Name	Qty	Serial No.
	206-70-00431	ARM ASS'Y	1	65531-
	206-70-00430	ARM ASS'Y	1	65001-65530
1	☆	・ARM	1	65531-
	☆	・ARM	1	65001-65530
2	20Y-70-31272	・BUSHING	2	65096-
	□20Y-70-31271	・BUSHING	2	65001-65095
3	20Y-70-32321	・BUSHING	2	60001-
4	20Y-70-32331	・BUSHING	2	60001-
5	20Y-70-32351	・BUSHING	2	60001-
6	07020-00000	・FITTING	3	60001-
7	07145-00090	SEAL	2	60001-
8	20Y-70-23230	SEAL	4	60001-
9	20Y-70-31161	PIN	1	65531-
	20Y-70-31160	PIN	1	65001-65530
10	205-70-66581	PLATE	1	65531-
	205-70-66580	PLATE	1	65001-65530
11	01010-81230	BOLT	2	60001-
12	01643-31232	WASHER	2	60001-
13	21K-70-71650	SPACER, 1.0MM	4	69185-
	◆20Y-70-31431	SPACER, 1.0MM	4	66138-69184
	□20Y-70-31430	SPACER, 1.0MM	2	65001-66137
14	205-70-71321	PIN	1	65531-
	205-70-71320	PIN	1	65001-65530
15	205-70-66581	PLATE	1	65531-
	205-70-66580	PLATE	1	65001-65530
16	01010-81230	BOLT	2	60001-
17	01643-31232	WASHER	2	60001-
18	21K-70-71650	SPACER, 1.0MM	4	69185-

ARM (3.05M) (HEAVY DUTY) (500 HOURS LUBRICATING)(#65001-)

Item	Part No.	Part Name	Qty	Serial No.
	◆20Y-70-31431	SPACER, 1.0MM	4	66138-69184
	□20Y-70-31430	SPACER, 1.0MM	2	65001-66137
19	21K-70-71660	SPACER, 2.0MM	2	69185-
	◆206-70-71451	SPACER, 2.0MM	2	66138-69184
	□206-70-71450	SPACER, 2.0MM	2	65001-66137
20	(⊙707-01-XZ912)	CYLINDER GROUP	1	65889-
	(⊙707-01-XZ911)	CYLINDER GROUP	1	65358-65888
	(⊙707-01-XZ910)	CYLINDER GROUP	1	65001-65357

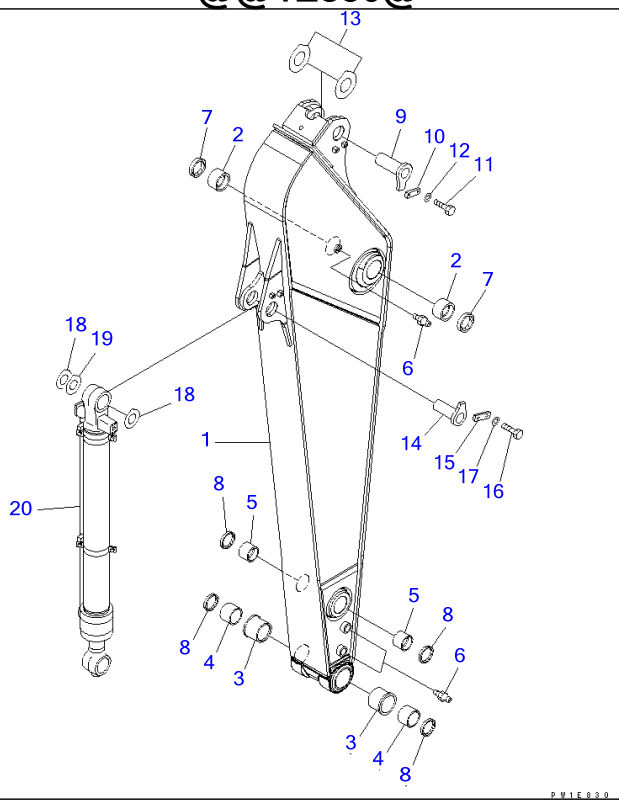

Ref T1200-01A7 **Page 360560**

PC220-7 S/N 60001-UP (Overseas Version)

ARM (2.5M) (500 HOURS LUBRICATING)(#60001-65000)

Item	Part No.	Part Name	Qty	Serial No.
	206-70-00451	ARM ASS'Y	1	60762-65000
	206-70-00450	ARM ASS'Y	1	60001-60761
1	☆	・ARM	1	60762-65000
	☆	・ARM	1	60001-60761
2	20Y-70-31272	・BUSHING	2	60746-65000
	□20Y-70-31271	・BUSHING	2	60001-60745
3	20Y-70-32321	・BUSHING	2	60001-@
4	20Y-70-32331	・BUSHING	2	60001-@
5	20Y-70-32351	・BUSHING	2	60001-@
6	07020-00000	・FITTING	3	60001-@
7	07145-00090	SEAL	2	60001-@
8	20Y-70-23230	SEAL	4	60001-@
9	20Y-70-31161	PIN	1	60762-65000
	20Y-70-31160	PIN	1	60001-60761
10	205-70-66581	PLATE	1	60762-65000
	205-70-66580	PLATE	1	60001-60761
11	01010-81230	BOLT	2	60001-@
12	01643-31232	WASHER	2	60001-@
13	20Y-70-31431	SPACER, 1.0MM	2	60773-65000
	□20Y-70-31430	SPACER, 1.0MM	2	60001-60772
14	205-70-71321	PIN	1	60762-65000
	205-70-71320	PIN	1	60001-60761
15	205-70-66581	PLATE	1	60762-65000
	205-70-66580	PLATE	1	60001-60761
16	01010-81230	BOLT	2	60001-@
17	01643-31232	WASHER	2	60001-@
18	20Y-70-31431	SPACER, 1.0MM	2	60773-65000
	□20Y-70-31430	SPACER, 1.0MM	2	60001-60772

ARM (2.5M) (500 HOURS LUBRICATING)(#60001-65000)

Item	Part No.	Part Name	Qty	Serial No.
19	206-70-71451	SPACER, 2.0MM	2	60773-65000
	□206-70-71450	SPACER, 2.0MM	2	60001-60772
20	(⊙707-01-XZ912)	CYLINDER GROUP	1	60767-65000
	(⊙707-01-XZ911)	CYLINDER GROUP	1	60759-60766
	(⊙707-01-XZ910)	CYLINDER GROUP	1	60001-60758

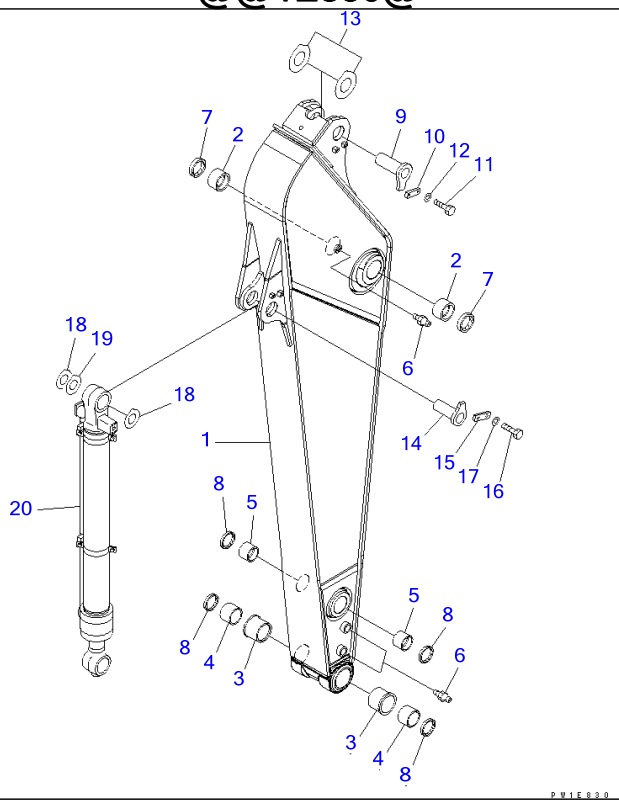

Ref T1200-01A7A **Page 360570**

PC220-7 S/N 60001-UP (Overseas Version)

ARM (2.5M) (500 HOURS LUBRICATING)(#65001-)

Item	Part No.	Part Name	Qty	Serial No.
	206-70-00451	ARM ASS'Y	1	65531-
	206-70-00450	ARM ASS'Y	1	65001-65530
1	☆	・ARM	1	65531-
	☆	・ARM	1	65001-65530
2	20Y-70-31272	・BUSHING	2	65096-
	□20Y-70-31271	・BUSHING	2	65001-65095
3	20Y-70-32321	・BUSHING	2	60001-
4	20Y-70-32331	・BUSHING	2	60001-
5	20Y-70-32351	・BUSHING	2	60001-
6	07020-00000	・FITTING	3	60001-
7	07145-00090	SEAL	2	60001-
8	20Y-70-23230	SEAL	4	60001-
9	20Y-70-31161	PIN	1	65531-
	20Y-70-31160	PIN	1	65001-65530
10	205-70-66581	PLATE	1	65531-
	205-70-66580	PLATE	1	65001-65530
11	01010-81230	BOLT	2	60001-
12	01643-31232	WASHER	2	60001-
13	21K-70-71650	SPACER, 1.0MM	4	69185-
	◆20Y-70-31431	SPACER, 1.0MM	4	66138-69184
	□20Y-70-31430	SPACER, 1.0MM	2	65001-66137
14	205-70-71321	PIN	1	65531-
	205-70-71320	PIN	1	65001-65530
15	205-70-66581	PLATE	1	65531-
	205-70-66580	PLATE	1	65001-65530
16	01010-81230	BOLT	2	60001-
17	01643-31232	WASHER	2	60001-
18	21K-70-71650	SPACER, 1.0MM	4	69185-

ARM (2.5M) (500 HOURS LUBRICATING)(#65001-)

Item	Part No.	Part Name	Qty	Serial No.
	◆20Y-70-31431	SPACER, 1.0MM	4	66138-69184
	□20Y-70-31430	SPACER, 1.0MM	2	65001-66137
19	21K-70-71660	SPACER, 2.0MM	2	69185-
	◆206-70-71451	SPACER, 2.0MM	2	66138-69184
	□206-70-71450	SPACER, 2.0MM	2	65001-66137
20	(⊙707-01-XZ912)	CYLINDER GROUP	1	65889-
	(⊙707-01-XZ911)	CYLINDER GROUP	1	65358-65888
	(⊙707-01-XZ910)	CYLINDER GROUP	1	65001-65357

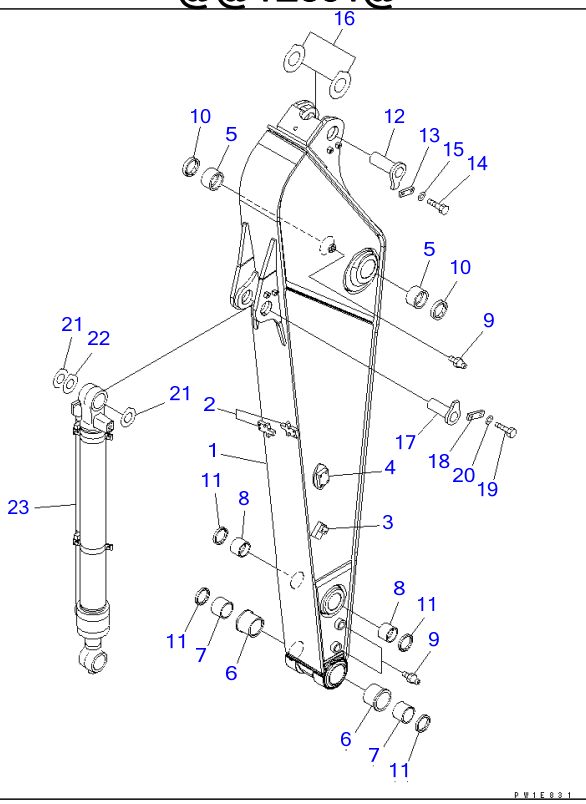

Ref T1200-01A8 **Page 360580**

PC220-7 S/N 60001-UP (Overseas Version)
ARM (2.5M) (FOR ADDITIONAL PIPING) (500 HOURS LUBRICATING)(#60001-65000)

Item	Part No.	Part Name	Qty	Serial No.
	206-70-00461	ARM ASS'Y	1	60762-65000
	206-70-00460	ARM ASS'Y	1	60001-60761
1	☆	・ARM	1	60762-65000
	☆	・ARM	1	60001-60761
2	20Y-70-32E50	・・SEAT (WELDED)	2	60001-@
3	20Y-970-3560	・・BRACKET (WELDED)	2	60001-@
4	20Y-970-3570	・・BRACKET (WELDED)	2	60001-@
5	20Y-70-31272	・BUSHING	2	60746-65000
	□20Y-70-31271	・BUSHING	2	60001-60745
6	20Y-70-32321	・BUSHING	2	60001-@
7	20Y-70-32331	・BUSHING	2	60001-@
8	20Y-70-32351	・BUSHING	2	60001-@
9	07020-00000	・FITTING	3	60001-@
10	07145-00090	SEAL	2	60001-@
11	20Y-70-23230	SEAL	4	60001-@
12	20Y-70-31161	PIN	1	60762-65000
	20Y-70-31160	PIN	1	60001-60761
13	205-70-66581	PLATE	1	60762-65000
	205-70-66580	PLATE	1	60001-60761
14	01010-81230	BOLT	2	60001-@
15	01643-31232	WASHER	2	60001-@
16	20Y-70-31431	SPACER, 1.0MM	2	60773-65000
	□20Y-70-31430	SPACER, 1.0MM	2	60001-60772
17	205-70-71321	PIN	1	60762-65000
	205-70-71320	PIN	1	60001-60761
18	205-70-66581	PLATE	1	60762-65000

PC220-7 S/N 60001-UP (Overseas Version)

ARM (2.5M) (FOR ADDITIONAL PIPING) (500 HOURS LUBRICATING)(#60001-65000)

Item	Part No.	Part Name	Qty	Serial No.
	205-70-66580	PLATE	1	60001-60761
19	01010-81230	BOLT	2	60001-@
20	01643-31232	WASHER	2	60001-@
21	20Y-70-31431	SPACER, 1.0MM	2	60773-65000
	□20Y-70-31430	SPACER, 1.0MM	2	60001-60772
22	206-70-71451	SPACER, 2.0MM	2	60773-65000
	□206-70-71450	SPACER, 2.0MM	2	60001-60772
23	(⊙707-01-XZ912)	CYLINDER GROUP	1	60767-65000
	(⊙707-01-XZ911)	CYLINDER GROUP	1	60759-60766
	(⊙707-01-XZ910)	CYLINDER GROUP	1	60001-60758

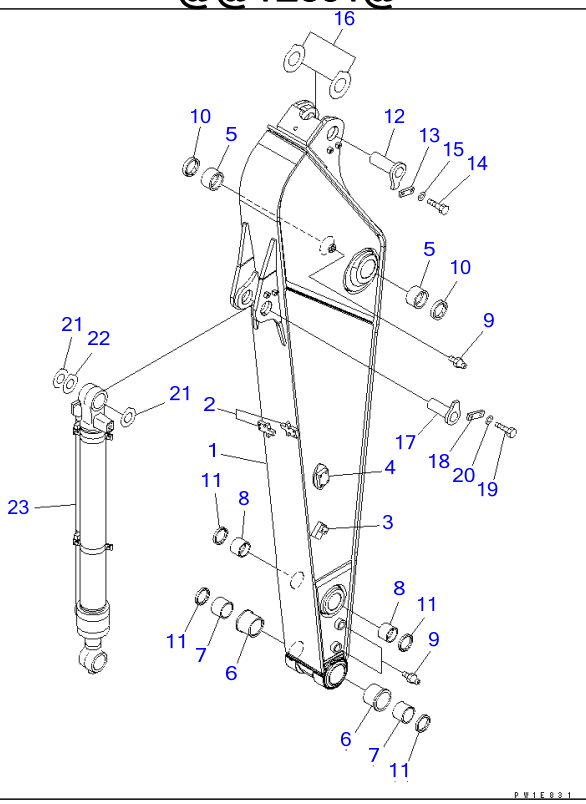

Ref T1200-01A8A **Page 360590**

PC220-7 S/N 60001-UP (Overseas Version)

ARM (2.5M) (FOR ADDITIONAL PIPING) (500 HOURS LUBRICATING)(#65001-)

Item	Part No.	Part Name	Qty	Serial No.
	206-70-00461	ARM ASS'Y	1	65531-
	206-70-00460	ARM ASS'Y	1	65001-65530
1	☆	・ARM	1	65531-
	☆	・ARM	1	65001-65530
2	20Y-70-32E50	・・SEAT (WELDED)	2	60001-
3	20Y-970-3560	・・BRACKET (WELDED)	2	60001-
4	20Y-970-3570	・・BRACKET (WELDED)	2	60001-
5	20Y-70-31272	・BUSHING	2	65096-
	□20Y-70-31271	・BUSHING	2	65001-65095
6	20Y-70-32321	・BUSHING	2	60001-
7	20Y-70-32331	・BUSHING	2	60001-
8	20Y-70-32351	・BUSHING	2	60001-
9	07020-00000	・FITTING	3	60001-
10	07145-00090	SEAL	2	60001-
11	20Y-70-23230	SEAL	4	60001-
12	20Y-70-31161	PIN	1	65531-
	20Y-70-31160	PIN	1	65001-65530
13	205-70-66581	PLATE	1	65531-
	205-70-66580	PLATE	1	65001-65530
14	01010-81230	BOLT	2	60001-
15	01643-31232	WASHER	2	60001-
16	21K-70-71650	SPACER, 1.0MM	4	69185-
	◆20Y-70-31431	SPACER, 1.0MM	4	66138-69184
	□20Y-70-31430	SPACER, 1.0MM	2	65001-66137
17	205-70-71321	PIN	1	65531-
	205-70-71320	PIN	1	65001-65530
18	205-70-66581	PLATE	1	65531-
	205-70-66580	PLATE	1	65001-65530

ARM (2.5M) (FOR ADDITIONAL PIPING) (500 HOURS LUBRICATING)(#65001-)

Item	Part No.	Part Name	Qty	Serial No.
19	01010-81230	BOLT	2	60001-
20	01643-31232	WASHER	2	60001-
21	21K-70-71650	SPACER, 1.0MM	4	69185-
	◆20Y-70-31431	SPACER, 1.0MM	4	66138-69184
	□20Y-70-31430	SPACER, 1.0MM	2	65001-66137
22	21K-70-71660	SPACER, 2.0MM	2	69185-
	◆206-70-71451	SPACER, 2.0MM	2	66138-69184
	□206-70-71450	SPACER, 2.0MM	2	65001-66137
23	(⊙707-01-XZ912)	CYLINDER GROUP	1	65889-
	(⊙707-01-XZ911)	CYLINDER GROUP	1	65358-65888
	(⊙707-01-XZ910)	CYLINDER GROUP	1	65001-65357

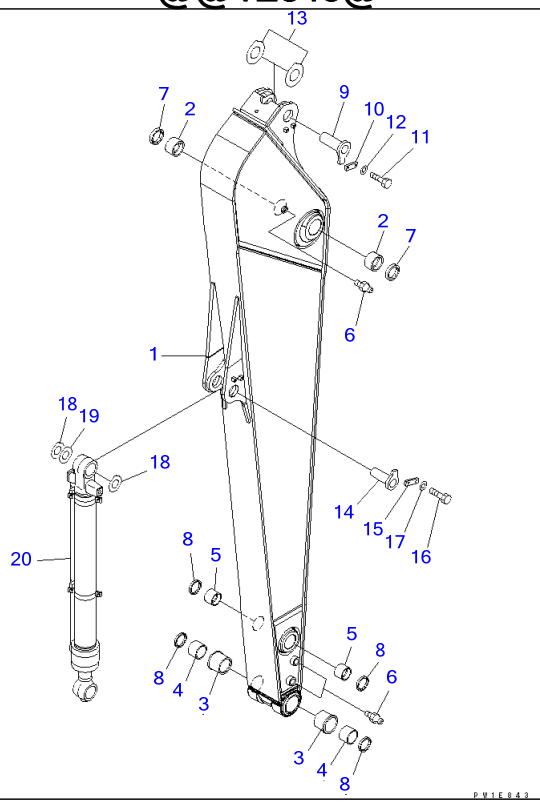

Ref T1200-01A9 **Page 360600**

PC220-7 S/N 60001-UP (Overseas Version)

ARM (3.5M) (500 HOURS LUBRICATING)(#60001-65000)

Item	Part No.	Part Name	Qty	Serial No.
	206-70-00471	ARM ASS'Y	1	60762-65000
	206-70-00470	ARM ASS'Y	1	60001-60761
1	☆	・ARM	1	60762-65000
	☆	・ARM	1	60001-60761
2	20Y-70-31272	・BUSHING	2	60746-65000
	□20Y-70-31271	・BUSHING	2	60001-60745
3	20Y-70-32321	・BUSHING	2	60001-@
4	20Y-70-32331	・BUSHING	2	60001-@
5	20Y-70-32351	・BUSHING	2	60001-@
6	07020-00000	・FITTING	3	60001-@
7	07145-00090	SEAL	2	60001-@
8	20Y-70-23230	SEAL	4	60001-@
9	20Y-70-31161	PIN	1	60762-65000
	20Y-70-31160	PIN	1	60001-60761
10	205-70-66581	PLATE	1	60762-65000
	205-70-66580	PLATE	1	60001-60761
11	01010-81230	BOLT	2	60001-@
12	01643-31232	WASHER	2	60001-@
13	20Y-70-31431	SPACER, 1.0MM	2	60773-65000
	□20Y-70-31430	SPACER, 1.0MM	2	60001-60772
14	205-70-71321	PIN	1	60762-65000
	205-70-71320	PIN	1	60001-60761
15	205-70-66581	PLATE	1	60762-65000
	205-70-66580	PLATE	1	60001-60761
16	01010-81230	BOLT	2	60001-@
17	01643-31232	WASHER	2	60001-@
18	20Y-70-31431	SPACER, 1.0MM	2	60773-65000
	□20Y-70-31430	SPACER, 1.0MM	2	60001-60772

ARM (3.5M) (500 HOURS LUBRICATING)(#60001-65000)

Item	Part No.	Part Name	Qty	Serial No.
19	206-70-71451	SPACER, 2.0MM	2	60773-65000
	□206-70-71450	SPACER, 2.0MM	2	60001-60772
20	(⊙707-01-XZ912)	CYLINDER GROUP	1	60767-65000
	(⊙707-01-XZ911)	CYLINDER GROUP	1	60759-60766
	(⊙707-01-XZ910)	CYLINDER GROUP	1	60001-60758

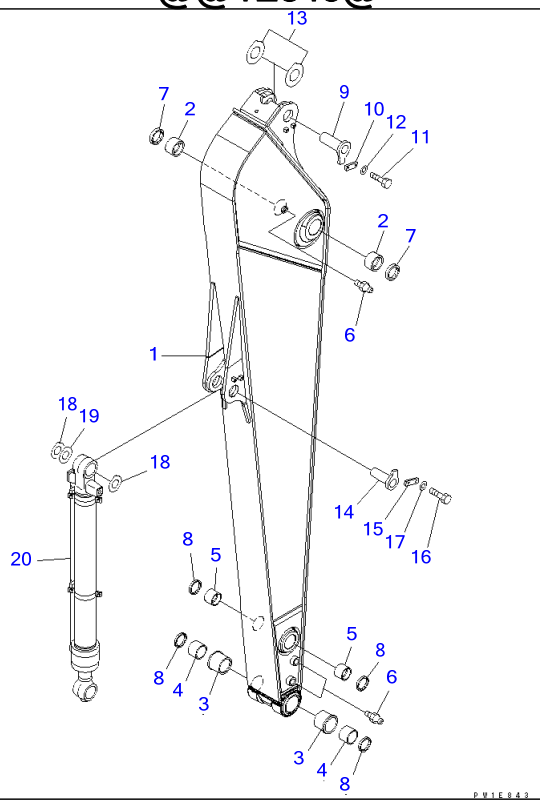

Ref T1200-01A9A **Page 360610**

PC220-7 S/N 60001-UP (Overseas Version)

ARM (3.5M) (500 HOURS LUBRICATING)(#65001-)

Item	Part No.	Part Name	Qty	Serial No.
	206-70-00471	ARM ASS'Y	1	65531-
	206-70-00470	ARM ASS'Y	1	65001-65530
1	☆	・ARM	1	65531-
	☆	・ARM	1	65001-65530
2	20Y-70-31272	・BUSHING	2	65096-
	□20Y-70-31271	・BUSHING	2	65001-65095
3	20Y-70-32321	・BUSHING	2	60001-
4	20Y-70-32331	・BUSHING	2	60001-
5	20Y-70-32351	・BUSHING	2	60001-
6	07020-00000	・FITTING	3	60001-
7	07145-00090	SEAL	2	60001-
8	20Y-70-23230	SEAL	4	60001-
9	20Y-70-31161	PIN	1	65531-
	20Y-70-31160	PIN	1	65001-65530
10	205-70-66581	PLATE	1	65531-
	205-70-66580	PLATE	1	65001-65530
11	01010-81230	BOLT	2	60001-
12	01643-31232	WASHER	2	60001-
13	21K-70-71650	SPACER, 1.0MM	4	69185-
	◆20Y-70-31431	SPACER, 1.0MM	4	66138-69184
	□20Y-70-31430	SPACER, 1.0MM	2	65001-66137
14	205-70-71321	PIN	1	65531-
	205-70-71320	PIN	1	65001-65530
15	205-70-66581	PLATE	1	65531-
	205-70-66580	PLATE	1	65001-65530
16	01010-81230	BOLT	2	60001-
17	01643-31232	WASHER	2	60001-
18	21K-70-71650	SPACER, 1.0MM	4	69185-

ARM (3.5M) (500 HOURS LUBRICATING)(#65001-)

Item	Part No.	Part Name	Qty	Serial No.
	◆20Y-70-31431	SPACER, 1.0MM	4	66138-69184
	□20Y-70-31430	SPACER, 1.0MM	2	65001-66137
19	21K-70-71660	SPACER, 2.0MM	2	69185-
	◆206-70-71451	SPACER, 2.0MM	2	66138-69184
	□206-70-71450	SPACER, 2.0MM	2	65001-66137
20	(⊙707-01-XZ912)	CYLINDER GROUP	1	65889-
	(⊙707-01-XZ911)	CYLINDER GROUP	1	65358-65888
	(⊙707-01-XZ910)	CYLINDER GROUP	1	65001-65357

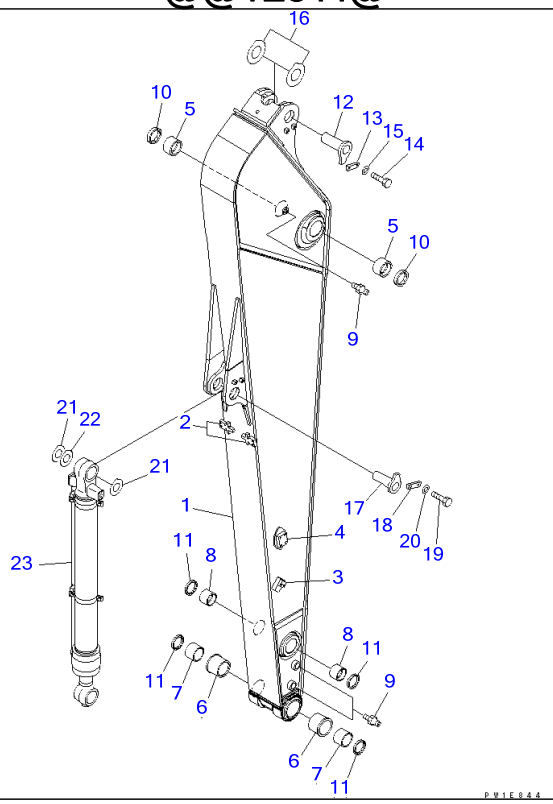

Ref T1200-01B0 **Page 360620**

PC220-7 S/N 60001-UP (Overseas Version)
ARM (3.5M) (FOR ADDITIONAL PIPING) (500 HOURS LUBRICATING)(#60001-65000)

Item	Part No.	Part Name	Qty	Serial No.
	206-70-00481	ARM ASS'Y	1	60762-65000
	206-70-00480	ARM ASS'Y	1	60001-60761
1	☆	・ARM	1	60762-65000
	☆	・ARM	1	60001-60761
2	20Y-70-32E50	・・SEAT (WELDED)	2	60001-@
3	20Y-970-3560	・・BRACKET (WELDED)	2	60001-@
4	20Y-970-3570	・・BRACKET (WELDED)	2	60001-@
5	20Y-70-31272	・BUSHING	2	60746-65000
	□20Y-70-31271	・BUSHING	2	60001-60745
6	20Y-70-32321	・BUSHING	2	60001-@
7	20Y-70-32331	・BUSHING	2	60001-@
8	20Y-70-32351	・BUSHING	2	60001-@
9	07020-00000	・FITTING	3	60001-@
10	07145-00090	SEAL	2	60001-@
11	20Y-70-23230	SEAL	4	60001-@
12	20Y-70-31161	PIN	1	60762-65000
	20Y-70-31160	PIN	1	60001-60761
13	205-70-66581	PLATE	1	60762-65000
	205-70-66580	PLATE	1	60001-60761
14	01010-81230	BOLT	2	60001-@
15	01643-31232	WASHER	2	60001-@
16	20Y-70-31431	SPACER, 1.0MM	2	60773-65000
	□20Y-70-31430	SPACER, 1.0MM	2	60001-60772
17	205-70-71321	PIN	1	60762-65000
	205-70-71320	PIN	1	60001-60761
18	205-70-66581	PLATE	1	60762-65000

ARM (3.5M) (FOR ADDITIONAL PIPING) (500 HOURS LUBRICATING)(#60001-65000)

Item	Part No.	Part Name	Qty	Serial No.
	205-70-66580	PLATE	1	60001-60761
19	01010-81230	BOLT	2	60001-@
20	01643-31232	WASHER	2	60001-@
21	20Y-70-31431	SPACER, 1.0MM	2	60773-65000
	□20Y-70-31430	SPACER, 1.0MM	2	60001-60772
22	206-70-71451	SPACER, 2.0MM	2	60773-65000
	□206-70-71450	SPACER, 2.0MM	2	60001-60772
23	(⊙707-01-XZ912)	CYLINDER GROUP	1	60767-65000
	(⊙707-01-XZ911)	CYLINDER GROUP	1	60759-60766
	(⊙707-01-XZ910)	CYLINDER GROUP	1	60001-60758

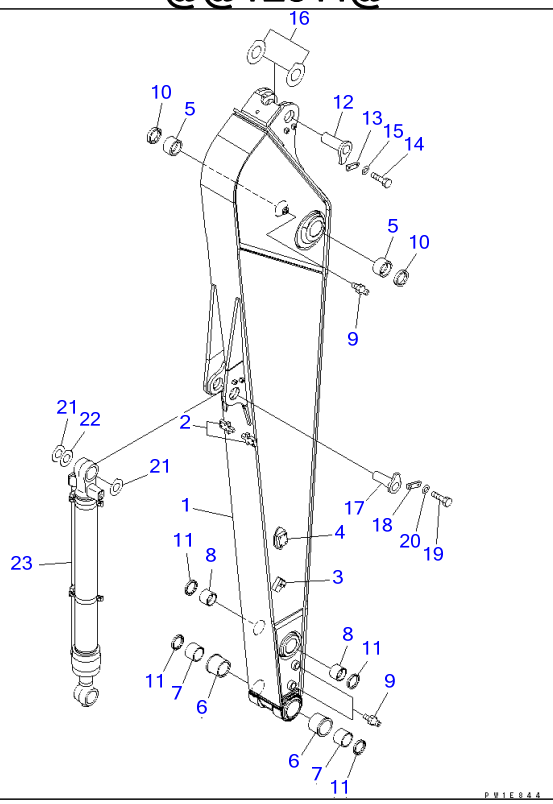

Ref T1200-01B0A **Page 360630**

PC220-7 S/N 60001-UP (Overseas Version)

ARM (3.5M) (FOR ADDITIONAL PIPING) (500 HOURS LUBRICATING)(#65001-)

Item	Part No.	Part Name	Qty	Serial No.
	206-70-00481	ARM ASS'Y	1	65531-
	206-70-00480	ARM ASS'Y	1	65001-65530
1	☆	・ARM	1	65531-
	☆	・ARM	1	65001-65530
2	20Y-70-32E50	・・SEAT (WELDED)	2	60001-
3	20Y-970-3560	・・BRACKET (WELDED)	2	60001-
4	20Y-970-3570	・・BRACKET (WELDED)	2	60001-
5	20Y-70-31272	・BUSHING	2	65096-
	□20Y-70-31271	・BUSHING	2	65001-65095
6	20Y-70-32321	・BUSHING	2	60001-
7	20Y-70-32331	・BUSHING	2	60001-
8	20Y-70-32351	・BUSHING	2	60001-
9	07020-00000	・FITTING	3	60001-
10	07145-00090	SEAL	2	60001-
11	20Y-70-23230	SEAL	4	60001-
12	20Y-70-31161	PIN	1	65531-
	20Y-70-31160	PIN	1	65001-65530
13	205-70-66581	PLATE	1	65531-
	205-70-66580	PLATE	1	65001-65530
14	01010-81230	BOLT	2	60001-
15	01643-31232	WASHER	2	60001-
16	21K-70-71650	SPACER, 1.0MM	4	69185-
	◆20Y-70-31431	SPACER, 1.0MM	4	66138-69184
	□20Y-70-31430	SPACER, 1.0MM	2	65001-66137
17	205-70-71321	PIN	1	65531-
	205-70-71320	PIN	1	65001-65530
18	205-70-66581	PLATE	1	65531-
	205-70-66580	PLATE	1	65001-65530

ARM (3.5M) (FOR ADDITIONAL PIPING) (500 HOURS LUBRICATING)(#65001-)

Item	Part No.	Part Name	Qty	Serial No.
19	01010-81230	BOLT	2	60001-
20	01643-31232	WASHER	2	60001-
21	21K-70-71650	SPACER, 1.0MM	4	69185-
	◆20Y-70-31431	SPACER, 1.0MM	4	66138-69184
	□20Y-70-31430	SPACER, 1.0MM	2	65001-66137
22	21K-70-71660	SPACER, 2.0MM	2	69185-
	◆206-70-71451	SPACER, 2.0MM	2	66138-69184
	□206-70-71450	SPACER, 2.0MM	2	65001-66137
23	(⊙707-01-XZ912)	CYLINDER GROUP	1	65889-
	(⊙707-01-XZ911)	CYLINDER GROUP	1	65358-65888
	(⊙707-01-XZ910)	CYLINDER GROUP	1	65001-65357

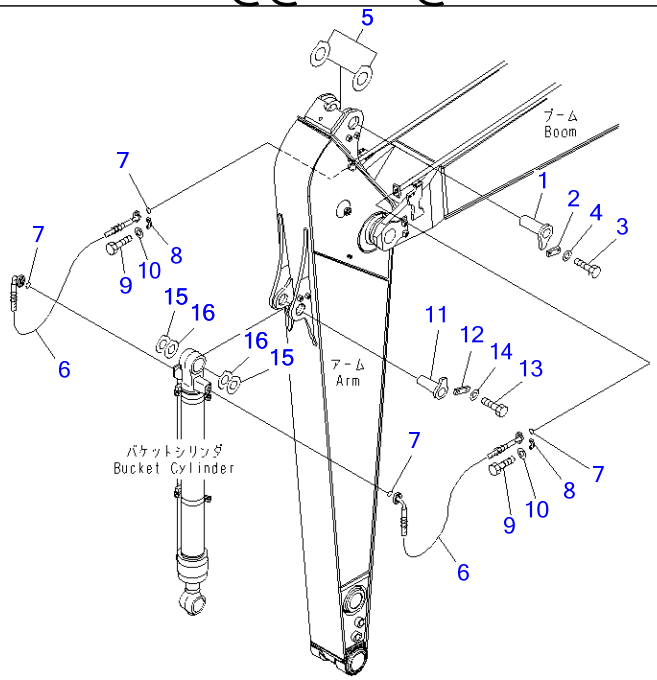

P W 1 E 8 4 7

ARM LESS

Item	Part No.	Part Name	Qty	Serial No.
1	20Y-70-31160	PIN	1	60001-
2	205-70-66580	PLATE	1	60001-
3	01010-81230	BOLT	2	60001-
4	01643-31232	WASHER	2	60001-
5	21K-70-71650	SPACER, 1.0MM	4	69185-
	◆20Y-70-31431	SPACER, 1.0MM	4	66138-69184
	□20Y-70-31430	SPACER, 1.0MM	2	65001-66137
	20Y-70-31431	SPACER, 1.0MM	2	60773-65000
	□20Y-70-31430	SPACER, 1.0MM	2	60001-60772
6	206-62-73210	HOSE	2	60001-
7	07000-13025	O-RING	4	60001-
8	07371-30640	FLANGE	8	60001-
9	07372-21035	BOLT	16	60001-
10	01643-51032	WASHER	16	60001-
11	205-70-71320	PIN	1	60001-
12	205-70-66580	PLATE	1	60001-
13	01010-81230	BOLT	2	60001-
14	01643-31232	WASHER	2	60001-
15	21K-70-71650	SPACER, 1.0MM	4	69185-
	◆20Y-70-31431	SPACER, 1.0MM	4	66138-69184
	□20Y-70-31430	SPACER, 1.0MM	2	65001-66137
	20Y-70-31431	SPACER, 1.0MM	2	60773-65000
	□20Y-70-31430	SPACER, 1.0MM	2	60001-60772
16	21K-70-71660	SPACER, 2.0MM	2	69185-
	◆206-70-71451	SPACER, 2.0MM	2	66138-69184
	□206-70-71450	SPACER, 2.0MM	2	65001-66137
	206-70-71451	SPACER, 2.0MM	2	60773-65000
	□206-70-71450	SPACER, 2.0MM	2	60001-60772

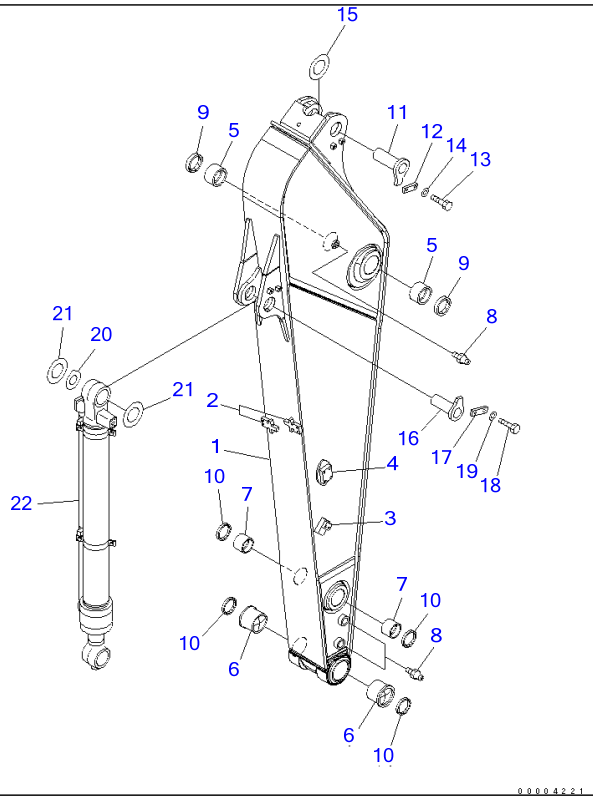

Ref T1200-01B2 Page 360650

PC220-7 S/N 60001-UP (Overseas Version)

ARM (2.5M) (FOR ADDITIONAL PIPING) (100 HOURS LUBRICATING)(#60001-65000)

Item	Part No.	Part Name	Qty	Serial No.
1	206-970-7151	ARM	1	60762-65000
	206-970-7150	ARM	1	60001-60761
	☆	・ARM	1	60762-65000
	☆	・ARM	1	60001-60761
2	20Y-70-32E50	・SEAT (WELDED)	2	60001-@
3	20Y-970-3560	・BRACKET (WELDED)	2	60001-@
4	20Y-970-3570	・BRACKET (WELDED)	2	60001-@
5	205-70-72180	BUSHING	2	60001-@
6	20Y-70-32410	BUSHING	2	60001-@
7	21K-70-12161	BUSHING	2	60001-@
8	07020-00000	FITTING	3	60001-@
9	07145-00090	SEAL	2	60001-@
10	20Y-70-23230	SEAL	4	60001-@
11	20Y-70-31161	PIN	1	60762-65000
	20Y-70-31160	PIN	1	60001-60761
12	205-70-66581	PLATE	1	60762-65000
	205-70-66580	PLATE	1	60001-60761
13	01010-81230	BOLT	2	60001-@
14	01643-31232	WASHER	2	60001-@
15	205-70-51530	SPACER, 1.5MM	1	60001-@
16	205-70-71321	PIN	1	60762-65000
	205-70-71320	PIN	1	60001-60761
17	205-70-66581	PLATE	1	60762-65000
	205-70-66580	PLATE	1	60001-60761
18	01010-81230	BOLT	2	60001-@
19	01643-31232	WASHER	2	60001-@

PC220-7 S/N 60001-UP (Overseas Version)

ARM (2.5M) (FOR ADDITIONAL PIPING) (100 HOURS LUBRICATING)(#60001-65000)

Item	Part No.	Part Name	Qty	Serial No.
20	20Y-70-11340	SPACER, 0.8MM	1	60001-@
21	205-70-51530	SPACER, 1.5MM	3	60001-@
22	(⊙707-01-XX101)	CYLINDER GROUP	1	60759-65000
	(⊙707-01-XX100)	CYLINDER GROUP	1	60001-60758

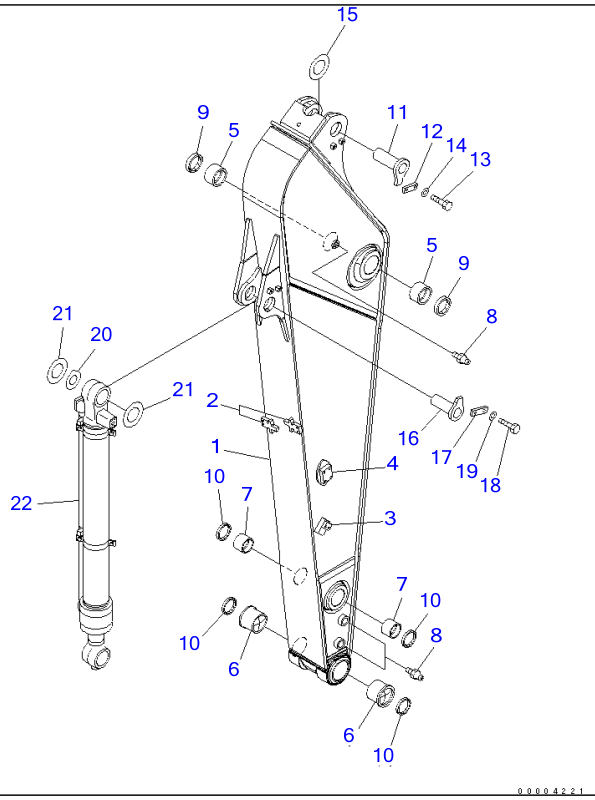

Ref T1200-01B2A

Page 360660

PC220-7 S/N 60001-UP (Overseas Version)

ARM (2.5M) (FOR ADDITIONAL PIPING) (100 HOURS LUBRICATING)(#65001-)

Item	Part No.	Part Name	Qty	Serial No.
1	206-970-7151	ARM	1	65531-
	206-970-7150	ARM	1	60001-65530
2	20Y-70-32E50	・SEAT (WELDED)	2	60001-
3	20Y-970-3560	・BRACKET (WELDED)	2	60001-
4	20Y-970-3570	・BRACKET (WELDED)	2	60001-
5	205-70-72180	BUSHING	2	60001-
6	20Y-70-32410	BUSHING	2	60001-
7	21K-70-12161	BUSHING	2	60001-
8	07020-00000	FITTING	3	60001-
9	07145-00090	SEAL	2	60001-
10	20Y-70-23230	SEAL	4	60001-
11	20Y-70-31161	PIN	1	65531-
	20Y-70-31160	PIN	1	60001-65530
12	205-70-66581	PLATE	1	65531-
	205-70-66580	PLATE	1	60001-65530
13	01010-81230	BOLT	2	60001-
14	01643-31232	WASHER	2	60001-
15	205-70-51530	SPACER, 1.5MM	1	60001-
16	205-70-71321	PIN	1	65531-
	205-70-71320	PIN	1	60001-65530
17	205-70-66581	PLATE	1	65531-
	205-70-66580	PLATE	1	60001-65530
18	01010-81230	BOLT	2	60001-
19	01643-31232	WASHER	2	60001-
20	20Y-70-11340	SPACER, 0.8MM	1	60001-
21	205-70-51530	SPACER, 1.5MM	3	60001-
22	(⊙707-01-XX101)	CYLINDER GROUP	1	65358-
	(⊙707-01-XX100)	CYLINDER GROUP	1	65001-65357

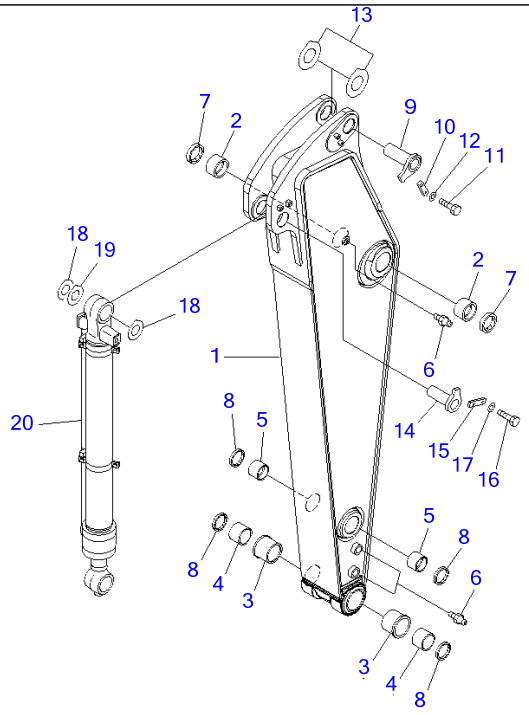

00004222

Ref T1200-01B3 **Page 360670**

PC220-7 S/N 60001-UP (Overseas Version)
ARM (2.0M) (500 HOURS LUBRICATING)(#60001-65000)

Item	Part No.	Part Name	Qty	Serial No.
	206-70-00491	ARM ASS'Y	1	60762-65000
	206-70-00490	ARM ASS'Y	1	60001-60761
1	☆	・ARM	1	60762-65000
	☆	・ARM	1	60001-60761
2	20Y-70-31272	・BUSHING	2	60746-65000
	□20Y-70-31271	・BUSHING	2	60001-60745
3	20Y-70-32321	・BUSHING	2	60001-@
4	20Y-70-32331	・BUSHING	2	60001-@
5	20Y-70-32351	・BUSHING	2	60001-@
6	07020-00000	・FITTING	3	60001-@
7	07145-00090	SEAL	2	60001-@
8	20Y-70-23230	SEAL	4	60001-@
9	206-70-71591	PIN	1	60762-65000
	206-70-71590	PIN	1	60001-60761
10	205-70-66581	PLATE	1	60762-65000
	205-70-66580	PLATE	1	60001-60761
11	01010-81230	BOLT	2	60001-@
12	01643-31232	WASHER	2	60001-@
13	20Y-70-31431	SPACER, 1.0MM	2	60773-65000
	□20Y-70-31430	SPACER, 1.0MM	2	60001-60772
14	206-70-72191	PIN	1	60762-65000
	206-70-51170	PIN	1	60001-60761
15	205-70-66581	PLATE	1	60762-65000
	205-70-66580	PLATE	1	60001-60761
16	01010-81230	BOLT	2	60001-@
17	01643-31232	WASHER	2	60001-@
18	20Y-70-31431	SPACER, 1.0MM	2	60773-65000
	□20Y-70-31430	SPACER, 1.0MM	2	60001-60772

ARM (2.0M) (500 HOURS LUBRICATING)(#60001-65000)

Item	Part No.	Part Name	Qty	Serial No.
19	206-70-71451	SPACER, 2.0MM	2	60773-65000
	□206-70-71450	SPACER, 2.0MM	2	60001-60772
20	(⊙707-01-XS540)	CYLINDER GROUP	1	60767-65000
	(⊙707-01-XZ950)	CYLINDER GROUP	1	60001-60766

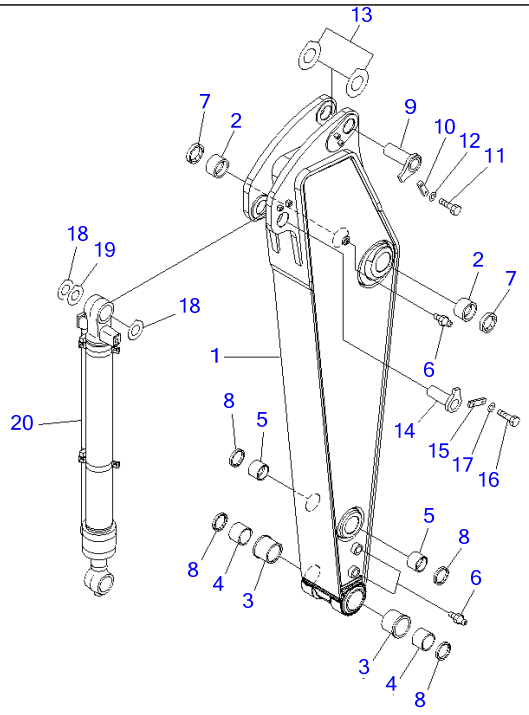

00004222

Ref T1200-01B3A **Page 360680**

PC220-7 S/N 60001-UP (Overseas Version)
ARM (2.0M) (500 HOURS LUBRICATING)(#65001-65888)

Item	Part No.	Part Name	Qty	Serial No.
	206-70-00491	ARM ASS'Y	1	65531-65888
	206-70-00490	ARM ASS'Y	1	65001-65530
1	☆	・ARM	1	65531-@
	☆	・ARM	1	65001-65530
2	20Y-70-31272	・BUSHING	2	65096-@
	□20Y-70-31271	・BUSHING	2	65001-65095
3	20Y-70-32321	・BUSHING	2	60001-65888
4	20Y-70-32331	・BUSHING	2	60001-65888
5	20Y-70-32351	・BUSHING	2	60001-65888
6	07020-00000	・FITTING	3	60001-@
7	07145-00090	SEAL	2	60001-@
8	20Y-70-23230	SEAL	4	60001-@
9	206-70-71591	PIN	1	65531-@
	206-70-71590	PIN	1	65001-65530
10	205-70-66581	PLATE	1	65531-@
	205-70-66580	PLATE	1	65001-65530
11	01010-81230	BOLT	2	60001-@
12	01643-31232	WASHER	2	60001-@
13	20Y-70-31430	SPACER, 1.0MM	2	65001-@
14	206-70-72191	PIN	1	65531-@
	206-70-51170	PIN	1	65001-65530
15	205-70-66581	PLATE	1	65531-@
	205-70-66580	PLATE	1	65001-65530
16	01010-81230	BOLT	2	60001-@
17	01643-31232	WASHER	2	60001-@
18	20Y-70-31430	SPACER, 1.0MM	2	65001-@
19	206-70-71450	SPACER, 2.0MM	2	65001-@
20	(⊙707-01-XZ950)	CYLINDER GROUP	1	65001-65888

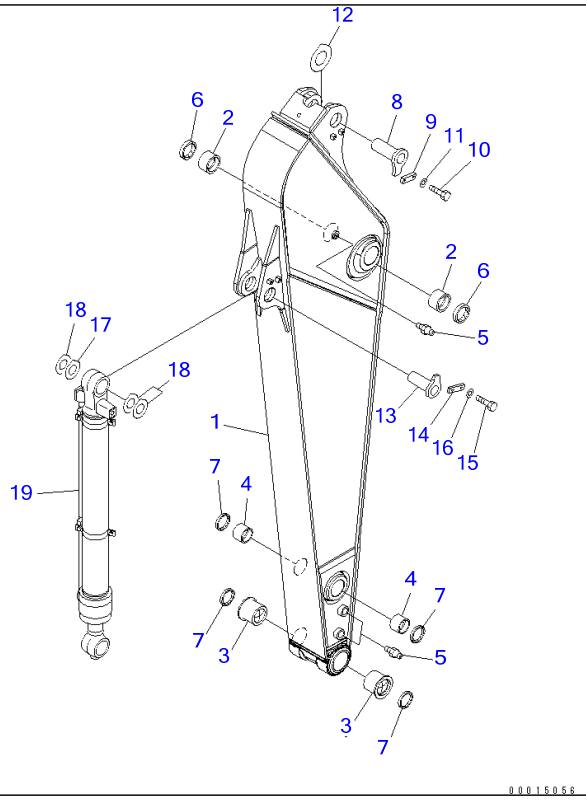

Ref T1200-01B4 **Page 360690**

PC220-7 S/N 60001-UP (Overseas Version)

ARM (2.5M) (500 HOURS LUBRICATING)(#60001-65000)

Item	Part No.	Part Name	Qty	Serial No.
1	206-944-7511	ARM	1	60762-65000
	206-944-7510	ARM	1	60001-60761
2	205-70-72180	BUSHING	2	60001-@
3	20Y-70-32410	BUSHING	2	60001-@
4	21K-70-12161	BUSHING	2	60001-@
5	07020-00000	FITTING	3	60001-@
6	07145-00090	SEAL	2	60001-@
7	20Y-70-23230	SEAL	4	60001-@
8	20Y-70-31161	PIN	1	60762-65000
	20Y-70-31160	PIN	1	60001-60761
9	205-70-66581	PLATE	1	60762-65000
	205-70-66580	PLATE	1	60001-60761
10	01010-81230	BOLT	2	60001-@
11	01643-31232	WASHER	2	60001-@
12	205-70-51530	SPACER, 1.5MM	1	60001-@
13	205-70-71321	PIN	1	60762-65000
	205-70-71320	PIN	1	60001-60761
14	205-70-66581	PLATE	1	60762-65000
	205-70-66580	PLATE	1	60001-60761
15	01010-81230	BOLT	2	60001-@
16	01643-31232	WASHER	2	60001-@
17	20Y-70-11340	SPACER, 0.8MM	1	60001-@
18	205-70-51530	SPACER, 1.5MM	3	60001-@
19	(⊙707-01-XX101)	CYLINDER GROUP	1	60759-65000
	(⊙707-01-XX100)	CYLINDER GROUP	1	60001-60758

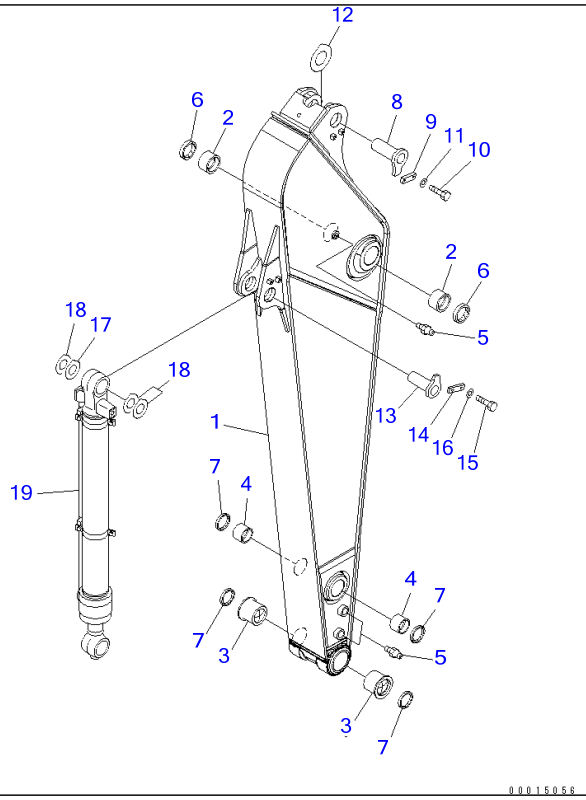

Ref T1200-01B4A **Page 360700**

PC220-7 S/N 60001-UP (Overseas Version)

ARM (2.5M) (500 HOURS LUBRICATING)(#65001-)

Item	Part No.	Part Name	Qty	Serial No.
1	206-944-7511	ARM	1	65531-
	206-944-7510	ARM	1	60001-65530
2	205-70-72180	BUSHING	2	60001-
3	20Y-70-32410	BUSHING	2	60001-
4	21K-70-12161	BUSHING	2	60001-
5	07020-00000	FITTING	3	60001-
6	07145-00090	SEAL	2	60001-
7	20Y-70-23230	SEAL	4	60001-
8	20Y-70-31161	PIN	1	65531-
	20Y-70-31160	PIN	1	60001-65530
9	205-70-66581	PLATE	1	65531-
	205-70-66580	PLATE	1	60001-65530
10	01010-81230	BOLT	2	60001-
11	01643-31232	WASHER	2	60001-
12	205-70-51530	SPACER, 1.5MM	1	60001-
13	205-70-71321	PIN	1	65531-
	205-70-71320	PIN	1	60001-65530
14	205-70-66581	PLATE	1	65531-
	205-70-66580	PLATE	1	60001-65530
15	01010-81230	BOLT	2	60001-
16	01643-31232	WASHER	2	60001-
17	20Y-70-11340	SPACER, 0.8MM	1	60001-
18	205-70-51530	SPACER, 1.5MM	3	60001-
19	(⊙707-01-XX101)	CYLINDER GROUP	1	65358-
	(⊙707-01-XX100)	CYLINDER GROUP	1	65001-65357

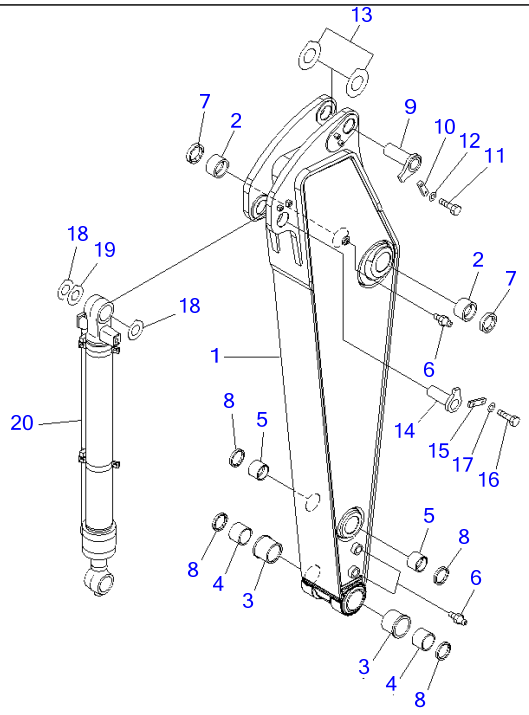

00004222

Ref T1200-01B5 **Page 360710**

PC220-7 S/N 60001-UP (Overseas Version)
ARM (2.0M) (500 HOURS LUBRICATING) (FOR SOUTH AFRICA)(#60001-65000)

Item	Part No.	Part Name	Qty	Serial No.
1	206-944-7532	ARM	1	60762-65000
	206-944-7531	ARM	1	60001-60761
2	☐20Y-70-31272	BUSHING	2	60746-65000
	20Y-70-31271	BUSHING	2	60001-60745
3	20Y-70-32410	BUSHING	2	60767-65000
	20Y-70-32321	BUSHING	2	60001-60766
4	20Y-70-32331	BUSHING	2	60001-60766
5	21K-70-12161	BUSHING	2	60767-65000
	20Y-70-32351	BUSHING	2	60001-60766
6	07020-00000	FITTING	3	60001-@
7	07145-00090	SEAL	2	60001-@
8	20Y-70-23230	SEAL	4	60001-@
9	206-70-71591	PIN	1	60762-65000
	206-70-71590	PIN	1	60001-60761
10	205-70-66581	PLATE	1	60762-65000
	205-70-66580	PLATE	1	60001-60761
11	01010-81230	BOLT	2	60001-@
12	01643-31232	WASHER	2	60001-@
13	20Y-70-31431	SPACER, 1.0MM	2	60773-65000
	☐20Y-70-31430	SPACER, 1.0MM	2	60001-60772
14	206-70-72191	PIN	1	60762-65000
	206-70-51170	PIN	1	60001-60761
15	205-70-66581	PLATE	1	60762-65000
	205-70-66580	PLATE	1	60001-60761
16	01010-81230	BOLT	2	60001-@
17	01643-31232	WASHER	2	60001-@
18	20Y-70-31431	SPACER, 1.0MM	2	60773-65000
	☐20Y-70-31430	SPACER, 1.0MM	2	60001-60772

ARM (2.0M) (500 HOURS LUBRICATING) (FOR SOUTH AFRICA)(#60001-65000)

Item	Part No.	Part Name	Qty	Serial No.
19	206-70-71451	SPACER, 2.0MM	2	60773-65000
	□206-70-71450	SPACER, 2.0MM	2	60001-60772
20	(⊙707-01-XS540)	CYLINDER GROUP	1	60767-65000
	(⊙707-01-XZ950)	CYLINDER GROUP	1	60001-60766

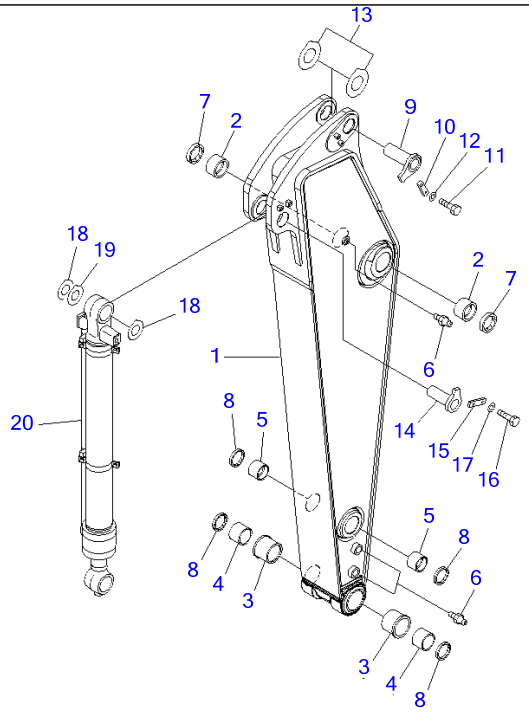

00004222

Ref T1200-01B5A **Page 360720**

PC220-7 S/N 60001-UP (Overseas Version)

ARM (2.0M) (500 HOURS LUBRICATING) (FOR SOUTH AFRICA)(#65001-)

Item	Part No.	Part Name	Qty	Serial No.
1	206-944-7532	ARM	1	65531-
	206-944-7531	ARM	1	65001-65530
2	□20Y-70-31272	BUSHING	2	65096-
	20Y-70-31271	BUSHING	2	65001-65095
3	20Y-70-32410	BUSHING	2	65889-
	20Y-70-32321	BUSHING	2	65001-65888
4	20Y-70-32331	BUSHING	2	65001-65888
5	21K-70-12161	BUSHING	2	65889-
	20Y-70-32351	BUSHING	2	65001-65888
6	07020-00000	FITTING	3	60001-
7	07145-00090	SEAL	2	60001-
8	20Y-70-23230	SEAL	4	60001-
9	206-70-71591	PIN	1	65531-
	206-70-71590	PIN	1	65001-65530
10	205-70-66581	PLATE	1	65531-
	205-70-66580	PLATE	1	65001-65530
11	01010-81230	BOLT	2	60001-
12	01643-31232	WASHER	2	60001-
13	21K-70-71650	SPACER, 1.0MM	4	69185-
	◆20Y-70-31431	SPACER, 1.0MM	4	66138-69184
	□20Y-70-31430	SPACER, 1.0MM	2	65001-66137
14	206-70-72191	PIN	1	65531-
	206-70-51170	PIN	1	65001-65530
15	205-70-66581	PLATE	1	65531-
	205-70-66580	PLATE	1	65001-65530
16	01010-81230	BOLT	2	60001-
17	01643-31232	WASHER	2	60001-
18	21K-70-71650	SPACER, 1.0MM	4	69185-

ARM (2.0M) (500 HOURS LUBRICATING) (FOR SOUTH AFRICA)(#65001-)

Item	Part No.	Part Name	Qty	Serial No.
	◆20Y-70-31431	SPACER, 1.0MM	4	66138-69184
	□20Y-70-31430	SPACER, 1.0MM	2	65001-66137
19	21K-70-71660	SPACER, 2.0MM	2	69185-
	◆206-70-71451	SPACER, 2.0MM	2	66138-69184
	□206-70-71450	SPACER, 2.0MM	2	65001-66137
20	(⊙707-01-XS540)	CYLINDER GROUP	1	65889-
	(⊙707-01-XZ950)	CYLINDER GROUP	1	65001-65888

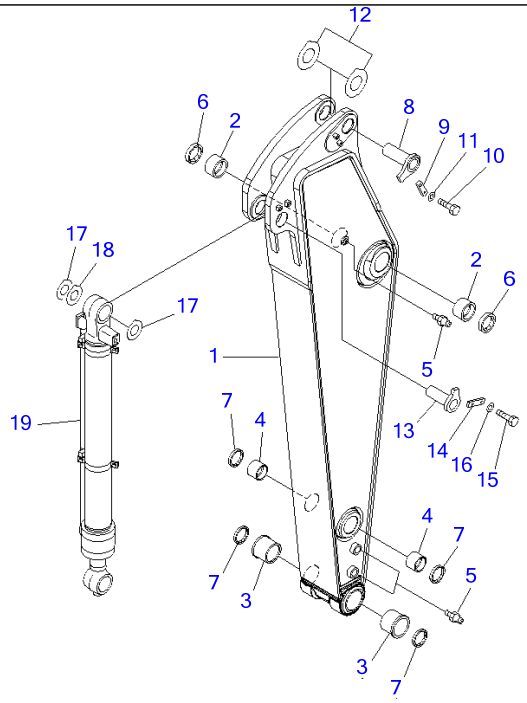

0 0 0 2 9 3 5 1

Ref T1200-01C3A **Page 360730**

PC220-7 S/N 60001-UP (Overseas Version)

ARM (2.0M) (500 HOURS LUBRICATING)(#65889-)

Item	Part No.	Part Name	Qty	Serial No.
	206-70-00492	ARM ASS'Y	1	65889-
1	☆	・ARM	1	65001-
2	20Y-70-31272	・BUSHING	2	65001-
3	20Y-70-32410	・BUSHING	2	65001-
4	21K-70-12161	・BUSHING	2	65889-
5	07020-00000	・FITTING	3	65001-
6	07145-00090	SEAL	2	65001-
7	20Y-70-23230	SEAL	4	65001-
8	206-70-71591	PIN	1	65001-
9	205-70-66581	PLATE	1	65001-
10	01010-81230	BOLT	2	65001-
11	01643-31232	WASHER	2	65001-
12	21K-70-71650	SPACER, 1.0MM	4	69185-
	◆20Y-70-31431	SPACER, 1.0MM	4	66138-69184
	□20Y-70-31430	SPACER, 1.0MM	2	65001-66137
13	206-70-72191	PIN	1	65001-
14	205-70-66581	PLATE	1	65001-
15	01010-81230	BOLT	2	65001-
16	01643-31232	WASHER	2	65001-
17	21K-70-71650	SPACER, 1.0MM	4	69185-
	◆20Y-70-31431	SPACER, 1.0MM	4	66138-69184
	□20Y-70-31430	SPACER, 1.0MM	2	65001-66137
18	21K-70-71660	SPACER, 2.0MM	2	69185-
	◆206-70-71451	SPACER, 2.0MM	2	66138-69184
	□206-70-71450	SPACER, 2.0MM	2	65001-66137
19	(⊙707-01-XS540)	CYLINDER GROUP	1	65889-

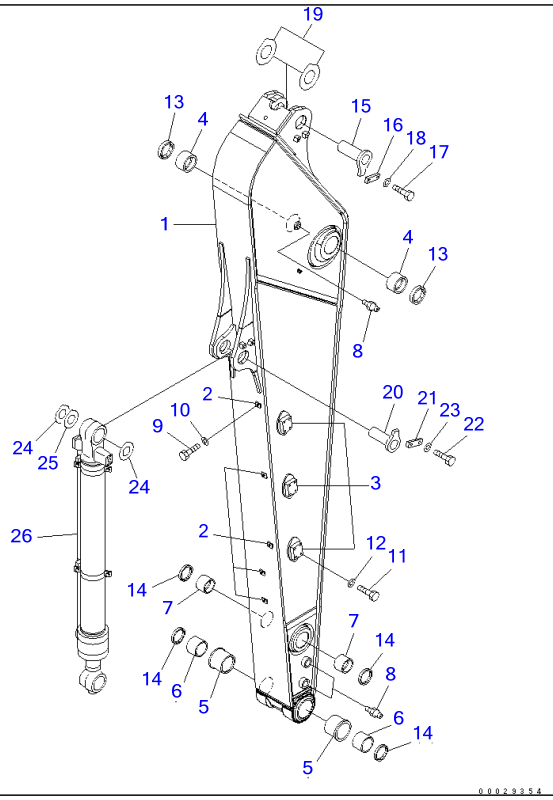

Ref T1200-01C4 Page 360740

PC220-7 S/N 60001-UP (Overseas Version)

ARM (3.05M) (500 HOURS LUBRICATING) (FOR AUSTRALIA SPEC.)(#65202-)

Item	Part No.	Part Name	Qty	Serial No.
1	206-70-72231	ARM	1	65202-
2	206-62-71320	▪ PLATE (WELDED)	5	65202-
3	20Y-970-3570	▪ BRACKET (WELDED)	6	65202-
4	20Y-70-31272	BUSHING	2	65202-
5	20Y-70-32410	BUSHING	2	65889-
	20Y-70-32321	BUSHING	2	65202-65888
6	20Y-70-32331	BUSHING	2	65202-65888
7	21K-70-12161	BUSHING	2	65889-
	20Y-70-32351	BUSHING	2	65202-65888
8	07020-00000	FITTING	3	65202-
9	01010-80610	BOLT	5	65202-
10	01643-30623	WASHER	5	65202-
11	01010-81220	BOLT	24	65202-
12	01643-31232	WASHER	24	65202-
13	07145-00090	SEAL	2	65202-
14	20Y-70-23230	SEAL	4	65202-
15	20Y-70-31161	PIN	1	65202-
16	205-70-66581	PLATE	1	65202-
17	01010-81230	BOLT	2	65202-
18	01643-31232	WASHER	2	65202-
19	21K-70-71650	SPACER, 1.0MM	4	69185-
	◆20Y-70-31431	SPACER, 1.0MM	4	66138-69184
	□20Y-70-31430	SPACER, 1.0MM	2	65202-66137
20	205-70-71321	PIN	1	65202-
21	205-70-66581	PLATE	1	65202-
22	01010-81230	BOLT	2	65202-
23	01643-31232	WASHER	2	65202-
24	21K-70-71650	SPACER, 1.0MM	4	69185-

ARM (3.05M) (500 HOURS LUBRICATING) (FOR AUSTRALIA SPEC.)(#65202-)

Item	Part No.	Part Name	Qty	Serial No.
	◆20Y-70-31431	SPACER, 1.0MM	4	66138-69184
	□20Y-70-31430	SPACER, 1.0MM	2	65202-66137
25	21K-70-71660	SPACER, 2.0MM	2	69185-
	◆206-70-71451	SPACER, 2.0MM	2	66138-69184
	□206-70-71450	SPACER, 2.0MM	2	65202-66137
26	(⊙707-01-XS550)	CYLINDER GROUP	1	65889-
	(⊙707-01-XZ911)	CYLINDER GROUP	1	65202-65888

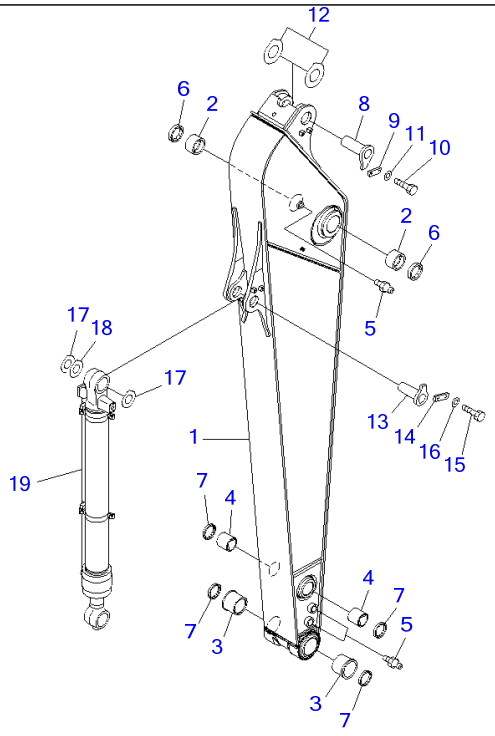

00051507

Ref T1200-01C9 **Page 360750**

PC220-7 S/N 60001-UP (Overseas Version)
ARM (3.05M)(#65889-)

Item	Part No.	Part Name	Qty	Serial No.
	206-70-00402	ARM ASS'Y	1	65889-
1	☆	・ARM	1	65889-
2	20Y-70-31272	・BUSHING	2	65889-
3	20Y-70-32410	・BUSHING	2	65889-
4	21K-70-12161	・BUSHING	2	65889-
5	07020-00000	・FITTING	3	65889-
6	07145-00090	SEAL	2	65889-
7	20Y-70-23230	SEAL	4	65889-
8	20Y-70-31161	PIN	1	65889-
9	205-70-66581	PLATE	1	65889-
10	01010-81230	BOLT	2	65889-
11	01643-31232	WASHER	2	65889-
12	21K-70-71650	SPACER, 1.0MM	4	69185-
	◆20Y-70-31431	SPACER, 1.0MM	4	65889-69184
13	205-70-71321	PIN	1	65889-
14	205-70-66581	PLATE	1	65889-
15	01010-81230	BOLT	2	65889-
16	01643-31232	WASHER	2	65889-
17	21K-70-71650	SPACER, 1.0MM	4	69185-
	◆20Y-70-31431	SPACER, 1.0MM	4	65889-69184
18	21K-70-71660	SPACER, 2.0MM	2	69185-
	◆206-70-71451	SPACER, 2.0MM	2	65889-69184
19	(⊙707-01-XS550)	CYLINDER GROUP	1	65889-

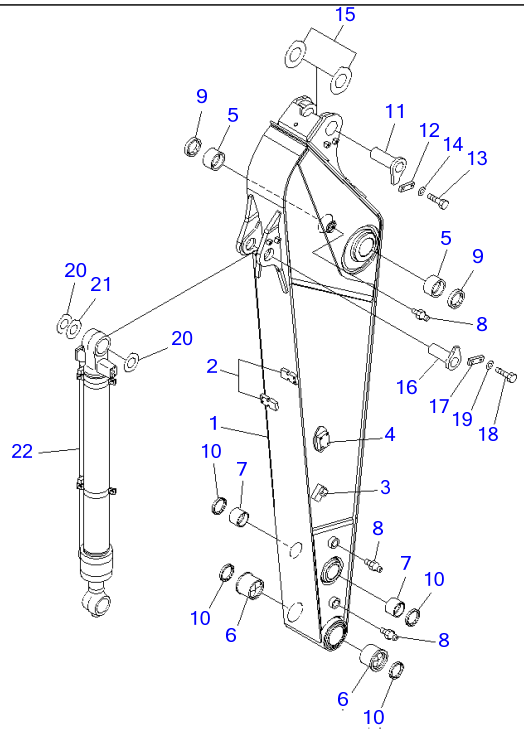

00022831

Ref T1200-01D0 **Page 360760**

PC220-7 S/N 60001-UP (Overseas Version)

ARM (3.05M) (HEAVY DUTY) (FOR ADDITIONAL PIPING)(#65889-)

Item	Part No.	Part Name	Qty	Serial No.
	206-70-00661	ARM ASS'Y	1	65889-
1	☆	・ARM	1	65889-
2	20Y-70-32E50	・・SEAT (WELDED)	2	65889-
3	20Y-970-3560	・・BRACKET (WELDED)	2	65889-
4	20Y-970-3570	・・BRACKET (WELDED)	2	65889-
5	20Y-70-31272	・BUSHING	2	65889-
6	20Y-70-32410	・BUSHING	2	65889-
7	21K-70-12161	・BUSHING	2	65889-
8	07020-00000	・FITTING	3	65889-
9	07145-00090	SEAL	2	65889-
10	20Y-70-23230	SEAL	4	65889-
11	20Y-70-31161	PIN	1	65889-
12	205-70-66581	PLATE	1	65889-
13	01010-81230	BOLT	2	65889-
14	01643-31232	WASHER	2	65889-
15	21K-70-71650	SPACER, 1.0MM	4	69185-
	◆20Y-70-31431	SPACER, 1.0MM	4	65889-69184
16	205-70-71321	PIN	1	65889-
17	205-70-66581	PLATE	1	65889-
18	01010-81230	BOLT	2	65889-
19	01643-31232	WASHER	2	65889-
20	21K-70-71650	SPACER, 1.0MM	4	69185-
	◆20Y-70-31431	SPACER, 1.0MM	4	65889-69184
21	21K-70-71660	SPACER, 2.0MM	2	69185-
	◆206-70-71451	SPACER, 2.0MM	2	65889-69184
22	(⊙707-01-XS550)	CYLINDER GROUP	1	65889-

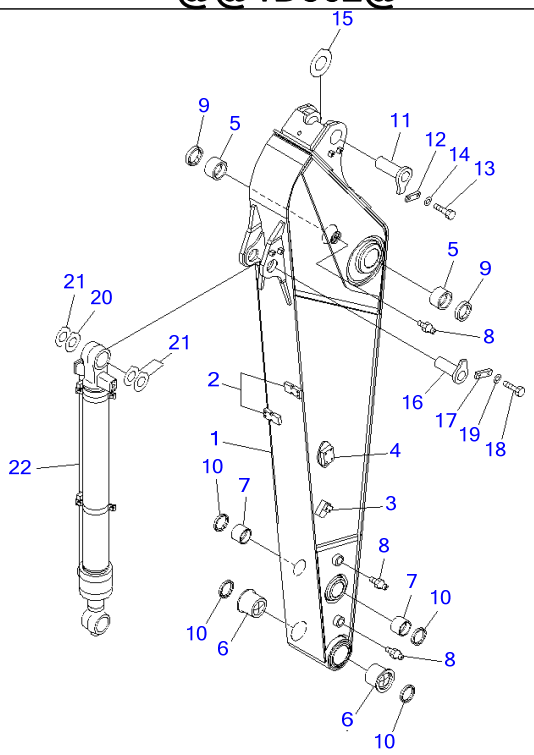

PC220-7 S/N 60001-UP (Overseas Version)

ARM (3.05M) (FOR ADDITIONAL PIPING) (100 HOURS LUBRICATING) (-40ßC SPEC.)(#67318-)

Item	Part No.	Part Name	Qty	Serial No.
1	206-970-7121	ARM	1	67318-
2	20Y-70-32E50	▪ SEAT (WELDED)	2	67318-
3	20Y-970-3560	▪ BRACKET (WELDED)	2	67318-
4	20Y-970-3570	▪ BRACKET (WELDED)	2	67318-
5	205-70-72180	BUSHING	2	67318-
6	20Y-70-32410	BUSHING	2	67318-
7	21K-70-12161	BUSHING	2	67318-
8	07020-00000	FITTING	3	67318-
9	07145-10090	SEAL	2	67318-
10	20Y-70-23230	SEAL	4	67318-
11	20Y-70-31161	PIN	1	67318-
12	205-70-66581	PLATE	1	67318-
13	01010-81230	BOLT	2	67318-
14	01643-31232	WASHER	2	67318-
15	205-70-51530	SPACER, 1.5MM	1	67318-
16	205-70-71321	PIN	1	67318-
17	205-70-66581	PLATE	1	67318-
18	01010-81230	BOLT	2	67318-
19	01643-31232	WASHER	2	67318-
20	20Y-70-11340	SPACER, 0.8MM	1	67318-
21	205-70-51530	SPACER, 1.5MM	3	67318-
22	(⊙707-01-XP590)	CYLINDER GROUP	1	67318-

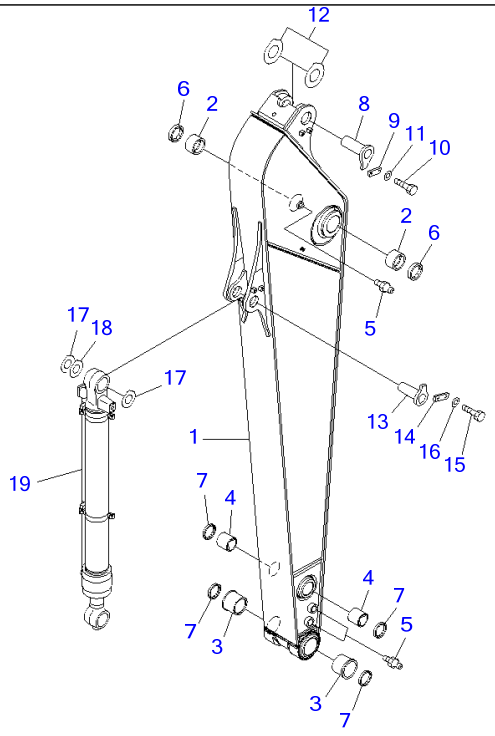

00051507

Ref T1200-01D2 **Page 360780**

PC220-7 S/N 60001-UP (Overseas Version)

ARM (3.05M) (HEAVY DUTY) (500 HOURS LUBRICATING)(#65889-)

Item	Part No.	Part Name	Qty	Serial No.
	206-70-00651	ARM ASS'Y	1	65889-
1	☆	・ARM	1	65889-
2	20Y-70-31272	・BUSHING	2	65889-
3	20Y-70-32410	・BUSHING	2	65889-
4	21K-70-12161	・BUSHING	2	65889-
5	07020-00000	・FITTING	3	65889-
6	07145-00090	SEAL	2	65889-
7	20Y-70-23230	SEAL	4	65889-
8	20Y-70-31161	PIN	1	65889-
9	205-70-66581	PLATE	1	65889-
10	01010-81230	BOLT	2	65889-
11	01643-31232	WASHER	2	65889-
12	21K-70-71650	SPACER, 1.0MM	4	69185-
	◆20Y-70-31431	SPACER, 1.0MM	4	65889-69184
13	205-70-71321	PIN	1	65889-
14	205-70-66581	PLATE	1	65889-
15	01010-81230	BOLT	2	65889-
16	01643-31232	WASHER	2	65889-
17	21K-70-71650	SPACER, 1.0MM	4	69185-
	◆20Y-70-31431	SPACER, 1.0MM	4	65889-69184
18	21K-70-71660	SPACER, 2.0MM	2	69185-
	◆206-70-71451	SPACER, 2.0MM	2	65889-69184
19	(⊙707-01-XU581)	CYLINDER GROUP	1	65889-

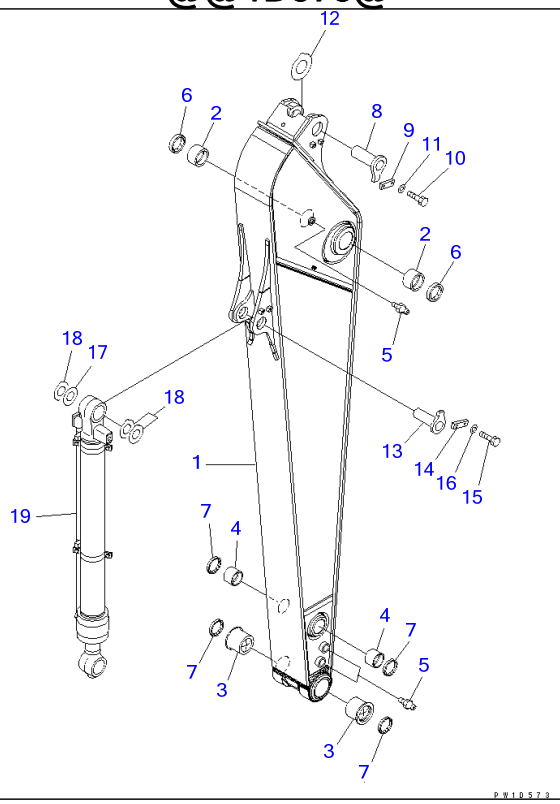

Ref T1200-01D3 **Page 360790**

PC220-7 S/N 60001-UP (Overseas Version)

ARM (3.05M) (100 HOURS LUBRICATING) (-30 SPEC.)(#67318-)

Item	Part No.	Part Name	Qty	Serial No.
1	206-70-72122	ARM	1	67318-
2	205-70-72180	BUSHING	2	67318-
3	20Y-70-32410	BUSHING	2	67318-
4	21K-70-12161	BUSHING	2	67318-
5	07020-00000	FITTING	3	67318-
6	07145-10090	SEAL	2	67318-
7	20Y-70-23230	SEAL	4	67318-
8	20Y-70-31161	PIN	1	67318-
9	205-70-66581	PLATE	1	67318-
10	01010-81230	BOLT	2	67318-
11	01643-31232	WASHER	2	67318-
12	205-70-51530	SPACER, 1.5MM	1	67318-
13	205-70-71321	PIN	1	67318-
14	205-70-66581	PLATE	1	67318-
15	01010-81230	BOLT	2	67318-
16	01643-31232	WASHER	2	67318-
17	20Y-70-11340	SPACER, 0.8MM	1	67318-
18	205-70-51530	SPACER, 1.5MM	3	67318-
19	(⊙707-01-XP590)	CYLINDER GROUP	1	67318-

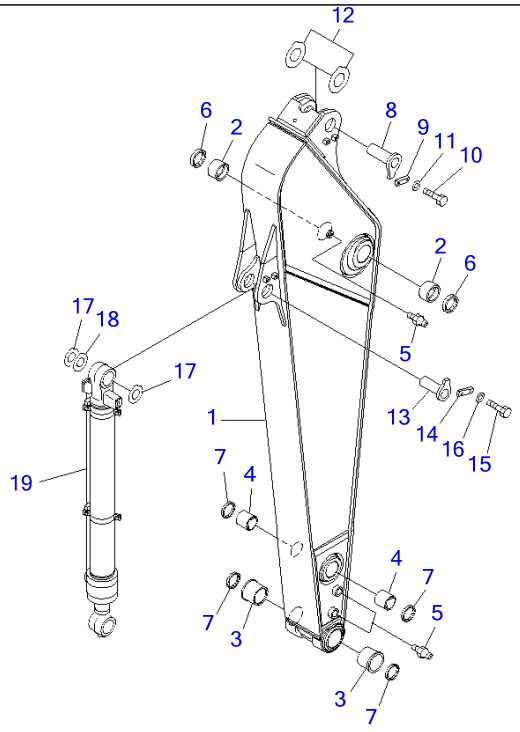

Ref T1200-01D4 **Page 360800**

PC220-7 S/N 60001-UP (Overseas Version)

ARM (2.5M) (500 HOURS LUBRICATING)(#65889-)

Item	Part No.	Part Name	Qty	Serial No.
	206-70-00681	ARM ASS'Y	1	65889-
1	☆	・ARM	1	65889-
2	20Y-70-31272	・BUSHING	2	65889-
3	20Y-70-32410	・BUSHING	2	65889-
4	21K-70-12161	・BUSHING	2	65889-
5	07020-00000	・FITTING	3	65889-
6	07145-00090	SEAL	2	65889-
7	20Y-70-23230	SEAL	4	65889-
8	20Y-70-31161	PIN	1	65889-
9	205-70-66581	PLATE	1	65889-
10	01010-81230	BOLT	2	65889-
11	01643-31232	WASHER	2	65889-
12	21K-70-71650	SPACER, 1.0MM	4	69185-
	◆20Y-70-31431	SPACER, 1.0MM	4	65889-69184
13	205-70-71321	PIN	1	65889-
14	205-70-66581	PLATE	1	65889-
15	01010-81230	BOLT	2	65889-
16	01643-31232	WASHER	2	65889-
17	21K-70-71650	SPACER, 1.0MM	4	69185-
	◆20Y-70-31431	SPACER, 1.0MM	4	65889-69184
18	21K-70-71660	SPACER, 2.0MM	2	69185-
	◆206-70-71451	SPACER, 2.0MM	2	65889-69184
19	(⊙707-01-XS550)	CYLINDER GROUP	1	65889-

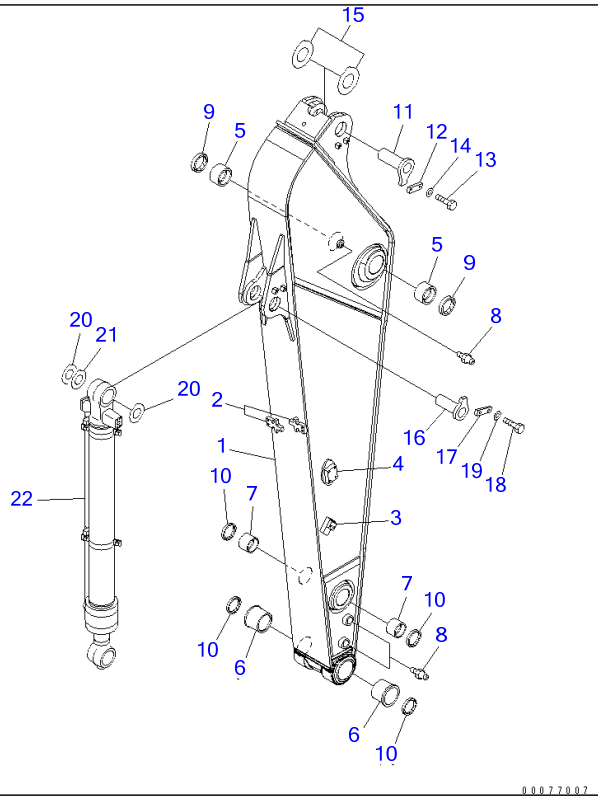

Ref T1200-01D5 **Page 360810**

PC220-7 S/N 60001-UP (Overseas Version)

ARM (2.5M) (FOR ADDITIONAL PIPING) (500 HOURS LUBRICATING)(#65889-)

Item	Part No.	Part Name	Qty	Serial No.
	206-70-00691	ARM ASS'Y	1	65889-
1	☆	・ARM	1	65889-
2	20Y-70-32E50	・・SEAT (WELDED)	2	65889-
3	20Y-970-3560	・・BRACKET (WELDED)	2	65889-
4	20Y-970-3570	・・BRACKET (WELDED)	2	65889-
5	20Y-70-31272	・BUSHING	2	65889-
6	20Y-70-32410	・BUSHING	2	65889-
7	21K-70-12161	・BUSHING	2	65889-
8	07020-00000	・FITTING	3	65889-
9	07145-00090	SEAL	2	65889-
10	20Y-70-23230	SEAL	4	65889-
11	20Y-70-31161	PIN	1	65889-
12	205-70-66581	PLATE	1	65889-
13	01010-81230	BOLT	2	65889-
14	01643-31232	WASHER	2	65889-
15	21K-70-71650	SPACER, 1.0MM	4	69185-
	◆20Y-70-31431	SPACER, 1.0MM	4	65889-69184
16	205-70-71321	PIN	1	65889-
17	205-70-66581	PLATE	1	65889-
18	01010-81230	BOLT	2	65889-
19	01643-31232	WASHER	2	65889-
20	21K-70-71650	SPACER, 1.0MM	4	69185-
	◆20Y-70-31431	SPACER, 1.0MM	4	65889-69184
21	21K-70-71660	SPACER, 2.0MM	2	69185-
	◆206-70-71451	SPACER, 2.0MM	2	65889-69184
22	(⊙707-01-XS550)	CYLINDER GROUP	1	65889-

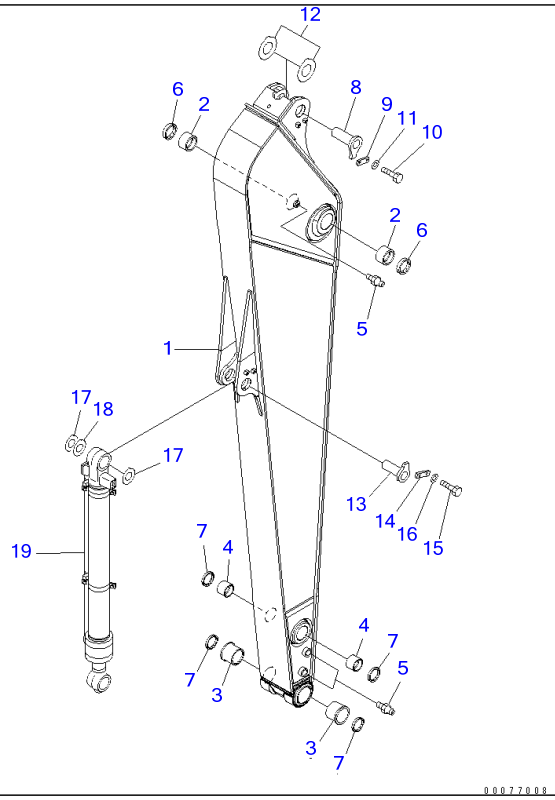

Ref T1200-01D6 **Page 360820**

PC220-7 S/N 60001-UP (Overseas Version)

ARM (3.5M) (500 HOURS LUBRICATING)(#65889-)

Item	Part No.	Part Name	Qty	Serial No.
	206-70-00671	ARM ASS'Y	1	65889-
1	☆	・ARM	1	65889-
2	20Y-70-31272	・BUSHING	2	65889-
3	20Y-70-32410	・BUSHING	2	65889-
4	21K-70-12161	・BUSHING	2	65889-
5	07020-00000	・FITTING	3	65889-
6	07145-00090	SEAL	2	65889-
7	20Y-70-23230	SEAL	4	65889-
8	20Y-70-31161	PIN	1	65889-
9	205-70-66581	PLATE	1	65889-
10	01010-81230	BOLT	2	65889-
11	01643-31232	WASHER	2	65889-
12	21K-70-71650	SPACER, 1.0MM	4	69185-
	◆20Y-70-31431	SPACER, 1.0MM	4	65889-69184
13	205-70-71321	PIN	1	65889-
14	205-70-66581	PLATE	1	65889-
15	01010-81230	BOLT	2	65889-
16	01643-31232	WASHER	2	65889-
17	21K-70-71650	SPACER, 1.0MM	4	69185-
	◆20Y-70-31431	SPACER, 1.0MM	4	65889-69184
18	21K-70-71660	SPACER, 2.0MM	2	69185-
	◆206-70-71451	SPACER, 2.0MM	2	65889-69184
19	(⊙707-01-XS550)	CYLINDER GROUP	1	65889-

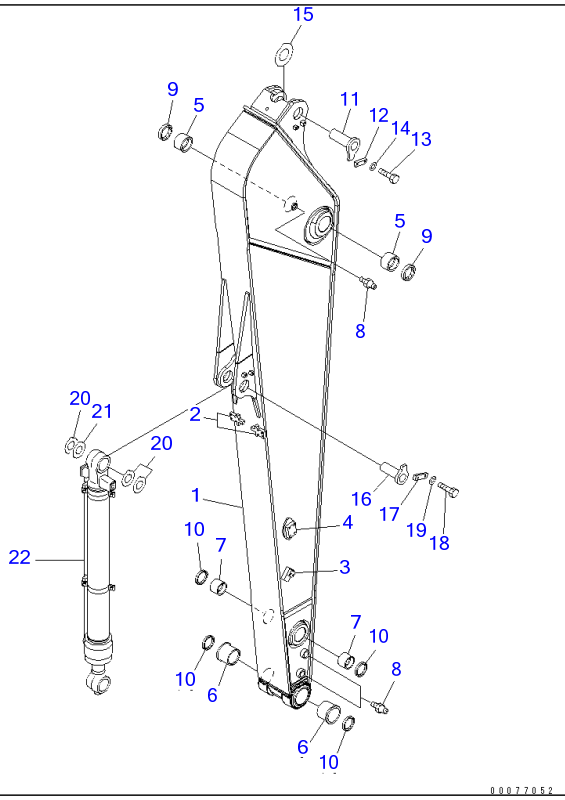

Ref T1200-01D7 **Page 360830**

PC220-7 S/N 60001-UP (Overseas Version)

ARM (3.5M) (FOR ADDITIONAL PIPING) (100 HOURS LUBRICATING)(#65001-)

Item	Part No.	Part Name	Qty	Serial No.
	206-70-00760	ARM ASS'Y	1	65001-
1	☆	・ARM	1	65001-
2	20Y-70-32E50	・・SEAT (WELDED)	2	65001-
3	20Y-970-3560	・・BRACKET (WELDED)	2	65001-
4	20Y-970-3570	・・BRACKET (WELDED)	2	65001-
5	205-70-72180	・BUSHING	2	65001-
6	20Y-70-32410	・BUSHING	2	65001-
7	21K-70-12161	・BUSHING	2	65001-
8	07020-00000	・FITTING	3	65001-
9	07145-00090	SEAL	2	65001-
10	20Y-70-23230	SEAL	4	65001-
11	20Y-70-31161	PIN	1	65001-
12	205-70-66581	PLATE	1	65001-
13	01010-81230	BOLT	2	65001-
14	01643-31232	WASHER	2	65001-
15	205-70-51530	SPACER, 1.5MM	1	65001-
16	205-70-71321	PIN	1	65001-
17	205-70-66581	PLATE	1	65001-
18	01010-81230	BOLT	2	65001-
19	01643-31232	WASHER	2	65001-
20	20Y-70-11340	SPACER, 0.8MM	1	65001-
21	205-70-51530	SPACER, 1.5MM	3	65001-
22	(⊙707-01-XX101)	CYLINDER GROUP	1	65001-

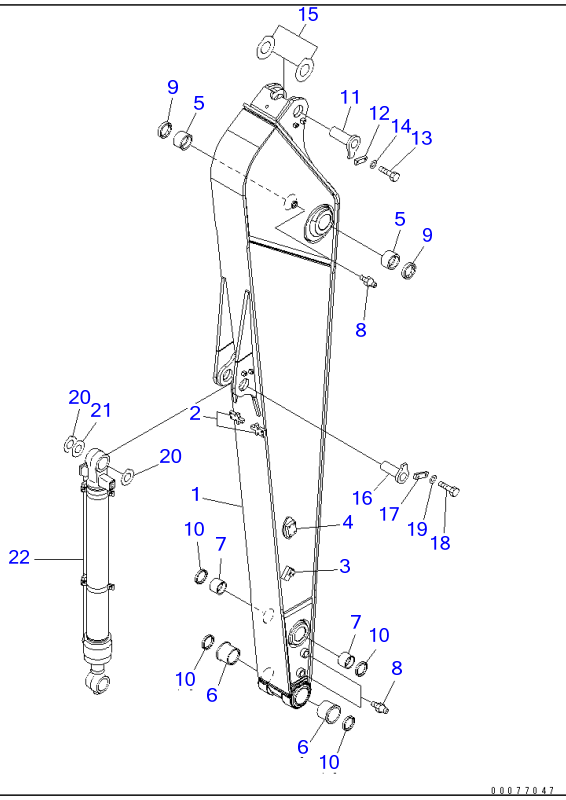

Ref T1200-01D8 **Page 360840**

PC220-7 S/N 60001-UP (Overseas Version)

ARM (3.5M) (FOR ADDITIONAL PIPING) (500 HOURS LUBRICATING)(#65889-)

Item	Part No.	Part Name	Qty	Serial No.
	206-70-00582	ARM ASS'Y	1	65889-
1	☆	・ARM	1	65889-
2	20Y-70-32E50	・・SEAT (WELDED)	2	65889-
3	20Y-970-3560	・・BRACKET (WELDED)	2	65889-
4	20Y-970-3570	・・BRACKET (WELDED)	2	65889-
5	20Y-70-31272	・BUSHING	2	65889-
6	20Y-70-32410	・BUSHING	2	65889-
7	21K-70-12161	・BUSHING	2	65889-
8	07020-00000	・FITTING	3	65889-
9	07145-00090	SEAL	2	65889-
10	20Y-70-23230	SEAL	4	65889-
11	20Y-70-31161	PIN	1	65889-
12	205-70-66581	PLATE	1	65889-
13	01010-81230	BOLT	2	65889-
14	01643-31232	WASHER	2	65889-
15	21K-70-71650	SPACER, 1.0MM	4	69185-
	◆20Y-70-31431	SPACER, 1.0MM	4	65889-69184
16	205-70-71321	PIN	1	65889-
17	205-70-66581	PLATE	1	65889-
18	01010-81230	BOLT	2	65889-
19	01643-31232	WASHER	2	65889-
20	21K-70-71650	SPACER, 1.0MM	4	69185-
	◆20Y-70-31431	SPACER, 1.0MM	4	65889-69184
21	21K-70-71660	SPACER, 2.0MM	2	69185-
	◆206-70-71451	SPACER, 2.0MM	2	65889-69184
22	(⊙707-01-XS550)	CYLINDER GROUP	1	65889-

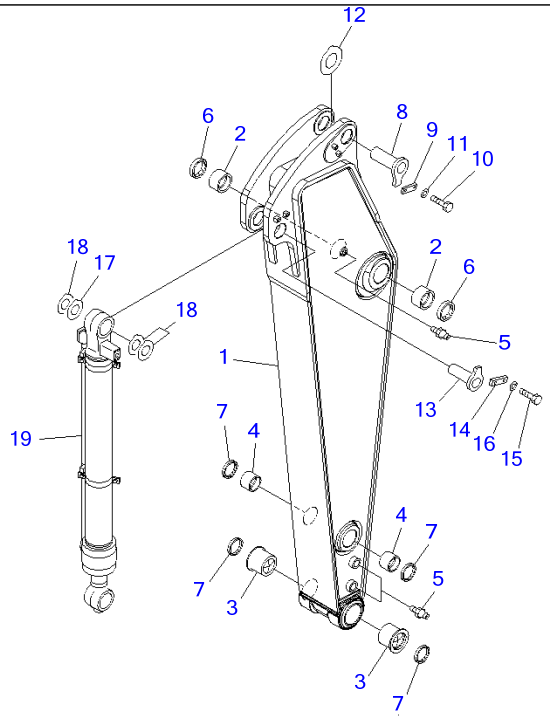

00022859

PC220-7 S/N 60001-UP (Overseas Version)

ARM (2.0M) (100 HOURS LUBRICATING)(#65001-)

Item	Part No.	Part Name	Qty	Serial No.
1	206-944-7532	ARM	1	65001-
2	205-70-72180	BUSHING	2	65001-
3	20Y-70-32410	BUSHING	2	65001-
4	21K-70-12161	BUSHING	2	65001-
5	07020-00000	FITTING	3	65001-
6	07145-00090	SEAL	2	65001-
7	20Y-70-23230	SEAL	4	65001-
8	206-70-71591	PIN	1	65001-
9	205-70-66581	PLATE	1	65001-
10	01010-81230	BOLT	2	65001-
11	01643-31232	WASHER	2	65001-
12	205-70-51530	SPACER, 1.5MM	1	65001-
13	206-70-72191	PIN	1	65001-
14	205-70-66581	PLATE	1	65001-
15	01010-81230	BOLT	2	65001-
16	01643-31232	WASHER	2	65001-
17	20Y-70-11340	SPACER, 0.8MM	1	65001-
18	205-70-51530	SPACER, 1.5MM	3	65001-
19	(⊙707-01-XS220)	CYLINDER GROUP	1	65001-

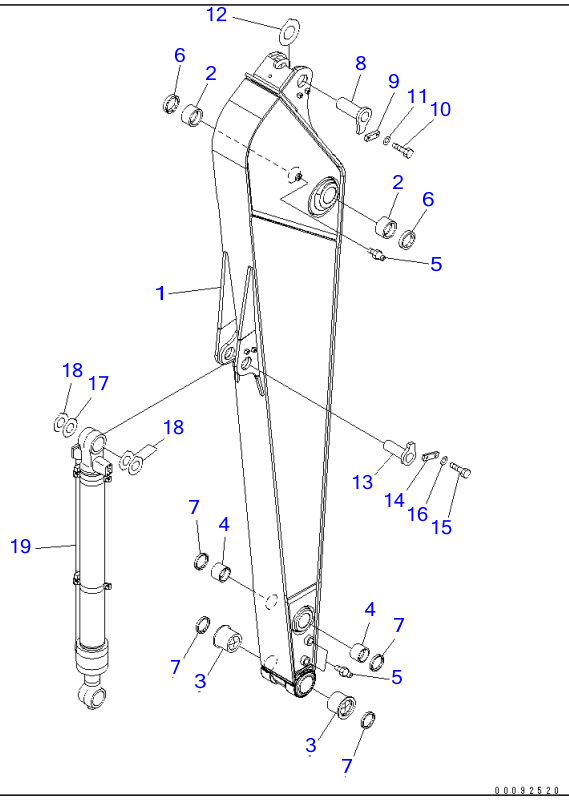

Ref T1200-01E0 **Page 360860**

PC220-7 S/N 60001-UP (Overseas Version)

ARM (3.5M) (100 HOURS LUBRICATING)(#65001-)

Item	Part No.	Part Name	Qty	Serial No.
1	☆	ARM	1	65001-
2	205-70-72180	BUSHING	2	65001-
3	20Y-70-32410	BUSHING	2	65001-
4	21K-70-12161	BUSHING	2	65001-
5	07020-00000	FITTING	3	65001-
6	07145-00090	SEAL	2	65001-
7	20Y-70-23230	SEAL	4	65001-
8	20Y-70-31161	PIN	1	65001-
9	205-70-66581	PLATE	1	65001-
10	01010-81230	BOLT	2	65001-
11	01643-31232	WASHER	2	65001-
12	205-70-51530	SPACER, 1.5MM	1	65001-
13	205-70-71321	PIN	1	65001-
14	205-70-66581	PLATE	1	65001-
15	01010-81230	BOLT	2	65001-
16	01643-31232	WASHER	2	65001-
17	20Y-70-11340	SPACER, 0.8MM	1	65001-
18	205-70-51530	SPACER, 1.5MM	3	65001-
19	707-01-XX101	CYLINDER GROUP	1	65001-

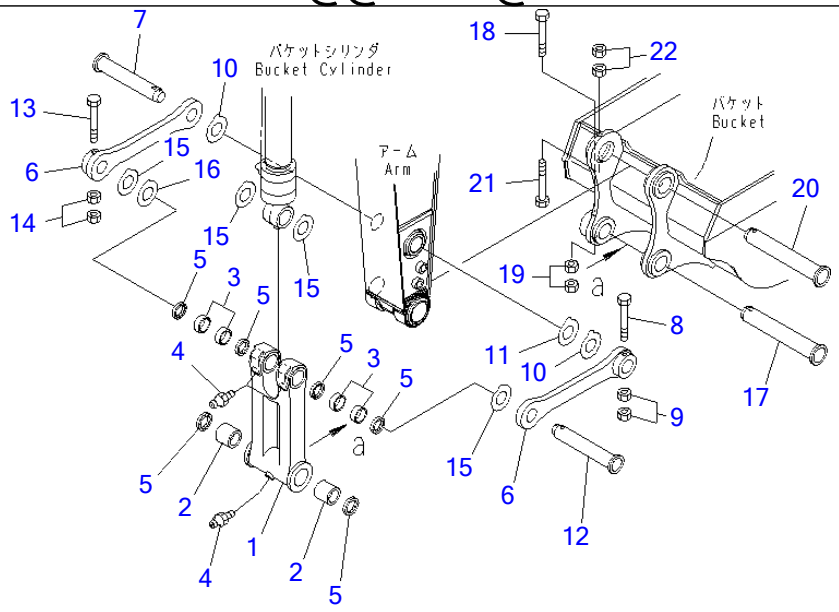

P W 1 C 6 9 0

Ref T1200-02A0 Page 360870

PC220-7 S/N 60001-UP (Overseas Version)

ARM (BUCKET LINK)

Item	Part No.	Part Name	Qty	Serial No.
	206-70-00840	LINK ASS'Y	1	60001-
1	☆	・LINK	1	60001-
2	20Y-70-32351	・BUSHING	2	60001-
3	206-70-71381	・BUSHING	4	60001-
4	07020-00000	・FITTING	3	60001-
5	20Y-70-23230	・SEAL	6	60001-
6	206-70-57120	LINK	2	60001-
7	206-70-53142	PIN	1	65776-
	□206-70-53141	PIN	1	65001-65775
	206-70-53142	PIN	1	60766-65000
	□206-70-53141	PIN	1	60081-60765
	□206-70-53140	PIN	1	60001-60080
8	20Y-70-32450	BOLT	1	65235-
	205-70-73190	BOLT	1	65001-65234
	20Y-70-32450	BOLT	1	60753-65000
	205-70-73190	BOLT	1	60001-60752
9	01580-12016	NUT	2	60001-
10	20Y-70-31411	SPACER, 1.0MM	2	66138-
	□20Y-70-31410	SPACER, 1.0MM	2	65001-66137
	20Y-70-31411	SPACER, 1.0MM	2	60773-65000
	□20Y-70-31410	SPACER, 1.0MM	2	60001-60772
11	20Y-70-31421	SPACER, 2.0MM	1	66138-
	□20Y-70-31420	SPACER, 2.0MM	1	65001-66137
	20Y-70-31421	SPACER, 2.0MM	1	60773-65000
	□20Y-70-31420	SPACER, 2.0MM	1	60001-60772
12	206-70-53142	PIN	1	65776-
	□206-70-53141	PIN	1	65001-65775
	206-70-53142	PIN	1	60766-65000

ARM (BUCKET LINK)

Item	Part No.	Part Name	Qty	Serial No.
	□206-70-53141	PIN	1	60081-60765
	□206-70-53140	PIN	1	60001-60080
13	20Y-70-32450	BOLT	2	65235-
	205-70-73190	BOLT	2	65001-65234
	20Y-70-32450	BOLT	2	60753-65000
	205-70-73190	BOLT	2	60001-60752
14	01580-12016	NUT	2	60001-
15	206-70-31390	SPACER	4	69185-
	◆206-70-71541	SPACER, 1.0MM	4	66138-69184
	□206-70-71540	SPACER, 1.0MM	4	65001-66137
	206-70-71541	SPACER, 1.0MM	4	60773-65000
	□206-70-71540	SPACER, 1.0MM	4	60001-60772
16	206-70-31410	SPACER	2	69185-
	◆206-70-71551	SPACER, 2.0MM	2	66138-69184
	□206-70-71550	SPACER, 2.0MM	1	65001-66137
	206-70-71551	SPACER, 2.0MM	1	60773-65000
	□206-70-71550	SPACER, 2.0MM	1	60001-60772
17	205-70-73270	PIN	1	60001-
18	20Y-70-32450	BOLT	1	65235-
	205-70-73190	BOLT	1	65001-65234
	20Y-70-32450	BOLT	1	60753-65000
	205-70-73190	BOLT	1	60001-60752
19	01580-12016	NUT	2	60001-
20	205-70-73270	PIN	1	60001-
21	20Y-70-32460	BOLT	1	65235-
	362-46-11210	BOLT	1	65001-65234
	20Y-70-32460	BOLT	1	60753-65000
	362-46-11210	BOLT	1	60001-60752
22	01580-12016	NUT	2	60001-

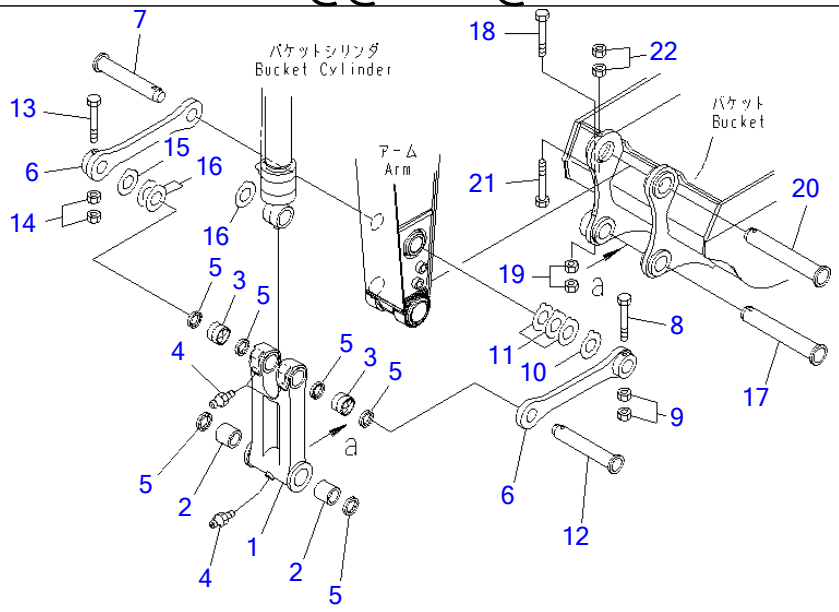

Ref T1200-02A4 **Page 360880**

PC220-7 S/N 60001-UP (Overseas Version)
ARM (BUCKET LINK) (100 HOURS LUBRICATING)

Item	Part No.	Part Name	Qty	Serial No.
	206-70-00830	LINK ASS'Y	1	60001-
1	☆	・LINK	1	60001-
2	21K-70-12161	・BUSHING	2	60001-
3	206-70-53150	・BUSHING	2	60001-
4	07020-00000	・FITTING	3	60001-
5	20Y-70-23230	・SEAL	6	60001-
6	206-70-57120	LINK	2	60001-
7	206-70-53142	PIN	1	65776-
	□206-70-53141	PIN	1	65001-65775
	206-70-53142	PIN	1	60766-65000
	□206-70-53141	PIN	1	60081-60765
	□206-70-53140	PIN	1	60001-60080
8	20Y-70-32450	BOLT	1	65235-
	205-70-73190	BOLT	1	65001-65234
	20Y-70-32450	BOLT	1	60753-65000
	205-70-73190	BOLT	1	60001-60752
9	01580-12016	NUT	2	60001-
10	20Y-70-11340	SPACER, 0.8MM	1	60001-
11	205-70-51530	SPACER, 1.5MM	3	60001-
12	206-70-53142	PIN	1	65776-
	□206-70-53141	PIN	1	65001-65775
	206-70-53142	PIN	1	60766-65000
	□206-70-53141	PIN	1	60081-60765
	□206-70-53140	PIN	1	60001-60080
13	20Y-70-32450	BOLT	2	65235-
	205-70-73190	BOLT	2	65001-65234
	20Y-70-32450	BOLT	2	60753-65000
	205-70-73190	BOLT	2	60001-60752

ARM (BUCKET LINK) (100 HOURS LUBRICATING)

Item	Part No.	Part Name	Qty	Serial No.
14	01580-12016	NUT	2	60001-
15	20Y-70-11340	SPACER, 0.8MM	1	60001-
16	205-70-51530	SPACER, 1.5MM	4	60001-
17	205-70-73270	PIN	1	60001-
18	20Y-70-32450	BOLT	1	65235-
	205-70-73190	BOLT	1	65001-65234
	20Y-70-32450	BOLT	1	60753-65000
	205-70-73190	BOLT	1	60001-60752
19	01580-12016	NUT	2	60001-
20	205-70-73270	PIN	1	60001-
21	20Y-70-32460	BOLT	1	65235-
	362-46-11210	BOLT	1	65001-65234
	20Y-70-32460	BOLT	1	60753-65000
	362-46-11210	BOLT	1	60001-60752
22	01580-12016	NUT	2	60001-

PC220-7 S/N 60001-UP (Overseas Version)

@@1C690@

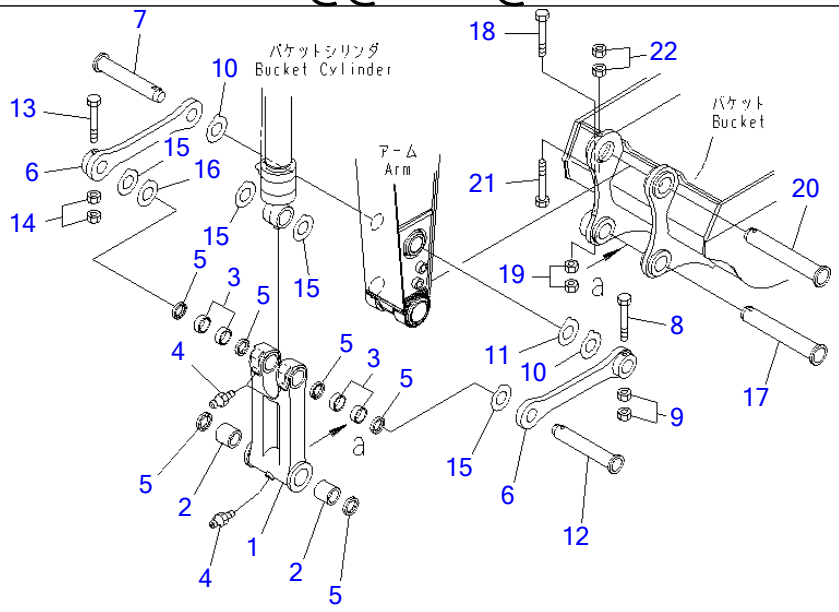

Ref T1200-02B3

Page 360890

PC220-7 S/N 60001-UP (Overseas Version)

ARM (BUCKET LINK) (500 HOURS LUBRICATING)(#60001-65888)

Item	Part No.	Part Name	Qty	Serial No.
1	206-70-73111	LINK	1	60001-65888
2	20Y-70-32351	BUSHING	2	60001-65888
3	206-70-71381	BUSHING	4	60001-65888
4	07020-00000	FITTING	3	60001-65888
5	20Y-70-23230	SEAL	6	60001-65888
6	206-70-57120	LINK	2	60001-65888
7	206-70-53142	PIN	1	65776-65888
	□206-70-53141	PIN	1	65001-65775
	206-70-53142	PIN	1	60766-65000
	□206-70-53141	PIN	1	60001-65765
8	20Y-70-32450	BOLT	1	65235-65888
	205-70-73190	BOLT	1	65001-65234
	20Y-70-32450	BOLT	1	60753-65000
	205-70-73190	BOLT	1	60001-60752
9	01580-12016	NUT	2	60001-65888
10	20Y-70-31410	SPACER, 1.0MM	2	60001-65888
11	20Y-70-31420	SPACER, 2.0MM	1	60001-65888
12	206-70-53142	PIN	1	65776-65888
	□206-70-71360	PIN	1	65001-65775
	206-70-53142	PIN	1	60766-65000
	□206-70-71360	PIN	1	60001-60765
13	20Y-70-32450	BOLT	2	65235-65888
	205-70-73190	BOLT	2	65001-65234
	20Y-70-32450	BOLT	2	60753-65000
	205-70-73190	BOLT	2	60001-60752
14	01580-12016	NUT	2	60001-65888
15	206-70-71540	SPACER, 1.0MM	4	60001-65888
16	206-70-71550	SPACER, 2.0MM	1	60001-65888

ARM (BUCKET LINK) (500 HOURS LUBRICATING)(#60001-65888)

Item	Part No.	Part Name	Qty	Serial No.
17	205-70-73270	PIN	1	60001-65888
18	20Y-70-32450	BOLT	1	65235-65888
	205-70-73190	BOLT	1	65001-65234
	20Y-70-32450	BOLT	1	60753-65000
	205-70-73190	BOLT	1	60001-60752
19	01580-12016	NUT	2	60001-65888
20	205-70-73270	PIN	1	60001-65888
21	20Y-70-32460	BOLT	1	65235-65888
	362-46-11210	BOLT	1	65001-65234
	20Y-70-32460	BOLT	1	60753-65000
	362-46-11210	BOLT	1	60001-60752
22	01580-12016	NUT	2	60001-65888

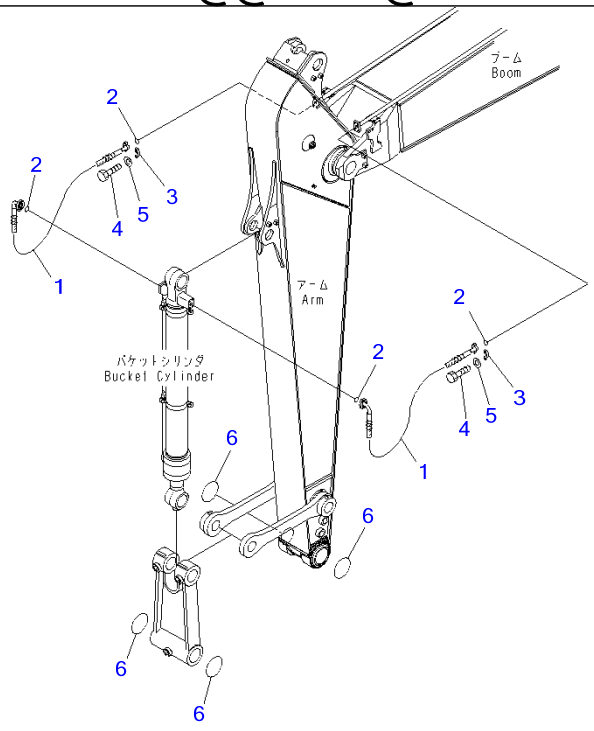

Ref T1200-03A0 **Page 360900**

PC220-7 S/N 60001-UP (Overseas Version)

ARM (BUCKET CYLINDER HOSE AND SPACER) (3.05M)

Item	Part No.	Part Name	Qty	Serial No.
1	206-62-73210	HOSE	2	60001-
2	07000-13025	O-RING	4	60001-
3	07371-30640	FLANGE	8	60001-
4	07372-21035	BOLT	16	60001-
5	01643-51032	WASHER	16	60001-
6	205-70-73280	O-RING	4	60001-

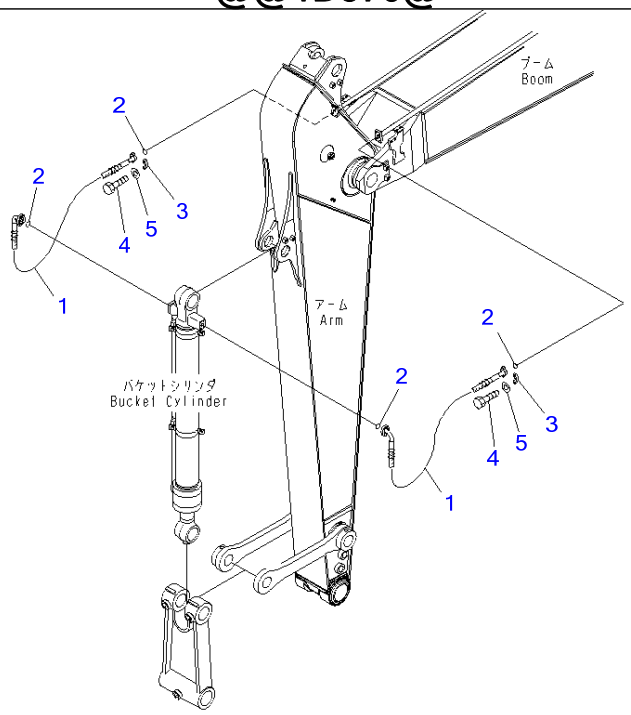

Ref T1200-03A4 **Page 360910**

PC220-7 S/N 60001-UP (Overseas Version)

ARM (BUCKET CYLINDER HOSE) (3.05M) (100 HOURS LUBRICATING)

Item	Part No.	Part Name	Qty	Serial No.
1	206-62-73210	HOSE	2	60001-
2	07000-13025	O-RING	4	60001-
3	07371-30640	FLANGE	8	60001-
4	07372-21035	BOLT	16	60001-
5	01643-51032	WASHER	16	60001-

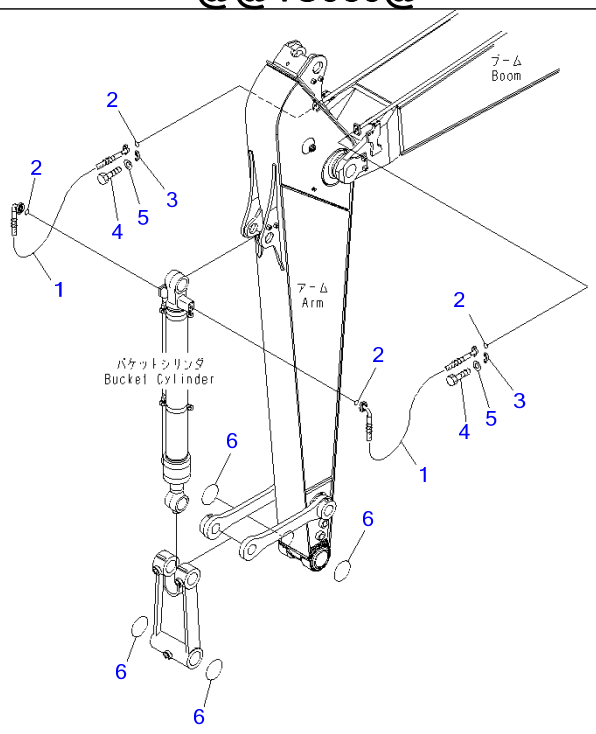

PC220-7 S/N 60001-UP (Overseas Version)

ARM (BUCKET CYLINDER HOSE AND SPACER) (3.5M) (500 HOURS LUBRICATING)

Item	Part No.	Part Name	Qty	Serial No.
1	206-943-7210	HOSE	2	60001-
2	07000-13025	O-RING	4	60001-
3	07371-30640	FLANGE	8	60001-
4	07372-21035	BOLT	16	60001-
5	01643-51032	WASHER	16	60001-
6	205-70-73280	O-RING	4	60001-

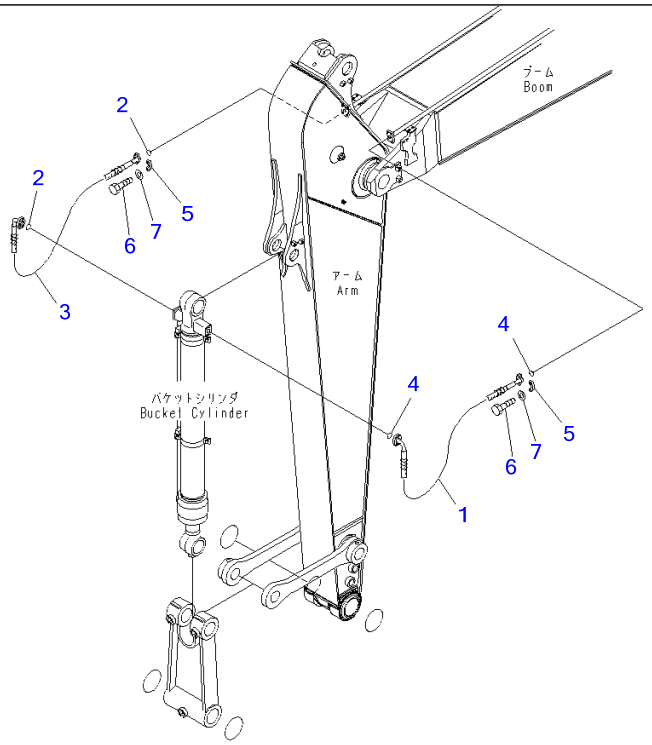

Ref T1200-03D1 **Page 360930**

PC220-7 S/N 60001-UP (Overseas Version)

ARM (BUCKET CYLINDER HOSE) (3.05M) (-40ßC SPEC.)(#67318-)

Item	Part No.	Part Name	Qty	Serial No.
1	206-62-21220	HOSE	1	67318-
2	07000-53025	O-RING	2	67318-
3	206-62-73210	HOSE	1	67318-
4	07000-53025	O-RING	2	67318-
5	07371-30640	FLANGE	8	67318-
6	07372-21035	BOLT	16	67318-
7	01643-51032	WASHER	16	67318-

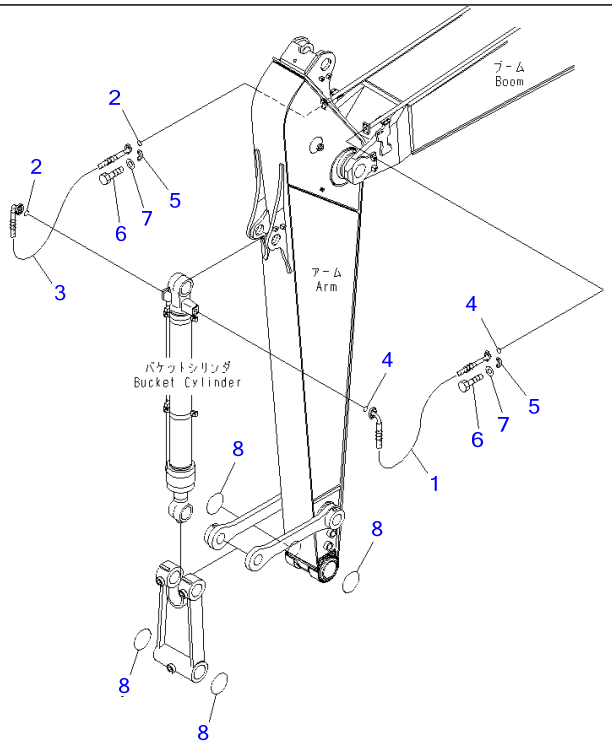

Ref T1200-03D3 **Page 360940**

PC220-7 S/N 60001-UP (Overseas Version)

ARM (BUCKET CYLINDER HOSE AND SPACER) (3.05M) (-40ßC SPEC.)(#67318-)

Item	Part No.	Part Name	Qty	Serial No.
1	206-62-21220	HOSE	1	67318-
2	07000-53025	O-RING	2	67318-
3	206-62-73210	HOSE	1	67318-
4	07000-53025	O-RING	2	67318-
5	07371-30640	FLANGE	8	67318-
6	07372-21035	BOLT	16	67318-
7	01643-51032	WASHER	16	67318-
8	205-70-73280	O-RING	4	67318-

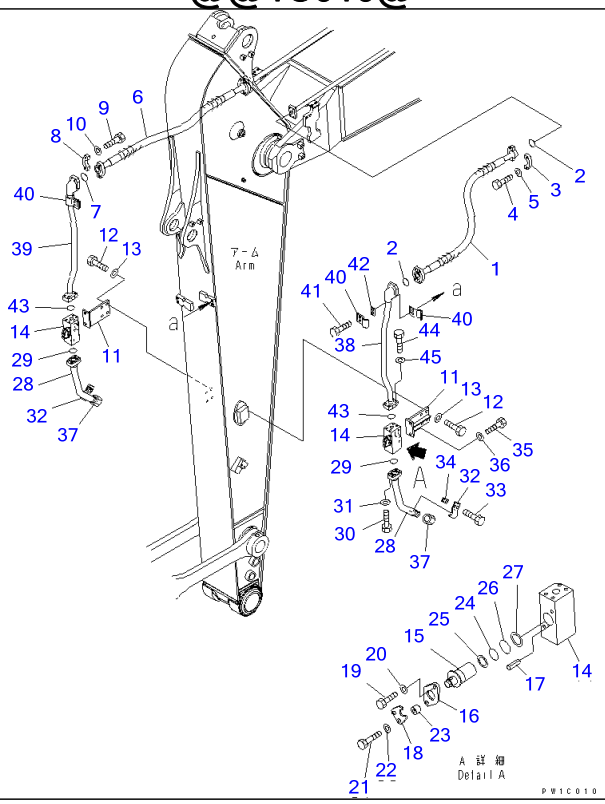

Ref T1200-04A2 **Page 360950**

PC220-7 S/N 60001-UP (Overseas Version)
ARM (3.05M) (FOR ADDITIONAL PIPING)

Item	Part No.	Part Name	Qty	Serial No.
1	07097-21016	HOSE	1	60001-
2	07000-13032	O-RING	1	69442-
	21T-09-11460	O-RING	1	65001-69441
	07000-13032	O-RING	1	60776-65000
	21T-09-11460	O-RING	1	60001-60775
3	07371-31049	FLANGE	4	60001-
4	07372-21035	BOLT	8	60001-
5	01643-51032	WASHER	8	60001-
6	07097-21217	HOSE	1	60001-
7	07000-13038	O-RING	2	60001-
8	07371-51260	FLANGE	4	60001-
9	01010-81245	BOLT	8	60001-
10	01643-31232	WASHER	8	60001-
11	20Y-970-3220	BRACKET	2	60001-
12	01010-81230	BOLT	8	60001-
13	01643-31232	WASHER	8	60001-
	20Y-970-2301	VALVE ASS'Y	2	60036-
	□20Y-970-2300	STOP VALVE ASS'Y	2	60001-60035
14	☆	・BODY	1	60036-
	☆	・BODY	1	60001-60035
15	20Y-970-3241	・ROTOR	1	60036-
	20Y-970-3240	・ROTOR	1	60001-60035
16	20Y-970-3270	・PLATE	1	60001-
17	04025-00412	・PIN	1	60001-
18	20Y-970-4612	・PLATE	1	60036-
	20Y-970-4611	・PLATE	1	60001-60035
19	01010-81025	・BOLT	1	60001-
20	01643-31032	・WASHER	1	60001-

ARM (3.05M) (FOR ADDITIONAL PIPING)

Item	Part No.	Part Name	Qty	Serial No.
21	01010-81045	▪ BOLT	1	60001-
22	01643-31032	▪ WASHER	1	60001-
23	201-03-29160	▪ SPACER	1	60001-
24	07000-13032	▪ O-RING	1	60001-
25	07001-03032	▪ RING	1	60001-60035
26	07000-13038	▪ O-RING	1	60001-
27	07001-03038	▪ RING	1	60001-60035
28	20Y-62-45360	TUBE	2	60001-
29	07000-13035	O-RING	2	60001-
30	07372-21040	BOLT	8	60001-
31	01643-51032	WASHER	8	60001-
32	207-62-31330	CLAMP	2	60001-
33	01010-81225	BOLT	4	60001-
34	20Y-62-13450	PLATE	2	60001-
35	01010-81230	BOLT	4	60001-
36	01643-31232	WASHER	4	60001-
37	205-970-5770	PLUG	2	60001-
38	20Y-62-45340	TUBE	1	60001-
39	206-62-73190	TUBE	1	60001-
40	207-62-31330	CLAMP	4	60001-
41	01010-81230	BOLT	4	60001-
42	20Y-62-13450	PLATE	2	60001-
43	07000-13035	O-RING	2	60001-
44	07372-21040	BOLT	8	60001-
45	01643-51032	WASHER	8	60001-

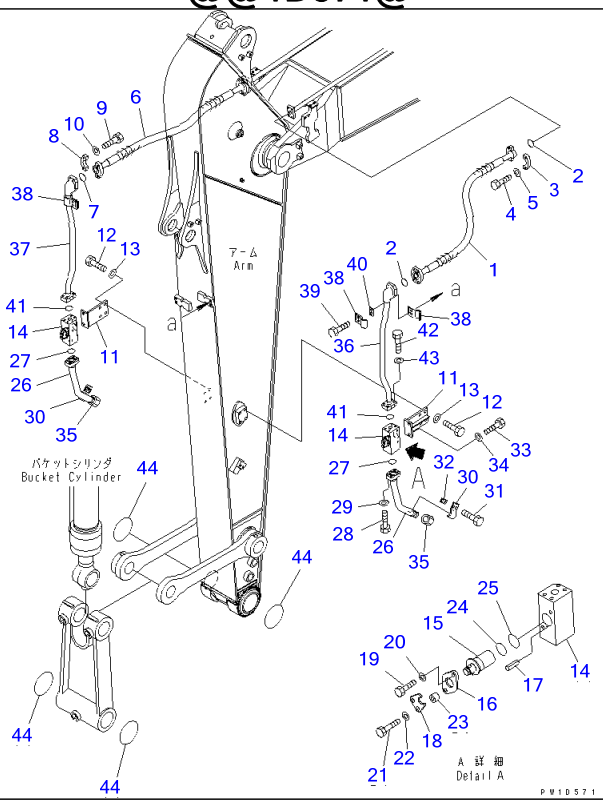

Ref T1200-04A4 Page 360960

PC220-7 S/N 60001-UP (Overseas Version)

ARM (3.05M) (FOR ADDITIONAL PIPING) (100 HOURS LUBRICATING)

Item	Part No.	Part Name	Qty	Serial No.
1	07097-21016	HOSE	1	60001-
2	07000-13032	O-RING	2	69442-
	21T-09-11460	O-RING	2	65001-69441
	07000-13032	O-RING	2	60776-65000
	21T-09-11460	O-RING	2	60001-60775
3	07371-31049	FLANGE	4	60001-
4	07372-21035	BOLT	8	60001-
5	01643-51032	WASHER	8	60001-
6	07097-21217	HOSE	1	60001-
7	07000-13038	O-RING	2	60001-
8	07371-51260	FLANGE	4	60001-
9	01010-81245	BOLT	8	60001-
10	01643-31232	WASHER	8	60001-
11	20Y-970-3220	BRACKET	2	60001-
12	01010-81230	BOLT	8	60001-
13	01643-31232	WASHER	8	60001-
	20Y-970-2301	VALVE ASS'Y	2	60001-
14	☆	・BODY	1	60001-
15	20Y-970-3241	・ROTOR	1	60001-
16	20Y-970-3270	・PLATE	1	60001-
17	04025-00412	・PIN	1	60001-
18	20Y-970-4612	・PLATE	1	60001-
19	01010-81025	・BOLT	1	60001-
20	01643-31032	・WASHER	1	60001-
21	01010-81045	・BOLT	1	60001-
22	01643-31032	・WASHER	1	60001-
23	201-03-29160	・SPACER	1	60001-
24	07000-13032	・O-RING	1	60001-

ARM (3.05M) (FOR ADDITIONAL PIPING) (100 HOURS LUBRICATING)

Item	Part No.	Part Name	Qty	Serial No.
25	07000-13038	• O-RING	1	60001-
26	20Y-62-45360	TUBE	2	60001-
27	07000-13035	O-RING	2	60001-
28	07372-21040	BOLT	8	60001-
29	01643-51032	WASHER	8	60001-
30	207-62-31330	CLAMP	2	60001-
31	01010-81225	BOLT	4	60001-
32	20Y-62-13450	PLATE	2	60001-
33	01010-81230	BOLT	4	60001-
34	01643-31232	WASHER	4	60001-
35	205-970-5770	PLUG	2	60001-
36	20Y-62-45340	TUBE	1	60001-
37	206-62-73190	TUBE	1	60001-
38	207-62-31330	CLAMP	4	60001-
39	01010-81230	BOLT	4	60001-
40	20Y-62-13450	PLATE	2	60001-
41	07000-13035	O-RING	2	60001-
42	07372-21040	BOLT	8	60001-
43	01643-51032	WASHER	8	60001-
44	205-70-73280	O-RING	4	60001-

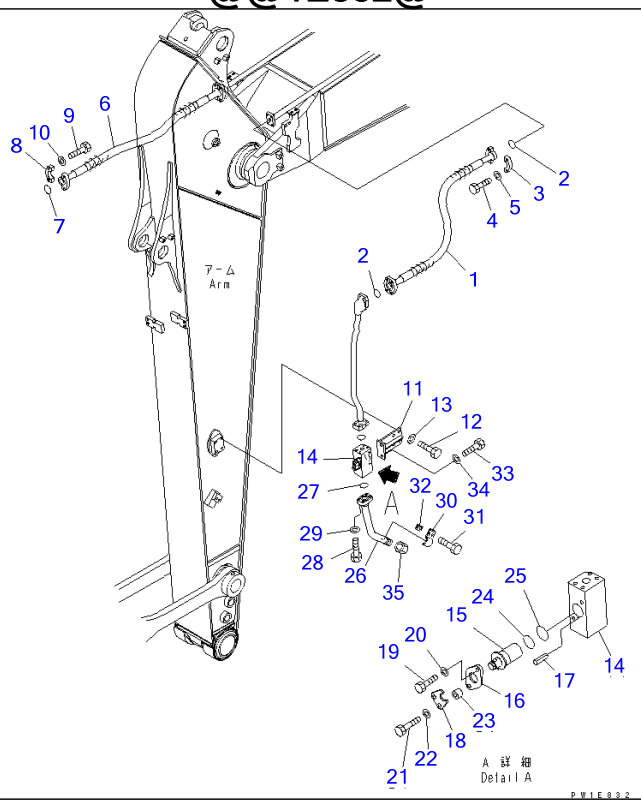

Ref T1200-04A8 Page 360970

PC220-7 S/N 60001-UP (Overseas Version)

ARM (2.5M) (FOR ADDITIONAL PIPING) (500 HOURS LUBRICATING) (L.H.)

Item	Part No.	Part Name	Qty	Serial No.
1	07097-21016	HOSE	1	60001-
2	07000-13032	O-RING	1	69442-
	21T-09-11460	O-RING	1	65001-69441
	07000-13032	O-RING	1	60776-65000
	21T-09-11460	O-RING	1	60001-60775
3	07371-31049	FLANGE	4	60001-
4	07372-21035	BOLT	8	60001-
5	01643-51032	WASHER	8	60001-
6	07097-21217	HOSE	1	60001-
7	07000-13038	O-RING	2	60001-
8	07371-51260	FLANGE	4	60001-
9	01010-81245	BOLT	8	60001-
10	01643-31232	WASHER	8	60001-
11	20Y-970-3220	BRACKET	1	60001-
12	01010-81230	BOLT	4	60001-
13	01643-31232	WASHER	4	60001-
	20Y-970-2301	VALVE ASS'Y	1	60001-
14	☆	・BODY	1	60001-
15	20Y-970-3241	・ROTOR	1	60001-
16	20Y-970-3270	・PLATE	1	60001-
17	04025-00412	・PIN	1	60001-
18	20Y-970-4612	・PLATE	1	60001-
19	01010-81025	・BOLT	1	60001-
20	01643-31032	・WASHER	1	60001-
21	01010-81045	・BOLT	1	60001-
22	01643-31032	・WASHER	1	60001-
23	201-03-29160	・SPACER	1	60001-
24	07000-13032	・O-RING	1	60001-

ARM (2.5M) (FOR ADDITIONAL PIPING) (500 HOURS LUBRICATING) (L.H.)

Item	Part No.	Part Name	Qty	Serial No.
25	07000-13038	▪ O-RING	1	60001-
26	20Y-62-45360	TUBE	1	60001-
27	07000-13035	O-RING	1	60001-
28	07372-21040	BOLT	4	60001-
29	01643-51032	WASHER	4	60001-
30	207-62-31330	CLAMP	1	60001-
31	01010-81225	BOLT	2	60001-
32	20Y-62-13450	PLATE	1	60001-
33	01010-81230	BOLT	2	60001-
34	01643-31232	WASHER	2	60001-
35	205-970-5770	PLUG	1	60001-

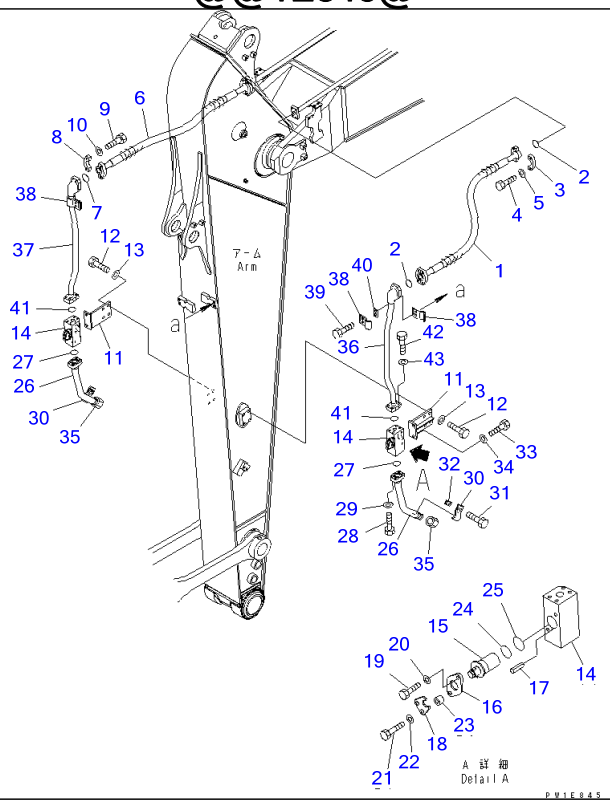

Ref T1200-04B0 **Page 360980**

PC220-7 S/N 60001-UP (Overseas Version)

ARM (3.05M) (FOR ADDITIONAL PIPING) (500 HOURS LUBRICATING)

Item	Part No.	Part Name	Qty	Serial No.
1	07097-21021	HOSE	1	60001-
2	07000-13032	O-RING	1	69442-
	21T-09-11460	O-RING	1	60001-69441
3	07371-31049	FLANGE	4	60001-
4	07372-21035	BOLT	8	60001-
5	01643-51032	WASHER	8	60001-
6	07097-21222	HOSE	1	60001-
7	07000-13038	O-RING	2	60001-
8	07371-51260	FLANGE	4	60001-
9	01010-81245	BOLT	8	60001-
10	01643-31232	WASHER	8	60001-
11	20Y-970-3220	BRACKET	2	60001-
12	01010-81230	BOLT	8	60001-
13	01643-31232	WASHER	8	60001-
	20Y-970-2301	VALVE ASS'Y	2	60001-
14	☆	・BODY	2	60001-
15	20Y-970-3241	・ROTOR	2	60001-
16	20Y-970-3270	・PLATE	2	60001-
17	04025-00412	・PIN	2	60001-
18	20Y-970-4612	・PLATE	2	60001-
19	01010-81025	・BOLT	2	60001-
20	01643-31032	・WASHER	2	60001-
21	01010-81045	・BOLT	2	60001-
22	01643-31032	・WASHER	2	60001-
23	201-03-29160	・SPACER	2	60001-
24	07000-13032	・O-RING	2	60001-
25	07000-13038	・O-RING	2	60001-
26	20Y-62-45360	TUBE	2	60001-

ARM (3.05M) (FOR ADDITIONAL PIPING) (500 HOURS LUBRICATING)

Item	Part No.	Part Name	Qty	Serial No.
27	07000-13035	O-RING	2	60001-
28	07372-21040	BOLT	8	60001-
29	01643-51032	WASHER	8	60001-
30	207-62-31330	CLAMP	2	60001-
31	01010-81225	BOLT	4	60001-
32	20Y-62-13450	PLATE	2	60001-
33	01010-81230	BOLT	4	60001-
34	01643-31232	WASHER	4	60001-
35	205-970-5770	PLUG	2	60001-
36	20Y-62-45340	TUBE	1	60001-
37	206-62-73190	TUBE	1	60001-
38	207-62-31330	CLAMP	4	60001-
39	01010-81230	BOLT	4	60001-
40	20Y-62-13450	PLATE	2	60001-
41	07000-13035	O-RING	2	60001-
42	07372-21040	BOLT	8	60001-
43	01643-51032	WASHER	8	60001-

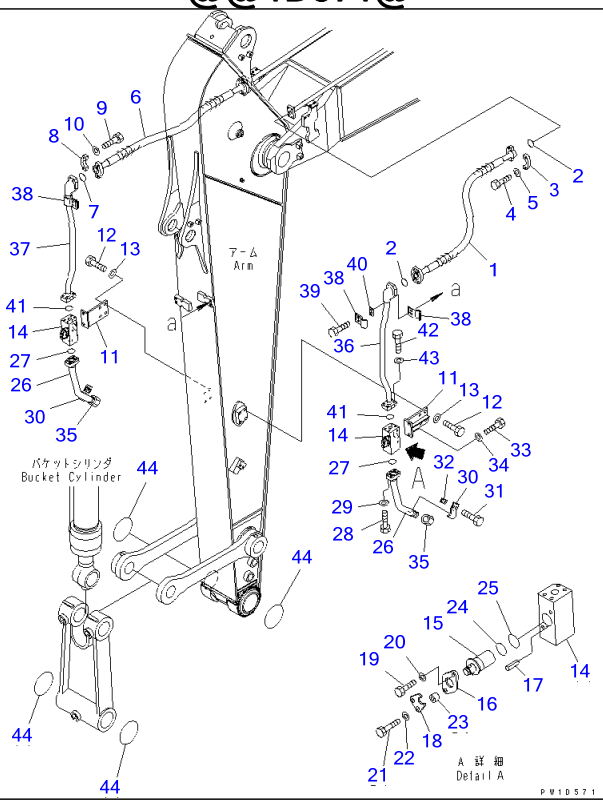

Ref T1200-04D1 Page 360990

PC220-7 S/N 60001-UP (Overseas Version)

ARM (3.05M) (FOR ADDITIONAL PIPING) (100 HOURS LUBRICATING) (-40ßC SPEC.)(#67318-)

Item	Part No.	Part Name	Qty	Serial No.
1	07097-21016	HOSE	1	67318-
2	07000-53032	O-RING	2	67318-
3	07371-31049	FLANGE	4	67318-
4	07372-21035	BOLT	8	67318-
5	01643-51032	WASHER	8	67318-
6	07097-21217	HOSE	1	67318-
7	07000-53038	O-RING	2	67318-
8	07371-51260	FLANGE	4	67318-
9	01010-81245	BOLT	8	67318-
10	01643-31232	WASHER	8	67318-
11	20Y-970-3220	BRACKET	2	67318-
12	01010-81230	BOLT	8	67318-
13	01643-31232	WASHER	8	67318-
	20Y-970-2400	VALVE ASS'Y	2	67318-
14	☆	・BODY	1	67318-
15	20Y-970-3241	・ROTOR	1	67318-
16	20Y-970-3270	・PLATE	1	67318-
17	04025-00412	・PIN	1	67318-
18	20Y-970-4612	・PLATE	1	67318-
19	01010-81025	・BOLT	1	67318-
20	01643-31032	・WASHER	1	67318-
21	01010-81045	・BOLT	1	67318-
22	01643-31032	・WASHER	1	67318-
23	201-03-29160	・SPACER	1	67318-
24	07000-53032	・O-RING	1	67318-
25	07000-53038	・O-RING	1	67318-

ARM (3.05M) (FOR ADDITIONAL PIPING) (100 HOURS LUBRICATING) (-40ßC SPEC.)(#67318-)

Item	Part No.	Part Name	Qty	Serial No.
26	20Y-62-45360	TUBE	2	67318-
27	07000-53035	O-RING	2	67318-
28	07372-21040	BOLT	8	67318-
29	01643-51032	WASHER	8	67318-
30	207-62-31330	CLAMP	2	67318-
31	01010-81225	BOLT	4	67318-
32	20Y-62-13450	PLATE	2	67318-
33	01010-81230	BOLT	4	67318-
34	01643-31232	WASHER	4	67318-
35	205-970-5770	PLUG	2	67318-
36	20Y-62-45340	TUBE	1	67318-
37	206-62-73190	TUBE	1	67318-
38	207-62-31330	CLAMP	4	67318-
39	01010-81230	BOLT	4	67318-
40	20Y-62-13450	PLATE	2	67318-
41	07000-53035	O-RING	2	67318-
42	07372-21040	BOLT	8	67318-
43	01643-51032	WASHER	8	67318-
44	205-70-73280	O-RING	4	67318-

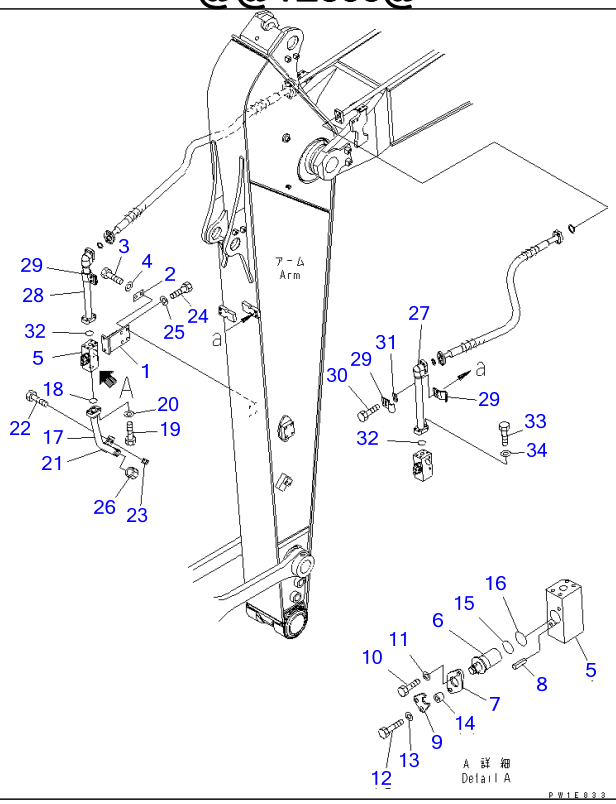

Ref T1200-05A8 Page 361000

PC220-7 S/N 60001-UP (Overseas Version)

ARM (2.5M) (FOR ADDITIONAL PIPING) (500 HOURS LUBRICATING) (R.H.)

Item	Part No.	Part Name	Qty	Serial No.
1	20Y-970-3220	BRACKET	1	60001-
2	22T-72-11220	PLATE	2	60001-
3	01010-81240	BOLT	4	60001-
4	01643-31232	WASHER	4	60001-
	20Y-970-2301	VALVE ASS'Y	1	60001-
5	☆	・BODY	1	60001-
6	20Y-970-3241	・ROTOR	1	60001-
7	20Y-970-3270	・PLATE	1	60001-
8	04025-00412	・PIN	1	60001-
9	20Y-970-4612	・PLATE	1	60001-
10	01010-81025	・BOLT	1	60001-
11	01643-31032	・WASHER	1	60001-
12	01010-81045	・BOLT	1	60001-
13	01643-31032	・WASHER	1	60001-
14	201-03-29160	・SPACER	1	60001-
15	07000-13032	・O-RING	1	60001-
16	07000-13038	・O-RING	1	60001-
17	20Y-62-45360	TUBE	1	60001-
18	07000-13035	O-RING	1	60001-
19	07372-21040	BOLT	4	60001-
20	01643-51032	WASHER	4	60001-
21	207-62-31330	CLAMP	2	60001-
22	01010-81230	BOLT	2	60001-
23	20Y-62-13450	PLATE	1	60001-
24	01010-81230	BOLT	2	60001-
25	01643-31232	WASHER	2	60001-
26	205-970-5770	PLUG	1	60001-
27	20Y-970-6310	TUBE,L.H.	1	60001-

ARM (2.5M) (FOR ADDITIONAL PIPING) (500 HOURS LUBRICATING) (R.H.)

Item	Part No.	Part Name	Qty	Serial No.
28	206-970-7210	TUBE	1	60001-
29	207-62-31330	CLAMP	4	60001-
30	01010-81230	BOLT	4	60001-
31	20Y-62-13450	PLATE	2	60001-
32	07000-13035	O-RING	2	60001-
33	07372-21040	BOLT	8	60001-
34	01643-51032	WASHER	8	60001-

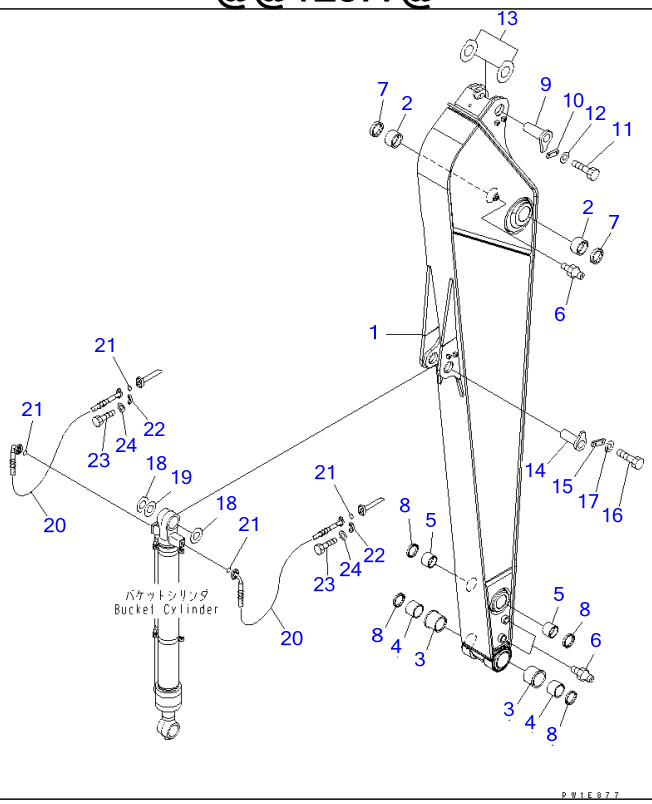

Ref T1210-01A0 **Page 361010**

PC220-7 S/N 60001-UP (Overseas Version)

ARM (3.5M) (500 HOURS LUBRICATING)(#60001-65000)

Item	Part No.	Part Name	Qty	Serial No.
	206-70-00471	ARM ASS'Y	1	60762-65000
	206-70-00470	ARM ASS'Y	1	60001-60761
1	☆	・ARM	1	60762-65000
	☆	・ARM	1	60001-60761
2	20Y-70-31272	・BUSHING	2	60746-65000
	□20Y-70-31271	・BUSHING	2	60001-60745
3	20Y-70-32321	・BUSHING	2	60001-@
4	20Y-70-32331	・BUSHING	2	60001-@
5	20Y-70-32351	・BUSHING	2	60001-@
6	07020-00000	・FITTING	3	60001-@
7	07145-00090	SEAL	2	60001-@
8	20Y-70-23230	SEAL	4	60001-@
9	20Y-70-31161	PIN	1	60762-65000
	20Y-70-31160	PIN	1	60001-60761
10	205-70-66581	PLATE	1	60762-65000
	205-70-66580	PLATE	1	60001-60761
11	01010-81230	BOLT	2	60001-@
12	01643-31232	WASHER	2	60001-@
13	20Y-70-31431	SPACER, 1.0MM	2	60773-65000
	□20Y-70-31430	SPACER, 1.0MM	2	60001-60772
14	205-70-71321	PIN	1	60762-65000
	205-70-71320	PIN	1	60001-60761
15	205-70-66581	PLATE	1	60762-65000
	205-70-66580	PLATE	1	60001-60761
16	01010-81230	BOLT	2	60001-@
17	01643-31232	WASHER	2	60001-@
18	20Y-70-31431	SPACER, 1.0MM	2	60773-65000
	□20Y-70-31430	SPACER, 1.0MM	2	60001-60772

ARM (3.5M) (500 HOURS LUBRICATING)(#60001-65000)

Item	Part No.	Part Name	Qty	Serial No.
19	206-70-71451	SPACER, 2.0MM	2	60773-65000
	□206-70-71450	SPACER, 2.0MM	2	60001-60772
20	206-943-7210	HOSE	2	60001-@
21	07000-13025	O-RING	4	60001-@
22	07371-30640	FLANGE	8	60001-@
23	07372-21035	BOLT	16	60001-@
24	01643-51032	WASHER	16	60001-@

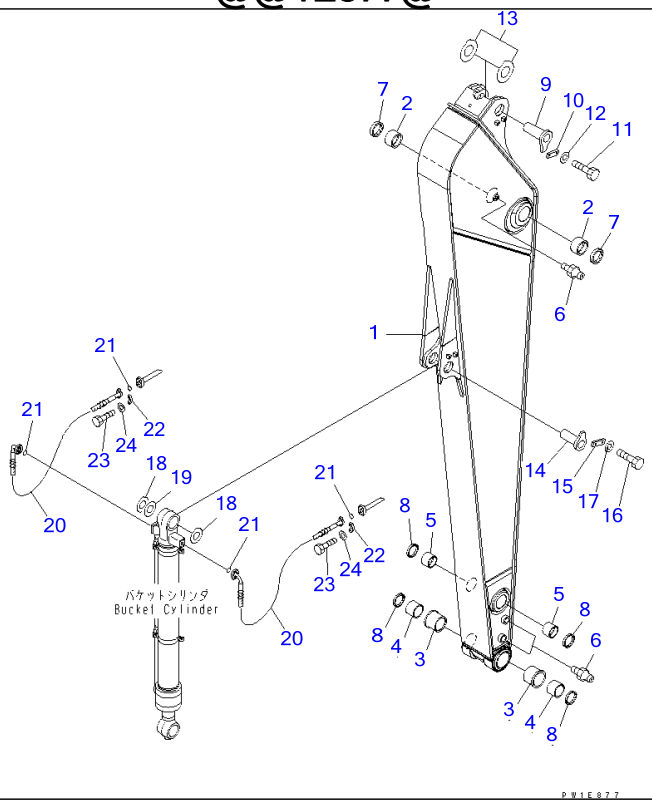

Ref T1210-01A0A **Page 361020**

PC220-7 S/N 60001-UP (Overseas Version)

ARM (3.5M) (500 HOURS LUBRICATING)(#65001-)

Item	Part No.	Part Name	Qty	Serial No.
	206-70-00471	ARM ASS'Y	1	65531-
	206-70-00470	ARM ASS'Y	1	65001-65530
1	☆	・ARM	1	65531-
	☆	・ARM	1	65001-65530
2	20Y-70-31272	・BUSHING	2	65096-
	□20Y-70-31271	・BUSHING	2	65001-65095
3	20Y-70-32321	・BUSHING	2	60001-
4	20Y-70-32331	・BUSHING	2	60001-
5	20Y-70-32351	・BUSHING	2	60001-
6	07020-00000	・FITTING	3	60001-
7	07145-00090	SEAL	2	60001-
8	20Y-70-23230	SEAL	4	60001-
9	20Y-70-31161	PIN	1	65531-
	20Y-70-31160	PIN	1	65001-65530
10	205-70-66581	PLATE	1	65531-
	205-70-66580	PLATE	1	65001-65530
11	01010-81230	BOLT	2	60001-
12	01643-31232	WASHER	2	60001-
13	21K-70-71650	SPACER, 1.0MM	4	69185-
	◆20Y-70-31431	SPACER, 1.0MM	4	66138-69184
	□20Y-70-31430	SPACER, 1.0MM	2	65001-66137
14	205-70-71321	PIN	1	65531-
	205-70-71320	PIN	1	65001-65530
15	205-70-66581	PLATE	1	65531-
	205-70-66580	PLATE	1	65001-65530
16	01010-81230	BOLT	2	60001-
17	01643-31232	WASHER	2	60001-
18	21K-70-71650	SPACER, 1.0MM	4	69185-

ARM (3.5M) (500 HOURS LUBRICATING)(#65001-)

Item	Part No.	Part Name	Qty	Serial No.
	◆20Y-70-31431	SPACER, 1.0MM	4	66138-69184
	□20Y-70-31430	SPACER, 1.0MM	2	65001-66137
19	21K-70-71660	SPACER, 2.0MM	2	69185-
	◆206-70-71451	SPACER, 2.0MM	2	66138-69184
	□206-70-71450	SPACER, 2.0MM	2	65001-66137
20	206-943-7210	HOSE	2	60001-
21	07000-13025	O-RING	4	60001-
22	07371-30640	FLANGE	8	60001-
23	07372-21035	BOLT	16	60001-
24	01643-51032	WASHER	16	60001-

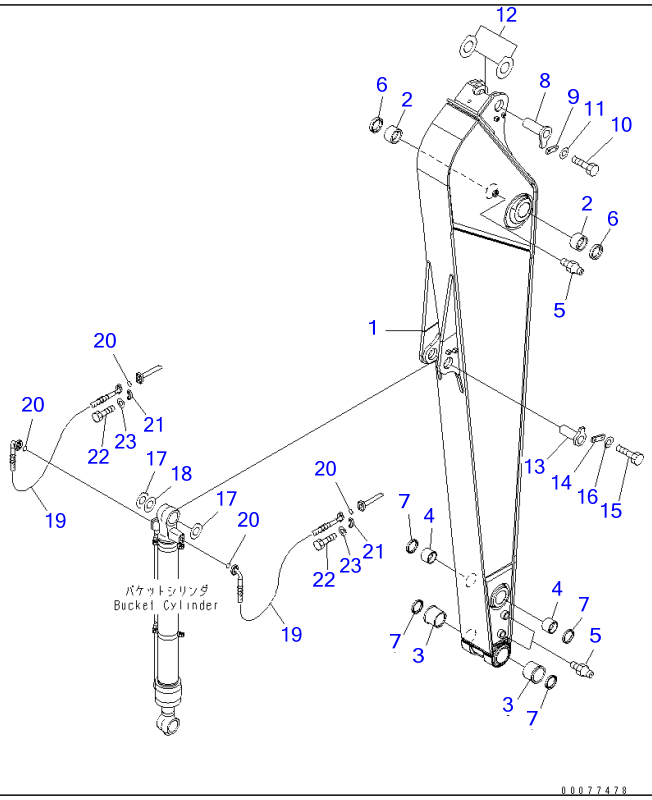

Ref T1210-01A1 **Page 361030**

PC220-7 S/N 60001-UP (Overseas Version)
ARM (3.5M) (500 HOURS LUBRICATING)(#65889-)

Item	Part No.	Part Name	Qty	Serial No.
	206-70-00671	ARM ASS'Y	1	65889-
1	☆	・ARM	1	65889-
2	20Y-70-31272	・BUSHING	2	65889-
3	20Y-70-32410	・BUSHING	2	65889-
4	21K-70-12161	・BUSHING	2	65889-
5	07020-00000	・FITTING	3	65889-
6	07145-00090	SEAL	2	65889-
7	20Y-70-23230	SEAL	4	65889-
8	20Y-70-31161	PIN	1	65889-
9	205-70-66581	PLATE	1	65889-
10	01010-81230	BOLT	2	65889-
11	01643-31232	WASHER	2	65889-
12	21K-70-71650	SPACER, 1.0MM	4	69185-
	◆20Y-70-31431	SPACER, 1.0MM	4	65889-69184
13	205-70-71321	PIN	1	65889-
14	205-70-66581	PLATE	1	65889-
15	01010-81230	BOLT	2	65889-
16	01643-31232	WASHER	2	65889-
17	21K-70-71650	SPACER, 1.0MM	4	69185-
	◆20Y-70-31431	SPACER, 1.0MM	4	65889-69184
18	21K-70-71660	SPACER, 2.0MM	2	69185-
	◆206-70-71451	SPACER, 2.0MM	2	65889-69184
19	206-943-7210	HOSE	2	65889-
20	07000-13025	O-RING	4	65889-
21	07371-30640	FLANGE	8	65889-
22	07372-21035	BOLT	16	65889-
23	01643-51032	WASHER	16	65889-

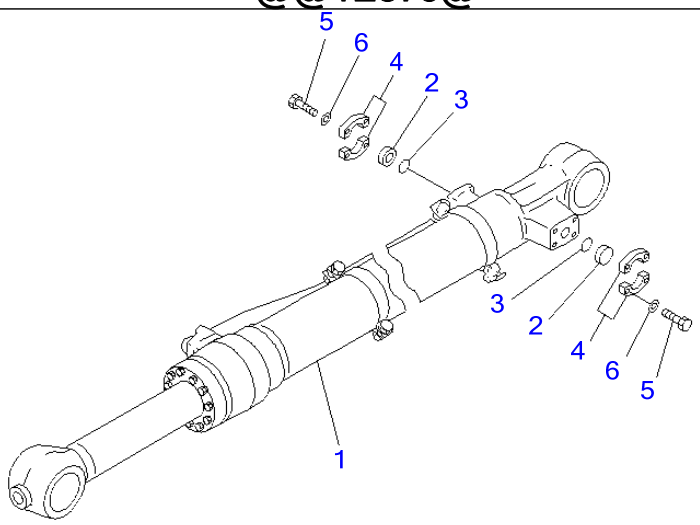

P W 1 E 8 7 5

Ref T1220-01A0 **Page 361040**

PC220-7 S/N 60001-UP (Overseas Version)
BUCKET CYLINDER KIT

Item	Part No.	Part Name	Qty	Serial No.
1	(⊙707-01-XZ912)	CYLINDER GROUP	1	65889-
	(⊙707-01-XZ911)	CYLINDER GROUP	1	65358-65888
	(⊙707-01-XZ910)	CYLINDER GROUP	1	65001-65357
	(⊙707-01-XZ912)	CYLINDER GROUP	1	60767-65000
	(⊙707-01-XZ911)	CYLINDER GROUP	1	60759-60766
	(⊙707-01-XZ910)	CYLINDER GROUP	1	60001-60758
2	07378-10600	HEAD	2	60001-
3	07000-13025	O-RING	2	60001-
4	07371-30640	FLANGE	4	60001-
5	07372-21035	BOLT	8	60001-
6	01643-51032	WASHER	8	60001-

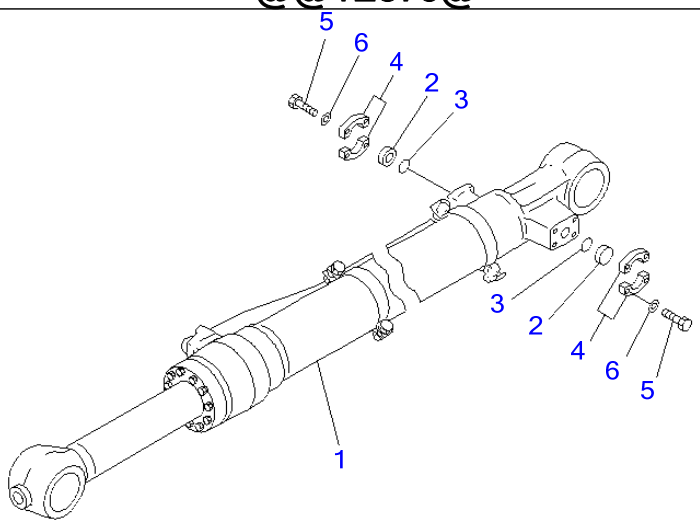

P W 1 E 8 7 5

Ref T1220-01A1 **Page 361050**

PC220-7 S/N 60001-UP (Overseas Version)
BUCKET CYLINDER KIT(#65889-)

Item	Part No.	Part Name	Qty	Serial No.
1	(⊙707-01-XS550)	CYLINDER GROUP	1	65889-
2	07378-10600	HEAD	2	65889-
3	07000-13025	O-RING	2	65889-
4	07371-30640	FLANGE	4	65889-
5	07372-21035	BOLT	8	65889-
6	01643-51032	WASHER	8	65889-

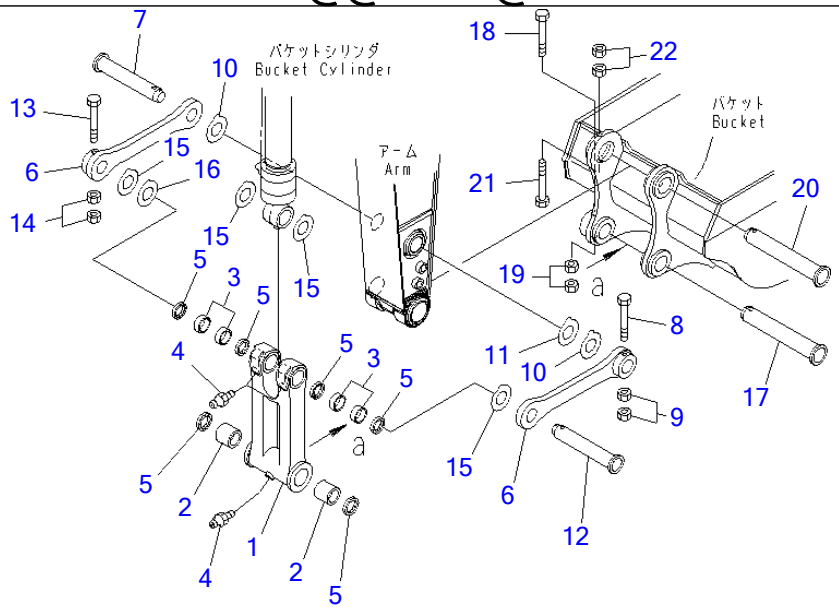

Ref T1230-01A0 **Page 361060**

PC220-7 S/N 60001-UP (Overseas Version)
BUCKET LINK KIT

Item	Part No.	Part Name	Qty	Serial No.
	206-70-00840	LINK ASS'Y	1	60001-
1	☆	・LINK	1	60001-
2	20Y-70-32351	・BUSHING	2	60001-
3	206-70-71381	・BUSHING	4	60001-
4	07020-00000	・FITTING	3	60001-
5	20Y-70-23230	・SEAL	6	60001-
6	206-70-57120	LINK	2	60001-
7	206-70-53142	PIN	1	65776-
	□206-70-53141	PIN	1	65001-65775
	206-70-53142	PIN	1	60766-65000
	□206-70-53141	PIN	1	60001-60765
8	20Y-70-32450	BOLT	1	65235-
	205-70-73190	BOLT	1	65001-65234
	20Y-70-32450	BOLT	1	60753-65000
	205-70-73190	BOLT	1	60001-60752
9	01580-12016	NUT	2	60001-
10	20Y-70-31411	SPACER, 1.0MM	2	66138-
	□20Y-70-31410	SPACER, 1.0MM	2	65001-66137
	20Y-70-31411	SPACER, 1.0MM	2	60773-65000
	□20Y-70-31410	SPACER, 1.0MM	2	60001-60772
11	20Y-70-31421	SPACER, 2.0MM	1	66138-
	□20Y-70-31420	SPACER, 2.0MM	1	65001-66137
	20Y-70-31421	SPACER, 2.0MM	1	60773-65000
	□20Y-70-31420	SPACER, 2.0MM	1	60001-60772
12	206-70-53142	PIN	1	65776-
	□206-70-53141	PIN	1	65001-65775
	206-70-53142	PIN	1	60766-65000
	□206-70-53141	PIN	1	60001-60765

BUCKET LINK KIT

Item	Part No.	Part Name	Qty	Serial No.
13	20Y-70-32450	BOLT	2	65235-
	205-70-73190	BOLT	2	65001-65234
	20Y-70-32450	BOLT	2	60753-65000
	205-70-73190	BOLT	2	60001-60752
14	01580-12016	NUT	2	60001-
15	206-70-71541	SPACER, 1.0MM	4	66138-
	□206-70-71540	SPACER, 1.0MM	4	65001-66137
	206-70-71541	SPACER, 1.0MM	4	60773-65000
	□206-70-71540	SPACER, 1.0MM	4	60001-60772
16	206-70-71551	SPACER, 2.0MM	1	66138-
	□206-70-71550	SPACER, 2.0MM	1	65001-66137
	206-70-71551	SPACER, 2.0MM	1	60773-65000
	□206-70-71550	SPACER, 2.0MM	1	60001-60772
17	205-70-73270	PIN	1	60001-
18	20Y-70-32450	BOLT	1	65235-
	205-70-73190	BOLT	1	65001-65234
	20Y-70-32450	BOLT	1	60753-65000
	205-70-73190	BOLT	1	60001-60752
19	01580-12016	NUT	2	60001-
20	205-70-73270	PIN	1	60001-
21	20Y-70-32460	BOLT	1	65235-
	362-46-11210	BOLT	1	65001-65234
	20Y-70-32460	BOLT	1	60753-65000
	362-46-11210	BOLT	1	60001-60752
22	01580-12016	NUT	2	60001-

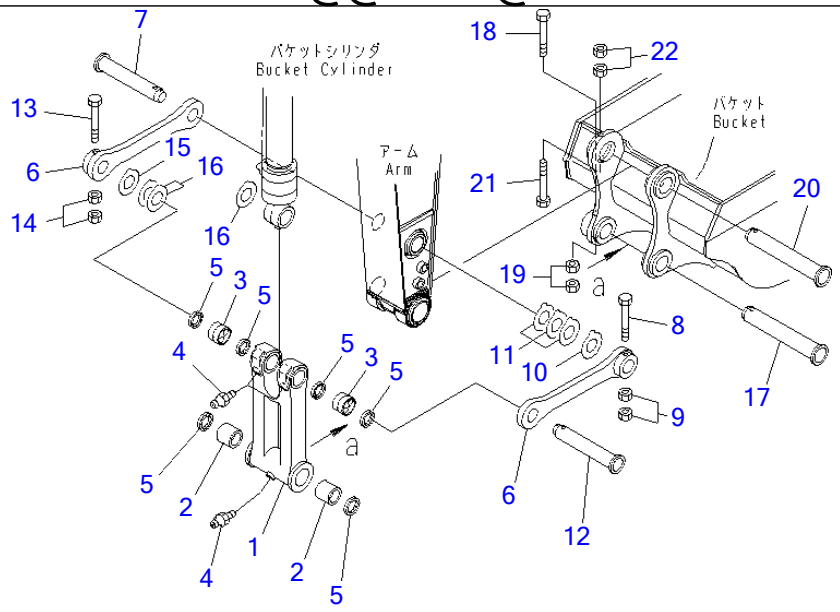

PC220-7 S/N 60001-UP (Overseas Version)

BUCKET LINK KIT(#65889-)

Item	Part No.	Part Name	Qty	Serial No.
	206-70-00830	LINK ASS'Y	1	65889-
1	☆	・LINK	1	65889-
2	21K-70-12161	・BUSHING	2	65889-
3	206-70-53150	・BUSHING	2	65889-
4	07020-00000	・FITTING	3	65889-
5	20Y-70-23230	・SEAL	6	65889-
6	206-70-57120	LINK	2	65889-
7	206-70-53142	PIN	1	65889-
8	20Y-70-32450	BOLT	1	65889-
9	01580-12016	NUT	2	65889-
10	20Y-70-11340	SPACER, 0.8MM	1	65889-
11	205-70-51530	SPACER, 1.5MM	3	65889-
12	206-70-53142	PIN	1	65889-
13	20Y-70-32450	BOLT	1	65889-
14	01580-12016	NUT	2	65889-
15	20Y-70-11340	SPACER, 0.8MM	1	65889-
16	205-70-51530	SPACER, 1.5MM	4	65889-
17	205-70-73270	PIN	1	65889-
18	20Y-70-32450	BOLT	1	65889-
19	01580-12016	NUT	2	65889-
20	205-70-73270	PIN	1	65889-
21	20Y-70-32460	BOLT	1	65889-
22	01580-12016	NUT	2	65889-

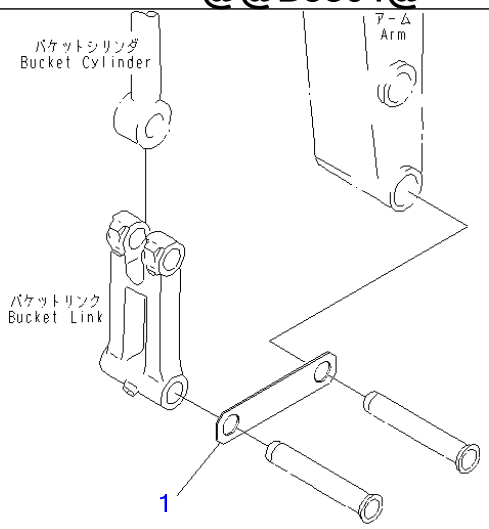

PEB3804

Ref T1290-01A0 **Page 361080**

PC220-7 S/N 60001-UP (Overseas Version)
BUCKET LESS

Item	Part No.	Part Name	Qty	Serial No.
1	207-70-33220	LINK	1	60001-

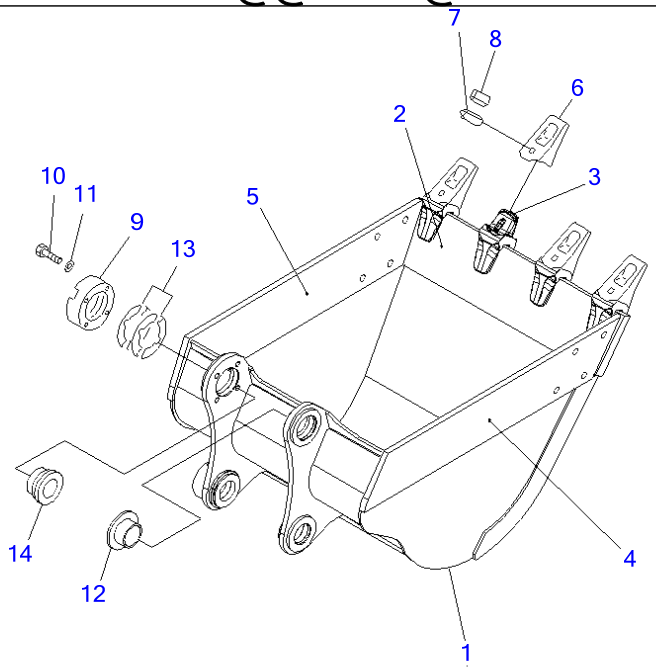

PW1C676

Ref T1510-01A0 **Page 361090**

PC220-7 S/N 60001-UP (Overseas Version)

BUCKET¤ 1.0M3 (CECE 0.9M3)¤ 1140MM (VERTICAL PIN TYPE) (WITH ADJUSTER) (500 HOURS LUBRICATING)

Item	Part No.	Part Name	Qty	Serial No.
1	206-70-74111	BUCKET	1	60001-
2	206-70-58143	▪ PLATE (WELDED)	1	60001-
3	206-70-58150	▪ ADAPTER (WELDED)	4	60001-
4	206-70-58122	▪ PLATE (WELDED)	1	60001-
5	206-70-58132	▪ PLATE (WELDED)	1	60001-
6	206-70-54221	TOOTH	4	60001-
7	207-70-34221	PIN	4	60001-
8	205-70-74291	LOCK	4	60001-
9	205-70-74391	PLATE	1	60001-
10	01010-62055	BOLT	4	60001-
11	01643-32060	WASHER	4	60001-
12	20Y-70-34221	BUSHING	1	60001-
13	205-70-00100	SHIM ASS'Y	1	60001-
	☆	▪ SHIM, 1.0MM	12	65953-
	☆	▪ SHIM, 1.0MM	8	65001-65952
	☆	▪ SHIM, 1.0MM	12	60767-65000
	☆	▪ SHIM, 1.0MM	8	60001-60766
	☆	▪ SHIM, 0.5MM	4	60001-
14	20Y-70-34211	BUSHING	1	60001-

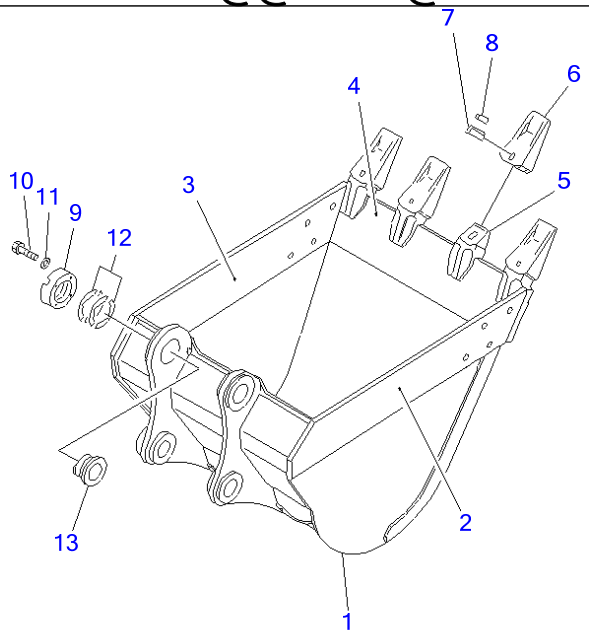

PW10257

Ref T1510-01A1 **Page 361100**

PC220-7 S/N 60001-UP (Overseas Version)

BUCKET¤ 1.0M3 (CECE 0.9M3)¤ 1148MM (VERTICAL PIN TYPE) (WITH ADJUSTER) (100 HOURS LUBRICATING)

Item	Part No.	Part Name	Qty	Serial No.
1	206-70-58111	BUCKET	1	60001-
2	206-70-58122	・PLATE,L.H. (WELDED)	1	60001-
3	206-70-58132	・PLATE,R.H. (WELDED)	1	60001-
4	206-70-58143	・PLATE (WELDED)	1	60001-
5	206-70-58150	・ADAPTER (WELDED)	4	60001-
6	206-70-54221	TOOTH	4	60001-
7	207-70-34221	PIN	4	60001-
8	205-70-74291	LOCK	4	60001-
9	205-70-74391	PLATE	1	60001-
10	01010-62055	BOLT	4	60001-
11	01643-32060	WASHER	4	60001-
12	205-70-00100	SHIM ASS'Y	1	60001-
	☆	・SHIM, 1.0MM	12	65953-
	☆	・SHIM, 1.0MM	8	65001-65952
	☆	・SHIM, 1.0MM	12	60767-65000
	☆	・SHIM, 1.0MM	8	60001-60766
	☆	・SHIM, 0.5MM	4	60001-
13	205-70-74381	SPACER	1	60001-

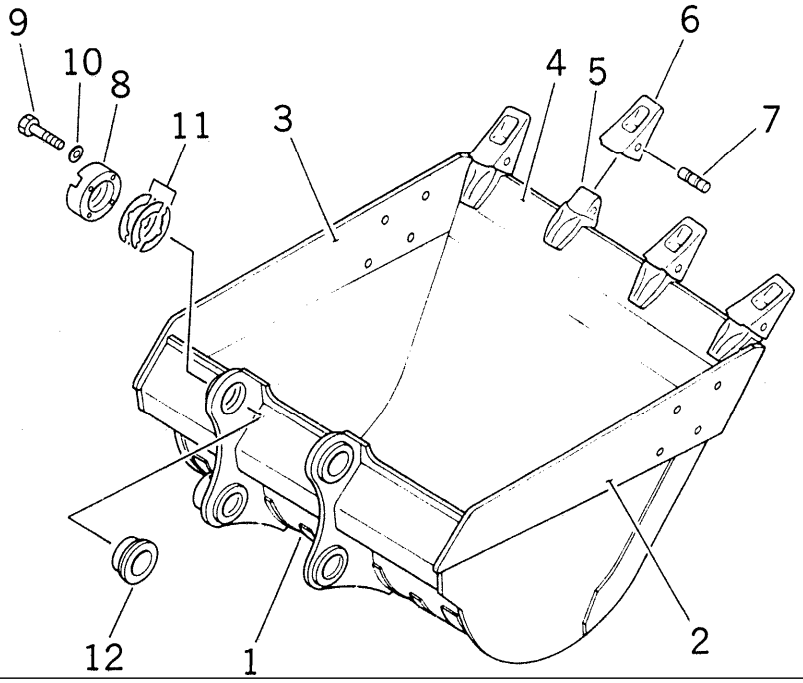

Ref T1510-01A2 Page 361110

PC220-7 S/N 60001-UP (Overseas Version)

BUCKET¤ 1.0M3 (CECE 0.9M3)¤ 1148MM (HORIZONTAL PIN TYPE) (WITH ADJUSTER) (100 HOURS LUBRICATING)

Item	Part No.	Part Name	Qty	Serial No.
1	206-70-58511	BUCKET	1	60001-
2	206-70-58122	・PLATE,L.H. (WELDED)	1	60001-
3	206-70-58132	・PLATE,R.H. (WELDED)	1	60001-
4	206-70-58143	・PLATE (WELDED)	1	60001-
5	206-70-58520	・ADAPTER (WELDED)	4	60001-
6	206-70-48610	TOOTH	4	60001-
7	09244-02516	PIN	4	60001-
8	205-70-74391	PLATE	1	60001-
9	01010-62055	BOLT	4	60001-
10	01643-32060	WASHER	4	60001-
11	205-70-00100	SHIM ASS'Y	1	60001-
	☆	・SHIM, 1.0MM	12	65953-
	☆	・SHIM, 1.0MM	8	65001-65952
	☆	・SHIM, 1.0MM	12	60767-65000
	☆	・SHIM, 1.0MM	8	60001-60766
	☆	・SHIM, 0.5MM	4	60001-
12	205-70-74381	SPACER	1	60001-

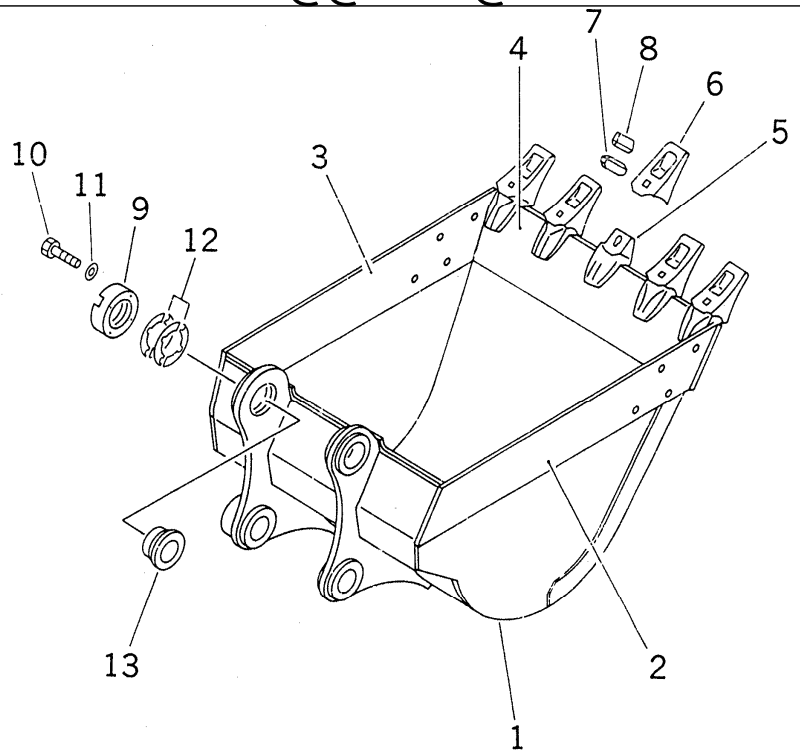

Ref T1510-01A3 **Page 361120**

PC220-7 S/N 60001-UP (Overseas Version)

BUCKET¤ 1.17M3 (CECE 1.0M3)¤ 1293MM (VERTICAL PIN TYPE) (WITH ADJUSTER) (100 HOURS LUBRICATING)

Item	Part No.	Part Name	Qty	Serial No.
1	206-920-6111	BUCKET	1	60001-
2	206-70-58122	・PLATE,L.H. (WELDED)	1	60001-
3	206-70-58132	・PLATE,R.H. (WELDED)	1	60001-
4	206-920-6121	・PLATE (WELDED)	1	60001-
5	206-70-58150	・ADAPTER (WELDED)	5	60001-
6	206-70-54221	TOOTH	5	60001-
7	207-70-34221	PIN	5	60001-
8	205-70-74291	LOCK	5	60001-
9	205-70-74391	PLATE	1	60001-
10	01010-62055	BOLT	4	60001-
11	01643-32060	WASHER	4	60001-
12	205-70-00100	SHIM ASS'Y	1	60001-
	☆	・SHIM, 1.0MM	12	65953-
	☆	・SHIM, 1.0MM	8	65001-65952
	☆	・SHIM, 1.0MM	12	60767-65000
	☆	・SHIM, 1.0MM	8	60001-60766
	☆	・SHIM, 0.5MM	4	60001-
13	205-70-74381	SPACER	1	60001-

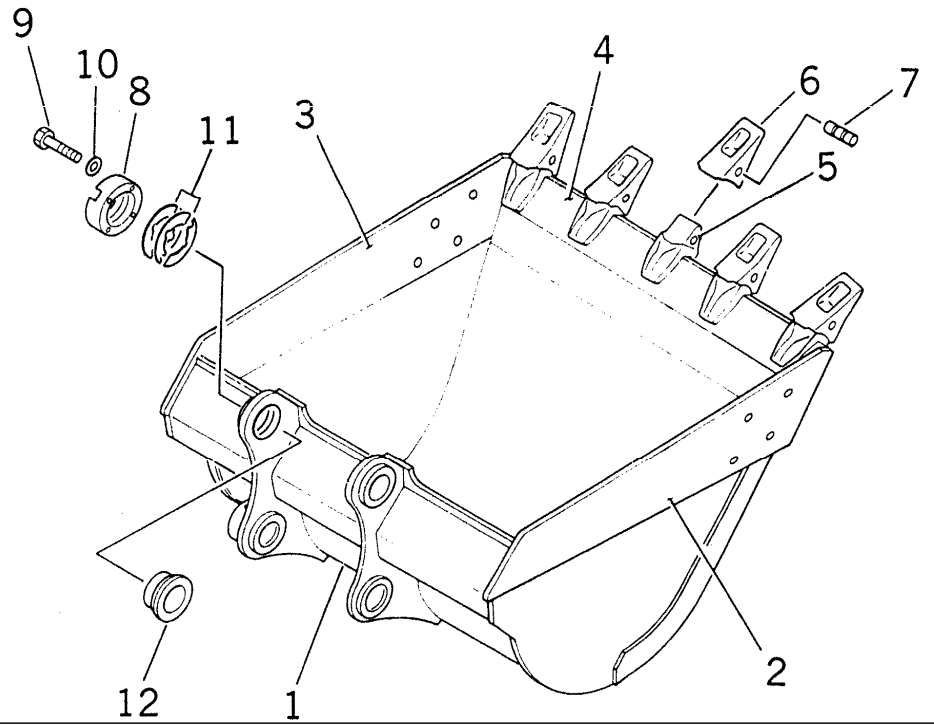

Ref T1510-01A4 Page 361130

PC220-7 S/N 60001-UP (Overseas Version)

BUCKET¤ 1.17M3 (CECE 1.0M3)¤ 1293MM (HORIZONTAL PIN TYPE) (WITH ADJUSTER) (100 HOURS LUBRICATING)

Item	Part No.	Part Name	Qty	Serial No.
1	206-920-6151	BUCKET	1	60001-
2	206-70-58122	・PLATE,L.H. (WELDED)	1	60001-
3	206-70-58132	・PLATE,R.H. (WELDED)	1	60001-
4	206-920-6121	・PLATE (WELDED)	1	60001-
5	206-70-58520	・ADAPTER (WELDED)	5	60001-
6	206-70-48610	TOOTH	5	60001-
7	09244-02516	PIN	5	60001-
8	205-70-74391	PLATE	1	60001-
9	01010-62055	BOLT	4	60001-
10	01643-32060	WASHER	4	60001-
11	205-70-00100	SHIM ASS'Y	1	60001-
	☆	・SHIM, 1.0MM	12	65953-
	☆	・SHIM, 1.0MM	8	65001-65952
	☆	・SHIM, 1.0MM	12	60767-65000
	☆	・SHIM, 1.0MM	8	60001-60766
	☆	・SHIM, 0.5MM	4	60001-
12	205-70-74381	SPACER	1	60001-

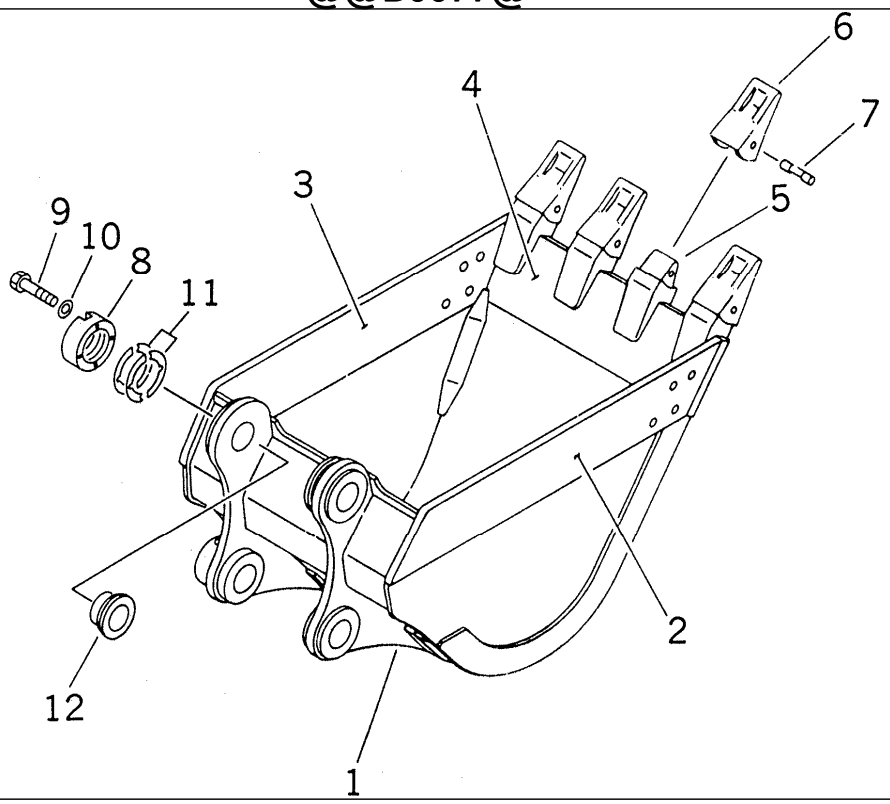

Ref T1510-01A5 Page 361140

PC220-7 S/N 60001-UP (Overseas Version)

BUCKET¤ 1.0M3 (CECE 0.9M3)¤ 1153MM (HORIZONTAL PIN TYPE) (HEAVY DUTY) (WITH ADJUSTER) (100H)

Item	Part No.	Part Name	Qty	Serial No.
1	206-939-5510	BUCKET	1	60001-
2	206-70-58220	・PLATE,L.H. (WELDED)	1	60001-
3	206-70-58230	・PLATE,R.H. (WELDED)	1	60001-
4	206-939-5520	・PLATE (WELDED)	1	60001-
5	206-939-5550	・ADAPTER (WELDED)	4	60001-
6	206-70-48610	TOOTH	4	60001-
7	09244-02516	PIN	4	60001-
8	205-70-74391	PLATE	1	60001-
9	01010-62055	BOLT	4	60001-
10	01643-32060	WASHER	4	60001-
11	205-70-00100	SHIM ASS'Y	1	60001-
	☆	・SHIM, 1.0MM	12	65953-
	☆	・SHIM, 1.0MM	8	65001-65952
	☆	・SHIM, 1.0MM	12	60767-65000
	☆	・SHIM, 1.0MM	8	60001-60766
	☆	・SHIM, 0.5MM	4	60001-
12	205-70-74381	SPACER	1	60001-

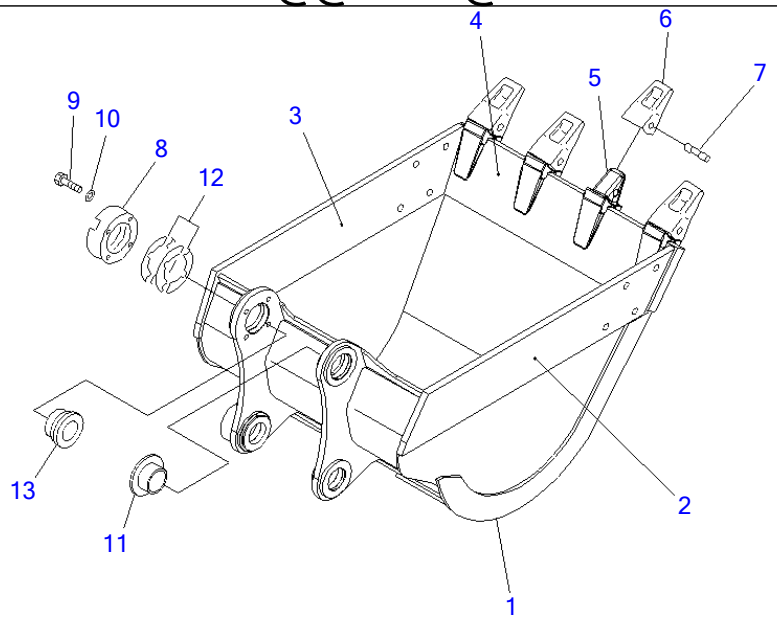

P W 1 D 2 5 6

Ref T1510-01A6 **Page 361150**

PC220-7 S/N 60001-UP (Overseas Version)

BUCKET¤ 1.0M3 (CECE 0.9M3)¤ 1153MM (HORIZONTAL PIN TYPE) (HEAVY DUTY) (WITH ADJUSTER) (500H)

Item	Part No.	Part Name	Qty	Serial No.
1	206-939-7110	BUCKET	1	60001-
2	206-70-58220	▪ PLATE (WELDED)	1	60001-
3	206-70-58230	▪ PLATE (WELDED)	1	60001-
4	206-939-5520	▪ PLATE (WELDED)	1	60001-
5	206-939-5550	▪ ADAPTER (WELDED)	4	60001-
6	206-70-48610	TOOTH	4	60001-
7	09244-02516	PIN	4	60001-
8	205-70-74391	PLATE	1	60001-
9	01010-62055	BOLT	4	60001-
10	01643-32060	WASHER	4	60001-
11	20Y-70-34221	BUSHING	1	60001-
12	205-70-00100	SHIM ASS'Y	1	60001-
	☆	▪ SHIM, 1.0MM	12	65953-
	☆	▪ SHIM, 1.0MM	8	65001-65952
	☆	▪ SHIM, 1.0MM	12	60767-65000
	☆	▪ SHIM, 1.0MM	8	60001-60766
	☆	▪ SHIM, 0.5MM	4	60001-
13	20Y-70-34211	BUSHING	1	60001-

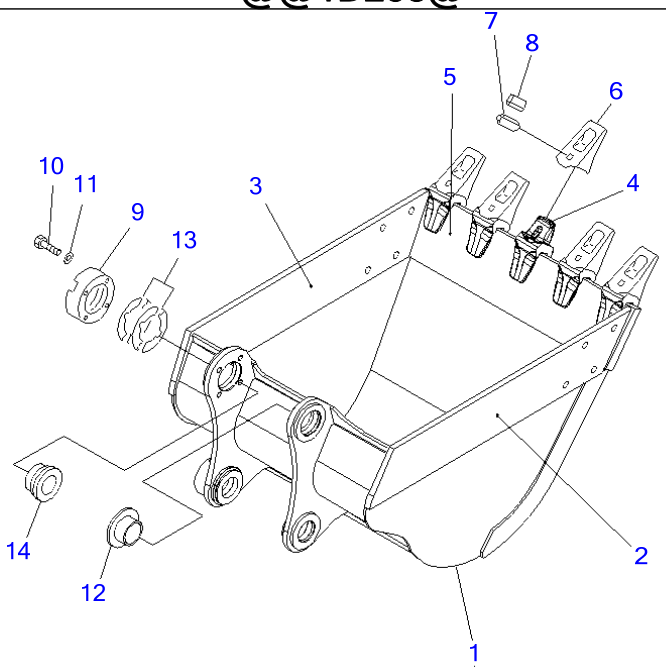

PW1D258

Ref T1510-01A7 **Page 361160**

PC220-7 S/N 60001-UP (Overseas Version)

BUCKET¤ 1.17M3 (CECE 1.0M3)¤ 1293MM (VERTICAL PIN TYPE) (WITH ADJUSTER) (500H LUBRICATING)

Item	Part No.	Part Name	Qty	Serial No.
1	206-920-7110	BUCKET	1	60001-
2	206-70-58122	▪ PLATE (WELDED)	1	60001-
3	206-70-58132	▪ PLATE (WELDED)	1	60001-
4	206-70-58150	▪ ADAPTER (WELDED)	5	60001-
5	206-920-6121	▪ PLATE (WELDED)	1	60001-
6	206-70-54221	TOOTH	5	60001-
7	207-70-34221	PIN	5	60001-
8	205-70-74291	LOCK	5	60001-
9	205-70-74391	PLATE	1	60001-
10	01010-62055	BOLT	4	60001-
11	01643-32060	WASHER	4	60001-
12	20Y-70-34221	BUSHING	1	60001-
13	205-70-00100	SHIM ASS'Y	1	60001-
	☆	▪ SHIM, 1.0MM	12	65953-
	☆	▪ SHIM, 1.0MM	8	65001-65952
	☆	▪ SHIM, 1.0MM	12	60767-65000
	☆	▪ SHIM, 1.0MM	8	60001-60766
	☆	▪ SHIM, 0.5MM	4	60001-
14	20Y-70-34211	BUSHING	1	60001-

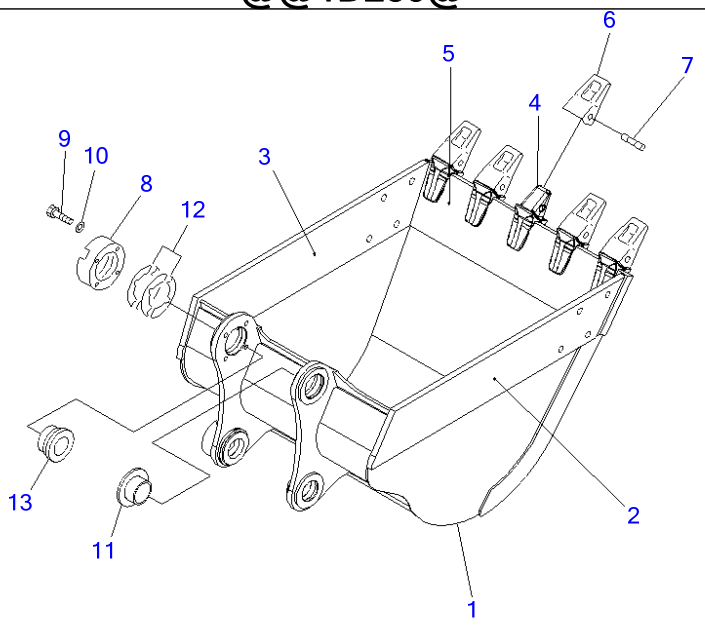

PW1D259

Ref T1510-01A8 **Page 361170**

PC220-7 S/N 60001-UP (Overseas Version)

BUCKET¤ 1.17M3 (CECE 1.0M3)¤ 1293MM (HORIZONTAL PIN TYPE) (WITH ADJUSTER) (500H LUBRICATING)

Item	Part No.	Part Name	Qty	Serial No.
1	206-920-7210	BUCKET	1	60001-
2	206-70-58122	・PLATE (WELDED)	1	60001-
3	206-70-58132	・PLATE (WELDED)	1	60001-
4	206-70-58520	・ADAPTER (WELDED)	5	60001-
5	206-920-6121	・PLATE (WELDED)	1	60001-
6	206-70-48610	TOOTH	5	60001-
7	09244-02516	PIN	5	60001-
8	205-70-74391	PLATE	1	60001-
9	01010-62055	BOLT	4	60001-
10	01643-32060	WASHER	4	60001-
11	20Y-70-34221	BUSHING	1	60001-
12	205-70-00100	SHIM ASS'Y	1	60001-
	☆	・SHIM, 1.0MM	12	65953-
	☆	・SHIM, 1.0MM	8	65001-65952
	☆	・SHIM, 1.0MM	12	60767-65000
	☆	・SHIM, 1.0MM	8	60001-60766
	☆	・SHIM, 0.5MM	4	60001-
13	20Y-70-34211	BUSHING	1	60001-

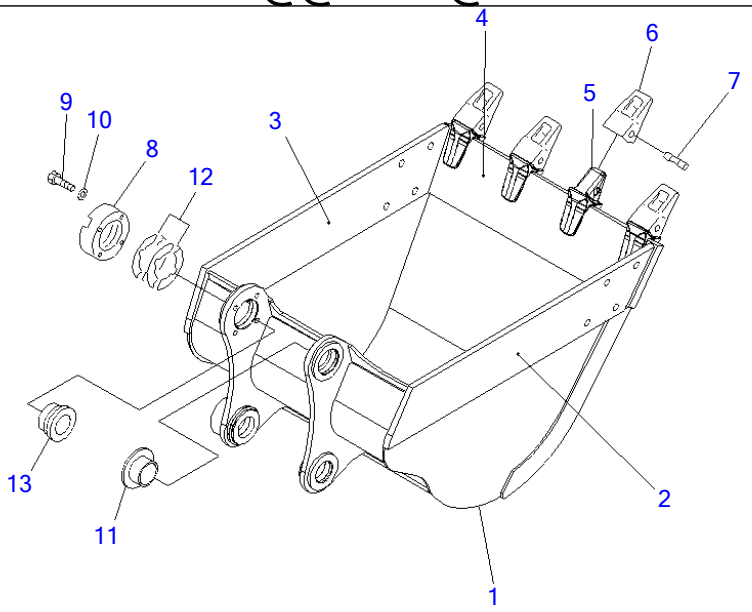

P W 1 D 2 5 5

PC220-7 S/N 60001-UP (Overseas Version)

BUCKET¤ 1.0M3 (CECE 0.9M3)¤ 1148MM (HORIZONTAL PIN TYPE) (WITH ADJUSTER) (500H LUBRICATING)

Item	Part No.	Part Name	Qty	Serial No.
1	206-70-74210	BUCKET	1	60001-
2	206-70-58122	▪ PLATE (WELDED)	1	60001-
3	206-70-58132	▪ PLATE (WELDED)	1	60001-
4	206-70-58143	▪ PLATE (WELDED)	1	60001-
5	206-70-58520	▪ ADAPTER (WELDED)	4	60001-
6	206-70-48610	TOOTH	4	60001-
7	09244-02516	PIN	4	60001-
8	205-70-74391	PLATE	1	60001-
9	01010-62055	BOLT	4	60001-
10	01643-32060	WASHER	4	60001-
11	20Y-70-34221	BUSHING	1	60001-
12	205-70-00100	SHIM ASS'Y	1	60001-
	☆	▪ SHIM, 1.0MM	12	65953-
	☆	▪ SHIM, 1.0MM	8	65001-65952
	☆	▪ SHIM, 1.0MM	12	60767-65000
	☆	▪ SHIM, 1.0MM	8	60001-60766
	☆	▪ SHIM, 0.5MM	4	60001-
13	20Y-70-34211	BUSHING	1	60001-

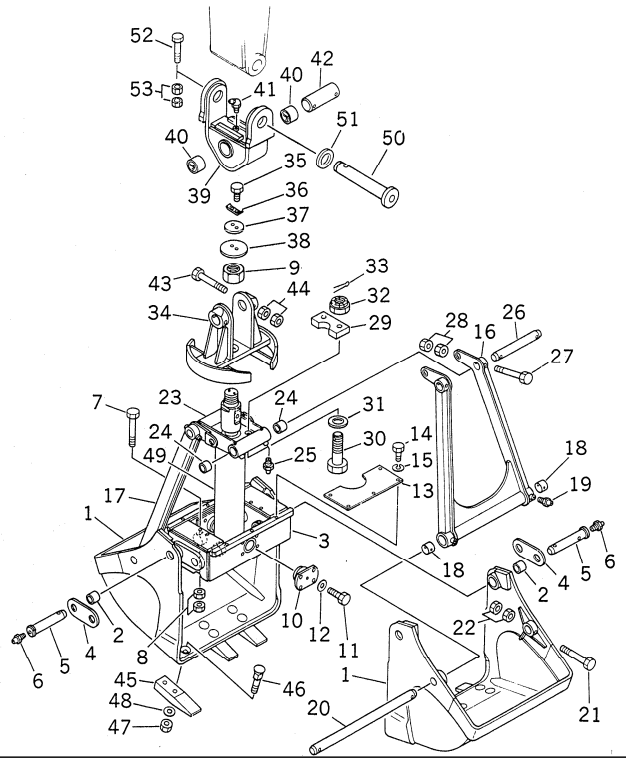

Ref T1510-01B0 **Page 361190**

PC220-7 S/N 60001-UP (Overseas Version)

CLAMSHELL BUCKET

Item	Part No.	Part Name	Qty	Serial No.
1	205-931-1161	SHELL	2	60001-
2	07143-10505	BUSHING	4	60001-
3	205-931-1230	FRAME	1	60001-
4	205-931-1240	PLATE	2	60001-
5	205-931-1250	PIN	4	60001-
6	07020-00000	FITTING	4	60001-
7	01011-81610	BOLT	4	60001-
8	01580-11613	NUT	8	60001-
9	205-931-2140	NUT	1	60001-
10	205-931-1260	CAP	2	60001-
11	01010-81450	BOLT	8	60001-
12	01643-31445	WASHER	8	60001-
13	205-931-1270	COVER	2	60001-
14	01010-81020	BOLT	10	60001-
15	01643-31032	WASHER	10	60001-
16	205-931-1192	ARM	1	60001-
17	205-931-1212	ARM	1	60001-
18	07144-10505	BUSHING	4	60001-
19	07020-00000	FITTING	4	60001-
20	205-931-1220	PIN	2	60001-
21	01011-81630	BOLT	4	60001-
22	01580-11613	NUT	8	60001-
23	205-931-1281	FRAME	1	60001-
24	07144-10505	BUSHING	4	60001-
25	07020-00000	FITTING	4	60001-
26	205-931-1290	PIN	2	60001-
27	01011-81610	BOLT	4	60001-
28	01580-11613	NUT	8	60001-

CLAMSHELL BUCKET

Item	Part No.	Part Name	Qty	Serial No.
29	205-931-1310	PLATE	2	60001-
30	01013-83010	BOLT	4	60001-
31	01643-33080	WASHER	4	60001-
32	01590-33033	NUT	4	60001-
33	04050-16055	PIN	4	60001-
34	205-931-1122	HANGER	1	60001-
35	01010-81230	BOLT	2	60001-
36	04081-06012	LOCK	1	60001-
37	205-931-1330	HOLDER	1	60001-
38	205-931-1320	PLATE	1	60001-
39	205-931-6110	BRACKET	1	60001-
40	205-931-6150	BUSHING	2	60001-
41	07020-00675	FITTING	1	60001-
42	205-931-1130	PIN	1	60001-
43	01011-81650	BOLT	2	60001-
44	01580-11613	NUT	4	60001-
45	202-931-1180	TOOTH	6	60001-
46	02090-11285	BOLT	12	60001-
47	02290-11219	NUT	12	60001-
48	01643-32060	WASHER	12	60001-
49	205-63-94101	CYLINDER ASS'Y	1	60001-
50	205-70-73270	PIN	1	60001-
51	205-70-74410	COLLAR	1	60001-
52	205-70-73190	BOLT	1	60001-
53	01580-12016	NUT	2	60001-

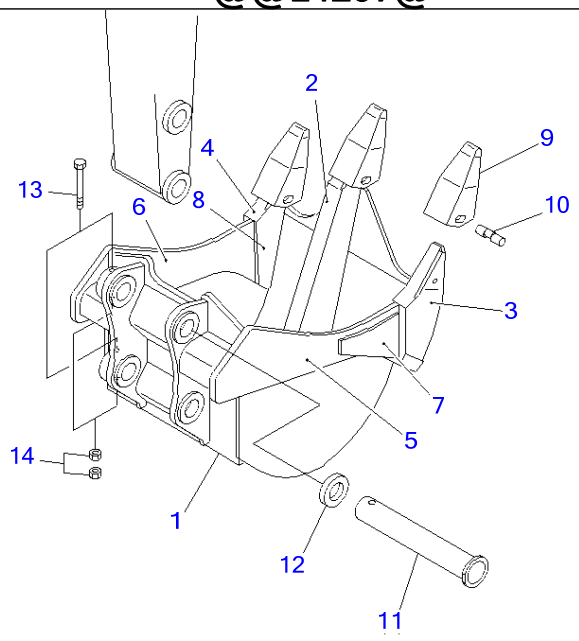

PWL4297

Ref T1510-01B1 **Page 361200**

PC220-7 S/N 60001-UP (Overseas Version)
RIPPER BUCKET¤ 0.61M3 (CECE 0.56M3)¤ 950MM

Item	Part No.	Part Name	Qty	Serial No.
1	205-922-6210	BUCKET	1	60001-
2	205-922-1120	・SHANK (WELDED)	1	60001-
3	205-922-1130	・ADAPTER (WELDED)	1	60001-
4	205-922-1140	・ADAPTER (WELDED)	1	60001-
5	205-922-1150	・PLATE (WELDED)	1	60001-
6	205-922-1160	・PLATE (WELDED)	1	60001-
7	205-922-1170	・PLATE (WELDED)	1	60001-
8	205-922-1180	・PLATE (WELDED)	1	60001-
9	175-78-31230	POINT	3	60001-
10	09244-02508	PIN	3	60001-
11	205-70-73270	PIN	1	60001-
12	205-70-74410	COLLAR	1	60001-
13	205-70-73190	BOLT	2	60001-
14	01580-12016	NUT	4	60001-

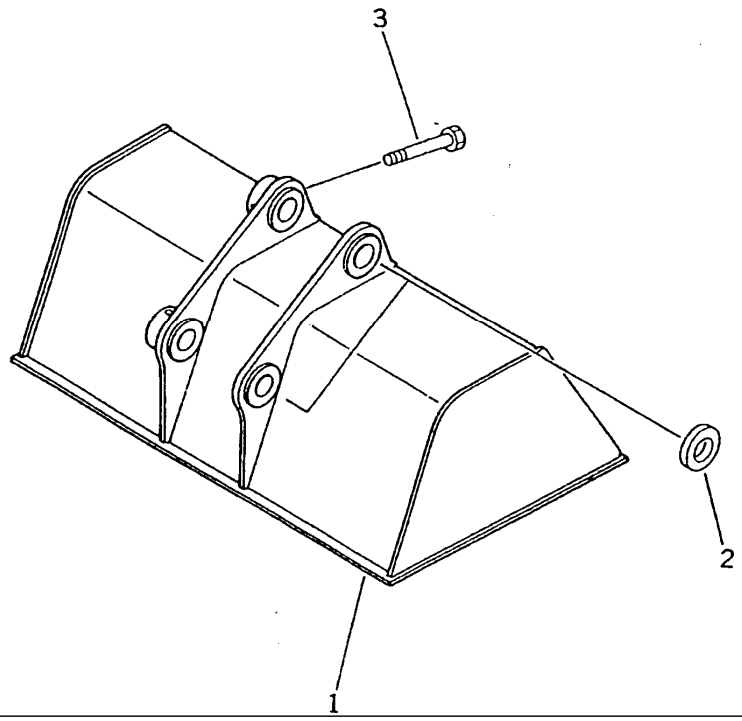

Ref T1510-01B2 Page 361210

PC220-7 S/N 60001-UP (Overseas Version)

SLOPE FINISHING BUCKET

Item	Part No.	Part Name	Qty	Serial No.
1	205-928-6110	BUCKET	1	60001-
2	205-70-74410	COLLAR	2	60001-
3	205-70-73190	BOLT	1	60001-

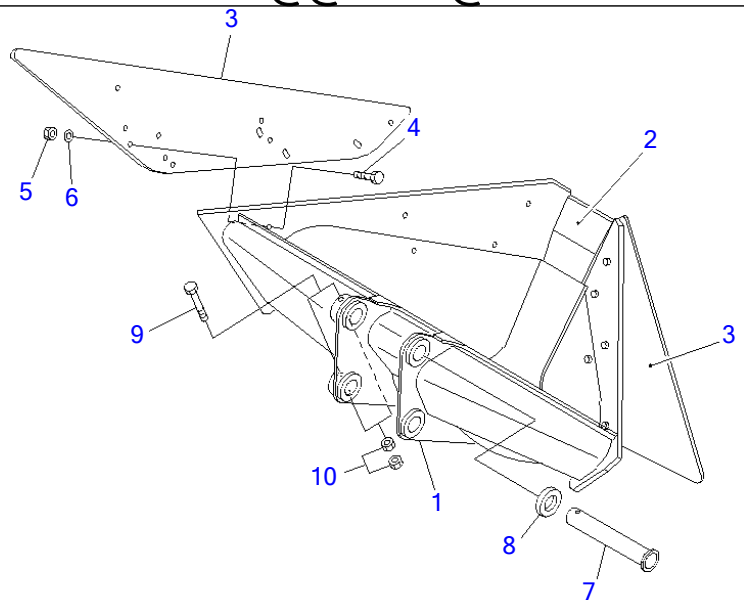

PWL4298

Ref T1510-01B3 **Page 361220**

PC220-7 S/N 60001-UP (Overseas Version)
TRAPEZOIDAL BUCKET

Item	Part No.	Part Name	Qty	Serial No.
1	205-929-6210	BUCKET	1	60001-
2	205-929-6120	▪ PLATE (WELDED)	1	60001-
3	205-929-6130	PLATE	2	60001-
4	01010-82460	BOLT	12	60001-
5	01580-12419	NUT	12	60001-
6	01643-32460	WASHER	12	60001-
7	205-70-73270	PIN	1	60001-
8	205-70-74410	COLLAR	1	60001-
9	205-70-73190	BOLT	2	60001-
10	01580-12016	NUT	4	60001-

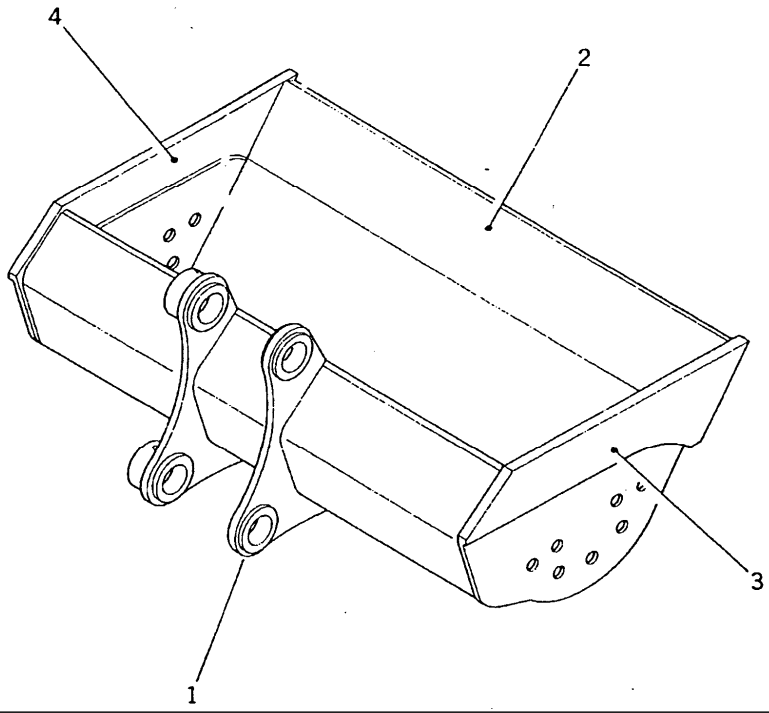

PC220-7 S/N 60001-UP (Overseas Version)

DITCH CLEANING BUCKET¤ 0.8M3 (CECE 0.7M3)¤ 1800MM

Item	Part No.	Part Name	Qty	Serial No.
1	205-938-7111	BUCKET	1	60001-
2	205-938-6220	・PLATE (WELDED)	1	60001-
3	205-938-6230	・PLATE (WELDED)	1	60001-
4	205-938-6240	・PLATE (WELDED)	1	60001-

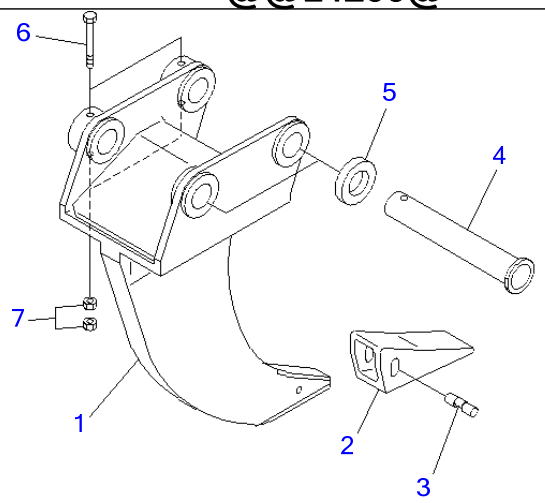

PWL4299

Ref T1510-01B5 **Page 361240**

PC220-7 S/N 60001-UP (Overseas Version)
SINGLE SHANK RIPPER

Item	Part No.	Part Name	Qty	Serial No.
	205-950-0012	RIPPER ASS'Y	1	60001-
1	☆	・RIPPER	1	60001-
2	175-78-31230	・POINT	1	60001-
3	09244-02508	・PIN	1	60001-
4	205-70-73270	PIN	1	60001-
5	205-70-74410	COLLAR	1	60001-
6	205-70-73190	BOLT	2	60001-
7	01580-12016	NUT	4	60001-

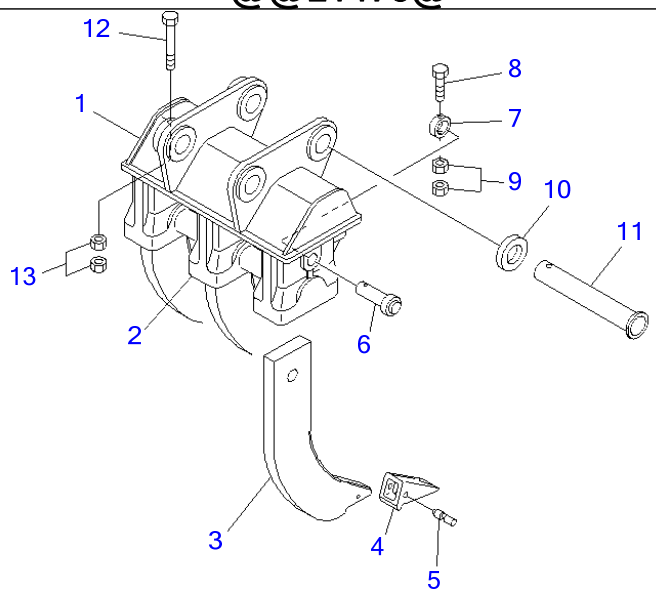

PWL1475

PC220-7 S/N 60001-UP (Overseas Version)
THREE SHANK RIPPER

Item	Part No.	Part Name	Qty	Serial No.
	205-951-0013	RIPPER ASS'Y	1	60001-
1	☆	・BRACKET	1	60001-
2	205-951-6120	・・HOLDER	3	60001-
	205-951-0020	・SHANK ASS'Y	3	60001-
3	☆	・・SHANK	1	60001-
4	131-78-31190	・・POINT	1	60001-
5	09244-02489	・・PIN	1	60001-
6	205-951-6140	・PIN	3	60001-
7	205-951-6150	・COLLAR	3	60001-
8	01019-11205	・BOLT	3	60001-
9	01580-11210	・NUT	6	60001-
10	205-70-74410	COLLAR	1	60001-
11	205-70-73270	PIN	1	60001-
12	205-70-73190	BOLT	2	60001-
13	01580-12016	NUT	4	60001-

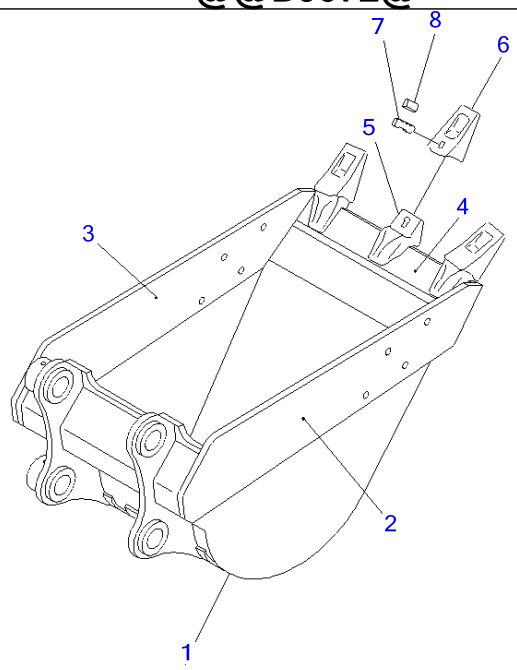

PJB0072

PC220-7 S/N 60001-UP (Overseas Version)

BUCKET¤ 0.72M3 (CECE 0.65M3)¤ 900MM (VERTICAL PIN TYPE) (100 HOURS LUBRICATING)

Item	Part No.	Part Name	Qty	Serial No.
1	206-926-5211	BUCKET, 0.65M3	1	60001-
2	206-70-54141	・PLATE (WELDED)	1	60001-
3	206-70-54151	・PLATE (WELDED)	1	60001-
4	206-926-5220	・PLATE (WELDED)	1	60001-
5	206-70-54121	・ADAPTER (WELDED)	3	60001-
6	206-70-54221	TOOTH	3	60001-
7	207-70-34221	PIN	3	60001-
8	205-70-74291	LOCK	3	60001-

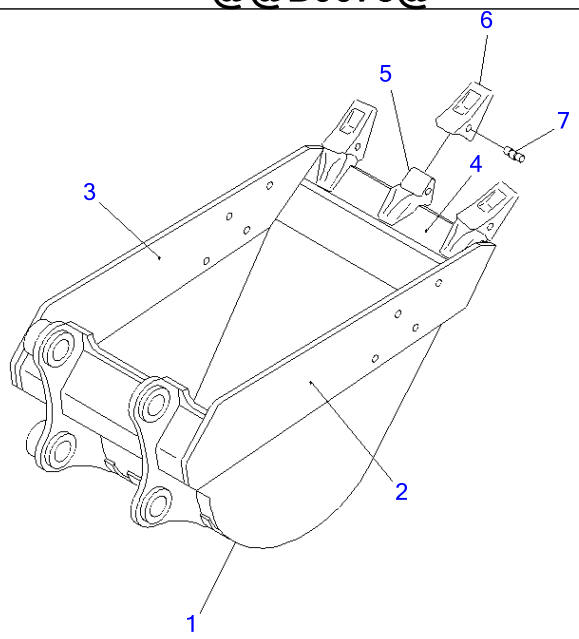

PJB0073

PC220-7 S/N 60001-UP (Overseas Version)

BUCKET¤ 0.72M3 (CECE 0.65M3)¤ 900MM (HORIZONTAL PIN TYPE) (100 OURS LUBRICATING)

Item	Part No.	Part Name	Qty	Serial No.
1	206-926-5250	BUCKET	1	60001-
2	206-70-54141	・PLATE (WELDED)	1	60001-
3	206-70-54151	・PLATE (WELDED)	1	60001-
4	206-926-5220	・PLATE (WELDED)	1	60001-
5	206-939-5120	・ADAPTER (WELDED)	3	60001-
6	206-70-48610	TOOTH	3	60001-
7	09244-02516	PIN	3	60001-

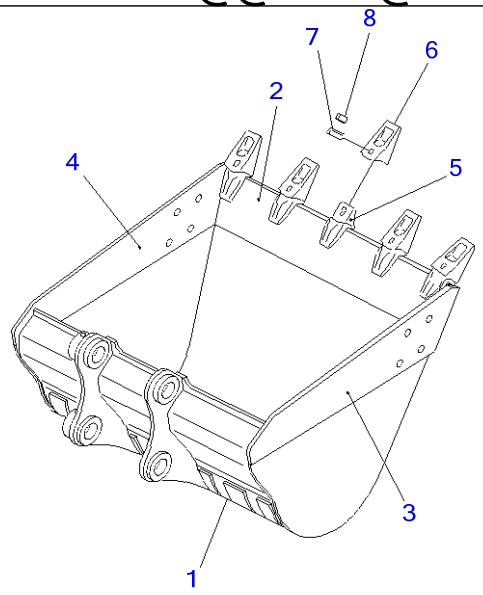

PJ15165

PC220-7 S/N 60001-UP (Overseas Version)

BUCKET¤ 1.26M3 (CECE 1.1M3)¤ 1400MM (VERTICAL PIN TYPE) (100 HOURS LUBRICATING)

Item	Part No.	Part Name	Qty	Serial No.
1	206-920-6211	BUCKET	1	60001-
2	206-920-6221	・PLATE (WELDED)	1	60001-
3	206-70-58122	・PLATE (WELDED)	1	60001-
4	206-70-58132	・PLATE (WELDED)	1	60001-
5	206-70-58150	・ADAPTER (WELDED)	5	60001-
6	206-70-54221	TOOTH	5	60001-
7	207-70-34221	PIN	5	60001-
8	205-70-74291	LOCK	5	60001-

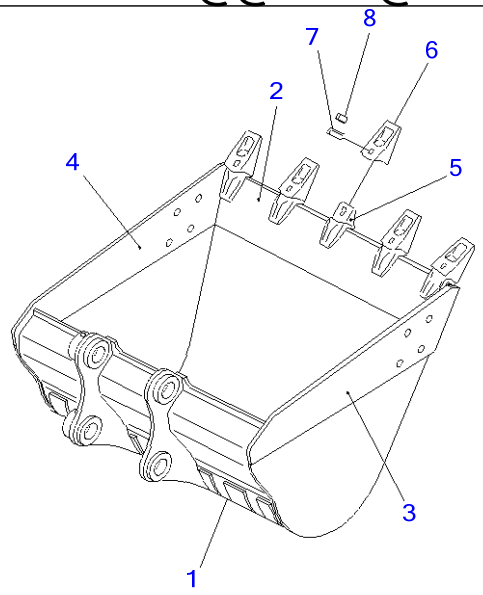

PJ15165

PC220-7 S/N 60001-UP (Overseas Version)

BUCKET¤ 1.26M3 (CECE 1.1M3)¤ 1400MM (VERTICAL PIN TYPE) (100 HOURS LUBRICATING)

Item	Part No.	Part Name	Qty	Serial No.
1	206-920-6211	BUCKET	1	60001-
2	206-920-6221	・PLATE (WELDED)	1	60001-
3	206-70-58122	・PLATE (WELDED)	1	60001-
4	206-70-58132	・PLATE (WELDED)	1	60001-
5	206-70-58150	・ADAPTER (WELDED)	5	60001-
6	206-70-54221	TOOTH	5	60001-
7	207-70-34221	PIN	5	60001-
8	205-70-74291	LOCK	5	60001-

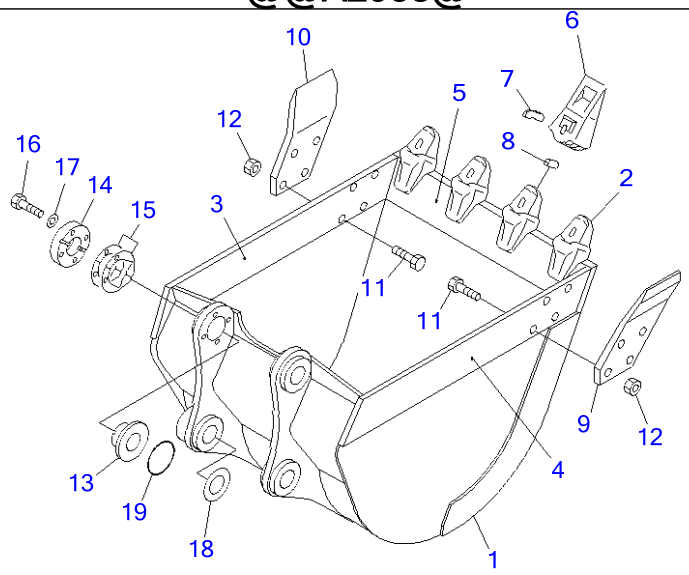

PNA2938

Ref T1510-01D0 **Page 361300**

PC220-7 S/N 60001-UP (Overseas Version)
BUCKET¤ 0.5M3 (CECE 0.45M3) 860MM (VERTICAL PIN TYPE) (FOR 18M SUPER LONG FRONT)(#65272-)

Item	Part No.	Part Name	Qty	Serial No.
	203-70-01112	BUCKET ASS'Y	1	65272-
1	203-70-64113	・BUCKET	1	65272-
2	203-70-64210	・・ADAPTER (WELDED)	4	65272-
3	203-70-64141	・・PLATE (WELDED)	1	65272-
4	203-70-64131	・・PLATE (WELDED)	1	65272-
5	203-70-64121	・・PLATE (WELDED)	1	65272-
6	205-70-74272	・TOOTH	4	65272-
7	205-70-74281	・PIN	4	65272-
8	205-70-74291	・LOCK	4	65272-
9	202-70-63161	・CUTTER	1	65272-
10	202-70-63171	・CUTTER	1	65272-
11	208-32-11231	・BOLT	8	65272-
12	01803-02228	・NUT	8	65272-
13	202-70-64250	SPACER	1	65272-
14	202-70-64240	PLATE	1	65272-
15	202-70-64210	SPACER, 0.5MM	4	65272-
	202-70-64220	SPACER, 1.0MM	8	65272-
16	01010-81470	BOLT	4	65272-
17	01643-31445	WASHER	4	65272-
18	21Y-70-14770	SPACER, 1.0MM	1	65272-
	21Y-70-14780	SPACER, 2.0MM	1	65272-
19	203-70-44470	O-RING	2	65272-

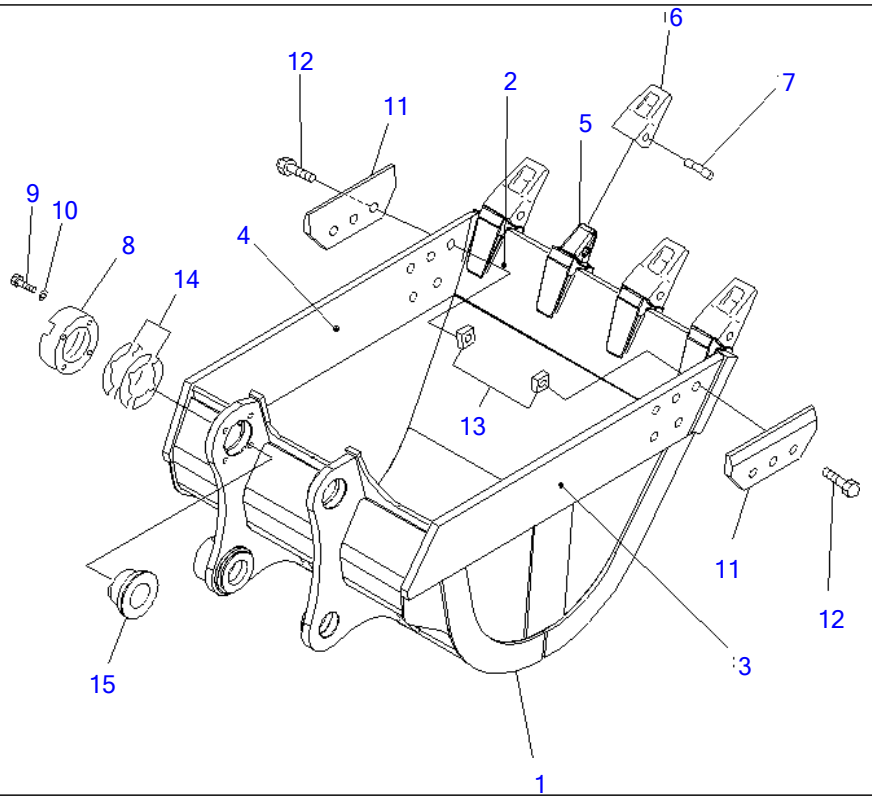

Ref T1510-01D6 Page 361310

PC220-7 S/N 60001-UP (Overseas Version)

BUCKET¤ 1.0M3¤ WIDTH 1260MM (HORIZONTAL PIN TYPE) (FOR ROCK)

Item	Part No.	Part Name	Qty	Serial No.
1	206-934-2110	BUCKET	1	60001-
2	206-934-6120	▪ PLATE (WELDED)	1	60001-
3	206-934-6131	▪ PLATE,(L.H.) (WELDED)	1	60001-
4	206-934-6141	▪ PLATE,(R.H.) (WELDED)	1	60001-
5	207-939-5120	▪ ADAPTER (WELDED)	4	60001-
6	206-70-48610	TOOTH	4	60001-
7	09244-02516	PIN	4	60001-
8	205-70-74391	PLATE	1	60001-
9	01010-62055	BOLT	4	60001-
10	01643-32060	WASHER	4	60001-
11	20Y-934-2150	SHROUD	2	60001-
12	209-32-11234	BOLT	6	60001-
13	195-32-11222	NUT	6	60001-
14	205-70-00100	SHIM ASS'Y	1	60001-
	☆	▪ SHIM, 1.0MM	12	60001-
	☆	▪ SHIM, 0.5MM	4	60001-
15	205-70-74381	SPACER	1	60001-

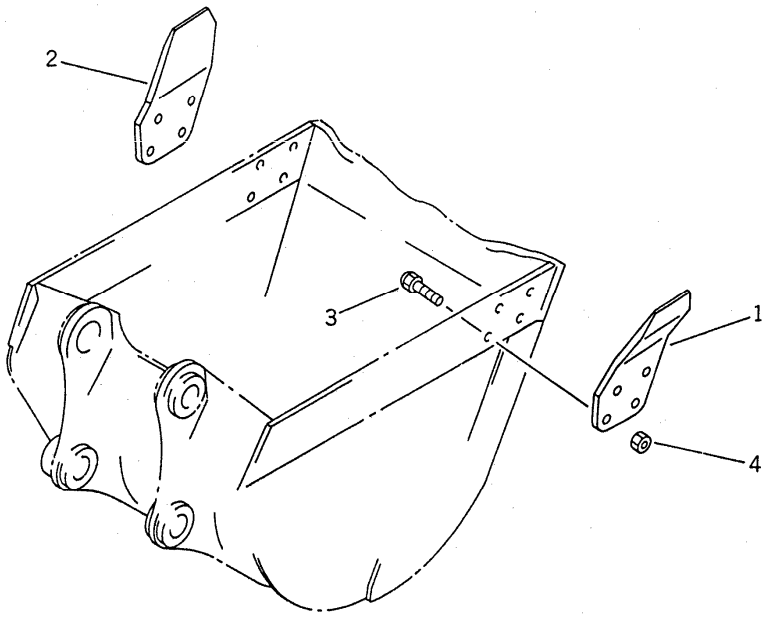

Ref T1510-02A0 **Page 361320**

PC220-7 S/N 60001-UP (Overseas Version)
SIDE CUTTER (FOR BUCKET)

Item	Part No.	Part Name	Qty	Serial No.
1	205-70-74180	CUTTER	1	60001-
2	205-70-74190	CUTTER	1	60001-
3	176-32-11210	BOLT	8	60001-
4	01803-02430	NUT	8	60001-

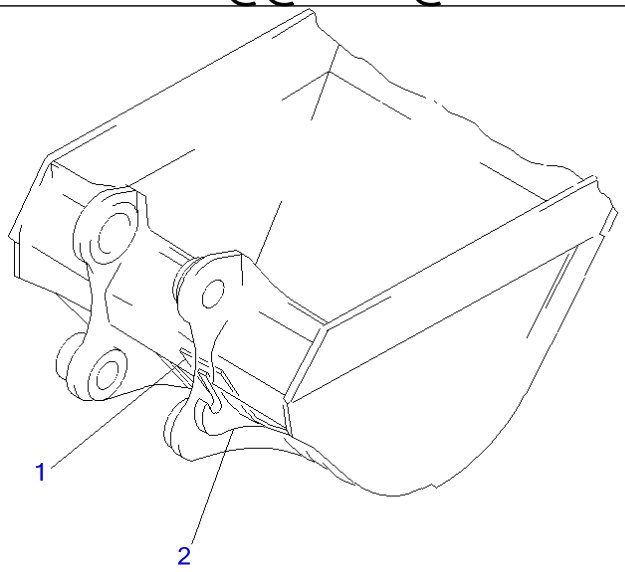

PJB0027

Ref T1510-03B8 **Page 361330**

PC220-7 S/N 60001-UP (Overseas Version)
HOOK (FOR BUCKET)

Item	Part No.	Part Name	Qty	Serial No.
1	206-70-58180	PLATE (WELDED)	1	60001-
2	205-70-69570	HOOK (WELDED)	1	60001-

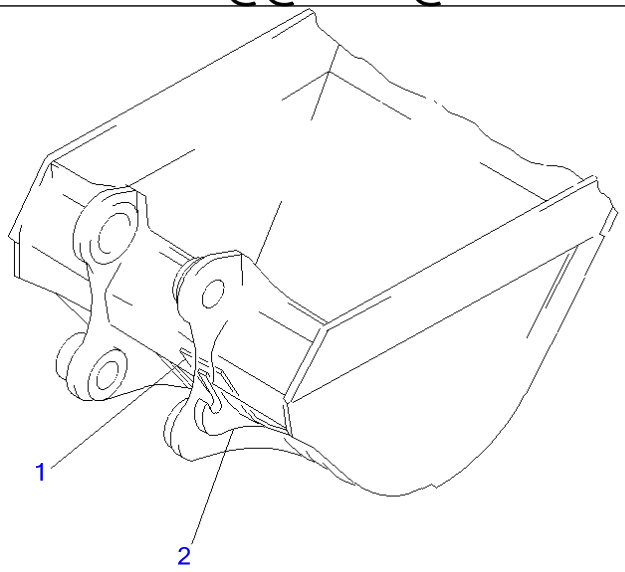

PJB0027

Ref T1510-03C0 **Page 361340**

PC220-7 S/N 60001-UP (Overseas Version)
HOOK (FOR BUCKET)

Item	Part No.	Part Name	Qty	Serial No.
1	20Y-70-14221	PLATE	1	60001-
2	205-70-69570	HOOK	1	60001-

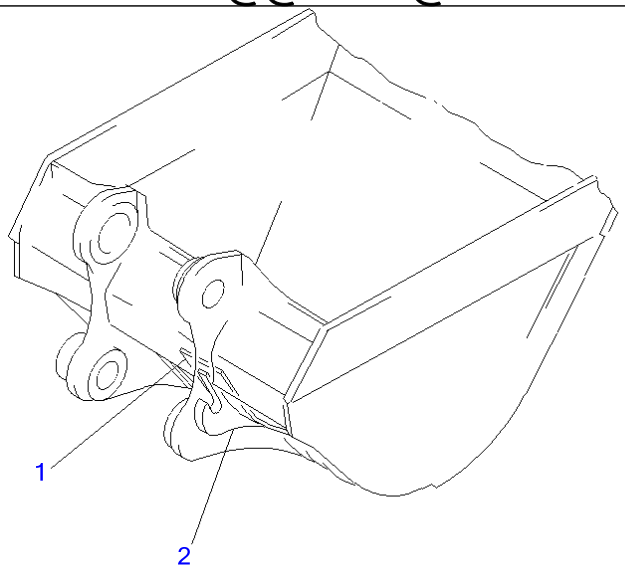

PJB0027

Ref T1510-03C4 **Page 361350**

PC220-7 S/N 60001-UP (Overseas Version)
HOOK (FOR BUCKET)

Item	Part No.	Part Name	Qty	Serial No.
1	206-70-74230	PLATE (WELDED)	1	60001-
2	205-70-69570	HOOK (WELDED)	1	60001-

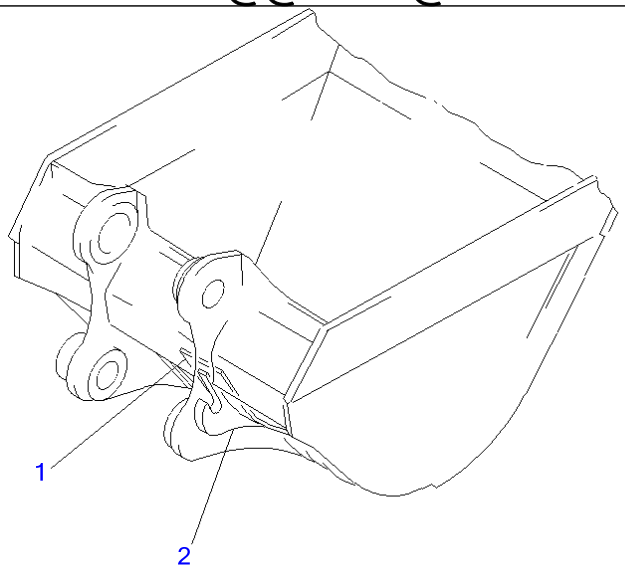

PJB0027

Ref T1510-03C5 **Page 361360**

PC220-7 S/N 60001-UP (Overseas Version)
HOOK (FOR BUCKET)

Item	Part No.	Part Name	Qty	Serial No.
1	20Y-70-14220	PLATE (WELDED)	1	60001-
2	205-70-69570	HOOK (WELDED)	1	60001-

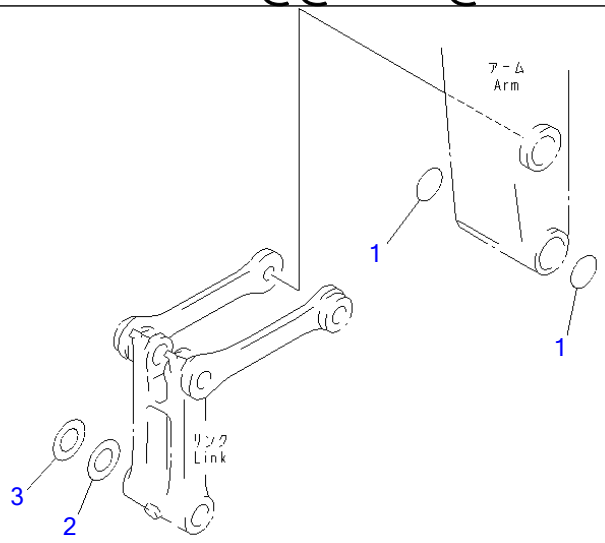

PJ1D254

Ref T1510-04A2 **Page 361370**

PC220-7 S/N 60001-UP (Overseas Version)
O-RING AND SPACER

Item	Part No.	Part Name	Qty	Serial No.
1	205-70-73280	O-RING	2	60001-
2	20Y-70-11340	SPACER, 0.8MM	1	60001-
3	205-70-51530	SPACER, 1.5MM	2	60001-

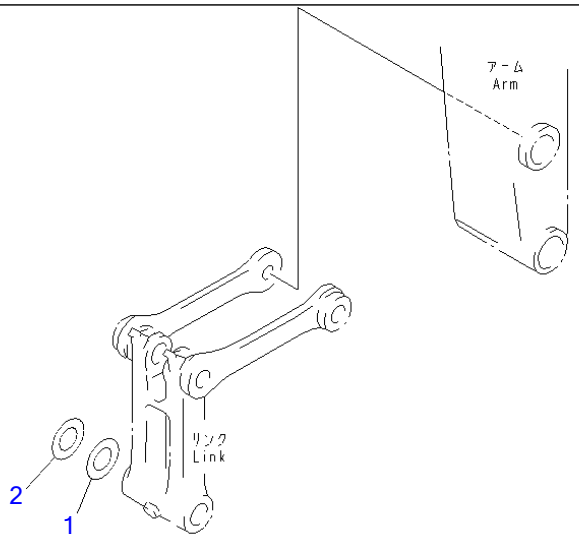

00069841

Ref T1510-04B4 **Page 361380**

PC220-7 S/N 60001-UP (Overseas Version)

SPACER

Item	Part No.	Part Name	Qty	Serial No.
1	20Y-70-11340	SPACER, 0.8MM	1	60001-
2	205-70-51530	SPACER, 1.5MM	2	60001-

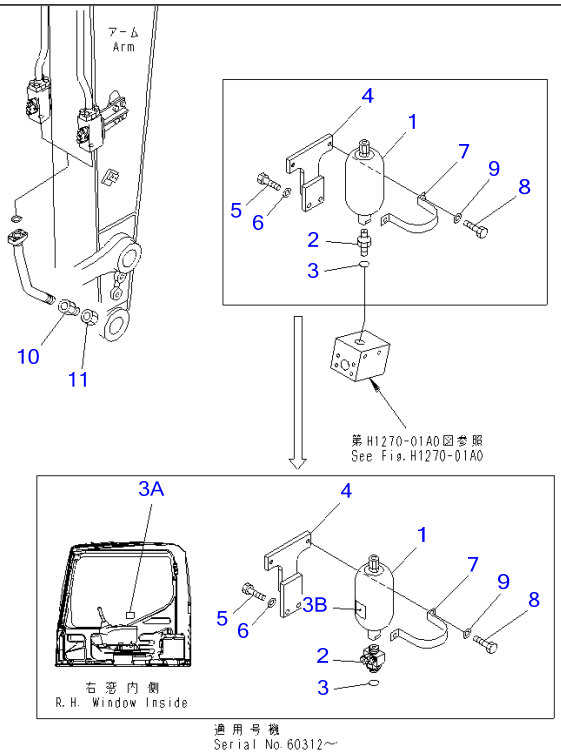

00004341

Ref T1920-01A0 **Page 361390**

PC220-7 S/N 60001-UP (Overseas Version)

BREAKER ADAPTER (FOR KRUPP)(#60001-60445)

Item	Part No.	Part Name	Qty	Serial No.
1	20Y-970-6440	ACCUMULATOR	1	60001-@
	205-970-5560	・O-RING	1	60001-@
2	(22U-970-2200)	VALVE	1	60312-60445
	205-970-5550	NIPPLE	1	60001-60311
3	07002-12434	O-RING	1	60001-@
3A	20Y-00-32160	PLATE	1	60312-60445
3B	20Y-00-32170	PLATE	1	60312-60445
4	20Y-62-43251	BRACKET	1	60312-@
	20Y-62-43250	BRACKET	1	60001-60311
5	01010-81235	BOLT	2	60001-@
6	01643-31232	WASHER	2	60001-@
7	175-61-51750	PLATE	1	60001-@
8	01010-81225	BOLT	2	60001-@
9	01643-31232	WASHER	2	60001-@
10	20Y-970-7130	ADAPTER	2	60001-@
11	205-970-7680	PLUG	2	60001-@

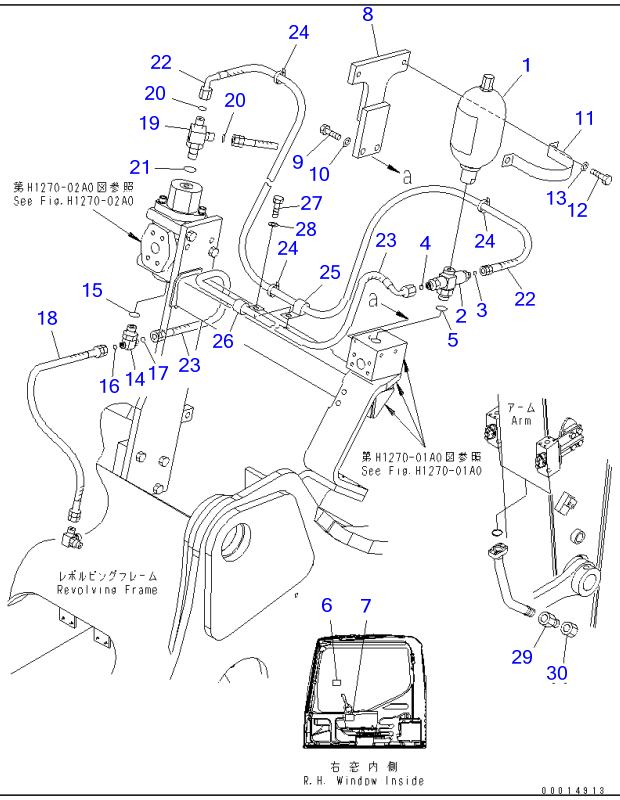

Ref T1920-01A0A **Page 361400**

PC220-7 S/N 60001-UP (Overseas Version)

BREAKER ADAPTER (FOR KRUPP)(#60446-60775)

Item	Part No.	Part Name	Qty	Serial No.
1	20Y-970-6440	ACCUMULATOR	1	60001-@
	205-970-5560	・O-RING	1	60001-@
2	(20Y-62-31300)	VALVE	1	60446-60775
3	02896-11008	O-RING	1	60446-@
4	02896-11009	O-RING	1	60446-@
5	07002-12434	O-RING	1	60001-@
6	20Y-00-32180	PLATE	1	60446-@
7	20Y-00-32190	TAG	1	60446-@
8	20Y-62-43251	BRACKET	1	60312-@
9	01010-81235	BOLT	2	60001-@
10	01643-31232	WASHER	2	60001-@
11	175-61-51750	PLATE	1	60001-@
12	01010-81225	BOLT	2	60001-@
13	01643-31232	WASHER	2	60001-@
14	11Y-62-12810	TEE	1	60446-@
15	07002-12034	O-RING	1	60446-@
16	02896-11008	O-RING	1	60446-@
17	02896-11009	O-RING	1	60446-@
18	02760-002A3	HOSE	1	60446-@
19	11Y-62-12330	ELBOW	1	60446-@
20	02896-11008	O-RING	2	60446-@
21	07002-11423	O-RING	1	60446-@
22	02761-00210	HOSE	1	60446-@
23	02761-00310	HOSE	1	60446-@
24	08034-00519	BAND	4	60446-@
25	04434-51212	CLIP	1	60446-@
26	04434-51512	CLIP	1	60446-@
27	01010-81225	BOLT	1	60446-@

BREAKER ADAPTER (FOR KRUPP)(#60446-60775)

Item	Part No.	Part Name	Qty	Serial No.
28	01643-31232	WASHER	1	60446-@
29	20Y-970-7130	ADAPTER	2	60001-@
30	205-970-7680	PLUG	2	60001-@

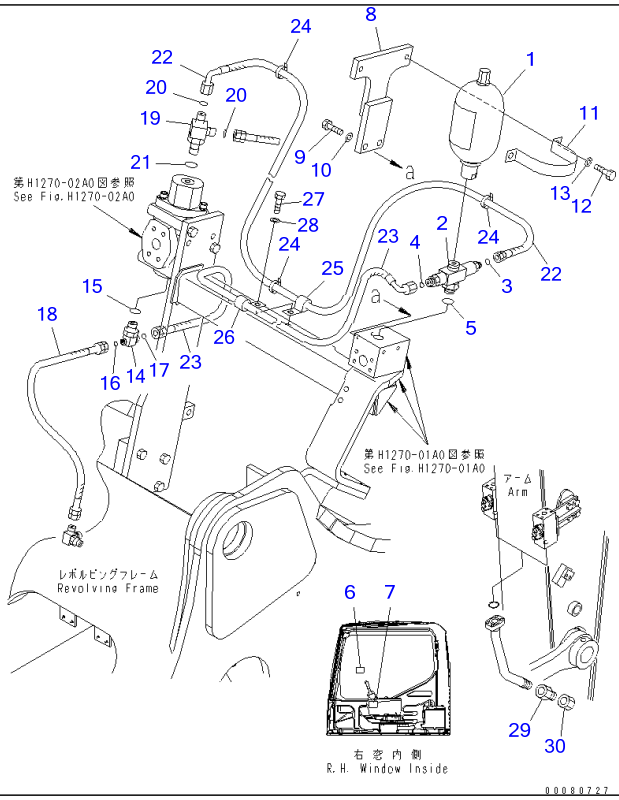

Ref T1920-01A0B

Page 361410

PC220-7 S/N 60001-UP (Overseas Version)

BREAKER ADAPTER (FOR KRUPP)(#60776-65000)

Item	Part No.	Part Name	Qty	Serial No.
1	20Y-970-6440	ACCUMULATOR	1	60001-65000
	205-970-5560	・O-RING	1	60001-65000
2	(20Y-62-31400)	VALVE	1	60776-65000
3	02896-11008	O-RING	1	60446-65000
4	02896-11009	O-RING	1	60446-65000
5	07002-12434	O-RING	1	60001-65000
6	20Y-00-32180	PLATE	1	60446-65000
7	20Y-00-32190	TAG	1	60446-65000
8	20Y-62-43251	BRACKET	1	60312-65000
9	01010-81235	BOLT	2	60001-65000
10	01643-31232	WASHER	2	60001-65000
11	175-61-51750	PLATE	1	60001-65000
12	01010-81225	BOLT	2	60001-65000
13	01643-31232	WASHER	2	60001-65000
14	11Y-62-12810	TEE	1	60446-65000
15	07002-12034	O-RING	1	60446-65000
16	02896-11008	O-RING	1	60446-65000
17	02896-11009	O-RING	1	60446-65000
18	02760-002A3	HOSE	1	60446-65000
19	11Y-62-12330	ELBOW	1	60446-65000
20	02896-11008	O-RING	2	60446-65000
21	07002-11423	O-RING	1	60446-65000
22	02761-00210	HOSE	1	60446-65000
23	02761-00310	HOSE	1	60446-65000
24	08034-00519	BAND	4	60446-65000
25	04434-51212	CLIP	1	60446-65000
26	04434-51512	CLIP	1	60446-65000
27	01010-81225	BOLT	1	60446-65000

BREAKER ADAPTER (FOR KRUPP)(#60776-65000)

Item	Part No.	Part Name	Qty	Serial No.
28	01643-31232	WASHER	1	60446-65000
29	20Y-970-7130	ADAPTER	2	60001-65000
30	205-970-7680	PLUG	2	60001-65000

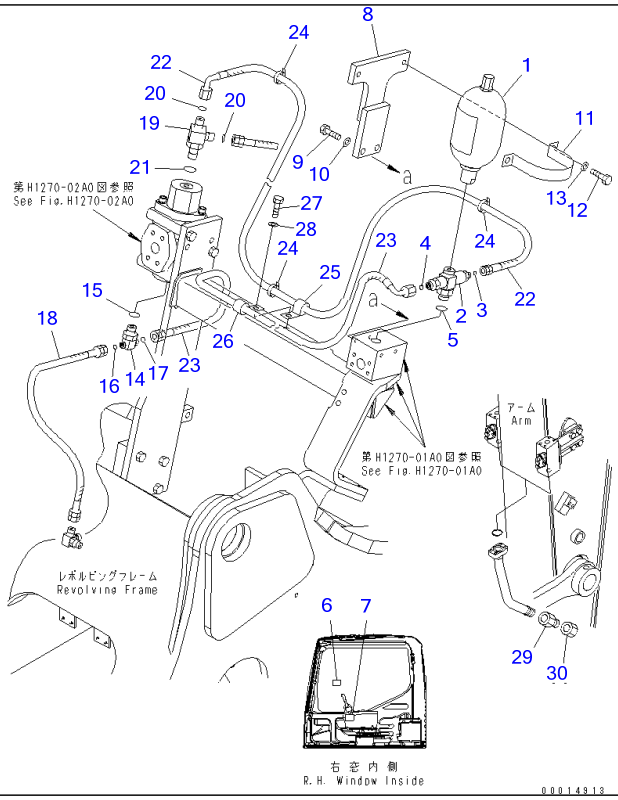

Ref T1920-01A0C **Page 361420**

PC220-7 S/N 60001-UP (Overseas Version)
BREAKER ADAPTER (FOR KRUPP)(#65001-67480)

Item	Part No.	Part Name	Qty	Serial No.
1	20Y-970-6440	ACCUMULATOR	1	65001-@
	205-970-5560	・O-RING	1	65001-@
2	(20Y-62-31300)	VALVE	1	65001-67480
3	02896-11008	O-RING	1	65001-@
4	02896-11009	O-RING	1	65001-@
5	07002-12434	O-RING	1	65001-@
6	20Y-00-32180	PLATE	1	65001-@
7	20Y-00-32190	TAG	1	65001-@
8	20Y-62-43251	BRACKET	1	65001-@
9	01010-81235	BOLT	2	65001-@
10	01643-31232	WASHER	2	65001-@
11	175-61-51750	PLATE	1	65001-@
12	01010-81225	BOLT	2	65001-@
13	01643-31232	WASHER	2	65001-@
14	11Y-62-12810	TEE	1	65001-@
15	07002-12034	O-RING	1	65001-@
16	02896-11008	O-RING	1	65001-@
17	02896-11009	O-RING	1	65001-@
18	02760-002A3	HOSE	1	65001-@
19	11Y-62-12330	ELBOW	1	65001-@
20	02896-11008	O-RING	2	65001-@
21	07002-11423	O-RING	1	65001-@
22	02761-00210	HOSE	1	65001-@
23	02761-00310	HOSE	1	65001-@
24	08034-00519	BAND	4	65001-@
25	04434-51212	CLIP	1	65001-@
26	04434-51512	CLIP	1	65001-@
27	01010-81225	BOLT	1	65001-@

BREAKER ADAPTER (FOR KRUPP)(#65001-67480)

Item	Part No.	Part Name	Qty	Serial No.
28	01643-31232	WASHER	1	65001-@
29	20Y-970-7130	ADAPTER	2	65001-@
30	205-970-7680	PLUG	2	65001-@

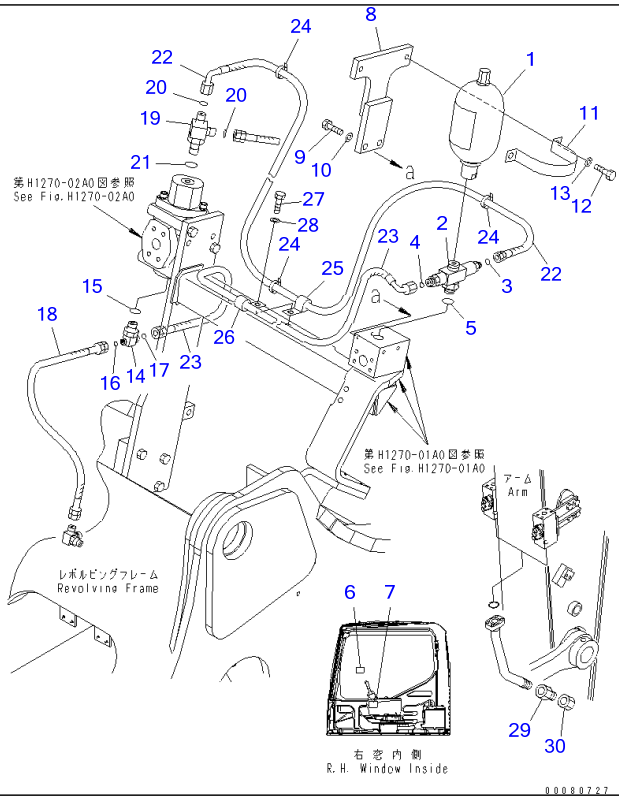

Ref T1920-01A0D **Page 361430**

PC220-7 S/N 60001-UP (Overseas Version)
BREAKER ADAPTER (FOR KRUPP)(#67481-)

Item	Part No.	Part Name	Qty	Serial No.
1	20Y-970-6440	ACCUMULATOR	1	65001-
	205-970-5560	・O-RING	1	65001-
2	(20Y-62-31400)	VALVE	1	67481-
3	02896-11008	O-RING	1	65001-
4	02896-11009	O-RING	1	65001-
5	07002-12434	O-RING	1	65001-
6	20Y-00-32180	PLATE	1	65001-
7	20Y-00-32190	TAG	1	65001-
8	20Y-62-43251	BRACKET	1	65001-
9	01010-81235	BOLT	2	65001-
10	01643-31232	WASHER	2	65001-
11	175-61-51750	PLATE	1	65001-
12	01010-81225	BOLT	2	65001-
13	01643-31232	WASHER	2	65001-
14	11Y-62-12810	TEE	1	65001-
15	07002-12034	O-RING	1	65001-
16	02896-11008	O-RING	1	65001-
17	02896-11009	O-RING	1	65001-
18	02760-002A3	HOSE	1	65001-
19	11Y-62-12330	ELBOW	1	65001-
20	02896-11008	O-RING	2	65001-
21	07002-11423	O-RING	1	65001-
22	02761-00210	HOSE	1	65001-
23	02761-00310	HOSE	1	65001-
24	08034-00519	BAND	4	65001-
25	04434-51212	CLIP	1	65001-
26	04434-51512	CLIP	1	65001-
27	01010-81225	BOLT	1	65001-

BREAKER ADAPTER (FOR KRUPP)(#67481-)

Item	Part No.	Part Name	Qty	Serial No.
28	01643-31232	WASHER	1	65001-
29	20Y-970-7130	ADAPTER	2	65001-
30	205-970-7680	PLUG	2	65001-

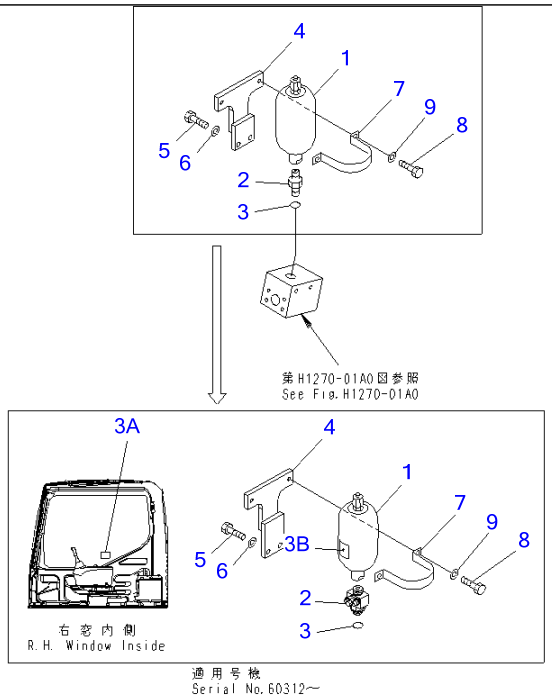

00004345

Ref T1920-01A1 **Page 361440**

PC220-7 S/N 60001-UP (Overseas Version)
BREAKER ADAPTER (FOR NIPPON PNEUMATIC)(#60001-60445)

Item	Part No.	Part Name	Qty	Serial No.
1	20Y-970-6440	ACCUMULATOR	1	60001-@
	205-970-5560	▪ O-RING	1	60001-@
2	(22U-970-2200)	VALVE	1	60312-60445
	205-970-5550	NIPPLE	1	60001-60311
3	07002-12434	O-RING	1	60001-@
3A	20Y-00-32160	PLATE	1	60312-60445
3B	20Y-00-32170	PLATE	1	60312-60445
4	20Y-62-43251	BRACKET	1	60312-@
	20Y-62-43250	BRACKET	1	60001-60311
5	01010-81235	BOLT	2	60001-@
6	01643-31232	WASHER	2	60001-@
7	175-61-51750	PLATE	1	60001-@
8	01010-81225	BOLT	2	60001-@
9	01643-31232	WASHER	2	60001-@

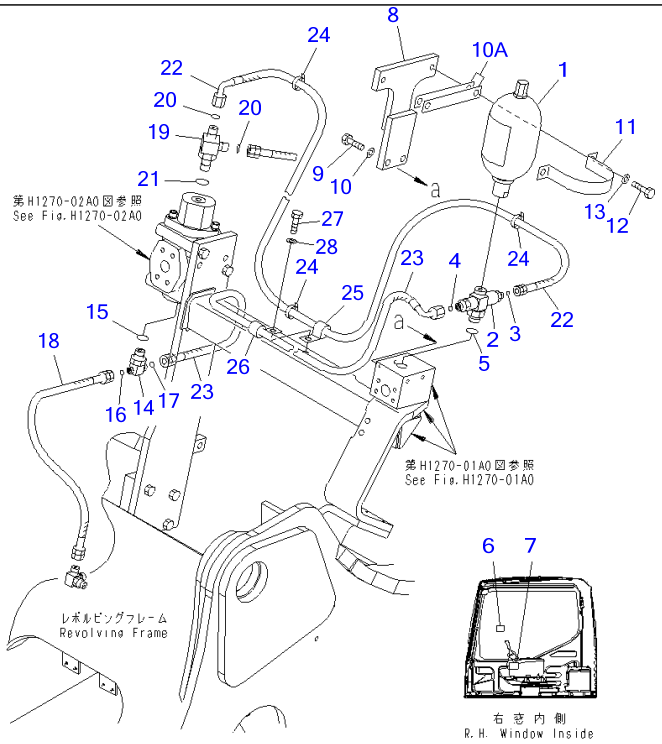

Ref T1920-01A1A **Page 361450**

PC220-7 S/N 60001-UP (Overseas Version)

BREAKER ADAPTER (FOR NIPPON PNEUMATIC)(#60446-60775)

Item	Part No.	Part Name	Qty	Serial No.
1	20Y-970-6440	ACCUMULATOR	1	60001-@
	205-970-5560	・O-RING	1	60001-@
2	(20Y-62-31300)	VALVE	1	60446-60775
3	02896-11008	O-RING	1	60446-@
4	02896-11009	O-RING	1	60446-@
5	07002-12434	O-RING	1	60001-@
6	20Y-00-32180	PLATE	1	60446-@
7	20Y-00-32190	TAG	1	60446-@
8	20Y-62-43251	BRACKET	1	60312-@
9	01010-81235	BOLT	2	60001-@
10	01643-31232	WASHER	2	60001-@
10A	20Y-62-47790	PLATE	2	60772-@
11	175-61-51750	PLATE	1	60001-@
12	01010-81225	BOLT	2	60001-@
13	01643-31232	WASHER	2	60001-@
14	11Y-62-12810	TEE	1	60446-@
15	07002-12034	O-RING	1	60446-@
16	02896-11008	O-RING	1	60446-@
17	02896-11009	O-RING	1	60446-@
18	02760-002A3	HOSE	1	60446-@
19	11Y-62-12330	ELBOW	1	60446-@
20	02896-11008	O-RING	2	60446-@
21	07002-11423	O-RING	1	60446-@
22	02761-00210	HOSE	1	60446-@
23	02761-00310	HOSE	1	60446-@
24	08034-00519	BAND	4	60446-@
25	04434-51212	CLIP	1	60446-@
26	04434-51512	CLIP	1	60446-@

BREAKER ADAPTER (FOR NIPPON PNEUMATIC)(#60446-60775)

Item	Part No.	Part Name	Qty	Serial No.
27	01010-81225	BOLT	1	60446-@
28	01643-31232	WASHER	1	60446-@

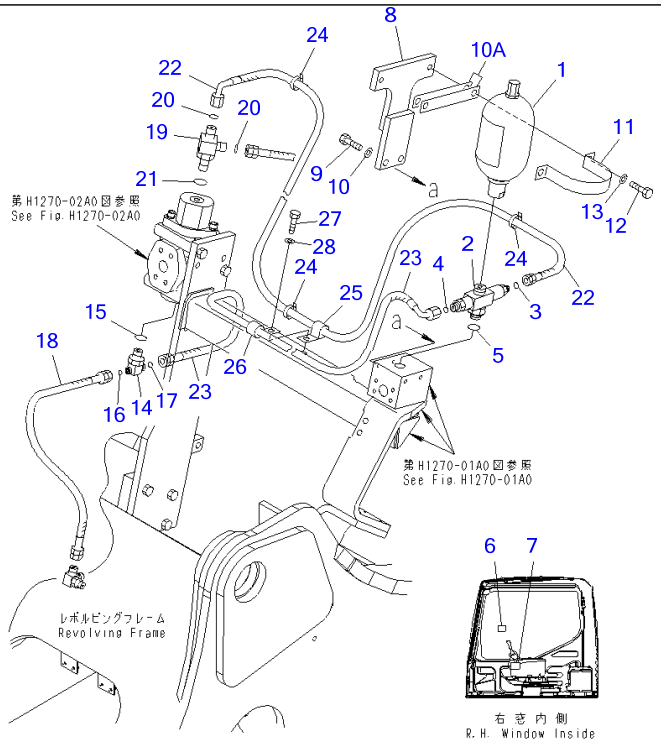

Ref T1920-01A1B **Page 361460**

PC220-7 S/N 60001-UP (Overseas Version)

BREAKER ADAPTER (FOR NIPPON PNEUMATIC)(#60776-65000)

Item	Part No.	Part Name	Qty	Serial No.
1	20Y-970-6440	ACCUMULATOR	1	60001-65000
	205-970-5560	・O-RING	1	60001-65000
2	(20Y-62-31400)	VALVE	1	60776-65000
3	02896-11008	O-RING	1	60446-65000
4	02896-11009	O-RING	1	60446-65000
5	07002-12434	O-RING	1	60001-65000
6	20Y-00-32180	PLATE	1	60446-65000
7	20Y-00-32190	TAG	1	60446-65000
8	20Y-62-43251	BRACKET	1	60312-65000
9	01010-81235	BOLT	2	60001-65000
10	01643-31232	WASHER	2	60001-65000
10A	20Y-62-47790	PLATE	2	60772-65000
11	175-61-51750	PLATE	1	60001-65000
12	01010-81225	BOLT	2	60001-65000
13	01643-31232	WASHER	2	60001-65000
14	11Y-62-12810	TEE	1	60446-65000
15	07002-12034	O-RING	1	60446-65000
16	02896-11008	O-RING	1	60446-65000
17	02896-11009	O-RING	1	60446-65000
18	02760-002A3	HOSE	1	60446-65000
19	11Y-62-12330	ELBOW	1	60446-65000
20	02896-11008	O-RING	2	60446-65000
21	07002-11423	O-RING	1	60446-65000
22	02761-00210	HOSE	1	60446-65000
23	02761-00310	HOSE	1	60446-65000
24	08034-00519	BAND	4	60446-65000
25	04434-51212	CLIP	1	60446-65000
26	04434-51512	CLIP	1	60446-65000

BREAKER ADAPTER (FOR NIPPON PNEUMATIC)(#60776-65000)

Item	Part No.	Part Name	Qty	Serial No.
27	01010-81225	BOLT	1	60446-65000
28	01643-31232	WASHER	1	60446-65000

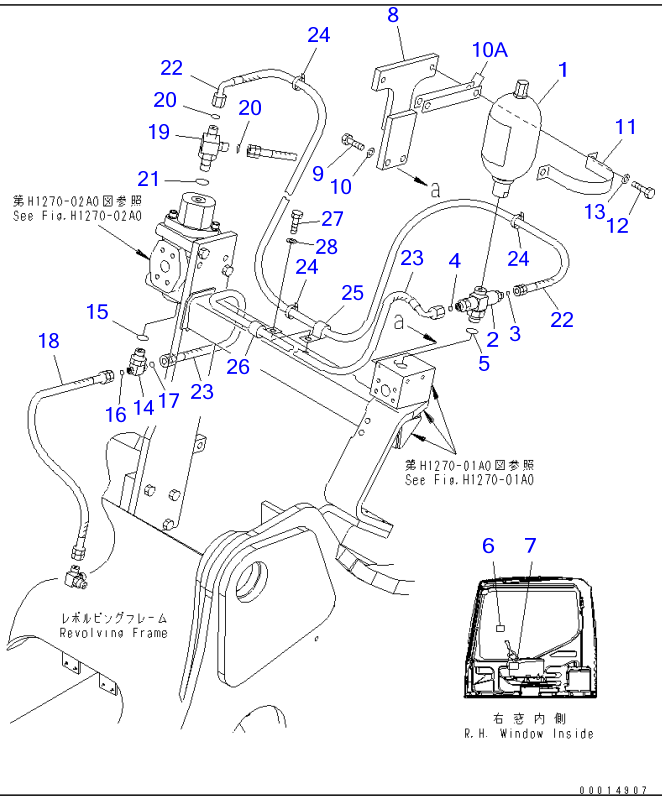

Ref T1920-01A1C **Page 361470**

PC220-7 S/N 60001-UP (Overseas Version)

BREAKER ADAPTER (FOR NIPPON PNEUMATIC)(#65001-67480)

Item	Part No.	Part Name	Qty	Serial No.
1	20Y-970-6440	ACCUMULATOR	1	65001-@
	205-970-5560	・O-RING	1	65001-@
2	(20Y-62-31300)	VALVE	1	65001-67480
3	02896-11008	O-RING	1	65001-@
4	02896-11009	O-RING	1	65001-@
5	07002-12434	O-RING	1	65001-@
6	20Y-00-32180	PLATE	1	65001-@
7	20Y-00-32190	TAG	1	65001-@
8	20Y-62-43251	BRACKET	1	65001-@
9	01010-81235	BOLT	2	65001-@
10	01643-31232	WASHER	2	65001-@
10A	20Y-62-47790	PLATE	2	65001-@
11	175-61-51750	PLATE	1	65001-@
12	01010-81225	BOLT	2	65001-@
13	01643-31232	WASHER	2	65001-@
14	11Y-62-12810	TEE	1	65001-@
15	07002-12034	O-RING	1	65001-@
16	02896-11008	O-RING	1	65001-@
17	02896-11009	O-RING	1	65001-@
18	02760-002A3	HOSE	1	65001-@
19	11Y-62-12330	ELBOW	1	65001-@
20	02896-11008	O-RING	2	65001-@
21	07002-11423	O-RING	1	65001-@
22	02761-00210	HOSE	1	65001-@
23	02761-00310	HOSE	1	65001-@
24	08034-00519	BAND	4	65001-@
25	04434-51212	CLIP	1	65001-@
26	04434-51512	CLIP	1	65001-@

BREAKER ADAPTER (FOR NIPPON PNEUMATIC)(#65001-67480)

Item	Part No.	Part Name	Qty	Serial No.
27	01010-81225	BOLT	1	65001-@
28	01643-31232	WASHER	1	65001-@

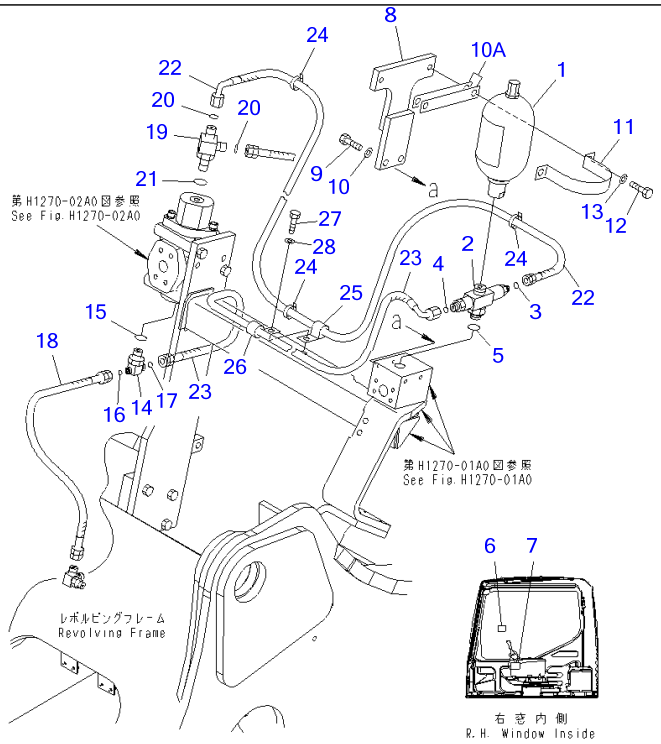

Ref T1920-01A1D **Page 361480**

PC220-7 S/N 60001-UP (Overseas Version)

BREAKER ADAPTER (FOR NIPPON PNEUMATIC)(#67481-)

Item	Part No.	Part Name	Qty	Serial No.
1	20Y-970-6440	ACCUMULATOR	1	65001-
	205-970-5560	▪ O-RING	1	65001-
2	(20Y-62-31400)	VALVE	1	67481-
3	02896-11008	O-RING	1	65001-
4	02896-11009	O-RING	1	65001-
5	07002-12434	O-RING	1	65001-
6	20Y-00-32180	PLATE	1	65001-
7	20Y-00-32190	TAG	1	65001-
8	20Y-62-43251	BRACKET	1	65001-
9	01010-81235	BOLT	2	65001-
10	01643-31232	WASHER	2	65001-
10A	20Y-62-47790	PLATE	2	65001-
11	175-61-51750	PLATE	1	65001-
12	01010-81225	BOLT	2	65001-
13	01643-31232	WASHER	2	65001-
14	11Y-62-12810	TEE	1	65001-
15	07002-12034	O-RING	1	65001-
16	02896-11008	O-RING	1	65001-
17	02896-11009	O-RING	1	65001-
18	02760-002A3	HOSE	1	65001-
19	11Y-62-12330	ELBOW	1	65001-
20	02896-11008	O-RING	2	65001-
21	07002-11423	O-RING	1	65001-
22	02761-00210	HOSE	1	65001-
23	02761-00310	HOSE	1	65001-
24	08034-00519	BAND	4	65001-
25	04434-51212	CLIP	1	65001-
26	04434-51512	CLIP	1	65001-

BREAKER ADAPTER (FOR NIPPON PNEUMATIC)(#67481-)

Item	Part No.	Part Name	Qty	Serial No.
27	01010-81225	BOLT	1	65001-
28	01643-31232	WASHER	1	65001-

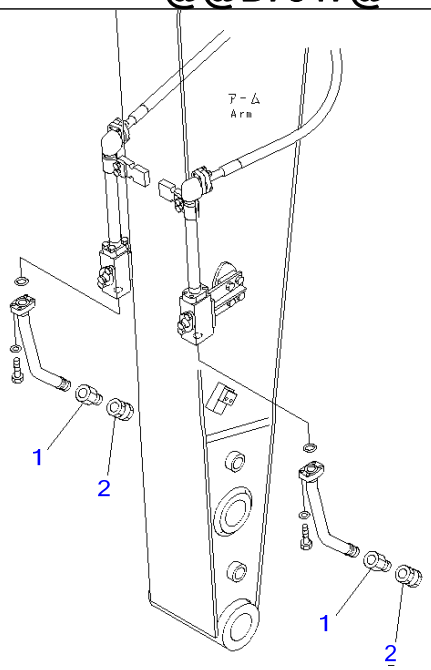

PWB7347

Ref T1920-01A2 **Page 361490**

PC220-7 S/N 60001-UP (Overseas Version)
BREAKER ADAPTER (FOR ATLAS AND OKADA)

Item	Part No.	Part Name	Qty	Serial No.
1	20Y-970-7130	ADAPTER	2	60001-
2	205-970-7680	PLUG	2	60001-

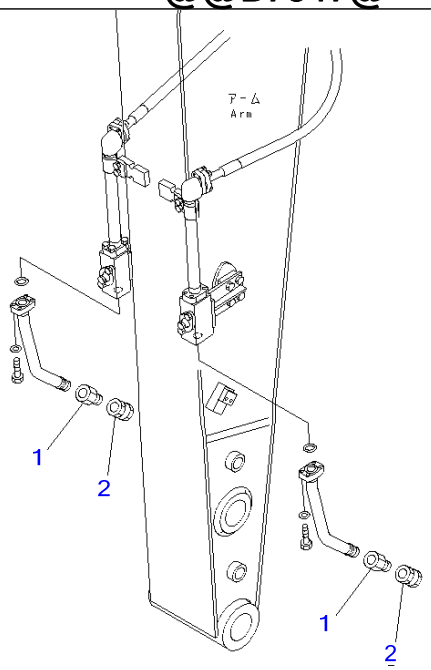

PWB7347

PC220-7 S/N 60001-UP (Overseas Version)

BREAKER ADAPTER (FOR MATUDA AND FURUKAWA)

Item	Part No.	Part Name	Qty	Serial No.
1	20Y-970-7140	ADAPTER	2	60001-
2	20Y-970-6550	PLUG	2	60001-

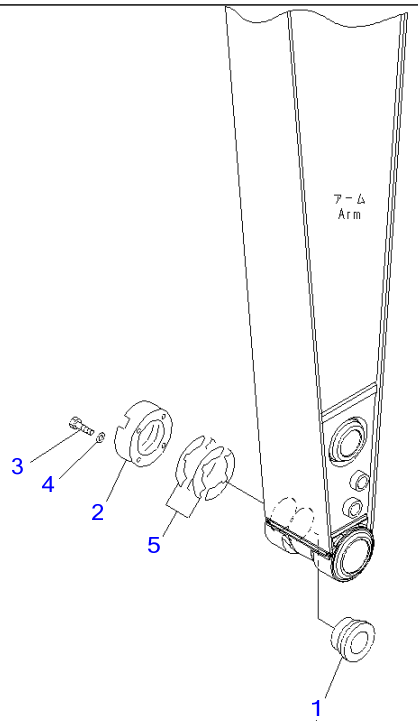

Ref T1930-01A0 **Page 361510**

PC220-7 S/N 60001-UP (Overseas Version)
PARTS FOR LESS BUCKET

Item	Part No.	Part Name	Qty	Serial No.
1	20Y-70-34211	BUSHING	1	60001-
2	205-70-74391	PLATE	1	60001-
3	01010-62055	BOLT	4	60001-
4	01643-32060	WASHER	4	60001-
5	205-70-00100	SHIM ASS'Y	1	60001-
	☆	・SHIM, 1.0MM	12	60001-
	☆	・SHIM, 0.5MM	4	60001-

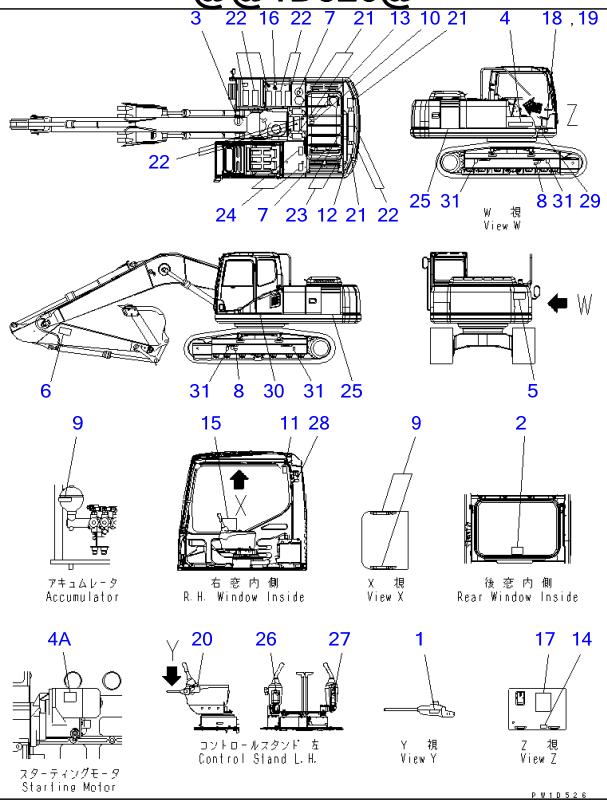

DECAL AND PLATE (ENGLISH)(#60001-65000)

Item	Part No.	Part Name	Qty	Serial No.
1	09685-00002	PLATE, OPERATING	1	60001-@
2	20Y-00-31170	PLATE, SAFETY	1	60001-@
3	09690-M0063	PLATE, MARK	1	60001-60775
4	09690-P0630	PLATE, MARK	1	60001-@
4A	09842-A0481	PLATE, CAUTION	1	60240-@
5	09133-A3281	PLATE, SAFETY	1	60001-@
6	09134-A1681	PLATE, CAUTION	2	60001-60761
7	09653-A0481	PLATE, SAFETY	2	60001-@
8	09657-A0881	PLATE, SAFETY	2	60001-@
9	09659-A057B	PLATE, SAFETY	3	60001-@
10	09667-A0481	PLATE, SAFETY	1	60001-@
11	09803-A0481	PLATE, SAFETY	1	60001-@
12	09805-A0881	PLATE, SAFETY	1	60001-@
13	09805-C0481	PLATE, SAFETY	1	60001-@
14	09808-A0881	PLATE, SAFETY	1	60001-@
15	22U-00-21440	PLATE	1	60001-@
16	09669-0000E	PLATE, CAUTION	1	60132-@
	09669-0000B	PLATE, CAUTION	1	60001-60131
17	20Y-00-31780	PLATE	1	60001-60131
18	(★09601-10001)	PLATE, NAME	1	60504-@
	(★09601-10000)	PLATE, NAME	1	60001-60503
19	04418-13060	SCREW	4	60001-@
20	09963-03001	TAG	1	60001-@
21	203-00-51170	SEAT	4	60001-@
22	154-54-23260	SEAT	10	60001-@
23	20Y-00-31110	SHEET	2	60001-@
24	206-00-71290	SEAT	2	60001-@
25	206-00-71130	PLATE	2	60001-@

PC220-7 S/N 60001-UP (Overseas Version)
DECAL AND PLATE (ENGLISH)(#60001-65000)

Item	Part No.	Part Name	Qty	Serial No.
26	20Y-00-31341	PLATE, INSTRUCTION	1	60762-65000
	20Y-00-31340	PLATE, INSTRUCTION	1	60001-60761
27	20Y-00-31330	PLATE, OPERATING	1	60001-@
28	20Y-00-31350	PLATE, CAUTION	1	60001-@
29	20Y-00-31840	PLATE	1	60765-65000
	□20Y-00-31360	PLATE, SAFETY	1	60001-60764
30	21U-98-31160	PLATE, MARK	2	60001-@
31	09960-00801	MARK	4	60765-65000
	□21U-98-31150	PLATE, MARK	4	60001-60764

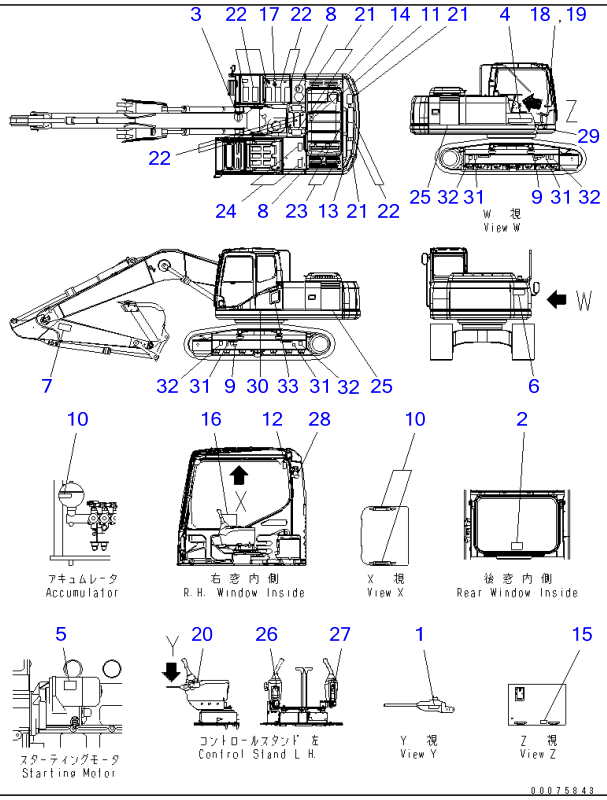

Ref U0100-01A3A **Page 390020**

PC220-7 S/N 60001-UP (Overseas Version)
DECAL AND PLATE (ENGLISH)(#65001-)

Item	Part No.	Part Name	Qty	Serial No.
1	09685-00002	PLATE, OPERATING	1	60001-
2	20Y-00-31170	PLATE, SAFETY	1	60001-
3	09690-M0063	PLATE, MARK	1	65001-69462
4	09690-P0630	PLATE, MARK	1	60001-
5	09842-A0481	PLATE, CAUTION	1	60240-
6	09133-A3281	PLATE, SAFETY	1	60001-
7	09134-A1681	PLATE, CAUTION	2	65001-65618
8	09653-A0481	PLATE, SAFETY	2	60001-
9	09657-A0881	PLATE, SAFETY	2	60001-
10	09659-A057B	PLATE, SAFETY	3	60001-
11	09667-A0481	PLATE, SAFETY	1	60001-
12	09803-A0481	PLATE, SAFETY	1	60001-
13	09805-A0881	PLATE, SAFETY	1	60001-
14	09805-C0481	PLATE, SAFETY	1	60001-
15	09808-A0881	PLATE, SAFETY	1	60001-
16	22U-00-21440	PLATE	1	60001-
17	09669-0000E	PLATE, CAUTION	1	60132-
18	(★09601-10001)	PLATE, NAME	1	60504-
19	04418-13060	SCREW	4	60001-
20	09963-03001	TAG	1	60001-
21	203-00-51170	SEAT	4	60001-
22	154-54-23260	SEAT	10	60001-
23	20Y-00-31110	SHEET	2	60001-
24	206-00-71290	SEAT	2	60001-
25	206-00-71130	PLATE	2	60001-
26	20Y-00-31341	PLATE, INSTRUCTION	1	65531-
	20Y-00-31340	PLATE, INSTRUCTION	1	65001-65530
27	20Y-00-31330	PLATE, OPERATING	1	60001-

DECAL AND PLATE (ENGLISH)(#65001-)

Item	Part No.	Part Name	Qty	Serial No.
28	20Y-00-31350	PLATE, CAUTION	1	60001-
29	20Y-00-31840	PLATE	1	65737-
	☐20Y-00-31360	PLATE, SAFETY	1	65001-65736
30	21U-98-31160	PLATE, MARK	2	60001-
31	09960-00801	MARK	4	65737-
	☐21U-98-31150	PLATE, MARK	4	65001-65736
32	09960-00802	MARK	4	65737-
33	208-00-71260	PLATE	1	65001-

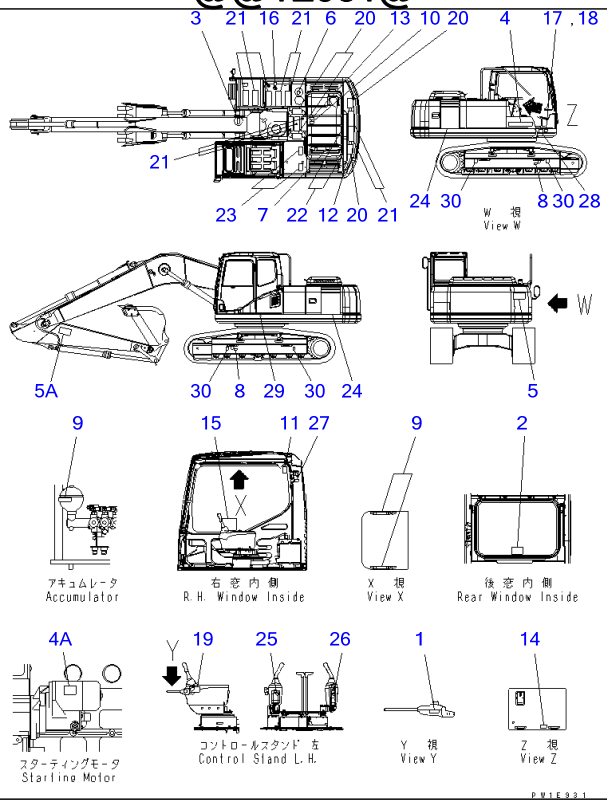

Ref U0100-01A5 Page 390030

PC220-7 S/N 60001-UP (Overseas Version)

DECAL AND PLATE (ENGLISH) (LETTERING TYPE)(#60001-65000)

Item	Part No.	Part Name	Qty	Serial No.
1	09685-00002	PLATE, OPERATING	1	60001-@
2	20Y-00-31170	PLATE, SAFETY	1	60001-@
3	09690-M0063	PLATE, MARK	1	60001-60775
4	09690-P0630	PLATE, MARK	1	60001-@
4A	09842-A0481	PLATE, CAUTION	1	60240-@
5	09133-23000	PLATE, SAFETY	1	60001-@
5A	09134-A1681	PLATE, CAUTION	2	60678-60761
6	09653-03001	PLATE, SAFETY	1	60001-@
7	09668-03001	PLATE, SAFETY	1	60001-@
8	09657-03003	PLATE, SAFETY	2	60001-@
9	09659-53000	PLATE, SAFETY	3	60001-@
10	09667-03001	PLATE, SAFETY	1	60001-@
11	09803-03000	PLATE, SAFETY	1	60001-@
12	09805-23000	PLATE, SAFETY	1	60001-@
13	09805-13000	PLATE, SAFETY	1	60001-@
14	09808-03000	PLATE, SAFETY	1	60001-@
15	22U-00-21290	PLATE, CAUTION	1	60001-@
16	09669-0000E	PLATE, CAUTION	1	60001-@
17	(★09601-10001)	PLATE, NAME	1	60504-@
	(★09601-10000)	PLATE, NAME	1	60001-60503
18	04418-13060	SCREW	4	60001-@
19	09963-03001	TAG	1	60001-@
20	203-00-51170	SEAT	4	60001-@
21	154-54-23260	SEAT	10	60001-@
22	20Y-00-31110	SHEET	2	60001-@
23	206-00-71290	SEAT	2	60001-@
24	206-00-71130	PLATE	2	60001-@
25	20Y-00-31341	PLATE, INSTRUCTION	1	60762-65000

DECAL AND PLATE (ENGLISH) (LETTERING TYPE)(#60001-65000)

Item	Part No.	Part Name	Qty	Serial No.
	20Y-00-31340	PLATE, INSTRUCTION	1	60001-60761
26	20Y-00-31330	PLATE, OPERATING	1	60001-@
27	20Y-00-31350	PLATE, CAUTION	1	60001-@
28	20Y-00-31840	PLATE	1	60765-65000
	☐20Y-00-31360	PLATE, SAFETY	1	60001-60764
29	21U-98-31160	PLATE, MARK	2	60001-@
30	09960-00801	MARK	4	60765-65000
	☐21U-98-31150	PLATE, MARK	4	60001-60764

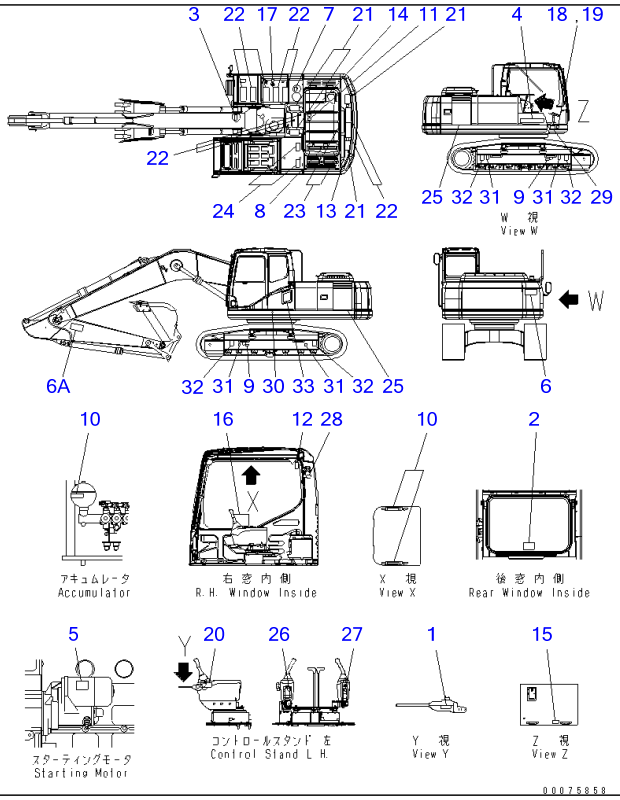

Ref U0100-01A5A **Page 390040**

PC220-7 S/N 60001-UP (Overseas Version)

DECAL AND PLATE (ENGLISH) (LETTERING TYPE)(#65001-)

Item	Part No.	Part Name	Qty	Serial No.
1	09685-00002	PLATE, OPERATING	1	60001-
2	20Y-00-31170	PLATE, SAFETY	1	60001-
3	09690-M0063	PLATE, MARK	1	65001-69462
4	09690-P0630	PLATE, MARK	1	60001-
5	09842-A0481	PLATE, CAUTION	1	60240-
6	09133-23000	PLATE, SAFETY	1	60001-
6A	09134-A1681	PLATE, CAUTION	2	65001-65618
7	09653-03001	PLATE, SAFETY	1	60001-
8	09668-03001	PLATE, SAFETY	1	60001-
9	09657-03003	PLATE, SAFETY	2	60001-
10	09659-53000	PLATE, SAFETY	3	60001-
11	09667-03001	PLATE, SAFETY	1	60001-
12	09803-03000	PLATE, SAFETY	1	60001-
13	09805-23000	PLATE, SAFETY	1	60001-
14	09805-13000	PLATE, SAFETY	1	60001-
15	09808-03000	PLATE, SAFETY	1	60001-
16	22U-00-21290	PLATE, CAUTION	1	60001-
17	09669-0000E	PLATE, CAUTION	1	60001-
18	(★09601-10001)	PLATE, NAME	1	60504-
19	04418-13060	SCREW	4	60001-
20	09963-03001	TAG	1	60001-
21	203-00-51170	SEAT	4	60001-
22	154-54-23260	SEAT	10	60001-
23	20Y-00-31110	SHEET	2	60001-
24	206-00-71290	SEAT	2	60001-
25	206-00-71130	PLATE	2	60001-
26	20Y-00-31341	PLATE, INSTRUCTION	1	65531-
	20Y-00-31340	PLATE, INSTRUCTION	1	65001-65530

DECAL AND PLATE (ENGLISH) (LETTERING TYPE)(#65001-)

Item	Part No.	Part Name	Qty	Serial No.
27	20Y-00-31330	PLATE, OPERATING	1	60001-
28	20Y-00-31350	PLATE, CAUTION	1	60001-
29	20Y-00-31840	PLATE	1	65737-
	20Y-00-31360	PLATE, SAFETY	1	65001-65736
30	21U-98-31160	PLATE, MARK	2	60001-
31	09960-00801	MARK	4	65737-
	□21U-98-31150	PLATE, MARK	4	65001-65736
32	09960-00802	MARK	4	65737-
33	208-00-71260	PLATE	1	65001-

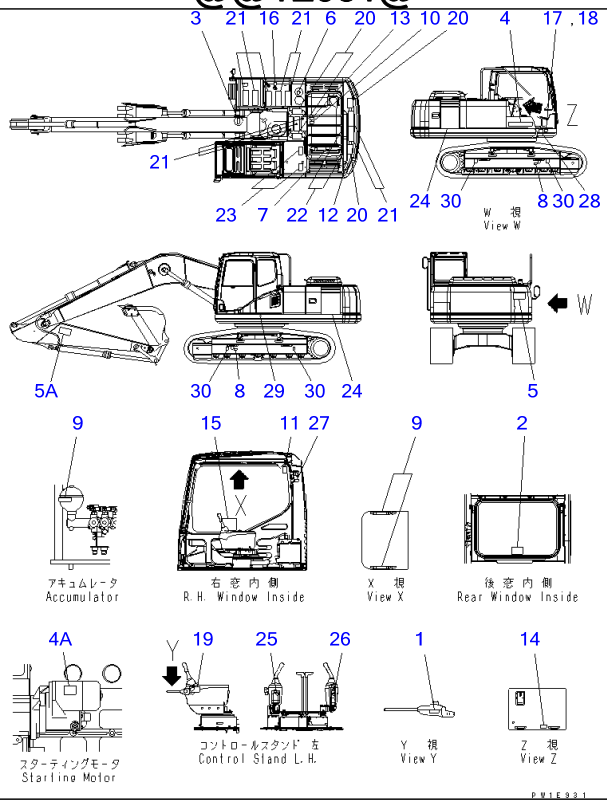

Ref U0100-01A6 Page 390050

PC220-7 S/N 60001-UP (Overseas Version)

DECAL AND PLATE (SPANISH) (LETTERING TYPE)(#60001-65000)

Item	Part No.	Part Name	Qty	Serial No.
1	09685-00002	PLATE, OPERATING	1	60001-@
2	20Y-00-31170	PLATE, SAFETY	1	60001-@
3	09690-M0063	PLATE, MARK	1	60001-60775
4	09690-P0630	PLATE, MARK	1	60001-@
4A	09842-A0481	PLATE, CAUTION	1	60240-@
5	09133-21001	PLATE, SAFETY	1	60001-@
5A	09134-A1681	PLATE, CAUTION	2	60678-60761
6	09653-01001	PLATE, SAFETY	1	60001-@
7	09668-01001	PLATE, SAFETY	1	60001-@
8	09657-01004	PLATE, SAFETY	2	60001-@
9	09659-51000	PLATE, SAFETY	3	60001-@
10	09667-01001	PLATE, SAFETY	1	60001-@
11	09803-01000	PLATE, SAFETY	1	60001-@
12	09805-21000	PLATE, SAFETY	1	60001-@
13	09805-11000	PLATE, SAFETY	1	60001-@
14	09808-01000	PLATE, SAFETY	1	60001-@
15	20Y-00-31680	PLATE	1	60001-@
16	09669-0000E	PLATE, CAUTION	1	60001-@
17	(★09601-10001)	PLATE, NAME	1	60504-@
	(★09601-10000)	PLATE, NAME	1	60001-60503
18	04418-13060	SCREW	4	60001-@
19	09963-01001	TAG	1	60001-@
20	203-00-51170	SEAT	4	60001-@
21	154-54-23260	SEAT	10	60001-@
22	20Y-00-31110	SHEET	2	60001-@
23	206-00-71290	SEAT	2	60001-@
24	206-00-71130	PLATE	2	60001-@
25	207-00-71481	PLATE	1	60762-65000

DECAL AND PLATE (SPANISH) (LETTERING TYPE)(#60001-65000)

Item	Part No.	Part Name	Qty	Serial No.
	207-00-71480	PLATE	1	60001-60761
26	20Y-00-31640	PLATE	1	60001-@
27	20Y-00-31660	PLATE, CAUTION	1	60001-@
28	20Y-00-31670	PLATE	1	60001-@
29	21U-98-31160	PLATE, MARK	2	60001-@
30	09960-00801	MARK	4	60765-65000
	□21U-98-31150	PLATE, MARK	4	60001-60764

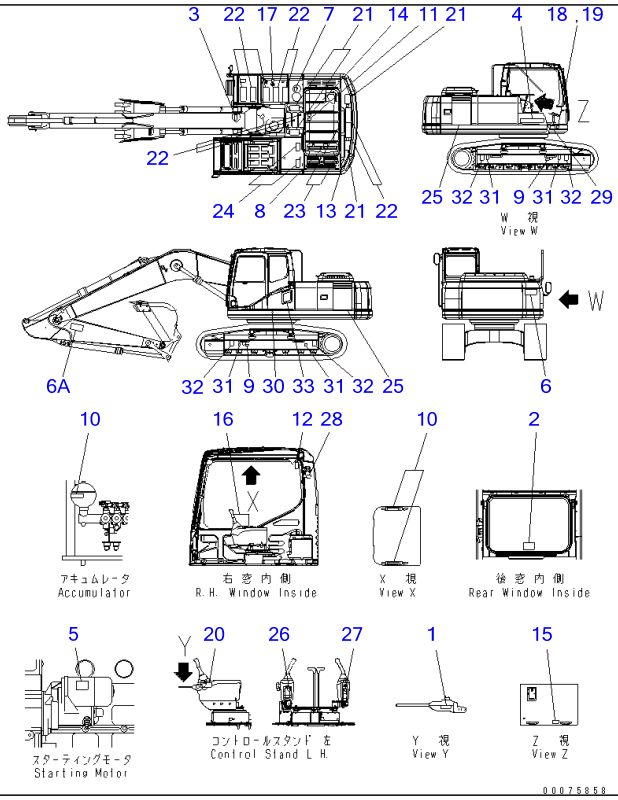

Ref U0100-01A6A **Page 390060**

PC220-7 S/N 60001-UP (Overseas Version)
DECAL AND PLATE (SPANISH) (LETTERING TYPE)(#65001-)

Item	Part No.	Part Name	Qty	Serial No.
1	09685-00002	PLATE, OPERATING	1	60001-
2	20Y-00-31170	PLATE, SAFETY	1	60001-
3	09690-M0063	PLATE, MARK	1	65001-69462
4	09690-P0630	PLATE, MARK	1	60001-
5	09842-A0481	PLATE, CAUTION	1	60240-
6	09133-21001	PLATE, SAFETY	1	60001-
6A	09134-A1681	PLATE, CAUTION	2	65001-65618
7	09653-01001	PLATE, SAFETY	1	60001-
8	09668-01001	PLATE, SAFETY	1	60001-
9	09657-01004	PLATE, SAFETY	2	60001-
10	09659-51000	PLATE, SAFETY	3	60001-
11	09667-01001	PLATE, SAFETY	1	60001-
12	09803-01000	PLATE, SAFETY	1	60001-
13	09805-21000	PLATE, SAFETY	1	60001-
14	09805-11000	PLATE, SAFETY	1	60001-
15	09808-01000	PLATE, SAFETY	1	60001-
16	20Y-00-31680	PLATE	1	60001-
17	09669-0000E	PLATE, CAUTION	1	60001-
18	(★09601-10001)	PLATE, NAME	1	60504-
19	04418-13060	SCREW	4	60001-
20	09963-01001	TAG	1	60001-
21	203-00-51170	SEAT	4	60001-
22	154-54-23260	SEAT	10	60001-
23	20Y-00-31110	SHEET	2	60001-
24	206-00-71290	SEAT	2	60001-
25	206-00-71130	PLATE	2	60001-
26	207-00-71481	PLATE	1	65531-
	207-00-71480	PLATE	1	65001-65530

DECAL AND PLATE (SPANISH) (LETTERING TYPE)(#65001-)

Item	Part No.	Part Name	Qty	Serial No.
27	20Y-00-31640	PLATE	1	60001-
28	20Y-00-31660	PLATE, CAUTION	1	60001-
29	20Y-00-31840	PLATE	1	65737-
	20Y-00-31670	PLATE	1	65001-65736
30	21U-98-31160	PLATE, MARK	2	60001-
31	09960-00801	MARK	4	65737-
	□21U-98-31150	PLATE, MARK	4	65001-65736
32	09960-00802	MARK	4	65737-
33	208-00-71430	PLATE	1	65001-

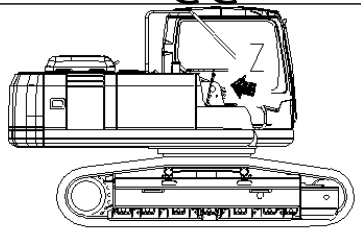

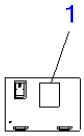

Z 視
View Z

P W 1 E 9 3 5

PC220-7 S/N 60001-UP (Overseas Version)

PLATE (LUBRICATION STANDARD CHART) (500H)

Item	Part No.	Part Name	Qty	Serial No.
1	20Y-00-31130	PLATE, OPERATING	1	60001-

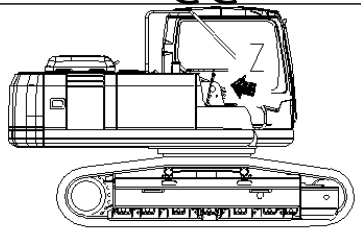

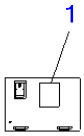

Z 視
View Z

P W 1 E 9 3 5

PC220-7 S/N 60001-UP (Overseas Version)

PLATE (LUBRICATION STANDARD CHART) (100H)

Item	Part No.	Part Name	Qty	Serial No.
1	20Y-00-31780	PLATE	1	60001-

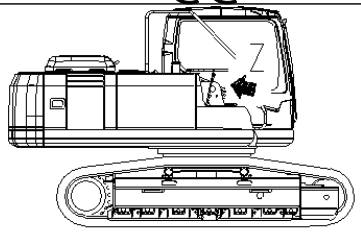

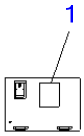

Z 視
View Z

P W 1 E 9 3 5

PC220-7 S/N 60001-UP (Overseas Version)

PLATE (LUBRICATION STANDARD CHART) (500H)

Item	Part No.	Part Name	Qty	Serial No.
1	20Y-00-31481	PLATE	1	60001-

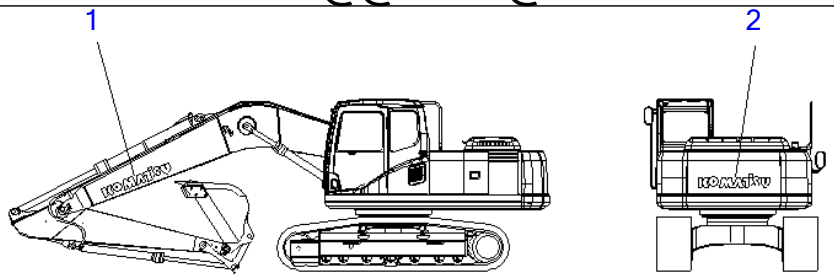

PW1B927

Ref U0150-01A0 **Page 390210**

PC220-7 S/N 60001-UP (Overseas Version)
LOGO (KOMATSU) (SMALL) (GENERAL)

Item	Part No.	Part Name	Qty	Serial No.
1	09690-P1250	PLATE, MARK	1	60001-
2	09690-P1250	PLATE, MARK	1	60001-

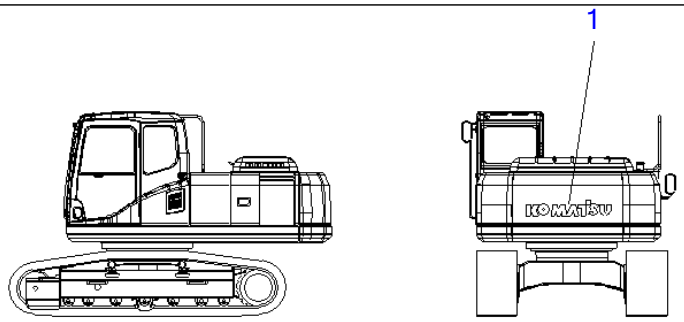

00054969

Ref U0150-01A1 **Page 390220**

PC220-7 S/N 60001-UP (Overseas Version)

KOMATSU LOGO (COUNTERWEIGHT)(#66019-)

Item	Part No.	Part Name	Qty	Serial No.
1	09690-P1250	PLATE, MARK	1	66019-

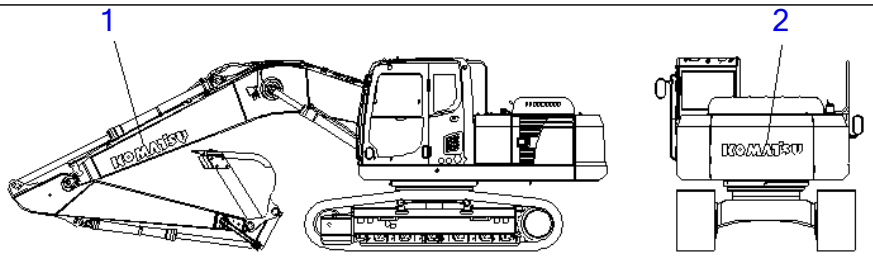

00045816

PC220-7 S/N 60001-UP (Overseas Version)

KOMATSU LOGO (BOOM AND COUNTERWEIGHT)

Item	Part No.	Part Name	Qty	Serial No.
1	09690-P1250	PLATE, MARK	2	60001-
2	09690-P1250	PLATE, MARK	1	60001-

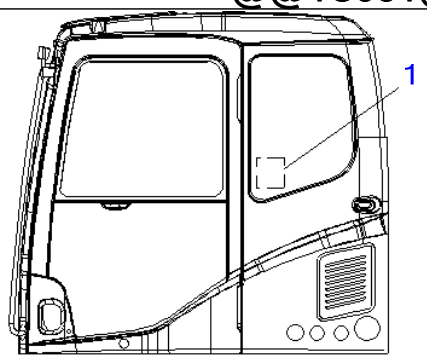

PW1C951

Ref U0200-01A3 **Page 390240**

PC220-7 S/N 60001-UP (Overseas Version)

PLATE (LIFTING CAPACITY) (SPANISH)

Item	Part No.	Part Name	Qty	Serial No.
1	206-00-71470	PLATE	1	60001-

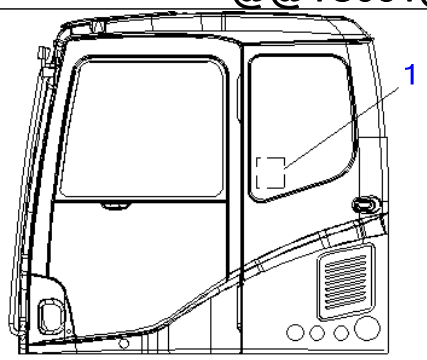

PW1C951

Ref U0200-01A5 **Page 390250**

PC220-7 S/N 60001-UP (Overseas Version)
PLATE (LIFTING CAPACITY) (ENGLISH)

Item	Part No.	Part Name	Qty	Serial No.
1	206-00-71440	PLATE	1	60001-

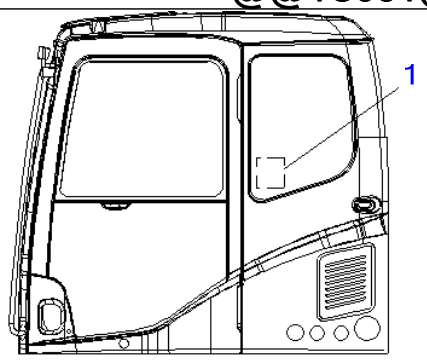

P W 1 C 9 5 1

Ref U0200-01A8 **Page 390260**

PC220-7 S/N 60001-UP (Overseas Version)
PLATE (LIFTING CAPACITY)(#65001-)

Item	Part No.	Part Name	Qty	Serial No.
1	206-00-71610	PLATE	1	65001-

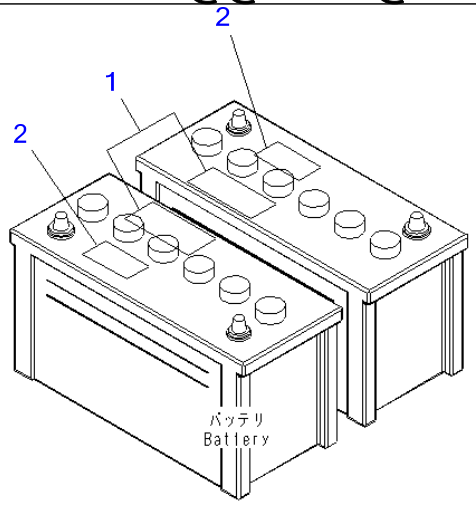

P W 1 C 9 5 2

Ref U0201-01A1 **Page 390270**

PC220-7 S/N 60001-UP (Overseas Version)
BATTERY CAUTION (SPANISH)(#60001-65000)

Item	Part No.	Part Name	Qty	Serial No.
1	20Y-00-31690	PLATE	2	60001-@
2	22A-00-11180	PLATE, INSTRUCTION	2	60001-60775

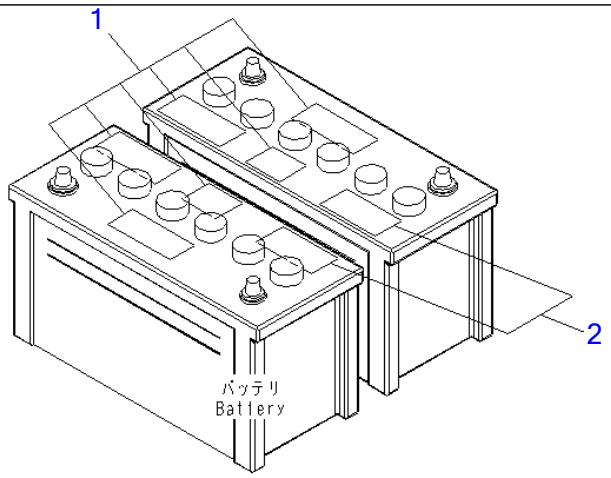

00071446

Ref U0201-01A1A **Page 390280**

PC220-7 S/N 60001-UP (Overseas Version)

BATTERY CAUTION (SPANISH)(#65001-)

Item	Part No.	Part Name	Qty	Serial No.
1	09664-30011	PLATE, SAFETY	2	67454-
2	20Y-00-31690	PLATE	2	60001-

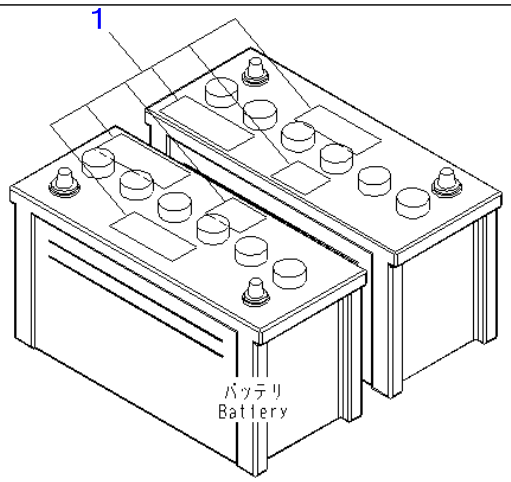

00071483

Ref U0201-01A2 **Page 390290**

PC220-7 S/N 60001-UP (Overseas Version)

BATTERY CAUTION (ENGLISH AND TURKISH)

Item	Part No.	Part Name	Qty	Serial No.
1	09664-60000	PLATE, SAFETY	2	60001-

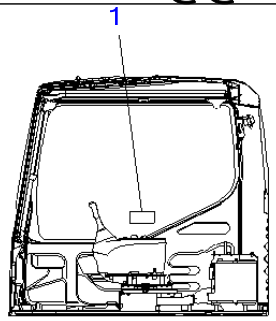

PW1B929

PC220-7 S/N 60001-UP (Overseas Version)

PLATE (SIFT PATTERN¤ ISO)(#60001-60316)

Item	Part No.	Part Name	Qty	Serial No.
1	09822-03000	PLATE, SAFETY,(ENGLISH)	1	60001-60316
	09822-01000	PLATE, SAFETY,(SPANISH)	1	60001-60316
	09822-04000	PLATE, SAFETY,(RUSSIAN)	1	60001-60316

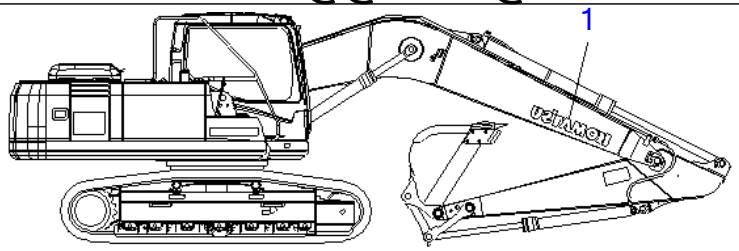

P W 1 C 9 5 6

Ref U0510-01A0 **Page 390310**

PC220-7 S/N 60001-UP (Overseas Version)

PLATE (BOOM SIDE¤ R.H.) (LOGO MARK)(#60001-60762)

Item	Part No.	Part Name	Qty	Serial No.
1	09690-P1250	PLATE, MARK	1	60001-60762

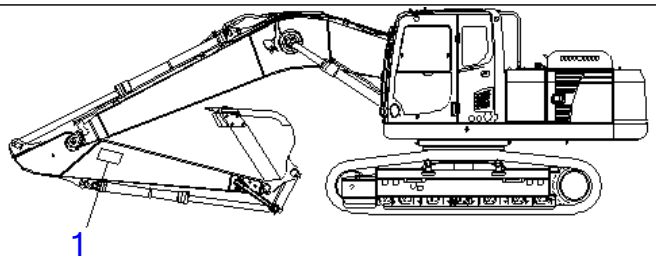

00045822

Ref U0510-01A2 Page 390320

PC220-7 S/N 60001-UP (Overseas Version)

CAUTION PLATE (ARM)

Item	Part No.	Part Name	Qty	Serial No.
1	09134-A1681	PLATE, CAUTION	2	60001-

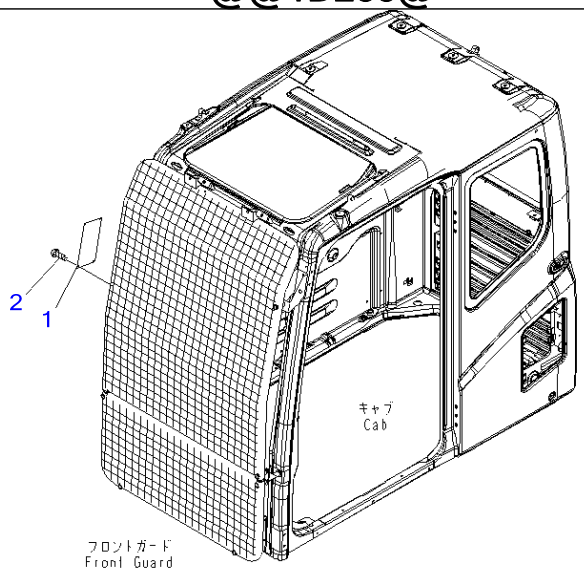

P W 1 D 2 3 5

Ref U0520-01A0 **Page 390330**

PC220-7 S/N 60001-UP (Overseas Version)

CAUTION PLATE (FOR LV1 GUARD) (FOR EXCEPT JAPAN)(#60001-60035)

Item	Part No.	Part Name	Qty	Serial No.
1	(★20Y-00-31610)	PLATE	1	60001-60035
2	04418-13060	SCREW	4	60001-60035

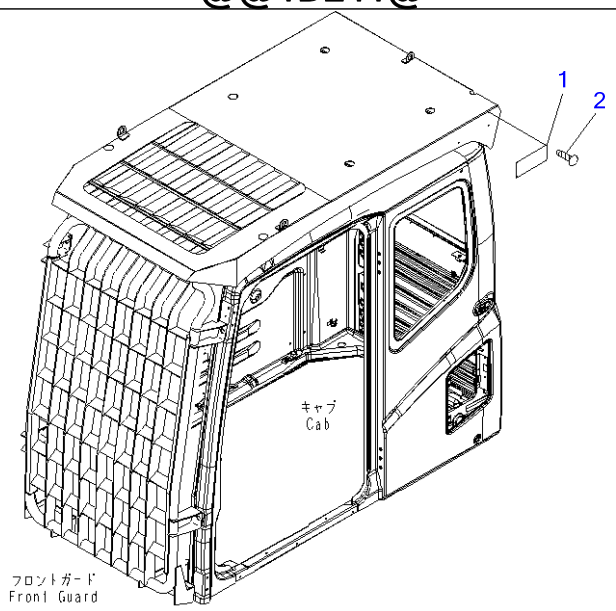

PW1D241

Ref U0520-01A1 **Page 390340**

PC220-7 S/N 60001-UP (Overseas Version)

CAUTION PLATE (FOR LV2 GUARD) (FOR EXCEPT JAPAN)(#60001-65000)

Item	Part No.	Part Name	Qty	Serial No.
1	(★20Y-00-31610)	PLATE	1	60001-65000
2	04418-13060	SCREW	4	60001-65000

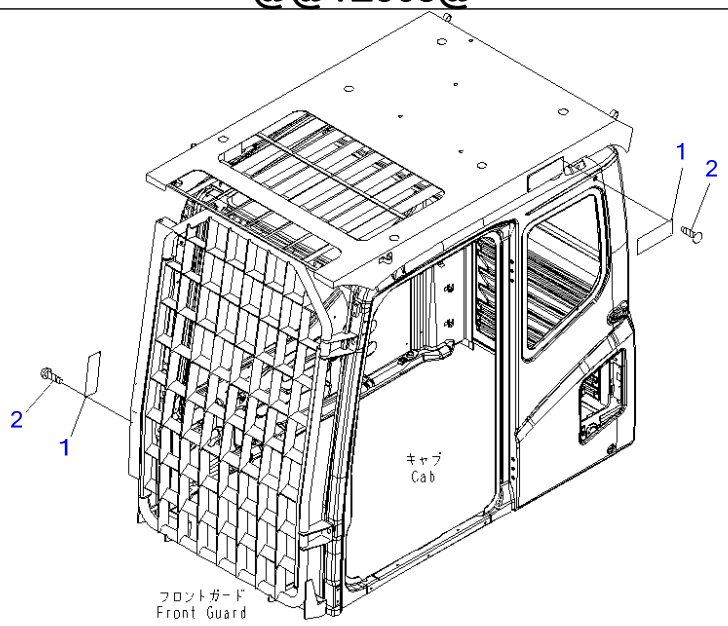

P W 1 E 5 6 8

Ref U0520-01A5 **Page 390350**

PC220-7 S/N 60001-UP (Overseas Version)

CAUTION PLATE (FOR LV2 GUARD) (FRONT FULL GUARD AND TOP GUARD) (ENGLISH)(#60001-65000)

Item	Part No.	Part Name	Qty	Serial No.
1	(★20Y-00-31610)	PLATE	2	60001-65000
2	04418-13060	SCREW	8	60001-65000

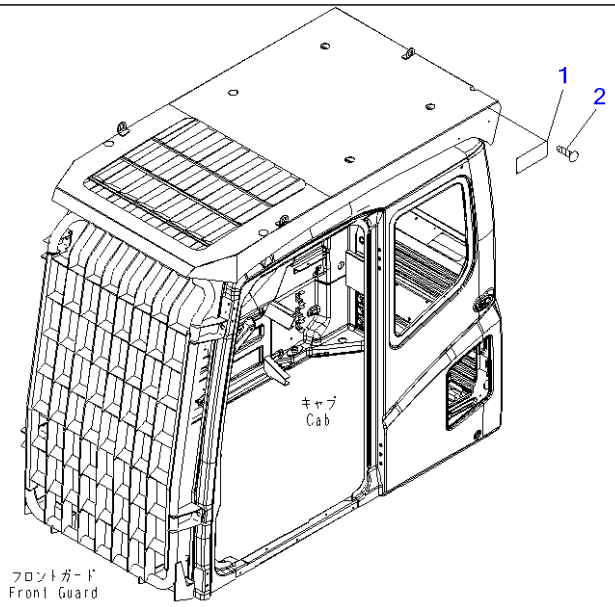

00013111

Ref U0520-01A9 **Page 390360**

PC220-7 S/N 60001-UP (Overseas Version)

CAUTION PLATE (FOR LV2 GUARD) (FOR EXCEPT JAPAN)(#65001-)

Item	Part No.	Part Name	Qty	Serial No.
1	(★09620-D2000)	PLATE, WARNING	1	65001-
2	04418-13060	SCREW	4	65001-

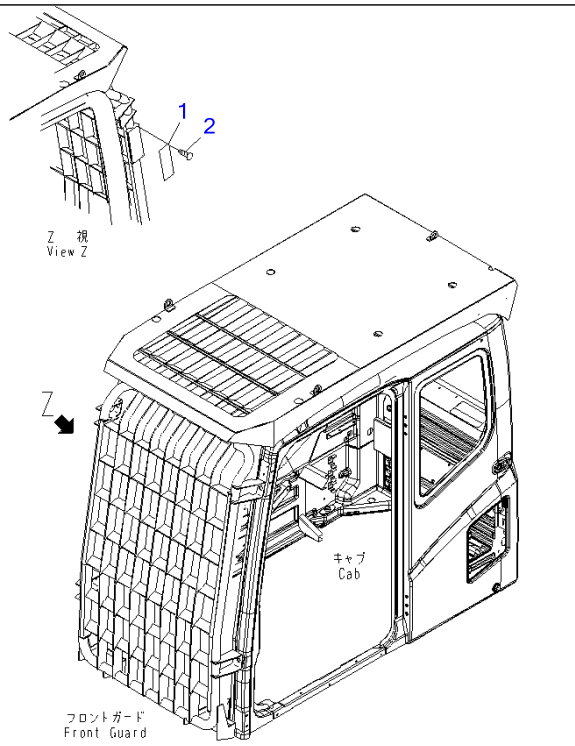

Ref U0520-01B0 **Page 390370**

PC220-7 S/N 60001-UP (Overseas Version)

CAUTION PLATE (FOR LV2 GUARD) (FOR EXCEPT JAPAN)(#65001-)

Item	Part No.	Part Name	Qty	Serial No.
1	(★09620-E2000)	PLATE, WARNING	1	65001-
2	04418-13060	SCREW	4	65001-

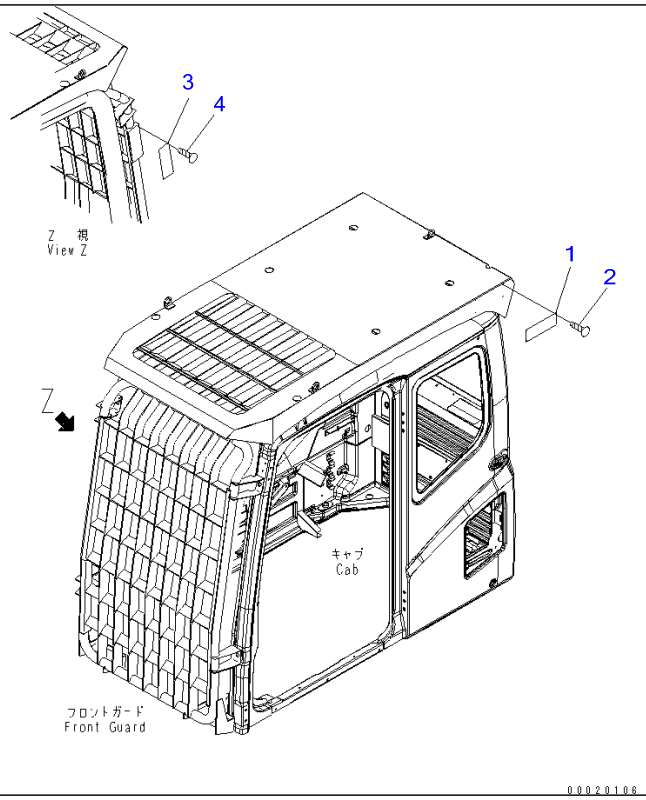

Ref U0520-01B1 **Page 390380**

PC220-7 S/N 60001-UP (Overseas Version)

CAUTION PLATE (FOR LV2 GUARD) (FOR EXCEPT JAPAN)(#65001-)

Item	Part No.	Part Name	Qty	Serial No.
1	(★09620-D2000)	PLATE, WARNING	1	65001-
2	04418-13060	SCREW	4	65001-
3	(★09620-E2000)	PLATE, WARNING	1	65001-
4	04418-13060	SCREW	4	65001-

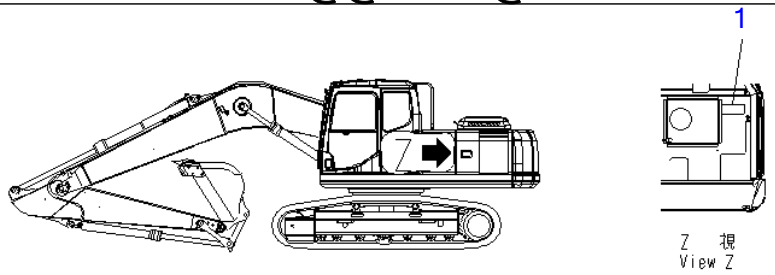

PW1B930

Ref U0550-01A1 **Page 390390**

PC220-7 S/N 60001-UP (Overseas Version)

PLATE (AIR CLEANER¤ DOUBLE ELEMENT) (FOR NORTH AMERICA)

Item	Part No.	Part Name	Qty	Serial No.
1	09637-30163	PLATE, INSTRUCTION	1	60001-

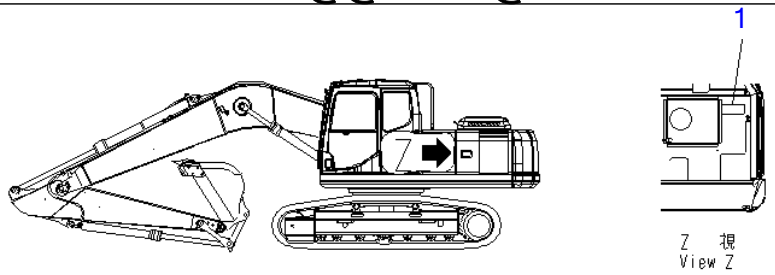

PW1B930

Ref U0550-01A2 **Page 390400**

PC220-7 S/N 60001-UP (Overseas Version)

PLATE (AIR CLEANER¤ DOUBLE ELEMENT) (SPANISH)

Item	Part No.	Part Name	Qty	Serial No.
1	09637-70163	PLATE, INSTRUCTION	1	60001-

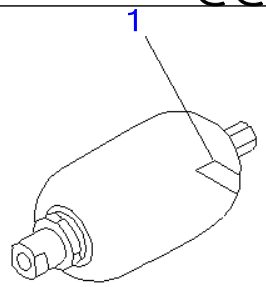

PW1B973

Ref U0580-01A2 **Page 390460**

PC220-7 S/N 60001-UP (Overseas Version)
PLATE (WITH ACCUMULATOR)

Item	Part No.	Part Name	Qty	Serial No.
1	09659-A057B	PLATE, SAFETY	1	60001-

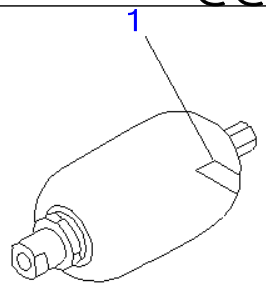

PW1B973

Ref U0580-01A3 **Page 390470**

PC220-7 S/N 60001-UP (Overseas Version)
PLATE (WITH 2 ACCUMULATOR)

Item	Part No.	Part Name	Qty	Serial No.
1	09659-A057B	PLATE, SAFETY	2	60001-

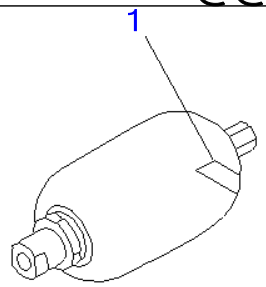

PW1B973

Ref U0580-01A4 **Page 390480**

PC220-7 S/N 60001-UP (Overseas Version)

PLATE (WITH ACCUMULATOR) (ENGLISH) (LETTERING TYPE)

Item	Part No.	Part Name	Qty	Serial No.
1	09659-53000	PLATE, SAFETY	1	60001-

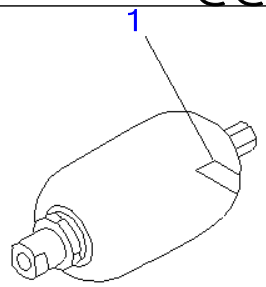

PW1B973

PC220-7 S/N 60001-UP (Overseas Version)

PLATE (WITH 2 ACCUMULATOR) (ENGLISH) (LETTERING TYPE)

Item	Part No.	Part Name	Qty	Serial No.
1	09659-53000	PLATE, SAFETY	2	60001-

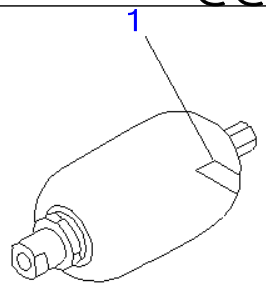

PW1B973

Ref U0580-01A6 Page 390500

PC220-7 S/N 60001-UP (Overseas Version)

PLATE (WITH ACCUMULATOR) (SPANISH) (LETTERING TYPE)

Item	Part No.	Part Name	Qty	Serial No.
1	09659-51000	PLATE, SAFETY	1	60001-

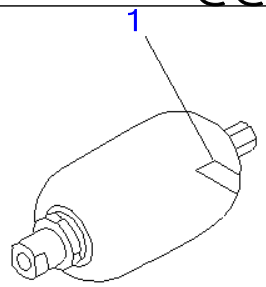

PW1B973

Ref U0580-01A7 Page 390510

PC220-7 S/N 60001-UP (Overseas Version)

PLATE (WITH 2 ACCUMULATOR) (SPANISH) (LETTERING TYPE)

Item	Part No.	Part Name	Qty	Serial No.
1	09659-51000	PLATE, SAFETY,(SPANISH) (LETTERING TYPE)	2	60001-

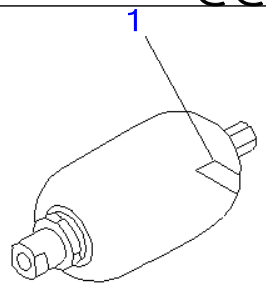

PW1B973

Ref U0580-01A8 **Page 390520**

PC220-7 S/N 60001-UP (Overseas Version)
PLATE (WITH ACCUMULATOR) (KIT)

Item	Part No.	Part Name	Qty	Serial No.
1	09659-A057A	PLATE, SAFETY,(JAPANESE)	1	60001-
	09659-A057B	PLATE, SAFETY,(PICTOLIAL)	1	60001-
	09659-53000	PLATE, SAFETY,(ENGLISH) (LETTERING TYPE)	1	60001-
	09659-51000	PLATE, SAFETY,(SPANISH) (LETTERING TYPE)	1	60001-

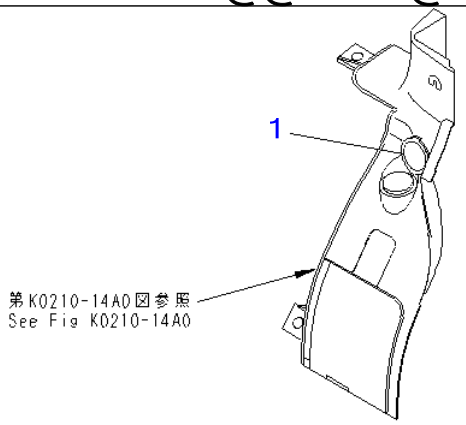

P W 1 A 7 8 3

Ref U0710-01A0 **Page 390530**

PC220-7 S/N 60001-UP (Overseas Version)

PLATE (12V POWER SOURCE)

Item	Part No.	Part Name	Qty	Serial No.
1	22U-00-21510	PLATE	1	60001-

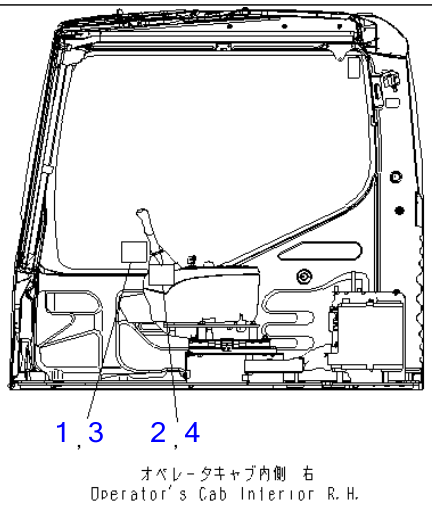

00081881

Ref U0710-01A7 **Page 390540**

PC220-7 S/N 60001-UP (Overseas Version)

PLATE (FOR BREAKER KIT)(#60001-69903)

Item	Part No.	Part Name	Qty	Serial No.
1	20Y-00-32430	PLATE	1	60001-@
2	20Y-00-32440	PLATE	1	60001-@
3	20Y-00-32470	PLATE	1	67823-@
4	20Y-00-32480	PLATE	1	67823-@

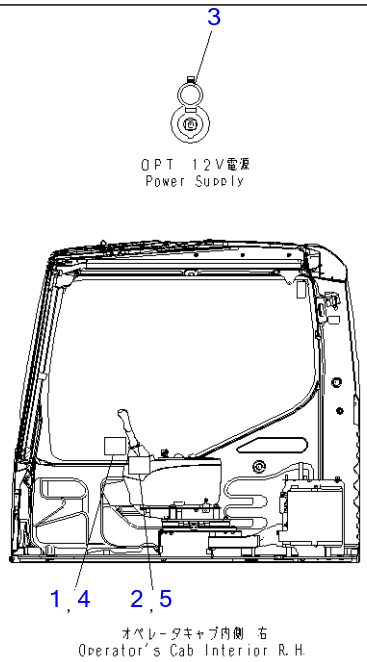

00082204

Ref U0710-01A8 **Page 390550**

PC220-7 S/N 60001-UP (Overseas Version)
PLATE (12V POWER SOURCE)(#60001-69903)

Item	Part No.	Part Name	Qty	Serial No.
1	20Y-00-32430	PLATE	1	60001-@
2	20Y-00-32440	PLATE	1	60001-@
3	22U-00-21510	PLATE	1	60001-@
4	20Y-00-32470	PLATE	1	67823-@
5	20Y-00-32480	PLATE	1	67823-@

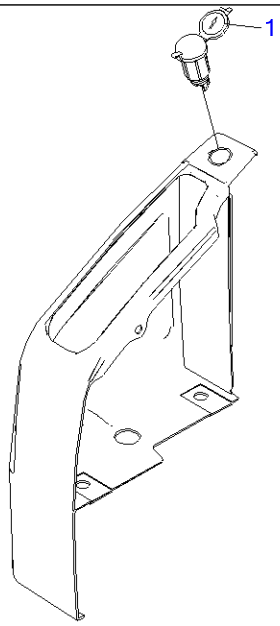

00050329

Ref U0710-01A9 **Page 390560**

PC220-7 S/N 60001-UP (Overseas Version)

PLATE (12V POWER SOURCE) (RUSSIAN)(ENGLISH)(#65001-)

Item	Part No.	Part Name	Qty	Serial No.
1	22U-00-21510	PLATE	1	65001-

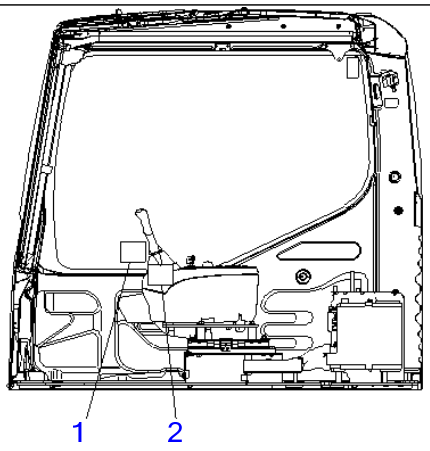

オペレータキャブ内側 右
Operator's Cab Interior R.H.

00086100

PC220-7 S/N 60001-UP (Overseas Version)

PLATE (FOR BREAKER KIT) (COLOR MULTI MONITOR)(#69904-)

Item	Part No.	Part Name	Qty	Serial No.
1	20Y-00-32430	PLATE	1	60001-
2	20Y-00-32440	PLATE	1	60001-

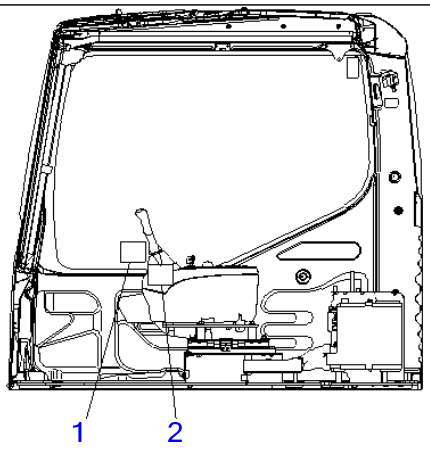

オペレータキャブ内側 右
Operator's Cab Interior R.H.

00086100

Ref U0710-01B1 **Page 390580**

PC220-7 S/N 60001-UP (Overseas Version)

PLATE (FOR BREAKER KIT) (7-SEGMENT MONITOR)(#69904-)

Item	Part No.	Part Name	Qty	Serial No.
1	20Y-00-32470	PLATE	1	67823-
2	20Y-00-32480	PLATE	1	67823-

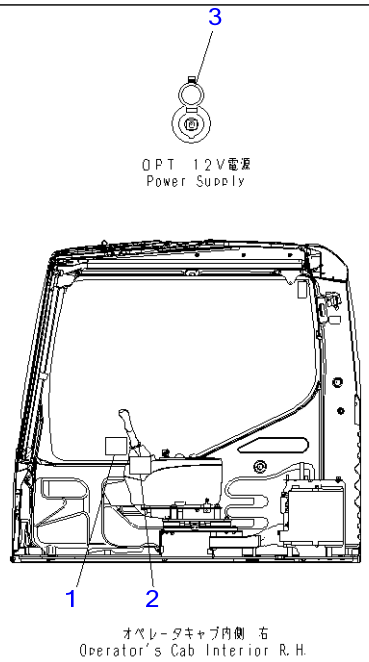

00086101

Ref U0710-01B2 **Page 390590**

PC220-7 S/N 60001-UP (Overseas Version)
PLATE (12V POWER SOURCE) (FOR BREAKER KIT) (COLOR MULTI MONITOR)(#69904-)

Item	Part No.	Part Name	Qty	Serial No.
1	20Y-00-32430	PLATE	1	60001-
2	20Y-00-32440	PLATE	1	60001-
3	22U-00-21510	PLATE	1	60001-

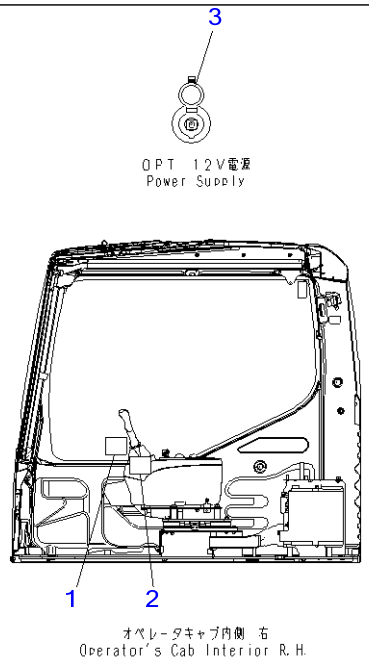

00086101

Ref U0710-01B3 **Page 390600**

PC220-7 S/N 60001-UP (Overseas Version)

PLATE (12V POWER SOURCE) (FOR BREAKER KIT) (7-SEGMENT MONITOR)(#69904-)

Item	Part No.	Part Name	Qty	Serial No.
1	20Y-00-32470	PLATE	1	67823-
2	20Y-00-32480	PLATE	1	67823-
3	22U-00-21510	PLATE	1	60001-

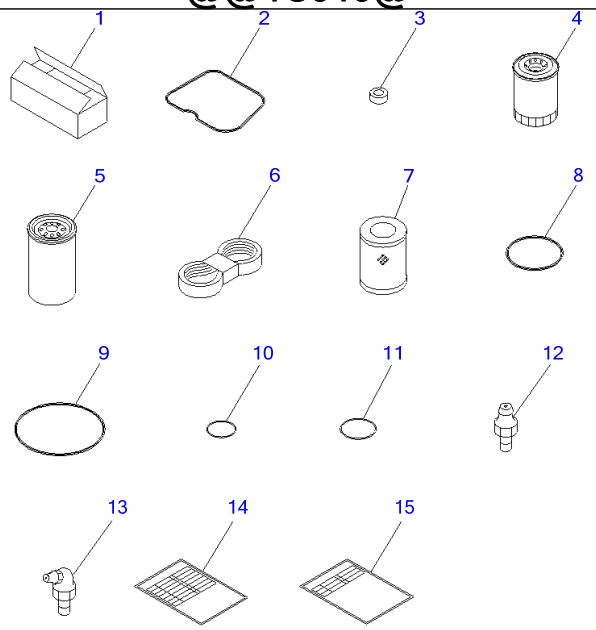

P V 1 C 9 1 9

Ref V0100-01A0 **Page 420010**

PC220-7 S/N 60001-UP (Overseas Version)
SPARE PARTS

Item	Part No.	Part Name	Qty	Serial No.
1	09059-00800	BOX	1	60001-
2	6732-11-8181	GASKET	6	60001-
3	6732-11-8210	GASKET	6	60001-
4	6736-51-5142	CARTRIDGE	1	60294-
	6736-51-5141	CARTRIDGE	1	60001-60293
5	6732-71-6112	CARTRIDGE	1	60294-
	6732-71-6111	CARTRIDGE	1	60001-60293
6	6732-61-4170	BELT	1	60001-
7	207-60-71182	ELEMENT	1	67280-
	☐207-60-71181	ELEMENT	1	65001-67279
	207-60-71182	ELEMENT	1	60766-65000
	☐207-60-71181	ELEMENT	1	60759-60765
	☐20Y-60-31121	ELEMENT	1	60001-60758
8	07000-15160	O-RING	1	60001-
9	07000-15195	O-RING	1	60001-
10	07002-11223	O-RING	1	60001-
11	07002-12434	O-RING	5	60001-
12	07020-00000	FITTING	4	60001-
13	07020-00675	FITTING	4	60001-
14	20Y-98-31120	TABLE	1	60001-
15	20Y-98-31130	TABLE	1	60001-

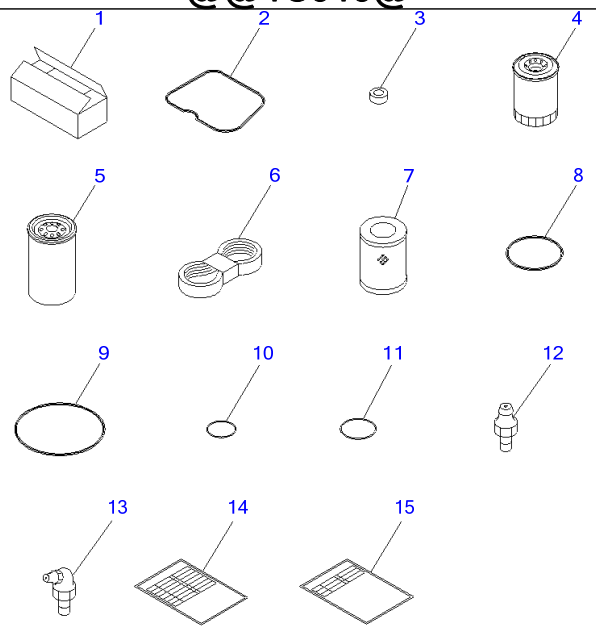

P V 1 C 9 1 9

Ref V0100-01A1 **Page 420020**

PC220-7 S/N 60001-UP (Overseas Version)
SPARE PARTS (SANDY AND DUSTY TERRAIN SPEC.)

Item	Part No.	Part Name	Qty	Serial No.
1	09059-00800	BOX	1	60001-
2	6732-11-8181	GASKET	6	60001-
3	6732-11-8210	GASKET	6	60001-
4	6736-51-5142	CARTRIDGE	1	60001-
5	6732-71-6112	CARTRIDGE	1	60001-
6	6732-61-4190	BELT	1	60001-
7	207-60-71182	ELEMENT	1	67280-
	□207-60-71181	ELEMENT	1	65001-67279
	207-60-71182	ELEMENT	1	60766-65000
	□207-60-71181	ELEMENT	1	60759-60765
	□20Y-60-31121	ELEMENT	1	60001-65758
8	07000-15160	O-RING	1	60001-
9	07000-15195	O-RING	1	60001-
10	07002-11223	O-RING	1	60001-
11	07002-12434	O-RING	5	60001-
12	07020-00000	FITTING	4	60001-
13	07020-00675	FITTING	4	60001-
14	20Y-98-31120	TABLE	1	60001-
15	20Y-98-31130	TABLE	1	60001-

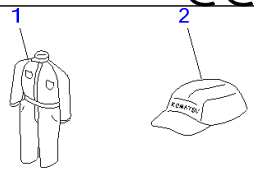

PEB0040

PC220-7 S/N 60001-UP (Overseas Version)
CAP AND OVERALL

Item	Part No.	Part Name	Qty	Serial No.
	09980-92550	CAP AND OVERALL KIT	1	60001-
1	09980-10550	▪ OVERALL	1	60001-
2	09982-20057	▪ CAP	1	60001-

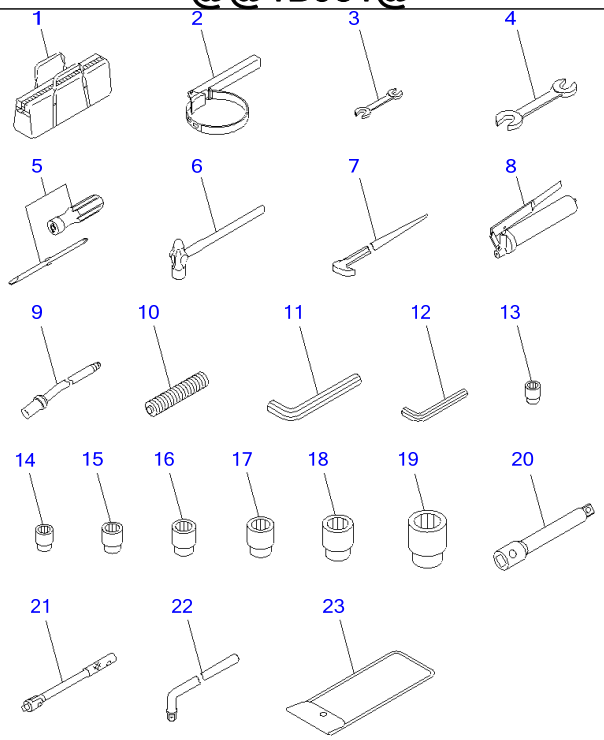

Ref V0300-01A0 **Page 420040**

PC220-7 S/N 60001-UP (Overseas Version)
TOOL KIT

Item	Part No.	Part Name	Qty	Serial No.
1	09056-04613	BAG	1	60001-
2	09019-28035	WRENCH	1	66138-
	09019-08035	WRENCH	1	65001-66137
	09019-28035	WRENCH	1	60773-65000
	09019-08035	WRENCH	1	60001-60772
3	09002-01417	WRENCH, 14X17	1	60001-
4	09002-03032	WRENCH, 30X32	1	60001-
5	09033-00190	DRIVER	1	60001-
6	09039-00150	HAMMER	1	60001-
7	09055-10390	BAR	1	60001-
	07952-70004	GREASE PUMP ASS'Y	1	60001-
8	07950-10450	▪ PUMP	1	60001-
9	07951-41017	▪ NOZZLE	1	60001-
10	07950-90403	CARTRIDGE	1	60001-
11	09007-00836	WRENCH, 8	1	60001-
12	09007-00425	WRENCH, 4	1	60001-
	20Y-98-21130	TOOL KIT	1	60001-
13	09021-01219	▪ SOCKET, 12	1	60001-
14	09021-01422	▪ SOCKET, 14	1	60001-
15	09021-01725	▪ SOCKET, 17	1	60001-
16	09021-01928	▪ SOCKET, 19	1	60001-
17	09021-02233	▪ SOCKET, 22	1	60001-
18	09021-02436	▪ SOCKET, 24	1	60001-
19	09021-03044	▪ SOCKET, 30	1	60001-
20	09022-00150	▪ EXTENSION	1	60001-
21	09023-00300	▪ HANDLE	1	60001-
22	09024-00300	▪ HANDLE	1	60001-
23	20Y-98-21140	▪ BAG	1	60001-

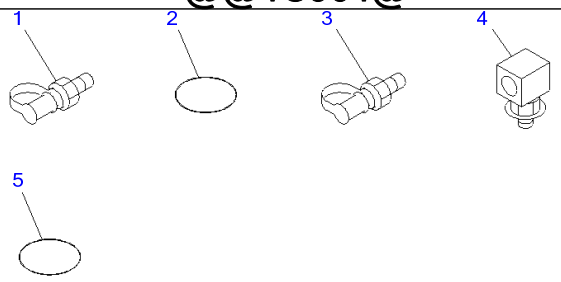

P W 1 C 9 6 4

Ref W0111-01A0 **Page 450010**

PC220-7 S/N 60001-UP (Overseas Version)
PREVENTIVE MAINTENANCE CLINIC PARTS

Item	Part No.	Part Name	Qty	Serial No.
1	799-101-5220	NIPPLE	9	60001-
2	07002-11023	O-RING	9	60001-
3	195-49-36120	NIPPLE	1	60001-
4	207-62-72820	ELBOW,SEMS	1	60001-
5	07002-11023	O-RING	1	60001-

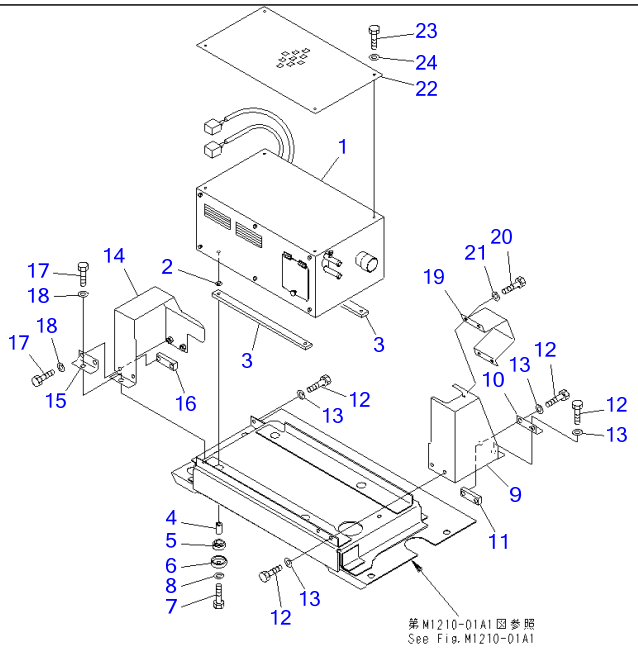

00003741

Ref W1112-01A0 **Page 450020**

PC220-7 S/N 60001-UP (Overseas Version)

PRE HEATER (HEATER AND MOUNTING) (COLD WEATHER A SPEC.)(#60255-)

Item	Part No.	Part Name	Qty	Serial No.
1	(20Y-977-1290)	PRE HEATER ASS'Y	1	60255-
2	20Y-54-12550	COLLAR	4	60255-
3	154-01-15120	CUSHION	2	60255-
4	113-03-21170	SPACER	4	60255-
5	195-01-16160	CUSHION	4	60255-
6	195-01-16130	COVER	4	60255-
7	01010-81065	BOLT	4	60255-
8	01643-31032	WASHER	4	60255-
9	20Y-54-21571	COVER	1	60317-
	20Y-54-21570	COVER	1	60255-60316
10	20Y-54-24180	BRACKET	1	60255-
11	01573-20208	SEAT	1	60255-
12	01010-81020	BOLT	5	60255-
13	01643-31032	WASHER	5	60255-
14	20Y-977-6550	COVER	1	60255-
15	20Y-54-24180	BRACKET	1	60255-
16	01573-20208	SEAT	1	60255-
17	01010-81020	BOLT	5	60255-
18	01643-31032	WASHER	5	60255-
19	20Y-977-6270	COVER	1	60255-
20	01010-81020	BOLT	4	60255-
21	01643-31032	WASHER	4	60255-
22	20Y-977-1360	COVER	1	60317-
23	01010-80625	BOLT	4	60317-
24	01643-30623	WASHER	4	60317-

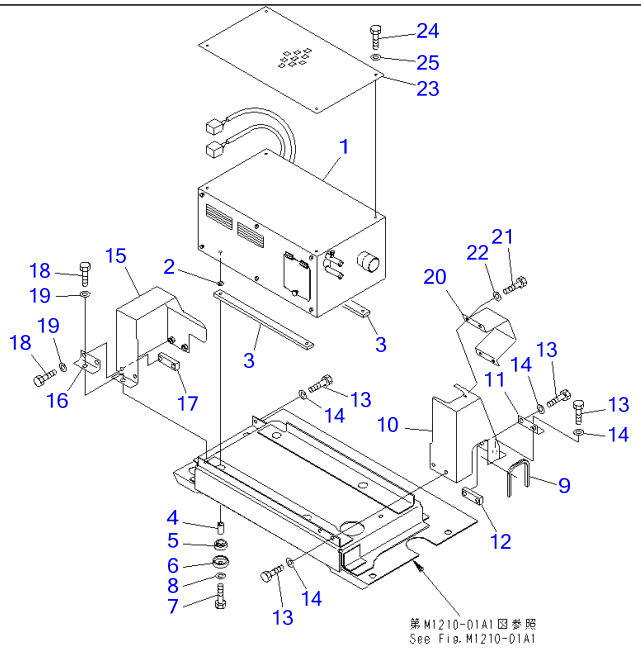

00003742

Ref W1112-01A1 **Page 450030**

PC220-7 S/N 60001-UP (Overseas Version)
PRE HEATER (HEATER AND MOUNTING) (COLD WEATHER A SPEC.) (FOR CAB EATER)(#60255-)

Item	Part No.	Part Name	Qty	Serial No.
1	(20Y-977-1290)	PRE HEATER ASS'Y	1	60255-
2	20Y-54-12550	COLLAR	4	60255-
3	154-01-15120	CUSHION	2	60255-
4	113-03-21170	SPACER	4	60255-
5	195-01-16160	CUSHION	4	60255-
6	195-01-16130	COVER	4	60255-
7	01010-81065	BOLT	4	60255-
8	01643-31032	WASHER	4	60255-
9	209-54-74670	SEAL	1	60255-
10	20Y-977-2371	COVER	1	60317-
	20Y-977-2370	COVER	1	60255-60316
11	20Y-54-24180	BRACKET	1	60255-
12	01573-20208	SEAT	1	60255-
13	01010-81020	BOLT	5	60255-
14	01643-31032	WASHER	5	60255-
15	20Y-977-6550	COVER	1	60255-
16	20Y-54-24180	BRACKET	1	60255-
17	01573-20208	SEAT	1	60255-
18	01010-81020	BOLT	5	60255-
19	01643-31032	WASHER	5	60255-
20	20Y-977-6270	COVER	1	60255-
21	01010-81020	BOLT	4	60255-
22	01643-31032	WASHER	4	60255-
23	20Y-977-1360	COVER	1	60317-
24	01010-80625	BOLT	4	60317-
25	01643-30623	WASHER	4	60317-

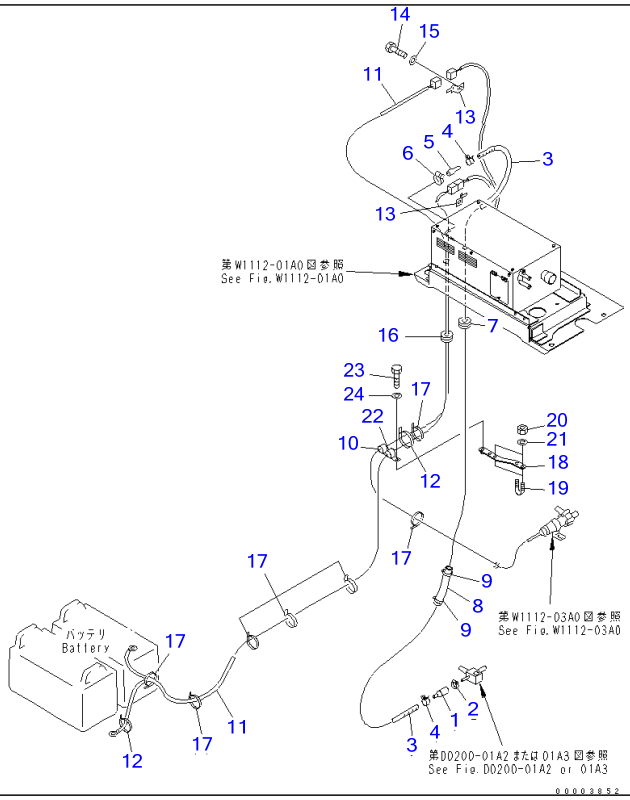

Ref W1112-02A0 **Page 450040**

PC220-7 S/N 60001-UP (Overseas Version)

PRE HEATER (FUEL AND WIRING) (COLD WEATHER A SPEC.)(#60255-)

Item	Part No.	Part Name	Qty	Serial No.
1	20Y-04-11290	REDUCER	1	60255-
2	07280-01010	CLAMP	1	60255-
3	207-977-5340	HOSE	1	60255-
4	07285-00068	CLIP	2	60255-
5	20Y-04-11290	REDUCER	1	60255-
6	07280-01010	CLAMP	1	60255-
7	08037-01610	GROMMET	1	60255-
8	205-62-72140	COVER	1	60255-
9	08034-20536	BAND	2	60255-
10	515-35-13930	CLIP	1	60255-
11	20Y-977-6721	WIRE HARNESS	1	60255-
12	08034-20536	BAND	2	60255-
13	08053-01510	CLIP	2	60255-
14	01010-81020	BOLT	2	60255-
15	01643-31032	WASHER	2	60255-
16	08037-02512	GROMMET	1	60255-
17	08034-20536	BAND	8	60255-
18	20Y-977-6710	BRACKET	1	60255-
19	07283-32738	CLIP	2	60255-
20	01597-01009	NUT	4	60255-
21	01643-31032	WASHER	4	60255-
22	08036-01414	CLIP	1	60255-
23	01010-81225	BOLT	1	60255-
24	01643-31232	WASHER	1	60255-

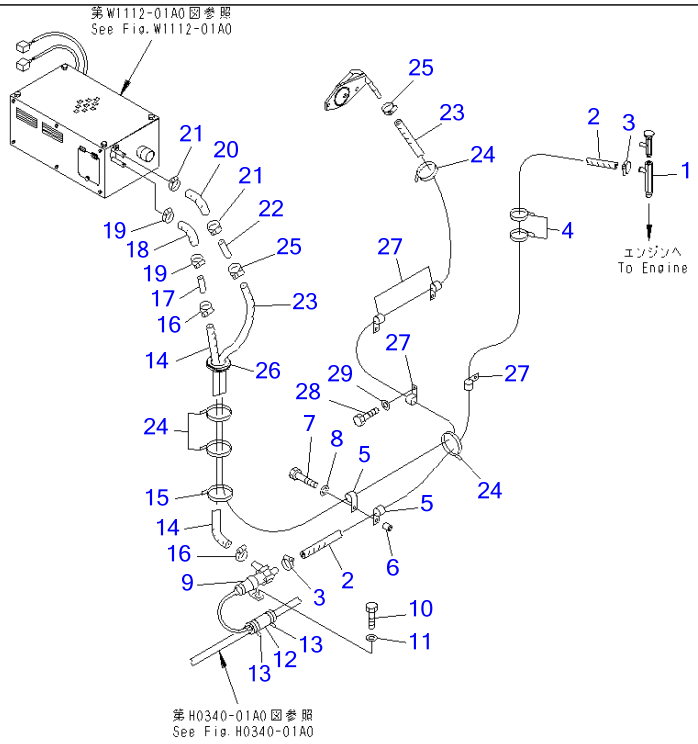

Ref W1112-03A0 **Page 450050**

PC220-7 S/N 60001-UP (Overseas Version)

PRE HEATER (COOLANT) (COLD WEATHER A SPEC.)(#60255-65000)

Item	Part No.	Part Name	Qty	Serial No.
1	20Y-977-6590	ADAPTER	1	60255-@
2	09483-10517	HOSE	1	60255-@
3	07281-00259	CLAMP	2	60255-65000
4	08034-20876	BAND	2	60255-@
5	04434-52512	CLIP	2	60255-@
6	21T-72-23290	SPACER	1	60255-@
7	01010-81255	BOLT	1	60255-@
8	01643-31232	WASHER	1	60255-@
9	20Y-977-1330	PUMP ASS'Y	1	60255-@
10	01010-80620	BOLT	2	60255-@
11	01643-30623	WASHER	2	60255-@
12	205-62-72240	COVER	1	60255-@
13	08034-20536	BAND	2	60255-@
14	09483-10509	HOSE	1	60255-@
15	08034-20536	BAND	1	60255-@
16	07281-00259	CLAMP	2	60255-65000
17	09484-00560	CONNECTOR	1	60255-@
18	09483-30550	HOSE	1	60255-@
19	07281-00259	CLAMP	2	60255-65000
20	09483-30550	HOSE	1	60255-@
21	07281-00259	CLAMP	2	60255-65000
22	09484-00560	CONNECTOR	1	60255-@
23	09483-10535	HOSE	1	60255-@
24	08034-20536	BAND	4	60255-@
25	07281-00259	CLAMP	2	60255-65000
26	198-911-4430	GROMMET	1	60255-@
27	04434-52512	CLIP	4	60255-@
28	01010-81225	BOLT	1	60255-@

PRE HEATER (COOLANT) (COLD WEATHER A SPEC.)(#60255-65000)

Item	Part No.	Part Name	Qty	Serial No.
29	01643-31232	WASHER	1	60255-@

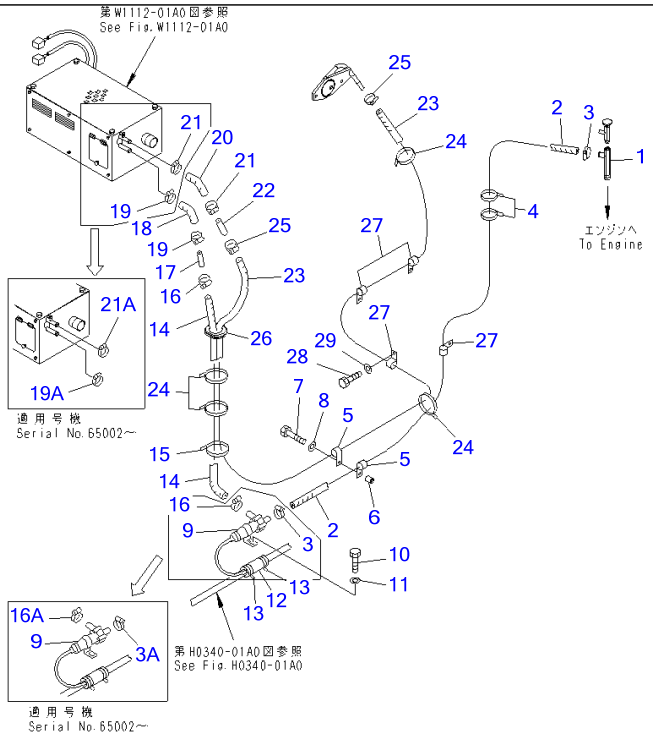

00028236

Ref W1112-03A0A **Page 450060**

PC220-7 S/N 60001-UP (Overseas Version)

PRE HEATER (COOLANT) (COLD WEATHER A SPEC.)(#65001-)

Item	Part No.	Part Name	Qty	Serial No.
1	20Y-977-6590	ADAPTER	1	60255-
2	09483-10517	HOSE	1	60255-
3	09479-02400	CLAMP	1	65002-
	09479-02400	CLAMP	2	65001-65001
3A	07281-00289	CLAMP	1	65002-
4	08034-20876	BAND	2	60255-
5	04434-52512	CLIP	2	60255-
6	21T-72-23290	SPACER	1	60255-
7	01010-81255	BOLT	1	60255-
8	01643-31232	WASHER	1	60255-
9	20Y-977-1330	PUMP ASS'Y	1	60255-
10	01010-80620	BOLT	2	60255-
11	01643-30623	WASHER	2	60255-
12	205-62-72240	COVER	1	60255-
13	08034-20536	BAND	2	60255-
14	09483-10509	HOSE	1	60255-
15	08034-20536	BAND	1	60255-
16	09479-02400	CLAMP	1	65002-
	09479-02400	CLAMP	2	65001-65001
16A	07281-00289	CLAMP	1	65002-
17	09484-00560	CONNECTOR	1	60255-
18	09483-30550	HOSE	1	60255-
19	09479-02400	CLAMP	1	65002-
	09479-02400	CLAMP	2	65001-65001
19A	07281-00289	CLAMP	1	65002-
20	09483-30550	HOSE	1	60255-
21	09479-02400	CLAMP	1	65002-
	09479-02400	CLAMP	2	65001-65001

PRE HEATER (COOLANT) (COLD WEATHER A SPEC.)(#65001-)

Item	Part No.	Part Name	Qty	Serial No.
21A	07281-00289	CLAMP	1	65002-
22	09484-00560	CONNECTOR	1	60255-
23	09483-10535	HOSE	1	60255-
24	08034-20536	BAND	4	60255-
25	09479-02400	CLAMP	2	65001-
26	198-911-4430	GROMMET	1	60255-
27	04434-52512	CLIP	4	60255-
28	01010-81225	BOLT	1	60255-
29	01643-31232	WASHER	1	60255-

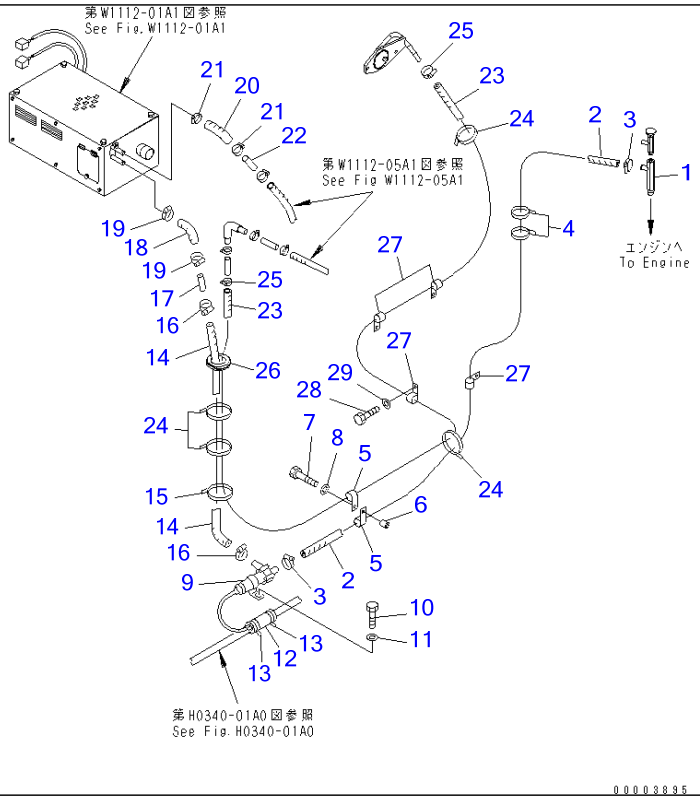

Ref W1112-03A1 **Page 450070**

PC220-7 S/N 60001-UP (Overseas Version)

PRE HEATER (COOLANT) (COLD WEATHER A SPEC.) (FOR CAB HEATER)(#60255-65000)

Item	Part No.	Part Name	Qty	Serial No.
1	20Y-977-6590	ADAPTER	1	60255-@
2	09483-10517	HOSE	1	60255-@
3	07281-00259	CLAMP	2	60255-65000
4	08034-20876	BAND	2	60255-@
5	04434-52512	CLIP	2	60255-@
6	21T-72-23290	SPACER	1	60255-@
7	01010-81255	BOLT	1	60255-@
8	01643-31232	WASHER	1	60255-@
9	20Y-977-1330	PUMP ASS'Y	1	60255-@
10	01010-80620	BOLT	2	60255-@
11	01643-30623	WASHER	2	60255-@
12	205-62-72240	COVER	1	60255-@
13	08034-20536	BAND	2	60255-@
14	09483-10509	HOSE	1	60255-@
15	08034-20536	BAND	1	60255-@
16	07281-00259	CLAMP	2	60255-65000
17	09484-00560	CONNECTOR	1	60255-@
18	09483-30550	HOSE	1	60255-@
19	07281-00259	CLAMP	2	60255-65000
20	09483-30550	HOSE	1	60255-@
21	07281-00259	CLAMP	2	60255-65000
22	09484-00560	CONNECTOR	1	60255-@
23	09483-10533	HOSE	1	60255-@
24	08034-20536	BAND	4	60255-@
25	07281-00259	CLAMP	2	60255-65000
26	198-911-4430	GROMMET	1	60255-@

PRE HEATER (COOLANT) (COLD WEATHER A SPEC.) (FOR CAB HEATER)(#60255-65000)

Item	Part No.	Part Name	Qty	Serial No.
27	04434-52512	CLIP	4	60255-@
28	01010-81225	BOLT	1	60255-@
29	01643-31232	WASHER	1	60255-@

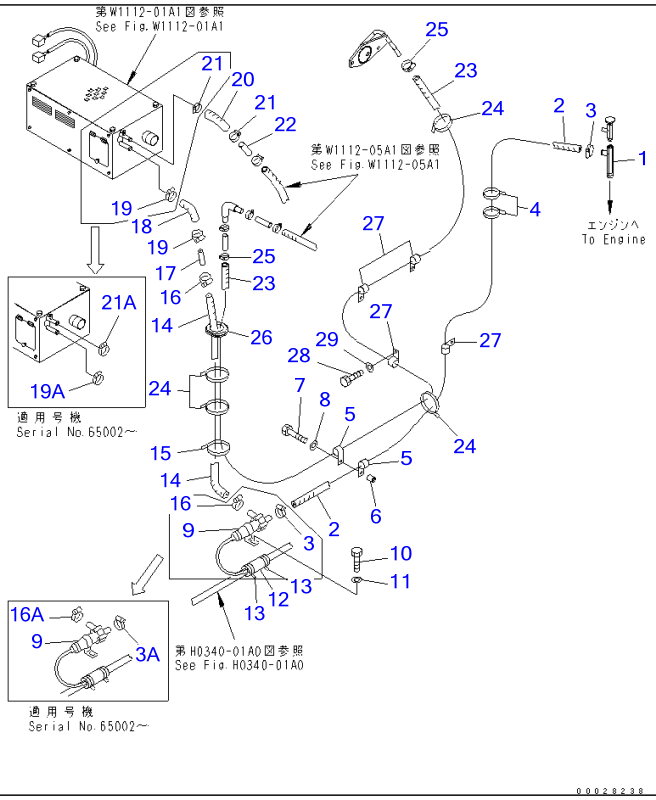

Ref W1112-03A1A **Page 450080**

PC220-7 S/N 60001-UP (Overseas Version)
PRE HEATER (COOLANT) (COLD WEATHER A SPEC.) (FOR CAB HEATER)(#65001-)

Item	Part No.	Part Name	Qty	Serial No.
1	20Y-977-6590	ADAPTER	1	60255-
2	09483-10517	HOSE	1	60255-
3	09479-02400	CLAMP	1	65002-
	09479-02400	CLAMP	2	65001-65001
3A	07281-00289	CLAMP	1	65003-
4	08034-20876	BAND	2	60255-
5	04434-52512	CLIP	2	60255-
6	21T-72-23290	SPACER	1	60255-
7	01010-81255	BOLT	1	60255-
8	01643-31232	WASHER	1	60255-
9	20Y-977-1330	PUMP ASS'Y	1	60255-
10	01010-80620	BOLT	2	60255-
11	01643-30623	WASHER	2	60255-
12	205-62-72240	COVER	1	60255-
13	08034-20536	BAND	2	60255-
14	09483-10509	HOSE	1	60255-
15	08034-20536	BAND	1	60255-
16	09479-02400	CLAMP	1	65002-
	09479-02400	CLAMP	2	65001-65001
16A	07281-00289	CLAMP	1	65002-
17	09484-00560	CONNECTOR	1	60255-
18	09483-30550	HOSE	1	60255-
19	09479-02400	CLAMP	1	65002-
	09479-02400	CLAMP	2	65001-65001
19A	07281-00289	CLAMP	1	65002-
20	09483-30550	HOSE	1	60255-

PRE HEATER (COOLANT) (COLD WEATHER A SPEC.) (FOR CAB HEATER)(#65001-)

Item	Part No.	Part Name	Qty	Serial No.
21	09479-02400	CLAMP	1	65002-
	09479-02400	CLAMP	2	65001-65001
21A	07281-00289	CLAMP	1	65002-
22	09484-00560	CONNECTOR	1	60255-
23	09483-10533	HOSE	1	60255-
24	08034-20536	BAND	4	60255-
25	09479-02400	CLAMP	2	65001-
26	198-911-4430	GROMMET	1	60255-
27	04434-52512	CLIP	4	60255-
28	01010-81225	BOLT	1	60255-
29	01643-31232	WASHER	1	60255-

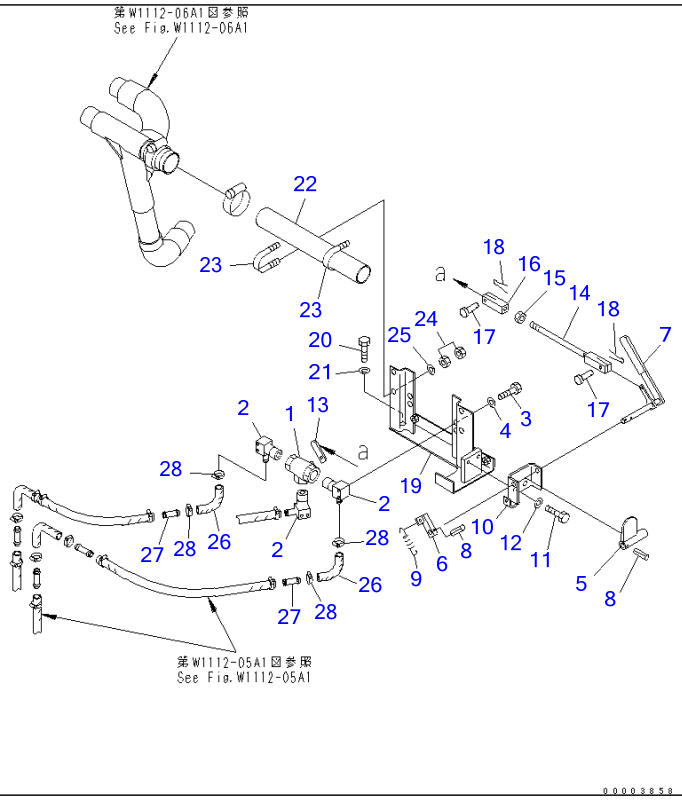

Ref W1112-04A1 **Page 450090**

PC220-7 S/N 60001-UP (Overseas Version)
PRE HEATER (VALVE) (COLD WEATHER A SPEC.) (FOR CAB HEATER)(#60255-65000)

Item	Part No.	Part Name	Qty	Serial No.
1	208-979-2150	VALVE	1	60255-@
2	20Y-977-2220	ELBOW	3	60255-@
3	01010-81020	BOLT	4	60255-@
4	01643-31032	WASHER	4	60255-@
5	20Y-977-2310	COVER	1	60255-@
6	20Y-977-2320	BRACKET	1	60255-@
7	20Y-977-2290	LEVER	1	60255-@
8	04025-00520	PIN	2	60255-@
9	203-43-21370	SPRING	1	60255-@
10	20Y-977-2280	BRACKET	1	60255-@
11	01010-81020	BOLT	2	60255-@
12	01643-31032	WASHER	2	60255-@
13	208-43-51582	LEVER	1	60255-@
14	04244-50615	ROD	1	60255-@
15	01580-10605	NUT	1	60255-@
16	04211-20634	YOKE	1	60255-@
17	04205-10618	PIN	2	60255-@
18	04050-11612	PIN	2	60255-@
19	20Y-977-2270	BRACKET	1	60255-@
20	01010-81020	BOLT	3	60255-@
21	01643-31032	WASHER	3	60255-@
22	20Y-977-2330	PIPE	1	60255-@
23	07283-34949	CLIP	2	60255-@
24	01582-11008	NUT	8	60255-@
25	01643-31032	WASHER	4	60255-@
26	09483-30550	HOSE	2	60255-@

PRE HEATER (VALVE) (COLD WEATHER A SPEC.) (FOR CAB HEATER)(#60255-65000)

Item	Part No.	Part Name	Qty	Serial No.
27	09484-00560	CONNECTOR	2	60255-@
28	09479-02400	CLAMP	1	65002-@
	07281-00259	CLAMP	2	60255-65000

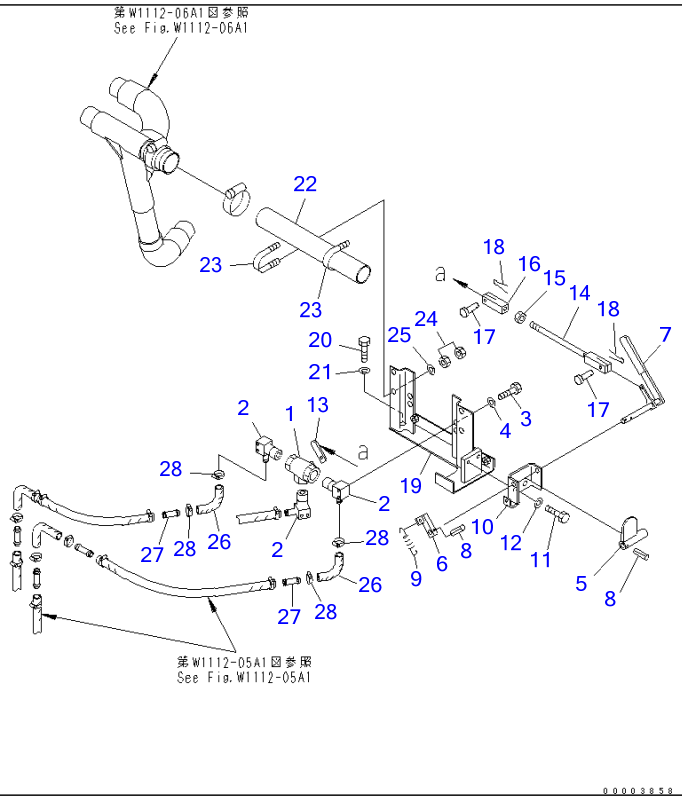

Ref W1112-04A1A **Page 450100**

PC220-7 S/N 60001-UP (Overseas Version)
PRE HEATER (VALVE) (COLD WEATHER A SPEC.) (FOR CAB HEATER)(#65001-)

Item	Part No.	Part Name	Qty	Serial No.
1	208-979-2150	VALVE	1	60255-
2	20Y-977-2220	ELBOW	3	60255-
3	01010-81020	BOLT	4	60255-
4	01643-31032	WASHER	4	60255-
5	20Y-977-2310	COVER	1	60255-
6	20Y-977-2320	BRACKET	1	60255-
7	20Y-977-2290	LEVER	1	60255-
8	04025-00520	PIN	2	60255-
9	203-43-21370	SPRING	1	60255-
10	20Y-977-2280	BRACKET	1	60255-
11	01010-81020	BOLT	2	60255-
12	01643-31032	WASHER	2	60255-
13	208-43-51582	LEVER	1	60255-
14	04244-50615	ROD	1	60255-
15	01580-10605	NUT	1	60255-
16	04211-20634	YOKE	1	60255-
17	04205-10618	PIN	2	60255-
18	04050-11612	PIN	2	60255-
19	20Y-977-2270	BRACKET	1	60255-
20	01010-81020	BOLT	3	60255-
21	01643-31032	WASHER	3	60255-
22	20Y-977-2330	PIPE	1	60255-
23	07283-34949	CLIP	2	60255-
24	01582-11008	NUT	8	60255-
25	01643-31032	WASHER	4	60255-
26	09483-30550	HOSE	2	60255-

PRE HEATER (VALVE) (COLD WEATHER A SPEC.) (FOR CAB HEATER)(#65001-)

Item	Part No.	Part Name	Qty	Serial No.
27	09484-00560	CONNECTOR	2	60255-
28	09479-02400	CLAMP	4	65001-

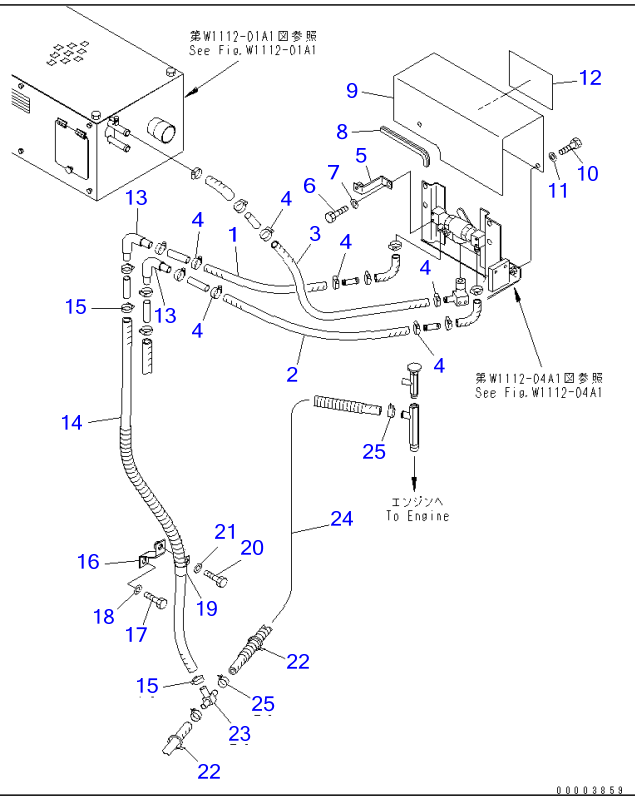

Ref W1112-05A1 **Page 450110**

PC220-7 S/N 60001-UP (Overseas Version)
PRE HEATER (CAB HEATER) (COLD WEATHER A SPEC.)(#60255-65000)

Item	Part No.	Part Name	Qty	Serial No.
1	09483-10503	HOSE	1	60255-@
2	09483-10504	HOSE	1	60255-@
3	09483-10505	HOSE	1	60255-@
4	07281-00259	CLAMP	2	60255-65000
5	20Y-977-2340	BRACKET	1	60255-@
6	01010-81020	BOLT	1	60255-@
7	01643-31032	WASHER	1	60255-@
8	209-54-66280	SEAL	1	60255-@
9	20Y-977-2350	COVER	1	60255-@
10	01010-81020	BOLT	4	60255-@
11	01643-31032	WASHER	4	60255-@
12	20Y-977-2420	PLATE	1	60255-@
13	20Y-977-2430	TUBE	2	60255-@
14	20Y-977-6820	HOSE	1	60255-@
15	07281-00259	CLAMP	2	60255-65000
16	20Y-977-6810	BRACKET	1	60255-@
17	01010-81225	BOLT	1	60255-@
18	01643-31232	WASHER	1	60255-@
19	04434-52512	CLIP	1	60255-@
20	01010-81225	BOLT	1	60255-@
21	01643-31232	WASHER	1	60255-@
22	08034-20536	BAND	2	60255-@
23	20Y-977-6760	TEE	1	60255-@
24	20Y-979-7220	HOSE ASS'Y	1	60255-@
25	11Y-09-11160	CLIP	2	60255-@

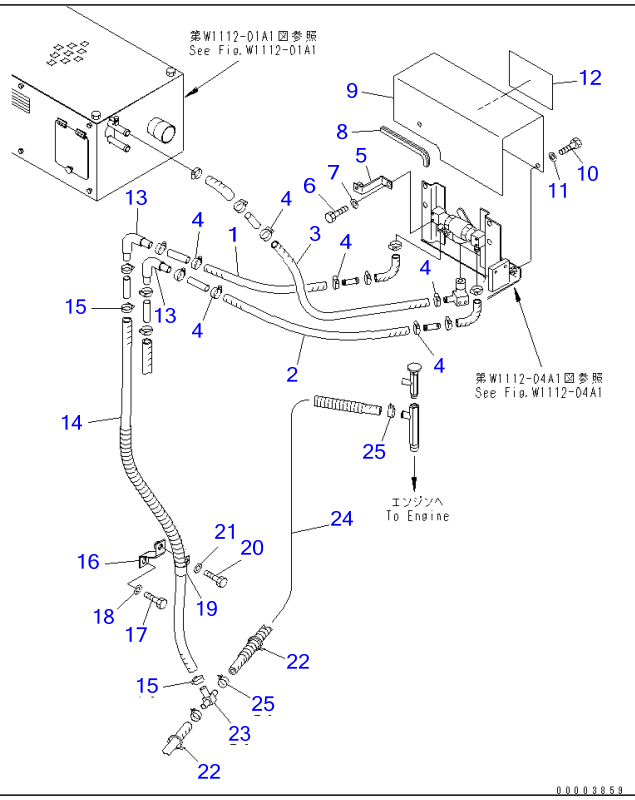

Ref W1112-05A1A **Page 450120**

PC220-7 S/N 60001-UP (Overseas Version)
PRE HEATER (CAB HEATER) (COLD WEATHER A SPEC.)(#65001-)

Item	Part No.	Part Name	Qty	Serial No.
1	09483-10503	HOSE	1	60255-
2	09483-10504	HOSE	1	60255-
3	09483-10505	HOSE	1	60255-
4	09479-02400	CLAMP	2	65001-
5	20Y-977-2340	BRACKET	1	60255-
6	01010-81020	BOLT	1	60255-
7	01643-31032	WASHER	1	60255-
8	209-54-66280	SEAL	1	60255-
9	20Y-977-2350	COVER	1	60255-
10	01010-81020	BOLT	4	60255-
11	01643-31032	WASHER	4	60255-
12	20Y-977-2420	PLATE	1	60255-
13	20Y-977-2430	TUBE	2	60255-
14	20Y-977-6820	HOSE	1	60255-
15	09479-02400	CLAMP	2	65001-
16	20Y-977-6810	BRACKET	1	60255-
17	01010-81225	BOLT	1	60255-
18	01643-31232	WASHER	1	60255-
19	04434-52512	CLIP	1	60255-
20	01010-81225	BOLT	1	60255-
21	01643-31232	WASHER	1	60255-
22	08034-20536	BAND	2	60255-
23	20Y-977-6760	TEE	1	60255-
24	20Y-979-7220	HOSE ASS'Y	1	60255-
25	11Y-09-11160	CLIP	2	60255-

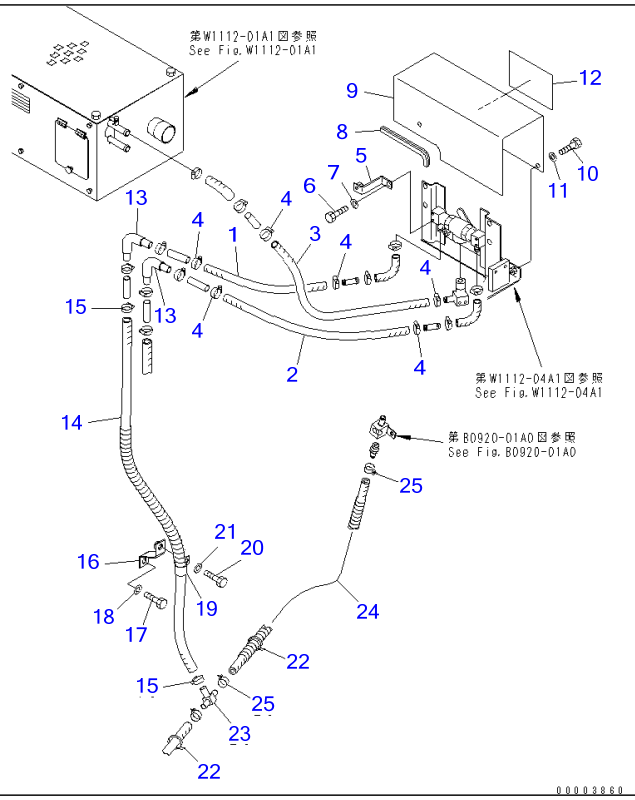

Ref W1112-05A2 **Page 450130**

PC220-7 S/N 60001-UP (Overseas Version)
PRE HEATER (CAB HEATER) (COLD WEATHER A SPEC.) (WITH CORROSION RESISTOR)(#60255-65000)

Item	Part No.	Part Name	Qty	Serial No.
1	09483-10503	HOSE	1	60255-@
2	09483-10504	HOSE	1	60255-@
3	09483-10505	HOSE	1	60255-@
4	07281-00259	CLAMP	6	60255-65000
5	20Y-977-2340	BRACKET	1	60255-@
6	01010-81020	BOLT	1	60255-@
7	01643-31032	WASHER	1	60255-@
8	209-54-66280	SEAL	1	60255-@
9	20Y-977-2350	COVER	1	60255-@
10	01010-81020	BOLT	4	60255-@
11	01643-31032	WASHER	4	60255-@
12	20Y-977-2420	PLATE	1	60255-@
13	20Y-977-2430	TUBE	2	60255-@
14	20Y-977-6820	HOSE	1	60255-@
15	07281-00259	CLAMP	4	60255-65000
16	20Y-977-6810	BRACKET	1	60255-@
17	01010-81225	BOLT	1	60255-@
18	01643-31232	WASHER	1	60255-@
19	04434-52512	CLIP	1	60255-@
20	01010-81225	BOLT	1	60255-@
21	01643-31232	WASHER	1	60255-@
22	08034-20536	BAND	2	60255-@
23	20Y-977-6760	TEE	1	60255-@
24	20Y-979-7240	HOSE ASS'Y	1	60255-@
25	11Y-09-11160	CLIP	2	60255-@

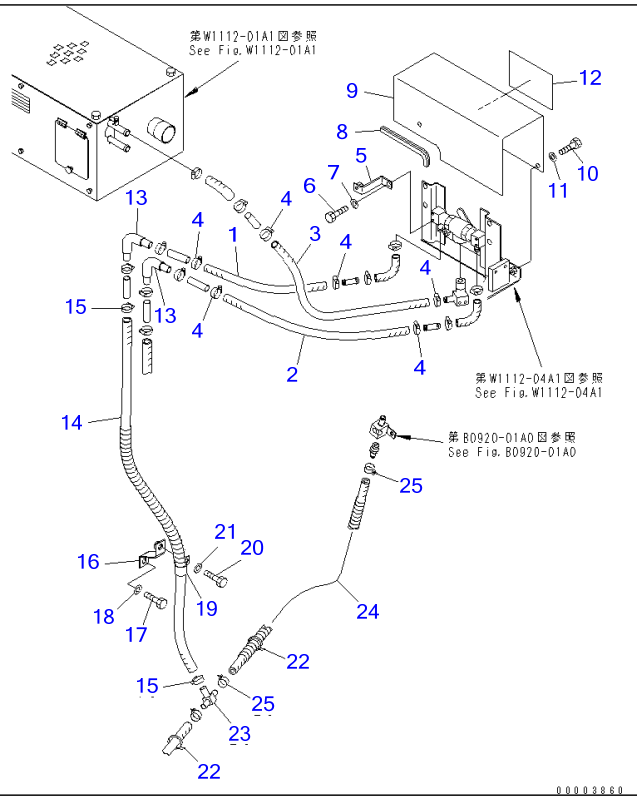

Ref W1112-05A2A **Page 450140**

PC220-7 S/N 60001-UP (Overseas Version)
PRE HEATER (CAB HEATER) (COLD WEATHER A SPEC.) (WITH CORROSION RESISTOR)(#65001-)

Item	Part No.	Part Name	Qty	Serial No.
1	09483-10503	HOSE	1	60255-
2	09483-10504	HOSE	1	60255-
3	09483-10505	HOSE	1	60255-
4	09479-02400	CLAMP	4	65001-
5	20Y-977-2340	BRACKET	1	60255-
6	01010-81020	BOLT	1	60255-
7	01643-31032	WASHER	1	60255-
8	209-54-66280	SEAL	1	60255-
9	20Y-977-2350	COVER	1	60255-
10	01010-81020	BOLT	4	60255-
11	01643-31032	WASHER	4	60255-
12	20Y-977-2420	PLATE	1	60255-
13	20Y-977-2430	TUBE	2	60255-
14	20Y-977-6820	HOSE	1	60255-
15	09479-02400	CLAMP	4	65001-
16	20Y-977-6810	BRACKET	1	60255-
17	01010-81225	BOLT	1	60255-
18	01643-31232	WASHER	1	60255-
19	04434-52512	CLIP	1	60255-
20	01010-81225	BOLT	1	60255-
21	01643-31232	WASHER	1	60255-
22	08034-20536	BAND	2	60255-
23	20Y-977-6760	TEE	1	60255-
24	20Y-979-7240	HOSE ASS'Y	1	60255-
25	11Y-09-11160	CLIP	2	60255-

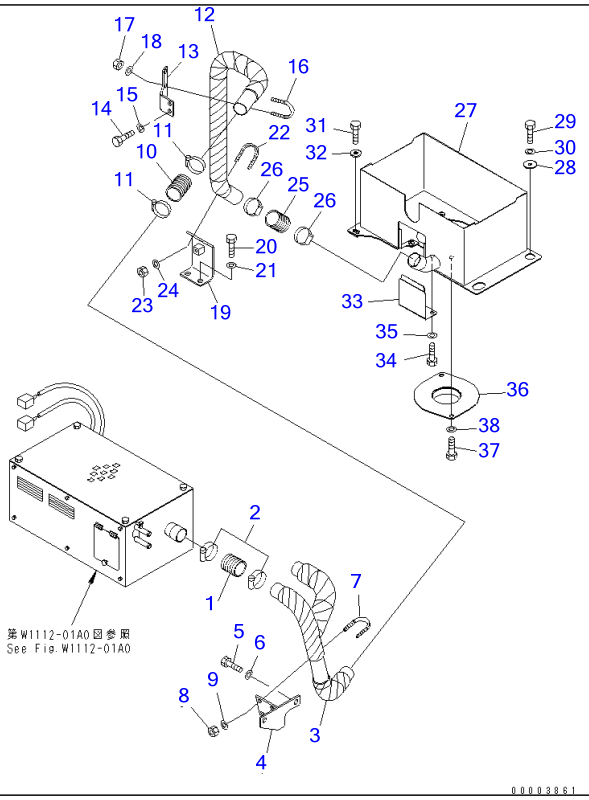

Ref W1112-06A0 **Page 450150**

PC220-7 S/N 60001-UP (Overseas Version)
PRE HEATER (DUCT) (COLD WEATHER A SPEC.)(#60255-)

Item	Part No.	Part Name	Qty	Serial No.
1	20Y-01-11330	TUBE	1	60255-
2	07289-00055	CLAMP	2	60255-
3	20Y-977-6522	DUCT	1	60255-
4	20Y-977-6560	BRACKET	1	60255-
5	01010-81230	BOLT	2	60255-
6	01643-31232	WASHER	2	60255-
7	07283-34949	CLIP	2	60255-
8	01597-01009	NUT	4	60255-
9	01643-31032	WASHER	4	60255-
10	20Y-01-11330	TUBE	1	60255-
11	07289-00055	CLAMP	2	60255-
12	20Y-977-6510	DUCT	1	60255-
13	20Y-977-6580	PLATE	1	60255-
14	01010-81225	BOLT	2	60255-
15	01643-31232	WASHER	2	60255-
16	07283-34949	CLIP	1	60255-
17	01597-01009	NUT	2	60255-
18	01643-31032	WASHER	2	60255-
19	20Y-977-6570	BRACKET	1	60255-
20	01010-81225	BOLT	2	60255-
21	01643-31232	WASHER	2	60255-
22	07283-34949	CLIP	1	60255-
23	01597-01009	NUT	2	60255-
24	01643-31032	WASHER	2	60255-
25	20Y-01-11330	TUBE	1	60255-
26	07289-00055	CLAMP	2	60255-
27	20Y-977-6530	COVER	1	60255-
28	208-54-57180	COLLAR	2	60255-

PRE HEATER (DUCT) (COLD WEATHER A SPEC.)(#60255-)

Item	Part No.	Part Name	Qty	Serial No.
29	01010-81230	BOLT	2	60255-
30	01643-31232	WASHER	2	60255-
31	01010-81230	BOLT	2	60255-
32	175-54-34170	WASHER	2	60255-
33	20Y-977-6730	COVER	1	60255-
34	01010-81020	BOLT	2	60255-
35	01643-31032	WASHER	2	60255-
36	20Y-977-6360	PLATE	1	60255-
37	01010-81225	BOLT	2	60255-
38	01643-31232	WASHER	2	60255-

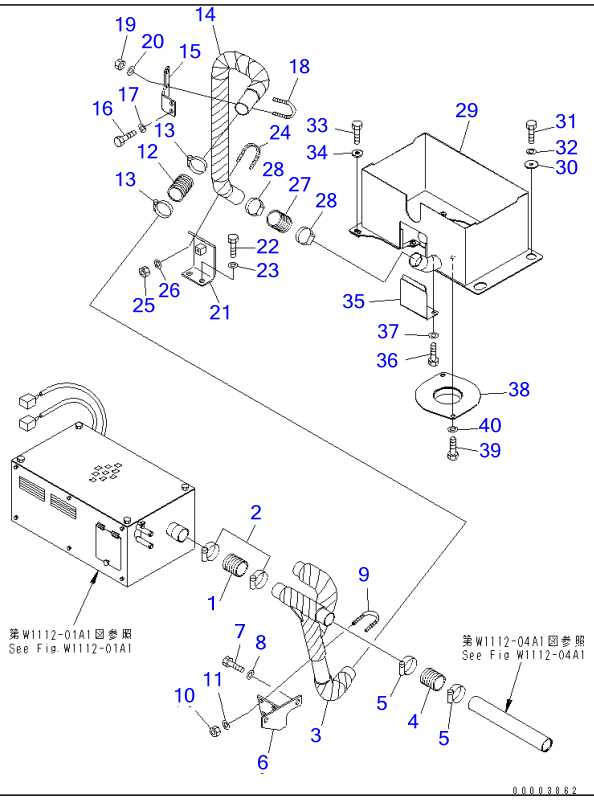

Ref W1112-06A1 **Page 450160**

PC220-7 S/N 60001-UP (Overseas Version)

PRE HEATER (DUCT) (COLD WEATHER A SPEC.) (FOR CAB HEATER)(#60255-)

Item	Part No.	Part Name	Qty	Serial No.
1	20Y-01-11330	TUBE	1	60255-
2	07289-00055	CLAMP	2	60255-
3	20Y-977-6751	DUCT	1	60255-
4	20Y-01-11330	TUBE	1	60255-
5	07289-00055	CLAMP	2	60255-
6	20Y-977-6560	BRACKET	1	60255-
7	01010-81230	BOLT	2	60255-
8	01643-31232	WASHER	2	60255-
9	07283-34949	CLIP	2	60255-
10	01597-01009	NUT	4	60255-
11	01643-31032	WASHER	4	60255-
12	20Y-01-11330	TUBE	1	60255-
13	07289-00055	CLAMP	2	60255-
14	20Y-977-6510	DUCT	1	60255-
15	20Y-977-6580	PLATE	1	60255-
16	01010-81225	BOLT	2	60255-
17	01643-31232	WASHER	2	60255-
18	07283-34949	CLIP	1	60255-
19	01597-01009	NUT	2	60255-
20	01643-31032	WASHER	2	60255-
21	20Y-977-6570	BRACKET	1	60255-
22	01010-81225	BOLT	2	60255-
23	01643-31232	WASHER	2	60255-
24	07283-34949	CLIP	1	60255-
25	01597-01009	NUT	2	60255-
26	01643-31032	WASHER	2	60255-
27	20Y-01-11330	TUBE	1	60255-
28	07289-00055	CLAMP	2	60255-

PRE HEATER (DUCT) (COLD WEATHER A SPEC.) (FOR CAB HEATER)(#60255-)

Item	Part No.	Part Name	Qty	Serial No.
29	20Y-977-6530	COVER	1	60255-
30	208-54-57180	COLLAR	2	60255-
31	01010-81230	BOLT	2	60255-
32	01643-31232	WASHER	2	60255-
33	01010-81230	BOLT	2	60255-
34	175-54-34170	WASHER	2	60255-
35	20Y-977-6730	COVER	1	60255-
36	01010-81020	BOLT	2	60255-
37	01643-31032	WASHER	2	60255-
38	20Y-977-6360	PLATE	1	60255-
39	01010-81225	BOLT	2	60255-
40	01643-31232	WASHER	2	60255-

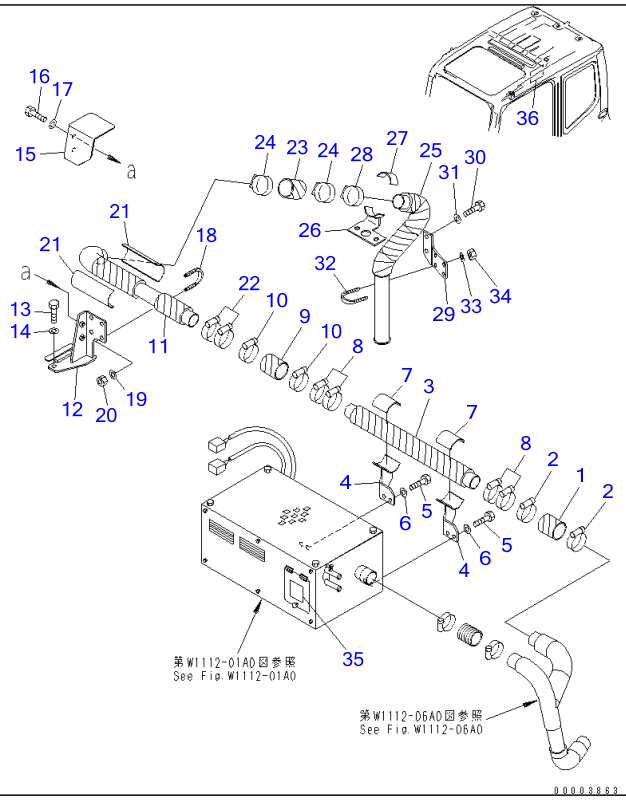

Ref W1112-07A0 **Page 450170**

PC220-7 S/N 60001-UP (Overseas Version)

PRE HEATER (DUCT AND DECAL) (COLD WEATHER A SPEC.)(#60255-)

Item	Part No.	Part Name	Qty	Serial No.
1	20Y-977-6790	TUBE	1	60255-
2	07289-00070	CLAMP	2	60255-
3	20Y-977-6421	DUCT	1	60255-
4	20Y-977-6431	BRACKET	2	60255-
5	01010-81025	BOLT	4	60255-
6	01643-31032	WASHER	4	60255-
7	20Y-977-6781	COVER	2	60255-
8	07289-00070	CLAMP	4	60255-
9	20Y-977-6790	TUBE	1	60255-
10	07289-00070	CLAMP	2	60255-
11	20Y-977-6452	DUCT	1	60255-
12	20Y-977-6460	BRACKET	1	60255-
13	01010-81235	BOLT	2	60255-
14	01643-31232	WASHER	2	60255-
15	20Y-977-6770	COVER	1	60255-
16	01010-81025	BOLT	2	60255-
17	01643-31032	WASHER	2	60255-
18	07283-34949	CLIP	2	60255-
19	01643-31032	WASHER	4	60255-
20	01597-01009	NUT	4	60255-
21	20Y-977-6281	COVER	2	60255-
22	07289-00070	CLAMP	2	60255-
23	20Y-977-6790	TUBE	1	60255-
24	07289-00070	CLAMP	2	60255-
25	20Y-977-6472	DUCT	1	60255-
26	20Y-977-6492	BRACKET	1	60255-
27	20Y-977-6441	PLATE	1	60255-
28	07289-00070	CLAMP	1	60255-

PRE HEATER (DUCT AND DECAL) (COLD WEATHER A SPEC.)(#60255-)

Item	Part No.	Part Name	Qty	Serial No.
29	20Y-977-6480	BRACKET	1	60255-
30	01010-81030	BOLT	2	60255-
31	01643-31032	WASHER	2	60255-
32	07283-34949	CLIP	2	60255-
33	01643-31032	WASHER	4	60255-
34	01597-01009	NUT	4	60255-
35	20Y-00-12690	PLATE,(RUSSIAN)	1	60255-
	20Y-00-13450	PLATE,(ENGLISH)	1	60255-
36	20Y-00-32110	PLATE,(RUSSIAN)	1	60255-
	20Y-00-32120	PLATE,(ENGLISH)	1	60255-

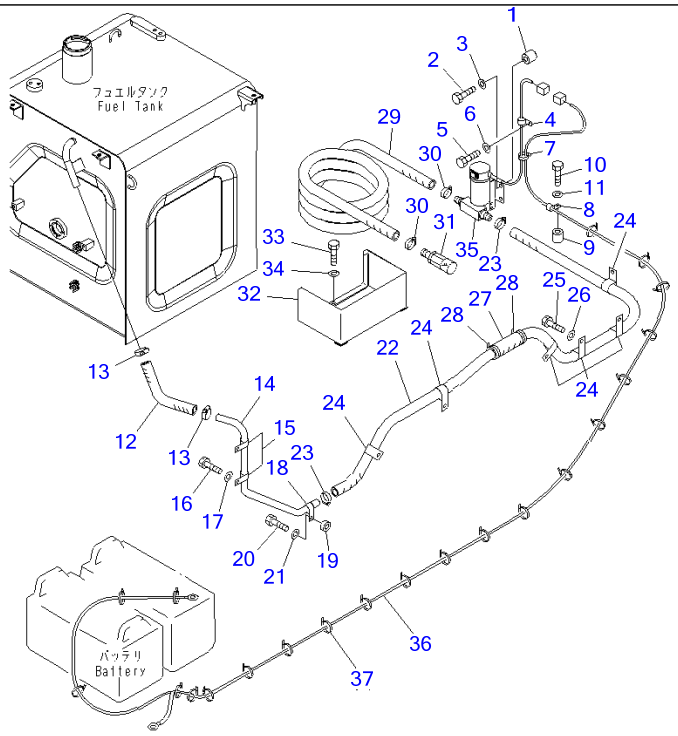

Ref W1113-01A0 Page 450180

PC220-7 S/N 60001-UP (Overseas Version)

FUEL SELF CHARGE PUMP(#60001-60624)

Item	Part No.	Part Name	Qty	Serial No.
1	195-33-11220	SPACER	4	60001-@
2	01010-81250	BOLT	4	60001-@
3	01643-31232	WASHER	4	60001-@
4	04434-51012	CLIP	1	60001-@
5	01010-81225	BOLT	1	60001-@
6	01643-31232	WASHER	1	60001-@
7	08034-00519	BAND	1	60001-@
8	04434-51012	CLIP	1	60001-@
9	195-33-11220	SPACER	1	60001-@
10	01010-81250	BOLT	1	60001-@
11	01643-31232	WASHER	1	60001-@
12	206-04-71121	HOSE	1	60001-60624
13	07281-00419	CLAMP	2	60001-60624
14	206-04-71130	TUBE	1	60001-@
15	04434-52512	CLIP	2	60001-@
16	01010-81225	BOLT	2	60001-@
17	01643-31232	WASHER	2	60001-@
18	04434-52512	CLIP	1	60001-@
19	198-43-15310	COLLAR, 10MM	1	60001-@
20	01010-81235	BOLT	1	60001-@
21	01643-31232	WASHER	1	60001-@
22	206-04-71141	HOSE	1	60001-60624
23	07281-00419	CLAMP	2	60001-60624
24	581-04-22290	CLIP	6	60001-@
25	01010-81225	BOLT	6	60001-@
26	01643-31232	WASHER	6	60001-@
27	205-62-53780	COVER	1	60001-@
28	08034-00834	BAND	2	60001-@

FUEL SELF CHARGE PUMP(#60001-60624)

Item	Part No.	Part Name	Qty	Serial No.
29	207-04-71510	HOSE	1	60001-60624
30	07281-00419	CLAMP	2	60001-60624
31	207-04-K1160	VALVE ASS'Y	1	60001-60624
32	20Y-04-38170	BRACKET	1	60001-@
33	01010-81225	BOLT	3	60001-@
34	01643-31232	WASHER	3	60001-@
35	(206-04-K1110)	PUMP ASS'Y,(SEE FIG. Y1040-01A0)	1	60001-60624
36	20Y-06-31480	WIRING HARNESS	1	60001-@
37	08034-20536	BAND	21	60001-@

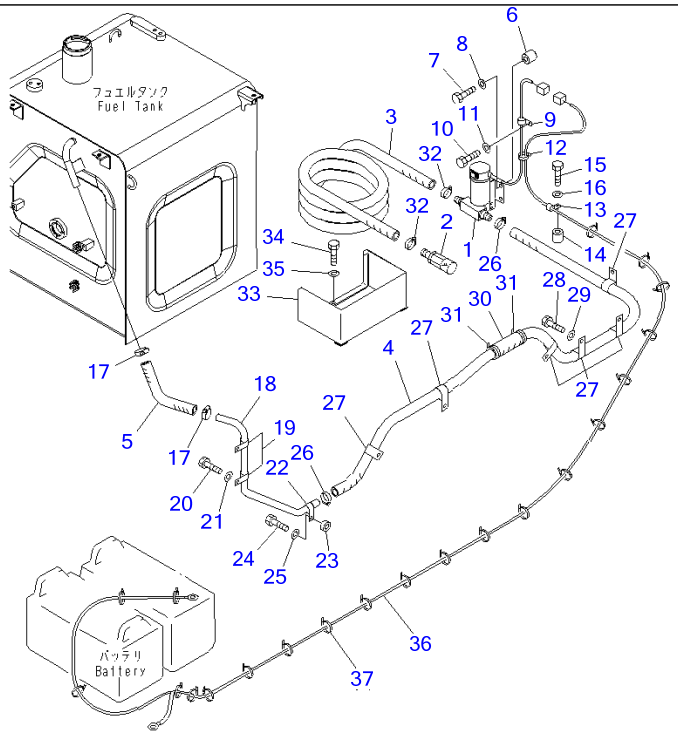

00028239

Ref W1113-01A0A **Page 450190**

PC220-7 S/N 60001-UP (Overseas Version)
FUEL SELF CHARGE PUMP(#60625-)

Item	Part No.	Part Name	Qty	Serial No.
1	(21K-04-K1130)	PUMP ASS'Y	1	68829-
	(206-04-K1111)	PUMP ASS'Y,(SEE FIG. Y1040-01A0A)	1	60625-68828
2	20Y-04-K2450	VALVE ASS'Y	1	60625-
3	20Y-04-K2351	HOSE	1	60625-
4	206-04-K1121	HOSE	1	60625-
5	206-04-K1131	HOSE	1	60625-
6	195-33-11220	SPACER	4	60001-
7	01010-81250	BOLT	4	60001-
8	01643-31232	WASHER	4	60001-
9	04434-51012	CLIP	1	60001-
10	01010-81225	BOLT	1	60001-
11	01643-31232	WASHER	1	60001-
12	08034-00519	BAND	1	60001-
13	04434-51012	CLIP	1	60001-
14	195-33-11220	SPACER	1	60001-
15	01010-81250	BOLT	1	60001-
16	01643-31232	WASHER	1	60001-
17	07289-00035	CLAMP	2	60625-
18	206-04-71130	TUBE	1	60001-
19	04434-52512	CLIP	2	60001-
20	01010-81225	BOLT	2	60001-
21	01643-31232	WASHER	2	60001-
22	04434-52512	CLIP	1	60001-
23	198-43-15310	COLLAR, 10MM	1	60001-
24	01010-81235	BOLT	1	60001-
25	01643-31232	WASHER	1	60001-
26	07289-00035	CLAMP	2	60625-
27	581-04-22290	CLIP	6	60001-

FUEL SELF CHARGE PUMP(#60625-)

Item	Part No.	Part Name	Qty	Serial No.
28	01010-81225	BOLT	6	60001-
29	01643-31232	WASHER	6	60001-
30	205-62-53780	COVER	1	60001-
31	08034-00834	BAND	2	60001-
32	07289-00035	CLAMP	2	60625-
33	20Y-04-38170	BRACKET	1	60001-
34	01010-81225	BOLT	3	60001-
35	01643-31232	WASHER	3	60001-
36	20Y-06-31480	WIRING HARNESS	1	60001-
37	08034-20536	BAND	21	60001-

PC220-7 S/N 60001-UP (Overseas Version)

00014381

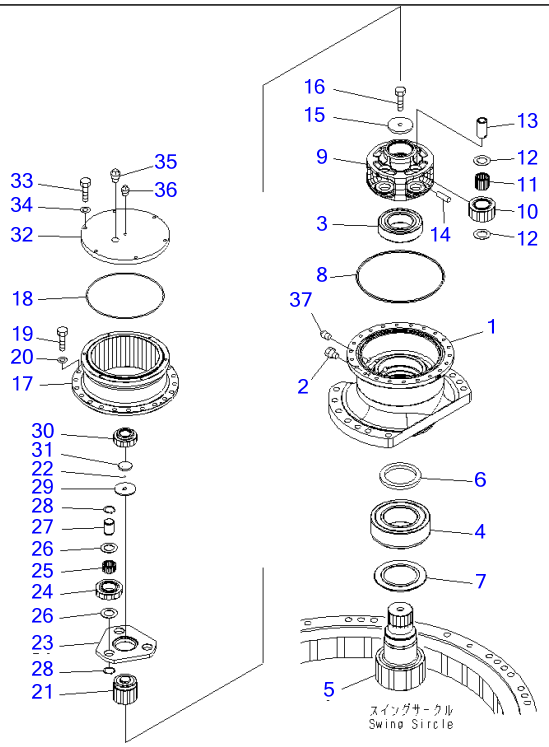

Ref Y0260-01A0

Page 480010

PC220-7 S/N 60001-UP (Overseas Version)

SWING MACHINERY (SUPPLY ONLY)(#60001-60600)

Item	Part No.	Part Name	Qty	Serial No.
	206-26-00401	SWING MACHINERY A.	1	60601-@
	□206-26-00400	SWING MACHINERY A.	1	60001-60600
1	206-26-71490	・CASE	1	60001-60600
2	07029-00000	・VALVE	1	60001-60600
3	20Y-26-22330	・BEARING	1	60001-60600
4	206-26-71240	・BEARING	1	60001-60600
5	206-26-71460	・SHAFT	1	60001-60600
6	07012-00115	・SEAL	1	60001-60600
7	206-26-71310	・SPACER	1	60001-60600
8	07000-15310	・O-RING	1	60001-@
9	206-26-71480	・CARRIER	1	60001-@
10	206-26-71440	・GEAR	4	60001-@
11	22U-26-21320	・BEARING	8	60036-@
	22U-26-21330	・BEARING	8	60001-60035
12	206-26-71520	・THRUST WASHER	8	60001-@
13	206-26-71510	・PIN	4	60001-@
14	20Y-26-21330	・PIN	4	60001-@
15	20Y-26-21240	・PLATE	1	60001-@
16	112-32-11211	・BOLT	1	60001-@
17	206-26-71452	・GEAR	1	60283-@
	206-26-71450	・GEAR	1	60001-60282
18	20K-22-11190	・O-RING	1	60001-@
19	01010-81440	・BOLT	22	60001-@
20	01643-31445	・WASHER	22	60001-@
21	206-26-71430	・GEAR	1	60001-@
22	04260-01270	・BALL	1	60001-@
23	206-26-71470	・CARRIER	1	60001-@
24	206-26-71420	・GEAR	3	60001-@

SWING MACHINERY (SUPPLY ONLY)(#60001-60600)

Item	Part No.	Part Name	Qty	Serial No.
25	20Y-27-22210	・BEARING	3	60001-@
26	22U-26-21230	・WASHER,THRUST	6	60001-@
27	206-26-71210	・PIN	3	60001-@
28	04064-03515	・RING	6	60001-@
29	206-26-71350	・HOLDER	1	60001-@
30	206-26-71410	・GEAR	1	60001-@
31	206-26-71341	・PLATE	1	60593-@
	206-26-71340	・PLATE	1	60001-@
32	20Y-26-31510	・COVER	1	60001-@
33	01010-81035	・BOLT	6	60001-@
34	01643-51032	・WASHER	6	60001-@
35	07042-30617	・PLUG	1	60001-@
36	07042-30108	・PLUG	1	60001-@
37	07042-30415	・PLUG	1	60001-@

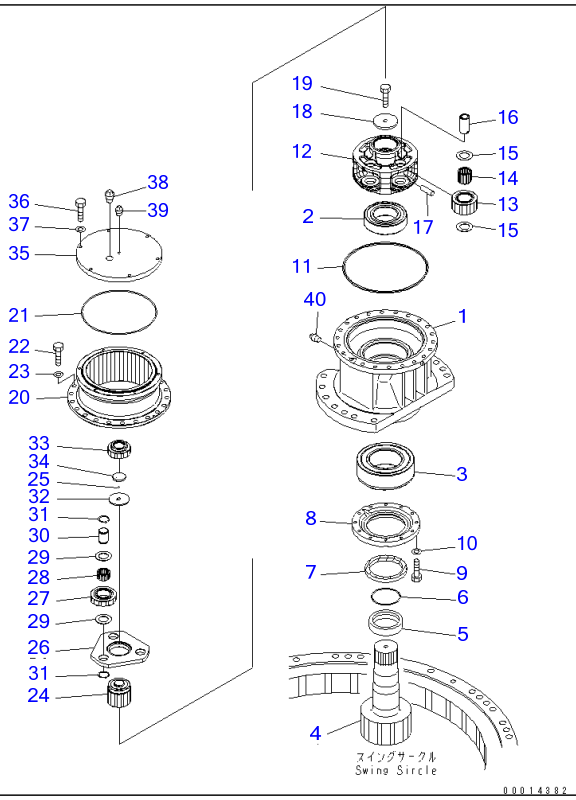

Ref Y0260-01A0A

Page 480020

PC220-7 S/N 60001-UP (Overseas Version)

SWING MACHINERY (SUPPLY ONLY)(#60601-)

Item	Part No.	Part Name	Qty	Serial No.
	206-26-00401	SWING MACHINERY A.	1	60601-
1	206-26-73110	・CASE	1	60601-
2	206-26-73150	・BEARING	1	60601-
3	206-26-73160	・BEARING	1	60601-
4	206-26-73130	・SHAFT	1	60601-
5	206-26-73140	・SPACER	1	60601-
6	07000-15100	・O-RING	1	60601-
7	20Y-26-22420	・SEAL	1	60601-
8	206-26-73120	・COVER	1	60601-
9	01010-81040	・BOLT	12	60601-
10	01643-31032	・WASHER	12	60601-
11	07000-15310	・O-RING	1	60001-
12	206-26-71480	・CARRIER	1	60001-
13	206-26-71440	・GEAR	4	60001-
14	22U-26-21320	・BEARING	8	60036-
15	206-26-71520	・THRUST WASHER	8	60001-
16	206-26-71510	・PIN	4	60001-
17	20Y-26-21330	・PIN	4	60001-
18	20Y-26-21240	・PLATE	1	60001-
19	112-32-11211	・BOLT	1	60001-
20	206-26-71452	・GEAR	1	60283-
21	20K-22-11190	・O-RING	1	60001-
22	01010-81440	・BOLT	22	60001-
23	01643-31445	・WASHER	22	60001-
24	206-26-71430	・GEAR	1	60001-
25	04260-01270	・BALL	1	60001-
26	206-26-71470	・CARRIER	1	60001-
27	206-26-71420	・GEAR	3	60001-

SWING MACHINERY (SUPPLY ONLY)(#60601-)

Item	Part No.	Part Name	Qty	Serial No.
28	20Y-27-22210	・BEARING	3	60001-
29	22U-26-21230	・WASHER	6	60001-
30	206-26-71210	・PIN	3	60001-
31	04064-03515	・RING	6	60001-
32	206-26-71350	・HOLDER	1	60001-
33	206-26-71410	・GEAR	1	60001-
34	206-26-71341	・PLATE	1	60593-
35	20Y-26-31510	・COVER	1	60001-
36	01010-81035	・BOLT	6	60001-
37	01643-51032	・WASHER	6	60001-
38	07042-30617	・PLUG	1	60001-
39	07042-30108	・PLUG	1	60001-
40	07042-30415	・PLUG	1	60001-

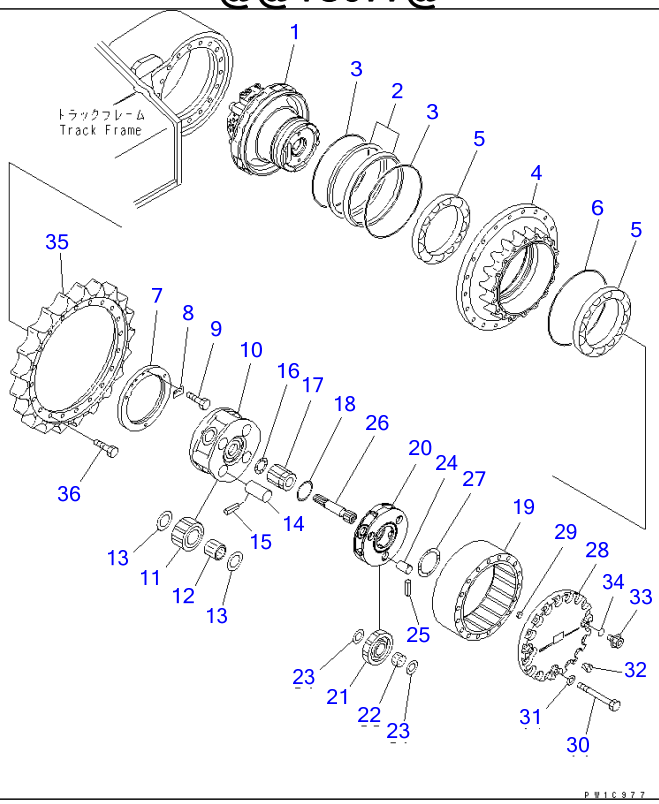

Ref Y0270-01A1 **Page 480030**

PC220-7 S/N 60001-UP (Overseas Version)
FINAL DRIVE (SUPPLY ONLY)

Item	Part No.	Part Name	Qty	Serial No.
	206-27-00422	FINAL DRIVE ASS'Y	2	60283-
	206-27-00301	FINAL DRIVE ASS'Y	2	60262-60282
	206-27-00300	FINAL DRIVE ASS'Y	2	60001-60261
1	(708-8F-00192)	・MOTOR ASS'Y	1	60262-
	(□708-8F-00191)	・MOTOR ASS'Y	1	60003-60261
	(□708-8F-00190)	・MOTOR ASS'Y	1	60001-60002
	150-27-00410	・FLOATING SEAL ASS'Y	1	60283-
	150-27-00330	・FLOATING SEAL ASS'Y	1	60001-60282
2	☆	・・RING	2	60001-
3	☆	・・O-RING	2	60283-
	☆	・・O-RING	2	60001-60282
4	22U-27-21182	・HUB	1	60001-
5	20Y-27-22230	・BEARING	2	60001-
6	22U-27-21220	・O-RING	1	60001-
7	20Y-27-22261	・LOCK	1	60001-
8	20Y-27-22270	・LOCK	1	60001-
9	01010-81020	・BOLT	2	60001-
10	22U-27-21170	・CARRIER	1	60001-
11	22U-27-21140	・GEAR	4	60001-
12	20Y-27-22220	・BEARING	4	60001-
13	20Y-27-21250	・WASHER	8	60001-
14	22U-27-21230	・PIN	4	60001-
15	20Y-27-21290	・PIN	4	60001-
16	20Y-27-13310	・WASHER	1	60001-
17	22U-27-21130	・GEAR	1	60001-
18	22U-27-21210	・THRUST WASHER	1	60001-
19	22U-27-21153	・GEAR	1	60283-
	22U-27-21152	・GEAR	1	60001-60282

FINAL DRIVE (SUPPLY ONLY)

Item	Part No.	Part Name	Qty	Serial No.
20	22U-27-21161	・CARRIER	1	60001-
21	22U-27-21120	・GEAR	3	60001-
22	20Y-27-22210	・BEARING	3	60001-
23	22U-27-21240	・THRUST WASHER	6	60001-
24	20Y-27-21220	・PIN	3	60001-
25	20Y-27-21280	・PIN	3	60001-
26	22U-27-21110	・SHAFT	1	60001-
27	20Y-27-21310	・WASHER	1	60001-
28	22U-27-21192	・COVER	1	60001-
29	20Y-27-22250	・BUTTON	1	60001-
30	20Y-27-13281	・BOLT	20	60001-
31	01643-31645	・WASHER	20	60001-
32	07049-01012	・PLUG	2	60001-
33	07044-12412	・PLUG	3	60001-
34	07002-02434	・O-RING	3	60001-
35	20Y-27-11582	・SPROCKET	1	60001-
36	20Y-27-11561	・BOLT	20	60001-

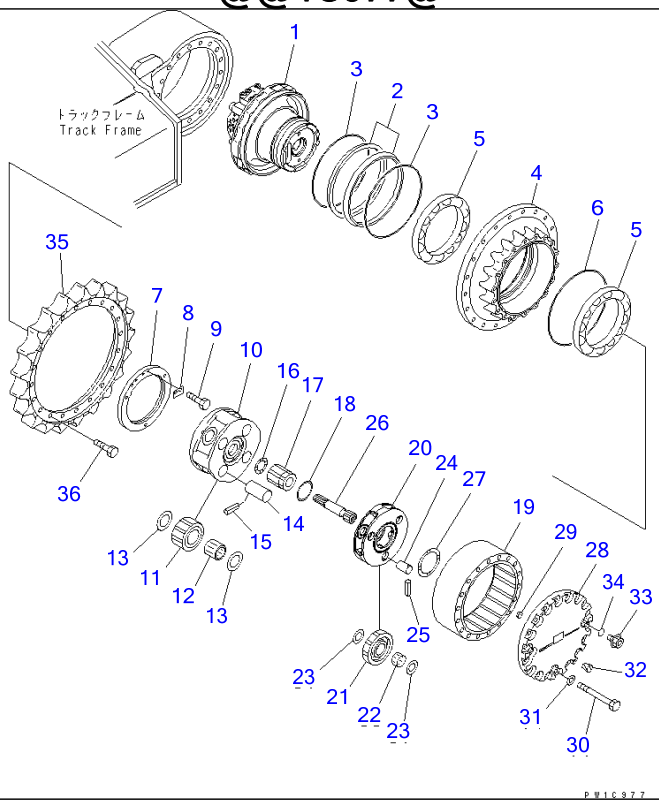

Ref Y0270-01A2 Page 480040

PC220-7 S/N 60001-UP (Overseas Version)

FINAL DRIVE (COLD WEATHER A SPEC.) (SUPPLY ONLY)(#60255-)

Item	Part No.	Part Name	Qty	Serial No.
	206-27-00311	FINAL DRIVE ASS'Y	2	67164-
	206-27-00310	FINAL DRIVE ASS'Y	2	65001-67163
	206-27-00311	FINAL DRIVE ASS'Y	2	60776-65000
	206-27-00310	FINAL DRIVE ASS'Y	2	60255-60775
1	(708-8F-00192)	・MOTOR ASS'Y	1	60255-
	20Y-27-00450	・FLOATING SEAL ASS'Y	1	60255-
2	☆	・・SEAL	2	60255-
3	☆	・・O-RING	2	60255-
4	22U-27-21182	・HUB	1	60255-
5	20Y-27-31320	・BEARING	2	67164-
	20Y-27-22230	・BEARING	2	65001-67163
	20Y-27-31320	・BEARING	2	60776-65000
	20Y-27-22230	・BEARING	2	60255-60775
6	22U-09-21110	・O-RING	1	60255-
7	20Y-27-22261	・LOCK	1	60255-
8	20Y-27-22270	・LOCK	1	60255-
9	01010-81020	・BOLT	2	60255-
10	22U-27-21170	・CARRIER	1	60255-
11	22U-27-21140	・GEAR	4	60255-
12	20Y-27-21270	・BEARING	4	67164-
	□20Y-27-22220	・BEARING	4	65001-67163
	20Y-27-21270	・BEARING	4	60776-65000
	□20Y-27-22220	・BEARING	4	60255-67163
13	20Y-27-21250	・WASHER	8	60255-
14	22U-27-21230	・PIN	4	60255-
15	20Y-27-21290	・PIN	4	60255-
16	20Y-27-13310	・WASHER	1	60255-
17	22U-27-21130	・GEAR	1	60255-

FINAL DRIVE (COLD WEATHER A SPEC.) (SUPPLY ONLY)(#60255-)

Item	Part No.	Part Name	Qty	Serial No.
18	22U-27-21210	・THRUST WASHER	1	60255-
19	22U-27-21153	・GEAR	1	60255-
20	22U-27-21161	・CARRIER	1	60255-
21	22U-27-21120	・GEAR	3	60255-
22	20Y-27-21260	・BEARING	3	67164-
	□20Y-27-22210	・BEARING	3	65001-67163
	20Y-27-21260	・BEARING	3	60776-65000
	□20Y-27-22210	・BEARING	3	60255-60775
23	22U-27-21240	・THRUST WASHER	6	60255-
24	20Y-27-21220	・PIN	3	60255-
25	20Y-27-21280	・PIN	3	60255-
26	22U-27-21110	・SHAFT	1	60255-
27	20Y-27-21310	・WASHER	1	60255-
28	22U-27-21192	・COVER	1	60255-
29	20Y-27-22250	・BUTTON	1	60255-
30	20Y-27-13281	・BOLT	20	60255-
31	01643-31645	・WASHER	20	60255-
32	07049-01012	・PLUG	2	60255-
33	07044-12412	・PLUG	3	60255-
34	07002-52434	・O-RING	3	60255-
35	20Y-27-11582	・SPROCKET	1	60255-
36	20Y-27-11561	・BOLT	20	60255-

KIT 詳細については次のページを参照して下さい。
See subsequent pages for details.

K01	20Y-32-05070	シュー ボルト および ナット サービスキット SHOE BOLT AND NUT SERVICE KIT
K02	20Y-32-05051	シュー ボルト および ナット サービスキット フラットタイプ用 SHOE BOLT AND NUT SERVICE KIT (FOR FLAT TYPE)
K03	20Y-32-05080	シュー ボルト および ナット サービスキット ロードライナ用 SHOE BOLT AND NUT SERVICE KIT (FOR ROAD LINER)

PC220-7 S/N 60001-UP (Overseas Version)

SHOE BOLT AND NUT SERVICE KIT

Item	Part No.	Part Name	Qty	Serial No.
K01	20Y-32-05070	SHOE BOLT AND NUT K.	1	60001-
	20Y-32-31210	・BOLT	50	60001-
	134-32-61221	・NUT	50	60001-
K02	20Y-32-05051	SHOE BOLT AND NUT K.	1	60001-
	20Y-32-11220	・BOLT	50	60001-
	134-32-61221	・NUT	50	60001-
K03	20Y-32-05080	SHOE BOLT AND NUT K.	1	60001-
	20Y-32-31231	・BOLT	50	60001-
	134-32-61221	・NUT	50	60001-

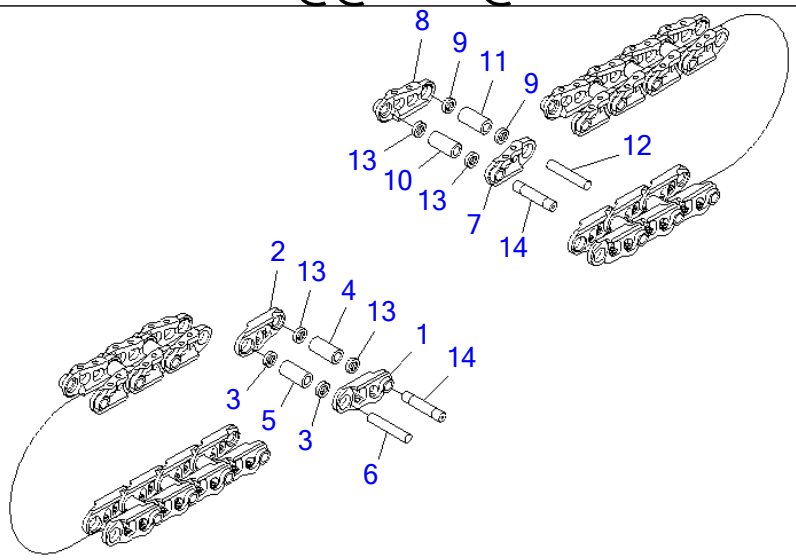

PW1A010

Ref Y0321-01A0 **Page 480060**

PC220-7 S/N 60001-UP (Overseas Version)

TRACK LINK ASS'Y (94 SET) (SUPPLY PARTS)

Item	Part No.	Part Name	Qty	Serial No.
	20Y-32-00320	TRACK LINK ASS'Y	1	60001-
1	20Y-32-31120	・LINK	46	60001-
2	20Y-32-31130	・LINK	46	60001-
3	20Y-32-11240	・SEAL	88	60001-
4	20Y-32-11171	・BUSHING, MASTER	2	60001-
5	20Y-32-11141	・BUSHING, REGULAR	44	60001-
6	20Y-32-31150	・PIN, REGULAR	44	60001-
7	20Y-32-31120	・LINK	48	60001-
8	20Y-32-31130	・LINK	48	60001-
9	20Y-32-11240	・SEAL	92	60001-
10	20Y-32-11171	・BUSHING, MASTER	2	60001-
11	20Y-32-11141	・BUSHING, REGULAR	46	60001-
12	20Y-32-31150	・PIN, REGULAR	46	60001-
13	20Y-32-11260	・SEAL	8	60001-
14	20Y-32-31190	・PIN, MASTER	4	60001-

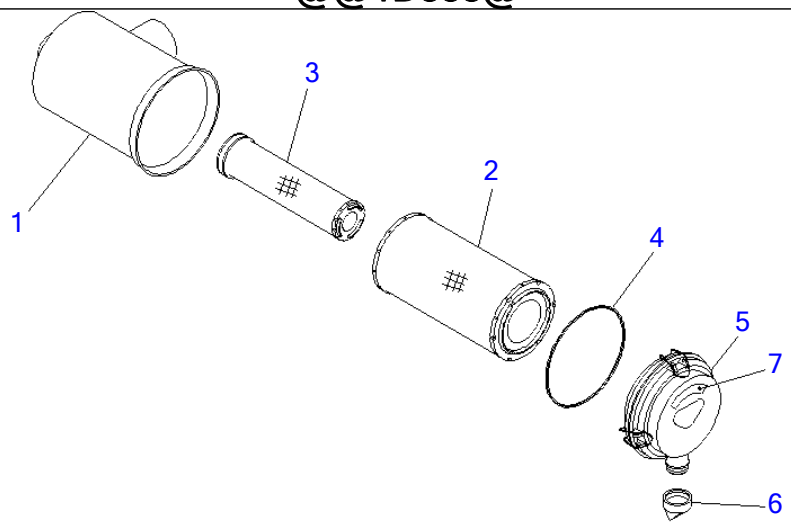

PJ1D888

Ref Y1011-01A0 **Page 480070**

PC220-7 S/N 60001-UP (Overseas Version)
AIR CLEANER (INNER PART)

Item	Part No.	Part Name	Qty	Serial No.
	6738-81-7200	AIR CLEANER ASS'Y	1	60001-
1	6738-81-7210	・BODY	1	60001-
	600-185-4100	・ELEMENT ASS'Y	1	60001-
2	600-185-4110	・・ELEMENT	1	60001-
3	600-185-4120	・・ELEMENT	1	60001-
4	600-184-1470	・・O-RING	1	60001-
5	600-184-1420	・COVER ASS'Y	1	60001-
6	600-184-1350	・VALVE	1	60001-
7	600-181-1930	・PLATE, INSTRUCTION	1	60001-

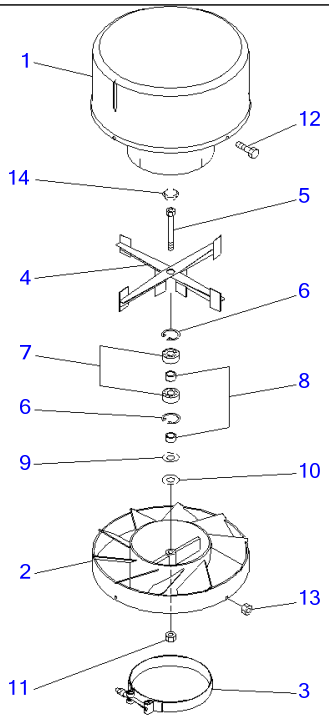

00002317

Ref Y1011-01A1 **Page 480080**

PC220-7 S/N 60001-UP (Overseas Version)
PRECLEANER (INNER PART)(#60001-69709)

Item	Part No.	Part Name	Qty	Serial No.
	423-U12-3101	PRE-CLEANER ASS'Y	1	69710-@
	□423-U12-3100	PRE-CLEANER	1	60001-69709
1	☆	・HOOD,PRECLEANER	1	60001-69709
2	423-U12-3130	・BODY,PRECLEANER	1	60001-69709
3	421-U12-3140	・CLAMP	1	60001-@
4	423-U12-3150	・ROTOR	1	60001-69709
5	421-U12-3160	・BOLT	1	60001-@
6	421-U12-3170	・RING,SNAP	2	60001-@
7	421-U12-3180	・BEARING,BALL	2	60001-69709
8	421-U12-3190	・BUSHING,SPACER	2	60001-69709
9	421-U12-3210	・WASHER	1	60001-69709
10	421-U12-3220	・WASHER	1	60001-69709
11	421-U12-3230	・NUT	1	60001-@
12	421-U12-3240	・BOLT	4	60001-@
13	421-U12-3250	・NUT	4	60001-@
14	421-U12-3260	・PLUG	1	60001-@

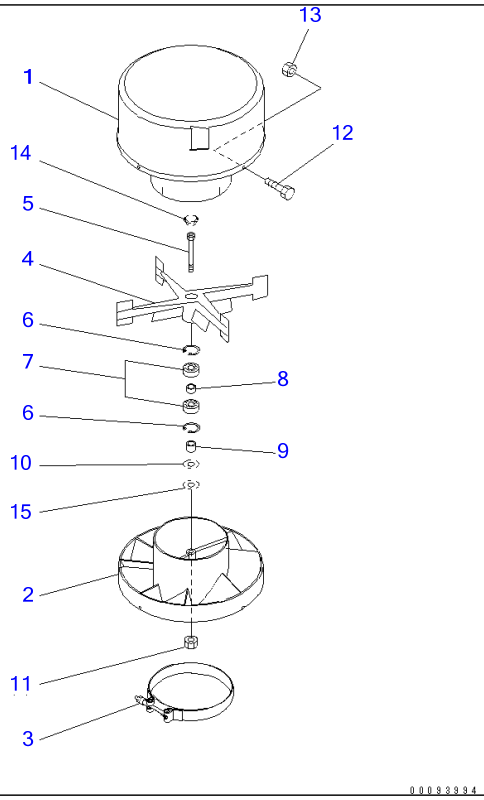

Ref Y1011-01A1A **Page 480090**

PC220-7 S/N 60001-UP (Overseas Version)
PRECLEANER (INNER PART)(#69710-)

Item	Part No.	Part Name	Qty	Serial No.
	423-U12-3101	PRE-CLEANER ASS'Y	1	69710-
	☐423-U12-3100	PRE-CLEANER	1	60001-69709
1	☆	・HOOD,PRECLEANER	1	69710-
2	423-U12-3330	・BODY,PRECLEANER	1	69710-
3	421-U12-3140	・CLAMP	1	60001-
4	423-U12-3350	・ROTOR	1	69710-
5	421-U12-3160	・BOLT	1	60001-
6	421-U12-3170	・RING,SNAP	2	60001-
7	421-U12-3181	・BEARING,BALL	2	69710-
8	421-U12-3190	・BUSHING,SPACER	1	69710-
9	421-U12-3410	・BUSHING,SPACER	1	69710-
10	421-U12-3420	・SHIELD	1	69710-
11	421-U12-3230	・NUT	1	60001-
12	421-U12-3240	・BOLT	4	60001-
13	421-U12-3250	・NUT	4	60001-
14	421-U12-3260	・PLUG	1	60001-
15	418-U12-3470	・WASHER,FLAT	1	69710-

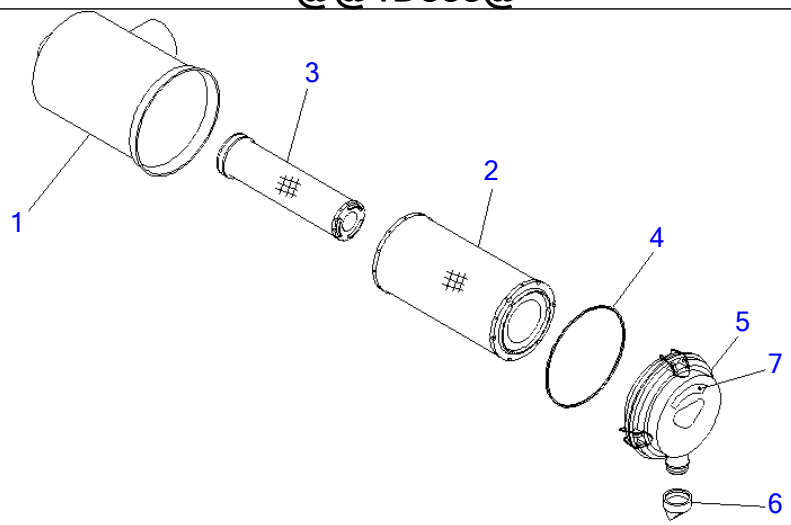

PJ1D888

Ref Y1011-01A2 **Page 480100**

PC220-7 S/N 60001-UP (Overseas Version)
AIR CLEANER (INNER PART)

Item	Part No.	Part Name	Qty	Serial No.
	6738-81-7500	AIR CLEANER ASS'Y	1	60001-
1	6738-81-7510	・BODY	1	60001-
	600-185-4100	・ELEMENT ASS'Y	1	60001-
2	600-185-4110	・・ELEMENT,OUTER	1	60001-
3	☆	・・ELEMENT,INNER	1	60001-
4	600-184-1470	・・O-RING	1	60001-
5	600-184-1420	・COVER ASS'Y	1	60001-
6	600-184-1350	・VALVE	1	60001-
7	600-181-1930	・PLATE, INSTRUCTION	1	60001-

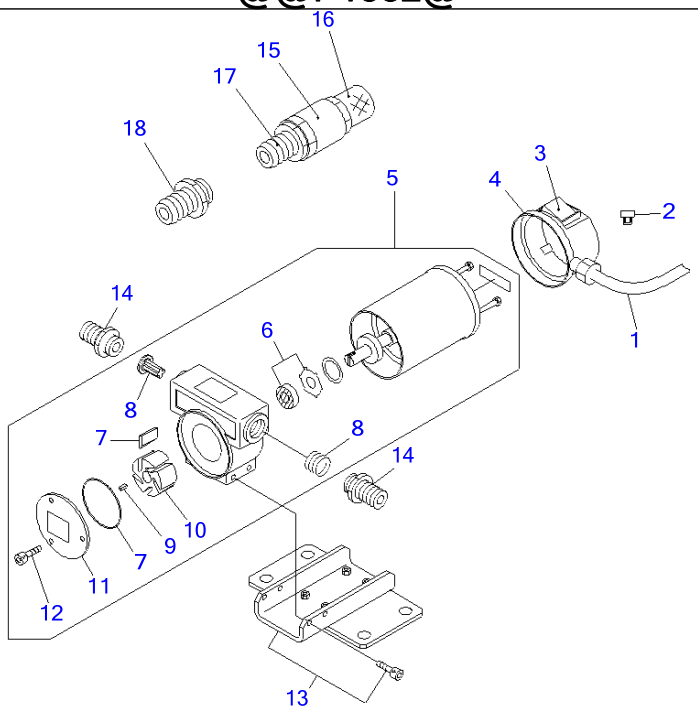

PWP1532

Ref Y1040-01A0 **Page 480110**

PC220-7 S/N 60001-UP (Overseas Version)

FUEL SELF CHARGE PUMP (INNER PARTS)(#60001-60624)

Item	Part No.	Part Name	Qty	Serial No.
	206-04-K1110	PUMP ASS'Y,REFUELLING	1	60001-60624
1	20Y-04-K2130	・CABLE KIT	1	60001-@
2	20Y-04-K2150	・FUSE, 15A	1	60001-@
3	20Y-04-K2160	・SWITCH	1	60001-@
4	20Y-04-K2170	・BOX	1	60001-@
5	20Y-04-K2180	・PUMP ASS'Y	1	60001-@
6	20Y-04-K2190	・・SEAL KIT	1	60001-@
7	20Y-04-K2210	・・VANE KIT	1	60001-@
8	20Y-04-K2220	・・VALVE KIT,BYPASS	1	60001-@
9	20Y-04-K2230	・・KEY	1	60001-@
10	20Y-04-K2240	・・ROTOR	1	60001-@
11	20Y-04-K2250	・・COVER	1	60001-@
12	20Y-04-K2260	・・SCREW	3	60001-@
13	20Y-04-K2280	・BRACKET	1	60001-@
14	20Y-04-K2290	・ADAPTER	2	60001-60624
15	20Y-04-K2310	・VALVE	1	60001-60624
16	20Y-04-K2320	・FILTER	1	60001-60624
17	20Y-04-K2330	・ADAPTER	1	60001-60624
18	20Y-04-K2340	・ADAPTER	1	60001-60624

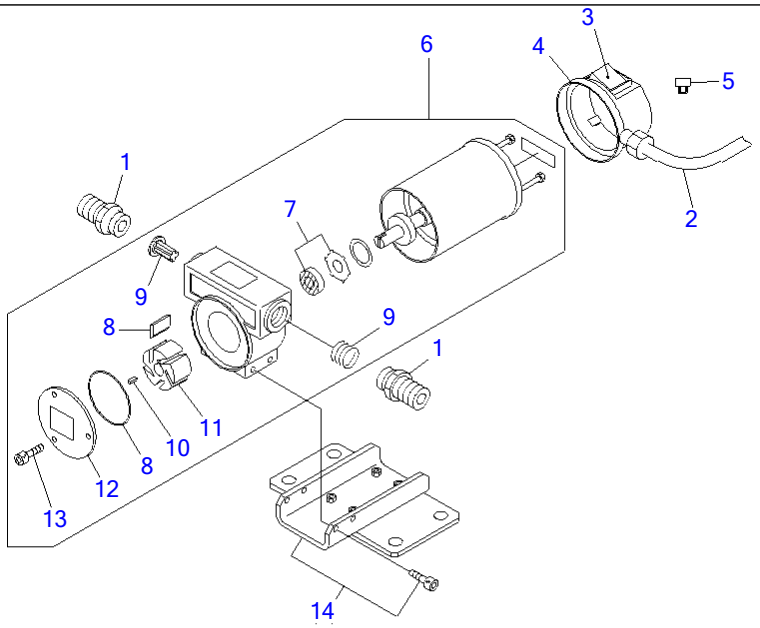

00005239

Ref Y1040-01A0A **Page 480120**

PC220-7 S/N 60001-UP (Overseas Version)

FUEL SELF CHARGE PUMP (INNER PARTS)(#60625-)

Item	Part No.	Part Name	Qty	Serial No.
	21K-04-K1130	PUMP ASS'Y,REFUELLING	1	68829-
	206-04-K1111	PUMP ASS'Y	1	60625-68828
1	20Y-04-K2090	・ADAPTER	2	60625-
2	20Y-04-K2130	・CABLE KIT	1	60001-
3	20Y-04-K2160	・・SWITCH	1	60001-
4	20Y-04-K2170	・・BOX	1	60001-
5	20Y-04-K2150	・FUSE, 15A	1	60001-
6	20Y-04-K2180	・PUMP ASS'Y	1	60001-
7	20Y-04-K2190	・・SEAL KIT	1	60001-
8	20Y-04-K2210	・・VANE KIT	1	60001-
9	20Y-04-K2220	・・VALVE KIT,BYPASS	1	60001-
10	20Y-04-K2230	・・KEY	1	60001-
11	20Y-04-K2240	・・ROTOR	1	60001-
12	20Y-04-K2250	・・COVER	1	60001-
13	20Y-04-K2260	・・SCREW	3	60001-
14	20Y-04-K2280	・BRACKET	1	60001-

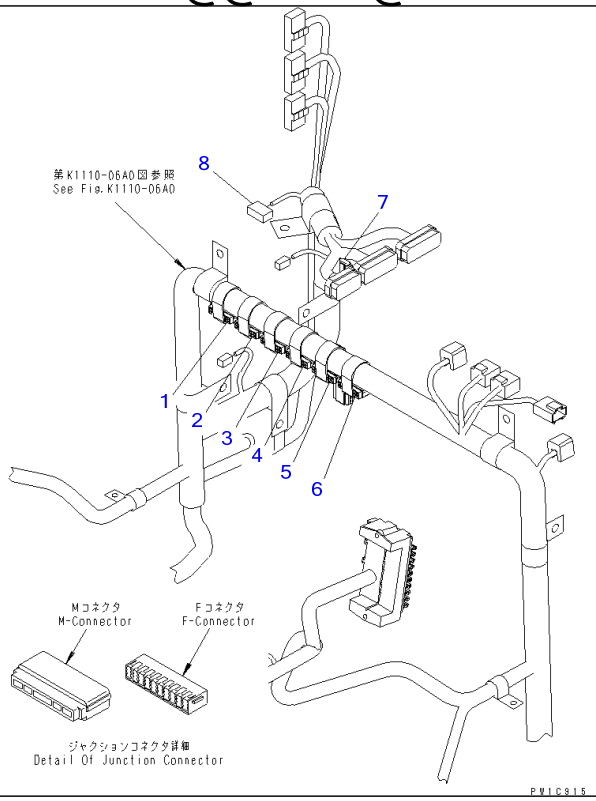

Ref Y1061-01A0 Page 480130

PC220-7 S/N 60001-UP (Overseas Version)

WIRING HARNESS (JUNCTION CONNECTOR) (FOR SUPPLY)

Item	Part No.	Part Name	Qty	Serial No.
	(20Y-06-31110)	WIRING HARNESS	1	60001-
1	☆	・JUNCTION CONNECTOR,BLACK (CN-J01)	1	60001-
	HM6400-0012	・・F-CONNECTOR, BLACK	1	60001-
	HM6409-0071	・・M-CONNECTOR, BLACK	1	60001-
2	☆	・JUNCTION CONNECTOR,BLACK (CN-J02)	1	60001-
	HM6400-0012	・・F-CONNECTOR, BLACK	1	60001-
	HM6409-0071	・・M-CONNECTOR, BLACK	1	60001-
3	☆	・JUNCTION CONNECTOR,ORANGE (CN-J03)	1	60001-
	HM6400-0013	・・F-CONNECTOR, GREEN	1	60001-
	HM6409-0072	・・M-CONNECTOR, GREEN	1	60001-
4	☆	・JUNCTION CONNECTOR,GREEN (CN-J04)	1	60001-
	HM6400-0013	・・F-CONNECTOR, GREEN	1	60001-
	HM6409-0072	・・M-CONNECTOR, GREEN	1	60001-
5	☆	・JUNCTION CONNECTOR,PINK (CN-J05)	1	60001-
	HM6440-0129	・・F-CONNECTOR, PINK	1	60001-
	HM6440-0128	・・M-CONNECTOR, PINK	1	60001-
6	☆	・JUNCTION CONNECTOR,ORANGE (CN-J06)	1	60001-
	HM6400-0016	・・F-CONNECTOR, ORANGE	1	60001-
	HM6409-0075	・・M-CONNECTOR, ORANGE	1	60001-
7	☆	・JUNCTION CONNECTOR,ORANGE (CN-J07)	1	60001-
	HM6400-0016	・・F-CONNECTOR, ORANGE	1	60001-
	HM6409-0075	・・M-CONNECTOR, ORANGE	1	60001-
8	☆	・JUNCTION CONNECTOR,PINK (CN-J08)	1	60001-
	HM6440-0129	・・F-CONNECTOR, PINK	1	60001-
	HM6440-0128	・・M-CONNECTOR, PINK	1	60001-

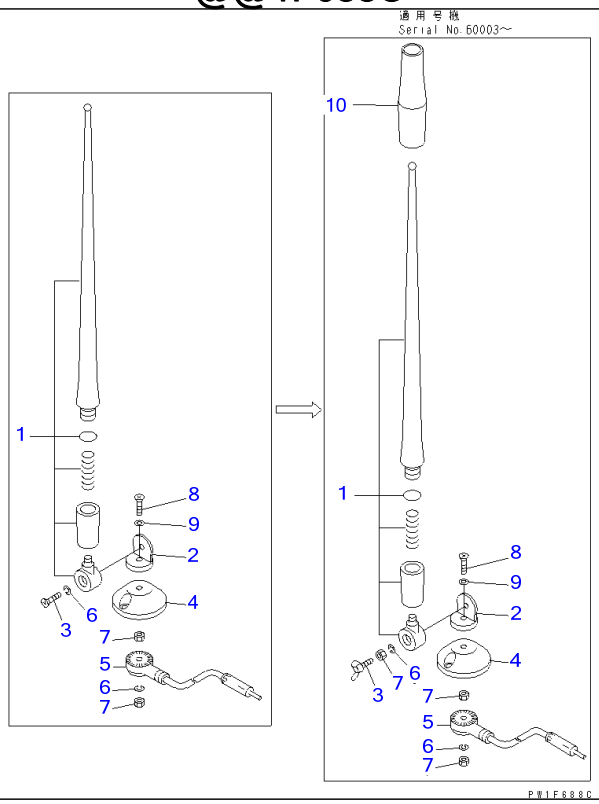

Ref Y1062-01A0 **Page 480140**

PC220-7 S/N 60001-UP (Overseas Version)
RUBBER ANTENNA(#60001-68116)

Item	Part No.	Part Name	Qty	Serial No.
	198-Z11-4610	RUBBER ANTENNA	1	60003-68116
	362-56-42261	RUBBER ANTENNA	1	60001-60002
1	EP72-540-901	・RUBBER ELEMENT ASS'Y	1	60003-68116
	□EP72-520-901	・RUBBER ELEMENT ASS'Y	1	60001-60002
2	☆	・HOLDER	1	60001-68116
3	EP23-141-001	・WING BOLT	1	60003-68116
	■EP23-257-015	・SCREW (EP23-141-001,EP23-141-003 EP23-141-004	1	60001-60002
4	☆	・BASE	1	60001-68116
5	☆	・CORD ASS'Y	1	60001-68116
6	EP23-141-003	・SPRING WASHER	2	60003-68116
	☆	・SPRING WASHER	2	60001-60002
7	EP23-141-004	・NUT	3	60003-68116
	☆	・NUT	2	60001-60002
8	☆	・SCREW	1	60001-68116
9	☆	・WASHER	1	60001-68116
10	☆	・TUBE	1	60003-68116

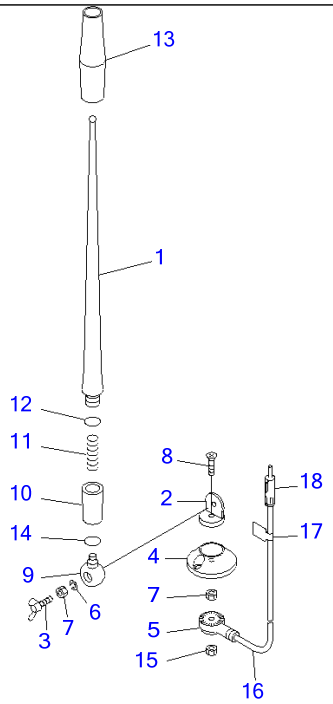

00084650

Ref Y1062-01A0A **Page 480150**

PC220-7 S/N 60001-UP (Overseas Version)
RUBBER ANTENNA(#68117-)

Item	Part No.	Part Name	Qty	Serial No.
	20Y-06-41990	RUBBER ANTENNA	1	68117-
1	RFU419B-418-A	・ROD	1	68117-
2	☆	・HOLDER	1	68117-
3	RFU419B-418-D	・BOLT, WING	1	68117-
4	RFU419B-418-E	・BASE	1	68117-
5	☆	・HOLDER	1	68117-
6	RFU419B-418-B	・SPRING WASHER	1	68117-
7	RFU419B-418-C	・NUT	2	68117-
8	☆	・SCREW	1	68117-
9	☆	・HOLDER	1	68117-
10	☆	・HOLDER ASS'Y	1	68117-
11	☆	・SPRING	1	68117-
12	☆	・O-RING	1	68117-
13	☆	・TUBE	1	68117-
14	☆	・O-RING	1	68117-
15	REU419B-418-C	・NUT	1	68117-
16	RFU419B-418-F	・CABLE	1	68117-
17	☆	・PLATE	1	68117-
18	☆	・PLUG	1	68117-

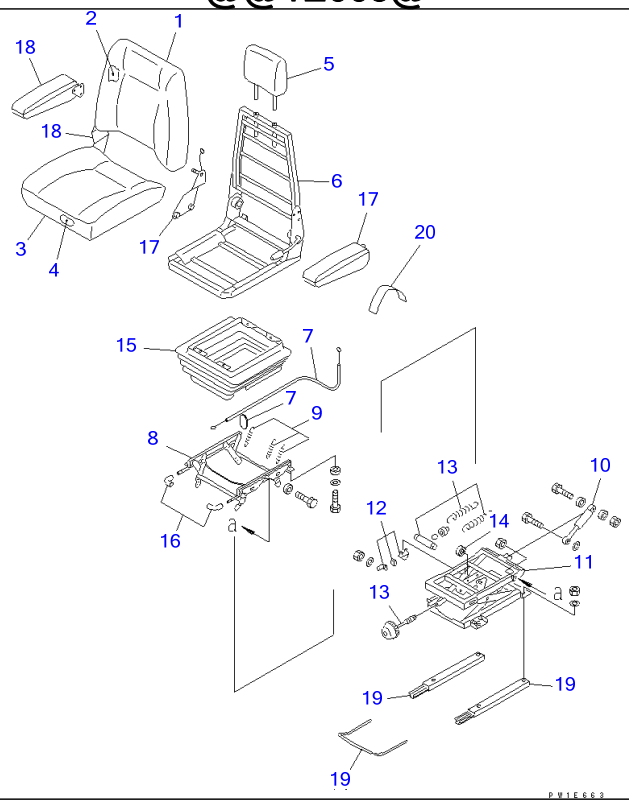

Ref Y1570-01A1 **Page 480160**

PC220-7 S/N 60001-UP (Overseas Version)

OPERATOR'S SEAT ASS'Y (SUSPENSION)

Item	Part No.	Part Name	Qty	Serial No.
	20Y-57-31100	SEAT ASS'Y	1	60001-
	AS186829	・SEAT	1	60001-
1	AS182431	・・SEAT	1	60001-
2	AS160430	・・FRAME	1	60001-
3	AS182432	・・SEAT	1	60001-
4	AS160432	・・SEAT	1	60001-
5	AS182326	・REST	1	60001-
6	AS170691	・FRAME	1	60001-
7	AS162032	・CABLE KIT	1	60001-
8	AS186830	・HEIGHT RISER KIT	1	60001-
9	AS162056	・SPRING KIT	1	60001-
10	AS156718	・DAMPER ASS'Y	1	60001-
11	AS186831	・SUSPENSION ASS'Y	1	60001-
12	AS156717	・UP STOP/BUMP STOP K.	1	60001-
13	AS156737	・WEIGHT ADJUSTER KIT	1	60001-
14	AS156738	・BEARING KIT	1	60001-
15	AS186832	・COVER	1	60001-
16	AS186833	・HANDLE KIT	1	60001-
17	AS186834	・ARMREST	1	60001-
18	AS186835	・ARMREST	1	60001-
19	AS186836	・RAIL	1	60001-
20	AS172287	・PLATE	1	60001-

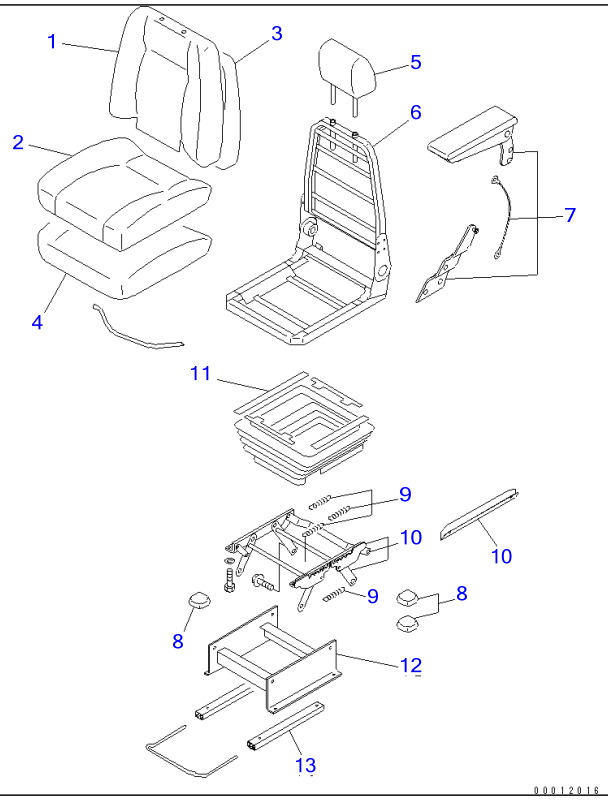

Ref Y1570-01A2 **Page 480170**

PC220-7 S/N 60001-UP (Overseas Version)
OPERATOR'S SEAT ASS'Y (FABRIC SEAT)

Item	Part No.	Part Name	Qty	Serial No.
	20Y-57-31201	SEAT ASS'Y,(WITH HEAD REST COVER)	1	68831-
	☐20Y-57-31200	SEAT ASS'Y	1	60001-68830
	AS189395	・UPPER ASS'Y	1	60001-
1	AS182431	・・SEAT	1	60001-
2	AS182432	・・SEAT	1	60001-
3	AS160430	・・FRAME	1	60001-
4	AS160432	・・SEAT	1	60001-
5	AS182326	・REST	1	60001-
6	AS170691	・FRAME	1	60001-
7	AS186834	・ARMREST,L.H.	1	60001-
	AS186835	・ARMREST,R.H.	1	60001-
8	AS186833	・HANDLE KIT	1	60001-
9	AS160122	・HI RISER SPRING KIT	1	60001-
10	AS186830	・HEIGHT RISER KIT	1	60001-
11	AS189401	・SUSPENSION COVER KIT	1	60001-
12	AS164968	・PLINTH KIT	1	60001-
13	AS189402	・ADJUSTMENT KIT	1	60001-

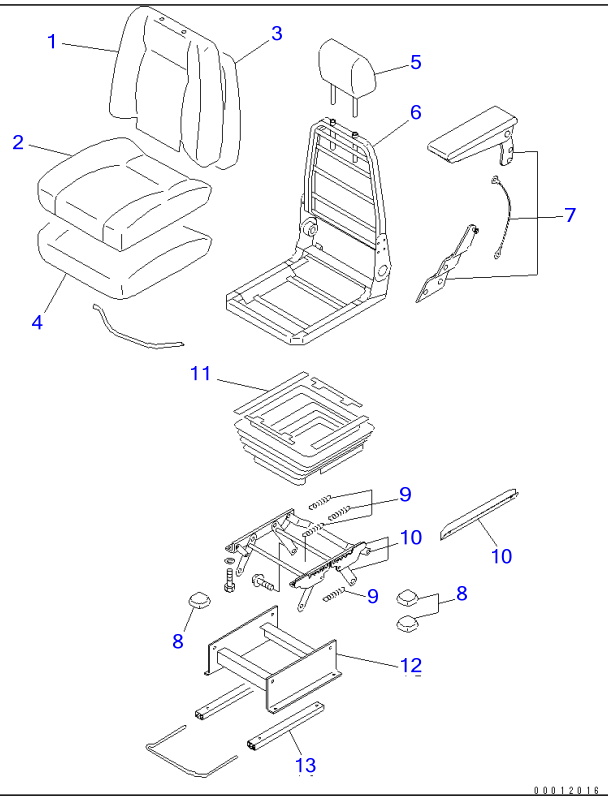

Ref Y1570-01A3 **Page 480180**

PC220-7 S/N 60001-UP (Overseas Version)

OPERATOR'S SEAT ASS'Y (LEATHER SEAT)

Item	Part No.	Part Name	Qty	Serial No.
	20Y-57-31400	SEAT ASS'Y	1	60001-
	AS189985	・UPPER ASS'Y	1	60001-
1	AS189988	・・BACK COVER KIT	1	60001-
2	AS189989	・・SEAT COVER KIT	1	60001-
3	AS160430	・・FRAME	1	60001-
4	AS160432	・・SEAT	1	60001-
5	AS169317	・HEAD REST KIT	1	60001-
6	AS170691	・FRAME	1	60001-
7	AS186834	・ARMREST,L.H.	1	60001-
	AS186835	・ARMREST,R.H.	1	60001-
8	AS186833	・HANDLE KIT	1	60001-
9	AS160122	・HI RISER SPRING KIT	1	60001-
10	AS186830	・HEIGHT RISER KIT	1	60001-
11	AS189401	・SUSPENSION COVER KIT	1	60001-
12	AS164968	・PLINTH KIT	1	60001-
13	AS189402	・ADJUSTMENT KIT	1	60001-

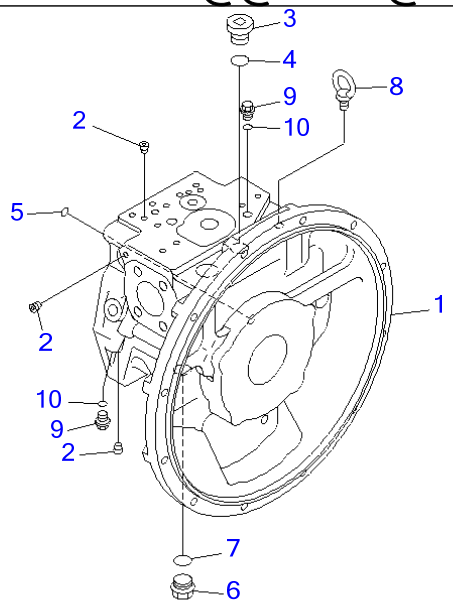

PJ5A189

Ref Y1600-01A0 **Page 480190**

PC220-7 S/N 60001-UP (Overseas Version)
PISTON PUMP (1/11)

Item	Part No.	Part Name	Qty	Serial No.
	708-2L-00112	PUMP ASS'Y THIS ASSEMBLY CONSISTS OF ALL PARTS SHOWN IN FIGS.Y1600-01A0 T0 Y1600-11A0.	1	60001-
	708-2L-01151	・PUMP SUB ASS'Y	1	60001-
	(★708-2L-06112)	・・CASE ASS'Y,FRONT	1	60001-
1	☆	・・・CASE,FRONT	1	60001-
2	☆	・・・PLUG	32	60001-
3	07040-12414	・・PLUG	1	60001-
4	07002-62434	・・O-RING	1	60001-
5	(★07000-B1009)	・・O-RING	1	60001-
6	07044-12412	・・PLUG	1	60001-
7	07002-62434	・・O-RING	1	60001-
8	04530-11222	・・BOLT,EYE	1	60001-
9	708-8E-16150	・・PLUG	2	60001-
10	07002-61023	・・O-RING	2	60001-

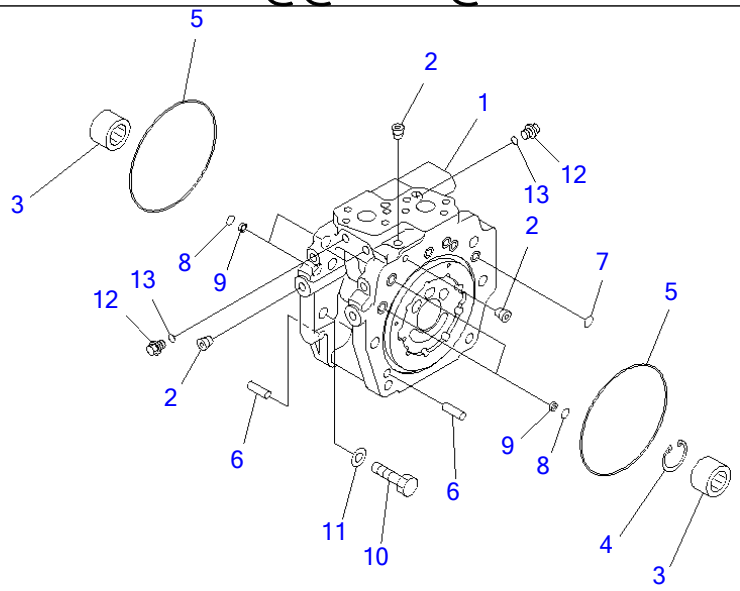

PJ5A190

Ref Y1600-02A0 **Page 480200**

PC220-7 S/N 60001-UP (Overseas Version)
PISTON PUMP (2/11)

Item	Part No.	Part Name	Qty	Serial No.
	(708-2L-00112)	PUMP ASS'Y THIS ASSEMBLY CONSISTS OF ALL PARTS SHOWN IN FIGS.Y1600-01A0 T0 Y1600-11A0.	1	60001-
	(708-2L-01151)	・PUMP SUB ASS'Y	1	60001-
	(★708-2L-06121)	・・CAP ASS'Y,END	1	60001-
1	☆	・・・CAP,END	1	60001-
2	☆	・・・PLUG	15	60001-
3	(★708-2L-32260)	・・BEARING	2	60001-
4	(★708-2L-22271)	・・RING,SNAP	1	60001-
5	(★07000-A5165)	・・O-RING	2	60001-
6	(★04020-01228)	・・PIN	2	60001-
7	(★07000-B2012)	・・O-RING	7	60001-
8	(★07000-B2014)	・・O-RING	4	60001-
9	(★708-2L-25480)	・・FILTER	4	60001-
10	(★01010-61450)	・・BOLT	12	60001-
11	(★01643-31445)	・・WASHER	12	60001-
12	708-8E-16150	・・PLUG	3	60001-
13	07002-61023	・・O-RING	3	60001-

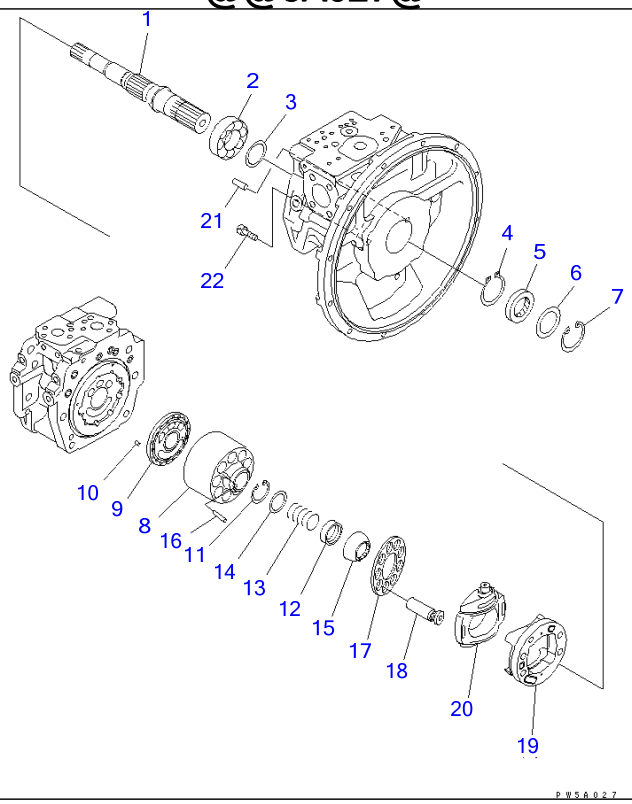

Ref Y1600-03A0 **Page 480210**

PC220-7 S/N 60001-UP (Overseas Version)
PISTON PUMP (3/11)

Item	Part No.	Part Name	Qty	Serial No.
	(708-2L-00112)	PUMP ASS'Y THIS ASSEMBLY CONSISTS OF ALL PARTS SHOWN IN FIGS.Y1600-01A0 T0 Y1600-11A0.	1	60001-
	(708-2L-01151)	・PUMP SUB ASS'Y	1	60001-
1	(★708-2L-32110)	・・SHAFT,FRONT	1	60001-
2	(★708-2L-32150)	・・BEARING	1	60001-
3	(★708-2E-05040)	・・WASHER KIT	1	60001-
	☆	・・・WASHER, 3.1MM	1	60001-
	☆	・・・WASHER, 3.0MM	1	60001-
	☆	・・・WASHER, 2.9MM	1	60001-
	☆	・・・WASHER, 2.8MM	1	60001-
4	(★708-25-12790)	・・RING,SNAP	1	60001-
5	708-25-52861	・・SEAL,OIL	1	60001-
6	708-2L-22160	・・SPACER	1	60001-
7	04065-06825	・・RING,SNAP	1	60001-
	(★708-2L-06340)	・・BLOCK ASS'Y,FRONT	1	60001-
8	☆	・・・BLOCK,CYLINDER	1	60001-
9	☆	・・・PLATE,VALVE	1	60001-
10	(★720-68-19610)	・・PIN	1	60001-
11	(★04065-04818)	・・RING,SNAP	1	60001-
12	(★708-2L-23131)	・・SEAT	1	60001-
13	(★708-2L-33160)	・・SPRING	1	60001-
14	(★708-7L-13140)	・・SEAT	1	60001-
15	(★708-2L-23351)	・・GUIDE,RETAINER	1	60001-
16	(★708-2L-23360)	・・PIN	3	60001-
17	(★708-2L-33350)	・・RETAINER,SHOE	1	60001-
18	(★708-2L-33310)	・・PISTON SUB ASS'Y	9	60001-
	(★708-2L-06190)	・・CRADLE ASS'Y	1	60001-

PISTON PUMP (3/11)

Item	Part No.	Part Name	Qty	Serial No.
19	☆	・・・CRADLE	1	60001-
20	☆	・・・CAM,ROCKER	1	60001-
21	(★04020-01228)	・・PIN	1	60001-
22	(★01252-61230)	・・BOLT	4	60001-

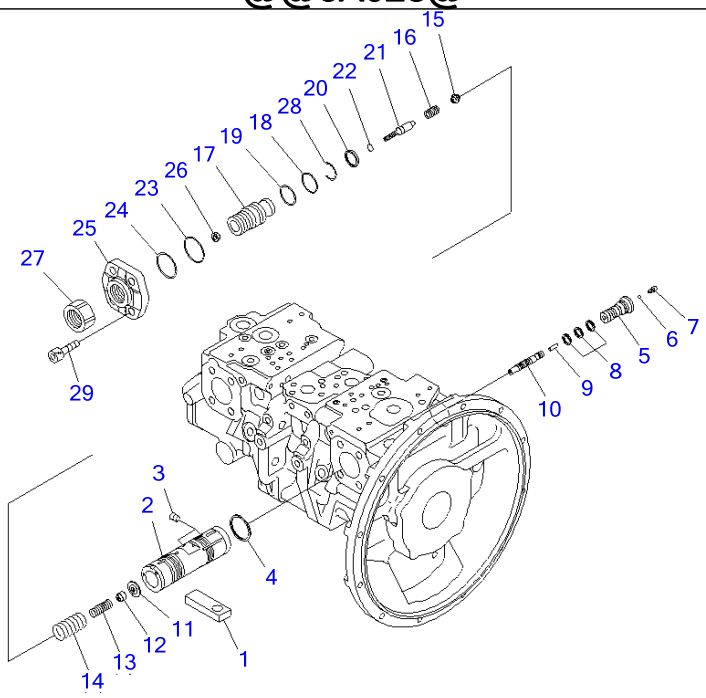

P W 5 A 0 2 8

Ref Y1600-04A0 **Page 480220**

PC220-7 S/N 60001-UP (Overseas Version)
PISTON PUMP (4/11)

Item	Part No.	Part Name	Qty	Serial No.
	(708-2L-00112)	PUMP ASS'Y THIS ASSEMBLY CONSISTS OF ALL PARTS SHOWN IN FIGS.Y1600-01A0 T0 Y1600-11A0.	1	60001-
	(708-2L-01151)	・PUMP SUB ASS'Y	1	60001-
1	(★708-2L-34120)	・・SLIDER	1	60001-
	(★708-2L-06410)	・・VALVE ASS'Y,PC	1	60001-
	(★708-2L-06520)	・・・PISTON ASS'Y,SERVO	1	60001-
2	☆	・・・・PISTON,SERVO	1	60001-
3	☆	・・・・PLUG	9	60001-
4	(★708-2L-35680)	・・・SEAL	1	60001-
5	(★708-2L-35622)	・・・PLUG	1	60001-
6	(★708-2L-35760)	・・・BALL	1	60001-
7	(★708-2L-35770)	・・・PLUG	1	60001-
8	(★708-2L-35690)	・・・SEAL	3	60001-
9	(★708-2L-35170)	・・・PIN	1	60001-
10	(★708-2L-35220)	・・・SPOOL	1	60001-
11	(★708-2L-35630)	・・・RETAINER	1	60001-
12	(★708-2L-35641)	・・・SEAT	1	60001-
13	(★708-2L-35720)	・・・SPRING	1	60001-
14	(★708-2L-35730)	・・・SPRING	1	60001-
15	(★708-2L-35650)	・・・SEAT	1	60001-
16	(★708-2L-35740)	・・・SPRING	1	60001-
17	(★708-2L-34250)	・・・SCREW	1	60001-
18	(★07000-B3034)	・・・O-RING	1	60001-
19	(★708-2L-35210)	・・・RING	1	60001-
20	(★708-2L-35710)	・・・SEAL	1	60001-
21	(★708-2L-35660)	・・・PLUG	1	60001-
22	(★07000-B2010)	・・・O-RING	1	60001-

PISTON PUMP (4/11)

Item	Part No.	Part Name	Qty	Serial No.
23	(★07000-B3045)	・・・O-RING	1	60001-
24	(★708-2L-35750)	・・・RING	1	60001-
25	(★708-2L-34230)	・・・COVER	1	60001-
26	(★01580-10806)	・・・NUT	1	60001-
27	(★708-2L-35870)	・・・NUT	1	60001-
28	(★708-2L-35670)	・・・RING,WIRE	1	60001-
29	(★01252-61440)	・・BOLT	4	60001-

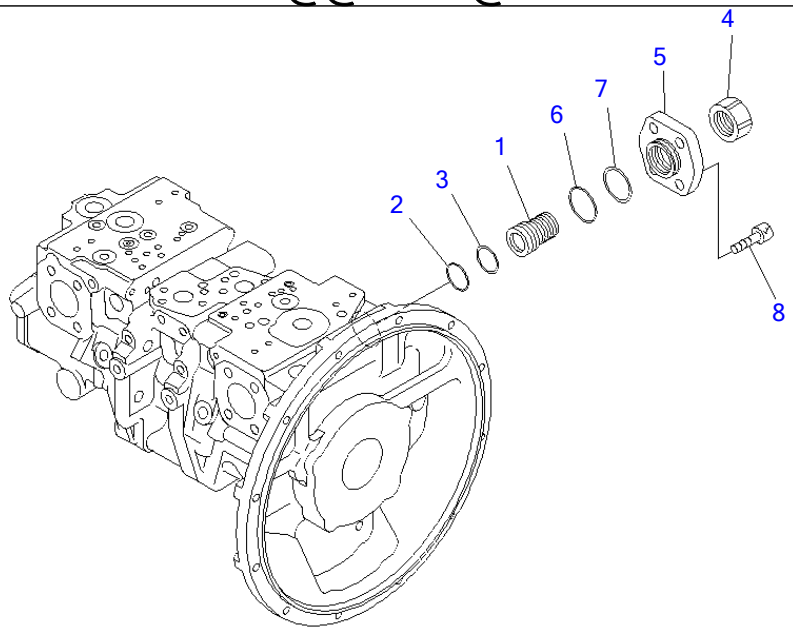

PW5A029

Ref Y1600-05A0 **Page 480230**

PC220-7 S/N 60001-UP (Overseas Version)
PISTON PUMP (5/11)

Item	Part No.	Part Name	Qty	Serial No.
	(708-2L-00112)	PUMP ASS'Y THIS ASSEMBLY CONSISTS OF ALL PARTS SHOWN IN FIGS.Y1600-01A0 T0 Y1600-11A0.	1	60001-
	(708-2L-01151)	・PUMP SUB ASS'Y	1	60001-
	(★708-2L-06530)	・・COVER ASS'Y	1	60001-
1	(★708-2L-34270)	・・・SCREW	1	60001-
2	(★07000-B3034)	・・・O-RING	1	60001-
3	(★708-2L-35210)	・・・RING	1	60001-
4	(★708-2L-35870)	・・・NUT	1	60001-
5	(★708-2L-34260)	・・・COVER	1	60001-
6	(★07000-B3045)	・・・O-RING	1	60001-
7	(★708-2L-35750)	・・・RING	1	60001-
8	(★01252-61440)	・・BOLT	4	60001-

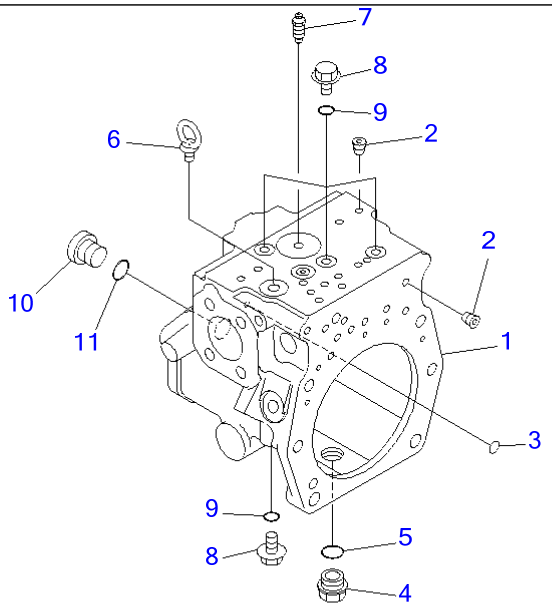

00014386

Ref Y1600-06A0 **Page 480240**

PC220-7 S/N 60001-UP (Overseas Version)
PISTON PUMP (6/11)

Item	Part No.	Part Name	Qty	Serial No.
	(708-2L-00112)	PUMP ASS'Y THIS ASSEMBLY CONSISTS OF ALL PARTS SHOWN IN FIGS.Y1600-01A0 T0 Y1600-11A0.	1	60001-
	(708-2L-01151)	・PUMP SUB ASS'Y	1	60001-
	(★708-2L-06211)	・・CASE ASS'Y,REAR	1	60001-
1	☆	・・・CASE,REAR	1	60001-
2	☆	・・・PLUG	35	60001-
3	(★07000-B1009)	・・O-RING	1	60001-
4	07044-12412	・・PLUG	1	60001-
5	07002-62434	・・O-RING	1	60001-
6	04530-11222	・・BOLT,EYE	1	60001-
7	20B-27-11210	・・BLEEDER	1	60001-
8	708-8E-16150	・・PLUG	4	60001-
9	07002-61023	・・O-RING	4	60001-
10	07040-12414	・・PLUG	1	60001-
11	07002-62434	・・O-RING	1	60001-

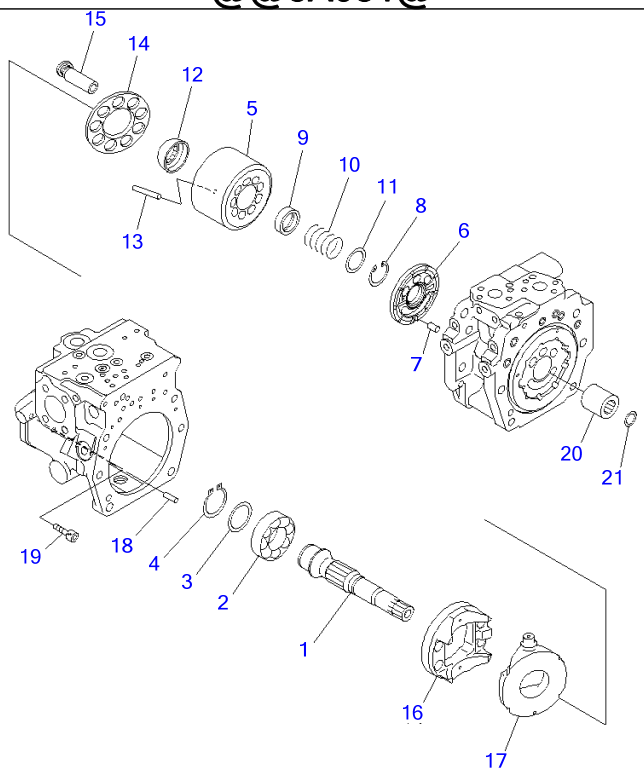

Ref Y1600-07A0 **Page 480250**

PC220-7 S/N 60001-UP (Overseas Version)
PISTON PUMP (7/11)

Item	Part No.	Part Name	Qty	Serial No.
	(708-2L-00112)	PUMP ASS'Y THIS ASSEMBLY CONSISTS OF ALL PARTS SHOWN IN FIGS.Y1600-01A0 T0 Y1600-11A0.	1	60001-
	(708-2L-01151)	・PUMP SUB ASS'Y	1	60001-
1	(★708-2L-32130)	・・SHAFT,REAR	1	60001-
2	(★708-2L-32150)	・・BEARING	1	60001-
3	(★708-2E-05040)	・・WASHER KIT	1	60001-
	☆	・・・WASHER, 3.1MM	1	60001-
	☆	・・・WASHER, 3.0MM	1	60001-
	☆	・・・WASHER, 2.9MM	1	60001-
	☆	・・・WASHER, 2.8MM	1	60001-
4	(★708-25-12790)	・・RING,SNAP	1	60001-
	(★708-2L-06350)	・・BLOCK ASS'Y,REAR	1	60001-
5	☆	・・・BLOCK,CYLINDER	1	60001-
6	☆	・・・PLATE,VALVE	1	60001-
7	(★720-68-19610)	・・PIN	1	60001-
8	(★04065-04818)	・・RING,SNAP	1	60001-
9	(★708-2L-23131)	・・SEAT	1	60001-
10	(★708-2L-33160)	・・SPRING	1	60001-
11	(★708-7L-13140)	・・SEAT	1	60001-
12	(★708-2L-23351)	・・GUIDE,RETAINER	1	60001-
13	(★708-2L-23360)	・・PIN	3	60001-
14	(★708-2L-33350)	・・RETAINER,SHOE	1	60001-
15	(★708-2L-33310)	・・PISTON SUB ASS'Y	9	60001-
	(★708-2L-06190)	・・CRADLE ASS'Y	1	60001-
16	☆	・・・CRADLE	1	60001-
17	☆	・・・CAM,ROCKER	1	60001-
18	(★04020-01228)	・・PIN	1	60001-

PISTON PUMP (7/11)

Item	Part No.	Part Name	Qty	Serial No.
19	(★01252-61230)	・・BOLT	4	60001-
20	(★708-2L-22130)	・・COUPLING	1	60001-
21	(★708-2E-12140)	・・RING	1	60001-

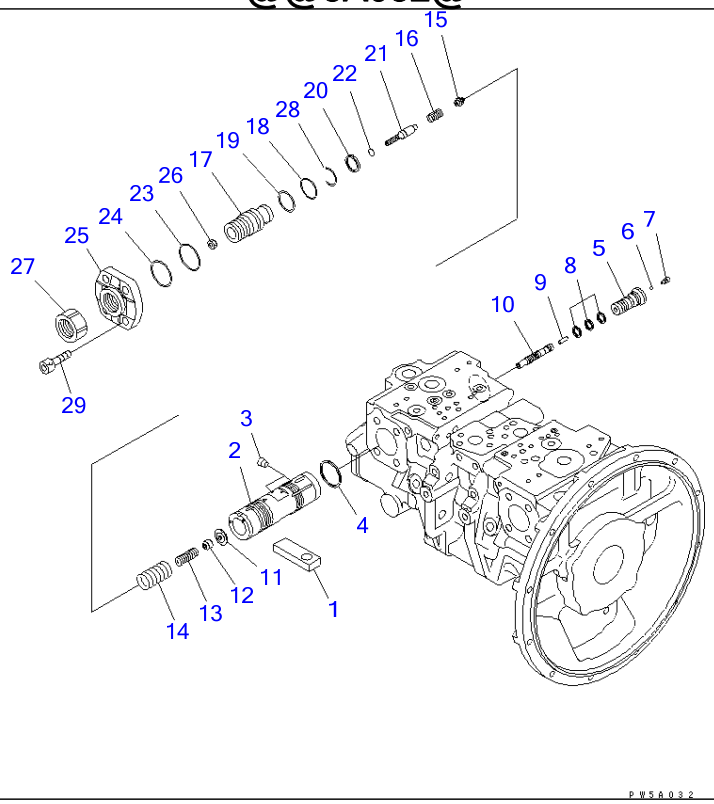

Ref Y1600-08A0 **Page 480260**

PC220-7 S/N 60001-UP (Overseas Version)
PISTON PUMP (8/11)

Item	Part No.	Part Name	Qty	Serial No.
	(708-2L-00112)	PUMP ASS'Y THIS ASSEMBLY CONSISTS OF ALL PARTS SHOWN IN FIGS.Y1600-01A0 T0 Y1600-11A0.	1	60001-
	(708-2L-01151)	・PUMP SUB ASS'Y	1	60001-
1	(★708-2L-34120)	・・SLIDER	1	60001-
	(★708-2L-06410)	・・VALVE ASS'Y,PC	1	60001-
	(★708-2L-06520)	・・・PISTON ASS'Y,SERVO	1	60001-
2	☆	・・・・PISTON,SERVO	1	60001-
3	☆	・・・・PLUG	9	60001-
4	(★708-2L-35680)	・・・SEAL	1	60001-
5	(★708-2L-35622)	・・・PLUG	1	60001-
6	(★708-2L-35760)	・・・BALL	1	60001-
7	(★708-2L-35770)	・・・PLUG	1	60001-
8	(★708-2L-35690)	・・・SEAL	3	60001-
9	(★708-2L-35170)	・・・PIN	1	60001-
10	(★708-2L-35220)	・・・SPOOL	1	60001-
11	(★708-2L-35630)	・・・RETAINER	1	60001-
12	(★708-2L-35641)	・・・SEAT	1	60001-
13	(★708-2L-35720)	・・・SPRING	1	60001-
14	(★708-2L-35730)	・・・SPRING	1	60001-
15	(★708-2L-35650)	・・・SEAT	1	60001-
16	(★708-2L-35740)	・・・SPRING	1	60001-
17	(★708-2L-34250)	・・・SCREW	1	60001-
18	(★07000-B3034)	・・・O-RING	1	60001-
19	(★708-2L-35210)	・・・RING	1	60001-
20	(★708-2L-35710)	・・・SEAL	1	60001-
21	(★708-2L-35660)	・・・PLUG	1	60001-
22	(★07000-B2010)	・・・O-RING	1	60001-

PISTON PUMP (8/11)

Item	Part No.	Part Name	Qty	Serial No.
23	(★07000-B3045)	・・・O-RING	1	60001-
24	(★708-2L-35750)	・・・RING	1	60001-
25	(★708-2L-34230)	・・・COVER	1	60001-
26	(★01580-10806)	・・・NUT	1	60001-
27	(★708-2L-35870)	・・・NUT	1	60001-
28	(★708-2L-35670)	・・・RING,WIRE	1	60001-
29	(★01252-61440)	・・BOLT	4	60001-

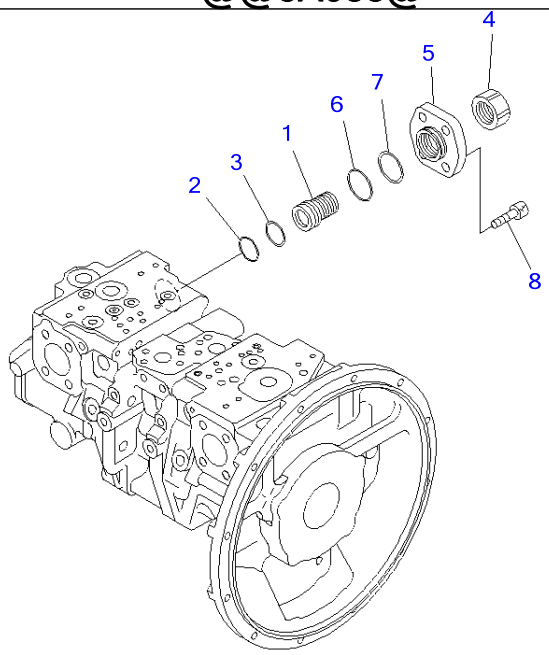

P W 5 A 0 3 3

Ref Y1600-09A0 **Page 480270**

PC220-7 S/N 60001-UP (Overseas Version)
PISTON PUMP (9/11)

Item	Part No.	Part Name	Qty	Serial No.
	(708-2L-00112)	PUMP ASS'Y THIS ASSEMBLY CONSISTS OF ALL PARTS SHOWN IN FIGS.Y1600-01A0 T0 Y1600-11A0.	1	60001-
	(708-2L-01151)	・PUMP SUB ASS'Y	1	60001-
	(★708-2L-06530)	・・COVER ASS'Y	1	60001-
1	(★708-2L-34270)	・・・SCREW	1	60001-
2	(★07000-B3034)	・・・O-RING	1	60001-
3	(★708-2L-35210)	・・・RING	1	60001-
4	(★708-2L-35870)	・・・NUT	1	60001-
5	(★708-2L-34260)	・・・COVER	1	60001-
6	(★07000-B3045)	・・・O-RING	1	60001-
7	(★708-2L-35750)	・・・RING	1	60001-
8	(★01252-61440)	・・BOLT	4	60001-

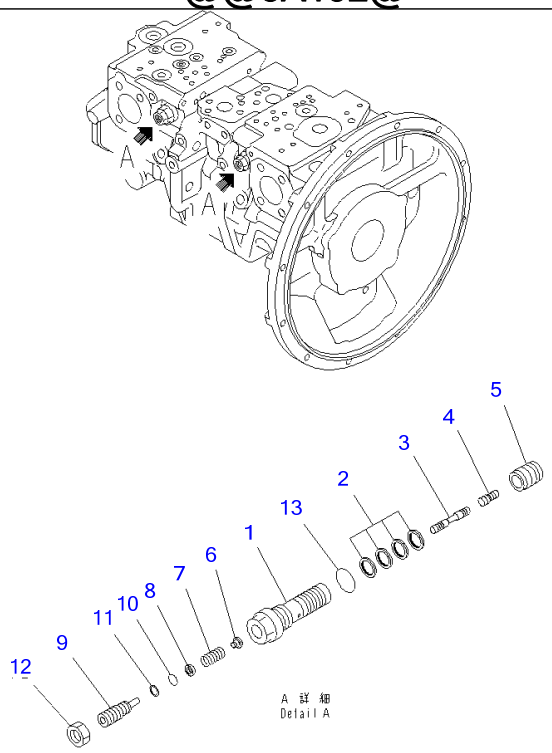

Ref Y1600-10A0 **Page 480280**

PC220-7 S/N 60001-UP (Overseas Version)
PISTON PUMP (10/11)

Item	Part No.	Part Name	Qty	Serial No.
	(708-2L-00112)	PUMP ASS'Y THIS ASSEMBLY CONSISTS OF ALL PARTS SHOWN IN FIGS.Y1600-01A0 T0 Y1600-11A0.	1	60001-
	708-2L-06710	・VALVE ASS'Y,LS	2	60001-
1	(★708-2L-35311)	・・SLEEVE	1	60001-
2	708-2L-24680	・・SEAL	4	60001-
3	(★708-2L-35430)	・・SPOOL	1	60001-
4	(★708-2L-28540)	・・PISTON	1	60001-
5	(★708-2L-35360)	・・SLEEVE	1	60001-
6	(★708-2L-35331)	・・SEAT	1	60001-
7	(★708-2L-35410)	・・SPRING	1	60001-
8	(★708-2L-35341)	・・SEAT	1	60001-
9	(★708-2L-35351)	・・PLUG	1	60001-
10	(★07000-B1009)	・・O-RING	1	60001-
11	(★07001-01009)	・・RING,BACK-UP	1	60001-
12	01583-11408	・・NUT	1	60001-
13	07002-62434	・・O-RING	1	60001-

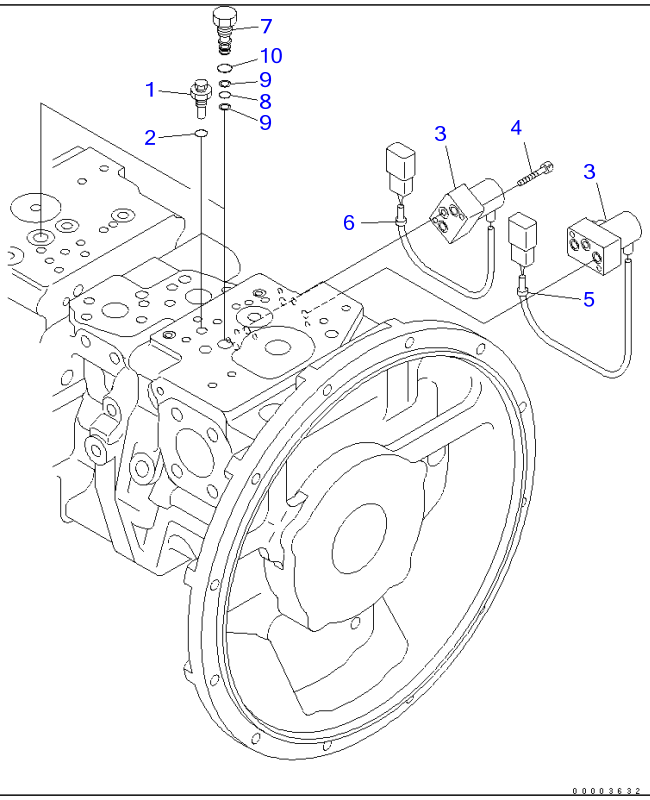

Ref Y1600-11A0 **Page 480290**

PC220-7 S/N 60001-UP (Overseas Version)
PISTON PUMP (11/11)

Item	Part No.	Part Name	Qty	Serial No.
	(708-2L-00112)	PUMP ASS'Y THIS ASSEMBLY CONSISTS OF ALL PARTS SHOWN IN FIGS.Y1600-01A0 T0 Y1600-11A0.	1	60001-
1	708-2L-35530	・PLUG	1	60001-
2	07002-61023	・O-RING	1	60001-
3	702-21-55901	・PILOT VALVE	2	60001-
4	01252-60635	・BOLT	4	60001-
5	20Y-62-22790	・BAND, RED	1	60001-
6	20Y-62-22830	・BAND, WHITE	1	60001-
7	(★708-2L-35941)	・PLUG	2	60001-
8	07000-B1008	・O-RING	2	60001-
9	07001-01008	・RING	4	60001-
10	07002-61423	・O-RING	2	60001-

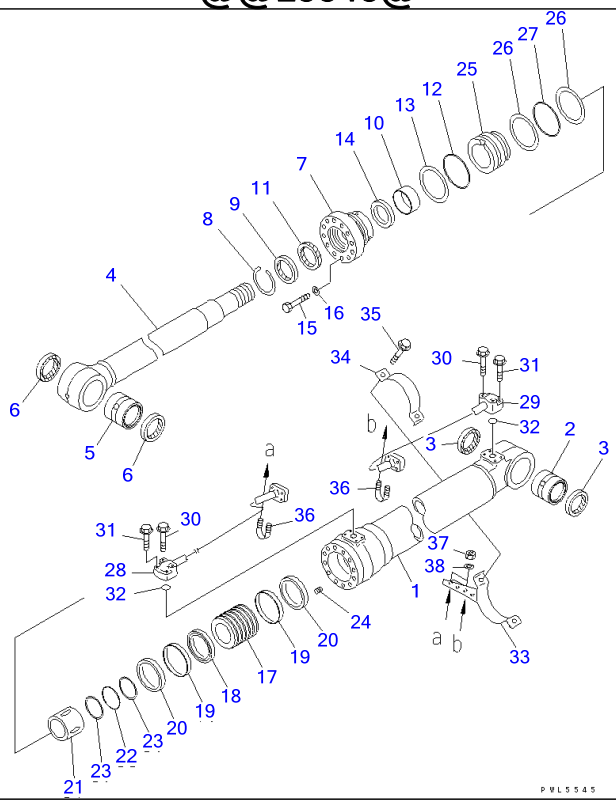

Ref Y1620-01A0 **Page 480300**

PC220-7 S/N 60001-UP (Overseas Version)

BOOM CYLINDER

Item	Part No.	Part Name	Qty	Serial No.
G-1	(⊙707-01-XZ880)	BOOM CYLINDER GROUP,L.H. (FINAL COATING)	1	60001-
G-2	(⊙707-01-XZ890)	BOOM CYLINDER GROUP,R.H. (FINAL COATING)	1	60001-
		==========		
	707-01-0A350	CYLINDER ASS'Y	1	60001-
1	707-13-13470	・CYLINDER	1	60001-
2	707-76-80431	・BUSHING	1	60001-
3	07145-00080	・SEAL,DUST (KIT)	2	60001-
4	707-58-90930	・ROD,PISTON	1	60001-
5	707-76-80431	・BUSHING	1	60001-
6	07145-00080	・SEAL,DUST (KIT)	2	60001-
7	707-27-13921	・HEAD,CYLINDER	1	60001-
8	07179-13104	・RING,SNAP	1	60001-
9	195-63-94170	・SEAL,DUST (KIT)	1	60001-
10	707-52-90680	・BUSHING	1	60001-
11	707-51-90030	・PACKING,ROD (KIT)	1	60001-
12	07000-15120	・O-RING (KIT)	1	60001-
13	707-35-91320	・RING,BACK-UP (KIT)	1	60001-
14	707-51-90640	・RING,BUFFER (KIT)	1	60001-
15	01010-81670	・BOLT	12	60001-
16	01643-51645	・WASHER	12	60001-
17	707-36-13780	・PISTON	1	60001-
18	707-44-13180	・RING,PISTON (KIT)	1	60001-
19	707-39-13150	・RING,WEAR (KIT)	2	60001-
20	707-44-13911	・RING	2	60001-
21	707-71-60970	・PLUNGER	1	60001-
22	07000-15080	・O-RING (KIT)	1	60001-
23	707-35-90940	・RING,BACK-UP (KIT)	2	60001-
24	01310-01216	・SCREW	1	60001-

BOOM CYLINDER

Item	Part No.	Part Name	Qty	Serial No.
25	707-71-34630	▪ COLLAR	1	60001-
26	707-35-91320	▪ RING,BACK-UP (KIT)	2	60001-
27	07000-15120	▪ O-RING (KIT)	1	60001-
28	707-86-66290	TUBE,L.H.	1	60001-
	707-86-66320	TUBE,R.H.	1	60001-
29	707-86-66310	TUBE,L.H.	1	60001-
	707-86-66330	TUBE,R.H.	1	60001-
30	01435-01055	BOLT	4	60001-
31	01435-01040	BOLT	4	60001-
32	07000-13030	O-RING (KIT)	2	60001-
33	707-88-22610	BRACKET,L.H.	1	60001-
	707-88-22620	BRACKET,R.H.	1	60001-
34	707-88-21311	BAND	1	60001-
35	01435-01030	BOLT	2	60001-
36	07283-22738	CLIP	2	60001-
37	01599-01011	NUT	4	60001-
38	01643-31032	WASHER	4	60001-
		==========		
	707-99-47790	SERVICE KIT	2	60001-

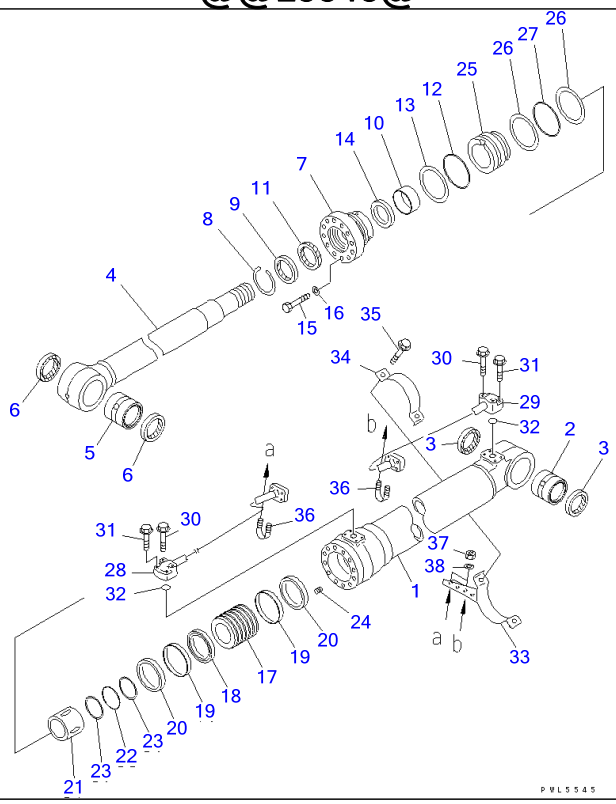

Ref Y1620-01A3 **Page 480310**

PC220-7 S/N 60001-UP (Overseas Version)

BOOM CYLINDER (100 HOURS LUBRICATING)

Item	Part No.	Part Name	Qty	Serial No.
G-1	(⊙707-01-XX070)	CYLINDER GROUP,L.H. (FINAL COATING)	1	60001-
G-2	(⊙707-01-XX080)	CYLINDER GROUP,R.H. (FINAL COATING)	1	60001-
		==========		
	707-01-0C670	CYLINDER ASS'Y	1	60001-
1	707-13-13470	・CYLINDER	1	60001-
2	206-70-55280	・BUSHING	1	60001-
3	07145-00080	・SEAL,DUST (KIT)	2	60001-
4	707-58-90930	・ROD,PISTON	1	60001-
5	707-76-80010	・BUSHING	1	60001-
6	07145-00080	・SEAL,DUST (KIT)	2	60001-
7	707-27-13921	・HEAD,CYLINDER	1	60001-
8	07179-13104	・RING,SNAP	1	60001-
9	195-63-94170	・SEAL,DUST (KIT)	1	60001-
10	707-52-90680	・BUSHING	1	60001-
11	707-51-90030	・PACKING,ROD (KIT)	1	60001-
12	07000-15120	・O-RING (KIT)	1	60001-
13	707-35-91320	・RING,BACK-UP (KIT)	1	60001-
14	707-51-90640	・RING,BUFFER (KIT)	1	60001-
15	01010-81670	・BOLT	12	60001-
16	01643-51645	・WASHER	12	60001-
17	707-36-13780	・PISTON	1	60001-
18	707-44-13180	・RING,PISTON (KIT)	1	60001-
19	707-39-13150	・RING,WEAR (KIT)	2	60001-
20	707-44-13911	・RING	2	60001-
21	707-71-60970	・PLUNGER	1	60001-
22	07000-15080	・O-RING (KIT)	1	60001-
23	707-35-90940	・RING,BACK-UP (KIT)	2	60001-
24	01310-01216	・SCREW	1	60001-

BOOM CYLINDER (100 HOURS LUBRICATING)

Item	Part No.	Part Name	Qty	Serial No.
25	707-71-34630	・COLLAR	1	60001-
26	707-35-91320	・RING,BACK-UP (KIT)	2	60001-
27	07000-15120	・O-RING (KIT)	1	60001-
28	707-86-66290	TUBE,L.H.	1	60001-
	707-86-66320	TUBE,R.H.	1	60001-
29	707-86-66310	TUBE,L.H.	1	60001-
	707-86-66330	TUBE,R.H.	1	60001-
30	01435-01055	BOLT	4	60001-
31	01435-01040	BOLT	4	60001-
32	07000-13030	O-RING (KIT)	2	60001-
33	707-88-22610	BRACKET,L.H.	1	60001-
	707-88-22620	BRACKET,R.H.	1	60001-
34	707-88-21311	BAND	1	60001-
35	01435-01030	BOLT	2	60001-
36	07283-22738	CLIP	2	60001-
37	01599-01011	NUT	4	60001-
38	01643-31032	WASHER	4	60001-
		==========		
	707-99-47790	SERVICE KIT	2	60001-

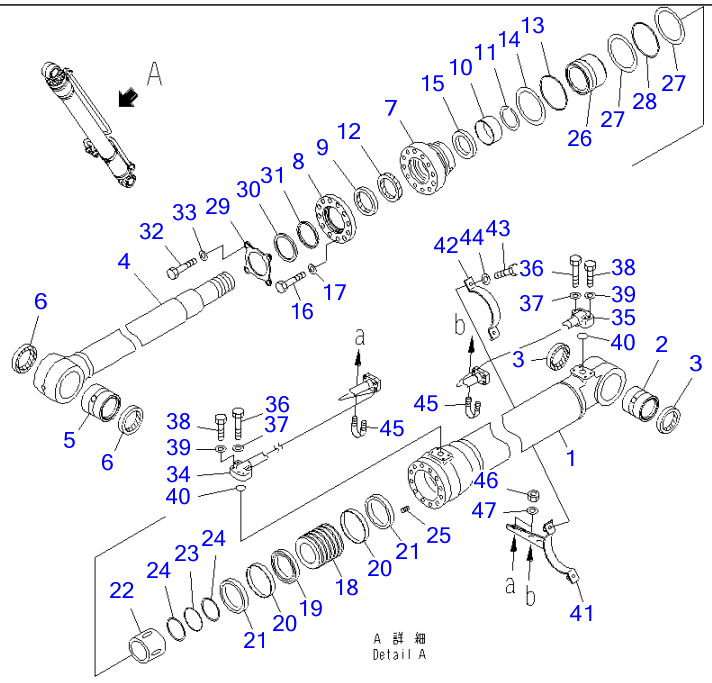

Ref Y1620-01A4 Page 480320

PC220-7 S/N 60001-UP (Overseas Version)

BOOM CYLINDER (100 HOURS LUBRICATING) (COLD AREA ARRANGEMENT)

Item	Part No.	Part Name	Qty	Serial No.
G-1	(⊙707-01-XP560)	CYLINDER GROUP,L.H. (FINAL COATING)	1	60001-
G-2	(⊙707-01-XP570)	CYLINDER GROUP,R.H. (FINAL COATING)	1	60001-
		==========		
	707-01-0K640	CYLINDER ASS'Y	1	60001-
1	707-13-13980	・CYLINDER	1	60001-
2	206-70-55280	・BUSHING	1	60001-
3	07145-10080	・SEAL,DUST (KIT)	2	60001-
4	707-58-90F20	・ROD,PISTON	1	60001-
5	707-76-80010	・BUSHING	1	60001-
6	07145-10080	・SEAL,DUST (KIT)	2	60001-
7	707-27-13650	・HEAD,CYLINDER	1	60001-
8	707-88-05510	・COLLAR	1	60001-
9	707-56-90740	・SEAL,DUST (KIT)	1	60001-
10	707-52-90681	・BUSHING	1	60001-
	707-52-90680	・BUSHING	1	60001-.
11	707-75-90110	・RING,SNAP	1	60001-
12	707-51-90730	・U-PACKING,ROD (KIT)	1	60001-
13	07000-55120	・O-RING (KIT)	1	60001-
14	707-35-91320	・RING,BACK-UP (KIT)	2	60001-
15	707-51-90650	・RING,BUFFER (KIT)	1	60001-
16	01010-81695	・BOLT	8	60001-
17	01643-51645	・WASHER	8	60001-
18	707-36-13780	・PISTON	1	60001-
19	707-44-13180	・RING,PISTON (KIT)	1	60001-
20	707-39-13150	・RING,WEAR (KIT)	2	60001-
21	707-44-13911	・RING	2	60001-
22	707-71-60970	・PLUNGER	1	60001-
23	07000-55080	・O-RING (KIT)	1	60001-

BOOM CYLINDER (100 HOURS LUBRICATING) (COLD AREA ARRANGEMENT)

Item	Part No.	Part Name	Qty	Serial No.
24	707-35-90940	・RING,BACK-UP (KIT)	2	60001-
25	01310-01216	・SCREW	1	60001-
26	707-71-34670	・COLLAR	1	60001-
27	707-35-91320	・RING,BACK-UP (KIT)	2	60001-
28	07000-15120	・O-RING (KIT)	1	60001-
29	707-88-05520	・PLATE	1	60001-
30	707-88-03921	・RING	1	60001-
31	707-56-90820	・SEAL,DUST (KIT)	1	60001-
32	01011-81600	・BOLT	4	60001-
33	01643-51645	・WASHER	4	60001-
34	707-86-67760	TUBE,L.H.	1	60001-
	707-86-67770	TUBE,R.H.	1	60001-
35	707-86-66310	TUBE,L.H.	1	60001-
	707-86-66330	TUBE,R.H.	1	60001-
36	07372-21060	BOLT	4	60001-
37	01643-51032	WASHER	4	60001-
38	07372-21045	BOLT	4	60001-
39	01643-51032	WASHER	4	60001-
40	07000-53030	O-RING (KIT)	2	60001-
41	707-88-28050	BRACKET,L.H.	1	60001-
	707-88-28060	BRACKET,R.H.	1	60001-
42	707-88-21311	BAND	1	60001-
43	07372-21035	BOLT	2	60001-
44	01643-51032	WASHER	2	60001-
45	07283-32738	CLIP	2	60001-
46	01597-01009	NUT	4	60001-
47	01643-31032	WASHER	4	60001-
		==========		
	707-98-47841	SERVICE KIT	1	60001-

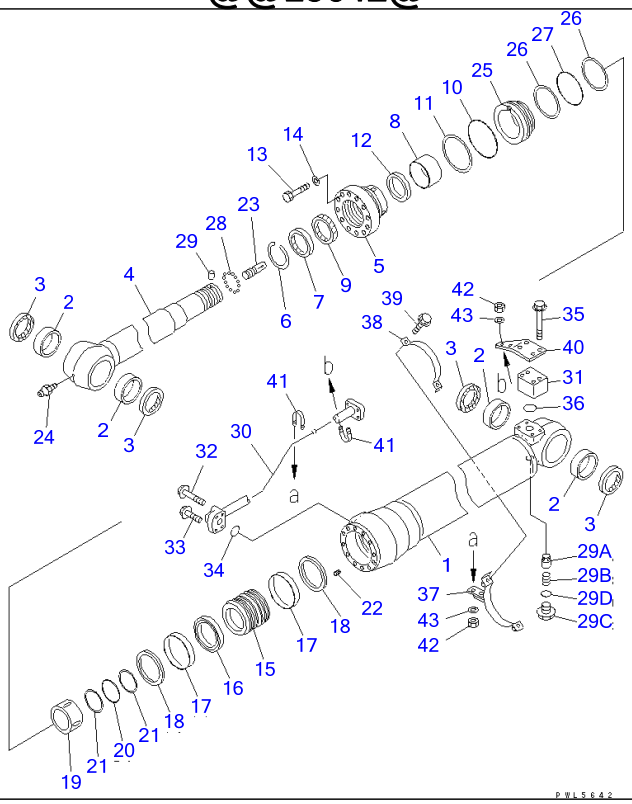

Ref Y1620-11A0 **Page 480330**

PC220-7 S/N 60001-UP (Overseas Version)

ARM CYLINDER

Item	Part No.	Part Name	Qty	Serial No.
G-1	(⊙707-01-XZ901)	CYLINDER GROUP,(FINAL COATING)	1	65001-65888
	(⊙707-01-XZ901)	CYLINDER GROUP,(FINAL COATING)	1	60274-60766
	(⊙707-01-XZ900)	ARM CYLINDER GROUP,(FINAL COATING)	1	60001-60273
		==========		
	707-01-0A371	CYLINDER ASS'Y	1	60274-
	(⊠707-01-0A370)	CYLINDER ASS'Y	1	(60001-60273)
1	707-13-14550	・CYLINDER	1	60001-
2	707-76-80470	・BUSHING	4	60001-
3	07145-00080	・SEAL,DUST (KIT)	4	60001-
4	707-58-10681	・ROD,PISTON	1	60274-
	(⊠707-58-10680)	・ROD,PISTON	1	(60001-60273)
5	707-27-14930	・HEAD,CYLINDER	1	60001-
6	07179-13114	・RING,SNAP	1	60001-
7	176-63-56170	・SEAL,DUST (KIT)	1	60001-
8	707-52-90780	・BUSHING	1	60001-
9	707-51-10030	・PACKING,ROD (KIT)	1	60001-
10	07000-15130	・O-RING (KIT)	1	60001-
11	707-35-91420	・RING,BACK-UP (KIT)	1	60001-
12	707-51-10640	・RING,BUFFER (KIT)	1	60001-
13	01010-81875	・BOLT	12	60001-
14	707-41-11840	・WASHER	12	60001-
15	707-36-14650	・PISTON	1	60001-
16	707-44-14180	・RING,PISTON (KIT)	1	60001-
17	707-39-14110	・RING,WEAR (KIT)	2	60001-
18	707-44-14910	・RING	2	60001-
19	707-71-61080	・PLUNGER	1	60001-
20	07000-15090	・O-RING (KIT)	1	60001-
21	07001-05090	・RING,BACK-UP (KIT)	2	60001-

ARM CYLINDER

Item	Part No.	Part Name	Qty	Serial No.
22	01310-01216	・SCREW	1	60001-
23	707-71-70270	・PLUNGER	1	60001-
24	07020-00000	・FITTING,GREASE	1	60001-
25	707-71-32780	・COLLAR	1	60001-
26	707-35-91420	・RING,BACK-UP (KIT)	2	60001-
27	07000-15130	・O-RING (KIT)	1	60001-
28	04260-00635	・BALL	12	60001-
29	707-71-91270	・CAP	1	60001-
29A	707-83-13010	・VALVE	1	60001-
29B	07750-01628	・SPRING	1	60001-
29C	707-87-14070	・PLUG	1	60001-
29D	07002-12034	・O-RING (KIT)	1	60001-
30	707-86-66340	TUBE	1	60001-
31	20D-62-17860	ELBOW	1	60001-
32	01435-01055	BOLT	2	60001-
33	01435-01040	BOLT	2	60001-
34	07000-13030	O-RING (KIT)	1	60001-
35	01435-01075	BOLT	4	60001-
36	07000-13035	O-RING (KIT)	1	60001-
37	707-88-22630	BRACKET	1	60001-
38	707-88-21321	BAND	1	60001-
39	01435-01030	BOLT	2	60001-
40	707-88-11560	PLATE	1	60001-
41	07283-22738	CLIP	2	60001-
42	01599-01011	NUT	4	60001-
43	01643-31032	WASHER	4	60001-
		==========		
	707-99-58070	SERVICE KIT	1	60001-

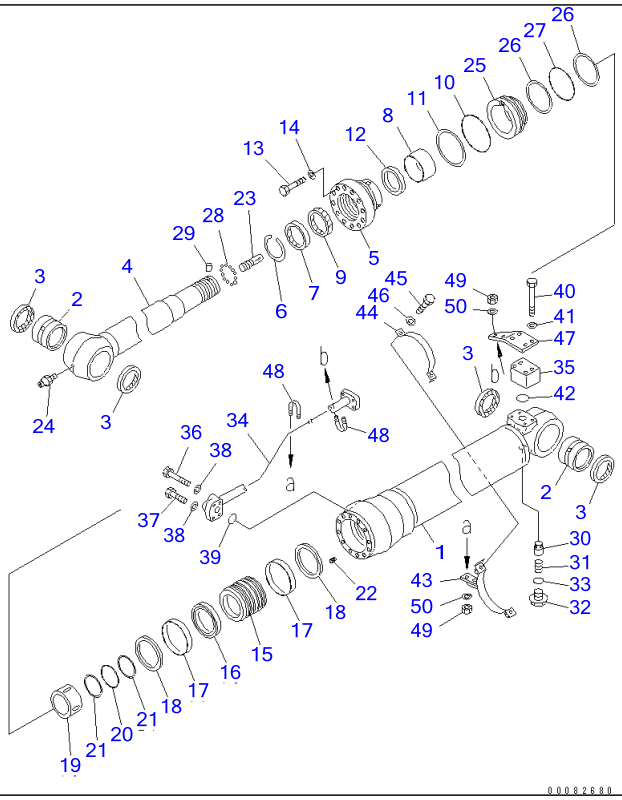

Ref Y1620-11A0A **Page 480340**

PC220-7 S/N 60001-UP (Overseas Version)
ARM CYLINDER(#60767-)

Item	Part No.	Part Name	Qty	Serial No.
G-1	(⊙707-01-XZ902)	CYLINDER,(FINAL COATING)	1	65889-
	(⊙707-01-XZ902)	CYLINDER,(FINAL COATING)	1	60767-65000
		==========		
	707-01-0A372	CYLINDER ASS'Y	1	60767-
1	707-13-14550	・CYLINDER	1	60767-
2	707-76-80560	・BUSHING	2	60767-
3	07145-00080	・SEAL,DUST (KIT)	4	60767-
4	707-58-10681	・ROD,PISTON	1	60767-
5	707-27-14930	・HEAD,CYLINDER	1	60767-
6	07179-13114	・RING,SNAP	1	60767-
7	176-63-56170	・SEAL,DUST (KIT)	1	60767-
8	707-52-90780	・BUSHING	1	60767-
9	707-51-10030	・PACKING,ROD (KIT)	1	60767-
10	07000-15130	・O-RING (KIT)	1	60767-
11	707-35-91420	・RING,BACK-UP (KIT)	1	60767-
12	707-51-10640	・RING,BUFFER (KIT)	1	60767-
13	01010-81875	・BOLT	12	60767-
14	707-41-11840	・WASHER	12	60767-
15	707-36-14650	・PISTON	1	60767-
16	707-44-14180	・RING,PISTON (KIT)	1	60767-
17	707-39-14110	・RING,WEAR (KIT)	2	60767-
18	707-44-14910	・RING	2	60767-
19	707-71-61080	・PLUNGER	1	60767-
20	07000-15090	・O-RING (KIT)	1	60767-
21	07001-05090	・RING,BACK-UP (KIT)	2	60767-
22	01310-01216	・SCREW	1	60767-
23	707-71-70270	・PLUNGER	1	60767-
24	07020-00000	・FITTING,GREASE	1	60767-

ARM CYLINDER(#60767-)

Item	Part No.	Part Name	Qty	Serial No.
25	707-71-32780	・COLLAR	1	60767-
26	707-35-91420	・RING,BACK-UP (KIT)	2	60767-
27	07000-15130	・O-RING (KIT)	1	60767-
28	04260-00635	・BALL	12	60767-
29	707-71-91270	・CAP	1	60767-
30	707-83-13010	・VALVE	1	60767-
31	07750-01628	・SPRING	1	60767-
32	707-87-14070	・PLUG	1	60767-
33	07002-12034	・O-RING (KIT)	1	60767-
34	707-86-66340	TUBE	1	60767-
35	20D-62-17860	ELBOW	1	60767-
36	07372-21060	BOLT	2	60767-
37	07372-21045	BOLT	2	60767-
38	01643-51032	WASHER	4	60767-
39	07000-13030	O-RING (KIT)	1	60767-
40	01010-81080	BOLT	4	60767-
41	01643-31032	WASHER	4	60767-
42	07000-13035	O-RING (KIT)	1	60767-
43	707-88-22630	BRACKET	1	60767-
44	707-88-21321	BAND	1	60767-
45	07372-21035	BOLT	2	60767-
46	01643-51032	WASHER	2	60767-
47	707-88-11560	PLATE	1	60767-
48	07283-32738	CLIP	2	60767-
49	01597-01009	NUT	4	60767-
50	01643-31032	WASHER	4	60767-
		==========		
	707-99-58070	SERVICE KIT	1	60767-

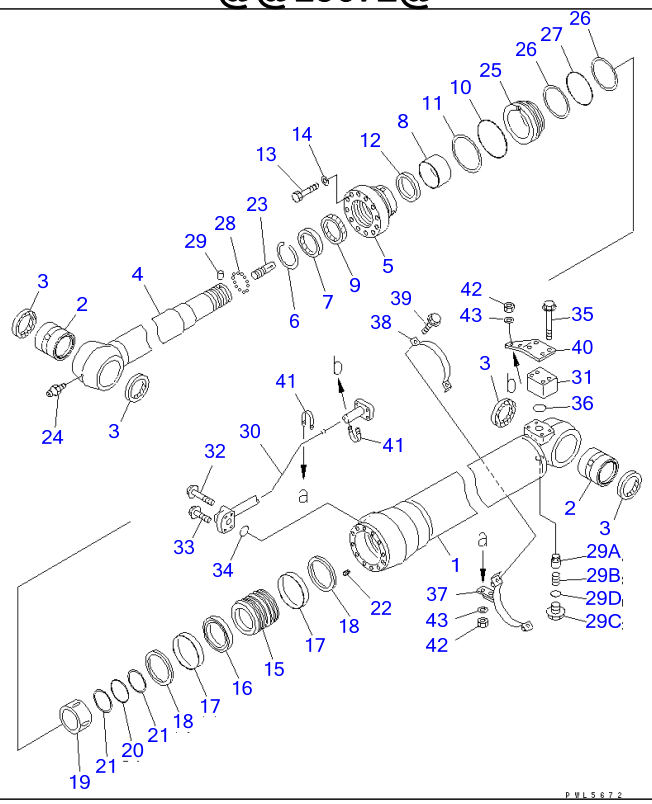

Ref Y1620-11A2 Page 480350

PC220-7 S/N 60001-UP (Overseas Version)

ARM CYLINDER (100 HOURS LUBRICATING)

Item	Part No.	Part Name	Qty	Serial No.
G-1	(⊙707-01-XX091)	CYLINDER GROUP,(FINAL COATING)	1	60274-
	(⊙707-01-XX090)	CYLINDER GROUP,(FINAL COATING)	1	60001-60273
		==========		
	707-01-0C691	CYLINDER ASS'Y	1	60274-
	(⊠707-01-0C690)	CYLINDER ASS'Y	1	(60001-60273)
1	707-13-14550	・CYLINDER	1	60001-
2	707-76-80010	・BUSHING	2	60001-
3	07145-00080	・SEAL,DUST (KIT)	4	60001-
4	707-58-10681	・ROD,PISTON	1	60274-
	(⊠707-58-10680)	・ROD,PISTON	1	(60001-60273)
5	707-27-14930	・HEAD,CYLINDER	1	60001-
6	07179-13114	・RING,SNAP	1	60001-
7	176-63-56170	・SEAL,DUST (KIT)	1	60001-
8	707-52-90780	・BUSHING	1	60001-
9	707-51-10030	・PACKING,ROD (KIT)	1	60001-
10	07000-15130	・O-RING (KIT)	1	60001-
11	707-35-91420	・RING,BACK-UP (KIT)	1	60001-
12	707-51-10640	・RING,BUFFER (KIT)	1	60001-
13	01010-81875	・BOLT	12	60001-
14	707-41-11840	・WASHER	12	60001-
15	707-36-14650	・PISTON	1	60001-
16	707-44-14180	・RING,PISTON (KIT)	1	60001-
17	707-39-14110	・RING,WEAR (KIT)	2	60001-
18	707-44-14910	・RING	2	60001-
19	707-71-61080	・PLUNGER	1	60001-
20	07000-15090	・O-RING (KIT)	1	60001-
21	07001-05090	・RING,BACK-UP (KIT)	2	60001-
22	01310-01216	・SCREW	1	60001-

ARM CYLINDER (100 HOURS LUBRICATING)

Item	Part No.	Part Name	Qty	Serial No.
23	707-71-70270	・PLUNGER	1	60001-
24	07020-00000	・FITTING,GREASE	1	60001-
25	707-71-32780	・COLLAR	1	60001-
26	707-35-91420	・RING,BACK-UP (KIT)	2	60001-
27	07000-15130	・O-RING (KIT)	1	60001-
28	04260-00635	・BALL	12	60001-
29	707-71-91270	・CAP	1	60001-
29A	707-83-13010	・VALVE	1	60001-
29B	07750-01628	・SPRING	1	60001-
29C	707-87-14070	・PLUG	1	60001-
29D	07002-12034	・O-RING (KIT)	1	60001-
30	707-86-66340	TUBE	1	60001-
31	20D-62-17860	ELBOW	1	60001-
32	01435-01055	BOLT	2	60001-
33	01435-01040	BOLT	2	60001-
34	07000-13030	O-RING (KIT)	1	60001-
35	01435-01075	BOLT	4	60001-
36	07000-13035	O-RING (KIT)	1	60001-
37	707-88-22630	BRACKET	1	60001-
38	707-88-21321	BAND	1	60001-
39	01435-01030	BOLT	2	60001-
40	707-88-11560	PLATE	1	60001-
41	07283-22738	CLIP	2	60001-
42	01599-01011	NUT	4	60001-
43	01643-31032	WASHER	4	60001-
		==========		
	707-99-58070	SERVICE KIT	1	60001-

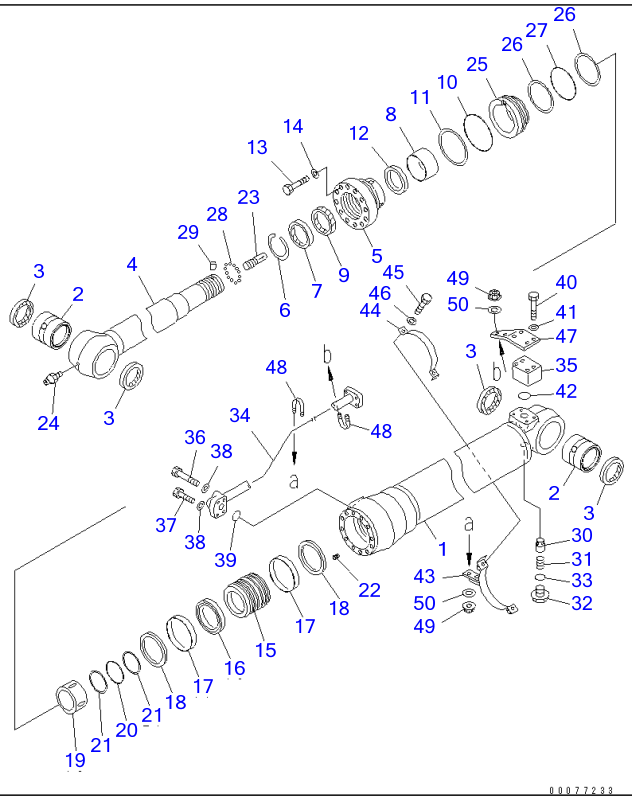

Ref Y1620-11A4 **Page 480360**

PC220-7 S/N 60001-UP (Overseas Version)
ARM CYLINDER(#60767-)

Item	Part No.	Part Name	Qty	Serial No.
G-1	(⊙707-01-X902)	CYLINDER GROUP,(FINAL COATING)	1	65889-
	(⊙707-01-X902)	CYLINDER GROUP,(FINAL COATING)	1	60767-65000
		==========		
	707-01-0A372	CYLINDER ASS'Y	1	60767-
1	707-13-14550	・CYLINDER	1	60767-
2	707-76-80560	・BUSHING	2	60767-
3	07145-00080	・SEAL,DUST (KIT)	4	60767-
4	707-58-10681	・ROD,PISTON	1	60767-
5	707-27-14930	・HEAD,CYLINDER	1	60767-
6	07179-13114	・RING,SNAP	1	60767-
7	176-63-56170	・SEAL,DUST (KIT)	1	60767-
8	707-52-90780	・BUSHING	1	60767-
9	707-51-10030	・PACKING,ROD (KIT)	1	60767-
10	07000-15130	・O-RING (KIT)	1	60767-
11	707-35-91420	・RING,BACK-UP (KIT)	1	60767-
12	707-51-10640	・RING,BUFFER (KIT)	1	60767-
13	01010-81875	・BOLT	12	60767-
14	707-41-11840	・WASHER	12	60767-
15	707-36-14650	・PISTON	1	60767-
16	707-44-14180	・RING,PISTON (KIT)	1	60767-
17	707-39-14110	・RING,WEAR (KIT)	2	60767-
18	707-44-14910	・RING	2	60767-
19	707-71-61080	・PLUNGER	1	60767-
20	07000-15090	・O-RING (KIT)	1	60767-
21	07001-05090	・RING,BACK-UP (KIT)	2	60767-
22	01310-01216	・SCREW	1	60767-
23	707-71-70270	・PLUNGER	1	60767-
24	07020-00000	・FITTING,GREASE	1	60767-

ARM CYLINDER(#60767-)

Item	Part No.	Part Name	Qty	Serial No.
25	707-71-32780	・COLLAR	1	60767-
26	707-35-91420	・RING,BACK-UP (KIT)	2	60767-
27	07000-15130	・O-RING (KIT)	1	60767-
28	04260-00635	・BALL	12	60767-
29	707-71-91270	・CAP	1	60767-
30	707-83-13010	・VALVE	1	60767-
31	07750-01628	・SPRING	1	60767-
32	707-87-14070	・PLUG	1	60767-
33	07002-12034	・O-RING (KIT)	1	60767-
34	707-86-66340	TUBE	1	60767-
35	20D-62-17860	ELBOW	1	60767-
36	07372-21060	BOLT	2	60767-
37	07372-21045	BOLT	2	60767-
38	01643-51032	WASHER	4	60767-
39	07000-13030	O-RING (KIT)	1	60767-
40	01010-81080	BOLT	4	60767-
41	01643-31032	WASHER	4	60767-
42	07000-13035	O-RING (KIT)	1	60767-
43	707-88-22630	BRACKET	1	60767-
44	707-88-21321	BAND	1	60767-
45	07372-21035	BOLT	2	60767-
46	01643-51032	WASHER	2	60767-
47	707-88-11560	PLATE	1	60767-
48	07283-32738	CLIP	2	60767-
49	01597-01009	NUT	4	60767-
50	01643-31032	WASHER	4	60767-
		==========		
	707-99-58070	SERVICE KIT	1	60767-

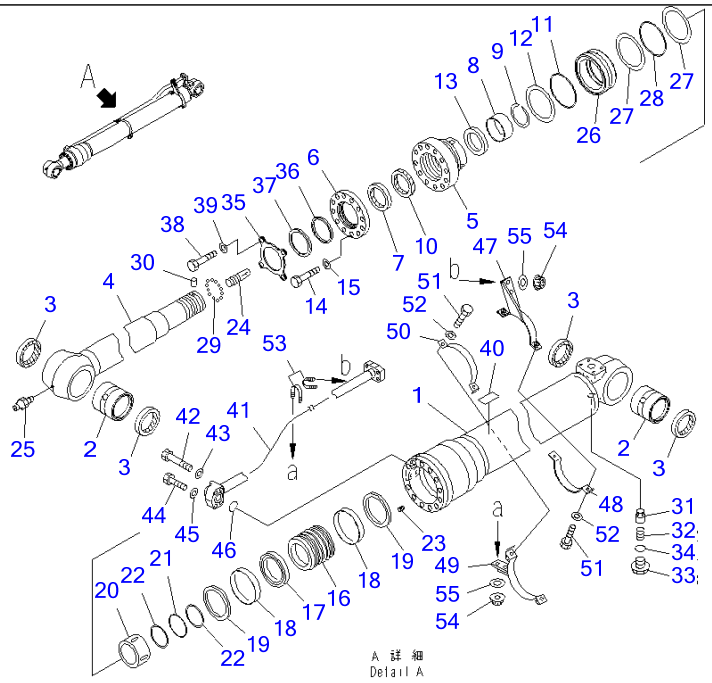

PC220-7 S/N 60001-UP (Overseas Version)

ARM CYLINDER (COLD AREA ARRANGEMENT (-40 DEG.))

Item	Part No.	Part Name	Qty	Serial No.
G-1	(⊙707-01-XP580)	CYLINDER GROUP,(FINAL COATING)	1	60001-
		==========		
	707-01-0K660	CYLINDER ASS'Y	1	60001-
1	707-13-14820	・CYLINDER	1	60001-
2	707-76-80010	・BUSHING	2	60001-
3	07145-10080	・SEAL,DUST (KIT)	4	60001-
4	721-58-10180	・ROD,PISTON	1	60001-
5	707-27-14690	・HEAD,CYLINDER	1	60001-
6	707-88-05850	・COLLAR	1	60001-
7	707-56-10740	・SEAL,DUST (KIT)	1	60001-
8	707-52-90781	・BUSHING	1	60001-
9	707-75-10160	・RING,SNAP	1	60001-
10	707-51-10730	・PACKING,ROD (KIT)	1	60001-
11	07000-55130	・O-RING (KIT)	1	60001-
12	707-35-91420	・RING,BACK-UP (KIT)	1	60001-
13	707-51-10650	・RING,BUFFER (KIT)	1	60001-
14	01011-81800	・BOLT	8	60001-
15	707-41-11840	・WASHER	8	60001-
16	707-36-14650	・PISTON	1	60001-
17	707-44-14180	・RING,PISTON (KIT)	1	60001-
18	707-39-14110	・RING,WEAR (KIT)	2	60001-
19	707-44-14910	・RING	2	60001-
20	707-71-71020	・PLUNGER	1	60001-
21	07000-55090	・O-RING (KIT)	1	60001-
22	07001-05090	・RING,BACK-UP (KIT)	2	60001-
23	01310-01216	・SCREW	1	60001-
24	707-71-80270	・PLUNGER	1	60001-
25	07020-00000	・FITTING,GREASE	1	60001-

ARM CYLINDER (COLD AREA ARRANGEMENT (-40 DEG.))

Item	Part No.	Part Name	Qty	Serial No.
26	707-71-34990	・COLLAR	1	60001-
27	707-35-91420	・RING,BACK-UP (KIT)	2	60001-
28	07000-55130	・O-RING (KIT)	1	60001-
29	04260-00635	・BALL	12	60001-
30	707-71-91270	・CAP	1	60001-
31	707-83-13010	・VALVE	1	60001-
32	07750-01628	・SPRING	1	60001-
33	707-87-14070	・PLUG	1	60001-
34	07002-52034	・O-RING (KIT)	1	60001-
35	707-88-05860	・PLATE	1	60001-
36	707-56-10820	・SEAL,DUST (KIT)	1	60001-
37	707-88-36921	・RING	1	60001-
38	01011-81805	・BOLT	4	60001-
39	707-41-11840	・WASHER	4	60001-
40	700-11-31980	・PLATE, NAME	1	60001-
41	707-86-67810	TUBE	1	60001-
42	07372-21060	BOLT	2	60001-
43	01643-51032	WASHER	2	60001-
44	07372-21045	BOLT	2	60001-
45	01643-51032	WASHER	2	60001-
46	07000-53030	O-RING (KIT)	1	60001-
47	707-88-28090	BRACKET	1	60001-
48	707-88-28140	BAND	1	60001-
49	707-88-22630	BRACKET	1	60001-
50	707-88-21321	BAND	1	60001-
51	07372-21035	BOLT	4	60001-
52	01643-51032	WASHER	4	60001-
53	07283-32738	CLIP	2	60001-
54	01597-01009	NUT	4	60001-
55	01643-31032	WASHER	4	60001-
		==========		
	707-99-59381	SERVICE KIT	1	60001-

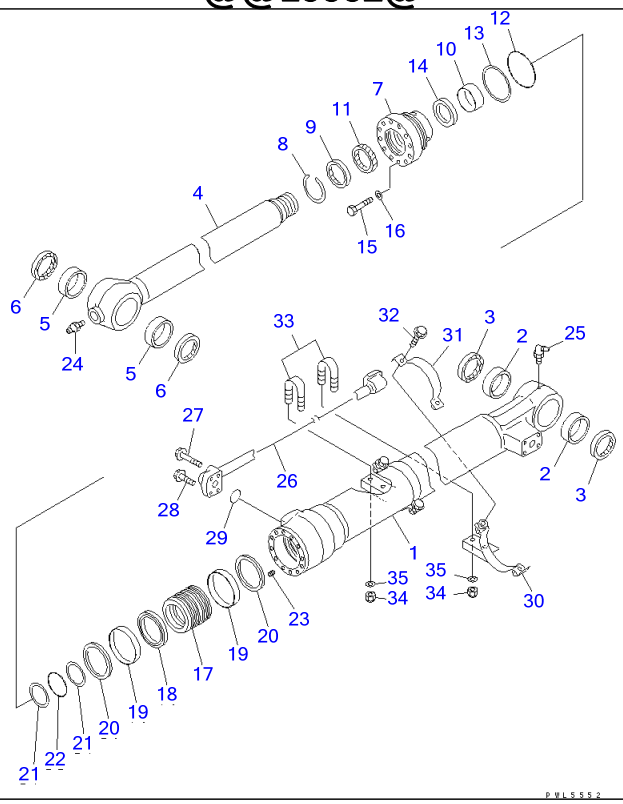

Ref Y1620-41A0 Page 480380

PC220-7 S/N 60001-UP (Overseas Version)
BUCKET CYLINDER

Item	Part No.	Part Name	Qty	Serial No.
G-1	(⊙707-01-XZ910)	CYLINDER GROUP,(FINAL COATING)	1	65001-65357
	(⊙707-01-XZ910)	CYLINDER GROUP,(FINAL COATING)	1	60001-60758
		==========		
	707-01-0A380	CYLINDER ASS'Y	1	60001-
1	707-13-13480	・CYLINDER	1	60001-
2	707-76-80470	・BUSHING	2	60001-
3	07145-00080	・SEAL,DUST (KIT)	2	60001-
4	707-58-90940	・ROD,PISTON	1	60001-
5	707-76-80480	・BUSHING	2	60001-
6	20Y-70-23230	・SEAL,DUST (KIT)	2	60001-
7	707-27-13921	・HEAD,CYLINDER	1	60001-
8	07179-13104	・RING,SNAP	1	60001-
9	195-63-94170	・SEAL,DUST (KIT)	1	60001-
10	707-52-90680	・BUSHING	1	60001-
11	707-51-90030	・PACKING,ROD (KIT)	1	60001-
12	07000-15120	・O-RING (KIT)	1	60001-
13	707-35-91320	・RING,BACK-UP (KIT)	1	60001-
14	707-51-90640	・RING,BUFFER (KIT)	1	60001-
15	01010-81670	・BOLT	12	60001-
16	01643-51645	・WASHER	12	60001-
17	707-36-13780	・PISTON	1	60001-
18	707-44-13180	・RING,PISTON (KIT)	1	60001-
19	707-39-13150	・RING,WEAR (KIT)	2	60001-
20	707-44-13911	・RING	2	60001-
21	707-35-90940	・RING,BACK-UP (KIT)	2	60001-
22	07000-15080	・O-RING (KIT)	1	60001-
23	01310-01216	・SCREW	1	60001-
24	07020-00000	・FITTING,GREASE	1	60001-

BUCKET CYLINDER

Item	Part No.	Part Name	Qty	Serial No.
25	07020-00900	▪ FITTING,GREASE	1	60001-
26	707-86-66350	TUBE	1	60001-
27	01435-01055	BOLT	2	60001-
28	01435-01040	BOLT	2	60001-
29	07000-13030	O-RING (KIT)	1	60001-
30	707-88-22640	BRACKET	2	60001-
31	707-88-21331	BAND	2	60001-
32	01435-01030	BOLT	4	60001-
33	07283-22738	CLIP	2	60001-
34	01599-01011	NUT	4	60001-
35	01643-31032	WASHER	4	60001-
		==========		
	707-99-47570	SERVICE KIT	1	60001-

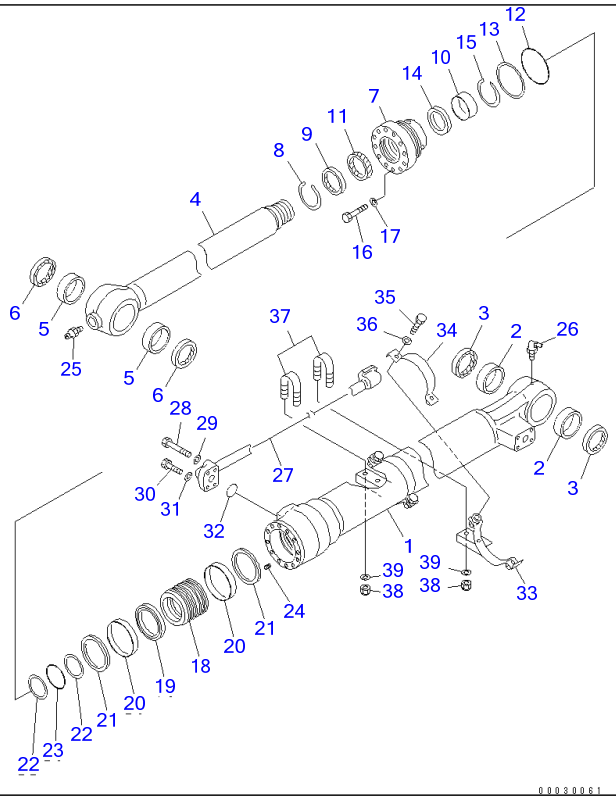

Ref Y1620-41A0A

Page 480390

PC220-7 S/N 60001-UP (Overseas Version)

BUCKET CYLINDER(#60759-)

Item	Part No.	Part Name	Qty	Serial No.
G1	(⊙707-01-XZ911)	CYLINDER GROUP,(FINAL COATING)	1	65358-65888
	(⊙707-01-XZ911)	CYLINDER GROUP,(FINAL COATING)	1	60759-60766
		==========		
	707-01-0A381	CYLINDER ASS'Y	1	60759-
1	707-13-13481	・CYLINDER	1	60759-
2	707-76-80470	・BUSHING	2	60759-
3	07145-00080	・SEAL,DUST (KIT)	2	60759-
4	707-58-90940	・ROD,PISTON	1	60759-
5	707-76-80480	・BUSHING	2	60759-
6	20Y-70-23230	・SEAL,DUST (KIT)	2	60759-
7	707-27-13650	・HEAD,CYLINDER	1	60759-
8	07179-13104	・RING,SNAP	1	60759-
9	195-63-94170	・SEAL,DUST (KIT)	1	60759-
10	707-52-90680	・BUSHING	1	60759-
11	707-51-90030	・PACKING,ROD (KIT)	1	60759-
12	07000-15120	・O-RING (KIT)	1	60759-
13	707-35-91320	・RING,BACK-UP (KIT)	1	60759-
14	707-51-90640	・RING,BUFFER (KIT)	1	60759-
15	707-75-90110	・RING,SNAP	1	60759-
16	01010-81670	・BOLT	12	60759-
17	01643-51645	・WASHER	12	60759-
18	707-36-13780	・PISTON	1	60759-
19	707-44-13180	・RING,PISTON (KIT)	1	60759-
20	707-39-13150	・RING,WEAR (KIT)	2	60759-
21	707-44-13911	・RING	2	60759-
22	707-35-90940	・RING,BACK-UP (KIT)	2	60759-
23	07000-15080	・O-RING (KIT)	1	60759-
24	01310-01216	・SCREW	1	60759-

BUCKET CYLINDER(#60759-)

Item	Part No.	Part Name	Qty	Serial No.
25	07020-00000	・FITTING,GREASE	1	60759-
26	07020-00900	・FITTING,GREASE	1	60759-
27	707-86-66721	TUBE	1	60759-
28	07372-21060	BOLT	2	60759-
29	01643-51032	WASHER	2	60759-
30	07372-21045	BOLT	2	60759-
31	01643-51032	WASHER	2	60759-
32	07000-13030	O-RING (KIT)	1	60759-
33	707-88-22640	BRACKET	2	60759-
34	707-88-21331	BAND	2	60759-
35	07372-21035	BOLT	4	60759-
36	01643-51032	WASHER	4	60759-
37	07283-32738	CLIP	2	60759-
38	01597-01009	NUT	4	60759-
39	01643-31032	WASHER	4	60759-
		==========		
	707-99-47570	SERVICE KIT	1	60759-

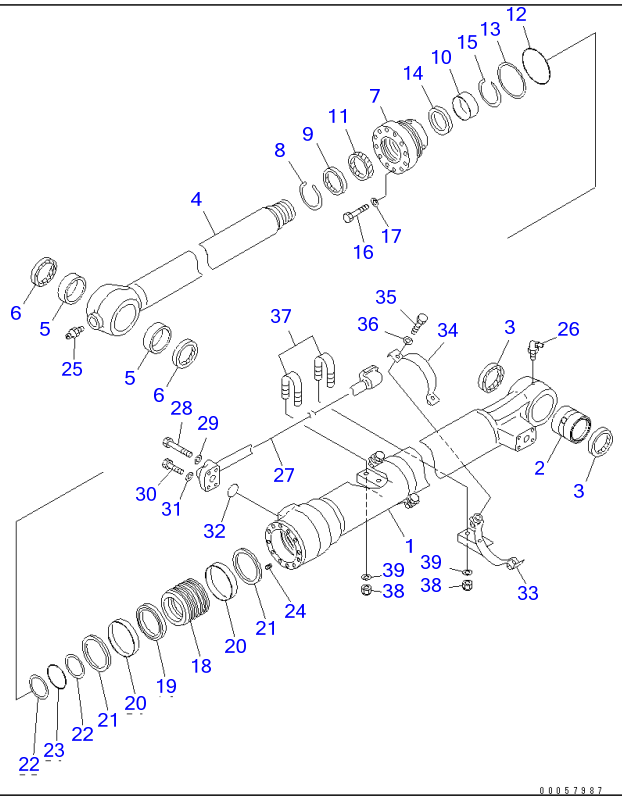

Ref Y1620-41A0B **Page 480400**

BUCKET CYLINDER(#60767-)

Item	Part No.	Part Name	Qty	Serial No.
G1	(⊙707-01-XZ912)	CYLINDER GROUP,(FINAL COATING)	1	65889-
	(⊙707-01-XZ912)	CYLINDER GROUP,(FINAL COATING)	1	60767-65000
		==========		
	707-01-0A382	CYLINDER ASS'Y	1	60767-
1	707-13-13481	・CYLINDER	1	60767-
2	707-76-80431	・BUSHING	1	60767-
3	07145-00080	・SEAL,DUST (KIT)	2	60767-
4	707-58-90940	・ROD,PISTON	1	60767-
5	707-76-80480	・BUSHING	2	60767-
6	20Y-70-23230	・SEAL,DUST (KIT)	2	60767-
7	707-27-13650	・HEAD,CYLINDER	1	60767-
8	07179-13104	・RING,SNAP	1	60767-
9	195-63-94170	・SEAL,DUST (KIT)	1	60767-
10	707-52-90680	・BUSHING	1	60767-
11	707-51-90030	・PACKING,ROD (KIT)	1	60767-
12	07000-15120	・O-RING (KIT)	1	60767-
13	707-35-91320	・RING,BACK-UP (KIT)	1	60767-
14	707-51-90640	・RING,BUFFER (KIT)	1	60767-
15	707-75-90110	・RING,SNAP	1	60767-
16	01010-81670	・BOLT	12	60767-
17	01643-51645	・WASHER	12	60767-
18	707-36-13780	・PISTON	1	60767-
19	707-44-13180	・RING,PISTON (KIT)	1	60767-
20	707-39-13150	・RING,WEAR (KIT)	2	60767-
21	707-44-13911	・RING	2	60767-
22	707-35-90940	・RING,BACK-UP (KIT)	2	60767-
23	07000-15080	・O-RING (KIT)	1	60767-
24	01310-01216	・SCREW	1	60767-

BUCKET CYLINDER(#60767-)

Item	Part No.	Part Name	Qty	Serial No.
25	07020-00000	・FITTING,GREASE	1	60767-
26	07020-00900	・FITTING,GREASE	1	60767-
27	707-86-66721	TUBE	1	60767-
28	07372-21060	BOLT	2	60767-
29	01643-51032	WASHER	2	60767-
30	07372-21045	BOLT	2	60767-
31	01643-51032	WASHER	2	60767-
32	07000-13030	O-RING (KIT)	1	60767-
33	707-88-22640	BRACKET	2	60767-
34	707-88-21331	BAND	2	60767-
35	07372-21035	BOLT	4	60767-
36	01643-51032	WASHER	4	60767-
37	07283-32738	CLIP	2	60767-
38	01597-01009	NUT	4	60767-
39	01643-31032	WASHER	4	60767-
		==========		
	707-99-47570	SERVICE KIT	1	60767-

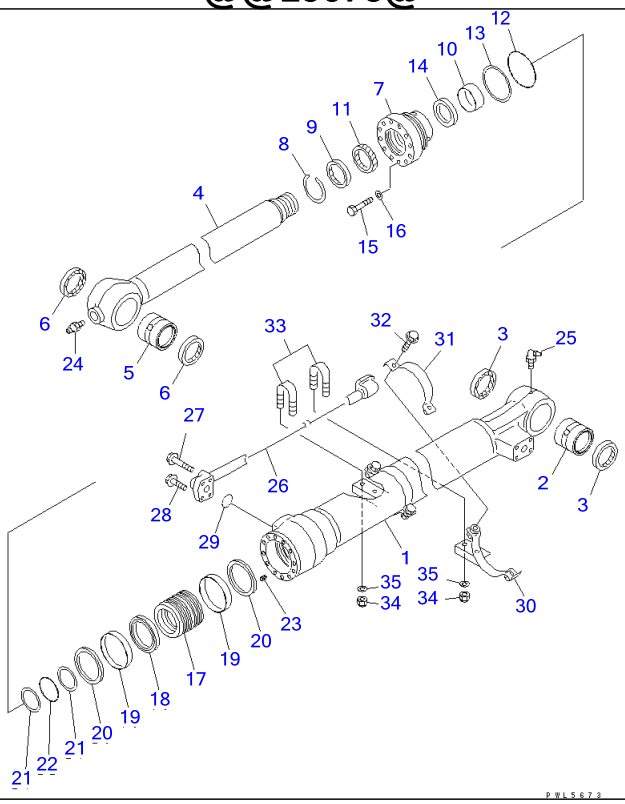

Ref Y1620-41A1 Page 480410

PC220-7 S/N 60001-UP (Overseas Version)

BUCKET CYLINDER (100 HOURS LUBRICATING)

Item	Part No.	Part Name	Qty	Serial No.
G-1	(⊙707-01-XX100)	CYLINDER GROUP,(FINAL COATING)	1	65001-65357
	(⊙707-01-XX100)	CYLINDER GROUP,(FINAL COATING)	1	60001-60758
		==========		
	707-01-0C700	CYLINDER ASS'Y	1	60001-
1	707-13-13480	・CYLINDER	1	60001-
2	707-76-80010	・BUSHING	1	60001-
3	07145-00080	・SEAL,DUST (KIT)	2	60001-
4	707-58-90940	・ROD,PISTON	1	60001-
5	707-76-80020	・BUSHING	1	60001-
6	20Y-70-23230	・SEAL,DUST (KIT)	2	60001-
7	707-27-13921	・HEAD,CYLINDER	1	60001-
8	07179-13104	・RING,SNAP	1	60001-
9	195-63-94170	・SEAL,DUST (KIT)	1	60001-
10	707-52-90680	・BUSHING	1	60001-
11	707-51-90030	・PACKING,ROD (KIT)	1	60001-
12	07000-15120	・O-RING (KIT)	1	60001-
13	707-35-91320	・RING,BACK-UP (KIT)	1	60001-
14	707-51-90640	・RING,BUFFER (KIT)	1	60001-
15	01010-81670	・BOLT	12	60001-
16	01643-51645	・WASHER	12	60001-
17	707-36-13780	・PISTON	1	60001-
18	707-44-13180	・RING,PISTON (KIT)	1	60001-
19	707-39-13150	・RING,WEAR (KIT)	2	60001-
20	707-44-13911	・RING	2	60001-
21	707-35-90940	・RING,BACK-UP (KIT)	2	60001-
22	07000-15080	・O-RING (KIT)	1	60001-
23	01310-01216	・SCREW	1	60001-
24	07020-00000	・FITTING,GREASE	1	60001-

BUCKET CYLINDER (100 HOURS LUBRICATING)

Item	Part No.	Part Name	Qty	Serial No.
25	07020-00900	・FITTING,GREASE	1	60001-
26	707-86-66350	TUBE	1	60001-
27	01435-01055	BOLT	2	60001-
28	01435-01040	BOLT	2	60001-
29	07000-13030	O-RING (KIT)	1	60001-
30	707-88-22640	BRACKET	2	60001-
31	707-88-21331	BAND	2	60001-
32	01435-01030	BOLT	4	60001-
33	07283-22738	CLIP	2	60001-
34	01599-01011	NUT	4	60001-
35	01643-31032	WASHER	4	60001-
		==========		
	707-99-47570	SERVICE KIT	1	60001-

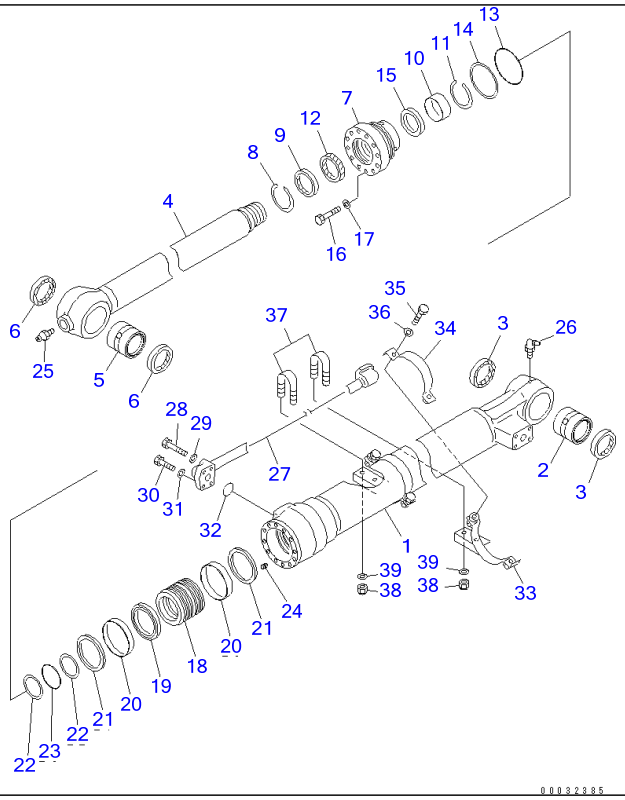

Ref Y1620-41A1A

Page 480420

PC220-7 S/N 60001-UP (Overseas Version)

BUCKET CYLINDER (100 HOURS LUBRICATING)(#60759-)

Item	Part No.	Part Name	Qty	Serial No.
G-1	(⊙707-01-XX101)	CYLINDER GROUP,(FINAL COATING)	1	65358-
	(⊙707-01-XX101)	CYLINDER GROUP,(FINAL COATING)	1	60759-65000
		==========		
	707-01-0C701	CYLINDER ASS'Y	1	60759-
1	707-13-13481	・CYLINDER	1	60759-
2	707-76-80010	・BUSHING	1	60759-
3	07145-00080	・SEAL,DUST (KIT)	2	60759-
4	707-58-90940	・ROD,PISTON	1	60759-
5	707-76-80020	・BUSHING	1	60759-
6	20Y-70-23230	・SEAL,DUST (KIT)	2	60759-
7	707-27-13650	・HEAD,CYLINDER	1	60759-
8	07179-13104	・RING,SNAP	1	60759-
9	195-63-94170	・SEAL,DUST (KIT)	1	60759-
10	707-52-90680	・BUSHING	1	60759-
11	707-75-90110	・RING,SNAP	1	60759-
12	707-51-90030	・PACKING,ROD (KIT)	1	60759-
13	07000-15120	・O-RING (KIT)	1	60759-
14	707-35-91320	・RING,BACK-UP (KIT)	1	60759-
15	707-51-90640	・RING,BUFFER (KIT)	1	60759-
16	01010-81670	・BOLT	12	60759-
17	01643-51645	・WASHER	12	60759-
18	707-36-13780	・PISTON	1	60759-
19	707-44-13180	・RING,PISTON (KIT)	1	60759-
20	707-39-13150	・RING,WEAR (KIT)	2	60759-
21	707-44-13911	・RING	2	60759-
22	707-35-90940	・RING,BACK-UP (KIT)	2	60759-
23	07000-15080	・O-RING (KIT)	1	60759-
24	01310-01216	・SCREW	1	60759-

BUCKET CYLINDER (100 HOURS LUBRICATING)(#60759-)

Item	Part No.	Part Name	Qty	Serial No.
25	07020-00000	・FITTING,GREASE	1	60759-
26	07020-00900	・FITTING,GREASE	1	60759-
27	707-86-66721	TUBE	1	60759-
28	07372-21060	BOLT	2	60759-
29	01643-51032	WASHER	2	60759-
30	07372-21045	BOLT	2	60759-
31	01643-51032	WASHER	2	60759-
32	07000-13030	O-RING (KIT)	1	60759-
33	707-88-22640	BRACKET	2	60759-
34	707-88-21331	BAND	2	60759-
35	07372-21035	BOLT	4	60759-
36	01643-51032	WASHER	4	60759-
37	07283-32738	CLIP	2	60759-
38	01597-01009	NUT	4	60759-
39	01643-31032	WASHER	4	60759-
		==========		
	707-99-47570	SERVICE KIT	1	60759-

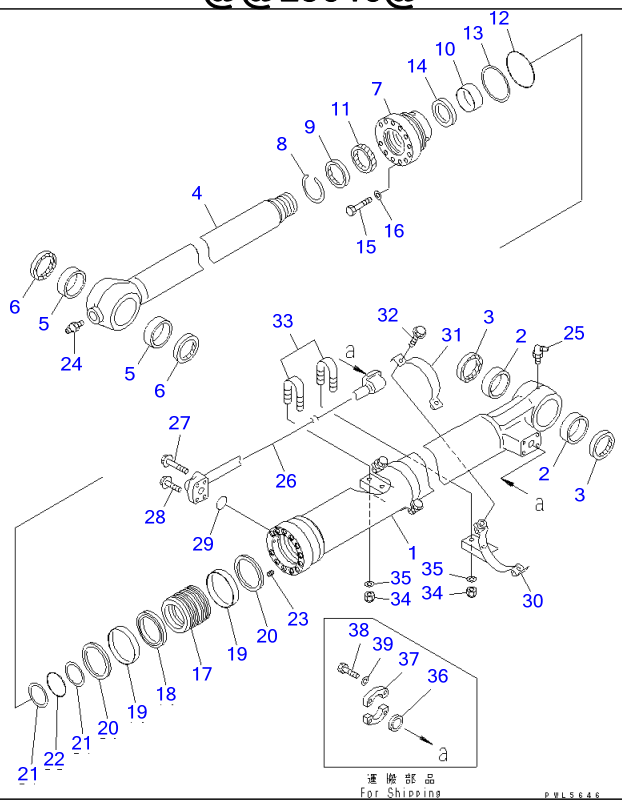

Ref Y1620-41A2 Page 480430

PC220-7 S/N 60001-UP (Overseas Version)

BUCKET CYLINDER

Item	Part No.	Part Name	Qty	Serial No.
G-1	(⊙707-01-XZ950)	CYLINDER GROUP,(FINAL COATING)	1	65001-65888
	(⊙707-01-XZ950)	CYLINDER GROUP,(FINAL COATING)	1	60001-60766
		==========		
	707-01-0A420	CYLINDER ASS'Y	1	60001-
1	707-13-14570	・CYLINDER	1	60001-
2	707-76-80470	・BUSHING	2	60001-
3	07145-00080	・SEAL,DUST (KIT)	2	60001-
4	707-58-10710	・ROD,PISTON	1	60001-
5	707-76-80480	・BUSHING	2	60001-
6	20Y-70-23230	・SEAL,DUST (KIT)	2	60001-
7	707-27-14930	・HEAD,CYLINDER	1	60001-
8	07179-13114	・RING,SNAP	1	60001-
9	176-63-56170	・SEAL,DUST (KIT)	1	60001-
10	707-52-90780	・BUSHING	1	60001-
11	707-51-10030	・PACKING,ROD (KIT)	1	60001-
12	07000-15130	・O-RING (KIT)	1	60001-
13	707-35-91420	・RING,BACK-UP (KIT)	1	60001-
14	707-51-10640	・RING,BUFFER (KIT)	1	60001-
15	01010-81875	・BOLT	12	60001-
16	707-41-11840	・WASHER	12	60001-
17	707-36-14650	・PISTON	1	60001-
18	707-44-14180	・RING,PISTON (KIT)	1	60001-
19	707-39-14110	・RING,WEAR (KIT)	2	60001-
20	707-44-14910	・RING	2	60001-
21	07001-05090	・RING,BACK-UP (KIT)	2	60001-
22	07000-15090	・O-RING (KIT)	1	60001-
23	01310-01216	・SCREW	1	60001-
24	07020-00000	・FITTING,GREASE	1	60001-

BUCKET CYLINDER

Item	Part No.	Part Name	Qty	Serial No.
25	07020-00900	▪ FITTING,GREASE	1	60001-
26	707-86-66390	TUBE	1	60001-
27	01435-01055	BOLT	2	60001-
28	01435-01040	BOLT	2	60001-
29	07000-13030	O-RING (KIT)	1	60001-
30	707-88-22680	BRACKET	2	60001-
31	707-88-21361	BAND	2	60001-
32	01435-01030	BOLT	4	60001-
33	07283-22738	CLIP	2	60001-
34	01599-01011	NUT	4	60001-
35	01643-31032	WASHER	4	60001-
36	707-88-33030	CAP	2	60001-
37	07371-30640	FLANGE,SPLIT	4	60001-
38	07372-21035	BOLT	8	60001-
39	01643-51032	WASHER	8	60001-
		==========		
	707-99-58060	SERVICE KIT	1	60001-

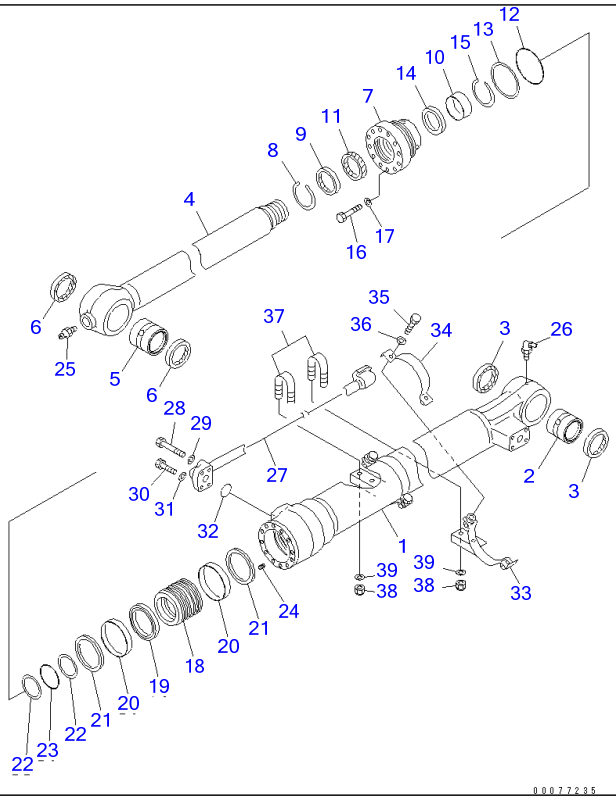

Ref Y1620-41A4 Page 480440

PC220-7 S/N 60001-UP (Overseas Version)

BUCKET CYLINDER(#65889-)

Item	Part No.	Part Name	Qty	Serial No.
G1	(⊙707-01-XS550)	CYLINDER GROUP,(FINAL COATING)	1	65889-
		==========		
	707-01-0H720	CYLINDER ASS'Y	1	65889-
1	707-13-13481	・CYLINDER	1	65889-
2	707-76-80431	・BUSHING	1	65889-
3	07145-00080	・SEAL,DUST (KIT)	2	65889-
4	707-58-90940	・ROD,PISTON	1	65889-
5	707-76-80020	・BUSHING	1	65889-
6	20Y-70-23230	・SEAL,DUST (KIT)	2	65889-
7	707-27-13650	・HEAD,CYLINDER	1	65889-
8	07179-13104	・RING,SNAP	1	65889-
9	195-63-94170	・SEAL,DUST (KIT)	1	65889-
10	707-52-90680	・BUSHING	1	65889-
11	707-51-90030	・PACKING,ROD (KIT)	1	65889-
12	07000-15120	・O-RING (KIT)	1	65889-
13	707-35-91320	・RING,BACK-UP (KIT)	1	65889-
14	707-51-90640	・RING,BUFFER (KIT)	1	65889-
15	707-75-90110	・RING,SNAP	1	65889-
16	01010-81670	・BOLT	12	65889-
17	01643-51645	・WASHER	12	65889-
18	707-36-13780	・PISTON	1	65889-
19	707-44-13180	・RING,PISTON (KIT)	1	65889-
20	707-39-13150	・RING,WEAR (KIT)	2	65889-
21	707-44-13911	・RING	2	65889-
22	707-35-90940	・RING,BACK-UP (KIT)	2	65889-
23	07000-15080	・O-RING (KIT)	1	65889-
24	01310-01216	・SCREW	1	65889-
25	07020-00000	・FITTING,GREASE	1	65889-

BUCKET CYLINDER(#65889-)

Item	Part No.	Part Name	Qty	Serial No.
26	07020-00900	・FITTING,GREASE	1	65889-
27	707-86-66721	TUBE	1	65889-
28	07372-21060	BOLT	2	65889-
29	01643-51032	WASHER	2	65889-
30	07372-21045	BOLT	2	65889-
31	01643-51032	WASHER	2	65889-
32	07000-13030	O-RING (KIT)	1	65889-
33	707-88-22640	BRACKET	2	65889-
34	707-88-21331	BAND	2	65889-
35	07372-21035	BOLT	4	65889-
36	01643-51032	WASHER	4	65889-
37	07283-32738	CLIP	2	65889-
38	01597-01009	NUT	4	65889-
39	01643-31032	WASHER	4	65889-
		==========		
	707-99-47570	SERVICE KIT	1	65889-

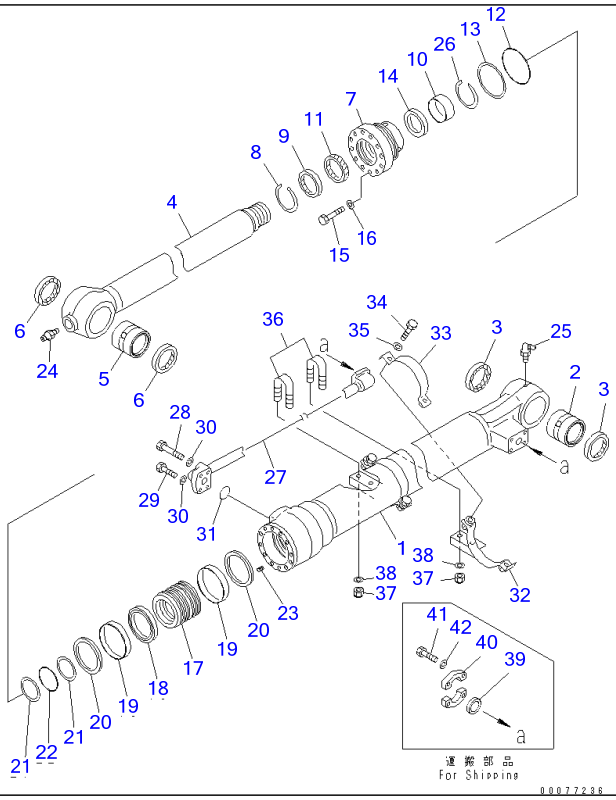

Ref Y1620-41A6 **Page 480450**

PC220-7 S/N 60001-UP (Overseas Version)

BUCKET CYLINDER (500 HOURS LUBRICATING)(#65889-)

Item	Part No.	Part Name	Qty	Serial No.
G-1	(⊙707-01-XU581)	CYLINDER GROUP,(FINAL COATING)	1	65889-
		==========		
	707-01-0G492	CYLINDER ASS'Y	1	65889-
1	707-13-13611	・CYLINDER	1	65889-
2	707-76-80431	・BUSHING	1	65889-
3	07145-00080	・SEAL,DUST (KIT)	2	65889-
4	707-58-90940	・ROD,PISTON	1	65889-
5	707-76-80020	・BUSHING	1	65889-
6	20Y-70-23230	・SEAL,DUST (KIT)	2	65889-
7	707-27-13750	・HEAD,CYLINDER	1	65889-
8	07179-13104	・RING,SNAP	1	65889-
9	195-63-94170	・SEAL,DUST (KIT)	1	65889-
10	707-52-90680	・BUSHING	1	65889-
11	707-51-90030	・PACKING,ROD (KIT)	1	65889-
12	07000-15120	・O-RING (KIT)	1	65889-
13	707-35-91320	・RING,BACK-UP (KIT)	1	65889-
14	707-51-90640	・RING,BUFFER (KIT)	1	65889-
15	01010-81875	・BOLT	12	65889-
16	707-41-11840	・WASHER	12	65889-
17	707-36-13780	・PISTON	1	65889-
18	707-44-13180	・RING,PISTON (KIT)	1	65889-
19	707-39-13150	・RING,WEAR (KIT)	2	65889-
20	707-44-13911	・RING	2	65889-
21	707-35-90940	・RING,BACK-UP (KIT)	2	65889-
22	07000-15080	・O-RING (KIT)	1	65889-
23	01310-01216	・SCREW	1	65889-
24	07020-00000	・FITTING,GREASE	1	65889-
25	07020-00900	・FITTING,GREASE	1	65889-

BUCKET CYLINDER (500 HOURS LUBRICATING)(#65889-)

Item	Part No.	Part Name	Qty	Serial No.
26	707-75-90110	・RING,SNAP		65889-
27	707-86-66350	TUBE	1	65889-
28	01435-01055	BOLT	2	65889-
29	01435-01040	BOLT	2	65889-
30	01643-51032	WASHER	4	65889-
31	07000-13030	O-RING (KIT)	1	65889-
32	707-88-22640	BRACKET	2	65889-
33	707-88-21331	BAND	2	65889-
34	07372-21035	BOLT	4	65889-
35	01643-51032	WASHER	4	65889-
36	07283-22738	CLIP	2	65889-
37	01597-01009	NUT	4	65889-
38	01643-31032	WASHER	4	65889-
39	707-88-33030	CAP	2	65889-
40	07371-30640	FLANGE	4	65889-
41	07372-21035	BOLT	8	65889-
42	01643-51032	WASHER	8	65889-
		==========		
	707-99-47570	SERVICE KIT	1	65889-

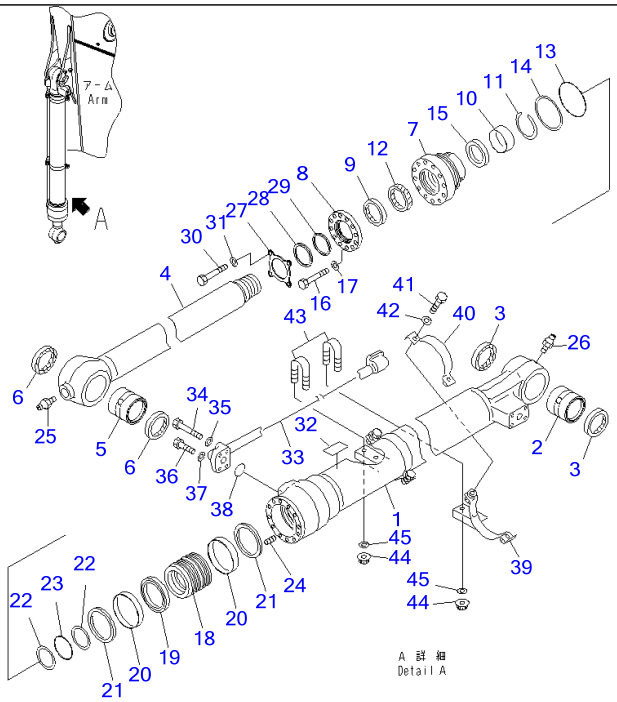

Ref Y1620-41A7 **Page 480460**

PC220-7 S/N 60001-UP (Overseas Version)

BUCKET CYLINDER (100 HOURS LUBRICATING) (-40ßC SPEC.)(#67318-)

Item	Part No.	Part Name	Qty	Serial No.
G1	(⊙707-01-XP590)	CYLINDER GROUP,(FINAL COATING) ==========	1	67318-
	707-01-0K670	CYLINDER ASS'Y	1	67318-
1	707-13-13880	・CYLINDER	1	67318-
2	707-76-80010	・BUSHING	1	67318-
3	07145-10080	・SEAL,DUST (KIT)	2	67318-
4	707-58-90F30	・ROD,PISTON	1	67318-
5	707-76-80020	・BUSHING	1	67318-
6	20Y-70-23230	・SEAL,DUST (KIT)	2	67318-
7	707-27-13750	・HEAD,CYLINDER	1	67318-
8	707-88-05870	・COLLAR	1	67318-
9	707-56-90740	・SEAL,DUST (KIT)	1	67318-
10	707-52-90681	・BUSHING	1	67318-
11	707-75-90110	・RING,SNAP	1	67318-
12	707-51-90730	・U-PACKING,ROD	1	67318-
13	07000-55120	・O-RING (KIT)	1	67318-
14	707-35-91320	・RING,BACK-UP (KIT)	1	67318-
15	707-51-90650	・RING,BUFFER (KIT)	1	67318-
16	01010-81800	・BOLT	8	67318-
17	707-41-11840	・WASHER	8	67318-
18	707-36-13780	・PISTON	1	67318-
19	707-44-13180	・RING,PISTON (KIT)	1	67318-
20	707-39-13150	・RING,WEAR (KIT)	2	67318-
21	707-44-13911	・RING	2	67318-
22	707-35-90940	・RING,BACK-UP (KIT)	2	67318-
23	07000-55080	・O-RING (KIT)	1	67318-
24	01310-01216	・SCREW	1	67318-
25	07020-00000	・FITTING,GREASE	1	67318-

BUCKET CYLINDER (100 HOURS LUBRICATING) (-40ßC SPEC.)(#67318-)

Item	Part No.	Part Name	Qty	Serial No.
26	07020-00000	・FITTING,GREASE	1	67318-
27	707-88-05880	・PLATE	1	67318-
28	707-88-03921	・RING	1	67318-
29	707-56-90820	・SEAL,DUST (KIT)	1	67318-
30	01011-81805	・BOLT	4	67318-
31	707-41-11840	・WASHER	4	67318-
32	700-11-31980	・PLATE, NAME	1	67318-
33	707-86-67820	TUBE	1	67318-
34	07372-21060	BOLT	2	67318-
35	01643-51032	WASHER	2	67318-
36	07372-21045	BOLT	2	67318-
37	01643-51032	WASHER	2	67318-
38	07000-53030	O-RING (KIT)	1	67318-
39	707-88-22640	BRACKET	2	67318-
40	707-88-21331	BAND	2	67318-
41	07372-21035	BOLT	4	67318-
42	01643-51032	WASHER	4	67318-
43	07283-32738	CLIP	2	67318-
44	01597-01009	NUT	4	67318-
45	01643-31032	WASHER	4	67318-
		==========		
	707-99-47851	SERVICE KIT	1	67318-

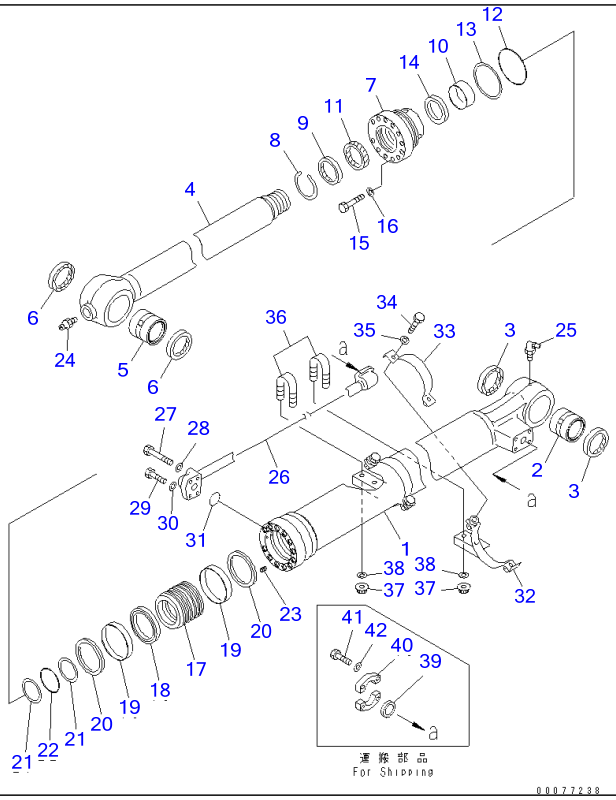

Ref Y1620-41A8 Page 480470

PC220-7 S/N 60001-UP (Overseas Version)

BUCKET CYLINDER (100 HOURS LUBRICATING)(#65001-)

Item	Part No.	Part Name	Qty	Serial No.
G-1	(⊙707-01-XS220)	CYLINDER GROUP,(FINAL COATING)	1	65001-
		==========		
	707-01-0H430	CYLINDER ASS'Y	1	65001-
1	707-13-14570	・CYLINDER	1	65001-
2	707-76-80010	・BUSHING	1	65001-
3	07145-00080	・SEAL,DUST (KIT)	2	65001-
4	707-58-10710	・ROD,PISTON	1	65001-
5	707-76-80020	・BUSHING	1	65001-
6	20Y-70-23230	・SEAL,DUST (KIT)	2	65001-
7	707-27-14930	・HEAD,CYLINDER	1	65001-
8	07179-13114	・RING,SNAP	1	65001-
9	176-63-56170	・SEAL,DUST (KIT)	1	65001-
10	707-52-90780	・BUSHING	1	65001-
11	707-51-10030	・PACKING,ROD (KIT)	1	65001-
12	07000-15130	・O-RING (KIT)	1	65001-
13	707-35-91420	・RING,BACK-UP (KIT)	1	65001-
14	707-51-10640	・RING,BUFFER (KIT)	1	65001-
15	01010-81875	・BOLT	12	65001-
16	707-41-11840	・WASHER	12	65001-
17	707-36-14650	・PISTON	1	65001-
18	707-44-14180	・RING,PISTON (KIT)	1	65001-
19	707-39-14110	・RING,WEAR (KIT)	2	65001-
20	707-44-14910	・RING	2	65001-
21	07001-05090	・RING,BACK-UP (KIT)	2	65001-
22	07000-15090	・O-RING (KIT)	1	65001-
23	01310-01216	・SCREW	1	65001-
24	07020-00000	・FITTING,GREASE	1	65001-
25	07020-00900	・FITTING,GREASE	1	65001-

BUCKET CYLINDER (100 HOURS LUBRICATING)(#65001-)

Item	Part No.	Part Name	Qty	Serial No.
26	707-86-66390	TUBE	1	65001-
27	07372-21060	BOLT	2	65001-
28	01643-51032	WASHER	2	65001-
29	07372-21045	BOLT	2	65001-
30	01643-51032	WASHER	2	65001-
31	07000-13030	O-RING (KIT)	1	65001-
32	707-88-22680	BRACKET	2	65001-
33	707-88-21361	BAND	2	65001-
34	07372-21035	BOLT	4	65001-
35	01643-51032	WASHER	4	65001-
36	07283-32738	CLIP	2	65001-
37	01597-01009	NUT	4	65001-
38	01643-31032	WASHER	4	65001-
39	707-88-33030	CAP	2	65001-
40	07371-30640	FLANGE,SPLIT	4	65001-
41	07372-21035	BOLT	8	65001-
42	01643-51032	WASHER	8	65001-
		==========		
	707-99-58060	SERVICE KIT	1	65001-

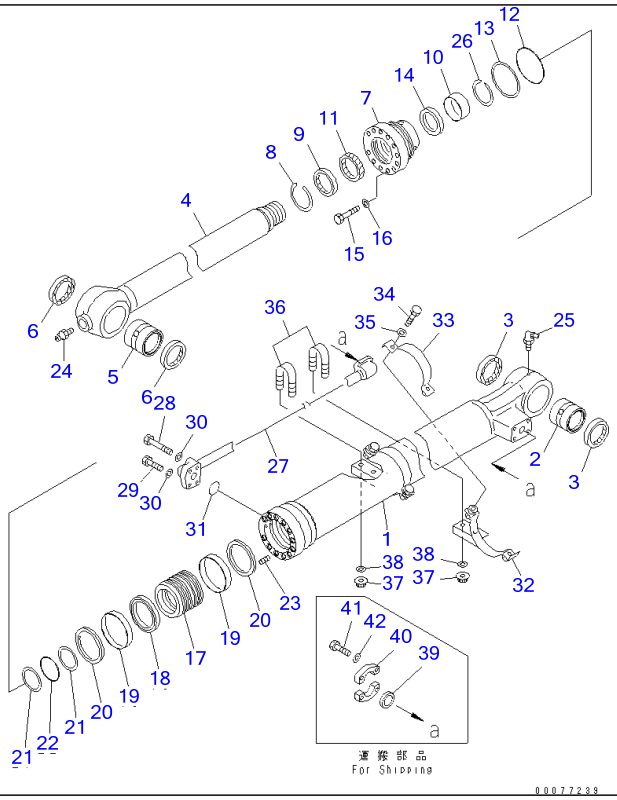

Ref Y1620-41A9 **Page 480480**

PC220-7 S/N 60001-UP (Overseas Version)

BUCKET CYLINDER (500 HOURS LUBRICATING)(#60767-)

Item	Part No.	Part Name	Qty	Serial No.
G-1	(⊙707-01-XS540)	CYLINDER GROUP,(FINAL COATING)	1	65889-
	(⊙707-01-XS540)	CYLINDER GROUP,(FINAL COATING)	1	60767-65000
		==========		
	707-01-0G502	CYLINDER ASS'Y	1	60767-
1	707-13-14571	・CYLINDER	1	60767-
2	707-76-80431	・BUSHING	1	60767-
3	07145-00080	・SEAL,DUST (KIT)	2	60767-
4	707-58-10710	・ROD,PISTON	1	60767-
5	707-76-80020	・BUSHING	1	60767-
6	20Y-70-23230	・SEAL,DUST (KIT)	2	60767-
7	707-27-14690	・HEAD,CYLINDER	1	60767-
8	07179-13114	・RING,SNAP	1	60767-
9	176-63-56170	・SEAL,DUST (KIT)	1	60767-
10	707-52-90780	・BUSHING	1	60767-
11	707-51-10030	・PACKING,ROD (KIT)	1	60767-
12	07000-15130	・O-RING (KIT)	1	60767-
13	707-35-91420	・RING,BACK-UP (KIT)	1	60767-
14	707-51-10640	・RING,BUFFER (KIT)	1	60767-
15	01010-81875	・BOLT	12	60767-
16	707-41-11840	・WASHER	12	60767-
17	707-36-14650	・PISTON	1	60767-
18	707-44-14180	・RING,PISTON (KIT)	1	60767-
19	707-39-14110	・RING,WEAR (KIT)	2	60767-
20	707-44-14910	・RING	2	60767-
21	07001-05090	・RING,BACK-UP (KIT)	2	60767-
22	07000-15090	・O-RING (KIT)	1	60767-
23	01310-01216	・SCREW	1	60767-
24	07020-00000	・FITTING,GREASE	1	60767-

BUCKET CYLINDER (500 HOURS LUBRICATING)(#60767-)

Item	Part No.	Part Name	Qty	Serial No.
25	07020-00900	・FITTING,GREASE	1	60767-
26	707-75-10160	・RING,SNAP	1	60767-
27	707-86-66391	TUBE	1	60767-
28	07372-21060	BOLT	2	60767-
29	07372-21045	BOLT	2	60767-
30	01643-51032	WASHER	4	60767-
31	07000-13030	O-RING (KIT)	1	60767-
32	707-88-22680	BRACKET	2	60767-
33	707-88-21361	BAND	2	60767-
34	07372-21035	BOLT	4	60767-
35	01643-51032	WASHER	4	60767-
36	07283-32738	CLIP	2	60767-
37	01597-01009	NUT	4	60767-
38	01643-31032	WASHER	4	60767-
39	707-88-33030	CAP	2	60767-
40	07371-30640	FLANGE,SPLIT	4	60767-
41	07372-21035	BOLT	8	60767-
42	01643-51032	WASHER	8	60767-
		==========		
	707-99-58060	SERVICE KIT	1	60767-

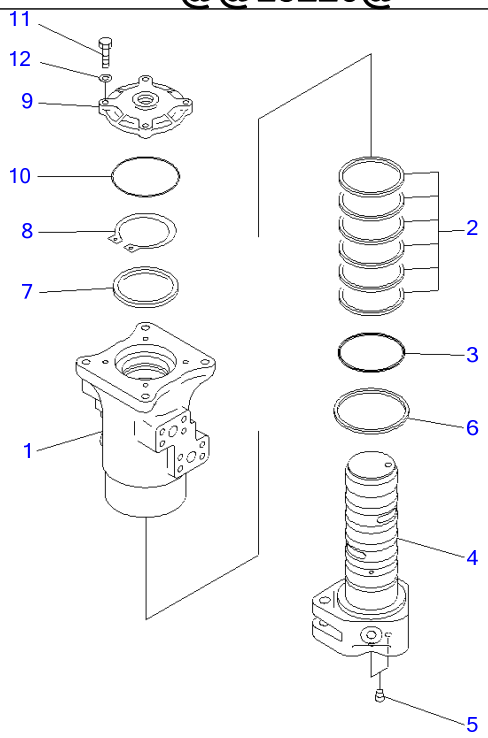

Ref Y1627-01A0 **Page 480490**

PC220-7 S/N 60001-UP (Overseas Version)
SWIVEL JOINT(#60001-65058)

Item	Part No.	Part Name	Qty	Serial No.
	703-08-33610	SWIVEL JOINT ASS'Y	1	60001-65058
1	☆	・ROTOR	1	60001-65058
2	703-08-95620	・SEAL	6	60001-65058
3	07000-15080	・O-RING	1	60001-65058
4	☆	・SHAFT	1	60001-65058
5	703-13-98930	・・PLUG	2	60001-65058
6	703-09-98130	・SEAL	1	60001-65058
7	703-08-94510	・RING	1	60001-65058
8	04064-07525	・RING,SNAP	1	60001-65058
9	703-08-93170	・COVER	1	60001-65058
10	07000-12105	・O-RING	1	60001-65058
11	01010-80835	・BOLT	4	60001-65058
12	01643-30823	・WASHER	4	60001-65058

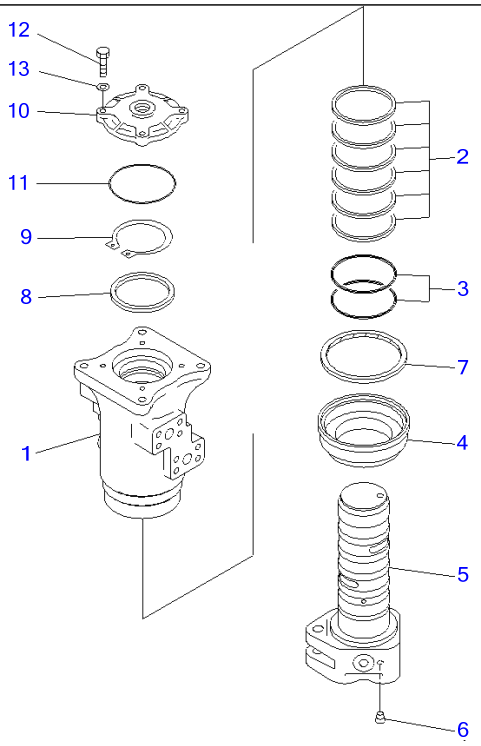

Ref Y1627-01A0A **Page 480500**

PC220-7 S/N 60001-UP (Overseas Version)
SWIVEL JOINT(#65059-)

Item	Part No.	Part Name	Qty	Serial No.
	703-08-33631	SWIVEL JOINT ASS'Y	1	67532-
	703-08-33630	SWIVEL JOINT ASS'Y	1	65059-67531
1	☆	・ROTOR	1	67532-
	☆	・ROTOR	1	65059-67531
2	703-08-95620	・SEAL	6	65059-
3	07000-15080	・O-RING	2	65059-
4	703-08-93771	・COVER	1	67532-
	703-08-93770	・COVER	1	65059-67531
5	☆	・SHAFT	1	67532-
	☆	・SHAFT	1	65059-67531
6	703-13-98930	・・PLUG	1	65059-
7	703-08-95770	・SEAL,DUST	1	65059-
8	703-08-94510	・RING	1	65059-
9	04064-07525	・RING,SNAP	1	65059-
10	703-08-93170	・COVER	1	65059-
11	07000-12105	・O-RING	1	65059-
12	01010-80835	・BOLT	4	65059-
13	01643-30823	・WASHER	4	65059-

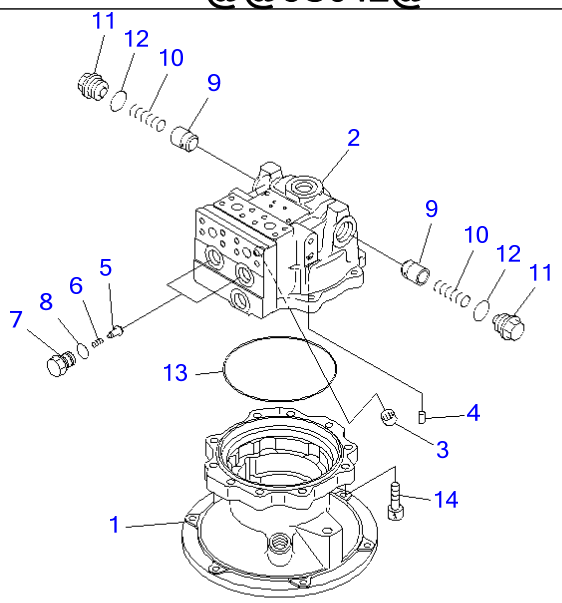

P W 5 S 0 4 2

Ref Y1640-01A0 **Page 480510**

PC220-7 S/N 60001-UP (Overseas Version)
SWING MOTOR (1/3)

Item	Part No.	Part Name	Qty	Serial No.
	706-7G-01041	MOTOR ASS'Y	1	69348-
	706-7G-01040	MOTOR ASS'Y	1	60001-69347
		THESE ASSEMBLIES CONSIST OF ALL PARTS SHOWN IN FIGS.Y1640-01A0 TO Y1640-03A0.		
	706-7G-03041	・MOTOR SUB ASS'Y	1	69348-
	706-7G-03040	・MOTOR SUB ASS'Y	1	60001-69347
1	(★706-7G-41111)	・・CASE	1	69348-
	(★706-7G-41110)	・・CASE	1	60001-69347
2	(★706-7G-71130)	・・HOUSING	1	60001-
3	(★706-7G-40010)	・・BEARING	1	60001-
4	(★706-75-42820)	・・PIN,DOWEL	1	60001-
5	709-25-11650	・・VALVE,CHECK	2	60001-
6	709-25-11361	・・SPRING	2	60001-
7	709-25-11640	・・PLUG	2	60001-
8	07000-12020	・・O-RING	2	60001-
9	706-75-74540	・・VALVE	2	60001-
10	706-7G-71550	・・SPRING	2	60001-
11	706-75-74850	・・PLUG	2	60001-
12	07002-13334	・・O-RING	2	60001-
13	(★706-75-42370)	・・O-RING	1	60001-
14	01252-61245	・・BOLT	10	60001-

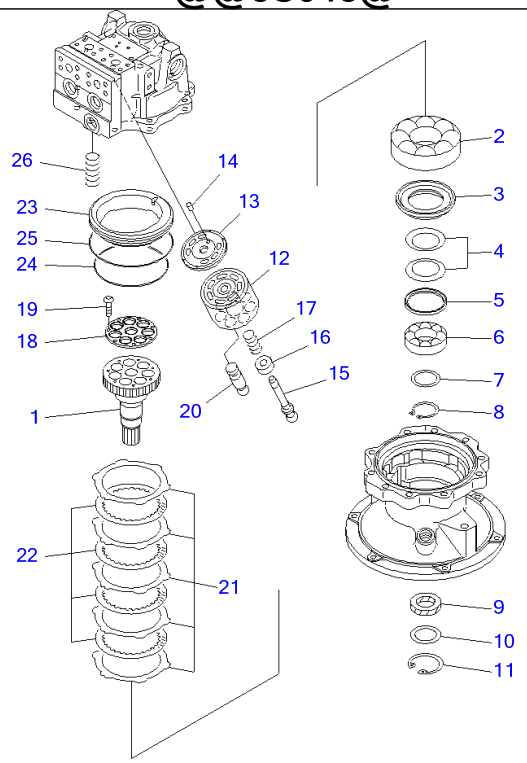

Ref Y1640-02A0 **Page 480520**

PC220-7 S/N 60001-UP (Overseas Version)
SWING MOTOR (2/3)

Item	Part No.	Part Name	Qty	Serial No.
	(706-7G-01041)	MOTOR ASS'Y	1	69348-
	(706-7G-01040)	MOTOR ASS'Y	1	60001-69347
		THESE ASSEMBLIES CONSIST OF ALL PARTS SHOWN IN FIGS.Y1640-01A0 TO Y1640-03A0.		
	(706-7G-03041)	・MOTOR SUB ASS'Y	1	69348-
	(706-7G-03040)	・MOTOR SUB ASS'Y	1	60001-69347
1	(★706-7G-41610)	・・SHAFT,DRIVE	1	60001-
2	(★706-75-42880)	・・BEARING	1	60001-
3	(★706-75-43810)	・・SPACER	1	60001-
4	(★706-7E-11260)	・・SPRING	2	60001-
5	(★706-7E-11270)	・・SEAT	1	60001-
6	(★706-76-40890)	・・BEARING	1	60001-
7	(★706-75-05040)	・・SPACER KIT	1	60001-
	☆	・・・SPACER, 3.1MM	1	60001-
	☆	・・・SPACER, 3.4MM	1	60001-
	☆	・・・SPACER, 3.7MM	1	60001-
8	04064-04518	・・RING,SNAP	1	60001-
9	706-7E-11280	・・SEAL,OIL	1	60001-
10	706-7G-41910	・・SPACER	1	60001-
11	04065-06220	・・RING	1	60001-
12	(★706-7G-41210)	・・BLOCK,CYLINDER	1	60001-
13	(★706-7G-41710)	・・PLATE,VALVE	1	60001-
14	(★706-75-43750)	・・PIN,DOWEL	1	60001-
15	(★706-7G-41120)	・・SHAFT,CENTER	1	60001-
16	(★706-7G-41130)	・・RING,CENTER	1	60001-
17	(★706-7G-41140)	・・SPRING	1	60001-
	(★706-7G-05010)	・・RETAINER KIT	1	60001-
18	☆	・・・RETAINER	1	60001-

SWING MOTOR (2/3)

Item	Part No.	Part Name	Qty	Serial No.
19	☆	・・・SCREW	7	60001-
20	(★706-7G-41160)	・・PISTON SUB ASS'Y	7	60001-
21	(★706-7G-91340)	・・PLATE	5	60001-
22	(★706-7G-91350)	・・DISC	4	60001-
23	(★706-7G-91111)	・・PISTON	1	69348-
	(★706-7G-91110)	・・PISTON,BRAKE	1	60001-69347
24	(★706-77-40370)	・・O-RING	1	60001-
25	(★708-8F-31610)	・・O-RING	1	60001-
26	(★706-7G-91360)	・・SPRING	6	60001-

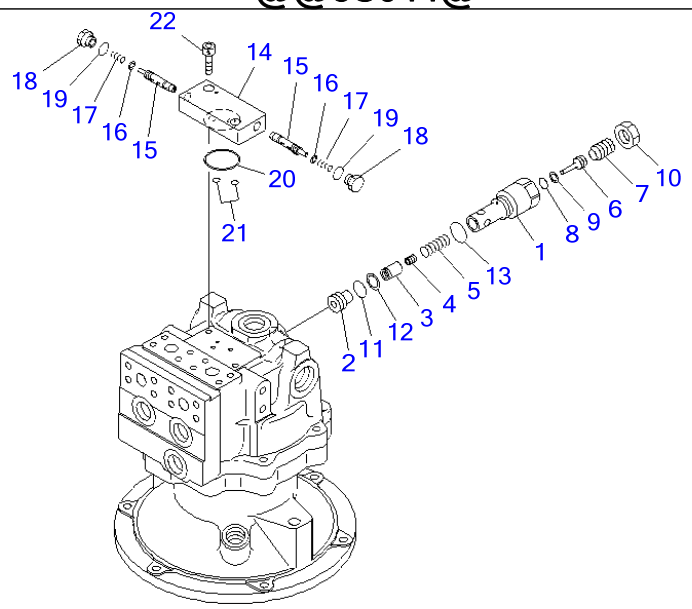

P W 5 S 0 4 4

Ref Y1640-03A0 **Page 480530**

PC220-7 S/N 60001-UP (Overseas Version)
SWING MOTOR (3/3)

Item	Part No.	Part Name	Qty	Serial No.
	(706-7G-01041)	MOTOR ASS'Y	1	69348-
	(706-7G-01040)	MOTOR ASS'Y	1	60001-69347
		THESE ASSEMBLIES CONSIST OF ALL PARTS SHOWN IN FIGS.Y1640-01A0 TO Y1640-03A0.		
	702-75-01270	・VALVE ASS'Y	1	69348-
	702-75-01250	・VALVE ASS'Y,RELIEF	1	60001-69347
1	☆	・・SLEEVE	1	60001-
2	☆	・・SEAT,VALVE	1	60001-
3	☆	・・VALVE	1	60001-
4	☆	・・PISTON	1	60001-
5	☆	・・SPRING	1	60001-
6	☆	・・ROD	1	60001-
7	☆	・・SCREW	1	60001-
8	☆	・・O-RING	1	60001-
9	☆	・・RING,BACK-UP	1	60001-
10	☆	・・NUT	1	60001-
11	07000-F2020	・・O-RING	1	60001-
12	07001-02020	・・RING,BACK-UP	1	60001-
13	07002-13034	・・O-RING	1	60001-
	702-15-77000	・VALVE ASS'Y	1	60001-
14	☆	・・BODY	1	60001-
15	☆	・・SPOOL	2	60001-
16	709-70-71610	・・SEAL	2	60001-
17	702-15-71130	・・SPRING	2	60001-
18	702-15-71140	・・PLUG	2	60001-
19	07002-01423	・・O-RING	2	60001-
20	07000-03042	・O-RING	1	60001-
21	07000-11009	・O-RING	2	60001-

SWING MOTOR (3/3)

Item	Part No.	Part Name	Qty	Serial No.
22	01252-60825	・BOLT	2	60001-

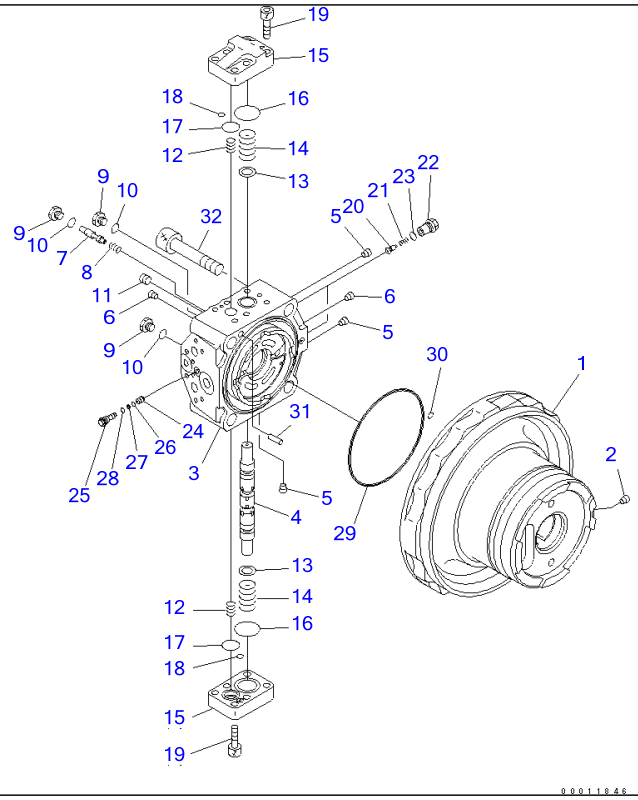

Ref Y1641-01A0 **Page 480540**

PC220-7 S/N 60001-UP (Overseas Version)
TRAVEL MOTOR (1/3)

Item	Part No.	Part Name	Qty	Serial No.
	708-8F-00192	MOTOR ASS'Y	1	60262-
	708-8F-00191	MOTOR ASS'Y	1	60003-60261
	708-8F-00190	MOTOR ASS'Y	1	60001-60002
		THESE ASSEMBLIES CONSIST OF ALL PARTS SHOWN IN FIGS.Y1641-01A0 TO Y1641-03A0.		
	(★708-8F-04660)	・CASE SUB ASS'Y	1	60001-
1	☆	・・CASE,MOTOR	1	60001-
2	☆	・・PLUG	1	60001-
	(★708-8F-04192)	・END COVER SUB ASS'Y	1	60003-
	(★708-8F-04190)	・END COVER SUB ASS'Y	1	60001-60002
3	☆	・・COVER,END	1	60003-
	☆	・・COVER,END	1	60001-60002
4	☆	・・SPOOL	1	60003-
	☆	・・SPOOL	1	60001-60002
5	☆	・・PLUG	3	60001-
6	☆	・・PLUG	2	60001-
7	☆	・・SPOOL	1	60001-
8	(★708-8F-34220)	・・SPRING	1	60001-
9	708-8H-11530	・PLUG	3	60001-
10	07002-11423	・O-RING	3	60001-
11	20B-27-11210	・BLEEDER	1	60001-
12	708-8F-36611	・SPRING	2	60001-
13	☆	・RING	2	60001-
14	708-8H-36121	・SPRING	2	60001-
15	708-8F-36311	・COVER	2	60001-
16	07000-13040	・O-RING	2	60001-
17	700-93-11320	・O-RING	2	60001-
18	07000-11009	・O-RING	2	60001-

TRAVEL MOTOR (1/3)

Item	Part No.	Part Name	Qty	Serial No.
19	01252-61235	・BOLT	12	60001-
20	708-8F-34120	・VALVE	2	60001-
21	722-10-91130	・SPRING	2	60001-
22	708-8F-34110	・PLUG	2	60001-
23	07002-11823	・O-RING	2	60001-
24	708-8E-16180	・VALVE	1	60001-
25	708-8F-31660	・PLUG	1	60001-
26	07000-11006	・O-RING	1	60001-
27	07001-01006	・RING	1	60001-
28	07002-11223	・O-RING	1	60001-
29	708-8F-31610	・O-RING	1	60001-
30	07000-11009	・O-RING	1	60001-
31	(★04020-01228)	・PIN	1	60001-
32	708-8F-31210	・BOLT	4	60001-

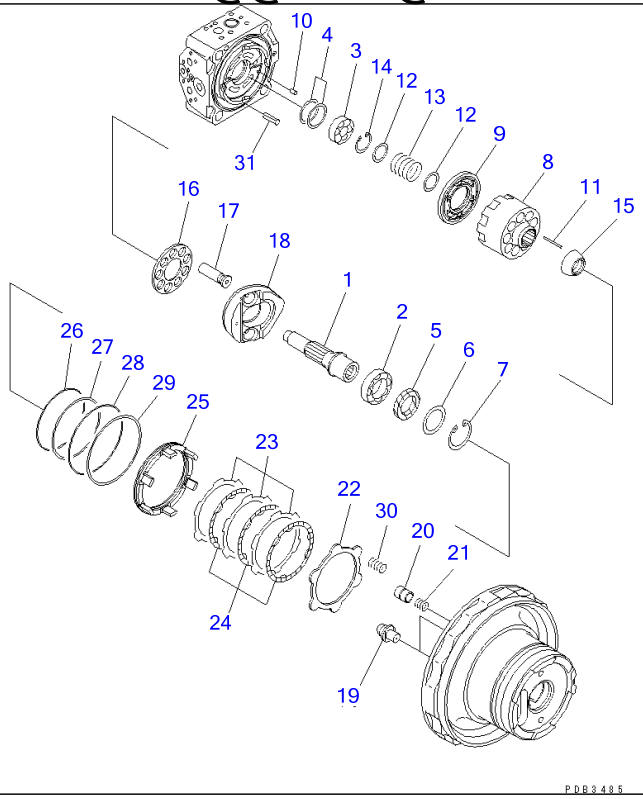

Ref Y1641-02A0 Page 480550

PC220-7 S/N 60001-UP (Overseas Version)

TRAVEL MOTOR (2/3)

Item	Part No.	Part Name	Qty	Serial No.
	(708-8F-00192)	MOTOR ASS'Y	1	60262-
	(708-8F-00191)	MOTOR ASS'Y	1	60003-60261
	(708-8F-00190)	MOTOR ASS'Y	1	60001-60002
		THESE ASSEMBLIES CONSIST OF ALL PARTS SHOWN IN FIGS.Y1641-01A0 TO Y1641-03A0.		
1	(★708-8F-32121)	・SHAFT	1	60001-
2	(★708-8F-12151)	・BEARING	1	60001-
3	(★708-7L-12140)	・BEARING	1	60001-
4	(★708-7L-05010)	・SPACER KIT	1	60001-
	☆	・・SPACER, 1.5MM	1	60001-
	☆	・・SPACER, 1.6MM	1	60001-
	☆	・・SPACER, 1.7MM	1	60001-
	☆	・・SPACER, 1.8MM	1	60001-
	☆	・・SPACER, 1.9MM	1	60001-
	☆	・・SPACER, 2.0MM	1	60001-
5	706-7G-11291	・SEAL,OIL	1	60001-
6	708-8F-12230	・SPACER, 3.2MM	1	60001-
7	04065-07225	・RING	1	60001-
8	☆	・BLOCK,CYLINDER	1	60262-
	☆	・BLOCK,CYLINDER	1	60001-60261
9	☆	・PLATE,VALVE	1	60262-
	☆	・PLATE,VALVE	1	60001-60261
10	☆	・PIN	1	60001-
11	(★708-8F-33360)	・PIN	3	60001-
12	(★708-7L-13140)	・SEAT	2	60001-
13	(★708-8F-33160)	・SPRING	1	60001-
14	(★04065-04818)	・RING,SNAP	1	60001-
15	(★708-8F-33350)	・GUIDE,RETAINER	1	60001-

TRAVEL MOTOR (2/3)

Item	Part No.	Part Name	Qty	Serial No.
16	(★708-2L-33350)	・RETAINER,SHOE	1	60262-
	(★708-8F-33340)	・RETAINER,SHOE	1	60001-60261
17	(★708-8F-33310)	・PISTON SUB ASS'Y	9	60001-
18	(★708-8F-33471)	・CAM,ROCKER	1	60001-
19	(★708-8F-33710)	・BALL,RETAINER	2	60001-
20	(★708-8F-34141)	・PISTON	1	60001-
21	(★708-8F-34150)	・SPRING	1	60001-
22	(★708-8F-35110)	・PLATE	1	60001-
23	(★708-8F-35130)	・PLATE	3	60001-
24	(★708-8F-35120)	・DISC	3	60001-
25	(★708-8F-35140)	・PISTON,BRAKE	1	60001-
26	(★708-8F-35160)	・O-RING	1	60001-
27	(★708-8F-35170)	・RING,BACK-UP	1	60001-
28	(★708-8F-35180)	・O-RING	1	60001-
29	(★708-8F-35190)	・RING,BACK-UP	1	60001-
30	(★708-8F-35150)	・SPRING	6	60001-
31	(★04025-00324)	・PIN,SPRING	1	60001-

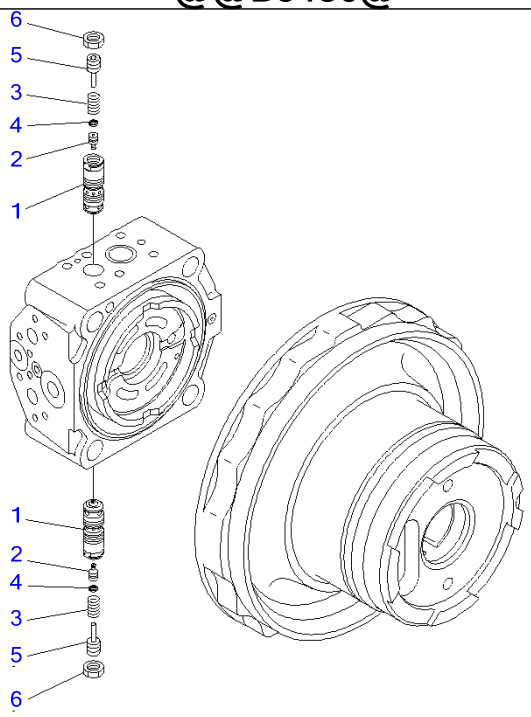

PDB3486

Ref Y1641-03A0 **Page 480560**

PC220-7 S/N 60001-UP (Overseas Version)
TRAVEL MOTOR (3/3)

Item	Part No.	Part Name	Qty	Serial No.
	(708-8F-00192)	MOTOR ASS'Y	1	60262-
	(708-8F-00191)	MOTOR ASS'Y	1	60003-60261
	(708-8F-00190)	MOTOR ASS'Y	1	60001-60002
		THESE ASSEMBLIES CONSIST OF ALL PARTS SHOWN IN FIGS.Y1641-01A0 TO Y1641-03A0.		
	702-73-02112	・VALVE ASS'Y,RELIEF	2	60001-
1	☆	・・SLEEVE	1	60001-
2	☆	・・VALVE	1	60001-
3	☆	・・SPRING	1	60001-
4	☆	・・SEAL	1	60001-
5	☆	・・SCREW	1	60001-
6	☆	・・NUT	1	60001-

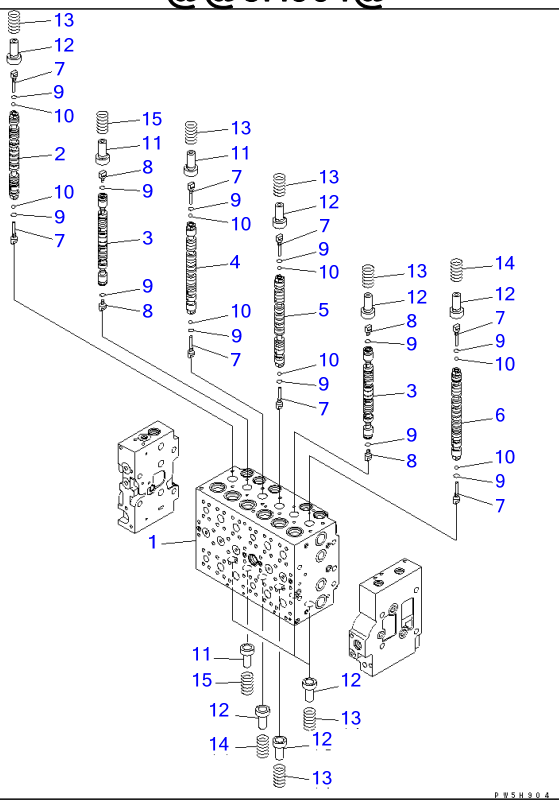

Ref Y1660-01A0 Page 480570

PC220-7 S/N 60001-UP (Overseas Version)
CONTROL VALVE (1/16)

Item	Part No.	Part Name	Qty	Serial No.
	723-46-20502	VALVE ASS'Y	1	60561-
	723-46-20501	VALVE ASS'Y	1	60109-60560
	723-46-20500	VALVE ASS'Y	1	60001-60108
		THESE ASSEMBLIES CONSIST OF ALL PARTS SHOWN IN FIGS.Y1660-01A0 TO Y1660-16A0.		
	☆	・BODY SUB ASS'Y	1	60561-
	☆	・BODY SUB ASS'Y	1	60109-60560
	☆	・BODY SUB ASS'Y	1	60001-60108
1	☆	・・BLOCK,VALVE	1	60001-
2	☆	・・SPOOL	1	60001-
3	☆	・・SPOOL	2	60001-
4	☆	・・SPOOL	1	60001-
5	☆	・・SPOOL	1	60001-
6	☆	・・SPOOL	1	60001-
7	723-46-15130	・・PLUG	8	60001-
8	723-46-15140	・・PLUG	4	60001-
9	07002-10823	・・O-RING	12	60001-
10	708-7T-16460	・・BALL	8	60001-
11	723-46-15120	・・RETAINER	3	60001-
12	723-46-15690	・・RETAINER	9	60001-
13	723-46-14110	・・SPRING	8	60001-
14	723-46-14270	・・SPRING	2	60001-
15	723-46-14131	・・SPRING	2	60001-

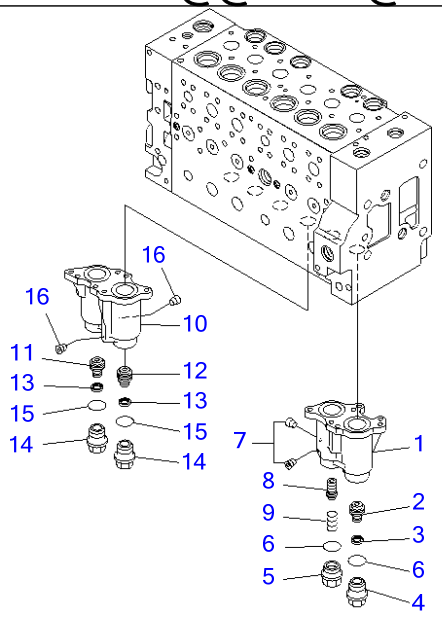

P W 5 H 9 0 5

Ref Y1660-02A0 **Page 480580**

PC220-7 S/N 60001-UP (Overseas Version)
CONTROL VALVE (2/16)

Item	Part No.	Part Name	Qty	Serial No.
	(723-46-20502)	VALVE ASS'Y	1	60561-
	(723-46-20501)	VALVE ASS'Y	1	60109-60560
	(723-46-20500)	VALVE ASS'Y	1	60001-60108
		THESE ASSEMBLIES CONSIST OF ALL PARTS SHOWN IN FIGS.Y1660-01A0 TO Y1660-16A0.		
	☆	・BODY SUB ASS'Y	1	60561-
	☆	・BODY SUB ASS'Y	1	60109-60560
	☆	・BODY SUB ASS'Y	1	60001-60108
	723-46-18300	・・CASE SUB ASS'Y	1	60001-
1	☆	・・・CASE	1	60001-
2	☆	・・・PISTON	1	60001-
3	☆	・・・SEAL	1	60001-
4	723-46-15630	・・・PLUG	1	60001-
5	723-46-17340	・・・PLUG	1	60001-
6	07000-13024	・・・O-RING	2	60001-
7	☆	・・・PLUG	3	60001-
8	723-46-17320	・・・SPOOL	1	60001-
9	723-46-17330	・・・SPRING	1	60001-
	723-46-17101	・・CASE SUB ASS'Y	1	60001-
10	☆	・・・CASE	1	60001-
11	☆	・・・PISTON	1	60001-
12	☆	・・・PISTON	1	60001-
13	☆	・・・SEAL	2	60001-
14	723-46-15630	・・・PLUG	2	60001-
15	07000-13024	・・・O-RING	2	60001-
16	☆	・・・PLUG	2	60001-

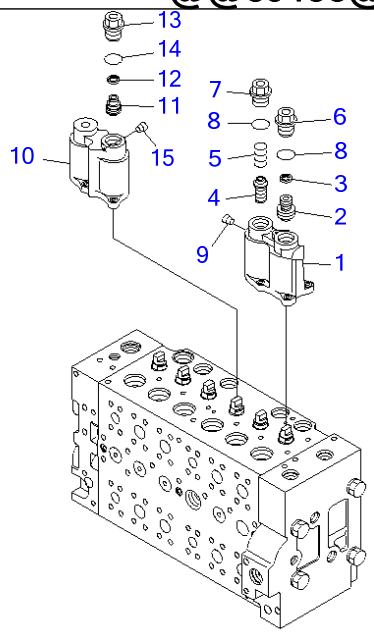

P W 5 J 4 5 3

Ref Y1660-03A0 **Page 480590**

PC220-7 S/N 60001-UP (Overseas Version)
CONTROL VALVE (3/16)

Item	Part No.	Part Name	Qty	Serial No.
	(723-46-20502)	VALVE ASS'Y	1	60561-
	(723-46-20501)	VALVE ASS'Y	1	60109-60560
	(723-46-20500)	VALVE ASS'Y	1	60001-60108
		THESE ASSEMBLIES CONSIST OF ALL PARTS SHOWN IN FIGS.Y1660-01A0 TO Y1660-16A0.		
	☆	・BODY SUB ASS'Y	1	60561-
	☆	・BODY SUB ASS'Y	1	60109-60560
	☆	・BODY SUB ASS'Y	1	60001-60108
	723-46-18401	・・CASE SUB ASS'Y	1	60001-
1	☆	・・・CASE	1	60001-
2	☆	・・・PISTON	1	60001-
3	☆	・・・SEAL	1	60001-
4	723-46-17320	・・・SPOOL	1	60001-
5	723-46-17330	・・・SPRING	1	60001-
6	723-46-15630	・・・PLUG	1	60001-
7	723-46-17340	・・・PLUG	1	60001-
8	07000-13024	・・・O-RING	2	60001-
9	☆	・・・PLUG	3	60001-
	723-46-17203	・・CASE SUB ASS'Y	1	60001-
10	☆	・・・CASE	1	60001-
11	☆	・・・PISTON	1	60001-
12	☆	・・・SEAL	1	60001-
13	723-46-15630	・・・PLUG	1	60001-
14	07000-13024	・・・O-RING	1	60001-
15	☆	・・・PLUG	1	60001-

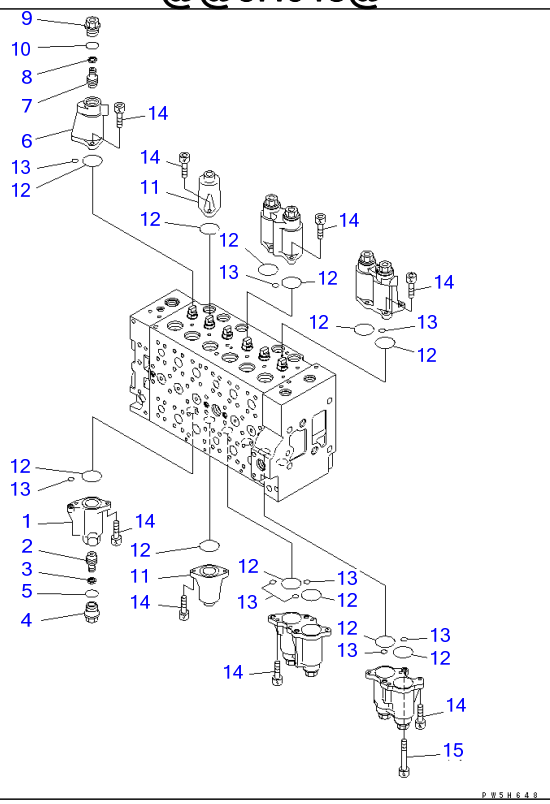

Ref Y1660-04A0 **Page 480600**

PC220-7 S/N 60001-UP (Overseas Version)
CONTROL VALVE (4/16)

Item	Part No.	Part Name	Qty	Serial No.
	(723-46-20502)	VALVE ASS'Y	1	60561-
	(723-46-20501)	VALVE ASS'Y	1	60109-60560
	(723-46-20500)	VALVE ASS'Y	1	60001-60108
		THESE ASSEMBLIES CONSIST OF ALL PARTS SHOWN IN FIGS.Y1660-01A0 TO Y1660-16A0.		
	☆	・BODY SUB ASS'Y	1	60561-
	☆	・BODY SUB ASS'Y	1	60109-60560
	☆	・BODY SUB ASS'Y	1	60001-60108
	723-46-18500	・・CASE SUB ASS'Y	1	60001-
1	☆	・・・CASE	1	60001-
2	☆	・・・PISTON	1	60001-
3	☆	・・・SEAL	1	60001-
4	723-46-15630	・・・PLUG	1	60001-
5	07000-13024	・・・O-RING	1	60001-
	723-46-18600	・・CASE SUB ASS'Y	1	60001-
6	☆	・・・CASE	1	60001-
7	☆	・・・PISTON	1	60001-
8	☆	・・・SEAL	1	60001-
9	723-46-15630	・・・PLUG	1	60001-
10	07000-13024	・・・O-RING	1	60001-
11	723-46-15111	・・CASE	2	60001-
12	07430-71380	・・O-RING	12	60001-
13	702-16-53920	・・O-RING	9	60001-
14	01252-60820	・・BOLT	22	60001-
15	723-46-17350	・・BOLT	2	60001-

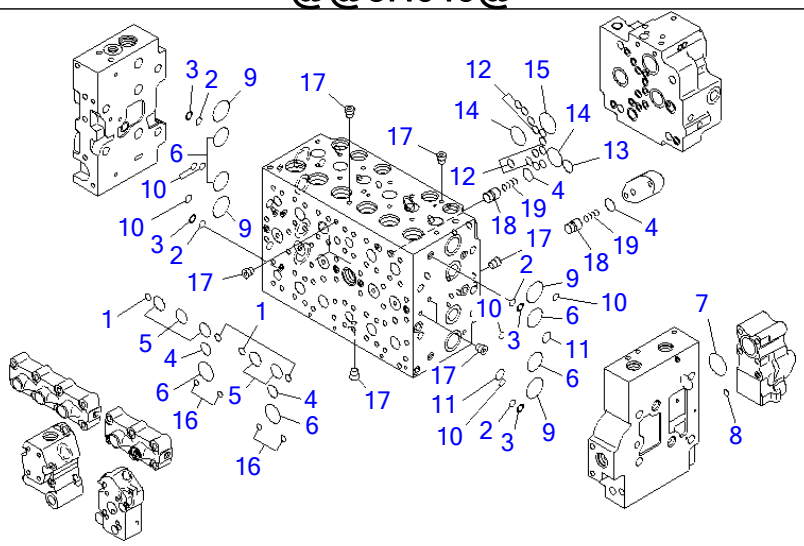

PW5H649

Ref Y1660-05A0 **Page 480610**

PC220-7 S/N 60001-UP (Overseas Version)
CONTROL VALVE (5/16)

Item	Part No.	Part Name	Qty	Serial No.
	(723-46-20502)	VALVE ASS'Y	1	60561-
	(723-46-20501)	VALVE ASS'Y	1	60109-60560
	(723-46-20500)	VALVE ASS'Y	1	60001-60108
		THESE ASSEMBLIES CONSIST OF ALL PARTS SHOWN IN FIGS.Y1660-01A0 TO Y1660-16A0.		
	☆	・BODY SUB ASS'Y	1	60561-
	☆	・BODY SUB ASS'Y	1	60109-60560
	☆	・BODY SUB ASS'Y	1	60001-60108
1	07000-12012	・・O-RING	4	60001-
2	723-11-19130	・・O-RING	4	60001-
3	723-46-17520	・・RING,BACK-UP	4	60001-
4	07000-12021	・・O-RING	4	60001-
5	07000-13028	・・O-RING	5	60001-
6	07000-13032	・・O-RING	6	60001-
7	07000-13038	・・O-RING	1	60001-
8	07000-11010	・・O-RING	1	60001-
9	723-46-17510	・・O-RING	4	60001-
10	723-46-17530	・・O-RING	6	60001-
11	723-11-18150	・・O-RING	2	60001-
12	07000-12012	・・O-RING	12	60001-
13	07000-12021	・・O-RING	1	60001-
14	07000-13032	・・O-RING	2	60001-
15	07000-13036	・・O-RING	1	60001-
16	702-16-53920	・・O-RING	4	60001-
17	☆	・・PLUG	17	60001-
18	723-46-17650	・・VALVE	2	60001-
19	723-46-14150	・・SPRING	2	60001-

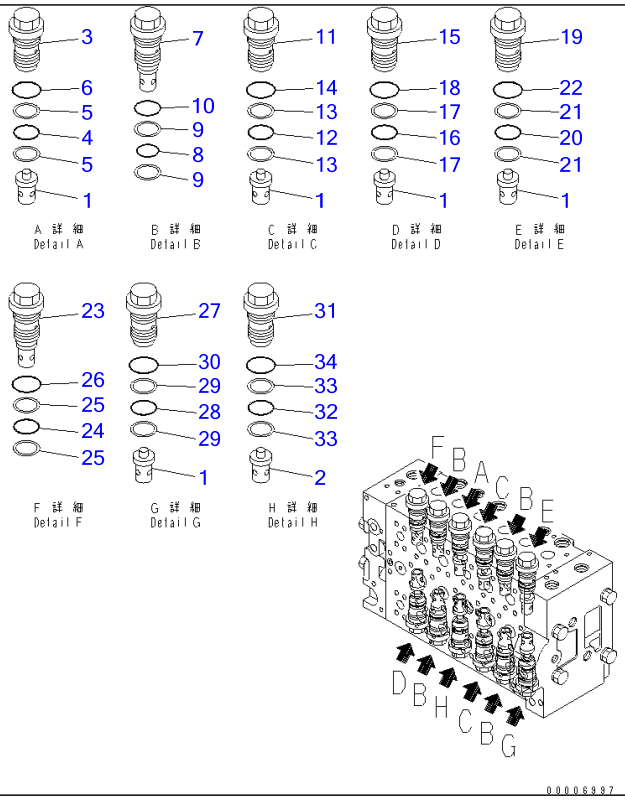

PC220-7 S/N 60001-UP (Overseas Version)

CONTROL VALVE (6/16)

Item	Part No.	Part Name	Qty	Serial No.
	(723-46-20502)	VALVE ASS'Y	1	60561-
	(723-46-20501)	VALVE ASS'Y	1	60109-60560
	(723-46-20500)	VALVE ASS'Y	1	60001-60108
		THESE ASSEMBLIES CONSIST OF ALL PARTS SHOWN IN FIGS.Y1660-01A0 TO Y1660-16A0.		
	☆	・BODY SUB ASS'Y	1	60561-
	☆	・BODY SUB ASS'Y	1	60109-60560
	☆	・BODY SUB ASS'Y	1	60001-60108
1	723-46-41110	・・VALVE	6	60001-
2	723-46-41190	・・VALVE	1	60109-
	723-46-41120	・・VALVE	1	60001-60108
3	723-46-40100	・・VALVE ASS'Y	1	60001-
4	700-93-11320	・・・O-RING	1	60001-
5	723-46-41950	・・・RING	2	60001-
6	07002-13634	・・・O-RING	1	60001-
7	723-46-42700	・・VALVE ASS'Y	4	60001-
8	700-93-11320	・・・O-RING	1	60001-
9	723-46-41950	・・・RING	2	60001-
10	07002-13634	・・・O-RING	1	60001-
11	723-46-41100	・・VALVE ASS'Y	2	60001-
12	700-93-11320	・・・O-RING	1	60001-
13	723-46-41950	・・・RING	2	60001-
14	07002-13634	・・・O-RING	1	60001-
15	723-46-45100	・・VALVE ASS'Y	1	60001-
16	700-93-11320	・・・O-RING	1	60001-
17	723-46-41950	・・・RING	2	60001-
18	07002-13634	・・・O-RING	1	60001-
19	723-46-46300	・・VALVE ASS'Y	1	60001-

CONTROL VALVE (6/16)

Item	Part No.	Part Name	Qty	Serial No.
20	700-93-11320	・・・O-RING	1	60001-
21	723-46-41950	・・・RING	2	60001-
22	07002-13634	・・・O-RING	1	60001-
23	723-46-43400	・・VALVE ASS'Y	1	60001-
24	700-93-11320	・・・O-RING	1	60001-
25	723-46-41950	・・・RING	2	60001-
26	07002-13634	・・・O-RING	1	60001-
27	723-46-43100	・・VALVE ASS'Y	1	60001-
28	700-93-11320	・・・O-RING	1	60001-
29	723-46-41950	・・・RING	2	60001-
30	07002-13634	・・・O-RING	1	60001-
31	723-46-46101	・・VALVE ASS'Y	1	60001-
32	700-93-11320	・・・O-RING	1	60001-
33	723-46-41950	・・・RING	2	60001-
34	07002-13634	・・・O-RING	1	60001-

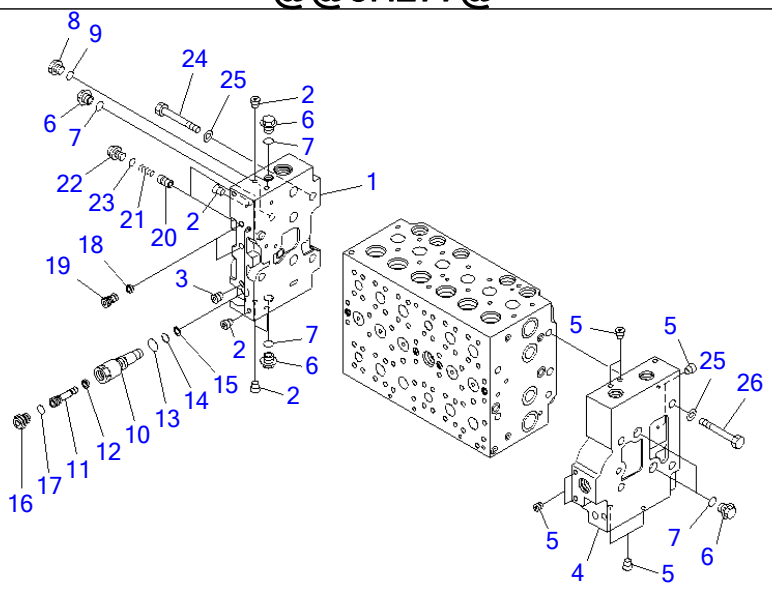

PWSH277

Ref Y1660-07A0 **Page 480630**

PC220-7 S/N 60001-UP (Overseas Version)
CONTROL VALVE (7/16)(#60001-69810)

Item	Part No.	Part Name	Qty	Serial No.
	(723-46-20502)	VALVE ASS'Y	1	60561-@
	(723-46-20501)	VALVE ASS'Y	1	60109-60560
	(723-46-20500)	VALVE ASS'Y	1	60001-60108
		THESE ASSEMBLIES CONSIST OF ALL PARTS SHOWN IN FIGS.Y1660-01A0 TO Y1660-16A0.		
	723-46-00750	・COVER ASS'Y	1	60001-69810
1	☆	・・COVER	1	60001-69810
2	☆	・・PLUG	7	60001-@
3	☆	・・PLUG	1	60001-@
	723-46-00742	・COVER ASS'Y	1	60001-@
4	☆	・・COVER	1	60001-@
5	☆	・・PLUG	8	60001-@
6	723-46-15180	・PLUG	5	60001-69810
7	07002-11823	・O-RING	5	60001-69810
8	708-8H-11530	・PLUG	1	60001-@
9	07002-11423	・O-RING	1	60001-@
	723-46-17600	・PLUG ASS'Y	1	60001-@
10	723-46-17610	・・SLEEVE	1	60001-@
11	723-46-17640	・・PLUG	1	60001-@
12	702-21-55760	・・FILTER	1	60001-@
13	07002-11423	・・O-RING	1	60001-@
14	07000-11007	・・O-RING	1	60001-@
15	07001-01007	・・RING,BACK-UP	1	60001-@
16	708-8E-16160	・・PLUG	1	60001-@
17	07002-11023	・・O-RING	1	60001-@
18	723-40-82220	・FILTER	2	60001-@
19	723-46-17550	・PLUG	2	60001-@
20	723-46-15190	・VALVE	2	60001-@

CONTROL VALVE (7/16)(#60001-69810)

Item	Part No.	Part Name	Qty	Serial No.
21	723-46-14140	・SPRING	2	60001-@
22	708-8E-16160	・PLUG	2	60001-@
23	07002-11023	・O-RING	2	60001-@
24	01010-61490	・BOLT	4	60001-@
25	01643-31445	・WASHER	8	60001-@
26	01010-61490	・BOLT	4	60001-@

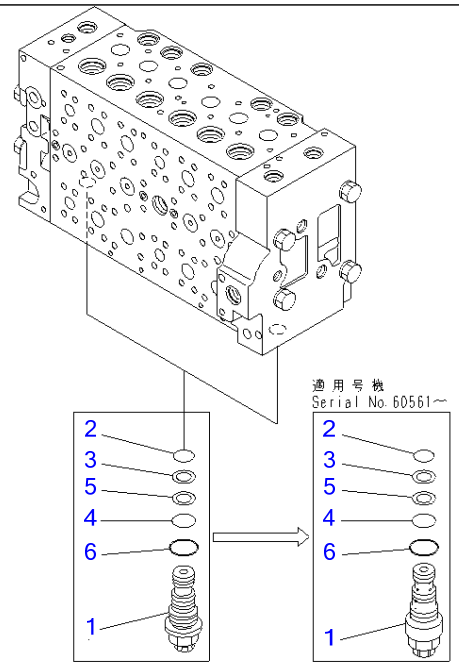

00015344

Ref Y1660-08A0 **Page 480640**

PC220-7 S/N 60001-UP (Overseas Version)
CONTROL VALVE (8/16)

Item	Part No.	Part Name	Qty	Serial No.
	(723-46-20502)	VALVE ASS'Y	1	60561-
	(723-46-20501)	VALVE ASS'Y	1	60109-60560
	(723-46-20500)	VALVE ASS'Y	1	60001-60108
		THESE ASSEMBLIES CONSIST OF ALL PARTS SHOWN IN FIGS.Y1660-01A0 TO Y1660-16A0.		
1	723-40-56900	・VALVE ASS'Y,UNLOAD	2	60561-
	723-40-56302	・VALVE ASS'Y,UNLOAD	2	60001-60560
2	07000-12014	・・O-RING	1	60001-
3	723-40-56350	・・RING	1	60001-
4	07000-12016	・・O-RING	1	60001-
5	723-60-22230	・・RING,BACK-UP	1	60001-
6	07002-12434	・・O-RING	1	60001-

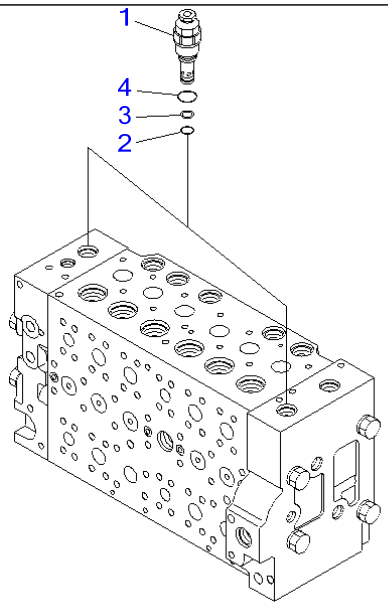

00014397

Ref Y1660-09A0 **Page 480650**

PC220-7 S/N 60001-UP (Overseas Version)
CONTROL VALVE (9/16)

Item	Part No.	Part Name	Qty	Serial No.
	(723-46-20502)	VALVE ASS'Y	1	60561-
	(723-46-20501)	VALVE ASS'Y	1	60109-60560
	(723-46-20500)	VALVE ASS'Y	1	60001-60108
		THESE ASSEMBLIES CONSIST OF ALL PARTS SHOWN IN FIGS.Y1660-01A0 TO Y1660-16A0.		
1	723-40-92201	・VALVE ASS'Y,RELIEF	2	60561-
	723-40-92200	・VALVE ASS'Y,RELIEF	2	60001-60560
2	700-22-11410	・・O-RING	1	60001-
3	700-80-64220	・・RING	1	60001-
4	07002-12434	・・O-RING	1	60001-

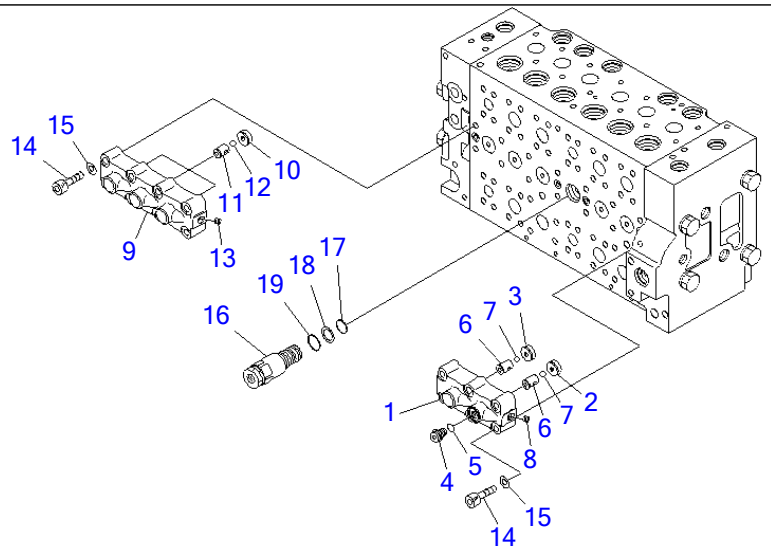

00007000

Ref Y1660-10A0 **Page 480660**

PC220-7 S/N 60001-UP (Overseas Version)
CONTROL VALVE (10/16)

Item	Part No.	Part Name	Qty	Serial No.
	(723-46-20502)	VALVE ASS'Y	1	60561-
	(723-46-20501)	VALVE ASS'Y	1	60109-60560
	(723-46-20500)	VALVE ASS'Y	1	60001-60108
		THESE ASSEMBLIES CONSIST OF ALL PARTS SHOWN IN FIGS.Y1660-01A0 TO Y1660-16A0.		
	723-40-66701	・VALVE ASS'Y	1	60001-
1	☆	・・CASE	1	60001-
2	☆	・・SEAT	1	60001-
3	☆	・・SEAT	1	60001-
4	708-8H-11530	・・PLUG	1	60001-
5	07002-11423	・・O-RING	1	60001-
6	☆	・・SEAT	2	60001-
7	☆	・・BALL	2	60001-
8	☆	・・PLUG	1	60001-
	723-40-66601	・VALVE ASS'Y	1	60001-
9	☆	・・CASE	1	60001-
10	☆	・・SEAT	3	60001-
11	☆	・・SEAT	3	60001-
12	☆	・・BALL	3	60001-
13	☆	・・PLUG	1	60001-
14	01252-61045	・BOLT	14	67090-
	01252-61050	・BOLT	14	60001-67089
15	01643-51032	・WASHER	14	60001-67089
16	723-40-60101	・VALVE ASS'Y	1	60001-
17	07000-12020	・・O-RING	1	60001-
18	07001-02020	・・RING,BACK-UP	1	60001-
19	709-25-11390	・・O-RING	1	60001-

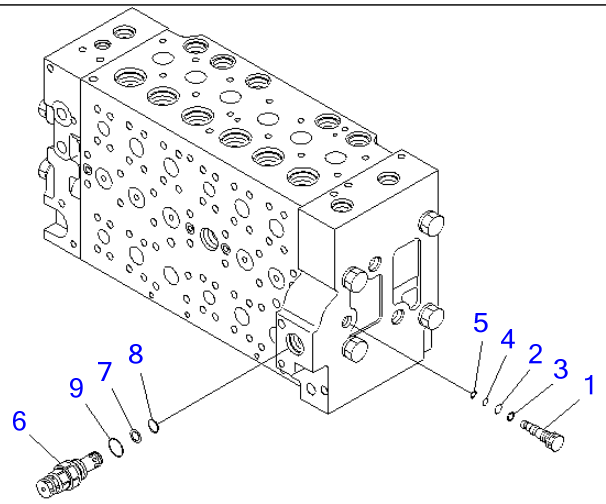

00007219

Ref Y1660-11A0 **Page 480670**

PC220-7 S/N 60001-UP (Overseas Version)
CONTROL VALVE (11/16)

Item	Part No.	Part Name	Qty	Serial No.
	(723-46-20502)	VALVE ASS'Y	1	60561-
	(723-46-20501)	VALVE ASS'Y	1	60109-60560
	(723-46-20500)	VALVE ASS'Y	1	60001-60108
		THESE ASSEMBLIES CONSIST OF ALL PARTS SHOWN IN FIGS.Y1660-01A0 TO Y1660-16A0.		
	723-46-17701	・PLUG ASS'Y	1	60001-
1	723-46-17711	・・PLUG	1	60001-
2	07000-11009	・・O-RING	1	60001-
3	07001-01009	・・RING,BACK-UP	1	60001-
4	07000-11007	・・O-RING	1	60001-
5	07001-01007	・・RING,BACK-UP	1	60001-
6	723-40-91500	・VALVE ASS'Y,RELIEF	1	60001-
7	700-80-64220	・・RING	1	60001-
8	700-22-11410	・・O-RING	1	60001-
9	709-25-11390	・・O-RING	1	60001-

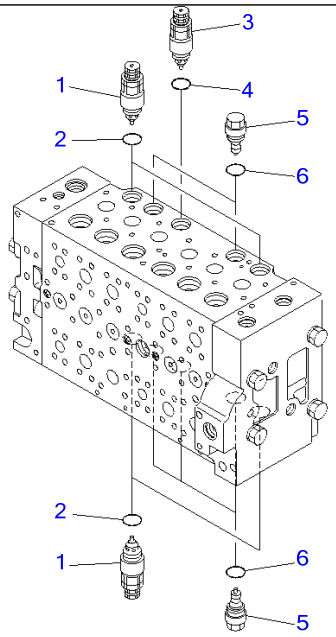

00014387

Ref Y1660-12A0 **Page 480680**

PC220-7 S/N 60001-UP (Overseas Version)
CONTROL VALVE (12/16)

Item	Part No.	Part Name	Qty	Serial No.
	(723-46-20502)	VALVE ASS'Y	1	60561-
	(723-46-20501)	VALVE ASS'Y	1	60109-60560
	(723-46-20500)	VALVE ASS'Y	1	60001-60108
		THESE ASSEMBLIES CONSIST OF ALL PARTS SHOWN IN FIGS.Y1660-01A0 TO Y1660-16A0.		
1	723-40-91200	・VALVE ASS'Y,SUCTION AND SAFETY	4	60001-
2	709-25-11390	・・O-RING	1	60001-
3	723-90-61600	・VALVE ASS'Y,SUCTION AND SAFETY	1	60001-
4	07000-13024	・・O-RING	1	60001-
5	723-40-85100	・VALVE ASS'Y,SUCTION	5	60001-
6	709-25-11390	・・O-RING	1	60001-

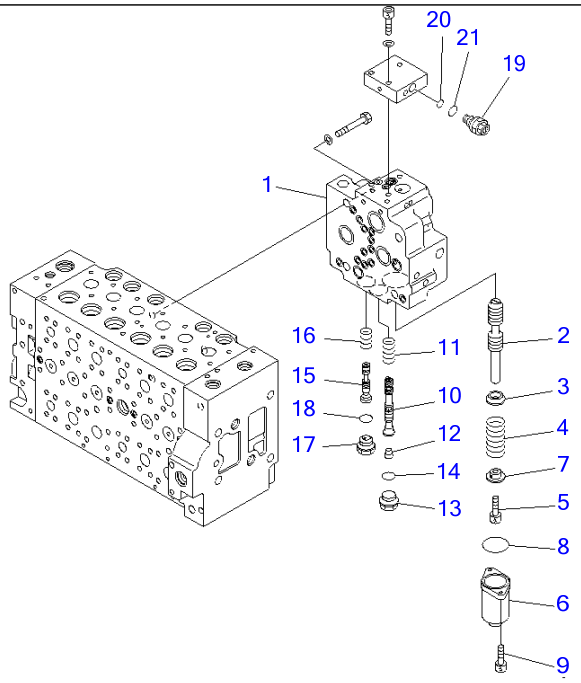

00007221

Ref Y1660-13A0 **Page 480690**

PC220-7 S/N 60001-UP (Overseas Version)
CONTROL VALVE (13/16)

Item	Part No.	Part Name	Qty	Serial No.
	(723-46-20502)	VALVE ASS'Y	1	60561-
	(723-46-20501)	VALVE ASS'Y	1	60109-60560
	(723-46-20500)	VALVE ASS'Y	1	60001-60108
		THESE ASSEMBLIES CONSIST OF ALL PARTS SHOWN IN FIGS.Y1660-01A0 TO Y1660-16A0.		
	723-40-71103	・VALVE ASS'Y	1	60109-
	723-40-71102	・VALVE ASS'Y	1	60001-60108
1	☆	・・BODY	1	60001-
2	☆	・・SPOOL	1	60001-
3	723-40-71330	・・RETAINER	1	60001-
4	723-40-71340	・・SPRING	1	60001-
5	01252-60816	・・BOLT	1	60001-
6	723-46-15111	・・CASE	1	60001-
7	723-40-71350	・・RETAINER	1	60001-
8	07430-71380	・・O-RING	1	60001-
9	01252-60820	・・BOLT	2	60001-
10	☆	・・SPOOL	1	60109-
	☆	・・SPOOL	1	60001-60108
11	723-40-71440	・・SPRING	1	60001-
12	☆	・・PLUG	1	60001-
13	709-74-91860	・・PLUG	1	60001-
14	07002-12434	・・O-RING	1	60001-
15	☆	・・SPOOL	1	60001-
16	723-40-71390	・・SPRING	1	60001-
17	723-40-61150	・・PLUG	1	60001-
18	07002-12434	・・O-RING	1	60001-
19	☆	・・VALVE ASS'Y,RELIEF	1	60001-
20	702-16-53920	・・・O-RING	1	60001-

CONTROL VALVE (13/16)

Item	Part No.	Part Name	Qty	Serial No.
21	07002-11623	・・・O-RING	1	60001-

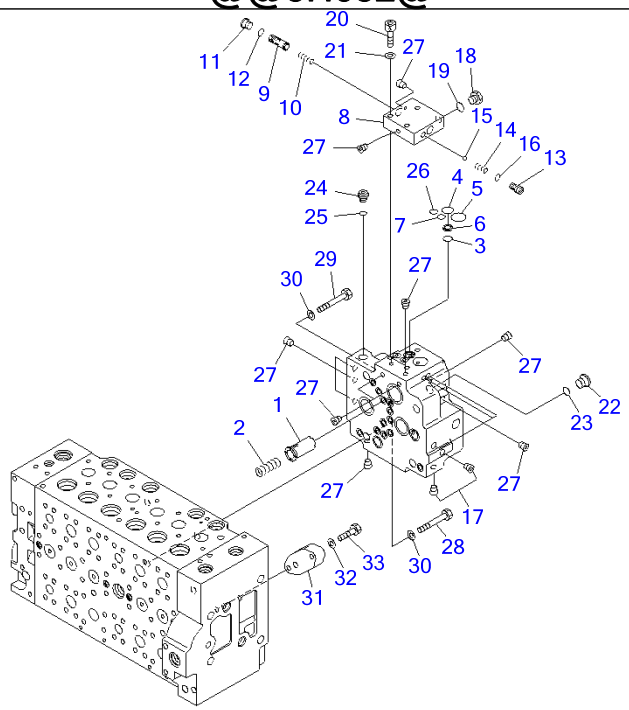

PW5H652

Ref Y1660-14A0 **Page 480700**

PC220-7 S/N 60001-UP (Overseas Version)
CONTROL VALVE (14/16)

Item	Part No.	Part Name	Qty	Serial No.
	(723-46-20502)	VALVE ASS'Y	1	60561-
	(723-46-20501)	VALVE ASS'Y	1	60109-60560
	(723-46-20500)	VALVE ASS'Y	1	60001-60108
		THESE ASSEMBLIES CONSIST OF ALL PARTS SHOWN IN FIGS.Y1660-01A0 TO Y1660-16A0.		
	(723-40-71103)	・VALVE ASS'Y	1	60109-
	(723-40-71102)	・VALVE ASS'Y	1	60001-60108
1	723-40-71430	・・VALVE	1	60001-
2	702-21-55460	・・SPRING	1	60001-
3	702-21-55420	・・O-RING	1	60001-
4	702-21-55520	・・O-RING	1	60001-
5	702-21-55440	・・O-RING	1	60001-
6	702-21-53120	・・FILTER	1	60001-
7	07000-12011	・・O-RING	1	60001-
8	☆	・・BLOCK	1	60001-
9	☆	・・SPOOL	1	60001-
10	☆	・・SPRING	1	60001-
11	702-21-55620	・・PLUG	1	60001-
12	07002-11423	・・O-RING	1	60001-
13	702-21-55710	・・SEAT	1	60001-
14	702-21-55720	・・SPRING	1	60001-
15	04260-00793	・・BALL	1	60001-
16	07000-11009	・・O-RING	1	60001-
17	☆	・・PLUG	2	60001-
18	708-8H-11530	・・PLUG	1	60001-
19	07002-11423	・・O-RING	1	60001-
20	01252-61040	・・BOLT	3	60001-
21	01643-51032	・・WASHER	3	60001-

PC220-7 S/N 60001-UP (Overseas Version)
CONTROL VALVE (14/16)

Item	Part No.	Part Name	Qty	Serial No.
22	702-21-55620	・・PLUG	1	60001-
23	07002-11423	・・O-RING	1	60001-
24	708-8E-16160	・・PLUG	1	60001-
25	07002-11023	・・O-RING	1	60001-
26	07000-12011	・・O-RING	1	60001-
27	☆	・・PLUG	15	60001-
28	01010-61470	・BOLT	3	60001-
29	01010-61460	・BOLT	1	60001-
30	01643-31445	・WASHER	4	60001-
31	723-46-17560	・PLATE	1	60001-
32	01643-51032	・WASHER	2	60001-
33	01010-81040	・BOLT	2	60001-

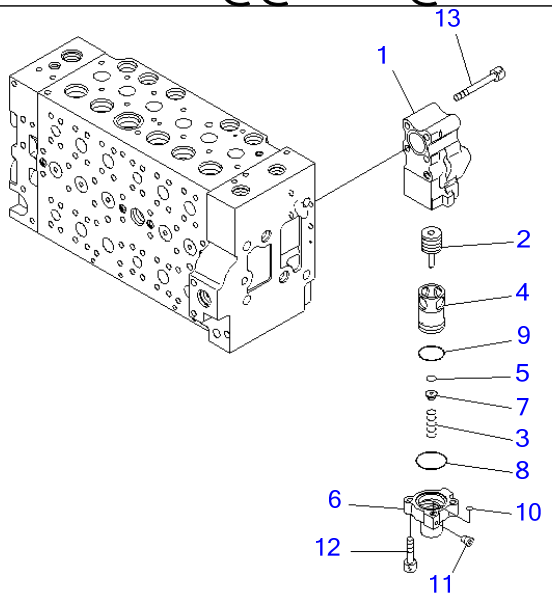

P W 5 H 2 8 5

Ref Y1660-15A0 **Page 480710**

PC220-7 S/N 60001-UP (Overseas Version)
CONTROL VALVE (15/16)

Item	Part No.	Part Name	Qty	Serial No.
	(723-46-20502)	VALVE ASS'Y	1	60561-
	(723-46-20501)	VALVE ASS'Y	1	60109-60560
	(723-46-20500)	VALVE ASS'Y	1	60001-60108
		THESE ASSEMBLIES CONSIST OF ALL PARTS SHOWN IN FIGS.Y1660-01A0 TO Y1660-16A0.		
	723-40-87200	・VALVE ASS'Y	1	60001-
1	723-40-87110	・・BODY	1	60001-
2	723-40-87240	・・SPOOL	1	60001-
3	723-40-87260	・・SPRING	1	60001-
4	☆	・・SLEEVE	1	60001-
5	☆	・・SEAL	1	60001-
6	☆	・・CASE	1	60001-
7	723-40-87250	・・RETAINER	1	60001-
8	723-40-87170	・・O-RING	1	60001-
9	07000-13035	・・O-RING	1	60001-
10	07000-11007	・・O-RING	1	60001-
11	☆	・・PLUG	1	60001-
12	01252-60830	・・BOLT	2	60001-
13	01252-61075	・BOLT	4	60001-

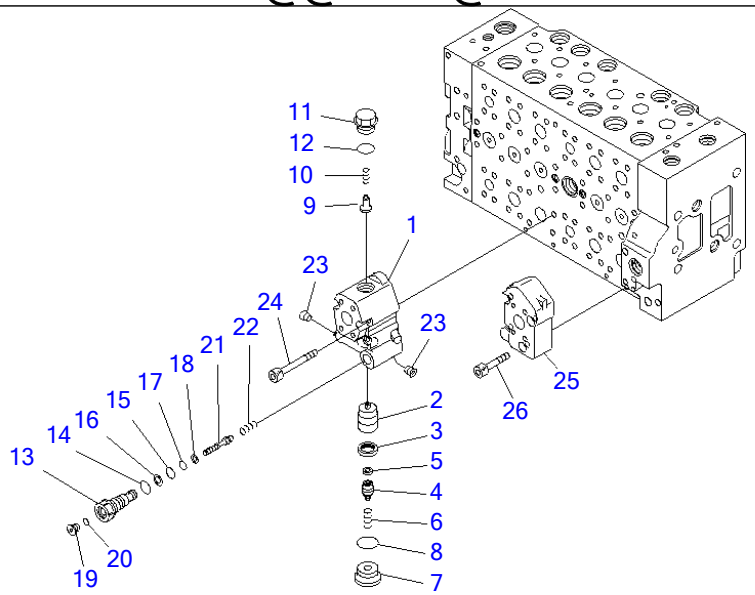

P W 5 H 2 8 6

Ref Y1660-16A0 **Page 480720**

PC220-7 S/N 60001-UP (Overseas Version)
CONTROL VALVE (16/16)

Item	Part No.	Part Name	Qty	Serial No.
	(723-46-20502)	VALVE ASS'Y	1	60561-
	(723-46-20501)	VALVE ASS'Y	1	60109-60560
	(723-46-20500)	VALVE ASS'Y	1	60001-60108
		THESE ASSEMBLIES CONSIST OF ALL PARTS SHOWN IN FIGS.Y1660-01A0 TO Y1660-16A0.		
	723-40-82500	・VALVE ASS'Y	1	60001-
1	☆	・・BODY	1	60001-
2	☆	・・VALVE	1	60001-
3	☆	・・SEAL	1	60001-
4	723-40-82210	・・PLUG	1	60001-
5	723-40-82220	・・FILTER	1	60001-
6	723-40-82140	・・SPRING	1	60001-
7	723-40-82150	・・PLUG	1	60001-
8	07002-13334	・・O-RING	1	60001-
9	709-25-11650	・・VALVE,CHECK	1	60001-
10	709-25-11361	・・SPRING	1	60001-
11	723-40-82161	・・PLUG	1	60001-
12	07000-13024	・・O-RING	1	60001-
13	☆	・・PLUG	1	60001-
14	07002-11823	・・O-RING	1	60001-
15	07000-12011	・・O-RING	1	60001-
16	07001-02011	・・RING	1	60001-
17	07000-11010	・・O-RING	1	60001-
18	07001-01010	・・RING	1	60001-
19	723-11-18190	・・PLUG	1	60001-
20	07002-11023	・・O-RING	1	60001-
21	☆	・・PISTON	1	60001-
22	723-40-82290	・・SPRING	1	60001-

CONTROL VALVE (16/16)

Item	Part No.	Part Name	Qty	Serial No.
23	☆	・・PLUG	2	60001-
24	01252-61075	・BOLT	4	60001-
25	723-46-17570	・BLOCK	1	60001-
26	01252-61045	・BOLT	4	60001-

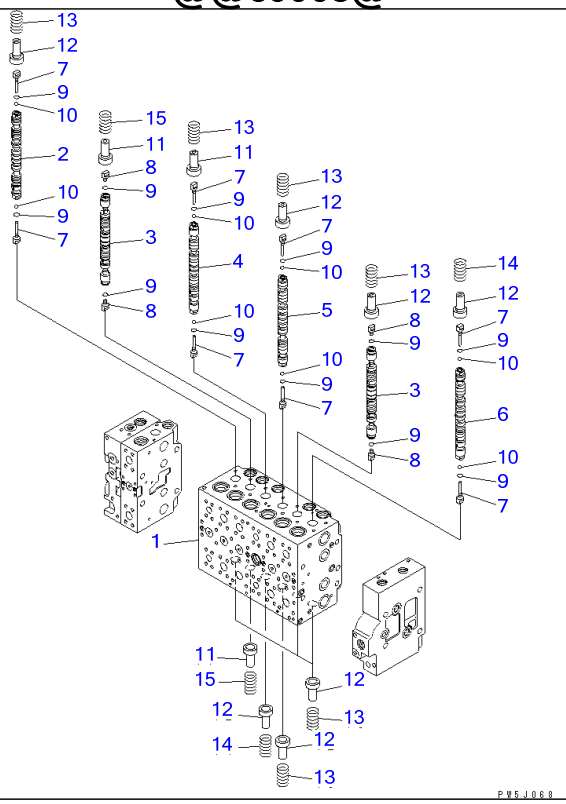

Ref Y1662-01A0 **Page 480730**

PC220-7 S/N 60001-UP (Overseas Version)
CONTROL VALVE (1-ACTUATOR) (1/19)

Item	Part No.	Part Name	Qty	Serial No.
	723-47-20502	VALVE ASS'Y	1	60561-
	723-47-20501	VALVE ASS'Y	1	60109-60560
	723-47-20500	VALVE ASS'Y	1	60001-60108
		THESE ASSEMBLIES CONSIST OF ALL PARTS SHOWN IN FIGS.Y1662-01A0 TO Y1662-19A0.		
	☆	・BODY SUB ASS'Y	1	60561-
	☆	・BODY SUB ASS'Y	1	60109-60560
	☆	・BODY SUB ASS'Y	1	60001-60108
1	☆	・・BLOCK,VALVE	1	60001-
2	☆	・・SPOOL	1	60001-
3	☆	・・SPOOL	2	60001-
4	☆	・・SPOOL	1	60001-
5	☆	・・SPOOL	1	60001-
6	☆	・・SPOOL	1	60001-
7	723-46-15130	・・PLUG	8	60001-
8	723-46-15140	・・PLUG	4	60001-
9	07002-10823	・・O-RING	12	60001-
10	708-7T-16460	・・BALL	8	60001-
11	723-46-15120	・・RETAINER	3	60001-
12	723-46-15690	・・RETAINER	9	60001-
13	723-46-14110	・・SPRING	8	60001-
14	723-46-14270	・・SPRING	2	60001-
15	723-46-14131	・・SPRING	2	60001-

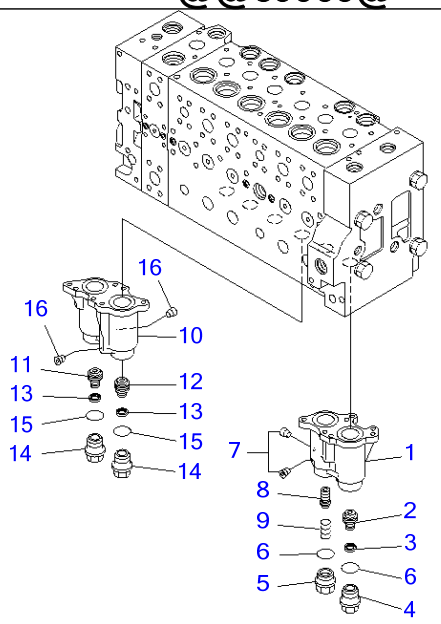

P W 5 J 0 6 9

Ref Y1662-02A0 **Page 480740**

PC220-7 S/N 60001-UP (Overseas Version)
CONTROL VALVE (1-ACTUATOR) (2/19)

Item	Part No.	Part Name	Qty	Serial No.
	(723-47-20502)	VALVE ASS'Y	1	60561-
	(723-47-20501)	VALVE ASS'Y	1	60109-60560
	(723-47-20500)	VALVE ASS'Y	1	60001-60108
		THESE ASSEMBLIES CONSIST OF ALL PARTS SHOWN IN FIGS.Y1662-01A0 TO Y1662-19A0.		
	☆	・BODY SUB ASS'Y	1	60561-
	☆	・BODY SUB ASS'Y	1	60109-60560
	☆	・BODY SUB ASS'Y	1	60001-60108
	723-46-18300	・・CASE SUB ASS'Y	1	60001-
1	☆	・・・CASE	1	60001-
2	☆	・・・PISTON	1	60001-
3	☆	・・・SEAL	1	60001-
4	723-46-15630	・・・PLUG	1	60001-
5	723-46-17340	・・・PLUG	1	60001-
6	07000-13024	・・・O-RING	2	60001-
7	☆	・・・PLUG	3	60001-
8	723-46-17320	・・・SPOOL	1	60001-
9	723-46-17330	・・・SPRING	1	60001-
	723-46-17101	・・CASE SUB ASS'Y	1	60001-
10	☆	・・・CASE	1	60001-
11	☆	・・・PISTON	1	60001-
12	☆	・・・PISTON	1	60001-
13	☆	・・・SEAL	2	60001-
14	723-46-15630	・・・PLUG	2	60001-
15	07000-13024	・・・O-RING	2	60001-
16	☆	・・・PLUG	2	60001-

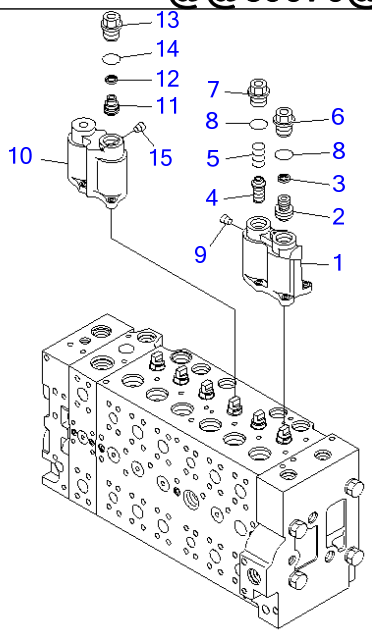

P W 5 J 0 7 0

Ref Y1662-03A0 **Page 480750**

PC220-7 S/N 60001-UP (Overseas Version)
CONTROL VALVE (1-ACTUATOR) (3/19)

Item	Part No.	Part Name	Qty	Serial No.
	(723-47-20502)	VALVE ASS'Y	1	60561-
	(723-47-20501)	VALVE ASS'Y	1	60109-60560
	(723-47-20500)	VALVE ASS'Y	1	60001-60108
		THESE ASSEMBLIES CONSIST OF ALL PARTS SHOWN IN FIGS.Y1662-01A0 TO Y1662-19A0.		
	☆	・BODY SUB ASS'Y	1	60561-
	☆	・BODY SUB ASS'Y	1	60109-60560
	☆	・BODY SUB ASS'Y	1	60001-60108
	723-46-18401	・・CASE SUB ASS'Y	1	60001-
1	☆	・・・CASE	1	60001-
2	☆	・・・PISTON	1	60001-
3	☆	・・・SEAL	1	60001-
4	723-46-17320	・・・SPOOL	1	60001-
5	723-46-17330	・・・SPRING	1	60001-
6	723-46-15630	・・・PLUG	1	60001-
7	723-46-17340	・・・PLUG	1	60001-
8	07000-13024	・・・O-RING	2	60001-
9	☆	・・・PLUG	3	60001-
	723-46-17203	・・CASE SUB ASS'Y	1	60001-
10	☆	・・・CASE	1	60001-
11	☆	・・・PISTON	1	60001-
12	☆	・・・SEAL	1	60001-
13	723-46-15630	・・・PLUG	1	60001-
14	07000-13024	・・・O-RING	1	60001-
15	☆	・・・PLUG	1	60001-

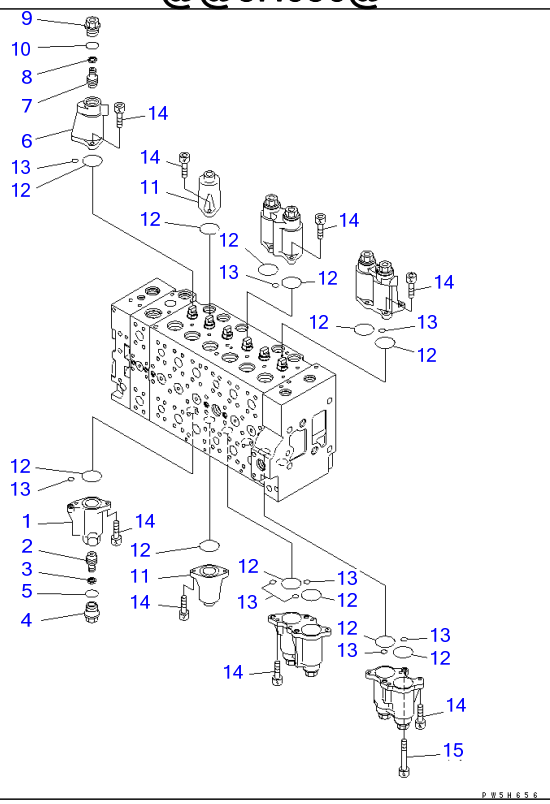

Ref Y1662-04A0 **Page 480760**

PC220-7 S/N 60001-UP (Overseas Version)
CONTROL VALVE (1-ACTUATOR) (4/19)

Item	Part No.	Part Name	Qty	Serial No.
	(723-47-20502)	VALVE ASS'Y	1	60561-
	(723-47-20501)	VALVE ASS'Y	1	60109-60560
	(723-47-20500)	VALVE ASS'Y	1	60001-60108
		THESE ASSEMBLIES CONSIST OF ALL PARTS SHOWN IN FIGS.Y1662-01A0 TO Y1662-19A0.		
	☆	・BODY SUB ASS'Y	1	60561-
	☆	・BODY SUB ASS'Y	1	60109-60560
	☆	・BODY SUB ASS'Y	1	60001-60108
	723-46-18500	・・CASE SUB ASS'Y	1	60001-
1	☆	・・・CASE	1	60001-
2	☆	・・・PISTON	1	60001-
3	☆	・・・SEAL	1	60001-
4	723-46-15630	・・・PLUG	1	60001-
5	07000-13024	・・・O-RING	1	60001-
	723-46-18600	・・CASE SUB ASS'Y	1	60001-
6	☆	・・・CASE	1	60001-
7	☆	・・・PISTON	1	60001-
8	☆	・・・SEAL	1	60001-
9	723-46-15630	・・・PLUG	1	60001-
10	07000-13024	・・・O-RING	1	60001-
11	723-46-15111	・・CASE	2	60001-
12	07430-71380	・・O-RING	12	60001-
13	702-16-53920	・・O-RING	9	60001-
14	01252-60820	・・BOLT	22	60001-
15	723-46-17350	・・BOLT	2	60001-

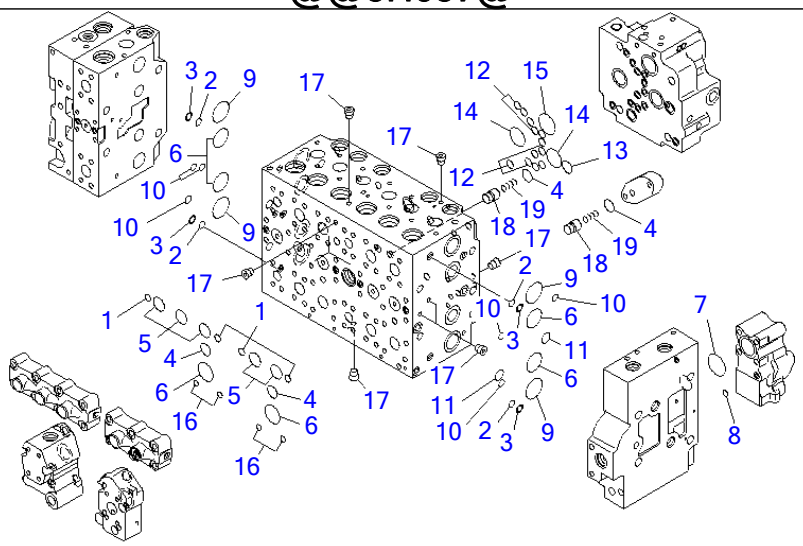

Ref Y1662-05A0 **Page 480770**

PC220-7 S/N 60001-UP (Overseas Version)
CONTROL VALVE (1-ACTUATOR) (5/19)

Item	Part No.	Part Name	Qty	Serial No.
	(723-47-20502)	VALVE ASS'Y	1	60561-
	(723-47-20501)	VALVE ASS'Y	1	60109-60560
	(723-47-20500)	VALVE ASS'Y	1	60001-60108
		THESE ASSEMBLIES CONSIST OF ALL PARTS SHOWN IN FIGS.Y1662-01A0 TO Y1662-19A0.		
	☆	・BODY SUB ASS'Y	1	60561-
	☆	・BODY SUB ASS'Y	1	60109-60560
	☆	・BODY SUB ASS'Y	1	60001-60108
1	07000-12012	・・O-RING	4	60001-
2	723-11-19130	・・O-RING	4	60001-
3	723-46-17520	・・RING,BACK-UP	4	60001-
4	07000-12021	・・O-RING	4	60001-
5	07000-13028	・・O-RING	5	60001-
6	07000-13032	・・O-RING	6	60001-
7	07000-13038	・・O-RING	1	60001-
8	07000-11010	・・O-RING	1	60001-
9	723-46-17510	・・O-RING	4	60001-
10	723-46-17530	・・O-RING	6	60001-
11	723-11-18150	・・O-RING	2	60001-
12	07000-12012	・・O-RING	12	60001-
13	07000-12021	・・O-RING	1	60001-
14	07000-13032	・・O-RING	2	60001-
15	07000-13036	・・O-RING	1	60001-
16	702-16-53920	・・O-RING	4	60001-
17	☆	・・PLUG	17	60001-
18	723-46-17650	・・VALVE	2	60001-
19	723-46-14150	・・SPRING	2	60001-

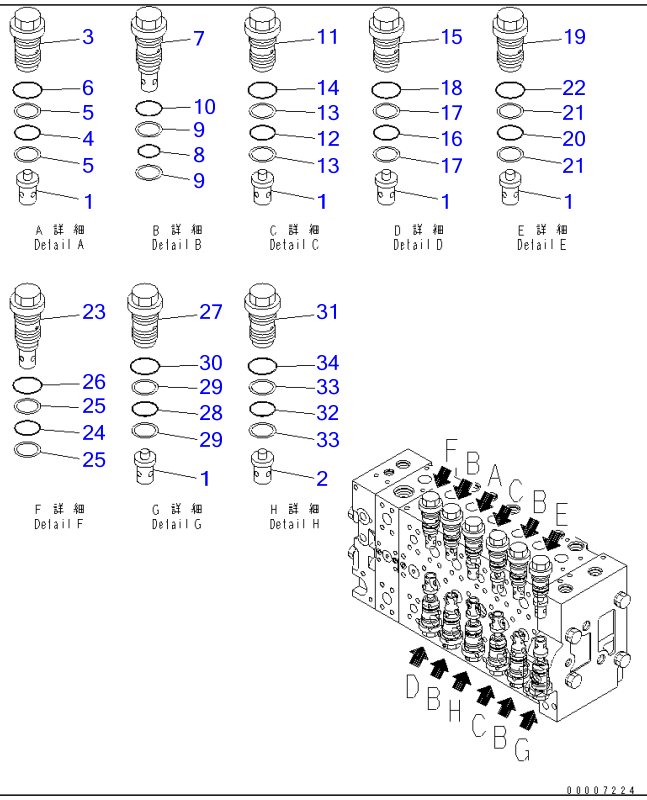

PC220-7 S/N 60001-UP (Overseas Version)

CONTROL VALVE (1-ACTUATOR) (6/19)

Item	Part No.	Part Name	Qty	Serial No.
	(723-47-20502)	VALVE ASS'Y	1	60561-
	(723-47-20501)	VALVE ASS'Y	1	60109-60560
	(723-47-20500)	VALVE ASS'Y	1	60001-60108
		THESE ASSEMBLIES CONSIST OF ALL PARTS SHOWN IN FIGS.Y1662-01A0 TO Y1662-19A0.		
	☆	・BODY SUB ASS'Y	1	60561-
	☆	・BODY SUB ASS'Y	1	60109-60560
	☆	・BODY SUB ASS'Y	1	60001-60108
1	723-46-41110	・・VALVE	6	60001-
2	723-46-41190	・・VALVE	1	60109-
	723-46-41120	・・VALVE	1	60001-60108
3	723-46-40100	・・VALVE ASS'Y	1	60001-
4	700-93-11320	・・・O-RING	1	60001-
5	723-46-41950	・・・RING	2	60001-
6	07002-13634	・・・O-RING	1	60001-
7	723-46-42700	・・VALVE ASS'Y	4	60001-
8	700-93-11320	・・・O-RING	1	60001-
9	723-46-41950	・・・RING	2	60001-
10	07002-13634	・・・O-RING	1	60001-
11	723-46-41100	・・VALVE ASS'Y	2	60001-
12	700-93-11320	・・・O-RING	1	60001-
13	723-46-41950	・・・RING	2	60001-
14	07002-13634	・・・O-RING	1	60001-
15	723-46-45100	・・VALVE ASS'Y	1	60001-
16	700-93-11320	・・・O-RING	1	60001-
17	723-46-41950	・・・RING	2	60001-
18	07002-13634	・・・O-RING	1	60001-
19	723-46-46300	・・VALVE ASS'Y	1	60001-

CONTROL VALVE (1-ACTUATOR) (6/19)

Item	Part No.	Part Name	Qty	Serial No.
20	700-93-11320	・・・O-RING	1	60001-
21	723-46-41950	・・・RING	2	60001-
22	07002-13634	・・・O-RING	1	60001-
23	723-46-43400	・・VALVE ASS'Y	1	60001-
24	700-93-11320	・・・O-RING	1	60001-
25	723-46-41950	・・・RING	2	60001-
26	07002-13634	・・・O-RING	1	60001-
27	723-46-43100	・・VALVE ASS'Y	1	60001-
28	700-93-11320	・・・O-RING	1	60001-
29	723-46-41950	・・・RING	2	60001-
30	07002-13634	・・・O-RING	1	60001-
31	723-46-46101	・・VALVE ASS'Y	1	60001-
32	700-93-11320	・・・O-RING	1	60001-
33	723-46-41950	・・・RING	2	60001-
34	07002-13634	・・・O-RING	1	60001-

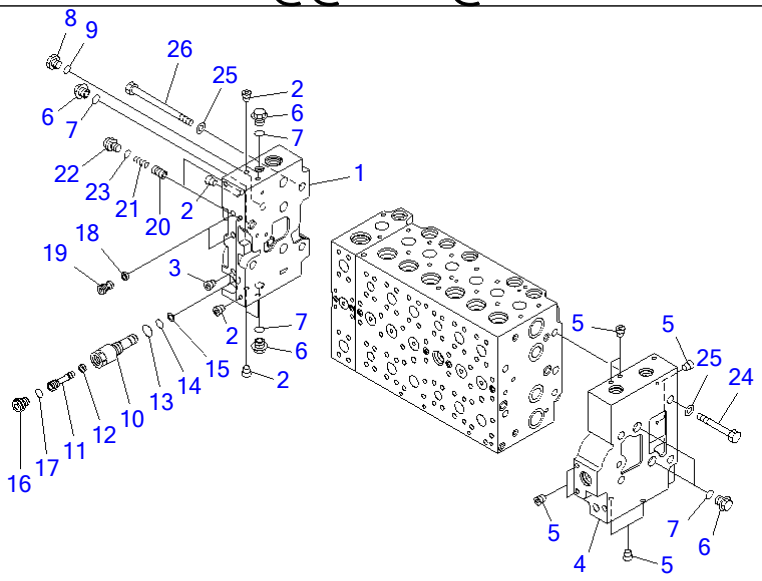

PW5J071

PC220-7 S/N 60001-UP (Overseas Version)

CONTROL VALVE (1-ACTUATOR) (7/19)(#60001-69810)

Item	Part No.	Part Name	Qty	Serial No.
	(723-47-20502)	VALVE ASS'Y	1	60561-@
	(723-47-20501)	VALVE ASS'Y	1	60109-60560
	(723-47-20500)	VALVE ASS'Y	1	60001-60108
		THESE ASSEMBLIES CONSIST OF ALL PARTS SHOWN IN FIGS.Y1662-01A0 TO Y1662-19A0.		
	723-46-00750	・COVER ASS'Y	1	60001-69810
1	☆	・・COVER	1	60001-69810
2	☆	・・PLUG	7	60001-@
3	☆	・・PLUG	1	60001-@
	723-46-00742	・COVER ASS'Y	1	60001-@
4	☆	・・COVER	1	60001-@
5	☆	・・PLUG	8	60001-@
6	723-46-15180	・PLUG	5	60001-69810
7	07002-11823	・O-RING	5	60001-69810
8	708-8H-11530	・PLUG	1	60001-@
9	07002-11423	・O-RING	1	60001-@
	723-46-17600	・PLUG ASS'Y	1	60001-@
10	723-46-17610	・・SLEEVE	1	60001-@
11	723-46-17640	・・PLUG	1	60001-@
12	702-21-55760	・・FILTER	1	60001-@
13	07002-11423	・・O-RING	1	60001-@
14	07000-11007	・・O-RING	1	60001-@
15	07001-01007	・・RING,BACK-UP	1	60001-@
16	708-8E-16160	・・PLUG	1	60001-@
17	07002-11023	・・O-RING	1	60001-@
18	723-40-82220	・FILTER	2	60001-@
19	723-46-17550	・PLUG	2	60001-@
20	723-46-15190	・VALVE	2	60001-@

CONTROL VALVE (1-ACTUATOR) (7/19)(#60001-69810)

Item	Part No.	Part Name	Qty	Serial No.
21	723-46-14140	・SPRING	2	60001-@
22	708-8E-16160	・PLUG	2	60001-@
23	07002-11023	・O-RING	2	60001-@
24	01010-61490	・BOLT	4	60001-@
25	01643-31445	・WASHER	8	60001-@
26	01011-61455	・BOLT	4	60001-@

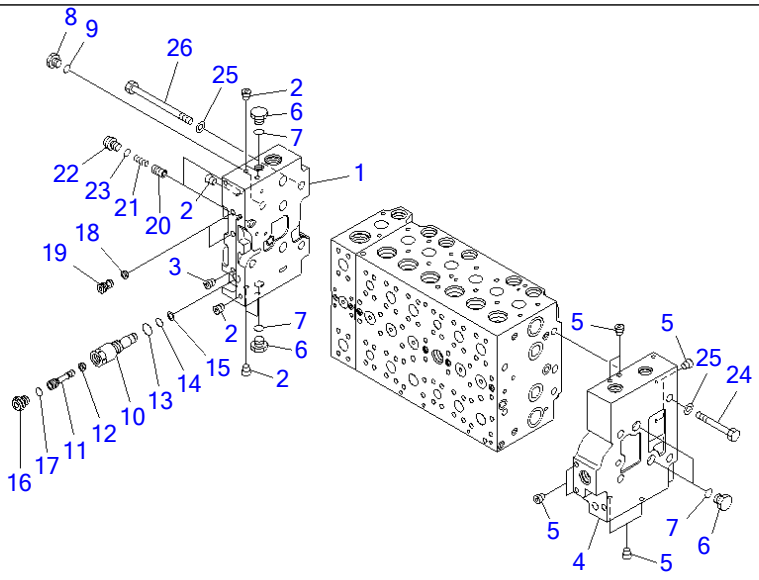

Ref Y1662-07A0A **Page 480800**

PC220-7 S/N 60001-UP (Overseas Version)

CONTROL VALVE (1-ACTUATOR) (7/19)(#69811-)

Item	Part No.	Part Name	Qty	Serial No.
	(723-47-20502)	VALVE ASS'Y THESE ASSEMBLIES CONSIST OF ALL PARTS SHOWN IN FIGS.Y1662-01A0 TO Y1662-19A0.	1	60561-
	723-46-00630	・COVER ASS'Y	1	69811-
1	☆	・・COVER	1	69811-
2	☆	・・PLUG	7	60001-
3	☆	・・PLUG	1	60001-
	723-46-00742	・COVER ASS'Y	1	60001-
4	☆	・・COVER	1	60001-
5	☆	・・PLUG	8	60001-
6	708-8E-16250	・PLUG	4	69811-
7	07002-11823	・O-RING	4	69811-
8	708-8H-11530	・PLUG	1	60001-
9	07002-11423	・O-RING	1	60001-
	723-46-17600	・PLUG ASS'Y	1	60001-
10	723-46-17610	・・SLEEVE	1	60001-
11	723-46-17640	・・PLUG	1	60001-
12	702-21-55760	・・FILTER	1	60001-
13	07002-11423	・・O-RING	1	60001-
14	07000-11007	・・O-RING	1	60001-
15	07001-01007	・・RING,BACK-UP	1	60001-
16	708-8E-16160	・・PLUG	1	60001-
17	07002-11023	・・O-RING	1	60001-
18	723-40-82220	・FILTER	2	60001-
19	723-46-17550	・PLUG	2	60001-
20	723-46-15190	・VALVE	2	60001-
21	723-46-14140	・SPRING	2	60001-
22	708-8E-16160	・PLUG	2	60001-

CONTROL VALVE (1-ACTUATOR) (7/19)(#69811-)

Item	Part No.	Part Name	Qty	Serial No.
23	07002-11023	・O-RING	2	60001-
24	01010-61490	・BOLT	4	60001-
25	01643-31445	・WASHER	8	60001-
26	01011-61455	・BOLT	4	60001-

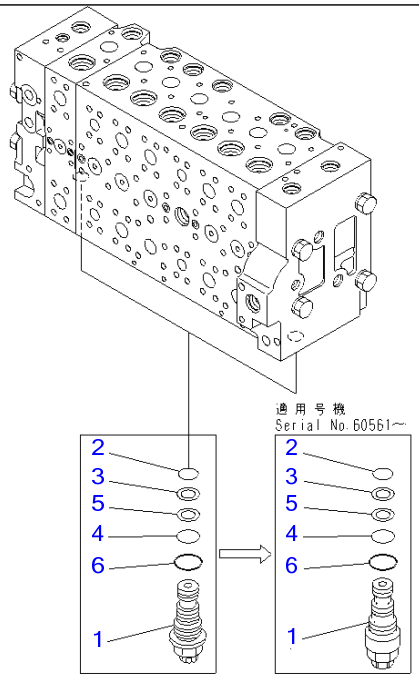

00015345

Ref Y1662-08A0 **Page 480810**

PC220-7 S/N 60001-UP (Overseas Version)
CONTROL VALVE (1-ACTUATOR) (7/19)

Item	Part No.	Part Name	Qty	Serial No.
	(723-47-20502)	VALVE ASS'Y	1	60561-
	(723-47-20501)	VALVE ASS'Y	1	60109-60560
	(723-47-20500)	VALVE ASS'Y	1	60001-60108
		THESE ASSEMBLIES CONSIST OF ALL PARTS SHOWN IN FIGS.Y1662-01A0 TO Y1662-19A0.		
1	723-40-56900	・VALVE ASS'Y,UNLOAD	2	60561-
	723-40-56302	・VALVE ASS'Y,UNLOAD	2	60001-60560
2	07000-12014	・・O-RING	1	60001-
3	723-40-56350	・・RING	1	60001-
4	07000-12016	・・O-RING	1	60001-
5	723-60-22230	・・RING,BACK-UP	1	60001-
6	07002-12434	・・O-RING	1	60001-

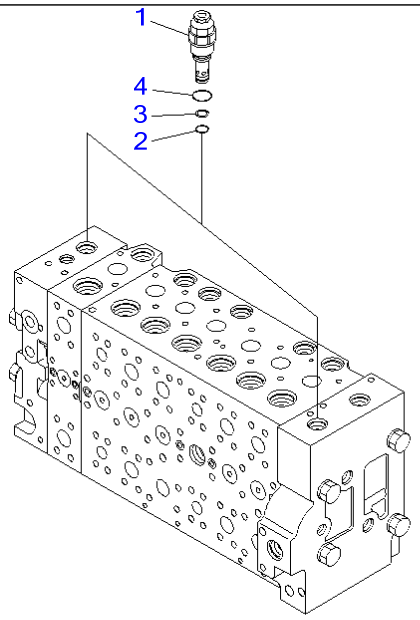

00014398

Ref Y1662-09A0 **Page 480820**

PC220-7 S/N 60001-UP (Overseas Version)
CONTROL VALVE (1-ACTUATOR) (9/19)

Item	Part No.	Part Name	Qty	Serial No.
	(723-47-20502)	VALVE ASS'Y	1	60561-
	(723-47-20501)	VALVE ASS'Y	1	60109-60560
	(723-47-20500)	VALVE ASS'Y	1	60001-60108
		THESE ASSEMBLIES CONSIST OF ALL PARTS SHOWN IN FIGS.Y1662-01A0 TO Y1662-19A0.		
1	723-40-92201	・VALVE ASS'Y,RELIEF	2	60561-
	723-40-92200	・VALVE ASS'Y,RELIEF	2	60001-60560
2	700-22-11410	・・O-RING	1	60001-
3	700-80-64220	・・RING	1	60001-
4	07002-12434	・・O-RING	1	60001-

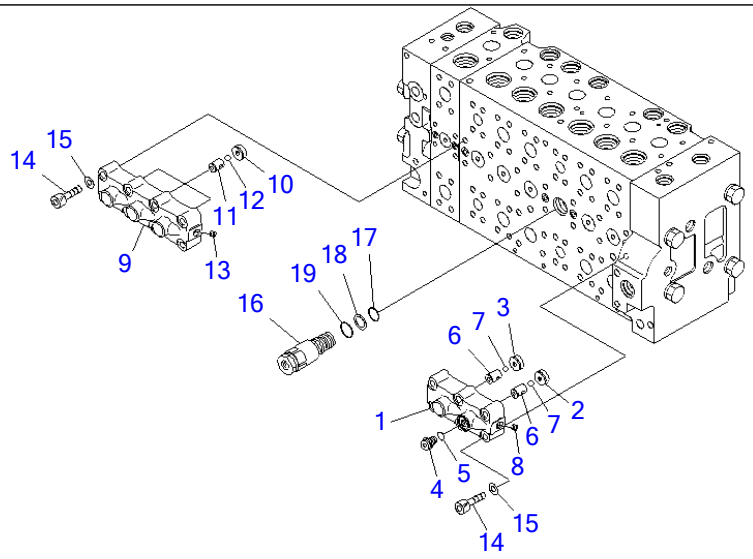

00007227

Ref Y1662-10A0 **Page 480830**

PC220-7 S/N 60001-UP (Overseas Version)
CONTROL VALVE (1-ACTUATOR) (10/19)

Item	Part No.	Part Name	Qty	Serial No.
	(723-47-20502)	VALVE ASS'Y	1	60561-
	(723-47-20501)	VALVE ASS'Y	1	60109-60560
	(723-47-20500)	VALVE ASS'Y	1	60001-60108
		THESE ASSEMBLIES CONSIST OF ALL PARTS SHOWN IN FIGS.Y1662-01A0 TO Y1662-19A0.		
	723-40-66701	・VALVE ASS'Y	1	60001-
1	☆	・・CASE	1	60001-
2	☆	・・SEAT	1	60001-
3	☆	・・SEAT	1	60001-
4	708-8H-11530	・・PLUG	1	60001-
5	07002-11423	・・O-RING	1	60001-
6	☆	・・SEAT	2	60001-
7	☆	・・BALL	2	60001-
8	☆	・・PLUG	1	60001-
	723-40-66601	・VALVE ASS'Y	1	60001-
9	☆	・・CASE	1	60001-
10	☆	・・SEAT	3	60001-
11	☆	・・SEAT	3	60001-
12	☆	・・BALL	3	60001-
13	☆	・・PLUG	1	60001-
14	01252-61045	・BOLT	14	67090-
	01252-61050	・BOLT	14	60001-67089
15	01643-51032	・WASHER	14	60001-67089
16	723-40-60101	・VALVE ASS'Y	1	60001-
17	07000-12020	・・O-RING	1	60001-
18	07001-02020	・・RING,BACK-UP	1	60001-
19	709-25-11390	・・O-RING	1	60001-

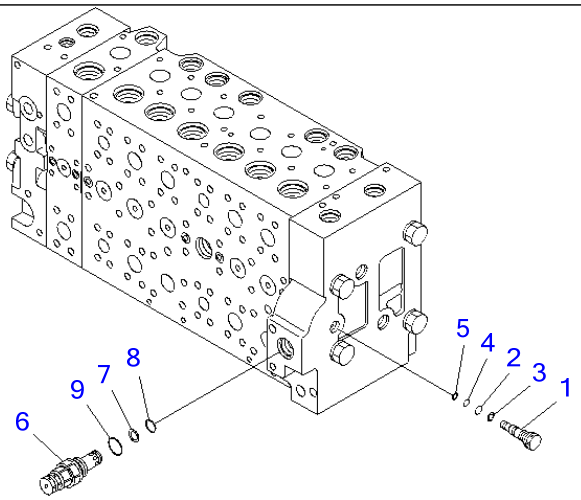

00007228

Ref Y1662-11A0 **Page 480840**

PC220-7 S/N 60001-UP (Overseas Version)
CONTROL VALVE (1-ACTUATOR) (11/19)

Item	Part No.	Part Name	Qty	Serial No.
	(723-47-20502)	VALVE ASS'Y	1	60561-
	(723-47-20501)	VALVE ASS'Y	1	60109-60560
	(723-47-20500)	VALVE ASS'Y	1	60001-60108
		THESE ASSEMBLIES CONSIST OF ALL PARTS SHOWN IN FIGS.Y1662-01A0 TO Y1662-19A0.		
	723-46-17701	・PLUG ASS'Y	1	60001-
1	723-46-17711	・・PLUG	1	60001-
2	07000-11009	・・O-RING	1	60001-
3	07001-01009	・・RING,BACK-UP	1	60001-
4	07000-11007	・・O-RING	1	60001-
5	07001-01007	・・RING,BACK-UP	1	60001-
6	723-40-91500	・VALVE ASS'Y,RELIEF	1	60001-
7	700-80-64220	・・RING	1	60001-
8	700-22-11410	・・O-RING	1	60001-
9	709-25-11390	・・O-RING	1	60001-

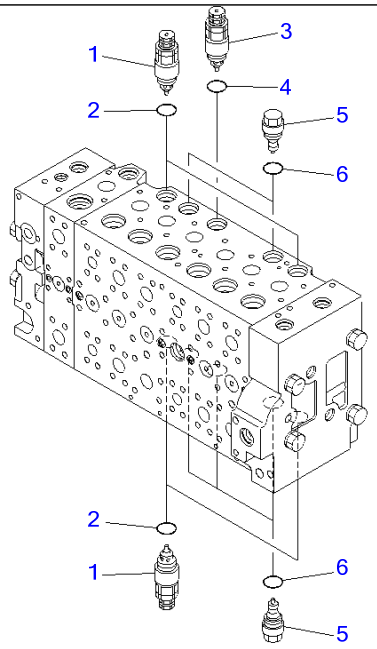

00014388

Ref Y1662-12A0 **Page 480850**

PC220-7 S/N 60001-UP (Overseas Version)
CONTROL VALVE (1-ACTUATOR) (12/19)

Item	Part No.	Part Name	Qty	Serial No.
	(723-47-20502)	VALVE ASS'Y	1	60561-
	(723-47-20501)	VALVE ASS'Y	1	60109-60560
	(723-47-20500)	VALVE ASS'Y	1	60001-60108
		THESE ASSEMBLIES CONSIST OF ALL PARTS SHOWN IN FIGS.Y1662-01A0 TO Y1662-19A0.		
1	723-40-91200	・VALVE ASS'Y,SUCTION AND SAFETY	4	60001-
2	709-25-11390	・・O-RING	1	60001-
3	723-90-61600	・VALVE ASS'Y,SUCTION AND SAFETY	1	60001-
4	07000-13024	・・O-RING	1	60001-
5	723-40-85100	・VALVE ASS'Y,SUCTION	5	60001-
6	709-25-11390	・・O-RING	1	60001-

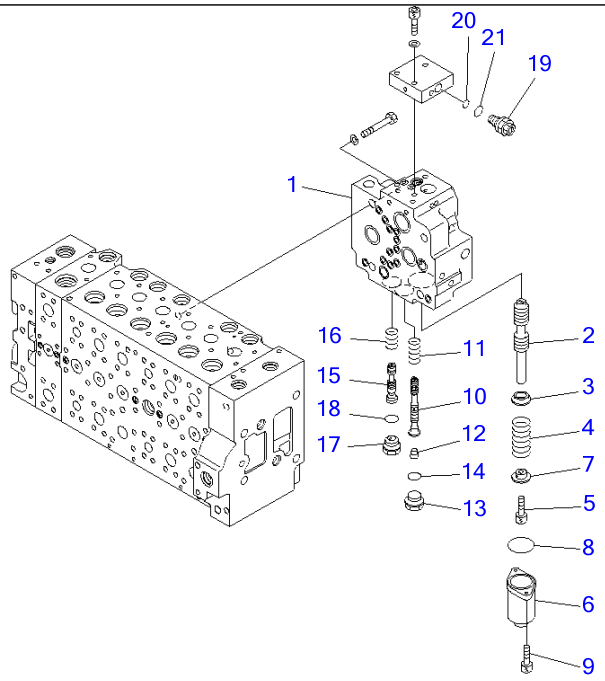

00007230

Ref Y1662-13A0 **Page 480860**

PC220-7 S/N 60001-UP (Overseas Version)
CONTROL VALVE (1-ACTUATOR) (13/19)

Item	Part No.	Part Name	Qty	Serial No.
	(723-47-20502)	VALVE ASS'Y	1	60561-
	(723-47-20501)	VALVE ASS'Y	1	60109-60560
	(723-47-20500)	VALVE ASS'Y	1	60001-60108
		THESE ASSEMBLIES CONSIST OF ALL PARTS SHOWN IN FIGS.Y1662-01A0 TO Y1662-19A0.		
	723-40-71103	・VALVE ASS'Y	1	60109-
	723-40-71102	・VALVE ASS'Y	1	60001-60108
1	☆	・・BODY	1	60001-
2	☆	・・SPOOL	1	60001-
3	723-40-71330	・・RETAINER	1	60001-
4	723-40-71340	・・SPRING	1	60001-
5	01252-60816	・・BOLT	1	60001-
6	723-46-15111	・・CASE	1	60001-
7	723-40-71350	・・RETAINER	1	60001-
8	07430-71380	・・O-RING	1	60001-
9	01252-60820	・・BOLT	2	60001-
10	☆	・・SPOOL	1	60109-
	☆	・・SPOOL	1	60001-60108
11	723-40-71440	・・SPRING	1	60001-
12	☆	・・PLUG	1	60001-
13	709-74-91860	・・PLUG	1	60001-
14	07002-12434	・・O-RING	1	60001-
15	☆	・・SPOOL	1	60001-
16	723-40-71390	・・SPRING	1	60001-
17	723-40-61150	・・PLUG	1	60001-
18	07002-12434	・・O-RING	1	60001-
19	☆	・・VALVE ASS'Y,RELIEF	1	60001-
20	702-16-53920	・・・O-RING	1	60001-

CONTROL VALVE (1-ACTUATOR) (13/19)

Item	Part No.	Part Name	Qty	Serial No.
21	07002-11623	・・・O-RING	1	60001-

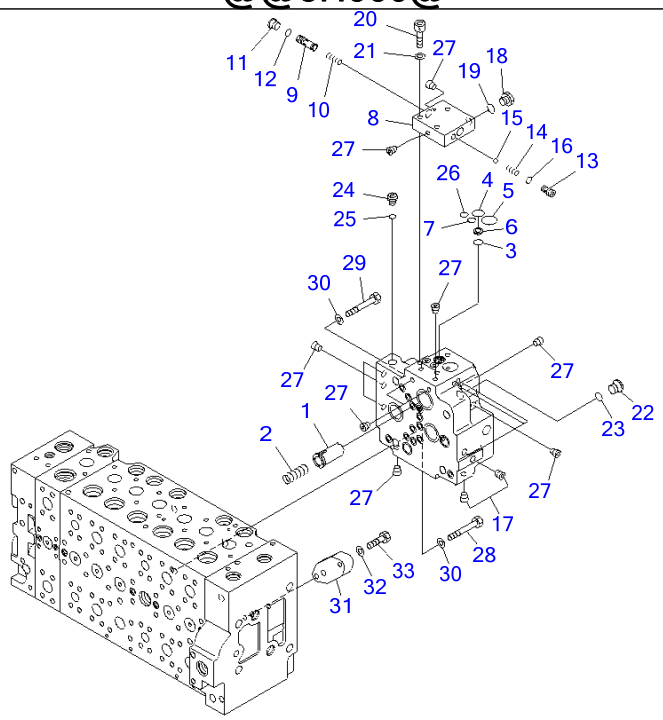

P W S H 6 6 0

Ref Y1662-14A0 **Page 480870**

PC220-7 S/N 60001-UP (Overseas Version)
CONTROL VALVE (1-ACTUATOR) (14/19)

Item	Part No.	Part Name	Qty	Serial No.
	(723-47-20502)	VALVE ASS'Y	1	60561-
	(723-47-20501)	VALVE ASS'Y	1	60109-60560
	(723-47-20500)	VALVE ASS'Y	1	60001-60108
		THESE ASSEMBLIES CONSIST OF ALL PARTS SHOWN IN FIGS.Y1662-01A0 TO Y1662-19A0.		
	(723-40-71103)	・VALVE ASS'Y	1	60109-
	(723-40-71102)	・VALVE ASS'Y	1	60001-60108
1	723-40-71430	・・VALVE	1	60001-
2	702-21-55460	・・SPRING	1	60001-
3	702-21-55420	・・O-RING	1	60001-
4	702-21-55520	・・O-RING	1	60001-
5	702-21-55440	・・O-RING	1	60001-
6	702-21-53120	・・FILTER	1	60001-
7	07000-12011	・・O-RING	1	60001-
8	☆	・・BLOCK	1	60001-
9	☆	・・SPOOL	1	60001-
10	☆	・・SPRING	1	60001-
11	702-21-55620	・・PLUG	1	60001-
12	07002-11423	・・O-RING	1	60001-
13	702-21-55710	・・SEAT	1	60001-
14	702-21-55720	・・SPRING	1	60001-
15	04260-00793	・・BALL	1	60001-
16	07000-11009	・・O-RING	1	60001-
17	☆	・・PLUG	2	60001-
18	708-8H-11530	・・PLUG	1	60001-
19	07002-11423	・・O-RING	1	60001-
20	01252-61040	・・BOLT	3	60001-
21	01643-51032	・・WASHER	3	60001-

CONTROL VALVE (1-ACTUATOR) (14/19)

Item	Part No.	Part Name	Qty	Serial No.
22	702-21-55620	・・PLUG	1	60001-
23	07002-11423	・・O-RING	1	60001-
24	708-8E-16160	・・PLUG	1	60001-
25	07002-11023	・・O-RING	1	60001-
26	07000-12011	・・O-RING	1	60001-
27	☆	・・PLUG	15	60001-
28	01010-61470	・BOLT	3	60001-
29	01010-61460	・BOLT	1	60001-
30	01643-31445	・WASHER	4	60001-
31	723-46-17560	・PLATE	1	60001-
32	01643-51032	・WASHER	2	60001-
33	01010-81040	・BOLT	2	60001-

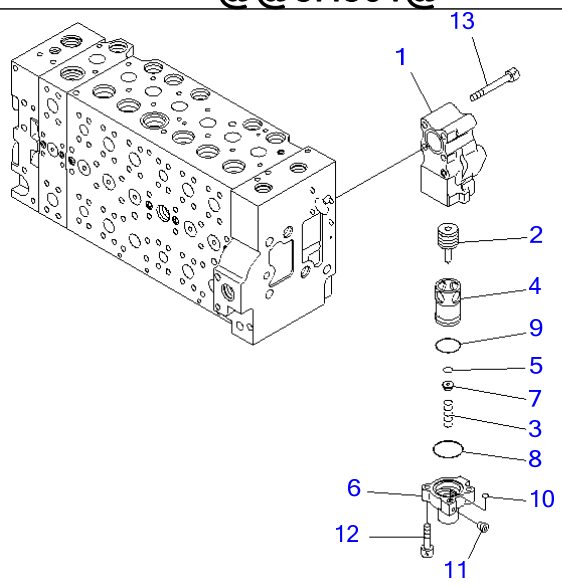

PW5H301

Ref Y1662-15A0 **Page 480880**

PC220-7 S/N 60001-UP (Overseas Version)
CONTROL VALVE (1-ACTUATOR) (15/19)

Item	Part No.	Part Name	Qty	Serial No.
	(723-47-20502)	VALVE ASS'Y	1	60561-
	(723-47-20501)	VALVE ASS'Y	1	60109-60560
	(723-47-20500)	VALVE ASS'Y	1	60001-60108
		THESE ASSEMBLIES CONSIST OF ALL PARTS SHOWN IN FIGS.Y1662-01A0 TO Y1662-19A0.		
	723-40-87200	・VALVE ASS'Y	1	60001-
1	723-40-87110	・・BODY	1	60001-
2	723-40-87240	・・SPOOL	1	60001-
3	723-40-87260	・・SPRING	1	60001-
4	☆	・・SLEEVE	1	60001-
5	☆	・・SEAL	1	60001-
6	☆	・・CASE	1	60001-
7	723-40-87250	・・RETAINER	1	60001-
8	723-40-87170	・・O-RING	1	60001-
9	07000-13035	・・O-RING	1	60001-
10	07000-11007	・・O-RING	1	60001-
11	☆	・・PLUG	1	60001-
12	01252-60830	・・BOLT	2	60001-
13	01252-61075	・BOLT	4	60001-

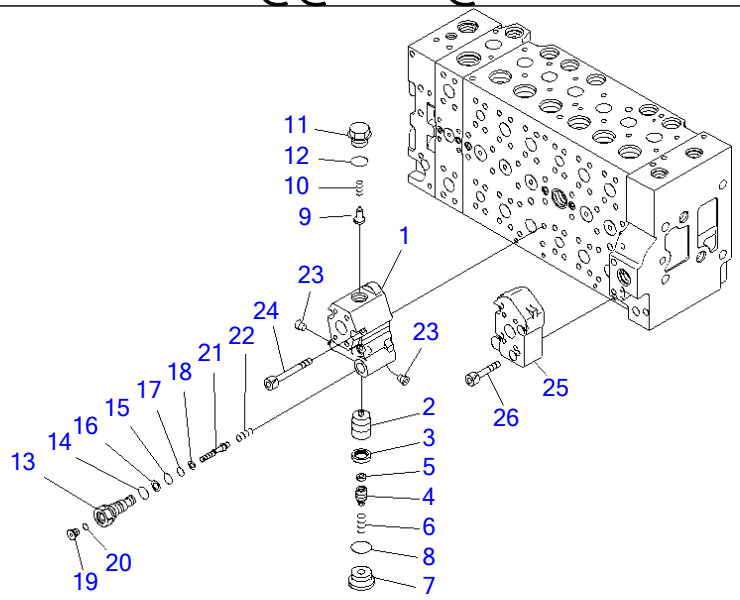

P W 5 H 3 0 2

Ref Y1662-16A0 **Page 480890**

PC220-7 S/N 60001-UP (Overseas Version)
CONTROL VALVE (1-ACTUATOR) (16/19)

Item	Part No.	Part Name	Qty	Serial No.
	(723-47-20502)	VALVE ASS'Y	1	60561-
	(723-47-20501)	VALVE ASS'Y	1	60109-60560
	(723-47-20500)	VALVE ASS'Y	1	60001-60108
		THESE ASSEMBLIES CONSIST OF ALL PARTS SHOWN IN FIGS.Y1662-01A0 TO Y1662-19A0.		
	723-40-82500	・VALVE ASS'Y	1	60001-
1	☆	・・BODY	1	60001-
2	☆	・・VALVE	1	60001-
3	☆	・・SEAL	1	60001-
4	723-40-82210	・・PLUG	1	60001-
5	723-40-82220	・・FILTER	1	60001-
6	723-40-82140	・・SPRING	1	60001-
7	723-40-82150	・・PLUG	1	60001-
8	07002-13334	・・O-RING	1	60001-
9	709-25-11650	・・VALVE,CHECK	1	60001-
10	709-25-11361	・・SPRING	1	60001-
11	723-40-82161	・・PLUG	1	60001-
12	07000-13024	・・O-RING	1	60001-
13	☆	・・PLUG	1	60001-
14	07002-11823	・・O-RING	1	60001-
15	07000-12011	・・O-RING	1	60001-
16	07001-02011	・・RING	1	60001-
17	07000-11010	・・O-RING	1	60001-
18	07001-01010	・・RING	1	60001-
19	723-11-18190	・・PLUG	1	60001-
20	07002-11023	・・O-RING	1	60001-
21	☆	・・PISTON	1	60001-
22	723-40-82290	・・SPRING	1	60001-

CONTROL VALVE (1-ACTUATOR) (16/19)

Item	Part No.	Part Name	Qty	Serial No.
23	☆	・・PLUG	2	60001-
24	01252-61075	・BOLT	4	60001-
25	723-46-17570	・BLOCK	1	60001-
26	01252-61045	・BOLT	4	60001-

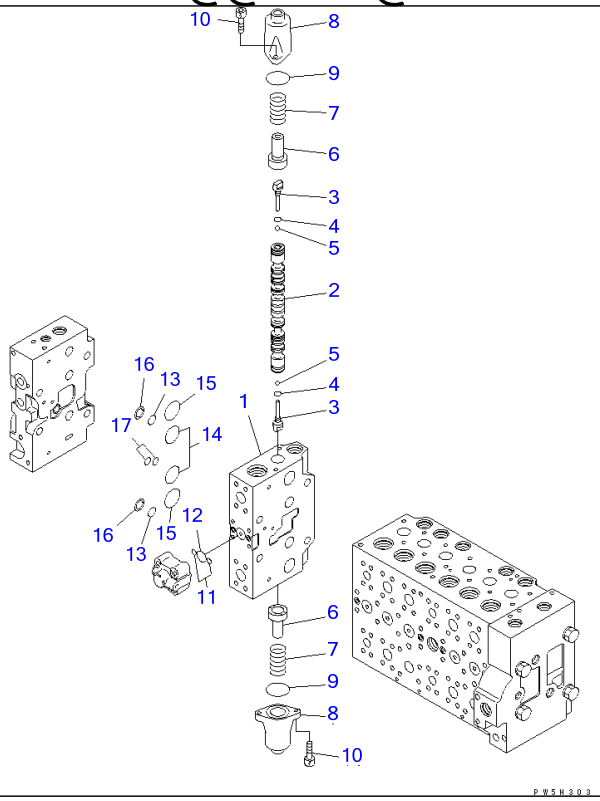

Ref Y1662-17A0 **Page 480900**

PC220-7 S/N 60001-UP (Overseas Version)
CONTROL VALVE (1-ACTUATOR) (17/19)

Item	Part No.	Part Name	Qty	Serial No.
	(723-47-20502)	VALVE ASS'Y	1	60561-
	(723-47-20501)	VALVE ASS'Y	1	60109-60560
	(723-47-20500)	VALVE ASS'Y	1	60001-60108
		THESE ASSEMBLIES CONSIST OF ALL PARTS SHOWN IN FIGS.Y1662-01A0 TO Y1662-19A0.		
	☆	・BODY SUB ASS'Y	1	60001-
1	☆	・・BLOCK,VALVE	1	60001-
2	☆	・・SPOOL	1	60001-
3	723-46-15130	・・PLUG	2	60001-
4	07002-10823	・・O-RING	2	60001-
5	708-7T-16460	・・BALL	2	60001-
6	723-46-15120	・・RETAINER	2	60001-
7	723-46-14110	・・SPRING	2	60001-
8	723-46-15111	・・CASE	2	60001-
9	07430-71380	・・O-RING	2	60001-
10	01252-60820	・・BOLT	4	60001-
11	07000-11009	・・O-RING	2	60001-
12	07000-12021	・・O-RING	1	60001-
13	723-11-19130	・・O-RING	2	60001-
14	07000-13032	・・O-RING	2	60001-
15	723-46-17510	・・O-RING	2	60001-
16	723-46-17520	・・RING,BACK-UP	2	60001-
17	723-46-17530	・・O-RING	2	60001-

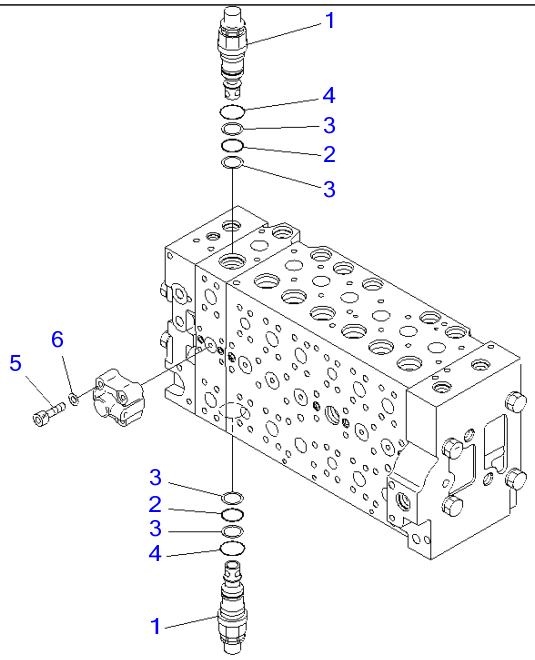

00007232

Ref Y1662-18A0 **Page 480910**

PC220-7 S/N 60001-UP (Overseas Version)
CONTROL VALVE (1-ACTUATOR) (18/19)

Item	Part No.	Part Name	Qty	Serial No.
	(723-47-20502)	VALVE ASS'Y	1	60561-
	(723-47-20501)	VALVE ASS'Y	1	60109-60560
	(723-47-20500)	VALVE ASS'Y	1	60001-60108
		THESE ASSEMBLIES CONSIST OF ALL PARTS SHOWN IN FIGS.Y1662-01A0 TO Y1662-19A0.		
	☆	・BODY SUB ASS'Y	1	60001-
1	723-46-48100	・・VALVE ASS'Y	2	60001-
2	700-93-11320	・・・O-RING	1	60001-
3	723-46-41950	・・・RING	2	60001-
4	07002-13634	・・・O-RING	1	60001-
5	01252-60845	・・BOLT	4	60001-
6	01643-50823	・・WASHER	4	60001-

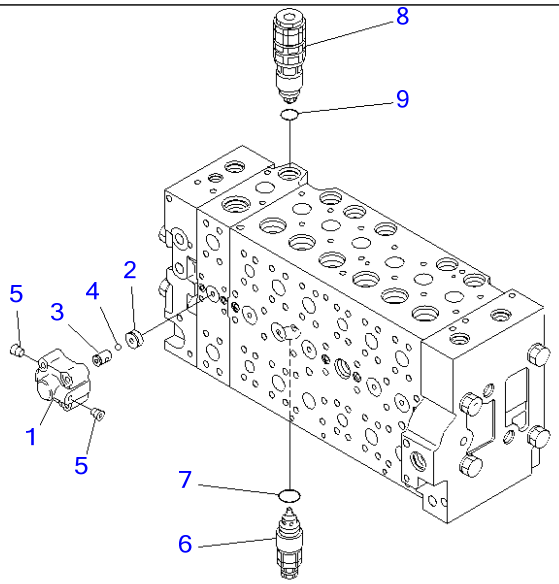

00007233

Ref Y1662-19A0 **Page 480920**

PC220-7 S/N 60001-UP (Overseas Version)
CONTROL VALVE (1-ACTUATOR) (19/19)

Item	Part No.	Part Name	Qty	Serial No.
	(723-47-20502)	VALVE ASS'Y	1	60561-
	(723-47-20501)	VALVE ASS'Y	1	60109-60560
	(723-47-20500)	VALVE ASS'Y	1	60001-60108
		THESE ASSEMBLIES CONSIST OF ALL PARTS SHOWN IN FIGS.Y1662-01A0 TO Y1662-19A0.		
	723-40-66300	・VALVE ASS'Y	1	60001-
1	☆	・・CASE	1	60001-
2	☆	・・SEAT	1	60001-
3	☆	・・SEAT	1	60001-
4	☆	・・BALL	1	60001-
5	☆	・・PLUG	2	60001-
6	723-40-91300	・VALVE ASS'Y,SUCTION AND SAFETY	1	60001-
7	709-25-11390	・・O-RING	1	60001-
8	723-90-76101	・VALVE ASS'Y,SUCTION AND SAFETY	1	60001-
9	07000-13024	・・O-RING	1	60001-

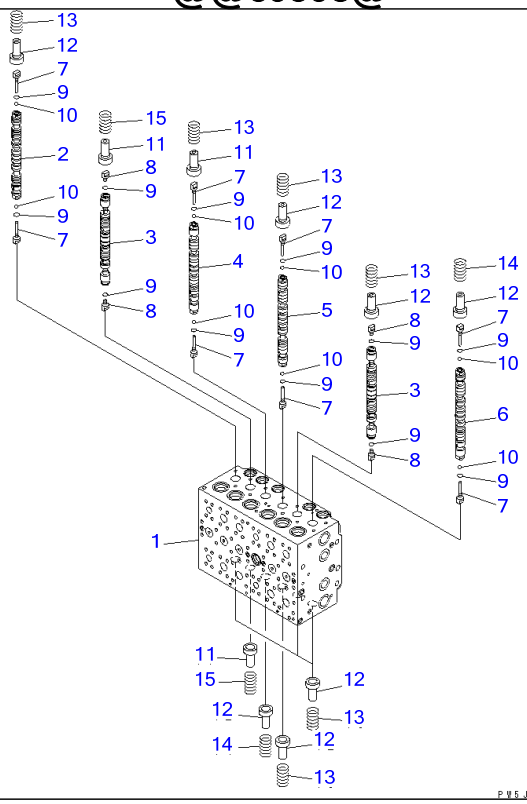

Ref Y1664-01A0 **Page 480930**

PC220-7 S/N 60001-UP (Overseas Version)
CONTROL VALVE (2-ACTUATOR) (1/21)

Item	Part No.	Part Name	Qty	Serial No.
	723-48-20502	VALVE ASS'Y	1	60561-
	723-48-20501	VALVE ASS'Y	1	60109-60560
	723-48-20500	VALVE ASS'Y	1	60001-60108
		THESE ASSEMBLIES CONSIST OF ALL PARTS SHOWN IN FIGS.Y1664-01A0 TO Y1664-21A0.		
	☆	・BODY SUB ASS'Y	1	60561-
	☆	・BODY SUB ASS'Y	1	60109-60560
	☆	・BODY SUB ASS'Y	1	60001-60108
1	☆	・・BLOCK,VALVE	1	60001-
2	☆	・・SPOOL	1	60001-
3	☆	・・SPOOL	2	60001-
4	☆	・・SPOOL	1	60001-
5	☆	・・SPOOL	1	60561-
	☆	・・SPOOL	1	60001-60560
6	☆	・・SPOOL	1	60001-
7	723-46-15130	・・PLUG	8	60001-
8	723-46-15140	・・PLUG	4	60001-
9	07002-10823	・・O-RING	12	60001-
10	708-7T-16460	・・BALL	8	60001-
11	723-46-15120	・・RETAINER	3	60001-
12	723-46-15690	・・RETAINER	9	60001-
13	723-46-14110	・・SPRING	8	60001-
14	723-46-14270	・・SPRING	2	60001-
15	723-46-14131	・・SPRING	2	60001-

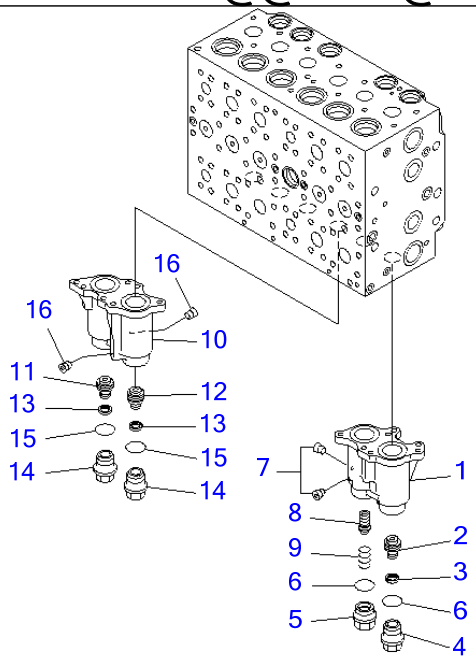

PW5J399

Ref Y1664-02A0 **Page 480940**

PC220-7 S/N 60001-UP (Overseas Version)
CONTROL VALVE (2-ACTUATOR) (2/21)

Item	Part No.	Part Name	Qty	Serial No.
	(723-48-20502)	VALVE ASS'Y	1	60561-
	(723-48-20501)	VALVE ASS'Y	1	60109-60560
	(723-48-20500)	VALVE ASS'Y	1	60001-60108
		THESE ASSEMBLIES CONSIST OF ALL PARTS SHOWN IN FIGS.Y1664-01A0 TO Y1664-21A0.		
	☆	・BODY SUB ASS'Y	1	60561-
	☆	・BODY SUB ASS'Y	1	60109-60560
	☆	・BODY SUB ASS'Y	1	60001-60108
	723-46-18300	・・CASE SUB ASS'Y	1	60001-
1	☆	・・・CASE	1	60001-
2	☆	・・・PISTON	1	60001-
3	☆	・・・SEAL	1	60001-
4	723-46-15630	・・・PLUG	1	60001-
5	723-46-17340	・・・PLUG	1	60001-
6	07000-13024	・・・O-RING	2	60001-
7	☆	・・・PLUG	3	60001-
8	723-46-17320	・・・SPOOL	1	60001-
9	723-46-17330	・・・SPRING	1	60001-
	723-46-17101	・・CASE SUB ASS'Y	1	60001-
10	☆	・・・CASE	1	60001-
11	☆	・・・PISTON	1	60001-
12	☆	・・・PISTON	1	60001-
13	☆	・・・SEAL	2	60001-
14	723-46-15630	・・・PLUG	2	60001-
15	07000-13024	・・・O-RING	2	60001-
16	☆	・・・PLUG	2	60001-

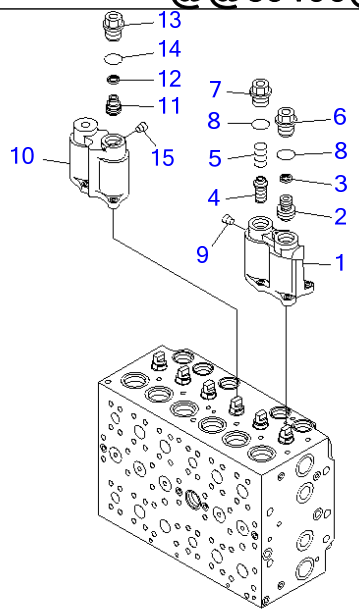

P W 5 J 4 0 0

Ref Y1664-03A0 **Page 480950**

PC220-7 S/N 60001-UP (Overseas Version)
CONTROL VALVE (2-ACTUATOR) (3/21)

Item	Part No.	Part Name	Qty	Serial No.
	(723-48-20502)	VALVE ASS'Y	1	60561-
	(723-48-20501)	VALVE ASS'Y	1	60109-60560
	(723-48-20500)	VALVE ASS'Y	1	60001-60108
		THESE ASSEMBLIES CONSIST OF ALL PARTS SHOWN IN FIGS.Y1664-01A0 TO Y1664-21A0.		
	☆	・BODY SUB ASS'Y	1	60561-
	☆	・BODY SUB ASS'Y	1	60109-60560
	☆	・BODY SUB ASS'Y	1	60001-60108
	723-46-18401	・・CASE SUB ASS'Y	1	60001-
1	☆	・・・CASE	1	60001-
2	☆	・・・PISTON	1	60001-
3	☆	・・・SEAL	1	60001-
4	723-46-17320	・・・SPOOL	1	60001-
5	723-46-17330	・・・SPRING	1	60001-
6	723-46-15630	・・・PLUG	1	60001-
7	723-46-17340	・・・PLUG	1	60001-
8	07000-13024	・・・O-RING	2	60001-
9	☆	・・・PLUG	3	60001-
	723-46-17203	・・CASE SUB ASS'Y	1	60001-
10	☆	・・・CASE	1	60001-
11	☆	・・・PISTON	1	60001-
12	☆	・・・SEAL	1	60001-
13	723-46-15630	・・・PLUG	1	60001-
14	07000-13024	・・・O-RING	1	60001-
15	☆	・・・PLUG	1	60001-

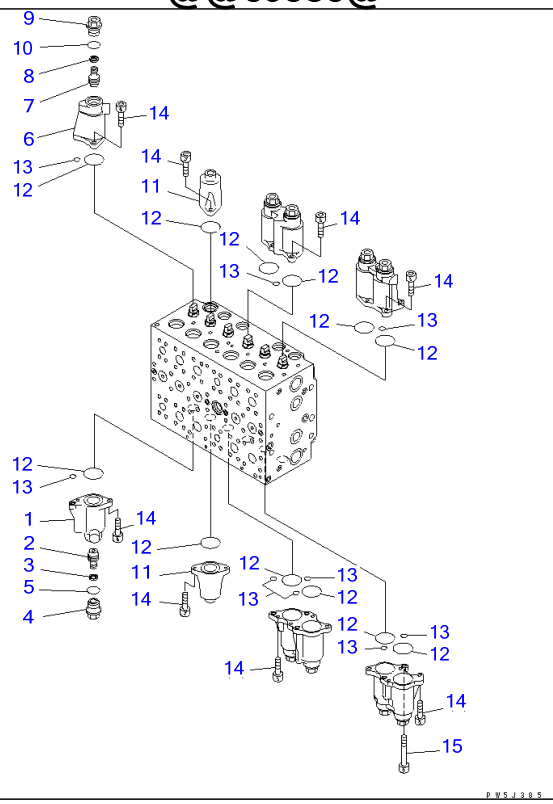

Ref Y1664-04A0 **Page 480960**

PC220-7 S/N 60001-UP (Overseas Version)
CONTROL VALVE (2-ACTUATOR) (4/21)

Item	Part No.	Part Name	Qty	Serial No.
	(723-48-20502)	VALVE ASS'Y	1	60561-
	(723-48-20501)	VALVE ASS'Y	1	60109-60560
	(723-48-20500)	VALVE ASS'Y	1	60001-60108
		THESE ASSEMBLIES CONSIST OF ALL PARTS SHOWN IN FIGS.Y1664-01A0 TO Y1664-21A0.		
	☆	・BODY SUB ASS'Y	1	60561-
	☆	・BODY SUB ASS'Y	1	60109-60560
	☆	・BODY SUB ASS'Y	1	60001-60108
	723-46-18500	・・CASE SUB ASS'Y	1	60001-
1	☆	・・・CASE	1	60001-
2	☆	・・・PISTON	1	60001-
3	☆	・・・SEAL	1	60001-
4	723-46-15630	・・・PLUG	1	60001-
5	07000-13024	・・・O-RING	1	60001-
	723-46-18600	・・CASE SUB ASS'Y	1	60001-
6	☆	・・・CASE	1	60001-
7	☆	・・・PISTON	1	60001-
8	☆	・・・SEAL	1	60001-
9	723-46-15630	・・・PLUG	1	60001-
10	07000-13024	・・・O-RING	1	60001-
11	723-46-15111	・・CASE	2	60001-
12	07430-71380	・・O-RING	12	60001-
13	702-16-53920	・・O-RING	9	60001-
14	01252-60820	・・BOLT	22	60001-
15	723-46-17350	・・BOLT	2	60001-

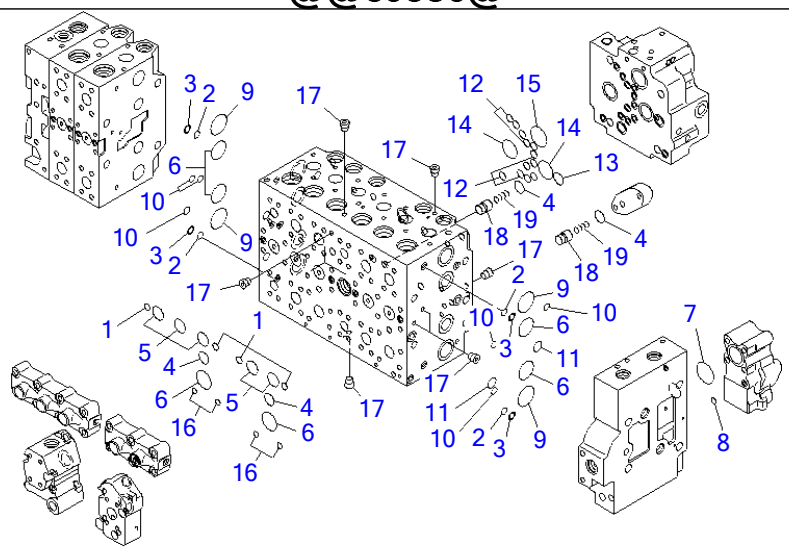

PW5J386

Ref Y1664-05A0 **Page 480970**

PC220-7 S/N 60001-UP (Overseas Version)
CONTROL VALVE (2-ACTUATOR) (5/21)

Item	Part No.	Part Name	Qty	Serial No.
	(723-48-20502)	VALVE ASS'Y	1	60561-
	(723-48-20501)	VALVE ASS'Y	1	60109-60560
	(723-48-20500)	VALVE ASS'Y	1	60001-60108
		THESE ASSEMBLIES CONSIST OF ALL PARTS SHOWN IN FIGS.Y1664-01A0 TO Y1664-21A0.		
	☆	・BODY SUB ASS'Y	1	60561-
	☆	・BODY SUB ASS'Y	1	60109-60560
	☆	・BODY SUB ASS'Y	1	60001-60108
1	07000-12012	・・O-RING	4	60001-
2	723-11-19130	・・O-RING	4	60001-
3	723-46-17520	・・RING,BACK-UP	4	60001-
4	07000-12021	・・O-RING	4	60001-
5	07000-13028	・・O-RING	5	60001-
6	07000-13032	・・O-RING	6	60001-
7	07000-13038	・・O-RING	1	60001-
8	07000-11010	・・O-RING	1	60001-
9	723-46-17510	・・O-RING	4	60001-
10	723-46-17530	・・O-RING	6	60001-
11	723-11-18150	・・O-RING	2	60001-
12	07000-12012	・・O-RING	12	60001-
13	07000-12021	・・O-RING	1	60001-
14	07000-13032	・・O-RING	2	60001-
15	07000-13036	・・O-RING	1	60001-
16	702-16-53920	・・O-RING	4	60001-
17	☆	・・PLUG	17	60001-
18	723-46-17650	・・VALVE	2	60001-
19	723-46-14150	・・SPRING	2	60001-

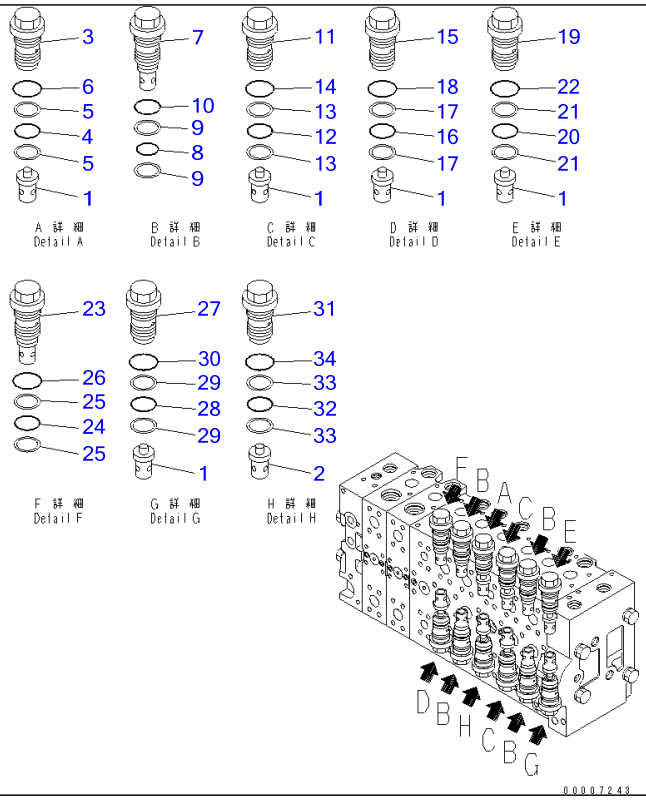

Ref Y1664-06A0 **Page 480980**

PC220-7 S/N 60001-UP (Overseas Version)

CONTROL VALVE (2-ACTUATOR) (6/21)

Item	Part No.	Part Name	Qty	Serial No.
	(723-48-20502)	VALVE ASS'Y	1	60561-
	(723-48-20501)	VALVE ASS'Y	1	60109-60560
	(723-48-20500)	VALVE ASS'Y	1	60001-60108
		THESE ASSEMBLIES CONSIST OF ALL PARTS SHOWN IN FIGS.Y1664-01A0 TO Y1664-21A0.		
	☆	・BODY SUB ASS'Y	1	60561-
	☆	・BODY SUB ASS'Y	1	60109-60560
	☆	・BODY SUB ASS'Y	1	60001-60108
1	723-46-41110	・・VALVE	6	60001-
2	723-46-41190	・・VALVE	1	60109-
	723-46-41120	・・VALVE	1	60001-60108
3	723-46-40100	・・VALVE ASS'Y	1	60001-
4	700-93-11320	・・・O-RING	1	60001-
5	723-46-41950	・・・RING	2	60001-
6	07002-13634	・・・O-RING	1	60001-
7	723-46-42700	・・VALVE ASS'Y	4	60001-
8	700-93-11320	・・・O-RING	1	60001-
9	723-46-41950	・・・RING	2	60001-
10	07002-13634	・・・O-RING	1	60001-
11	723-46-41100	・・VALVE ASS'Y	2	60001-
12	700-93-11320	・・・O-RING	1	60001-
13	723-46-41950	・・・RING	2	60001-
14	07002-13634	・・・O-RING	1	60001-
15	723-46-45100	・・VALVE ASS'Y	1	60001-
16	700-93-11320	・・・O-RING	1	60001-
17	723-46-41950	・・・RING	2	60001-
18	07002-13634	・・・O-RING	1	60001-
19	723-46-46300	・・VALVE ASS'Y	1	60001-

CONTROL VALVE (2-ACTUATOR) (6/21)

Item	Part No.	Part Name	Qty	Serial No.
20	700-93-11320	・・・O-RING	1	60001-
21	723-46-41950	・・・RING	2	60001-
22	07002-13634	・・・O-RING	1	60001-
23	723-46-43400	・・VALVE ASS'Y	1	60001-
24	700-93-11320	・・・O-RING	1	60001-
25	723-46-41950	・・・RING	2	60001-
26	07002-13634	・・・O-RING	1	60001-
27	723-46-43100	・・VALVE ASS'Y	1	60001-
28	700-93-11320	・・・O-RING	1	60001-
29	723-46-41950	・・・RING	2	60001-
30	07002-13634	・・・O-RING	1	60001-
31	723-46-46101	・・VALVE ASS'Y	1	60001-
32	700-93-11320	・・・O-RING	1	60001-
33	723-46-41950	・・・RING	2	60001-
34	07002-13634	・・・O-RING	1	60001-

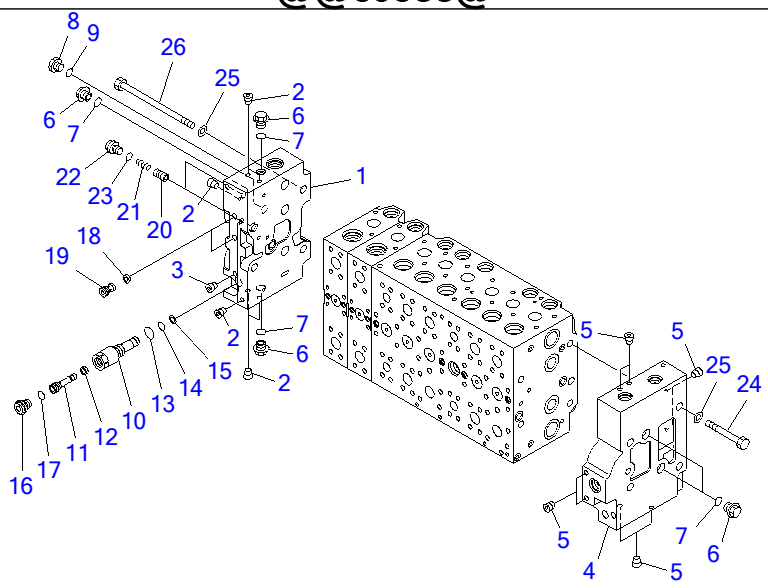

PW5J388

Ref Y1664-07A0 **Page 480990**

PC220-7 S/N 60001-UP (Overseas Version)
CONTROL VALVE (2-ACTUATOR) (7/21)(#60001-69810)

Item	Part No.	Part Name	Qty	Serial No.
	(723-48-20502)	VALVE ASS'Y	1	60561-@
	(723-48-20501)	VALVE ASS'Y	1	60109-60560
	(723-48-20500)	VALVE ASS'Y	1	60001-60108
		THESE ASSEMBLIES CONSIST OF ALL PARTS SHOWN IN FIGS.Y1664-01A0 TO Y1664-21A0.		
	723-46-00750	・COVER ASS'Y	1	60001-69810
1	☆	・・COVER	1	60001-69810
2	☆	・・PLUG	7	60001-@
3	☆	・・PLUG	1	60001-@
	723-46-00742	・COVER ASS'Y	1	60001-@
4	☆	・・COVER	1	60001-@
5	☆	・・PLUG	8	60001-@
6	723-46-15180	・PLUG	5	60001-69810
7	07002-11823	・O-RING	5	60001-69810
8	708-8H-11530	・PLUG	1	60001-@
9	07002-11423	・O-RING	1	60001-@
	723-46-17600	・PLUG ASS'Y	1	60001-@
10	723-46-17610	・・SLEEVE	1	60001-@
11	723-46-17640	・・PLUG	1	60001-@
12	702-21-55760	・・FILTER	1	60001-@
13	07002-11423	・・O-RING	1	60001-@
14	07000-11007	・・O-RING	1	60001-@
15	07001-01007	・・RING,BACK-UP	1	60001-@
16	708-8E-16160	・・PLUG	1	60001-@
17	07002-11023	・・O-RING	1	60001-@
18	723-40-82220	・FILTER	2	60001-@
19	723-46-17550	・PLUG	2	60001-@
20	723-46-15190	・VALVE	2	60001-@

CONTROL VALVE (2-ACTUATOR) (7/21)(#60001-69810)

Item	Part No.	Part Name	Qty	Serial No.
21	723-46-14140	・SPRING	2	60001-@
22	708-8E-16160	・PLUG	2	60001-@
23	07002-11023	・O-RING	2	60001-@
24	01010-61490	・BOLT	4	60001-@
25	01643-31445	・WASHER	8	60001-@
26	723-46-15220	・BOLT	4	60001-@

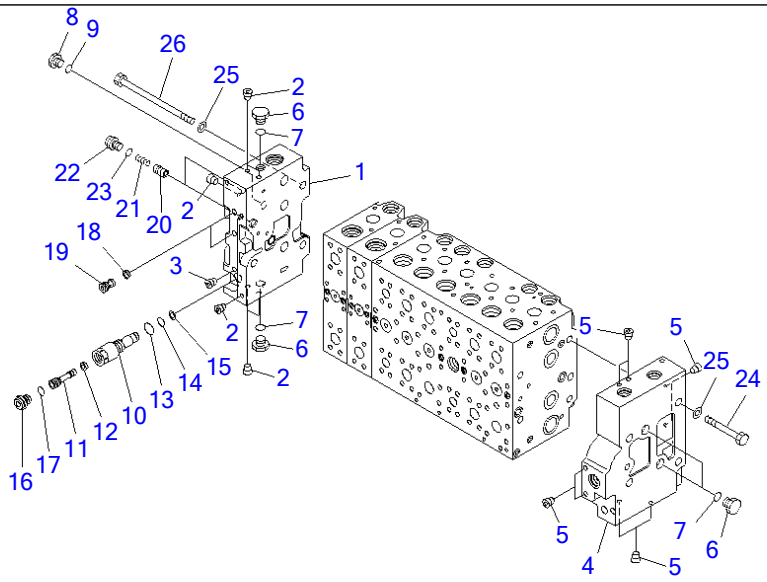

JY021789

Ref Y1664-07A0A **Page 481000**

PC220-7 S/N 60001-UP (Overseas Version)

CONTROL VALVE (2-ACTUATOR) (7/21)(#69811-)

Item	Part No.	Part Name	Qty	Serial No.
	(723-48-20502)	VALVE ASS'Y THESE ASSEMBLIES CONSIST OF ALL PARTS SHOWN IN FIGS.Y1664-01A0 TO Y1664-21A0.	1	60561-
	723-46-00630	・COVER ASS'Y	1	69811-
1	☆	・・COVER	1	69811-
2	☆	・・PLUG	7	60001-
3	☆	・・PLUG	1	60001-
	723-46-00742	・COVER ASS'Y	1	60001-
4	☆	・・COVER	1	60001-
5	☆	・・PLUG	8	60001-
6	708-8E-16250	・PLUG	4	69811-
7	07002-11823	・O-RING	4	69811-
8	708-8H-11530	・PLUG	1	60001-
9	07002-11423	・O-RING	1	60001-
	723-46-17600	・PLUG ASS'Y	1	60001-
10	723-46-17610	・・SLEEVE	1	60001-
11	723-46-17640	・・PLUG	1	60001-
12	702-21-55760	・・FILTER	1	60001-
13	07002-11423	・・O-RING	1	60001-
14	07000-11007	・・O-RING	1	60001-
15	07001-01007	・・RING,BACK-UP	1	60001-
16	708-8E-16160	・・PLUG	1	60001-
17	07002-11023	・・O-RING	1	60001-
18	723-40-82220	・FILTER	2	60001-
19	723-46-17550	・PLUG	2	60001-
20	723-46-15190	・VALVE	2	60001-
21	723-46-14140	・SPRING	2	60001-
22	708-8E-16160	・PLUG	2	60001-

CONTROL VALVE (2-ACTUATOR) (7/21)(#69811-)

Item	Part No.	Part Name	Qty	Serial No.
23	07002-11023	・O-RING	2	60001-
24	01010-61490	・BOLT	4	60001-
25	01643-31445	・WASHER	8	60001-
26	723-46-15220	・BOLT	4	60001-

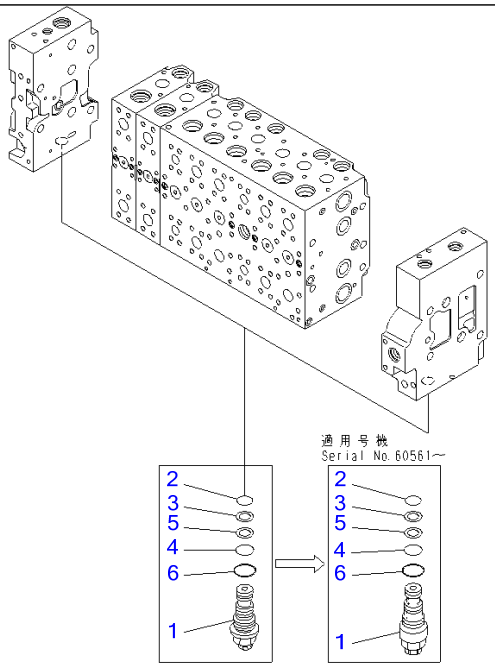

00015346

Ref Y1664-08A0 **Page 481010**

PC220-7 S/N 60001-UP (Overseas Version)
CONTOROL VALVE (2-ACTUATOR) (8/21)

Item	Part No.	Part Name	Qty	Serial No.
	(723-48-20502)	VALVE ASS'Y	1	60561-
	(723-48-20501)	VALVE ASS'Y	1	60109-60560
	(723-48-20500)	VALVE ASS'Y	1	60001-60108
		THESE ASSEMBLIES CONSIST OF ALL PARTS SHOWN IN FIGS.Y1664-01A0 TO Y1664-21A0.		
1	723-40-56900	・VALVE ASS'Y,UNLOAD	2	60561-
	723-40-56302	・VALVE ASS'Y,UNLOAD	2	60001-60560
2	07000-12014	・・O-RING	1	60001-
3	723-40-56350	・・RING	1	60001-
4	07000-12016	・・O-RING	1	60001-
5	723-60-22230	・・RING,BACK-UP	1	60001-
6	07002-12434	・・O-RING	1	60001-

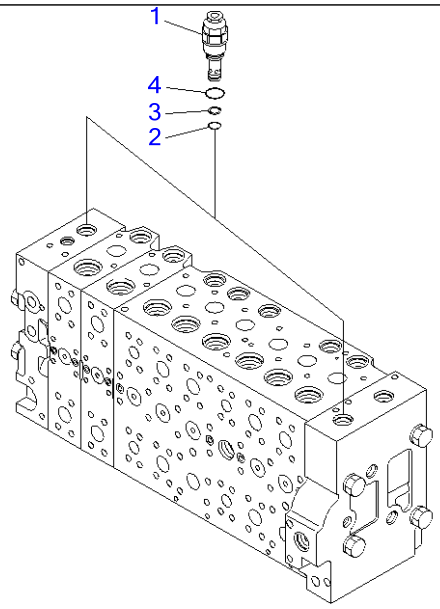

00014399

Ref Y1664-09A0 **Page 481020**

PC220-7 S/N 60001-UP (Overseas Version)
CONTROL VALVE (2-ACTUATOR) (9/21)

Item	Part No.	Part Name	Qty	Serial No.
	(723-48-20502)	VALVE ASS'Y	1	60561-
	(723-48-20501)	VALVE ASS'Y	1	60109-60560
	(723-48-20500)	VALVE ASS'Y	1	60001-60108
		THESE ASSEMBLIES CONSIST OF ALL PARTS SHOWN IN FIGS.Y1664-01A0 TO Y1664-21A0.		
1	723-40-92203	・VALVE ASS'Y	2	60561-
	723-40-92200	・VALVE ASS'Y,RELIEF	2	60001-60560
2	700-22-11410	・・O-RING	1	60001-
3	700-80-64220	・・RING	1	60001-
4	07002-12434	・・O-RING	1	60001-

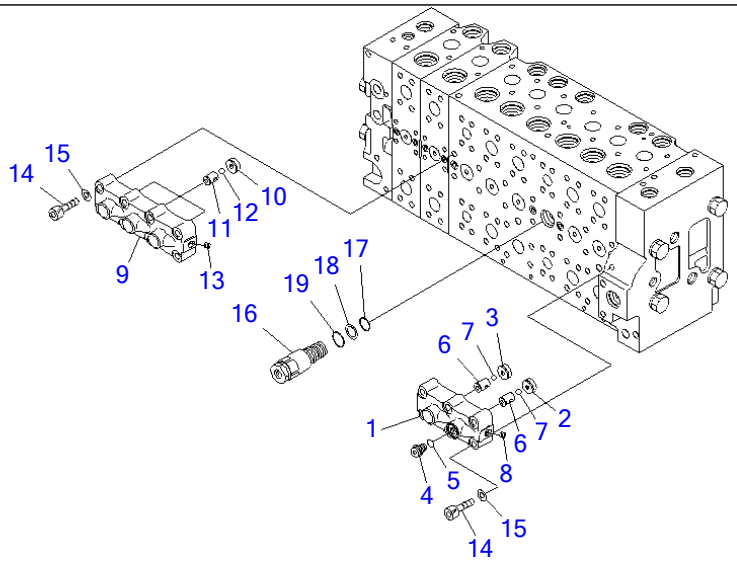

00007246

Ref Y1664-10A0 **Page 481030**

PC220-7 S/N 60001-UP (Overseas Version)
CONTROL VALVE (2-ACTUATOR) (10/21)

Item	Part No.	Part Name	Qty	Serial No.
	(723-48-20502)	VALVE ASS'Y	1	60561-
	(723-48-20501)	VALVE ASS'Y	1	60109-60560
	(723-48-20500)	VALVE ASS'Y	1	60001-60108
		THESE ASSEMBLIES CONSIST OF ALL PARTS SHOWN IN FIGS.Y1664-01A0 TO Y1664-21A0.		
	723-40-66701	・VALVE ASS'Y	1	60001-
1	☆	・・CASE	1	60001-
2	☆	・・SEAT	1	60001-
3	☆	・・SEAT	1	60001-
4	708-8H-11530	・・PLUG	1	60001-
5	07002-11423	・・O-RING	1	60001-
6	☆	・・SEAT	2	60001-
7	☆	・・BALL	2	60001-
8	☆	・・PLUG	1	60001-
	723-40-66601	・VALVE ASS'Y	1	60001-
9	☆	・・CASE	1	60001-
10	☆	・・SEAT	3	60001-
11	☆	・・SEAT	3	60001-
12	☆	・・BALL	3	60001-
13	☆	・・PLUG	1	60001-
14	01252-61045	・BOLT	14	67090-
	01252-61050	・BOLT	14	60001-67089
15	01643-51032	・WASHER	14	60001-67089
16	723-40-60101	・VALVE ASS'Y	1	60001-
17	07000-12020	・・O-RING	1	60001-
18	07001-02020	・・RING,BACK-UP	1	60001-
19	709-25-11390	・・O-RING	1	60001-

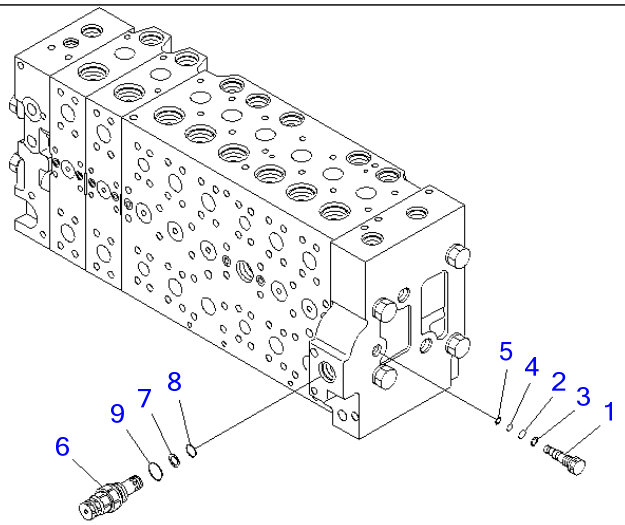

00007247

Ref Y1664-11A0 **Page 481040**

PC220-7 S/N 60001-UP (Overseas Version)
CONTROL VALVE (2-ACTUATOR) (11/21)

Item	Part No.	Part Name	Qty	Serial No.
	(723-48-20502)	VALVE ASS'Y	1	60561-
	(723-48-20501)	VALVE ASS'Y	1	60109-60560
	(723-48-20500)	VALVE ASS'Y	1	60001-60108
		THESE ASSEMBLIES CONSIST OF ALL PARTS SHOWN IN FIGS.Y1664-01A0 TO Y1664-21A0.		
	723-46-17701	・PLUG ASS'Y	1	60001-
1	723-46-17711	・・PLUG	1	60001-
2	07000-11009	・・O-RING	1	60001-
3	07001-01009	・・RING,BACK-UP	1	60001-
4	07000-11007	・・O-RING	1	60001-
5	07001-01007	・・RING,BACK-UP	1	60001-
6	723-40-91500	・VALVE ASS'Y,RELIEF	1	60001-
7	700-80-64220	・・RING	1	60001-
8	700-22-11410	・・O-RING	1	60001-
9	709-25-11390	・・O-RING	1	60001-

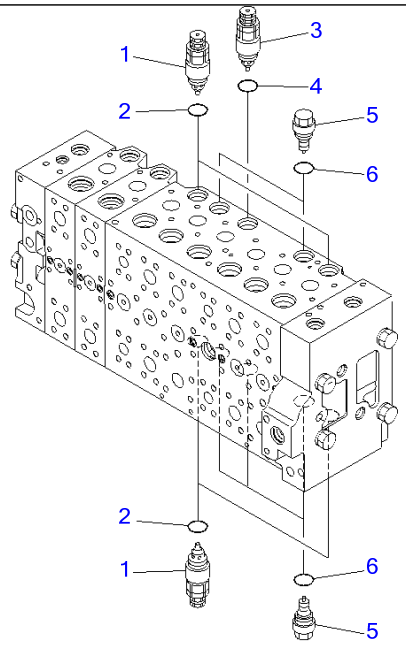

00014390

Ref Y1664-12A0 **Page 481050**

PC220-7 S/N 60001-UP (Overseas Version)
CONTROL VALVE (2-ACTUATOR) (12/21)

Item	Part No.	Part Name	Qty	Serial No.
	(723-48-20502)	VALVE ASS'Y	1	60561-
	(723-48-20501)	VALVE ASS'Y	1	60109-60560
	(723-48-20500)	VALVE ASS'Y	1	60001-60108
		THESE ASSEMBLIES CONSIST OF ALL PARTS SHOWN IN FIGS.Y1664-01A0 TO Y1664-21A0.		
1	723-40-91200	・VALVE ASS'Y,SUCTION AND SAFETY	4	60001-
2	709-25-11390	・・O-RING	1	60001-
3	723-90-61600	・VALVE ASS'Y,SUCTION AND SAFETY	1	60001-
4	07000-13024	・・O-RING	1	60001-
5	723-40-85100	・VALVE ASS'Y,SUCTION	5	60001-
6	709-25-11390	・・O-RING	1	60001-

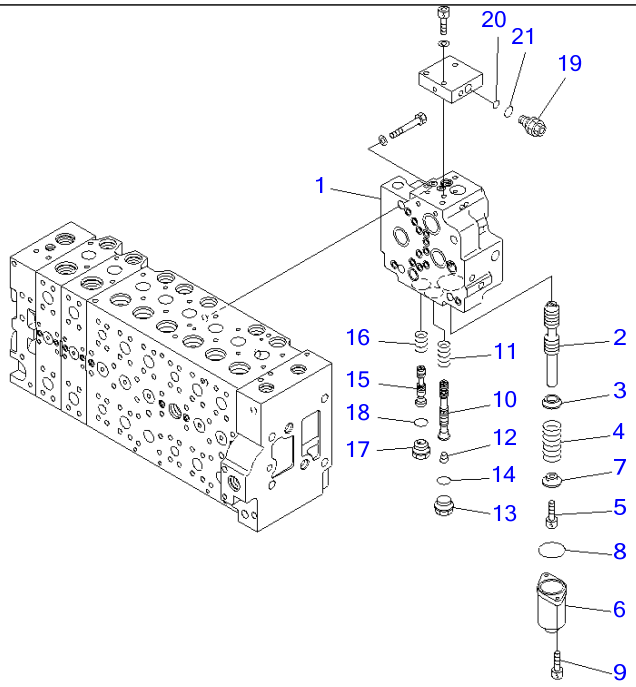

00007249

Ref Y1664-13A0 **Page 481060**

PC220-7 S/N 60001-UP (Overseas Version)
CONTROL VALVE (2-ACTUATOR) (13/21)

Item	Part No.	Part Name	Qty	Serial No.
	(723-48-20502)	VALVE ASS'Y	1	60561-
	(723-48-20501)	VALVE ASS'Y	1	60109-60560
	(723-48-20500)	VALVE ASS'Y	1	60001-60108
		THESE ASSEMBLIES CONSIST OF ALL PARTS SHOWN IN FIGS.Y1664-01A0 TO Y1664-21A0.		
	723-40-71103	・VALVE ASS'Y	1	60109-
	723-40-71102	・VALVE ASS'Y	1	60001-60108
1	☆	・・BODY	1	60001-
2	☆	・・SPOOL	1	60001-
3	723-40-71330	・・RETAINER	1	60001-
4	723-40-71340	・・SPRING	1	60001-
5	01252-60816	・・BOLT	1	60001-
6	723-46-15111	・・CASE	1	60001-
7	723-40-71350	・・RETAINER	1	60001-
8	07430-71380	・・O-RING	1	60001-
9	01252-60820	・・BOLT	2	60001-
10	☆	・・SPOOL	1	60109-
	☆	・・SPOOL	1	60001-60108
11	723-40-71440	・・SPRING	1	60001-
12	☆	・・PLUG	1	60001-
13	709-74-91860	・・PLUG	1	60001-
14	07002-12434	・・O-RING	1	60001-
15	☆	・・SPOOL	1	60001-
16	723-40-71390	・・SPRING	1	60001-
17	723-40-61150	・・PLUG	1	60001-
18	07002-12434	・・O-RING	1	60001-
19	☆	・・VALVE ASS'Y,RELIEF	1	60001-
20	702-16-53920	・・・O-RING	1	60001-

CONTROL VALVE (2-ACTUATOR) (13/21)

Item	Part No.	Part Name	Qty	Serial No.
21	07002-11623	・・・O-RING	1	60001-

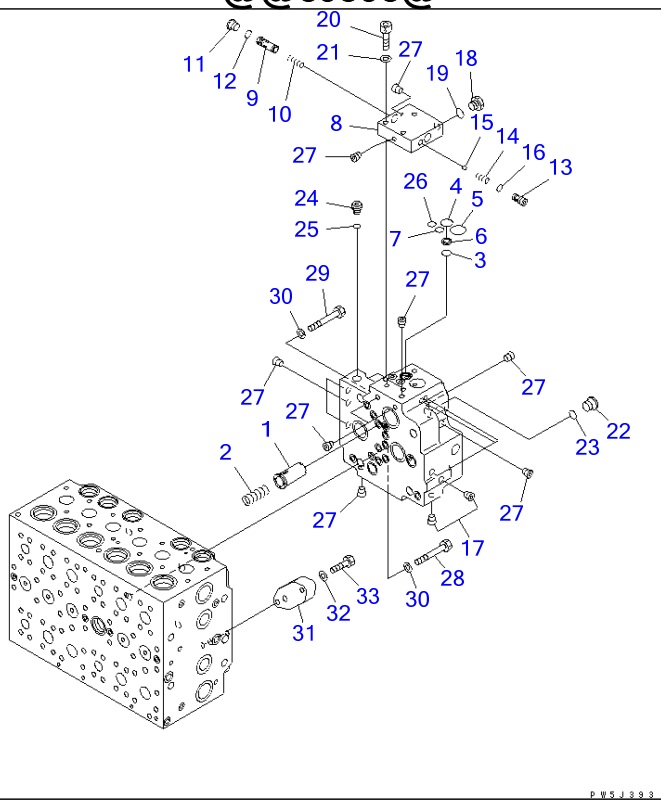

Ref Y1664-14A0 **Page 481070**

PC220-7 S/N 60001-UP (Overseas Version)
CONTROL VALVE (2-ACTUATOR) (14/21)

Item	Part No.	Part Name	Qty	Serial No.
	(723-48-20502)	VALVE ASS'Y	1	60561-
	(723-48-20501)	VALVE ASS'Y	1	60109-60560
	(723-48-20500)	VALVE ASS'Y	1	60001-60108
		THESE ASSEMBLIES CONSIST OF ALL PARTS SHOWN IN FIGS.Y1664-01A0 TO Y1664-21A0.		
	(723-40-71103)	・VALVE ASS'Y	1	60109-
	(723-40-71102)	・VALVE ASS'Y	1	60001-60108
1	723-40-71430	・・VALVE	1	60001-
2	702-21-55460	・・SPRING	1	60001-
3	702-21-55420	・・O-RING	1	60001-
4	702-21-55520	・・O-RING	1	60001-
5	702-21-55440	・・O-RING	1	60001-
6	702-21-53120	・・FILTER	1	60001-
7	07000-12011	・・O-RING	1	60001-
8	☆	・・BLOCK	1	60001-
9	☆	・・SPOOL	1	60001-
10	☆	・・SPRING	1	60001-
11	702-21-55620	・・PLUG	1	60001-
12	07002-11423	・・O-RING	1	60001-
13	702-21-55710	・・SEAT	1	60001-
14	702-21-55720	・・SPRING	1	60001-
15	04260-00793	・・BALL	1	60001-
16	07000-11009	・・O-RING	1	60001-
17	☆	・・PLUG	2	60001-
18	708-8H-11530	・・PLUG	1	60001-
19	07002-11423	・・O-RING	1	60001-
20	01252-61040	・・BOLT	3	60001-
21	01643-51032	・・WASHER	3	60001-

CONTROL VALVE (2-ACTUATOR) (14/21)

Item	Part No.	Part Name	Qty	Serial No.
22	702-21-55620	・・PLUG	1	60001-
23	07002-11423	・・O-RING	1	60001-
24	708-8E-16160	・・PLUG	1	60001-
25	07002-11023	・・O-RING	1	60001-
26	07000-12011	・・O-RING	1	60001-
27	☆	・・PLUG	15	60001-
28	01010-61470	・BOLT	3	60001-
29	01010-61460	・BOLT	1	60001-
30	01643-31445	・WASHER	4	60001-
31	723-46-17560	・PLATE	1	60001-
32	01643-51032	・WASHER	2	60001-
33	01010-81040	・BOLT	2	60001-

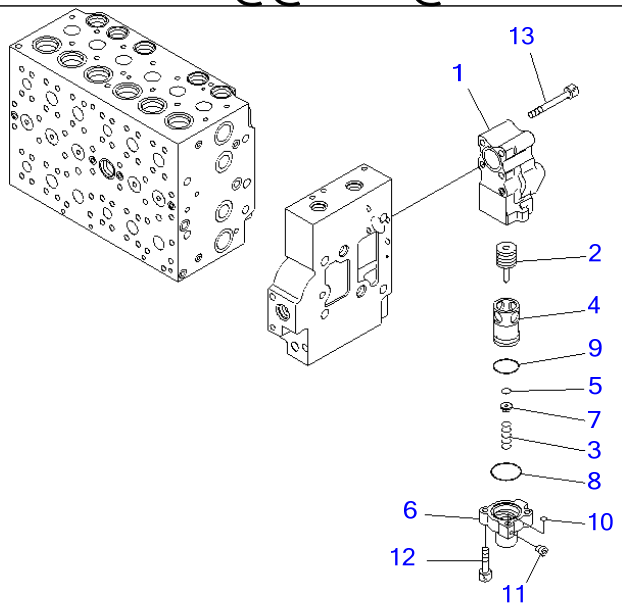

P W 5 J 3 9 4

Ref Y1664-15A0 **Page 481080**

PC220-7 S/N 60001-UP (Overseas Version)
CONTROL VALVE (2-ACTUATOR) (15/21)

Item	Part No.	Part Name	Qty	Serial No.
	(723-48-20502)	VALVE ASS'Y	1	60561-
	(723-48-20501)	VALVE ASS'Y	1	60109-60560
	(723-48-20500)	VALVE ASS'Y	1	60001-60108
		THESE ASSEMBLIES CONSIST OF ALL PARTS SHOWN IN FIGS.Y1664-01A0 TO Y1664-21A0.		
	723-40-87200	・VALVE ASS'Y	1	60001-
1	723-40-87110	・・BODY	1	60001-
2	723-40-87240	・・SPOOL	1	60001-
3	723-40-87260	・・SPRING	1	60001-
4	☆	・・SLEEVE	1	60001-
5	☆	・・SEAL	1	60001-
6	☆	・・CASE	1	60001-
7	723-40-87250	・・RETAINER	1	60001-
8	723-40-87170	・・O-RING	1	60001-
9	07000-13035	・・O-RING	1	60001-
10	07000-11007	・・O-RING	1	60001-
11	☆	・・PLUG	1	60001-
12	01252-60830	・・BOLT	2	60001-
13	01252-61075	・BOLT	4	60001-

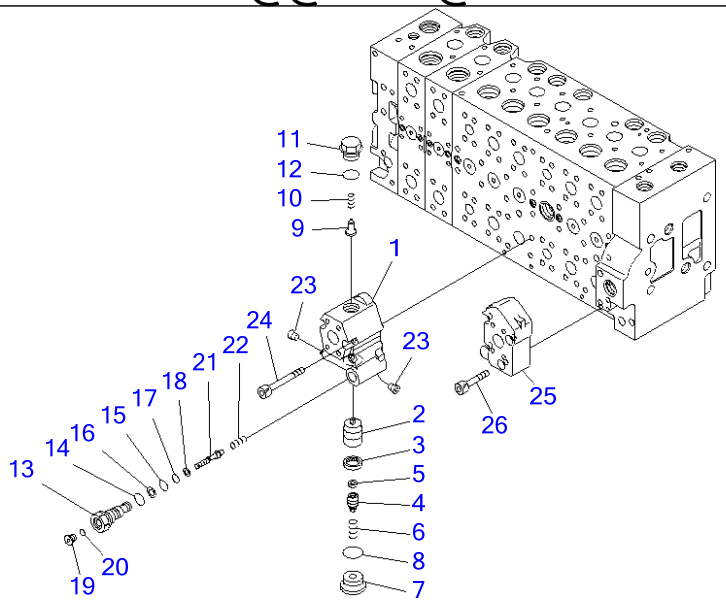

PJ5H370

PC220-7 S/N 60001-UP (Overseas Version)
CONTROL VALVE (2-ACTUATOR) (16/21)

Item	Part No.	Part Name	Qty	Serial No.
	(723-48-20502)	VALVE ASS'Y	1	60561-
	(723-48-20501)	VALVE ASS'Y	1	60109-60560
	(723-48-20500)	VALVE ASS'Y	1	60001-60108
		THESE ASSEMBLIES CONSIST OF ALL PARTS SHOWN IN FIGS.Y1664-01A0 TO Y1664-21A0.		
	723-40-82500	・VALVE ASS'Y	1	60001-
1	☆	・・BODY	1	60001-
2	☆	・・VALVE	1	60001-
3	☆	・・SEAL	1	60001-
4	723-40-82210	・・PLUG	1	60001-
5	723-40-82220	・・FILTER	1	60001-
6	723-40-82140	・・SPRING	1	60001-
7	723-40-82150	・・PLUG	1	60001-
8	07002-13334	・・O-RING	1	60001-
9	709-25-11650	・・VALVE,CHECK	1	60001-
10	709-25-11361	・・SPRING	1	60001-
11	723-40-82161	・・PLUG	1	60001-
12	07000-13024	・・O-RING	1	60001-
13	☆	・・PLUG	1	60001-
14	07002-11823	・・O-RING	1	60001-
15	07000-12011	・・O-RING	1	60001-
16	07001-02011	・・RING	1	60001-
17	07000-11010	・・O-RING	1	60001-
18	07001-01010	・・RING	1	60001-
19	723-11-18190	・・PLUG	1	60001-
20	07002-11023	・・O-RING	1	60001-
21	☆	・・PISTON	1	60001-
22	723-40-82290	・・SPRING	1	60001-

CONTROL VALVE (2-ACTUATOR) (16/21)

Item	Part No.	Part Name	Qty	Serial No.
23	☆	・・PLUG	2	60001-
24	01252-61075	・BOLT	4	60001-
25	723-46-17570	・BLOCK	1	60001-
26	01252-61045	・BOLT	4	60001-

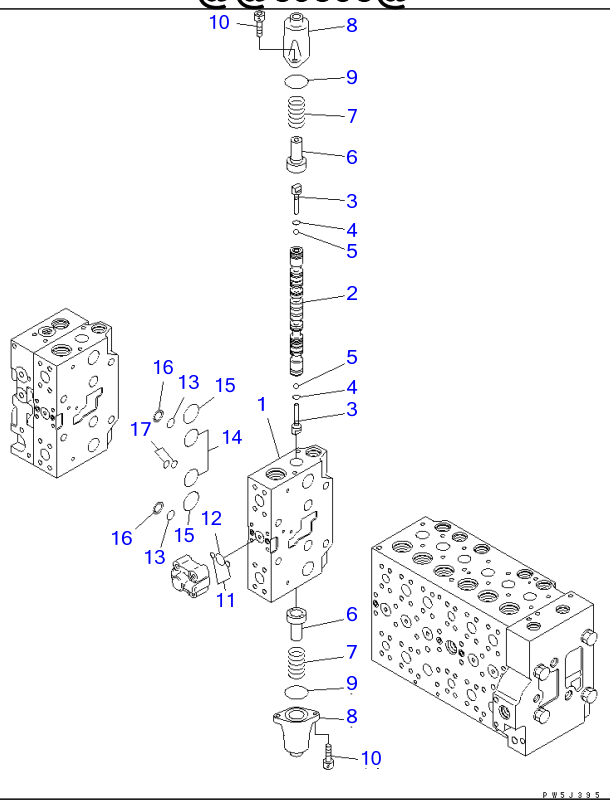

Ref Y1664-17A0 **Page 481100**

PC220-7 S/N 60001-UP (Overseas Version)
CONTROL VALVE (2-ACTUATOR) (17/21)

Item	Part No.	Part Name	Qty	Serial No.
	(723-48-20502)	VALVE ASS'Y	1	60561-
	(723-48-20501)	VALVE ASS'Y	1	60109-60560
	(723-48-20500)	VALVE ASS'Y	1	60001-60108
		THESE ASSEMBLIES CONSIST OF ALL PARTS SHOWN IN FIGS.Y1664-01A0 TO Y1664-21A0.		
	☆	・BODY SUB ASS'Y	1	60001-
1	☆	・・BLOCK,VALVE	1	60001-
2	☆	・・SPOOL	1	60001-
3	723-46-15130	・・PLUG	2	60001-
4	07002-10823	・・O-RING	2	60001-
5	708-7T-16460	・・BALL	2	60001-
6	723-46-15120	・・RETAINER	2	60001-
7	723-46-14110	・・SPRING	2	60001-
8	723-46-15111	・・CASE	2	60001-
9	07430-71380	・・O-RING	2	60001-
10	01252-60820	・・BOLT	4	60001-
11	07000-11009	・・O-RING	2	60001-
12	07000-12021	・・O-RING	1	60001-
13	723-11-19130	・・O-RING	2	60001-
14	07000-13032	・・O-RING	2	60001-
15	723-46-17510	・・O-RING	2	60001-
16	723-46-17520	・・RING,BACK-UP	2	60001-
17	723-46-17530	・・O-RING	2	60001-

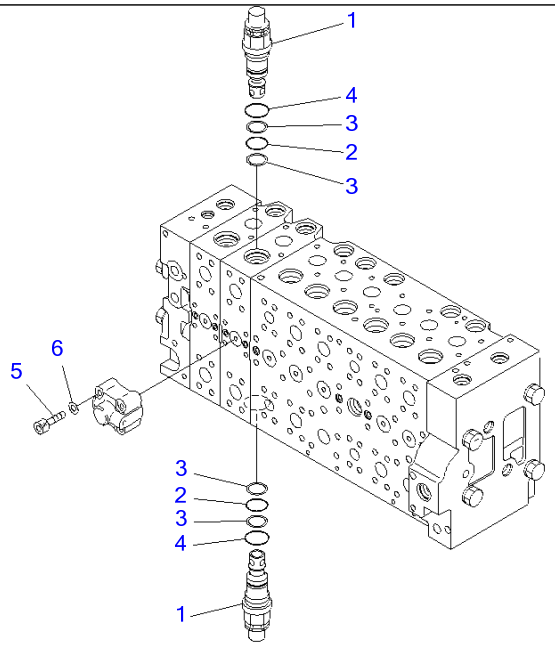

00007251

Ref Y1664-18A0 **Page 481110**

PC220-7 S/N 60001-UP (Overseas Version)
CONTROL VALVE (2-ACTUATOR) (18/21)

Item	Part No.	Part Name	Qty	Serial No.
	(723-48-20502)	VALVE ASS'Y	1	60561-
	(723-48-20501)	VALVE ASS'Y	1	60109-60560
	(723-48-20500)	VALVE ASS'Y	1	60001-60108
		THESE ASSEMBLIES CONSIST OF ALL PARTS SHOWN IN FIGS.Y1664-01A0 TO Y1664-21A0.		
	☆	・BODY SUB ASS'Y	1	60001-
1	723-46-48100	・・VALVE ASS'Y	2	60001-
2	700-93-11320	・・・O-RING	1	60001-
3	723-46-41950	・・・RING	2	60001-
4	07002-13634	・・・O-RING	1	60001-
5	01252-60845	・・BOLT	4	60001-
6	01643-50823	・・WASHER	4	60001-

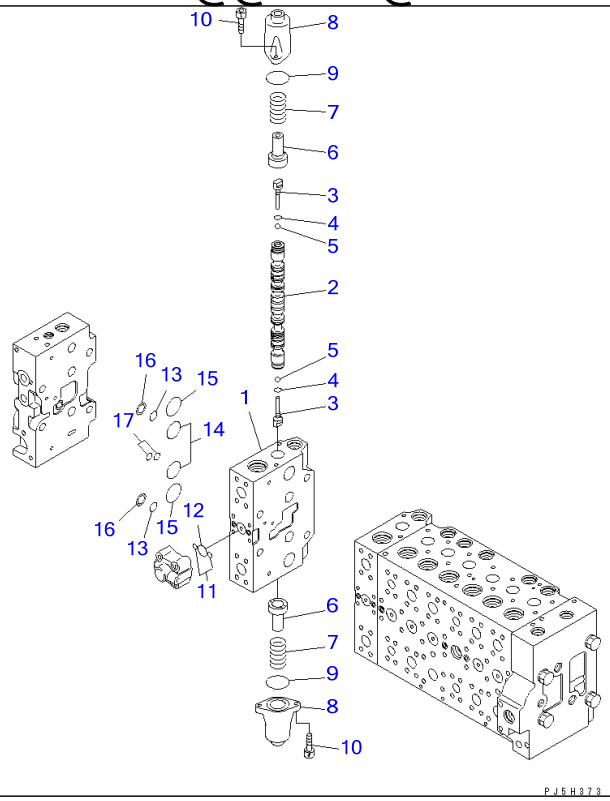

Ref Y1664-19A0 **Page 481120**

PC220-7 S/N 60001-UP (Overseas Version)
CONTROL VALVE (2-ACTUATOR) (19/21)

Item	Part No.	Part Name	Qty	Serial No.
	(723-48-20502)	VALVE ASS'Y	1	60561-
	(723-48-20501)	VALVE ASS'Y	1	60109-60560
	(723-48-20500)	VALVE ASS'Y	1	60001-60108
		THESE ASSEMBLIES CONSIST OF ALL PARTS SHOWN IN FIGS.Y1664-01A0 TO Y1664-21A0.		
	☆	・BODY SUB ASS'Y	1	60001-
1	☆	・・BLOCK,VALVE	1	60001-
2	☆	・・SPOOL	1	60001-
3	723-46-15130	・・PLUG	2	60001-
4	07002-10823	・・O-RING	2	60001-
5	708-7T-16460	・・BALL	2	60001-
6	723-46-15120	・・RETAINER	2	60001-
7	723-46-14110	・・SPRING	2	60001-
8	723-46-15111	・・CASE	2	60001-
9	07430-71380	・・O-RING	2	60001-
10	01252-60820	・・BOLT	4	60001-
11	07000-11009	・・O-RING	2	60001-
12	07000-12021	・・O-RING	1	60001-
13	723-11-19130	・・O-RING	2	60001-
14	07000-13032	・・O-RING	2	60001-
15	723-46-17510	・・O-RING	2	60001-
16	723-46-17520	・・RING,BACK-UP	2	60001-
17	723-46-17530	・・O-RING	2	60001-

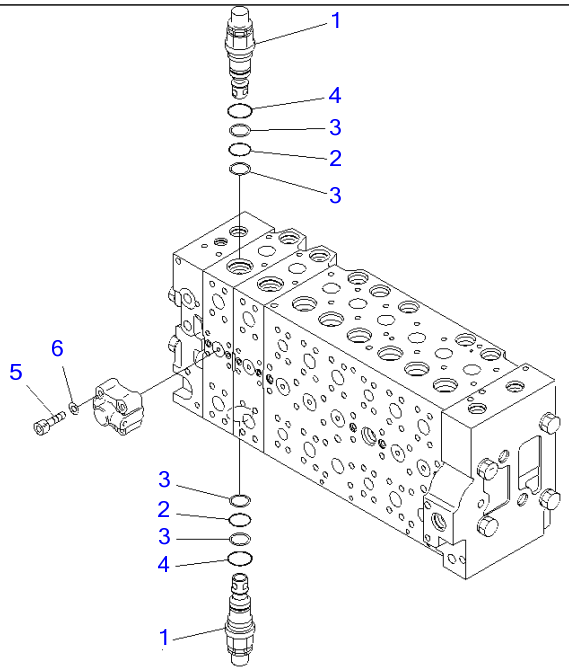

00014391

Ref Y1664-20A0 **Page 481130**

PC220-7 S/N 60001-UP (Overseas Version)
CONTROL VALVE (2-ACTUATOR) (20/21)

Item	Part No.	Part Name	Qty	Serial No.
	(723-48-20502)	VALVE ASS'Y	1	60561-
	(723-48-20501)	VALVE ASS'Y	1	60109-60560
	(723-48-20500)	VALVE ASS'Y	1	60001-60108
		THESE ASSEMBLIES CONSIST OF ALL PARTS SHOWN IN FIGS.Y1664-01A0 TO Y1664-21A0.		
	☆	・BODY SUB ASS'Y	1	60001-
1	723-46-48100	・・VALVE ASS'Y	2	60001-
2	700-93-11320	・・・O-RING	1	60001-
3	723-46-41950	・・・RING	2	60001-
4	07002-13634	・・・O-RING	1	60001-
5	01252-60845	・・BOLT	4	60001-
6	01643-50823	・・WASHER	4	60001-

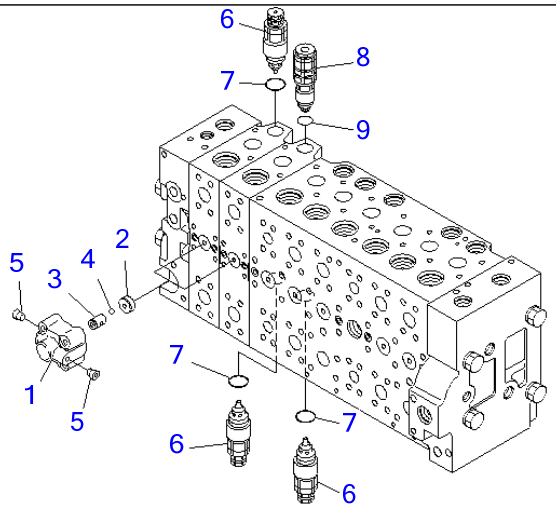

00014392

Ref Y1664-21A0 **Page 481140**

PC220-7 S/N 60001-UP (Overseas Version)
CONTROL VALVE (2-ACTUATOR) (21/21)

Item	Part No.	Part Name	Qty	Serial No.
	(723-48-20502)	VALVE ASS'Y	1	60561-
	(723-48-20501)	VALVE ASS'Y	1	60109-60560
	(723-48-20500)	VALVE ASS'Y	1	60001-60108
		THESE ASSEMBLIES CONSIST OF ALL PARTS SHOWN IN FIGS.Y1664-01A0 TO Y1664-21A0.		
	723-40-66300	・VALVE ASS'Y	2	60001-
1	☆	・・CASE	1	60001-
2	☆	・・SEAT	1	60001-
3	☆	・・SEAT	1	60001-
4	☆	・・BALL	1	60001-
5	☆	・・PLUG	2	60001-
6	723-40-91300	・VALVE ASS'Y,SUCTION AND SAFETY	3	60001-
7	709-25-11390	・・O-RING	1	60001-
8	723-90-76101	・VALVE ASS'Y,SUCTION AND SAFETY	1	60001-
9	07000-13024	・・O-RING	1	60001-

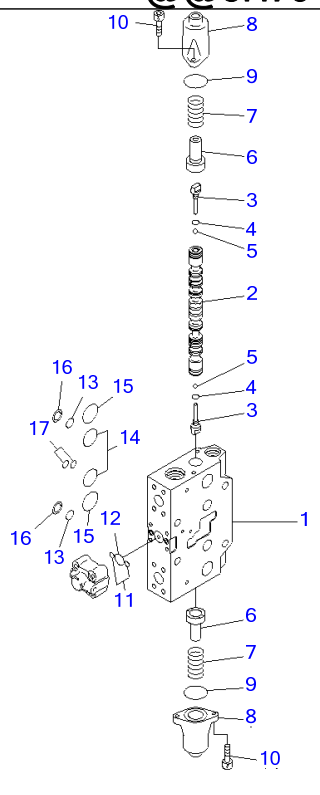

Ref Y1669-01A0 **Page 481150**

PC220-7 S/N 60001-UP (Overseas Version)
SERVICE VALVE (FOR 1-ACTUATOR) (1/3)

Item	Part No.	Part Name	Qty	Serial No.
	723-41-07600	VALVE SUB ASS'Y THIS ASSEMBLY CONSISTS OF ALL PARTS SHOWN IN FIGS.Y1669-01A0 TO Y1669-03A0.	1	60001-
	☆	・BODY SUB ASS'Y	1	60001-
1	☆	・・BLOCK,VALVE	1	60001-
2	☆	・・SPOOL	1	60001-
3	723-46-15130	・・PLUG	2	60001-
4	07002-10823	・・O-RING	2	60001-
5	708-7T-16460	・・BALL	2	60001-
6	723-46-15120	・・RETAINER	2	60001-
7	723-46-14110	・・SPRING	2	60001-
8	723-46-15111	・・CASE	2	60001-
9	07430-71380	・・O-RING	2	60001-
10	01252-60820	・・BOLT	4	60001-
11	07000-11009	・・O-RING	2	60001-
12	07000-12021	・・O-RING	1	60001-
13	723-11-19130	・・O-RING	2	60001-
14	07000-13032	・・O-RING	2	60001-
15	723-46-17510	・・O-RING	2	60001-
16	723-46-17520	・・RING,BACK-UP	2	60001-
17	723-46-17530	・・O-RING	2	60001-

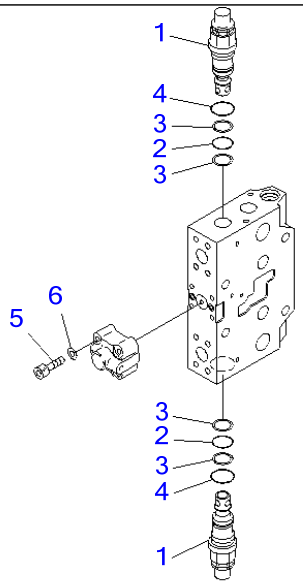

00007256

Ref Y1669-02A0 **Page 481160**

PC220-7 S/N 60001-UP (Overseas Version)
SERVICE VALVE (FOR 1-ACTUATOR) (2/3)

Item	Part No.	Part Name	Qty	Serial No.
	(723-41-07600)	VALVE SUB ASS'Y THIS ASSEMBLY CONSISTS OF ALL PARTS SHOWN IN FIGS.Y1669-01A0 TO Y1669-03A0.	1	60001-
	☆	・BODY SUB ASS'Y	1	60001-
1	723-46-48100	・・VALVE ASS'Y	2	60001-
2	700-93-11320	・・・O-RING	1	60001-
3	723-46-41950	・・・RING	2	60001-
4	07002-13634	・・・O-RING	1	60001-
5	01252-60845	・・BOLT	4	60001-
6	01643-50823	・・WASHER	4	60001-

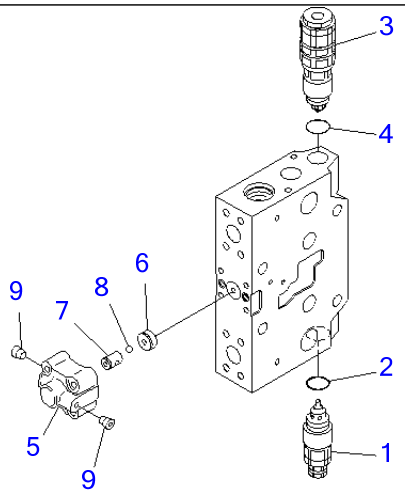

00007257

Ref Y1669-03A0 **Page 481170**

PC220-7 S/N 60001-UP (Overseas Version)
SERVICE VALVE (FOR 1-ACTUATOR) (3/3)

Item	Part No.	Part Name	Qty	Serial No.
	(723-41-07600)	VALVE SUB ASS'Y THIS ASSEMBLY CONSISTS OF ALL PARTS SHOWN IN FIGS.Y1669-01A0 TO Y1669-03A0.	1	60001-
1	723-90-61400	・VALVE ASS'Y,SUCTION AND SAFETY	1	60001-
2	07000-13024	・・O-RING	1	60001-
3	723-90-76101	・VALVE ASS'Y,SUCTION AND SAFETY	1	60001-
4	07000-13024	・・O-RING	1	60001-
	723-40-66300	・VALVE ASS'Y	1	60001-
5	☆	・・CASE	1	60001-
6	☆	・・SEAT	1	60001-
7	☆	・・SEAT	1	60001-
8	☆	・・BALL	1	60001-
9	☆	・・PLUG	2	60001-

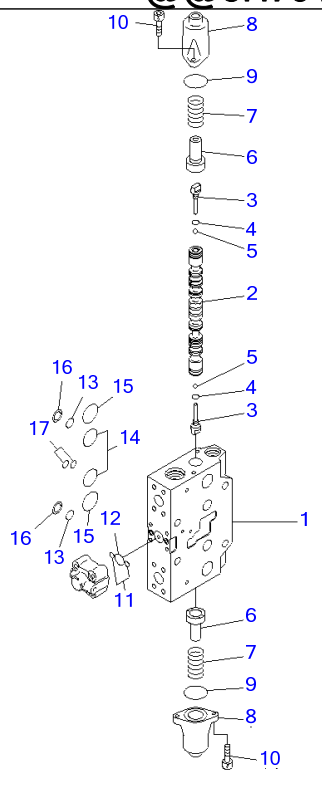

Ref Y1669-11A0 **Page 481180**

PC220-7 S/N 60001-UP (Overseas Version)
SERVICE VALVE (FOR 2-ACTUATOR) (1/3)

Item	Part No.	Part Name	Qty	Serial No.
	723-41-07400	VALVE ASS'Y THIS ASSEMBLY CONSISTS OF ALL PARTS SHOWN IN FIGS.Y1669-11A0 TO Y1669-13A0.	1	60001-
	☆	・BODY SUB ASS'Y	1	60001-
1	☆	・・BLOCK,VALVE	1	60001-
2	☆	・・SPOOL	1	60001-
3	723-46-15130	・・PLUG	2	60001-
4	07002-10823	・・O-RING	2	60001-
5	708-7T-16460	・・BALL	2	60001-
6	723-46-15120	・・RETAINER	2	60001-
7	723-46-14110	・・SPRING	2	60001-
8	723-46-15111	・・CASE	2	60001-
9	07430-71380	・・O-RING	2	60001-
10	01252-60820	・・BOLT	4	60001-
11	07000-11009	・・O-RING	2	60001-
12	07000-12021	・・O-RING	1	60001-
13	723-11-19130	・・O-RING	2	60001-
14	07000-13032	・・O-RING	2	60001-
15	723-46-17510	・・O-RING	2	60001-
16	723-46-17520	・・RING,BACK-UP	2	60001-
17	723-46-17530	・・O-RING	2	60001-

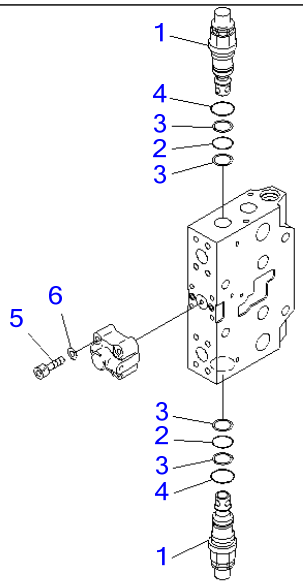

00007256

Ref Y1669-12A0 **Page 481190**

PC220-7 S/N 60001-UP (Overseas Version)
SERVICE VALVE (FOR 2-ACTUATOR) (2/3)

Item	Part No.	Part Name	Qty	Serial No.
	(723-41-07400)	VALVE ASS'Y THIS ASSEMBLY CONSISTS OF ALL PARTS SHOWN IN FIGS.Y1669-11A0 TO Y1669-13A0.	1	60001-
	☆	・BODY SUB ASS'Y	1	60001-
1	723-46-48100	・・VALVE ASS'Y	2	60001-
2	700-93-11320	・・・O-RING	1	60001-
3	723-46-41950	・・・RING	2	60001-
4	07002-13634	・・・O-RING	1	60001-
5	01252-60845	・・BOLT	4	60001-
6	01643-50823	・・WASHER	4	60001-

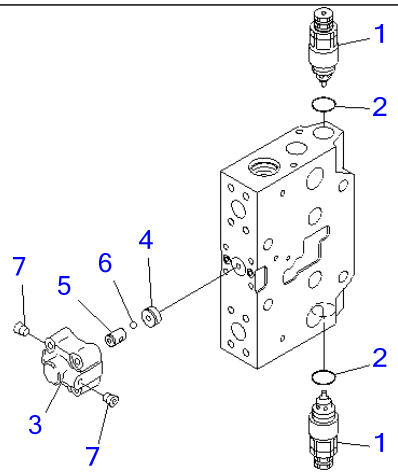

00007279

Ref Y1669-13A0 **Page 481200**

PC220-7 S/N 60001-UP (Overseas Version)
SERVICE VALVE (FOR 2-ACTUATOR) (3/3)

Item	Part No.	Part Name	Qty	Serial No.
	(723-41-07400)	VALVE ASS'Y THIS ASSEMBLY CONSISTS OF ALL PARTS SHOWN IN FIGS.Y1669-11A0 TO Y1669-13A0.	1	60001-
1	723-90-61400	・VALVE ASS'Y,SUCTION AND SAFETY	2	60001-
2	07000-13024	・・O-RING	1	60001-
	723-40-66300	・VALVE ASS'Y	1	60001-
3	☆	・・CASE	1	60001-
4	☆	・・SEAT	1	60001-
5	☆	・・SEAT	1	60001-
6	☆	・・BALL	1	60001-
7	☆	・・PLUG	2	60001-

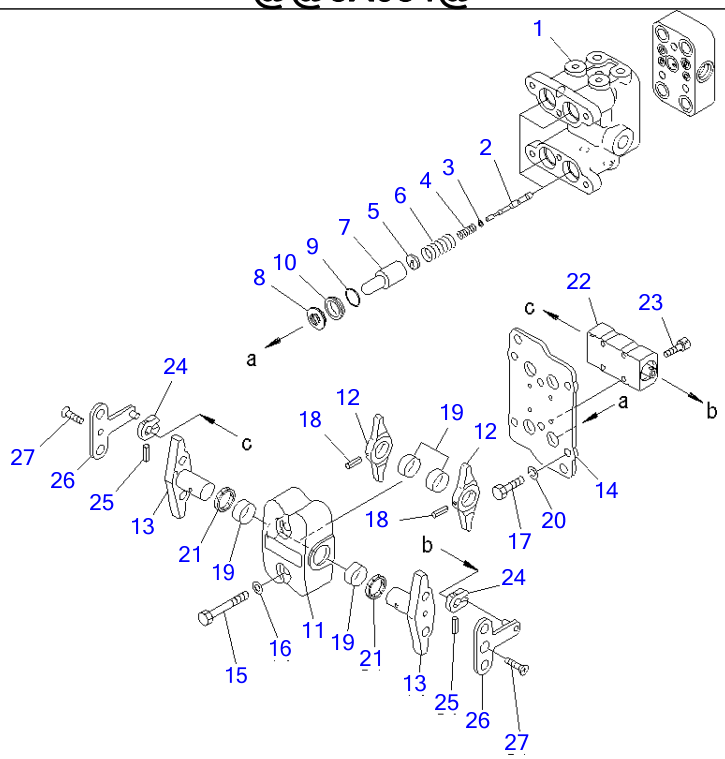

Ref Y1670-01A0 **Page 481210**

PC220-7 S/N 60001-UP (Overseas Version)
PPC VALVE (FOR TRAVEL) (1/2)(#60001-65000)

Item	Part No.	Part Name	Qty	Serial No.
	702-16-01861	PILOT VALVE THIS ASSEMBLY CONSISTS OF ALL PARTS SHOWN IN FIGS.Y1670-01A0 AND Y1670-02A0.	1	60001-65000
1	☆	・BODY,VALVE	1	60001-65000
2	☆	・VALVE	4	60001-65000
3	702-16-51140	・SHIM, 0.30MM	4	60001-65000
4	702-16-53420	・SPRING	4	60001-65000
5	702-16-53140	・RETAINER	4	60001-65000
6	702-16-54420	・SPRING	4	60001-65000
7	702-16-53170	・PISTON	4	60001-65000
8	702-16-51270	・SEAL	4	60001-65000
9	07000-12020	・O-RING	4	60001-65000
10	702-16-54170	・COLLAR	4	60001-65000
11	702-16-54311	・CASE	1	60001-65000
12	☆	・LEVER	2	60001-65000
13	☆	・SHAFT	2	60001-65000
14	☆	・PLATE	1	60001-65000
15	01010-80855	・BOLT	2	60001-65000
16	01643-30823	・WASHER	2	60001-65000
17	01010-80816	・BOLT	4	60001-65000
18	04025-00432	・PIN,SPRING	2	60001-65000
19	702-16-54430	・BUSHING	4	60001-65000
20	702-16-54331	・WASHER, 1.60MM	4	60001-65000
	702-16-54341	・WASHER, 1.30MM	4	60001-65000
	702-16-54351	・WASHER, 1.00MM	4	60001-65000
21	702-16-54280	・SEAL,DUST	2	60001-65000
22	(★702-16-54506)	・DAMPER ASS'Y	1	60001-65000
23	01252-60525	・BOLT	4	60001-65000

PPC VALVE (FOR TRAVEL) (1/2)(#60001-65000)

Item	Part No.	Part Name	Qty	Serial No.
24	702-16-54511	・PLATE	2	60001-65000
25	04025-00420	・PIN,SPRING	2	60001-65000
26	702-16-54520	・LEVER	2	60001-65000
27	01224-40612	・SCREW	2	60001-65000

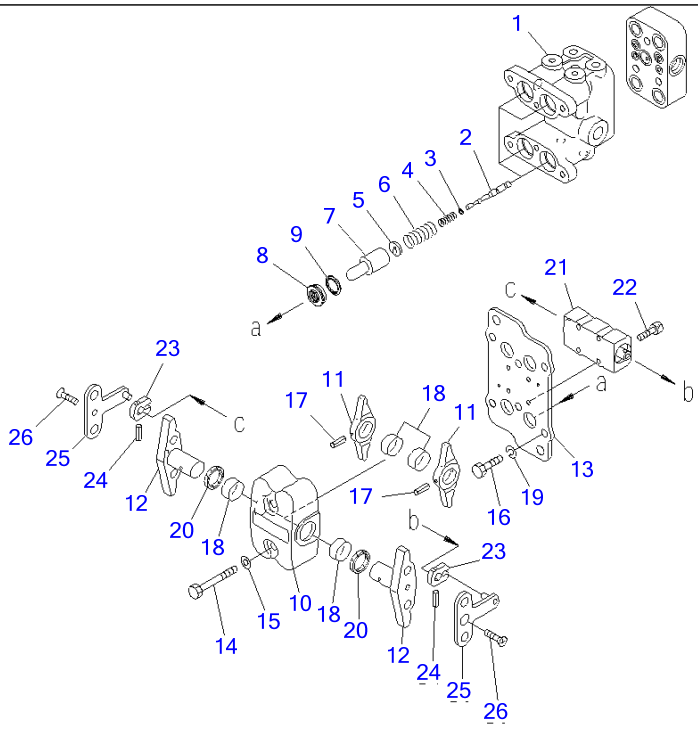

00014718

Ref Y1670-01A0A **Page 481220**

PC220-7 S/N 60001-UP (Overseas Version)
PPC VALVE (FOR TRAVEL) (1/2)(#65001-65436)

Item	Part No.	Part Name	Qty	Serial No.
	702-16-04160	PILOT VALVE THIS ASSEMBLY CONSISTS OF ALL PARTS SHOWN IN FIGS.Y1670-01A0A AND Y1670-02A0A.	1	65001-65436
1	☆	・BODY,VALVE	1	65001-65436
2	☆	・VALVE	4	65001-65436
3	702-16-51140	・SHIM, 0.30MM	4	65001-65436
4	702-16-53420	・SPRING	4	65001-65436
5	702-16-53140	・RETAINER	4	65001-65436
6	702-16-54420	・SPRING	4	65001-65436
7	702-16-53170	・PISTON	4	65001-65436
8	702-16-71150	・SEAL	4	65001-65436
9	702-16-71160	・SEAT	4	65001-65436
10	702-16-72570	・CASE	1	65001-65436
11	☆	・LEVER	2	65001-65436
12	☆	・SHAFT	2	65001-65436
13	☆	・PLATE	1	65001-65436
14	01010-80855	・BOLT	2	65001-65436
15	01643-30823	・WASHER	2	65001-65436
16	01010-80816	・BOLT	4	65001-65436
17	04025-00432	・PIN,SPRING	2	65001-65436
18	702-16-54430	・BUSHING	4	65001-65436
19	702-16-54331	・WASHER, 1.60MM	4	65001-65436
	702-16-54341	・WASHER, 1.30MM	4	65001-65436
	702-16-54351	・WASHER, 1.00MM	4	65001-65436
20	702-16-54280	・SEAL,DUST	2	65001-65436
21	(★702-16-72500)	・DAMPER ASS'Y	1	65001-65436
22	01252-60525	・BOLT	4	65001-65436
23	702-16-54511	・PLATE	2	65001-65436

PPC VALVE (FOR TRAVEL) (1/2)(#65001-65436)

Item	Part No.	Part Name	Qty	Serial No.
24	04025-00420	・PIN,SPRING	2	65001-65436
25	702-16-54520	・LEVER	2	65001-65436
26	01224-40612	・SCREW	2	65001-65436

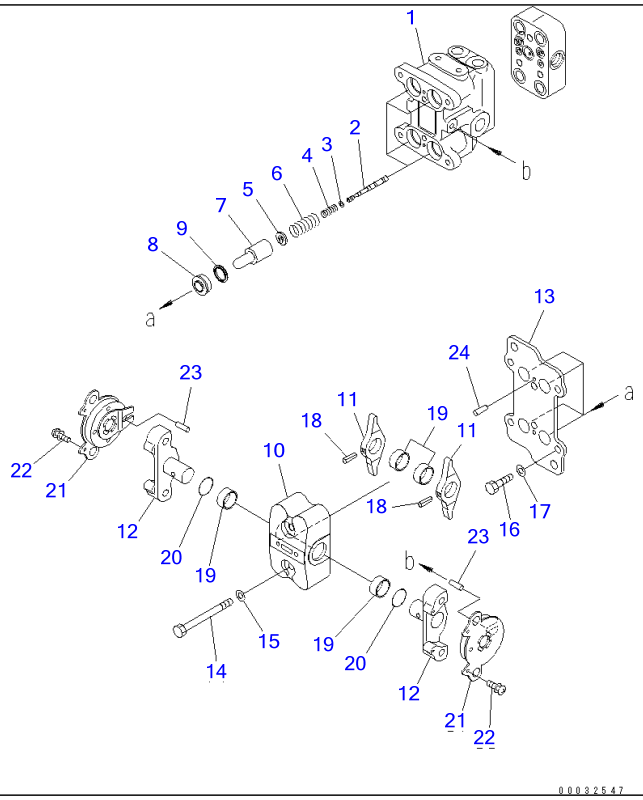

Ref Y1670-01A0B **Page 481230**

PC220-7 S/N 60001-UP (Overseas Version)
PPC VALVE (FOR TRAVEL) (1/2)(#65437-)

Item	Part No.	Part Name	Qty	Serial No.
	702-16-04250	PILOT VALVE THIS ASSEMBLY CONSISTS OF ALL PARTS SHOWN IN FIGS.Y1670-01A0B AND Y1670-02A0B.	1	65437-
1	☆	・BODY,VALVE	1	65437-
2	☆	・VALVE	4	65437-
3	702-16-51140	・SHIM, 0.30MM	4	65437-
4	702-16-53420	・SPRING	4	65437-
5	702-16-53140	・RETAINER	4	65437-
6	702-16-54420	・SPRING	4	65437-
7	702-16-53170	・PISTON	4	65437-
8	702-16-71150	・SEAL	4	65437-
9	702-16-71160	・SEAT	4	65437-
10	702-16-73630	・CASE	1	65437-
11	☆	・LEVER	2	65437-
12	☆	・SHAFT	2	65437-
13	☆	・PLATE	1	65437-
14	01010-80855	・BOLT	2	65437-
15	01643-30823	・WASHER	2	65437-
16	01010-80816	・BOLT	4	65437-
17	702-16-54331	・WASHER, 1.60MM	4	65437-
	702-16-54341	・WASHER, 1.30MM	4	65437-
	702-16-54351	・WASHER, 1.00MM	4	65437-
18	04025-00432	・PIN,SPRING	2	65437-
19	702-16-54430	・BUSHING	4	65437-
20	07000-12018	・O-RING	2	65437-
21	(★702-16-73610)	・DAMPER ASS'Y	2	65437-
22	01023-10306	・SCREW	4	65437-
23	702-16-73650	・PIN	2	65437-

PPC VALVE (FOR TRAVEL) (1/2)(#65437-)

Item	Part No.	Part Name	Qty	Serial No.
24	04022-04016	・PIN,DOWEL	2	65437-

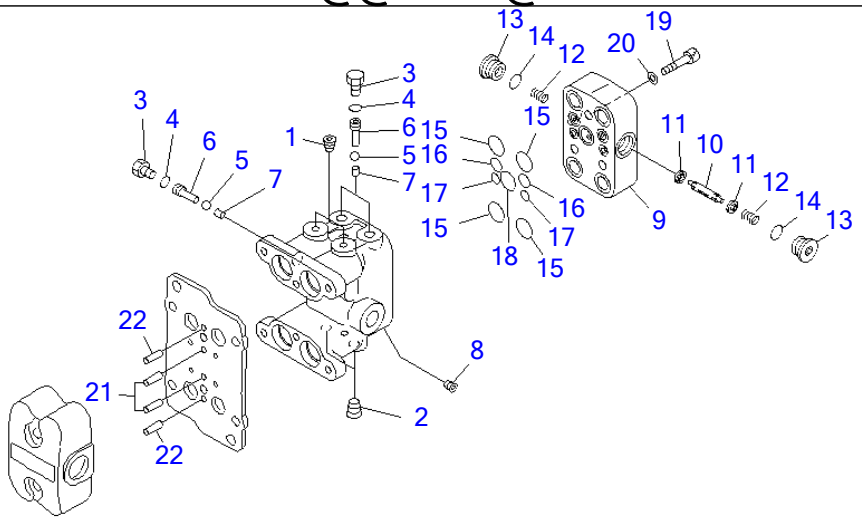

P W 5 X 0 3 5

Ref Y1670-02A0 **Page 481240**

PC220-7 S/N 60001-UP (Overseas Version)
PPC VALVE (FOR TRAVEL) (2/2)(#60001-65000)

Item	Part No.	Part Name	Qty	Serial No.
	(702-16-01861)	PILOT VALVE THIS ASSEMBLY CONSISTS OF ALL PARTS SHOWN IN FIGS.Y1670-01A0 AND Y1670-02A0.	1	60001-65000
1	☆	・PLUG	2	60001-65000
2	☆	・PLUG	2	60001-65000
3	07040-11209	・PLUG	3	60001-65000
4	07002-11223	・O-RING	3	60001-65000
5	☆	・BALL	3	60001-65000
6	702-16-55940	・PLUG	3	60001-65000
7	702-16-55950	・SEAT	3	60001-65000
8	☆	・PLUG	2	60001-65000
9	☆	・BODY,VALVE	1	60001-65000
10	☆	・SPOOL	1	60001-65000
11	702-16-57440	・RETAINER	2	60001-65000
12	702-16-57450	・SPRING	2	60001-65000
13	723-11-15110	・PLUG	2	60001-65000
14	07002-11623	・O-RING	2	60001-65000
15	07000-12015	・O-RING	4	60001-65000
16	07000-11010	・O-RING	2	60001-65000
17	07000-11007	・O-RING	2	60001-65000
18	700-22-11410	・O-RING	1	60001-65000
19	01252-60835	・BOLT	3	60001-65000
20	01643-50823	・WASHER	3	60001-65000
21	04022-04016	・PIN,DOWEL	2	60001-65000
22	04022-04010	・PIN,DOWEL	2	60001-65000

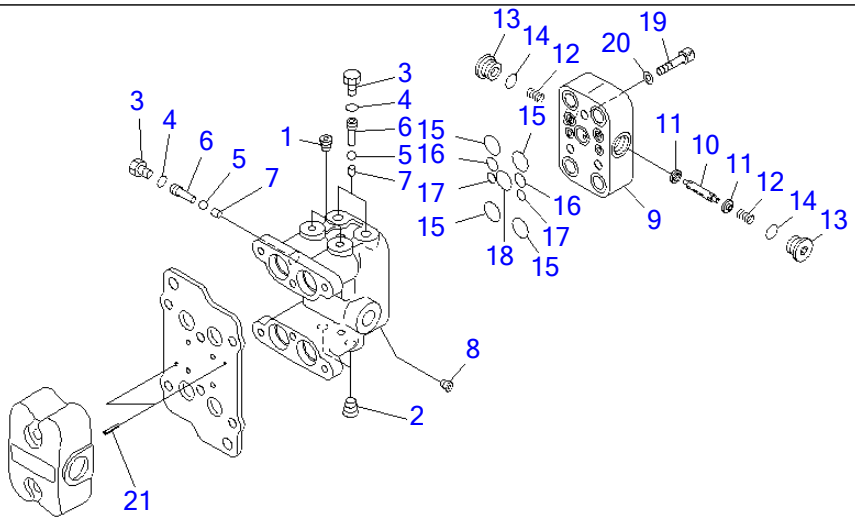

00014719

Ref Y1670-02A0A **Page 481250**

PC220-7 S/N 60001-UP (Overseas Version)
PPC VALVE (FOR TRAVEL) (2/2)(#65001-65436)

Item	Part No.	Part Name	Qty	Serial No.
	(702-16-04160)	PILOT VALVE THIS ASSEMBLY CONSISTS OF ALL PARTS SHOWN IN FIGS.Y1670-01A0A AND Y1670-02A0A.	1	65001-65436
1	☆	・PLUG	2	65001-65436
2	☆	・PLUG	2	65001-65436
3	07040-11209	・PLUG	3	65001-65436
4	07002-11223	・O-RING	3	65001-65436
5	700-84-11730	・BALL	3	65001-65436
6	702-16-55940	・PLUG	3	65001-65436
7	702-16-55950	・SEAT	3	65001-65436
8	☆	・PLUG	2	65001-65436
9	☆	・BODY,VALVE	1	65001-65436
10	☆	・SPOOL	1	65001-65436
11	702-16-57440	・RETAINER	2	65001-65436
12	702-16-57450	・SPRING	2	65001-65436
13	723-11-15110	・PLUG	2	65001-65436
14	07002-11623	・O-RING	2	65001-65436
15	07000-12015	・O-RING	4	65001-65436
16	07000-11010	・O-RING	2	65001-65436
17	07000-11007	・O-RING	2	65001-65436
18	700-22-11410	・O-RING	1	65001-65436
19	01252-60835	・BOLT	3	65001-65436
20	01643-50823	・WASHER	3	65001-65436
21	702-16-72510	・PIN	2	65001-65436

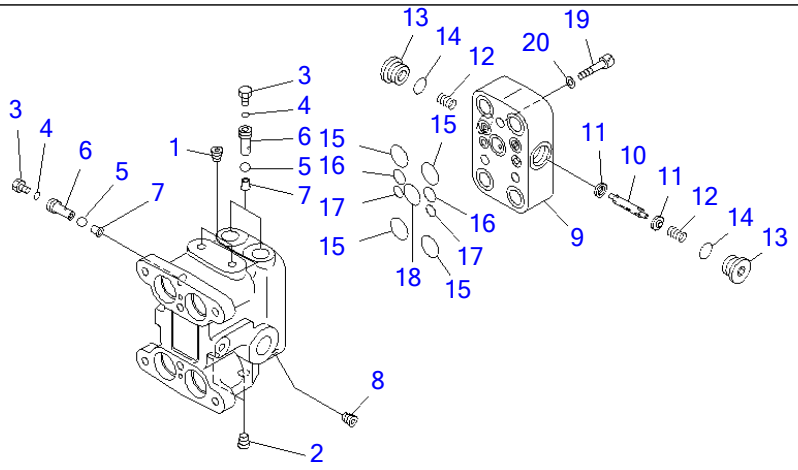

00032548

Ref Y1670-02A0B **Page 481260**

PC220-7 S/N 60001-UP (Overseas Version)

PPC VALVE (FOR TRAVEL) (2/2)(#65437-)

Item	Part No.	Part Name	Qty	Serial No.
	(702-16-04250)	PILOT VALVE THIS ASSEMBLY CONSISTS OF ALL PARTS SHOWN IN FIGS.Y1670-01A0B AND Y1670-02A0B.	1	65437-
1	☆	・PLUG	2	65437-
2	☆	・PLUG	2	65437-
3	07040-11209	・PLUG	3	65437-
4	07002-11223	・O-RING	3	65437-
5	☆	・BALL	3	65437-
6	702-16-55940	・PLUG	3	65437-
7	702-16-55950	・SEAT	3	65437-
8	☆	・PLUG	2	65437-
9	☆	・BODY,VALVE	1	65437-
10	☆	・SPOOL	1	65437-
11	702-16-57440	・RETAINER	2	65437-
12	702-16-57450	・SPRING	2	65437-
13	723-11-15110	・PLUG	2	65437-
14	07002-11623	・O-RING	2	65437-
15	07000-12015	・O-RING	4	65437-
16	07000-11010	・O-RING	2	65437-
17	07000-11007	・O-RING	2	65437-
18	700-22-11410	・O-RING	1	65437-
19	01252-60835	・BOLT	3	65437-
20	01643-50823	・WASHER	3	65437-

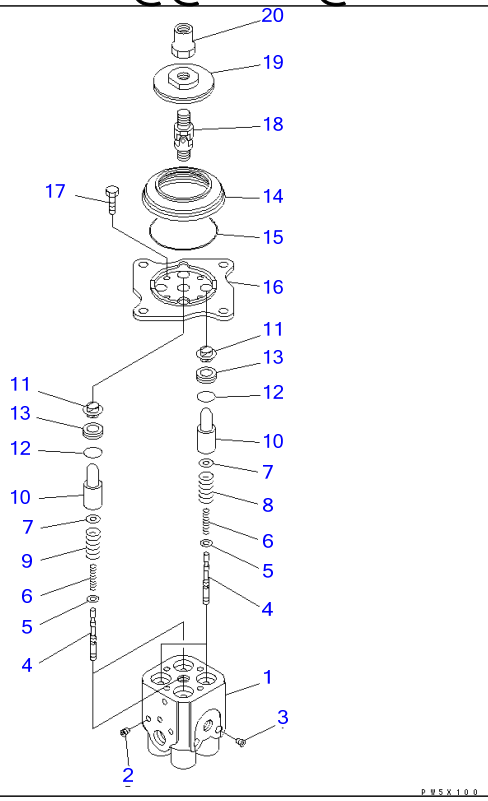

Ref Y1670-11A0 **Page 481270**

PC220-7 S/N 60001-UP (Overseas Version)

PPC VALVE (FOR WORK EQUIPMENT)(#60001-60239)

Item	Part No.	Part Name	Qty	Serial No.
	702-16-01651	VALVE ASS'Y	1	60001-60239
1	☆	・BODY,VALVE	1	60001-60239
2	☆	・PLUG	2	60001-60239
3	☆	・PLUG	2	60001-60239
4	☆	・VALVE	4	60001-60239
5	702-16-51140	・SHIM, 0.30MM	4	60001-60239
6	702-16-53420	・SPRING	4	60001-60239
7	702-16-53140	・RETAINER	4	60001-60239
8	702-16-53470	・SPRING	2	60001-60239
9	702-16-53590	・SPRING	2	60001-60239
10	702-16-53170	・PISTON	4	60001-60239
11	702-16-51270	・SEAL	4	60001-60239
12	07000-12020	・O-RING	4	60001-60239
13	702-16-54170	・COLLAR	4	60001-60239
14	702-16-58820	・BOOT	1	60001-60239
15	07000-02070	・O-RING	1	60001-60239
16	702-16-53210	・PLATE	1	60001-60239
17	01010-80620	・BOLT	4	60001-60239
18	702-16-51240	・JOINT,UNIVERSAL	1	60001-60239
19	☆	・DISC	1	60001-60239
20	702-16-53230	・NUT	1	60001-60239

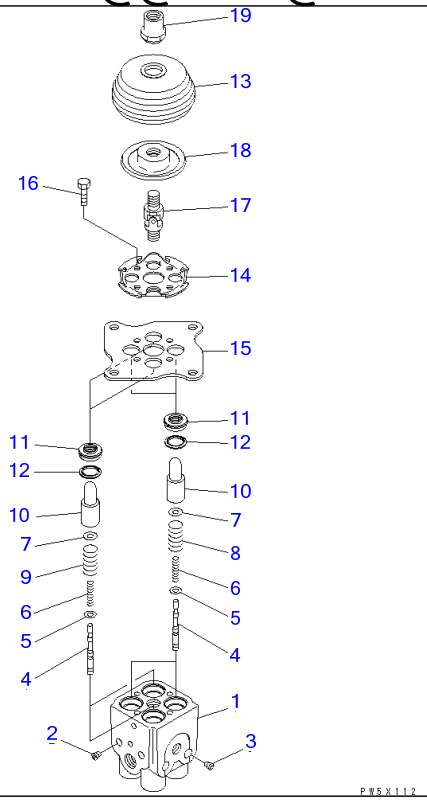

Ref Y1670-11A0A **Page 481280**

PC220-7 S/N 60001-UP (Overseas Version)

PPC VALVE (FOR WORK EQUIPMENT)(#60240-)

Item	Part No.	Part Name	Qty	Serial No.
	702-16-03530	PILOT VALVE	1	60240-
1	☆	・BODY,VALVE	1	60240-
2	☆	・PLUG	2	60240-
3	☆	・PLUG	2	60240-
4	☆	・VALVE	4	60240-
5	702-16-51140	・SHIM, 0.30MM	4	60240-
6	702-16-53420	・SPRING	4	60240-
7	702-16-53140	・RETAINER	4	60240-
8	702-16-53470	・SPRING	2	60240-
9	702-16-53590	・SPRING	2	60240-
10	702-16-53170	・PISTON	4	60240-
11	702-16-71150	・SEAL	4	60240-
12	702-16-71160	・SEAT	4	60240-
13	702-16-71280	・BOOT	1	60240-
14	702-16-71131	・PLATE	1	60240-
15	702-16-71141	・PLATE	1	60240-
16	01010-80620	・BOLT	4	60240-
17	702-16-51240	・JOINT,UNIVERSAL	1	60240-
18	702-16-71361	・DISC	1	60240-
19	702-16-71441	・NUT	1	60240-

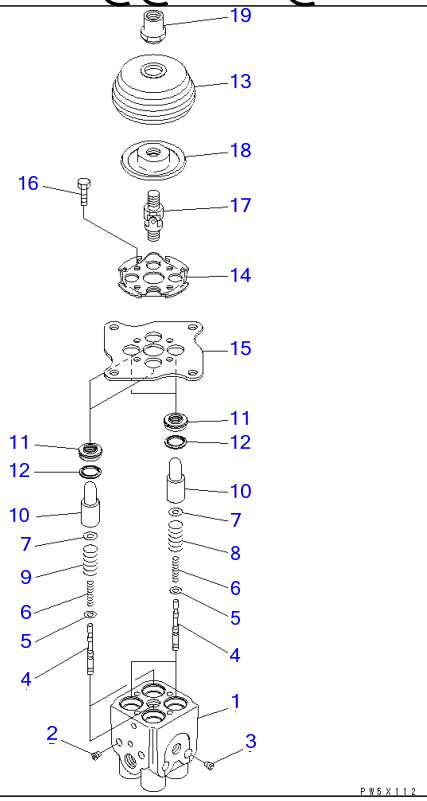

Ref Y1670-11A1 **Page 481290**

PC220-7 S/N 60001-UP (Overseas Version)

PPC VALVE (FOR WORK EQUIPMENT) (FOR HEATPROOF)(#65001-)

Item	Part No.	Part Name	Qty	Serial No.
	702-16-03910	PILOT VALVE	1	65001-
1	☆	・BODY,VALVE	1	65001-
2	☆	・PLUG	2	65001-
3	☆	・PLUG	2	65001-
4	☆	・VALVE	4	65001-
5	702-16-51140	・SHIM, 0.30MM	4	65001-
6	702-16-53420	・SPRING	4	65001-
7	702-16-53140	・RETAINER	4	65001-
8	702-16-53470	・SPRING	2	65001-
9	702-16-53590	・SPRING	2	65001-
10	702-16-53170	・PISTON	4	65001-
11	702-16-71210	・SEAL	4	65001-
12	702-16-71160	・SEAT	4	65001-
13	702-16-71280	・BOOT	1	65001-
14	702-16-71131	・PLATE	1	65001-
15	702-16-71141	・PLATE	1	65001-
16	01010-80620	・BOLT	4	65001-
17	702-16-51240	・JOINT,UNIVERSAL	1	65001-
18	702-16-71361	・DISC	1	65001-
19	702-16-71441	・NUT	1	65001-

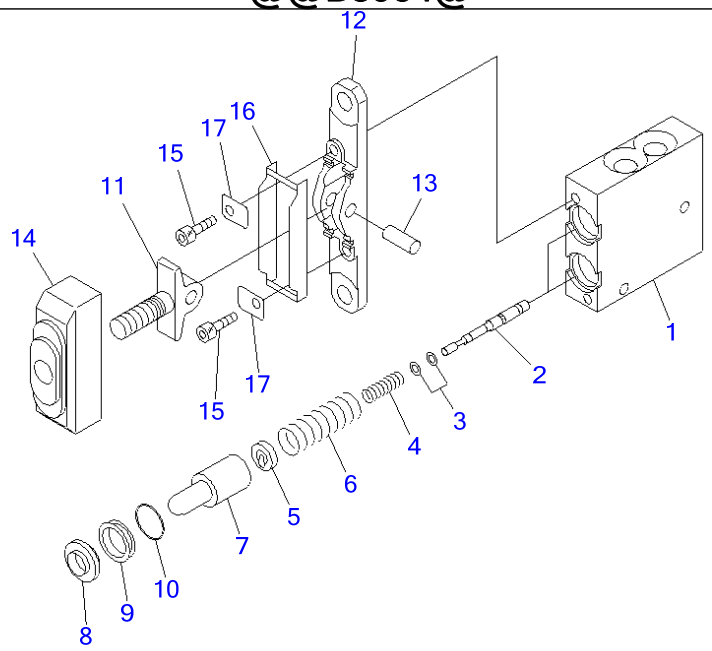

PWB8954

Ref Y1670-21A0 **Page 481300**

PC220-7 S/N 60001-UP (Overseas Version)

PPC VALVE (FOR ATTACHMENT)

Item	Part No.	Part Name	Qty	Serial No.
	702-16-01230	PILOT VALVE	1	60001-
1	☆	・BODY,VALVE	1	60001-
2	☆	・VALVE	2	60001-
3	702-16-51140	・SHIM, 0.30MM	2	60001-
	702-16-54670	・SHIM, 0.20MM	4	60001-
4	702-16-54550	・SPRING	2	60001-
5	702-16-54571	・RETAINER	2	60001-
6	702-16-54560	・SPRING	2	60001-
7	702-16-53170	・PISTON	2	60001-
8	702-16-51270	・SEAL	2	60001-
9	702-16-54580	・COLLAR	2	60001-
10	702-16-54590	・O-RING	2	60001-
11	☆	・LEVER	1	60001-
12	☆	・PLATE	1	60001-
13	☆	・SHAFT	1	60001-
14	702-16-54641	・BOOT	1	60001-
15	01252-30625	・BOLT	2	60001-
16	702-16-54660	・PLATE	1	60001-
17	702-16-54650	・PLATE	2	60001-

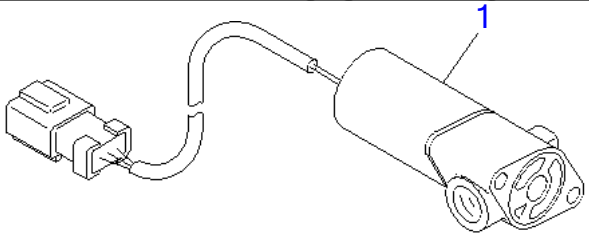

PT19821

Ref Y1671-01A0 **Page 481310**

PC220-7 S/N 60001-UP (Overseas Version)

EPC VALVE

Item	Part No.	Part Name	Qty	Serial No.
1	702-21-07010	VALVE ASS'Y,EPC	1	60001-

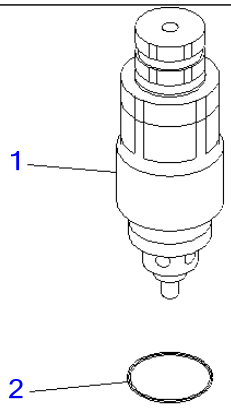

00012095

Ref Y1672-01A0 **Page 481320**

PC220-7 S/N 60001-UP (Overseas Version)
SAFETY VALVE

Item	Part No.	Part Name	Qty	Serial No.
1	723-90-61100	VALVE ASS'Y,(175KG/CM2)	1	60001-
	723-90-61200	VALVE ASS'Y,(210KG/CM2)	1	60001-
	723-90-61300	VALVE ASS'Y,(250KG/CM2)	1	60001-
	723-90-61400	VALVE ASS'Y,(280KG/CM2)	1	60001-
2	07000-13024	▪ O-RING	1	60001-

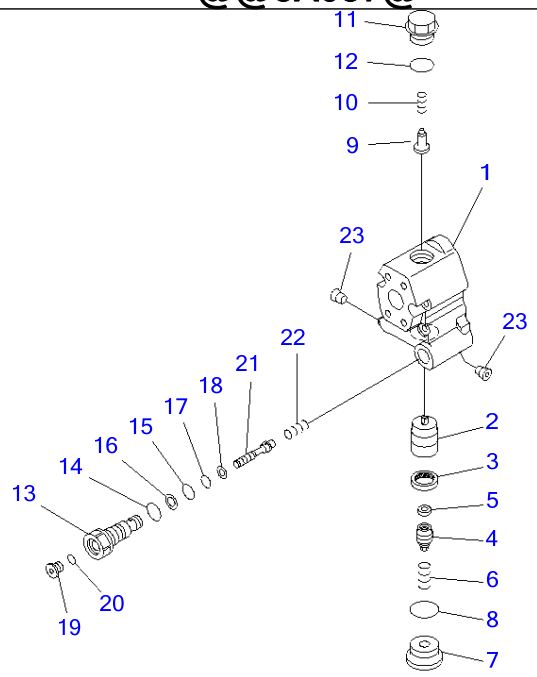

P W 5 X 0 3 7

Ref Y1675-01A0 **Page 481330**

PC220-7 S/N 60001-UP (Overseas Version)
LOCK VALVE

Item	Part No.	Part Name	Qty	Serial No.
	723-40-82601	VALVE	1	66791-
	723-40-82600	LOCK VALVE	1	60001-66790
1	☆	・BODY	1	60001-
2	☆	・VALVE	1	60001-
3	☆	・SEAL	1	60001-
4	☆	・PLUG	1	60001-
5	☆	・FILTER	1	60001-
6	☆	・SPRING	1	60001-
7	☆	・PLUG	1	60001-
8	07002-13334	・O-RING	1	60001-
9	723-40-84420	・VALVE,CHECK	1	66791-
	709-25-11650	・VALVE,CHECK	1	60001-66790
10	723-40-84430	・SPRING	1	66791-
	709-25-11361	・SPRING	1	60001-66790
11	☆	・PLUG	1	66791-
	☆	・PLUG	1	60001-66790
12	07000-13024	・O-RING	1	60001-
13	☆	・PLUG	1	60001-
14	07002-11823	・O-RING	1	60001-
15	07000-12011	・O-RING	1	60001-
16	07001-02011	・RING,BACK-UP	1	60001-
17	07000-11010	・O-RING	1	60001-
18	07001-01010	・RING	1	60001-
19	723-11-18190	・PLUG	1	60001-
20	07002-11023	・O-RING	1	60001-
21	☆	・PISTON	1	60001-
22	☆	・SPRING	1	60001-
23	☆	・PLUG	2	60001-

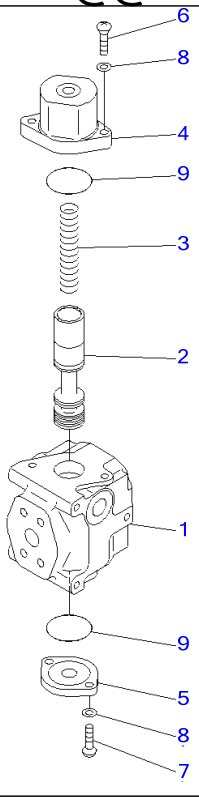

Ref Y1679-01A0 **Page 481340**

PC220-7 S/N 60001-UP (Overseas Version)
SELECTOR VALVE

Item	Part No.	Part Name	Qty	Serial No.
	702-21-01910	VALVE ASS'Y	1	60001-
1	☆	・BLOCK	1	60001-
2	☆	・SPOOL	1	60001-
3	702-21-11930	・SPRING	1	60001-
4	702-21-11940	・CASE	1	60001-
5	709-10-91240	・FLANGE	1	60001-
6	01252-61040	・BOLT	2	60001-
7	01252-61030	・BOLT	2	60001-
8	01643-51032	・WASHER	4	60001-
9	07000-12055	・O-RING	2	60001-

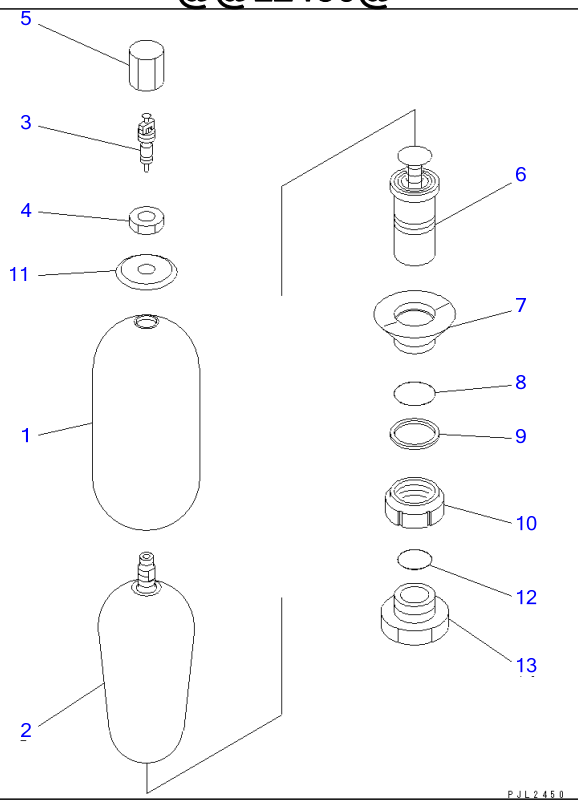

Ref Y1840-01A0 **Page 481350**

PC220-7 S/N 60001-UP (Overseas Version)
ACCUMULATOR (AL300-1) (INNER PARTS)

Item	Part No.	Part Name	Qty	Serial No.
	20Y-970-6450	ACCUMULATOR	1	60001-
1	☆	・SHELL	1	60001-
	NFEB3401 A1	・BLADDER ASS'Y	1	60001-
2	NFEB3026 A1	・・BLADDER	1	60001-
3	NFEB4475 Z0	・・CORE	1	60001-
4	☆	・NUT	1	60001-
5	☆	・CAP	1	60001-
6	NFEB0427 Z0	・BODY ASS'Y	1	60001-
7	NFEB4477 Z0	・RING	1	60001-
8	☆	・O-RING (K1)	1	60001-
9	☆	・BACK-UP RING (K1)	1	60001-
10	☆	・RING	1	60001-
11	☆	・PLATE	1	60001-
12	205-970-5560	・O-RING (K1)	1	60001-
13	☆	・BUSHING	1	60001-
		SERVICE KIT		
K1	NFEB1601 P8	SEAL KIT	1	60001-
1	☆	・O-RING	1	60001-
	☆	・BACK-UP RING	1	60001-
	205-970-5560	・O-RING	1	60001-

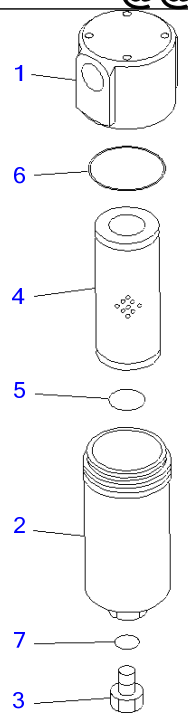

PJB9618

Ref Y1851-01A0 **Page 481360**

PC220-7 S/N 60001-UP (Overseas Version)
FILTER (INNER PARTS)

Item	Part No.	Part Name	Qty	Serial No.
	20Y-970-2700	FILTER ASS'Y	1	60001-
1	☆	・HEAD	1	60001-
2	☆	・CASE	1	60001-
3	☆	・PLUG	1	60001-
4	20Y-970-1820	・ELEMENT	1	60001-
5	07000-13050	・・O-RING	1	60001-
6	07000-12115	・O-RING	1	60001-
7	07000-12014	・O-RING	1	60001-

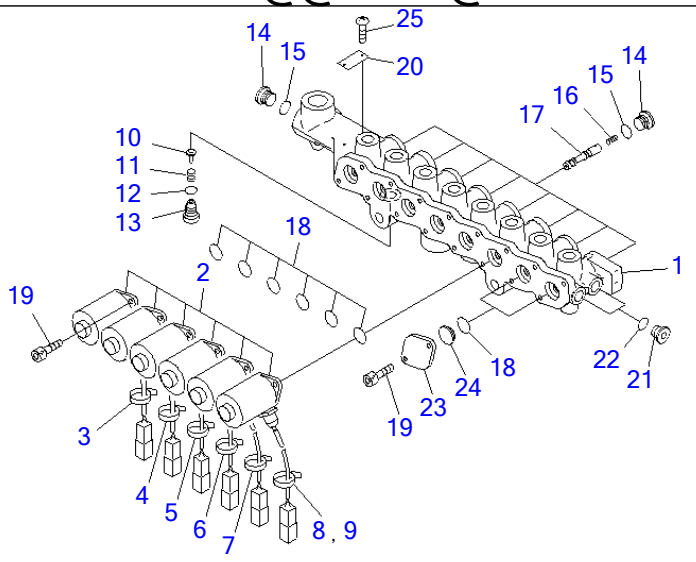

P W 1 C 0 0 0

Ref Y1860-01A0 **Page 481370**

PC220-7 S/N 60001-UP (Overseas Version)

SOLENOID VALVE (INNER PARTS)(#60001-60308)

Item	Part No.	Part Name	Qty	Serial No.
	20Y-60-31211	VALVE ASS'Y	1	60001-60308
1	☆	・BLOCK	1	60001-60308
2	20Y-60-32120	・SOLENOID ASS'Y	2	60001-@
3	NY07207-11700	・TUBE	1	60001-@
4	NY07529-10200	・TUBE	1	60001-@
5	NY07529-10300	・TUBE	1	60001-@
6	NY07529-10400	・TUBE	1	60001-@
7	NY07529-10500	・TUBE	1	60001-@
8	NY07529-10600	・TUBE	1	60001-@
9	NY89103-00090	・BAND	6	60001-@
10	NY05062-1170A	・PLUNGER	1	60001-@
11	NY05062-11800	・SPRING	1	60001-@
12	07000-11010	・O-RING	1	60001-@
13	NY06277-1320A	・PLUG	1	60001-@
14	NY80000-02200	・PLUG	9	60001-60308
15	07000-12011	・O-RING	9	60001-60308
16	NY06339-10200	・SPRING	8	60001-60308
17	NY07493-10200	・SPOOL	8	60001-60308
18	07000-12016	・O-RING	8	60001-60308
19	NY81446-05012	・BOLT	16	60001-60308
20	NY09000-11400	・PLATE	1	60001-@
21	NY80000-02100	・PLUG	3	60001-@
22	07000-11008	・O-RING	3	60001-@
23	NY07926-10100	・PLATE	2	60001-60308
24	NY01720-10600	・STOPPER	2	60001-60308
25	NY84110-00248	・SCREW	2	60001-@

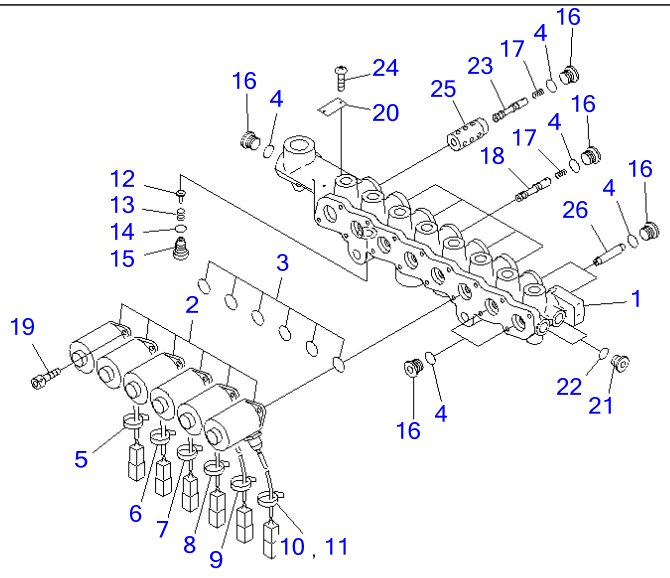

00004179

Ref Y1860-01A0A **Page 481380**

PC220-7 S/N 60001-UP (Overseas Version)
SOLENOID VALVE (INNER PARTS)(#60309-)

Item	Part No.	Part Name	Qty	Serial No.
	20Y-60-31212	VALVE ASS'Y	1	60309-
1	☆	・BLOCK	1	60309-
2	20Y-60-32121	・SOLENOID ASS'Y	6	66355-
	□20Y-60-32120	・SOLENOID ASS'Y	6	65001-66354
	20Y-60-32121	・SOLENOID ASS'Y	6	60776-65000
	□20Y-60-32120	・SOLENOID ASS'Y	6	60309-60775
3	07000-12016	・O-RING	6	60309-
4	07000-12011	・O-RING	11	60309-
5	NY07207-11700	・TUBE	1	60001-
6	NY07529-10200	・TUBE	1	60001-
7	NY07529-10300	・TUBE	1	60001-
8	NY07529-10400	・TUBE	1	60001-
9	NY07529-10500	・TUBE	1	60001-
10	NY07529-10600	・TUBE	1	60001-
11	NY89103-00090	・BAND	6	60001-
12	NY05062-1170A	・PLUNGER	1	60001-
13	NY05062-11800	・SPRING	1	60001-
14	07000-11010	・O-RING	1	60001-
15	NY06277-1320A	・PLUG	1	60001-
16	NY80000-02200	・PLUG	11	60309-
17	NY06339-10200	・SPRING	6	60309-
18	NY07493-10200	・SPOOL	5	60309-
19	NY81416-05012	・BOLT	12	60309-
20	NY09000-11400	・PLATE	1	60001-
21	NY80000-02100	・PLUG	3	60001-
22	07000-11008	・O-RING	3	60001-
23	NY16207-10300	・SPOOL	1	60309-
24	NY84110-00248	・SCREW	2	60001-

SOLENOID VALVE (INNER PARTS)(#60309-)

Item	Part No.	Part Name	Qty	Serial No.
25	NY16207-10200	・SLEEVE	1	60309-
26	NY16207-10400	・SPOOL	2	60309-

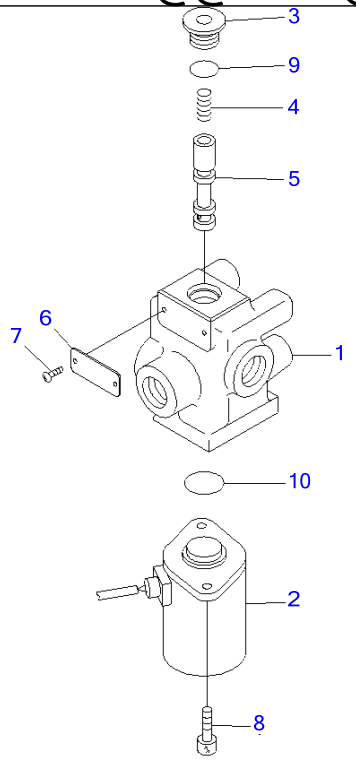

P W 1 C 0 2 5

Ref Y1861-01A0 **Page 481390**

PC220-7 S/N 60001-UP (Overseas Version)
SOLENOID VALVE (INNER PARTS)

Item	Part No.	Part Name	Qty	Serial No.
	20Y-60-32110	VALVE ASS'Y	1	60001-
1	☆	・BLOCK	1	60001-
2	20Y-60-32121	・SOLENOID ASS'Y	1	66355-
	□20Y-60-32120	・SOLENOID ASS'Y	1	65001-66354
	20Y-60-32121	・SOLENOID ASS'Y	1	60776-65000
	□20Y-60-32120	・SOLENOID ASS'Y	1	60001-60775
3	NY08000-02200	・PLUG	1	60001-
4	NY06339-10200	・SPRING	1	60001-
5	NY07493-10200	・SPOOL	1	60001-
6	NY09000-11400	・PLATE	1	60001-
7	NY84110-00264	・SCREW	2	60001-
8	NY81446-05010	・BOLT	2	60001-
9	07000-12011	・O-RING	1	60001-
10	07000-12016	・O-RING	1	60001-

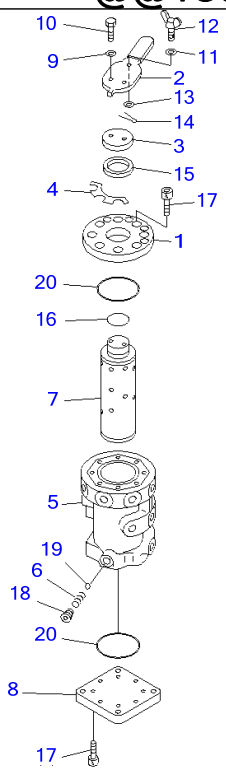

PW1C070

Ref Y1880-01A0 **Page 481400**

PC220-7 S/N 60001-UP (Overseas Version)
MULTI PATERN VALVE

Item	Part No.	Part Name	Qty	Serial No.
	203-62-62501	VALVE ASS'Y	1	60001-
1	203-62-59231	・COVER	1	60001-
2	203-62-58911	・LEVER	1	60001-
3	203-62-59260	・PLATE	1	60001-
4	09822-00800	・PLATE, OPERATING,SELECT VALVE	1	60001-
5	203-62-58950	・BODY	1	60001-
6	236-10-12240	・SPRING	1	60001-
7	203-62-58940	・SHAFT	1	60001-
8	203-62-58980	・COVER	1	60001-
9	01643-30623	・WASHER	2	60001-
10	01010-80625	・BOLT	2	60001-
11	01643-30823	・WASHER	1	60001-
12	203-62-59270	・WING BOLT	1	60001-
13	01640-20816	・WASHER	2	60001-
14	04050-12015	・PIN	1	60001-
15	07003-13642	・GASKET	1	60001-
16	07000-13028	・O-RING	1	67484-
	07000-03028	・O-RING	1	65001-67483
	07000-13028	・O-RING	1	60776-65000
	07000-03028	・O-RING	1	60001-60775
17	01252-60616	・BOLT	16	60001-
18	07043-00108	・PLUG	1	60001-
19	04260-00793	・BALL	1	60001-
20	07000-12060	・O-RING	2	67484-
	07000-02060	・O-RING	2	65001-67483
	07000-12060	・O-RING	2	60776-65000
	07000-02060	・O-RING	2	60001-60775

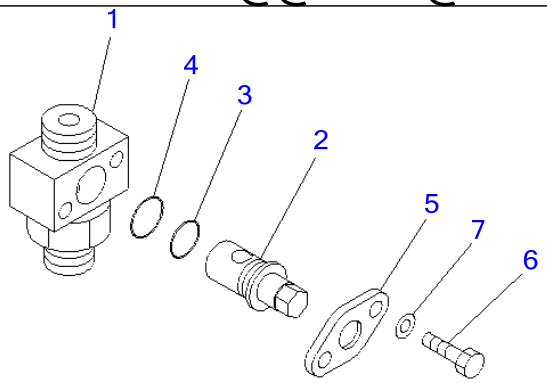

P W 1 D 7 0 6

Ref Y1970-01A0 **Page 481410**

PC220-7 S/N 60001-UP (Overseas Version)
VALVE (FOR ACCUMULATOR)(#60312-60445)

Item	Part No.	Part Name	Qty	Serial No.
	22U-970-2200	VALVE	1	60312-60445
1	☆	・BODY	1	60312-60445
2	22U-970-2220	・ROTOR	1	60312-60445
3	07000-12016	・O-RING	1	60312-60445
4	07000-12020	・O-RING	1	60312-60445
5	22U-970-2230	・COVER	1	60312-60445
6	01010-80820	・BOLT	2	60312-60445
7	01643-30823	・WASHER	2	60312-60445

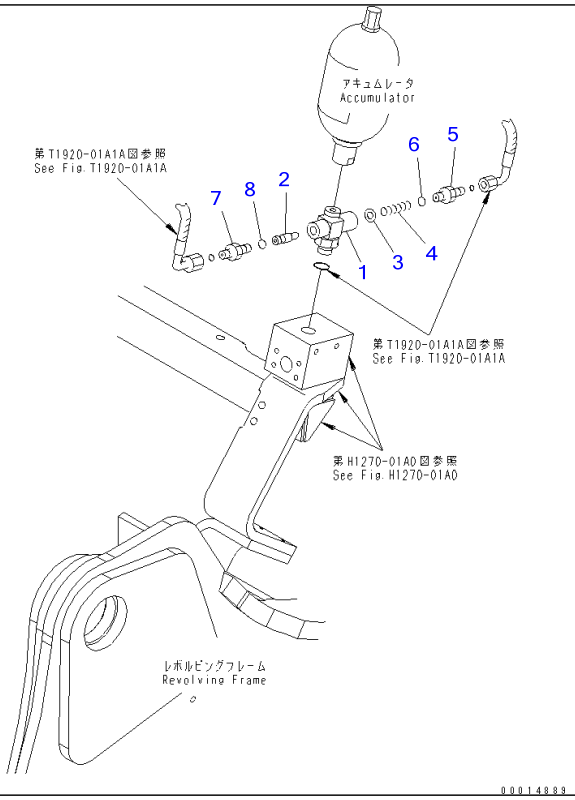

Ref Y1970-01A0A **Page 481420**

PC220-7 S/N 60001-UP (Overseas Version)
VALVE (FOR ACCUMULATOR)(#60446-60775)

Item	Part No.	Part Name	Qty	Serial No.
	20Y-62-31300	VALVE	1	60446-60775
1	☆	・BODY	1	60446-60775
2	20Y-62-31320	・SPOOL	1	60446-60775
3	01643-51032	・WASHER	1	60446-@
4	723-26-14240	・SPRING	1	60446-@
5	20Y-62-31331	・NIPPLE	1	60446-@
6	07002-12034	・O-RING	1	60446-@
7	02781-00313	・UNION	1	60446-@
8	07002-12034	・O-RING	1	60446-@

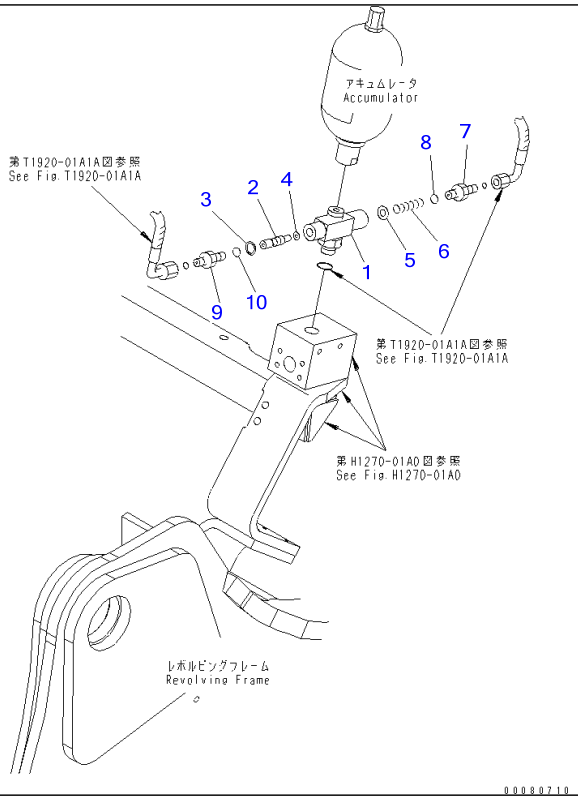

Ref Y1970-01A0B **Page 481430**

PC220-7 S/N 60001-UP (Overseas Version)
VALVE (FOR ACCUMULATOR)(#60776-65000)

Item	Part No.	Part Name	Qty	Serial No.
	20Y-62-31400	VALVE	1	60776-65000
1	☆	・BODY	1	60776-65000
2	20Y-62-31321	・SPOOL	1	60776-65000
3	22U-62-32790	・SEAL	1	60776-65000
4	708-1S-15390	・SEAL	1	60776-65000
5	01643-51032	・WASHER	1	60446-65000
6	723-26-14240	・SPRING	1	60446-65000
7	20Y-62-31331	・NIPPLE	1	60446-65000
8	07002-12034	・O-RING	1	60446-65000
9	02781-00313	・UNION	1	60446-65000
10	07002-12034	・O-RING	1	60446-65000

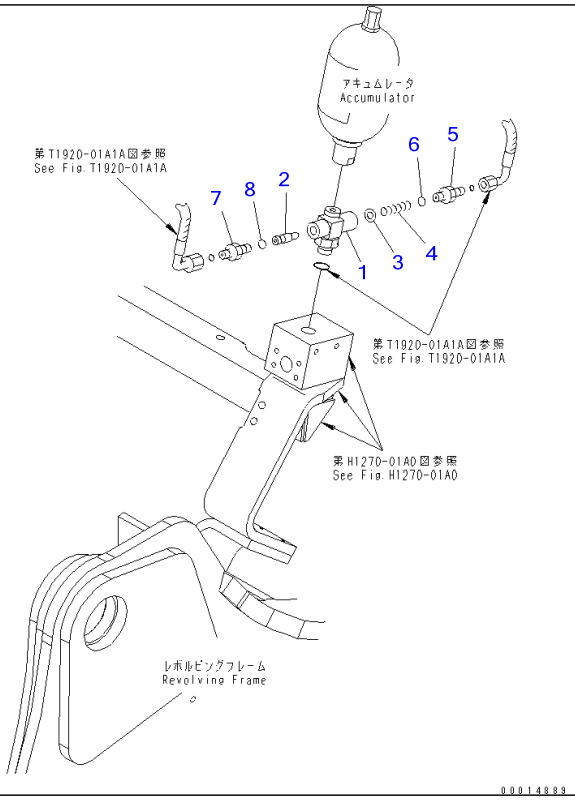

Ref Y1970-01A0C **Page 481440**

PC220-7 S/N 60001-UP (Overseas Version)
VALVE (FOR ACCUMULATOR)(#65001-67480)

Item	Part No.	Part Name	Qty	Serial No.
	20Y-62-31300	VALVE	1	65001-67480
1	☆	・BODY	1	65001-67480
2	20Y-62-31320	・SPOOL	1	65001-67480
3	01643-51032	・WASHER	1	65001-@
4	723-26-14240	・SPRING	1	65001-@
5	20Y-62-31331	・NIPPLE	1	65001-@
6	07002-12034	・O-RING	1	65001-@
7	02781-00313	・UNION	1	65001-@
8	07002-12034	・O-RING	1	65001-@

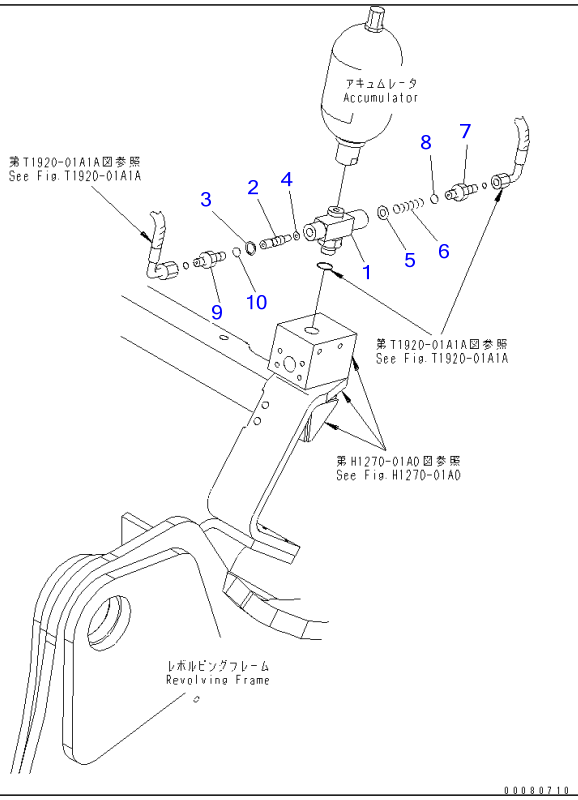

Ref Y1970-01A0D **Page 481450**

PC220-7 S/N 60001-UP (Overseas Version)
VALVE (FOR ACCUMULATOR)(#67481-)

Item	Part No.	Part Name	Qty	Serial No.
	20Y-62-31400	VALVE	1	67481-
1	☆	・BODY	1	67481-
2	20Y-62-31321	・SPOOL	1	67481-
3	22U-62-32790	・SEAL	1	67481-
4	708-1S-15390	・SEAL	1	67481-
5	01643-51032	・WASHER	1	65001-
6	723-26-14240	・SPRING	1	65001-
7	20Y-62-31331	・NIPPLE	1	65001-
8	07002-12034	・O-RING	1	65001-
9	02781-00313	・UNION	1	65001-
10	07002-12034	・O-RING	1	65001-

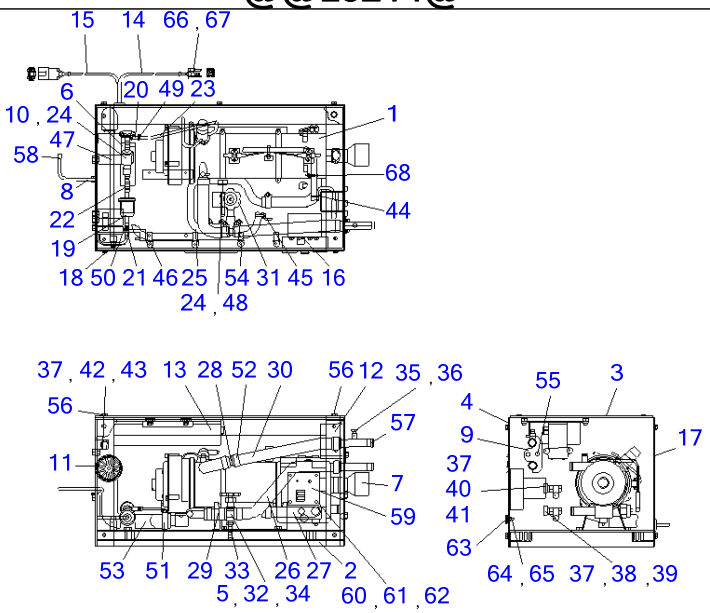

PJL5214

Ref Y1977-01A0 **Page 481460**

PC220-7 S/N 60001-UP (Overseas Version)
PRE-HEATER(#60255-)

Item	Part No.	Part Name	Qty	Serial No.
	20Y-977-1290	PRE HEATER ASS'Y	1	60255-
1	(MKMX60APT-1)	・PRE HEATER ASS'Y	1	60255-
2	MK533 819D	・CABINET ASS'Y	1	60255-
3	MK533 836A	・COVER ASS'Y,TOP	1	60255-
4	MK533 831A	・COVER ASS'Y,FRONT	1	60255-
5	MK533 285	・PIPE	1	60255-
6	MK533 735	・BRACKET ASS'Y	1	60255-
7	MK533 843	・PIPE ASS'Y,EXHAUST	1	60255-
8	MK020 449	・PIPE ASS'Y,FUEL	1	60255-
9	MK533 278A	・JOINT ASS'Y,WATER	1	60255-
10	MK503 252	・FUEL PUMP ASS'Y	1	60255-
11	MK533 581A	・SILENCER ASS'Y	1	60255-
12	MK057 509	・REGULATOR ASS'Y	1	60255-
13	MK057 328F	・CONTROL BOX ASS'Y	1	60255-
14	MK063 1076	・CABLE ASS'Y	1	60255-
15	MK063 1077	・CABLE ASS'Y	1	60255-
16	MK533 838A	・ANGLE	1	60255-
17	MK533 844B	・COVER	1	60255-
18	MK007 208	・PIPE HOLDER ASS'Y,FUEL	1	60255-
19	MK040 048	・FILTER,OIL	1	60255-
20	MK016 264	・HOSE	2	60255-
21	MK016 137A	・HOSE	1	60255-
22	MK009 027	・REDUCER	1	60255-
23	MK016 324	・HOSE,FUEL	1	60255-
24	MK013 273	・RUBBER	2	60255-
25	MK020 417	・PIPE	1	60255-
26	MK009 039	・HOSE	1	60255-
27	MK009 002	・ELBOW	2	60255-

PRE-HEATER(#60255-)

Item	Part No.	Part Name	Qty	Serial No.
28	MK020 035	・PIPE	1	60255-
29	MK016 031	・HOSE,HEATER	1	60255-
30	MK016 154	・HOSE,HEATER	1	60255-
31	MK537 031	・VALVE,WATER DRAIN	1	60255-
32	MKBU-1/8X1/4	・BUSHING	1	60255-
33	MK025 087	・JOINT ASS'Y	1	60255-
34	MK025 172	・NIPPLE	1	60255-
35	MK001 041	・RELEASE VALVE	1	60255-
36	MK010 014	・O-RING	1	60255-
37	MK065 087	・BRACKET	3	60255-
38	MK065 126	・HOLDER	1	60255-
39	MK065 113	・FUSE,3A	1	60255-
40	MK065 125	・HOLDER	1	60255-
41	MK065 127	・FUSE,25A	1	60255-
42	MK065 101	・HOLDER,30A	1	60255-
43	MK065 102	・FUSE	1	60255-
44	MK007 038	・CLAMP	5	60255-
45	MK007 147	・CLAMP	4	60255-
46	MK007 035	・CLAMP	4	60255-
47	MK007 059	・CLAMP	2	60255-
48	MK007 127	・CLAMP	1	60255-
49	MKBDG-8	・BAND	5	60255-
50	MKBDG-10	・BAND	3	60255-
51	MK007 272	・CLAMP	3	60255-
52	MK007 157	・CLAMP	10	60255-
53	MK005 122	・HOSE	1	60255-
54	MKCW2=0510	・SCREW	9	60255-
55	MKBW13=0612	・BOLT	24	60255-
56	MKBW13=0616	・BOLT	2	60255-
57	MK015 015	・CAP	2	60255-
58	MK015 013	・CAP	1	60255-
59	MK056 547	・SWITCH PANEL ASS'Y	1	60255-
60	MKCW2=0408	・SCREW	4	60255-
61	MKW4-04	・WASHER,SPRING	4	60255-
62	MKN1=04	・NUT	4	60255-
63	MK001 023	・SCREW	1	60255-
64	MK022 012	・E-RING	1	60255-
65	MKN1=06	・NUT	1	60255-
66	MK064 390	・CONNECTOR	1	60255-
67	MK064 396	・HOLDER,REAR	1	60255-
68	MK007 280	・CLAMP	1	60255-

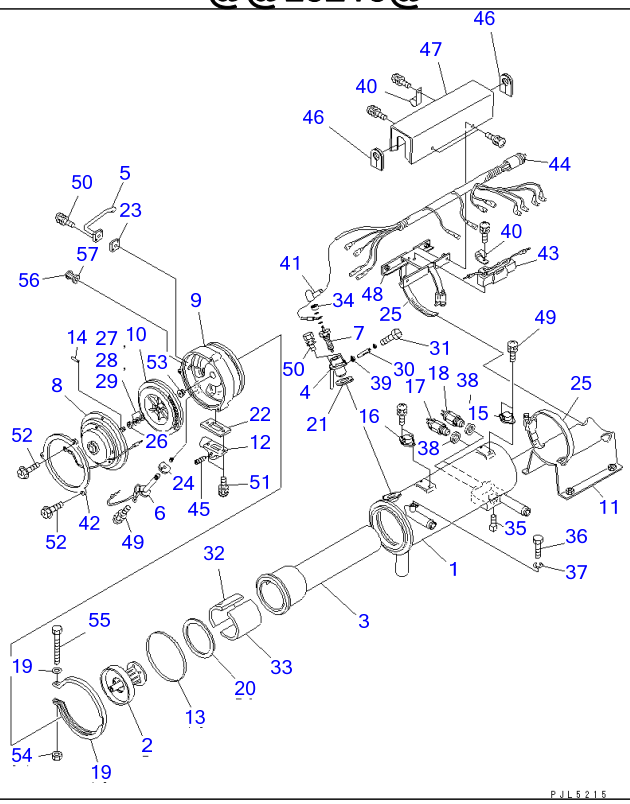

Ref Y1977-02A0 **Page 481470**

PC220-7 S/N 60001-UP (Overseas Version)
PRE-HEATER (HEATER ASS'Y)(#60255-)

Item	Part No.	Part Name	Qty	Serial No.
	(20Y-977-1290)	PRE HEATER ASS'Y	1	60255-
	MKMX60APT-1	・PRE HEATER ASS'Y	1	60255-
1	MK533 555	・・EXCHANGER ASS'Y,HEAT	1	60255-
2	MK533 576D	・・PIPE ASS'Y	1	60255-
3	MK533 586B	・・CHAMBER ASS'Y	1	60255-
4	MK533 588D	・・BOSS ASS'Y,GLOW PLUG	1	60255-
5	MK533 593	・・PIPE ASS'Y	1	60255-
6	MK059 143C	・・SENSOR ASS'Y	1	60255-
7	MK061 113A	・・GLOW PLUG ASS'Y	1	60255-
8	MK054 354	・・MOTOR ASS'Y	1	60255-
9	MK533 554	・・HOUSING	1	60255-
10	MK035 001	・・BLOWER	1	60255-
11	MK533 575A	・・SUPPORT	1	60255-
12	MK533 596A	・・AIR INLET	1	60255-
13	MK010 068A	・・O-RING	1	60255-
14	MK021 021	・・SPRING PIN	1	60255-
15	MK059 141	・・THERMOSTAT	1	60255-
16	MK059 142	・・THERMOSTAT	1	60255-
17	MK042 124A	・・THERMOSTAT	1	60255-
18	MK042 008	・・THERMOSTAT	1	60255-
19	MK007 287	・・BAND	1	60255-
20	MK011 098A	・・SHEET	1	60255-
21	MK011 099	・・PACKING	1	60255-
22	MK011 100	・・PACKING	1	60255-
23	MK011 101	・・PACKING	1	60255-
24	MK011 102	・・PACKING	1	60255-
25	MK007 016	・・CLAMP	2	60255-
26	MK003 081	・・WASHER	1	60255-

PRE-HEATER (HEATER ASS'Y)(#60255-)

Item	Part No.	Part Name	Qty	Serial No.
27	MK003 083	・・SHIM	1	60255-
28	MK003 084	・・SHIM	1	60255-
29	MK003 085	・・SHIM	1	60255-
30	MK016 184	・・HOSE	1	60255-
31	MKN102 221-210	・・JET	1	60255-
32	MK533 669	・・WICK,A	1	60255-
33	MK533 668	・・WICK,B	1	60255-
34	MK002 112	・・NUT,PLUG	1	60255-
35	MKSP-1/8	・・PLUG	1	60255-
36	MK001 041	・・RELEASE VALVE	1	60255-
37	MK010 014	・・O-RING	1	60255-
38	MK003 023	・・PACKING	2	60255-
39	MK007 124	・・CLIP,SPRING	2	60255-
40	MK007 035	・・CLAMP	2	60255-
41	MK015 005	・・CAP	1	60255-
42	MK533 399	・・PLATE	1	60255-
43	MK060 152	・・RESISTANCE ASS'Y	1	60255-
44	MK063 704A	・・CABLE	1	60255-
45	MK001 115A	・・SCREW	1	60255-
46	MK018 083	・・GROMMET	2	60255-
47	MK533 621	・・COVER ASS'Y	1	60255-
48	MK533 617	・・BRACKET ASS'Y	1	60255-
49	MKCW2=0306	・・SCREW	5	60255-
50	MKCW2=0408	・・SCREW	4	60255-
51	MKCW2=0510	・・SCREW	2	60255-
52	MKBW3=0516	・・BOLT	3	60255-
53	MK002 115	・・NUT	1	60255-
54	MKN1-06	・・NUT	1	60255-
55	MKBW3=0635	・・BOLT	1	60255-
56	MK001 130	・・SCREW	1	60255-
57	MK011 103	・・PACKING	1	60255-

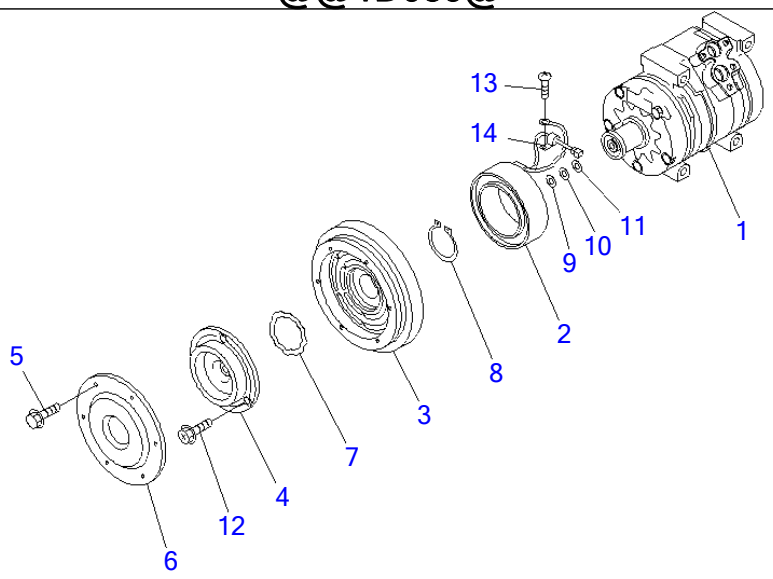

PW1D039

Ref Y1979-01A0 **Page 481480**

PC220-7 S/N 60001-UP (Overseas Version)
COMPRESSOR ASS'Y (FOR AIR CONDITIONER)

Item	Part No.	Part Name	Qty	Serial No.
	20Y-810-1260	COMPRESSOR ASS'Y	1	69767-
	20Y-979-6121	COMPRESSOR ASS'Y	1	60001-69766
1	ND447220-4051	・COMPRESSOR ASS'Y	1	60001-
	ND247300-0510	・CLUTCH ASS'Y,MAGNET	1	60001-
2	ND047310-7240	・・STATOR,MAGNET CLUTCH	1	60001-
3	☆	・・ROTOR,MAGNET CLUTCH	1	60001-
4	ND047410-1570	・・HUB,CLUTCH	1	60001-
	ND047410-1580	・・HUB,CLUTCH	1	60001-
5	ND949047-2950	・・BOLT,WASHER	6	60001-
6	ND047372-0660	・・COVER,DUST	1	60001-
7	ND949070-1360	・RING, SNAP	1	60001-
	ND949070-0640	・RING, SNAP	1	60001-
8	ND949070-1390	・RING, SNAP	1	60001-
9	ND949013-7480	・WASHER, 0.1MM,PLATE	1	60001-
10	ND949013-7500	・WASHER, 0.3MM,PLATE	1	60001-
11	ND949013-7510	・WASHER, 0.5MM,PLATE	1	60001-
12	ND949048-0430	・BOLT,WASHER HEAD	1	60001-
13	ND91310-05081	・SCREW,WASHER	1	60001-
14	ND146691-4470	・CLAMP	1	60001-

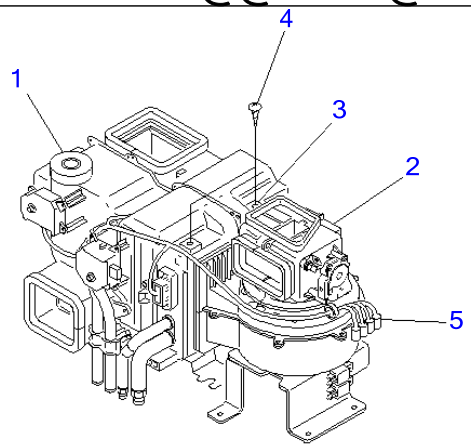

P W 1 D 0 4 0

Ref Y1979-11A0 **Page 481490**

PC220-7 S/N 60001-UP (Overseas Version)
UNIT ASS'Y (FOR AIR CONDITIONER)

Item	Part No.	Part Name	Qty	Serial No.
	20Y-979-6111	UNIT ASS'Y	1	60001-
1	(ND448800-5222)	・UNIT ASS'Y,COOLING	1	60001-
2	(ND117200-0843)	・BLOWER ASS'Y	1	60001-
3	ND146525-6041	・BRACKET,PARTS	2	60001-
4	ND90930-06141	・SCREW,TAPPING	2	60001-
5	ND246460-9451	・HARNESS SUB ASS'Y,AIR CONDITIONER	1	60001-

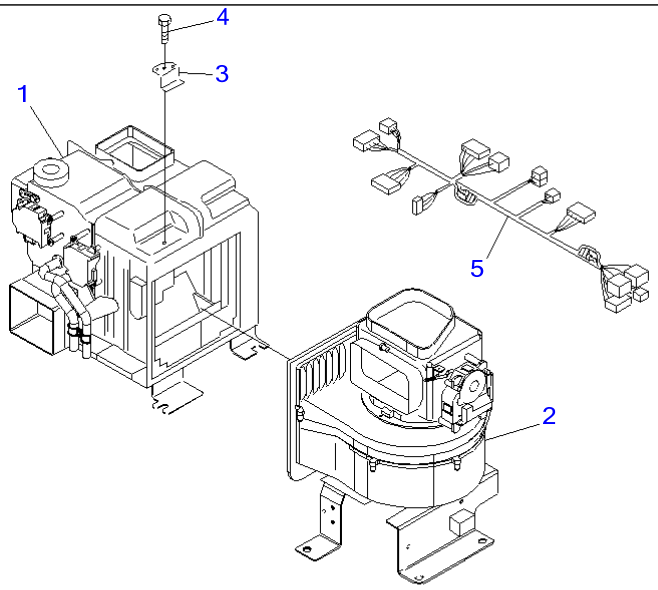

00020267

Ref Y1979-11A1 **Page 481500**

PC220-7 S/N 60001-UP (Overseas Version)
UNIT ASS'Y (FOR HEATER)(#60255-)

Item	Part No.	Part Name	Qty	Serial No.
	21K-979-7310	UNIT,HEATER	1	60255-
1	(ND113140-0270)	・UNIT ASS'Y,HEATER	1	60255-
2	(ND117200-2720)	・BLOWER ASS'Y	1	60255-
3	ND146525-6041	・BRACKET	1	60255-
4	ND90930-06141	・SCREW,TAPPING	2	60255-
5	ND246470-1610	・HARNESS SUB ASS'Y,WIRE	1	60255-

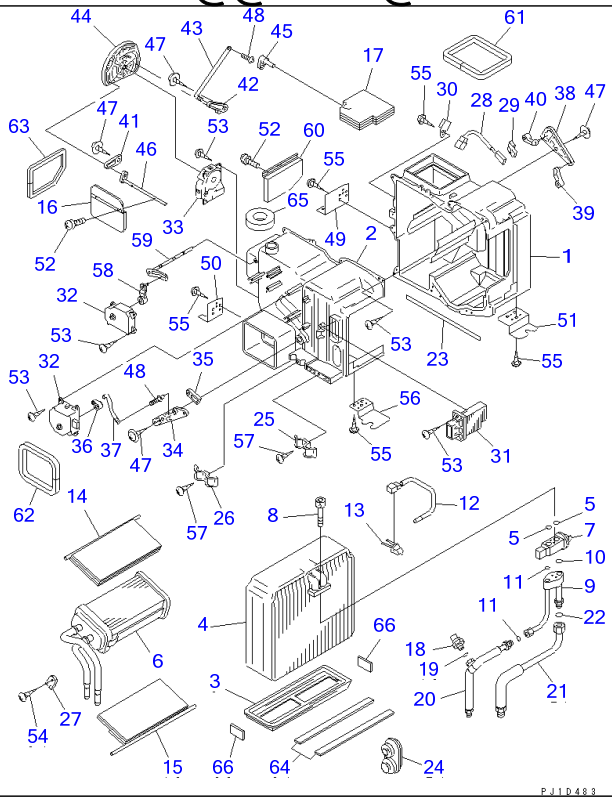

Ref Y1979-21A0 **Page 481510**

PC220-7 S/N 60001-UP (Overseas Version)
UNIT ASS'Y (COOLING) (FOR AIR CONDITIONER)(#60001-65000)

Item	Part No.	Part Name	Qty	Serial No.
	ND448800-5222	UNIT ASS'Y,COOLING	1	60001-65000
1	ND245450-2221	・CASE,COOLING	1	60001-65000
2	ND245450-1721	・CASE,COOLING	1	60001-65000
3	ND116569-5010	・PLATE	1	60001-65000
4	ND447600-4970	・EVAPORATOR	1	60001-65000
5	ND949142-0030	・・O-RING	2	60001-65000
6	ND116120-7990	・CORE ASS'Y,HEATER	1	60001-65000
7	ND447500-1390	・VALVE,EXPANSION	1	60001-65000
8	ND949046-2150	・BOLT	2	60001-65000
9	ND446870-5650	・TUBE,ACCESSORY	1	60001-65000
10	ND949142-0030	・・O-RING	1	60001-65000
11	ND949142-0010	・・O-RING	2	60001-65000
12	ND077500-0710	・THERMISTOR	1	60001-65000
13	ND246690-2840	・CLAMP	2	60001-65000
14	ND116650-8800	・DOOR ASS'Y	1	60001-65000
15	ND116650-8820	・DOOR ASS'Y	1	60001-65000
16	ND116650-8840	・DOOR ASS'Y	1	60001-65000
17	ND116640-4652	・DAMPER ASS'Y	1	60001-65000
18	ND443440-0030	・SWITCH,PRESSURE	1	60001-65000
19	ND949142-0040	・・O-RING	1	60001-65000
20	ND446830-3880	・TUBE	1	60001-65000
21	ND446810-9520	・TUBE,SUCTION	1	60001-65000
22	ND949142-0030	・・O-RING	1	60001-65000
23	ND146678-4930	・PACKING	1	60001-65000
24	ND949321-9940	・GROMMET	1	60001-65000
25	ND246770-6990	・CLAMP,PIPING	1	60001-65000
26	ND017231-1400	・CLAMP	1	60001-65000
27	ND017660-3490	・BRACKET	1	60001-65000

UNIT ASS'Y (COOLING) (FOR AIR CONDITIONER)(#60001-65000)

Item	Part No.	Part Name	Qty	Serial No.
28	ND170400-4310	・SENSOR ASS'Y,THERMO	1	60001-65000
29	ND146690-6020	・CLAMP	1	60001-65000
30	ND246634-6010	・BRACKET	1	60001-65000
31	ND499300-2051	・I.C. POWER	1	60001-65000
32	ND063700-7200	・SERVO MOTOR ASS'Y	2	60001-65000
33	ND063700-7210	・SERVO MOTOR ASS'Y	1	60001-65000
34	ND116569-5020	・PLATE	1	60001-65000
35	ND116682-0930	・LEVER	1	60001-65000
36	ND116682-0960	・LEVER	1	60001-65000
37	ND116662-4850	・SHAFT	1	60001-65000
38	ND116569-5030	・PLATE	1	60001-65000
39	ND116682-0940	・LEVER	1	60001-65000
40	ND116682-0951	・LEVER	1	60001-65000
41	ND116569-5041	・PLATE	1	60001-65000
42	ND116569-5051	・PLATE	1	60001-65000
43	ND116662-4860	・SHAFT	1	60001-65000
44	ND116569-5062	・PLATE	1	60001-65000
45	ND116682-0920	・LEVER	1	60001-65000
46	ND116682-0910	・LEVER	1	60001-65000
47	ND949008-0460	・SCREW,TAPPING	4	60001-65000
48	17M-911-3290	・CLAMP	2	60001-65000
49	ND146535-1311	・BRACKET	1	60001-65000
50	ND146535-0411	・BRACKET	1	60001-65000
51	ND146525-6070	・BRACKET	1	60001-65000
52	ND91310-03081	・SCREW,WASHER	4	60001-65000
53	ND949001-1730	・SCREW,TAPPING	23	60001-65000
54	ND90930-05121	・SCREW,TAPPING	1	60001-65000
55	ND90930-06141	・SCREW,TAPPING	8	60001-65000
56	ND146535-0421	・BRACKET	1	60001-65000
57	ND90930-05161	・SCREW,TAPPING	2	60001-65000
58	ND116682-3440	・LEVER	1	60001-65000
59	ND017730-8380	・LEVER,CONTROL	1	60001-65000
60	ND116660-2770	・DOOR ASS'Y	1	60001-65000
61	ND146698-6930	・PACKING	1	60001-65000
62	ND146698-6950	・PACKING	1	60001-65000
63	ND146698-8480	・PACKING	1	60001-65000
64	ND146637-5650	・PACKING	2	60001-65000
65	ND146647-0712	・PACKING	1	60001-65000
66	ND146647-3880	・PACKING	2	60001-65000

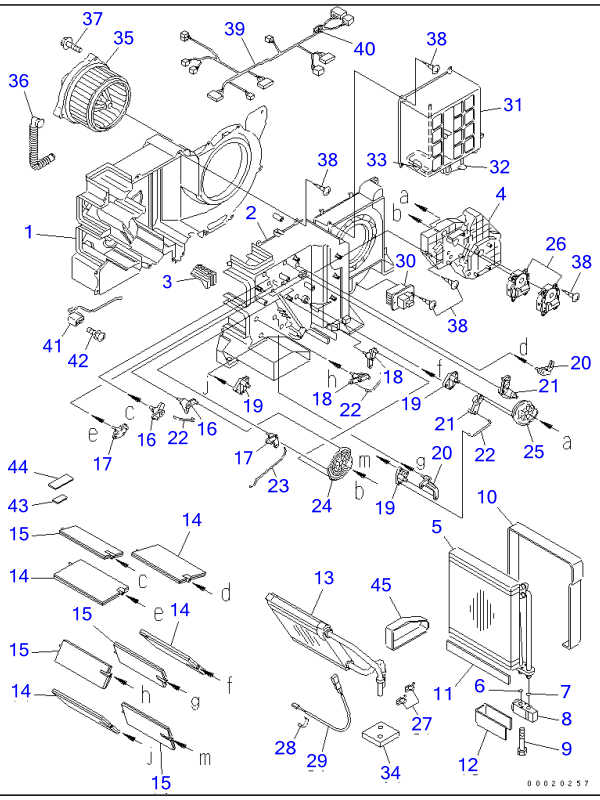

Ref Y1979-21A0A **Page 481520**

PC220-7 S/N 60001-UP (Overseas Version)

UNIT ASS'Y (COOLING) (FOR AIR CONDITIONER)(#65001-69862)

Item	Part No.	Part Name	Qty	Serial No.
	208-979-7610	AIR CONDITIONER	1	65001-69862
1	ND245450-5112	・CASE,COOLING	1	65001-69862
2	ND245450-5121	・CASE,COOLING	1	65001-69862
3	ND116576-3810	・PLATE	1	65001-@
4	ND116576-3820	・PLATE	1	65001-@
	ND446010-3131	・EVAPORATOR ASS'Y,PARTS	1	65001-69862
5	ND446600-0990	・・EVAPORATOR ASS'Y	1	65001-69862
6	ND949142-0020	・・・O-RING	1	65001-@
7	ND949142-0030	・・・O-RING	1	65001-@
8	ND447500-1482	・・VALVE,EXPANSION	1	65001-69862
9	ND949046-3100	・・BOLT	2	65001-@
10	ND146657-8841	・・PACKING	1	65001-@
11	ND146657-9811	・・PACKING	1	65001-@
12	ND146657-8850	・・PACKING	1	65001-@
13	ND116140-0050	・CORE SUB ASS'Y,HEATER	1	65001-@
14	ND116660-7570	・DOOR SUB ASS'Y	4	65001-@
15	ND116650-6850	・DOOR SUB ASS'Y	4	65001-69862
16	ND116780-2481	・LEVER SUB ASS'Y,LINK	2	65001-@
17	ND116780-2491	・LEVER SUB ASS'Y,LINK	2	65001-@
18	ND116780-2501	・LEVER SUB ASS'Y,LINK	2	65001-@
19	ND116780-2510	・LEVER SUB ASS'Y,LINK	3	65001-@
20	ND116781-3000	・LEVER	2	65001-@
21	ND116780-2521	・LEVER SUB ASS'Y,LINK	2	65001-69862
22	ND116662-7670	・SHAFT	3	65001-@
23	ND116662-7681	・SHAFT	1	65001-@
24	ND116576-3851	・PLATE	1	65001-69862
25	ND116576-3861	・PLATE	1	65001-69862
26	ND063800-0300	・SERVO MOTOR ASS'Y	2	65001-@

UNIT ASS'Y (COOLING) (FOR AIR CONDITIONER)(#65001-69862)

Item	Part No.	Part Name	Qty	Serial No.
27	ND017231-0700	・CLAMP	2	65001-@
28	ND170400-4670	・SENSOR ASS'Y,THERMO	1	65001-@
29	ND145511-0040	・HOLDER,REMOTE VALVE	1	65001-@
30	ND077800-0750	・POWER TRANSISTOR	1	65001-@
31	ND146340-0531	・BOX SUB ASS'Y	1	65001-69862
32	ND063600-4580	・・SERVO MOTOR ASS'Y	1	65001-@
33	ND077500-5650	・・THERMISTOR ASS'Y	1	65001-@
34	ND146657-8860	・PACKING	1	65001-@
35	ND116340-7030	・MOTOR ASS'Y,FAN	1	65001-69862
36	205-979-7260	・PIPE	1	65001-69862
37	ND949008-0330	・SCREW,TAPPING	3	65001-@
38	ND949001-1730	・SCREW,TAPPING	31	65001-@
39	ND246470-2451	・HARNESS SUB ASS'Y,WIRE	1	65001-69862
40	ND93950-05003	・・FUSE	1	65001-69862
41	ND113550-0780	・THERMOSTAT ASS'Y	1	65001-69862
42	ND91370-04101	・SCREW,WASHER	2	65001-69862
43	ND146667-0300	・PACKING	1	65001-69862
44	ND146667-0380	・PACKING	1	65001-69862
45	ND146667-0440	・PACKING	1	65001-@

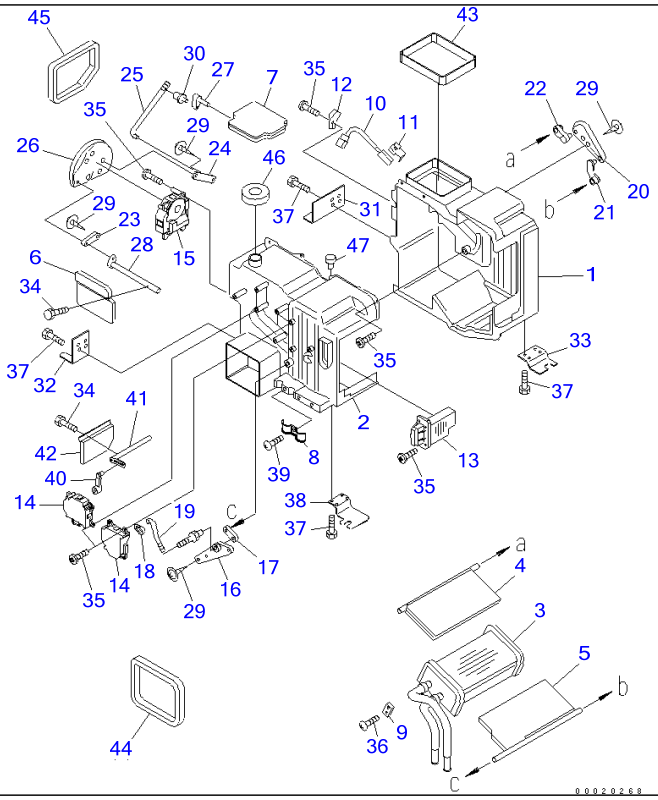

Ref Y1979-21A1 Page 481530

PC220-7 S/N 60001-UP (Overseas Version)

UNIT ASS'Y (COOLING) (FOR HEATER)(#60255-)

Item	Part No.	Part Name	Qty	Serial No.
	ND113140-0270	UNIT ASS'Y,HEATER	1	60255-
1	ND245450-2990	・CASE,COOLING	1	60255-
2	ND245450-2980	・CASE,COOLING	1	60255-
3	ND116120-7990	・CORE ASS'Y,HEATER	1	60255-
4	ND116650-8800	・DOOR ASS'Y	1	60255-
5	ND116650-8820	・DOOR ASS'Y	1	60255-
6	ND116650-8840	・DOOR ASS'Y	1	60255-
7	ND116640-4652	・DAMPER ASS'Y	1	60255-
8	ND017231-1400	・CLAMP	1	60255-
9	ND017660-3490	・BRACKET	1	60255-
10	ND170400-4310	・SENSOR ASS'Y,THERMO	1	60255-
11	ND146690-6020	・CLAMP	1	60255-
12	ND246634-6010	・BRACKET	1	60255-
13	ND499300-2051	・I.C. POWER	1	60255-
14	ND063700-7200	・SERVO MOTOR ASS'Y	2	60255-
15	ND063700-7210	・SERVO MOTOR ASS'Y	1	60255-
16	ND116569-5020	・PLATE	1	60255-
17	ND116682-0930	・LEVER	1	60255-
18	ND116682-0960	・LEVER	1	60255-
19	ND116662-4850	・SHAFT	1	60255-
20	ND116569-5030	・PLATE	1	60255-
21	ND116682-0940	・LEVER	1	60255-
22	ND116682-0951	・LEVER	1	60255-
23	ND116569-5041	・PLATE	1	60255-
24	ND116569-5051	・PLATE	1	60255-
25	ND116662-4860	・SHAFT	1	60255-
26	ND116569-5062	・PLATE	1	60255-
27	ND116682-0920	・LEVER	1	60255-

UNIT ASS'Y (COOLING) (FOR HEATER)(#60255-)

Item	Part No.	Part Name	Qty	Serial No.
28	ND116682-0910	・LEVER	1	60255-
29	ND949008-0460	・SCREW,TAPPING	4	60255-
30	17M-911-3290	・CLAMP	2	60255-
31	ND146535-1311	・BRACKET	1	60255-
32	ND146535-0411	・BRACKET	1	60255-
33	ND146525-6070	・BRACKET	1	60255-
34	ND91310-03081	・SCREW,WASHER	4	60255-
35	ND949001-1730	・SCREW,TAPPING	23	60255-
36	ND90930-05121	・SCREW,TAPPING	1	60255-
37	ND90930-06141	・SCREW,TAPPING	8	60255-
38	ND146535-0421	・BRACKET	1	60255-
39	ND90930-05161	・SCREW,TAPPING	1	60255-
40	ND116682-3440	・LEVER	1	60255-
41	ND017730-8380	・LEVER,CONTROL	1	60255-
42	ND116660-2770	・DOOR ASS'Y	1	60255-
43	ND146698-6930	・PACKING	1	60255-
44	ND146698-6950	・PACKING	1	60255-
45	ND146698-8480	・PACKING	1	60255-
46	ND146647-0712	・PACKING	1	60255-
47	ND146625-7620	・BUSHING	1	60255-

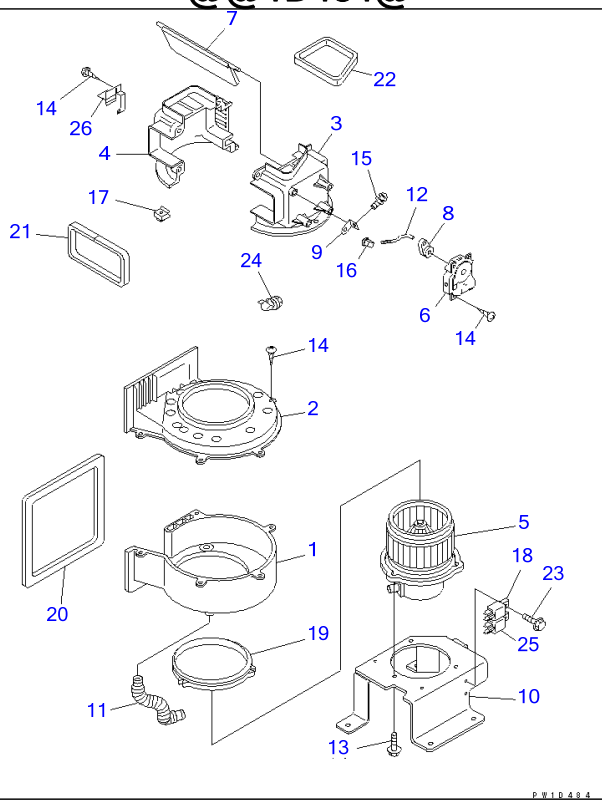

Ref Y1979-31A0 **Page 481540**

PC220-7 S/N 60001-UP (Overseas Version)
BLOWER ASS'Y (FOR AIR CONDITIONER)(#60001-65000)

Item	Part No.	Part Name	Qty	Serial No.
	ND117200-0843	BLOWER ASS'Y	1	60001-65000
1	ND116241-3220	・CASE,BLOWER	1	60001-65000
2	ND116241-3230	・CASE,BLOWER	1	60001-65000
3	ND017321-3202	・CASE,AIR DAMPER	1	60001-65000
4	ND017321-3212	・CASE,AIR DAMPER	1	60001-65000
5	ND116340-3860	・MOTOR ASS'Y,FAN	1	60001-65000
6	ND063700-7210	・SERVO MOTOR ASS'Y	1	60001-65000
7	ND116660-4680	・DOOR ASS'Y	1	60001-65000
8	ND116682-0980	・LEVER	1	60001-65000
9	ND116682-0970	・LEVER	1	60001-65000
10	ND146535-1320	・BRACKET	1	60001-65000
11	205-979-7260	・PIPE	1	60001-65000
12	ND116662-7120	・SHAFT	1	60001-65000
13	ND949047-2370	・BOLT,WASHER	3	60001-65000
14	ND949001-1730	・SCREW,TAPPING	17	60001-65000
15	ND91370-03081	・SCREW,WASHER	1	60001-65000
16	17M-911-3290	・CLAMP	1	60001-65000
17	ND949057-0190	・NUT,PLATE	1	60001-65000
18	ND056700-8170	・RELAY ASS'Y	1	60001-65000
19	ND146622-6880	・PACKING	1	60001-65000
20	ND146678-4901	・PACKING	1	60001-65000
21	ND146678-5060	・PACKING	1	60001-65000
22	ND146647-0790	・PACKING	1	60001-65000
23	ND91570-06141	・BOLT,WASHER	2	60001-65000
24	ND146625-4450	・BUSH	1	60001-65000
25	ND056800-3130	・RELAY ASS'Y	1	60001-65000
26	ND146530-9530	・BRACKET ASS'Y	1	60001-65000

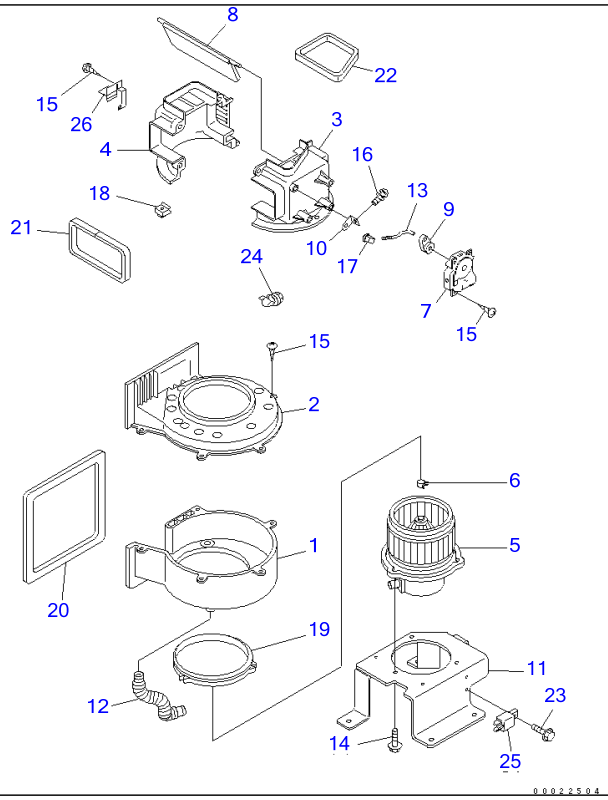

Ref Y1979-31A1 **Page 481550**

PC220-7 S/N 60001-UP (Overseas Version)
BLOWER ASS'Y (FOR HEATER)(#60255-)

Item	Part No.	Part Name	Qty	Serial No.
	ND117200-2720	BLOWER ASS'Y	1	60255-
1	ND116241-3220	・CASE,BLOWER	1	60255-
2	ND116241-3230	・CASE,BLOWER	1	60255-
3	ND017321-3202	・CASE,AIR DAMPER	1	60255-
4	ND017321-3212	・CASE,AIR DAMPER	1	60255-
	ND116340-3860	・MOTOR ASS'Y,FAN	1	60255-
5	ND116221-3010	・・FAN,FAN	1	60255-
6	ND017231-2370	・・CLAMP,FAN	1	60255-
7	ND063700-7210	・SERVO MOTOR ASS'Y	1	60255-
8	ND116660-4680	・DOOR ASS'Y	1	60255-
9	ND116682-0980	・LEVER	1	60255-
10	ND116682-0970	・LEVER	1	60255-
11	ND146535-1320	・BRACKET	1	60255-
12	205-979-7260	・PIPE	1	60255-
13	ND116662-7120	・SHAFT	1	60255-
14	ND949047-2370	・BOLT,WASHER	3	60255-
15	ND949001-1730	・SCREW,TAPPING	17	60255-
16	ND91370-03081	・SCREW,WASHER	1	60255-
17	17M-911-3290	・CLAMP	1	60255-
18	ND949057-0190	・NUT,PLATE	1	60255-
19	ND146622-6880	・PACKING	1	60255-
20	ND146678-4901	・PACKING	1	60255-
21	ND146678-5060	・PACKING	1	60255-
22	ND146647-0790	・PACKING	1	60255-
23	ND91570-06141	・BOLT,WASHER	2	60255-
24	ND146625-4450	・BUSH	1	60255-
25	421-07-31270	・RELAY	1	60255-
26	ND146530-9530	・BRACKET ASS'Y	1	60255-