https://truckmanualshub.com/

RUTHZIL TRATOR COMERCIAL DE PEÇAS LTDA 11 97083-6812 ROLANDO CITRANGULO

SEBM024300

P A R T S B O O K

KOMATSU

PC 228US-3N-W1

S/N 30001-UP

© 2001 KOMATSU
All Rights Reserved
Printed in USA 09-01

https://truckmanualshub.com/

KOMATSU PC228US-3N-W1 S/N 30001-UP

Item	Description	Book	Page
	SAA6D102E-2A-8 ENGINE S/N 26274903-UP	saa6d0qc	
B0	ENGINE RELATED PARTS		030000
C0	COOLING SYSTEM		060000
D0	FUEL TANK AND RELATED PARTS		090000
E0	ELECTRICAL SYSTEM		120000
H0	HYDRAULIC SYSTEM		150000
J0	MAIN/REVOLVING FRAME AND RELATED PARTS		180000
K0	OPERATOR'S COMPARTMENT AND CONTROL SYSTEM		210000
M0	GUARD		240000
N0	SWING CIRCLE AND RELATED PARTS		270000
P0	TRAVEL AND LOWER PIPING		300000
R0	UNDER CARRIAGE		330000
T0	WORK EQUIPMENT		360000
U0	MARKS AND PLATES		390000
V0	ACCESSORY		420000
Y0	SERVICE KIT AND COMPONENT PARTS		450000

https://truckmanualshub.com/

SAA6D102E-2A-8 S/N 26274903-UP

ENGINE

Item	Description	Qty	Page
10	CYLINDER HEAD	1	030010
20	WATER TEMPERATURE SENSOR	1	030020
30	REAR HANGER	1	030030
40	HEAD COVER	1	030040
50	AIR CONNECTOR	1	030050
60	AIR INTAKE HEATER	1	030060
70	AIR INTAKE COVER	1	030070
80	EXHAUST CONNECTOR CLAMP	1	030080
90	EXHAUST MANIFOLD GASKET AND BOLT	1	030090
100	EXHAUST MANIFOLD	1	030100
110	TURBOCHARGER OIL PIPING	1	030110
120	TURBOCHARGER OUT CONNECTION	1	030120
130	TURBOCHARGER MOUNTING	1	030130
140	MUFFLER AND MOUNTING	1	030140
145	MUFFLER AND MOUNTING (AFTER M/C)(#26307088-)	1	030145
150	THERMOSTAT HOUSING	1	030150
160	THERMOSTAT(#26295864-)	1	030160
170	THERMOSTAT(#26274903-26295863)	1	030170
180	OIL PRESSURE SWITCH	1	030180
190	CYLINDER BLOCK	1	030190
200	FRONT COVER POINTER	1	030200
210	FRONT COVER	1	030210
220	CAMFOLLOWER COVER	1	030220
230	BREATHER HOSE(#26274903-26285648)	1	030230
240	CYLINDER BLOCK BLIND PLUG	1	030240
250	OIL PAN BOLT	1	030250
260	FLUID LEVEL SENSOR	1	030260
270	OIL PAN AND SUCTION TUBE	1	030270
280	OIL LEVEL GAUGE	1	030280
290	REVOLUTION SENSOR	1	030290
295	REVOLUTION SENSOR (AFTER M/C)(#26307088-)	1	030295
300	FLYWHEEL HOUSING	1	030300
310	FLYWHEEL	1	030310
320	CRANKSHAFT	1	030320
330	DAMPER	1	030330
340	PISTON	1	030340
350	ROCKER ARM	1	030350
360	TAPPET	1	030360
370	CAMSHAFT	1	030370
380	FRONT GEAR TRAIN COVER	1	030380
390	FAN PULLEY	1	030390
400	TACHOMETER DRIVE COVER	1	030400
410	UNDER PLATE	1	030410
420	NOISE PANEL CYLINDER BLOCK	1	030420
430	OIL PUMP	1	030430
440	OIL FILTER AND PIPING	1	030440
450	OIL HOSE MARK BAND	1	030450
460	OIL COOLER COVER	1	030460
470	FUEL INJECTION PUMP	1	030470
480	FUEL INJECTION PUMP (PUMP) (1/2) (INNER PARTS)	1	030480
490	FUEL INJECTION PUMP (PUMP) (2/2) (INNER PARTS)	1	030490
500	FUEL INJECTION PUMP (GOVERNOR) (1/2) (INNER PARTS)	1	030500
510	FUEL INJECTION PUMP (GOVERNOR) (2/2) (INNER PARTS)	1	030510
520	FUEL INJECTION PUMP (FEED PUMP) (INNER PARTS)	1	030520
530	BOOST TUBE	1	030530
535	BOOST TUBE(#26307088-)	1	030535
540	NOISE PANEL INJECTION PUMP	1	030540
550	FUEL INLET AND OUTLET JOINT CAP	1	030550
560	FUEL INJECTION PUMP MOUNTING	1	030560
570	FUEL FILTER	1	030570
576	FUEL FILTER (AFTER M/C)(#26307088-)	1	030576

https://truckmanualshub.com/

ENGINE

Item	Description	Qty	Page
582	FUEL FILTER PIPING (AFTER M/C)(#26307088-)	1	030582
590	FUEL PIPING	1	030590
600	CYLINDER BLOCK BLIND COVER AND PIPING	1	030600
605	CYLINDER BLOCK BLIND COVER AND PIPING (AFTER M/C)(#26307088-)	1	030605
610	INJECTION NOZZLE	1	030610
620	FUEL JOINT	1	030620
630	WATER CONNECTOR	1	030630
640	WATER CONNECTOR PLUG	1	030640
650	WATER PUMP	1	030650
660	FAN DRIVE PULLEY	1	030660
670	COOLING FAN	1	030670
680	FAN PILOT SPACER	1	030680
690	ALTERNATOR (60A)	1	030690
700	ALTERNATOR (35A)	1	030700
703	ALTERNATOR (35A) (AFTER M/C)(#26307088-)	1	030703
706	ALTERNATOR (60A) (AFTER M/C)(#26307088-)	1	030706
710	ALTERNATOR (60A) (INNER PARTS)	1	030710
720	ALTERNATOR (35A) (INNER PARTS)	1	030720
721	ALTERNATOR (35A) (INNER PARTS)(#26315328-)	1	030721
723	ALTERNATOR (35A) (AFTER M/C) (INNER PARTS)(#26307088-)	1	030723
726	ALTERNATOR (60A) (AFTER M/C) (INNER PARTS)(#26307088-)	1	030726
730	BELT TENSIONER (FOR 60A ALTERNATOR)	1	030730
740	BELT TENSIONER (FOR 35A ALTERNATOR)	1	030740
750	ALTERNATOR MOUNTING	1	030750
760	STARTING MOTOR (5.5KW)	1	030760
770	STARTING MOTOR (4.5KW)	1	030770
780	STARTING MOTOR (4.5KW) (WITH PROTECT COVER)(#26302312-)	1	030780
790	STARTING MOTOR (5.5KW) (INNER PARTS)	1	030790
800	STARTING MOTOR (4.5KW) (INNER PARTS)	1	030800
810	STARTING MOTOR (4.5KW) (WITH PROTECT COVER) (INNER PARTS)(#26302312-)	1	030810
820	STARTING MOTOR MOUNTING (4.5KW)	1	030820
830	STARTING MOTOR MOUNTING (5.5KW)	1	030830
840	REPAIR PARTS (1/4) (CYLINDER HEAD)	1	030840
850	REPAIR PARTS (2/4) (CYLINDER BLOCK)	1	030850
860	REPAIR PARTS (3/4) (CRANKSHAFT)	1	030860
870	REPAIR PARTS (4/4) (PISTON)	1	030870
880	CYLINDER HEAD GASKET KIT	1	030880
890	CYLINDER BLOCK GASKET KIT	1	030890
900	CAUTION PLATE (JAPANESE-ENGLISH)	1	030900
910	CAUTION PLATE (FOR REGULATION OF EPA)(#26274903-26293514)	1	030910
920	CAUTION PLATE (FOR REGULATION OF EPA)(#26293515-)	1	030920
930	CAUTION PLATE (ENGLISH) (TUNNEL SPEC.)(#26293515-)	1	030930
940	HEATER SWITCH	1	030940
950	MUFFLER DRAIN TUBE	1	030950
960	CERAMIC MUFFLER RELATED PARTS(#26293515-)	1	030960
970	AIR CLEANER	1	030970
980	WIRING HARNESS(#26280116-)	1	030980
990	MUFFLER (CERAMIC TYPE)(#26293515-)	1	030990
1000	AFTER COOLER(#26274903-26277782)	1	031000
1010	AFTER COOLER(#26277783-26288621)	1	031010
1020	AFTER COOLER(#26288622-)	1	031020
1030	CORROSION RESISTOR(#26288679-)	1	031030
1040	SPARE PARTS	1	031040
1050	SPARE PARTS	1	031050

https://truckmanualshub.com/

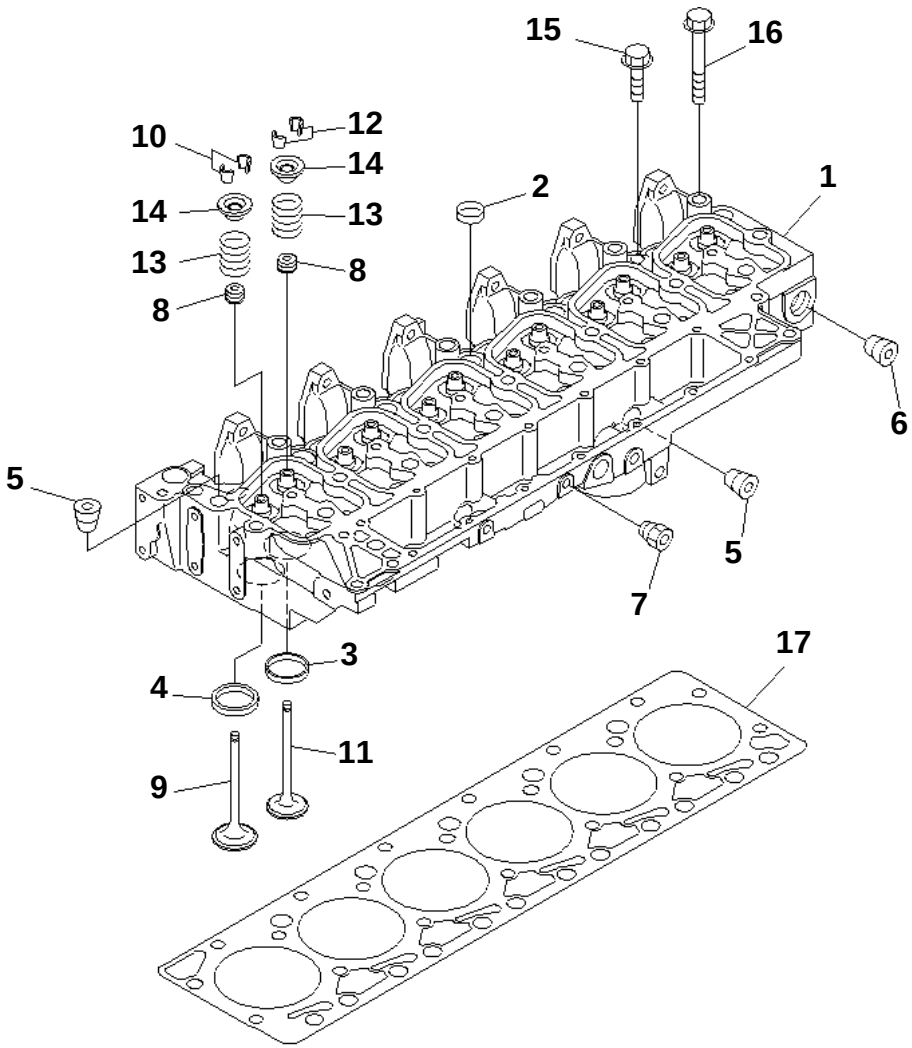

SAA6D102E-2A-8 S/N 26274903-UP

CYLINDER HEAD

Item	Part No.	Description	Qty	Options
	6731-11-1371	HEAD ASS'Y	1	SN:26317355--
	□6731-11-1370	HEAD ASS'Y	1	SN:26274903--26317354
1	☆	· HEAD	1	SN:26317355--
	☆	· HEAD	1	SN:26274903--26317354
2	6736-11-1150	· PLUG	5	SN:26274903--
3	6732-11-1170	· INSERT,EXHAUST	6	SN:26274903--
4	6732-11-1180	· INSERT,INTAKE	6	SN:26274903--
5	6732-11-1910	· PLUG	5	SN:26274903--
6	6732-11-1920	· PLUG	1	SN:26274903--
7	6732-11-1930	· PLUG	2	SN:26274903--
8	6732-41-4541	SEAL (K1)	12	SN:26317355--
	□6732-41-4540	SEAL (K1)	12	SN:26274903--26317354
	6736-41-4110	INTAKE VALVE ASS'Y	6	SN:26274903--
9	☆	· VALVE	1	SN:26274903--
10	6732-41-4520	· COTTER	2	SN:26274903--
	6736-41-4210	EXHAUST VALVE ASS'Y	6	SN:26274903--
11	☆	· VALVE	1	SN:26274903--
12	6732-41-4520	· COTTER	2	SN:26274903--
13	6732-41-4430	SPRING	12	SN:26274903--
14	6731-41-4511	RETAINER	12	SN:26317355--
	□6731-41-4510	RETAINER	12	SN:26274903--26317354
15	6732-11-1610	BOLT	6	SN:26274903--
16	6732-11-1620	BOLT	14	SN:26274903--
17	6735-11-1821	GASKET (K1)	1	SN:26274903--

REFER TO FIG. NOS. OF REPAIR PARTS FOR O.S.¤ U.S.¤ AND SERVICE PARTS.

Ref. A1009-01A4 Page 030010

https://truckmanualshub.com/

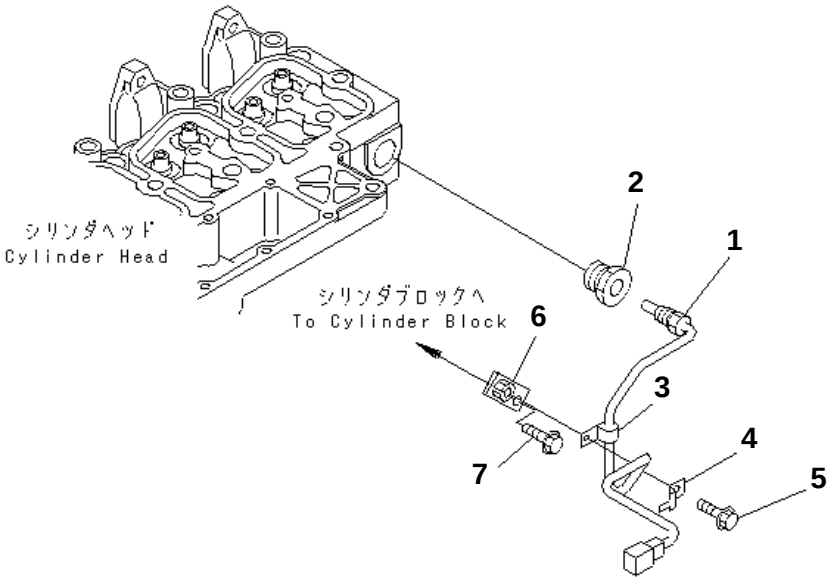

PJ6B404

SAA6D102E-2A-8 S/N 26274903-UP

WATER TEMPERATURE SENSOR

Item	Part No.	Description	Qty	Options
1	7861-92-3320	SENSOR,WATER TEMPERATURE	1	SN:26274903--
2	6732-11-6140	ADAPTER	1	SN:26296451--
	□512-06-11281	ADAPTER	1	SN:26274903--26296450
3	04434-50610	CLIP	1	SN:26274903--
4	08053-01510	CLIP	1	SN:26274903--
5	6734-71-5610	BOLT	1	SN:26274903--
6	6136-11-8510	BRACKET	1	SN:26274903--
7	6732-21-5160	BOLT	1	SN:26274903--

Ref. A101V-01A0 Page 030020

https://truckmanualshub.com/

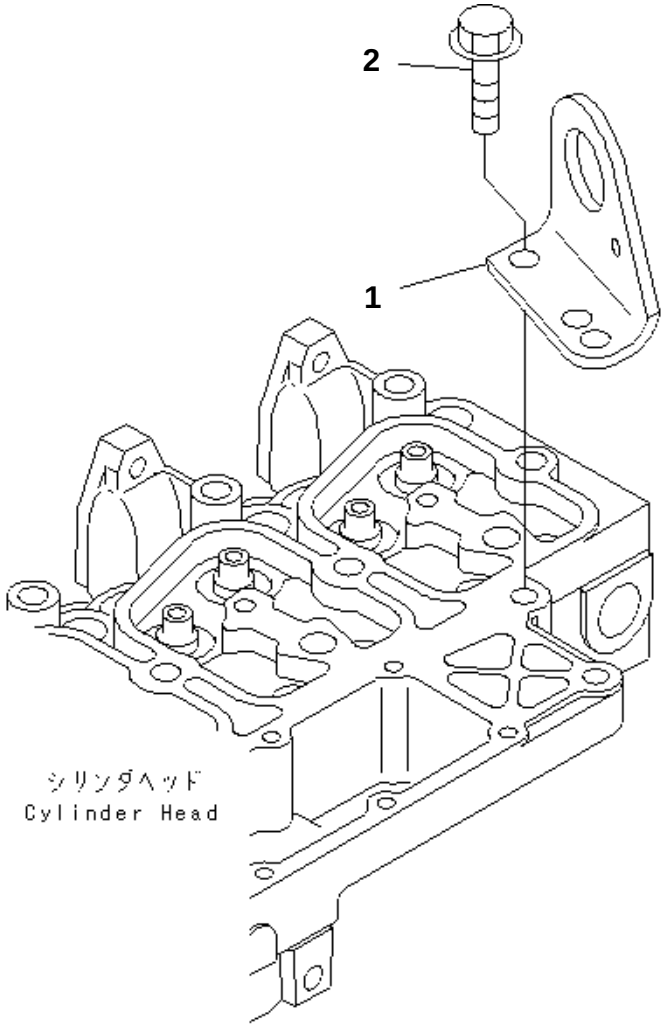

SAA6D102E-2A-8 S/N 26274903-UP

REAR HANGER

Item	Part No.	Description	Qty	Options
1	6732-11-1710	BRACKET,LIFTING	1	SN:26274903--
2	6732-11-1720	BOLT	2	SN:26274903--

Ref. A105P-01A1 Page 030030

https://truckmanualshub.com/

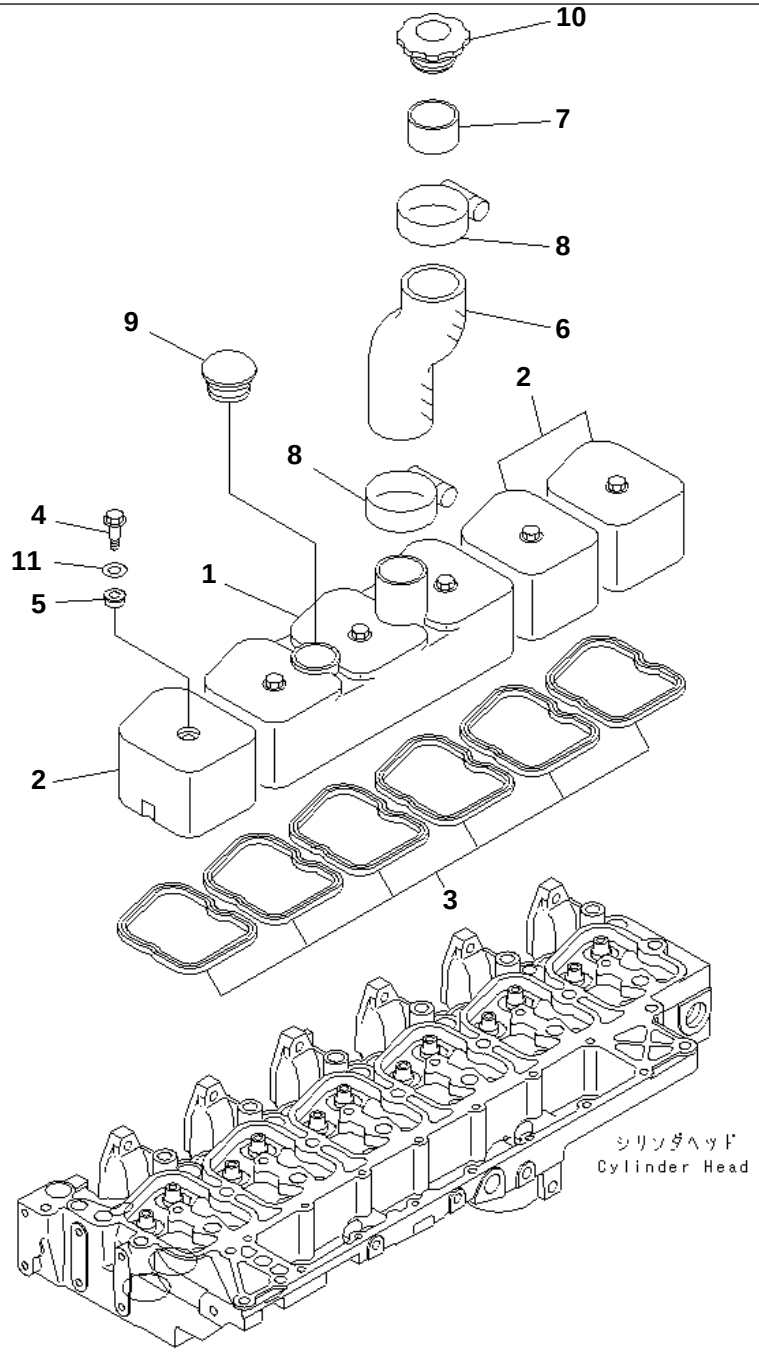

SAA6D102E-2A-8 S/N 26274903-UP

HEAD COVER

Item	Part No.	Description	Qty	Options
1	6738-11-8110	COVER	1	SN:26274903--
2	6735-11-8120	COVER	3	SN:26274903--
3	6732-11-8181	GASKET (K1)	6	SN:26274903--
4	6732-11-8130	BOLT	6	SN:26274903--
5	6732-11-8210	GASKET,SEAL (K1)	6	SN:26277761--
	□6738-11-8210	GROMMET,SEAL	6	SN:26274903--26277760
6	6130-12-8720	HOSE	1	SN:26274903--
7	6130-12-8630	PIPE	1	SN:26274903--
8	07281-00709	CLAMP	2	SN:26274903--
9	6204-11-8610	CAP	1	SN:26274903--
10	6130-12-8610	CAP	1	SN:26274903--
11	6732-11-8150	WASHER	6	SN:26277761--

Ref. A111P-01B0 Page 030040

https://truckmanualshub.com/

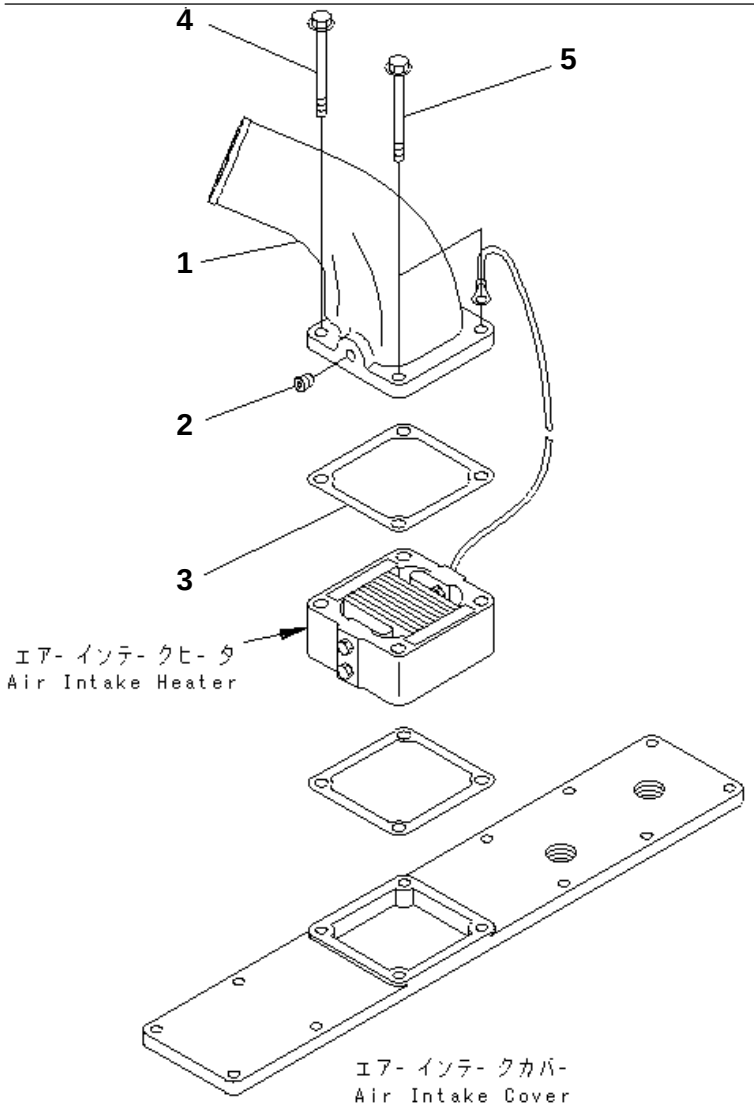

PJ6B412

SAA6D102E-2A-8 S/N 26274903-UP

AIR CONNECTOR

Item	Part No.	Description	Qty	Options
1	6738-11-4410	CONNECTOR	1	SN:26274903--
2	07043-70108	PLUG	1	SN:26274903--
3	6732-11-4811	GASKET (K1)	1	SN:26274903--
4	6734-11-5210	BOLT	1	SN:26274903--
5	6736-81-8730	BOLT	2	SN:26274903--

Ref. A131P-01A4 Page 030050

https://truckmanualshub.com/

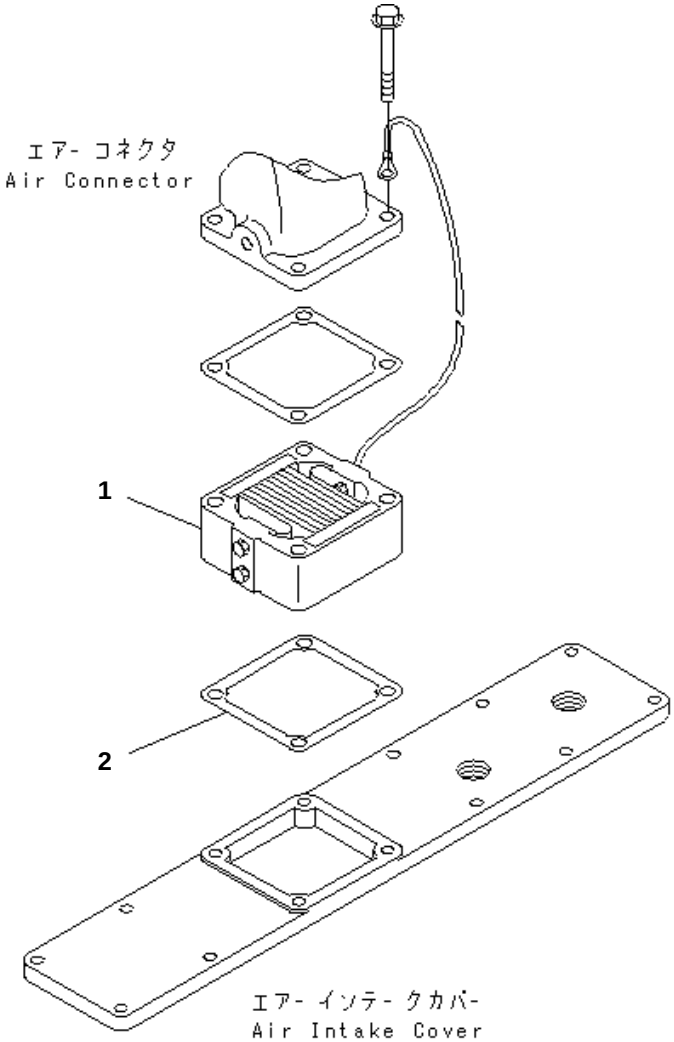

SAA6D102E-2A-8 S/N 26274903-UP

AIR INTAKE HEATER

Item	Part No.	Description	Qty	Options
1	6732-81-5120	HEATER ASS'Y	1	SN:26274903--
2	6732-11-4811	GASKET (K1)	1	SN:26274903--

Ref. A131R-01A0 Page 030060

https://truckmanualshub.com/

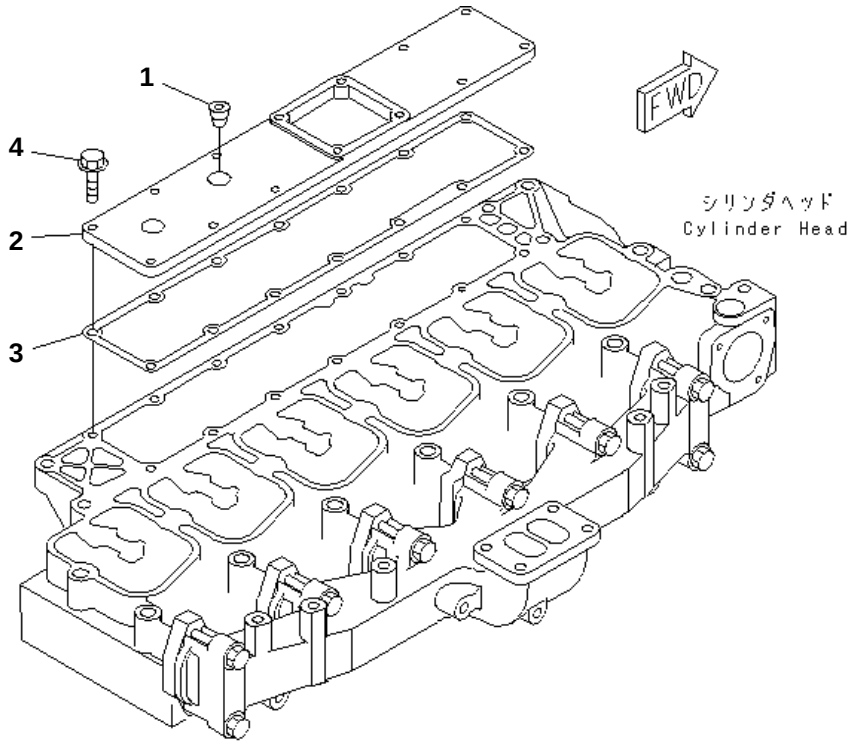

SAA6D102E-2A-8 S/N 26274903-UP

AIR INTAKE COVER

Item	Part No.	Description	Qty	Options
1	6732-11-1910	PLUG	2	SN:26274903--
2	6735-11-4110	COVER,INTAKE	1	SN:26274903--
3	6735-11-4812	GASKET (K1)	1	SN:26287624--
	☐6735-11-4811	GASKET	1	SN:26274903--26287623
4	6732-11-4160	BOLT	8	SN:26274903--

Ref. A131V-01A0 Page 030070

https://truckmanualshub.com/

1

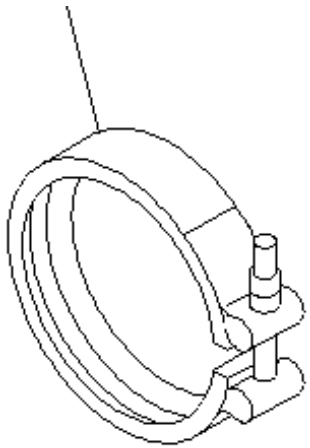

PMD1036

SAA6D102E-2A-8 S/N 26274903-UP

EXHAUST CONNECTOR CLAMP

Item	Part No.	Description	Qty	Options
1	6732-81-8220	CLAMP (K1)	1	SN:26274903--

Ref. A151R-01A0 Page 030080

https://truckmanualshub.com/

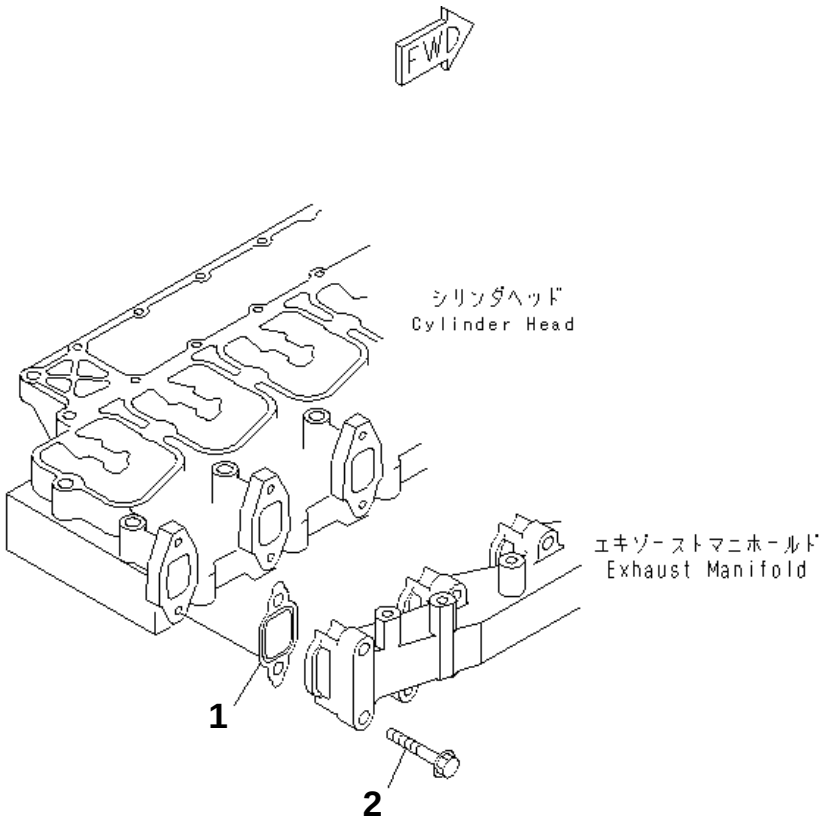

PFD1324

SAA6D102E-2A-8 S/N 26274903-UP

EXHAUST MANIFOLD GASKET AND BOLT

Item	Part No.	Description	Qty	Options
1	6736-11-5830	GASKET	6	SN:26312301--
	□6736-11-5820	GASKET (K1)	6	SN:26274903--26312300
2	6735-11-4150	BOLT	12	SN:26274903--

Ref. A151T-01A2 Page 030090

https://truckmanualshub.com/

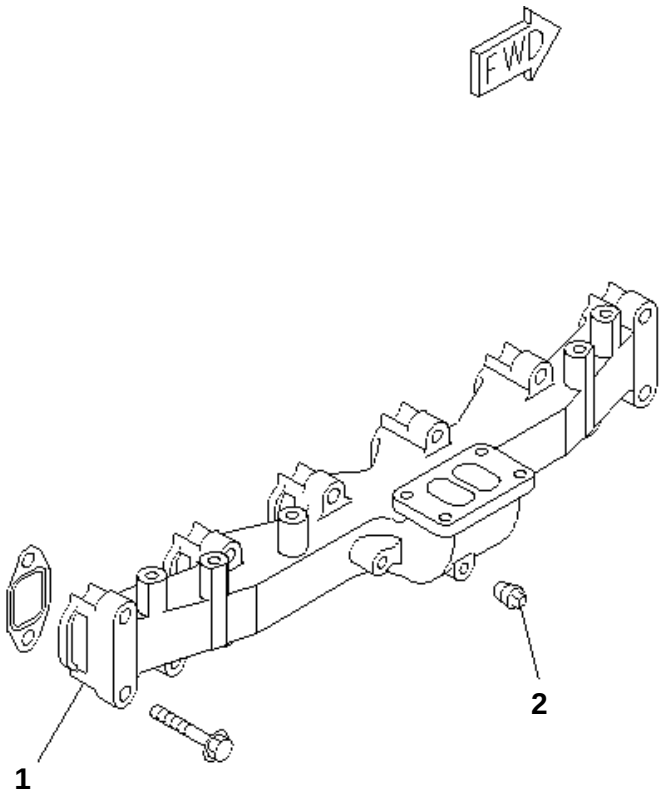

PJ6B423

SAA6D102E-2A-8 S/N 26274903-UP

EXHAUST MANIFOLD

Item	Part No.	Description	Qty	Options
1	6735-11-5120	MANIFOLD,EXHAUST	1	SN:26274903--
2	07042-00108	PLUG	1	SN:26274903--

Ref. A151V-01A0 Page 030100

https://truckmanualshub.com/

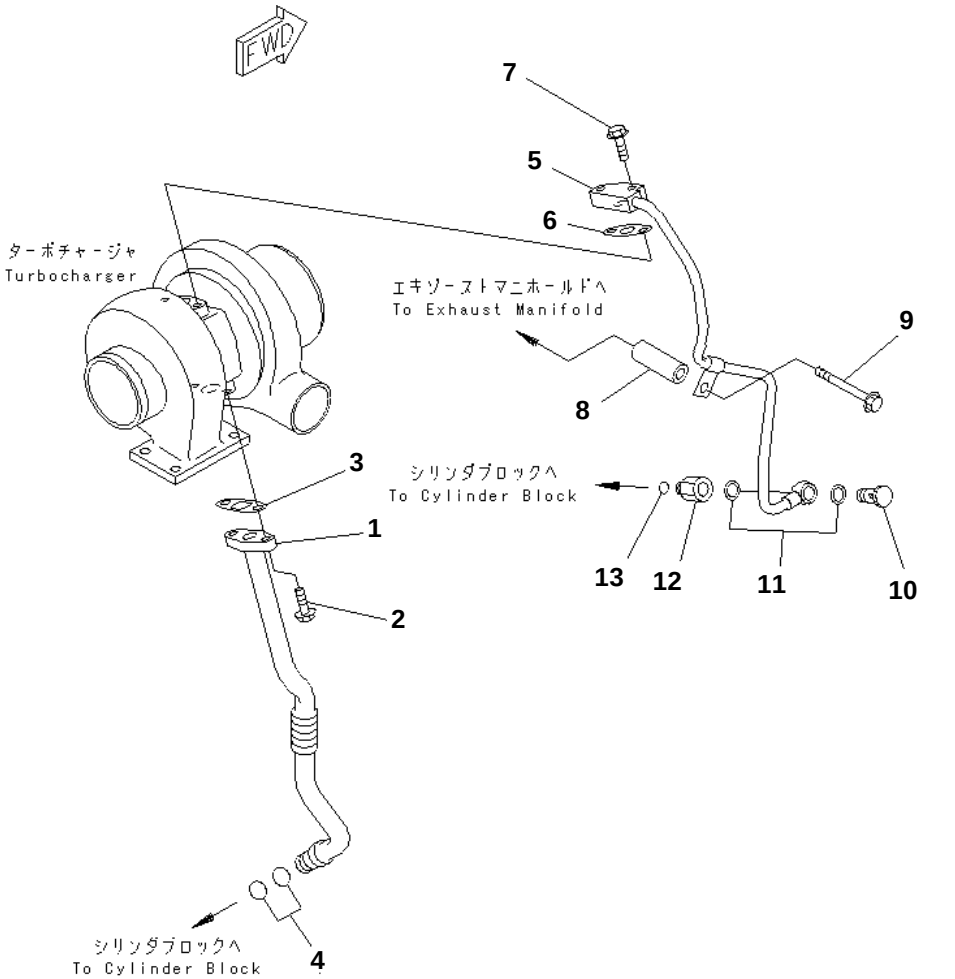

SAA6D102E-2A-8 S/N 26274903-UP

TURBOCHARGER OIL PIPING

Item	Part No.	Description	Qty	Options
1	6738-81-8410	TUBE,OIL	1	SN:26274903--
2	6732-71-3220	BOLT	2	SN:26274903--
3	6207-51-7690	GASKET (K1)	1	SN:26274903--
4	6732-51-8330	O-RING (K2)	2	SN:26274903--
5	6738-51-8110	TUBE,OIL	1	SN:26274903--
6	6221-51-8160	GASKET (K1)	1	SN:26274903--
7	6732-21-6630	BOLT	2	SN:26274903--
8	6112-23-6971	SPACER	1	SN:26274903--
9	01435-01085	BOLT	1	SN:26274903--
10	6732-71-5620	BOLT,JOINT	1	SN:26274903--
11	07005-01412	GASKET (K1)	2	SN:26274903--
12	6732-51-8510	CONNECTOR	1	SN:26274903--
13	6736-51-8710	O-RING (K1)	1	SN:26274903--

Ref. A153T-01B2 Page 030110

https://truckmanualshub.com/

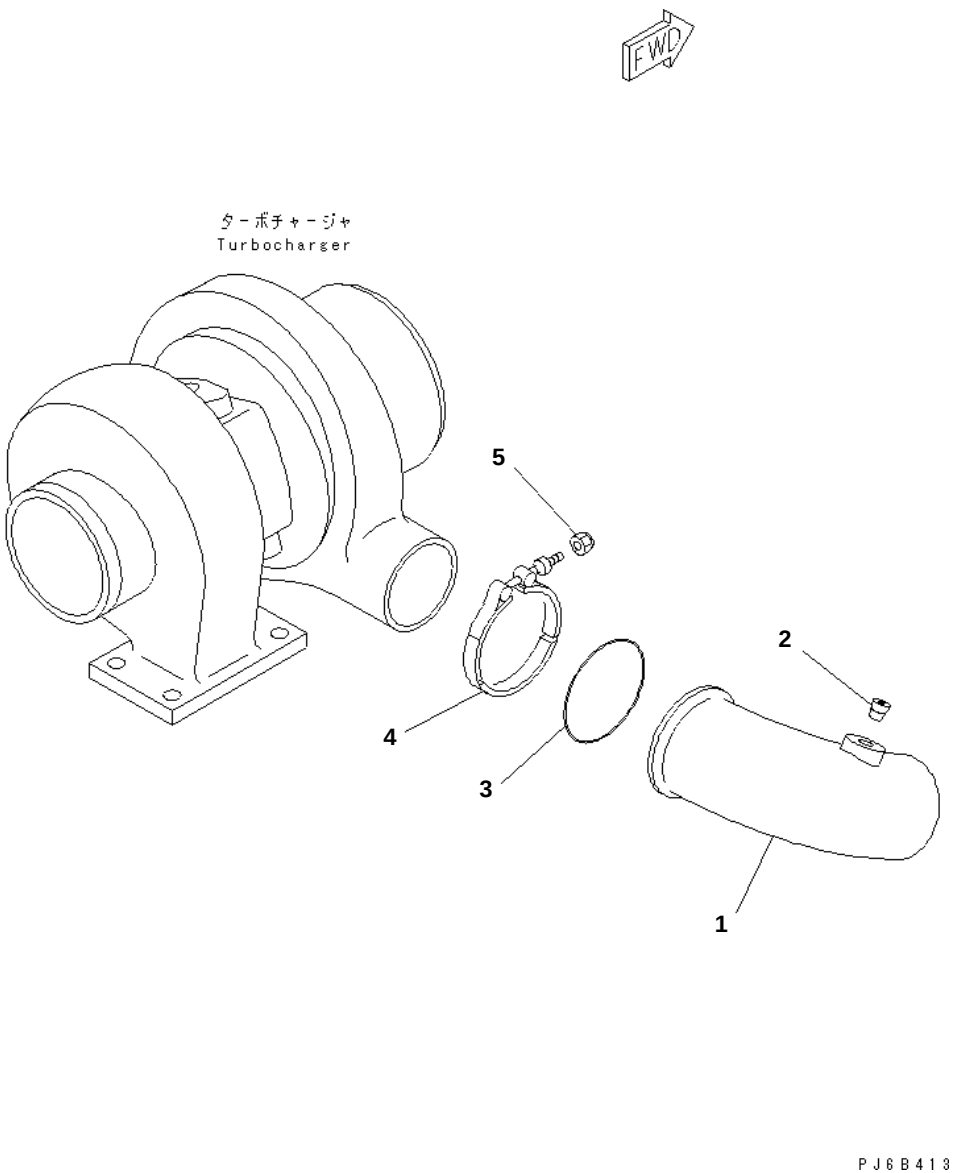

SAA6D102E-2A-8 S/N 26274903-UP

TURBOCHARGER OUT CONNECTION

Item	Part No.	Description	Qty	Options
1	6738-11-4320	PIPE,AIR	1	SN:26294599--
	□6738-11-4310	PIPE,AIR	1	SN:26274903--26294598
2	07043-70108	PLUG	1	SN:26274903--
3	6738-11-4370	O-RING (K1)	1	SN:26274903--
4	6738-11-4380	CLAMP	1	SN:26274903--
5	6738-11-4390	NUT	1	SN:26274903--

Ref. A153V-01A0 Page 030120

https://truckmanualshub.com/

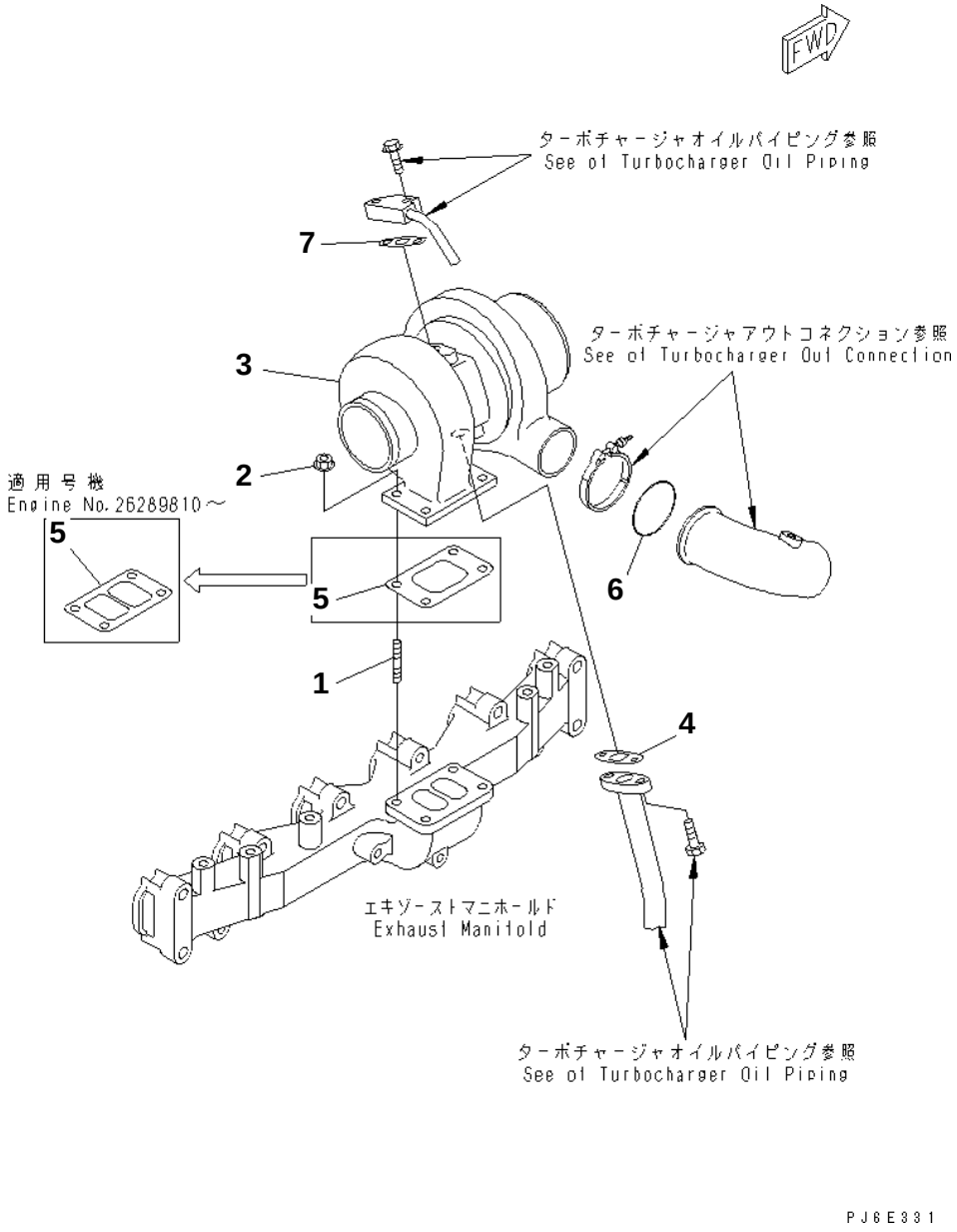

SAA6D102E-2A-8 S/N 26274903-UP

TURBOCHARGER MOUNTING

Item	Part No.	Description	Qty	Options
1	6732-81-8810	STUD	4	SN:26274903--
2	6732-81-8820	NUT	4	SN:26274903--
	6738-81-8092	KIT,TURBOCHARGER	1	SN:26312492--
	□6738-81-8091	KIT,TURBOCHARGER	1	SN:26285026--26312491
	□6738-81-8090	KIT,TURBOCHARGER	1	SN:26274903--26285025
3	☆	· TURBOCHARGER	1	SN:26312492--
	☆	· TURBOCHARGER	1	SN:26289810--26312491
	☆	· TURBOCHARGER	1	SN:26285026--26289809
	☆	· TURBOCHARGER	1	SN:26274903--26285025
4	6207-51-7690	· GASKET (K1)	1	SN:26289810--
	□6736-51-8720	· GASKET	1	SN:26274903--26289809
5	6732-81-8830	· GASKET (K1)	1	SN:26289810--
	□6736-11-5710	· GASKET	1	SN:26274903--26289809
6	6738-11-4370	· O-RING (K1)	1	SN:26289810--
7	6221-51-8160	· GASKET (K1)	1	SN:26289810--

Ref. A1539-01B3 Page 030130

https://truckmanualshub.com/

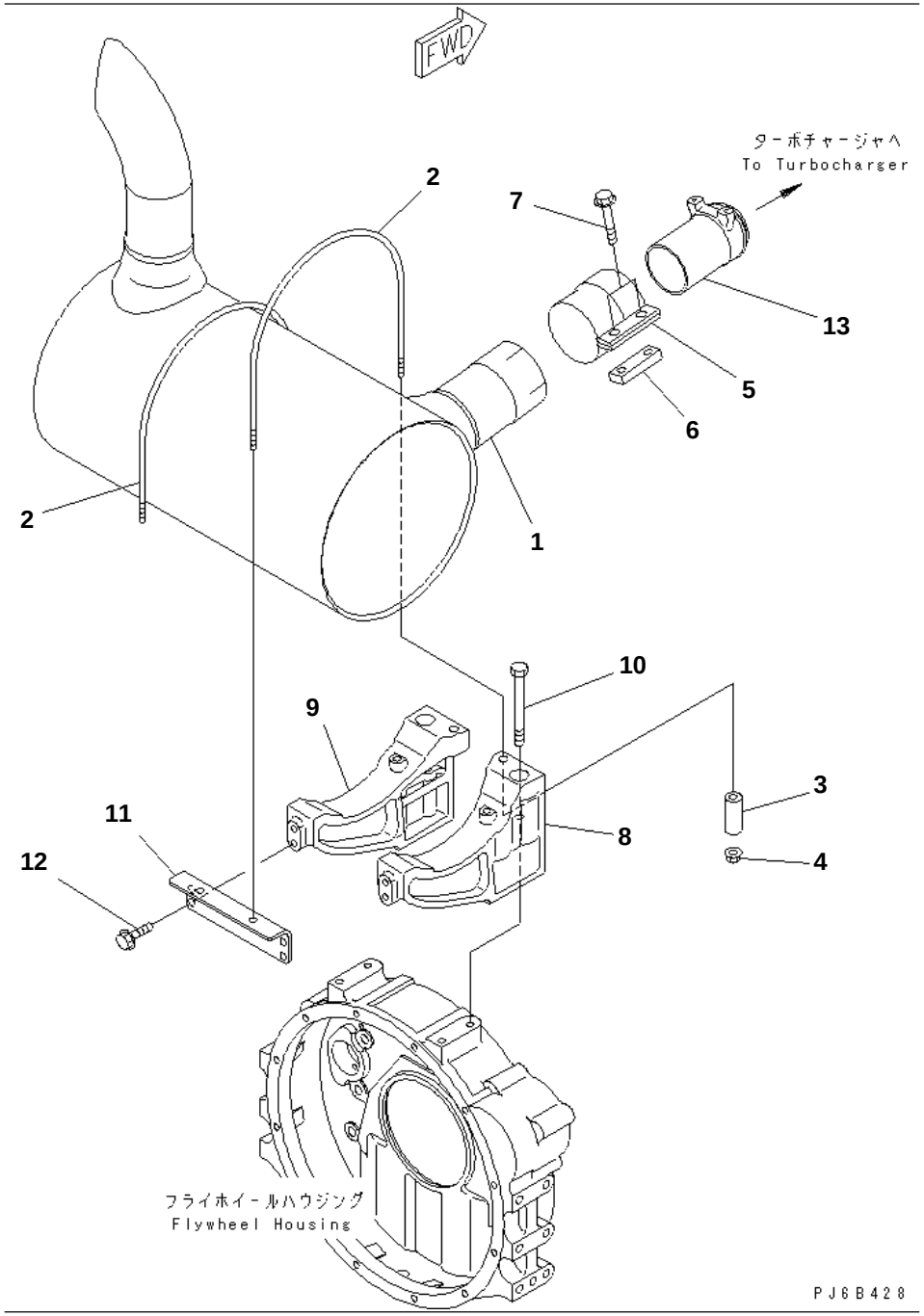

SAA6D102E-2A-8 S/N 26274903-UP

MUFFLER AND MOUNTING

Item	Part No.	Description	Qty	Options
1	6738-11-5510	MUFFLER	1	SN:26274903--
2	6738-11-5940	U-BOLT	2	SN:26274903--
3	6134-11-5120	SPACER	2	SN:26274903--
4	01594-01008	NUT	4	SN:26274903--
5	6210-11-5232	CLAMP	1	SN:26274903--
6	6206-11-5850	PLATE	1	SN:26274903--
7	01435-01235	BOLT	2	SN:26274903--
8	6738-11-5310	BRACKET	1	SN:26274903--
9	6738-11-5320	BRACKET	1	SN:26274903--
10	01435-01095	BOLT	4	SN:26274903--
11	6738-11-5330	BRACKET	1	SN:26274903--
12	01435-01020	BOLT	4	SN:26274903--
13	6735-11-5611	TUBE	1	SN:26274903--

Ref. A1610-01G3 Page 030140

https://truckmanualshub.com/

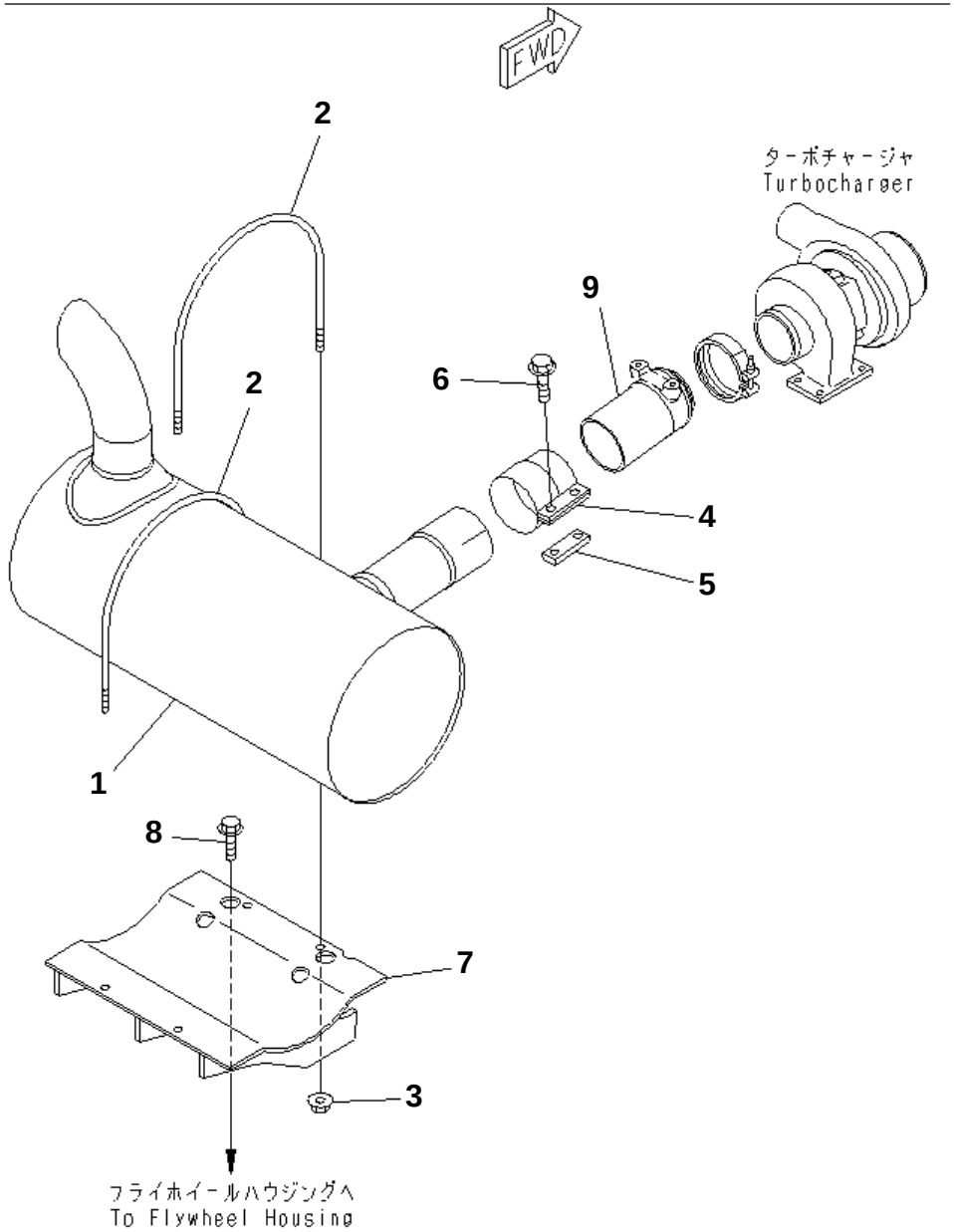

SAA6D102E-2A-8 S/N 26274903-UP

MUFFLER AND MOUNTING (AFTER M/C)(#26307088-)

Item	Part No.	Description	Qty	Options
1	6738-11-5510	MUFFLER	1	SN:26307088--
2	6222-11-5940	U-BOLT	2	SN:26307088--
3	01594-01008	NUT	4	SN:26307088--
4	6210-11-5232	CLAMP	1	SN:26307088--
5	6206-11-5850	PLATE	1	SN:26307088--
6	01435-01235	BOLT	2	SN:26307088--
7	6207-11-5431	BRACKET	1	SN:26307088--
8	01435-01025	BOLT	4	SN:26307088--
9	6735-11-5611	TUBE	1	SN:26307088--

Ref. A1610-01H4 Page 030145

https://truckmanualshub.com/

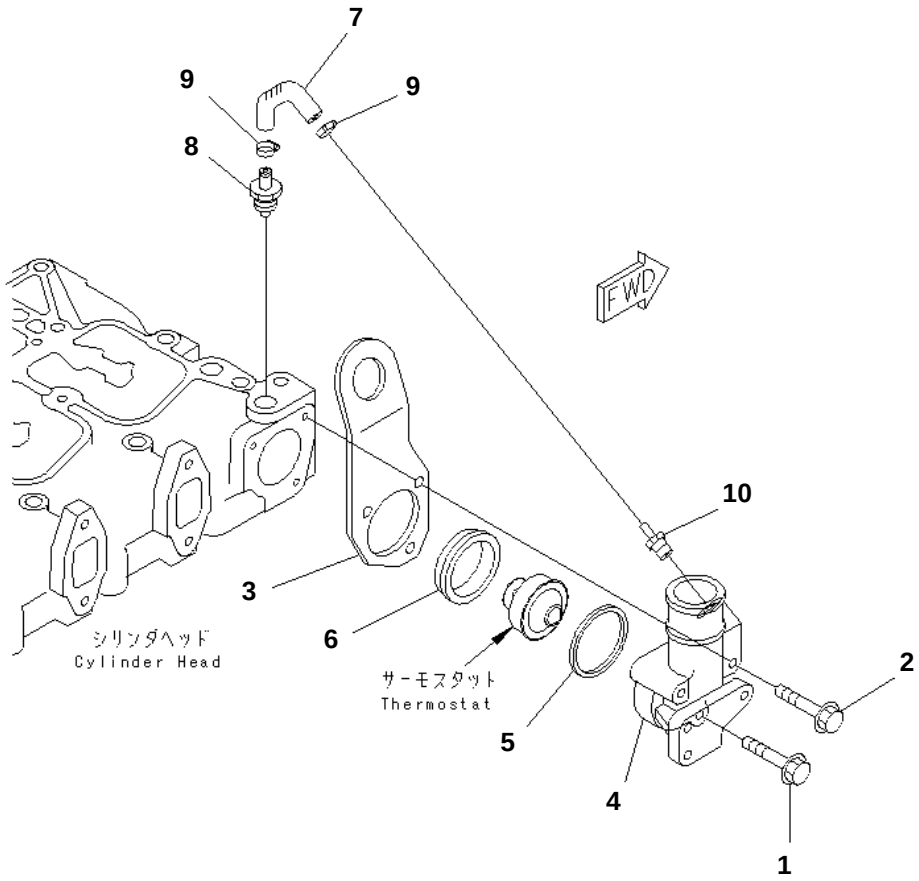

SAA6D102E-2A-8 S/N 26274903-UP

THERMOSTAT HOUSING

Item	Part No.	Description	Qty	Options
1	6732-61-6140	BOLT	1	SN:26274903--
2	6732-61-6180	BOLT	2	SN:26274903--
3	6735-11-1920	BRACKET	1	SN:26274903--
4	6732-61-6231	HOUSING,THERMOSTAT	1	SN:26274903--
5	6732-61-6250	SEAL,RING (K1)	1	SN:26274903--
6	6732-61-6240	GASKET (K1)	1	SN:26274903--
7	6732-61-6280	HOSE	1	SN:26274903--
8	6732-61-6270	VALVE,CHECK	1	SN:26274903--
9	07285-00125	CLIP	2	SN:26274903--
10	6732-61-6171	COUPLING	1	SN:26274903--

Ref. A173P-01A5 Page 030150

https://truckmanualshub.com/

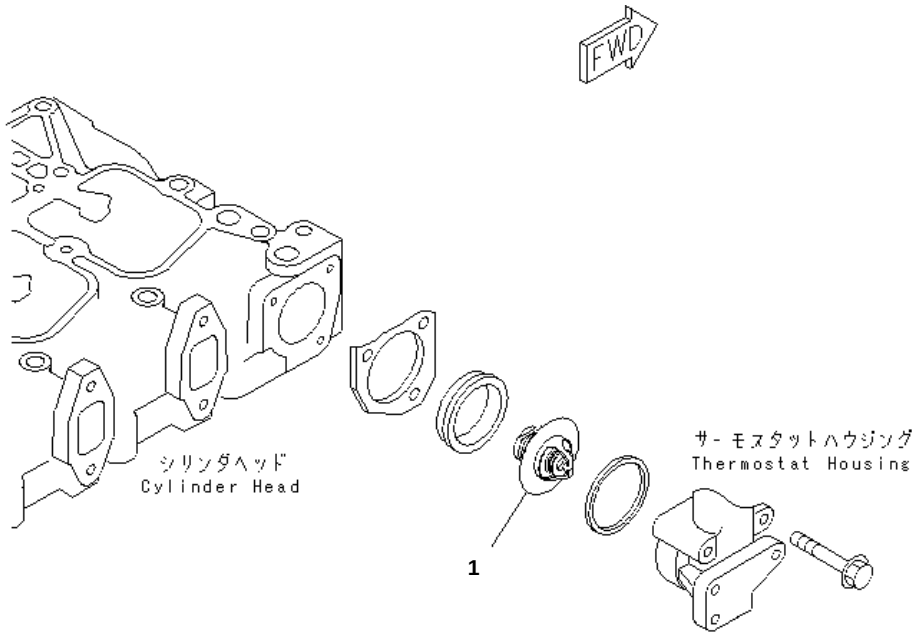

SAA6D102E-2A-8 S/N 26274903-UP

THERMOSTAT(#26295864-)

Item	Part No.	Description	Qty	Options
1	6735-61-6471	THERMOSTAT	1	SN:26295864--

Ref. A173R-01A0 Page 030160

https://truckmanualshub.com/

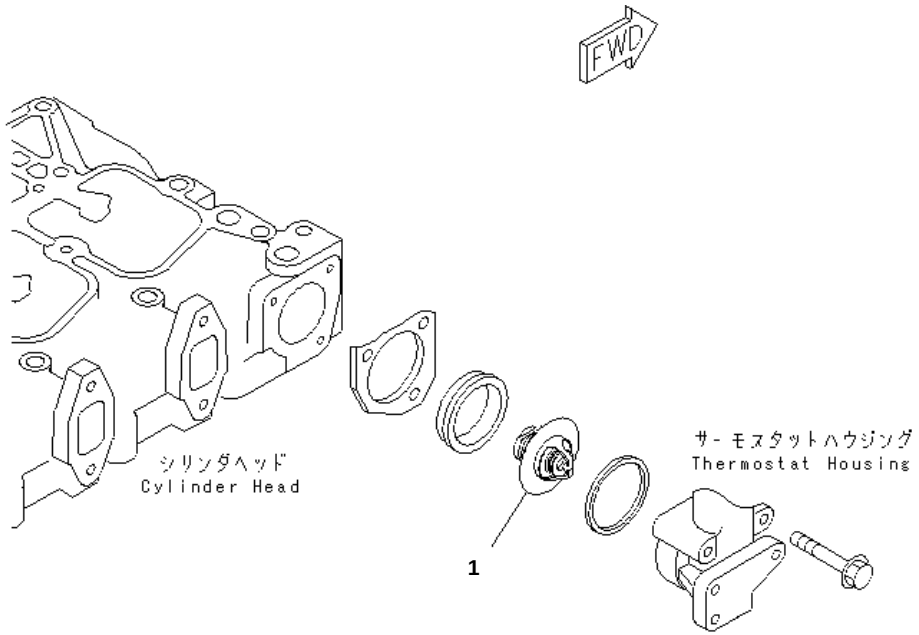

PJ6C418

SAA6D102E-2A-8 S/N 26274903-UP

THERMOSTAT(#26274903-26295863)

Item	Part No.	Description	Qty	Options
1	6735-61-6471	THERMOSTAT	1	SN:26274903--26295863

Ref. A173R-01A1 Page 030170

https://truckmanualshub.com/

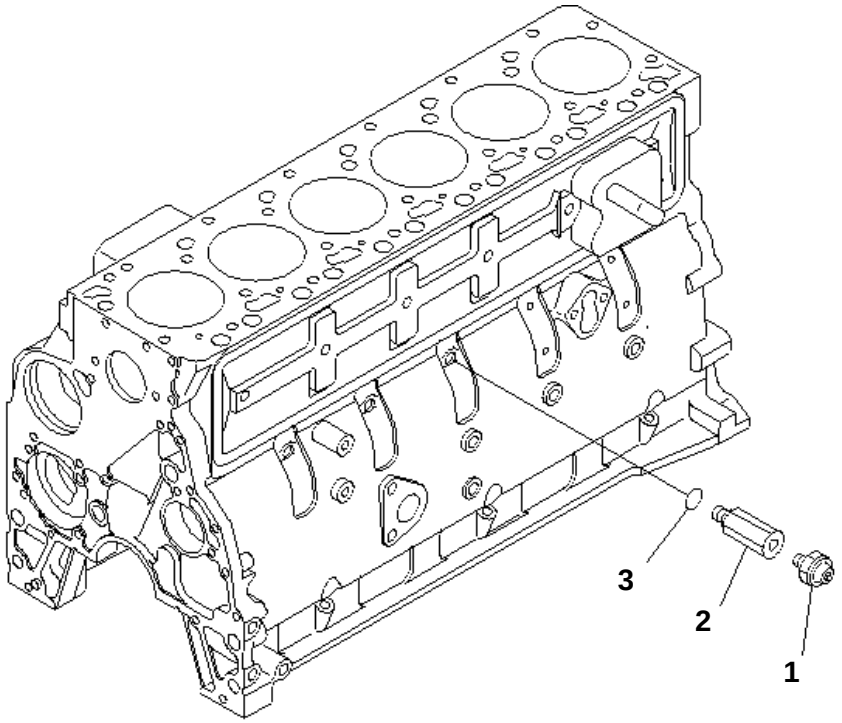

PJ6B403

SAA6D102E-2A-8 S/N 26274903-UP

OIL PRESSURE SWITCH

Item	Part No.	Description	Qty	Options
1	08073-10505	SWITCH,OIL PRESSURE	1	SN:26274903--
2	6738-81-3170	ADAPTER	1	SN:26274903--
3	6215-81-9710	O-RING	1	SN:26274903--

Ref. A201V-01A1 Page 030180

https://truckmanualshub.com/

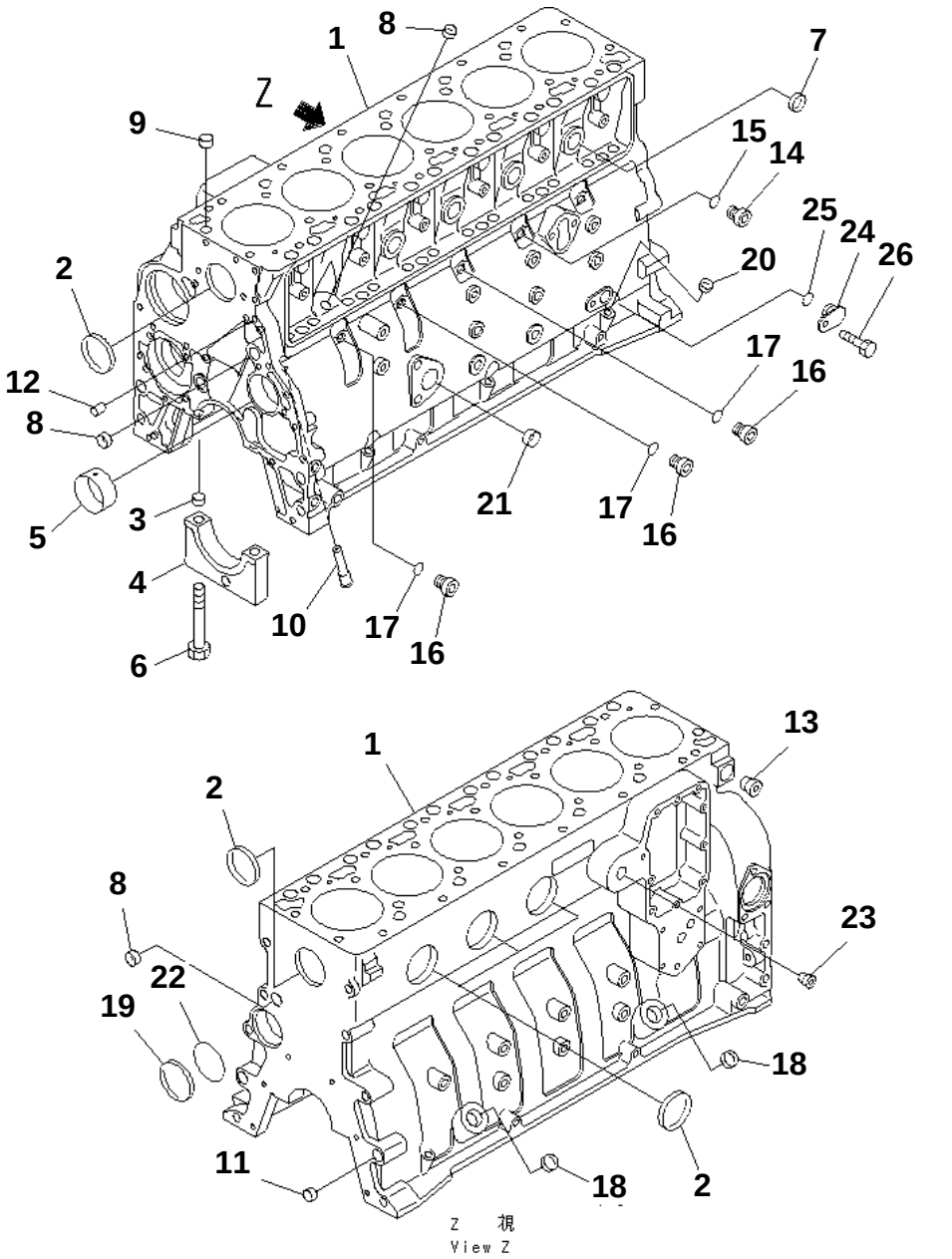

SAA6D102E-2A-8 S/N 26274903-UP

CYLINDER BLOCK

Item	Part No.	Description	Qty	Options
	6731-21-1170	CYLINDER BLOCK ASS'Y	1	SN:26274903--
	☆	· BLOCK ASS'Y	1	SN:26274903--
1	☆	· · BLOCK,CYLINDER	1	SN:26312676--
	☆	· · BLOCK,CYLINDER	1	SN:26274903--26312675
2	6732-21-1830	· · PLUG	5	SN:26274903--
3	6732-21-1910	· · RING	14	SN:26274903--
4	△6732-21-1210	· · CAP	7	SN:26274903--
5	6732-21-1411	· · BUSHING	1	SN:26274903--
6	6732-21-1611	· · BOLT	14	SN:26274903--
7	6732-21-1820	· · PLUG	4	SN:26274903--
8	6732-21-1812	· · PLUG,EXPANSION	3	SN:26312676--
	□6732-21-1811	· · PLUG,EXPANSION	3	SN:26274903--26312675
	6731-21-1210	· BLOCK SERVICE KIT	1	SN:26274903--
9	6732-21-6140	· · RING	2	SN:26274903--
10	6731-21-1190	· · NOZZLE,PISTON COOLING	6	SN:26312676--
	□6732-21-1191	· · NOZZLE,PISTON COOLING	6	SN:26274903--26312675
11	6732-21-1910	· · RING	2	SN:26274903--
12	6732-21-6120	· · PIN	2	SN:26274903--
13	6732-11-1910	· · PLUG	1	SN:26274903--
	6735-21-1910	· · PLUG ASS'Y	1	SN:26274903--
14	6735-21-1920	· · · PLUG	1	SN:26274903--
15	6735-21-1930	· · · O-RING (K2)	1	SN:26274903--
	6732-21-1960	· · PLUG ASS'Y	3	SN:26274903--
16	6215-81-9510	· · · PLUG	1	SN:26274903--
17	6215-81-9710	· · · O-RING (K2)	1	SN:26274903--
18	6735-21-5530	· · PLUG	3	SN:26274903--
19	6732-21-6130	· · PLUG	1	SN:26274903--
20	6732-21-5530	· · PLUG	3	SN:26274903--
21	6732-21-6160	· · PLUG	1	SN:26274903--
22	6732-21-1930	· · O-RING	1	SN:26274903--
23	6732-11-1920	· · PLUG	1	SN:26274903--
	6735-21-1940	· · PLUG	1	SN:26274903--
24	6735-21-1950	· · · PLUG	1	SN:26274903--
25	6735-21-1960	· · · O-RING (K2)	1	SN:26274903--
26	6732-21-3120	· · BOLT	1	SN:26274903--

REFER TO FIG. NOS. OF REPAIR PARTS FOR O.S.¤ U.S.¤ AND SERVICE PARTS.

Ref. A2019-01A2 Page 030190

https://truckmanualshub.com/

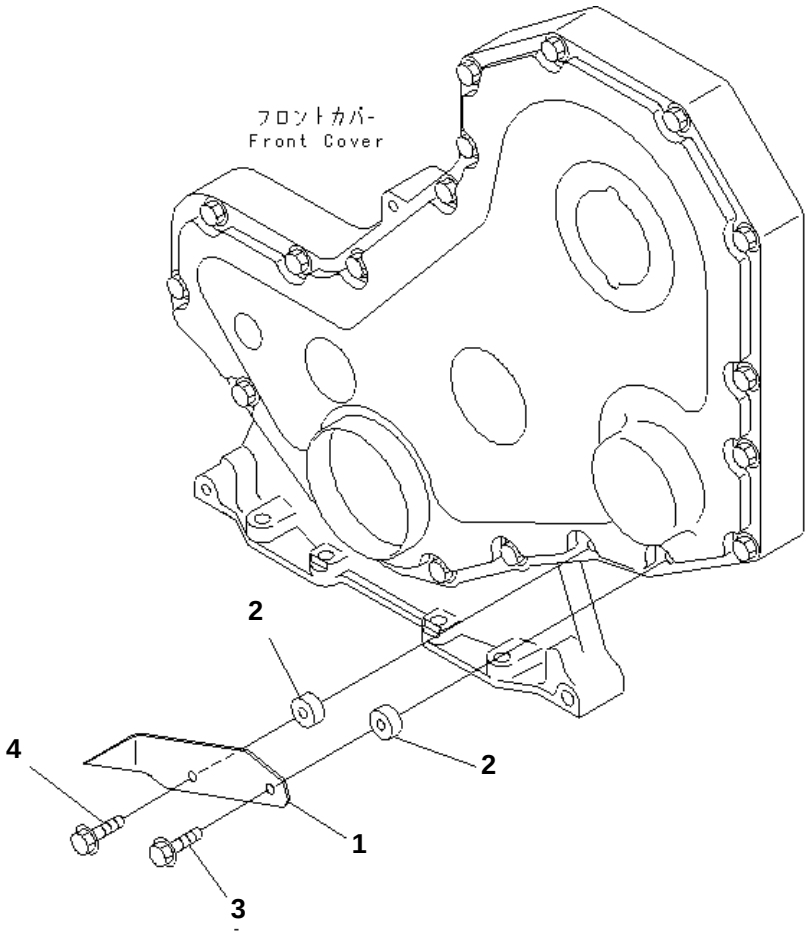

SAA6D102E-2A-8 S/N 26274903-UP

FRONT COVER POINTER

Item	Part No.	Description	Qty	Options
1	6738-21-3910	POINTER	1	SN:26274903--
2	6130-12-1961	SPACER	2	SN:26274903--
3	6732-21-5160	BOLT	1	SN:26274903--
4	6736-21-3230	BOLT	1	SN:26274903--

Ref. A2040-01A0 Page 030200

https://truckmanualshub.com/

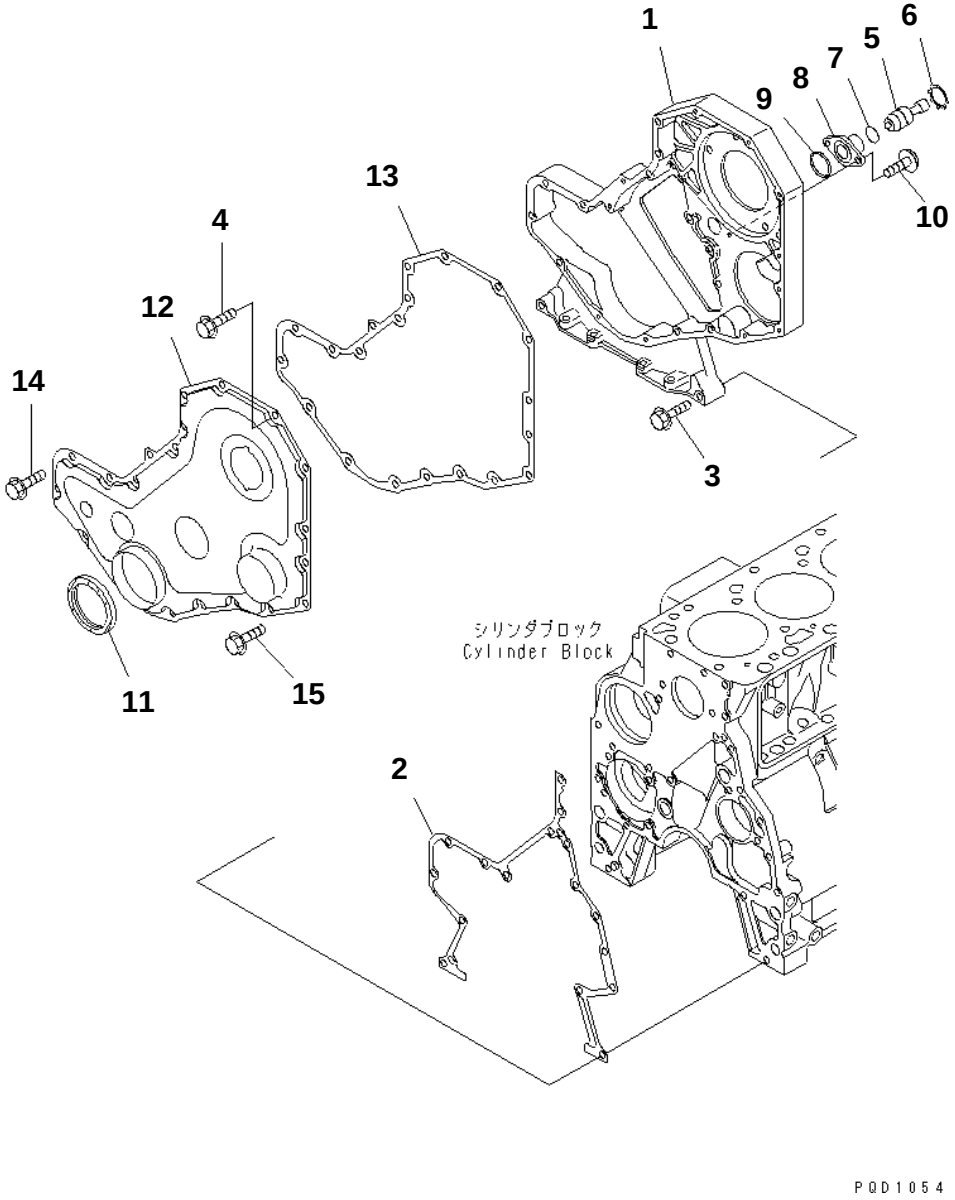

SAA6D102E-2A-8 S/N 26274903-UP

FRONT COVER

Item	Part No.	Description	Qty	Options
1	6738-21-3110	HOUSING,GEAR	1	SN:26274903--
2	6732-21-3811	GASKET (K2)	1	SN:26274903--
3	6736-21-3210	BOLT	2	SN:26274903--
4	6736-21-5310	BOLT	5	SN:26274903--
5	6732-21-3140	PIN	1	SN:26274903--
6	6732-21-3150	RING	1	SN:26274903--
7	6732-21-3870	O-RING (K2)	1	SN:26274903--
8	6732-21-3180	HOUSING	1	SN:26274903--
9	6732-21-3880	GASKET (K2)	1	SN:26274903--
10	6732-21-3160	BOLT	2	SN:26274903--
11	6735-21-3511	SEAL	1	SN:26274903--
12	6736-21-3310	COVER,GEAR	1	SN:26312301--
	6735-21-3310	COVER,GEAR	1	SN:26274903--26312300
13	6736-21-3450	GASKET (K2)	1	SN:26274903--26312300
14	6736-21-3210	BOLT	9	SN:26274903--
15	6736-21-5310	BOLT	11	SN:26274903--

Ref. A2049-01A1 Page 030210

https://truckmanualshub.com/

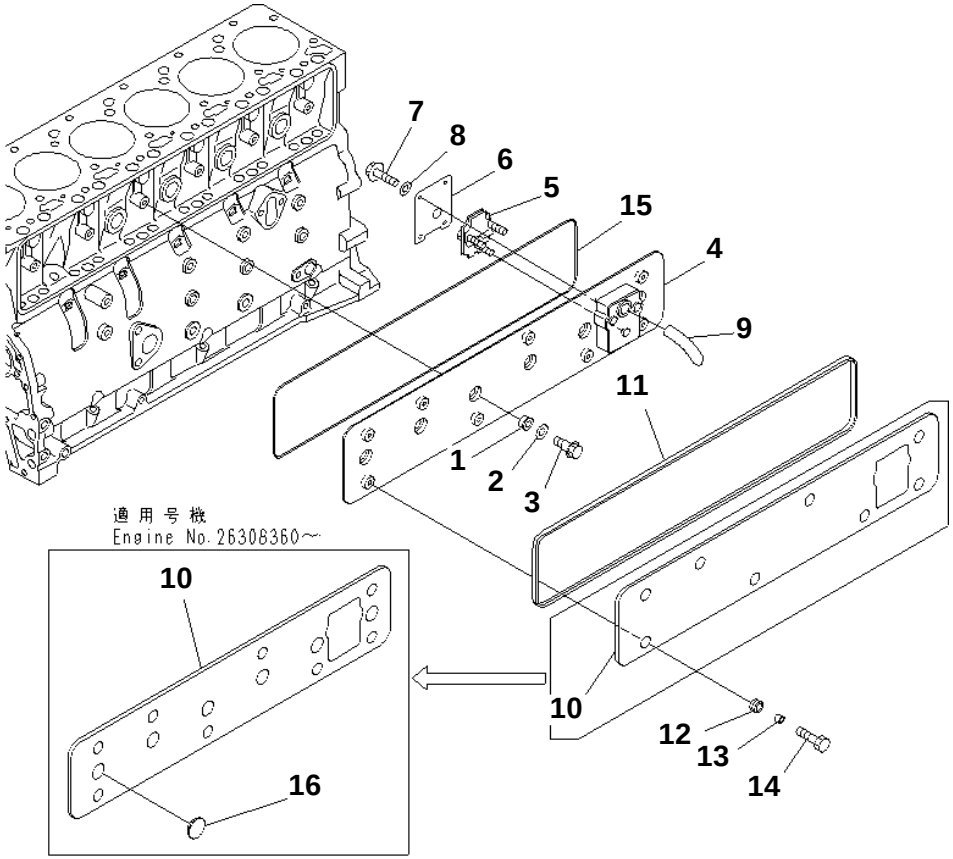

SAA6D102E-2A-8 S/N 26274903-UP

CAMFOLLOWER COVER

Item	Part No.	Description	Qty	Options
1	6732-11-8210	GASKET,SEAL (K2)	6	SN:26277761--
	□6738-11-8210	GROMMET,SEAL	6	SN:26274903--26277760
2	6732-11-8150	WASHER	6	SN:26277761--
3	6738-21-6280	BOLT	6	SN:26274903--
	6738-21-6100	COVER ASS'Y	1	SN:26274903--
4	☆	· COVER	1	SN:26274903--
5	6738-21-7710	· BREATHER	1	SN:26274903--
6	6738-21-7780	· COVER	1	SN:26274903--
7	01435-00616	· BOLT	4	SN:26274903--
8	01640-20610	· WASHER	4	SN:26274903--
9	6738-21-7810	· TUBE	1	SN:26274903--
10	6738-21-6620	PANEL	1	SN:26308360--
	6738-21-6610	COVER	1	SN:26274903--26308539
11	6738-21-6650	GASKET (K2)	1	SN:26274903--
12	6738-21-6660	GASKET (K2)	8	SN:26274903--
13	6738-21-6670	SPACER	8	SN:26274903--
14	6732-71-3220	BOLT	8	SN:26274903--
15	6738-21-6180	O-RING (K2)	1	SN:26274903--
16	6738-21-6680	GROMMET	6	SN:26308360--

Ref. A206P-01A7 Page 030220

https://truckmanualshub.com/

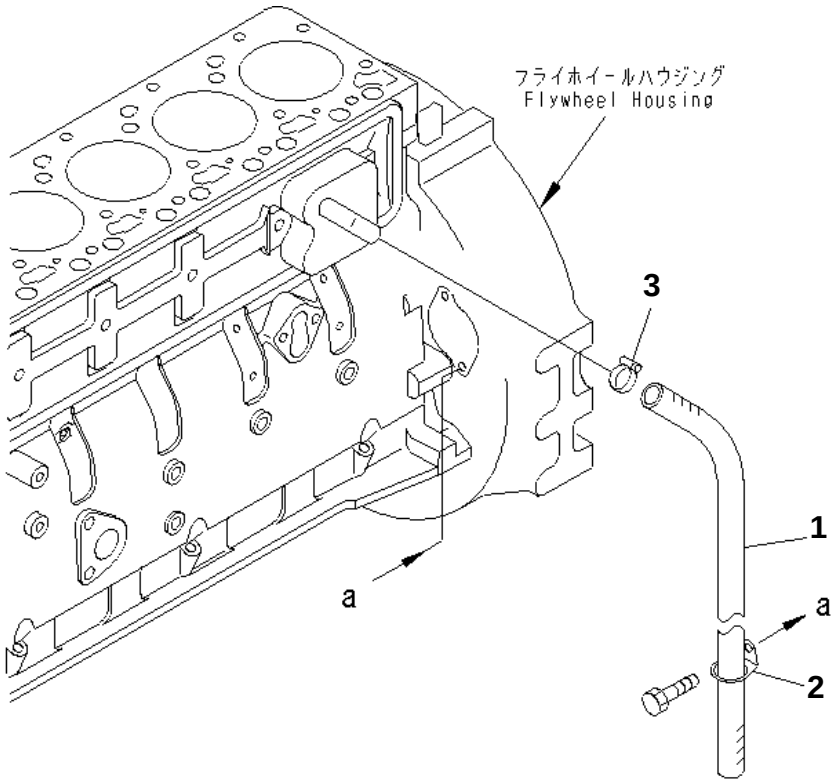

SAA6D102E-2A-8 S/N 26274903-UP

BREATHER HOSE(#26274903-26285648)

Item	Part No.	Description	Qty	Options
1	07286-01978	HOSE	1	SN:26274903--26285648
2	6735-21-4240	CLIP	1	SN:26274903--26285648
3	07285-00220	CLIP	1	SN:26274903--26285648

Ref. A2060-01A2 Page 030230

https://truckmanualshub.com/

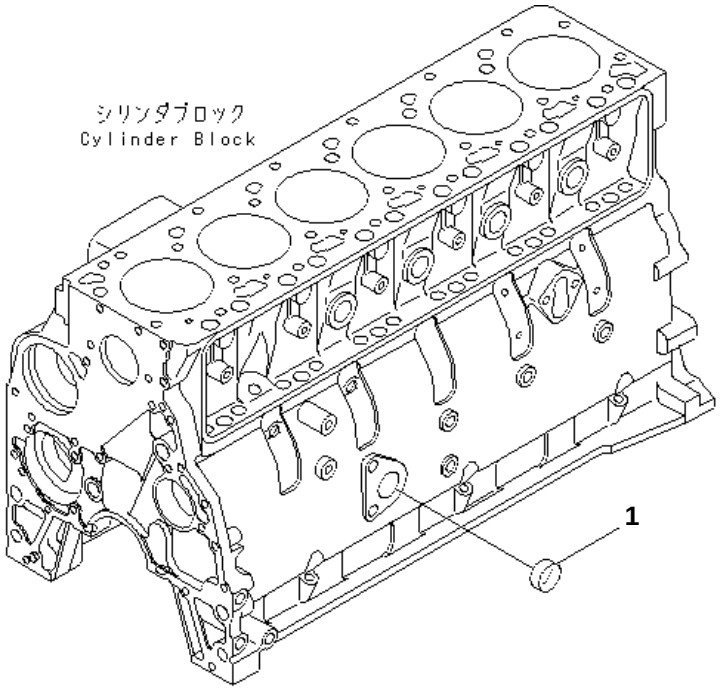

PMD1057

SAA6D102E-2A-8 S/N 26274903-UP

CYLINDER BLOCK BLIND PLUG

Item	Part No.	Description	Qty	Options
1	6732-21-6160	PLUG	1	SN:26274903--

Ref. A207P-01A0Z Page 030240

https://truckmanualshub.com/

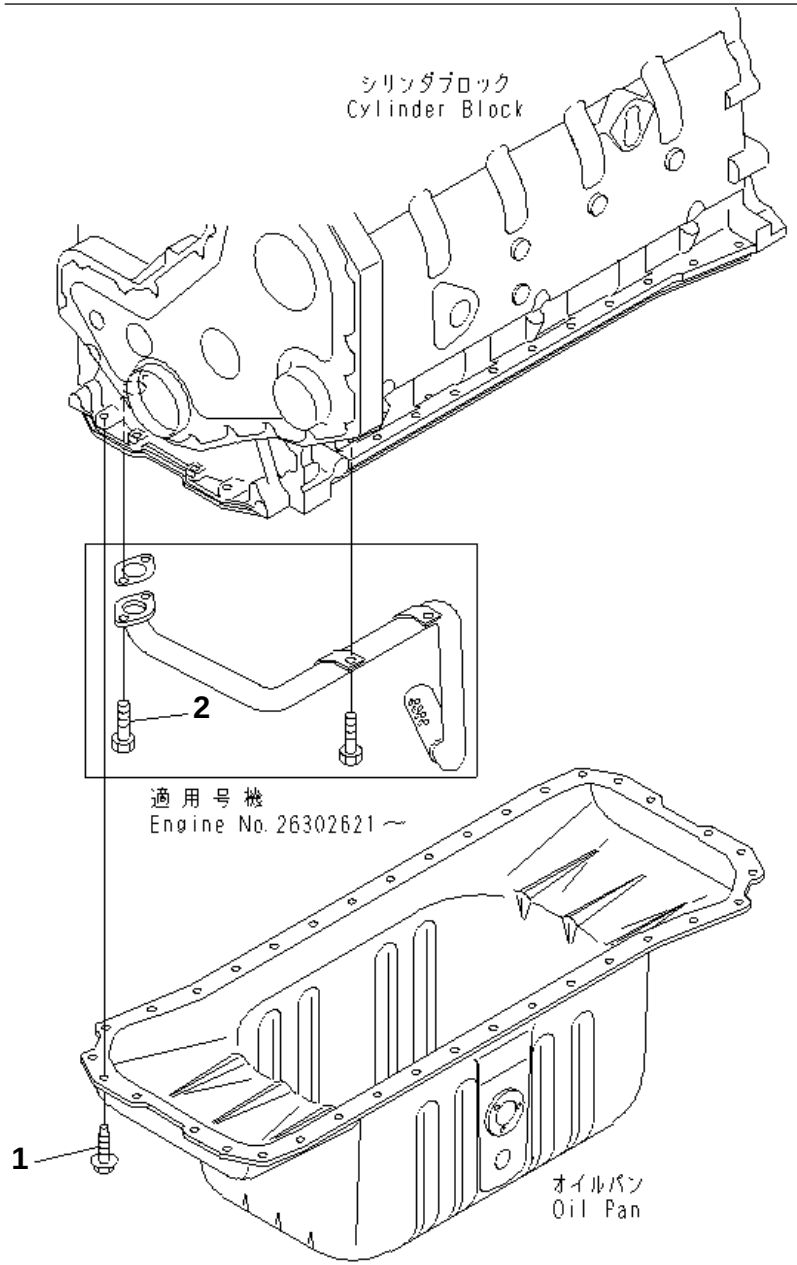

SAA6D102E-2A-8 S/N 26274903-UP

OIL PAN BOLT

Item	Part No.	Description	Qty	Options
1	6732-21-6610	BOLT	36	SN:26274903--
2	6732-21-5160	BOLT	2	SN:26302621--

Ref. A211R-01A1 Page 030250

https://truckmanualshub.com/

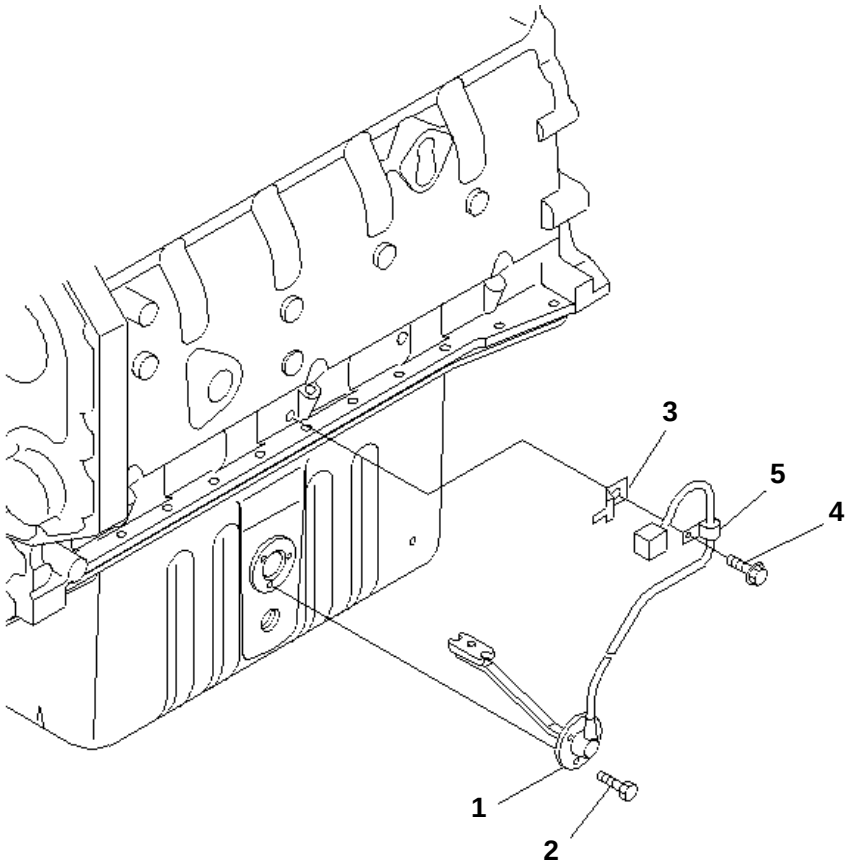

PJ6B421

SAA6D102E-2A-8 S/N 26274903-UP

FLUID LEVEL SENSOR

Item	Part No.	Description	Qty	Options
1	7861-92-4210	SENSOR	1	SN:26274903--
2	6733-71-5680	BOLT	3	SN:26274903--
3	08053-01510	CLIP	1	SN:26274903--
4	6216-74-6180	BOLT	1	SN:26274903--
5	04434-50608	CLIP	1	SN:26274903--

Ref. A211V-01A0 Page 030260

https://truckmanualshub.com/

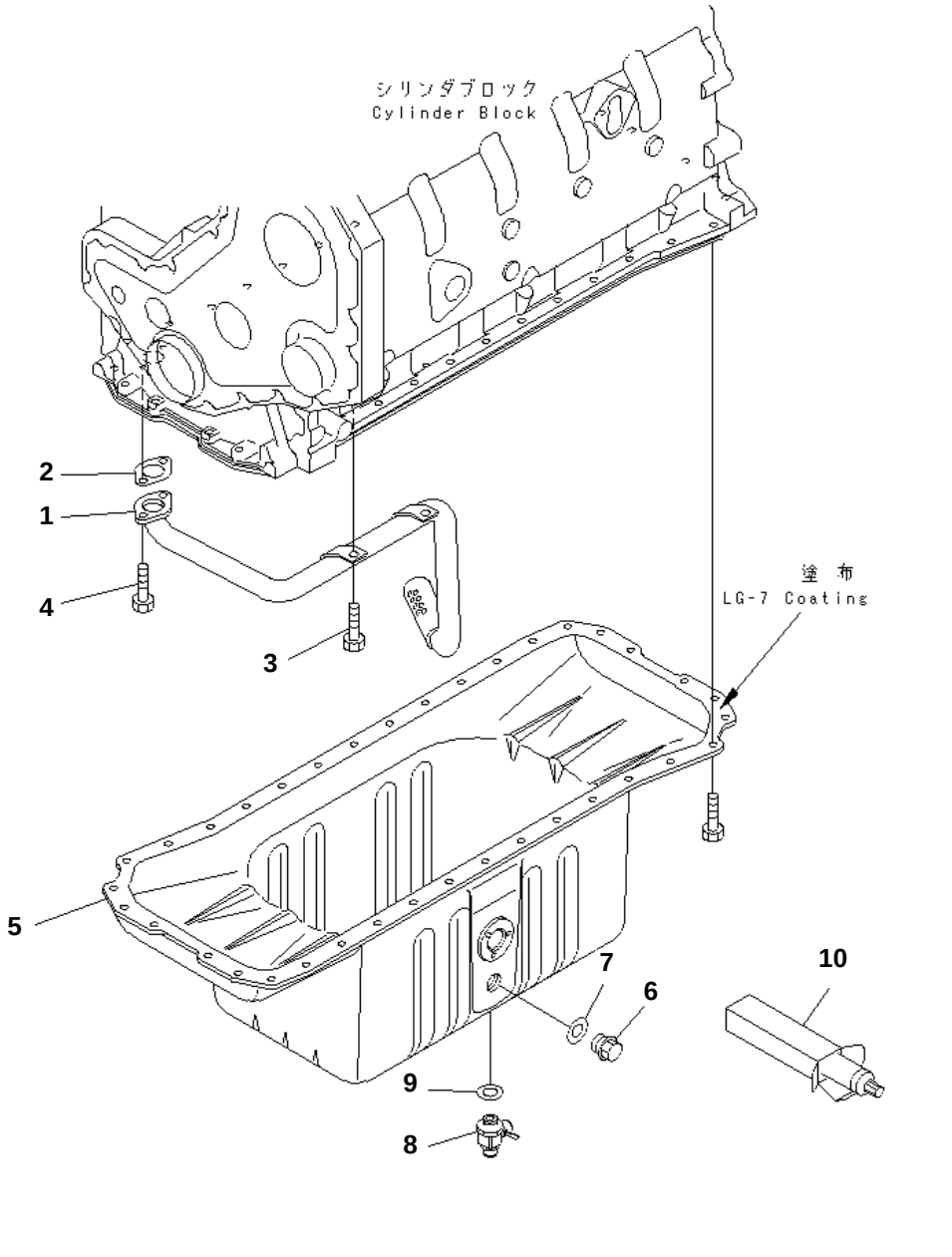

SAA6D102E-2A-8 S/N 26274903-UP

OIL PAN AND SUCTION TUBE

Item	Part No.	Description	Qty	Options
1	6735-51-5521	TUBE,SUCTION	1	SN:26274903--
2	6732-21-5510	GASKET	1	SN:26274903--
3	6732-71-3220	BOLT	2	SN:26274903--
4	6732-21-5160	BOLT	2	SN:26274903--
5	6735-21-5120	PAN,OIL	1	SN:26274903--
6	6204-21-5180	PLUG	1	SN:26274903--
7	07005-02216	GASKET (K2)	1	SN:26274903--
8	6732-21-5610	VALVE	1	SN:26274903--
9	07005-02216	GASKET (K2)	1	SN:26274903--
10	09920-00150	LIQUID GASKET,LG-7. 150G	AR	SN:26274903--

Ref. A2119-01B1 Page 030270

https://truckmanualshub.com/

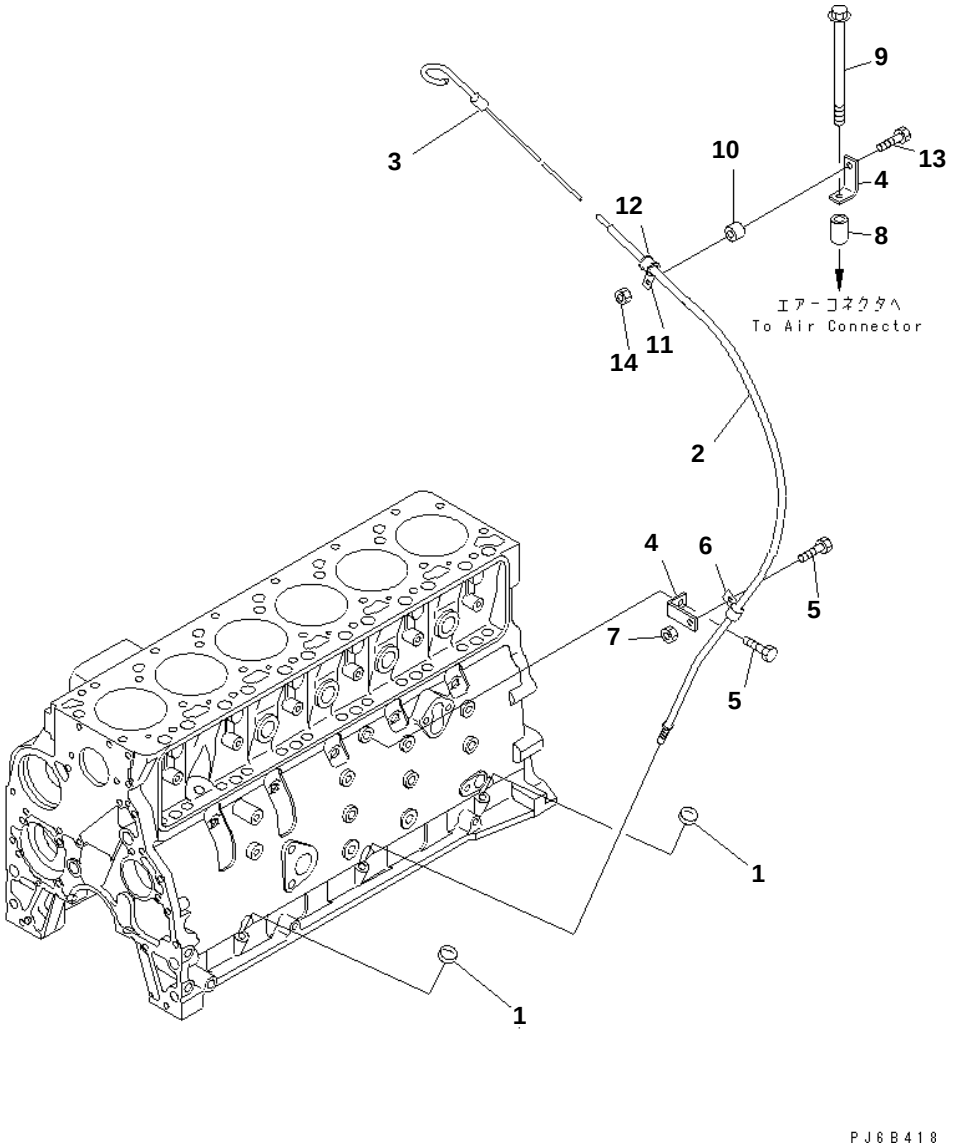

SAA6D102E-2A-8 S/N 26274903-UP

OIL LEVEL GAUGE

Item	Part No.	Description	Qty	Options
1	6732-21-5530	PLUG	2	SN:26274903--
2	6732-21-5490	GUIDE	1	SN:26274903--
3	6732-21-5642	GAUGE	1	SN:26306697--
	6732-21-5641	GAUGE	1	SN:26274903--26306696
4	6205-51-8380	BRACKET	2	SN:26274903--
5	6732-21-3120	BOLT	2	SN:26274903--
6	04434-51208	CLIP	1	SN:26274903--
7	6732-71-3210	NUT	1	SN:26274903--
8	203-54-11170	SPACER	1	SN:26274903--
9	6222-11-4910	BOLT	1	SN:26274903--
10	6141-64-2560	SPACER	1	SN:26274903--
11	04434-51708	CLIP	1	SN:26274903--
12	07095-20211	CUSHION	1	SN:26274903--
13	6732-61-6140	BOLT	1	SN:26274903--
14	6732-71-3210	NUT	1	SN:26274903--

Ref. A219P-01A1 Page 030280

https://truckmanualshub.com/

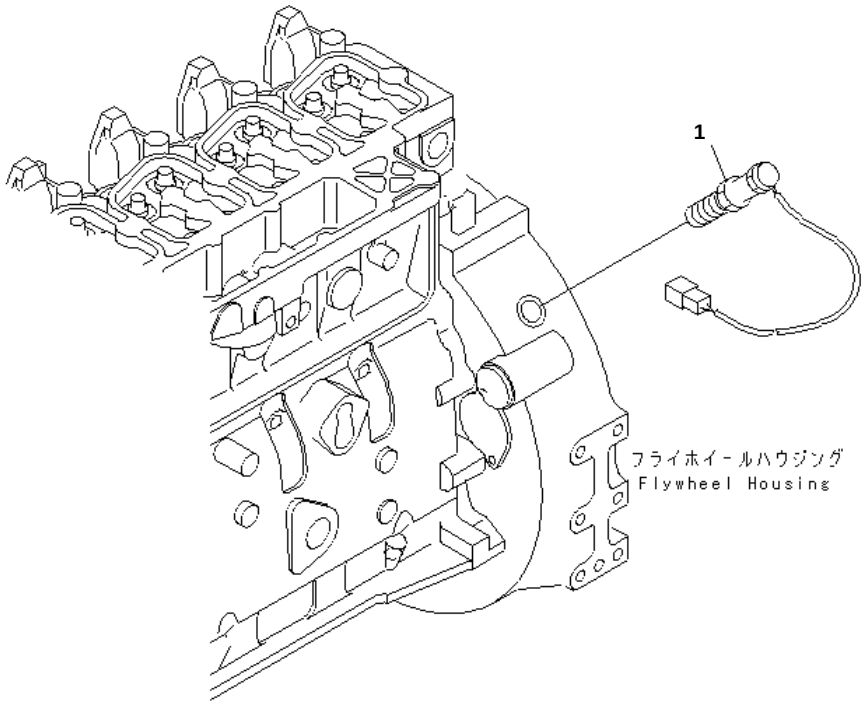

PJ6B402

SAA6D102E-2A-8 S/N 26274903-UP

REVOLUTION SENSOR

Item	Part No.	Description	Qty	Options
1	7861-93-2310	SENSOR,REVOLUTION	1	SN:26274903--

Ref. A221V-01A0 Page 030290

https://truckmanualshub.com/

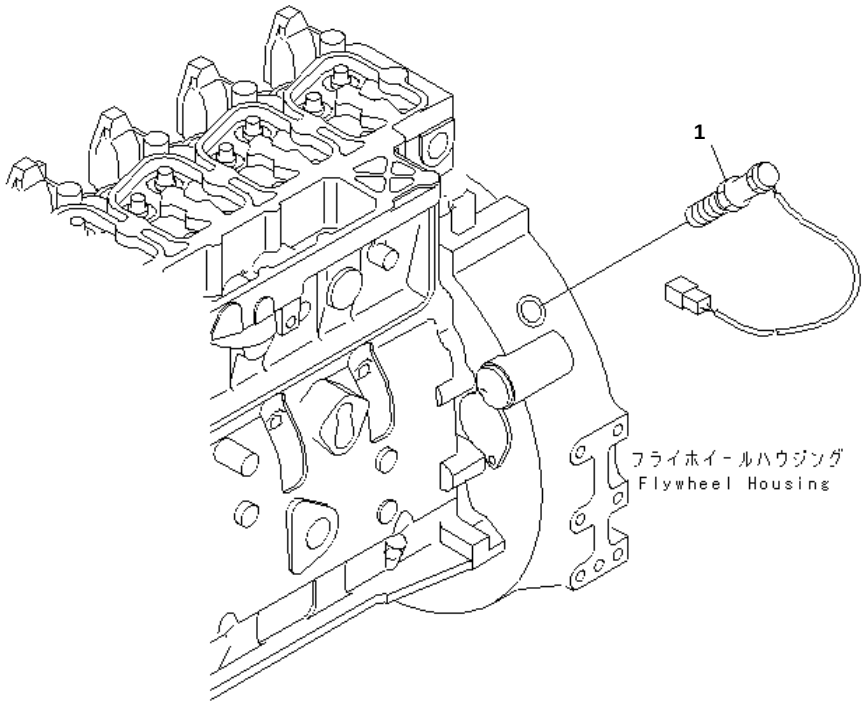

SAA6D102E-2A-8 S/N 26274903-UP

REVOLUTION SENSOR (AFTER M/C)(#26307088-)

Item	Part No.	Description	Qty	Options
1	7861-93-2330	SENSOR,REVOLUTION	1	SN:26307088--

Ref. A221V-01A2 Page 030295

https://truckmanualshub.com/

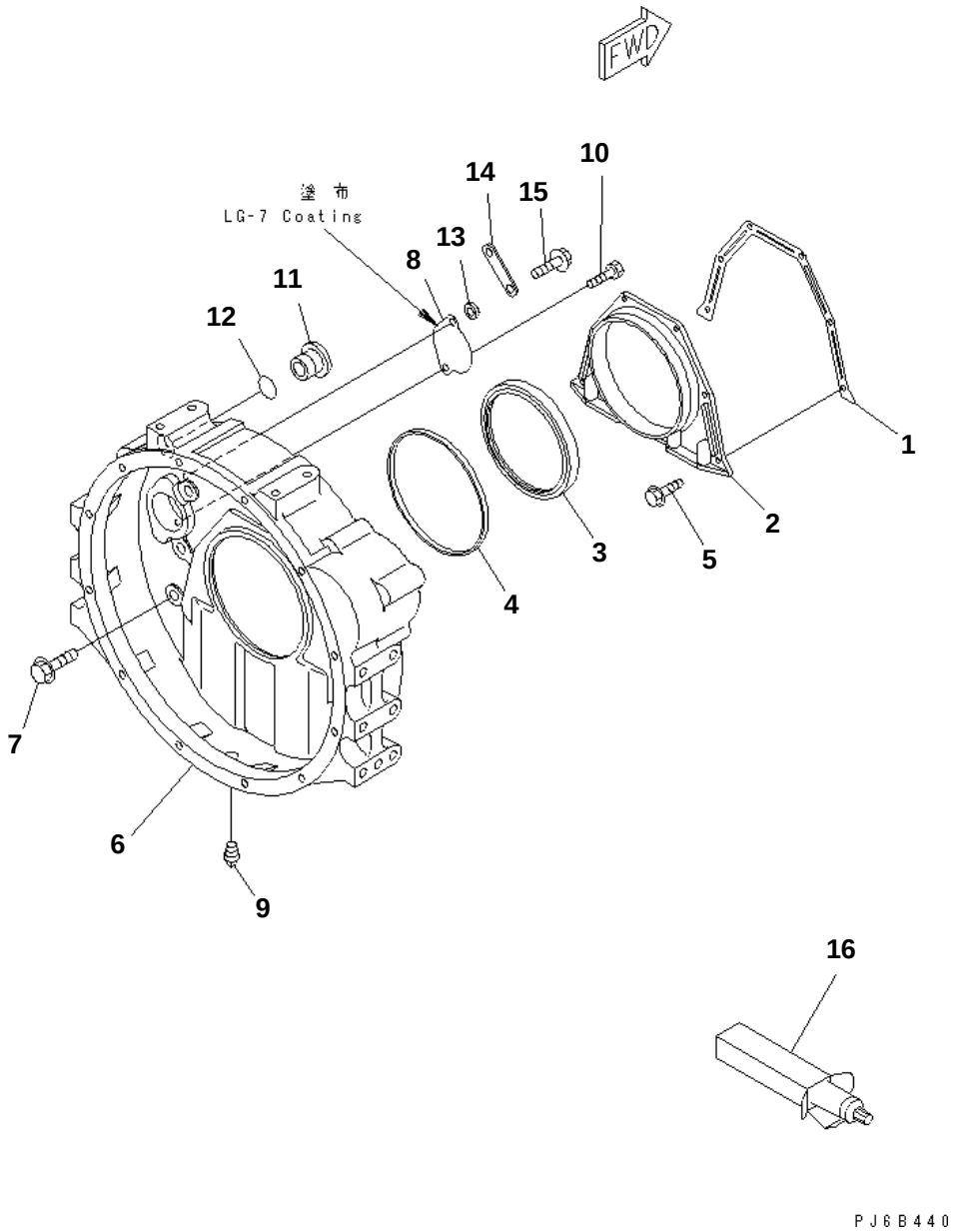

SAA6D102E-2A-8 S/N 26274903-UP

FLYWHEEL HOUSING

Item	Part No.	Description	Qty	Options
1	6735-21-4191	GASKET (K2)	1	SN:26274903--
2	6731-21-4240	COVER,REAR	1	SN:26274903--
3	6736-21-4220	SEAL (K2)	1	SN:26274903--
4	6732-21-4171	GASKET (K2)	1	SN:26274903--
5	6732-21-4290	BOLT	6	SN:26274903--
6	6732-21-4111	HOUSING,FLYWHEEL	1	SN:26274903--
7	6732-21-4220	BOLT	8	SN:26274903--
8	6732-21-4130	PLATE	1	SN:26274903--
9	02721-00813	PLUG	1	SN:26274903--
10	6732-21-4120	BOLT	2	SN:26274903--
11	6732-21-4150	PLUG	1	SN:26274903--
12	6732-21-4161	O-RING (K2)	1	SN:26274903--
13	6110-23-6490	SPACER	1	SN:26274903--
14	6301-11-4630	PLATE	1	SN:26274903--
15	6732-21-5160	BOLT	1	SN:26274903--
16	(09920-00150)	LIQUID GASKET,LG-7¤ 150G	AR	SN:26274903--

Ref. A2219-01B2 Page 030300

https://truckmanualshub.com/

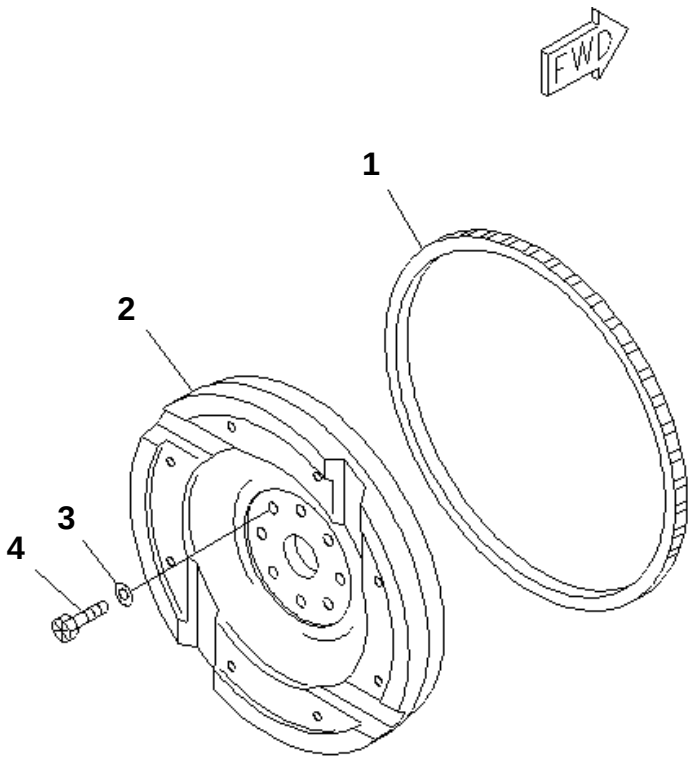

PMD1070

SAA6D102E-2A-8 S/N 26274903-UP

FLYWHEEL

Item	Part No.	Description	Qty	Options
	6738-31-4200	FLYWHEEL ASS'Y	1	SN:26274903--
1	6732-31-4180	· GEAR,RING	1	SN:26274903--
2	☆	· FLYWHEEL	1	SN:26274903--
3	6732-31-4120	WASHER	8	SN:26274903--
4	6732-31-4130	BOLT	8	SN:26274903--

Ref. A223P-01B1 Page 030310

https://truckmanualshub.com/

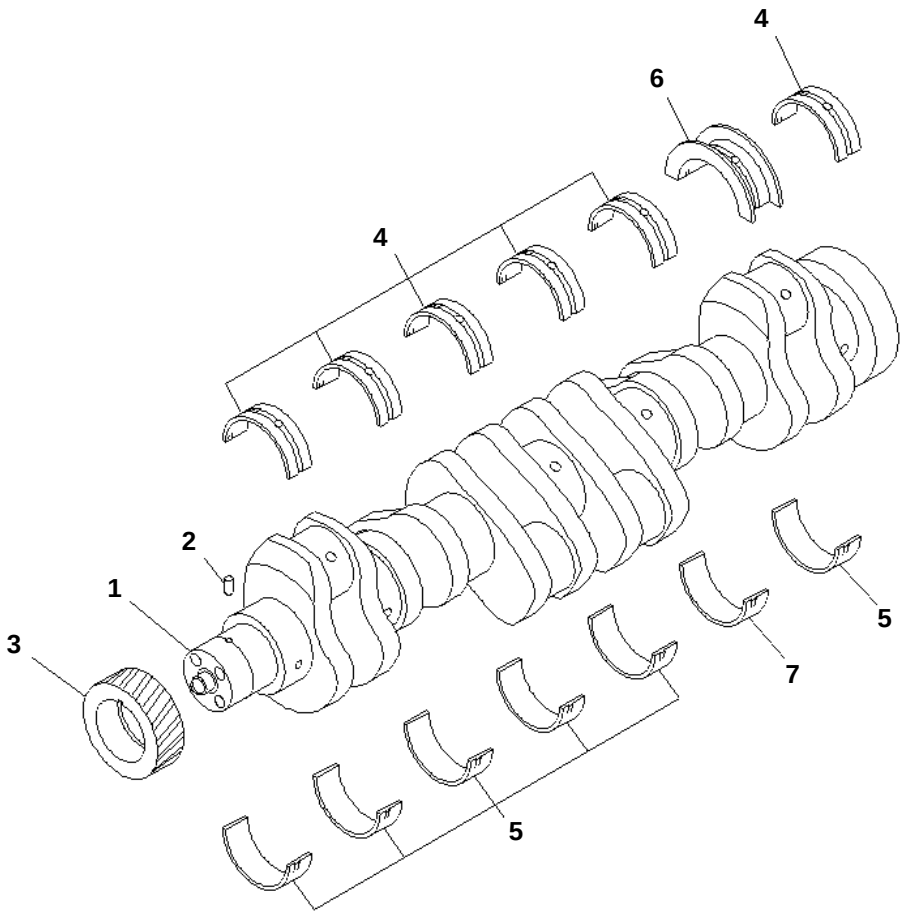

SAA6D102E-2A-8 S/N 26274903-UP

CRANKSHAFT

Item	Part No.	Description	Qty	Options
	6735-01-1310	CRANKSHAFT ASS'Y	1	SN:26274903--
1	☆	· CRANKSHAFT	1	SN:26274903--
2	6732-21-6150	· PIN	1	SN:26274903--
3	6732-31-1211	· GEAR	1	SN:26274903--
	6736-21-8110	MAIN METAL ASS'Y	6	SN:26274903--
4	☆	· METAL,UPPER	1	SN:26274903--
5	☆	· METAL,LOWER	1	SN:26274903--
	6736-21-8610	THRUST METAL ASS'Y	1	SN:26274903--
6	☆	· METAL,THRUST	1	SN:26274903--
7	☆	· METAL,LOWER	1	SN:26274903--

REFER TO FIG. NOS. OF REPAIR PARTS FOR O.S.¤ U.S.¤ AND SERVICE PARTS.

Ref. A2319-01A0 Page 030320

https://truckmanualshub.com/

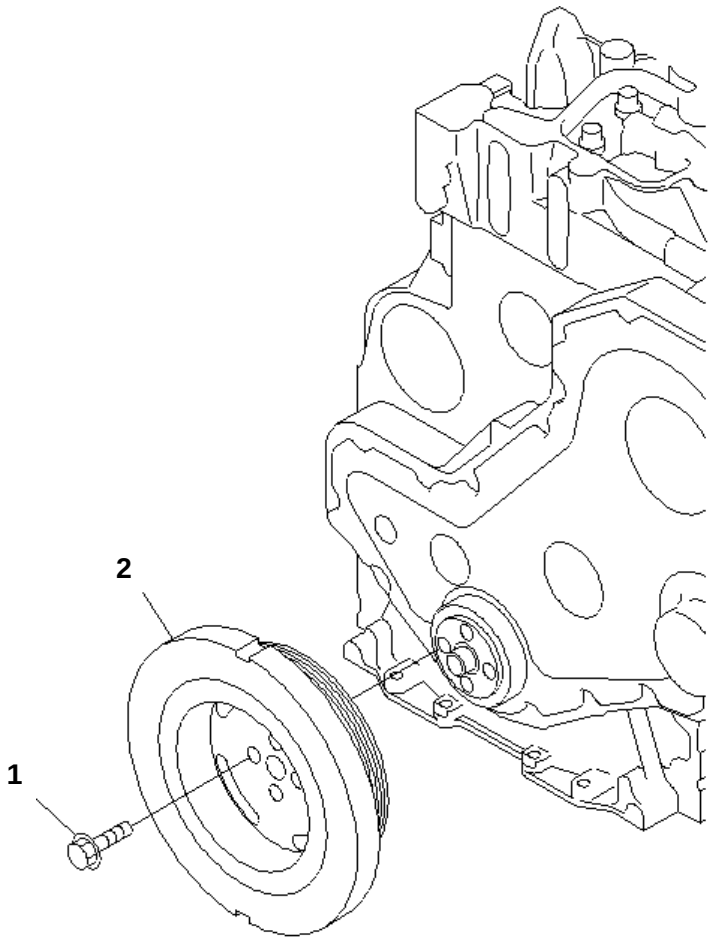

SAA6D102E-2A-8 S/N 26274903-UP

DAMPER

Item	Part No.	Description	Qty	Options
1	6732-31-8120	BOLT	4	SN:26274903--
2	6735-31-8120	DAMPER	1	SN:26274903--

Ref. A233P-01A0 Page 030330

https://truckmanualshub.com/

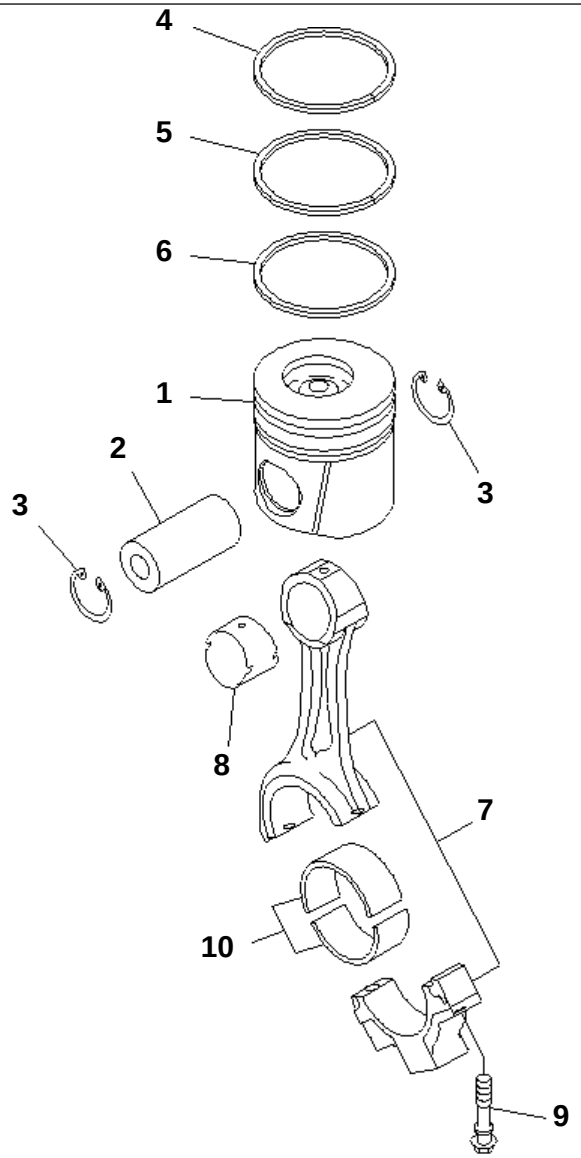

PMD0835

SAA6D102E-2A-8 S/N 26274903-UP

PISTON

Item	Part No.	Description	Qty	Options
1	6738-31-2111	PISTON	6	SN:26292269--
	□6738-31-2110	PISTON	6	SN:26274903--26292268
2	6732-31-2410	PIN	6	SN:26274903--
3	6732-31-2420	RING,SNAP	12	SN:26274903--
	6738-31-2031	PISTON RING ASS'Y	6	SN:26292269--
	□6738-31-2030	PISTON RING ASS'Y	6	SN:26274903--26292268
4	☆	· RING,TOP	1	SN:26292269--
	☆	· RING,TOP	1	SN:26274903--26292268
5	☆	· RING,SECOND	1	SN:26274903--
6	☆	· RING,OIL	1	SN:26274903--
	6732-31-3101	CONNECTING ROD A.	6	SN:26274903--
7	☆	· ROD	1	SN:26274903--
8	6732-31-3131	· BUSHING	1	SN:26274903--
9	6732-31-3311	· BOLT	2	SN:26299827--
	6732-31-3310	· BOLT	2	SN:26274903--26299826
10	6732-31-3410	METAL	12	SN:26274903--

REFER TO FIG. NOS. OF REPAIR PARTS FOR O.S.¤ U.S.¤ AND SERVICE PARTS.

Ref. A2359-01A2 Page 030340

https://truckmanualshub.com/

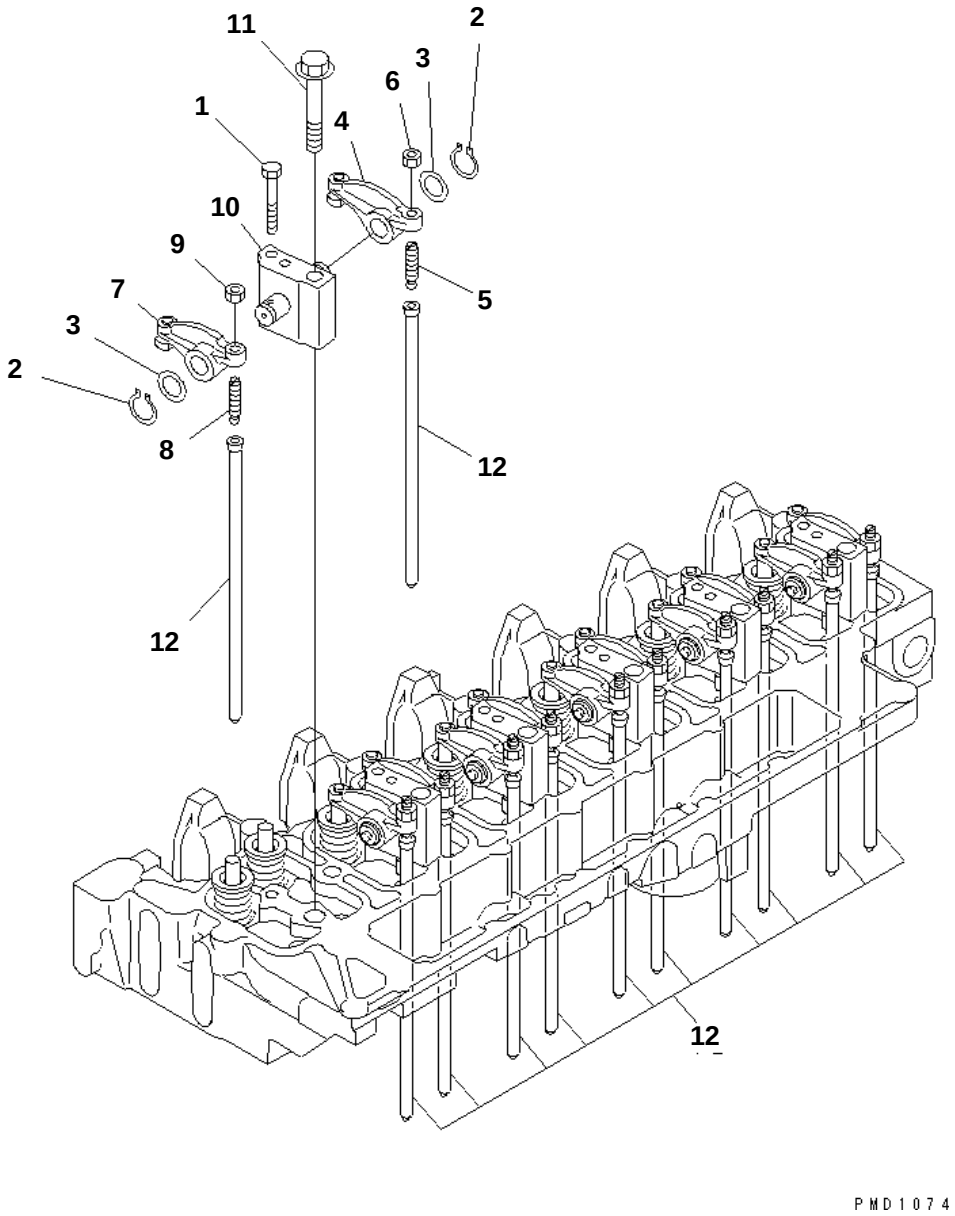

SAA6D102E-2A-8 S/N 26274903-UP

ROCKER ARM

Item	Part No.	Description	Qty	Options
1	6732-41-5180	BOLT	6	SN:26274903--
2	6732-41-5170	RING,SNAP	12	SN:26274903--
3	6732-41-5160	WASHER	12	SN:26274903--
4	6732-41-5400	ARM ASS'Y	6	SN:26274903--
5	6735-41-5560	· SCREW	1	SN:26296416--
	□6731-41-5270	· SCREW	1	SN:26274903--26296415
6	6735-41-5550	· NUT	1	SN:26274903--
7	6732-41-5200	ARM ASS'Y	6	SN:26274903--
8	6735-41-5560	· SCREW	1	SN:26296416--
	□6731-41-5270	· SCREW	1	SN:26274903--26296415
9	6735-41-5550	· NUT	1	SN:26274903--
10	6736-41-5110	BRACKET ASS'Y	6	SN:26274903--
11	6732-11-1640	BOLT	6	SN:26274903--
12	6732-41-3111	ROD,PUSH	12	SN:26274903--

Ref. A241P-01A0 Page 030350

https://truckmanualshub.com/

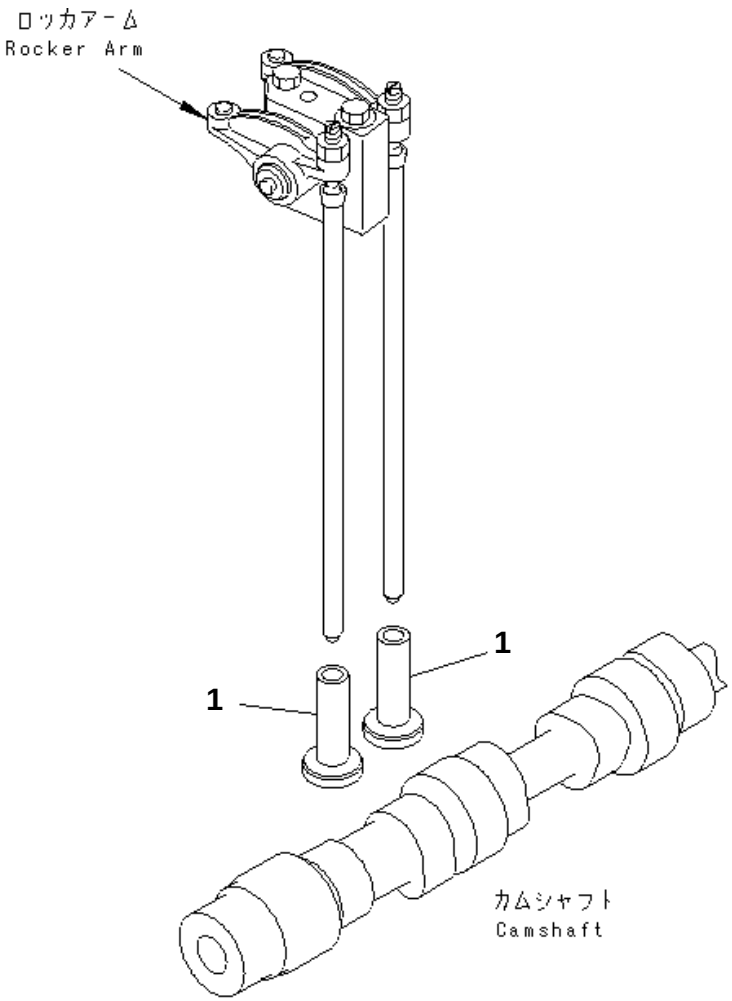

SAA6D102E-2A-8 S/N 26274903-UP

TAPPET

Item	Part No.	Description	Qty	Options
1	6732-41-2112	TAPPET	12	SN:26274903--

Ref. A241R-01A0 Page 030360

https://truckmanualshub.com/

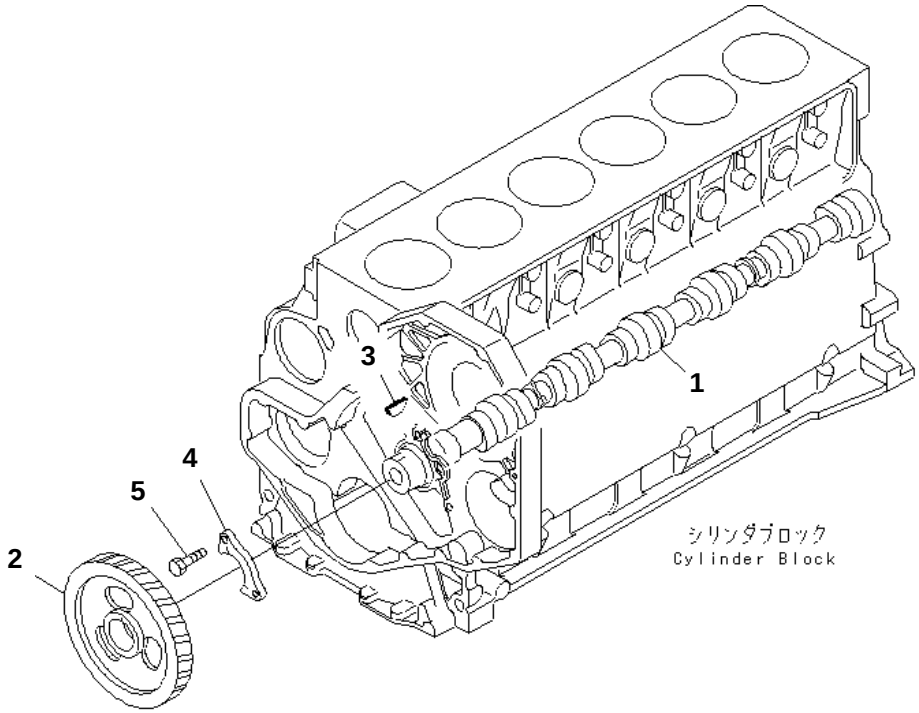

SAA6D102E-2A-8 S/N 26274903-UP

CAMSHAFT

Item	Part No.	Description	Qty	Options
1	6735-41-1111	CAMSHAFT	1	SN:26274903--
2	6732-41-1231	GEAR	1	SN:26274903--
3	6732-41-1280	KEY	1	SN:26274903--
4	6732-41-1220	SUPPORT,THRUST	1	SN:26274903--
5	6732-41-1260	BOLT	2	SN:26274903--

Ref. A2419-01A0 Page 030370

https://truckmanualshub.com/

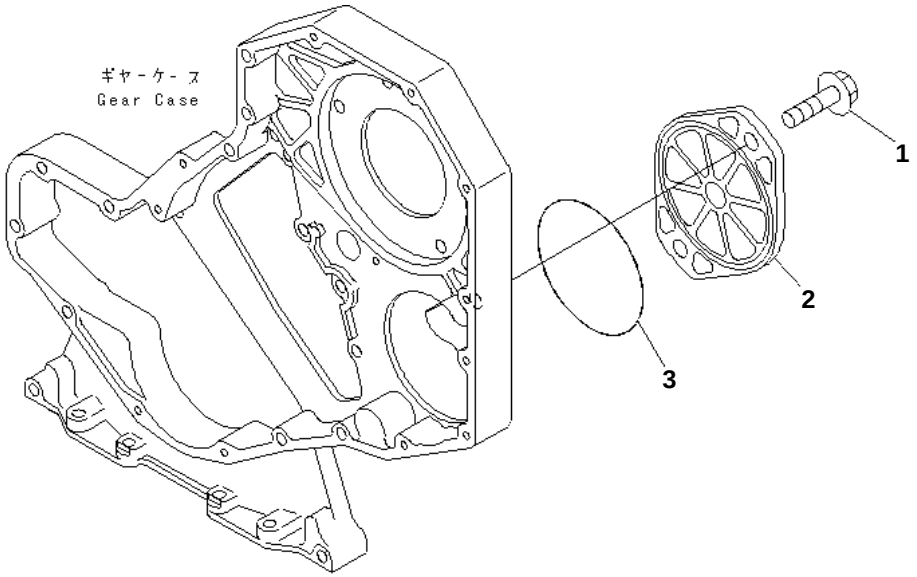

PJD5920

SAA6D102E-2A-8 S/N 26274903-UP

FRONT GEAR TRAIN COVER

Item	Part No.	Description	Qty	Options
1	6732-51-5130	BOLT	2	SN:26274903--
2	6732-21-9330	COVER	1	SN:26274903--
3	07000-72110	O-RING (K2)	1	SN:26274903--

Ref. A261P-01A1 Page 030380

https://truckmanualshub.com/

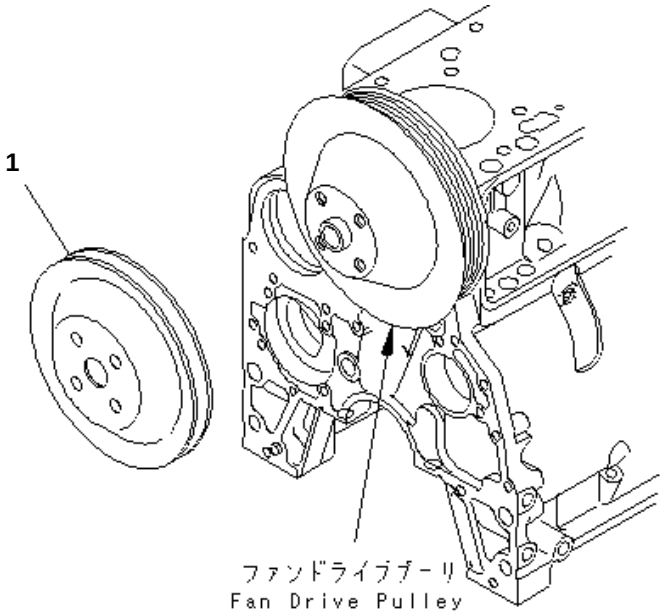

SAA6D102E-2A-8 S/N 26274903-UP

FAN PULLEY

Item	Part No.	Description	Qty	Options
1	6731-91-1550	PULLEY	1	SN:26274903--

Ref. A267P-01A2Z Page 030390

https://truckmanualshub.com/

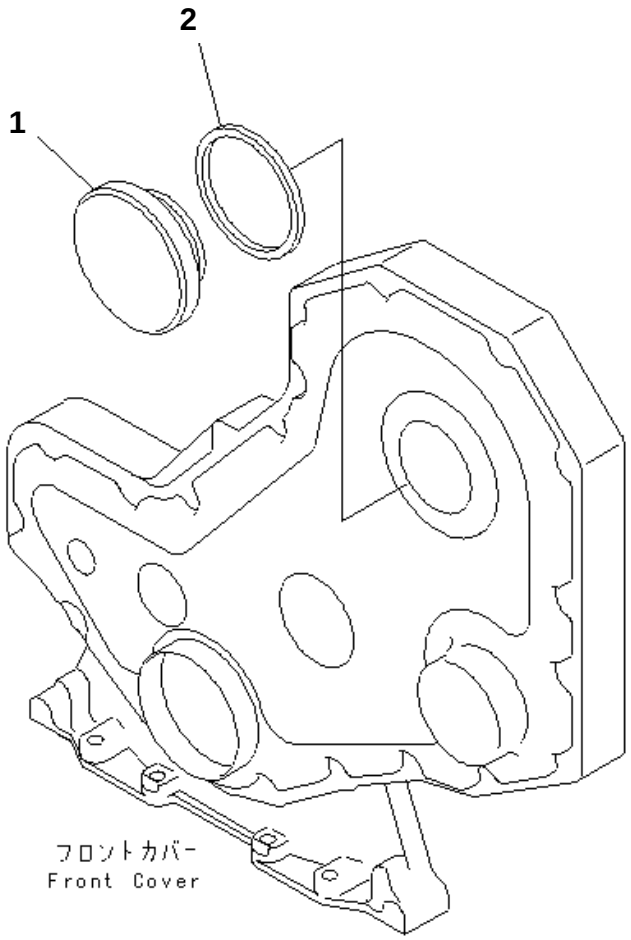

PMD1077

SAA6D102E-2A-8 S/N 26274903-UP

TACHOMETER DRIVE COVER

Item	Part No.	Description	Qty	Options
1	6732-21-3190	COVER	1	SN:26274903--
2	6732-21-3220	SEAL (K2)	1	SN:26274903--

Ref. A281P-01A0 Page 030400

https://truckmanualshub.com/

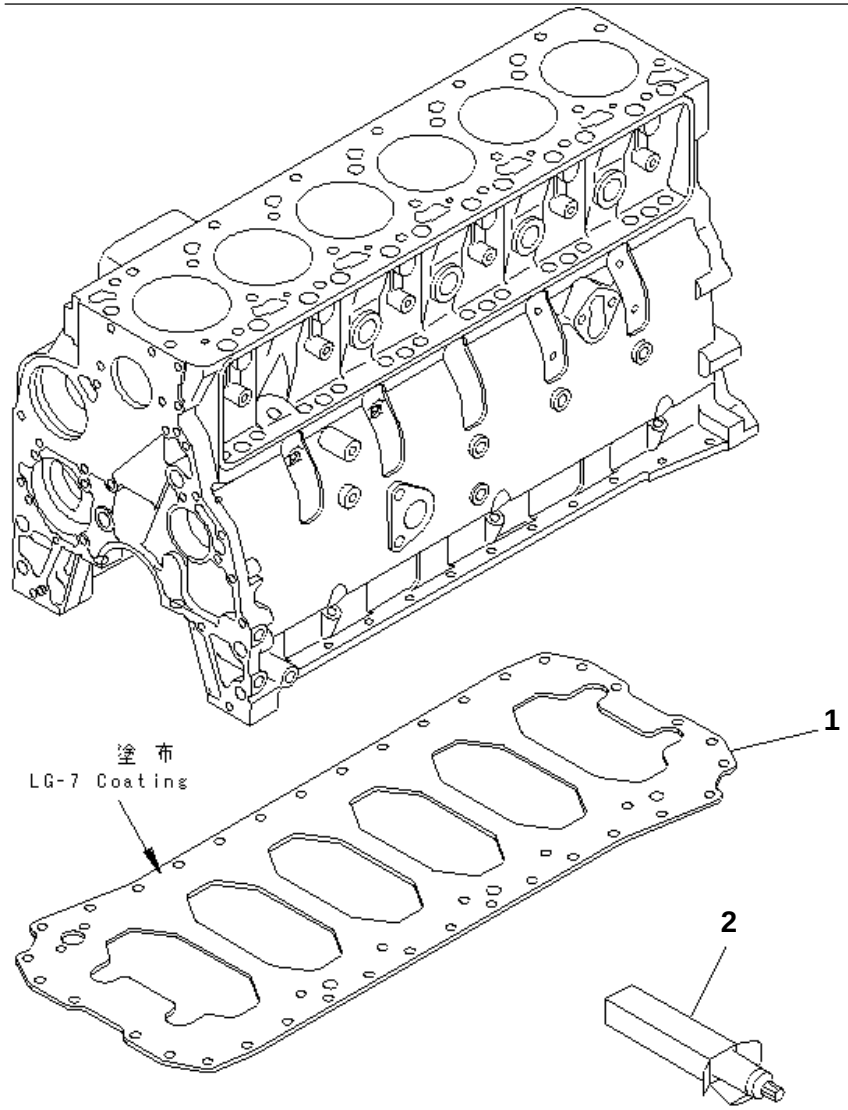

SAA6D102E-2A-8 S/N 26274903-UP

UNDER PLATE

Item	Part No.	Description	Qty	Options
1	6735-21-5151	PLATE	1	SN:26274903--
2	(09920-00150)	LIQUID GASKET,LG-7¤ 150G	AR	SN:26274903--

Ref. A283P-01A0 Page 030410

https://truckmanualshub.com/

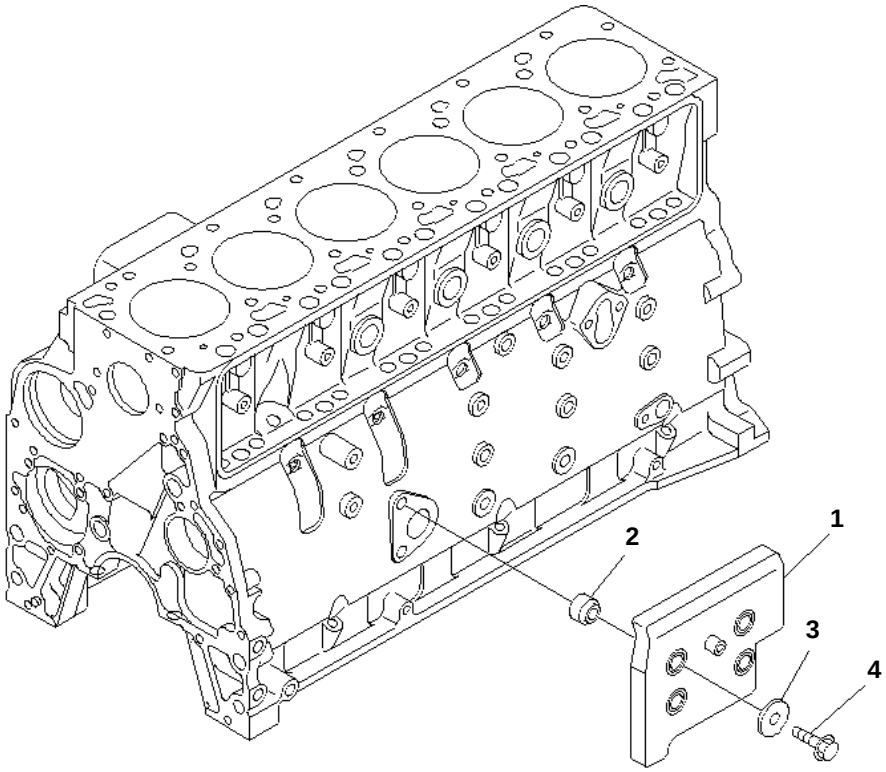

SAA6D102E-2A-8 S/N 26274903-UP

NOISE PANEL CYLINDER BLOCK

Item	Part No.	Description	Qty	Options
1	6738-21-6810	PANEL	1	SN:26274903--
2	6738-21-6890	SPACER	4	SN:26274903--
3	6144-21-2420	WASHER	4	SN:26274903--
4	01435-01240	BOLT	4	SN:26274903--

Ref. A283V-01A0 Page 030420

https://truckmanualshub.com/

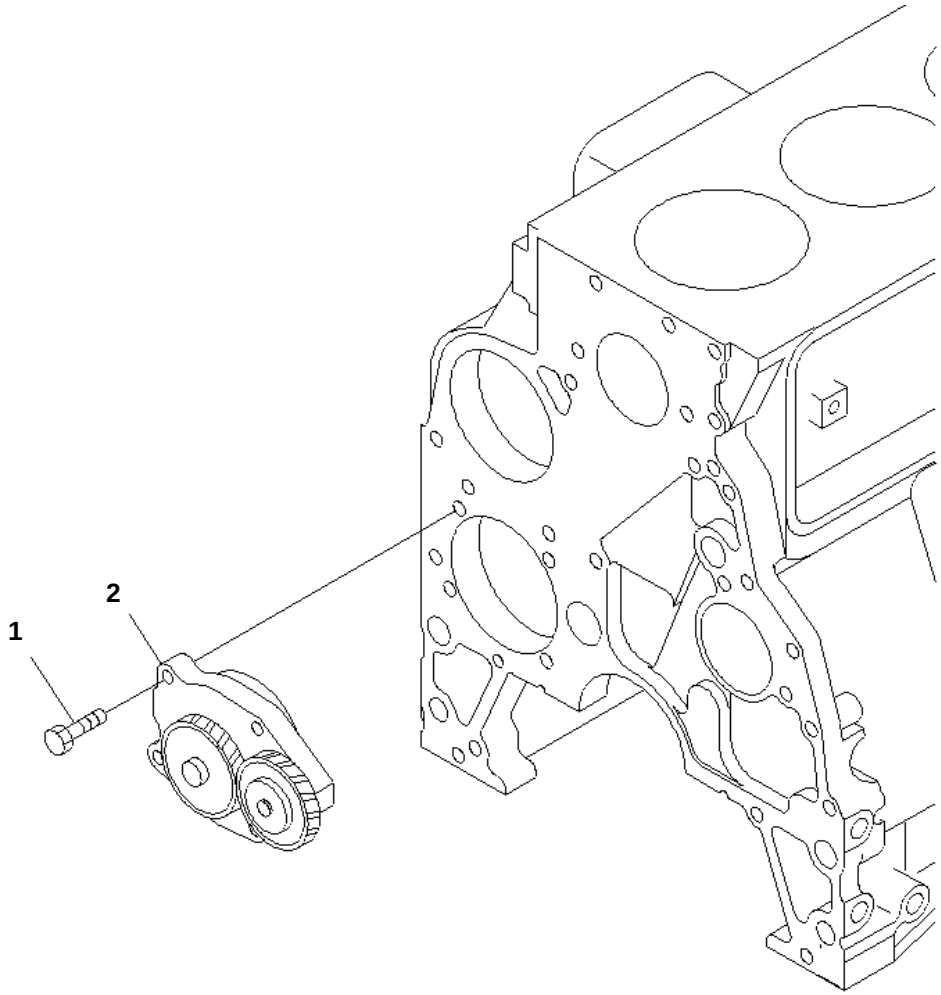

SAA6D102E-2A-8 S/N 26274903-UP

OIL PUMP

Item	Part No.	Description	Qty	Options
1	6735-51-1120	BOLT	4	SN:26274903--
2	6731-51-1111	OIL PUMP ASS'Y	1	SN:26274903--

Ref. A301P-01A2 Page 030430

https://truckmanualshub.com/

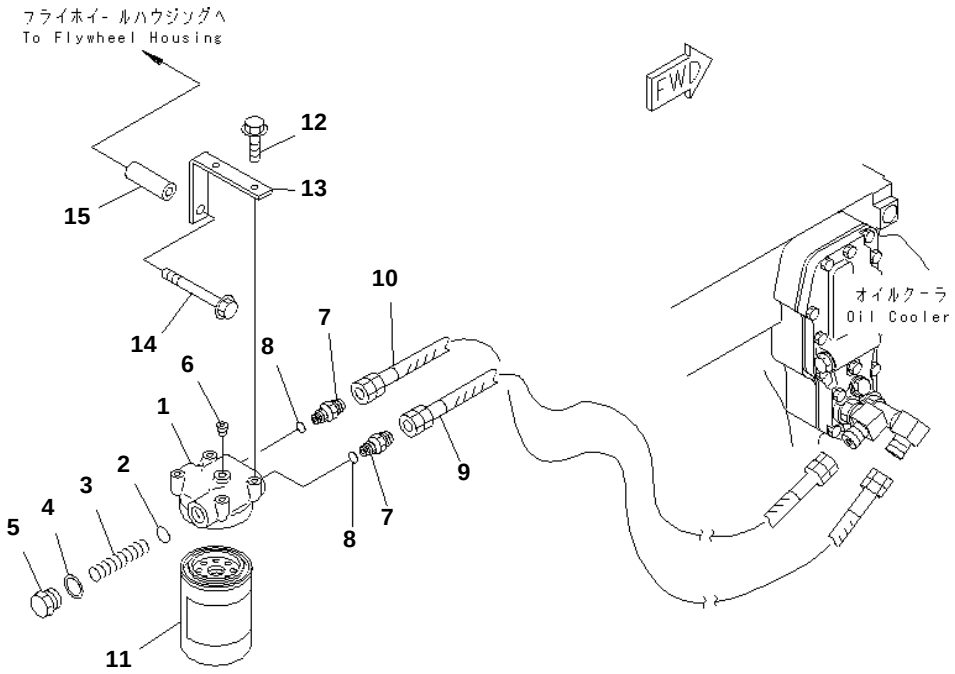

SAA6D102E-2A-8 S/N 26274903-UP

OIL FILTER AND PIPING

Item	Part No.	Description	Qty	Options
	6731-51-5201	HEAD ASS'Y	1	SN:26274903--
1	6731-51-5211	· HEAD	1	SN:26274903--
2	6162-53-5450	· PACKING (K2)	1	SN:26274903--
3	600-211-1870	· SPRING	1	SN:26274903--
4	6162-53-5430	· PACKING (K2)	1	SN:26274903--
5	6162-53-5420	· CAP	1	SN:26274903--
6	07043-A0108	· PLUG	1	SN:26274903--
7	6731-51-5260	NIPPLE	2	SN:26274903--
8	6731-51-5290	· O-RING (K2)	1	SN:26274903--
9	6731-51-9930	HOSE	1	SN:26274903--
10	6731-51-9920	HOSE	1	SN:26274903--
11	6736-51-5141	CARTRIDGE	1	SN:26274903--
12	6732-71-3220	BOLT,(FOR SHIPPING)	2	SN:26274903--
13	6738-51-9950	BRACKET,(FOR SHIPPING)	1	SN:26274903--
14	01435-01095	BOLT,(FOR SHIPPING)	1	SN:26274903--
15	6136-11-5120	SPACER,(FOR SHIPPING)	1	SN:26274903--

Ref. A311P-01A0 Page 030440

https://truckmanualshub.com/

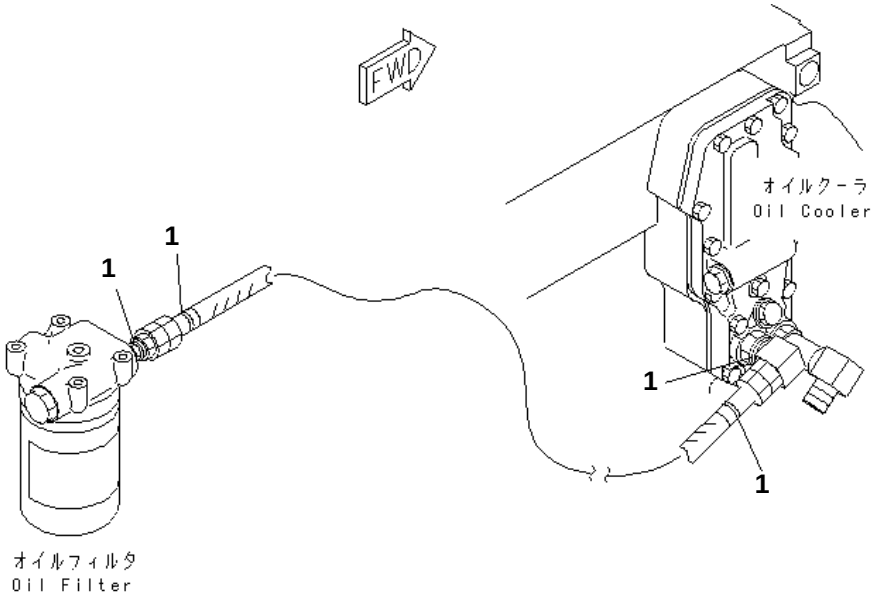

PJ6B430

SAA6D102E-2A-8 S/N 26274903-UP

OIL HOSE MARK BAND

Item	Part No.	Description	Qty	Options
1	6738-51-9980	BAND	4	SN:26274903--

Ref. A3110-01A5 Page 030450

https://truckmanualshub.com/

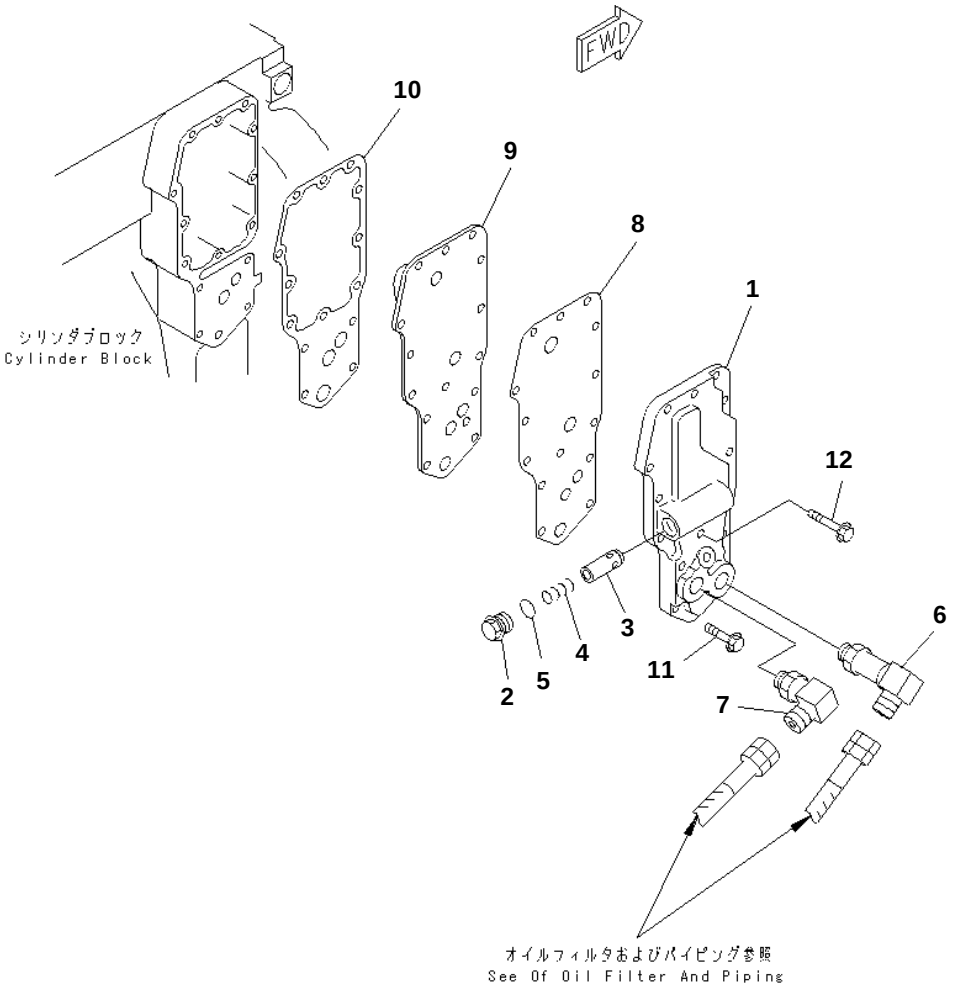

SAA6D102E-2A-8 S/N 26274903-UP

OIL COOLER COVER

Item	Part No.	Description	Qty	Options
1	6735-61-2220	COVER	1	SN:26274903--
2	6735-61-2140	PLUG	1	SN:26274903--
3	6735-61-2160	PLUNGER	1	SN:26274903--
4	6735-61-2190	SPRING	1	SN:26274903--
5	6732-51-4420	O-RING (K2)	1	SN:26274903--
6	6731-51-5250	ELBOW	1	SN:26274903--
7	6731-51-5240	ELBOW	1	SN:26274903--
8	6732-51-4432	GASKET (K2)	1	SN:26274903--
9	6735-61-2110	CORE	1	SN:26274903--
10	6732-61-2311	GASKET (K2)	1	SN:26274903--
11	6732-61-6140	BOLT	13	SN:26274903--
12	6735-61-2120	BOLT	1	SN:26274903--

Ref. A331P-01A4 Page 030460

https://truckmanualshub.com/

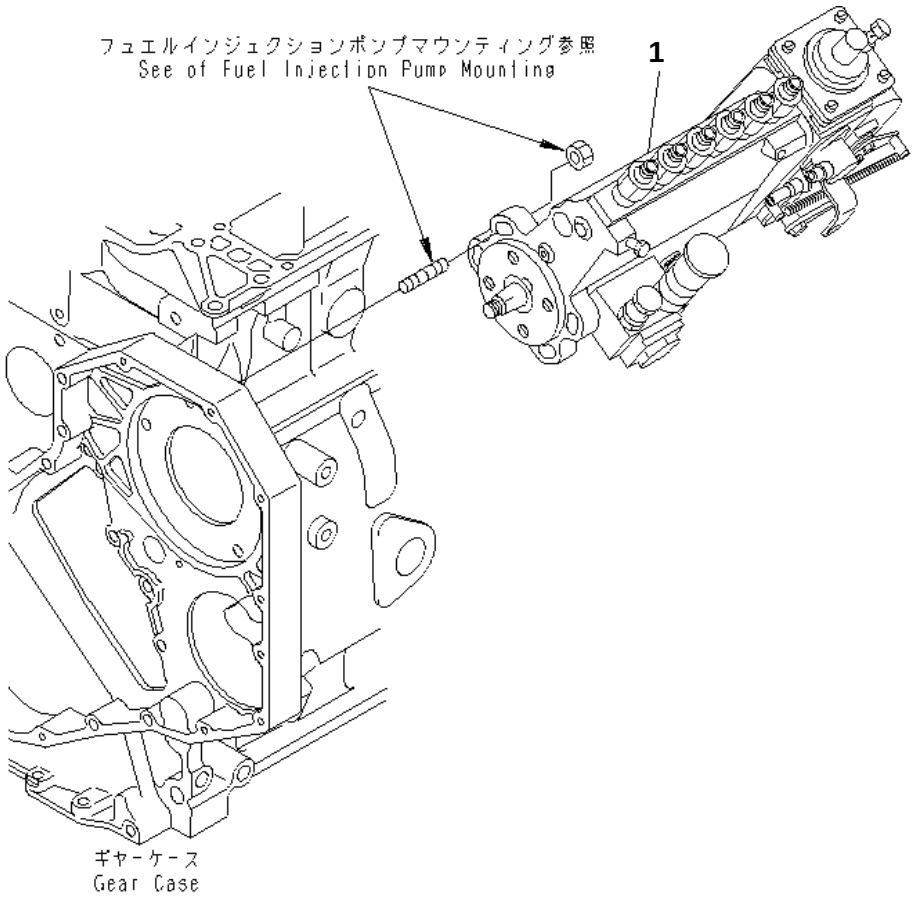

PJ6F085

SAA6D102E-2A-8 S/N 26274903-UP

FUEL INJECTION PUMP

Item	Part No.	Description	Qty	Options
1	(6738-71-1110)	INJECTION PUMP ASS'Y,(SEE FIG.A401P-02G2)	1	SN:26274903--

Ref. A401P-01G2 Page 030470

https://truckmanualshub.com/

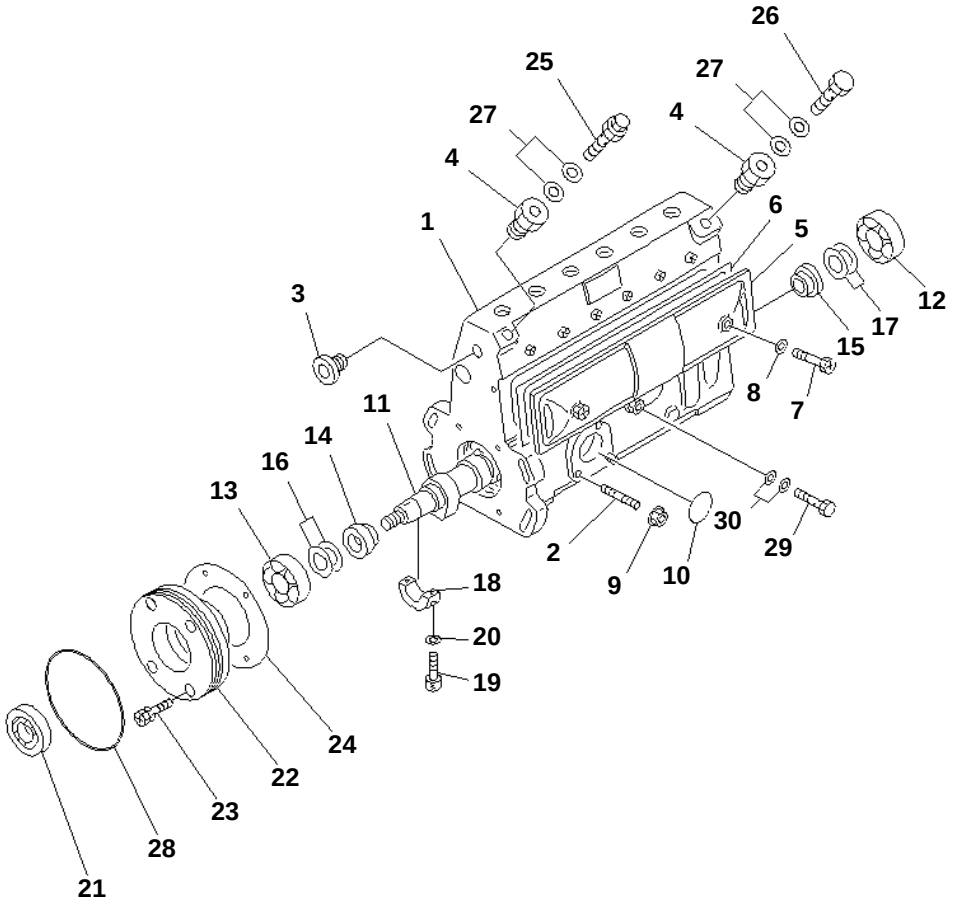

SAA6D102E-2A-8 S/N 26274903-UP

FUEL INJECTION PUMP (PUMP) (1/2) (INNER PARTS)

Item	Part No.	Description	Qty	Options
	6738-71-1110	INJECTION PUMP ASS'Y	1	SN:26274903--
THIS ASSEMBLY CONSISTS OF ALL PARTS SHOWN IN FIGS.A401P-02G2 TO A401P-06G2.				
	DK101062-9270	· PUMP ASS'Y	1	SN:26274903--
THIS ASSEMBLY CONSISTS OF ALL PARTS SHOWN IN FIGS.A401P-02G2 AND A401P-03G2.				
1	DK131073-9120	· · HOUSING	1	SN:26274903--
2	DK029040-6020	· · · STUD	3	SN:26274903--
3	DK134026-0000	· · · PLUG	1	SN:26274903--
4	DK131002-2000	· · · ADAPTER	2	SN:26274903--
5	DK131028-6020	· · COVER	1	SN:26274903--
6	DK131011-0800	· · · GASKET	1	SN:26274903--
7	DK131017-1000	· · SCREW	2	SN:26274903--
8	DK029340-6020	· · GASKET	2	SN:26274903--
9	DK139206-0400	· · NUT	3	SN:26274903--
10	DK029633-1010	· · O-RING	1	SN:26274903--
11	DK131371-4600	· · CAMSHAFT	1	SN:26274903--
12	DK016630-2030	· · BEARING	AR	SN:26274903--
	DK028201-7020	· · BEARING	AR	SN:26274903--
13	DK016640-2030	· · BEARING	AR	SN:26274903--
	DK028202-0020	· · BEARING	AR	SN:26274903--
14	DK131302-1300	· · RING	1	SN:26274903--
15	DK131302-1700	· · RING	1	SN:26274903--
16	DK029312-0310	· · SHIM¤ 0.10MM	AR	SN:26274903--
	DK029312-0320	· · SHIM¤ 0.12MM	AR	SN:26274903--
	DK029312-0330	· · SHIM¤ 0.14MM	AR	SN:26274903--
	DK029312-0340	· · SHIM¤ 0.16MM	AR	SN:26274903--
	DK029312-0350	· · SHIM¤ 0.18MM	AR	SN:26274903--
	DK029312-0360	· · SHIM¤ 0.3MM	AR	SN:26274903--
	DK029312-0370	· · SHIM¤ 0.5MM	AR	SN:26274903--
	DK029312-0380	· · SHIM¤ 1.0MM	AR	SN:26274903--
17	DK029311-7010	· · SHIM¤ 0.1MM	AR	SN:26274903--
	DK029311-7020	· · SHIM¤ 0.12MM	AR	SN:26274903--
	DK029311-7030	· · SHIM¤ 0.14MM	AR	SN:26274903--
	DK029311-7040	· · SHIM¤ 0.16MM	AR	SN:26274903--
	DK029311-7050	· · SHIM¤ 0.18MM	AR	SN:26274903--
	DK029311-7090	· · SHIM¤ 0.3MM	AR	SN:26274903--
	DK029311-7060	· · SHIM¤ 0.5MM	AR	SN:26274903--
	DK029311-7210	· · SHIM¤ 0.7MM	AR	SN:26274903--
	DK029311-7070	· · SHIM¤ 1.0MM	AR	SN:26274903--

Ref. A401P-02G2 Page 030480

https://truckmanualshub.com/

SAA6D102E-2A-8 S/N 26274903-UP

FUEL INJECTION PUMP (PUMP) (1/2) (INNER PARTS)

Item	Part No.	Description	Qty	Options
	DK029311-7220	· · SHIM¤ 1.4MM	AR	SN:26274903--
	DK139417-0000	· · SHIM¤ 2.40MM	AR	SN:26274903--
18	DK131306-1000	· · BEARING,CENTER	1	SN:26274903--
19	DK029050-5010	· · SCREW	2	SN:26274903--
20	DK026505-0940	· · GASKET	2	SN:26274903--
21	DK029622-0190	· · SEAL,OIL	1	SN:26274903--
22	DK131330-6400	· · COVER	1	SN:26274903--
23	DK029010-6810	· · BOLT	4	SN:26274903--
24	DK131321-1900	· · GASKET	1	SN:26274903--
25	DK131424-3420	· · VALVE	1	SN:26274903--
26	DK131401-0120	· · BOLT,EYE	1	SN:26274903--
27	DK029341-4130	· · GASKET	4	SN:26274903--
28	DK029637-5030	· · O-RING	1	SN:26274903--
29	DK029731-0120	· · BOLT,EYE	1	SN:26274903--
30	DK029341-0110	· · GASKET	2	SN:26274903--

https://truckmanualshub.com/

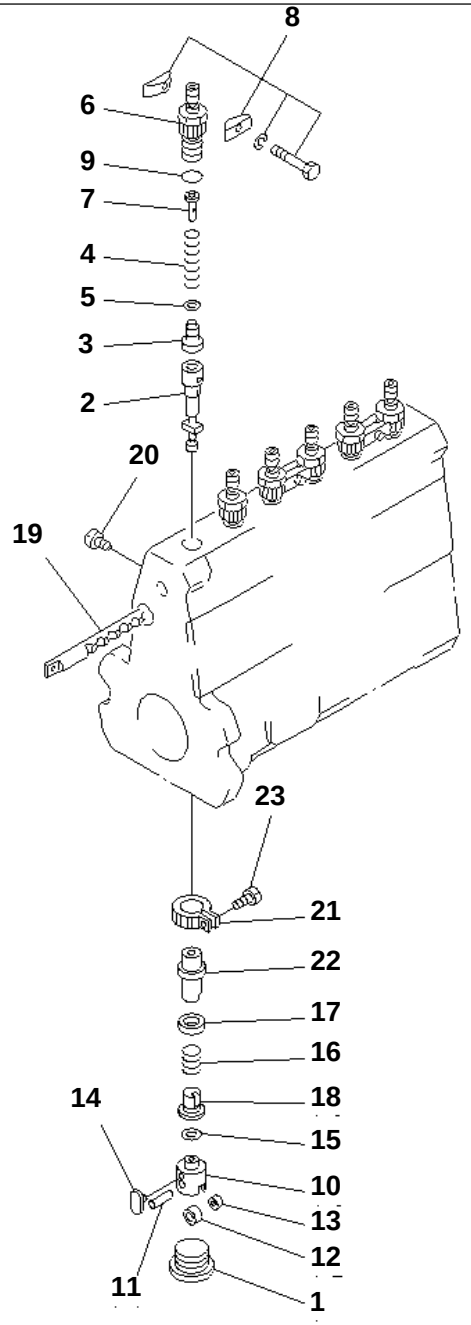

PG3P840

SAA6D102E-2A-8 S/N 26274903-UP

FUEL INJECTION PUMP (PUMP) (2/2) (INNER PARTS)

Item	Part No.	Description	Qty	Options
	(6738-71-1110)	INJECTION PUMP ASS'Y	1	SN:26274903--
THIS ASSEMBLY CONSISTS OF ALL PARTS SHOWN IN FIGS.A401P-02G2 TO A401P-06G2.				
	(DK101062-9270)	· PUMP ASS'Y	1	SN:26274903--
THIS ASSEMBLY CONSISTS OF ALL PARTS SHOWN IN FIGS.A401P-02G2 AND A401P-03G2.				
1	DK131034-1401	· · PLUG	6	SN:26274903--
2	DK131154-5620	· · PLUNGER ASS'Y	6	SN:26274903--
3	DK131110-8020	· · VALVE,DELIVERY	6	SN:26274903--
4	DK131112-5600	· · SPRING	6	SN:26274903--
5	DK131115-1600	· · GASKET	6	SN:26274903--
6	DK131116-8420	· · HOLDER	6	SN:26274903--
7	DK131117-3100	· · STOPPER	6	SN:26274903--
8	DK131122-0520	· · PLATE ASS'Y	3	SN:26274903--
9	DK029632-0030	· · O-RING	6	SN:26274903--
10	DK131200-2820	· · TAPPET ASS'Y	6	SN:26274903--
11	DK131203-0800	· · · PIN	1	SN:26274903--
12	DK131204-1000	· · · ROLLER	1	SN:26274903--
13	DK131205-0500	· · · BUSHING	1	SN:26274903--
14	DK131206-0200	· · · GUIDE	1	SN:26274903--
15	DK029311-0580	· · SHIM¤ 0.2MM	AR	SN:26274903--
	DK029311-0590	· · SHIM¤ 0.25MM	AR	SN:26274903--
	DK029311-0020	· · SHIM¤ 0.30MM	AR	SN:26274903--
	DK029311-0600	· · SHIM¤ 0.35MM	AR	SN:26274903--
	DK029311-0030	· · SHIM¤ 0.40MM	AR	SN:26274903--
	DK029311-0610	· · SHIM¤ 0.45MM	AR	SN:26274903--
	DK029311-0040	· · SHIM¤ 0.50MM	AR	SN:26274903--
	DK029311-0270	· · SHIM¤ 0.55MM	AR	SN:26274903--
	DK029311-0050	· · SHIM¤ 0.6MM	AR	SN:26274903--
	DK029311-0280	· · SHIM¤ 0.65MM	AR	SN:26274903--
	DK029311-0060	· · SHIM¤ 0.7MM	AR	SN:26274903--
	DK029311-0290	· · SHIM¤ 0.75MM	AR	SN:26274903--
	DK029311-0070	· · SHIM¤ 0.8MM	AR	SN:26274903--
	DK029311-0310	· · SHIM¤ 0.85MM	AR	SN:26274903--
	DK029311-0080	· · SHIM¤ 0.9MM	AR	SN:26274903--
	DK029311-0320	· · SHIM¤ 0.95MM	AR	SN:26274903--
	DK029311-0090	· · SHIM¤ 1.0MM	AR	SN:26274903--
	DK029311-0330	· · SHIM¤ 1.05MM	AR	SN:26274903--
	DK029311-0110	· · SHIM¤ 1.1MM	AR	SN:26274903--
	DK029311-0340	· · SHIM¤ 1.15MM	AR	SN:26274903--

Ref. A401P-03G2 Page 030490

https://truckmanualshub.com/

SAA6D102E-2A-8 S/N 26274903-UP

FUEL INJECTION PUMP (PUMP) (2/2) (INNER PARTS)

Item	Part No.	Description	Qty	Options
	DK029311-0120	･ ･ SHIM¤ 1.2MM	AR	SN:26274903--
	DK029311-0350	･ ･ SHIM¤ 1.25MM	AR	SN:26274903--
	DK029311-0130	･ ･ SHIM¤ 1.3MM	AR	SN:26274903--
	DK029311-0620	･ ･ SHIM¤ 1.35MM	AR	SN:26274903--
	DK029311-0140	･ ･ SHIM¤ 1.4MM	AR	SN:26274903--
	DK029311-0630	･ ･ SHIM¤ 1.45MM	AR	SN:26274903--
	DK029311-0490	･ ･ SHIM¤ 1.5MM	AR	SN:26274903--
	DK029311-0710	･ ･ SHIM¤ 1.55MM	AR	SN:26274903--
	DK029311-0500	･ ･ SHIM¤ 1.6MM	AR	SN:26274903--
16	DK131215-2500	･ ･ SPRING	6	SN:26274903--
17	DK131216-0100	･ ･ SEAT,SPRING	6	SN:26274903--
18	DK131217-0200	･ ･ SEAT,SPRING	6	SN:26274903--
19	DK131256-0900	･ ･ RACK,CONTROL	1	SN:26274903--
20	DK131226-0300	･ ･ SCREW	1	SN:26274903--
21	DK131240-0100	･ ･ PINION	6	SN:26274903--
22	DK131241-0100	･ ･ SLEEVE,CONTROL	6	SN:26274903--
23	DK131242-0100	･ ･ SCREW	6	SN:26274903--

https://truckmanualshub.com/

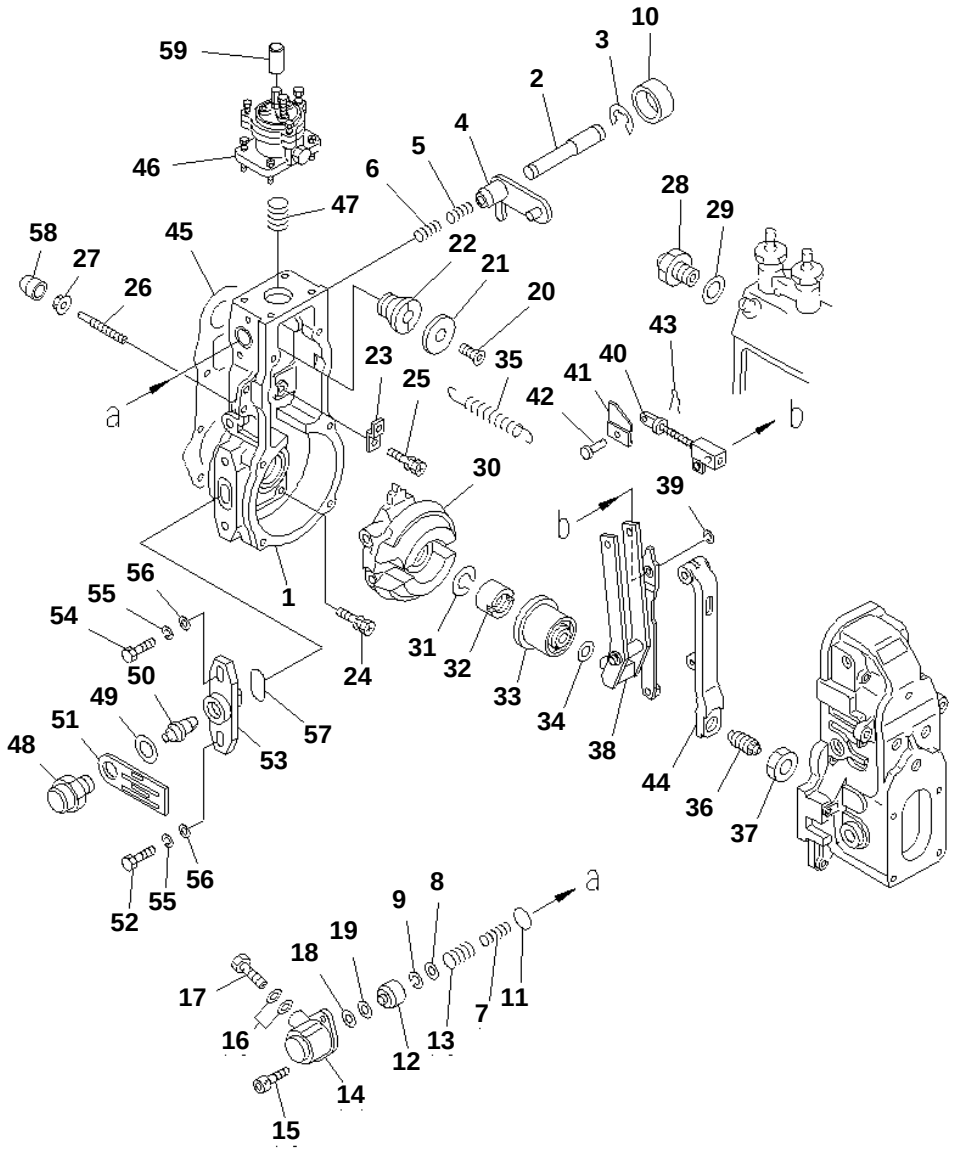

SAA6D102E-2A-8 S/N 26274903-UP

FUEL INJECTION PUMP (GOVERNOR) (1/2) (INNER PARTS)

Item	Part No.	Description	Qty	Options
	(6738-71-1110)	INJECTION PUMP ASS'Y	1	SN:26274903--
THIS ASSEMBLY CONSISTS OF ALL PARTS SHOWN IN FIGS.A401P-02G2 TO A401P-06G2.				
	DK105404-5820	· GOVERNOR ASS'Y	1	SN:26274903--
THIS ASSEMBLY CONSISTS OF ALL PARTS SHOWN IN FIGS.A401P-04G2 AND A401P-05G2.				
	DK154620-0720	· · HOUSING ASS'Y	1	SN:26274903--
1	DK154620-0020	· · · HOUSING	1	SN:26274903--
2	DK154621-3701	· · · SHAFT	1	SN:26274903--
3	DK016010-0740	· · · RING,SNAP	1	SN:26274903--
4	DK154415-3320	· · · LEVER	1	SN:26274903--
5	DK154415-3400	· · · SPRING	1	SN:26274903--
6	DK154621-3800	· · · SPRING	1	SN:26274903--
7	DK154621-4000	· · · SPRING	1	SN:26274903--
8	DK139406-1300	· · · SHIM	1	SN:26274903--
9	DK160100-0540	· · · RING,SNAP	1	SN:26274903--
10	DK154621-3600	· · · CAP	1	SN:26274903--
11	DK016520-2210	· · · O-RING	1	SN:26274903--
12	DK154621-3500	· · · BUSHING	1	SN:26274903--
13	DK154621-3900	· · · SPRING	1	SN:26274903--
14	DK154620-1600	· · · COVER	1	SN:26274903--
15	DK010235-1640	· · · BOLT,SOCKET	2	SN:26274903--
16	DK026510-1440	· · · GASKET	1	SN:26274903--
17	DK029111-0010	· · · PLUG	1	SN:26274903--
18	DK139308-1500	· · · WASHER	1	SN:26274903--
19	DK029300-7020	· · · WASHER	4	SN:26274903--
20	DK154620-4600	· · BOLT	1	SN:26274903--
21	DK154621-4100	· · WASHER	1	SN:26274903--
22	DK154620-7900	· · ADAPTER	1	SN:26274903--
23	DK154375-9020	· · PLATE	1	SN:26274903--
24	DK029010-6810	· · BOLT	5	SN:26274903--
25	DK020106-1840	· · BOLT	1	SN:26274903--
26	DK154013-4000	· · SCREW	AR	SN:26274903--
	DK154013-5000	· · SCREW	AR	SN:26274903--
27	DK154011-0100	· · NUT,LOCK	1	SN:26274903--
28	DK155404-5120	· · LIMITER	1	SN:26274903--
29	DK026518-2240	· · GASKET	1	SN:26274903--
30	DK154621-2520	· · FLYWEIGHT ASS'Y	1	SN:26274903--
31	DK029321-2020	· · WASHER,SPRING	1	SN:26274903--

Ref. A401P-04G2 Page 030500

https://truckmanualshub.com/

SAA6D102E-2A-8 S/N 26274903-UP

FUEL INJECTION PUMP (GOVERNOR) (1/2) (INNER PARTS)

Item	Part No.	Description	Qty	Options
32	DK029231-2030	· · NUT	1	SN:26274903--
33	DK154123-2320	· · SLEEVE	1	SN:26274903--
34	DK029311-0010	· · SHIM¤ 0.20MM	AR	SN:26274903--
	DK029311-0180	· · SHIM¤ 0.30MM	AR	SN:26274903--
	DK029311-0190	· · SHIM¤ 0.40MM	AR	SN:26274903--
	DK139410-0000	· · SHIM¤ 0.50MM	AR	SN:26274903--
	DK029311-0210	· · SHIM¤ 1.00MM	AR	SN:26274903--
	DK139410-0100	· · SHIM¤ 1.50MM	AR	SN:26274903--
	DK139410-3000	· · SHIM¤ 2.00MM	AR	SN:26274903--
	DK139410-3100	· · SHIM¤ 3.00MM	AR	SN:26274903--
	DK139410-3200	· · SHIM¤ 4.00MM	AR	SN:26274903--
35	DK154154-5200	· · SPRING	1	SN:26274903--
36	DK154177-1820	· · CAPSULE,SPRING	1	SN:26274903--
37	DK029201-6010	· · NUT	1	SN:26274903--
38	DK154218-7320	· · GUIDE LEVER ASS'Y	1	SN:26274903--
39	DK016010-0540	· · RING,SNAP	1	SN:26274903--
40	DK154234-4120	· · LINK	1	SN:26274903--
41	DK154232-3200	· · CONNECTOR	1	SN:26274903--
42	DK154222-5800	· · PIN	1	SN:26274903--
43	DK155402-3800	· · PIN	1	SN:26274903--
44	DK154239-5120	· · TENSION PULLEY ASS'Y	1	SN:26274903--
45	DK154390-0000	· · GASKET	1	SN:26274903--
46	DK154422-7820	· · BOOST COMPENSATOR	1	SN:26274903--
47	DK154402-3000	· · SPRING	1	SN:26274903--
48	DK154621-3000	· · PLUG	1	SN:26274903--
49	DK026518-2240	· · GASKET	1	SN:26274903--
50	DK154620-8800	· · PIN	1	SN:26274903--
51	DK154620-8901	· · PLATE	1	SN:26274903--
52	DK010038-1840	· · BOLT	1	SN:26274903--
53	DK154620-1500	· · FLANGE	1	SN:26274903--
54	DK154620-4700	· · BOLT	1	SN:26274903--
55	DK014110-8440	· · WASHER,SPRING	2	SN:26274903--
56	DK014010-8140	· · WASHER	2	SN:26274903--
57	DK154621-3200	· · O-RING	1	SN:26274903--
58	DK154062-3520	· · CAP	1	SN:26274903--
59	DK154062-2720	· · CAP	1	SN:26274903--

https://truckmanualshub.com/

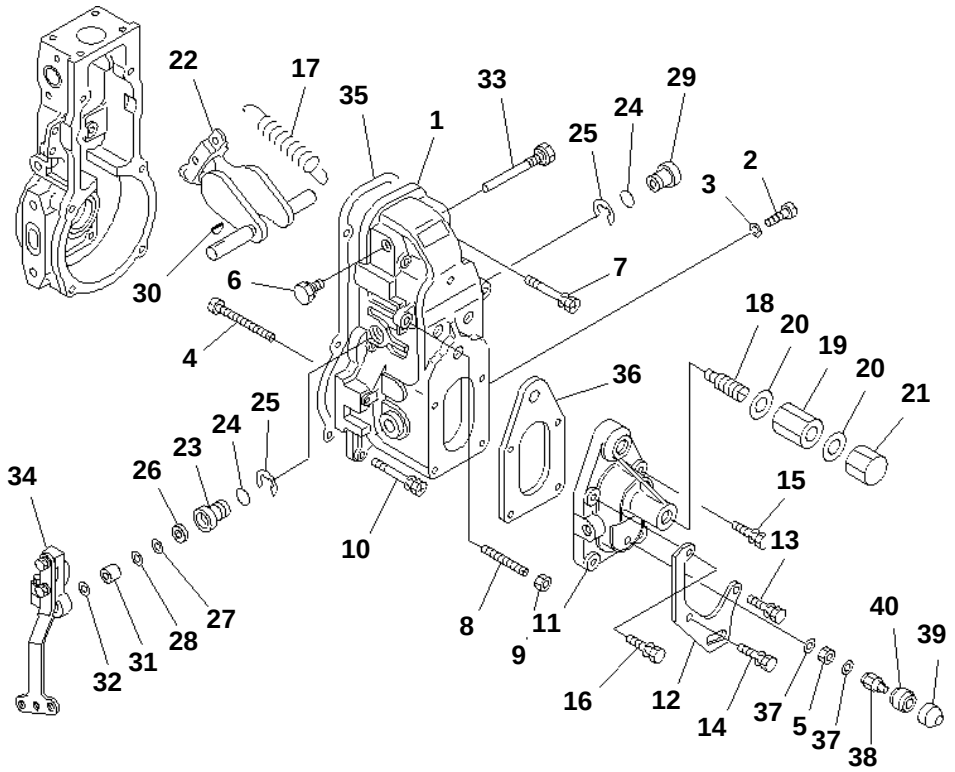

SAA6D102E-2A-8 S/N 26274903-UP

FUEL INJECTION PUMP (GOVERNOR) (2/2) (INNER PARTS)

Item	Part No.	Description	Qty	Options
	(6738-71-1110)	INJECTION PUMP ASS'Y	1	SN:26274903--
THIS ASSEMBLY CONSISTS OF ALL PARTS SHOWN IN FIGS.A401P-02G2 TO A401P-06G2.				
	(DK105404-5820)	· GOVERNOR ASS'Y	1	SN:26274903--
THIS ASSEMBLY CONSISTS OF ALL PARTS SHOWN IN FIGS.A401P-04G2 AND A401P-05G2.				
1	DK154022-8720	· · COVER	1	SN:26274903--
2	DK154222-2700	· · SCREW	1	SN:26274903--
3	DK014110-3440	· · · WASHER,SPRING	1	SN:26274903--
4	DK154031-4700	· · SCREW	1	SN:26274903--
5	DK139208-0400	· · NUT	1	SN:26274903--
6	DK154036-0300	· · PLUG	1	SN:26274903--
7	DK139006-7100	· · BOLT	2	SN:26274903--
8	DK154010-0200	· · SCREW	1	SN:26274903--
9	DK154011-4900	· · NUT	1	SN:26274903--
10	DK020106-3840	· · BOLT	4	SN:26274903--
11	DK154064-4200	· · COVER	1	SN:26274903--
12	DK154376-3000	· · BRACKET	1	SN:26274903--
13	DK029020-6260	· · BOLT	1	SN:26274903--
14	DK029020-6260	· · BOLT	1	SN:26274903--
15	DK020006-1640	· · BOLT	1	SN:26274903--
16	DK020006-2040	· · BOLT	1	SN:26274903--
17	DK154151-1300	· · SPRING,GOVERNOR	1	SN:26274903--
18	DK154158-5720	· · CAPSULE,SPRING	1	SN:26274903--
19	DK029201-2290	· · NUT	1	SN:26274903--
20	DK026512-1540	· · GASKET	2	SN:26274903--
21	DK154159-1200	· · NUT,CAP	1	SN:26274903--
22	DK154200-7020	· · LEVER ASS'Y,SWIVEL	1	SN:26274903--
23	DK154204-4300	· · BUSHING	1	SN:26274903--
24	DK029631-8020	· · O-RING	2	SN:26274903--
25	DK016010-1640	· · RING,SNAP	2	SN:26274903--
26	DK139611-0000	· · SEAL,OIL	1	SN:26274903--
27	DK139411-0000	· · SHIM¤ 0.40MM	1	SN:26274903--
28	DK029311-1070	· · SHIM¤ 0.50MM	AR	SN:26274903--
29	DK154204-4400	· · BUSHING	1	SN:26274903--
30	DK025803-1310	· · KEY¤ 13MM,WOODRUFF	1	SN:26274903--
31	DK154206-2800	· · COLLAR	1	SN:26274903--
32	DK154206-0200	· · WASHER¤ 1.0MM	AR	SN:26274903--
33	DK154237-1100	· · PIN	1	SN:26274903--

Ref. A401P-05G2 Page 030510

https://truckmanualshub.com/

SAA6D102E-2A-8 S/N 26274903-UP

FUEL INJECTION PUMP (GOVERNOR) (2/2) (INNER PARTS)

Item	Part No.	Description	Qty	Options
34	DK154395-8620	· · LEVER	1	SN:26274903--
35	DK154390-0300	· · GASKET	1	SN:26274903--
36	DK154390-5000	· · GASKET	1	SN:26274903--
37	DK026508-1140	· · GASKET	2	SN:26274903--
38	DK154035-2900	· · NUT,CAP	1	SN:26274903--
39	DK154062-4020	· · CAP	1	SN:26274903--
40	DK154062-3900	· · ADAPTER	1	SN:26274903--

https://truckmanualshub.com/

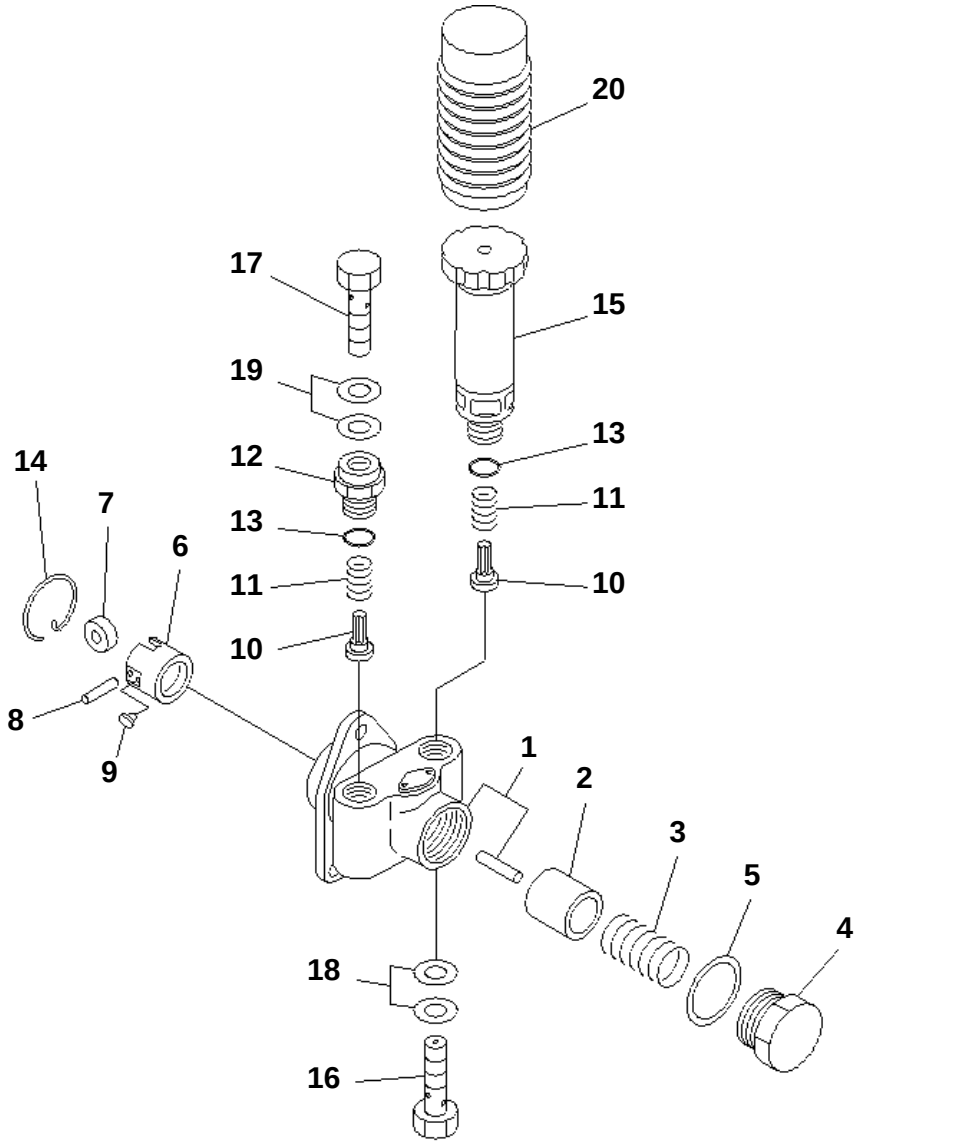

SAA6D102E-2A-8 S/N 26274903-UP

FUEL INJECTION PUMP (FEED PUMP) (INNER PARTS)

Item	Part No.	Description	Qty	Options
	(6738-71-1110)	INJECTION PUMP ASS'Y	1	SN:26274903--
THIS ASSEMBLY CONSISTS OF ALL PARTS SHOWN IN FIGS.A401P-02G2 TO A401P-06G2.				
	DK105220-5960	· FEED PUMP ASS'Y	1	SN:26274903--
1	DK152003-1020	· · HOUSING	1	SN:26274903--
2	DK152100-1120	· · PISTON	1	SN:26274903--
3	DK152102-1600	· · SPRING	1	SN:26274903--
4	DK152105-1600	· · PLUG	1	SN:26274903--
5	DK029332-6030	· · GASKET	1	SN:26274903--
6	DK152111-2820	· · TAPPET ASS'Y	1	SN:26274903--
7	DK152112-0100	· · · ROLLER	1	SN:26274903--
8	DK152113-0700	· · · PIN	1	SN:26274903--
9	DK152114-0400	· · · GUIDE	2	SN:26274903--
10	DK152115-0500	· · VALVE	2	SN:26274903--
11	DK152116-0200	· · SPRING	2	SN:26274903--
12	DK152118-0900	· · ADAPTER	1	SN:26274903--
13	DK029631-6060	· · O-RING	2	SN:26274903--
14	DK152121-0200	· · RING,SNAP	1	SN:26274903--
15	DK152200-5420	· · PUMP,PRIMING	1	SN:26274903--
16	DK152300-5920	· · BOLT,JOINT	1	SN:26274903--
17	DK029731-4680	· · BOLT,JOINT	1	SN:26274903--
18	DK029341-4130	· · GASKET	2	SN:26274903--
19	DK029341-4130	· · GASKET	2	SN:26274903--
20	DK152320-0100	· · COVER	1	SN:26274903--

Ref. A401P-06G2 Page 030520

https://truckmanualshub.com/

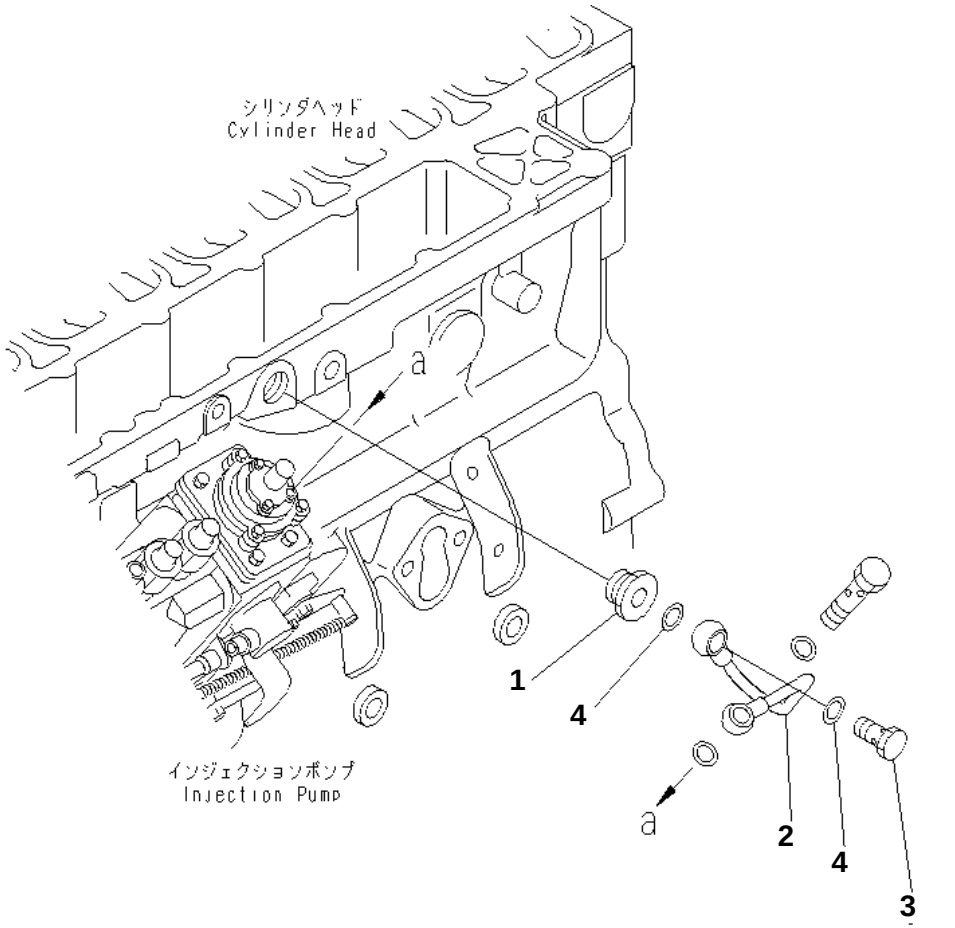

SAA6D102E-2A-8 S/N 26274903-UP

BOOST TUBE

Item	Part No.	Description	Qty	Options
1	6735-71-5460	NIPPLE	1	SN:26274903--
2	6738-71-5450	TUBE	1	SN:26274903--
3	6732-71-6510	BOLT,JOINT	1	SN:26274903--
4	07005-01212	GASKET (K1)	2	SN:26274903--

Ref. A401R-01B2 Page 030530

https://truckmanualshub.com/

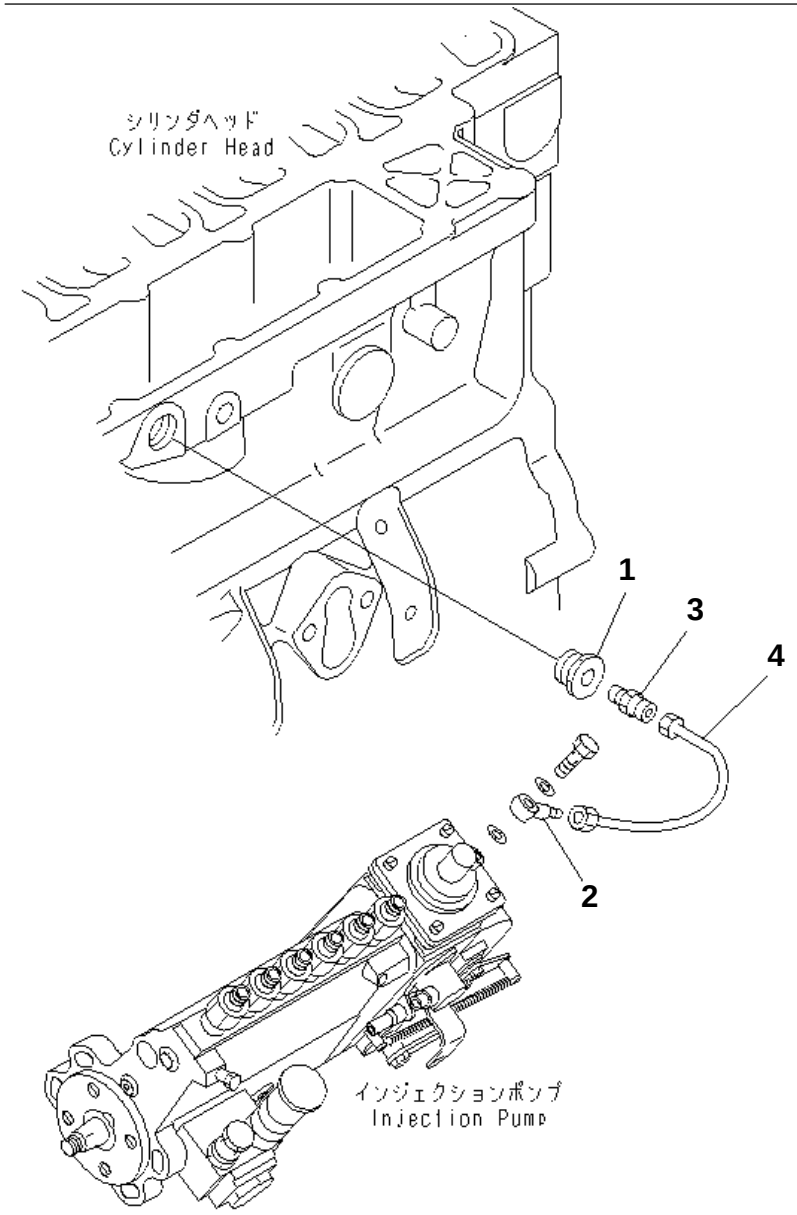

SAA6D102E-2A-8 S/N 26274903-UP

BOOST TUBE(#26307088-)

Item	Part No.	Description	Qty	Options
1	6733-81-8910	PLUG	1	SN:26307088--
2	6738-81-8220	JOINT	1	SN:26307088--
3	6736-11-4530	CONNECTOR	1	SN:26307088--
4	6742-11-4360	TUBE	1	SN:26307088--

Ref. A401R-01B5 Page 030535

https://truckmanualshub.com/

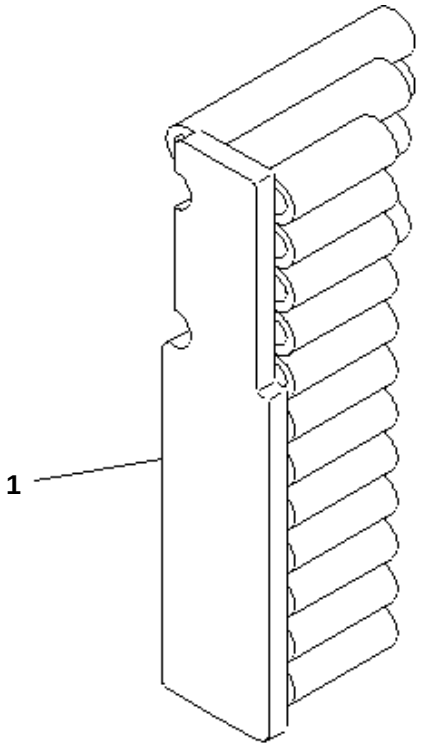

PJ6B420

SAA6D102E-2A-8 S/N 26274903-UP

NOISE PANEL INJECTION PUMP

Item	Part No.	Description	Qty	Options
1	6738-21-6710	ISOLATOR	1	SN:26274903--

Ref. A401V-01A0 Page 030540

https://truckmanualshub.com/

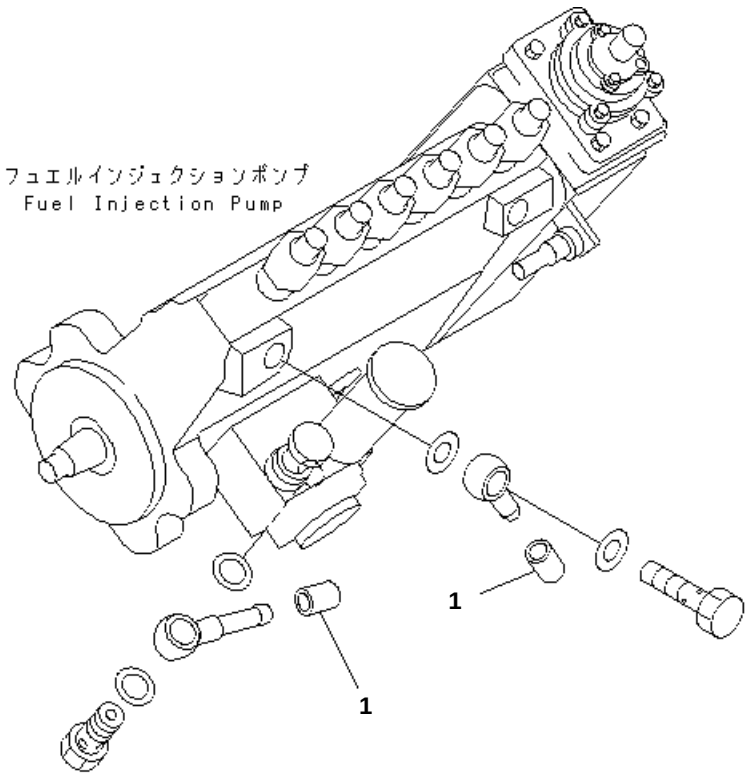

PJ6B431

SAA6D102E-2A-8 S/N 26274903-UP

FUEL INLET AND OUTLET JOINT CAP

Item	Part No.	Description	Qty	Options
1	6732-71-5740	CAP,(FOR SHIPPING)	2	SN:26274903--

Ref. A4010-01B0Z Page 030550

https://truckmanualshub.com/

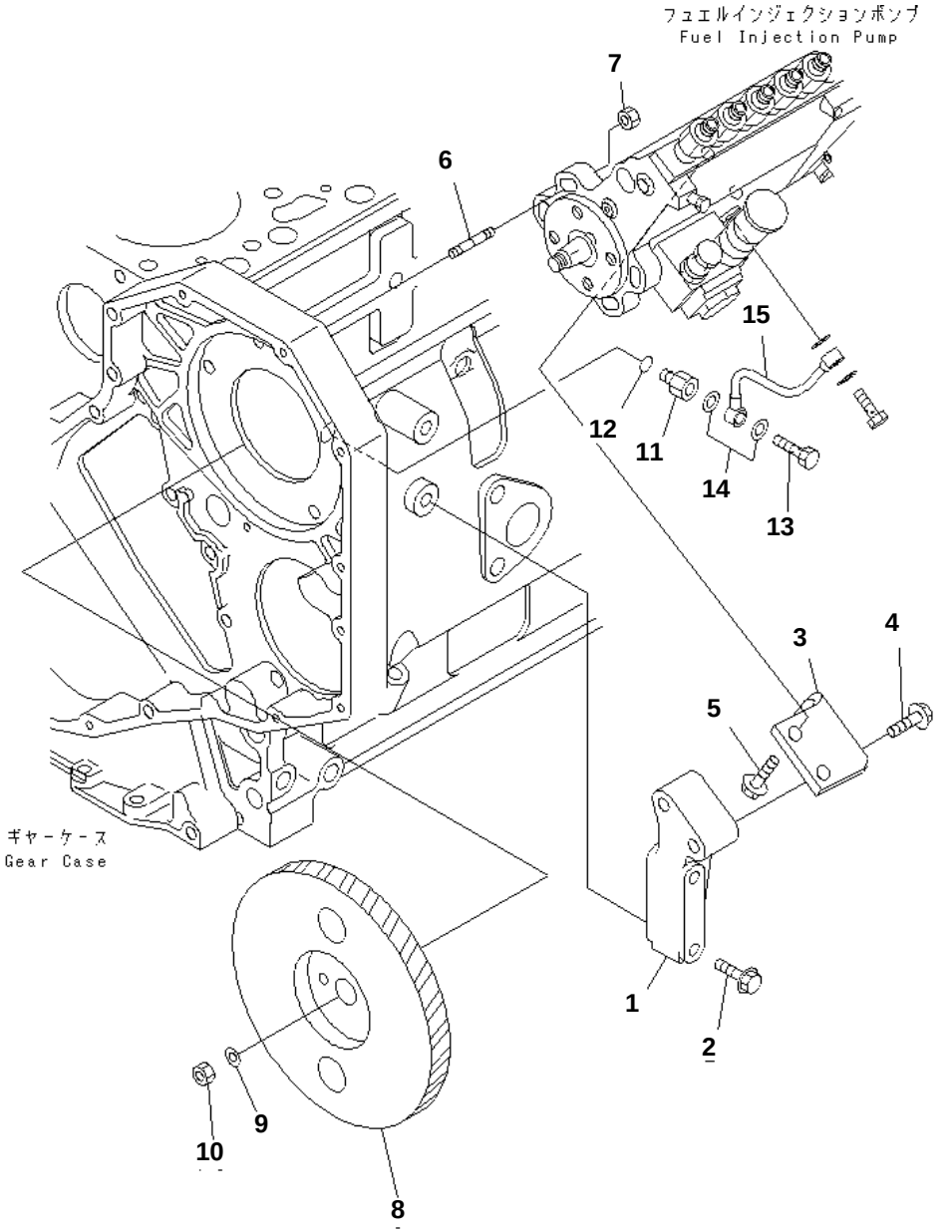

SAA6D102E-2A-8 S/N 26274903-UP

FUEL INJECTION PUMP MOUNTING

Item	Part No.	Description	Qty	Options
1	6738-71-3620	BRACKET	1	SN:26274903--
2	6732-61-3110	BOLT	2	SN:26274903--
3	6738-71-3610	BRACKET	1	SN:26274903--
4	6735-71-3220	BOLT	2	SN:26274903--
5	6734-71-5610	BOLT	2	SN:26274903--
6	6738-71-3120	STUD	4	SN:26287632--
	□6735-71-3120	STUD	4	SN:26274903--26287631
7	6736-81-6170	NUT	4	SN:26274903--
8	6738-71-3100	GEAR ASS'Y	1	SN:26274903--
9	6130-32-1361	WASHER	1	SN:26274903--
10	01582-01411	NUT	1	SN:26274903--
11	6732-71-5450	NIPPLE	1	SN:26274903--
12	6215-81-9710	O-RING	1	SN:26274903--
13	07206-30710	BOLT,JOINT	1	SN:26274903--
14	07005-01012	GASKET (K2)	2	SN:26274903--
15	6735-71-5411	TUBE,OIL	1	SN:26274903--

Ref. A408P-01A7 Page 030560

https://truckmanualshub.com/

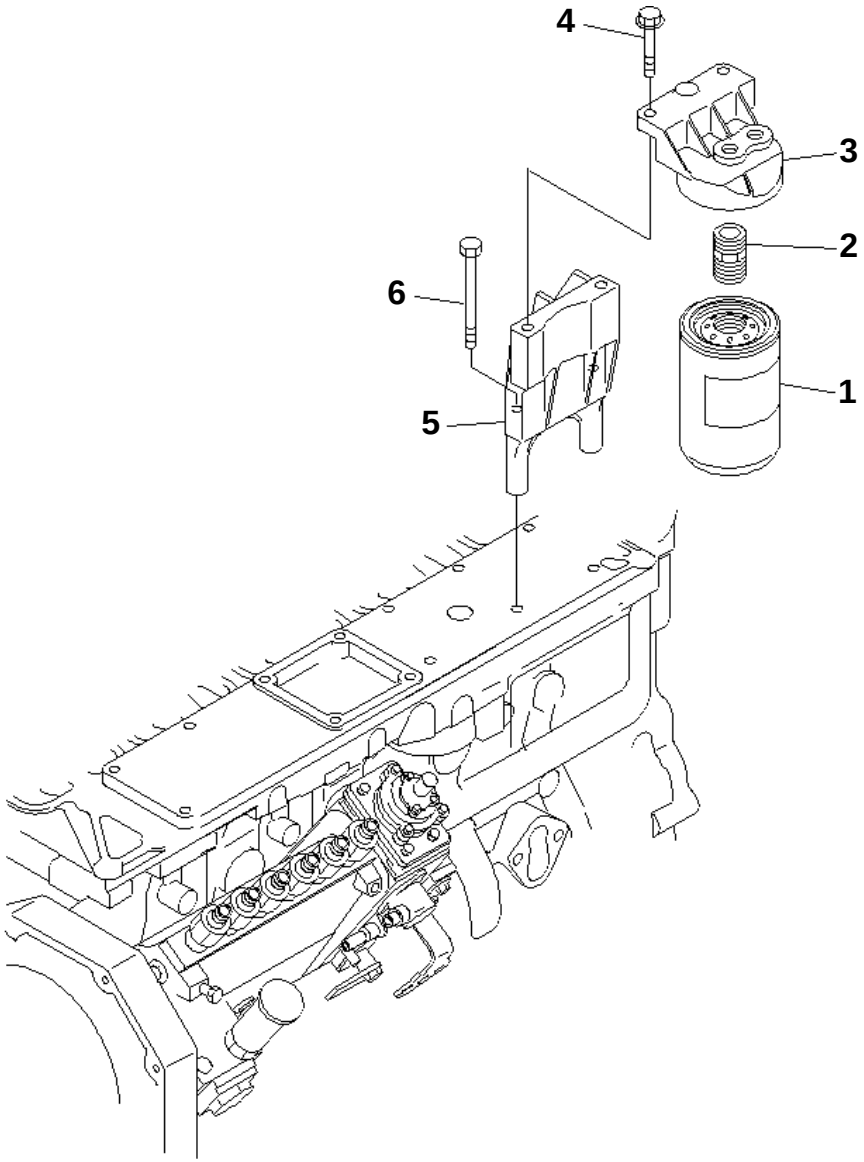

SAA6D102E-2A-8 S/N 26274903-UP

FUEL FILTER

Item	Part No.	Description	Qty	Options
1	6732-71-6112	CARTRIDGE,FUEL	1	SN:26307442--
	☐6732-71-6111	CARTRIDGE,FUEL	1	SN:26274903--26307441
2	6732-71-6340	ADAPTER	1	SN:26319510--
	☐6732-71-6650	ADAPTER	1	SN:26274903--26319509
3	6732-71-6220	HEAD	1	SN:26274903--
4	6732-21-5160	BOLT	2	SN:26274903--
5	6738-71-6710	BRACKET	1	SN:26274903--
6	6742-01-4460	BOLT	3	SN:26274903--

Ref. A411P-01A3 Page 030570

https://truckmanualshub.com/

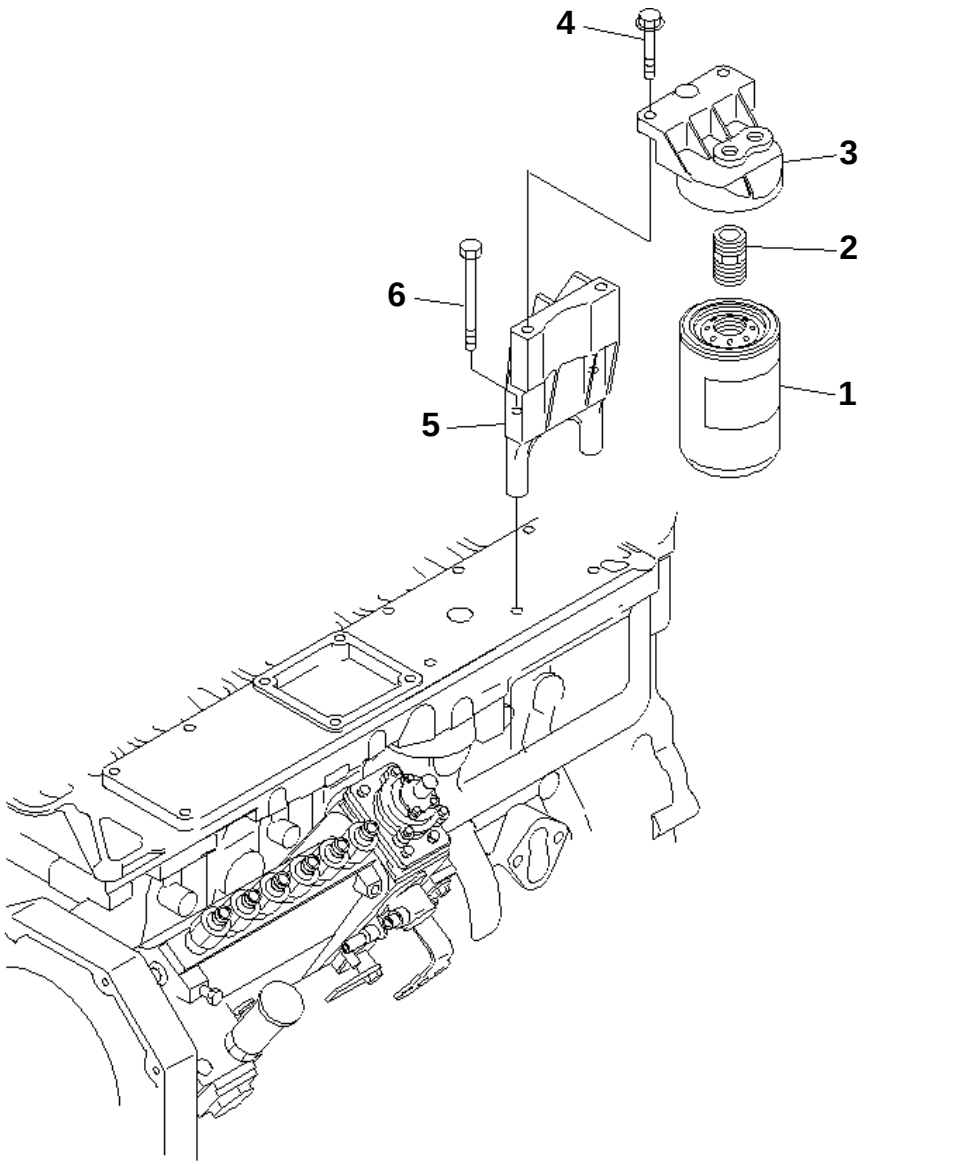

SAA6D102E-2A-8 S/N 26274903-UP

FUEL FILTER (AFTER M/C)(#26307088-)

Item	Part No.	Description	Qty	Options
1	6732-71-6112	CARTRIDGE,FUEL	1	SN:26307174--
	□6732-71-6111	CARTRIDGE,FUEL	1	SN:26307088--26307173
2	6732-71-6650	ADAPTER	1	SN:26307088--
3	6732-71-6220	HEAD	1	SN:26307088--
4	6732-21-5160	BOLT	2	SN:26307088--
5	6738-71-6720	BRACKET	1	SN:26307088--
6	6742-01-4460	BOLT	3	SN:26307088--

Ref. A411P-01A4Z Page 030576

https://truckmanualshub.com/

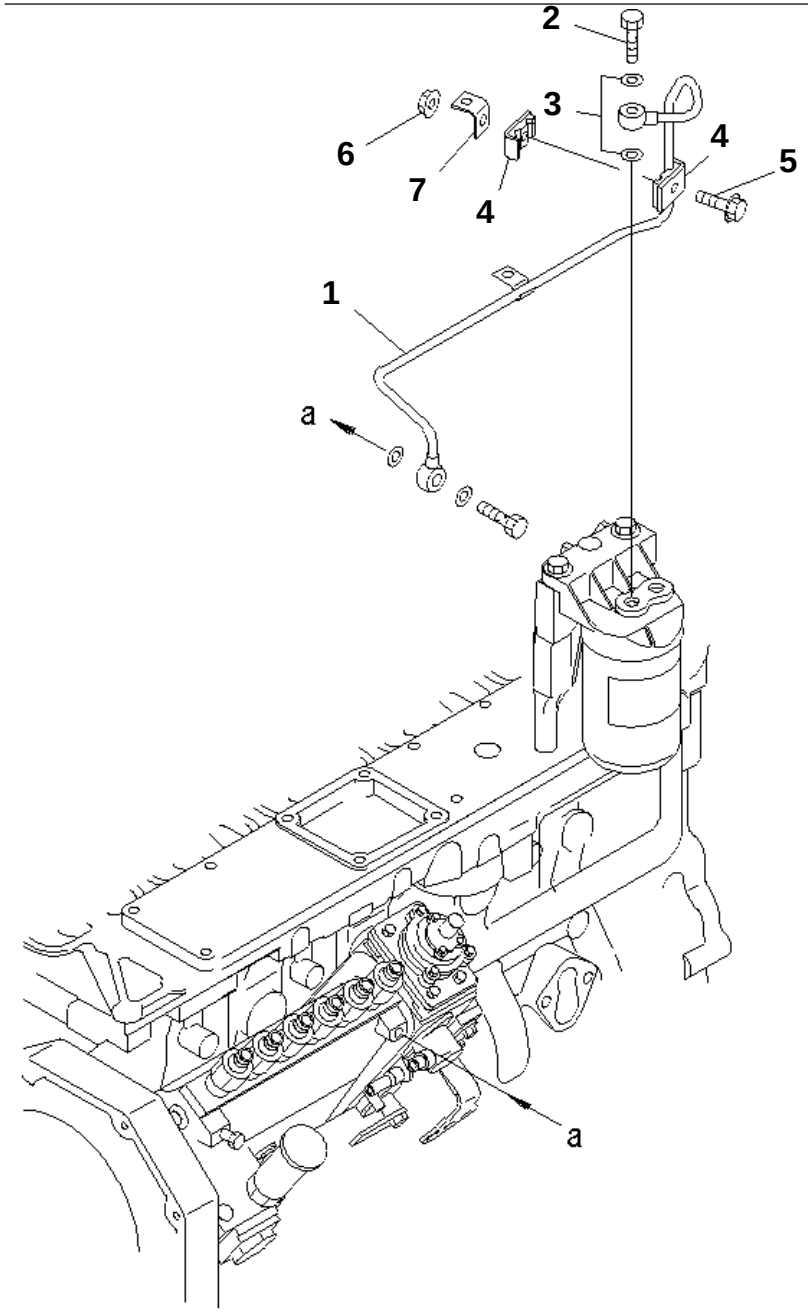

PJ6B407

SAA6D102E-2A-8 S/N 26274903-UP

FUEL FILTER PIPING (AFTER M/C)(#26307088-)

Item	Part No.	Description	Qty	Options
1	6738-71-5640	TUBE	1	SN:26307088--
2	6732-71-6510	BOLT,JOINT	1	SN:26307088--
3	07005-01212	GASKET (K1)	2	SN:26307088--
4	6162-75-5820	CLAMP	2	SN:26307088--
5	6742-01-2630	BOLT	1	SN:26307088--
6	6742-01-2660	NUT	1	SN:26307088--
7	6211-21-5490	BRACKET	1	SN:26307088--

Ref. A411R-01A6Z Page 030582

https://truckmanualshub.com/

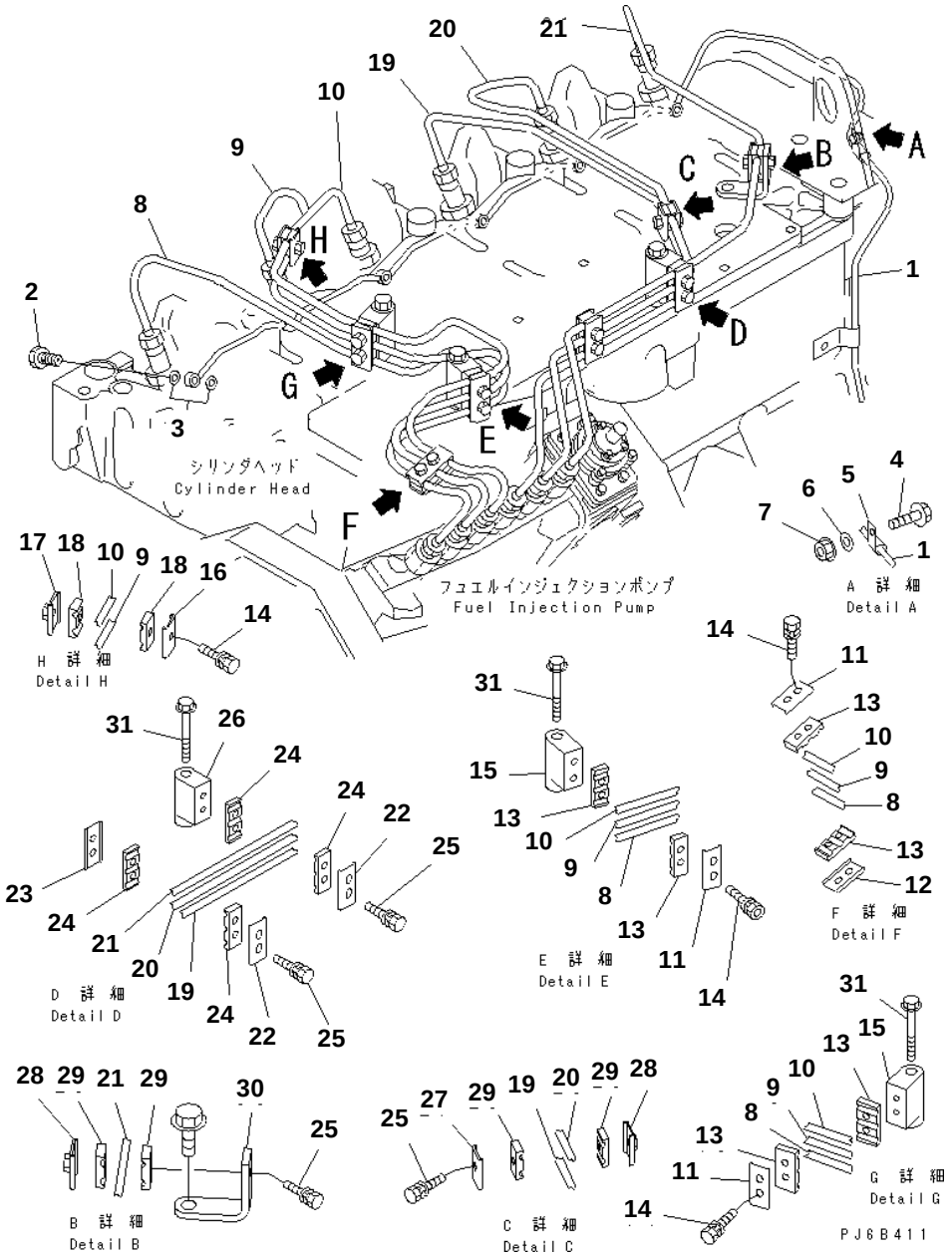

SAA6D102E-2A-8 S/N 26274903-UP

FUEL PIPING

Item	Part No.	Description	Qty	Options
1	6738-71-5520	MANIFOLD	1	SN:26274903--
2	6732-71-6240	BOLT,JOINT	6	SN:26274903--
3	6732-71-6260	GASKET (K1)	12	SN:26274903--
4	6732-21-5160	BOLT	1	SN:26274903--
5	04434-50508	CLIP	1	SN:26274903--
6	01643-30823	WASHER	1	SN:26274903--
7	6732-71-3210	NUT	1	SN:26274903--
8	6738-71-5110	TUBE,NO.1	1	SN:26274903--
9	6738-71-5120	TUBE,NO.2	1	SN:26274903--
10	6738-71-5130	TUBE,NO.3	1	SN:26274903--
11	6734-71-5710	BRACKET	3	SN:26274903--
12	6735-71-5830	BRACKET	1	SN:26274903--
13	6734-71-5720	ISOLATOR	6	SN:26274903--
14	6734-71-5520	BOLT	7	SN:26274903--
15	6734-71-5741	BRACKET	2	SN:26274903--
16	6735-71-5820	BRACKET	1	SN:26274903--
17	6735-71-5840	BRACKET	1	SN:26274903--
18	6735-71-5860	ISOLATOR	2	SN:26274903--
19	6735-71-5643	TUBE,NO.4	1	SN:26274903--
20	6735-71-5653	TUBE,NO.5	1	SN:26274903--
21	6735-71-5663	TUBE,NO.6	1	SN:26274903--
22	6734-71-5710	BRACKET	2	SN:26274903--
23	6735-71-5830	BRACKET	1	SN:26274903--
24	6734-71-5720	ISOLATOR	4	SN:26274903--
25	6734-71-5520	BOLT	6	SN:26274903--
26	6734-71-5741	BRACKET	1	SN:26274903--
27	6735-71-5820	BRACKET	1	SN:26274903--
28	6735-71-5840	BRACKET	2	SN:26274903--
29	6735-71-5860	ISOLATOR	4	SN:26274903--
30	6732-71-5760	BRACKET	1	SN:26274903--
31	6734-11-5210	BOLT	3	SN:26274903--

Ref. A411S-01A9 Page 030590

https://truckmanualshub.com/

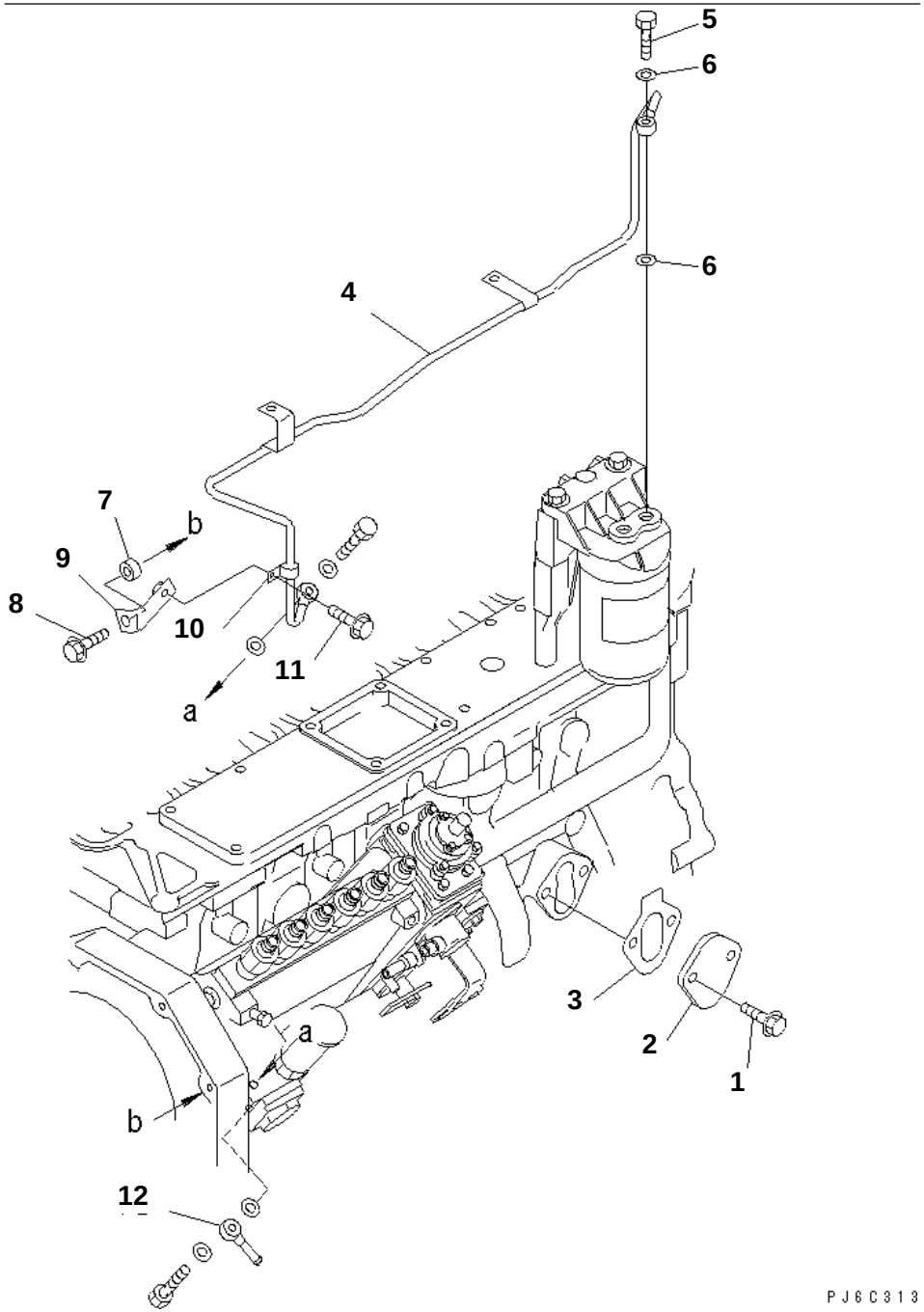

SAA6D102E-2A-8 S/N 26274903-UP

CYLINDER BLOCK BLIND COVER AND PIPING

Item	Part No.	Description	Qty	Options
1	6732-71-3220	BOLT	2	SN:26274903--
2	6736-71-5811	PLATE	1	SN:26274903--
3	6735-61-6411	GASKET (K2)	1	SN:26274903--
4	6738-71-5611	TUBE	1	SN:26275899--
	□6738-71-5610	TUBE	1	SN:26274903--26275898
5	6732-71-6510	BOLT,JOINT	1	SN:26274903--
6	07005-01212	GASKET (K1)	2	SN:26274903--
7	6354-81-6310	SPACER	1	SN:26275899--
	□6130-12-1961	SPACER	1	SN:26274903--26275898
8	6732-21-6630	BOLT	1	SN:26275899--
	□6732-21-5160	BOLT	1	SN:26274903--26275898
9	6736-71-5530	BRACKET	1	SN:26275899--
10	6736-71-5540	CLAMP	1	SN:26275899--
11	6731-71-6270	SCREW	1	SN:26275899--
12	6141-71-1710	JOINT	1	SN:26274903--

Ref. A417P-01A7 Page 030600

https://truckmanualshub.com/

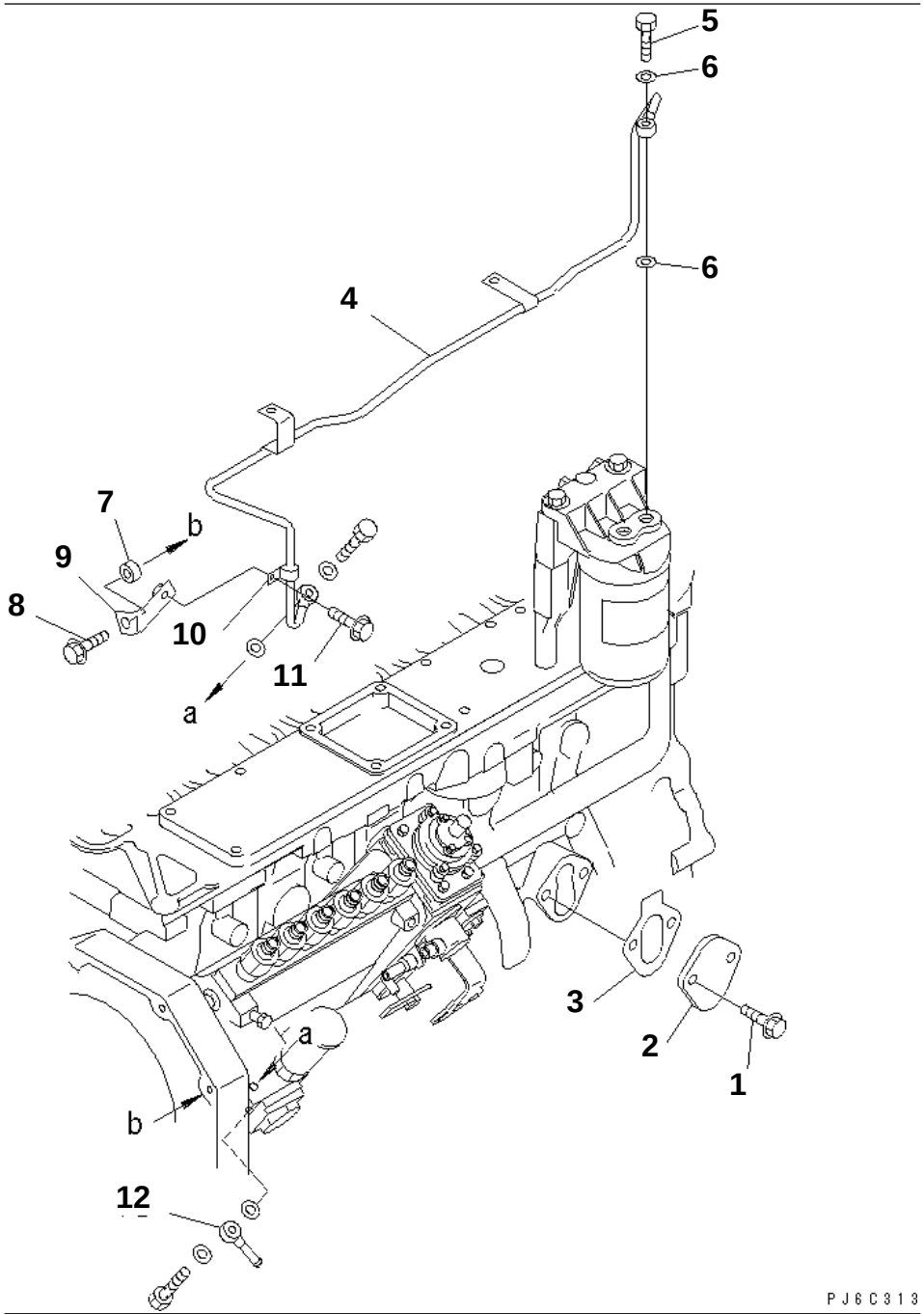

SAA6D102E-2A-8 S/N 26274903-UP

CYLINDER BLOCK BLIND COVER AND PIPING (AFTER M/C)(#26307088-)

Item	Part No.	Description	Qty	Options
1	6732-71-3220	BOLT	2	SN:26307088--
2	6736-71-5811	PLATE	1	SN:26307088--
3	6735-61-6411	GASKET (K2)	1	SN:26307088--
4	6738-71-5630	TUBE	1	SN:26307088--
5	6732-71-6510	BOLT,JOINT	1	SN:26307088--
6	07005-01212	GASKET (K1)	2	SN:26307088--
7	6354-81-6310	SPACER	1	SN:26307088--
8	6732-21-6630	BOLT	1	SN:26307088--
9	6738-71-5590	BRACKET	1	SN:26311571--
	6736-71-5530	BRACKET	1	SN:26307088--26311570
10	6736-71-5540	CLAMP	1	SN:26307088--
11	6731-71-6270	SCREW	1	SN:26307088--
12	6141-71-1710	JOINT	1	SN:26307088--

Ref. A417P-01A8Z Page 030605

https://truckmanualshub.com/

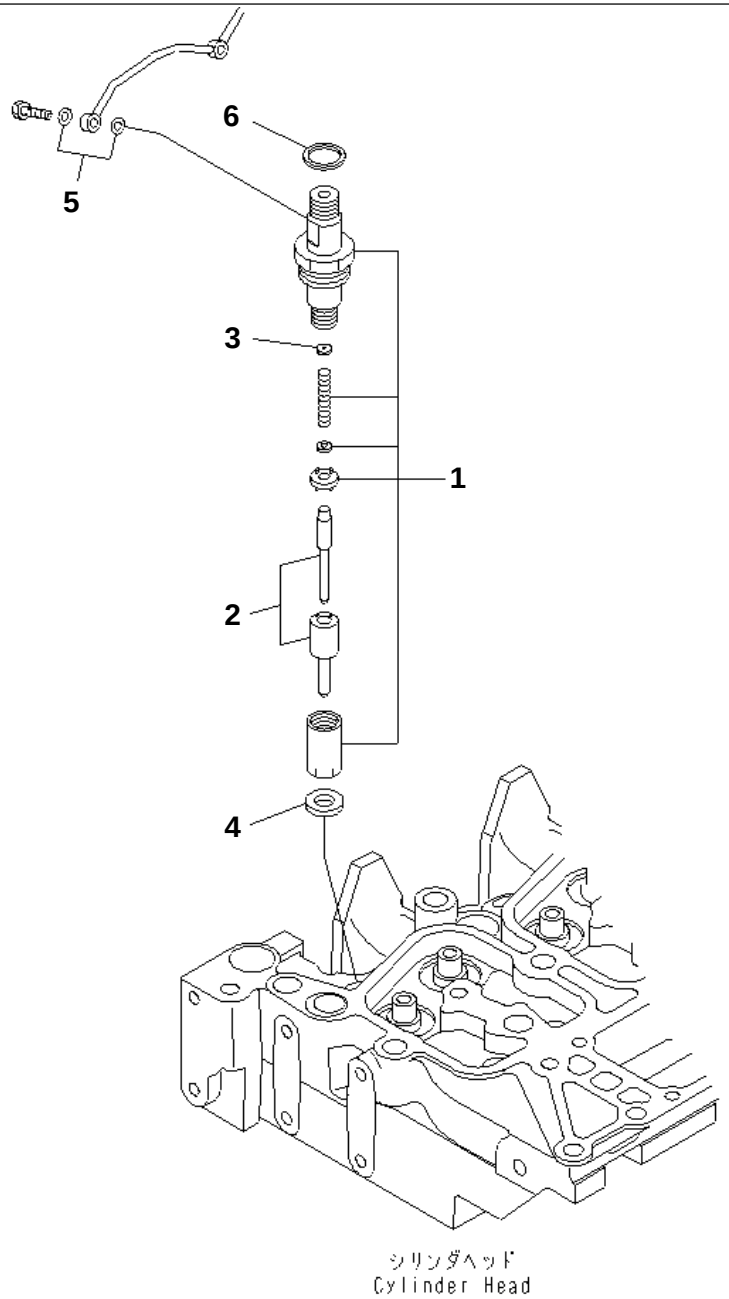

シリンダヘッド
Cylinder Head

PJD4922

SAA6D102E-2A-8 S/N 26274903-UP

INJECTION NOZZLE

Item	Part No.	Description	Qty	Options
	6738-11-3090	KIT,NOZZLE HOLDER	6	SN:26274903--
1	6738-11-3100	· NOZZLE HOLDER ASS'Y	1	SN:26274903--
2	6738-11-3120	· · NOZZLE	1	SN:26274903--
3	6734-11-3610	· · SHIM¤ 1.00MM	1	SN:26274903--
	6734-11-3620	· · SHIM¤ 1.04MM	1	SN:26274903--
	6734-11-3630	· · SHIM¤ 1.08MM	1	SN:26274903--
	6734-11-3640	· · SHIM¤ 1.10MM	1	SN:26274903--
	6734-11-3650	· · SHIM¤ 1.14MM	1	SN:26274903--
	6734-11-3660	· · SHIM¤ 1.18MM	1	SN:26274903--
	6734-11-3670	· · SHIM¤ 1.20MM	1	SN:26274903--
	6734-11-3680	· · SHIM¤ 1.24MM	1	SN:26274903--
	6734-11-3690	· · SHIM¤ 1.28MM	1	SN:26274903--
	6734-11-3710	· · SHIM¤ 1.30MM	1	SN:26274903--
	6734-11-3720	· · SHIM¤ 1.34MM	1	SN:26274903--
	6734-11-3730	· · SHIM¤ 1.38MM	1	SN:26274903--
	6734-11-3740	· · SHIM¤ 1.40MM	1	SN:26274903--
	6734-11-3750	· · SHIM¤ 1.44MM	1	SN:26274903--
	6734-11-3760	· · SHIM¤ 1.48MM	1	SN:26274903--
	6734-11-3770	· · SHIM¤ 1.50MM	1	SN:26274903--
	6734-11-3780	· · SHIM¤ 1.54MM	1	SN:26274903--
	6734-11-3790	· · SHIM¤ 1.58MM	1	SN:26274903--
	6734-11-3810	· · SHIM¤ 1.60MM	1	SN:26274903--
	6734-11-3820	· · SHIM¤ 1.64MM	1	SN:26274903--
	6734-11-3830	· · SHIM¤ 1.68MM	1	SN:26274903--
	6734-11-3840	· · SHIM¤ 1.70MM	1	SN:26274903--
	6734-11-3850	· · SHIM¤ 1.74MM	1	SN:26274903--
	6734-11-3860	· · SHIM¤ 1.78MM	1	SN:26274903--
	6734-11-3870	· · SHIM¤ 1.80MM	1	SN:26274903--
	6734-11-3880	· · SHIM¤ 1.84MM	1	SN:26274903--
	6734-11-3890	· · SHIM¤ 1.88MM	1	SN:26274903--
	6734-11-3910	· · SHIM¤ 1.90MM	1	SN:26274903--
	6734-11-3920	· · SHIM¤ 1.94MM	1	SN:26274903--
	6734-11-3930	· · SHIM¤ 1.98MM	1	SN:26274903--
4	6736-11-3430	· · GASKET (K1)	1	SN:26274903--
5	6732-71-6260	· GASKET (K1)	2	SN:26274903--
6	6732-11-3850	· SEAL (K1)	1	SN:26274903--

Ref. A4219-01A6 Page 030610

https://truckmanualshub.com/

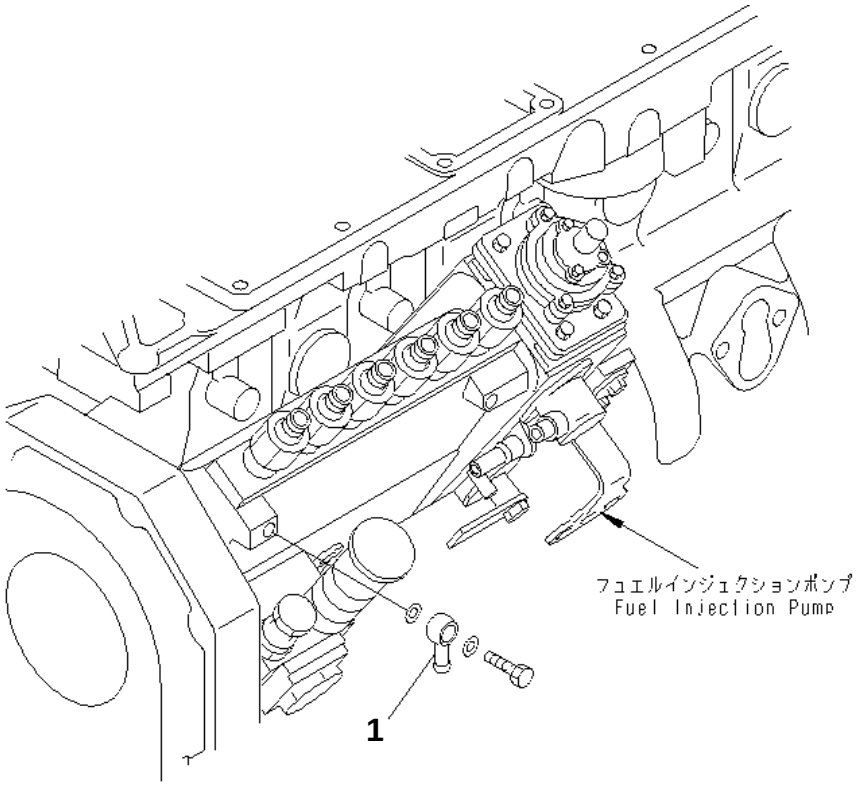

00012111

SAA6D102E-2A-8 S/N 26274903-UP

FUEL JOINT

Item	Part No.	Description	Qty	Options
1	6144-71-5750	JOINT	1	SN:26274903--

Ref. A423V-01A0Z Page 030620

https://truckmanualshub.com/

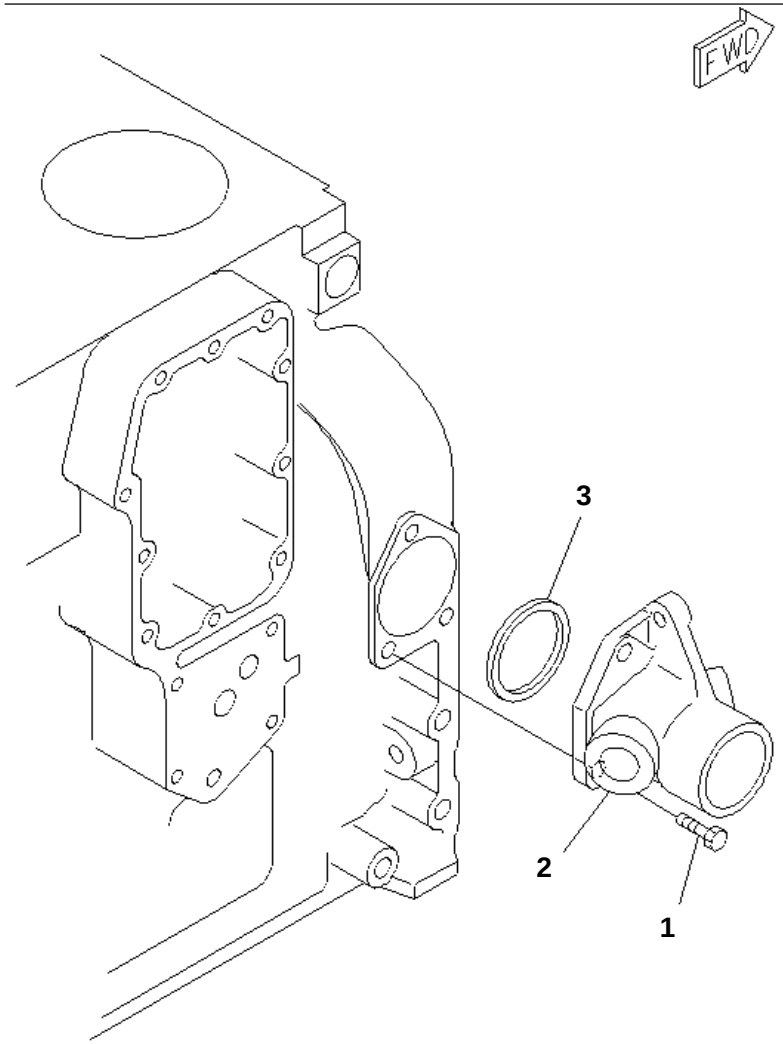

PJ6B426

SAA6D102E-2A-8 S/N 26274903-UP

WATER CONNECTOR

Item	Part No.	Description	Qty	Options
1	6735-71-3220	BOLT	3	SN:26274903--
2	6734-61-6110	CONNECTOR	1	SN:26274903--
3	6732-61-6130	SEAL (K2)	1	SN:26274903--

Ref. A501R-01A3 Page 030630

https://truckmanualshub.com/

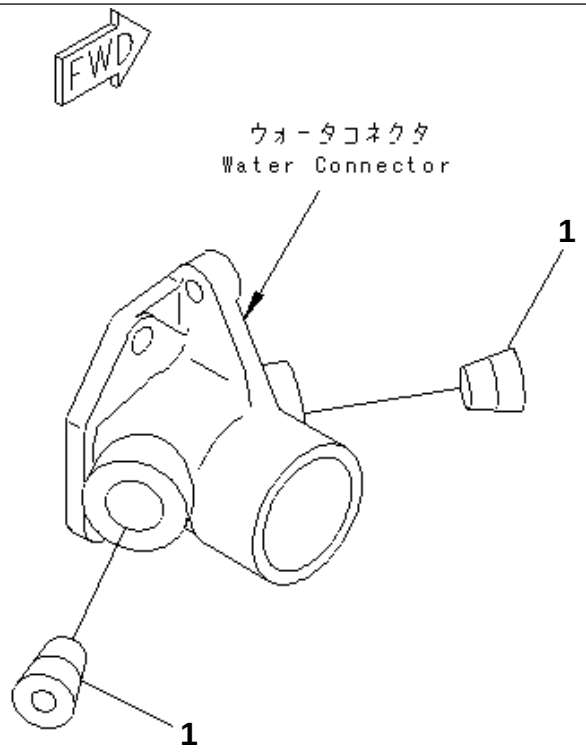

PJ6B427

SAA6D102E-2A-8 S/N 26274903-UP

WATER CONNECTOR PLUG

Item	Part No.	Description	Qty	Options
1	6732-11-1910	PLUG	2	SN:26274903--

Ref. A501S-01A0Z Page 030640

https://truckmanualshub.com/

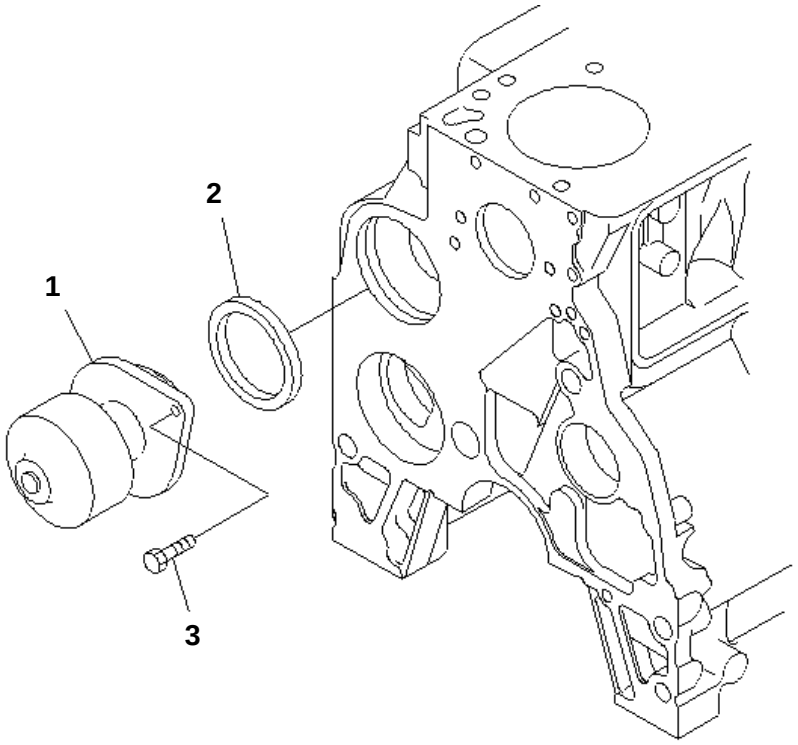

PJ6B451

SAA6D102E-2A-8 S/N 26274903-UP

WATER PUMP

Item	Part No.	Description	Qty	Options
	6736-61-1202	KIT,WATER PUMP	1	SN:26274903--
	□6736-61-1201	KIT,WATER PUMP	1	SN:26274903--
1	6735-61-1102	· WATER PUMP ASS'Y	1	SN:26274903--
	□6735-61-1101	· WATER PUMP ASS'Y	1	SN:26274903--
2	6736-61-1520	· SEAL (K2)	1	SN:26274903--
3	6732-41-1260	BOLT	2	SN:26274903--

Ref. A5019-01A0Z Page 030650

https://truckmanualshub.com/

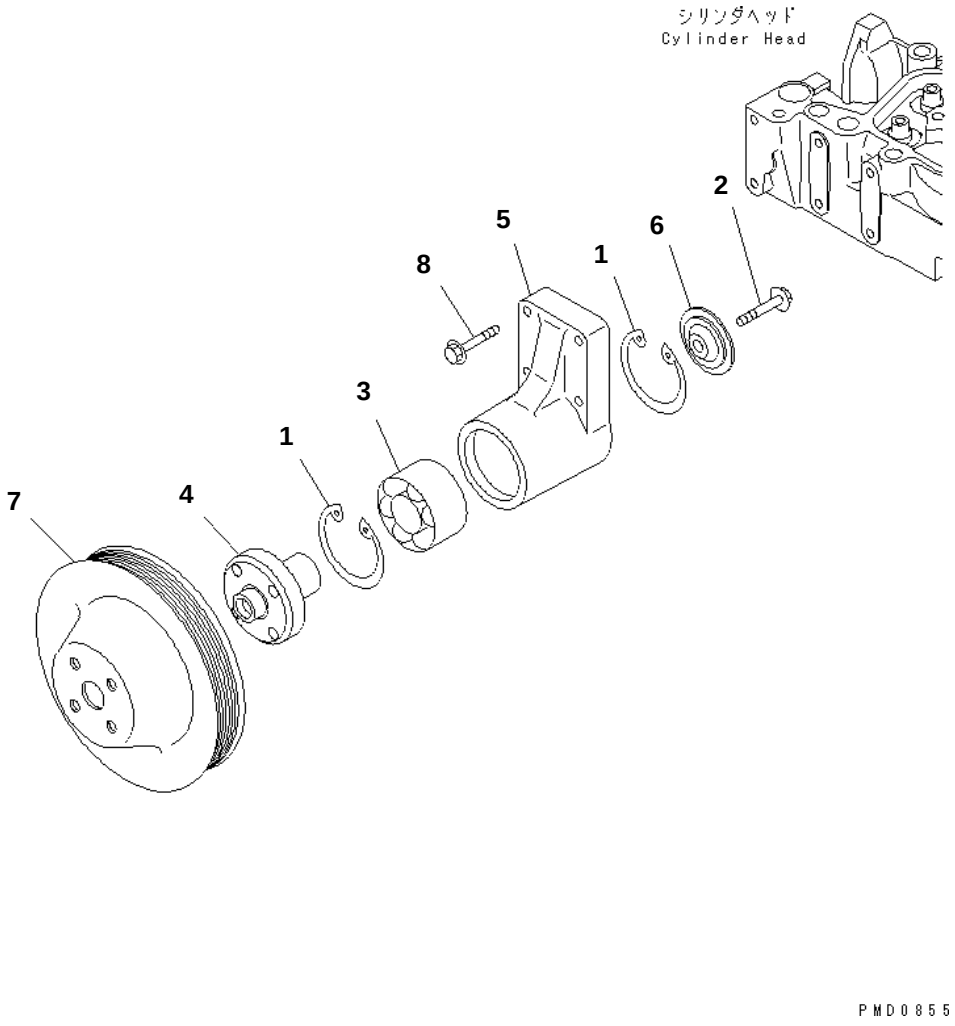

SAA6D102E-2A-8 S/N 26274903-UP

FAN DRIVE PULLEY

Item	Part No.	Description	Qty	Options
	6732-61-3120	SUPPORT ASS'Y	1	SN:26274903--
1	6732-61-3450	· RING,SNAP	2	SN:26274903--
2	6732-61-3440	· BOLT	1	SN:26274903--
3	6732-61-3420	· BEARING,BALL	1	SN:26274903--
4	6732-61-3410	· HUB	1	SN:26274903--
5	☆	· SUPPORT	1	SN:26274903--
6	6732-61-3430	· RETAINER	1	SN:26274903--
7	6738-61-3130	PULLEY	1	SN:26274903--
8	6732-61-3170	BOLT	4	SN:26274903--

Ref. A502P-01B8 Page 030660

https://truckmanualshub.com/

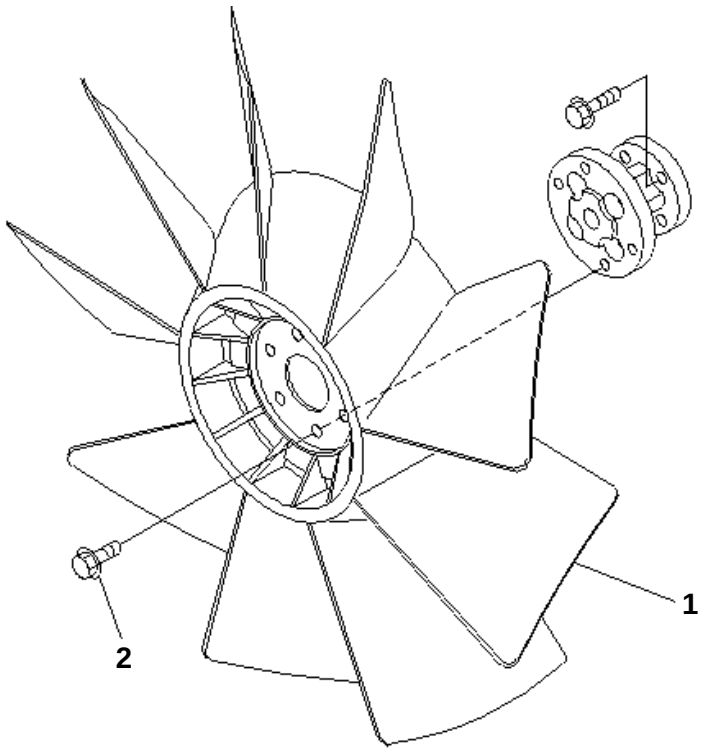

PJ6B432

SAA6D102E-2A-8 S/N 26274903-UP

COOLING FAN

Item	Part No.	Description	Qty	Options
1	600-625-7620	FAN,COOLING	1	SN:26274903--
2	01435-01020	BOLT	4	SN:26274903--

Ref. A5030-01C0 Page 030670

https://truckmanualshub.com/

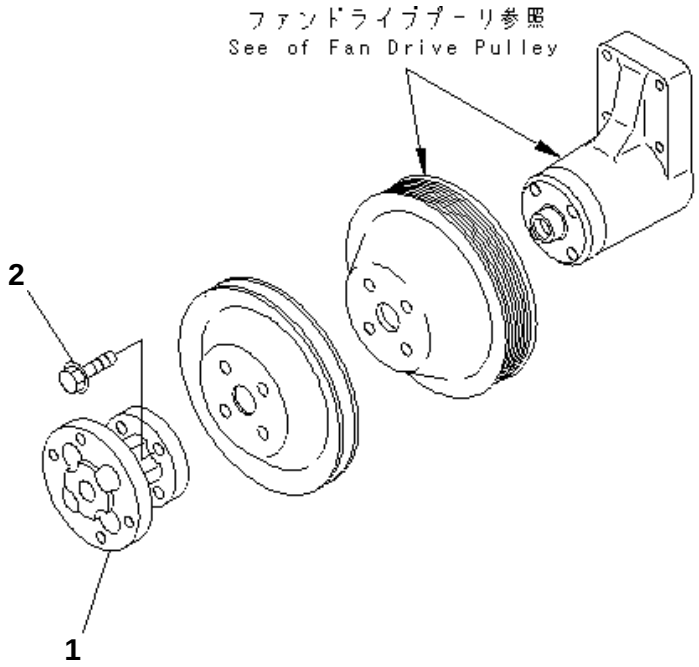

PJ6B422

SAA6D102E-2A-8 S/N 26274903-UP

FAN PILOT SPACER

Item	Part No.	Description	Qty	Options
1	6732-61-3610	SPACER	1	SN:26274903--
2	01435-01035	BOLT	4	SN:26274903--

Ref. A504P-01A1 Page 030680

https://truckmanualshub.com/

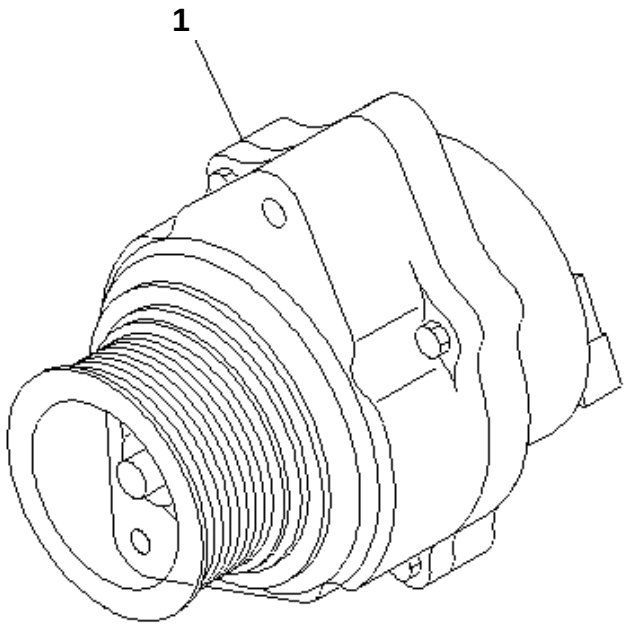

PMD1097

SAA6D102E-2A-8 S/N 26274903-UP

ALTERNATOR (60A)

Item	Part No.	Description	Qty	Options
1	(600-861-6410)	ALTERNATOR A. (60A),(SEE FIG.A601P-02A2)	1	SN:26274903--

Ref. A601P-01A2 Page 030690

https://truckmanualshub.com/

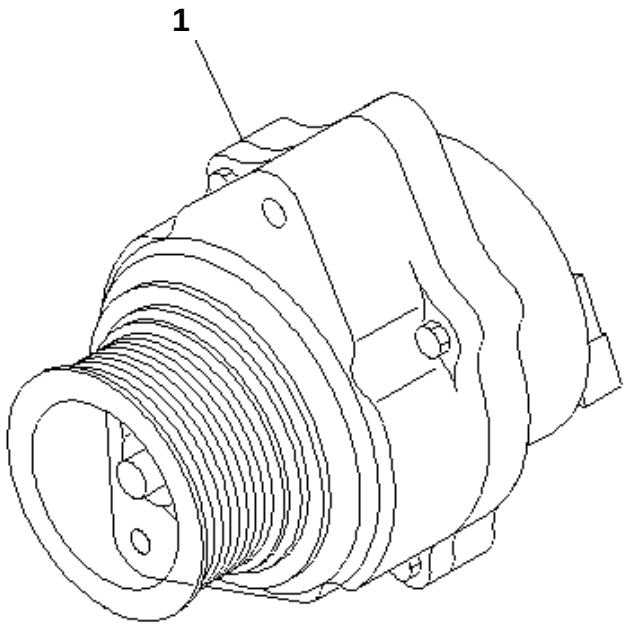

PMD1097

SAA6D102E-2A-8 S/N 26274903-UP

ALTERNATOR (35A)

Item	Part No.	Description	Qty	Options
1	(600-861-3410)	ALTERNATOR A. (35A),(SEE FIG.A601P-02A9)	1	SN:26274903--

Ref. A601P-01A9 Page 030700

https://truckmanualshub.com/

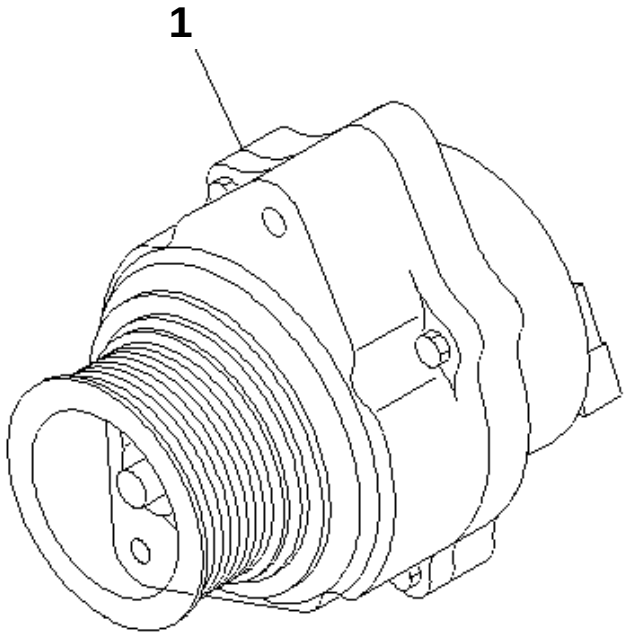

PMD1097

SAA6D102E-2A-8 S/N 26274903-UP

ALTERNATOR (35A) (AFTER M/C)(#26307088-)

Item	Part No.	Description	Qty	Options
1	(600-861-3420)	ALTERNATOR A. (35A),(SEE FIG.A601P-02B0A)	1	SN:26315328--
	(600-861-3410)	ALTERNATOR A. (35A),(SEE FIG.A601P-02B0Z)	1	SN:26307088--26315327

Ref. A601P-01B0Z Page 030703

https://truckmanualshub.com/

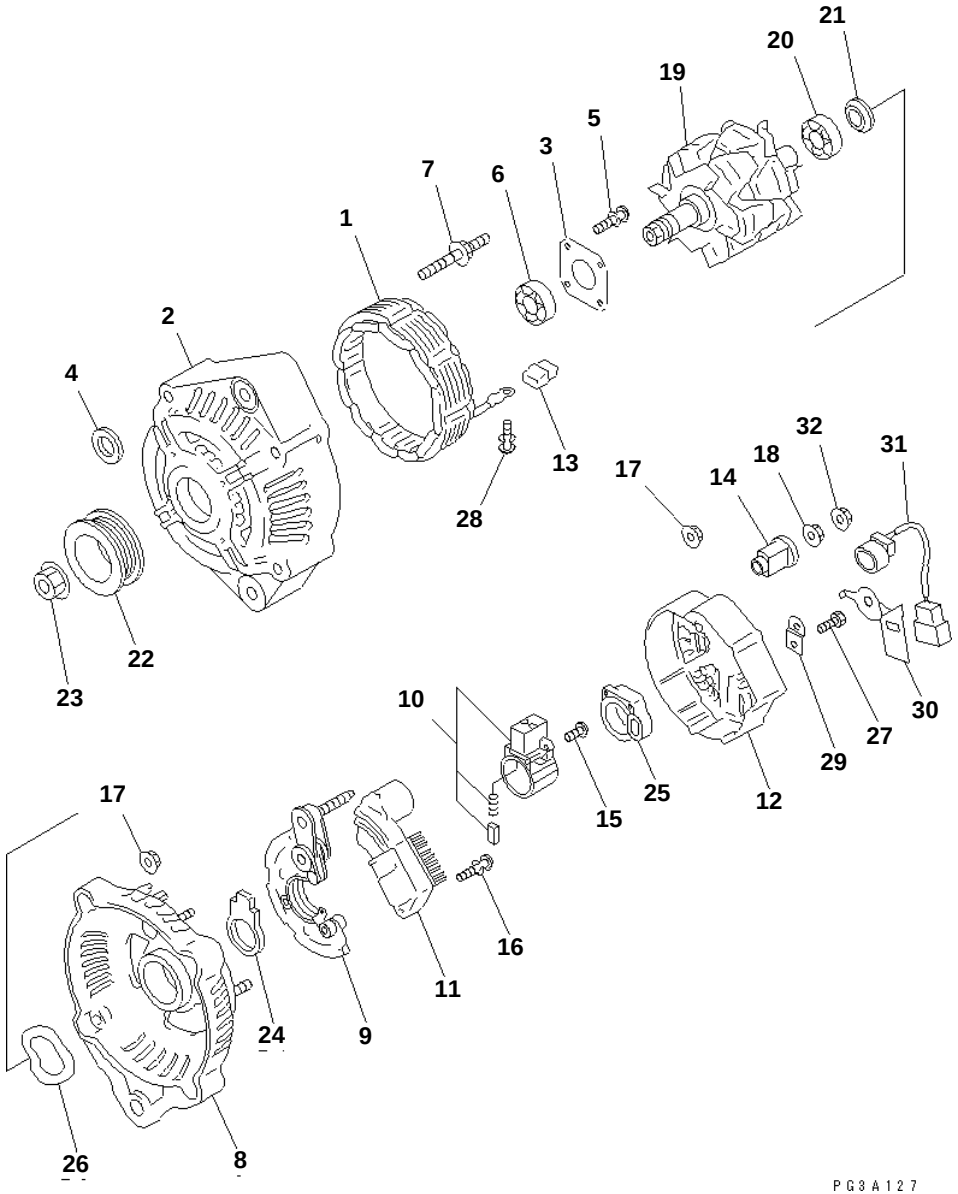

SAA6D102E-2A-8 S/N 26274903-UP

ALTERNATOR (60A) (INNER PARTS)

Item	Part No.	Description	Qty	Options
	600-861-6410	ALTERNATOR A. (60A)	1	SN:26274903--
	ND121400-0800	· FRAME ASS'Y	1	SN:26274903--
1	ND021100-4210	· · STATOR ASS'Y	1	SN:26274903--
2	ND021401-4980	· · FRAME	1	SN:26274903--
3	ND021411-0570	· · PLATE	1	SN:26274903--
4	ND021045-0530	· · COLLAR	1	SN:26274903--
5	ND949006-5590	· · SCREW	4	SN:26274903--
6	ND949100-5010	· · BEARING,BALL	1	SN:26274903--
7	ND949043-2000	· · BOLT,STUD	4	SN:26274903--
8	ND021501-8050	· FRAME,REAR	1	SN:26274903--
9	ND021580-4820	· HOLDER	1	SN:26274903--
10	ND021620-2720	· BRUSH HOLDER ASS'Y	1	SN:26274903--
11	ND126000-2320	· BRUSH HOLDER ASS'Y	1	SN:26274903--
12	ND021551-2480	· COVER	1	SN:26274903--
13	ND021605-1970	· BUSHING	4	SN:26274903--
14	ND021605-2480	· BUSHING	1	SN:26274903--
15	ND949006-5460	· SCREW	3	SN:26274903--
16	ND91310-04251	· SCREW	2	SN:26274903--
	ND949007-5110	· SCREW	2	SN:26274903--
17	ND949056-2481	· NUT	7	SN:26274903--
18	ND949056-3080	· NUT	1	SN:26274903--
19	ND021200-4141	· ROTOR ASS'Y	1	SN:26274903--
20	ND949100-2790	· · BEARING,BALL	1	SN:26274903--
21	ND021506-0070	· · COVER	1	SN:26274903--
22	ND021041-8620	· PULLEY	1	SN:26274903--
23	ND949056-2520	· NUT	1	SN:26274903--
24	ND021626-0190	· SEAL	1	SN:26274903--
25	ND021626-0250	· SEAL	1	SN:26274903--
26	ND021542-0160	· WASHER	1	SN:26274903--
27	ND949006-6401	· SCREW	1	SN:26274903--
28	ND949007-6280	· SCREW	4	SN:26274903--
29	ND021602-5230	· PLATE	1	SN:26274903--
30	ND021751-1990	· CLIP	1	SN:26274903--
31	ND021700-2680	· WIRE	1	SN:26274903--
32	ND92150-06061	· NUT	1	SN:26274903--

Ref. A601P-02A2 Page 030710

https://truckmanualshub.com/

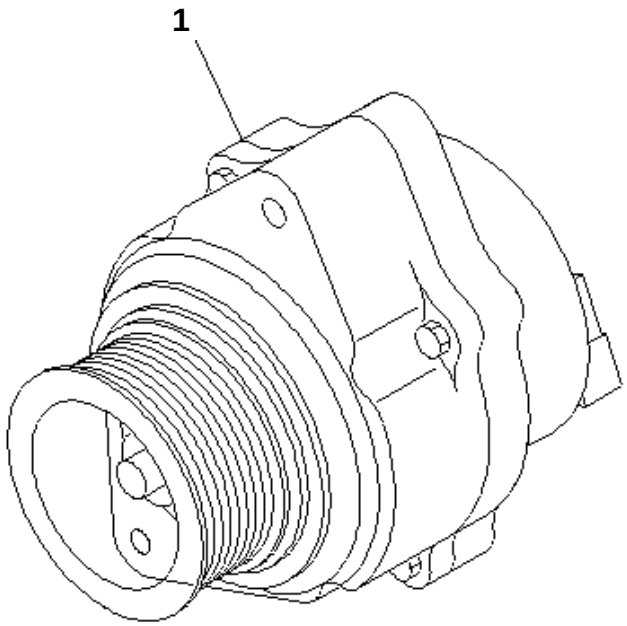

PMD1097

SAA6D102E-2A-8 S/N 26274903-UP

ALTERNATOR (60A) (AFTER M/C)(#26307088-)

Item	Part No.	Description	Qty	Options
1	(600-861-6420)	ALTERNATOR A. (60A),(SEE FIG.A601P-02B1Z)	1	SN:26307088--

Ref. A601P-01B1Z Page 030706

https://truckmanualshub.com/

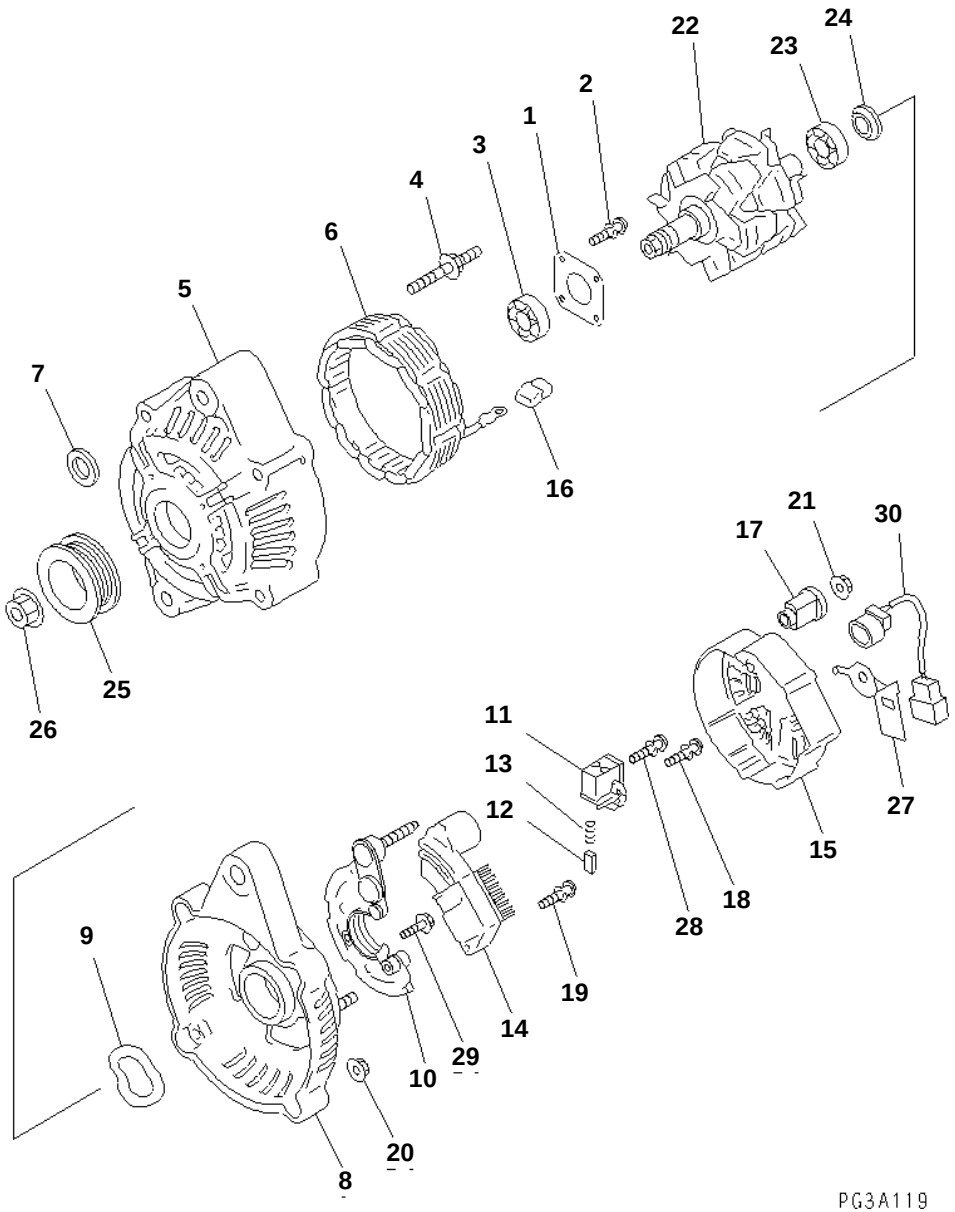

SAA6D102E-2A-8 S/N 26274903-UP

ALTERNATOR (35A) (INNER PARTS)

Item	Part No.	Description	Qty	Options
	600-861-3410	ALTERNATOR A. (35A)	1	SN:26274903--
	ND121400-0840	· FRAME ASS'Y	1	SN:26274903--
1	ND021411-0450	· · PLATE	1	SN:26274903--
2	ND949006-6970	· · SCREW	4	SN:26274903--
3	ND949100-3361	· · BEARING,BALL	1	SN:26274903--
4	ND949043-2000	· · BOLT,STUD	4	SN:26274903--
5	ND021401-3671	· · FRAME	1	SN:26274903--
6	ND021100-4360	· · STATOR ASS'Y	1	SN:26274903--
7	ND021045-0530	· · COLLAR	1	SN:26274903--
8	ND021501-9560	· FRAME,REAR	1	SN:26274903--
9	ND021542-0220	· · WASHER	1	SN:26274903--
10	ND021580-5060	· HOLDER	1	SN:26274903--
	ND021620-2201	· BRUSH HOLDER ASS'Y	1	SN:26274903--
11	ND021626-0240	· · BRUSH HOLDER	1	SN:26274903--
12	ND021660-0510	· · BRUSH	2	SN:26274903--
13	ND949170-6990	· · SPRING	2	SN:26274903--
14	ND126000-2310	· REGULATOR ASS'Y	1	SN:26274903--
15	ND021551-2910	· COVER,REAR	1	SN:26274903--
16	ND021605-1360	· BUSHING	4	SN:26274903--
17	ND021605-2490	· BUSHING	1	SN:26274903--
18	ND949006-5460	· SCREW	6	SN:26274903--
19	ND91310-04251	· SCREW	2	SN:26274903--
20	ND949056-2481	· NUT	8	SN:26274903--
21	ND949056-1001	· NUT	1	SN:26274903--
22	ND021200-4132	· ROTOR ASS'Y	1	SN:26274903--
23	ND949100-2790	· · BEARING,BALL	1	SN:26274903--
24	ND021506-0070	· · COVER	1	SN:26274903--
25	ND021041-8680	· PULLEY	1	SN:26274903--
26	ND949056-2520	· NUT	1	SN:26274903--
27	ND021751-1990	· CLIP	1	SN:26274903--
28	ND949007-7000	· SCREW	1	SN:26274903--
29	ND949047-7870	· BOLT	1	SN:26274903--
30	ND021700-2680	· WIRE	1	SN:26274903--

Ref. A601P-02A9 Page 030720

https://truckmanualshub.com/

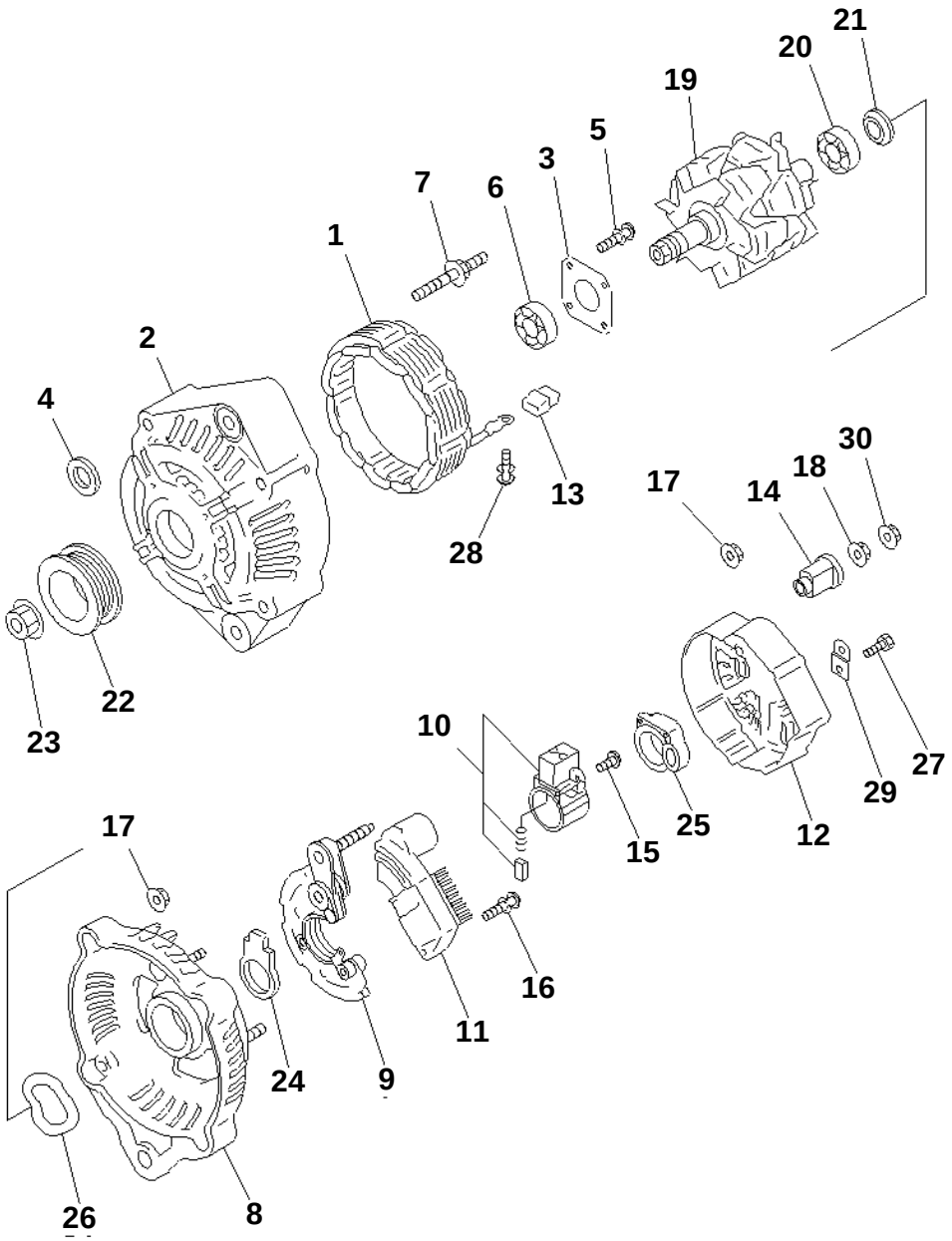

SAA6D102E-2A-8 S/N 26274903-UP

ALTERNATOR (35A) (INNER PARTS)(#26315328-)

Item	Part No.	Description	Qty	Options
	600-861-3420	ALTERNATOR A. (35A)	1	SN:26315328--
	ND121400-4840	· FRAME ASS'Y	1	SN:26315328--
1	ND021100-5060	· · STATOR ASS'Y	1	SN:26315328--
2	ND021401-1620	· · FRAME	1	SN:26315328--
3	ND021411-0570	· · PLATE	1	SN:26315328--
4	ND021045-0530	· · COLLAR	1	SN:26315328--
5	ND949006-5590	· · SCREW	4	SN:26315328--
6	ND949100-5010	· · BEARING,BALL	1	SN:26315328--
7	ND949043-2000	· · BOLT,STUD	4	SN:26315328--
8	ND121501-2920	· FRAME,REAR	1	SN:26315328--
9	ND021580-4670	· RECTIFIER ASS'Y	1	SN:26315328--
10	ND021620-2720	· BRUSH HOLDER ASS'Y	1	SN:26315328--
11	ND126000-3730	· REGULATOR ASS'Y	1	SN:26315328--
12	ND021551-2360	· COVER	1	SN:26315328--
13	ND021605-1970	· BUSHING	4	SN:26315328--
14	ND021605-2950	· BUSHING	1	SN:26315328--
15	ND949006-5460	· SCREW	3	SN:26315328--
16	ND91310-04251	· SCREW	2	SN:26315328--
	ND949007-5110	· SCREW	2	SN:26315328--
17	ND949056-2481	· NUT	7	SN:26315328--
18	ND949056-1001	· NUT	1	SN:26315328--
19	ND021200-8610	· ROTOR ASS'Y	1	SN:26315328--
20	ND949100-2790	· · BEARING,BALL	1	SN:26315328--
21	ND021506-0070	· · COVER	1	SN:26315328--
22	ND021041-8620	· PULLEY	1	SN:26315328--
23	ND949056-2520	· NUT	1	SN:26315328--
24	ND021626-0190	· SEAL	1	SN:26315328--
25	ND021626-0250	· SEAL	1	SN:26315328--
26	ND021542-0160	· WASHER	1	SN:26315328--
27	ND949006-6401	· SCREW	1	SN:26315328--
28	ND949007-6280	· SCREW	4	SN:26315328--
29	ND021602-5230	· PLATE	1	SN:26315328--
30	ND92150-06061	· NUT	1	SN:26315328--

Ref. A601P-02B0A Page 030721

https://truckmanualshub.com/

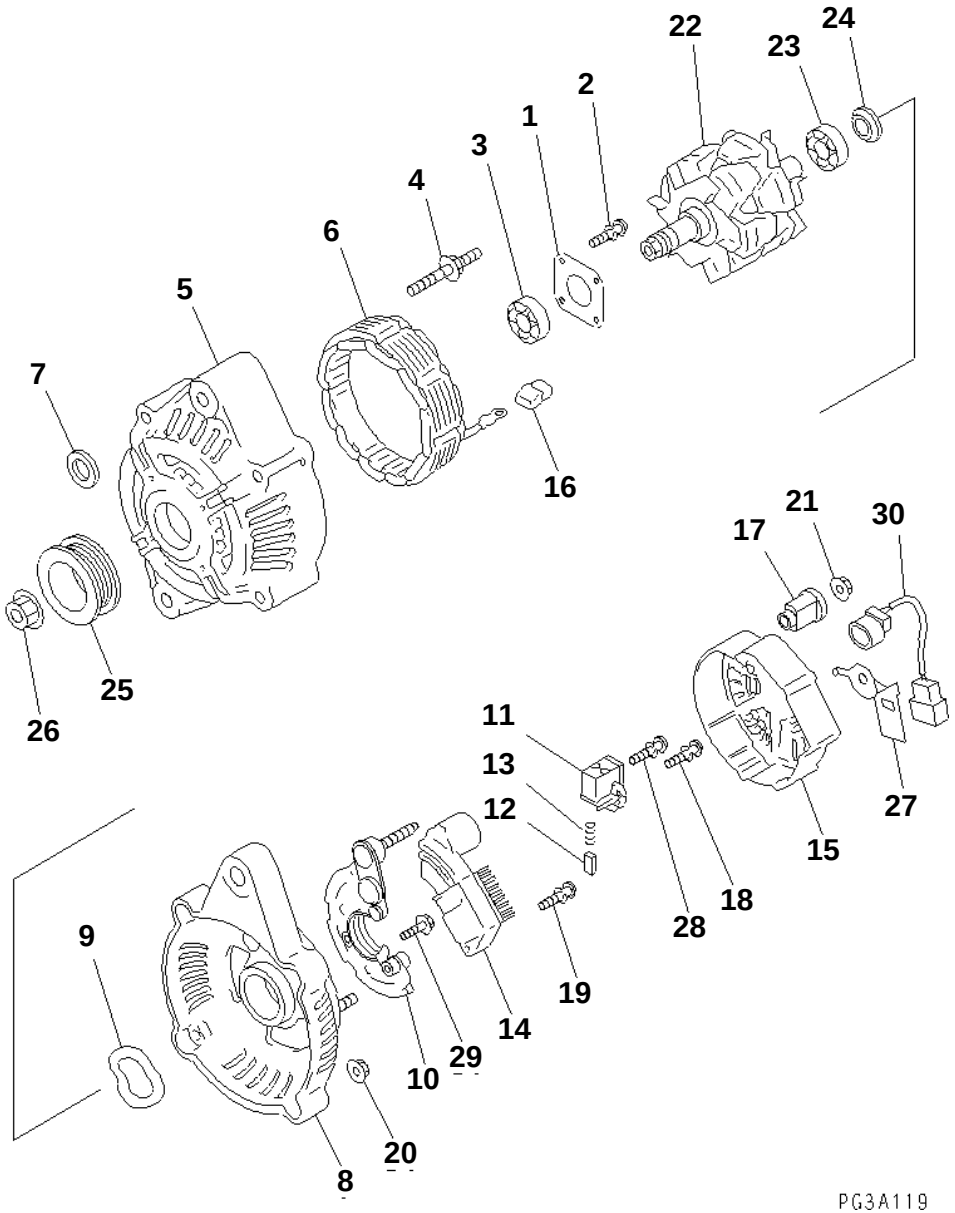

SAA6D102E-2A-8 S/N 26274903-UP

ALTERNATOR (35A) (AFTER M/C) (INNER PARTS)(#26307088-)

Item	Part No.	Description	Qty	Options
	600-861-3410	ALTERNATOR A. (35A)	1	SN:26307088--26315327
	ND121400-0840	· FRAME ASS'Y	1	SN:26307088--26315327
1	ND021411-0450	· · PLATE	1	SN:26307088--26315327
2	ND949006-6970	· · SCREW	4	SN:26307088--26315327
3	ND949100-3361	· · BEARING,BALL	1	SN:26307088--26315327
4	ND949043-2000	· · BOLT,STUD	4	SN:26307088--26315327
5	ND021401-3671	· · FRAME	1	SN:26307088--26315327
6	ND021100-4360	· · STATOR ASS'Y	1	SN:26307088--26315327
7	ND021045-0530	· · COLLAR	1	SN:26307088--26315327
8	ND021501-9560	· FRAME,REAR	1	SN:26307088--26315327
9	ND021542-0220	· · WASHER	1	SN:26307088--26315327
10	ND021580-5060	· HOLDER	1	SN:26307088--26315327
	ND021620-2201	· BRUSH HOLDER ASS'Y	1	SN:26307088--26315327
11	ND021626-0240	· · BRUSH HOLDER	1	SN:26307088--26315327
12	ND021660-0510	· · BRUSH	2	SN:26307088--26315327
13	ND949170-6990	· · SPRING	2	SN:26307088--26315327
14	ND126000-2310	· REGULATOR ASS'Y	1	SN:26307088--26315327
15	ND021551-2910	· COVER,REAR	1	SN:26307088--26315327
16	ND021605-1360	· BUSHING	4	SN:26307088--26315327
17	ND021605-2490	· BUSHING	1	SN:26307088--26315327
18	ND949006-5460	· SCREW	6	SN:26307088--26315327
19	ND91310-04251	· SCREW	2	SN:26307088--26315327
20	ND949056-2481	· NUT	8	SN:26307088--26315327
21	ND949056-1001	· NUT	1	SN:26307088--26315327
22	ND021200-4132	· ROTOR ASS'Y	1	SN:26307088--26315327
23	ND949100-2790	· · BEARING,BALL	1	SN:26307088--26315327
24	ND021506-0070	· · COVER	1	SN:26307088--26315327
25	ND021041-8680	· PULLEY	1	SN:26307088--26315327
26	ND949056-2520	· NUT	1	SN:26307088--26315327
27	ND021751-1990	· CLIP	1	SN:26307088--26315327
28	ND949007-7000	· SCREW	1	SN:26307088--26315327
29	ND949047-7870	· BOLT	1	SN:26307088--26315327
30	ND021700-2680	· WIRE	1	SN:26307088--26315327

Ref. A601P-02B0Z Page 030723

https://truckmanualshub.com/

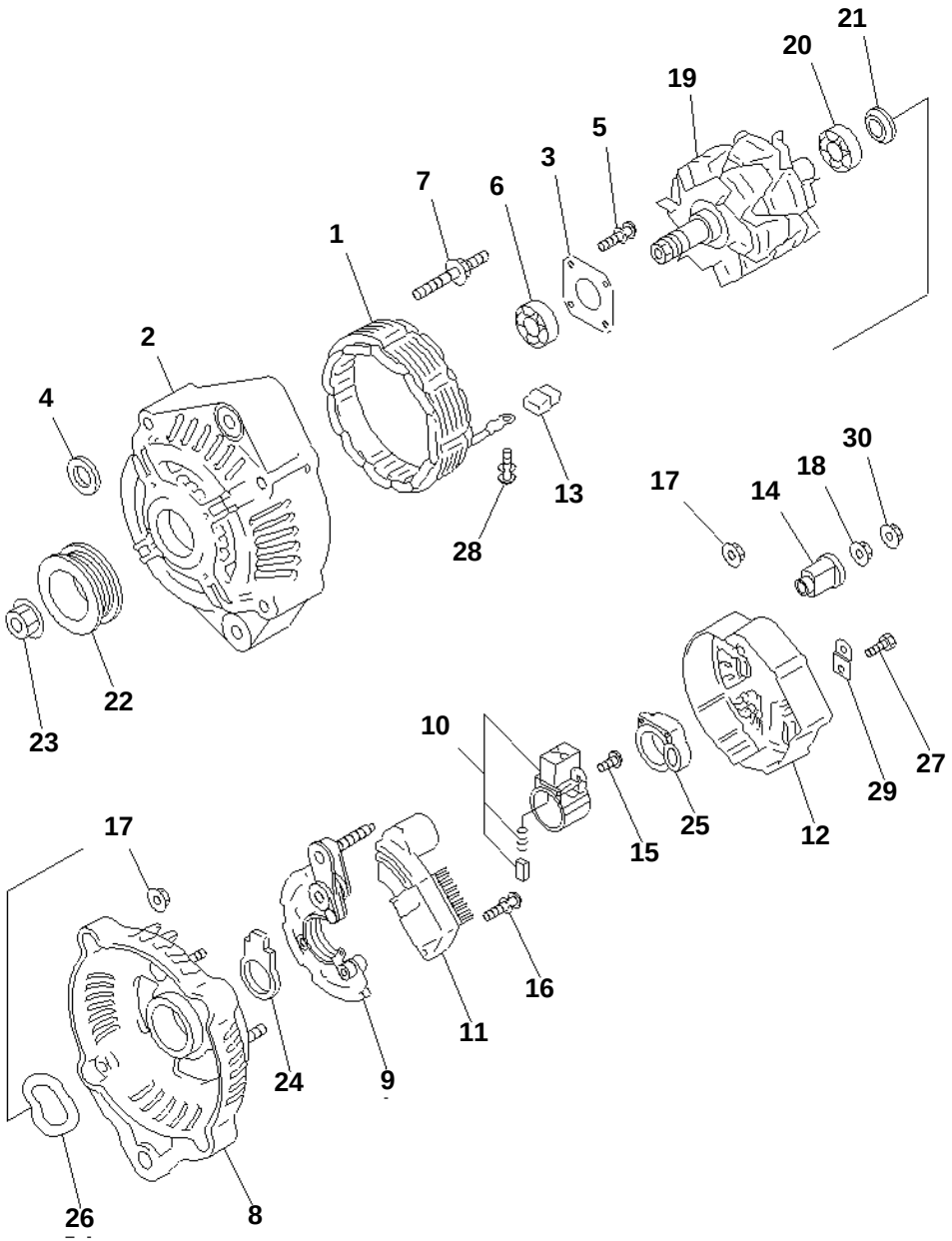

SAA6D102E-2A-8 S/N 26274903-UP

ALTERNATOR (60A) (AFTER M/C) (INNER PARTS)(#26307088-)

Item	Part No.	Description	Qty	Options
	600-861-6420	ALTERNATOR A. (60A)	1	SN:26307088--
	ND121400-0800	· FRAME ASS'Y	1	SN:26307088--
1	ND021100-4210	· · STATOR ASS'Y	1	SN:26307088--
2	ND021401-4980	· · FRAME	1	SN:26307088--
3	ND021411-0570	· · PLATE	1	SN:26307088--
4	ND021045-0530	· · COLLAR	1	SN:26307088--
5	ND949006-5590	· · SCREW	4	SN:26307088--
6	ND949100-5010	· · BEARING,BALL	1	SN:26307088--
7	ND949043-2000	· · BOLT,STUD	4	SN:26307088--
8	ND021501-8050	· FRAME,REAR	1	SN:26307088--
9	ND021580-4820	· HOLDER	1	SN:26307088--
10	ND021620-2720	· BRUSH HOLDER ASS'Y	1	SN:26307088--
11	ND126000-2320	· BRUSH HOLDER ASS'Y	1	SN:26307088--
12	ND021551-2480	· COVER	1	SN:26307088--
13	ND021605-1970	· BUSHING	4	SN:26307088--
14	ND021605-2481	· BUSHING	1	SN:26307088--
15	ND949006-5460	· SCREW	3	SN:26307088--
16	ND91310-04251	· SCREW	2	SN:26307088--
	ND949007-5110	· SCREW	2	SN:26307088--
17	ND949056-2481	· NUT	7	SN:26307088--
18	ND949056-3080	· NUT	1	SN:26307088--
19	ND021200-8380	· ROTOR ASS'Y	1	SN:26307088--
20	ND949100-2790	· · BEARING,BALL	1	SN:26307088--
21	ND021506-0070	· · COVER	1	SN:26307088--
22	ND021041-8620	· PULLEY	1	SN:26307088--
23	ND949056-2520	· NUT	1	SN:26307088--
24	ND021626-0190	· SEAL	1	SN:26307088--
25	ND021626-0250	· SEAL	1	SN:26307088--
26	ND021542-0160	· WASHER	1	SN:26307088--
27	ND949006-6401	· SCREW	1	SN:26307088--
28	ND949007-6280	· SCREW	4	SN:26307088--
29	ND021602-5230	· PLATE	1	SN:26307088--
30	ND92150-06061	· NUT	1	SN:26307088--

Ref. A601P-02B1Z Page 030726

https://truckmanualshub.com/

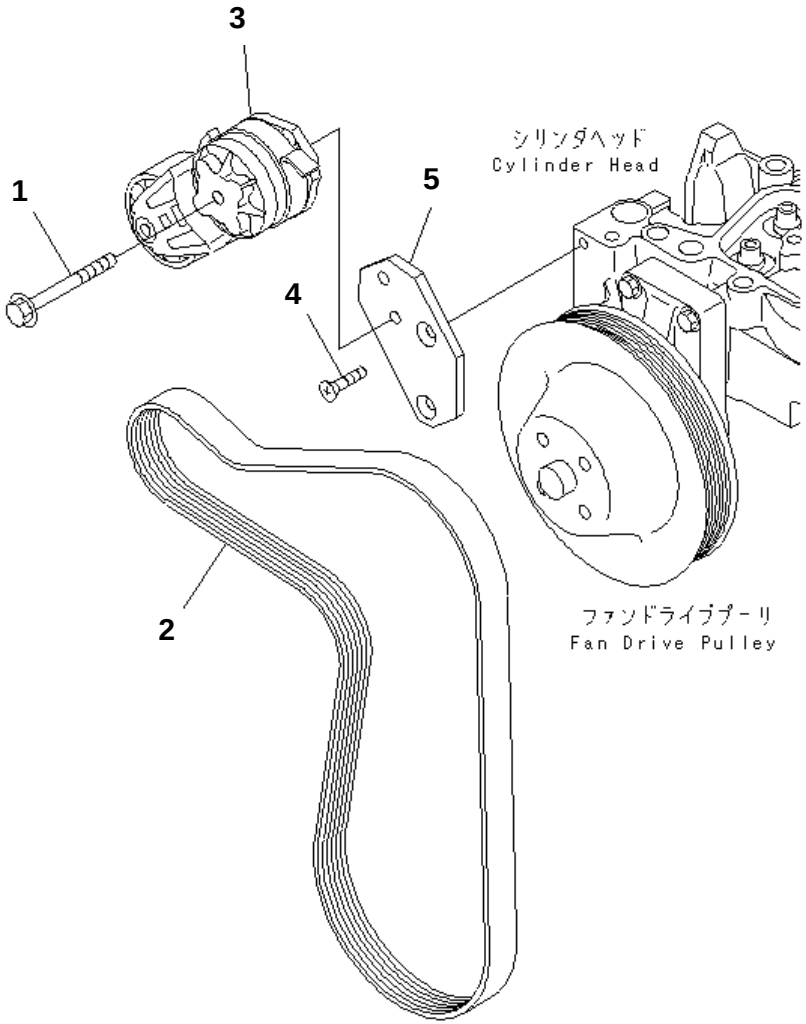

SAA6D102E-2A-8 S/N 26274903-UP

BELT TENSIONER (FOR 60A ALTERNATOR)

Item	Part No.	Description	Qty	Options
1	6732-61-4120	BOLT	1	SN:26274903--
2	6732-61-3940	BELT	1	SN:26274903--
3	6736-61-4110	TENSIONER	1	SN:26280731--
	□6731-61-4511	TENSIONER	1	SN:26274903--26280730
4	6732-61-4220	SCREW	2	SN:26274903--
5	6732-61-3990	PLATE	1	SN:26274903--

Ref. A601S-01A0 Page 030730

https://truckmanualshub.com/

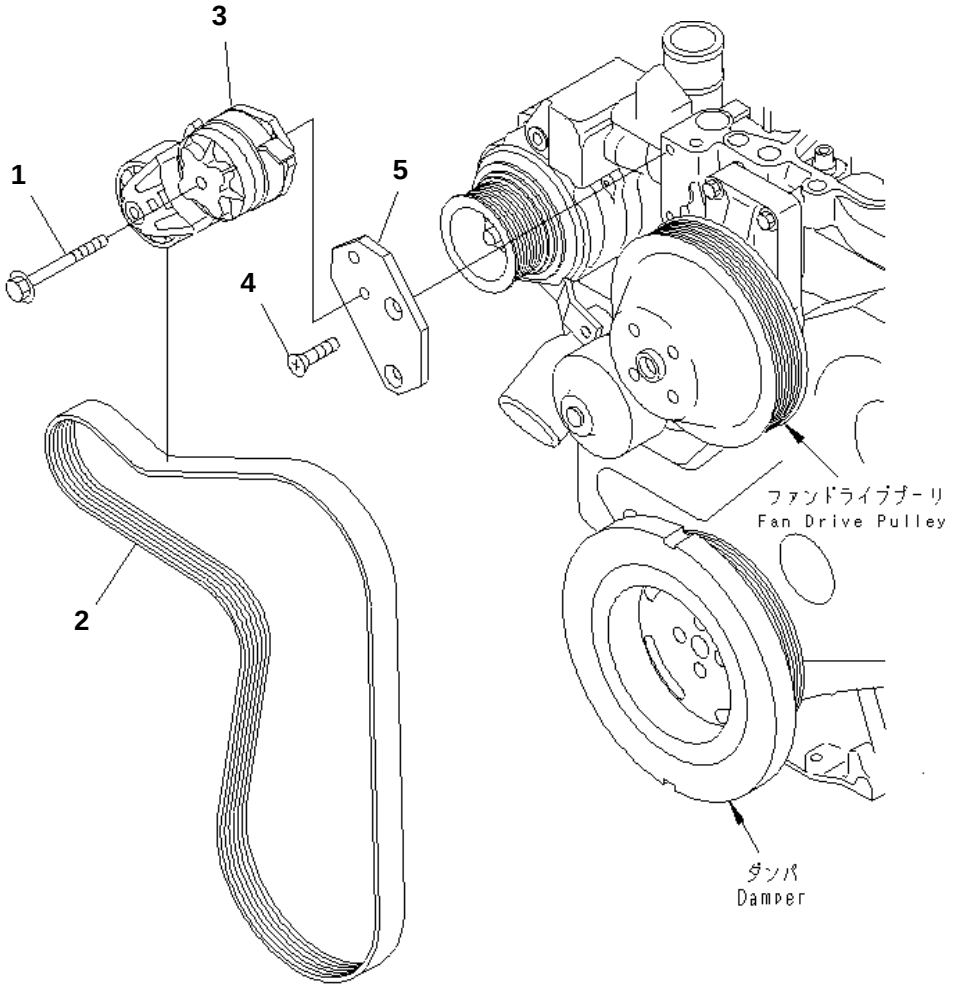

SAA6D102E-2A-8 S/N 26274903-UP

BELT TENSIONER (FOR 35A ALTERNATOR)

Item	Part No.	Description	Qty	Options
1	6732-61-4120	BOLT	1	SN:26274903--
2	6732-61-3940	BELT	1	SN:26274903--
3	6736-61-4110	TENSIONER,BELT	1	SN:26274903--
4	6732-61-4220	SCREW	2	SN:26274903--
5	6732-61-3990	PLATE	1	SN:26274903--

Ref. A601S-01A9 Page 030740

https://truckmanualshub.com/

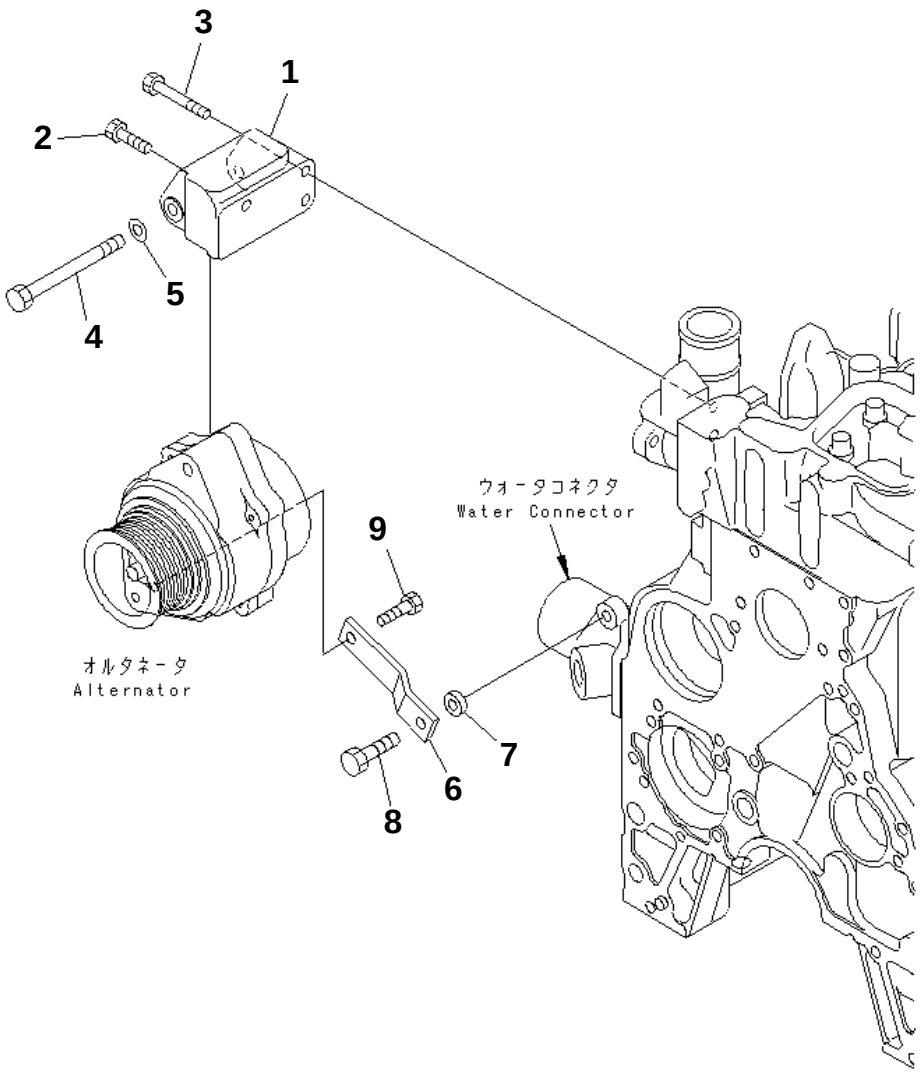

SAA6D102E-2A-8 S/N 26274903-UP

ALTERNATOR MOUNTING

Item	Part No.	Description	Qty	Options
1	6732-81-6611	SUPPORT ASS'Y	1	SN:26274903--
2	6732-21-5160	BOLT	1	SN:26274903--
3	6736-21-3210	BOLT	2	SN:26274903--
4	01018-31095	BOLT	1	SN:26274903--
5	01641-01016	WASHER	1	SN:26274903--
6	6732-81-6560	PLATE	1	SN:26274903--
7	6732-81-6690	SPACER	1	SN:26274903--
8	6732-21-5160	BOLT	1	SN:26274903--
9	6732-21-6630	BOLT	1	SN:26274903--

Ref. A601T-01B1 Page 030750

https://truckmanualshub.com/

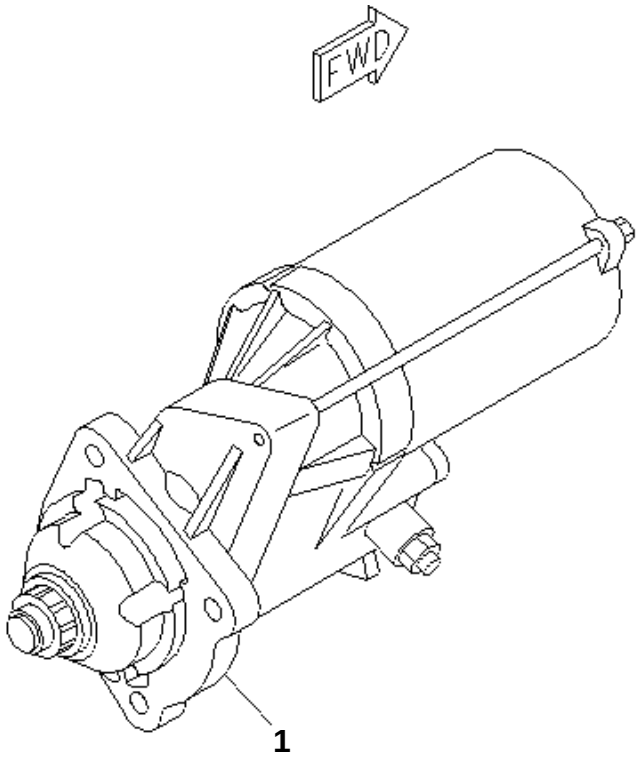

PMD1186

SAA6D102E-2A-8 S/N 26274903-UP

STARTING MOTOR (5.5KW)

Item	Part No.	Description	Qty	Options
1	(600-863-5111)	STARTING MOTOR ASS'Y, (5.5KW) (SEE FIG.A621P-02A1)	1	SN:26298939--
	(□600-863-5110)	STARTING MOTOR ASS'Y, (5.5KW) (SEE FIG.A621P-02A1)	1	SN:26274903--26298938

Ref. A621P-01A1 Page 030760

https://truckmanualshub.com/

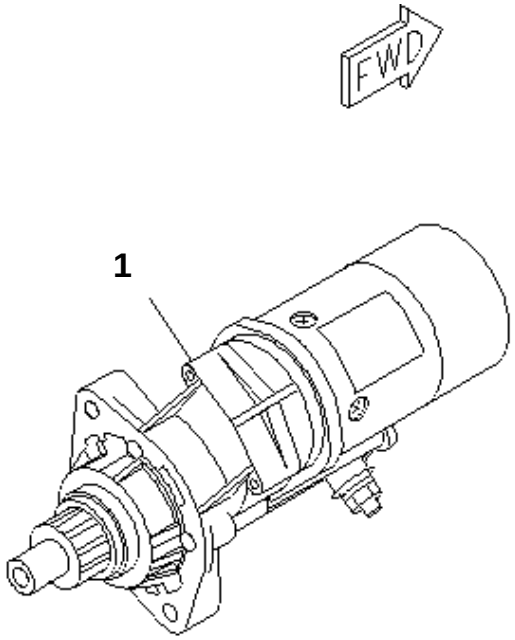

PMD1103

SAA6D102E-2A-8 S/N 26274903-UP

STARTING MOTOR (4.5KW)

Item	Part No.	Description	Qty	Options
1	(600-863-4110)	STARTING MOTOR ASS'Y,(4.5KW) (SEE FIG.A621P-02A2)	1	SN:26274903--

Ref. A621P-01A2 Page 030770

https://truckmanualshub.com/

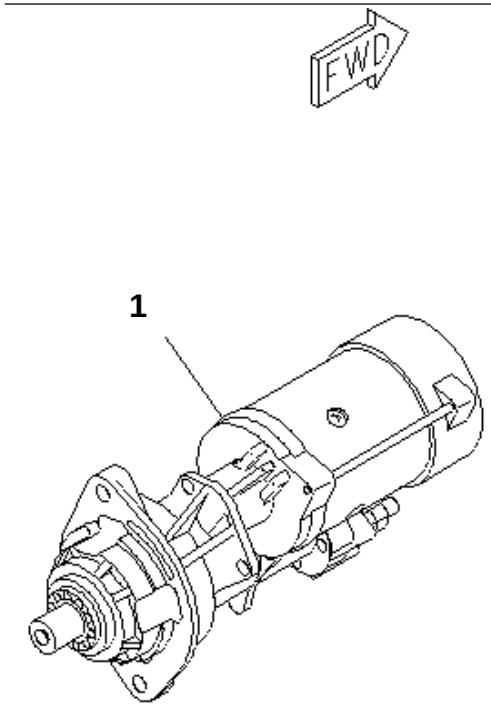

PMD0858

SAA6D102E-2A-8 S/N 26274903-UP

STARTING MOTOR (4.5KW) (WITH PROTECT COVER)(#26302312-)

Item	Part No.	Description	Qty	Options
1	(600-863-4210)	STARTING MOTOR ASS'Y,(4.5KW) (SEE FIG.A621P-02A4)	1	SN:26302312--

Ref. A621P-01A4 Page 030780

https://truckmanualshub.com/

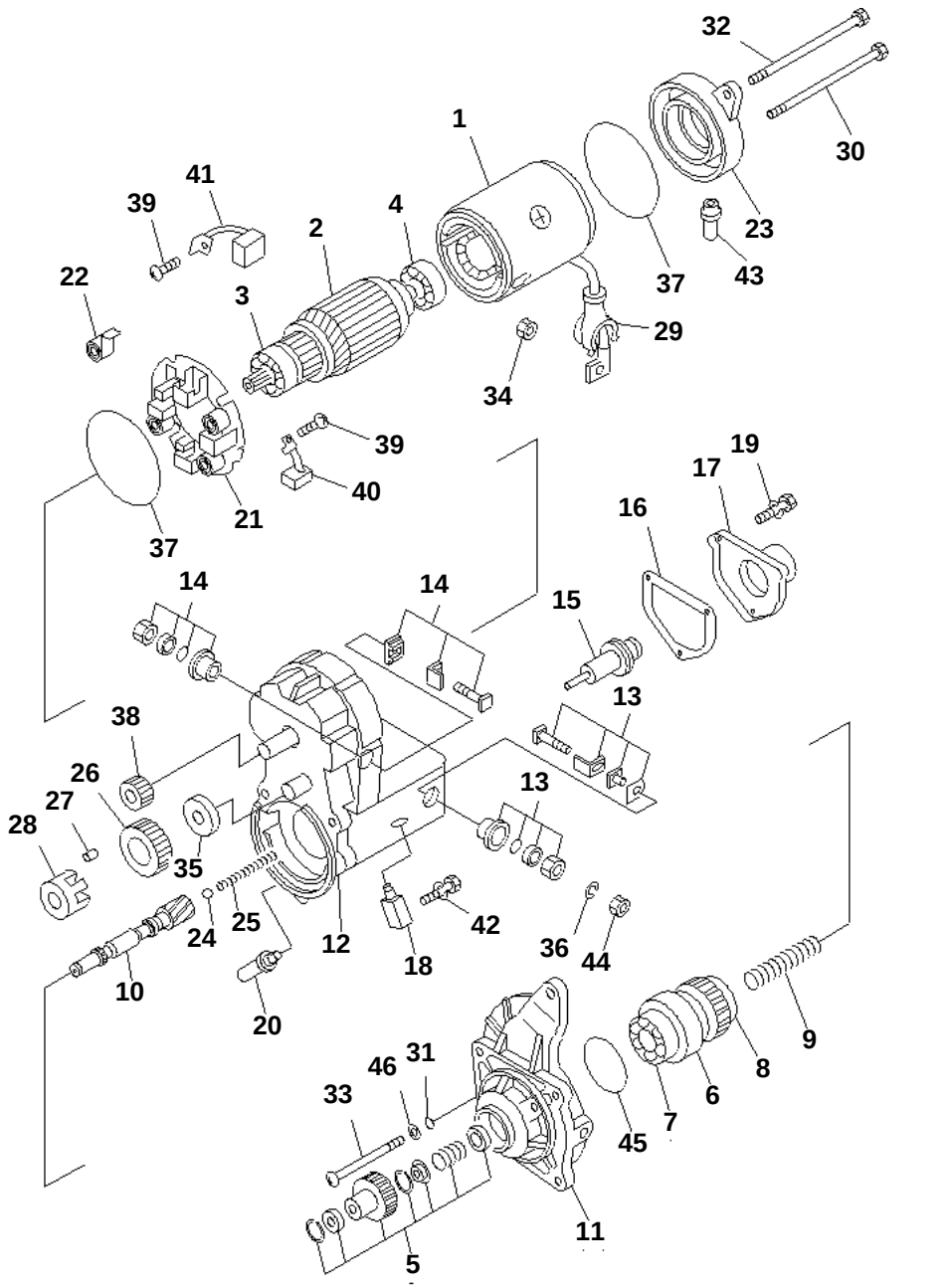

SAA6D102E-2A-8 S/N 26274903-UP

STARTING MOTOR (5.5KW) (INNER PARTS)

Item	Part No.	Description	Qty	Options
	600-863-5111	STARTING MOTOR ASS'Y, (5.5KW)	1	SN:26298939--
	600-863-5110	STARTING MOTOR ASS'Y, (5.5KW)	1	SN:26274903--26298938
1	ND028100-5410	· YOKE ASS'Y	1	SN:26274903--
2	ND028200-5250	· ARMATURE ASS'Y	1	SN:26274903--
3	ND949100-3161	· · BEARING,BALL	1	SN:26274903--
	ND949100-5290	· · BEARING,BALL	1	SN:26274903--
4	ND949100-3540	· · BEARING,BALL	1	SN:26274903--
	ND028300-6551	· CLUTCH ASS'Y	1	SN:26274903--
5	ND028099-3270	· · STARTER KIT	1	SN:26274903--
6	ND028300-6751	· · CLUTCH ASS'Y	1	SN:26274903--
7	ND949100-4500	· · · BEARING,BALL¤ FRONT	1	SN:26274903--
8	ND949100-1920	· · · BEARING,BALL¤ REAR	1	SN:26274903--
9	ND949170-4040	· · SPRING	1	SN:26274903--
10	ND028381-0071	· · SHAFT	1	SN:26274903--
11	ND128401-5621	· HOUSING	1	SN:26274903--
12	ND153400-6740	· SWITCH ASS'Y,MAGNETIC	1	SN:26298939--
	ND153400-2600	· SWITCH ASS'Y,MAGNETIC	1	SN:26274903--26298938
13	ND128099-5770	· · KIT,STARTER	1	SN:26298939--
	ND028099-5090	· · KIT,STARTER	1	SN:26274903--26298938
14	ND028099-5100	· · KIT,STARTER	1	SN:26274903--
15	ND053660-0443	· · PLUNGER	1	SN:26274903--
16	ND053404-0240	· · GASKET	1	SN:26274903--
17	ND053505-0290	· · COVER,SOLENOID	1	SN:26274903--
18	ND053480-7560	· · BOLT ASS'Y,TERMINAL	1	SN:26274903--
19	ND949047-4440	· · BOLT	3	SN:26274903--
20	ND028065-0250	· · BUSHING,DRAIN	1	SN:26274903--
21	ND028510-0880	· HOLDER ASS'Y,BRUSH	1	SN:26274903--
22	ND028520-0011	· · SPRING,BRUSH	4	SN:26274903--
23	ND028501-7711	· FRAME	1	SN:26274903--
24	ND128961-0010	· BALL	1	SN:26298939--
	ND949120-0240	· BALL,STEEL	1	SN:26274903--26298938
25	ND949170-4070	· SPRING	1	SN:26274903--
26	ND028371-3210	· PINION,STARTER	1	SN:26274903--
27	ND028306-0070	· ROLLER,CLUTCH	5	SN:26274903--
28	ND028063-0030	· RETAINER	1	SN:26274903--
29	ND028062-0130	· CAP	1	SN:26274903--
30	ND949042-3680	· BOLT	1	SN:26274903--

Ref. A621P-02A1 Page 030790

https://truckmanualshub.com/

SAA6D102E-2A-8 S/N 26274903-UP

STARTING MOTOR (5.5KW) (INNER PARTS)

Item	Part No.	Description	Qty	Options
31	ND90801-10050	· O-RING	3	SN:26274903--
32	ND949042-3690	· BOLT	1	SN:26274903--
33	ND949006-4720	· SCREW	3	SN:26274903--
34	ND949056-4480	· NUT	1	SN:26274903--
35	ND028327-0171	· RETAINER,SNAP	1	SN:26274903--
36	ND90258-10001	· WASHER,SPRING	1	SN:26274903--
37	ND028901-0361	· SEAL	2	SN:26274903--
38	ND028371-3200	· PINION	1	SN:26274903--
39	ND949007-6530	· SCREW	4	SN:26274903--
40	ND028530-1090	· BRUSH ASS'Y	2	SN:26274903--
41	ND028530-1100	· BRUSH ASS'Y	2	SN:26274903--
42	ND949007-6850	· SCREW	1	SN:26274903--
43	ND028062-5790	· COVER	1	SN:26274903--
44	ND90170-10061	· NUT	1	SN:26274903--
45	ND028901-5190	· SEAL	1	SN:26298939--
	ND90801-20470	· O-RING	1	SN:26274903--26298938
46	ND90200-06241	· WASHER	3	SN:26274903--

https://truckmanualshub.com/

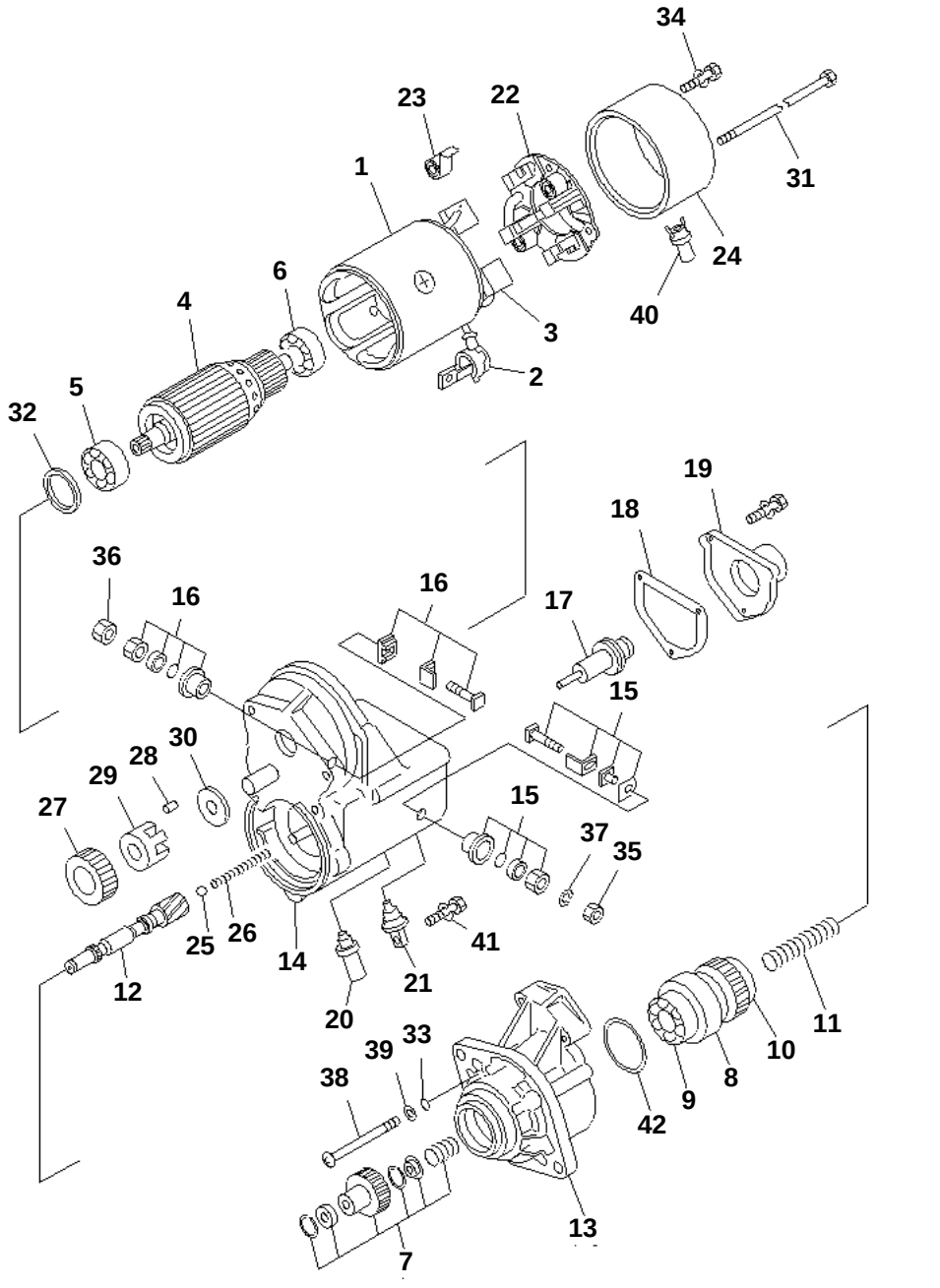

SAA6D102E-2A-8 S/N 26274903-UP

STARTING MOTOR (4.5KW) (INNER PARTS)

Item	Part No.	Description	Qty	Options
	600-863-4110	STARTING MOTOR ASS'Y,(4.5KW)	1	SN:26274903--
1	ND028100-2882	· YOKE ASS'Y	1	SN:26274903--
2	ND028062-0130	· · CAP	1	SN:26274903--
3	ND028099-3570	· · STARTER KIT	2	SN:26274903--
4	ND028200-1590	· ARMATURE ASS'Y	1	SN:26274903--
5	ND949100-1930	· · BEARING,BALL	1	SN:26274903--
6	ND949100-1750	· · BEARING,BALL	1	SN:26274903--
	ND028300-6551	· CLUTCH ASS'Y	1	SN:26274903--
7	ND028099-3270	· · STARTER KIT	1	SN:26274903--
8	ND028300-6751	· · CLUTCH ASS'Y	1	SN:26274903--
9	ND949100-4500	· · · BEARING,BALL¤ FRONT	1	SN:26274903--
10	ND949100-1920	· · · BEARING,BALL¤ REAR	1	SN:26274903--
11	ND949170-4040	· · SPRING	1	SN:26274903--
12	ND028381-0071	· · SHAFT	1	SN:26274903--
13	ND228401-0633	· HOUSING ASS'Y	1	SN:26274903--
14	ND153400-2410	· MAGNETIC SWITCH A.	1	SN:26274903--
15	ND028099-2790	· · STARTER KIT	1	SN:26274903--
16	ND028099-3160	· · STARTER KIT	1	SN:26274903--
17	ND053660-7170	· · PLUNGER	1	SN:26274903--
18	ND053404-0240	· · GASKET	1	SN:26274903--
19	ND053505-0290	· · COVER	1	SN:26274903--
20	ND053480-0110	· · BOLT	1	SN:26274903--
21	ND028065-0250	· · BUSHING	1	SN:26274903--
22	ND028510-5390	· BRUSH HOLDER ASS'Y	1	SN:26274903--
23	ND949173-0571	· · SPRING	4	SN:26274903--
24	ND028501-8091	· FRAME	1	SN:26274903--
25	ND128961-0010	· BALL	1	SN:26274903--
26	ND949170-4070	· SPRING	1	SN:26274903--
27	ND028371-1500	· PINION	1	SN:26274903--
28	ND028306-0070	· ROLLER	5	SN:26274903--
29	ND028063-0030	· RETAINER	1	SN:26274903--
30	ND028327-0171	· RETAINER	1	SN:26274903--
31	ND128950-0520	· BOLT	2	SN:26274903--
32	ND949020-0600	· WASHER,FELT	1	SN:26274903--
33	ND90801-10050	· O-RING	3	SN:26274903--
34	ND949007-6530	· SCREW	2	SN:26274903--
35	ND90170-10061	· NUT	1	SN:26274903--
36	ND949056-4480	· NUT	1	SN:26274903--
37	ND90258-10001	· WASHER	1	SN:26274903--
38	ND949006-4720	· SCREW	3	SN:26274903--

Ref. A621P-02A2 Page 030800

https://truckmanualshub.com/

SAA6D102E-2A-8 S/N 26274903-UP

STARTING MOTOR (4.5KW) (INNER PARTS)

Item	Part No.	Description	Qty	Options
39	ND90200-06241	· WASHER	3	SN:26274903--
40	ND028062-5790	· COVER	1	SN:26274903--
41	ND949007-6850	· SCREW	1	SN:26274903--
42	ND028901-5190	· SEAL	1	SN:26274903--

https://truckmanualshub.com/

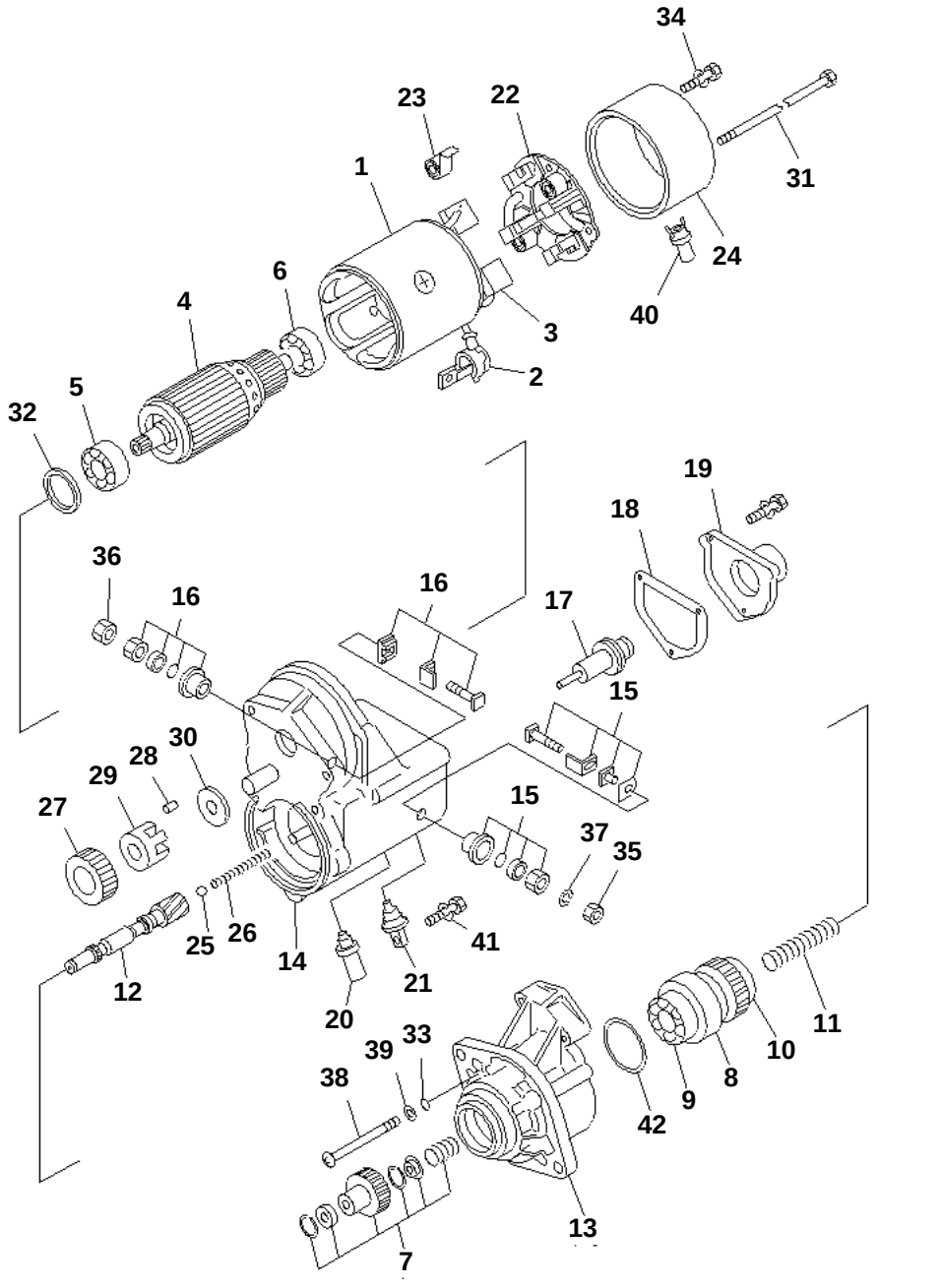

SAA6D102E-2A-8 S/N 26274903-UP

STARTING MOTOR (4.5KW) (WITH PROTECT COVER) (INNER PARTS)(#26302312-)

Item	Part No.	Description	Qty	Options
	600-863-4210	STARTING MOTOR ASS'Y,(4.5KW)	1	SN:26302312--
1	ND028100-2882	· YOKE ASS'Y	1	SN:26302312--
2	ND028062-0130	· · CAP	1	SN:26302312--
3	ND028099-3570	· · STARTER KIT	2	SN:26302312--
4	ND028200-1590	· ARMATURE ASS'Y	1	SN:26302312--
5	ND949100-1930	· · BEARING,BALL	1	SN:26302312--
6	ND949100-1750	· · BEARING,BALL	1	SN:26302312--
	ND028300-6551	· CLUTCH ASS'Y	1	SN:26302312--
7	ND028099-3270	· · STARTER KIT	1	SN:26302312--
8	ND028300-6751	· · CLUTCH ASS'Y	1	SN:26302312--
9	ND949100-4500	· · · BEARING,BALL¤ FRONT	1	SN:26302312--
10	ND949100-1920	· · · BEARING,BALL¤ REAR	1	SN:26302312--
11	ND949170-4040	· · SPRING	1	SN:26302312--
12	ND028381-0071	· · SHAFT	1	SN:26302312--
13	ND228401-0633	· HOUSING ASS'Y	1	SN:26302312--
14	ND153400-8530	· MAGNETIC SWITCH A.	1	SN:26302312--
15	ND028099-5620	· · STARTER KIT	1	SN:26302312--
16	ND028099-3160	· · STARTER KIT	1	SN:26302312--
17	ND053660-7170	· · PLUNGER	1	SN:26302312--
18	ND053404-0240	· · GASKET	1	SN:26302312--
19	ND053505-0290	· · COVER	1	SN:26302312--
20	ND053480-7560	· · BOLT ASS'Y	1	SN:26302312--
21	ND028065-0250	· · BUSHING	1	SN:26302312--
22	ND028510-5390	· BRUSH HOLDER ASS'Y	1	SN:26302312--
23	ND949173-0571	· · SPRING	4	SN:26302312--
24	ND028501-8091	· FRAME	1	SN:26302312--
25	ND128961-0010	· BALL	1	SN:26302312--
26	ND949170-4070	· SPRING	1	SN:26302312--
27	ND028371-1500	· PINION	1	SN:26302312--
28	ND028306-0070	· ROLLER	5	SN:26302312--
29	ND028063-0030	· RETAINER	1	SN:26302312--
30	ND028327-0171	· RETAINER	1	SN:26302312--
31	ND128950-0520	· BOLT	2	SN:26302312--
32	ND949020-0600	· WASHER,FELT	1	SN:26302312--
33	ND90801-10050	· O-RING	3	SN:26302312--
34	ND949007-6530	· SCREW	2	SN:26302312--
35	ND90170-10061	· NUT	1	SN:26302312--
36	ND949056-4480	· NUT	1	SN:26302312--
37	ND90258-10001	· WASHER	1	SN:26302312--

Ref. A621P-02A4 Page 030810

https://truckmanualshub.com/

SAA6D102E-2A-8 S/N 26274903-UP

STARTING MOTOR (4.5KW) (WITH PROTECT COVER) (INNER PARTS)(#26302312-)

Item	Part No.	Description	Qty	Options
38	ND949006-4720	· SCREW	3	SN:26302312--
39	ND90200-06241	· WASHER	3	SN:26302312--
40	ND028062-5790	· COVER	1	SN:26302312--
41	ND949007-6850	· SCREW	1	SN:26302312--
42	ND028901-5190	· SEAL	1	SN:26302312--

https://truckmanualshub.com/

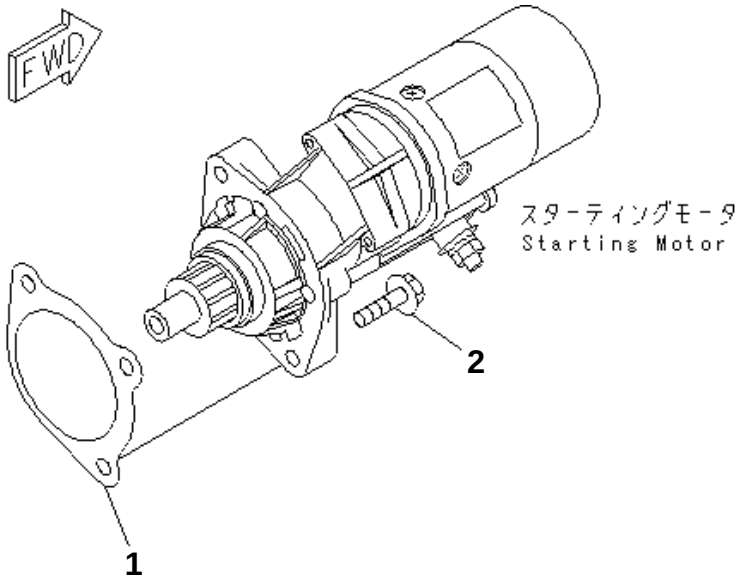

PMD1104

SAA6D102E-2A-8 S/N 26274903-UP

STARTING MOTOR MOUNTING (4.5KW)

Item	Part No.	Description	Qty	Options
1	6732-81-6811	GASKET (K2)	1	SN:26274903--
2	01435-01035	BOLT	2	SN:26274903--

Ref. A621S-01A7Z Page 030820

https://truckmanualshub.com/

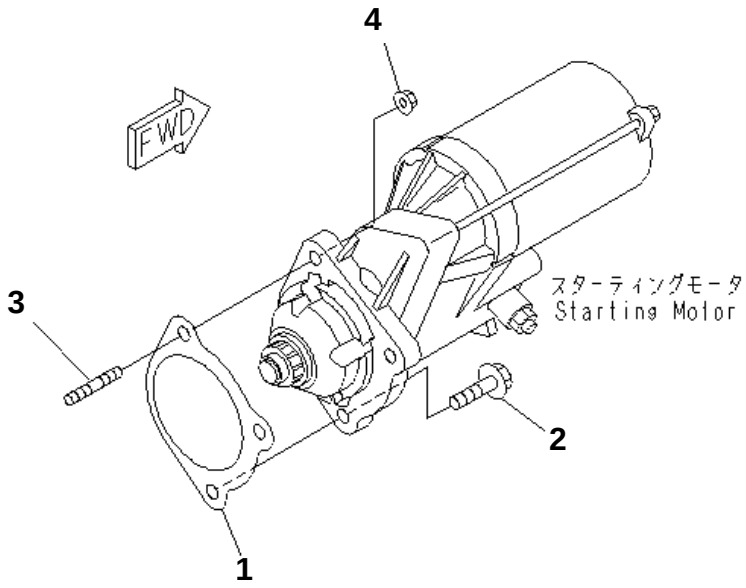

PJD4445

SAA6D102E-2A-8 S/N 26274903-UP

STARTING MOTOR MOUNTING (5.5KW)

Item	Part No.	Description	Qty	Options
1	6732-81-6811	GASKET (K2)	1	SN:26274903--
2	01435-01035	BOLT	2	SN:26274903--
3	6735-81-6170	STUD	1	SN:26274903--
4	01584-01008	NUT	1	SN:26274903--

Ref. A621S-01A8 Page 030830

https://truckmanualshub.com/

リペア　パーツ
REPAIR PARTS

詳細については次のページを参照して下さい。
See subsequent pages for details.

PMD0861

SAA6D102E-2A-8 S/N 26274903-UP

REPAIR PARTS (1/4) (CYLINDER HEAD)

Item	Part No.	Description	Qty	Options
1	6736-19-1310	GUIDE¤ 60.50MM	6	SN:26274903--
2	6736-19-1410	GUIDE¤ 51.75MM	6	SN:26274903--
3	6736-18-1310	GUIDE	12	SN:26274903--
OVERSIZE PARTS				
4	6735-11-1870	GASKET¤ 0.25MM	1	SN:26274903--
	6735-11-1840	GASKET¤ 0.50MM	1	SN:26274903--

Ref. A8110-01A9 Page 030840

https://truckmanualshub.com/

リペア　パーツ
REPAIR PARTS

詳細については次のページを参照して下さい。
See subsequent pages for details.

PMD0861

SAA6D102E-2A-8 S/N 26274903-UP

REPAIR PARTS (2/4) (CYLINDER BLOCK)

Item	Part No.	Description	Qty	Options
OVERSIZE PARTS				
1	6736-29-1410	BUSHING,CAM¤ NO.1	1	SN:26274903--
2	6736-29-1420	BUSHING,CAM¤ NO.2¤3¤4¤5¤6¤7	1	SN:26274903--
STANDARD				
3	6736-29-2110	LINER,SALVAGE	6	SN:26274903--

Ref. A8110-02A9 Page 030850

https://truckmanualshub.com/

リペア パーツ
REPAIR PARTS

詳細については次のページを参照して下さい。
See subsequent pages for details.

PMD0861

SAA6D102E-2A-8 S/N 26274903-UP

REPAIR PARTS (3/4) (CRANKSHAFT)

Item	Part No.	Description	Qty	Options
1	6736-39-1220	SLEEVE,WEAR	1	SN:26274903--
2	6736-39-1130	SLEEVE,WET	1	SN:26274903--
OVERSIZE 0.25MM				
	6735-29-8100	MAIN METAL ASS'Y	6	SN:26274903--
3	☆	· METAL,UPPER	1	SN:26274903--
4	☆	· METAL,LOWER	1	SN:26274903--
	6736-29-8610	THRUST METAL ASS'Y	1	SN:26274903--
5	☆	· METAL,THRUST	1	SN:26274903--
6	☆	· METAL,LOWER	1	SN:26274903--
OVERSIZE 0.50MM				
	6735-28-8100	MAIN METAL ASS'Y	6	SN:26274903--
3	☆	· METAL,UPPER	1	SN:26274903--
4	☆	· METAL,LOWER	1	SN:26274903--
	6735-28-8200	THRUST METAL ASS'Y	1	SN:26274903--
5	☆	· METAL,THRUST	1	SN:26274903--
6	☆	· METAL,LOWER	1	SN:26274903--
OVERSIZE 0.75MM				
	6735-27-8100	MAIN METAL ASS'Y	6	SN:26274903--
3	☆	· METAL,UPPER	1	SN:26274903--
4	☆	· METAL,LOWER	1	SN:26274903--
	6736-28-8620	THRUST METAL ASS'Y	1	SN:26274903--
5	☆	· METAL,THRUST	1	SN:26274903--
6	☆	· METAL,LOWER	1	SN:26274903--
OVERSIZE 1.00MM				
	6735-26-8100	MAIN METAL ASS'Y	6	SN:26274903--
3	☆	· METAL,UPPER	1	SN:26274903--
4	☆	· METAL,LOWER	1	SN:26274903--
	6736-27-8620	THRUST METAL ASS'Y	1	SN:26274903--
5	☆	· METAL,THRUST	1	SN:26274903--
6	☆	· METAL,LOWER	1	SN:26274903--
OVERSIZE 0.5MM/0.5MM				
	6736-29-8700	THRUST METAL ASS'Y	1	SN:26274903--
5	☆	· METAL,THRUST 0.5MM/0.5MM	1	SN:26274903--
6	☆	· METAL,LOWER	1	SN:26274903--
OVERSIZE 1.0MM/1.0MM				
	6736-28-8700	THRUST METAL ASS'Y	1	SN:26274903--
5	☆	· METAL,THRUST 1.0MM/1.0MM	1	SN:26274903--
6	☆	· METAL,LOWER	1	SN:26274903--

Ref. A8110-03A9 Page 030860

https://truckmanualshub.com/

リペア　パーツ
REPAIR PARTS

詳細については次のページを参照して下さい。
See subsequent pages for details.

PMD0861

SAA6D102E-2A-8 S/N 26274903-UP

REPAIR PARTS (4/4) (PISTON)

Item	Part No.	Description	Qty	Options
OVERSIZE PARTS				
1	6736-39-3400	METAL¤ 0.25MM	12	SN:26274903--
	6736-38-3400	METAL¤ 0.50MM	12	SN:26274903--
	6736-37-3400	METAL¤ 0.75MM	12	SN:26274903--
	6736-36-3400	METAL¤ 1.00MM	12	SN:26274903--
OVERSIZE 0.5MM				
	6738-39-2031	PISTON RING ASS'Y	6	SN:26292269--
	□6738-39-2030	PISTON RING ASS'Y	6	SN:26274903--26292268
2	☆	・ RING,TOP	1	SN:26292269--
	☆	・ RING,TOP	1	SN:26274903--26292268
3	☆	・ RING,SECOND	1	SN:26274903--
4	☆	・ RING,OIL	1	SN:26274903--
OVERSIZE 1.0MM				
	6738-38-2031	PISTON RING ASS'Y	6	SN:26292269--
	□6738-38-2030	PISTON RING ASS'Y	6	SN:26274903--26292268
2	☆	・ RING,TOP	1	SN:26292269--
	☆	・ RING,TOP	1	SN:26274903--26292268
3	☆	・ RING,SECOND	1	SN:26274903--
4	☆	・ RING,OIL	1	SN:26274903--
OVERSIZE PARTS				
5	6738-39-2111	PISTON¤ 0.5MM	6	SN:26292269--
	□6738-39-2110	PISTON¤ 0.5MM	6	SN:26274903--26292268
6	6738-38-2111	PISTON¤ 1.0MM	6	SN:26292269--
	□6738-38-2110	PISTON¤ 1.0MM	6	SN:26274903--26292268

Ref. A8110-04A9 Page 030870

https://truckmanualshub.com/

KIT 詳細については次のページを参照して下さい。
See subsequent pages for details.

シリンダ ヘッド ガスケット キット
K-1 6738-K1-1100 CYLINDER HEAD GASKET KIT

このガスケットキットは、キット区分ごとの基本セットです。
部品明細書中、キットの記号が付いていない消耗部品は、お手数ですが単品にて手配下さい。

This kit basis to the gasket kit.
Thers not kit mark parts articles of consumption single order.

PJ6F186

SAA6D102E-2A-8 S/N 26274903-UP

CYLINDER HEAD GASKET KIT

Item	Part No.	Description	Qty	Options
1	6738-K1-1100	GASKET KIT,CYLINDER HEAD	1	SN:26274903--
	6732-11-4811	· GASKET,AIR INTAKE HEATER	2	SN:26274903--
	07005-01212	· GASKET,AIR TUBE	2	SN:26274903--
	07005-01012	· GASKET,AIR TUBE	2	SN:26274903--
	07005-01212	· GASKET,FUEL TUBE (FILTER)	4	SN:26274903--
	07005-01412	· GASKET,FUEL TUBE (INJECTION PUMP)	8	SN:26274903--
	6732-71-6260	· GASKET,INJECTOR - SPILL	12	SN:26274903--
	6738-11-4370	· O-RING,TURBOCHARGER CONNECTOR	1	SN:26274903--
	6735-11-4812	· GASKET,INTAKE MANIFOLD COVER	1	SN:26274903--
	6732-11-3850	· SEAL,INJECTOR	6	SN:26274903--
	6736-11-3430	· GASKET,INJECTOR SHIM	6	SN:26274903--
	6732-81-8830	· GASKET,TURBOCHARGER GASKET	1	SN:26274903--
	6732-41-4540	· SEAL,VALVE STEM	12	SN:26274903--
	6735-11-1821	· GASKET,CYLINDER HEAD	1	SN:26274903--
	6736-11-5820	· GASKET,EXHAUST MANIFOLD	6	SN:26274903--
	6732-61-6250	· SEAL,THERMOSTAT	1	SN:26274903--
	6732-61-6240	· GASKET,THERMOSTAT	1	SN:26274903--
	6207-51-7690	· GASKET,TURBOCHARGER OIL DRAIN	1	SN:26274903--
	6221-51-8160	· GASKET,TURBOCHARGER OIL SUPPLY	1	SN:26274903--
	07005-01412	· GASKET,TURBOCHARGER OIL SUPPLY TUBE	2	SN:26274903--
	6736-51-8710	· O-RING,TURBOCHARGER OIL SUPPLY NIPPLE	1	SN:26274903--
	6732-11-8181	· GASKET,HEAD COVER	6	SN:26274903--
	6732-11-8210	· GASKET,CAMFOLLOWER COVER BOLT	6	SN:26274903--
	6732-81-8220	· CLAMP,TURBOCHARGER OUTLET PIPE	1	SN:26274903--

Ref. A8120-01A1 Page 030880

https://truckmanualshub.com/

KIT 詳細については次のページを参照して下さい。
See subsequent pages for details.

シリンダ ブロック ガスケット キット
K-2 6738-K2-1100 CYLINDER BLOCK GASKET KIT

このガスケットキットは、キット区分ごとの基本セットです。
部品明細書中、キットの記号が付いていない消耗部品は、お手数ですが単品にて手配下さい。

This kit basis to the gasket kit.
Thers not kit mark parts articles of consumption single order.

PJ6F187

SAA6D102E-2A-8 S/N 26274903-UP

CYLINDER BLOCK GASKET KIT

Item	Part No.	Description	Qty	Options
2	6738-K2-1100	GASKET KIT,CYLINDER BLOCK	1	SN:26274903--
	6735-21-1960	· O-RING,SPEED SENSOR	1	SN:26274903--
	6215-81-9710	· O-RING,M10 PLUG	3	SN:26274903--
	6735-21-1930	· O-RING,M14 PLUG	1	SN:26274903--
	6731-21-1190	· NOZZLE,COOLING NOZZLE	6	SN:26274903--
	6732-21-3811	· GASKET,GEAR CASE	1	SN:26274903--
	6732-21-3870	· O-RING,GEAR CASE	1	SN:26274903--
	6732-21-3880	· GASKET,GEAR HOUSING	1	SN:26274903--
	6731-21-4220	· SEAL,FRONT SEAL KIT	1	SN:26274903--
	6736-21-3450	· GASKET,FRONT COVER	1	SN:26274903--
	6732-11-8210	· GASKET,PUSH ROD COVER BOLT	6	SN:26274903--
	6738-21-6180	· O-RING,PUSH ROD COVER	1	SN:26274903--
	6738-21-6650	· GASKET,PUSH ROD COVER	1	SN:26274903--
	6738-21-6660	· GASKET,PUSH ROD COVER BOLT	8	SN:26274903--
	07000-72110	· O-RING,PTO COVER	1	SN:26274903--
	6732-21-3380	· GASKET,PTO HOUSING	2	SN:26274903--
	6732-21-3220	· SEAL,FRONT COVER	1	SN:26274903--
	6735-21-4191	· GASKET,REAR COVER	1	SN:26274903--
	6736-21-4220	· SEAL,REAR SEAL KIT (SINGLE)	1	SN:26274903--
	6732-21-4171	· GASKET,REAR COVER	1	SN:26274903--
	6732-21-4161	· O-RING,BEARING CAP	1	SN:26274903--
	07005-01012	· GASKET,INJECTION PUMP OIL PIPING	7	SN:26274903--
	6735-61-6411	· GASKET	1	SN:26274903--
	6732-51-4420	· O-RING,OIL PRESSURE PLUG	1	SN:26274903--
	6731-51-5290	· O-RING,OIL FILTER AND PIPING	2	SN:26274903--
	6732-51-4432	· GASKET,OIL PRESSURE PLUG	1	SN:26274903--
	6732-61-2311	· GASKET,OIL COOLER CORE	1	SN:26274903--
	6162-53-5450	· PACKING,OIL FILTER AND PIPING	1	SN:26274903--
	6162-53-5430	· PACKING,OIL FILTER AND PIPING	1	SN:26274903--
	6731-51-5290	· O-RING,OIL FILTER AND PIPING	2	SN:26274903--
	6733-21-5520	· GASKET,SUCTION TUBE	1	SN:26274903--
	07005-02216	· GASKET,OIL PAN DRAIN	2	SN:26274903--
	6732-81-6811	· GASKET,STARTER	1	SN:26274903--
	6732-51-8330	· O-RING,TURBOCHARGER DRAIN	2	SN:26274903--
	6732-61-6130	· SEAL,WATER INLET CONNECTION	1	SN:26274903--
	6736-61-1520	· SEAL,WATER PUMP	1	SN:26274903--

Ref. A8120-02A1 Page 030890

https://truckmanualshub.com/

1

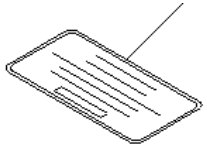

PMD1188

SAA6D102E-2A-8 S/N 26274903-UP

CAUTION PLATE (JAPANESE-ENGLISH)

Item	Part No.	Description	Qty	Options
1	6738-81-2511	PLATE	1	SN:26299870--
	□6738-81-2510	PLATE	1	SN:26274903--26299869

Ref. A9810-01E5 Page 030900

https://truckmanualshub.com/

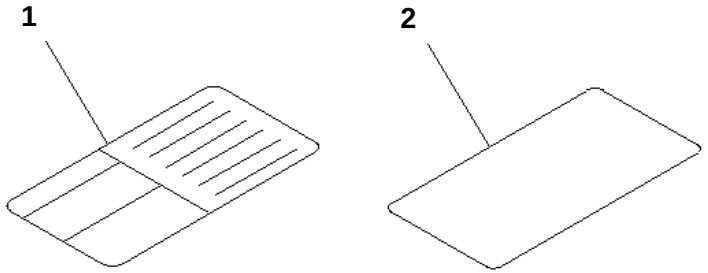

PJ6A211

SAA6D102E-2A-8 S/N 26274903-UP

CAUTION PLATE (FOR REGULATION OF EPA)(#26274903-26293514)

Item	Part No.	Description	Qty	Options
1	6732-81-2570	PLATE	1	SN:26274903--26293514
2	6732-81-2580	PLATE	1	SN:26274903--26293514

Ref. A9850-01A0 Page 030910

https://truckmanualshub.com/

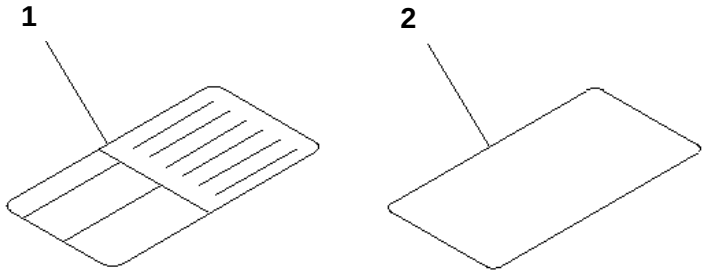

PJ6A211

SAA6D102E-2A-8 S/N 26274903-UP

CAUTION PLATE (FOR REGULATION OF EPA)(#26293515-)

Item	Part No.	Description	Qty	Options
1	6732-81-5870	PLATE	1	SN:26293515--
2	6732-81-2191	DECAL	1	SN:26298970--
	□6732-81-2190	DECAL	1	SN:26293515--26298969

Ref. A9850-01A0A Page 030920

https://truckmanualshub.com/

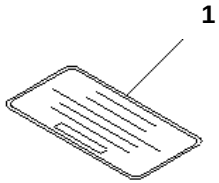

PMD1188

SAA6D102E-2A-8 S/N 26274903-UP

CAUTION PLATE (ENGLISH) (TUNNEL SPEC.)(#26293515-)

Item	Part No.	Description	Qty	Options
1	6732-81-2611	PLATE¤ NAME	1	SN:26293515--

Ref. A9850-01A4 Page 030930

https://truckmanualshub.com/

1

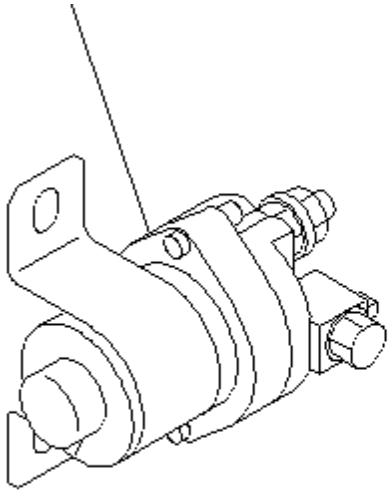

PJ6F064

SAA6D102E-2A-8 S/N 26274903-UP

HEATER SWITCH

Item	Part No.	Description	Qty	Options
1	600-815-2170	SWITCH	1	SN:26274903--

Ref. B9999-01E7 Page 030940

https://truckmanualshub.com/

1

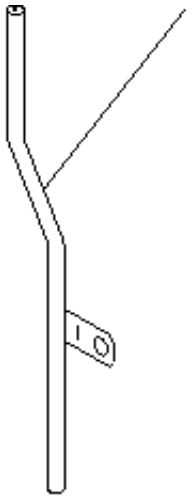

PJ6F063

SAA6D102E-2A-8 S/N 26274903-UP

MUFFLER DRAIN TUBE

Item	Part No.	Description	Qty	Options
1	6209-11-5480	TUBE	1	SN:26274903--

Ref. B9999-01G7 Page 030950

https://truckmanualshub.com/

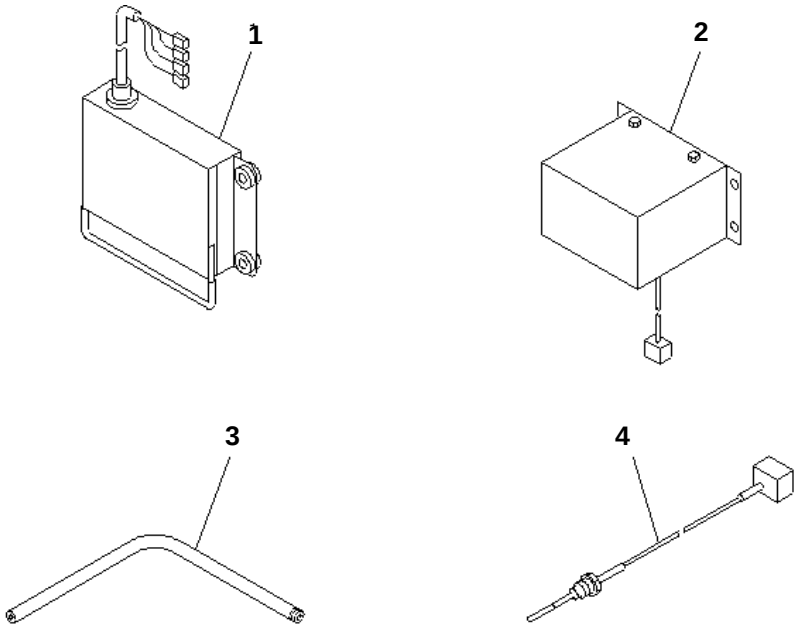

PJD5389

SAA6D102E-2A-8 S/N 26274903-UP

CERAMIC MUFFLER RELATED PARTS(#26293515-)

Item	Part No.	Description	Qty	Options
1	6138-82-5510	MONITOR ASS'Y	1	SN:26293515--
2	6138-82-5550	SENSOR	1	SN:26293515--
3	6138-12-5570	TUBE	1	SN:26293515--
4	6138-82-5561	SENSOR,EXHAUST TEMPERATURE	1	SN:26293515--

Ref. B9999-01H5 Page 030960

https://truckmanualshub.com/

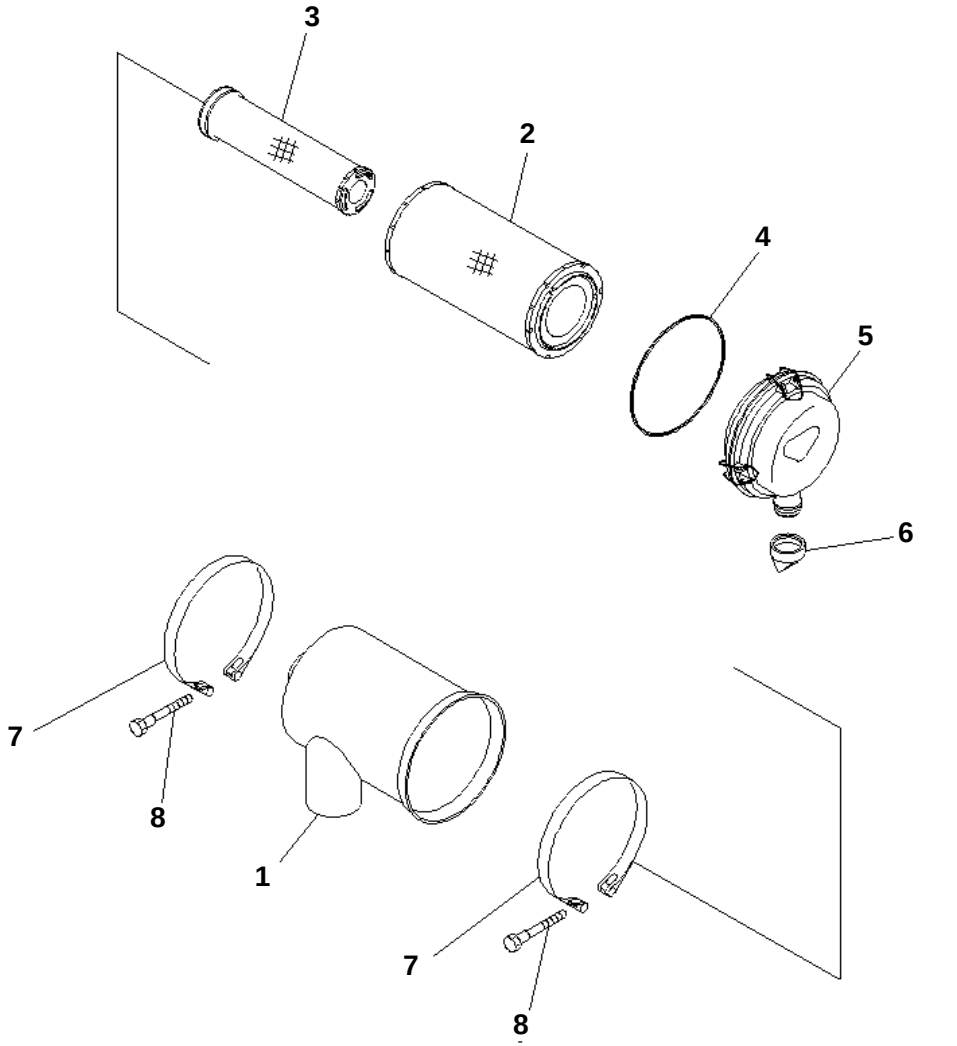

SAA6D102E-2A-8 S/N 26274903-UP

AIR CLEANER

Item	Part No.	Description	Qty	Options
	6738-81-7100	AIR CLEANER	1	SN:26274903--
1	6738-81-7110	· BODY	1	SN:26274903--
	600-185-3100	· ELEMENT ASS'Y	1	SN:26274903--
2	☆	· · ELEMENT,OUTER	1	SN:26274903--
3	☆	· · ELEMENT,INNER	1	SN:26274903--
4	600-184-1370	· · O-RING	1	SN:26274903--
	600-184-1310	· COVER ASS'Y	1	SN:26274903--
5	600-184-2810	· · PLATE	1	SN:26274903--
6	600-184-1350	· VALVE	1	SN:26274903--
7	6131-11-4520	BAND ASS'Y	2	SN:26274903--
8	6643-11-4641	BOLT	2	SN:26274903--

Ref. B9999-01L0 Page 030970

https://truckmanualshub.com/

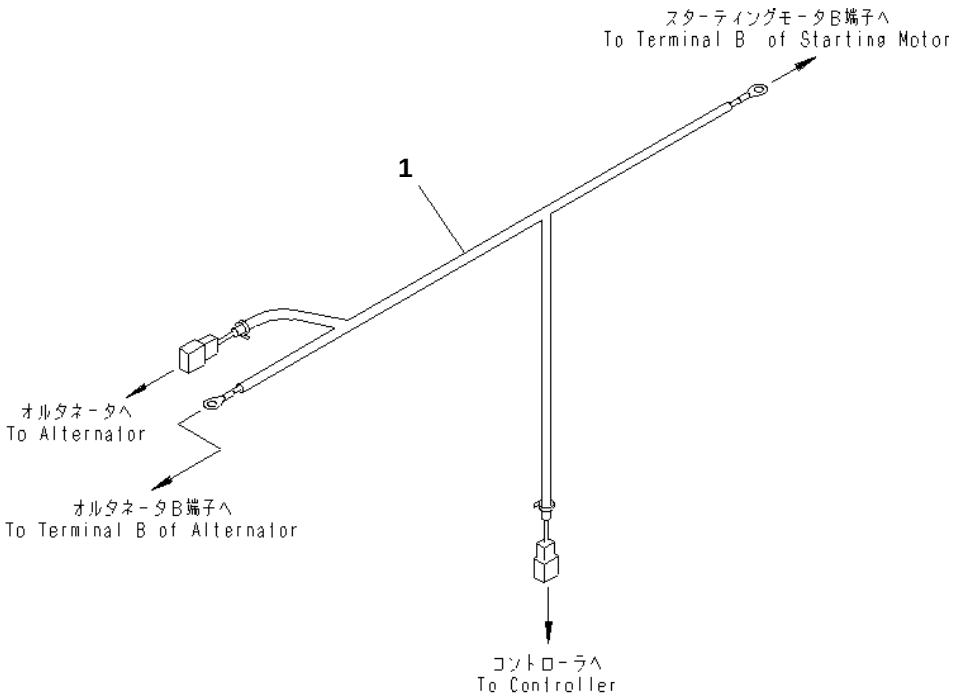

SAA6D102E-2A-8 S/N 26274903-UP

WIRING HARNESS(#26280116-)

Item	Part No.	Description	Qty	Options
1	6735-81-4310	WIRING HARNESS	1	SN:26280116--

Ref. B9999-01N6 Page 030980

https://truckmanualshub.com/

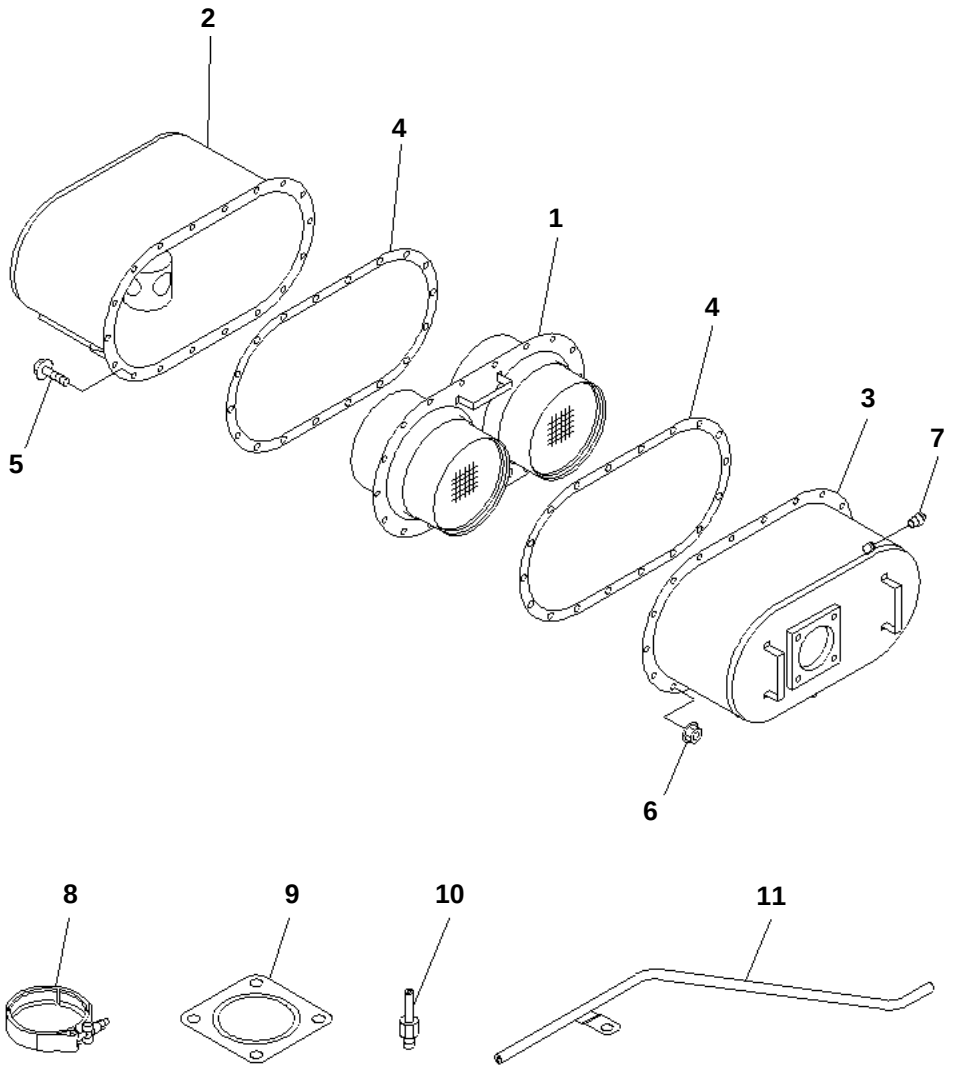

SAA6D102E-2A-8 S/N 26274903-UP

MUFFLER (CERAMIC TYPE)(#26293515-)

Item	Part No.	Description	Qty	Options
	6138-12-5515	MUFFLER,CERAMIC	1	SN:26293515--
1	6138-12-5550	· FILTER,CERAMIC	1	SN:26293515--
2	6138-12-5522	· BODY ASS'Y	1	SN:26293515--
3	6138-12-5533	· BODY ASS'Y	1	SN:26293515--
4	6138-12-5561	· GASKET	2	SN:26293515--
5	01435-01030	· BOLT	18	SN:26293515--
6	01584-01008	· NUT	18	SN:26293515--
7	07042-00108	· PLUG	1	SN:26293515--
8	6732-81-8220	CLAMP	1	SN:26293515--
9	6138-11-5810	GASKET	1	SN:26293515--
10	6124-11-6151	NIPPLE	1	SN:26293515--
11	6209-11-5490	TUBE	1	SN:26293515--

Ref. B9999-01P0 Page 030990

https://truckmanualshub.com/

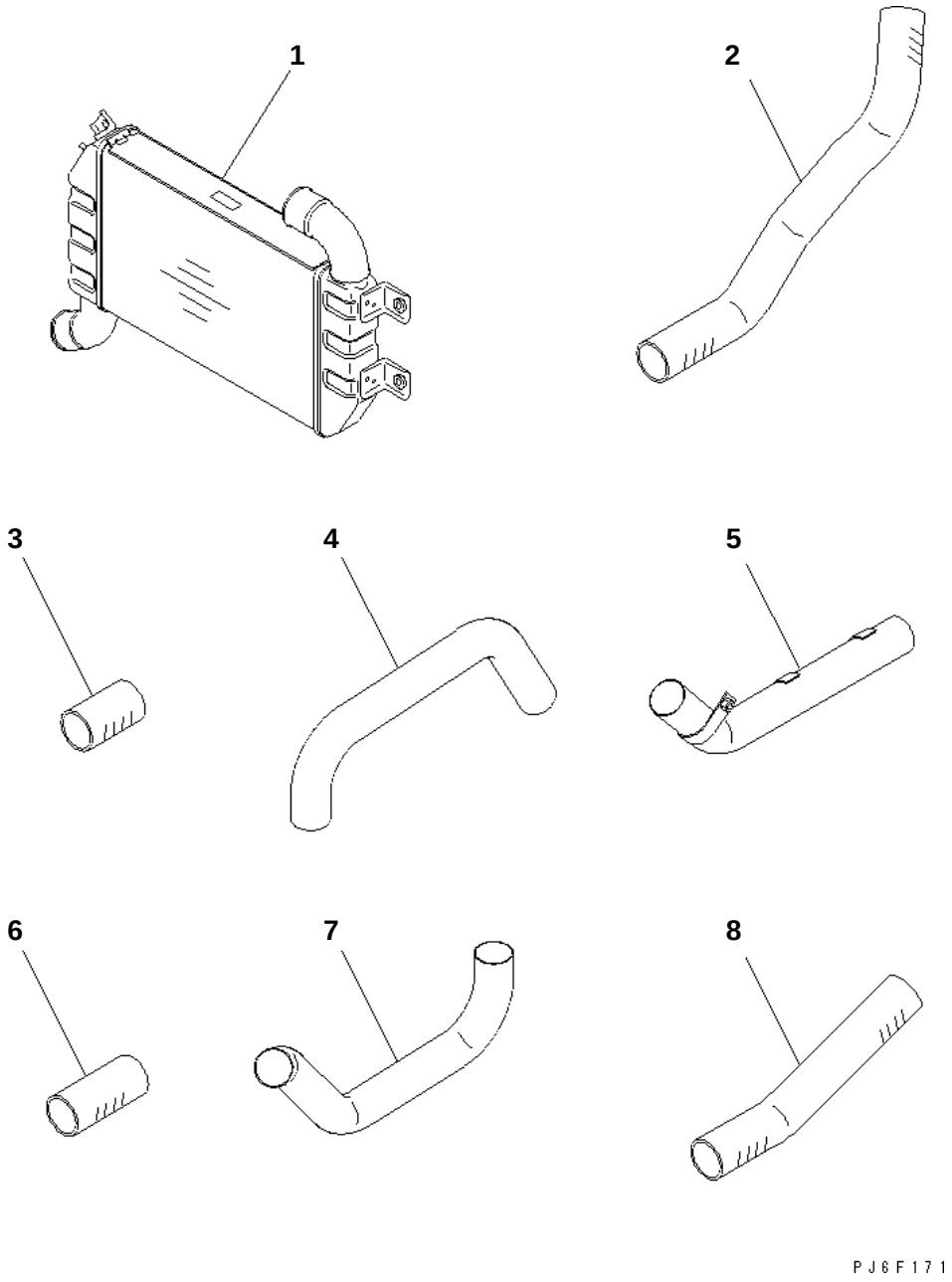

SAA6D102E-2A-8 S/N 26274903-UP

AFTER COOLER(#26274903-26277782)

Item	Part No.	Description	Qty	Options
1	6738-61-4100	AFTER COOLER ASS'Y, CERAMIC	1	SN:26274903--26277782
2	6738-11-4710	HOSE	1	SN:26274903--26277782
3	6738-11-4720	HOSE	2	SN:26274903--26277782
4	6738-11-4730	TUBE	1	SN:26274903--26277782
5	6738-11-4740	TUBE	1	SN:26274903--26277782
6	6738-11-4750	HOSE	1	SN:26274903--26277782
7	6738-11-4760	TUBE	1	SN:26274903--26277782
8	6738-11-4770	HOSE	1	SN:26274903--26277782

Ref. B9999-01P1 Page 031000

https://truckmanualshub.com/

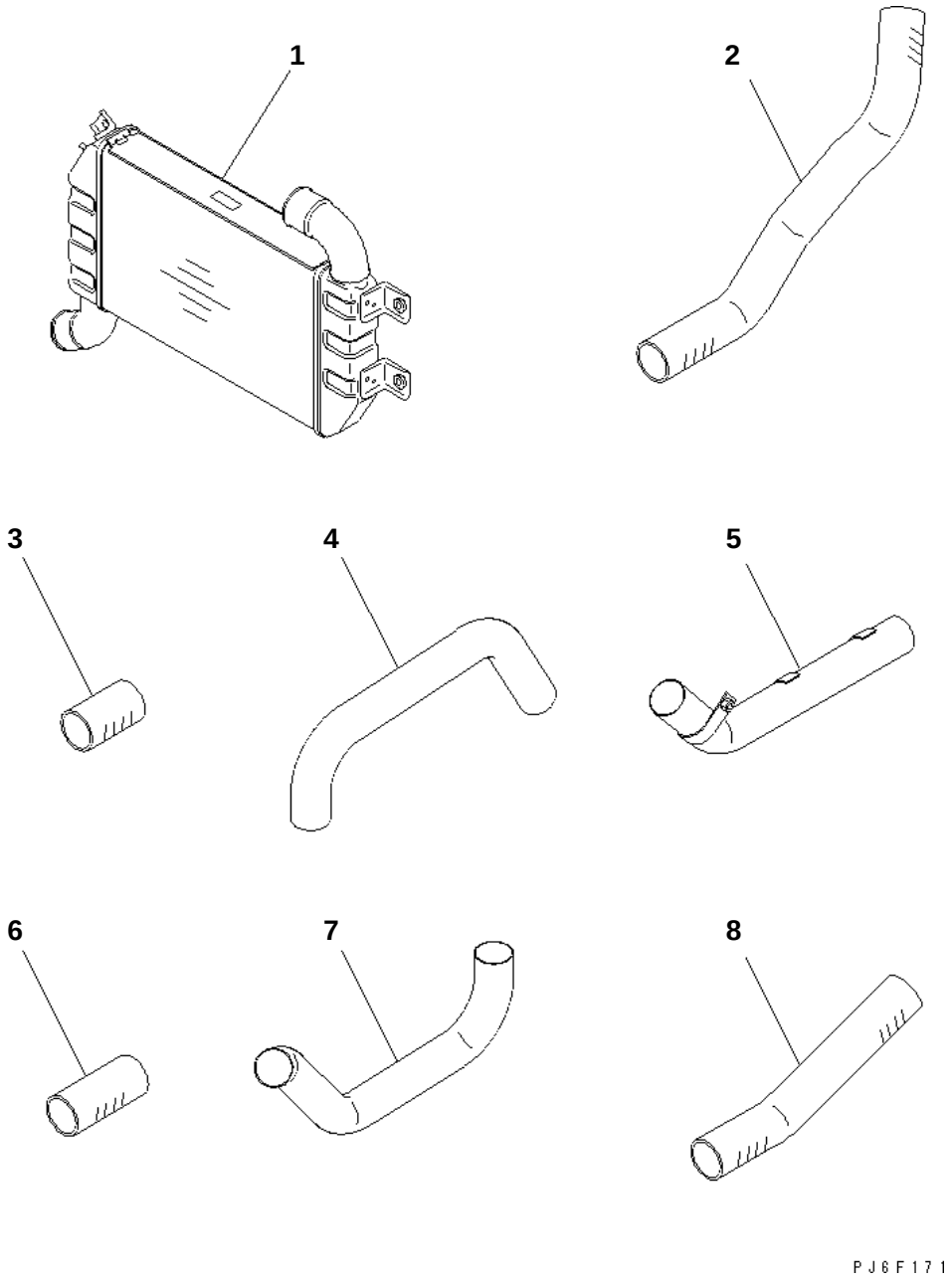

SAA6D102E-2A-8 S/N 26274903-UP

AFTER COOLER(#26277783-26288621)

Item	Part No.	Description	Qty	Options
1	6738-61-4102	AFTER COOLER ASS'Y, CERAMIC	1	SN:26277783--26288621
2	6738-11-4710	HOSE	1	SN:26277783--26288621
3	6738-11-4720	HOSE	2	SN:26277783--26288621
4	6738-11-4730	TUBE	1	SN:26277783--26288621
5	6738-11-4740	TUBE	1	SN:26277783--26288621
6	6738-11-4750	HOSE	1	SN:26277783--26288621
7	6738-11-4760	TUBE	1	SN:26277783--26288621
8	6738-11-4770	HOSE	1	SN:26277783--26288621

Ref. B9999-01P2 Page 031010

https://truckmanualshub.com/

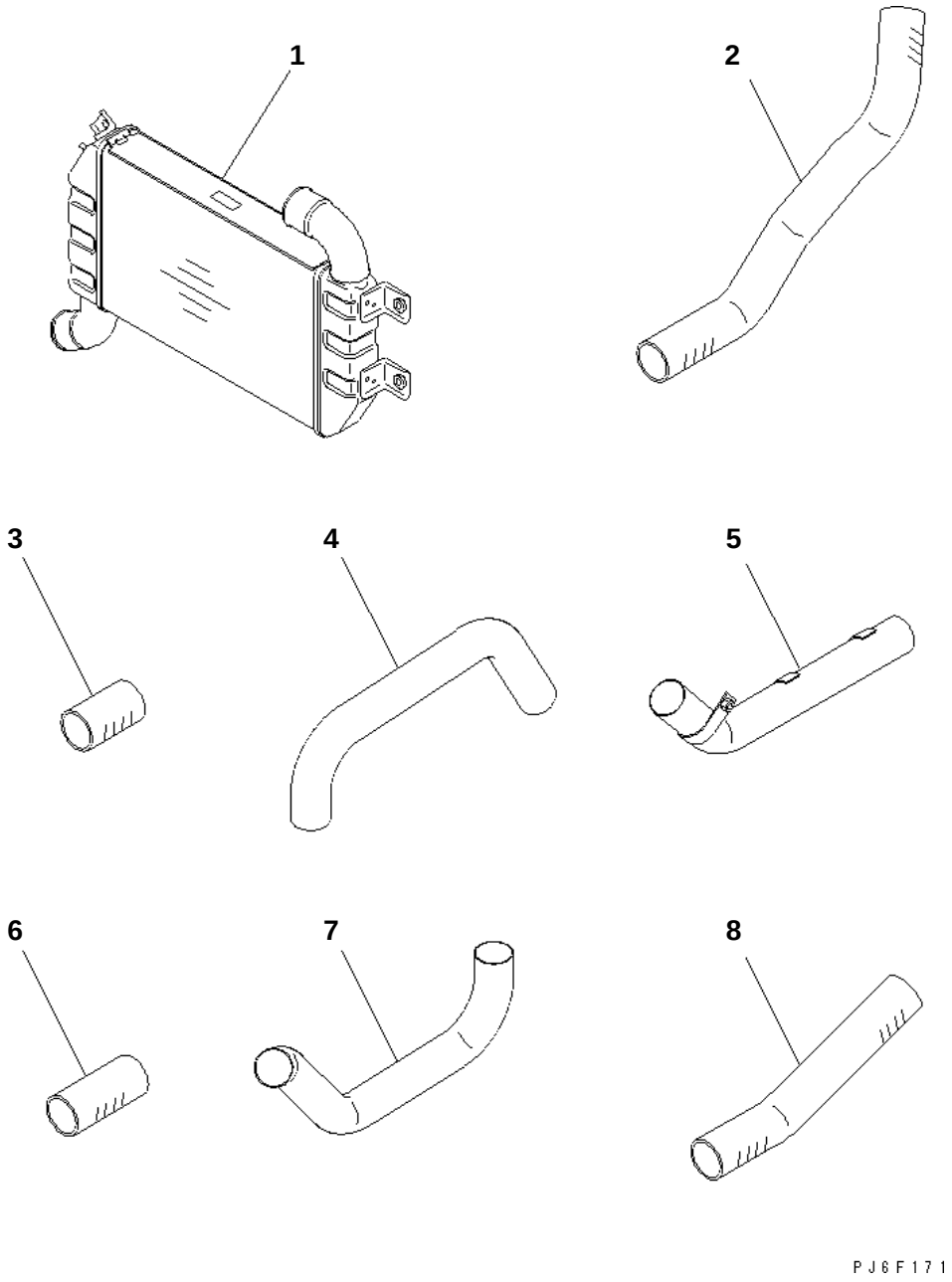

SAA6D102E-2A-8 S/N 26274903-UP

AFTER COOLER(#26288622-)

Item	Part No.	Description	Qty	Options
1	6738-61-4103	AIR COOLER ASS'Y,CERAMIC	1	SN:26288622--
2	6738-11-4710	HOSE	1	SN:26288622--
3	6738-11-4720	HOSE	2	SN:26288622--
4	6738-11-4730	TUBE	1	SN:26288622--
5	6738-11-4740	TUBE	1	SN:26288622--
6	6738-11-4750	HOSE	1	SN:26288622--
7	6738-11-4760	TUBE	1	SN:26288622--
8	6738-11-4770	HOSE	1	SN:26288622--

Ref. B9999-01P3 Page 031020

https://truckmanualshub.com/

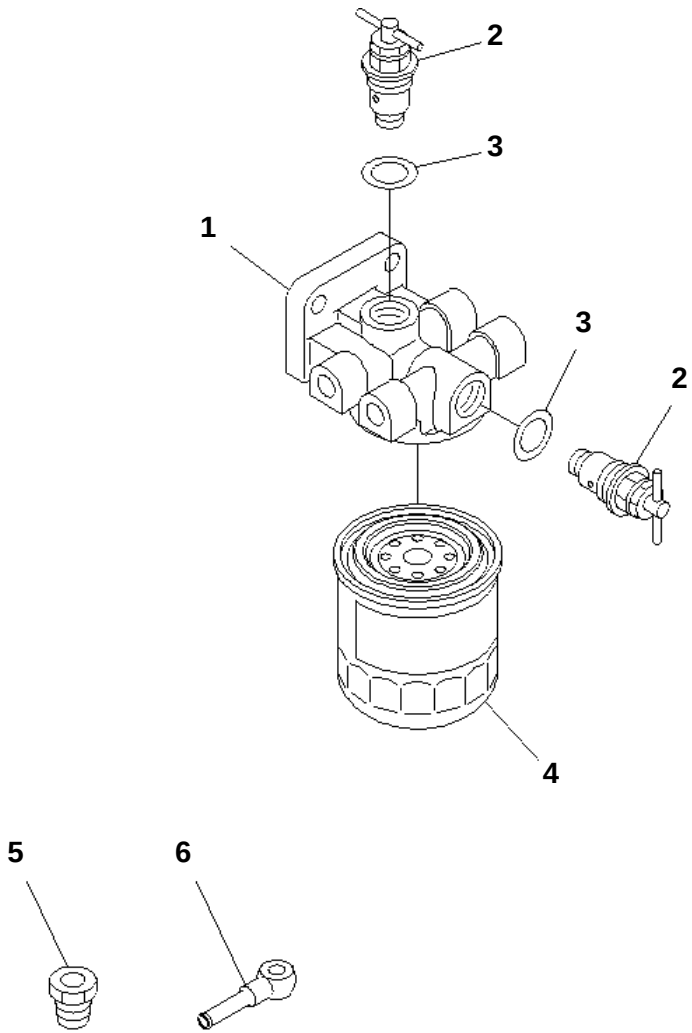

PJ6F172

SAA6D102E-2A-8 S/N 26274903-UP

CORROSION RESISTOR(#26288679-)

Item	Part No.	Description	Qty	Options
	6738-61-8100	CORROSION ASS'Y	1	SN:26288679--
	6732-61-8300	· HEAD ASS'Y	1	SN:26288679--
1	600-411-2410	· · HEAD	1	SN:26288679--
2	600-411-2120	· · VALVE ASS'Y	2	SN:26288679--
3	600-411-2130	· · GASKET,CORROSION	2	SN:26288679--
4	600-411-1191	· CARTRIDGE	1	SN:26288679--
5	6151-71-5910	CONNECTOR	1	SN:26288679--
6	6141-71-1710	JOINT	1	SN:26288679--

Ref. B9999-01P4 Page 031030

https://truckmanualshub.com/

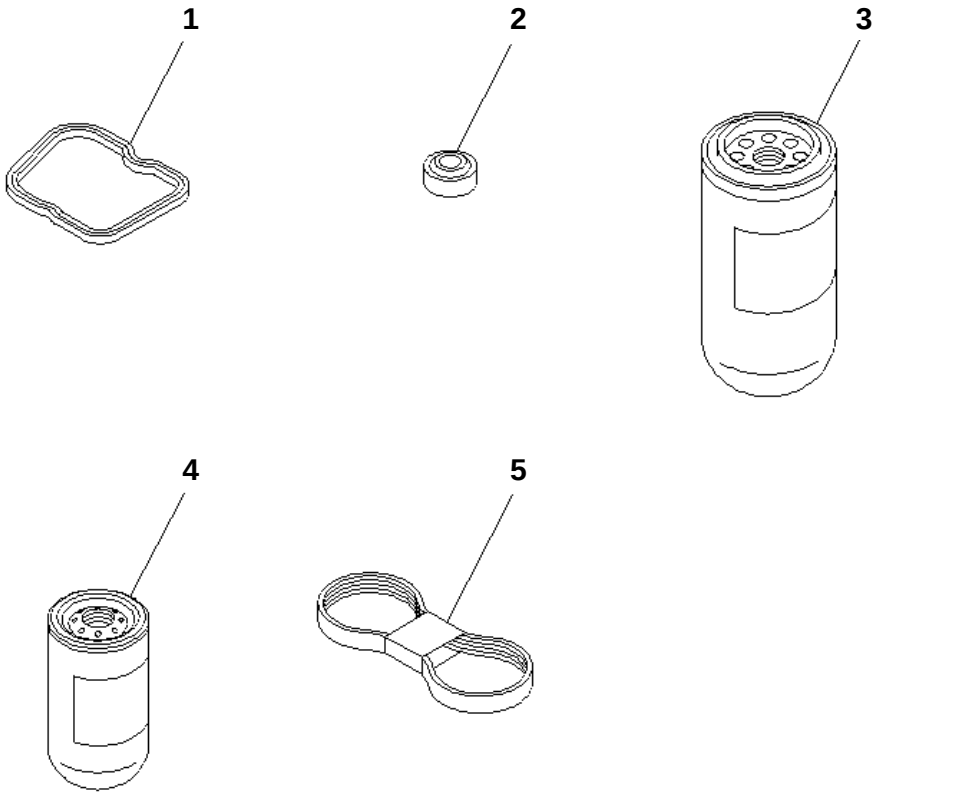

SAA6D102E-2A-8 S/N 26274903-UP

SPARE PARTS

Item	Part No.	Description	Qty	Options
1	6732-11-8181	GASKET	6	SN:26274903--
2	6732-11-8210	GASKET	6	SN:26274903--
3	6736-51-5141	CARTRIDGE	1	SN:26274903--
4	6732-71-6111	CARTRIDGE,FUEL	1	SN:26274903--
5	6732-61-3940	BELT	1	SN:26274903--

Ref. B9999-01P5 Page 031040

https://truckmanualshub.com/

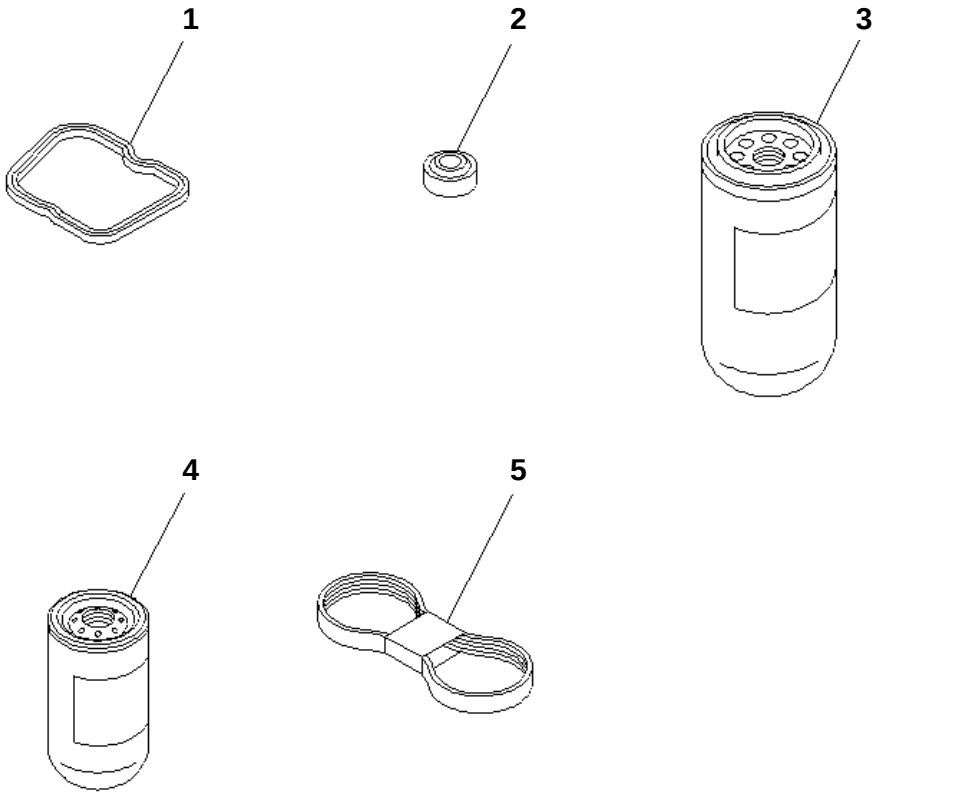

SAA6D102E-2A-8 S/N 26274903-UP

SPARE PARTS

Item	Part No.	Description	Qty	Options
1	6732-11-8181	GASKET	6	SN:26274903--
2	6732-11-8210	GASKET	6	SN:26274903--
3	6736-51-5142	CARTRIDGE	1	SN:26274903--
4	6732-71-6111	CARTRIDGE,FUEL	1	SN:26274903--
5	6732-61-3940	BELT	1	SN:26274903--

Ref. B9999-01R8 Page 031050

https://truckmanualshub.com/

ENGINE RELATED PARTS

Item	Description	Qty	Page
10	DAMPER¤ PUMP AND TUBE(#20594-)	1	030010
20	DAMPER AND PUMP(#20001-)	1	030020
30	ENGINE MOUNT (BRACKET)	1	030030
40	ENGINE MOUNT (CUSHION AND TUBE)	1	030040
50	AIR CLEANER CONNECTION (FOR DOUBLE ELEMENT)	1	030050
60	FUEL CONTROL	1	030060

https://truckmanualshub.com/

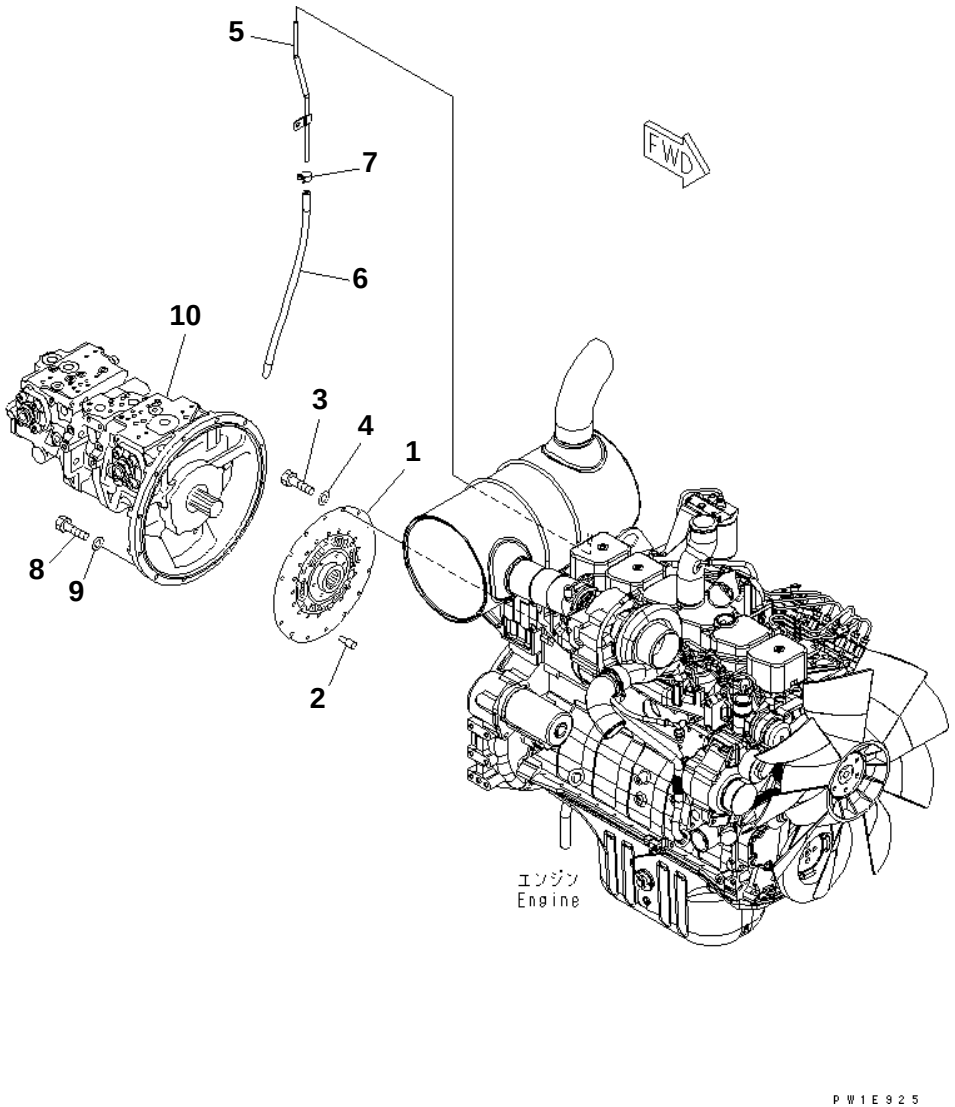

PC228US-3N-W1 S/N 30001-UP

DAMPER¤ PUMP AND TUBE(#20594-)

Item	Part No.	Description	Qty	Options
1	(22U-01-21310)	DISK DAMPER	1	SN:20594--
2	(203-01-51120)	PIN	2	SN:20594--
3	(01010-81020)	BOLT	8	SN:20594--
4	(01643-31032)	WASHER	8	SN:20594--
5	(6209-11-5480)	TUBE	1	SN:20594--
6	(07260-20950)	HOSE	1	SN:20594--
7	(07285-00155)	CLIP	1	SN:20594--
8	(01010-81040)	BOLT	12	SN:20594--
9	(01643-31032)	WASHER	12	SN:20594--
10	(708-2L-00102)	PUMP ASS'Y	1	SN:20594--

Ref. B0000-01A0 Page 030010

https://truckmanualshub.com/

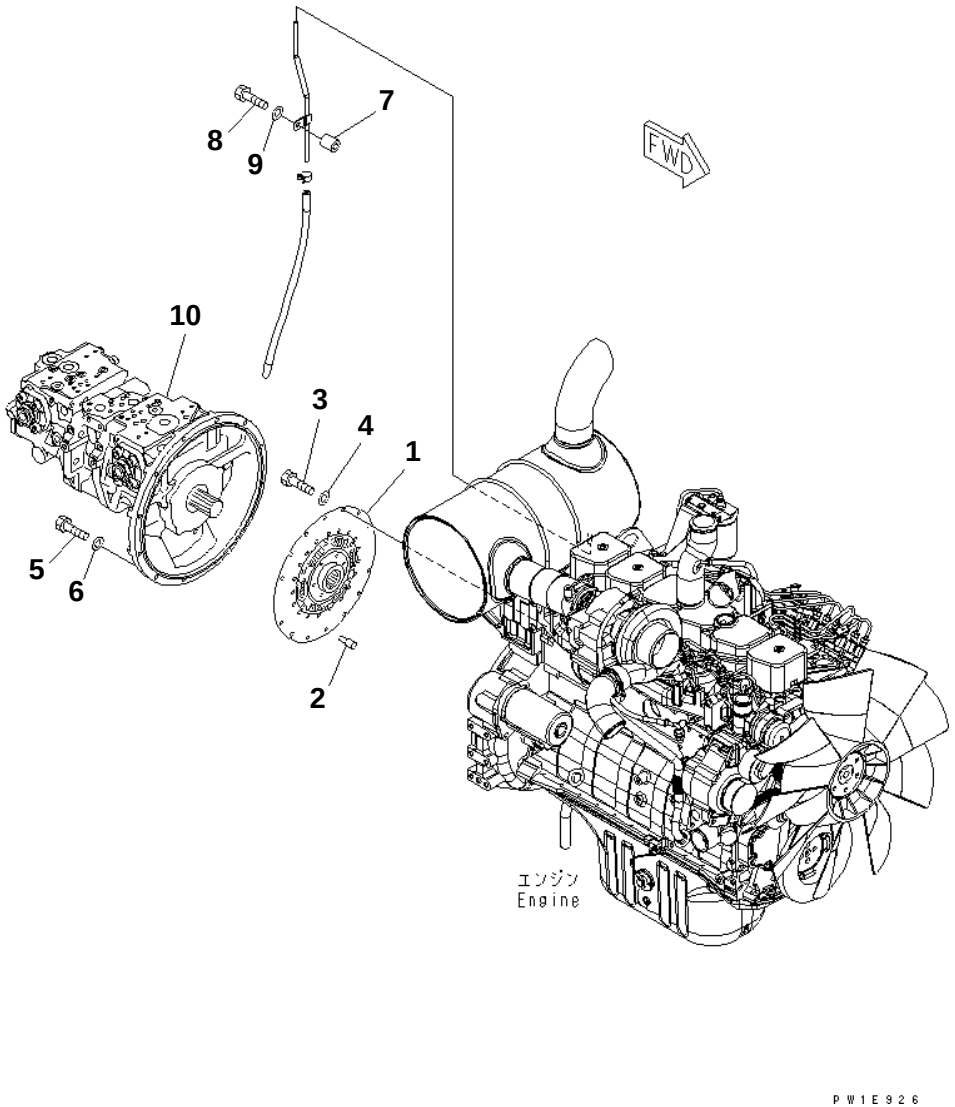

PC228US-3N-W1 S/N 30001-UP

DAMPER AND PUMP(#20001-)

Item	Part No.	Description	Qty	Options
1	(22U-01-21310)	DISK DAMPER	1	SN:20001--
2	(203-01-51120)	PIN	2	SN:20001--
3	(01010-81020)	BOLT	8	SN:20001--
4	(01643-31032)	WASHER	8	SN:20001--
5	(01010-81040)	BOLT	11	SN:20001--
6	(01643-31032)	WASHER	11	SN:20001--
7	(20Y-03-11220)	COLLAR	1	SN:20001--
8	(01010-81075)	BOLT	1	SN:20001--
9	(01643-31032)	WASHER	1	SN:20001--
10	(708-2L-00102)	PUMP ASS'Y	1	SN:20001--

Ref. B0000-01A1 Page 030020

https://truckmanualshub.com/

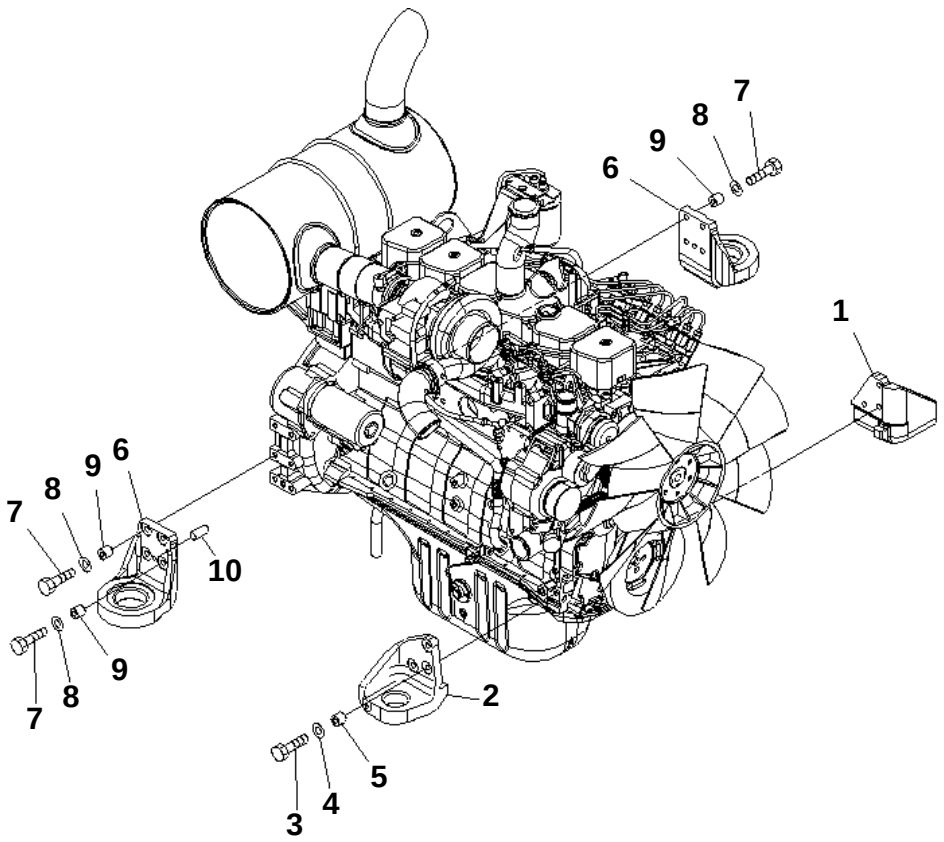

PC228US-3N-W1 S/N 30001-UP

ENGINE MOUNT (BRACKET)

Item	Part No.	Description	Qty	Options
1	22U-01-21340	BRACKET	1	SN:30001--
2	20Y-01-31220	BRACKET	1	SN:30001--
3	01010-81265	BOLT	6	SN:30001--
4	01643-31232	WASHER	6	SN:30001--
5	20Y-01-21260	BOSS	6	SN:30001--
6	20Y-01-22121	BRACKET	2	SN:30001--
7	01010-81265	BOLT	8	SN:30001--
8	01643-31232	WASHER	8	SN:30001--
9	20Y-01-21260	BOSS	8	SN:30001--
10	04020-01228	PIN	2	SN:30001--

Ref. B0100-01A0 Page 030030

https://truckmanualshub.com/

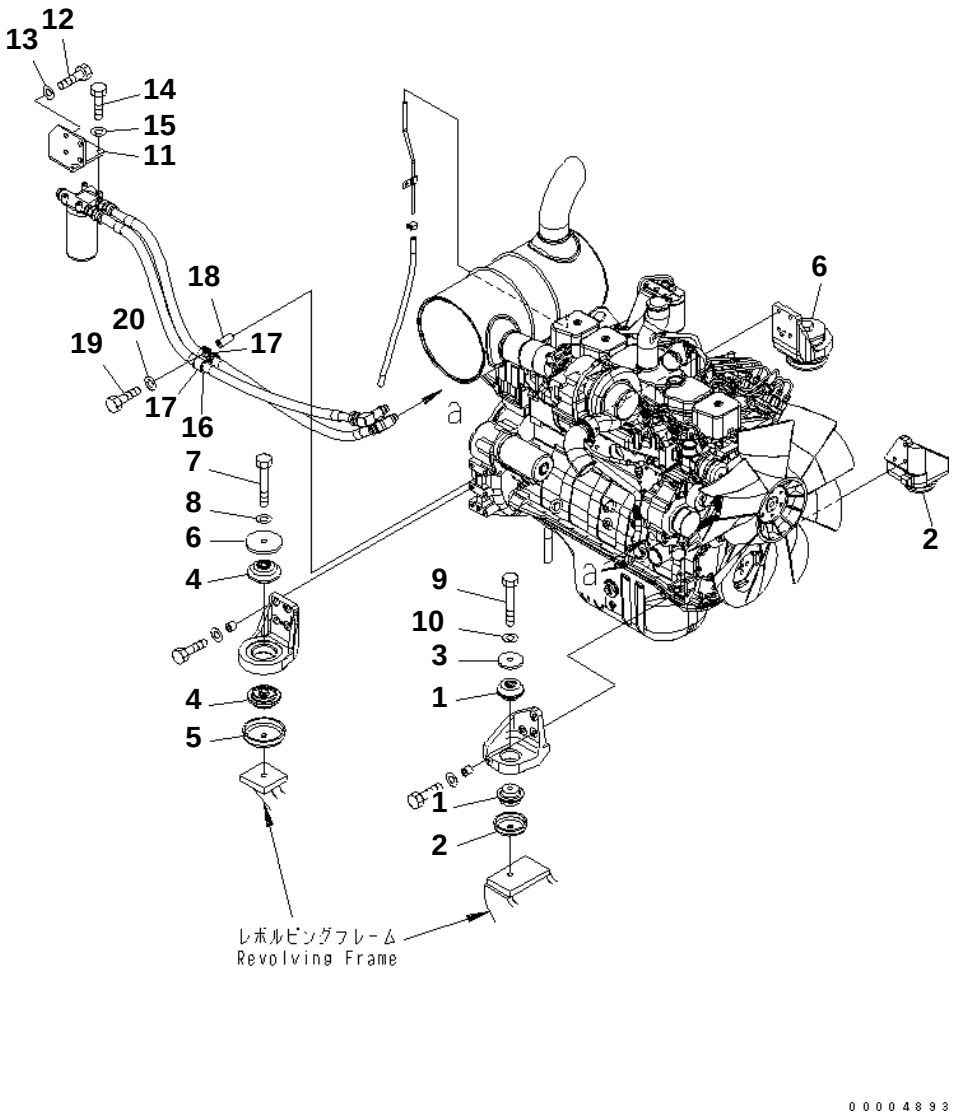

PC228US-3N-W1 S/N 30001-UP

ENGINE MOUNT (CUSHION AND TUBE)

Item	Part No.	Description	Qty	Options
1	20Y-01-12210	CUSHION	4	SN:30001--
2	22U-01-21330	STOPPER	2	SN:30001--
3	20Y-01-11141	WASHER	2	SN:30001--
4	20Y-01-12222	CUSHION	4	SN:30001--
5	20Y-01-12161	STOPPER	2	SN:30001--
6	20Y-01-12180	WASHER	2	SN:30001--
7	01011-B1635	BOLT	2	SN:30001--
8	01643-31645	WASHER	2	SN:30001--
9	01011-B1630	BOLT	2	SN:30001--
10	01643-31645	WASHER	2	SN:30001--
11	22U-01-21211	BRACKET	1	SN:30001--
12	01010-81230	BOLT	4	SN:30001--
13	01643-31232	WASHER	4	SN:30001--
14	01010-80825	BOLT	4	SN:30001--
15	01643-30823	WASHER	4	SN:30001--
16	07095-20627	CUSHION	2	SN:30001--
17	04434-53412	CLIP	2	SN:30001--
18	195-979-5190	COLLAR	1	SN:30001--
19	01010-81275	BOLT	1	SN:30001--
20	01643-31232	WASHER	1	SN:30001--

Ref. B0100-02A0 Page 030040

https://truckmanualshub.com/

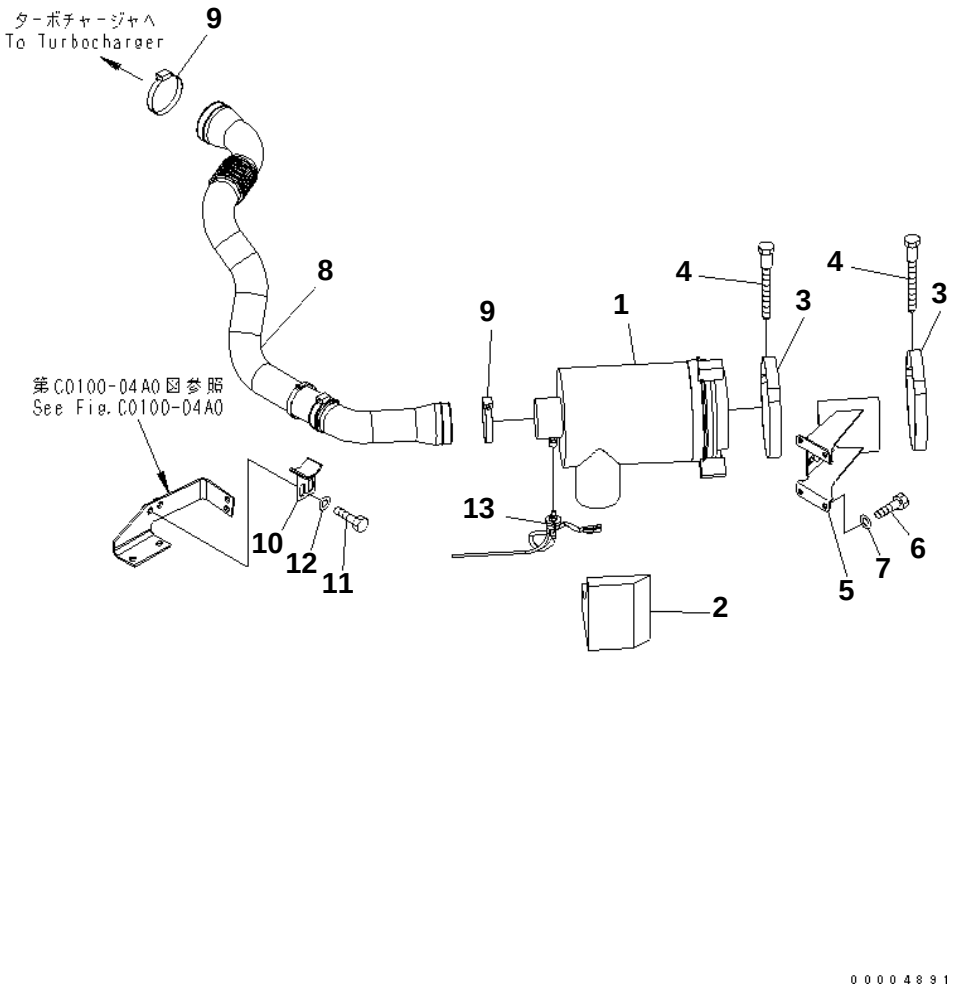

PC228US-3N-W1 S/N 30001-UP

AIR CLEANER CONNECTION (FOR DOUBLE ELEMENT)

Item	Part No.	Description	Qty	Options
1	6738-81-7100	AIR CLEANER	1	SN:30001--
2	22U-01-21171	SEAL	1	SN:30001--
3	6131-11-4520	BAND ASS'Y	2	SN:30001--
4	6643-11-4641	BOLT	2	SN:30001--
5	22U-01-21162	BRACKET	1	SN:30001--
6	01010-81225	BOLT	4	SN:30001--
7	01643-31232	WASHER	4	SN:30001--
8	22U-01-21141	HOSE	1	SN:30001--
9	6212-11-4840	CLAMP	2	SN:30001--
10	22U-01-21291	BRACKET	1	SN:30001--
11	01010-81225	BOLT	2	SN:30001--
12	01643-31232	WASHER	2	SN:30001--
13	7861-93-1420	SENSOR	1	SN:30001--

Ref. B0200-01A0 Page 030050

https://truckmanualshub.com/

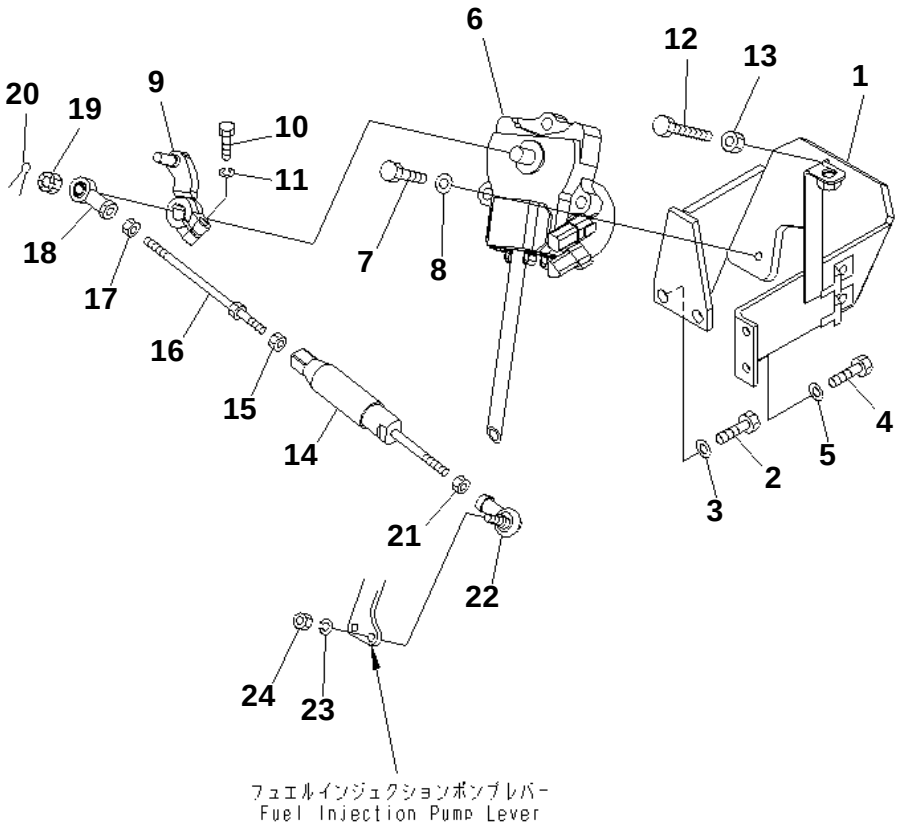

PC228US-3N-W1 S/N 30001-UP

FUEL CONTROL

Item	Part No.	Description	Qty	Options
1	22U-43-21511	BRACKET	1	SN:30001--
2	01010-81230	BOLT	2	SN:30001--
3	01643-31232	WASHER	2	SN:30001--
4	01010-80820	BOLT	2	SN:30001--
5	01643-30823	WASHER	2	SN:30001--
6	7834-41-2000	MOTOR ASS'Y	1	SN:30001--
7	01010-81040	BOLT	3	SN:30001--
8	01643-31032	WASHER	3	SN:30001--
9	20Y-43-12143	LEVER	1	SN:30001--
10	01010-81030	BOLT	1	SN:30001--
11	01602-21030	WASHER	1	SN:30001--
12	01016-51070	BOLT	1	SN:30001--
13	01580-11008	NUT	1	SN:30001--
14	20Y-43-23441	SPRING ASS'Y	1	SN:30001--
15	01582-11008	NUT	1	SN:30001--
16	04248-31018	ROD	1	SN:30001--
17	01508-41006	NUT	1	SN:30001--
18	04250-91056	END	1	SN:30001--
19	01593-31008	NUT	1	SN:30001--
20	04050-12018	PIN	1	SN:30001--
21	01582-11008	NUT	1	SN:30001--
22	20Y-43-12180	JOINT	1	SN:30001--
23	01602-20619	WASHER	1	SN:30001--
24	01580-10605	NUT	1	SN:30001--

Ref. B0400-01A0 Page 030060

https://truckmanualshub.com/

COOLING SYSTEM

Item	Description	Qty	Page
10	COOLING (RADIATOR)	1	060010
20	COOLING (OIL COOLER)	1	060020
30	COOLING (SHROUD)	1	060030
40	COOLING (AFTER COOLER¤ CONDENSER AND PIPING)	1	060040
50	COOLING (AFTER COOLER¤ CONDENSER AND PIPING) (AUTO AIR CONDITIONER)	1	060050
60	COOLING (SUB TANK AND RADIATOR MOUNT)	1	060060
70	COOLING (FAN GUARD)	1	060070

https://truckmanualshub.com/

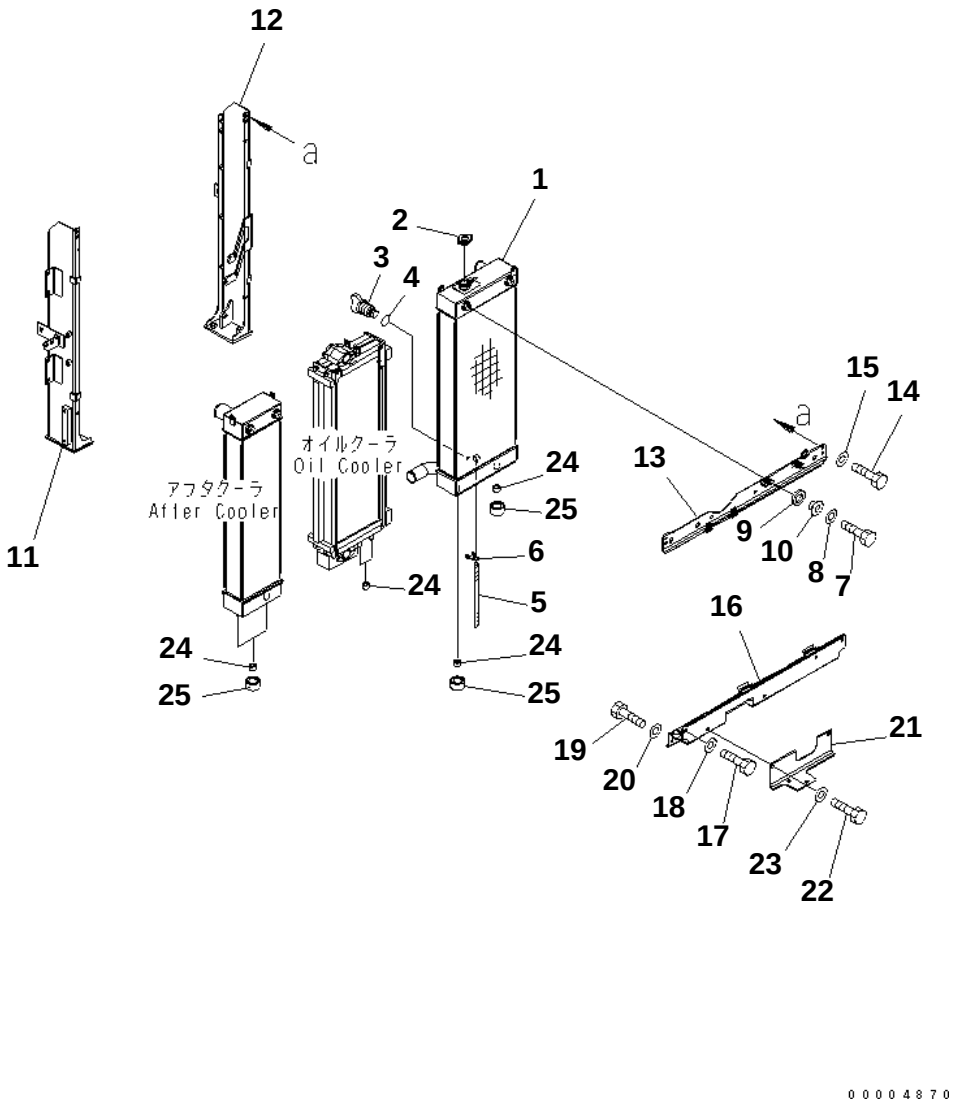

PC228US-3N-W1 S/N 30001-UP

COOLING (RADIATOR)

Item	Part No.	Description	Qty	Options
1	22U-03-22111	CORE ASS'Y	1	SN:30001--
2	20Y-03-22110	CAP	1	SN:30001--
3	205-03-62660	PLUG	1	SN:30001--
4	07000-11007	· O-RING	1	SN:30001--
5	203-03-41410	HOSE	1	SN:30001--
6	20Y-03-11330	CLIP	1	SN:30001--
7	01010-81030	BOLT	2	SN:30001--
8	01643-31032	WASHER	2	SN:30001--
9	22U-03-22860	CUSHION	2	SN:30001--
10	6738-61-4952	COLLAR	2	SN:30001--
11	22U-03-22150	FRAME	1	SN:30001--
12	22U-03-22160	FRAME	1	SN:30001--
13	22U-03-22171	BRACKET	1	SN:30001--
14	01010-81025	BOLT	4	SN:30001--
15	01643-31032	WASHER	4	SN:30001--
16	22U-03-22180	BRACKET	1	SN:30001--
17	01010-81020	BOLT	2	SN:30001--
18	01643-31032	WASHER	2	SN:30001--
19	01010-81025	BOLT	2	SN:30001--
20	01643-31032	WASHER	2	SN:30001--
21	22U-03-22370	BRACKET	1	SN:30001--
22	01010-81225	BOLT	2	SN:30001--
23	01643-31232	WASHER	2	SN:30001--
24	22B-03-12590	CUSHION	6	SN:30001--
25	22U-03-22870	CUSHION	4	SN:30001--

Ref. C0100-01A0 Page 060010

https://truckmanualshub.com/

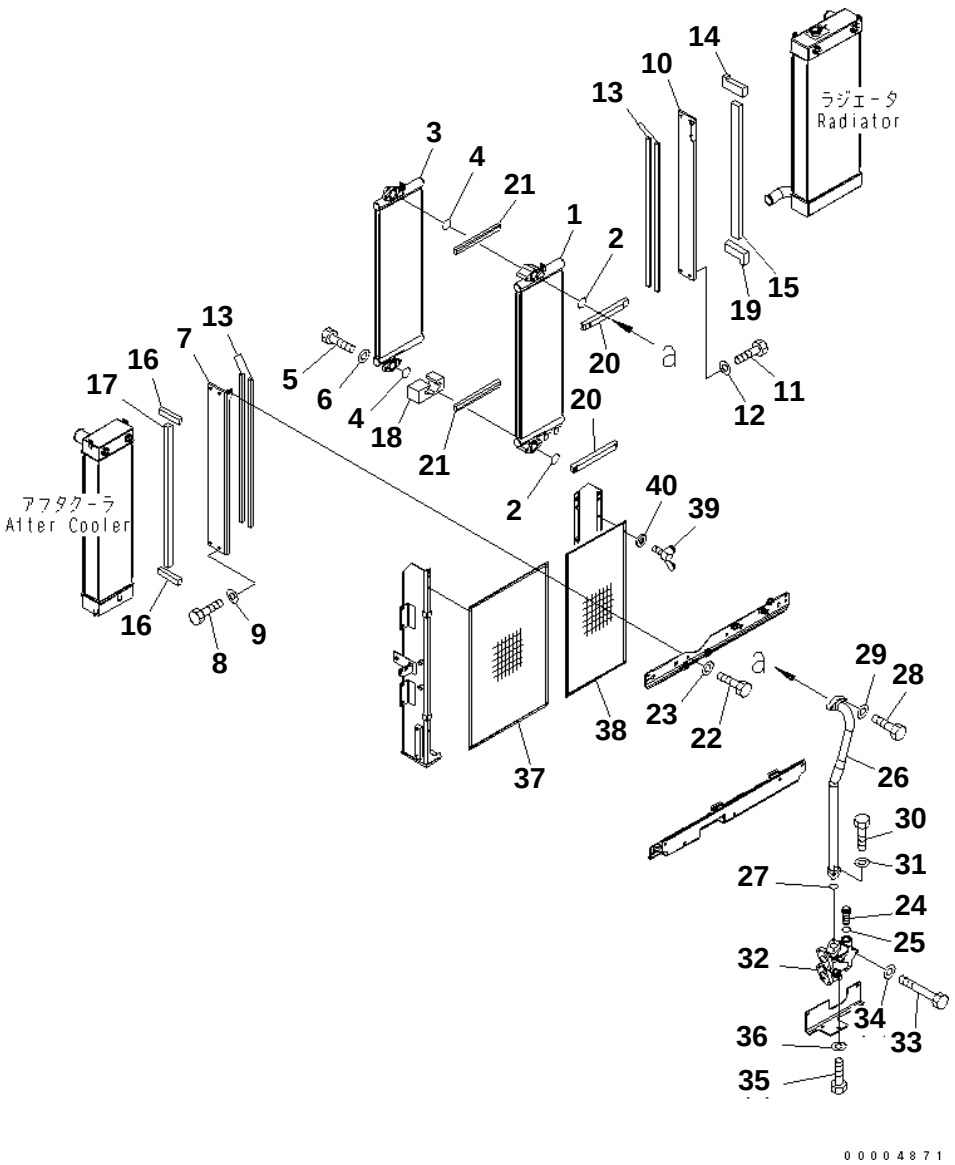

PC228US-3N-W1 S/N 30001-UP

COOLING (OIL COOLER)

Item	Part No.	Description	Qty	Options
1	22U-03-22120	OIL COOLER	1	SN:30001--
2	07000-13045	O-RING	2	SN:30001--
3	22U-03-22130	OIL COOLER	1	SN:30001--
4	07000-13045	O-RING	2	SN:30001--
5	01010-81240	BOLT	4	SN:30001--
6	01643-31232	WASHER	4	SN:30001--
7	22U-03-22230	BRACKET	1	SN:30001--
8	01010-81020	BOLT	4	SN:30001--
9	01643-31032	WASHER	4	SN:30001--
10	22U-03-22240	BRACKET	1	SN:30001--
11	01010-81020	BOLT	4	SN:30001--
12	01643-31032	WASHER	4	SN:30001--
13	21K-03-71590	SHEET	4	SN:30001--
14	22U-03-22550	SHEET	1	SN:30001--
15	22U-03-22560	SHEET	1	SN:30001--
16	22U-03-22580	SHEET	2	SN:30001--
17	22U-03-22590	SHEET	1	SN:30001--
18	22U-03-22610	SHEET	1	SN:30001--
19	22U-03-22660	SHEET	1	SN:30001--
20	22U-03-22680	SHEET	2	SN:30001--
21	22U-03-22790	SHEET	2	SN:30001--
22	01010-81025	BOLT	2	SN:30001--
23	01643-31032	WASHER	2	SN:30001--
24	22U-03-21790	VALVE ASS'Y	1	SN:30001--
25	07002-13634	O-RING	1	SN:30001--
26	22U-03-22310	TUBE	1	SN:30001--
27	07000-13045	O-RING	1	SN:30001--
28	01010-81245	BOLT	2	SN:30001--
29	01643-31232	WASHER	2	SN:30001--
30	01010-81255	BOLT	2	SN:30001--
31	01643-31232	WASHER	2	SN:30001--
32	22U-03-22320	BLOCK	1	SN:30001--
33	01011-81225	BOLT	2	SN:30001--
34	01643-31232	WASHER	2	SN:30001--
35	01010-81235	BOLT	2	SN:30001--
36	01643-31232	WASHER	2	SN:30001--
37	22U-03-22350	NET	1	SN:30001--
38	22U-03-22360	NET	1	SN:30001--
39	01434-10616	BOLT¤ WING	4	SN:30001--
40	01643-30623	WASHER	4	SN:30001--

Ref. C0100-02A0 Page 060020

https://truckmanualshub.com/

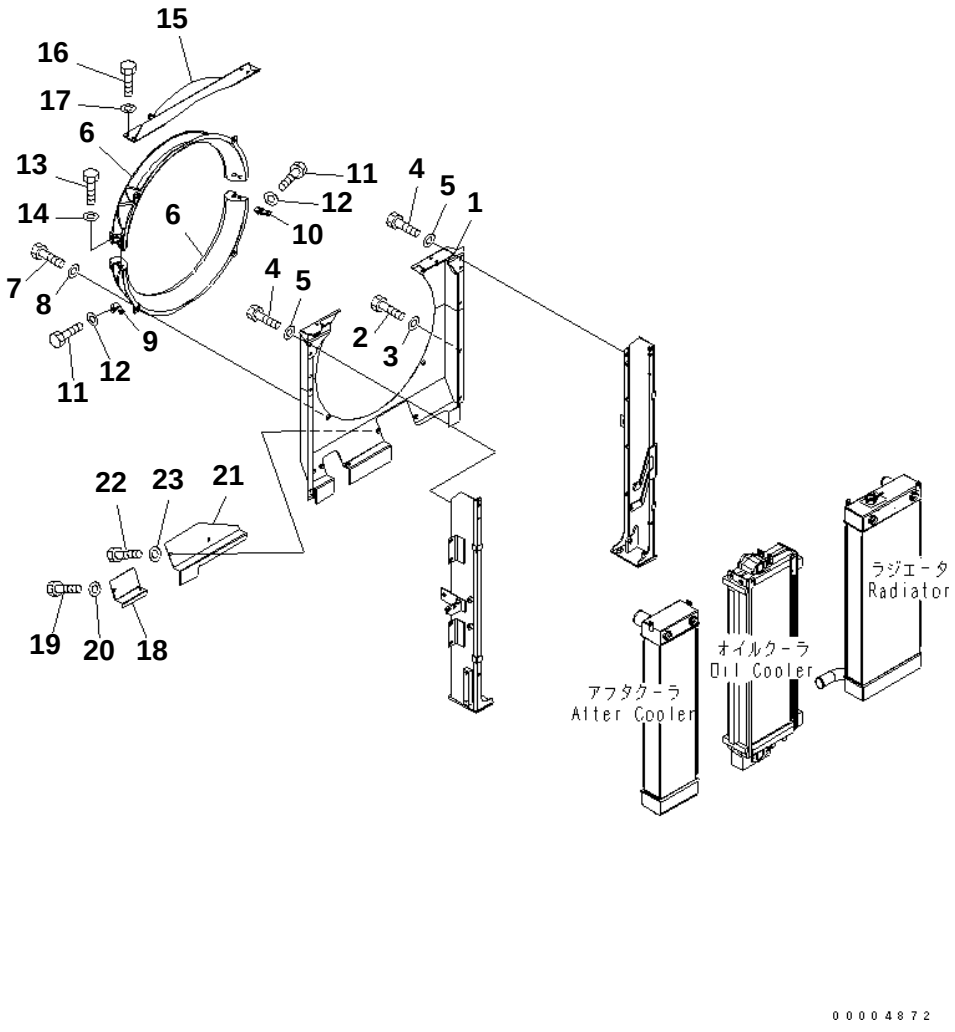

PC228US-3N-W1 S/N 30001-UP

COOLING (SHROUD)

Item	Part No.	Description	Qty	Options
1	22U-03-22190	SHROUD	1	SN:30001--
2	01010-81020	BOLT	3	SN:30001--
3	01643-31032	WASHER	3	SN:30001--
4	01010-81025	BOLT	4	SN:30001--
5	01643-31032	WASHER	4	SN:30001--
6	22U-03-21321	SHROUD	2	SN:30001--
7	01010-81020	BOLT	4	SN:30001--
8	203-54-56970	WASHER	4	SN:30001--
9	22U-03-21770	BRACKET	1	SN:30001--
10	22U-03-21780	BRACKET	1	SN:30001--
11	01010-81025	BOLT	2	SN:30001--
12	01643-31032	WASHER	2	SN:30001--
13	01010-81030	BOLT	4	SN:30001--
14	01643-31032	WASHER	4	SN:30001--
15	22U-03-22210	BRACKET	1	SN:30001--
16	01010-81020	BOLT	4	SN:30001--
17	01643-31032	WASHER	4	SN:30001--
18	22U-03-22220	COVER	1	SN:30001--
19	01010-81020	BOLT	2	SN:30001--
20	01643-31032	WASHER	2	SN:30001--
21	22U-03-22290	COVER	1	SN:30001--
22	01010-81020	BOLT	2	SN:30001--
23	01643-31032	WASHER	2	SN:30001--

Ref. C0100-03A0 Page 060030

https://truckmanualshub.com/

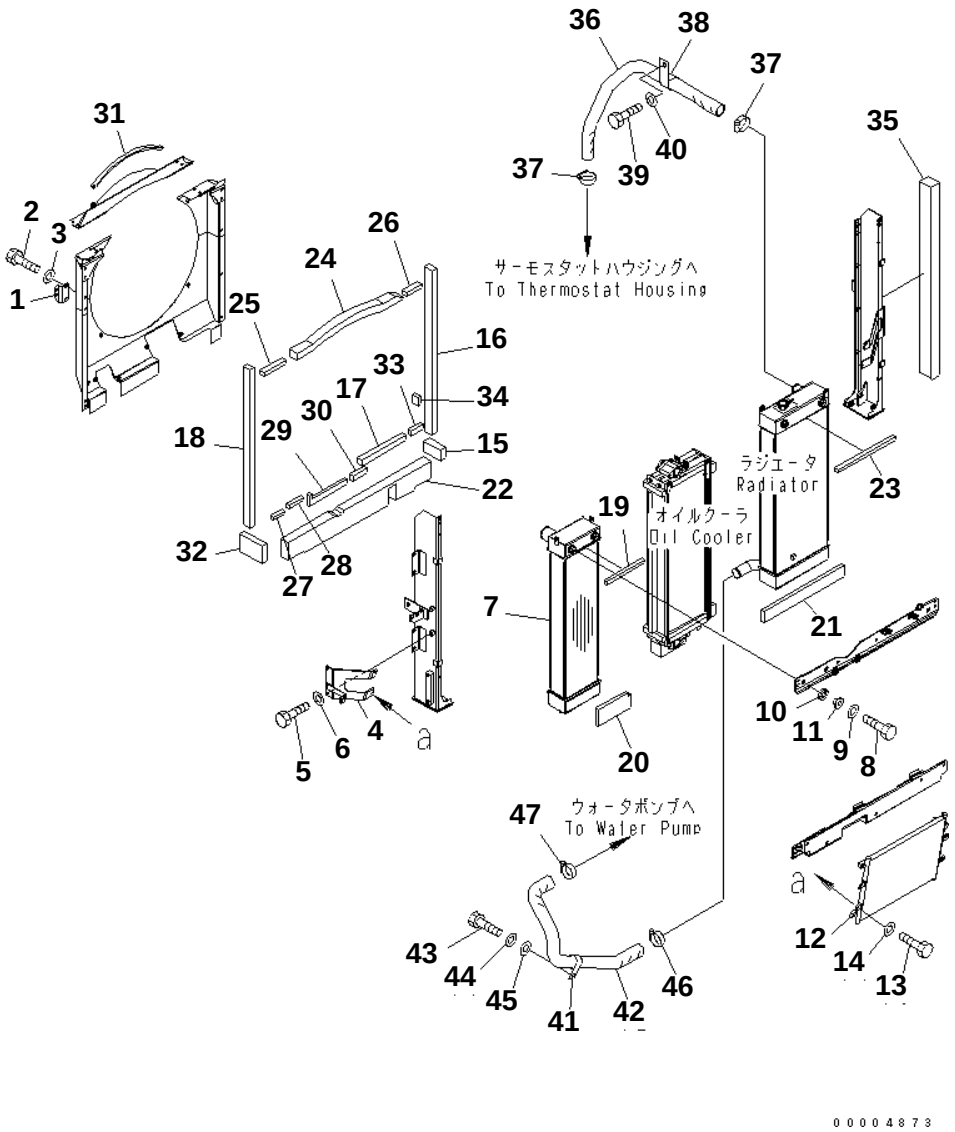

PC228US-3N-W1 S/N 30001-UP

COOLING (AFTER COOLER¤ CONDENSER AND PIPING)

Item	Part No.	Description	Qty	Options
1	22U-03-22510	BRACKET	1	SN:30001--
2	01010-81025	BOLT	2	SN:30001--
3	01643-31032	WASHER	2	SN:30001--
4	22U-03-22440	BRACKET	1	SN:30001--
5	01010-81020	BOLT	2	SN:30001--
6	01643-31032	WASHER	2	SN:30001--
7	22U-03-22141	AFTER COOLER	1	SN:30001--
8	01010-81030	BOLT	2	SN:30001--
9	01643-31032	WASHER	2	SN:30001--
10	22U-03-22860	CUSHION	2	SN:30001--
11	6738-61-4952	COLLAR	2	SN:30001--
12	22U-979-1740	CONDENSER ASS'Y	1	SN:30001--
13	01010-80825	BOLT	4	SN:30001--
14	01643-30823	WASHER	4	SN:30001--
15	21K-03-71650	SHEET	1	SN:30001--
16	22U-03-22540	SHEET	1	SN:30001--
17	22U-03-22570	SHEET	1	SN:30001--
18	22U-03-22620	SHEET	1	SN:30001--
19	22U-03-22630	SHEET	1	SN:30001--
20	22U-03-22640	SHEET	1	SN:30001--
21	22U-03-22650	SHEET	1	SN:30001--
22	22U-03-22670	SHEET	1	SN:30001--
23	22U-03-22690	SHEET	1	SN:30001--
24	22U-03-22710	SHEET	1	SN:30001--
25	22U-03-22720	SHEET	1	SN:30001--
26	22U-03-22730	SHEET	1	SN:30001--
27	22U-03-22740	SHEET	1	SN:30001--
28	22U-03-22750	SHEET	1	SN:30001--
29	22U-03-22760	SHEET	1	SN:30001--
30	22U-03-22770	SHEET	1	SN:30001--
31	22U-03-22820	SHEET	1	SN:30001--
32	22U-03-22830	SHEET	1	SN:30001--
33	22U-03-22840	SHEET	1	SN:30001--
34	22U-03-22850	SHEET	1	SN:30001--
35	22U-03-22430	SHEET	1	SN:30001--
36	22U-03-22250	HOSE	1	SN:30001--
37	07289-00055	CLAMP	2	SN:30001--
38	20Y-62-15960	CLIP	1	SN:30001--
39	01010-81225	BOLT	1	SN:30001--
40	01643-31232	WASHER	1	SN:30001--

Ref. C0100-04A0 Page 060040

https://truckmanualshub.com/

PC228US-3N-W1 S/N 30001-UP

COOLING (AFTER COOLER¤ CONDENSER AND PIPING)

Item	Part No.	Description	Qty	Options
41	208-62-38370	CLIP	1	SN:30001--
42	22U-03-22260	HOSE	1	SN:30001--
43	01010-81030	BOLT	1	SN:30001--
44	01643-31032	WASHER	1	SN:30001--
45	560-43-15220	WASHER	1	SN:30001--
46	07289-00055	CLAMP	1	SN:30001--
47	07289-00070	CLAMP	1	SN:30001--

https://truckmanualshub.com/

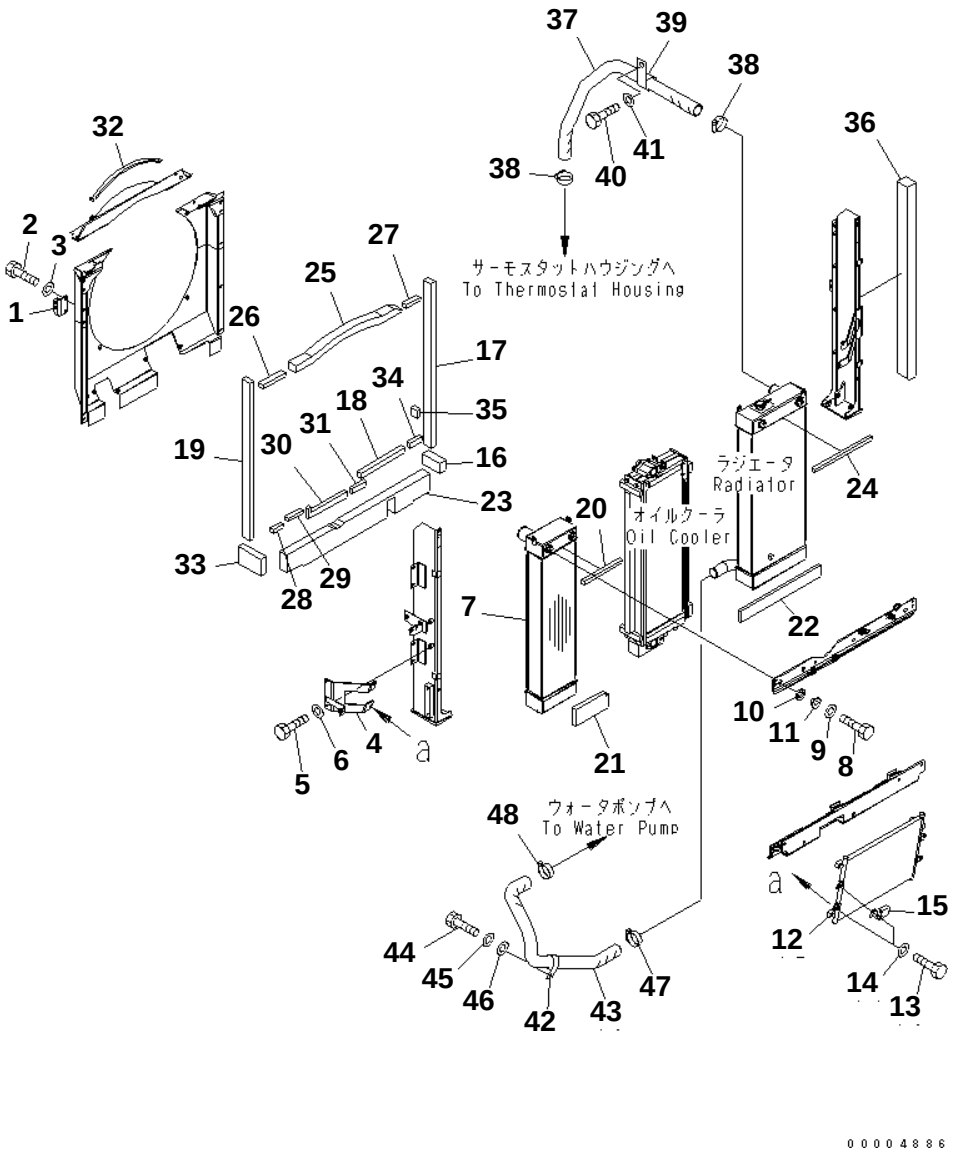

PC228US-3N-W1 S/N 30001-UP

COOLING (AFTER COOLER¤ CONDENSER AND PIPING) (AUTO AIR CONDITIONER)

Item	Part No.	Description	Qty	Options
1	22U-03-22510	BRACKET	1	SN:30001--
2	01010-81025	BOLT	2	SN:30001--
3	01643-31032	WASHER	2	SN:30001--
4	22U-03-22440	BRACKET	1	SN:30001--
5	01010-81020	BOLT	2	SN:30001--
6	01643-31032	WASHER	2	SN:30001--
7	22U-03-22141	AFTER COOLER	1	SN:30001--
8	01010-81030	BOLT	2	SN:30001--
9	01643-31032	WASHER	2	SN:30001--
10	22U-03-22860	CUSHION	2	SN:30001--
11	6738-61-4952	COLLAR	2	SN:30001--
12	22U-979-1740	CONDENSER ASS'Y	1	SN:30001--
13	01010-80825	BOLT	4	SN:30001--
14	01643-30823	WASHER	4	SN:30001--
15	22B-979-1830	SENSOR	1	SN:30001--
16	21K-03-71650	SHEET	1	SN:30001--
17	22U-03-22540	SHEET	1	SN:30001--
18	22U-03-22570	SHEET	1	SN:30001--
19	22U-03-22620	SHEET	1	SN:30001--
20	22U-03-22630	SHEET	1	SN:30001--
21	22U-03-22640	SHEET	1	SN:30001--
22	22U-03-22650	SHEET	1	SN:30001--
23	22U-03-22670	SHEET	1	SN:30001--
24	22U-03-22690	SHEET	1	SN:30001--
25	22U-03-22710	SHEET	1	SN:30001--
26	22U-03-22720	SHEET	1	SN:30001--
27	22U-03-22730	SHEET	1	SN:30001--
28	22U-03-22740	SHEET	1	SN:30001--
29	22U-03-22750	SHEET	1	SN:30001--
30	22U-03-22760	SHEET	1	SN:30001--
31	22U-03-22770	SHEET	1	SN:30001--
32	22U-03-22820	SHEET	1	SN:30001--
33	22U-03-22830	SHEET	1	SN:30001--
34	22U-03-22840	SHEET	1	SN:30001--
35	22U-03-22850	SHEET	1	SN:30001--
36	22U-03-22430	SHEET	1	SN:30001--
37	22U-03-22250	HOSE	1	SN:30001--
38	07289-00055	CLAMP	2	SN:30001--
39	20Y-62-15960	CLIP	1	SN:30001--

Ref. C0100-04A1 Page 060050

https://truckmanualshub.com/

PC228US-3N-W1 S/N 30001-UP

COOLING (AFTER COOLER¤ CONDENSER AND PIPING) (AUTO AIR CONDITIONER)

Item	Part No.	Description	Qty	Options
40	01010-81225	BOLT	1	SN:30001--
41	01643-31232	WASHER	1	SN:30001--
42	208-62-38370	CLIP	1	SN:30001--
43	22U-03-22260	HOSE	1	SN:30001--
44	01010-81030	BOLT	1	SN:30001--
45	01643-31032	WASHER	1	SN:30001--
46	560-43-15220	WASHER	1	SN:30001--
47	07289-00055	CLAMP	1	SN:30001--
48	07289-00070	CLAMP	1	SN:30001--

https://truckmanualshub.com/

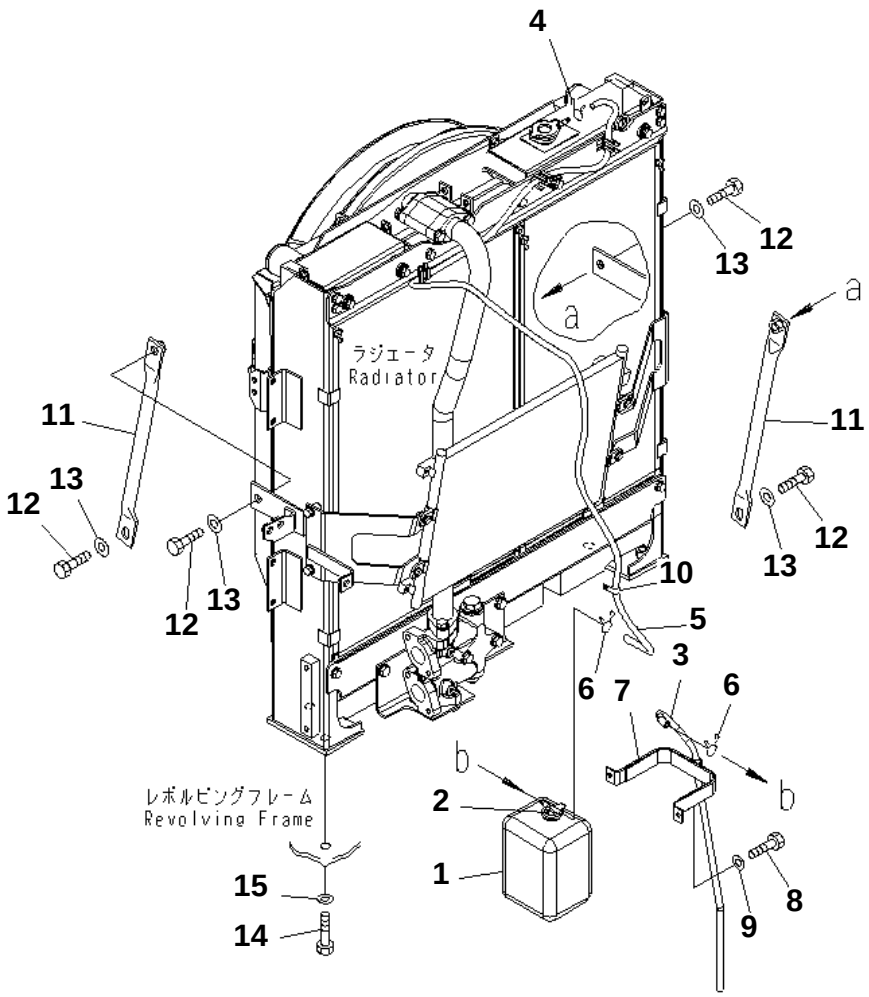

PC228US-3N-W1 S/N 30001-UP

COOLING (SUB TANK AND RADIATOR MOUNT)

Item	Part No.	Description	Qty	Options
1	20Y-06-15240	TANK ASS'Y	1	SN:30001--
2	205-03-71532	· CAP	1	SN:30001--
	205-03-71540	· · PACKING	1	SN:30001--
3	20Y-03-21450	HOSE	1	SN:30001--
4	206-03-43340	CLIP	1	SN:30001--
5	22U-03-22780	HOSE	1	SN:30001--
6	206-03-43340	CLIP	2	SN:30001--
7	22U-03-21350	BRACKET	1	SN:30001--
8	01010-80820	BOLT	2	SN:30001--
9	01643-30823	WASHER	2	SN:30001--
10	04434-51212	CLIP	1	SN:30001--
11	22U-03-22280	STAY	2	SN:30001--
12	01010-81640	BOLT	4	SN:30001--
13	21T-54-16150	WASHER	4	SN:30001--
14	01010-81655	BOLT	4	SN:30001--
15	01643-31645	WASHER	4	SN:30001--

Ref. C0100-05A0 Page 060060

https://truckmanualshub.com/

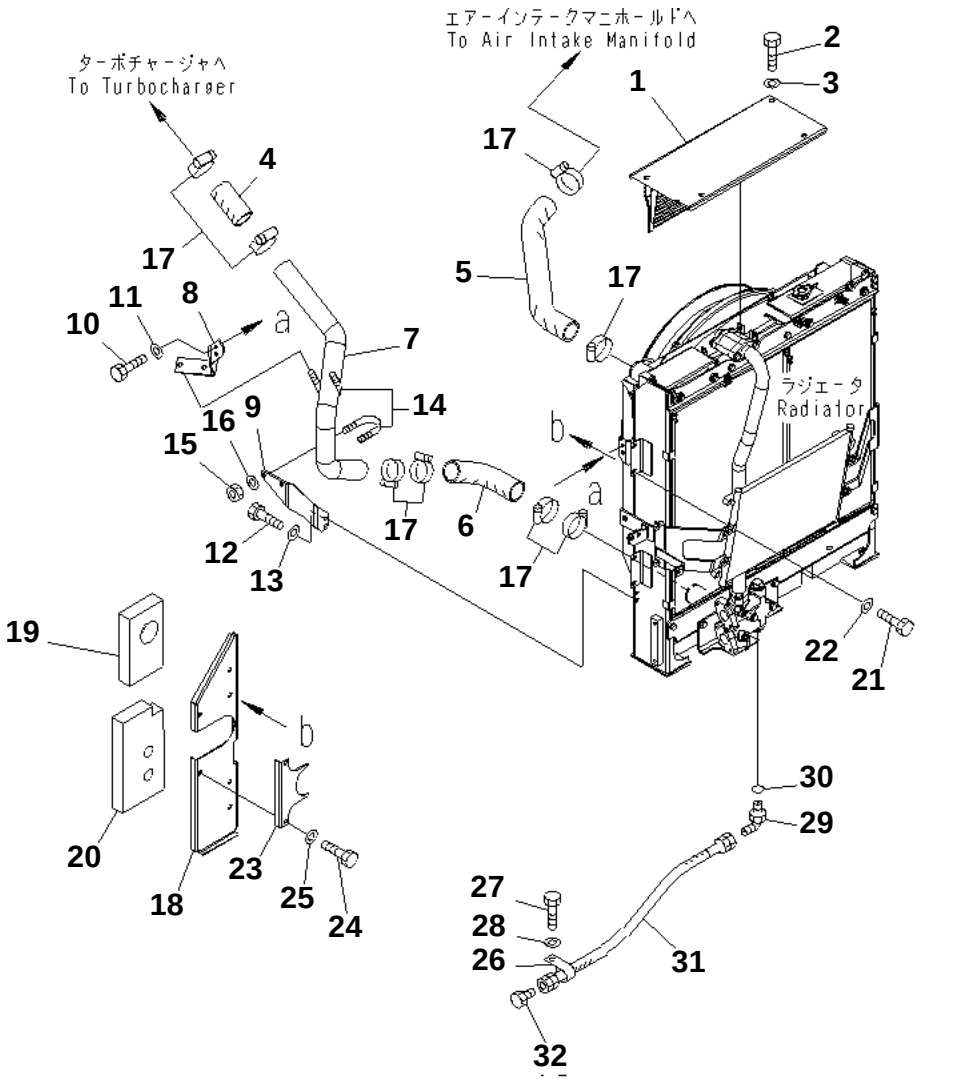

PC228US-3N-W1 S/N 30001-UP

COOLING (FAN GUARD)

Item	Part No.	Description	Qty	Options
1	22U-03-22381	GUARD	1	SN:30001--
2	01010-81225	BOLT	4	SN:30001--
3	01643-31232	WASHER	4	SN:30001--
4	22U-01-22210	HOSE	1	SN:30001--
5	22U-01-22240	HOSE	1	SN:30001--
6	22U-01-22220	HOSE	1	SN:30001--
7	22U-01-22230	TUBE	1	SN:30001--
8	22U-01-22260	BRACKET	1	SN:30001--
9	22U-01-22270	PLATE	1	SN:30001--
10	01010-81025	BOLT	2	SN:30001--
11	01643-31032	WASHER	2	SN:30001--
12	01010-81030	BOLT	2	SN:30001--
13	01643-31032	WASHER	2	SN:30001--
14	07283-37060	CLIP	2	SN:30001--
15	01597-01009	NUT	4	SN:30001--
16	01643-31032	WASHER	4	SN:30001--
17	07299-00070	CLAMP	8	SN:30001--
18	22U-03-22810	PLATE	1	SN:30001--
19	22U-03-22390	· SHEET	1	SN:30001--
20	22U-03-22420	· SHEET	1	SN:30001--
21	01010-81225	BOLT	4	SN:30001--
22	01643-31232	WASHER	4	SN:30001--
23	22U-03-21661	PLATE	1	SN:30001--
24	01010-81220	BOLT	2	SN:30001--
25	01643-31232	WASHER	2	SN:30001--
26	04434-51712	CLIP	1	SN:30001--
27	01010-81225	BOLT	1	SN:30001--
28	01643-31232	WASHER	1	SN:30001--
29	07235-10210	ELBOW	1	SN:30001--
30	07002-11423	O-RING	1	SN:30001--
31	07103-50205	HOSE	1	SN:30001--
32	07376-50210	PLUG	1	SN:30001--

Ref. C0100-06A0 Page 060070

https://truckmanualshub.com/

FUEL TANK AND RELATED PARTS

Item	Description	Qty	Page
10	FUEL TANK (YELLOW)	1	090010
20	FUEL LINES	1	090020
30	FUEL LINES (WATER SEPARATOR)	1	090030

https://truckmanualshub.com/

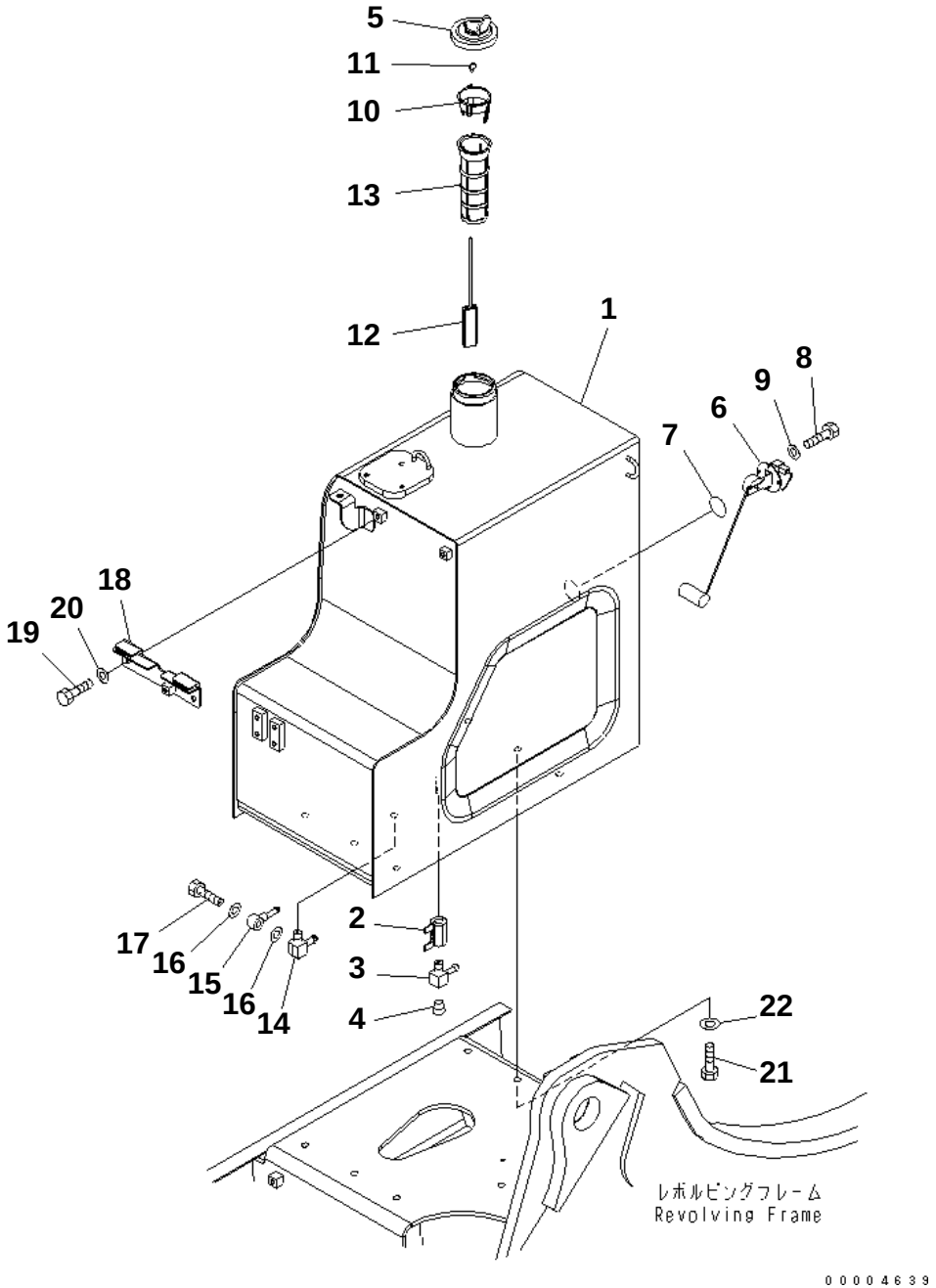

PC228US-3N-W1 S/N 30001-UP

FUEL TANK (YELLOW)

Item	Part No.	Description	Qty	Options
1	22U-04-21320YN	TANK	1	SN:30001--
2	07700-50240	VALVE	1	SN:30001--
3	22U-04-21120	TEE	1	SN:30001--
4	07043-A0108	PLUG	1	SN:30001--
5	20Y-04-11160	CAP	1	SN:30001--
6	7861-92-5810	SENSOR	1	SN:30001--
7	07000-13050	O-RING	1	SN:30001--
8	01010-80612	BOLT	4	SN:30001--
9	01643-30623	WASHER	4	SN:30001--
	22U-04-21241	STRAINER ASS'Y	1	SN:30001--
	22U-04-21200	· FLOAT ASS'Y	1	SN:30001--
10	22U-04-21210	· · GUIDE	1	SN:30001--
11	20Y-04-21580	· · CAP	1	SN:30001--
12	22U-04-21220	· · FLOAT	1	SN:30001--
13	07056-18425	· STRAINER	1	SN:30001--
14	20Y-04-21131	ELBOW	1	SN:30001--
15	20Y-04-21141	TUBE	1	SN:30001--
16	07005-00812	GASKET	2	SN:30001--
17	07206-30508	BOLT	1	SN:30001--
18	22U-54-23170YN	BRACKET	1	SN:30001--
19	01010-81230	BOLT	2	SN:30001--
20	01643-31232	WASHER	6	SN:30001--
21	01010-81640	BOLT	6	SN:30001--
22	01643-31645	WASHER	6	SN:30001--

Ref. D0100-01A0 Page 090010

https://truckmanualshub.com/

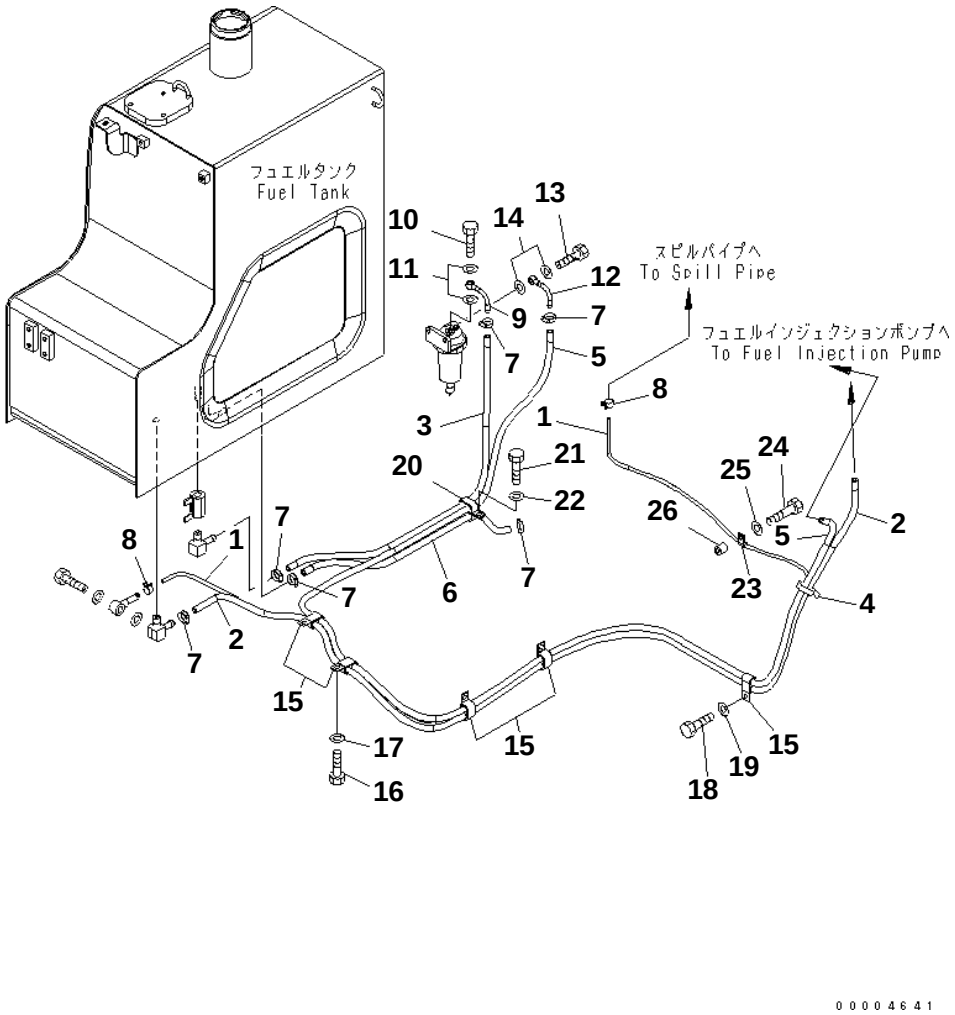

PC228US-3N-W1 S/N 30001-UP

FUEL LINES

Item	Part No.	Description	Qty	Options
1	07270-40427	TUBE	1	SN:30001--
2	07288-01029	HOSE	1	SN:30001--
3	07288-01033	HOSE	1	SN:30001--
4	08034-20834	BAND	1	SN:30001--
5	22U-04-21180	HOSE ASS'Y	1	SN:30001--
6	22U-04-21190	HOSE ASS'Y	1	SN:30001--
7	07281-00197	CLAMP	8	SN:30001--
8	07285-00080	CLIP	2	SN:30001--
9	203-04-56150	JOINT	1	SN:30001--
10	07206-31014	BOLT	1	SN:30001--
11	07005-01412	GASKET	2	SN:30001--
12	22U-04-21170	JOINT	1	SN:30001--
13	07206-31014	BOLT	1	SN:30001--
14	07005-01412	GASKET	2	SN:30001--
15	141-06-11220	CLIP	5	SN:30001--
16	01010-81220	BOLT	2	SN:30001--
17	01643-31232	WASHER	2	SN:30001--
18	01010-81225	BOLT	3	SN:30001--
19	01643-31232	WASHER	3	SN:30001--
20	198-61-14180	CLIP	1	SN:30001--
21	01010-81225	BOLT	1	SN:30001--
22	01643-31232	WASHER	1	SN:30001--
23	04434-51312	CLIP	1	SN:30001--
24	01010-81245	BOLT	1	SN:30001--
25	01643-31232	WASHER	1	SN:30001--
26	195-33-11220	SPACER	1	SN:30001--

Ref. D0200-01A0 Page 090020

https://truckmanualshub.com/

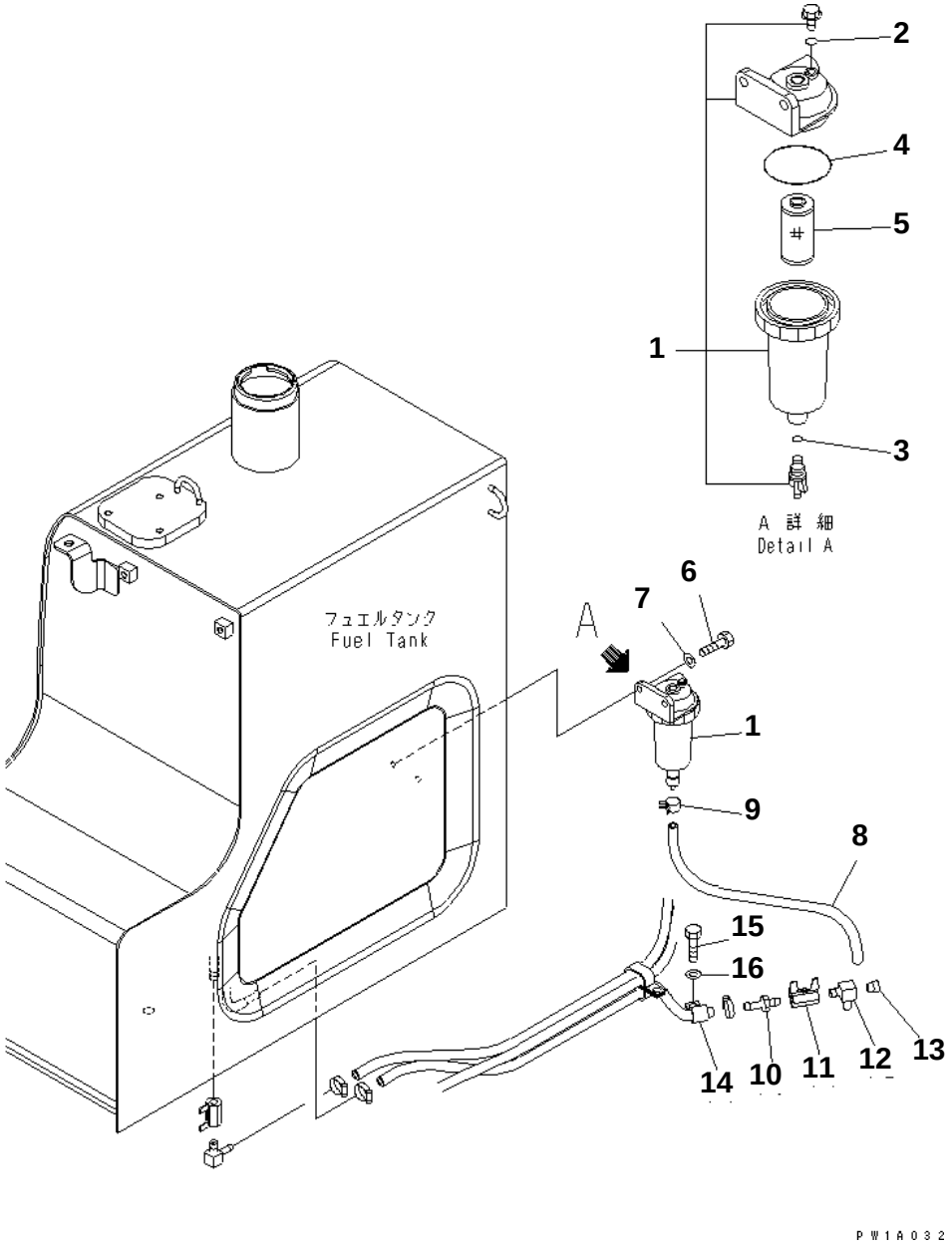

PC228US-3N-W1 S/N 30001-UP

FUEL LINES (WATER SEPARATOR)

Item	Part No.	Description	Qty	Options
1	22U-04-21131	WATER SEPARATOR	1	SN:30001--
2	07000-11006	· O-RING	1	SN:30001--
3	07000-11007	· O-RING	1	SN:30001--
4	07000-12065	· O-RING	1	SN:30001--
5	22U-04-21260	· ELEMENT	1	SN:30001--
6	01010-81030	BOLT	2	SN:30001--
7	01643-31032	WASHER	2	SN:30001--
8	07270-40703	TUBE	1	SN:30001--
9	07285-00100	CLIP	1	SN:30001--
10	154-04-11540	NIPPLE	1	SN:30001--
11	07700-50240	VALVE	1	SN:30001--
12	22U-04-12230	TEE	1	SN:30001--
13	07043-A0108	PLUG	1	SN:30001--
14	04434-51612	CLIP	1	SN:30001--
15	01010-81225	BOLT	1	SN:30001--
16	01643-31232	WASHER	1	SN:30001--

Ref. D0200-02A0 Page 090030

https://truckmanualshub.com/

ELECTRICAL SYSTEM

Item	Description	Qty	Page
10	BATTERY (115E41R)	1	120010
20	BATTERY (LARGE CAPACITY) (NX300)(#20001-)	1	120020
30	WIRING (STARTING HARNESS)	1	120030
40	WIRING (MAIN HARNESS)	1	120040
50	WIRING (MAIN HARNESS) (FOR 2-PIECE BOOM) (EU SPEC.)	1	120050
60	WIRING (MAIN HARNESS) (CLIP)	1	120060
70	WIRING (BATTERY CASE)	1	120070
80	ADDITIONAL WORK LAMP(#20001-)	1	120080
90	HORN(#20001-)	1	120090
100	HORN (BIG SOUND)(#20001-)	1	120100
110	TRAVEL ALARM(#20001-)	1	120110

https://truckmanualshub.com/

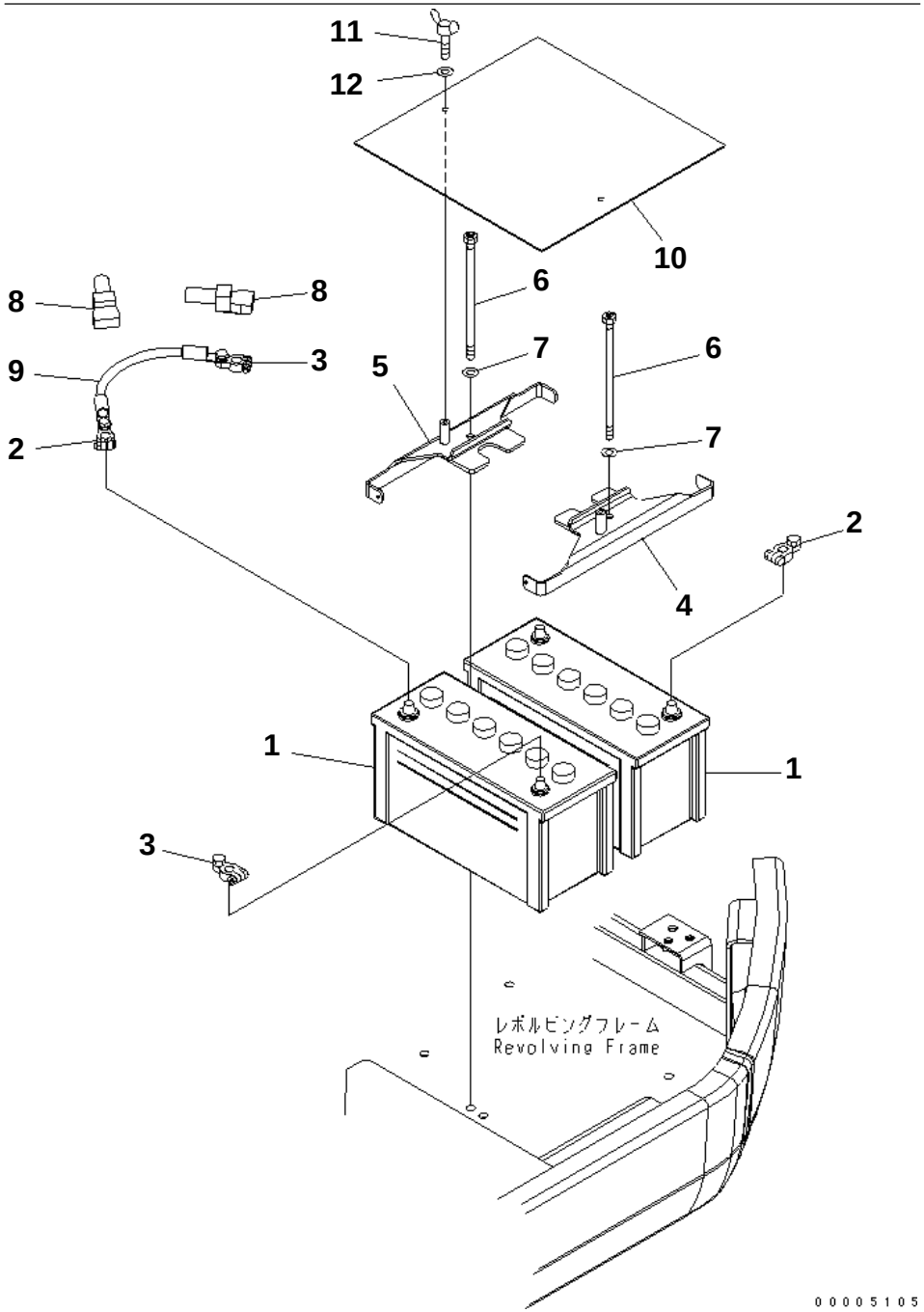

PC228US-3N-W1 S/N 30001-UP

BATTERY (115E41R)

Item	Part No.	Description	Qty	Options
1	☆	BATTERY	2	SN:30001--
2	08000-00000	TERMINAL¤ (+)	2	SN:30001--
3	08000-00001	TERMINAL¤ (-)	2	SN:30001--
4	22U-06-21122	HOLDER	1	SN:30001--
5	22U-06-21151	HOLDER	1	SN:30001--
6	22U-06-21130	BOLT	2	SN:30001--
7	01643-31232	WASHER	2	SN:30001--
8	08038-42511	CAP	2	SN:30001--
9	08028-63035	WIRE	1	SN:30001--
10	22U-06-21141	COVER	1	SN:30001--
11	01434-00820	BOLT¤ WING	2	SN:30001--
12	01643-30823	WASHER	2	SN:30001--

Ref. E0100-01A0 Page 120010

https://truckmanualshub.com/

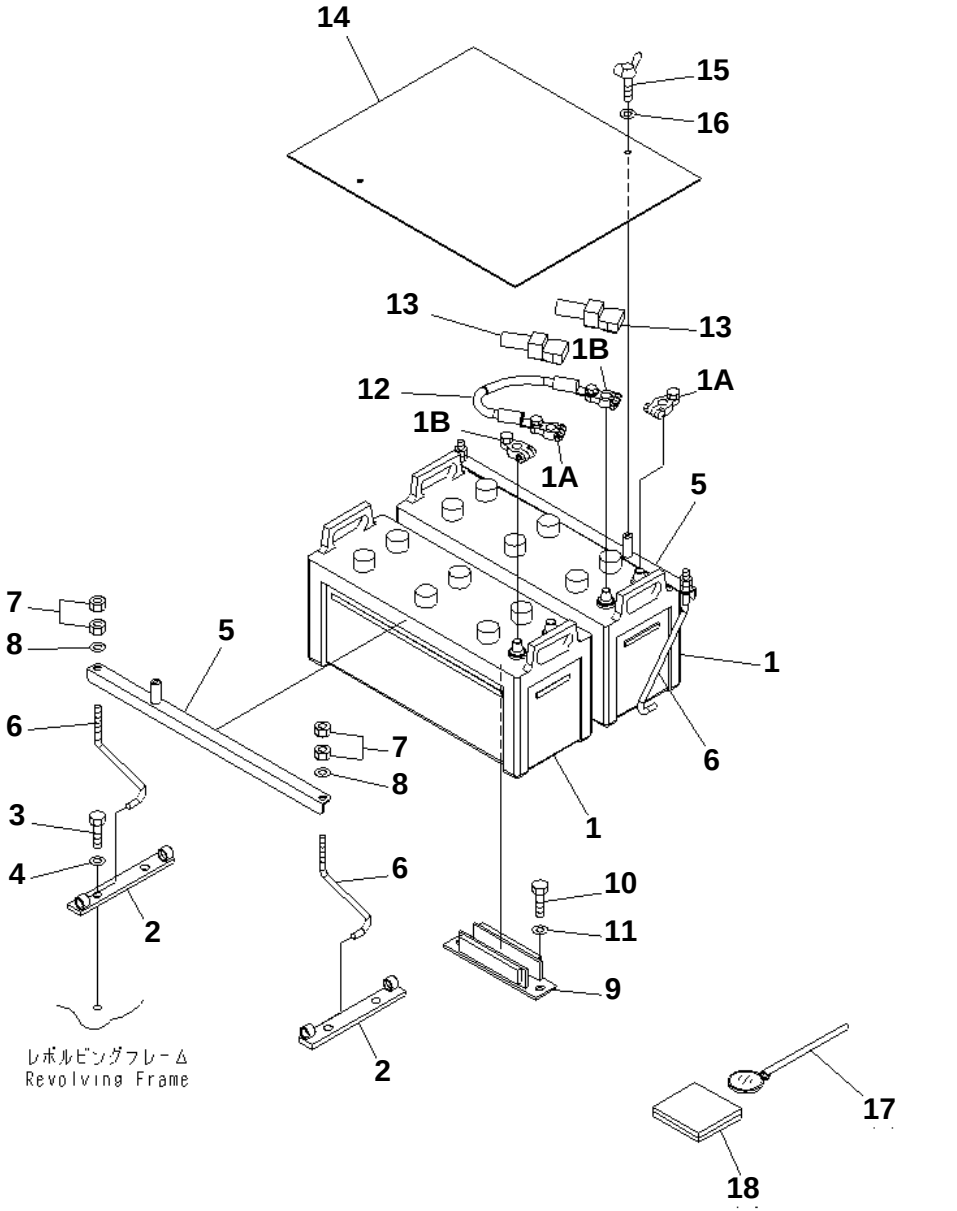

PC228US-3N-W1 S/N 30001-UP

BATTERY (LARGE CAPACITY) (NX300)(#20001-)

Item	Part No.	Description	Qty	Options
1	22U-06-21210	BATTERY	2	SN:20001--
1A	08000-00000	TERMINAL¤ (+)	2	SN:20001--
1B	08000-00001	TERMINAL¤ (-)	2	SN:20001--
2	22U-06-21160	BRACKET	2	SN:20001--
3	01010-81235	BOLT	4	SN:20001--
4	01643-31232	WASHER	4	SN:20001--
5	22U-06-21221	HOLDER	2	SN:20001--
6	120-06-31151	BOLT	4	SN:20001--
7	01580-11008	NUT	8	SN:20001--
8	01643-31032	WASHER	4	SN:20001--
9	22U-06-21270	BRACKET	1	SN:20001--
10	01010-81230	BOLT	2	SN:20001--
11	01643-31232	WASHER	2	SN:20001--
12	08038-42511	CAP	2	SN:20001--
13	08028-63035	WIRE	1	SN:20001--
14	22U-06-21241	COVER	1	SN:20001--
15	01434-00820	BOLT¤ WING	2	SN:20001--
16	01643-30823	WASHER	2	SN:20001--
	22U-06-21530	MIRROR ASS'Y	1	SN:20001--
17	☆	· MIRROR	1	SN:20001--
18	22U-06-21550	· SHEET	1	SN:20001--

Ref. E0100-01A1 Page 120020

https://truckmanualshub.com/

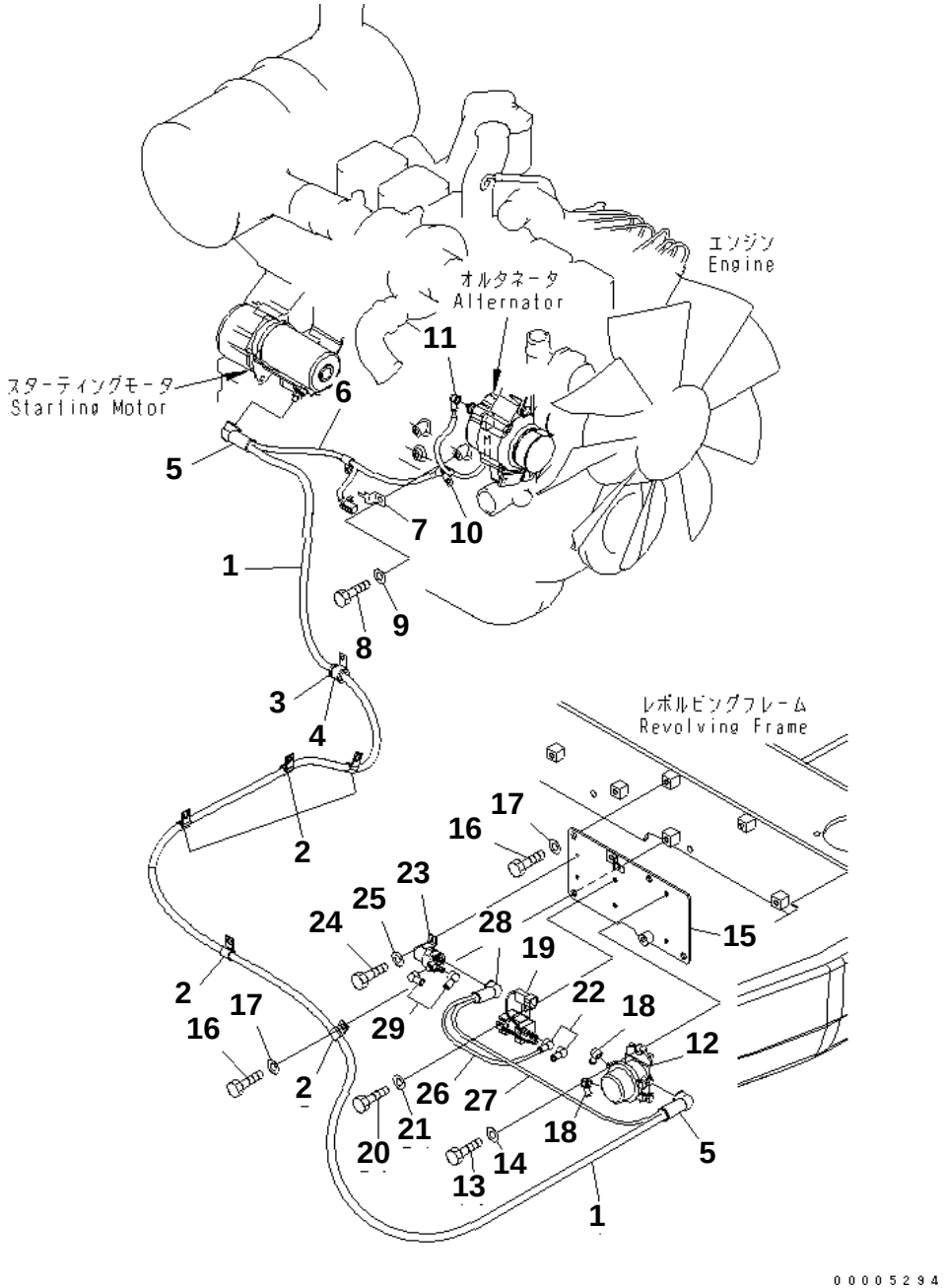

PC228US-3N-W1 S/N 30001-UP

WIRING (STARTING HARNESS)

Item	Part No.	Description	Qty	Options
1	22U-06-21341	CABLE	1	SN:30001--
2	04434-51912	CLIP	5	SN:30001--
3	07095-20318	CUSHION	1	SN:30001--
4	04434-52512	CLIP	1	SN:30001--
5	08038-00035	CAP	2	SN:30001--
6	21K-06-71261	WIRING HARNESS	1	SN:30001--
7	08053-01512	CLIP	1	SN:30001--
8	01010-81220	BOLT	1	SN:30001--
9	01643-31232	WASHER	1	SN:30001--
10	04434-51410	CLIP	1	SN:30001--
11	08038-00519	CAP	1	SN:30001--
12	08088-30000	SWITCH	1	SN:30001--
13	01010-80830	BOLT	2	SN:30001--
14	01643-30823	WASHER	2	SN:30001--
15	22U-06-21431	BRACKET	1	SN:30001--
16	01010-81225	BOLT	4	SN:30001--
17	01643-31232	WASHER	4	SN:30001--
18	08038-00519	CAP	2	SN:30001--
19	203-06-59321	SWITCH	1	SN:30001--
20	01010-80816	BOLT	2	SN:30001--
21	01643-30823	WASHER	2	SN:30001--
22	08038-00519	CAP	2	SN:30001--
23	600-815-2170	SWITCH	1	SN:30001--
24	01010-80616	BOLT	2	SN:30001--
25	01643-30623	WASHER	2	SN:30001--
26	20Y-06-22880	CABLE	1	SN:30001--
27	22U-06-11360	CABLE	1	SN:30001--
28	08038-06031	CAP	1	SN:30001--
29	08038-00519	CAP	2	SN:30001--

Ref. E0200-01A0 Page 120030

https://truckmanualshub.com/

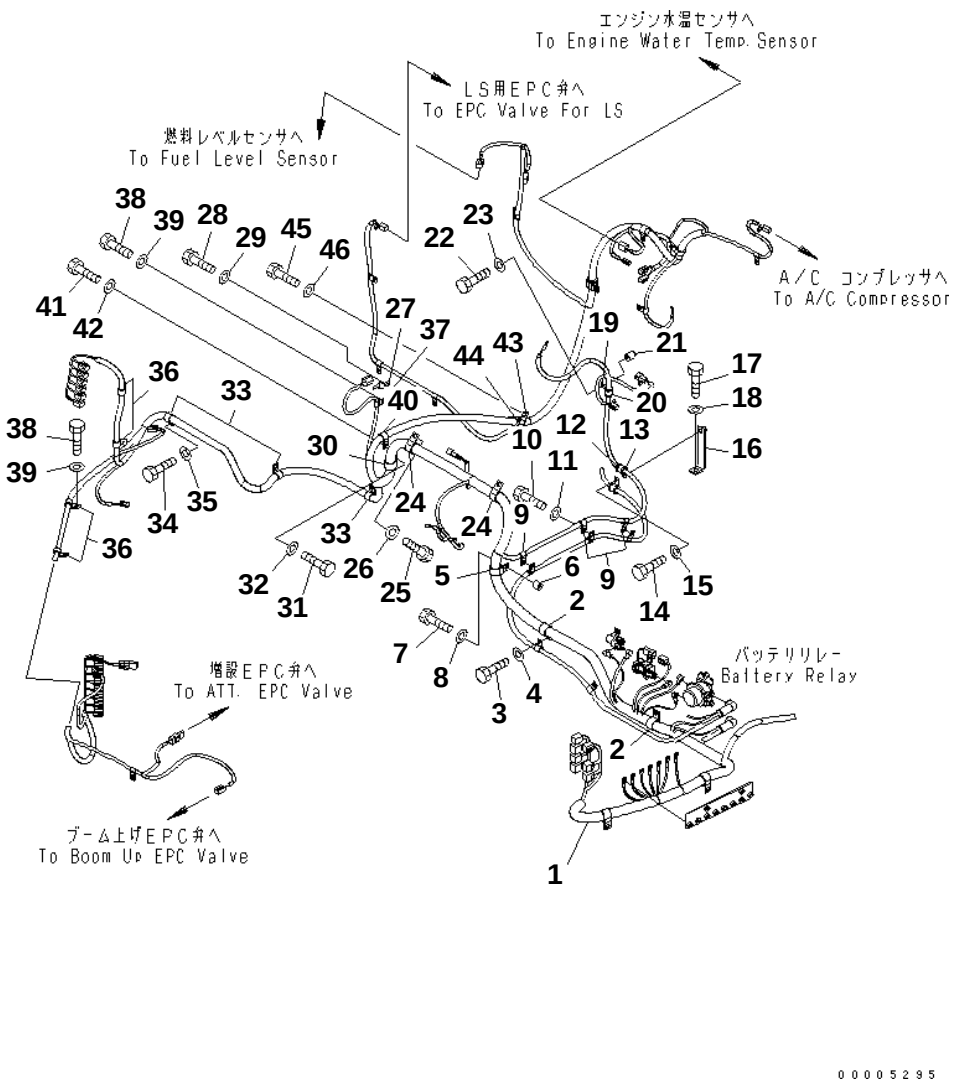

PC228US-3N-W1 S/N 30001-UP

WIRING (MAIN HARNESS)

Item	Part No.	Description	Qty	Options
1	22U-06-21416	WIRING HARNESS	1	SN:30001--
	22U-06-11270	· FUSIBLE LINK¤ 65A	1	SN:30001--
	20Y-06-31660	· FUSIBLE LINK¤ 30A	1	SN:30001--
2	04434-53412	CLIP	2	SN:30001--
3	01010-81225	BOLT	2	SN:30001--
4	01643-31232	WASHER	2	SN:30001--
5	04434-53412	CLIP	1	SN:30001--
6	195-33-11220	SPACER	1	SN:30001--
7	01010-81250	BOLT	1	SN:30001--
8	01643-31232	WASHER	1	SN:30001--
9	04434-51412	CLIP	3	SN:30001--
10	01010-81225	BOLT	3	SN:30001--
11	01643-31232	WASHER	3	SN:30001--
12	04434-52112	CLIP	1	SN:30001--
13	07095-20314	CUSHION	1	SN:30001--
14	01010-81225	BOLT	1	SN:30001--
15	01643-31232	WASHER	1	SN:30001--
16	22U-06-21820	BRACKET	1	SN:30001--
17	01010-81225	BOLT	1	SN:30001--
18	01643-31232	WASHER	1	SN:30001--
19	04434-52112	CLIP	1	SN:30001--
20	07095-20314	CUSHION	1	SN:30001--
21	195-33-11220	SPACER	1	SN:30001--
22	01010-81245	BOLT	1	SN:30001--
23	01643-31232	WASHER	1	SN:30001--
24	04434-53412	CLIP	2	SN:30001--
25	01010-81225	BOLT	2	SN:30001--
26	01643-31232	WASHER	2	SN:30001--
27	08193-20012	CLIP	1	SN:30001--
28	01010-81225	BOLT	1	SN:30001--
29	01643-31232	WASHER	1	SN:30001--
30	04434-53412	CLIP	1	SN:30001--
31	01010-81225	BOLT	1	SN:30001--
32	01643-31232	WASHER	1	SN:30001--
33	04434-52312	CLIP	3	SN:30001--
34	01010-81225	BOLT	3	SN:30001--
35	01643-31232	WASHER	3	SN:30001--
36	04434-51712	CLIP	4	SN:30001--
37	04434-51012	CLIP	1	SN:30001--
38	01010-81225	BOLT	4	SN:30001--

Ref. E0200-02A0 Page 120040

https://truckmanualshub.com/

PC228US-3N-W1 S/N 30001-UP

WIRING (MAIN HARNESS)

Item	Part No.	Description	Qty	Options
39	01643-31232	WASHER	4	SN:30001--
40	04434-52312	CLIP	1	SN:30001--
41	01010-81225	BOLT	1	SN:30001--
42	01643-31232	WASHER	1	SN:30001--
43	04434-53212	CLIP	1	SN:30001--
44	07095-20523	CUSHION	1	SN:30001--
45	01010-81225	BOLT	1	SN:30001--
46	01643-31232	WASHER	1	SN:30001--

https://truckmanualshub.com/

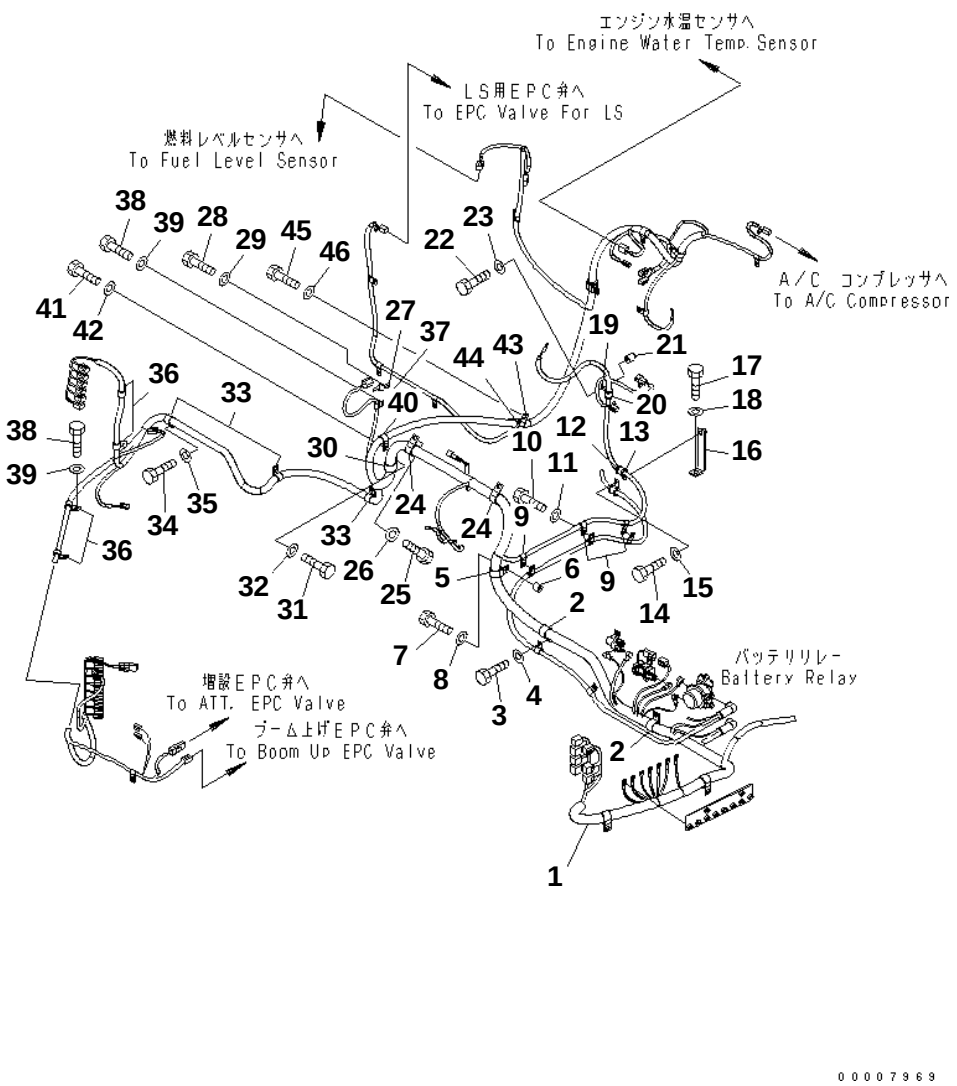

PC228US-3N-W1 S/N 30001-UP

WIRING (MAIN HARNESS) (FOR 2-PIECE BOOM) (EU SPEC.)

Item	Part No.	Description	Qty	Options
1	22U-06-21840	WIRING HARNESS	1	SN:30001--
	22U-06-11270	· FUSIBLE LINK¤ 65A	1	SN:30001--
	20Y-06-31660	· FUSIBLE LINK¤ 30A	1	SN:30001--
2	04434-53412	CLIP	2	SN:30001--
3	01010-81225	BOLT	2	SN:30001--
4	01643-31232	WASHER	2	SN:30001--
5	04434-53412	CLIP	1	SN:30001--
6	195-33-11220	SPACER	1	SN:30001--
7	01010-81250	BOLT	1	SN:30001--
8	01643-31232	WASHER	1	SN:30001--
9	04434-51412	CLIP	3	SN:30001--
10	01010-81225	BOLT	3	SN:30001--
11	01643-31232	WASHER	3	SN:30001--
12	04434-52112	CLIP	1	SN:30001--
13	07095-20314	CUSHION	1	SN:30001--
14	01010-81225	BOLT	1	SN:30001--
15	01643-31232	WASHER	1	SN:30001--
16	22U-06-21820	BRACKET	1	SN:30001--
17	01010-81225	BOLT	1	SN:30001--
18	01643-31232	WASHER	1	SN:30001--
19	04434-52112	CLIP	1	SN:30001--
20	07095-20314	CUSHION	1	SN:30001--
21	195-33-11220	SPACER	1	SN:30001--
22	01010-81245	BOLT	1	SN:30001--
23	01643-31232	WASHER	1	SN:30001--
24	04434-53412	CLIP	2	SN:30001--
25	01010-81225	BOLT	2	SN:30001--
26	01643-31232	WASHER	2	SN:30001--
27	08193-20012	CLIP	1	SN:30001--
28	01010-81225	BOLT	1	SN:30001--
29	01643-31232	WASHER	1	SN:30001--
30	04434-53412	CLIP	1	SN:30001--
31	01010-81225	BOLT	1	SN:30001--
32	01643-31232	WASHER	1	SN:30001--
33	04434-52312	CLIP	3	SN:30001--
34	01010-81225	BOLT	3	SN:30001--
35	01643-31232	WASHER	3	SN:30001--
36	04434-51712	CLIP	4	SN:30001--
37	04434-51012	CLIP	1	SN:30001--

Ref. E0200-02A1 Page 120050

https://truckmanualshub.com/

WIRING (MAIN HARNESS) (FOR 2-PIECE BOOM) (EU SPEC.)

Item	Part No.	Description	Qty	Options
38	01010-81225	BOLT	4	SN:30001--
39	01643-31232	WASHER	4	SN:30001--
40	04434-52312	CLIP	1	SN:30001--
41	01010-81225	BOLT	1	SN:30001--
42	01643-31232	WASHER	1	SN:30001--
43	04434-53212	CLIP	1	SN:30001--
44	07095-20523	CUSHION	1	SN:30001--
45	01010-81225	BOLT	1	SN:30001--
46	01643-31232	WASHER	1	SN:30001--

https://truckmanualshub.com/

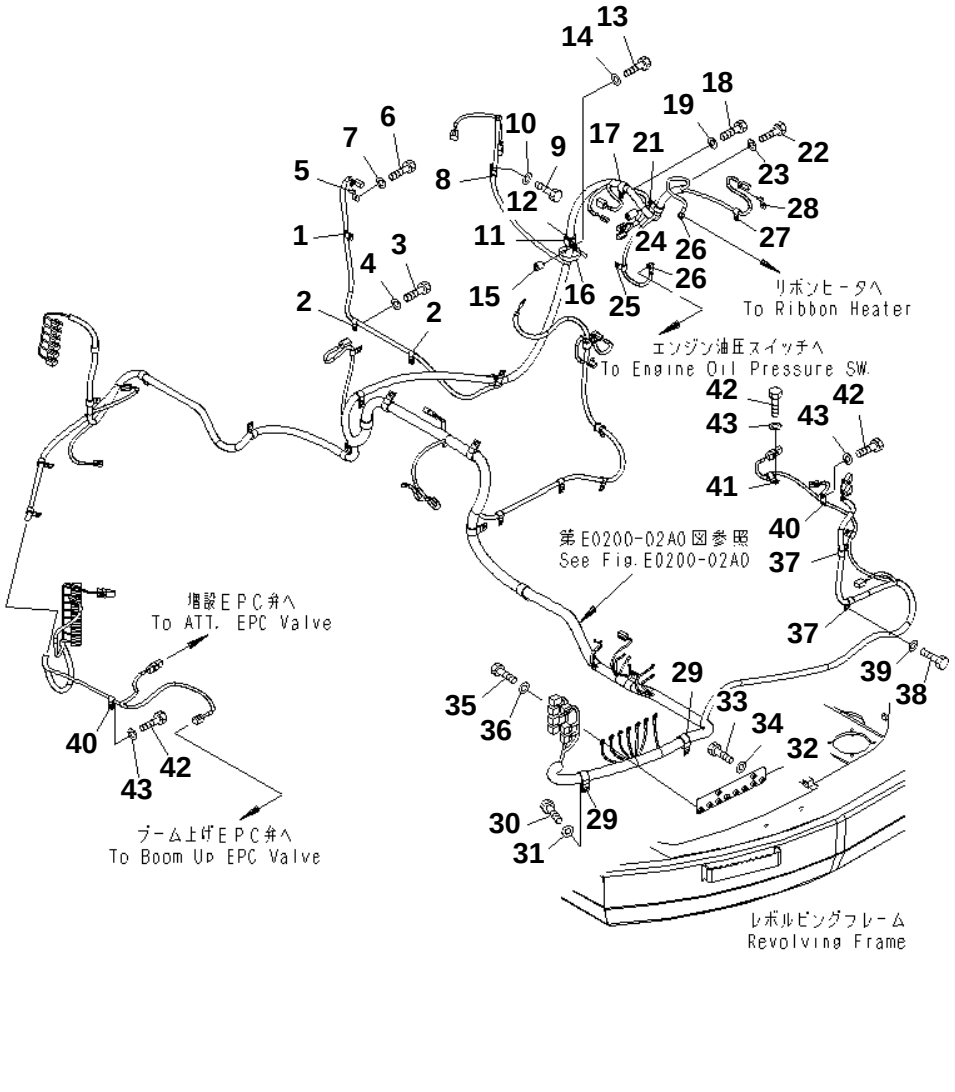

PC228US-3N-W1 S/N 30001-UP

WIRING (MAIN HARNESS) (CLIP)

Item	Part No.	Description	Qty	Options
1	04434-51012	CLIP	1	SN:30001--
2	04434-51012	CLIP	2	SN:30001--
3	01010-81225	BOLT	2	SN:30001--
4	01643-31232	WASHER	2	SN:30001--
5	08053-01510	CLIP	1	SN:30001--
6	01010-81020	BOLT	1	SN:30001--
7	01643-31032	WASHER	1	SN:30001--
8	04434-51612	CLIP	1	SN:30001--
9	01010-81225	BOLT	1	SN:30001--
10	01643-31232	WASHER	1	SN:30001--
11	04434-53212	CLIP	1	SN:30001--
12	07095-20523	CUSHION	1	SN:30001--
13	01010-81255	BOLT	1	SN:30001--
14	01643-31232	WASHER	1	SN:30001--
15	195-33-11220	SPACER	1	SN:30001--
16	08034-20823	BAND	1	SN:30001--
17	04434-52312	CLIP	1	SN:30001--
18	01010-81225	BOLT	1	SN:30001--
19	01643-31232	WASHER	1	SN:30001--
21	04434-52312	CLIP	1	SN:30001--
22	01050-51260	BOLT	1	SN:30001--
23	01643-31232	WASHER	1	SN:30001--
24	205-03-71330	COLLAR	1	SN:30001--
25	04434-51010	CLIP	1	SN:30001--
26	08038-00519	CAP	2	SN:30001--
27	04434-51008	CLIP	1	SN:30001--
28	08053-01510	CLIP	1	SN:30001--
29	04434-53412	CLIP	2	SN:30001--
30	01010-81225	BOLT	2	SN:30001--
31	01643-31232	WASHER	2	SN:30001--
32	22U-06-21441	BRACKET	1	SN:30001--
33	01010-81025	BOLT	2	SN:30001--
34	01643-31032	WASHER	2	SN:30001--
35	01010-81020	BOLT	8	SN:30001--
36	01643-31032	WASHER	8	SN:30001--
37	04434-51712	CLIP	2	SN:30001--
38	01010-81225	BOLT	2	SN:30001--
39	01643-31232	WASHER	2	SN:30001--
40	04434-51012	CLIP	2	SN:30001--
41	04434-51712	CLIP	1	SN:30001--

Ref. E0200-03A0 Page 120060

https://truckmanualshub.com/

PC228US-3N-W1 S/N 30001-UP

WIRING (MAIN HARNESS) (CLIP)

Item	Part No.	Description	Qty	Options
42	01010-81225	BOLT	3	SN:30001--
43	01643-31232	WASHER	3	SN:30001--

https://truckmanualshub.com/

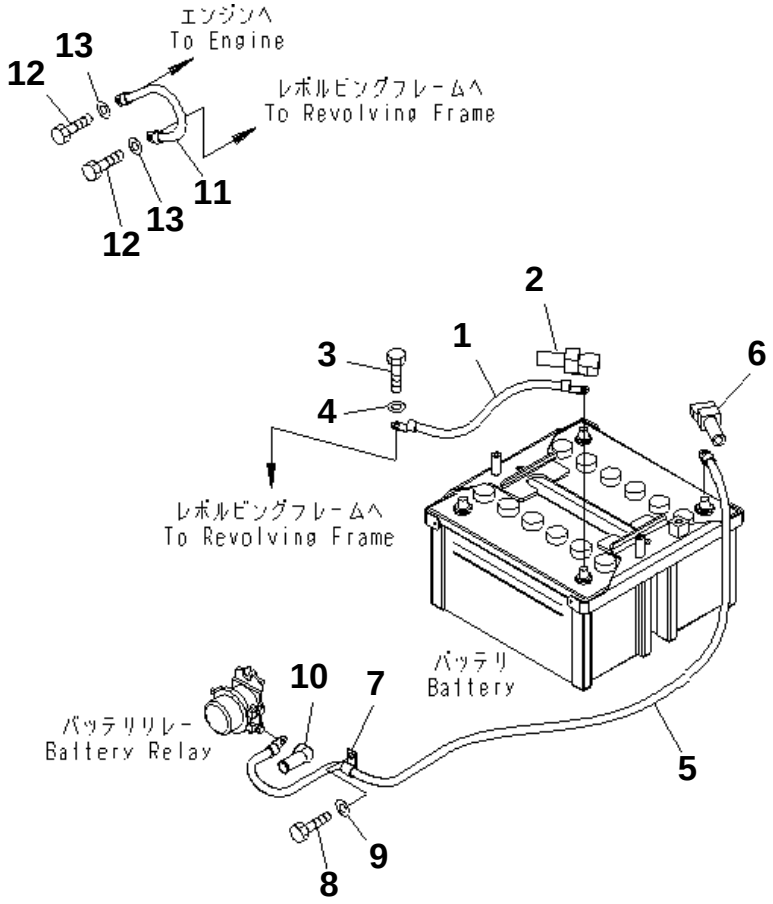

PC228US-3N-W1 S/N 30001-UP

WIRING (BATTERY CASE)

Item	Part No.	Description	Qty	Options
1	08028-43060	CABLE	1	SN:30001--
2	08038-22511	CAP	1	SN:30001--
3	01010-81020	BOLT	1	SN:30001--
4	01643-31032	WASHER	1	SN:30001--
5	08028-CC150	CABLE	1	SN:30001--
6	08038-42511	CAP	1	SN:30001--
7	04434-51912	CLIP	1	SN:30001--
8	01010-81225	BOLT	1	SN:30001--
9	01643-31232	WASHER	1	SN:30001--
10	08038-06031	CAP	1	SN:30001--
11	08028-43030	CABLE	1	SN:30001--
12	01010-81020	BOLT	2	SN:30001--
13	01643-31032	WASHER	2	SN:30001--

Ref. E0200-04A0 Page 120070

https://truckmanualshub.com/

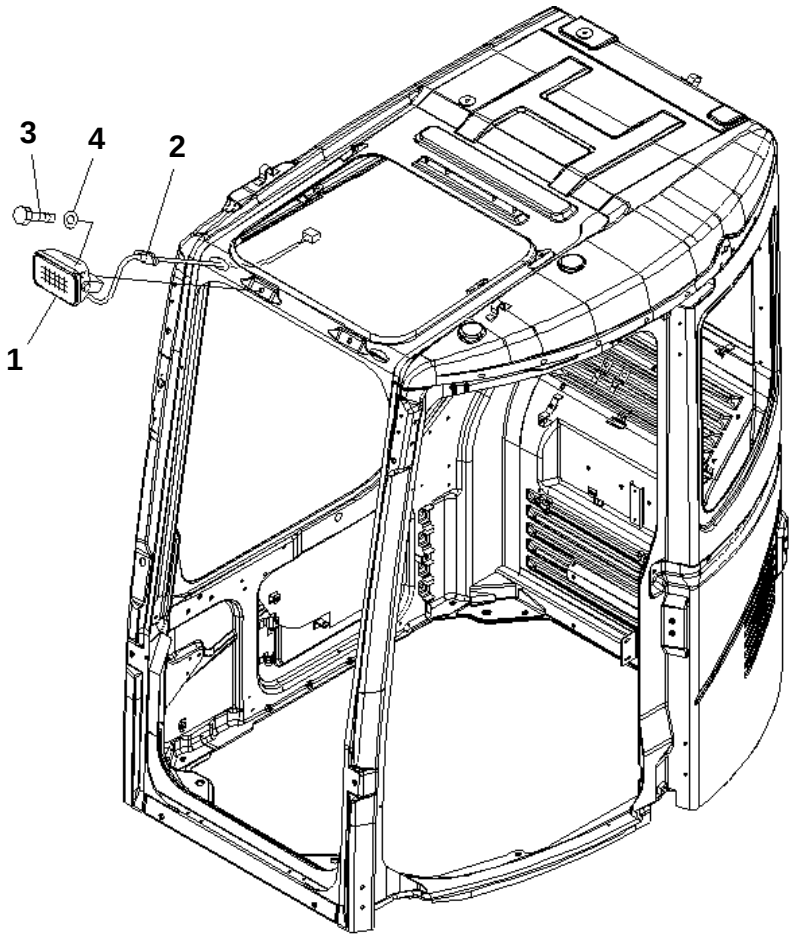

00005204

PC228US-3N-W1 S/N 30001-UP

ADDITIONAL WORK LAMP(#20001-)

Item	Part No.	Description	Qty	Options
1	22B-54-17511	WORK LAMP ASS'Y	1	SN:20001--
2	22B-54-17271	· GROMMET	1	SN:20001--
	421-06-23330	· BULB¤ 70W	1	SN:20001--
3	01010-D1016	BOLT	1	SN:20001--
4	01643-71032	WASHER	1	SN:20001--

Ref. E0310-01A0 Page 120080

https://truckmanualshub.com/

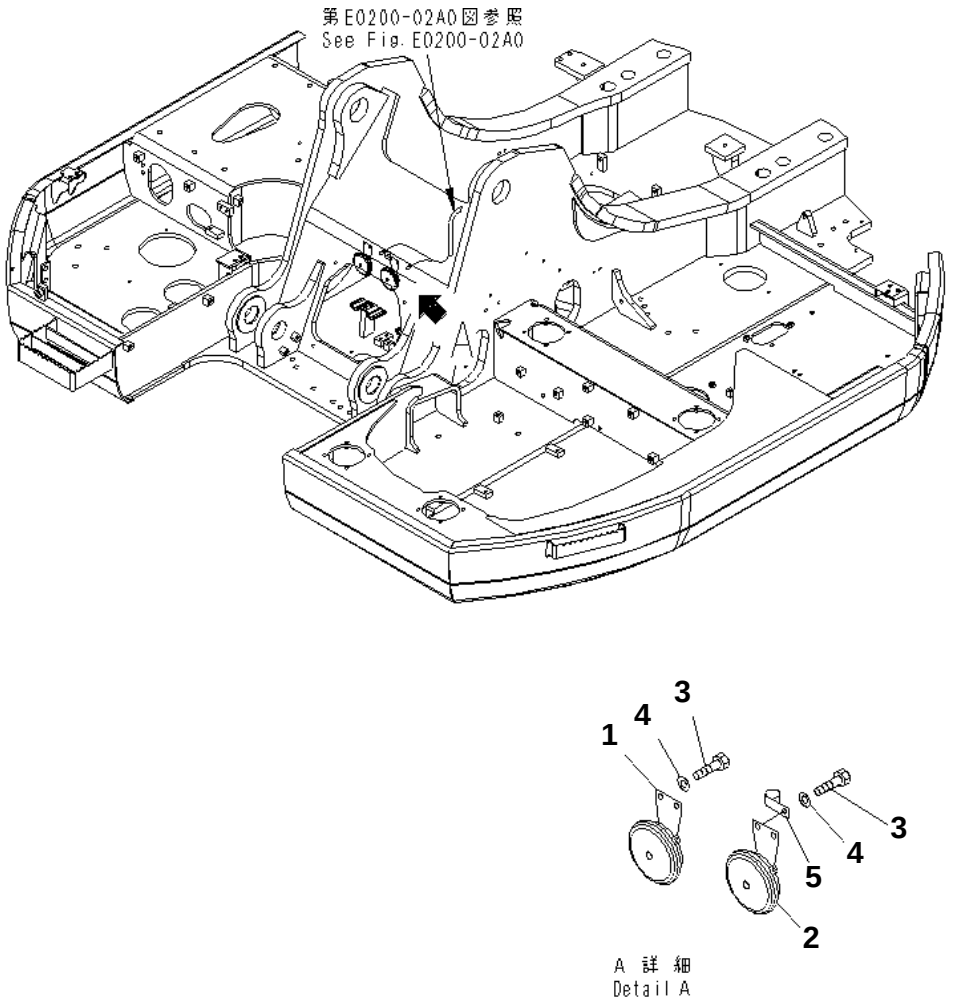

PC228US-3N-W1 S/N 30001-UP

HORN(#20001-)

Item	Part No.	Description	Qty	Options
1	08160-62420	HORN	1	SN:20001--
2	08160-62430	HORN	1	SN:20001--
3	01010-80825	BOLT	4	SN:20001--
4	01643-30823	WASHER	4	SN:20001--
5	08036-10810	CLIP	1	SN:20001--

Ref. E0410-01A0 Page 120090

https://truckmanualshub.com/

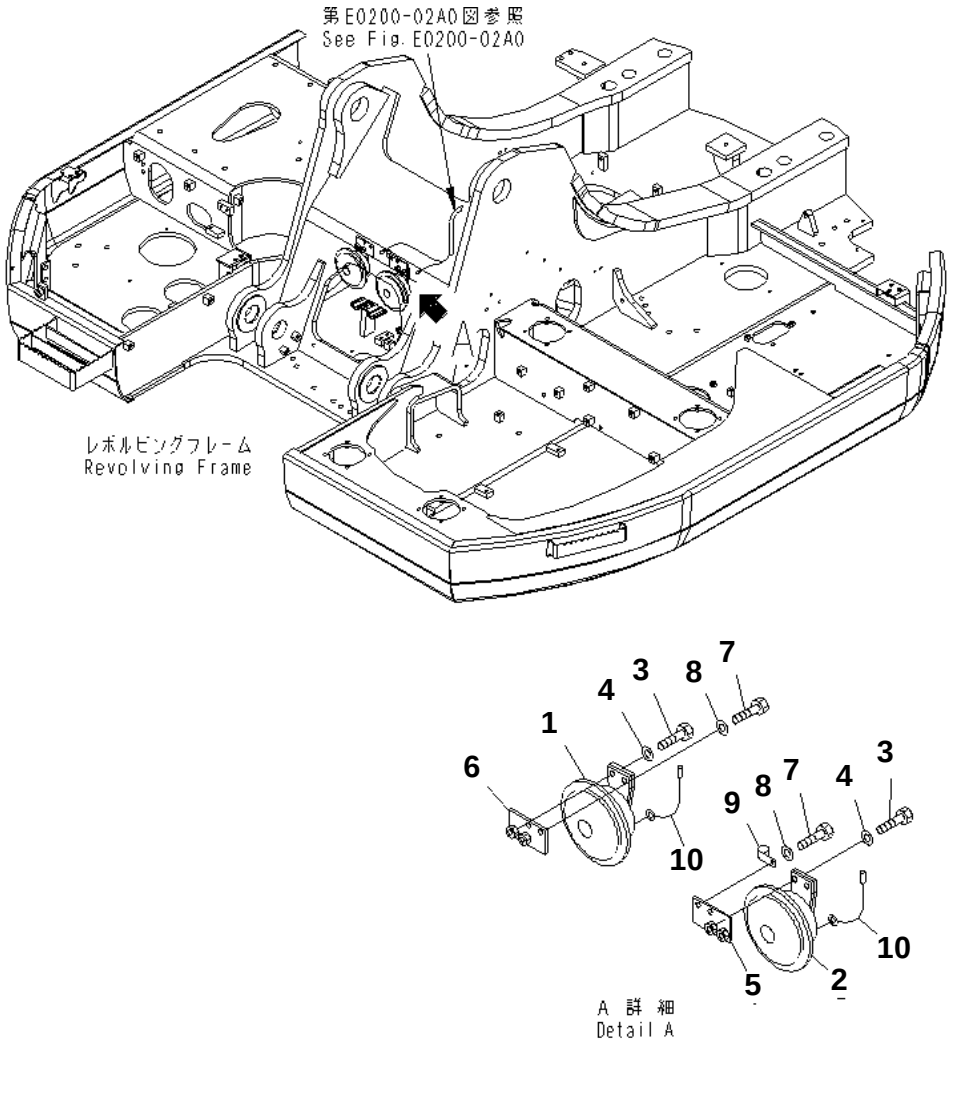

PC228US-3N-W1 S/N 30001-UP

HORN (BIG SOUND)(#20001-)

Item	Part No.	Description	Qty	Options
1	20Y-06-12220	HORN	1	SN:20001--
2	20Y-06-12230	HORN	1	SN:20001--
3	01010-81025	BOLT	2	SN:20001--
4	01643-31032	WASHER	2	SN:20001--
5	20Y-06-12240	BRACKET	1	SN:20001--
6	20Y-06-12250	BRACKET	1	SN:20001--
7	01010-80825	BOLT	4	SN:20001--
8	01643-30823	WASHER	4	SN:20001--
9	08036-10810	CLIP	1	SN:20001--
10	20Y-06-12260	WIRE	2	SN:20001--

Ref. E0410-01A1 Page 120100

https://truckmanualshub.com/

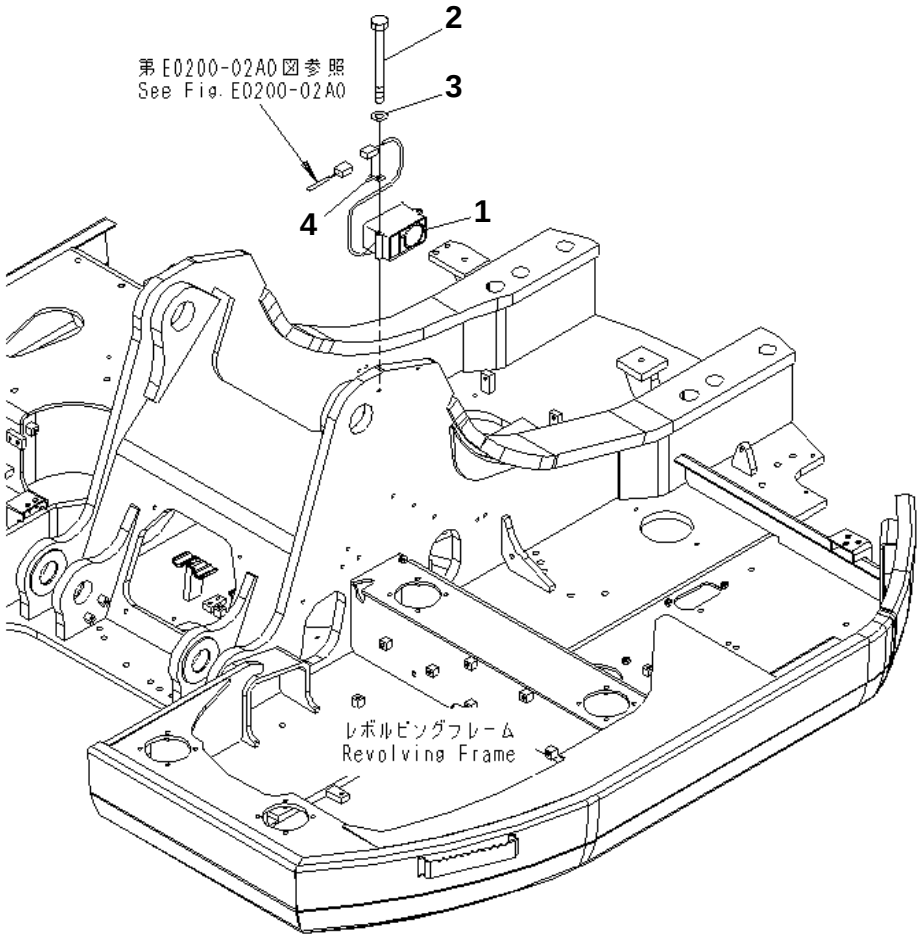

PC228US-3N-W1 S/N 30001-UP

TRAVEL ALARM(#20001-)

Item	Part No.	Description	Qty	Options
1	21Y-06-17610	BUZZER	1	SN:20001--
2	01011-81000	BOLT	2	SN:20001--
3	01643-31032	WASHER	2	SN:20001--
4	08053-01510	CLIP	1	SN:20001--

Ref. E0420-01A0 Page 120110

https://truckmanualshub.com/

PC228US-3N-W1 S/N 30001-UP

HYDRAULIC SYSTEM

Item	Description	Qty	Page
10	HYDRAULIC TANK (TANK) (YELLOW)(#20001-)	1	150010
20	HYDRALIC TANK (TANK) (YELLOW) (FOR ARM CRANE)(#20001-)	1	150020
30	HYDRAULIC TANK (TANK) (1 ACTUATOR) (YELLOW)	1	150030
40	HYDRAULIC TANK (TANK) (1 ACTUATOR) (YELLOW) (FOR ARM CRANE)	1	150040
50	HYDRAULIC TANK (TANK) (1 ACTUATOR) (YELLOW) (FOR 2-PIECE BOOM) (EU SPEC.)	1	150050
60	HYDRAULIC TANK (TANK) (2 ACTUATOR) (YELLOW) (FOR 2-PIECE BOOM) (EU SPEC.)	1	150060
70	HYDRAULIC TANK (BRACKET) (YELLOW)(#20001-)	1	150070
80	MAIN VALVE (CONNECTING PARTS)	1	150080
90	MAIN VALVE (CONNECTING PARTS) (1 ACTUATOR)	1	150090
100	MAIN VALVE (CONNECTING PARTS) (FOR ARM CRANE)	1	150100
110	MAIN VALVE (CONNECTING PARTS) (SERVICE VALVE)	1	150110
120	MAIN VALVE (CONNECTING PARTS) (1 ACTUATOR) (FOR ARM CRANE)	1	150120
130	MAIN VALVE (CONNECTING PARTS) (1 ACTUATOR) (SERVICE VALVE)	1	150130
140	MAIN VALVE (CONNECTING PARTS) (2 ACTUATOR)	1	150140
150	MAIN VALVE (CONNECTING PARTS) (2 ACTUATOR) (EU SPEC.)	1	150150
160	MAIN VALVE (CONNECTING PARTS) (FOR SLIDE ARM)	1	150160
170	MAIN VALVE (CONNECTING PARTS) (WITH ROTATION ARM)	1	150170
180	MAIN VALVE (CONNECTING PARTS) (1 ACTUATOR) (KIT)	1	150180
190	MAIN VALVE (CONNECTING PARTS) (2 ACTUATOR) (KIT)	1	150190
200	MAIN VALVE (CONNECTING PARTS) (1 ACTUATOR) (WITH 2-PIECE BOOM) (EU SPEC.)	1	150200
210	MAIN VALVE (CONNECTING PARTS) (2 ACTUATOR) (WITH 2-PIECE BOOM) (EU SPEC.)	1	150210
220	MAIN VALVE (HOSE)	1	150220
230	MAIN VALVE (HOSE) (1 AND 2 ACTUATOR)	1	150230
240	MAIN VALVE (HOSE) (SERVICE VALVE)	1	150240
250	MAIN VALVE (HOSE) (1 ACTUATOR BLADE SPEC. OR 2 ACTUATOR EU SPEC.)	1	150250
260	MAIN PUMP (CONNECTING PARTS)	1	150260
270	SUCTION LINE	1	150270
280	DELIVERY LINE	1	150280
290	OIL COOLER LINE	1	150290
300	RETURN LINE	1	150300
310	RETURN LINE (EU SPEC.)	1	150310
320	DRAIN LINE(#20001-)	1	150320
330	BOOM LINE(#20001-)	1	150330
340	BOOM LINE (WITH 2-PIECE BOOM)	1	150340
350	ARM AND BUCKET LINE	1	150350
360	ARM DRIFT PRIVENTIVE	1	150360
370	BURST VALVE (EU SPEC.)	1	150370
380	BURST VALVE	1	150380
390	BURST VALVE (FOR 2-PIECE BOOM) (EU SPEC.)	1	150390
400	BURST VALVE (ARM) (EU SPEC.)	1	150400
410	BURST VALVE (ARM) (1 AND 2 ACTUATOR) (EU SPEC.)	1	150410
420	RELIEF VALVE (280 KG/250 KG/CM2) (FOR SERVICE VALVE)	1	150420
430	RELIEF VALVE (280 KG/210 KG/CM2) (FOR SERVICE VALVE)	1	150430
440	RELIEF VALVE (280 KG/175 KG/CM2) (FOR SERVICE VALVE)	1	150440
450	ATTACHMENT LINE (VALVE) (EU SPEC.)	1	150450
460	ATTACHMENT LINE (BLADE SPEC.)(#20001-)	1	150460
470	ATTACHMENT LINE (HOSE CLAMP) (EU SPEC.)	1	150470
480	ATTACHMENT LINE (HOSE CLAMP) (2 ACTUATOR) (EU SPEC.)	1	150480
490	ATTACHMENT LINE (HOSE CLAMP) (WITH 2-PIECE BOOM) (EU SPEC.)	1	150490
500	ATTACHMENT LINE (VALVE) (EU SPEC.)	1	150500
510	ATTACHMENT LINE (VALVE) (2 ACTUATOR) (EU SPEC.)	1	150510
520	ATTACHMENT LINE (VALVE) (WITH 2-PIECE BOOM OR BLADE SPEC.) (EU SPEC.)	1	150520
530	ATTACHMENT LINE (VALVE) (2 ACTUATOR) (WITH 2-PIECE BOOM OR BLADE SPEC.) (EU SPEC.)	1	150530
540	ATTACHMENT LINE (ACCUMULATOR)	1	150540
550	ATTACHMENT LINE (2-PIECE BOOM LINE) (EU SPEC.)	1	150550
560	ATTACHMENT LINE (CLAMP AND SOLENOID VALVE) (2 ACTUATOR) (WITH 2-PIECE BOOM) (EU SPEC.)	1	150560
570	TRAVEL LINES	1	150570
580	TRAVEL LINES (BLADE SPEC.)(#20001-)	1	150580
590	LS LINES	1	150590

https://truckmanualshub.com/

HYDRAULIC SYSTEM

Item	Description	Qty	Page
600	SOLENOID VALVE (VALVE)	1	150600
610	SOLENOID VALVE (VALVE) (1 ACTUATOR)	1	150610
620	SOLENOID VALVE (VALVE) (2 ACTUATOR) (WITH 2-PIECE BOOM) (EU SPEC.)	1	150620
630	SOLENOID VALVE (EPC AND HOSE)	1	150630
640	SOLENOID VALVE (EPC AND HOSE) (1 ACTUATOR)	1	150640
650	PPC MAIN LINE	1	150650

https://truckmanualshub.com/

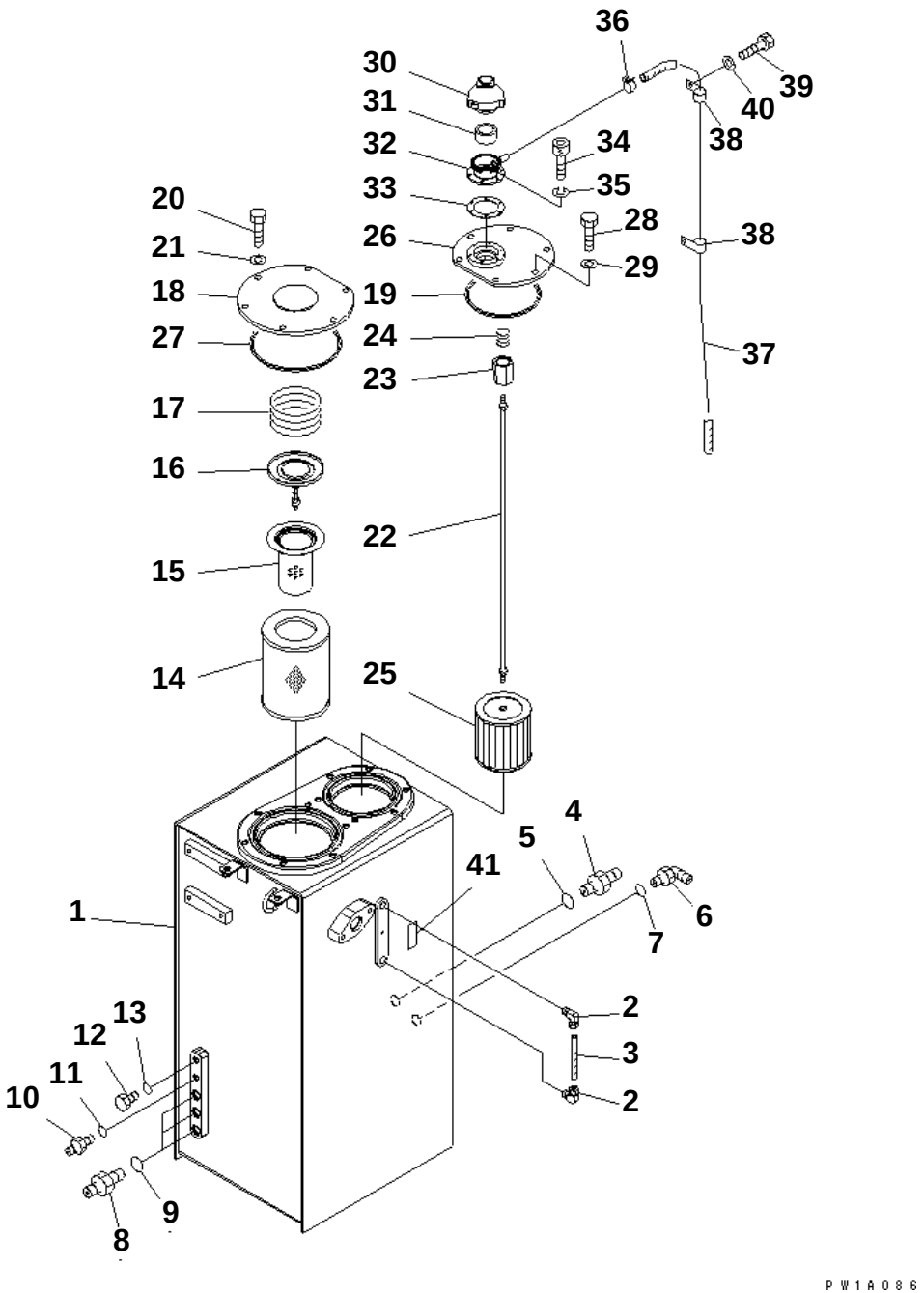

PC228US-3N-W1 S/N 30001-UP

HYDRAULIC TANK (TANK) (YELLOW)(#20001-)

Item	Part No.	Description	Qty	Options
1	22U-60-21111YN	TANK	1	SN:20001--
2	203-60-31100	ELBOW ASS'Y	2	SN:20001--
3	203-60-31160	TUBE	1	SN:20001--
4	07230-20628	UNION	1	SN:20001--
5	07002-12434	O-RING	1	SN:20001--
6	07235-10522	ELBOW	1	SN:20001--
7	07002-12434	O-RING	1	SN:20001--
8	07230-20315	UNION	3	SN:20001--
9	07002-12034	O-RING	3	SN:20001--
10	07230-20210	UNION	1	SN:20001--
11	07002-11423	O-RING	1	SN:20001--
12	07040-11409	PLUG	1	SN:20001--
13	07002-11423	O-RING	1	SN:20001--
14	207-60-71180	ELEMENT	1	SN:21162--
15	20Y-60-31140	STRAINER	1	SN:20001--
16	20Y-60-31131	VALVE ASS'Y	1	SN:20001--
17	20Y-60-21240	SPRING	1	SN:20001--
18	22U-60-21231YN	COVER	1	SN:20001--
19	07000-15160	O-RING	1	SN:20001--
20	01010-81230	BOLT	6	SN:20001--
21	01643-31232	WASHER	6	SN:20001--
	22U-60-21171	STRAINER ASS'Y	1	SN:20001--
22	22U-60-21181	· ROD ASS'Y	1	SN:20001--
23	20Y-60-21320	· · HOLDER	1	SN:20001--
24	12R-60-11230	· · SPRING	1	SN:20001--
25	22B-60-11160	· STRAINER	1	SN:20001--
26	22U-60-21221YN	COVER	1	SN:20001--
27	07000-15195	O-RING	1	SN:20001--
28	01010-81230	BOLT	6	SN:20001--
29	01643-31232	WASHER	6	SN:20001--
30	17A-60-11310	CAP ASS'Y	1	SN:20001--
31	20Y-60-21470	· ELEMENT	1	SN:20001--
32	20Y-60-21460YN	NECK	1	SN:20001--
33	20Y-60-21340	GASKET	1	SN:20001--
34	01252-70516	BOLT	6	SN:20001--
35	01601-20513	WASHER	6	SN:20001--
36	07285-00155	CLIP	1	SN:20001--
37	07270-61415	TUBE	1	SN:20993--
38	04434-51812	CLIP	2	SN:20001--
39	01010-81220	BOLT	2	SN:20001--

Ref. H0110-01A0 Page 150010

https://truckmanualshub.com/

PC228US-3N-W1 S/N 30001-UP

HYDRAULIC TANK (TANK) (YELLOW)(#20001-)

Item	Part No.	Description	Qty	Options
40	01643-31232	WASHER	2	SN:20001--
41	205-00-73360	PLATE¤ OPERATING	1	SN:20001--

https://truckmanualshub.com/

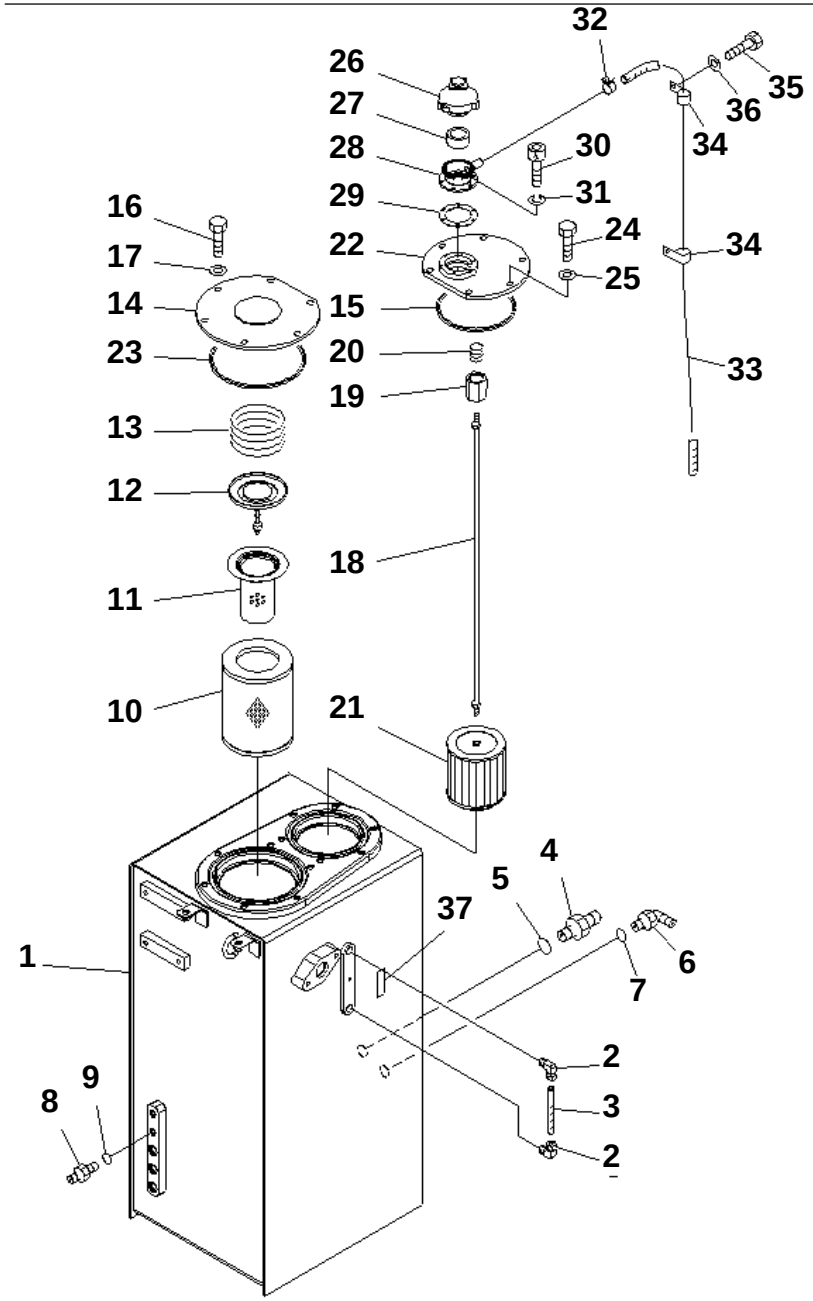

PC228US-3N-W1 S/N 30001-UP

HYDRALIC TANK (TANK) (YELLOW) (FOR ARM CRANE)(#20001-)

Item	Part No.	Description	Qty	Options
1	22U-60-21111YN	TANK	1	SN:20001--
2	203-60-31100	ELBOW ASS'Y	2	SN:20001--
3	203-60-31160	TUBE	1	SN:20001--
4	07230-20628	UNION	1	SN:20001--
5	07002-12434	O-RING	1	SN:20001--
6	07235-10522	ELBOW	1	SN:20001--
7	07002-12434	O-RING	1	SN:20001--
8	07230-20210	UNION	1	SN:21576--
9	07002-11423	O-RING	1	SN:21576--
10	207-60-71180	ELEMENT	1	SN:21162--
11	20Y-60-31140	STRAINER	1	SN:20001--
12	20Y-60-31131	VALVE ASS'Y	1	SN:20001--
13	20Y-60-21240	SPRING	1	SN:20001--
14	22U-60-21231YN	COVER	1	SN:20001--
15	07000-15160	O-RING	1	SN:20001--
16	01010-81230	BOLT	6	SN:20001--
17	01643-31232	WASHER	6	SN:20001--
	22U-60-21171	STRAINER ASS'Y	1	SN:20001--
18	22U-60-21181	· ROD ASS'Y	1	SN:20001--
19	20Y-60-21320	· · HOLDER	1	SN:20001--
20	12R-60-11230	· · SPRING	1	SN:20001--
21	22B-60-11160	· STRAINER	1	SN:20001--
22	22U-60-21221YN	COVER	1	SN:20001--
23	07000-15195	O-RING	1	SN:20001--
24	01010-81230	BOLT	6	SN:20001--
25	01643-31232	WASHER	6	SN:20001--
26	17A-60-11310	CAP ASS'Y	1	SN:20001--
27	20Y-60-21470	· ELEMENT	1	SN:20001--
28	20Y-60-21460YN	NECK	1	SN:20001--
29	20Y-60-21340	GASKET	1	SN:20001--
30	01252-70516	BOLT	6	SN:20001--
31	01601-20513	WASHER	6	SN:20001--
32	07285-00155	CLIP	1	SN:20001--
33	07270-61415	TUBE	1	SN:20993--
34	04434-51812	CLIP	2	SN:20001--
35	01010-81220	BOLT	2	SN:20001--
36	01643-31232	WASHER	2	SN:20001--
37	205-00-73360	PLATE¤ OPERATING	1	SN:20001--

Ref. H0110-01A1 Page 150020

https://truckmanualshub.com/

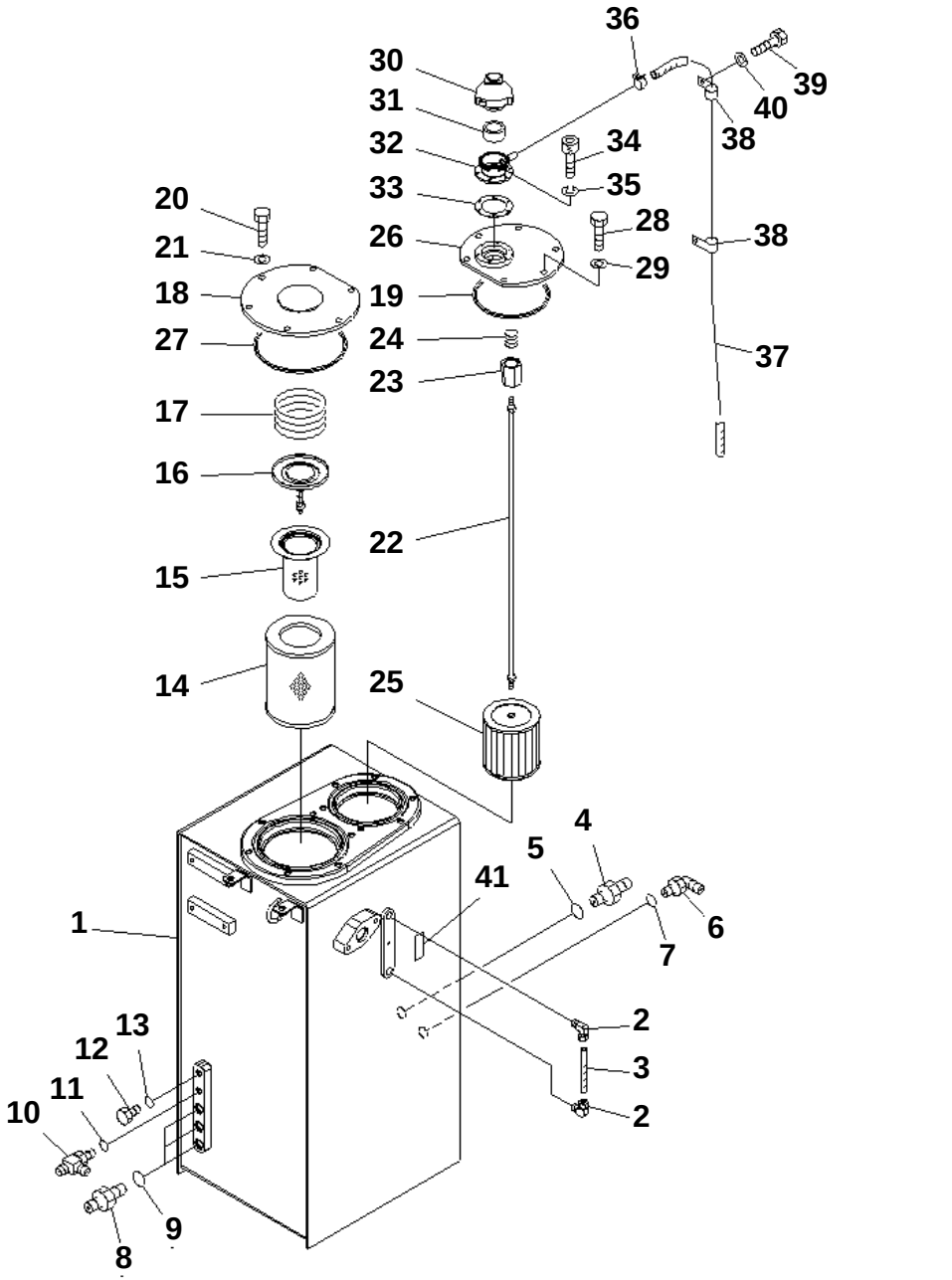

PC228US-3N-W1 S/N 30001-UP

HYDRAULIC TANK (TANK) (1 ACTUATOR) (YELLOW)

Item	Part No.	Description	Qty	Options
1	22U-60-21111YN	TANK	1	SN:30001--
2	203-60-31100	ELBOW ASS'Y	2	SN:30001--
3	203-60-31160	TUBE	1	SN:30001--
4	07230-20628	UNION	1	SN:30001--
5	07002-12434	O-RING	1	SN:30001--
6	07235-10522	ELBOW	1	SN:30001--
7	07002-12434	O-RING	1	SN:30001--
8	07230-20315	UNION	3	SN:30001--
9	07002-12034	O-RING	3	SN:30001--
10	208-62-17550	TEE	1	SN:30001--
11	07002-11423	O-RING	1	SN:30001--
12	07040-11409	PLUG	1	SN:30001--
13	07002-11423	O-RING	1	SN:30001--
14	207-60-71180	ELEMENT	1	SN:30001--
15	20Y-60-31140	STRAINER	1	SN:30001--
16	20Y-60-31131	VALVE ASS'Y	1	SN:30001--
17	20Y-60-21240	SPRING	1	SN:30001--
18	22U-60-21231YN	COVER	1	SN:30001--
19	07000-15160	O-RING	1	SN:30001--
20	01010-81230	BOLT	6	SN:30001--
21	01643-31232	WASHER	6	SN:30001--
	22U-60-21171	STRAINER ASS'Y	1	SN:30001--
22	22U-60-21181	· ROD ASS'Y	1	SN:30001--
23	20Y-60-21320	· · HOLDER	1	SN:30001--
24	12R-60-11230	· · SPRING	1	SN:30001--
25	22B-60-11160	· STRAINER	1	SN:30001--
26	22U-60-21221YN	COVER	1	SN:30001--
27	07000-15195	O-RING	1	SN:30001--
28	01010-81230	BOLT	6	SN:30001--
29	01643-31232	WASHER	6	SN:30001--
30	17A-60-11310	CAP ASS'Y	1	SN:30001--
31	20Y-60-21470	· ELEMENT	1	SN:30001--
32	20Y-60-21460YN	NECK	1	SN:30001--
33	20Y-60-21340	GASKET	1	SN:30001--
34	01252-70516	BOLT	6	SN:30001--
35	01601-20513	WASHER	6	SN:30001--
36	07285-00155	CLIP	1	SN:30001--
37	07270-61415	TUBE	1	SN:30001--
38	04434-51812	CLIP	2	SN:30001--
39	01010-81220	BOLT	2	SN:30001--

Ref. H0110-01A2 Page 150030

https://truckmanualshub.com/

PC228US-3N-W1 S/N 30001-UP

HYDRAULIC TANK (TANK) (1 ACTUATOR) (YELLOW)

Item	Part No.	Description	Qty	Options
40	01643-31232	WASHER	2	SN:30001--
41	205-00-73360	PLATE¤ OPERATING	1	SN:30001--

https://truckmanualshub.com/

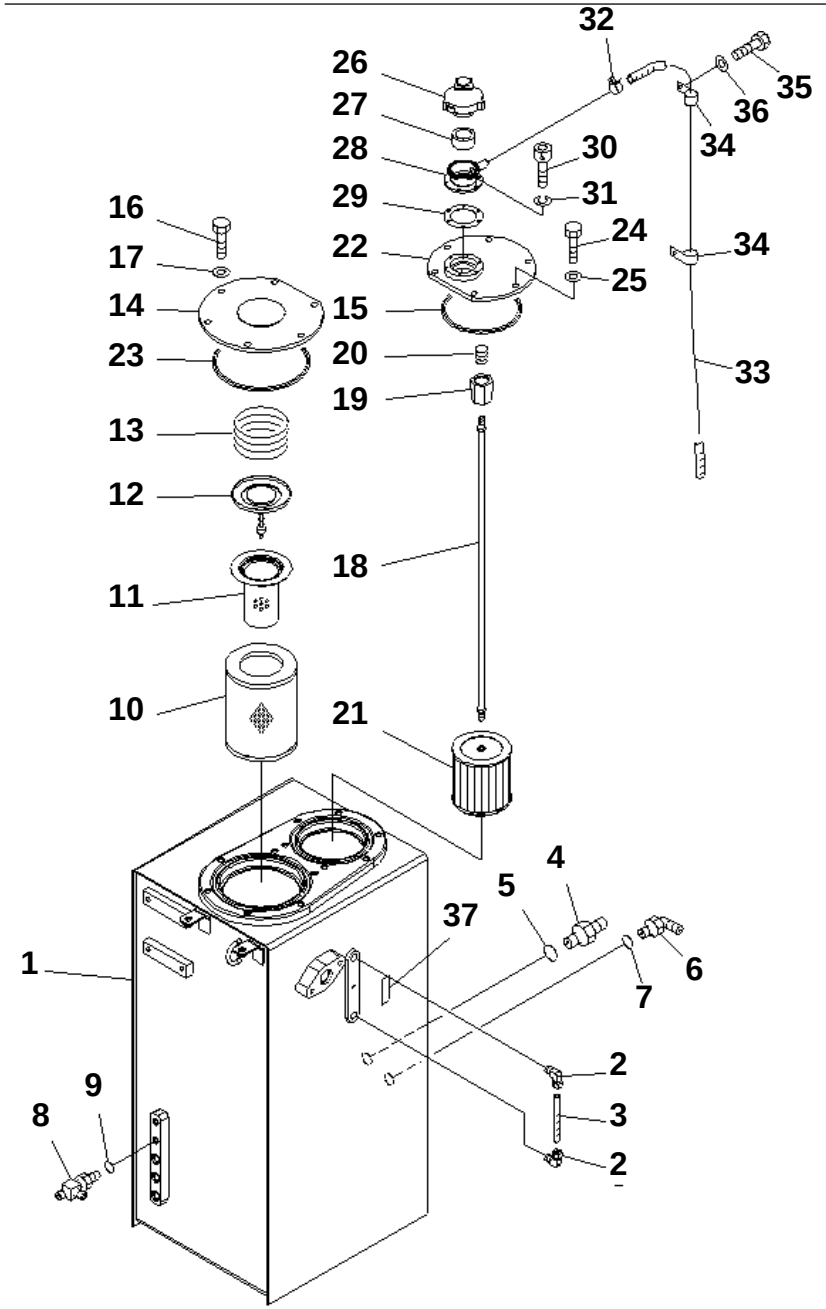

PC228US-3N-W1 S/N 30001-UP

HYDRAULIC TANK (TANK) (1 ACTUATOR) (YELLOW) (FOR ARM CRANE)

Item	Part No.	Description	Qty	Options
1	22U-60-21111YN	TANK	1	SN:30001--
2	203-60-31100	ELBOW ASS'Y	2	SN:30001--
3	203-60-31160	TUBE	1	SN:30001--
4	07230-20628	UNION	1	SN:30001--
5	07002-12434	O-RING	1	SN:30001--
6	07235-10522	ELBOW	1	SN:30001--
7	07002-12434	O-RING	1	SN:30001--
8	208-62-17550	TEE	1	SN:30001--
9	07002-11423	O-RING	1	SN:30001--
10	207-60-71180	ELEMENT	1	SN:30001--
11	20Y-60-31140	STRAINER	1	SN:30001--
12	20Y-60-31131	VALVE ASS'Y	1	SN:30001--
13	20Y-60-21240	SPRING	1	SN:30001--
14	22U-60-21231YN	COVER	1	SN:30001--
15	07000-15160	O-RING	1	SN:30001--
16	01010-81230	BOLT	6	SN:30001--
17	01643-31232	WASHER	6	SN:30001--
	22U-60-21171	STRAINER ASS'Y	1	SN:30001--
18	22U-60-21181	· ROD ASS'Y	1	SN:30001--
19	20Y-60-21320	· · HOLDER	1	SN:30001--
20	12R-60-11230	· · SPRING	1	SN:30001--
21	22B-60-11160	· STRAINER	1	SN:30001--
22	22U-60-21221YN	COVER	1	SN:30001--
23	07000-15195	O-RING	1	SN:30001--
24	01010-81230	BOLT	6	SN:30001--
25	01643-31232	WASHER	6	SN:30001--
26	17A-60-11310	CAP ASS'Y	1	SN:30001--
27	20Y-60-21470	· ELEMENT	1	SN:30001--
28	20Y-60-21460YN	NECK	1	SN:30001--
29	20Y-60-21340	GASKET	1	SN:30001--
30	01252-70516	BOLT	6	SN:30001--
31	01601-20513	WASHER	6	SN:30001--
32	07285-00155	CLIP	1	SN:30001--
33	07270-61415	TUBE	1	SN:30001--
34	04434-51812	CLIP	2	SN:30001--
35	01010-81220	BOLT	2	SN:30001--
36	01643-31232	WASHER	2	SN:30001--
37	205-00-73360	PLATE¤ OPERATING	1	SN:30001--

Ref. H0110-01A3 Page 150040

https://truckmanualshub.com/

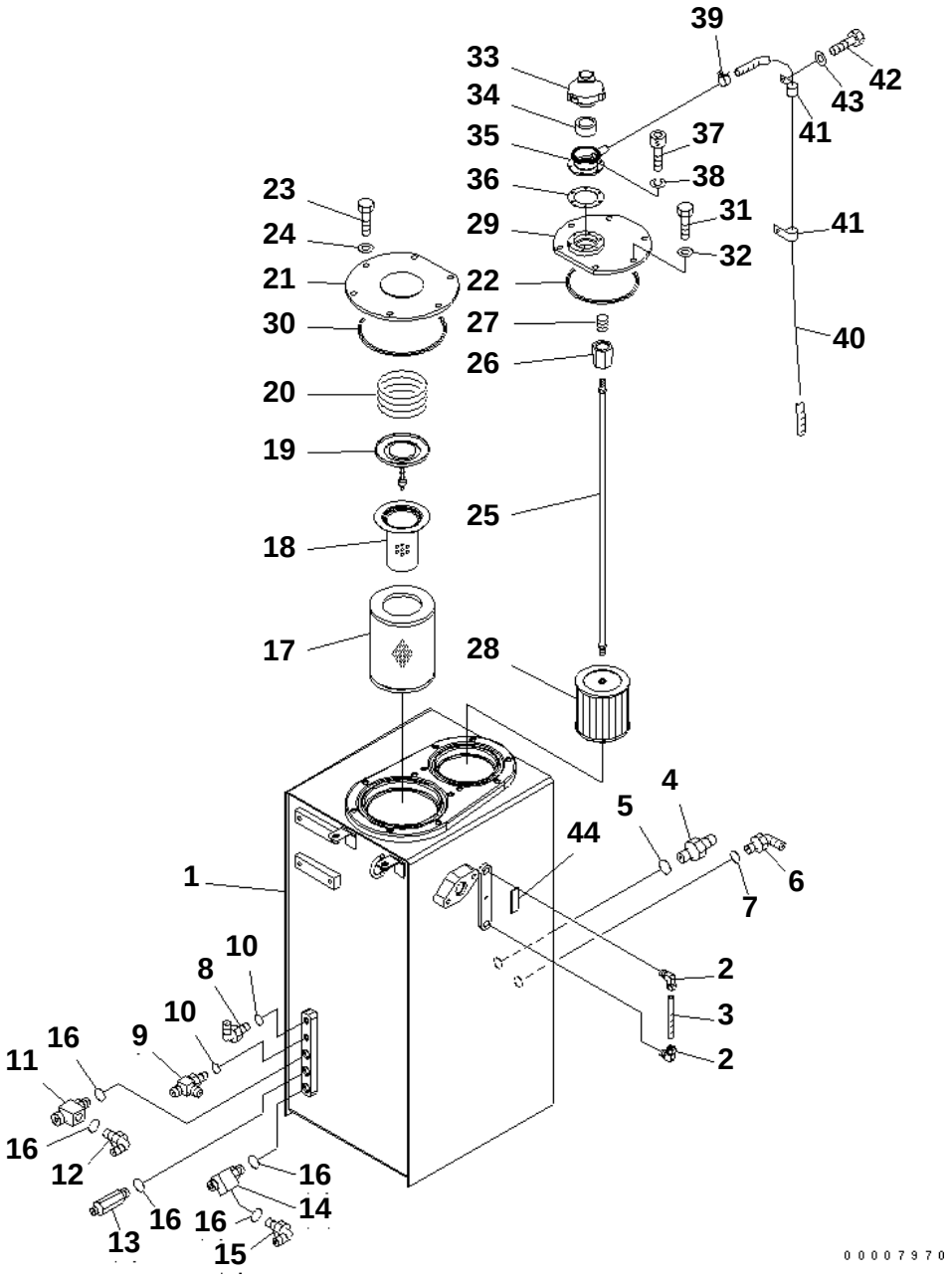

PC228US-3N-W1 S/N 30001-UP

HYDRAULIC TANK (TANK) (1 ACTUATOR) (YELLOW) (FOR 2-PIECE BOOM) (EU SPEC.)

Item	Part No.	Description	Qty	Options
1	22U-60-21111YN	TANK	1	SN:30001--
2	203-60-31100	ELBOW ASS'Y	2	SN:30001--
3	203-60-31160	TUBE	1	SN:30001--
4	07230-20628	UNION	1	SN:30001--
5	07002-12434	O-RING	1	SN:30001--
6	07235-10522	ELBOW	1	SN:30001--
7	07002-12434	O-RING	1	SN:30001--
8	07235-10311	ELBOW	1	SN:30001--
9	208-62-17550	TEE	1	SN:30001--
10	07002-11423	O-RING	2	SN:30001--
11	22U-60-27110	TEE	1	SN:30001--
12	07235-10315	ELBOW	1	SN:30001--
13	23S-62-16530	NIPPLE	1	SN:30001--
14	22U-60-27120	TEE	1	SN:30001--
15	07235-10315	ELBOW	1	SN:30001--
16	07002-12034	O-RING	5	SN:30001--
17	207-60-71180	ELEMENT	1	SN:30001--
18	20Y-60-31140	STRAINER	1	SN:30001--
19	20Y-60-31131	VALVE ASS'Y	1	SN:30001--
20	20Y-60-21240	SPRING	1	SN:30001--
21	22U-60-21231YN	COVER	1	SN:30001--
22	07000-15160	O-RING	1	SN:30001--
23	01010-81230	BOLT	6	SN:30001--
24	01643-31232	WASHER	6	SN:30001--
	22U-60-21171	STRAINER ASS'Y	1	SN:30001--
25	22U-60-21181	· ROD ASS'Y	1	SN:30001--
26	20Y-60-21320	· · HOLDER	1	SN:30001--
27	12R-60-11230	· · SPRING	1	SN:30001--
28	22B-60-11160	· STRAINER	1	SN:30001--
29	22U-60-21221YN	COVER	1	SN:30001--
30	07000-15195	O-RING	1	SN:30001--
31	01010-81230	BOLT	6	SN:30001--
32	01643-31232	WASHER	6	SN:30001--
33	17A-60-11310	CAP ASS'Y	1	SN:30001--
34	20Y-60-21470	· ELEMENT	1	SN:30001--
35	20Y-60-21460YN	NECK	1	SN:30001--
36	20Y-60-21340	GASKET	1	SN:30001--
37	01252-70516	BOLT	6	SN:30001--
38	01601-20513	WASHER	6	SN:30001--

Ref. H0110-01A4 Page 150050

https://truckmanualshub.com/

HYDRAULIC TANK (TANK) (1 ACTUATOR) (YELLOW) (FOR 2-PIECE BOOM) (EU SPEC.)

Item	Part No.	Description	Qty	Options
39	07285-00155	CLIP	1	SN:30001--
40	07270-61415	TUBE	1	SN:30001--
41	04434-51812	CLIP	2	SN:30001--
42	01010-81220	BOLT	2	SN:30001--
43	01643-31232	WASHER	2	SN:30001--
44	205-00-73360	PLATE¤ OPERATING	1	SN:30001--

https://truckmanualshub.com/

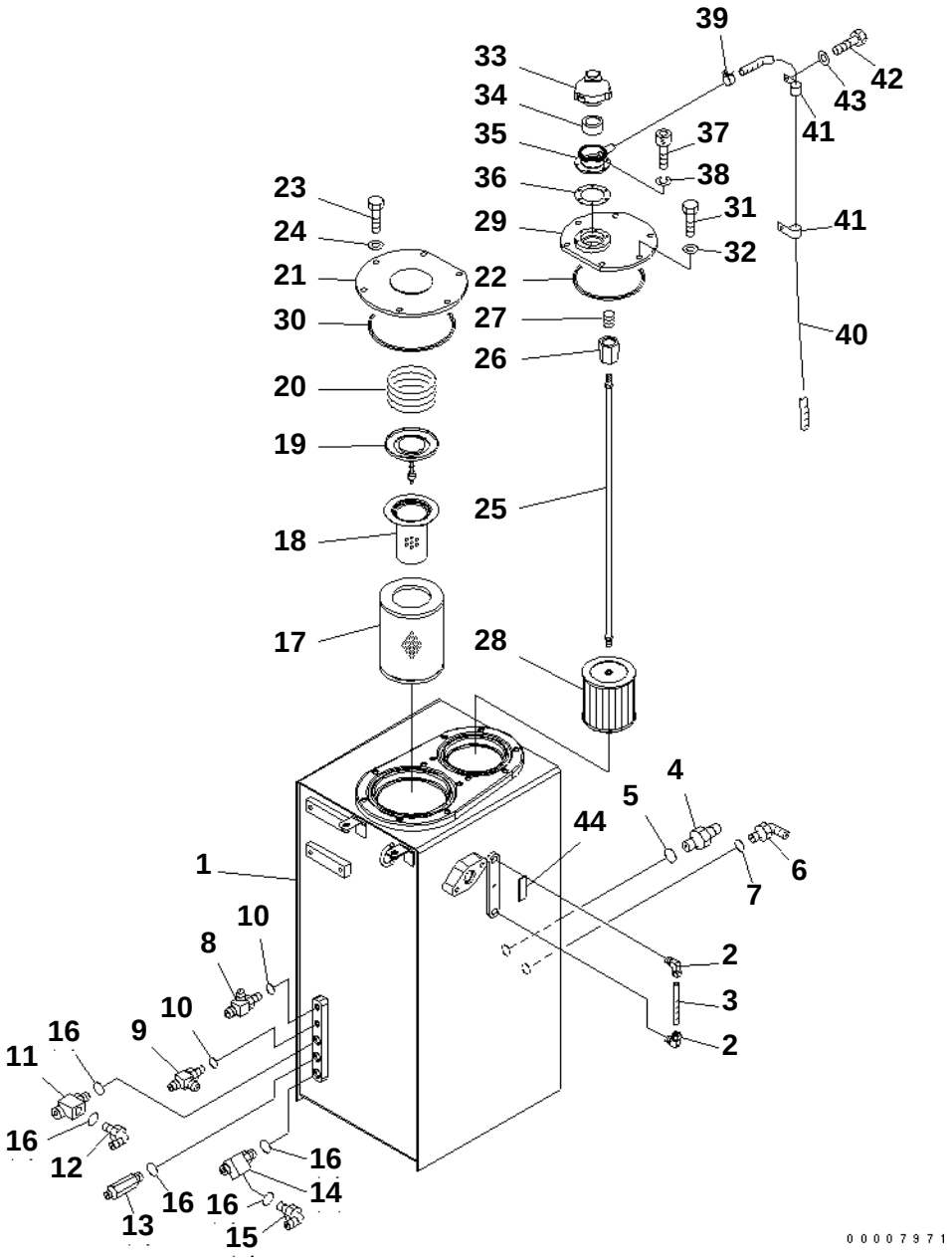

PC228US-3N-W1 S/N 30001-UP

HYDRAULIC TANK (TANK) (2 ACTUATOR) (YELLOW) (FOR 2-PIECE BOOM) (EU SPEC.)

Item	Part No.	Description	Qty	Options
1	22U-60-21111YN	TANK	1	SN:30001--
2	203-60-31100	ELBOW ASS'Y	2	SN:30001--
3	203-60-31160	TUBE	1	SN:30001--
4	07230-20628	UNION	1	SN:30001--
5	07002-12434	O-RING	1	SN:30001--
6	07235-10522	ELBOW	1	SN:30001--
7	07002-12434	O-RING	1	SN:30001--
8	20Y-62-25810	TEE	1	SN:30001--
9	208-62-17550	TEE	1	SN:30001--
10	07002-11423	O-RING	2	SN:30001--
11	22U-60-27110	TEE	1	SN:30001--
12	07235-10315	ELBOW	1	SN:30001--
13	23S-62-16530	NIPPLE	1	SN:30001--
14	22U-60-27120	TEE	1	SN:30001--
15	07235-10315	ELBOW	1	SN:30001--
16	07002-12034	O-RING	5	SN:30001--
17	207-60-71180	ELEMENT	1	SN:30001--
18	20Y-60-31140	STRAINER	1	SN:30001--
19	20Y-60-31131	VALVE ASS'Y	1	SN:30001--
20	20Y-60-21240	SPRING	1	SN:30001--
21	22U-60-21231YN	COVER	1	SN:30001--
22	07000-15160	O-RING	1	SN:30001--
23	01010-81230	BOLT	6	SN:30001--
24	01643-31232	WASHER	6	SN:30001--
	22U-60-21171	STRAINER ASS'Y	1	SN:30001--
25	22U-60-21181	· ROD ASS'Y	1	SN:30001--
26	20Y-60-21320	· · HOLDER	1	SN:30001--
27	12R-60-11230	· · SPRING	1	SN:30001--
28	22B-60-11160	· STRAINER	1	SN:30001--
29	22U-60-21221YN	COVER	1	SN:30001--
30	07000-15195	O-RING	1	SN:30001--
31	01010-81230	BOLT	6	SN:30001--
32	01643-31232	WASHER	6	SN:30001--
33	17A-60-11310	CAP ASS'Y	1	SN:30001--
34	20Y-60-21470	· ELEMENT	1	SN:30001--
35	20Y-60-21460YN	NECK	1	SN:30001--
36	20Y-60-21340	GASKET	1	SN:30001--
37	01252-70516	BOLT	6	SN:30001--
38	01601-20513	WASHER	6	SN:30001--

Ref. H0110-01A5 Page 150060

https://truckmanualshub.com/

PC228US-3N-W1 S/N 30001-UP

HYDRAULIC TANK (TANK) (2 ACTUATOR) (YELLOW) (FOR 2-PIECE BOOM) (EU SPEC.)

Item	Part No.	Description	Qty	Options
39	07285-00155	CLIP	1	SN:30001--
40	07270-61415	TUBE	1	SN:30001--
41	04434-51812	CLIP	2	SN:30001--
42	01010-81220	BOLT	2	SN:30001--
43	01643-31232	WASHER	2	SN:30001--
44	205-00-73360	PLATE¤ OPERATING	1	SN:30001--

https://truckmanualshub.com/

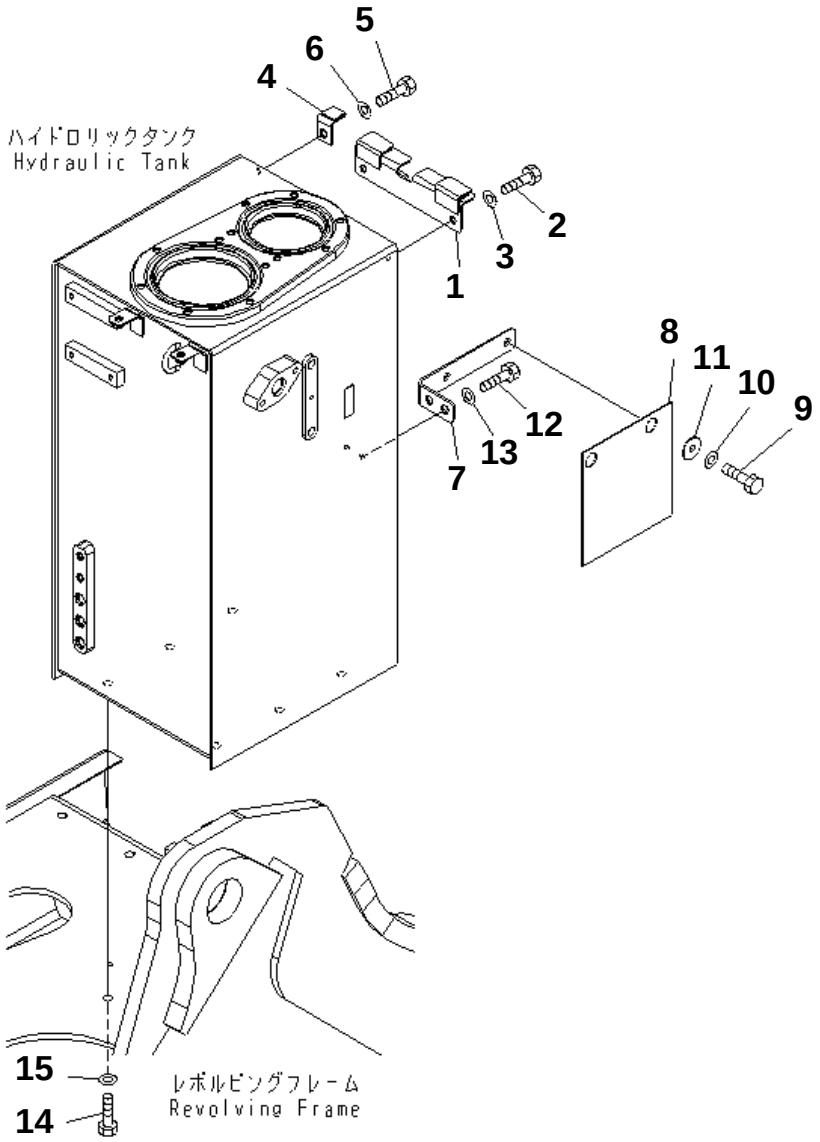

PC228US-3N-W1 S/N 30001-UP

HYDRAULIC TANK (BRACKET) (YELLOW)(#20001-)

Item	Part No.	Description	Qty	Options
1	22U-54-23170YN	BRACKET	1	SN:20001--
2	01010-81230	BOLT	2	SN:20001--
3	01643-31232	WASHER	2	SN:20001--
4	22U-54-23180	PLATE	1	SN:20001--
5	01010-81230	BOLT	1	SN:20001--
6	01643-31232	WASHER	1	SN:20001--
7	22U-54-22970	BRACKET	1	SN:20001--
8	22U-54-22960	SHEET	1	SN:20001--
9	01010-81230	BOLT	2	SN:20001--
10	01643-31232	WASHER	2	SN:20001--
11	203-54-62670	COLLAR	2	SN:20001--
12	01010-81225	BOLT	2	SN:20001--
13	01643-31232	WASHER	2	SN:20001--
14	01010-81635	BOLT	6	SN:20001--
15	01643-31645	WASHER	6	SN:20001--

Ref. H0110-02A0 Page 150070

https://truckmanualshub.com/

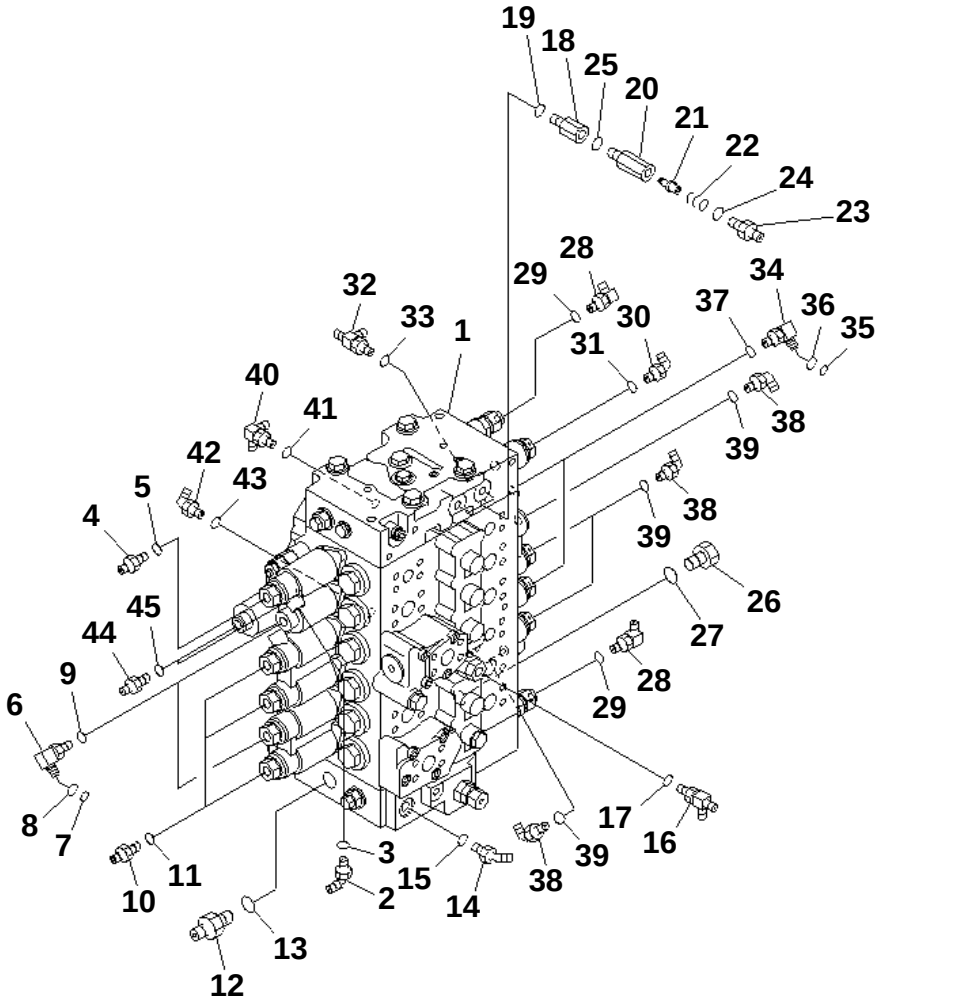

PC228US-3N-W1 S/N 30001-UP

MAIN VALVE (CONNECTING PARTS)

Item	Part No.	Description	Qty	Options
1	(723-46-20104)	VALVE ASS'Y	1	SN:30001--
2	07235-10210	ELBOW	1	SN:30001--
3	07002-11423	O-RING	1	SN:30001--
4	205-62-55270	NIPPLE	1	SN:30001--
5	07002-11423	O-RING	1	SN:30001--
6	22U-62-22480	ELBOW	2	SN:30001--
7	201-60-11390	· O-RING	1	SN:30001--
8	20Y-62-19560	· O-RING	1	SN:30001--
9	07002-11423	O-RING	2	SN:30001--
10	07230-20210	UNION	3	SN:30001--
11	07002-11423	O-RING	3	SN:30001--
12	07230-20628	UNION	1	SN:30001--
13	07002-12434	O-RING	1	SN:30001--
14	07236-10210	ELBOW	1	SN:30001--
15	07002-11423	O-RING	1	SN:30001--
16	208-62-17550	TEE	1	SN:30001--
17	07002-11423	O-RING	1	SN:30001--
18	22U-62-23540	JOINT	2	SN:30001--
19	07002-11423	O-RING	2	SN:30001--
	20Y-60-22261	VALVE ASS'Y	2	SN:30001--
20	☆	· BODY	1	SN:30001--
21	20Y-60-22270	· POPPET	1	SN:30001--
22	701-20-61230	· SPRING	1	SN:30001--
23	07230-20210	· UNION	1	SN:30001--
24	07002-11423	· O-RING	1	SN:30001--
25	07002-11423	O-RING	2	SN:30001--
26	07040-12412	PLUG	1	SN:30001--
27	07002-12434	O-RING	1	SN:30001--
28	205-62-74190	ELBOW	2	SN:30001--
29	07002-11223	O-RING	2	SN:30001--
30	07235-10311	ELBOW	1	SN:30001--
31	07002-11423	O-RING	1	SN:30001--
32	208-62-17550	TEE	1	SN:30001--
33	07002-11423	O-RING	1	SN:30001--
34	22U-62-22480	ELBOW	2	SN:30001--
35	201-60-11390	· O-RING	1	SN:30001--
36	20Y-62-19560	· O-RING	1	SN:30001--
37	07002-11423	O-RING	2	SN:30001--
38	07235-10210	ELBOW	4	SN:30001--
39	07002-11423	O-RING	4	SN:30001--

Ref. H0120-01A0 Page 150080

https://truckmanualshub.com/

PC228US-3N-W1 S/N 30001-UP

MAIN VALVE (CONNECTING PARTS)

Item	Part No.	Description	Qty	Options
40	245-62-51510	ELBOW	1	SN:30001--
41	07002-11423	O-RING	1	SN:30001--
42	07235-10212	ELBOW	1	SN:30001--
43	07002-11423	O-RING	1	SN:30001--
44	07230-10210	UNION	2	SN:30001--
45	07002-11423	O-RING	2	SN:30001--

https://truckmanualshub.com/

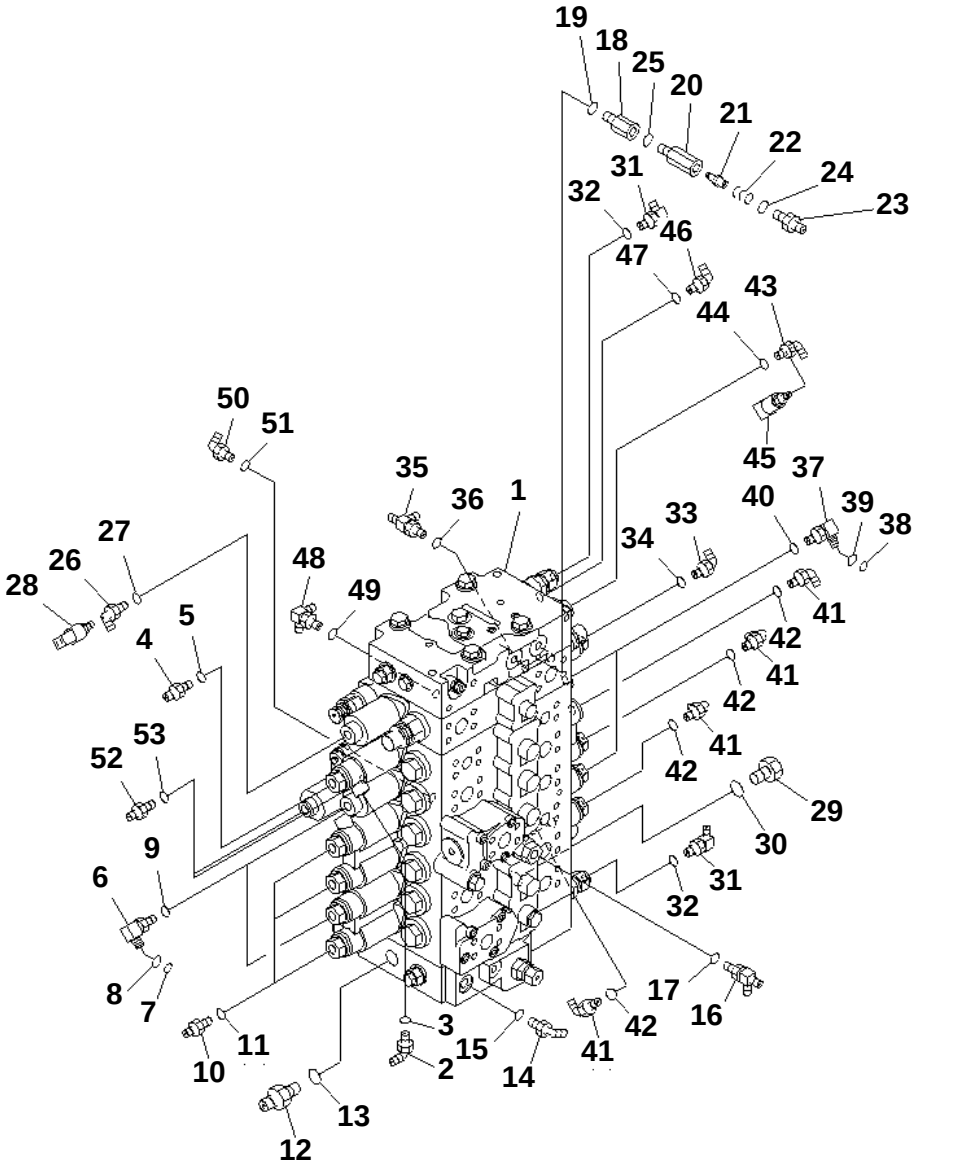

00003596

PC228US-3N-W1 S/N 30001-UP

MAIN VALVE (CONNECTING PARTS) (1 ACTUATOR)

Item	Part No.	Description	Qty	Options
1	(723-47-21300)	VALVE ASS'Y	1	SN:30001--
2	07235-10210	ELBOW	1	SN:30001--
3	07002-11423	O-RING	1	SN:30001--
4	205-62-55270	NIPPLE	1	SN:30001--
5	07002-11423	O-RING	1	SN:30001--
6	22U-62-22480	ELBOW	2	SN:30001--
7	201-60-11390	· O-RING	1	SN:30001--
8	20Y-62-19560	· O-RING	1	SN:30001--
9	07002-11423	O-RING	2	SN:30001--
10	07230-20210	UNION	3	SN:30001--
11	07002-11423	O-RING	3	SN:30001--
12	07230-20628	UNION	1	SN:30001--
13	07002-12434	O-RING	1	SN:30001--
14	07236-10210	ELBOW	1	SN:30001--
15	07002-11423	O-RING	1	SN:30001--
16	208-62-17550	TEE	1	SN:30001--
17	07002-11423	O-RING	1	SN:30001--
18	22U-62-23540	JOINT	2	SN:30001--
19	07002-11423	O-RING	2	SN:30001--
	20Y-60-22261	VALVE ASS'Y	2	SN:30001--
20	☆	· BODY	1	SN:30001--
21	20Y-60-22270	· POPPET	1	SN:30001--
22	701-20-61230	· SPRING	1	SN:30001--
23	07230-20210	· UNION	1	SN:30001--
24	07002-11423	· O-RING	1	SN:30001--
25	07002-11423	O-RING	2	SN:30001--
26	07235-50210	ELBOW	1	SN:30001--
27	07002-11423	O-RING	1	SN:30001--
28	206-06-61130	SWITCH	1	SN:30001--
29	07040-12412	PLUG	1	SN:30001--
30	07002-12434	O-RING	1	SN:30001--
31	205-62-74190	ELBOW	2	SN:30001--
32	07002-11223	O-RING	2	SN:30001--
33	07235-10311	ELBOW	1	SN:30001--
34	07002-11423	O-RING	1	SN:30001--
35	208-62-17550	TEE	1	SN:30001--
36	07002-11423	O-RING	1	SN:30001--
37	22U-62-22480	ELBOW	2	SN:30001--
38	201-60-11390	· O-RING	1	SN:30001--
39	20Y-62-19560	· O-RING	1	SN:30001--

Ref. H0120-01A1 Page 150090

https://truckmanualshub.com/

PC228US-3N-W1 S/N 30001-UP

MAIN VALVE (CONNECTING PARTS) (1 ACTUATOR)

Item	Part No.	Description	Qty	Options
40	07002-11423	O-RING	2	SN:30001--
41	07235-10210	ELBOW	4	SN:30001--
42	07002-11423	O-RING	4	SN:30001--
43	205-966-7420	ELBOW	1	SN:30001--
44	07002-11423	O-RING	1	SN:30001--
45	206-06-61130	SWITCH	1	SN:30001--
46	07235-10210	ELBOW	1	SN:30001--
47	07002-11423	O-RING	1	SN:30001--
48	245-62-51510	ELBOW	1	SN:30001--
49	07002-11423	O-RING	1	SN:30001--
50	07235-10212	ELBOW	1	SN:30001--
51	07002-11423	O-RING	1	SN:30001--
52	07230-10210	UNION	2	SN:30001--
53	07002-11423	O-RING	2	SN:30001--

https://truckmanualshub.com/

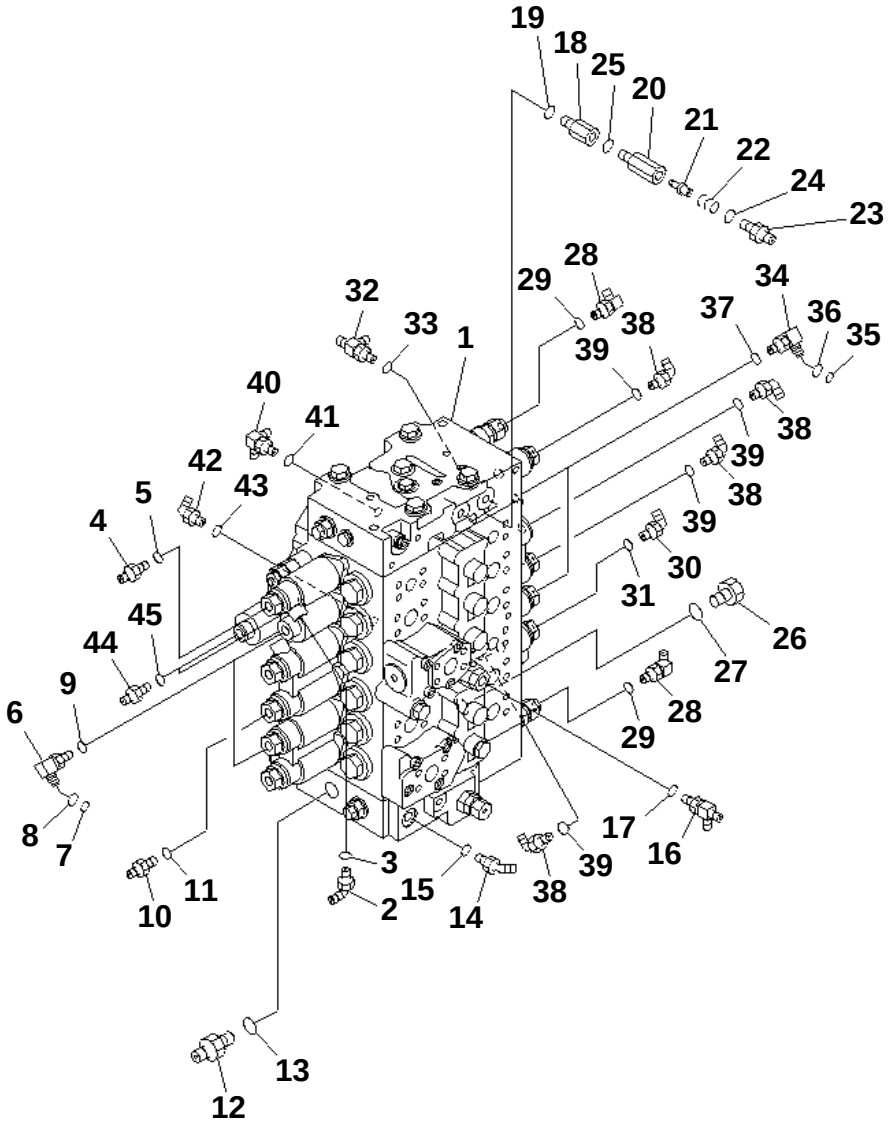

PC228US-3N-W1 S/N 30001-UP

MAIN VALVE (CONNECTING PARTS) (FOR ARM CRANE)

Item	Part No.	Description	Qty	Options
1	(723-46-20104)	VALVE ASS'Y	1	SN:30001--
2	07235-10210	ELBOW	1	SN:30001--
3	07002-11423	O-RING	1	SN:30001--
4	205-62-55270	NIPPLE	1	SN:30001--
5	07002-11423	O-RING	1	SN:30001--
6	22U-62-22480	ELBOW	2	SN:30001--
7	201-60-11390	· O-RING	1	SN:30001--
8	20Y-62-19560	· O-RING	1	SN:30001--
9	07002-11423	O-RING	2	SN:30001--
10	07230-20210	UNION	1	SN:30001--
11	07002-11423	O-RING	1	SN:30001--
12	07230-20628	UNION	1	SN:30001--
13	07002-12434	O-RING	1	SN:30001--
14	07236-10210	ELBOW	1	SN:30001--
15	07002-11423	O-RING	1	SN:30001--
16	208-62-17550	TEE	1	SN:30001--
17	07002-11423	O-RING	1	SN:30001--
18	22U-62-23540	JOINT	2	SN:30001--
19	07002-11423	O-RING	2	SN:30001--
	20Y-60-22261	VALVE ASS'Y	2	SN:30001--
20	☆	· BODY	1	SN:30001--
21	20Y-60-22270	· POPPET	1	SN:30001--
22	701-20-61230	· SPRING	1	SN:30001--
23	07230-20210	· UNION	1	SN:30001--
24	07002-11423	· O-RING	1	SN:30001--
25	07002-11423	O-RING	2	SN:30001--
26	07040-12412	PLUG	1	SN:30001--
27	07002-12434	O-RING	1	SN:30001--
28	205-62-74190	ELBOW	2	SN:30001--
29	07002-11223	O-RING	2	SN:30001--
30	07235-10311	ELBOW	1	SN:30001--
31	07002-11423	O-RING	1	SN:30001--
32	208-62-17550	TEE	1	SN:30001--
33	07002-11423	O-RING	1	SN:30001--
34	22U-62-22480	ELBOW	2	SN:30001--
35	201-60-11390	· O-RING	2	SN:30001--
36	20Y-62-19560	· O-RING	2	SN:30001--
37	07002-11423	O-RING	2	SN:30001--
38	07235-10210	ELBOW	4	SN:30001--
39	07002-11423	O-RING	4	SN:30001--

Ref. H0120-01A2 Page 150100

https://truckmanualshub.com/

PC228US-3N-W1 S/N 30001-UP

MAIN VALVE (CONNECTING PARTS) (FOR ARM CRANE)

Item	Part No.	Description	Qty	Options
40	245-62-51510	ELBOW	1	SN:30001--
41	07002-11423	O-RING	1	SN:30001--
42	07235-10212	ELBOW	1	SN:30001--
43	07002-11423	O-RING	1	SN:30001--
44	07230-10210	UNION	2	SN:30001--
45	07002-11423	O-RING	2	SN:30001--

https://truckmanualshub.com/

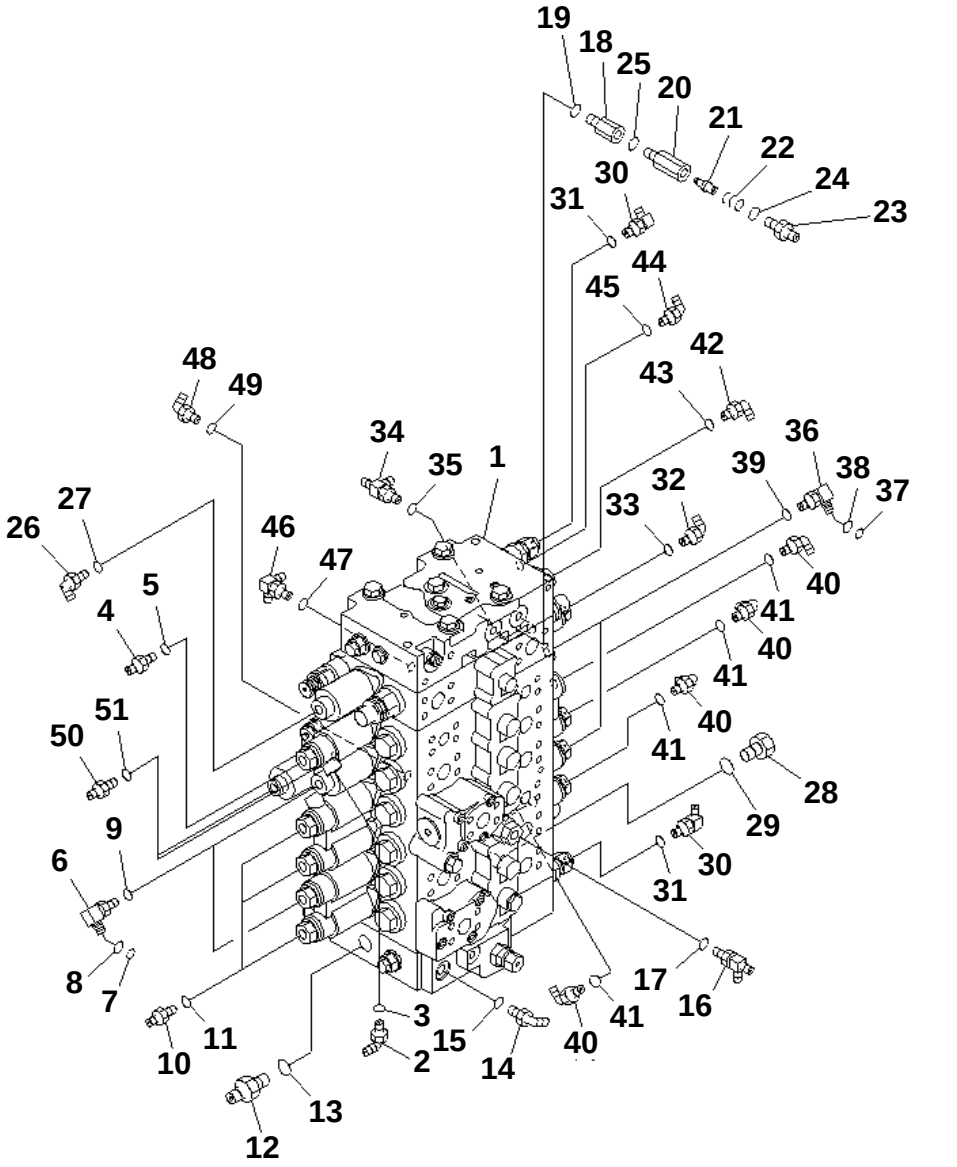

00003598

PC228US-3N-W1 S/N 30001-UP

MAIN VALVE (CONNECTING PARTS) (SERVICE VALVE)

Item	Part No.	Description	Qty	Options
1	(723-47-21300)	VALVE ASS'Y	1	SN:30001--
2	07235-10210	ELBOW	1	SN:30001--
3	07002-11423	O-RING	1	SN:30001--
4	205-62-55270	NIPPLE	1	SN:30001--
5	07002-11423	O-RING	1	SN:30001--
6	22U-62-22480	ELBOW	2	SN:30001--
7	201-60-11390	· O-RING	1	SN:30001--
8	20Y-62-19560	· O-RING	1	SN:30001--
9	07002-11423	O-RING	2	SN:30001--
10	07230-20210	UNION	3	SN:30001--
11	07002-11423	O-RING	3	SN:30001--
12	07230-20628	UNION	1	SN:30001--
13	07002-12434	O-RING	1	SN:30001--
14	07236-10210	ELBOW	1	SN:30001--
15	07002-11423	O-RING	1	SN:30001--
16	208-62-17550	TEE	1	SN:30001--
17	07002-11423	O-RING	1	SN:30001--
18	22U-62-23540	JOINT	2	SN:30001--
19	07002-11423	O-RING	2	SN:30001--
	20Y-60-22261	VALVE ASS'Y	2	SN:30001--
20	☆	· BODY	1	SN:30001--
21	20Y-60-22270	· POPPET	1	SN:30001--
22	701-20-61230	· SPRING	1	SN:30001--
23	07230-20210	· UNION	1	SN:30001--
24	07002-11423	· O-RING	1	SN:30001--
25	07002-11423	O-RING	2	SN:30001--
26	07235-50210	ELBOW	1	SN:30001--
27	07002-11423	O-RING	1	SN:30001--
28	07040-12412	PLUG	1	SN:30001--
29	07002-12434	O-RING	1	SN:30001--
30	205-62-74190	ELBOW	2	SN:30001--
31	07002-11223	O-RING	2	SN:30001--
32	07235-10311	ELBOW	1	SN:30001--
33	07002-11423	O-RING	1	SN:30001--
34	208-62-17550	TEE	1	SN:30001--
35	07002-11423	O-RING	1	SN:30001--
36	22U-62-22480	ELBOW	2	SN:30001--
37	201-60-11390	O-RING	2	SN:30001--
38	20Y-62-19560	O-RING	2	SN:30001--
39	07002-11423	O-RING	2	SN:30001--

Ref. H0120-01A3 Page 150110

https://truckmanualshub.com/

PC228US-3N-W1 S/N 30001-UP

MAIN VALVE (CONNECTING PARTS) (SERVICE VALVE)

Item	Part No.	Description	Qty	Options
40	07235-10210	ELBOW	4	SN:30001--
41	07002-11423	O-RING	4	SN:30001--
42	205-966-7420	ELBOW	1	SN:30001--
43	07002-11423	O-RING	1	SN:30001--
44	07235-10210	ELBOW	1	SN:30001--
45	07002-11423	O-RING	1	SN:30001--
46	245-62-51510	ELBOW	1	SN:30001--
47	07002-11423	O-RING	1	SN:30001--
48	07235-10212	ELBOW	1	SN:30001--
49	07002-11423	O-RING	1	SN:30001--
50	07230-10210	UNION	2	SN:30001--
51	07002-11423	O-RING	2	SN:30001--

https://truckmanualshub.com/

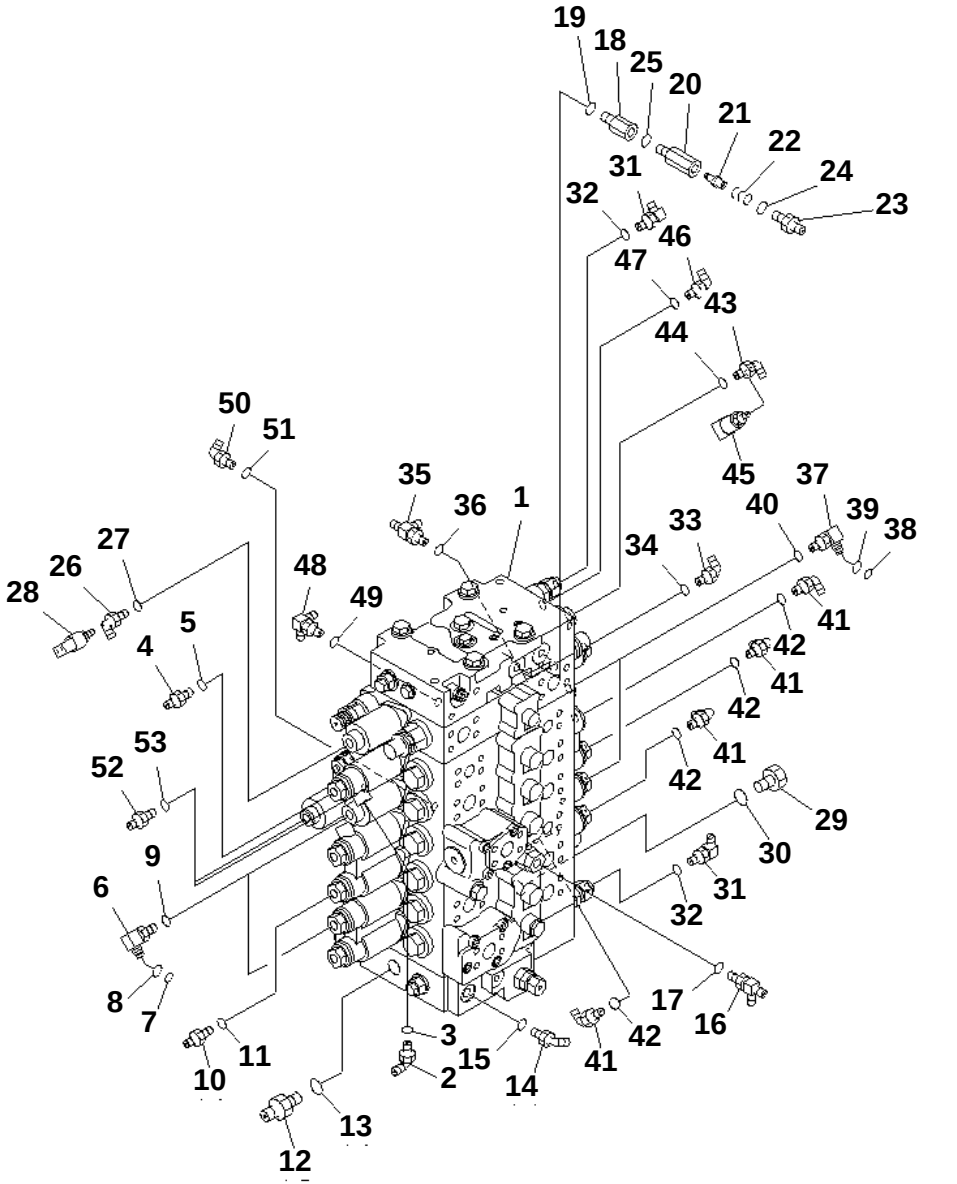

PC228US-3N-W1 S/N 30001-UP

MAIN VALVE (CONNECTING PARTS) (1 ACTUATOR) (FOR ARM CRANE)

Item	Part No.	Description	Qty	Options
1	(723-47-21300)	VALVE ASS'Y	1	SN:30001--
2	07235-10210	ELBOW	1	SN:30001--
3	07002-11423	O-RING	1	SN:30001--
4	205-62-55270	NIPPLE	1	SN:30001--
5	07002-11423	O-RING	1	SN:30001--
6	22U-62-22480	ELBOW	2	SN:30001--
7	201-60-11390	· O-RING	1	SN:30001--
8	20Y-62-19560	· O-RING	1	SN:30001--
9	07002-11423	O-RING	2	SN:30001--
10	07230-20210	UNION	1	SN:30001--
11	07002-11423	O-RING	1	SN:30001--
12	07230-20628	UNION	1	SN:30001--
13	07002-12434	O-RING	1	SN:30001--
14	07236-10210	ELBOW	1	SN:30001--
15	07002-11423	O-RING	1	SN:30001--
16	208-62-17550	TEE	1	SN:30001--
17	07002-11423	O-RING	1	SN:30001--
18	22U-62-23540	JOINT	2	SN:30001--
19	07002-11423	O-RING	2	SN:30001--
	20Y-60-22261	VALVE ASS'Y	2	SN:30001--
20	☆	· BODY	1	SN:30001--
21	20Y-60-22270	· POPPET	1	SN:30001--
22	701-20-61230	· SPRING	1	SN:30001--
23	07230-20210	· UNION	1	SN:30001--
24	07002-11423	· O-RING	1	SN:30001--
25	07002-11423	O-RING	2	SN:30001--
26	07235-50210	ELBOW	1	SN:30001--
27	07002-11423	O-RING	1	SN:30001--
28	206-06-61130	SWITCH	1	SN:30001--
29	07040-12412	PLUG	1	SN:30001--
30	07002-12434	O-RING	1	SN:30001--
31	205-62-74190	ELBOW	2	SN:30001--
32	07002-11223	O-RING	2	SN:30001--
33	07235-10311	ELBOW	1	SN:30001--
34	07002-11423	O-RING	1	SN:30001--
35	208-62-17550	TEE	1	SN:30001--
36	07002-11423	O-RING	1	SN:30001--
37	22U-62-22480	ELBOW	2	SN:30001--
38	201-60-11390	· O-RING	1	SN:30001--

Ref. H0120-01A4 Page 150120

https://truckmanualshub.com/

PC228US-3N-W1 S/N 30001-UP

MAIN VALVE (CONNECTING PARTS) (1 ACTUATOR) (FOR ARM CRANE)

Item	Part No.	Description	Qty	Options
39	20Y-62-19560	· O-RING	1	SN:30001--
40	07002-11423	O-RING	2	SN:30001--
41	07235-10210	ELBOW	4	SN:30001--
42	07002-11423	O-RING	4	SN:30001--
43	205-966-7420	ELBOW	1	SN:30001--
44	07002-11423	O-RING	1	SN:30001--
45	206-06-61130	SWITCH	1	SN:30001--
46	07235-10210	ELBOW	1	SN:30001--
47	07002-11423	O-RING	1	SN:30001--
48	245-62-51510	ELBOW	1	SN:30001--
49	07002-11423	O-RING	1	SN:30001--
50	07235-10212	ELBOW	1	SN:30001--
51	07002-11423	O-RING	1	SN:30001--
52	07230-10210	UNION	2	SN:30001--
53	07002-11423	O-RING	2	SN:30001--

https://truckmanualshub.com/

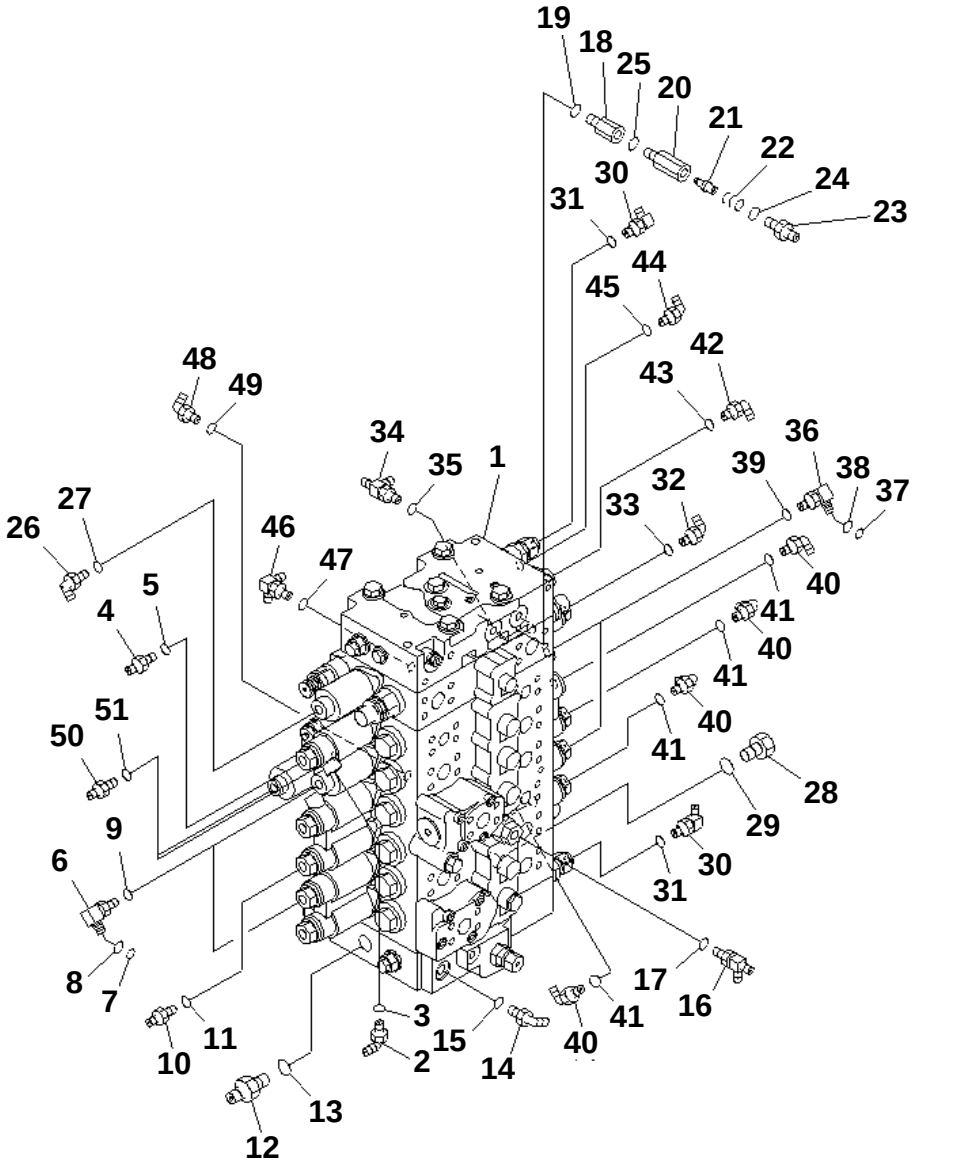

0 0 0 0 3 6 0 0

PC228US-3N-W1 S/N 30001-UP

MAIN VALVE (CONNECTING PARTS) (1 ACTUATOR) (SERVICE VALVE)

Item	Part No.	Description	Qty	Options
1	(723-47-21300)	VALVE ASS'Y	1	SN:30001--
2	07235-10210	ELBOW	1	SN:30001--
3	07002-11423	O-RING	1	SN:30001--
4	205-62-55270	NIPPLE	1	SN:30001--
5	07002-11423	O-RING	1	SN:30001--
6	22U-62-22480	ELBOW	2	SN:30001--
7	201-60-11390	· O-RING	1	SN:30001--
8	20Y-62-19560	· O-RING	1	SN:30001--
9	07002-11423	O-RING	2	SN:30001--
10	07230-20210	UNION	1	SN:30001--
11	07002-11423	O-RING	1	SN:30001--
12	07230-20628	UNION	1	SN:30001--
13	07002-12434	O-RING	1	SN:30001--
14	07236-10210	ELBOW	1	SN:30001--
15	07002-11423	O-RING	1	SN:30001--
16	208-62-17550	TEE	1	SN:30001--
17	07002-11423	O-RING	1	SN:30001--
18	22U-62-23540	JOINT	2	SN:30001--
19	07002-11423	O-RING	2	SN:30001--
	20Y-60-22261	VALVE ASS'Y	2	SN:30001--
20	☆	· BODY	1	SN:30001--
21	20Y-60-22270	· POPPET	1	SN:30001--
22	701-20-61230	· SPRING	1	SN:30001--
23	07230-20210	· UNION	1	SN:30001--
24	07002-11423	· O-RING	1	SN:30001--
25	07002-11423	O-RING	2	SN:30001--
26	07235-50210	ELBOW	1	SN:30001--
27	07002-11423	O-RING	1	SN:30001--
28	07040-12412	PLUG	1	SN:30001--
29	07002-12434	O-RING	1	SN:30001--
30	205-62-74190	ELBOW	2	SN:30001--
31	07002-11223	O-RING	2	SN:30001--
32	07235-10311	ELBOW	1	SN:30001--
33	07002-11423	O-RING	1	SN:30001--
34	208-62-17550	TEE	1	SN:30001--
35	07002-11423	O-RING	1	SN:30001--
36	22U-62-22480	ELBOW	2	SN:30001--
37	201-60-11390	· O-RING	2	SN:30001--
38	20Y-62-19560	· O-RING	2	SN:30001--

Ref. H0120-01A5 Page 150130

https://truckmanualshub.com/

PC228US-3N-W1 S/N 30001-UP

MAIN VALVE (CONNECTING PARTS) (1 ACTUATOR) (SERVICE VALVE)

Item	Part No.	Description	Qty	Options
39	07002-11423	O-RING	2	SN:30001--
40	07235-10210	ELBOW	4	SN:30001--
41	07002-11423	O-RING	4	SN:30001--
42	205-966-7420	ELBOW	1	SN:30001--
43	07002-11423	O-RING	1	SN:30001--
44	07235-10210	ELBOW	1	SN:30001--
45	07002-11423	O-RING	1	SN:30001--
46	245-62-51510	ELBOW	1	SN:30001--
47	07002-11423	O-RING	1	SN:30001--
48	07235-10212	ELBOW	1	SN:30001--
49	07002-11423	O-RING	1	SN:30001--
50	07230-10210	UNION	2	SN:30001--
51	07002-11423	O-RING	2	SN:30001--

https://truckmanualshub.com/

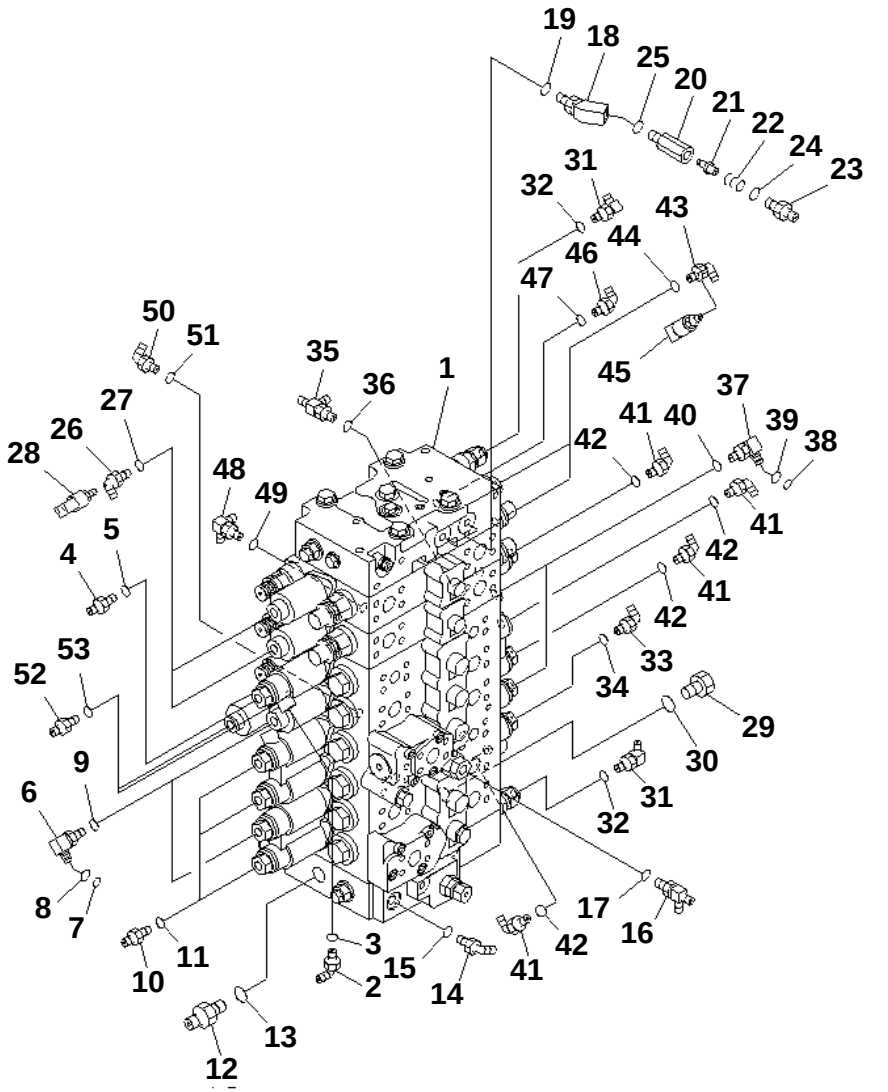

PC228US-3N-W1 S/N 30001-UP

MAIN VALVE (CONNECTING PARTS) (2 ACTUATOR)

Item	Part No.	Description	Qty	Options
1	(723-48-21300)	VALVE A.	1	SN:30001--
2	07235-10210	ELBOW	1	SN:30001--
3	07002-11423	O-RING	1	SN:30001--
4	205-62-55270	NIPPLE	1	SN:30001--
5	07002-11423	O-RING	1	SN:30001--
6	22U-62-22480	ELBOW	2	SN:30001--
7	201-60-11390	· O-RING	1	SN:30001--
8	20Y-62-19560	· O-RING	1	SN:30001--
9	07002-11423	O-RING	2	SN:30001--
10	07230-20210	UNION	3	SN:30001--
11	07002-11423	O-RING	3	SN:30001--
12	07230-20628	UNION	1	SN:30001--
13	07002-12434	O-RING	1	SN:30001--
14	07236-10210	ELBOW	1	SN:30001--
15	07002-11423	O-RING	1	SN:30001--
16	208-62-17550	TEE	1	SN:30001--
17	07002-11423	O-RING	1	SN:30001--
18	22U-62-21991	ELBOW	2	SN:30001--
19	07002-11423	O-RING	2	SN:30001--
	20Y-60-22261	VALVE ASS'Y	2	SN:30001--
20	☆	· BODY	1	SN:30001--
21	20Y-60-22270	· POPPET	1	SN:30001--
22	701-20-61230	· SPRING	1	SN:30001--
23	07230-20210	· UNION	1	SN:30001--
24	07002-11423	· O-RING	1	SN:30001--
25	07002-11423	O-RING	2	SN:30001--
26	07235-50210	ELBOW	2	SN:30001--
27	07002-11423	O-RING	2	SN:30001--
28	206-06-61130	SWITCH	2	SN:30001--
29	07040-12412	PLUG	1	SN:30001--
30	07002-12434	O-RING	1	SN:30001--
31	205-62-74190	ELBOW	2	SN:30001--
32	07002-11223	O-RING	2	SN:30001--
33	07235-10311	ELBOW	1	SN:30001--
34	07002-11423	O-RING	1	SN:30001--
35	208-62-17550	TEE	1	SN:30001--
36	07002-11423	O-RING	1	SN:30001--
37	22U-62-22480	ELBOW	2	SN:30001--
38	201-60-11390	· O-RING	1	SN:30001--
39	20Y-62-19560	· O-RING	1	SN:30001--
40	07002-11423	O-RING	2	SN:30001--
41	07235-10210	ELBOW	4	SN:30001--

Ref. H0120-01A6 Page 150140

https://truckmanualshub.com/

PC228US-3N-W1 S/N 30001-UP

MAIN VALVE (CONNECTING PARTS) (2 ACTUATOR)

Item	Part No.	Description	Qty	Options
42	07002-11423	O-RING	4	SN:30001--
43	205-966-7420	ELBOW	2	SN:30001--
44	07002-11423	O-RING	2	SN:30001--
45	206-06-61130	SWITCH	2	SN:30001--
46	07235-10210	ELBOW	1	SN:30001--
47	07002-11423	O-RING	1	SN:30001--
48	245-62-51510	ELBOW	1	SN:30001--
49	07002-11423	O-RING	1	SN:30001--
50	07235-10212	ELBOW	1	SN:30001--
51	07002-11423	O-RING	1	SN:30001--
52	07230-10210	UNION	2	SN:30001--
53	07002-11423	O-RING	2	SN:30001--

https://truckmanualshub.com/

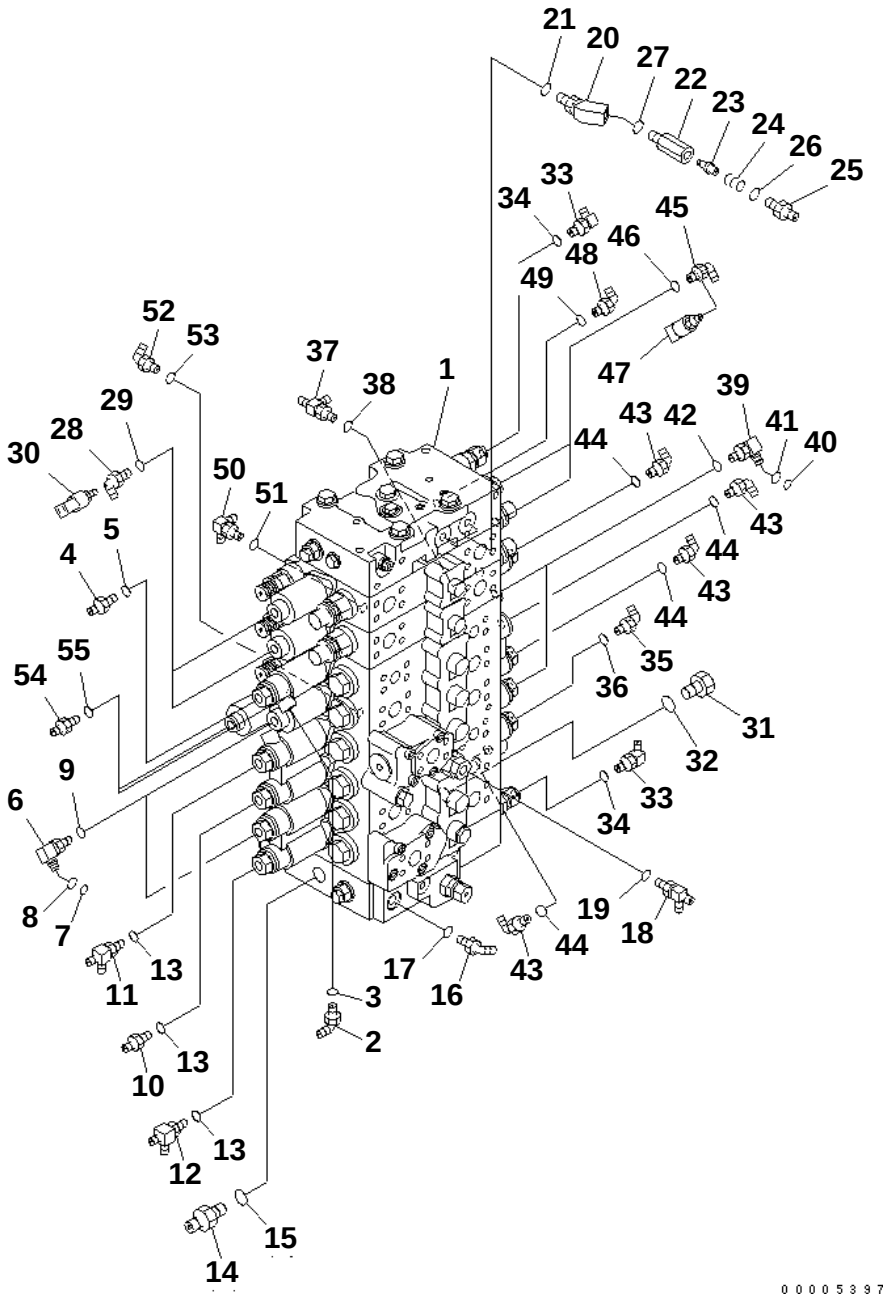

PC228US-3N-W1 S/N 30001-UP

MAIN VALVE (CONNECTING PARTS) (2 ACTUATOR) (EU SPEC.)

Item	Part No.	Description	Qty	Options
1	(723-48-21300)	VALVE A.	1	SN:30001--
2	07235-10210	ELBOW	1	SN:30001--
3	07002-11423	O-RING	1	SN:30001--
4	205-62-55270	NIPPLE	1	SN:30001--
5	07002-11423	O-RING	1	SN:30001--
6	22U-62-22480	ELBOW	2	SN:30001--
7	201-60-11390	· O-RING	1	SN:30001--
8	20Y-62-19560	· O-RING	1	SN:30001--
9	07002-11423	O-RING	2	SN:30001--
10	07230-20210	UNION	1	SN:30001--
11	208-62-17550	TEE	1	SN:30001--
12	203-62-58410	TEE	1	SN:30001--
13	07002-11423	O-RING	3	SN:30001--
14	07230-20628	UNION	1	SN:30001--
15	07002-12434	O-RING	1	SN:30001--
16	07236-10210	ELBOW	1	SN:30001--
17	07002-11423	O-RING	1	SN:30001--
18	208-62-17550	TEE	1	SN:30001--
19	07002-11423	O-RING	1	SN:30001--
20	22U-62-21991	ELBOW	2	SN:30001--
21	07002-11423	O-RING	2	SN:30001--
	20Y-60-22261	VALVE ASS'Y	2	SN:30001--
22	☆	· BODY	1	SN:30001--
23	20Y-60-22270	· POPPET	1	SN:30001--
24	701-20-61230	· SPRING	1	SN:30001--
25	07230-20210	· UNION	1	SN:30001--
26	07002-11423	· O-RING	1	SN:30001--
27	07002-11423	O-RING	2	SN:30001--
28	07235-50210	ELBOW	2	SN:30001--
29	07002-11423	O-RING	2	SN:30001--
30	206-06-61130	SWITCH	2	SN:30001--
31	07040-12412	PLUG	1	SN:30001--
32	07002-12434	O-RING	1	SN:30001--
33	205-62-74190	ELBOW	2	SN:30001--
34	07002-11223	O-RING	2	SN:30001--
35	07235-10311	ELBOW	1	SN:30001--
36	07002-11423	O-RING	1	SN:30001--
37	208-62-17550	TEE	1	SN:30001--
38	07002-11423	O-RING	1	SN:30001--
39	22U-62-22480	ELBOW	2	SN:30001--

Ref. H0120-01A7 Page 150150

https://truckmanualshub.com/

PC228US-3N-W1 S/N 30001-UP

MAIN VALVE (CONNECTING PARTS) (2 ACTUATOR) (EU SPEC.)

Item	Part No.	Description	Qty	Options
40	201-60-11390	· O-RING	1	SN:30001--
41	20Y-62-19560	· O-RING	1	SN:30001--
42	07002-11423	O-RING	2	SN:30001--
43	07235-10210	ELBOW	4	SN:30001--
44	07002-11423	O-RING	4	SN:30001--
45	205-966-7420	ELBOW	2	SN:30001--
46	07002-11423	O-RING	2	SN:30001--
47	206-06-61130	SWITCH	2	SN:30001--
48	07235-10210	ELBOW	1	SN:30001--
49	07002-11423	O-RING	1	SN:30001--
50	245-62-51510	ELBOW	1	SN:30001--
51	07002-11423	O-RING	1	SN:30001--
52	07235-10212	ELBOW	1	SN:30001--
53	07002-11423	O-RING	1	SN:30001--
54	07230-10210	UNION	2	SN:30001--
55	07002-11423	O-RING	2	SN:30001--

https://truckmanualshub.com/

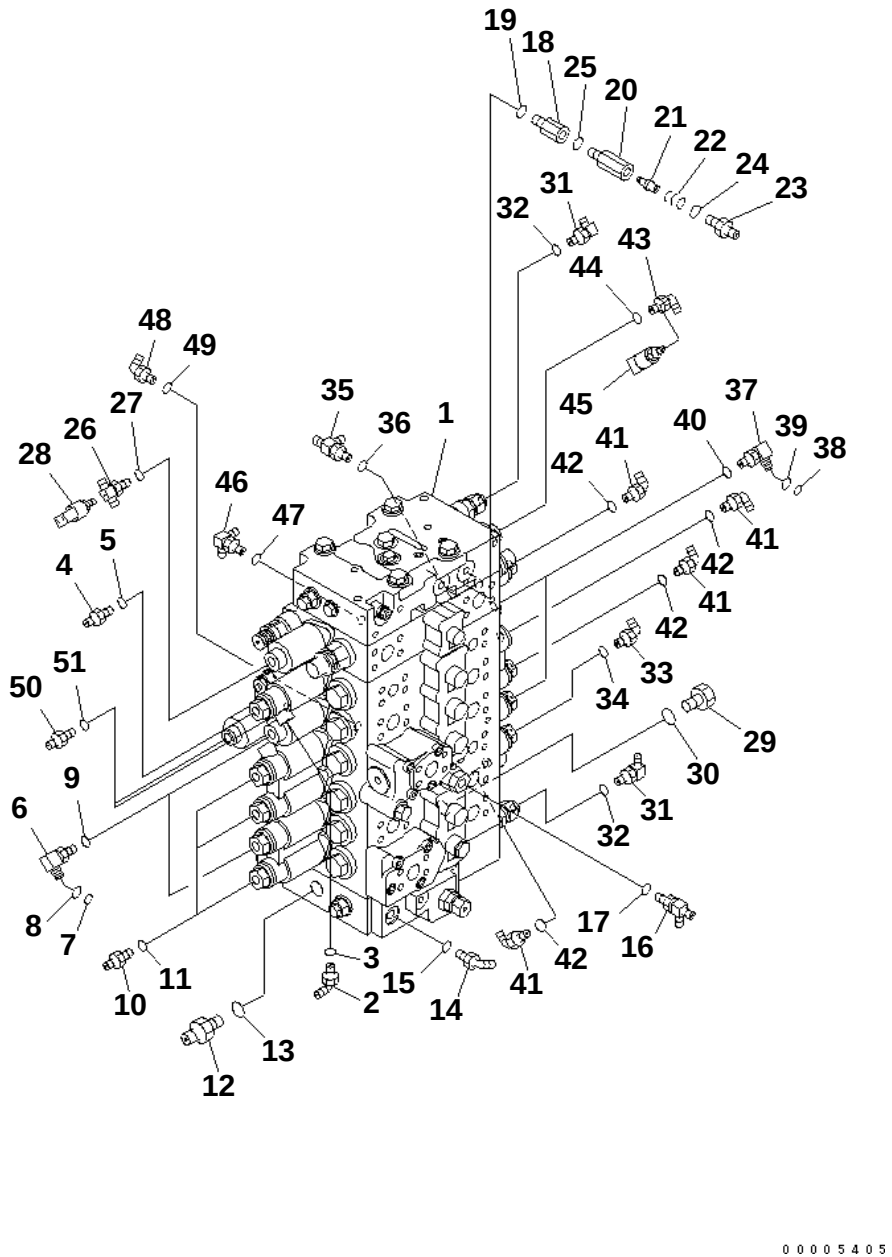

00005405

PC228US-3N-W1 S/N 30001-UP

MAIN VALVE (CONNECTING PARTS) (FOR SLIDE ARM)

Item	Part No.	Description	Qty	Options
1	(723-48-21300)	VALVE A.	1	SN:30001--
2	07235-10210	ELBOW	1	SN:30001--
3	07002-11423	O-RING	1	SN:30001--
4	205-62-55270	NIPPLE	1	SN:30001--
5	07002-11423	O-RING	1	SN:30001--
6	22U-62-22480	ELBOW	2	SN:30001--
7	201-60-11390	· O-RING	1	SN:30001--
8	20Y-62-19560	· O-RING	1	SN:30001--
9	07002-11423	O-RING	2	SN:30001--
10	07230-20210	UNION	3	SN:30001--
11	07002-11423	O-RING	3	SN:30001--
12	07230-20628	UNION	1	SN:30001--
13	07002-12434	O-RING	1	SN:30001--
14	07236-10210	ELBOW	1	SN:30001--
15	07002-11423	O-RING	1	SN:30001--
16	208-62-17550	TEE	1	SN:30001--
17	07002-11423	O-RING	1	SN:30001--
18	22U-62-23540	JOINT	2	SN:30001--
19	07002-11423	O-RING	2	SN:30001--
	20Y-60-22261	VALVE ASS'Y	2	SN:30001--
20	☆	· BODY	1	SN:30001--
21	20Y-60-22270	· POPPET	1	SN:30001--
22	701-20-61230	· SPRING	1	SN:30001--
23	07230-20210	· UNION	1	SN:30001--
24	07002-11423	· O-RING	1	SN:30001--
25	07002-11423	O-RING	2	SN:30001--
26	21N-62-17960	TEE	1	SN:30001--
27	07002-11423	O-RING	1	SN:30001--
28	206-06-61130	SWITCH	1	SN:30001--
29	07040-12412	PLUG	1	SN:30001--
30	07002-12434	O-RING	1	SN:30001--
31	205-62-74190	ELBOW	2	SN:30001--
32	07002-11223	O-RING	2	SN:30001--
33	07235-10311	ELBOW	1	SN:30001--
34	07002-11423	O-RING	1	SN:30001--
35	208-62-17550	TEE	1	SN:30001--
36	07002-11423	O-RING	1	SN:30001--
37	22U-62-22480	ELBOW	2	SN:30001--
38	201-60-11390	· O-RING	1	SN:30001--
39	20Y-62-19560	· O-RING	1	SN:30001--

Ref. H0120-01A9 Page 150160

https://truckmanualshub.com/

PC228US-3N-W1 S/N 30001-UP

MAIN VALVE (CONNECTING PARTS) (FOR SLIDE ARM)

Item	Part No.	Description	Qty	Options
40	07002-11423	O-RING	2	SN:30001--
41	07235-10210	ELBOW	4	SN:30001--
42	07002-11423	O-RING	4	SN:30001--
43	205-966-7420	ELBOW	2	SN:30001--
44	07002-11423	O-RING	2	SN:30001--
45	206-06-61130	SWITCH	2	SN:30001--
46	245-62-51510	ELBOW	1	SN:30001--
47	07002-11423	O-RING	1	SN:30001--
48	07235-10212	ELBOW	1	SN:30001--
49	07002-11423	O-RING	1	SN:30001--
50	07230-10210	UNION	2	SN:30001--
51	07002-11423	O-RING	2	SN:30001--

https://truckmanualshub.com/

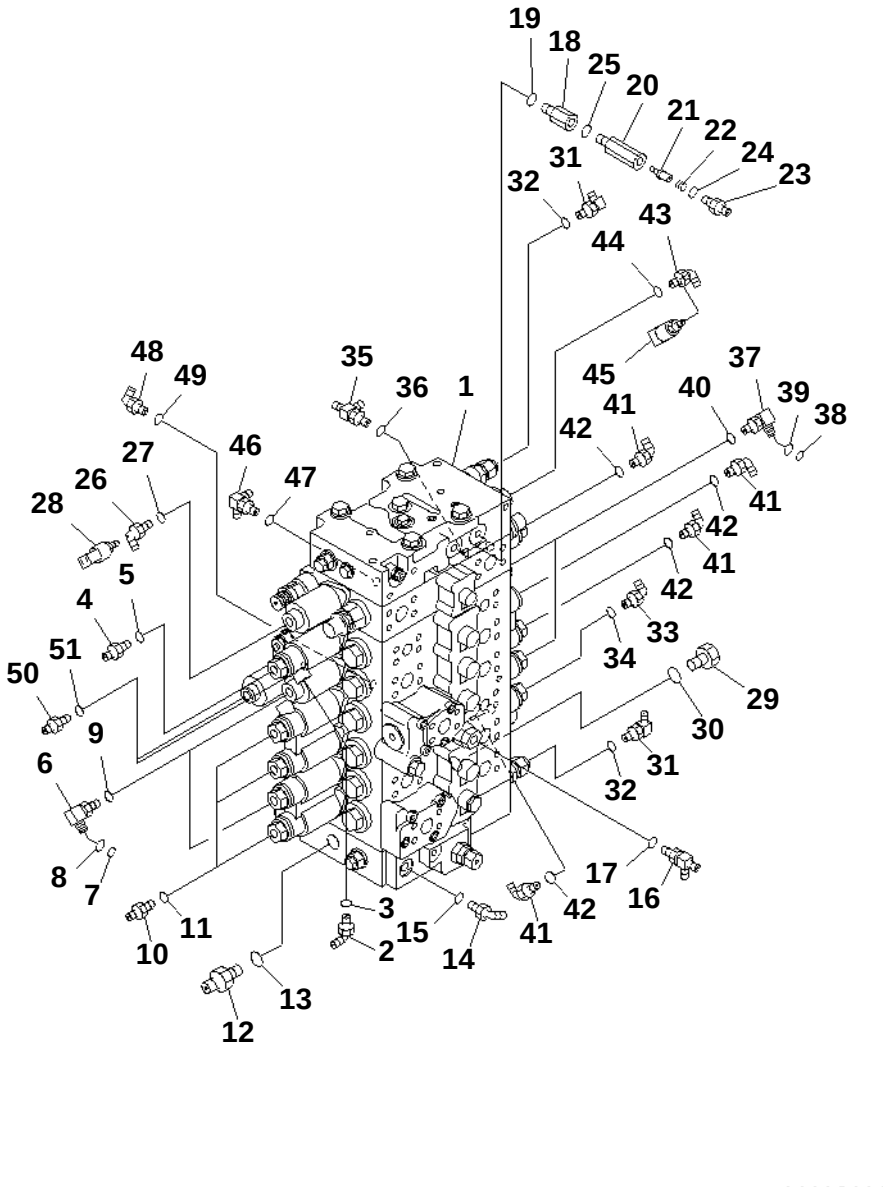

PC228US-3N-W1 S/N 30001-UP

MAIN VALVE (CONNECTING PARTS) (WITH ROTATION ARM)

Item	Part No.	Description	Qty	Options
1	(723-47-20302)	VALVE ASS'Y	1	SN:30001--
2	07235-10210	ELBOW	1	SN:30001--
3	07002-11423	O-RING	1	SN:30001--
4	205-62-55270	NIPPLE	1	SN:30001--
5	07002-11423	O-RING	1	SN:30001--
6	22U-62-22480	ELBOW	2	SN:30001--
7	201-60-11390	· O-RING	1	SN:30001--
8	20Y-62-19560	· O-RING	1	SN:30001--
9	07002-11423	O-RING	2	SN:30001--
10	07230-20210	UNION	3	SN:30001--
11	07002-11423	O-RING	3	SN:30001--
12	07230-20628	UNION	1	SN:30001--
13	07002-12434	O-RING	1	SN:30001--
14	07236-10210	ELBOW	1	SN:30001--
15	07002-11423	O-RING	1	SN:30001--
16	208-62-17550	TEE	1	SN:30001--
17	07002-11423	O-RING	1	SN:30001--
18	22U-62-23540	JOINT	2	SN:30001--
19	07002-11423	O-RING	2	SN:30001--
	20Y-60-22261	VALVE ASS'Y	2	SN:30001--
20	☆	· BODY	1	SN:30001--
21	20Y-60-22270	· POPPET	1	SN:30001--
22	701-20-61230	· SPRING	1	SN:30001--
23	07230-20210	· UNION	1	SN:30001--
24	07002-11423	· O-RING	1	SN:30001--
25	07002-11423	O-RING	2	SN:30001--
26	07235-50210	ELBOW	1	SN:30001--
27	07002-11423	O-RING	1	SN:30001--
28	206-06-61130	SWITCH	1	SN:30001--
29	07040-12412	PLUG	1	SN:30001--
30	07002-12434	O-RING	1	SN:30001--
31	205-62-74190	ELBOW	2	SN:30001--
32	07002-11223	O-RING	2	SN:30001--
33	07235-10311	ELBOW	1	SN:30001--
34	07002-11423	O-RING	1	SN:30001--
35	208-62-17550	TEE	1	SN:30001--
36	07002-11423	O-RING	1	SN:30001--
37	22U-62-22480	ELBOW	2	SN:30001--
38	201-60-11390	· O-RING	1	SN:30001--
39	20Y-62-19560	· O-RING	1	SN:30001--

Ref. H0120-01B0 Page 150170

https://truckmanualshub.com/

PC228US-3N-W1 S/N 30001-UP

MAIN VALVE (CONNECTING PARTS) (WITH ROTATION ARM)

Item	Part No.	Description	Qty	Options
40	07002-11423	O-RING	2	SN:30001--
41	07235-10210	ELBOW	4	SN:30001--
42	07002-11423	O-RING	4	SN:30001--
43	205-966-7420	ELBOW	1	SN:30001--
44	07002-11423	O-RING	1	SN:30001--
45	206-06-61130	SWITCH	1	SN:30001--
46	245-62-51510	ELBOW	1	SN:30001--
47	07002-11423	O-RING	1	SN:30001--
48	07235-10212	ELBOW	1	SN:30001--
49	07002-11423	O-RING	1	SN:30001--
50	07230-10210	UNION	2	SN:30001--
51	07002-11423	O-RING	2	SN:30001--

https://truckmanualshub.com/

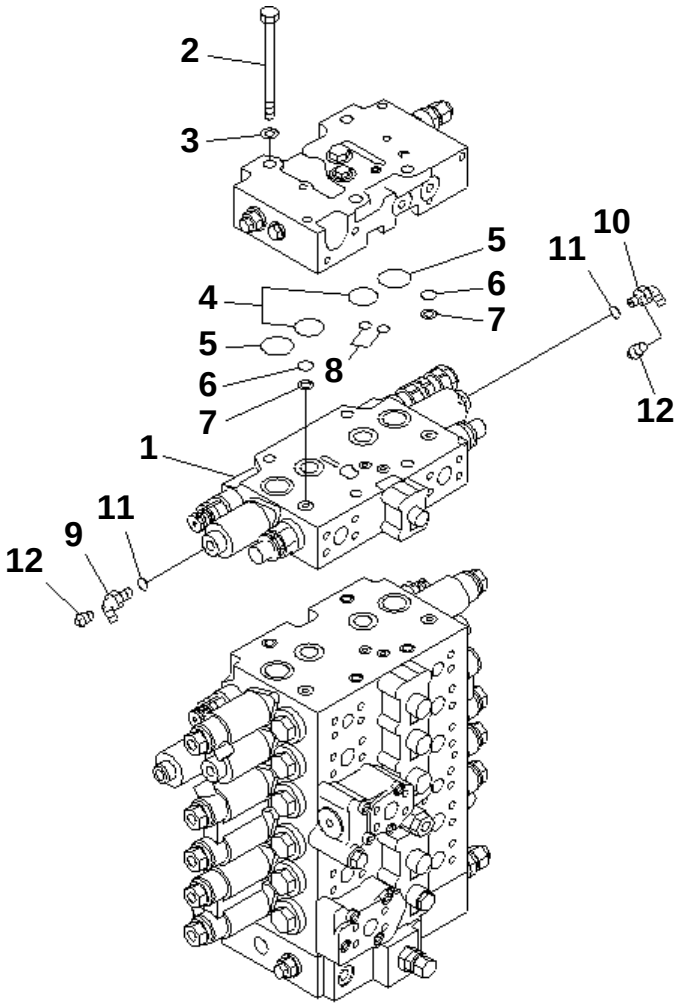

PC228US-3N-W1 S/N 30001-UP

MAIN VALVE (CONNECTING PARTS) (1 ACTUATOR) (KIT)

Item	Part No.	Description	Qty	Options
1	(723-41-07600)	VALVE SUB ASS'Y	1	SN:30001--
2	01011-61455	BOLT	4	SN:30001--
3	01643-31445	WASHER	4	SN:30001--
4	07000-13032	O-RING	2	SN:30001--
5	723-46-17510	O-RING	2	SN:30001--
6	723-11-19130	O-RING	2	SN:30001--
7	723-46-17520	RING	2	SN:30001--
8	723-46-17530	O-RING	2	SN:30001--
9	07235-50210	ELBOW	1	SN:30001--
10	205-966-7420	ELBOW	1	SN:30001--
11	07002-11423	O-RING	2	SN:30001--
12	07042-30108	PLUG	2	SN:30001--

Ref. H0120-01B2 Page 150180

https://truckmanualshub.com/

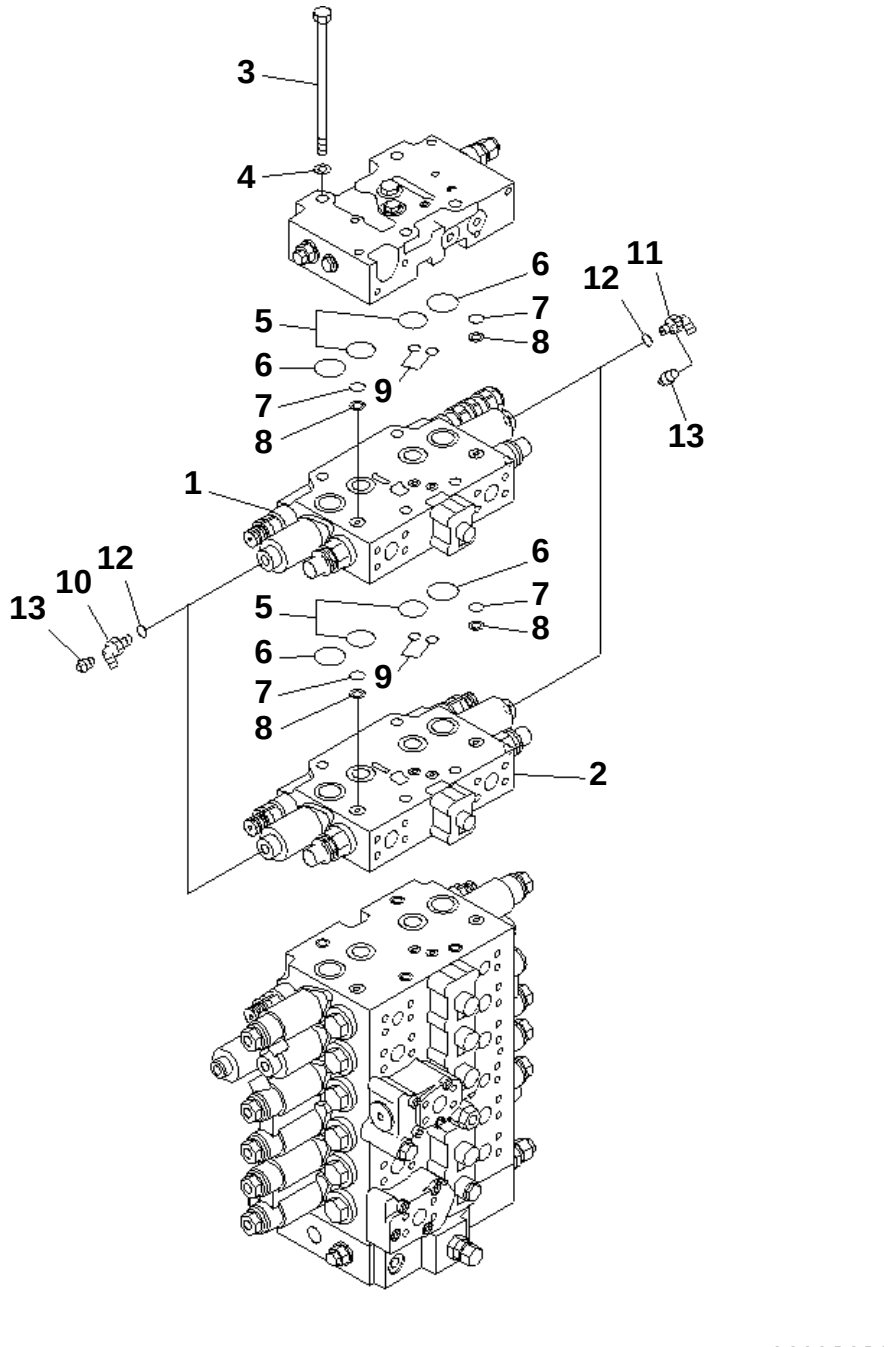

PC228US-3N-W1 S/N 30001-UP

MAIN VALVE (CONNECTING PARTS) (2 ACTUATOR) (KIT)

Item	Part No.	Description	Qty	Options
1	(723-41-07600)	VALVE SUB ASS'Y	1	SN:30001--
2	(723-41-07400)	VALVE ASS'Y	1	SN:30001--
3	723-46-15220	BOLT	4	SN:30001--
4	01643-31445	WASHER	4	SN:30001--
5	07000-13032	O-RING	4	SN:30001--
6	723-46-17510	O-RING	4	SN:30001--
7	723-11-19130	O-RING	4	SN:30001--
8	723-46-17520	RING	4	SN:30001--
9	723-46-17530	O-RING	4	SN:30001--
10	07235-50210	ELBOW	2	SN:30001--
11	205-966-7420	ELBOW	2	SN:30001--
12	07002-11423	O-RING	4	SN:30001--
13	07042-30108	PLUG	4	SN:30001--

Ref. H0120-01B3 Page 150190

https://truckmanualshub.com/

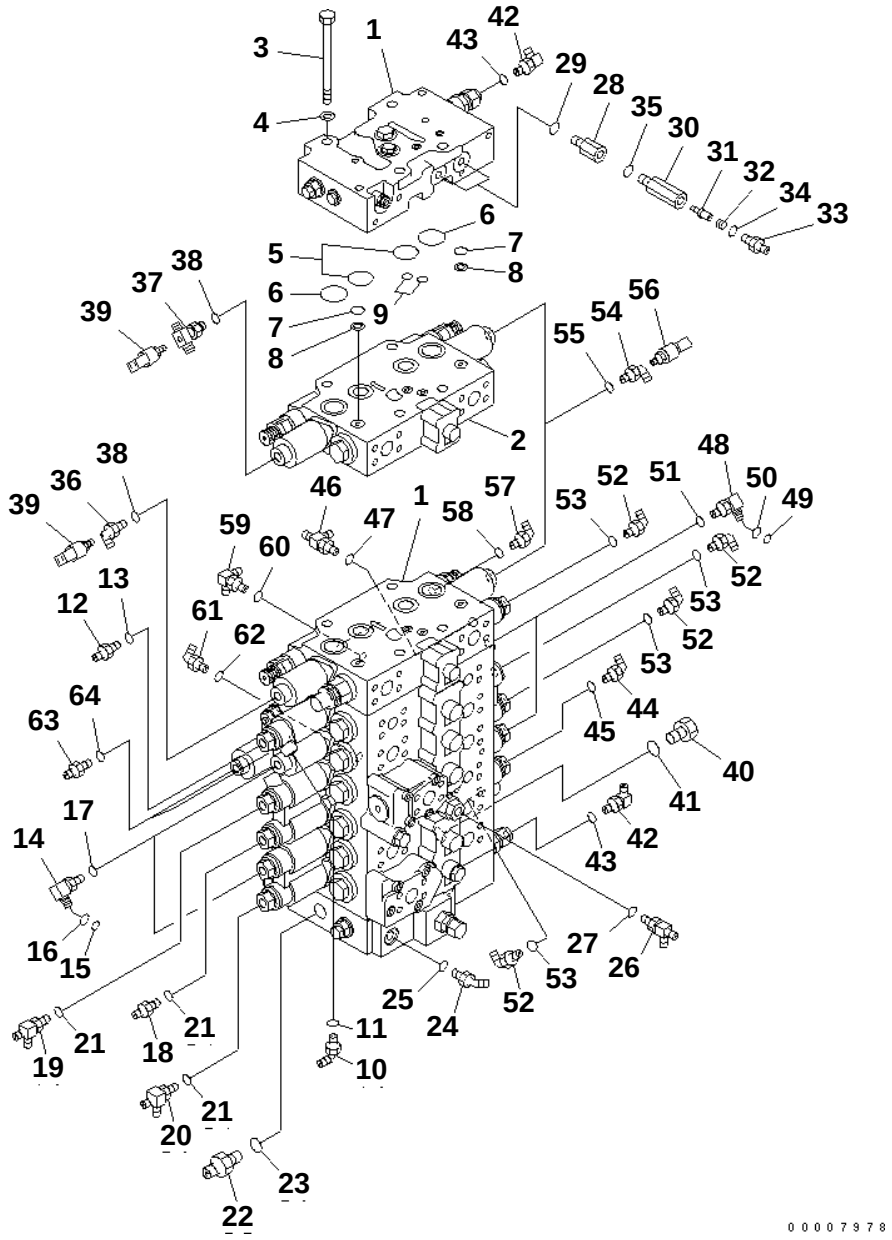

PC228US-3N-W1 S/N 30001-UP

MAIN VALVE (CONNECTING PARTS) (1 ACTUATOR) (WITH 2-PIECE BOOM) (EU SPEC.)

Item	Part No.	Description	Qty	Options
1	(723-47-21300)	VALVE ASS'Y	1	SN:30001--
2	(723-41-07900)	VALVE SUB ASS'Y	1	SN:30001--
3	723-46-15220	BOLT	4	SN:30001--
4	01643-31445	WASHER	4	SN:30001--
5	07000-13032	O-RING	2	SN:30001--
6	723-46-17510	O-RING	2	SN:30001--
7	723-11-19130	O-RING	2	SN:30001--
8	723-46-17520	RING	2	SN:30001--
9	723-46-17530	O-RING	2	SN:30001--
10	07235-10210	ELBOW	1	SN:30001--
11	07002-11423	O-RING	1	SN:30001--
12	205-62-55270	NIPPLE	1	SN:30001--
13	07002-11423	O-RING	1	SN:30001--
14	22U-62-22480	ELBOW	2	SN:30001--
15	201-60-11390	· O-RING	1	SN:30001--
16	20Y-62-19560	· O-RING	1	SN:30001--
17	07002-11423	O-RING	2	SN:30001--
18	07230-20210	UNION	1	SN:30001--
19	208-62-17550	TEE	1	SN:30001--
20	203-62-58410	TEE	1	SN:30001--
21	07002-11423	O-RING	3	SN:30001--
22	07230-20628	UNION	1	SN:30001--
23	07002-12434	O-RING	1	SN:30001--
24	07236-10210	ELBOW	1	SN:30001--
25	07002-11423	O-RING	1	SN:30001--
26	208-62-17550	TEE	1	SN:30001--
27	07002-11423	O-RING	1	SN:30001--
28	22U-62-23540	JOINT	2	SN:30001--
29	07002-11423	O-RING	2	SN:30001--
	20Y-60-22261	VALVE ASS'Y	2	SN:30001--
30	☆	· BODY	1	SN:30001--
31	20Y-60-22270	· POPPET	1	SN:30001--
32	701-20-61230	· SPRING	1	SN:30001--
33	07230-20210	· UNION	1	SN:30001--
34	07002-11423	· O-RING	1	SN:30001--
35	07002-11423	O-RING	2	SN:30001--
36	07235-50210	ELBOW	1	SN:30001--
37	22U-62-23980	TEE	1	SN:30001--
38	07002-11423	O-RING	2	SN:30001--
39	206-06-61130	SWITCH	2	SN:30001--

Ref. H0120-01B4 Page 150200

https://truckmanualshub.com/

PC228US-3N-W1 S/N 30001-UP

MAIN VALVE (CONNECTING PARTS) (1 ACTUATOR) (WITH 2-PIECE BOOM) (EU SPEC.)

Item	Part No.	Description	Qty	Options
40	07040-12412	PLUG	1	SN:30001--
41	07002-12434	O-RING	1	SN:30001--
42	205-62-74190	ELBOW	2	SN:30001--
43	07002-11223	O-RING	2	SN:30001--
44	07235-10311	ELBOW	1	SN:30001--
45	07002-11423	O-RING	1	SN:30001--
46	208-62-17550	TEE	1	SN:30001--
47	07002-11423	O-RING	1	SN:30001--
48	22U-62-22480	ELBOW	2	SN:30001--
49	201-60-11390	· O-RING	1	SN:30001--
50	20Y-62-19560	· O-RING	1	SN:30001--
51	07002-11423	O-RING	2	SN:30001--
52	07235-10210	ELBOW	4	SN:30001--
53	07002-11423	O-RING	4	SN:30001--
54	07235-50210	ELBOW	2	SN:30001--
55	07002-11423	O-RING	2	SN:30001--
56	206-06-61130	SWITCH	2	SN:30001--
57	07235-10210	ELBOW	1	SN:30001--
58	07002-11423	O-RING	1	SN:30001--
59	245-62-51510	ELBOW	1	SN:30001--
60	07002-11423	O-RING	1	SN:30001--
61	07235-10212	ELBOW	1	SN:30001--
62	07002-11423	O-RING	1	SN:30001--
63	07230-10210	UNION	2	SN:30001--
64	07002-11423	O-RING	2	SN:30001--

https://truckmanualshub.com/

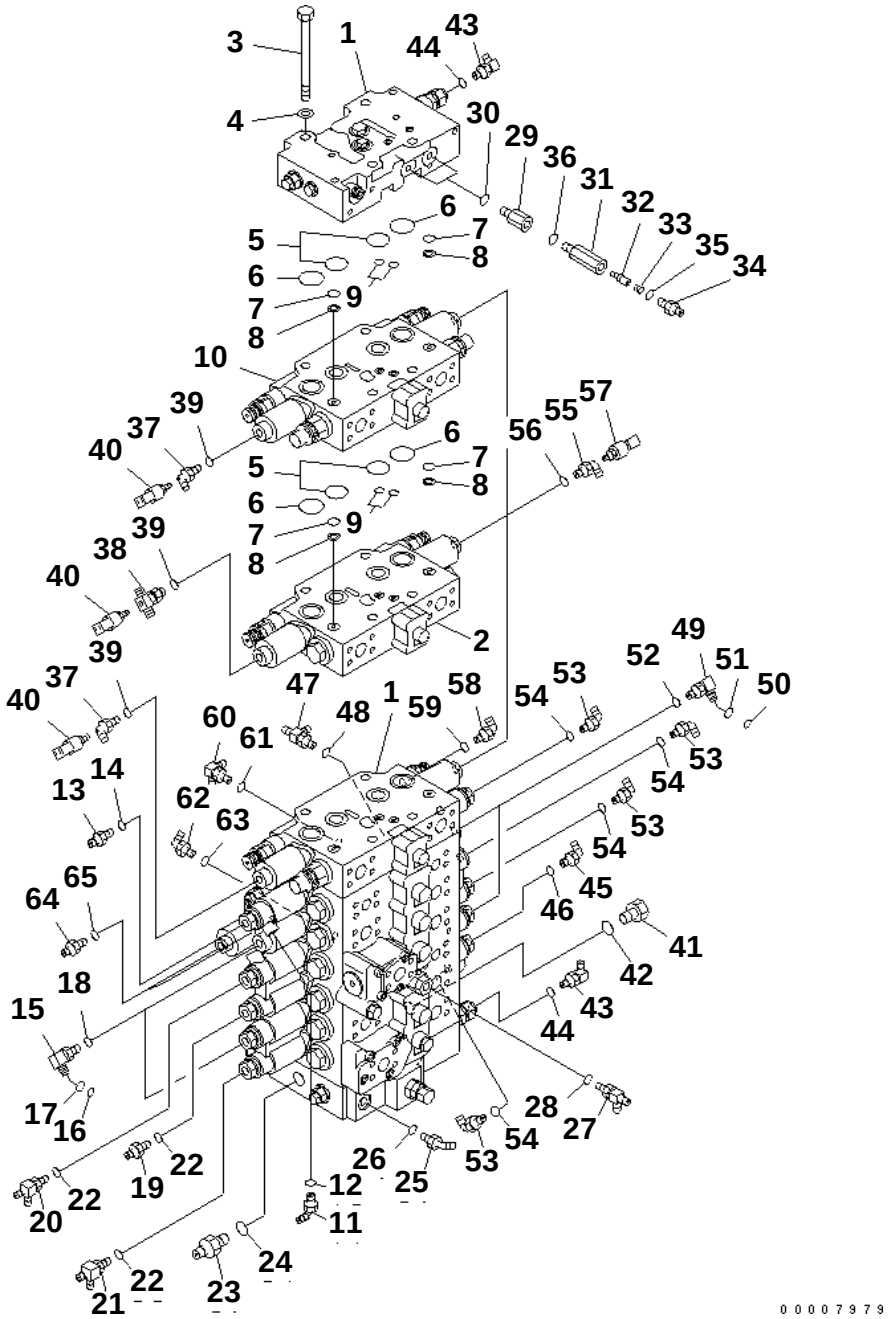

PC228US-3N-W1 S/N 30001-UP

MAIN VALVE (CONNECTING PARTS) (2 ACTUATOR) (WITH 2-PIECE BOOM) (EU SPEC.)

Item	Part No.	Description	Qty	Options
1	(723-47-21300)	VALVE ASS'Y	1	SN:30001--
2	(723-41-07900)	VALVE SUB ASS'Y	1	SN:30001--
3	700-84-13220	BOLT	4	SN:30001--
4	01643-31445	WASHER	4	SN:30001--
5	07000-13032	O-RING	4	SN:30001--
6	723-46-17510	O-RING	4	SN:30001--
7	723-11-19130	O-RING	4	SN:30001--
8	723-46-17520	RING	4	SN:30001--
9	723-46-17530	O-RING	4	SN:30001--
10	(723-41-07400)	VALVE ASS'Y	1	SN:30001--
11	07235-10210	ELBOW	1	SN:30001--
12	07002-11423	O-RING	1	SN:30001--
13	205-62-55270	NIPPLE	1	SN:30001--
14	07002-11423	O-RING	1	SN:30001--
15	22U-62-22480	ELBOW	2	SN:30001--
16	201-60-11390	· O-RING	1	SN:30001--
17	20Y-62-19560	· O-RING	1	SN:30001--
18	07002-11423	O-RING	2	SN:30001--
19	07230-20210	UNION	1	SN:30001--
20	208-62-17550	TEE	1	SN:30001--
21	203-62-58410	TEE	1	SN:30001--
22	07002-11423	O-RING	3	SN:30001--
23	07230-20628	UNION	1	SN:30001--
24	07002-12434	O-RING	1	SN:30001--
25	07236-10210	ELBOW	1	SN:30001--
26	07002-11423	O-RING	1	SN:30001--
27	208-62-17550	TEE	1	SN:30001--
28	07002-11423	O-RING	1	SN:30001--
29	22U-62-23540	JOINT	2	SN:30001--
30	07002-11423	O-RING	2	SN:30001--
	20Y-60-22261	VALVE ASS'Y	2	SN:30001--
31	☆	· BODY	1	SN:30001--
32	20Y-60-22270	· POPPET	1	SN:30001--
33	701-20-61230	· SPRING	1	SN:30001--
34	07230-20210	· UNION	1	SN:30001--
35	07002-11423	· O-RING	1	SN:30001--
36	07002-11423	O-RING	2	SN:30001--
37	07235-50210	ELBOW	2	SN:30001--
38	22U-62-23980	TEE	1	SN:30001--
39	07002-11423	O-RING	3	SN:30001--

Ref. H0120-01B5 Page 150210

https://truckmanualshub.com/

PC228US-3N-W1 S/N 30001-UP

MAIN VALVE (CONNECTING PARTS) (2 ACTUATOR) (WITH 2-PIECE BOOM) (EU SPEC.)

Item	Part No.	Description	Qty	Options
40	206-06-61130	SWITCH	3	SN:30001--
41	07040-12412	PLUG	1	SN:30001--
42	07002-12434	O-RING	1	SN:30001--
43	205-62-74190	ELBOW	2	SN:30001--
44	07002-11223	O-RING	2	SN:30001--
45	07235-10311	ELBOW	1	SN:30001--
46	07002-11423	O-RING	1	SN:30001--
47	208-62-17550	TEE	1	SN:30001--
48	07002-11423	O-RING	1	SN:30001--
49	22U-62-22480	ELBOW	2	SN:30001--
50	201-60-11390	· O-RING	1	SN:30001--
51	20Y-62-19560	· O-RING	1	SN:30001--
52	07002-11423	O-RING	2	SN:30001--
53	07235-10210	ELBOW	4	SN:30001--
54	07002-11423	O-RING	4	SN:30001--
55	07235-50210	ELBOW	3	SN:30001--
56	07002-11423	O-RING	3	SN:30001--
57	206-06-61130	SWITCH	3	SN:30001--
58	07235-10210	ELBOW	1	SN:30001--
59	07002-11423	O-RING	1	SN:30001--
60	245-62-51510	ELBOW	1	SN:30001--
61	07002-11423	O-RING	1	SN:30001--
62	07235-10212	ELBOW	1	SN:30001--
63	07002-11423	O-RING	1	SN:30001--
64	07230-10210	UNION	2	SN:30001--
65	07002-11423	O-RING	2	SN:30001--

https://truckmanualshub.com/

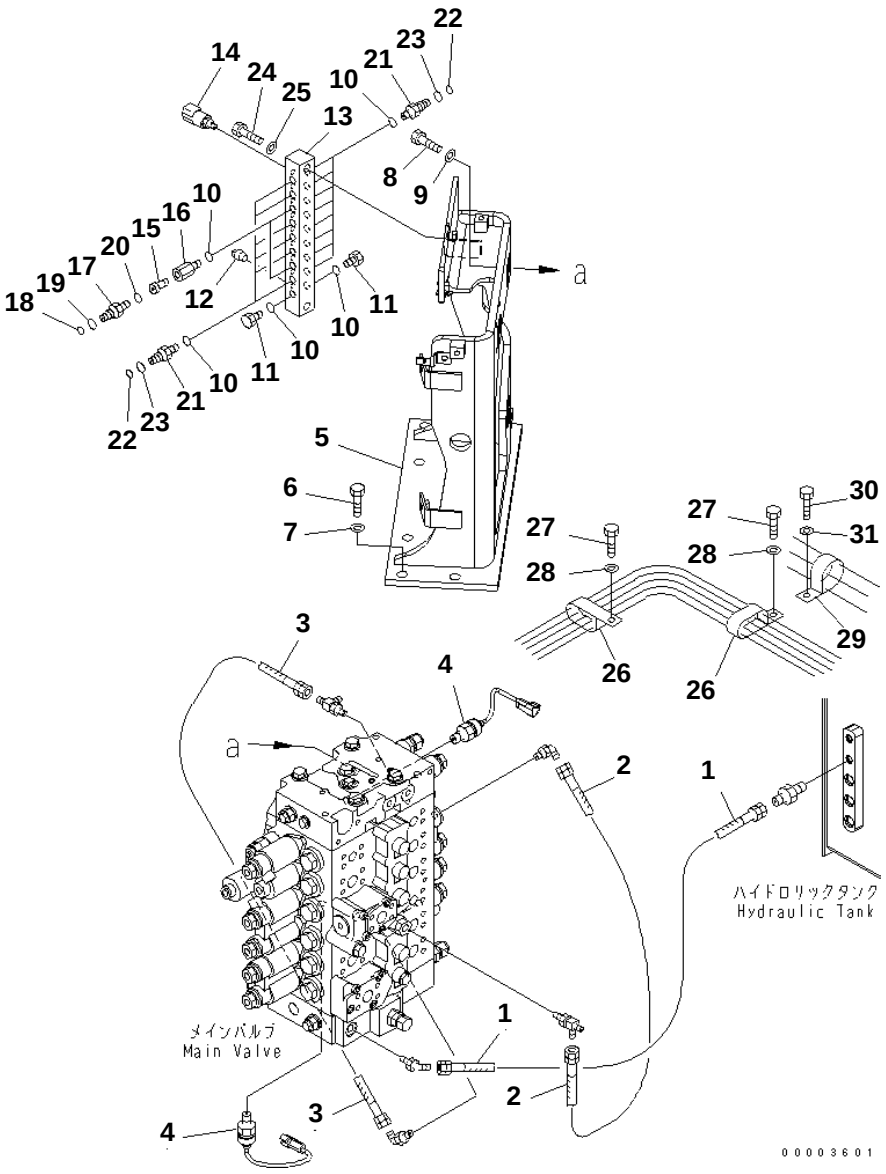

PC228US-3N-W1 S/N 30001-UP

MAIN VALVE (HOSE)

Item	Part No.	Description	Qty	Options
1	22U-62-22830	HOSE ASS'Y	1	SN:30001--
2	07184-00205	HOSE	1	SN:30001--
3	07184-00203	HOSE¤ 300MM	1	SN:30001--
4	7861-93-1650	SENSOR	2	SN:30001--
5	22U-62-26111	BRACKET	1	SN:30001--
6	01010-81650	BOLT	6	SN:30001--
7	01643-31645	WASHER	6	SN:30001--
8	01010-81650	BOLT	3	SN:30001--
9	01643-31645	WASHER	3	SN:30001--
10	07002-11423	O-RING	18	SN:30001--
11	07040-11409	PLUG	2	SN:30001--
12	07042-00108	PLUG	1	SN:30001--
13	203-62-63691	BLOCK	1	SN:30001--
14	206-06-61130	SWITCH	8	SN:30001--
	20Y-60-22201	VALVE ASS'Y	2	SN:30001--
15	20Y-60-11750	· POPPET	2	SN:30001--
16	☆	· BODY	2	SN:30001--
17	20Y-62-22410	· NIPPLE	2	SN:30001--
18	201-60-11390	· · O-RING	2	SN:30001--
19	20Y-62-19560	· · O-RING	2	SN:30001--
20	07002-01423	· O-RING	2	SN:30001--
21	20Y-62-16630	NIPPLE	14	SN:30001--
22	201-60-11390	· O-RING	14	SN:30001--
23	20Y-62-19560	· O-RING	14	SN:30001--
24	01010-81260	BOLT	2	SN:30001--
25	01643-31232	WASHER	2	SN:30001--
26	196-911-3310	CLIP	2	SN:30001--
27	01010-81220	BOLT	2	SN:30001--
28	01643-31232	WASHER	2	SN:30001--
29	21T-06-11950	CLIP	1	SN:30001--
30	01010-81220	BOLT	1	SN:30001--
31	01643-31232	WASHER	1	SN:30001--

Ref. H0120-02A0 Page 150220

https://truckmanualshub.com/

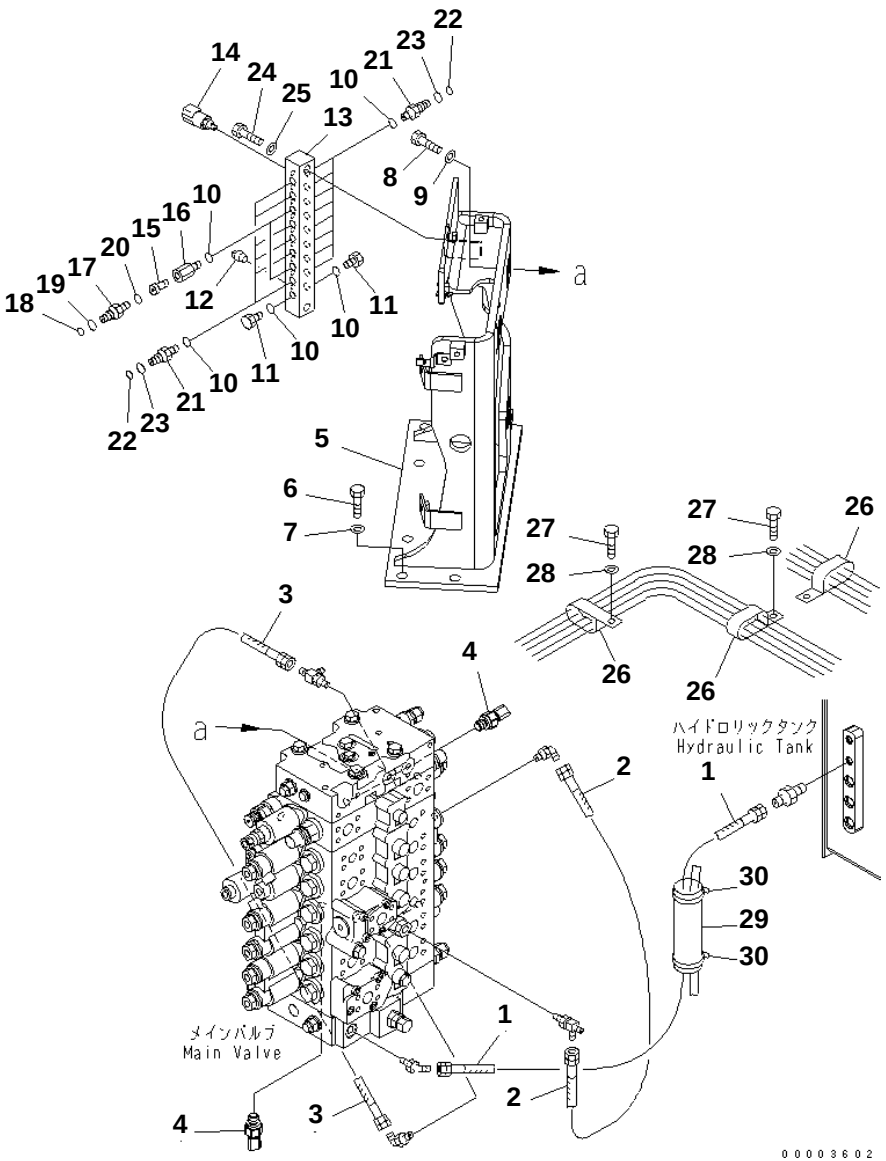

PC228US-3N-W1 S/N 30001-UP

MAIN VALVE (HOSE) (1 AND 2 ACTUATOR)

Item	Part No.	Description	Qty	Options
1	22U-62-22830	HOSE ASS'Y	1	SN:30001--
2	07184-00205	HOSE	1	SN:30001--
3	07184-00203	HOSE¤ 300MM	1	SN:30001--
4	7861-93-1650	SENSOR	2	SN:30001--
5	22U-62-26111	BRACKET	1	SN:30001--
6	01010-81650	BOLT	6	SN:30001--
7	01643-31645	WASHER	6	SN:30001--
8	01010-81650	BOLT	3	SN:30001--
9	01643-31645	WASHER	3	SN:30001--
10	07002-11423	O-RING	18	SN:30001--
11	07040-11409	PLUG	2	SN:30001--
12	07042-00108	PLUG	1	SN:30001--
13	203-62-63691	BLOCK	1	SN:30001--
14	206-06-61130	SWITCH	8	SN:30001--
	20Y-60-22201	VALVE ASS'Y	2	SN:30001--
15	20Y-60-11750	· POPPET	2	SN:30001--
16	☆	· BODY	2	SN:30001--
17	20Y-62-22410	· NIPPLE	2	SN:30001--
18	201-60-11390	· · O-RING	2	SN:30001--
19	20Y-62-19560	· · O-RING	2	SN:30001--
20	07002-01423	· O-RING	2	SN:30001--
21	20Y-62-16630	NIPPLE	14	SN:30001--
22	201-60-11390	· O-RING	1	SN:30001--
23	20Y-62-19560	· O-RING	1	SN:30001--
24	01010-81260	BOLT	2	SN:30001--
25	01643-31232	WASHER	2	SN:30001--
26	196-911-3310	CLIP	3	SN:30001--
27	01010-81220	BOLT	3	SN:30001--
28	01643-31232	WASHER	3	SN:30001--
29	205-62-53780	COVER	1	SN:30001--
30	08034-00536	BAND	2	SN:30001--

Ref. H0120-02A1 Page 150230

https://truckmanualshub.com/

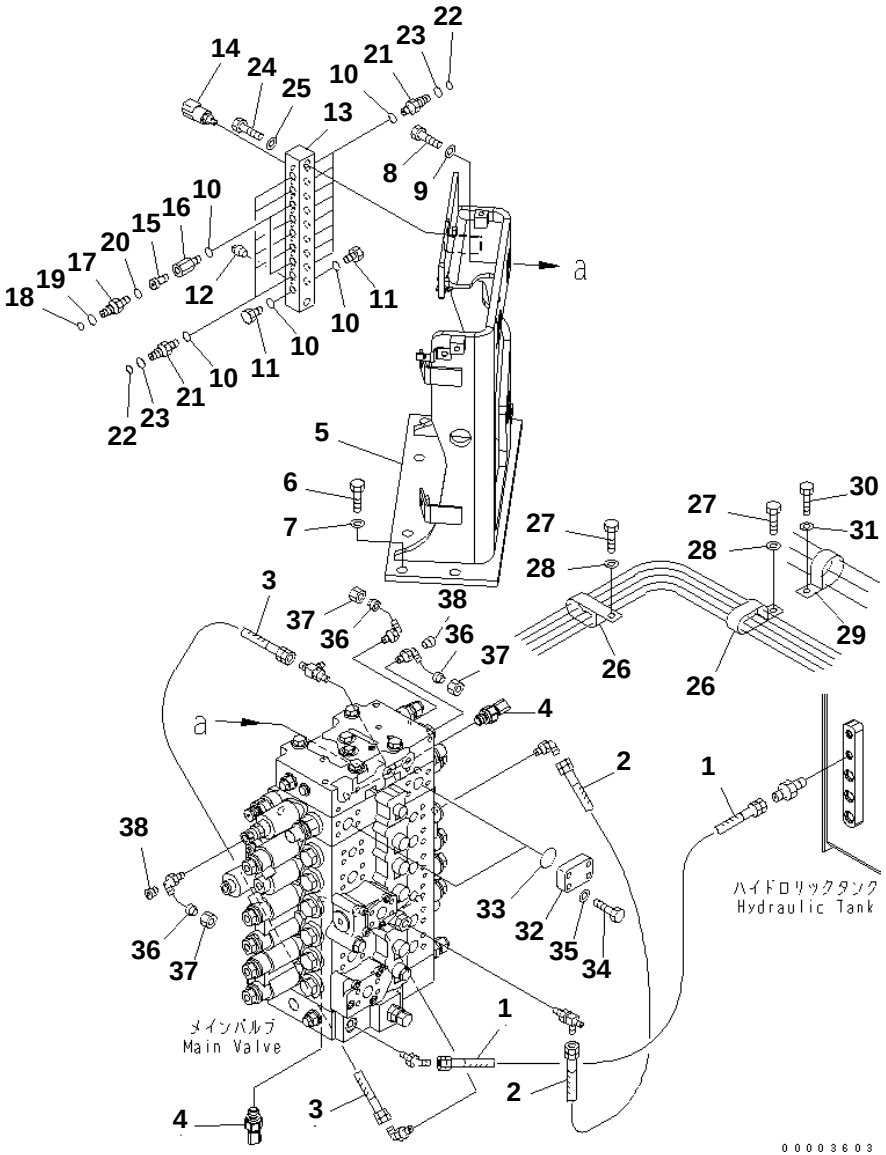

PC228US-3N-W1 S/N 30001-UP

MAIN VALVE (HOSE) (SERVICE VALVE)

Item	Part No.	Description	Qty	Options
1	22U-62-22830	HOSE ASS'Y	1	SN:30001--
2	07184-00205	HOSE	1	SN:30001--
3	07184-00203	HOSE¤ 300MM	1	SN:30001--
4	7861-93-1650	SENSOR	2	SN:30001--
5	22U-62-26111	BRACKET	1	SN:30001--
6	01010-81650	BOLT	6	SN:30001--
7	01643-31645	WASHER	6	SN:30001--
8	01010-81650	BOLT	3	SN:30001--
9	01643-31645	WASHER	3	SN:30001--
10	07002-11423	O-RING	18	SN:30001--
11	07040-11409	PLUG	2	SN:30001--
12	07042-00108	PLUG	1	SN:30001--
13	203-62-63691	BLOCK	1	SN:30001--
14	206-06-61130	SWITCH	8	SN:30001--
	20Y-60-22201	VALVE ASS'Y	2	SN:30001--
15	20Y-60-11750	· POPPET	1	SN:30001--
16	☆	· BODY	1	SN:30001--
17	20Y-62-22410	· NIPPLE	1	SN:30001--
18	201-60-11390	· · O-RING	1	SN:30001--
19	20Y-62-19560	· · O-RING	1	SN:30001--
20	07002-01423	· O-RING	1	SN:30001--
21	20Y-62-16630	NIPPLE	14	SN:30001--
22	201-60-11390	· O-RING	1	SN:30001--
23	20Y-62-19560	· O-RING	1	SN:30001--
24	01010-81260	BOLT	2	SN:30001--
25	01643-31232	WASHER	2	SN:30001--
26	196-911-3310	CLIP	2	SN:30001--
27	01010-81220	BOLT	2	SN:30001--
28	01643-31232	WASHER	2	SN:30001--
29	21T-06-11950	CLIP	1	SN:30001--
30	01010-81220	BOLT	1	SN:30001--
31	01643-31232	WASHER	1	SN:30001--
32	207-62-56190	FLANGE	2	SN:30001--
33	21T-09-11470	O-RING	2	SN:30001--
34	07372-21040	BOLT	8	SN:30001--
35	01643-51032	WASHER	8	SN:30001--
36	07222-00210	PLUG	3	SN:30001--
37	07221-20210	NUT	3	SN:30001--
38	07043-70108	PLUG	2	SN:30001--

Ref. H0120-02A3 Page 150240

https://truckmanualshub.com/

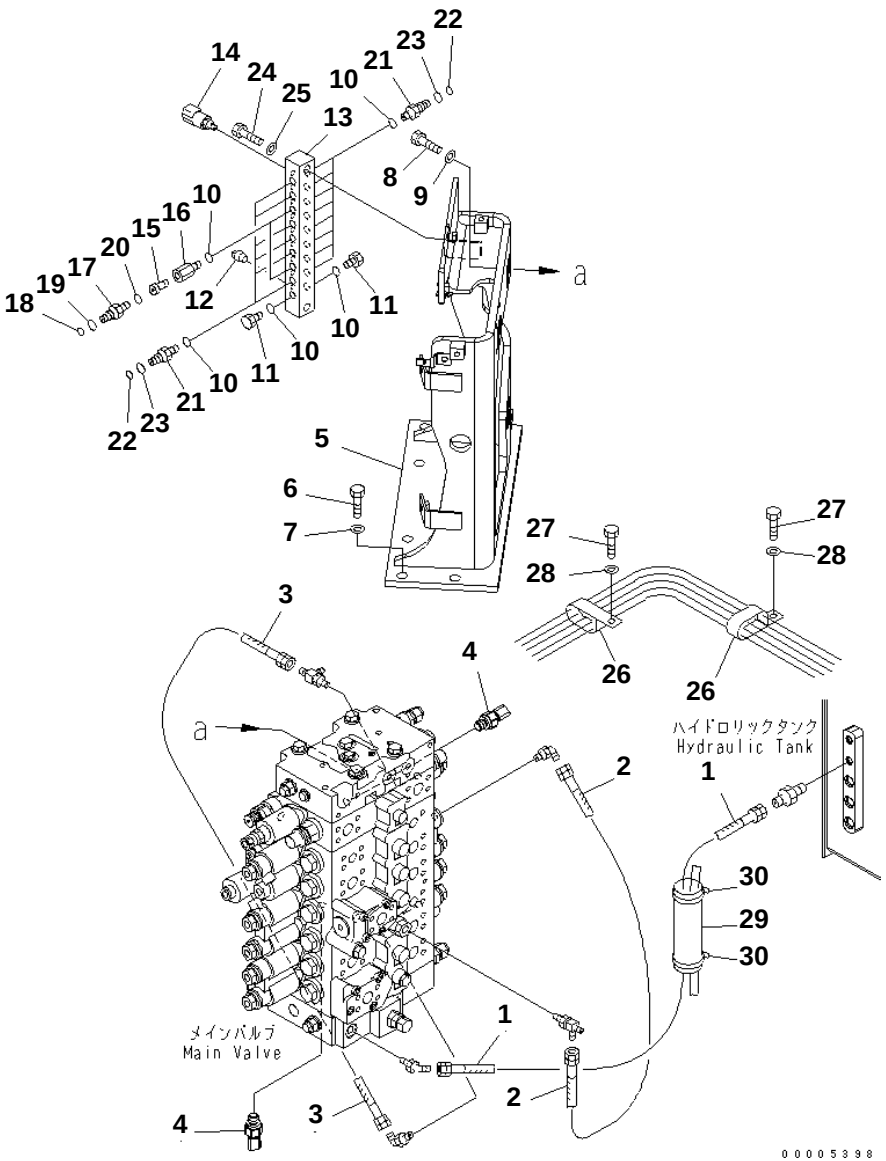

PC228US-3N-W1 S/N 30001-UP

MAIN VALVE (HOSE) (1 ACTUATOR BLADE SPEC. OR 2 ACTUATOR EU SPEC.)

Item	Part No.	Description	Qty	Options
1	22U-62-22830	HOSE ASS'Y	1	SN:30001--
2	07184-00205	HOSE	1	SN:30001--
3	07184-00203	HOSE¤ 300MM	1	SN:30001--
4	7861-93-1650	SENSOR	2	SN:30001--
5	22U-62-26111	BRACKET	1	SN:30001--
6	01010-81650	BOLT	6	SN:30001--
7	01643-31645	WASHER	6	SN:30001--
8	01010-81650	BOLT	3	SN:30001--
9	01643-31645	WASHER	3	SN:30001--
10	07002-11423	O-RING	18	SN:30001--
11	07040-11409	PLUG	2	SN:30001--
12	07042-00108	PLUG	1	SN:30001--
13	203-62-63691	BLOCK	1	SN:30001--
14	206-06-61130	SWITCH	8	SN:30001--
	20Y-60-22201	VALVE ASS'Y	2	SN:30001--
15	20Y-60-11750	· POPPET	2	SN:30001--
16	☆	· BODY	2	SN:30001--
17	20Y-62-22410	· NIPPLE	2	SN:30001--
18	201-60-11390	· · O-RING	2	SN:30001--
19	20Y-62-19560	· · O-RING	2	SN:30001--
20	07002-01423	· O-RING	2	SN:30001--
21	20Y-62-16630	NIPPLE	14	SN:30001--
22	201-60-11390	· O-RING	1	SN:30001--
23	20Y-62-19560	· O-RING	1	SN:30001--
24	01010-81260	BOLT	2	SN:30001--
25	01643-31232	WASHER	2	SN:30001--
26	196-911-3310	CLIP	2	SN:30001--
27	01010-81220	BOLT	2	SN:30001--
28	01643-31232	WASHER	2	SN:30001--
29	205-62-53780	COVER	1	SN:30001--
30	08034-00536	BAND	2	SN:30001--

Ref. H0120-02A7 Page 150250

https://truckmanualshub.com/

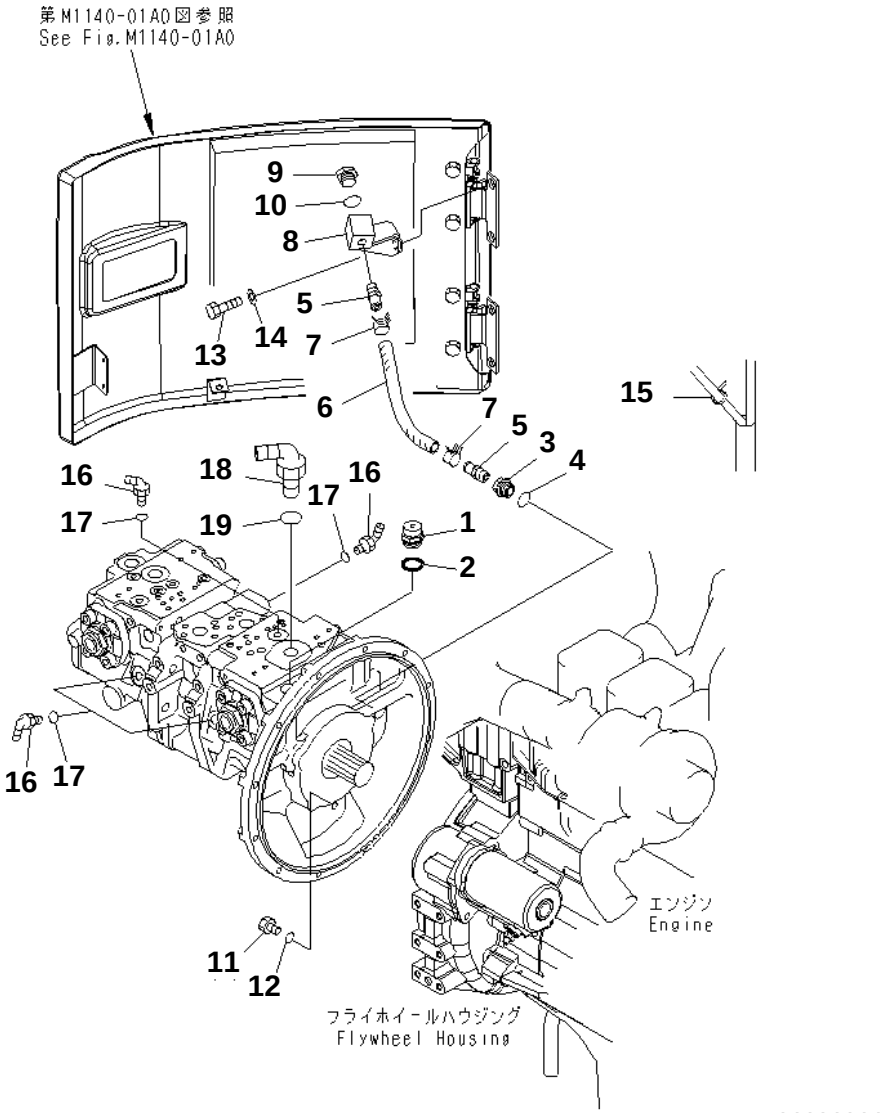

PC228US-3N-W1 S/N 30001-UP

MAIN PUMP (CONNECTING PARTS)

Item	Part No.	Description	Qty	Options
1	07030-03034	BREATHER	1	SN:30001--
2	07005-03016	GASKET	1	SN:30001--
3	21T-06-17940	PLUG	1	SN:30001--
4	07002-12434	O-RING	1	SN:30001--
5	566-07-41540	CONNECTOR	2	SN:30001--
6	07286-01625	HOSE	1	SN:30001--
7	07285-00200	CLIP	2	SN:30001--
8	22U-01-21193	BRACKET	1	SN:30001--
9	07040-12412	PLUG	1	SN:30001--
10	07002-12434	O-RING	1	SN:30001--
11	07040-11209	PLUG	1	SN:30001--
12	07002-11223	O-RING	1	SN:30001--
13	01010-81225	BOLT	1	SN:30001--
14	01643-31232	WASHER	1	SN:30001--
15	08034-00519	BAND	1	SN:30001--
16	07235-10210	ELBOW	4	SN:30001--
17	07002-11423	O-RING	4	SN:30001--
18	07235-10628	ELBOW	1	SN:30001--
19	07002-12434	O-RING	1	SN:30001--

Ref. H0210-01A0 Page 150260

https://truckmanualshub.com/

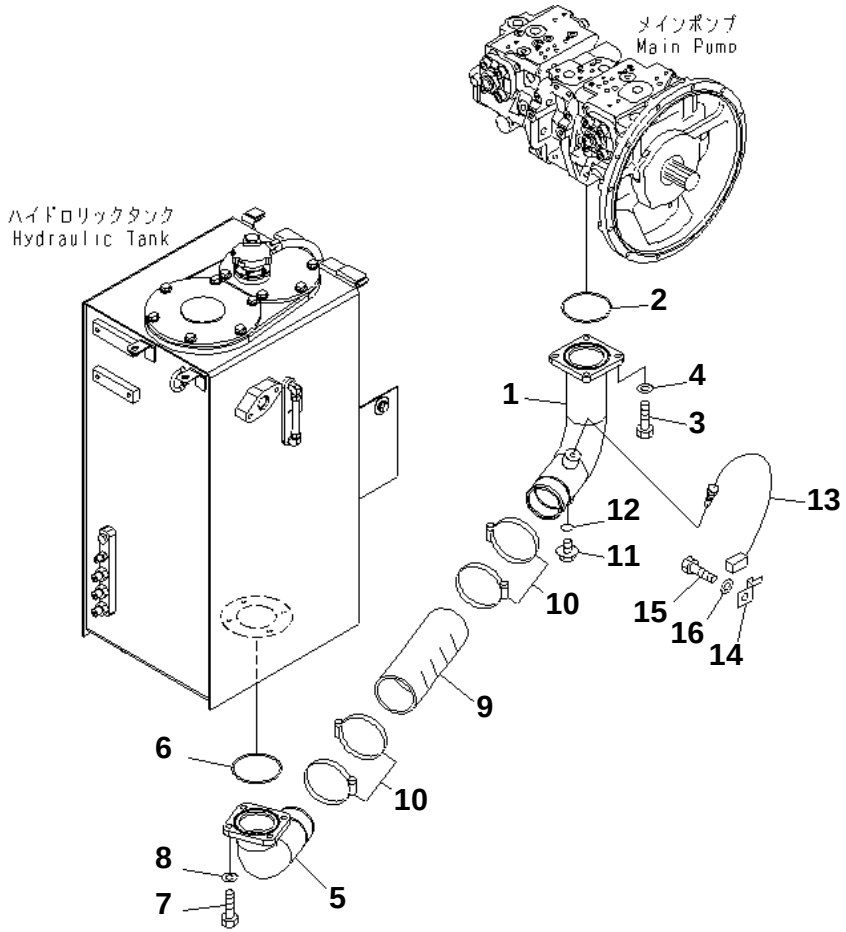

PC228US-3N-W1 S/N 30001-UP

SUCTION LINE

Item	Part No.	Description	Qty	Options
1	22U-62-26120	TUBE	1	SN:30001--
2	07000-12100	O-RING	1	SN:30001--
3	01010-81235	BOLT	4	SN:30001--
4	01643-31232	WASHER	4	SN:30001--
5	22U-62-21571	TUBE	1	SN:30001--
6	07000-12100	O-RING	1	SN:30001--
7	01010-81235	BOLT	4	SN:30001--
8	01643-31232	WASHER	4	SN:30001--
9	22U-62-22640	HOSE	1	SN:30001--
10	07289-00105	CLAMP	4	SN:30001--
11	07044-12412	PLUG	1	SN:30001--
12	07002-12434	O-RING	1	SN:30001--
13	7861-93-3320	SENSOR	1	SN:30001--
14	08193-21012	CLIP	1	SN:30001--
15	01010-81220	BOLT	1	SN:30001--
16	01643-31232	WASHER	1	SN:30001--

Ref. H0311-01A0 Page 150270

https://truckmanualshub.com/

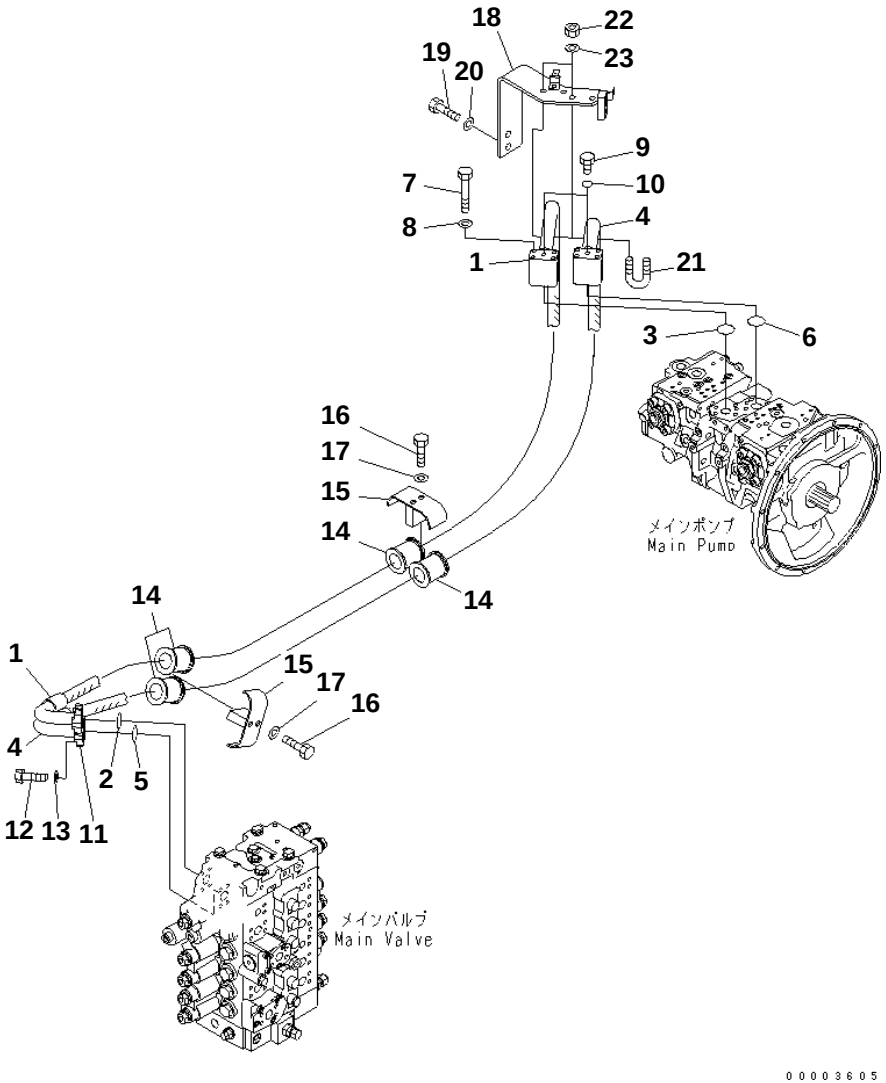

PC228US-3N-W1 S/N 30001-UP

DELIVERY LINE

Item	Part No.	Description	Qty	Options
1	22U-62-26130	HOSE	1	SN:30001--
2	21T-09-11460	O-RING	1	SN:30001--
3	21T-09-11470	O-RING	1	SN:30001--
4	22U-62-26140	HOSE	1	SN:30001--
5	21T-09-11460	O-RING	1	SN:30001--
6	21T-09-11470	O-RING	1	SN:30001--
7	01011-81005	BOLT	8	SN:30001--
8	01643-51032	WASHER	8	SN:30001--
9	07040-11007	PLUG	2	SN:30001--
10	07002-11023	O-RING	2	SN:30001--
11	07371-31049	FLANGE	4	SN:30001--
12	07372-21035	BOLT	8	SN:30001--
13	01643-51032	WASHER	8	SN:30001--
14	22U-62-22530	CUSHION	4	SN:30001--
15	22U-62-26150	CLAMP	2	SN:30001--
16	01010-81290	BOLT	4	SN:30001--
17	01643-31232	WASHER	4	SN:30001--
18	22U-62-21213	BRACKET	1	SN:30001--
19	01010-81230	BOLT	2	SN:30001--
20	01643-31232	WASHER	2	SN:30001--
21	07283-34346	CLIP	2	SN:30001--
22	01597-01009	NUT	4	SN:30001--
23	01643-31032	WASHER	4	SN:30001--

Ref. H0312-01A0 Page 150280

https://truckmanualshub.com/

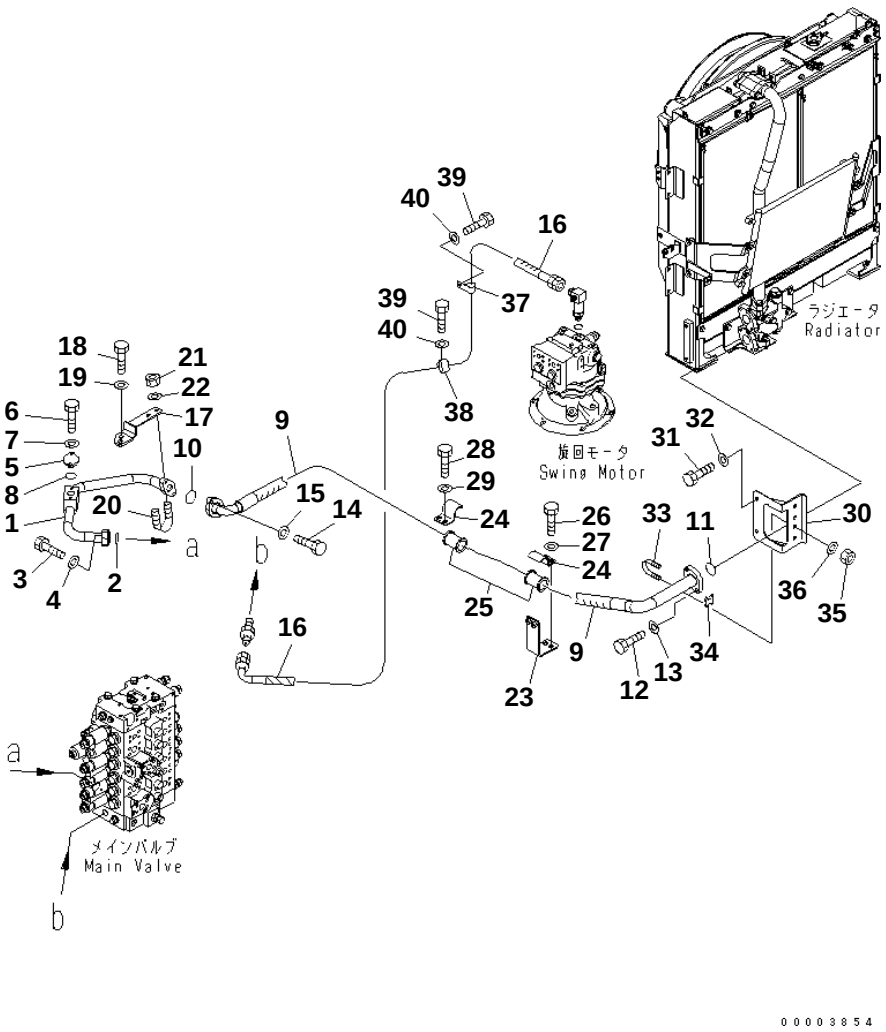

PC228US-3N-W1 S/N 30001-UP

OIL COOLER LINE

Item	Part No.	Description	Qty	Options
1	22U-62-21251	TUBE	1	SN:30001--
2	07000-13045	O-RING	1	SN:30001--
3	01010-81245	BOLT	2	SN:30001--
4	01643-31232	WASHER	2	SN:30001--
5	195-60-41420	PLATE	1	SN:30001--
6	01010-81025	BOLT	2	SN:30001--
7	01643-31032	WASHER	2	SN:30001--
8	07000-13032	O-RING	1	SN:30001--
9	22U-62-25890	HOSE	1	SN:30001--
10	07000-13048	O-RING	1	SN:30001--
11	07000-13038	O-RING	1	SN:30001--
12	01010-81240	BOLT	2	SN:30001--
13	01643-31232	WASHER	2	SN:30001--
14	01010-81040	BOLT	2	SN:30001--
15	01643-31032	WASHER	2	SN:30001--
16	22U-62-21242	HOSE	1	SN:30001--
17	22U-62-21261	BRACKET	1	SN:30001--
18	01010-81225	BOLT	2	SN:30001--
19	01643-31232	WASHER	2	SN:30001--
20	07283-33442	CLIP	1	SN:30001--
21	01597-01009	NUT	2	SN:30001--
22	01643-31032	WASHER	2	SN:30001--
23	22U-62-26170	BRACKET	1	SN:30001--
24	22U-62-21281	CLAMP	2	SN:30001--
25	07095-01038	CUSHION	2	SN:30001--
26	01010-81250	BOLT	2	SN:30001--
27	01643-31232	WASHER	2	SN:30001--
28	01010-81230	BOLT	2	SN:30001--
29	01643-31232	WASHER	2	SN:30001--
30	22U-62-26210	BRACKET	1	SN:30001--
31	01010-81225	BOLT	2	SN:30001--
32	01643-31232	WASHER	2	SN:30001--
33	07283-34354	CLIP	2	SN:30001--
34	07283-54353	SEAT	2	SN:30001--
35	01597-01009	NUT	4	SN:30001--
36	01643-31032	WASHER	4	SN:30001--
37	04434-53212	CLIP	1	SN:30001--
38	20Y-62-15951	CLIP	1	SN:30001--
39	01010-81225	BOLT	2	SN:30001--
40	01643-31232	WASHER	2	SN:30001--

Ref. H0320-01A0 Page 150290

https://truckmanualshub.com/

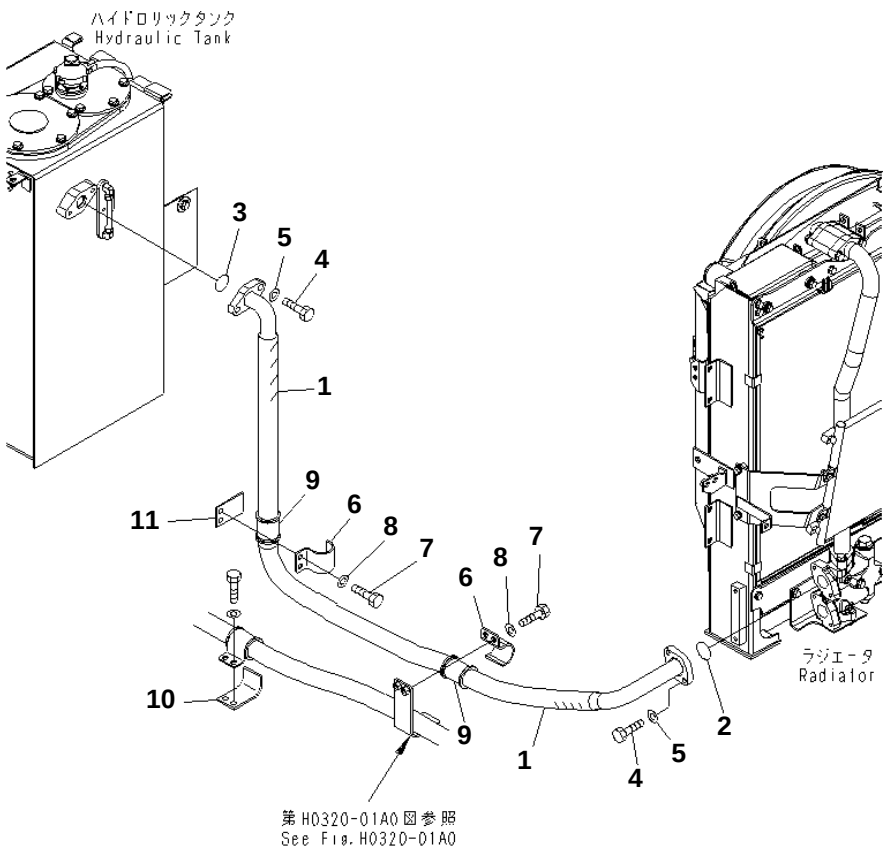

PC228US-3N-W1 S/N 30001-UP

RETURN LINE

Item	Part No.	Description	Qty	Options
1	22U-62-25690	HOSE	1	SN:30001--
2	07000-13048	O-RING	1	SN:30001--
3	07000-13042	O-RING	1	SN:30001--
4	01010-81240	BOLT	4	SN:30001--
5	01643-31232	WASHER	4	SN:30001--
6	22U-62-21551	CLAMP	2	SN:30001--
7	01010-81230	BOLT	4	SN:30001--
8	01643-31232	WASHER	4	SN:30001--
9	07095-01245	CUSHION	2	SN:30001--
10	22U-62-24990	PLATE	1	SN:30001--
11	22U-62-24980	PLATE	1	SN:30001--

Ref. H0330-01A0 Page 150300

https://truckmanualshub.com/

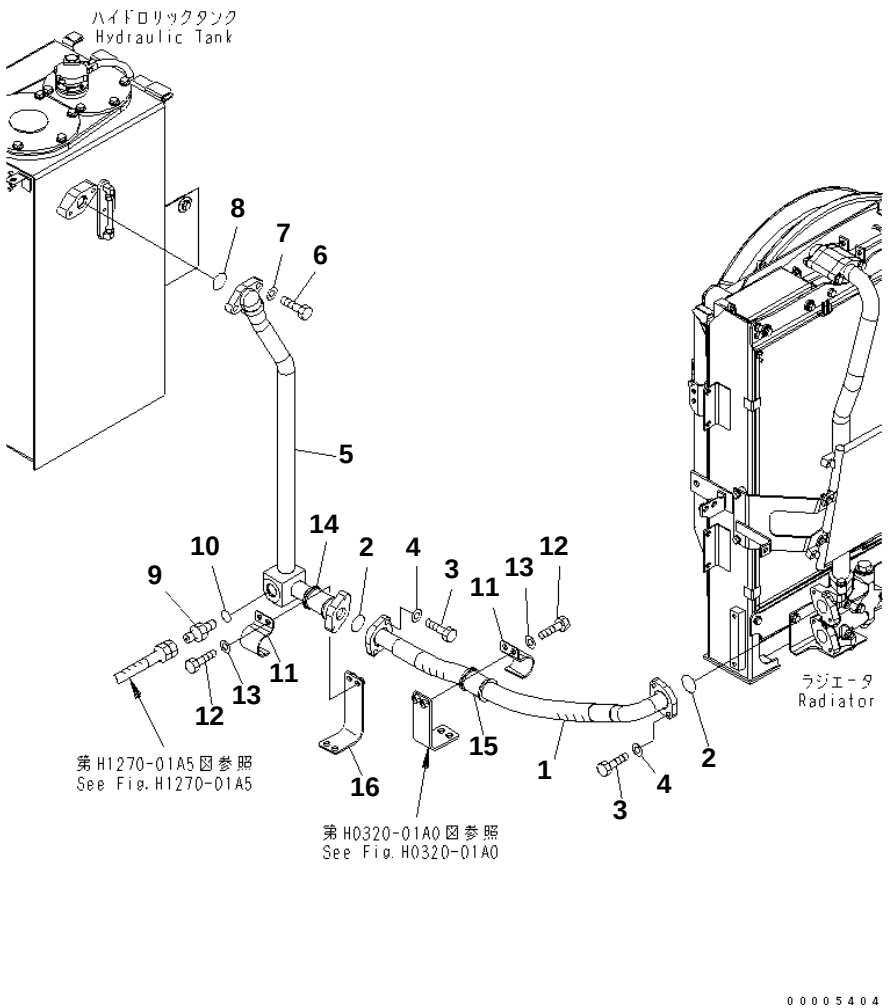

PC228US-3N-W1 S/N 30001-UP

RETURN LINE (EU SPEC.)

Item	Part No.	Description	Qty	Options
1	22U-62-25960	HOSE	1	SN:30001--
2	07000-13048	O-RING	2	SN:30001--
3	01010-81240	BOLT	4	SN:30001--
4	01643-31232	WASHER	4	SN:30001--
5	22U-62-23580	TUBE	1	SN:30001--
6	01010-81240	BOLT	2	SN:30001--
7	01643-31232	WASHER	2	SN:30001--
8	07000-13045	O-RING	1	SN:30001--
9	07230-21034	UNION	1	SN:30001--
10	07002-13334	O-RING	1	SN:30001--
11	22U-62-21551	CLAMP	2	SN:30001--
12	01010-81230	BOLT	4	SN:30001--
13	01643-31232	WASHER	4	SN:30001--
14	07095-01241	CUSHION	1	SN:30001--
15	07095-01245	CUSHION	1	SN:30001--
16	22U-62-21271	BRACKET	1	SN:30001--

Ref. H0330-01A1 Page 150310

https://truckmanualshub.com/

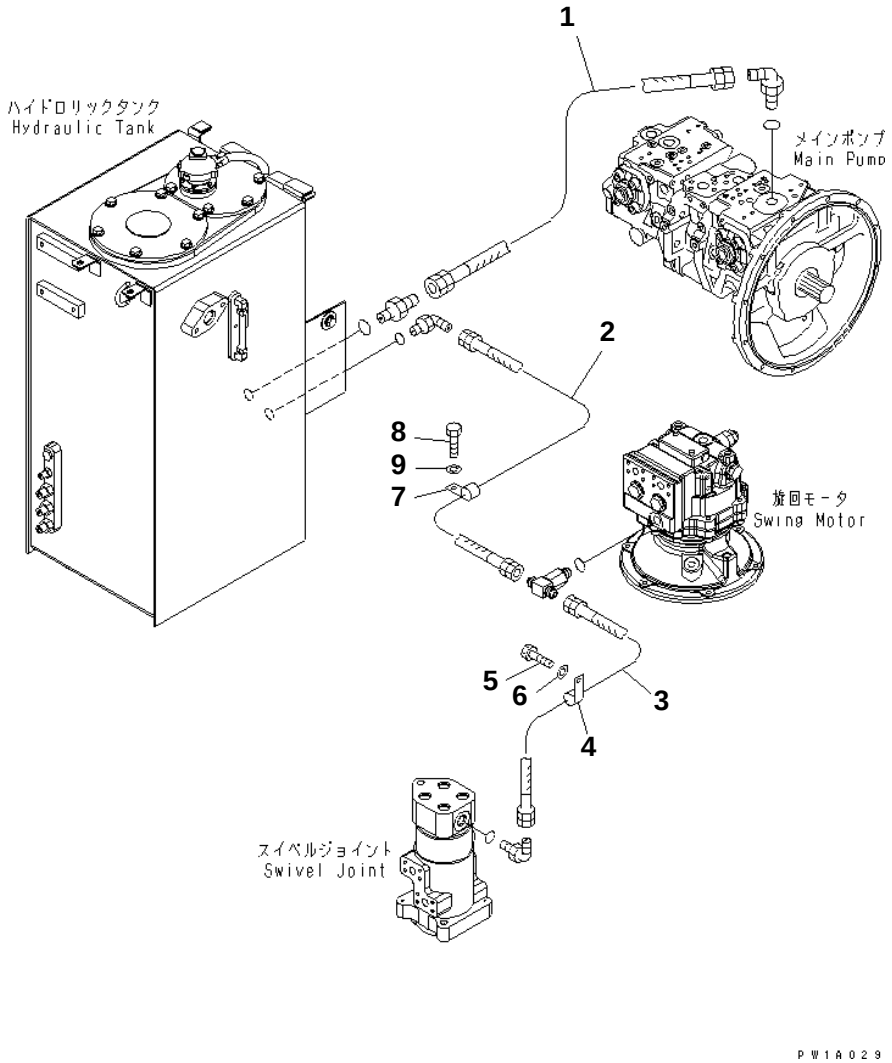

PC228US-3N-W1 S/N 30001-UP

DRAIN LINE(#20001-)

Item	Part No.	Description	Qty	Options
1	22U-62-22630	HOSE	1	SN:20001--
2	07621-00507	HOSE	1	SN:21222--
3	07621-00509	HOSE	1	SN:20001--
4	04434-52512	CLIP	1	SN:20001--
5	01010-81225	BOLT	1	SN:20001--
6	01643-31232	WASHER	1	SN:20001--
7	04434-52512	CLIP	1	SN:21222--
8	01010-81225	BOLT	1	SN:20001--
9	01643-31232	WASHER	1	SN:20001--

Ref. H0340-01A0 Page 150320

https://truckmanualshub.com/

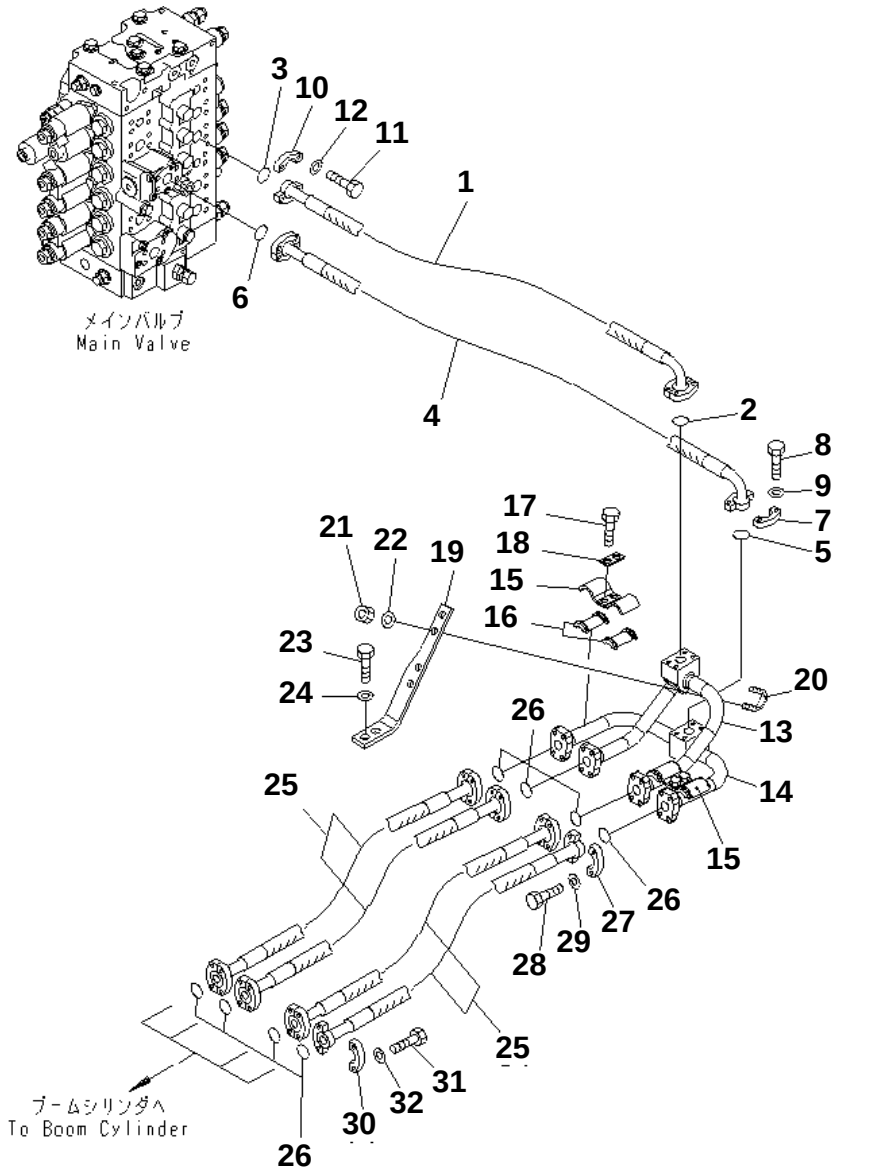

PC228US-3N-W1 S/N 30001-UP

BOOM LINE(#20001-)

Item	Part No.	Description	Qty	Options
1	22U-62-22141	HOSE	1	SN:20001--
2	07000-13025	O-RING	1	SN:20001--
3	21T-09-11460	O-RING	1	SN:20001--
4	22U-62-22150	HOSE	1	SN:20001--
5	07000-13025	O-RING	1	SN:20001--
6	21T-09-11460	O-RING	1	SN:20001--
7	07371-30640	FLANGE	4	SN:20001--
8	07372-21035	BOLT	8	SN:20001--
9	01643-51032	WASHER	8	SN:20001--
10	07371-31049	FLANGE	4	SN:20001--
11	07372-21035	BOLT	8	SN:20001--
12	01643-51032	WASHER	8	SN:20001--
13	22U-62-21361	TUBE	1	SN:20001--
14	22U-62-21371	TUBE	1	SN:20001--
15	20Y-62-13230	CLAMP	2	SN:20001--
16	20Y-62-13760	· SEAT	4	SN:20001--
17	01010-81235	BOLT	4	SN:20001--
18	20Y-62-13450	PLATE	2	SN:20001--
19	22U-62-21411	PLATE	1	SN:20001--
20	07283-32738	CLIP	2	SN:20001--
21	01597-01009	NUT	4	SN:20001--
22	01643-31032	WASHER	4	SN:20001--
23	01010-81230	BOLT	2	SN:20001--
24	01643-31232	WASHER	2	SN:20001--
25	20Y-62-17480	HOSE	4	SN:20001--
26	07000-13025	O-RING	8	SN:20001--
27	07371-30640	FLANGE	8	SN:20001--
28	07372-21035	BOLT	16	SN:20001--
29	01643-51032	WASHER	16	SN:20001--
30	07371-30640	FLANGE	8	SN:20001--
31	07372-21035	BOLT	16	SN:20001--
32	01643-51032	WASHER	16	SN:20001--

Ref. H1210-01A0 Page 150330

https://truckmanualshub.com/

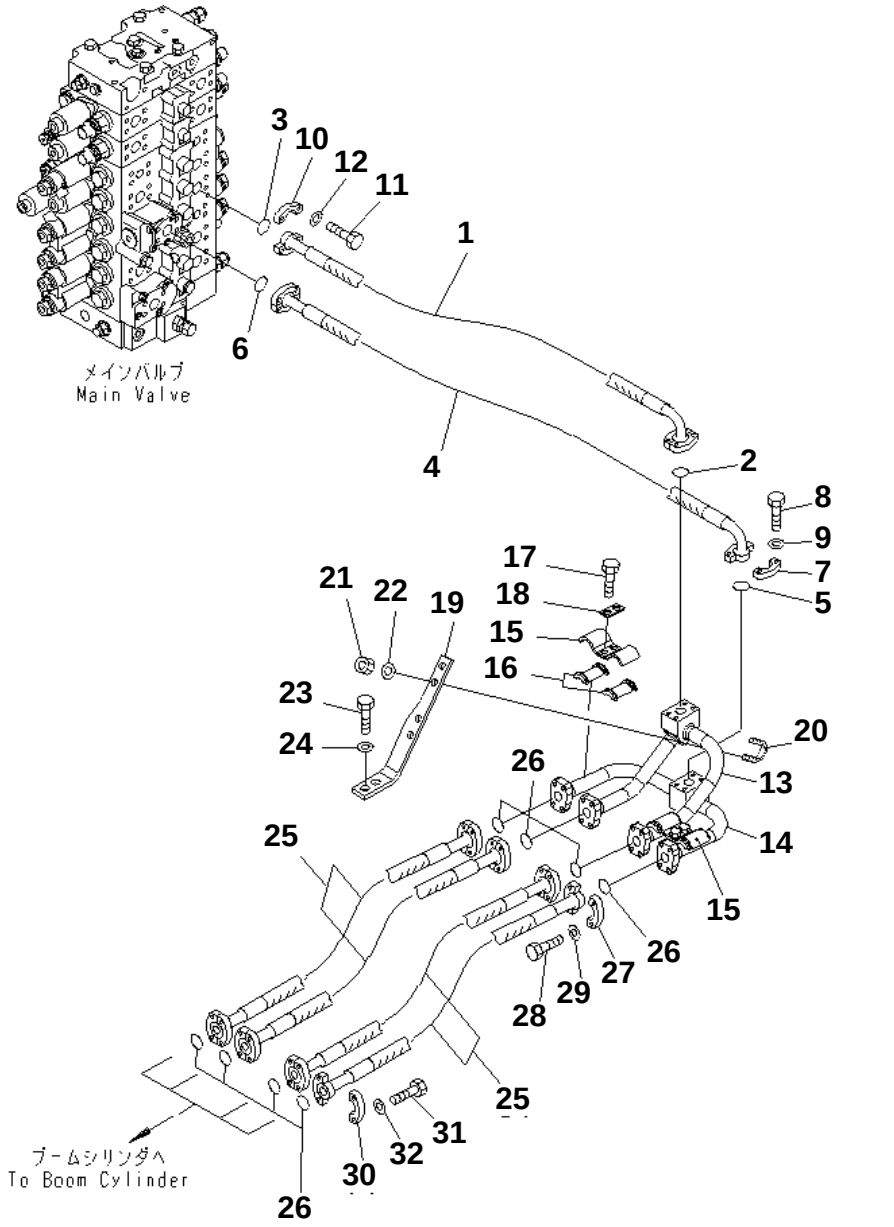

PC228US-3N-W1 S/N 30001-UP

BOOM LINE (WITH 2-PIECE BOOM)

Item	Part No.	Description	Qty	Options
1	22U-62-22141	HOSE	1	SN:30001--
2	07000-13025	O-RING	1	SN:30001--
3	21T-09-11460	O-RING	1	SN:30001--
4	22U-62-22150	HOSE	1	SN:30001--
5	07000-13025	O-RING	1	SN:30001--
6	21T-09-11460	O-RING	1	SN:30001--
7	07371-30640	FLANGE	4	SN:30001--
8	07372-21035	BOLT	8	SN:30001--
9	01643-51032	WASHER	8	SN:30001--
10	07371-31049	FLANGE	4	SN:30001--
11	07372-21035	BOLT	8	SN:30001--
12	01643-51032	WASHER	8	SN:30001--
13	22U-62-21361	TUBE	1	SN:30001--
14	22U-62-21371	TUBE	1	SN:30001--
15	20Y-62-13230	CLAMP	2	SN:30001--
16	20Y-62-13760	· SEAT	2	SN:30001--
17	01010-81235	BOLT	4	SN:30001--
18	20Y-62-13450	PLATE	2	SN:30001--
19	22U-62-21411	PLATE	1	SN:30001--
20	07283-32738	CLIP	2	SN:30001--
21	01597-01009	NUT	4	SN:30001--
22	01643-31032	WASHER	4	SN:30001--
23	01010-81230	BOLT	2	SN:30001--
24	01643-31232	WASHER	2	SN:30001--
25	22U-62-27890	HOSE¤ 920MM	4	SN:30001--
26	07000-13025	O-RING	8	SN:30001--
27	07371-30640	FLANGE	8	SN:30001--
28	07372-21035	BOLT	16	SN:30001--
29	01643-51032	WASHER	16	SN:30001--
30	07371-30640	FLANGE	8	SN:30001--
31	07372-21035	BOLT	16	SN:30001--
32	01643-51032	WASHER	16	SN:30001--

Ref. H1210-01A2 Page 150340

https://truckmanualshub.com/

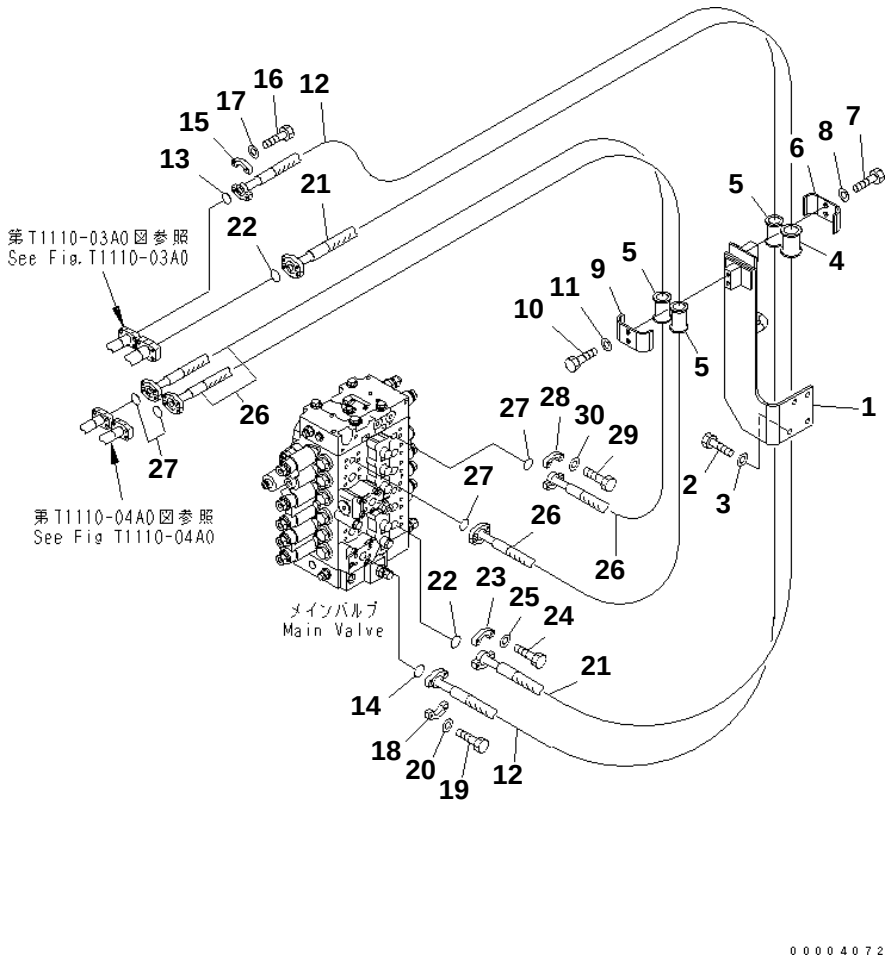

PC228US-3N-W1 S/N 30001-UP

ARM AND BUCKET LINE

Item	Part No.	Description	Qty	Options
1	22U-62-26180	BRACKET	1	SN:30001--
2	01010-81230	BOLT	4	SN:30001--
3	01643-31232	WASHER	4	SN:30001--
4	07095-01035	CUSHION	1	SN:30001--
5	22U-62-21950	CUSHION	3	SN:30001--
6	22U-62-21451	CLAMP	1	SN:30001--
7	01010-81235	BOLT	2	SN:30001--
8	01643-31232	WASHER	2	SN:30001--
9	22U-62-21461	CLAMP	1	SN:30001--
10	01010-81235	BOLT	2	SN:30001--
11	01643-31232	WASHER	2	SN:30001--
12	22U-62-22161	HOSE	1	SN:30001--
13	07000-13025	O-RING	1	SN:30001--
14	21T-09-11460	O-RING	1	SN:30001--
15	07371-30640	FLANGE	2	SN:30001--
16	07372-21035	BOLT	4	SN:30001--
17	01643-51032	WASHER	4	SN:30001--
18	07371-31049	FLANGE	2	SN:30001--
19	07372-21035	BOLT	4	SN:30001--
20	01643-51032	WASHER	4	SN:30001--
21	22U-62-21431	HOSE	1	SN:30001--
22	21T-09-11460	O-RING	2	SN:30001--
23	07371-31049	FLANGE	4	SN:30001--
24	07372-21035	BOLT	8	SN:30001--
25	01643-51032	WASHER	8	SN:30001--
26	22U-62-22231	HOSE	2	SN:30001--
27	21T-09-11430	O-RING	4	SN:30001--
28	07371-30640	FLANGE	8	SN:30001--
29	07372-21035	BOLT	16	SN:30001--
30	01643-51032	WASHER	16	SN:30001--

Ref. H1220-01A0 Page 150350

https://truckmanualshub.com/

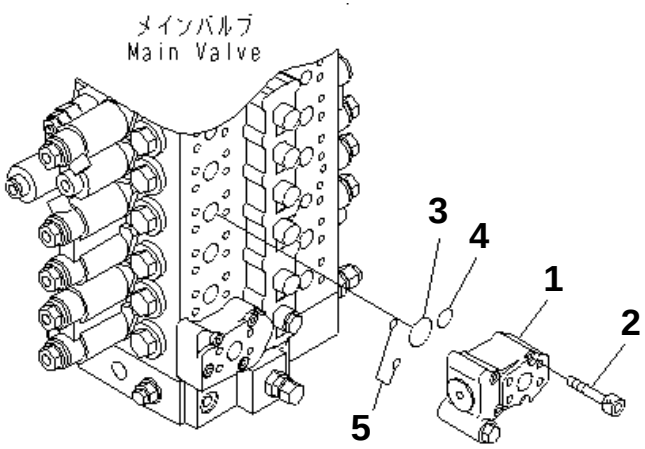

0 0 0 0 3 6 0 6

PC228US-3N-W1 S/N 30001-UP

ARM DRIFT PRIVENTIVE

Item	Part No.	Description	Qty	Options
1	723-40-82202	VALVE ASS'Y	1	SN:30001--
2	01252-61075	BOLT	4	SN:30001--
3	07000-13032	O-RING	1	SN:30001--
4	07000-12021	O-RING	1	SN:30001--
5	702-16-53920	O-RING	2	SN:30001--

Ref. H1240-01A0 Page 150360

https://truckmanualshub.com/

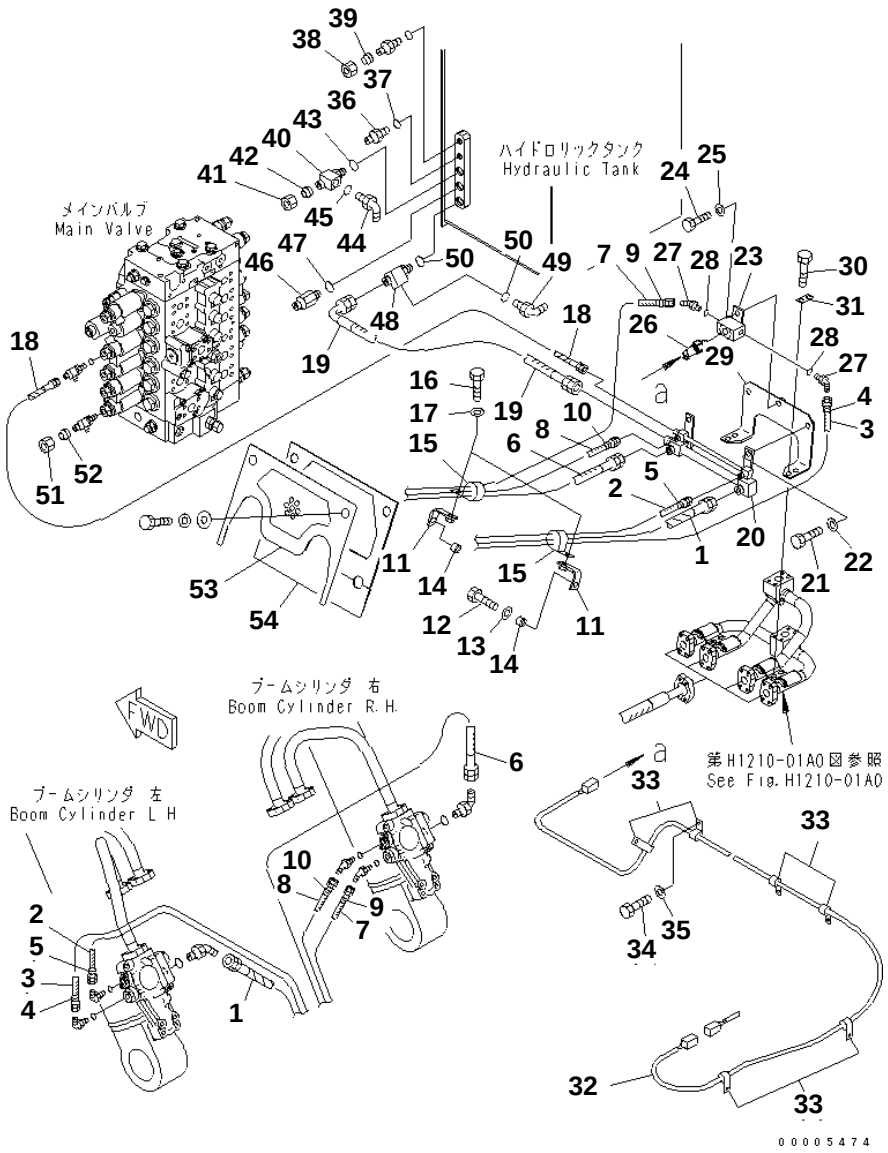

PC228US-3N-W1 S/N 30001-UP

BURST VALVE (EU SPEC.)

Item	Part No.	Description	Qty	Options
1	07621-00410	HOSE	1	SN:30001--
2	07637-00206	HOSE	1	SN:30001--
3	07184-00206	HOSE	1	SN:30001--
4	20Y-62-22790	BAND¤ RED	2	SN:30001--
5	20Y-62-22850	BAND¤ GREEN	2	SN:30001--
6	07621-004A5	HOSE	1	SN:30001--
7	07637-00211	HOSE	1	SN:30001--
8	07184-00210	HOSE	1	SN:30001--
9	20Y-62-22790	BAND¤ RED	2	SN:30001--
10	20Y-62-22850	BAND¤ GREEN	2	SN:30001--
11	207-62-51270	BRACKET	2	SN:30001--
12	01010-81250	BOLT	2	SN:30001--
13	01643-31232	WASHER	2	SN:30001--
14	195-33-11220	SPACER	2	SN:30001--
15	04434-53212	CLIP	2	SN:30001--
16	01010-81225	BOLT	2	SN:30001--
17	01643-31232	WASHER	2	SN:30001--
18	22U-62-27340	HOSE ASS'Y	1	SN:30001--
19	07623-005A6	HOSE	1	SN:30001--
20	22U-62-27270	TUBE	1	SN:30001--
21	01010-81235	BOLT	2	SN:30001--
22	01643-31232	WASHER	2	SN:30001--
23	22U-62-27280	BLOCK	1	SN:30001--
24	01010-81230	BOLT	1	SN:30001--
25	01643-31232	WASHER	1	SN:30001--
26	7861-93-1650	SENSOR	1	SN:30001--
27	07236-10210	ELBOW	2	SN:30001--
28	07002-11423	O-RING	2	SN:30001--
29	22U-62-27290	BRACKET	1	SN:30001--
30	01010-81260	BOLT	4	SN:30001--
31	20Y-62-13450	PLATE	2	SN:30001--
32	22U-06-21721	WIRING HARNESS	1	SN:30001--
33	04434-51012	CLIP	6	SN:30001--
34	01010-81220	BOLT	2	SN:30001--
35	01643-31232	WASHER	2	SN:30001--
36	07230-20210	UNION	1	SN:30001--
37	07002-11423	O-RING	1	SN:30001--
38	07221-20210	NUT	1	SN:30001--
39	07222-00210	PLUG	1	SN:30001--
40	22U-60-27110	TEE	1	SN:30001--
41	07221-20628	NUT	1	SN:30001--
42	07222-00616	PLUG	1	SN:30001--

Ref. H1250-01A0 Page 150370

https://truckmanualshub.com/

PC228US-3N-W1 S/N 30001-UP
BURST VALVE (EU SPEC.)

Item	Part No.	Description	Qty	Options
43	07002-12034	O-RING	1	SN:30001--
44	07235-10315	ELBOW	1	SN:30001--
45	07002-12034	O-RING	1	SN:30001--
46	23S-62-16530	NIPPLE	1	SN:30001--
47	07002-12034	O-RING	1	SN:30001--
48	22U-60-27120	TEE	1	SN:30001--
49	07235-10315	ELBOW	1	SN:30001--
50	07002-12034	O-RING	2	SN:30001--
51	07221-20315	NUT	1	SN:30001--
52	07222-00312	PLUG	1	SN:30001--
	22U-54-27190	COVER	1	SN:30001--
53	☆	· COVER	1	SN:30001--
54	22U-54-27180	· SHEET	1	SN:30001--

https://truckmanualshub.com/

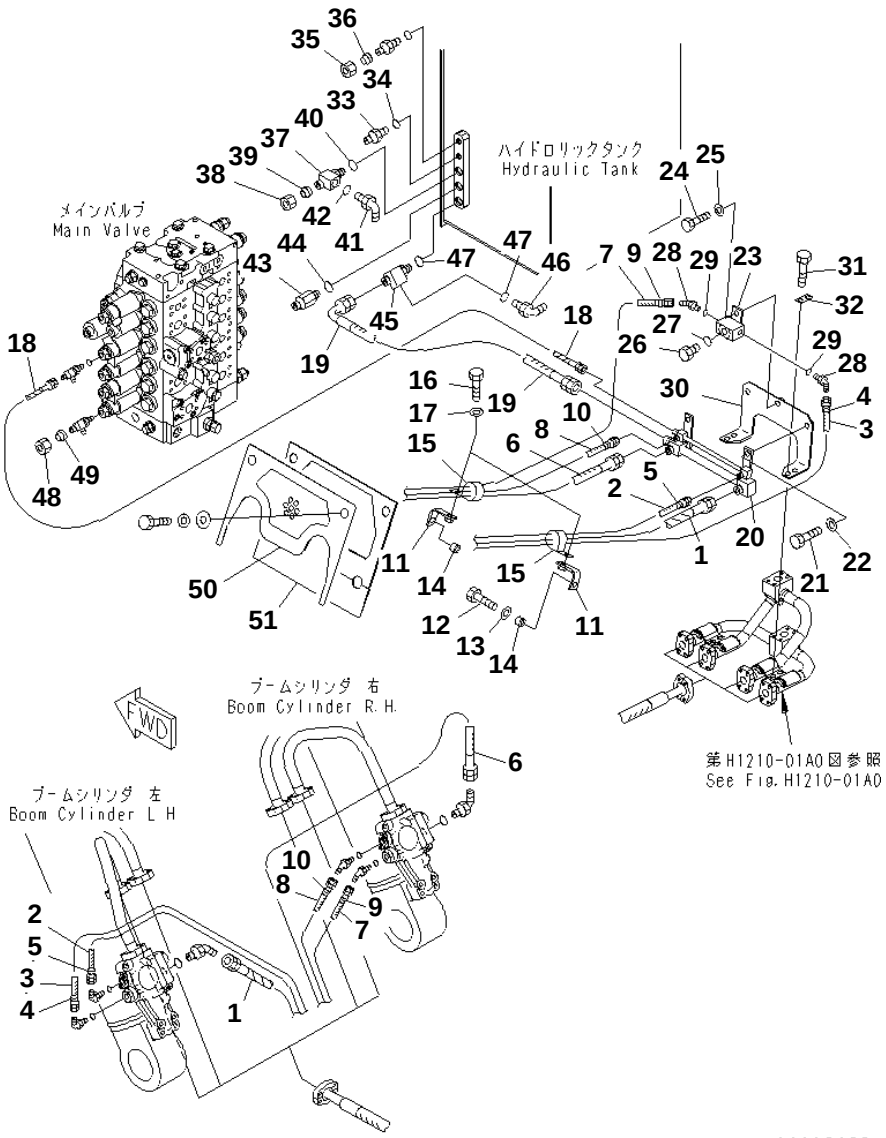

PC228US-3N-W1 S/N 30001-UP

BURST VALVE

Item	Part No.	Description	Qty	Options
1	07621-00410	HOSE	1	SN:30001--
2	07637-00206	HOSE	1	SN:30001--
3	07184-00206	HOSE	1	SN:30001--
4	20Y-62-22790	BAND¤ RED	2	SN:30001--
5	20Y-62-22850	BAND¤ GREEN	2	SN:30001--
6	07621-004A5	HOSE	1	SN:30001--
7	07637-00211	HOSE	1	SN:30001--
8	07184-00210	HOSE	1	SN:30001--
9	20Y-62-22790	BAND¤ RED	2	SN:30001--
10	20Y-62-22850	BAND¤ GREEN	2	SN:30001--
11	207-62-51270	BRACKET	2	SN:30001--
12	01010-81250	BOLT	2	SN:30001--
13	01643-31232	WASHER	2	SN:30001--
14	195-33-11220	SPACER	2	SN:30001--
15	04434-53212	CLIP	2	SN:30001--
16	01010-81225	BOLT	2	SN:30001--
17	01643-31232	WASHER	2	SN:30001--
18	22U-62-27340	HOSE ASS'Y	1	SN:30001--
19	07623-005A6	HOSE	1	SN:30001--
20	22U-62-27270	TUBE	1	SN:30001--
21	01010-81235	BOLT	2	SN:30001--
22	01643-31232	WASHER	2	SN:30001--
23	22U-62-27280	BLOCK	1	SN:30001--
24	01010-81230	BOLT	1	SN:30001--
25	01643-31232	WASHER	1	SN:30001--
26	07040-11812	PLUG	1	SN:30001--
27	07002-11823	O-RING	1	SN:30001--
28	07236-10210	ELBOW	2	SN:30001--
29	07002-11423	O-RING	2	SN:30001--
30	22U-62-27290	BRACKET	1	SN:30001--
31	01010-81260	BOLT	4	SN:30001--
32	20Y-62-13450	PLATE	2	SN:30001--
33	07230-20210	UNION	1	SN:30001--
34	07002-11423	O-RING	1	SN:30001--
35	07221-20210	NUT	1	SN:30001--
36	07222-00210	PLUG	1	SN:30001--
37	22U-60-27110	TEE	1	SN:30001--
38	07221-20628	NUT	1	SN:30001--
39	07222-00616	PLUG	1	SN:30001--
40	07002-12034	O-RING	1	SN:30001--
41	07235-10315	ELBOW	1	SN:30001--
42	07002-12034	O-RING	1	SN:30001--

Ref. H1250-01A1 Page 150380

https://truckmanualshub.com/

PC228US-3N-W1 S/N 30001-UP

BURST VALVE

Item	Part No.	Description	Qty	Options
43	23S-62-16530	NIPPLE	1	SN:30001--
44	07002-12034	O-RING	1	SN:30001--
45	22U-60-27120	TEE	1	SN:30001--
46	07235-10315	ELBOW	1	SN:30001--
47	07002-12034	O-RING	2	SN:30001--
48	07221-20315	NUT	1	SN:30001--
49	07222-00312	PLUG	1	SN:30001--
	22U-54-27190	COVER	1	SN:30001--
50	☆	· COVER	1	SN:30001--
51	22U-54-27180	· SHEET	1	SN:30001--

https://truckmanualshub.com/

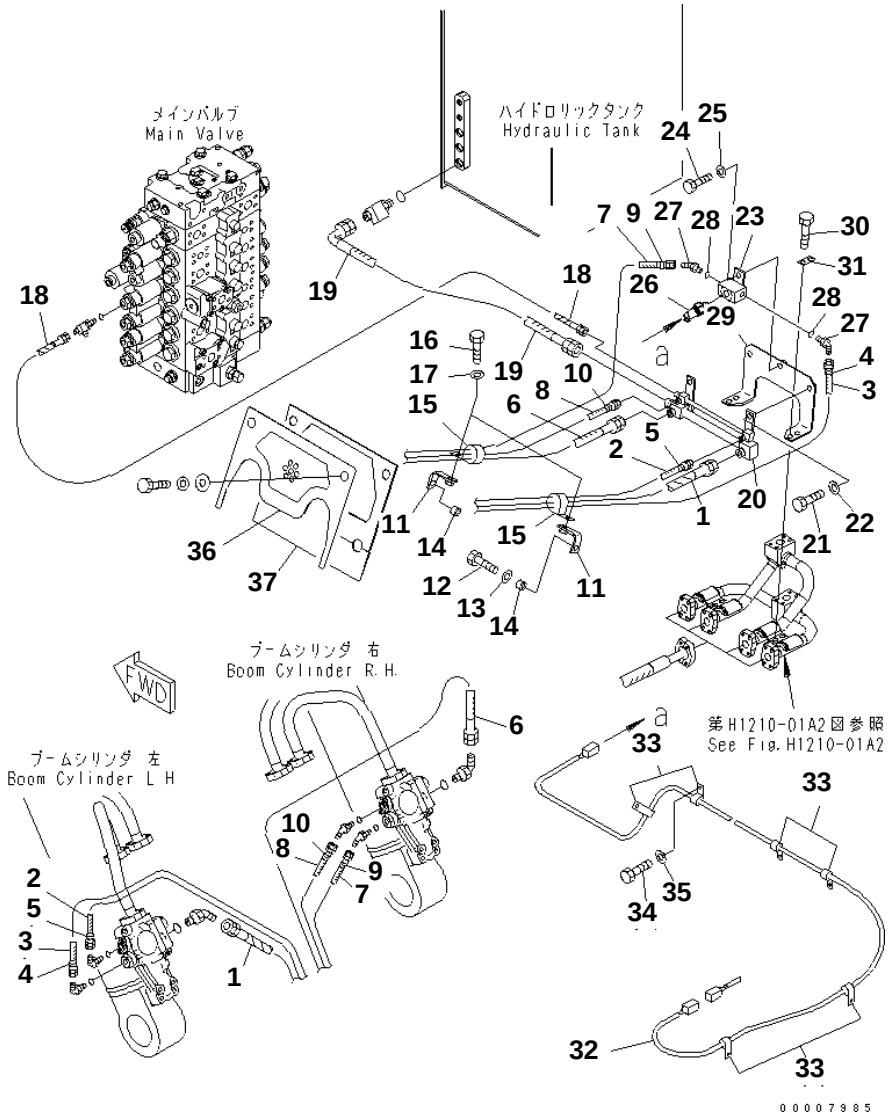

PC228US-3N-W1 S/N 30001-UP

BURST VALVE (FOR 2-PIECE BOOM) (EU SPEC.)

Item	Part No.	Description	Qty	Options
1	07621-00410	HOSE	1	SN:30001--
2	07637-00206	HOSE	1	SN:30001--
3	07184-00206	HOSE	1	SN:30001--
4	20Y-62-22790	BAND¤ RED	2	SN:30001--
5	20Y-62-22850	BAND¤ GREEN	2	SN:30001--
6	07621-004A5	HOSE	1	SN:30001--
7	07637-00211	HOSE	1	SN:30001--
8	07184-00210	HOSE	1	SN:30001--
9	20Y-62-22790	BAND¤ RED	2	SN:30001--
10	20Y-62-22850	BAND¤ GREEN	2	SN:30001--
11	207-62-51270	BRACKET	2	SN:30001--
12	01010-81250	BOLT	2	SN:30001--
13	01643-31232	WASHER	2	SN:30001--
14	195-33-11220	SPACER	2	SN:30001--
15	04434-53212	CLIP	2	SN:30001--
16	01010-81225	BOLT	2	SN:30001--
17	01643-31232	WASHER	2	SN:30001--
18	22U-62-27340	HOSE ASS'Y	1	SN:30001--
19	07623-005A6	HOSE	1	SN:30001--
20	22U-62-27270	TUBE	1	SN:30001--
21	01010-81235	BOLT	2	SN:30001--
22	01643-31232	WASHER	2	SN:30001--
23	22U-62-27280	BLOCK	1	SN:30001--
24	01010-81230	BOLT	1	SN:30001--
25	01643-31232	WASHER	1	SN:30001--
26	7861-93-1650	SENSOR	1	SN:30001--
27	07236-10210	ELBOW	2	SN:30001--
28	07002-11423	O-RING	2	SN:30001--
29	22U-62-27290	BRACKET	1	SN:30001--
30	01010-81260	BOLT	4	SN:30001--
31	20Y-62-13450	PLATE	2	SN:30001--
32	22U-06-21721	WIRING HARNESS	1	SN:30001--
33	04434-51012	CLIP	6	SN:30001--
34	01010-81220	BOLT	2	SN:30001--
35	01643-31232	WASHER	2	SN:30001--
	22U-54-27190	COVER	1	SN:30001--
36	☆	· COVER	1	SN:30001--
37	22U-54-27180	· SHEET	1	SN:30001--

Ref. H1250-01A4 Page 150390

https://truckmanualshub.com/

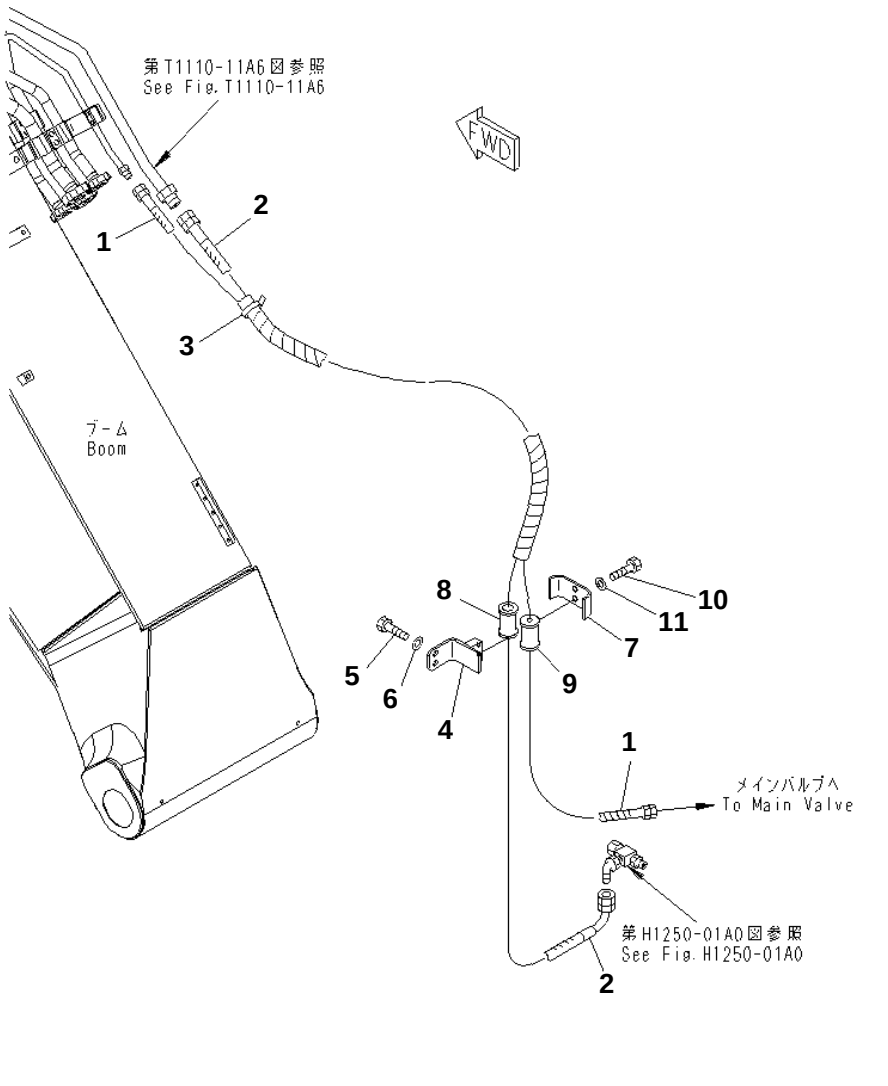

PC228US-3N-W1 S/N 30001-UP

BURST VALVE (ARM) (EU SPEC.)

Item	Part No.	Description	Qty	Options
1	07184-00334	HOSE	1	SN:30001--
2	07626-00621	HOSE	1	SN:30001--
3	08034-20823	BAND	1	SN:30001--
4	22U-62-27421	BRACKET	1	SN:30001--
5	01010-81230	BOLT	2	SN:30001--
6	01643-31232	WASHER	2	SN:30001--
7	22U-62-21461	CLAMP	1	SN:30001--
8	22U-62-21950	CUSHION	1	SN:30001--
9	22U-62-27540	CUSHION	1	SN:30001--
10	01010-81225	BOLT	2	SN:30001--
11	01643-31232	WASHER	2	SN:30001--

Ref. H1250-02A2 Page 150400

https://truckmanualshub.com/

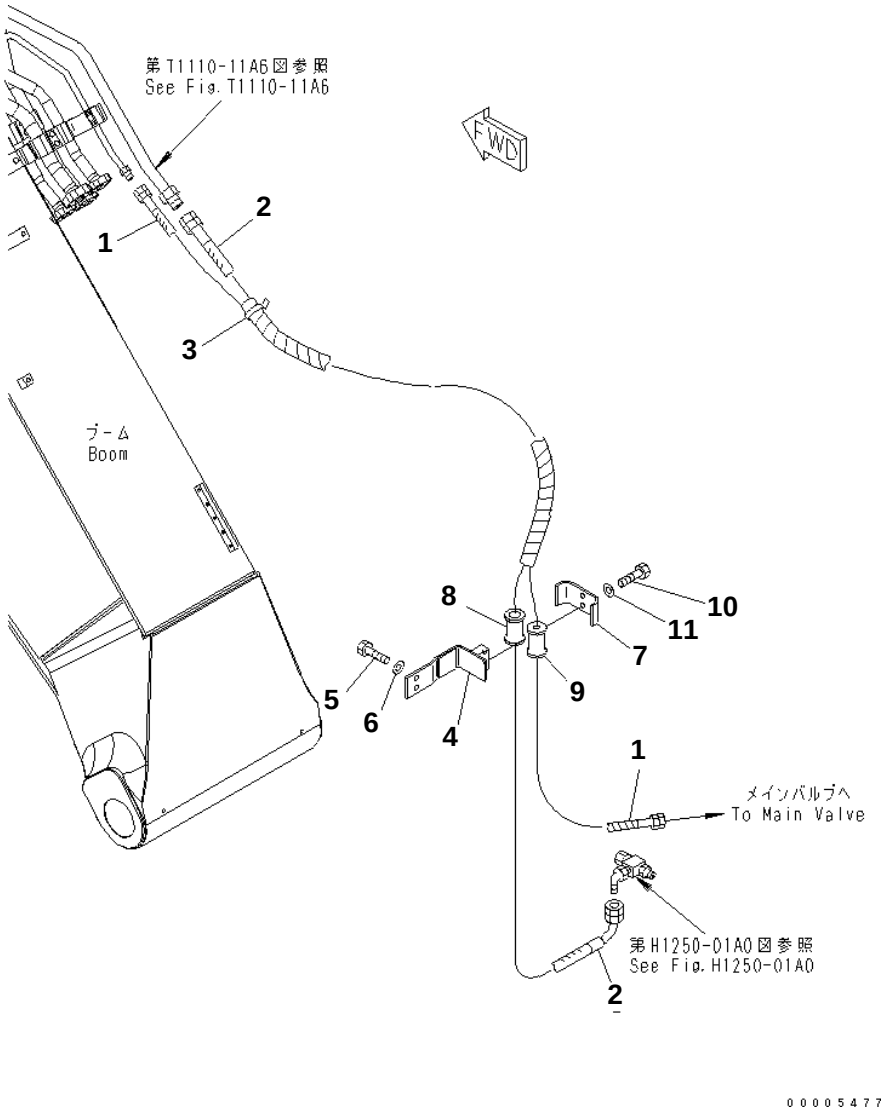

PC228US-3N-W1 S/N 30001-UP

BURST VALVE (ARM) (1 AND 2 ACTUATOR) (EU SPEC.)

Item	Part No.	Description	Qty	Options
1	07184-00334	HOSE	1	SN:30001--
2	07626-00621	HOSE	1	SN:30001--
3	08034-20823	BAND	1	SN:30001--
4	22U-62-27611	BRACKET	1	SN:30001--
5	01010-81230	BOLT	2	SN:30001--
6	01643-31232	WASHER	2	SN:30001--
7	22U-62-21461	CLAMP	1	SN:30001--
8	22U-62-21950	CUSHION	1	SN:30001--
9	22U-62-27540	CUSHION	1	SN:30001--
10	01010-81225	BOLT	2	SN:30001--
11	01643-31232	WASHER	2	SN:30001--

Ref. H1250-02A3 Page 150410

https://truckmanualshub.com/

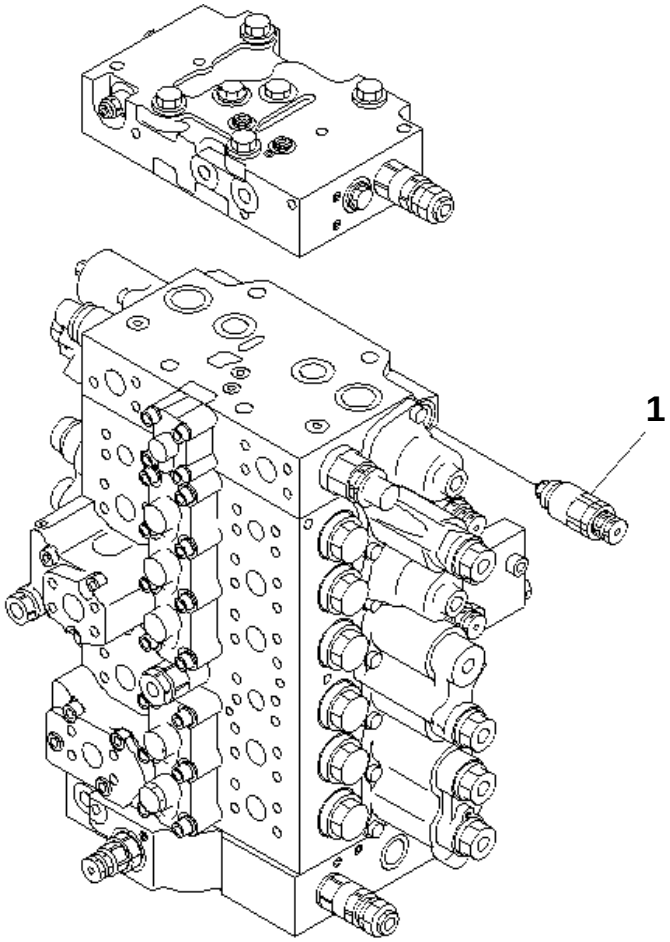

PC228US-3N-W1 S/N 30001-UP

RELIEF VALVE (280 KG/250 KG/CM2) (FOR SERVICE VALVE)

Item	Part No.	Description	Qty	Options
1	(723-90-76300)	VALVE ASS'Y	1	SN:30001--

Ref. H1270-01A1 Page 150420

https://truckmanualshub.com/

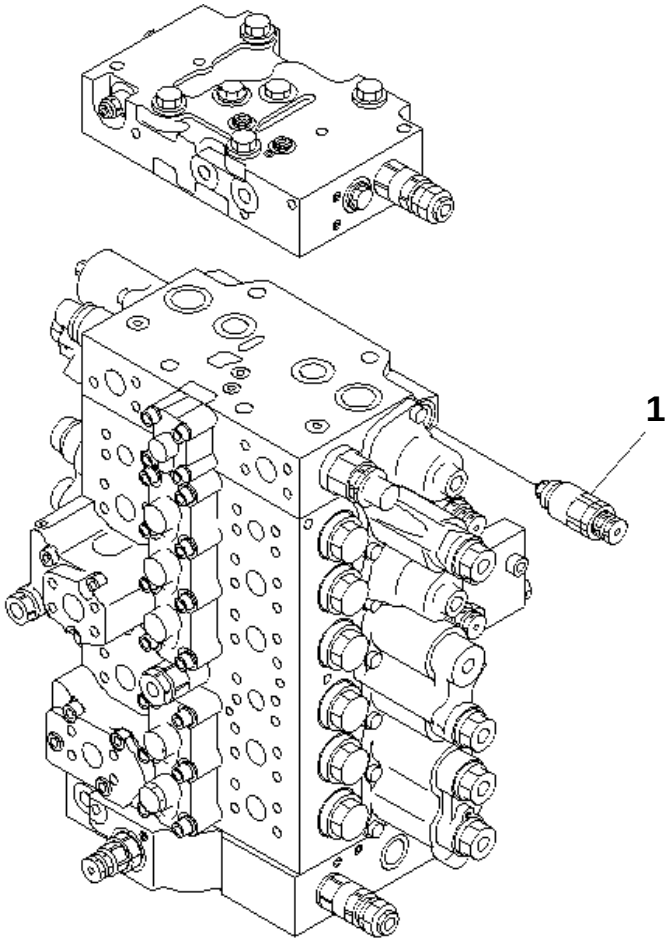

PC228US-3N-W1 S/N 30001-UP

RELIEF VALVE (280 KG/210 KG/CM2) (FOR SERVICE VALVE)

Item	Part No.	Description	Qty	Options
1	(723-90-76101)	VALVE ASS'Y	1	SN:30001--

Ref. H1270-01A2 Page 150430

https://truckmanualshub.com/

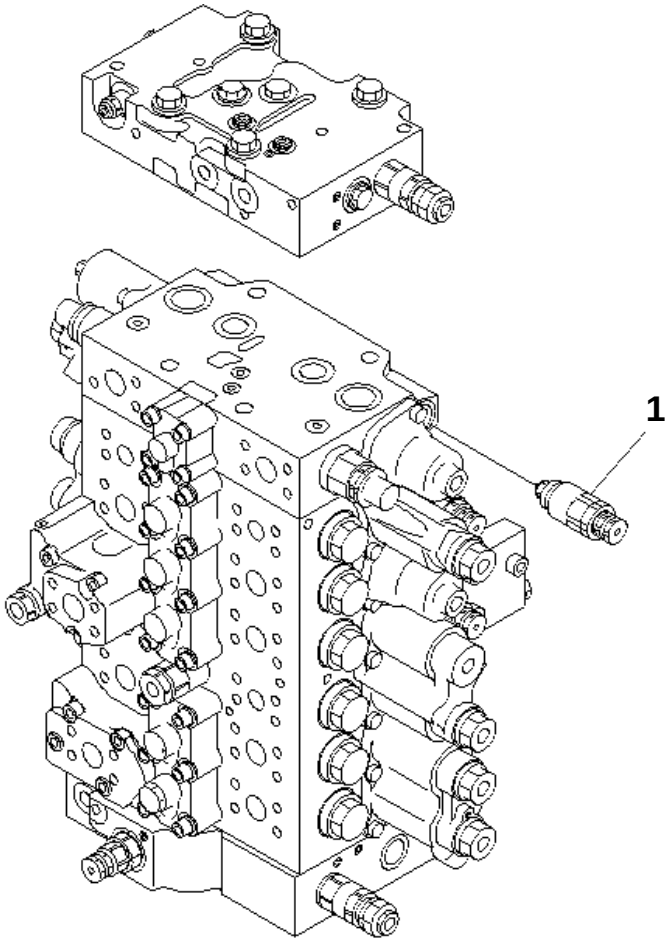

PC228US-3N-W1 S/N 30001-UP

RELIEF VALVE (280 KG/175 KG/CM2) (FOR SERVICE VALVE)

Item	Part No.	Description	Qty	Options
1	(723-90-76400)	VALVE ASS'Y	1	SN:30001--

Ref. H1270-01A3 Page 150440

https://truckmanualshub.com/

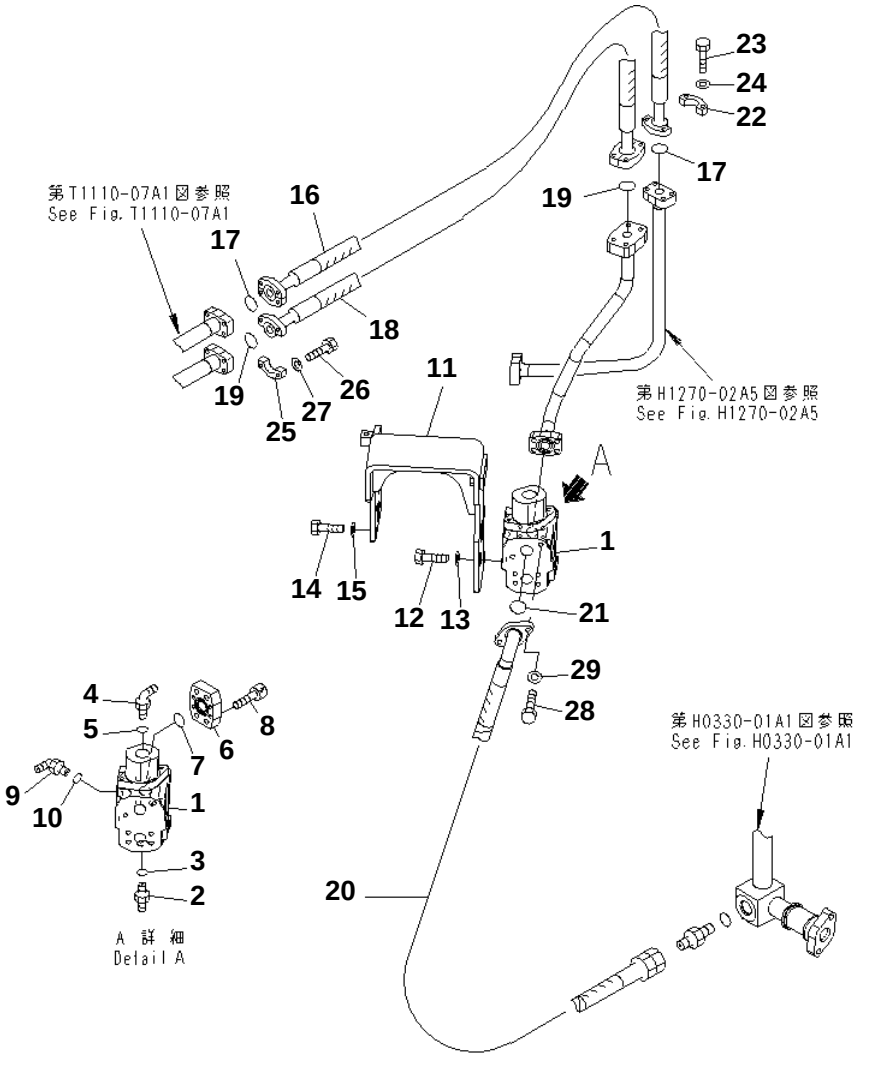

PC228US-3N-W1 S/N 30001-UP

ATTACHMENT LINE (VALVE) (EU SPEC.)

Item	Part No.	Description	Qty	Options
1	(702-21-01910)	VALVE ASS'Y	1	SN:30001--
2	175-79-82720	NIPPLE	1	SN:30001--
3	07002-12034	O-RING	1	SN:30001--
4	07235-10210	ELBOW	1	SN:30001--
5	07002-11423	O-RING	1	SN:30001--
6	21K-62-71680	PLATE	1	SN:30001--
7	07000-13038	O-RING	1	SN:30001--
8	01252-71230	BOLT	4	SN:30001--
9	20Y-62-43290	ELBOW	1	SN:30001--
10	07002-12434	O-RING	1	SN:30001--
11	22U-62-26190	BRACKET	1	SN:30001--
12	01010-81235	BOLT	3	SN:30001--
13	01643-31232	WASHER	3	SN:30001--
14	01010-81230	BOLT	4	SN:30001--
15	01643-31232	WASHER	4	SN:30001--
16	07099-01017	HOSE	1	SN:30001--
17	21T-09-11460	O-RING	2	SN:30001--
18	07099-01217	HOSE	1	SN:30001--
19	21T-09-11480	O-RING	2	SN:30001--
20	22U-62-23861	HOSE	1	SN:30001--
21	07000-13038	O-RING	1	SN:30001--
22	07371-31049	FLANGE	4	SN:30001--
23	07372-21035	BOLT	8	SN:30001--
24	01643-51032	WASHER	8	SN:30001--
25	07371-51260	FLANGE	4	SN:30001--
26	01010-81250	BOLT	8	SN:30001--
27	01643-31232	WASHER	8	SN:30001--
28	01010-81040	BOLT	2	SN:30001--
29	01643-31032	WASHER	2	SN:30001--

Ref. H1270-01A5 Page 150450

https://truckmanualshub.com/

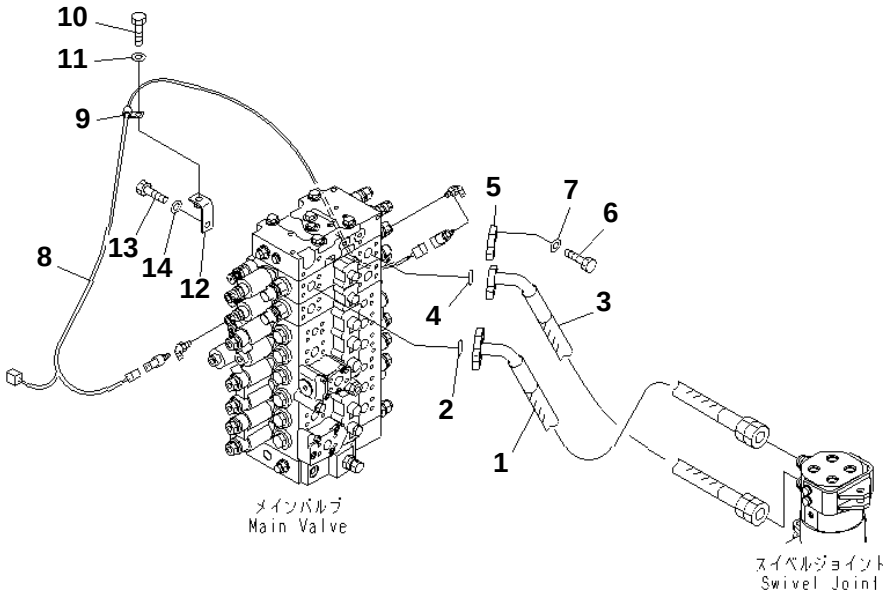

PC228US-3N-W1 S/N 30001-UP

ATTACHMENT LINE (BLADE SPEC.)(#20001-)

Item	Part No.	Description	Qty	Options
1	22U-62-24391	HOSE	1	SN:20001--
2	21T-09-11460	O-RING	1	SN:20001--
3	22U-62-24411	HOSE	1	SN:20001--
4	21T-09-11460	O-RING	1	SN:20001--
5	07371-31049	FLANGE	4	SN:20001--
6	07372-21035	BOLT	8	SN:20001--
7	01643-51032	WASHER	8	SN:20001--
8	22U-06-21381	WIRING HARNESS	1	SN:20001--
9	04434-51012	CLIP	1	SN:20001--
10	01010-81225	BOLT	1	SN:20001--
11	01643-31232	WASHER	1	SN:20001--
12	207-979-6180	BRACKET	1	SN:20001--
13	01010-81220	BOLT	1	SN:20001--
14	01643-31232	WASHER	1	SN:20001--

Ref. H1270-01A9 Page 150460

https://truckmanualshub.com/

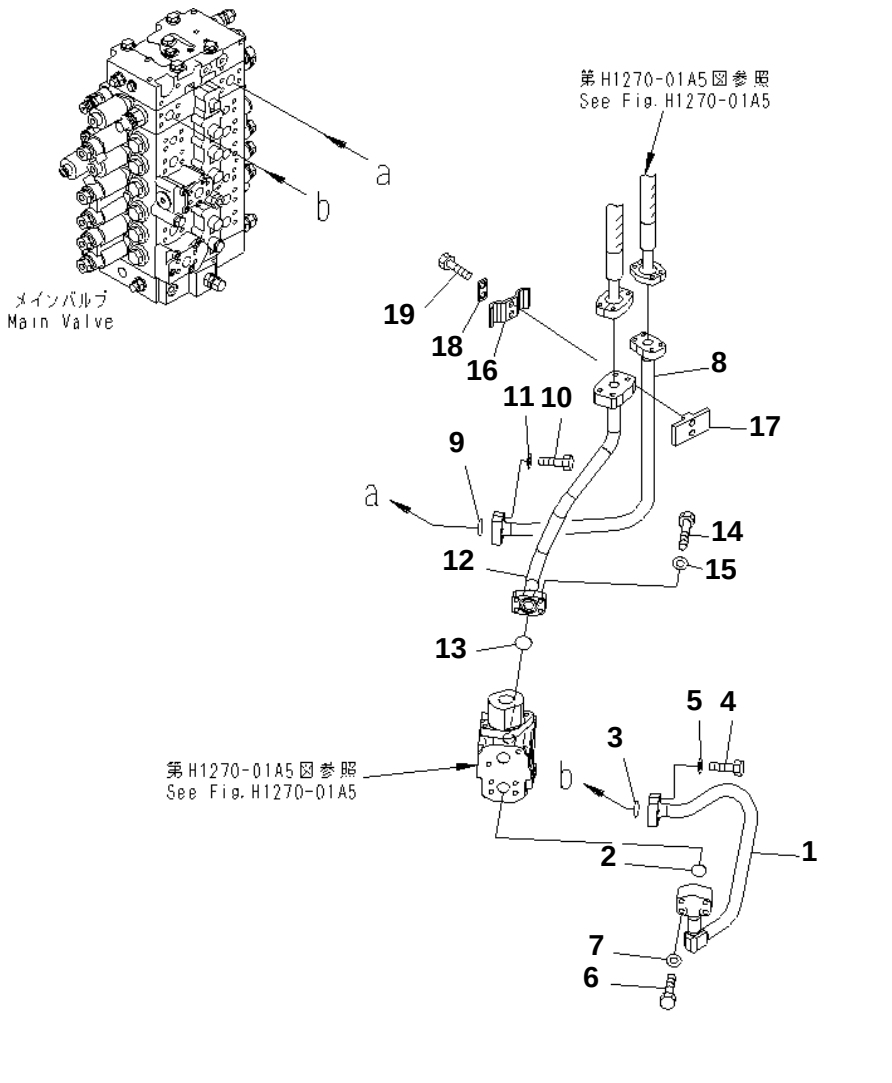

PC228US-3N-W1 S/N 30001-UP

ATTACHMENT LINE (HOSE CLAMP) (EU SPEC.)

Item	Part No.	Description	Qty	Options
1	22U-62-25671	TUBE	1	SN:30001--
2	07000-13035	O-RING	1	SN:30001--
3	21T-09-11460	O-RING	1	SN:30001--
4	07372-21040	BOLT	4	SN:30001--
5	01643-51032	WASHER	4	SN:30001--
6	07372-21060	BOLT	4	SN:30001--
7	01643-51032	WASHER	4	SN:30001--
8	22U-62-25650	TUBE	1	SN:30001--
9	21T-09-11460	O-RING	1	SN:30001--
10	07372-21040	BOLT	4	SN:30001--
11	01643-51032	WASHER	4	SN:30001--
12	22U-62-23642	TUBE	1	SN:30001--
13	07000-13032	O-RING	1	SN:30001--
14	07372-21040	BOLT	4	SN:30001--
15	01643-51032	WASHER	4	SN:30001--
16	20Y-62-13711	CLAMP	1	SN:30001--
17	20Y-62-21480	BRACKET	1	SN:30001--
18	20Y-62-13450	PLATE	1	SN:30001--
19	01010-81230	BOLT	2	SN:30001--

Ref. H1270-02A5 Page 150470

https://truckmanualshub.com/

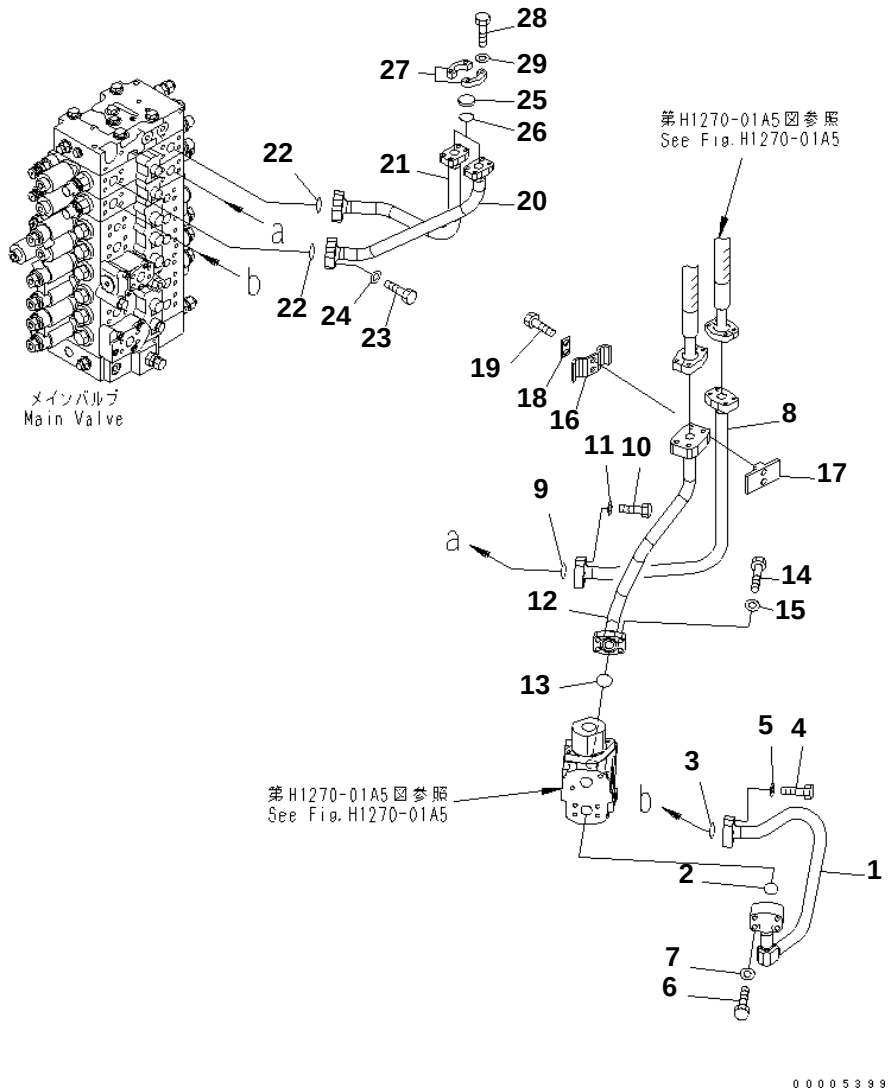

PC228US-3N-W1 S/N 30001-UP

ATTACHMENT LINE (HOSE CLAMP) (2 ACTUATOR) (EU SPEC.)

Item	Part No.	Description	Qty	Options
1	22U-62-25671	TUBE	1	SN:30001--
2	07000-13035	O-RING	1	SN:30001--
3	21T-09-11460	O-RING	1	SN:30001--
4	07372-21040	BOLT	4	SN:30001--
5	01643-51032	WASHER	4	SN:30001--
6	07372-21060	BOLT	4	SN:30001--
7	01643-51032	WASHER	4	SN:30001--
8	22U-62-25650	TUBE	1	SN:30001--
9	21T-09-11460	O-RING	1	SN:30001--
10	07372-21040	BOLT	4	SN:30001--
11	01643-51032	WASHER	4	SN:30001--
12	22U-62-23642	TUBE	1	SN:30001--
13	07000-13032	O-RING	1	SN:30001--
14	07372-21040	BOLT	4	SN:30001--
15	01643-51032	WASHER	4	SN:30001--
16	20Y-62-13711	CLAMP	1	SN:30001--
17	20Y-62-21480	BRACKET	1	SN:30001--
18	20Y-62-13450	PLATE	1	SN:30001--
19	01010-81230	BOLT	2	SN:30001--
20	22U-62-23610	TUBE	1	SN:30001--
21	22U-62-23620	TUBE	1	SN:30001--
22	21T-09-11460	O-RING	2	SN:30001--
23	07372-21040	BOLT	8	SN:30001--
24	01643-51032	WASHER	8	SN:30001--
25	07378-10600	HEAD	2	SN:30001--
26	07000-13025	O-RING	2	SN:30001--
27	07371-30640	FLANGE	4	SN:30001--
28	07372-21035	BOLT	8	SN:30001--
29	01643-51032	WASHER	8	SN:30001--

Ref. H1270-02A6 Page 150480

https://truckmanualshub.com/

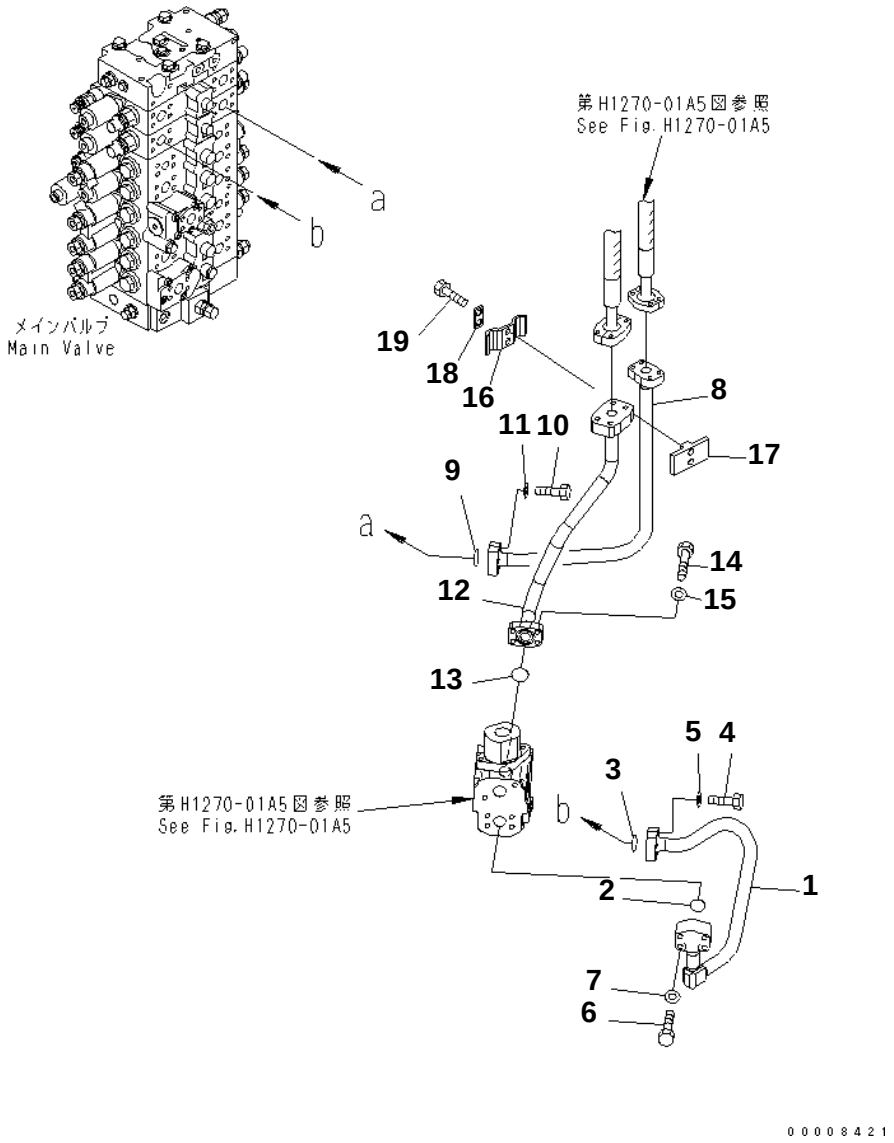

PC228US-3N-W1 S/N 30001-UP

ATTACHMENT LINE (HOSE CLAMP) (WITH 2-PIECE BOOM) (EU SPEC.)

Item	Part No.	Description	Qty	Options
1	22U-62-25671	TUBE	1	SN:30001--
2	07000-13035	O-RING	1	SN:30001--
3	21T-09-11460	O-RING	1	SN:30001--
4	07372-21040	BOLT	4	SN:30001--
5	01643-51032	WASHER	4	SN:30001--
6	07372-21060	BOLT	4	SN:30001--
7	01643-51032	WASHER	4	SN:30001--
8	22U-62-25650	TUBE	1	SN:30001--
9	21T-09-11460	O-RING	1	SN:30001--
10	07372-21040	BOLT	4	SN:30001--
11	01643-51032	WASHER	4	SN:30001--
12	22U-62-23642	TUBE	1	SN:30001--
13	07000-13032	O-RING	1	SN:30001--
14	07372-21040	BOLT	4	SN:30001--
15	01643-51032	WASHER	4	SN:30001--
16	20Y-62-13711	CLAMP	1	SN:30001--
17	20Y-62-21480	BRACKET	1	SN:30001--
18	20Y-62-13450	PLATE	1	SN:30001--
19	01010-81230	BOLT	2	SN:30001--

Ref. H1270-02A7 Page 150490

https://truckmanualshub.com/

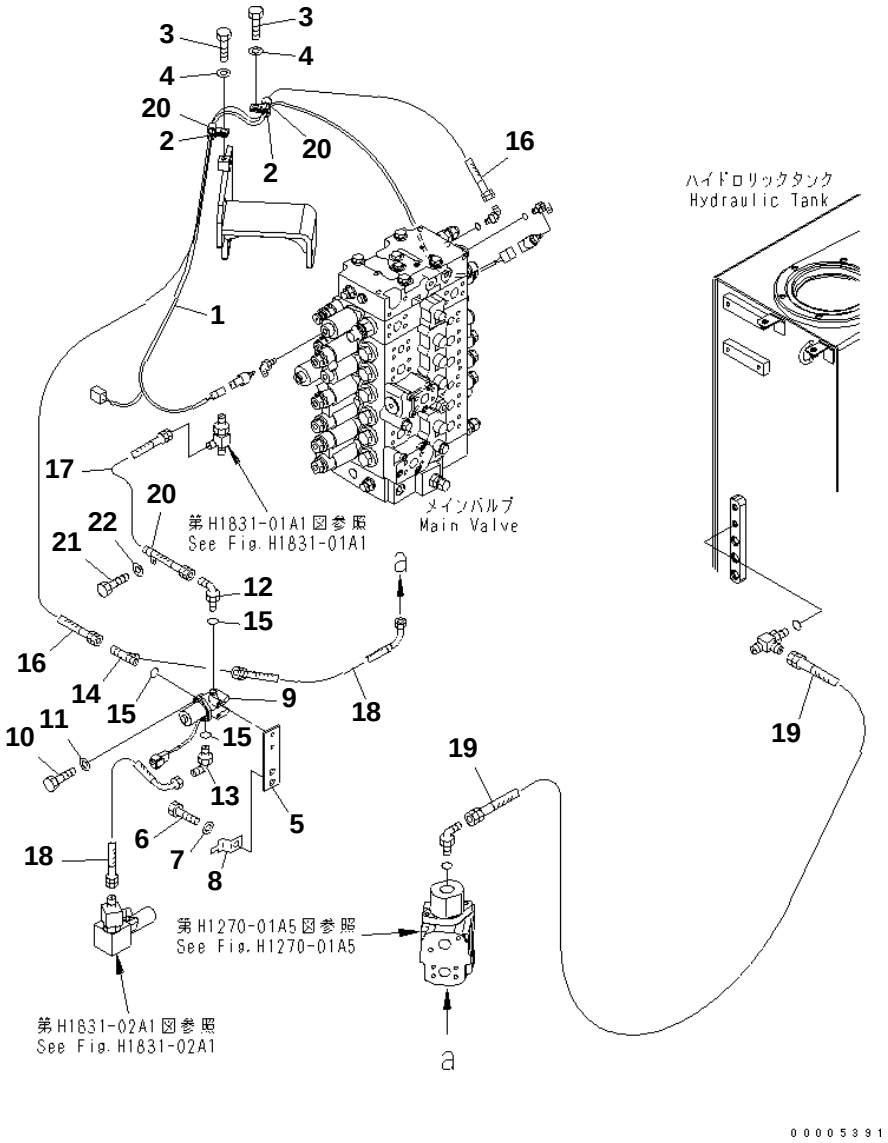

PC228US-3N-W1 S/N 30001-UP

ATTACHMENT LINE (VALVE) (EU SPEC.)

Item	Part No.	Description	Qty	Options
1	22U-06-21381	WIRING HARNESS	1	SN:30001--
2	04434-51012	CLIP	2	SN:30001--
3	01010-81220	BOLT	2	SN:30001--
4	01643-31232	WASHER	2	SN:30001--
5	22U-62-25611	PLATE	1	SN:30001--
6	01010-81225	BOLT	2	SN:30001--
7	01643-31232	WASHER	2	SN:30001--
8	08193-21012	CLIP	1	SN:30001--
9	(20Y-60-32110)	VALVE ASS'Y,(SEE FIG.Y1861-01A0)	1	SN:30001--
10	01010-80825	BOLT	2	SN:30001--
11	01643-30823	WASHER	2	SN:30001--
12	21Y-62-17810	ELBOW	1	SN:30001--
13	07235-10210	ELBOW	1	SN:30001--
14	205-62-55840	TEE	1	SN:30001--
15	07002-11423	O-RING	3	SN:30001--
16	07184-00211	HOSE	1	SN:30001--
17	07184-00206	HOSE	1	SN:30001--
18	07185-00203	HOSE	2	SN:30001--
19	22U-62-25760	HOSE	1	SN:30001--
20	04434-51212	CLIP	3	SN:30001--
21	01010-81220	BOLT	1	SN:30001--
22	01643-31232	WASHER	1	SN:30001--

Ref. H1270-03A5 Page 150500

https://truckmanualshub.com/

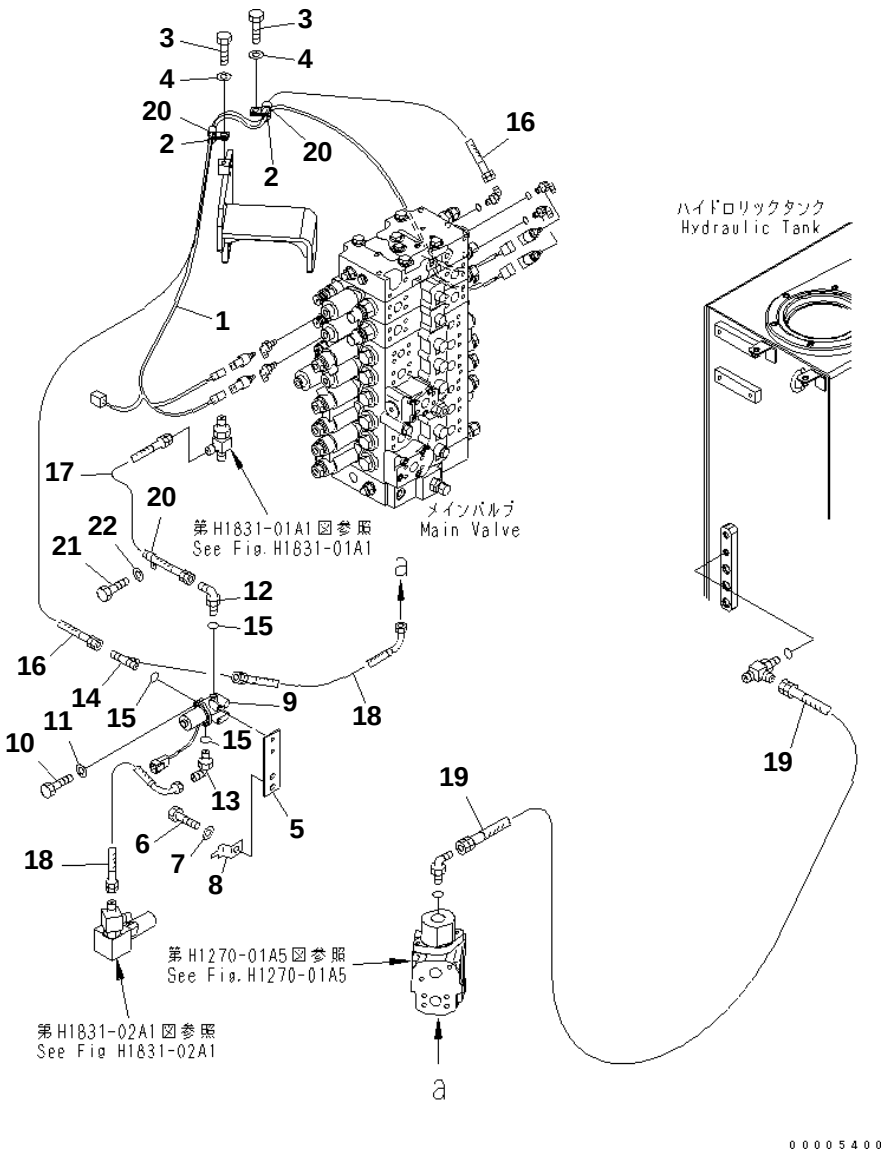

PC228US-3N-W1 S/N 30001-UP

ATTACHMENT LINE (VALVE) (2 ACTUATOR) (EU SPEC.)

Item	Part No.	Description	Qty	Options
1	22U-06-21710	WIRING HARNESS	1	SN:30001--
2	04434-51012	CLIP	2	SN:30001--
3	01010-81220	BOLT	2	SN:30001--
4	01643-31232	WASHER	2	SN:30001--
5	22U-62-25611	PLATE	1	SN:30001--
6	01010-81225	BOLT	2	SN:30001--
7	01643-31232	WASHER	2	SN:30001--
8	08193-21012	CLIP	1	SN:30001--
9	(20Y-60-32110)	VALVE ASS'Y,(SEE FIG.Y1861-01A0)	1	SN:30001--
10	01010-80825	BOLT	2	SN:30001--
11	01643-30823	WASHER	2	SN:30001--
12	21Y-62-17810	ELBOW	1	SN:30001--
13	07235-10210	ELBOW	1	SN:30001--
14	205-62-55840	TEE	1	SN:30001--
15	07002-11423	O-RING	3	SN:30001--
16	07184-00211	HOSE	1	SN:30001--
17	07184-00206	HOSE	1	SN:30001--
18	07185-00203	HOSE	2	SN:30001--
19	22U-62-25760	HOSE	1	SN:30001--
20	04434-51212	CLIP	3	SN:30001--
21	01010-81220	BOLT	1	SN:30001--
22	01643-31232	WASHER	1	SN:30001--

Ref. H1270-03A6 Page 150510

https://truckmanualshub.com/

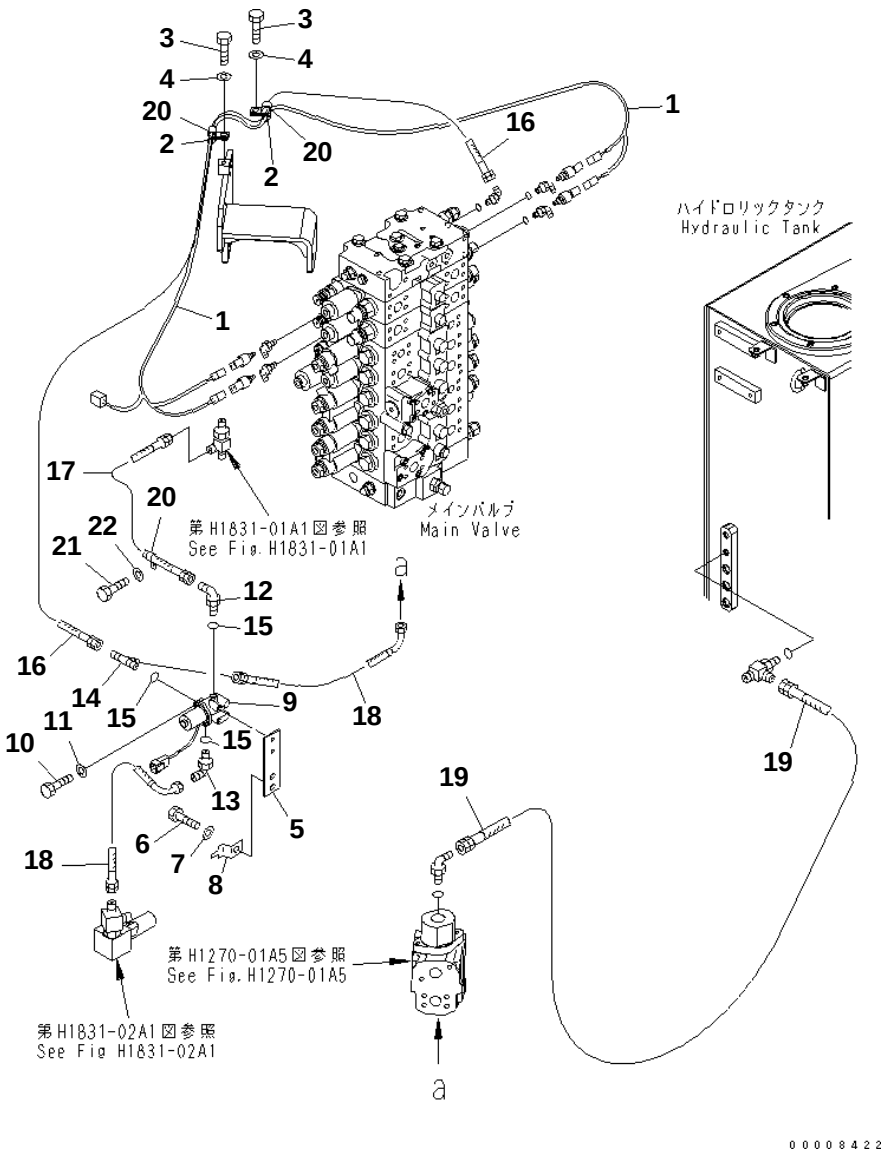

PC228US-3N-W1 S/N 30001-UP

ATTACHMENT LINE (VALVE) (WITH 2-PIECE BOOM OR BLADE SPEC.) (EU SPEC.)

Item	Part No.	Description	Qty	Options
1	22U-06-21710	WIRING HARNESS	1	SN:30001--
2	04434-51012	CLIP	2	SN:30001--
3	01010-81220	BOLT	2	SN:30001--
4	01643-31232	WASHER	2	SN:30001--
5	22U-62-25611	PLATE	1	SN:30001--
6	01010-81225	BOLT	2	SN:30001--
7	01643-31232	WASHER	2	SN:30001--
8	08193-21012	CLIP	1	SN:30001--
9	(20Y-60-32110)	VALVE ASS'Y,(SEE FIG.Y1861-01A0)	1	SN:30001--
10	01010-80825	BOLT	2	SN:30001--
11	01643-30823	WASHER	2	SN:30001--
12	21Y-62-17810	ELBOW	1	SN:30001--
13	07235-10210	ELBOW	1	SN:30001--
14	205-62-55840	TEE	1	SN:30001--
15	07002-11423	O-RING	3	SN:30001--
16	07184-00211	HOSE	1	SN:30001--
17	07184-00206	HOSE	1	SN:30001--
18	07185-00203	HOSE	2	SN:30001--
19	22U-62-25760	HOSE	1	SN:30001--
20	04434-51212	CLIP	3	SN:30001--
21	01010-81220	BOLT	1	SN:30001--
22	01643-31232	WASHER	1	SN:30001--

Ref. H1270-03A7 Page 150520

https://truckmanualshub.com/

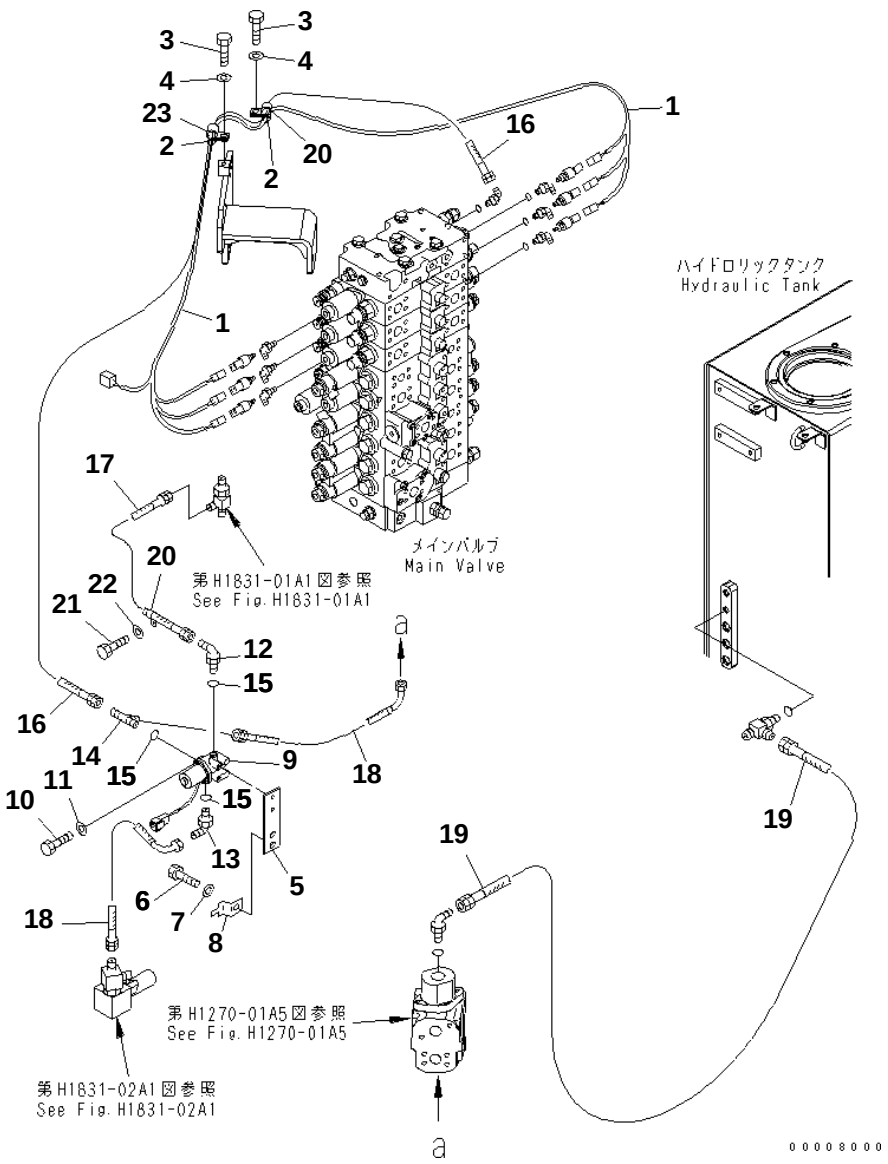

PC228US-3N-W1 S/N 30001-UP

ATTACHMENT LINE (VALVE) (2 ACTUATOR) (WITH 2-PIECE BOOM OR BLADE SPEC.) (EU SPEC.)

Item	Part No.	Description	Qty	Options
1	22U-06-21830	WIRING HARNESS	1	SN:30001--
2	04434-51412	CLIP	2	SN:30001--
3	01010-81220	BOLT	2	SN:30001--
4	01643-31232	WASHER	2	SN:30001--
5	22U-62-25611	PLATE	1	SN:30001--
6	01024-81225	BOLT	2	SN:30001--
	01010-81225	BOLT	2	SN:30001--
7	01643-31232	WASHER	2	SN:30001--
8	08193-21012	CLIP	1	SN:30001--
9	(20Y-60-32110)	VALVE ASS'Y,(SEE FIG.Y1861-01A0)	1	SN:30001--
10	01010-80825	BOLT	2	SN:30001--
11	01643-30823	WASHER	2	SN:30001--
12	21Y-62-17810	ELBOW	1	SN:30001--
13	07235-10210	ELBOW	1	SN:30001--
14	205-62-55840	TEE	1	SN:30001--
15	01583-11408	NUT	1	SN:30001--
	07002-11423	O-RING	3	SN:30001--
16	07184-00211	HOSE	1	SN:30001--
17	07184-00206	HOSE	1	SN:30001--
18	07185-00203	HOSE	2	SN:30001--
19	22U-62-25760	HOSE	1	SN:30001--
20	04434-51212	CLIP	2	SN:30001--
21	01010-81220	BOLT	1	SN:30001--
22	01643-31232	WASHER	1	SN:30001--
23	04434-52212	CLIP	1	SN:30001--

Ref. H1270-03A8 Page 150530

https://truckmanualshub.com/

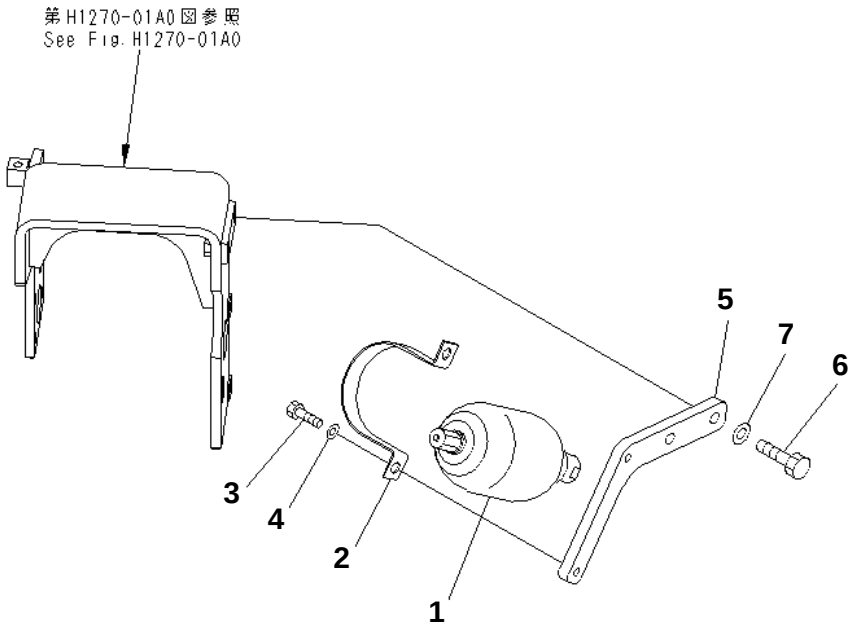

00004076

PC228US-3N-W1 S/N 30001-UP

ATTACHMENT LINE (ACCUMULATOR)

Item	Part No.	Description	Qty	Options
1	(20Y-970-6450)	ACCUMULATOR,(SEE FIG.Y1840-01A0)	1	SN:30001--
2	175-61-51750	PLATE	1	SN:30001--
3	01010-81225	BOLT	2	SN:30001--
4	01643-31232	WASHER	2	SN:30001--
5	22U-62-25750	BRACKET	1	SN:30001--
6	01010-81250	BOLT	2	SN:30001--
7	01643-31232	WASHER	2	SN:30001--

Ref. H1270-04A0 Page 150540

https://truckmanualshub.com/

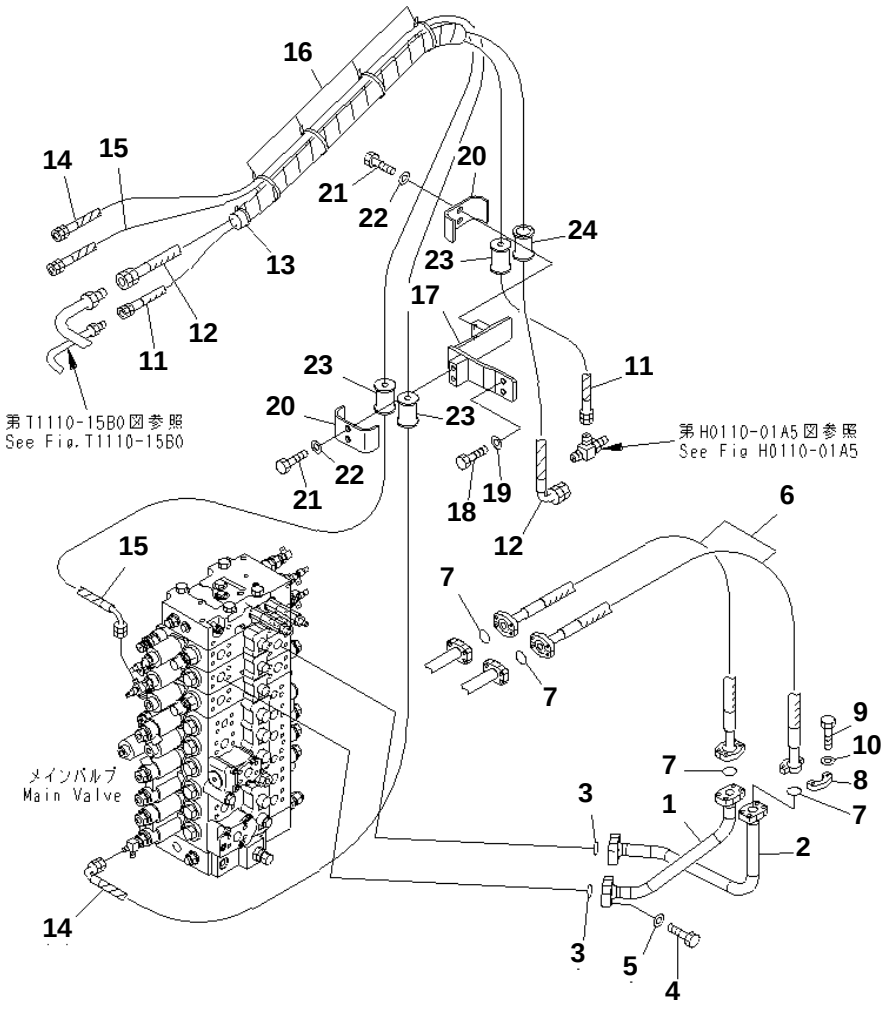

PC228US-3N-W1 S/N 30001-UP

ATTACHMENT LINE (2-PIECE BOOM LINE) (EU SPEC.)

Item	Part No.	Description	Qty	Options
1	22U-62-24460	TUBE	1	SN:30001--
2	22U-62-24470	TUBE	1	SN:30001--
3	21T-09-11460	O-RING	2	SN:30001--
4	07372-21040	BOLT	8	SN:30001--
5	01643-51032	WASHER	8	SN:30001--
6	07085-00616	HOSE	2	SN:30001--
7	21T-09-11430	O-RING	4	SN:30001--
8	07371-30640	FLANGE	8	SN:30001--
9	07372-21035	BOLT	16	SN:30001--
10	01643-51032	WASHER	16	SN:30001--
11	07184-00323	HOSE	1	SN:30001--
12	07626-00624	HOSE	1	SN:30001--
13	08034-20823	BAND	1	SN:30001--
14	22U-62-26340	HOSE	1	SN:30001--
15	22U-62-26330	HOSE	1	SN:30001--
16	08034-20536	BAND	4	SN:30001--
17	22U-62-27710	BRACKET	1	SN:30001--
18	01010-81245	BOLT	2	SN:30001--
19	01643-31232	WASHER	2	SN:30001--
20	22U-62-21461	CLAMP	2	SN:30001--
21	01010-81225	BOLT	4	SN:30001--
22	01643-31232	WASHER	4	SN:30001--
23	22U-62-27540	CUSHION	3	SN:30001--
24	22U-62-21950	CUSHION	1	SN:30001--

Ref. H1270-05A7 Page 150550

https://truckmanualshub.com/

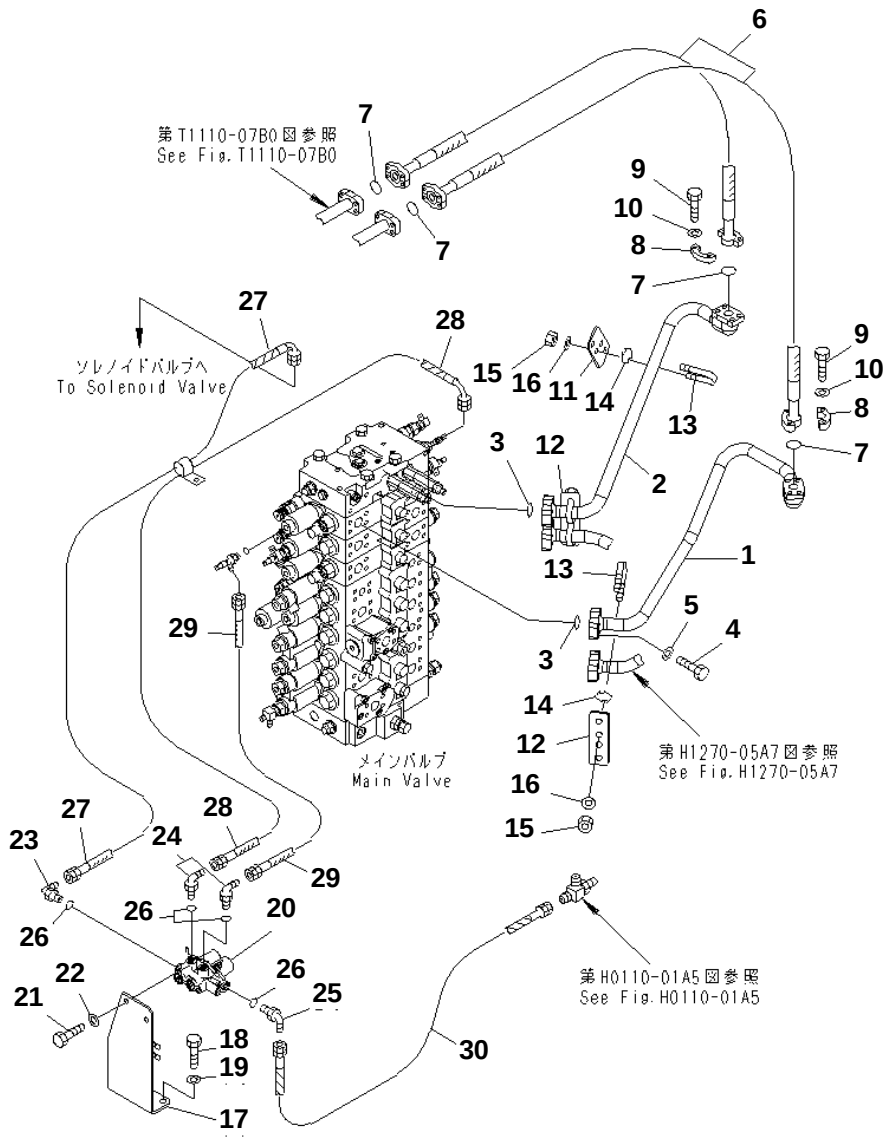

PC228US-3N-W1 S/N 30001-UP

ATTACHMENT LINE (CLAMP AND SOLENOID VALVE) (2 ACTUATOR) (WITH 2-PIECE BOOM) (EU SPEC.)

Item	Part No.	Description	Qty	Options
1	22U-62-27670	TUBE	1	SN:30001--
2	22U-62-27680	TUBE	1	SN:30001--
3	21T-09-11460	O-RING	2	SN:30001--
4	07372-21040	BOLT	8	SN:30001--
5	01643-51032	WASHER	8	SN:30001--
6	07099-00618	HOSE	2	SN:30001--
7	21T-09-11430	O-RING	4	SN:30001--
8	07371-30640	FLANGE	8	SN:30001--
9	07372-21035	BOLT	16	SN:30001--
10	01643-51032	WASHER	16	SN:30001--
11	22U-62-27720	PLATE	1	SN:30001--
12	22U-62-27730	PLATE	2	SN:30001--
13	07283-32746	CLIP	6	SN:30001--
14	07283-52737	SEAT	6	SN:30001--
15	01597-01009	NUT	12	SN:30001--
16	01643-31032	WASHER	12	SN:30001--
17	22U-62-27740	BRACKET	1	SN:30001--
18	01010-81230	BOLT	2	SN:30001--
19	01643-31232	WASHER	2	SN:30001--
20	(22U-60-21271)	VALVE ASS'Y,(SEE FIG. Y1862-01A0)	1	SN:30001--
21	01010-81025	BOLT	2	SN:30001--
22	01643-31032	WASHER	2	SN:30001--
23	21Y-62-17810	ELBOW	1	SN:30001--
24	07235-10210	ELBOW	2	SN:30001--
25	07235-10311	ELBOW	1	SN:30001--
26	07002-11423	O-RING	4	SN:30001--
27	22U-62-26310	HOSE	1	SN:30001--
28	22U-62-26320	HOSE	1	SN:30001--
29	07184-00205	HOSE	1	SN:30001--
30	22U-62-26350	HOSE	1	SN:30001--

Ref. H1270-06A8 Page 150560

https://truckmanualshub.com/

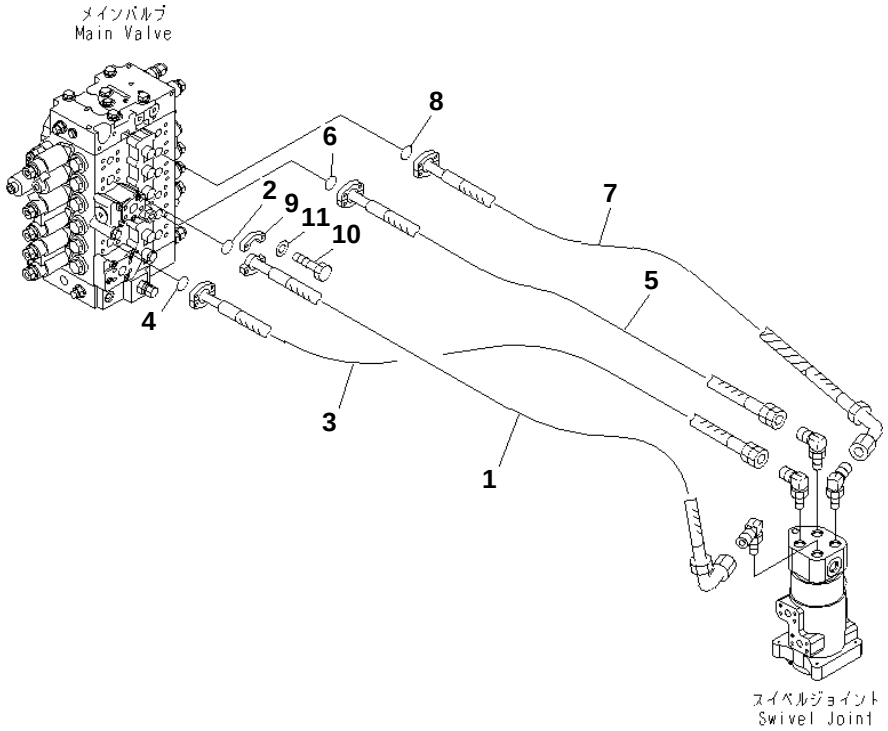

PC228US-3N-W1 S/N 30001-UP

TRAVEL LINES

Item	Part No.	Description	Qty	Options
1	22U-62-25580	HOSE	1	SN:30001--
2	21T-09-11460	O-RING	1	SN:30001--
3	22U-62-23950	HOSE	1	SN:30001--
4	21T-09-11460	O-RING	1	SN:30001--
5	22U-62-23960	HOSE¤ 1050MM	1	SN:30001--
6	21T-09-11460	O-RING	1	SN:30001--
7	22U-62-25590	HOSE	1	SN:30001--
8	21T-09-11460	O-RING	1	SN:30001--
9	07371-31049	FLANGE	8	SN:30001--
10	07372-21035	BOLT	16	SN:30001--
11	01643-51032	WASHER	16	SN:30001--

Ref. H1310-01A0 Page 150570

https://truckmanualshub.com/

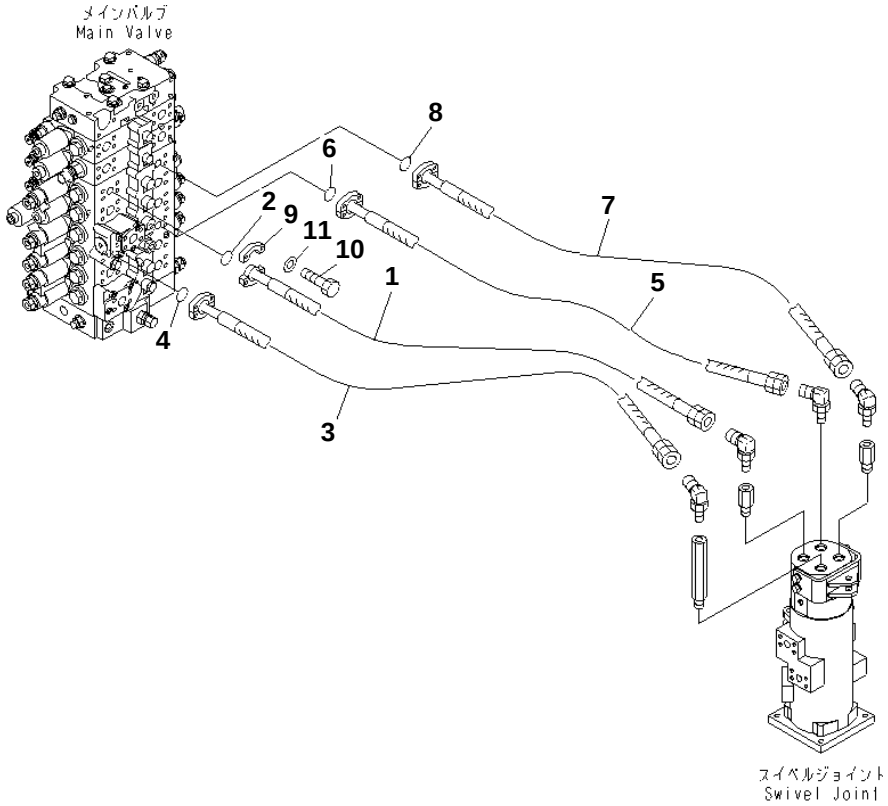

PC228US-3N-W1 S/N 30001-UP

TRAVEL LINES (BLADE SPEC.)(#20001-)

Item	Part No.	Description	Qty	Options
1	22U-62-22211	HOSE	1	SN:20001--
2	21T-09-11460	O-RING	1	SN:20001--
3	22U-62-24380	HOSE¤ 1150MM	1	SN:20001--
4	21T-09-11460	O-RING	1	SN:20001--
5	22U-62-23960	HOSE¤ 1050MM	1	SN:20001--
6	21T-09-11460	O-RING	1	SN:20001--
7	22U-62-21511	HOSE¤ 1200MM	1	SN:20001--
8	21T-09-11460	O-RING	1	SN:20001--
9	07371-31049	FLANGE	8	SN:20001--
10	07372-21035	BOLT	16	SN:20001--
11	01643-51032	WASHER	16	SN:20001--

Ref. H1310-01A1 Page 150580

https://truckmanualshub.com/

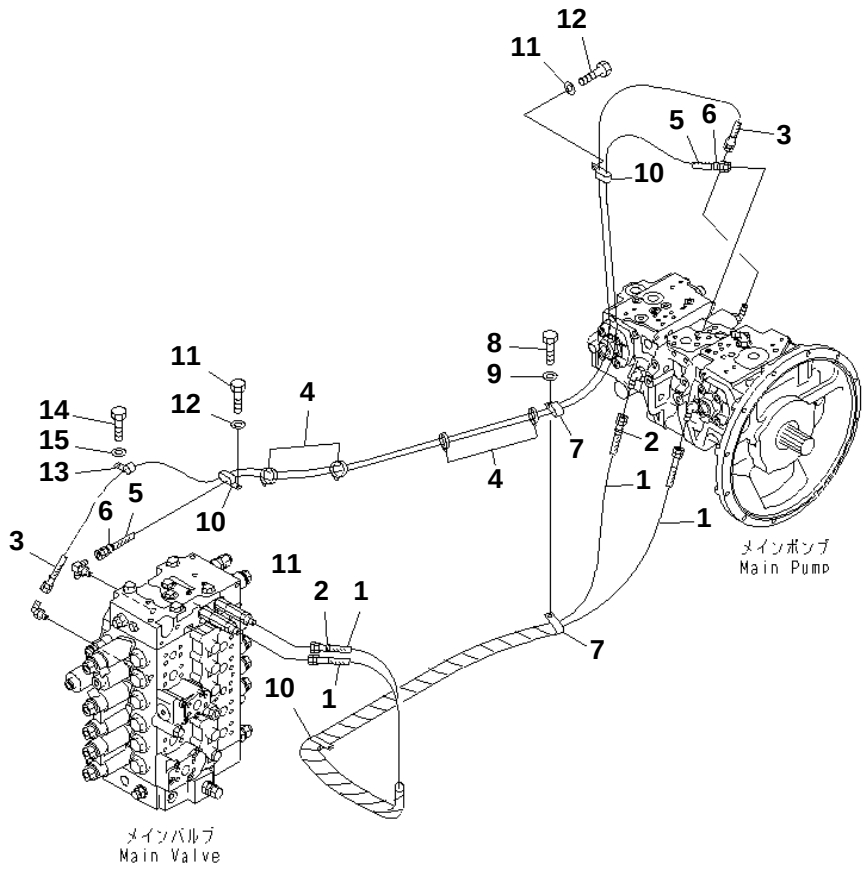

LS LINES

Item	Part No.	Description	Qty	Options
1	07096-00223	HOSE	2	SN:30001--
2	20Y-62-22790	BAND¤ RED	2	SN:30001--
3	07096-00229	HOSE	1	SN:30001--
4	08034-00519	BAND	4	SN:30001--
5	22U-62-25380	HOSE	1	SN:30001--
6	20Y-62-22810	BAND¤ YELLOW	2	SN:30001--
7	04435-51812	CLIP	2	SN:30001--
8	01010-81220	BOLT	2	SN:30001--
9	01643-31232	WASHER	2	SN:30001--
10	04435-51812	CLIP	3	SN:30001--
11	01010-81220	BOLT	3	SN:30001--
12	01643-31232	WASHER	3	SN:30001--
13	04434-51812	CLIP	1	SN:30001--
14	01010-81220	BOLT	1	SN:30001--
15	01643-31232	WASHER	1	SN:30001--

https://truckmanualshub.com/

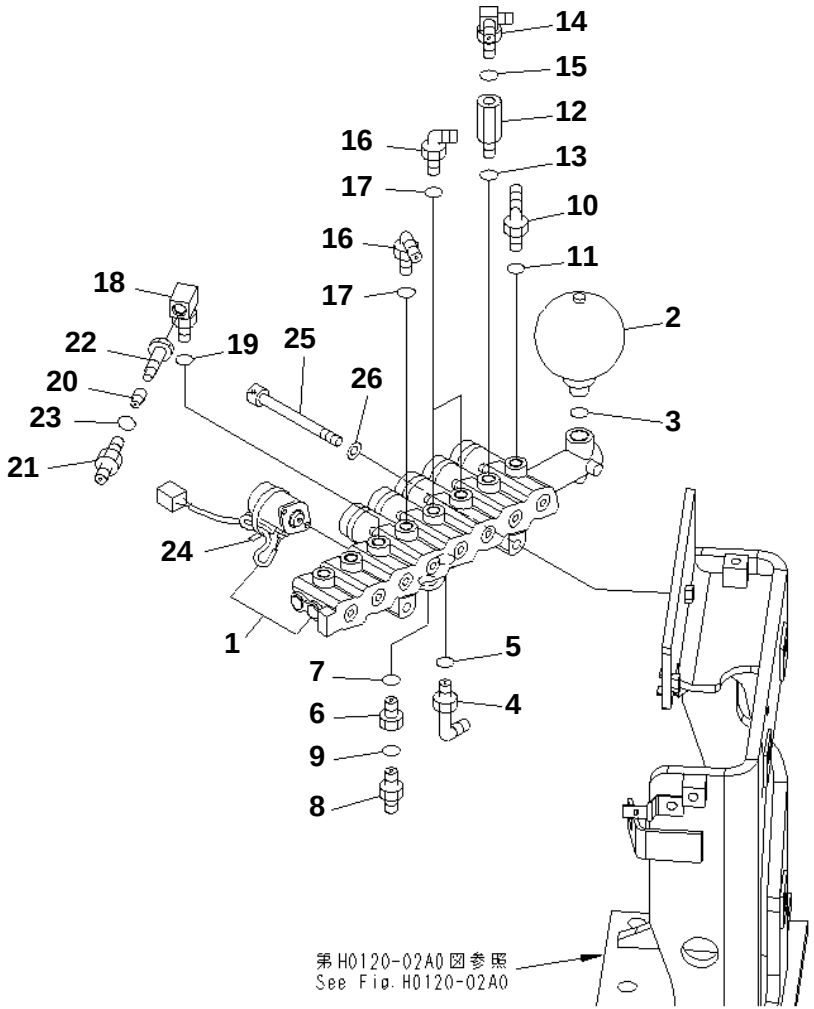

PC228US-3N-W1 S/N 30001-UP

SOLENOID VALVE (VALVE)

Item	Part No.	Description	Qty	Options
1	(20Y-60-31212)	VALVE ASS'Y,(SEE FIG. Y1860-01A0)	1	SN:30001--
2	22U-60-21330	ACCUMULATOR	1	SN:30001--
3	07002-12034	O-RING	1	SN:30001--
4	07235-10315	ELBOW	1	SN:30001--
5	07002-12034	O-RING	1	SN:30001--
6	20Y-62-21940	FILTER ASS'Y	1	SN:30001--
7	07002-12034	O-RING	1	SN:30001--
8	07230-10210	UNION	1	SN:30001--
9	07002-11423	O-RING	1	SN:30001--
10	07235-10311	ELBOW	1	SN:30001--
11	07002-11423	O-RING	1	SN:30001--
12	20Y-62-22160	ADAPTER	1	SN:30001--
13	07002-11423	O-RING	1	SN:30001--
14	245-62-51510	ELBOW	1	SN:30001--
15	07002-11423	O-RING	1	SN:30001--
16	07235-10210	ELBOW	1	SN:30001--
17	07002-11423	O-RING	1	SN:30001--
18	20Y-62-23541	ELBOW	1	SN:30001--
19	07002-11423	O-RING	1	SN:30001--
	22U-60-12230	VALVE ASS'Y	1	SN:30001--
20	22U-60-12240	· POPPET	1	SN:30001--
21	21Y-62-11580	· NIPPLE	1	SN:30001--
22	21Y-62-11590	· PLUG	1	SN:30001--
23	07002-11423	O-RING	1	SN:30001--
24	08034-00519	BAND	6	SN:30001--
25	21T-09-11580	BOLT	2	SN:30001--
26	01643-31032	WASHER	2	SN:30001--

Ref. H1831-01A0 Page 150600

https://truckmanualshub.com/

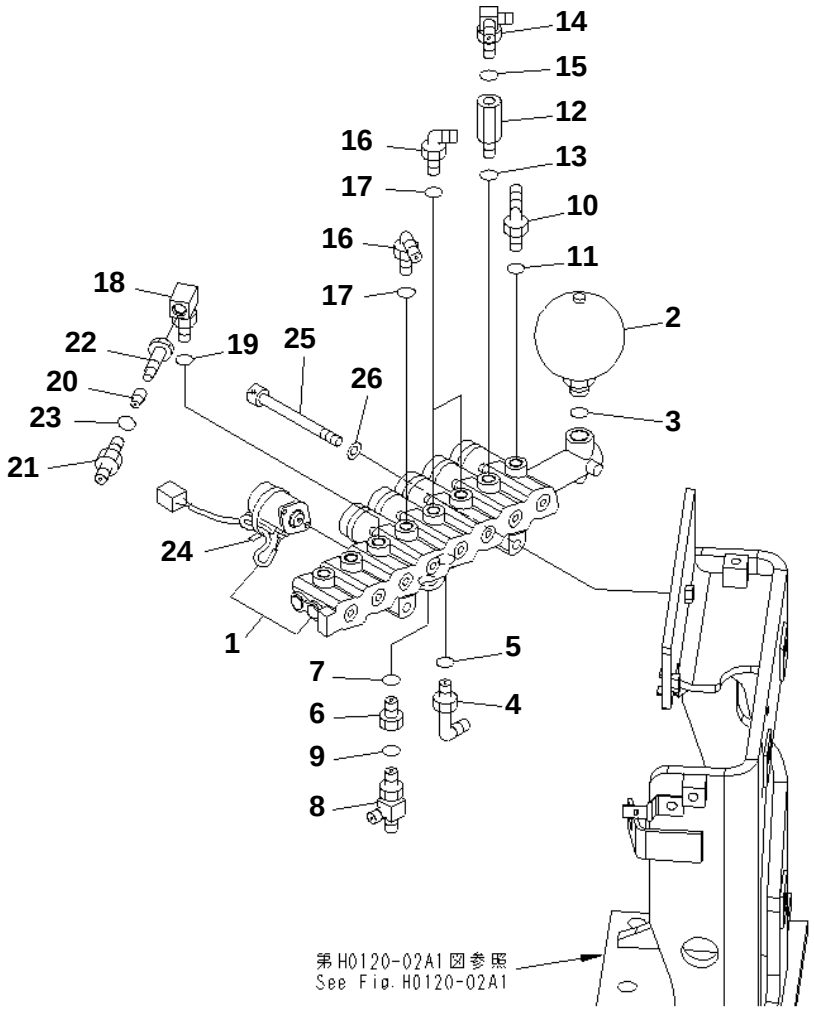

PC228US-3N-W1 S/N 30001-UP

SOLENOID VALVE (VALVE) (1 ACTUATOR)

Item	Part No.	Description	Qty	Options
1	(20Y-60-31212)	VALVE ASS'Y,(SEE FIG. 1860-01A0)	1	SN:30001--
2	22U-60-21330	ACCUMULATOR	1	SN:30001--
3	07002-12034	O-RING	1	SN:30001--
4	07235-10315	ELBOW	1	SN:30001--
5	07002-12034	O-RING	1	SN:30001--
6	20Y-62-21940	FILTER ASS'Y	1	SN:30001--
7	07002-12034	O-RING	1	SN:30001--
8	208-62-17550	TEE	1	SN:30001--
9	07002-11423	O-RING	1	SN:30001--
10	07235-10311	ELBOW	1	SN:30001--
11	07002-11423	O-RING	1	SN:30001--
12	20Y-62-22160	ADAPTER	1	SN:30001--
13	07002-11423	O-RING	1	SN:30001--
14	245-62-51510	ELBOW	1	SN:30001--
15	07002-11423	O-RING	1	SN:30001--
16	07235-10210	ELBOW	1	SN:30001--
17	07002-11423	O-RING	1	SN:30001--
18	20Y-62-23541	ELBOW	1	SN:30001--
19	07002-11423	O-RING	1	SN:30001--
	22U-60-12230	VALVE ASS'Y	1	SN:30001--
20	22U-60-12240	· POPPET	1	SN:30001--
21	21Y-62-11580	· NIPPLE	1	SN:30001--
22	21Y-62-11590	· PLUG	1	SN:30001--
23	07002-11423	O-RING	1	SN:30001--
24	08034-00519	BAND	6	SN:30001--
25	21T-09-11580	BOLT	2	SN:30001--
26	01643-31032	WASHER	2	SN:30001--

Ref. H1831-01A1 Page 150610

https://truckmanualshub.com/

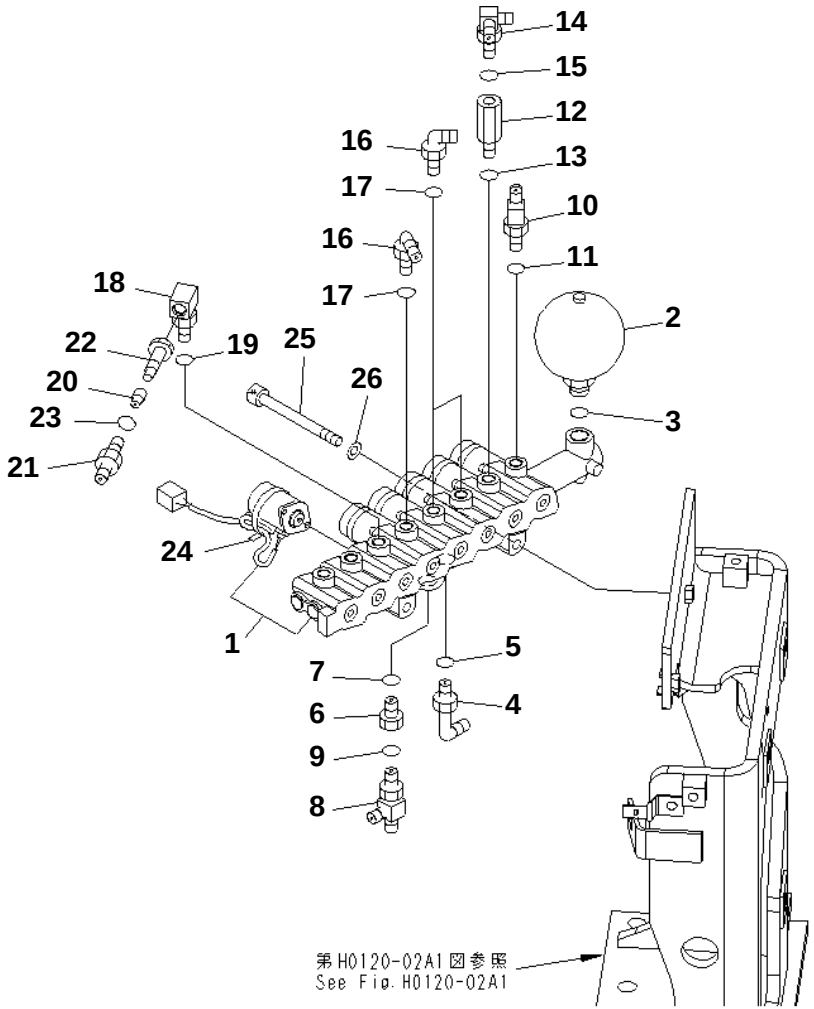

PC228US-3N-W1 S/N 30001-UP

SOLENOID VALVE (VALVE) (2 ACTUATOR) (WITH 2-PIECE BOOM) (EU SPEC.)

Item	Part No.	Description	Qty	Options
1	(20Y-60-31212)	VALVE ASS'Y,(SEE FIG. Y1860-01A0)	1	SN:30001--
2	22U-60-21330	ACCUMULATOR	1	SN:30001--
3	07002-12034	O-RING	1	SN:30001--
4	07235-10315	ELBOW	1	SN:30001--
5	07002-12034	O-RING	1	SN:30001--
6	20Y-62-21940	FILTER ASS'Y	1	SN:30001--
7	07002-12034	O-RING	1	SN:30001--
8	208-62-17550	TEE	1	SN:30001--
9	07002-11423	O-RING	1	SN:30001--
10	201-62-65280	TEE	1	SN:30001--
11	07002-11423	O-RING	1	SN:30001--
12	20Y-62-22160	ADAPTER	1	SN:30001--
13	07002-11423	O-RING	1	SN:30001--
14	245-62-51510	ELBOW	1	SN:30001--
15	07002-11423	O-RING	1	SN:30001--
16	07235-10210	ELBOW	1	SN:30001--
17	07002-11423	O-RING	1	SN:30001--
18	20Y-62-23541	ELBOW	1	SN:30001--
19	07002-11423	O-RING	1	SN:30001--
	22U-60-12230	VALVE ASS'Y	1	SN:30001--
20	22U-60-12240	· POPPET	1	SN:30001--
21	21Y-62-11580	· NIPPLE	1	SN:30001--
22	21Y-62-11590	· PLUG	1	SN:30001--
23	07002-11423	O-RING	1	SN:30001--
24	21T-09-11580	BOLT	2	SN:30001--
25	01643-31032	WASHER	2	SN:30001--
26	08034-20519	BAND	3	SN:30001--

Ref. H1831-01A2 Page 150620

https://truckmanualshub.com/

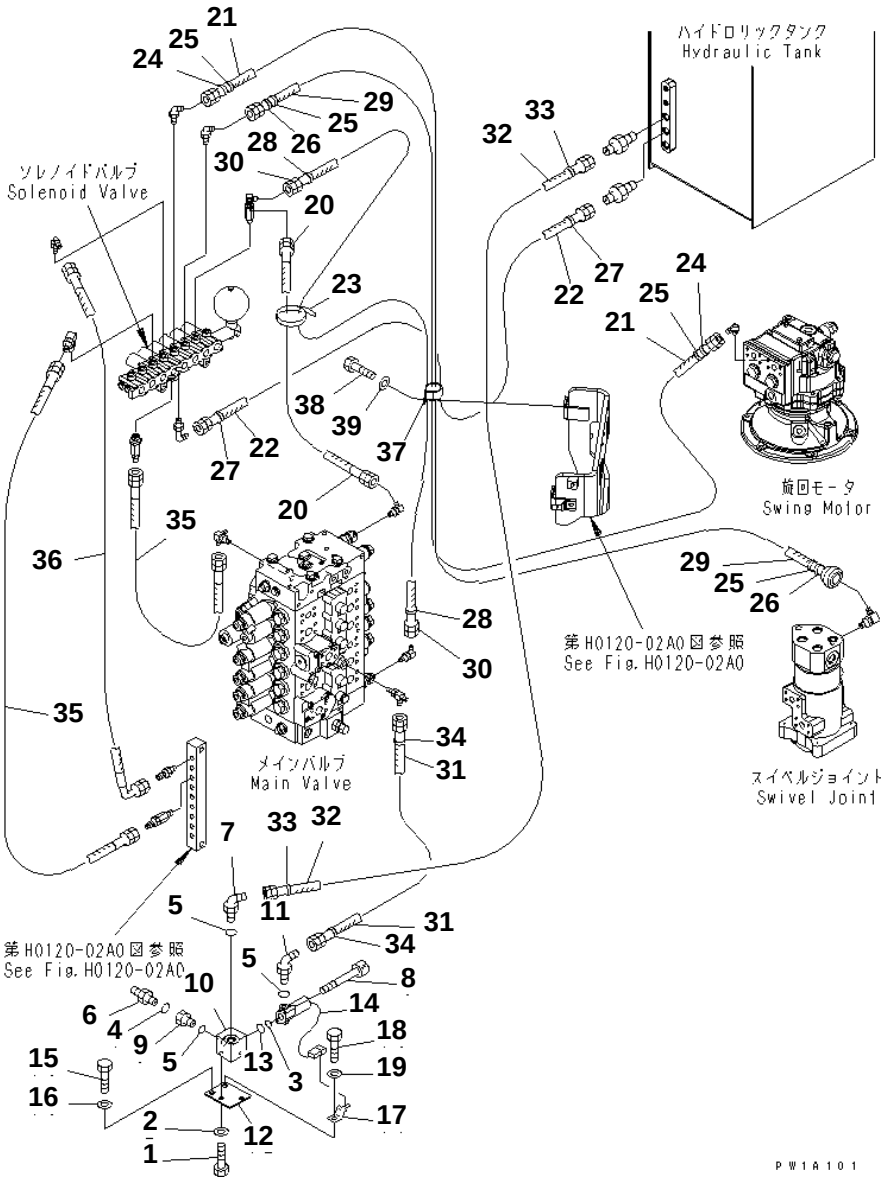

PC228US-3N-W1 S/N 30001-UP

SOLENOID VALVE (EPC AND HOSE)

Item	Part No.	Description	Qty	Options
	22U-62-21200	VALVE ASS'Y	1	SN:30001--
1	01010-81020	· BOLT	2	SN:30001--
2	01643-31032	· WASHER	2	SN:30001--
3	07000-12011	· O-RING	1	SN:30001--
4	07002-11423	· O-RING	2	SN:30001--
5	07002-12034	· O-RING	2	SN:30001--
6	07230-20210	· UNION	1	SN:30001--
7	07235-10315	· ELBOW	1	SN:30001--
8	203-60-62220	· BOLT	2	SN:30001--
9	20Y-62-21940	· FILTER ASS'Y	1	SN:30001--
10	☆	· BLOCK	1	SN:30001--
11	21Y-62-17810	· ELBOW	1	SN:30001--
12	22U-62-21890	· PLATE	1	SN:30001--
13	700-93-11320	· O-RING	1	SN:30001--
14	702-21-07010	· VALVE ASS'Y	1	SN:30001--
15	01010-81225	BOLT	2	SN:30001--
16	01643-31232	WASHER	2	SN:30001--
17	08053-01510	CLIP	1	SN:30001--
18	01010-81220	BOLT	1	SN:30001--
19	01643-31232	WASHER	1	SN:30001--
20	07184-00204	HOSE¤ 400MM	1	SN:30001--
21	07184-00229	HOSE	1	SN:30001--
22	07184-00318	HOSE¤ 1800MM	1	SN:30001--
23	08034-00414	BAND	1	SN:30001--
24	20Y-62-22790	BAND¤ RED	2	SN:30001--
25	20Y-62-22810	BAND¤ YELLOW	4	SN:30001--
26	20Y-62-22820	BAND¤ BLUE	2	SN:30001--
27	20Y-62-22850	BAND¤ GREEN	2	SN:30001--
28	20Y-62-22860	BAND¤ BROWN	2	SN:30001--
29	20Y-62-23981	HOSE	1	SN:30001--
30	22T-61-11710	HOSE	1	SN:30001--
31	07184-00207	HOSE	1	SN:30001--
32	07184-00313	HOSE	1	SN:30001--
33	20Y-62-22840	BAND¤ BLACK	2	SN:30001--
34	20Y-62-22850	BAND¤ GREEN	2	SN:30001--
35	07184-00205	HOSE	2	SN:30001--
36	22U-62-22660	HOSE ASS'Y	1	SN:30001--
37	20Y-62-15951	CLIP	1	SN:30001--
38	01010-81225	BOLT	1	SN:30001--
39	01643-31232	WASHER	1	SN:30001--

Ref. H1831-02A0 Page 150630

https://truckmanualshub.com/

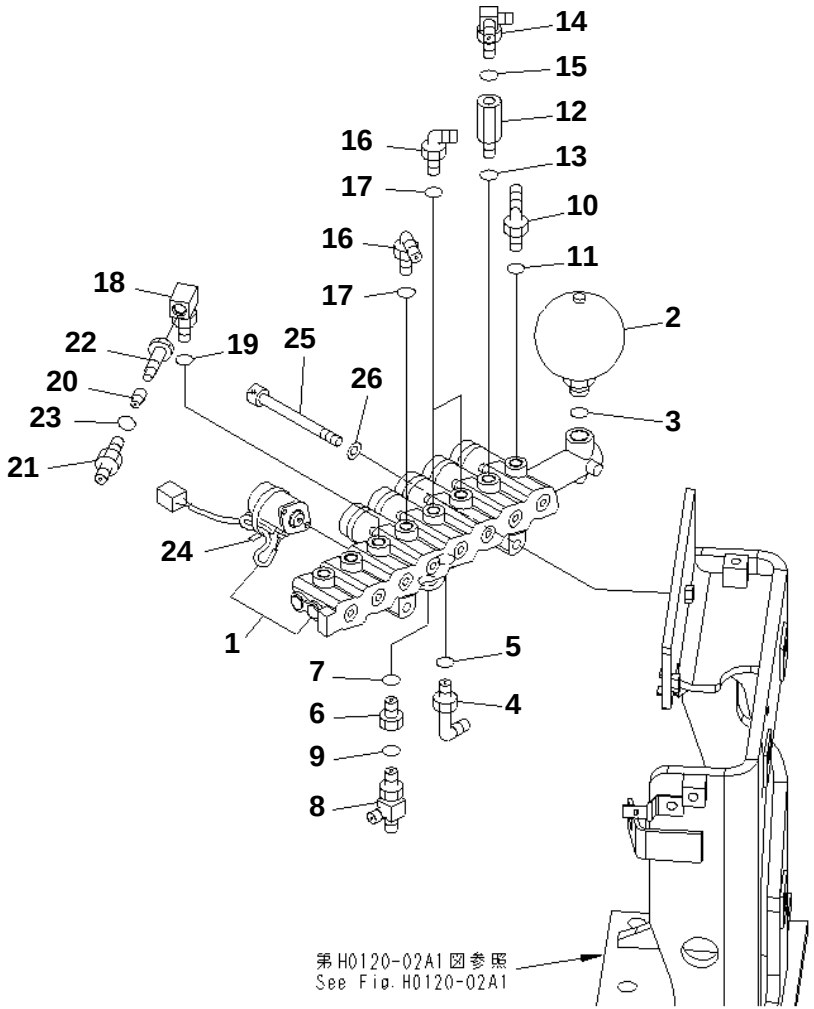

PC228US-3N-W1 S/N 30001-UP

SOLENOID VALVE (VALVE) (1 ACTUATOR)

Item	Part No.	Description	Qty	Options
1	(20Y-60-31212)	VALVE ASS'Y,(SEE FIG. 1860-01A0)	1	SN:30001--
2	22U-60-21330	ACCUMULATOR	1	SN:30001--
3	07002-12034	O-RING	1	SN:30001--
4	07235-10315	ELBOW	1	SN:30001--
5	07002-12034	O-RING	1	SN:30001--
6	20Y-62-21940	FILTER ASS'Y	1	SN:30001--
7	07002-12034	O-RING	1	SN:30001--
8	208-62-17550	TEE	1	SN:30001--
9	07002-11423	O-RING	1	SN:30001--
10	07235-10311	ELBOW	1	SN:30001--
11	07002-11423	O-RING	1	SN:30001--
12	20Y-62-22160	ADAPTER	1	SN:30001--
13	07002-11423	O-RING	1	SN:30001--
14	245-62-51510	ELBOW	1	SN:30001--
15	07002-11423	O-RING	1	SN:30001--
16	07235-10210	ELBOW	1	SN:30001--
17	07002-11423	O-RING	1	SN:30001--
18	20Y-62-23541	ELBOW	1	SN:30001--
19	07002-11423	O-RING	1	SN:30001--
	22U-60-12230	VALVE ASS'Y	1	SN:30001--
20	22U-60-12240	· POPPET	1	SN:30001--
21	21Y-62-11580	· NIPPLE	1	SN:30001--
22	21Y-62-11590	· PLUG	1	SN:30001--
23	07002-11423	O-RING	1	SN:30001--
24	08034-00519	BAND	6	SN:30001--
25	21T-09-11580	BOLT	2	SN:30001--
26	01643-31032	WASHER	2	SN:30001--

Ref. H1831-01A1 Page 150610

https://truckmanualshub.com/

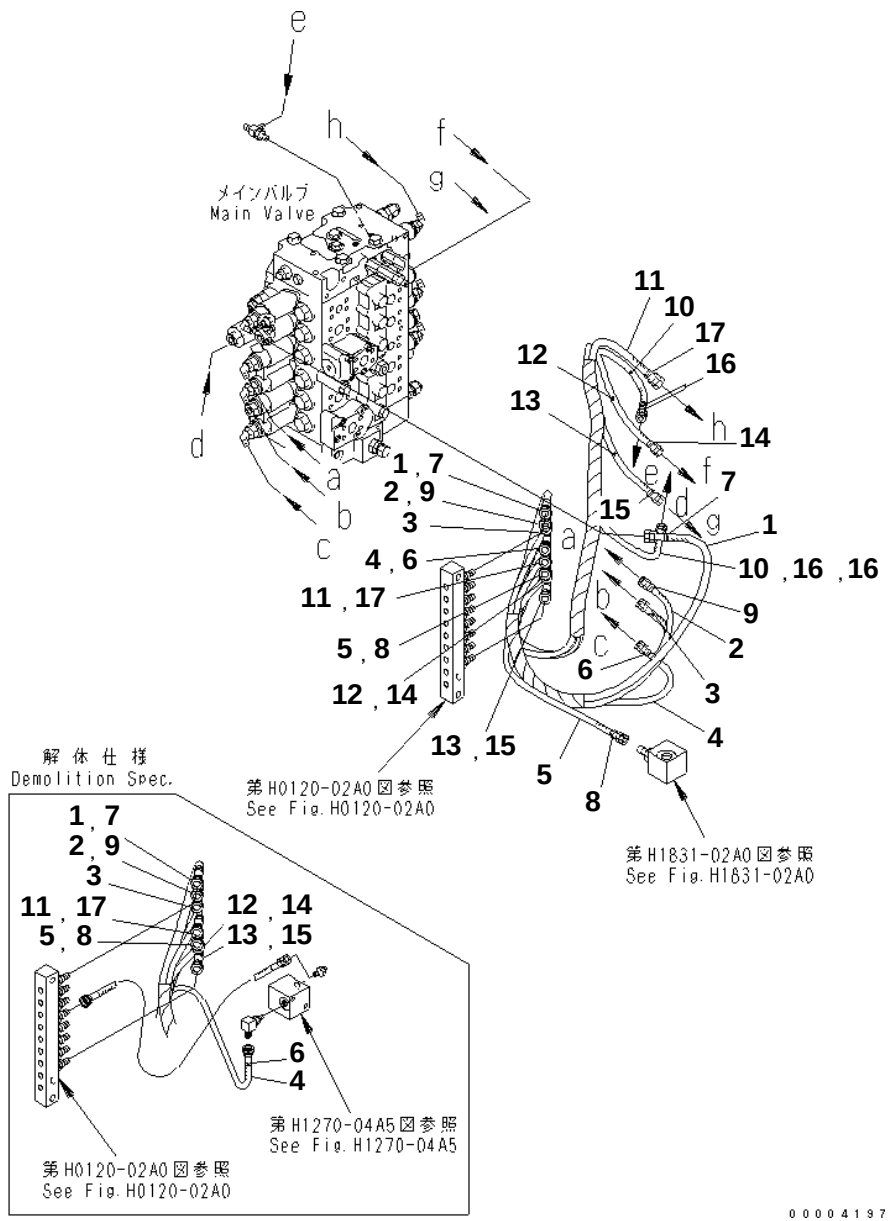

PC228US-3N-W1 S/N 30001-UP

PPC MAIN LINE

Item	Part No.	Description	Qty	Options
1	209-62-76511	HOSE	1	SN:30001--
2	22U-62-22560	HOSE	1	SN:30001--
3	21J-62-12380	HOSE¤ 1100MM	1	SN:30001--
4	20Y-62-23862	HOSE	1	SN:30001--
5	20Y-62-23831	HOSE¤ 800MM	1	SN:30001--
6	20Y-62-22820	BAND¤ BLUE	2	SN:30001--
7	20Y-62-22830	BAND¤ WHITE	2	SN:30001--
8	20Y-62-22850	BAND¤ GREEN	2	SN:30001--
9	20Y-62-22860	BAND¤ BROWN	2	SN:30001--
10	07184-00212	HOSE	1	SN:30001--
11	22U-62-25330	HOSE	1	SN:30001--
12	22U-62-25340	HOSE	1	SN:30001--
13	22U-62-25880	HOSE	1	SN:30001--
14	20Y-62-22790	BAND¤ RED	2	SN:30001--
15	20Y-62-22810	BAND¤ YELLOW	2	SN:30001--
16	20Y-62-22830	BAND¤ WHITE	4	SN:30001--
17	20Y-62-22840	BAND¤ BLACK	2	SN:30001--

Ref. H1840-01A0 Page 150650

https://truckmanualshub.com/

MAIN/REVOLVING FRAME AND RELATED PARTS

Item	Description	Qty	Page
10	REVOLVING FRAME (YELLOW)	1	180010
20	REVOLVING FRAME (BLADE SPEC.) (YELLOW)	1	180020
30	BOOM FOOT PIN (YELLOW)	1	180030

https://truckmanualshub.com/

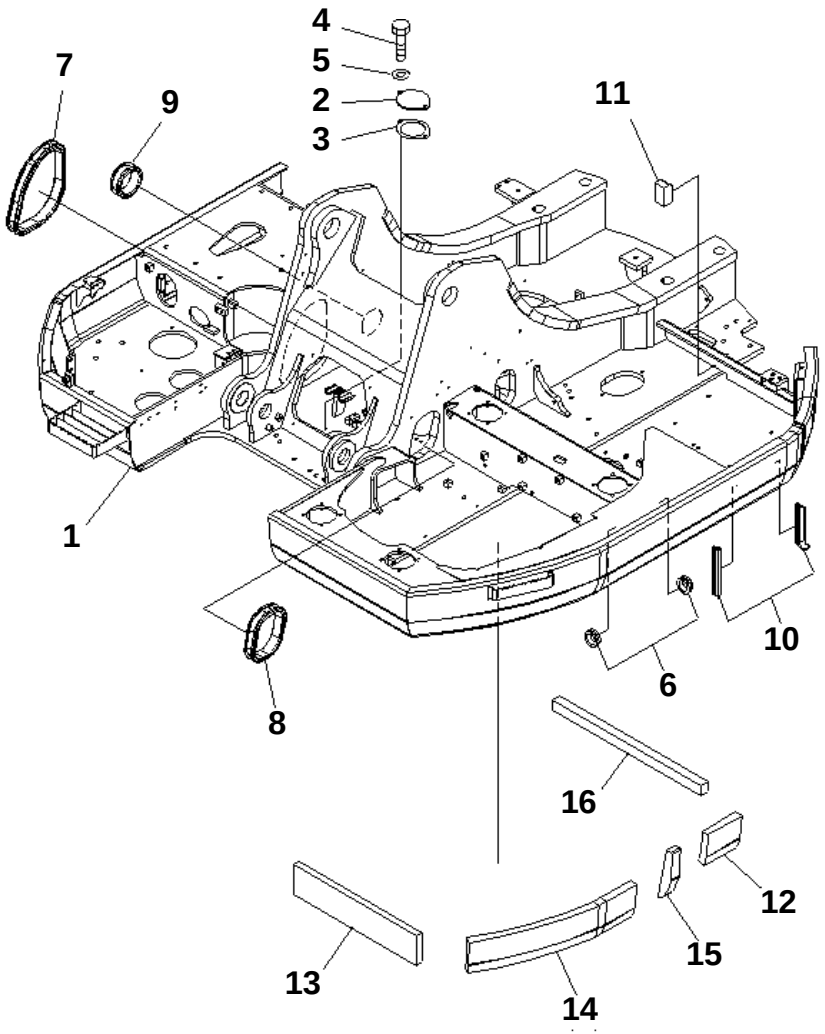

PC228US-3N-W1 S/N 30001-UP

REVOLVING FRAME (YELLOW)

Item	Part No.	Description	Qty	Options
1	22U-46-21512NK	FRAME	1	SN:30001--
2	205-30-71181	COVER	1	SN:30001--
3	205-30-71191	GASKET	1	SN:30001--
4	01010-81230	BOLT	2	SN:30001--
5	01643-31232	WASHER	2	SN:30001--
6	08037-05022	GROMMET	2	SN:30001--
7	22U-62-21350	GROMMET	1	SN:30001--
8	22U-979-2211	GROMMET	1	SN:30001--
9	22U-62-22940	GROMMET	1	SN:30001--
10	22U-06-21480	SEAL	2	SN:30001--
11	22U-46-21120	SHEET	1	SN:30001--
12	22U-46-21140	SHEET	1	SN:30001--
13	22U-46-21160	SHEET	1	SN:30001--
14	22U-46-21170	SHEET	1	SN:30001--
15	22U-46-21210	SHEET	1	SN:30001--
16	22U-46-21220	SHEET	1	SN:30001--

Ref. J1110-01A0 Page 180010

https://truckmanualshub.com/

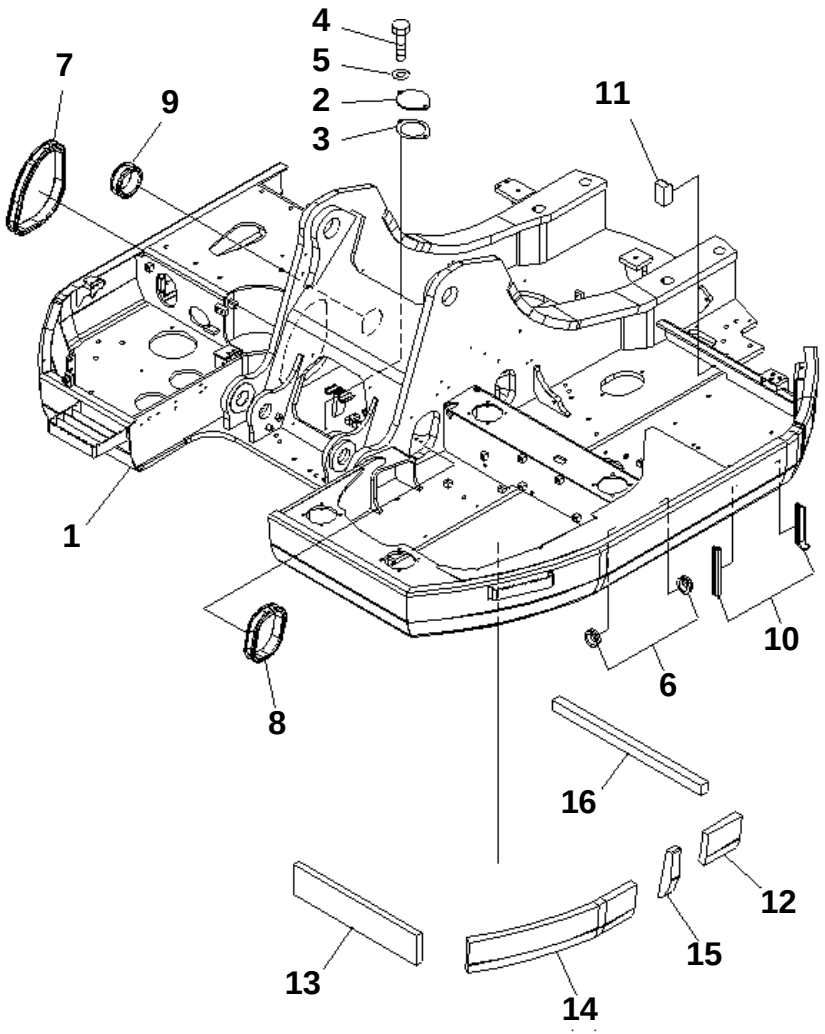

PC228US-3N-W1 S/N 30001-UP

REVOLVING FRAME (BLADE SPEC.) (YELLOW)

Item	Part No.	Description	Qty	Options
1	22U-46-21313NK	FRAME	1	SN:30001--
2	205-30-71181	COVER	1	SN:30001--
3	205-30-71191	GASKET	1	SN:30001--
4	01010-81230	BOLT	2	SN:30001--
5	01643-31232	WASHER	2	SN:30001--
6	08037-05022	GROMMET	2	SN:30001--
7	22U-62-21350	GROMMET	1	SN:30001--
8	22U-979-2211	GROMMET	1	SN:30001--
9	22U-62-22940	GROMMET	1	SN:30001--
10	22U-06-21480	SEAL	2	SN:30001--
11	22U-46-21120	SHEET	1	SN:30001--
12	22U-46-21140	SHEET	1	SN:30001--
13	22U-46-21160	SHEET	1	SN:30001--
14	22U-46-21170	SHEET	1	SN:30001--
15	22U-46-21210	SHEET	1	SN:30001--
16	22U-46-21220	SHEET	1	SN:30001--

Ref. J1110-01A1 Page 180020

https://truckmanualshub.com/

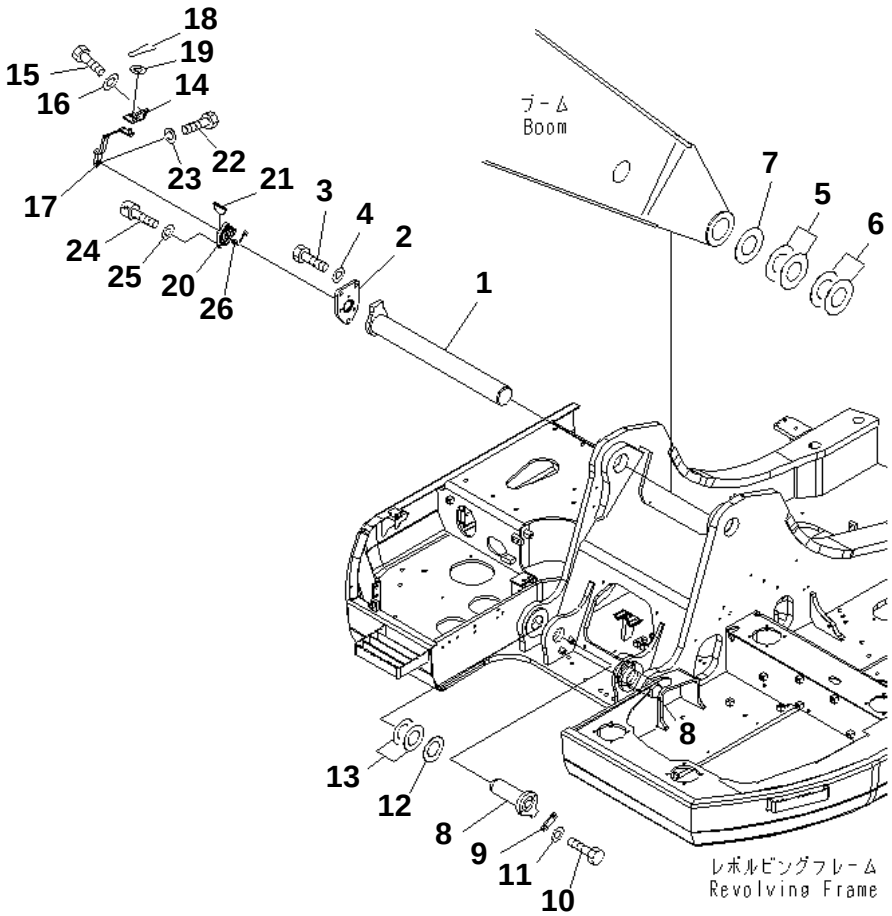

PC228US-3N-W1 S/N 30001-UP

BOOM FOOT PIN (YELLOW)

Item	Part No.	Description	Qty	Options
1	22U-70-15151	PIN	1	SN:30001--
2	22U-70-21391	PLATE	1	SN:30001--
3	01010-61640	BOLT	3	SN:30001--
4	01643-31645	WASHER	3	SN:30001--
5	20Y-70-11410	SPACER¤ 0.8MM	2	SN:30001--
6	20Y-70-11420	SPACER¤ 1.5MM	2	SN:30001--
7	20Y-70-11470	SPACER¤ 1.0MM	1	SN:30001--
8	205-70-71210	PIN	2	SN:30001--
9	205-70-66580	PLATE	2	SN:30001--
10	01010-81235	BOLT	4	SN:30001--
11	01643-31232	WASHER	4	SN:30001--
12	20Y-70-11430	SPACER¤ 0.8MM	2	SN:30001--
13	20Y-70-11440	SPACER¤ 1.5MM	4	SN:30001--
14	22U-70-21181NK	BRACKET	1	SN:30001--
15	01010-81230	BOLT	2	SN:30001--
16	175-54-34170	WASHER	2	SN:30001--
17	22U-70-21172NK	LEVER	1	SN:30001--
18	04050-13022	PIN	1	SN:30001--
19	01641-21223	WASHER	1	SN:30001--
20	7861-93-8710	SENSOR	1	SN:30001--
21	04010-00310	KEY	1	SN:30001--
22	01010-80835	BOLT	1	SN:30001--
23	01602-20825	WASHER	1	SN:30001--
24	01010-81030	BOLT	3	SN:30001--
25	01643-31032	WASHER	3	SN:30001--
26	20U-70-41560	CUSHION	1	SN:30001--

Ref. J1310-01A0 Page 180030

https://truckmanualshub.com/

OPERATOR'S COMPARTMENT AND CONTROL SYSTEM

Item	Description	Qty	Page
10	OPERATOR'S SEAT(#20001-)	1	210010
20	SEAT BELT(#20001-)	1	210020
30	SEAT REAR COVER	1	210030
40	OPERATOR'S CAB (CAB)	1	210040
50	OPERATOR'S CAB (FRONT WINDOW)	1	210050
60	OPERATOR'S CAB (FRONT LOWER WINDOW)	1	210060
70	OPERATOR'S CAB (ROOF WINDOW)	1	210070
80	OPERATOR'S CAB (DOOR) (WITH DOOR SASH)	1	210080
90	OPERATOR'S CAB (DOOR LOCK LINKAGE) (WITH DOOR SASH)	1	210090
100	OPERATOR'S CAB (DOOR ROLLER AND STRIKER) (WITH DOOR SASH)	1	210100
110	OPERATOR'S CAB (RAIL)	1	210110
120	OPERATOR'S CAB (WIPER AND ROOM LAMP)	1	210120
130	OPERATOR'S CAB (RADIO)	1	210130
140	OPERATOR'S CAB (ACCESSORIES)	1	210140
150	OPERATOR'S CAB (WIRING)	1	210150
160	OPERATOR'S CAB (MONITOR SYSTEM)	1	210160
170	OPERATOR'S CAB (COVER)	1	210170
180	OPERATOR'S CAB (DUCT)	1	210180
190	OPERATOR'S CAB (KOMTRAX CONTROLLER)	1	210190
200	OPERATOR'S CAB (INSTALLATION PARTS)	1	210200
210	FRONT GUARD (HALF)(#20001-)	1	210210
220	FRONT GUARD (FULL)(#20001-)	1	210220
230	FLOOR MAT(#20001-)	1	210230
240	FLOOR MAT (1 ACTUATOR)(#20001-)	1	210240
250	RAIN VISOR(#20001-)	1	210250
260	SUN VISOR	1	210260
270	WINDOW WASHER(#20001-)	1	210270
280	AIR CONDITIONER (UNIT)	1	210280
290	AIR CONDITIONER (HOSE)	1	210290
300	FIRE EXTINGUISHER(#20001-)	1	210300
310	FLOOR FRAME (FLOOR FRAME)	1	210310
320	FLOOR FRAME (TRAVEL CONTROL)	1	210320
330	FLOOR FRAME (FOOT REST) (L.H.)	1	210330
340	FLOOR FRAME (FOOT REST) (L.H.) (2 ACTUATOR)	1	210340
350	FLOOR FRAME (FOOT REST) (R.H.)	1	210350
360	FLOOR FRAME (FOOT REST) (R.H.) (1 ACTUATOR)	1	210360
370	FLOOR FRAME (BASE)	1	210370
380	FLOOR FRAME (ELECTRICAL)	1	210380
390	FLOOR FRAME (ELECTRICAL) (FOR 2-PIECE BOOM)	1	210390
400	FLOOR FRAME (HARNESS CLAMP)	1	210400
410	FLOOR FRAME (WIND WASHER)	1	210410
420	FLOOR FRAME (LEVER AND VALVE) (L.H.)	1	210420
430	FLOOR FRAME (CONSOLE) (UPPER) (L.H.) (RADIO LESS)	1	210430
440	FLOOR FRAME (CONSOLE) (LOWER) (L.H.)	1	210440
450	FLOOR FRAME (CONSOLE) (UNDER) (L.H.)	1	210450
460	FLOOR FRAME (LEVER AND VALVE) (R.H.)	1	210460
470	FLOOR FRAME (LEVER AND VALVE) (R.H.) (FOR 2-PIECE BOOM)	1	210470
480	FLOOR FRAME (CONSOLE) (MASTER KEY) (R.H.)	1	210480
490	FLOOR FRAME (AIR CONDITIONER UNIT AND HOSE)	1	210490
500	FLOOR FRAME (HEATER HOSE AND CLAMP)	1	210500
510	FLOOR FRAME (PPC) (1/2)	1	210510
520	FLOOR FRAME (PPC) (2/2)	1	210520
530	FLOOR FRAME (PPC CLAMP)	1	210530
540	FLOOR FRAME (P¤T BLOCK AND SEAL)	1	210540
550	FLOOR FRAME (P¤T BLOCK AND SEAL) (1 ACTUATOR)	1	210550
560	FLOOR FRAME (P¤T BLOCK AND SEAL) (2 ACTUATOR)	1	210560
570	FLOOR MOUNT(#20001-)	1	210570
580	GARNISH COVER	1	210580

https://truckmanualshub.com/

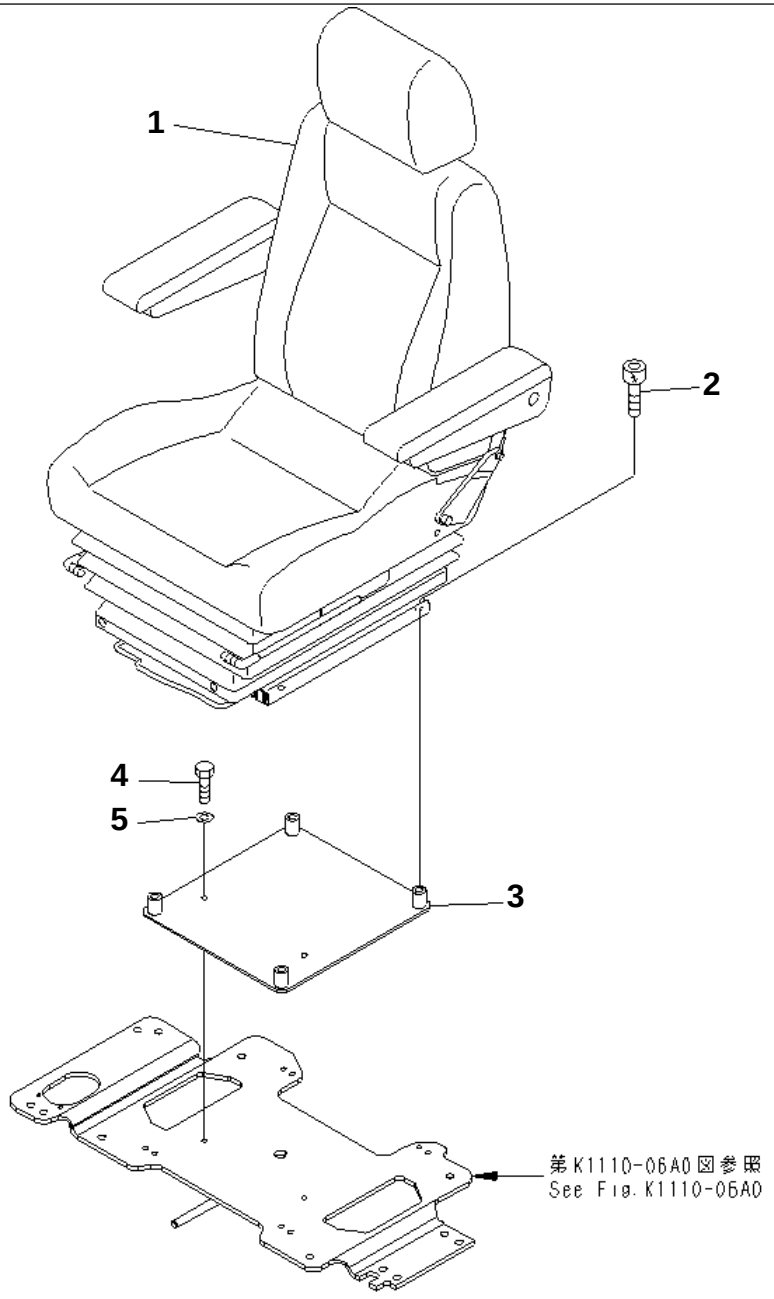

PC228US-3N-W1 S/N 30001-UP

OPERATOR'S SEAT(#20001-)

Item	Part No.	Description	Qty	Options
1	(22B-57-11600)	SEAT ASS'Y,(SEE FIG.Y1570-01A0)	1	SN:20001--
2	01252-80855	BOLT	4	SN:20001--
3	22B-57-11820	BRACKET	1	SN:20001--
4	01010-D0820	BOLT	2	SN:20001--
5	01643-70823	WASHER	2	SN:20001--

Ref. K0110-01A0 Page 210010

https://truckmanualshub.com/

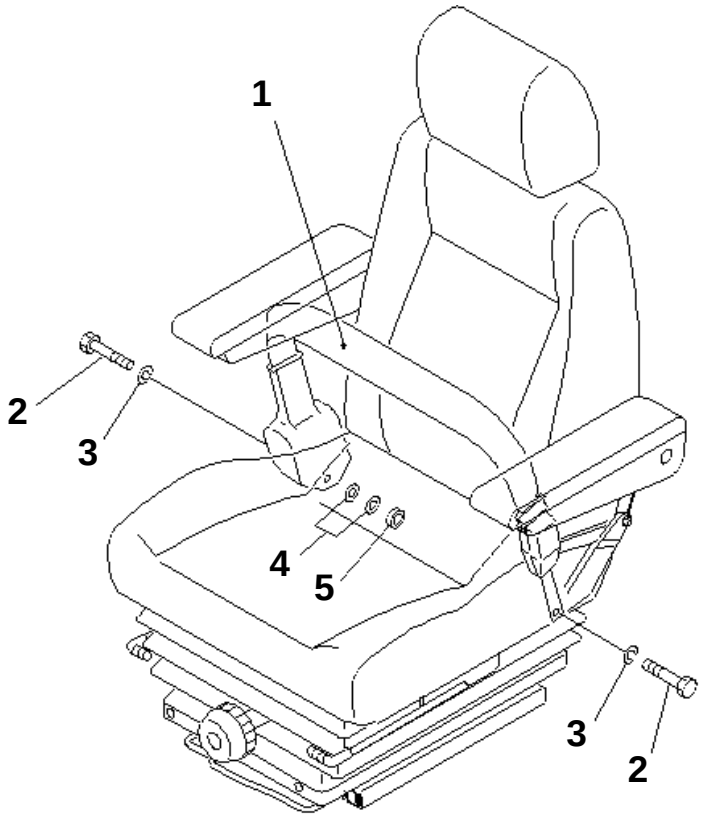

PW1B862

PC228US-3N-W1 S/N 30001-UP

SEAT BELT(#20001-)

Item	Part No.	Description	Qty	Options
1	22B-57-11911	BELT¤ LAP	1	SN:21222--
2	02030-70757	· BOLT	2	SN:20005--
3	09409-00002	· WASHER	2	SN:20001--
4	01643-11232	WASHER	2	SN:21222--
5	208-01-11270	WASHER	1	SN:20001--

Ref. K0160-01A1 Page 210020

https://truckmanualshub.com/

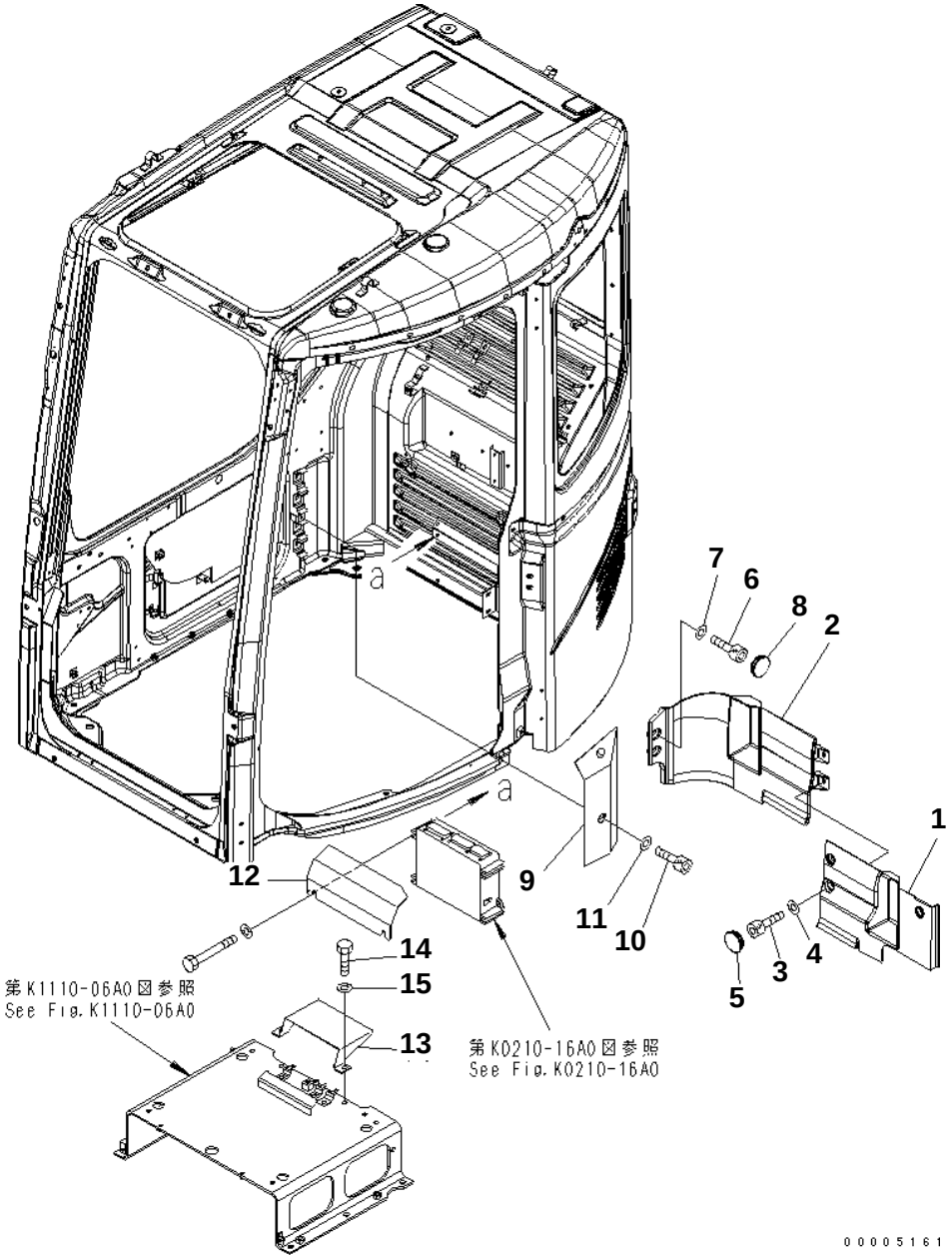

PC228US-3N-W1 S/N 30001-UP

SEAT REAR COVER

Item	Part No.	Description	Qty	Options
1	22U-54-25311	COVER	1	SN:30001--
2	22U-54-25321	COVER	1	SN:30001--
3	01252-70616	BOLT	3	SN:30001--
4	01643-30623	WASHER	3	SN:30001--
5	22U-54-25140	CAP	3	SN:30001--
6	01252-70616	BOLT	2	SN:30001--
7	01643-30623	WASHER	2	SN:30001--
8	22U-54-25140	CAP	2	SN:30001--
9	22U-43-21431	COVER	1	SN:30001--
10	01252-70616	BOLT	2	SN:30001--
11	01643-30623	WASHER	2	SN:30001--
12	22U-43-21520	PLATE	1	SN:30001--
13	22U-43-21540	COVER	1	SN:30001--
14	01010-81020	BOLT	2	SN:30001--
15	01643-31032	WASHER	2	SN:30001--

Ref. K0180-01A0 Page 210030

https://truckmanualshub.com/

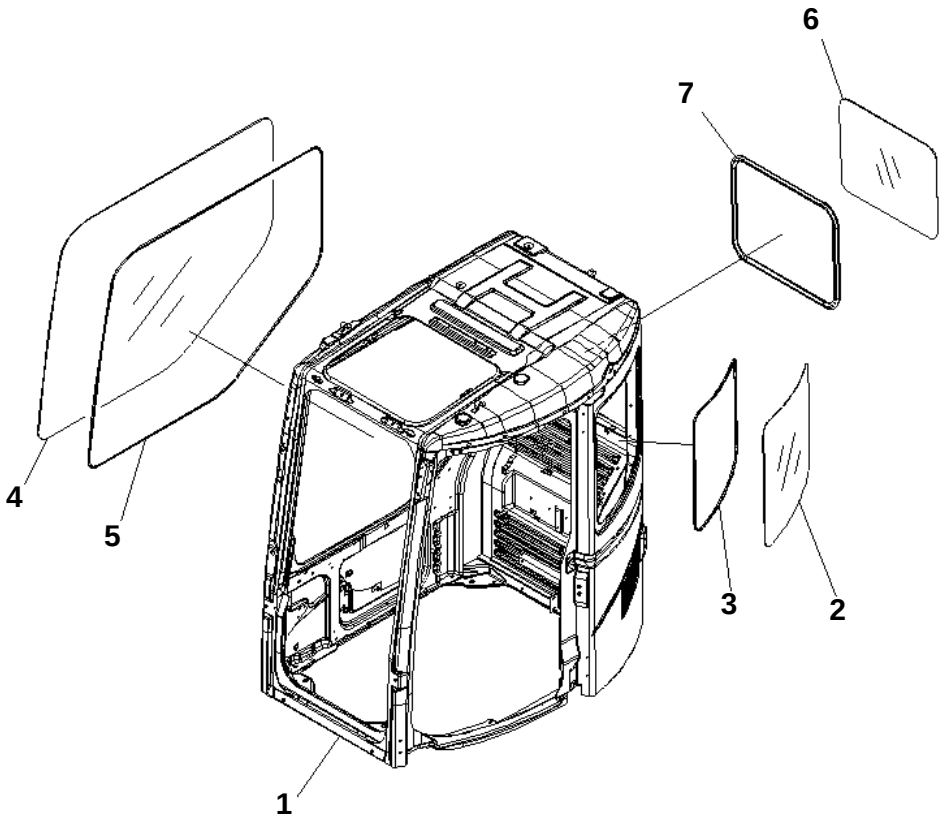

PC228US-3N-W1 S/N 30001-UP

OPERATOR'S CAB (CAB)

Item	Part No.	Description	Qty	Options
	22U-54-00210	CAB ASS'Y	1	SN:30001--
1	☆	· CAB	1	SN:30001--
2	22B-54-15211	· GLASS	1	SN:30001--
3	22B-54-15310	· SEAL	1	SN:30001--
4	22B-54-15221	· GLASS	1	SN:30001--
5	22B-54-15260	· DAM	1	SN:30001--
6	22B-54-15350	· GLASS	1	SN:30001--
7	22B-54-15330	· WEATHER STRIP	1	SN:30001--

Ref. K0210-01A0 Page 210040

https://truckmanualshub.com/

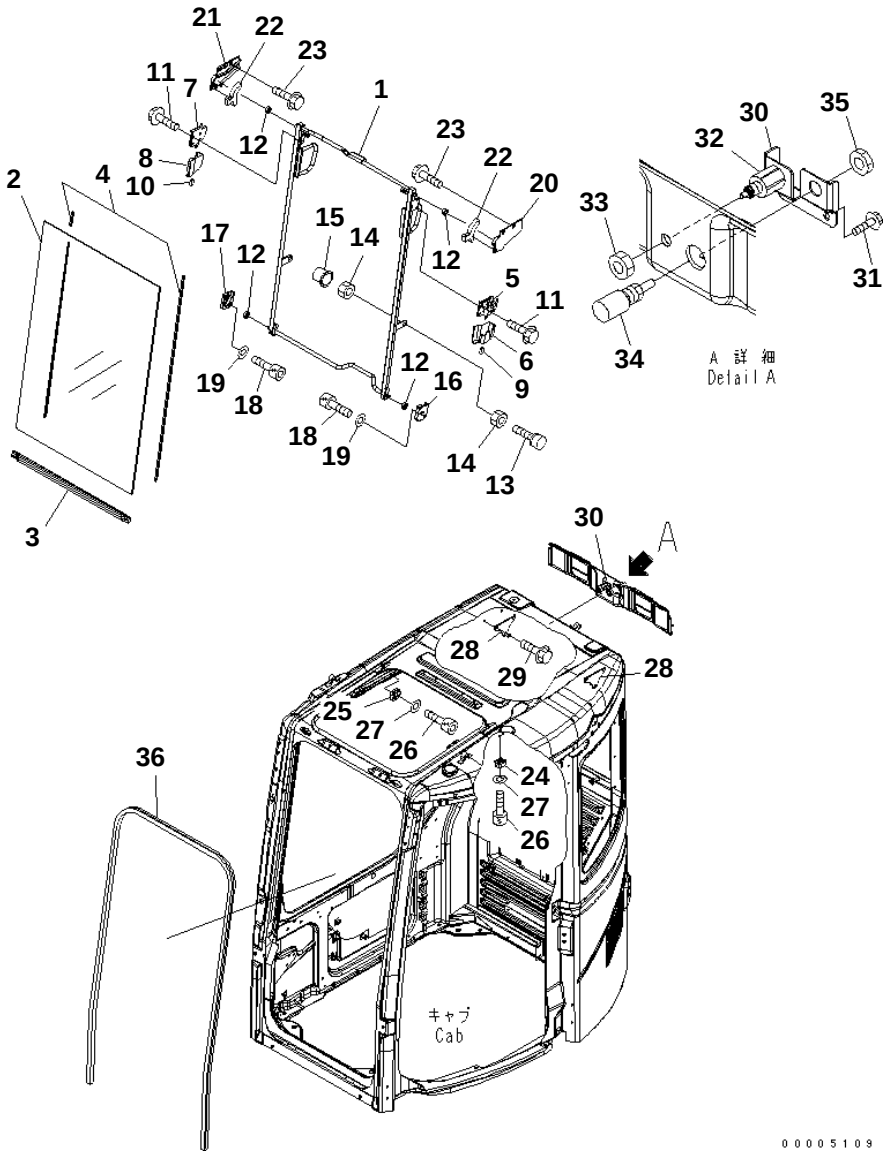

PC228US-3N-W1 S/N 30001-UP

OPERATOR'S CAB (FRONT WINDOW)

Item	Part No.	Description	Qty	Options
	(22U-54-00210)	CAB ASS'Y	1	SN:30001--
	22B-54-17901	· FRONT WINDOW ASS'Y	1	SN:30001--
1	22B-54-17922	· · FRAME¤ FRONT	1	SN:30001--
2	22B-54-17931	· · GLASS	1	SN:30001--
3	22B-54-17941	· · SEAL	1	SN:30001--
4	22B-54-17971	· · SEAL	2	SN:30001--
5	22B-54-15411	· LOCK ASS'Y	1	SN:30001--
6	22B-54-15440	· CASE	1	SN:30001--
7	22B-54-15421	· LOCK ASS'Y	1	SN:30001--
8	22B-54-15450	· CASE	1	SN:30001--
9	22B-54-15470	· KNOB	1	SN:30001--
10	22B-54-15480	· KNOB	1	SN:30001--
11	01435-40816	· BOLT	4	SN:30001--
12	22B-54-15540	· ROLLER	4	SN:30001--
13	22B-54-15560	· STOPPER	2	SN:30001--
14	01580-11008	· NUT	4	SN:30001--
15	20Y-54-65540	· CAP	2	SN:30001--
16	22B-54-15631	· BLOCK	1	SN:30001--
17	22B-54-15641	· BLOCK	1	SN:30001--
18	01252-80620	· BOLT	4	SN:30001--
19	01641-50608	· WASHER	4	SN:30001--
20	22B-54-15653	· BLOCK	1	SN:30001--
21	22B-54-15663	· BLOCK	1	SN:30001--
22	22B-54-15621	· STOPPER	2	SN:30001--
23	01435-40616	· BOLT	6	SN:30001--
24	22B-54-15672	· BLOCK	1	SN:30001--
25	22B-54-15682	· BLOCK	1	SN:30001--
26	01252-80620	· BOLT	4	SN:30001--
27	01641-50608	· WASHER	4	SN:30001--
28	22B-54-15432	· STRIKER	2	SN:30001--
29	01435-40616	· BOLT	4	SN:30001--
30	22B-54-15771	· BRACKET	1	SN:30001--
31	01435-40816	· BOLT	2	SN:30001--
32	21J-06-12440	· SWITCH	1	SN:30001--
33	01583-11811	· NUT	1	SN:30001--
34	20Y-54-11611	· STOPPER	1	SN:30001--
35	01580-11008	· NUT	1	SN:30001--
36	22B-54-15461	· SEAL	1	SN:30001--

Ref. K0210-02A0 Page 210050

https://truckmanualshub.com/

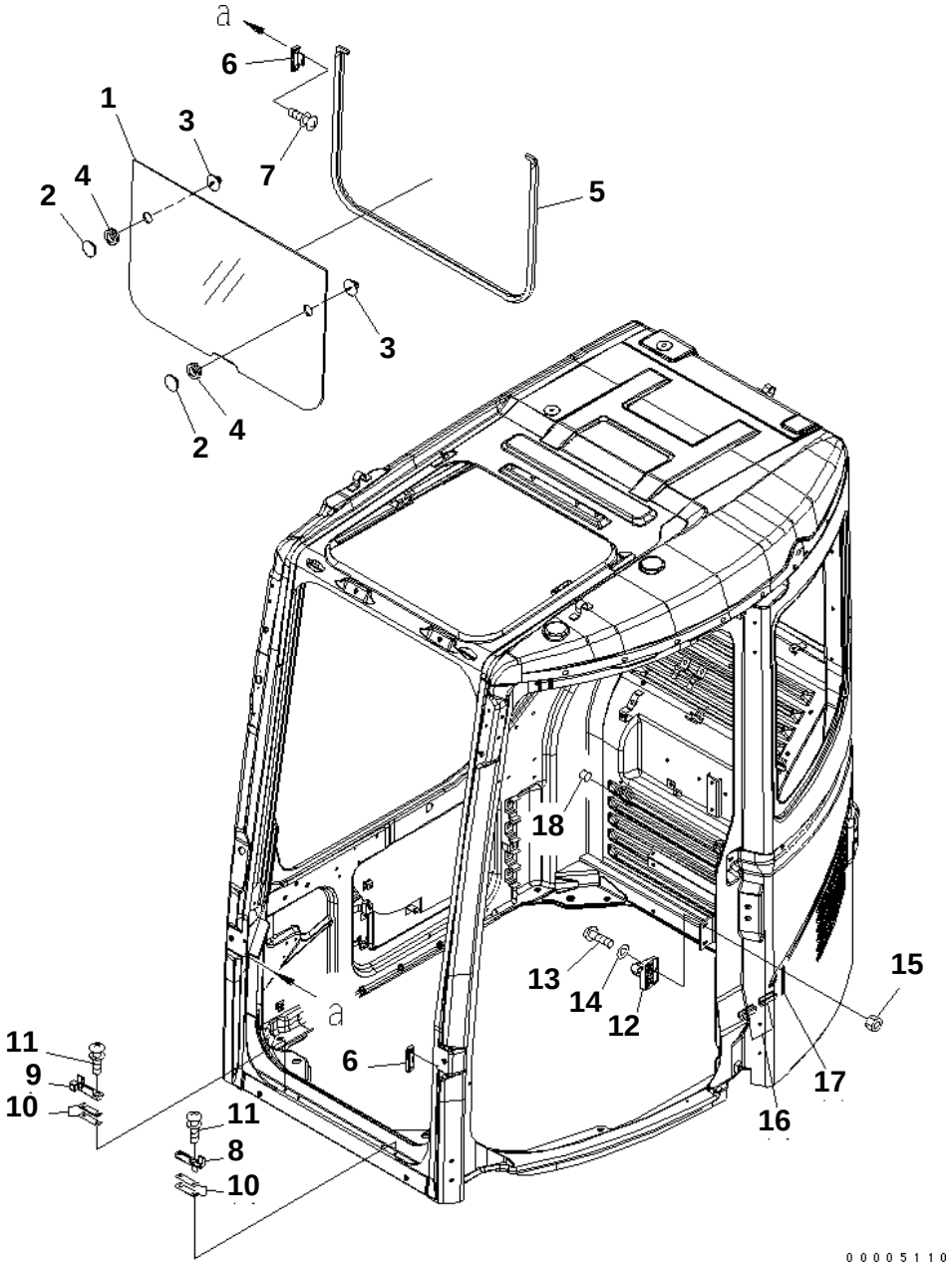

PC228US-3N-W1 S/N 30001-UP

OPERATOR'S CAB (FRONT LOWER WINDOW)

Item	Part No.	Description	Qty	Options
	(22U-54-00210)	CAB ASS'Y	1	SN:30001--
	22B-54-15800	· GLASS ASS'Y	1	SN:30001--
1	22B-54-15811	· · GLASS	1	SN:30001--
2	22B-54-15970	· · RETAINER	2	SN:30001--
3	22B-54-15980	· · KNOB	2	SN:30001--
4	08037-02512	· · GROMMET	2	SN:30001--
5	22B-54-15822	· SEAT	1	SN:30001--
6	22B-54-15832	· SEAT	2	SN:30001--
7	01023-20616	· SCREW	4	SN:30001--
8	22B-54-15781	· SEAT	1	SN:30001--
9	22B-54-15791	· SEAT	1	SN:30001--
10	22B-54-15580	· PLATE	4	SN:30001--
11	01023-20616	· SCREW	4	SN:30001--
12	22B-54-15841	· LOCK ASS'Y	1	SN:30001--
13	01245-00620	· SCREW	2	SN:30001--
14	01643-70623	· WASHER	2	SN:30001--
15	01584-30605	· NUT	2	SN:30001--
16	20U-54-25140	· STOPPER	2	SN:30001--
17	22B-54-15892	· RUBBER	2	SN:30001--
18	22B-54-16950	· CAP	1	SN:30001--

Ref. K0210-03A0 Page 210060

https://truckmanualshub.com/

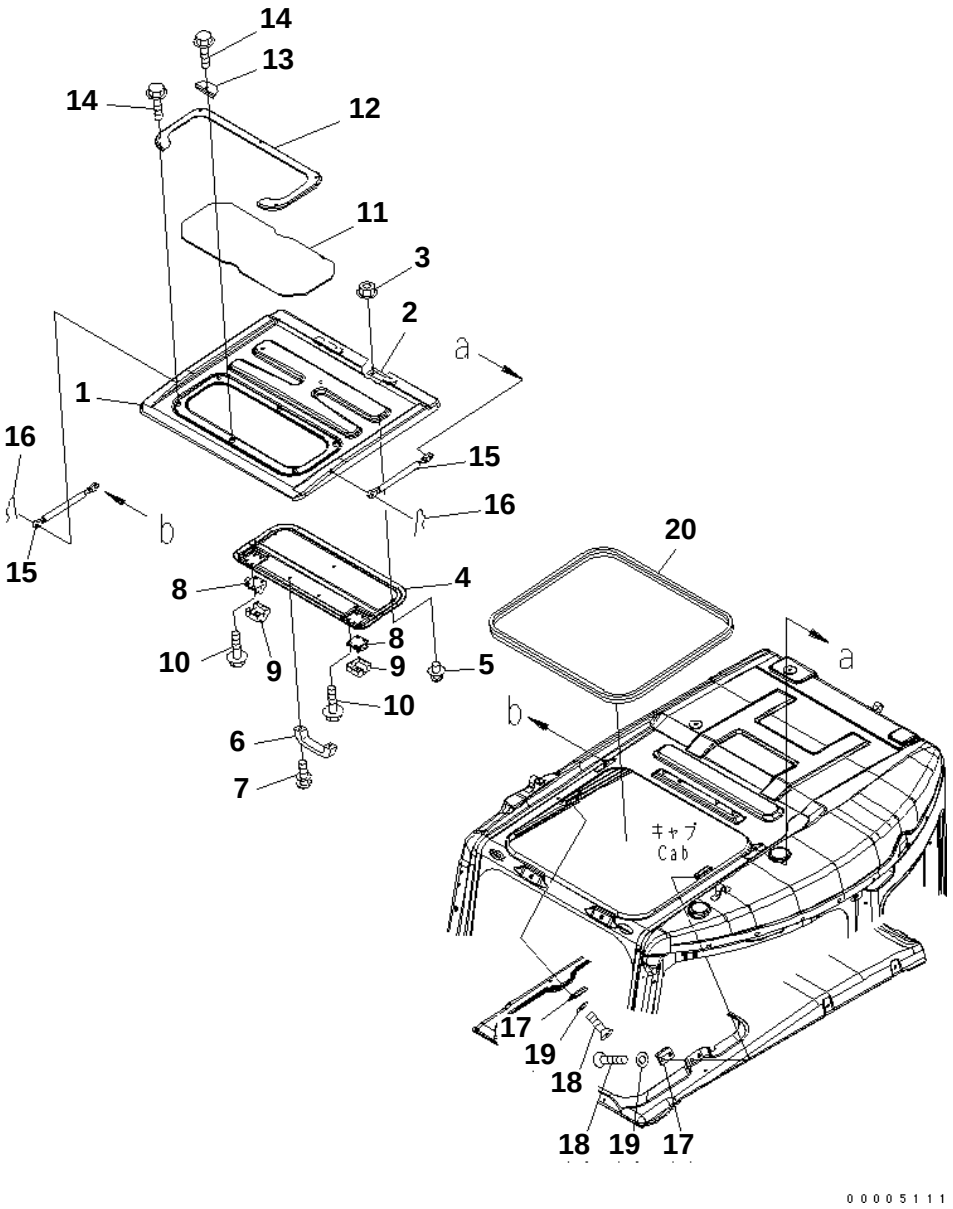

PC228US-3N-W1 S/N 30001-UP

OPERATOR'S CAB (ROOF WINDOW)

Item	Part No.	Description	Qty	Options
	(22U-54-00210)	CAB ASS'Y	1	SN:30001--
1	22B-54-15913	· ROOF	1	SN:30001--
2	22B-54-15M50	· · HINGE	2	SN:30001--
3	01584-30806	· NUT	4	SN:30001--
4	22B-54-17321	· COVER	1	SN:30001--
5	20Y-54-18690	· RIVET	3	SN:30001--
6	20Y-54-14590	· HANDLE	1	SN:30001--
7	01023-20616	· SCREW	2	SN:30001--
8	22B-54-15990	· LOCK ASS'Y	2	SN:30001--
9	20Y-54-36360	· COVER	2	SN:30001--
10	01435-40612	· BOLT	8	SN:30001--
11	22B-54-15942	· CLEAR PLATE	1	SN:30001--
12	22B-54-15960	· PLATE	1	SN:30001--
13	22B-54-15690	· PLATE	1	SN:30001--
14	01435-40612	· BOLT	6	SN:30001--
15	20Y-54-36342	· GAS SPRING ASS'Y	2	SN:30001--
16	04052-10833	· PIN	4	SN:30001--
17	22U-54-28920	· STRIKER	2	SN:30001--
18	01245-00820	· SCREW	4	SN:30001--
19	01643-70823	· WASHER	4	SN:30001--
20	22B-54-15931	· SEAL	1	SN:30001--

Ref. K0210-04A0 Page 210070

https://truckmanualshub.com/

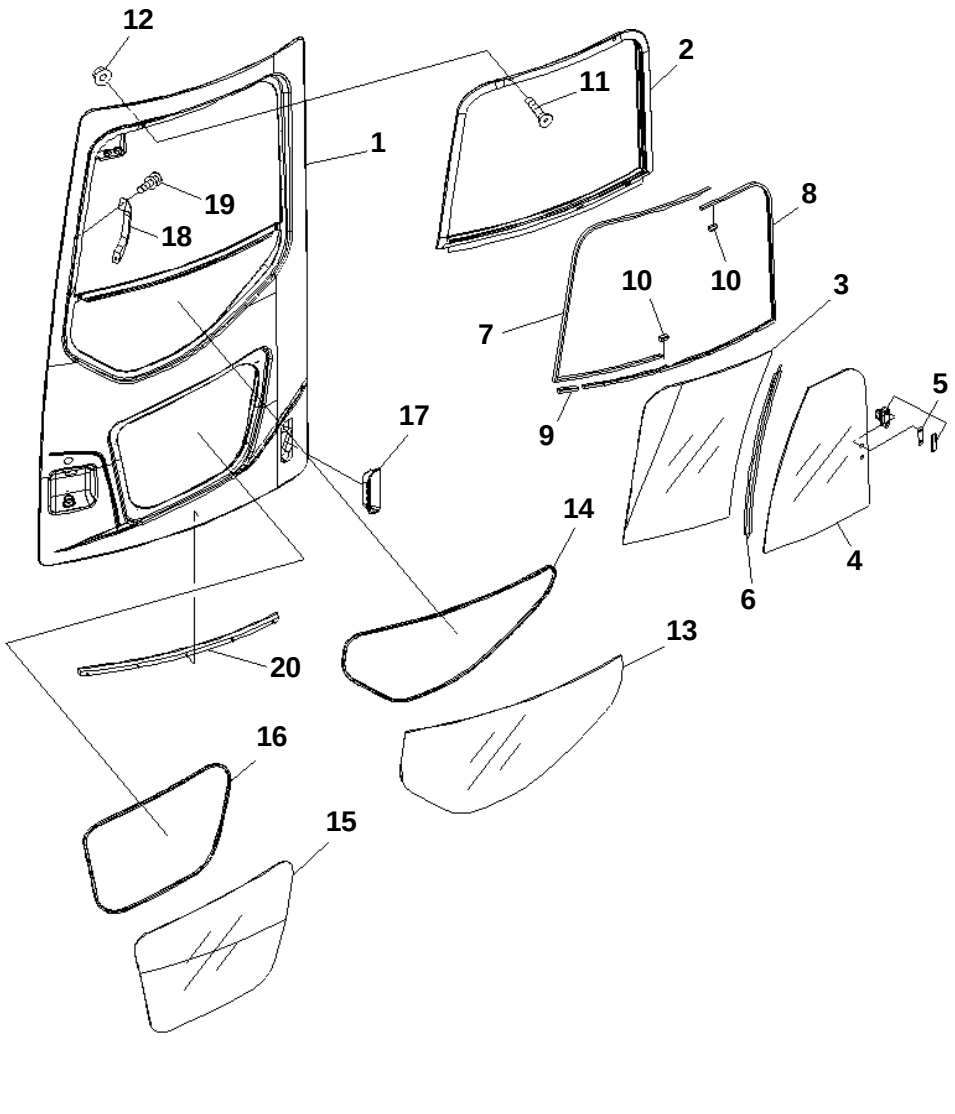

PC228US-3N-W1 S/N 30001-UP

OPERATOR'S CAB (DOOR) (WITH DOOR SASH)

Item	Part No.	Description	Qty	Options
	(22U-54-00210)	CAB ASS'Y	1	SN:30001--
	22B-54-00612	· DOOR ASS'Y	1	SN:30001--
1	☆	· · DOOR	1	SN:30001--
	22B-54-17412	· · SASH ASS'Y	1	SN:30001--
2	22B-54-17422	· · · FRAME	1	SN:30001--
3	22B-54-17431	· · · GLASS	1	SN:30001--
4	22B-54-17441	· · · GLASS	1	SN:30001--
5	21J-54-18510	· · · LOCK ASS'Y	1	SN:30001--
6	22B-54-17470	· · · SEAL	1	SN:30001--
7	22B-54-17480	· · · RUNCHANNEL	1	SN:30001--
8	22B-54-17490	· · · RUNCHANNEL	1	SN:30001--
9	22B-54-17390	· · · STOPPER	1	SN:30001--
10	21X-54-34170	· · · STOPPER	2	SN:30001--
11	01240-00616	· · SCREW	2	SN:30001--
12	01584-30605	· · NUT	2	SN:30001--
13	22B-54-17451	· · GLASS	1	SN:30001--
14	22B-54-17461	· · SEAL	1	SN:30001--
15	22B-54-16150	· · GLASS	1	SN:30001--
16	22B-54-16160	· · SEAL	1	SN:30001--
17	22M-54-14470	· · HANDLE	1	SN:30001--
18	21J-54-16630	· · GRIP	1	SN:30001--
19	01023-20516	· · SCREW	2	SN:30001--
20	22B-54-16541	· · SEAL	1	SN:30001--

Ref. K0210-05A0 Page 210080

https://truckmanualshub.com/

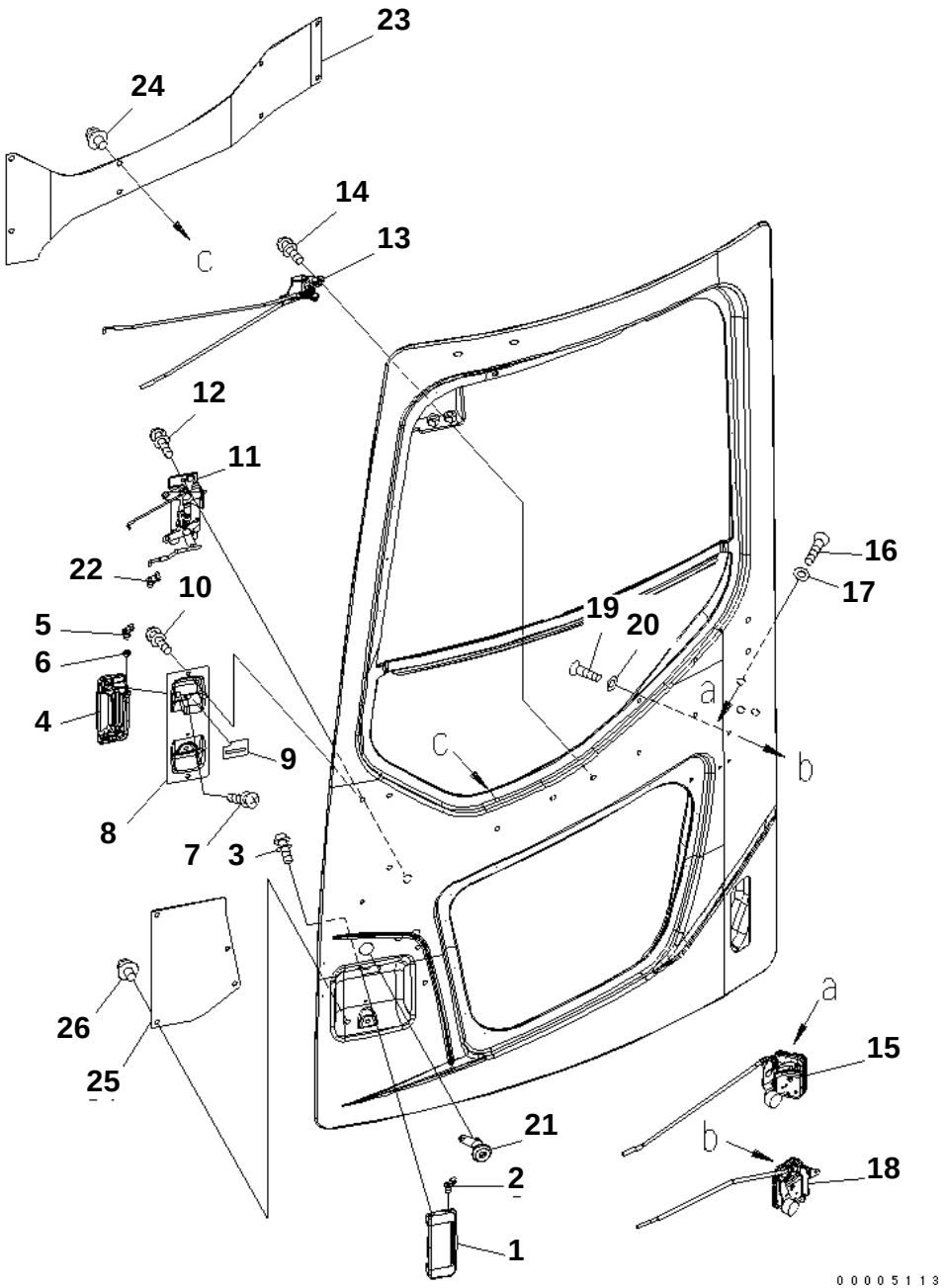

PC228US-3N-W1 S/N 30001-UP

OPERATOR'S CAB (DOOR LOCK LINKAGE) (WITH DOOR SASH)

Item	Part No.	Description	Qty	Options
	(22U-54-00210)	CAB ASS'Y	1	SN:30001--
	(22B-54-00612)	· DOOR ASS'Y	1	SN:30001--
1	22B-54-16211	· · HANDLE	1	SN:30001--
2	22B-54-16330	· · · SNAP	1	SN:30001--
3	01023-10612	· · SCREW	2	SN:30001--
4	22B-54-16220	· · HANDLE	1	SN:30001--
5	22B-54-16330	· · · SNAP	1	SN:30001--
6	22B-54-16370	· · · SPACER	1	SN:30001--
7	01023-10612	· · SCREW	2	SN:30001--
8	22B-54-16231	· · BRACKET	1	SN:30001--
9	22B-54-16590	· · SEAL	1	SN:30001--
10	01023-20616	· · SCREW	2	SN:30001--
11	22B-54-16200	· · LINK ASS'Y	1	SN:30001--
12	01023-10612	· · SCREW	3	SN:30001--
13	22B-54-16300	· · LINK ASS'Y	1	SN:30001--
14	01023-10612	· · SCREW	2	SN:30001--
15	22B-54-16380	· · LOCK ASS'Y	1	SN:30001--
16	01240-00616	· · SCREW	3	SN:30001--
17	195-Z11-1690	· · WASHER	3	SN:30001--
18	22B-54-16390	· · LOCK ASS'Y	1	SN:30001--
19	01240-00616	· · SCREW	3	SN:30001--
20	195-Z11-1690	· · WASHER	3	SN:30001--
21	20Y-54-35890	· · LOCK ASS'Y	1	SN:30001--
22	205-54-71840	· · SNAP	1	SN:30001--
23	22B-54-16441	· · COVER	1	SN:30001--
24	22B-54-16461	· · RIVET	8	SN:30001--
25	22B-54-16451	· · COVER	1	SN:30001--
26	22B-54-16461	· · RIVET	4	SN:30001--

Ref. K0210-06A0 Page 210090

https://truckmanualshub.com/

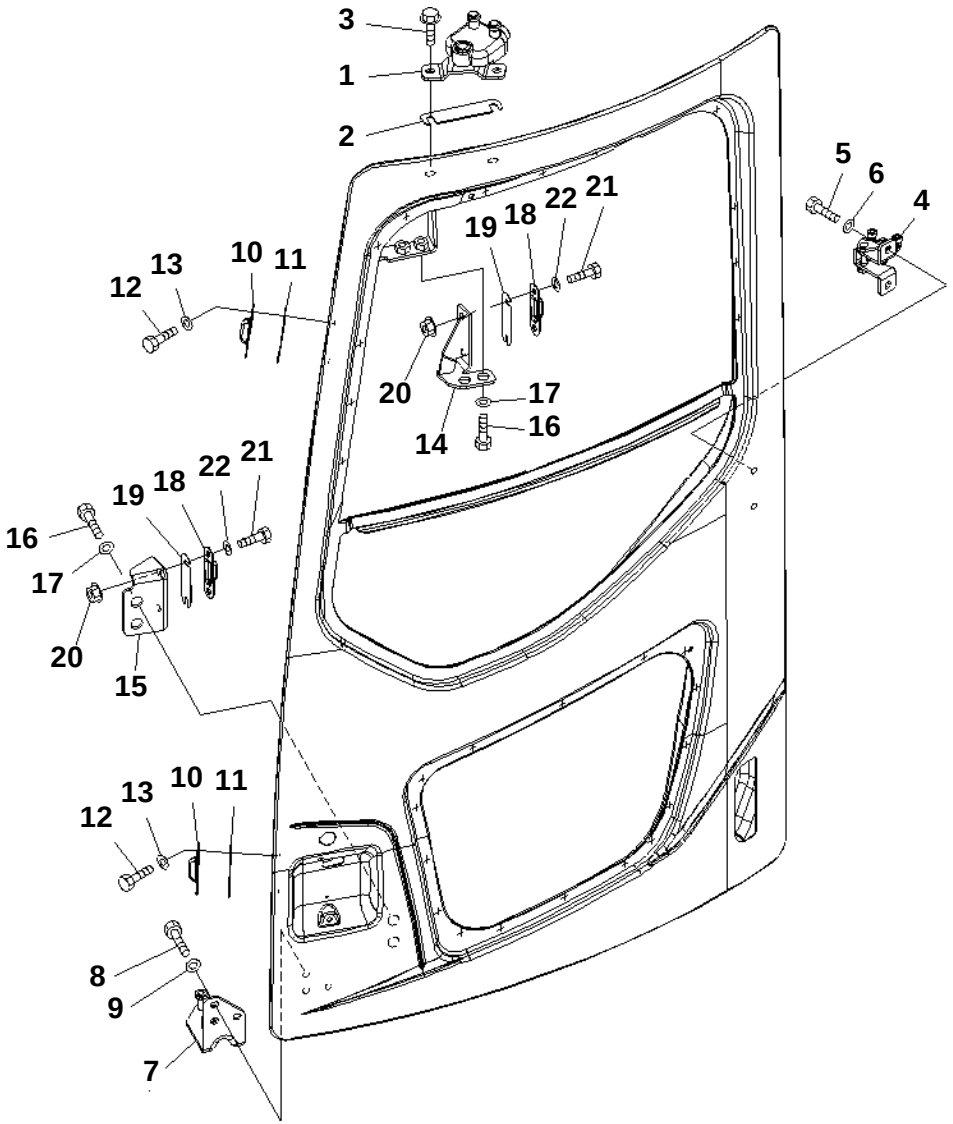

PC228US-3N-W1 S/N 30001-UP

OPERATOR'S CAB (DOOR ROLLER AND STRIKER) (WITH DOOR SASH)

Item	Part No.	Description	Qty	Options
	(22U-54-00210)	CAB ASS'Y	1	SN:30001--
	(22B-54-00612)	· DOOR ASS'Y	1	SN:30001--
1	22B-54-16413	· · UPPER ROLLER ASS'Y	1	SN:30001--
2	22B-54-16490	· · PLATE	1	SN:30001--
3	01435-41020	· · BOLT	2	SN:30001--
4	22B-54-16424	· · ROLLER	1	SN:30001--
5	01010-D0820	· · BOLT	2	SN:30001--
6	01643-70823	· · WASHER	2	SN:30001--
7	22B-54-16433	· · LOWER ROLLER ASS'Y	1	SN:30001--
8	01010-D0820	· · BOLT	3	SN:30001--
9	01643-70823	· · WASHER	3	SN:30001--
10	20U-54-25321	· · STRIKER	2	SN:30001--
11	20U-54-25341	· · SHIM¤ 1.0MM	2	SN:30001--
12	01010-80616	· · BOLT	4	SN:30001--
13	01640-20610	· · WASHER	4	SN:30001--
14	22B-54-16511	· · BRACKET	1	SN:30001--
15	22B-54-16521	· · BRACKET	1	SN:30001--
16	01010-D1225	· · BOLT	4	SN:30001--
17	01643-71232	· · WASHER	4	SN:30001--
18	20U-54-25321	· · STRIKER	2	SN:30001--
19	20U-54-25341	· · SHIM¤ 1.0MM	2	SN:30001--
20	01584-30605	· · NUT	4	SN:30001--
21	01010-80616	· · BOLT	4	SN:30001--
22	01640-20610	· · WASHER	4	SN:30001--

Ref. K0210-07A0 Page 210100

https://truckmanualshub.com/

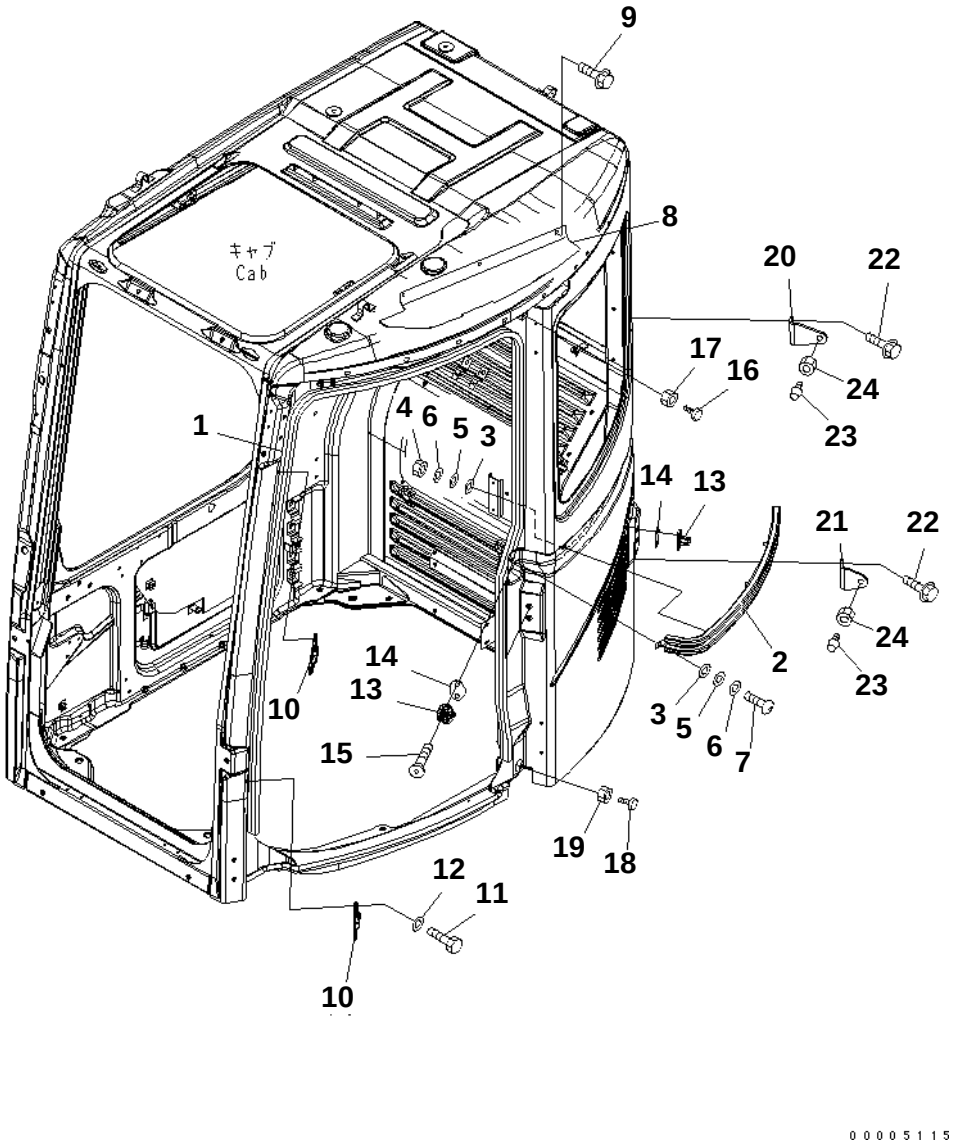

PC228US-3N-W1 S/N 30001-UP

OPERATOR'S CAB (RAIL)

Item	Part No.	Description	Qty	Options
	(22U-54-00210)	CAB ASS'Y	1	SN:30001--
1	22B-54-16612	· SEAL	1	SN:30001--
2	22B-54-16633	· RAIL	1	SN:30001--
3	22M-54-16550	· PACKING	4	SN:30001--
4	01546-10812	· NUT	4	SN:30001--
5	22W-43-17330	· WASHER	4	SN:30001--
6	01643-70823	· WASHER	4	SN:30001--
7	01245-00816	· SCREW	1	SN:30001--
8	22B-54-16661	· PLATE	1	SN:30001--
9	01435-40616	· BOLT	3	SN:30001--
10	22B-54-16690	· STRIKER	4	SN:30001--
11	01010-80616	· BOLT	8	SN:30001--
12	01640-20610	· WASHER	8	SN:30001--
13	20Y-54-35470	· STRIKER	2	SN:30001--
14	20Y-54-35480	· SHIM	2	SN:30001--
15	01240-01025	· SCREW	4	SN:30001--
16	22B-54-16680	· STOPPER	1	SN:30001--
17	01580-11008	· NUT	1	SN:30001--
18	22B-54-16680	· STOPPER	1	SN:30001--
19	01580-11008	· NUT	1	SN:30001--
20	22B-54-16641	· BRACKET	1	SN:30001--
21	22B-54-16651	· BRACKET	1	SN:30001--
22	01435-40616	· BOLT	4	SN:30001--
23	20U-54-25371	· STOPPER	2	SN:30001--
24	01580-11210	· NUT	4	SN:30001--

Ref. K0210-08A0 Page 210110

https://truckmanualshub.com/

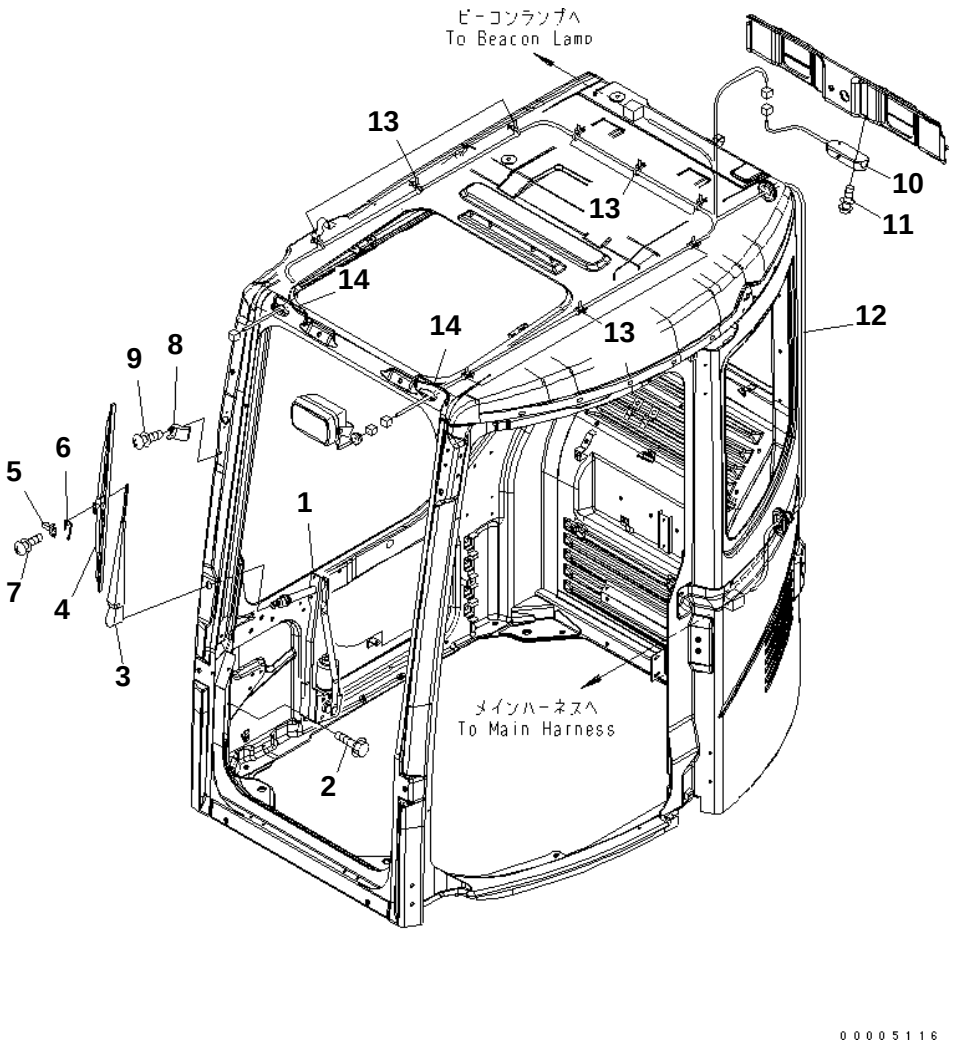

PC228US-3N-W1 S/N 30001-UP

OPERATOR'S CAB (WIPER AND ROOM LAMP)

Item	Part No.	Description	Qty	Options
	(22U-54-00210)	CAB ASS'Y	1	SN:30001--
1	22B-54-17111	· WIPER MOTOR	1	SN:30001--
2	01435-40616	· BOLT	6	SN:30001--
	22B-54-17121	· WIPER ASS'Y	1	SN:30001--
3	22B-54-17131	· · WIPER ARM	1	SN:30001--
4	20Y-54-39450	· · BLADE	1	SN:30001--
5	20Y-54-39460	· · SLIDER	1	SN:30001--
6	20Y-54-39480	· · PLATE	1	SN:30001--
7	ND949007-2350	· · SCREW AND WASHER	2	SN:30001--
8	20Y-54-52231	· STOPPER	1	SN:30001--
9	01023-20616	· SCREW	1	SN:30001--
10	22B-54-17211	· ROOM LAMP	1	SN:30001--
11	01023-20425	· SCREW	2	SN:30001--
12	22B-54-17222	· WIRING HARNESS	1	SN:30001--
13	08059-00413	· CLIP	9	SN:30001--
14	20Y-54-36150	· GROMMET	2	SN:30001--

Ref. K0210-09A0 Page 210120

https://truckmanualshub.com/

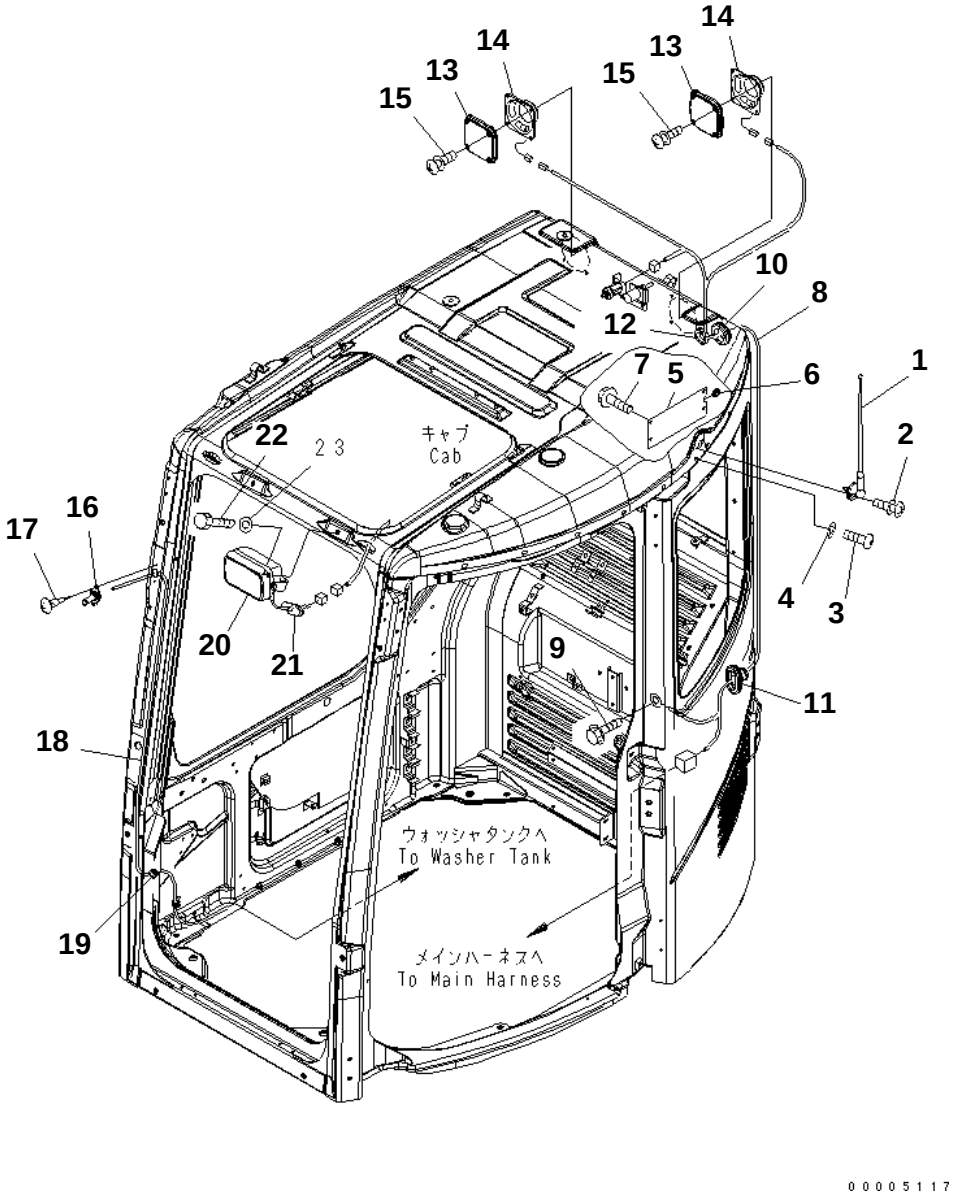

PC228US-3N-W1 S/N 30001-UP

OPERATOR'S CAB (RADIO)

Item	Part No.	Description	Qty	Options
	(22U-54-00210)	CAB ASS'Y	1	SN:30001--
1	(198-Z11-4610)	· RUBBER ANTENNA,(SEE FIG. Y1062-01A0)	1	SN:30001--
2	01023-20412	· SCREW	2	SN:30001--
3	01245-00616	· SCREW	2	SN:30001--
4	01643-70623	· WASHER	2	SN:30001--
5	22U-54-28230	· PLATE	1	SN:30001--
6	175-06-81610	· GROMMET	1	SN:30001--
7	22B-54-16461	· RIVET	4	SN:30001--
8	22B-54-17252	· WIRING HARNESS	1	SN:30001--
9	01435-41016	· BOLT	1	SN:30001--
10	209-06-51470	· GROMMET	1	SN:30001--
11	22T-06-15330	· GROMMET	1	SN:30001--
12	201-54-13210	· GROMMET	1	SN:30001--
13	418-967-2150	· COVER	2	SN:30001--
14	11Y-979-1950	· SPEAKER	2	SN:30001--
15	01023-20425	· SCREW	8	SN:30001--
16	20Y-54-39511	· NOZZLE	1	SN:30001--
17	01370-10520	· SCREW	2	SN:30001--
18	17M-911-2670	· HOSE	1	SN:30001--
19	08037-01008	· GROMMET	1	SN:30001--
20	22B-54-17511	· WORK LAMP ASS'Y	1	SN:30001--
	421-06-23330	· · BULB¤ 70W	1	SN:30001--
21	01010-D1016	· BOLT	1	SN:30001--
22	01643-71032	· WASHER	1	SN:30001--

Ref. K0210-10A0 Page 210130

https://truckmanualshub.com/

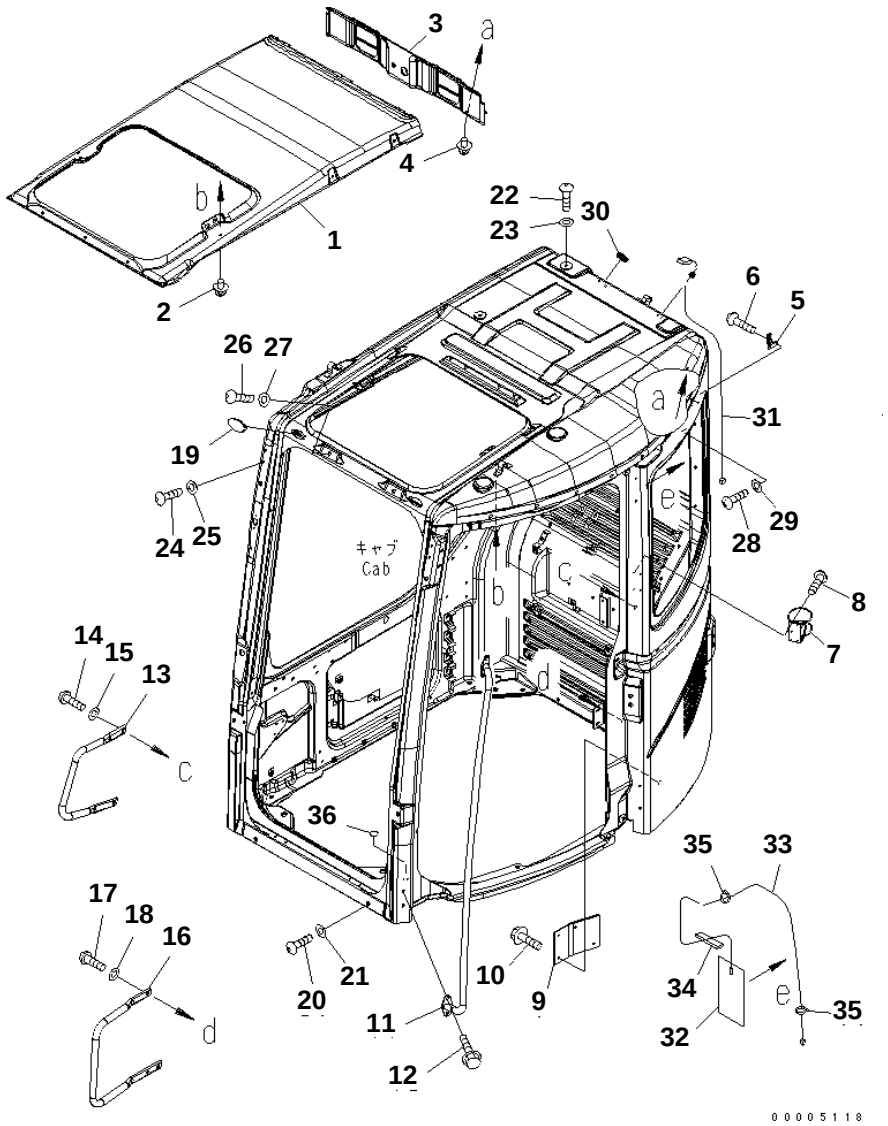

PC228US-3N-W1 S/N 30001-UP

OPERATOR'S CAB (ACCESSORIES)

Item	Part No.	Description	Qty	Options
	(22U-54-00210)	CAB ASS'Y	1	SN:30001--
1	22B-54-17312	· COVER	1	SN:30001--
2	20Y-54-18690	· RIVET	12	SN:30001--
3	22B-54-17331	· COVER	1	SN:30001--
4	20Y-54-18690	· RIVET	2	SN:30001--
5	205-54-51250	· HANGER	1	SN:30001--
6	01370-30412	· SCREW	2	SN:30001--
7	22B-54-17360	· HOLDER	1	SN:30001--
8	01370-40412	· SCREW	4	SN:30001--
9	22B-54-15591	· COVER	1	SN:30001--
10	01435-40616	· BOLT	4	SN:30001--
11	22B-54-16811	· GRIP	1	SN:30001--
12	01435-40820	· BOLT	4	SN:30001--
13	22B-54-16821	· GRIP	1	SN:30001--
14	01245-01030	· SCREW	2	SN:30001--
15	01643-71032	· WASHER	2	SN:30001--
16	22B-54-16831	· GRIP	1	SN:30001--
17	01245-01030	· SCREW	3	SN:30001--
18	01643-71032	· WASHER	3	SN:30001--
19	22B-54-17282	· CAP	1	SN:30001--
20	01245-01220	· SCREW	6	SN:30001--
21	01643-71232	· WASHER	6	SN:30001--
22	01245-01220	· SCREW	2	SN:30001--
23	01643-71232	· WASHER	2	SN:30001--
24	01245-00616	· SCREW	4	SN:30001--
25	01643-70623	· WASHER	4	SN:30001--
26	01245-01016	· SCREW	1	SN:30001--
27	01643-71032	· WASHER	1	SN:30001--
28	01245-00816	· SCREW	2	SN:30001--
29	01643-70823	· WASHER	2	SN:30001--
30	09415-02512	· CAP	1	SN:30001--
31	8A13-10-1310	· ANTENNA	1	SN:30001--
32	7836-10-2910	· ANTENNA	1	SN:30001--
33	7836-10-2920	· CABLE	1	SN:30001--
34	20Y-54-37150	· SHEET	1	SN:30001--
35	08034-20519	· BAND	2	SN:30001--
36	22B-54-17290	· SEAL	4	SN:30001--

Ref. K0210-11A0 Page 210140

https://truckmanualshub.com/

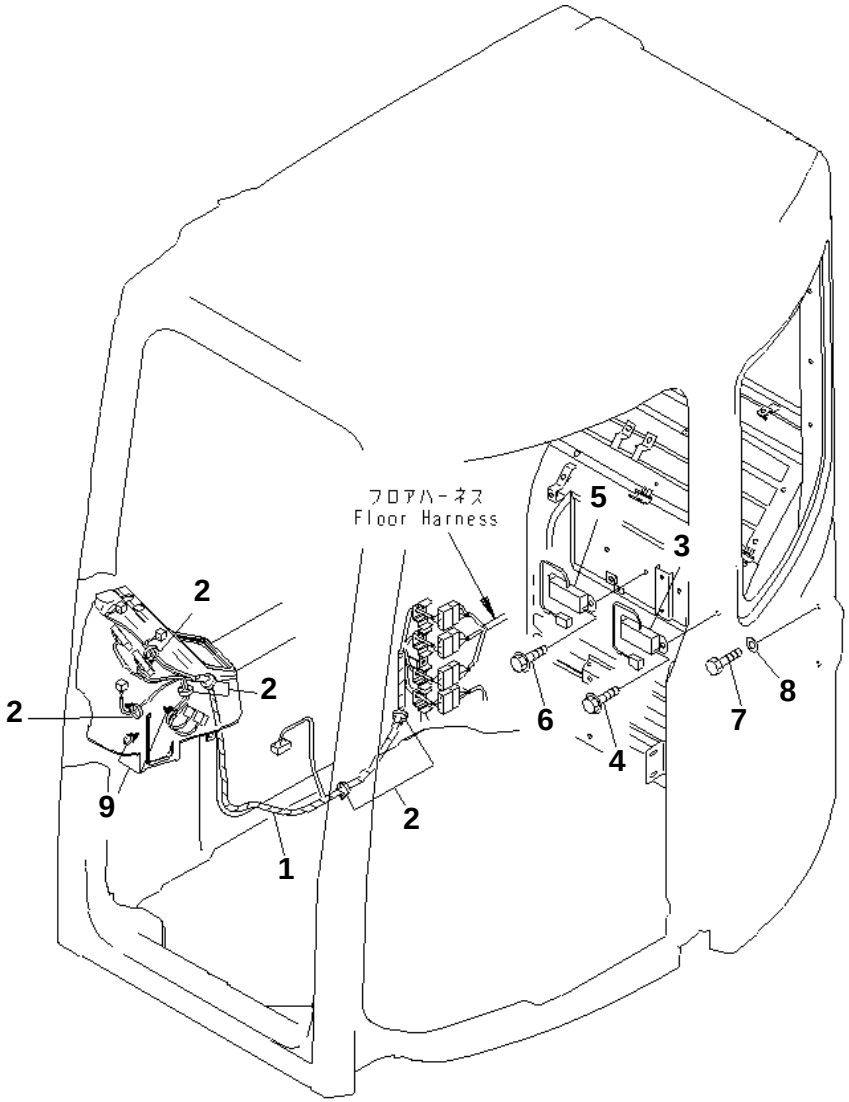

PC228US-3N-W1 S/N 30001-UP

OPERATOR'S CAB (WIRING)

Item	Part No.	Description	Qty	Options
1	22U-06-22112	WIRING HARNESS	1	SN:30001--
2	08059-00413	CLIP	7	SN:30001--
3	(7861-94-3000)	RESISTOR	1	SN:30001--
4	01435-40816	BOLT	2	SN:30001--
5	7861-94-2000	REGISTER	1	SN:30001--
6	01435-40816	BOLT	2	SN:30001--
7	01010-81020	BOLT	2	SN:30001--
8	01643-31032	WASHER	2	SN:30001--
9	08059-00515	CLIP	3	SN:30001--

Ref. K0210-12A0 Page 210150

https://truckmanualshub.com/

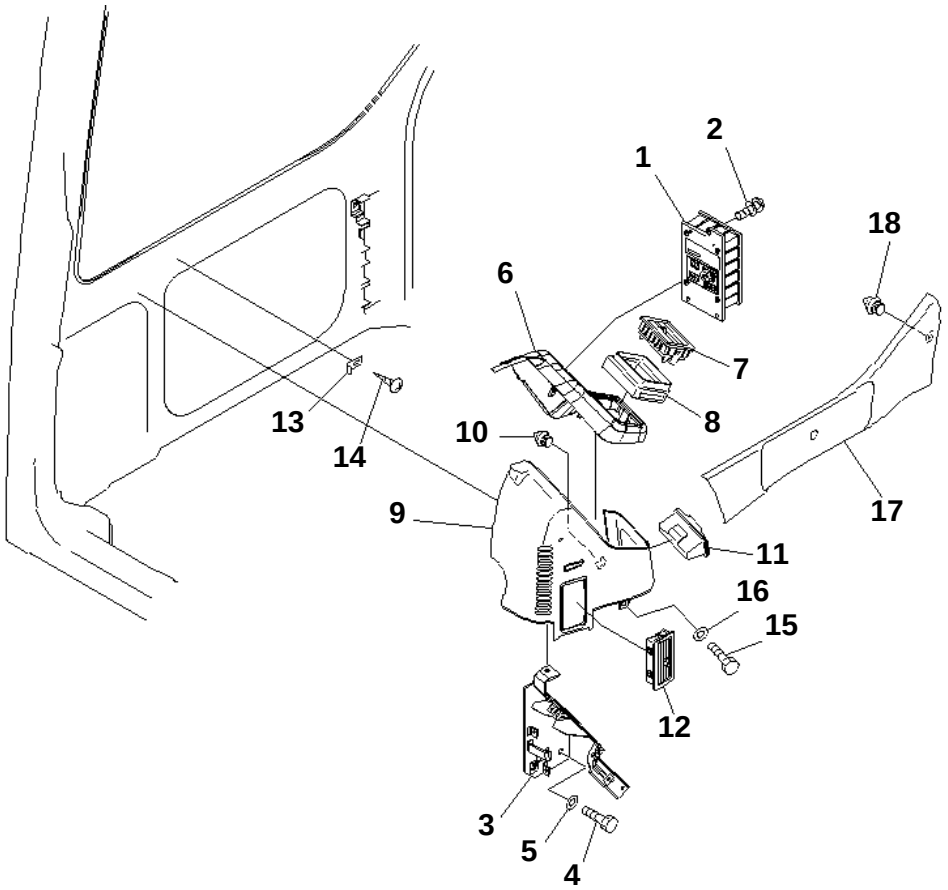

PC228US-3N-W1 S/N 30001-UP

OPERATOR'S CAB (MONITOR SYSTEM)

Item	Part No.	Description	Qty	Options
1	(7835-12-1007)	MONITOR	1	SN:30001--
2	01023-10616	SCREW	3	SN:30001--
3	20Y-06-31810	BRACKET	1	SN:30001--
4	01010-81020	BOLT	3	SN:30001--
5	01643-31032	WASHER	3	SN:30001--
6	20Y-54-65210	COVER ASS'Y	1	SN:30001--
7	201-979-7820	GRILLE	1	SN:30001--
8	20Y-979-6420	DUCT	1	SN:30001--
9	22U-54-25221	COVER	1	SN:30001--
10	22U-54-25340	· CLIP	2	SN:30001--
11	22U-54-25371	· ASHTRAY	1	SN:30001--
12	22U-979-2381	GRILLE	1	SN:30001--
13	22U-06-22590	BRACKET	1	SN:30001--
14	01370-00508	SCREW	1	SN:30001--
15	01010-80616	BOLT	1	SN:30001--
16	01643-30623	WASHER	1	SN:30001--
17	22U-54-25251	COVER	1	SN:30001--
18	22U-54-25360	· CLIP	4	SN:30001--

Ref. K0210-13A0 Page 210160

https://truckmanualshub.com/

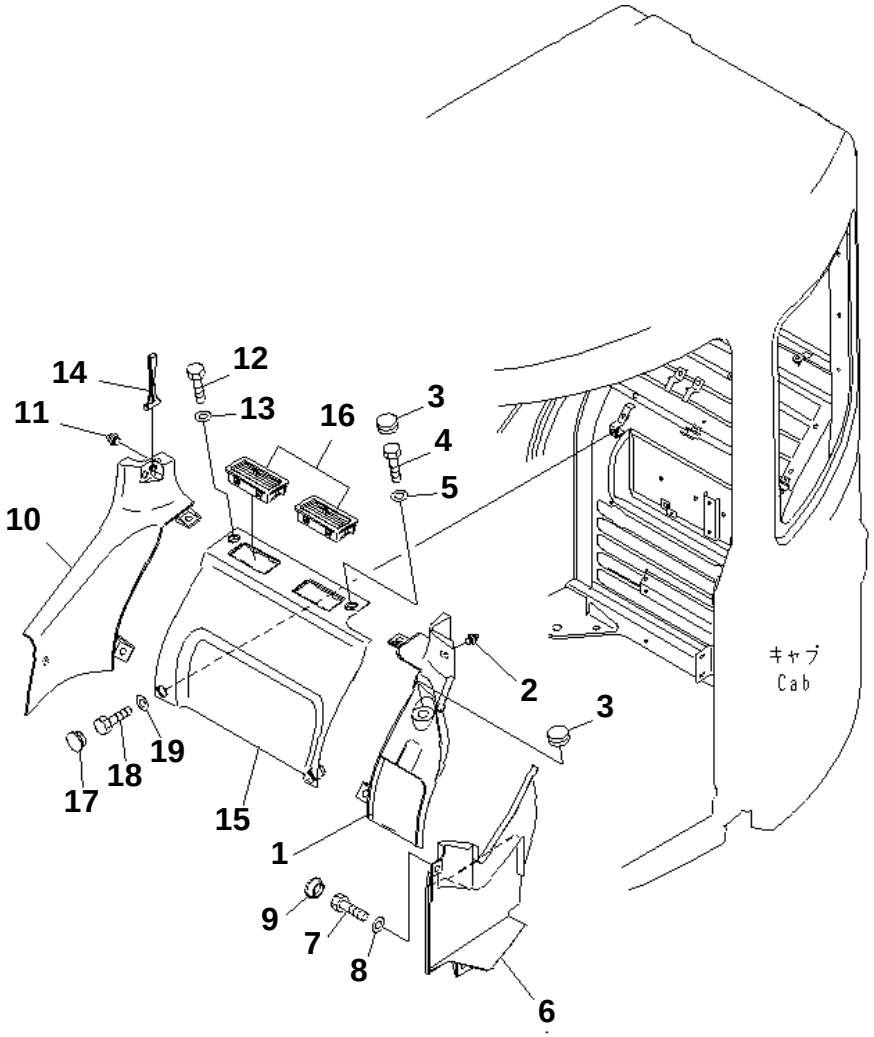

PC228US-3N-W1 S/N 30001-UP

OPERATOR'S CAB (COVER)

Item	Part No.	Description	Qty	Options
1	22U-54-25261	COVER	1	SN:30001--
2	22U-54-25340	· CLIP	1	SN:30001--
3	09415-02110	CAP	1	SN:30001--
4	01010-D0820	BOLT	2	SN:30001--
5	01643-70823	WASHER	2	SN:30001--
6	22U-54-25271	COVER	1	SN:30001--
7	01010-D0820	BOLT	3	SN:30001--
8	01643-70823	WASHER	3	SN:30001--
9	22U-54-25331	CAP	1	SN:30001--
10	22U-54-25281	COVER	1	SN:30001--
11	22U-54-25360	· CLIP	2	SN:30001--
12	01010-80820	BOLT	1	SN:30001--
13	01643-30823	WASHER	1	SN:30001--
14	22B-54-17380	HAMMER	1	SN:30001--
15	22U-54-25291	COVER	1	SN:30001--
16	22U-979-2381	GRILLE	2	SN:30001--
17	22U-54-25331	CAP	4	SN:30001--
18	01010-80820	BOLT	4	SN:30001--
19	01643-30823	WASHER	4	SN:30001--

Ref. K0210-14A0 Page 210170

https://truckmanualshub.com/

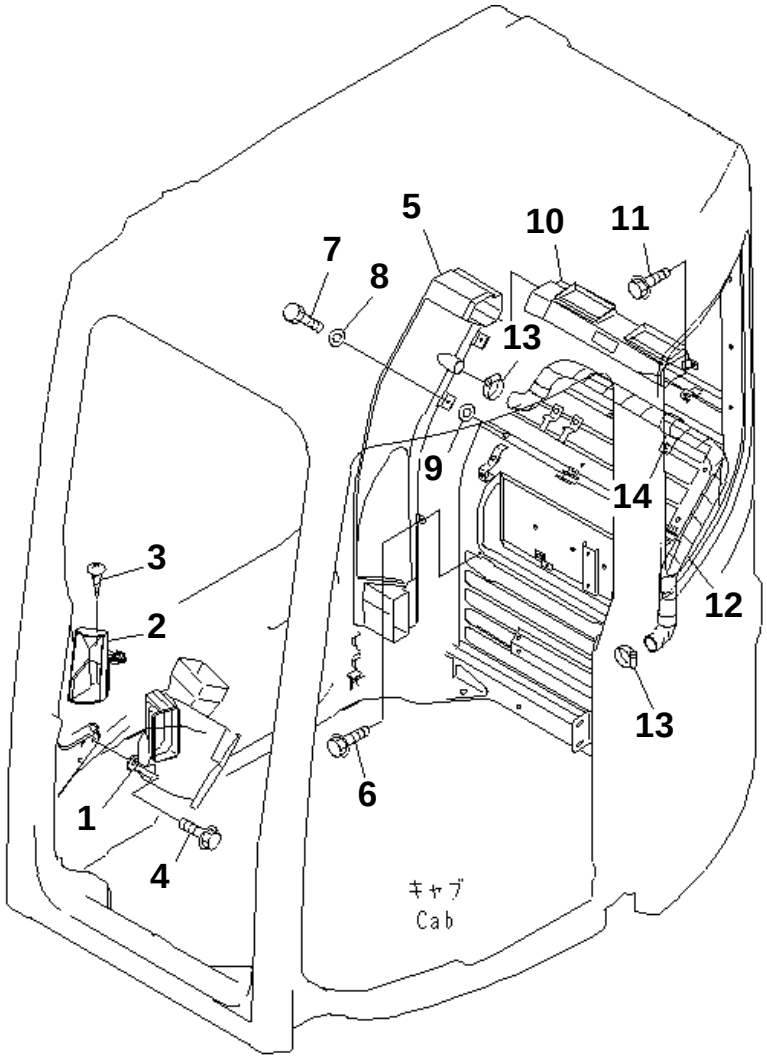

00005122

PC228US-3N-W1 S/N 30001-UP

OPERATOR'S CAB (DUCT)

Item	Part No.	Description	Qty	Options
	22U-979-2300	DUCT ASS'Y	1	SN:30001--
1	☆	· DUCT	1	SN:30001--
2	22U-979-2351	· DEFROSTER ASS'Y	1	SN:30001--
3	01370-40408	· SCREW	4	SN:30001--
4	01435-00612	· BOLT	2	SN:30001--
5	22U-979-2331	DUCT	1	SN:30001--
6	01435-00612	BOLT	1	SN:30001--
7	01010-81020	BOLT	2	SN:30001--
8	01643-31032	WASHER	2	SN:30001--
9	01643-31032	WASHER	2	SN:30001--
10	22U-979-2321	DUCT	1	SN:30001--
11	01435-00612	BOLT	1	SN:30001--
12	22U-979-2370	HOSE	1	SN:30001--
13	07281-00419	CLAMP	2	SN:30001--
14	04434-53411	CLIP	1	SN:30001--

Ref. K0210-15A0 Page 210180

https://truckmanualshub.com/

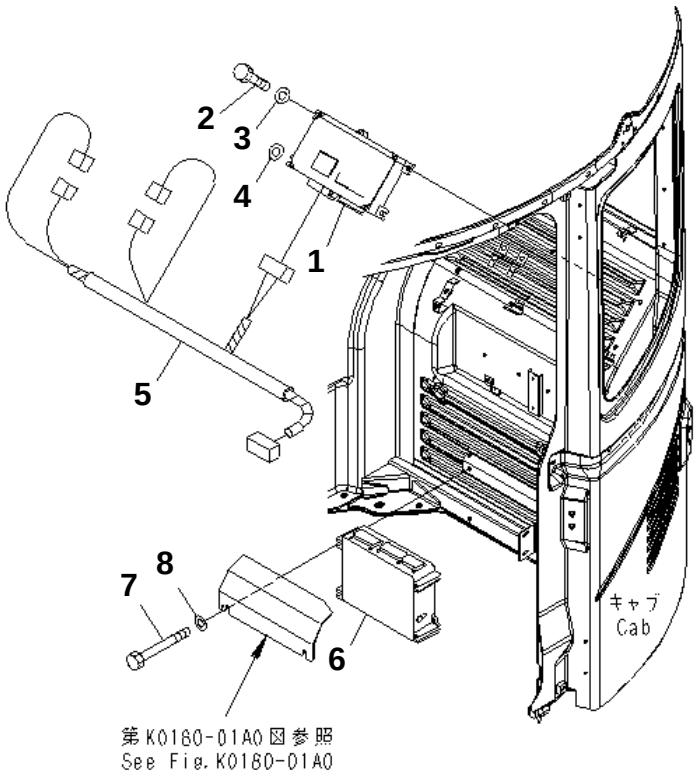

00005124

PC228US-3N-W1 S/N 30001-UP

OPERATOR'S CAB (KOMTRAX CONTROLLER)

Item	Part No.	Description	Qty	Options
1	7826-20-5003	CONTROLLER	1	SN:30001--
2	01010-80825	BOLT	4	SN:30001--
3	01643-30823	WASHER	4	SN:30001--
4	01643-30823	WASHER	1	SN:30001--
5	22U-06-21170	WIRING HARNESS	1	SN:30001--
6	7835-26-4001	CONTROLLER	1	SN:30001--
7	01010-80885	BOLT	4	SN:30001--
8	01643-30823	WASHER	4	SN:30001--

Ref. K0210-16A2 Page 210190

https://truckmanualshub.com/

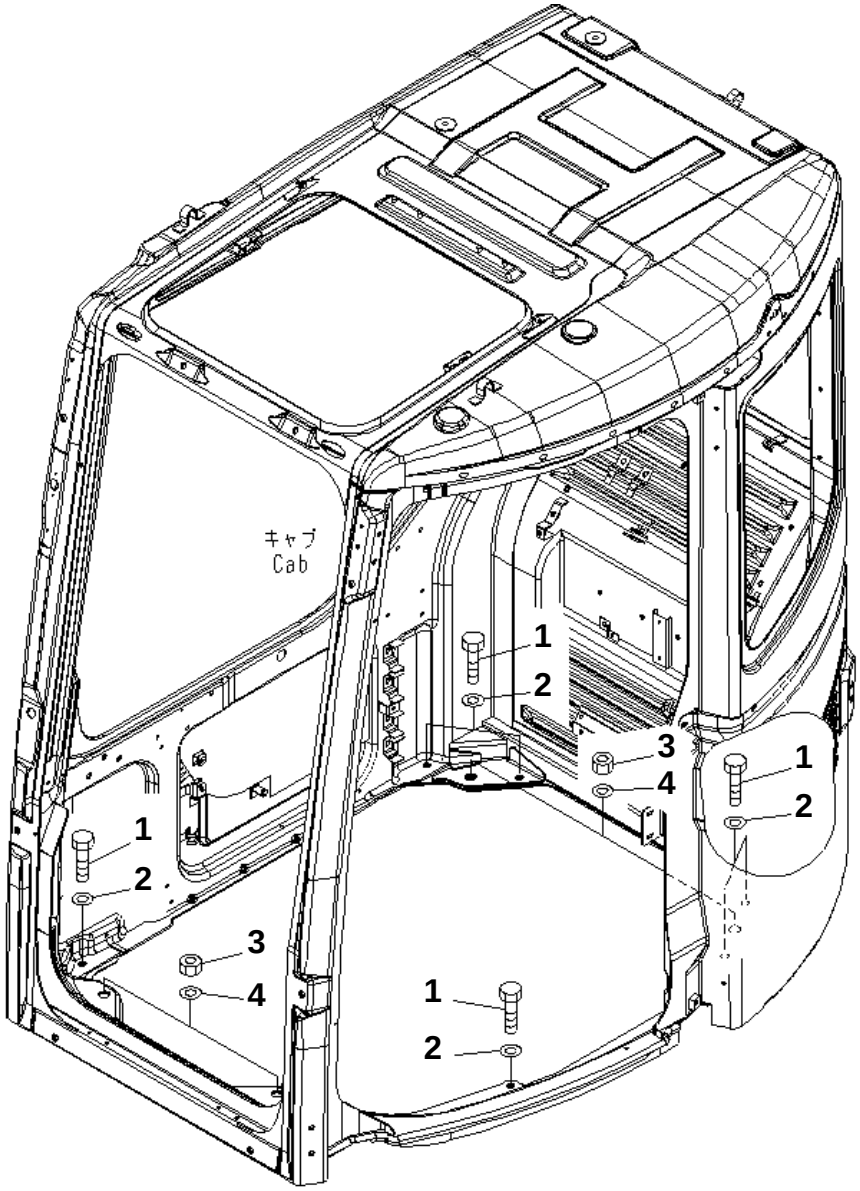

PC228US-3N-W1 S/N 30001-UP

OPERATOR'S CAB (INSTALLATION PARTS)

Item	Part No.	Description	Qty	Options
1	01010-D1030	BOLT	6	SN:30001--
2	01643-71032	WASHER	6	SN:30001--
3	01580-11613	NUT	4	SN:30001--
4	01643-31645	WASHER	4	SN:30001--

Ref. K0210-17A0 Page 210200

https://truckmanualshub.com/

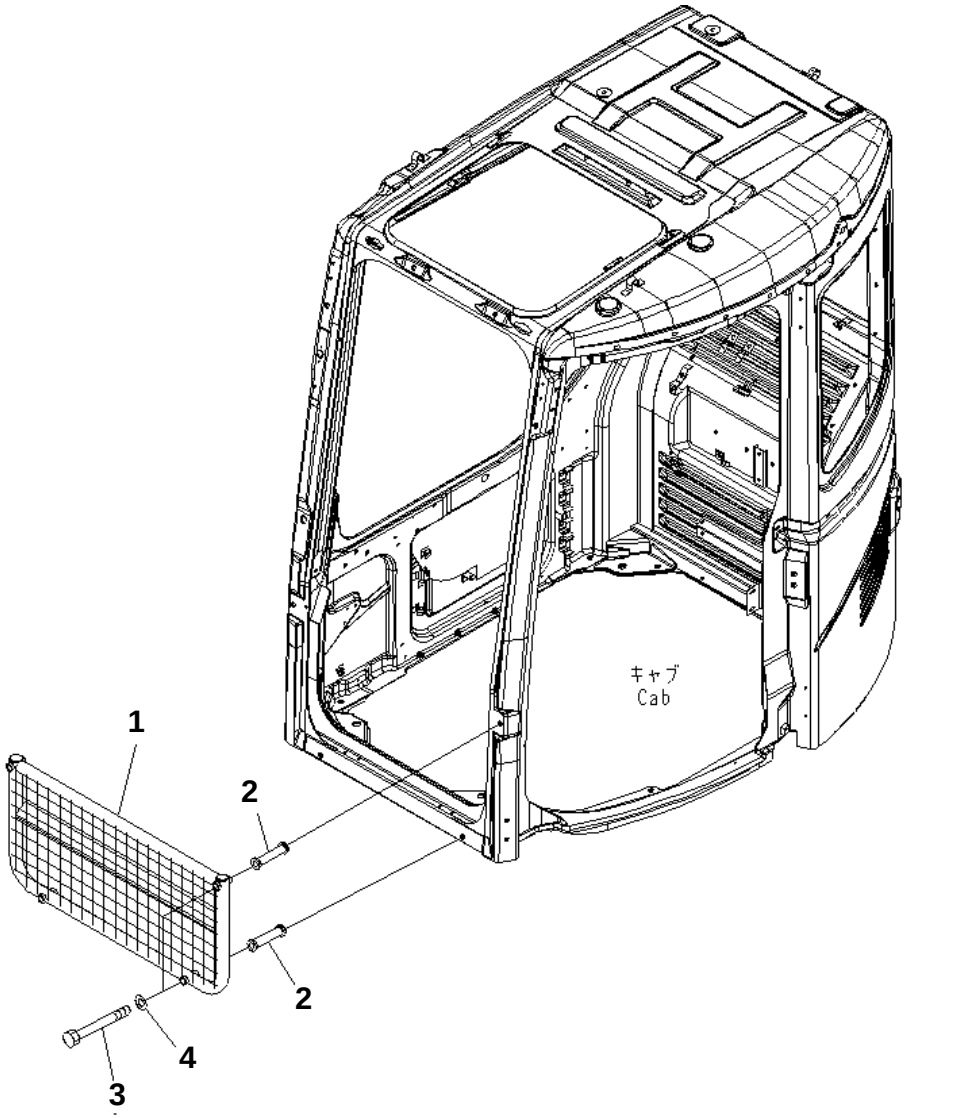

PC228US-3N-W1 S/N 30001-UP

FRONT GUARD (HALF)(#20001-)

Item	Part No.	Description	Qty	Options
1	22B-954-1710	GUARD	1	SN:20001--
2	22B-954-1760	SPACER	4	SN:20037--
3	01011-D1260	BOLT	4	SN:20037--
4	01643-71232	WASHER	4	SN:20037--

Ref. K0230-01A0 Page 210210

https://truckmanualshub.com/

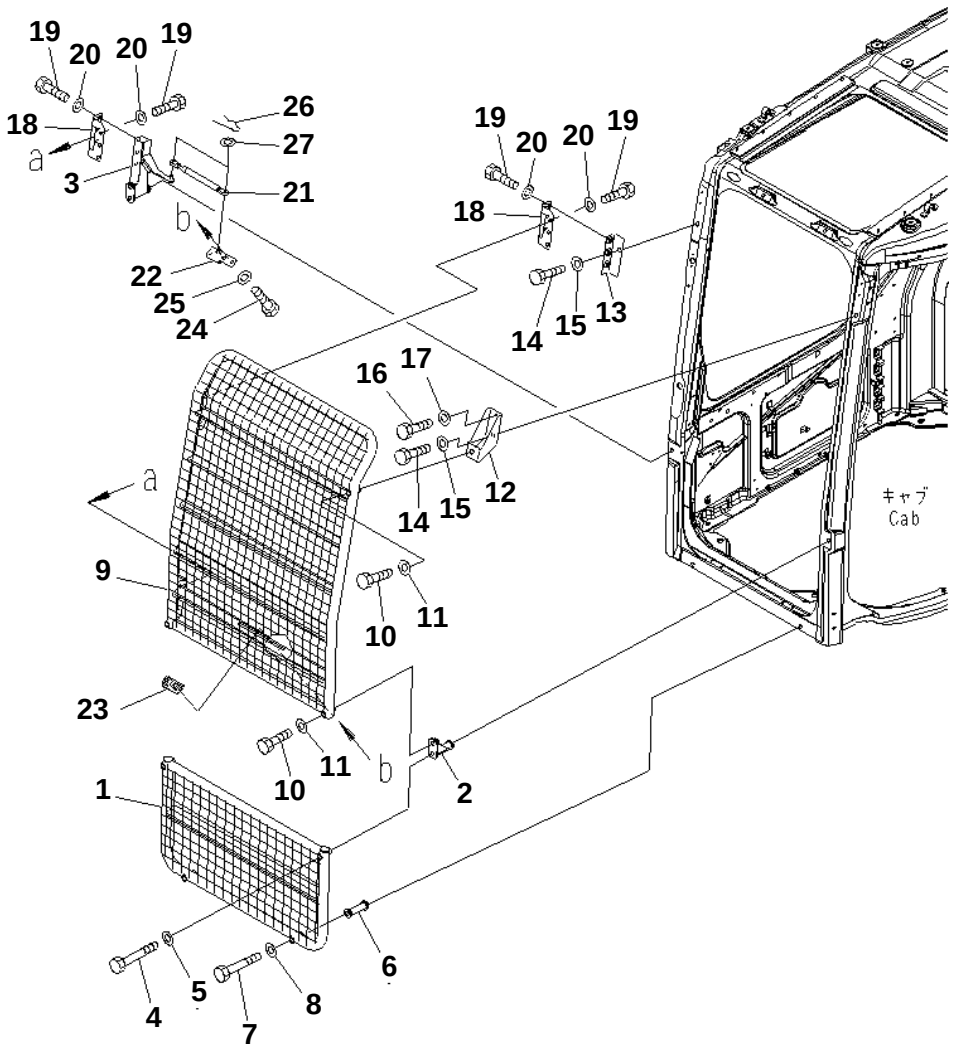

PC228US-3N-W1 S/N 30001-UP

FRONT GUARD (FULL)(#20001-)

Item	Part No.	Description	Qty	Options
1	22B-954-1710	GUARD	1	SN:20001--
2	22B-954-1720	BRACKET	1	SN:20001--
3	22B-954-1741	BRACKET	1	SN:20001--
4	01011-D1260	BOLT	2	SN:20271--
5	01643-71232	WASHER	2	SN:20001--
6	22B-954-1760	SPACER	2	SN:20001--
7	01011-D1260	BOLT	2	SN:20001--
8	01643-71232	WASHER	2	SN:20001--
9	22B-954-1731	GUARD	1	SN:20001--
10	01010-D1275	BOLT	3	SN:20271--
11	01643-71232	WASHER	3	SN:20001--
12	22B-954-1811	BRACKET	1	SN:20001--
13	22B-954-1750	BRACKET	1	SN:20001--
14	01010-D1225	BOLT	2	SN:20001--
15	01643-71232	WASHER	2	SN:20001--
16	01010-D0625	BOLT	1	SN:20001--
17	01643-70623	WASHER	1	SN:20001--
18	14X-911-1330	HINGE	2	SN:20001--
19	01010-D1025	BOLT	12	SN:20001--
20	01643-71032	WASHER	12	SN:20001--
21	20Y-54-36342	GAS SPRING ASS'Y	1	SN:20001--
22	22B-954-1840	PLATE	1	SN:20001--
23	22B-954-1660	PLATE	1	SN:20001--
24	01010-D0820	BOLT	2	SN:20001--
25	01643-70823	WASHER	2	SN:20001--
26	04052-10833	PIN	2	SN:20001--
27	01643-70823	WASHER	2	SN:20001--

Ref. K0230-01A1 Page 210220

https://truckmanualshub.com/

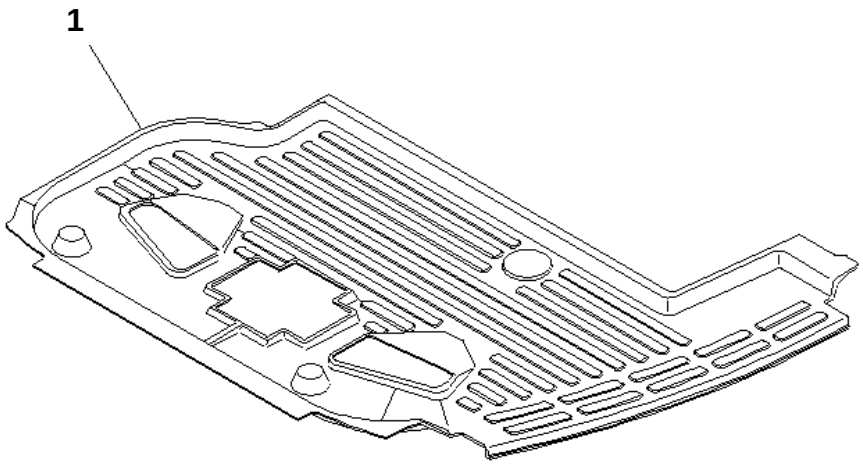

PC228US-3N-W1 S/N 30001-UP

FLOOR MAT(#20001-)

Item	Part No.	Description	Qty	Options
1	22U-54-25410	FLOOR MAT	1	SN:20001--

Ref. K0310-01A0 Page 210230

https://truckmanualshub.com/

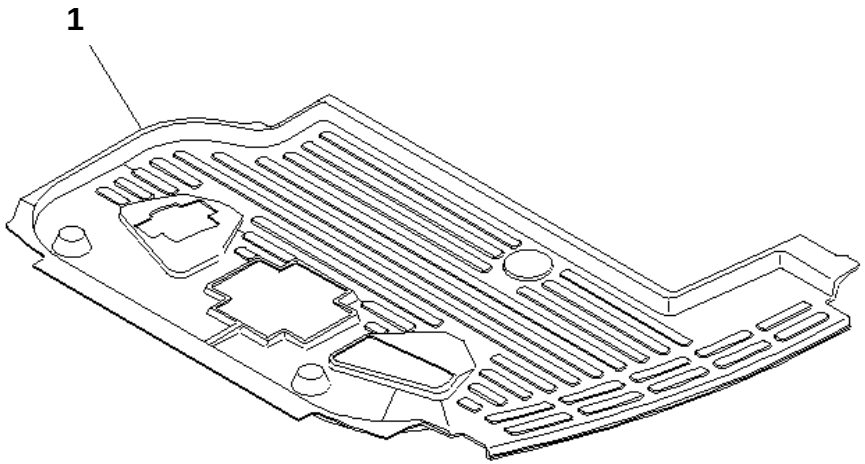

PC228US-3N-W1 S/N 30001-UP

FLOOR MAT (1 ACTUATOR)(#20001-)

Item	Part No.	Description	Qty	Options
1	22U-54-25610	FLOOR MAT	1	SN:20001--

Ref. K0310-01A1 Page 210240

https://truckmanualshub.com/

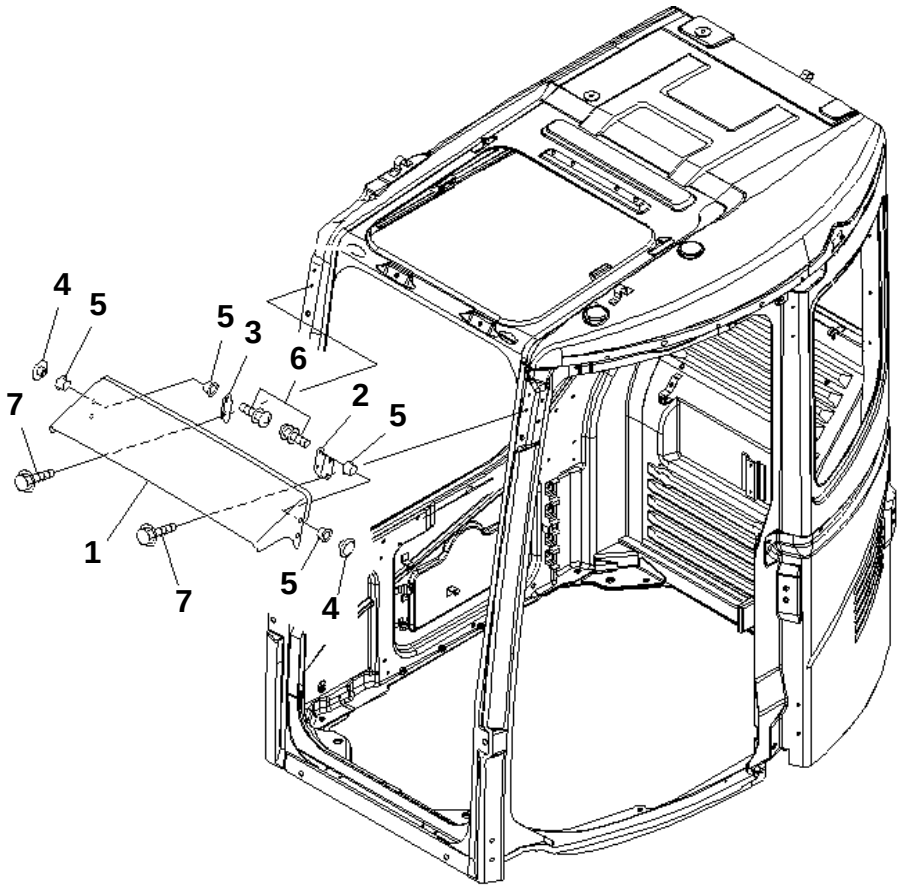

PC228US-3N-W1 S/N 30001-UP

RAIN VISOR(#20001-)

Item	Part No.	Description	Qty	Options
1	22B-54-17551	VISOR	1	SN:20001--
2	22B-54-17520	PLATE	1	SN:20001--
3	22B-54-17530	PLATE	1	SN:20001--
4	205-54-51720	RETAINER	4	SN:20001--
5	205-54-51730	PACKING	8	SN:20001--
6	01023-20608	SCREW	4	SN:20001--
7	01435-40616	BOLT	4	SN:20001--

Ref. K0320-01A0 Page 210250

https://truckmanualshub.com/

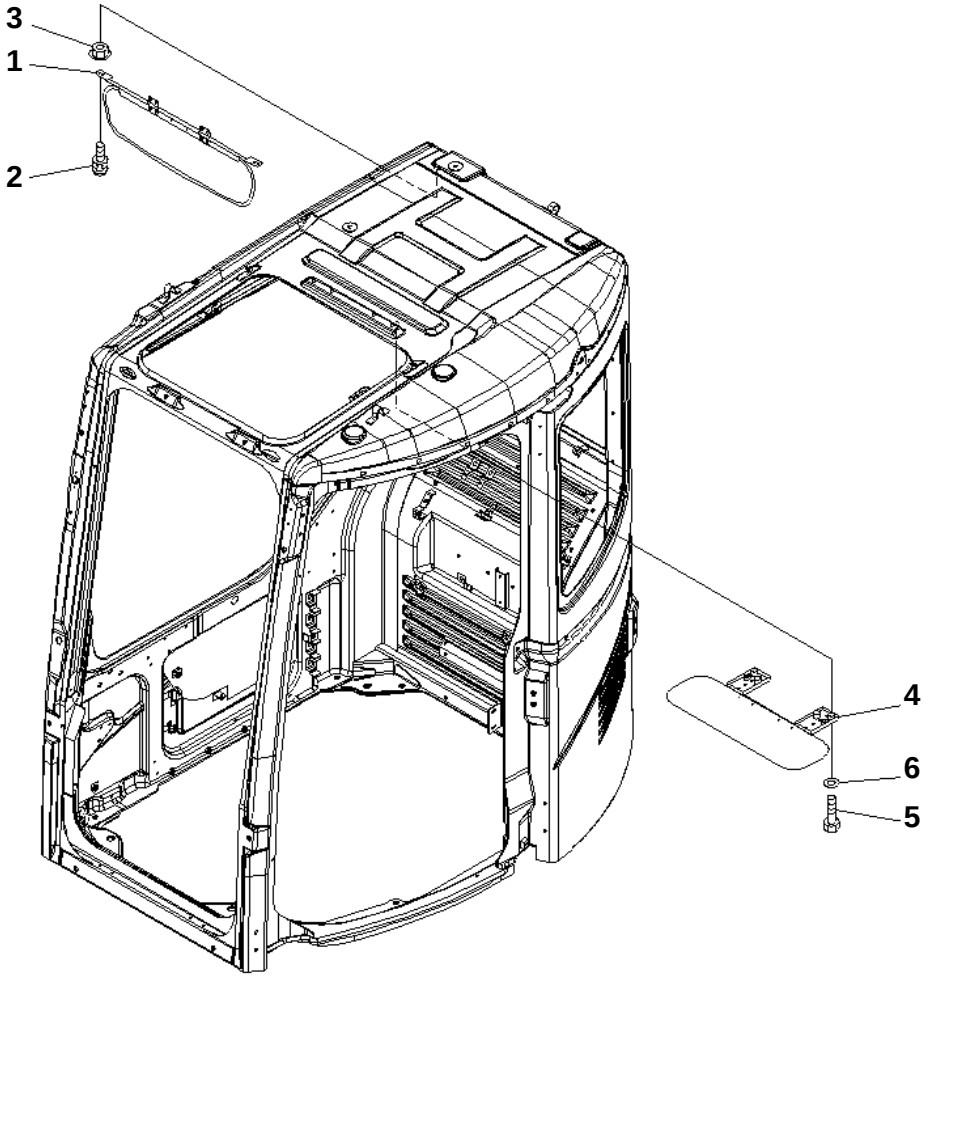

PC228US-3N-W1 S/N 30001-UP

SUN VISOR

Item	Part No.	Description	Qty	Options
1	22B-54-17710	SUN VISOR	1	SN:30001--
2	01023-70512	SCREW	4	SN:30001--
3	01584-30504	NUT	4	SN:30001--
4	22B-54-17720	SUN VISOR	1	SN:30001--
5	01010-D0620	BOLT	4	SN:30001--
6	01643-70623	WASHER	4	SN:30001--

Ref. K0330-01A0 Page 210260

https://truckmanualshub.com/

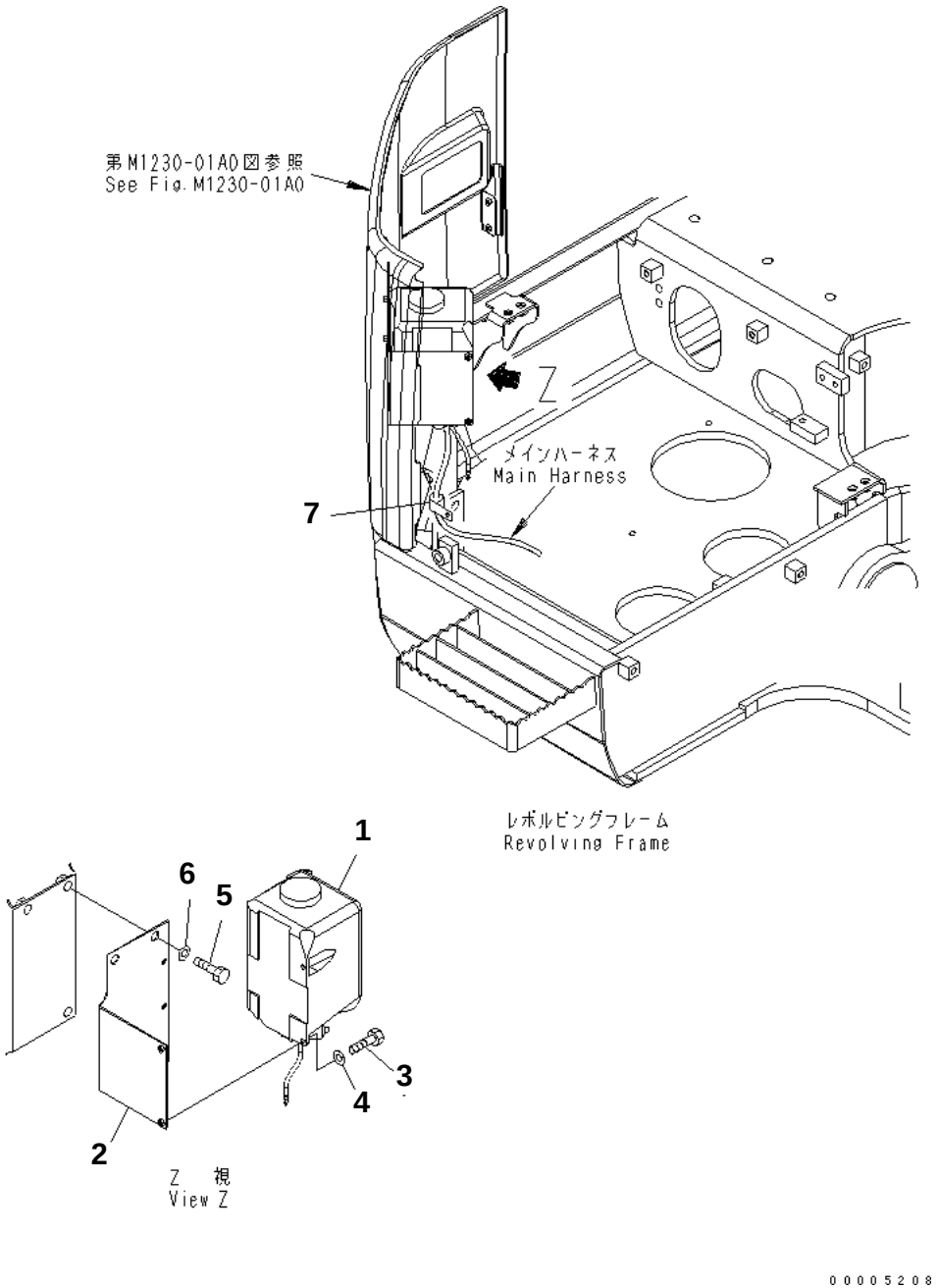

PC228US-3N-W1 S/N 30001-UP

WINDOW WASHER(#20001-)

Item	Part No.	Description	Qty	Options
1	21T-06-11350	TANK ASS'Y	1	SN:20001--
2	22U-06-21511	BRACKET	1	SN:20001--
3	01010-80616	BOLT	4	SN:20001--
4	01643-30623	WASHER	4	SN:20001--
5	01010-81225	BOLT	3	SN:20001--
6	01643-31232	WASHER	3	SN:20001--
7	04434-51612	CLIP	1	SN:20005--

Ref. K0350-01A0 Page 210270

https://truckmanualshub.com/

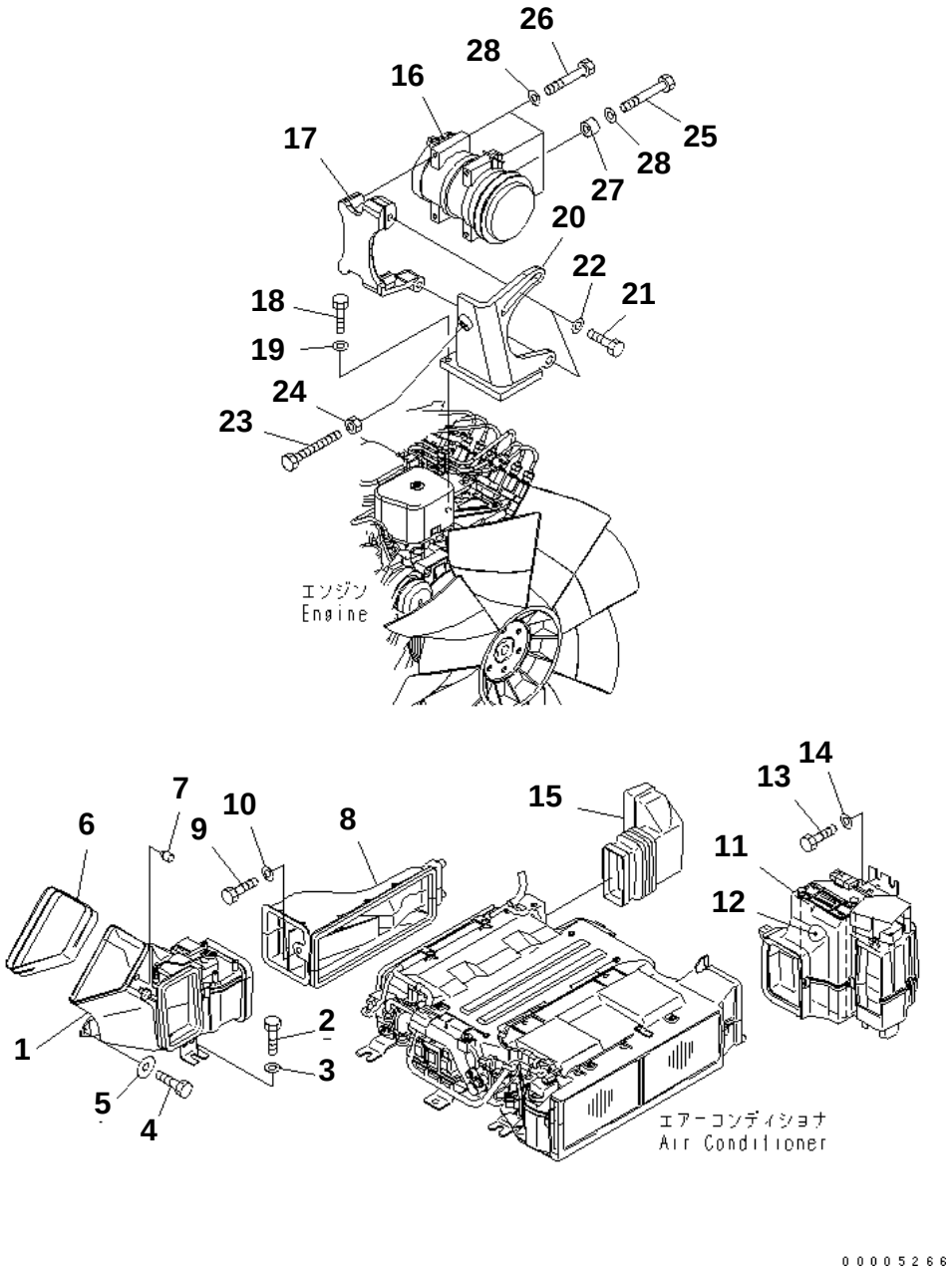

PC228US-3N-W1 S/N 30001-UP

AIR CONDITIONER (UNIT)

Item	Part No.	Description	Qty	Options
1	22B-979-1711	DUCT	1	SN:30001--
2	01010-D1020	BOLT	1	SN:30001--
3	01643-71032	WASHER	1	SN:30001--
4	01010-D0616	BOLT	1	SN:30001--
5	419-43-17760	WASHER	1	SN:30001--
6	22U-979-2361	COVER	1	SN:30001--
7	20Y-54-35780	STOPPER	1	SN:30001--
8	22B-979-1691	DUCT	1	SN:30001--
9	01010-D1020	BOLT	1	SN:30001--
10	01643-71032	WASHER	1	SN:30001--
11	22B-979-1720	DUCT	1	SN:30001--
12	22B-979-1740	· FILTER	1	SN:30001--
13	01010-D1020	BOLT	2	SN:30001--
14	01643-71032	WASHER	2	SN:30001--
15	22U-979-2341	DUCT	1	SN:30001--
16	22U-979-1710	COMPRESSOR ASS'Y	1	SN:30001--
17	22U-979-2282	BRACKET	1	SN:30001--
18	01010-81035	BOLT	3	SN:30001--
19	01643-31032	WASHER	3	SN:30001--
20	20Y-979-5581	BRACKET	1	SN:30001--
21	01010-81435	BOLT	2	SN:30001--
22	01643-31445	WASHER	2	SN:30001--
23	01017-51420	BOLT	1	SN:30001--
24	01580-11411	NUT	1	SN:30001--
25	01010-80895	BOLT	3	SN:30001--
26	20T-62-61970	BOLT	1	SN:30001--
27	6204-81-6740	SPACER	1	SN:30001--
28	01643-30823	WASHER	4	SN:30001--

Ref. K0700-01A0 Page 210280

https://truckmanualshub.com/

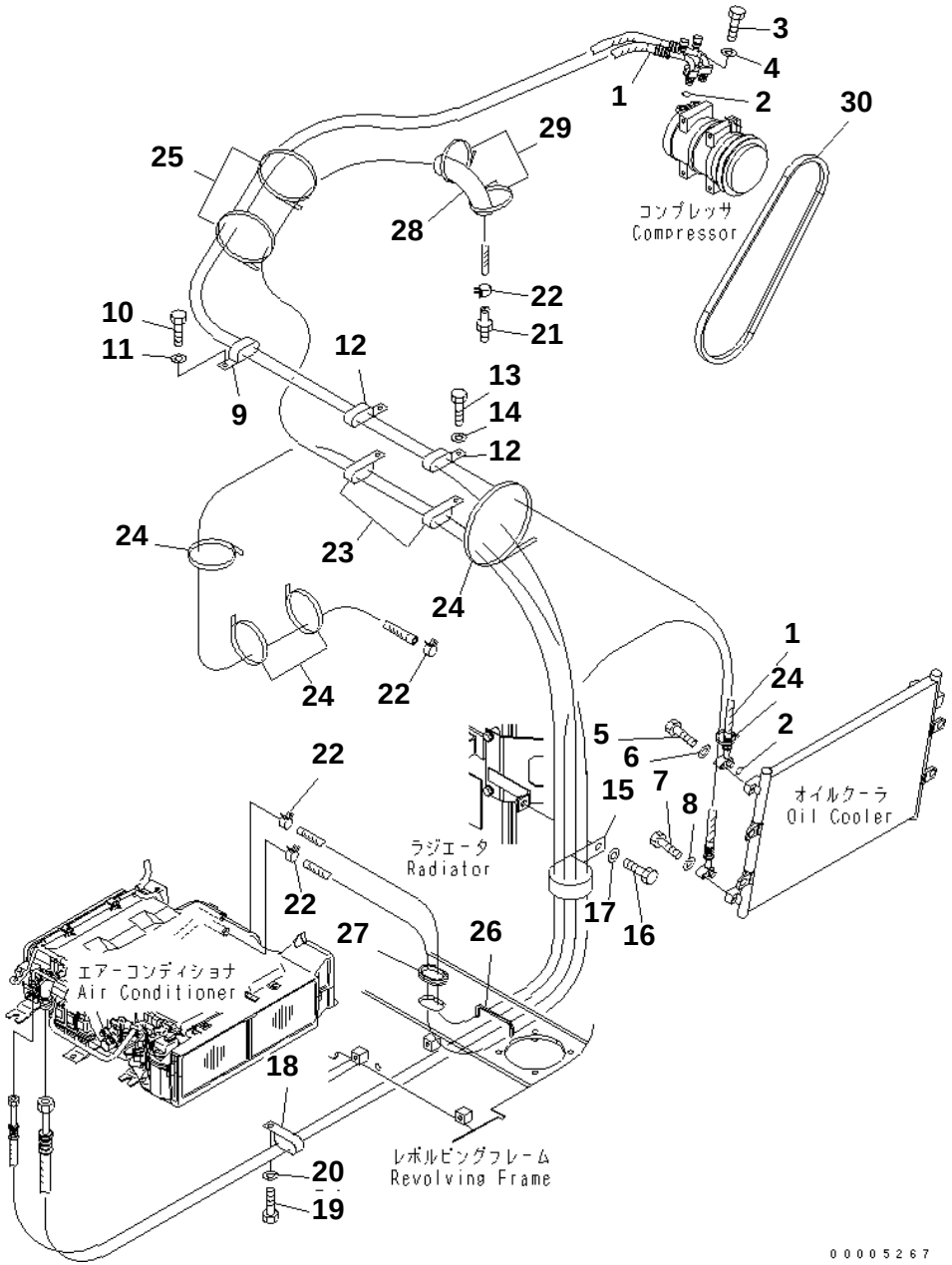

PC228US-3N-W1 S/N 30001-UP

AIR CONDITIONER (HOSE)

Item	Part No.	Description	Qty	Options
1	22U-979-2243	HOSE	1	SN:30001--
2	TW581520-9800	· O-RING	2	SN:30001--
3	01050-51045	BOLT	1	SN:30001--
4	01643-31032	WASHER	1	SN:30001--
5	01010-80830	BOLT	1	SN:30001--
6	01643-30823	WASHER	1	SN:30001--
7	01010-80830	BOLT	1	SN:30001--
8	01643-30823	WASHER	1	SN:30001--
9	22U-62-26260	CLIP	1	SN:30001--
10	01010-81225	BOLT	1	SN:30001--
11	01643-31232	WASHER	1	SN:30001--
12	22U-62-26270	CLIP	2	SN:30001--
13	01010-81225	BOLT	2	SN:30001--
14	01643-31232	WASHER	2	SN:30001--
15	20Y-62-17930	CLIP	1	SN:30001--
16	01010-81225	BOLT	1	SN:30001--
17	01643-31232	WASHER	1	SN:30001--
18	04435-52112	CLIP	1	SN:30001--
19	01010-81225	BOLT	1	SN:30001--
20	01643-31232	WASHER	1	SN:30001--
21	22U-979-1930	VALVE	1	SN:30001--
22	11Y-09-11160	CLIP	4	SN:30001--
23	04435-51912	CLIP	2	SN:30001--
24	08034-20519	BAND	5	SN:30001--
25	08034-20834	BAND	2	SN:30001--
26	22U-979-2420	GROMMET	1	SN:30001--
27	22U-979-2430	GROMMET	1	SN:30001--
28	21T-06-17820	COVER	1	SN:30001--
29	08034-20536	BAND	2	SN:30001--
30	04120-21746	V-BELT	1	SN:30001--

Ref. K0700-02A0 Page 210290

https://truckmanualshub.com/

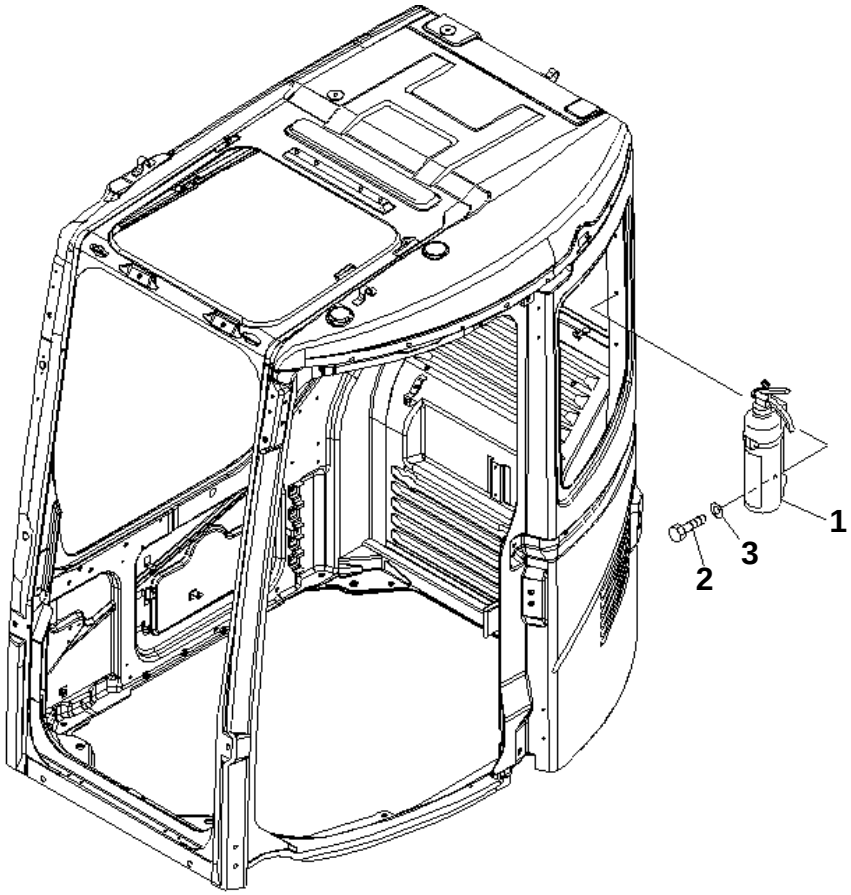

PC228US-3N-W1 S/N 30001-UP

FIRE EXTINGUISHER(#20001-)

Item	Part No.	Description	Qty	Options
1	22B-98-11110	EXTINGUISHER	1	SN:20001--
2	01010-D0820	BOLT	2	SN:20001--
3	01643-70823	WASHER	2	SN:20001--

Ref. K0830-01A0 Page 210300

https://truckmanualshub.com/

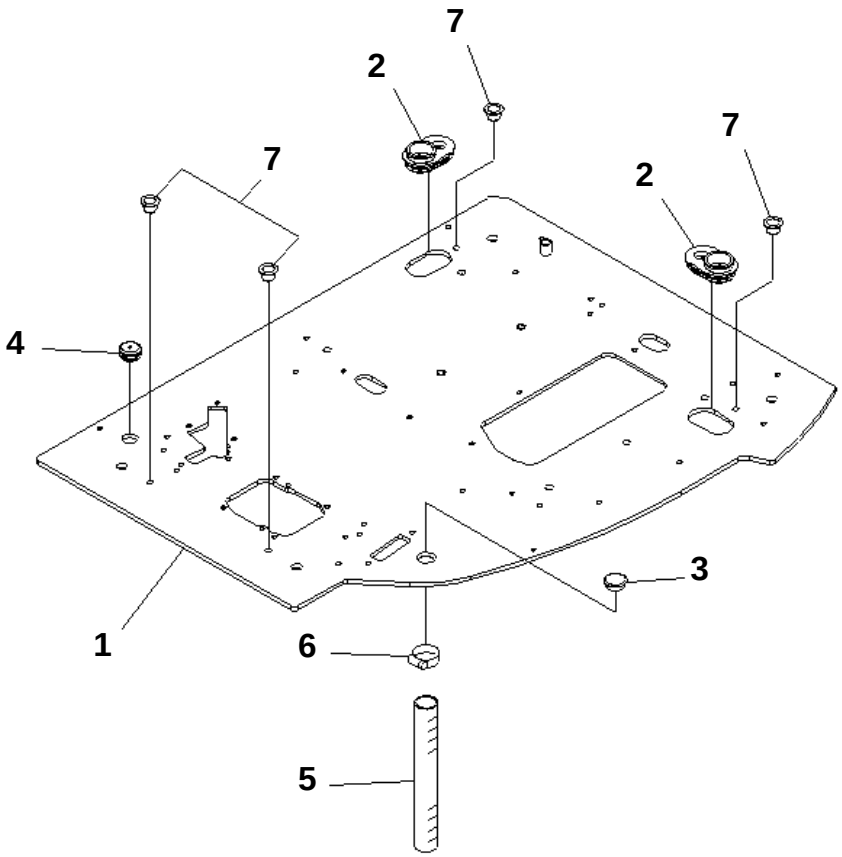

00004737

PC228US-3N-W1 S/N 30001-UP

FLOOR FRAME (FLOOR FRAME)

Item	Part No.	Description	Qty	Options
1	22U-54-25514	FLOOR FRAME	1	SN:30001--
2	22U-54-25561	GROMMET	2	SN:30001--
3	22U-54-25581	GROMMET	1	SN:30001--
4	22U-54-25590	GROMMET	1	SN:30001--
5	07286-03833	HOSE	1	SN:30001--
6	07280-04726	CLAMP	1	SN:30001--
7	07048-01310	PLUG	4	SN:30001--

Ref. K1110-01A0 Page 210310

https://truckmanualshub.com/

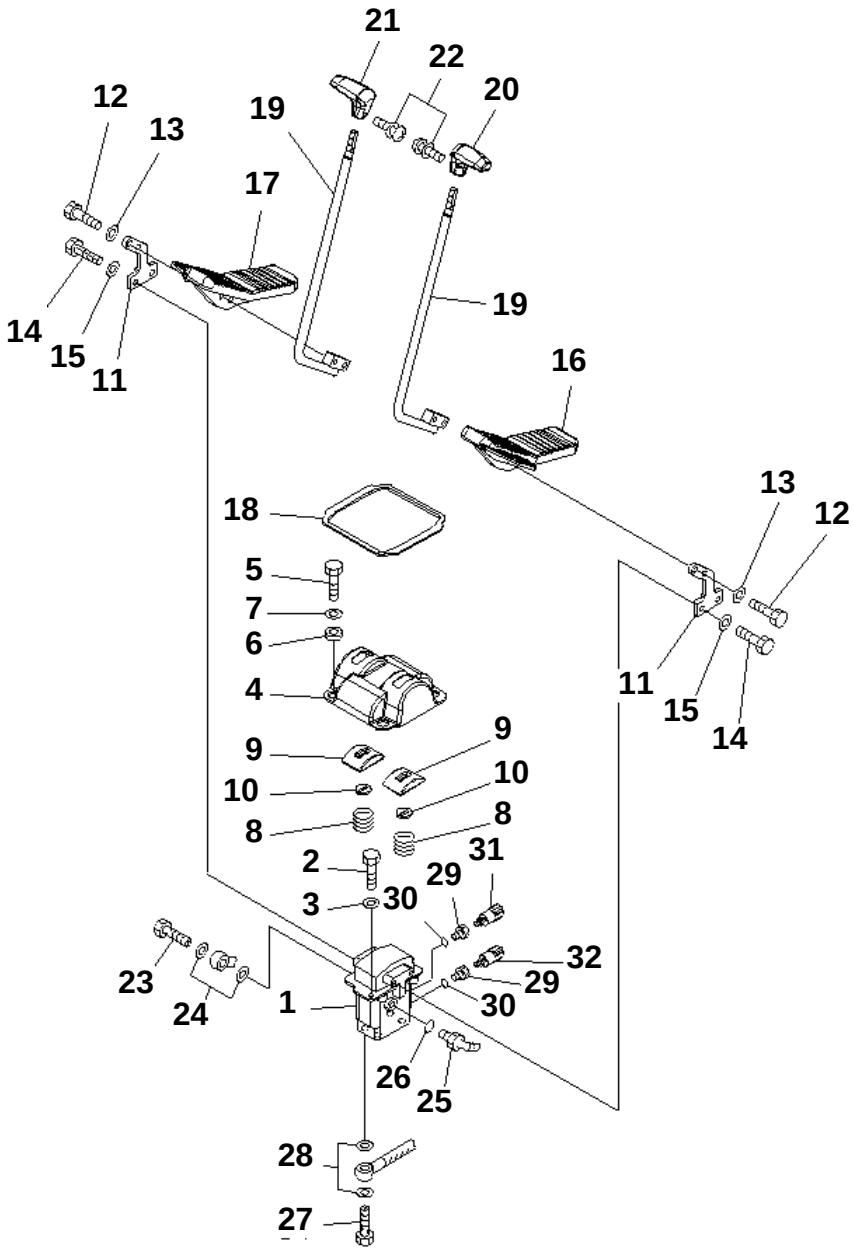

PC228US-3N-W1 S/N 30001-UP

FLOOR FRAME (TRAVEL CONTROL)

Item	Part No.	Description	Qty	Options
1	(702-16-01861)	PILOT VALVE	1	SN:30001--
2	01010-81020	BOLT	2	SN:30001--
3	01643-31032	WASHER	2	SN:30001--
4	20Y-43-21151	COVER	1	SN:30001--
5	01010-81020	BOLT	4	SN:30001--
6	20Y-43-21260	COLLAR	4	SN:30001--
7	203-54-56970	WASHER	4	SN:30001--
8	203-43-51620	SPRING	2	SN:30001--
9	20Y-43-21140	COVER	2	SN:30001--
10	22U-43-21360	SEAL	2	SN:30001--
11	22U-43-21151	LEVER	2	SN:30001--
12	01010-D1045	BOLT	4	SN:30001--
13	01643-71032	WASHER	4	SN:30001--
14	01010-81030	BOLT	4	SN:30001--
15	01643-31032	WASHER	4	SN:30001--
16	22U-43-21111	PEDAL	1	SN:30001--
17	22U-43-21121	PEDAL	1	SN:30001--
18	22U-43-21380	SEAL	1	SN:30001--
19	22U-43-21131	LEVER	2	SN:30001--
20	20Y-43-21231	KNOB	1	SN:30001--
21	20Y-43-21241	KNOB	1	SN:30001--
22	01023-20416	SCREW	2	SN:30001--
23	20Y-62-18910	BOLT	1	SN:30001--
24	07000-12018	O-RING	2	SN:30001--
25	07235-10210	ELBOW	1	SN:30001--
26	07002-11423	O-RING	1	SN:30001--
27	20Y-62-18890	BOLT	4	SN:30001--
28	07000-12015	O-RING	8	SN:30001--
29	20Y-62-41390	ADAPTER	2	SN:30001--
30	07002-11423	O-RING	2	SN:30001--
31	20Y-06-21710	SWITCH	1	SN:30001--
32	206-06-61130	SWITCH	1	SN:30001--

Ref. K1110-02A0 Page 210320

https://truckmanualshub.com/

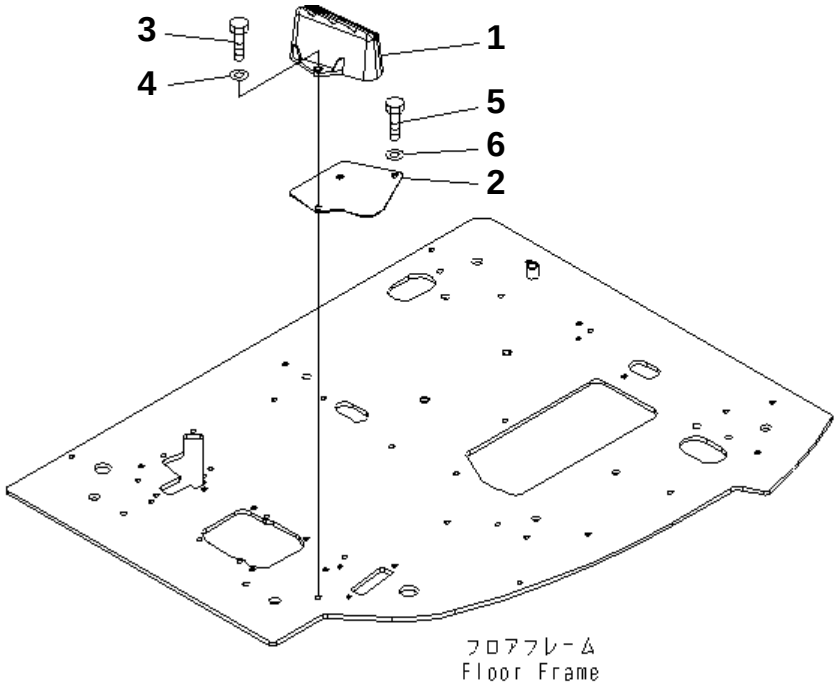

00005162

PC228US-3N-W1 S/N 30001-UP

FLOOR FRAME (FOOT REST) (L.H.)

Item	Part No.	Description	Qty	Options
1	22U-54-25110	FOOT REST	1	SN:30001--
2	22U-54-25521	PLATE	1	SN:30001--
3	01010-81025	BOLT	2	SN:30001--
4	01643-31032	WASHER	2	SN:30001--
5	01010-81020	BOLT	1	SN:30001--
6	01643-31032	WASHER	1	SN:30001--

Ref. K1110-03A0 Page 210330

https://truckmanualshub.com/

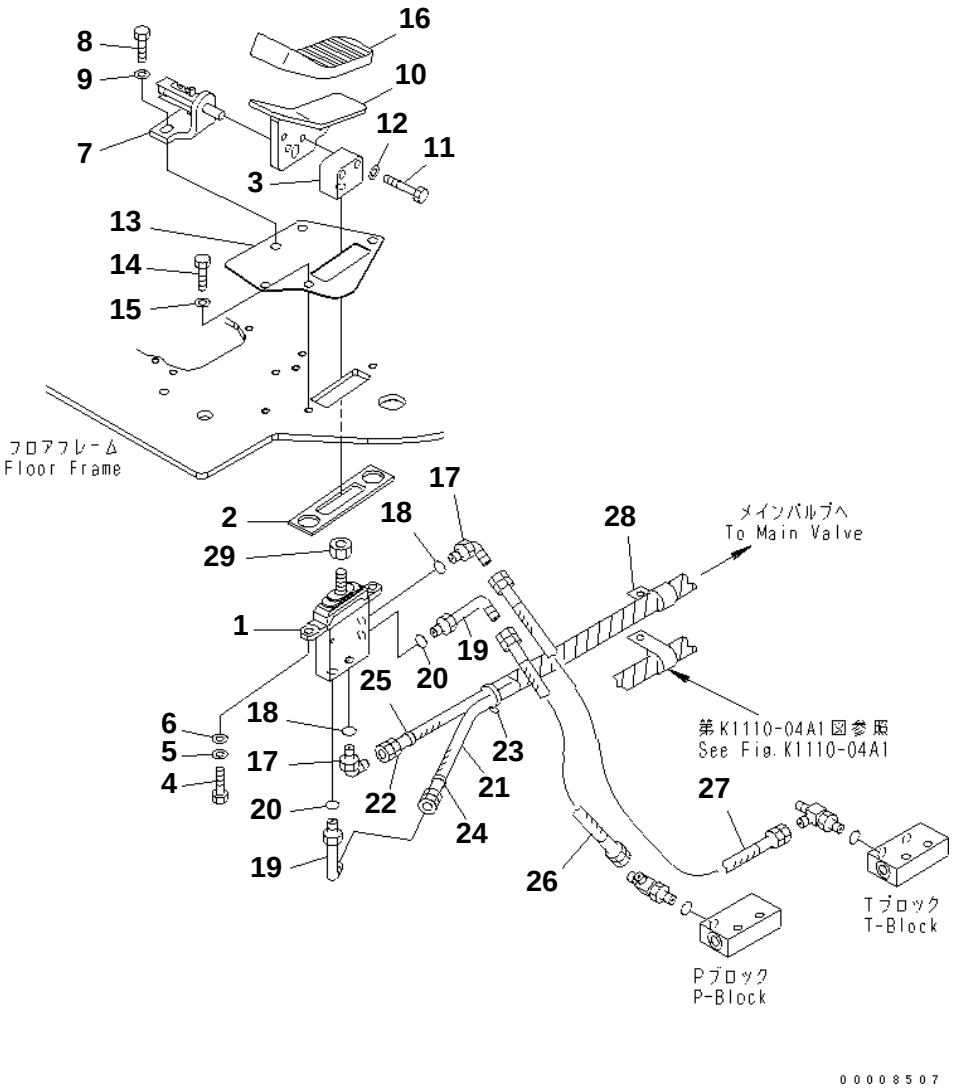

PC228US-3N-W1 S/N 30001-UP

FLOOR FRAME (FOOT REST) (L.H.) (2 ACTUATOR)

Item	Part No.	Description	Qty	Options
1	(702-16-01230)	PILOT VALVE	1	SN:30001--
2	22U-54-25660	SEAL	1	SN:30001--
3	22U-43-21470	SEAT	1	SN:30001--
4	01010-81025	BOLT	2	SN:30001--
5	01643-31032	WASHER	2	SN:30001--
6	01643-31032	WASHER	2	SN:30001--
7	20Y-62-25360	BRACKET	1	SN:30001--
8	01010-D1025	BOLT	2	SN:30001--
9	01643-71032	WASHER	2	SN:30001--
10	20Y-43-31220	PEDAL	1	SN:30001--
11	01010-D1045	BOLT	2	SN:30001--
12	01643-71032	WASHER	2	SN:30001--
13	22U-54-25180	PLATE	1	SN:30001--
14	01010-81020	BOLT	3	SN:30001--
15	01643-31032	WASHER	3	SN:30001--
16	22U-54-25670	CAP	1	SN:30001--
17	21P-62-11590	ELBOW	2	SN:30001--
18	07000-12011	O-RING	2	SN:30001--
19	20U-62-22430	ELBOW	2	SN:30001--
20	07000-12011	O-RING	2	SN:30001--
21	07184-00230	HOSE	1	SN:30001--
22	07184-00231	HOSE	1	SN:30001--
23	08034-00876	BAND	1	SN:30001--
24	20Y-62-22840	BAND¤ BLACK	2	SN:30001--
25	20Y-62-22860	BAND¤ BROWN	2	SN:30001--
26	07184-00205	HOSE	1	SN:30001--
27	07184-00204	HOSE¤ 400MM	1	SN:30001--
28	04434-52711	CLIP	1	SN:30001--
29	01583-51408	NUT	1	SN:30001--

Ref. K1110-03A3 Page 210340

https://truckmanualshub.com/

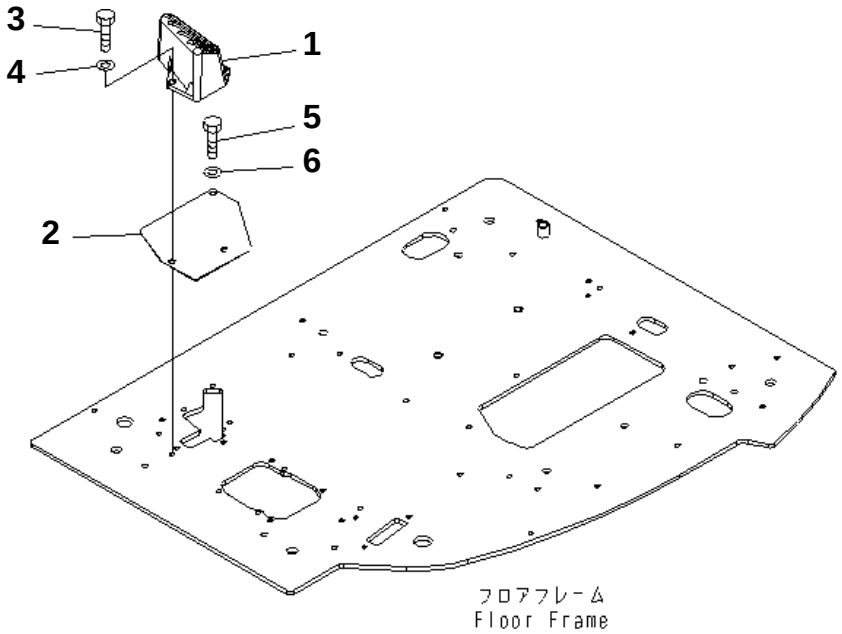

00005163

PC228US-3N-W1 S/N 30001-UP

FLOOR FRAME (FOOT REST) (R.H.)

Item	Part No.	Description	Qty	Options
1	22U-54-25120	FOOT REST	1	SN:30001--
2	22U-54-25531	PLATE	1	SN:30001--
3	01010-81025	BOLT	2	SN:30001--
4	01643-31032	WASHER	2	SN:30001--
5	01010-81020	BOLT	1	SN:30001--
6	01643-31032	WASHER	1	SN:30001--

Ref. K1110-04A0 Page 210350

https://truckmanualshub.com/

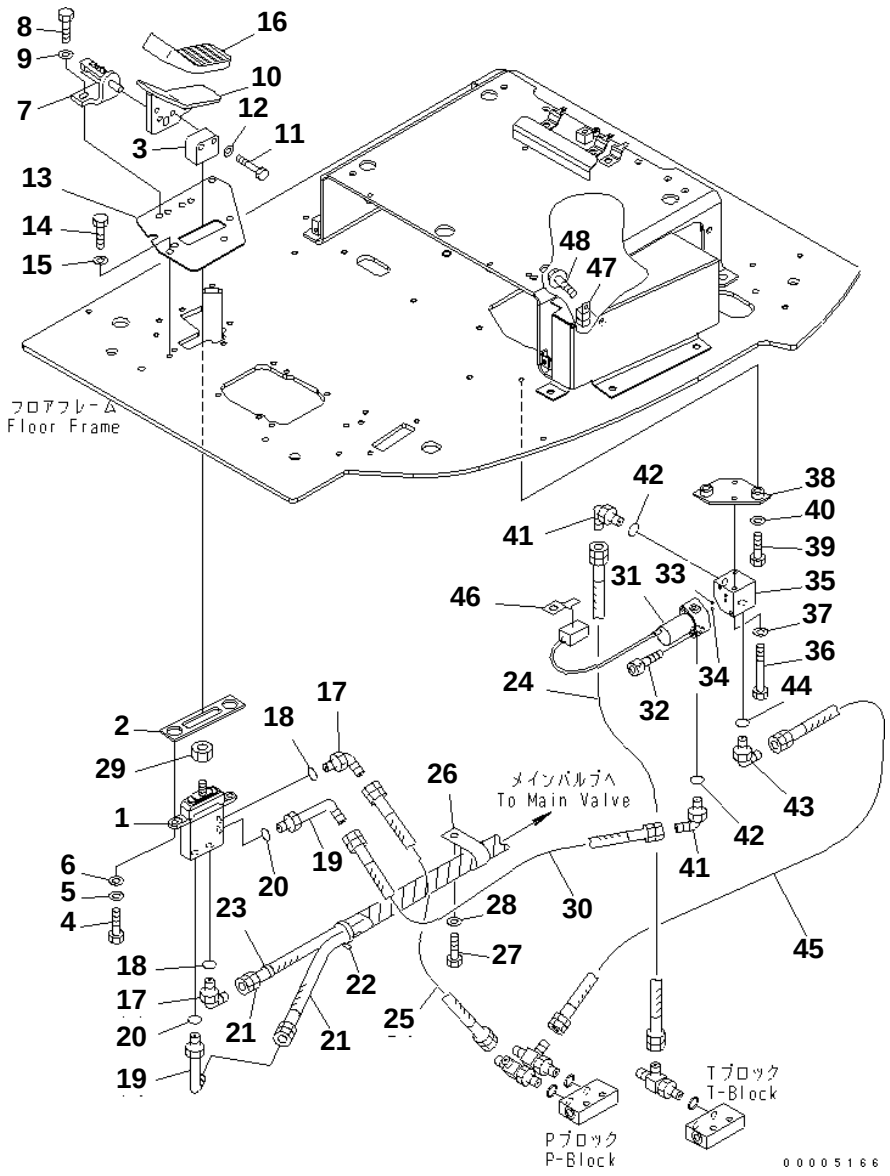

PC228US-3N-W1 S/N 30001-UP

FLOOR FRAME (FOOT REST) (R.H.) (1 ACTUATOR)

Item	Part No.	Description	Qty	Options
1	(702-16-01230)	PILOT VALVE	1	SN:30001--
2	22U-54-25660	SEAL	1	SN:30001--
3	22U-43-21470	SEAT	1	SN:30001--
4	01010-81025	BOLT	2	SN:30001--
5	01643-31032	WASHER	2	SN:30001--
6	01643-31032	WASHER	2	SN:30001--
7	20Y-62-25360	BRACKET	1	SN:30001--
8	01010-D1025	BOLT	2	SN:30001--
9	01643-71032	WASHER	2	SN:30001--
10	20Y-62-25360	BRACKET	1	SN:30001--
11	01010-D1045	BOLT	2	SN:30001--
12	01643-71032	WASHER	2	SN:30001--
13	22U-54-25541	PLATE	1	SN:30001--
14	01010-81020	BOLT	3	SN:30001--
15	01643-31032	WASHER	3	SN:30001--
16	22U-54-25670	CAP	1	SN:30001--
17	21P-62-11590	ELBOW	2	SN:30001--
18	07000-12011	O-RING	2	SN:30001--
19	20U-62-22430	ELBOW	2	SN:30001--
20	07000-12011	O-RING	2	SN:30001--
21	07184-00229	HOSE	2	SN:30001--
22	08034-00876	BAND	1	SN:30001--
23	20Y-62-22810	BAND¤ YELLOW	2	SN:30001--
24	07184-00205	HOSE	1	SN:30001--
25	07184-00203	HOSE¤ 300MM	1	SN:30001--
26	04434-51210	CLIP	1	SN:30001--
27	01010-81025	BOLT	1	SN:30001--
28	01643-31032	WASHER	1	SN:30001--
29	01583-51408	NUT	1	SN:30001--
30	07184-002A5	HOSE	1	SN:30001--
31	702-21-07010	VALVE ASS'Y	1	SN:30001--
32	203-60-62220	BOLT	2	SN:30001--
33	700-93-11320	O-RING	1	SN:30001--
34	07000-02011	O-RING	1	SN:30001--
35	20Y-62-43410	BLOCK	1	SN:30001--
36	01010-80820	BOLT	2	SN:30001--
37	01643-30823	WASHER	2	SN:30001--
38	20Y-62-43420	BRACKET	1	SN:30001--
39	01010-81025	BOLT	2	SN:30001--
40	01643-31032	WASHER	2	SN:30001--
41	21Y-62-17810	ELBOW	2	SN:30001--
42	07002-11423	O-RING	2	SN:30001--

Ref. K1110-04A1 Page 210360

https://truckmanualshub.com/

PC228US-3N-W1 S/N 30001-UP

FLOOR FRAME (FOOT REST) (R.H.) (1 ACTUATOR)

Item	Part No.	Description	Qty	Options
43	07235-10210	ELBOW	1	SN:30001--
44	07002-11423	O-RING	1	SN:30001--
45	07184-00204	HOSE¤ 400MM	1	SN:30001--
46	08053-01510	CLIP	1	SN:30001--
47	569-06-61960	RELAY	1	SN:30001--
48	01435-00612	BOLT	1	SN:30001--

https://truckmanualshub.com/

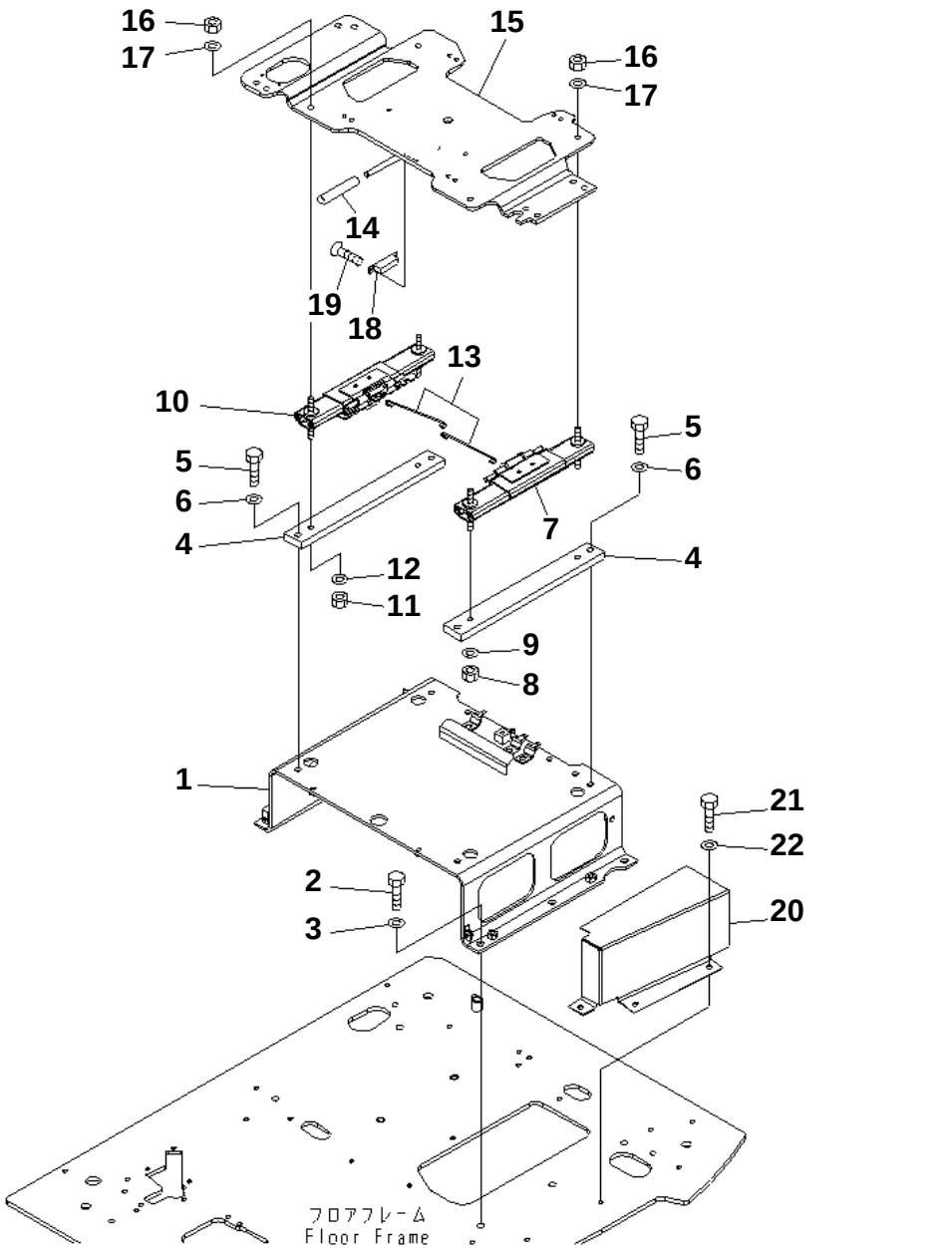

PC228US-3N-W1 S/N 30001-UP

FLOOR FRAME (BASE)

Item	Part No.	Description	Qty	Options
1	22U-43-21223	BRACKET	1	SN:30001--
2	01010-D1235	BOLT	5	SN:30001--
3	01643-71232	WASHER	5	SN:30001--
4	20Y-43-31131	PLATE	2	SN:30001--
5	01010-D1035	BOLT	4	SN:30001--
6	01643-71032	WASHER	4	SN:30001--
7	22U-43-21241	ADJUSTER	1	SN:30001--
8	20Y-54-65340	NUT	2	SN:30001--
9	01643-71032	WASHER	2	SN:30001--
10	22U-43-21251	ADJUSTER	1	SN:30001--
11	20Y-54-65340	NUT	2	SN:30001--
12	01643-71032	WASHER	2	SN:30001--
13	22U-43-21260	WIRE	2	SN:30001--
14	22U-43-21390	CAP	1	SN:30001--
15	22U-43-21282	FRAME	1	SN:30001--
16	20Y-54-65340	NUT	4	SN:30001--
17	01643-71032	WASHER	4	SN:30001--
18	09452-06506	CATCHER	1	SN:30001--
19	01224-40410	SCREW	2	SN:30001--
20	22U-43-21334	COVER	1	SN:30001--
21	01010-D1020	BOLT	3	SN:30001--
22	01643-71032	WASHER	3	SN:30001--

Ref. K1110-06A0 Page 210370

https://truckmanualshub.com/

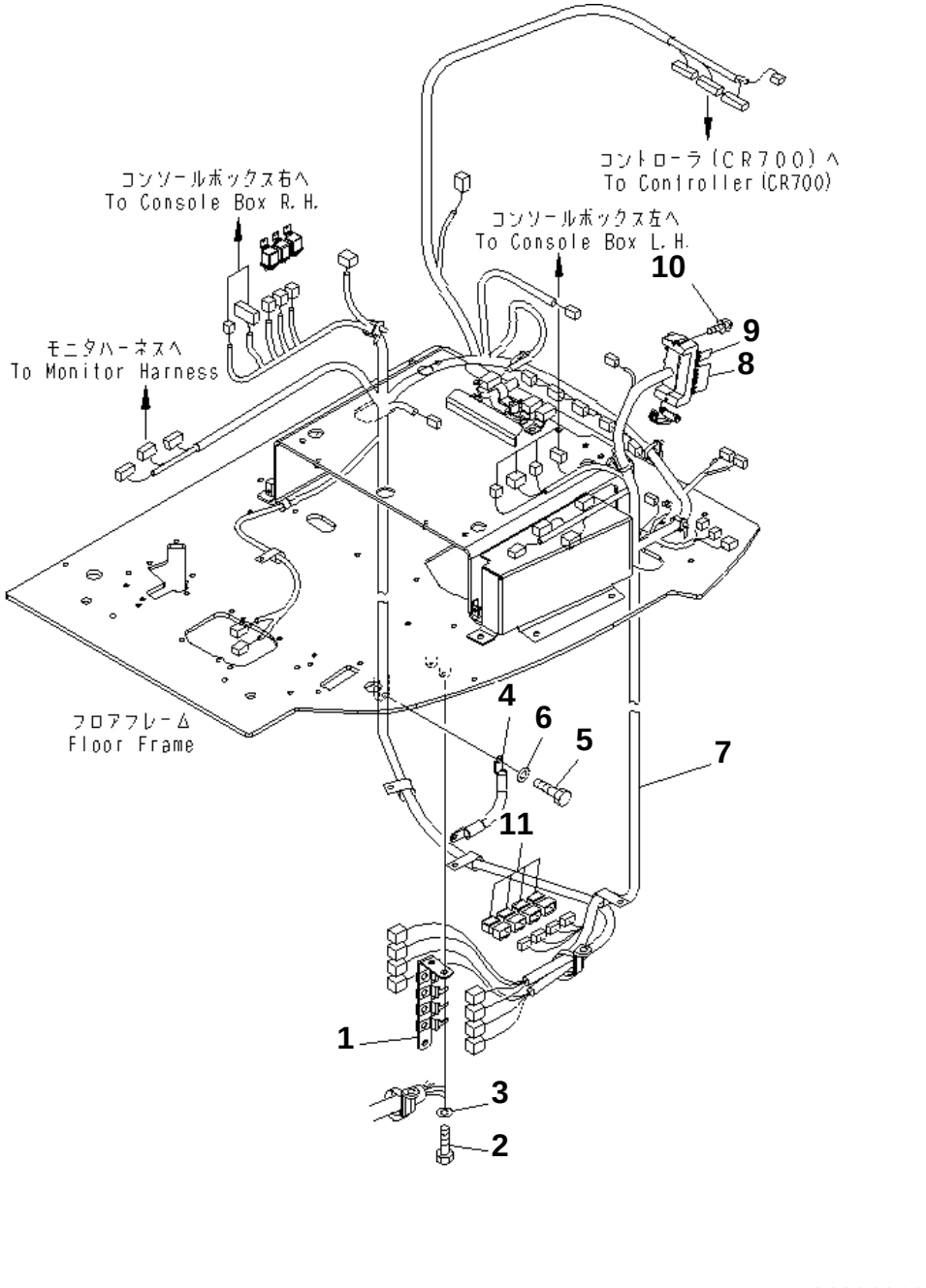

PC228US-3N-W1 S/N 30001-UP

FLOOR FRAME (ELECTRICAL)

Item	Part No.	Description	Qty	Options
1	22U-06-22221	BRACKET	1	SN:30001--
2	01010-81020	BOLT	2	SN:30001--
3	01643-31032	WASHER	2	SN:30001--
4	08028-43030	CABLE	1	SN:30001--
5	01010-81020	BOLT	1	SN:30001--
6	01643-31032	WASHER	1	SN:30001--
7	22U-06-22182	WIRING HARNESS	1	SN:30001--
8	08041-01000	· FUSE¤ 10A	15	SN:30001--
9	08041-02000	· FUSE¤ 20A	5	SN:30001--
10	01023-10620	SCREW	2	SN:30001--
11	8233-06-3350	DIODE	4	SN:30001--

Ref. K1110-07A0 Page 210380

https://truckmanualshub.com/

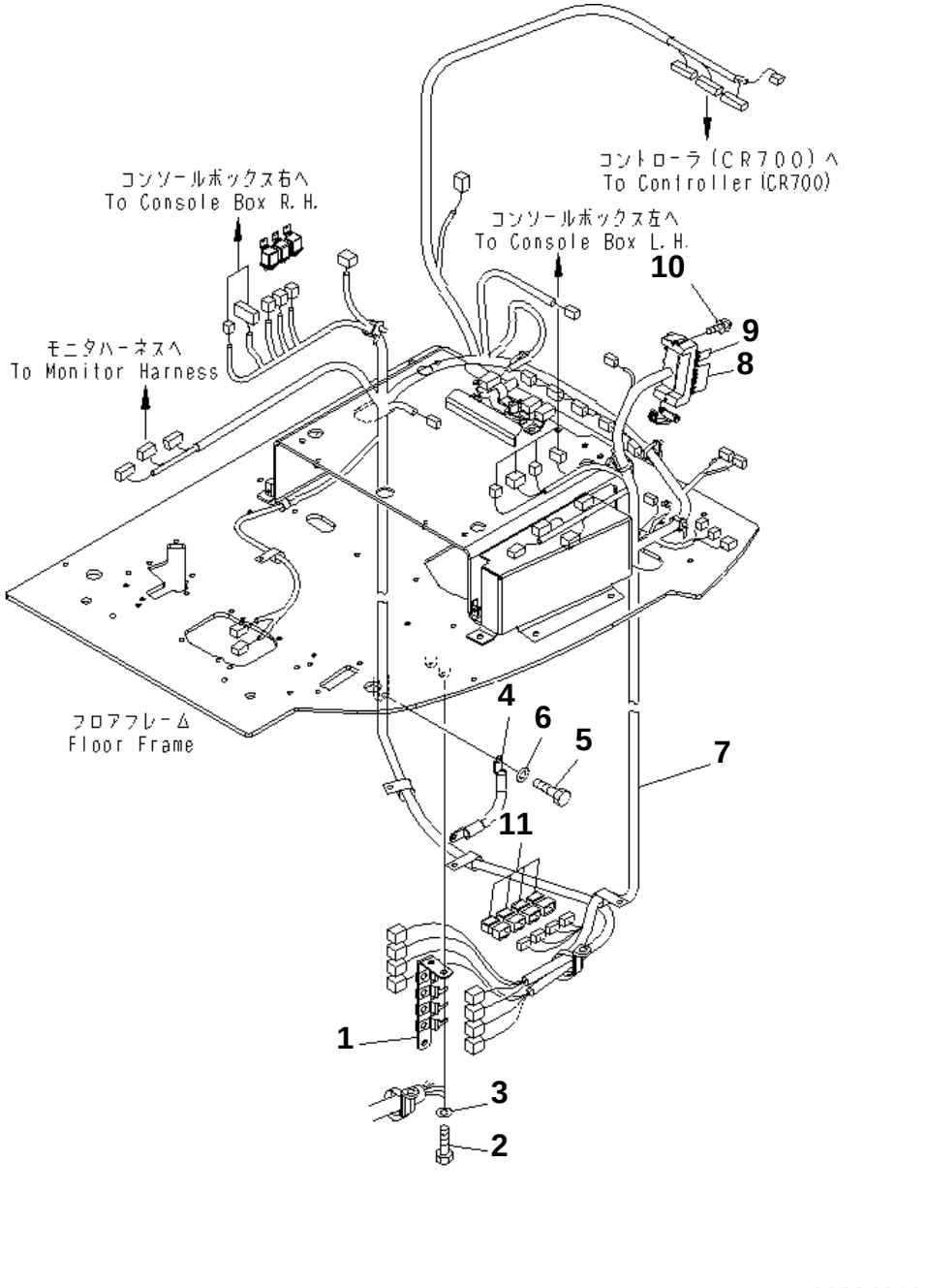

PC228US-3N-W1 S/N 30001-UP

FLOOR FRAME (ELECTRICAL) (FOR 2-PIECE BOOM)

Item	Part No.	Description	Qty	Options
1	22U-06-22221	BRACKET	1	SN:30001--
2	01010-81020	BOLT	2	SN:30001--
3	01643-31032	WASHER	2	SN:30001--
4	08028-43030	CABLE	1	SN:30001--
5	01010-81020	BOLT	1	SN:30001--
6	01643-31032	WASHER	1	SN:30001--
7	22U-06-22580	WIRING HARNESS	1	SN:30001--
8	08041-01000	· FUSE¤ 10A	15	SN:30001--
9	08041-02000	· FUSE¤ 20A	5	SN:30001--
10	01023-10620	SCREW	2	SN:30001--
11	8233-06-3350	DIODE	4	SN:30001--

Ref. K1110-07A3 Page 210390

https://truckmanualshub.com/

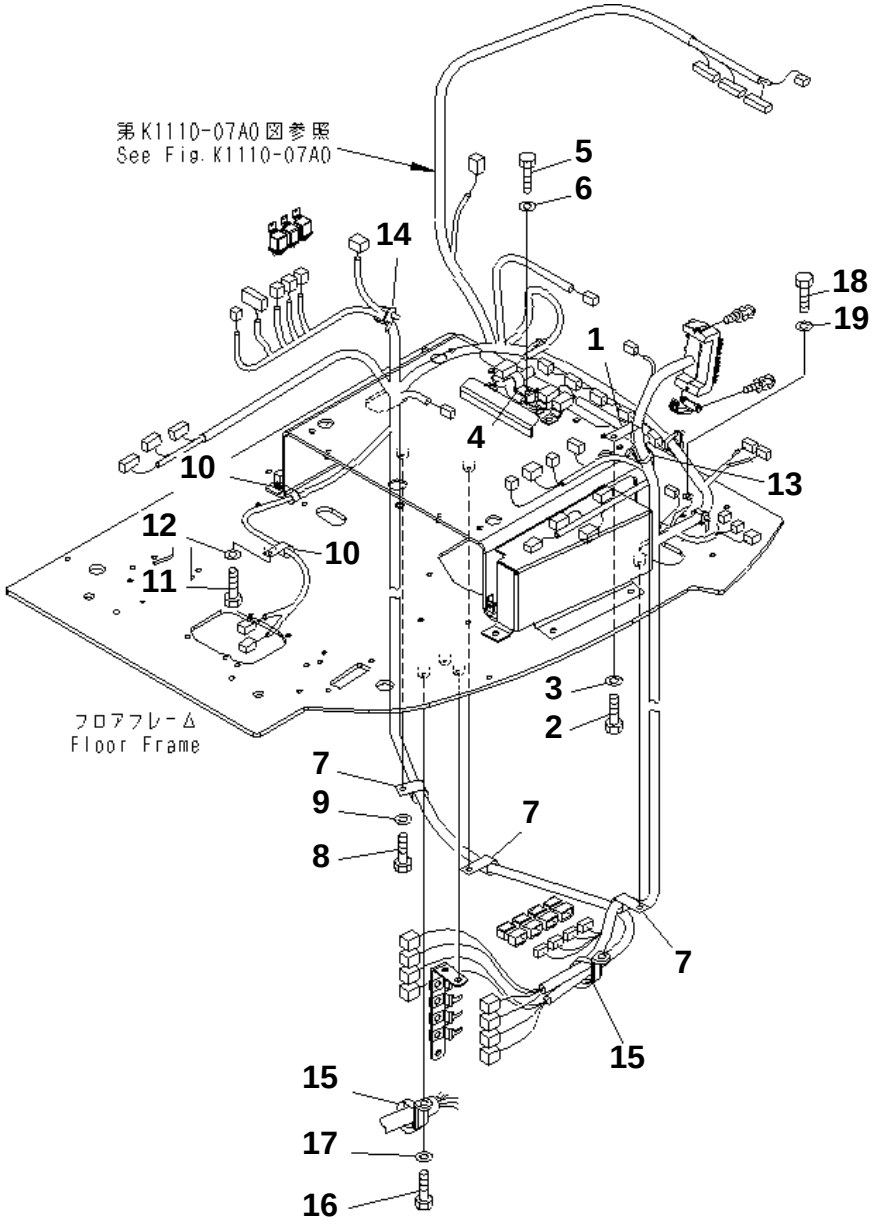

PC228US-3N-W1 S/N 30001-UP

FLOOR FRAME (HARNESS CLAMP)

Item	Part No.	Description	Qty	Options
1	04434-51410	CLIP	2	SN:30001--
2	01010-81020	BOLT	2	SN:30001--
3	01643-31032	WASHER	2	SN:30001--
4	04434-51910	CLIP	1	SN:30001--
5	01010-81020	BOLT	1	SN:30001--
6	01643-31032	WASHER	1	SN:30001--
7	04434-52711	CLIP	3	SN:30001--
8	01010-81020	BOLT	3	SN:30001--
9	01643-31032	WASHER	3	SN:30001--
10	04434-51010	CLIP	2	SN:30001--
11	01010-81020	BOLT	2	SN:30001--
12	01643-31032	WASHER	2	SN:30001--
13	08059-00515	CLIP	1	SN:30001--
14	08059-00515	CLIP	1	SN:30001--
15	08058-11040	CLIP	2	SN:30001--
16	01010-81025	BOLT	2	SN:30001--
17	01643-31032	WASHER	2	SN:30001--
18	01010-81020	BOLT	1	SN:30001--
19	01643-31032	WASHER	1	SN:30001--

Ref. K1110-08A0 Page 210400

https://truckmanualshub.com/

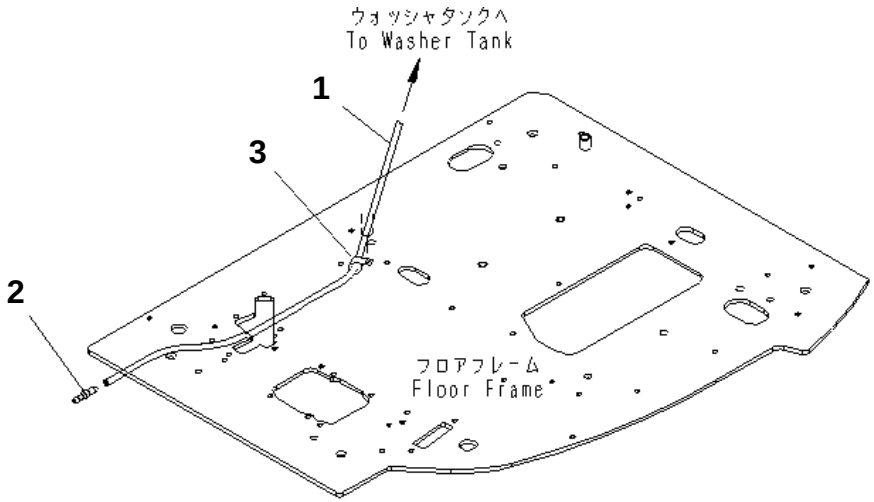

00004896

PC228US-3N-W1 S/N 30001-UP

FLOOR FRAME (WIND WASHER)

Item	Part No.	Description	Qty	Options
1	20Y-06-22520	HOSE	1	SN:30001--
2	207-06-61490	VALVE	1	SN:30001--
3	21T-38-12270	CLIP	1	SN:30001--

Ref. K1110-09A0 Page 210410

https://truckmanualshub.com/

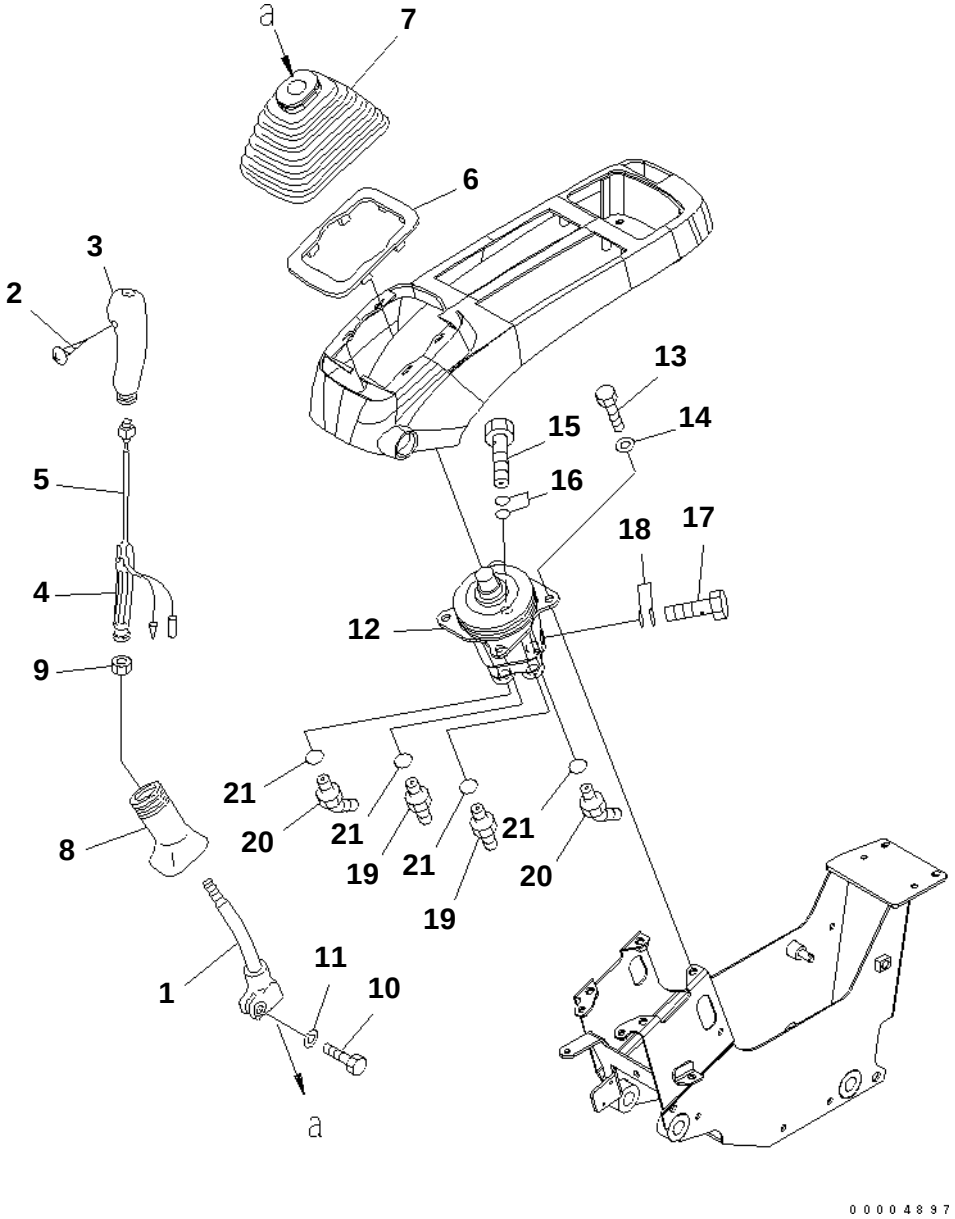

PC228US-3N-W1 S/N 30001-UP

FLOOR FRAME (LEVER AND VALVE) (L.H.)

Item	Part No.	Description	Qty	Options
1	20Y-43-22211	LEVER	1	SN:30001--
	22U-43-21181	KNOB	1	SN:30001--
2	01370-10308	· SCREW	1	SN:30001--
3	20Y-43-22381	· KNOB	1	SN:30001--
4	20Y-43-22421	· INSERT	1	SN:30001--
5	22U-43-21211	· SWITCH	1	SN:30001--
6	20Y-43-22250	PLATE	1	SN:30001--
7	20Y-43-22261	BOOT	1	SN:30001--
8	20Y-43-22370	BOOT	1	SN:30001--
9	600-411-1280	NUT	1	SN:30001--
10	01252-41025	BOLT	1	SN:30001--
11	01643-51032	WASHER	1	SN:30001--
12	(702-16-03530)	PILOT VALVE	1	SN:30001--
13	01010-80820	BOLT	4	SN:30001--
14	01643-30823	WASHER	4	SN:30001--
15	20Y-62-18910	BOLT	1	SN:30001--
16	07000-12018	O-RING	2	SN:30001--
17	20Y-62-18890	BOLT	1	SN:30001--
18	07000-12015	O-RING	2	SN:30001--
19	07230-20210	UNION	2	SN:30001--
20	07236-10210	ELBOW	2	SN:30001--
21	07002-11423	O-RING	4	SN:30001--

Ref. K1110-10A0 Page 210420

https://truckmanualshub.com/

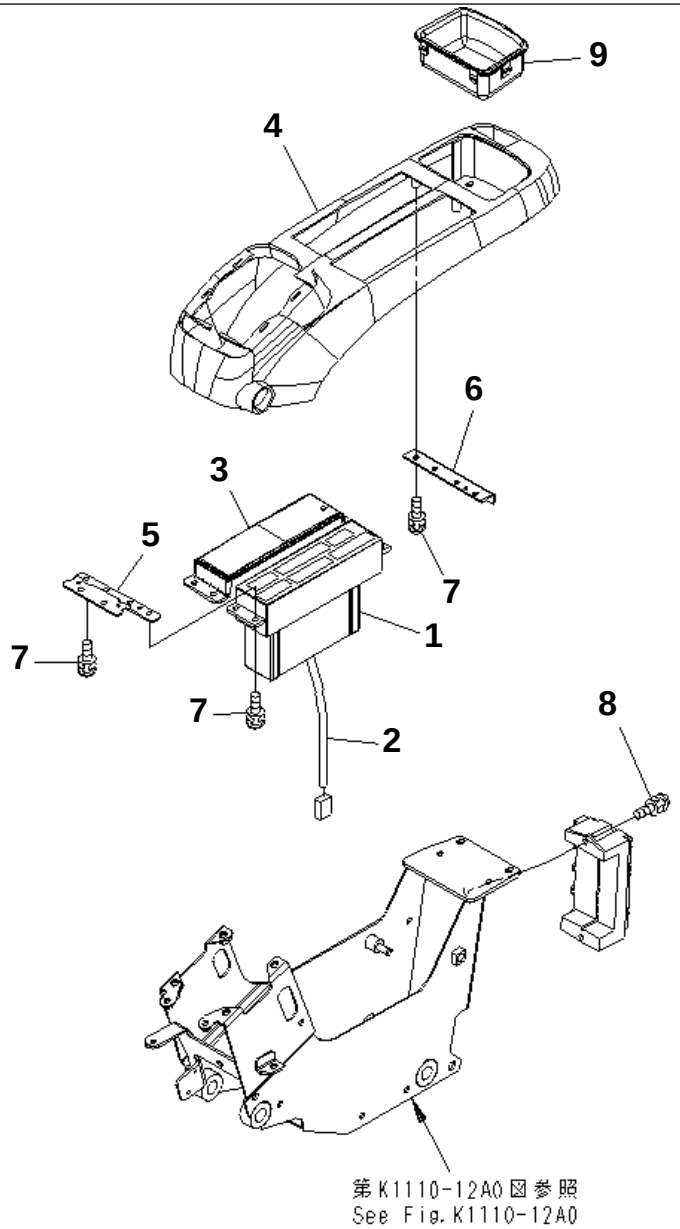

00005259

PC228US-3N-W1 S/N 30001-UP

FLOOR FRAME (CONSOLE) (UPPER) (L.H.) (RADIO LESS)

Item	Part No.	Description	Qty	Options
1	22B-979-1672	PANEL ASS'Y	1	SN:30001--
2	22B-979-1780	WIRING HARNESS	1	SN:30001--
3	22U-43-22550	COVER	1	SN:30001--
4	22U-43-22210	COVER	1	SN:30001--
5	22U-43-22220	PLATE	1	SN:30001--
6	22U-43-22231	STAY	1	SN:30001--
7	01023-60516	SCREW	8	SN:30001--
8	01023-60620	SCREW	4	SN:30001--
9	22U-43-22110	TRAY	1	SN:30001--

Ref. K1110-11A2 Page 210430

https://truckmanualshub.com/

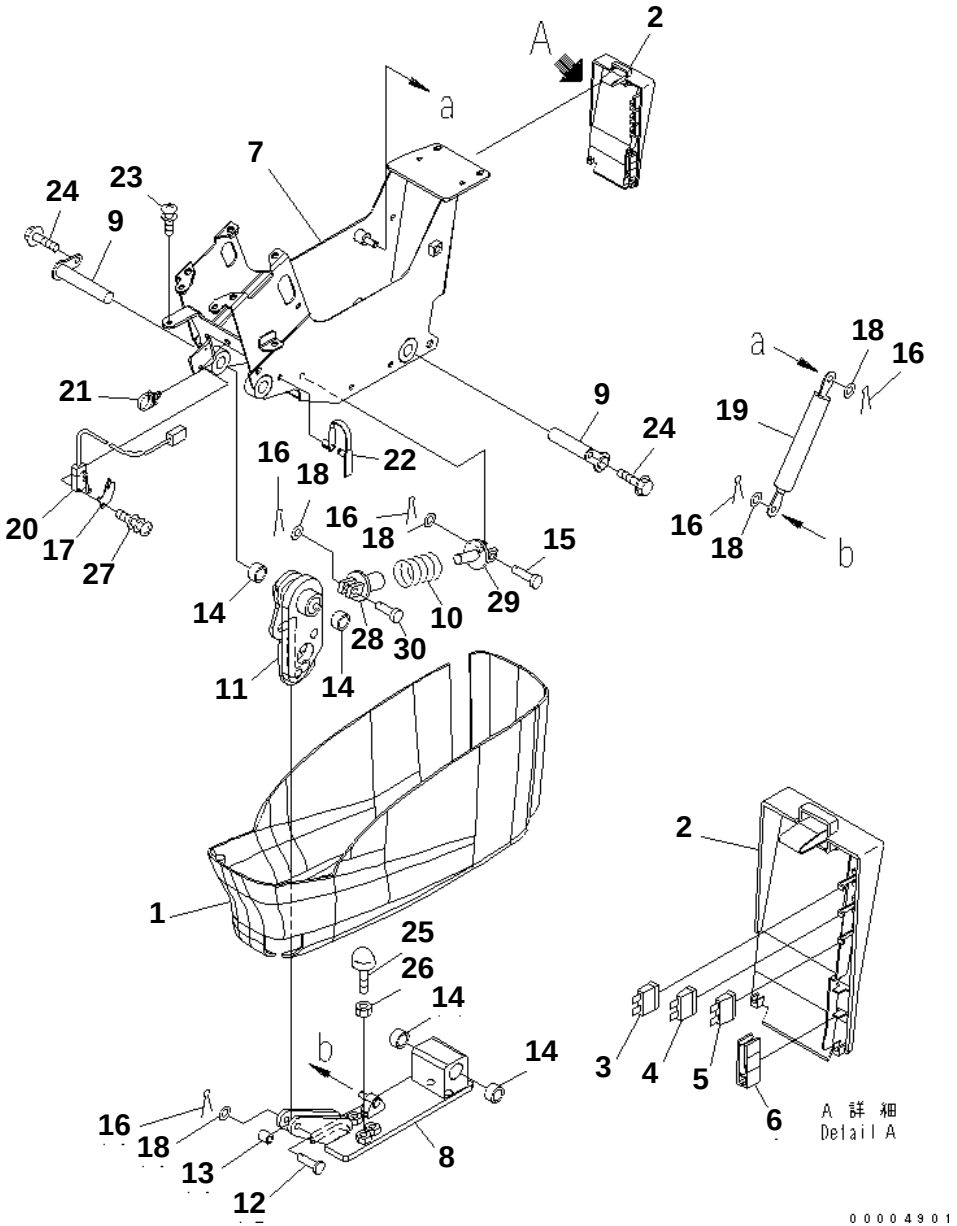

PC228US-3N-W1 S/N 30001-UP

FLOOR FRAME (CONSOLE) (LOWER) (L.H.)

Item	Part No.	Description	Qty	Options
1	22U-43-22310	COVER	1	SN:30001--
	22U-43-22320	COVER ASS'Y	1	SN:30001--
2	☆	· COVER	1	SN:30001--
3	08041-01000	· FUSE¤ 10A	1	SN:30001--
4	08041-02000	· FUSE¤ 20A	1	SN:30001--
5	08041-02500	· FUSE¤ 25A	1	SN:30001--
6	22U-43-22340	· PULLER	1	SN:30001--
7	22U-43-22351	FRAME	1	SN:30001--
8	22U-43-22361	BRACKET	1	SN:30001--
9	22U-43-22370	SHAFT	2	SN:30001--
10	22U-43-22380	SPRING	1	SN:30001--
11	22U-43-22391	LEVER	1	SN:30001--
12	22U-54-17730	PIN	1	SN:30001--
13	20T-43-71271	COLLAR	1	SN:30001--
14	06124-01616	BEARING	4	SN:30001--
15	04205-10835	PIN	1	SN:30001--
16	04050-12015	PIN	5	SN:30001--
17	22U-06-22490	PLATE	1	SN:30001--
18	01640-20816	WASHER	6	SN:30001--
19	21U-43-32380	SPRING	1	SN:30001--
20	22U-06-22360	SWITCH ASS'Y	1	SN:30001--
21	08059-00310	CLIP	2	SN:30001--
22	22U-43-22420	CLIP	2	SN:30001--
23	01023-10616	SCREW	4	SN:30001--
24	01435-00612	BOLT	2	SN:30001--
25	20Y-54-11611	STOPPER	1	SN:30001--
26	01580-11008	NUT	1	SN:30001--
27	01023-60316	SCREW	2	SN:30001--
28	22U-43-22510	YOKE	1	SN:30001--
29	22U-43-22520	YOKE	1	SN:30001--
30	04205-10830	PIN	1	SN:30001--

Ref. K1110-12A0 Page 210440

https://truckmanualshub.com/

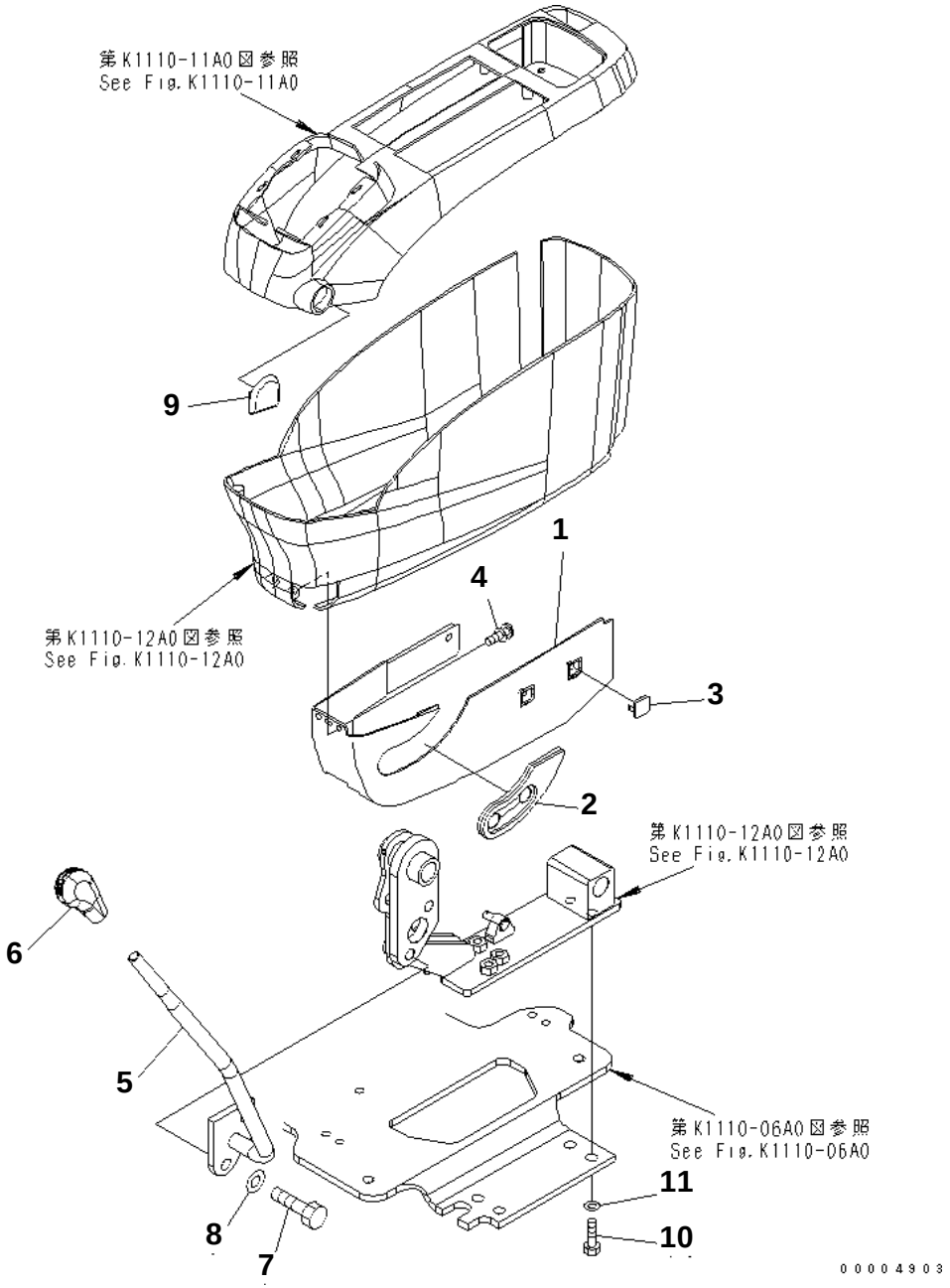

PC228US-3N-W1 S/N 30001-UP

FLOOR FRAME (CONSOLE) (UNDER) (L.H.)

Item	Part No.	Description	Qty	Options
1	22U-43-22810	COVER	1	SN:30001--
2	22U-43-22820	GROMMET	1	SN:30001--
3	22U-43-22830	CAP	2	SN:30001--
4	01023-10614	SCREW	3	SN:30001--
	22U-43-22602	LEVER ASS'Y	1	SN:30001--
5	☆	· LEVER	1	SN:30001--
6	22U-43-22490	· KNOB	1	SN:30001--
7	01010-81225	BOLT	2	SN:30001--
8	01643-31232	WASHER	2	SN:30001--
9	22U-43-22620	CAP	1	SN:30001--
10	01010-D1030	BOLT	4	SN:30001--
11	01643-71032	WASHER	4	SN:30001--

Ref. K1110-13A0 Page 210450

https://truckmanualshub.com/

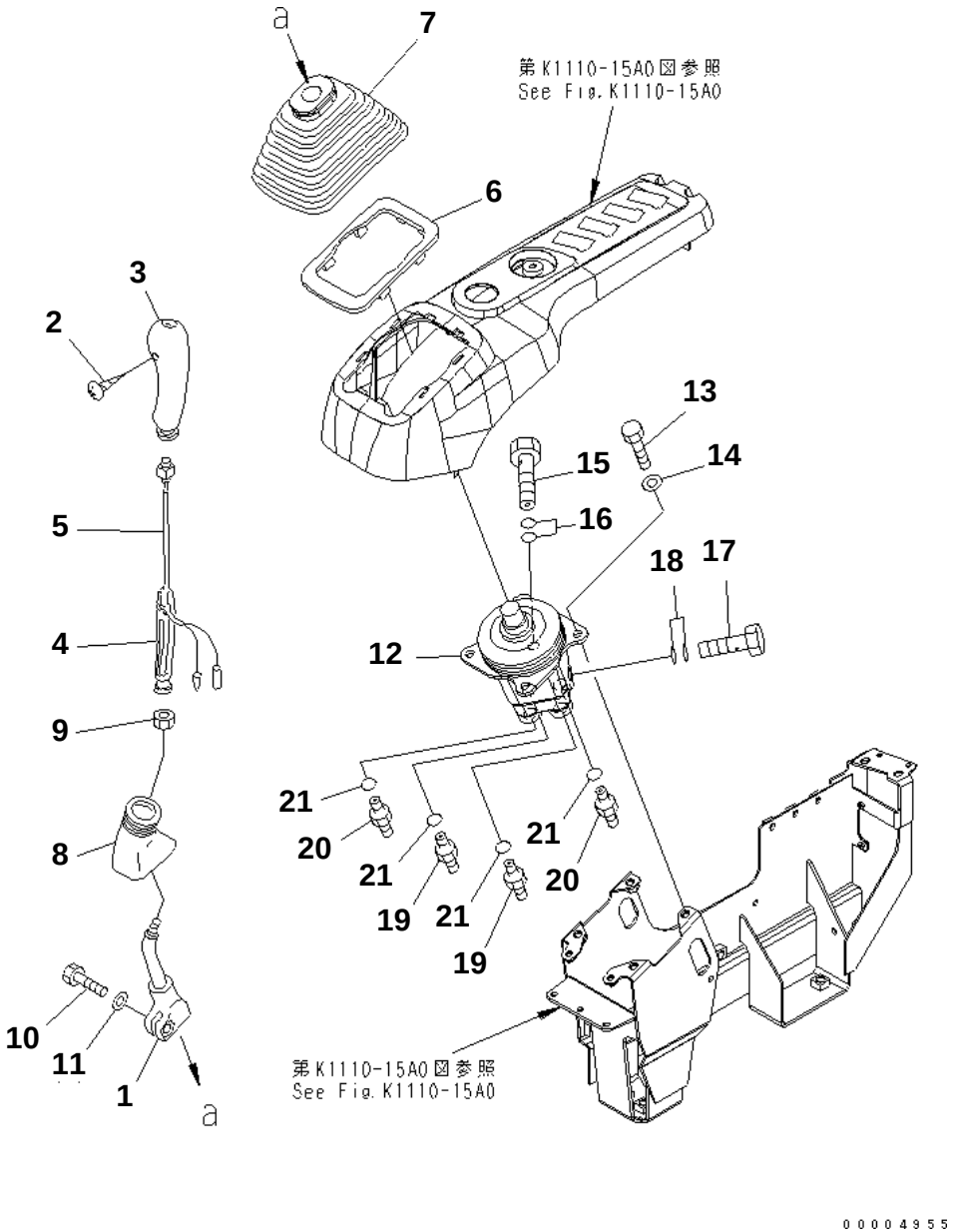

PC228US-3N-W1 S/N 30001-UP

FLOOR FRAME (LEVER AND VALVE) (R.H.)

Item	Part No.	Description	Qty	Options
1	20Y-43-22221	LEVER	1	SN:30001--
	22U-43-21191	KNOB	1	SN:30001--
2	01370-10308	· SCREW	1	SN:30001--
3	20Y-43-22390	· KNOB	1	SN:30001--
4	20Y-43-22421	· INSERT	1	SN:30001--
5	22U-43-21211	· SWITCH	1	SN:30001--
6	20Y-43-22250	PLATE	1	SN:30001--
7	20Y-43-22261	BOOT	1	SN:30001--
8	20Y-43-22370	BOOT	1	SN:30001--
9	600-411-1280	NUT	1	SN:30001--
10	01252-41025	BOLT	1	SN:30001--
11	01643-51032	WASHER	1	SN:30001--
12	(702-16-03530)	PILOT VALVE	1	SN:30001--
13	01010-80820	BOLT	4	SN:30001--
14	01643-30823	WASHER	4	SN:30001--
15	20Y-62-18910	BOLT	1	SN:30001--
16	07000-12018	O-RING	2	SN:30001--
17	20Y-62-18890	BOLT	1	SN:30001--
18	07000-12015	O-RING	2	SN:30001--
19	07230-20210	UNION	2	SN:30001--
20	205-62-55270	NIPPLE	2	SN:30001--
21	07002-11423	O-RING	4	SN:30001--

Ref. K1110-14A0 Page 210460

https://truckmanualshub.com/

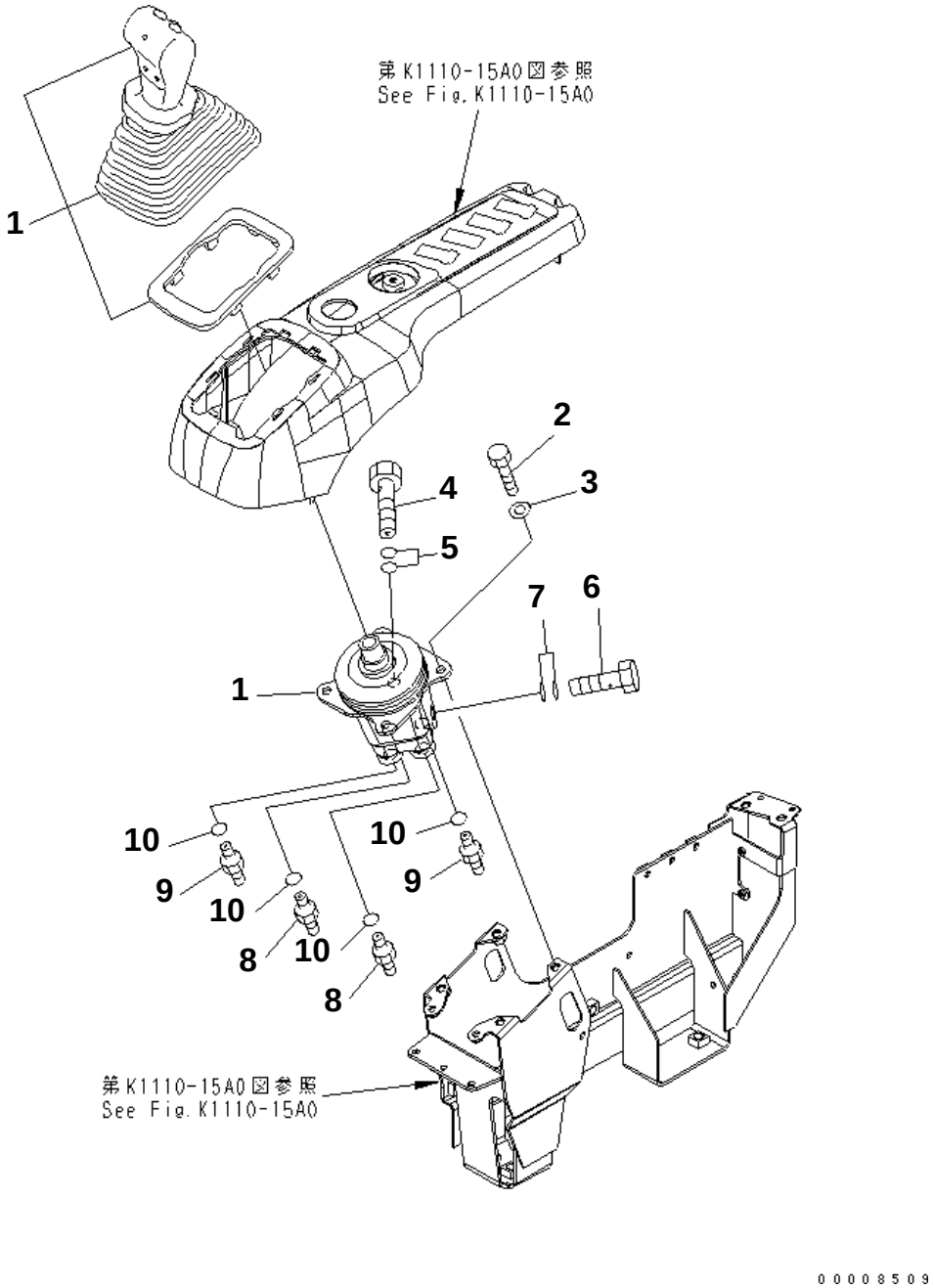

PC228US-3N-W1 S/N 30001-UP

FLOOR FRAME (LEVER AND VALVE) (R.H.) (FOR 2-PIECE BOOM)

Item	Part No.	Description	Qty	Options
1	(702-16-09120)	VALVE ASS'Y	1	SN:30001--
2	01010-80820	BOLT	4	SN:30001--
3	01643-30823	WASHER	4	SN:30001--
4	20Y-62-18910	BOLT	1	SN:30001--
5	07000-12018	O-RING	2	SN:30001--
6	20Y-62-18890	BOLT	1	SN:30001--
7	07000-12015	O-RING	2	SN:30001--
8	07230-20210	UNION	2	SN:30001--
9	205-62-55270	NIPPLE	2	SN:30001--
10	07002-11423	O-RING	4	SN:30001--

Ref. K1110-14A3 Page 210470

https://truckmanualshub.com/

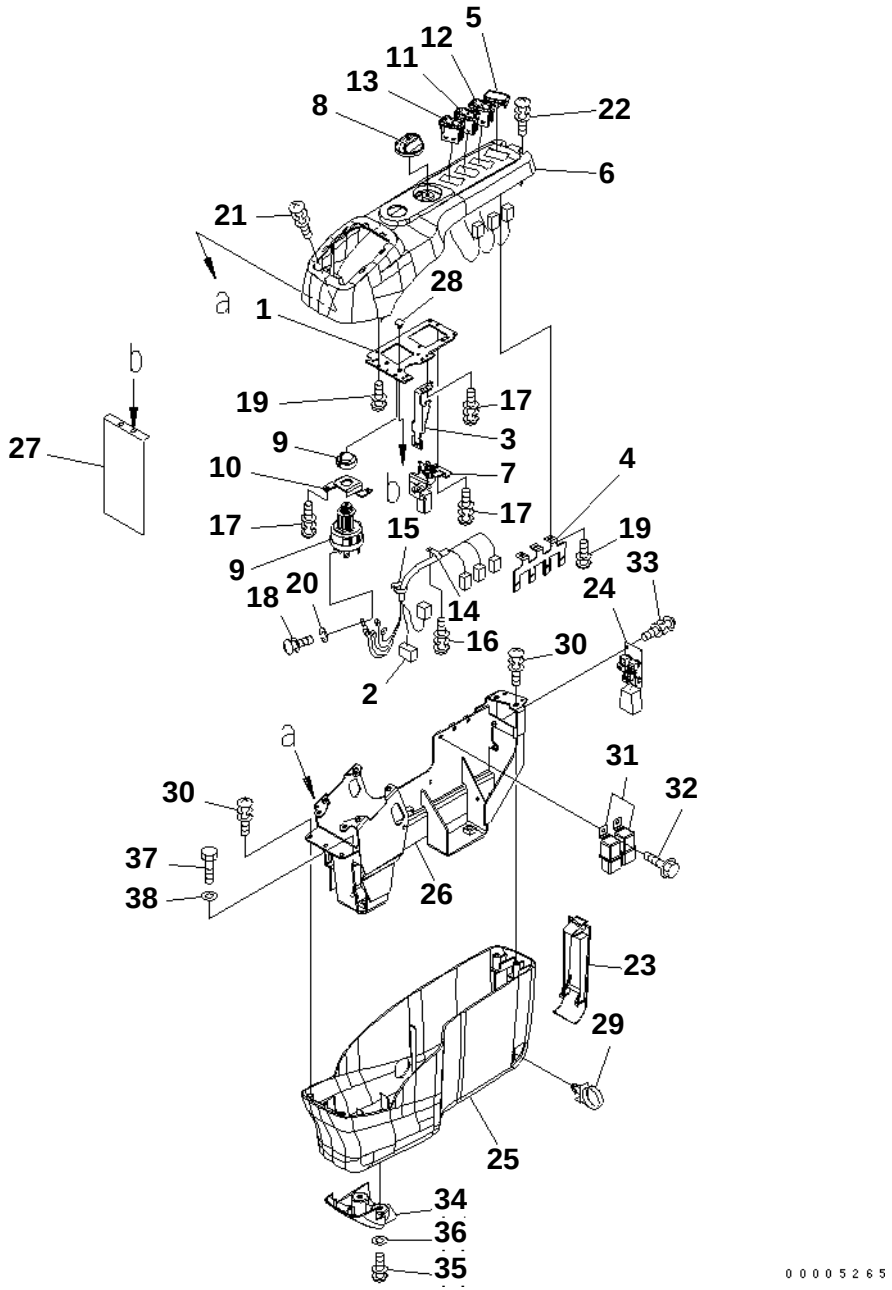

PC228US-3N-W1 S/N 30001-UP

FLOOR FRAME (CONSOLE) (MASTER KEY) (R.H.)

Item	Part No.	Description	Qty	Options
1	22U-43-23111	PLATE	1	SN:30001--
2	22U-06-22330	WIRING HARNESS	1	SN:30001--
3	22U-43-23120	BRACKET	1	SN:30001--
4	22U-43-23130	STAY	1	SN:30001--
5	22U-06-22320	COVER	1	SN:30001--
6	22U-43-23140	COVER	1	SN:30001--
7	22U-06-22420	POTENTIOMETER ASS'Y	1	SN:30001--
8	22U-06-22470	KNOB	1	SN:30001--
9	08086-20000	SWITCH	1	SN:30001--
10	22U-06-22480	PLATE	1	SN:30001--
11	22U-06-22190	SWITCH	1	SN:30001--
12	22U-06-22290	SWITCH	1	SN:30001--
13	22U-06-22390	SWITCH	1	SN:30001--
14	20Y-06-23920	CLAMP	1	SN:30001--
15	08034-10414	BAND	2	SN:30001--
16	01023-60410	SCREW	1	SN:30001--
17	01023-60512	SCREW	6	SN:30001--
18	01023-10508	SCREW	5	SN:30001--
19	01023-10512	SCREW	6	SN:30001--
20	01601-20513	WASHER	5	SN:30001--
21	01023-60620	SCREW	2	SN:30001--
22	01023-70514	SCREW	2	SN:30001--
23	22U-43-23210	COVER	1	SN:30001--
24	22U-06-22370	SWITCH ASS'Y	1	SN:30001--
25	22U-43-23230	COVER	1	SN:30001--
26	22U-43-23241	FRAME	1	SN:30001--
27	22U-43-23251	SHEET	1	SN:30001--
28	22U-43-23290	CLIP	2	SN:30001--
29	08059-00310	CLIP	1	SN:30001--
30	01023-60616	SCREW	4	SN:30001--
31	569-06-61960	RELAY	3	SN:30001--
32	01435-00612	BOLT	3	SN:30001--
33	01023-60410	SCREW	3	SN:30001--
34	22U-43-23711	COVER	1	SN:30001--
35	01023-10614	SCREW	2	SN:30001--
36	01643-30623	WASHER	2	SN:30001--
37	01010-D1030	BOLT	3	SN:30001--
38	01643-71032	WASHER	3	SN:30001--

Ref. K1110-15A2 Page 210480

https://truckmanualshub.com/

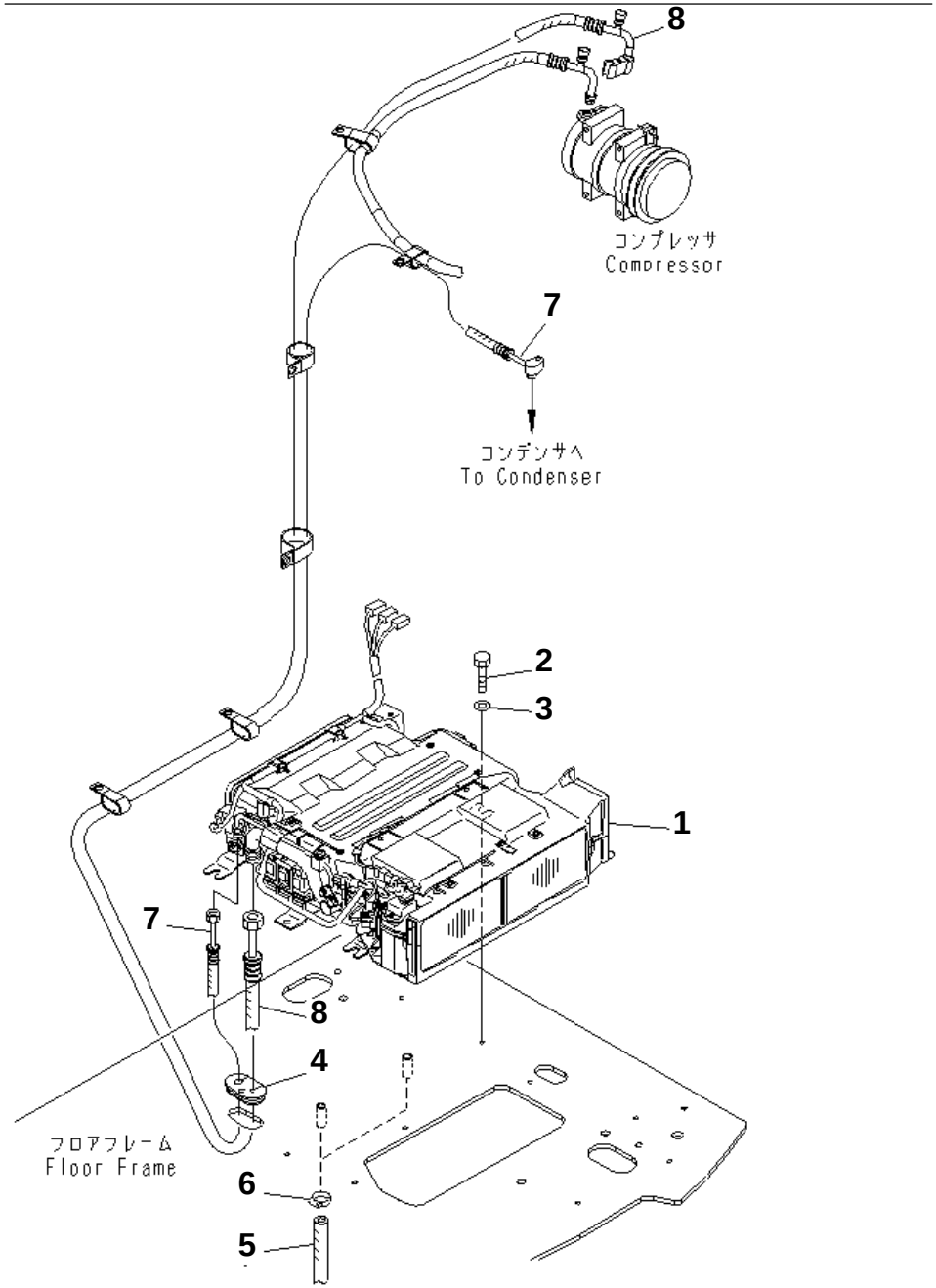

PC228US-3N-W1 S/N 30001-UP

FLOOR FRAME (AIR CONDITIONER UNIT AND HOSE)

Item	Part No.	Description	Qty	Options
1	22U-979-1720	UNIT ASS'Y	1	SN:30001--
	22B-979-1730	· FILTER	1	SN:30001--
2	01010-D1020	BOLT	6	SN:30001--
3	01643-71032	WASHER	6	SN:30001--
4	22U-54-25571	GROMMET	1	SN:30001--
5	22B-979-1860	HOSE	2	SN:30001--
6	07280-02523	CLAMP	2	SN:30001--
7	22U-979-2263	HOSE	1	SN:30001--
8	22U-979-2273	HOSE	1	SN:30001--

Ref. K1110-16A0 Page 210490

https://truckmanualshub.com/

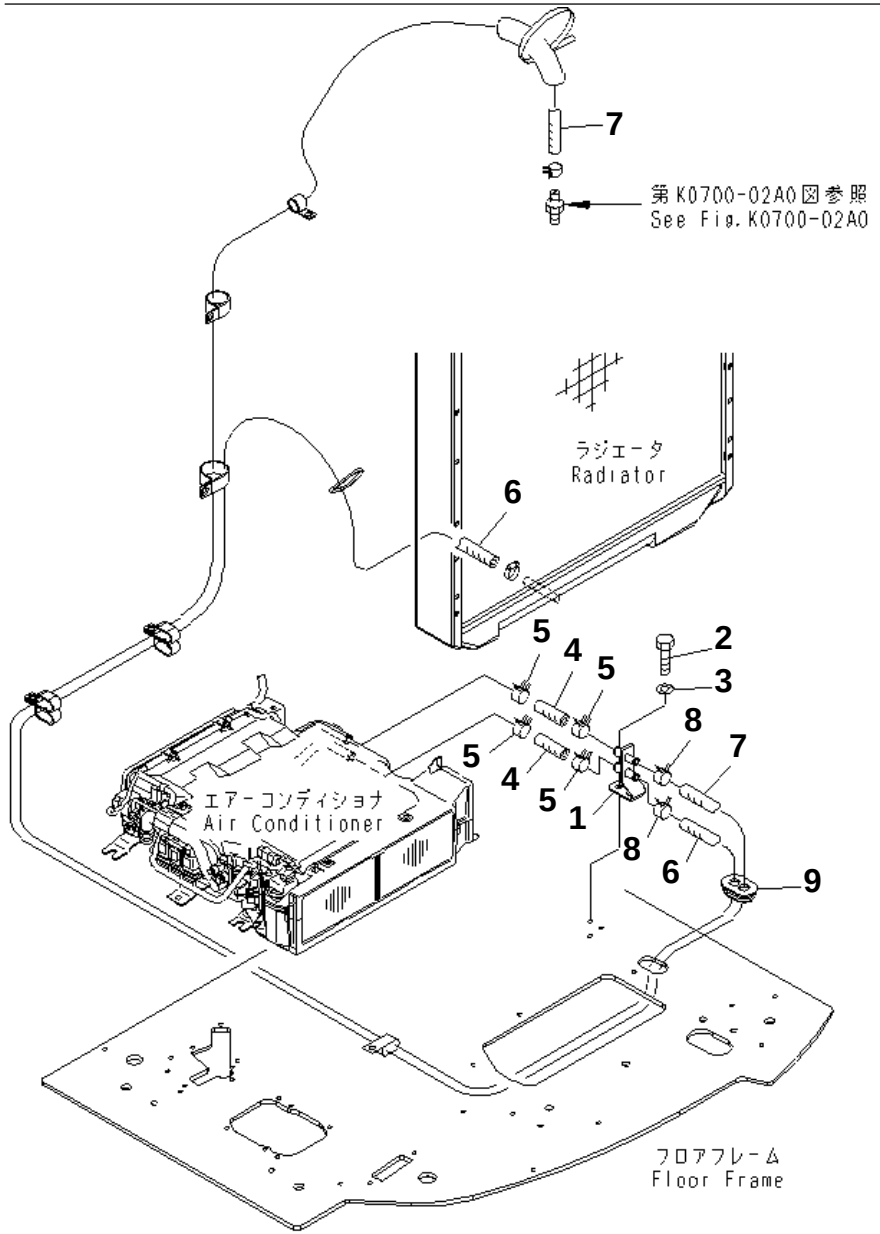

PC228US-3N-W1 S/N 30001-UP

FLOOR FRAME (HEATER HOSE AND CLAMP)

Item	Part No.	Description	Qty	Options
1	22U-979-2410	BRACKET	1	SN:30001--
2	01010-81020	BOLT	2	SN:30001--
3	01643-31032	WASHER	2	SN:30001--
4	198-904-4180	HOSE	2	SN:30001--
5	09479-02400	CLAMP	4	SN:30001--
6	09483-00431	HOSE	1	SN:30001--
7	09483-00439	HOSE	1	SN:30001--
8	11Y-09-11160	CLIP	2	SN:30001--
9	22U-54-25960	GROMMET	1	SN:30001--

Ref. K1110-17A0 Page 210500

https://truckmanualshub.com/

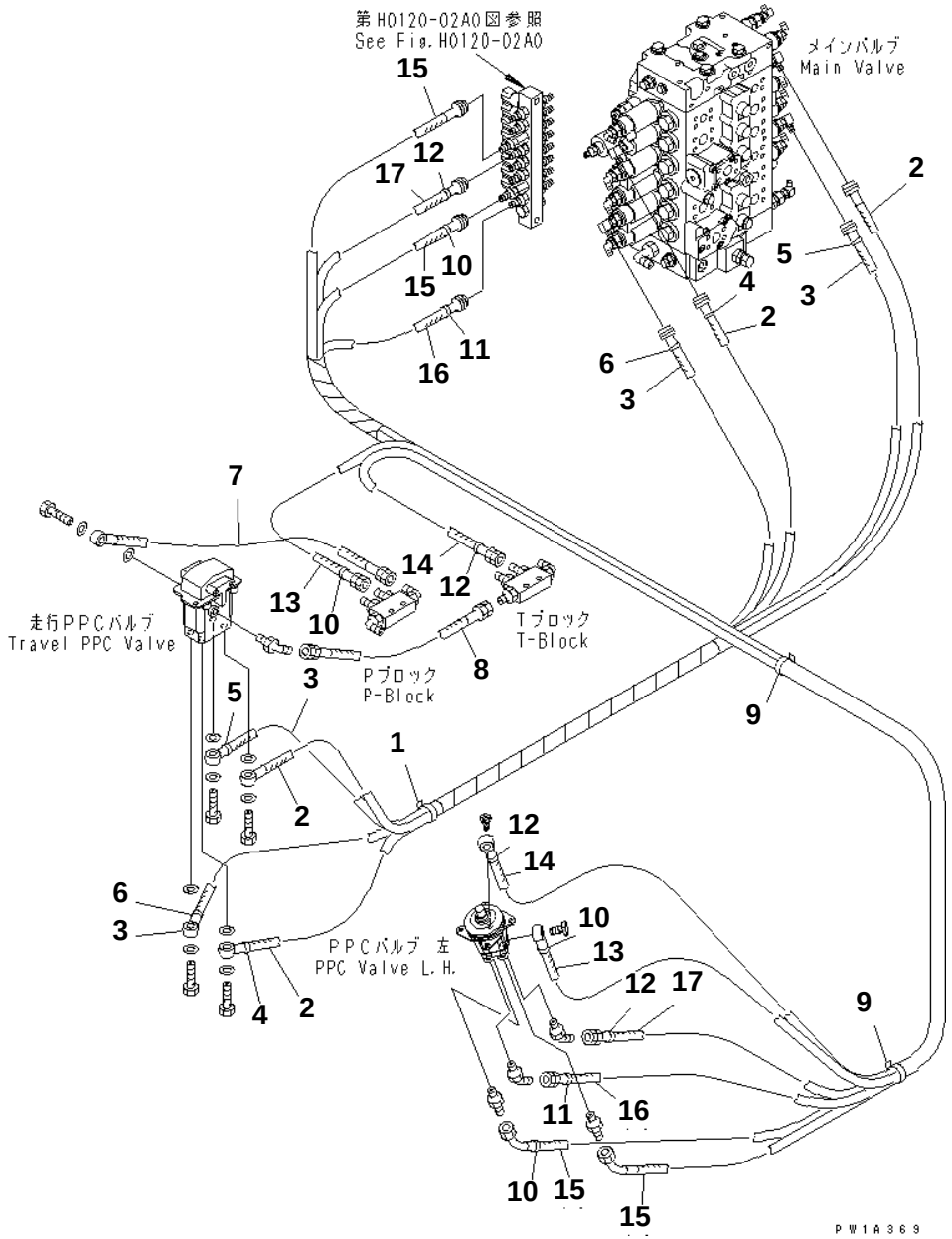

FLOOR FRAME (PPC) (1/2)

Item	Part No.	Description	Qty	Options
1	08034-00536	BAND	1	SN:30001--
2	22U-62-22341	HOSE	2	SN:30001--
3	22U-62-22351	HOSE	2	SN:30001--
4	20Y-62-22790	BAND¤ RED	2	SN:30001--
5	20Y-62-22820	BAND¤ BLUE	2	SN:30001--
6	20Y-62-22850	BAND¤ GREEN	2	SN:30001--
7	22U-62-22442	HOSE	1	SN:30001--
8	07184-00203	HOSE¤ 300MM	1	SN:30001--
9	08034-00876	BAND	2	SN:30001--
10	20Y-62-22790	BAND¤ RED	4	SN:30001--
11	20Y-62-22810	BAND¤ YELLOW	2	SN:30001--
12	20Y-62-22820	BAND¤ BLUE	4	SN:30001--
13	22U-62-22362	HOSE	1	SN:30001--
14	22U-62-22371	HOSE	1	SN:30001--
15	22U-62-22391	HOSE	2	SN:30001--
16	22U-62-22411	HOSE	1	SN:30001--
17	22U-62-22930	HOSE	1	SN:30001--

https://truckmanualshub.com/

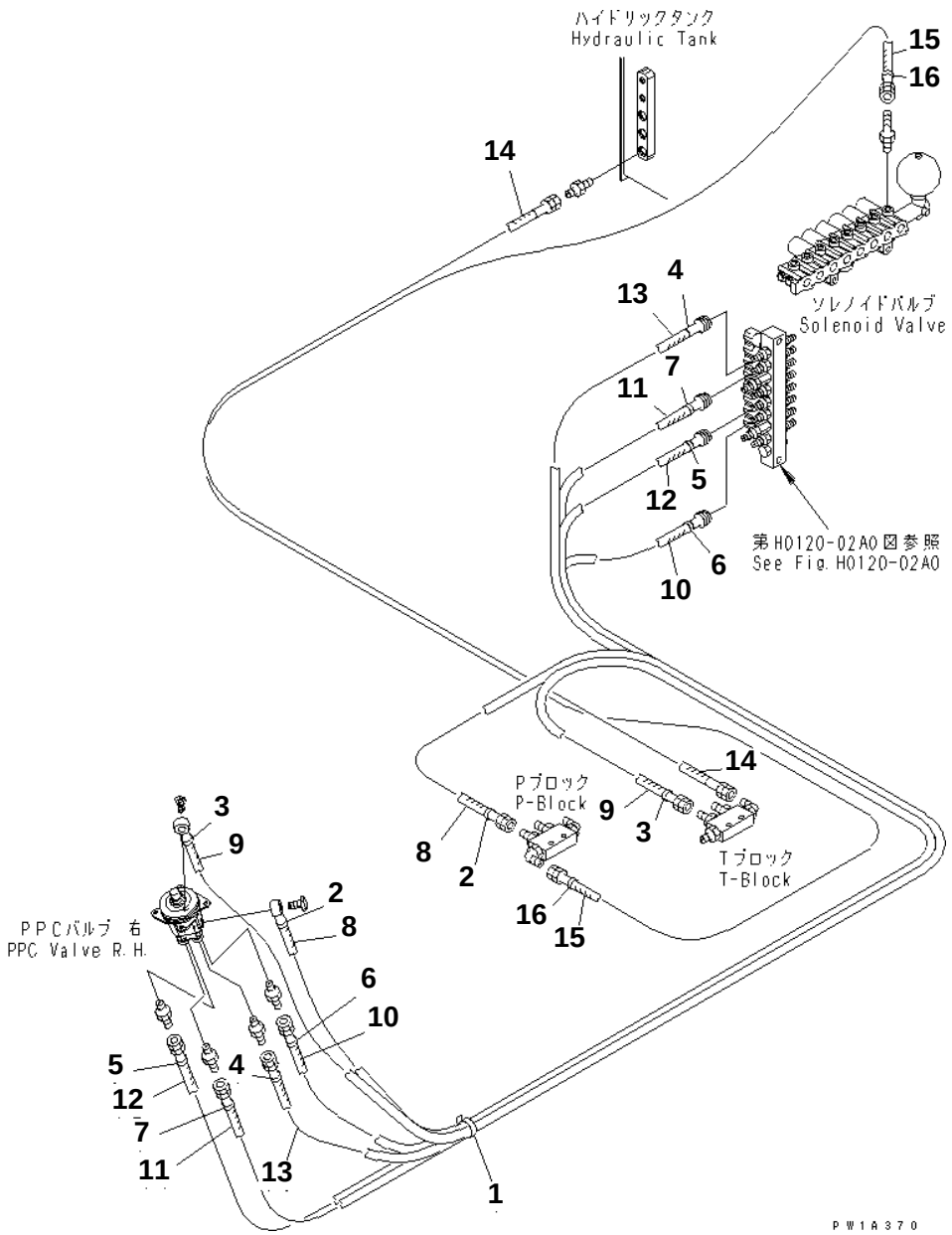

FLOOR FRAME (PPC) (2/2)

Item	Part No.	Description	Qty	Options
1	08034-00876	BAND	2	SN:30001--
2	20Y-62-22790	BAND¤ RED	2	SN:30001--
3	20Y-62-22820	BAND¤ BLUE	2	SN:30001--
4	20Y-62-22830	BAND¤ WHITE	2	SN:30001--
5	20Y-62-22840	BAND¤ BLACK	2	SN:30001--
6	20Y-62-22850	BAND¤ GREEN	2	SN:30001--
7	20Y-62-22860	BAND¤ BROWN	2	SN:30001--
8	207-62-63961	HOSE¤ 1500MM	1	SN:30001--
9	22U-62-22380	HOSE	1	SN:30001--
10	22U-62-22421	HOSE	1	SN:30001--
11	22U-62-22431	HOSE	1	SN:30001--
12	22U-62-22680	HOSE	1	SN:30001--
13	22U-62-22690	HOSE	1	SN:30001--
14	07184-00324	HOSE	1	SN:30001--
15	07184-00333	HOSE	1	SN:30001--
16	20Y-62-22790	BAND¤ RED	2	SN:30001--

https://truckmanualshub.com/

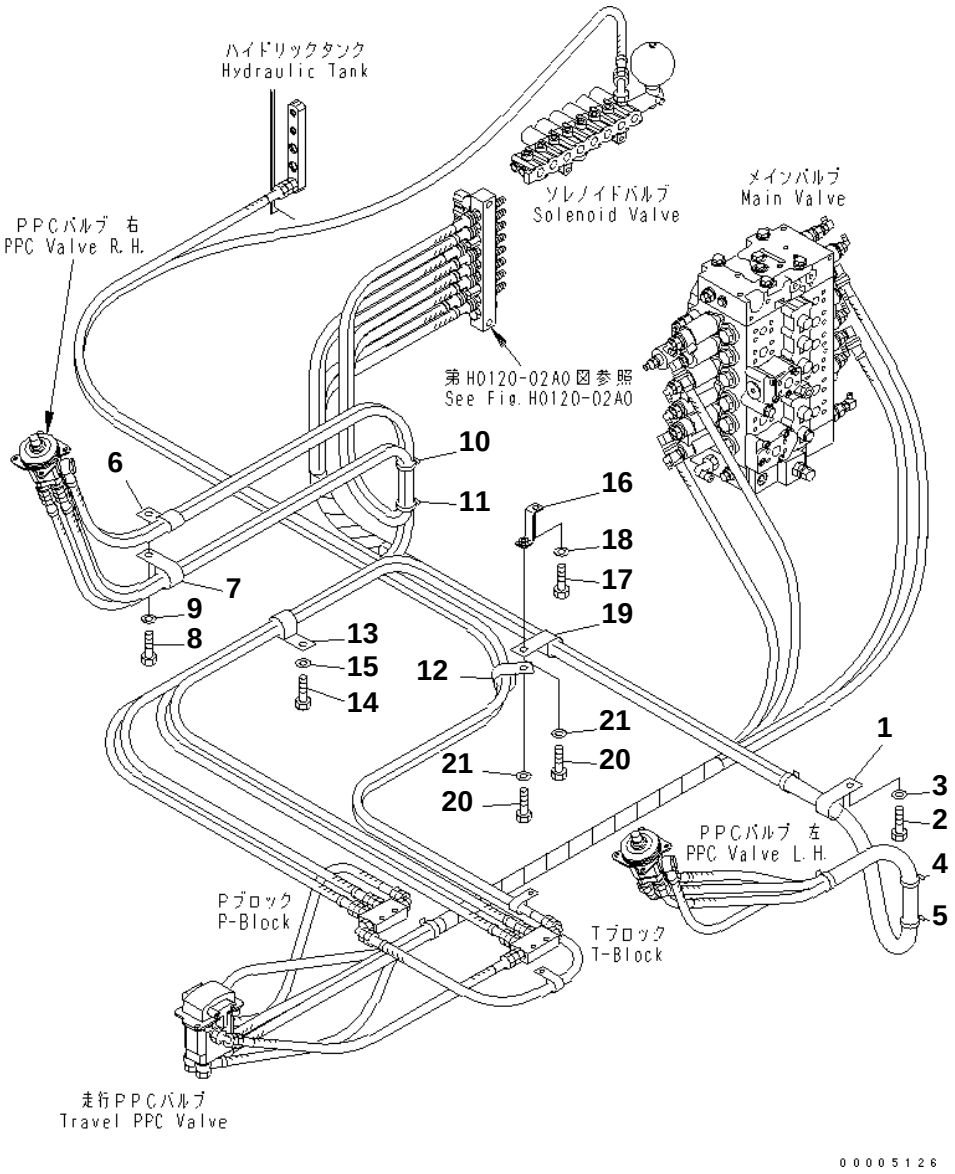

PC228US-3N-W1 S/N 30001-UP

FLOOR FRAME (PPC CLAMP)

Item	Part No.	Description	Qty	Options
1	04434-53211	CLIP	1	SN:30001--
2	01010-81020	BOLT	1	SN:30001--
3	01643-31032	WASHER	1	SN:30001--
4	08034-20536	BAND	2	SN:30001--
5	08034-20536	BAND	1	SN:30001--
6	04435-51310	CLIP	1	SN:30001--
7	04434-53411	CLIP	1	SN:30001--
8	01010-81020	BOLT	1	SN:30001--
9	01643-31032	WASHER	1	SN:30001--
10	08034-20536	BAND	2	SN:30001--
11	08034-20536	BAND	1	SN:30001--
12	208-06-19170	CLIP	1	SN:30001--
13	04434-52712	CLIP	1	SN:30001--
14	01010-81020	BOLT	1	SN:30001--
15	01643-31032	WASHER	1	SN:30001--
16	22U-54-25950	BRACKET	1	SN:30001--
17	01010-81020	BOLT	1	SN:30001--
18	01643-31032	WASHER	1	SN:30001--
19	04434-53211	CLIP	2	SN:30001--
20	01010-81020	BOLT	2	SN:30001--
21	01643-31032	WASHER	2	SN:30001--

Ref. K1110-20A0 Page 210530

https://truckmanualshub.com/

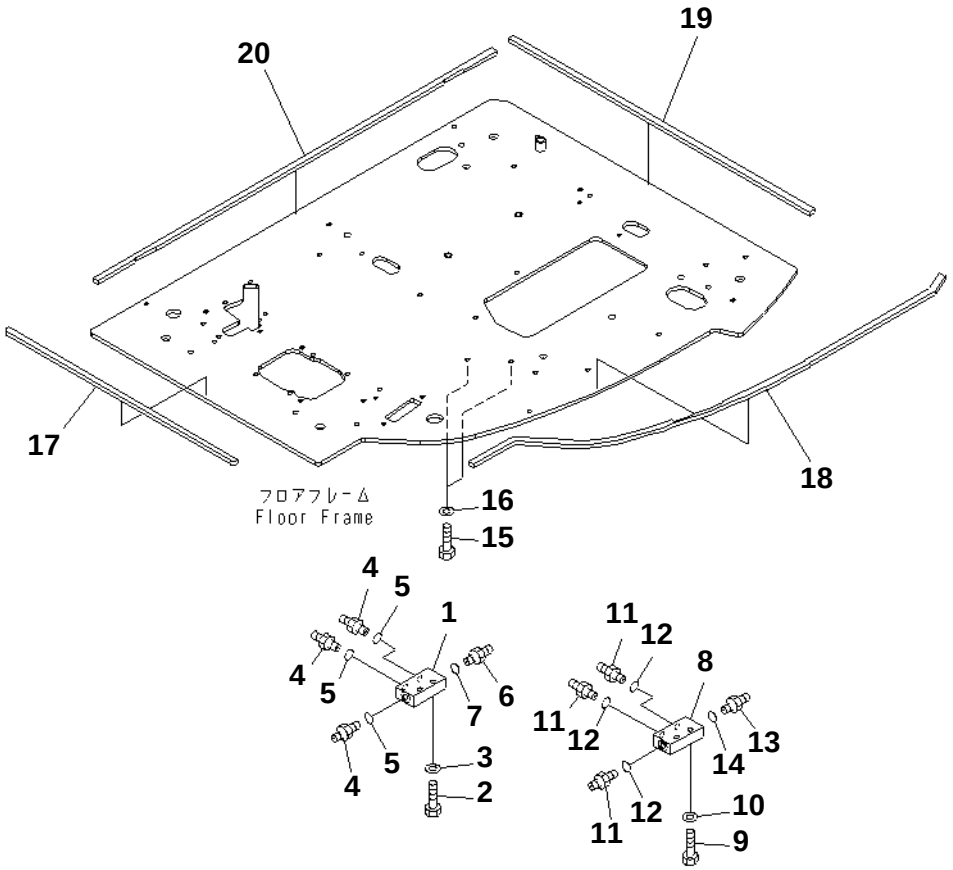

PC228US-3N-W1 S/N 30001-UP

FLOOR FRAME (P¤T BLOCK AND SEAL)

Item	Part No.	Description	Qty	Options
1	20Y-62-15831	BLOCK	1	SN:30001--
2	01010-81045	BOLT	2	SN:30001--
3	01643-31032	WASHER	2	SN:30001--
4	07230-20210	UNION	3	SN:30001--
5	07002-11423	O-RING	3	SN:30001--
6	205-62-55270	NIPPLE	1	SN:30001--
7	07002-11423	O-RING	1	SN:30001--
8	20Y-62-15831	BLOCK	1	SN:30001--
9	01010-81045	BOLT	2	SN:30001--
10	01643-31032	WASHER	2	SN:30001--
11	07230-20210	UNION	3	SN:30001--
12	07002-11423	O-RING	3	SN:30001--
13	205-62-55270	NIPPLE	1	SN:30001--
14	07002-11423	O-RING	1	SN:30001--
15	01010-81020	BOLT	2	SN:30001--
16	01643-31032	WASHER	2	SN:30001--
17	22U-54-25620	SEAL	1	SN:30001--
18	22U-54-25630	SEAL	1	SN:30001--
19	22U-54-25640	SEAL	1	SN:30001--
20	22U-54-25650	SEAL	1	SN:30001--

Ref. K1110-21A0 Page 210540

https://truckmanualshub.com/

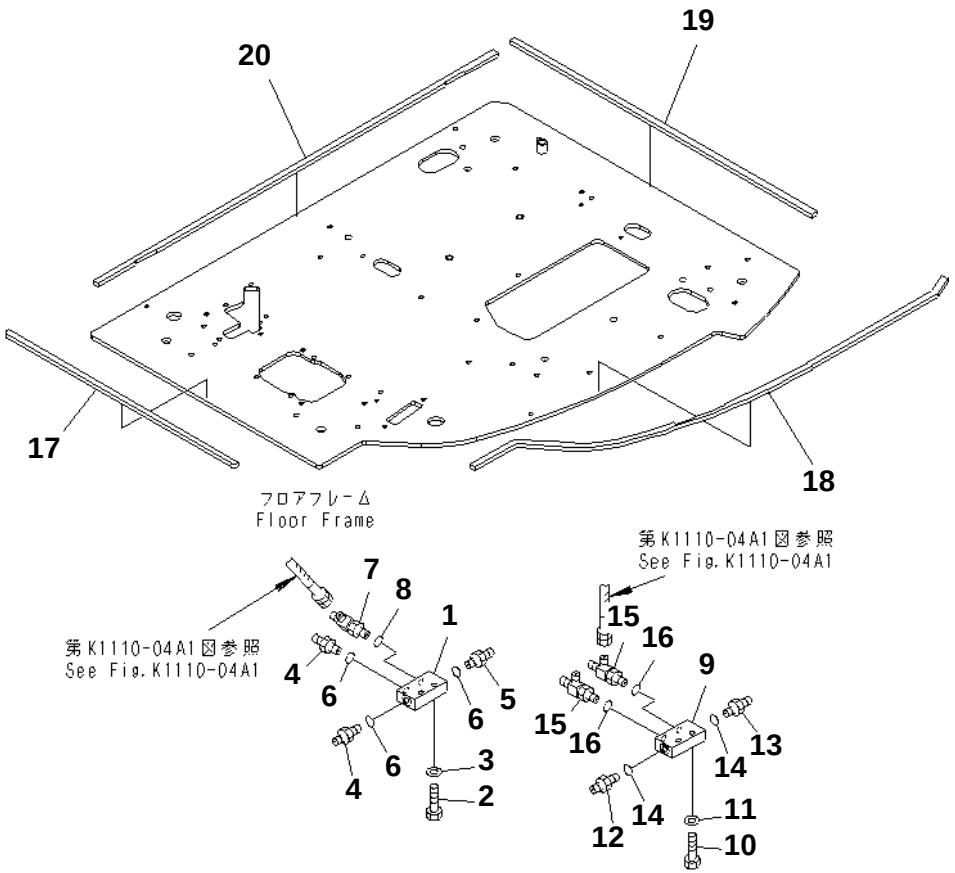

00005181

PC228US-3N-W1 S/N 30001-UP

FLOOR FRAME (P¤T BLOCK AND SEAL) (1 ACTUATOR)

Item	Part No.	Description	Qty	Options
1	20Y-62-15831	BLOCK	1	SN:30001--
2	01010-81045	BOLT	2	SN:30001--
3	01643-31032	WASHER	2	SN:30001--
4	07230-20210	UNION	2	SN:30001--
5	205-62-55270	NIPPLE	1	SN:30001--
6	07002-11423	O-RING	3	SN:30001--
7	208-62-17550	TEE	1	SN:30001--
8	07002-11423	O-RING	1	SN:30001--
9	20Y-62-15831	BLOCK	1	SN:30001--
10	01010-81045	BOLT	2	SN:30001--
11	01643-31032	WASHER	2	SN:30001--
12	07230-20210	UNION	1	SN:30001--
13	205-62-55270	NIPPLE	1	SN:30001--
14	07002-11423	O-RING	2	SN:30001--
15	208-62-17550	TEE	2	SN:30001--
16	07002-11423	O-RING	2	SN:30001--
17	22U-54-25620	SEAL	1	SN:30001--
18	22U-54-25630	SEAL	1	SN:30001--
19	22U-54-25640	SEAL	1	SN:30001--
20	22U-54-25650	SEAL	1	SN:30001--

Ref. K1110-21A1 Page 210550

https://truckmanualshub.com/

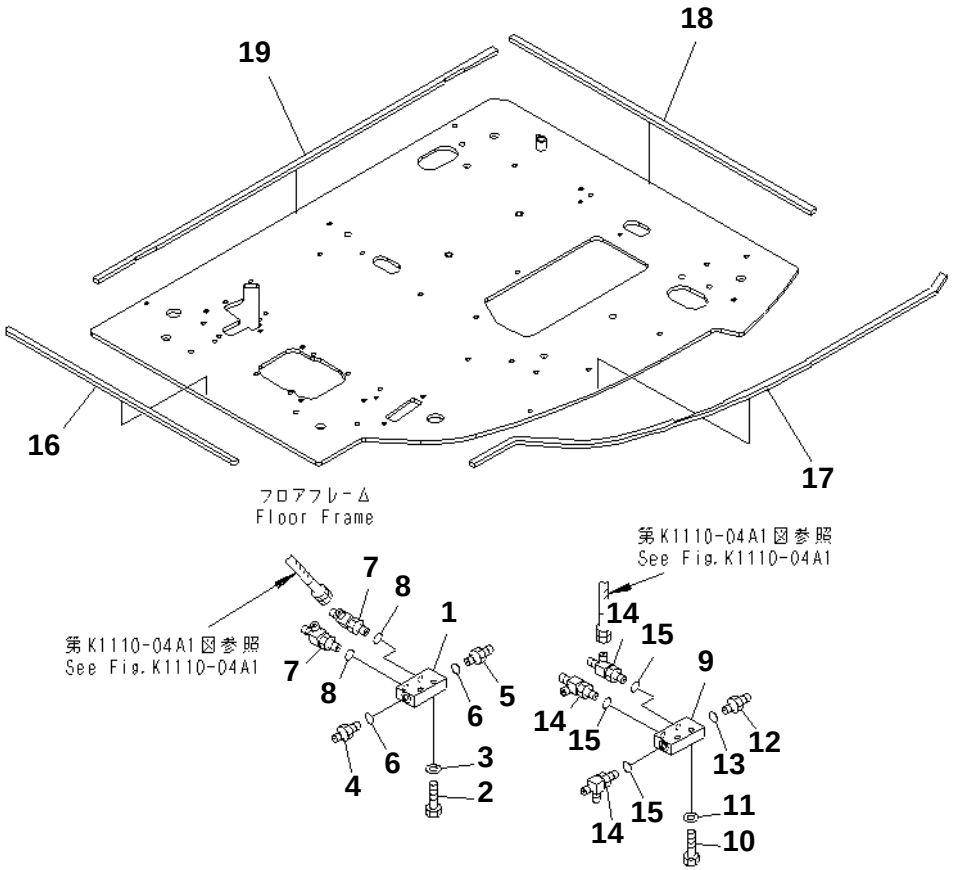

00008510

PC228US-3N-W1 S/N 30001-UP

FLOOR FRAME (P¤T BLOCK AND SEAL) (2 ACTUATOR)

Item	Part No.	Description	Qty	Options
1	20Y-62-15831	BLOCK	1	SN:30001--
2	01010-81045	BOLT	2	SN:30001--
3	01643-31032	WASHER	2	SN:30001--
4	07230-20210	UNION	1	SN:30001--
5	205-62-55270	NIPPLE	1	SN:30001--
6	07002-11423	O-RING	2	SN:30001--
7	208-62-17550	TEE	2	SN:30001--
8	07002-11423	O-RING	2	SN:30001--
9	20Y-62-15831	BLOCK	1	SN:30001--
10	01010-81045	BOLT	2	SN:30001--
11	01643-31032	WASHER	2	SN:30001--
12	205-62-55270	NIPPLE	1	SN:30001--
13	07002-11423	O-RING	1	SN:30001--
14	208-62-17550	TEE	3	SN:30001--
15	07002-11423	O-RING	3	SN:30001--
16	22U-54-25620	SEAL	1	SN:30001--
17	22U-54-25630	SEAL	1	SN:30001--
18	22U-54-25640	SEAL	1	SN:30001--
19	22U-54-25650	SEAL	1	SN:30001--

Ref. K1110-21A3 Page 210560

https://truckmanualshub.com/

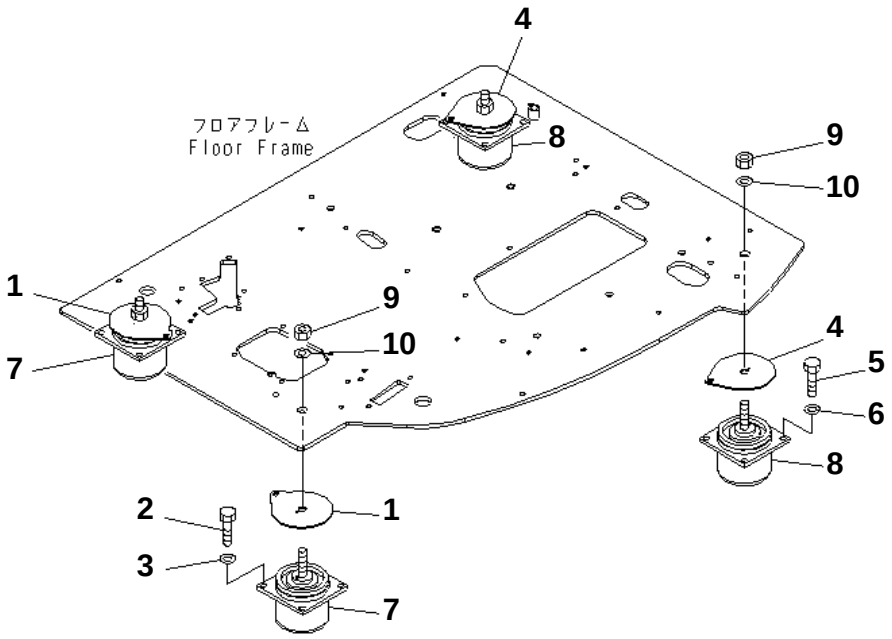

00005275

PC228US-3N-W1 S/N 30001-UP

FLOOR MOUNT(#20001-)

Item	Part No.	Description	Qty	Options
1	22U-54-25161	SPACER	2	SN:21162--
2	01010-81035	BOLT	8	SN:20005--
3	01643-31032	WASHER	8	SN:20001--
4	207-54-65131	SPACER	2	SN:21162--
5	01010-81035	BOLT	8	SN:20005--
6	01643-31032	WASHER	8	SN:20001--
7	22B-54-18110	CUSHION	2	SN:20001--
8	20Y-54-39870	CUSHION	2	SN:20001--
9	01580-11613	NUT	4	SN:20001--
10	01643-31645	WASHER	4	SN:20001--

Ref. K1120-01A0 Page 210570

https://truckmanualshub.com/

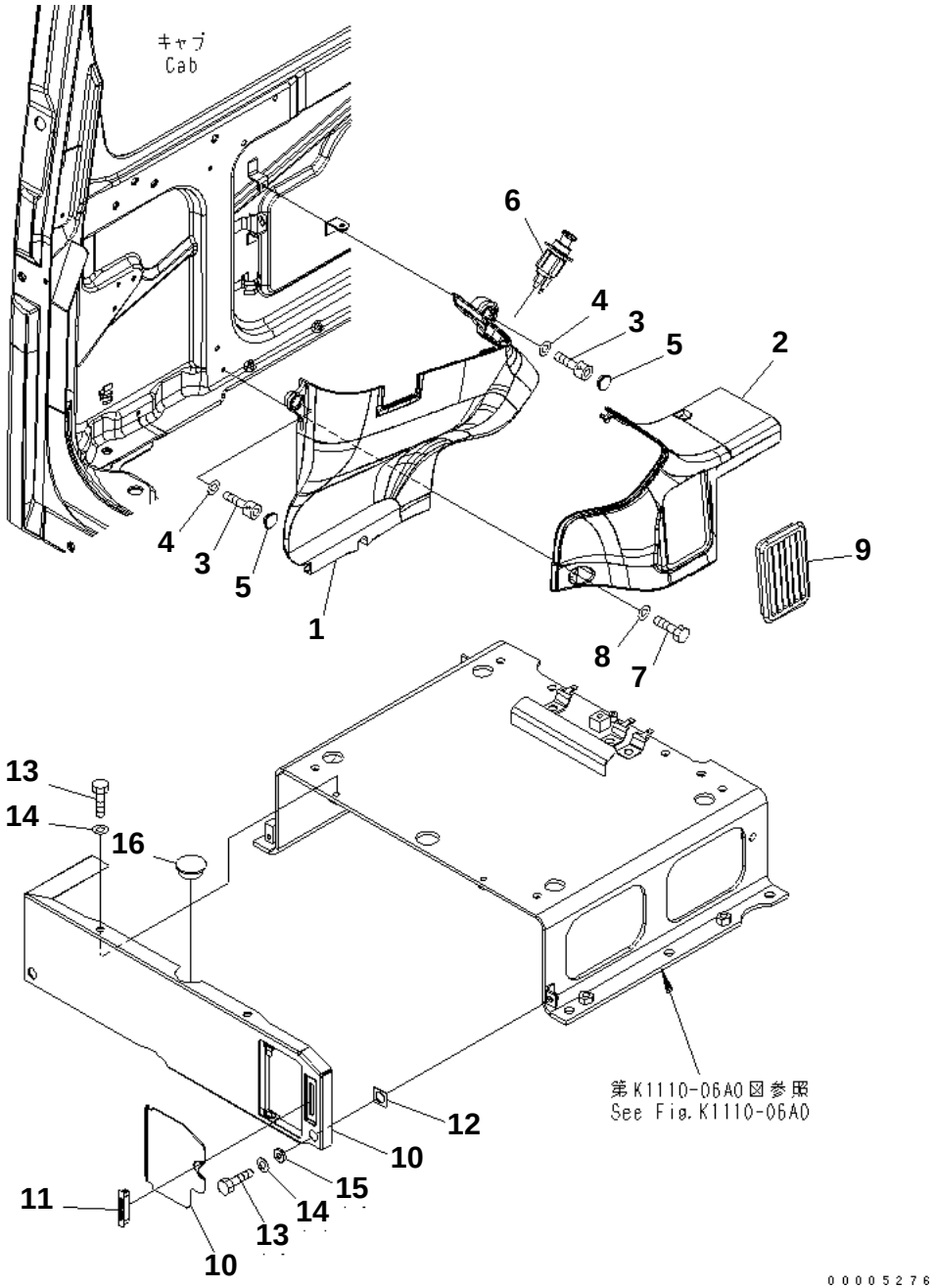

PC228US-3N-W1 S/N 30001-UP

GARNISH COVER

Item	Part No.	Description	Qty	Options
1	22U-54-25231	COVER	1	SN:30001--
2	22U-54-25241	COVER	1	SN:30001--
3	01252-70616	BOLT	3	SN:30001--
4	01643-30623	WASHER	3	SN:30001--
5	22U-54-25351	CAP	2	SN:30001--
6	20Y-06-23472	LIGHTER	1	SN:30001--
7	01252-80616	BOLT	2	SN:30001--
8	01643-70623	WASHER	2	SN:30001--
9	20Y-979-2150	GRILLE	1	SN:30001--
10	22U-43-21312	COVER	1	SN:30001--
11	20Y-979-6630	CATCHER	1	SN:30001--
12	22U-43-21340	SHEET	2	SN:30001--
13	01010-D0820	BOLT	4	SN:30001--
14	01643-70823	WASHER	4	SN:30001--
15	102-60-15240	SEAT	2	SN:30001--
16	22U-54-25581	GROMMET	1	SN:30001--

Ref. K1740-01A0 Page 210580

https://truckmanualshub.com/

GUARD

Item	Description	Qty	Page
10	HOOD (YELLOW)	1	240010
20	HOOD (YELLOW) (CORROSION RESISTOR)	1	240020
30	FRAME	1	240030
40	LEFT SIDE COVER (YELLOW)	1	240040
50	RIGHT SIDE COVER (YELLOW)	1	240050
60	PARTITION (COVER) (1/2) (YELLOW)	1	240060
70	PARTITION (COVER) (1/2) (YELLOW) (CORROSION RESISTOR)	1	240070
80	PARTITION (COVER) (2/2) (YELLOW)	1	240080
90	PARTITION (COVER) (2/2) (YELLOW) (FOR ARM CRANE)	1	240090
100	UPPER COVER (YELLOW)	1	240100
110	TOOL CASE(#20001-)	1	240110
120	FRONT COVER (COVER) (1/2) (YELLOW)	1	240120
130	FRONT COVER (COVER) (2/2) (YELLOW)	1	240130
140	FRONT COVER (COVER) (2/2) (YELLOW) (FOR 1 ACTUATOR OR ARM CRANE)	1	240140
150	FRONT COVER (COVER) (2/2) (YELLOW) (1 ACTUATOR) (FOR ARM CRANE)	1	240150
160	FRONT COVER (COVER) (2/2) (YELLOW) (2 ACTUATOR) (ARM BURST VALVE)	1	240160
170	FRONT COVER (COVER) (2/2) (YELLOW) (2 ACTUATOR)	1	240170
180	FRONT COVER (COVER) (2/2) (YELLOW) (FOR 2-PIECE BOOM WITH 1 ATT)	1	240180
190	FRONT COVER (COVER) (2/2) (YELLOW) (FOR 2-PIECE BOOM WITH 2 ATT)	1	240190
200	HAND RAIL (YELLOW)(#20001-)	1	240200
210	REAR VIEW MIRROR¤ L.H.(#20001-)	1	240210
220	REAR VIEW MIRROR¤ R.H. (YELLOW)(#20001-)	1	240220
230	REAR VIEW MIRROR (YELLOW)(#20001-)	1	240230
240	COUNTER WEIGHT (6060KG) (YELLOW)	1	240240
250	COUNTER WEIGHT MOUNTING(#20001-)	1	240250
260	UNDER COVER (YELLOW)	1	240260

https://truckmanualshub.com/

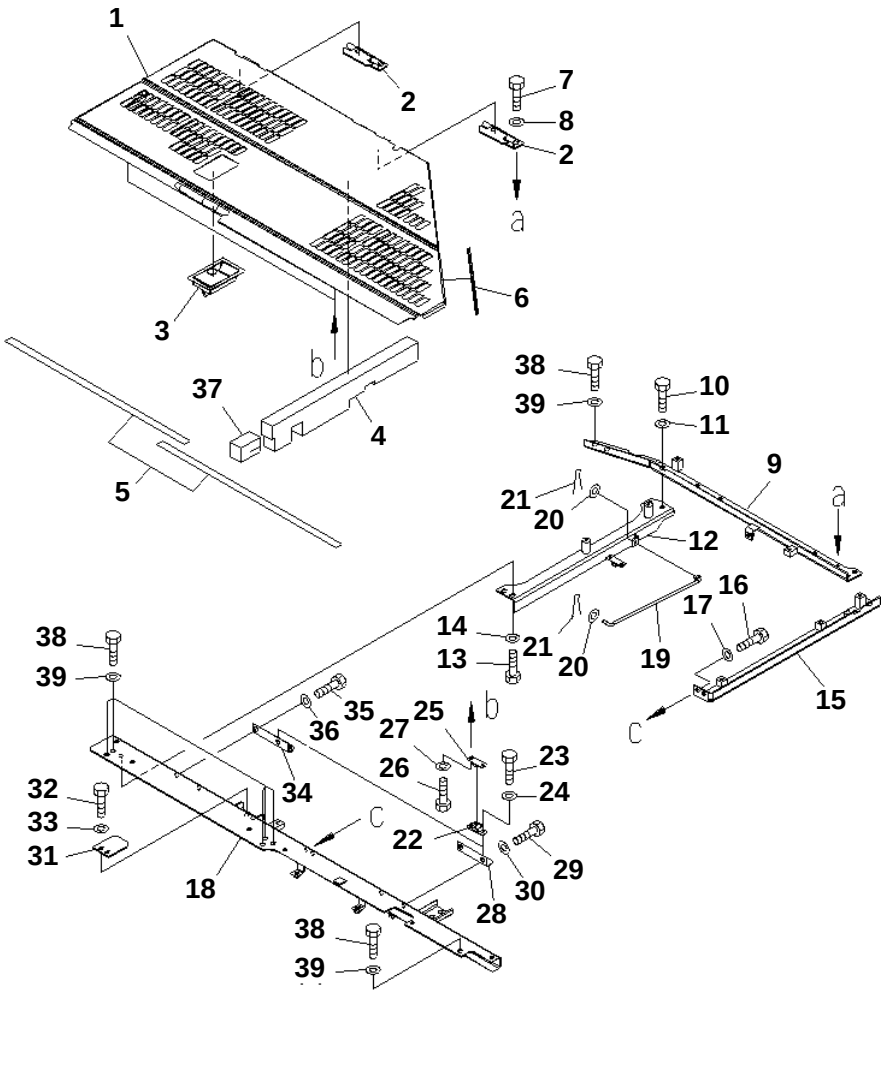

PC228US-3N-W1 S/N 30001-UP

HOOD (YELLOW)

Item	Part No.	Description	Qty	Options
	22U-54-21143	HOOD	1	SN:30001--
1	☆	· HOOD	1	SN:30001--
2	22U-54-23570	· · HINGE (WELDED)	2	SN:30001--
3	198-54-41982	· · LOCK ASS'Y (WELDED)	1	SN:30001--
4	22U-54-23731	· SHEET	1	SN:30001--
5	22U-54-21131	· SHEET	2	SN:30001--
6	22U-54-21161	· SEAL	1	SN:30001--
7	01010-81230	BOLT	4	SN:30001--
8	01643-31232	WASHER	4	SN:30001--
9	22U-54-23461	FRAME	1	SN:30001--
10	01010-81230	BOLT	3	SN:30001--
11	01643-31232	WASHER	3	SN:30001--
12	22U-54-23561	FRAME	1	SN:30001--
13	01010-81230	BOLT	2	SN:30001--
14	01643-31232	WASHER	2	SN:30001--
15	22U-54-23551	FRAME	1	SN:30001--
16	01010-81225	BOLT	2	SN:30001--
17	01643-31232	WASHER	2	SN:30001--
18	22U-54-23422	FRAME	1	SN:30001--
19	22U-54-21840	BAR	1	SN:30001--
20	01643-31032	WASHER	2	SN:30001--
21	04050-13018	PIN	2	SN:30001--
22	205-54-51970	DOVE TAIL	2	SN:30001--
23	01010-80612	BOLT	4	SN:30001--
24	01643-30623	WASHER	4	SN:30001--
25	205-54-53550	DOVE TAIL	2	SN:30001--
26	01010-80616	BOLT	4	SN:30001--
27	01643-30623	WASHER	4	SN:30001--
28	22U-54-21150	BRACKET	1	SN:30001--
29	01010-81230	BOLT	2	SN:30001--
30	01643-31232	WASHER	2	SN:30001--
31	20Y-54-28182	PLATE	1	SN:30001--
32	01010-81230	BOLT	2	SN:30001--
33	01643-31232	WASHER	2	SN:30001--
34	22U-54-21170	BRACKET	1	SN:30001--
35	01010-81230	BOLT	2	SN:30001--
36	01643-31232	WASHER	2	SN:30001--
37	22U-54-23720	SHEET	1	SN:30001--
38	01010-81230	BOLT	12	SN:30001--
39	01643-31232	WASHER	12	SN:30001--

Ref. M1110-01A0 Page 240010

https://truckmanualshub.com/

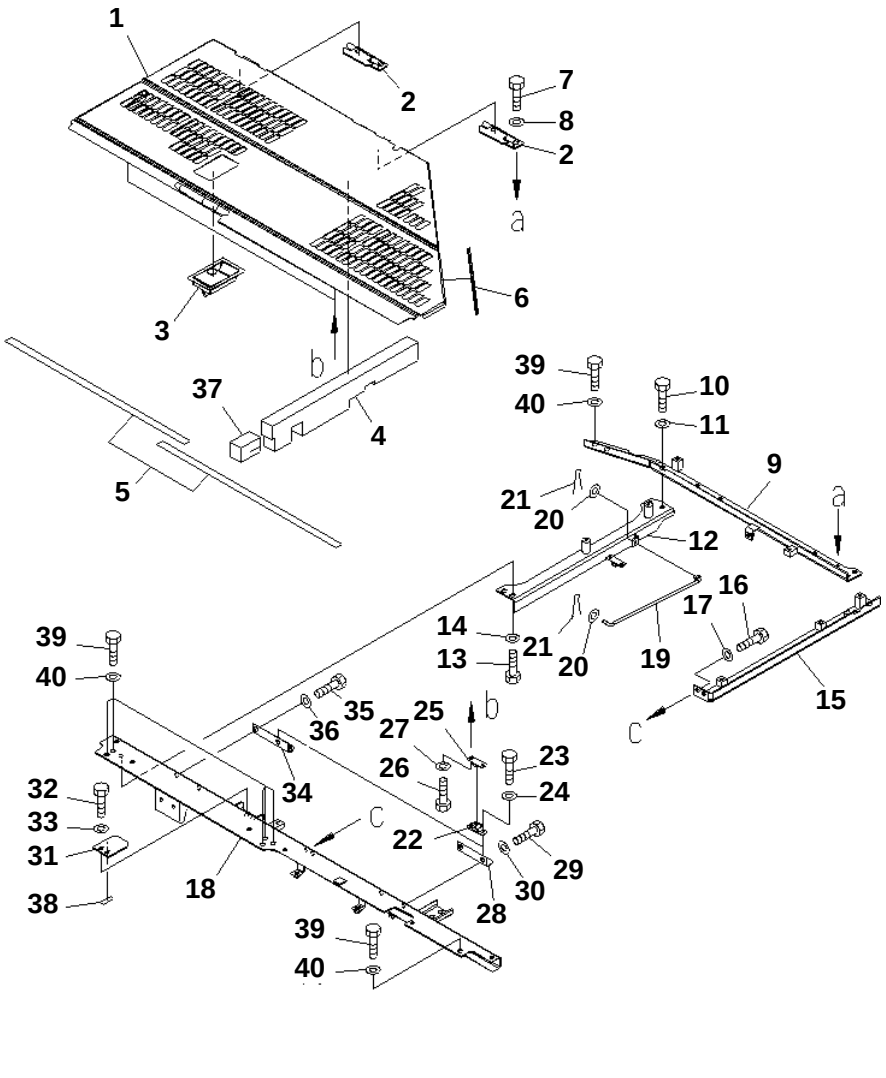

PC228US-3N-W1 S/N 30001-UP

HOOD (YELLOW) (CORROSION RESISTOR)

Item	Part No.	Description	Qty	Options
	22U-54-21143	HOOD	1	SN:30001--
1	☆	· HOOD	1	SN:30001--
2	22U-54-23570	· · HINGE (WELDED)	2	SN:30001--
3	198-54-41982	· · LOCK ASS'Y (WELDED)	1	SN:30001--
4	22U-54-23731	· SHEET	1	SN:30001--
5	22U-54-21131	· SHEET	2	SN:30001--
6	22U-54-21161	· SEAL	1	SN:30001--
7	01010-81230	BOLT	4	SN:30001--
8	01643-31232	WASHER	4	SN:30001--
9	22U-54-23461	FRAME	1	SN:30001--
10	01010-81230	BOLT	3	SN:30001--
11	01643-31232	WASHER	3	SN:30001--
12	22U-54-23561	FRAME	1	SN:30001--
13	01010-81230	BOLT	2	SN:30001--
14	01643-31232	WASHER	2	SN:30001--
15	22U-54-23551	FRAME	1	SN:30001--
16	01010-81225	BOLT	2	SN:30001--
17	01643-31232	WASHER	2	SN:30001--
18	22U-54-23960	FRAME	1	SN:30001--
19	22U-54-21840	BAR	1	SN:30001--
20	01643-31032	WASHER	2	SN:30001--
21	04050-13018	PIN	2	SN:30001--
22	205-54-51970	DOVE TAIL	2	SN:30001--
23	01010-80612	BOLT	4	SN:30001--
24	01643-30623	WASHER	4	SN:30001--
25	205-54-53550	DOVE TAIL	2	SN:30001--
26	01010-80616	BOLT	4	SN:30001--
27	01643-30623	WASHER	4	SN:30001--
28	22U-54-21150	BRACKET	1	SN:30001--
29	01010-81230	BOLT	2	SN:30001--
30	01643-31232	WASHER	2	SN:30001--
31	20Y-54-28182	PLATE	1	SN:30001--
32	01010-81230	BOLT	2	SN:30001--
33	01643-31232	WASHER	2	SN:30001--
34	22U-54-21170	BRACKET	1	SN:30001--
35	01010-81230	BOLT	2	SN:30001--
36	01643-31232	WASHER	2	SN:30001--
37	22U-54-23720	SHEET	1	SN:30001--
38	22U-54-23930	SHEET	1	SN:30001--
39	01010-81230	BOLT	12	SN:30001--
40	01643-31232	WASHER	12	SN:30001--

Ref. M1110-01A1 Page 240020

https://truckmanualshub.com/

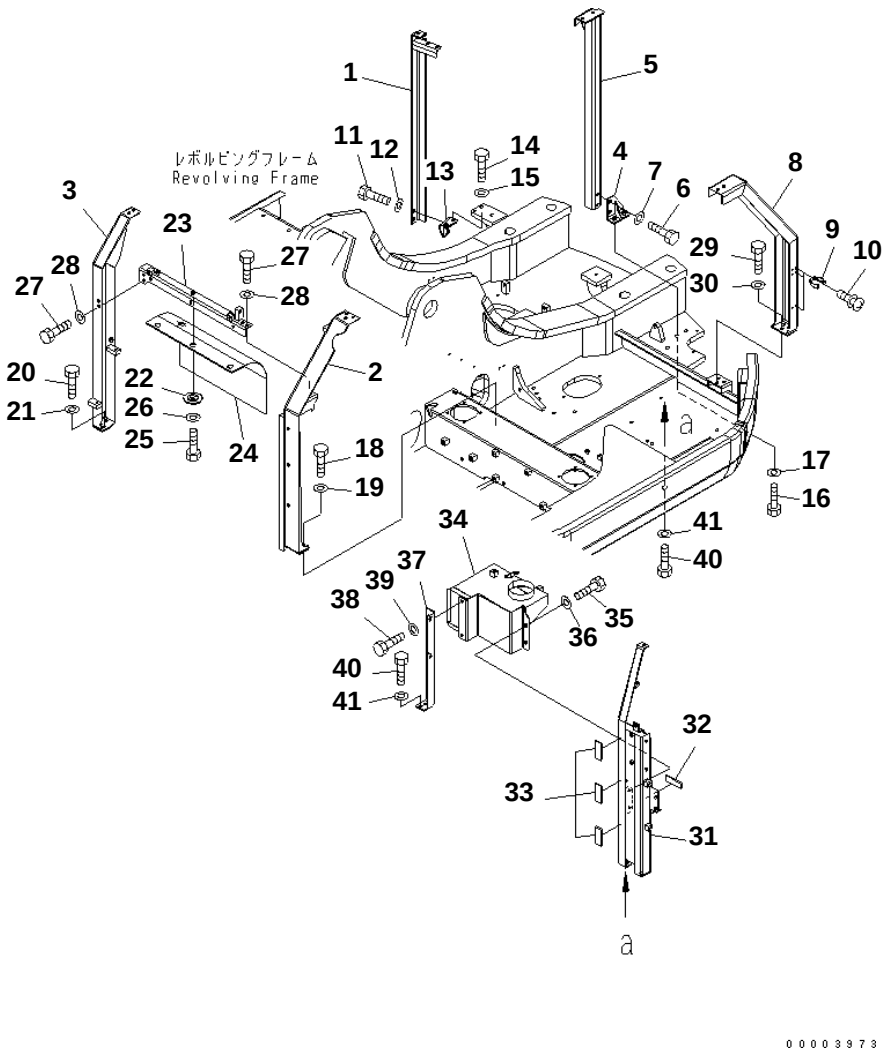

PC228US-3N-W1 S/N 30001-UP

FRAME

Item	Part No.	Description	Qty	Options
1	22U-54-23541	FRAME	1	SN:30001--
2	22U-54-21632	FRAME	1	SN:30001--
3	22U-54-21671	FRAME	1	SN:30001--
4	22U-54-23650	BRACKET	1	SN:30001--
5	22U-54-23441	FRAME	1	SN:30001--
6	01010-81230	BOLT	2	SN:30001--
7	01643-31232	WASHER	2	SN:30001--
8	22U-54-21682	FRAME	1	SN:30001--
9	203-54-63230	CLAMP	3	SN:30001--
10	01023-20616	SCREW	6	SN:30001--
11	01010-81230	BOLT	2	SN:30001--
12	01643-31232	WASHER	2	SN:30001--
13	22U-54-21761	BRACKET	1	SN:30001--
14	01010-81245	BOLT	2	SN:30001--
15	01643-31232	WASHER	2	SN:30001--
16	01010-81250	BOLT	2	SN:30001--
17	01643-31232	WASHER	2	SN:30001--
18	01010-81230	BOLT	3	SN:30001--
19	01643-31232	WASHER	3	SN:30001--
20	01010-81230	BOLT	3	SN:30001--
21	01643-31232	WASHER	3	SN:30001--
22	203-54-62670	COLLAR	3	SN:30001--
23	22U-54-21651	FRAME	1	SN:30001--
24	22U-54-22652	SHEET	1	SN:30001--
25	01010-81230	BOLT	3	SN:30001--
26	01643-31232	WASHER	3	SN:30001--
27	01010-81225	BOLT	4	SN:30001--
28	01643-31232	WASHER	4	SN:30001--
29	01010-81230	BOLT	3	SN:30001--
30	01643-31232	WASHER	3	SN:30001--
31	22U-54-21712	FRAME	1	SN:30001--
32	205-03-71440	· SHEET	1	SN:30001--
33	22U-54-21730	· SHEET	3	SN:30001--
34	22U-54-21742	BRACKET	1	SN:30001--
35	01010-81230	BOLT	2	SN:30001--
36	01643-31232	WASHER	2	SN:30001--
37	22U-54-21771	FRAME	1	SN:30001--
38	01010-81230	BOLT	2	SN:30001--
39	01643-31232	WASHER	2	SN:30001--
40	01010-81230	BOLT	4	SN:30001--
41	01643-31232	WASHER	4	SN:30001--

Ref. M1120-01A0 Page 240030

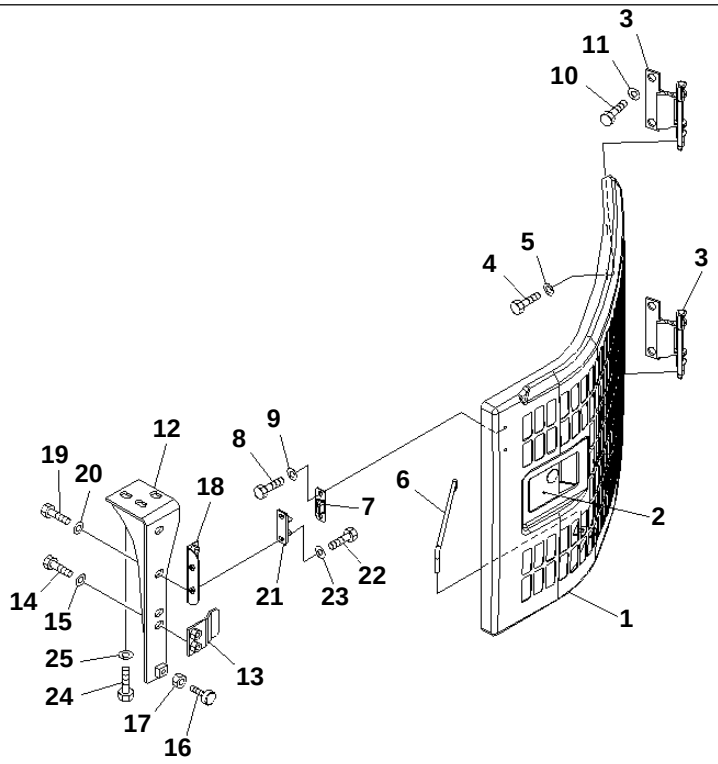

00003997

PC228US-3N-W1 S/N 30001-UP
LEFT SIDE COVER (YELLOW)

Item	Part No.	Description	Qty	Options
1	22U-54-22113NK	COVER	1	SN:30001--
2	22U-54-24480	· LOCK (WELDED)	1	SN:30001--
3	22U-54-22231NK	HINGE	2	SN:30001--
4	01010-81230	BOLT	4	SN:30001--
5	01643-31232	WASHER	4	SN:30001--
6	20Y-54-29232	BAR	1	SN:30001--
7	205-54-53550	DOVE TAIL	1	SN:30001--
8	01010-80616	BOLT	2	SN:30001--
9	01643-30623	WASHER	2	SN:30001--
10	01010-81225	BOLT	4	SN:30001--
11	01643-31232	WASHER	4	SN:30001--
	22U-54-22121	FRAME ASS'Y	1	SN:30001--
12	☆	· FRAME	1	SN:30001--
13	22U-54-23152	· BRACKET	1	SN:30001--
14	01010-81230	· BOLT	2	SN:30001--
15	01643-31232	· WASHER	2	SN:30001--
16	20Y-54-11611	· STOPPER	1	SN:30001--
17	01580-11008	· NUT	1	SN:30001--
18	20Y-54-28170	· BRACKET	1	SN:30001--
19	01010-81230	· BOLT	2	SN:30001--
20	01643-31232	· WASHER	2	SN:30001--
21	205-54-51970	· DOVE TAIL	1	SN:30001--
22	01010-80616	· BOLT	2	SN:30001--
23	01643-30623	· WASHER	2	SN:30001--
24	01010-81225	BOLT	3	SN:30001--
25	01643-31232	WASHER	3	SN:30001--

https://truckmanualshub.com/

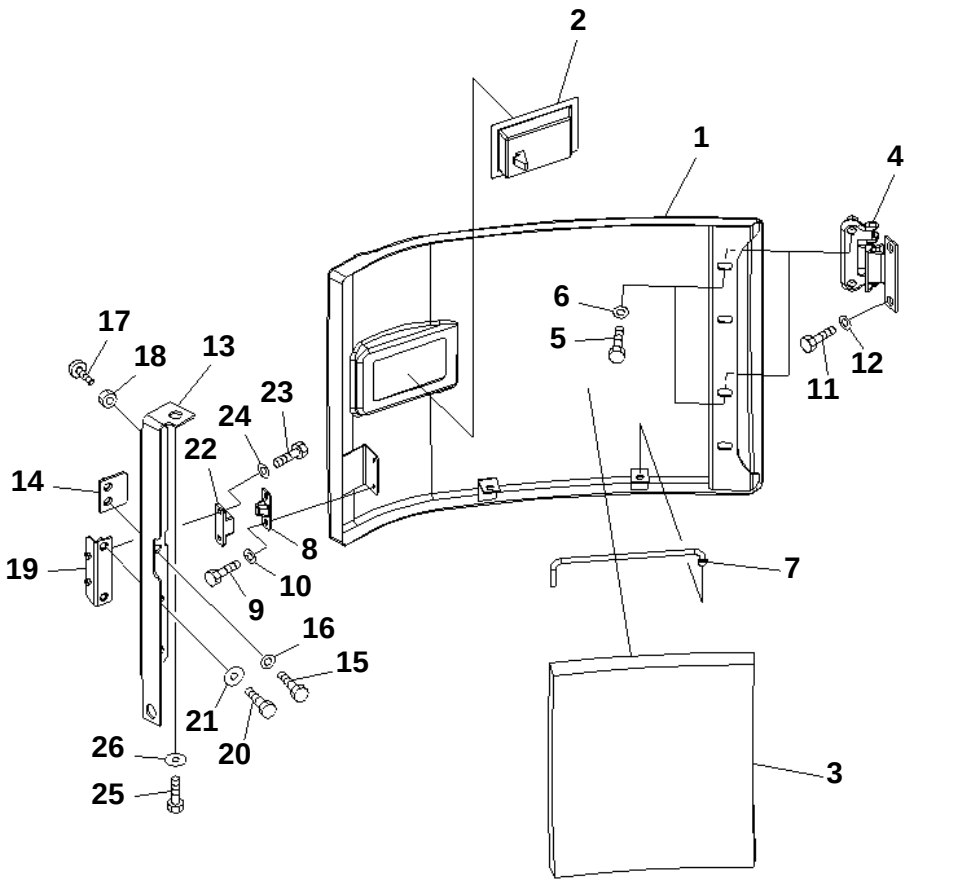

PC228US-3N-W1 S/N 30001-UP

RIGHT SIDE COVER (YELLOW)

Item	Part No.	Description	Qty	Options
	22U-54-22313	COVER	1	SN:30001--
1	☆	· COVER,R.H.	1	SN:30001--
2	22U-54-24480	· · LOCK (WELDED)	1	SN:30001--
3	22U-54-22292	· SHEET	1	SN:30001--
4	22U-54-22231NK	HINGE	2	SN:30001--
5	01010-81230	BOLT	4	SN:30001--
6	01643-31232	WASHER	4	SN:30001--
7	20Y-54-29232	BAR	1	SN:30001--
8	205-54-53550	DOVE TAIL	1	SN:30001--
9	01010-80616	BOLT	2	SN:30001--
10	01643-30623	WASHER	2	SN:30001--
11	01010-81225	BOLT	4	SN:30001--
12	01643-31232	WASHER	4	SN:30001--
	22U-54-23860	FRAME ASS'Y	1	SN:30001--
13	☆	· FRAME	1	SN:30001--
14	22U-54-22162	· BRACKET	1	SN:30001--
15	01010-81225	· BOLT	2	SN:30001--
16	01643-31232	· WASHER	2	SN:30001--
17	20Y-54-11611	· STOPPER	1	SN:30001--
18	01580-11008	· NUT	1	SN:30001--
19	20Y-54-28170	· BRACKET	1	SN:30001--
20	01010-81225	· BOLT	2	SN:30001--
21	175-54-34170	· WASHER	2	SN:30001--
22	205-54-51970	· DOVE TAIL	1	SN:30001--
23	01010-80616	· BOLT	2	SN:30001--
24	01643-30623	· WASHER	2	SN:30001--
25	01010-81225	BOLT	2	SN:30001--
26	175-54-34170	WASHER	2	SN:30001--

Ref. M1140-01A0 Page 240050

https://truckmanualshub.com/

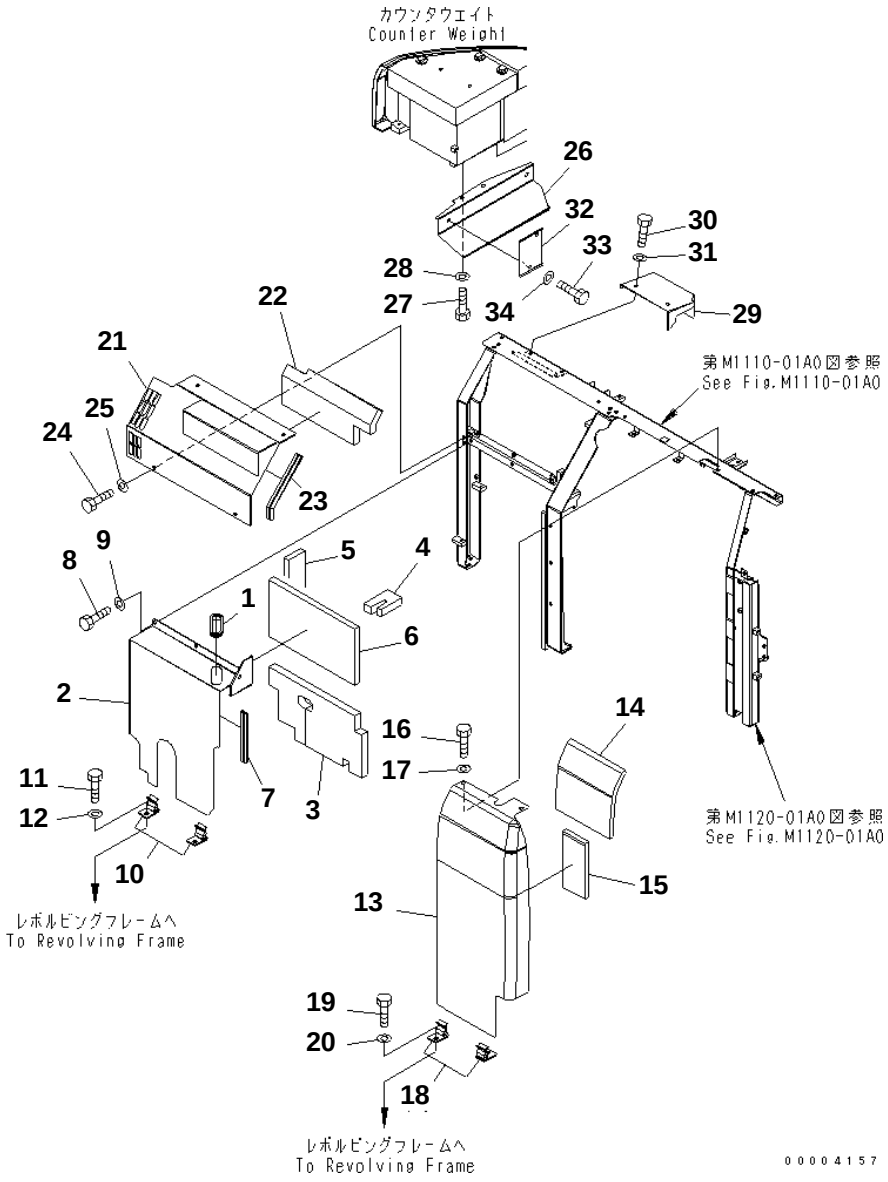

PC228US-3N-W1 S/N 30001-UP

PARTITION (COVER) (1/2) (YELLOW)

Item	Part No.	Description	Qty	Options
	22U-54-22924	COVER	1	SN:30001--
1	22U-54-22772	· GROMMET	1	SN:30001--
2	☆	· COVER	1	SN:30001--
3	22U-54-22741	· SHEET	1	SN:30001--
4	22U-54-22752	· SHEET	1	SN:30001--
5	22U-54-22761	· SHEET	1	SN:30001--
6	22U-54-23220	· SHEET	1	SN:30001--
7	22U-54-23230	· SEAL	1	SN:30001--
8	01010-81230	BOLT	4	SN:30001--
9	01643-31232	WASHER	4	SN:30001--
10	20Y-54-12320	CATCH	2	SN:30001--
11	01010-81230	BOLT	2	SN:30001--
12	01643-31232	WASHER	2	SN:30001--
	22U-54-22932	COVER	1	SN:30001--
13	☆	· COVER	1	SN:30001--
14	22U-54-22731	· SHEET	1	SN:30001--
15	22U-54-22821	· SHEET	1	SN:30001--
16	01010-81230	BOLT	5	SN:30001--
17	01643-31232	WASHER	5	SN:30001--
18	20Y-54-12320	CATCH	2	SN:30001--
19	01010-81230	BOLT	2	SN:30001--
20	01643-31232	WASHER	2	SN:30001--
	22U-54-22943	COVER	1	SN:30001--
21	☆	· COVER	1	SN:30001--
22	22U-54-22842	· SHEET	1	SN:30001--
23	22U-54-23240	· SEAL	1	SN:30001--
24	01010-81230	BOLT	4	SN:30001--
25	01643-31232	WASHER	4	SN:30001--
26	22U-54-23522	COVER	1	SN:30001--
27	01010-81220	BOLT	3	SN:30001--
28	01643-31232	WASHER	3	SN:30001--
29	22U-54-22882	COVER	1	SN:30001--
30	01010-81220	BOLT	2	SN:30001--
31	01643-31232	WASHER	2	SN:30001--
32	22U-54-23530	COVER	1	SN:30001--
33	01010-81220	BOLT	2	SN:30001--
34	01643-31232	WASHER	2	SN:30001--

Ref. M1150-01A0 Page 240060

https://truckmanualshub.com/

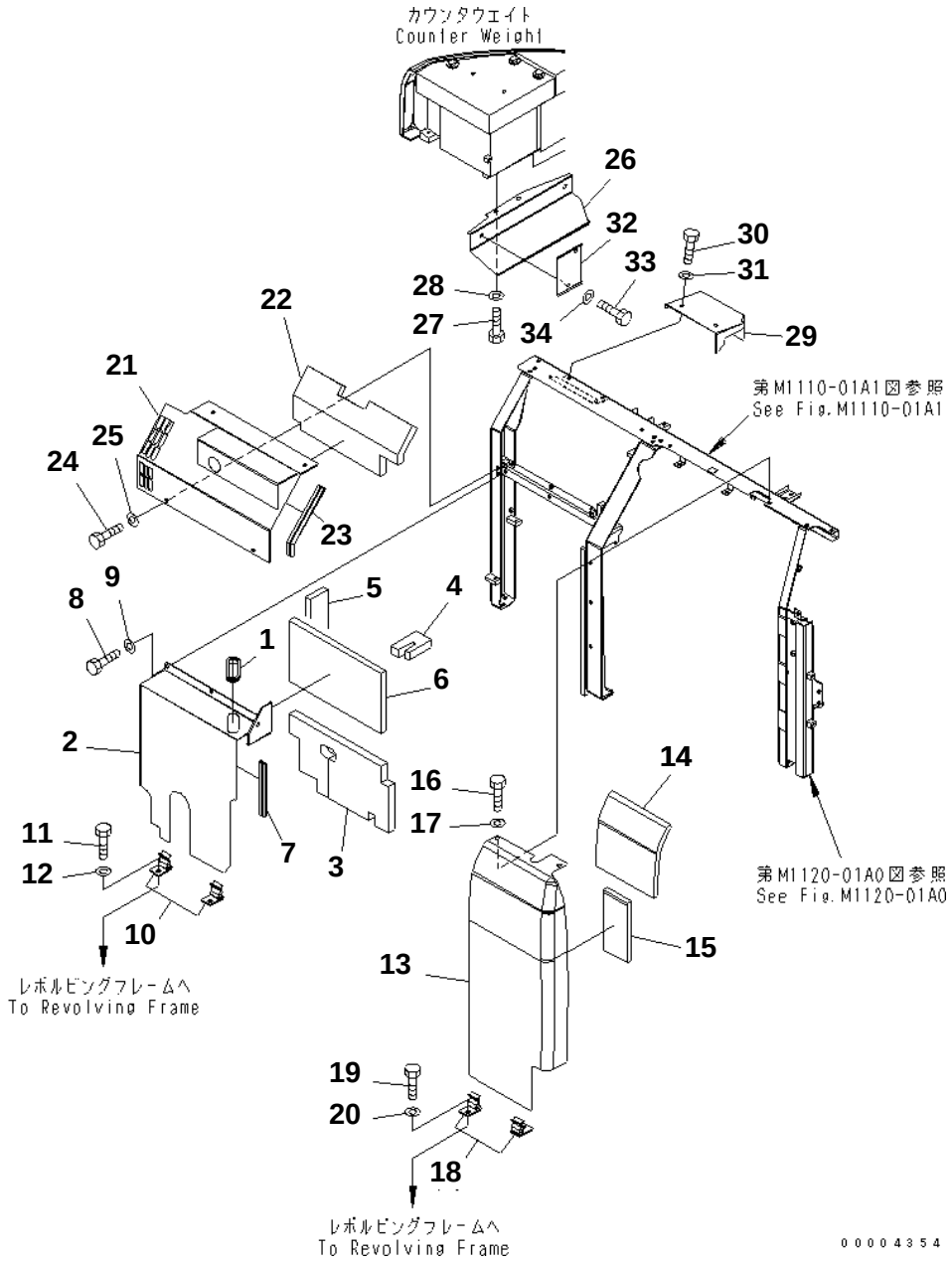

PC228US-3N-W1 S/N 30001-UP

PARTITION (COVER) (1/2) (YELLOW) (CORROSION RESISTOR)

Item	Part No.	Description	Qty	Options
	22U-54-22924	COVER	1	SN:30001--
1	22U-54-22772	· GROMMET	1	SN:30001--
2	☆	· COVER	1	SN:30001--
3	22U-54-22741	· SHEET	1	SN:30001--
4	22U-54-22752	· SHEET	1	SN:30001--
5	22U-54-22761	· SHEET	1	SN:30001--
6	22U-54-23220	· SHEET	1	SN:30001--
7	22U-54-23230	· SEAL	1	SN:30001--
8	01010-81230	BOLT	4	SN:30001--
9	01643-31232	WASHER	4	SN:30001--
10	20Y-54-12320	CATCH	2	SN:30001--
11	01010-81230	BOLT	2	SN:30001--
12	01643-31232	WASHER	2	SN:30001--
	22U-54-22932	COVER	1	SN:30001--
13	☆	· COVER	1	SN:30001--
14	22U-54-22622	· COVER	1	SN:30001--
	22U-54-22731	· SHEET	1	SN:30001--
15	22U-54-22821	· SHEET	1	SN:30001--
16	01010-81230	BOLT	5	SN:30001--
17	01643-31232	WASHER	5	SN:30001--
18	20Y-54-12320	CATCH	2	SN:30001--
19	01010-81230	BOLT	2	SN:30001--
20	01643-31232	WASHER	2	SN:30001--
	22U-54-23940	COVER	1	SN:30001--
21	☆	· COVER	1	SN:30001--
22	22U-54-25470	· SHEET	1	SN:30001--
23	22U-54-23240	· SEAL	1	SN:30001--
24	01010-81230	BOLT	4	SN:30001--
25	01643-31232	WASHER	4	SN:30001--
26	22U-54-23522	COVER	1	SN:30001--
27	01010-81220	BOLT	3	SN:30001--
28	01643-31232	WASHER	3	SN:30001--
29	22U-54-22882	COVER	1	SN:30001--
30	01010-81220	BOLT	2	SN:30001--
31	01643-31232	WASHER	2	SN:30001--
32	22U-54-23530	COVER	1	SN:30001--
33	01010-81220	BOLT	2	SN:30001--
34	01643-31232	WASHER	2	SN:30001--

Ref. M1150-01A2 Page 240070

https://truckmanualshub.com/

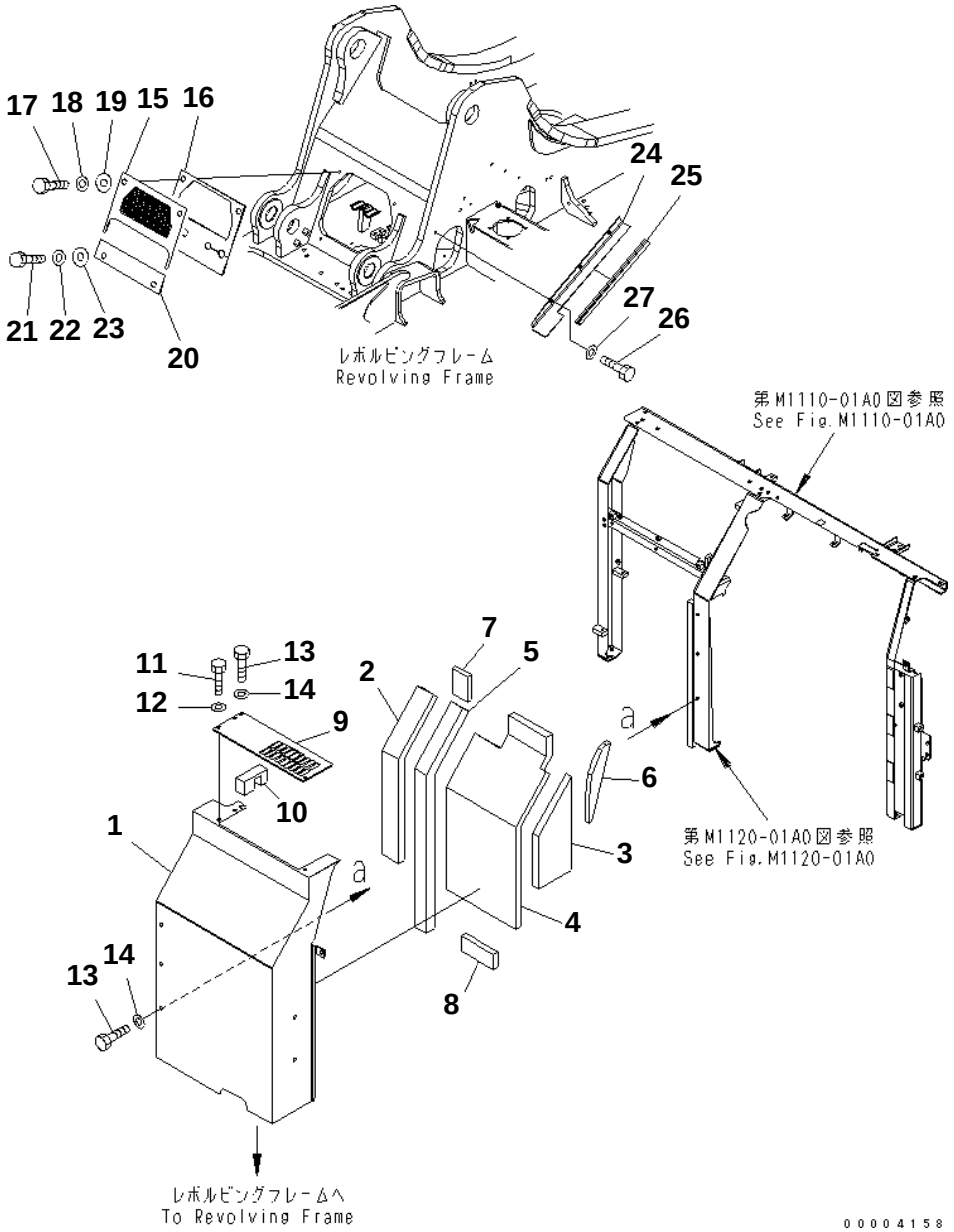

PC228US-3N-W1 S/N 30001-UP

PARTITION (COVER) (2/2) (YELLOW)

Item	Part No.	Description	Qty	Options
	22U-54-22953	COVER	1	SN:30001--
1	☆	· COVER	1	SN:30001--
2	22U-54-23670	· SHEET	1	SN:30001--
3	22U-54-22811	· SHEET	1	SN:30001--
4	22U-54-23660	· SHEET	1	SN:30001--
5	22U-54-22850	· SHEET	1	SN:30001--
6	22U-54-23250	· SHEET	1	SN:30001--
7	22U-54-23680	· SHEET	1	SN:30001--
8	22U-54-23850	· SHEET	1	SN:30001--
	22U-54-22722	COVER	1	SN:30001--
9	☆	· COVER	1	SN:30001--
10	22U-54-23710	· SHEET	1	SN:30001--
11	01010-81220	BOLT	3	SN:30001--
12	01643-31232	WASHER	3	SN:30001--
13	01010-81230	BOLT	6	SN:30001--
14	01643-31232	WASHER	6	SN:30001--
	22U-54-23330	COVER	1	SN:30001--
15	☆	· PLATE	1	SN:30001--
16	22U-54-22691	· SHEET	1	SN:30001--
17	01010-81230	BOLT	2	SN:30001--
18	01643-31232	WASHER	2	SN:30001--
19	205-54-76411	COLLAR	2	SN:30001--
20	22U-54-22680NK	PLATE	1	SN:30001--
21	01010-81230	BOLT	2	SN:30001--
22	01643-31232	WASHER	2	SN:30001--
23	205-54-76411	COLLAR	2	SN:30001--
24	22U-54-23190NK	COVER	1	SN:30001--
25	22U-54-11960	SEAL	1	SN:30001--
26	01010-81230	BOLT	3	SN:30001--
27	01643-31232	WASHER	3	SN:30001--

Ref. M1150-02A0 Page 240080

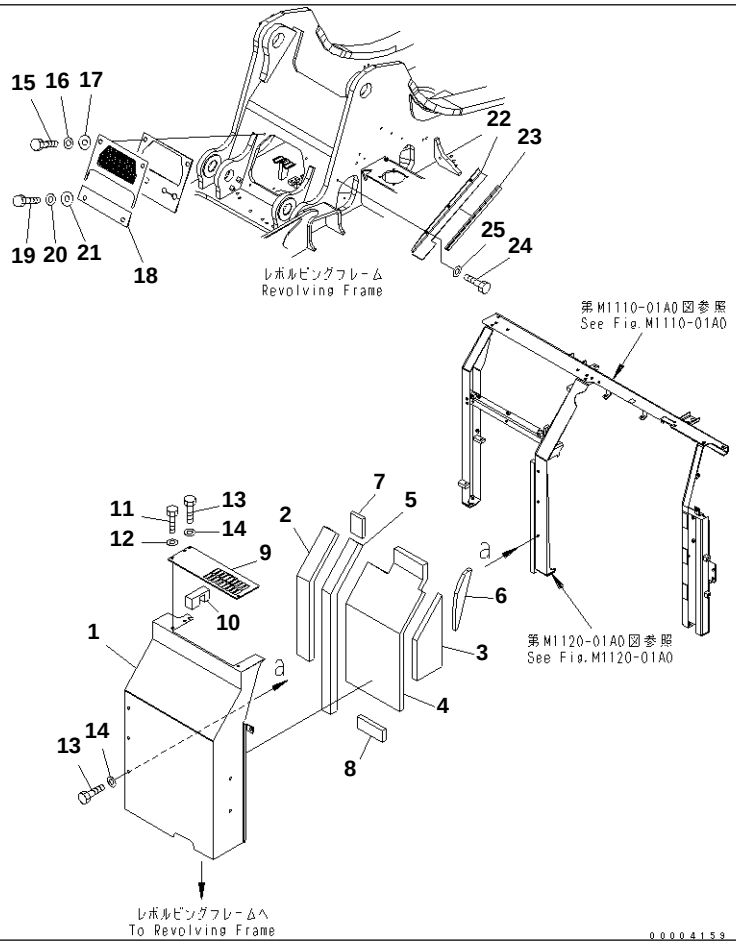

PC228US-3N-W1 S/N 30001-UP

PARTITION (COVER) (2/2) (YELLOW) (FOR ARM CRANE)

Item	Part No.	Description	Qty	Options
	22U-54-22953	COVER	1	SN:30001--
1	☆	· COVER	1	SN:30001--
2	22U-54-23670	· SHEET	1	SN:30001--
3	22U-54-22811	· SHEET	1	SN:30001--
4	22U-54-23660	· SHEET	1	SN:30001--
5	22U-54-22850	· SHEET	1	SN:30001--
6	22U-54-23250	· SHEET	1	SN:30001--
7	22U-54-23680	· SHEET	1	SN:30001--
8	22U-54-23850	· SHEET	1	SN:30001--
	22U-54-22722	COVER	1	SN:30001--
9	☆	· COVER	1	SN:30001--
10	22U-54-23710	· SHEET	1	SN:30001--
11	01010-81220	BOLT	3	SN:30001--
12	01643-31232	WASHER	3	SN:30001--
13	01010-81230	BOLT	6	SN:30001--
14	01643-31232	WASHER	6	SN:30001--
15	01010-81230	BOLT	2	SN:30001--
16	01643-31232	WASHER	2	SN:30001--
17	205-54-76411	COLLAR	2	SN:30001--
18	22U-54-22680NK	PLATE	1	SN:30001--
19	01010-81230	BOLT	2	SN:30001--
20	01643-31232	WASHER	2	SN:30001--
21	205-54-76411	COLLAR	2	SN:30001--
22	22U-54-23190NK	COVER	1	SN:30001--
23	22U-54-11960	SEAL	1	SN:30001--
24	01010-81230	BOLT	3	SN:30001--
25	01643-31232	WASHER	3	SN:30001--

https://truckmanualshub.com/

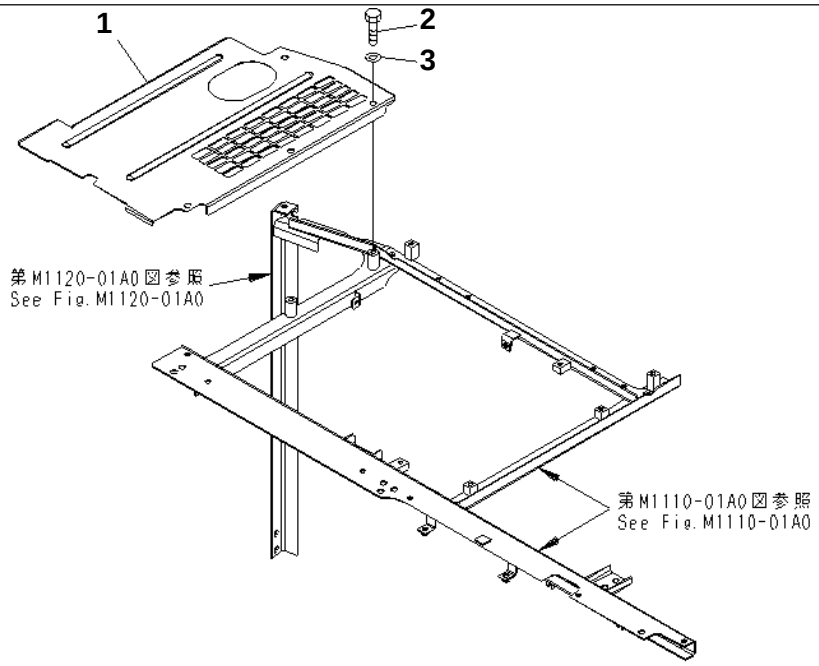

00004163

PC228US-3N-W1 S/N 30001-UP

UPPER COVER (YELLOW)

Item	Part No.	Description	Qty	Options
1	22U-54-23641YN	COVER	1	SN:30001--
2	01010-81220	BOLT	4	SN:30001--
3	01643-31232	WASHER	4	SN:30001--

https://truckmanualshub.com/

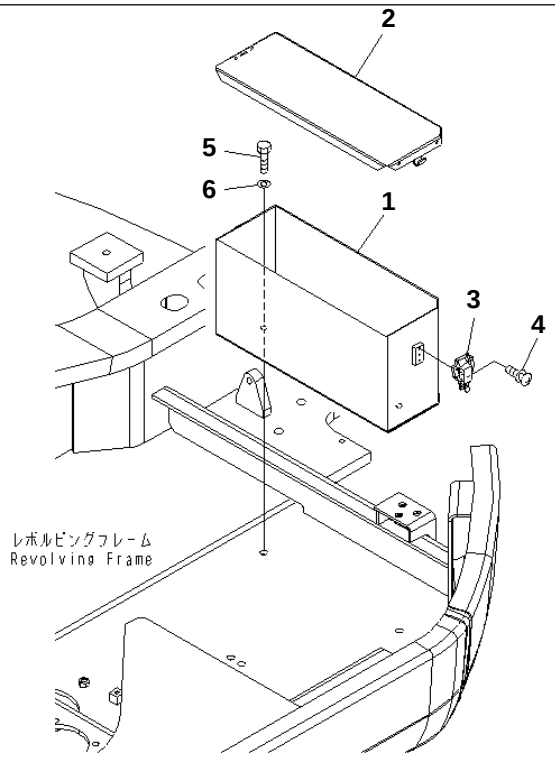

00004164

PC228US-3N-W1 S/N 30001-UP

TOOL CASE(#20001-)

Item	Part No.	Description	Qty	Options
	22U-54-23631	CASE	1	SN:21222--
1	☆	· COVER	1	SN:21222--
2	22U-54-23622	· COVER	1	SN:21222--
3	195-57-11530	· CATCHER	1	SN:20001--
4	01023-10512	· SCREW	3	SN:20001--
5	01010-81230	BOLT	2	SN:20001--
6	01643-31232	WASHER	2	SN:20001--

https://truckmanualshub.com/

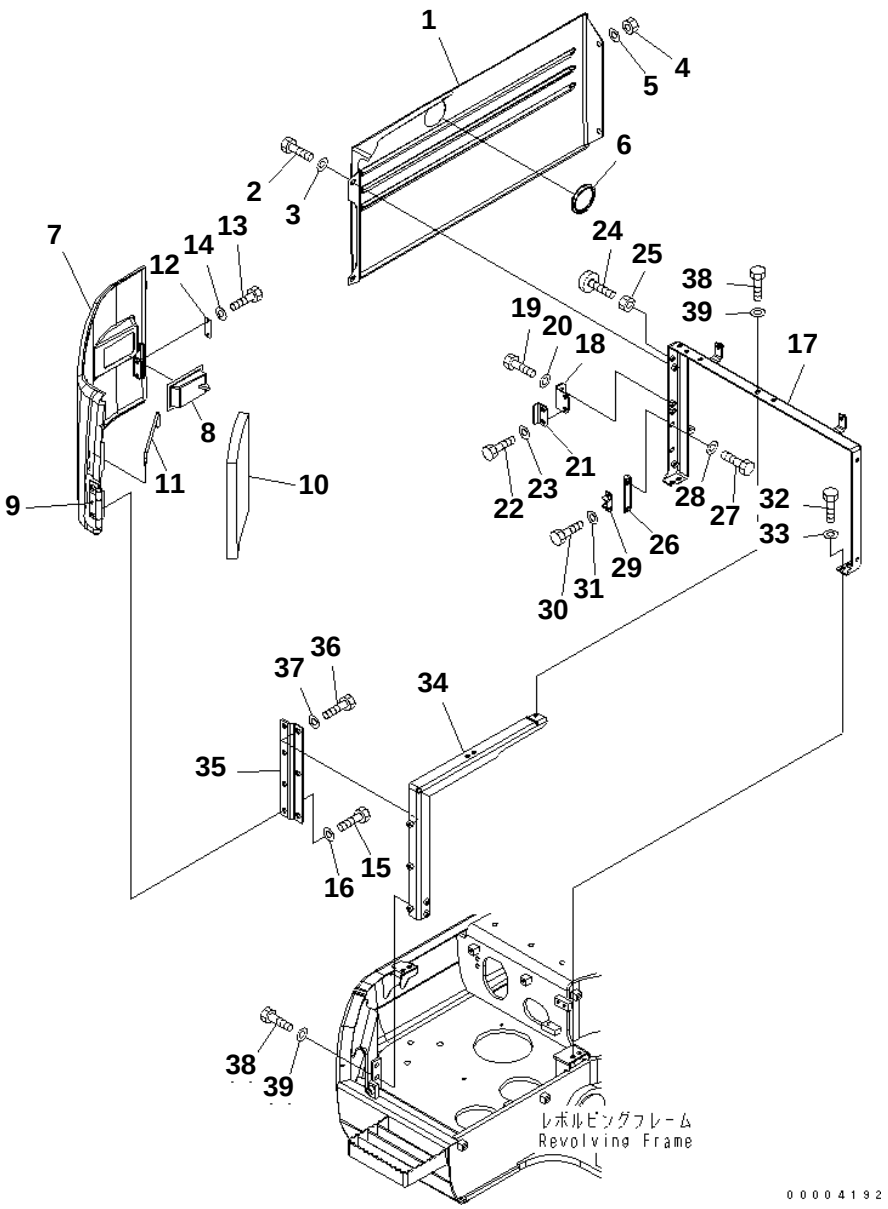

PC228US-3N-W1 S/N 30001-UP

FRONT COVER (COVER) (1/2) (YELLOW)

Item	Part No.	Description	Qty	Options
1	22U-54-24111NK	COVER	1	SN:30001--
2	01010-81225	BOLT	2	SN:30001--
3	01643-31232	WASHER	2	SN:30001--
4	01580-11210	NUT	2	SN:30001--
5	01643-31232	WASHER	2	SN:30001--
6	22U-54-24440	CAP	1	SN:30001--
	22U-54-24312	COVER	1	SN:30001--
7	22U-54-24122NK	COVER	1	SN:30001--
8	22U-54-24480	· LOCK	1	SN:30001--
9	22U-54-24450	· HINGE (WELDED)	2	SN:30001--
10	22U-54-24272	SHEET	1	SN:30001--
11	22U-54-24180	BAR	1	SN:30001--
12	205-54-53550	DOVE TAIL	1	SN:30001--
13	01010-80612	BOLT	2	SN:30001--
14	01643-30623	WASHER	2	SN:30001--
15	01010-81225	BOLT	4	SN:30001--
16	01643-31232	WASHER	4	SN:30001--
17	22U-54-24161	FRAME	1	SN:30001--
18	22U-54-24361	BRACKET	1	SN:30001--
19	01010-81230	BOLT	2	SN:30001--
20	01643-31232	WASHER	2	SN:30001--
21	22U-54-24411	BRACKET	1	SN:30001--
22	01010-81230	BOLT	2	SN:30001--
23	01643-31232	WASHER	2	SN:30001--
24	20Y-54-11611	STOPPER	1	SN:30001--
25	01580-11008	NUT	1	SN:30001--
26	20Y-54-28170	BRACKET	1	SN:30001--
27	01010-81230	BOLT	2	SN:30001--
28	01643-31232	WASHER	2	SN:30001--
29	205-54-51970	DOVE TAIL	1	SN:30001--
30	01010-80616	BOLT	2	SN:30001--
31	01643-30623	WASHER	2	SN:30001--
32	01010-81230	BOLT	4	SN:30001--
33	01643-31232	WASHER	4	SN:30001--
34	22U-54-24191	FRAME	1	SN:30001--
35	22U-54-24420	PLATE	1	SN:30001--
36	01010-81225	BOLT	3	SN:30001--
37	01643-31232	WASHER	3	SN:30001--
38	01010-81230	BOLT	3	SN:30001--
39	01643-31232	WASHER	3	SN:30001--

Ref. M1230-01A0 Page 240120

https://truckmanualshub.com/

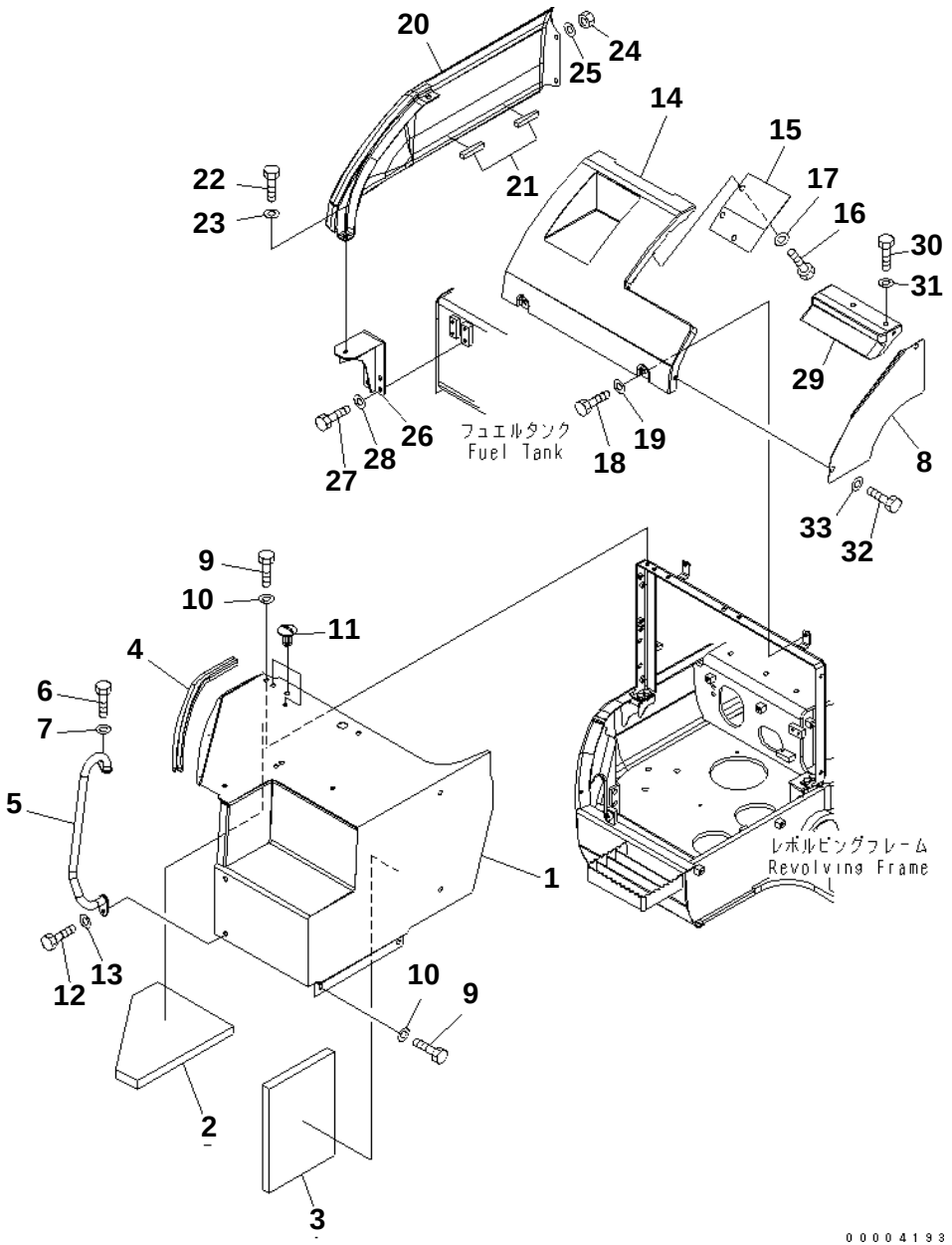

FRONT COVER (COVER) (2/2) (YELLOW)

Item	Part No.	Description	Qty	Options
1	22U-54-24133NK	COVER	1	SN:30001--
2	22U-54-24221	SHEET	1	SN:30001--
3	22U-54-24261	SHEET	1	SN:30001--
4	22U-54-24331	SEAL	1	SN:30001--
5	22U-54-24661YN	HAND RAIL	1	SN:30001--
6	01010-81230	BOLT	1	SN:30001--
7	01643-31232	WASHER	1	SN:30001--
8	22U-54-24171YN	COVER	1	SN:30001--
9	01010-81225	BOLT	7	SN:30001--
10	01643-31232	WASHER	7	SN:30001--
11	22L-46-12150	CAP	3	SN:30001--
12	01010-81245	BOLT	1	SN:30001--
13	01643-31232	WASHER	1	SN:30001--
14	22U-54-24151YN	COVER	1	SN:30001--
15	22U-54-24380YN	COVER	1	SN:30001--
16	01010-81225	BOLT	3	SN:30001--
17	01643-31232	WASHER	3	SN:30001--
18	01010-81230	BOLT	2	SN:30001--
19	01643-31232	WASHER	2	SN:30001--
	22U-54-24540	COVER	1	SN:30001--
20	☆	· COVER	1	SN:30001--
21	22U-54-24490	· SHEET	2	SN:30001--
22	01010-81225	BOLT	2	SN:30001--
23	01643-31232	WASHER	2	SN:30001--
24	01580-11210	NUT	2	SN:30001--
25	01643-31232	WASHER	2	SN:30001--
26	22U-54-24211	BRACKET	1	SN:30001--
27	01010-81225	BOLT	4	SN:30001--
28	01643-31232	WASHER	4	SN:30001--
29	22U-54-24430YN	COVER	1	SN:30001--
30	01010-81230	BOLT	2	SN:30001--
31	01643-31232	WASHER	2	SN:30001--
32	01010-81230	BOLT	2	SN:30001--
33	01643-31232	WASHER	2	SN:30001--

https://truckmanualshub.com/

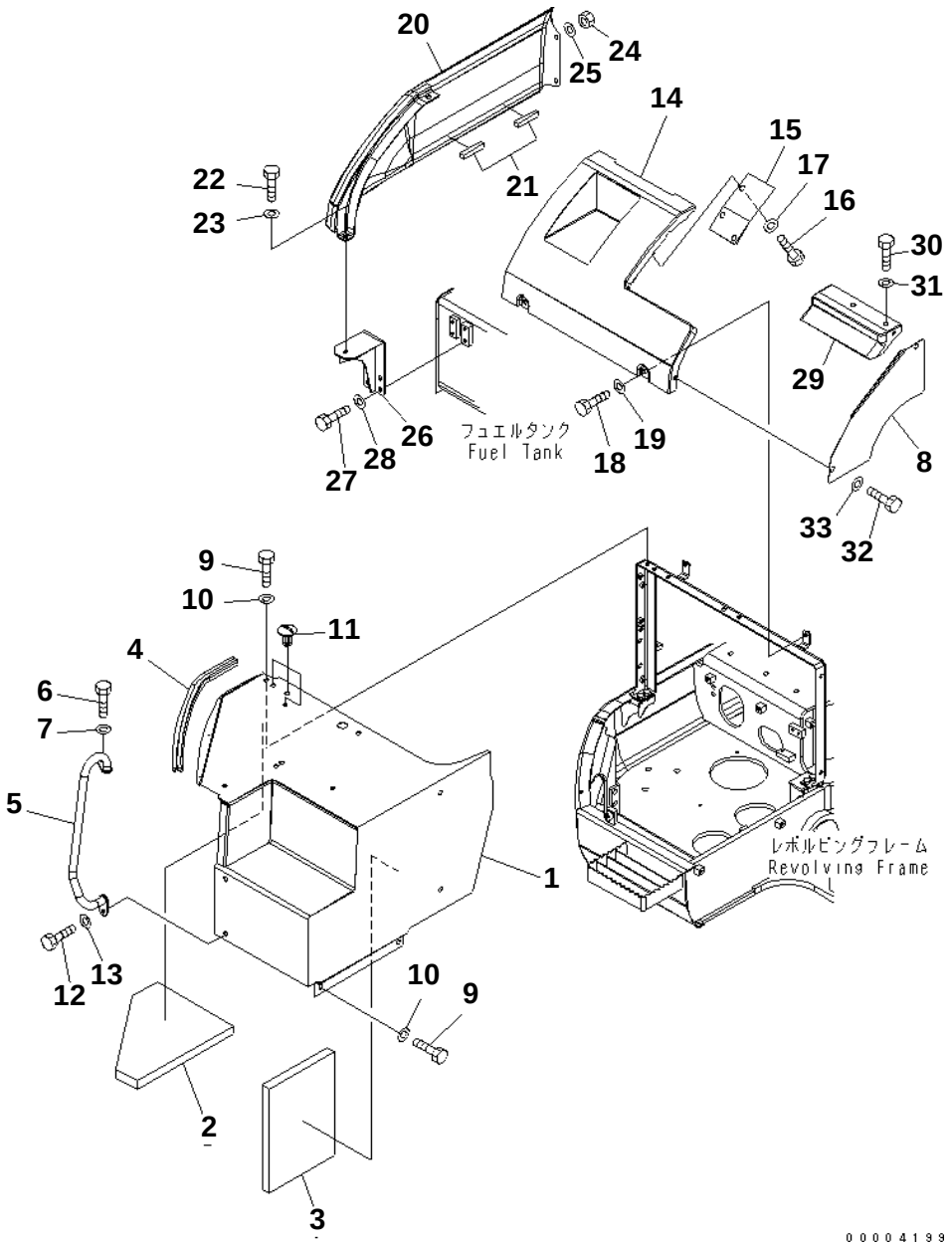

PC228US-3N-W1 S/N 30001-UP

FRONT COVER (COVER) (2/2) (YELLOW) (FOR 1 ACTUATOR OR ARM CRANE)

Item	Part No.	Description	Qty	Options
1	22U-54-24133NK	COVER	1	SN:30001--
2	22U-54-24221	SHEET	1	SN:30001--
3	22U-54-24261	SHEET	1	SN:30001--
4	22U-54-24331	SEAL	1	SN:30001--
5	22U-54-24661YN	HAND RAIL	1	SN:30001--
6	01010-81230	BOLT	1	SN:30001--
7	01643-31232	WASHER	1	SN:30001--
8	22U-54-24171YN	COVER	1	SN:30001--
9	01010-81225	BOLT	7	SN:30001--
10	01643-31232	WASHER	7	SN:30001--
11	22L-46-12150	CAP	3	SN:30001--
12	01010-81245	BOLT	1	SN:30001--
13	01643-31232	WASHER	1	SN:30001--
14	22U-54-24151YN	COVER	1	SN:30001--
15	22U-54-24250YN	COVER	1	SN:30001--
16	01010-81225	BOLT	3	SN:30001--
17	01643-31232	WASHER	3	SN:30001--
18	01010-81230	BOLT	2	SN:30001--
19	01643-31232	WASHER	2	SN:30001--
	22U-54-24540	COVER	1	SN:30001--
20	☆	· COVER	1	SN:30001--
21	22U-54-24490	· SHEET	2	SN:30001--
22	01010-81225	BOLT	2	SN:30001--
23	01643-31232	WASHER	2	SN:30001--
24	01580-11210	NUT	2	SN:30001--
25	01643-31232	WASHER	2	SN:30001--
26	22U-54-24211	BRACKET	1	SN:30001--
27	01010-81225	BOLT	4	SN:30001--
28	01643-31232	WASHER	4	SN:30001--
29	22U-54-24430YN	COVER	1	SN:30001--
30	01010-81230	BOLT	2	SN:30001--
31	01643-31232	WASHER	2	SN:30001--
32	01010-81230	BOLT	2	SN:30001--
33	01643-31232	WASHER	2	SN:30001--

Ref. M1230-02A1 Page 240140

https://truckmanualshub.com/

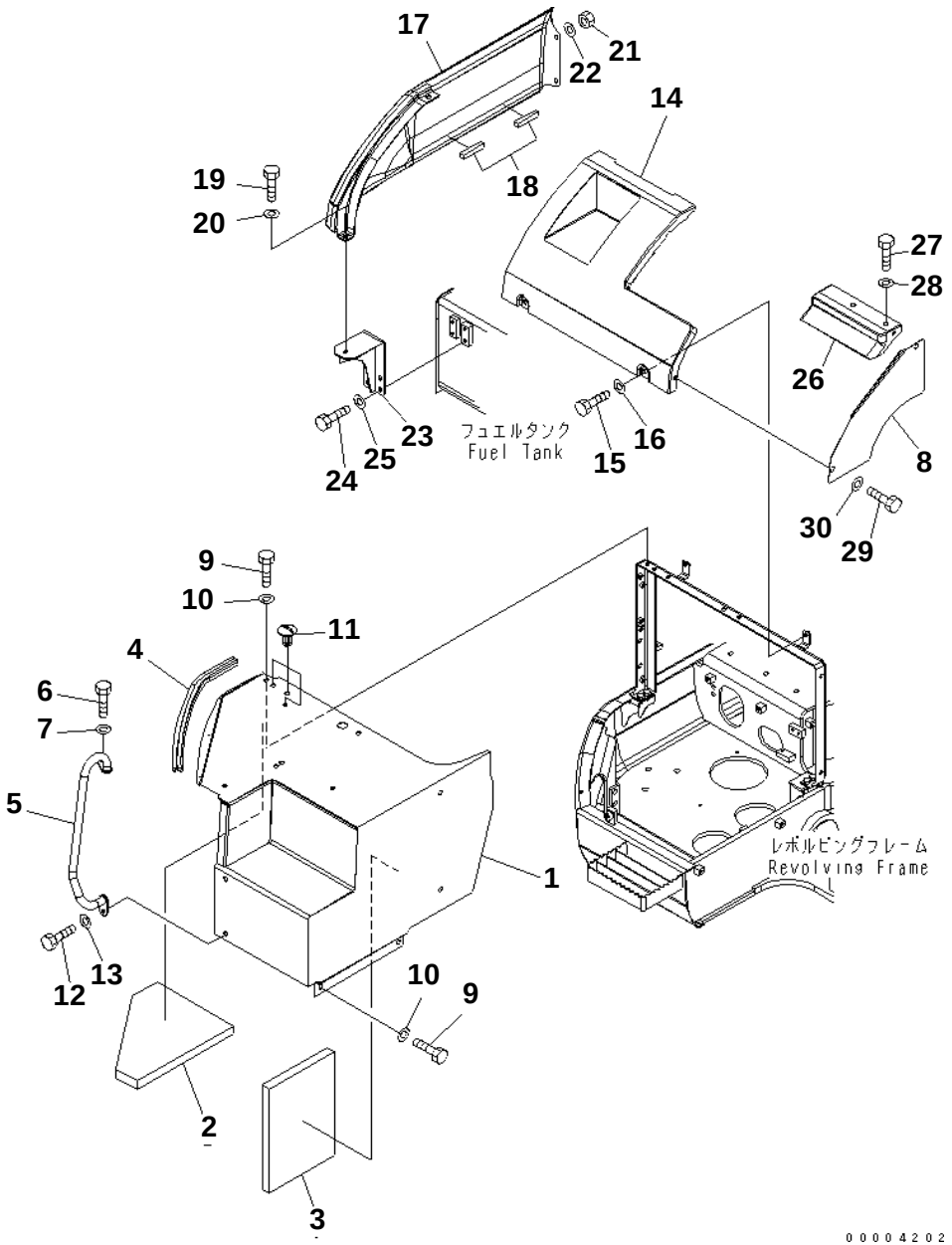

PC228US-3N-W1 S/N 30001-UP

FRONT COVER (COVER) (2/2) (YELLOW) (1 ACTUATOR) (FOR ARM CRANE)

Item	Part No.	Description	Qty	Options
1	22U-54-24133NK	COVER	1	SN:30001--
2	22U-54-24221	SHEET	1	SN:30001--
3	22U-54-24261	SHEET	1	SN:30001--
4	22U-54-24331	SEAL	1	SN:30001--
5	22U-54-24661YN	HAND RAIL	1	SN:30001--
6	01010-81230	BOLT	1	SN:30001--
7	01643-31232	WASHER	1	SN:30001--
8	22U-54-24171YN	COVER	1	SN:30001--
9	01010-81225	BOLT	7	SN:30001--
10	01643-31232	WASHER	7	SN:30001--
11	22L-46-12150	CAP	3	SN:30001--
12	01010-81245	BOLT	1	SN:30001--
13	01643-31232	WASHER	1	SN:30001--
14	22U-54-24151YN	COVER	1	SN:30001--
15	01010-81230	BOLT	2	SN:30001--
16	01643-31232	WASHER	2	SN:30001--
	22U-54-24540	COVER	1	SN:30001--
17	☆	· COVER	1	SN:30001--
18	22U-54-24490	· SHEET	2	SN:30001--
19	01010-81225	BOLT	2	SN:30001--
20	01643-31232	WASHER	2	SN:30001--
21	01580-11210	NUT	2	SN:30001--
22	01643-31232	WASHER	2	SN:30001--
23	22U-54-24211	BRACKET	1	SN:30001--
24	01010-81225	BOLT	4	SN:30001--
25	01643-31232	WASHER	4	SN:30001--
26	22U-54-24430YN	COVER	1	SN:30001--
27	01010-81230	BOLT	2	SN:30001--
28	01643-31232	WASHER	2	SN:30001--
29	01010-81230	BOLT	2	SN:30001--
30	01643-31232	WASHER	2	SN:30001--

Ref. M1230-02A2 Page 240150

https://truckmanualshub.com/

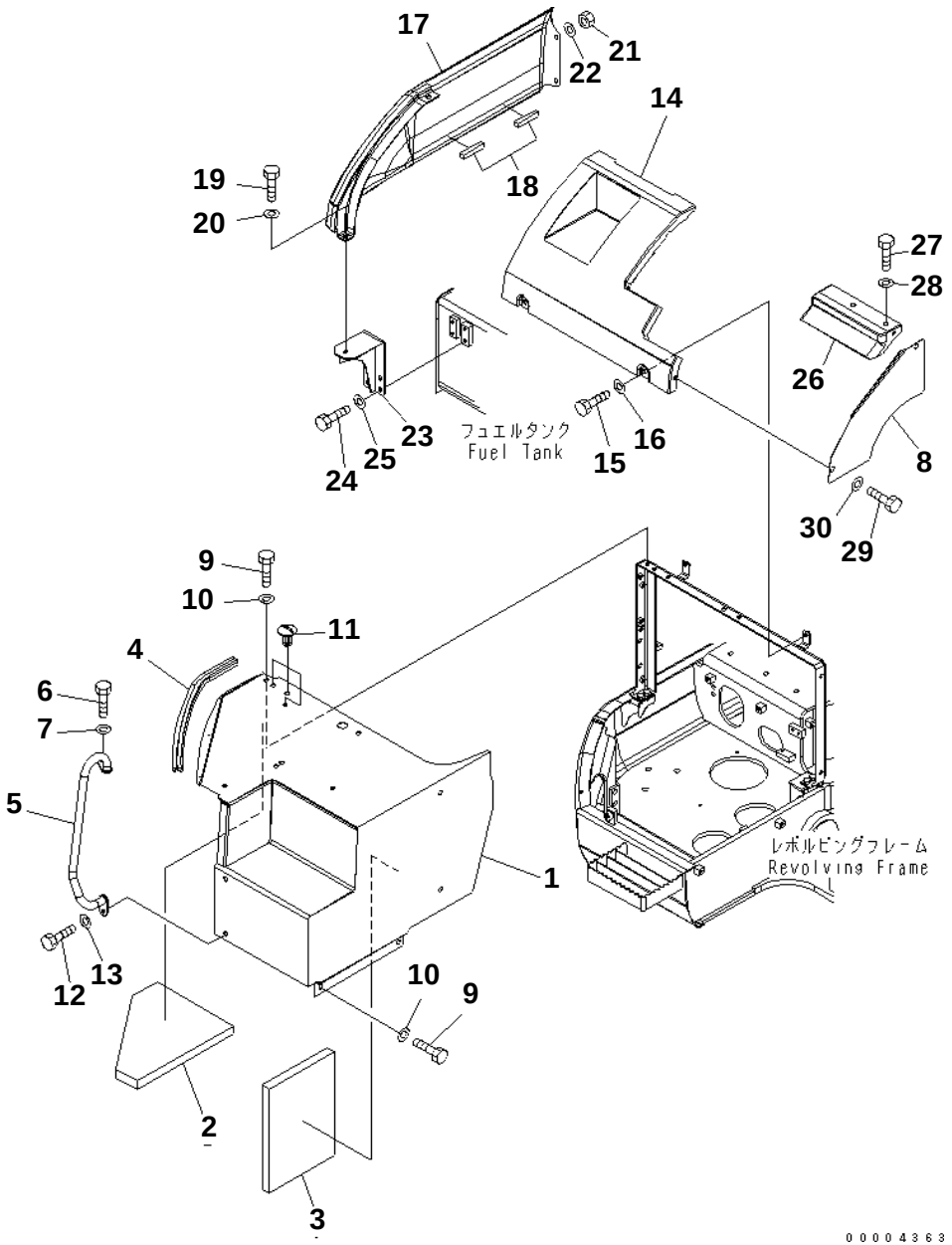

PC228US-3N-W1 S/N 30001-UP

FRONT COVER (COVER) (2/2) (YELLOW) (2 ACTUATOR) (ARM BURST VALVE)

Item	Part No.	Description	Qty	Options
1	22U-54-24133NK	COVER	1	SN:30001--
2	22U-54-24221	SHEET	1	SN:30001--
3	22U-54-24261	SHEET	1	SN:30001--
4	22U-54-24331	SEAL	1	SN:30001--
5	22U-54-24661YN	HAND RAIL	1	SN:30001--
6	01010-81230	BOLT	1	SN:30001--
7	01643-31232	WASHER	1	SN:30001--
8	22U-54-24171YN	COVER	1	SN:30001--
9	01010-81225	BOLT	7	SN:30001--
10	01643-31232	WASHER	7	SN:30001--
11	22L-46-12150	CAP	3	SN:30001--
12	01010-81245	BOLT	1	SN:30001--
13	01643-31232	WASHER	1	SN:30001--
14	22U-54-24570YN	COVER	1	SN:30001--
15	01010-81230	BOLT	2	SN:30001--
16	01643-31232	WASHER	2	SN:30001--
	22U-54-24540	COVER	1	SN:30001--
17	☆	· COVER	1	SN:30001--
18	22U-54-24490	· SHEET	2	SN:30001--
19	01010-81225	BOLT	2	SN:30001--
20	01643-31232	WASHER	2	SN:30001--
21	01580-11210	NUT	2	SN:30001--
22	01643-31232	WASHER	2	SN:30001--
23	22U-54-24211	BRACKET	1	SN:30001--
24	01010-81225	BOLT	4	SN:30001--
25	01643-31232	WASHER	4	SN:30001--
26	22U-54-24430YN	COVER	1	SN:30001--
27	01010-81230	BOLT	2	SN:30001--
28	01643-31232	WASHER	2	SN:30001--
29	01010-81230	BOLT	2	SN:30001--
30	01643-31232	WASHER	2	SN:30001--

Ref. M1230-02A3 Page 240160

https://truckmanualshub.com/

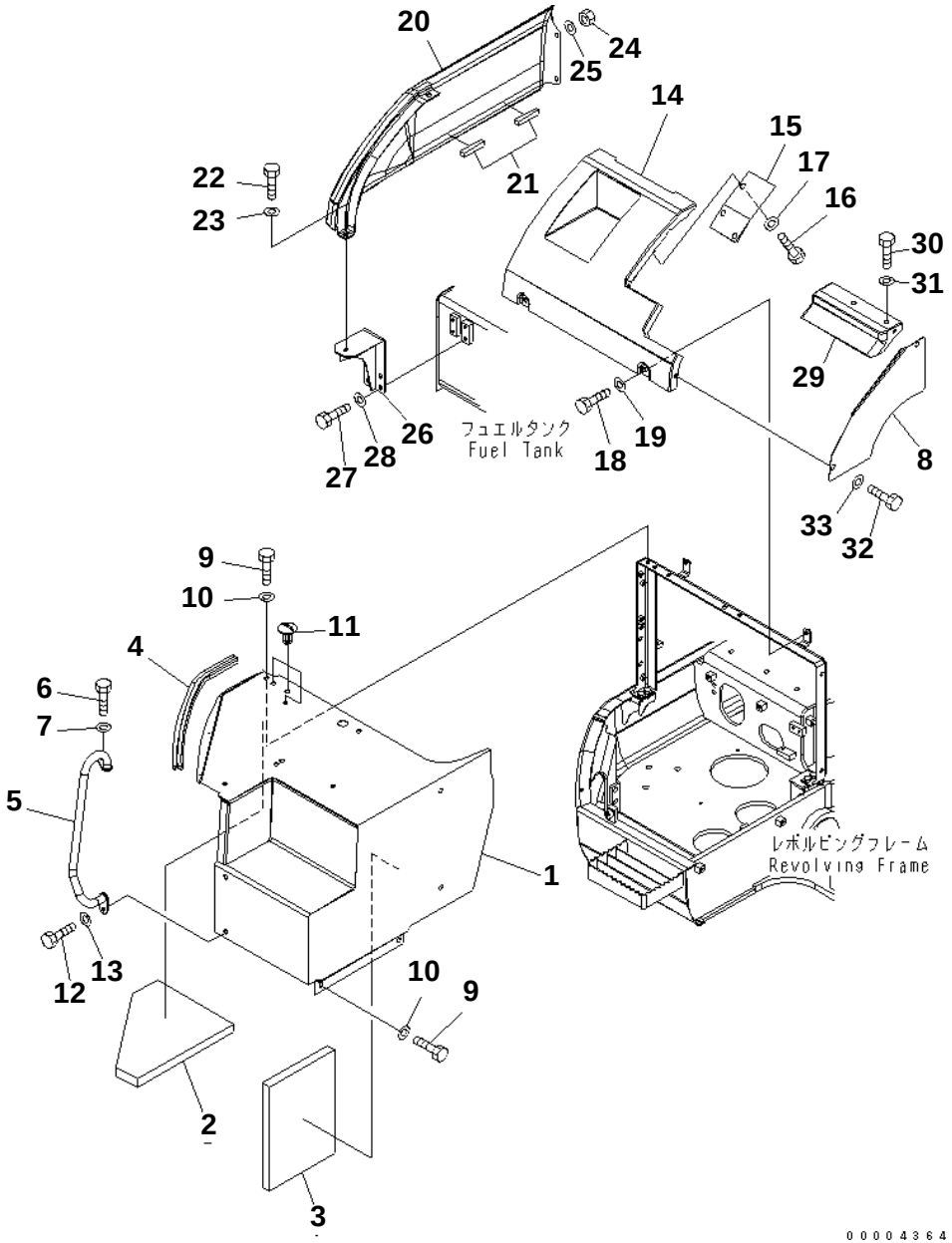

PC228US-3N-W1 S/N 30001-UP

FRONT COVER (COVER) (2/2) (YELLOW) (2 ACTUATOR)

Item	Part No.	Description	Qty	Options
1	22U-54-24133NK	COVER	1	SN:30001--
2	22U-54-24221	SHEET	1	SN:30001--
3	22U-54-24261	SHEET	1	SN:30001--
4	22U-54-24331	SEAL	1	SN:30001--
5	22U-54-24661YN	HAND RAIL	1	SN:30001--
6	01010-81230	BOLT	1	SN:30001--
7	01643-31232	WASHER	1	SN:30001--
8	22U-54-24171YN	COVER	1	SN:30001--
9	01010-81225	BOLT	7	SN:30001--
10	01643-31232	WASHER	7	SN:30001--
11	22L-46-12150	CAP	3	SN:30001--
12	01010-81245	BOLT	1	SN:30001--
13	01643-31232	WASHER	1	SN:30001--
14	22U-54-24570YN	COVER	1	SN:30001--
15	22U-54-24250YN	COVER	1	SN:30001--
16	01010-81225	BOLT	3	SN:30001--
17	01643-31232	WASHER	3	SN:30001--
18	01010-81230	BOLT	2	SN:30001--
19	01643-31232	WASHER	2	SN:30001--
	22U-54-24540	COVER	1	SN:30001--
20	☆	· COVER	1	SN:30001--
21	22U-54-24490	· SHEET	2	SN:30001--
22	01010-81225	BOLT	2	SN:30001--
23	01643-31232	WASHER	2	SN:30001--
24	01580-11210	NUT	2	SN:30001--
25	01643-31232	WASHER	2	SN:30001--
26	22U-54-24211	BRACKET	1	SN:30001--
27	01010-81225	BOLT	4	SN:30001--
28	01643-31232	WASHER	4	SN:30001--
29	22U-54-24430YN	COVER	1	SN:30001--
30	01010-81230	BOLT	2	SN:30001--
31	01643-31232	WASHER	2	SN:30001--
32	01010-81230	BOLT	2	SN:30001--
33	01643-31232	WASHER	2	SN:30001--

Ref. M1230-02A4 Page 240170

https://truckmanualshub.com/

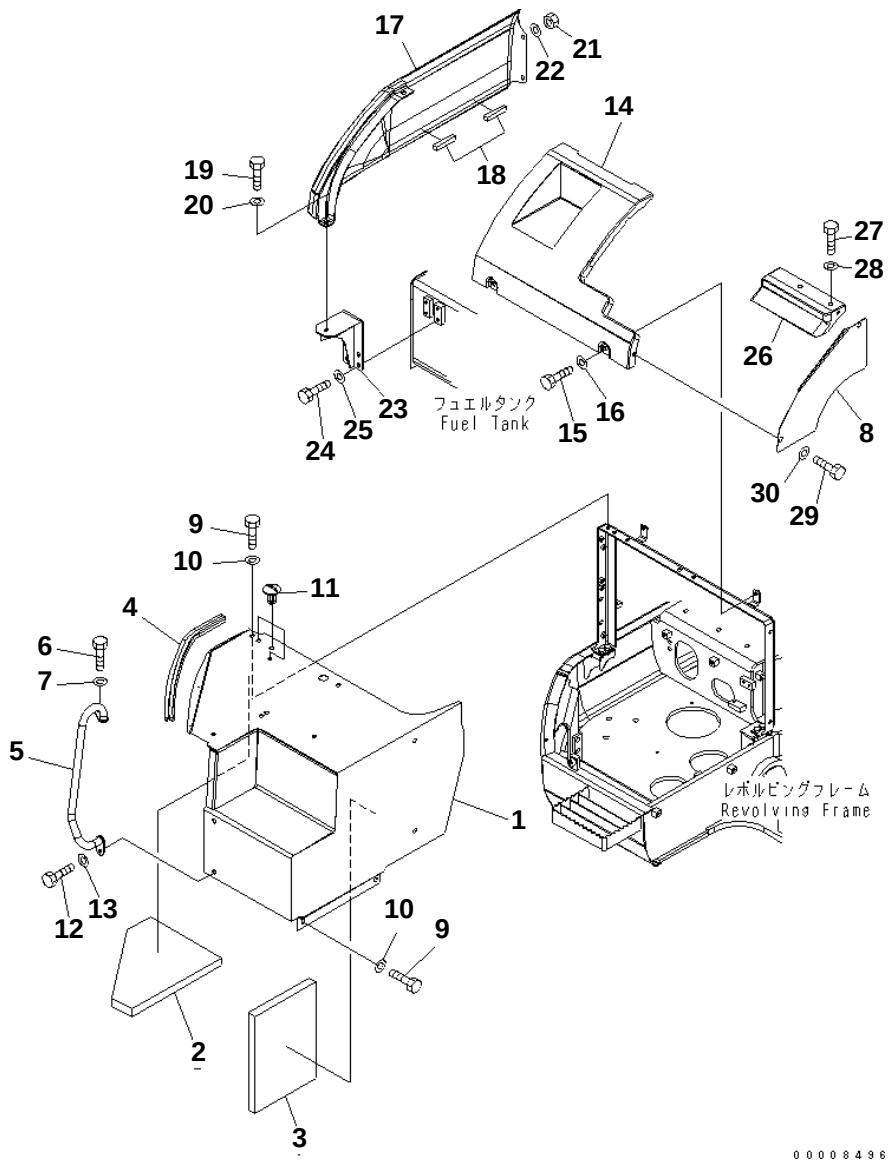

PC228US-3N-W1 S/N 30001-UP

FRONT COVER (COVER) (2/2) (YELLOW) (FOR 2-PIECE BOOM WITH 1 ATT)

Item	Part No.	Description	Qty	Options
1	22U-54-24133NK	COVER	1	SN:30001--
2	22U-54-24221	SHEET	1	SN:30001--
3	22U-54-24261	SHEET	1	SN:30001--
4	22U-54-24331	SEAL	1	SN:30001--
5	22U-54-24661YN	HAND RAIL	1	SN:30001--
6	01010-81230	BOLT	1	SN:30001--
7	01643-31232	WASHER	1	SN:30001--
8	22U-54-24171YN	COVER	1	SN:30001--
9	01010-81225	BOLT	7	SN:30001--
10	01643-31232	WASHER	7	SN:30001--
11	22L-46-12150	CAP	3	SN:30001--
12	01010-81245	BOLT	1	SN:30001--
13	01643-31232	WASHER	1	SN:30001--
14	22U-54-26620YN	COVER	1	SN:30001--
15	01010-81230	BOLT	2	SN:30001--
16	01643-31232	WASHER	2	SN:30001--
	22U-54-24540	COVER	1	SN:30001--
17	☆	· COVER	1	SN:30001--
18	22U-54-24490	· SHEET	2	SN:30001--
19	01010-81225	BOLT	2	SN:30001--
20	01643-31232	WASHER	2	SN:30001--
21	01580-11210	NUT	2	SN:30001--
22	01643-31232	WASHER	2	SN:30001--
23	22U-54-24211	BRACKET	1	SN:30001--
24	01010-81225	BOLT	4	SN:30001--
25	01643-31232	WASHER	4	SN:30001--
26	22U-54-24430YN	COVER	1	SN:30001--
27	01010-81230	BOLT	2	SN:30001--
28	01643-31232	WASHER	2	SN:30001--
29	01010-81230	BOLT	2	SN:30001--
30	01643-31232	WASHER	2	SN:30001--

Ref. M1230-02A5 Page 240180

https://truckmanualshub.com/

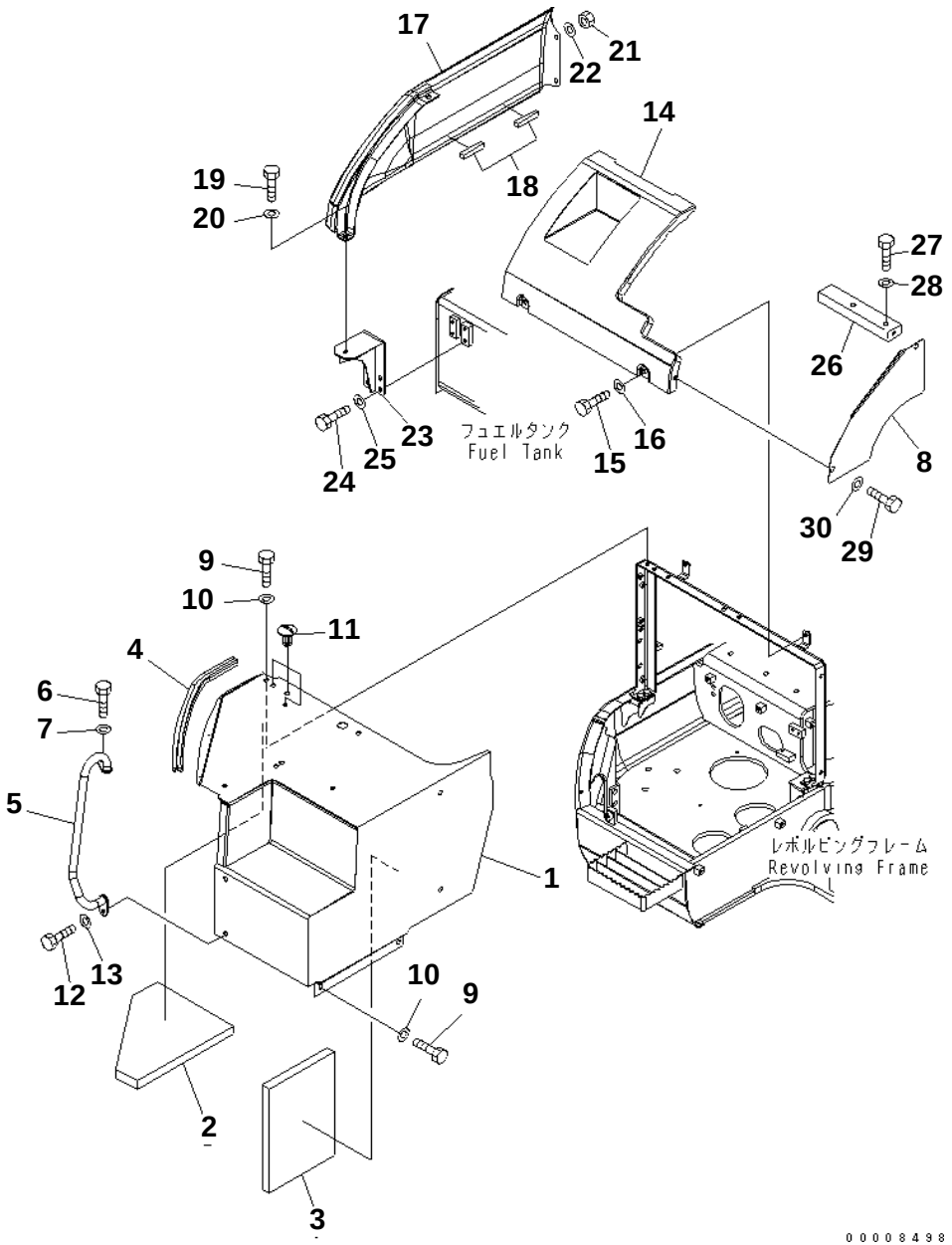

PC228US-3N-W1 S/N 30001-UP

FRONT COVER (COVER) (2/2) (YELLOW) (FOR 2-PIECE BOOM WITH 2 ATT)

Item	Part No.	Description	Qty	Options
1	22U-54-24133NK	COVER	1	SN:30001--
2	22U-54-24221	SHEET	1	SN:30001--
3	22U-54-24261	SHEET	1	SN:30001--
4	22U-54-24331	SEAL	1	SN:30001--
5	22U-54-24661YN	HAND RAIL	1	SN:30001--
6	01010-81230	BOLT	1	SN:30001--
7	01643-31232	WASHER	1	SN:30001--
8	22U-54-24171YN	COVER	1	SN:30001--
9	01010-81225	BOLT	7	SN:30001--
10	01643-31232	WASHER	7	SN:30001--
11	22L-46-12150	CAP	3	SN:30001--
12	01010-81245	BOLT	1	SN:30001--
13	01643-31232	WASHER	1	SN:30001--
14	22U-54-26620YN	COVER	1	SN:30001--
15	01010-81230	BOLT	2	SN:30001--
16	01643-31232	WASHER	2	SN:30001--
	22U-54-24540	COVER	1	SN:30001--
17	☆	· COVER	1	SN:30001--
18	22U-54-24490	· SHEET	2	SN:30001--
19	01010-81225	BOLT	2	SN:30001--
20	01643-31232	WASHER	2	SN:30001--
21	01580-11210	NUT	2	SN:30001--
22	01643-31232	WASHER	2	SN:30001--
23	22U-54-24211	BRACKET	1	SN:30001--
24	01010-81225	BOLT	4	SN:30001--
25	01643-31232	WASHER	4	SN:30001--
26	22U-54-26630YN	COVER	1	SN:30001--
27	01010-81230	BOLT	2	SN:30001--
28	01643-31232	WASHER	2	SN:30001--
29	01010-81230	BOLT	2	SN:30001--
30	01643-31232	WASHER	2	SN:30001--

Ref. M1230-02A6 Page 240190

https://truckmanualshub.com/

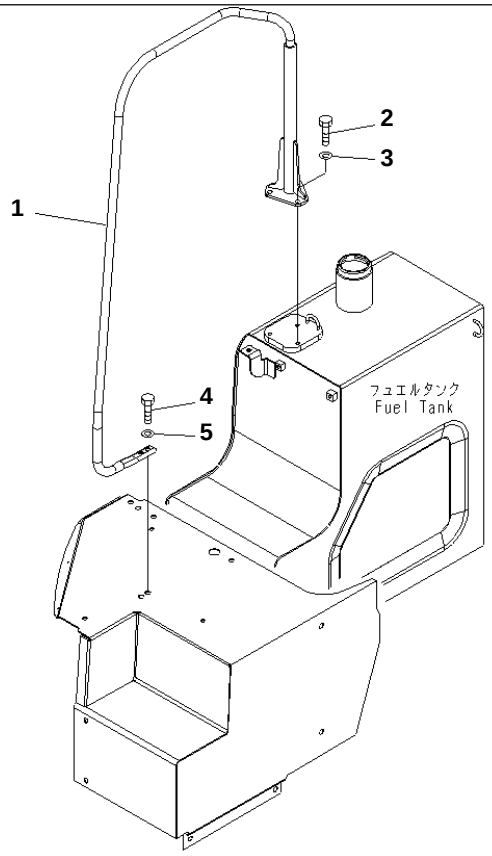

0 0 0 0 4 2 2 3

PC228US-3N-W1 S/N 30001-UP
HAND RAIL (YELLOW)(#20001-)

Item	Part No.	Description	Qty	Options
1	22U-54-24651YN	HAND RAIL	1	SN:20001--
2	01010-81230	BOLT	3	SN:20001--
3	01643-31232	WASHER	3	SN:20001--
4	01010-81240	BOLT	2	SN:20001--
5	01643-31232	WASHER	2	SN:20001--

https://truckmanualshub.com/

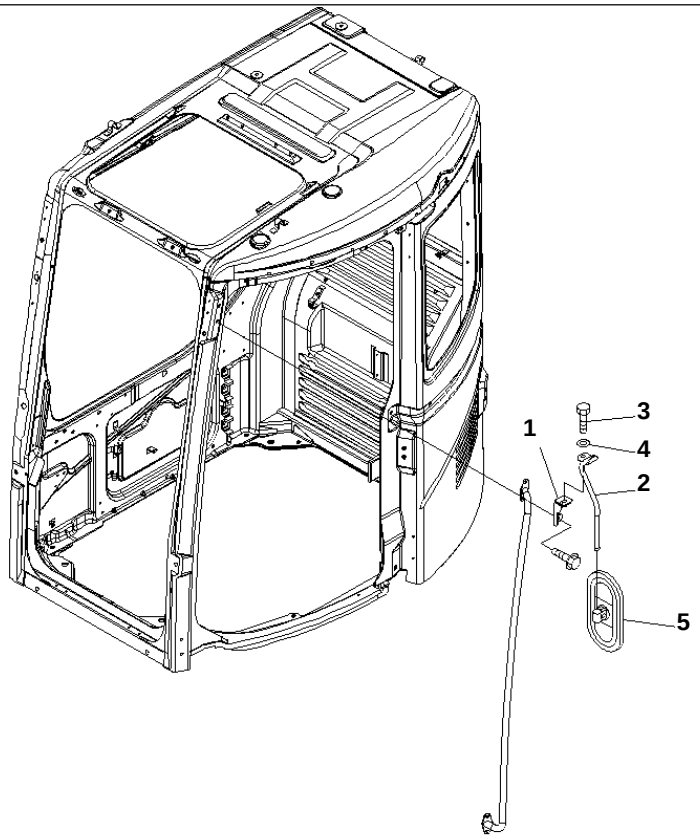

PC228US-3N-W1 S/N 30001-UP

REAR VIEW MIRROR¤ L.H.(#20001-)

Item	Part No.	Description	Qty	Options
1	22B-54-17951	BRACKET	1	SN:20001--
2	22B-54-17961	SUPPORT	1	SN:20001--
3	01010-D1225	BOLT	1	SN:20001--
4	01643-71232	WASHER	1	SN:20001--
5	08174-13118	MIRROR	1	SN:20001--

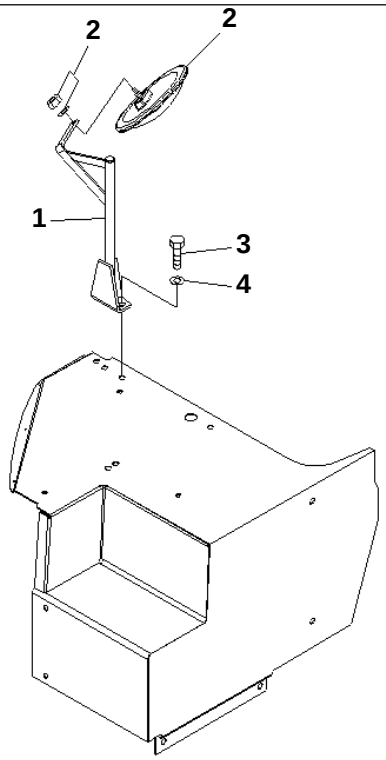

00004224

REAR VIEW MIRROR¤ R.H. (YELLOW)(#20001-)

Item	Part No.	Description	Qty	Options
1	22U-54-24711YN	BRACKET	1	SN:20001--
2	23S-54-36270	MIRROR	1	SN:20001--
3	01010-81235	BOLT	2	SN:20001--
4	01643-31232	WASHER	2	SN:20001--

https://truckmanualshub.com/

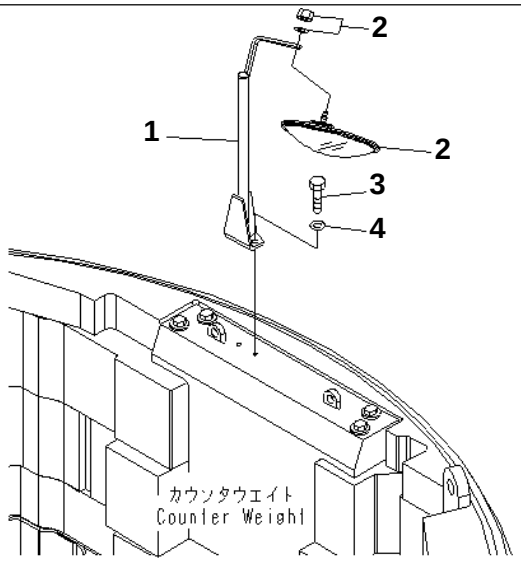

00004225

PC228US-3N-W1 S/N 30001-UP

REAR VIEW MIRROR (YELLOW)(#20001-)

Item	Part No.	Description	Qty	Options
1	22U-54-24691YN	BRACKET	1	SN:20001--
2	23S-54-36270	MIRROR	1	SN:20001--
3	01010-81230	BOLT	2	SN:20001--
4	01643-31232	WASHER	2	SN:20001--

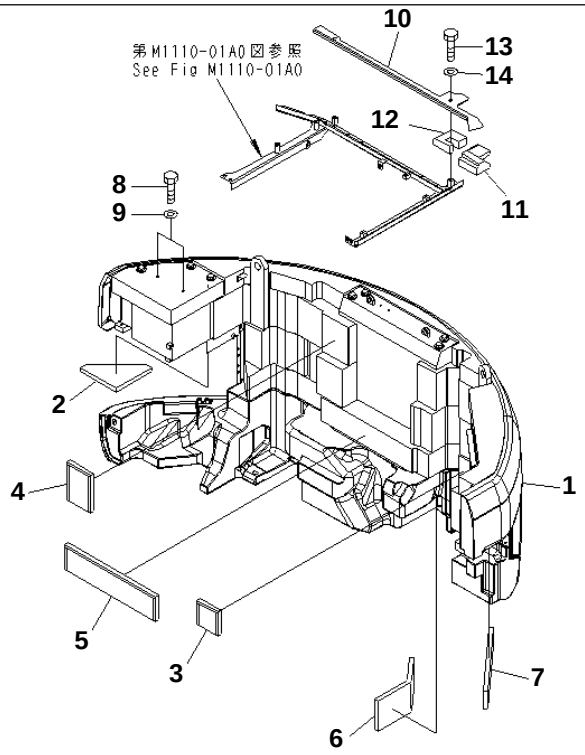

PC228US-3N-W1 S/N 30001-UP

COUNTER WEIGHT (6060KG) (YELLOW)

Item	Part No.	Description	Qty	Options
1	22U-46-23910	WEIGHT	1	SN:30001--
2	22U-46-24220	SHEET	1	SN:30001--
3	22U-46-24240	SHEET	1	SN:30001--
4	22U-46-24250	SHEET	1	SN:30001--
5	22U-46-24290	SHEET	1	SN:30001--
6	22U-46-24330	SHEET	1	SN:30001--
7	22U-46-24341	SHEET	1	SN:30001--
8	01010-81625	BOLT	2	SN:30001--
9	01643-31645	WASHER	2	SN:30001--
10	22U-54-23592YN	PLATE	1	SN:30001--
11	22U-54-23740	SHEET	1	SN:30001--
12	22U-54-23780	SHEET	1	SN:30001--
13	01010-81220	BOLT	2	SN:30001--
14	01643-31232	WASHER	2	SN:30001--

https://truckmanualshub.com/

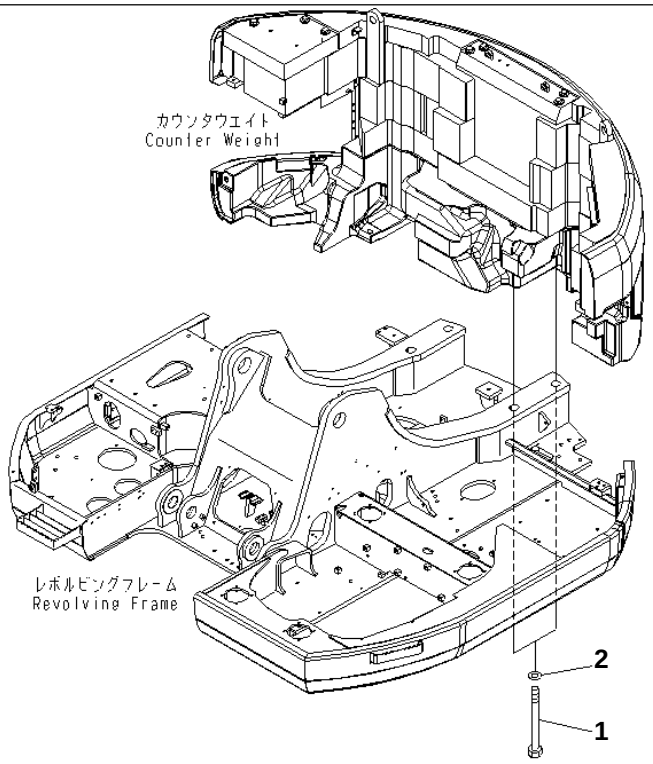

00004181

PC228US-3N-W1 S/N 30001-UP

COUNTER WEIGHT MOUNTING(#20001-)

Item	Part No.	Description	Qty	Options
1	22U-46-23210	BOLT	4	SN:20001--
2	01643-34212	WASHER	4	SN:20001--

https://truckmanualshub.com/

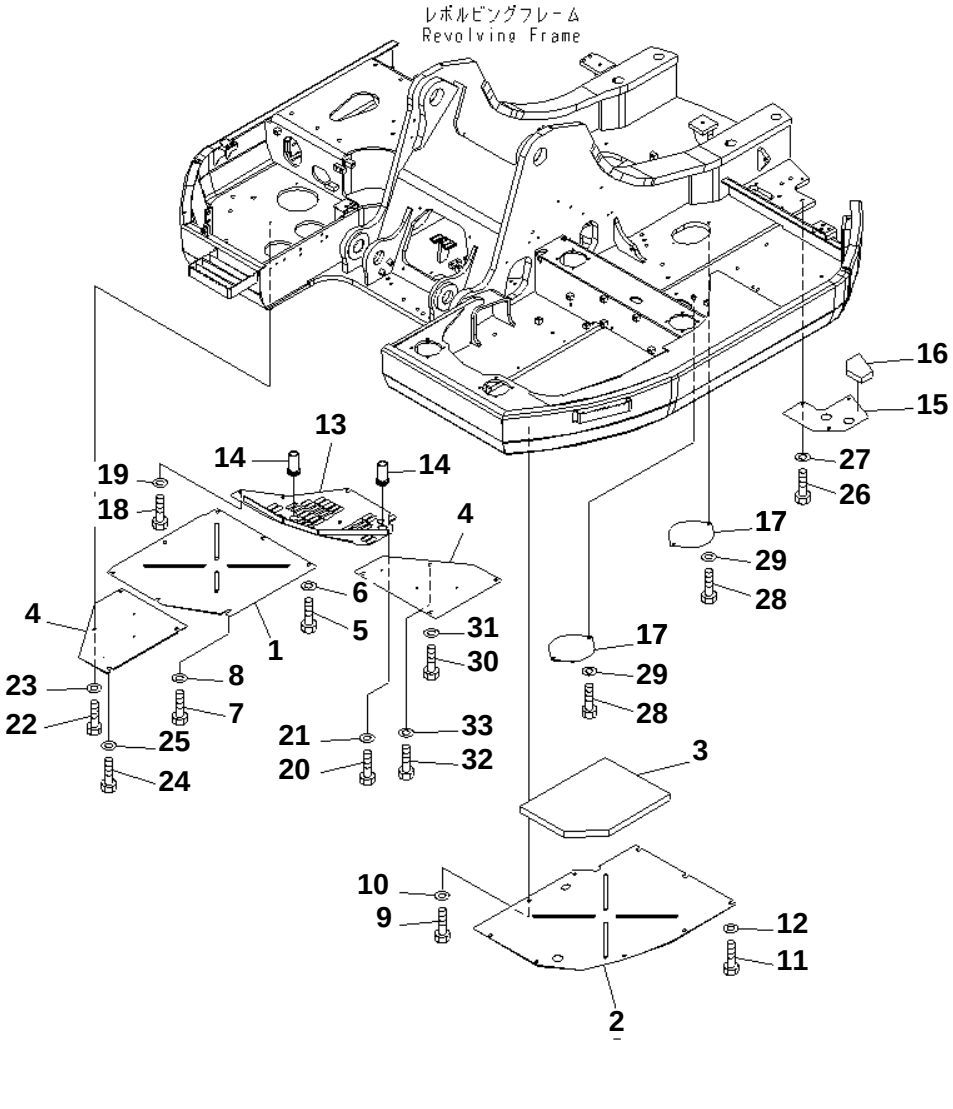

PC228US-3N-W1 S/N 30001-UP

UNDER COVER (YELLOW)

Item	Part No.	Description	Qty	Options
1	22U-54-24611NK	COVER	1	SN:30001--
	22U-54-24721	COVER	1	SN:30001--
2	☆	· COVER	1	SN:30001--
3	22U-54-24680	· SHEET	1	SN:30001--
4	22U-54-24641NK	COVER	2	SN:30001--
5	01010-81230	BOLT	4	SN:30001--
6	01643-31232	WASHER	4	SN:30001--
7	01010-81230	BOLT	3	SN:30001--
8	124-54-26540	WASHER	3	SN:30001--
9	01010-81230	BOLT	6	SN:30001--
10	01643-31232	WASHER	6	SN:30001--
11	01010-81230	BOLT	3	SN:30001--
12	124-54-26540	WASHER	3	SN:30001--
	22U-54-24752	COVER	1	SN:30001--
13	☆	· COVER	1	SN:30001--
14	22U-54-24760	· GROMMET	2	SN:30001--
	22U-54-23840	COVER	1	SN:30001--
15	☆	· COVER	1	SN:30001--
16	22U-54-23750	· SHEET	1	SN:30001--
17	207-54-51440NK	PLATE	2	SN:30001--
	207-54-51440	PLATE	2	SN:30001--
18	01010-81225	BOLT	3	SN:30001--
19	01643-31232	WASHER	3	SN:30001--
20	01010-81225	BOLT	2	SN:30001--
21	124-54-26540	WASHER	2	SN:30001--
22	01010-81220	BOLT	2	SN:30001--
23	01643-31232	WASHER	2	SN:30001--
24	01010-81220	BOLT	2	SN:30001--
25	124-54-26540	WASHER	2	SN:30001--
26	01010-81230	BOLT	3	SN:30001--
27	01643-31232	WASHER	3	SN:30001--
28	01010-81230	BOLT	4	SN:30001--
29	01643-31232	WASHER	4	SN:30001--
30	01010-81230	BOLT	2	SN:30001--
31	124-54-26540	WASHER	2	SN:30001--
32	01010-81230	BOLT	2	SN:30001--
33	01643-31232	WASHER	2	SN:30001--

Ref. M1810-01A0 Page 240260

https://truckmanualshub.com/

SWING CIRCLE AND RELATED PARTS

Item	Description	Qty	Page
10	SWING CIRCLE(#20001-)	1	270010
20	SWING MACHINERY	1	270020
30	SWING MOTOR JOINT(#20001-)	1	270030
40	SWIVEL JOINT (CONNECTING PARTS)	1	270040
50	SWIVEL JOINT (CONNECTING PARTS) (TRAVEL SPEED 3RD) (BLADE SPEC.)(#20874-)	1	270050

https://truckmanualshub.com/

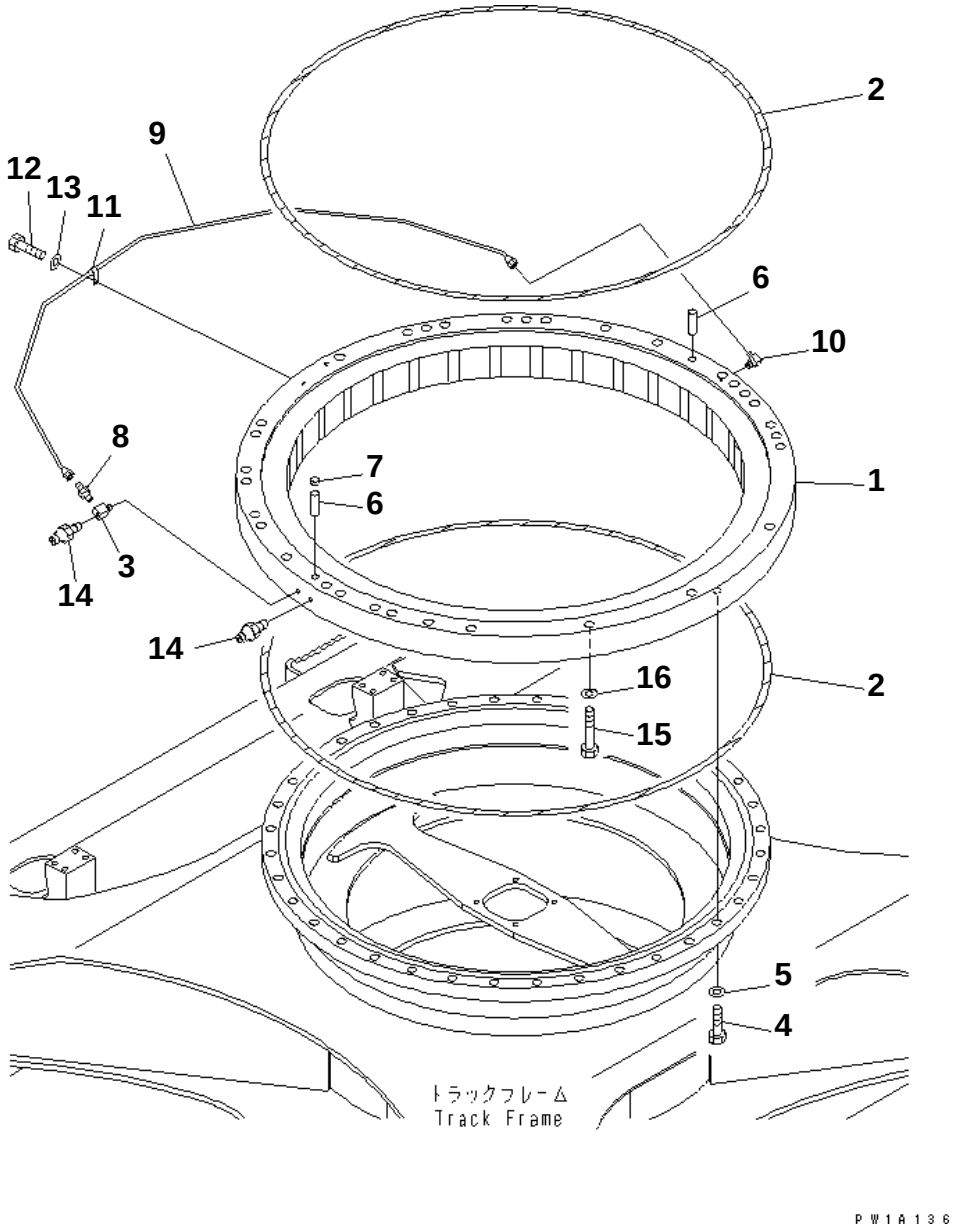

PC228US-3N-W1 S/N 30001-UP

SWING CIRCLE(#20001-)

Item	Part No.	Description	Qty	Options
	22U-25-00101	SWING CIRCLE ASS'Y	1	SN:20001--
1	22U-25-00201	· SWING CIRCLE ASS'Y	1	SN:20001--
2	205-25-71152	· · SEAL	2	SN:20001--
3	205-25-71280	· NIPPLE	1	SN:20001--
4	20Y-09-11170	BOLT	36	SN:20001--
5	01643-32060	WASHER	36	SN:20001--
6	04020-01842	PIN	2	SN:20001--
7	20Y-46-21520	CAP	1	SN:20001--
8	07214-50813	CONNECTOR	1	SN:20001--
9	20Y-25-21123	TUBE	1	SN:20001--
10	20Y-25-11270	ELBOW	1	SN:20001--
11	08036-00814	CLIP	1	SN:20001--
12	01010-81016	BOLT	1	SN:20001--
13	01643-31032	WASHER	1	SN:20001--
14	07020-00000	FITTING	2	SN:20001--
15	20Y-25-21220	BOLT	32	SN:20001--
16	01643-72060	WASHER	32	SN:20001--

Ref. N1110-01A0 Page 270010

https://truckmanualshub.com/

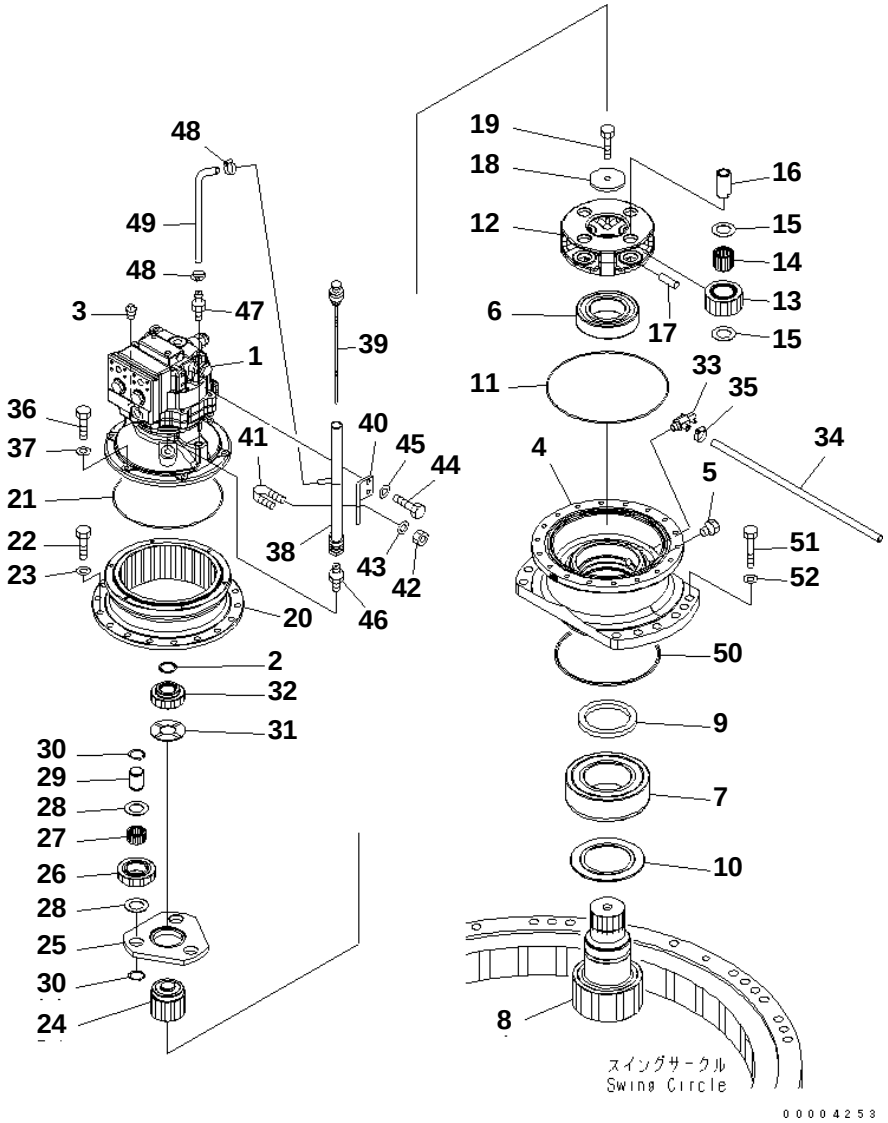

PC228US-3N-W1 S/N 30001-UP

SWING MACHINERY

Item	Part No.	Description	Qty	Options
1	(706-7G-01011)	MOTOR ASS'Y	1	SN:30001--
2	22U-26-21280	RING	1	SN:30001--
3	07042-00312	PLUG	1	SN:30001--
4	22U-26-21190	CASE	1	SN:30001--
5	07029-00000	VALVE	1	SN:30001--
6	20Y-26-22330	BEARING	1	SN:30001--
7	22U-26-21340	BEARING	1	SN:30001--
8	22U-26-21560	SHAFT¤ 15 TEETH	1	SN:30001--
9	07012-00115	SEAL	1	SN:30001--
10	22U-26-21270	SPACER	1	SN:30001--
11	07000-15310	O-RING	1	SN:30001--
12	22U-26-21580	CARRIER	1	SN:30001--
13	22U-26-21540	GEAR	4	SN:30001--
14	20G-26-11240	BEARING	4	SN:30001--
15	20Y-27-21240	WASHER	8	SN:30001--
16	20Y-26-22250	PIN	4	SN:30001--
17	20Y-27-21280	PIN	4	SN:30001--
18	20Y-26-21240	PLATE	1	SN:30001--
19	112-32-11211	BOLT¤ SHOE	1	SN:30001--
20	22U-26-21551	GEAR	1	SN:30001--
21	20K-22-11190	O-RING	1	SN:30001--
22	01010-81440	BOLT	18	SN:30001--
23	01643-31445	WASHER	18	SN:30001--
24	22U-26-21530	GEAR	1	SN:30001--
25	22U-26-21570	CARRIER	1	SN:30001--
26	22U-26-21520	GEAR	3	SN:30001--
27	20Y-26-21281	BEARING	3	SN:30001--
28	22U-26-21230	WASHER	6	SN:30001--
29	22U-26-21210	PIN	3	SN:30001--
30	04064-03515	RING	6	SN:30001--
31	22U-26-21250	WASHER	1	SN:30001--
32	22U-26-21510	GEAR	1	SN:30001--
33	195-03-13241	VALVE	1	SN:30001--
34	205-26-71620	TUBE	1	SN:30001--
35	07281-00197	CLAMP	1	SN:30001--
36	01010-81035	BOLT	6	SN:30001--
37	01643-51032	WASHER	6	SN:30001--
38	22U-26-21671	TUBE	1	SN:30001--
39	22U-26-21661	CAP	1	SN:30001--
40	22U-26-21440	BRACKET	1	SN:30001--
41	07283-32738	CLIP	1	SN:30001--
42	01597-01009	NUT	2	SN:30001--

Ref. N1210-01A0 Page 270020

https://truckmanualshub.com/

PC228US-3N-W1 S/N 30001-UP
SWING MACHINERY

Item	Part No.	Description	Qty	Options
43	01643-31032	WASHER	2	SN:30001--
44	01010-81030	BOLT	2	SN:30001--
45	01643-31032	WASHER	2	SN:30001--
46	07238-10630	CONNECTOR	1	SN:30001--
47	6138-55-7610	NIPPLE	1	SN:30001--
48	07281-00167	CLAMP	2	SN:30001--
49	07286-01045	HOSE	1	SN:30001--
50	07000-15240	O-RING	1	SN:30001--
51	01010-82060	BOLT	12	SN:30001--
52	01643-32060	WASHER	12	SN:30001--

https://truckmanualshub.com/

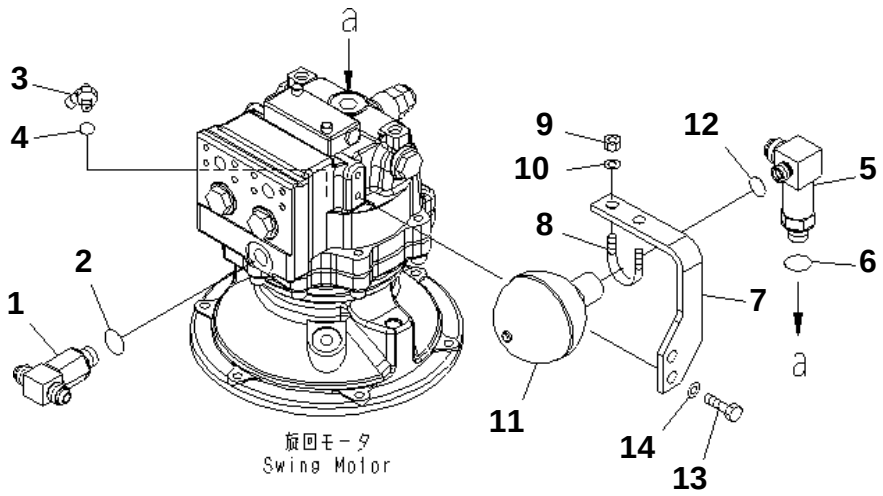

PC228US-3N-W1 S/N 30001-UP

SWING MOTOR JOINT(#20001-)

Item	Part No.	Description	Qty	Options
1	208-62-53110	TEE	1	SN:20001--
2	07002-12434	O-RING	1	SN:20001--
3	07235-10210	ELBOW	1	SN:20001--
4	07002-11423	O-RING	1	SN:20001--
5	22U-62-22960	ELBOW	1	SN:20001--
6	07002-12434	O-RING	1	SN:20001--
7	22U-62-22970	BRACKET	1	SN:20001--
8	07283-33450	CLIP	1	SN:20001--
9	01597-01009	NUT	2	SN:20001--
10	01643-31032	WASHER	2	SN:20001--
11	22U-60-21340	ACCUMULATOR	1	SN:20001--
12	07002-12034	O-RING	1	SN:20001--
13	01010-81030	BOLT	2	SN:20001--
14	01643-31032	WASHER	2	SN:20001--

Ref. N1220-01A0 Page 270030

https://truckmanualshub.com/

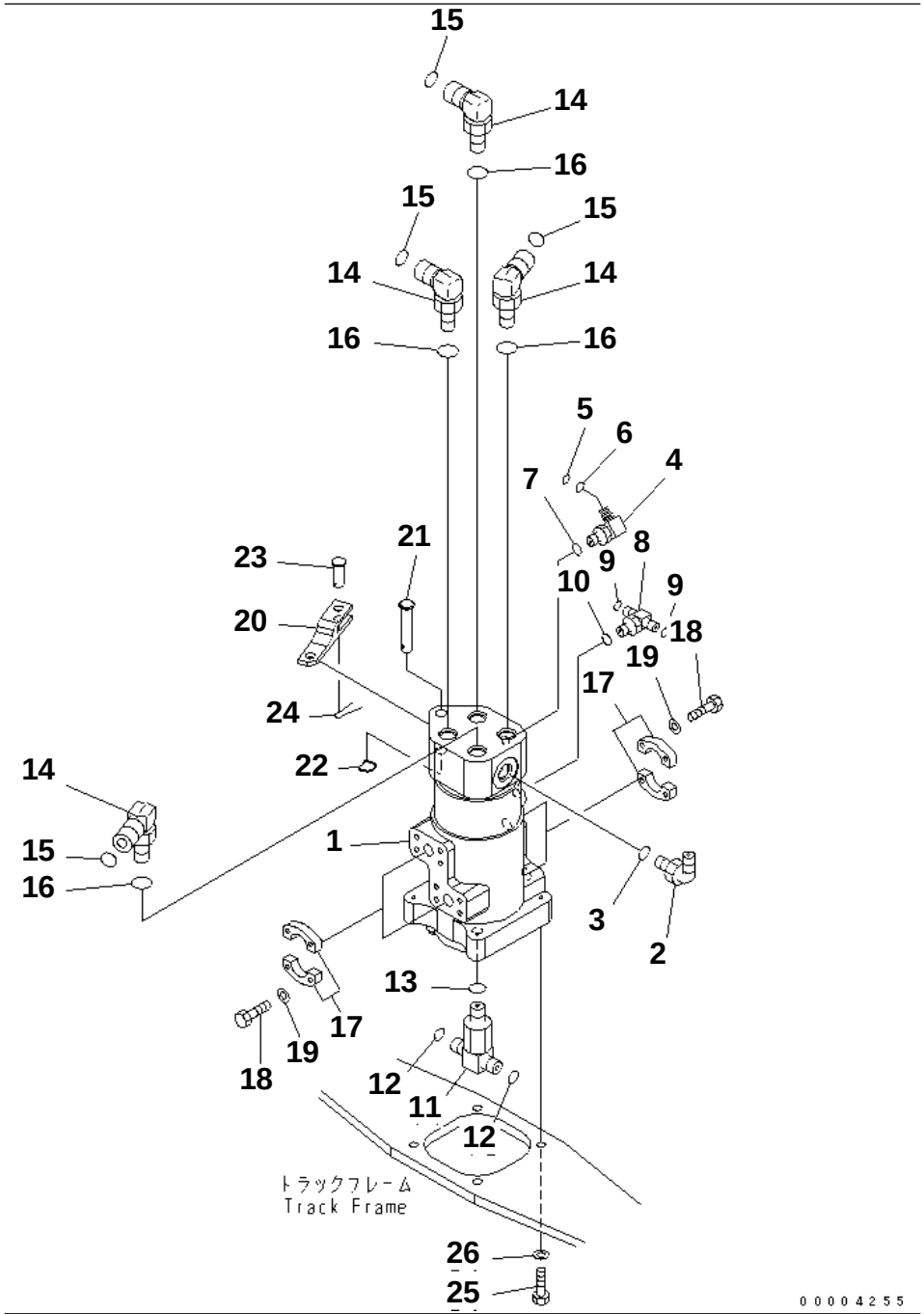

PC228US-3N-W1 S/N 30001-UP

SWIVEL JOINT (CONNECTING PARTS)

Item	Part No.	Description	Qty	Options
1	(703-08-33610)	SWIVEL JOINT ASS'Y	1	SN:30001--
2	07235-10522	ELBOW	1	SN:30001--
3	07002-12434	O-RING	1	SN:30001--
4	20Y-62-22271	ELBOW	1	SN:30001--
5	201-60-11390	· O-RING	1	SN:30001--
6	20Y-62-19560	· O-RING	1	SN:30001--
7	07002-11423	O-RING	1	SN:30001--
8	11Y-62-12250	TEE	1	SN:30001--
9	02896-11008	O-RING	2	SN:30001--
10	07002-11423	O-RING	1	SN:30001--
11	20Y-62-41930	TEE	1	SN:30001--
12	02896-11012	O-RING	2	SN:30001--
13	07002-12434	O-RING	1	SN:30001--
14	02782-10628	ELBOW	4	SN:30001--
15	02896-11018	O-RING	4	SN:30001--
16	07002-12434	O-RING	4	SN:30001--
17	07371-30640	FLANGE	8	SN:30001--
18	07372-21035	BOLT	16	SN:30001--
19	01643-51032	WASHER	16	SN:30001--
20	22U-62-21582	BRACKET	1	SN:30001--
21	22U-62-21870	PIN	1	SN:30001--
22	22U-62-24420	PIN	1	SN:30001--
23	04205-11648	PIN	1	SN:30001--
24	04050-14028	PIN	1	SN:30001--
25	01010-81235	BOLT	4	SN:30001--
26	01643-31232	WASHER	4	SN:30001--

Ref. N1310-01A0 Page 270040

https://truckmanualshub.com/

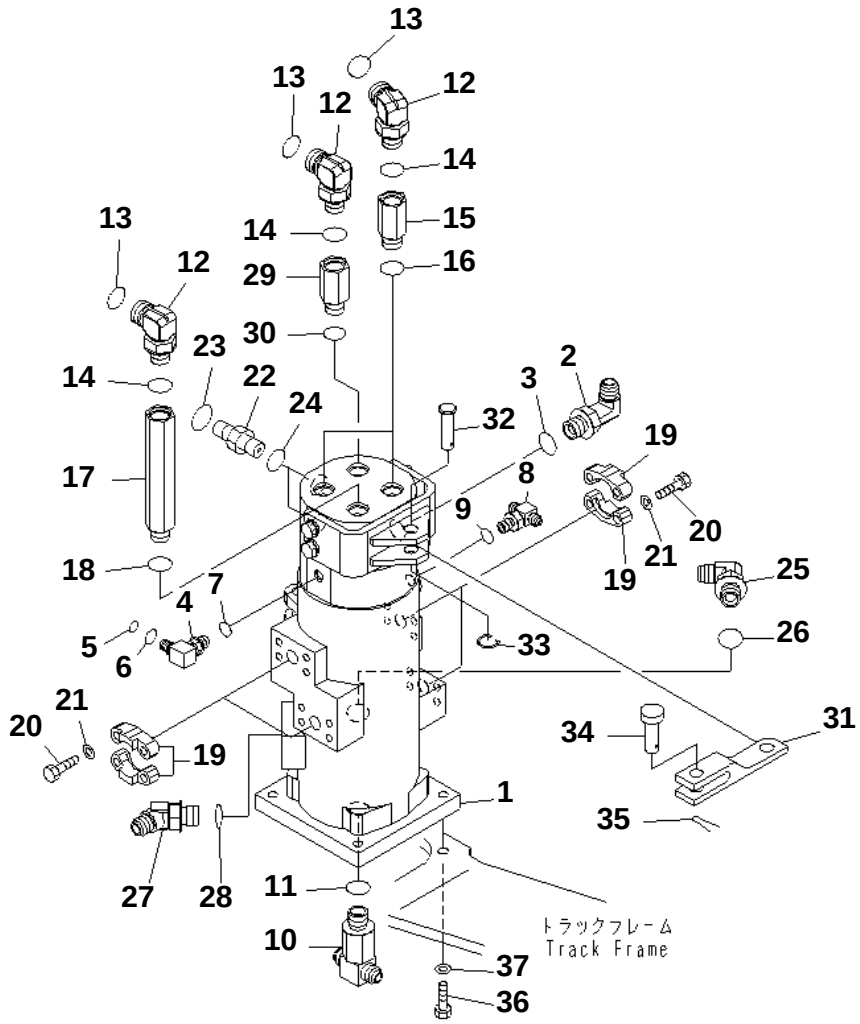

PC228US-3N-W1 S/N 30001-UP

SWIVEL JOINT (CONNECTING PARTS) (TRAVEL SPEED 3RD) (BLADE SPEC.)(#20874-)

Item	Part No.	Description	Qty	Options
1	(703-10-33610)	SWIVEL JOINT ASS'Y	1	SN:20001--
2	23S-61-33290	ELBOW	1	SN:20001--
3	07002-12434	O-RING	1	SN:20001--
4	20Y-62-22271	ELBOW	1	SN:20001--
5	201-60-11390	・ O-RING	1	SN:20001--
6	20Y-62-19560	・ O-RING	1	SN:20001--
7	07002-11423	O-RING	1	SN:20001--
8	208-26-11611	TEE	1	SN:20001--
9	07002-11423	O-RING	1	SN:20001--
10	20Y-62-21870	TEE	1	SN:20001--
11	07002-12434	O-RING	1	SN:20001--
12	20Y-62-41330	ELBOW	4	SN:20001--
13	02890-01018	O-RING	4	SN:20001--
14	07002-12434	O-RING	4	SN:20001--
15	201-62-71820	JOINT	2	SN:20001--
16	07002-12434	O-RING	2	SN:20001--
17	22U-62-22520	JOINT	1	SN:20001--
18	07002-12434	O-RING	1	SN:20001--
19	07371-30640	FLANGE	8	SN:20001--
20	07372-21035	BOLT	16	SN:20001--
21	01643-51032	WASHER	16	SN:20001--
22	22U-62-21470	NIPPLE	2	SN:20001--
23	02890-01018	O-RING	2	SN:20001--
24	07002-12434	O-RING	2	SN:20001--
25	07235-10522	ELBOW	1	SN:20001--
26	07002-12434	O-RING	1	SN:20001--
27	07236-10522	ELBOW	1	SN:20001--
28	07002-12434	O-RING	1	SN:20001--
29	201-62-71820	JOINT	1	SN:20874--
30	07002-12434	O-RING	1	SN:20874--
31	22U-62-21582	BRACKET	1	SN:20874--
32	22U-62-21870	PIN	1	SN:20874--
33	22U-62-24420	PIN	1	SN:20874--
34	04205-11648	PIN	1	SN:20874--
35	04050-14028	PIN	1	SN:20001--
36	01010-81240	BOLT	1	SN:20001--
37	01643-31232	WASHER	1	SN:20001--

Ref. N1310-01A1 Page 270050

https://truckmanualshub.com/

TRAVEL AND LOWER PIPING

Item	Description	Qty	Page
10	TRAVEL PIPING	1	300010
20	TRAVEL PIPING (BLADE SPEC.)	1	300020
30	FINAL DRIVE	1	300030

https://truckmanualshub.com/

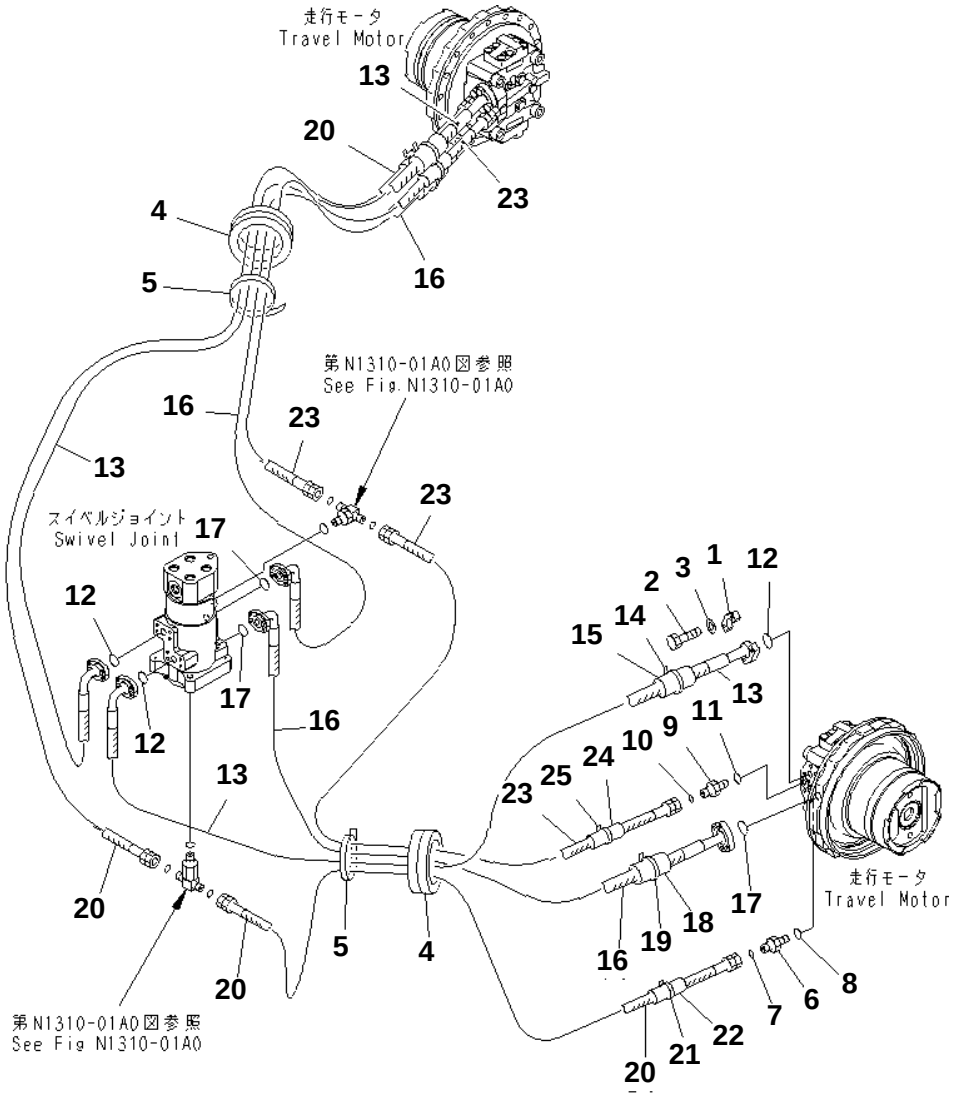

PC228US-3N-W1 S/N 30001-UP

TRAVEL PIPING

Item	Part No.	Description	Qty	Options
1	07371-30640	FLANGE	8	SN:30001--
2	07372-21035	BOLT	16	SN:30001--
3	01643-51032	WASHER	16	SN:30001--
4	20Y-62-12590	GROMMET	2	SN:30001--
5	08034-20536	BAND	2	SN:30001--
6	02781-00422	UNION	2	SN:30001--
7	02896-11012	O-RING	2	SN:30001--
8	07002-12034	O-RING	2	SN:30001--
9	11Y-62-12130	NIPPLE	2	SN:30001--
10	02896-11008	O-RING	2	SN:30001--
11	07002-11423	O-RING	2	SN:30001--
12	07000-13025	O-RING	4	SN:30001--
13	07098-00622	HOSE	2	SN:30001--
14	08034-00536	BAND	2	SN:30001--
15	205-62-72240	COVER	2	SN:30001--
16	20Y-62-12540	HOSE	2	SN:30001--
17	07000-13025	O-RING	4	SN:30001--
18	205-62-72240	COVER	2	SN:30001--
19	08034-00536	BAND	2	SN:30001--
20	02762-00419	HOSE	2	SN:30001--
21	08034-00536	BAND	2	SN:30001--
22	205-62-72240	COVER	2	SN:30001--
23	02760-00220	HOSE	2	SN:30001--
24	205-62-72140	COVER	2	SN:30001--
25	08034-00536	BAND	2	SN:30001--

Ref. P1120-01A0 Page 300010

https://truckmanualshub.com/

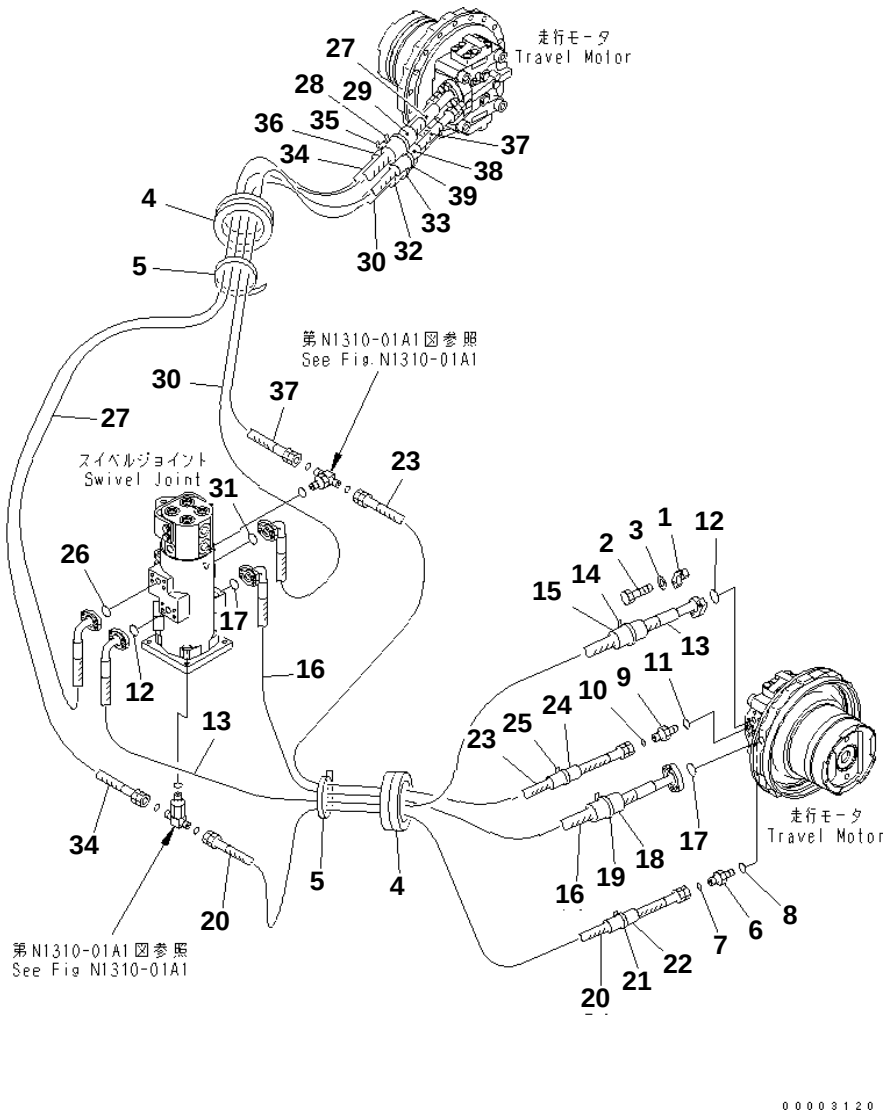

PC228US-3N-W1 S/N 30001-UP

TRAVEL PIPING (BLADE SPEC.)

Item	Part No.	Description	Qty	Options
1	07371-30640	FLANGE	8	SN:30001--
2	07372-21035	BOLT	16	SN:30001--
3	01643-51032	WASHER	16	SN:30001--
4	20Y-62-12590	GROMMET	2	SN:30001--
5	08034-20536	BAND	2	SN:30001--
6	02781-00422	UNION	2	SN:30001--
7	02896-11012	O-RING	2	SN:30001--
8	07002-12034	O-RING	2	SN:30001--
9	11Y-62-12130	NIPPLE	2	SN:30001--
10	02896-11008	O-RING	2	SN:30001--
11	07002-11423	O-RING	2	SN:30001--
12	07000-13025	O-RING	2	SN:30001--
13	07098-00622	HOSE	1	SN:30001--
14	08034-00536	BAND	1	SN:30001--
15	205-62-72240	COVER	1	SN:30001--
16	20Y-62-12540	HOSE	1	SN:30001--
17	07000-13025	O-RING	2	SN:30001--
18	205-62-72240	COVER	1	SN:30001--
19	08034-00536	BAND	1	SN:30001--
20	02762-00419	HOSE	1	SN:30001--
21	08034-00536	BAND	1	SN:30001--
22	205-62-72240	COVER	1	SN:30001--
23	02760-00220	HOSE	1	SN:30001--
24	205-62-72140	COVER	1	SN:30001--
25	08034-00536	BAND	1	SN:30001--
26	07000-13025	O-RING	2	SN:30001--
27	07098-00623	HOSE	1	SN:30001--
28	08034-00536	BAND	1	SN:30001--
29	205-62-72240	COVER	1	SN:30001--
30	20Y-62-12540	HOSE	1	SN:30001--
31	07000-13025	O-RING	2	SN:30001--
32	205-62-72240	COVER	1	SN:30001--
33	08034-00536	BAND	1	SN:30001--
34	02762-00419	HOSE	1	SN:30001--
35	08034-00536	BAND	1	SN:30001--
36	205-62-72240	COVER	1	SN:30001--
37	02760-00220	HOSE	1	SN:30001--
38	205-62-72140	COVER	1	SN:30001--
39	08034-00536	BAND	1	SN:30001--

Ref. P1120-01A2 Page 300020

https://truckmanualshub.com/

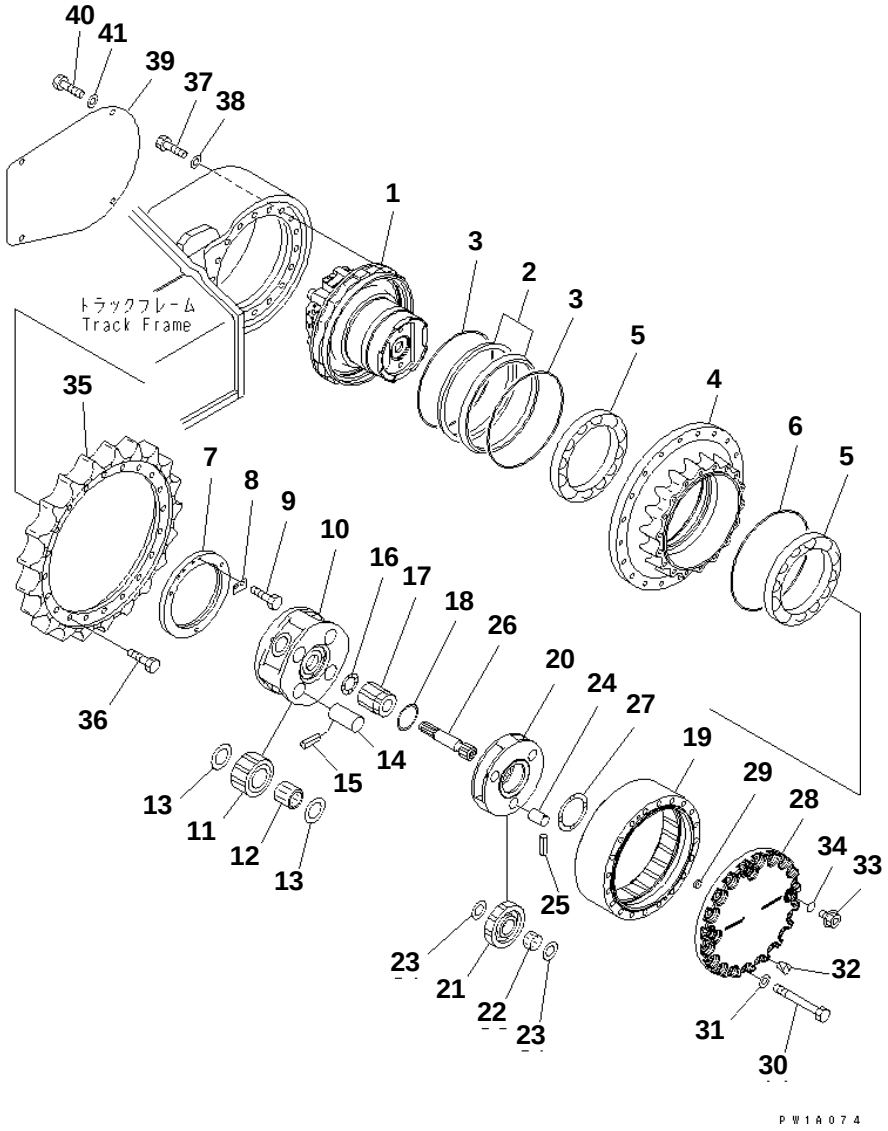

PC228US-3N-W1 S/N 30001-UP

FINAL DRIVE

Item	Part No.	Description	Qty	Options
1	(708-8F-00220)	MOTOR ASS'Y	2	SN:21290--
	(708-8F-00150)	MOTOR ASS'Y	2	SN:20001--21289
	150-27-00330	FLOATING SEAL ASS'Y	2	SN:20001--
2	150-27-00264	· SEAL RING ASS'Y	1	SN:20001--
	☆	· · RING	2	SN:20001--
3	144-873-0310	· O-RING ASS'Y	1	SN:20001--
	☆	· · O-RING	2	SN:20001--
4	22U-27-21182	HUB	2	SN:20001--
5	20Y-27-22230	BEARING	4	SN:20001--
6	22U-27-21220	O-RING	2	SN:20001--
7	20Y-27-22261	LOCK	2	SN:20001--
8	20Y-27-22270	LOCK	2	SN:20001--
9	01010-81020	BOLT	4	SN:20001--
10	22U-27-21170	CARRIER	2	SN:20001--
11	22U-27-21140	GEAR	8	SN:20001--
12	20Y-27-22220	BEARING	8	SN:20001--
13	20Y-27-21250	WASHER	16	SN:20001--
14	22U-27-21230	PIN	8	SN:20001--
15	20Y-27-21290	PIN	8	SN:20001--
16	20Y-27-13310	WASHER	2	SN:20001--
17	22U-27-21130	GEAR	2	SN:20001--
18	22U-27-21210	THRUST WASHER	2	SN:20001--
19	22U-27-21153	GEAR	2	SN:21533--
	□22U-27-21152	GEAR	2	SN:20001--21532
20	22U-27-21161	CARRIER	2	SN:20001--
21	22U-27-21120	GEAR	6	SN:20001--
22	20Y-27-22210	BEARING	6	SN:20001--
23	22U-27-21240	THRUST WASHER	12	SN:20001--
24	20Y-27-21220	PIN	6	SN:20001--
25	20Y-27-21280	PIN	6	SN:20001--
26	22U-27-21110	SHAFT	2	SN:20001--
27	20Y-27-21310	WASHER	2	SN:20001--
28	22U-27-21192	COVER	2	SN:20001--
29	20Y-27-22250	BUTTON	2	SN:20001--
30	20Y-27-13281	BOLT	40	SN:20001--
31	01643-31645	WASHER	40	SN:20001--
32	07049-01012	PLUG	4	SN:20001--
33	07044-12412	PLUG	6	SN:20001--
34	07002-02434	O-RING	6	SN:20001--
35	20Y-27-11582	SPROCKET	2	SN:20001--
36	20Y-27-11561	BOLT	40	SN:20001--
37	01010-61660	BOLT	36	SN:20001--

Ref. P1210-01A0 Page 300030

https://truckmanualshub.com/

PC228US-3N-W1 S/N 30001-UP
FINAL DRIVE

Item	Part No.	Description	Qty	Options
38	01643-31645	WASHER	36	SN:20001--
39	20Y-30-21191	COVER	2	SN:20001--
	20Y-30-21190	COVER	1	SN:20001--20001
40	01010-81230	BOLT	8	SN:20001--
41	01643-31232	WASHER	8	SN:20001--

https://truckmanualshub.com/

UNDER CARRIAGE

Item	Description	Qty	Page
10	FRONT IDLER(#21222-)	1	330010
20	IDLER CUSHION(#21589-)	1	330020
30	TRACK ROLLER(#20001-)	1	330030
40	CARRIER ROLLER(#20001-)	1	330040
50	TRACK SHOE (TRIPLE GROUSER WITH HOLE) (600MM WIDE) (HEAVY DUTY)(#20958-)	1	330050
60	TRACK SHOE (TRIPLE GROUSER WITH HOLE) (700MM WIDE)(#20958-)	1	330060
70	TRACK SHOE (TRIPLE GROUSER WITH HOLE) (800MM WIDE)(#20958-)	1	330070
80	TRACK SHOE (TRIPLE GROUSER WITH HOLE) (600MM WIDE)(#20958-)	1	330080
90	TRACK SHOE (SWAMP TYPE) (860MM WIDE)(#20001-)	1	330090
100	TRACK SHOE (FLAT TYPE) (610MM WIDE)(#20001-)	1	330100
110	TRACK FRAME(#21222-)	1	330110
120	TRACK FRAME (WITH UNDER COVER) (EU. SPEC.)(#21222-)	1	330120
130	TRACK FRAME (WITH UNDER COVER) (EU. SPEC.) (LC)(#21222-)	1	330130
140	TRACK FRAME (WITH UNDER COVER) (BLADE SPEC.) (LC)	1	330140
150	TRACK ROLLER GUARD(#21222-)	1	330150

https://truckmanualshub.com/

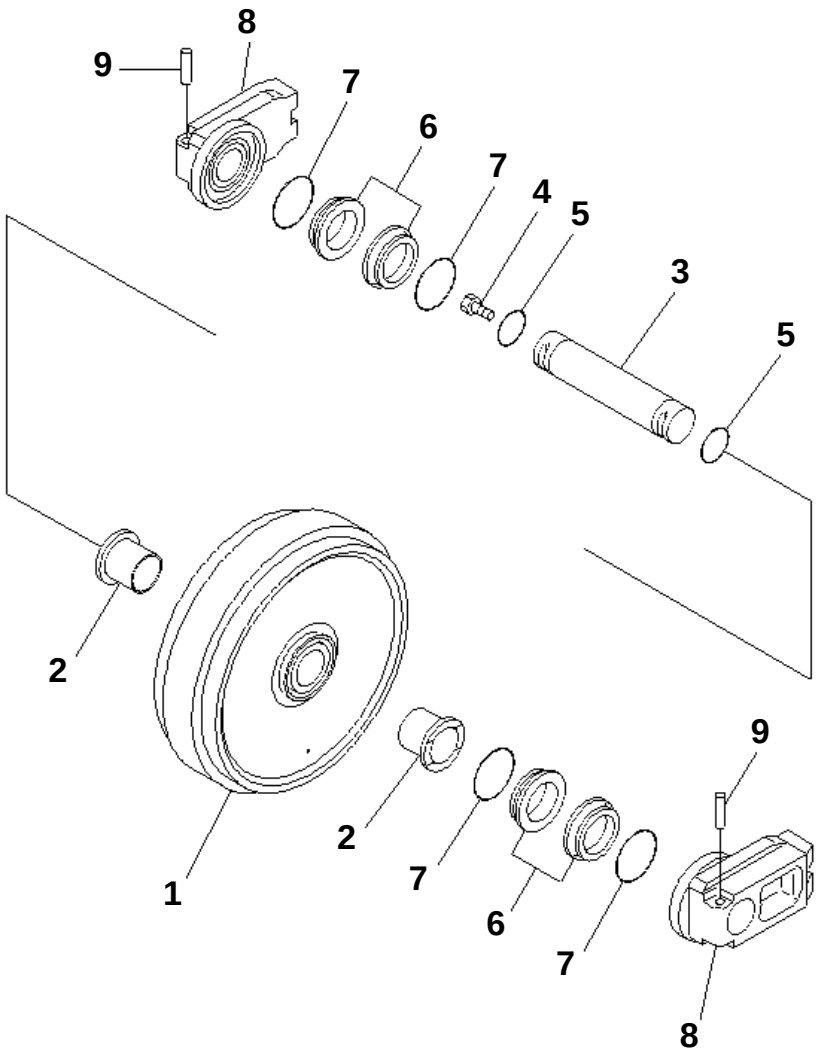

PC228US-3N-W1 S/N 30001-UP

FRONT IDLER(#21222-)

Item	Part No.	Description	Qty	Options
	20Y-30-00321	FRONT IDLER ASS'Y	2	SN:21222--
1	20Y-30-33211	· IDLER	1	SN:21222--
2	207-30-56140	· BUSHING	2	SN:20001--
3	20Y-30-13130	· SHAFT	1	SN:20001--
4	07052-31624	· PLUG	1	SN:20001--
5	07000-12060	· O-RING	2	SN:20001--
	20Y-30-00100	· FLOATING SEAL ASS'Y	2	SN:20001--
6	20Y-30-00110	· · SEAL RING ASS'Y	1	SN:20001--
	☆	· · · RING	2	SN:20001--
7	20Y-30-00120	· · O-RING ASS'Y	1	SN:20001--
	☆	· · · O-RING	2	SN:20001--
8	20Y-30-13150	· SUPPORT	2	SN:20001--
9	205-30-76190	· PIN	2	SN:20001--

Ref. R0110-01A0 Page 330010

https://truckmanualshub.com/

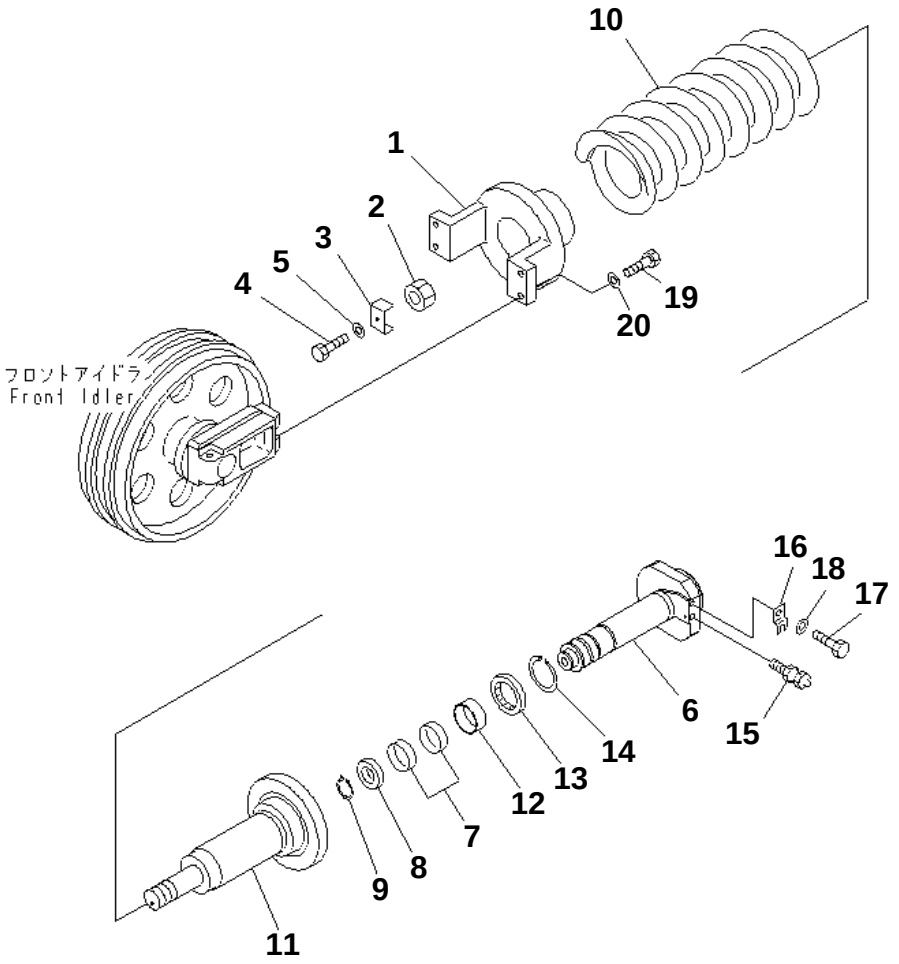

PC228US-3N-W1 S/N 30001-UP

IDLER CUSHION(#21589-)

Item	Part No.	Description	Qty	Options
1	20Y-30-32110	YOKE	2	SN:21222--
2	206-30-45381	NUT	2	SN:20001--
3	206-30-45262	LOCK	2	SN:20001--
4	01010-81225	BOLT	2	SN:20001--
5	01643-31232	WASHER	2	SN:20001--
6	206-30-72140	SHAFT	2	SN:21589--
7	07155-00720	RING	4	SN:21589--
8	09370-00070	U-PACKING	2	SN:20001--
9	04064-04518	RING	2	SN:20001--
10	206-30-55172	SPRING	2	SN:20001--
11	206-30-72130	CYLINDER	2	SN:21624--
12	07177-07030	BUSHING	2	SN:21589--
13	707-56-70540	SEAL	2	SN:21589--
14	04077-00085	RING	2	SN:21589--
15	07959-20001	VALVE	2	SN:20001--
16	205-30-72170	PLATE	2	SN:20001--
17	01010-81225	BOLT	2	SN:20001--
18	01643-31232	WASHER	2	SN:20001--
19	01010-61655	BOLT	8	SN:20001--
20	01643-31645	WASHER	8	SN:20001--

Ref. R0110-02A0 Page 330020

https://truckmanualshub.com/

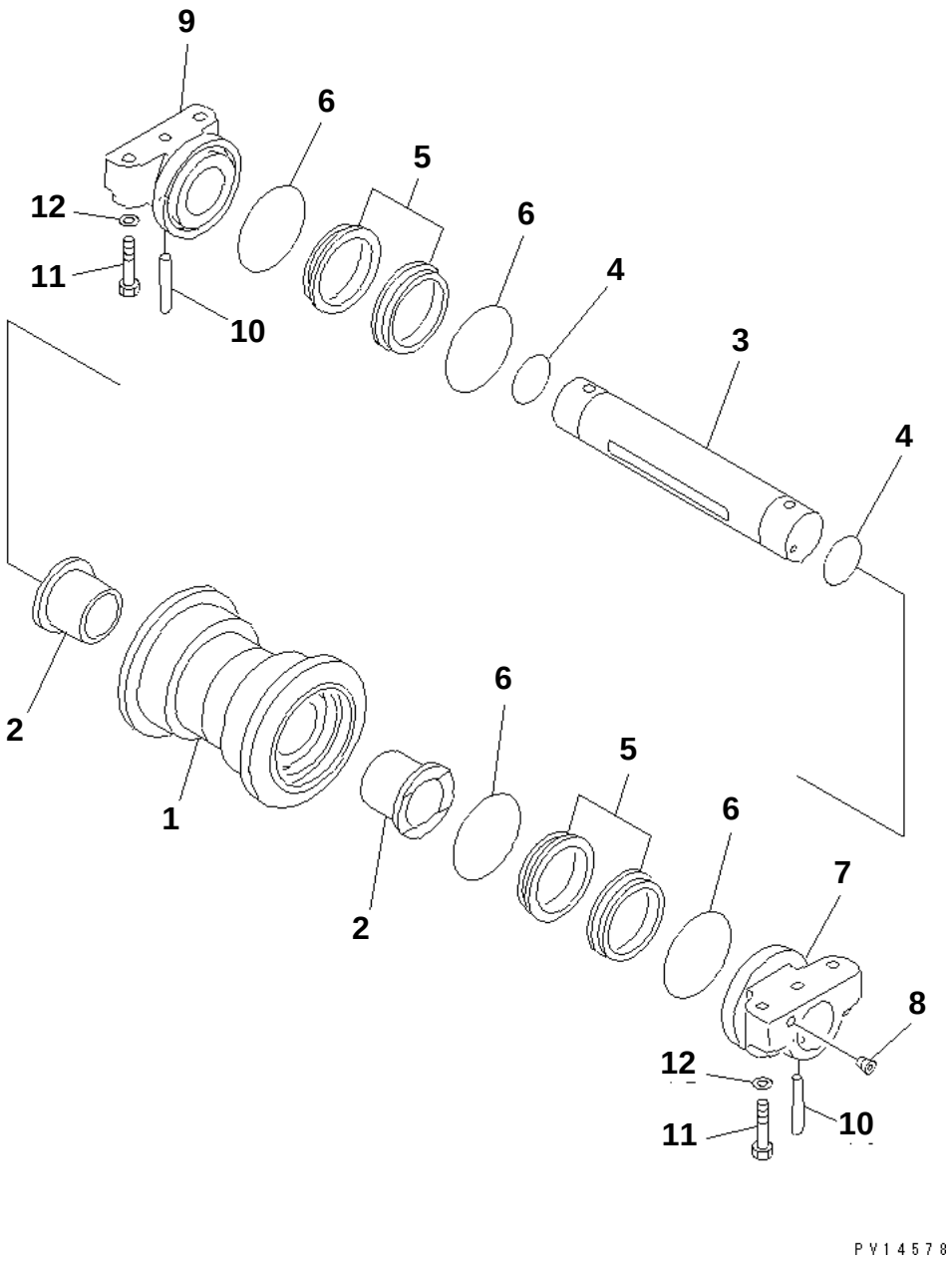

PC228US-3N-W1 S/N 30001-UP

TRACK ROLLER(#20001-)

Item	Part No.	Description	Qty	Options
	20Y-30-00016	TRACK ROLLER ASS'Y	14	SN:21290--
1	20Y-30-16411	· ROLLER	1	SN:20001--
2	22U-30-11450	· BUSHING	2	SN:20001--
3	22U-30-11420	· SHAFT	1	SN:20001--
4	205-30-76260	· O-RING	2	SN:20001--
	20Y-30-00430	· FLOATING SEAL ASS'Y	2	SN:21290--
5	☆	· · SEAL	2	SN:21290--
6	20Y-30-16460	· · O-RING	2	SN:21290--
7	22U-30-11430	· COLLAR	1	SN:20001--
8	20Y-30-16330	· PLUG	1	SN:20001--
9	22U-30-11440	· COLLAR	1	SN:20001--
10	20Y-30-16170	· PIN	2	SN:20001--
11	20Y-30-11340	BOLT	56	SN:20001--
12	01643-31845	WASHER	56	SN:20001--

Ref. R0200-01A0 Page 330030

https://truckmanualshub.com/

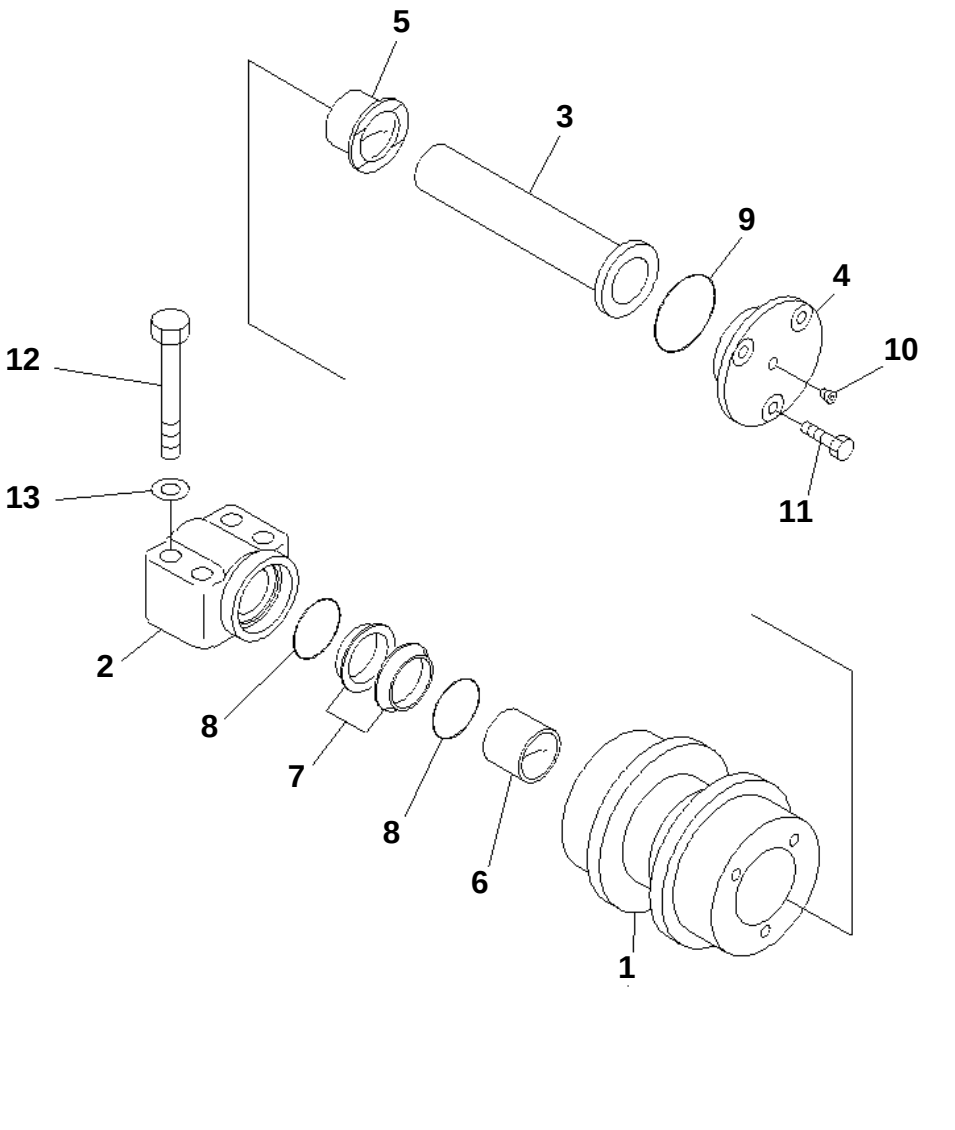

PC228US-3N-W1 S/N 30001-UP

CARRIER ROLLER(#20001-)

Item	Part No.	Description	Qty	Options
	22U-30-00021	CARRIER ROLLER ASS'Y	4	SN:20594--
1	22U-30-25110	· ROLLER	1	SN:20001--
2	22U-30-25120	· SUPPORT	1	SN:20001--
3	22U-30-25130	· SHAFT	1	SN:20001--
4	22U-30-25140	· COVER	1	SN:20001--
5	22U-30-25150	· BUSHING	1	SN:20001--
6	22U-30-25160	· BUSHING	1	SN:20001--
	110-30-00086	· FLOATING SEAL ASS'Y	1	SN:20594--
7	☆	· · SEAL	2	SN:20594--
8	110-30-13250	· · O-RING	2	SN:20001--
9	07000-12060	· O-RING	1	SN:20001--
10	20Y-30-16330	· PLUG	1	SN:20001--
11	01010-81025	· BOLT	3	SN:20001--
12	01010-81485	BOLT	16	SN:21055--
13	01643-31445	WASHER	16	SN:20001--

Ref. R0300-01A0 Page 330040

https://truckmanualshub.com/

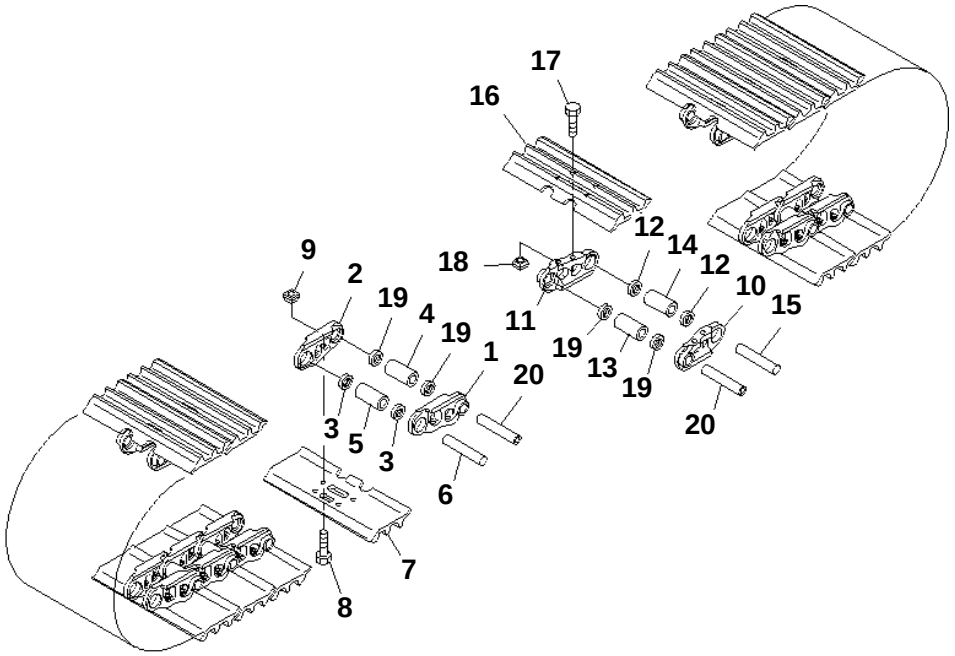

PC228US-3N-W1 S/N 30001-UP

TRACK SHOE (TRIPLE GROUSER WITH HOLE) (600MM WIDE) (HEAVY DUTY)(#20958-)

Item	Part No.	Description	Qty	Options
	20Y-32-02021	TRACK SHOE ASS'Y,60	1	SN:20958--
1	20Y-32-31120	· LINK,L.H.	44	SN:20001--
2	20Y-32-31130	· LINK,R.H.	44	SN:20001--
3	20Y-32-11240	· SEAL	84	SN:20001--
4	20Y-32-11171	· BUSHING¤ MASTER	2	SN:20001--
5	20Y-32-11141	· BUSHING¤ REGULAR	42	SN:20001--
6	20Y-32-31150	· PIN	42	SN:20001--
7	206-32-61110	· SHOE	44	SN:20958--
8	20Y-32-31210	· BOLT¤ SHOE (Y0320-K01	176	SN:20958--
9	134-32-61221	· NUT (Y0320-K01	176	SN:20805--
10	20Y-32-31120	· LINK,L.H.	46	SN:20001--
11	20Y-32-31130	· LINK,R.H.	46	SN:20001--
12	20Y-32-11240	· SEAL	88	SN:20001--
13	20Y-32-11171	· BUSHING¤ MASTER	2	SN:20001--
14	20Y-32-11141	· BUSHING¤ REGULAR	44	SN:20001--
15	20Y-32-31150	· PIN	44	SN:20001--
16	206-32-61110	· SHOE	46	SN:20958--
17	20Y-32-31210	· BOLT¤ SHOE (Y0320-K01	184	SN:20958--
18	134-32-61221	· NUT (Y0320-K01	184	SN:20805--
19	20Y-32-11260	· SEAL	8	SN:20001--
20	20Y-32-31190	· PIN	4	SN:20001--

Ref. R0500-01A0 Page 330050

https://truckmanualshub.com/

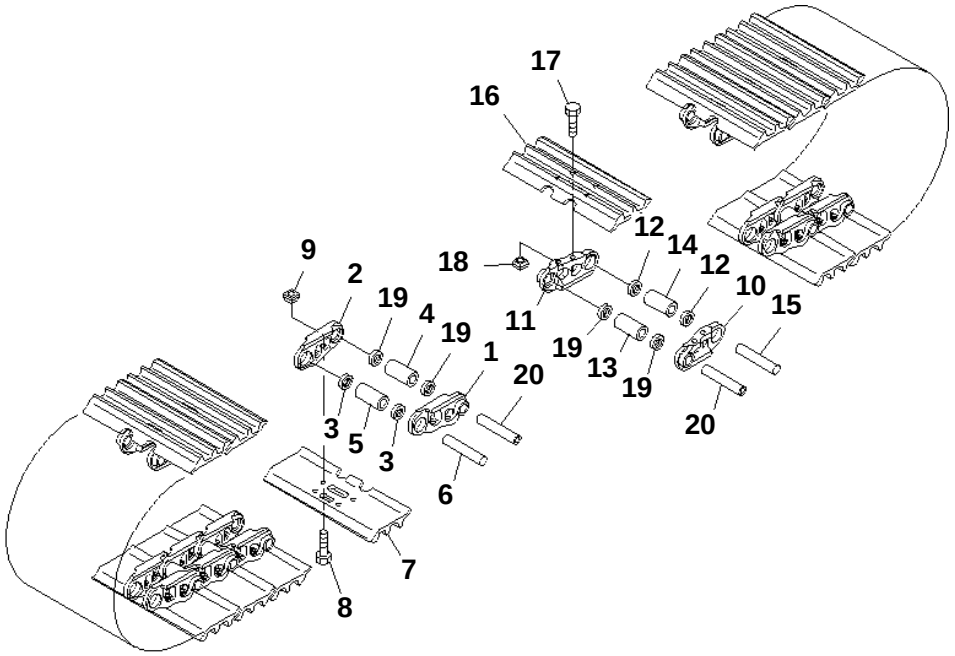

PC228US-3N-W1 S/N 30001-UP

TRACK SHOE (TRIPLE GROUSER WITH HOLE) (700MM WIDE)(#20958-)

Item	Part No.	Description	Qty	Options
	20Y-32-02031	TRACK SHOE ASS'Y,70	1	SN:20958--
1	20Y-32-31120	· LINK,L.H.	44	SN:20001--
2	20Y-32-31130	· LINK,R.H.	44	SN:20001--
3	20Y-32-11240	· SEAL	84	SN:20001--
4	20Y-32-11171	· BUSHING¤ MASTER	2	SN:20001--
5	20Y-32-11141	· BUSHING¤ REGULAR	42	SN:20001--
6	20Y-32-31150	· PIN	42	SN:20001--
7	20Y-32-31310	· SHOE	44	SN:20958--
8	20Y-32-31210	· BOLT¤ SHOE (Y0320-K01	176	SN:20958--
9	134-32-61221	· NUT (Y0320-K01	176	SN:20805--
10	20Y-32-31120	· LINK,L.H.	46	SN:20001--
11	20Y-32-31130	· LINK,R.H.	46	SN:20001--
12	20Y-32-11240	· SEAL	88	SN:20001--
13	20Y-32-11171	· BUSHING¤ MASTER	2	SN:20001--
14	20Y-32-11141	· BUSHING¤ REGULAR	44	SN:20001--
15	20Y-32-31150	· PIN	44	SN:20001--
16	20Y-32-31310	· SHOE	46	SN:20958--
17	20Y-32-31210	· BOLT¤ SHOE (Y0320-K01	184	SN:20958--
18	134-32-61221	· NUT (Y0320-K01	184	SN:20805--
19	20Y-32-11260	· SEAL	8	SN:20001--
20	20Y-32-31190	· PIN	4	SN:20001--

Ref. R0500-01A1 Page 330060

https://truckmanualshub.com/

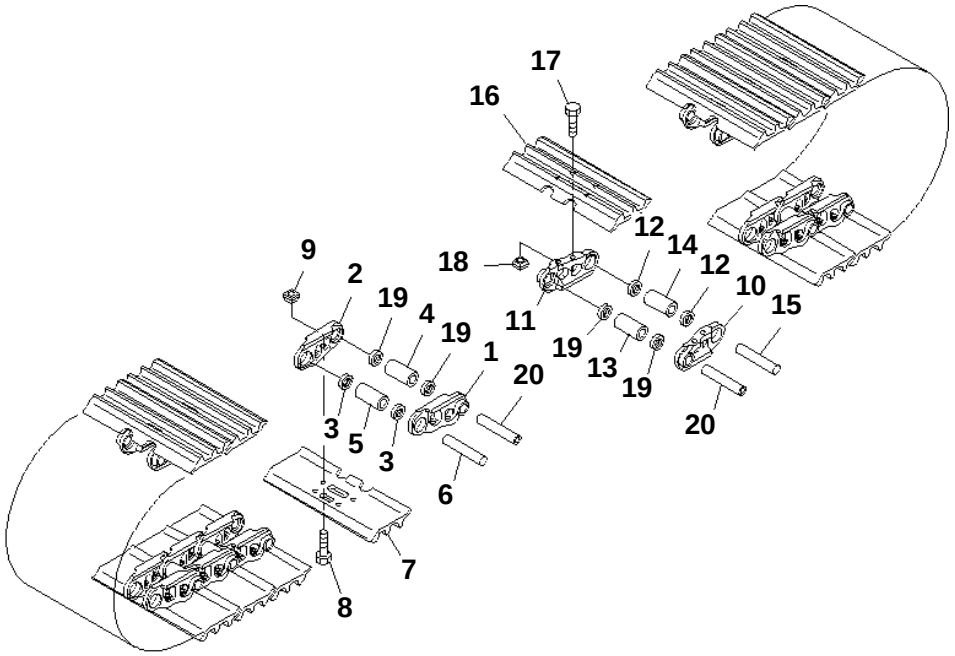

PC228US-3N-W1 S/N 30001-UP

TRACK SHOE (TRIPLE GROUSER WITH HOLE) (800MM WIDE)(#20958-)

Item	Part No.	Description	Qty	Options
	20Y-32-02041	TRACK SHOE ASS'Y,80	1	SN:20958--
1	20Y-32-31120	· LINK,L.H.	44	SN:20001--
2	20Y-32-31130	· LINK,R.H.	44	SN:20001--
3	20Y-32-11240	· SEAL	84	SN:20001--
4	20Y-32-11171	· BUSHING¤ MASTER	2	SN:20001--
5	20Y-32-11141	· BUSHING¤ REGULAR	42	SN:20001--
6	20Y-32-31150	· PIN	42	SN:20001--
7	20Y-32-31320	· SHOE	44	SN:20958--
8	20Y-32-31210	· BOLT¤ SHOE (Y0320-K01	176	SN:20958--
9	134-32-61221	· NUT (Y0320-K01	176	SN:20805--
10	20Y-32-31120	· LINK,L.H.	46	SN:20001--
11	20Y-32-31130	· LINK,R.H.	46	SN:20001--
12	20Y-32-11240	· SEAL	88	SN:20001--
13	20Y-32-11171	· BUSHING¤ MASTER	2	SN:20001--
14	20Y-32-11141	· BUSHING¤ REGULAR	44	SN:20001--
15	20Y-32-31150	· PIN	44	SN:20001--
16	20Y-32-31320	· SHOE	46	SN:20958--
17	20Y-32-31210	· BOLT¤ SHOE (Y0320-K01	184	SN:20958--
18	134-32-61221	· NUT (Y0320-K01	184	SN:20805--
19	20Y-32-11260	· SEAL	8	SN:20001--
20	20Y-32-31190	· PIN	4	SN:20001--

Ref. R0500-01A2 Page 330070

https://truckmanualshub.com/

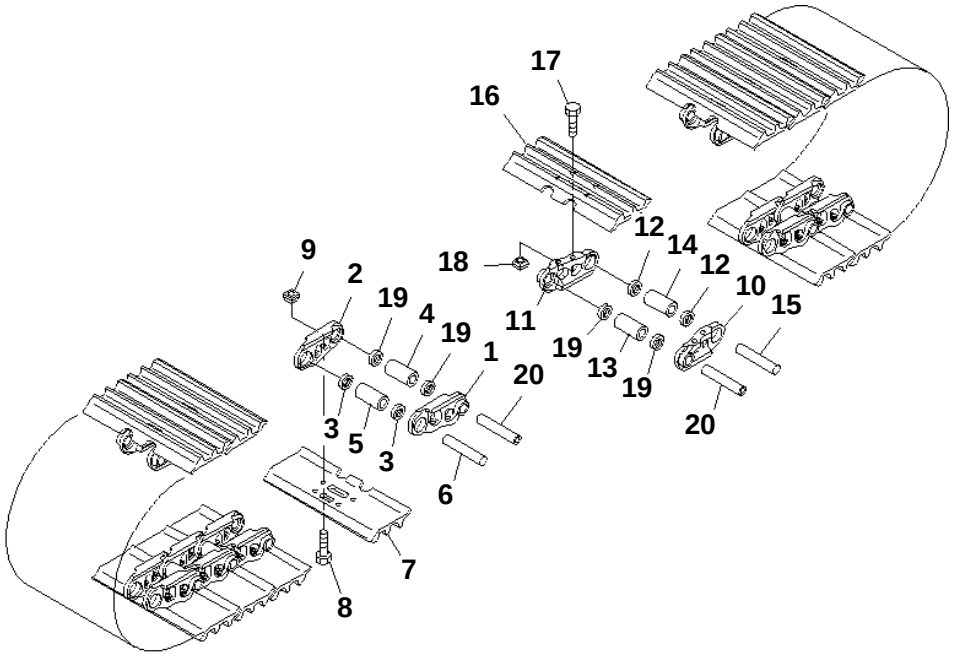

PC228US-3N-W1 S/N 30001-UP

TRACK SHOE (TRIPLE GROUSER WITH HOLE) (600MM WIDE)(#20958-)

Item	Part No.	Description	Qty	Options
	20Y-32-02051	TRACK SHOE ASS'Y,60	1	SN:20958--
1	20Y-32-31120	· LINK,L.H.	44	SN:20001--
2	20Y-32-31130	· LINK,R.H.	44	SN:20001--
3	20Y-32-11240	· SEAL	84	SN:20001--
4	20Y-32-11171	· BUSHING¤ MASTER	2	SN:20001--
5	20Y-32-11141	· BUSHING¤ REGULAR	42	SN:20001--
6	20Y-32-31150	· PIN	42	SN:20001--
7	20Y-32-21110	· SHOE	44	SN:20001--
8	20Y-32-31210	· BOLT¤ SHOE (Y0320-K01	176	SN:20958--
9	134-32-61221	· NUT (Y0320-K01	176	SN:20805--
10	20Y-32-31120	· LINK,L.H.	46	SN:20001--
11	20Y-32-31130	· LINK,R.H.	46	SN:20001--
12	20Y-32-11240	· SEAL	88	SN:20001--
13	20Y-32-11171	· BUSHING¤ MASTER	2	SN:20001--
14	20Y-32-11141	· BUSHING¤ REGULAR	44	SN:20001--
15	20Y-32-31150	· PIN	44	SN:20001--
16	20Y-32-21110	· SHOE	46	SN:20001--
17	20Y-32-31210	· BOLT¤ SHOE (Y0320-K01	184	SN:20958--
18	134-32-61221	· NUT (Y0320-K01	184	SN:20805--
19	20Y-32-11260	· SEAL	8	SN:20001--
20	20Y-32-31190	· PIN	4	SN:20001--

Ref. R0500-01A3 Page 330080

https://truckmanualshub.com/

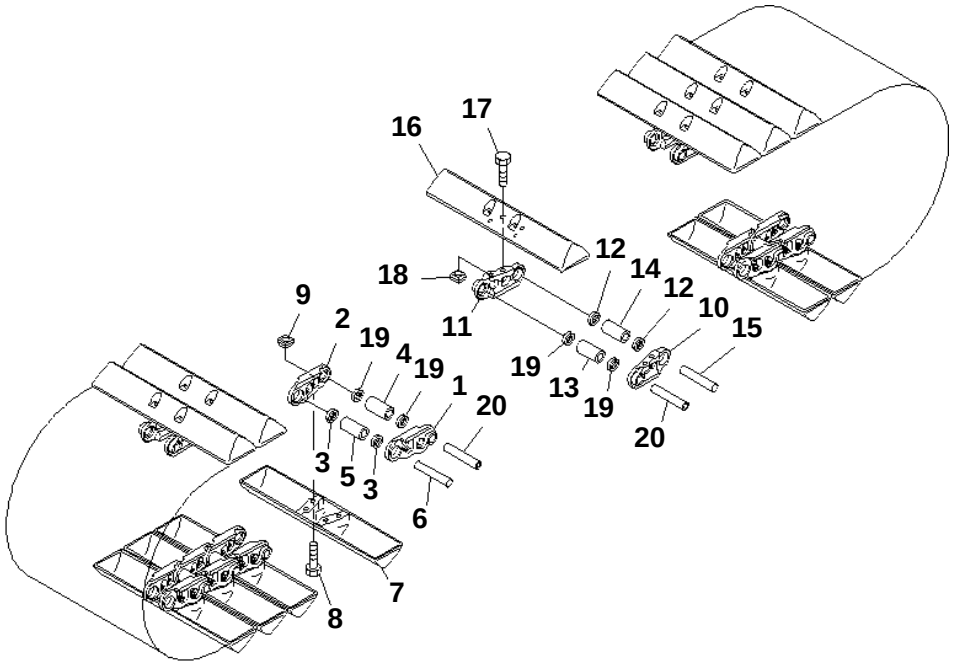

PC228US-3N-W1 S/N 30001-UP

TRACK SHOE (SWAMP TYPE) (860MM WIDE)(#20001-)

Item	Part No.	Description	Qty	Options
	20Y-32-02060	TRACK SHOE ASS'Y	1	SN:20001--
1	20Y-32-31120	· LINK,L.H.	44	SN:20001--
2	20Y-32-31130	· LINK,R.H.	44	SN:20001--
3	20Y-32-11240	· SEAL	84	SN:20001--
4	20Y-32-11171	· BUSHING¤ MASTER	2	SN:20001--
5	20Y-32-11141	· BUSHING¤ REGULAR	42	SN:20001--
6	20Y-32-31150	· PIN	42	SN:20001--
7	20Y-32-11340	· SHOE	44	SN:20001--
8	20Y-32-11230	· BOLT (Y0320-K02	176	SN:20001--
9	134-32-61221	· NUT (Y0320-K02	176	SN:20805--
10	20Y-32-31120	· LINK,L.H.	46	SN:20001--
11	20Y-32-31130	· LINK,R.H.	46	SN:20001--
12	20Y-32-11240	· SEAL	88	SN:20001--
13	20Y-32-11171	· BUSHING¤ MASTER	2	SN:20001--
14	20Y-32-11141	· BUSHING¤ REGULAR	44	SN:20001--
15	20Y-32-31150	· PIN	44	SN:20001--
16	20Y-32-11340	· SHOE	46	SN:20001--
17	20Y-32-11230	· BOLT (Y0320-K02	184	SN:20001--
18	134-32-61221	· NUT (Y0320-K02	184	SN:20805--
19	20Y-32-11260	· SEAL	8	SN:20001--
20	20Y-32-31190	· PIN	4	SN:20001--

Ref. R0500-01A4 Page 330090

https://truckmanualshub.com/

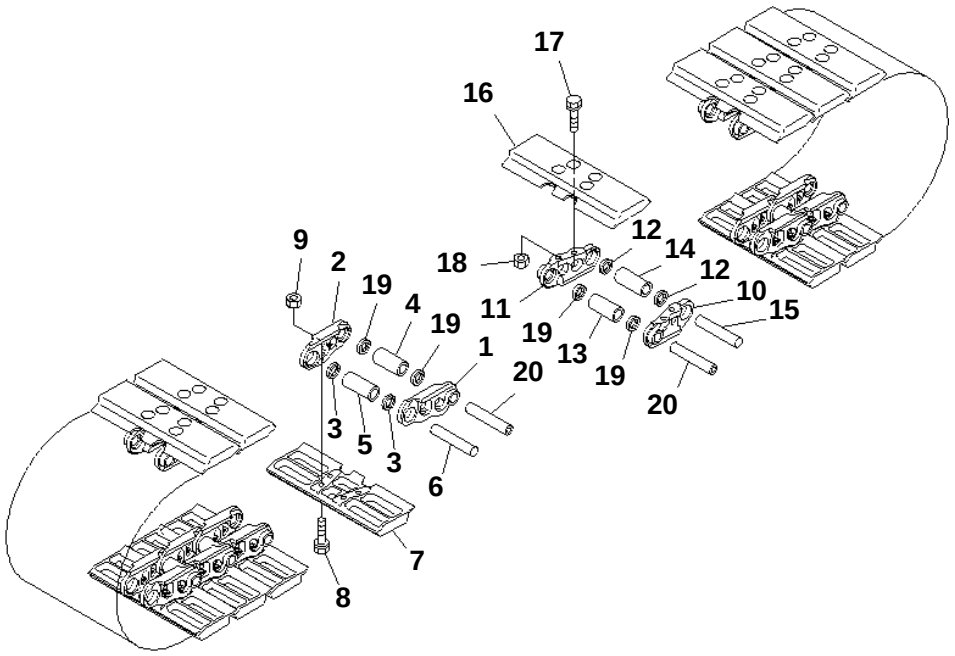

PC228US-3N-W1 S/N 30001-UP

TRACK SHOE (FLAT TYPE) (610MM WIDE)(#20001-)

Item	Part No.	Description	Qty	Options
	20Y-32-02070	TRACK SHOE ASS'Y	1	SN:20001--
1	20Y-32-31120	· LINK,L.H.	44	SN:20001--
2	20Y-32-31130	· LINK,R.H.	44	SN:20001--
3	20Y-32-11240	· SEAL	84	SN:20001--
4	20Y-32-11171	· BUSHING¤ MASTER	2	SN:20001--
5	20Y-32-11141	· BUSHING¤ REGULAR	42	SN:20001--
6	20Y-32-31150	· PIN	42	SN:20001--
7	20Y-32-11350	· SHOE	44	SN:20001--
8	20Y-32-11220	· BOLT¤ SHOE (Y0320-K03	176	SN:20001--
9	134-32-61221	· NUT (Y0320-K03	176	SN:20805--
10	20Y-32-31120	· LINK,L.H.	46	SN:20001--
11	20Y-32-31130	· LINK,R.H.	46	SN:20001--
12	20Y-32-11240	· SEAL	88	SN:20001--
13	20Y-32-11171	· BUSHING¤ MASTER	2	SN:20001--
14	20Y-32-11141	· BUSHING¤ REGULAR	44	SN:20001--
15	20Y-32-31150	· PIN	44	SN:20001--
16	20Y-32-11350	· SHOE	46	SN:20001--
17	20Y-32-11220	· BOLT¤ SHOE (Y0320-K03	184	SN:20001--
18	134-32-61221	· NUT (Y0320-K03	184	SN:20805--
19	20Y-32-11260	· SEAL	8	SN:20001--
20	20Y-32-31190	· PIN	4	SN:20001--

Ref. R0500-01A5 Page 330100

https://truckmanualshub.com/

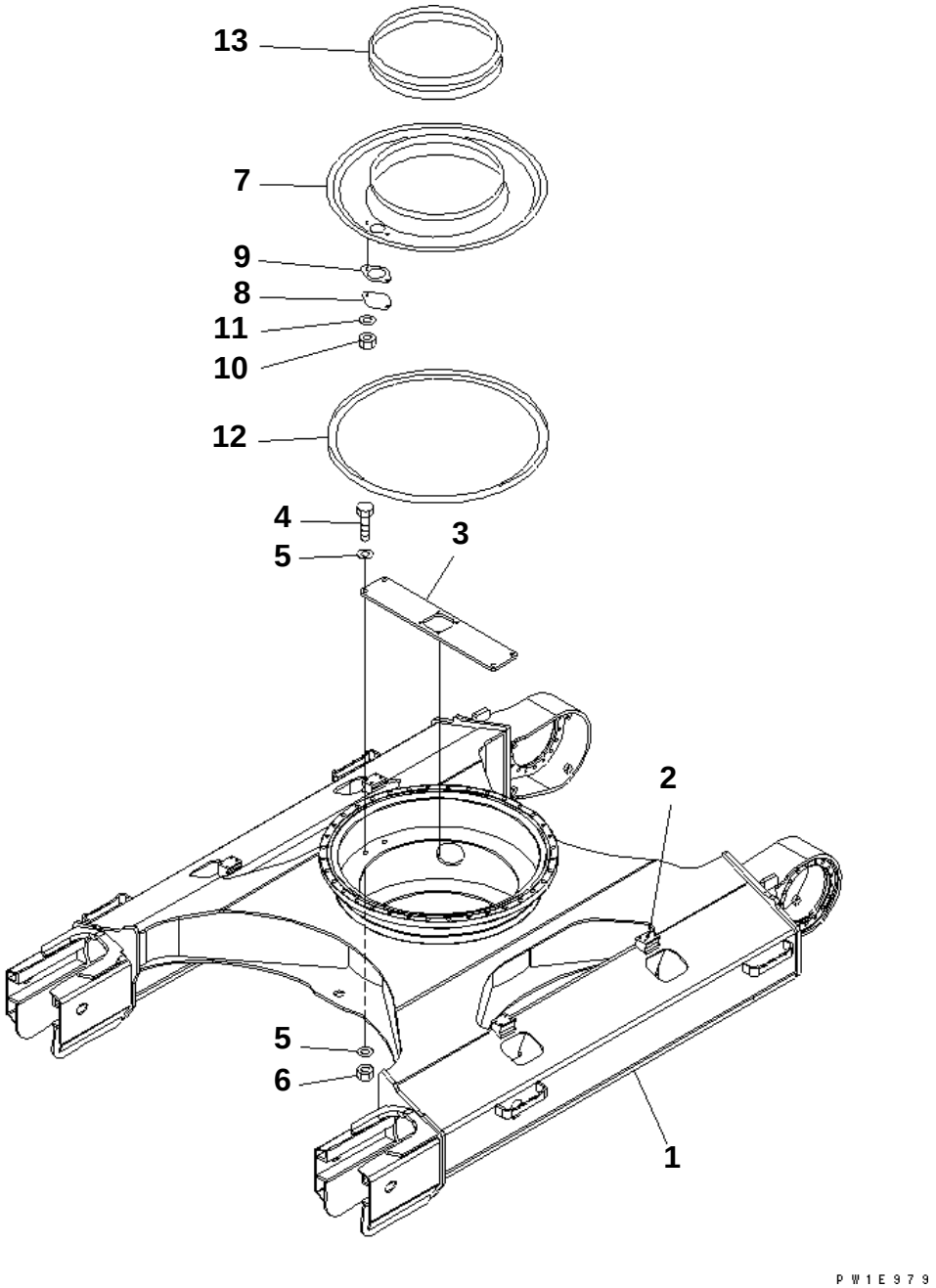

PC228US-3N-W1 S/N 30001-UP

TRACK FRAME(#21222-)

Item	Part No.	Description	Qty	Options
1	22U-30-21111	TRACK FRAME	1	SN:21222--
2	20Y-30-31D21	· BRACKET (WELDED)	4	SN:21222--
3	20Y-30-31E81	PLATE	1	SN:21222--
4	01010-82065	BOLT	4	SN:21222--
5	01643-32060	WASHER	8	SN:21222--
6	01580-12016	NUT	4	SN:21222--
7	20Y-30-21151	COVER	1	SN:20001--
8	205-30-71181	COVER	1	SN:20001--
9	205-30-71191	GASKET	1	SN:20001--
10	01580-11008	NUT	2	SN:20001--
11	01643-31032	WASHER	2	SN:20001--
12	20Y-30-11370	SEAL	1	SN:20001--
13	205-30-71171	SEAL	1	SN:20001--

Ref. R1100-01A0 Page 330110

https://truckmanualshub.com/

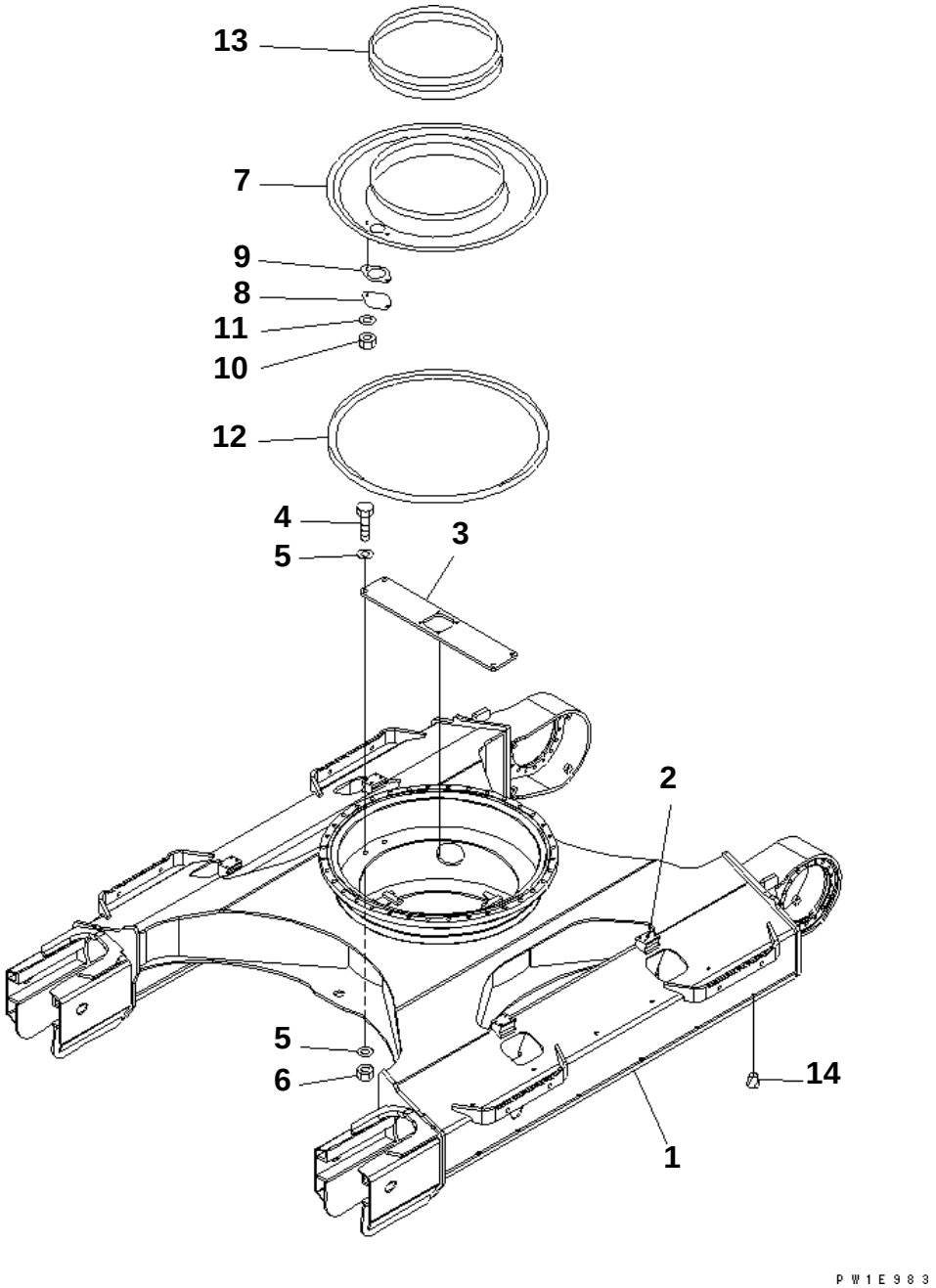

PC228US-3N-W1 S/N 30001-UP

TRACK FRAME (WITH UNDER COVER) (EU. SPEC.)(#21222-)

Item	Part No.	Description	Qty	Options
1	22U-30-21231	TRACK FRAME	1	SN:21222--
2	20Y-30-31D21	· BRACKET (WELDED)	4	SN:21222--
3	20Y-30-31E81	PLATE	1	SN:21222--
4	01010-82065	BOLT	4	SN:21222--
5	01643-32060	WASHER	8	SN:21222--
6	01580-12016	NUT	4	SN:21222--
7	20Y-30-21151	COVER	1	SN:20001--
8	205-30-71181	COVER	1	SN:20001--
9	205-30-71191	GASKET	1	SN:20001--
10	01580-11008	NUT	2	SN:20001--
11	01643-31032	WASHER	2	SN:20001--
12	20Y-30-11370	SEAL	1	SN:20001--
13	205-30-71171	SEAL	1	SN:20001--
14	07049-02025	PLUG	24	SN:20001--

Ref. R1100-01A5 Page 330120

https://truckmanualshub.com/

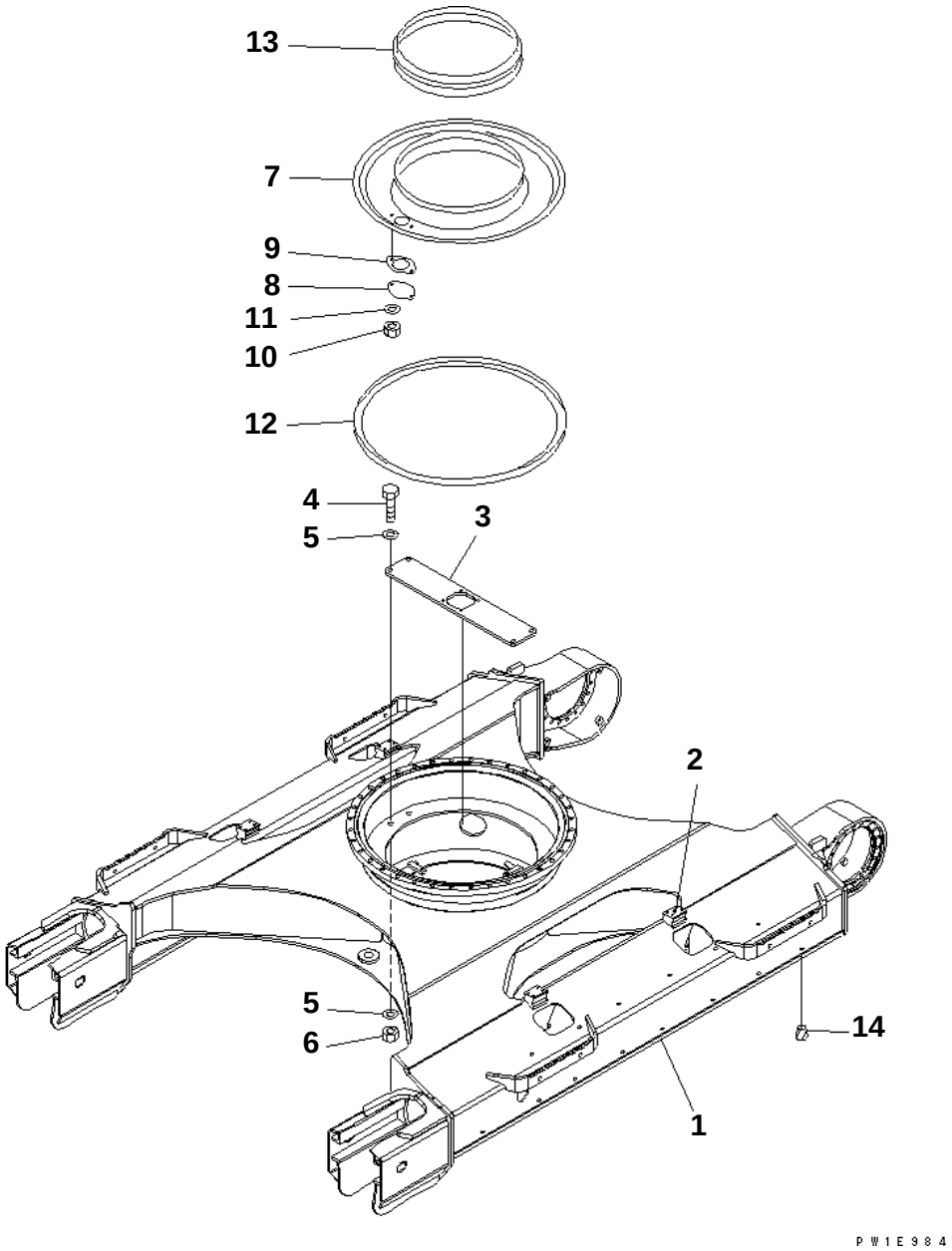

PC228US-3N-W1 S/N 30001-UP

TRACK FRAME (WITH UNDER COVER) (EU. SPEC.) (LC)(#21222-)

Item	Part No.	Description	Qty	Options
1	22U-30-21241	TRACK FRAME	1	SN:21222--
2	20Y-30-31D21	· BRACKET (WELDED)	4	SN:21222--
3	20Y-30-31E81	PLATE	1	SN:21222--
4	01010-82065	BOLT	4	SN:21222--
5	01643-32060	WASHER	8	SN:21222--
6	01580-12016	NUT	4	SN:21222--
7	20Y-30-21151	COVER	1	SN:20001--
8	205-30-71181	COVER	1	SN:20001--
9	205-30-71191	GASKET	1	SN:20001--
10	01580-11008	NUT	2	SN:20001--
11	01643-31032	WASHER	2	SN:20001--
12	20Y-30-11370	SEAL	1	SN:20001--
13	205-30-71171	SEAL	1	SN:20001--
14	07049-02025	PLUG	32	SN:20001--

Ref. R1100-01A6 Page 330130

https://truckmanualshub.com/

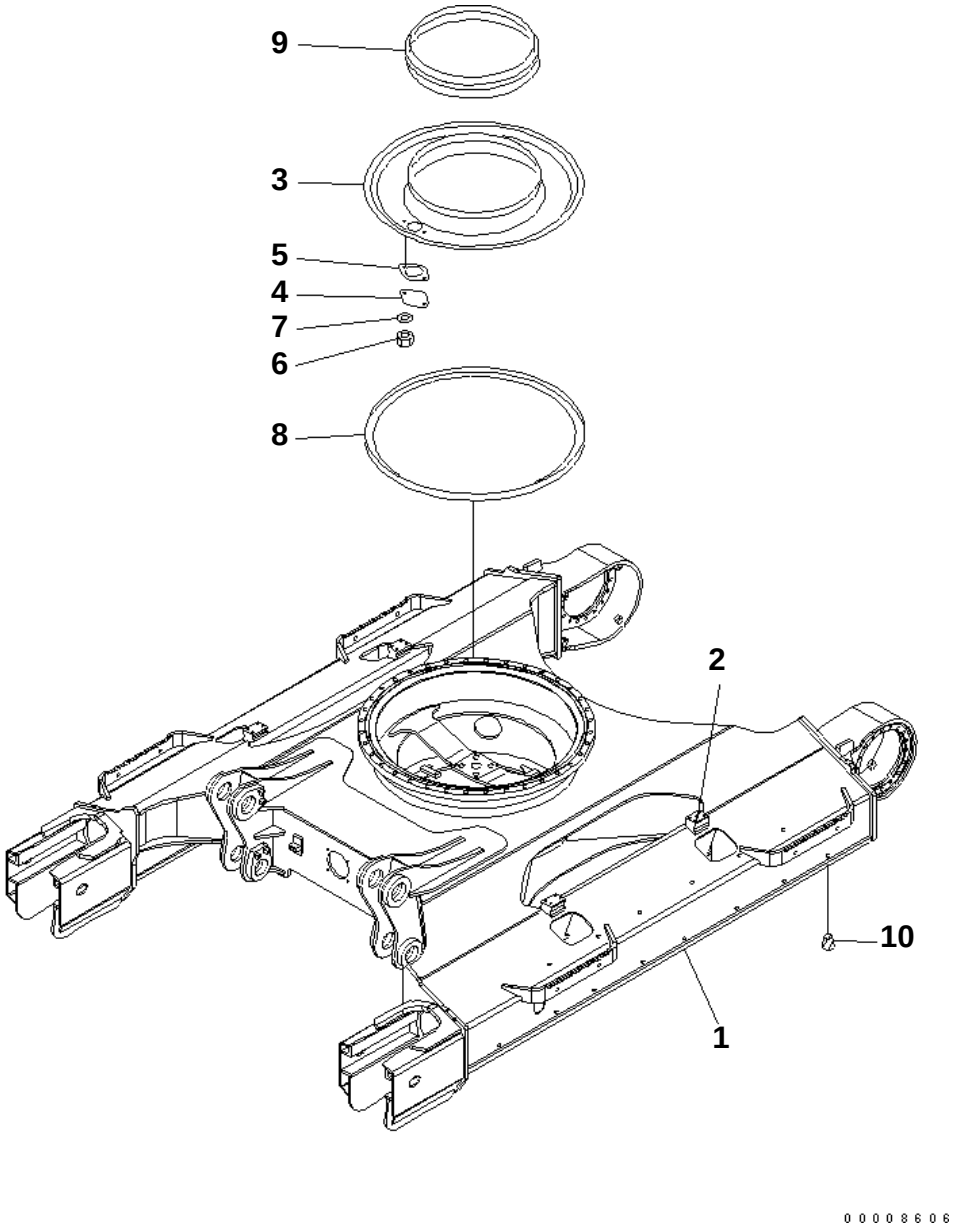

PC228US-3N-W1 S/N 30001-UP

TRACK FRAME (WITH UNDER COVER) (BLADE SPEC.) (LC)

Item	Part No.	Description	Qty	Options
1	22U-30-21250	TRACK FRAME	1	SN:30001--
2	20Y-30-31D21	· BRACKET (WELDED)	4	SN:30001--
3	20Y-30-21151	COVER	1	SN:30001--
4	205-30-71181	COVER	1	SN:30001--
5	205-30-71191	GASKET	1	SN:30001--
6	01580-11008	NUT	2	SN:30001--
7	01643-31032	WASHER	2	SN:30001--
8	20Y-30-11370	SEAL	1	SN:30001--
9	205-30-71171	SEAL	1	SN:30001--
10	07049-02025	PLUG	32	SN:30001--

Ref. R1100-01A9 Page 330140

https://truckmanualshub.com/

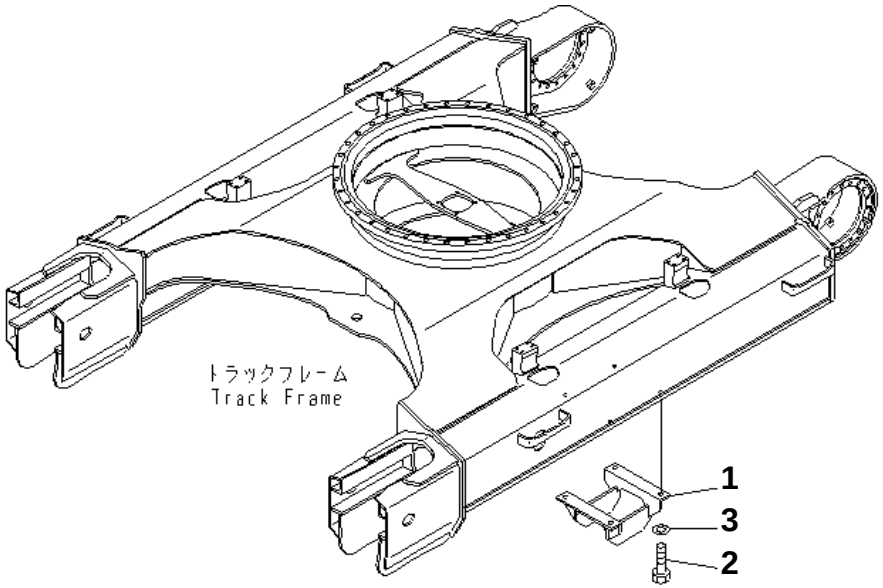

PC228US-3N-W1 S/N 30001-UP

TRACK ROLLER GUARD(#21222-)

Item	Part No.	Description	Qty	Options
1	20Y-30-31160	GUARD	2	SN:21222--
2	01010-62050	BOLT	8	SN:20001--
3	01643-32060	WASHER	8	SN:20001--

Ref. R1200-01A0 Page 330150

https://truckmanualshub.com/

PC228US-3N-W1 S/N 30001-UP

WORK EQUIPMENT

Item	Description	Qty	Page
10	BOOM (5.7M) (FOR U.S.A.)	1	360010
20	2-PIECE BOOM (FIRST BOOM AND ADJUST CYLINDER PIN)	1	360020
30	2-PIECE BOOM (ADJUST CYLINDER LINE)	1	360030
40	BOOM (5.7M) (ARM CYLINDER LINE) (YELLOW) (WITH BURST VALVE)	1	360040
50	BOOM (5.7M) (ARM CYLINDER LINE) (YELLOW) (FOR ADDITIONAL PIPING) (YELLOW) (WITH BURST VALVE)	1	360050
60	2-PIECE BOOM (ARM CYLINDER AND BUCKET CYLINDER LINE)	1	360060
70	BOOM (5.7M) (BUCKET CYLINDER LINE) (FOR U.S.A.) (YELLOW)	1	360070
80	BOOM (5.7M) (BUCKET CYLINDER LINE) (FOR ADDITIONAL PIPING) (YELLOW)	1	360080
90	2-PIECE BOOM (LUBRICATING LINE AND WORKING LAMP HARNESS)	1	360090
100	BOOM (5.7M) (LUBRICATING LINE) (FOR U.S.A.)	1	360100
110	2-PIECE BOOM (ADDITIONAL LINE) (FIRST BOOM SIDE)	1	360110
120	2-PIECE BOOM (FIRST BOOM FOOT LUBRICATING LINE)	1	360120
130	BOOM (5.7M) (ADDITIONAL PIPING) (YELLOW)	1	360130
140	2-PIECE BOOM (ADDITIONAL LINE) (FIRST BOOM SIDE) (FOR 2 ACTUATOR)	1	360140
150	2-PIECE BOOM (SECOND BOOM AND CONNECTING PIN)	1	360150
160	2-PIECE BOOM (SECOND BOOM AND CONNECTING PIN) (FOR 1 ACTUATOR)	1	360160
170	2-PIECE BOOM (BUCKET CYLINDER LINE AND LUBRICATING LINE) (SECOND BOOM SIDE)	1	360170
180	2-PIECE BOOM (ADDITIONAL LINE) (SECOND BOOM SIDE)	1	360180
190	2-PIECE BOOM (ADDITIONAL LINE) (SECOND BOOM SIDE) (FOR 1 ACTUATOR)	1	360190
200	BOOM (5.7M) (ARM CYLINDER BURST VALVE LINE)	1	360200
210	BOOM (5.7M) (ARM CYLINDER BURST VALVE LINE) (FOR ADDITIONAL PIPING)	1	360210
220	2-PIECE BOOM (ADDITIONAL LINE) (SECOND BOOM SIDE) (FOR 2 ACTUATOR)	1	360220
230	BOOM (5.7M) (WORKING LAMP AND BOOM FOOT LUBRICATING)	1	360230
240	2-PIECE BOOM (CONNECTING PIN AND ADJUST CYLINDER)	1	360240
250	2-PIECE BOOM (WORKING LAMP)	1	360250
260	2-PIECE BOOM (BURST VALVE LINE) (BOOM ADJUST CYLINDER SIDE)	1	360260
270	2-PIECE BOOM (BURST VALVE LINE) (ARM CYLINDER SIDE)	1	360270
280	BOOM CYLINDER (YELLOW)	1	360280
290	BOOM CYLINDER (FOR ARM CRANE) (YELLOW)	1	360290
300	BOOM CYLINDER (FOR U.S.A.)	1	360300
310	BOOM CYLINDER (FOR 2-PIECE BOOM) (YELLOW)	1	360310
320	BOOM CYLINDER (LARGE DIAMETER TYPE)	1	360320
330	BOOM CYLINDER (WITH BURST VALVE) (YELLOW)	1	360330
340	BOOM CYLINDER (WITH BURST VALVE) (FOR 2-PIECE BOOM) (YELLOW)	1	360340
350	BOOM CYLINDER (LARGE DIAMETER TYPE WITH BURST VALVE) (YELLOW)	1	360350
360	BOOM PIN (YELLOW)(#20001-)	1	360360
370	ARM CYLINDER (YELLOW)	1	360370
380	ARM CYLINDER (1/2) (WITH BURST VALVE) (YELLOW)	1	360380
390	ARM CYLINDER (1/2) (WITH BURST VALVE) (FOR 2-PIECE BOOM)(YELLOW)	1	360390
400	ARM CYLINDER (2/2) (WITH BURST VALVE) (YELLOW)	1	360400
410	ARM CYLINDER (2/2) (WITH BURST VALVE) (FOR 2-PIECE BOOM) (YELLOW)	1	360410
420	ARM (2.9M) (YELLOW)	1	360420
430	ARM (2.4M)	1	360430
440	ARM (2.4M) (FOR 2-PIECE BOOM)	1	360440
450	ARM (2.9M) (BUCKET CYLINDER) (YELLOW)	1	360450
460	ARM (2.9M) (BUCKET LINK) (YELLOW)	1	360460
470	ARM (2.9M) (BUCKET CYLINDER HOSE)	1	360470
480	ARM (2.4M) (BUCKET CYLINDER HOSE AND SPACER)	1	360480
490	ARM (2.9M) (BUCKET CYLINDER PIPING) (FOR 2-PIECE BOOM)	1	360490
500	ARM (2.9M) (ADDITIONAL PIPING AND SPACER) (FOR 2-PIECE BOOM) (1/2)	1	360500
510	ARM (2.9M) (ADDITIONAL PIPING AND SPACER) (FOR 2-PIECE BOOM) (2/2)	1	360510
520	BUCKET¤ 0.5M3 (CECE 0.45M3)¤ 750MM (VERTICAL PIN TYPE)(#20001-)	1	360520
530	BUCKET¤ 0.5M3 (CECE 0.45M3)¤ 750MM (HORIZONTAL PIN TYPE)(#20001-)	1	360530
540	BUCKET¤ 0.8M3 (CECE 0.7M3)¤ 1150MM (VERTICAL PIN TYPE) (WITH ADJUSTER)(#20001-)	1	360540
550	BUCKET¤ 0.8M3 (CECE 0.7M3)¤ 1150MM (HORIZONTAL PIN TYPE) (WITH ADJUSTER)(#20001-)	1	360550
560	BUCKET¤ 0.6M3 (CECE 0.55M3)¤ 970MM (VERTICAL PIN TYPE) (WITH ADJUSTER)(#20001-)	1	360560
570	BUCKET¤ 0.8M3 (CECE 0.7M3)¤ 1150MM (HORIZONTAL PIN TYPE) (WITH ADJUSTER)(#20001-)	1	360570
580	BUCKET¤ 0.9M3 (CECE 0.8M3)¤ 1200MM (VERTICAL PIN TYPE) (WITH ADJUSTER)(#20001-)	1	360580
590	BUCKET¤ 0.9M3 (CECE 0.8M3)¤ 1200MM (HORIZONTAL PIN TYPE) (WITH ADJUSTER)(#20001-)	1	360590
600	BUCKET¤ 1.0M3 (CECE 0.9M3)¤ 1330MM (VERTICAL PIN TYPE)(#20001-)	1	360600
610	BUCKET¤ 1.0M3 (CECE 0.9M3)¤ 1330MM (HORIZONTAL PIN TYPE)(#20001-)	1	360610
620	SIDE CUTTER (FOR BUCKET)(#20001-)	1	360620
630	SPACER(#20001-)	1	360630
640	BLADE(#20001-)	1	360640
650	BLADE (LC)	1	360650
660	BLADE CYLINDER(#20001-)	1	360660
670	BLADE CYLINDER (COVER AND PIN)(#20001-)	1	360670
680	BREAKER ADAPTER (FOR NPK)	1	360680
690	BREAKER ADAPTER (FOR KRUP)	1	360690

https://truckmanualshub.com/

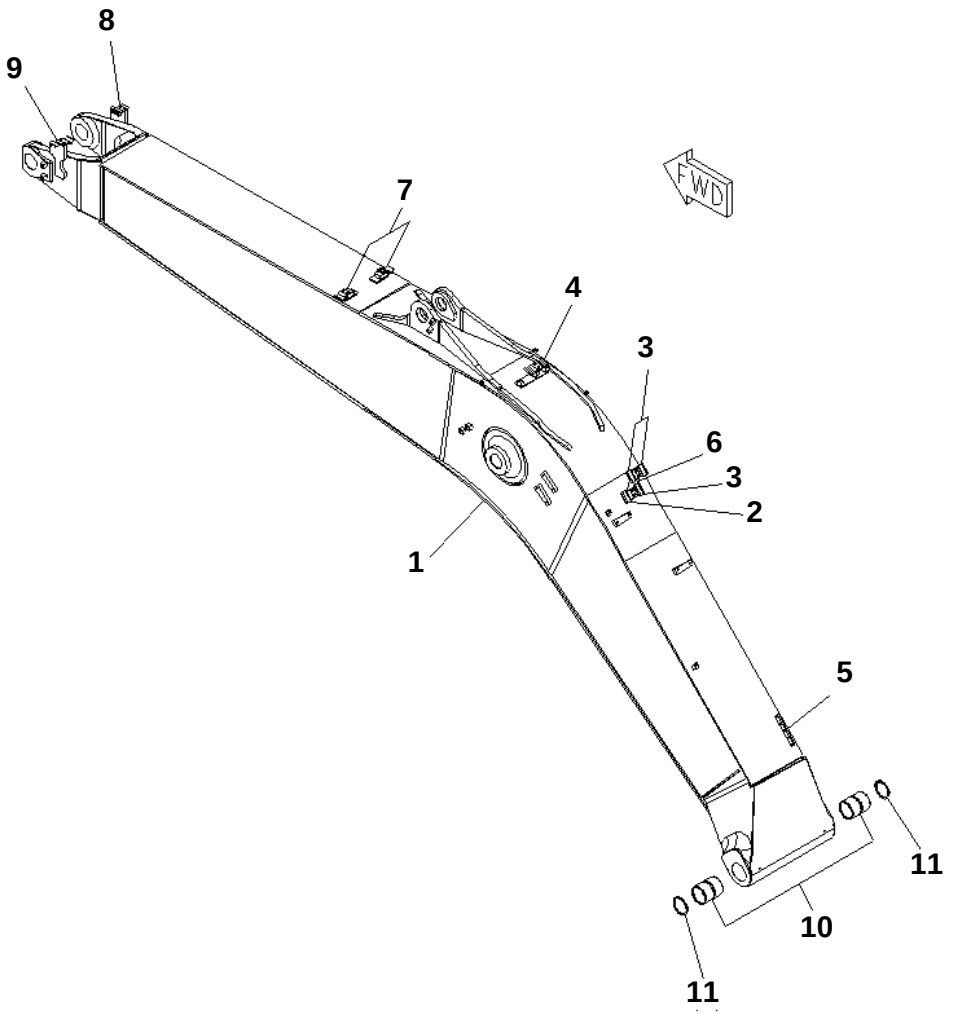

PC228US-3N-W1 S/N 30001-UP

BOOM (5.7M) (FOR U.S.A.)

Item	Part No.	Description	Qty	Options
1	22U-70-21151NK	BOOM	1	SN:30001--
2	205-62-73430	· SEAT	1	SN:30001--
3	20Y-62-13760	· SEAT	3	SN:30001--
4	20Y-62-24240	· BRACKET (WELDED)	1	SN:30001--
5	20Y-70-11651	· SEAT (WELDED)	1	SN:30001--
6	22U-62-23210	· BRACKET (WELDED)	1	SN:30001--
7	20Y-62-45371	· BRACKET (WELDED)	2	SN:30001--
8	22U-62-23313	· BRACKET (WELDED)	1	SN:30001--
9	22U-62-23293	· BRACKET (WELDED)	1	SN:30001--
10	20Y-70-31511	BUSHING	2	SN:30001--
11	07145-00090	SEAL	2	SN:30001--

Ref. T1110-01A4 Page 360010

https://truckmanualshub.com/

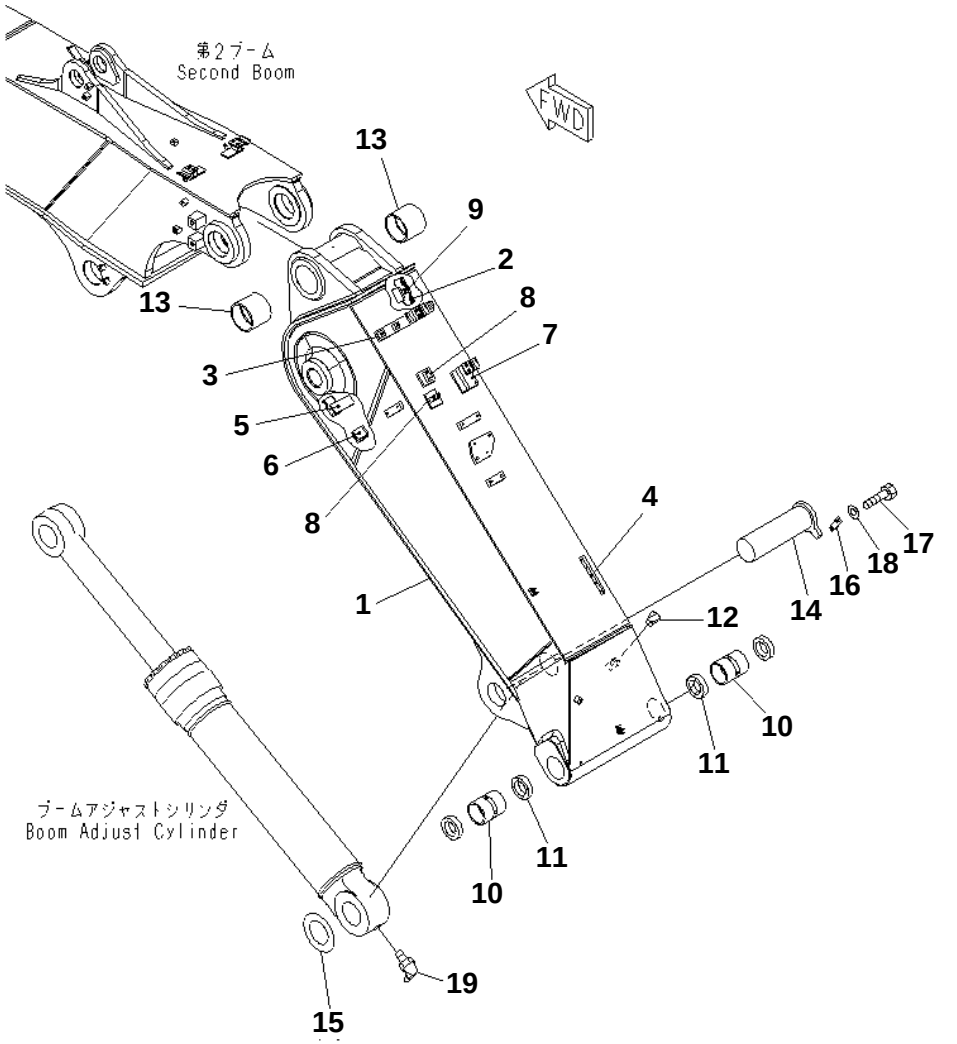

PC228US-3N-W1 S/N 30001-UP

2-PIECE BOOM (FIRST BOOM AND ADJUST CYLINDER PIN)

Item	Part No.	Description	Qty	Options
1	22U-966-2350NK	BOOM FIRST	1	SN:30001--
2	20Y-62-13760	· SEAT	2	SN:30001--
3	20Y-62-45750	· BRACKET (WELDED)	1	SN:30001--
4	20Y-70-11651	· SEAT (WELDED)	1	SN:30001--
5	22U-62-28150	· BRACKET (WELDED)	1	SN:30001--
6	22U-62-28160	· BRACKET (WELDED)	2	SN:30001--
7	22U-62-28280	· BRACKET (WELDED)	1	SN:30001--
8	22U-62-28340	· BRACKET (WELDED)	2	SN:30001--
9	22U-62-28350	· BRACKET (WELDED)	1	SN:30001--
10	20Y-70-31511	BUSHING	2	SN:30001--
11	07145-00090	SEAL	2	SN:30001--
12	07049-01215	PLUG	2	SN:30001--
13	20Y-70-31710	BUSHING	2	SN:30001--
14	208-70-61191NK	PIN	1	SN:30001--
15	207-70-11360	SPACER¤ 1.0MM	15	SN:30001--
16	205-70-66580	PLATE	1	SN:30001--
17	01010-81235	BOLT	2	SN:30001--
18	01643-31232	WASHER	2	SN:30001--
19	07020-00900	FITTING	1	SN:30001--

Ref. T1110-01B0 Page 360020

https://truckmanualshub.com/

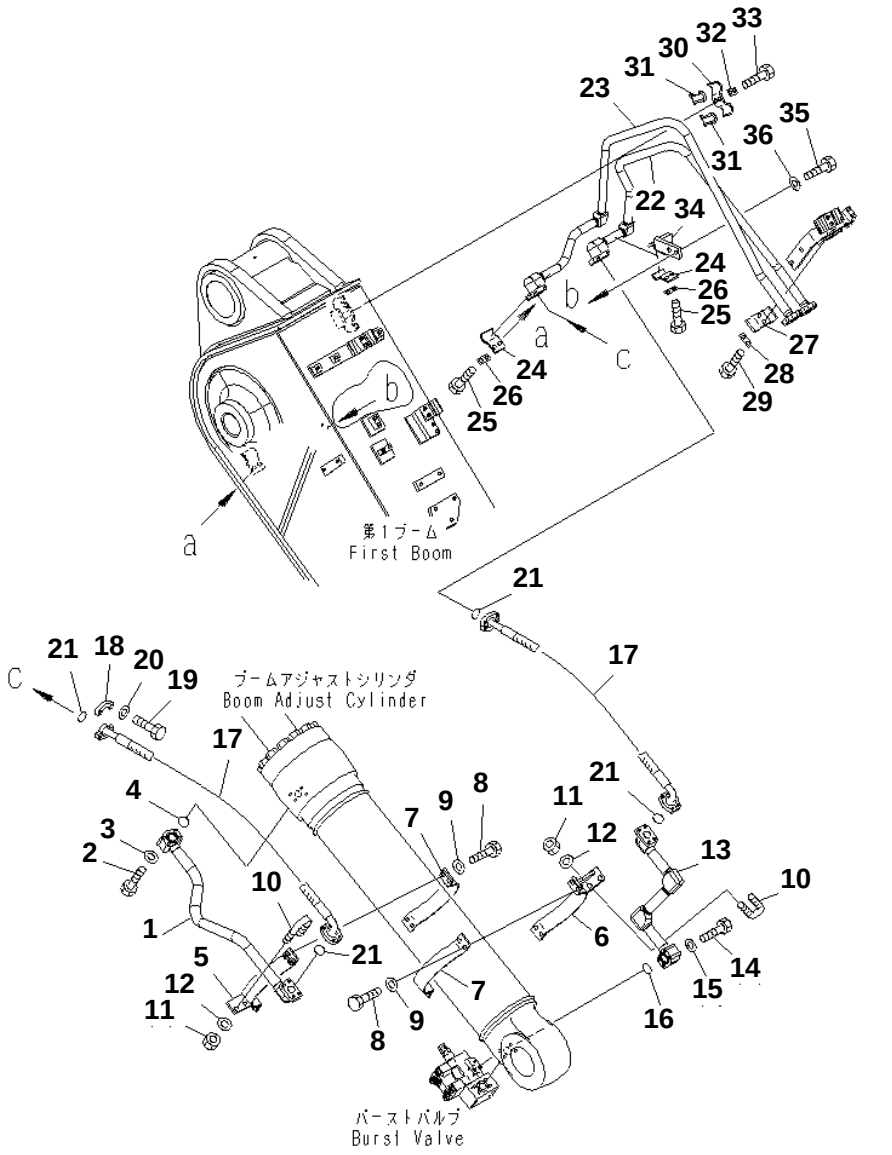

PC228US-3N-W1 S/N 30001-UP

2-PIECE BOOM (ADJUST CYLINDER LINE)

Item	Part No.	Description	Qty	Options
1	22U-62-27830NK	TUBE	1	SN:30001--
2	07372-21060	BOLT	4	SN:30001--
3	01643-51032	WASHER	4	SN:30001--
4	07000-13035	O-RING	1	SN:30001--
5	22U-62-28110NK	BRACKET	1	SN:30001--
6	22U-62-27990NK	BRACKET	1	SN:30001--
7	707-88-95820	BAND	2	SN:30001--
8	01010-81240	BOLT	8	SN:30001--
9	01643-31232	WASHER	8	SN:30001--
10	07283-33450	CLIP	2	SN:30001--
11	01597-01009	NUT	4	SN:30001--
12	01643-31032	WASHER	4	SN:30001--
13	22U-62-27850NK	TUBE	1	SN:30001--
14	07372-21060	BOLT	4	SN:30001--
15	01643-51032	WASHER	4	SN:30001--
16	07000-13035	O-RING	1	SN:30001--
17	07084-01A09	TUBE	2	SN:30001--
18	07371-31049	FLANGE	8	SN:30001--
19	07372-21035	BOLT	16	SN:30001--
20	01643-51032	WASHER	16	SN:30001--
21	07000-13032	O-RING	4	SN:30001--
22	22U-62-27950NK	TUBE	1	SN:30001--
23	22U-62-27960NK	TUBE	1	SN:30001--
24	20Y-62-13650NK	CLAMP	2	SN:30001--
25	01010-81230	BOLT	4	SN:30001--
26	20Y-62-13450	PLATE	2	SN:30001--
27	20Y-62-13710NK	CLAMP	1	SN:30001--
28	20Y-62-13450	PLATE	1	SN:30001--
29	01010-81230	BOLT	2	SN:30001--
30	20Y-62-13230NK	CLAMP	1	SN:30001--
31	20Y-62-13760	SEAT	2	SN:30001--
32	20Y-62-13450	PLATE	1	SN:30001--
33	01010-81230	BOLT	2	SN:30001--
34	22U-62-28140NK	BRACKET	1	SN:30001--
35	01010-81230	BOLT	2	SN:30001--
36	01643-31232	WASHER	2	SN:30001--

Ref. T1110-02B0 Page 360030

https://truckmanualshub.com/

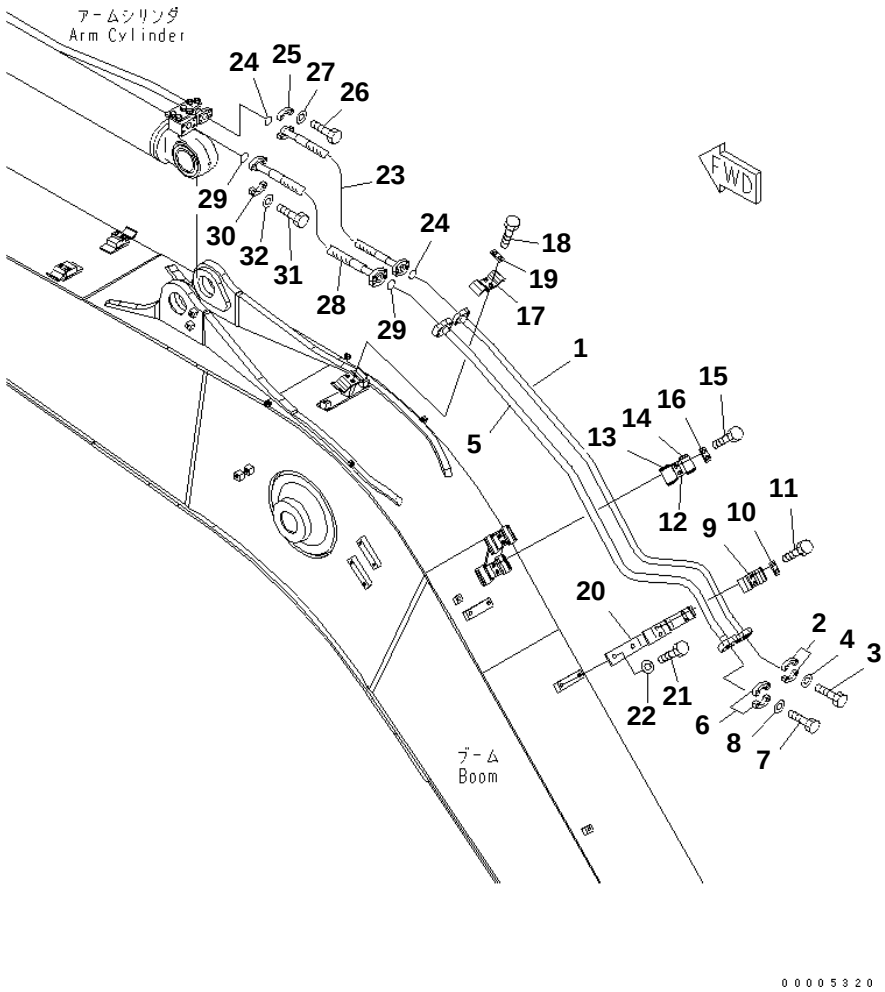

PC228US-3N-W1 S/N 30001-UP

BOOM (5.7M) (ARM CYLINDER LINE) (YELLOW) (WITH BURST VALVE)

Item	Part No.	Description	Qty	Options
1	22U-62-23420NK	TUBE	1	SN:30001--
2	07371-30640	FLANGE	2	SN:30001--
3	07372-21035	BOLT	4	SN:30001--
4	01643-51032	WASHER	4	SN:30001--
5	22U-62-23410NK	TUBE	1	SN:30001--
6	07371-31049	FLANGE	2	SN:30001--
7	07372-21035	BOLT	4	SN:30001--
8	01643-51032	WASHER	4	SN:30001--
9	20Y-62-13690NK	CLAMP	1	SN:30001--
10	20Y-62-13450	PLATE	1	SN:30001--
11	01010-81230	BOLT	2	SN:30001--
12	20Y-62-13740NK	CLAMP	1	SN:30001--
13	20Y-62-13760	· SEAT	1	SN:30001--
14	205-62-73430	· SEAT	1	SN:30001--
15	01010-81230	BOLT	2	SN:30001--
16	20Y-62-13450	PLATE	1	SN:30001--
17	20Y-62-13720NK	CLAMP	1	SN:30001--
18	01010-81230	BOLT	2	SN:30001--
19	20Y-62-13450	PLATE	1	SN:30001--
20	22U-62-27441NK	BRACKET	1	SN:30001--
21	01010-81230	BOLT	2	SN:30001--
22	01643-31232	WASHER	2	SN:30001--
23	20Y-62-13570	HOSE¤ 750MM	1	SN:30001--
24	07000-13025	O-RING	2	SN:30001--
25	07371-30640	FLANGE	4	SN:30001--
26	07372-21035	BOLT	8	SN:30001--
27	01643-51032	WASHER	8	SN:30001--
28	20Y-62-13560	HOSE	1	SN:30001--
29	07000-13032	O-RING	2	SN:30001--
30	07371-31049	FLANGE	4	SN:30001--
31	07372-21035	BOLT	8	SN:30001--
32	01643-51032	WASHER	8	SN:30001--

Ref. T1110-03A6 Page 360040

https://truckmanualshub.com/

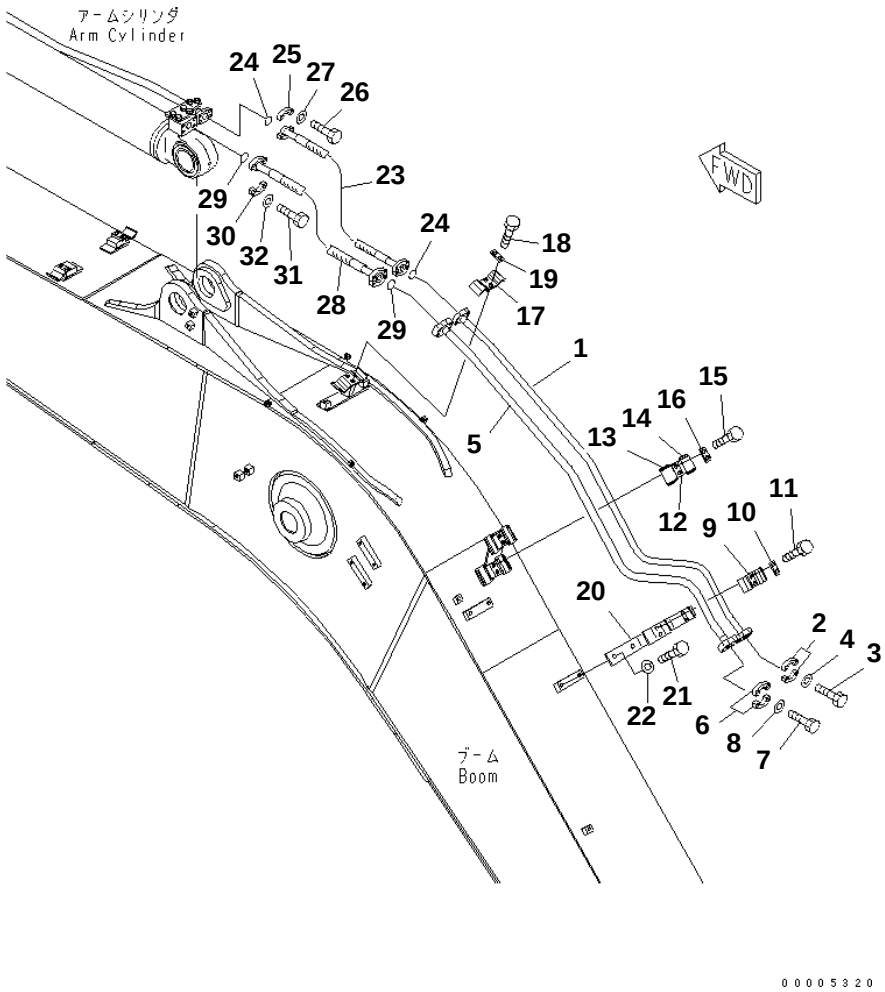

PC228US-3N-W1 S/N 30001-UP

BOOM (5.7M) (ARM CYLINDER LINE) (YELLOW) (FOR ADDITIONAL PIPING) (YELLOW) (WITH BURST VALVE)

Item	Part No.	Description	Qty	Options
1	22U-62-23420NK	TUBE	1	SN:30001--
2	07371-30640	FLANGE	2	SN:30001--
3	07372-21035	BOLT	4	SN:30001--
4	01643-51032	WASHER	4	SN:30001--
5	22U-62-23410NK	TUBE	1	SN:30001--
6	07371-31049	FLANGE	2	SN:30001--
7	07372-21035	BOLT	4	SN:30001--
8	01643-51032	WASHER	4	SN:30001--
9	20Y-62-13690NK	CLAMP	1	SN:30001--
10	20Y-62-13450	PLATE	1	SN:30001--
11	01010-81230	BOLT	2	SN:30001--
12	20Y-62-13740NK	CLAMP	1	SN:30001--
13	20Y-62-13760	· SEAT	1	SN:30001--
14	205-62-73430	· SEAT	1	SN:30001--
15	01010-81230	BOLT	2	SN:30001--
16	20Y-62-13450	PLATE	1	SN:30001--
17	20Y-62-13720NK	CLAMP	1	SN:30001--
18	01010-81230	BOLT	2	SN:30001--
19	20Y-62-13450	PLATE	1	SN:30001--
20	22U-62-27441NK	BRACKET	1	SN:30001--
21	01010-81230	BOLT	2	SN:30001--
22	01643-31232	WASHER	2	SN:30001--
23	20Y-62-13570	HOSE¤ 750MM	1	SN:30001--
24	07000-13025	O-RING	2	SN:30001--
25	07371-30640	FLANGE	4	SN:30001--
26	07372-21035	BOLT	8	SN:30001--
27	01643-51032	WASHER	8	SN:30001--
28	20Y-62-13560	HOSE	1	SN:30001--
29	07000-13032	O-RING	2	SN:30001--
30	07371-31049	FLANGE	4	SN:30001--
31	07372-21035	BOLT	8	SN:30001--
32	01643-51032	WASHER	8	SN:30001--

Ref. T1110-03A7 Page 360050

https://truckmanualshub.com/

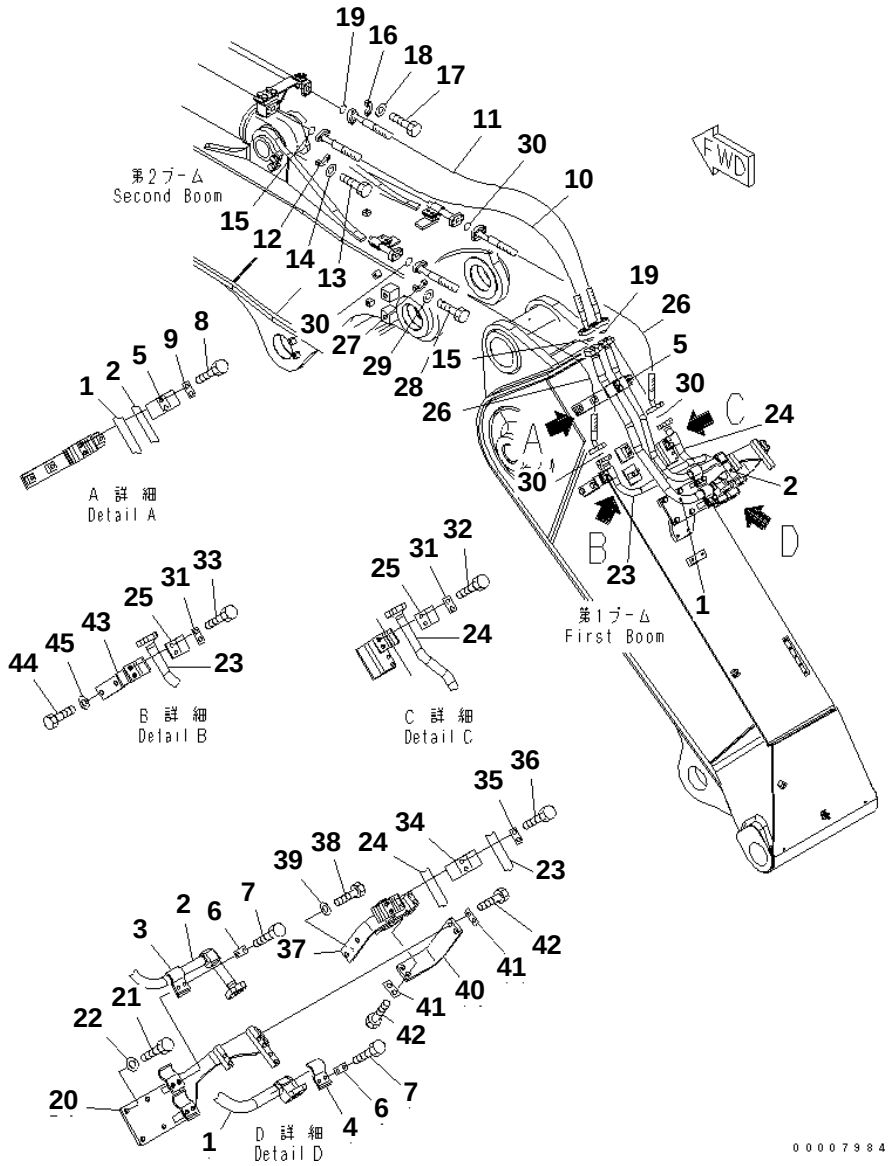

PC228US-3N-W1 S/N 30001-UP

2-PIECE BOOM (ARM CYLINDER AND BUCKET CYLINDER LINE)

Item	Part No.	Description	Qty	Options
1	22U-62-27930NK	TUBE	1	SN:30001--
2	22U-62-27940NK	TUBE	1	SN:30001--
3	20Y-62-13650NK	CLAMP	1	SN:30001--
4	207-62-31330NK	CLAMP	1	SN:30001--
5	20Y-62-13690NK	CLAMP	1	SN:30001--
6	20Y-62-13450	PLATE	2	SN:30001--
7	01010-81230	BOLT	4	SN:30001--
8	01010-81230	BOLT	2	SN:30001--
9	20Y-62-13450	PLATE	1	SN:30001--
10	07085-01018	HOSE	1	SN:30001--
11	07085-00618	HOSE	1	SN:30001--
12	07371-31049	FLANGE	4	SN:30001--
13	07372-21035	BOLT	8	SN:30001--
14	01643-51032	WASHER	8	SN:30001--
15	07000-13032	O-RING	2	SN:30001--
16	07371-30640	FLANGE	4	SN:30001--
17	07372-21035	BOLT	8	SN:30001--
18	01643-51032	WASHER	8	SN:30001--
19	07000-13025	O-RING	2	SN:30001--
20	22U-62-28230NK	BRACKET	1	SN:30001--
21	01010-81230	BOLT	4	SN:30001--
22	01643-31232	WASHER	4	SN:30001--
23	22U-62-27870NK	TUBE	1	SN:30001--
24	22U-62-27860NK	TUBE	1	SN:30001--
25	20Y-62-13650NK	CLAMP	2	SN:30001--
26	07083-00611	HOSE	2	SN:30001--
27	07371-30640	FLANGE	8	SN:30001--
28	07372-21035	BOLT	16	SN:30001--
29	01643-51032	WASHER	16	SN:30001--
30	07000-13025	O-RING	4	SN:30001--
31	20Y-62-13450	PLATE	2	SN:30001--
32	01010-81230	BOLT	2	SN:30001--
33	01010-81240	BOLT	2	SN:30001--
34	20Y-62-13710NK	CLAMP	1	SN:30001--
35	20Y-62-13450	PLATE	1	SN:30001--
36	01010-81230	BOLT	2	SN:30001--
37	22U-62-28180NK	BRACKET	1	SN:30001--
38	01010-81230	BOLT	2	SN:30001--
39	01643-31232	WASHER	2	SN:30001--
40	22U-62-28170NK	BRACKET	1	SN:30001--

Ref. T1110-03B0 Page 360060

https://truckmanualshub.com/

PC228US-3N-W1 S/N 30001-UP

2-PIECE BOOM (ARM CYLINDER AND BUCKET CYLINDER LINE)

Item	Part No.	Description	Qty	Options
41	20Y-62-13450	PLATE	2	SN:30001--
42	01010-81230	BOLT	4	SN:30001--
43	22U-62-28240NK	BRACKET	1	SN:30001--
44	01010-81230	BOLT	2	SN:30001--
45	01643-31232	WASHER	2	SN:30001--

https://truckmanualshub.com/

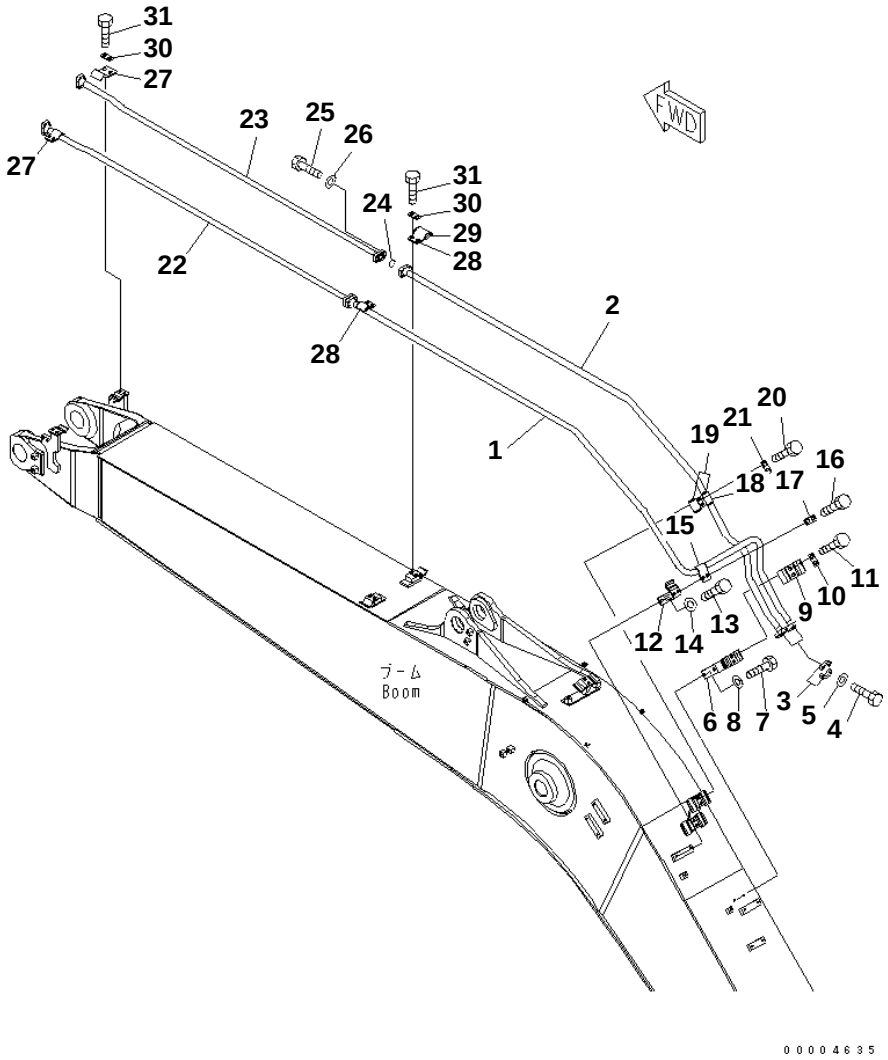

PC228US-3N-W1 S/N 30001-UP

BOOM (5.7M) (BUCKET CYLINDER LINE) (FOR U.S.A.) (YELLOW)

Item	Part No.	Description	Qty	Options
1	22U-62-23431NK	TUBE	1	SN:30001--
2	22U-62-23441NK	TUBE	1	SN:30001--
3	07371-30640	FLANGE	4	SN:30001--
4	07372-21035	BOLT	8	SN:30001--
5	01643-51032	WASHER	8	SN:30001--
6	22U-62-23180NK	BRACKET	1	SN:30001--
7	01010-81230	BOLT	2	SN:30001--
8	01643-31232	WASHER	2	SN:30001--
9	20Y-62-13710NK	CLAMP	1	SN:30001--
10	20Y-62-13450	PLATE	1	SN:30001--
11	01010-81230	BOLT	2	SN:30001--
12	22U-62-23190NK	BRACKET	1	SN:30001--
13	01010-81225	BOLT	2	SN:30001--
14	01643-31232	WASHER	2	SN:30001--
15	20Y-62-13650NK	CLAMP	1	SN:30001--
16	01010-81230	BOLT	2	SN:30001--
17	20Y-62-13450	PLATE	1	SN:30001--
18	20Y-62-13230NK	CLAMP	1	SN:30001--
19	20Y-62-13760	· SEAT	2	SN:30001--
20	01010-81230	BOLT	2	SN:30001--
21	20Y-62-13450	PLATE	1	SN:30001--
22	22U-62-23451NK	TUBE	1	SN:30001--
23	22U-62-23461NK	TUBE	1	SN:30001--
24	07000-13030	O-RING	2	SN:30001--
25	07372-21035	BOLT	8	SN:30001--
26	01643-51032	WASHER	8	SN:30001--
27	20Y-62-13650NK	CLAMP	2	SN:30001--
28	20Y-62-13220NK	CLAMP	2	SN:30001--
29	20Y-62-13760	· SEAT	2	SN:30001--
30	20Y-62-13450	PLATE	4	SN:30001--
31	01010-81230	BOLT	8	SN:30001--

Ref. T1110-04A4 Page 360070

https://truckmanualshub.com/

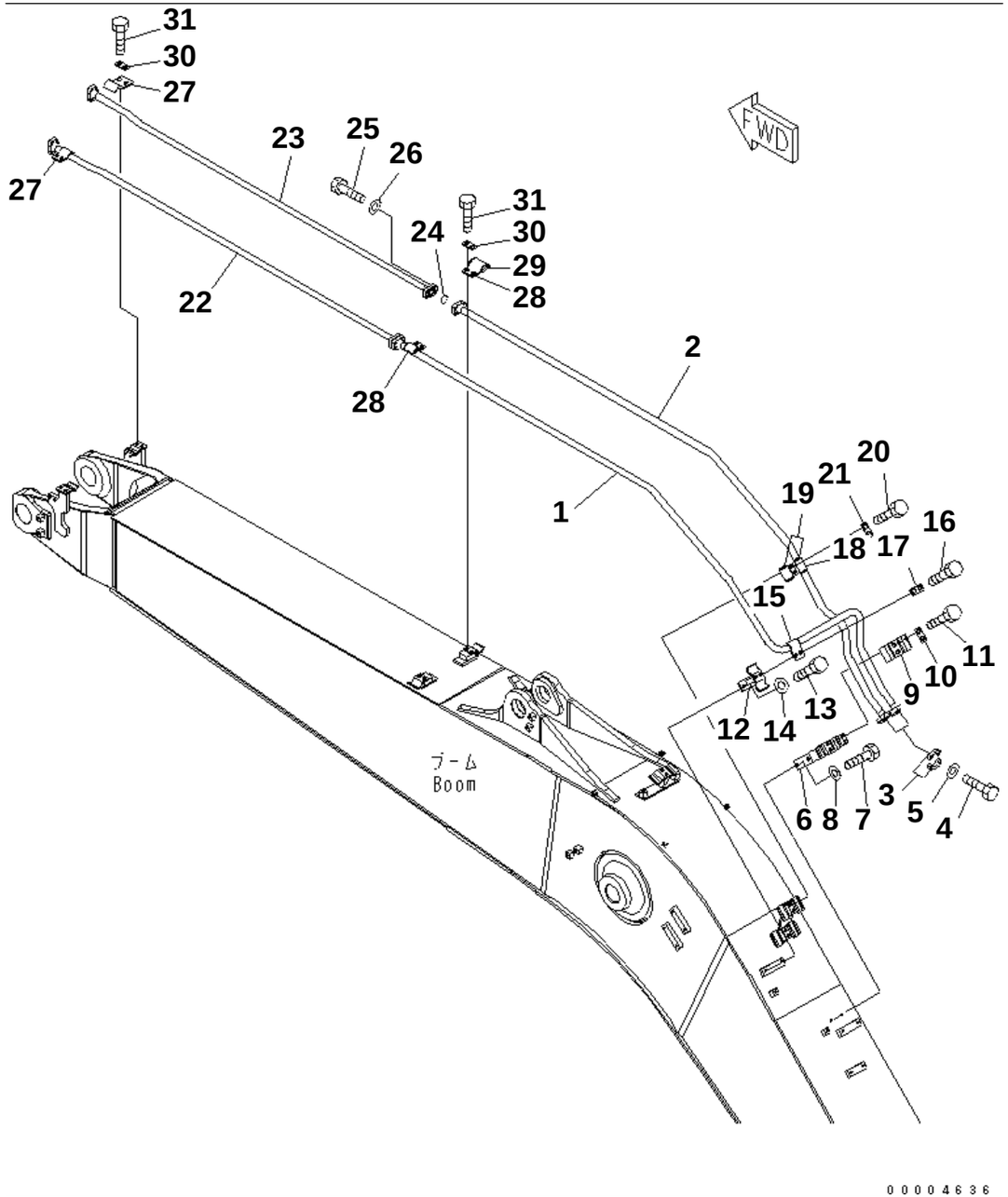

PC228US-3N-W1 S/N 30001-UP

BOOM (5.7M) (BUCKET CYLINDER LINE) (FOR ADDITIONAL PIPING) (YELLOW)

Item	Part No.	Description	Qty	Options
1	22U-62-23431NK	TUBE	1	SN:30001--
2	22U-62-23441NK	TUBE	1	SN:30001--
3	07371-30640	FLANGE	4	SN:30001--
4	07372-21035	BOLT	8	SN:30001--
5	01643-51032	WASHER	8	SN:30001--
6	22U-62-23230NK	BRACKET	1	SN:30001--
7	01010-81230	BOLT	2	SN:30001--
8	01643-31232	WASHER	2	SN:30001--
9	20Y-62-13710NK	CLAMP	1	SN:30001--
10	20Y-62-13450	PLATE	1	SN:30001--
11	01010-81230	BOLT	2	SN:30001--
12	22U-62-23240NK	BRACKET	1	SN:30001--
13	01010-81225	BOLT	2	SN:30001--
14	01643-31232	WASHER	2	SN:30001--
15	20Y-62-13690NK	CLAMP	1	SN:30001--
16	01010-81230	BOLT	2	SN:30001--
17	20Y-62-13450	PLATE	1	SN:30001--
18	20Y-62-13230NK	CLAMP	1	SN:30001--
19	20Y-62-13760	· SEAT	2	SN:30001--
20	01010-81230	BOLT	2	SN:30001--
21	20Y-62-13450	PLATE	1	SN:30001--
22	22U-62-23451NK	TUBE	1	SN:30001--
23	22U-62-23461NK	TUBE	1	SN:30001--
24	07000-13030	O-RING	2	SN:30001--
25	07372-21035	BOLT	8	SN:30001--
26	01643-51032	WASHER	8	SN:30001--
27	20Y-62-13650NK	CLAMP	2	SN:30001--
28	20Y-62-13220NK	CLAMP	2	SN:30001--
29	20Y-62-13760	· SEAT	2	SN:30001--
30	20Y-62-13450	PLATE	4	SN:30001--
31	01010-81230	BOLT	8	SN:30001--

Ref. T1110-04A5 Page 360080

https://truckmanualshub.com/

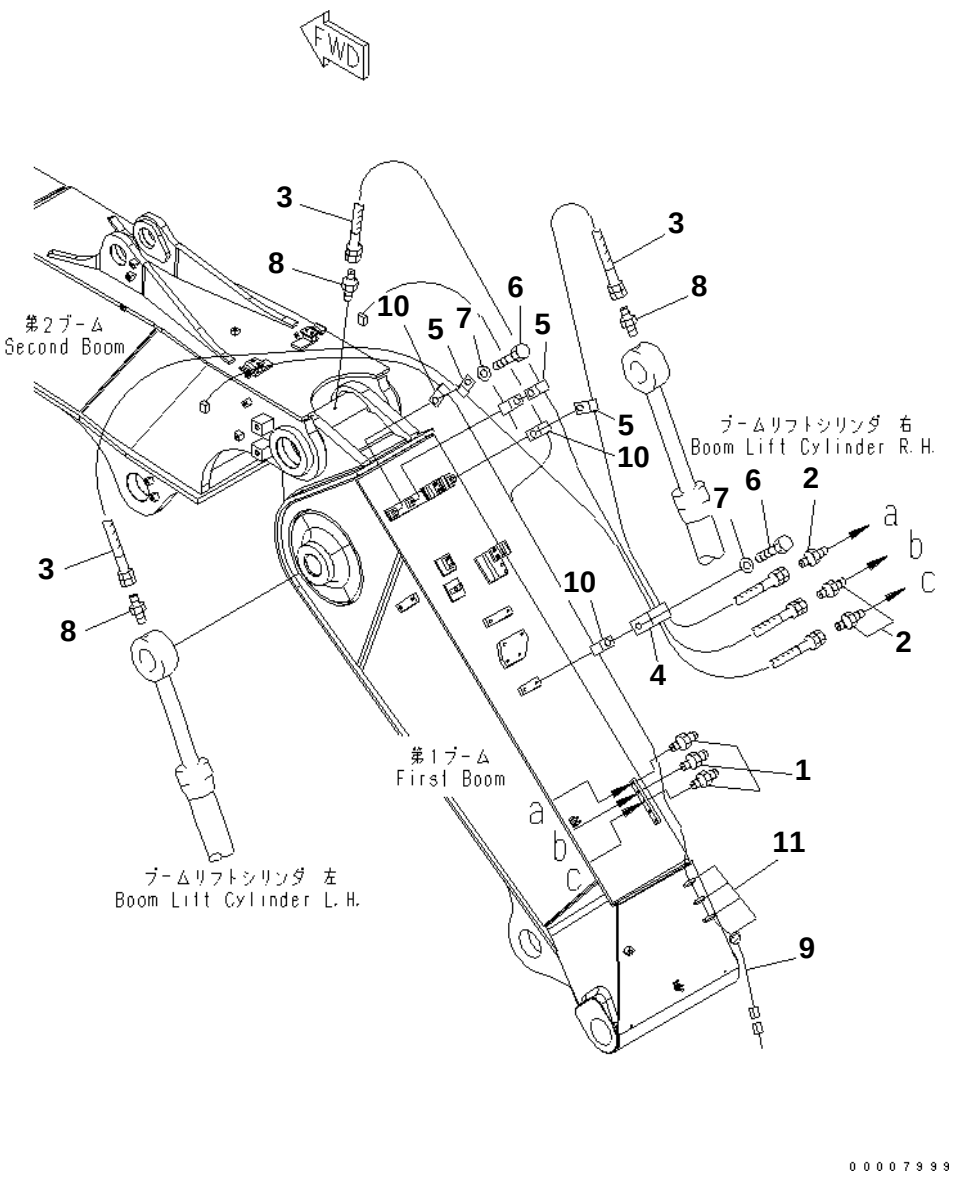

PC228US-3N-W1 S/N 30001-UP

2-PIECE BOOM (LUBRICATING LINE AND WORKING LAMP HARNESS)

Item	Part No.	Description	Qty	Options
1	07020-00000	FITTING	3	SN:30001--
2	205-70-51390	NIPPLE	3	SN:30001--
3	20Y-966-3320	HOSE¤ 2200MM	3	SN:30001--
4	04434-52212	CLIP	4	SN:30001--
5	04434-51012	CLIP	3	SN:30001--
6	01010-81220	BOLT	4	SN:30001--
7	01643-31232	WASHER	4	SN:30001--
8	205-70-51390	NIPPLE	3	SN:30001--
9	22U-06-21330	WIRE	1	SN:30001--
10	04434-51012	CLIP	5	SN:30001--
11	08034-20519	BAND	4	SN:30001--

Ref. T1110-04B0 Page 360090

https://truckmanualshub.com/

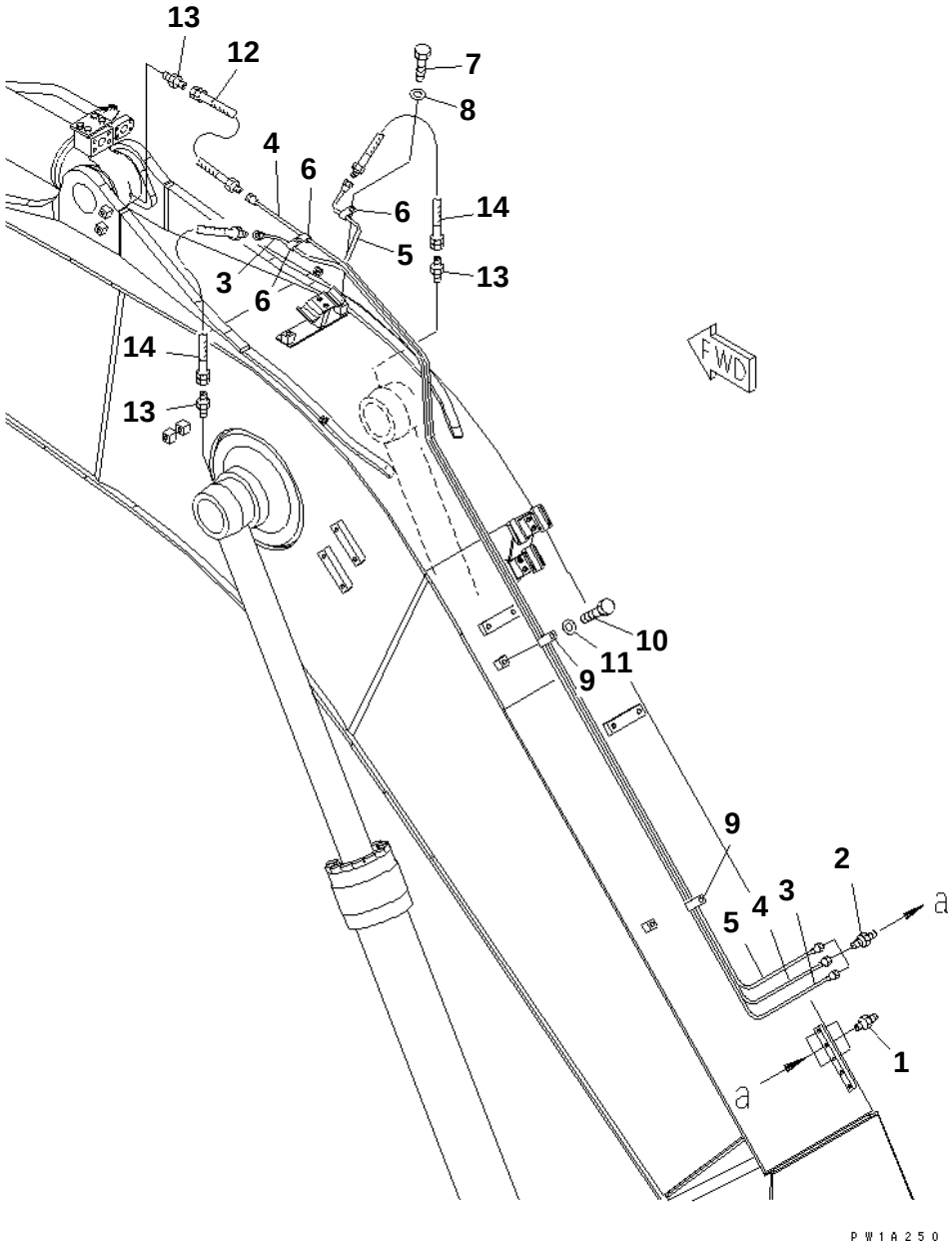

PC228US-3N-W1 S/N 30001-UP

BOOM (5.7M) (LUBRICATING LINE) (FOR U.S.A.)

Item	Part No.	Description	Qty	Options
1	07020-00000	FITTING	3	SN:30001--
2	20Y-70-11540	CONNECTOR	3	SN:30001--
3	20Y-70-21520	TUBE	1	SN:30001--
4	20Y-70-21530	TUBE	1	SN:30001--
5	20Y-70-21540	TUBE	1	SN:30001--
6	08036-00814	CLIP	3	SN:30001--
7	01010-81220	BOLT	2	SN:30001--
8	01643-31232	WASHER	2	SN:30001--
9	04434-51712	CLIP	2	SN:30001--
10	01010-81220	BOLT	2	SN:30001--
11	01643-31232	WASHER	2	SN:30001--
12	20Y-70-11520	HOSE¤ 440MM	1	SN:30001--
13	205-70-51390	NIPPLE	3	SN:30001--
14	20Y-70-21550	HOSE¤ 490MM	2	SN:30001--

Ref. T1110-05A4 Page 360100

https://truckmanualshub.com/

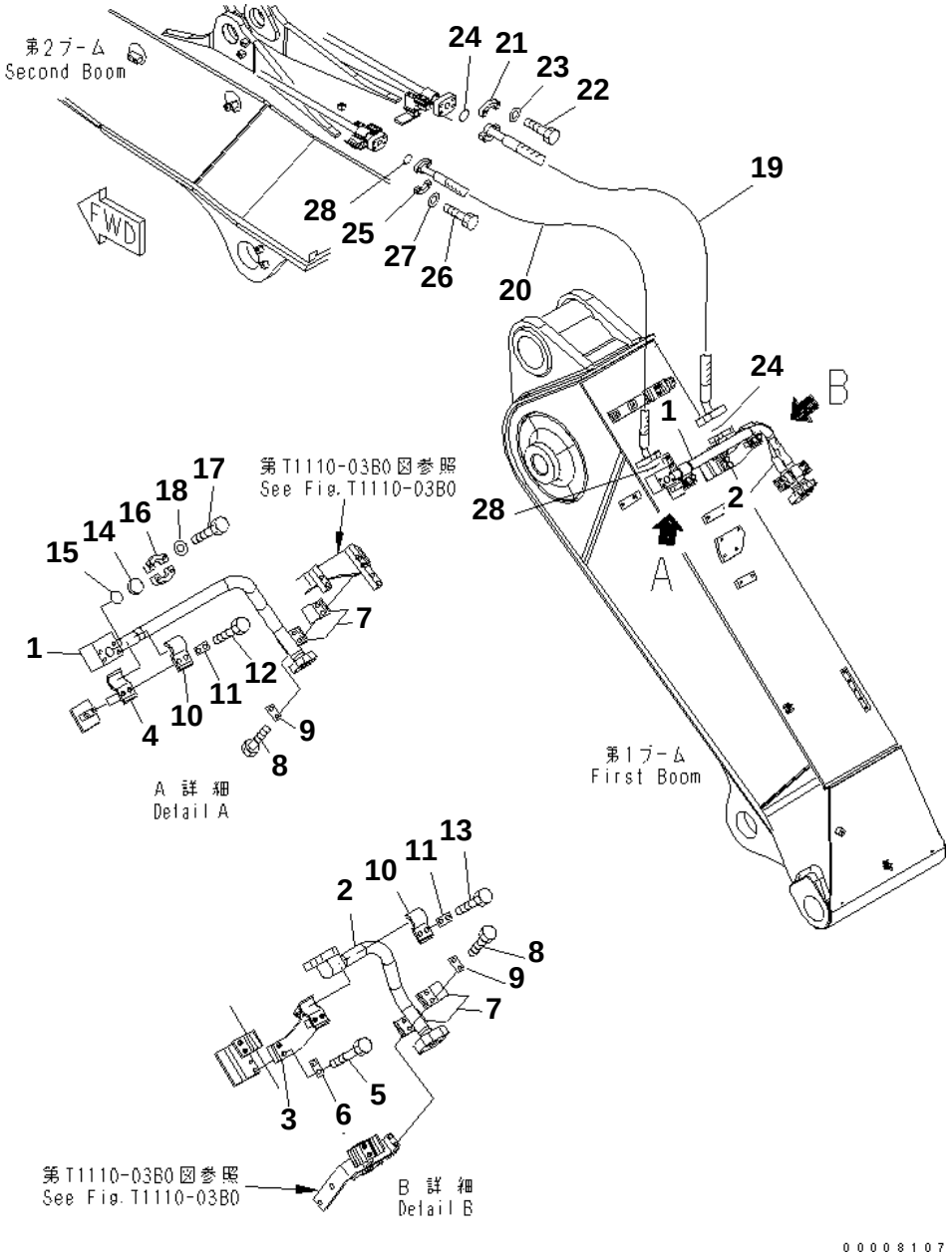

PC228US-3N-W1 S/N 30001-UP

2-PIECE BOOM (ADDITIONAL LINE) (FIRST BOOM SIDE)

Item	Part No.	Description	Qty	Options
1	22U-62-27920NK	TUBE	1	SN:30001--
2	22U-62-27910NK	TUBE	1	SN:30001--
3	22U-62-28370NK	BRACKET	1	SN:30001--
4	22U-62-28330NK	BRACKET	1	SN:30001--
5	01010-81260	BOLT	2	SN:30001--
6	20Y-62-13450	PLATE	1	SN:30001--
7	207-62-31330NK	CLAMP	4	SN:30001--
8	01010-81230	BOLT	4	SN:30001--
9	20Y-62-13450	PLATE	2	SN:30001--
10	207-62-31330NK	CLAMP	2	SN:30001--
11	20Y-62-13450	PLATE	2	SN:30001--
12	01010-81295	BOLT	2	SN:30001--
13	01010-81230	BOLT	2	SN:30001--
14	07378-11000	HEAD	1	SN:30001--
15	07000-13032	O-RING	1	SN:30001--
16	07371-31049	FLANGE	2	SN:30001--
17	07372-21035	BOLT	4	SN:30001--
18	01643-51032	WASHER	4	SN:30001--
19	07083-01213	HOSE	1	SN:30001--
20	07083-01013	HOSE	1	SN:30001--
21	07371-51260	FLANGE	4	SN:30001--
22	07372-21245	BOLT	8	SN:30001--
23	01643-51232	WASHER	8	SN:30001--
24	07000-13038	O-RING	2	SN:30001--
25	07371-31049	FLANGE	4	SN:30001--
26	07372-21035	BOLT	8	SN:30001--
27	01643-51032	WASHER	8	SN:30001--
28	07000-13032	O-RING	2	SN:30001--

Ref. T1110-05B0 Page 360110

https://truckmanualshub.com/

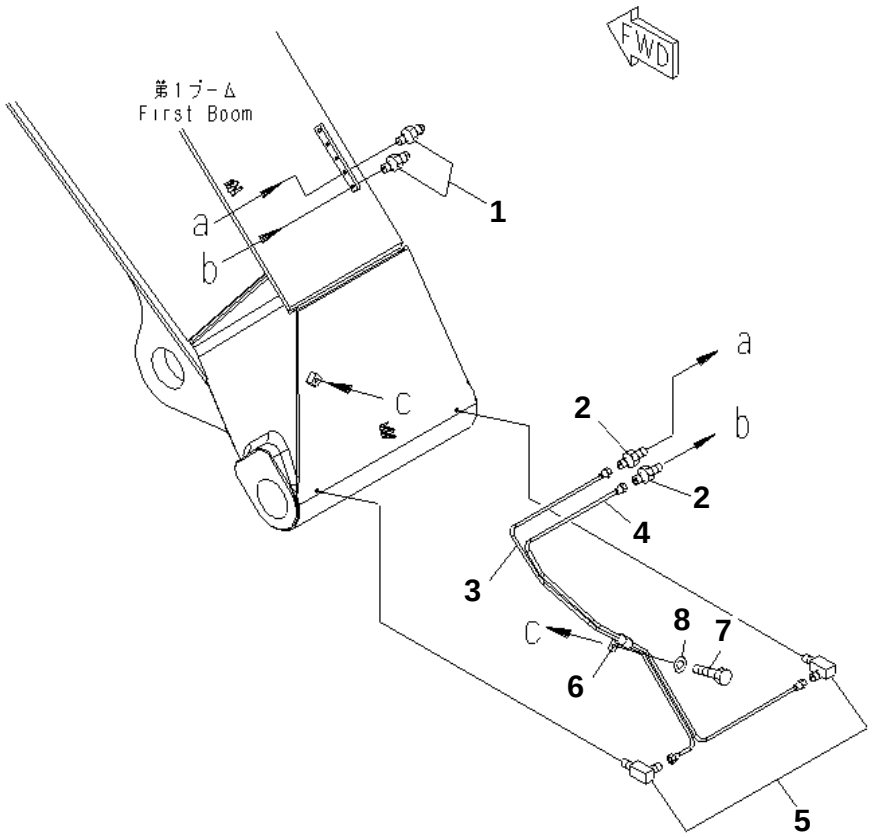

PC228US-3N-W1 S/N 30001-UP

2-PIECE BOOM (FIRST BOOM FOOT LUBRICATING LINE)

Item	Part No.	Description	Qty	Options
1	07020-00000	FITTING	2	SN:30001--
2	20Y-70-11540	CONNECTOR	2	SN:30001--
3	22U-70-21610	TUBE	1	SN:30001--
4	22U-70-21620	TUBE	1	SN:30001--
5	20Y-25-11270	ELBOW	2	SN:30001--
6	04434-50812	CLIP	1	SN:30001--
7	01010-81220	BOLT	1	SN:30001--
8	01643-31232	WASHER	1	SN:30001--

Ref. T1110-06B0 Page 360120

https://truckmanualshub.com/

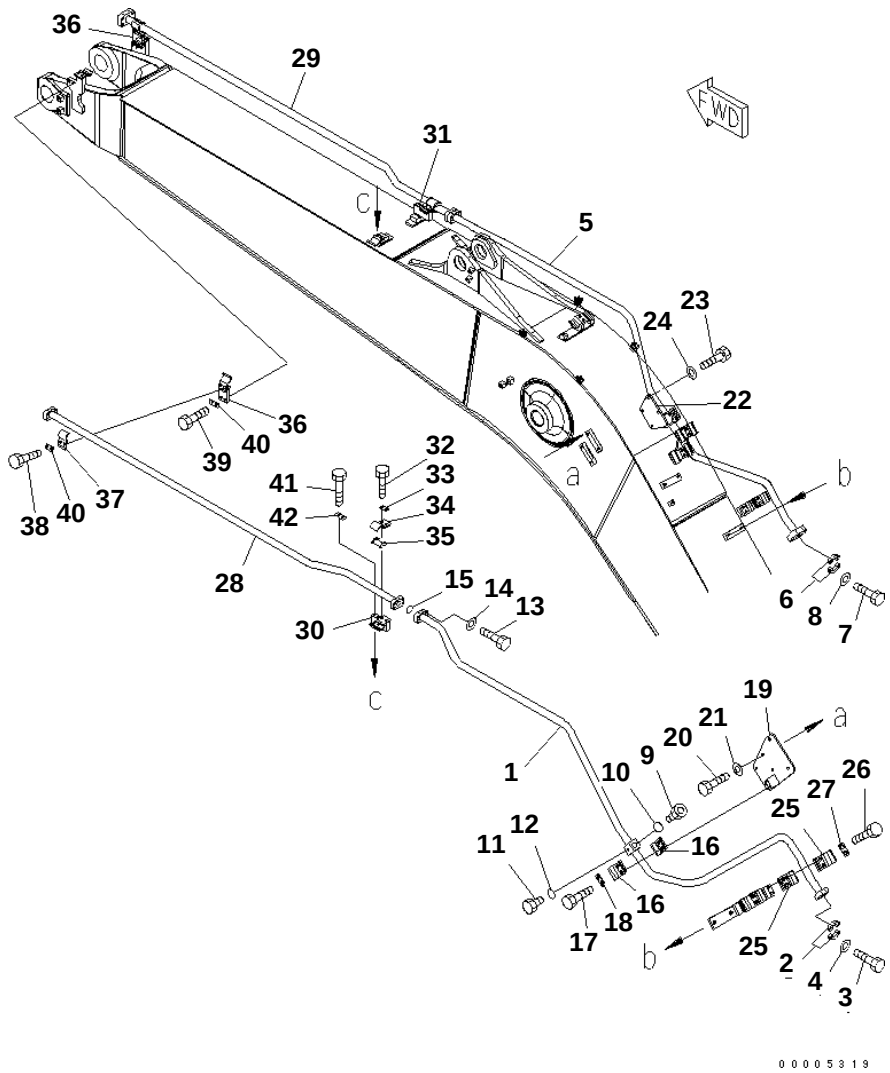

PC228US-3N-W1 S/N 30001-UP

BOOM (5.7M) (ADDITIONAL PIPING) (YELLOW)

Item	Part No.	Description	Qty	Options
1	22U-62-23471NK	TUBE	1	SN:30001--
2	07371-31049	FLANGE	2	SN:30001--
3	07372-21035	BOLT	4	SN:30001--
4	01643-51032	WASHER	4	SN:30001--
5	22U-62-23482NK	TUBE	1	SN:30001--
6	07371-51260	FLANGE	2	SN:30001--
7	01010-81250	BOLT	4	SN:30001--
8	01643-31232	WASHER	4	SN:30001--
9	07040-12412	PLUG	2	SN:30001--
10	07002-12434	O-RING	2	SN:30001--
11	07040-11007	PLUG	2	SN:30001--
12	07002-11023	O-RING	2	SN:30001--
13	07372-21040	BOLT	8	SN:30001--
14	01643-51032	WASHER	8	SN:30001--
15	07000-13035	O-RING	2	SN:30001--
16	207-62-31330NK	CLAMP	4	SN:30001--
17	01010-81230	BOLT	4	SN:30001--
18	20Y-62-13450	PLATE	2	SN:30001--
19	22U-62-23253NK	BRACKET	1	SN:30001--
20	01010-81230	BOLT	4	SN:30001--
21	01643-31232	WASHER	4	SN:30001--
22	22U-62-23373NK	BRACKET	1	SN:30001--
23	01010-81230	BOLT	4	SN:30001--
24	01643-31232	WASHER	4	SN:30001--
25	207-62-31330NK	CLAMP	4	SN:30001--
26	01010-81230	BOLT	4	SN:30001--
27	20Y-62-13450	PLATE	2	SN:30001--
28	22U-62-23491NK	TUBE	1	SN:30001--
29	22U-62-23512NK	TUBE	1	SN:30001--
30	20Y-62-45250NK	BRACKET	1	SN:30001--
31	20Y-62-45260NK	BRACKET	1	SN:30001--
32	01010-81230	BOLT	4	SN:30001--
33	20Y-62-13450	PLATE	2	SN:30001--
34	207-62-52430NK	CLAMP	2	SN:30001--
35	205-62-73430	· SEAT	1	SN:30001--
36	20Y-62-45381NK	BRACKET	2	SN:30001--
37	207-62-31330NK	CLAMP	2	SN:30001--
38	01010-81225	BOLT	4	SN:30001--
39	01010-81235	BOLT	4	SN:30001--
40	20Y-62-13450	PLATE	4	SN:30001--
41	01010-81285	BOLT	4	SN:30001--
42	20Y-62-13450	PLATE	2	SN:30001--

Ref. T1110-07A5 Page 360130

https://truckmanualshub.com/

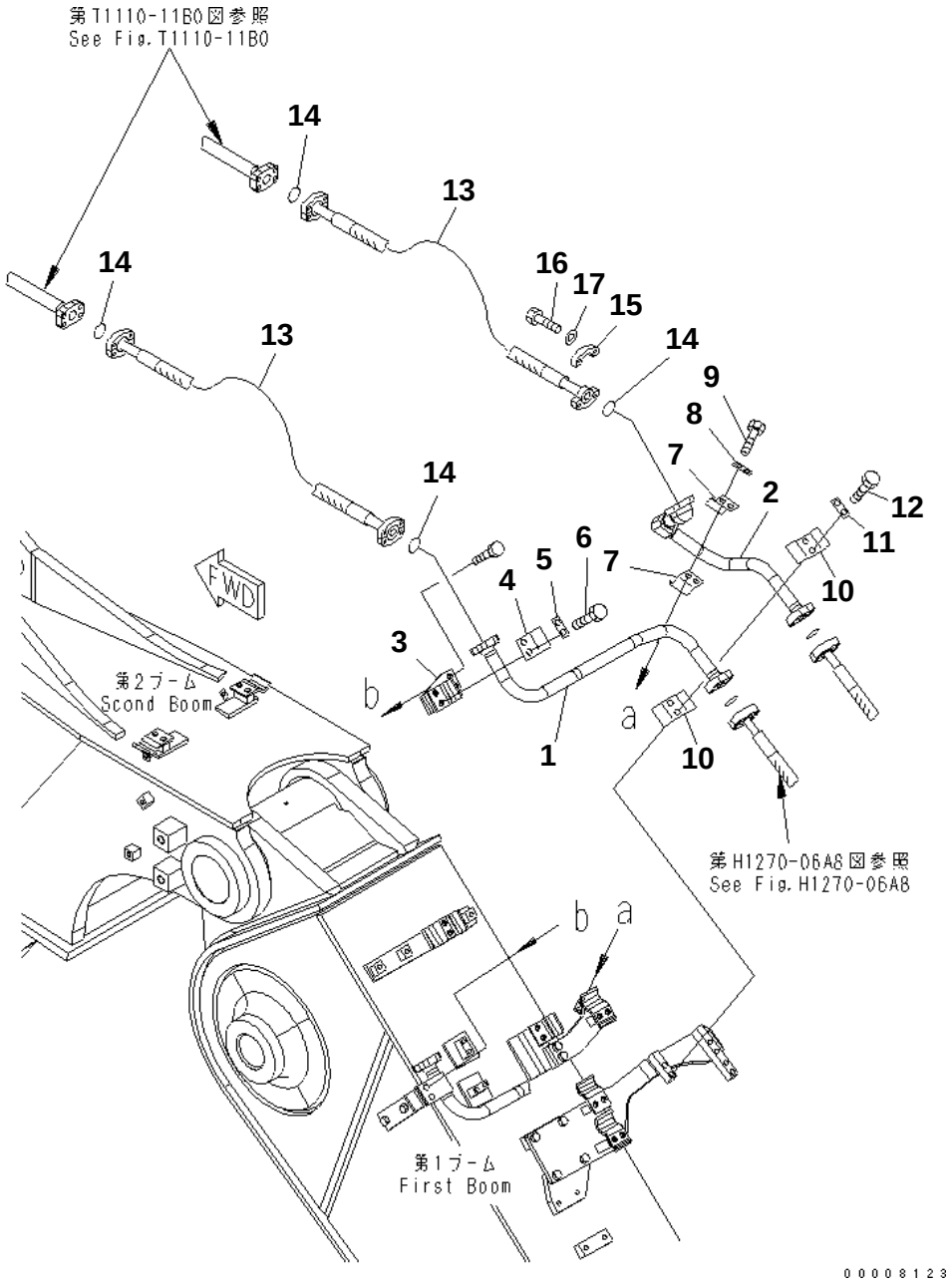

PC228US-3N-W1 S/N 30001-UP

2-PIECE BOOM (ADDITIONAL LINE) (FIRST BOOM SIDE) (FOR 2 ACTUATOR)

Item	Part No.	Description	Qty	Options
1	22U-62-27970NK	TUBE	1	SN:30001--
2	22U-62-27980NK	TUBE	1	SN:30001--
3	22U-62-28360NK	BRACKET	1	SN:30001--
4	20Y-62-13650NK	CLAMP	1	SN:30001--
5	20Y-62-13450	PLATE	1	SN:30001--
6	01010-81230	BOLT	2	SN:30001--
7	20Y-62-13650NK	CLAMP	2	SN:30001--
8	20Y-62-13450	PLATE	1	SN:30001--
9	01010-81230	BOLT	2	SN:30001--
10	20Y-62-13710NK	CLAMP	2	SN:30001--
11	20Y-62-13450	PLATE	1	SN:30001--
12	01010-81230	BOLT	2	SN:30001--
13	07083-20614	HOSE	2	SN:30001--
14	07000-13025	O-RING	4	SN:30001--
15	07371-30640	FLANGE	8	SN:30001--
16	07372-21035	BOLT	16	SN:30001--
17	01643-51032	WASHER	16	SN:30001--

Ref. T1110-07B0 Page 360140

https://truckmanualshub.com/

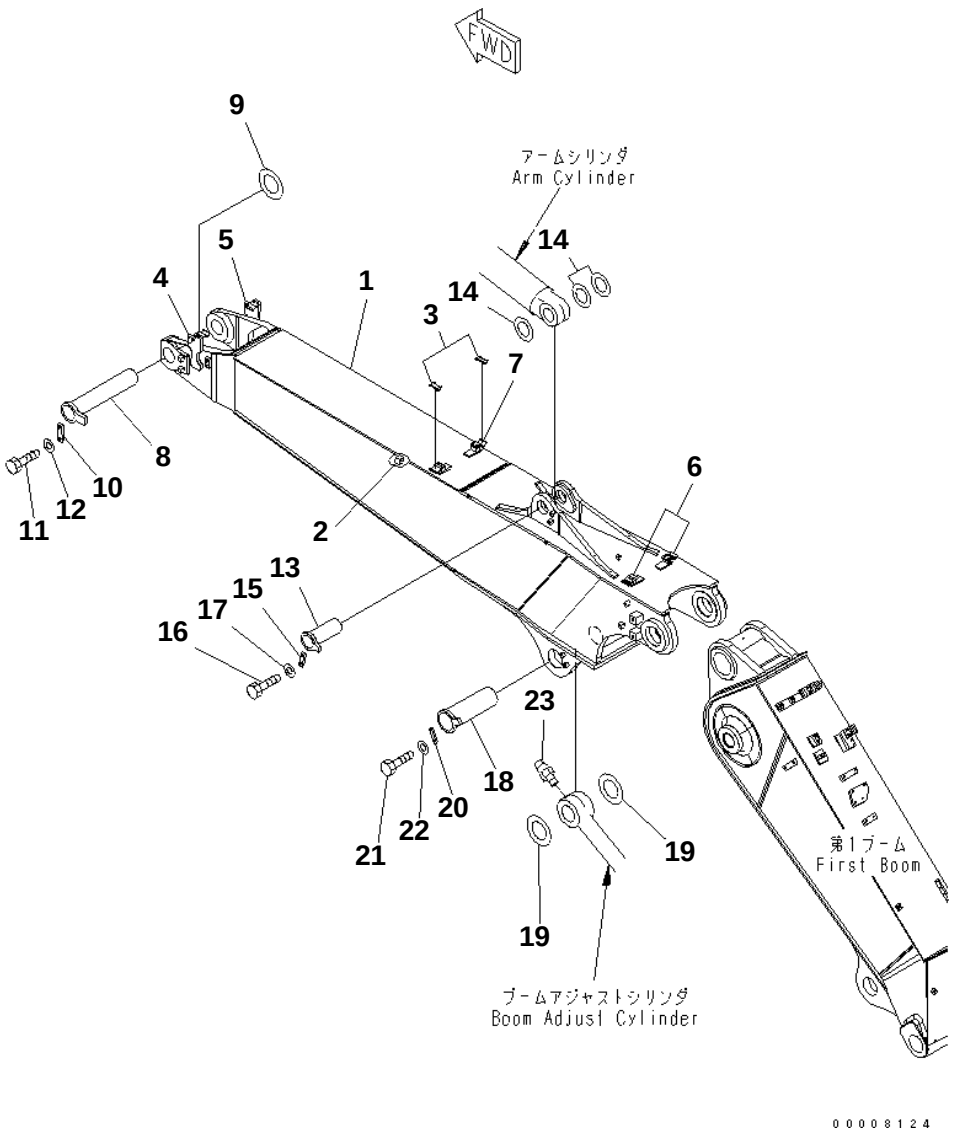

PC228US-3N-W1 S/N 30001-UP

2-PIECE BOOM (SECOND BOOM AND CONNECTING PIN)

Item	Part No.	Description	Qty	Options
1	20Y-966-3150NK	BOOM SECOND	1	SN:30001--
2	205-966-5340	· SEAT (WELDED)	1	SN:30001--
3	20Y-62-13760	· SEAT	2	SN:30001--
4	20Y-62-45150	· BRACKET (WELDED)	1	SN:30001--
5	20Y-62-45160	· BRACKET (WELDED)	1	SN:30001--
6	20Y-62-45740	· BRACKET (WELDED)	2	SN:30001--
7	20Y-62-45760	· BRACKET (WELDED)	2	SN:30001--
8	20Y-70-31251NK	PIN	1	SN:30001--
9	20Y-70-11360	SPACER¤ 0.8MM	3	SN:30001--
	206-70-45220	SPACER¤ 1.0MM	3	SN:30001--
	206-70-45210	SPACER¤ 1.5MM	3	SN:30001--
10	205-70-71310	PLATE	1	SN:30001--
11	01010-81235	BOLT	2	SN:30001--
12	01643-31232	WASHER	2	SN:30001--
13	20Y-70-11180NK	PIN	1	SN:30001--
14	205-70-51520	SPACER¤ 1.0MM	3	SN:30001--
	21Y-70-14860	SPACER¤ 1.5MM	3	SN:30001--
15	205-70-66580	PLATE	1	SN:30001--
16	01010-81230	BOLT	2	SN:30001--
17	01643-31232	WASHER	2	SN:30001--
18	208-70-61191NK	PIN	1	SN:30001--
19	207-70-11360	SPACER¤ 1.0MM	5	SN:30001--
20	205-70-66580	PLATE	1	SN:30001--
21	01010-81235	BOLT	2	SN:30001--
22	01643-31232	WASHER	2	SN:30001--
23	07020-00000	FITTING	1	SN:30001--

Ref. T1110-08B0 Page 360150

https://truckmanualshub.com/

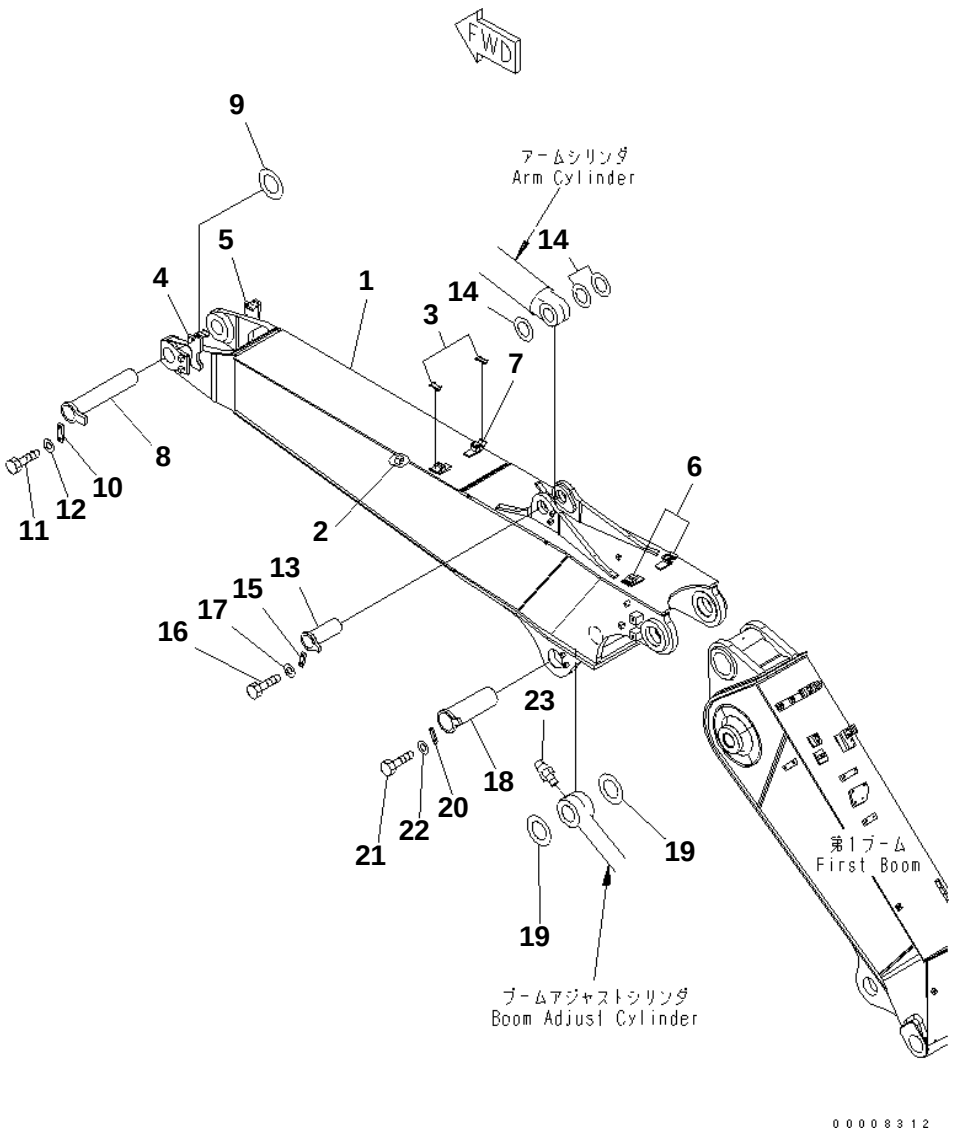

PC228US-3N-W1 S/N 30001-UP

2-PIECE BOOM (SECOND BOOM AND CONNECTING PIN) (FOR 1 ACTUATOR)

Item	Part No.	Description	Qty	Options
1	20Y-966-3130	BOOM	1	SN:30001--
2	205-966-5340	· SEAT (WELDED)	1	SN:30001--
3	20Y-62-13760	· SEAT	2	SN:30001--
4	20Y-62-45150	· BRACKET (WELDED)	1	SN:30001--
5	20Y-62-45160	· BRACKET (WELDED)	1	SN:30001--
6	20Y-62-45740	· BRACKET (WELDED)	2	SN:30001--
7	20Y-62-45760	· BRACKET (WELDED)	2	SN:30001--
8	20Y-70-31251	PIN	1	SN:30001--
9	20Y-70-11360	SPACER¤ 0.8MM	3	SN:30001--
	206-70-45220	SPACER¤ 1.0MM	3	SN:30001--
	206-70-45210	SPACER¤ 1.5MM	3	SN:30001--
10	205-70-71310	PLATE	1	SN:30001--
11	01010-81235	BOLT	2	SN:30001--
12	01643-31232	WASHER	2	SN:30001--
13	20Y-70-11180	PIN	1	SN:30001--
14	205-70-51520	SPACER¤ 1.0MM	3	SN:30001--
	21Y-70-14860	SPACER¤ 1.5MM	3	SN:30001--
15	205-70-66580	PLATE	1	SN:30001--
16	01010-81230	BOLT	2	SN:30001--
17	01643-31232	WASHER	2	SN:30001--
18	208-70-61191	PIN	1	SN:30001--
19	207-70-11360	SPACER¤ 1.0MM	5	SN:30001--
20	205-70-66580	PLATE	1	SN:30001--
21	01010-81235	BOLT	2	SN:30001--
22	01643-31232	WASHER	2	SN:30001--
23	07020-00000	FITTING	1	SN:30001--

Ref. T1110-08B1 Page 360160

https://truckmanualshub.com/

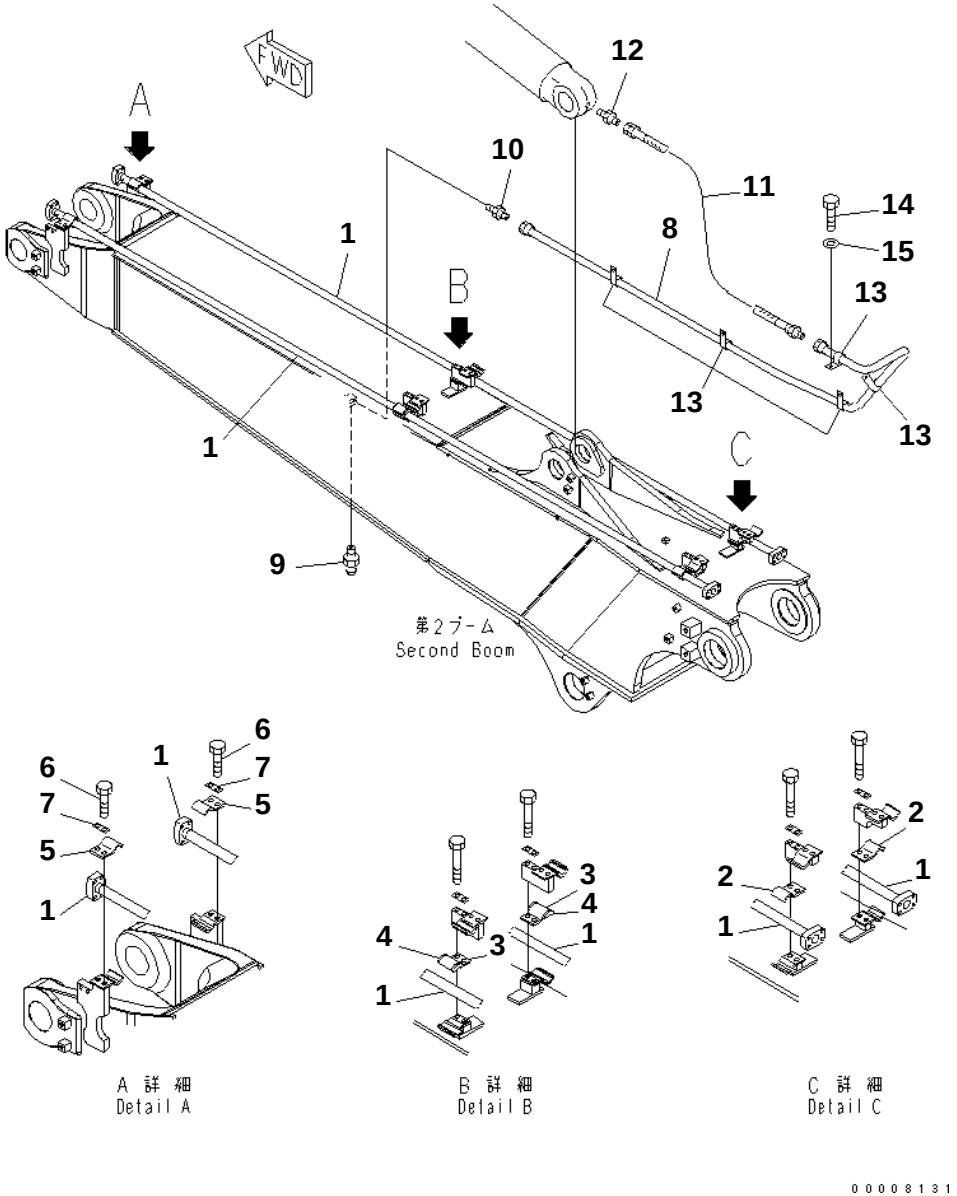

PC228US-3N-W1 S/N 30001-UP

2-PIECE BOOM (BUCKET CYLINDER LINE AND LUBRICATING LINE) (SECOND BOOM SIDE)

Item	Part No.	Description	Qty	Options
1	20Y-62-45810NK	TUBE	2	SN:30001--
2	20Y-62-13650NK	CLAMP	2	SN:30001--
3	20Y-62-13220NK	CLAMP	2	SN:30001--
4	20Y-62-13760	· SEAT	2	SN:30001--
5	20Y-62-13650NK	CLAMP	2	SN:30001--
6	01010-81230	BOLT	4	SN:30001--
7	20Y-62-13450	PLATE	2	SN:30001--
8	20Y-966-3210NK	TUBE	1	SN:30001--
9	07020-00000	FITTING	1	SN:30001--
10	07214-50813	CONNECTOR	1	SN:30001--
11	20Y-70-11520	HOSE¤ 440MM	1	SN:30001--
12	205-70-51390	NIPPLE	1	SN:30001--
13	04434-50810	CLIP	5	SN:30001--
14	01010-81016	BOLT	5	SN:30001--
15	01643-31032	WASHER	5	SN:30001--

Ref. T1110-09B0 Page 360170

https://truckmanualshub.com/

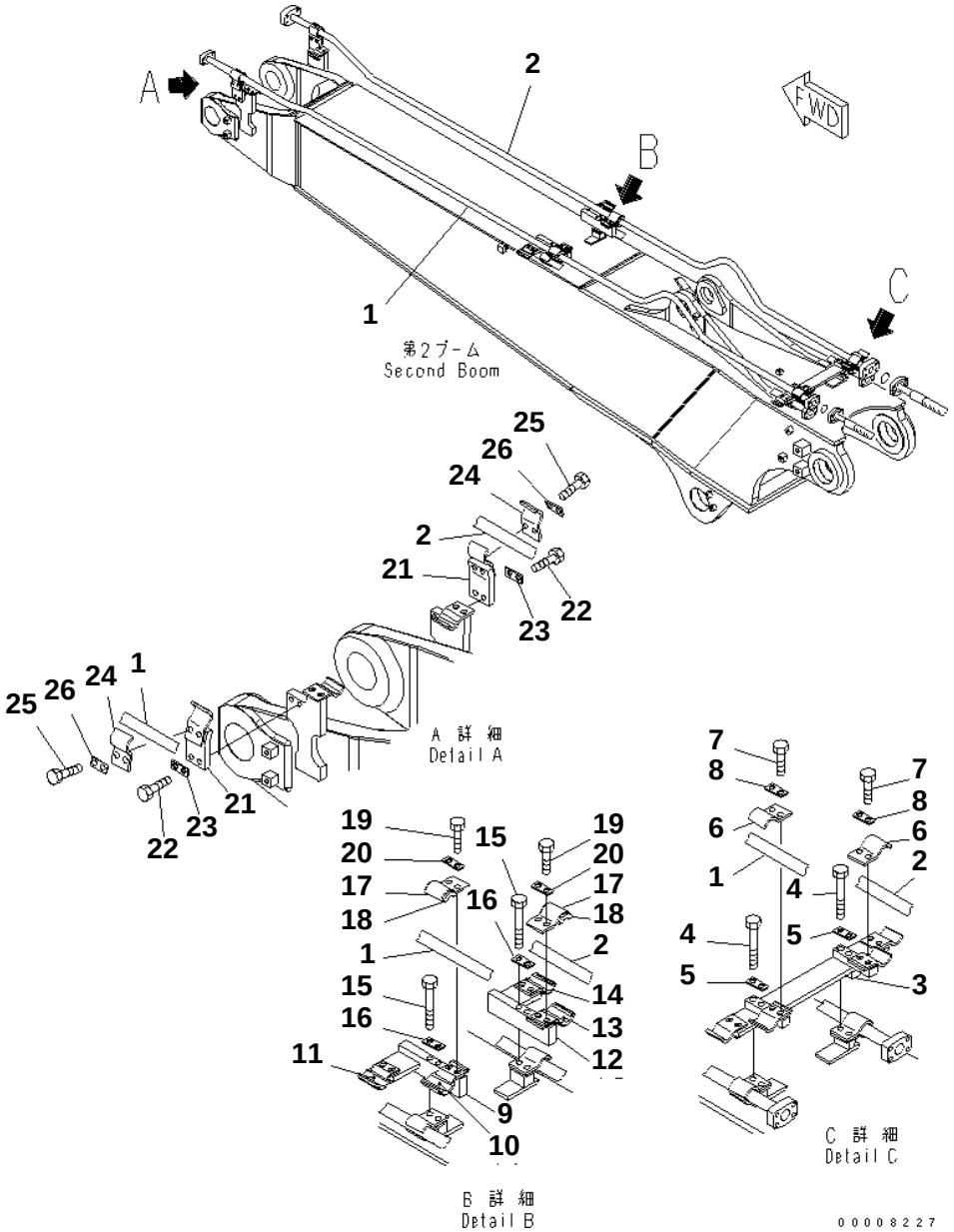

PC228US-3N-W1 S/N 30001-UP

2-PIECE BOOM (ADDITIONAL LINE) (SECOND BOOM SIDE)

Item	Part No.	Description	Qty	Options
1	20Y-62-45820NK	TUBE	1	SN:30001--
2	20Y-62-45830NK	TUBE	1	SN:30001--
3	20Y-62-45560NK	BRACKET	1	SN:30001--
4	01010-81285	BOLT	4	SN:30001--
5	20Y-62-13450	PLATE	2	SN:30001--
6	207-62-31330	CLAMP	2	SN:30001--
7	01010-81230	BOLT	4	SN:30001--
8	20Y-62-13450	PLATE	2	SN:30001--
9	20Y-62-45570NK	BRACKET	1	SN:30001--
10	205-62-73430	· SEAT	1	SN:30001--
11	20Y-62-13760	· SEAT	1	SN:30001--
12	20Y-62-45580NK	BRACKET	1	SN:30001--
13	205-62-73430	· SEAT	1	SN:30001--
14	20Y-62-13760	· SEAT	1	SN:30001--
15	01010-81285	BOLT	4	SN:30001--
16	20Y-62-13450	PLATE	2	SN:30001--
17	207-62-52430NK	CLAMP	2	SN:30001--
18	205-62-73430	· SEAT	2	SN:30001--
19	01010-81230	BOLT	4	SN:30001--
20	20Y-62-13450	PLATE	2	SN:30001--
21	20Y-62-45381NK	BRACKET	2	SN:30001--
22	01010-81230	BOLT	4	SN:30001--
23	20Y-62-13450	PLATE	2	SN:30001--
24	207-62-31330NK	CLAMP	2	SN:30001--
25	01010-81230	BOLT	4	SN:30001--
26	20Y-62-13450	PLATE	2	SN:30001--

Ref. T1110-10B0 Page 360180

https://truckmanualshub.com/

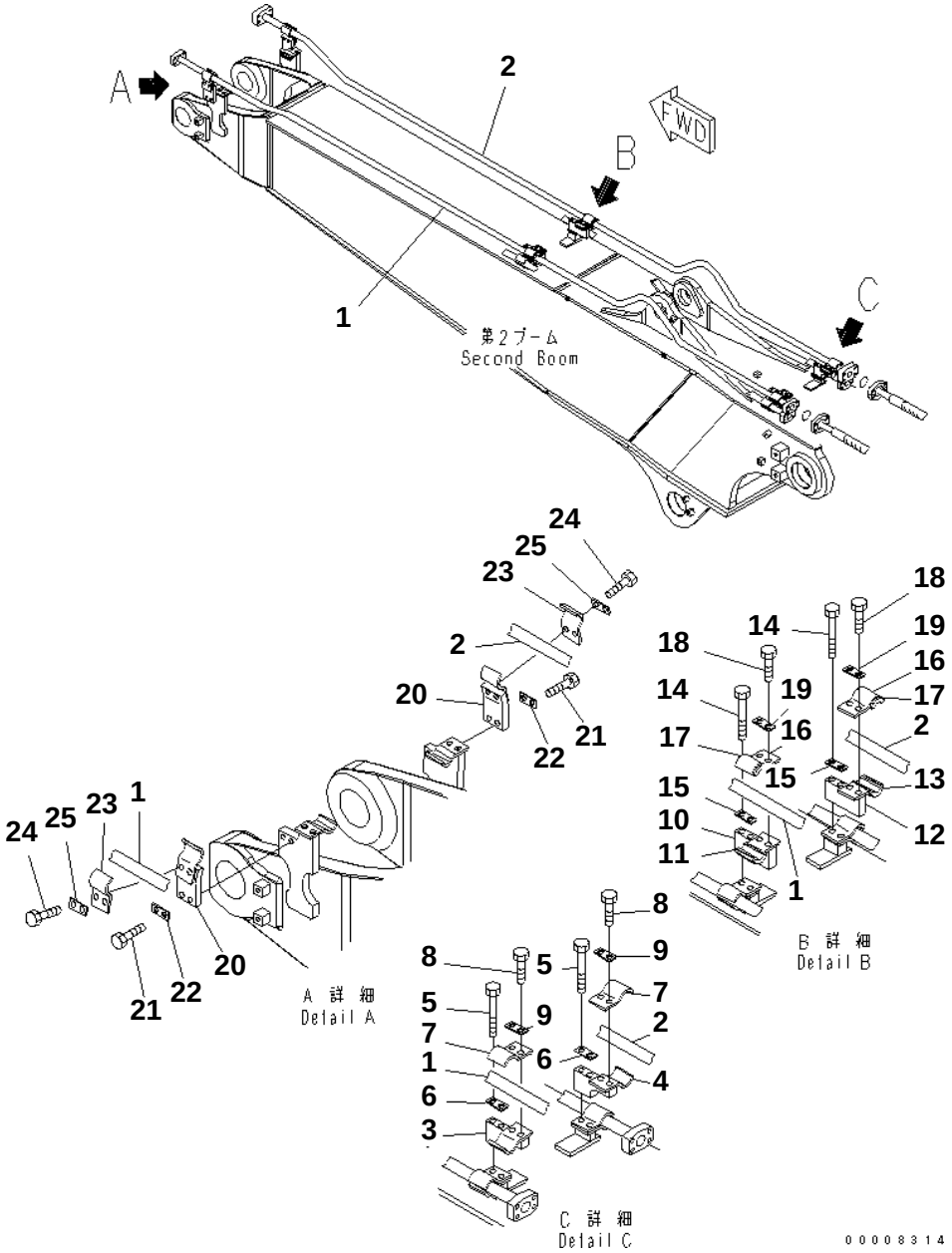

PC228US-3N-W1 S/N 30001-UP

2-PIECE BOOM (ADDITIONAL LINE) (SECOND BOOM SIDE) (FOR 1 ACTUATOR)

Item	Part No.	Description	Qty	Options
1	20Y-62-45820	TUBE	1	SN:30001--
2	20Y-62-45830	TUBE	1	SN:30001--
3	20Y-62-45770	BRACKET	1	SN:30001--
4	20Y-62-45780	BRACKET	1	SN:30001--
5	01010-81285	BOLT	4	SN:30001--
6	20Y-62-13450	PLATE	2	SN:30001--
7	207-62-31330	CLAMP	2	SN:30001--
8	01010-81230	BOLT	4	SN:30001--
9	20Y-62-13450	PLATE	2	SN:30001--
10	20Y-62-45250	BRACKET	1	SN:30001--
11	205-62-73430	· SEAT	1	SN:30001--
12	20Y-62-45260	BRACKET	1	SN:30001--
13	205-62-73430	· SEAT	1	SN:30001--
14	01010-81285	BOLT	4	SN:30001--
15	20Y-62-13450	PLATE	2	SN:30001--
16	207-62-52430	CLAMP	2	SN:30001--
17	205-62-73430	· SEAT	2	SN:30001--
18	01010-81230	BOLT	4	SN:30001--
19	20Y-62-13450	PLATE	2	SN:30001--
20	20Y-62-45381	BRACKET	2	SN:30001--
21	01010-81230	BOLT	4	SN:30001--
22	20Y-62-13450	PLATE	2	SN:30001--
23	207-62-31330	CLAMP	2	SN:30001--
24	01010-81230	BOLT	4	SN:30001--
25	20Y-62-13450	PLATE	2	SN:30001--

Ref. T1110-10B1 Page 360190

https://truckmanualshub.com/

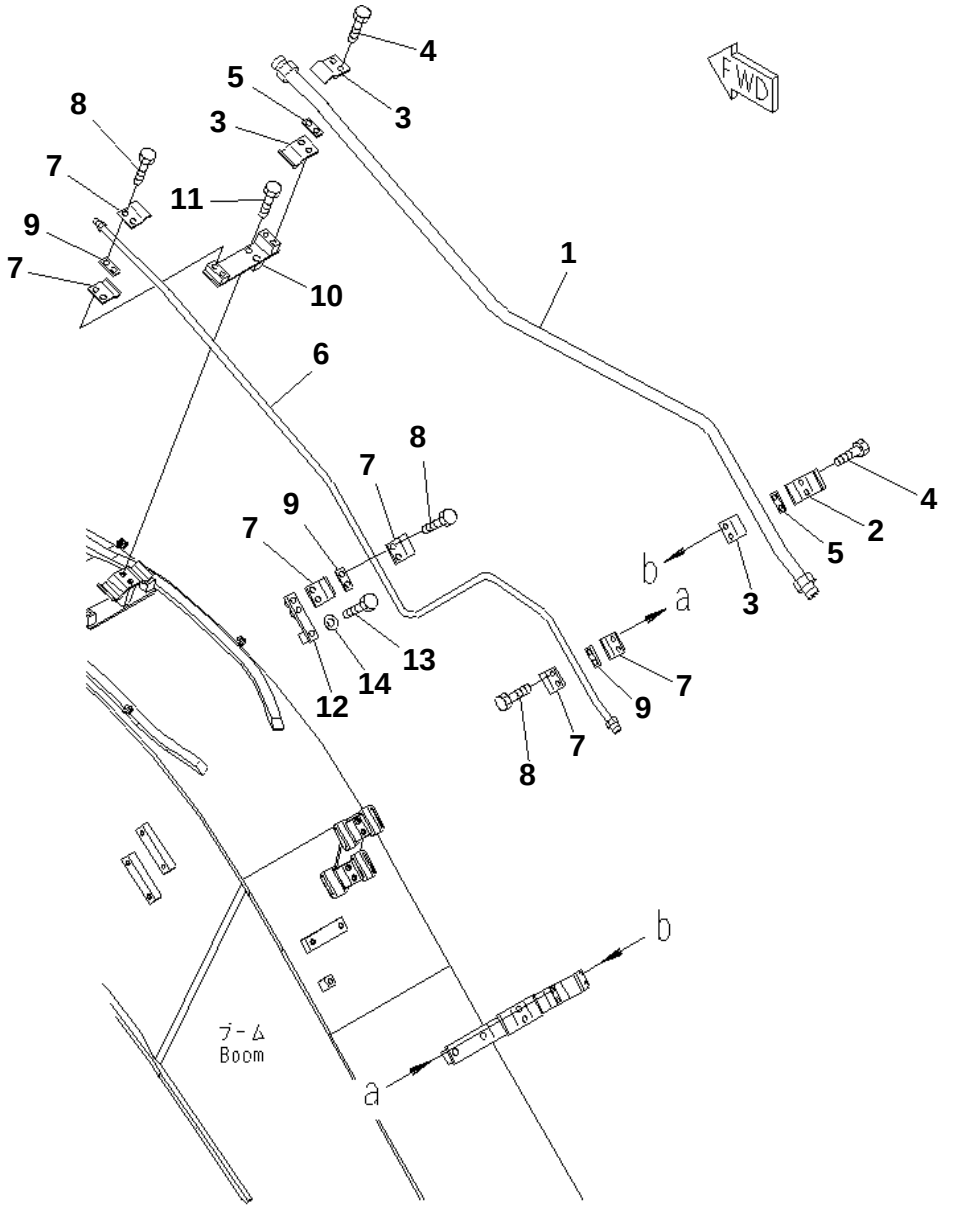

PC228US-3N-W1 S/N 30001-UP

BOOM (5.7M) (ARM CYLINDER BURST VALVE LINE)

Item	Part No.	Description	Qty	Options
1	22U-62-27152NK	TUBE	1	SN:30001--
2	22U-62-27590NK	CLAMP	1	SN:30001--
3	20Y-62-13650NK	CLAMP	3	SN:30001--
4	01010-81230	BOLT	4	SN:30001--
5	20Y-62-13450	PLATE	2	SN:30001--
6	22U-62-27242NK	TUBE	1	SN:30001--
7	20Y-966-2310NK	CLAMP	6	SN:30001--
8	01010-81225	BOLT	6	SN:30001--
9	20Y-62-13450	PLATE	3	SN:30001--
10	22U-62-27210NK	BRACKET	1	SN:30001--
11	01010-81255	BOLT	2	SN:30001--
12	22U-62-27430NK	BRACKET	1	SN:30001--
13	01010-81260	BOLT	1	SN:30001--
14	01643-31232	WASHER	1	SN:30001--

Ref. T1110-11A6 Page 360200

https://truckmanualshub.com/

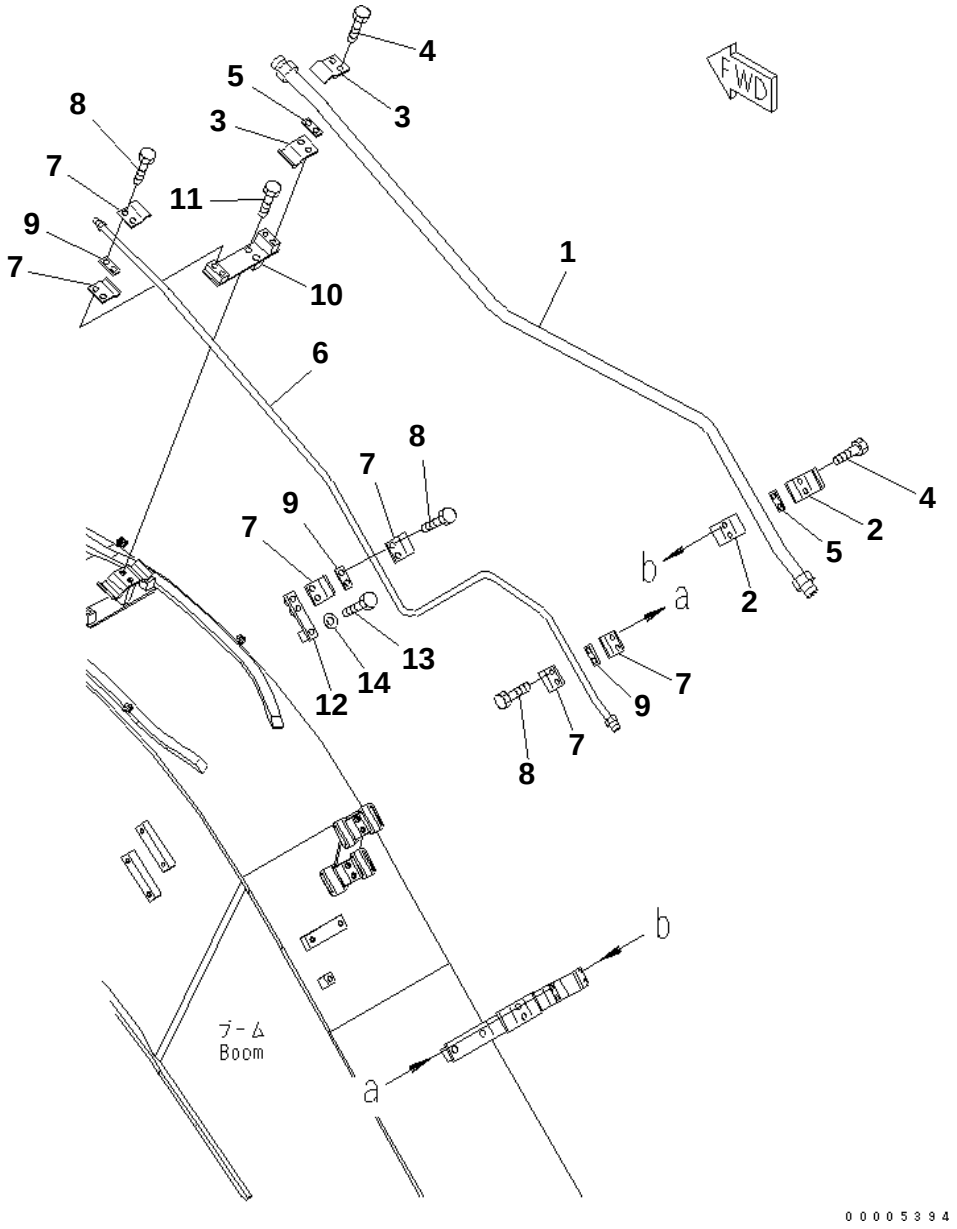

PC228US-3N-W1 S/N 30001-UP

BOOM (5.7M) (ARM CYLINDER BURST VALVE LINE) (FOR ADDITIONAL PIPING)

Item	Part No.	Description	Qty	Options
1	22U-62-27152NK	TUBE	1	SN:30001--
2	20Y-62-13690NK	CLAMP	2	SN:30001--
3	20Y-62-13650NK	CLAMP	2	SN:30001--
4	01010-81230	BOLT	4	SN:30001--
5	20Y-62-13450	PLATE	2	SN:30001--
6	22U-62-27242NK	TUBE	1	SN:30001--
7	20Y-966-2310NK	CLAMP	6	SN:30001--
8	01010-81225	BOLT	6	SN:30001--
9	20Y-62-13450	PLATE	3	SN:30001--
10	22U-62-27210NK	BRACKET	1	SN:30001--
11	01010-81255	BOLT	2	SN:30001--
12	22U-62-27430NK	BRACKET	1	SN:30001--
13	01010-81260	BOLT	1	SN:30001--
14	01643-31232	WASHER	1	SN:30001--

Ref. T1110-11A7 Page 360210

https://truckmanualshub.com/

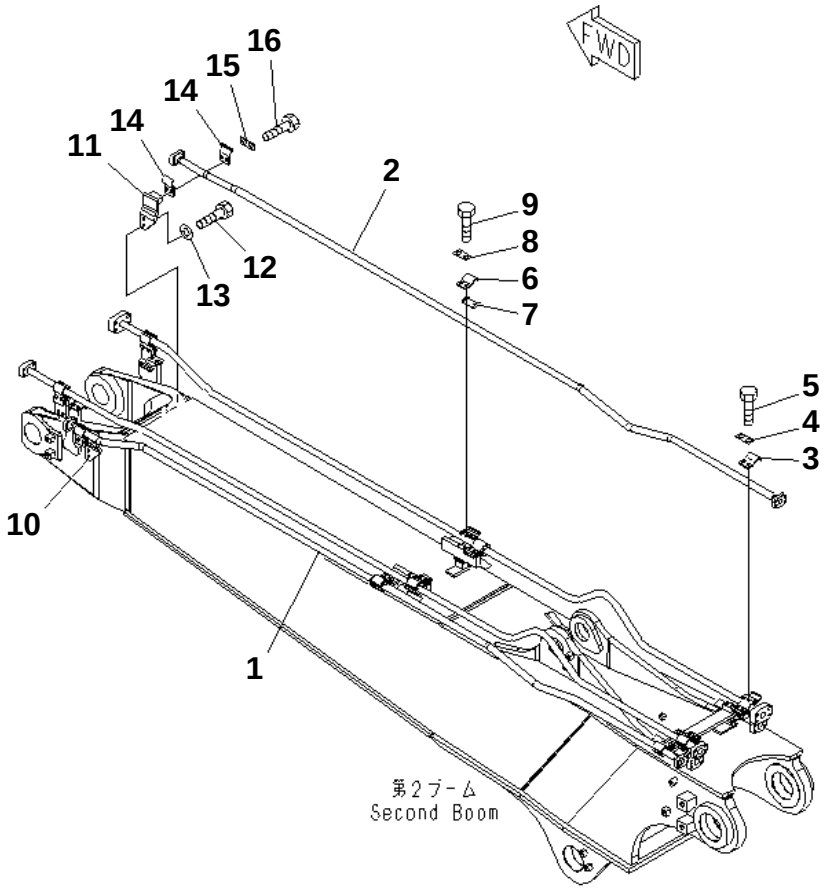

PC228US-3N-W1 S/N 30001-UP

2-PIECE BOOM (ADDITIONAL LINE) (SECOND BOOM SIDE) (FOR 2 ACTUATOR)

Item	Part No.	Description	Qty	Options
1	20Y-62-45530NK	TUBE	1	SN:30001--
2	20Y-62-45540NK	TUBE	1	SN:30001--
3	20Y-62-13650NK	CLAMP	2	SN:30001--
4	20Y-62-13450	PLATE	2	SN:30001--
5	01010-81240	BOLT	4	SN:30001--
6	20Y-62-13220NK	CLAMP	2	SN:30001--
7	20Y-62-13760	· SEAT	2	SN:30001--
8	20Y-62-13450	PLATE	2	SN:30001--
9	01010-81240	BOLT	4	SN:30001--
10	206-62-73670NK	BRACKET	1	SN:30001--
11	206-62-73680NK	BRACKET	1	SN:30001--
12	01010-81230	BOLT	4	SN:30001--
13	01643-31232	WASHER	4	SN:30001--
14	20Y-62-13650NK	CLAMP	4	SN:30001--
15	20Y-62-13450	PLATE	2	SN:30001--
16	01010-81230	BOLT	4	SN:30001--

Ref. T1110-11B0 Page 360220

https://truckmanualshub.com/

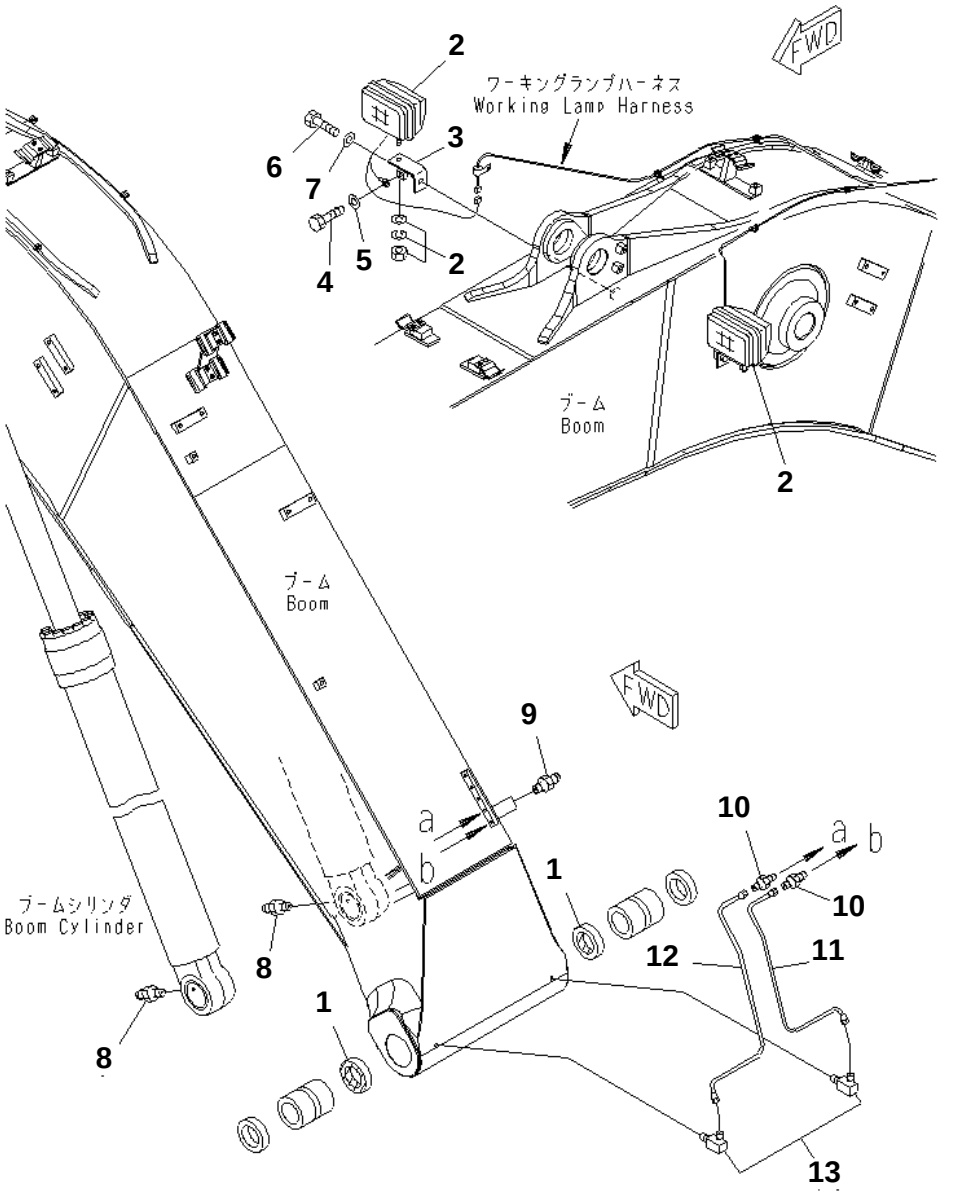

PC228US-3N-W1 S/N 30001-UP

BOOM (5.7M) (WORKING LAMP AND BOOM FOOT LUBRICATING)

Item	Part No.	Description	Qty	Options
1	07145-00090	SEAL	2	SN:30001--
2	20Y-06-25310	WORK LAMP ASS'Y	2	SN:30001--
	421-06-23330	· BULB¤ 70W	2	SN:30001--
3	20Y-06-21551	BRACKET	2	SN:30001--
4	01010-81220	BOLT	2	SN:30001--
5	01643-31232	WASHER	2	SN:30001--
6	01010-81230	BOLT	2	SN:30001--
7	01643-31232	WASHER	2	SN:30001--
8	07020-00000	FITTING	2	SN:30001--
9	07020-00000	FITTING	2	SN:30001--
10	20Y-70-11540	CONNECTOR	2	SN:30001--
11	20Y-70-21490	TUBE	1	SN:30001--
12	20Y-70-21510	TUBE	1	SN:30001--
13	20Y-25-11270	ELBOW	2	SN:30001--

Ref. T1110-12A4 Page 360230

https://truckmanualshub.com/

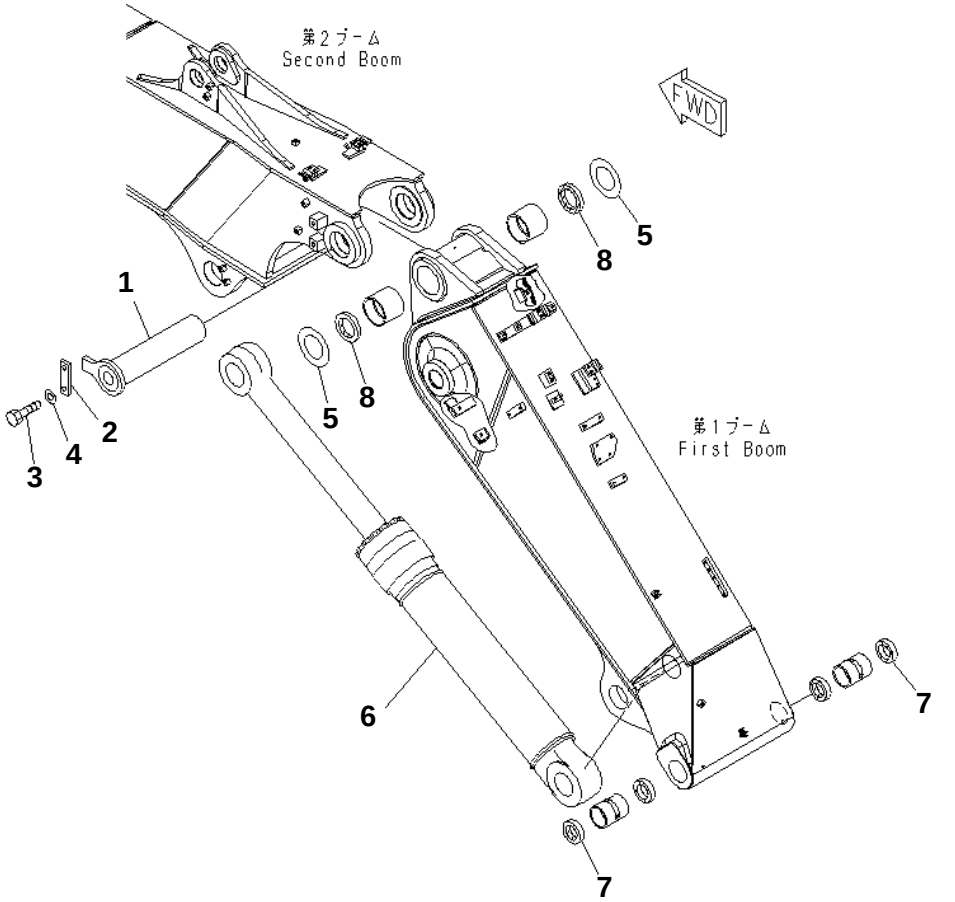

PC228US-3N-W1 S/N 30001-UP

2-PIECE BOOM (CONNECTING PIN AND ADJUST CYLINDER)

Item	Part No.	Description	Qty	Options
1	20Y-70-K3780NK	PIN	1	SN:30001--
2	205-70-61560NK	PLATE	1	SN:30001--
3	01010-82045	BOLT	2	SN:30001--
4	01643-32060	WASHER	2	SN:30001--
5	202-70-48380	SPACER¤ 1.0MM	4	SN:30001--
6	(707-01-0X530)	CYLINDER ASS'Y	1	SN:30001--
7	07145-00090	SEAL	2	SN:30001--
8	07145-00120	SEAL	2	SN:30001--

Ref. T1110-12B0 Page 360240

https://truckmanualshub.com/

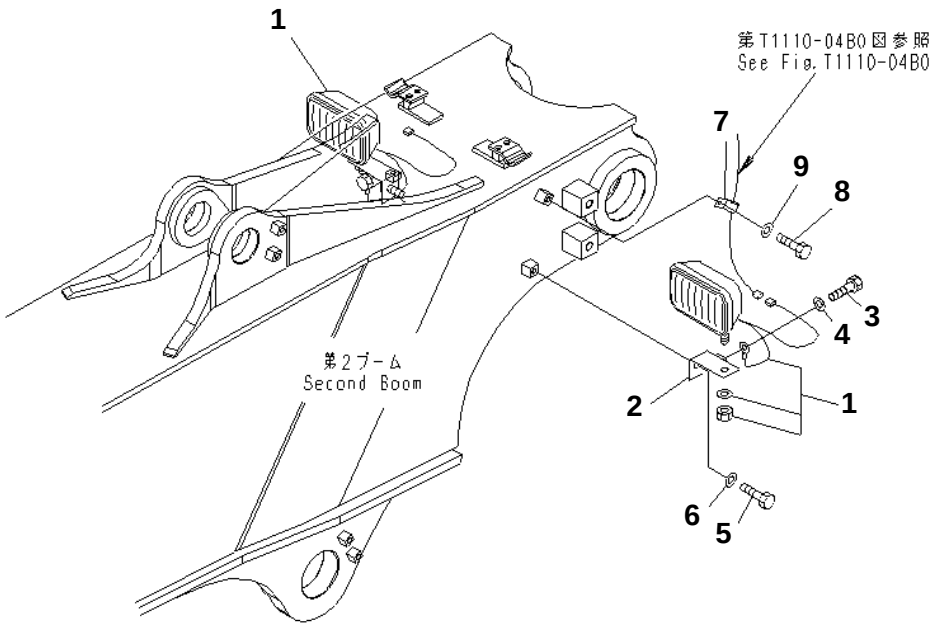

PC228US-3N-W1 S/N 30001-UP

2-PIECE BOOM (WORKING LAMP)

Item	Part No.	Description	Qty	Options
1	20Y-06-25310	WORK LAMP ASS'Y	2	SN:30001--
	421-06-23330	· BULB¤ 70W	1	SN:30001--
2	20Y-06-21551	BRACKET	2	SN:30001--
3	01010-81220	BOLT	2	SN:30001--
4	01643-31232	WASHER	2	SN:30001--
5	01010-81230	BOLT	2	SN:30001--
6	01643-31232	WASHER	2	SN:30001--
7	04434-51012	CLIP	2	SN:30001--
8	01010-81220	BOLT	2	SN:30001--
9	01643-31232	WASHER	2	SN:30001--

Ref. T1110-13B0 Page 360250

https://truckmanualshub.com/

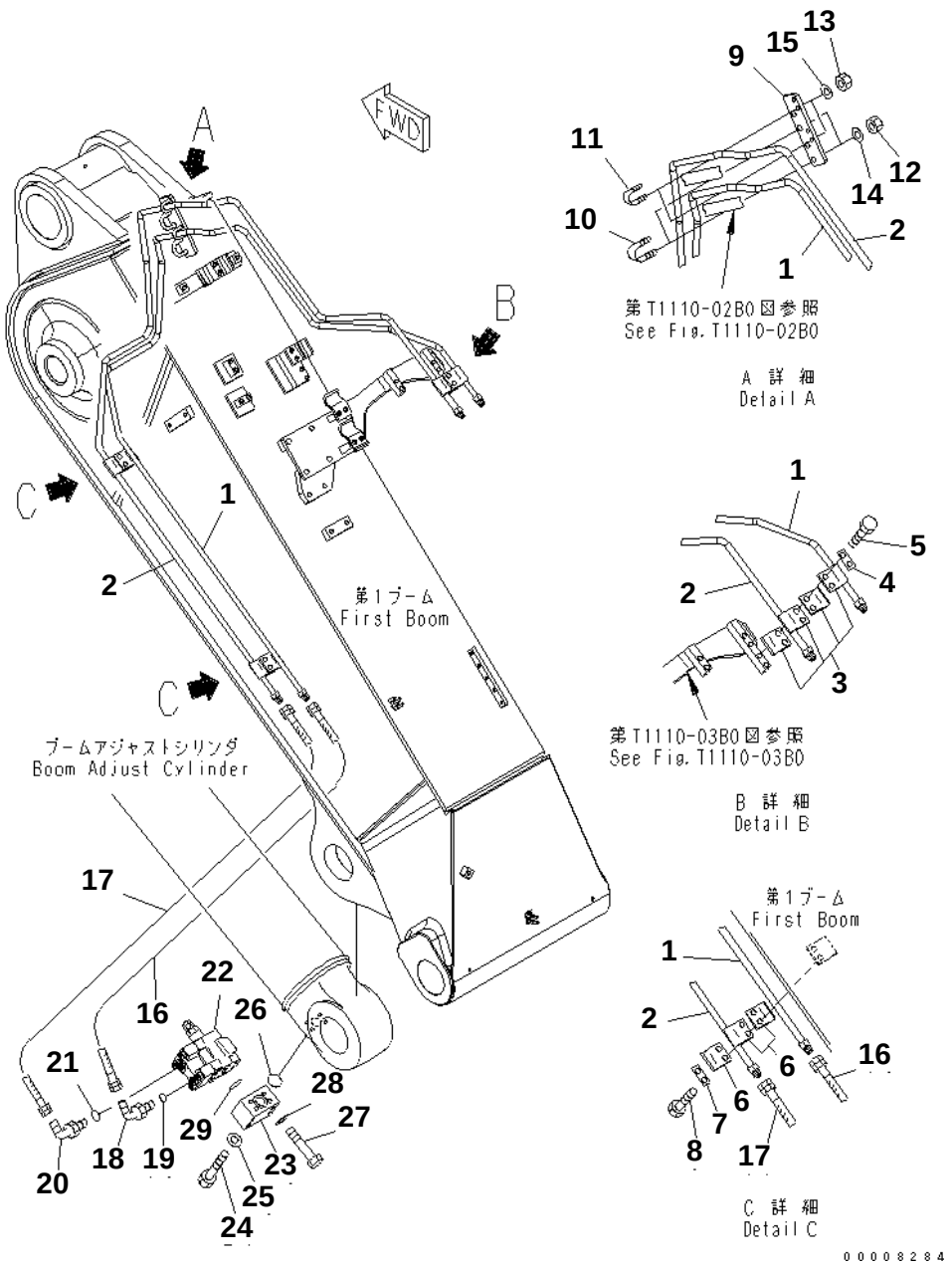

PC228US-3N-W1 S/N 30001-UP

2-PIECE BOOM (BURST VALVE LINE) (BOOM ADJUST CYLINDER SIDE)

Item	Part No.	Description	Qty	Options
1	22U-62-28190NK	TUBE	1	SN:30001--
2	22U-62-28210NK	TUBE	1	SN:30001--
3	20Y-966-2310NK	CLAMP	4	SN:30001--
4	20Y-62-13450	PLATE	1	SN:30001--
5	01010-81240	BOLT	2	SN:30001--
6	20Y-966-2310NK	CLAMP	6	SN:30001--
7	20Y-62-13450	PLATE	2	SN:30001--
8	01010-81240	BOLT	4	SN:30001--
9	22U-62-28220NK	PLATE	1	SN:30001--
10	07283-32738	CLIP	2	SN:30001--
11	07283-31529	CLIP	2	SN:30001--
12	01597-01009	NUT	4	SN:30001--
13	01597-00807	NUT	4	SN:30001--
14	01643-31032	WASHER	4	SN:30001--
15	01643-30823	WASHER	4	SN:30001--
16	07623-40305	HOSE	1	SN:30001--
17	07623-403A4	HOSE	1	SN:30001--
18	07235-10312	ELBOW	1	SN:30001--
19	07002-11423	O-RING	1	SN:30001--
20	07235-10315	ELBOW	1	SN:30001--
21	07002-12034	O-RING	1	SN:30001--
22	(702-21-04440)	LOCK VALVE ASS'Y	1	SN:30001--
23	206-63-K2250NK	BLOCK	1	SN:30001--
24	01010-81090	BOLT	4	SN:30001--
25	01643-31032	WASHER	4	SN:30001--
26	07000-13035	O-RING	1	SN:30001--
27	01010-81080	BOLT	4	SN:30001--
28	01643-31032	WASHER	4	SN:30001--
29	07000-13035	O-RING	1	SN:30001--

Ref. T1110-14B0 Page 360260

https://truckmanualshub.com/

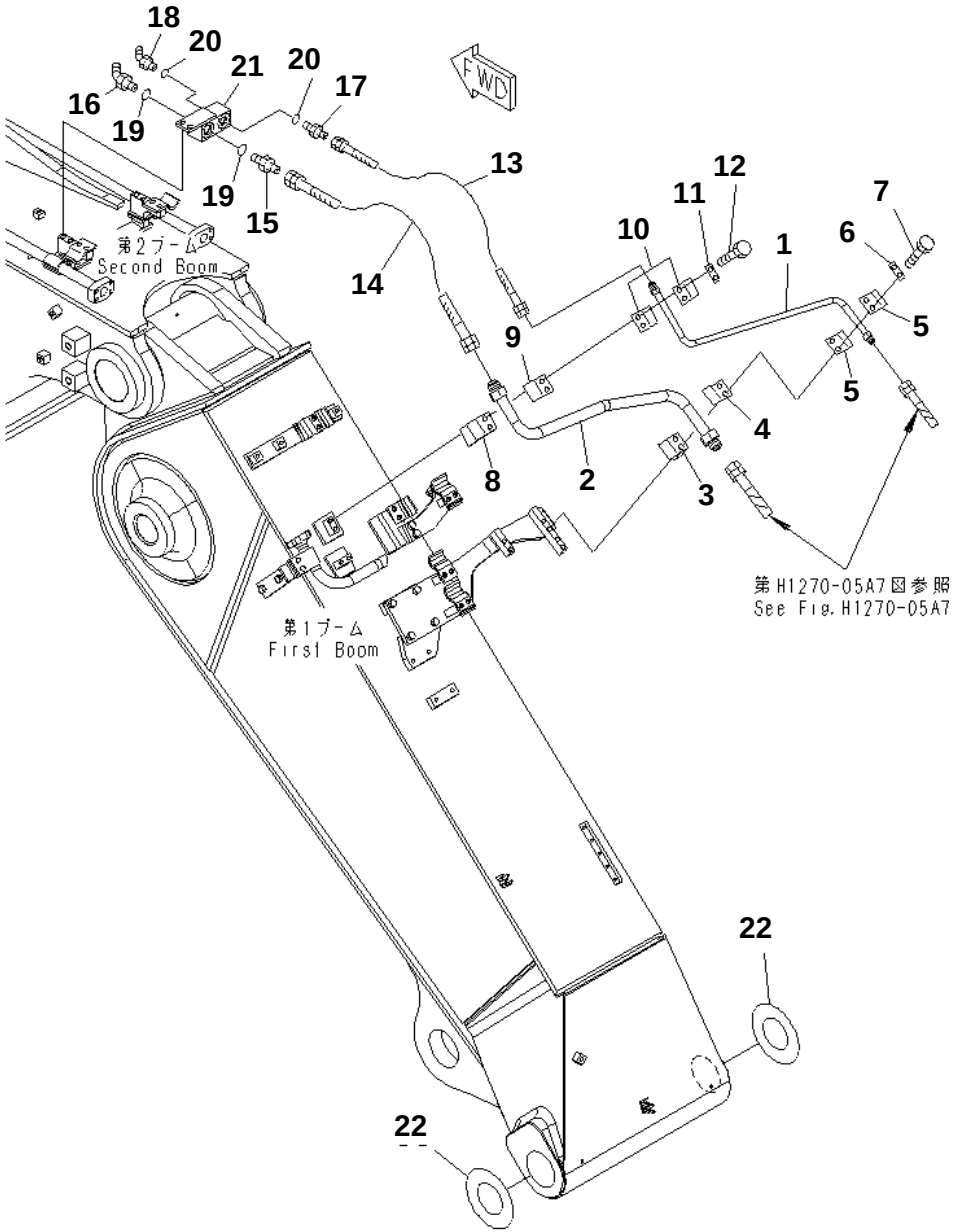

PC228US-3N-W1 S/N 30001-UP

2-PIECE BOOM (BURST VALVE LINE) (ARM CYLINDER SIDE)

Item	Part No.	Description	Qty	Options
1	22U-62-28130NK	TUBE	1	SN:30001--
2	22U-62-28120NK	TUBE	1	SN:30001--
3	22U-62-28310NK	BRACKET	1	SN:30001--
4	20Y-62-13650NK	CLAMP	1	SN:30001--
5	20Y-966-2310NK	CLAMP	2	SN:30001--
6	20Y-62-13450	PLATE	1	SN:30001--
7	01010-81285	BOLT	2	SN:30001--
8	22U-62-28320NK	BRACKET	1	SN:30001--
9	20Y-62-13650NK	CLAMP	1	SN:30001--
10	20Y-966-2310NK	CLAMP	2	SN:30001--
11	20Y-62-13450	PLATE	1	SN:30001--
12	01011-81255	BOLT	2	SN:30001--
13	07621-00612	HOSE	1	SN:30001--
14	07184-00312	HOSE	1	SN:30001--
15	07230-20628	UNION	1	SN:30001--
16	07236-10628	ELBOW	1	SN:30001--
17	07230-20315	UNION	1	SN:30001--
18	07236-10315	ELBOW	1	SN:30001--
19	07002-12434	O-RING	2	SN:30001--
20	07002-12034	O-RING	2	SN:30001--
21	207-62-73570	BLOCK	1	SN:30001--
22	20Y-70-11420	SPACER¤ 1.5MM	3	SN:30001--

Ref. T1110-15B0 Page 360270

https://truckmanualshub.com/

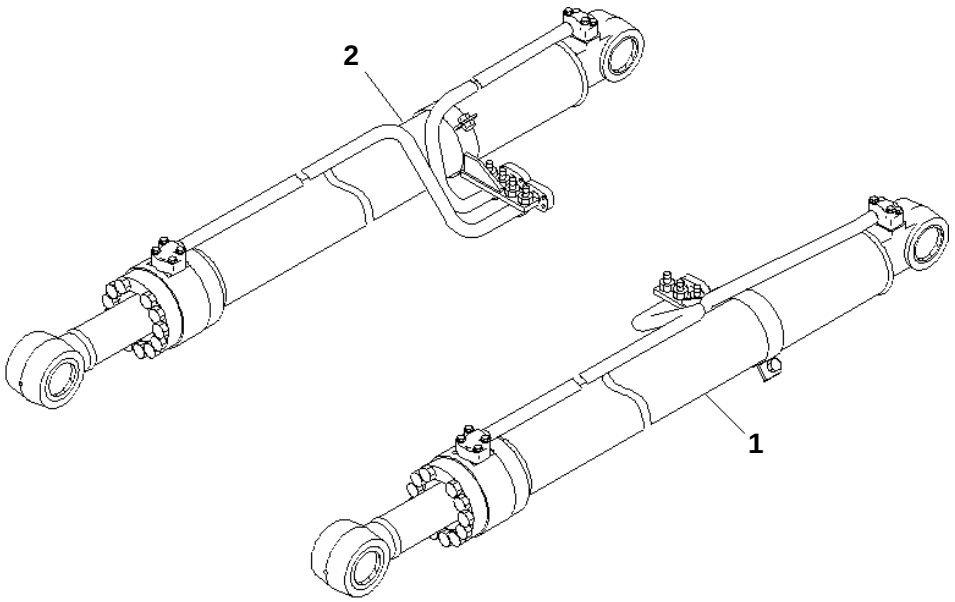

PC228US-3N-W1 S/N 30001-UP

BOOM CYLINDER (YELLOW)

Item	Part No.	Description	Qty	Options
1	(⊙707-01-XU160)	CYLINDER GROUP	1	SN:30001--
2	(⊙707-01-XU170)	CYLINDER GROUP	1	SN:30001--

Ref. T1120-01A0 Page 360280

https://truckmanualshub.com/

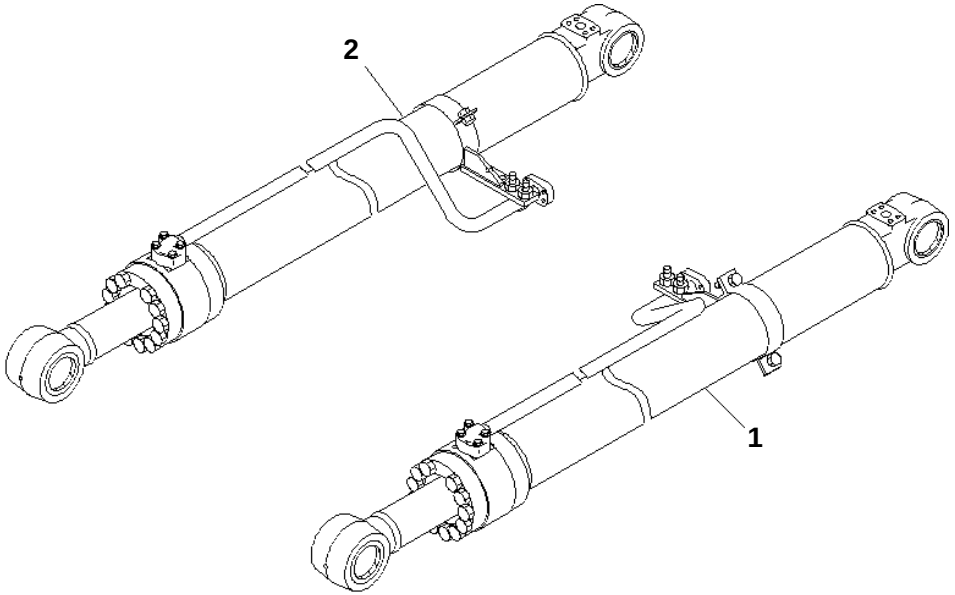

PC228US-3N-W1 S/N 30001-UP

BOOM CYLINDER (FOR ARM CRANE) (YELLOW)

Item	Part No.	Description	Qty	Options
1	(⊙707-01-XU220)	BOOM CYLINDER GROUP	1	SN:30001--
2	(⊙707-01-XU230)	BOOM CYLINDER GROUP	1	SN:30001--

Ref. T1120-01A1 Page 360290

https://truckmanualshub.com/

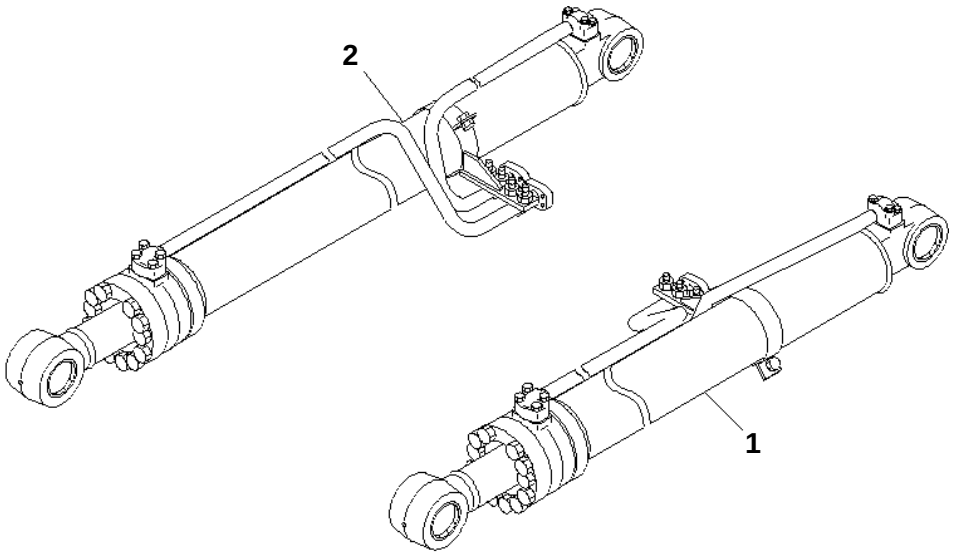

PC228US-3N-W1 S/N 30001-UP

BOOM CYLINDER (FOR U.S.A.)

Item	Part No.	Description	Qty	Options
1	(⊙707-01-XU180)	BOOM CYLINDER GROUP	1	SN:30001--
2	(⊙707-01-XU190)	BOOM CYLINDER GROUP	1	SN:30001--

Ref. T1120-01A2 Page 360300

https://truckmanualshub.com/

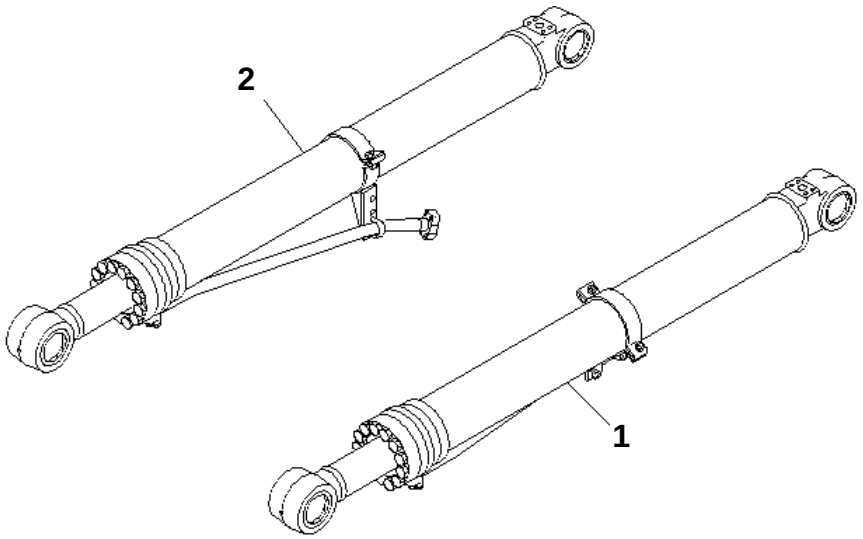

00008499

PC228US-3N-W1 S/N 30001-UP

BOOM CYLINDER (FOR 2-PIECE BOOM) (YELLOW)

Item	Part No.	Description	Qty	Options
1	(⊙707-01-XU540)	CYLINDER G.(L.H.)	1	SN:30001--
2	(⊙707-01-XU550)	CYLINDER G.(R.H.)	1	SN:30001--

Ref. T1120-01A4 Page 360310

https://truckmanualshub.com/

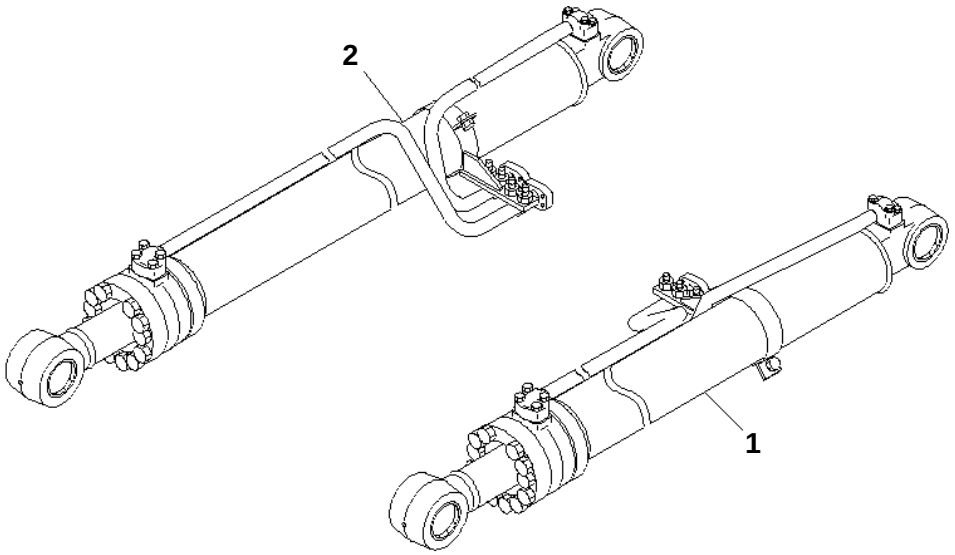

PC228US-3N-W1 S/N 30001-UP

BOOM CYLINDER (LARGE DIAMETER TYPE)

Item	Part No.	Description	Qty	Options
1	707-01-XU180	BOOM CYLINDER GROUP	1	SN:30001--
2	707-01-XU190	BOOM CYLINDER GROUP	1	SN:30001--

Ref. T1120-01A5 Page 360320

https://truckmanualshub.com/

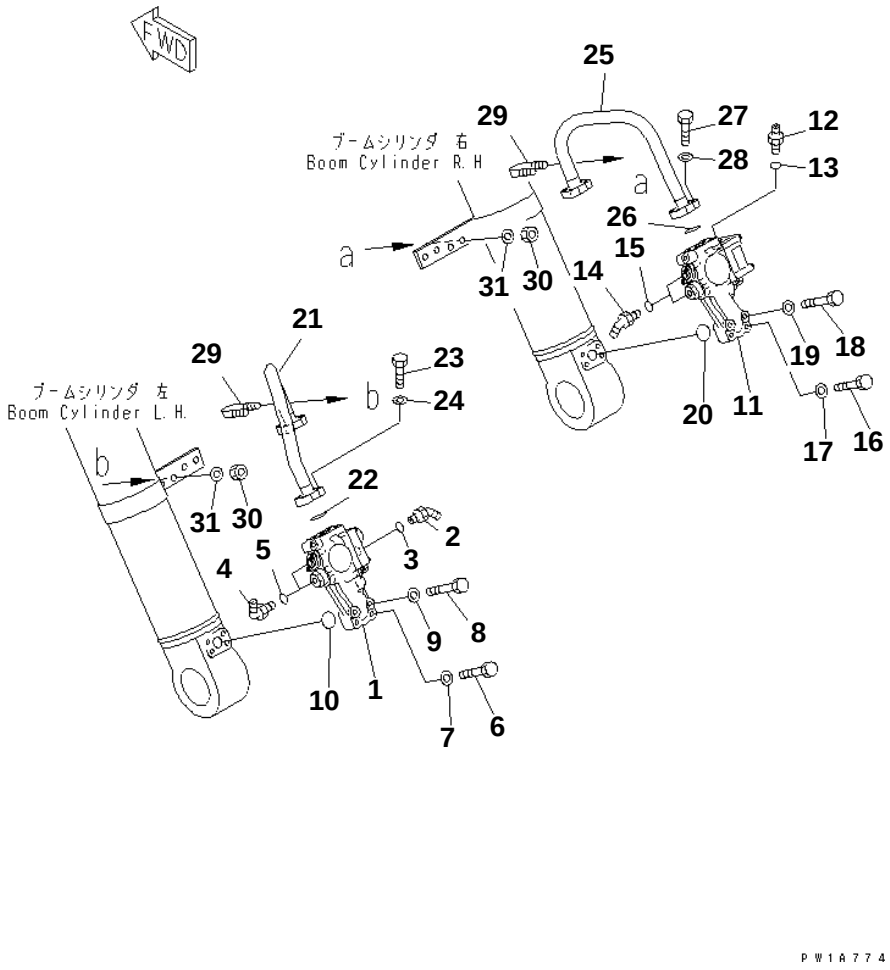

PC228US-3N-W1 S/N 30001-UP

BOOM CYLINDER (WITH BURST VALVE) (YELLOW)

Item	Part No.	Description	Qty	Options
1	(702-21-08330)	PILOT VALVE	1	SN:30001--
2	22U-62-27460	ELBOW	1	SN:30001--
3	07002-12034	O-RING	1	SN:30001--
4	07235-10210	ELBOW	2	SN:30001--
5	07002-11423	O-RING	2	SN:30001--
6	07372-21050	BOLT	2	SN:30001--
7	01643-51032	WASHER	2	SN:30001--
8	07372-21060	BOLT	2	SN:30001--
9	01643-51032	WASHER	2	SN:30001--
10	07000-13030	O-RING	1	SN:30001--
11	(702-21-08350)	PILOT VALVE	1	SN:30001--
12	07230-20422	UNION	1	SN:30001--
13	07002-12034	O-RING	1	SN:30001--
14	07236-10210	ELBOW	2	SN:30001--
15	07002-11423	O-RING	2	SN:30001--
16	07372-21050	BOLT	2	SN:30001--
17	01643-51032	WASHER	2	SN:30001--
18	07372-21060	BOLT	2	SN:30001--
19	01643-51032	WASHER	2	SN:30001--
20	07000-13030	O-RING	1	SN:30001--
21	22U-62-27360NK	TUBE	1	SN:30001--
22	07000-13030	O-RING	1	SN:30001--
23	07372-21035	BOLT	4	SN:30001--
24	01643-51032	WASHER	4	SN:30001--
25	22U-62-27350NK	TUBE	1	SN:30001--
26	07000-13030	O-RING	1	SN:30001--
27	07372-21035	BOLT	4	SN:30001--
28	01643-51032	WASHER	4	SN:30001--
29	07283-22738	CLIP	2	SN:30001--
30	01599-01011	NUT	4	SN:30001--
31	01643-31032	WASHER	4	SN:30001--

Ref. T1120-02A3 Page 360330

https://truckmanualshub.com/

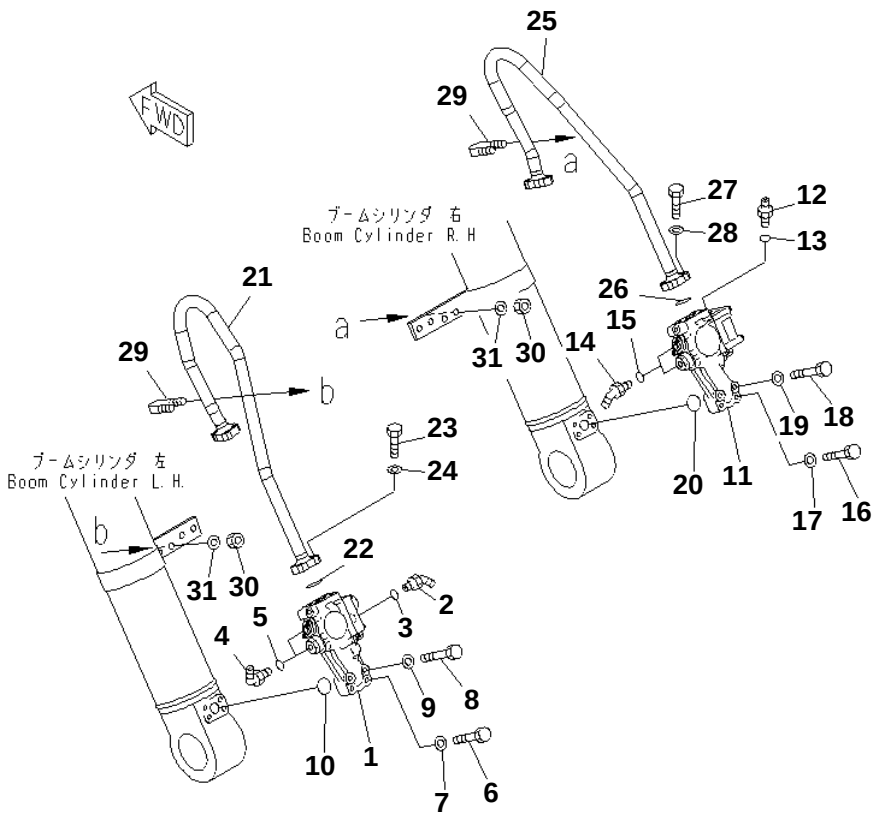

PC228US-3N-W1 S/N 30001-UP

BOOM CYLINDER (WITH BURST VALVE) (FOR 2-PIECE BOOM) (YELLOW)

Item	Part No.	Description	Qty	Options
1	(702-21-08330)	PILOT VALVE	1	SN:30001--
2	22U-62-27460	ELBOW	1	SN:30001--
3	07002-12034	O-RING	1	SN:30001--
4	07235-10210	ELBOW	2	SN:30001--
5	07002-11423	O-RING	2	SN:30001--
6	07372-21050	BOLT	2	SN:30001--
7	01643-51032	WASHER	2	SN:30001--
8	07372-21060	BOLT	2	SN:30001--
9	01643-51032	WASHER	2	SN:30001--
10	07000-13030	O-RING	1	SN:30001--
11	(702-21-08350)	PILOT VALVE	1	SN:30001--
12	07230-20422	UNION	1	SN:30001--
13	07002-12034	O-RING	1	SN:30001--
14	07236-10210	ELBOW	2	SN:30001--
15	07002-11423	O-RING	2	SN:30001--
16	07372-21050	BOLT	2	SN:30001--
17	01643-51032	WASHER	2	SN:30001--
18	07372-21060	BOLT	2	SN:30001--
19	01643-51032	WASHER	2	SN:30001--
20	07000-13030	O-RING	1	SN:30001--
21	22U-62-27810NK	TUBE	1	SN:30001--
22	07000-13030	O-RING	1	SN:30001--
23	07372-21035	BOLT	4	SN:30001--
24	01643-51032	WASHER	4	SN:30001--
25	22U-62-27820NK	TUBE	1	SN:30001--
26	07000-13030	O-RING	1	SN:30001--
27	07372-21035	BOLT	4	SN:30001--
28	01643-51032	WASHER	4	SN:30001--
29	07283-32738	CLIP	2	SN:30001--
30	01597-01009	NUT	4	SN:30001--
31	01643-31032	WASHER	4	SN:30001--

Ref. T1120-02A4 Page 360340

https://truckmanualshub.com/

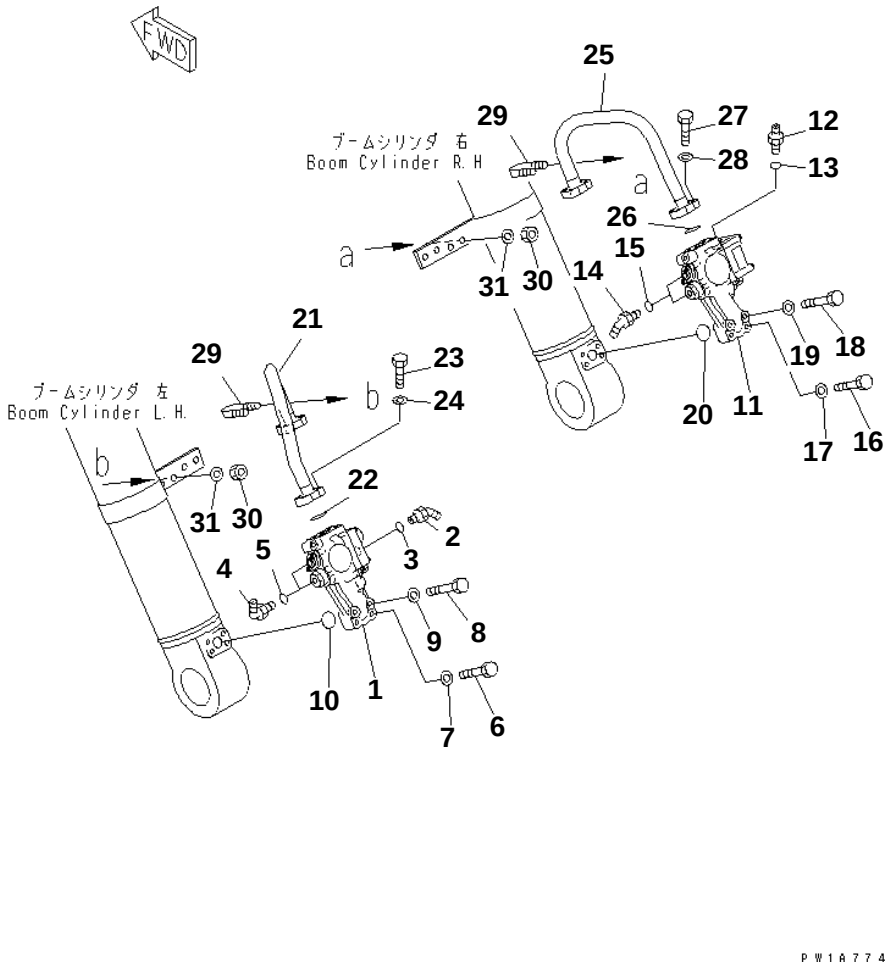

PC228US-3N-W1 S/N 30001-UP

BOOM CYLINDER (LARGE DIAMETER TYPE WITH BURST VALVE) (YELLOW)

Item	Part No.	Description	Qty	Options
1	(702-21-08330)	PILOT VALVE	1	SN:30001--
2	22U-62-27460	ELBOW	1	SN:30001--
3	07002-12034	O-RING	1	SN:30001--
4	07235-10210	ELBOW	2	SN:30001--
5	07002-11423	O-RING	2	SN:30001--
6	07372-21050	BOLT	2	SN:30001--
7	01643-51032	WASHER	2	SN:30001--
8	07372-21060	BOLT	2	SN:30001--
9	01643-51032	WASHER	2	SN:30001--
10	07000-13030	O-RING	1	SN:30001--
11	(702-21-08350)	PILOT VALVE	1	SN:30001--
12	07230-20422	UNION	1	SN:30001--
13	07002-12034	O-RING	1	SN:30001--
14	07236-10210	ELBOW	2	SN:30001--
15	07002-11423	O-RING	2	SN:30001--
16	07372-21050	BOLT	2	SN:30001--
17	01643-51032	WASHER	2	SN:30001--
18	07372-21060	BOLT	2	SN:30001--
19	01643-51032	WASHER	2	SN:30001--
20	07000-13030	O-RING	1	SN:30001--
21	22U-62-28380NK	TUBE	1	SN:30001--
22	07000-13030	O-RING	1	SN:30001--
23	07372-21035	BOLT	4	SN:30001--
24	01643-51032	WASHER	4	SN:30001--
25	22U-62-28390NK	TUBE	1	SN:30001--
26	07000-13030	O-RING	1	SN:30001--
27	07372-21035	BOLT	4	SN:30001--
28	01643-51032	WASHER	4	SN:30001--
29	07283-22738	CLIP	2	SN:30001--
30	01599-01011	NUT	4	SN:30001--
31	01643-31032	WASHER	4	SN:30001--

Ref. T1120-02A5 Page 360350

https://truckmanualshub.com/

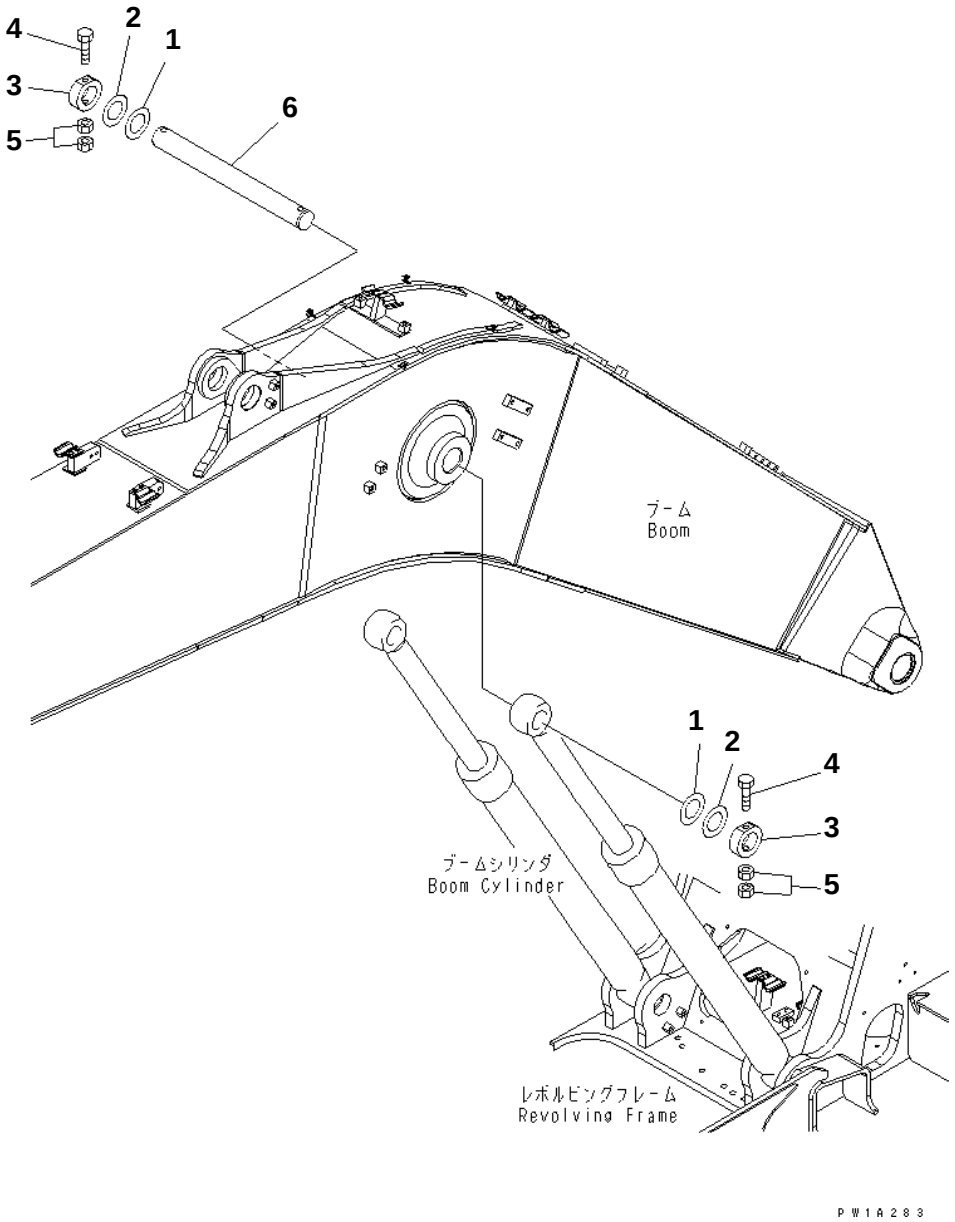

PC228US-3N-W1 S/N 30001-UP

BOOM PIN (YELLOW)(#20001-)

Item	Part No.	Description	Qty	Options
1	20Y-70-11390	SPACER¤ 0.8MM	2	SN:20001--
2	20Y-70-11370	SPACER¤ 1.5MM	4	SN:20001--
3	20Y-70-11170NK	PLATE	2	SN:20001--
4	20Y-70-11380	BOLT	2	SN:20001--
5	01580-12016	NUT	4	SN:20001--
6	206-70-51190	PIN	1	SN:20001--

Ref. T1125-01A0 Page 360360

https://truckmanualshub.com/

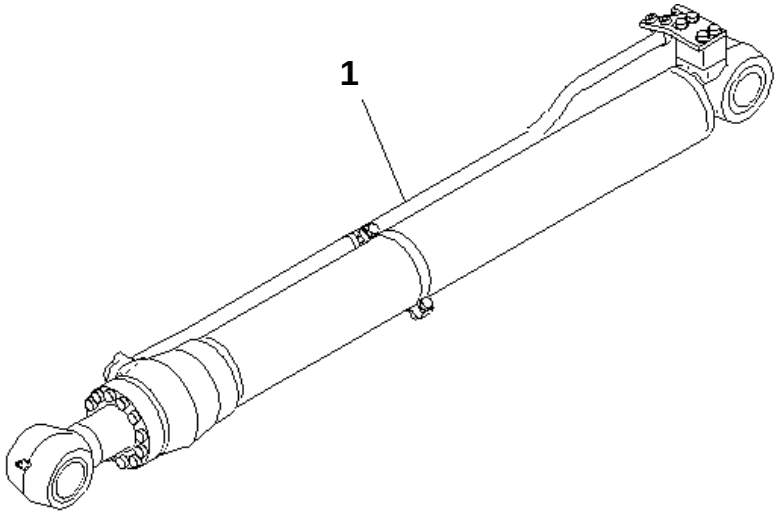

PW1B897

PC228US-3N-W1 S/N 30001-UP

ARM CYLINDER (YELLOW)

Item	Part No.	Description	Qty	Options
1	(⊙707-01-XZ841)	CYLINDER GROUP	1	SN:30001--

Ref. T1140-01A0 Page 360370

https://truckmanualshub.com/

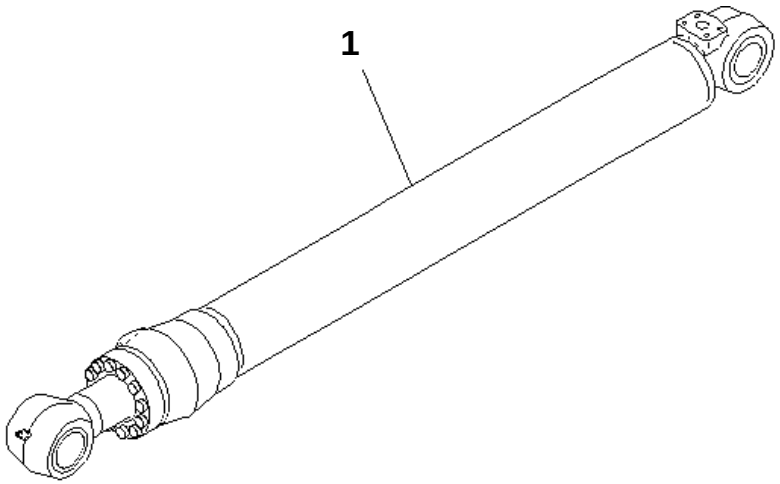

PW1B990

PC228US-3N-W1 S/N 30001-UP

ARM CYLINDER (1/2) (WITH BURST VALVE) (YELLOW)

Item	Part No.	Description	Qty	Options
1	(⊙707-01-0Z840)	CYLINDER ASS'Y	1	SN:30001--

Ref. T1140-01A3 Page 360380

https://truckmanualshub.com/

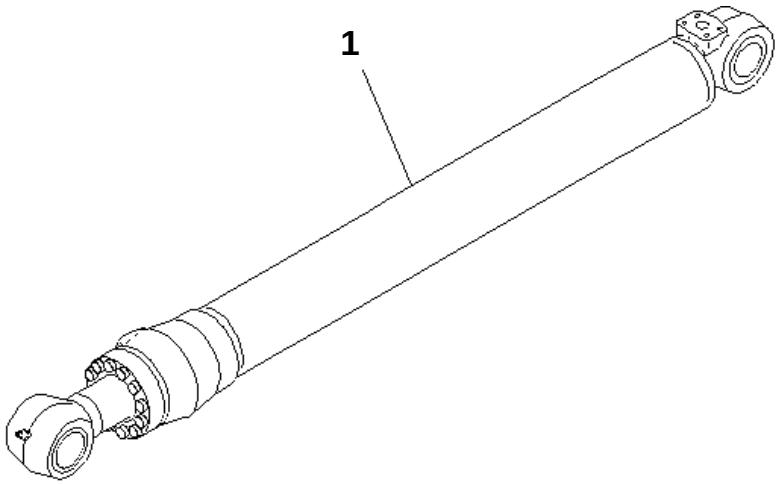

PW1B990

PC228US-3N-W1 S/N 30001-UP

ARM CYLINDER (1/2) (WITH BURST VALVE) (FOR 2-PIECE BOOM)(YELLOW)

Item	Part No.	Description	Qty	Options
1	(⊙707-01-0Z841)	CYLINDER ASS'Y	1	SN:30001--

Ref. T1140-01A5 Page 360390

https://truckmanualshub.com/

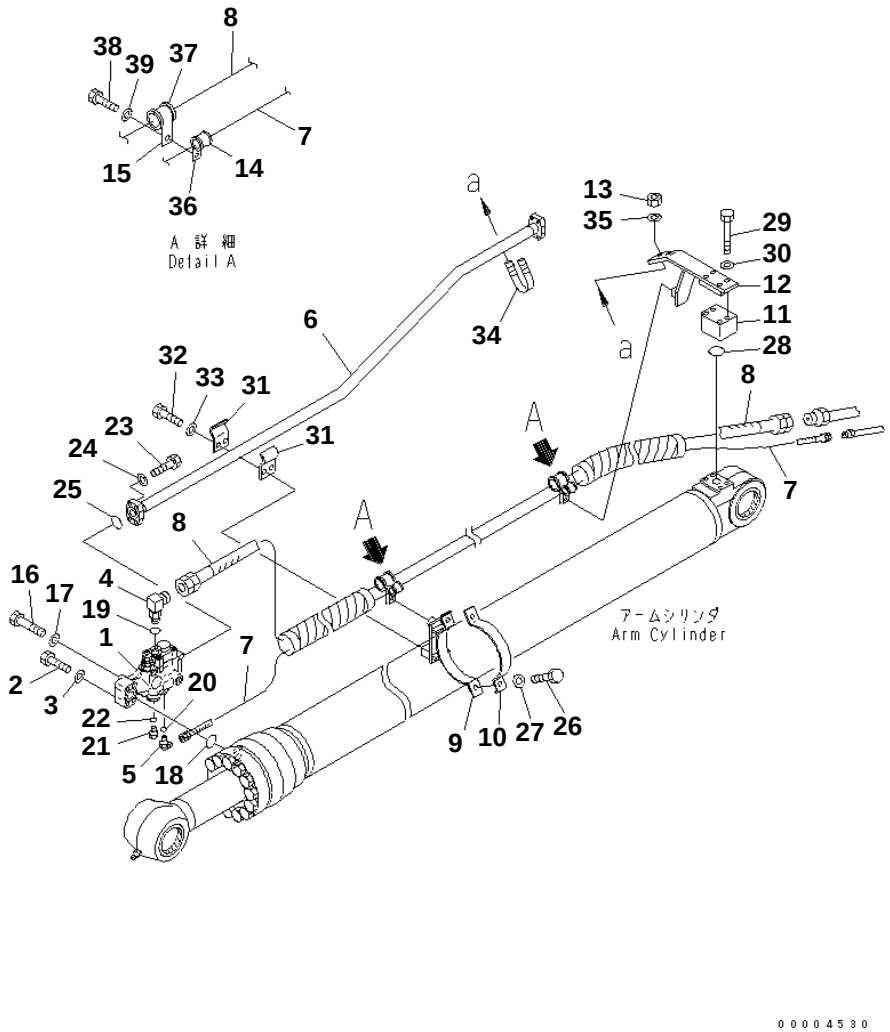

PC228US-3N-W1 S/N 30001-UP

ARM CYLINDER (2/2) (WITH BURST VALVE) (YELLOW)

Item	Part No.	Description	Qty	Options
1	(702-21-08340)	PILOT VALVE	1	SN:30001--
2	07372-21050	BOLT	2	SN:30001--
3	01643-51032	WASHER	2	SN:30001--
4	22U-62-27580	ELBOW	1	SN:30001--
5	416-875-1250	ELBOW	1	SN:30001--
6	20Y-62-43710NK	TUBE	1	SN:30001--
7	07184-00223	HOSE¤ 2300MM	1	SN:30001--
8	22U-62-27480	HOSE	1	SN:30001--
9	20Y-62-43720NK	BRACKET	1	SN:30001--
10	707-88-21260NK	BAND	1	SN:30001--
11	20D-62-17860	ELBOW	1	SN:30001--
12	22U-62-27470NK	BRACKET	1	SN:30001--
13	01597-01009	NUT	2	SN:30001--
14	07095-20211	CUSHION	2	SN:30001--
15	04434-53412	CLIP	2	SN:30001--
16	07372-21060	BOLT	2	SN:30001--
17	01643-51032	WASHER	2	SN:30001--
18	07000-13030	O-RING	1	SN:30001--
19	07002-12034	O-RING	1	SN:30001--
20	07002-11423	O-RING	1	SN:30001--
21	07040-11409	PLUG	1	SN:30001--
22	07002-11423	O-RING	1	SN:30001--
23	07372-21035	BOLT	4	SN:30001--
24	01643-51032	WASHER	4	SN:30001--
25	07000-13030	O-RING	1	SN:30001--
26	01010-81035	BOLT	2	SN:30001--
27	01643-31032	WASHER	2	SN:30001--
28	07000-13035	O-RING	1	SN:30001--
29	01011-81000	BOLT	4	SN:30001--
30	01643-31032	WASHER	4	SN:30001--
31	20Y-62-13650NK	CLAMP	2	SN:30001--
32	01010-81230	BOLT	2	SN:30001--
33	01643-31232	WASHER	2	SN:30001--
34	07283-32738	CLIP	1	SN:30001--
35	01643-31032	WASHER	2	SN:30001--
36	04434-51712	CLIP	2	SN:30001--
37	07095-20627	CUSHION	2	SN:30001--
38	01010-81225	BOLT	2	SN:30001--
39	01643-31232	WASHER	2	SN:30001--

Ref. T1140-02A3 Page 360400

https://truckmanualshub.com/

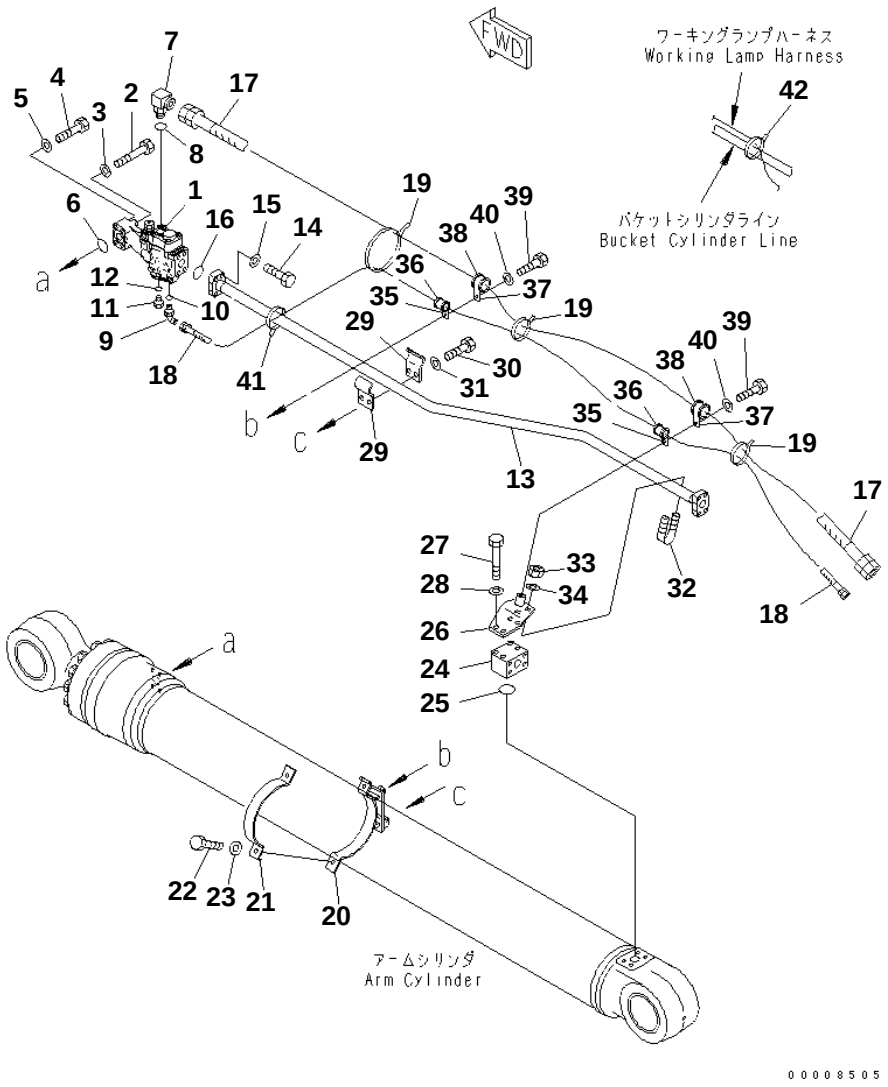

PC228US-3N-W1 S/N 30001-UP

ARM CYLINDER (2/2) (WITH BURST VALVE) (FOR 2-PIECE BOOM) (YELLOW)

Item	Part No.	Description	Qty	Options
1	(702-21-08340)	PILOT VALVE	1	SN:30001--
2	07372-21060	BOLT	2	SN:30001--
3	01643-51032	WASHER	2	SN:30001--
4	07372-21050	BOLT	2	SN:30001--
5	01643-51032	WASHER	2	SN:30001--
6	07000-13030	O-RING	1	SN:30001--
7	22U-62-27580	ELBOW	1	SN:30001--
8	07002-12034	O-RING	1	SN:30001--
9	07235-10311	ELBOW	1	SN:30001--
10	07002-11423	O-RING	1	SN:30001--
11	07040-11409	PLUG	1	SN:30001--
12	07002-11423	O-RING	1	SN:30001--
13	20Y-62-46461NK	TUBE	1	SN:30001--
14	07372-21035	BOLT	4	SN:30001--
15	01643-51032	WASHER	4	SN:30001--
16	07000-13030	O-RING	1	SN:30001--
17	07621-00625	HOSE	1	SN:30001--
18	07184-00325	HOSE	1	SN:30001--
19	08034-00519	BAND	3	SN:30001--
20	20Y-62-43720NK	BRACKET	1	SN:30001--
21	707-88-21260NK	BAND	1	SN:30001--
22	01010-81035	BOLT	2	SN:30001--
23	01643-31032	WASHER	2	SN:30001--
24	20D-62-17860	ELBOW	1	SN:30001--
25	07000-13035	O-RING	1	SN:30001--
26	20Y-62-46250NK	BRACKET	1	SN:30001--
27	01010-81080	BOLT	4	SN:30001--
28	01643-31032	WASHER	4	SN:30001--
29	20Y-62-13650NK	CLAMP	2	SN:30001--
30	01010-81230	BOLT	2	SN:30001--
31	01643-31232	WASHER	2	SN:30001--
32	07283-32738	CLIP	1	SN:30001--
33	01597-01009	NUT	2	SN:30001--
34	01643-31032	WASHER	2	SN:30001--
35	04434-51912	CLIP	2	SN:30001--
36	07095-20213	CUSHION	2	SN:30001--
37	04434-53412	CLIP	2	SN:30001--
38	07095-20627	CUSHION	2	SN:30001--
39	01010-81225	BOLT	2	SN:30001--
40	01643-31232	WASHER	2	SN:30001--

Ref. T1140-02A5 Page 360410

https://truckmanualshub.com/

PC228US-3N-W1 S/N 30001-UP

ARM CYLINDER (2/2) (WITH BURST VALVE) (FOR 2-PIECE BOOM) (YELLOW)

Item	Part No.	Description	Qty	Options
41	08034-40521	BAND	1	SN:30001--
42	08034-00519	BAND	1	SN:30001--

https://truckmanualshub.com/

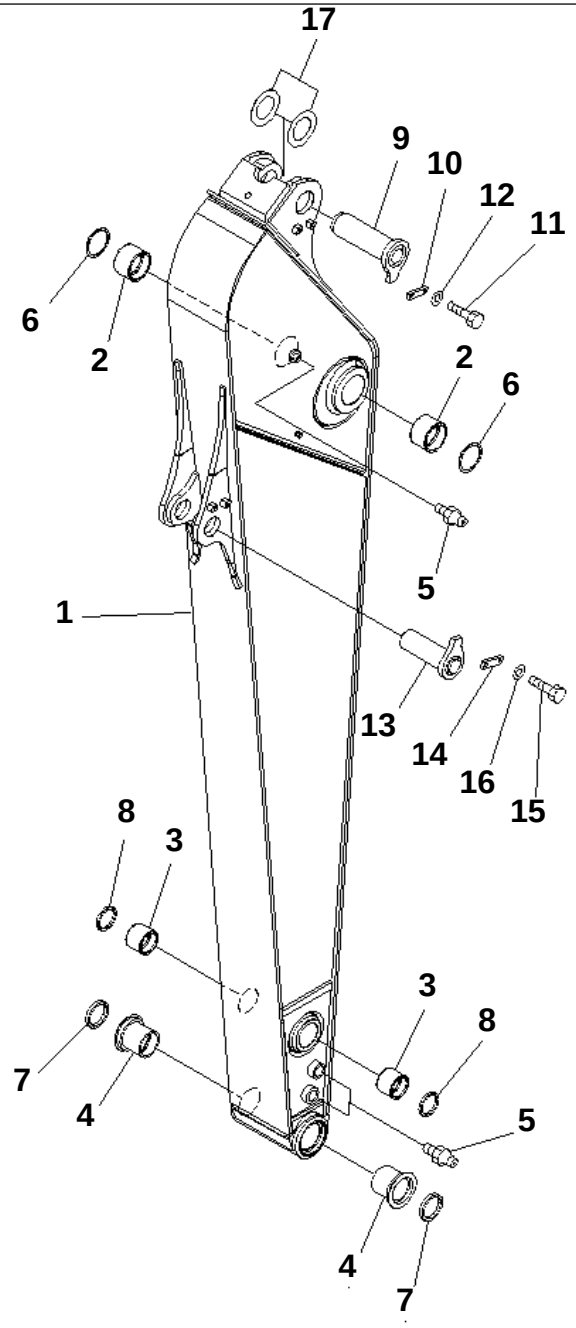

PC228US-3N-W1 S/N 30001-UP

ARM (2.9M) (YELLOW)

Item	Part No.	Description	Qty	Options
1	22U-70-22113NK	ARM	1	SN:30001--
2	20Y-70-31271	BUSHING	2	SN:30001--
3	20Y-70-32371	BUSHING	2	SN:30001--
4	205-70-72130	BUSHING	2	SN:30001--
5	07020-00000	FITTING	3	SN:30001--
6	07145-00090	SEAL	2	SN:30001--
7	205-70-62150	SEAL	2	SN:30001--
8	20Y-70-23220	SEAL	2	SN:30001--
9	20Y-70-31160NK	PIN	1	SN:30001--
10	205-70-66580	PLATE	1	SN:30001--
11	01010-81230	BOLT	2	SN:30001--
12	01643-31232	WASHER	2	SN:30001--
13	22U-70-21381NK	PIN	1	SN:30001--
14	205-70-66580	PLATE	1	SN:30001--
15	01010-81230	BOLT	2	SN:30001--
16	01643-31232	WASHER	2	SN:30001--
17	20Y-70-11370	SPACER¤ 1.5MM	AR	SN:30001--
	20Y-70-11390	SPACER¤ 0.8MM	AR	SN:30001--

Ref. T1200-01A0 Page 360420

https://truckmanualshub.com/

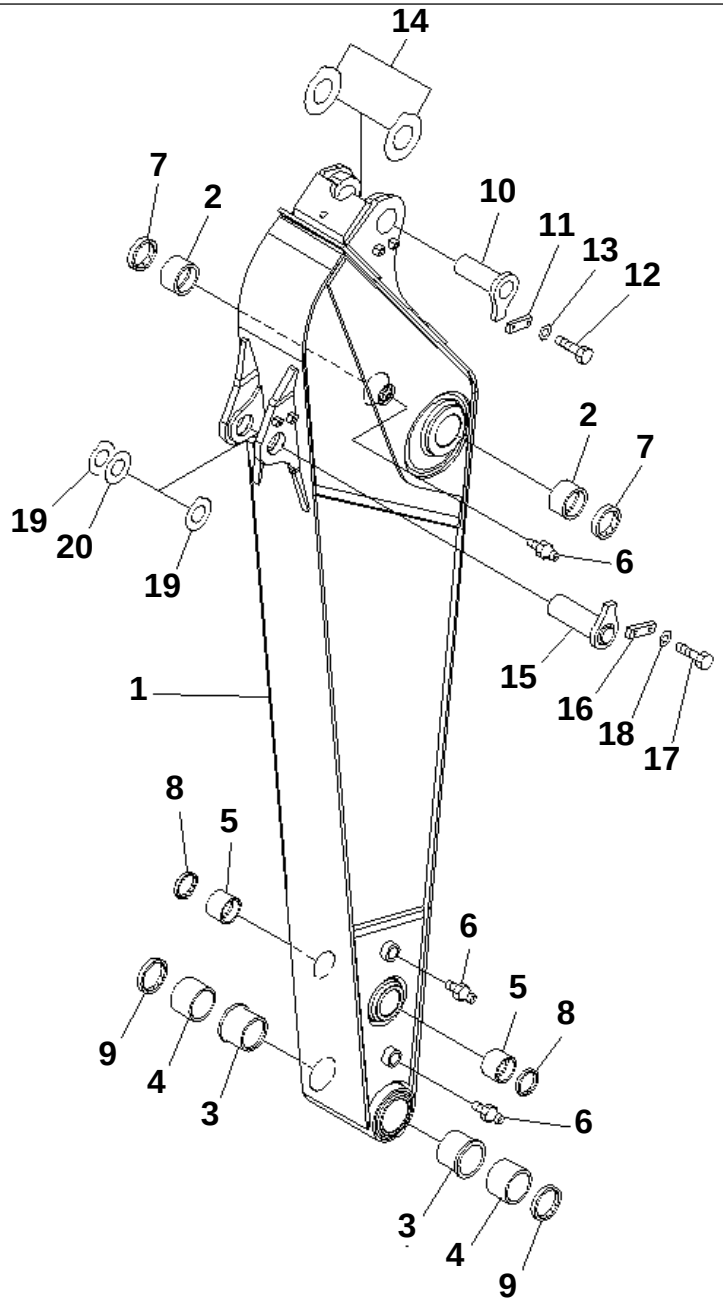

00005395

PC228US-3N-W1 S/N 30001-UP

ARM (2.4M)

Item	Part No.	Description	Qty	Options
1	20Y-944-4211NK	ARM	1	SN:30001--
2	20Y-70-31271	BUSHING	2	SN:30001--
3	20Y-70-32321	BUSHING	2	SN:30001--
4	20Y-70-32331	BUSHING	2	SN:30001--
5	20Y-70-32371	BUSHING	2	SN:30001--
6	07020-00000	FITTING	3	SN:30001--
7	07145-00090	SEAL	2	SN:30001--
8	20Y-70-23220	SEAL	2	SN:30001--
9	20Y-70-23230	SEAL	2	SN:30001--
10	20Y-70-31160NK	PIN	1	SN:30001--
11	205-70-66580	PLATE	1	SN:30001--
12	01010-81230	BOLT	2	SN:30001--
13	01643-31232	WASHER	2	SN:30001--
14	20Y-70-31430	SPACER¤ 1.0MM	2	SN:30001--
15	22U-70-21381NK	PIN	1	SN:30001--
16	205-70-66580	PLATE	1	SN:30001--
17	01010-81230	BOLT	2	SN:30001--
18	01643-31232	WASHER	2	SN:30001--
19	20Y-70-31380	SPACER¤ 1.0MM	2	SN:30001--
20	20Y-70-31390	SPACER¤ 2.0MM	2	SN:30001--

Ref. T1200-01A3 Page 360430

https://truckmanualshub.com/

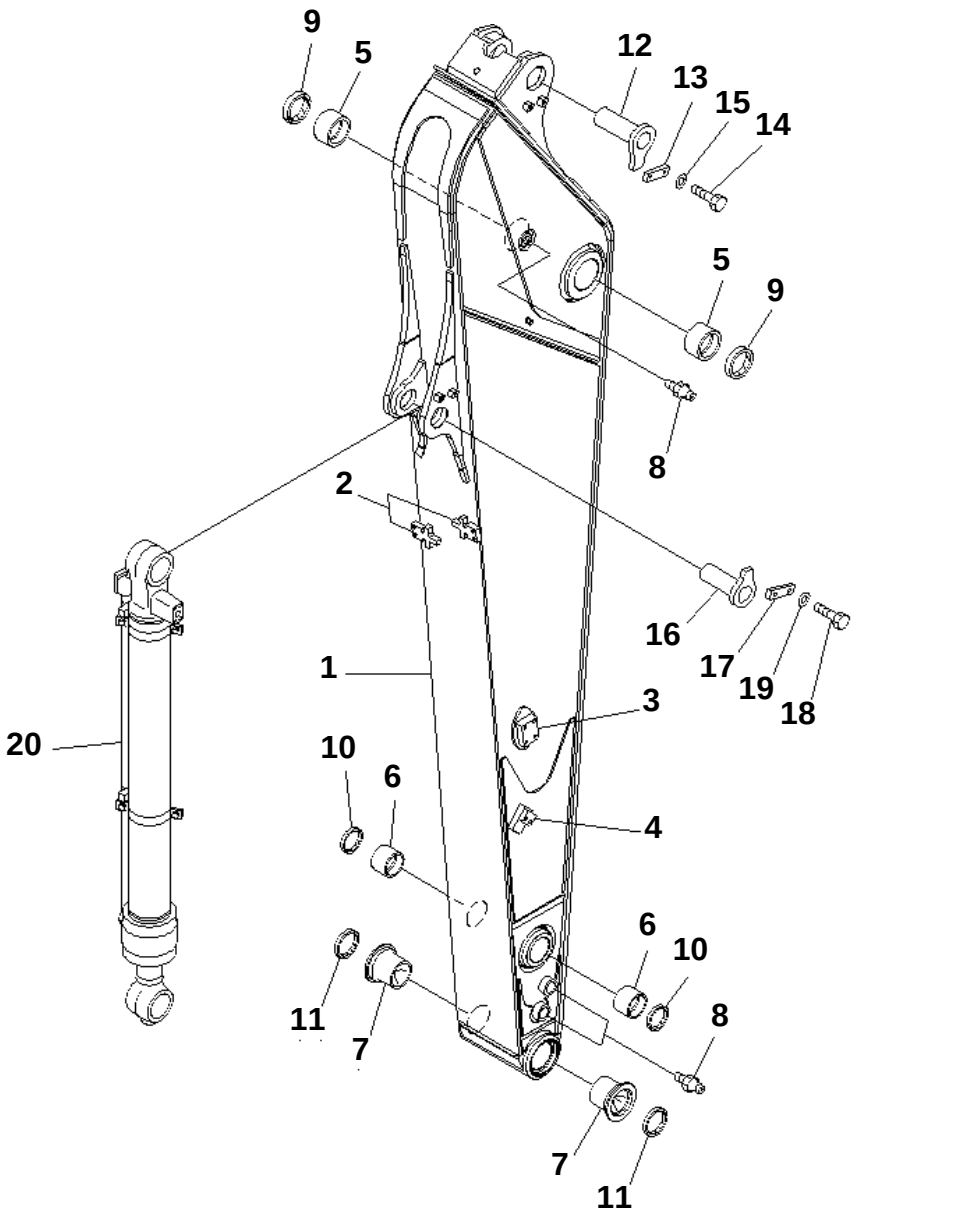

PC228US-3N-W1 S/N 30001-UP

ARM (2.4M) (FOR 2-PIECE BOOM)

Item	Part No.	Description	Qty	Options
	22U-970-2112NK	ARM	1	SN:30001--
1	☆	· ARM (WELDED)	1	SN:30001--
2	20Y-70-32E50	· SEAT (WELDED)	2	SN:30001--
3	20Y-970-3570	· BRACKET (WELDED)	2	SN:30001--
4	20Y-970-6470	· BRACKET (WELDED)	2	SN:30001--
5	20Y-70-31271	BUSHING	2	SN:30001--
6	20Y-70-32371	BUSHING	2	SN:30001--
7	205-70-72130	BUSHING	2	SN:30001--
8	07020-00000	FITTING	3	SN:30001--
9	07145-00090	SEAL	2	SN:30001--
10	205-70-62150	SEAL	2	SN:30001--
11	20Y-70-23230	SEAL	2	SN:30001--
12	20Y-70-31160NK	PIN	1	SN:30001--
13	205-70-66580	PLATE	1	SN:30001--
14	01010-81230	BOLT	2	SN:30001--
15	01643-31232	WASHER	2	SN:30001--
16	22U-70-21381NK	PIN	1	SN:30001--
17	205-70-66580	PLATE	1	SN:30001--
18	01010-81230	BOLT	2	SN:30001--
19	01643-31232	WASHER	2	SN:30001--
20	(⊙707-01-XZ850)	CYLINDER GROUP	1	SN:30001--

Ref. T1200-01A6 Page 360440

https://truckmanualshub.com/

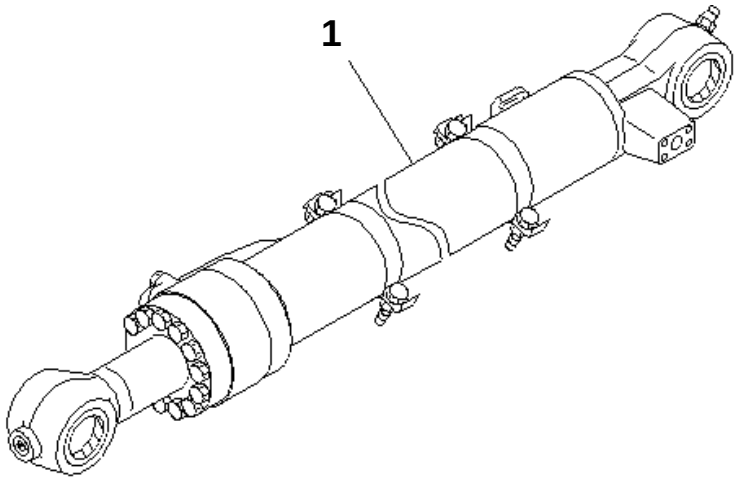

00004536

PC228US-3N-W1 S/N 30001-UP

ARM (2.9M) (BUCKET CYLINDER) (YELLOW)

Item	Part No.	Description	Qty	Options
1	(⊙707-01-XZ850)	CYLINDER GROUP	1	SN:30001--

Ref. T1200-04A0 Page 360450

https://truckmanualshub.com/

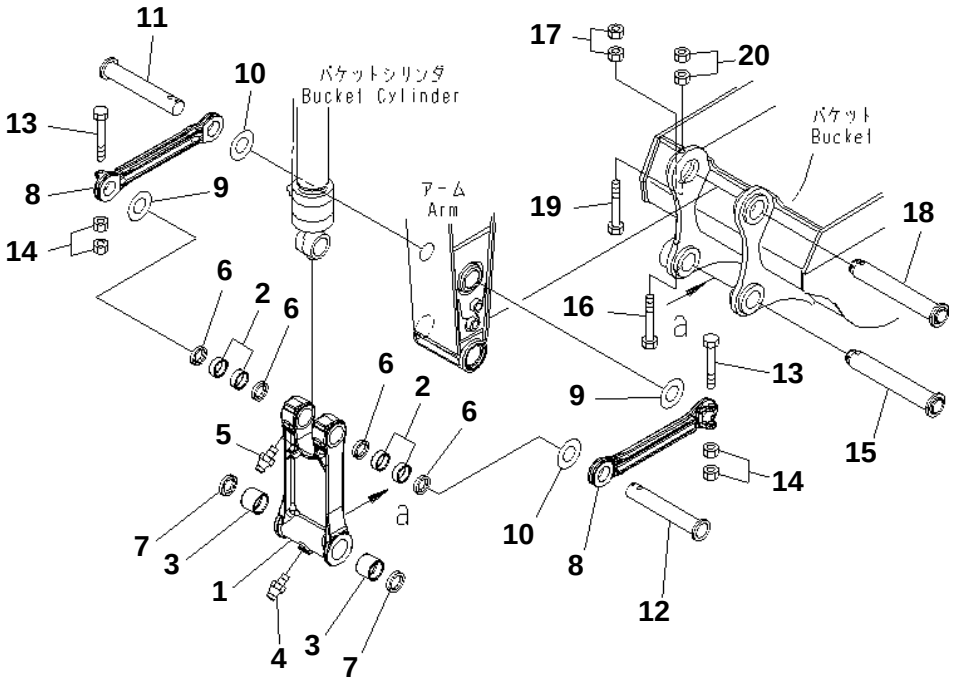

PC228US-3N-W1 S/N 30001-UP

ARM (2.9M) (BUCKET LINK) (YELLOW)

Item	Part No.	Description	Qty	Options
	22U-70-00121NK	LINK ASS'Y	1	SN:30001--
1	☆	· LINK	1	SN:30001--
2	20Y-70-32361	· BUSHING	4	SN:30001--
3	20Y-70-32351	· BUSHING	2	SN:30001--
4	07020-00000	· FITTING	1	SN:30001--
5	07020-00000	· FITTING	2	SN:30001--
6	20Y-70-23220	· SEAL	4	SN:30001--
7	20Y-70-23230	· SEAL	2	SN:30001--
8	22U-70-23120NK	LINK	2	SN:30001--
9	20Y-70-11320	SPACER¤ 0.8MM	3	SN:30001--
10	20Y-70-11330	SPACER¤ 1.5MM	3	SN:30001--
11	22U-70-21191NK	PIN	1	SN:30001--
12	22U-70-21191NK	PIN	1	SN:30001--
13	205-70-73190	BOLT	2	SN:30001--
14	01580-12016	NUT	4	SN:30001--
15	22U-70-11672NK	PIN	1	SN:30001--
16	205-70-73190	BOLT	1	SN:30001--
17	01580-12016	NUT	2	SN:30001--
18	22U-70-11672NK	PIN	1	SN:30001--
19	362-46-11210	BOLT	1	SN:30001--
20	01580-12016	NUT	2	SN:30001--

Ref. T1200-05A0 Page 360460

https://truckmanualshub.com/

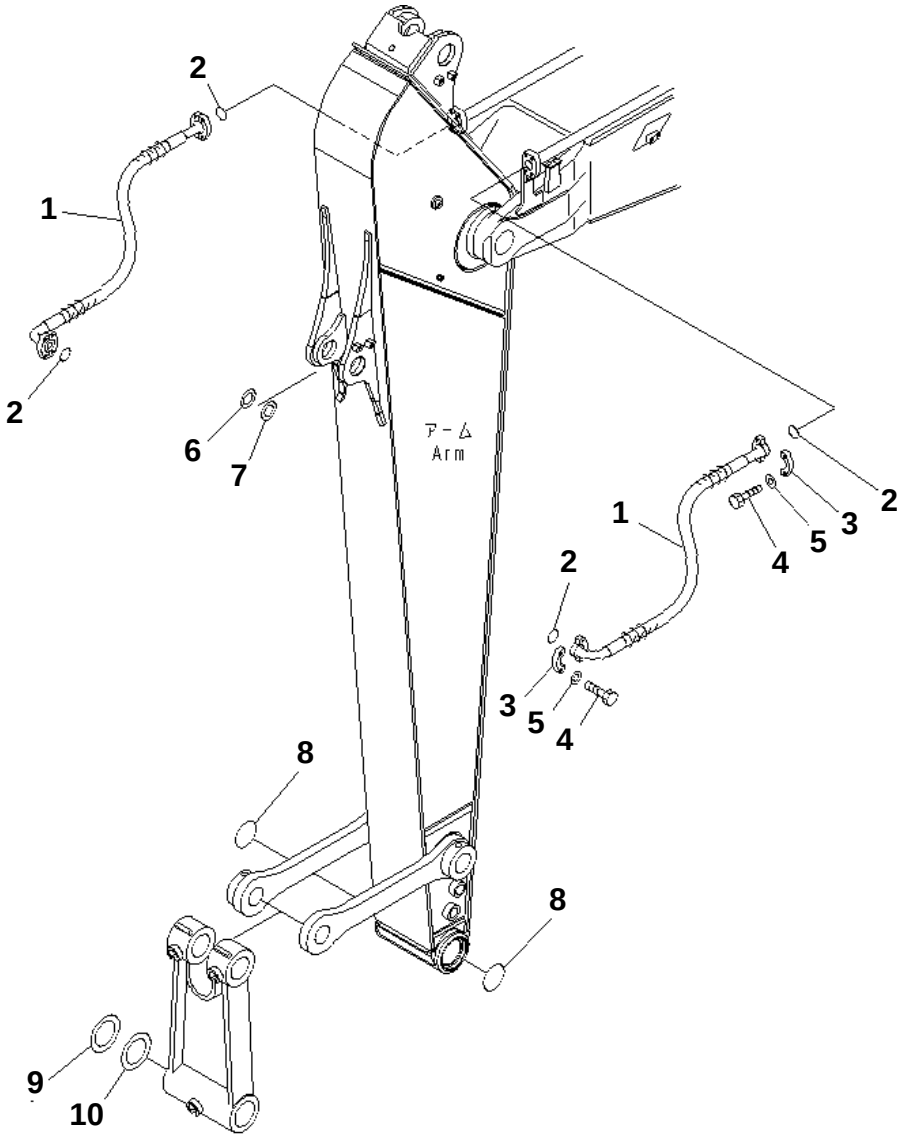

PC228US-3N-W1 S/N 30001-UP

ARM (2.9M) (BUCKET CYLINDER HOSE)

Item	Part No.	Description	Qty	Options
1	20Y-62-13412	HOSE	2	SN:30001--
2	07000-13025	O-RING	4	SN:30001--
3	07371-30640	FLANGE	8	SN:30001--
4	07372-21035	BOLT	16	SN:30001--
5	01643-51032	WASHER	16	SN:30001--
6	20Y-70-11290	SPACER¤ 0.8MM	1	SN:30001--
7	20Y-70-11310	SPACER¤ 1.5MM	2	SN:30001--
8	205-70-73280	O-RING	2	SN:30001--
9	20Y-70-11340	SPACER¤ 0.8MM	1	SN:30001--
10	205-70-51530	SPACER¤ 1.5MM	2	SN:30001--

Ref. T1200-06A0 Page 360470

https://truckmanualshub.com/

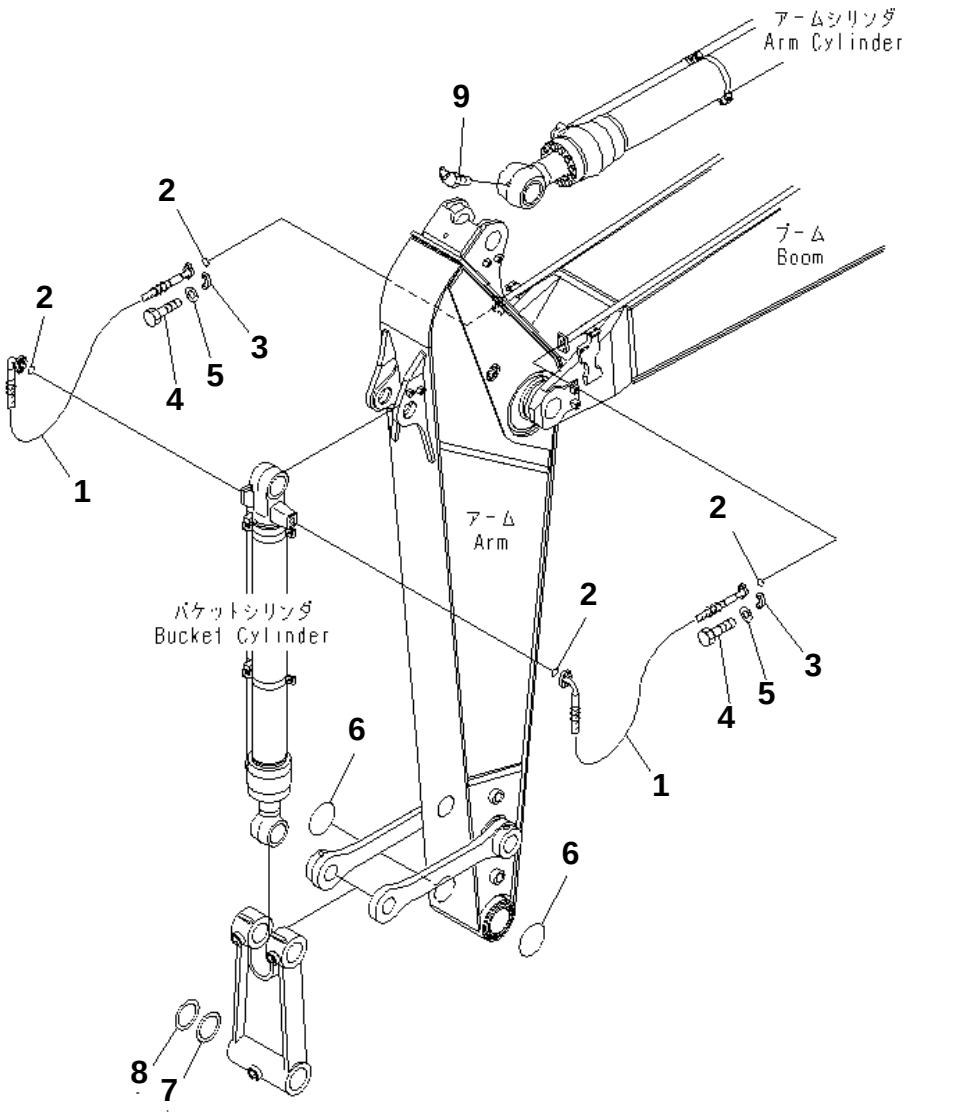

PC228US-3N-W1 S/N 30001-UP

ARM (2.4M) (BUCKET CYLINDER HOSE AND SPACER)

Item	Part No.	Description	Qty	Options
1	20Y-62-13412	HOSE	2	SN:30001--
2	07000-13025	O-RING	4	SN:30001--
3	07371-30640	FLANGE	8	SN:30001--
4	07372-21035	BOLT	16	SN:30001--
5	01643-51032	WASHER	16	SN:30001--
6	205-70-73280	O-RING	2	SN:30001--
7	20Y-70-11340	SPACER¤ 0.8MM	1	SN:30001--
8	205-70-51530	SPACER¤ 1.5MM	2	SN:30001--
9	07020-00675	FITTING	1	SN:30001--

Ref. T1200-06A3 Page 360480

https://truckmanualshub.com/

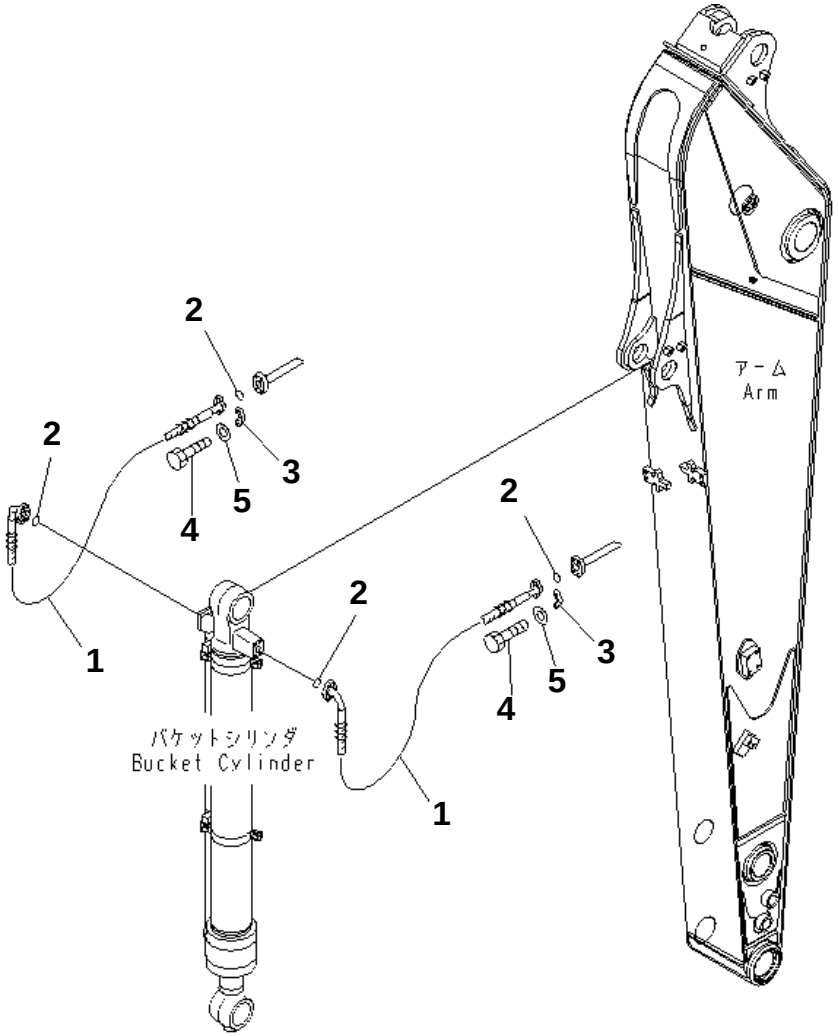

PC228US-3N-W1 S/N 30001-UP

ARM (2.9M) (BUCKET CYLINDER PIPING) (FOR 2-PIECE BOOM)

Item	Part No.	Description	Qty	Options
1	07084-20617	HOSE	2	SN:30001--
2	07000-13025	O-RING	4	SN:30001--
3	07371-30640	FLANGE	8	SN:30001--
4	07372-21035	BOLT	16	SN:30001--
5	01643-51032	WASHER	16	SN:30001--

Ref. T1200-06A6 Page 360490

https://truckmanualshub.com/

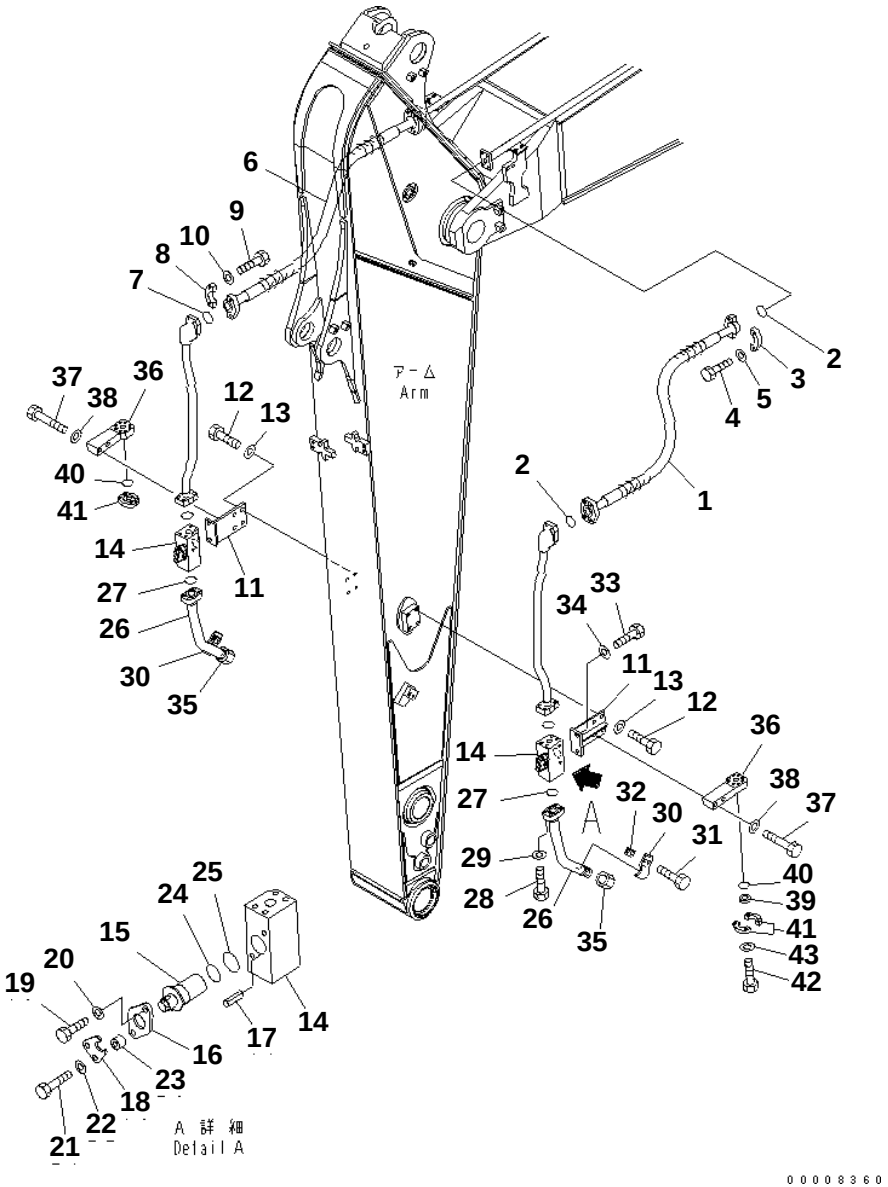

PC228US-3N-W1 S/N 30001-UP

ARM (2.9M) (ADDITIONAL PIPING AND SPACER) (FOR 2-PIECE BOOM) (1/2)

Item	Part No.	Description	Qty	Options
1	07097-21015	HOSE	1	SN:30001--
2	21T-09-11460	O-RING	2	SN:30001--
3	07371-31049	FLANGE	4	SN:30001--
4	07372-21035	BOLT	8	SN:30001--
5	01643-51032	WASHER	8	SN:30001--
6	07097-21218	HOSE	1	SN:30001--
7	07000-13038	O-RING	2	SN:30001--
8	07371-51260	FLANGE	4	SN:30001--
9	01010-81245	BOLT	8	SN:30001--
10	01643-31232	WASHER	8	SN:30001--
11	206-970-7220NK	BRACKET	2	SN:30001--
12	01010-81230	BOLT	4	SN:30001--
13	01643-31232	WASHER	4	SN:30001--
	20Y-970-2301	VALVE ASS'Y	2	SN:30001--
14	☆	· BODY	1	SN:30001--
15	20Y-970-3241	· ROTOR	1	SN:30001--
16	20Y-970-3270	· PLATE	1	SN:30001--
17	04025-00412	· PIN	1	SN:30001--
18	20Y-970-4612	· PLATE	1	SN:30001--
19	01010-81025	· BOLT	1	SN:30001--
20	01643-31032	· WASHER	1	SN:30001--
21	01010-81045	· BOLT	1	SN:30001--
22	01643-31032	· WASHER	1	SN:30001--
23	201-03-29160	· SPACER	1	SN:30001--
24	07000-13032	· O-RING	1	SN:30001--
25	07000-13038	· O-RING	1	SN:30001--
26	20Y-62-45360NK	TUBE	2	SN:30001--
27	07000-13035	O-RING	2	SN:30001--
28	07372-21040	BOLT	8	SN:30001--
29	01643-51032	WASHER	8	SN:30001--
30	207-62-31330NK	CLAMP	2	SN:30001--
31	01010-81225	BOLT	4	SN:30001--
32	20Y-62-13450	PLATE	2	SN:30001--
33	01010-81230	BOLT	4	SN:30001--
34	01643-31232	WASHER	4	SN:30001--
35	205-970-5770	PLUG	2	SN:30001--
36	206-970-7230	PLATE	2	SN:30001--
37	01010-81280	BOLT	4	SN:30001--
38	01643-31232	WASHER	4	SN:30001--
39	07378-10600	HEAD	2	SN:30001--

Ref. T1200-07A6 Page 360500

https://truckmanualshub.com/

PC228US-3N-W1 S/N 30001-UP

ARM (2.9M) (ADDITIONAL PIPING AND SPACER) (FOR 2-PIECE BOOM) (1/2)

Item	Part No.	Description	Qty	Options
40	07000-13025	O-RING	2	SN:30001--
41	07371-30640	FLANGE	4	SN:30001--
42	07372-21035	BOLT	8	SN:30001--
43	01643-51032	WASHER	8	SN:30001--

https://truckmanualshub.com/

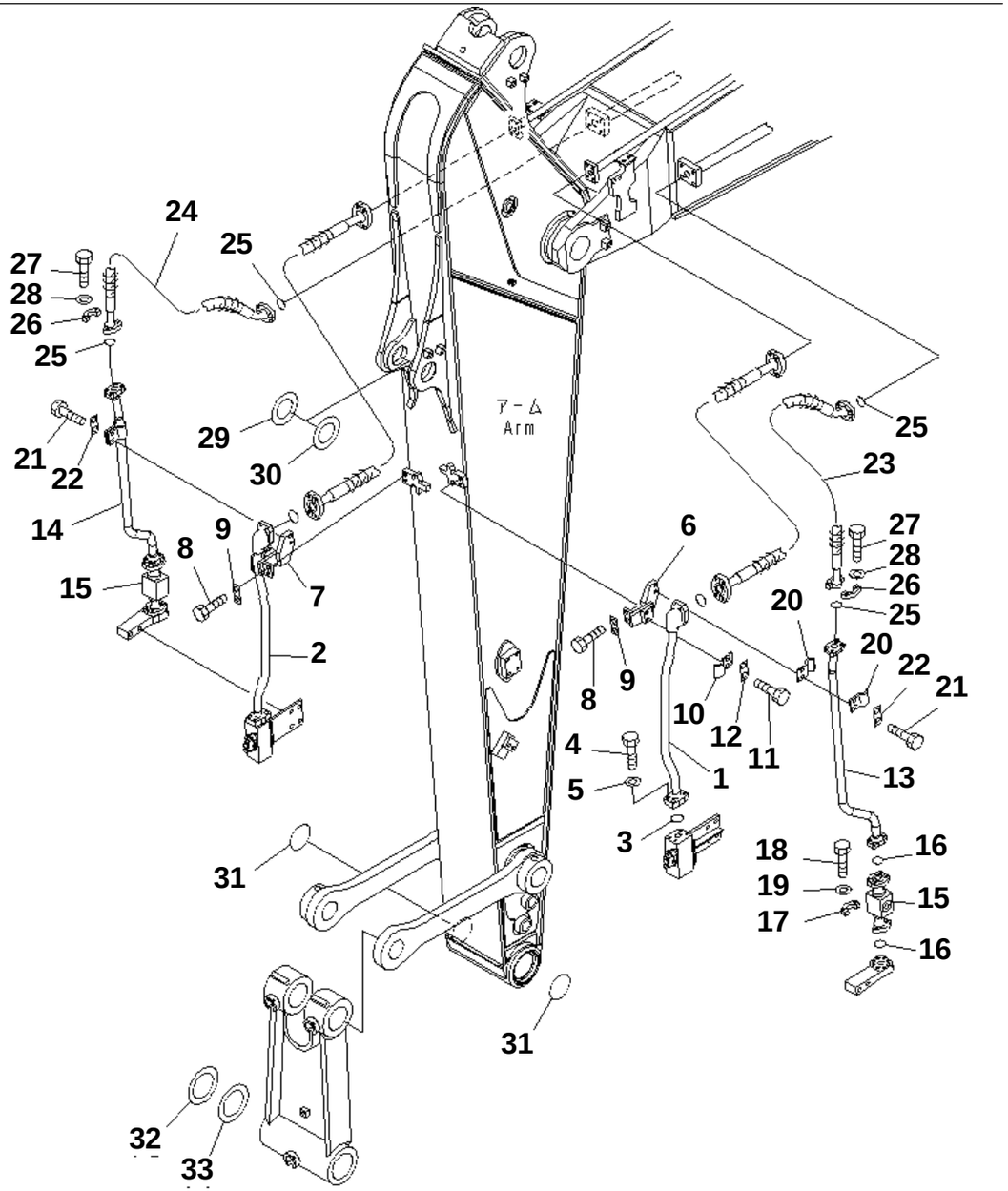

PC228US-3N-W1 S/N 30001-UP

ARM (2.9M) (ADDITIONAL PIPING AND SPACER) (FOR 2-PIECE BOOM) (2/2)

Item	Part No.	Description	Qty	Options
1	20Y-62-45340NK	TUBE	1	SN:30001--
2	20Y-62-45350NK	TUBE	1	SN:30001--
3	07000-13035	O-RING	2	SN:30001--
4	07372-21040	BOLT	8	SN:30001--
5	01643-51032	WASHER	8	SN:30001--
6	206-970-7240NK	BRACKET	1	SN:30001--
7	206-970-7250NK	BRACKET	1	SN:30001--
8	01010-81230	BOLT	4	SN:30001--
9	20Y-62-13450	PLATE	2	SN:30001--
10	207-62-31330NK	CLAMP	2	SN:30001--
11	01010-81225	BOLT	4	SN:30001--
12	20Y-62-13450	PLATE	2	SN:30001--
13	206-970-7260NK	TUBE	1	SN:30001--
14	20Y-970-7210NK	TUBE	1	SN:30001--
15	20Y-970-K551	VALVE	2	SN:30001--
16	07000-13025	O-RING	4	SN:30001--
17	07371-30640	FLANGE	8	SN:30001--
18	07372-21035	BOLT	16	SN:30001--
19	01643-51032	WASHER	16	SN:30001--
20	20Y-62-13650NK	CLAMP	4	SN:30001--
21	01010-81230	BOLT	4	SN:30001--
22	20Y-62-13450	PLATE	2	SN:30001--
23	07097-20617	HOSE	1	SN:30001--
24	07097-20618	HOSE	1	SN:30001--
25	07000-13025	O-RING	4	SN:30001--
26	07371-30640	FLANGE	8	SN:30001--
27	07372-21035	BOLT	16	SN:30001--
28	01643-51032	WASHER	16	SN:30001--
29	20Y-70-11290	SPACER¤ 0.8MM	1	SN:30001--
30	20Y-70-11310	SPACER¤ 1.5MM	2	SN:30001--
31	205-70-73280	O-RING	2	SN:30001--
32	20Y-70-11340	SPACER¤ 0.8MM	1	SN:30001--
33	205-70-51530	SPACER¤ 1.5MM	2	SN:30001--

Ref. T1200-08A6 Page 360510

https://truckmanualshub.com/

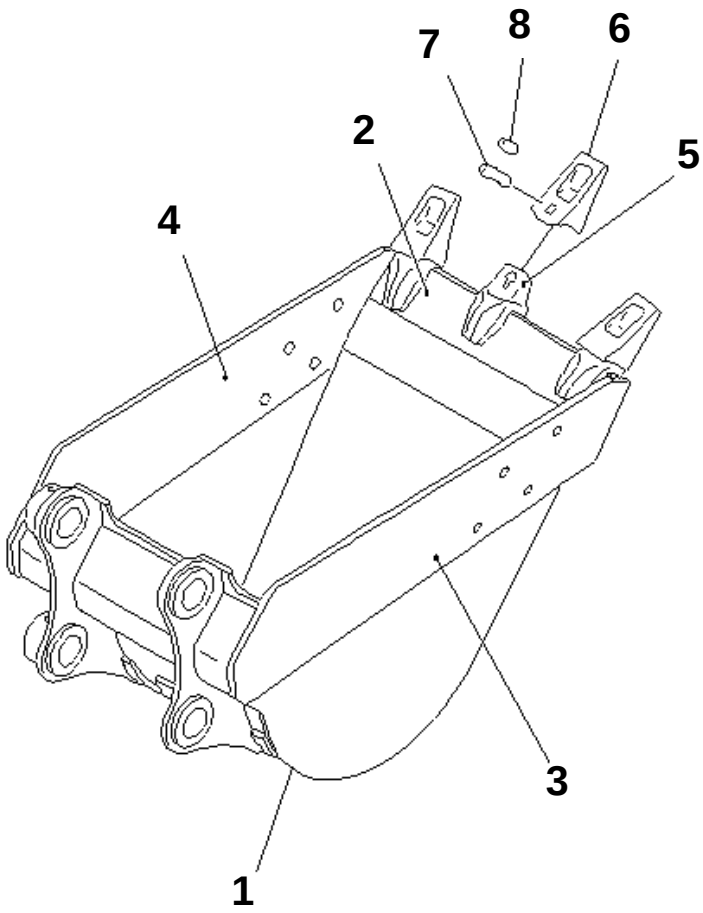

PWB7127

PC228US-3N-W1 S/N 30001-UP

BUCKET¤ 0.5M3 (CECE 0.45M3)¤ 750MM (VERTICAL PIN TYPE)(#20001-)

Item	Part No.	Description	Qty	Options
1	205-926-7211	BUCKET	1	SN:20001--
2	205-926-7221	· PLATE (WELDED)	1	SN:20001--
3	205-70-74162	· PLATE,L.H. (WELDED)	1	SN:20001--
4	205-70-74172	· PLATE,R.H. (WELDED)	1	SN:20001--
5	203-70-64210	· ADAPTER (WELDED)	3	SN:20001--
6	205-70-74272	TOOTH	3	SN:20001--
7	205-70-74281	PIN	3	SN:20001--
8	205-70-74291	LOCK	3	SN:20001--

Ref. T1510-01A0 Page 360520

https://truckmanualshub.com/

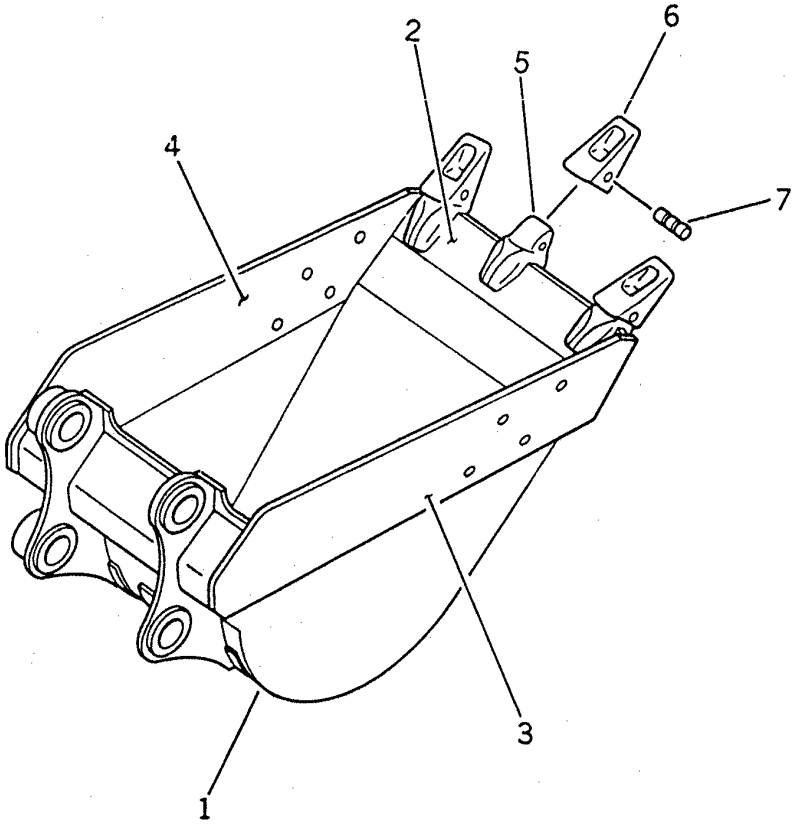

PC228US-3N-W1 S/N 30001-UP

BUCKET¤ 0.5M3 (CECE 0.45M3)¤ 750MM (HORIZONTAL PIN TYPE)(#20001-)

Item	Part No.	Description	Qty	Options
1	205-926-7250	BUCKET	1	SN:20001--
2	205-926-7221	· PLATE (WELDED)	1	SN:20001--
3	205-70-74162	· PLATE,L.H. (WELDED)	1	SN:20001--
4	205-70-74172	· PLATE,R.H. (WELDED)	1	SN:20001--
5	205-939-7120	· ADAPTER (WELDED)	3	SN:20001--
6	205-70-19570	TOOTH	3	SN:20001--
7	09244-02496	PIN	3	SN:20001--

Ref. T1510-01A1 Page 360530

https://truckmanualshub.com/

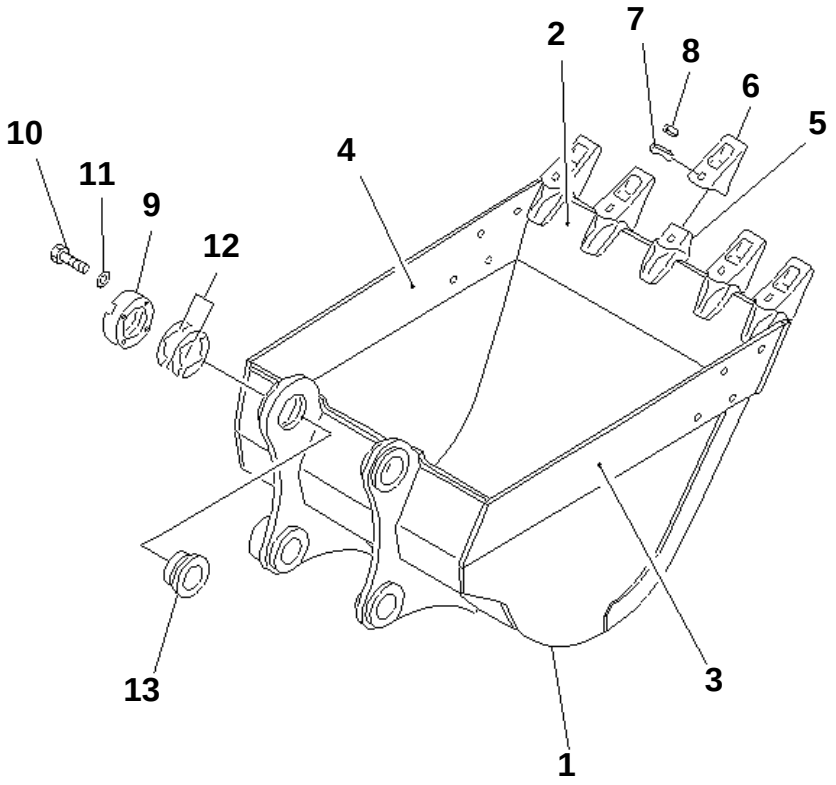

PWB0022

PC228US-3N-W1 S/N 30001-UP

BUCKET¤ 0.8M3 (CECE 0.7M3)¤ 1150MM (VERTICAL PIN TYPE) (WITH ADJUSTER)(#20001-)

Item	Part No.	Description	Qty	Options
1	20Y-70-24113	BUCKET	1	SN:20958--
2	20Y-70-14122	· PLATE (WELDED)	1	SN:20001--
3	20Y-70-34121	· PLATE,L.H. (WELDED)	1	SN:20958--
4	20Y-70-34131	· PLATE,R.H. (WELDED)	1	SN:20958--
5	20Y-70-24210	· ADAPTER (WELDED)	5	SN:20001--
6	205-70-74272	TOOTH	5	SN:20001--
7	205-70-74281	PIN	5	SN:20001--
8	205-70-74291	LOCK	5	SN:20001--
9	205-70-74391	PLATE	1	SN:20001--
10	01010-62055	BOLT	4	SN:20001--
11	01643-32060	WASHER	4	SN:20001--
12	205-70-00100	SHIM ASS'Y	1	SN:20001--
	☆	· SHIM¤ 1.0MM	8	SN:20001--
	☆	· SHIM¤ 0.5MM	4	SN:20001--
13	205-70-74381	SPACER	1	SN:20001--

Ref. T1510-01A3 Page 360540

https://truckmanualshub.com/

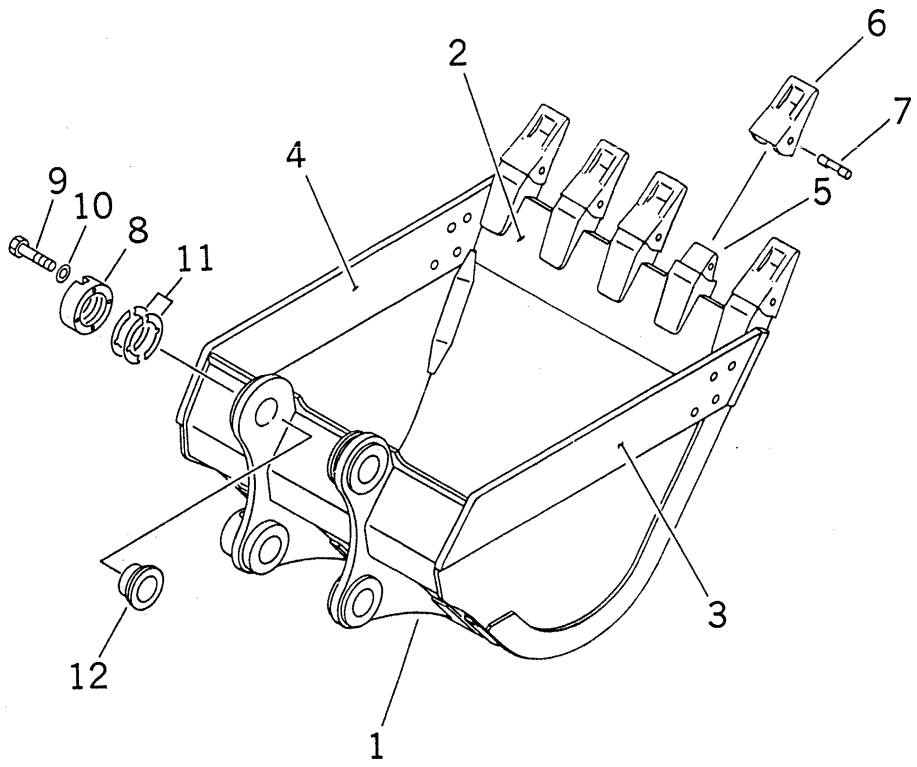

PC228US-3N-W1 S/N 30001-UP

BUCKET¤ 0.8M3 (CECE 0.7M3)¤ 1150MM (HORIZONTAL PIN TYPE) (WITH ADJUSTER)(#20001-)

Item	Part No.	Description	Qty	Options
1	20Y-939-2113	BUCKET	1	SN:20958--
2	20Y-939-2121	· PLATE (WELDED)	1	SN:20001--
3	20Y-70-34121	· PLATE,L.H. (WELDED)	1	SN:20958--
4	20Y-70-34131	· PLATE,R.H. (WELDED)	1	SN:20958--
5	20Y-939-1180	· ADAPTER (WELDED)	5	SN:20001--
6	205-70-19570	TOOTH	5	SN:20001--
7	09244-02496	PIN	5	SN:20001--
8	205-70-74391	PLATE	1	SN:20001--
9	01010-62055	BOLT	4	SN:20001--
10	01643-32060	WASHER	4	SN:20001--
11	205-70-00100	SHIM ASS'Y	1	SN:20001--
	☆	· SHIM¤ 1.0MM	8	SN:20001--
	☆	· SHIM¤ 0.5MM	4	SN:20001--
12	205-70-74381	SPACER	1	SN:20001--

Ref. T1510-01A4 Page 360550

https://truckmanualshub.com/

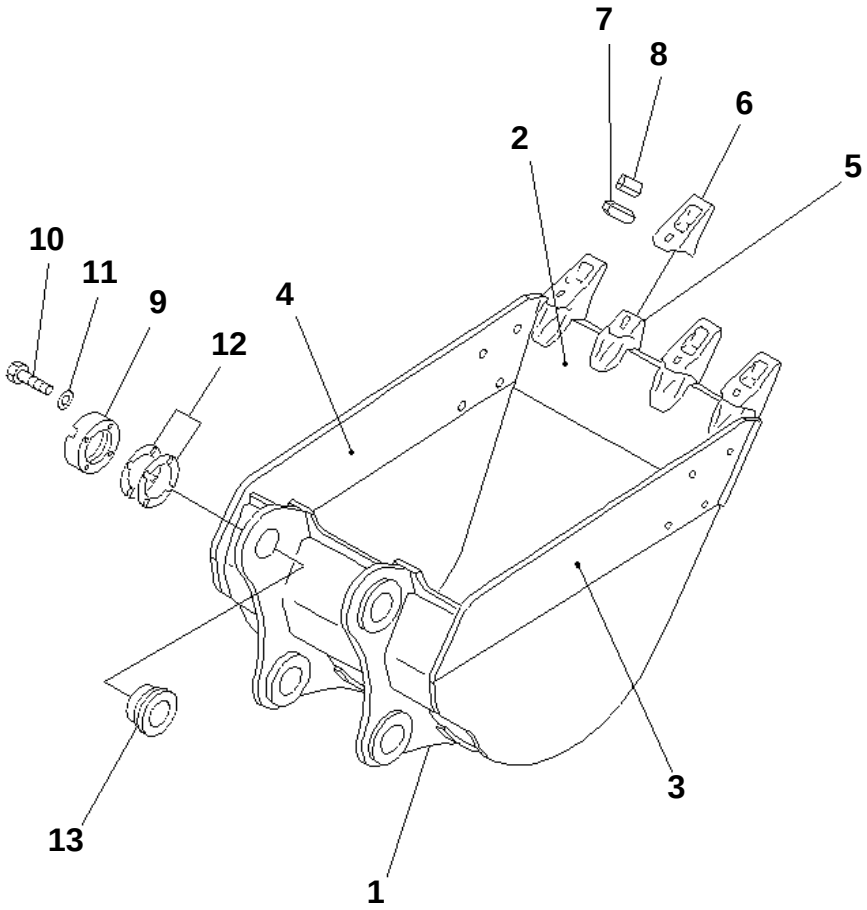

PC228US-3N-W1 S/N 30001-UP

BUCKET¤ 0.6M3 (CECE 0.55M3)¤ 970MM (VERTICAL PIN TYPE) (WITH ADJUSTER)(#20001-)

Item	Part No.	Description	Qty	Options
1	205-966-7161	BUCKET	1	SN:20001--
2	205-966-7171	· PLATE (WELDED)	1	SN:20001--
3	205-70-74162	· PLATE,L.H. (WELDED)	1	SN:20001--
4	205-70-74172	· PLATE,R.H. (WELDED)	1	SN:20001--
5	203-70-64210	· ADAPTER (WELDED)	4	SN:20001--
6	205-70-74272	TOOTH	4	SN:20001--
7	205-70-74281	PIN	4	SN:20001--
8	205-70-74291	LOCK	4	SN:20001--
9	205-70-74391	PLATE	1	SN:20001--
10	01010-62055	BOLT	4	SN:20001--
11	01643-32060	WASHER	4	SN:20001--
12	205-70-00100	SHIM ASS'Y	1	SN:20001--
	☆	· SHIM¤ 1.0MM	8	SN:20001--
	☆	· SHIM¤ 0.5MM	4	SN:20001--
13	205-70-74381	SPACER	1	SN:20001--

Ref. T1510-01A5 Page 360560

https://truckmanualshub.com/

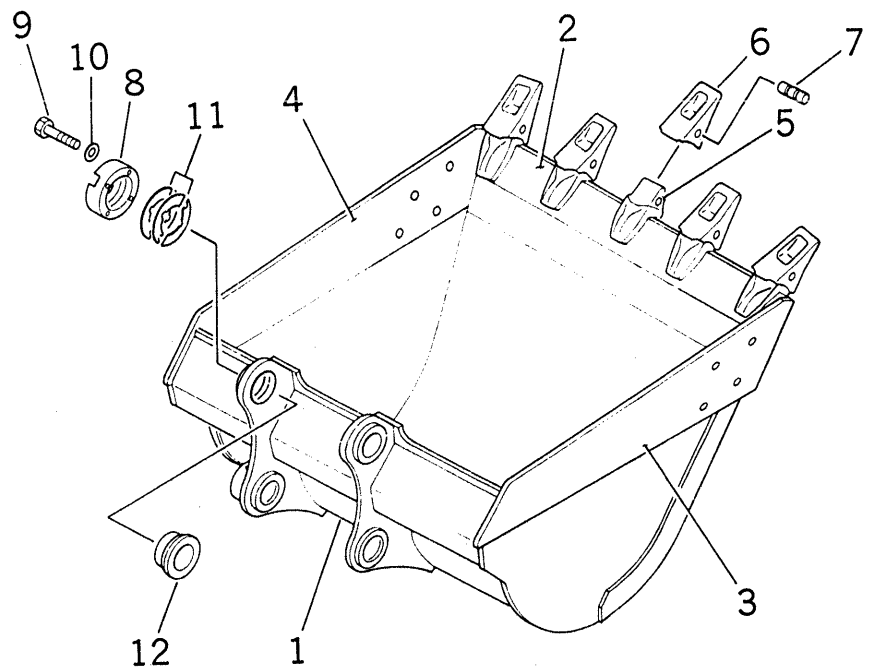

PC228US-3N-W1 S/N 30001-UP

BUCKET¤ 0.8M3 (CECE 0.7M3)¤ 1150MM (HORIZONTAL PIN TYPE) (WITH ADJUSTER)(#20001-)

Item	Part No.	Description	Qty	Options
1	20Y-70-24512	BUCKET	1	SN:20958--
2	20Y-70-14122	· PLATE (WELDED)	1	SN:20001--
3	20Y-70-34121	· PLATE,L.H. (WELDED)	1	SN:20958--
4	20Y-70-24131	· PLATE,R.H. (WELDED)	1	SN:20958--
5	20Y-70-14520	· ADAPTER (WELDED)	5	SN:20001--
6	205-70-19570	TOOTH	5	SN:20001--
7	09244-02496	PIN	5	SN:20001--
8	205-70-74391	PLATE	1	SN:20001--
9	01010-62055	BOLT	4	SN:20001--
10	01643-32060	WASHER	4	SN:20001--
11	205-70-00100	SHIM ASS'Y	1	SN:20001--
	☆	· SHIM¤ 1.0MM	8	SN:20001--
	☆	· SHIM¤ 0.5MM	4	SN:20001--
12	205-70-74381	SPACER	1	SN:20001--

Ref. T1510-01A6 Page 360570

https://truckmanualshub.com/

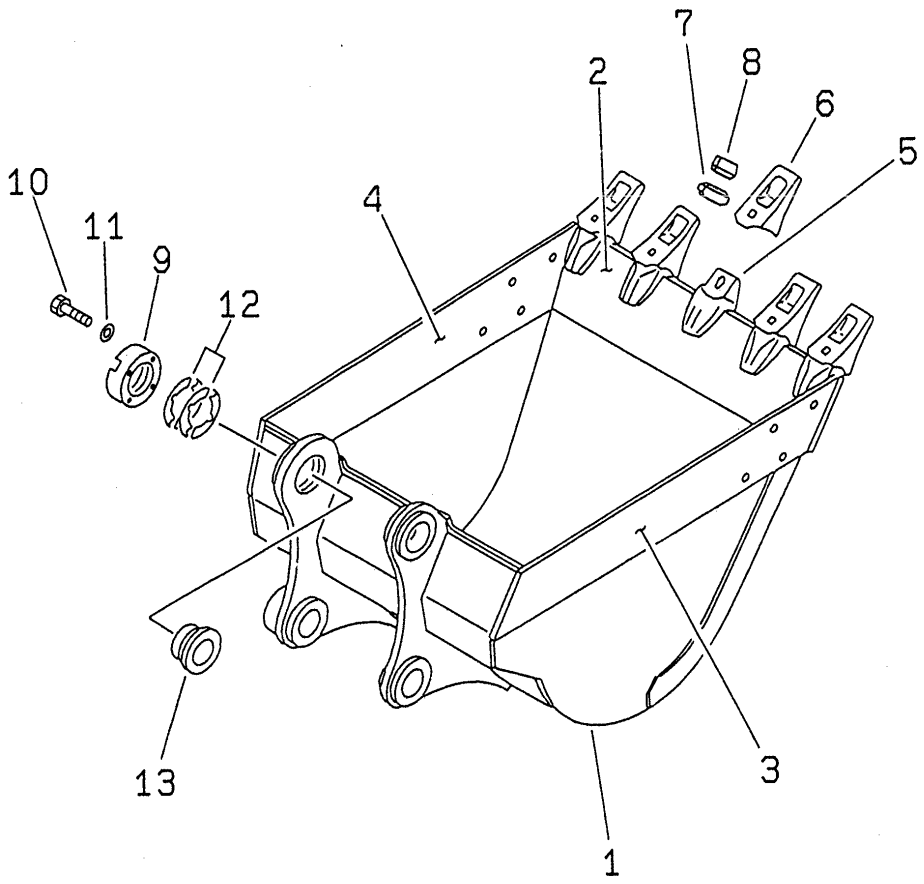

PC228US-3N-W1 S/N 30001-UP

BUCKET¤ 0.9M3 (CECE 0.8M3)¤ 1200MM (VERTICAL PIN TYPE) (WITH ADJUSTER)(#20001-)

Item	Part No.	Description	Qty	Options
1	20Y-920-2112	BUCKET	1	SN:20958--
2	20Y-920-1121	· PLATE (WELDED)	1	SN:20001--
3	20Y-70-34121	· PLATE,L.H. (WELDED)	1	SN:20958--
4	20Y-70-34131	· PLATE,R.H. (WELDED)	1	SN:20958--
5	20Y-70-24210	· ADAPTER (WELDED)	5	SN:20001--
6	205-70-74272	TOOTH	5	SN:20001--
7	205-70-74281	PIN	5	SN:20001--
8	205-70-74291	LOCK	5	SN:20001--
9	205-70-74391	PLATE	1	SN:20001--
10	01010-62055	BOLT	4	SN:20001--
11	01643-32060	WASHER	4	SN:20001--
12	205-70-00100	SHIM ASS'Y	1	SN:20001--
	☆	· SHIM¤ 1.0MM	8	SN:20001--
	☆	· SHIM¤ 0.5MM	4	SN:20001--
13	205-70-74381	SPACER	1	SN:20001--

Ref. T1510-01A7 Page 360580

https://truckmanualshub.com/

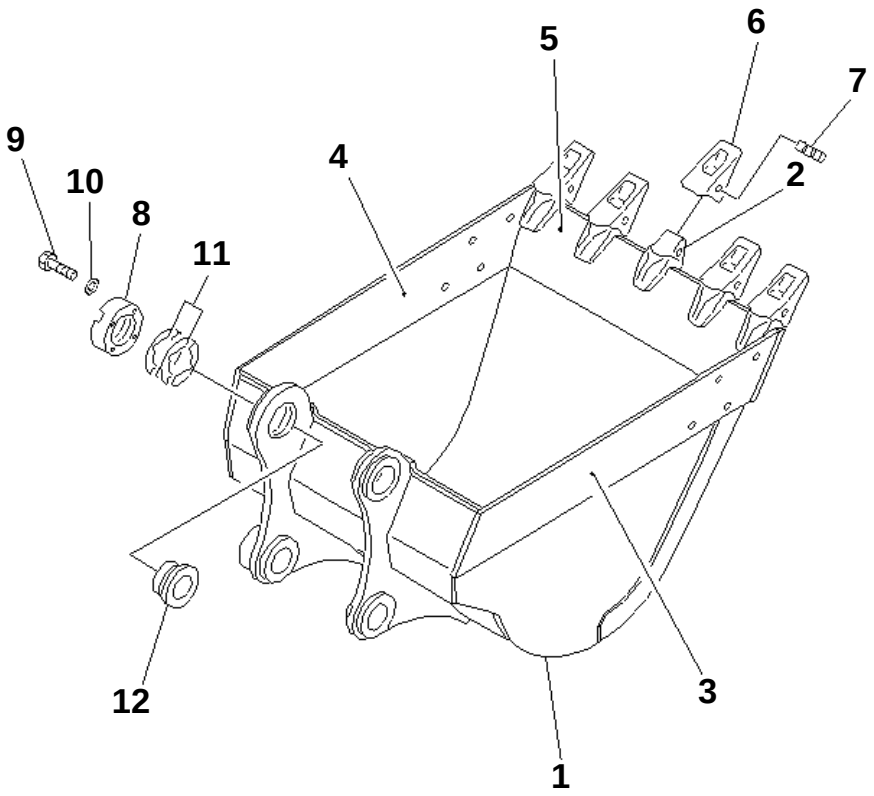

PEB7133

PC228US-3N-W1 S/N 30001-UP

BUCKET¤ 0.9M3 (CECE 0.8M3)¤ 1200MM (HORIZONTAL PIN TYPE) (WITH ADJUSTER)(#20001-)

Item	Part No.	Description	Qty	Options
1	20Y-920-2152	BUCKET	1	SN:20958--
2	20Y-70-14520	· ADAPTER (WELDED)	5	SN:20001--
3	20Y-70-34121	· PLATE,L.H. (WELDED)	1	SN:20958--
4	20Y-70-34131	· PLATE,R.H. (WELDED)	1	SN:20958--
5	20Y-920-1121	· PLATE (WELDED)	1	SN:20001--
6	205-70-19570	TOOTH	5	SN:20001--
7	09244-02496	PIN	5	SN:20001--
8	205-70-74391	PLATE	1	SN:20001--
9	01010-62055	BOLT	4	SN:20001--
10	01643-32060	WASHER	4	SN:20001--
11	205-70-00100	SHIM ASS'Y	1	SN:20001--
	☆	· SHIM¤ 1.0MM	8	SN:20001--
	☆	· SHIM¤ 0.5MM	4	SN:20001--
12	205-70-74381	SPACER	1	SN:20001--

Ref. T1510-01A8 Page 360590

https://truckmanualshub.com/

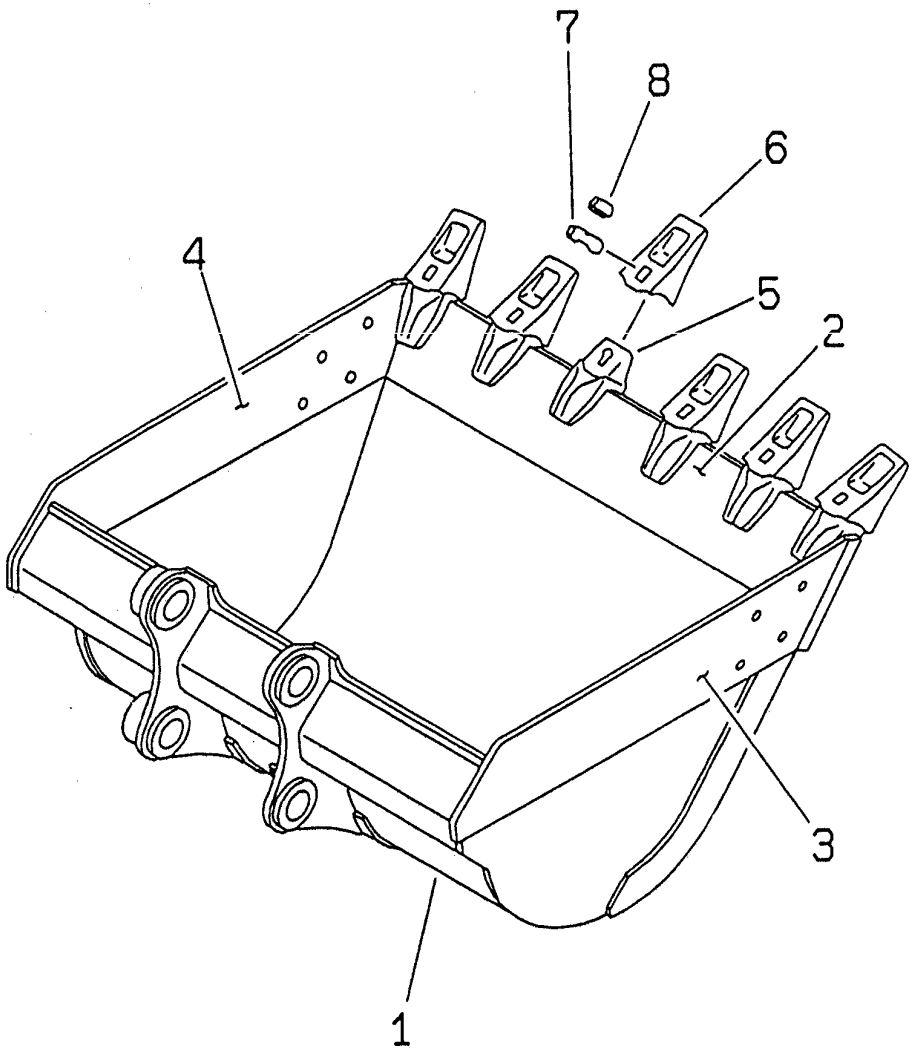

PC228US-3N-W1 S/N 30001-UP

BUCKET¤ 1.0M3 (CECE 0.9M3)¤ 1330MM (VERTICAL PIN TYPE)(#20001-)

Item	Part No.	Description	Qty	Options
1	20Y-920-3310	BUCKET	1	SN:20958--
2	20Y-920-1221	· PLATE (WELDED)	1	SN:20001--
3	20Y-70-34121	· PLATE,L.H. (WELDED)	1	SN:20958--
4	20Y-70-34131	· PLATE,R.H. (WELDED)	1	SN:20958--
5	20Y-70-24210	· ADAPTER (WELDED)	1	SN:20001--
6	205-70-74272	TOOTH	6	SN:20001--
7	205-70-74281	PIN	6	SN:20001--
8	205-70-74291	LOCK	6	SN:20001--

Ref. T1510-01A9 Page 360600

https://truckmanualshub.com/

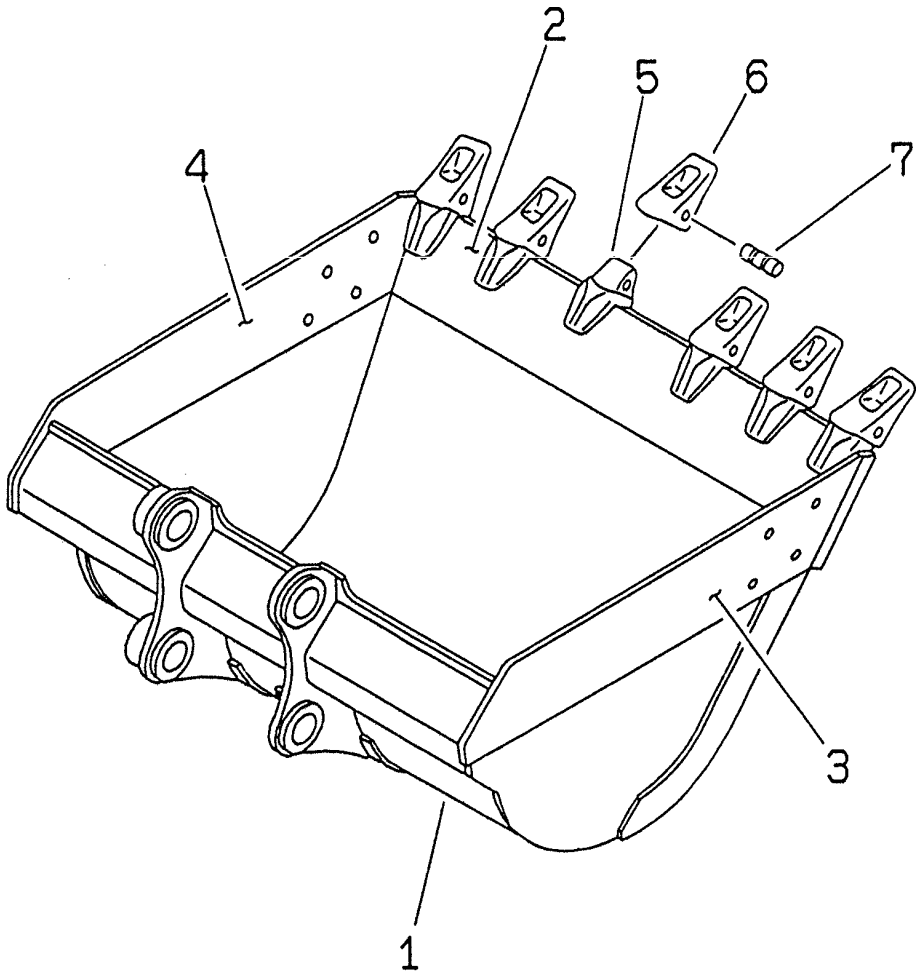

PC228US-3N-W1 S/N 30001-UP

BUCKET¤ 1.0M3 (CECE 0.9M3)¤ 1330MM (HORIZONTAL PIN TYPE)(#20001-)

Item	Part No.	Description	Qty	Options
1	20Y-920-3350	BUCKET	1	SN:20958--
2	20Y-920-1221	· PLATE (WELDED)	1	SN:20001--
3	20Y-70-34121	· PLATE,L.H. (WELDED)	1	SN:20958--
4	20Y-70-34131	· PLATE,R.H. (WELDED)	1	SN:20958--
5	20Y-70-14520	· ADAPTER (WELDED)	6	SN:20001--
6	205-70-19570	TOOTH	6	SN:20001--
7	09244-02496	PIN	6	SN:20001--

Ref. T1510-01B0 Page 360610

https://truckmanualshub.com/

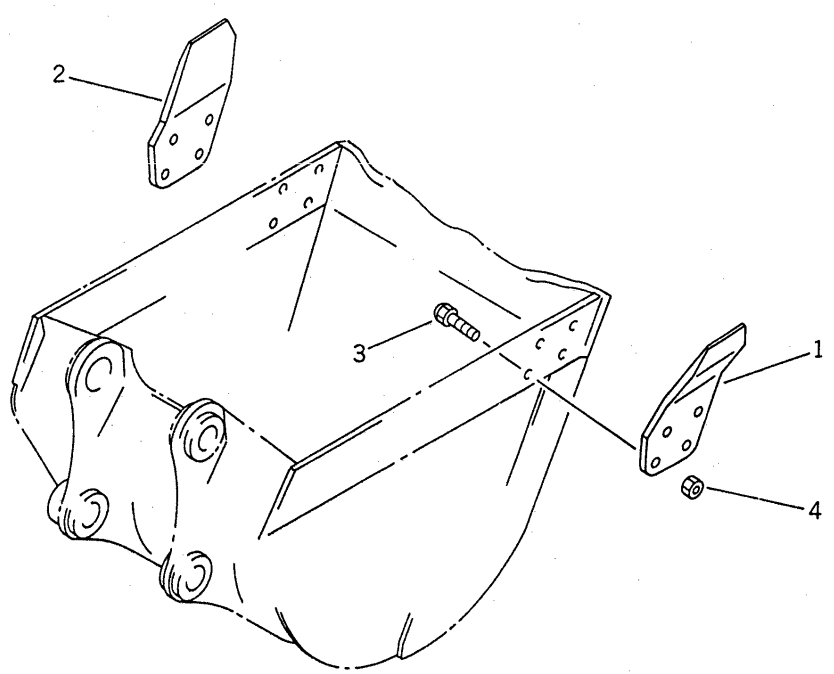

PC228US-3N-W1 S/N 30001-UP

SIDE CUTTER (FOR BUCKET)(#20001-)

Item	Part No.	Description	Qty	Options
1	205-70-74180	CUTTER,L.H.	1	SN:20001--
2	205-70-74190	CUTTER,R.H.	1	SN:20001--
3	176-32-11210	BOLT¤ SHOE	8	SN:20001--
4	01803-02430	NUT	8	SN:20001--

Ref. T1510-02A0 Page 360620

https://truckmanualshub.com/

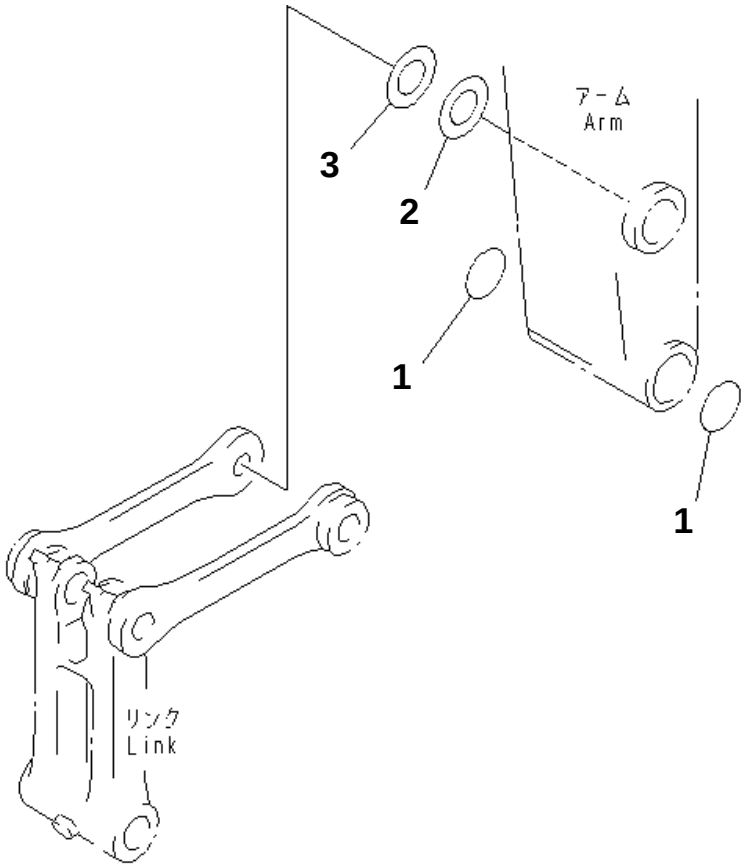

PC228US-3N-W1 S/N 30001-UP

SPACER(#20001-)

Item	Part No.	Description	Qty	Options
1	205-70-73280	O-RING	2	SN:20001--
2	20Y-70-11340	SPACER¤ 0.8MM	1	SN:20001--
3	205-70-51530	SPACER¤ 1.5MM	2	SN:20001--

Ref. T1510-03A0 Page 360630

https://truckmanualshub.com/

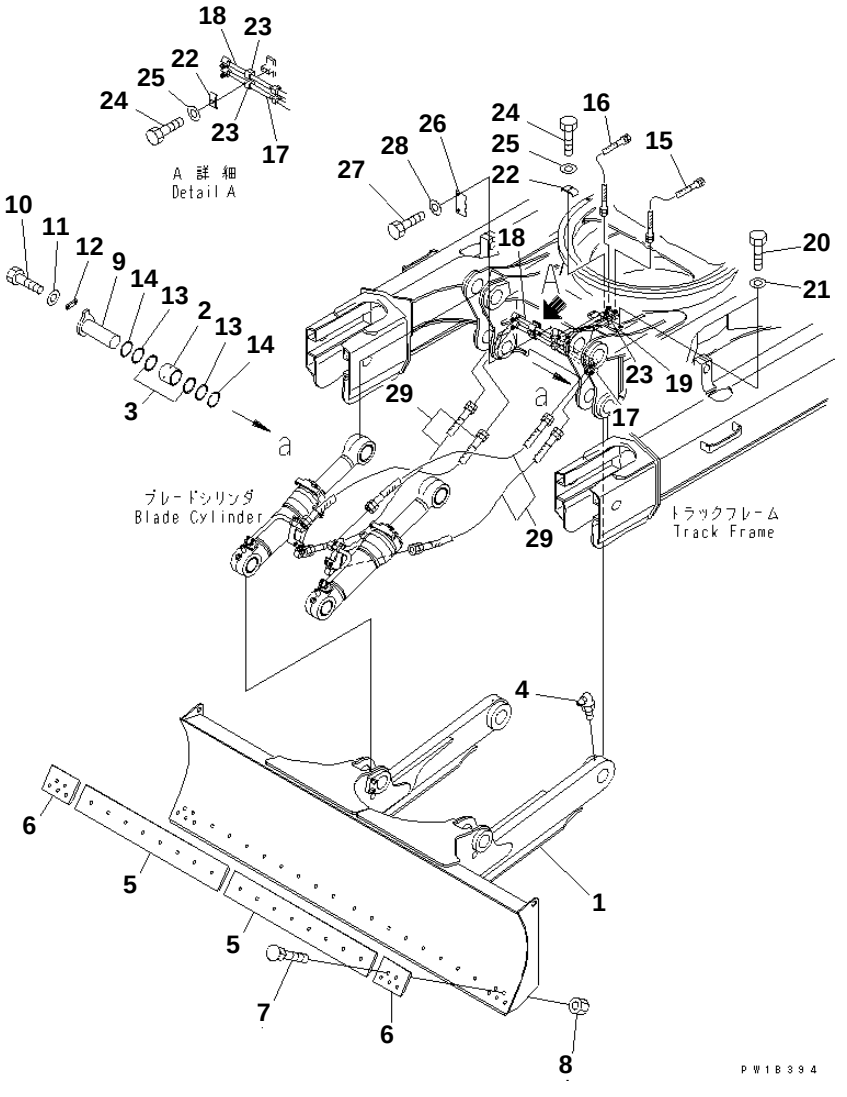

PC228US-3N-W1 S/N 30001-UP

BLADE(#20001-)

Item	Part No.	Description	Qty	Options
1	22U-71-11122XC	BLADE ASS'Y	1	SN:20001--
2	707-76-90270	BUSHING	2	SN:20001--
3	07145-00090	SEAL	4	SN:20001--
4	07020-00900	FITTING	2	SN:20001--
5	130-Z20-1510XC	CUTTING EDGE	2	SN:20001--
6	22U-71-11130XC	CUTTING EDGE	2	SN:20001--
7	02090-11270	BOLT	26	SN:20001--
8	02290-11219	NUT	26	SN:20001--
9	207-70-31210	PIN	2	SN:20001--
10	01010-81235	BOLT	4	SN:20001--
11	01643-31232	WASHER	4	SN:20001--
12	205-70-66580	PLATE	2	SN:20001--
13	207-70-24190	SPACER¤ 0.8MM	16	SN:20001--
14	207-70-24210	SPACER¤ 1.5MM	16	SN:20001--
15	07096-005A4	HOSE	1	SN:20001--
16	07096-005A6	HOSE	1	SN:20001--
17	22U-62-14760	TUBE	1	SN:20001--
18	22U-62-14770	TUBE	1	SN:20001--
19	22U-71-81490	BRACKET	1	SN:20001--
20	01010-81235	BOLT	4	SN:20001--
21	01643-31232	WASHER	4	SN:20001--
22	203-70-53381	PLATE	3	SN:20001--
23	203-62-58810	CUSHION	6	SN:20001--
24	01010-81025	BOLT	6	SN:20001--
25	01643-31032	WASHER	6	SN:20001--
26	22U-71-81540	COVER	2	SN:20001--
27	01010-81220	BOLT	4	SN:20001--
28	01643-31232	WASHER	4	SN:20001--
29	07096-20509	HOSE	4	SN:20001--

Ref. T1710-01A0 Page 360640

https://truckmanualshub.com/

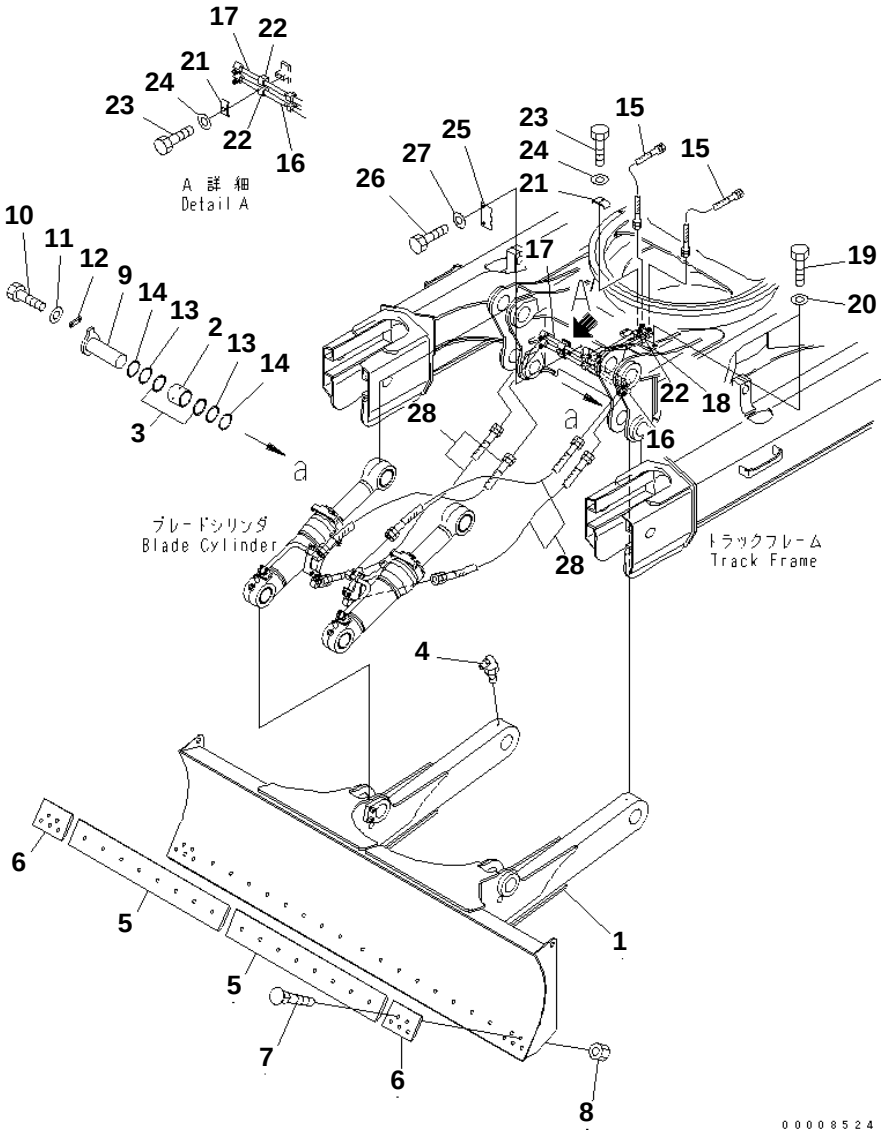

PC228US-3N-W1 S/N 30001-UP

BLADE (LC)

Item	Part No.	Description	Qty	Options
1	22U-71-21110XC	BLADE ASS'Y	1	SN:30001--
2	707-76-90270	BUSHING	2	SN:30001--
3	07145-00090	SEAL	4	SN:30001--
4	07020-00900	FITTING	2	SN:30001--
5	130-Z20-1510XC	CUTTING EDGE	2	SN:30001--
6	22U-71-11130XC	CUTTING EDGE	2	SN:30001--
7	02090-11270	BOLT	26	SN:30001--
8	02290-11219	NUT	26	SN:30001--
9	207-70-31210	PIN	2	SN:30001--
10	01010-81235	BOLT	4	SN:30001--
11	01643-31232	WASHER	4	SN:30001--
12	205-70-66580	PLATE	2	SN:30001--
13	207-70-24190	SPACER¤ 0.8MM	16	SN:30001--
14	207-70-24210	SPACER¤ 1.5MM	16	SN:30001--
15	07096-00506	HOSE	2	SN:30001--
16	22U-62-26410	TUBE	1	SN:30001--
17	22U-62-26420	TUBE	1	SN:30001--
18	22U-71-81490	BRACKET	1	SN:30001--
19	01010-81235	BOLT	4	SN:30001--
20	01643-31232	WASHER	4	SN:30001--
21	203-70-53381	PLATE	3	SN:30001--
22	203-62-58810	CUSHION	6	SN:30001--
23	01010-81025	BOLT	6	SN:30001--
24	01643-31032	WASHER	6	SN:30001--
25	22U-71-81540	COVER	2	SN:30001--
26	01010-81220	BOLT	4	SN:30001--
27	01643-31232	WASHER	4	SN:30001--
28	07096-20509	HOSE	4	SN:30001--

Ref. T1710-01A1 Page 360650

https://truckmanualshub.com/

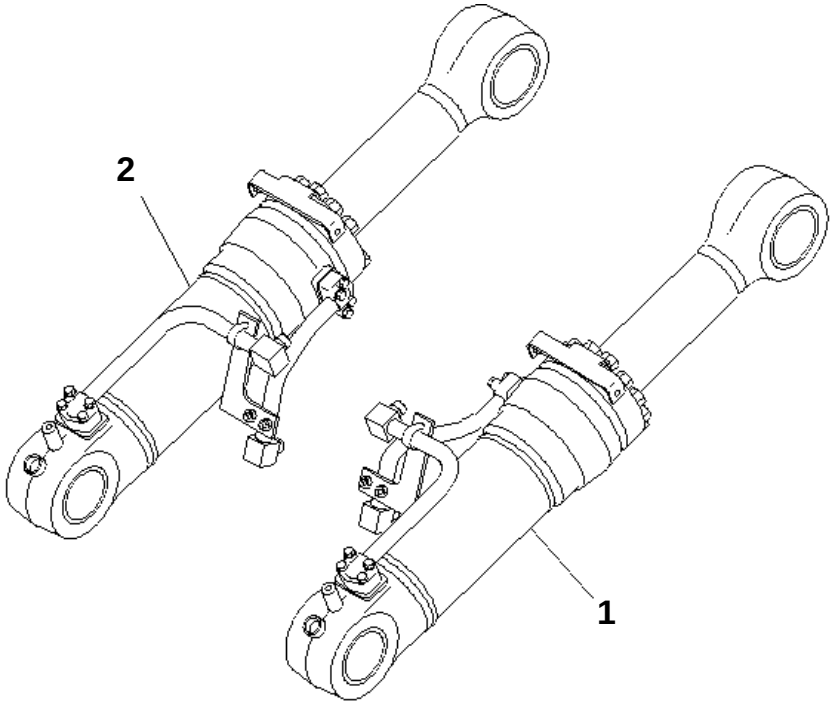

PC228US-3N-W1 S/N 30001-UP

BLADE CYLINDER(#20001-)

Item	Part No.	Description	Qty	Options
1	(⊙22U-63-X9180)	CYLINDER GROUP	1	SN:20001--
2	(⊙22U-63-X9190)	CYLINDER GROUP	1	SN:20001--

Ref. T1720-01A0 Page 360660

https://truckmanualshub.com/

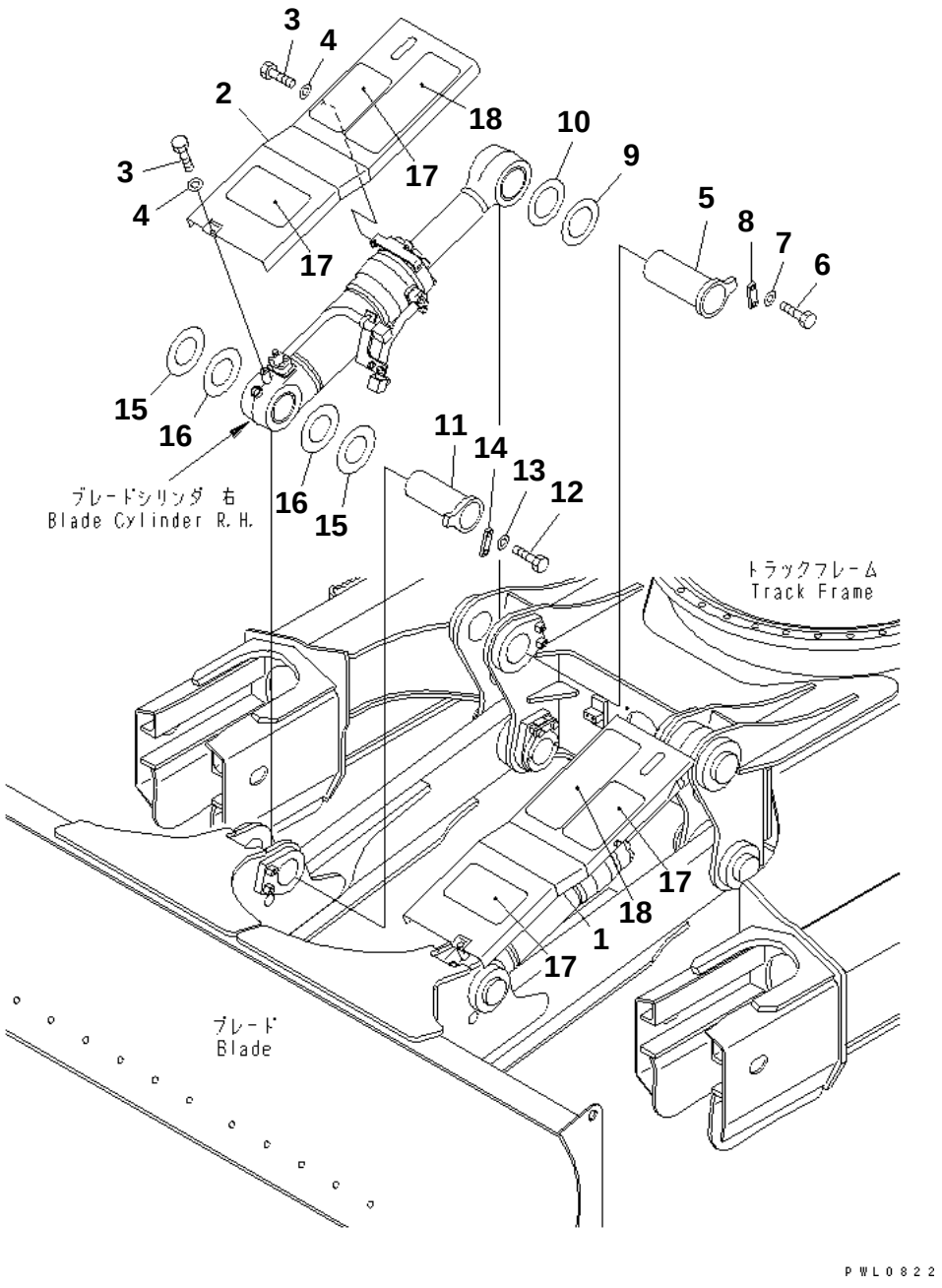

PC228US-3N-W1 S/N 30001-UP

BLADE CYLINDER (COVER AND PIN)(#20001-)

Item	Part No.	Description	Qty	Options
1	22U-62-14810NY	COVER	1	SN:20001--
2	22U-62-14820NY	COVER	1	SN:20001--
3	01010-81020	BOLT	6	SN:20001--
4	01643-31032	WASHER	6	SN:20001--
5	207-70-31190	PIN	2	SN:20001--
6	01010-81235	BOLT	4	SN:20001--
7	01643-31232	WASHER	4	SN:20001--
8	205-70-66580	PLATE	2	SN:20001--
9	207-70-31340	SPACER¤ 0.8MM	2	SN:20001--
10	207-70-51320	SPACER¤ 1.5MM	2	SN:20001--
11	207-70-32160	PIN	2	SN:20001--
12	01010-81235	BOLT	4	SN:20001--
13	01643-31232	WASHER	4	SN:20001--
14	205-70-66580	PLATE	2	SN:20001--
15	207-70-24190	SPACER¤ 0.8MM	4	SN:20001--
16	207-70-24210	SPACER¤ 1.5MM	4	SN:20001--
17	203-00-51170	SEAT	4	SN:20001--
18	154-54-23260	SEAT	2	SN:20001--

Ref. T1720-02A0 Page 360670

https://truckmanualshub.com/

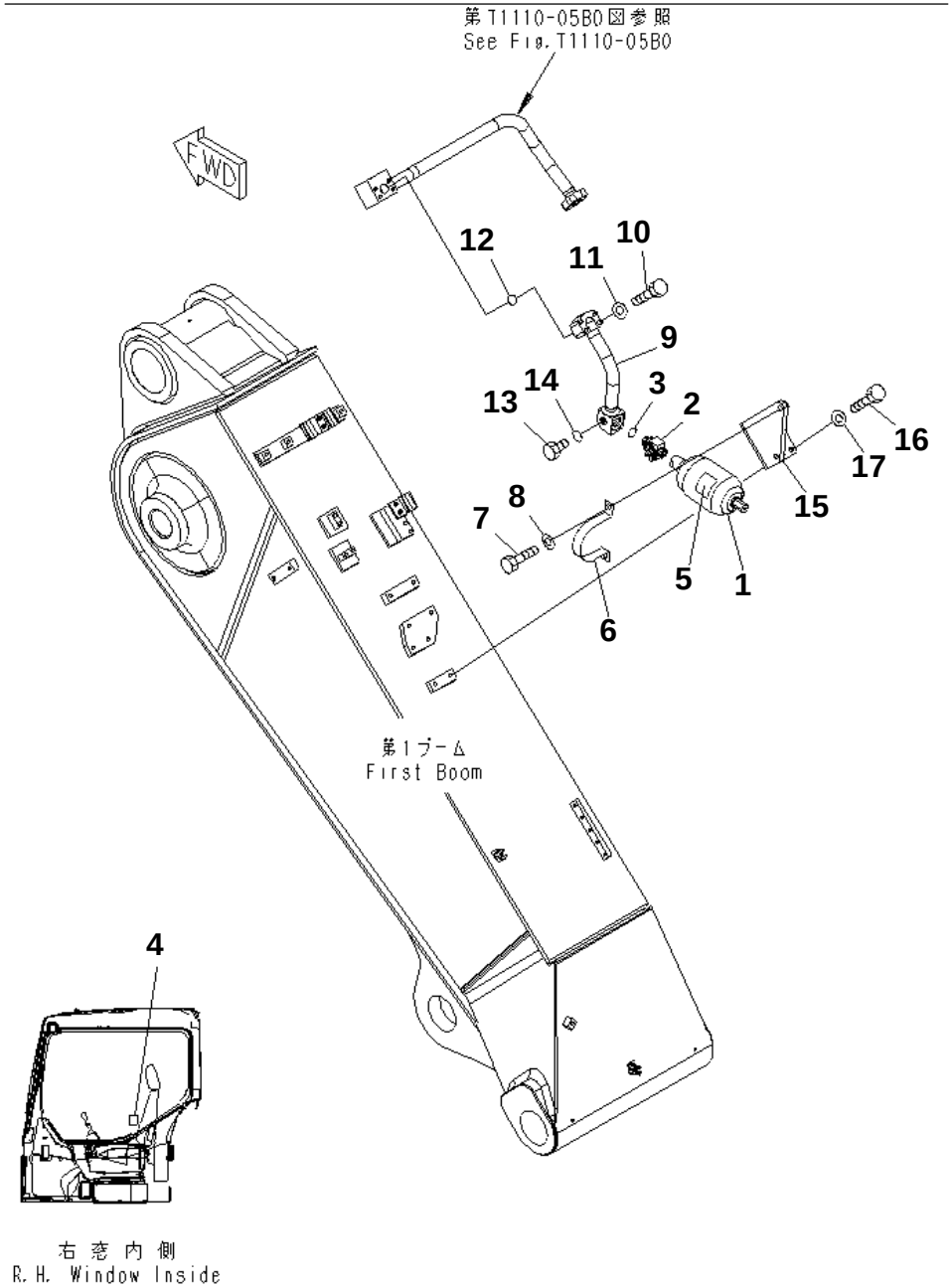

00008635

PC228US-3N-W1 S/N 30001-UP

BREAKER ADAPTER (FOR NPK)

Item	Part No.	Description	Qty	Options
1	20Y-970-6440	ACCUMULATOR	1	SN:30001--
	205-970-5560	O-RING	1	SN:30001--
2	(22U-970-2200)	VALVE	1	SN:30001--
3	07002-12434	O-RING	1	SN:30001--
4	20Y-00-32160	PLATE	1	SN:30001--
5	20Y-00-32170	PLATE	1	SN:30001--
6	22U-970-2120XC	BRACKET	2	SN:30001--
7	01010-81235	BOLT	4	SN:20001--
8	01643-31232	WASHER	4	SN:30001--
9	22U-62-28250NK	TUBE	1	SN:30001--
10	01010-81060	BOLT	4	SN:30001--
11	01643-51032	WASHER	4	SN:30001--
12	07000-13035	O-RING	1	SN:30001--
13	07040-11007	PLUG	1	SN:30001--
14	07002-11023	O-RING	1	SN:30001--
15	22U-62-28270NK	BRACKET	1	SN:30001--
16	01010-81230	BOLT	4	SN:30001--
17	01643-31232	WASHER	4	SN:30001--

Ref. T1920-01A0 Page 360680

https://truckmanualshub.com/

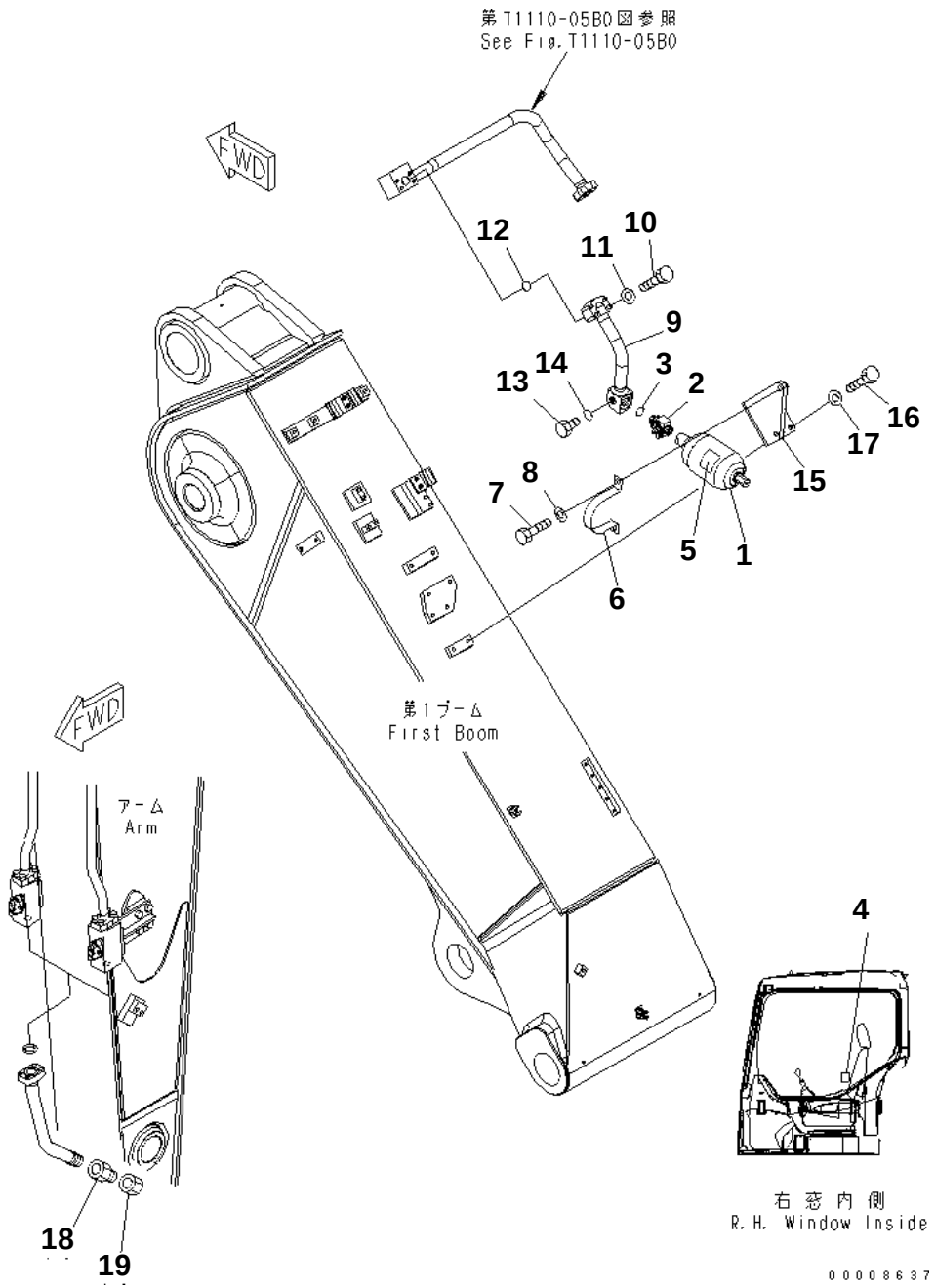

PC228US-3N-W1 S/N 30001-UP

BREAKER ADAPTER (FOR KRUP)

Item	Part No.	Description	Qty	Options
1	20Y-970-6440XC	ACCUMULATOR	1	SN:30001--
	205-970-5560	O-RING	1	SN:30001--
2	(22U-970-2200)	VALVE	1	SN:30001--
3	07002-12434	O-RING	1	SN:30001--
4	20Y-00-32160	PLATE	1	SN:30001--
5	20Y-00-32170	PLATE	1	SN:30001--
6	22U-970-2120XC	BRACKET	2	SN:30001--
7	01010-81235	BOLT	4	SN:20001--
8	01643-31232	WASHER	4	SN:30001--
9	22U-62-28250NK	TUBE	1	SN:30001--
10	01010-81060	BOLT	4	SN:30001--
11	01643-51032	WASHER	4	SN:30001--
12	07000-13035	O-RING	1	SN:30001--
13	07040-11007	PLUG	1	SN:30001--
14	07002-11023	O-RING	1	SN:30001--
15	22U-62-28270NK	BRACKET	1	SN:30001--
16	01010-81230	BOLT	4	SN:30001--
17	01643-31232	WASHER	4	SN:30001--
18	20Y-970-7130	ADAPTER	2	SN:30001--
19	205-970-7680	PLUG	2	SN:30001--

Ref. T1920-01A1 Page 360690

https://truckmanualshub.com/

MARKS AND PLATES

Item	Description	Qty	Page
10	DECAL AND PLATE (ENGLISH)	1	390010
20	DECAL AND PLATE (EU. SPEC.)(#20001-)	1	390020
30	DECAL AND PLATE (ENGLISH)	1	390030
40	DECAL AND PLATE (FOR 2-PIECE BOOM) (EU. SPEC.)	1	390040
50	DECAL AND PLATE (FOR 2-PIECE BOOM) (EU. SPEC.) (LC)	1	390050
60	PLATE (LIFTING CAPACITY)	1	390060
70	PLATE (LIFTING CAPACITY)	1	390070
80	PLATE (WITH ACCUMLATEOR)(#20001-)	1	390080
90	PLATE (WITH 2 ACCUMLATEOR)(#20001-)	1	390090
100	PLATE (WITH ACCUMLATEOR) (KIT)(#20001-)	1	390100
110	PLATE (WITH 2 ACCUMLATEOR) (KIT)(#20001-)	1	390110
120	PLATE (12V POWER SOURCE)(#20001-)	1	390120

https://truckmanualshub.com/

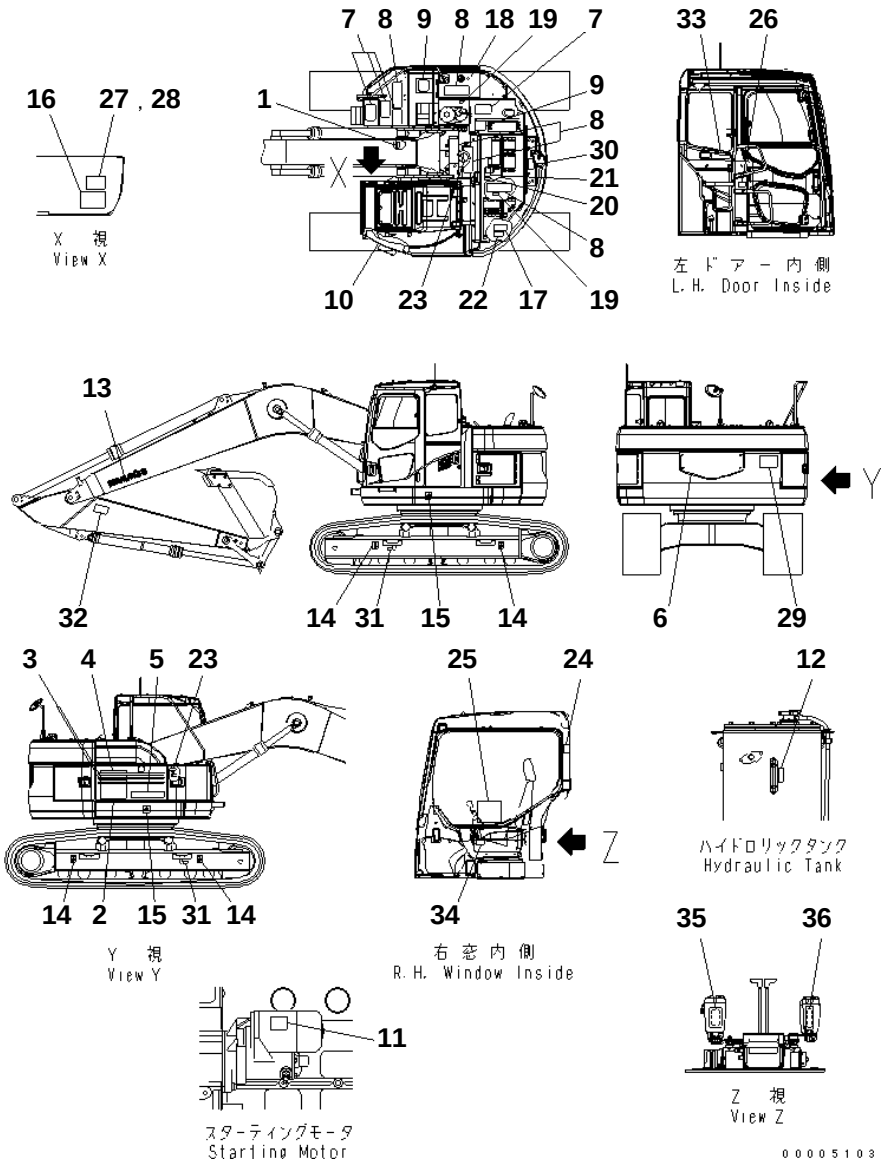

PC228US-3N-W1 S/N 30001-UP

DECAL AND PLATE (ENGLISH)

Item	Part No.	Description	Qty	Options
1	09690-M0063	PLATE¤ MARK	1	SN:30001--
2	22U-00-21610	MARK	1	SN:30001--
3	22U-00-21670	PLATE	2	SN:30001--
4	22U-00-21680	PLATE	1	SN:30001--
5	09690-P0500	PLATE¤ MARK	1	SN:30001--
6	22U-00-21720	PLATE	1	SN:30001--
7	203-00-51170	SEAT	4	SN:30001--
8	154-54-23260	SEAT	5	SN:30001--
9	22B-00-11220	PLATE¤ NAME	2	SN:30001--
10	22U-00-21230	SHEET	1	SN:30001--
11	09842-A0481	PLATE¤ CAUTION	2	SN:30001--
12	205-00-73360	PLATE¤ OPERATING	1	SN:30001--
13	09690-B1000	PLATE¤ MARK	1	SN:30001--
14	21U-98-31150	PLATE¤ MARK	4	SN:30001--
15	21U-98-31160	PLATE¤ MARK	2	SN:30001--
16	22U-00-21270	PLATE	1	SN:30001--
17	09637-30163	PLATE¤ INSTRUCTION	1	SN:30001--
18	09669-0000E	PLATE¤ CAUTION	1	SN:30001--
19	09653-A0481	PLATE¤ SAFETY	2	SN:30001--
20	09805-C0481	PLATE¤ SAFETY	1	SN:30001--
21	09667-A0481	PLATE¤ SAFETY	1	SN:30001--
22	09808-A0881	PLATE¤ SAFETY	1	SN:30001--
23	09659-A057B	PLATE¤ SAFETY	2	SN:30001--
24	09803-A0481	PLATE¤ SAFETY	1	SN:30001--
25	22U-00-21440	PLATE	1	SN:30001--
26	22U-00-21330	PLATE¤ SAFETY	1	SN:30001--
27	22U-00-21740	PLATE	1	SN:30001--
28	04418-13060	SCREW	4	SN:30001--
29	09133-A3281	PLATE¤ SAFETY	1	SN:30001--
30	09805-A0881	PLATE¤ SAFETY	1	SN:30001--
31	09657-A0881	PLATE¤ SAFETY	2	SN:30001--
32	09134-A1681	PLATE¤ CAUTION	2	SN:30001--
33	22U-00-21281	PLATE	1	SN:30001--
34	09963-03001	TAG	1	SN:30001--
35	22U-00-21311	PLATE	1	SN:30001--
36	22U-00-21320	PLATE	1	SN:30001--

Ref. U0100-01A1 Page 390010

PC228US-3N-W1 S/N 30001-UP

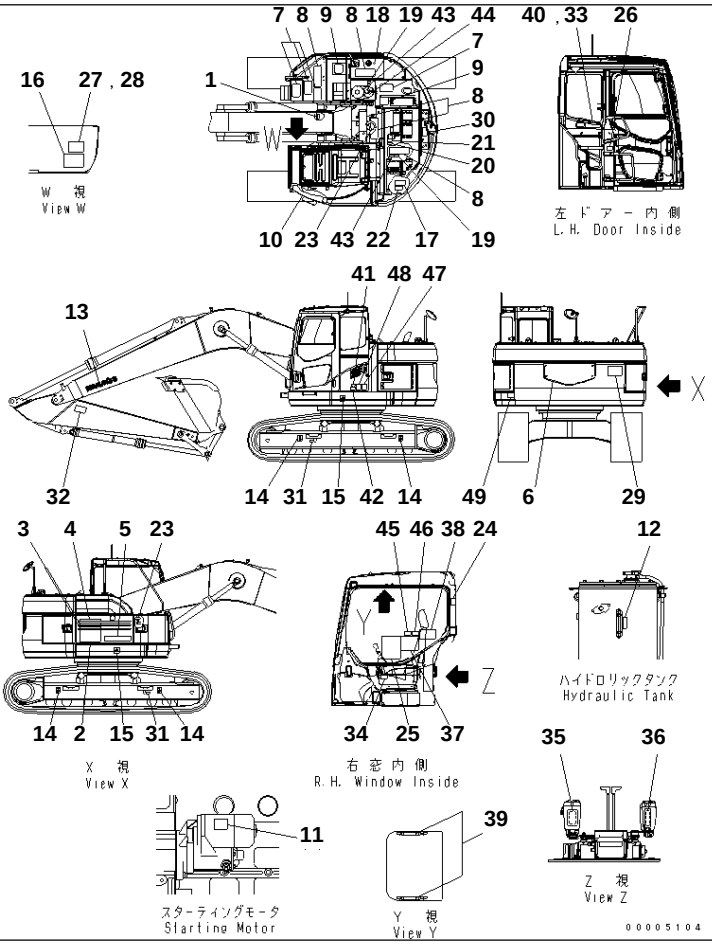

PC228US-3N-W1 S/N 30001-UP

DECAL AND PLATE (EU. SPEC.)(#20001-)

Item	Part No.	Description	Qty	Options
1	09690-M0063	PLATE¤ MARK	1	SN:30001--
2	22U-00-21610	MARK	1	SN:30001--
3	22U-00-21670	PLATE	2	SN:30001--
4	22U-00-21680	PLATE	1	SN:30001--
5	09690-P0500	PLATE¤ MARK	1	SN:30001--
6	22U-00-21720	PLATE	1	SN:30001--
7	203-00-51170	SEAT	4	SN:30001--
8	154-54-23260	SEAT	5	SN:30001--
9	22B-00-11220	PLATE¤ NAME	2	SN:30001--
10	22U-00-21230	SHEET	1	SN:30001--
11	09842-A0481	PLATE¤ CAUTION	2	SN:30001--
12	205-00-73360	PLATE¤ OPERATING	1	SN:30001--
13	09690-B1000	PLATE¤ MARK	1	SN:30001--
14	21U-98-31150	PLATE¤ MARK	4	SN:30001--
15	21U-98-31160	PLATE¤ MARK	2	SN:30001--
16	22U-00-21270	PLATE	1	SN:30001--
17	09637-30163	PLATE¤ INSTRUCTION	1	SN:30001--
18	09669-0000E	PLATE¤ CAUTION	1	SN:30001--
19	09653-A0481	PLATE¤ SAFETY	2	SN:30001--
20	09805-C0481	PLATE¤ SAFETY	1	SN:30001--
21	09667-A0481	PLATE¤ SAFETY	1	SN:30001--
22	09808-A0881	PLATE¤ SAFETY	1	SN:30001--
23	09659-A057B	PLATE¤ SAFETY	2	SN:30001--
24	09803-A0481	PLATE¤ SAFETY	1	SN:30001--
25	22U-00-21440	PLATE	1	SN:30001--
26	22U-00-21330	PLATE¤ SAFETY	1	SN:30001--
27	22U-00-21810	PLATE	1	SN:30001--

https://truckmanualshub.com/

DECAL AND PLATE (EU. SPEC.)(#20001-)

Item	Part No.	Description	Qty	Options
28	04418-13060	SCREW	4	SN:30001--
29	09133-A3281	PLATE¤ SAFETY	1	SN:30001--
30	09805-A0881	PLATE¤ SAFETY	1	SN:30001--
31	09657-A0881	PLATE¤ SAFETY	2	SN:30001--
32	09134-A1681	PLATE¤ CAUTION	2	SN:30001--
33	22U-00-21281	PLATE	1	SN:30001--
34	09963-03001	TAG	1	SN:30001--
35	22U-00-21311	PLATE	1	SN:30001--
36	22U-00-21320	PLATE	1	SN:30001--
37	22U-00-21750	PLATE	1	SN:30001--
38	22U-00-21470	PLATE	1	SN:30001--
39	09659-A057B	PLATE¤ SAFETY	2	SN:30001--
40	20Y-00-K2380	PLATE¤ MARK	1	SN:30001--
41	20E-00-K1710	PLATE¤ CAUTION	1	SN:30001--
42	20E-00-K1690	PLATE¤ CAUTION	1	SN:30001--
43	20E-00-K1470	PLATE	2	SN:30001--
44	09669-0000C	PLATE¤ CAUTION	1	SN:30001--
45	22U-00-11910	PLATE¤ SAFETY	1	SN:30001--
46	22U-00-11920	PLATE¤ SAFETY	1	SN:30001--
47	09696-40104	PLATE	1	SN:30001--
48	09696-50073	PLATE	1	SN:30001--
49	14X-98-23330	PLATE	2	SN:30001--

https://truckmanualshub.com/

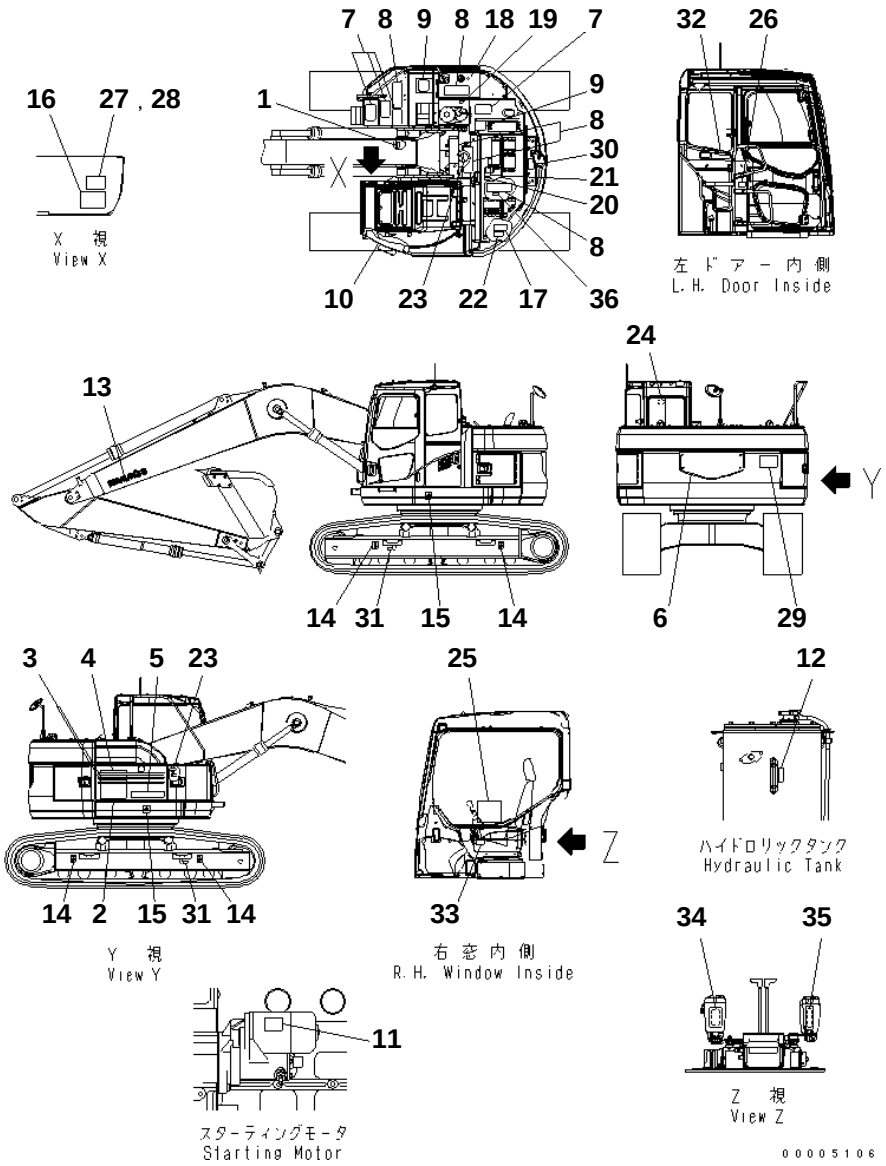

PC228US-3N-W1 S/N 30001-UP

DECAL AND PLATE (ENGLISH)

Item	Part No.	Description	Qty	Options
1	09690-M0063	PLATE¤ MARK	1	SN:30001--
2	22U-00-21610	MARK	1	SN:30001--
3	22U-00-21670	PLATE	2	SN:30001--
4	22U-00-21680	PLATE	1	SN:30001--
5	09690-P0500	PLATE¤ MARK	1	SN:30001--
6	22U-00-21720	PLATE	1	SN:30001--
7	203-00-51170	SEAT	4	SN:30001--
8	154-54-23260	SEAT	5	SN:30001--
9	22B-00-11220	PLATE¤ NAME	2	SN:30001--
10	22U-00-21230	SHEET	1	SN:30001--
11	09842-A0481	PLATE¤ CAUTION	2	SN:30001--
12	205-00-73360	PLATE¤ OPERATING	1	SN:30001--
13	09690-B1000	PLATE¤ MARK	1	SN:30001--
14	21U-98-31150	PLATE¤ MARK	4	SN:30001--
15	21U-98-31160	PLATE¤ MARK	2	SN:30001--
16	22U-00-21270	PLATE	1	SN:30001--
17	09637-30163	PLATE¤ INSTRUCTION	1	SN:30001--
18	09669-0000E	PLATE¤ CAUTION	1	SN:30001--
19	09653-03001	PLATE¤ SAFETY	1	SN:30001--
20	09805-13000	PLATE¤ SAFETY	1	SN:30001--
21	09667-03001	PLATE¤ SAFETY	1	SN:30001--
22	09808-03000	PLATE¤ SAFETY	1	SN:30001--
23	09659-53000	PLATE¤ SAFETY	2	SN:30001--
24	09803-03000	PLATE¤ SAFETY	1	SN:30001--
25	22U-00-21290	PLATE¤ CAUTION	1	SN:30001--
26	22U-00-21330	PLATE¤ SAFETY	1	SN:30001--
27	22U-00-21740	PLATE	1	SN:30001--
28	04418-13060	SCREW	4	SN:30001--
29	09133-23000	PLATE¤ SAFETY	1	SN:30001--
30	09805-23000	PLATE¤ SAFETY	1	SN:30001--
31	09657-03003	PLATE¤ SAFETY	2	SN:30001--
32	22U-00-21281	PLATE	1	SN:30001--
33	09963-03001	TAG	1	SN:30001--
34	22U-00-21311	PLATE	1	SN:30001--
35	22U-00-21320	PLATE	1	SN:30001--
36	09668-03001	PLATE¤ SAFETY	1	SN:30001--

Ref. U0100-01A6 Page 390030

https://truckmanualshub.com/

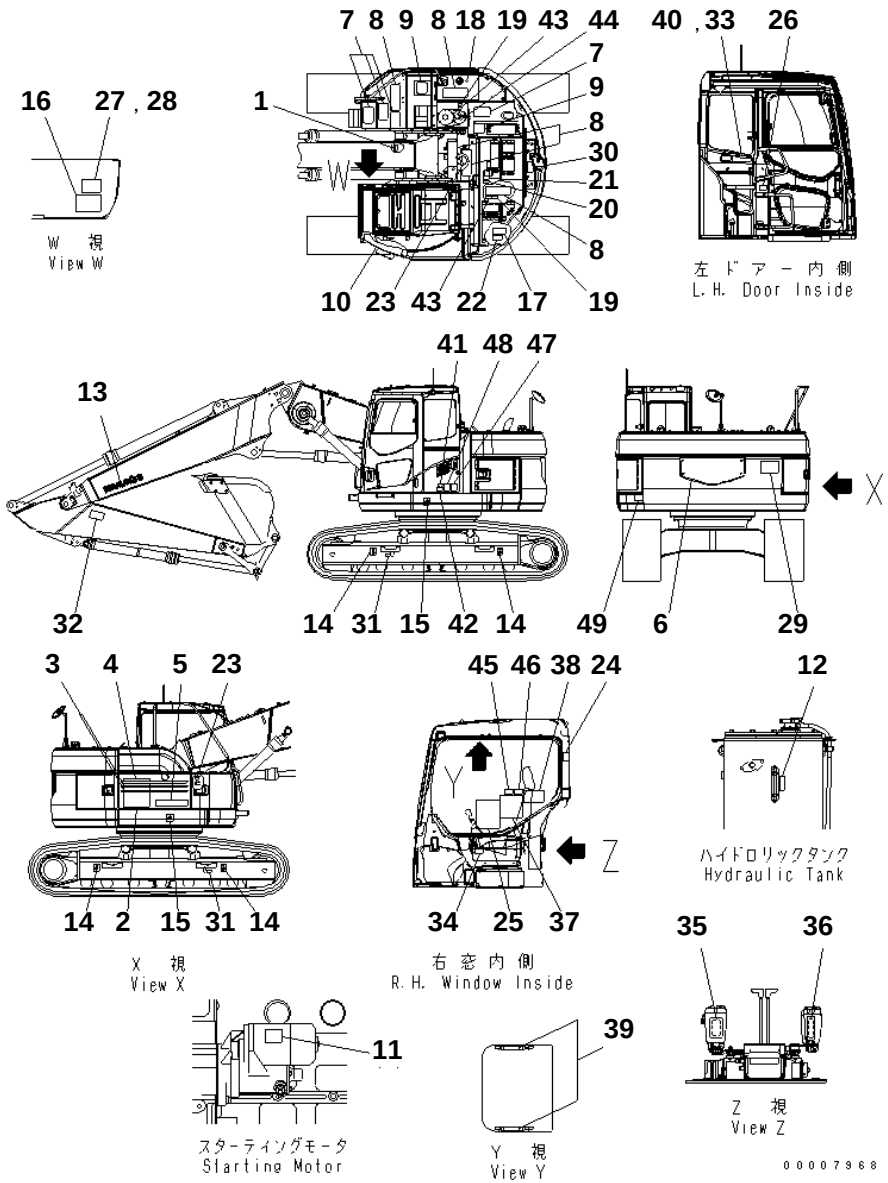

DECAL AND PLATE (FOR 2-PIECE BOOM) (EU. SPEC.)

Item	Part No.	Description	Qty	Options
1	09690-M0063	PLATE¤ MARK	1	SN:30001--
2	22U-00-21610	MARK	1	SN:30001--
3	22U-00-21670	PLATE	2	SN:30001--
4	22U-00-21680	PLATE	1	SN:30001--
5	09690-P0500	PLATE¤ MARK	1	SN:30001--
6	22U-00-21720	PLATE	1	SN:30001--
7	203-00-51170	SEAT	4	SN:30001--
8	154-54-23260	SEAT	5	SN:30001--
9	22B-00-11220	PLATE¤ NAME	2	SN:30001--
10	22U-00-21230	SHEET	1	SN:30001--
11	09842-A0481	PLATE¤ CAUTION	2	SN:30001--
12	205-00-73360	PLATE¤ OPERATING	1	SN:30001--
13	09690-B1000	PLATE¤ MARK	1	SN:30001--
14	21U-98-31150	PLATE¤ MARK	4	SN:30001--
15	21U-98-31160	PLATE¤ MARK	2	SN:30001--
16	22U-00-21270	PLATE	1	SN:30001--
17	09637-30163	PLATE¤ INSTRUCTION	1	SN:30001--
18	09669-0000E	PLATE¤ CAUTION	1	SN:30001--
19	09653-A0481	PLATE¤ SAFETY	2	SN:30001--
20	09805-C0481	PLATE¤ SAFETY	1	SN:30001--
21	09667-A0481	PLATE¤ SAFETY	1	SN:30001--
22	09808-A0881	PLATE¤ SAFETY	1	SN:30001--
23	09659-A057B	PLATE¤ SAFETY	2	SN:30001--
24	09803-A0481	PLATE¤ SAFETY	1	SN:30001--
25	22U-00-21440	PLATE	1	SN:30001--
26	22U-00-21330	PLATE¤ SAFETY	1	SN:30001--
27	22U-00-21810	PLATE	1	SN:30001--
28	04418-13060	SCREW	4	SN:30001--
29	09133-A3281	PLATE¤ SAFETY	1	SN:30001--
30	09805-A0881	PLATE¤ SAFETY	1	SN:30001--
31	09657-A0881	PLATE¤ SAFETY	2	SN:30001--
32	09134-A1681	PLATE¤ CAUTION	2	SN:30001--
33	22U-00-21281	PLATE	1	SN:30001--
34	09963-03001	TAG	1	SN:30001--
35	22U-00-21311	PLATE	1	SN:30001--
36	22U-00-21320	PLATE	1	SN:30001--
37	22U-00-21910	PLATE	1	SN:30001--
38	22U-00-21920	PLATE	1	SN:30001--
39	09659-A057B	PLATE¤ SAFETY	2	SN:30001--
40	20Y-00-K2380	PLATE¤ MARK	1	SN:30001--

https://truckmanualshub.com/

PC228US-3N-W1 S/N 30001-UP

DECAL AND PLATE (FOR 2-PIECE BOOM) (EU. SPEC.)

Item	Part No.	Description	Qty	Options
41	20E-00-K1710	PLATE¤ CAUTION	1	SN:30001--
42	20E-00-K1690	PLATE¤ CAUTION	1	SN:30001--
43	20E-00-K1470	PLATE	2	SN:30001--
44	09669-0000C	PLATE¤ CAUTION	1	SN:30001--
45	22U-00-11910	PLATE¤ SAFETY	1	SN:30001--
46	22U-00-11920	PLATE¤ SAFETY	1	SN:30001--
47	09696-40104	PLATE	1	SN:30001--
48	09696-50073	PLATE	1	SN:30001--
49	14X-98-23330	PLATE	2	SN:30001--

https://truckmanualshub.com/

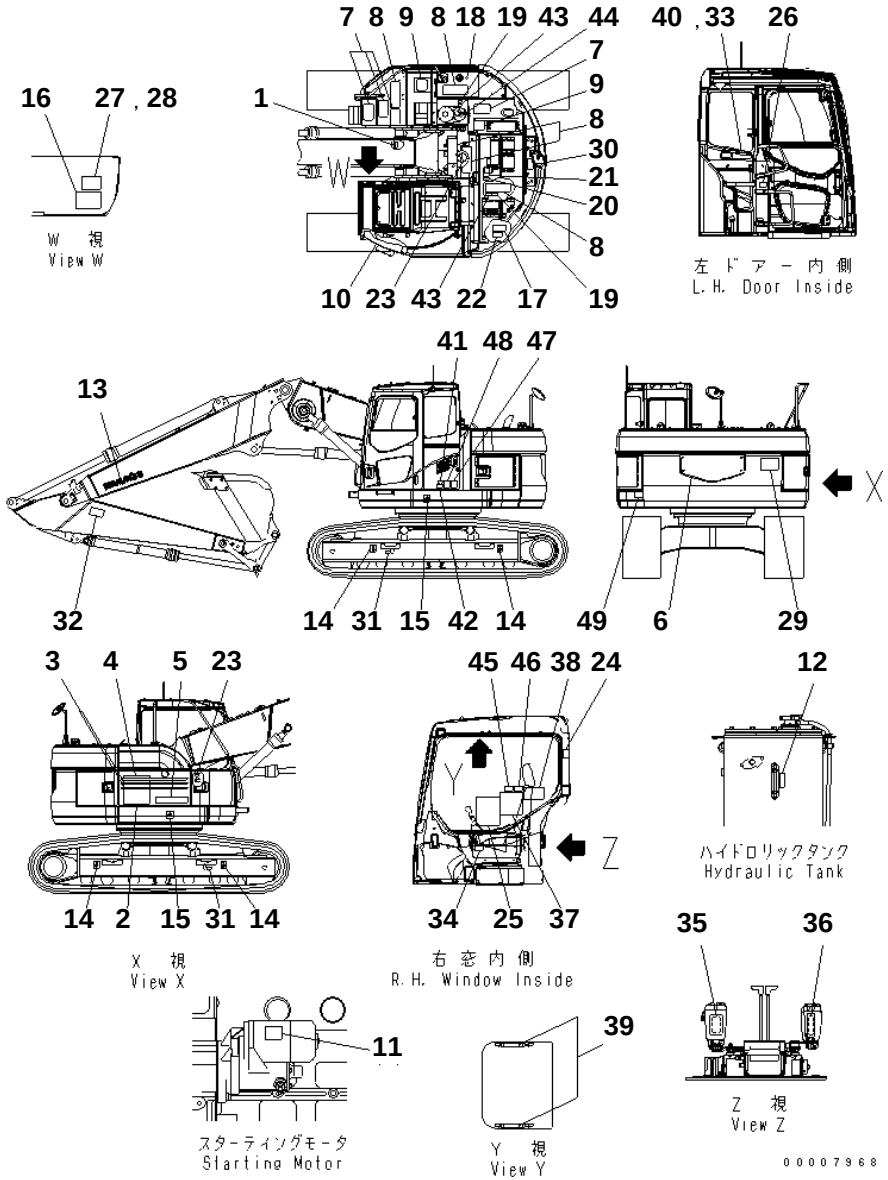

PC228US-3N-W1 S/N 30001-UP

DECAL AND PLATE (FOR 2-PIECE BOOM) (EU. SPEC.) (LC)

Item	Part No.	Description	Qty	Options
1	09690-M0063	PLATE¤ MARK	1	SN:30001--
2	22U-00-21620	MARK	1	SN:30001--
3	22U-00-21670	PLATE	2	SN:30001--
4	22U-00-21680	PLATE	1	SN:30001--
5	09690-P0500	PLATE¤ MARK	1	SN:30001--
6	22U-00-21730	MARK PLATE	1	SN:30001--
7	203-00-51170	SEAT	4	SN:30001--
8	154-54-23260	SEAT	5	SN:30001--
9	22B-00-11220	PLATE¤ NAME	2	SN:30001--
10	22U-00-21230	SHEET	1	SN:30001--
11	09842-A0481	PLATE¤ CAUTION	2	SN:30001--
12	205-00-73360	PLATE¤ OPERATING	1	SN:30001--
13	09690-B1000	PLATE¤ MARK	1	SN:30001--
14	21U-98-31150	PLATE¤ MARK	4	SN:30001--
15	21U-98-31160	PLATE¤ MARK	2	SN:30001--
16	22U-00-21270	PLATE	1	SN:30001--
17	09637-30163	PLATE¤ INSTRUCTION	1	SN:30001--
18	09669-0000E	PLATE¤ CAUTION	1	SN:30001--
19	09653-A0481	PLATE¤ SAFETY	2	SN:30001--
20	09805-C0481	PLATE¤ SAFETY	1	SN:30001--
21	09667-A0481	PLATE¤ SAFETY	1	SN:30001--
22	09808-A0881	PLATE¤ SAFETY	1	SN:30001--
23	09659-A057B	PLATE¤ SAFETY	2	SN:30001--
24	09803-A0481	PLATE¤ SAFETY	1	SN:30001--
25	22U-00-21440	PLATE	1	SN:30001--
26	22U-00-21330	PLATE¤ SAFETY	1	SN:30001--
27	22U-00-21810	PLATE	1	SN:30001--
28	04418-13060	SCREW	4	SN:30001--
29	09133-A3281	PLATE¤ SAFETY	1	SN:30001--
30	09805-A0881	PLATE¤ SAFETY	1	SN:30001--
31	09657-A0881	PLATE¤ SAFETY	2	SN:30001--
32	09134-A1681	PLATE¤ CAUTION	2	SN:30001--
33	22U-00-21281	PLATE	1	SN:30001--
34	09963-03001	TAG	1	SN:30001--
35	22U-00-21311	PLATE	1	SN:30001--
36	22U-00-21320	PLATE	1	SN:30001--
37	22U-00-21910	PLATE	1	SN:30001--
38	22U-00-21920	PLATE	1	SN:30001--
39	09659-A057B	PLATE¤ SAFETY	2	SN:30001--
40	20Y-00-K2380	PLATE¤ MARK	1	SN:30001--

Ref. U0100-01B1 Page 390050

https://truckmanualshub.com/

PC228US-3N-W1 S/N 30001-UP

DECAL AND PLATE (FOR 2-PIECE BOOM) (EU. SPEC.) (LC)

Item	Part No.	Description	Qty	Options
41	20E-00-K1710	PLATE¤ CAUTION	1	SN:30001--
42	20E-00-K1690	PLATE¤ CAUTION	1	SN:30001--
43	20E-00-K1470	PLATE	2	SN:30001--
44	09669-0000C	PLATE¤ CAUTION	1	SN:30001--
45	22U-00-11910	PLATE¤ SAFETY	1	SN:30001--
46	22U-00-11920	PLATE¤ SAFETY	1	SN:30001--
47	09696-40104	PLATE	1	SN:30001--
48	09696-50073	PLATE	1	SN:30001--
49	14X-98-23330	PLATE	2	SN:30001--

https://truckmanualshub.com/

1

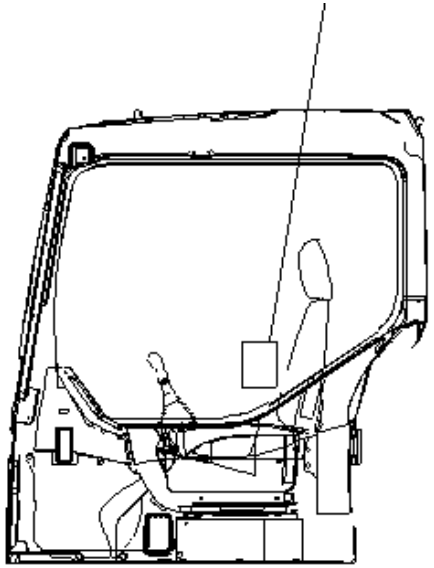

右 窓 内 側
R. H. Window Inside

P W 1 A 7 8 2

PC228US-3N-W1 S/N 30001-UP

PLATE (LIFTING CAPACITY)

Item	Part No.	Description	Qty	Options
1	22U-00-21750	PLATE	1	SN:30001--

Ref. U0200-01A0 Page 390060

https://truckmanualshub.com/

1

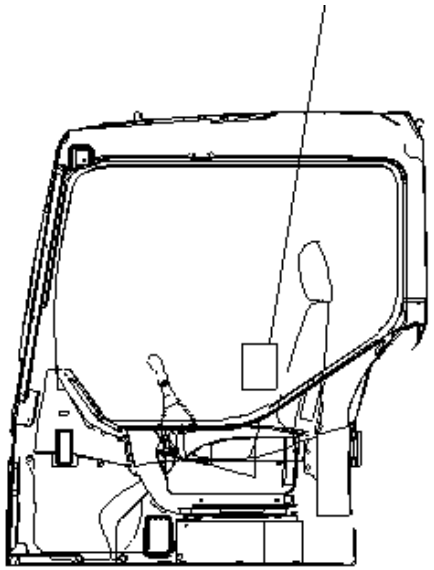

右 窓 内 側
R. H. Window Inside

P W 1 A 7 8 2

PC228US-3N-W1 S/N 30001-UP

PLATE (LIFTING CAPACITY)

Item	Part No.	Description	Qty	Options
1	22U-00-21770	PLATE	1	SN:30001--

Ref. U0200-01A4 Page 390070

https://truckmanualshub.com/

1

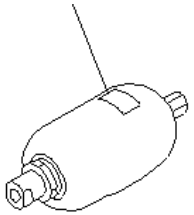

PWL4305

PC228US-3N-W1 S/N 30001-UP

PLATE (WITH ACCUMLATEOR)(#20001-)

Item	Part No.	Description	Qty	Options
1	09659-A057A	PLATE¤ SAFETY,(JAPANESE)	1	SN:20001--
	09659-A057B	PLATE¤ SAFETY	1	SN:20001--
	09659-53000	PLATE¤ SAFETY	1	SN:20001--

Ref. U0580-01A0 Page 390080

https://truckmanualshub.com/

1

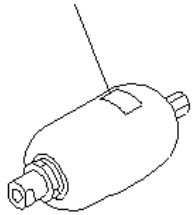

PWL4305

PC228US-3N-W1 S/N 30001-UP

PLATE (WITH 2 ACCUMLATEOR)(#20001-)

Item	Part No.	Description	Qty	Options
1	09659-A057A	PLATE¤ SAFETY,(JAPANESE)	2	SN:20001--
	09659-A057B	PLATE¤ SAFETY	2	SN:20001--
	09659-53000	PLATE¤ SAFETY	2	SN:20001--

Ref. U0580-01A1 Page 390090

https://truckmanualshub.com/

1

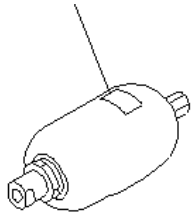

PWL4305

PC228US-3N-W1 S/N 30001-UP

PLATE (WITH ACCUMLATEOR) (KIT)(#20001-)

Item	Part No.	Description	Qty	Options
1	09659-A057A	PLATE¤ SAFETY,(JAPANESE)	1	SN:20001--
	09659-A057B	PLATE¤ SAFETY	1	SN:20001--
	09659-53000	PLATE¤ SAFETY,(ENGLISH) (LETTERING TYPE)	1	SN:20001--
	09659-51000	PLATE¤ SAFETY	1	SN:21154--

Ref. U0580-01A2 Page 390100

https://truckmanualshub.com/

1

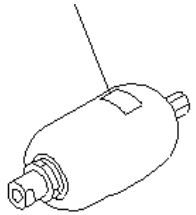

PWL4305

PC228US-3N-W1 S/N 30001-UP

PLATE (WITH 2 ACCUMLATEOR) (KIT)(#20001-)

Item	Part No.	Description	Qty	Options
1	09659-A057A	PLATE¤ SAFETY,(JAPANESE)	2	SN:20001--
	09659-A057B	PLATE¤ SAFETY	2	SN:20001--
	09659-53000	PLATE¤ SAFETY,(ENGLISH) (LETTERING TYPE)	2	SN:20001--
	09659-51000	PLATE¤ SAFETY	2	SN:21154--

Ref. U0580-01A3 Page 390110

https://truckmanualshub.com/

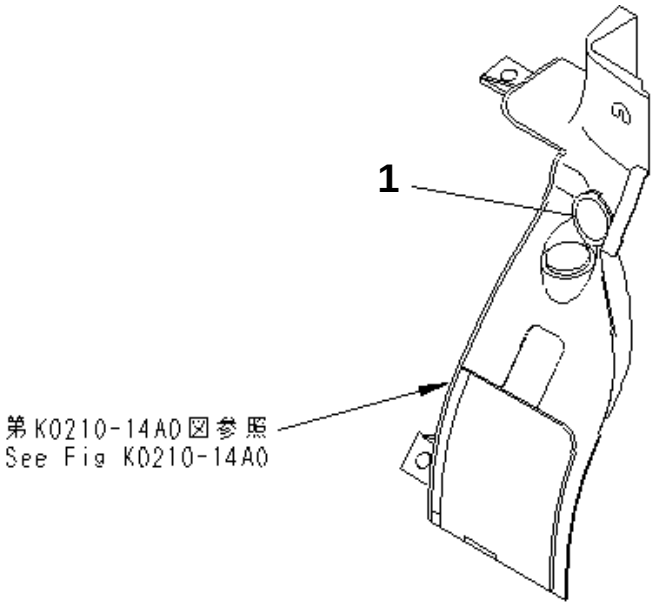

PW1A783

PC228US-3N-W1 S/N 30001-UP

PLATE (12V POWER SOURCE)(#20001-)

Item	Part No.	Description	Qty	Options
1	22U-00-21510	PLATE	1	SN:20001--

Ref. U0710-01A0 Page 390120

https://truckmanualshub.com/

ACCESSORY

Item	Description	Qty	Page
10	SPARE PARTS(#20001-)	1	420010
20	TOOL KIT	1	420020

https://truckmanualshub.com/

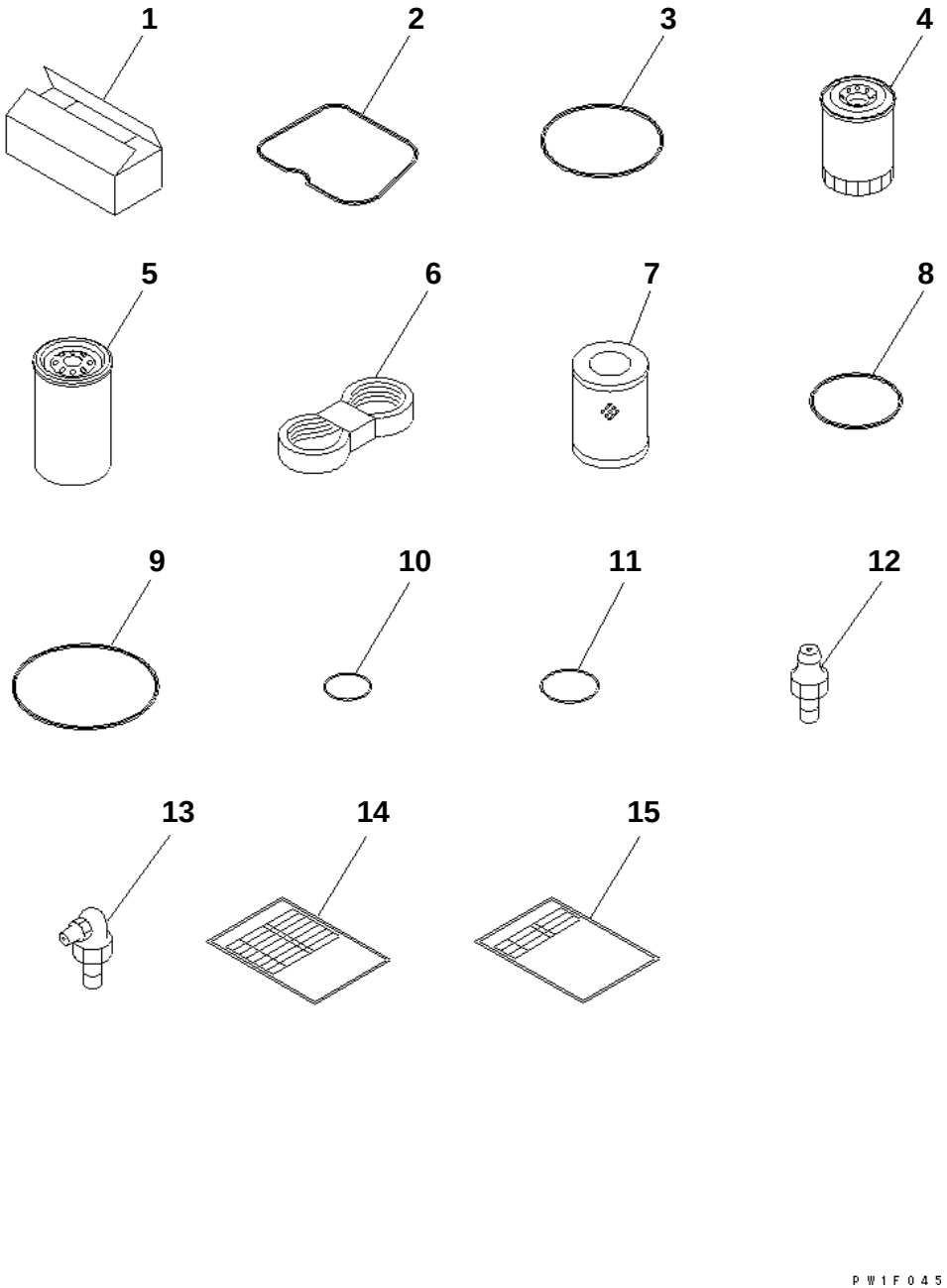

PC228US-3N-W1 S/N 30001-UP

SPARE PARTS(#20001-)

Item	Part No.	Description	Qty	Options
1	09059-00800	BOX	1	SN:20001--
2	6732-11-8181	GASKET	6	SN:20001--
3	6732-11-8210	GASKET	6	SN:20001--
4	6736-51-5142	CARTRIDGE	1	SN:21430--
5	6732-71-6112	FILTER	1	SN:21561--
6	6732-61-3940	BELT	1	SN:20001--
7	20Y-60-31121	ELEMENT	1	SN:20001--
8	07000-15160	O-RING	1	SN:20001--
9	07000-15195	O-RING	1	SN:20001--
10	07002-11223	O-RING	1	SN:20001--
11	07002-12434	O-RING	5	SN:20001--
12	07020-00000	FITTING	4	SN:20001--
13	07020-00900	FITTING	4	SN:20001--
14	22U-98-21110	SPARE PARTS TAB	1	SN:20001--
15	22U-98-21120	ACCESSORY TABLE	1	SN:20001--

Ref. V0100-01A0 Page 420010

https://truckmanualshub.com/

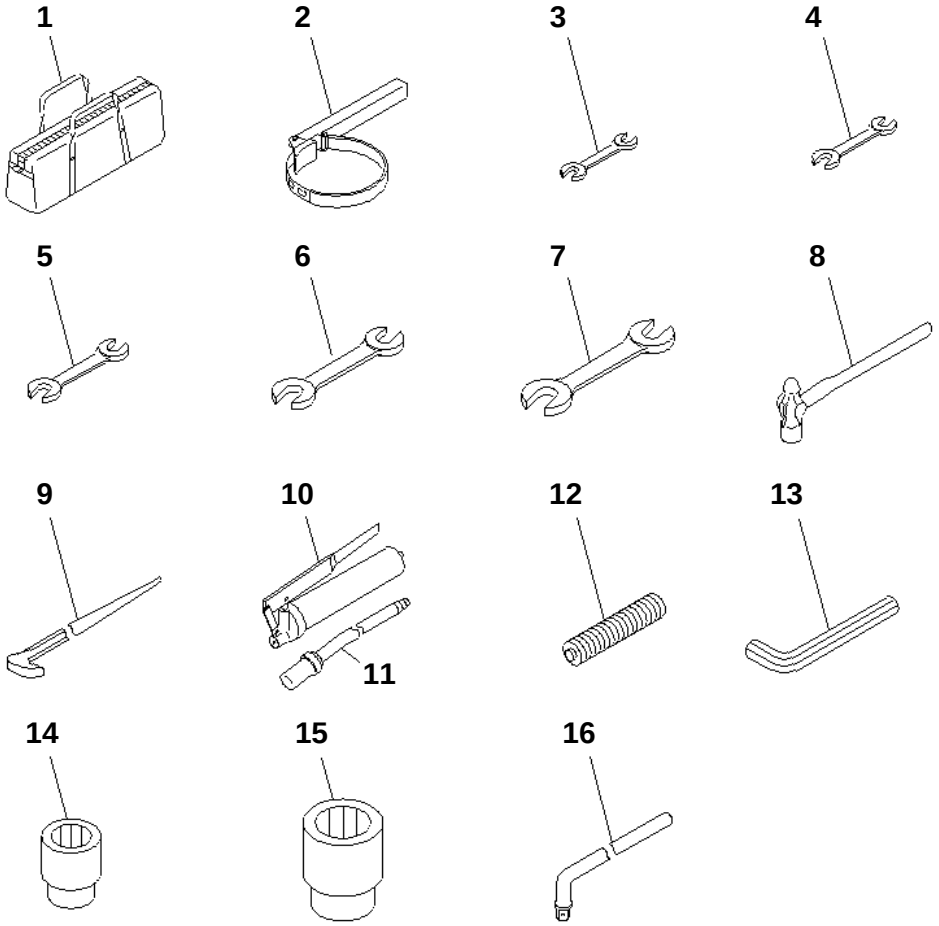

PC228US-3N-W1 S/N 30001-UP

TOOL KIT

Item	Part No.	Description	Qty	Options
1	09056-04613	BAG	1	SN:30001--
2	09019-08035	WRENCH	1	SN:30001--
3	09002-01012	WRENCH¤ 10X12	1	SN:30001--
4	09002-01417	WRENCH¤ 14X17	1	SN:30001--
5	09002-01922	WRENCH¤ 19X22	1	SN:30001--
6	09002-03032	WRENCH¤ 30X32	1	SN:30001--
7	09002-03641	WRENCH¤ 36X41	1	SN:30001--
8	09039-00150	HAMMER	1	SN:30001--
9	09055-10390	BAR	1	SN:30001--
	07952-70004	GREASE PUMP ASS'Y	1	SN:30001--
10	07950-10450	· PUMP	1	SN:30001--
11	07951-41017	· NOZZLE	1	SN:30001--
12	07950-90403	CARTRIDGE	1	SN:30001--
13	09007-00836	WRENCH¤ 8	1	SN:30001--
14	09021-03044	SOCKET¤ 30	1	SN:30001--
15	09021-03653	SOCKET¤ 36	1	SN:30001--
16	09024-00300	HANDLE	1	SN:30001--

Ref. V0300-01A0 Page 420020

https://truckmanualshub.com/

PC228US-3N-W1 S/N 30001-UP
SERVICE KIT AND COMPONENT PARTS

Item	Description	Qty	Page
10	SWING MACHINERY (SUPPLY ONLY)	1	450010
20	FINAL DRIVE (SUPPLY ONLY)	1	450020
30	SHOE BOLT AND NUT SERVICE KIT(#20958-)	1	450030
40	TRACK LINK (90 SET) (SUPPLY PARTS)(#20958-)	1	450040
50	RUBBER ANTENNA	1	450050
60	OPERATOR'S SEAT ASS'Y	1	450060
70	MAIN PUMP (1/11)	1	450070
80	MAIN PUMP (2/11)	1	450080
90	MAIN PUMP (3/11)	1	450090
100	MAIN PUMP (4/11)	1	450100
110	MAIN PUMP (5/11)	1	450110
120	MAIN PUMP (6/11)	1	450120
130	MAIN PUMP (7/11)	1	450130
140	MAIN PUMP (8/11)	1	450140
150	MAIN PUMP (9/11)	1	450150
160	MAIN PUMP (10/11)	1	450160
170	MAIN PUMP (11/11)	1	450170
180	BOOM CYLINDER (YELLOW)	1	450180
190	BOOM CYLINDER (FOR ARM CRANE) (YELLOW)	1	450190
200	BOOM CYLINDER (LARGE SIZE)	1	450200
210	BOOM CYLINDER (FOR 2-PIECE BOOM) (YELLOW)	1	450210
220	BOOM ADJUST CYLINDER (FOR 2-PIECE BOOM) (YELLOW)	1	450220
230	ARM CYLINDER (YELLOW)	1	450230
240	BUCKET CYLINDER(YELLOW)	1	450240
250	BLADE CYLINDER	1	450250
260	SWIVEL JOINT	1	450260
270	SWING MOTOR (1/3)	1	450270
280	SWING MOTOR (2/3)	1	450280
290	SWING MOTOR (3/3)	1	450290
300	TRAVEL MOTOR (1/3)	1	450300
310	TRAVEL MOTOR (2/3)	1	450310
320	TRAVEL MOTOR (3/3)	1	450320
330	MAIN VALVE (1/16)	1	450330
340	MAIN VALVE (2/16)	1	450340
350	MAIN VALVE (3/16)	1	450350
360	MAIN VALVE (4/16)	1	450360
370	MAIN VALVE (5/16)	1	450370
380	MAIN VALVE (6/16)	1	450380
390	MAIN VALVE (7/16)	1	450390
400	MAIN VALVE (8/16)	1	450400
410	MAIN VALVE (9/16)	1	450410
420	MAIN VALVE (10/16)	1	450420
430	MAIN VALVE (11/16)	1	450430
440	MAIN VALVE (12/16)	1	450440
450	MAIN VALVE (13/16)	1	450450
460	MAIN VALVE (14/16)	1	450460
470	MAIN VALVE (15/16)	1	450470
480	MAIN VALVE (16/16)	1	450480
490	MAIN VALVE (1-ACTUATOR) (1/19) (SERVICE VALVE¤ ARM CRANE)	1	450490
500	MAIN VALVE (1-ACTUATOR) (2/19) (SERVICE VALVE¤ ARM CRANE)	1	450500
510	MAIN VALVE (1-ACTUATOR) (3/19) (SERVICE VALVE¤ ARM CRANE)	1	450510
520	MAIN VALVE (1-ACTUATOR) (4/19) (SERVICE VALVE¤ ARM CRANE)	1	450520
530	MAIN VALVE (1-ACTUATOR) (5/19) (SERVICE VALVE¤ ARM CRANE)	1	450530
540	MAIN VALVE (1-ACTUATOR) (6/19) (SERVICE VALVE¤ ARM CRANE)	1	450540
550	MAIN VALVE (1-ACTUATOR) (7/19) (SERVICE VALVE¤ ARM CRANE)	1	450550
560	MAIN VALVE (1-ACTUATOR) (8/19) (SERVICE VALVE¤ ARM CRANE)	1	450560
570	MAIN VALVE (1-ACTUATOR) (9/19) (SERVICE VALVE¤ ARM CRANE)	1	450570
580	MAIN VALVE (1-ACTUATOR) (10/19) (SERVICE VALVE¤ ARM CRANE)	1	450580
590	MAIN VALVE (1-ACTUATOR) (11/19) (SERVICE VALVE¤ ARM CRANE)	1	450590
600	MAIN VALVE (1-ACTUATOR) (12/19) (SERVICE VALVE¤ ARM CRANE)	1	450600
610	MAIN VALVE (1-ACTUATOR) (13/19) (SERVICE VALVE¤ ARM CRANE)	1	450610
620	MAIN VALVE (1-ACTUATOR) (14/19) (SERVICE VALVE¤ ARM CRANE)	1	450620
630	MAIN VALVE (1-ACTUATOR) (15/19) (SERVICE VALVE¤ ARM CRANE)	1	450630
640	MAIN VALVE (1-ACTUATOR) (16/19) (SERVICE VALVE¤ ARM CRANE)	1	450640
650	MAIN VALVE (1-ACTUATOR) (17/19) (SERVICE VALVE¤ ARM CRANE)	1	450650
660	MAIN VALVE (1-ACTUATOR) (18/19) (SERVICE VALVE¤ ARM CRANE)	1	450660
670	MAIN VALVE (1-ACTUATOR) (19/19) (SERVICE VALVE¤ ARM CRANE)	1	450670
680	MAIN VALVE (1-ACTUATOR) (1/19) (ROTATION ARM)	1	450680
690	MAIN VALVE (1-ACTUATOR) (2/19) (ROTATION ARM)	1	450690
700	MAIN VALVE (1-ACTUATOR) (3/19) (ROTATION ARM)	1	450700
710	MAIN VALVE (1-ACTUATOR) (4/19) (ROTATION ARM)	1	450710
720	MAIN VALVE (1-ACTUATOR) (5/19) (ROTATION ARM)	1	450720
730	MAIN VALVE (1-ACTUATOR) (6/19) (ROTATION ARM)	1	450730
740	MAIN VALVE (1-ACTUATOR) (7/19) (ROTATION ARM)	1	450740
750	MAIN VALVE (1-ACTUATOR) (8/19) (ROTATION ARM)	1	450750
760	MAIN VALVE (1-ACTUATOR) (9/19) (ROTATION ARM)	1	450760

https://truckmanualshub.com/

SERVICE KIT AND COMPONENT PARTS

Item	Description	Qty	Page
770	MAIN VALVE (1-ACTUATOR) (10/19) (ROTATION ARM)	1	450770
780	MAIN VALVE (1-ACTUATOR) (11/19) (ROTATION ARM)	1	450780
790	MAIN VALVE (1-ACTUATOR) (12/19) (ROTATION ARM)	1	450790
800	MAIN VALVE (1-ACTUATOR) (13/19) (ROTATION ARM)	1	450800
810	MAIN VALVE (1-ACTUATOR) (14/19) (ROTATION ARM)	1	450810
820	MAIN VALVE (1-ACTUATOR) (15/19) (ROTATION ARM)	1	450820
830	MAIN VALVE (1-ACTUATOR) (16/19) (ROTATION ARM)	1	450830
840	MAIN VALVE (1-ACTUATOR) (17/19) (ROTATION ARM)	1	450840
850	MAIN VALVE (1-ACTUATOR) (18/19) (ROTATION ARM)	1	450850
860	MAIN VALVE (1-ACTUATOR) (19/19) (ROTATION ARM)	1	450860
870	SERVICE VALVE (1/3) (1-ACTUATOR AND 2-ACTUATOR) (KIT)	1	450870
880	SERVICE VALVE (2/3) (1-ACTUATOR AND 2-ACTUATOR) (KIT)	1	450880
890	SERVICE VALVE (3/3) (1-ACTUATOR AND 2-ACTUATOR) (KIT)	1	450890
900	SERVICE VALVE (1/3) (2-ACTUATOR) (KIT)	1	450900
910	SERVICE VALVE (2/3) (2-ACTUATOR) (KIT)	1	450910
920	SERVICE VALVE (3/3) (2-ACTUATOR) (KIT)	1	450920
930	SERVICE VALVE (1/3) (WITH 2-PIECE BOOM) (EU SPEC.)	1	450930
940	SERVICE VALVE (2/3) (WITH 2-PIECE BOOM) (EU SPEC.)	1	450940
950	SERVICE VALVE (3/3) (WITH 2-PIECE BOOM) (EU SPEC.)	1	450950
960	PPC VALVE (FOR TRAVEL) (1/2)	1	450960
970	PPC VALVE (FOR TRAVEL) (2/2)	1	450970
980	PPC VALVE (FOR WORK EQUIPMENT)	1	450980
990	WORK EQUIPMENT LEVER (1/2) (FOR 2-PIECE BOOM)	1	450990
1000	WORK EQUIPMENT LEVER (2/2) (FOR 2-PIECE BOOM)	1	451000
1010	PPC VALVE (FOR ATTACHMENT)	1	451010
1020	EPC VALVE	1	451020
1030	LOCK VALVE	1	451030
1040	BURST VALVE (FOR BOOM CYLINDER) (FOR ARM CRANE) (YELLOW)	1	451040
1050	BURST VALVE (FOR BOOM CYLINDER) (FOR ARM CRANE) (YELLOW)	1	451050
1060	BURST VALVE (FOR ARM CYLINDER) (FOR ARM CRANE) (YELLOW)	1	451060
1070	SELECTOR VALVE	1	451070
1080	ACCUMULATOR (AL300-1) (INNER PARTS)	1	451080
1090	SOLENOID VALVE (INNER PARTS)	1	451090
1100	SOLENOID VALVE (INNER PARTS)	1	451100
1110	SOLENOID VALVE (INNER PARTS)	1	451110

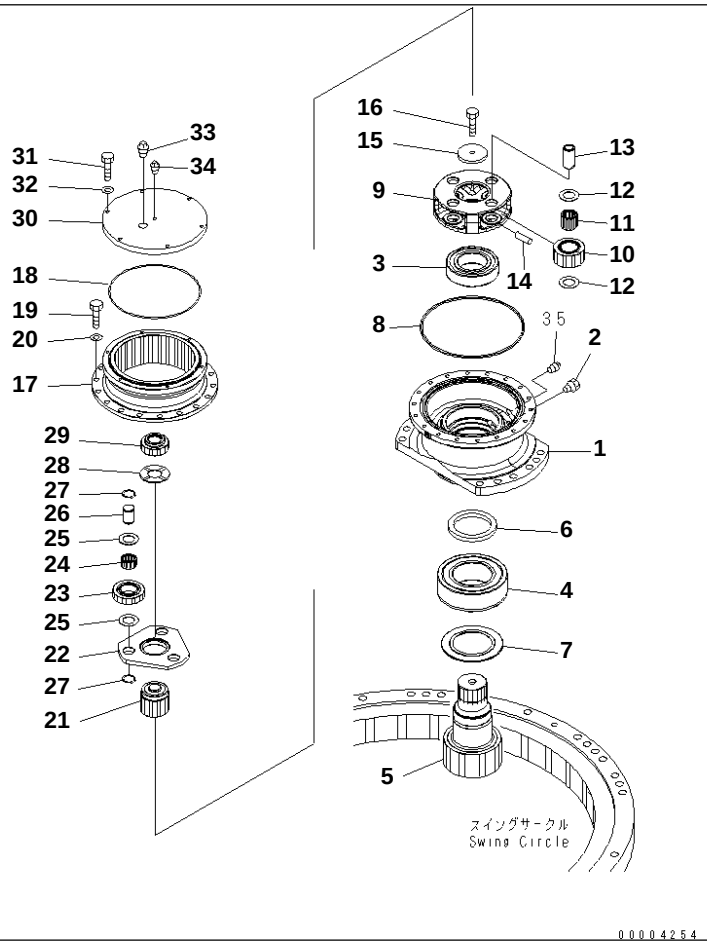

PC228US-3N-W1 S/N 30001-UP

SWING MACHINERY (SUPPLY ONLY)

Item	Part No.	Description	Qty	Options
	22U-26-00100	SWING MACHINERY A.	1	SN:30001--
1	22U-26-21190	· CASE	1	SN:30001--
2	07029-00000	· VALVE	1	SN:30001--
3	20Y-26-22330	· BEARING	1	SN:30001--
4	22U-26-21340	· BEARING	1	SN:30001--
5	22U-26-21560	· SHAFT¤ 15 TEETH	1	SN:30001--
6	07012-00115	· SEAL	1	SN:30001--
7	22U-26-21270	· SPACER	1	SN:30001--
8	07000-15310	· O-RING	1	SN:30001--
9	22U-26-21580	· CARRIER	1	SN:30001--
10	22U-26-21540	· GEAR	4	SN:30001--
11	20G-26-11240	· BEARING	4	SN:30001--
12	20Y-27-21240	· WASHER	8	SN:30001--
13	20Y-26-22250	· PIN	4	SN:30001--
14	20Y-27-21280	· PIN	4	SN:30001--
15	20Y-26-21240	· PLATE	1	SN:30001--
16	112-32-11211	· BOLT¤ SHOE	1	SN:30001--
17	22U-26-21551	· GEAR	1	SN:30001--
18	20K-22-11190	· O-RING	1	SN:30001--
19	01010-81440	· BOLT	18	SN:30001--
20	01643-31445	· WASHER	18	SN:30001--
21	22U-26-21530	· GEAR	1	SN:30001--
22	22U-26-21570	· CARRIER	1	SN:30001--
23	22U-26-21520	· GEAR	3	SN:30001--
24	20Y-26-21281	· BEARING	3	SN:30001--
25	22U-26-21230	· WASHER,THRUST	6	SN:30001--
26	22U-26-21210	· PIN	3	SN:30001--

https://truckmanualshub.com/

SWING MACHINERY (SUPPLY ONLY)

Item	Part No.	Description	Qty	Options
27	04064-03515	· RING	6	SN:30001--
28	22U-26-21250	· WASHER,THRUST	1	SN:30001--
29	22U-26-21510	· GEAR	1	SN:30001--
30	22U-26-21620	· COVER	1	SN:30001--
31	01010-81035	· BOLT	6	SN:30001--
32	01643-51032	· WASHER	6	SN:30001--
33	07042-30617	· PLUG	1	SN:30001--
34	07042-30108	· PLUG	1	SN:30001--

https://truckmanualshub.com/

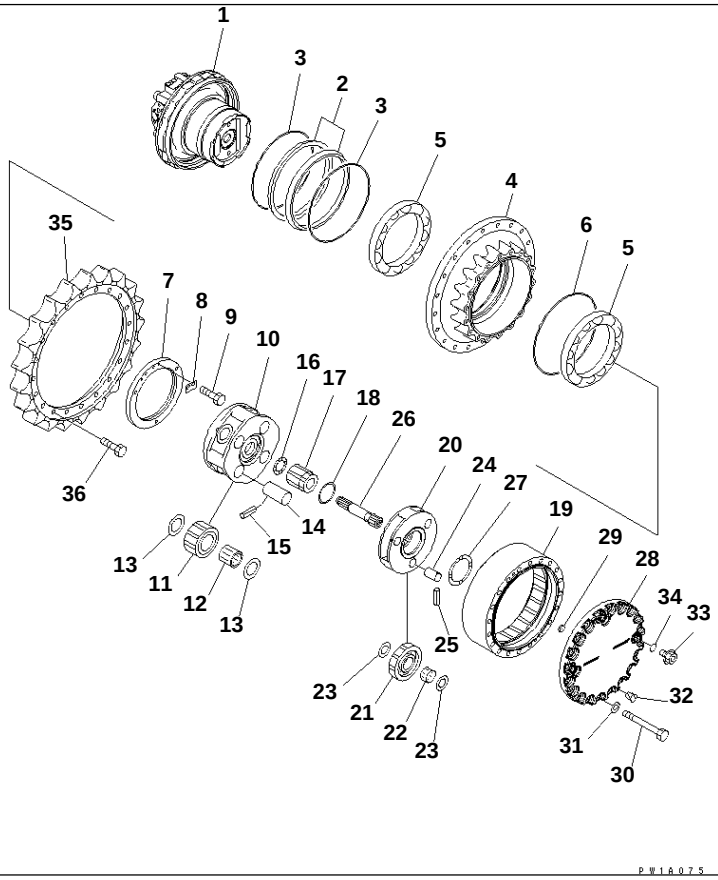

PW1A075

PC228US-3N-W1 S/N 30001-UP

FINAL DRIVE (SUPPLY ONLY)

Item	Part No.	Description	Qty	Options
	22U-27-00101	FINAL DRIVE ASS'Y	1	SN:30001--
1	(708-8F-00220)	· MOTOR ASS'Y	1	SN:30001--
	150-27-00330	· FLOATING SEAL ASS'Y	1	SN:30001--
2	150-27-00264	· · SEAL RING ASS'Y	1	SN:30001--
	☆	· · · RING	2	SN:30001--
3	144-873-0310	· · O-RING ASS'Y	1	SN:30001--
	☆	· · · O-RING	2	SN:30001--
4	22U-27-21182	· HUB	1	SN:30001--
5	20Y-27-22230	· BEARING	2	SN:30001--
6	22U-27-21220	· O-RING	1	SN:30001--
7	20Y-27-22261	· LOCK	1	SN:30001--
8	20Y-27-22270	· LOCK	1	SN:30001--
9	01010-81020	· BOLT	2	SN:30001--
10	22U-27-21170	· CARRIER	1	SN:30001--
11	22U-27-21140	· GEAR	4	SN:30001--
12	20Y-27-22220	· BEARING	4	SN:30001--
13	20Y-27-21250	· WASHER	8	SN:30001--
14	22U-27-21230	· PIN	4	SN:30001--
15	20Y-27-21290	· PIN	4	SN:30001--
16	20Y-27-13310	· WASHER	1	SN:30001--
17	22U-27-21130	· GEAR	1	SN:30001--
18	22U-27-21210	· THRUST WASHER	1	SN:30001--
19	22U-27-21153	· GEAR	1	SN:30001--
20	22U-27-21161	· CARRIER	1	SN:30001--
21	22U-27-21120	· GEAR	3	SN:30001--

https://truckmanualshub.com/

FINAL DRIVE (SUPPLY ONLY)

Item	Part No.	Description	Qty	Options
22	20Y-27-22210	· BEARING	3	SN:30001--
23	22U-27-21240	· THRUST WASHER	6	SN:30001--
24	20Y-27-21220	· PIN	3	SN:30001--
25	20Y-27-21280	· PIN	3	SN:30001--
26	22U-27-21110	· SHAFT	1	SN:30001--
27	20Y-27-21310	· WASHER	1	SN:30001--
28	22U-27-21192	· COVER	1	SN:30001--
29	20Y-27-22250	· BUTTON	1	SN:30001--
30	20Y-27-13281	· BOLT	20	SN:30001--
31	01643-31645	· WASHER	20	SN:30001--
32	07049-01012	· PLUG	2	SN:30001--
33	07044-12412	· PLUG	3	SN:30001--
34	07002-02434	· O-RING	3	SN:30001--
35	20Y-27-11582	· SPROCKET	1	SN:30001--
36	20Y-27-11561	· BOLT	20	SN:30001--

https://truckmanualshub.com/

KIT 詳細については次のページを参照して下さい。
See subsequent pages for details.

K01	20Y-32-05070	シュー ボルト および ナット サービスキット SHOE BOLT AND NUT SERVICE KIT
K02	20Y-32-05041	シュー ボルト および ナット サービスキット 湿地タイプ用 SHOE BOLT AND NUT SERVICE KIT (FOR SWAMP TYPE)
K03	20Y-32-05051	シュー ボルト および ナット サービスキット フラットタイプ用 SHOE BOLT AND NUT SERVICE KIT (FOR FLAT TYPE)
K04	20Y-32-05080	シュー ボルト および ナット サービスキット ロードライナ用 SHOE BOLT AND NUT SERVICE KIT (FOR ROAD LINER)

PW1B856

PC228US-3N-W1 S/N 30001-UP

SHOE BOLT AND NUT SERVICE KIT(#20958-)

Item	Part No.	Description	Qty	Options
K01	20Y-32-05070	SHOE BOLT AND NUT K.	1	SN:20958--
	20Y-32-31210	· BOLT¤ SHOE (Y0320-K01	50	SN:20958--
	134-32-61221	· NUT (Y0320-K01	50	SN:20958--
K02	20Y-32-05041	SHOE BOLT AND NUT K.	1	SN:20805--
	20Y-32-11230	· BOLT (Y0320-K01	50	SN:20001--
	134-32-61221	· NUT (Y0320-K01	50	SN:20805--
K03	20Y-32-05051	SHOE BOLT AND NUT K.	1	SN:20805--
	20Y-32-11220	· BOLT¤ SHOE	50	SN:20001--
	134-32-61221	· NUT	50	SN:20805--
K04	20Y-32-05080	SHOE BOLT AND NUT K.	1	SN:20805--
	20Y-32-31231	· BOLT¤ SHOE	50	SN:20728--
	134-32-61221	· NUT	50	SN:20805--

Ref. Y0320-01A0 Page 450030

https://truckmanualshub.com/

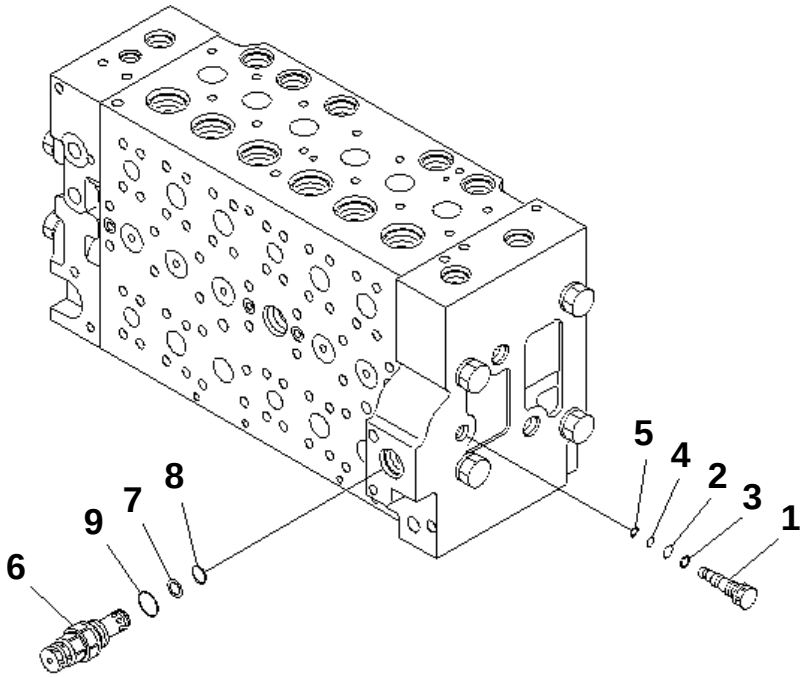

00007219

PC228US-3N-W1 S/N 30001-UP

MAIN VALVE (11/16)

Item	Part No.	Description	Qty	Options
	(723-46-20104)	VALVE ASS'Y	1	SN:30001--
THIS ASSEMBLY CONSISTS OF ALL PARTS SHOWN IN FIGS.Y1660-01A0 T0 Y1660-16A0.				
	723-46-17701	· PLUG ASS'Y	1	SN:30001--
1	723-46-17711	· · PLUG	1	SN:30001--
2	07000-11009	· · O-RING	1	SN:30001--
3	07001-01009	· · RING,BACK-UP	1	SN:30001--
4	07000-11007	· · O-RING	1	SN:30001--
5	07001-01007	· · RING,BACK-UP	1	SN:30001--
6	723-40-91500	· VALVE ASS'Y,RELIEF	1	SN:30001--
7	700-80-64220	· · RING	1	SN:30001--
8	700-22-11410	· · O-RING	1	SN:30001--
9	709-25-11390	· · O-RING	1	SN:30001--

Ref. Y1660-11A0 Page 450430

https://truckmanualshub.com/

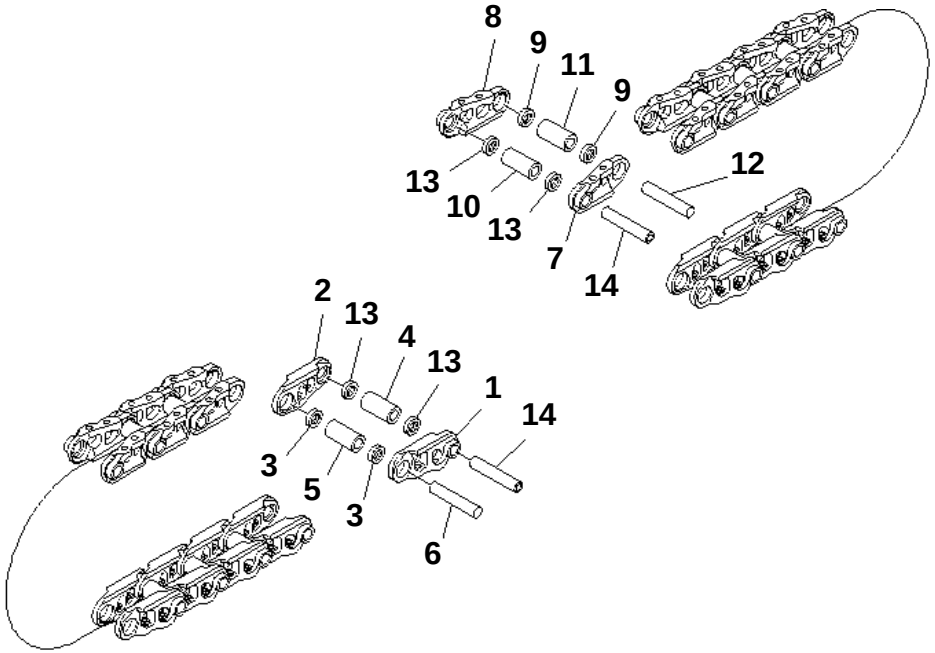

PW1A010

PC228US-3N-W1 S/N 30001-UP

TRACK LINK (90 SET) (SUPPLY PARTS)(#20958-)

Item	Part No.	Description	Qty	Options
	20Y-32-00300	TRACK LINK ASS'Y,60	1	SN:20001--
1	20Y-32-31120	· LINK,L.H.	44	SN:20001--
2	20Y-32-31130	· LINK,R.H.	44	SN:20001--
3	20Y-32-11240	· SEAL	84	SN:20001--
4	20Y-32-11171	· BUSHING¤ MASTER	2	SN:20001--
5	20Y-32-11141	· BUSHING¤ REGULAR	42	SN:20001--
6	20Y-32-31150	· PIN	42	SN:20001--
7	20Y-32-31120	· LINK,L.H.	46	SN:20001--
8	20Y-32-31130	· LINK,R.H.	46	SN:20001--
9	20Y-32-11240	· SEAL	88	SN:20001--
10	20Y-32-11171	· BUSHING¤ MASTER	2	SN:20001--
11	20Y-32-11141	· BUSHING¤ REGULAR	44	SN:20001--
12	20Y-32-31150	· PIN	44	SN:20001--
13	20Y-32-11260	· SEAL	8	SN:20001--
14	20Y-32-31190	· PIN	4	SN:20001--

Ref. Y0321-01A0 Page 450040

https://truckmanualshub.com/

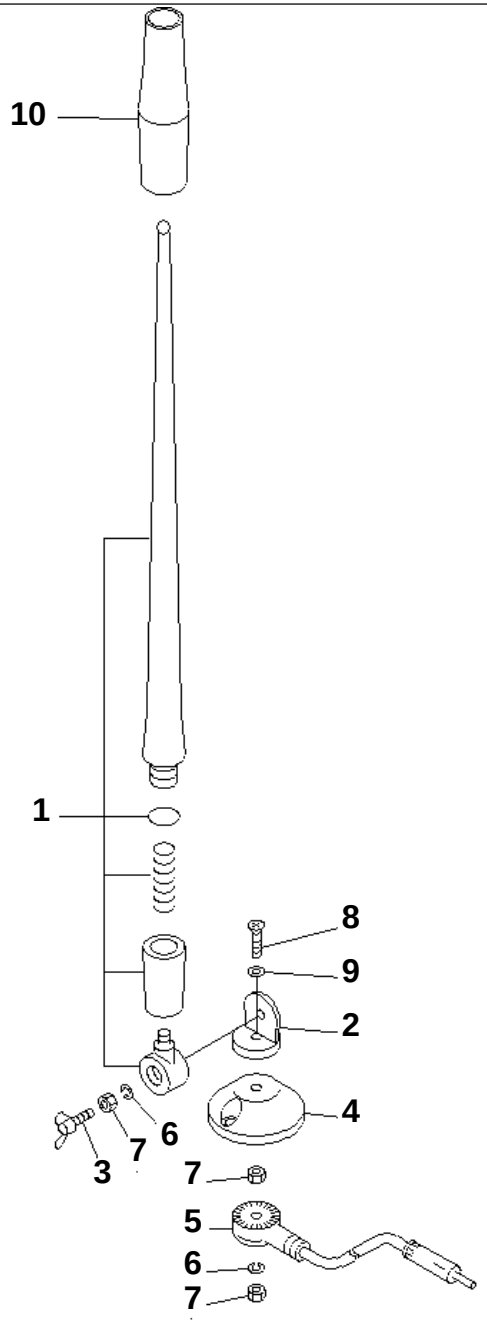

PC228US-3N-W1 S/N 30001-UP

RUBBER ANTENNA

Item	Part No.	Description	Qty	Options
	198-Z11-4610	RUBBER ANTENNA	1	SN:30001--
1	EP72-540-901	· RUBBER ELEMENT ASS'Y	1	SN:30001--
2	☆	· HOLDER	1	SN:30001--
3	EP23-141-001	· WING BOLT	1	SN:30001--
4	☆	· BASE	1	SN:30001--
5	☆	· CODE ASS'Y	1	SN:30001--
6	EP23-141-003	· SPRING WASHER	2	SN:30001--
7	EP23-141-004	· NUT	3	SN:30001--
8	☆	· SCREW	1	SN:30001--
9	☆	· WASHER	1	SN:30001--
10	☆	· TUBE	1	SN:30001--

Ref. Y1062-01A0 Page 450050

https://truckmanualshub.com/

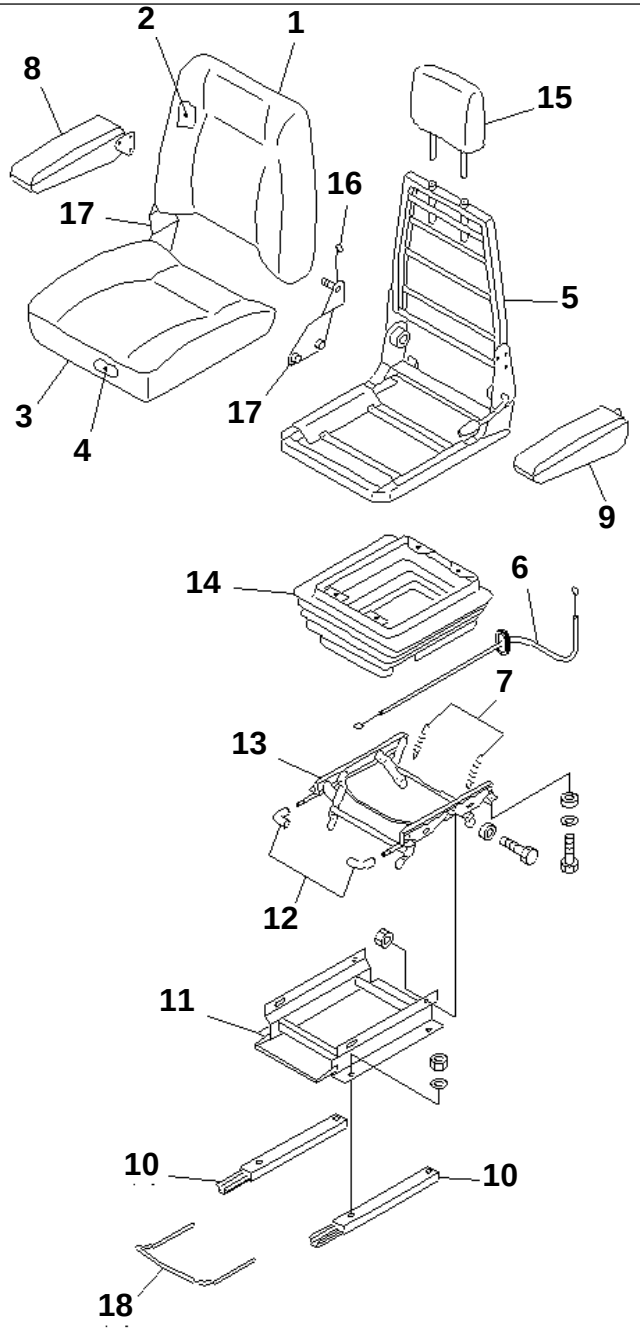

PC228US-3N-W1 S/N 30001-UP

OPERATOR'S SEAT ASS'Y

Item	Part No.	Description	Qty	Options
	22B-57-11600	SEAT ASS'Y	1	SN:30001--
	AS182408	· UPPER ASS'Y	1	SN:30001--
1	AS182428	· · BACK COVER KIT	1	SN:30001--
2	AS160167	· · BACK FOAM KIT	1	SN:30001--
3	AS182323	· · SEAT COVER KIT	1	SN:30001--
4	AS157154	· · SEAT FOAM KIT	1	SN:30001--
5	AS167489	· FRAME KIT	1	SN:30001--
6	AS162032	· CABLE KIT	1	SN:30001--
7	AS156713	· HI RISER SPRING KIT	1	SN:30001--
8	AS167490	· ARM REST ASS'Y	1	SN:30001--
9	AS167491	· ARM REST ASS'Y	1	SN:30001--
10	AS182412	· SLIDE RAIL KIT	1	SN:30001--
11	AS164968	· PLINTH KIT	1	SN:30001--
12	AS162036	· HANDLE KIT	1	SN:30001--
13	AS182413	· HEIGHT RISER KIT	1	SN:30001--
14	AS164960	· COVER KIT	1	SN:30001--
15	AS182326	· REST	1	SN:30001--
16	AS182118	· ARM REST KIT	1	SN:30001--
17	AS182415	· LIFTING BRACKET KIT	1	SN:30001--
18	AS161796	· HANDLE	1	SN:30001--

Ref. Y1570-01A0 Page 450060

https://truckmanualshub.com/

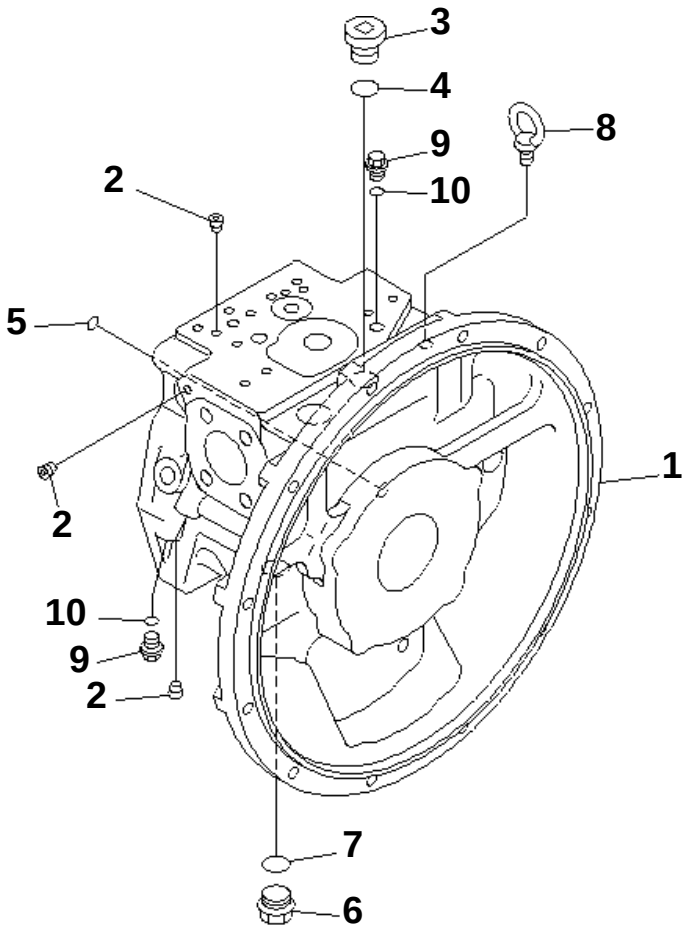

PJ5A189

PC228US-3N-W1 S/N 30001-UP

MAIN PUMP (1/11)

Item	Part No.	Description	Qty	Options
	708-2L-00102	PUMP ASS'Y	1	SN:30001--
THIS ASSEMBLY CONSISTS OF ALL PARTS SHOWN IN FIGS.Y1600-01A0 T0 Y1600-11A0.				
	708-2L-01102	· PUMP SUB ASS'Y	1	SN:30001--
	(★708-2L-06112)	· · CASE ASS'Y,FRONT	1	SN:30001--
1	☆	· · · CASE,FRONT	1	SN:30001--
2	☆	· · · PLUG	32	SN:30001--
3	07040-12414	· · PLUG	1	SN:30001--
4	07002-62434	· · O-RING	1	SN:30001--
5	(★07000-B1009)	· · O-RING	1	SN:30001--
6	07044-12412	· · PLUG	1	SN:30001--
7	07002-62434	· · O-RING	1	SN:30001--
8	04530-11222	· · BOLT,EYE	1	SN:30001--
9	708-8E-16150	· · PLUG	2	SN:30001--
10	07002-61023	· · O-RING	2	SN:30001--

Ref. Y1600-01A0 Page 450070

https://truckmanualshub.com/

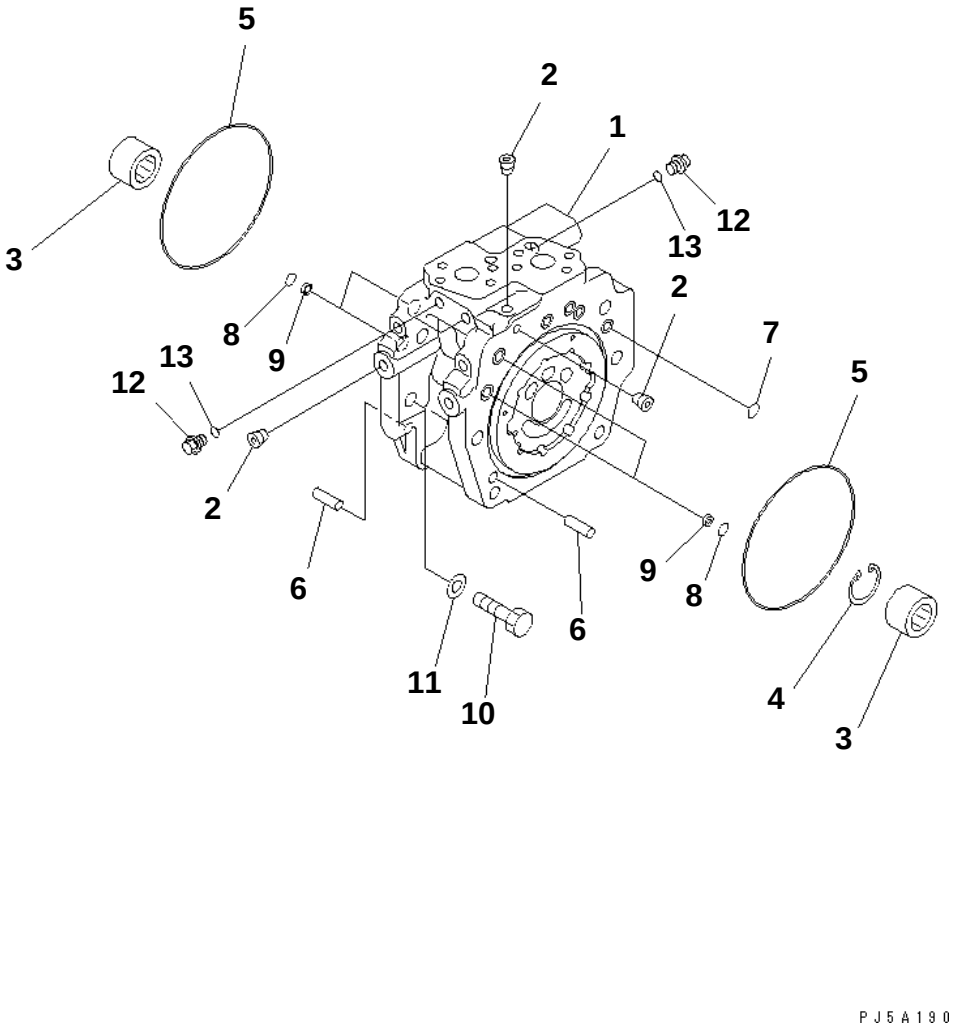

PC228US-3N-W1 S/N 30001-UP

MAIN PUMP (2/11)

Item	Part No.	Description	Qty	Options
	(708-2L-00102)	PUMP ASS'Y	1	SN:30001--
THIS ASSEMBLY CONSISTS OF ALL PARTS SHOWN IN FIGS.Y1600-01A0 T0 Y1600-11A0.				
	(708-2L-01102)	· PUMP SUB ASS'Y	1	SN:30001--
	(★708-2L-06121)	· · CAP ASS'Y,END	1	SN:30001--
1	☆	· · · CAP,END	1	SN:30001--
2	☆	· · · PLUG	15	SN:30001--
3	(★708-2L-32260)	· · BEARING	2	SN:30001--
4	(★708-2L-22271)	· · RING,SNAP	1	SN:30001--
5	(★07000-A5165)	· · O-RING	2	SN:30001--
6	(★04020-01228)	· · PIN	2	SN:30001--
7	(★07000-B2012)	· · O-RING	7	SN:30001--
8	(★07000-B2014)	· · O-RING	4	SN:30001--
9	(★708-2L-25480)	· · FILTER	4	SN:30001--
10	(★01010-61450)	· · BOLT	12	SN:30001--
11	(★01643-31445)	· · WASHER	12	SN:30001--
12	708-8E-16150	· · PLUG	3	SN:30001--
13	07002-61023	· · O-RING	3	SN:30001--

Ref. Y1600-02A0 Page 450080

https://truckmanualshub.com/

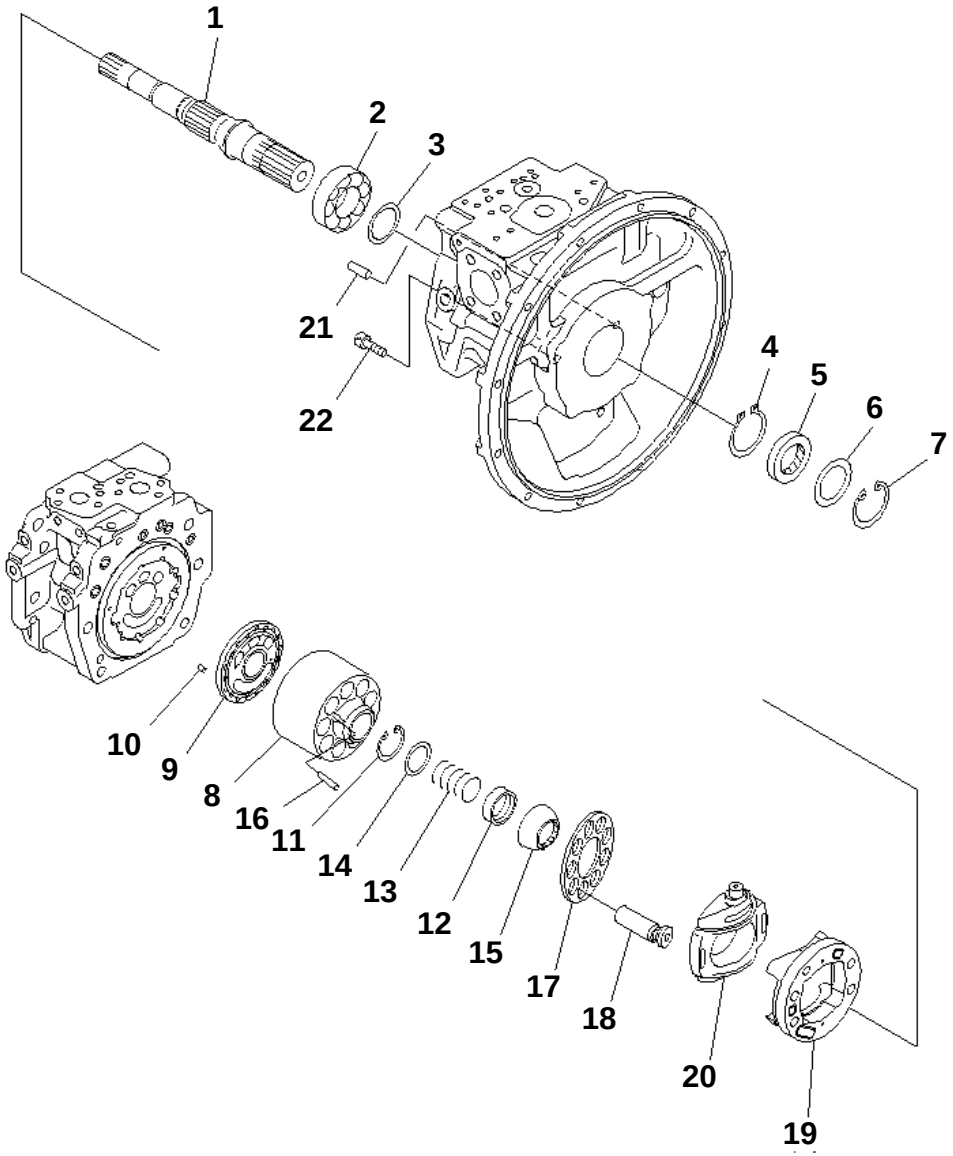

PC228US-3N-W1 S/N 30001-UP

MAIN PUMP (3/11)

Item	Part No.	Description	Qty	Options
	(708-2L-00102)	PUMP ASS'Y	1	SN:30001--
THIS ASSEMBLY CONSISTS OF ALL PARTS SHOWN IN FIGS.Y1600-01A0 T0 Y1600-11A0.				
	(708-2L-01102)	· PUMP SUB ASS'Y	1	SN:30001--
1	(★708-2L-32110)	· · SHAFT,FRONT	1	SN:30001--
2	(★708-2L-32150)	· · BEARING	1	SN:30001--
3	(★708-2E-05040)	· · WASHER KIT	1	SN:30001--
	☆	· · · WASHER¤ 3.1MM	1	SN:30001--
	☆	· · · WASHER¤ 3.0MM	1	SN:30001--
	☆	· · · WASHER¤ 2.9MM	1	SN:30001--
	☆	· · · WASHER¤ 2.8MM	1	SN:30001--
4	(★708-25-12790)	· · RING,SNAP	1	SN:30001--
5	708-25-52861	· · SEAL,OIL	1	SN:30001--
6	708-2L-22160	· · SPACER	1	SN:30001--
7	04065-06825	· · RING,SNAP	1	SN:30001--
	(★708-2L-06340)	· · BLOCK ASS'Y,FRONT	1	SN:30001--
8	☆	· · · BLOCK,CYLINDER	1	SN:30001--
9	☆	· · · PLATE,VALVE	1	SN:30001--
10	(★720-68-19610)	· · PIN	1	SN:30001--
11	(★04065-04818)	· · RING,SNAP	1	SN:30001--
12	(★708-2L-23131)	· · SEAT	1	SN:30001--
13	(★708-2L-33160)	· · SPRING	1	SN:30001--
14	(★708-7L-13140)	· · SEAT	1	SN:30001--
15	(★708-2L-23351)	· · GUIDE,RETAINER	1	SN:30001--
16	(★708-2L-23360)	· · PIN	3	SN:30001--
17	(★708-2L-33350)	· · RETAINER,SHOE	1	SN:30001--
18	(★708-2L-33310)	· · PISTON SUB ASS'Y	9	SN:30001--
	(★708-2L-06190)	· · CRADLE ASS'Y	1	SN:30001--
19	☆	· · · CRADLE	1	SN:30001--
20	☆	· · · CAM,ROCKER	1	SN:30001--
21	(★04020-01228)	· · PIN	1	SN:30001--
22	(★01252-61230)	· · BOLT	4	SN:30001--

Ref. Y1600-03A0 Page 450090

https://truckmanualshub.com/

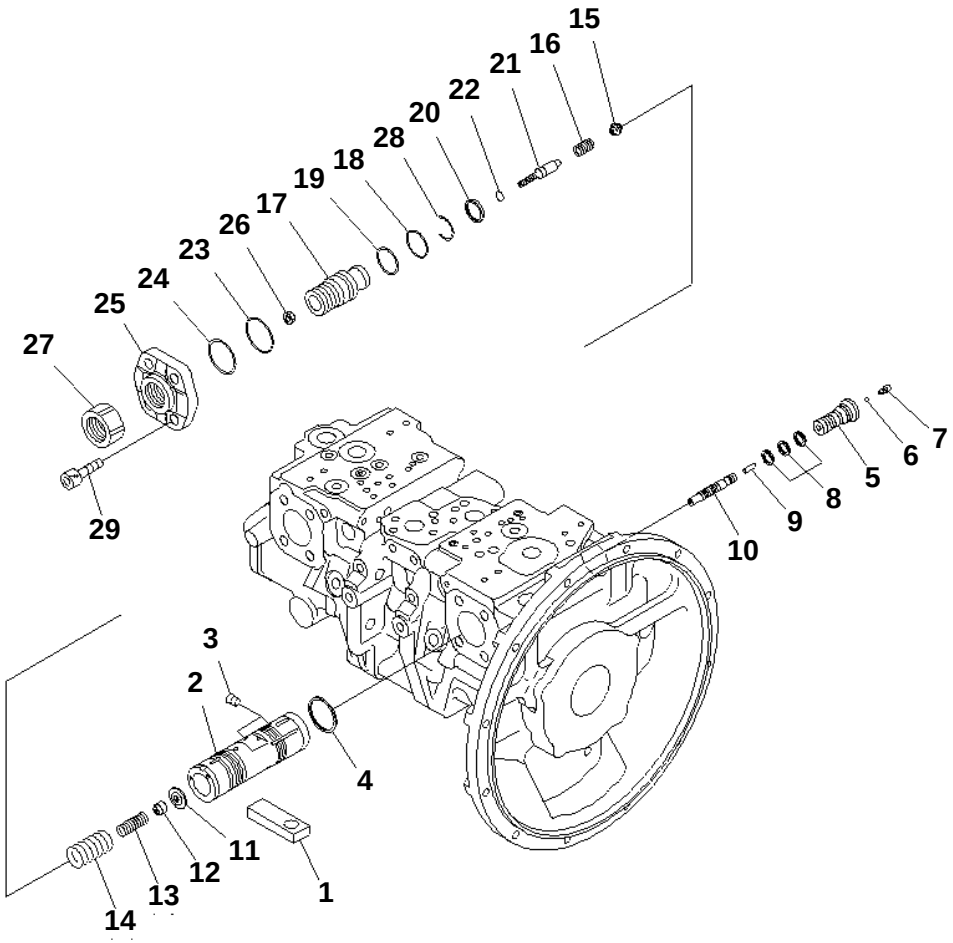

PC228US-3N-W1 S/N 30001-UP

MAIN PUMP (4/11)

Item	Part No.	Description	Qty	Options
	(708-2L-00102)	PUMP ASS'Y	1	SN:30001--
THIS ASSEMBLY CONSISTS OF ALL PARTS SHOWN IN FIGS.Y1600-01A0 T0 Y1600-11A0.				
	(708-2L-01102)	· PUMP SUB ASS'Y	1	SN:30001--
1	(★708-2L-34120)	· · SLIDER	1	SN:30001--
	(★708-2L-06510)	· · VALVE ASS'Y,PC	1	SN:30001--
	(★708-2L-06520)	· · · PISTON ASS'Y,SERVO	1	SN:30001--
2	☆	· · · · PISTON,SERVO	1	SN:30001--
3	☆	· · · · SCREW	9	SN:30001--
4	(★708-2L-35680)	· · · SEAL	1	SN:30001--
5	(★708-2L-35621)	· · · PLUG	1	SN:30001--
6	(★708-2L-35760)	· · · BALL	1	SN:30001--
7	(★708-2L-35770)	· · · PLUG	1	SN:30001--
8	(★708-2L-35690)	· · · SEAL	3	SN:30001--
9	(★708-2L-35170)	· · · PIN	1	SN:30001--
10	(★708-2L-35790)	· · · SPOOL	1	SN:30001--
11	(★708-2L-35630)	· · · RETAINER	1	SN:30001--
12	(★708-2L-35641)	· · · SEAT	1	SN:30001--
13	(★708-2L-35720)	· · · SPRING	1	SN:30001--
14	(★708-2L-35730)	· · · SPRING	1	SN:30001--
15	(★708-2L-35650)	· · · SEAT	1	SN:30001--
16	(★708-2L-35740)	· · · SPRING	1	SN:30001--
17	(★708-2L-34250)	· · · SCREW	1	SN:30001--
18	(★07000-B3034)	· · · O-RING	1	SN:30001--
19	(★708-2L-35210)	· · · RING	1	SN:30001--
20	(★708-2L-35710)	· · · SEAL	1	SN:30001--
21	(★708-2L-35660)	· · · PLUG	1	SN:30001--
22	(★07000-B2010)	· · · O-RING	1	SN:30001--
23	(★07000-B3045)	· · · O-RING	1	SN:30001--
24	(★708-2L-35750)	· · · RING	1	SN:30001--
25	(★708-2L-34230)	· · · COVER	1	SN:30001--
26	(★01580-10806)	· · · NUT	1	SN:30001--
27	(★708-2L-35870)	· · · NUT	1	SN:30001--
28	(★708-2L-35670)	· · · RING,WIRE	1	SN:30001--
29	(★01252-61440)	· · BOLT	4	SN:30001--

Ref. Y1600-04A0 Page 450100

https://truckmanualshub.com/

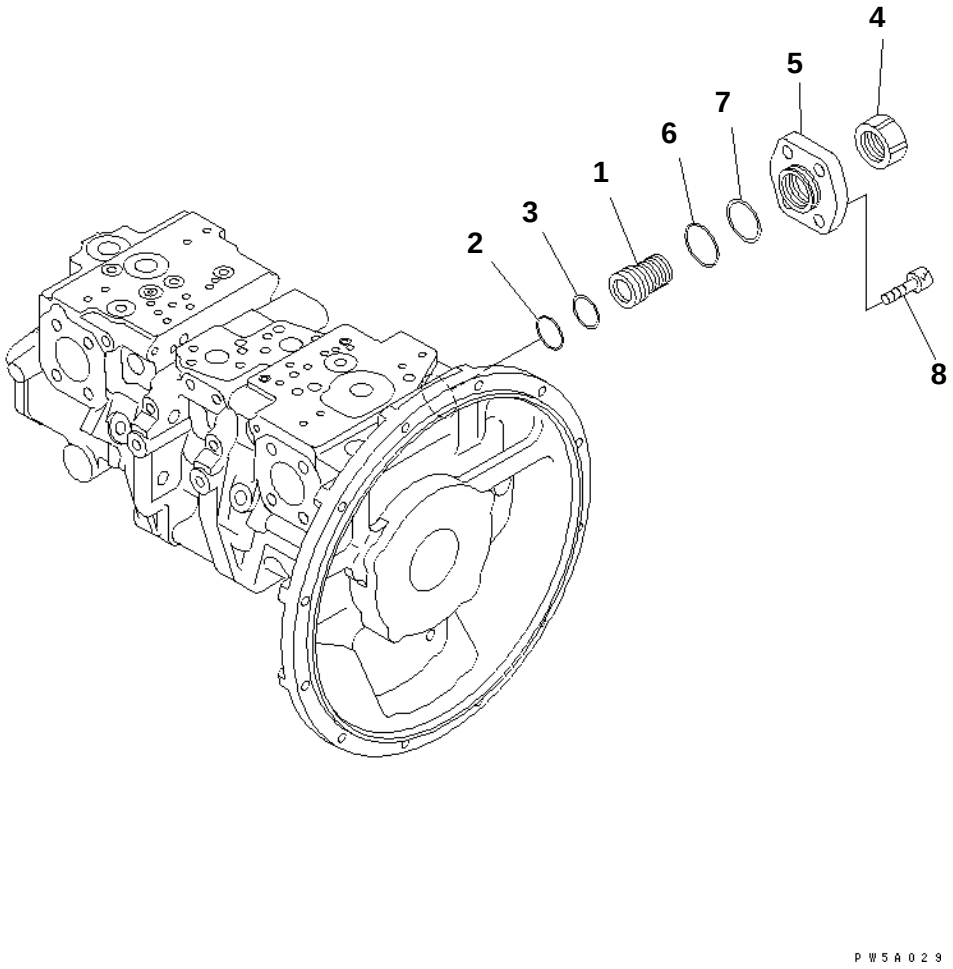

PC228US-3N-W1 S/N 30001-UP

MAIN PUMP (5/11)

Item	Part No.	Description	Qty	Options
	(708-2L-00102)	PUMP ASS'Y	1	SN:30001--
THIS ASSEMBLY CONSISTS OF ALL PARTS SHOWN IN FIGS.Y1600-01A0 T0 Y1600-11A0.				
	(708-2L-01102)	· PUMP SUB ASS'Y	1	SN:30001--
	(★708-2L-06530)	· · COVER ASS'Y	1	SN:30001--
1	(★708-2L-34270)	· · · SCREW	1	SN:30001--
2	(★07000-B3034)	· · · O-RING	1	SN:30001--
3	(★708-2L-35210)	· · · RING	1	SN:30001--
4	(★708-2L-35870)	· · · NUT	1	SN:30001--
5	(★708-2L-34260)	· · · COVER	1	SN:30001--
6	(★07000-B3045)	· · · O-RING	1	SN:30001--
7	(★708-2L-35750)	· · · RING	1	SN:30001--
8	(★01252-61440)	· · BOLT	4	SN:30001--

Ref. Y1600-05A0 Page 450110

https://truckmanualshub.com/

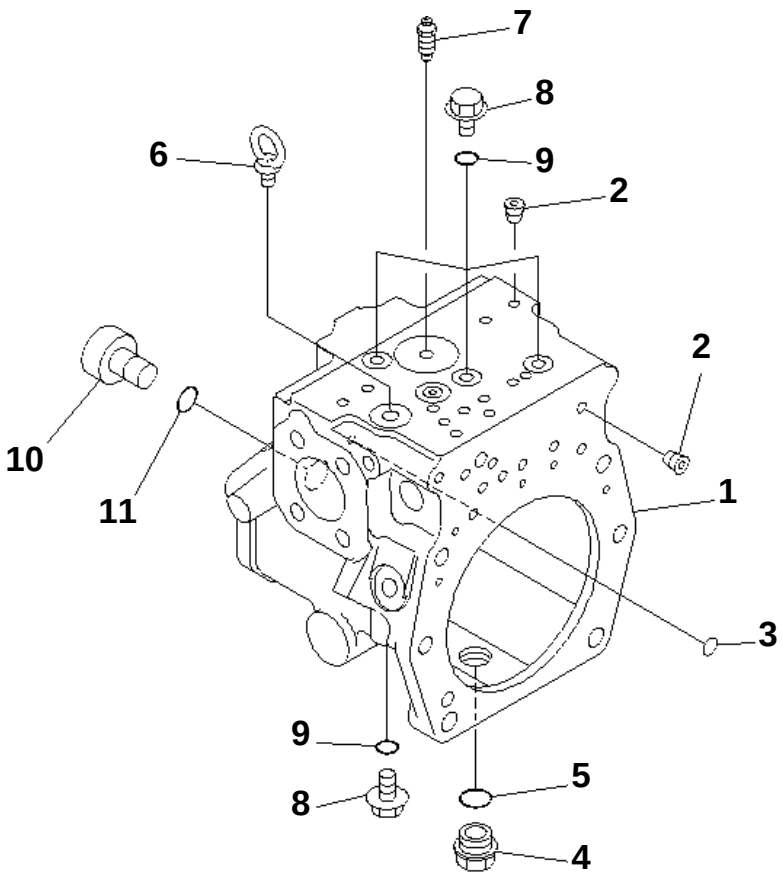

00007285

PC228US-3N-W1 S/N 30001-UP

MAIN PUMP (6/11)

Item	Part No.	Description	Qty	Options
	(708-2L-00102)	PUMP ASS'Y	1	SN:30001--
THIS ASSEMBLY CONSISTS OF ALL PARTS SHOWN IN FIGS.Y1600-01A0 T0 Y1600-11A0.				
	(708-2L-01102)	· PUMP SUB ASS'Y	1	SN:30001--
	(★708-2L-06211)	· · CASE ASS'Y,REAR	1	SN:30001--
1	☆	· · · CASE,REAR	1	SN:30001--
2	☆	· · · PLUG	35	SN:30001--
3	(★07000-B1009)	· · O-RING	1	SN:30001--
4	07044-12412	· · PLUG	1	SN:30001--
5	07002-62434	· · O-RING	1	SN:30001--
6	04530-11222	· · BOLT,EYE	1	SN:30001--
7	20B-27-11210	· · BLEEDER	1	SN:30001--
8	708-8E-16150	· · PLUG	4	SN:30001--
9	07002-61023	· · O-RING	4	SN:30001--
10	07040-12414	· · PLUG	1	SN:30001--
11	07002-62434	· · O-RING	1	SN:30001--

Ref. Y1600-06A0 Page 450120

https://truckmanualshub.com/

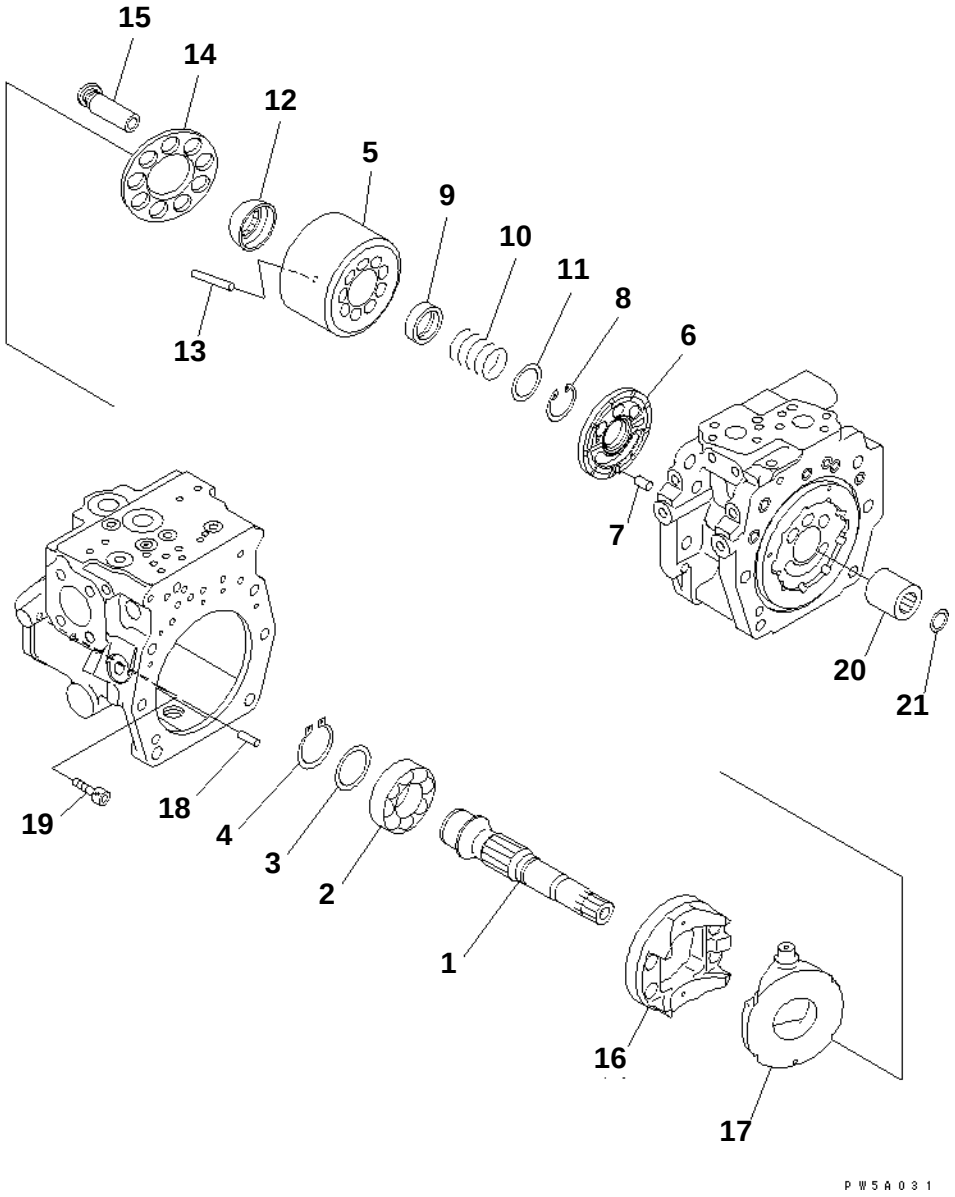

PC228US-3N-W1 S/N 30001-UP

MAIN PUMP (7/11)

Item	Part No.	Description	Qty	Options
	(708-2L-00102)	PUMP ASS'Y	1	SN:30001--
THIS ASSEMBLY CONSISTS OF ALL PARTS SHOWN IN FIGS.Y1600-01A0 T0 Y1600-11A0.				
	(708-2L-01102)	· PUMP SUB ASS'Y	1	SN:30001--
1	(★708-2L-32130)	· · SHAFT,REAR	1	SN:30001--
2	(★708-2L-32150)	· · BEARING	1	SN:30001--
3	(★708-2E-05040)	· · WASHER KIT	1	SN:30001--
	☆	· · · WASHER¤ 3.1MM	1	SN:30001--
	☆	· · · WASHER¤ 3.0MM	1	SN:30001--
	☆	· · · WASHER¤ 2.9MM	1	SN:30001--
	☆	· · · WASHER¤ 2.8MM	1	SN:30001--
4	(★708-25-12790)	· · RING,SNAP	1	SN:30001--
	(★708-2L-06350)	· · BLOCK ASS'Y,REAR	1	SN:30001--
5	☆	· · · BLOCK,CYLINDER	1	SN:30001--
6	☆	· · · PLATE,VALVE	1	SN:30001--
7	(★720-68-19610)	· · PIN	1	SN:30001--
8	(★04065-04818)	· · RING,SNAP	1	SN:30001--
9	(★708-2L-23131)	· · SEAT	1	SN:30001--
10	(★708-2L-33160)	· · SPRING	1	SN:30001--
11	(★708-7L-13140)	· · SEAT	1	SN:30001--
12	(★708-2L-23351)	· · GUIDE,RETAINER	1	SN:30001--
13	(★708-2L-23360)	· · PIN	3	SN:30001--
14	(★708-2L-33350)	· · RETAINER,SHOE	1	SN:30001--
15	(★708-2L-33310)	· · PISTON SUB ASS'Y	9	SN:30001--
	(★708-2L-06190)	· · CRADLE ASS'Y	1	SN:30001--
16	☆	· · · CRADLE	1	SN:30001--
17	☆	· · · CAM,ROCKER	1	SN:30001--
18	(★04020-01228)	· · PIN	1	SN:30001--
19	(★01252-61230)	· · BOLT	4	SN:30001--
20	(★708-2L-22130)	· · COUPLING	1	SN:30001--
21	(★708-2E-12140)	· · RING	1	SN:30001--

Ref. Y1600-07A0 Page 450130

https://truckmanualshub.com/

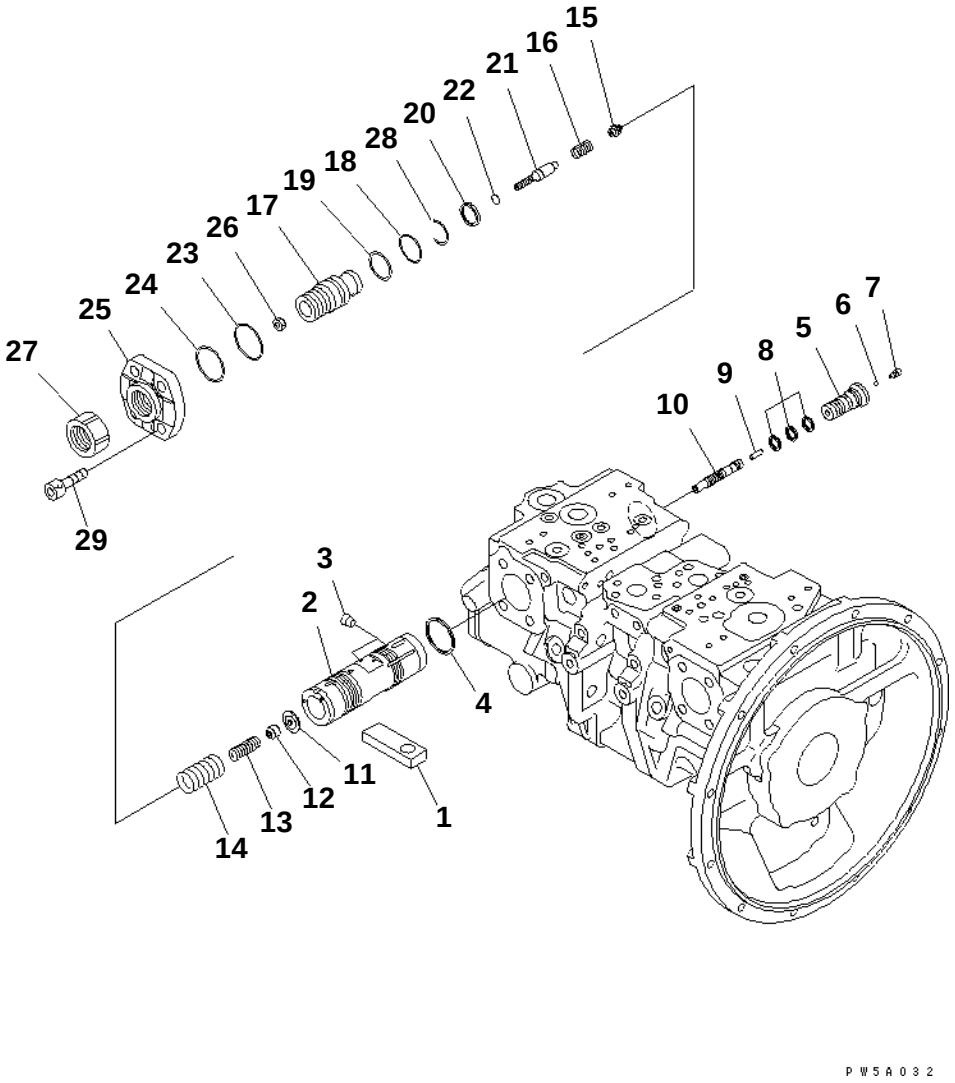

PC228US-3N-W1 S/N 30001-UP

MAIN PUMP (8/11)

Item	Part No.	Description	Qty	Options
	(708-2L-00102)	PUMP ASS'Y	1	SN:30001--
THIS ASSEMBLY CONSISTS OF ALL PARTS SHOWN IN FIGS.Y1600-01A0 T0 Y1600-11A0.				
	(708-2L-01102)	· PUMP SUB ASS'Y	1	SN:30001--
1	(★708-2L-34120)	· · SLIDER	1	SN:30001--
	(★708-2L-06510)	· · VALVE ASS'Y,PC	1	SN:30001--
	(★708-2L-06520)	· · · PISTON ASS'Y,SERVO	1	SN:30001--
2	☆	· · · · PISTON,SERVO	1	SN:30001--
3	☆	· · · · SCREW	9	SN:30001--
4	(★708-2L-35680)	· · · SEAL	1	SN:30001--
5	(★708-2L-35621)	· · · PLUG	1	SN:30001--
6	(★708-2L-35760)	· · · BALL	1	SN:30001--
7	(★708-2L-35770)	· · · PLUG	1	SN:30001--
8	(★708-2L-35690)	· · · SEAL	3	SN:30001--
9	(★708-2L-35170)	· · · PIN	1	SN:30001--
10	(★708-2L-35790)	· · · SPOOL	1	SN:30001--
11	(★708-2L-35630)	· · · RETAINER	1	SN:30001--
12	(★708-2L-35641)	· · · SEAT	1	SN:30001--
13	(★708-2L-35720)	· · · SPRING	1	SN:30001--
14	(★708-2L-35730)	· · · SPRING	1	SN:30001--
15	(★708-2L-35650)	· · · SEAT	1	SN:30001--
16	(★708-2L-35740)	· · · SPRING	1	SN:30001--
17	(★708-2L-34250)	· · · SCREW	1	SN:30001--
18	(★07000-B3034)	· · · O-RING	1	SN:30001--
19	(★708-2L-35210)	· · · RING	1	SN:30001--
20	(★708-2L-35710)	· · · SEAL	1	SN:30001--
21	(★708-2L-35660)	· · · PLUG	1	SN:30001--
22	(★07000-B2010)	· · · O-RING	1	SN:30001--
23	(★07000-B3045)	· · · O-RING	1	SN:30001--
24	(★708-2L-35750)	· · · RING	1	SN:30001--
25	(★708-2L-34230)	· · · COVER	1	SN:30001--
26	(★01580-10806)	· · · NUT	1	SN:30001--
27	(★708-2L-35870)	· · · NUT	1	SN:30001--
28	(★708-2L-35670)	· · · RING,WIRE	1	SN:30001--
29	(★01252-61440)	· · BOLT	4	SN:30001--

Ref. Y1600-08A0 Page 450140

https://truckmanualshub.com/

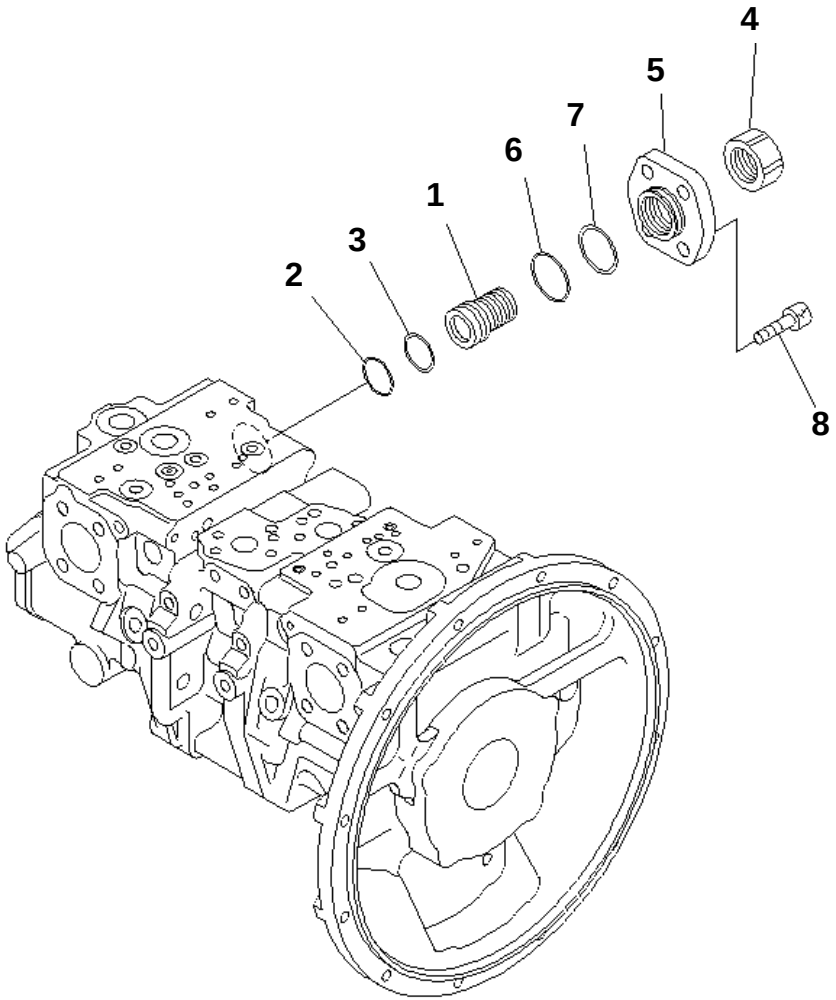

PC228US-3N-W1 S/N 30001-UP

MAIN PUMP (9/11)

Item	Part No.	Description	Qty	Options
	(708-2L-00102)	PUMP ASS'Y	1	SN:30001--
THIS ASSEMBLY CONSISTS OF ALL PARTS SHOWN IN FIGS.Y1600-01A0 T0 Y1600-11A0.				
	(708-2L-01102)	· PUMP SUB ASS'Y	1	SN:30001--
	(★708-2L-06530)	· · COVER ASS'Y	1	SN:30001--
1	(★708-2L-34270)	· · · SCREW	1	SN:30001--
2	(★07000-B3034)	· · · O-RING	1	SN:30001--
3	(★708-2L-35210)	· · · RING	1	SN:30001--
4	(★708-2L-35870)	· · · NUT	1	SN:30001--
5	(★708-2L-34260)	· · · COVER	1	SN:30001--
6	(★07000-B3045)	· · · O-RING	1	SN:30001--
7	(★708-2L-35750)	· · · RING	1	SN:30001--
8	(★01252-61440)	· · BOLT	4	SN:30001--

Ref. Y1600-09A0 Page 450150

https://truckmanualshub.com/

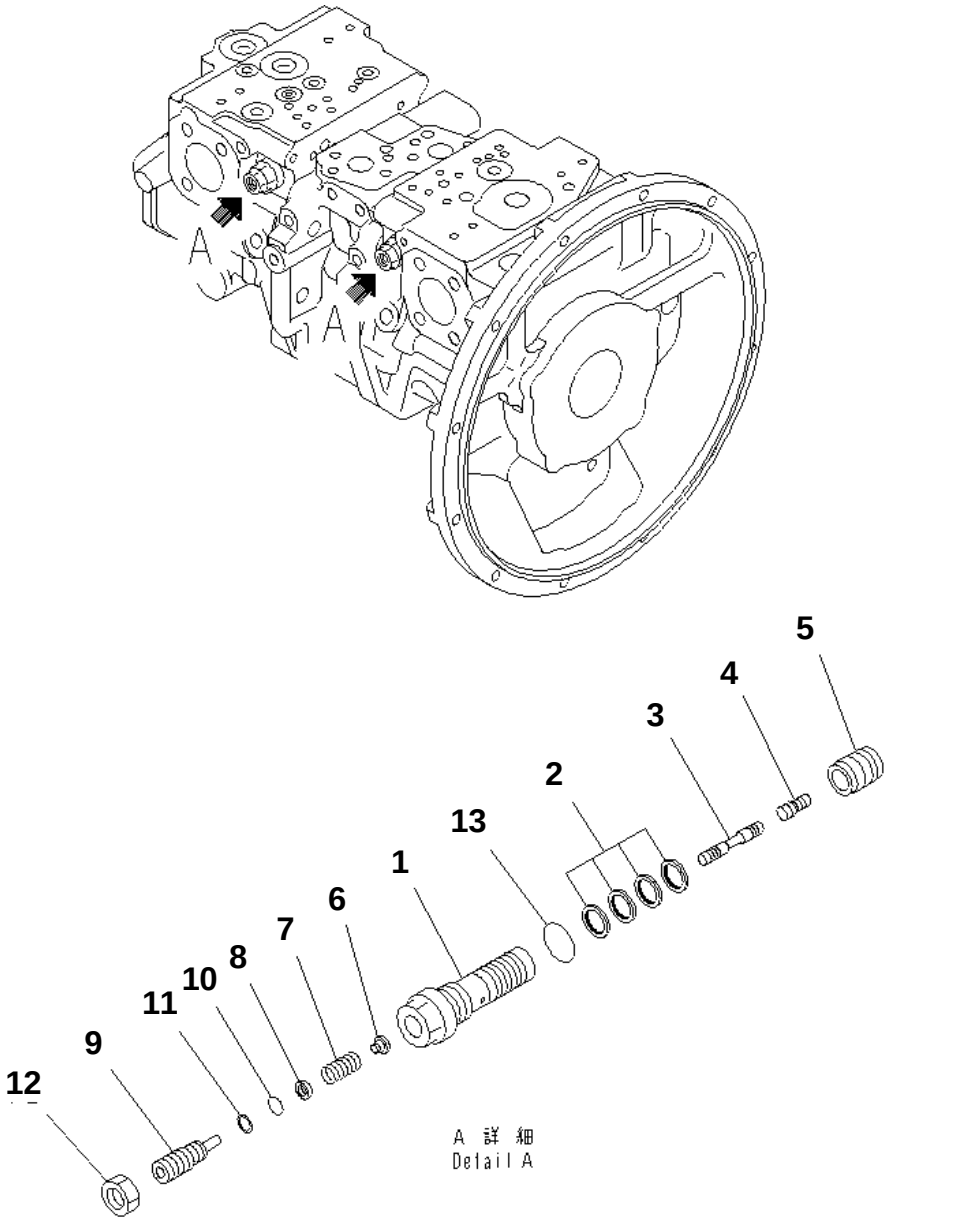

PC228US-3N-W1 S/N 30001-UP

MAIN PUMP (10/11)

Item	Part No.	Description	Qty	Options
	(708-2L-00102)	PUMP ASS'Y	1	SN:30001--
THIS ASSEMBLY CONSISTS OF ALL PARTS SHOWN IN FIGS.Y1600-01A0 T0 Y1600-11A0.				
	708-2L-06710	· VALVE ASS'Y,LS	2	SN:30001--
1	(★708-2L-35311)	· · SLEEVE	1	SN:30001--
2	708-2L-24680	· · SEAL	4	SN:30001--
3	(★708-2L-35430)	· · SPOOL	1	SN:30001--
4	(★708-2L-28540)	· · PISTON	1	SN:30001--
5	(★708-2L-35360)	· · SLEEVE	1	SN:30001--
6	(★708-2L-35331)	· · SEAT	1	SN:30001--
7	(★708-2L-35410)	· · SPRING	1	SN:30001--
8	(★708-2L-35341)	· · SEAT	1	SN:30001--
9	(★708-2L-35351)	· · PLUG	1	SN:30001--
10	(★07000-B1009)	· · O-RING	1	SN:30001--
11	(★07001-01009)	· · RING,BACK-UP	1	SN:30001--
12	01583-11408	· · NUT	1	SN:30001--
13	07002-62434	· · O-RING	1	SN:30001--

Ref. Y1600-10A0 Page 450160

https://truckmanualshub.com/

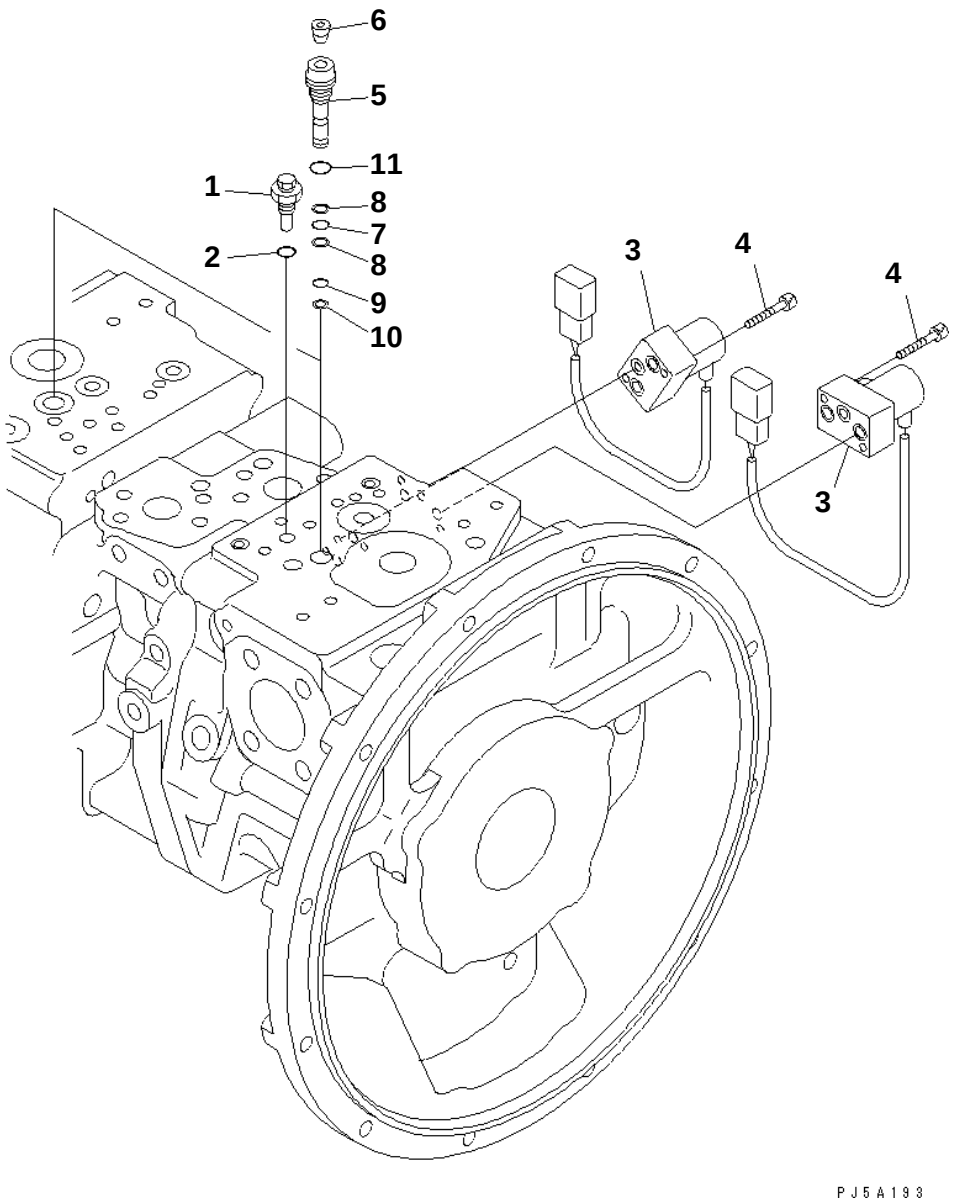

PC228US-3N-W1 S/N 30001-UP

MAIN PUMP (11/11)

Item	Part No.	Description	Qty	Options
	(708-2L-00102)	PUMP ASS'Y	1	SN:30001--
THIS ASSEMBLY CONSISTS OF ALL PARTS SHOWN IN FIGS.Y1600-01A0 T0 Y1600-11A0.				
1	708-2L-35530	· PLUG	1	SN:30001--
2	07002-61023	· O-RING	1	SN:30001--
3	702-21-54900	· PILOT VALVE	2	SN:30001--
4	01252-60635	· BOLT	4	SN:30001--
	708-2L-06820	· PLUG SUB ASS'Y	2	SN:30001--
5	(★708-2L-35920)	· · PLUG	1	SN:30001--
6	☆	· · PLUG	1	SN:30001--
7	07000-B1008	· · O-RING	1	SN:30001--
8	07001-01008	· · RING	2	SN:30001--
9	07000-B1007	· · O-RING	1	SN:30001--
10	07001-01007	· · RING,BACK-UP	1	SN:30001--
11	07002-61423	· · O-RING	1	SN:30001--

Ref. Y1600-11A0 Page 450170

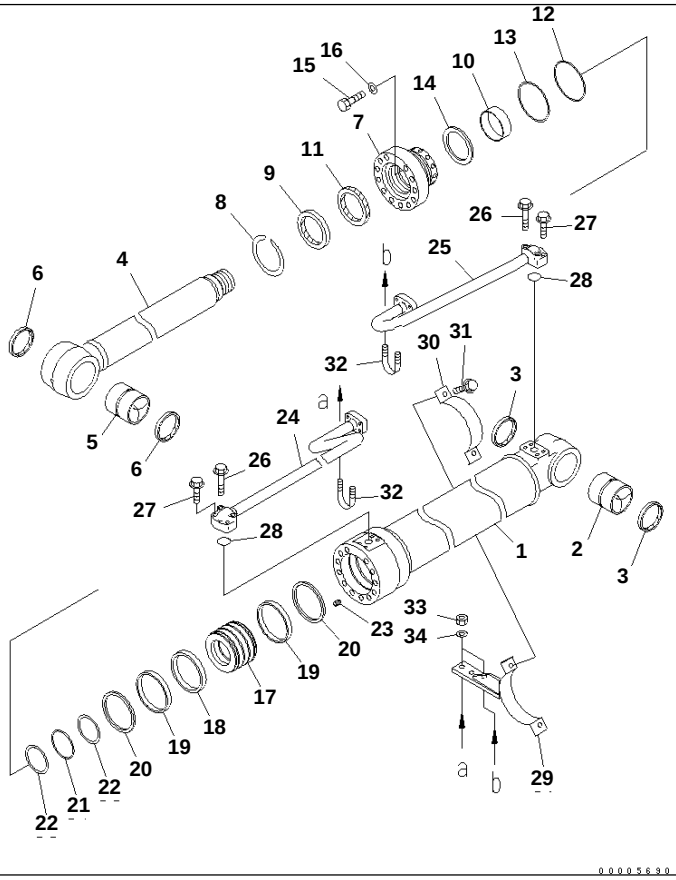

0 0 0 0 5 6 9 0

BOOM CYLINDER (YELLOW)

Item	Part No.	Description	Qty	Options
G-1	(⊙707-01-XU160)	CYLINDER GROUP,L.H. (FINAL COATING)	1	SN:30001--
G-2	(⊙707-01-XU170)	CYLINDER GROUP,R.H. (FINAL COATING)	1	SN:30001--
==========				
	707-01-0E770	CYLINDER ASS'Y	1	SN:30001--
1	707-13-12290	· CYLINDER	1	SN:30001--
2	707-76-70651	· BUSHING	1	SN:30001--
3	07145-00070	· SEAL,DUST (KIT)	2	SN:30001--
4	707-58-85270	· ROD,PISTON	1	SN:30001--
5	707-76-80431	· BUSHING	1	SN:30001--
6	07145-00080	· SEAL,DUST (KIT)	2	SN:30001--
7	707-27-12921	· HEAD,CYLINDER	1	SN:30001--
8	07179-13099	· RING,SNAP	1	SN:30001--
9	707-56-85510	· SEAL,DUST (KIT)	1	SN:30001--
10	707-52-90610	· BUSHING	1	SN:30001--
11	707-51-85030	· PACKING,ROD (KIT)	1	SN:30001--
12	07000-15110	· O-RING (KIT)	1	SN:30001--
13	707-35-91220	· RING,BACK-UP (KIT)	1	SN:30001--
14	707-51-85640	· RING,BUFFER (KIT)	1	SN:30001--
15	01010-81670	· BOLT	12	SN:30001--
16	01643-51645	· WASHER	12	SN:30001--
17	707-36-12851	· PISTON	1	SN:30001--
18	707-44-12180	· RING,PISTON (KIT)	1	SN:30001--
19	707-39-12140	· RING,WEAR (KIT)	2	SN:30001--
20	707-44-12911	· RING	2	SN:30001--
21	07000-15075	· O-RING (KIT)	1	SN:30001--

https://truckmanualshub.com/

BOOM CYLINDER (YELLOW)

Item	Part No.	Description	Qty	Options
22	707-35-90930	· RING,BACK-UP (KIT)	2	SN:30001--
23	01310-01216	· SCREW	1	SN:30001--
24	707-86-66730	TUBE,L.H.	1	SN:30001--
	707-86-66740	TUBE,R.H.	1	SN:30001--
25	20Y-62-24580	TUBE,L.H.	1	SN:30001--
	20Y-62-24610	TUBE,R.H.	1	SN:30001--
26	01435-01055	BOLT	4	SN:30001--
27	01435-01040	BOLT	4	SN:30001--
28	07000-13030	O-RING (KIT)	2	SN:30001--
29	707-88-22550	BRACKET,L.H.	1	SN:30001--
	707-88-22560	BRACKET,R.H.	1	SN:30001--
30	707-88-21251	BAND	1	SN:30001--
31	01435-01030	BOLT	2	SN:30001--
32	07283-32738	CLIP	2	SN:30001--
33	01597-01009	NUT	4	SN:30001--
34	01643-31032	WASHER	4	SN:30001--
==========				
	707-99-46130	SERVICE KIT	2	SN:30001--

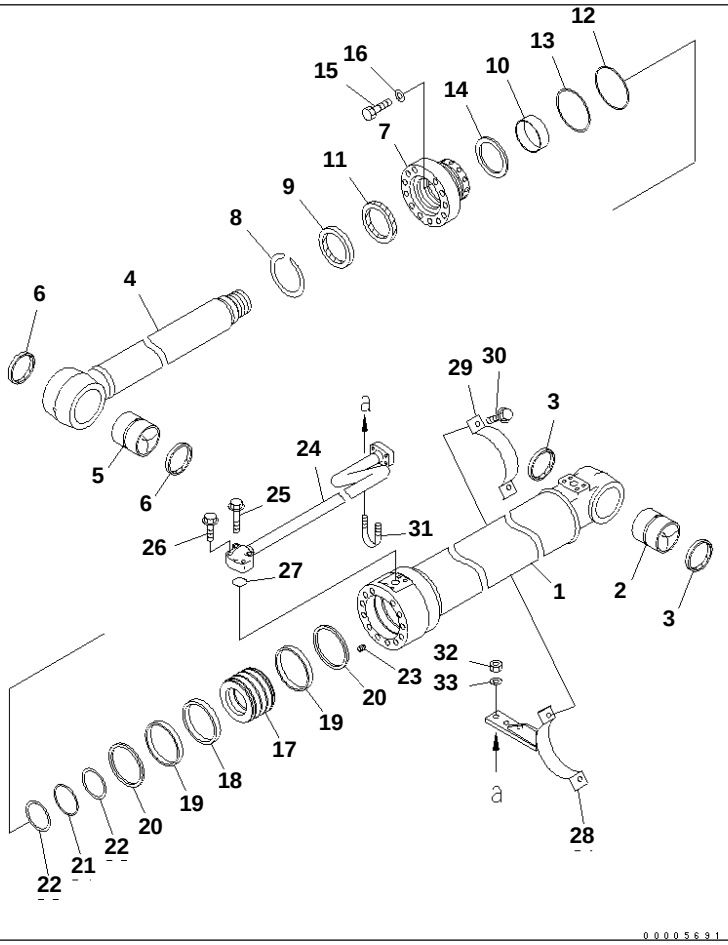

PC228US-3N-W1 S/N 30001-UP

BOOM CYLINDER (FOR ARM CRANE) (YELLOW)

Item	Part No.	Description	Qty	Options
G-1	(⊙707-01-XU220)	BOOM CYLINDER GROUP,L.H. (FINAL COATING)	1	SN:30001--
G-2	(⊙707-01-XU230)	BOOM CYLINDER GROUP,R.H. (FINAL COATING)	1	SN:30001--
==========				
	707-01-0E770	CYLINDER ASS'Y	1	SN:30001--
1	707-13-12290	· CYLINDER	1	SN:30001--
2	707-76-70651	· BUSHING	1	SN:30001--
3	07145-00070	· SEAL,DUST (KIT)	2	SN:30001--
4	707-58-85270	· ROD,PISTON	1	SN:30001--
5	707-76-80431	· BUSHING	1	SN:30001--
6	07145-00080	· SEAL,DUST (KIT)	2	SN:30001--
7	707-27-12921	· HEAD,CYLINDER	1	SN:30001--
8	07179-13099	· RING,SNAP	1	SN:30001--
9	707-56-85510	· SEAL,DUST (KIT)	1	SN:30001--
10	707-52-90610	· BUSHING	1	SN:30001--
11	707-51-85030	· PACKING,ROD (KIT)	1	SN:30001--
12	07000-15110	· O-RING (KIT)	1	SN:30001--
13	707-35-91220	· RING,BACK-UP (KIT)	1	SN:30001--
14	707-51-85640	· RING,BUFFER (KIT)	1	SN:30001--
15	01010-81670	· BOLT	12	SN:30001--
16	01643-51645	· WASHER	12	SN:30001--
17	707-36-12851	· PISTON	1	SN:30001--
18	707-44-12180	· RING,PISTON (KIT)	1	SN:30001--
19	707-39-12140	· RING,WEAR (KIT)	2	SN:30001--
20	707-44-12911	· RING	2	SN:30001--
21	07000-15075	· O-RING (KIT)	1	SN:30001--
22	707-35-90930	· RING,BACK-UP (KIT)	2	SN:30001--
23	01310-01216	· SCREW	1	SN:30001--

https://truckmanualshub.com/

BOOM CYLINDER (FOR ARM CRANE) (YELLOW)

Item	Part No.	Description	Qty	Options
24	707-86-66730	TUBE,L.H.	1	SN:30001--
	707-86-66740	TUBE,R.H.	1	SN:30001--
25	01435-01055	BOLT	2	SN:30001--
26	01435-01040	BOLT	2	SN:30001--
27	07000-13030	O-RING (KIT)	1	SN:30001--
28	707-88-22550	BRACKET,L.H.	1	SN:30001--
	707-88-22560	BRACKET,R.H.	1	SN:30001--
29	707-88-21251	BAND	1	SN:30001--
30	01435-01030	BOLT	2	SN:30001--
31	07283-32738	CLIP	1	SN:30001--
32	01597-01009	NUT	2	SN:30001--
33	01643-31032	WASHER	2	SN:30001--
==========				
	707-99-46130	SERVICE KIT	2	SN:30001--

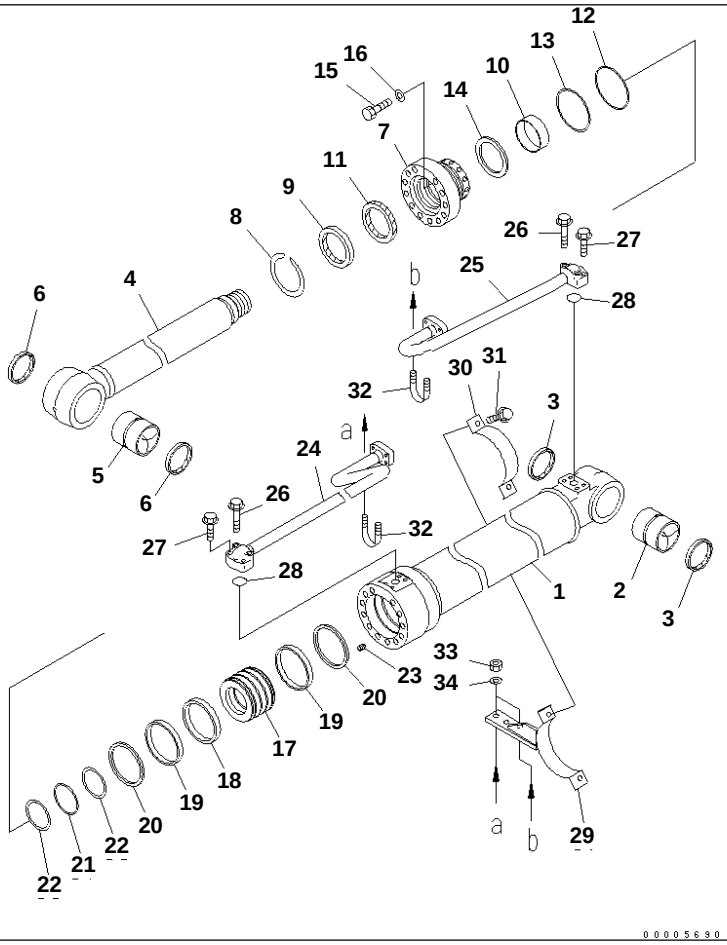

PC228US-3N-W1 S/N 30001-UP

BOOM CYLINDER (LARGE SIZE)

Item	Part No.	Description	Qty	Options
G-1	(⊙707-01-XU180)	BOOM CYLINDER GROUP,L.H. (FINAL COATING)	1	SN:30001--
G-2	(⊙707-01-XU190)	BOOM CYLINDER GROUP,R.H. (FINAL COATING)	1	SN:30001--
==========				
	707-01-0E790	CYLINDER ASS'Y	1	SN:30001--
1	707-13-13620	· CYLINDER	1	SN:30001--
2	707-76-80820	· BUSHING	1	SN:30001--
3	07145-00070	· SEAL,DUST (KIT)	2	SN:30001--
4	707-76-80431	· BUSHING,PISTON	1	SN:30001--
5	20Y-70-21360	· BUSHING	1	SN:30001--
6	07145-00080	· SEAL,DUST (KIT)	2	SN:30001--
7	707-27-13921	· HEAD,CYLINDER	1	SN:30001--
8	07179-13104	· RING,SNAP	1	SN:30001--
9	195-63-94170	· SEAL,DUST (KIT)	1	SN:30001--
10	707-52-90680	· BUSHING	1	SN:30001--
11	707-51-90030	· PACKING,ROD (KIT)	1	SN:30001--
12	07000-15120	· O-RING (KIT)	1	SN:30001--
13	707-35-91320	· RING,BACK-UP (KIT)	1	SN:30001--
14	707-51-90640	· RING,BUFFER (KIT)	1	SN:30001--
15	01010-81670	· BOLT	12	SN:30001--
16	01643-51645	· WASHER	12	SN:30001--
17	707-36-13780	· PISTON	1	SN:30001--
18	707-44-13180	· RING,PISTON (KIT)	1	SN:30001--
19	707-39-13150	· RING,WEAR (KIT)	2	SN:30001--
20	707-44-13911	· RING	2	SN:30001--
21	07000-15080	· O-RING (KIT)	1	SN:30001--
22	707-35-90940	· RING,BACK-UP (KIT)	2	SN:30001--
23	01310-01216	· SCREW	1	SN:30001--

https://truckmanualshub.com/

BOOM CYLINDER (LARGE SIZE)

Item	Part No.	Description	Qty	Options
24	707-86-66750	TUBE,L.H.	1	SN:30001--
	707-86-66760	TUBE,R.H.	1	SN:30001--
25	206-62-64270	TUBE,L.H.	1	SN:30001--
	206-62-64290	TUBE,R.H.	1	SN:30001--
26	01435-01055	BOLT	4	SN:30001--
27	01435-01040	BOLT	4	SN:30001--
28	07000-13030	O-RING (KIT)	2	SN:30001--
29	707-88-22610	BRACKET	1	SN:30001--
30	707-88-21311	BAND	1	SN:30001--
31	01435-01030	BOLT	2	SN:30001--
32	07283-32738	CLIP	2	SN:30001--
33	01597-01009	NUT	4	SN:30001--
34	01643-31032	WASHER	4	SN:30001--
==========				
	707-99-47790	SERVICE KIT	2	SN:30001--

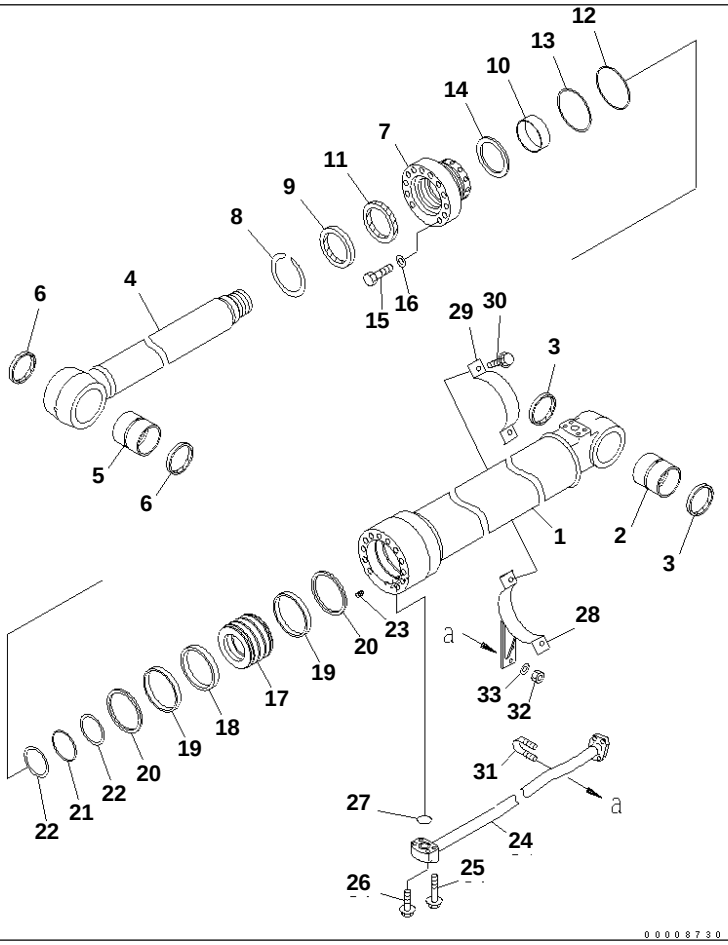

PC228US-3N-W1 S/N 30001-UP

BOOM CYLINDER (FOR 2-PIECE BOOM) (YELLOW)

Item	Part No.	Description	Qty	Options
G-1	(⊙707-01-XU540)	CYLINDER G.(L.H.),L.H. (FINAL COATING)	1	SN:30001--
G-2	(⊙707-01-XU550)	CYLINDER G.(R.H.),R.H. (FINAL COATING)	1	SN:30001--
==========				
	707-01-0F300	CYLINDER ASS'Y	1	SN:30001--
1	707-13-12360	· CYLINDER	1	SN:30001--
2	707-76-70651	· BUSHING	1	SN:30001--
3	07145-00070	· SEAL,DUST (KIT)	2	SN:30001--
4	707-58-85340	· ROD,PISTON	1	SN:30001--
5	707-76-80431	· BUSHING	1	SN:30001--
6	07145-00080	· SEAL,DUST (KIT)	2	SN:30001--
7	707-27-12921	· HEAD,CYLINDER	1	SN:30001--
8	07179-13099	· RING,SNAP	1	SN:30001--
9	707-56-85510	· SEAL,DUST (KIT)	1	SN:30001--
10	707-52-90610	· BUSHING	1	SN:30001--
11	707-51-85030	· PACKING,ROD (KIT)	1	SN:30001--
12	07000-15110	· O-RING (KIT)	1	SN:30001--
13	707-35-91220	· RING,BACK-UP (KIT)	1	SN:30001--
14	707-51-85640	· RING,BUFFER (KIT)	1	SN:30001--
15	01010-81670	· BOLT	12	SN:30001--
16	01643-51645	· WASHER	12	SN:30001--
17	707-36-12851	· PISTON	1	SN:30001--
18	707-44-12180	· RING,PISTON (KIT)	1	SN:30001--
19	707-39-12140	· RING,WEAR (KIT)	2	SN:30001--
20	707-44-12911	· RING	2	SN:30001--
21	07000-15075	· O-RING (KIT)	1	SN:30001--
22	707-35-90930	· RING,BACK-UP (KIT)	2	SN:30001--
23	01310-01216	· SCREW	1	SN:30001--

https://truckmanualshub.com/

BOOM CYLINDER (FOR 2-PIECE BOOM) (YELLOW)

Item	Part No.	Description	Qty	Options
24	707-86-66940	TUBE,L.H.	1	SN:30001--
	707-86-66950	TUBE,R.H.	1	SN:30001--
25	01435-01055	BOLT	2	SN:30001--
26	01435-01040	BOLT	2	SN:30001--
27	07000-13030	O-RING (KIT)	1	SN:30001--
28	707-88-25350	BRACKET,L.H.	1	SN:30001--
	707-88-25360	BRACKET,R.H.	1	SN:30001--
29	707-88-21830	BAND	1	SN:30001--
30	01435-01030	BOLT	2	SN:30001--
31	07283-32736	CLIP	1	SN:30001--
32	01597-01009	NUT	2	SN:30001--
33	01643-31032	WASHER	2	SN:30001--
==========				
	707-99-46130	SERVICE KIT	2	SN:30001--

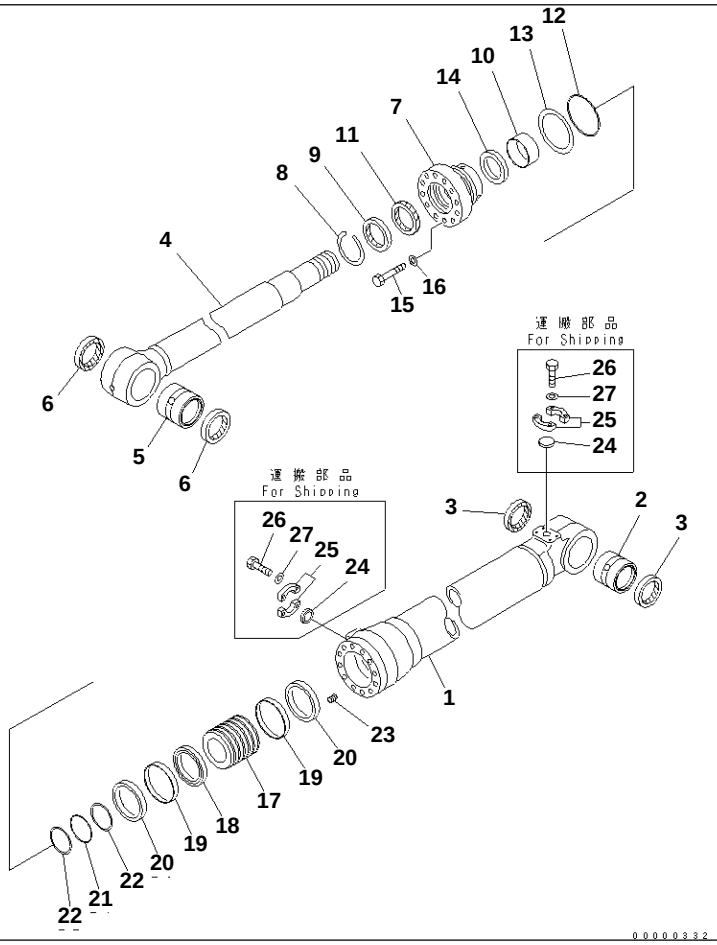

PC228US-3N-W1 S/N 30001-UP

BOOM ADJUST CYLINDER (FOR 2-PIECE BOOM) (YELLOW)

Item	Part No.	Description	Qty	Options
	707-01-0X530	CYLINDER ASS'Y,(FINAL COATING)	1	SN:30001--
1	707-13-18660	· CYLINDER	1	SN:30001--
2	707-76-11220	· BUSHING	1	SN:30001--
3	07145-00110	· SEAL,DUST (KIT)	2	SN:30001--
4	707-58-12430	· ROD,PISTON	1	SN:30001--
5	707-76-11220	· BUSHING	1	SN:30001--
6	07145-00110	· SEAL,DUST (KIT)	2	SN:30001--
7	707-27-18960	· HEAD,CYLINDER	1	SN:30001--
8	07179-13136	· RING,SNAP	1	SN:30001--
9	195-63-93170	· SEAL,DUST (KIT)	1	SN:30001--
10	707-52-90980	· BUSHING	1	SN:30001--
11	707-51-12030	· PACKING,ROD (KIT)	1	SN:30001--
12	07000-15175	· O-RING (KIT)	1	SN:30001--
13	707-35-91840	· RING,BACK-UP (KIT)	1	SN:30001--
14	707-51-12640	· RING,BUFFER (KIT)	1	SN:30001--
15	01011-82400	· BOLT	12	SN:30001--
16	707-88-75410	· WASHER	12	SN:30001--
17	707-36-18520	· PISTON	1	SN:30001--
18	707-44-18280	· RING,PISTON (KIT)	1	SN:30001--
19	707-39-18830	· RING,WEAR (KIT)	2	SN:30001--
20	707-44-18920	· RING	2	SN:30001--
21	07000-15110	· O-RING (KIT)	1	SN:30001--
22	07001-05110	· RING,BACK-UP (KIT)	2	SN:30001--
23	01310-01225	· SCREW	1	SN:30001--
24	707-88-33040	· CAP,(FOR SHIPPING)	2	SN:30001--
25	07371-31049	· FLANGE,(FOR SHIPPING)	4	SN:30001--
26	07372-21035	· BOLT,(FOR SHIPPING)	8	SN:30001--

https://truckmanualshub.com/

BOOM ADJUST CYLINDER (FOR 2-PIECE BOOM) (YELLOW)

Item	Part No.	Description	Qty	Options
27	01643-51032	· WASHER,(FOR SHIPPING)	8	SN:30001--
SERVICE KIT				
	707-99-68730	SERVICE KIT	1	SN:30001--

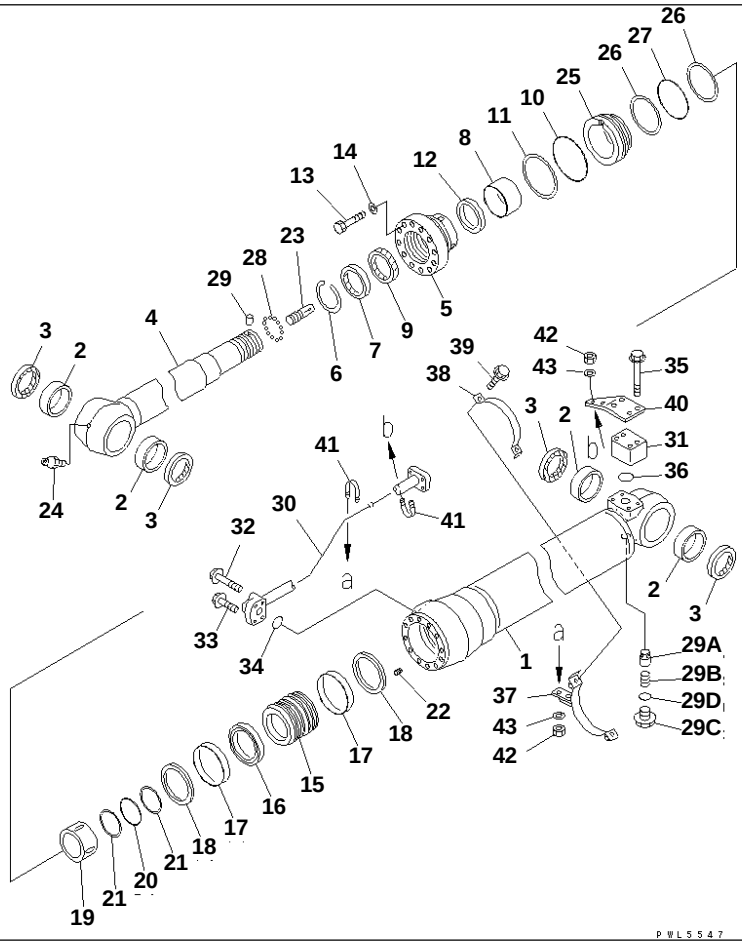

Ref. Y1620-11A0 Page 450230

PC228US-3N-W1 S/N 30001-UP
ARM CYLINDER (YELLOW)

Item	Part No.	Description	Qty	Options
G-1	(⊙707-01-XZ841)	CYLINDER GROUP,(FINAL COATING)	1	SN:30001--
==========				
	707-01-0A311	CYLINDER ASS'Y	1	SN:30001--
1	707-13-13540	· CYLINDER	1	SN:30001--
2	707-76-80470	· BUSHING	4	SN:30001--
3	07145-00080	· SEAL,DUST (KIT)	4	SN:30001--
4	707-58-95162	· ROD,PISTON	1	SN:30001--
5	707-27-13961	· HEAD,CYLINDER	1	SN:30001--
6	07179-13109	· RING,SNAP	1	SN:30001--
7	707-56-95510	· SEAL,DUST (KIT)	1	SN:30001--
8	707-52-90720	· BUSHING	1	SN:30001--
9	707-51-95030	· PACKING,ROD (KIT)	1	SN:30001--
10	07000-15125	· O-RING (KIT)	1	SN:30001--
11	707-35-91370	· RING,BACK-UP (KIT)	1	SN:30001--
12	707-51-95640	· RING,BUFFER (KIT)	1	SN:30001--
13	01010-81875	· BOLT	12	SN:30001--
14	707-41-11840	· WASHER	12	SN:30001--
15	707-36-13771	· PISTON	1	SN:30001--
16	707-44-13280	· RING,PISTON (KIT)	1	SN:30001--
17	707-39-13530	· RING,WEAR (KIT)	2	SN:30001--
18	707-44-13920	· RING	2	SN:30001--
19	707-71-61070	· PLUNGER	1	SN:30001--
20	07000-15085	· O-RING (KIT)	1	SN:30001--
21	707-35-90960	· RING,BACK-UP (KIT)	2	SN:30001--
22	01310-01216	· SCREW	1	SN:30001--
23	707-71-70270	· PLUNGER	1	SN:30001--
24	07020-00000	· FITTING,GREASE	1	SN:30001--

https://truckmanualshub.com/

ARM CYLINDER (YELLOW)

Item	Part No.	Description	Qty	Options
25	707-71-32770	· COLLAR	1	SN:30001--
26	707-35-91370	· RING,BACK-UP (KIT)	2	SN:30001--
27	07000-15125	· O-RING (KIT)	1	SN:30001--
28	04260-00635	· BALL	12	SN:30001--
29	707-71-91270	· CAP	1	SN:30001--
29A	707-83-13010	· VALVE	1	SN:30001--
29B	07750-01628	· SPRING	1	SN:30001--
29C	707-87-14070	· PLUG	1	SN:30001--
29D	07002-12034	· O-RING (KIT)	1	SN:30001--
30	707-86-66270	TUBE	1	SN:30001--
31	20D-62-17860	ELBOW	1	SN:30001--
32	01435-01055	BOLT	2	SN:30001--
33	01435-01040	BOLT	2	SN:30001--
34	07000-13030	O-RING (KIT)	1	SN:30001--
35	01435-01075	BOLT	4	SN:30001--
36	07000-13035	O-RING (KIT)	1	SN:30001--
37	707-88-22530	BRACKET	1	SN:30001--
38	707-88-21261	BAND	1	SN:30001--
39	01435-01030	BOLT	2	SN:30001--
40	707-88-11560	PLATE	1	SN:30001--
41	07283-22738	CLIP	2	SN:30001--
42	01599-01011	NUT	4	SN:30001--
43	01643-31032	WASHER	4	SN:30001--
==========				
	707-99-57160	SERVICE KIT	1	SN:30001--

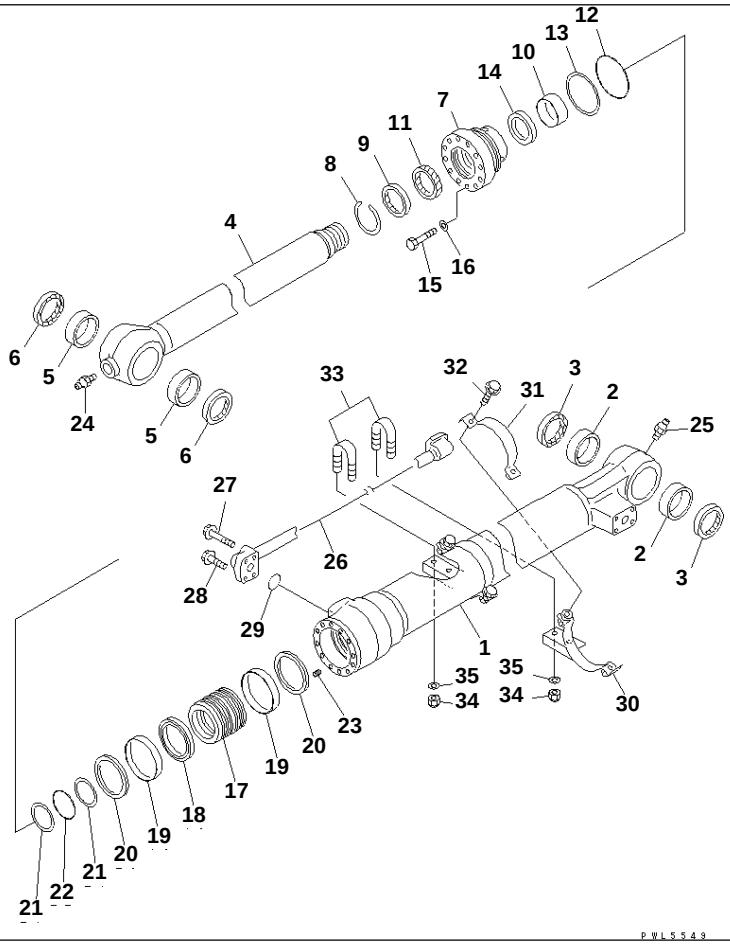

PC228US-3N-W1 S/N 30001-UP

BUCKET CYLINDER(YELLOW)

Item	Part No.	Description	Qty	Options
G-1	(⊙707-01-XZ850)	CYLINDER GROUP	1	SN:30001--
==========				
	707-01-0A320	CYLINDER ASS'Y	1	SN:30001--
1	707-13-11560	· CYLINDER	1	SN:30001--
2	707-76-70690	· BUSHING	2	SN:30001--
3	07145-00070	· SEAL,DUST (KIT)	2	SN:30001--
4	707-58-80651	· ROD,PISTON	1	SN:30001--
5	707-76-70690	· BUSHING	2	SN:30001--
6	20Y-70-23220	· SEAL,DUST (KIT)	2	SN:30001--
7	707-27-11981	· HEAD,CYLINDER	1	SN:30001--
8	07179-13094	· RING,SNAP	1	SN:30001--
9	195-63-92190	· SEAL,DUST (KIT)	1	SN:30001--
10	707-52-90560	· BUSHING	1	SN:30001--
11	707-51-80030	· PACKING,ROD (KIT)	1	SN:30001--
12	07000-15105	· O-RING (KIT)	1	SN:30001--
13	707-35-91150	· RING,BACK-UP (KIT)	1	SN:30001--
14	707-51-80640	· RING,BUFFER (KIT)	1	SN:30001--
15	01010-81670	· BOLT	12	SN:30001--
16	01643-51645	· WASHER	12	SN:30001--
17	707-36-11851	· PISTON	1	SN:30001--
18	707-44-11280	· RING,PISTON (KIT)	1	SN:30001--
19	707-39-11530	· RING,WEAR (KIT)	2	SN:30001--
20	707-44-11920	· RING	2	SN:30001--
21	707-35-90360	· RING (KIT)	2	SN:30001--
22	07000-15070	· O-RING (KIT)	1	SN:30001--
23	01310-01216	· SCREW	1	SN:30001--
24	07020-00000	· FITTING,GREASE	1	SN:30001--

Ref. Y1620-41A0 Page 450240

https://truckmanualshub.com/

BUCKET CYLINDER(YELLOW)

Item	Part No.	Description	Qty	Options
25	07020-00000	· FITTING,GREASE	1	SN:30001--
26	707-86-66280	TUBE	1	SN:30001--
27	01435-01055	BOLT	2	SN:30001--
28	01435-01040	BOLT	2	SN:30001--
29	07000-13030	O-RING (KIT)	1	SN:30001--
30	707-88-22570	BRACKET	2	SN:30001--
31	707-88-21271	BAND	2	SN:30001--
32	01435-01030	BOLT	4	SN:30001--
33	07283-22738	CLIP	2	SN:30001--
34	01599-01011	NUT	4	SN:30001--
35	01643-31032	WASHER	4	SN:30001--
==========				
	707-99-45230	SERVICE KIT	1	SN:30001--

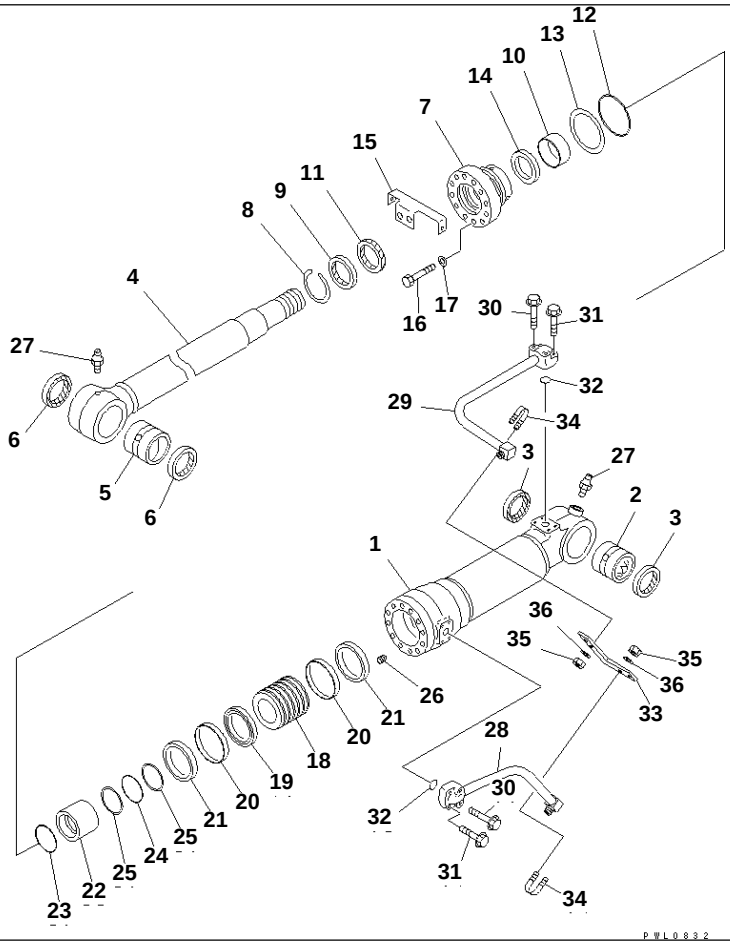

PC228US-3N-W1 S/N 30001-UP
BLADE CYLINDER

Item	Part No.	Description	Qty	Options
G-1	(⊙22U-63-X9180)	CYLINDER GROUP,L.H.	1	SN:30001--
G-2	(⊙22U-63-X9190)	CYLINDER GROUP,R.H.	1	SN:30001--
==========				
	22U-63-02550	CYLINDER ASS'Y,L.H.	1	SN:30001--
	22U-63-02560	CYLINDER ASS'Y,R.H.	1	SN:30001--
1	22U-63-92140	· CYLINDER,L.H.	1	SN:30001--
	22U-63-92240	· CYLINDER,R.H.	1	SN:30001--
2	707-76-90130	· BUSHING	1	SN:30001--
3	07145-00090	· SEAL,DUST (KIT)	2	SN:30001--
4	22U-63-92120	· ROD,PISTON	1	SN:30001--
5	707-76-10130	· BUSHING	1	SN:30001--
6	07145-00100	· SEAL,DUST (KIT)	2	SN:30001--
7	707-27-14920	· HEAD,CYLINDER	1	SN:30001--
8	07179-13114	· RING,SNAP	1	SN:30001--
9	176-63-56170	· SEAL,DUST (KIT)	1	SN:30001--
10	707-52-90780	· BUSHING	1	SN:30001--
11	707-51-10030	· PACKING,ROD (KIT)	1	SN:30001--
12	07000-15130	· O-RING (KIT)	1	SN:30001--
13	707-35-91420	· RING,BACK-UP (KIT)	1	SN:30001--
14	707-51-10630	· RING,BUFFER (KIT)	1	SN:30001--
15	707-88-32230	· BRACKET,L.H.	1	SN:30001--
	707-88-32240	· BRACKET,R.H.	1	SN:30001--
16	01010-81875	· BOLT	12	SN:30001--
17	707-41-11840	· WASHER	12	SN:30001--
18	707-36-14410	· PISTON	1	SN:30001--
19	707-44-14180	· RING,PISTON (KIT)	1	SN:30001--
20	707-39-14820	· RING,WEAR (KIT)	2	SN:30001--

https://truckmanualshub.com/

BLADE CYLINDER

Item	Part No.	Description	Qty	Options
21	707-44-14910	· RING	2	SN:30001--
22	707-81-10150	· COLLAR	1	SN:30001--
23	07000-15100	· O-RING	1	SN:30001--
24	07000-15090	· O-RING (KIT)	1	SN:30001--
25	07001-05090	· RING,BACK-UP (KIT)	2	SN:30001--
26	01310-01216	· SCREW	1	SN:30001--
27	07020-00000	· FITTING	2	SN:30001--
28	22U-63-92170	TUBE,L.H.	1	SN:30001--
	22U-63-92270	TUBE,R.H.	1	SN:30001--
29	22U-63-92180	TUBE,L.H.	1	SN:30001--
	22U-63-92280	TUBE,R.H.	1	SN:30001--
30	01435-01055	BOLT	4	SN:30001--
31	01435-01040	BOLT	4	SN:30001--
32	07000-13030	O-RING (KIT)	2	SN:30001--
33	707-88-31520	PLATE,L.H.	1	SN:30001--
34	07283-32738	CLIP	2	SN:30001--
35	01599-01011	NUT	4	SN:30001--
36	01643-31032	WASHER	4	SN:30001--
==========				
	707-99-58390	SERVICE KIT	2	SN:30001--

https://truckmanualshub.com/

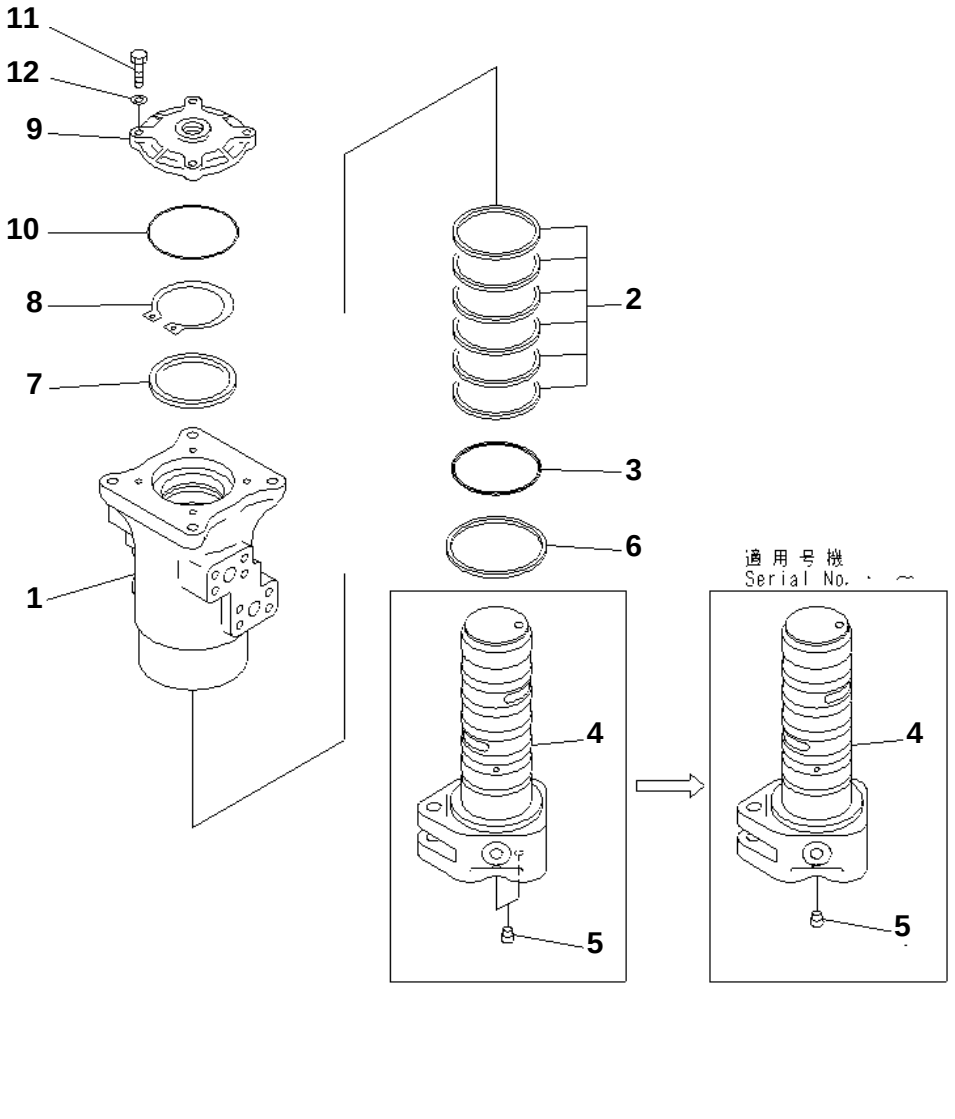

PC228US-3N-W1 S/N 30001-UP

SWIVEL JOINT

Item	Part No.	Description	Qty	Options
	703-08-33610	SWIVEL JOINT ASS'Y	1	SN:30001--
1	☆	・ ROTOR	1	SN:30001--
2	703-08-95620	・ SEAL	6	SN:30001--
3	07000-15080	・ O-RING	1	SN:30001--
4	☆	・ SHAFT	1	SN:30001--
5	703-13-98930	・・ PLUG	1	SN:.--
	703-13-98930	・・ PLUG	2	SN:30001--.
6	703-09-98130	・ SEAL	1	SN:30001--
7	703-08-94510	・ RING	1	SN:30001--
8	04064-07525	・ RING,SNAP	1	SN:30001--
9	☆	・ COVER	1	SN:30001--
10	07000-12105	・ O-RING	1	SN:30001--
11	01010-80835	・ BOLT	4	SN:30001--
12	01643-30823	・ WASHER	4	SN:30001--

Ref. Y1627-01A0 Page 450260

https://truckmanualshub.com/

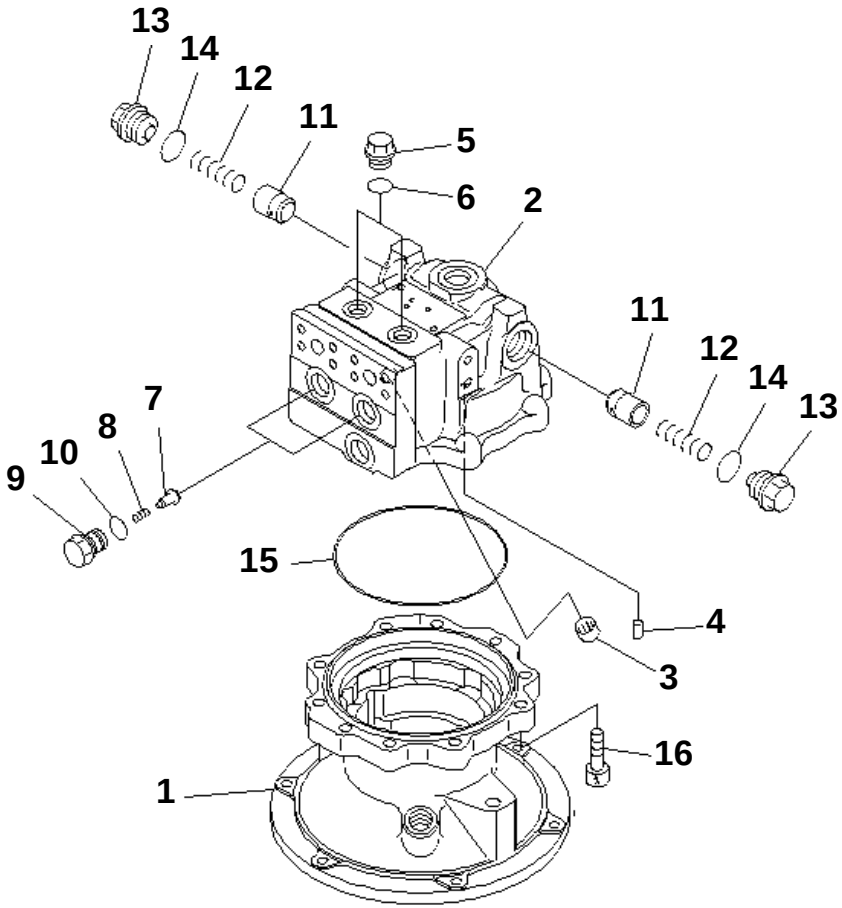

PC228US-3N-W1 S/N 30001-UP

SWING MOTOR (1/3)

Item	Part No.	Description	Qty	Options
	706-7G-01011	MOTOR ASS'Y	1	SN:30001--
THIS ASSEMBLY CONSISTS OF ALL PARTS SHOWN IN FIGS.Y1640-01A0 TO Y1640-03A0.				
	706-7G-03010	· MOTOR SUB ASS'Y	1	SN:30001--
1	(★706-7G-41110)	· · CASE	1	SN:30001--
2	(★706-7G-71111)	· · HOUSING	1	SN:30001--
3	(★706-7G-40010)	· · BEARING	1	SN:30001--
4	(★706-75-42820)	· · PIN,DOWEL	1	SN:30001--
5	706-8E-14191	· · PLUG	2	SN:30001--
6	07002-11823	· · O-RING	2	SN:30001--
7	709-25-11650	· · VALVE,CHECK	2	SN:30001--
8	709-25-11361	· · SPRING	2	SN:30001--
9	709-25-11640	· · PLUG	2	SN:30001--
10	07000-12020	· · O-RING	2	SN:30001--
11	706-75-74540	· · VALVE	2	SN:30001--
12	706-7G-71550	· · SPRING	2	SN:30001--
13	706-75-74850	· · PLUG	2	SN:30001--
14	07002-13334	· · O-RING	2	SN:30001--
15	(★706-75-42370)	· · O-RING	1	SN:30001--
16	01252-61245	· · BOLT	10	SN:30001--

Ref. Y1640-01A0 Page 450270

https://truckmanualshub.com/

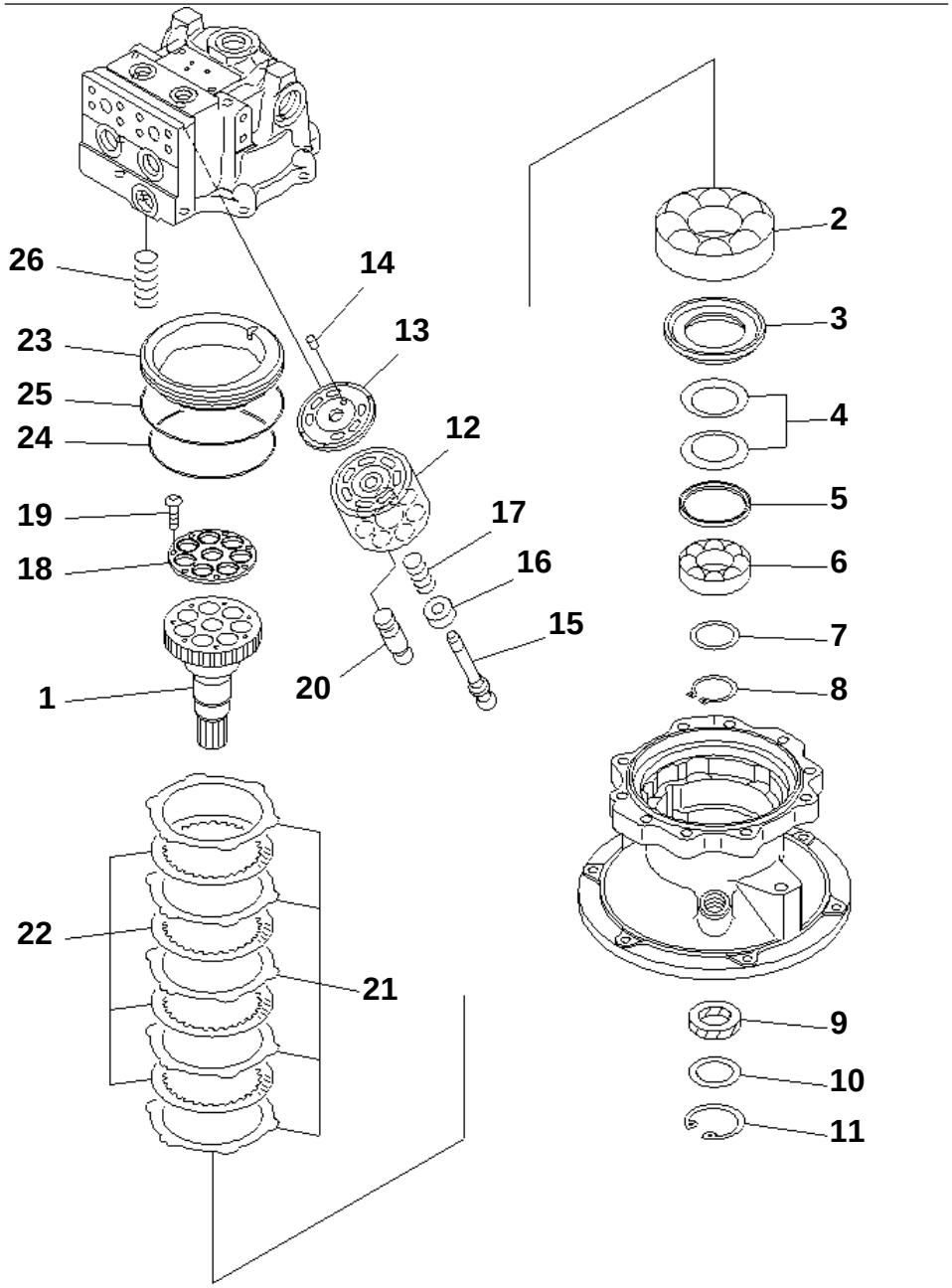

PC228US-3N-W1 S/N 30001-UP

SWING MOTOR (2/3)

Item	Part No.	Description	Qty	Options
	(706-7G-01011)	MOTOR ASS'Y	1	SN:30001--
THIS ASSEMBLY CONSISTS OF ALL PARTS SHOWN IN FIGS.Y1640-01A0 TO Y1640-03A0.				
	(706-7G-03010)	· MOTOR SUB ASS'Y	1	SN:30001--
1	(★706-7G-41610)	· · SHAFT,DRIVE	1	SN:30001--
2	(★706-75-42880)	· · BEARING	1	SN:30001--
3	(★706-75-43810)	· · SPACER	1	SN:30001--
4	(★706-7E-11260)	· · SPRING	2	SN:30001--
5	(★706-7E-11270)	· · SEAT	1	SN:30001--
6	(★706-76-40890)	· · BEARING	1	SN:30001--
7	(★706-75-05040)	· · SPACER KIT	1	SN:30001--
	☆	· · · SPACER¤ 3.1MM	1	SN:30001--
	☆	· · · SPACER¤ 3.4MM	1	SN:30001--
	☆	· · · SPACER¤ 3.7MM	1	SN:30001--
8	04064-04518	· · RING,SNAP	1	SN:30001--
9	706-7E-11280	· · SEAL,OIL	1	SN:30001--
10	706-75-43720	· · SPACER	1	SN:30001--
11	04065-06220	· · RING	1	SN:30001--
12	(★706-7G-41210)	· · BLOCK,CYLINDER	1	SN:30001--
13	(★706-7G-41710)	· · PLATE,VALVE	1	SN:30001--
14	(★706-75-43750)	· · PIN,DOWEL	1	SN:30001--
15	(★706-7G-41120)	· · SHAFT,CENTER	1	SN:30001--
16	(★706-7G-41130)	· · RING,CENTER	1	SN:30001--
17	(★706-7G-41140)	· · SPRING	1	SN:30001--
	(★706-7G-05010)	· · RETAINER KIT	1	SN:30001--
18	☆	· · · RETAINER	1	SN:30001--
19	☆	· · · SCREW	7	SN:30001--
20	(★706-7G-41160)	· · PISTON SUB ASS'Y	7	SN:30001--
21	(★706-7G-91340)	· · PLATE	5	SN:30001--
22	(★706-7G-91350)	· · DISC	4	SN:30001--
23	(★706-7G-91110)	· · PISTON,BRAKE	1	SN:30001--
24	(★706-77-40370)	· · O-RING	1	SN:30001--
25	(★708-8F-31610)	· · O-RING	1	SN:30001--
26	(★706-7G-91360)	· · SPRING	6	SN:30001--

Ref. Y1640-02A0 Page 450280

https://truckmanualshub.com/

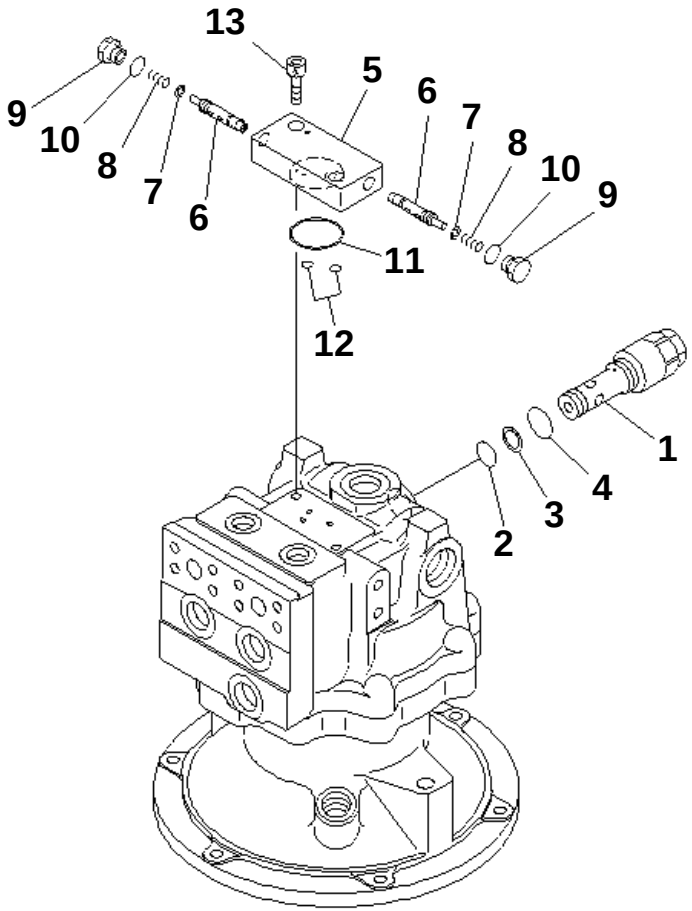

00006995

PC228US-3N-W1 S/N 30001-UP

SWING MOTOR (3/3)

Item	Part No.	Description	Qty	Options
	(706-7G-01011)	MOTOR ASS'Y	1	SN:30001--
THIS ASSEMBLY CONSISTS OF ALL PARTS SHOWN IN FIGS.Y1640-01A0 TO Y1640-03A0.				
1	702-75-01250	· VALVE ASS'Y,RELIEF	1	SN:30001--
2	07000-F2020	· · O-RING	1	SN:30001--
3	07001-02020	· · RING,BACK-UP	1	SN:30001--
4	07002-13034	· · O-RING	1	SN:30001--
	702-15-77000	· VALVE ASS'Y	1	SN:30001--
5	☆	· · BODY	1	SN:30001--
6	☆	· · SPOOL	2	SN:30001--
7	709-70-71610	· · SEAL	2	SN:30001--
8	702-15-71130	· · SPRING	2	SN:30001--
9	702-15-71140	· · PLUG	2	SN:30001--
10	07002-01423	· · O-RING	2	SN:30001--
11	07000-03042	· O-RING	1	SN:30001--
12	07000-11009	· O-RING	2	SN:30001--
13	01252-60825	· BOLT	2	SN:30001--

Ref. Y1640-03A0 Page 450290

https://truckmanualshub.com/

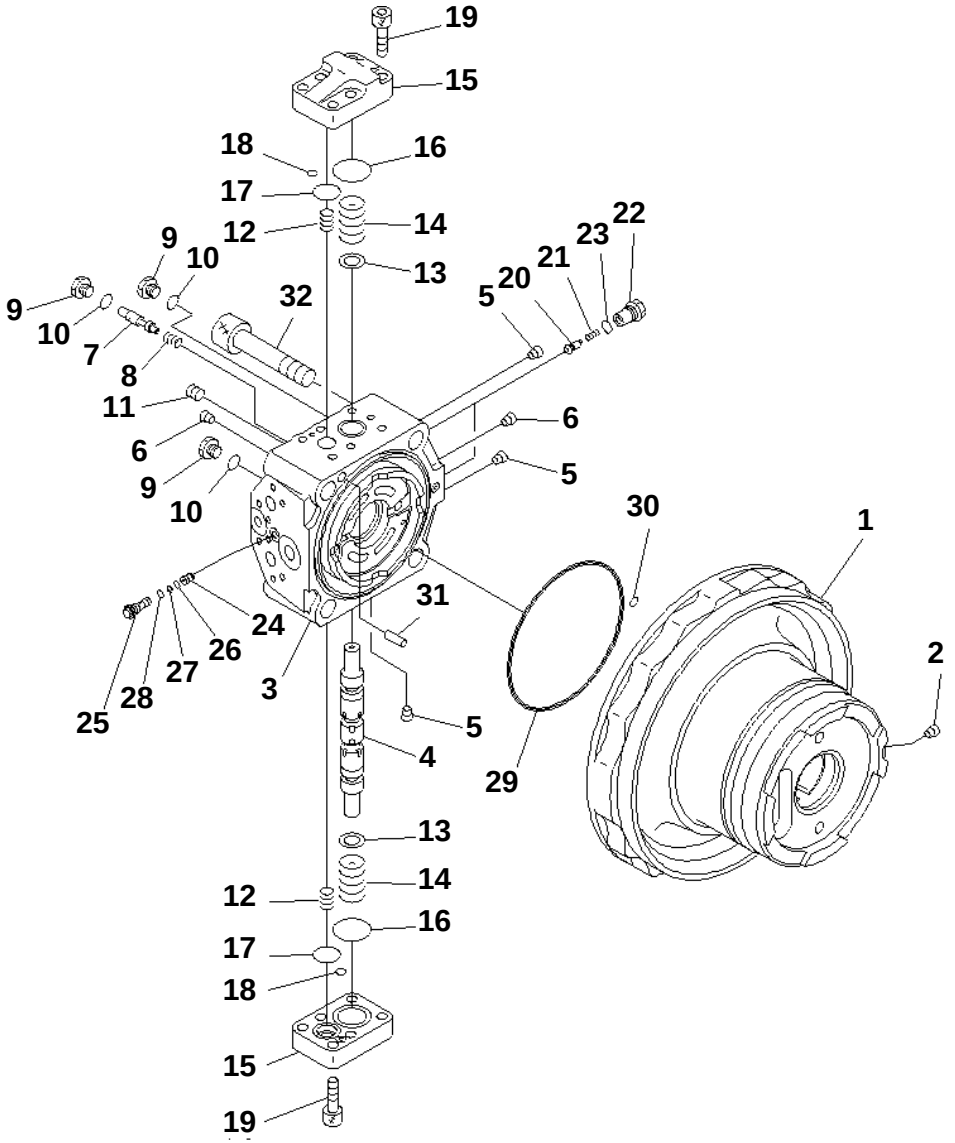

PC228US-3N-W1 S/N 30001-UP

TRAVEL MOTOR (1/3)

Item	Part No.	Description	Qty	Options
	708-8F-00220	MOTOR ASS'Y	1	SN:30001--
THIS ASSEMBLY CONSISTS OF ALL PARTS SHOWN IN FIGS.Y1641-01A0 TO Y1641-03A0.				
	(★708-8F-04660)	· CASE SUB ASS'Y	1	SN:30001--
1	☆	· · CASE,MOTOR	1	SN:30001--
2	☆	· · PLUG	1	SN:30001--
	(★708-8F-04210)	· END COVER SUB ASS'Y	1	SN:30001--
3	☆	· · COVER,END	1	SN:30001--
4	☆	· · SPOOL	1	SN:30001--
5	☆	· · PLUG	3	SN:30001--
6	☆	· · PLUG	2	SN:30001--
7	☆	· · SPOOL	1	SN:30001--
8	(★708-8F-34220)	· · SPRING	1	SN:30001--
9	708-8H-11530	· PLUG	3	SN:30001--
10	07002-11423	· O-RING	3	SN:30001--
11	20B-27-11210	· BLEEDER	1	SN:30001--
12	708-8F-36611	· SPRING	2	SN:30001--
13	☆	· RING	2	SN:30001--
14	708-8H-36121	· SPRING	2	SN:30001--
15	708-8F-36311	· COVER	2	SN:30001--
16	07000-13040	· O-RING	2	SN:30001--
17	700-93-11320	· O-RING	2	SN:30001--
18	07000-11009	· O-RING	2	SN:30001--
19	01252-61235	· BOLT	12	SN:30001--
20	708-8F-34120	· VALVE	2	SN:30001--
21	722-10-91130	· SPRING	2	SN:30001--
22	708-8F-34110	· PLUG	2	SN:30001--
23	07002-11823	· O-RING	2	SN:30001--
24	708-8E-16180	· VALVE	1	SN:30001--
25	708-8F-31660	· PLUG	1	SN:30001--
26	07000-11006	· O-RING	1	SN:30001--
27	07001-01006	· RING	1	SN:30001--
28	07002-11223	· O-RING	1	SN:30001--
29	708-8F-31610	· O-RING	1	SN:30001--
30	07000-11009	· O-RING	1	SN:30001--
31	(★04020-01228)	· PIN	1	SN:30001--
32	708-8F-31210	· BOLT	4	SN:30001--

Ref. Y1641-01A0 Page 450300

https://truckmanualshub.com/

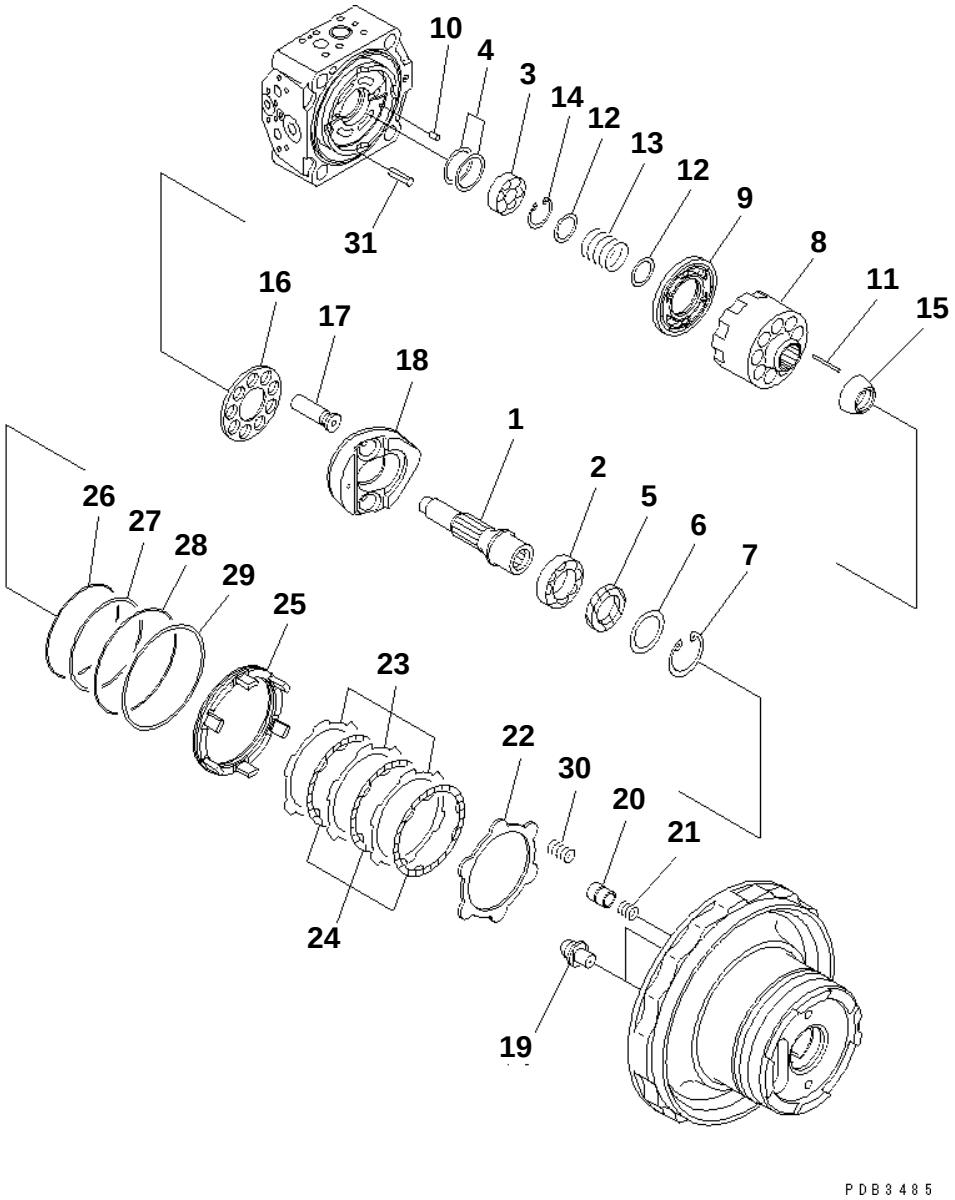

PC228US-3N-W1 S/N 30001-UP

TRAVEL MOTOR (2/3)

Item	Part No.	Description	Qty	Options
	(708-8F-00220)	MOTOR ASS'Y	1	SN:30001--
THIS ASSEMBLY CONSISTS OF ALL PARTS SHOWN IN FIGS.Y1641-01A0 TO Y1641-03A0.				
1	(★708-8F-32121)	· SHAFT	1	SN:30001--
2	(★708-8F-12151)	· BEARING	1	SN:30001--
3	(★708-7L-12140)	· BEARING	1	SN:30001--
4	(★708-7L-05010)	· SPACER KIT	1	SN:30001--
	☆	· · SPACER¤ 1.5MM	1	SN:30001--
	☆	· · SPACER¤ 1.6MM	1	SN:30001--
	☆	· · SPACER¤ 1.7MM	1	SN:30001--
	☆	· · SPACER¤ 1.8MM	1	SN:30001--
	☆	· · SPACER¤ 1.9MM	1	SN:30001--
	☆	· · SPACER¤ 2.0MM	1	SN:30001--
5	706-7G-11291	· SEAL,OIL	1	SN:30001--
6	708-8F-12230	· SPACER¤ 3.2MM	1	SN:30001--
7	04065-07225	· RING	1	SN:30001--
8	☆	· BLOCK,CYLINDER	1	SN:30001--
9	☆	· PLATE,VALVE	1	SN:30001--
10	☆	· PIN	1	SN:30001--
11	(★708-8F-33360)	· PIN	3	SN:30001--
12	(★708-7L-13140)	· SEAT	2	SN:30001--
13	(★708-8F-33160)	· SPRING	1	SN:30001--
14	(★04065-04818)	· RING,----------	1	SN:30001--
15	(★708-8F-33350)	· GUIDE,RETAINER	1	SN:30001--
16	(★708-2L-33350)	· RETAINER,SHOE	1	SN:30001--
17	(★708-8F-33310)	· PISTON SUB ASS'Y	9	SN:30001--
18	(★708-8F-33471)	· CAM,ROCKER	1	SN:30001--
19	(★708-8F-33710)	· BALL,RETAINER	2	SN:30001--
20	(★708-8F-34141)	· PISTON	1	SN:30001--
21	(★708-8F-34150)	· SPRING	1	SN:30001--
22	(★708-8F-35110)	· PLATE	1	SN:30001--
23	(★708-8F-35130)	· PLATE	3	SN:30001--
24	(★708-8F-35120)	· DISC	3	SN:30001--
25	(★708-8F-35140)	· PISTON,BRAKE	1	SN:30001--
26	(★708-8F-35160)	· O-RING	1	SN:30001--
27	(★708-8F-35170)	· RING,BACK-UP	1	SN:30001--
28	(★708-8F-35180)	· O-RING	1	SN:30001--
29	(★708-8F-35190)	· RING,BACK-UP	1	SN:30001--
30	(★708-8F-35150)	· SPRING	6	SN:30001--
31	(★04025-00324)	· PIN,SPRING	1	SN:30001--

Ref. Y1641-02A0 Page 450310

https://truckmanualshub.com/

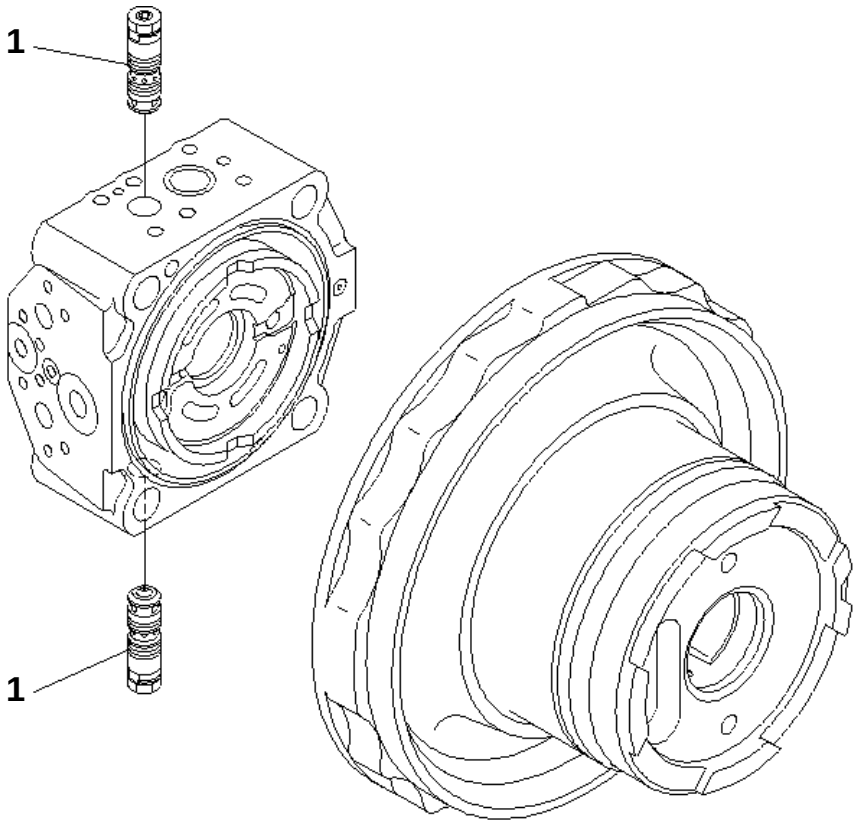

00006994

PC228US-3N-W1 S/N 30001-UP

TRAVEL MOTOR (3/3)

Item	Part No.	Description	Qty	Options
	(708-8F-00220)	MOTOR ASS'Y	1	SN:30001--
THIS ASSEMBLY CONSISTS OF ALL PARTS SHOWN IN FIGS.Y1641-01A0 TO Y1641-03A0.				
1	702-73-02112	· VALVE ASS'Y,RELIEF	2	SN:30001--

Ref. Y1641-03A0 Page 450320

https://truckmanualshub.com/

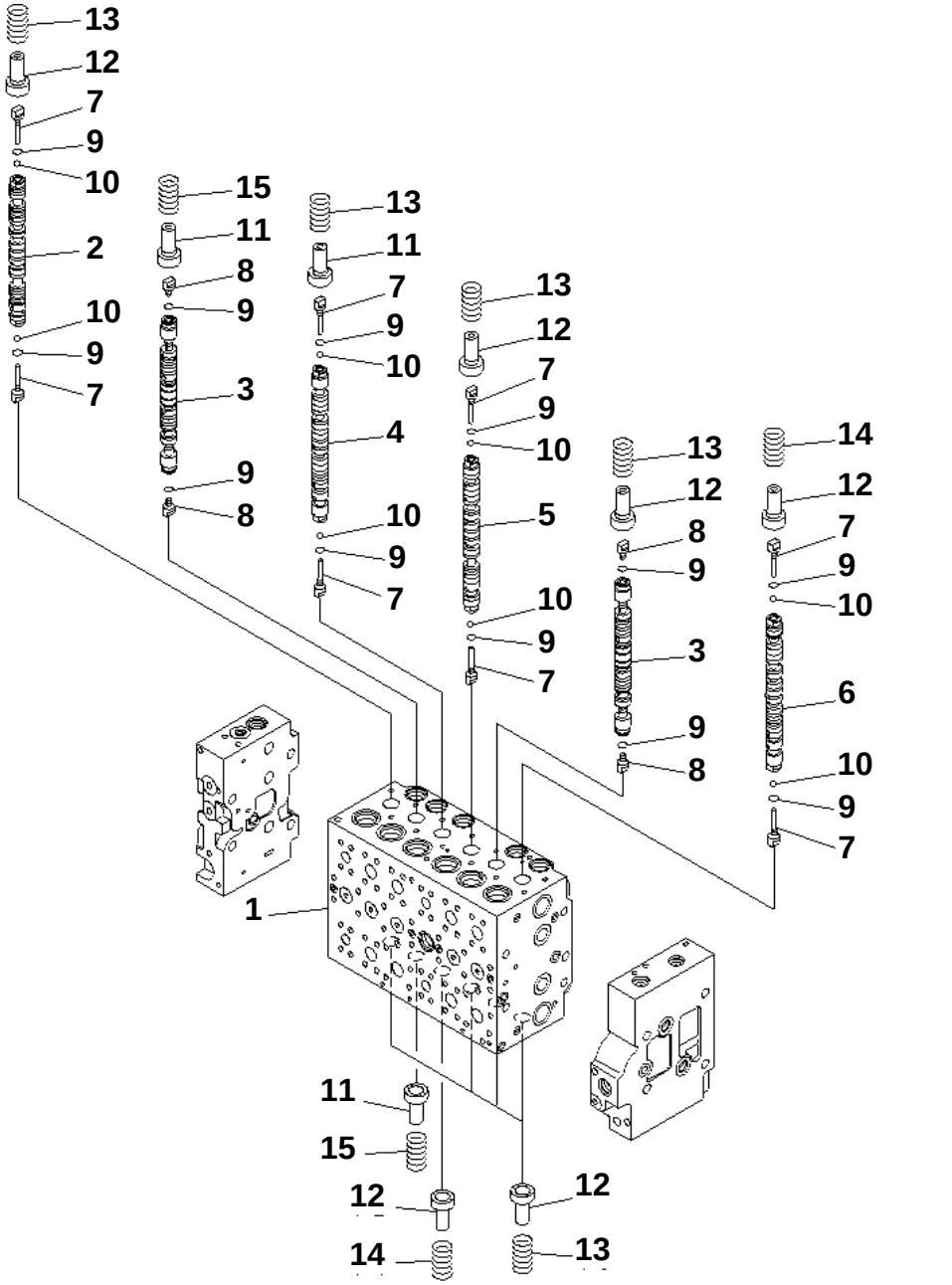

PC228US-3N-W1 S/N 30001-UP

MAIN VALVE (1/16)

Item	Part No.	Description	Qty	Options
	723-46-20104	VALVE ASS'Y	1	SN:30001--
THIS ASSEMBLY CONSISTS OF ALL PARTS SHOWN IN FIGS.Y1660-01A0 T0 Y1660-16A0.				
	☆	· BODY SUB ASS'Y	1	SN:30001--
1	☆	· · BLOCK,VALVE	1	SN:30001--
2	☆	· · SPOOL	1	SN:30001--
3	☆	· · SPOOL	2	SN:30001--
4	☆	· · SPOOL	1	SN:30001--
5	☆	· · SPOOL	1	SN:30001--
6	☆	· · SPOOL	1	SN:30001--
7	723-46-15130	· · PLUG	8	SN:30001--
8	723-46-15140	· · PLUG	4	SN:30001--
9	07002-10823	· · O-RING	12	SN:30001--
10	708-7T-16460	· · BALL	8	SN:30001--
11	723-46-15120	· · RETAINER	3	SN:30001--
12	723-46-15690	· · RETAINER	9	SN:30001--
13	723-46-14110	· · SPRING	8	SN:30001--
14	723-46-14270	· · SPRING	2	SN:30001--
15	723-46-14131	· · SPRING	2	SN:30001--

Ref. Y1660-01A0 Page 450330

https://truckmanualshub.com/

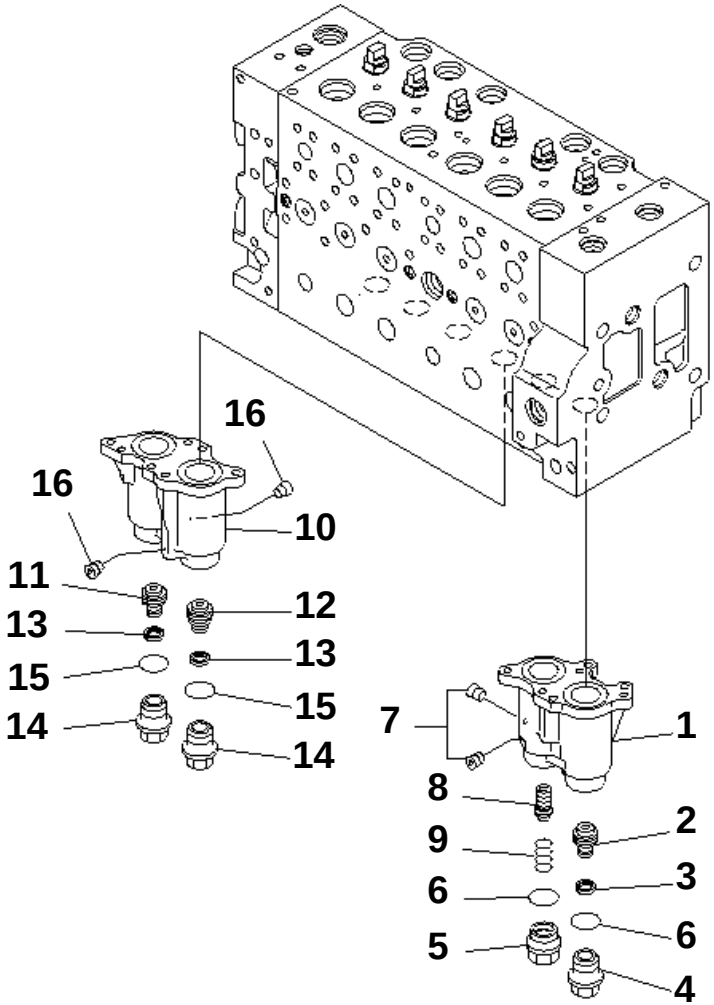

PJ5J170

PC228US-3N-W1 S/N 30001-UP

MAIN VALVE (2/16)

Item	Part No.	Description	Qty	Options
	(723-46-20104)	VALVE ASS'Y	1	SN:30001--
THIS ASSEMBLY CONSISTS OF ALL PARTS SHOWN IN FIGS.Y1660-01A0 T0 Y1660-16A0.				
	☆	· BODY SUB ASS'Y	1	SN:30001--
	723-46-17300	· · CASE SUB ASS'Y	1	SN:30001--
1	☆	· · · CASE	1	SN:30001--
2	☆	· · · PISTON	1	SN:30001--
3	☆	· · · SEAL	1	SN:30001--
4	723-46-15630	· · · PLUG	1	SN:30001--
5	723-46-17340	· · · PLUG	1	SN:30001--
6	07000-13024	· · · O-RING	2	SN:30001--
7	☆	· · · SCREW	3	SN:30001--
8	723-46-17320	· · · SPOOL	1	SN:30001--
9	723-46-17330	· · · SPRING	1	SN:30001--
	723-46-17101	· · CASE SUB ASS'Y	1	SN:30001--
10	☆	· · · CASE	1	SN:30001--
11	☆	· · · PISTON	1	SN:30001--
12	☆	· · · PISTON	1	SN:30001--
13	☆	· · · SEAL	2	SN:30001--
14	723-46-15630	· · · PLUG	2	SN:30001--
15	07000-13024	· · · O-RING	2	SN:30001--
16	☆	· · · SCREW	2	SN:30001--

Ref. Y1660-02A0 Page 450340

https://truckmanualshub.com/

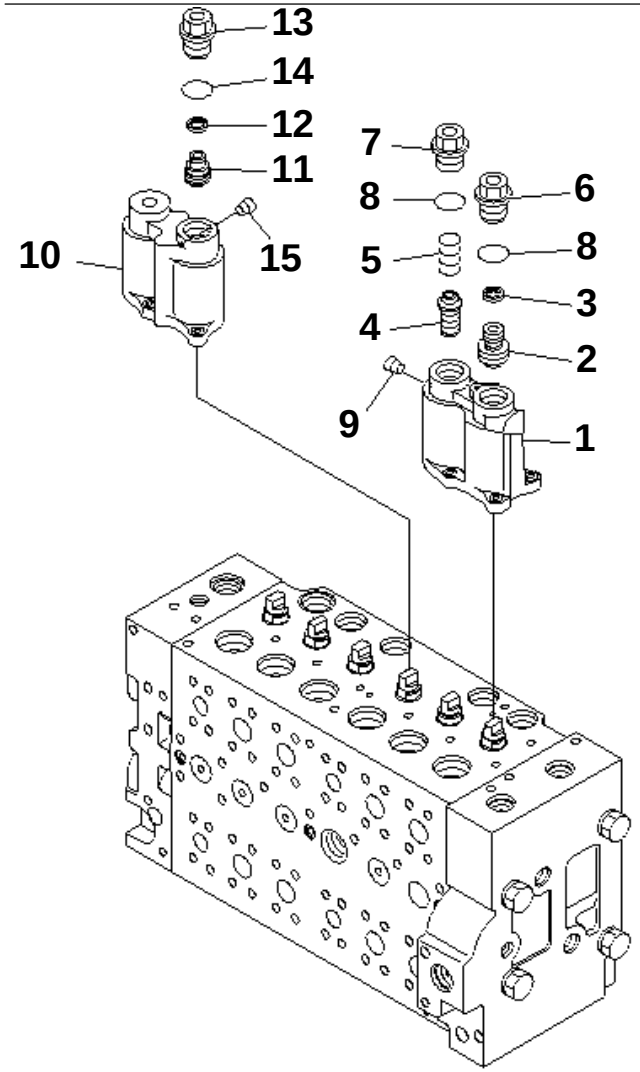

P W 5 J 4 5 3

PC228US-3N-W1 S/N 30001-UP

MAIN VALVE (3/16)

Item	Part No.	Description	Qty	Options
	(723-46-20104)	VALVE ASS'Y	1	SN:30001--
THIS ASSEMBLY CONSISTS OF ALL PARTS SHOWN IN FIGS.Y1660-01A0 T0 Y1660-16A0.				
	☆	· BODY SUB ASS'Y	1	SN:30001--
	723-46-17401	· · CASE SUB ASS'Y	1	SN:30001--
1	☆	· · · CASE	1	SN:30001--
2	☆	· · · PISTON	1	SN:30001--
3	☆	· · · SEAL	1	SN:30001--
4	723-46-17320	· · · SPOOL	1	SN:30001--
5	723-46-17330	· · · SPRING	1	SN:30001--
6	723-46-15630	· · · PLUG	1	SN:30001--
7	723-46-17340	· · · PLUG	1	SN:30001--
8	07000-13024	· · · O-RING	2	SN:30001--
9	☆	· · · SCREW	3	SN:30001--
	723-46-17203	· · CASE SUB ASS'Y	1	SN:30001--
10	☆	· · · CASE	1	SN:30001--
11	☆	· · · PISTON	1	SN:30001--
12	☆	· · · SEAL	1	SN:30001--
13	723-46-15630	· · · PLUG	1	SN:30001--
14	07000-13024	· · · O-RING	1	SN:30001--
15	☆	· · · SCREW	1	SN:30001--

Ref. Y1660-03A0 Page 450350

https://truckmanualshub.com/

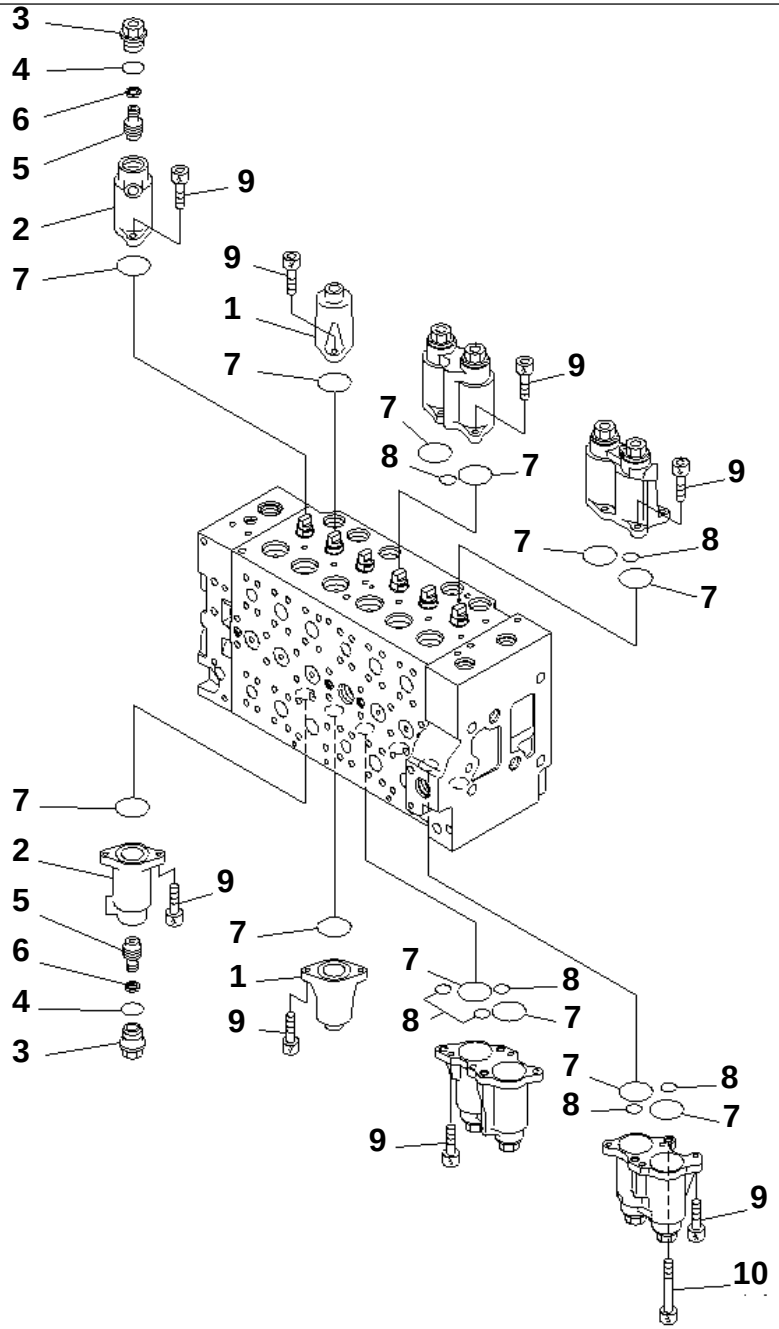

PC228US-3N-W1 S/N 30001-UP

MAIN VALVE (4/16)

Item	Part No.	Description	Qty	Options
	(723-46-20104)	VALVE ASS'Y	1	SN:30001--
THIS ASSEMBLY CONSISTS OF ALL PARTS SHOWN IN FIGS.Y1660-01A0 T0 Y1660-16A0.				
	☆	· BODY SUB ASS'Y	1	SN:30001--
1	723-46-15111	· · CASE	2	SN:30001--
2	723-46-15771	· · CASE	2	SN:30001--
3	723-46-15630	· · PLUG	2	SN:30001--
4	07000-13024	· · O-RING	2	SN:30001--
5	☆	· · PISTON	2	SN:30001--
6	☆	· · SEAL	2	SN:30001--
7	07430-71380	· · O-RING	12	SN:30001--
8	702-16-53920	· · O-RING	7	SN:30001--
9	01252-60820	· · BOLT	23	SN:30001--
10	723-46-17350	· · BOLT	1	SN:30001--

Ref. Y1660-04A0 Page 450360

https://truckmanualshub.com/

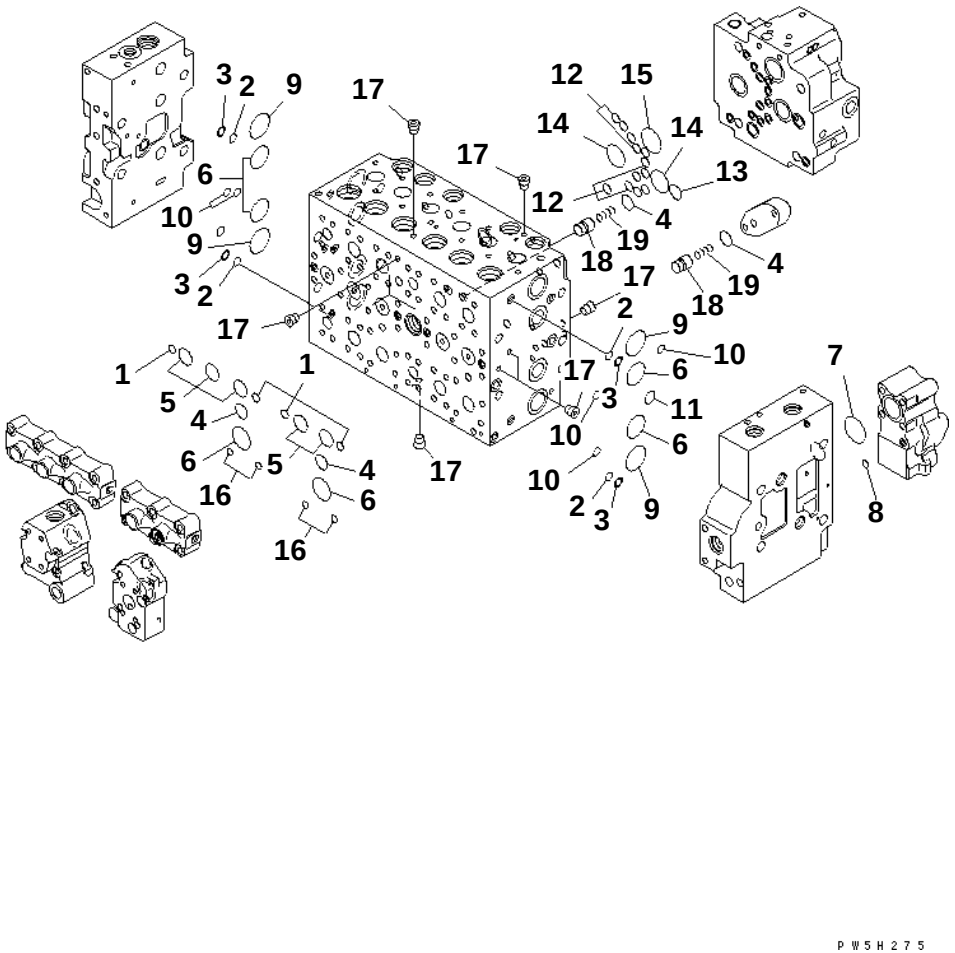

PC228US-3N-W1 S/N 30001-UP

MAIN VALVE (5/16)

Item	Part No.	Description	Qty	Options
	(723-46-20104)	VALVE ASS'Y	1	SN:30001--
THIS ASSEMBLY CONSISTS OF ALL PARTS SHOWN IN FIGS.Y1660-01A0 T0 Y1660-16A0.				
	☆	· BODY SUB ASS'Y	1	SN:30001--
1	07000-12012	· · O-RING	4	SN:30001--
2	723-11-19130	· · O-RING	4	SN:30001--
3	723-46-17520	· · RING,BACK-UP	4	SN:30001--
4	07000-12021	· · O-RING	4	SN:30001--
5	07000-13028	· · O-RING	5	SN:30001--
6	07000-13032	· · O-RING	6	SN:30001--
7	07000-13038	· · O-RING	1	SN:30001--
8	07000-11010	· · O-RING	1	SN:30001--
9	723-46-17510	· · O-RING	4	SN:30001--
10	723-46-17530	· · O-RING	5	SN:30001--
11	723-11-18150	· · O-RING	2	SN:30001--
12	07000-12012	· · O-RING	12	SN:30001--
13	07000-12021	· · O-RING	1	SN:30001--
14	07000-13032	· · O-RING	2	SN:30001--
15	07000-13036	· · O-RING	1	SN:30001--
16	702-16-53920	· · O-RING	4	SN:30001--
17	☆	· · PLUG	13	SN:30001--
18	723-46-15150	· · VALVE	2	SN:30001--
19	723-46-14150	· · SPRING	2	SN:30001--

Ref. Y1660-05A0 Page 450370

https://truckmanualshub.com/

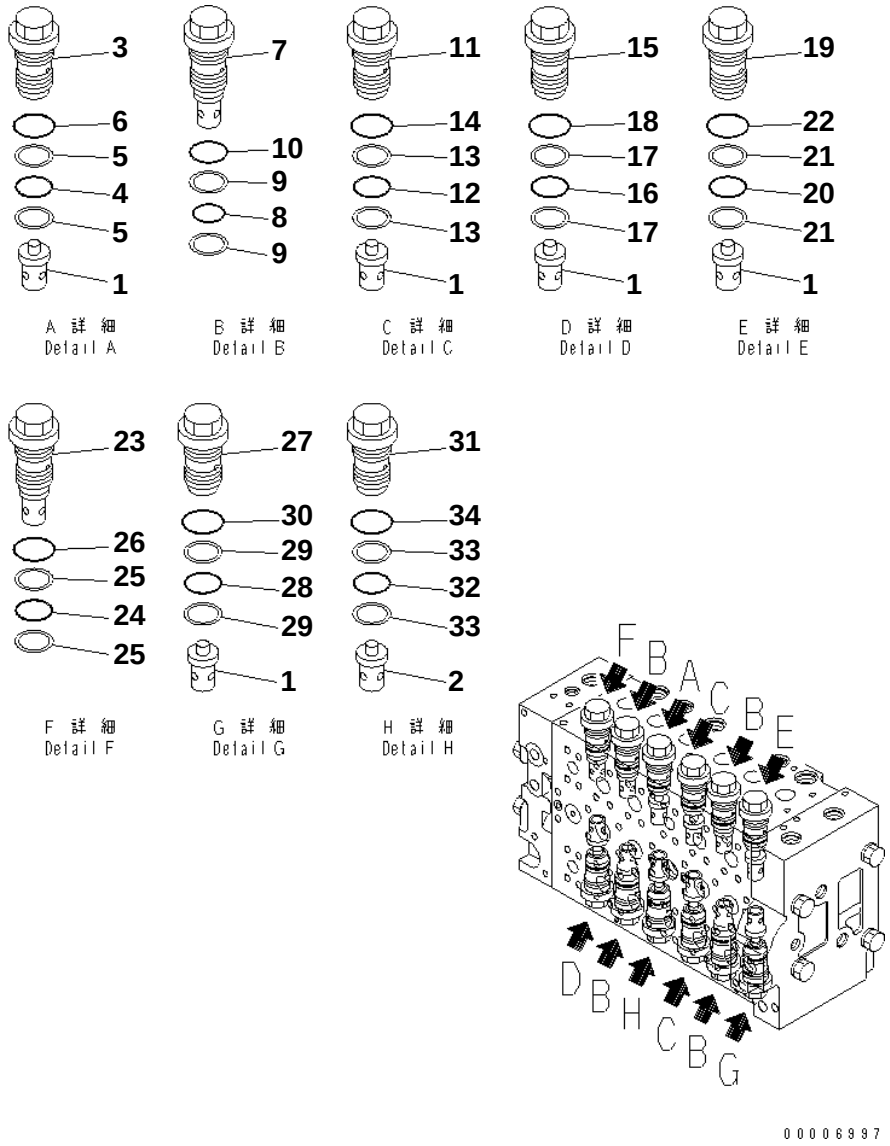

PC228US-3N-W1 S/N 30001-UP

MAIN VALVE (6/16)

Item	Part No.	Description	Qty	Options
	(723-46-20104)	VALVE ASS'Y	1	SN:30001--
THIS ASSEMBLY CONSISTS OF ALL PARTS SHOWN IN FIGS.Y1660-01A0 T0 Y1660-16A0.				
	☆	· BODY SUB ASS'Y	1	SN:30001--
1	723-46-41110	· · VALVE	6	SN:30001--
2	723-46-41190	· · VALVE	1	SN:30001--
3	723-46-40100	· · VALVE ASS'Y	1	SN:30001--
4	700-93-11320	· · · O-RING	1	SN:30001--
5	723-46-41950	· · · RING	2	SN:30001--
6	07002-13634	· · · O-RING	1	SN:30001--
7	723-46-42700	· · VALVE ASS'Y	4	SN:30001--
8	700-93-11320	· · · O-RING	1	SN:30001--
9	723-46-41950	· · · RING	2	SN:30001--
10	07002-13634	· · · O-RING	1	SN:30001--
11	723-46-41100	· · VALVE ASS'Y	2	SN:30001--
12	700-93-11320	· · · O-RING	1	SN:30001--
13	723-46-41950	· · · RING	2	SN:30001--
14	07002-13634	· · · O-RING	1	SN:30001--
15	723-46-45100	· · VALVE ASS'Y	1	SN:30001--
16	700-93-11320	· · · O-RING	1	SN:30001--
17	723-46-41950	· · · RING	2	SN:30001--
18	07002-13634	· · · O-RING	1	SN:30001--
19	723-46-46300	· · VALVE ASS'Y	1	SN:30001--
20	700-93-11320	· · · O-RING	1	SN:30001--
21	723-46-41950	· · · RING	2	SN:30001--
22	07002-13634	· · · O-RING	1	SN:30001--
23	723-46-43400	· · VALVE ASS'Y	1	SN:30001--
24	700-93-11320	· · · O-RING	1	SN:30001--
25	723-46-41950	· · · RING	2	SN:30001--
26	07002-13634	· · · O-RING	1	SN:30001--
27	723-46-43100	· · VALVE ASS'Y	1	SN:30001--
28	700-93-11320	· · · O-RING	1	SN:30001--
29	723-46-41950	· · · RING	2	SN:30001--
30	07002-13634	· · · O-RING	1	SN:30001--
31	723-46-46101	· · VALVE ASS'Y	1	SN:30001--
32	700-93-11320	· · · O-RING	1	SN:30001--
33	723-46-41950	· · · RING	2	SN:30001--
34	07002-13634	· · · O-RING	1	SN:30001--

Ref. Y1660-06A0 Page 450380

https://truckmanualshub.com/

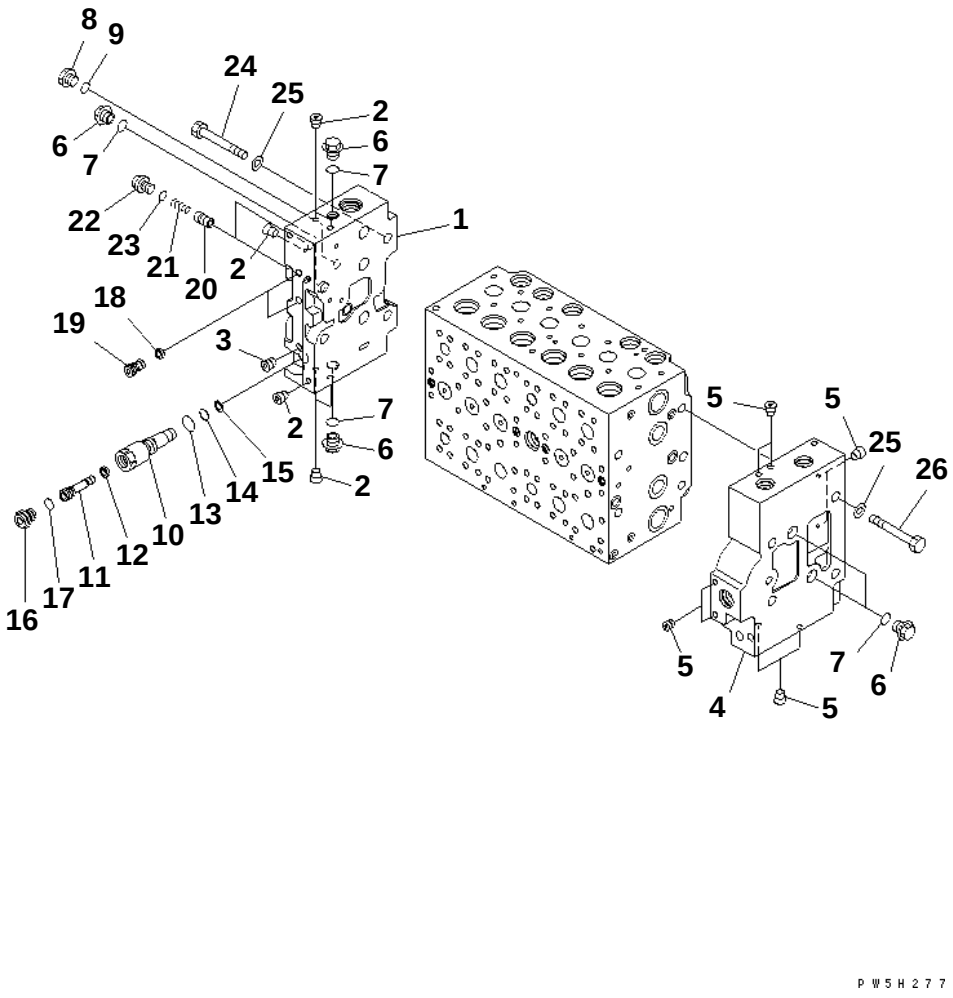

PC228US-3N-W1 S/N 30001-UP

MAIN VALVE (7/16)

Item	Part No.	Description	Qty	Options
	(723-46-20104)	VALVE ASS'Y	1	SN:30001--
THIS ASSEMBLY CONSISTS OF ALL PARTS SHOWN IN FIGS.Y1660-01A0 T0 Y1660-16A0.				
	723-46-00750	· COVER ASS'Y	1	SN:30001--
1	☆	· · COVER,A	1	SN:30001--
2	☆	· · PLUG	7	SN:30001--
3	☆	· · PLUG	1	SN:30001--
	723-46-00742	· COVER ASS'Y	1	SN:30001--
4	☆	· · COVER,B	1	SN:30001--
5	☆	· · PLUG	8	SN:30001--
6	723-46-15180	· PLUG	5	SN:30001--
7	07002-11823	· O-RING	5	SN:30001--
8	708-8H-11530	· PLUG	1	SN:30001--
9	07002-11423	· O-RING	1	SN:30001--
	723-46-17600	· PLUG ASS'Y	1	SN:30001--
10	723-46-17610	· · SLEEVE	1	SN:30001--
11	723-46-17640	· · PLUG	1	SN:30001--
12	702-21-55760	· · FILTER	1	SN:30001--
13	07002-11423	· · O-RING	1	SN:30001--
14	07000-11007	· · O-RING	1	SN:30001--
15	07001-01007	· · RING,BACK-UP	1	SN:30001--
16	708-8E-16160	· · PLUG	1	SN:30001--
17	07002-11023	· · O-RING	1	SN:30001--
18	☆	· FILTER	2	SN:30001--
19	723-46-17550	· PLUG	2	SN:30001--
20	723-46-15190	· VALVE	2	SN:30001--
21	723-46-14140	· SPRING	2	SN:30001--
22	708-8E-16160	· PLUG	2	SN:30001--
23	07002-11023	· O-RING	2	SN:30001--
24	01010-61490	· BOLT	4	SN:30001--
25	01643-31445	· WASHER	8	SN:30001--
26	01010-61490	· BOLT	4	SN:30001--

Ref. Y1660-07A0 Page 450390

https://truckmanualshub.com/

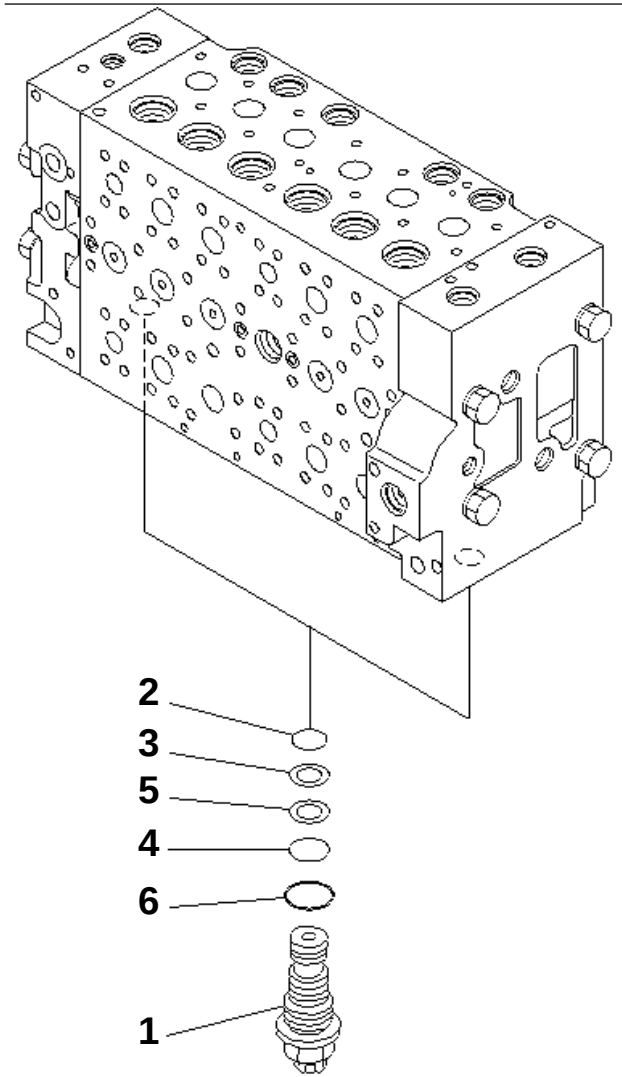

00006998

PC228US-3N-W1 S/N 30001-UP

MAIN VALVE (8/16)

Item	Part No.	Description	Qty	Options
	(723-46-20104)	VALVE ASS'Y	1	SN:30001--
THIS ASSEMBLY CONSISTS OF ALL PARTS SHOWN IN FIGS.Y1660-01A0 T0 Y1660-16A0.				
1	723-40-56302	· VALVE ASS'Y,UNLOAD	2	SN:30001--
2	07000-12014	· · O-RING	1	SN:30001--
3	723-40-56350	· · RING	1	SN:30001--
4	07000-12016	· · O-RING	1	SN:30001--
5	723-60-22230	· · RING,BACK-UP	1	SN:30001--
6	07002-12434	· · O-RING	1	SN:30001--

Ref. Y1660-08A0 Page 450400

https://truckmanualshub.com/

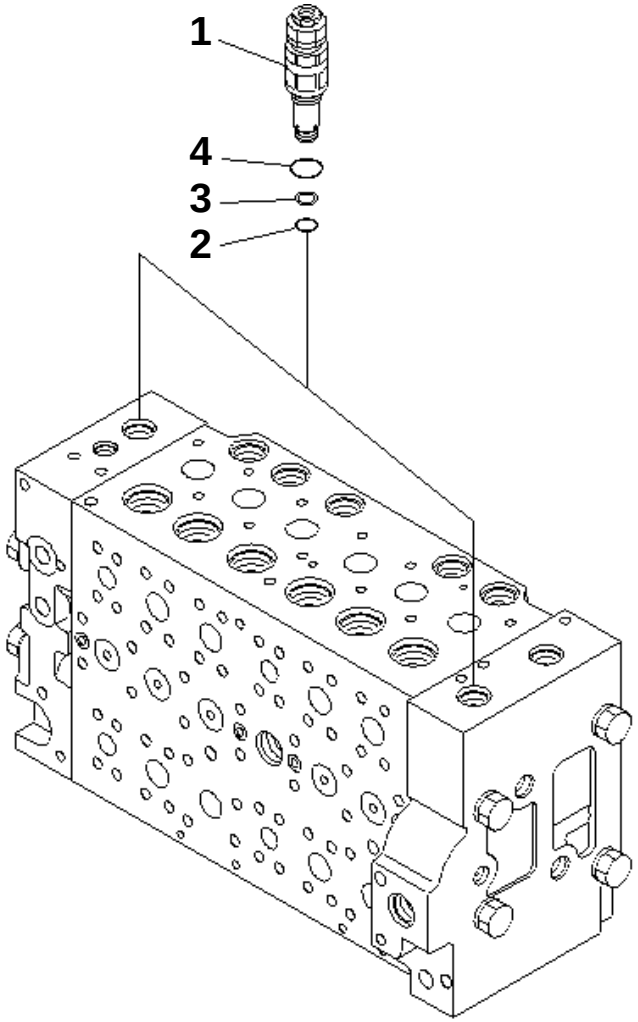

00006999

PC228US-3N-W1 S/N 30001-UP

MAIN VALVE (9/16)

Item	Part No.	Description	Qty	Options
	(723-46-20104)	VALVE ASS'Y	1	SN:30001--
THIS ASSEMBLY CONSISTS OF ALL PARTS SHOWN IN FIGS.Y1660-01A0 T0 Y1660-16A0.				
1	723-40-91101	· VALVE ASS'Y,RELIEF	2	SN:30001--
2	700-22-11410	· · O-RING	1	SN:30001--
3	700-80-64220	· · RING	1	SN:30001--
4	07002-12434	· · O-RING	1	SN:30001--

Ref. Y1660-09A0 Page 450410

https://truckmanualshub.com/

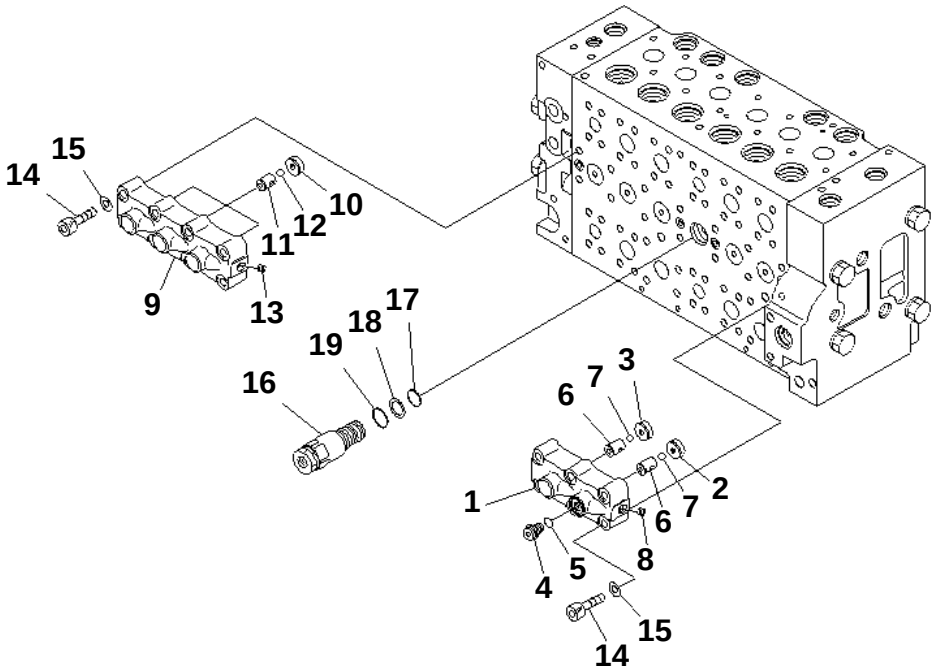

00007000

PC228US-3N-W1 S/N 30001-UP

MAIN VALVE (10/16)

Item	Part No.	Description	Qty	Options
	(723-46-20104)	VALVE ASS'Y	1	SN:30001--
THIS ASSEMBLY CONSISTS OF ALL PARTS SHOWN IN FIGS.Y1660-01A0 T0 Y1660-16A0.				
	723-40-66701	· VALVE ASS'Y	1	SN:30001--
1	☆	· · CASE	1	SN:30001--
2	☆	· · SEAT	1	SN:30001--
3	☆	· · SEAT	1	SN:30001--
4	708-8H-11530	· · PLUG	1	SN:30001--
5	07002-11423	· · O-RING	1	SN:30001--
6	☆	· · SEAT	2	SN:30001--
7	☆	· · BALL	2	SN:30001--
8	☆	· · PLUG	1	SN:30001--
	723-40-66601	· VALVE ASS'Y	1	SN:30001--
9	☆	· · CASE	1	SN:30001--
10	☆	· · SEAT	3	SN:30001--
11	☆	· · SEAT	3	SN:30001--
12	☆	· · BALL	3	SN:30001--
13	☆	· · PLUG	1	SN:30001--
14	01252-61050	· BOLT	14	SN:30001--
15	01643-51032	· WASHER	14	SN:30001--
16	723-40-60101	· VALVE ASS'Y	1	SN:30001--
17	07000-12020	· · O-RING	1	SN:30001--
18	07001-02020	· · RING,BACK-UP	1	SN:30001--
19	709-25-11390	· · O-RING	1	SN:30001--

Ref. Y1660-10A0 Page 450420

https://truckmanualshub.com/

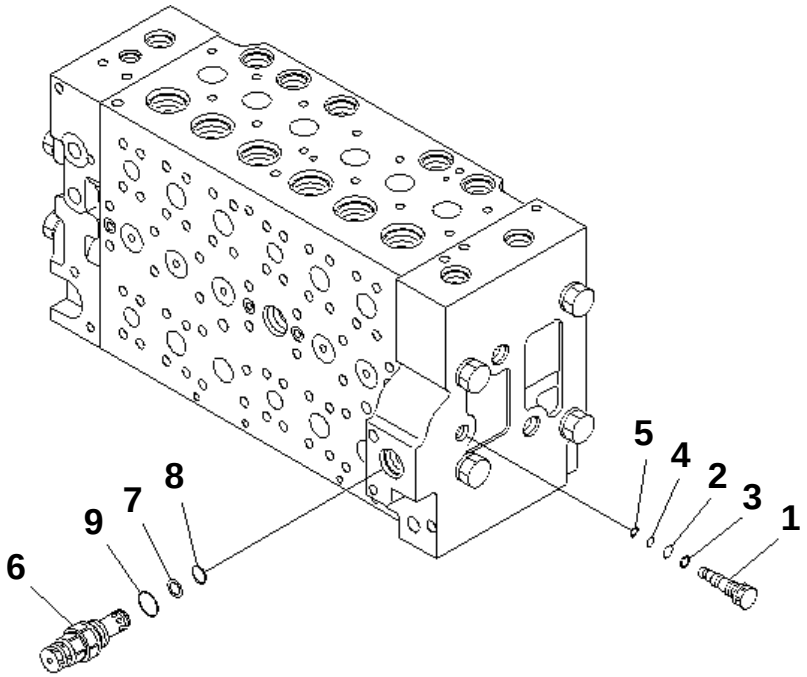

00007219

PC228US-3N-W1 S/N 30001-UP

MAIN VALVE (11/16)

Item	Part No.	Description	Qty	Options
	(723-46-20104)	VALVE ASS'Y	1	SN:30001--
THIS ASSEMBLY CONSISTS OF ALL PARTS SHOWN IN FIGS.Y1660-01A0 T0 Y1660-16A0.				
	723-46-17701	· PLUG ASS'Y	1	SN:30001--
1	723-46-17711	· · PLUG	1	SN:30001--
2	07000-11009	· · O-RING	1	SN:30001--
3	07001-01009	· · RING,BACK-UP	1	SN:30001--
4	07000-11007	· · O-RING	1	SN:30001--
5	07001-01007	· · RING,BACK-UP	1	SN:30001--
6	723-40-91500	· VALVE ASS'Y,RELIEF	1	SN:30001--
7	700-80-64220	· · RING	1	SN:30001--
8	700-22-11410	· · O-RING	1	SN:30001--
9	709-25-11390	· · O-RING	1	SN:30001--

Ref. Y1660-11A0 Page 450430

https://truckmanualshub.com/

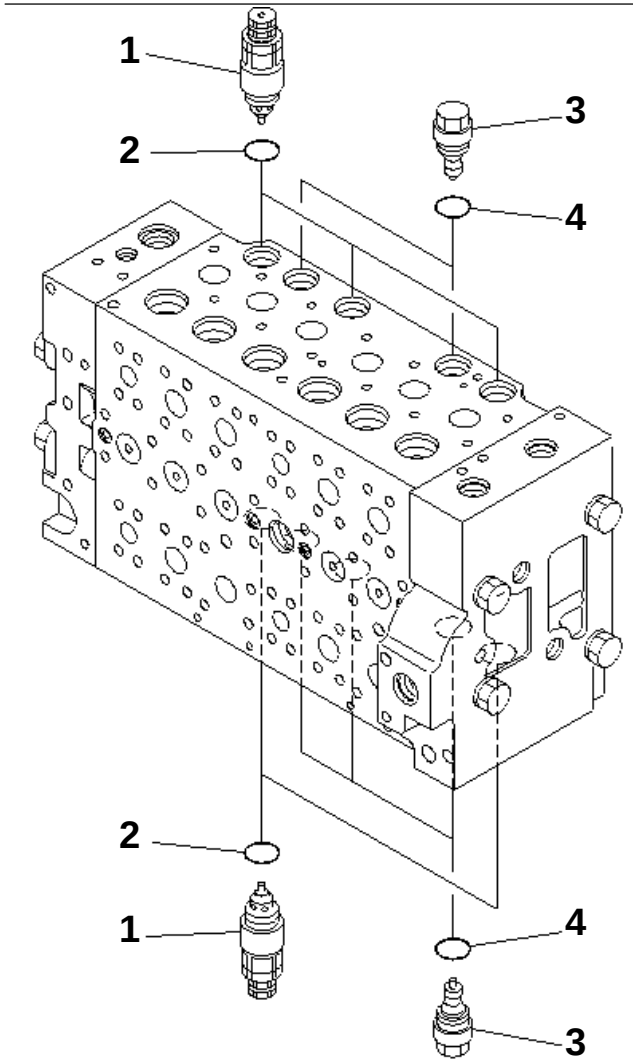

00007220

PC228US-3N-W1 S/N 30001-UP

MAIN VALVE (12/16)

Item	Part No.	Description	Qty	Options
	(723-46-20104)	VALVE ASS'Y	1	SN:30001--
THIS ASSEMBLY CONSISTS OF ALL PARTS SHOWN IN FIGS.Y1660-01A0 T0 Y1660-16A0.				
1	723-40-91200	· VALVE ASS'Y,SUCTION AND SAFETY	5	SN:30001--
2	709-25-11390	· · O-RING	1	SN:30001--
3	723-40-85100	· VALVE ASS'Y,SUCTION	5	SN:30001--
4	709-25-11390	· · O-RING	1	SN:30001--

Ref. Y1660-12A0 Page 450440

https://truckmanualshub.com/

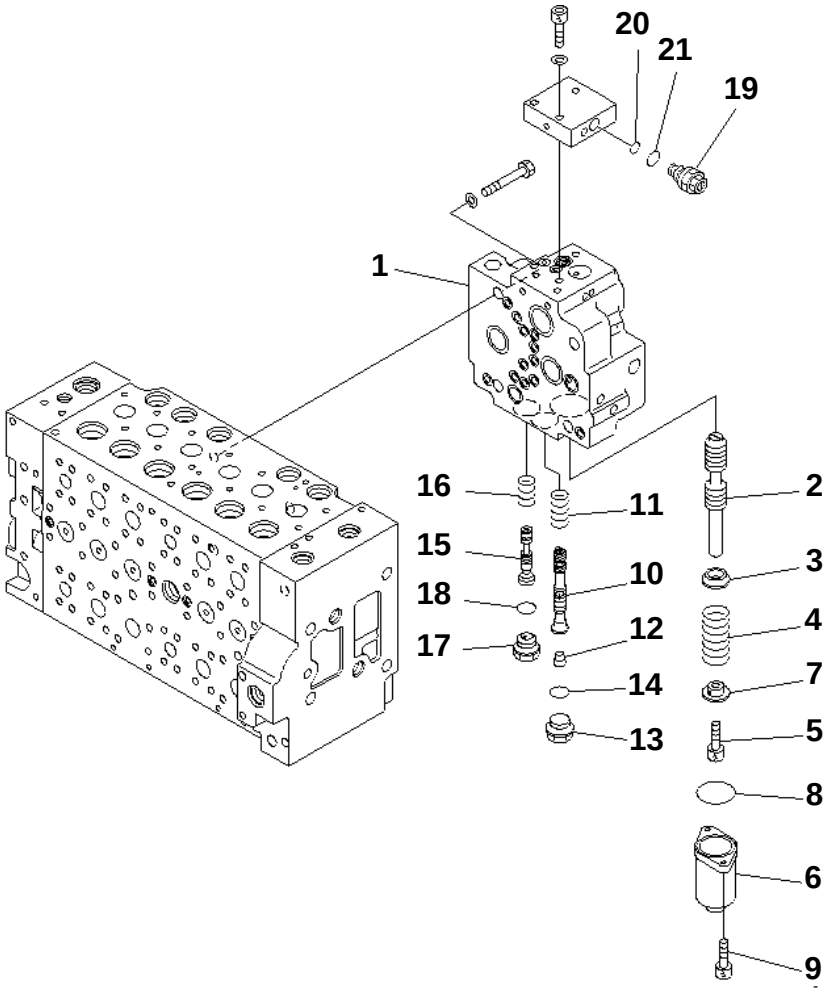

PC228US-3N-W1 S/N 30001-UP

MAIN VALVE (13/16)

Item	Part No.	Description	Qty	Options
	(723-46-20104)	VALVE ASS'Y	1	SN:30001--
THIS ASSEMBLY CONSISTS OF ALL PARTS SHOWN IN FIGS.Y1660-01A0 T0 Y1660-16A0.				
	723-40-71103	· VALVE ASS'Y	1	SN:30001--
1	☆	· · BODY	1	SN:30001--
2	☆	· · SPOOL	1	SN:30001--
3	☆	· · RETAINER	1	SN:30001--
4	723-40-71340	· · SPRING	1	SN:30001--
5	01252-60816	· · BOLT	1	SN:30001--
6	723-46-15111	· · CASE	1	SN:30001--
7	☆	· · RETAINER	1	SN:30001--
8	07430-71380	· · O-RING	1	SN:30001--
9	01252-60820	· · BOLT	2	SN:30001--
10	☆	· · SPOOL	1	SN:30001--
11	723-40-71440	· · SPRING	1	SN:30001--
12	☆	· · PLUG	1	SN:30001--
13	709-74-91860	· · PLUG	1	SN:30001--
14	07002-12434	· · O-RING	1	SN:30001--
15	☆	· · SPOOL	1	SN:30001--
16	723-40-71390	· · SPRING	1	SN:30001--
17	☆	· · PLUG	1	SN:30001--
18	07002-12434	· · O-RING	1	SN:30001--
19	723-40-91600	· · VALVE ASS'Y,RELIEF	1	SN:30001--
20	702-16-53920	· · · O-RING	1	SN:30001--
21	07002-11623	· · · O-RING	1	SN:30001--

Ref. Y1660-13A0 Page 450450

https://truckmanualshub.com/

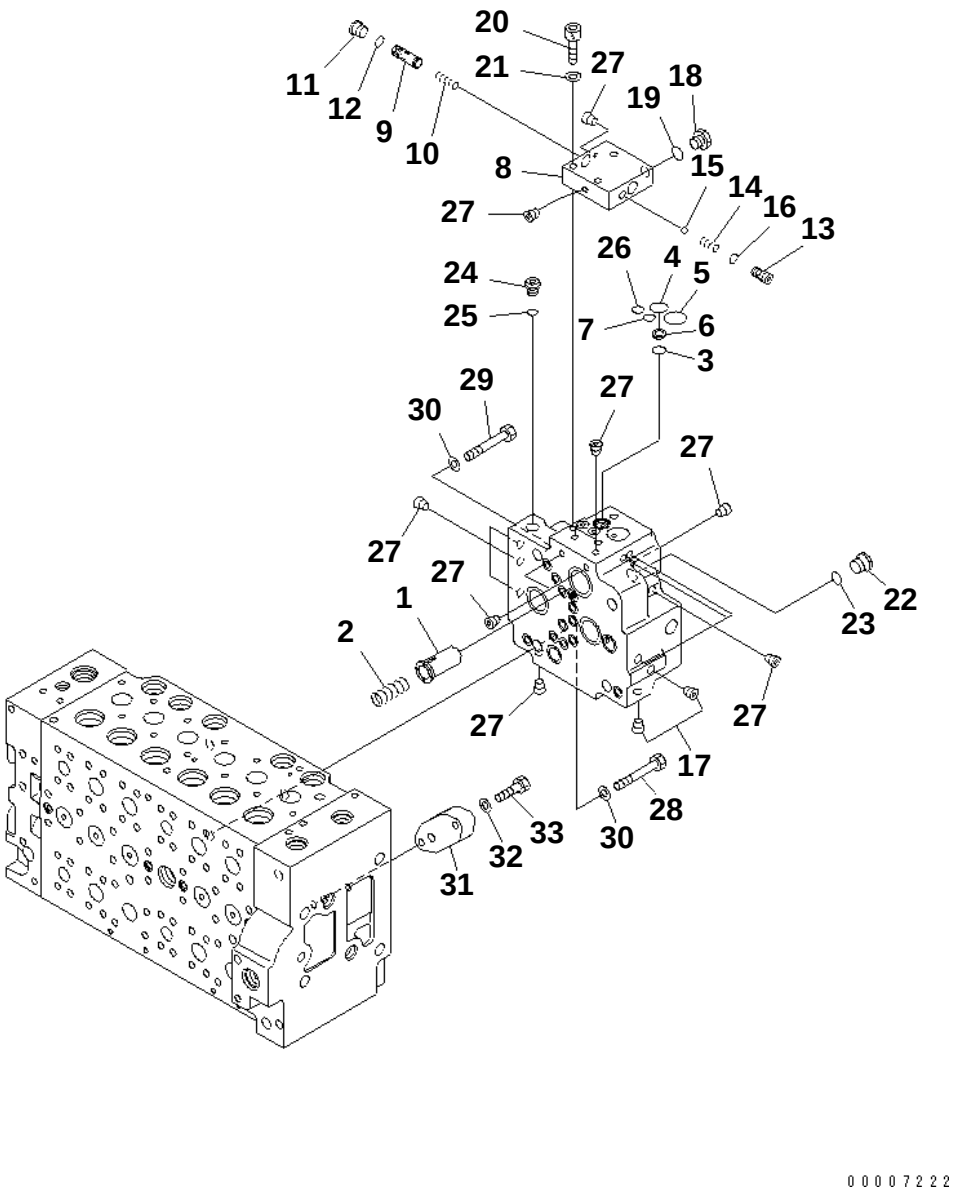

PC228US-3N-W1 S/N 30001-UP

MAIN VALVE (14/16)

Item	Part No.	Description	Qty	Options
	(723-46-20104)	VALVE ASS'Y	1	SN:30001--
THIS ASSEMBLY CONSISTS OF ALL PARTS SHOWN IN FIGS.Y1660-01A0 T0 Y1660-16A0.				
	(723-40-71103)	· VALVE ASS'Y	1	SN:30001--
1	723-40-71430	· · VALVE	1	SN:30001--
2	702-21-55460	· · SPRING	1	SN:30001--
3	702-21-55420	· · O-RING	1	SN:30001--
4	702-21-55520	· · O-RING	1	SN:30001--
5	702-21-55440	· · O-RING	1	SN:30001--
6	702-21-53120	· · FILTER	1	SN:30001--
7	07000-12011	· · O-RING	1	SN:30001--
8	☆	· · BLOCK	1	SN:30001--
9	☆	· · SPOOL	1	SN:30001--
10	702-21-55640	· · SPRING	1	SN:30001--
11	702-21-55620	· · PLUG	1	SN:30001--
12	07002-11423	· · O-RING	1	SN:30001--
13	702-21-55710	· · SEAT	1	SN:30001--
14	702-21-55720	· · SPRING	1	SN:30001--
15	04260-00793	· · BALL	1	SN:30001--
16	07000-11009	· · O-RING	1	SN:30001--
17	☆	· · PLUG	2	SN:30001--
18	708-8H-11530	· · PLUG	1	SN:30001--
19	07002-11423	· · O-RING	1	SN:30001--
20	01252-61040	· · BOLT	3	SN:30001--
21	01643-51032	· · WASHER	3	SN:30001--
22	702-21-55620	· · PLUG	1	SN:30001--
23	07002-11423	· · O-RING	1	SN:30001--
24	708-8E-16160	· · PLUG	1	SN:30001--
25	07002-11023	· · O-RING	1	SN:30001--
26	07000-12011	· · O-RING	1	SN:30001--
27	☆	· · PLUG	15	SN:30001--
28	01010-61470	· BOLT	3	SN:30001--
29	01010-61460	· BOLT	1	SN:30001--
30	01643-31445	· WASHER	4	SN:30001--
31	723-46-17560	· PLATE	1	SN:30001--
32	01643-51032	· WASHER	2	SN:30001--
33	01010-81040	· BOLT	2	SN:30001--

Ref. Y1660-14A0 Page 450460

https://truckmanualshub.com/

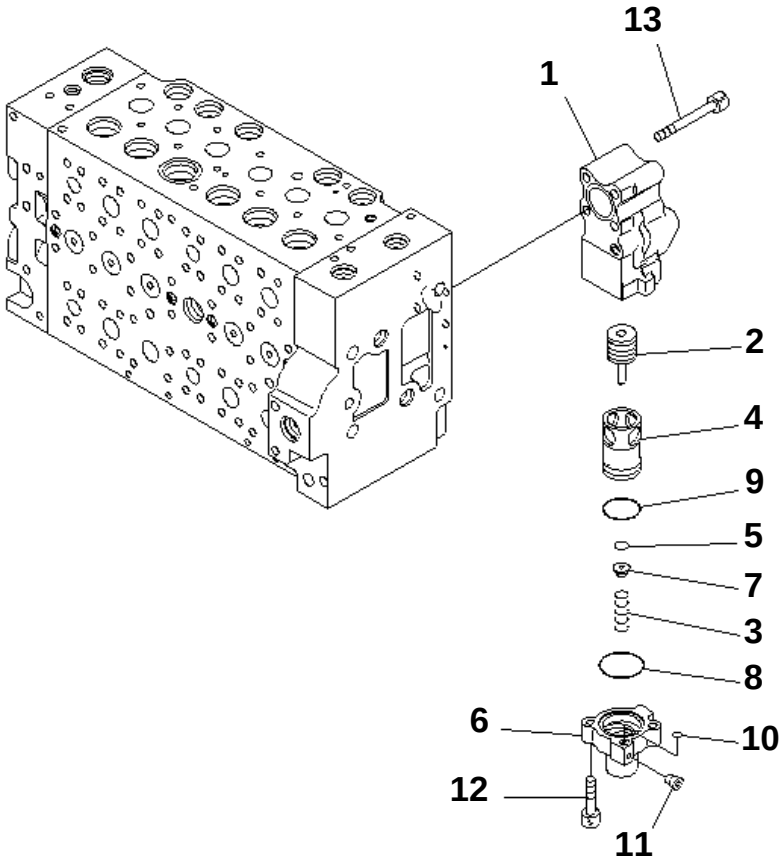

PW5H285

PC228US-3N-W1 S/N 30001-UP

MAIN VALVE (15/16)

Item	Part No.	Description	Qty	Options
	(723-46-20104)	VALVE ASS'Y	1	SN:30001--
THIS ASSEMBLY CONSISTS OF ALL PARTS SHOWN IN FIGS.Y1660-01A0 T0 Y1660-16A0.				
	723-40-87100	· VALVE ASS'Y	1	SN:30001--
1	☆	· · BODY	1	SN:30001--
2	☆	· · SPOOL	1	SN:30001--
3	723-40-87160	· · SPRING	1	SN:30001--
4	☆	· · SLEEVE	1	SN:30001--
5	☆	· · SEAL	1	SN:30001--
6	☆	· · CASE	1	SN:30001--
7	723-40-87150	· · RETAINER	1	SN:30001--
8	723-40-87170	· · O-RING	1	SN:30001--
9	07000-13035	· · O-RING	1	SN:30001--
10	07000-11007	· · O-RING	1	SN:30001--
11	☆	· · SCREW	1	SN:30001--
12	01252-60830	· · BOLT	2	SN:30001--
13	01252-61075	· BOLT	4	SN:30001--

Ref. Y1660-15A0 Page 450470

https://truckmanualshub.com/

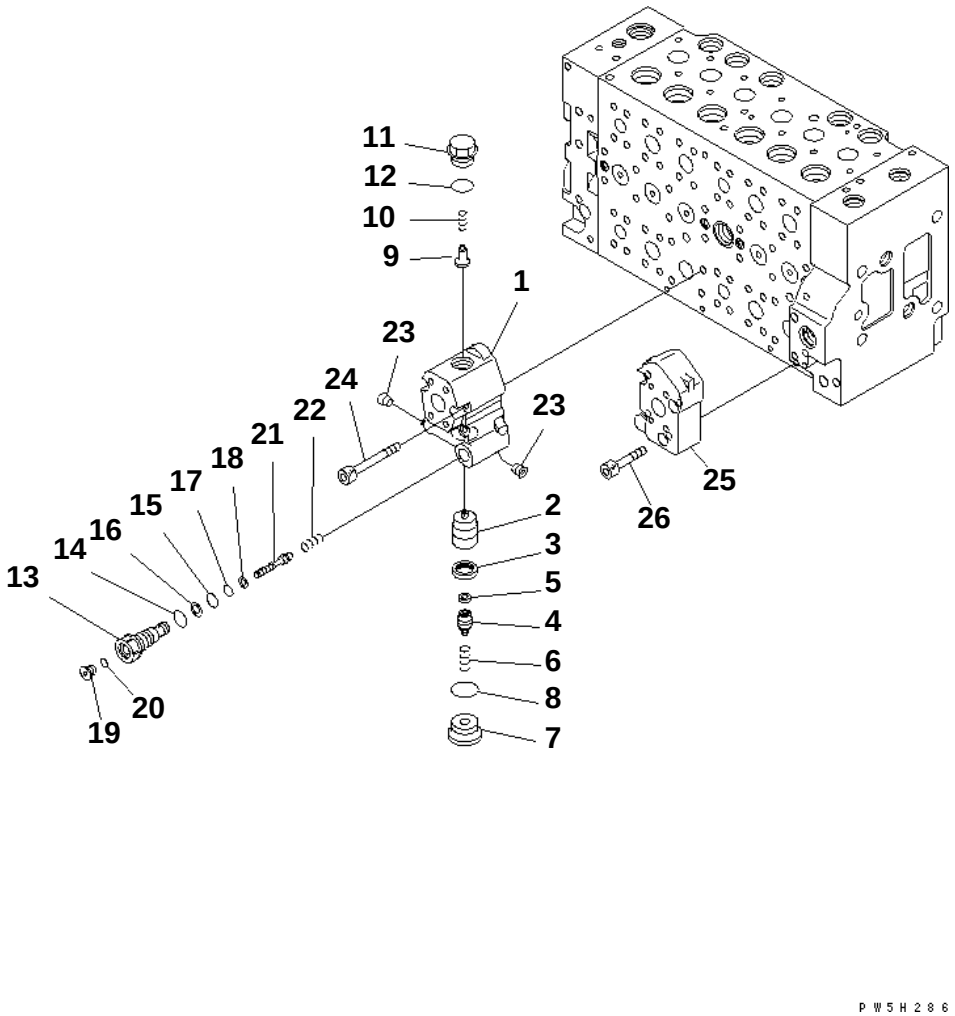

PC228US-3N-W1 S/N 30001-UP

MAIN VALVE (16/16)

Item	Part No.	Description	Qty	Options
	(723-46-20104)	VALVE ASS'Y	1	SN:30001--
THIS ASSEMBLY CONSISTS OF ALL PARTS SHOWN IN FIGS.Y1660-01A0 T0 Y1660-16A0.				
	723-40-82500	· VALVE ASS'Y	1	SN:30001--
1	☆	· · BODY	1	SN:30001--
2	☆	· · VALVE	1	SN:30001--
3	☆	· · SEAL	1	SN:30001--
4	☆	· · PLUG	1	SN:30001--
5	☆	· · FILTER	1	SN:30001--
6	☆	· · SPRING	1	SN:30001--
7	☆	· · PLUG	1	SN:30001--
8	07002-13334	· · O-RING	1	SN:30001--
9	709-25-11650	· · VALVE,CHECK	1	SN:30001--
10	709-25-11361	· · SPRING	1	SN:30001--
11	☆	· · PLUG	1	SN:30001--
12	07000-13024	· · O-RING	1	SN:30001--
13	☆	· · PLUG	1	SN:30001--
14	07002-11823	· · O-RING	1	SN:30001--
15	07000-12011	· · O-RING	1	SN:30001--
16	07001-02011	· · RING	1	SN:30001--
17	07000-11010	· · O-RING	1	SN:30001--
18	07001-01010	· · RING	1	SN:30001--
19	723-11-18190	· · PLUG	1	SN:30001--
20	07002-11023	· · O-RING	1	SN:30001--
21	☆	· · PISTON	1	SN:30001--
22	723-40-82290	· · SPRING	1	SN:30001--
23	☆	· · PLUG	2	SN:30001--
24	01252-61075	· BOLT	4	SN:30001--
25	723-46-17570	· BLOCK	1	SN:30001--
26	01252-61045	· BOLT	4	SN:30001--

Ref. Y1660-16A0 Page 450480

https://truckmanualshub.com/

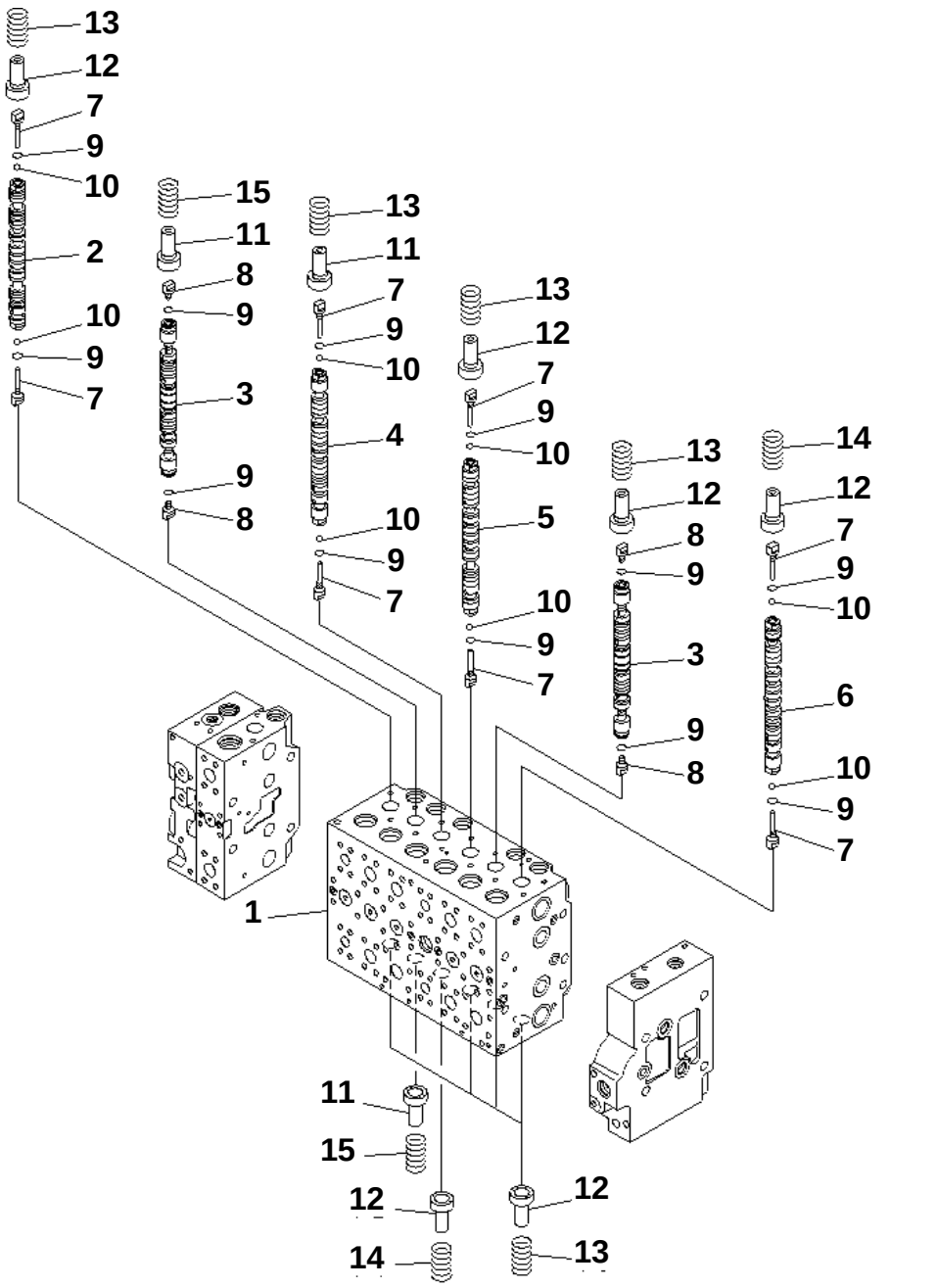

PC228US-3N-W1 S/N 30001-UP

MAIN VALVE (1-ACTUATOR) (1/19) (SERVICE VALVE¤ ARM CRANE)

Item	Part No.	Description	Qty	Options
	723-47-21300	VALVE ASS'Y	1	SN:30001--
THIS ASSEMBLY CONSISTS OF ALL PARTS SHOWN IN FIGS.Y1662-01A0 TO Y1662-19A0.				
	☆	· BODY SUB ASS'Y	1	SN:30001--
1	☆	· · BLOCK,VALVE	1	SN:30001--
2	☆	· · SPOOL	1	SN:30001--
3	☆	· · SPOOL	2	SN:30001--
4	☆	· · SPOOL	1	SN:30001--
5	☆	· · SPOOL	1	SN:30001--
6	☆	· · SPOOL	1	SN:30001--
7	723-46-15130	· · PLUG	8	SN:30001--
8	723-46-15140	· · PLUG	4	SN:30001--
9	07002-10823	· · O-RING	12	SN:30001--
10	708-7T-16460	· · BALL	8	SN:30001--
11	723-46-15120	· · RETAINER	3	SN:30001--
12	723-46-15690	· · RETAINER	9	SN:30001--
13	723-46-14110	· · SPRING	8	SN:30001--
14	723-46-14270	· · SPRING	2	SN:30001--
15	723-46-14131	· · SPRING	2	SN:30001--

Ref. Y1662-01A0 Page 450490

https://truckmanualshub.com/

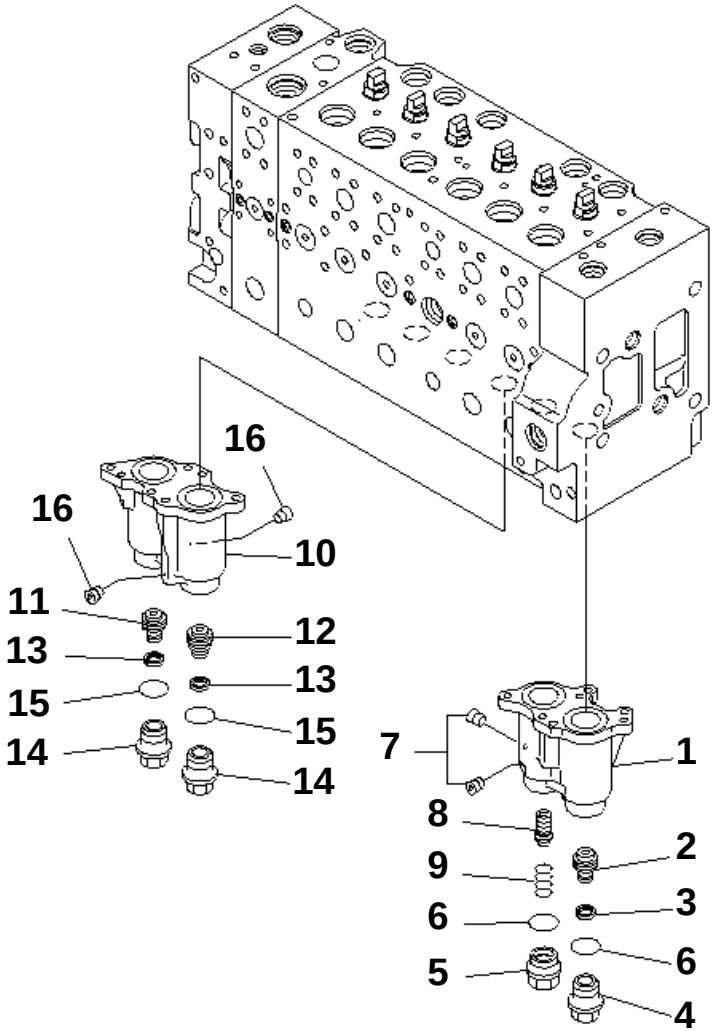

PJ5J172

PC228US-3N-W1 S/N 30001-UP

MAIN VALVE (1-ACTUATOR) (2/19) (SERVICE VALVE¤ ARM CRANE)

Item	Part No.	Description	Qty	Options
	(723-47-21300)	VALVE ASS'Y	1	SN:30001--
THIS ASSEMBLY CONSISTS OF ALL PARTS SHOWN IN FIGS.Y1662-01A0 TO Y1662-19A0.				
	☆	· BODY SUB ASS'Y	1	SN:30001--
	723-46-17300	· · CASE SUB ASS'Y	1	SN:30001--
1	☆	· · · CASE	1	SN:30001--
2	☆	· · · PISTON	1	SN:30001--
3	☆	· · · SEAL	1	SN:30001--
4	723-46-15630	· · · PLUG	1	SN:30001--
5	723-46-17340	· · · PLUG	1	SN:30001--
6	07000-13024	· · · O-RING	2	SN:30001--
7	☆	· · · SCREW	3	SN:30001--
8	723-46-17320	· · · SPOOL	1	SN:30001--
9	723-46-17330	· · · SPRING	1	SN:30001--
	723-46-17101	· · CASE SUB ASS'Y	1	SN:30001--
10	☆	· · · CASE	1	SN:30001--
11	☆	· · · PISTON	1	SN:30001--
12	☆	· · · PISTON	1	SN:30001--
13	☆	· · · SEAL	2	SN:30001--
14	723-46-15630	· · · PLUG	2	SN:30001--
15	07000-13024	· · · O-RING	2	SN:30001--
16	☆	· · · SCREW	2	SN:30001--

Ref. Y1662-02A0 Page 450500

https://truckmanualshub.com/

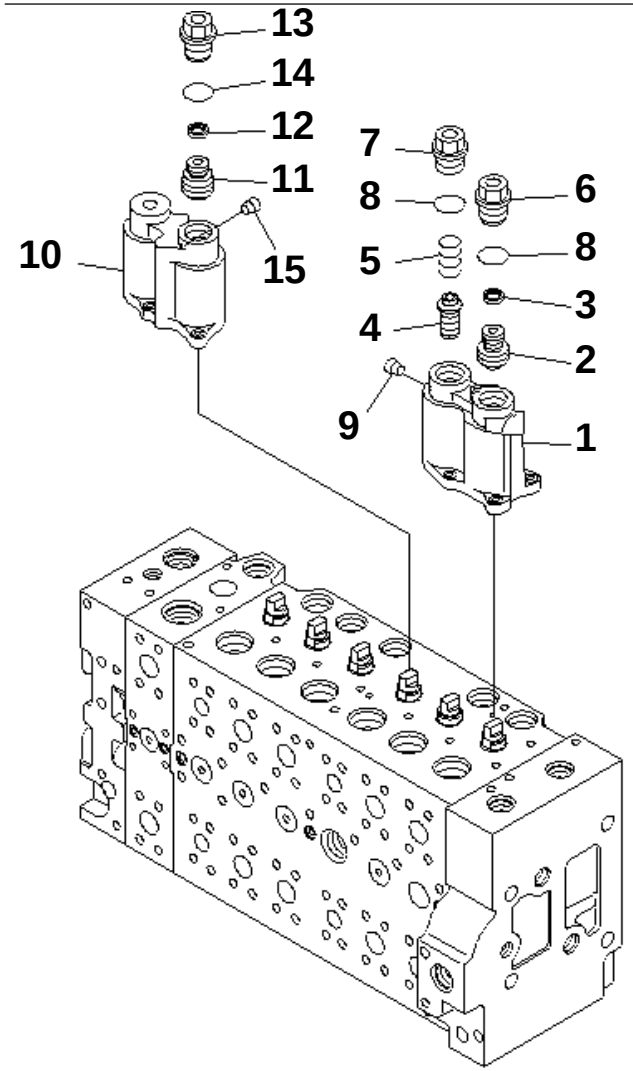

PJ5J107

PC228US-3N-W1 S/N 30001-UP

MAIN VALVE (1-ACTUATOR) (3/19) (SERVICE VALVE¤ ARM CRANE)

Item	Part No.	Description	Qty	Options
	(723-47-21300)	VALVE ASS'Y	1	SN:30001--
THIS ASSEMBLY CONSISTS OF ALL PARTS SHOWN IN FIGS.Y1662-01A0 TO Y1662-19A0.				
	☆	· BODY SUB ASS'Y	1	SN:30001--
	723-46-17401	· · CASE SUB ASS'Y	1	SN:30001--
1	☆	· · · CASE	1	SN:30001--
2	☆	· · · PISTON	1	SN:30001--
3	☆	· · · SEAL	1	SN:30001--
4	723-46-17320	· · · SPOOL	1	SN:30001--
5	723-46-17330	· · · SPRING	1	SN:30001--
6	723-46-15630	· · · PLUG	1	SN:30001--
7	723-46-17340	· · · PLUG	1	SN:30001--
8	07000-13024	· · · O-RING	2	SN:30001--
9	☆	· · · SCREW	3	SN:30001--
	723-46-17203	· · CASE SUB ASS'Y	1	SN:30001--
10	☆	· · · CASE	1	SN:30001--
11	☆	· · · PISTON	1	SN:30001--
12	☆	· · · SEAL	1	SN:30001--
13	723-46-15630	· · · PLUG	1	SN:30001--
14	07000-13024	· · · O-RING	1	SN:30001--
15	☆	· · · SCREW	1	SN:30001--

Ref. Y1662-03A0 Page 450510

https://truckmanualshub.com/

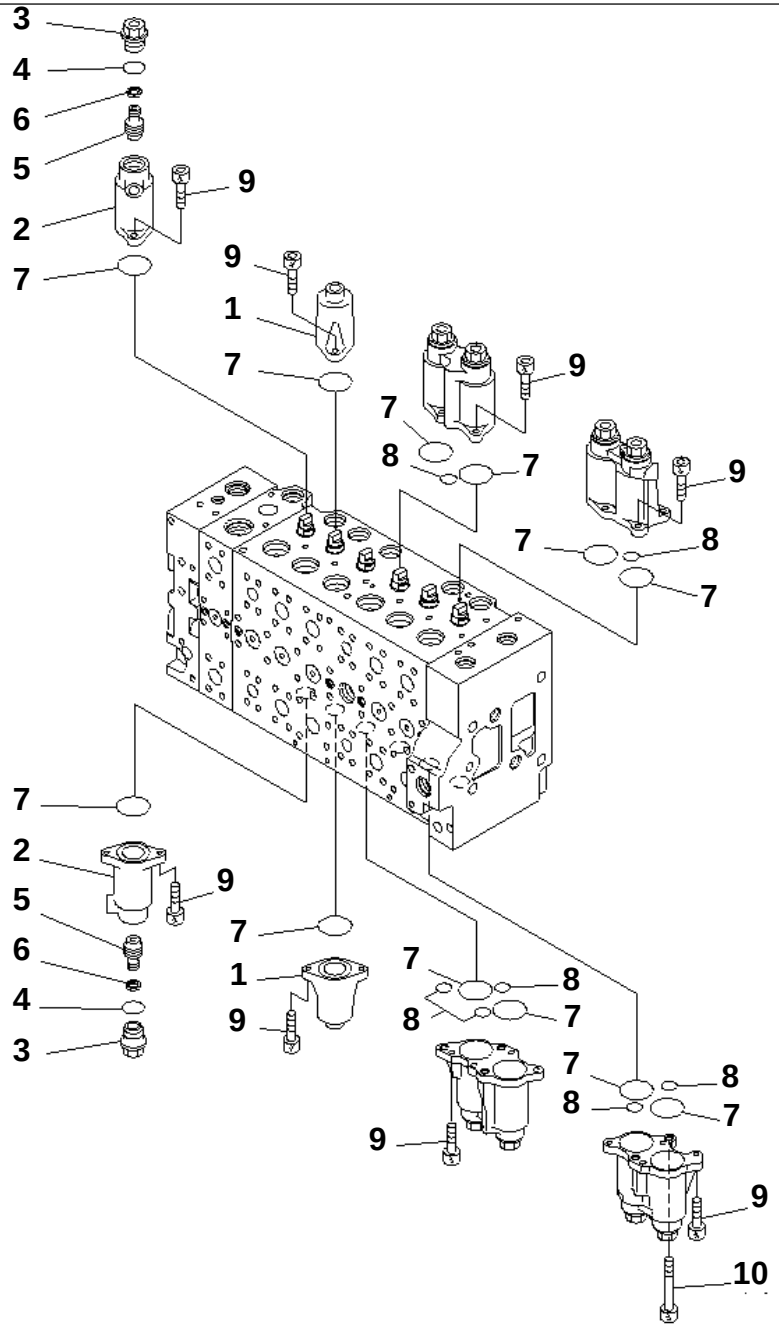

PC228US-3N-W1 S/N 30001-UP

MAIN VALVE (1-ACTUATOR) (4/19) (SERVICE VALVE¤ ARM CRANE)

Item	Part No.	Description	Qty	Options
	(723-47-21300)	VALVE ASS'Y	1	SN:30001--
THIS ASSEMBLY CONSISTS OF ALL PARTS SHOWN IN FIGS.Y1662-01A0 TO Y1662-19A0.				
	☆	· BODY SUB ASS'Y	1	SN:30001--
1	723-46-15111	· · CASE	2	SN:30001--
2	723-46-15771	· · CASE	2	SN:30001--
3	723-46-15630	· · PLUG	2	SN:30001--
4	07000-13024	· · O-RING	2	SN:30001--
5	☆	· · PISTON	2	SN:30001--
6	☆	· · SEAL	2	SN:30001--
7	07430-71380	· · O-RING	12	SN:30001--
8	702-16-53920	· · O-RING	7	SN:30001--
9	01252-60820	· · BOLT	23	SN:30001--
10	723-46-17350	· · BOLT	1	SN:30001--

Ref. Y1662-04A0 Page 450520

https://truckmanualshub.com/

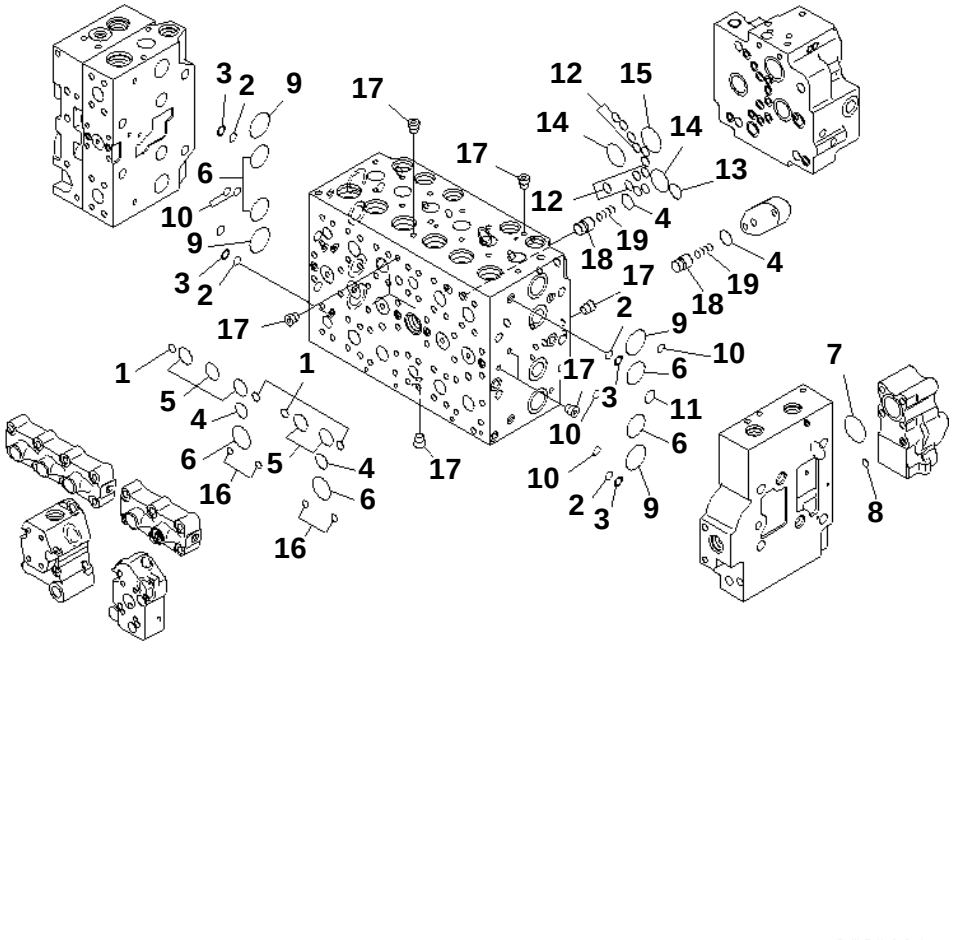

PC228US-3N-W1 S/N 30001-UP

MAIN VALVE (1-ACTUATOR) (5/19) (SERVICE VALVE¤ ARM CRANE)

Item	Part No.	Description	Qty	Options
	(723-47-21300)	VALVE ASS'Y	1	SN:30001--
THIS ASSEMBLY CONSISTS OF ALL PARTS SHOWN IN FIGS.Y1662-01A0 TO Y1662-19A0.				
	☆	· BODY SUB ASS'Y	1	SN:30001--
1	07000-12012	· · O-RING	4	SN:30001--
2	723-11-19130	· · O-RING	4	SN:30001--
3	723-46-17520	· · RING,BACK-UP	4	SN:30001--
4	07000-12021	· · O-RING	4	SN:30001--
5	07000-13028	· · O-RING	5	SN:30001--
6	07000-13032	· · O-RING	6	SN:30001--
7	07000-13038	· · O-RING	1	SN:30001--
8	07000-11010	· · O-RING	1	SN:30001--
9	723-46-17510	· · O-RING	4	SN:30001--
10	723-46-17530	· · O-RING	5	SN:30001--
11	723-11-18150	· · O-RING	2	SN:30001--
12	07000-12012	· · O-RING	12	SN:30001--
13	07000-12021	· · O-RING	1	SN:30001--
14	07000-13032	· · O-RING	2	SN:30001--
15	07000-13036	· · O-RING	1	SN:30001--
16	702-16-53920	· · O-RING	4	SN:30001--
17	☆	· · PLUG	13	SN:30001--
18	723-46-15150	· · VALVE	2	SN:30001--
19	723-46-14150	· · SPRING	2	SN:30001--

Ref. Y1662-05A0 Page 450530

https://truckmanualshub.com/

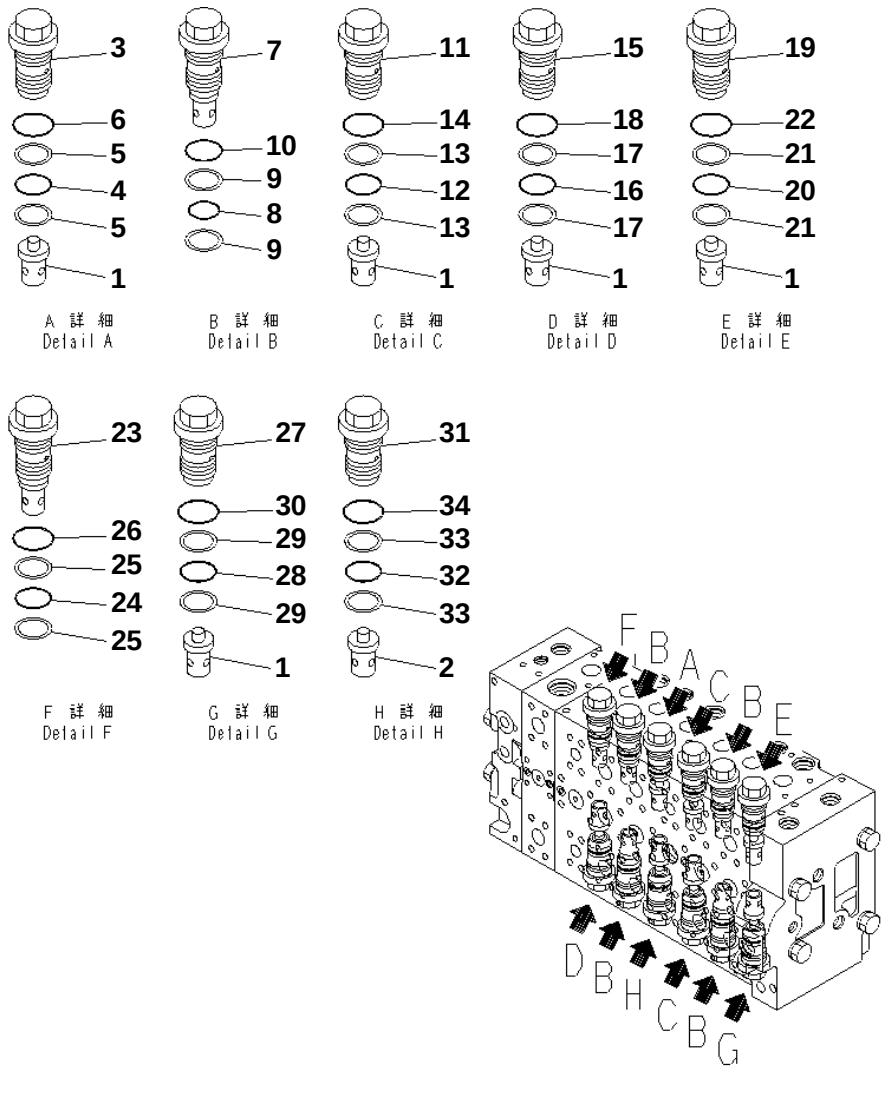

PC228US-3N-W1 S/N 30001-UP

MAIN VALVE (1-ACTUATOR) (6/19) (SERVICE VALVE¤ ARM CRANE)

Item	Part No.	Description	Qty	Options
	(723-47-21300)	VALVE ASS'Y	1	SN:30001--
THIS ASSEMBLY CONSISTS OF ALL PARTS SHOWN IN FIGS.Y1662-01A0 TO Y1662-19A0.				
	☆	· BODY SUB ASS'Y	1	SN:30001--
1	723-46-41110	· · VALVE	6	SN:30001--
2	723-46-41190	· · VALVE	1	SN:30001--
3	723-46-40100	· · VALVE ASS'Y	1	SN:30001--
4	700-93-11320	· · · O-RING	1	SN:30001--
5	723-46-41950	· · · RING	2	SN:30001--
6	07002-13634	· · · O-RING	1	SN:30001--
7	723-46-42700	· · VALVE ASS'Y	4	SN:30001--
8	700-93-11320	· · · O-RING	1	SN:30001--
9	723-46-41950	· · · RING	2	SN:30001--
10	07002-13634	· · · O-RING	1	SN:30001--
11	723-46-41100	· · VALVE ASS'Y	2	SN:30001--
12	700-93-11320	· · · O-RING	1	SN:30001--
13	723-46-41950	· · · RING	2	SN:30001--
14	07002-13634	· · · O-RING	1	SN:30001--
15	723-46-45100	· · VALVE ASS'Y	1	SN:30001--
16	700-93-11320	· · · O-RING	1	SN:30001--
17	723-46-41950	· · · RING	2	SN:30001--
18	07002-13634	· · · O-RING	1	SN:30001--
19	723-46-46300	· · VALVE ASS'Y	1	SN:30001--
20	700-93-11320	· · · O-RING	1	SN:30001--
21	723-46-41950	· · · RING	2	SN:30001--
22	07002-13634	· · · O-RING	1	SN:30001--
23	723-46-43400	· · VALVE ASS'Y	1	SN:30001--
24	700-93-11320	· · · O-RING	1	SN:30001--
25	723-46-41950	· · · RING	2	SN:30001--
26	07002-13634	· · · O-RING	1	SN:30001--
27	723-46-43100	· · VALVE ASS'Y	1	SN:30001--
28	700-93-11320	· · · O-RING	1	SN:30001--
29	723-46-41950	· · · RING	2	SN:30001--
30	07002-13634	· · · O-RING	1	SN:30001--
31	723-46-46101	· · VALVE ASS'Y	1	SN:30001--
32	700-93-11320	· · · O-RING	1	SN:30001--
33	723-46-41950	· · · RING	2	SN:30001--
34	07002-13634	· · · O-RING	1	SN:30001--

Ref. Y1662-06A0 Page 450540

https://truckmanualshub.com/

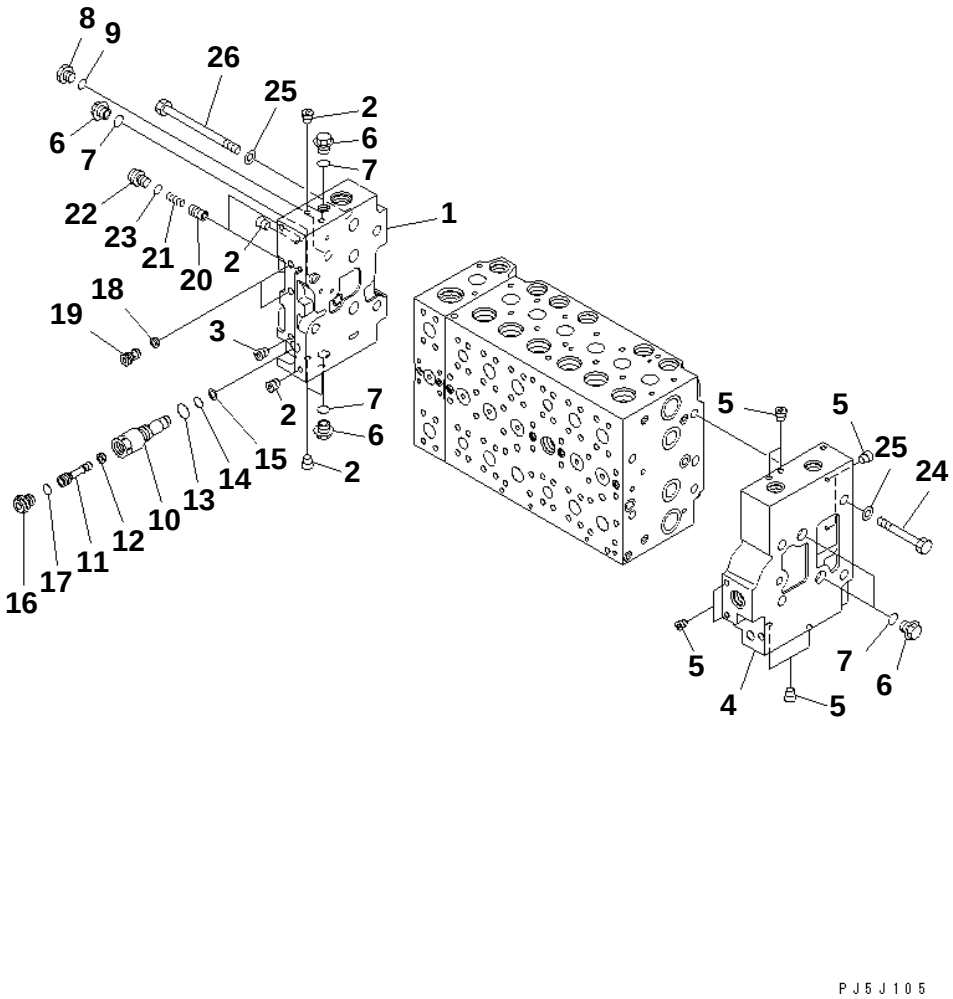

PC228US-3N-W1 S/N 30001-UP

MAIN VALVE (1-ACTUATOR) (7/19) (SERVICE VALVE¤ ARM CRANE)

Item	Part No.	Description	Qty	Options
	(723-47-21300)	VALVE ASS'Y	1	SN:30001--
THIS ASSEMBLY CONSISTS OF ALL PARTS SHOWN IN FIGS.Y1662-01A0 TO Y1662-19A0.				
	723-46-00750	· COVER ASS'Y	1	SN:30001--
1	☆	· · COVER,A	1	SN:30001--
2	☆	· · PLUG	7	SN:30001--
3	☆	· · PLUG	1	SN:30001--
	723-46-00742	· COVER ASS'Y	1	SN:30001--
4	☆	· · COVER,B	1	SN:30001--
5	☆	· · PLUG	8	SN:30001--
6	723-46-15180	· PLUG	5	SN:30001--
7	07002-11823	· O-RING	5	SN:30001--
8	708-8H-11530	· PLUG	1	SN:30001--
9	07002-11423	· O-RING	1	SN:30001--
	723-46-17600	· PLUG ASS'Y	1	SN:30001--
10	723-46-17610	· · SLEEVE	1	SN:30001--
11	723-46-17640	· · PLUG	1	SN:30001--
12	702-21-55760	· · FILTER	1	SN:30001--
13	07002-11423	· · O-RING	1	SN:30001--
14	07000-11007	· · O-RING	1	SN:30001--
15	07001-01007	· · RING,BACK-UP	1	SN:30001--
16	708-8E-16160	· · PLUG	1	SN:30001--
17	07002-11023	· · O-RING	1	SN:30001--
18	☆	· FILTER	2	SN:30001--
19	723-46-17550	· PLUG	2	SN:30001--
20	723-46-15190	· VALVE	2	SN:30001--
21	723-46-14140	· SPRING	2	SN:30001--
22	708-8E-16160	· PLUG	2	SN:30001--
23	07002-11023	· O-RING	2	SN:30001--
24	01010-61490	· BOLT	4	SN:30001--
25	01643-31445	· WASHER	8	SN:30001--
26	01011-61455	· BOLT	4	SN:30001--

Ref. Y1662-07A0 Page 450550

https://truckmanualshub.com/

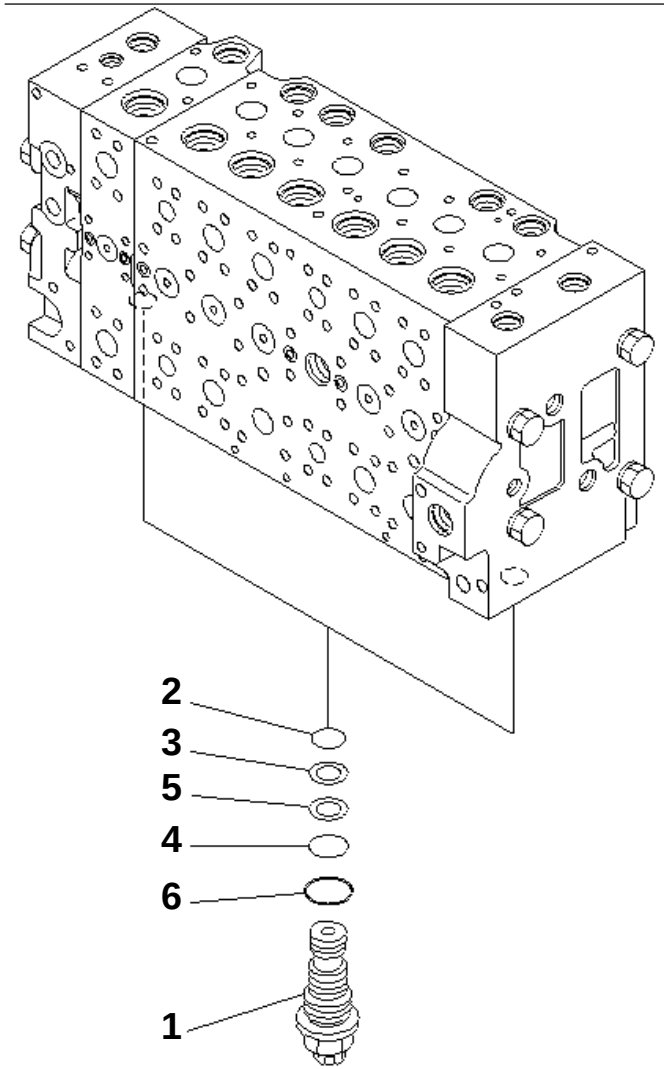

00007225

PC228US-3N-W1 S/N 30001-UP

MAIN VALVE (1-ACTUATOR) (8/19) (SERVICE VALVE¤ ARM CRANE)

Item	Part No.	Description	Qty	Options
	(723-47-21300)	VALVE ASS'Y	1	SN:30001--
THIS ASSEMBLY CONSISTS OF ALL PARTS SHOWN IN FIGS.Y1662-01A0 TO Y1662-19A0.				
1	723-40-56302	· VALVE ASS'Y,UNLOAD	2	SN:30001--
2	07000-12014	· · O-RING	1	SN:30001--
3	723-40-56350	· · RING	1	SN:30001--
4	07000-12016	· · O-RING	1	SN:30001--
5	723-60-22230	· · RING,BACK-UP	1	SN:30001--
6	07002-12434	· · O-RING	1	SN:30001--

Ref. Y1662-08A0 Page 450560

https://truckmanualshub.com/

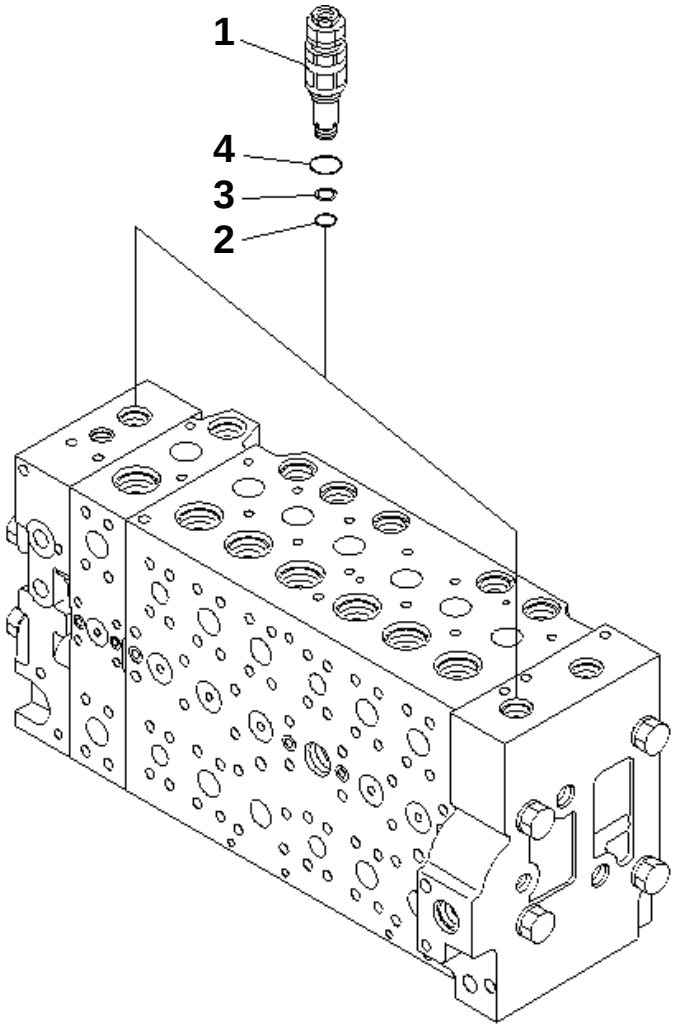

00007226

PC228US-3N-W1 S/N 30001-UP

MAIN VALVE (1-ACTUATOR) (9/19) (SERVICE VALVE¤ ARM CRANE)

Item	Part No.	Description	Qty	Options
	(723-47-21300)	VALVE ASS'Y	1	SN:30001--
THIS ASSEMBLY CONSISTS OF ALL PARTS SHOWN IN FIGS.Y1662-01A0 TO Y1662-19A0.				
1	723-40-91101	· VALVE ASS'Y,RELIEF	2	SN:30001--
2	700-22-11410	· · O-RING	1	SN:30001--
3	700-80-64220	· · RING	1	SN:30001--
4	07002-12434	· · O-RING	1	SN:30001--

Ref. Y1662-09A0 Page 450570

https://truckmanualshub.com/

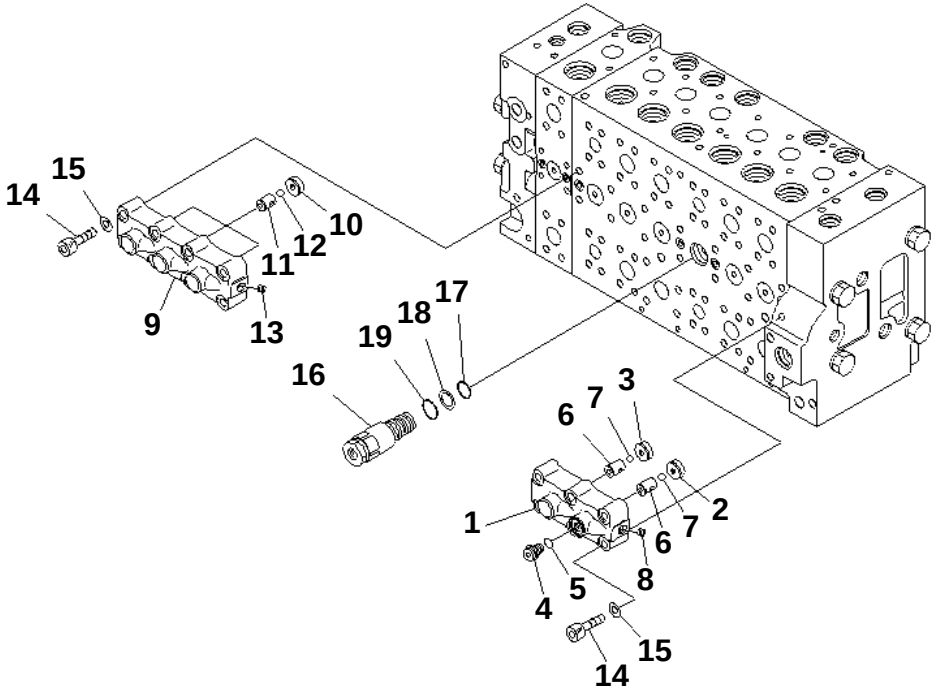

00007227

PC228US-3N-W1 S/N 30001-UP

MAIN VALVE (1-ACTUATOR) (10/19) (SERVICE VALVE¤ ARM CRANE)

Item	Part No.	Description	Qty	Options
	(723-47-21300)	VALVE ASS'Y	1	SN:30001--
THIS ASSEMBLY CONSISTS OF ALL PARTS SHOWN IN FIGS.Y1662-01A0 TO Y1662-19A0.				
	723-40-66701	· VALVE ASS'Y	1	SN:30001--
1	☆	· · CASE	1	SN:30001--
2	☆	· · SEAT	1	SN:30001--
3	☆	· · SEAT	1	SN:30001--
4	708-8H-11530	· · PLUG	1	SN:30001--
5	07002-11423	· · O-RING	1	SN:30001--
6	☆	· · SEAT	2	SN:30001--
7	☆	· · BALL	2	SN:30001--
8	☆	· · PLUG	1	SN:30001--
	723-40-66601	· VALVE ASS'Y	1	SN:30001--
9	☆	· · CASE	1	SN:30001--
10	☆	· · SEAT	3	SN:30001--
11	☆	· · SEAT	3	SN:30001--
12	☆	· · BALL	3	SN:30001--
13	☆	· · PLUG	1	SN:30001--
14	01252-61050	· BOLT	14	SN:30001--
15	01643-51032	· WASHER	14	SN:30001--
16	723-40-60101	· VALVE ASS'Y	1	SN:30001--
17	07000-12020	· · O-RING	1	SN:30001--
18	07001-02020	· · RING,BACK-UP	1	SN:30001--
19	709-25-11390	· · O-RING	1	SN:30001--

Ref. Y1662-10A0 Page 450580

https://truckmanualshub.com/

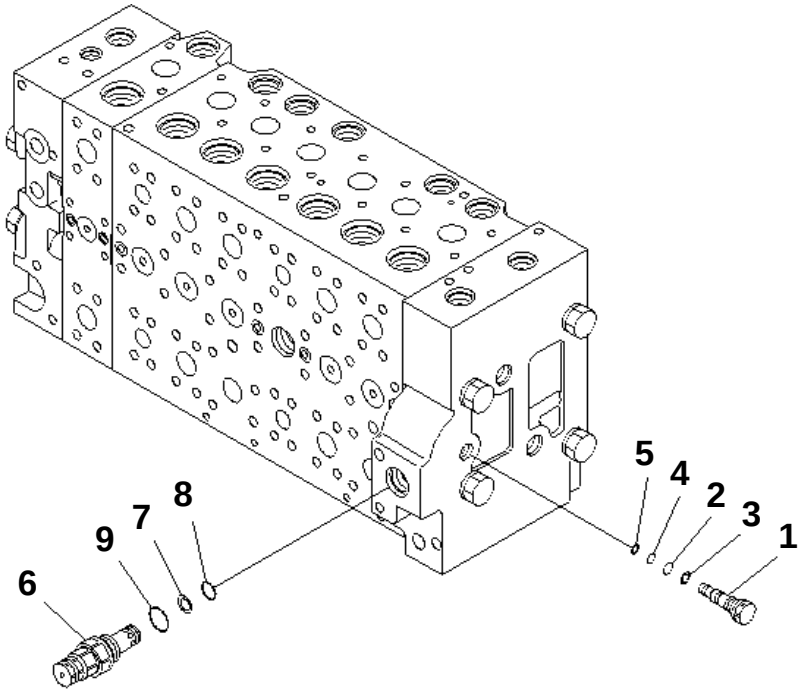

00007228

PC228US-3N-W1 S/N 30001-UP

MAIN VALVE (1-ACTUATOR) (11/19) (SERVICE VALVE¤ ARM CRANE)

Item	Part No.	Description	Qty	Options
	(723-47-21300)	VALVE ASS'Y	1	SN:30001--
THIS ASSEMBLY CONSISTS OF ALL PARTS SHOWN IN FIGS.Y1662-01A0 TO Y1662-19A0.				
	723-46-17701	· PLUG ASS'Y	1	SN:30001--
1	723-46-17711	· · PLUG	1	SN:30001--
2	07000-11009	· · O-RING	1	SN:30001--
3	07001-01009	· · RING,BACK-UP	1	SN:30001--
4	07000-11007	· · O-RING	1	SN:30001--
5	07001-01007	· · RING,BACK-UP	1	SN:30001--
6	723-40-91500	· VALVE ASS'Y,RELIEF	1	SN:30001--
7	700-80-64220	· · RING	1	SN:30001--
8	700-22-11410	· · O-RING	1	SN:30001--
9	709-25-11390	· · O-RING	1	SN:30001--

Ref. Y1662-11A0 Page 450590

https://truckmanualshub.com/

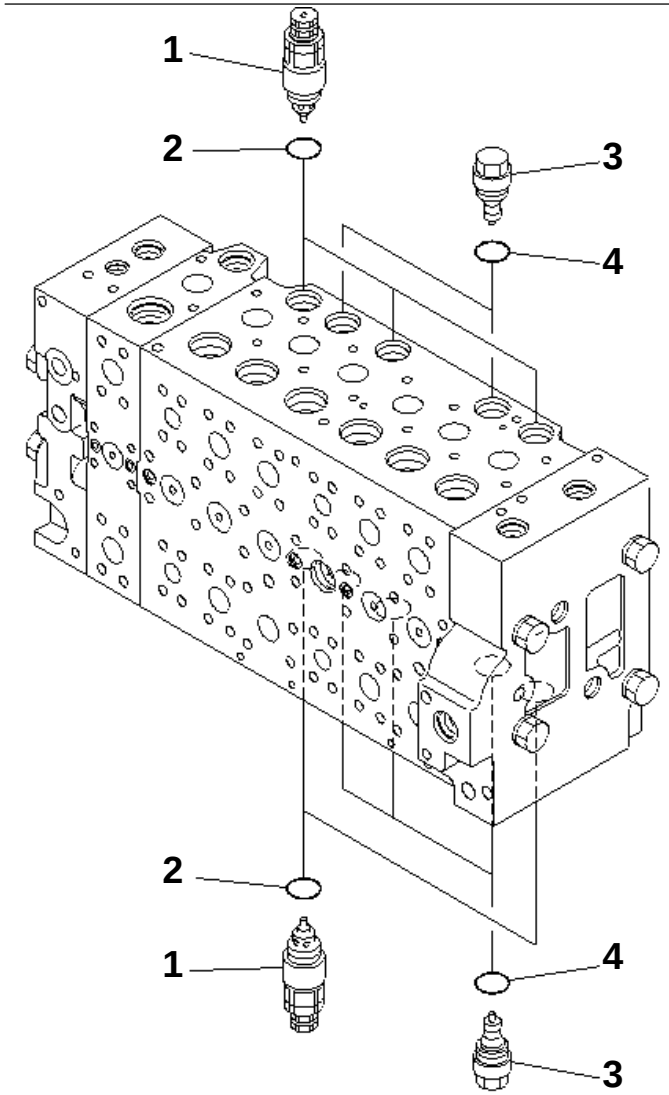

00007229

PC228US-3N-W1 S/N 30001-UP

MAIN VALVE (1-ACTUATOR) (12/19) (SERVICE VALVE¤ ARM CRANE)

Item	Part No.	Description	Qty	Options
	(723-47-21300)	VALVE ASS'Y	1	SN:30001--
THIS ASSEMBLY CONSISTS OF ALL PARTS SHOWN IN FIGS.Y1662-01A0 TO Y1662-19A0.				
1	723-40-91200	· VALVE ASS'Y,SUCTION AND SAFETY	5	SN:30001--
2	709-25-11390	· · O-RING	1	SN:30001--
3	723-40-85100	· VALVE ASS'Y,SUCTION	5	SN:30001--
4	709-25-11390	· · O-RING	1	SN:30001--

Ref. Y1662-12A0 Page 450600

https://truckmanualshub.com/

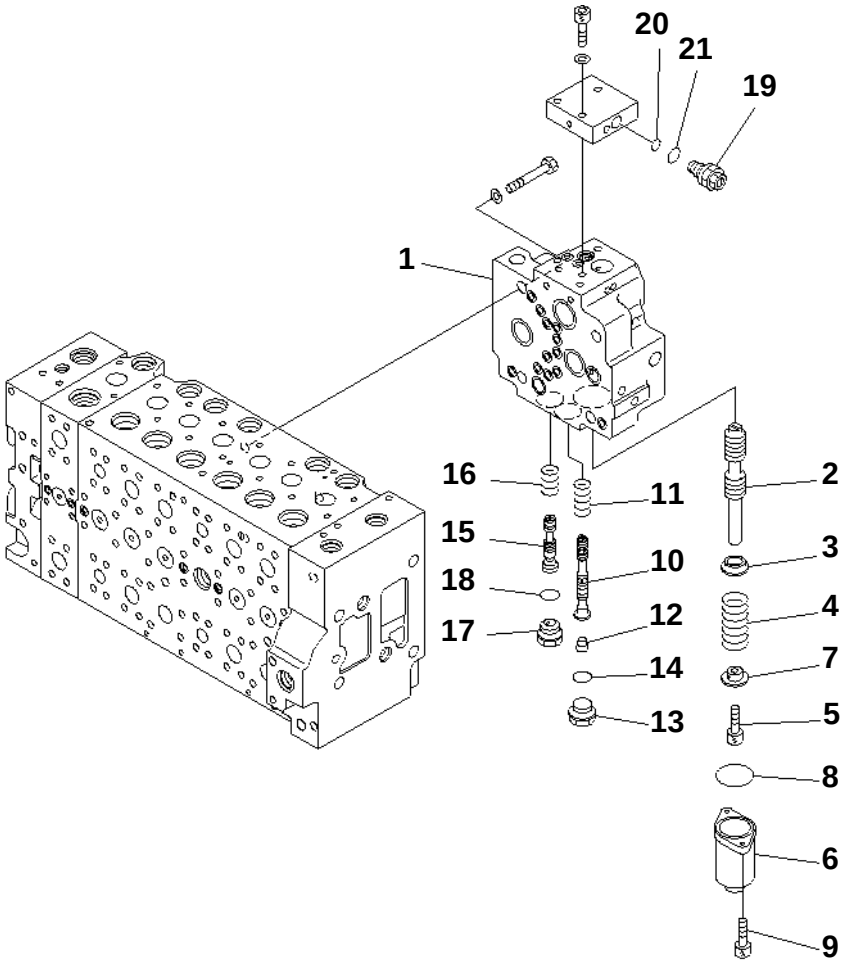

PC228US-3N-W1 S/N 30001-UP

MAIN VALVE (1-ACTUATOR) (13/19) (SERVICE VALVE¤ ARM CRANE)

Item	Part No.	Description	Qty	Options
	(723-47-21300)	VALVE ASS'Y	1	SN:30001--
THIS ASSEMBLY CONSISTS OF ALL PARTS SHOWN IN FIGS.Y1662-01A0 TO Y1662-19A0.				
	723-40-71103	· VALVE ASS'Y	1	SN:30001--
1	☆	· · BODY	1	SN:30001--
2	☆	· · SPOOL	1	SN:30001--
3	☆	· · RETAINER	1	SN:30001--
4	723-40-71340	· · SPRING	1	SN:30001--
5	01252-60816	· · BOLT	1	SN:30001--
6	723-46-15111	· · CASE	1	SN:30001--
7	☆	· · RETAINER	1	SN:30001--
8	07430-71380	· · O-RING	1	SN:30001--
9	01252-60820	· · BOLT	2	SN:30001--
10	☆	· · SPOOL	1	SN:30001--
11	723-40-71440	· · SPRING	1	SN:30001--
12	☆	· · PLUG	1	SN:30001--
13	709-74-91860	· · PLUG	1	SN:30001--
14	07002-12434	· · O-RING	1	SN:30001--
15	☆	· · SPOOL	1	SN:30001--
16	723-40-71390	· · SPRING	1	SN:30001--
17	☆	· · PLUG	1	SN:30001--
18	07002-12434	· · O-RING	1	SN:30001--
19	723-40-91600	· · VALVE ASS'Y,RELIEF	1	SN:30001--
20	702-16-53920	· · · O-RING	1	SN:30001--
21	07002-11623	· · · O-RING	1	SN:30001--

Ref. Y1662-13A0 Page 450610

https://truckmanualshub.com/

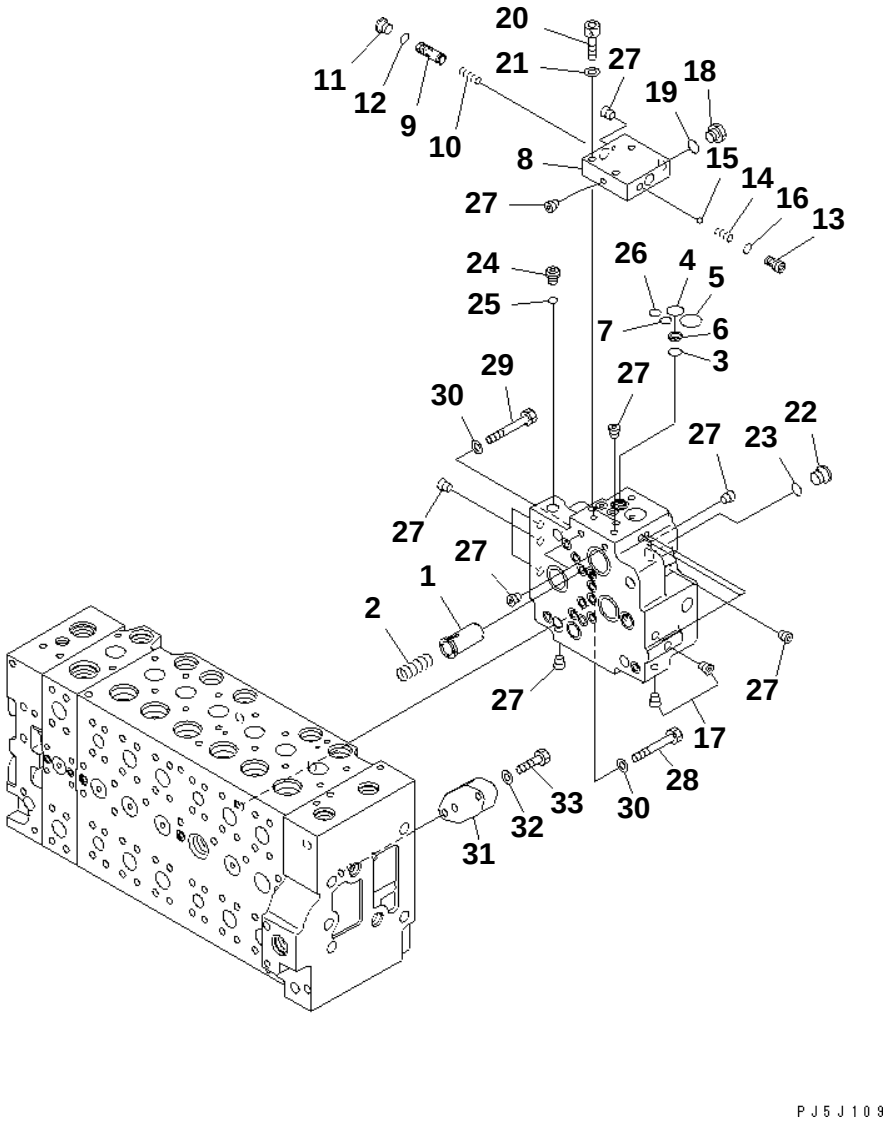

PC228US-3N-W1 S/N 30001-UP

MAIN VALVE (1-ACTUATOR) (14/19) (SERVICE VALVE¤ ARM CRANE)

Item	Part No.	Description	Qty	Options
	(723-47-21300)	VALVE ASS'Y	1	SN:30001--
THIS ASSEMBLY CONSISTS OF ALL PARTS SHOWN IN FIGS.Y1662-01A0 TO Y1662-19A0.				
	(723-40-71103)	· VALVE ASS'Y	1	SN:30001--
1	723-40-71430	· · VALVE	1	SN:30001--
2	702-21-55460	· · SPRING	1	SN:30001--
3	702-21-55420	· · O-RING	1	SN:30001--
4	702-21-55520	· · O-RING	1	SN:30001--
5	702-21-55440	· · O-RING	1	SN:30001--
6	702-21-53120	· · FILTER	1	SN:30001--
7	07000-12011	· · O-RING	1	SN:30001--
8	☆	· · BLOCK	1	SN:30001--
9	☆	· · SPOOL	1	SN:30001--
10	702-21-55640	· · SPRING	1	SN:30001--
11	702-21-55620	· · PLUG	1	SN:30001--
12	07002-11423	· · O-RING	1	SN:30001--
13	702-21-55710	· · SEAT	1	SN:30001--
14	702-21-55720	· · SPRING	1	SN:30001--
15	04260-00793	· · BALL	1	SN:30001--
16	07000-11009	· · O-RING	1	SN:30001--
17	☆	· · PLUG	2	SN:30001--
18	708-8H-11530	· · PLUG	1	SN:30001--
19	07002-11423	· · O-RING	1	SN:30001--
20	01252-61040	· · BOLT	3	SN:30001--
21	01643-51032	· · WASHER	3	SN:30001--
22	702-21-55620	· · PLUG	1	SN:30001--
23	07002-11423	· · O-RING	1	SN:30001--
24	708-8E-16160	· · PLUG	1	SN:30001--
25	07002-11023	· · O-RING	1	SN:30001--
26	07000-12011	· · O-RING	1	SN:30001--
27	☆	· · PLUG	15	SN:30001--
28	01010-61470	· BOLT	3	SN:30001--
29	01010-61460	· BOLT	1	SN:30001--
30	01643-31445	· WASHER	4	SN:30001--
31	723-46-17560	· PLATE	1	SN:30001--
32	01643-51032	· WASHER	2	SN:30001--
33	01010-81040	· BOLT	2	SN:30001--

Ref. Y1662-14A0 Page 450620

https://truckmanualshub.com/

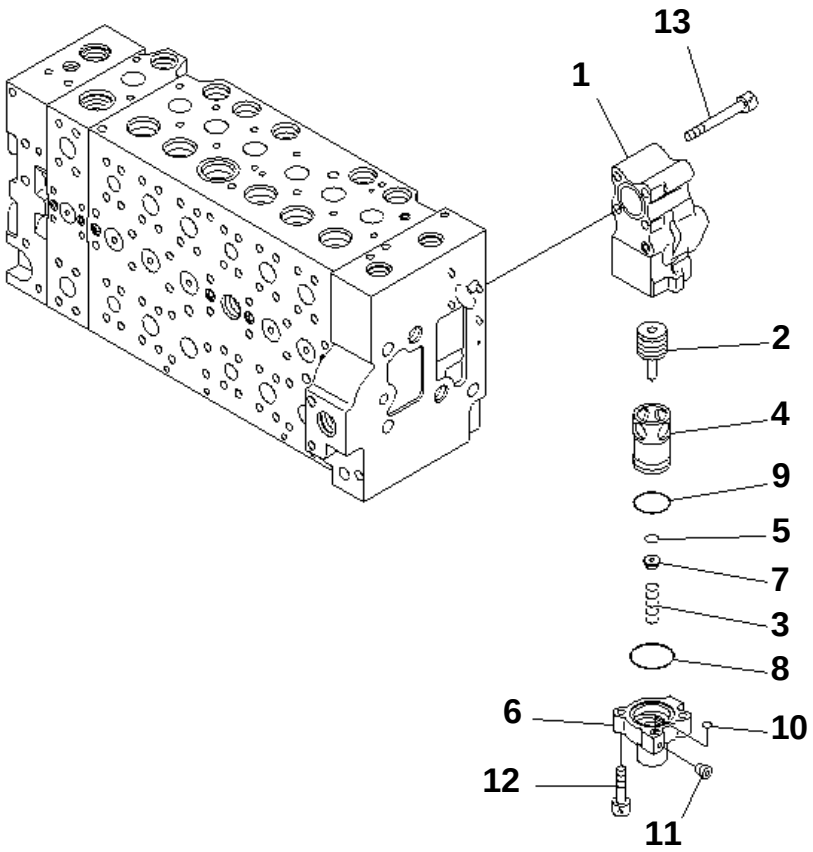

PC228US-3N-W1 S/N 30001-UP

MAIN VALVE (1-ACTUATOR) (15/19) (SERVICE VALVE¤ ARM CRANE)

Item	Part No.	Description	Qty	Options
	(723-47-21300)	VALVE ASS'Y	1	SN:30001--
THIS ASSEMBLY CONSISTS OF ALL PARTS SHOWN IN FIGS.Y1662-01A0 TO Y1662-19A0.				
	723-40-87100	· VALVE ASS'Y	1	SN:30001--
1	☆	· · BODY	1	SN:30001--
2	☆	· · SPOOL	1	SN:30001--
3	723-40-87160	· · SPRING	1	SN:30001--
4	☆	· · SLEEVE	1	SN:30001--
5	☆	· · SEAL	1	SN:30001--
6	☆	· · CASE	1	SN:30001--
7	723-40-87150	· · RETAINER	1	SN:30001--
8	723-40-87170	· · O-RING	1	SN:30001--
9	07000-13035	· · O-RING	1	SN:30001--
10	07000-11007	· · O-RING	1	SN:30001--
11	☆	· · SCREW	1	SN:30001--
12	01252-60830	· · BOLT	2	SN:30001--
13	01252-61075	· BOLT	4	SN:30001--

Ref. Y1662-15A0 Page 450630

https://truckmanualshub.com/

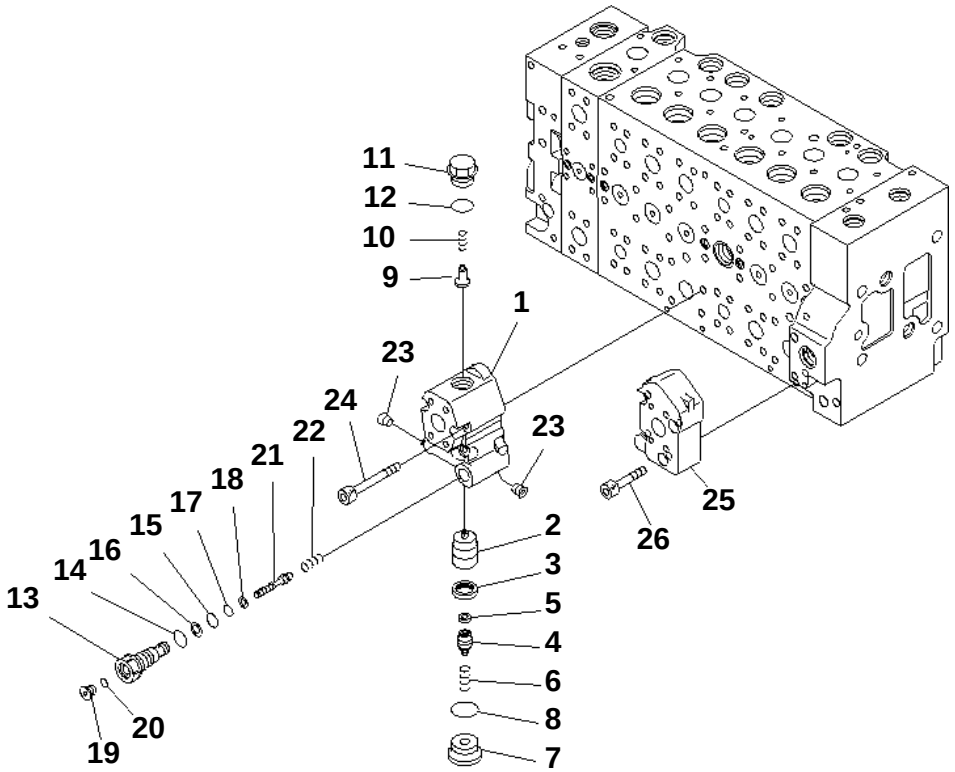

PC228US-3N-W1 S/N 30001-UP

MAIN VALVE (1-ACTUATOR) (16/19) (SERVICE VALVE¤ ARM CRANE)

Item	Part No.	Description	Qty	Options
	(723-47-21300)	VALVE ASS'Y	1	SN:30001--
THIS ASSEMBLY CONSISTS OF ALL PARTS SHOWN IN FIGS.Y1662-01A0 TO Y1662-19A0.				
	723-40-82500	· VALVE ASS'Y	1	SN:30001--
1	☆	· · BODY	1	SN:30001--
2	☆	· · VALVE	1	SN:30001--
3	☆	· · SEAL	1	SN:30001--
4	☆	· · PLUG	1	SN:30001--
5	☆	· · FILTER	1	SN:30001--
6	☆	· · SPRING	1	SN:30001--
7	☆	· · PLUG	1	SN:30001--
8	07002-13334	· · O-RING	1	SN:30001--
9	709-25-11650	· · VALVE,CHECK	1	SN:30001--
10	709-25-11361	· · SPRING	1	SN:30001--
11	☆	· · PLUG	1	SN:30001--
12	07000-13024	· · O-RING	1	SN:30001--
13	☆	· · PLUG	1	SN:30001--
14	07002-11823	· · O-RING	1	SN:30001--
15	07000-12011	· · O-RING	1	SN:30001--
16	07001-02011	· · RING	1	SN:30001--
17	07000-11010	· · O-RING	1	SN:30001--
18	07001-01010	· · RING	1	SN:30001--
19	723-11-18190	· · PLUG	1	SN:30001--
20	07002-11023	· · O-RING	1	SN:30001--
21	☆	· · PISTON	1	SN:30001--
22	723-40-82290	· · SPRING	1	SN:30001--
23	☆	· · PLUG	2	SN:30001--
24	01252-61075	· BOLT	4	SN:30001--
25	723-46-17570	· BLOCK	1	SN:30001--
26	01252-61045	· BOLT	4	SN:30001--

Ref. Y1662-16A0 Page 450640

https://truckmanualshub.com/

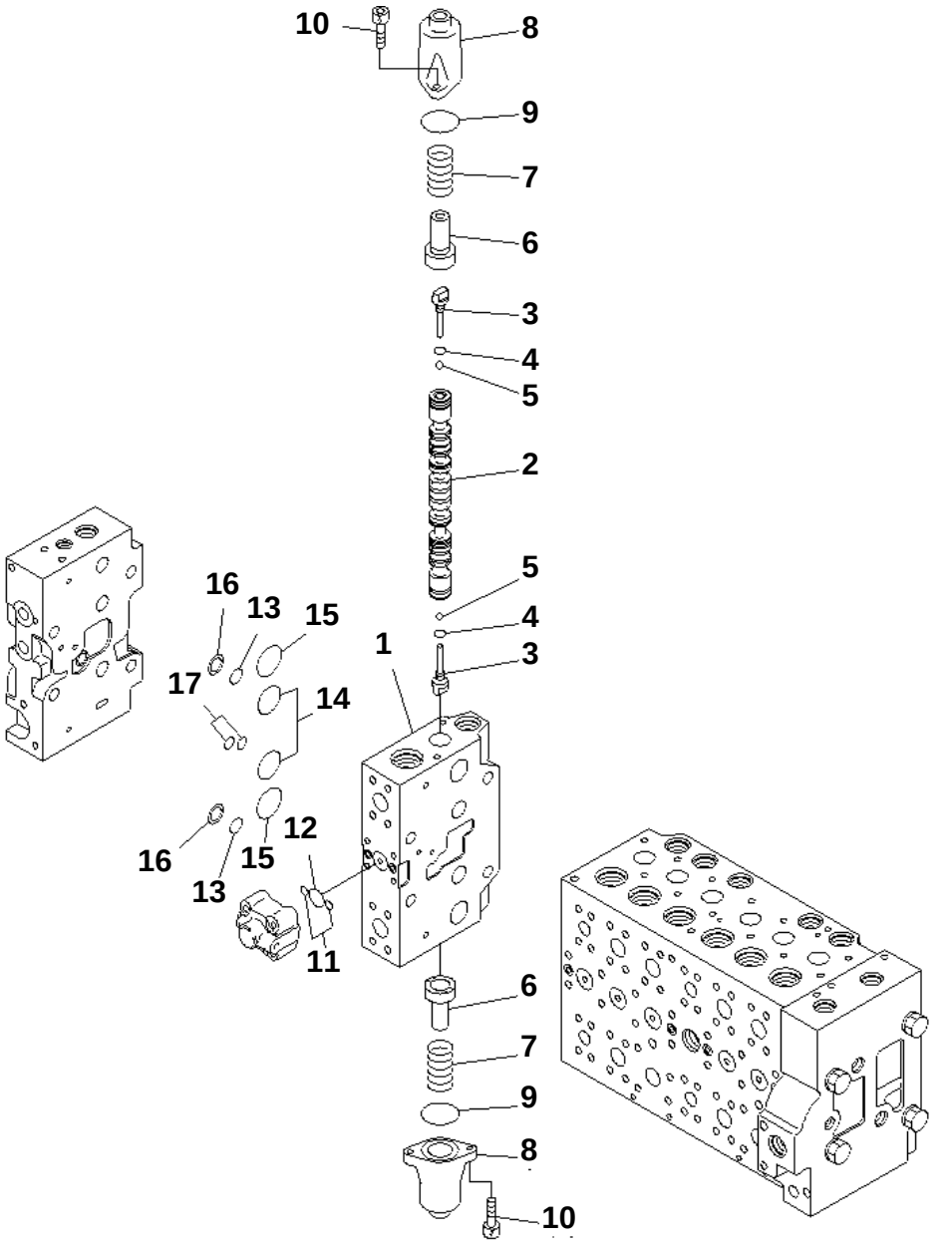

PC228US-3N-W1 S/N 30001-UP

MAIN VALVE (1-ACTUATOR) (17/19) (SERVICE VALVE¤ ARM CRANE)

Item	Part No.	Description	Qty	Options
	(723-47-21300)	VALVE ASS'Y	1	SN:30001--
THIS ASSEMBLY CONSISTS OF ALL PARTS SHOWN IN FIGS.Y1662-01A0 TO Y1662-19A0.				
	☆	· BODY SUB ASS'Y	1	SN:30001--
1	☆	· · BLOCK,VALVE	1	SN:30001--
2	☆	· · SPOOL	1	SN:30001--
3	723-46-15130	· · PLUG	2	SN:30001--
4	07002-10823	· · O-RING	2	SN:30001--
5	708-7T-16460	· · BALL	2	SN:30001--
6	723-46-15120	· · RETAINER	2	SN:30001--
7	723-46-14110	· · SPRING	2	SN:30001--
8	723-46-15111	· · CASE	2	SN:30001--
9	07430-71380	· · O-RING	2	SN:30001--
10	01252-60820	· · BOLT	4	SN:30001--
11	07000-11009	· · O-RING	2	SN:30001--
12	07000-12021	· · O-RING	1	SN:30001--
13	723-11-19130	· · O-RING	2	SN:30001--
14	07000-13032	· · O-RING	2	SN:30001--
15	723-46-17510	· · O-RING	2	SN:30001--
16	723-46-17520	· · RING,BACK-UP	2	SN:30001--
17	723-46-17530	· · O-RING	2	SN:30001--

Ref. Y1662-17A0 Page 450650

https://truckmanualshub.com/

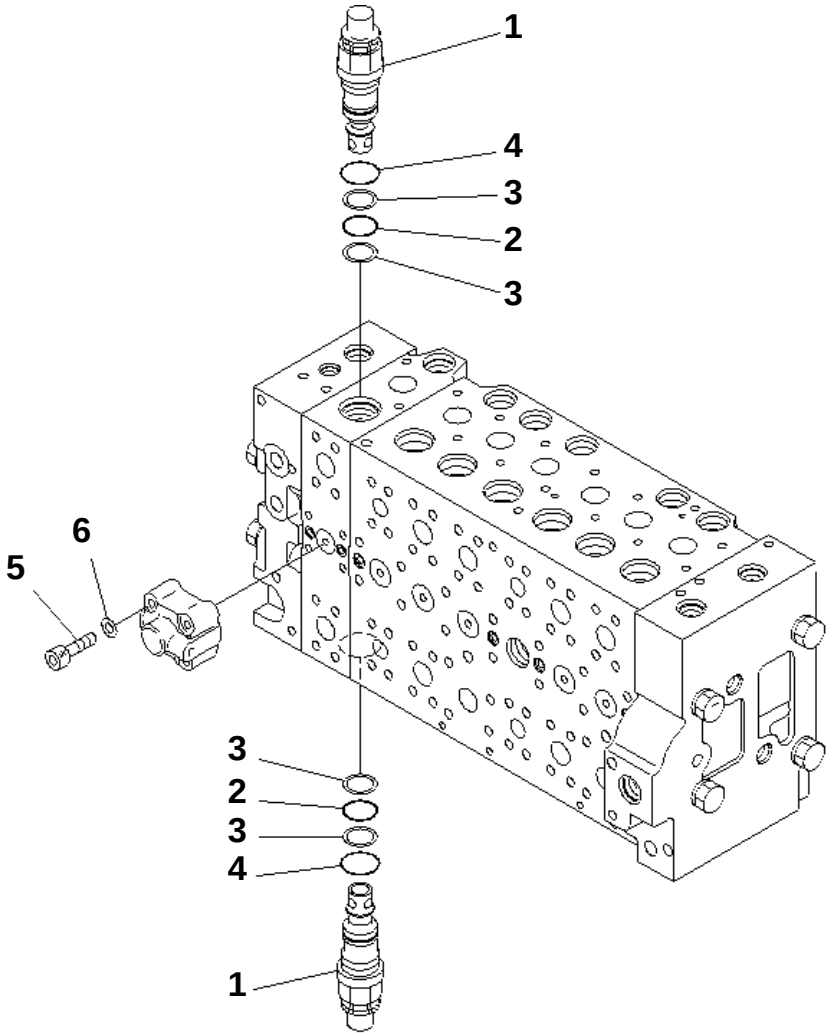

PC228US-3N-W1 S/N 30001-UP

MAIN VALVE (1-ACTUATOR) (18/19) (SERVICE VALVE¤ ARM CRANE)

Item	Part No.	Description	Qty	Options
	(723-47-21300)	VALVE ASS'Y	1	SN:30001--
THIS ASSEMBLY CONSISTS OF ALL PARTS SHOWN IN FIGS.Y1662-01A0 TO Y1662-19A0.				
	☆	· BODY SUB ASS'Y	1	SN:30001--
1	723-46-48100	· · VALVE ASS'Y	2	SN:30001--
2	700-93-11320	· · · O-RING	1	SN:30001--
3	723-46-41950	· · · RING	2	SN:30001--
4	07002-13634	· · · O-RING	1	SN:30001--
5	01252-60845	· · BOLT	4	SN:30001--
6	01643-50823	· · WASHER	4	SN:30001--

Ref. Y1662-18A0 Page 450660

https://truckmanualshub.com/

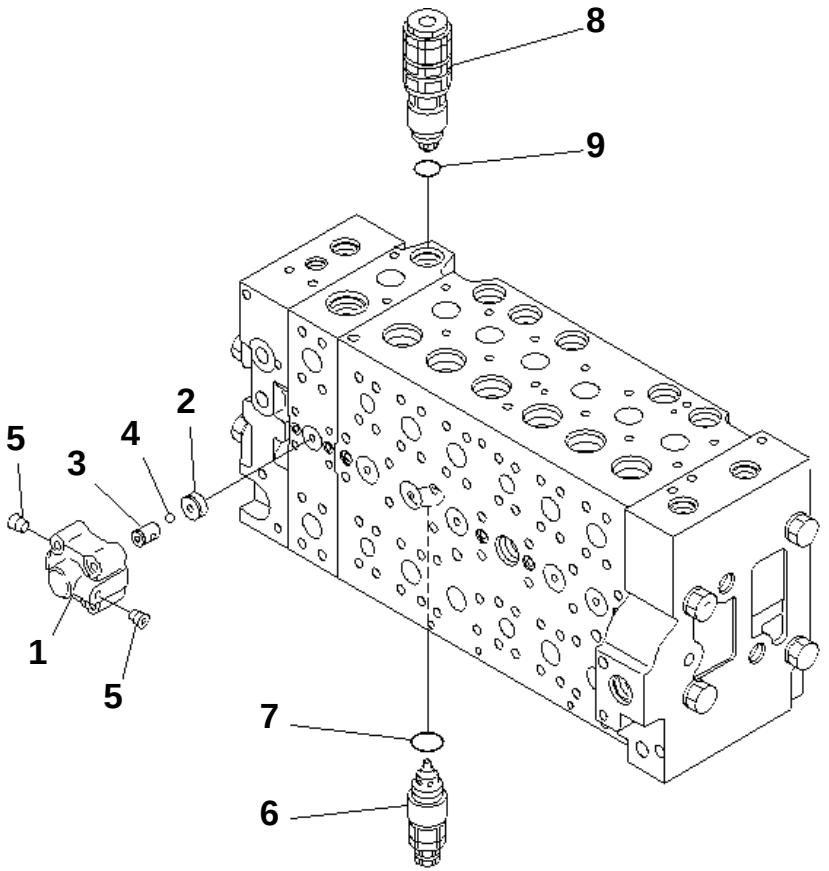

PC228US-3N-W1 S/N 30001-UP

MAIN VALVE (1-ACTUATOR) (19/19) (SERVICE VALVE¤ ARM CRANE)

Item	Part No.	Description	Qty	Options
	(723-47-21300)	VALVE ASS'Y	1	SN:30001--
THIS ASSEMBLY CONSISTS OF ALL PARTS SHOWN IN FIGS.Y1662-01A0 TO Y1662-19A0.				
	723-40-66300	· VALVE ASS'Y	1	SN:30001--
1	☆	· · CASE	1	SN:30001--
2	☆	· · SEAT	1	SN:30001--
3	☆	· · SEAT	1	SN:30001--
4	☆	· · BALL	1	SN:30001--
5	☆	· · PLUG	2	SN:30001--
6	723-40-91300	· VALVE ASS'Y,SUCTION AND SAFETY	1	SN:30001--
7	709-25-11390	· · O-RING	1	SN:30001--
8	723-90-76101	· VALVE ASS'Y	1	SN:30001--
9	07000-13024	· · O-RING	1	SN:30001--

Ref. Y1662-19A0 Page 450670

https://truckmanualshub.com/

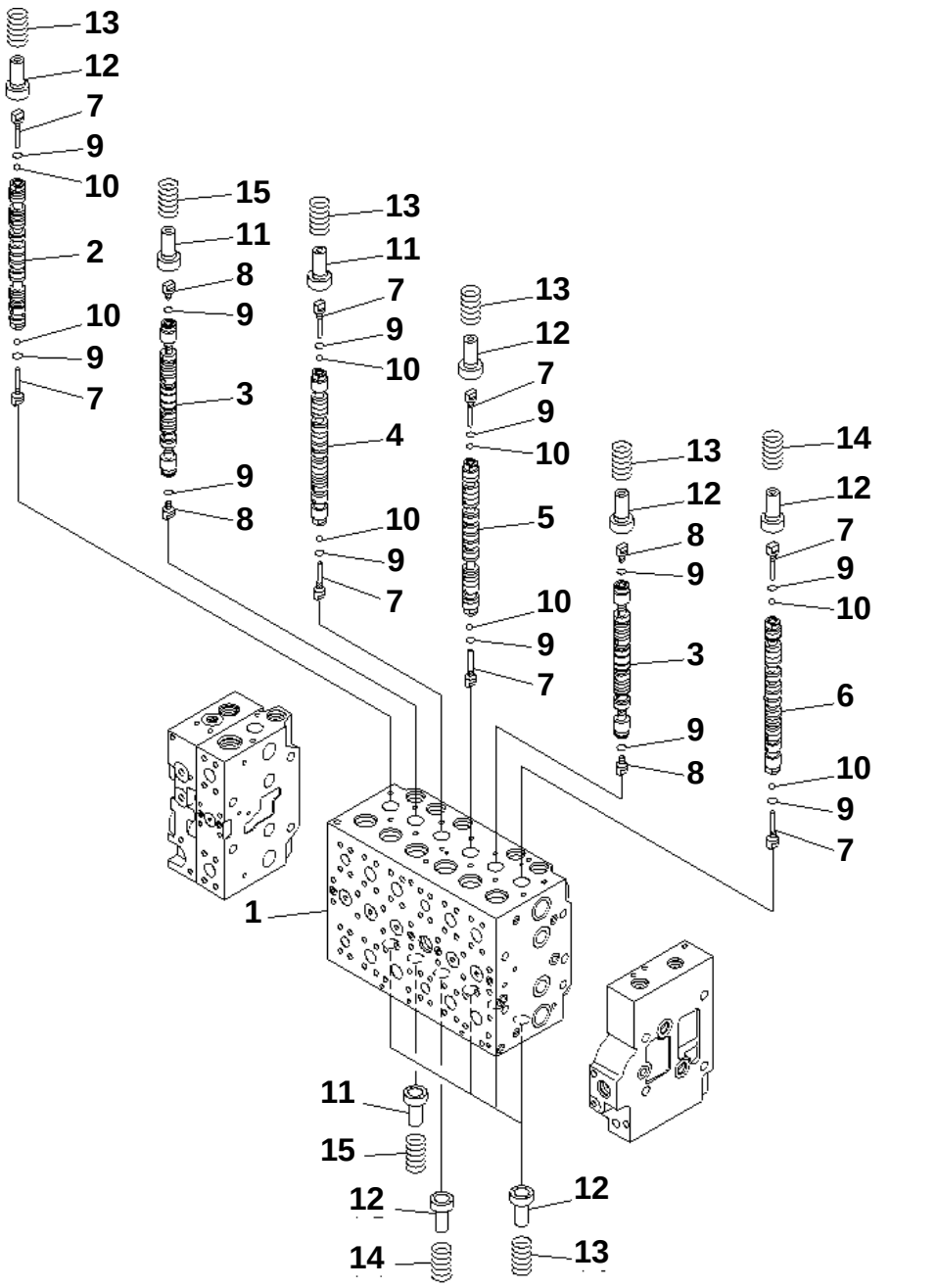

PC228US-3N-W1 S/N 30001-UP

MAIN VALVE (1-ACTUATOR) (1/19) (ROTATION ARM)

Item	Part No.	Description	Qty	Options
	723-47-20302	VALVE ASS'Y	1	SN:30001--
THIS ASSEMBLY CONSISTS OF ALL PARTS SHOWN IN FIGS.Y1662-21A0 TO Y1662-39A0.				
	☆	· BODY SUB ASS'Y	1	SN:30001--
1	☆	· · BLOCK,VALVE	1	SN:30001--
2	☆	· · SPOOL	1	SN:30001--
3	☆	· · SPOOL	2	SN:30001--
4	☆	· · SPOOL	1	SN:30001--
5	☆	· · SPOOL	1	SN:30001--
6	☆	· · SPOOL	1	SN:30001--
7	723-46-15130	· · PLUG	8	SN:30001--
8	723-46-15140	· · PLUG	4	SN:30001--
9	07002-10823	· · O-RING	12	SN:30001--
10	708-7T-16460	· · BALL	8	SN:30001--
11	723-46-15120	· · RETAINER	3	SN:30001--
12	723-46-15690	· · RETAINER	9	SN:30001--
13	723-46-14110	· · SPRING	8	SN:30001--
14	723-46-14270	· · SPRING	2	SN:30001--
15	723-46-14131	· · SPRING	2	SN:30001--

Ref. Y1662-21A0 Page 450680

https://truckmanualshub.com/

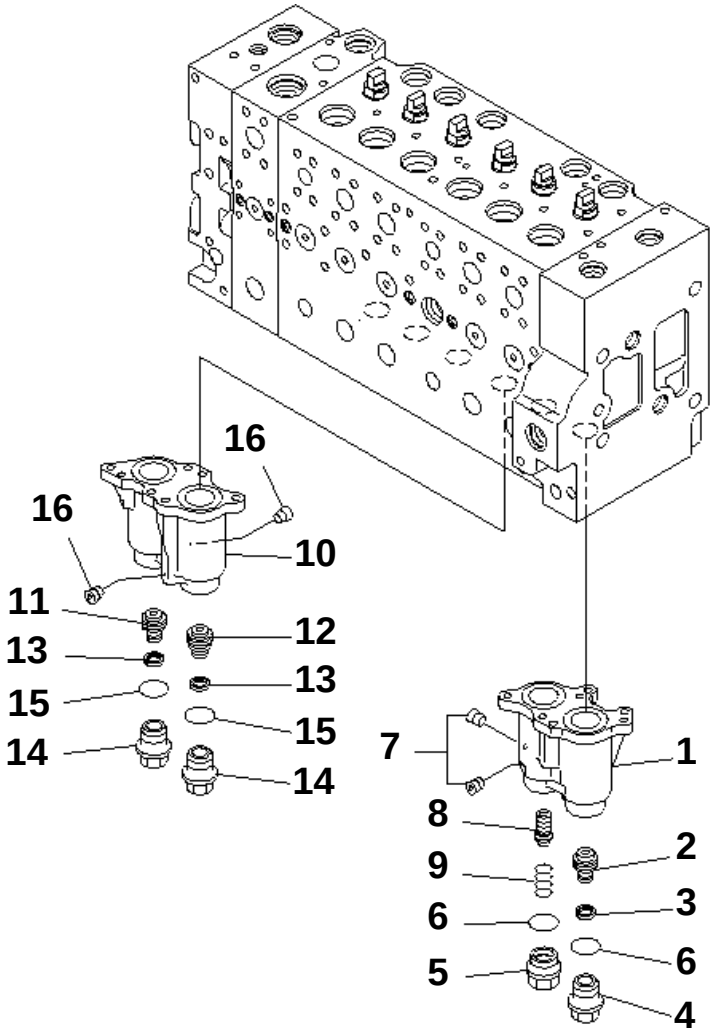

PJ5J172

PC228US-3N-W1 S/N 30001-UP

MAIN VALVE (1-ACTUATOR) (2/19) (ROTATION ARM)

Item	Part No.	Description	Qty	Options
	(723-47-20302)	VALVE ASS'Y	1	SN:30001--
THIS ASSEMBLY CONSISTS OF ALL PARTS SHOWN IN FIGS.Y1662-21A0 TO Y1662-39A0.				
	☆	· BODY SUB ASS'Y	1	SN:30001--
	723-46-17300	· · CASE SUB ASS'Y	1	SN:30001--
1	☆	· · · CASE	1	SN:30001--
2	☆	· · · PISTON	1	SN:30001--
3	☆	· · · SEAL	1	SN:30001--
4	723-46-15630	· · · PLUG	1	SN:30001--
5	723-46-17340	· · · PLUG	1	SN:30001--
6	07000-13024	· · · O-RING	2	SN:30001--
7	☆	· · · SCREW	3	SN:30001--
8	723-46-17320	· · · SPOOL	1	SN:30001--
9	723-46-17330	· · · SPRING	1	SN:30001--
	723-46-17101	· · CASE SUB ASS'Y	1	SN:30001--
10	☆	· · · CASE	1	SN:30001--
11	☆	· · · PISTON	1	SN:30001--
12	☆	· · · PISTON	1	SN:30001--
13	☆	· · · SEAL	2	SN:30001--
14	723-46-15630	· · · PLUG	2	SN:30001--
15	07000-13024	· · · O-RING	2	SN:30001--
16	☆	· · · SCREW	2	SN:30001--

Ref. Y1662-22A0 Page 450690

https://truckmanualshub.com/

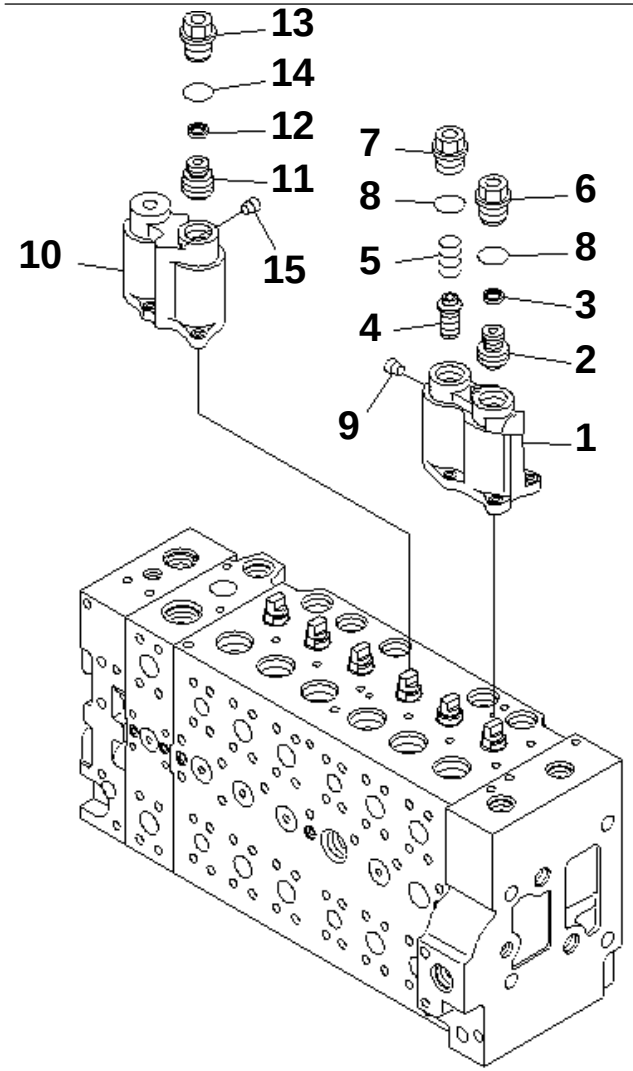

PJ5J107

PC228US-3N-W1 S/N 30001-UP

MAIN VALVE (1-ACTUATOR) (3/19) (ROTATION ARM)

Item	Part No.	Description	Qty	Options
	(723-47-20302)	VALVE ASS'Y	1	SN:30001--
THIS ASSEMBLY CONSISTS OF ALL PARTS SHOWN IN FIGS.Y1662-21A0 TO Y1662-39A0.				
	☆	· BODY SUB ASS'Y	1	SN:30001--
	723-46-17401	· · CASE SUB ASS'Y	1	SN:30001--
1	☆	· · · CASE	1	SN:30001--
2	☆	· · · PISTON	1	SN:30001--
3	☆	· · · SEAL	1	SN:30001--
4	723-46-17320	· · · SPOOL	1	SN:30001--
5	723-46-17330	· · · SPRING	1	SN:30001--
6	723-46-15630	· · · PLUG	1	SN:30001--
7	723-46-17340	· · · PLUG	1	SN:30001--
8	07000-13024	· · · O-RING	2	SN:30001--
9	☆	· · · SCREW	3	SN:30001--
	723-46-17203	· · CASE SUB ASS'Y	1	SN:30001--
10	☆	· · · CASE	1	SN:30001--
11	☆	· · · PISTON	1	SN:30001--
12	☆	· · · SEAL	1	SN:30001--
13	723-46-15630	· · · PLUG	1	SN:30001--
14	07000-13024	· · · O-RING	1	SN:30001--
15	☆	· · · SCREW	1	SN:30001--

Ref. Y1662-23A0 Page 450700

https://truckmanualshub.com/

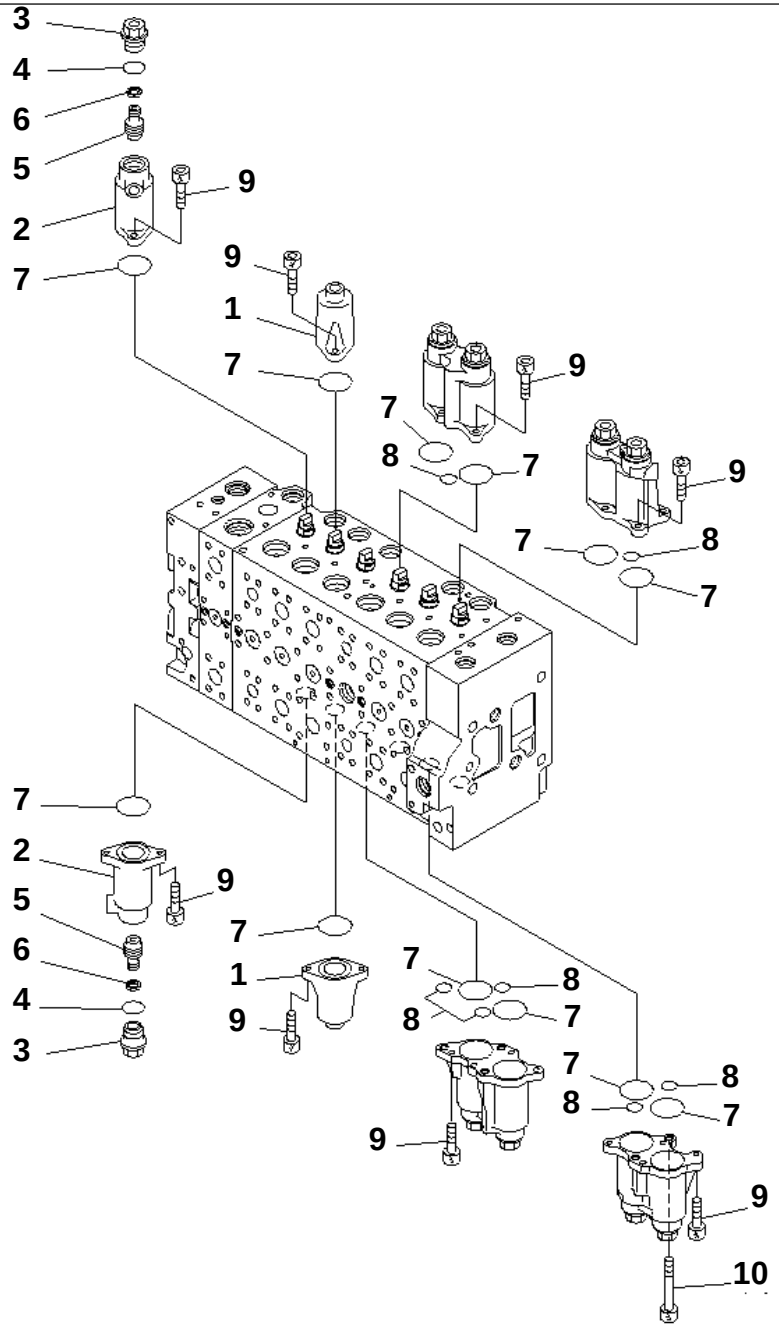

PC228US-3N-W1 S/N 30001-UP

MAIN VALVE (1-ACTUATOR) (4/19) (ROTATION ARM)

Item	Part No.	Description	Qty	Options
	(723-47-20302)	VALVE ASS'Y	1	SN:30001--
THIS ASSEMBLY CONSISTS OF ALL PARTS SHOWN IN FIGS.Y1662-21A0 TO Y1662-39A0.				
	☆	· BODY SUB ASS'Y	1	SN:30001--
1	723-46-15111	· · CASE	2	SN:30001--
2	723-46-15771	· · CASE	2	SN:30001--
3	723-46-15630	· · PLUG	2	SN:30001--
4	07000-13024	· · O-RING	2	SN:30001--
5	☆	· · PISTON	2	SN:30001--
6	☆	· · SEAL	2	SN:30001--
7	07430-71380	· · O-RING	12	SN:30001--
8	702-16-53920	· · O-RING	7	SN:30001--
9	01252-60820	· · BOLT	23	SN:30001--
10	723-46-17350	· · BOLT	1	SN:30001--

Ref. Y1662-24A0 Page 450710

https://truckmanualshub.com/

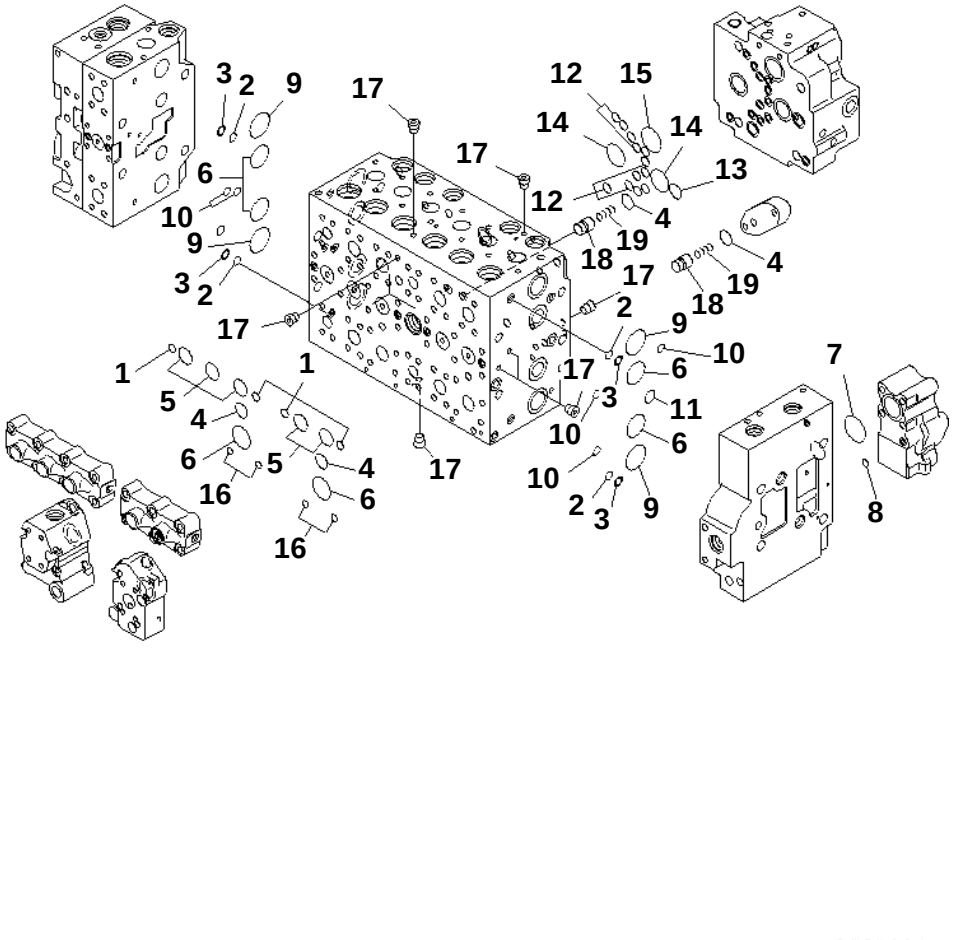

PC228US-3N-W1 S/N 30001-UP

MAIN VALVE (1-ACTUATOR) (5/19) (ROTATION ARM)

Item	Part No.	Description	Qty	Options
	(723-47-20302)	VALVE ASS'Y	1	SN:30001--
THIS ASSEMBLY CONSISTS OF ALL PARTS SHOWN IN FIGS.Y1662-21A0 TO Y1662-39A0.				
	☆	· BODY SUB ASS'Y	1	SN:30001--
1	07000-12012	· · O-RING	4	SN:30001--
2	723-11-19130	· · O-RING	4	SN:30001--
3	723-46-17520	· · RING,BACK-UP	4	SN:30001--
4	07000-12021	· · O-RING	4	SN:30001--
5	07000-13028	· · O-RING	5	SN:30001--
6	07000-13032	· · O-RING	6	SN:30001--
7	07000-13038	· · O-RING	1	SN:30001--
8	07000-11010	· · O-RING	1	SN:30001--
9	723-46-17510	· · O-RING	4	SN:30001--
10	723-46-17530	· · O-RING	5	SN:30001--
11	723-11-18150	· · O-RING	2	SN:30001--
12	07000-12012	· · O-RING	12	SN:30001--
13	07000-12021	· · O-RING	1	SN:30001--
14	07000-13032	· · O-RING	2	SN:30001--
15	07000-13036	· · O-RING	1	SN:30001--
16	702-16-53920	· · O-RING	4	SN:30001--
17	☆	· · PLUG	13	SN:30001--
18	723-46-15150	· · VALVE	2	SN:30001--
19	723-46-14150	· · SPRING	2	SN:30001--

Ref. Y1662-25A0 Page 450720

https://truckmanualshub.com/

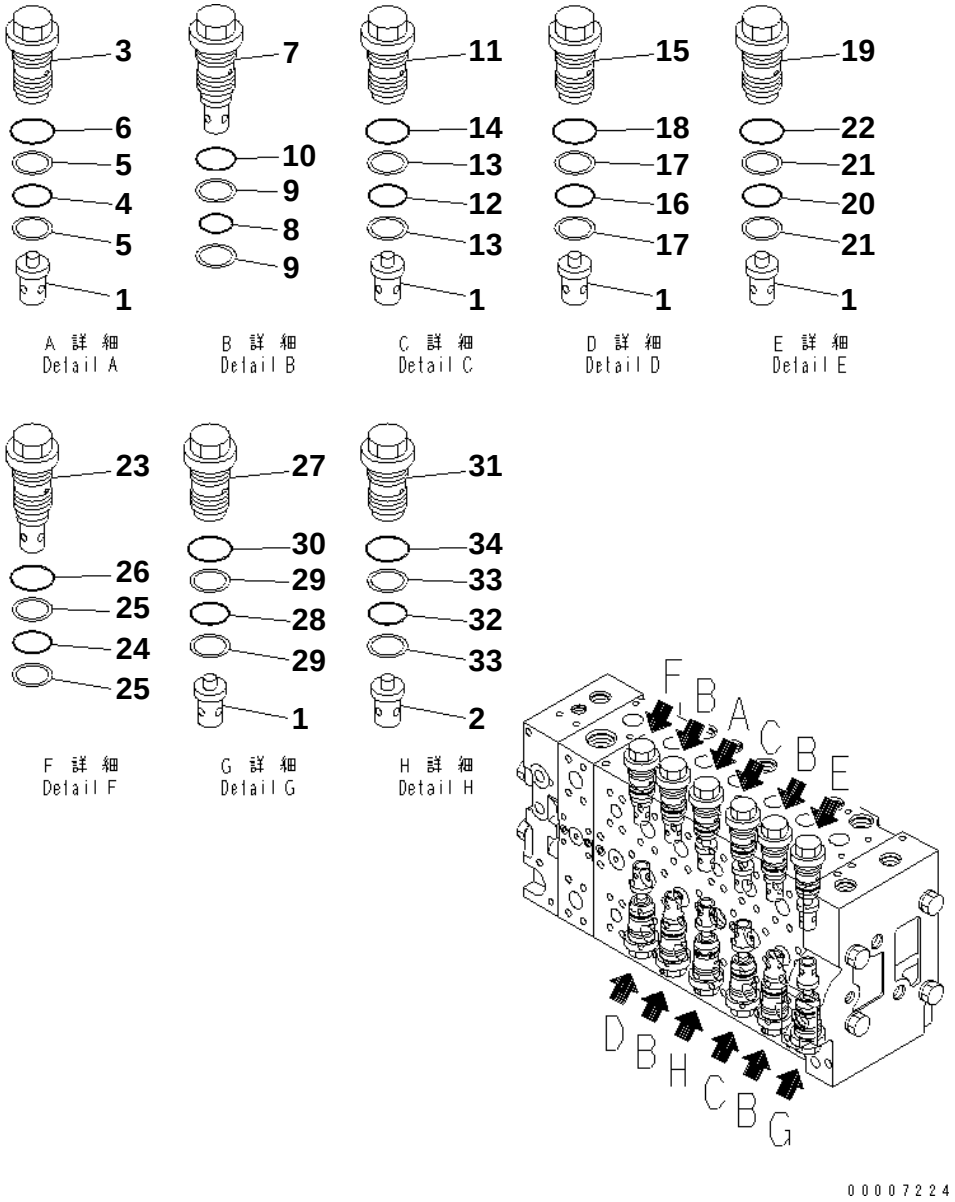

PC228US-3N-W1 S/N 30001-UP

MAIN VALVE (1-ACTUATOR) (6/19) (ROTATION ARM)

Item	Part No.	Description	Qty	Options
	(723-47-20302)	VALVE ASS'Y	1	SN:30001--
THIS ASSEMBLY CONSISTS OF ALL PARTS SHOWN IN FIGS.Y1662-21A0 TO Y1662-39A0.				
	☆	· BODY SUB ASS'Y	1	SN:30001--
1	723-46-41110	· · VALVE	6	SN:30001--
2	723-46-41190	· · VALVE	1	SN:30001--
3	723-46-40100	· · VALVE ASS'Y	1	SN:30001--
4	700-93-11320	· · · O-RING	1	SN:30001--
5	723-46-41950	· · · RING	2	SN:30001--
6	07002-13634	· · · O-RING	1	SN:30001--
7	723-46-42700	· · VALVE ASS'Y	4	SN:30001--
8	700-93-11320	· · · O-RING	1	SN:30001--
9	723-46-41950	· · · RING	2	SN:30001--
10	07002-13634	· · · O-RING	1	SN:30001--
11	723-46-41100	· · VALVE ASS'Y	2	SN:30001--
12	700-93-11320	· · · O-RING	1	SN:30001--
13	723-46-41950	· · · RING	2	SN:30001--
14	07002-13634	· · · O-RING	1	SN:30001--
15	723-46-45100	· · VALVE ASS'Y	1	SN:30001--
16	700-93-11320	· · · O-RING	1	SN:30001--
17	723-46-41950	· · · RING	2	SN:30001--
18	07002-13634	· · · O-RING	1	SN:30001--
19	723-46-46300	· · VALVE ASS'Y	1	SN:30001--
20	700-93-11320	· · · O-RING	1	SN:30001--
21	723-46-41950	· · · RING	2	SN:30001--
22	07002-13634	· · · O-RING	1	SN:30001--
23	723-46-43400	· · VALVE ASS'Y	1	SN:30001--
24	700-93-11320	· · · O-RING	1	SN:30001--
25	723-46-41950	· · · RING	2	SN:30001--
26	07002-13634	· · · O-RING	1	SN:30001--
27	723-46-43100	· · VALVE ASS'Y	1	SN:30001--
28	700-93-11320	· · · O-RING	1	SN:30001--
29	723-46-41950	· · · RING	2	SN:30001--
30	07002-13634	· · · O-RING	1	SN:30001--
31	723-46-46101	· · VALVE ASS'Y	1	SN:30001--
32	700-93-11320	· · · O-RING	1	SN:30001--
33	723-46-41950	· · · RING	2	SN:30001--
34	07002-13634	· · · O-RING	1	SN:30001--

Ref. Y1662-26A0 Page 450730

https://truckmanualshub.com/

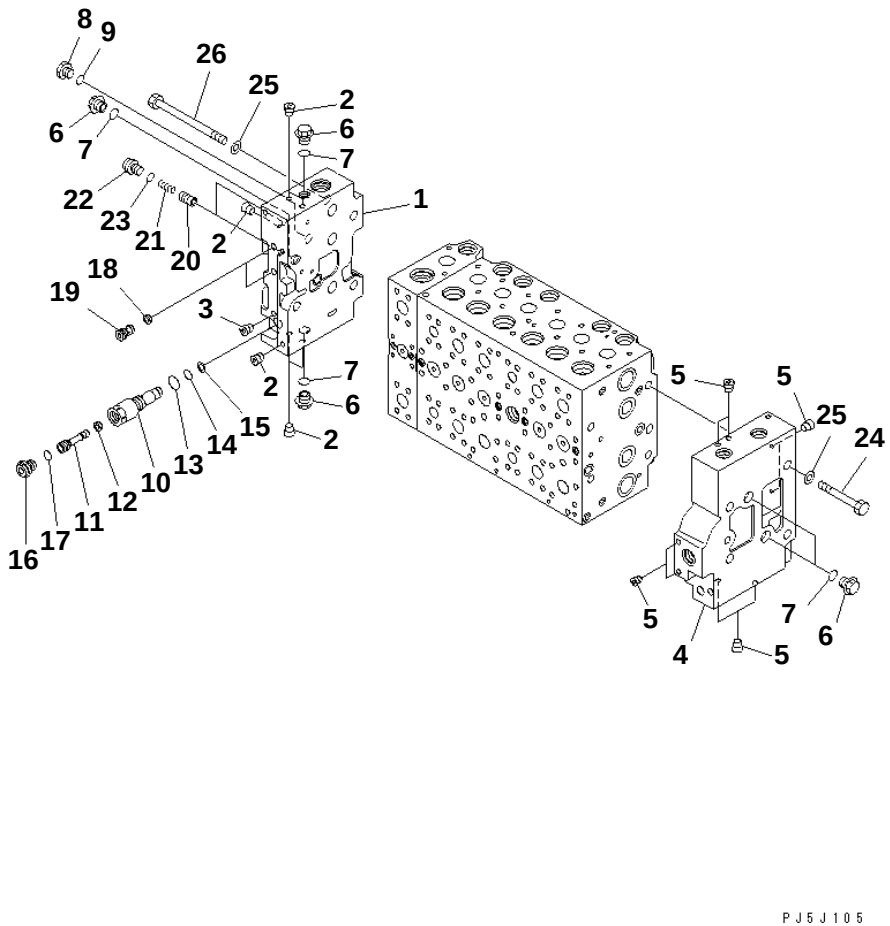

PC228US-3N-W1 S/N 30001-UP

MAIN VALVE (1-ACTUATOR) (7/19) (ROTATION ARM)

Item	Part No.	Description	Qty	Options
	(723-47-20302)	VALVE ASS'Y	1	SN:30001--
THIS ASSEMBLY CONSISTS OF ALL PARTS SHOWN IN FIGS.Y1662-21A0 TO Y1662-39A0.				
	723-46-00750	· COVER ASS'Y	1	SN:30001--
1	☆	· · COVER,A	1	SN:30001--
2	☆	· · PLUG	7	SN:30001--
3	☆	· · PLUG	1	SN:30001--
	723-46-00742	· COVER ASS'Y	1	SN:30001--
4	☆	· · COVER,B	1	SN:30001--
5	☆	· · PLUG	8	SN:30001--
6	723-46-15180	· PLUG	5	SN:30001--
7	07002-11823	· O-RING	5	SN:30001--
8	708-8H-11530	· PLUG	1	SN:30001--
9	07002-11423	· O-RING	1	SN:30001--
	723-46-17600	· PLUG ASS'Y	1	SN:30001--
10	723-46-17610	· · SLEEVE	1	SN:30001--
11	723-46-17640	· · PLUG	1	SN:30001--
12	702-21-55760	· · FILTER	1	SN:30001--
13	07002-11423	· · O-RING	1	SN:30001--
14	07000-11007	· · O-RING	1	SN:30001--
15	07001-01007	· · RING,BACK-UP	1	SN:30001--
16	708-8E-16160	· · PLUG	1	SN:30001--
17	07002-11023	· · O-RING	1	SN:30001--
18	☆	· FILTER	2	SN:30001--
19	723-46-17550	· PLUG	2	SN:30001--
20	723-46-15190	· VALVE	2	SN:30001--
21	723-46-14140	· SPRING	2	SN:30001--
22	708-8E-16160	· PLUG	2	SN:30001--
23	07002-11023	· O-RING	2	SN:30001--
24	01010-61490	· BOLT	4	SN:30001--
25	01643-31445	· WASHER	8	SN:30001--
26	01011-61455	· BOLT	4	SN:30001--

Ref. Y1662-27A0 Page 450740

https://truckmanualshub.com/

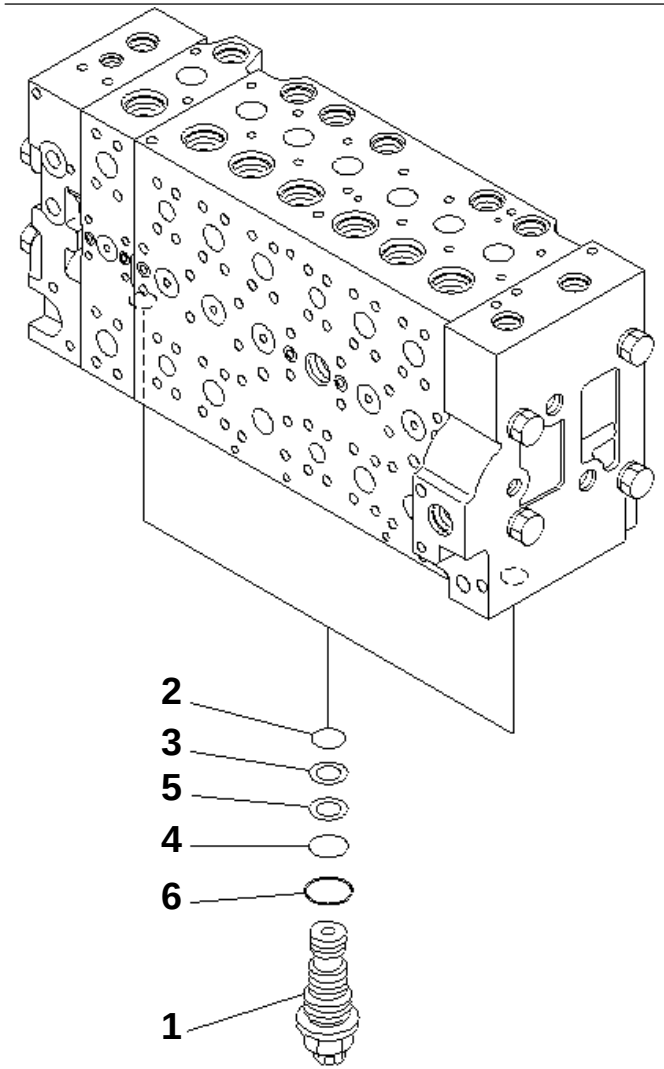

00007225

PC228US-3N-W1 S/N 30001-UP

MAIN VALVE (1-ACTUATOR) (8/19) (ROTATION ARM)

Item	Part No.	Description	Qty	Options
	(723-47-20302)	VALVE ASS'Y	1	SN:30001--
THIS ASSEMBLY CONSISTS OF ALL PARTS SHOWN IN FIGS.Y1662-21A0 TO Y1662-39A0.				
1	723-40-56302	· VALVE ASS'Y,UNLOAD	2	SN:30001--
2	07000-12014	· · O-RING	1	SN:30001--
3	723-40-56350	· · RING	1	SN:30001--
4	07000-12016	· · O-RING	1	SN:30001--
5	723-60-22230	· · RING,BACK-UP	1	SN:30001--
6	07002-12434	· · O-RING	1	SN:30001--

Ref. Y1662-28A0 Page 450750

https://truckmanualshub.com/

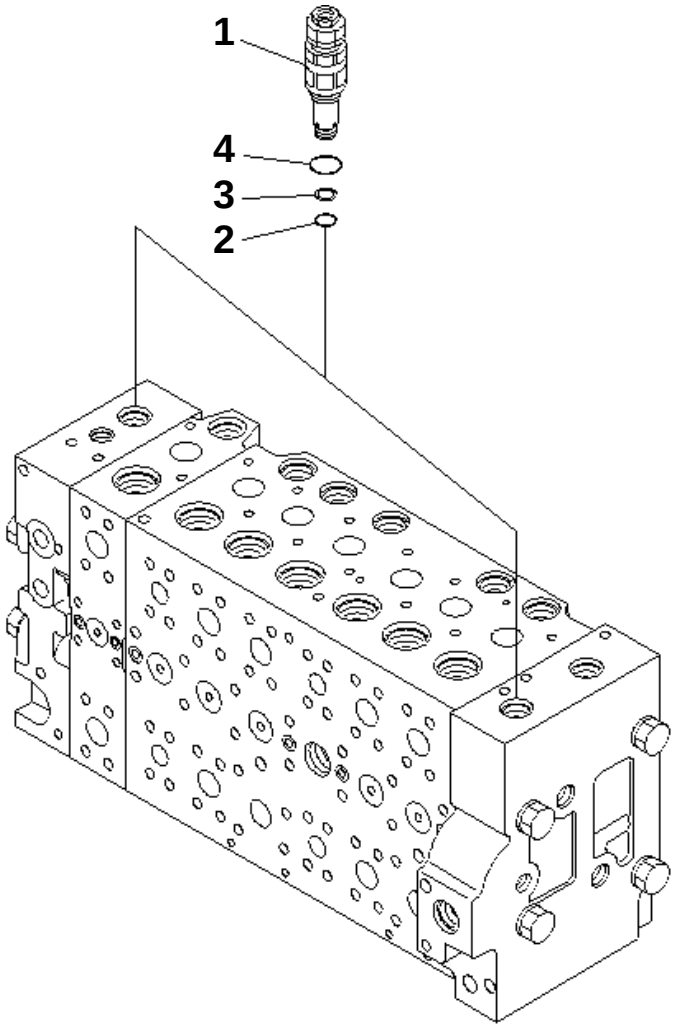

00007226

PC228US-3N-W1 S/N 30001-UP

MAIN VALVE (1-ACTUATOR) (9/19) (ROTATION ARM)

Item	Part No.	Description	Qty	Options
	(723-47-20302)	VALVE ASS'Y	1	SN:30001--
THIS ASSEMBLY CONSISTS OF ALL PARTS SHOWN IN FIGS.Y1662-21A0 TO Y1662-39A0.				
1	723-40-91101	· VALVE ASS'Y,RELIEF	2	SN:30001--
2	700-22-11410	· · O-RING	1	SN:30001--
3	700-80-64220	· · RING	1	SN:30001--
4	07002-12434	· · O-RING	1	SN:30001--

Ref. Y1662-29A0 Page 450760

https://truckmanualshub.com/

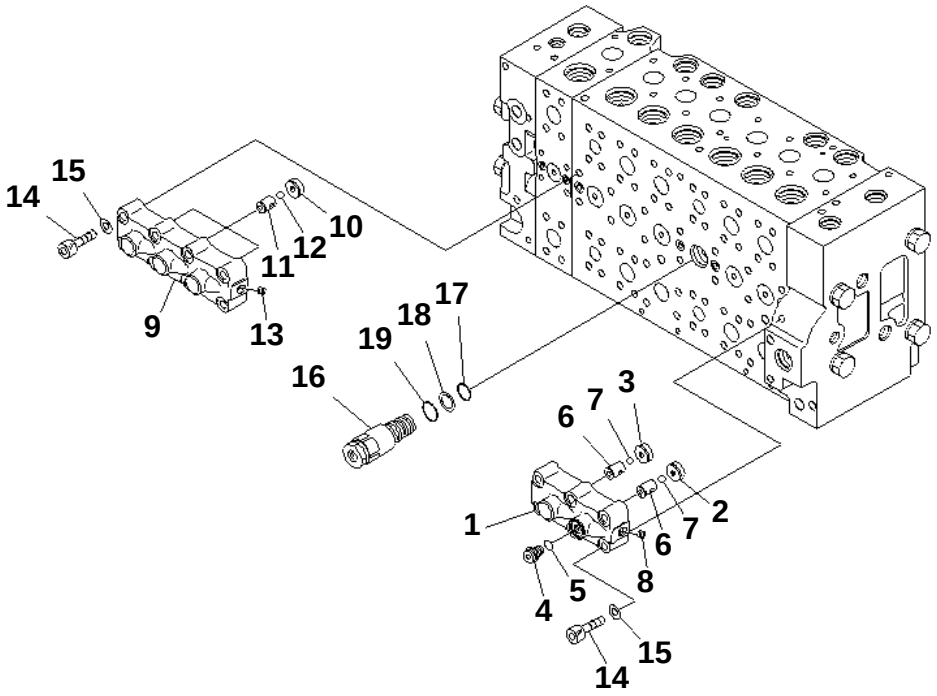

00007227

PC228US-3N-W1 S/N 30001-UP

MAIN VALVE (1-ACTUATOR) (10/19) (ROTATION ARM)

Item	Part No.	Description	Qty	Options
	(723-47-20302)	VALVE ASS'Y	1	SN:30001--
THIS ASSEMBLY CONSISTS OF ALL PARTS SHOWN IN FIGS.Y1662-21A0 TO Y1662-39A0.				
	723-40-66701	· VALVE ASS'Y	1	SN:30001--
1	☆	· · CASE	1	SN:30001--
2	☆	· · SEAT	1	SN:30001--
3	☆	· · SEAT	1	SN:30001--
4	708-8H-11530	· · PLUG	1	SN:30001--
5	07002-11423	· · O-RING	1	SN:30001--
6	☆	· · SEAT	2	SN:30001--
7	☆	· · BALL	2	SN:30001--
8	☆	· · PLUG	1	SN:30001--
	723-40-66601	· VALVE ASS'Y	1	SN:30001--
9	☆	· · CASE	1	SN:30001--
10	☆	· · SEAT	3	SN:30001--
11	☆	· · SEAT	3	SN:30001--
12	☆	· · BALL	3	SN:30001--
13	☆	· · PLUG	1	SN:30001--
14	01252-61050	· BOLT	14	SN:30001--
15	01643-51032	· WASHER	14	SN:30001--
16	723-40-60101	· VALVE ASS'Y	1	SN:30001--
17	07000-12020	· · O-RING	1	SN:30001--
18	07001-02020	· · RING,BACK-UP	1	SN:30001--
19	709-25-11390	· · O-RING	1	SN:30001--

Ref. Y1662-30A0 Page 450770

https://truckmanualshub.com/

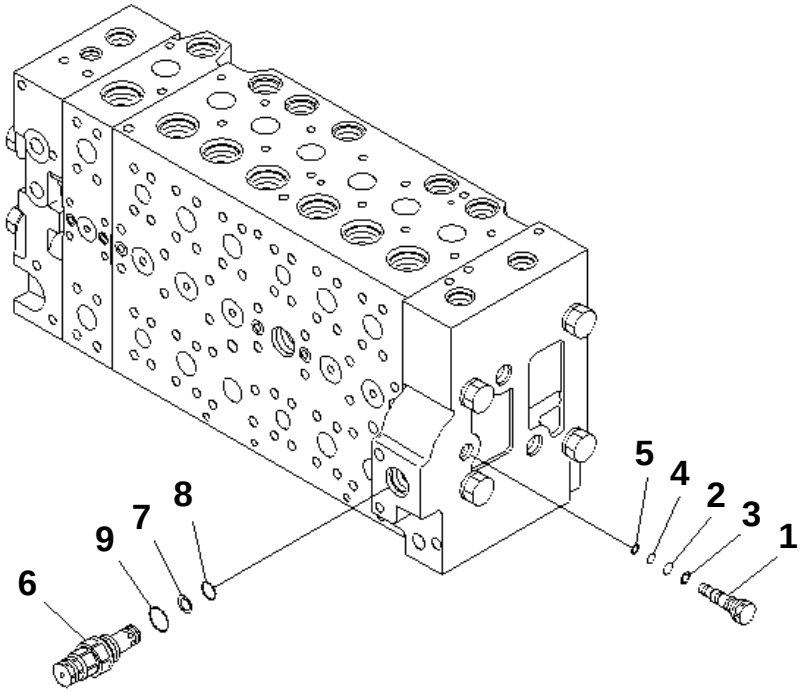

00007228

PC228US-3N-W1 S/N 30001-UP

MAIN VALVE (1-ACTUATOR) (11/19) (ROTATION ARM)

Item	Part No.	Description	Qty	Options
	(723-47-20302)	VALVE ASS'Y	1	SN:30001--
THIS ASSEMBLY CONSISTS OF ALL PARTS SHOWN IN FIGS.Y1662-21A0 TO Y1662-39A0.				
	723-46-17701	· PLUG ASS'Y	1	SN:30001--
1	723-46-17711	· · PLUG	1	SN:30001--
2	07000-11009	· · O-RING	1	SN:30001--
3	07001-01009	· · RING,BACK-UP	1	SN:30001--
4	07000-11007	· · O-RING	1	SN:30001--
5	07001-01007	· · RING,BACK-UP	1	SN:30001--
6	723-40-91500	· VALVE ASS'Y,RELIEF	1	SN:30001--
7	700-80-64220	· · RING	1	SN:30001--
8	700-22-11410	· · O-RING	1	SN:30001--
9	709-25-11390	· · O-RING	1	SN:30001--

Ref. Y1662-31A0 Page 450780

https://truckmanualshub.com/

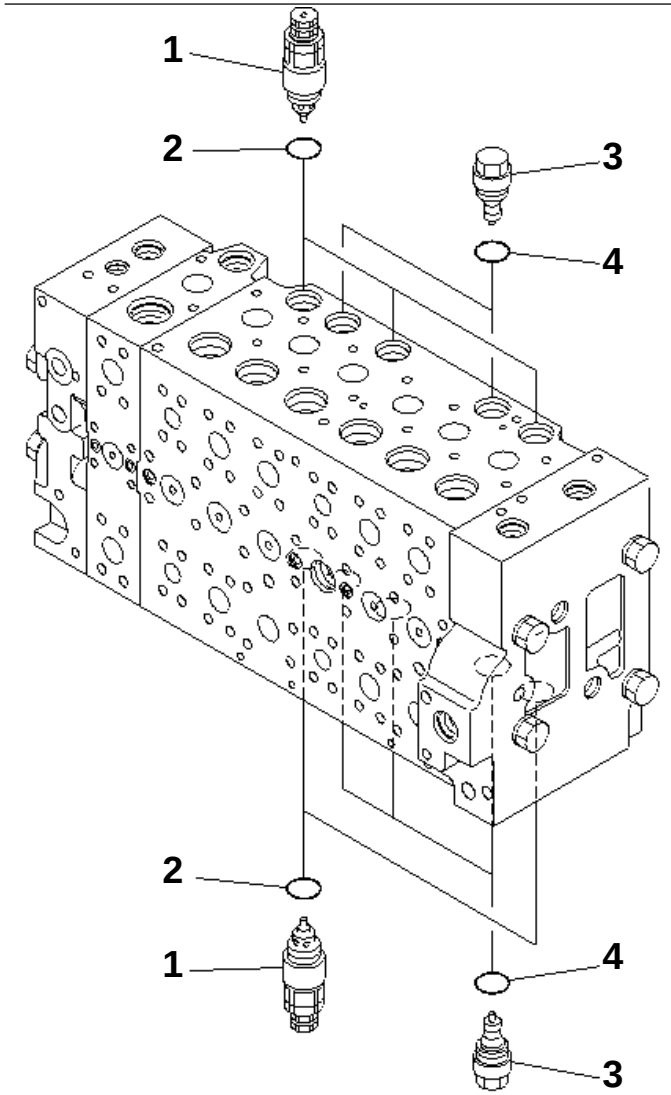

00007229

PC228US-3N-W1 S/N 30001-UP

MAIN VALVE (1-ACTUATOR) (12/19) (ROTATION ARM)

Item	Part No.	Description	Qty	Options
	(723-47-20302)	VALVE ASS'Y	1	SN:30001--
THIS ASSEMBLY CONSISTS OF ALL PARTS SHOWN IN FIGS.Y1662-21A0 TO Y1662-39A0.				
1	723-40-91200	· VALVE ASS'Y,SUCTION AND SAFETY	5	SN:30001--
2	709-25-11390	· · O-RING	1	SN:30001--
3	723-40-85100	· VALVE ASS'Y,SUCTION	5	SN:30001--
4	709-25-11390	· · O-RING	1	SN:30001--

Ref. Y1662-32A0 Page 450790

https://truckmanualshub.com/

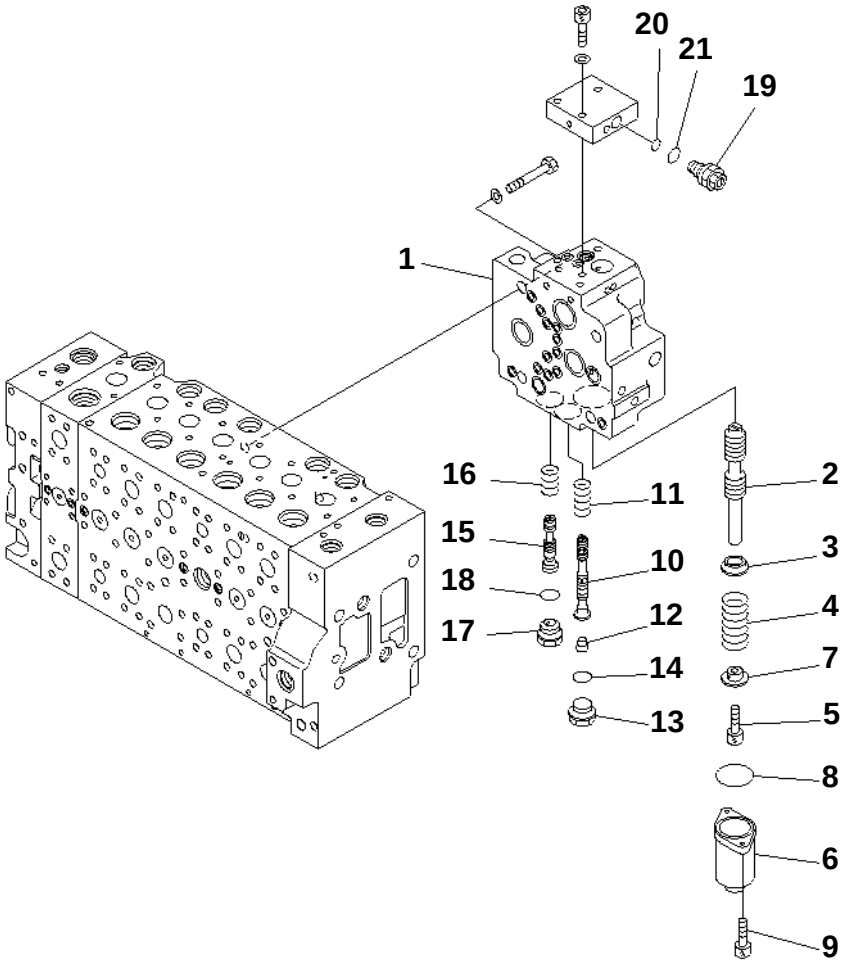

PC228US-3N-W1 S/N 30001-UP

MAIN VALVE (1-ACTUATOR) (13/19) (ROTATION ARM)

Item	Part No.	Description	Qty	Options
	(723-47-20302)	VALVE ASS'Y	1	SN:30001--
THIS ASSEMBLY CONSISTS OF ALL PARTS SHOWN IN FIGS.Y1662-21A0 TO Y1662-39A0.				
	723-40-71103	· VALVE ASS'Y	1	SN:30001--
1	☆	· · BODY	1	SN:30001--
2	☆	· · SPOOL	1	SN:30001--
3	☆	· · RETAINER	1	SN:30001--
4	723-40-71340	· · SPRING	1	SN:30001--
5	01252-60816	· · BOLT	1	SN:30001--
6	723-46-15111	· · CASE	1	SN:30001--
7	☆	· · RETAINER	1	SN:30001--
8	07430-71380	· · O-RING	1	SN:30001--
9	01252-60820	· · BOLT	2	SN:30001--
10	☆	· · SPOOL	1	SN:30001--
11	723-40-71440	· · SPRING	1	SN:30001--
12	☆	· · PLUG	1	SN:30001--
13	709-74-91860	· · PLUG	1	SN:30001--
14	07002-12434	· · O-RING	1	SN:30001--
15	☆	· · SPOOL	1	SN:30001--
16	723-40-71390	· · SPRING	1	SN:30001--
17	☆	· · PLUG	1	SN:30001--
18	07002-12434	· · O-RING	1	SN:30001--
19	723-40-91600	· · VALVE ASS'Y,RELIEF	1	SN:30001--
20	702-16-53920	· · · O-RING	1	SN:30001--
21	07002-11623	· · · O-RING	1	SN:30001--

Ref. Y1662-33A0 Page 450800

https://truckmanualshub.com/

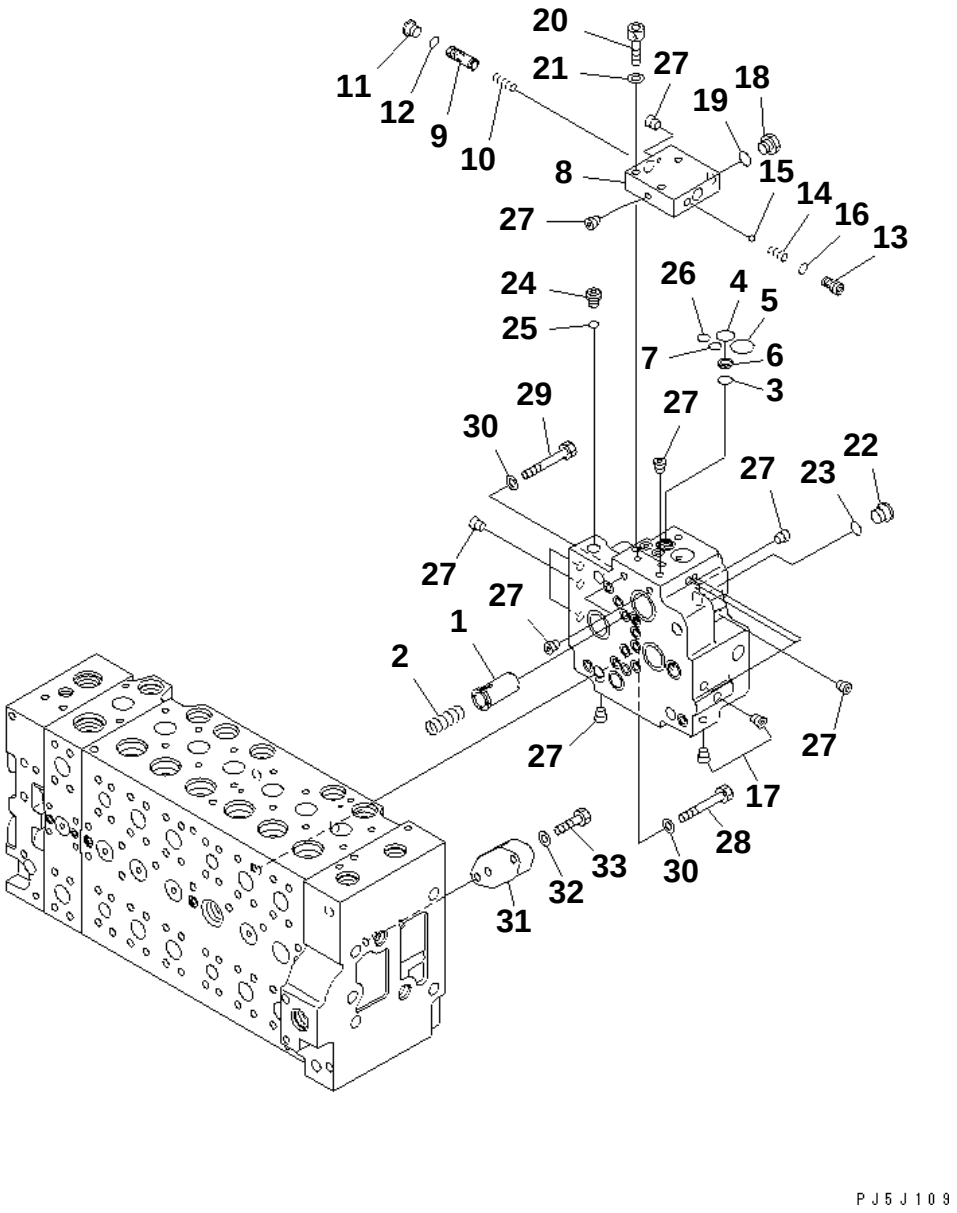

PC228US-3N-W1 S/N 30001-UP

MAIN VALVE (1-ACTUATOR) (14/19) (ROTATION ARM)

Item	Part No.	Description	Qty	Options
	(723-47-20302)	VALVE ASS'Y	1	SN:30001--
THIS ASSEMBLY CONSISTS OF ALL PARTS SHOWN IN FIGS.Y1662-21A0 TO Y1662-39A0.				
	(723-40-71103)	· VALVE ASS'Y	1	SN:30001--
1	723-40-71430	· · VALVE	1	SN:30001--
2	702-21-55460	· · SPRING	1	SN:30001--
3	702-21-55420	· · O-RING	1	SN:30001--
4	702-21-55520	· · O-RING	1	SN:30001--
5	702-21-55440	· · O-RING	1	SN:30001--
6	702-21-53120	· · FILTER	1	SN:30001--
7	07000-12011	· · O-RING	1	SN:30001--
8	☆	· · BLOCK	1	SN:30001--
9	☆	· · SPOOL	1	SN:30001--
10	702-21-55640	· · SPRING	1	SN:30001--
11	702-21-55620	· · PLUG	1	SN:30001--
12	07002-11423	· · O-RING	1	SN:30001--
13	702-21-55710	· · SEAT	1	SN:30001--
14	702-21-55720	· · SPRING	1	SN:30001--
15	04260-00793	· · BALL	1	SN:30001--
16	07000-11009	· · O-RING	1	SN:30001--
17	☆	· · PLUG	2	SN:30001--
18	708-8H-11530	· · PLUG	1	SN:30001--
19	07002-11423	· · O-RING	1	SN:30001--
20	01252-61040	· · BOLT	3	SN:30001--
21	01643-51032	· · WASHER	3	SN:30001--
22	702-21-55620	· · PLUG	1	SN:30001--
23	07002-11423	· · O-RING	1	SN:30001--
24	708-8E-16160	· · PLUG	1	SN:30001--
25	07002-11023	· · O-RING	1	SN:30001--
26	07000-12011	· · O-RING	1	SN:30001--
27	☆	· · PLUG	15	SN:30001--
28	01010-61470	· BOLT	3	SN:30001--
29	01010-61460	· BOLT	1	SN:30001--
30	01643-31445	· WASHER	4	SN:30001--
31	723-46-17560	· PLATE	1	SN:30001--
32	01643-51032	· WASHER	2	SN:30001--
33	01010-81040	· BOLT	2	SN:30001--

Ref. Y1662-34A0 Page 450810

https://truckmanualshub.com/

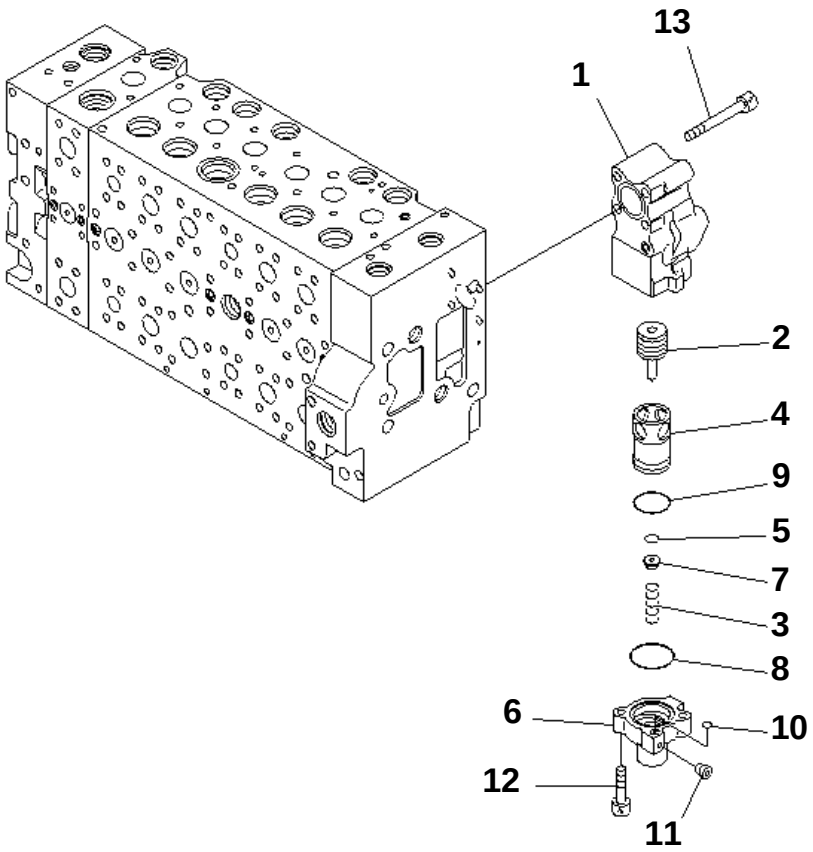

PC228US-3N-W1 S/N 30001-UP

MAIN VALVE (1-ACTUATOR) (15/19) (ROTATION ARM)

Item	Part No.	Description	Qty	Options
	(723-47-20302)	VALVE ASS'Y	1	SN:30001--
THIS ASSEMBLY CONSISTS OF ALL PARTS SHOWN IN FIGS.Y1662-21A0 TO Y1662-39A0.				
	723-40-87100	· VALVE ASS'Y	1	SN:30001--
1	☆	· · BODY	1	SN:30001--
2	☆	· · SPOOL	1	SN:30001--
3	723-40-87160	· · SPRING	1	SN:30001--
4	☆	· · SLEEVE	1	SN:30001--
5	☆	· · SEAL	1	SN:30001--
6	☆	· · CASE	1	SN:30001--
7	723-40-87150	· · RETAINER	1	SN:30001--
8	723-40-87170	· · O-RING	1	SN:30001--
9	07000-13035	· · O-RING	1	SN:30001--
10	07000-11007	· · O-RING	1	SN:30001--
11	☆	· · SCREW	1	SN:30001--
12	01252-60830	· · BOLT	2	SN:30001--
13	01252-61075	· BOLT	4	SN:30001--

Ref. Y1662-35A0 Page 450820

https://truckmanualshub.com/

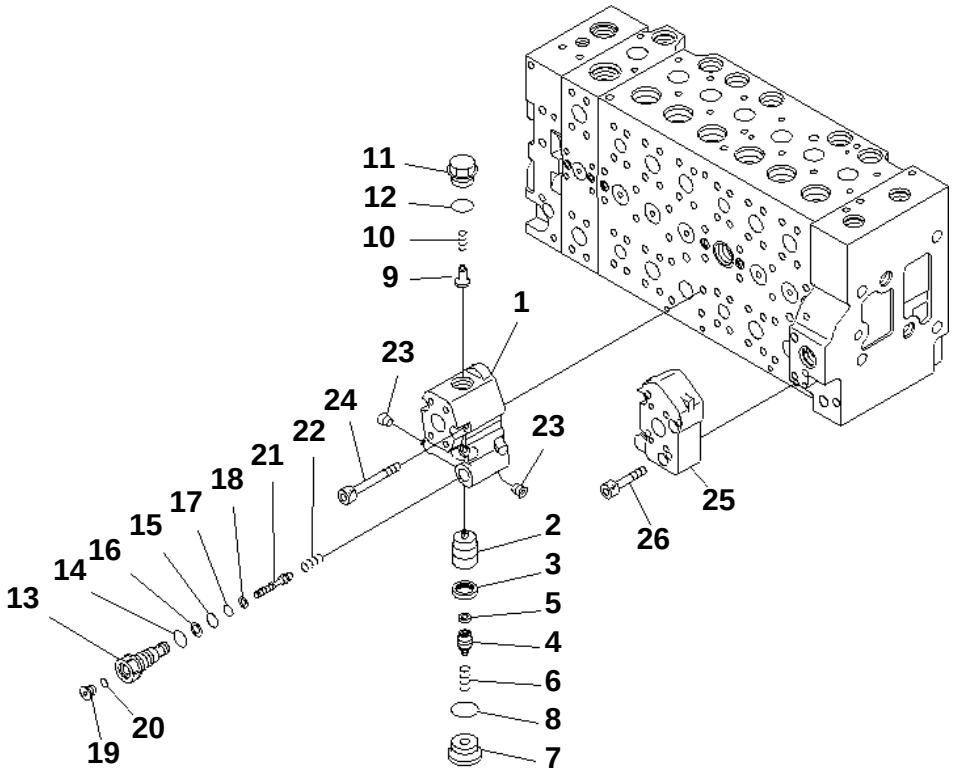

PC228US-3N-W1 S/N 30001-UP

MAIN VALVE (1-ACTUATOR) (16/19) (ROTATION ARM)

Item	Part No.	Description	Qty	Options
	(723-47-20302)	VALVE ASS'Y	1	SN:30001--
THIS ASSEMBLY CONSISTS OF ALL PARTS SHOWN IN FIGS.Y1662-21A0 TO Y1662-39A0.				
	723-40-82500	· VALVE ASS'Y	1	SN:30001--
1	☆	· · BODY	1	SN:30001--
2	☆	· · VALVE	1	SN:30001--
3	☆	· · SEAL	1	SN:30001--
4	☆	· · PLUG	1	SN:30001--
5	☆	· · FILTER	1	SN:30001--
6	☆	· · SPRING	1	SN:30001--
7	☆	· · PLUG	1	SN:30001--
8	07002-13334	· · O-RING	1	SN:30001--
9	709-25-11650	· · VALVE,CHECK	1	SN:30001--
10	709-25-11361	· · SPRING	1	SN:30001--
11	☆	· · PLUG	1	SN:30001--
12	07000-13024	· · O-RING	1	SN:30001--
13	☆	· · PLUG	1	SN:30001--
14	07002-11823	· · O-RING	1	SN:30001--
15	07000-12011	· · O-RING	1	SN:30001--
16	07001-02011	· · RING	1	SN:30001--
17	07000-11010	· · O-RING	1	SN:30001--
18	07001-01010	· · RING	1	SN:30001--
19	723-11-18190	· · PLUG	1	SN:30001--
20	07002-11023	· · O-RING	1	SN:30001--
21	☆	· · PISTON	1	SN:30001--
22	723-40-82290	· · SPRING	1	SN:30001--
23	☆	· · PLUG	2	SN:30001--
24	01252-61075	· BOLT	4	SN:30001--
25	723-46-17570	· BLOCK	1	SN:30001--
26	01252-61045	· BOLT	4	SN:30001--

Ref. Y1662-36A0 Page 450830

https://truckmanualshub.com/

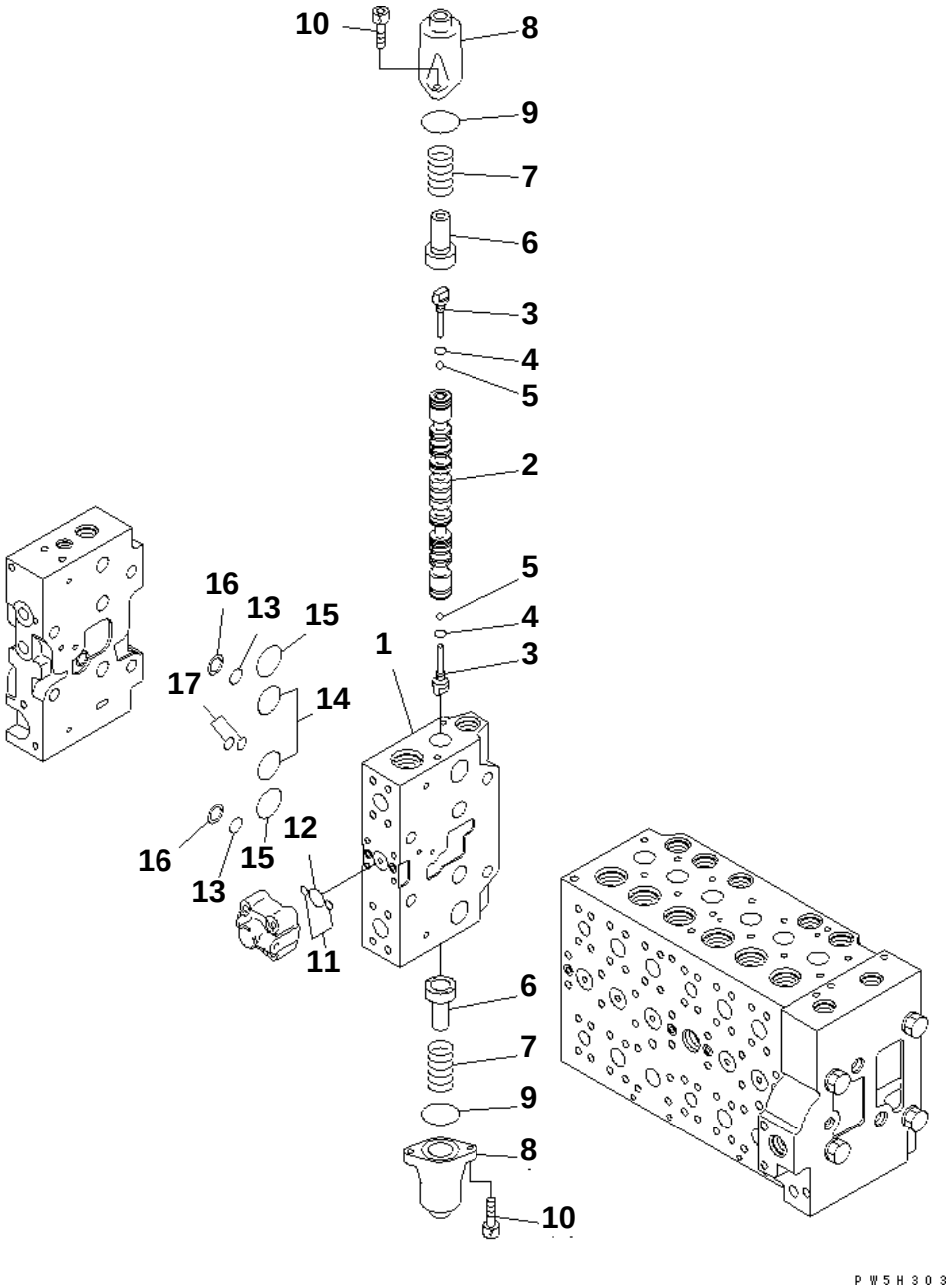

PC228US-3N-W1 S/N 30001-UP

MAIN VALVE (1-ACTUATOR) (17/19) (ROTATION ARM)

Item	Part No.	Description	Qty	Options
	(723-47-20302)	VALVE ASS'Y	1	SN:30001--
THIS ASSEMBLY CONSISTS OF ALL PARTS SHOWN IN FIGS.Y1662-21A0 TO Y1662-39A0.				
	☆	· BODY SUB ASS'Y	1	SN:30001--
1	☆	· · BLOCK,VALVE	1	SN:30001--
2	☆	· · SPOOL	1	SN:30001--
3	723-46-15130	· · PLUG	2	SN:30001--
4	07002-10823	· · O-RING	2	SN:30001--
5	708-7T-16460	· · BALL	2	SN:30001--
6	723-46-15120	· · RETAINER	2	SN:30001--
7	723-46-14110	· · SPRING	2	SN:30001--
8	723-46-15111	· · CASE	2	SN:30001--
9	07430-71380	· · O-RING	2	SN:30001--
10	01252-60820	· · BOLT	4	SN:30001--
11	07000-11009	· · O-RING	2	SN:30001--
12	07000-12021	· · O-RING	1	SN:30001--
13	723-11-19130	· · O-RING	2	SN:30001--
14	07000-13032	· · O-RING	2	SN:30001--
15	723-46-17510	· · O-RING	2	SN:30001--
16	723-46-17520	· · RING,BACK-UP	2	SN:30001--
17	723-46-17530	· · O-RING	2	SN:30001--

Ref. Y1662-37A0 Page 450840

https://truckmanualshub.com/

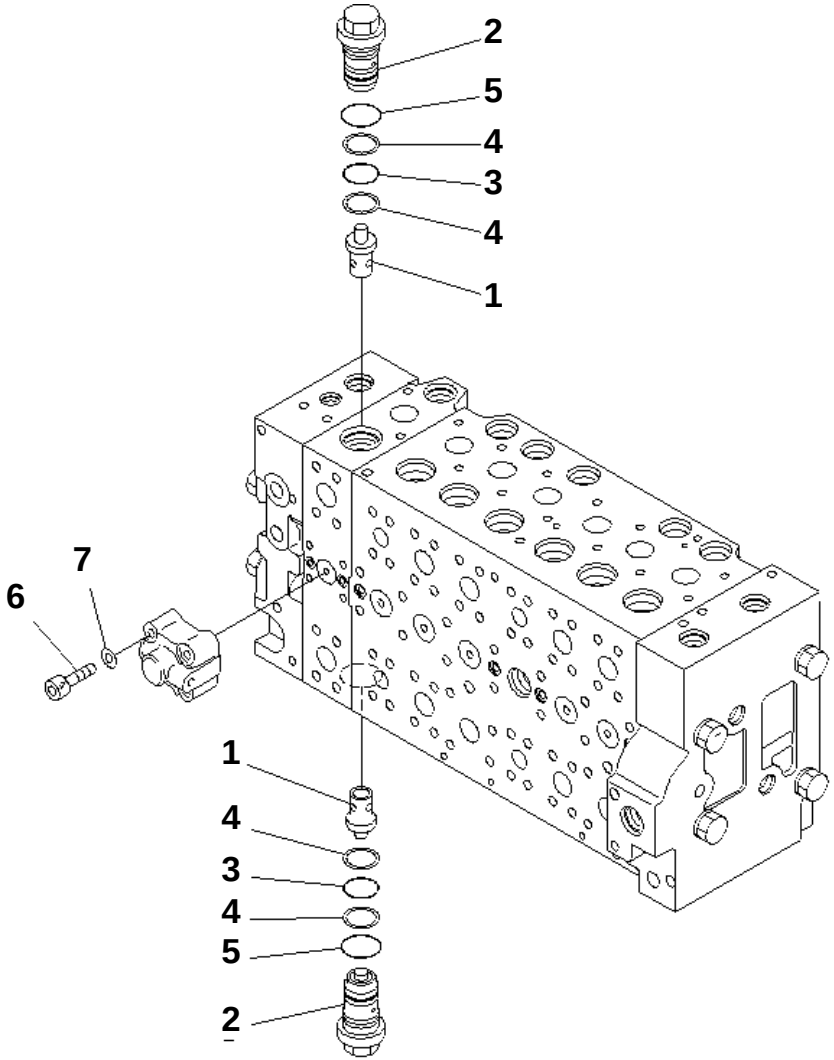

PC228US-3N-W1 S/N 30001-UP

MAIN VALVE (1-ACTUATOR) (18/19) (ROTATION ARM)

Item	Part No.	Description	Qty	Options
	(723-47-20302)	VALVE ASS'Y	1	SN:30001--
THIS ASSEMBLY CONSISTS OF ALL PARTS SHOWN IN FIGS.Y1662-21A0 TO Y1662-39A0.				
	☆	· BODY SUB ASS'Y	1	SN:30001--
1	723-46-41110	· · VALVE	2	SN:30001--
2	723-46-40100	· · VALVE ASS'Y	2	SN:30001--
3	700-93-11320	· · · O-RING	1	SN:30001--
4	723-46-41950	· · · RING	2	SN:30001--
5	07002-13634	· · · O-RING	1	SN:30001--
6	01252-60845	· · BOLT	4	SN:30001--
7	01643-50823	· · WASHER	4	SN:30001--

Ref. Y1662-38A0 Page 450850

https://truckmanualshub.com/

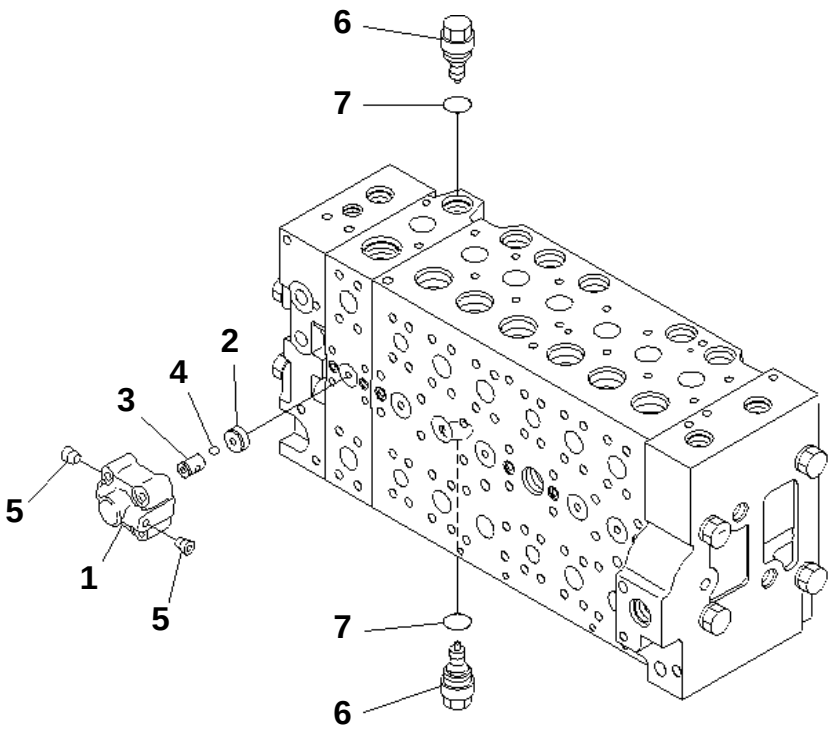

00007242

PC228US-3N-W1 S/N 30001-UP

MAIN VALVE (1-ACTUATOR) (19/19) (ROTATION ARM)

Item	Part No.	Description	Qty	Options
	(723-47-20302)	VALVE ASS'Y	1	SN:30001--
THIS ASSEMBLY CONSISTS OF ALL PARTS SHOWN IN FIGS.Y1662-21A0 TO Y1662-39A0.				
	723-40-66300	· VALVE ASS'Y	1	SN:30001--
1	☆	· · CASE	1	SN:30001--
2	☆	· · SEAT	1	SN:30001--
3	☆	· · SEAT	1	SN:30001--
4	☆	· · BALL	1	SN:30001--
5	☆	· · PLUG	2	SN:30001--
6	723-40-85100	· VALVE ASS'Y,SUCTION	2	SN:30001--
7	709-25-11390	· · O-RING	1	SN:30001--

Ref. Y1662-39A0 Page 450860

https://truckmanualshub.com/

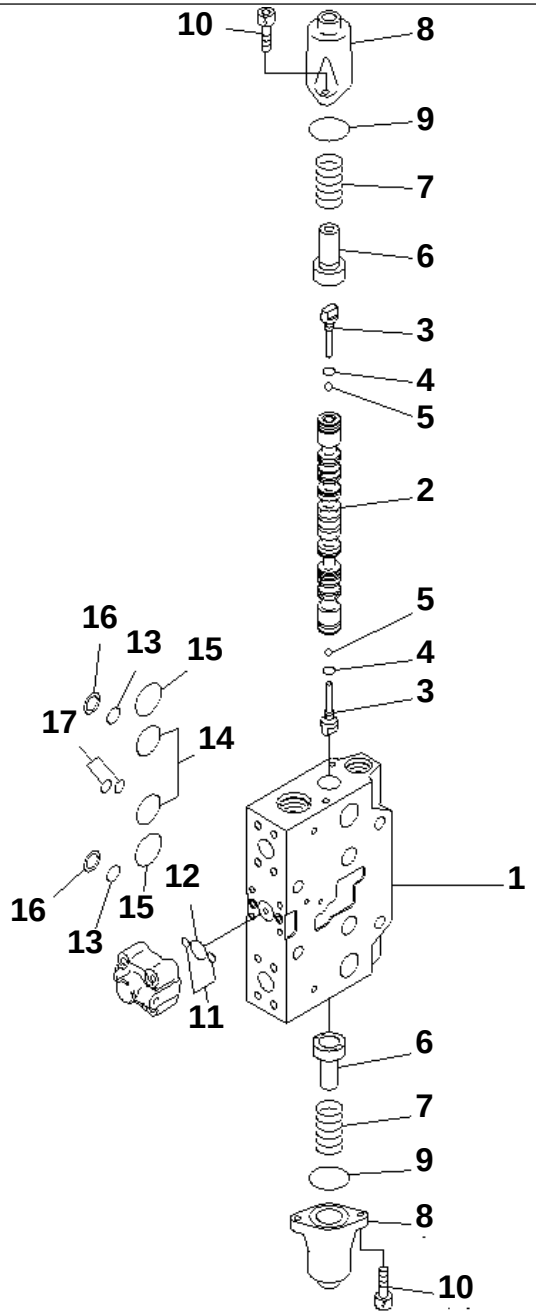

PW5H791

PC228US-3N-W1 S/N 30001-UP

SERVICE VALVE (1/3) (1-ACTUATOR AND 2-ACTUATOR) (KIT)

Item	Part No.	Description	Qty	Options
	723-41-07600	VALVE SUB ASS'Y	1	SN:30001--
THIS ASSEMBLY CONSISTS OF ALL PARTS SHOWN IN FIGS.Y1669-01A0 TO Y1669-03A0.				
	☆	· BODY SUB ASS'Y	1	SN:30001--
1	☆	· · BLOCK,VALVE	1	SN:30001--
2	☆	· · SPOOL	1	SN:30001--
3	723-46-15130	· · PLUG	2	SN:30001--
4	07002-10823	· · O-RING	2	SN:30001--
5	708-7T-16460	· · BALL	2	SN:30001--
6	723-46-15120	· · RETAINER	2	SN:30001--
7	723-46-14110	· · SPRING	2	SN:30001--
8	723-46-15111	· · CASE	2	SN:30001--
9	07430-71380	· · O-RING	2	SN:30001--
10	01252-60820	· · BOLT	4	SN:30001--
11	07000-11009	· · O-RING	2	SN:30001--
12	07000-12021	· · O-RING	1	SN:30001--
13	723-11-19130	· · O-RING	2	SN:30001--
14	07000-13032	· · O-RING	2	SN:30001--
15	723-46-17510	· · O-RING	2	SN:30001--
16	723-46-17520	· · RING,BACK-UP	2	SN:30001--
17	723-46-17530	· · O-RING	2	SN:30001--

Ref. Y1669-01A0 Page 450870

https://truckmanualshub.com/

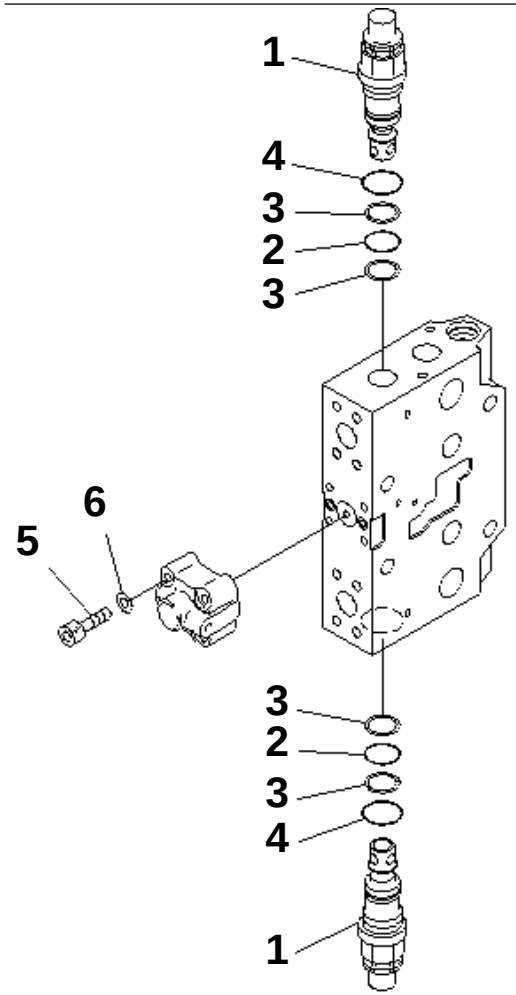

00007256

PC228US-3N-W1 S/N 30001-UP

SERVICE VALVE (2/3) (1-ACTUATOR AND 2-ACTUATOR) (KIT)

Item	Part No.	Description	Qty	Options
	(723-41-07600)	VALVE SUB ASS'Y	1	SN:30001--
THIS ASSEMBLY CONSISTS OF ALL PARTS SHOWN IN FIGS.Y1669-01A0 TO Y1669-03A0.				
	☆	· BODY SUB ASS'Y	1	SN:30001--
1	723-46-48100	· · VALVE ASS'Y	2	SN:30001--
2	700-93-11320	· · · O-RING	1	SN:30001--
3	723-46-41950	· · · RING	2	SN:30001--
4	07002-13634	· · · O-RING	1	SN:30001--
5	01252-60845	· · BOLT	4	SN:30001--
6	01643-50823	· · WASHER	4	SN:30001--

Ref. Y1669-02A0 Page 450880

https://truckmanualshub.com/

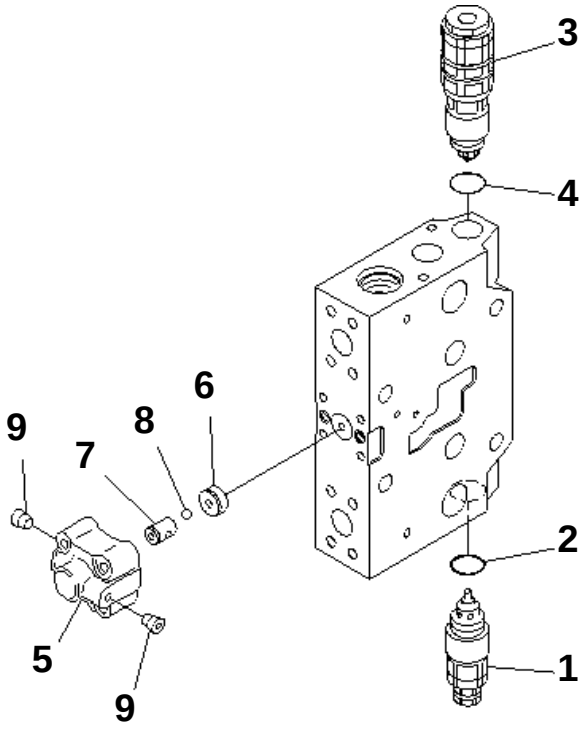

00007257

PC228US-3N-W1 S/N 30001-UP

SERVICE VALVE (3/3) (1-ACTUATOR AND 2-ACTUATOR) (KIT)

Item	Part No.	Description	Qty	Options
	(723-41-07600)	VALVE SUB ASS'Y	1	SN:30001--
THIS ASSEMBLY CONSISTS OF ALL PARTS SHOWN IN FIGS.Y1669-01A0 TO Y1669-03A0.				
1	723-90-61400	· VALVE ASS'Y,SUCTION AND SAFETY	1	SN:30001--
2	07000-13024	· · O-RING	1	SN:30001--
3	723-90-76101	· VALVE ASS'Y,SUCTION AND SAFETY	1	SN:30001--
4	07000-13024	· · O-RING	1	SN:30001--
	723-40-66300	· VALVE ASS'Y	1	SN:30001--
5	☆	· · CASE	1	SN:30001--
6	☆	· · SEAT	1	SN:30001--
7	☆	· · SEAT	1	SN:30001--
8	☆	· · BALL	1	SN:30001--
9	☆	· · PLUG	2	SN:30001--

Ref. Y1669-03A0 Page 450890

https://truckmanualshub.com/

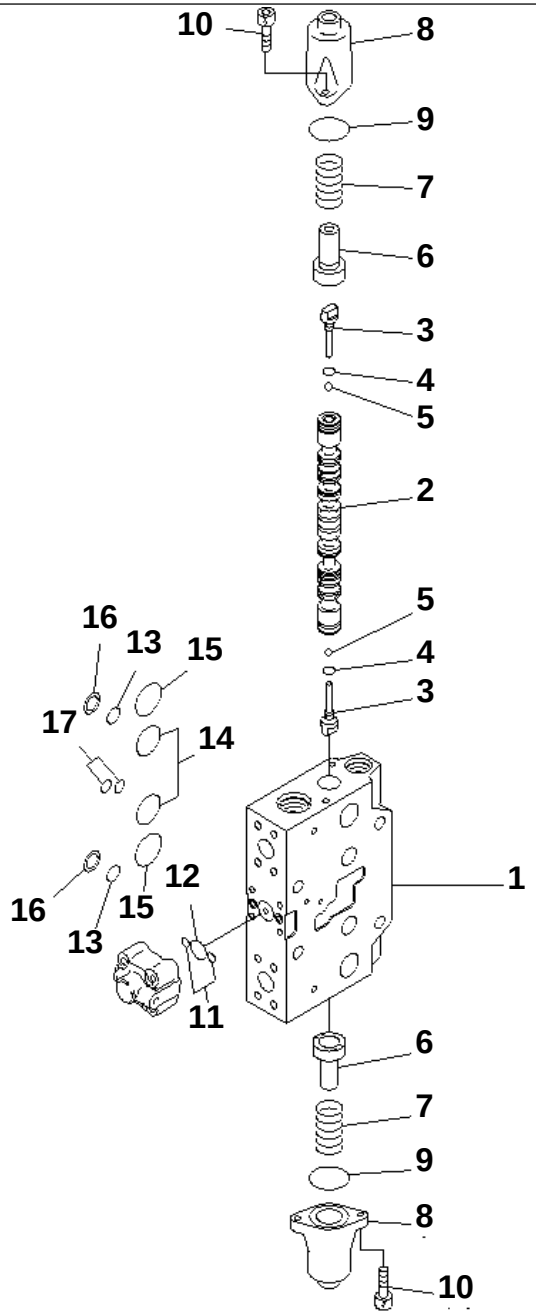

PC228US-3N-W1 S/N 30001-UP

SERVICE VALVE (1/3) (2-ACTUATOR) (KIT)

Item	Part No.	Description	Qty	Options
	723-41-07400	VALVE ASS'Y	1	SN:30001--
THIS ASSEMBLY CONSISTS OF ALL PARTS SHOWN IN FIGS.Y1669-11A0 TO Y1669-13A0.				
	☆	· BODY SUB ASS'Y	1	SN:30001--
1	☆	· · BLOCK,VALVE	1	SN:30001--
2	☆	· · SPOOL	1	SN:30001--
3	723-46-15130	· · PLUG	2	SN:30001--
4	07002-10823	· · O-RING	2	SN:30001--
5	708-7T-16460	· · BALL	2	SN:30001--
6	723-46-15120	· · RETAINER	2	SN:30001--
7	723-46-14110	· · SPRING	2	SN:30001--
8	723-46-15111	· · CASE	2	SN:30001--
9	07430-71380	· · O-RING	2	SN:30001--
10	01252-60820	· · BOLT	4	SN:30001--
11	07000-11009	· · O-RING	2	SN:30001--
12	07000-12021	· · O-RING	1	SN:30001--
13	723-11-19130	· · O-RING	2	SN:30001--
14	07000-13032	· · O-RING	2	SN:30001--
15	723-46-17510	· · O-RING	2	SN:30001--
16	723-46-17520	· · RING,BACK-UP	2	SN:30001--
17	723-46-17530	· · O-RING	2	SN:30001--

Ref. Y1669-11A0 Page 450900

https://truckmanualshub.com/

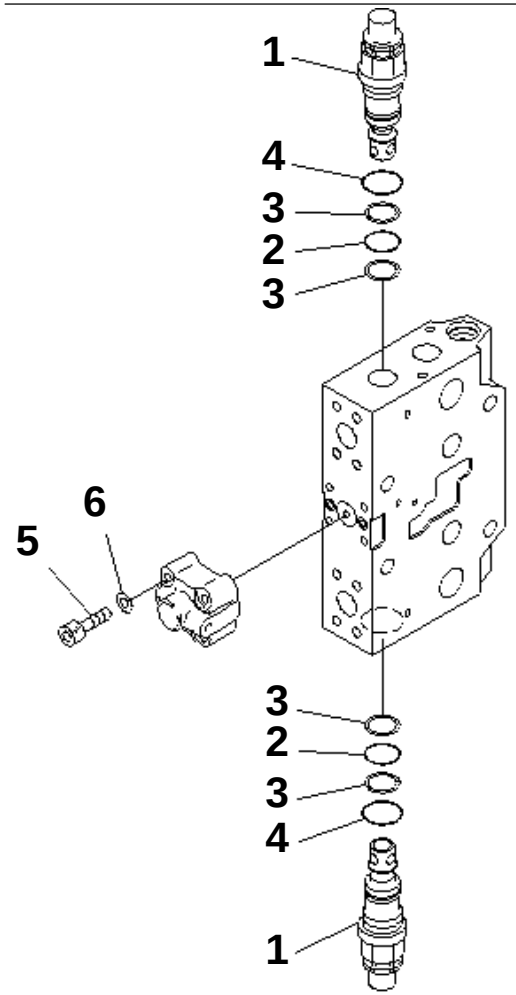

00007256

PC228US-3N-W1 S/N 30001-UP

SERVICE VALVE (2/3) (2-ACTUATOR) (KIT)

Item	Part No.	Description	Qty	Options
	(723-41-07400)	VALVE ASS'Y	1	SN:30001--
THIS ASSEMBLY CONSISTS OF ALL PARTS SHOWN IN FIGS.Y1669-11A0 TO Y1669-13A0.				
	☆	· BODY SUB ASS'Y	1	SN:30001--
1	723-46-48100	· · VALVE ASS'Y	2	SN:30001--
2	700-93-11320	· · · O-RING	1	SN:30001--
3	723-46-41950	· · · RING	2	SN:30001--
4	07002-13634	· · · O-RING	1	SN:30001--
5	01252-60845	· · BOLT	4	SN:30001--
6	01643-50823	· · WASHER	4	SN:30001--

Ref. Y1669-12A0 Page 450910

https://truckmanualshub.com/

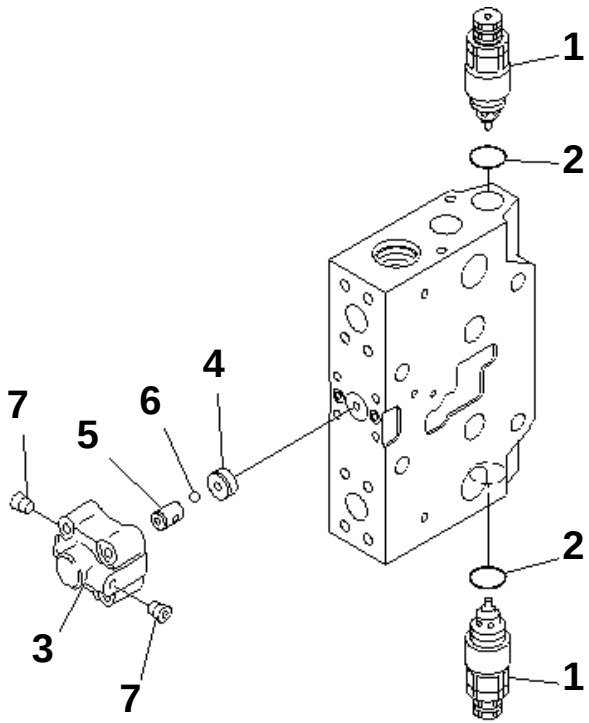

00007279

PC228US-3N-W1 S/N 30001-UP

SERVICE VALVE (3/3) (2-ACTUATOR) (KIT)

Item	Part No.	Description	Qty	Options
	(723-41-07400)	VALVE ASS'Y	1	SN:30001--
THIS ASSEMBLY CONSISTS OF ALL PARTS SHOWN IN FIGS.Y1669-11A0 TO Y1669-13A0.				
1	723-90-61400	· VALVE ASS'Y,SUCTION AND SAFETY	2	SN:30001--
2	07000-13024	· · O-RING	1	SN:30001--
	723-40-66300	· VALVE ASS'Y	1	SN:30001--
3	☆	· · CASE	1	SN:30001--
4	☆	· · SEAT	1	SN:30001--
5	☆	· · SEAT	1	SN:30001--
6	☆	· · BALL	1	SN:30001--
7	☆	· · PLUG	2	SN:30001--

Ref. Y1669-13A0 Page 450920

https://truckmanualshub.com/

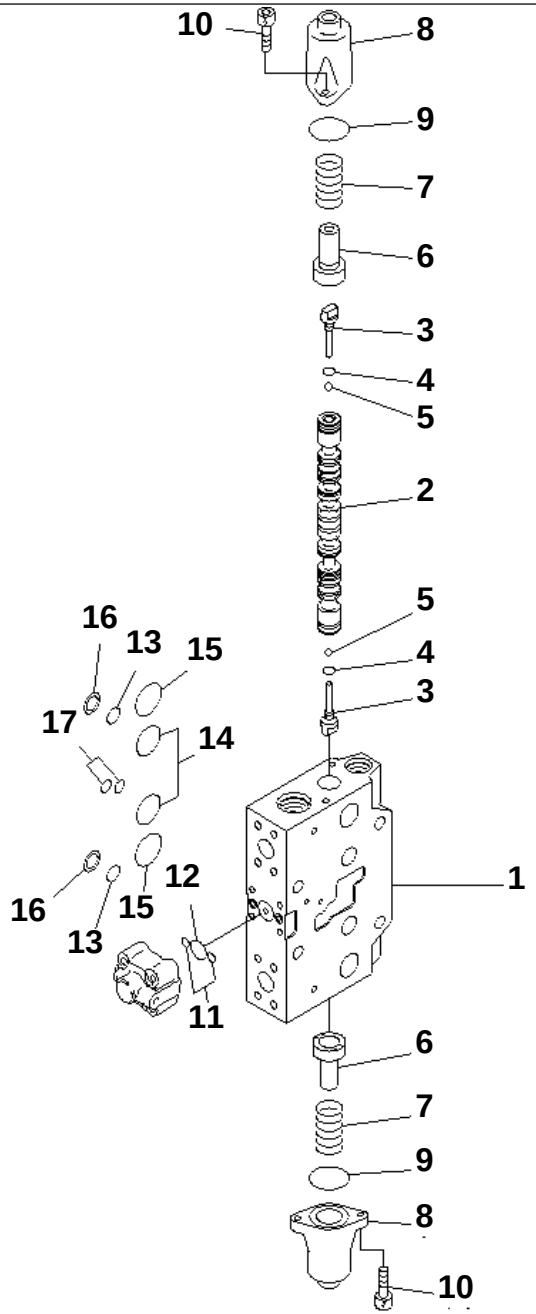

P W 5 H 7 9 1

PC228US-3N-W1 S/N 30001-UP

SERVICE VALVE (1/3) (WITH 2-PIECE BOOM) (EU SPEC.)

Item	Part No.	Description	Qty	Options
	723-41-07900	VALVE SUB ASS'Y	1	SN:30001--
THIS ASSEMBLY CONSISTS OF ALL PARTS SHOWN IN FIGS.Y1669-21A0 TO Y1669-23A0.				
	☆	· BODY SUB ASS'Y	1	SN:30001--
1	☆	· · BLOCK,VALVE	1	SN:30001--
2	☆	· · SPOOL	1	SN:30001--
3	723-46-15130	· · PLUG	2	SN:30001--
4	07002-10823	· · O-RING	2	SN:30001--
5	708-7T-16460	· · BALL	2	SN:30001--
6	723-46-15120	· · RETAINER	2	SN:30001--
7	723-46-14110	· · SPRING	2	SN:30001--
8	723-46-15111	· · CASE	2	SN:30001--
9	07430-71380	· · O-RING	2	SN:30001--
10	01252-60820	· · BOLT	4	SN:30001--
11	07000-11009	· · O-RING	2	SN:30001--
12	07000-12021	· · O-RING	1	SN:30001--
13	723-11-19130	· · O-RING	2	SN:30001--
14	07000-13032	· · O-RING	2	SN:30001--
15	723-46-17510	· · O-RING	2	SN:30001--
16	723-46-17520	· · RING,BACK-UP	2	SN:30001--
17	723-46-17530	· · O-RING	2	SN:30001--

Ref. Y1669-21A0 Page 450930

https://truckmanualshub.com/

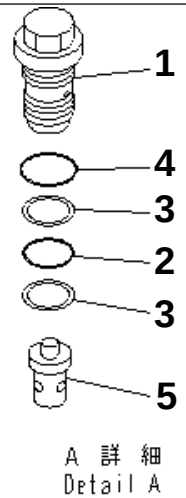

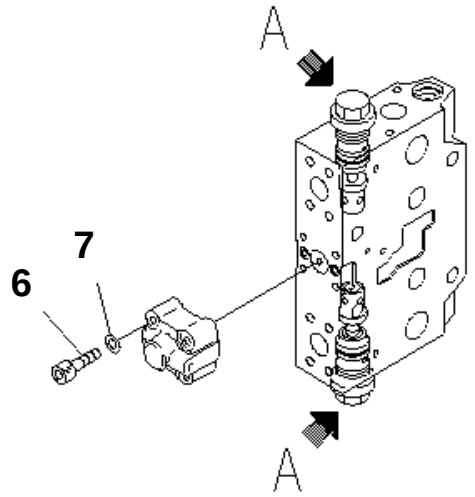

0 0 0 0 8 6 7 4

PC228US-3N-W1 S/N 30001-UP

SERVICE VALVE (2/3) (WITH 2-PIECE BOOM) (EU SPEC.)

Item	Part No.	Description	Qty	Options
	(723-41-07900)	VALVE SUB ASS'Y	1	SN:30001--
THIS ASSEMBLY CONSISTS OF ALL PARTS SHOWN IN FIGS.Y1669-21A0 TO Y1669-23A0.				
	☆	· BODY SUB ASS'Y	1	SN:30001--
1	723-46-40100	· · VALVE ASS'Y	2	SN:30001--
2	700-93-11320	· · · O-RING	1	SN:30001--
3	723-46-41950	· · · RING	2	SN:30001--
4	07002-13634	· · · O-RING	1	SN:30001--
5	723-46-41110	· · VALVE	2	SN:30001--
6	01252-60845	· · BOLT	4	SN:30001--
7	01643-50823	· · WASHER	4	SN:30001--

Ref. Y1669-22A0 Page 450940

https://truckmanualshub.com/

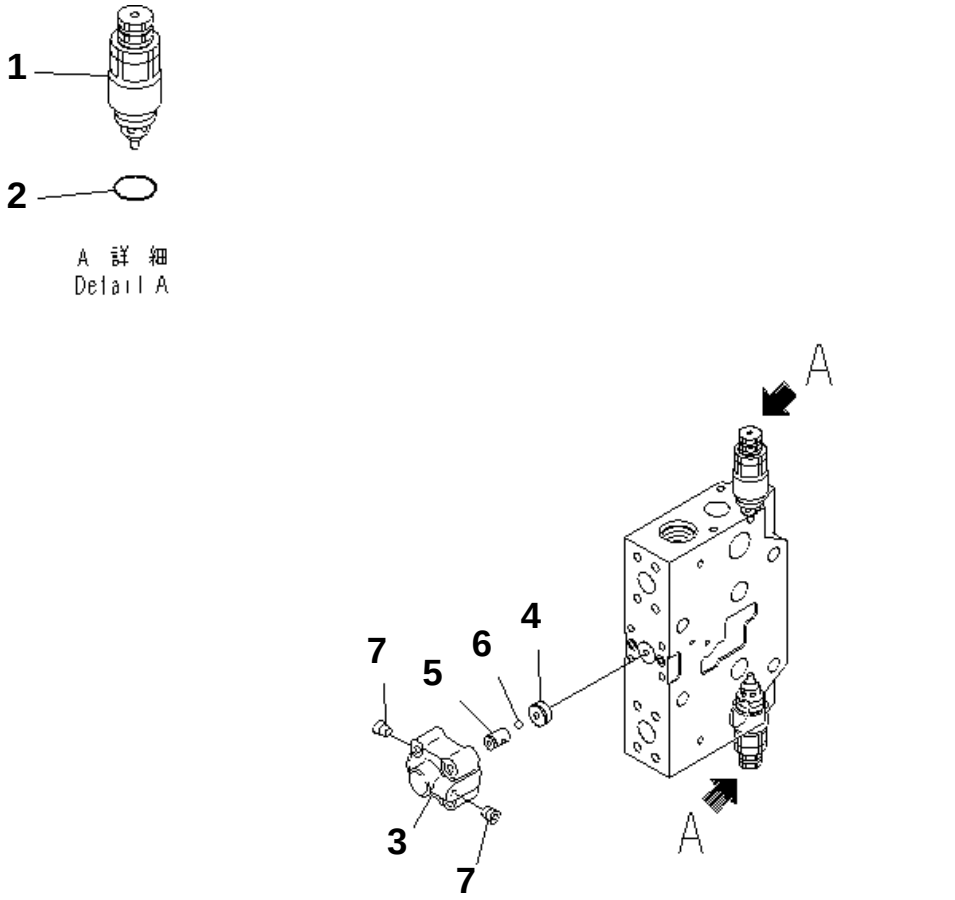

PC228US-3N-W1 S/N 30001-UP

SERVICE VALVE (3/3) (WITH 2-PIECE BOOM) (EU SPEC.)

Item	Part No.	Description	Qty	Options
	(723-41-07900)	VALVE SUB ASS'Y	1	SN:30001--
THIS ASSEMBLY CONSISTS OF ALL PARTS SHOWN IN FIGS.Y1669-21A0 TO Y1669-23A0.				
1	723-40-91200	· VALVE ASS'Y,SUCTION AND SAFETY	2	SN:30001--
2	709-25-11390	· · O-RING	1	SN:30001--
	723-40-66300	· VALVE ASS'Y	1	SN:30001--
3	☆	· · CASE	1	SN:30001--
4	☆	· · SEAT	1	SN:30001--
5	☆	· · SEAT	1	SN:30001--
6	☆	· · BALL	1	SN:30001--
7	☆	· · PLUG	2	SN:30001--

Ref. Y1669-23A0 Page 450950

https://truckmanualshub.com/

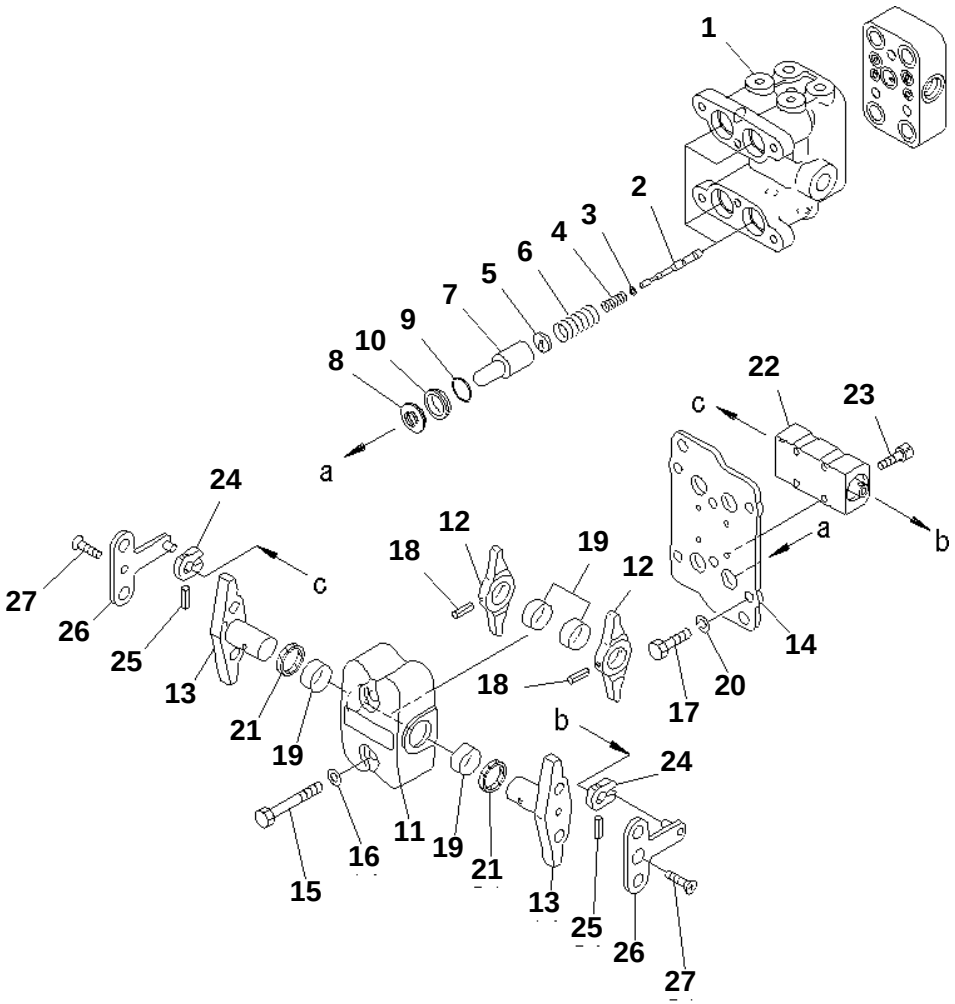

PPC VALVE (FOR TRAVEL) (1/2)

Item	Part No.	Description	Qty	Options
	702-16-01861	PILOT VALVE	1	SN:30001--
THIS ASSEMBLY CONSISTS OF ALL PARTS SHOWN IN FIGS.Y1670-01A0 AND Y1670-02A0.				
1	☆	· BODY,VALVE	1	SN:30001--
2	☆	· VALVE	4	SN:30001--
3	702-16-51140	· SHIM¤ 0.30MM	4	SN:30001--
4	702-16-53420	· SPRING	4	SN:30001--
5	702-16-53140	· RETAINER	4	SN:30001--
6	702-16-54420	· SPRING	4	SN:30001--
7	702-16-53170	· PISTON	4	SN:30001--
8	702-16-51270	· SEAL	4	SN:30001--
9	07000-12020	· O-RING	4	SN:30001--
10	702-16-54170	· COLLAR	4	SN:30001--
11	702-16-54311	· CASE	1	SN:30001--
12	☆	· LEVER	2	SN:30001--
13	☆	· SHAFT	2	SN:30001--
14	☆	· PLATE	1	SN:30001--
15	01010-80855	· BOLT	2	SN:30001--
16	01643-30823	· WASHER	2	SN:30001--
17	01010-80816	· BOLT	4	SN:30001--
18	04025-00432	· PIN,SPRING	2	SN:30001--
19	702-16-54430	· BUSHING	4	SN:30001--
20	702-16-54331	· WASHER¤ 1.60MM	4	SN:30001--
	702-16-54341	· WASHER¤ 1.30MM	4	SN:30001--
	702-16-54351	· WASHER¤ 1.00MM	4	SN:30001--
21	702-16-54280	· SEAL,DUST	2	SN:30001--
22	(★702-16-54506)	· DAMPER ASS'Y	1	SN:30001--
23	01252-60525	· BOLT	4	SN:30001--
24	702-16-54511	· PLATE	2	SN:30001--
25	04025-00420	· PIN,SPRING	2	SN:30001--
26	702-16-54520	· LEVER	2	SN:30001--
27	01224-40612	· SCREW	2	SN:30001--

https://truckmanualshub.com/

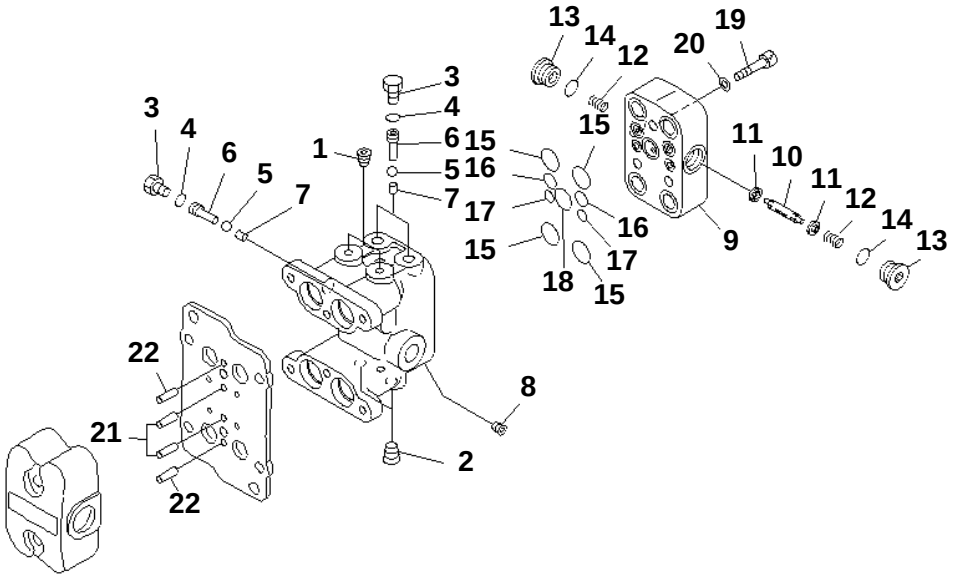

PC228US-3N-W1 S/N 30001-UP

PPC VALVE (FOR TRAVEL) (2/2)

Item	Part No.	Description	Qty	Options
	(702-16-01861)	PILOT VALVE	1	SN:30001--
THIS ASSEMBLY CONSISTS OF ALL PARTS SHOWN IN FIGS.Y1670-01A0 AND Y1670-02A0.				
1	☆	· PLUG	2	SN:30001--
2	☆	· PLUG	2	SN:30001--
3	07040-11209	· PLUG	3	SN:30001--
4	07002-11223	· O-RING	3	SN:30001--
5	700-84-11730	· BALL	3	SN:30001--
6	702-16-55940	· PLUG	3	SN:30001--
7	702-16-55950	· SEAT	3	SN:30001--
8	☆	· SCREW	2	SN:30001--
9	☆	· BODY,VALVE	1	SN:30001--
10	☆	· SPOOL	1	SN:30001--
11	702-16-57440	· RETAINER	2	SN:30001--
12	702-16-57450	· SPRING	2	SN:30001--
13	723-11-15110	· PLUG	2	SN:30001--
14	07002-11623	· O-RING	2	SN:30001--
15	07000-12015	· O-RING	4	SN:30001--
16	07000-11010	· O-RING	2	SN:30001--
17	07000-11007	· O-RING	2	SN:30001--
18	700-22-11410	· O-RING	1	SN:30001--
19	01252-60835	· BOLT	3	SN:30001--
20	01643-50823	· WASHER	3	SN:30001--
21	04022-04016	· PIN,DOWEL	2	SN:30001--
22	04022-04010	· PIN,DOWEL	2	SN:30001--

Ref. Y1670-02A0 Page 450970

https://truckmanualshub.com/

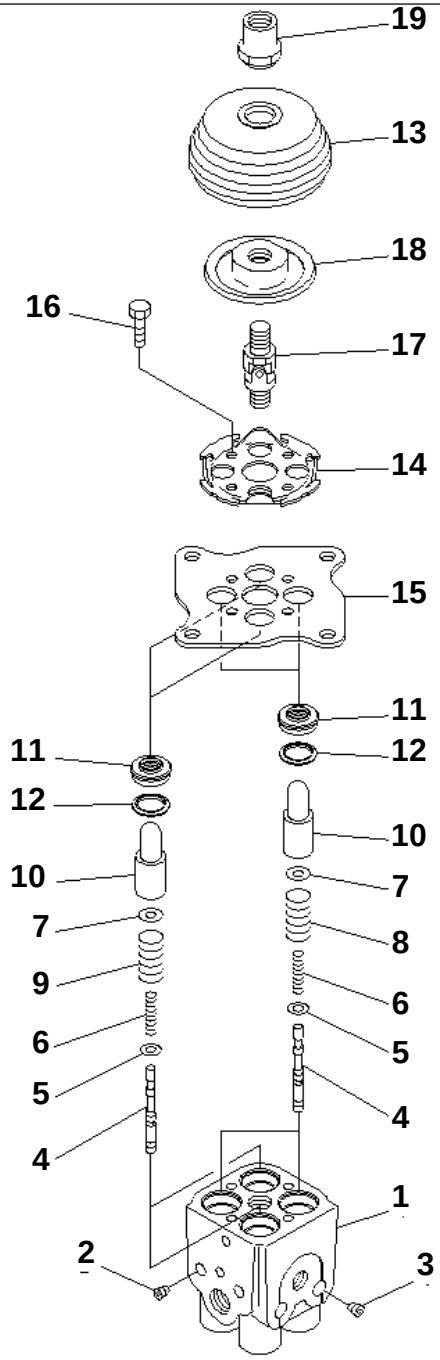

PC228US-3N-W1 S/N 30001-UP

PPC VALVE (FOR WORK EQUIPMENT)

Item	Part No.	Description	Qty	Options
	702-16-03530	PILOT VALVE	1	SN:30001--
1	☆	· BODY,VALVE	1	SN:30001--
2	☆	· PLUG	2	SN:30001--
3	☆	· PLUG	2	SN:30001--
4	☆	· VALVE	4	SN:30001--
5	702-16-51140	· SHIM¤ 0.30MM	4	SN:30001--
6	702-16-53420	· SPRING	4	SN:30001--
7	702-16-53140	· RETAINER	4	SN:30001--
8	702-16-53470	· SPRING	2	SN:30001--
9	702-16-53590	· SPRING	2	SN:30001--
10	702-16-53170	· PISTON	4	SN:30001--
11	702-16-71150	· SEAL	4	SN:30001--
12	702-16-71160	· SEAT	4	SN:30001--
13	702-16-71280	· BOOT	1	SN:30001--
14	702-16-71131	· PLATE	1	SN:30001--
15	702-16-71141	· PLATE	1	SN:30001--
16	01010-80620	· BOLT	4	SN:30001--
17	702-16-51240	· JOINT,UNIVERSAL	1	SN:30001--
18	702-16-71361	· DISC	1	SN:30001--
19	702-16-71441	· NUT	1	SN:30001--

Ref. Y1670-11A0 Page 450980

https://truckmanualshub.com/

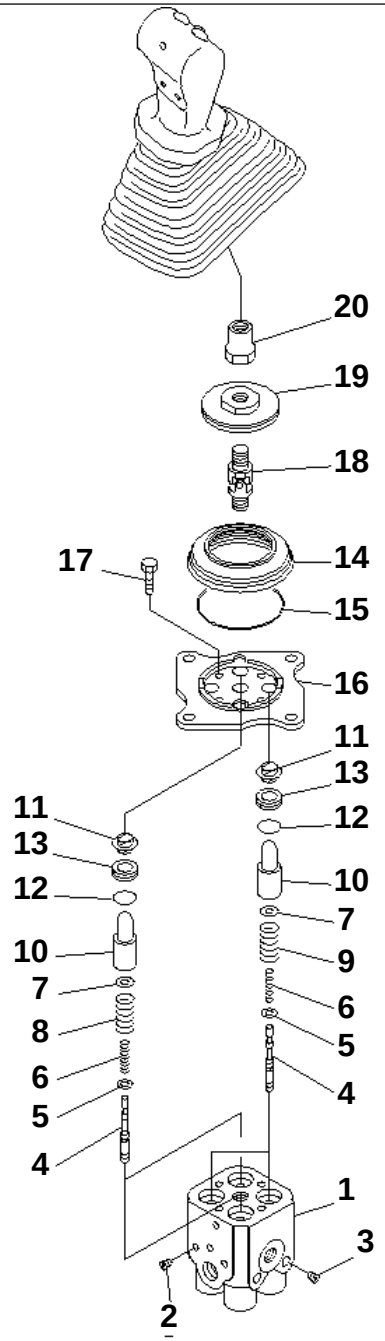

PC228US-3N-W1 S/N 30001-UP

WORK EQUIPMENT LEVER (1/2) (FOR 2-PIECE BOOM)

Item	Part No.	Description	Qty	Options
	702-16-09120	VALVE ASS'Y,RIGHT	1	SN:30001--
THIS ASSEMBLY CONSISTS OF ALL PARTS SHOWN IN FIGS.Y1670-11A1 AND Y1670-12A1.				
	702-16-03430	· PILOT VALVE	1	SN:30001--
1	☆	· · BODY,VALVE	1	SN:30001--
2	☆	· · PLUG	2	SN:30001--
3	☆	· · PLUG	2	SN:30001--
4	☆	· · VALVE	4	SN:30001--
5	702-16-51140	· · SHIM¤ 0.30MM	4	SN:30001--
6	702-16-53420	· · SPRING	4	SN:30001--
7	702-16-53140	· · RETAINER	4	SN:30001--
8	702-16-53470	· · SPRING	2	SN:30001--
9	702-16-53590	· · SPRING	2	SN:30001--
10	702-16-53170	· · PISTON	4	SN:30001--
11	702-16-51270	· · SEAL	4	SN:30001--
12	07000-12020	· · O-RING	4	SN:30001--
13	702-16-54170	· · COLLAR	4	SN:30001--
14	702-16-58820	· · BOOT	1	SN:30001--
15	07000-02070	· · O-RING	1	SN:30001--
16	☆	· · PLATE	1	SN:30001--
17	01010-80620	· · BOLT	4	SN:30001--
18	702-16-51240	· · JOINT,UNIVERSAL	1	SN:30001--
19	☆	· · DISC	1	SN:30001--
20	702-16-58990	· · NUT	1	SN:30001--

Ref. Y1670-11A1 Page 450990

https://truckmanualshub.com/

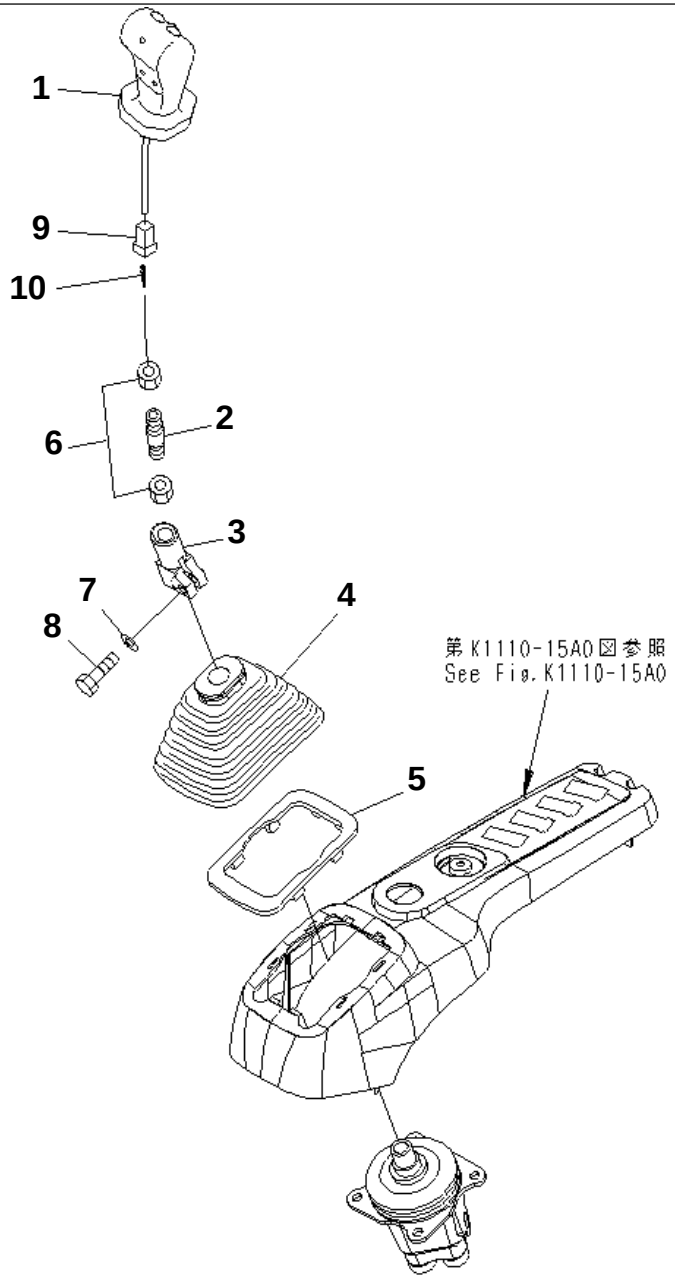

PC228US-3N-W1 S/N 30001-UP

WORK EQUIPMENT LEVER (2/2) (FOR 2-PIECE BOOM)

Item	Part No.	Description	Qty	Options
	(702-16-09120)	VALVE ASS'Y,RIGHT	1	SN:30001--
THIS ASSEMBLY CONSISTS OF ALL PARTS SHOWN IN FIGS.Y1670-11A1 AND Y1670-12A1.				
	702-16-58400	· LEVER SUB ASS'Y	1	SN:30001--
1	☆	· · LEVER	1	SN:30001--
2	☆	· · ROD	1	SN:30001--
3	☆	· · PLATE	1	SN:30001--
4	☆	· · BOOT	1	SN:30001--
5	☆	· · PLATE	1	SN:30001--
6	☆	· · NUT	2	SN:30001--
7	☆	· · WASHER	1	SN:30001--
8	☆	· · BOLT	1	SN:30001--
9	☆	· CONNECTOR	1	SN:30001--
10	☆	· TERMINAL	4	SN:30001--

Ref. Y1670-12A1 Page 451000

https://truckmanualshub.com/

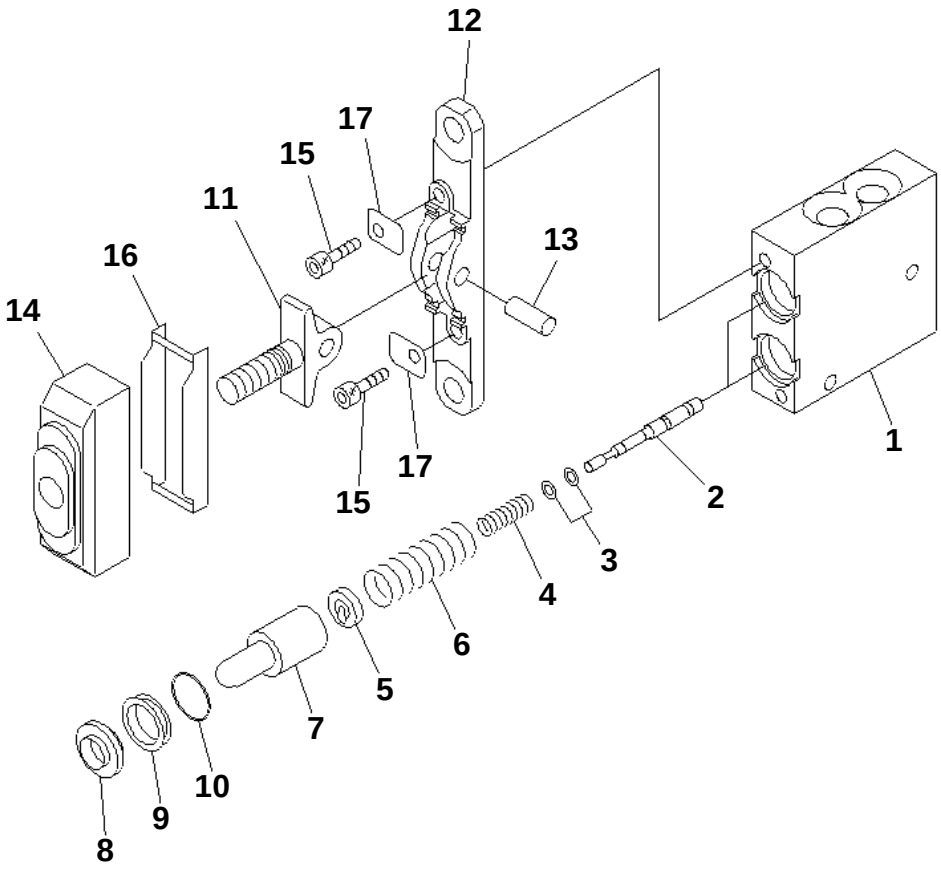

PC228US-3N-W1 S/N 30001-UP

PPC VALVE (FOR ATTACHMENT)

Item	Part No.	Description	Qty	Options
	702-16-01230	PILOT VALVE	1	SN:30001--
1	☆	· BODY,VALVE	1	SN:30001--
2	☆	· VALVE	2	SN:30001--
3	702-16-51140	· SHIM¤ 0.30MM	2	SN:30001--
	702-16-54670	· SHIM¤ 0.20MM	4	SN:30001--
4	702-16-54550	· SPRING	2	SN:30001--
5	702-16-54571	· RETAINER	2	SN:30001--
6	702-16-54560	· SPRING	2	SN:30001--
7	702-16-53170	· PISTON	2	SN:30001--
8	702-16-51270	· SEAL	2	SN:30001--
9	702-16-54580	· COLLAR	2	SN:30001--
10	702-16-54590	· O-RING	2	SN:30001--
11	☆	· LEVER	1	SN:30001--
12	☆	· PLATE	1	SN:30001--
13	☆	· SHAFT	1	SN:30001--
14	702-16-54641	· BOOT	1	SN:30001--
15	01252-30625	· BOLT	2	SN:30001--
16	702-16-54660	· PLATE	1	SN:30001--
17	702-16-54650	· PLATE	2	SN:30001--

Ref. Y1670-21A0 Page 451010

https://truckmanualshub.com/

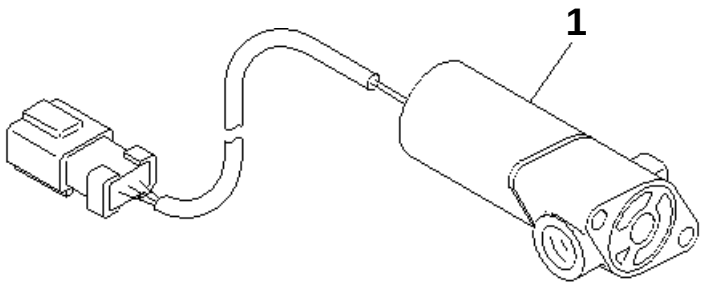

PT19821

PC228US-3N-W1 S/N 30001-UP

EPC VALVE

Item	Part No.	Description	Qty	Options
1	702-21-07010	VALVE ASS'Y,EPC	1	SN:30001--

Ref. Y1671-01A0 Page 451020

https://truckmanualshub.com/

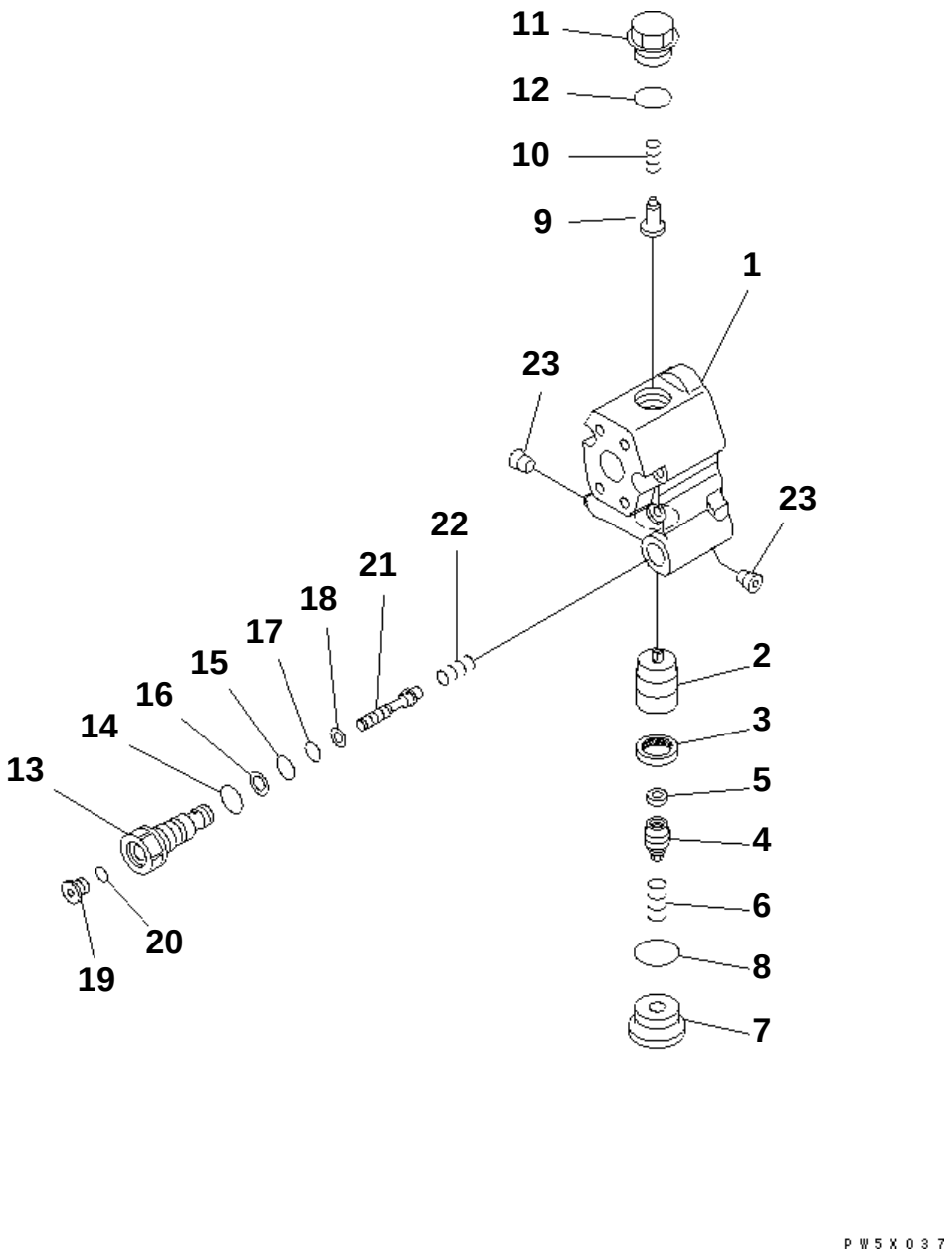

PC228US-3N-W1 S/N 30001-UP

LOCK VALVE

Item	Part No.	Description	Qty	Options
	723-40-82202	VALVE ASS'Y	1	SN:30001--
1	☆	· BODY	1	SN:30001--
2	☆	· VALVE	1	SN:30001--
3	☆	· SEAL	1	SN:30001--
4	723-40-82210	· PLUG	1	SN:30001--
5	723-40-82220	· FILTER	1	SN:30001--
6	723-40-82140	· SPRING	1	SN:30001--
7	723-40-82150	· PLUG	1	SN:30001--
8	07002-13334	· O-RING	1	SN:30001--
9	709-25-11650	· VALVE,CHECK	1	SN:30001--
10	709-25-11361	· SPRING	1	SN:30001--
11	723-40-82161	· PLUG	1	SN:30001--
12	07000-13024	· O-RING	1	SN:30001--
13	☆	· PLUG	1	SN:30001--
14	07002-11823	· O-RING	1	SN:30001--
15	07000-12011	· O-RING	1	SN:30001--
16	07001-02011	· RING,BACK-UP	1	SN:30001--
17	07000-11010	· O-RING	1	SN:30001--
18	07001-01010	· RING	1	SN:30001--
19	723-11-18190	· PLUG	1	SN:30001--
20	07002-11023	· O-RING	1	SN:30001--
21	☆	· PISTON	1	SN:30001--
22	723-11-19950	· SPRING	1	SN:30001--
23	☆	· SCREW	2	SN:30001--

Ref. Y1675-01A0 Page 451030

https://truckmanualshub.com/

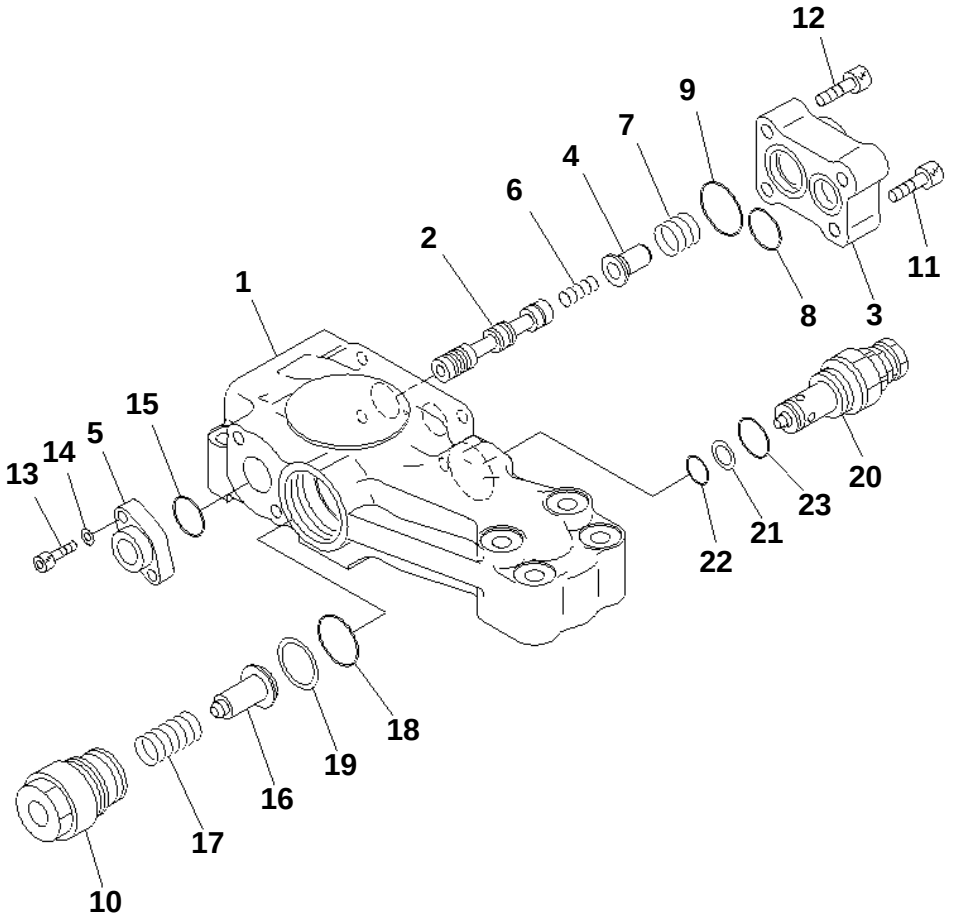

PC228US-3N-W1 S/N 30001-UP

BURST VALVE (FOR BOOM CYLINDER) (FOR ARM CRANE) (YELLOW)

Item	Part No.	Description	Qty	Options
	702-21-08330	PILOT VALVE	1	SN:30001--
1	☆	· BODY,VALVE	1	SN:30001--
2	☆	· SPOOL	1	SN:30001--
3	702-21-38510	· CASE	1	SN:30001--
4	702-21-38420	· RETAINER¤ 2.0MM	1	SN:30001--
	702-21-38550	· RETAINER¤ 1.7MM	1	SN:30001--
	702-21-38560	· RETAINER¤ 2.3MM	1	SN:30001--
	702-21-38610	· RETAINER¤ 1.8MM	1	SN:30001--
	702-21-38620	· RETAINER¤ 1.9MM	1	SN:30001--
	702-21-38630	· RETAINER¤ 2.1MM	1	SN:30001--
	702-21-38640	· RETAINER¤ 2.2MM	1	SN:30001--
5	702-21-38430	· FLANGE	1	SN:30001--
6	702-21-38440	· SPRING	1	SN:30001--
7	702-21-38650	· SPRING	1	SN:30001--
8	702-21-38460	· O-RING	1	SN:30001--
9	702-21-38470	· O-RING	1	SN:30001--
10	702-21-38480	· PLUG	1	SN:30001--
11	01252-60825	· BOLT	2	SN:30001--
12	01252-60835	· BOLT	2	SN:30001--
13	01252-60620	· BOLT	2	SN:30001--
14	01641-20608	· WASHER	2	SN:30001--
15	07000-12021	· O-RING	1	SN:30001--
16	709-74-92810	· VALVE	1	SN:30001--
17	709-75-92220	· SPRING	1	SN:30001--
18	700-93-11320	· O-RING	1	SN:30001--
19	700-93-11330	· RING,BACK-UP	1	SN:30001--
20	723-40-91500	· VALVE ASS'Y,RELIEF	1	SN:30001--
21	700-80-64220	· · RING	1	SN:30001--
22	700-22-11410	· · O-RING	1	SN:30001--
23	709-25-11390	· · O-RING	1	SN:30001--

Ref. Y1679-01A0 Page 451040

https://truckmanualshub.com/

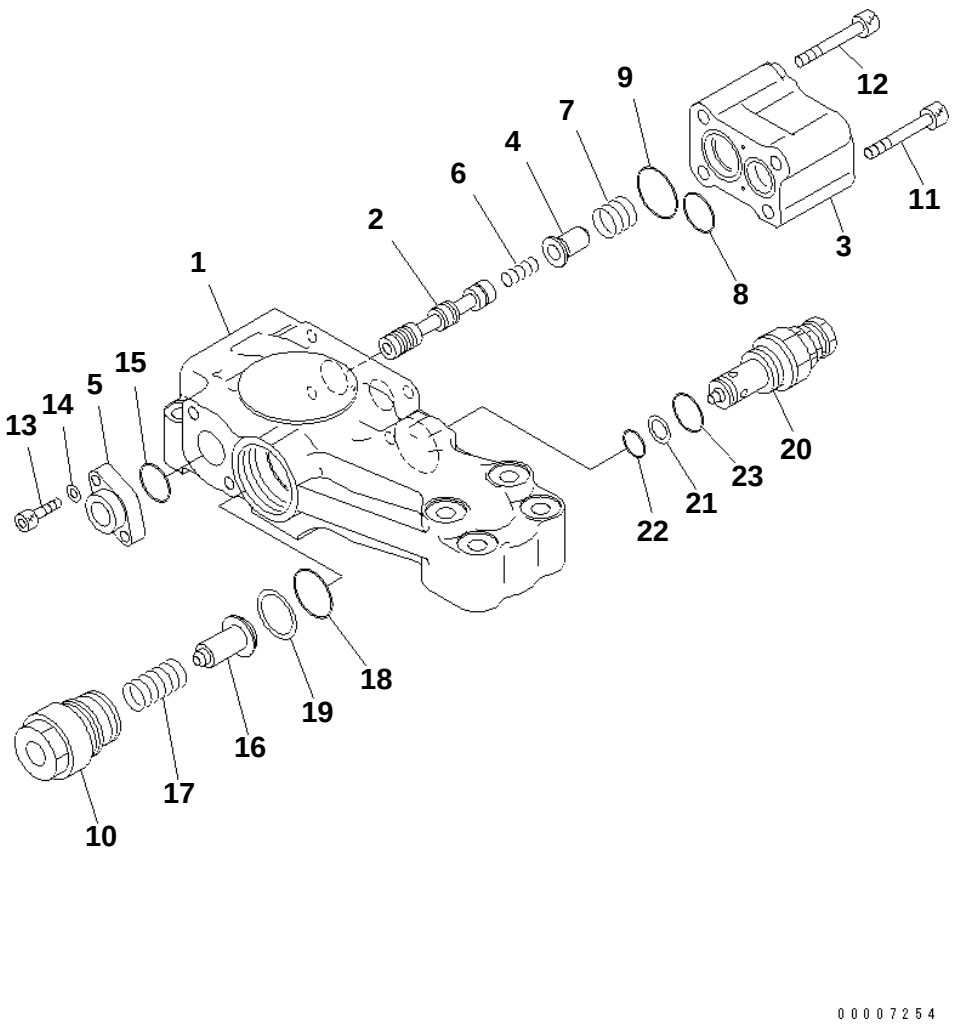

PC228US-3N-W1 S/N 30001-UP

BURST VALVE (FOR BOOM CYLINDER) (FOR ARM CRANE) (YELLOW)

Item	Part No.	Description	Qty	Options
	702-21-08350	PILOT VALVE	1	SN:30001--
1	☆	· BODY,VALVE	1	SN:30001--
2	☆	· SPOOL	1	SN:30001--
3	702-21-38750	· CASE	1	SN:30001--
4	702-21-38420	· RETAINER¤ 2.0MM	1	SN:30001--
	702-21-38550	· RETAINER¤ 1.7MM	1	SN:30001--
	702-21-38560	· RETAINER¤ 2.3MM	1	SN:30001--
	702-21-38610	· RETAINER¤ 1.8MM	1	SN:30001--
	702-21-38620	· RETAINER¤ 1.9MM	1	SN:30001--
	702-21-38630	· RETAINER¤ 2.1MM	1	SN:30001--
	702-21-38640	· RETAINER¤ 2.2MM	1	SN:30001--
5	702-21-38430	· FLANGE	1	SN:30001--
6	702-21-38440	· SPRING	1	SN:30001--
7	702-21-38650	· SPRING	1	SN:30001--
8	702-21-38460	· O-RING	1	SN:30001--
9	702-21-38470	· O-RING	1	SN:30001--
10	702-21-38480	· PLUG	1	SN:30001--
11	01252-60860	· BOLT	2	SN:30001--
12	01252-60865	· BOLT	2	SN:30001--
13	01252-60620	· BOLT	2	SN:30001--
14	01641-20608	· WASHER	2	SN:30001--
15	07000-12021	· O-RING	1	SN:30001--
16	709-74-92810	· VALVE	1	SN:30001--
17	709-75-92220	· SPRING	1	SN:30001--
18	700-93-11320	· O-RING	1	SN:30001--
19	700-93-11330	· RING,BACK-UP	1	SN:30001--
20	723-40-91500	· VALVE ASS'Y,RELIEF	1	SN:30001--
21	700-80-64220	· · RING	1	SN:30001--
22	700-22-11410	· · O-RING	1	SN:30001--
23	709-25-11390	· · O-RING	1	SN:30001--

Ref. Y1679-01A1 Page 451050

https://truckmanualshub.com/

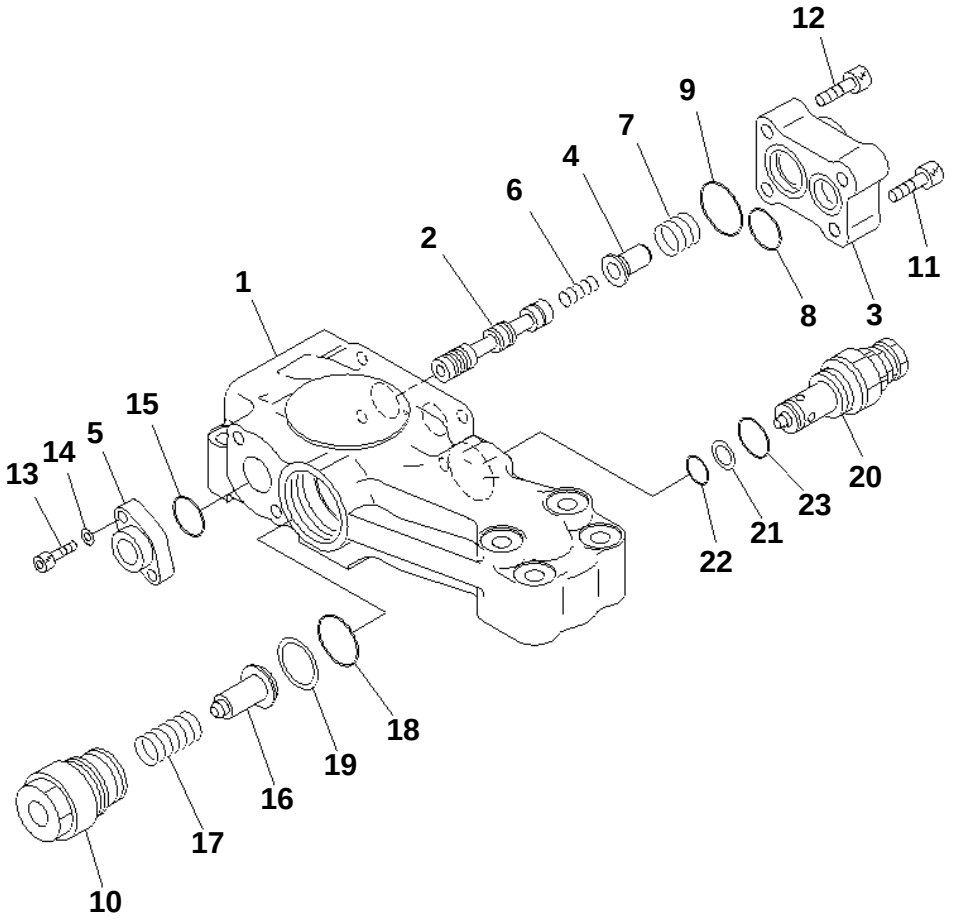

PC228US-3N-W1 S/N 30001-UP

BURST VALVE (FOR ARM CYLINDER) (FOR ARM CRANE) (YELLOW)

Item	Part No.	Description	Qty	Options
	702-21-08340	PILOT VALVE	1	SN:30001--
1	☆	· BODY,VALVE	1	SN:30001--
2	☆	· SPOOL	1	SN:30001--
3	702-21-38510	· CASE	1	SN:30001--
4	702-21-38420	· RETAINER¤ 2.0MM	1	SN:30001--
	702-21-38550	· RETAINER¤ 1.7MM	1	SN:30001--
	702-21-38560	· RETAINER¤ 2.3MM	1	SN:30001--
5	702-21-38430	· FLANGE	1	SN:30001--
6	702-21-38440	· SPRING	1	SN:30001--
7	702-21-38540	· SPRING	1	SN:30001--
8	702-21-38460	· O-RING	1	SN:30001--
9	702-21-38470	· O-RING	1	SN:30001--
10	702-21-38480	· PLUG	1	SN:30001--
11	01252-30825	· BOLT	2	SN:30001--
12	01252-30835	· BOLT	2	SN:30001--
13	01252-30620	· BOLT	2	SN:30001--
14	01641-20608	· WASHER	2	SN:30001--
15	07000-02021	· O-RING	1	SN:30001--
16	709-74-92810	· VALVE	1	SN:30001--
17	709-75-92220	· SPRING	1	SN:30001--
18	700-93-11320	· O-RING	1	SN:30001--
19	700-93-11330	· RING,BACK-UP	1	SN:30001--
20	723-40-91500	· VALVE ASS'Y,RELIEF	1	SN:30001--
21	700-80-64220	· · RING	1	SN:30001--
22	700-22-11410	· · O-RING	1	SN:30001--
23	709-25-11390	· · O-RING	1	SN:30001--

Ref. Y1679-01A2 Page 451060

https://truckmanualshub.com/

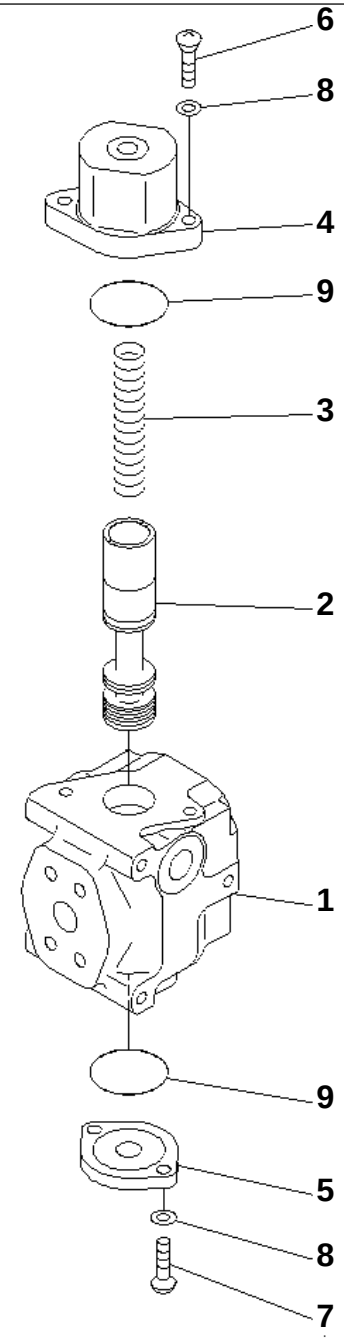

PC228US-3N-W1 S/N 30001-UP

SELECTOR VALVE

Item	Part No.	Description	Qty	Options
	702-21-01910	VALVE ASS'Y	1	SN:30001--
1	☆	· BLOCK	1	SN:30001--
2	☆	· SPOOL	1	SN:30001--
3	702-21-11930	· SPRING	1	SN:30001--
4	702-21-11940	· CASE	1	SN:30001--
5	709-10-91240	· FLANGE	1	SN:30001--
6	01252-61040	· BOLT	2	SN:30001--
7	01252-61030	· BOLT	2	SN:30001--
8	01643-51032	· WASHER	4	SN:30001--
9	07000-12055	· O-RING	2	SN:30001--

Ref. Y1679-11A0 Page 451070

https://truckmanualshub.com/

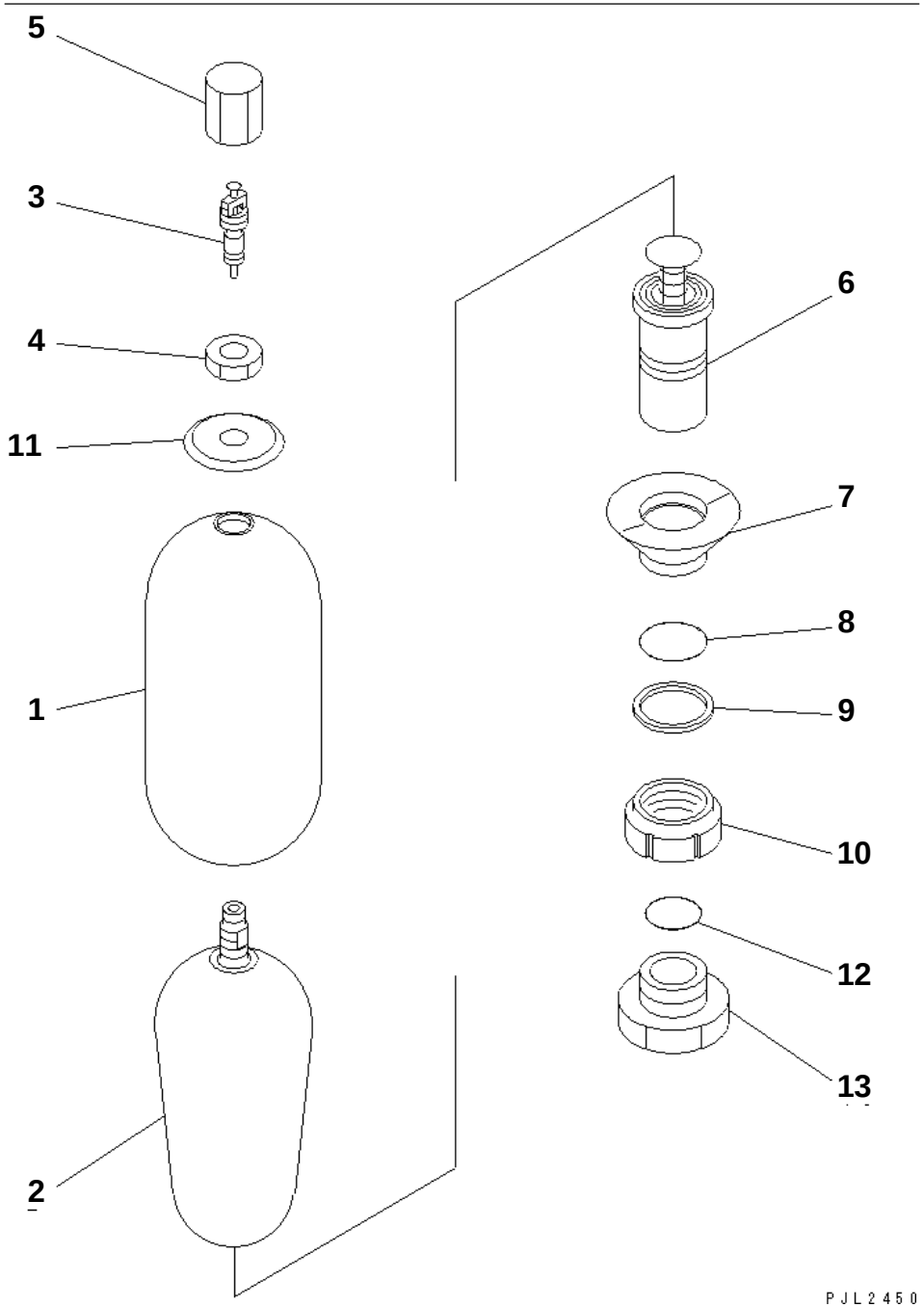

PC228US-3N-W1 S/N 30001-UP

ACCUMULATOR (AL300-1) (INNER PARTS)

Item	Part No.	Description	Qty	Options
	20Y-970-6450	ACCUMULATOR	1	SN:30001--
1	☆	· SHELL	1	SN:30001--
	NFEB3401 A1	· BLADDER ASS'Y	1	SN:30001--
2	NFEB3026 A1	· · BLADDER	1	SN:30001--
3	NFEB4475 Z0	· · CORE	1	SN:30001--
4	☆	· NUT	1	SN:30001--
5	☆	· CAP	1	SN:30001--
6	NFEB0427 Z0	· BODY ASS'Y	1	SN:30001--
7	NFEB4477 Z0	· RING	1	SN:30001--
8	☆	· O-RING (K1)	1	SN:30001--
9	☆	· BACK-UP RING (K1)	1	SN:30001--
10	☆	· RING	1	SN:30001--
11	☆	· PLATE	1	SN:30001--
12	205-970-5560	· O-RING (K1)	1	SN:30001--
13	☆	· BUSHING	1	SN:30001--
SERVICE KIT				
K1	NFEB1601 P8	SEAL KIT	1	SN:30001--
	☆	· O-RING	1	SN:30001--
	☆	· BACK-UP RING	1	SN:30001--
	205-970-5560	· O-RING	1	SN:30001--

Ref. Y1840-01A0 Page 451080

https://truckmanualshub.com/

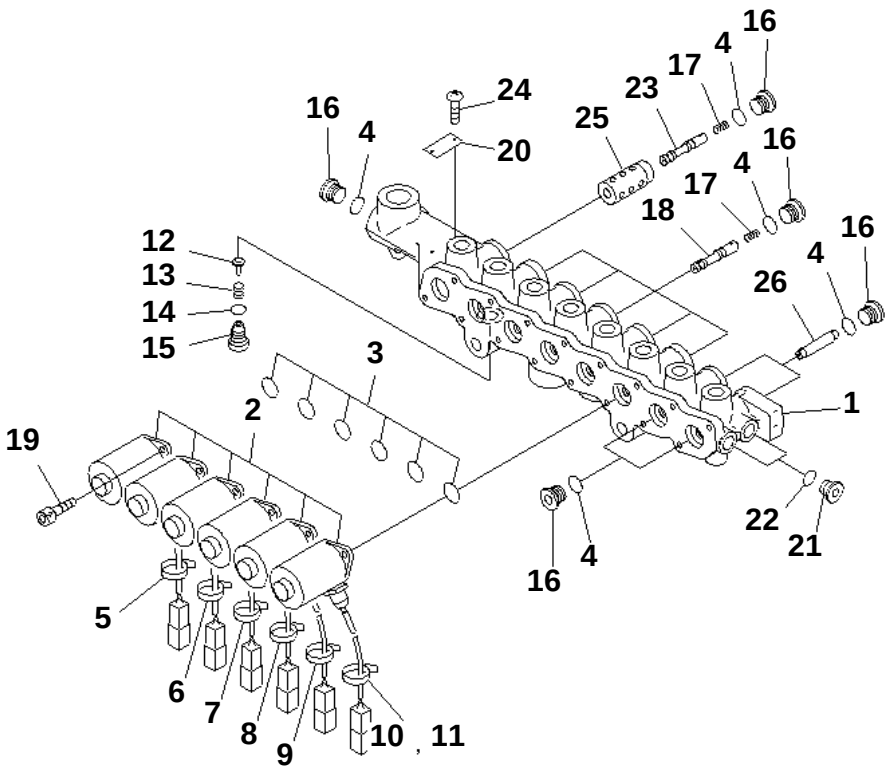

PC228US-3N-W1 S/N 30001-UP

SOLENOID VALVE (INNER PARTS)

Item	Part No.	Description	Qty	Options
	20Y-60-31212	VALVE ASS'Y	1	SN:30001--
1	☆	· BLOCK	1	SN:30001--
2	20Y-60-32120	· SOLENOID ASS'Y	6	SN:30001--
3	20Y-60-31240	· O-RING	6	SN:30001--
4	20Y-60-31250	· O-RING	11	SN:30001--
5	NY07207-11700	· TUBE	1	SN:30001--
6	NY07529-10200	· TUBE	1	SN:30001--
7	NY07529-10300	· TUBE	1	SN:30001--
8	NY07529-10400	· TUBE	1	SN:30001--
9	NY07529-10500	· TUBE	1	SN:30001--
10	NY07529-10600	· TUBE	1	SN:30001--
11	NY89103-00090	· BAND	6	SN:30001--
12	NY05062-1170A	· PLUNGER	1	SN:30001--
13	NY05062-11800	· SPRING	1	SN:30001--
14	NY86711-01010	· O-RING	1	SN:30001--
15	NY06277-1320A	· PLUG	1	SN:30001--
16	NY80000-02200	· PLUG	11	SN:30001--
17	NY06339-10200	· SPRING	6	SN:30001--
18	NY07493-10200	· SPOOL	5	SN:30001--
19	NY81416-05012	· BOLT	12	SN:30001--
20	NY09000-11400	· PLATE	1	SN:30001--
21	NY80000-02100	· PLUG	3	SN:30001--
22	NY86711-01008	· O-RING	3	SN:30001--
23	NY16207-10300	· SPOOL	1	SN:30001--
24	NY84110-00248	· SCREW	2	SN:30001--
25	NY16207-10200	· SLEEVE	1	SN:30001--
26	NY16207-10400	· SPOOL	2	SN:30001--

Ref. Y1860-01A0 Page 451090

https://truckmanualshub.com/

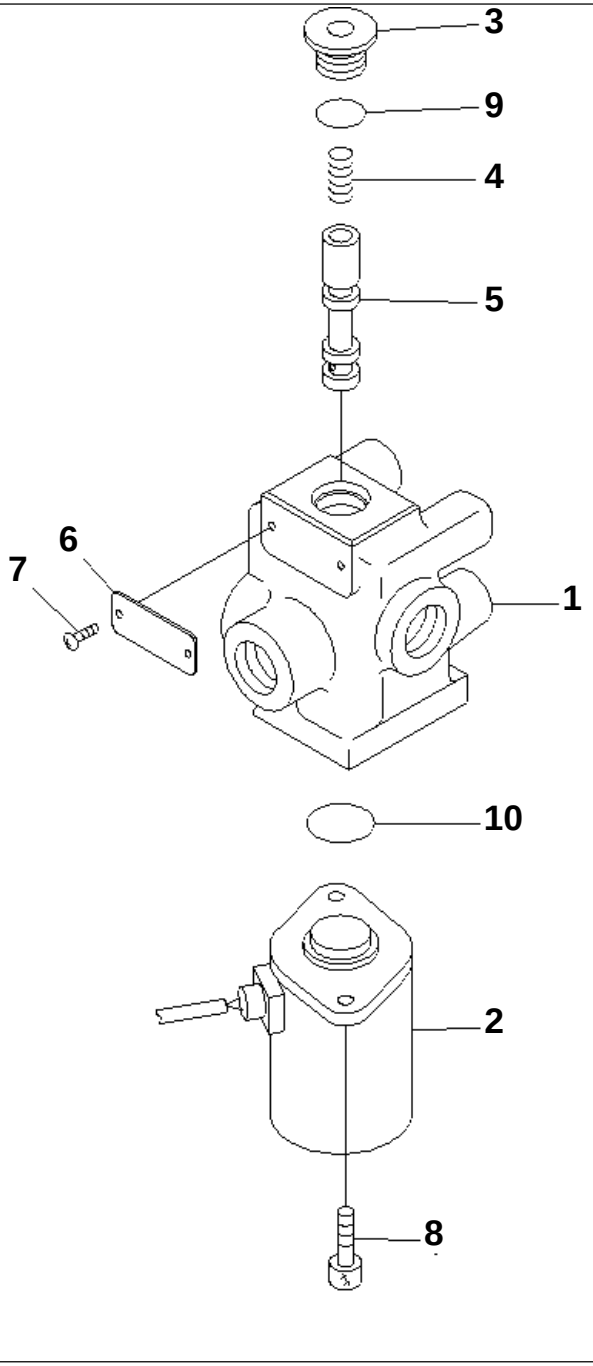

PC228US-3N-W1 S/N 30001-UP

SOLENOID VALVE (INNER PARTS)

Item	Part No.	Description	Qty	Options
	20Y-60-32110	VALVE ASS'Y	1	SN:30001--
1	☆	· BLOCK	1	SN:30001--
2	20Y-60-32120	· SOLENOID ASS'Y	1	SN:30001--
3	NY08000-02200	· PLUG	1	SN:30001--
4	NY06339-10200	· SPRING	1	SN:30001--
5	NY07493-10200	· SPOOL	1	SN:30001--
6	NY09000-11400	· PLATE	1	SN:30001--
7	NY84110-00264	· SCREW	2	SN:30001--
8	NY81446-05010	· BOLT	2	SN:30001--
9	NY86711-02011	· O-RING	1	SN:30001--
10	07000-12016	· O-RING	1	SN:30001--

Ref. Y1861-01A0 Page 451100

https://truckmanualshub.com/

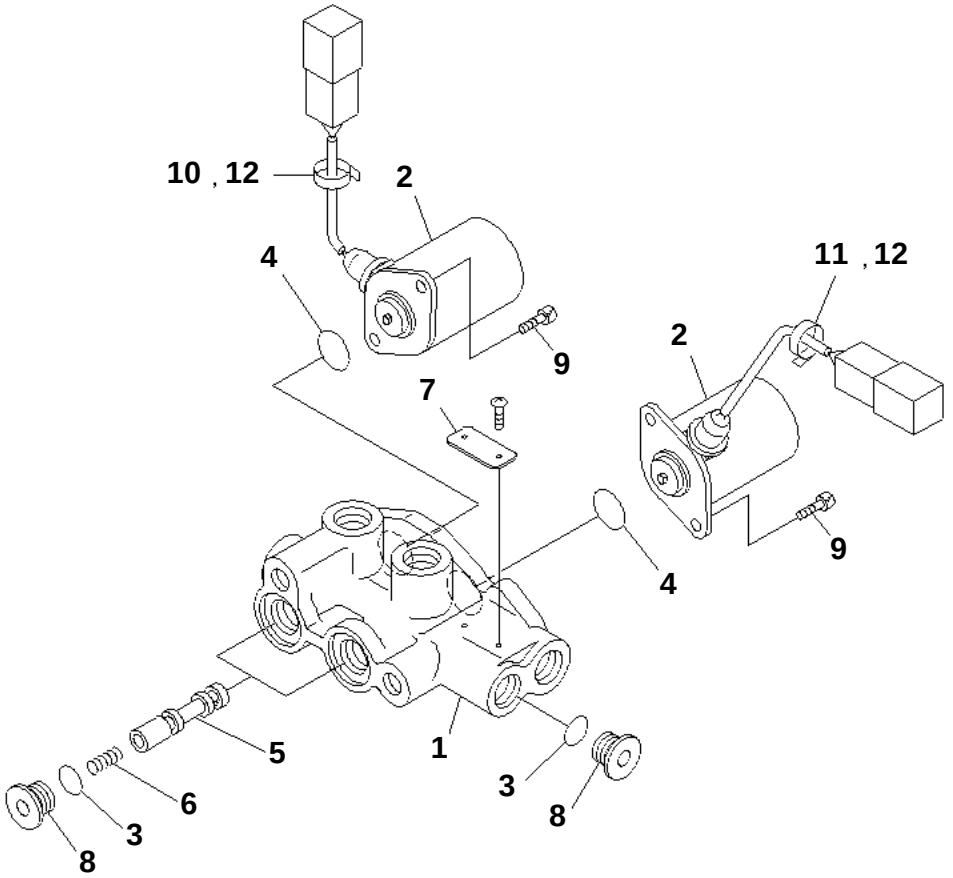

PC228US-3N-W1 S/N 30001-UP

SOLENOID VALVE (INNER PARTS)

Item	Part No.	Description	Qty	Options
	22U-60-21271	VALVE ASS'Y	1	SN:30001--
1	☆	· BLOCK	1	SN:30001--
2	20Y-60-32120	· SOLENOID ASS'Y	2	SN:30001--
3	20Y-60-31250	· O-RING	3	SN:30001--
4	20Y-60-31240	· O-RING	2	SN:30001--
5	NY07493-10200	· SPOOL	2	SN:30001--
6	NY06339-10200	· SPRING	2	SN:30001--
7	NY09000-11400	· PLATE	1	SN:30001--
8	NY80000-02200	· PLUG	3	SN:30001--
9	NY81416-05012	· BOLT	4	SN:30001--
10	☆	· TUBE	1	SN:30001--
11	☆	· TUBE	1	SN:30001--
12	☆	· BAND	2	SN:30001--

Ref. Y1862-01A0 Page 451110