RUTHZIL TRATOR COMERCIAL DE PEÇAS LTDA 11 97083-6812 ROLANDO CITRANGULO

KEPB095600

PARTS BOOK

KOMATSU

PC240LC-8
Serial No. B10001 and up

SAA6D107E-1C
Serial No. 26542663 and up

When ordering a spare part, specify the part number, part name, and quantity required, and also specify your machine model code, machine serial number, engine serial number and the service meter reading.

This Parts Book describes not only standard items but also optional equipment and attachments. To order a part, please contact your nearest Komatsu distributor.

This Parts Book contains the information and special codes as follows:

ILLUSTRATION AND PARTS LIST

When you open this Parts Book, you will find an illustration following its figure number (FIG.) Each individual part in the illustration is given an index number. Following the illustration, the component parts of the unit are listed in the order of the index numbers shown in the illustration. The part number, part name, quantity and applicable serial number are given for each part as a parts list.

FIGURE NUMBER (FIG.)

The figure number (FIG.) is the number which shows the figure of the page. It is not the spare part number. The numbers are not always continuous.

PARTS LIST

Spare parts information are listed in the parts list page as follows:

Index:

This is the same as the index number in the illustration. The parts are listed in index number order.

Code:

Codes are used in this column and represent as follows:

A1 This part and the part specified in the line immediately above are interchangeable.

A2 The part specified in the line above can be used instead of this part.

A3 This part can be used instead of the part specified in the line immediately above.

A4 The part specified in the description column can be used instead of this part if it is used as a set.

B1 This shows discontinued part. The part specified in the above line is supplied instead.

B2 This shows a discontinued part. The part specified in the description column is supplied instead as a set.

C1 This part cannot be supplied as an individual part. It is supplied as an assembly.

C2 This part is supplied for authorized Komatsu distributors only. It cannot be supplied as an individual part. It is supplied as an assembly.

C3 This indicates a part supplied as semi-finished. It requires additional work before installation.

Part Number:

The number given in the part number column is the part number for the part shown. It is the identification code used when ordering that part. It is important that there be no mistake in this code number when ordering.

Description:

This gives the name of part that has the part number listed. The mark "·" is put in front of the component part name of an assembly part and the item is entered following the assembly. If a part marked with "·" is a sub assembly, its components are marked with "··".

Example: Tank Assembly
·Tank
·Cap
··Packing

Furthermore, the following marks and abbreviations are used in this column.

Kit	This indicates kit parts. For kit parts, refer to the section FIELD REPAIR SERVICE PARTS in this Parts Book.
D	Diameter
L	Length
LHS	Left-hand side
RHS	Right-hand side
T	Thickness
W	Width

Quantity (Qty):

This specifies the number of pieces used for one machine. However, if a part is included in the assembly and/or component, the quantity per such assembly and/or component is specified.
Code AR (as required) shall be used in the Quantity column if the part cannot be specified numbers requires per machine and/or component. In such case, any number of quantities may be ordered depend on the field service requirement.

Serial Numbers:

Applicable engine serial number is indicated for the engine volume. In the chassis volume, this indicates the machine serial number in which the part is used.

If the serial number is enclosed in parenthesis, it shows that it is the applicable serial number for exclusive use of the equipment of figure number (FIG.)

AVANT-PROPOS

Lorsque vous passez une commande d'une pièce de rechange, vous êtes prié de spécifier le numéro de la pièce, la désignation de la pièce et la quantité requise et d'indiquer également le code du modèle de la machine, le numéro de série de la machine, le numéro de série du moteur et la lecture du compteur de service du véhicule.

Sur le présent catalogue des pièces figurent non seulement les équipements standard, mais également les équipements et accessoires en option. Si vous désirez un équipement ou une pièce quelconque, vous êtes prié de prendre contact avec le concessionnaire Komatsu le plus proche.

Ce catalogue des pièces comprend les informations et codes spéciaux de la manière suivante:

FIGURES ET LISTES DES PIÈCES

Lorsque vous ouvrez le présent catalogue, vous pouvez rechercher les figures en fonction du numéro de figure (FIG.). Chaque pièce individuelle dans la figure est fournie d'un numéro de référence. D'après la figure, les éléments de l'unité sont énumérés dans l'ordre des numéros de référence montrés sur la figure. Le numéro de la pièce, la désignation de la pièce, la quantité et le numéro de série utilisés sont indiqués pour chaque pièce comme liste des pièces.

NUMÉRO DE FIGURE (FIG.)

Le numéro de figure (FIG.) est un numéro qui permet d'identifier une figure sur une page. Il ne représente pas le numéro de la pièce de rechange. Les numéros ne sont pas toujours séquentiels.

LISTE DES PIÈCES DE RECHANGE

Les informations des pièces de rechange sont données dans la page de la liste des pièces comme ci-après:

Numéro de référence (Index):

Les numéros de référence correspondent aux numéros de référence notés sur la figure et sont énumérés dans l'ordre des numéros de référence.

Codification (Code):

Les codes sont utilisés dans cette colonne et représentent comme ci-après:

A1 Cette pièce et la pièce qui figure sur la ligne juste au-dessus sont interchangeables.

A2 La pièce indiquée sur la ligne au-dessus peut être utilisée au lieu de cette pièce.

A3 Cette pièce peut être utilisée au lieu de la pièce indiquée sur la ligne juste au-dessus.

A4 La pièce indiquée dans la colonne de description peut être utilisée au lieu de cette pièce si elle est utilisée comme ensemble.

B1 Ceci montre la pièce dont la production est interrompue. La pièce indiquée dans la ligne au-dessus est fournie à sa place.

B2 Ceci montre la pièce dont la production est interrompue. La pièce indiquée dans la colonne de description est fournie à sa place comme ensemble.

C1 Cette pièce ne peut pas être fournie comme pièce individuelle. Elle est fournie en tant qu'ensemble.

C2 Cette pièce est fournie pour les distributeurs autorisés de Komatsu seulement. Elle ne peut pas être fournie comme pièce individuelle. Elle est fournie en tant qu'ensemble.

C3 Ceci indique une pièce fournie à l'état semi-fini. Ceci exige un travail additionnel avant l'installation.

Numéros de pièce (Part Number):

Les numéros indiqués dans cette colonne correspondent aux numéros des pièces représentées et constituent les codes à spécifier pour toute commande de pièce. Il est important de ne pas faire d'erreur avec ce code au moment de la commande.

Description (Description):

Ceci indique le nom de la pièce qui montre le numéro de la pièce énumérée. La marque "·" est placée devant le nom de la pièce du composant d'une pièce d'ensemble et l'item est introduit suivant l'ensemble. Si une pièce marquée avec "·" est un sous-ensemble, ses composants sont marqués avec "· ·".
Exemple: Tank Assembly (Ensemble de réservoir)
· Tank
· Cap
· · Packing

En outre, les marques et abréviations suivantes sont utilisées dans cette colonne.

Kit Ceci indique les pièces de kit. Pour les pièces de kit, se référer à la Section FIELD REPAIR SERVICE PARTS de ce Catalogue des Pièces.
D Diamètre
L Longueur
LHS Côté gauche
RHS Côté droit
T Épaisseur
W Largeur

Quantité (Qty):

Ceci spécifie le nombre de pièces nécessaires pour l'équipement en question. S'il s'agit de pièces comprises dans un ensemble et/ou composant, et la quantité indiquée est le nombre de pièces nécessaires pour l'ensemble et/ou le composant en question.
Le code AR (comme requis) sera utilisé dans la colonne de Quantité si la pièce ne peut pas se présenter en nombres indiqués comme requis par machine et/ou composant. Dans ce cas, tout nombre de quantités peut être commandé selon la condition de service de champ.

Numéros de série (Serial Numbers):

Le numéro de série du moteur applicable est indiqué pour le volume du moteur. Dans le volume de la carrosserie, ceci indique le numéro de série de l'équipement sur lequel la pièce est utilisée.

Si le numéro de série est placé entre parenthèses, cela signifie qu'il s'agit d'un numéro de série destiné exclusivement à l'utilisation de l'équipement mentionné dans le numéro de figure (FIG.).

Quando fate un ordinazione di una parte di ricambio, siete pregati di precisare il numero della parte, la designazione della parte e la quantità necessaria ed indicare anche il codice del modello della macchina, il numero di serie della macchina, il numero di serie del motore e la lettura dell'indicatore di servizio del veicolo.

Sul presente catalogo delle parti appaiono non solo le attrezzature standard, ma anche le attrezzature ed accessori in opzione. Se desiderate un'attrezzatura o una parte qualunque, siete pregati di prendere contatto con il concessionario Komatsu più vicino.

Questo catalogo delle parti comprende le informazioni ed i codici speciali nel modo seguente:

ILLUSTRAZIONI ED ELENCO DELLE PARTI

Quando aprite il presente catalogo, troverete una figura secondo il suo numero di figura (FIG.). Ogni parte individuale nella figura è fornita di un numero di riferimento. Secondo la figura, gli elementi dell'unità sono enumerati nell'ordine dei numeri di riferimento mostrati sulla figura. Il numero della parte, la designazione della parte, la quantità ed il numero di serie utilizzati sono indicati per ogni parte come elenco delle parti.

NUMERO DI FIGURA (FIG.)

Il numero di figura (FIG.) è il numero che indica la figura della pagina. Non rappresenta il numero della parte di ricambio. I numeri non sono sempre continui.

ELENCO DELLE PARTI DI RICAMBIO

Le informazioni dei pezzi di ricambio sono elencate nella pagina dell'elenco dei pezzi come segue:

Numero di riferimento (Index):

I numeri di riferimento corrispondono ai numeri di riferimento notati sulla figura e sono enumerati nell'ordine dei numeri di riferimento.

Codice (Code):

I codici sono usati in questa colonna e rappresentano come segue:

A1 Questa parte ed la parte specificata nella linea immediatamente sopra sono intercambiabili.

A2 La parte specificata nella linea sopra può essere usata anziché questa parte.

A3 Questa parte può essere usata anziché la parte specificata nella linea immediatamente sopra.

A4 La parte specificata nella colonna di descrizione può essere usata anziché questa parte se è usata come insieme.

B1 Ciò mostra la parte non più in produzione. La parte specificata nella suddetta linea è invece fornita.

B2 Ciò mostra una parte non più in produzione. La parte specificata nella colonna di descrizione è fornita invece come insieme.

C1 Questa parte non può essere fornita come pezzo individuale. È fornita come insieme.

C2 Questa parte è destinata solo ai distributori autorizzati Komatsu. Non può essere fornita come parte individuale. È fornita come insieme.

C3 Ciò indica una parte fornita come semifinito. Richiede un lavoro supplementare prima dell'installazione.

Numeri di parte (Part Number):

I numeri indicati in questa colonna corrispondono ai numeri delle parti rappresentate e costituiscono i codici da precisare per qualsiasi ordinazione di parte. È importante non fare un errore con questo codice al momento dell'ordinazione.

Descrizione (Description):

Ciò dà il nome della parte che presenta il numero di parte elencato. Il contrassegno "·" è messo davanti al nome della parte componente di una parte di gruppo e l'articolo è inserito dopo il gruppo. Se un pezzo segnato con "·" è un sotto-gruppo, i suoi componenti sono segnati con "· ·".
Esempio: Tank Assembly
· Tank
· Cap
· · Packing

Inoltre, i seguenti contrassegni ed abbreviazioni sono usati in questa colonna.

Kit Ciò indica le parti di kit. Per le parti di kit, riferirsi alla sezione PARTI DI RICAMBIO PER SERVIZIO DI RIPARAZIONE IN SEDE in questo Catalogo delle Parti.
D Diametro
L Lunghezza
LHS Lato a sinistra
RHS Lato a destra
T Spessore
W Larghezza

Quantità (Qty):

Questo precisa il numero di parti necessarie per l'attrezzatura in questione. Se si tratta di parti comprese in un insieme e/o componente, e la quantità indicata è il numero di parti necessarie per l'insieme e/o il componente in questione.
Il codice AR (come richiesto) sarà utilizzato nella colonna di Quantità se la parte non può presentarsi in numeri indicati come richiesto per macchina e/o componente. In questo caso, qualsiasi numero di quantità può essere ordinato secondo la condizione di servizio di campo.

Numeri di serie (Serial Numbers):

Il numero di serie del motore applicabile è indicato per il volume del motore. Nel volume della carrozzeria, questo indica il numero di serie dell'attrezzatura sulla quale la parte è utilizzata.

Se il numero seriale è racchiuso tra parentesi, indica che è il numero di serie applicabile per uso esclusivo dell'attrezzatura del numero di figura (FIG.)

Bei der Bestellung von Teilen bitte die Teilenummer, die Teilebezeichnung und die Menge des jeweiligen Teils sowie die Modellnummer, die Seriennummer der Maschine, die Seriennummer des Motors und den Stand des Betriebsstundenzählers angeben.

In dieser Ersatzteilliste ist nicht nur das Standardzubehör aufgeführt, sondern auch als Sonderausstattung erhältliche Teile und Einrichtungen. Bestellungen nimmt Ihr zuständiger Komatsu-Händler entgegen.

Die folgenden Informationen und Kodes sind in der Ersatzteilliste enthalten:

Bilder und Ersatzteilliste

Beim Aufschlagen des Ersatzteilkatalogs finden Sie nach der Bildnummer (BILD) geordnete Bilder. Jedes Einzelteil einer Baugruppe ist mit einer Kennzahl versehen. Ausgehend von den Bildern sind die Bauteile der Baugruppe aufgeführt, und zwar geordnet nach den in den Bildern angegebenen Kennzahlen. Jedes Einzelteil wird mit Teilenummer, Teilebezeichnung und entsprechender Seriennummer angegeben.

Bildnummer (BILD)

Mit der Bildnummer (BILD) können Bilder auf einer Seite identifiziert werden. Es handelt sich dabei nicht um die Nummer des Lieferteils. Auch sind die Bilder nicht fortlaufend nummeriert.

Ersatzteilliste

Angaben zu den Ersatzteilen sind auf der Auflistungsseite wie folgt dargestellt::

Kennzahl (Index):

Hierbei handelt es sich um die Kennzahlen aus den Bildern. Die Bauteile sind nach diesen Kennzahlen geordnet aufgeführt.

Kode (Code):

In dieser Spalte werden Kodes mit den folgenden Bedeutungen benutzt:

A1 Dieses Teil ist mit dem in der vorangegangenen Zeile aufgeführten Teil austauschbar.

A2 Das in der vorangegangen Zeile aufgeführte Teil kann anstelle dieses Teils verwendet werden.

A3 Dieses Teil kann anstelle des in der vorangegangenen Zeile aufgeführten Teils verwendet werden.

A4 Anstelle dieses Teils kann das in der Spalte „Beschreibung“ aufgeführte Teil verwendet werden, wenn das Teil zusammen mit anderen Teilen als ein Bauteilsatz verwendet wird.

B1 Dieses Teil kann nicht mehr geliefert werden. Stattdessen wird das in der vorangegangenen Zeile aufgeführte Teil geliefert.

B2 Dieses Teil kann nicht mehr geliefert werden. Stattdessen wird das in der Spalte „Beschreibung“ aufgeführte Teil als ein Bauteilsatz geliefert.

C1 Dieses Teil kann nicht als Einzelteil, sondern nur als Baugruppe geliefert werden.

C2 Dieses Teil wird nur an autorisierte Komatsu-Händler geliefert. Es kann nicht als Einzelteil, sondern nur als Baugruppe geliefert werden.

C3 Hiermit werden Teile gekennzeichnet, die in vorbearbeitetem Zustand geliefert werden und für den Einbau nachbearbeitet werden müssen.

Teilenummer (Part Number):

Die in der Spalte „Teilenummer“ aufgeführte Nummer entspricht der Teilenummer für das betreffende Teil. Diese Nummer dient zur Identifizierung des Teils bei einer Bestellung. Deshalb sollte bei der Bestellung stets auf die genaue Angabe der Teilenummer geachtet werden.

Beschreibung (Description):

Hierunter wird die Bezeichnung des Teils mit der aufgeführten Teilenummer angegeben. Jedes Baugruppen-Bauteil ist mit dem vorangestellten Symbol „·“ gekennzeichnet und wird hinter der entsprechenden Baugruppe aufgeführt. Handelt es sich bei dem mit „·“ gekennzeichneten Bauteil um eine Baugruppe, sind die Bauteile dieser Baugruppe mit „· ·“ gekennzeichnet.
Beispiel: Tank Assembly
· Tank
· Cap
· · Packing

Zusätzlich werden die folgenden Zeichen und Abkürzungen in dieser Spalte verwendet:

Kit Hiermit werden Teile gekennzeichnet, die nur als Satz erhältlich sind. Siehe dazu den Abschnitt „FIELD REPAIR SERVICE PARTS“ dieses Ersatzteilkatalogs.
D Durchmesser
L Länge
LHS linke Seite
RHS Rechte Seite
T Dicke
W Breite

Menge (Qty):

Hierunter wird die Anzahl der Bauteile für eine Maschine angegeben. Im Falle einer Baugruppe oder eines Aggregats wird allerdings die Anzahl der Teile pro Baugruppe angegeben.
Der Kode AR (nach Bedarf) wird in dieser Spalte dann benutzt, wenn keine genaue Angabe darüber möglich ist, wie groß der Mengenbedarf pro Maschine und/oder Baugruppe ist. In diesem Fall kann eine beliebige Menge je nach Bedarf bestellt werden.

Serial Numbers (Seriennummern):

Im Ersatzteilkatalog für den Motor versteht man hierunter die Seriennummer des Motors, in den das betreffende Teil eingebaut ist. Im Ersatzteilkatalog für die Maschine versteht man hierunter die Seriennummer der Maschine, in die das entsprechende Teil eingebaut ist.
Wenn die Seriennummer in Klammern angegeben ist, ist diese Seriennummer ausschließlich für das in der Bildnummer (BILD) angegebene Zubehör bestimmt.

Ao solicitar uma peça, informe o número, nome e quantidade da peça necessária, bem como o código de modelo da máquina e seu número de série, o número do motor e a leitura do medidor de serviço.

Este catálogo de peças não somente especifica os acessórios padrões mas também as peças opcionais e aditamentos. Para pedir uma peça, entre em contato com o revendedor Komatsu mais próximo.

Este catálogo de peças contém as seguintes informações e códigos especiais:

LISTA DE PEÇAS E ILUSTRAÇÕES

Ao abrir este catálogo de peças, encontrar-se-á uma ilustração seguida do número da figura (FIG.). A cada peça individual na ilustração corresponde um número de índice. Seguindo a ilustração, as peças componentes da unidade são listadas na ordem dos números de índice nela indicados. O número, nome, quantidade e número de série aplicável da peça são aprsentados como uma lista de peças.

NÚMERO DA FIGURA (FIG.)

O número da figura (FIG.) é o número que mostra a ilustração da página. Não é um número para fornecimento de peças sobressalentes. Os números nem sempre são contínuos.ebene Zubehör bestimmt.

LISTA DE PEÇAS

As informações das peças sobressalentes são relacionadas na página com a lista de peças de acordo com o seguinte:

Índice (Index):

Este é o mesmo que o número de índice na ilustração. As peças são relacionadas na ordem dos números de índice.

Código (Code):

Códigos são utilizados nesta coluna e significam o seguinte:

A1 Esta peça e a peça especificada na linha imediatamente acima são intercambiáveis.

A2 A peça especificada na linha acima pode ser utilizada no lugar desta peça.

A3 Esta peça pode ser utilizada no lugar da peça especificada na linha imediatamente acima.

A4 A peça especificada na coluna “Descrição” pode ser utilizada no lugar desta peça se usada como um conjunto.

B1 Indica peça descontinuada. A peça especificada na linha acima é fornecida em seu lugar.

B2 Indica peça descontinuada. A peça especificada na coluna “Descrição” é fornecida em seu lugar como um conjunto.

C1 Esta peça não pode ser fornecida como peça individual. Ela é fornecida como um conjunto.

C2 Esta peça é fornecida somente para revendedores Komatsu autorizados. Não pode ser fornecida como peça individual. Ela é fornecida como um conjunto.

C3 Indica peça fornecida em condição semiacabada. Requer trabalho adicional antes da instalação.

Número da peça (Part Number):

O número indicado na coluna de números de peça corresponde ao número da peça exibida. É o código de identificação usado para o pedido da peça. É importante não enganar-se de número de código ao pedir a peça.

Descrição (Description):

Indica o nome da peça que tem o seu número de peça relacionado. O símbolo "·" é colocado na frente do nome peça do componente de uma peça de conjunto, e o item é lançado seguindo o conjunto. Se uma peça indicada com "·" é um subconjunto, os seus componentes são indicados por "· ·".
Exemplo: Tank Assembly
· Tank
· Cap
· · Packing

Além disso, os seguintes símbolos e abreviações são usados nesta coluna.

Kit Indica peças de um jogo. Para peças de jogo, referir-se à seção "FIELD REPAIR SERVICE PARTS" neste catálogo de peças.

D Diâmetro
L Comprimento
LHS Lado esquerdo
RHS Lado direito
T Espessura
W Largura

Quantidade (Qty):

Indica o número de peças utilizadas em uma máquina. Contudo, se uma peça é incluída no conjunto e/ou componente, a quantidade por conjunto e/ou componente é especificada.
O código AR (como requerido) usar-se-á na coluna "Quantitade" caso o número de peças por máquina e/ou componente não possa ser especificado. Em tal caso, qualquer número de peças pode ser pedido dependendo dos requisitos de serviço em campo.

Números de série (Serial Numbers):

O número de série do motor aplicável é indicado para o volume do motor. No volume da carroceria, indica o número de série da máquina na qual a peça é utilizada.

Se o número de série está entre parêntesis, mostra que é o número de série aplicável para uso exclusivo do equipamento do número da figura (FIG.)

订购零件时，请注明需要零件的货号、品名、数量以及使用机器的车辆编号、发动机型号和系列号、工作时数。

此零件明细表上不仅记载了标准装备零件，还记载了选购零件、附件零件。如果您需要订货，请与最近的小松代理店联系。

为了清楚明了，零件手册中有如下规定：

图表

打开此零件清单后，可以看到附带图号（FIG.）的零件明细表图示。在图示上标有各种零件的索引号码。除图之外，还按索引号码的顺序列表表示货号、品名、数量、适用机型。

图号（FIG.）

图号表示该页图的号码。它不是补充零件用的货号。此号码不一定是连续号码。

零件表

从左栏开始按以下顺序显示零件的明细。

索引 (Index):

与图的索引号码一致，按索引号码顺序编制为表格形式。

代号 (Code):

此栏使用的代号如下所示：

A1　此行零件可与紧挨着的上一行零件互换使用。

A2　上一行的零件可取代此行零件来使用。

A3　此行零件可代替紧挨着的上一行零件使用。

A4　品名栏内的零件配套后，可取代此行零件来使用。

B1　该行零件已停止供应，用上一行的零件代替使用。

B2　该行零件已停止供应，品名栏内的零件配套后代替此行零件供应。

C1　此行零件拟成套供应，不以单一零件供应。

C2　此行零件主要面向特定的代理。不以单一零件供应，只拟成套供应。

C3　此行零件以半成品的形式供应，使用前必需再加工。

货号 (Part Number):

此栏所示的编号是图示零件的货号。它是在订货时需要标明的特定代号，是非常重要的。

品名 (Description):

表示相当于货号的零件名称。构成组装品的零件，在品名的前面有 “·” 标记，记载在组装品之后。另外，如果标记 “·” 的零件是组装品，则该构成零件的品名前标有 “· ·” 标记。

例： TANK ASSEMBLY
· TANK
· CAP
· · PACKING

另外，说明栏可能显示以下代号。

Kit 表示修理包。关于修理包构件详情，请参考此零件清单中 “现场修理服务零件” 部分的内容。
D 直径
L 全长
LHS 左侧
RHS 右侧
T 厚度
W 全宽

数量 (Qty):

表示一台机器中需要使用的该零件数量。但是，如果是组装零件的构成零件时，表示其组装件的件数。如果不能指定每个机器以及（或者）组装零件中必须的零件数量时，可以在零件数量栏中使用代码 AR。此时，数量由现场的服务要件决定，然后进行定购。

适用机型 (Serial Numbers):

发动机篇中表示该使用零件的发动机型号，在机体篇中表示该使用零件的车辆号码。

如果适用机型位于括号中，表明该适用机型专门用于图号 (FIG.) 中所指的设备。

ПРЕДИСЛОВИЕ

При заказе запчасти укажите номер части, наименование части и нужное количество; кроме того, укажите код модели вашей машины, серийный номер машины, серийный номер двигателя и показания счетчика мото-часов.

В Каталоге приведены не только стандартные изделия, но и дополнительное оборудование и принадлежности. Для заказа запчасти пожалуйста обратитесь к ближайшему дилеру "Комацу".

Содержащаяся в Каталоге информация и специальные коды разъясняются ниже:

РИСУНОК И ПЕРЕЧЕНЬ ЧАСТЕЙ

Раскрыв Каталог, вы увидите рисунок после номера рисунка (ПОЗ). Каждой отдельной части на рисунке присвоен позиционный номер. За рисунком следует перечень составных частей устройства в порядке номеров позиций рисунка. Перечень частей указывает для каждой части ее номер, наименование, количество и применимый серийный номер.

НОМЕР РИСУНКА (ПОЗ)

Номер рисунка (ПОЗ) – это номер, который указывает рисунок на странице. Он не является номером запчасти. Последовательность номеров не обязательно непрерывна.

ПЕРЕЧЕНЬ ЧАСТЕЙ

Данные запасных частей приведены на странице перечня частей следующим образом:

Индекс (Index):

То же, что номер позиции на рисунке. Части перечислены в порядке их позиционных номеров.

Код: (Code):

В этой колонке находятся коды, обозначающие следующее:

A1 Данная часть и часть, указанная в предыдущей строке, взаимозаменяемы.

A2 Вместо данной части можно использовать часть, указанную в предыдущей строке.

A3 Данную часть можно использовать вместо части, указанной в предыдущей строке.

A4 В комплекте, вместо данной части можно использовать указанную в колонке описания.

B1 Поставки этой части прекращены. Взамен поставляется часть, указанная в предыдущей строке.

B2 Поставки этой части прекращены. Взамен комплектом поставляется часть, указанная в колонке описания.

C1 Данная часть отдельно не поставляется. Она поставляется с узлом.

C2 Данная часть поставляется лишь уполномоченным дилерам "Комацу". Отдельно не поставляется. Поставляется с узлом.

C3 Обозначает часть, поставляемую без доводки. Требует предустановочной подготовки.

Номер части (Part Number):

Приведенный в колонке номеров частей номер является номером изображенной части. Это код-идентификатор для заказа данной части. Важно, чтобы при заказе этот кодовый номер был указан без ошибок.

Описание (Description):

Здесь приводится наименование части, обозначенной номером в перечне. Значок "·" ставится перед наименованием детали компонента, причем деталь записана после узла. Если помеченная "·" часть является подсборкой узла, то ее составные части обозначаются значком "··".

Пример: Tank Assembly
·Tank
·Cap
··Packing

Далее, в этой колонке используются следующие обозначения и сокращения.

Kit	Указывает на элементы комплекта. Элементы комплекта смотри в разделе ЗАПАСНЫЕ ЧАСТИ ДЛЯ РЕМОНТА В УСЛОВИЯХ ЭКСПЛУАТАЦИИ данного Каталога.
D	Диаметр
L	Длина
LHS	Левая сторона
RHS	Правая сторона
T	Толщина
W	Ширина

Количество (Qty):

Указывает общее число изделий в одной машине. Если же изделие является частью узла и/или устройства, то указывается количество в таком узле и/или устройстве.
При невозможности указать количество частей на машину и/или устройство, в колонке Количество проставляется код AR (по потребности). В таком случае можно заказывать любые количества в зависимости от потребностей обслуживания на месте.

Серийные номера (Serial Numbers):

В книге по двигателю приводится соответствующий серийный номер двигателя. В книге по шасси указывает на серийный номер машины, где используется данная часть.

Серийный номер, заключенный в круглые скобки означает, что он применяется только для оборудования с номером рисунка (ПОЗ.)

. رقم القطعة (Part Number)

الرقم الوارد في عمود رقم القطعة هو رقم القطعة الخاص بالقطعة المبينة. وهو الرمز المستخدم لطلب تلك القطعة. ومن الضروري عدم ارتكاب اي خطأ في تحديد هذا الرقم عند طلب القطع.

. الوصف (Description)

يعطي اسم القطعة المدرج رقمها في القائمة. توضع العلامة "٠" امام اسم المكون لمجموعة ما ويدرج البند بعد المجموعة. اذا كانت القطعة المشار اليها بالعلامة "٠" هي نفسها عبارة عن مجموعة مكونات, فان كلا من مكوناتها يشار اليها بالعلامة "٠٠".

مثال

Tank Assembly
·Tank
·Cap
··Packing

بالاضافة الى ذلك, العلامات والمختصرات التالية تستخدم في هذا العمود.

Kit	هذا يشير الى قطع الطقم. حول قطع الطقم, راجع قسم "قطع غيار خدمة الإصلاح الميداني" في كتاب القطع هذا.
D	قطر
L	طول
LHS	جانب اليد اليسارى
RHS	جانب اليد اليمنى
T	السمك
W	العرض

. الكمية (Qty)

هذا هو عدد القطع المستخدمة لآلية واحدة. اما بالنسبة لمجموعات المكونات ومجموعات القطع فانه يتم تحديد عدد القطع لكل مجموعة.
الرمز AR (حسب الطلب) سوف يستخدم في عمود الكمية اذا لم يتم تحديد عدد القطع المطلوبة لكل مانكة و/او للمجموعة. في مثل هذه الحالة, فان اي عدد من الكميات ربما يتم طلبه بشكل يعتمد على متطلبات مجال الخدمة.

. الرقم التسلسلي (Serial Numbers)

في كتاب قطع المحرك يشير هذا الرقم الى الرقم التسلسلي للمحرك الذي تستخدم فيه القطعة. قي كتاب قطع الآلية, يشير هذا الرقم الى الرقم التسلسلي للآلية التي تستخدم فيها القطع.

في حالة وضع الرقم التسلسلي بين الأقواس، فهذا يعني أن هذا هو الرقم التسلسلي الساري للاستخدام الحصري للقطعة الموضحة بالشكل.

عند طلب القطع, يرجى تحديد رقم القطعة واسم القطعة والكمية المطلوبة من القطعة, مع تحديد رقم الموديل والرقم التسلسلي وقراءة عداد الخدمة.

قائمة القطع هذه لا تقتصر على الكميات القياسية فقط بل تشمل ايضاً القطع والملحقات الاختيارية. لطلب القطع, يرجى الاتصال باقرب موزع لمنتجات كوماتسو.

كتاب القطع هذا يحتوي على المعلومات ورموز التخصيص وكما مبين ادناه:

الشكل والقائمة

عندما تفتح كتاب القطع هذا, سوف تجد رسومًا توضيحية تتضمن رقم الشكل (الشكل). كل قطعة مفردة في الرسم يعطى لها رقم فهرس. في الرسم التالي, قطع المجموعة للوحدة تم ادراجها حسب ترتيب ارقام الفهرس المبينة في الرسم.. رقم القطعة, اسم القطعة, الكمية والرقم التسلسلي المطابق يعطى لكل قطعة حسب تسلسل القطع في القائمة.

رقم الشكل (الشكل)

رقم الشكل (الشكل) هو الرقم الذي يميز شكل ما داخل الصفحة. إنه ليس رقم القطعة. وليست الأرقام متتابعة دائمًا.

قائمة القطع

معلومات قطع الغيار مثبتة في صفحة قائمة القطع وكلاتي:

. الفهرست (Index)

هذا الرقم هو نفس رقم الفهرس الوارد في الشكل التوضيحي. تدرج القطع في القائمة مرتبة تبعاً لارقام الفهرس.

. الرمز (Code)

الرموز تستخدم في هذا العمود وتوصف كلاتي:

A1 هذه القطعة والقطعة المذكورة في السطر السابق مباشرة يمكن لكل منهما ان تحل محل الاخرى.

A2 القطعة المذكورة في السطر السابق يمكن استعمالها بدلاً من هذه القطعة.

A3 هذه القطعة يمكن استعمالها بدلاً من القطعة المذكورة في السطر السابق مباشرة.

A4 القطعة المذكورة في عمود الوصف يمكن استعمالها بدلاً من هذه القطعة اذا استخدمت كطقم.

B1 هذه القطعة توقف توريدها. يتم توريد القطعة المذكورة في السطر السابق بدلاً منها.

B2 هذه القطعة توقف توريدها. يتم توريد القطعة المذكورة في عمود "الوصف" بدلاً منها كطقم.

C1 هذه القطعة لا يمكن توريدها كقطعة منفردة. يتم توريدها كمجموعة.

C2 هذه القطعة يتم تجهيزها من قبل موزعين كوماتسو المرخصين فقط. لا يمكن تجهيزها كقطعة مفردة. يتم تجهيزها كمجموعة.

C3 هذا يشير الى قطعة موردة شبه مكتملة التصنيع. تتطلب استكمال تصنيعها قبل الاستعمال.

CONTENTS

CONTENTS

FOREWORD 2

CONTENTS OC-2

	FIG. NO	PAGE
ENGINE CYLINDER HEAD AND ITS RELATED PARTS		
Lifting Bracket Mounting	ALA10-001001	A001001
Lifting Bracket	ALA00-001001	A002001
Air Intake Connector Mounting	AIC20-001001	A003001
Head Cover	AVC00-001001	A004001
Breather and Hose	ABR00-001001	A005001
Water Inlet Connector	AWI10-002001	A006001
Exhaust Connector Clamp	AXS00-001001	A007001
Cylinder Head	A1009-001001	A008001
Air Intake Port Cover	AIM00-001001	A009001
Air Intake Connector	AIC00-001001	A010001
Air Intake Heater	AAH00-001001	A011001
Air Transfer Connection	B9999-508001	A012001
Exhaust Manifold	ATB30-001001	A013001
Turbocharger	A1539-001001	A014001
Turbocharger Oil Piping	ATP00-001001	A015001
ENGINE CYLINDER BLOCK AND ITS RELATED PARTS		
Breather Hose Related Parts	A2210-001001	B001001
Rear Gear Cover Fitting Parts	ADR20-001001	B002001
Flywheel Mounting	AFW10-001001	B003001
Front Gear Cover	AGG00-001001	B004001
Rocker Arm	ARL00-001001	B005001
Tappet and Block Plate	ABB00-001001	B006001
Accessory Drive Pulley	APA00-001001	B007001
Flywheel Housing	A2219-001001	B008001
Flywheel	AFW00-001001	B009001
Engine Oil Pan	AOP10-001001	B010001
Engine Oil Level Sensor	ASD00-001001	B011001
Cylinder Block	A2019-001001	B012001
Crankshaft	A2319-001001	B013001
Vibration Damper	ADA00-001001	B014001
Piston and Connecting Rod	A2359-001001	B015001
Oil Level Gauge	ALG00-001001	B016001
Rear Gear Housing	ABB20-001001	B017001
ENGINE LUBRICATING SYSTEM		
Heater Switch	B9999-502001	C001001
Engine Oil Pump	ALP00-001001	C002001
Engine Oil Cooler	ALC00-001001	C003001
Engine Oil Filter and Piping	ALF00-001001	C004001
ENGINE FUEL SYSTEM		
Fuel Filter Piping	AFF20-001001	D001001
Fuel System Cover	AFS20-001001	D002001
Fuel System Related Parts	AFP10-001001	D003001
Fuel Injection Pump	A4019-001001	D004001
Fuel Injection Controller	A4719-001001	D005001
Fuel Injector	A4219-001001	D006001
Fuel Injection Controller Related Parts	APH00-001001	D007001
Fuel Piping	AFT00-001001	D008001
Fuel Filter	AFF10-003001	D009001
ENGINE COOLING SYSTEM		
Cooling Fan Drive Pulley	AFA10-001001	E001001
Cooling Fan Spacer	ASP00-001001	E002001
Cooling Fan Belt	AWP10-002001	E003001
Cooling Fan Belt Tensioner	AWP20-001001	E004001
Water Pump, Mounting Bolt	AWP00-001001	E005001
Water Pump	A5019-001001	E006001
Water Outlet Connector	AWO00-001001	E007001
Thermostat	AEC00-001001	E008001

	FIG. NO	PAGE
ENGINE ELECTRICAL SYSTEM		
Starting Motor Mounting, 5.5KW	ASM00-001001	F001001
Wiring Harness	AWR00-001001	F002001
Starting Motor Relay	B9999-504001	F003001
ENGINE ACCESSORIES AND OTHERS		
Parts Performance, Camshaft	APP10-001001	G001001
Parts Performance, Common Rail	APP10-001002	G001002
FIELD REPAIR SERVICE PARTS		
Repair Service Parts	A8110-001001	Y001001
ENGINE RELATED PARTS		
Damper, Mounting	B0000-001001	B001001
Damper, Oil Filter Related Parts	B0000-001002	B001002
Heat Shield	B0000-002001	B002001
Exhaust Muffler and Mounting Bracket	B0000-003001	B003001
Engine Oil Pan Drain	B0000-004001	B004001
Cooling Fan	B0000-005001	B005001
Alternator, 60 Amp.	B0000-006001	B006001
Alternator, 60 Amp., Inner Parts	B0000-006002	B006002
Starting Motor, 5.5KW, Inner Parts	B0000-007001	B007001
Engine Mounting	B0100-008001	B008001
Air Intake Connector, Inner Parts, Air Cleaner	B0200-009001	B009001
Air Intake Connector, Mounting	B0200-009002	B009002
COOLING SYSTEM		
Cooling System, With Air Conditioner, Radiator	C0100-002001	C001001
Cooling System, With Air Conditioner, Oil Cooler	C0100-002002	C001002
Cooling System, With Air Conditioner, Aftercooler and Shroud	C0100-002003	C001003
Cooling System, With Air Conditioner, Fuel Cooler and Condenser	C0100-002004	C001004
Cooling System, With Air Conditioner, Fan Guard and Aftercooler Piping	C0100-002005	C001005

	FIG. NO	PAGE
FUEL SYSTEM		
Fuel Tank	D0100-001001	D001001
Fuel Supply Piping, Without Refuel Pump, Fuel Piping	D0200-002001	D002001
Fuel Supply Piping, Without Refuel Pump, Drain Piping	D0200-002002	D002002
Fuel Pre-Filter	D0200-002003	D002003
ELECTRICAL SYSTEM		
Battery	E0100-001001	E001001
Electric Wiring Harness, Starting Wiring Harness	E0200-002001	E002001
Electric Wiring Harness, Main Wiring Harness (1/3)	E0200-002002	E002002
Electric Wiring Harness, Main Wiring Harness (2/3)	E0200-002003	E002003
Electric Wiring Harness, Main Wiring Harness (3/3)	E0200-002004	E002004
Electric Wiring Harness, Battery Case Side	E0200-002005	E002005
Additional Working Lamp	E0310-003001	E003001
Additional Working Lamp	E0310-004001	E004001
Additional Rear Working Lamp	E0320-002001	E005001
Horn	E0410-001001	E006001
Travel Alarm	E0420-001001	E007001
Rear View Camera, 1-camera	E0450-002001	E008001
HYDRAULIC SYSTEM		
Hydraulic Tank	H0110-001001	H001001
Hydraulic Tank, 1ATT	H0110-002001	H002001
Main Control Valve, Inner Parts, Main Valve, 1ATT (1/21)	H0120-002001	H003001
Main Control Valve, Inner Parts, Main Valve, 1ATT (2/21)	H0120-002002	H003002
Main Control Valve, Inner Parts, Main Valve, 1ATT (3/21)	H0120-002003	H003003
Main Control Valve, Inner Parts, Main Valve, 1ATT (4/21)	H0120-002004	H003004
Main Control Valve, Inner Parts, Main Valve, 1ATT (5/21)	H0120-002005	H003005
Main Control Valve, Inner Parts, Main Valve, 1ATT (6/21)	H0120-002006	H003006
Main Control Valve, Inner Parts, Main Valve, 1ATT (7/21)	H0120-002007	H003007
Main Control Valve, Inner Parts, Main Valve, 1ATT (8/21)	H0120-002008	H003008
Main Control Valve, Inner Parts, Main Valve, 1ATT (9/21)	H0120-002009	H003009
Main Control Valve, Inner Parts, Main Valve, 1ATT (10/21)	H0120-002010	H003010
Main Control Valve, Inner Parts, Main Valve, 1ATT (11/21)	H0120-002011	H003011

	FIG. NO	PAGE
Main Control Valve, Inner Parts, Main Valve, 1ATT (12/21)	H0120-002012	H003012
Main Control Valve, Inner Parts, Main Valve, 1ATT (13/21)	H0120-002013	H003013
Main Control Valve, Inner Parts, Main Valve, 1ATT (14/21)	H0120-002014	H003014
Main Control Valve, Inner Parts, Main Valve, 1ATT (15/21)	H0120-002015	H003015
Main Control Valve, Inner Parts, Main Valve, 1ATT (16/21)	H0120-002016	H003016
Main Control Valve, Inner Parts, Main Valve, 1ATT (17/21)	H0120-002017	H003017
Main Control Valve, Inner Parts, Main Valve, 1ATT (18/21)	H0120-002018	H003018
Main Control Valve, Inner Parts, Main Valve, 1ATT (19/21)	H0120-002019	H003019
Main Control Valve, Inner Parts, Main Valve, 1ATT (20/21)	H0120-002020	H003020
Main Control Valve, Inner Parts, Main Valve, 1ATT (21/21)	H0120-002021	H003021
Main Control Valve, Main Valve, Connecting Parts, 1ATT (1/2)	H0120-002022	H003022
Main Control Valve, Main Valve, Connecting Parts, 1ATT 2/2	H0120-002023	H003023
Main Control Valve, Valve Bracket and Sensor, 1ATT	H0120-002024	H003024
Main Control Valve, Inner Parts, Main Valve (1/21)	H0120-006001	H004001
Main Control Valve, Inner Parts, Main Valve (2/21)	H0120-006002	H004002
Main Control Valve, Inner Parts, Main Valve (3/21)	H0120-006003	H004003
Main Control Valve, Inner Parts, Main Valve (4/21)	H0120-006004	H004004
Main Control Valve, Inner Parts, Main Valve (5/21)	H0120-006005	H004005
Main Control Valve, Inner Parts, Main Valve (6/21)	H0120-006006	H004006
Main Control Valve, Inner Parts, Main Valve (7/21)	H0120-006007	H004007
Main Control Valve, Inner Parts, Main Valve (8/21)	H0120-006008	H004008
Main Control Valve, Inner Parts, Main Valve (9/21)	H0120-006009	H004009
Main Control Valve, Inner Parts, Main Valve (10/21)	H0120-006010	H004010
Main Control Valve, Inner Parts, Main Valve (11/21)	H0120-006011	H004011
Main Control Valve, Inner Parts, Main Valve (12/21)	H0120-006012	H004012
Main Control Valve, Inner Parts, Main Valve (13/21)	H0120-006013	H004013
Main Control Valve, Inner Parts, Main Valve (14/21)	H0120-006014	H004014
Main Control Valve, Inner Parts, Main Valve (15/21)	H0120-006015	H004015
Main Control Valve, Inner Parts, Main Valve (16/21)	H0120-006016	H004016
Main Control Valve, Inner Parts, Main Valve (17/21)	H0120-006017	H004017
Main Control Valve, Inner Parts, Main Valve (18/21)	H0120-006018	H004018
Main Control Valve, Inner Parts, Main Valve (19/21)	H0120-006019	H004019
Main Control Valve, Inner Parts, Main Valve (20/21)	H0120-006020	H004020
Main Control Valve, Inner Parts, Main Valve (21/21)	H0120-006021	H004021

	FIG. NO	PAGE
Main Control Valve, Connecting Parts (1/2)	H0120-006022	H004022
Main Control Valve, Connecting Parts (2/2)	H0120-006023	H004023
Main Control Valve, Valve Bracket and Sensor	H0120-006024	H004024
Main Piston Pump, Inner Parts, Main Pump (1/11)	H0210-001001	H005001
Main Piston Pump, Inner Parts, Main Pump (2/11)	H0210-001002	H005002
Main Piston Pump, Inner Parts, Main Pump (3/11)	H0210-001003	H005003
Main Piston Pump, Inner Parts, Main Pump (4/11)	H0210-001004	H005004
Main Piston Pump, Inner Parts, Main Pump (5/11)	H0210-001005	H005005
Main Piston Pump, Inner Parts, Main Pump (6/11)	H0210-001006	H005006
Main Piston Pump, Inner Parts, Main Pump (7/11)	H0210-001007	H005007
Main Piston Pump, Inner Parts, Main Pump (8/11)	H0210-001008	H005008
Main Piston Pump, Inner Parts, Main Pump (9/11)	H0210-001009	H005009
Main Piston Pump, Inner Parts, Main Pump (10/11)	H0210-001010	H005010
Main Piston Pump, Inner Parts, Main Pump (11/11)	H0210-001011	H005011
Main Piston Pump	H0210-002001	H006001
Main Piston Pump, 1 ATT	H0210-003001	H007001
Suction Piping	H0311-001001	H008001
Delivery Piping	H0312-002001	H009001
Oil Cooler Piping	H0320-001001	H010001
Return Piping	H0330-001001	H011001
Return Piping, 1 ATT	H0330-002001	H012001
Drain Piping	H0340-001001	H013001
Boom Piping	H1210-001001	H014001
Arm and Bucket Piping	H1220-001001	H015001
Attachment Piping, 1 ATT, Main Piping, LHS	H1270-008001	H016001
Attachment Piping, 1 ATT, Inner Parts, Selector Valve	H1270-008002	H016002
Attachment Piping, 1 ATT, Main Piping, RHS	H1270-008003	H016003
Attachment Piping, 1 ATT, Mounting	H1270-008004	H016004
Travel Piping	H1310-001001	H017001
Swing Piping	H1340-001001	H018001
LS Piping	H1810-001001	H019001
LS Piping, 1 ATT	H1810-002001	H020001
Solenoid Valve Piping, Without 1 ATT Piping, Accumulator, Inner Parts, Starting Motor	H1831-001001	H021001

	FIG. NO	PAGE
Solenoid Valve Piping, Without 1 ATT Piping, Accumulator, Related Parts	H1831-001002	H021002
Solenoid Valve Piping, Without 1 ATT Piping, Accumulator, Solenoid Valve Piping	H1831-001003	H021003
Solenoid Valve Piping, 1 ATT Piping, Accumulator, Inner Parts, Starting Motor	H1831-002001	H022001
Solenoid Valve Piping, 1 ATT Piping, Accumulator, Related Parts	H1831-002002	H022002
Solenoid Valve Piping, 1ATT Piping, Accumulator, Solenoid Valve Piping	H1831-002003	H022003
Pressure Switch Block	H1833-002001	H023001
Proportional Pressure Control (PPC) Valve Piping	H1840-002001	H024001
FRAME AND ITS RELATED PARTS		
Revolving Frame	J1110-002001	J001001
Boom Foot Pin, 100 Hours Greasing Type	J1310-002001	J002001
OPERATOR'S COMPARTMENT AND CONTROL SYSTEM		
Operator's Seat, Suspension Type, Operator's Seat	K0110-001001	K001001
Operator's Seat, Suspension Type	K0110-001002	K001002
Operator's Seat, Rigid Type, Operator's Seat	K0110-002001	K002001
Operator's Seat, Rigid Type, Operator's Seat Mounting	K0110-002002	K002002
Seat Belt, 78mm Width	K0160-002001	K003001
Head Guard, Top Guard, Level 2	K0220-001001	K004001
Front Guard	K0230-001001	K005001
Front Guard, Half	K0230-002001	K006001
Front Guard, Full	K0230-003001	K007001
Floor Mat	K0310-001001	K008001
Floor Mat, 1 ATT	K0310-002001	K009001
Sunvisor	K0330-001001	K010001
Window Washer	K0350-001001	K011001
Air Conditioner	K0700-001001	K012001
Cab, Cab Body and Window	K1110-006001	K013001
Cab, Front Window	K1110-006002	K013002
Cab, Front Lower Window	K1110-006003	K013003
Cab, Roof Ventilator	K1110-006004	K013004
Cab, Door	K1110-006005	K013005
Cab, Door Lock	K1110-006006	K013006

	FIG. NO	PAGE
Cab, Open Lock and Door Catch	K1110-006007	K013007
Cab, Wiper and Room Lamp	K1110-006008	K013008
Cab, Rubber Antenna	K1110-006009	K013009
Cab, Speaker and Window Washer	K1110-006010	K013010
Cab, Roof Cover and Air Intake	K1110-006011	K013011
Cab, Pressure Valve and Grip	K1110-006012	K013012
Cab, KOMTRAX Film Antenna, ORBCOM Type	K1110-006013	K013013
Cab, Cab In Parts, Monitor and Cover	K1110-006014	K013014
Cab, Cab In Parts, Monitor Cover	K1110-006015	K013015
Cab, Cab In Parts, Luggage Plate	K1110-006016	K013016
Cab, Cab In Parts, Monitor Duct	K1110-006017	K013017
Cab, Cab In Parts, Air Duct	K1110-006018	K013018
Cab, Cab In Parts, Partition and Filter	K1110-006019	K013019
Cab, Cab In Parts, Sub Plate and Relay	K1110-006020	K013020
Cab, Cab In Parts, Air Conditioner and KOMTRAX Controller	K1110-006021	K013021
Cab, Cab In Parts, Main Wiring Harness Clamp	K1110-006022	K013022
Cab, Cab In Parts, Rear Cover	K1110-006023	K013023
Cab, Floor, Frame	K1110-006024	K013024
Cab, Floor, PPC Valve for Travel (1/2)	K1110-006025	K013025
Cab, Floor, PPC Valve for Travel (2/2)	K1110-006026	K013026
Cab, Floor, Travel Control	K1110-006027	K013027
Cab, Floor, Footrest, LHS	K1110-006028	K013028
Cab, Floor, Footrest, RHS	K1110-006029	K013029
Cab, Floor, Base	K1110-006030	K013030
Cab, Floor, Wiring Harness	K1110-006031	K013031
Cab, Floor, Wiring Harness Clamp and Earth	K1110-006032	K013032
Cab, Floor, Window Washer Hose	K1110-006033	K013033
Cab, Floor, Lever, LHS	K1110-006034	K013034
Cab, Floor, PPC Valve for Work Equipment, LHS	K1110-006035	K013035
Cab, Related Parts (1/2)	K1110-006036	K013036
Cab, Floor, Console, LHS	K1110-006037	K013037
Cab, Floor, P.P.C. Lock Lever and Radio	K1110-006038	K013038
Cab, Floor, Armrest, LHS	K1110-006039	K013039
Cab, Floor, Lever, RHS	K1110-006040	K013040

	FIG. NO	PAGE
Cab, Floor, PPC Valve for Work Equipment, RHS	K1110-006041	K013041
Cab, Related Parts (2/2)	K1110-006042	K013042
Cab, Floor, Console, RHS	K1110-006043	K013043
Cab, Floor, Armrest, RHS	K1110-006044	K013044
Cab, Inner Parts, Air Conditioner Unit	K1110-006045	K013045
Cab, Air Conditioner Unit Mounting	K1110-006046	K013046
Cab, Floor, Air Conditioner Piping	K1110-006047	K013047
Cab, Floor, Heater Hose	K1110-006048	K013048
Cab, Floor, PPC Piping for Travel Valve	K1110-006049	K013049
Cab, Floor, PPC Piping for Pilot Valve	K1110-006050	K013050
Cab, Floor Piping	K1110-006051	K013051
Cab, Floor, P, T Block and Seal	K1110-006052	K013052
Cab, Floor, Rear View Camera Cable	K1110-006053	K013053
Cab, 1ATT, Cab Body and Window	K1110-010001	K014001
Cab, 1ATT, Front Window	K1110-010002	K014002
Cab, 1ATT, Front Lower Window	K1110-010003	K014003
Cab, 1ATT, Roof Ventilator	K1110-010004	K014004
Cab, 1ATT, Door	K1110-010005	K014005
Cab, 1ATT, Door Lock	K1110-010006	K014006
Cab, 1ATT, Open Lock and Door Catch	K1110-010007	K014007
Cab, 1ATT, Wiper and Room Lamp	K1110-010008	K014008
Cab, 1ATT, Rubber Antenna	K1110-010009	K014009
Cab, 1ATT, Speaker and Window Washer	K1110-010010	K014010
Cab, 1ATT, Roof Cover and Air Intake	K1110-010011	K014011
Cab, 1ATT, Pressure Valve and Grip	K1110-010012	K014012
Cab, 1ATT, KOMTRAX Film Antenna	K1110-010013	K014013
Cab, 1ATT, Cab In Parts, Monitor and Cover	K1110-010014	K014014
Cab, 1ATT, Cab In Parts, Monitor Cover	K1110-010015	K014015
Cab, 1ATT, Cab In Parts, Luggage Plate	K1110-010016	K014016
Cab, 1ATT, Cab In Parts, Monitor Duct	K1110-010017	K014017
Cab, 1ATT, Cab In Parts, Air Duct	K1110-010018	K014018
Cab, 1ATT, Cab In Parts, Partition and Filter	K1110-010019	K014019
Cab, 1ATT, Cab In Parts, Sub Plate and Relay	K1110-010020	K014020

	FIG. NO	PAGE
Cab, 1ATT, Cab in Parts, Air Conditioner and KOMTRAX Controller	K1110-010021	K014021
Cab, 1ATT, Cab In Parts, Main Wiring Harness	K1110-010022	K014022
Cab, 1ATT, Cab In Parts, Rear Cover	K1110-010023	K014023
Cab, 1ATT, Floor, Frame	K1110-010024	K014024
Cab, 1ATT, Floor, PPC Valve for Travel (1/2)	K1110-010025	K014025
Cab, 1ATT, Floor, PPC Valve for Travel (2/2)	K1110-010026	K014026
Cab, 1ATT, Floor, Travel Control	K1110-010027	K014027
Cab, 1ATT, Floor, Footrest, LHS	K1110-010028	K014028
Cab, 1ATT, Floor, PPC Valve for 1ATT	K1110-010029	K014029
Cab, 1ATT, 1st Attachment Control	K1110-010030	K014030
Cab, 1ATT, Floor, Base	K1110-010031	K014031
Cab, 1ATT, Floor, Wiring Harness	K1110-010032	K014032
Cab, 1ATT, Floor, Wiring Harness Clamp and Earth	K1110-010033	K014033
Cab, 1ATT, Floor, Window Washer Hose	K1110-010034	K014034
Cab, 1ATT, Floor, Lever, LHS	K1110-010035	K014035
Cab, 1ATT, Floor, PPC Valve for Work Equipment, LHS	K1110-010036	K014036
Cab, 1ATT, Related Parts (1/2)	K1110-010037	K014037
Cab, 1ATT, Floor, Console, LHS	K1110-010038	K014038
Cab, 1ATT, Floor, P.P.C. Lock Lever and Radio	K1110-010039	K014039
Cab, 1ATT, Floor, Armrest, LHS	K1110-010040	K014040
Cab, 1ATT, Floor, Lever, RHS	K1110-010041	K014041
Cab, 1ATT, Floor, PPC Valve for Work Equipment, RHS	K1110-010042	K014042
Cab, 1ATT, Floor, Valve, RHS	K1110-010043	K014043
Cab, 1ATT, Floor, Console, RHS	K1110-010044	K014044
Cab, 1ATT, Floor, Armrest, RHS	K1110-010045	K014045
Cab, 1ATT, Inner Parts, Air Conditioner Unit	K1110-010046	K014046
Cab, 1ATT, Air Conditioner Unit Mounting	K1110-010047	K014047
Cab, 1ATT, Air Conditioner Piping	K1110-010048	K014048
Cab, 1ATT, Floor, Heater Hose	K1110-010049	K014049
Cab, 1ATT, Floor, PPC Piping for Travel Valve	K1110-010050	K014050
Cab, 1ATT, Floor, PPC Piping for Pilot Valve	K1110-010051	K014051
Cab, 1ATT, Floor Piping	K1110-010052	K014052
Cab, 1ATT, Floor, P, T Block and Seal	K1110-010053	K014053

	FIG. NO	PAGE
Cab, 1ATT, Rear View Camera Cable	K1110-010054	K014054
Floor Mounting	K1120-001001	K015001
Switch, Selection Connector	K1730-001001	K016001
GUARDS AND COVERS		
Hood	M1110-002001	M001001
Machine Cab Frame	M1120-003001	M002001
Side Cover, LHS	M1130-002001	M003001
Side Cover, RHS	M1140-002001	M004001
Machine Cab Partition, With Air Conditioner, LHS	M1150-002001	M005001
Machine Cab Partition, With Air Conditioner, Center	M1150-002002	M005002
Machine Cab Partition, With Air Conditioner, Valve and Muffler Side	M1150-002003	M005003
Machine Cab Cover	M1210-002001	M006001
Battery Case	M1220-001001	M007001
Handrail	M1310-001001	M008001
Rearview Mirror, LHS	M1410-002001	M009001
Rearview Mirror, RHS	M1420-003001	M010001
Counterweight, 5050kg	M1510-002001	M011001
Counterweight Mounting	M1520-001001	M012001
Under Cover, For Fuel Refill Pump	M1810-002001	M013001
SWING CIRCLE AND ITS RELATED PARTS		
Swing Circle	N1110-001001	N001001
Swing Machinery, Inner Parts, Swing Motor (1/3)	N1210-002001	N002001
Swing Machinery, Inner Parts, Swing Motor (2/3)	N1210-002002	N002002
Swing Machinery, Inner Parts, Swing Motor (3/3)	N1210-002003	N002003
Swing Machinery, Swing Machinery	N1210-002004	N002004
Swing Machinery, Drain Piping	N1210-002005	N002005
Swivel Joint, Inner Parts, Swivel Joint	N1310-001001	N003001
Swivel Joint, Related Parts	N1310-001002	N003002
TRAVEL SYSTEM AND ITS RELATED PARTS		
Travel Piping	P1120-001001	P001001
Final Drive, Inner Parts, Travel Motor (1/2)	P1210-001001	P002001

	FIG. NO	PAGE
Final Drive, Inner Parts, Travel Motor (2/2)	P1210-001002	P002002
Final Drive, Related Parts	P1210-001003	P002003
UNDERCARRIAGE		
Front Idler and Idler Cushion, Rustproof Spring, Front Idler	R0110-002001	R001001
Front Idler and Idler Cushion, Rustproof Spring, Idler Cushion	R0110-002002	R001002
Track Roller	R0200-001001	R002001
Carrier Roller	R0300-001001	R003001
Track Shoe Assembly, Holed Triple Grouser Shoe, 600mm Width, Sealed and Greased Links	R0500-001001	R004001
Track Shoe Assembly, Holed Triple Grouser Shoe, 700mm Width, Sealed and Greased Links	R0500-002001	R005001
Track Shoe Assembly, Holed Triple Grouser Shoe, 800mm Width, Sealed and Greased Links	R0500-003001	R006001
Track Frame, Full Roller Guard	R1100-001001	R007001
Track Frame	R1100-002001	R008001
Track Frame Under Cover	R1140-001001	R009001
Track Roller Guard, Full Roller Guard	R1200-001001	R010001
Track Roller Guard	R1200-002001	R011001
WORK EQUIPMENT		
Boom, 5.9m, Heavy Duty, 100 Hours Greasing Type, 1 ATT, Boom	T1110-002001	T001001
Boom, 5.9m, Heavy Duty, 100 Hours Greasing Type, 1 ATT, Top Pin and Bottom Pin	T1110-002002	T001002
Boom, 5.9m, Heavy Duty, 100 Hours Greasing Type, 1 ATT, Arm and Bucket Cylinder Piping	T1110-002003	T001003
Boom, 5.9m, Heavy Duty, 100 Hours Greasing Type, 1 ATT, Lubrication Piping	T1110-002004	T001004
Boom, 5.9m, Heavy Duty, 100 Hours Greasing Type, 1 ATT, Additional Piping	T1110-002005	T001005
Boom, 5.9m, Heavy Duty, 100 Hours Greasing Type, 1 ATT, Lubrication Piping and Working Lamp	T1110-002006	T001006
Boom, 5.9m, Heavy Duty, 100 Hours Greasing Type, Boom	T1110-005001	T002001
Boom, 5.9m, Heavy Duty, 100 Hours Greasing Type, Top Pin		

	FIG. NO	PAGE
and Bottom Pin	T1110-005002	T002002
Boom, 5.9m, Heavy Duty, 100 Hours Greasing Type, Arm and Bucket Cylinder Piping	T1110-005003	T002003
Boom, 5.9m, Heavy Duty, 100 Hours Greasing Type, Lubrication Piping	T1110-005004	T002004
Boom, 5.9m, Heavy Duty, 100 Hours Greasing Type, Attachment Plug	T1110-005005	T002005
Boom, 5.9m, Heavy Duty, 100 Hours Greasing Type, Lubrication Piping and Working Lamp	T1110-005006	T002006
Boom Cylinder, 100 Hours Greasing Type, LHS	T1120-002001	T003001
Boom Cylinder, 100 Hours Greasing Type, RHS	T1120-002002	T003002
Boom Cylinder, 100 Hours Greasing Type, Related Parts	T1120-002003	T003003
Boom Cylinder Head Pin, 100 Hours Greasing Type	T1125-002001	T004001
Arm Cylinder, 100 Hours Greasing Type	T1140-002001	T005001
Arm, 3.0m, Heavy Duty, 100 Hours Greasing Type, Arm	T1200-004001	T006001
Arm, 3.0m, Heavy Duty, 100 Hours Greasing Type, Inner Parts, Bucket Cylinder	T1200-004002	T006002
Arm, 3.0m, Heavy Duty, 100 Hours Greasing Type, Bucket Link	T1200-004003	T006003
Arm, 3.0m, Heavy Duty, 100 Hours Greasing Type, Bucket Cylinder Hose	T1200-004004	T006004
Arm, 3.0m, 100 Hours Greasing Type, 1 ATT, Arm	T1200-008001	T007001
Arm, 3.0m, 100 Hours Greasing Type, 1 ATT, Inner Parts, Bucket Cylinder	T1200-008002	T007002
Arm, 3.0m, 100 Hours Greasing Type, 1 ATT, Bucket Link	T1200-008003	T007003
Arm, 3.0m, 100 Hours Greasing Type, 1 ATT, Bucket Cylinder Hose	T1200-008004	T007004
Arm, 3.0m, 100 Hours Greasing Type, 1 ATT, Additional Piping	T1200-008005	T007005
Arm, 2.5m, 100 Hours Greasing Type, Arm	T1200-014001	T008001
Arm, 2.5m, 100 Hours Greasing Type, Inner Parts, Bucket Cylinder	T1200-014002	T008002
Arm, 2.5m, 100 Hours Greasing Type, Bucket Link	T1200-014003	T008003
Arm, 2.5m, 100 Hours Greasing Type, Bucket Cylinder Hose	T1200-014004	T008004
Arm, 2.5m, 100 Hours Greasing Type, 1 ATT, Arm	T1200-018001	T009001
Arm, 2.5m, 100 Hours Greasing Type, 1 ATT, Inner Parts, Bucket Cylinder	T1200-018002	T009002

	FIG. NO	PAGE
Arm, 2.5m, 100 Hours Greasing Type, 1 ATT, Bucket Link	T1200-018003	T009003
Arm, 2.5m, 100 Hours Greasing Type, 1 ATT, Bucket Cylinder Hose	T1200-018004	T009004
Arm, 2.5m, 100 Hours Greasing Type, 1 ATT, Additional Piping	T1200-018005	T009005
Arm, 2.5m, Heavy Duty, 100 Hours Greasing Type, Arm	T1200-022001	T010001
Arm, 2.5m, Heavy Duty, 100 Hours Greasing Type, Inner Parts, Bucket Cylinder	T1200-022002	T010002
Arm, 2.5m, Heavy Duty, 100 Hours Greasing Type, Bucket Link	T1200-022003	T010003
Arm, 2.5m, Heavy Duty, 100 Hours Greasing Type, Bucket Cylinder Hose	T1200-022004	T010004
Bucket, 1.73m3, 1528mm Width, Horizontal Pin Type, Bucket and Side Cutter	T1510-001001	T011001

MARKS AND PLATES

Marks and Plates, Portuguese, Lettering Type	U0100-002001	U001001
Marks and Plates, Spanish, Lettering Type	U0100-006001	U002001
Lubrication Chart, 100 Hours Greasing Type	U0110-003001	U003001
Caution Plates, Cab Windshield Lock Operation, Portuguese, Lettering Type	U0120-002001	U004001
Caution Plates, Cab Windshield Lock Operation, Spanish, Lettering Type	U0120-006001	U005001
Komatsu Logo, Boom and Counter Weight	U0150-001001	U006001
Coolant Decal, Portuguese	U0202-002001	U007001
Coolant Decal, Spanish	U0202-004001	U008001
Caution Plates, Arm	U0510-002001	U009001
Caution Plates, Top Guard, Portuguese	U0520-003001	U010001
Caution Plates, Front Guard, Portuguese	U0520-010001	U011001
Caution Plates, Top and Front Guard, Portuguese	U0520-017001	U012001
Caution Plates, Text Type, Portuguese	U0521-002001	U013001
Caution Plates, Spanish	U0521-007001	U014001
Rivet, Plate Less	U0521-008001	U015001
Service Instruction, Air Cleaner, Portuguese	U0550-003001	U016001
Service Instruction, Air Cleaner, Spanish	U0550-004001	U017001

	FIG. NO	PAGE
AUXILIARY PARTS AND TOOL		
Spare Parts	V0100-001001	V001001
Tools	V0300-001001	V002001
FIELD REPAIR SERVICE PARTS		
Service Kit Parts	KIT	Y001001

PC240LC-8

ENGINE CYLINDER HEAD AND ITS RELATED PARTS

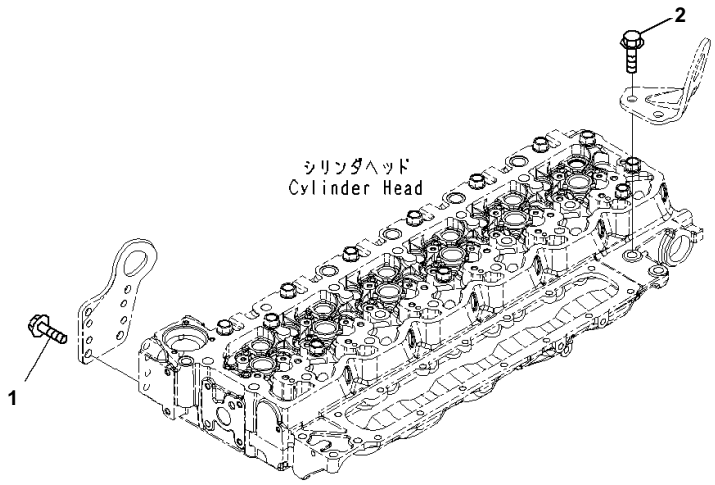

Index	Code	Part Number	Description	Qty	Serial No.
1		6735-71-3220	Bolt	4	26542663-
2		6754-11-4130	Screw	2	26542663-

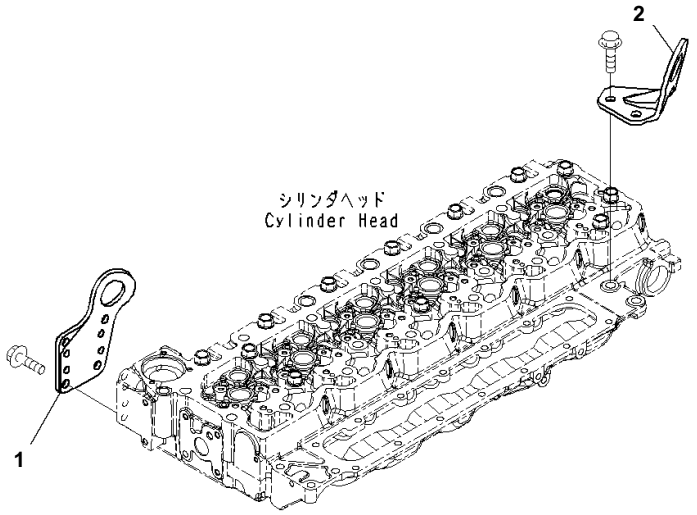

Index	Code	Part Number	Description	Qty	Serial No.
1		6754-11-1710	Bracket	1	26542663-
2		6754-11-1960	Bracket	1	26542663-

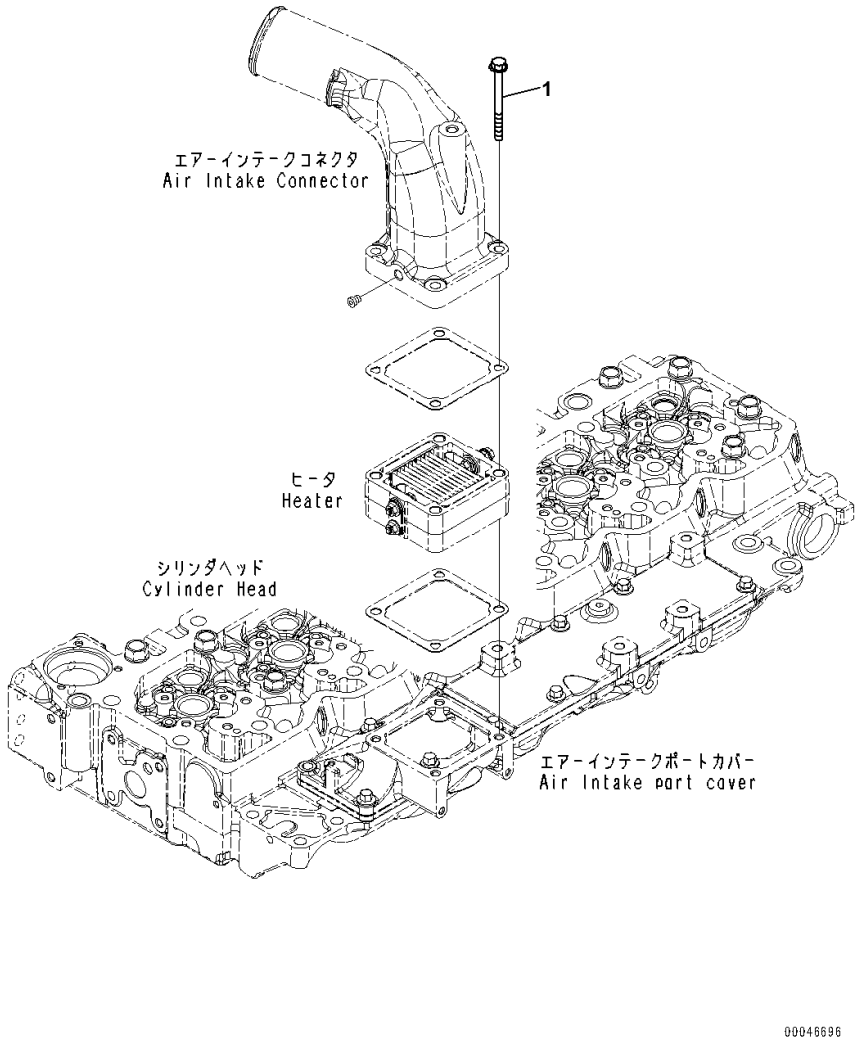

Air Intake Connector Mounting

Index	Code	Part Number	Description	Qty	Serial No.
1		6734-11-5210	Bolt	4	26542663-

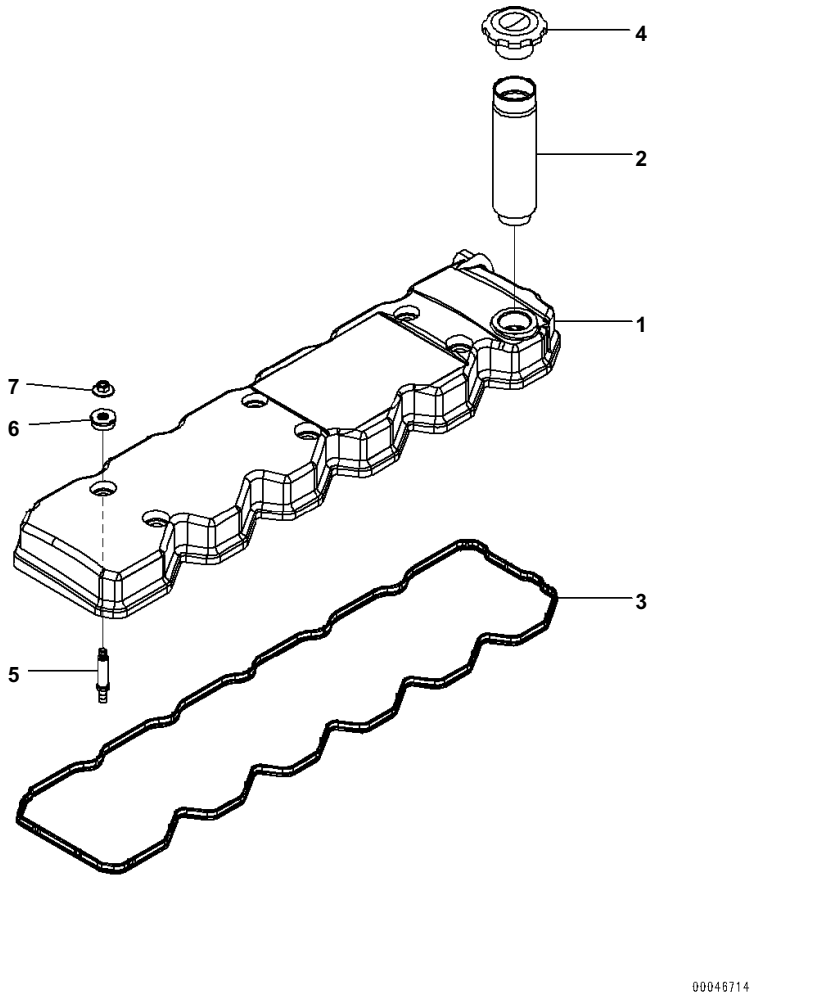

Index	Code	Part Number	Description	Qty	Serial No.
		6754-11-8100	Cover Assembly	1	26542663-
1		6754-11-8110	· Cover	1	26542663-
2		6754-11-8140	· Filler, Oil	1	26542663-
3		6754-11-8180	Packing	1	26542663-
4		6130-12-8610	Cap	1	26542663-
5		6754-11-8150	Stud	6	26542663-
6		6754-11-8210	Isolator	6	26542663-
7		6754-11-8160	Nut	6	26542663-

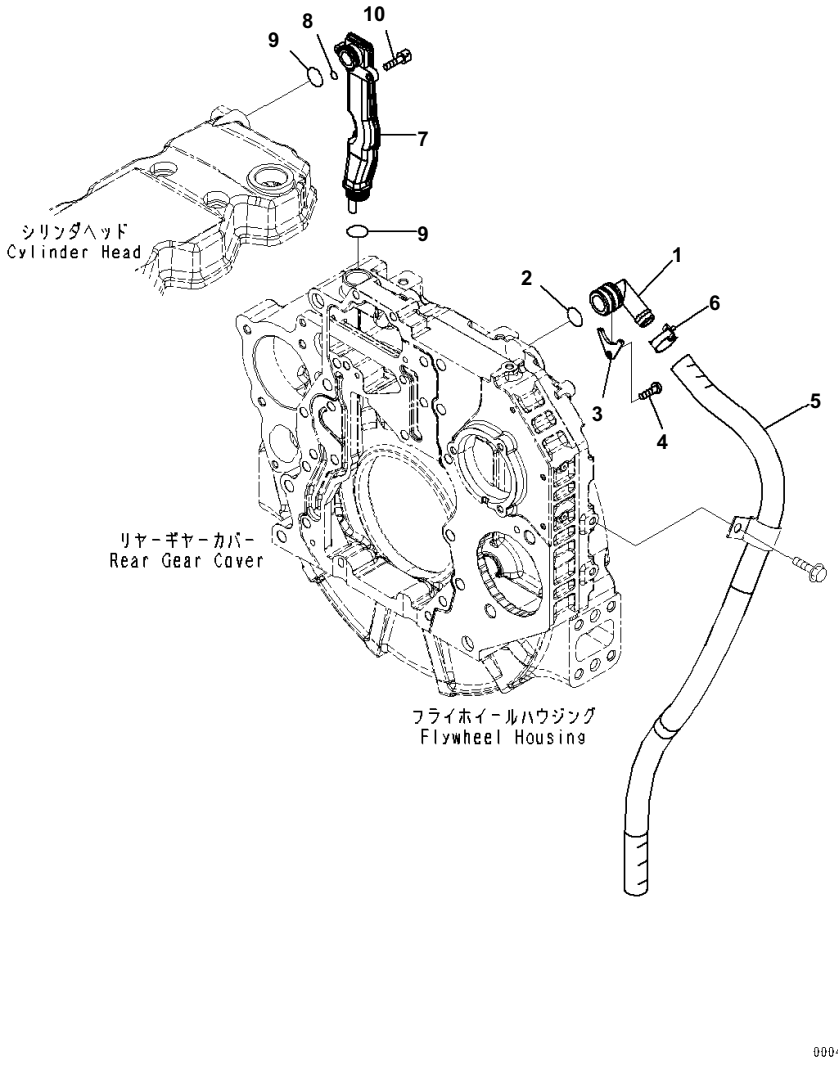

Index	Code	Part Number	Description	Qty	Serial No.
1		6754-21-6140	Breather	1	26542663-
2		1241155H1	O-ring	1	26542663-
3		6754-21-6150	Plate	1	26542663-
4		6754-21-6160	Bolt	1	26542663-
5		6754-21-6170	Hose	1	26542663-
6		6754-21-6180	Clamp	1	26542663-
		6754-21-6100	Tube Assembly	1	26542663-
7	C1		・ Tube	1	26542663-
8		6754-21-6250	・ O-ring	1	26542663-
9		6754-21-6240	・ O-ring	2	26542663-
10		6754-21-6280	Bolt	2	26542663-

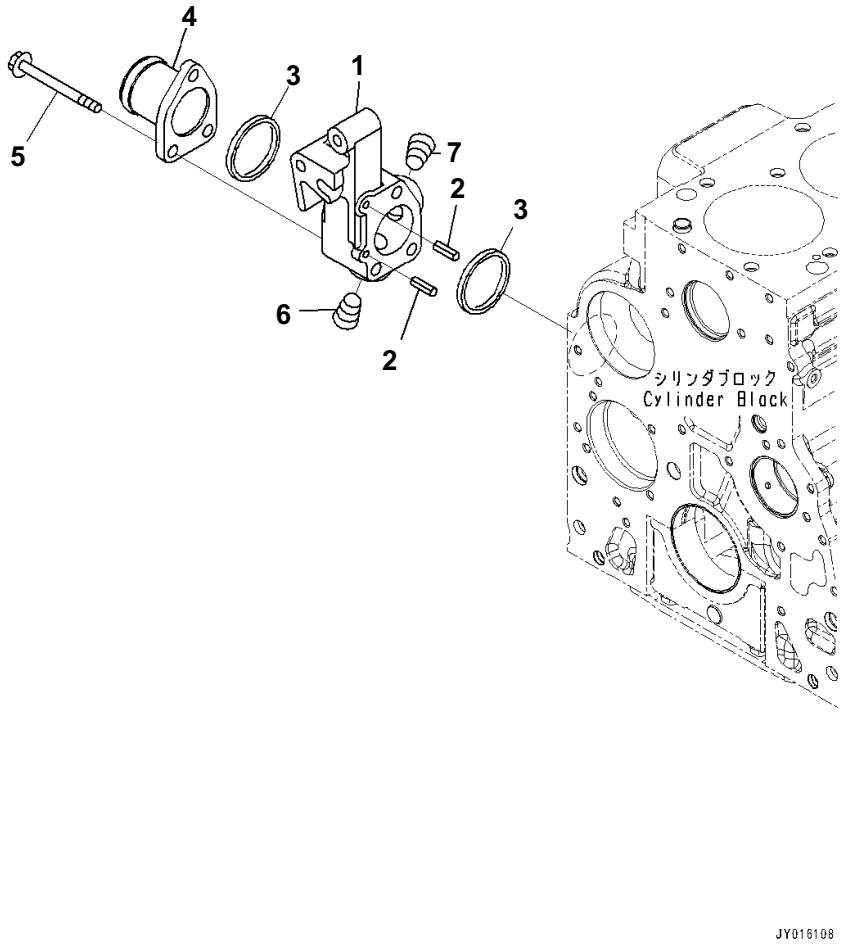

Index	Code	Part Number	Description	Qty	Serial No.
1		6737-62-6220	Connector Assembly	1	26542663-
2		6737-32-2110	・ Pin	2	26542663-
3		6732-61-6131	Seal Ring	2	26542663-
4		6754-61-6130	Connector	1	26542663-
5		6731-21-6220	Bolt	3	26542663-
6		6732-11-1910	Plug	1	26542663-
7		6732-11-1920	Plug	1	26542663-

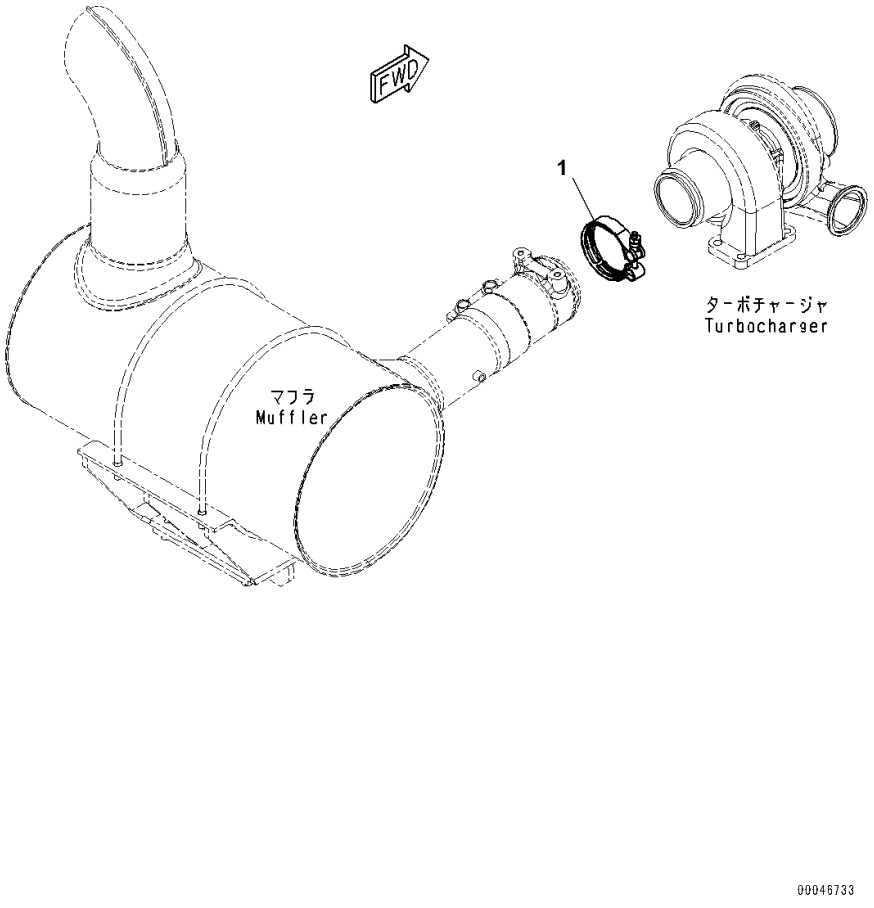

Index	Code	Part Number	Description	Qty	Serial No.
1		6732-81-8220	Clamp	1	26542663-

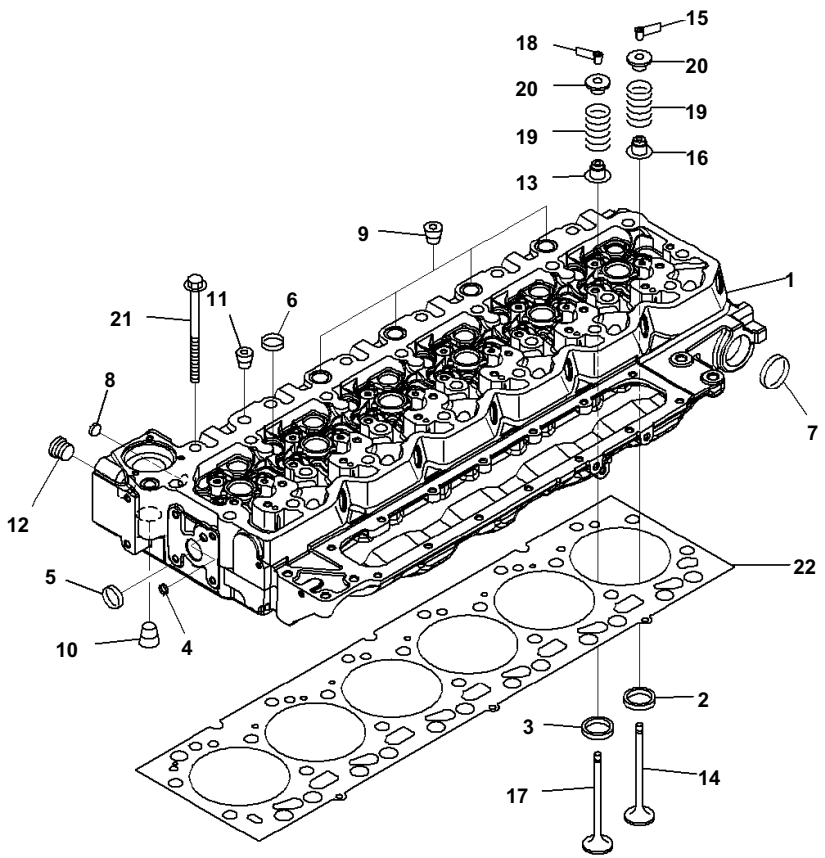

Index	Code	Part Number	Description	Qty	Serial No.
		6754-11-1211	Cylinder Head Assembly	1	26542663-
	C1		· Head Assembly, Cylinder	1	26542663-
1	C1		· · Cylinder Head	1	26542663-
2	C1		· · Insert, Intake	12	26542663-
3	C1		· · Insert, Exhaust	12	26542663-
4		6754-11-1150	· · Plug	7	26542663-
5		6732-21-1820	· · Plug	13	26542663-
6		6735-21-5530	· · Plug	11	26542663-
7		6744-11-1070	· · Plug	2	26542663-
8		6754-11-1160	· · Plug	2	26542663-
9		6732-11-1910	· Plug	4	26542663-
10		6732-11-1920	· Plug	3	26542663-
11		6732-61-2240	· Plug	1	26542663-
12		6216-14-6820	· Plug Assembly	1	26542663-
		6216-14-6860	· · O-ring	1	26542663-
13		6754-41-4540	Seal	12	26542663-
		6754-41-4100	Valve Kit, Intake	12	26542663-
14		6754-41-4110	· Valve	1	26542663-
15		6744-11-1020	· Collet	2	26542663-
16		6754-41-4540	· Seal	1	26542663-
		6754-41-4200	Valve Kit, Exhaust	12	26542663-
17		6754-41-4210	· Valve	1	26542663-
18		6744-11-1020	· Collet	2	26542663-
19		6754-41-4430	Spring	24	26542663-
20		6754-41-4510	Retainer	24	26542663-
21		6754-11-1610	Bolt	26	26542663-
22		6754-11-1811	Gasket	1	26542663-

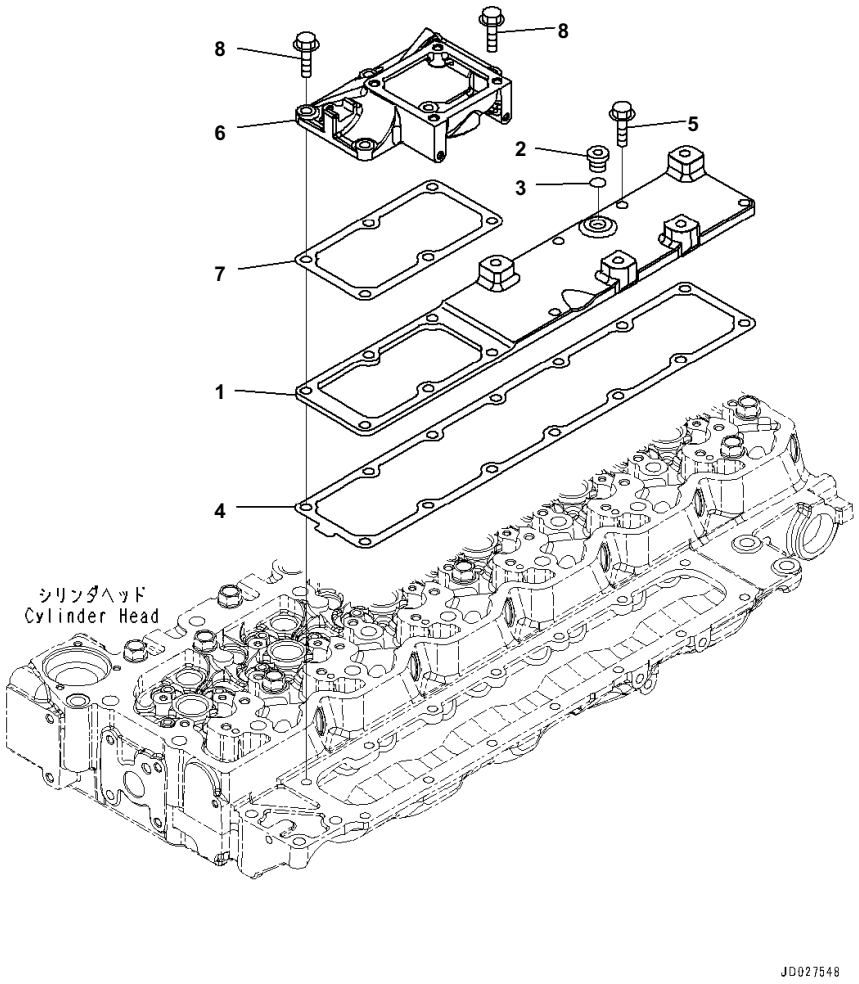

Air Intake Port Cover

Index	Code	Part Number	Description	Qty	Serial No.
1		6754-11-4230	Cover	1	26542663-
		6735-21-1910	Plug Assembly	1	26542663-
2		6735-21-1920	・ Plug	1	26542663-
3		6735-21-1930	・ O-ring	1	26542663-
4		6754-11-4280	Gasket	1	26542663-
5		6732-11-4160	Bolt	4	26542663-
6		6754-11-4221	Connector	1	26542663-
7		6754-11-4390	Gasket	1	26542663-
8		6743-12-4110	Bolt	6	26542663-

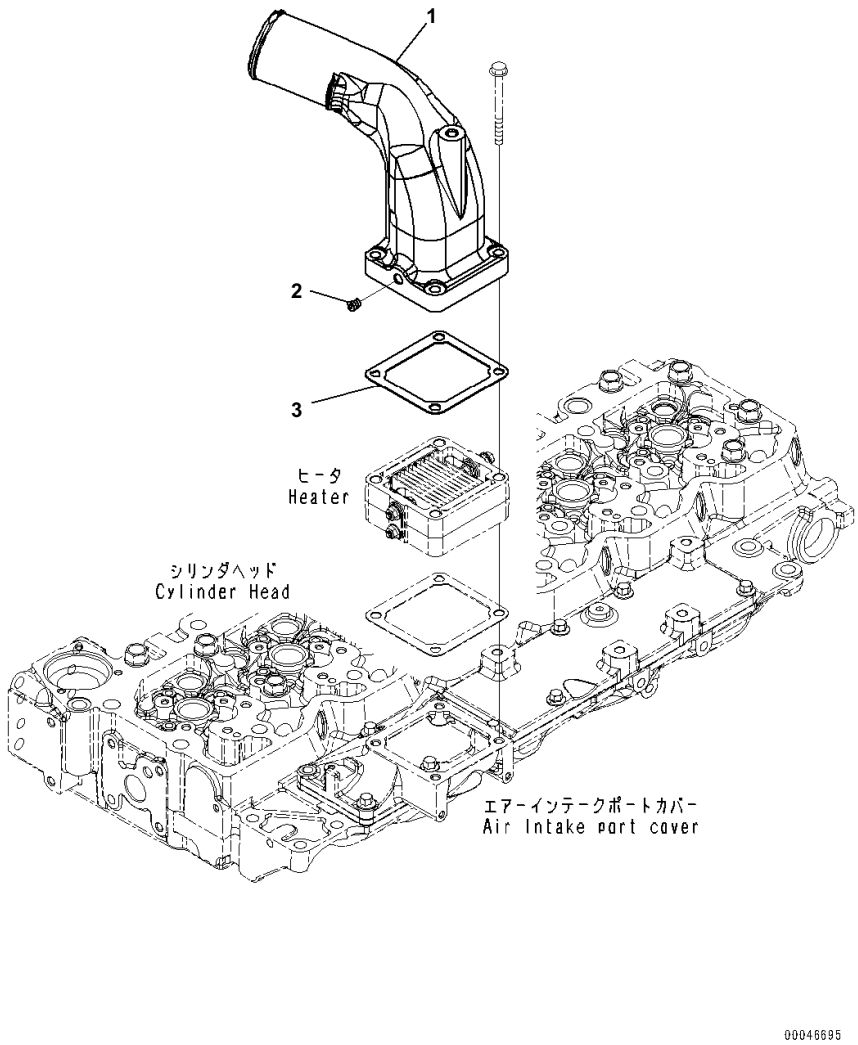

Index	Code	Part Number	Description	Qty	Serial No.
1		6754-11-4410	Connector, Air Intake	1	26542663-
2		07043-70108	Plug	1	26542663-
3		6754-11-4120	Gasket	1	26542663-

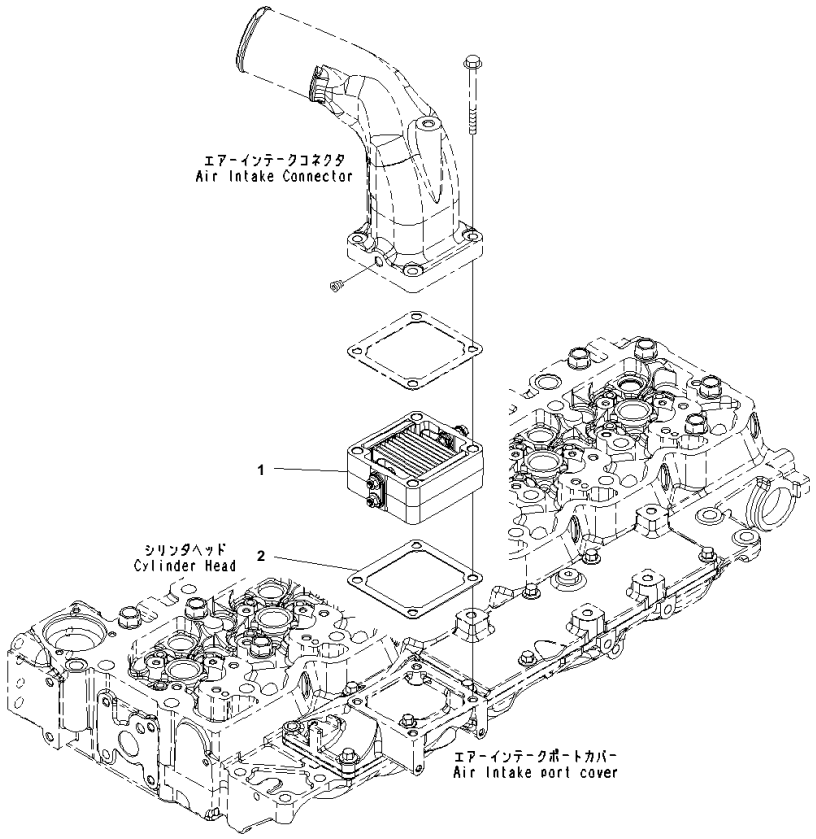

Air Intake Heater

Index	Code	Part Number	Description	Qty	Serial No.
1		6754-81-5110	Heater	1	26542663-
2		6754-11-4120	Gasket	1	26542663-

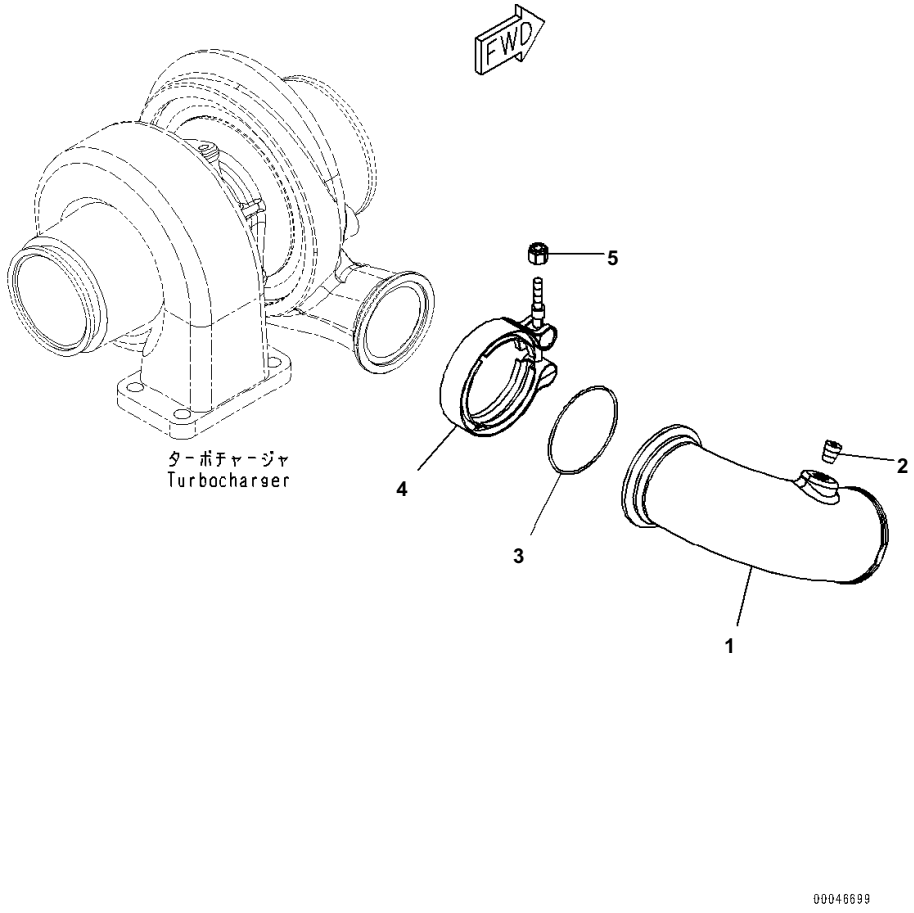

Air Transfer Connection

Index	Code	Part Number	Description	Qty	Serial No.
1		6738-11-4320	Pipe, Air	1	26542663-
2		07043-70108	Plug	1	26542663-
3		6738-11-4370	O-ring	1	26542663-
4		6738-11-4380	Clamp	1	26542663-
5		6738-11-4390	Nut	1	26542663-

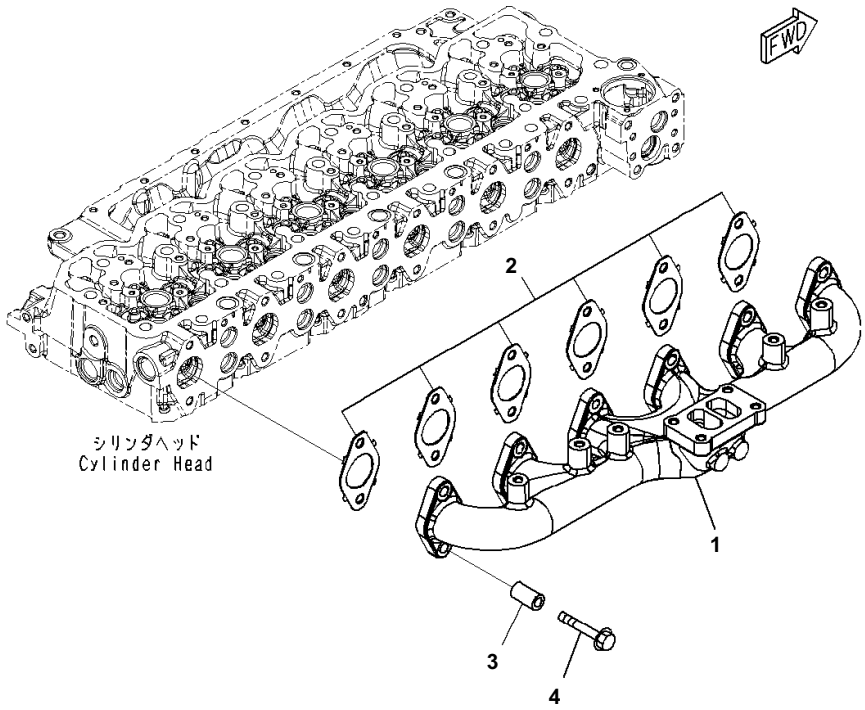

Exhaust Manifold

Index	Code	Part Number	Description	Qty	Serial No.
1		6754-11-5110	Manifold, Exhaust	1	26542663-
2		6754-11-5140	Gasket	6	26542663-
3		6754-11-5150	Spacer	12	26542663-
4		6732-11-5860	Bolt	12	26542663-

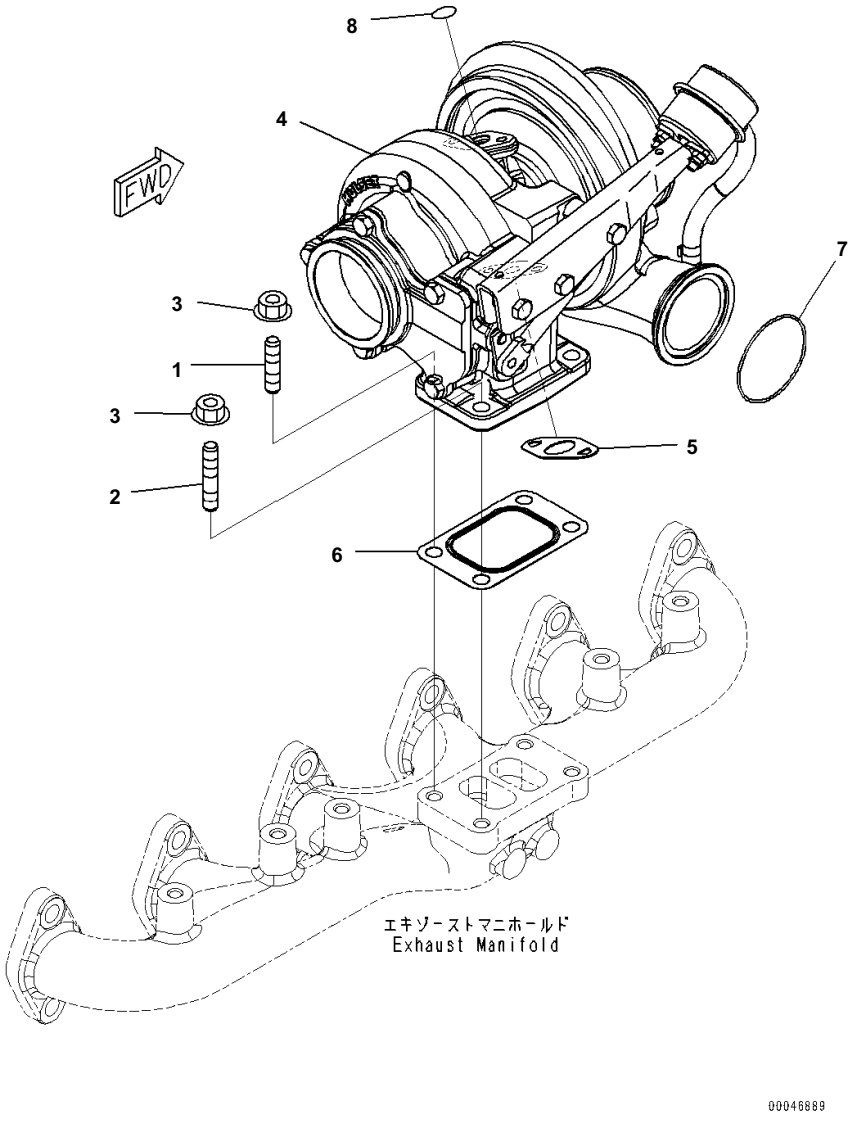

Index	Code	Part Number	Description	Qty	Serial No.
1		6732-81-8810	Stud	2	26542663-
2		6738-82-8810	Stud	2	26542663-
3		6732-81-8820	Nut	4	26542663-
		6754-82-8020	Turbocharger Kit	1	26542663-
4	C1		・ Turbocharger	1	26542663-
5		6754-51-8121	・ Gasket	1	26542663-
6		6754-81-8710	・ Gasket	1	26542663-
7		6738-11-4370	・ O-ring	1	26542663-
8		6736-51-8710	・ O-ring	1	26542663-

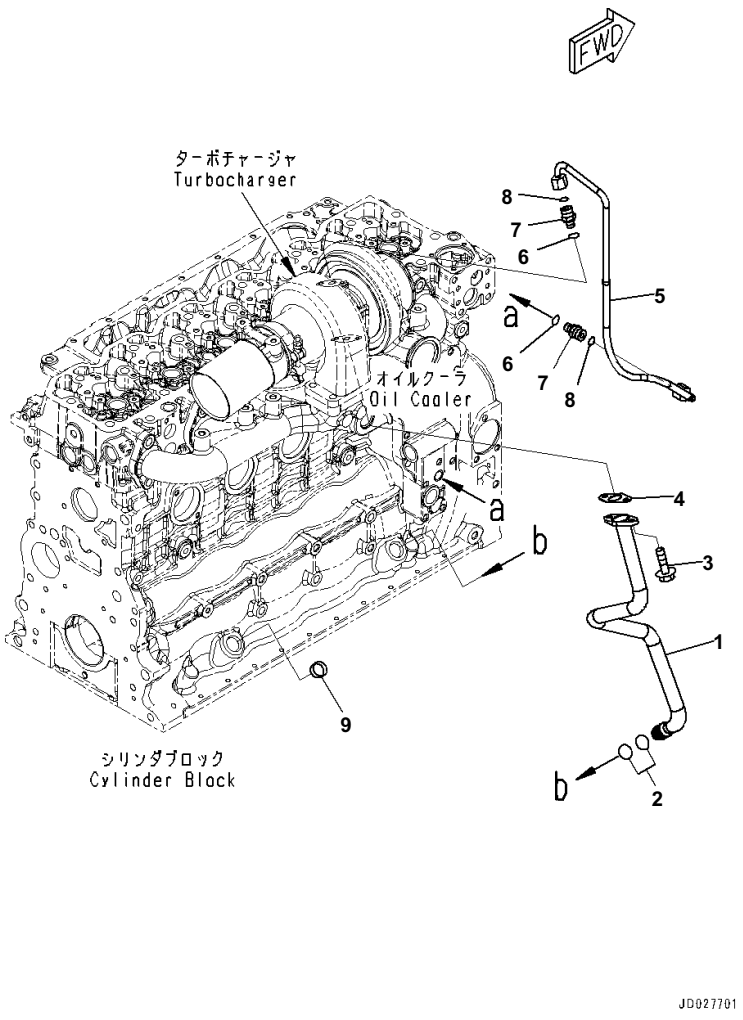

Index	Code	Part Number	Description	Qty	Serial No.
		6754-51-8100	Tube Assembly	1	26542663-
1	C1		・ Tube	1	26542663-
2		6732-51-8330	・ O-ring	2	26542663-
3		6731-61-1370	Bolt	2	26542663-
4		6754-51-8121	Gasket	1	26542663-
5		6754-51-8210	Hose	1	26542663-
		6732-51-8180	Connector Assembly	2	26542663-
6		6736-51-8710	・ O-ring	1	26542663-
7	C1		・ Connector	1	26542663-
8		6732-81-8860	・ O-ring	1	26542663-
9		6735-21-5530	Plug	1	26542663-

ENGINE CYLINDER BLOCK AND ITS RELATED PARTS

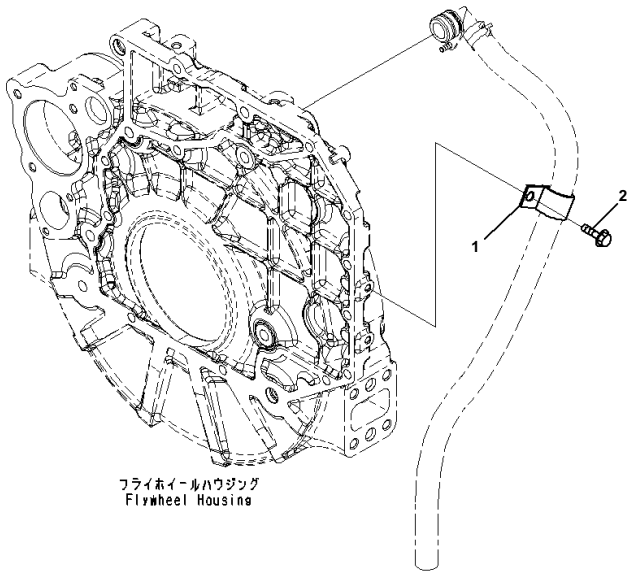

Breather Hose Related Parts

Index	Code	Part Number	Description	Qty	Serial No.
1		04434-52511	Clip	1	26542663-
2		01435-00820	Bolt	1	26542663-

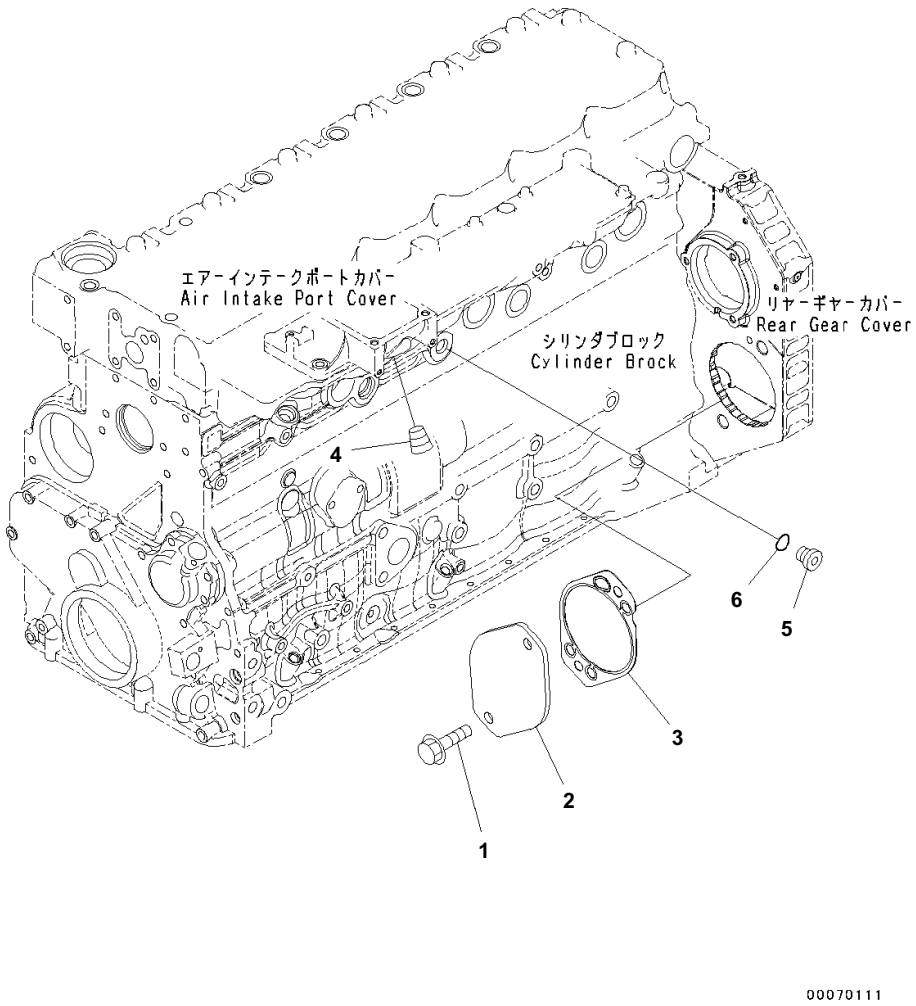

Rear Gear Cover Fitting Parts

Index	Code	Part Number	Description	Qty	Serial No.
1		6732-51-5130	Bolt	2	26542663-
2		6754-21-9110	Plate	1	26542663-
3		6754-22-9110	Gasket	1	26542663-
4		6732-11-1920	Plug	1	26542663-
		6216-14-6830	Plug Assembly	1	26542663-
5	C1		・ Plug	1	26542663-
6		6216-14-6840	・ Seal	1	26542663-

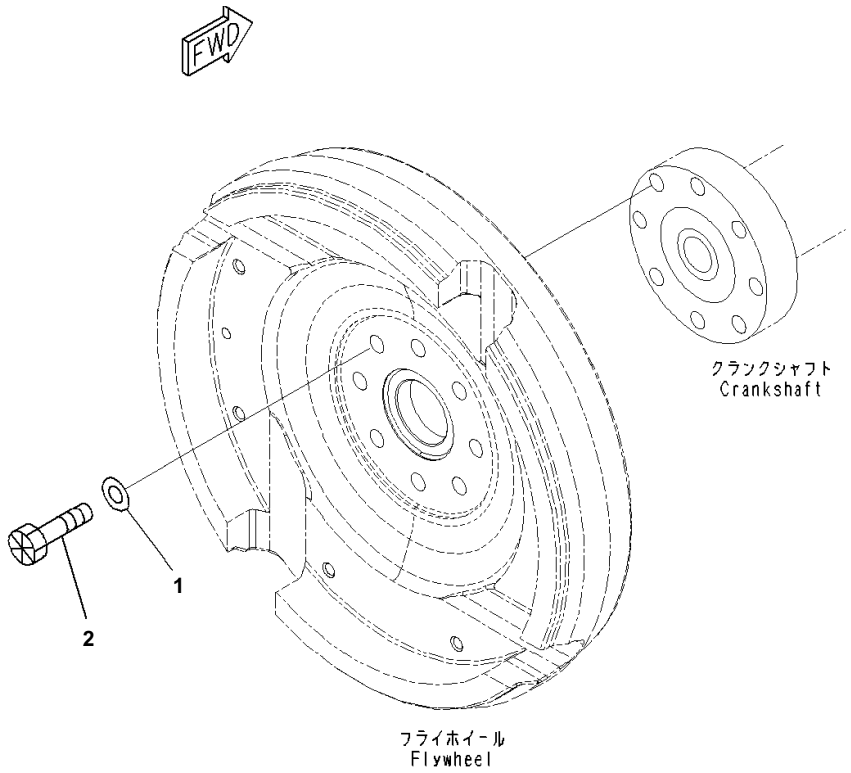

Index	Code	Part Number	Description	Qty	Serial No.
1		6732-31-4120	Washer	8	26542663-
2		6732-31-4130	Bolt	8	26542663-

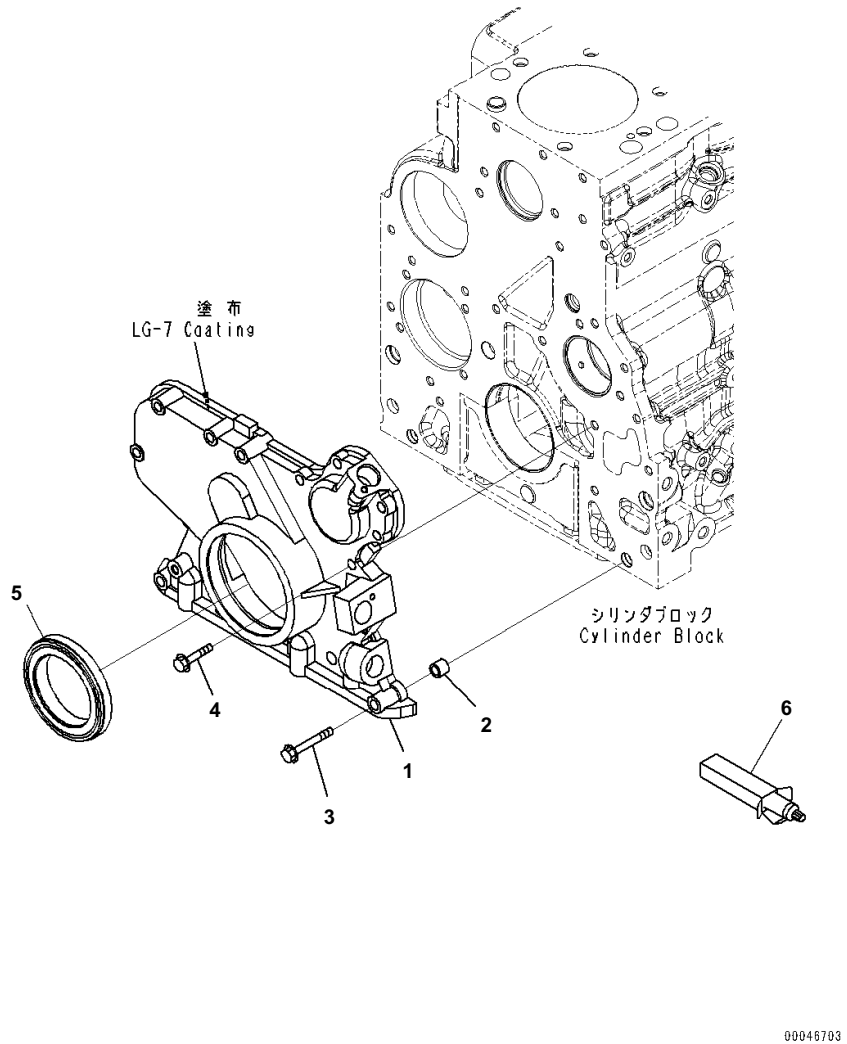

Index	Code	Part Number	Description	Qty	Serial No.
1		6754-21-6211	Cover, Front	1	26542663-
2		6754-21-6220	Ring	2	26542663-
3		6735-61-2120	Bolt	6	26542663-
4		6732-21-6630	Screw	7	26542663-
5		6754-21-6230	Seal	1	26542663-
6		09920-00150	Liquid gasket, LG-7, 150G	AR	26542663-

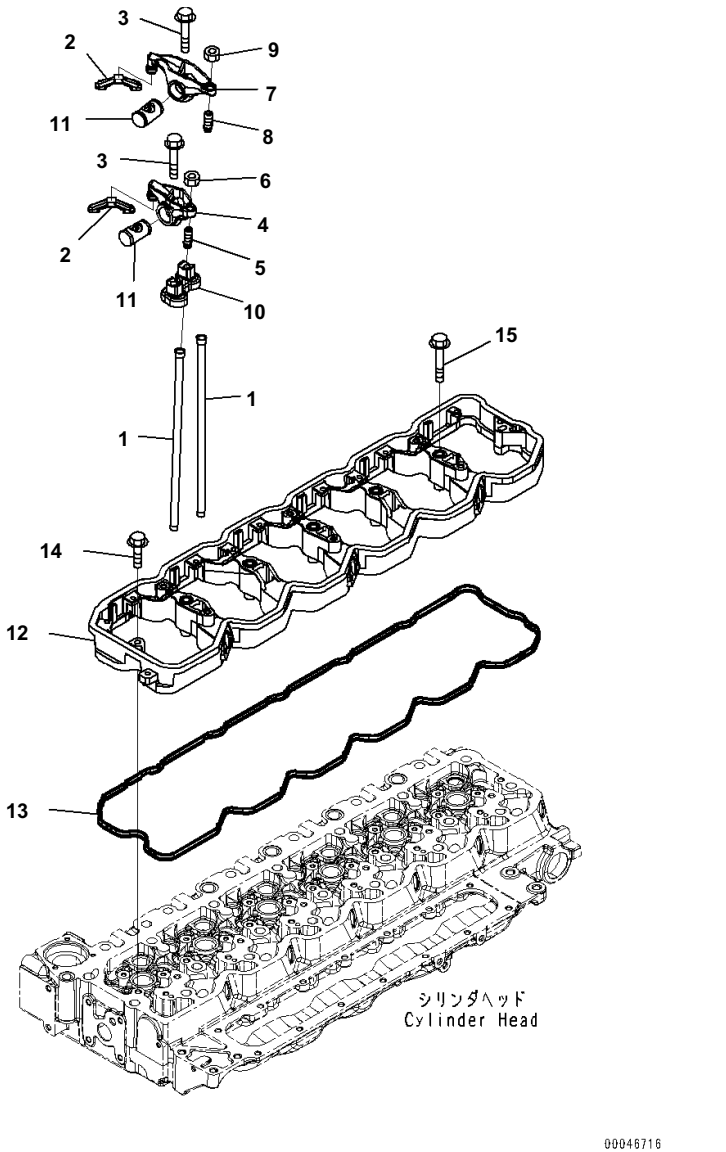

Rocker Arm

Index	Code	Part Number	Description	Qty	Serial No.
1		6754-41-3110	Rod	12	26542663-
2		6754-41-5310	Crosshead	12	26542663-
3		6754-41-5180	Bolt	12	26542663-
		6754-41-5211	Arm Assembly, Intake	6	26542663-
4	C1		・ Lever Assembly, Intake	1	26542663-
5		6754-41-5140	・・ Screw	1	26542663-
6		6735-41-5550	・・ Nut	1	26542663-
		6754-41-5111	Arm Assembly, Exhaust	6	26542663-
7	C1		・ Lever Assembly, Exhaust	1	26542663-
8		6754-41-5140	・・ Screw	1	26542663-
9		6735-41-5550	・・ Nut	1	26542663-
10		6754-41-5260	Support	6	26542663-
11		6754-41-5190	Shaft	12	26542663-
12		6754-11-7110	Housing Assembly	1	26542663-
13		6754-11-7120	Gasket	1	26542663-
14		6736-21-3210	Bolt	2	26542663-
15		6732-61-6150	Bolt	5	26542663-

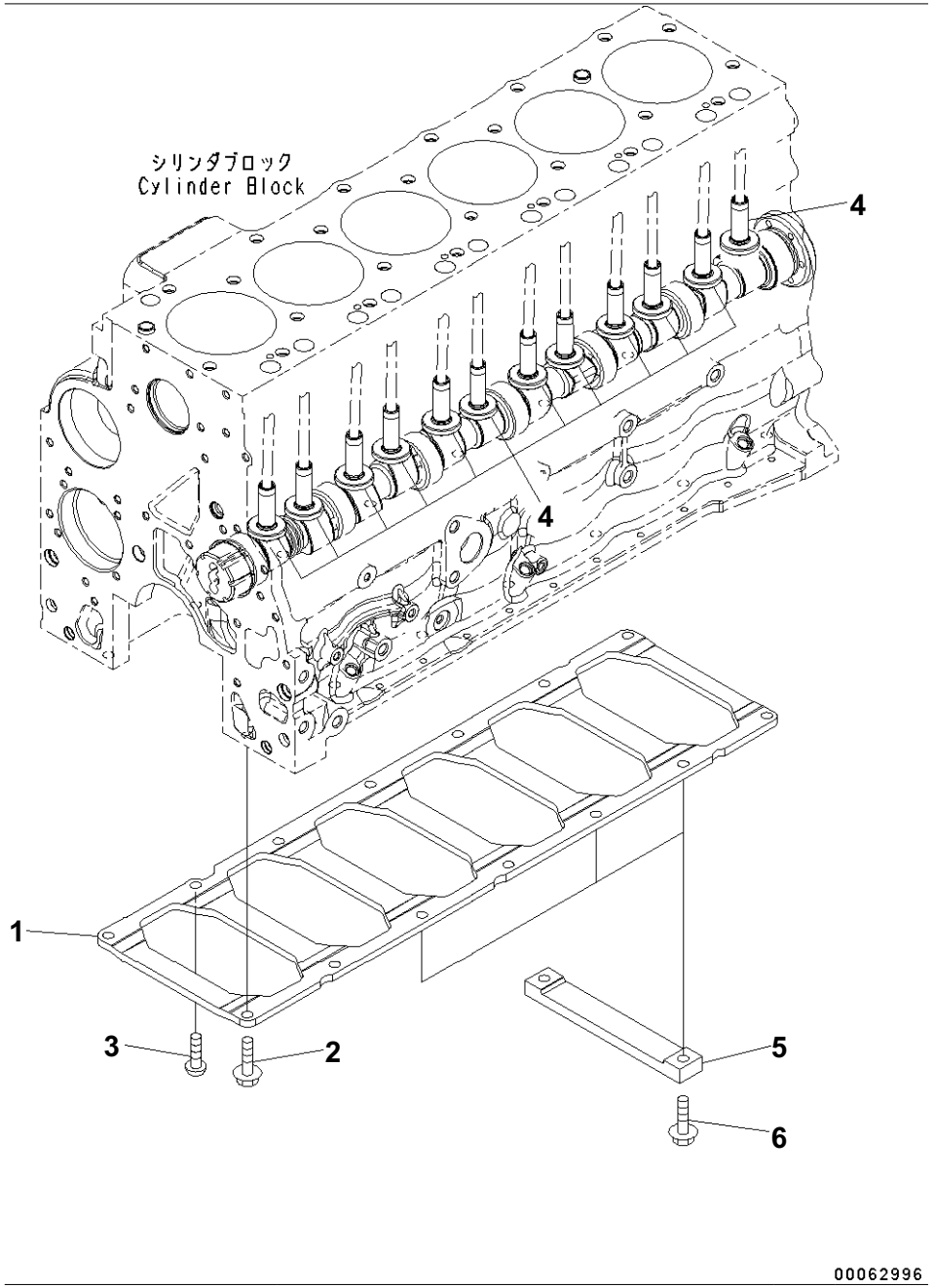

Tappet and Block Plate

Index	Code	Part Number	Description	Qty	Serial No.
1		6754-21-5150	Plate	1	26542663-
2		6735-71-3220	Bolt	7	26542663-
3		6754-21-1920	Bolt	1	26542663-
4		6754-41-2110	Tappet	12	26542663-
5		6754-21-5170	Plate	3	26542663-
6		6742-01-5504	Bolt	6	26542663-

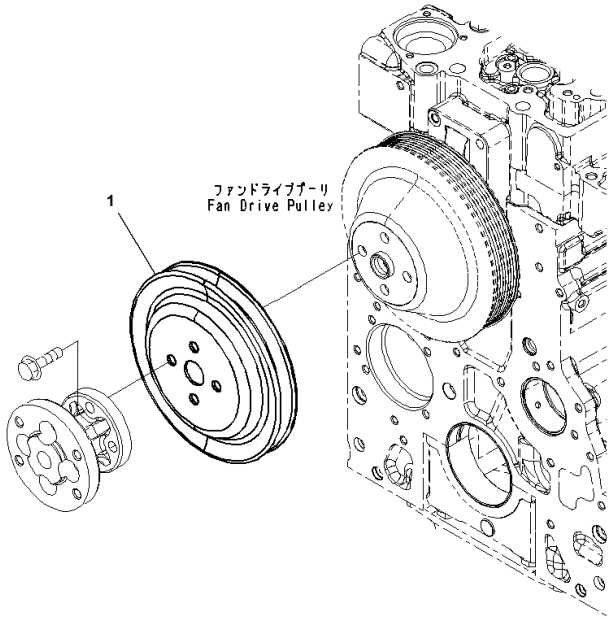

Accessory Drive Pulley

Index	Code	Part Number	Description	Qty	Serial No.
1		6738-91-1510	Pulley, Accessoy	1	26542663-

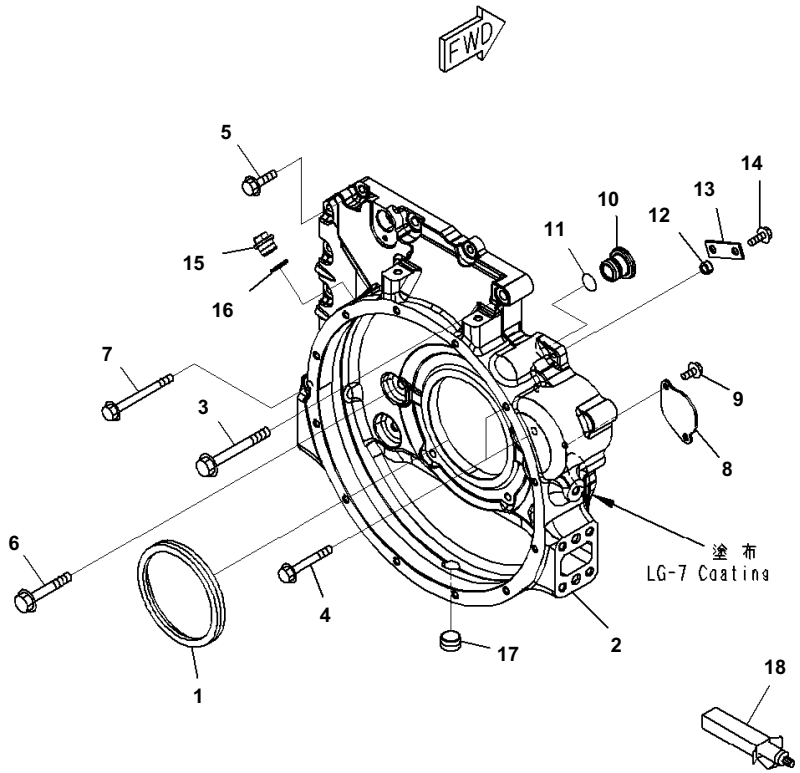

Flywheel Housing

Index	Code	Part Number	Description	Qty	Serial No.
1		6736-21-4221	Seal	1	26542663-
2		6754-21-4111	Housing, Flywheel	1	26542663-
3		6754-21-4210	Bolt	2	26542663-
4		6731-21-6220	Bolt	2	26542663-
5		6742-01-5504	Bolt	9	26542663-
6		6736-21-5350	Bolt	6	26542663-
7		6754-21-4220	Bolt	1	26542663-
8		6732-21-4130	Plate	1	26542663-
9		6732-71-3220	Bolt	2	26542663-
10		6732-21-4150	Plug	1	26542663-
11		6732-21-4161	O-ring	1	26542663-
12		6130-12-1961	Spacer	1	26542663-
13		6301-11-4630	Plate	1	26542663-
14		6732-21-5160	Bolt	1	26542663-
15		6736-21-5320	Plug	1	26542663-
16		6732-21-5170	Gasket	1	26542663-
17		6732-11-1920	Plug	1	26542663-
18		09920-00150	Liquid gasket, LG-7, 150G	AR	26542663-

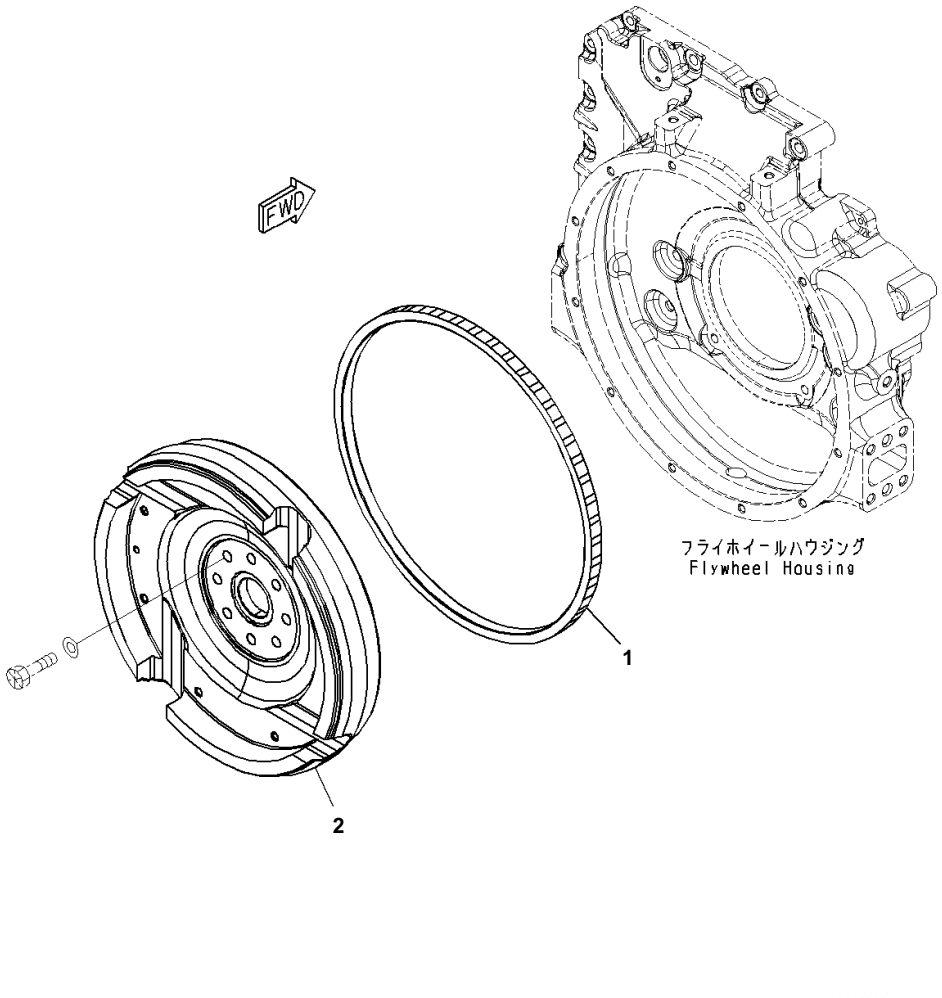

Index	Code	Part Number	Description	Qty	Serial No.
		6738-31-4100	Flywheel Assembly	1	26542663-
1		6732-31-4180	・ Gear, Ring	1	26542663-
2	C1		・ Flywheel	1	26542663-

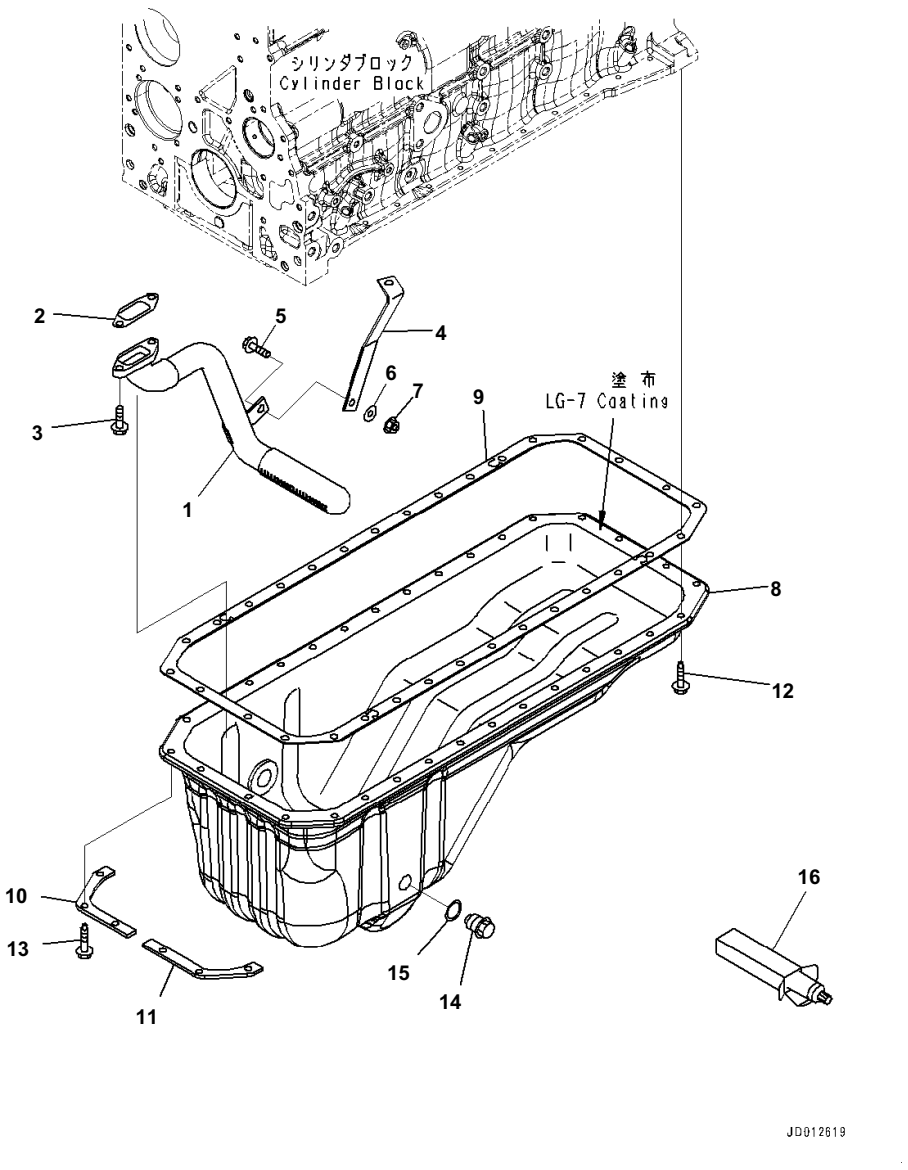

Engine Oil Pan

Index	Code	Part Number	Description	Qty	Serial No.
1		6754-21-5510	Tube, Suction	1	26542663-
2		6754-21-5530	Gasket	1	26542663-
3		6732-21-5160	Bolt	2	26542663-
4		6754-21-5520	Bracket	1	26542663-
5		6735-71-5190	Bolt	1	26542663-
6		6742-01-2690	Washer	1	26542663-
7		01584-00605	Nut	1	26542663-
8		6754-21-5120	Oil Pan	1	26542663-
9		6754-21-5830	Gasket	1	26542663-
10		6754-21-5130	Plate	1	26542663-
11		6754-21-5140	Plate	1	26542663-
12		6735-21-5540	Bolt	26	26542663-
13		6732-21-6610	Bolt	6	26542663-
14		6736-21-5320	Plug	1	26542663-
15		6732-21-5170	Gasket	1	26542663-
16		09920-00150	Liquid gasket, LG-7, 150G	AR	26542663-

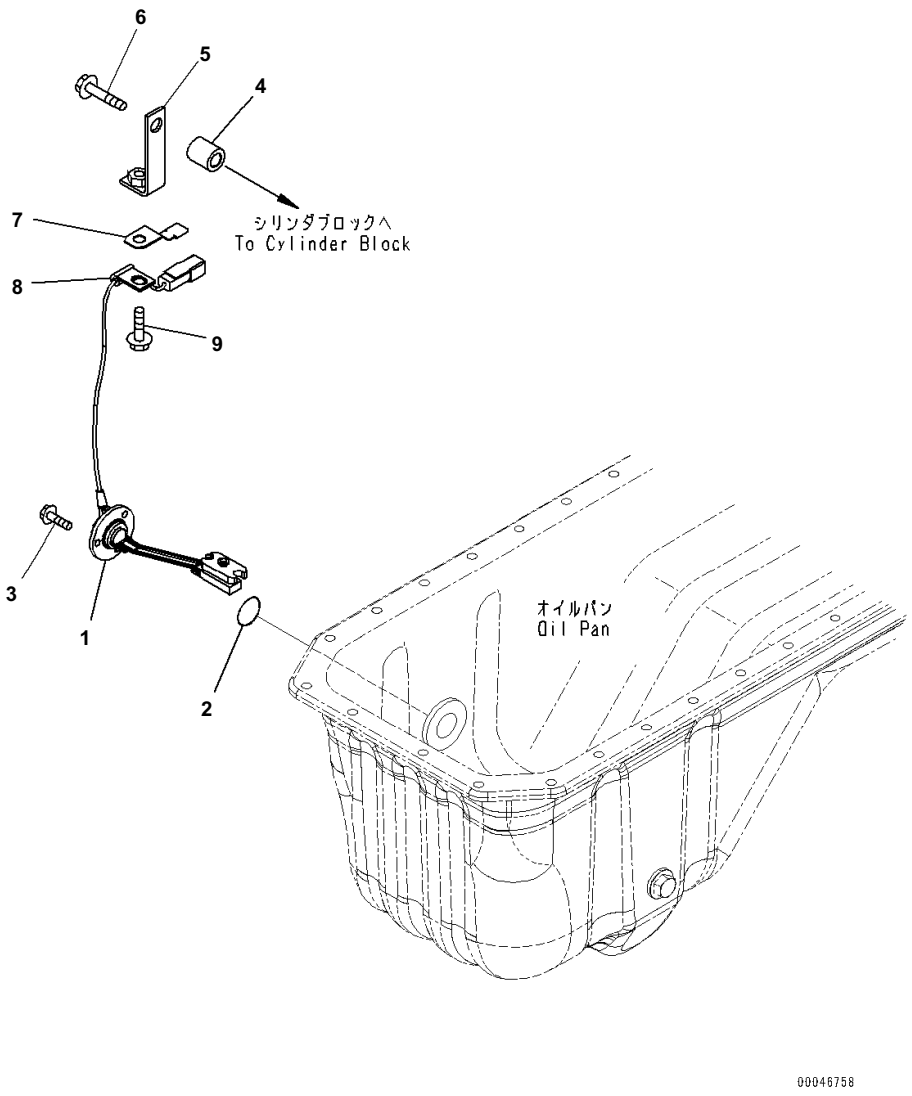

Index	Code	Part Number	Description	Qty	Serial No.
1		6741-81-9220	Sensor, Oil Level	1	26542663-
2		7861-91-4220	・ O-ring	1	26542663-
3		6733-71-5680	Bolt	3	26542663-
4		6144-81-6680	Spacer	1	26542663-
5		6215-11-6330	Bracket	1	26542663-
6		6754-81-9190	Bolt	1	26542663-
7		08193-20010	Clip	1	26542663-
8		04434-50510	Clip	1	26542663-
9		6734-71-5610	Bolt	1	26542663-

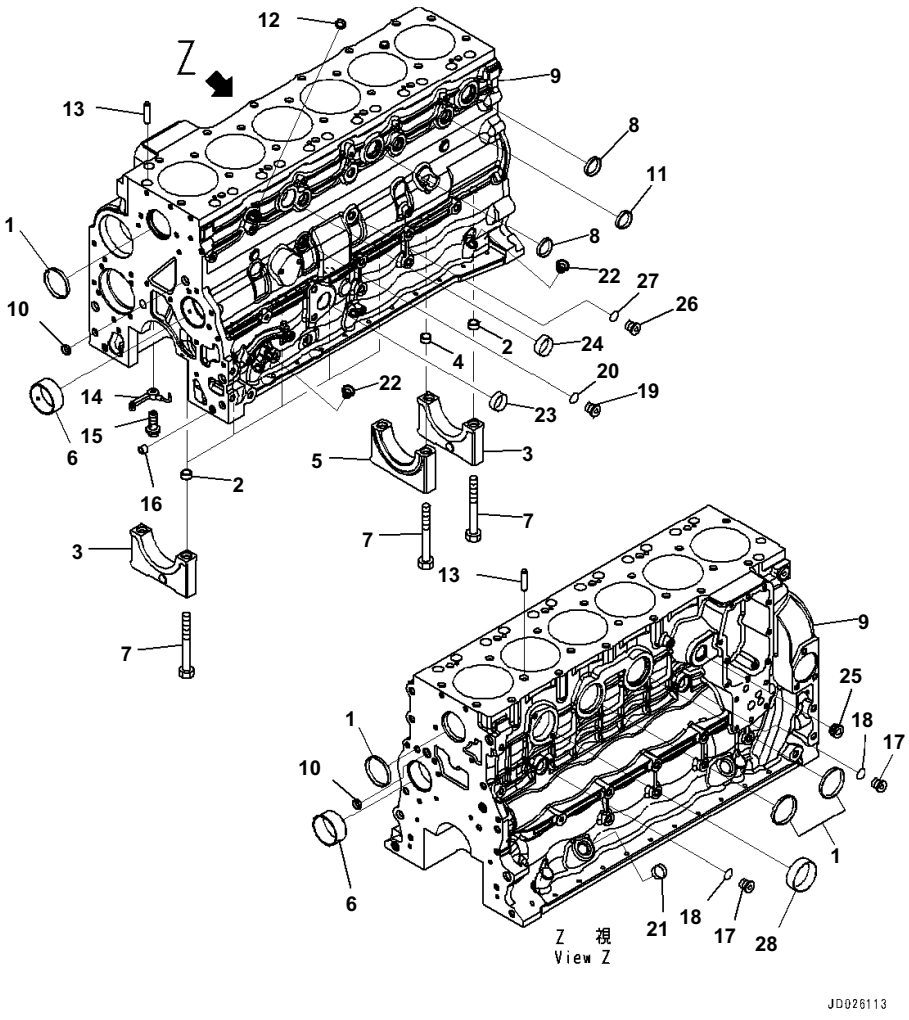

Cylinder Block

Index	Code	Part Number	Description	Qty	Serial No.
		6754-21-1310	Cylinder Block Assembly	1	26542663-
	C1		· Block Assembly	1	26542663-
	C1		· · Block Assembly	1	26542663-
1		6732-21-1831	· · · Plug	4	26542663-
	C3	6754-21-1220	· · · Cap Assembly	6	26542663-
2	C1		· · · · Ring	2	26542663-
3	C1		· · · · Cap	1	26542663-
	C3	6754-21-1240	· · · Cap Assembly	1	26542663-
4	C1		· · · · Ring	2	26542663-
5	C1		· · · · Cap	1	26542663-
6		6732-21-1411	· · · Bushing	2	26542663-
7		6732-21-1611	· · · Bolt	14	26542663-
8		6742-01-1420	· · · Plug	2	26542663-
9	C1		· · · Block	1	26542663-
10		6732-21-1812	· · Plug	2	26542663-
11		6732-21-1820	· · Plug	3	26542663-
12		6732-21-1812	· Plug	1	26542663-
		6754-21-1320	· Block Kit	1	26542663-
13		6732-21-6140	· · Ring	2	26542663-
14		6754-21-1191	· · Nozzle	6	26542663-
15		6754-21-1180	· · Joint	6	26542663-
16		6754-21-6220	· · Ring	2	26542663-
		6560-81-7110	· · Plug Assembly	2	26542663-
17		6560-81-7120	· · · Plug	1	26542663-
18		6560-81-7130	· · · O-ring	1	26542663-
		6732-21-1960	· · Plug Assembly	1	26542663-
19		6215-81-9510	· · · Plug	1	26542663-
20		6215-81-9710	· · · O-ring	1	26542663-
21		6735-21-5530	· · Plug	1	26542663-
22		6732-21-5530	· · Plug	4	26542663-
23		6732-21-6160	· · Plug	1	26542663-
24		6742-01-1420	· · Plug	1	26542663-
25		6732-11-1920	· · Plug	1	26542663-
		6216-24-5130	· · Plug Assembly	1	26542663-
26	C1		· · · Plug	1	26542663-
27		6735-21-1930	· · · O-ring	1	26542663-
28		6732-21-1831	· · Plug	1	26542663-

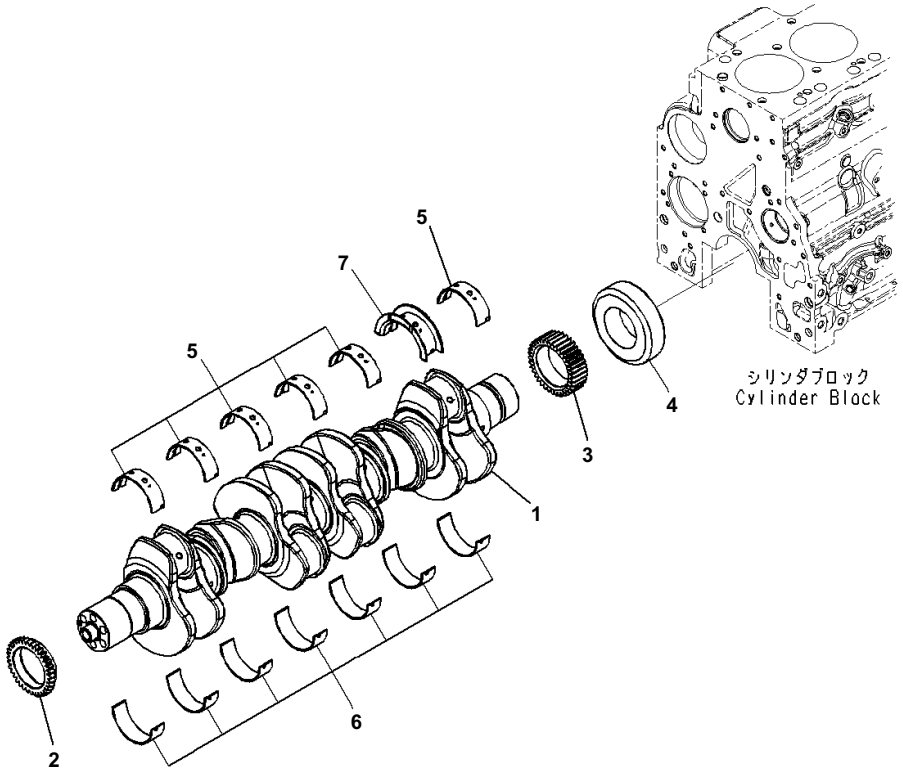

Index	Code	Part Number	Description	Qty	Serial No.
		6754-01-1310	Crankshaft Assembly	1	26542663-
1	C1		・ Crankshaft	1	26542663-
2		6754-31-1330	・ Gear	1	26542663-
3		6754-31-1340	・ Gear	1	26542663-
4		6754-31-1190	・ Collar	1	26542663-
		6754-22-8100	Main Metal Assembly	1	26542663-
5	C1		・ Metal,Upper	6	26542663-
6	C1		・ Metal,Lower	7	26542663-
7	C1		・ Bearing, Thrust,Upper	1	26542663-

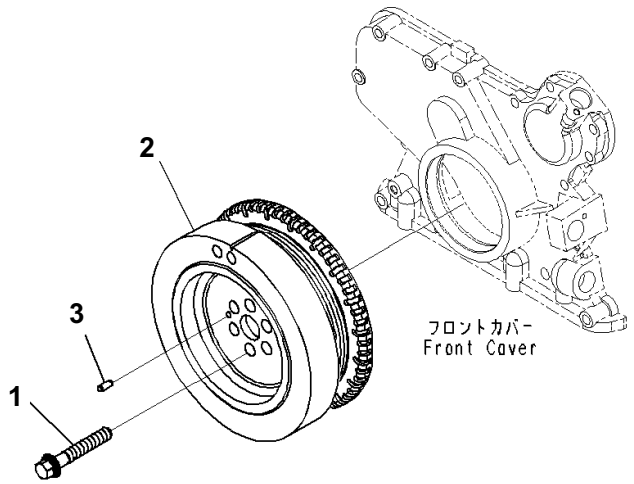

Vibration Damper

Index	Code	Part Number	Description	Qty	Serial No.
1		6754-31-8120	Bolt	6	26542663-
2		6754-31-8110	Damper	1	26542663-
3		6754-31-8130	Pin	1	26542663-

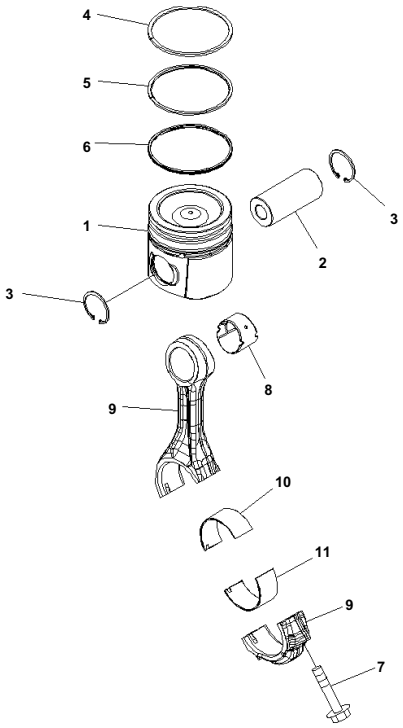

Index	Code	Part Number	Description	Qty	Serial No.
1		6754-31-2111	Piston	6	26542663-
2		6754-31-2410	Pin	6	26542663-
3		6732-31-2420	Ring	12	26542663-
		6754-31-2010	Ring Assembly	6	26542663-
4	C1		・ Ring, Top	1	26542663-
5	C1		・ Ring, 2nd	1	26542663-
6	C1		・ Ring, Oil	1	26542663-
		6737-32-3121	Rod Assembly	6	26542663-
7		6732-31-3320	・ Screw	2	26542663-
8		6732-31-3132	・ Bushing	1	26542663-
9	C1		・ Rod	1	26542663-
10		6754-31-3410	Metal,Upper	6	26542663-
11		6732-31-3420	Metal,Lower	6	26542663-

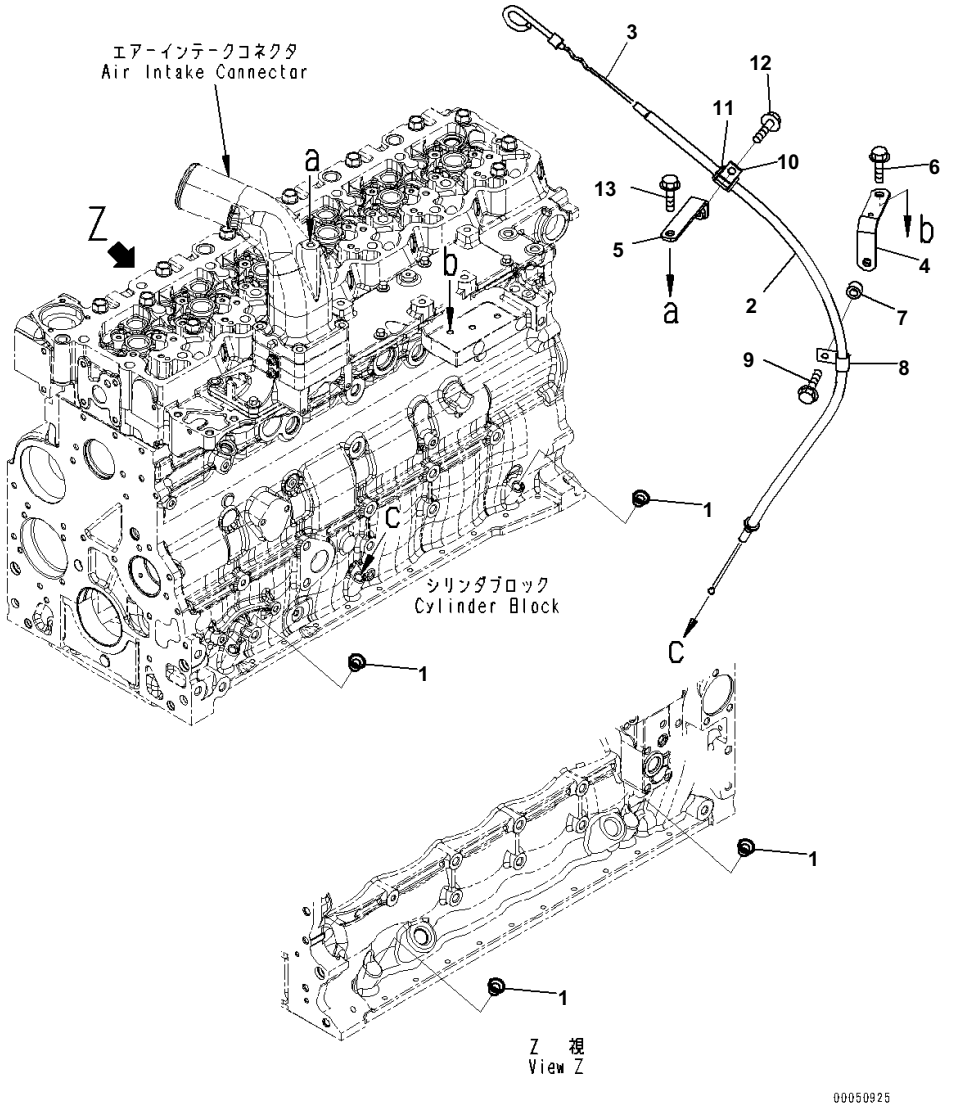

Index	Code	Part Number	Description	Qty	Serial No.
1		6732-21-5530	Plug	4	26542663-
2		6732-21-5491	Guide	1	26542663-
3		6754-21-5610	Gauge	1	26542663-
4		6754-21-5810	Bracket	1	26542663-
5		6754-21-5820	Bracket	1	26542663-
6		6732-71-3220	Bolt	1	26542663-
7		6131-12-5920	Spacer	1	26542663-
8		04434-51208	Clip	1	26542663-
9		6732-21-6630	Screw	1	26542663-
10		04434-51708	Clip	1	26542663-
11		07095-20211	Cushion	1	26542663-
12		6732-21-3120	Bolt	1	26542663-
13		6735-71-3220	Bolt	1	26542663-

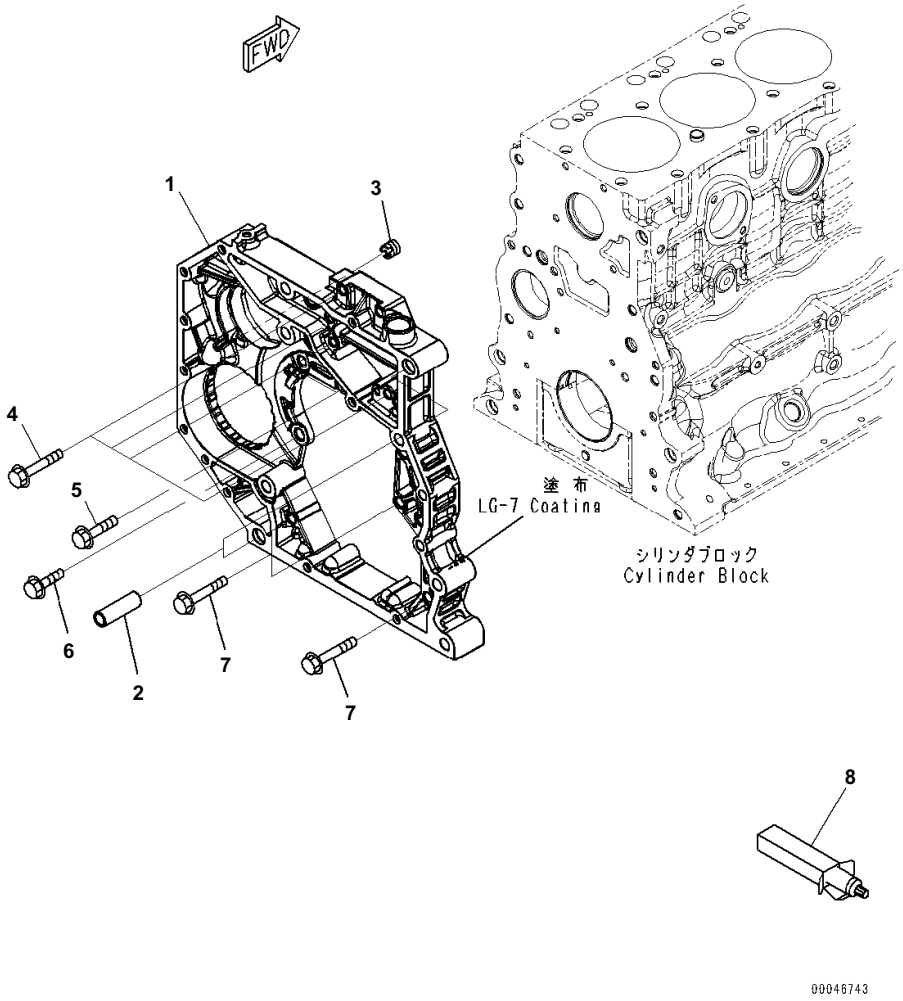

Index	Code	Part Number	Description	Qty	Serial No.
		6754-21-3102	Housing Assembly, Rear Gear	1	26542663-
1	C1		・ Housing, Rear Gear	1	26542663-
2		6754-21-3120	・ Pin	2	26542663-
3		6754-21-3150	・ Insert	2	26542663-
4		6735-61-2120	Bolt	4	26542663-
5		6735-61-3810	Bolt	2	26542663-
6		6732-11-1720	Bolt	1	26542663-
7		6754-21-3140	Bolt	3	26542663-
8		09920-00150	Liquid gasket, LG-7, 150G	AR	26542663-

ENGINE LUBRICATING SYSTEM

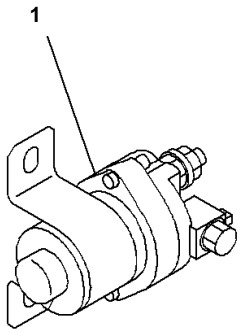

PJ6F064

Heater Switch

Index	Code	Part Number	Description	Qty	Serial No.
1		600-815-2170	Switch, Heater	1	26542663-

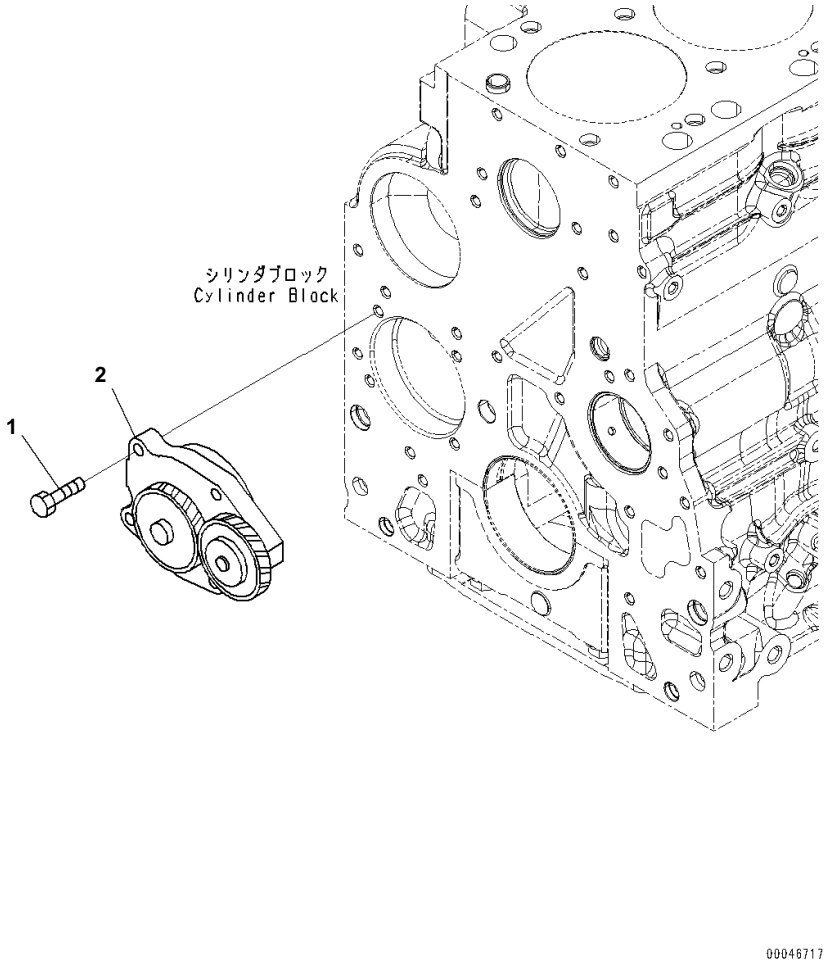

Engine Oil Pump

Index	Code	Part Number	Description	Qty	Serial No.
1		6735-51-1120	Bolt	4	26542663-
2		6754-51-1110	Pump Assembly, Oil	1	26542663-

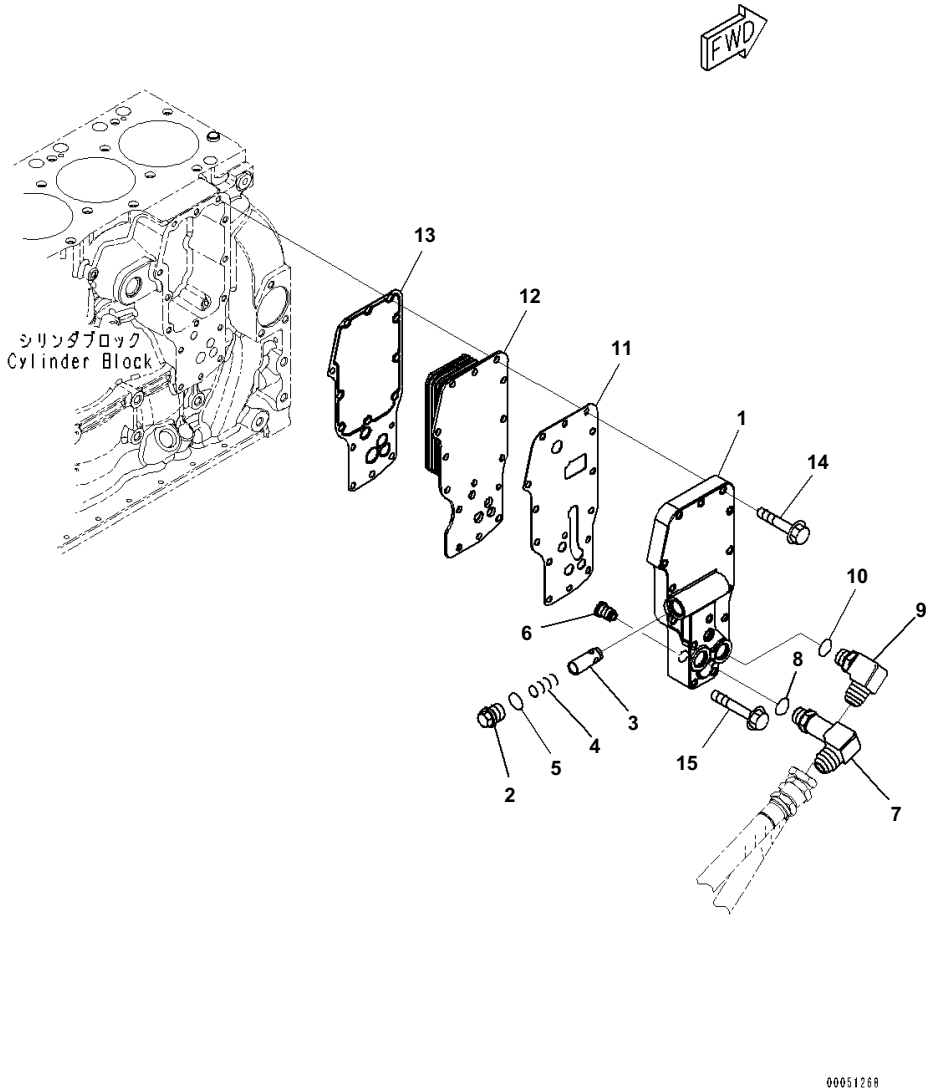

Engine Oil Cooler

Index	Code	Part Number	Description	Qty	Serial No.
1		6754-61-2220	Cover, Oil Cooler	1	26542663-
2		6735-61-2140	Plug	1	26542663-
3		6735-61-2160	Plunger	1	26542663-
4		6735-61-2190	Spring	1	26542663-
5		6732-51-4420	O-ring	1	26542663-
6		6731-61-2151	Valve	1	26542663-
7		6731-51-5250	Elbow	1	26542663-
8		6731-51-5290	・ O-ring	1	26542663-
9		6738-51-5240	Elbow	1	26542663-
10		6731-51-5290	・ O-ring	1	26542663-
11		6754-51-4440	Gasket	1	26542663-
12		6754-61-2110	Core, Cooler	1	26542663-
13		6754-61-2320	Gasket	1	26542663-
14		6735-61-2120	Bolt	11	26542663-
15		6736-21-3230	Bolt	4	26542663-

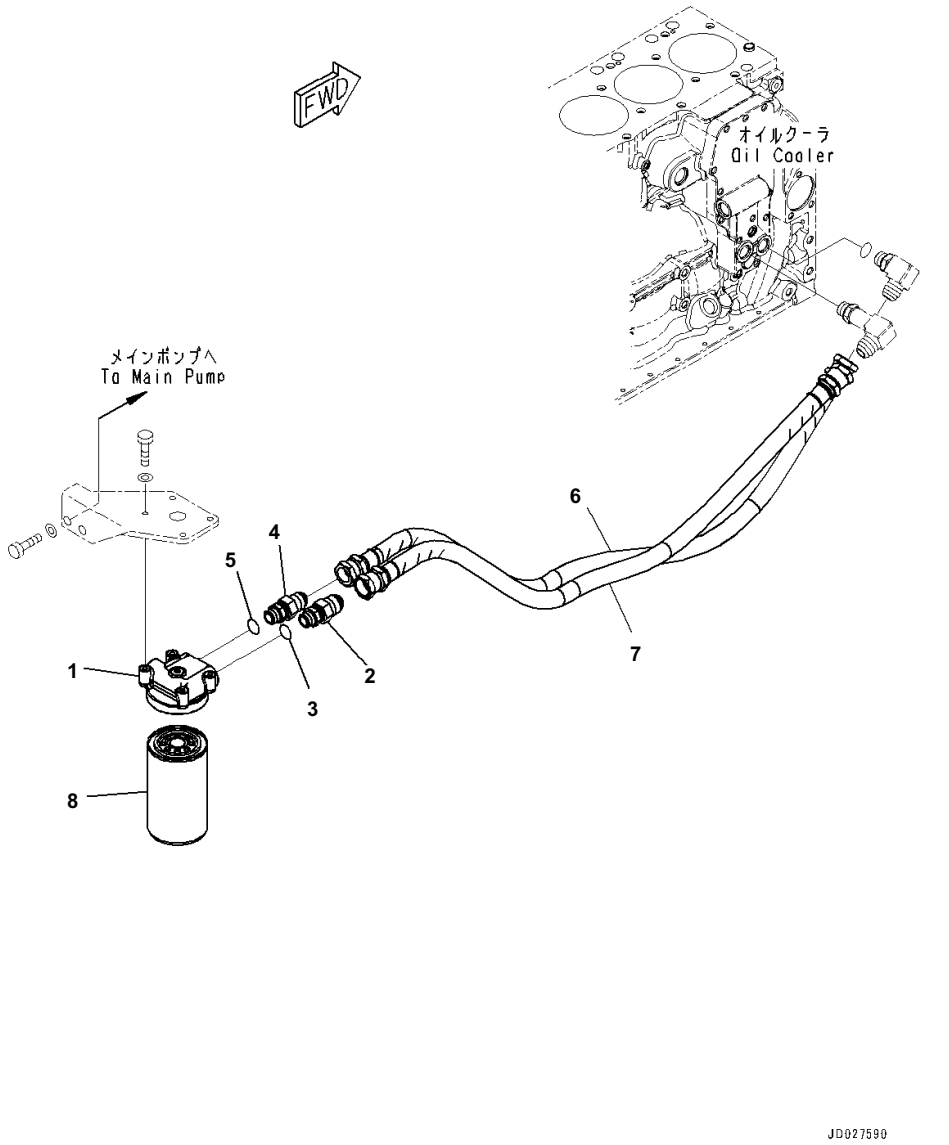

Engine Oil Filter and Piping

Index	Code	Part Number	Description	Qty	Serial No.
1		6754-52-5310	Head	1	26542663-
2		6731-51-5260	Nipple	1	26542663-
3		6731-51-5290	・O-ring	1	26542663-
4		6738-51-5260	Nipple	1	26542663-
5		6731-51-5290	・O-ring	1	26542663-
6		6754-51-9810	Hose	1	26542663-
7		6754-51-9910	Hose	1	26542663-
8		6736-51-5142	Cartridge	1	26542663-

ENGINE FUEL SYSTEM

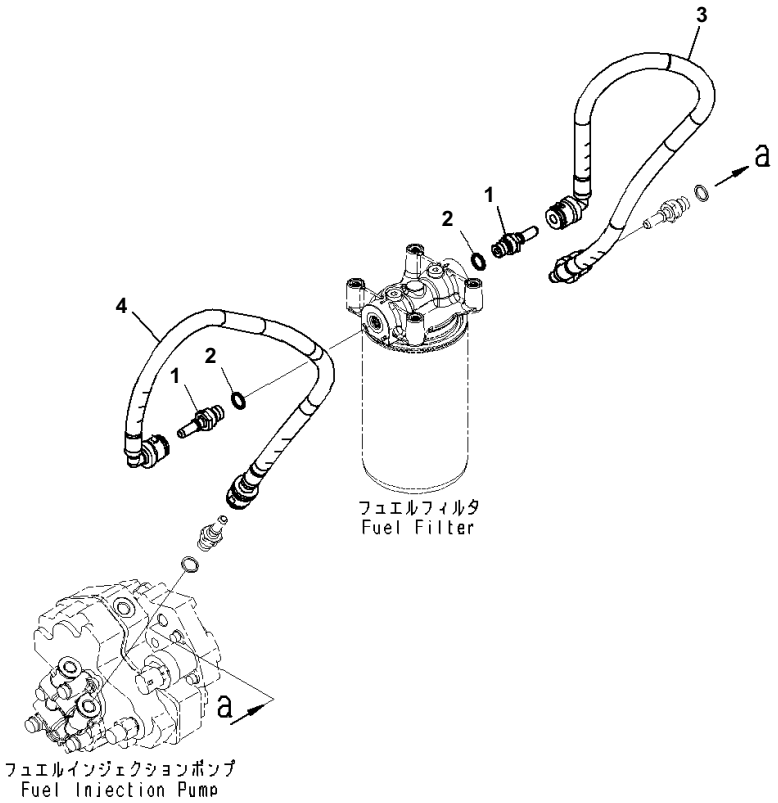

Index	Code	Part Number	Description	Qty	Serial No.
1		6754-71-5340	Connector	2	26542663-
2		6754-71-5350	Washer	2	26542663-
3		6754-71-9910	Hose	1	26542663-
4		6754-71-9920	Hose	1	26542663-

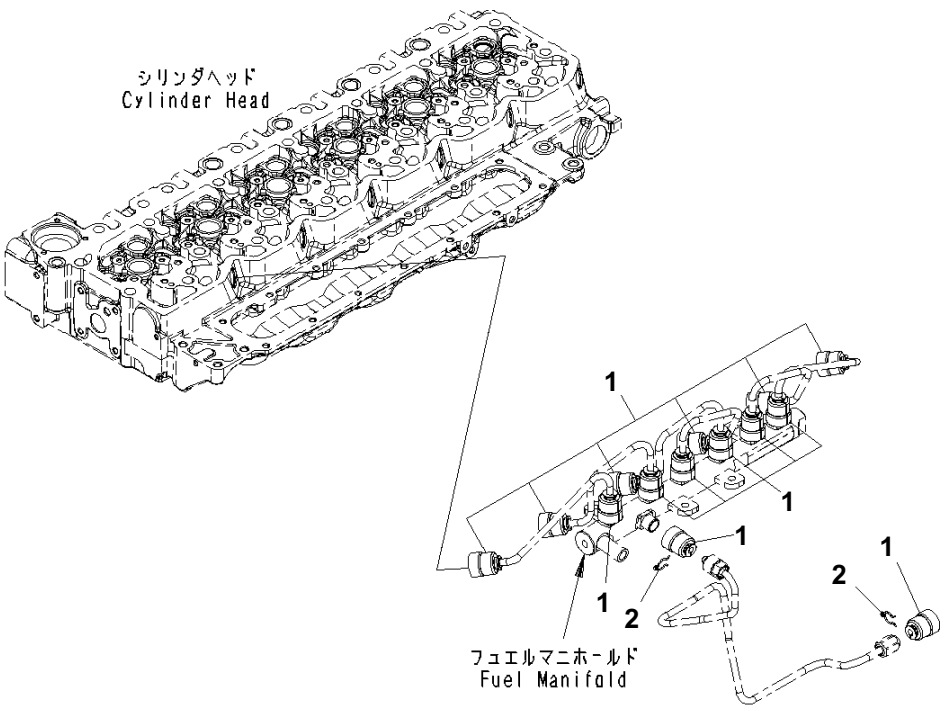

Index	Code	Part Number	Description	Qty	Serial No.
1		6754-71-9710	Cover	14	26542663-
2		6217-71-5770	Clamp	14	26542663-

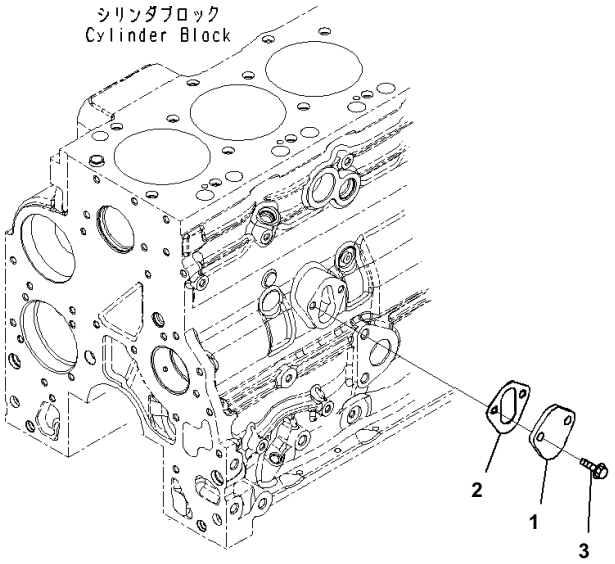

Index	Code	Part Number	Description	Qty	Serial No.
1		6736-71-5811	Plate	1	26542663-
2		6735-61-6411	Gasket	1	26542663-
3		6732-71-3220	Bolt	2	26542663-

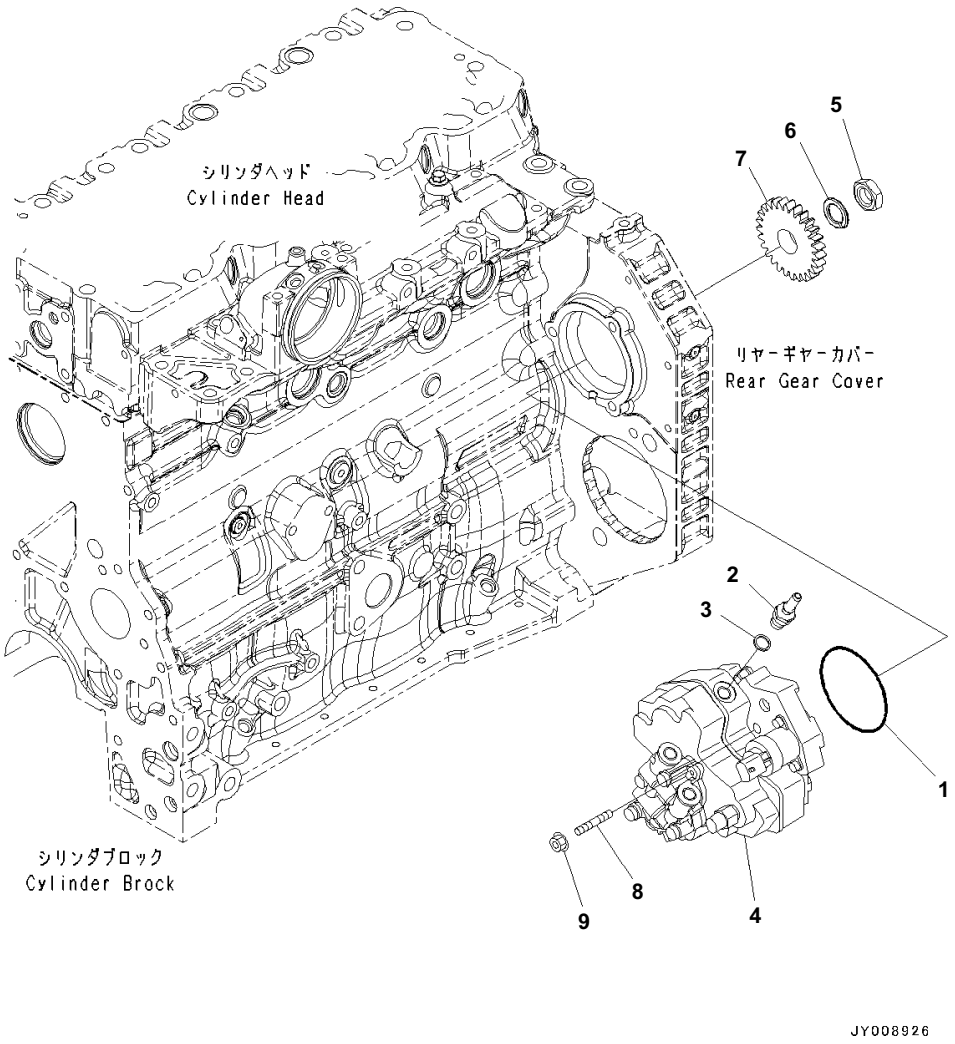

Index	Code	Part Number	Description	Qty	Serial No.
		6754-71-1012	Fuel Supply Pump Assembly	1	26542663-
		6754-72-1012	・ Pump Assembly	1	26542663-
1		6754-71-1320	・・ O-ring	1	26542663-
2		6754-71-1330	・・ Connector	1	26542663-
3		6754-71-5350	・・ Washer	1	26542663-
4	C1		・・ Pump	1	26542663-
5		6754-71-1340	・・ Nut	1	26542663-
6		6754-71-1350	・・ Washer, Spring	1	26542663-
7		6754-71-3110	・ Gear	1	26542663-
8		6754-71-3131	Stud	3	26542663-
9		6732-71-3210	Nut	3	26542663-

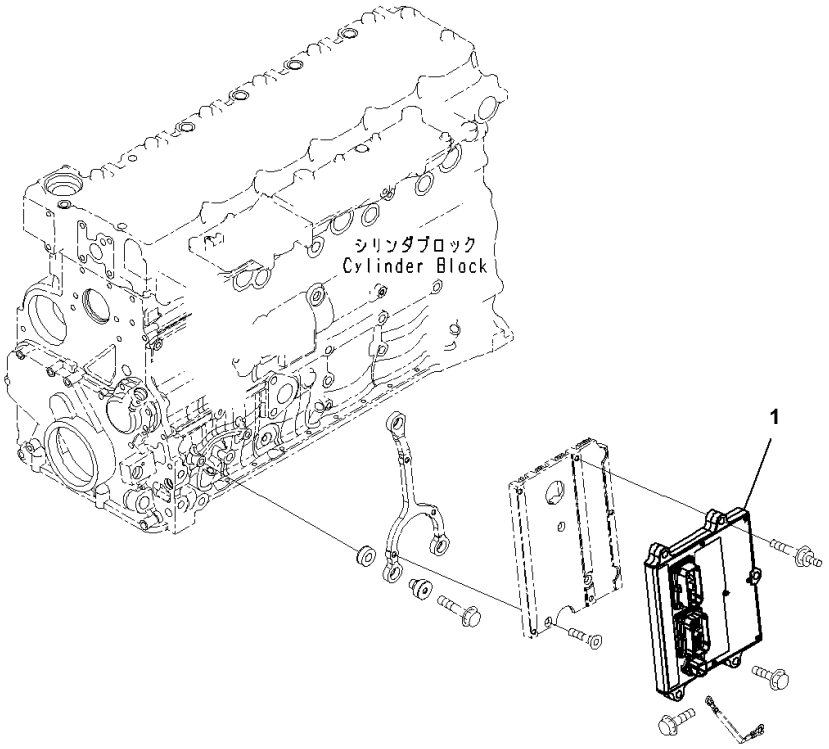

Index	Code	Part Number	Description	Qty	Serial No.
1		600-467-1200	Controller Assembly	1	26542663-

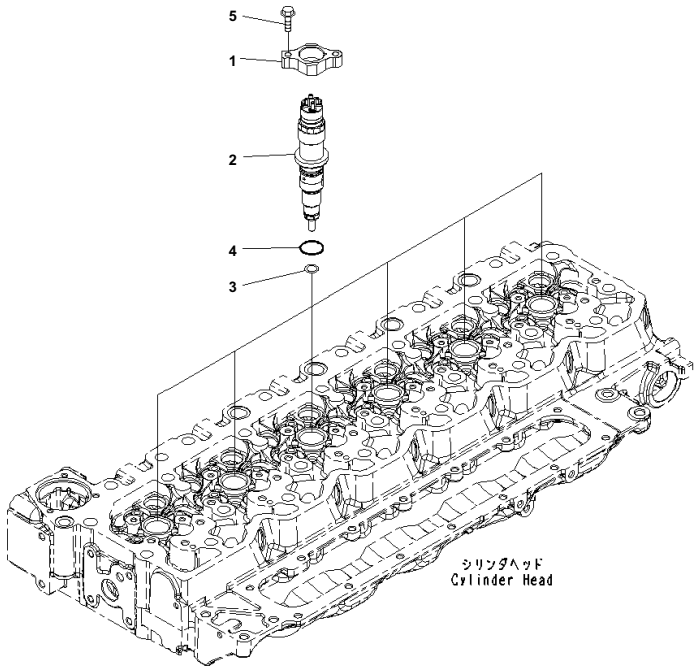

Fuel Injector

Index	Code	Part Number	Description	Qty	Serial No.
		6754-11-3011	Injector Assembly	6	26542663-
1		6754-11-3110	・ Clamp	1	26542663-
2	C1		・ Injector	1	26559025-
3		6754-11-3130	Gasket	1	26542663-
4		6754-11-3140	O-ring	1	26542663-
5		6742-01-2630	Bolt	12	26542663-

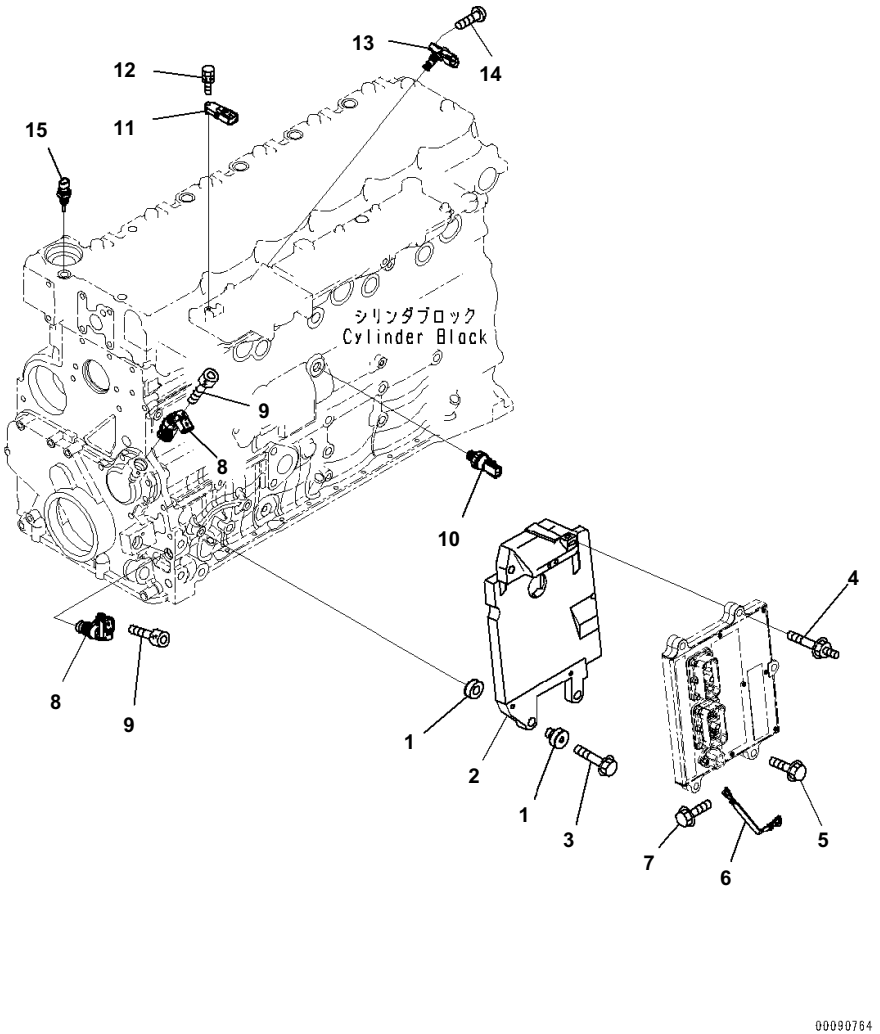

Fuel Injection Controller Related Parts

Index	Code	Part Number	Description	Qty	Serial No.
1		6754-81-9470	Isolator	3	26542663-
2		6754-81-9460	Bracket	1	26542663-
3		6735-61-2120	Bolt	3	26542663-
4		6754-81-9160	Bolt	3	26542663-
5		6732-61-3110	Bolt	2	26542663-
6		6754-81-9170	Wire	1	26542663-
7		6216-74-6180	Bolt	1	26542663-
8		6271-81-9201	Sensor Assembly, Position	2	26547244-
	A2	6271-81-9200	Sensor Assembly, Position	2	26542663-26547243
		6271-81-9220	・O-ring	1	26542663-
9		6216-84-9220	Bolt	2	26542663-
10		6744-81-4010	Switch	1	26542663-
		6219-81-1990	・O-ring	1	26542663-
11		6261-81-1900	Sensor	1	26542663-
12		6734-71-5520	Bolt	1	26542663-
13		6754-81-2701	Sensor	1	26542663-
		6754-81-2710	・O-ring	1	26542663-
14		6754-81-9180	Screw	1	26542663-
15		6261-81-6901	Sensor Assembly, Temperature	1	26542663-
		6216-84-9740	・Seal	1	26542663-

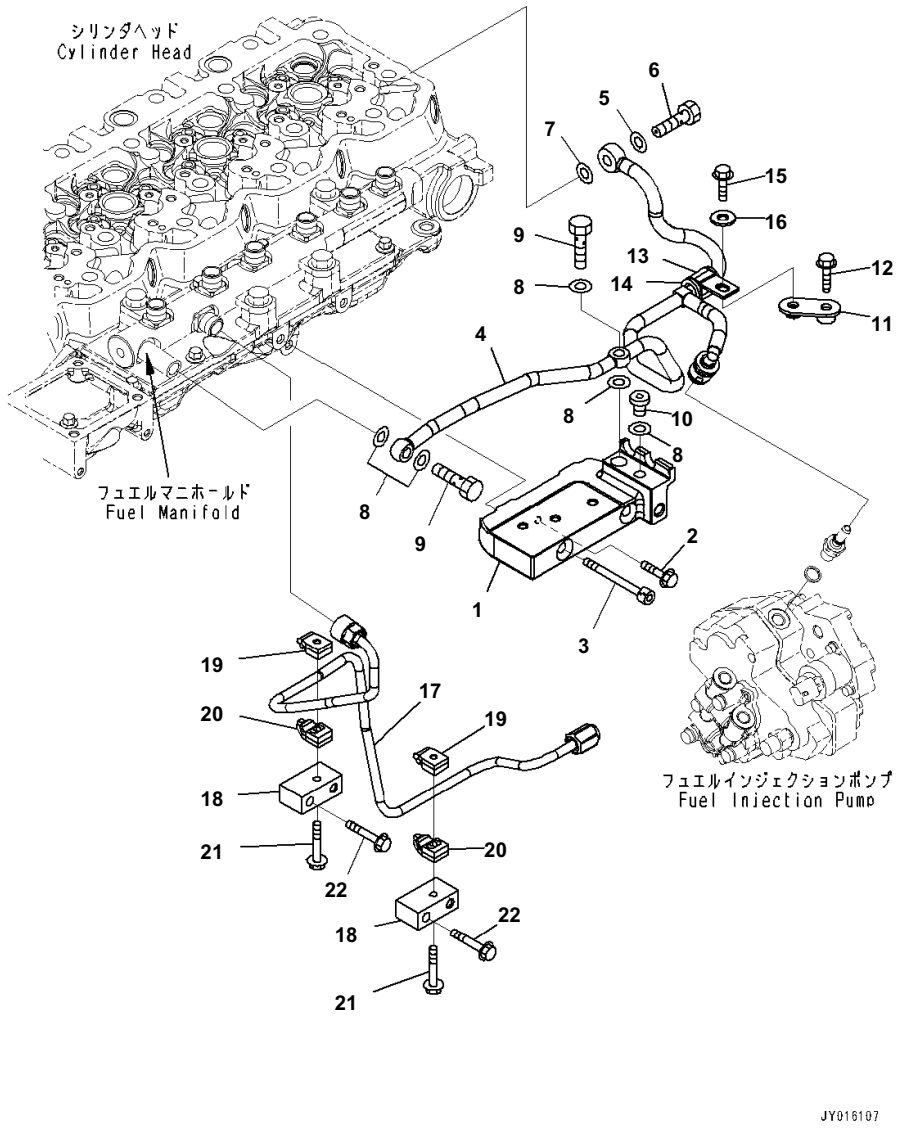

Fuel Piping

Index	Code	Part Number	Description	Qty	Serial No.
1		6754-71-5410	Connector	1	26542663-
2		6732-61-6140	Bolt	1	26542663-
3		6736-81-8730	Bolt	2	26542663-
4		6754-71-5421	Tube	1	26544541-
	A2	6754-71-5420	Tube	1	26542663-26544540
5		6735-71-3821	Seal	1	26542663-
6		6754-71-5430	Valve, Check	1	26542663-
7		6745-71-1130	Washer	1	26559025-
8		07005-01212	Seal, Washer	5	26559025-
		07005-01212	Seal, Washer	6	26542663-26559024
9		6732-71-6510	Bolt	2	26542663-
10		6754-71-5150	Plug, Threaded	1	26542663-
11		6754-71-5450	Bracket	1	26542663-
12		6732-21-6630	Screw	1	26542663-
13		04434-51708	Clip	1	26542663-
14		07095-20211	Cushion	1	26542663-
15		6732-21-3120	Bolt	1	26542663-
16		154-61-16570	Washer	1	26542663-
		6754-71-5120	Tube Assembly	1	26542663-
17		6754-71-5130	・ Tube	1	26542663-
18		6754-71-5140	・ Plate	2	26542663-
19		6217-71-6670	・ Clamp	2	26542663-
20		6217-71-6660	・ Clamp	2	26542663-
21		6733-71-5830	・ Bolt	2	26542663-
22		6732-61-3110	Bolt	2	26542663-

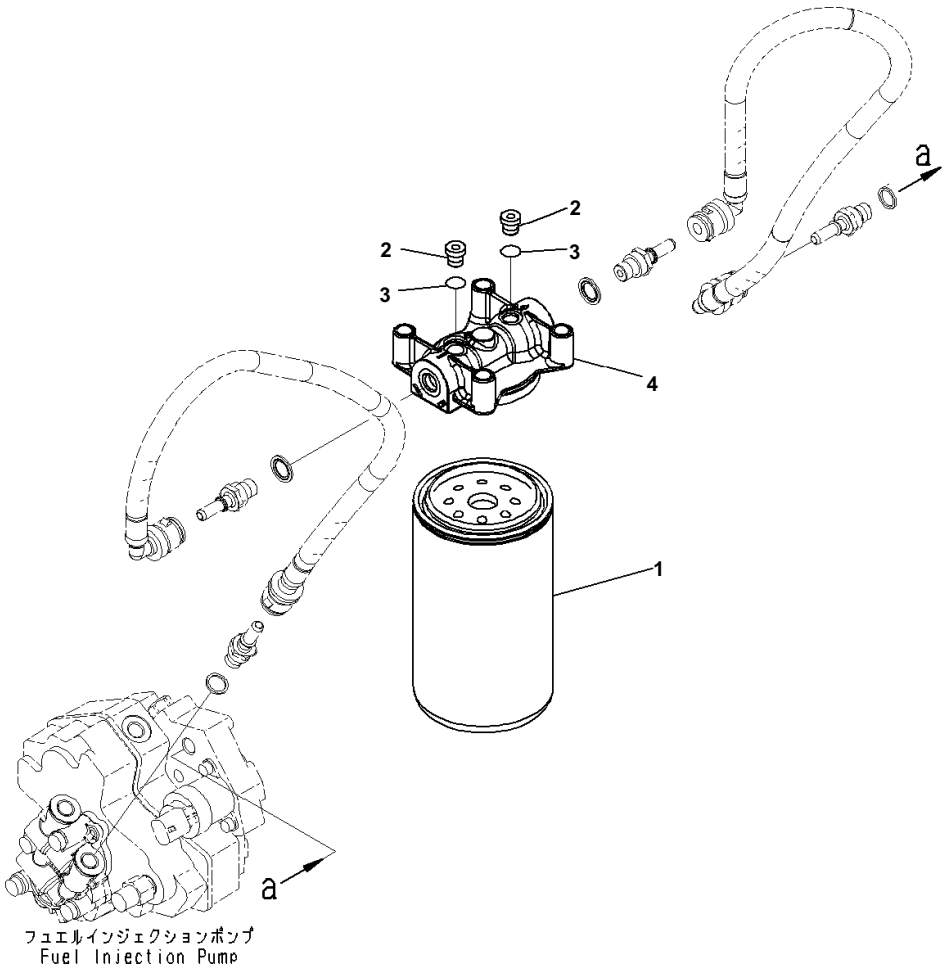

Fuel Filter

Index	Code	Part Number	Description	Qty	Serial No.
		6754-72-6330	Filter Assembly	1	26542663-
1	C1	6754-71-6140	・ Filter	1	26542663-
		6732-21-1960	・ Plug Assembly	2	26542663-
2		6215-81-9510	・・ Plug	1	26542663-
3		6735-21-1970	・・ O-ring	1	26542663-
4		6754-72-6110	・ Head	1	26542663-

ENGINE COOLING SYSTEM

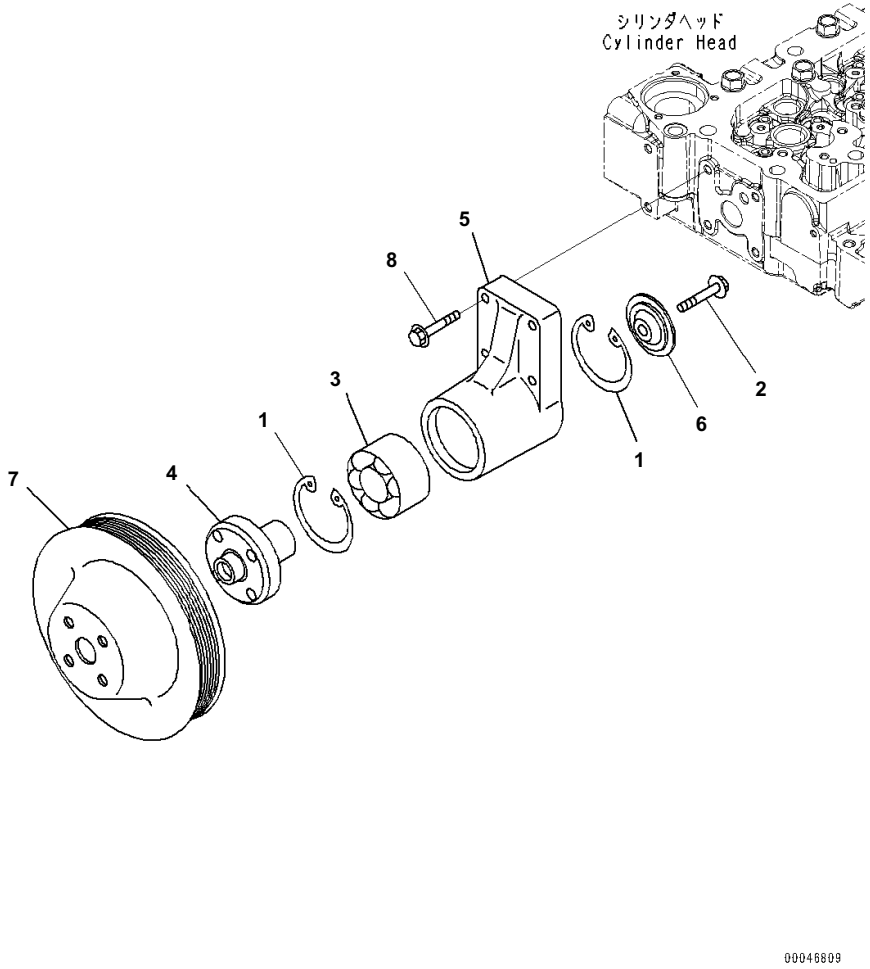

Cooling Fan Drive Pulley

Index	Code	Part Number	Description	Qty	Serial No.
		6732-61-3120	Support Assembly	1	26542663-
1		6732-61-3450	· Ring, Snap	2	26542663-
2		6732-61-3440	· Bolt	1	26542663-
3		6732-61-3420	· Bearing, Ball	1	26542663-
4		6732-61-3410	· Hub	1	26542663-
5		6732-61-3340	· Support	1	26542663-
6		6732-61-3430	· Retainer	1	26542663-
7		6738-61-3150	Pulley	1	26542663-
8		6732-61-3170	Bolt	3	26560192-

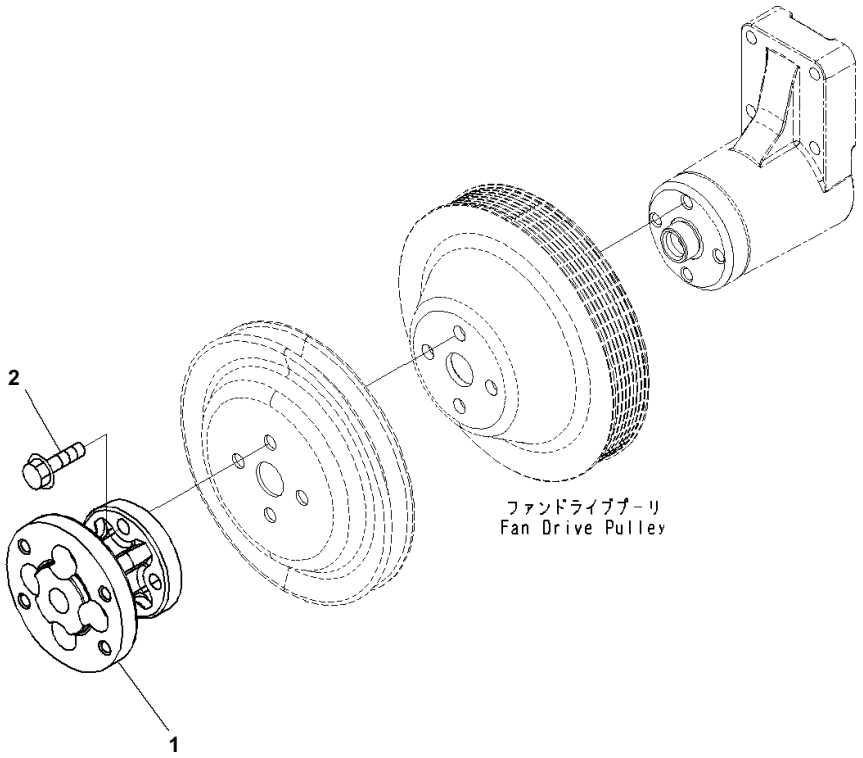

Index	Code	Part Number	Description	Qty	Serial No.
1		6732-61-3610	Spacer	1	26542663-
2		01435-01035	Bolt	4	26542663-

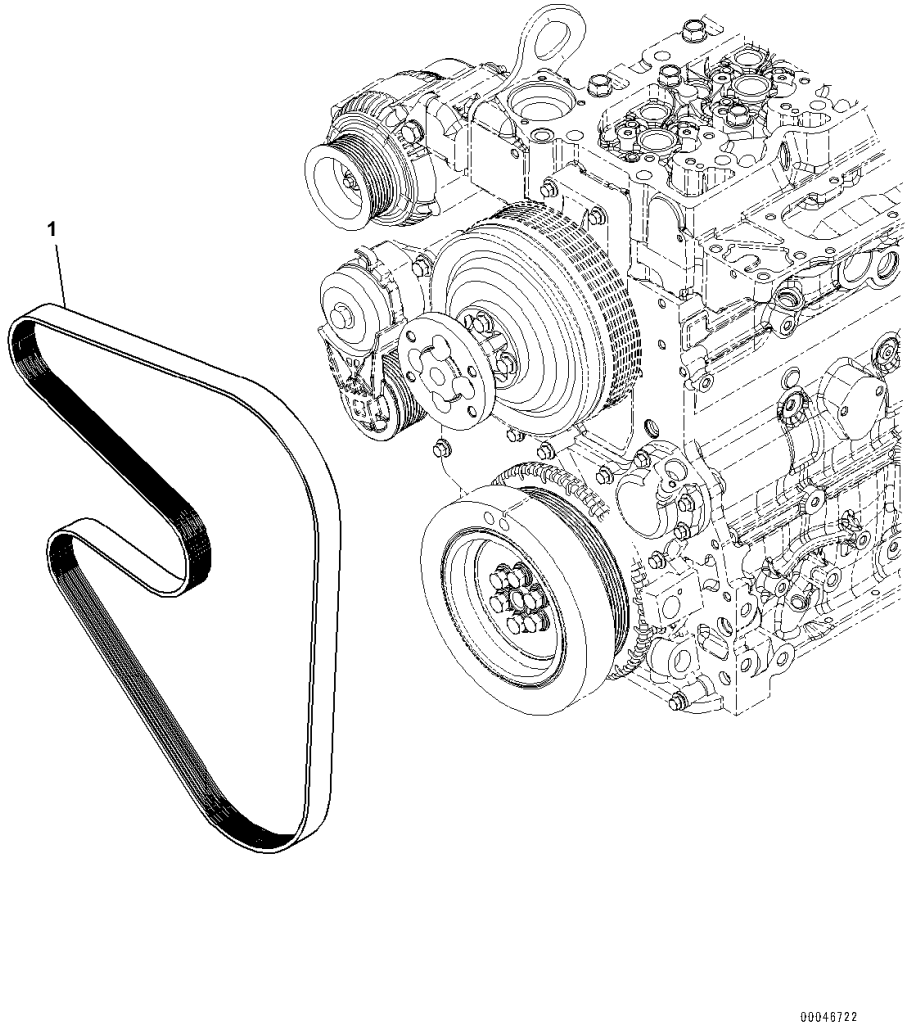

Index	Code	Part Number	Description	Qty	Serial No.
1		6732-81-3531	Belt	1	26542663-

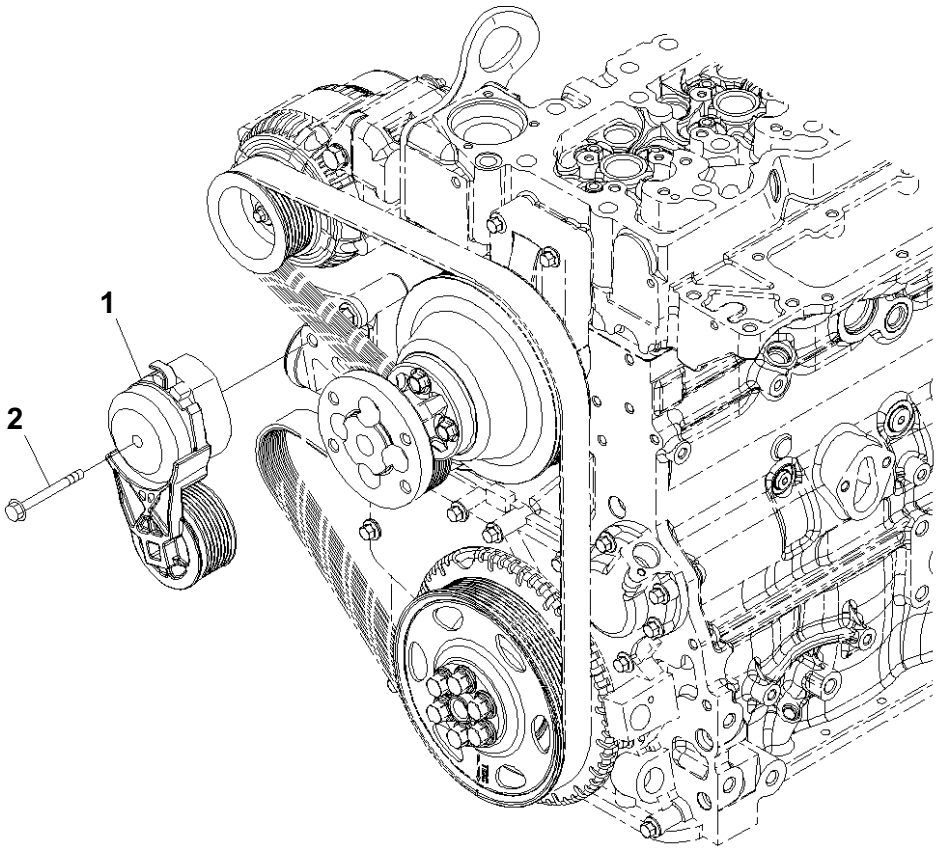

Index	Code	Part Number	Description	Qty	Serial No.
1		6754-61-4111	Tensioner, Belt	1	26542663-
2		6731-21-6220	Bolt	1	26542663-

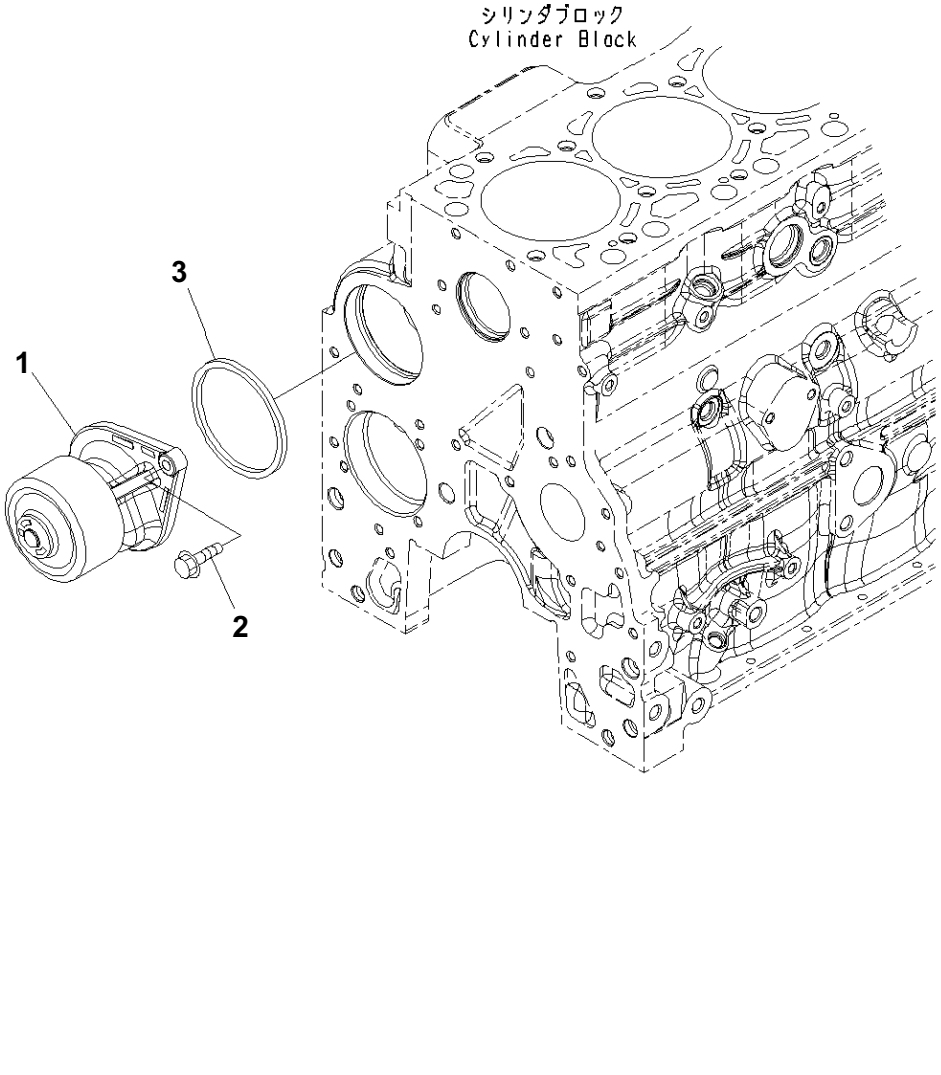

Index	Code	Part Number	Description	Qty	Serial No.
1		6754-61-1100	Pump Assembly	1	26542663-
2		01435-00825	Bolt	2	26542663-
3		6736-61-1520	Seal	1	26542663-

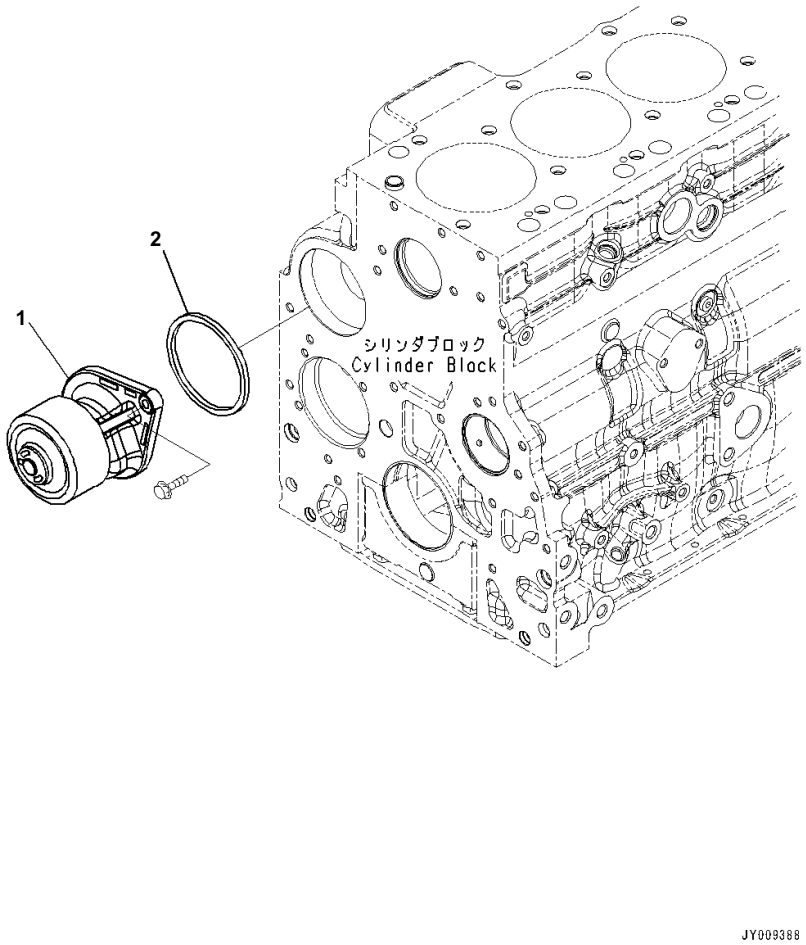

Water Pump

Index	Code	Part Number	Description	Qty	Serial No.
		6754-61-1010	Pump Kit	1	26542663-
1		6754-61-1100	・ Pump Assembly	1	26542663-
2		6736-61-1520	・ Seal	1	26542663-

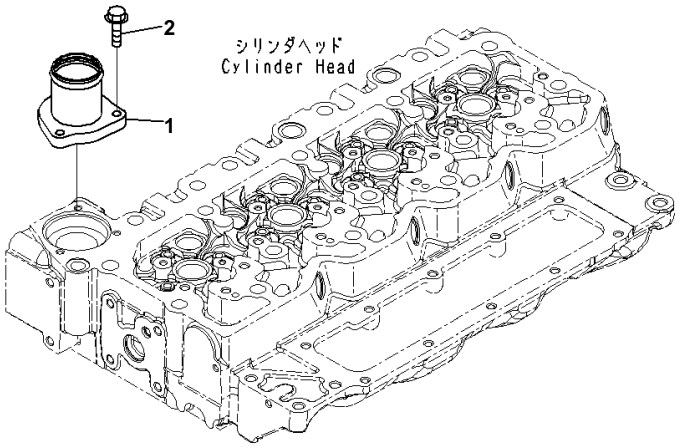

Water Outlet Connector

Index	Code	Part Number	Description	Qty	Serial No.
1		6754-61-6320	Connector, Outlet	1	26542663-
2		6735-71-5190	Bolt	3	26542663-

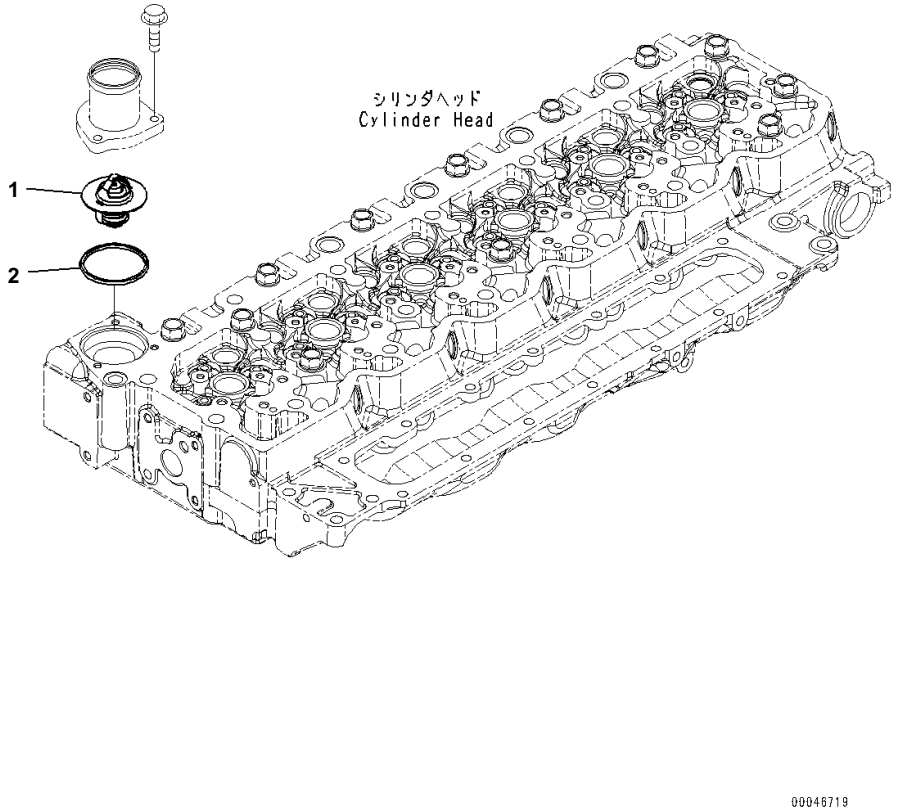

Thermostat

Index	Code	Part Number	Description	Qty	Serial No.
		6754-61-6211	Thermostat Assembly	1	26542663-
1	C1		・ Thermostat	1	26542663-
2		6754-61-6230	・ Seal	1	26542663-

ENGINE ELECTRICAL SYSTEM

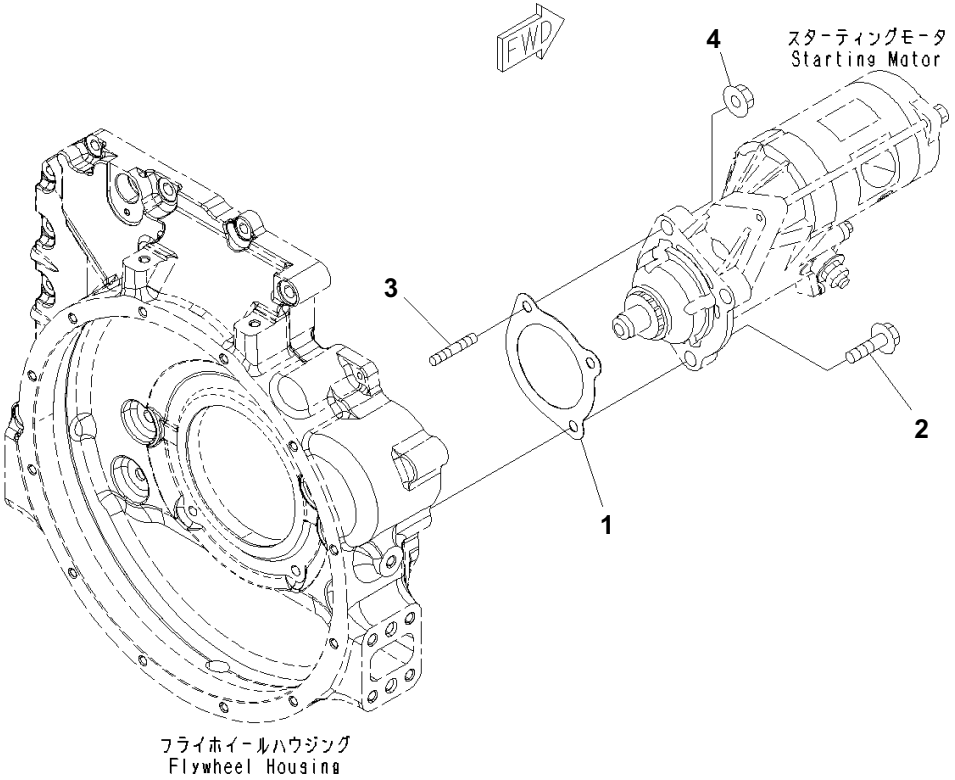

Starting Motor Mounting, 5.5KW

Index	Code	Part Number	Description	Qty	Serial No.
1		6754-81-6810	Gasket	1	26542663-
2		6731-82-6810	Bolt	2	26542663-
3		6735-81-6170	Stud	1	26542663-
4		6736-81-6170	Nut	1	26542663-

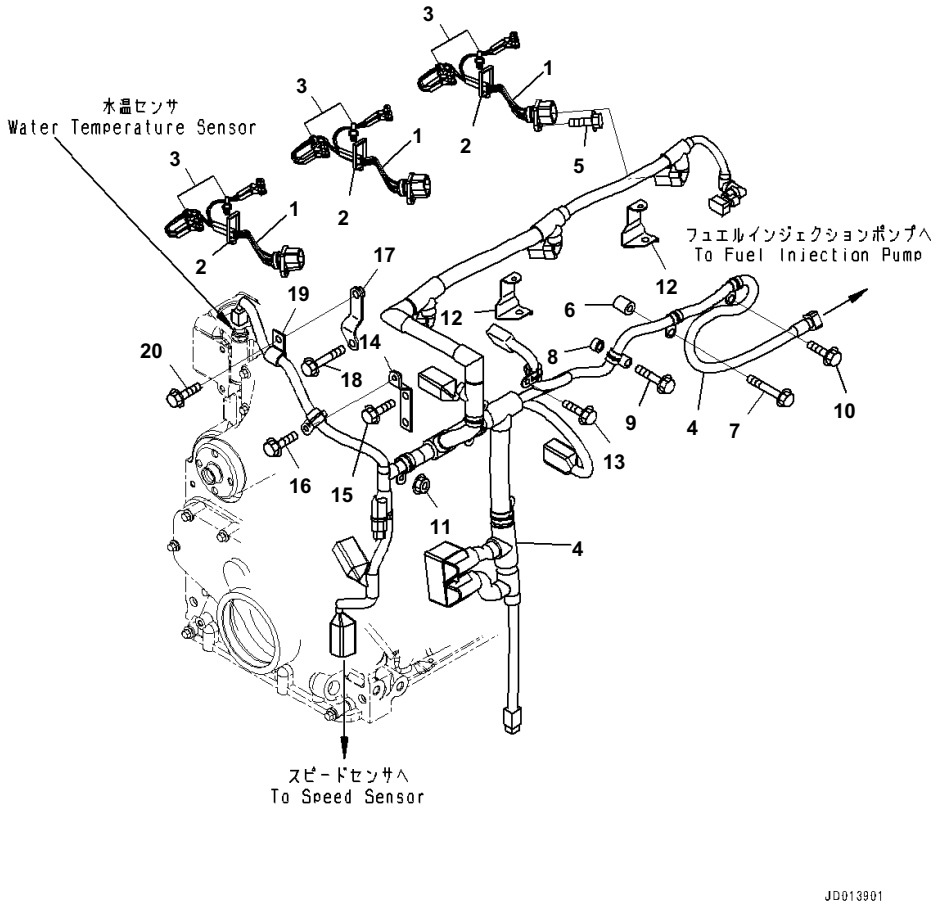

Wiring Harness

Index	Code	Part Number	Description	Qty	Serial No.
1		6754-81-9450	Wiring Harness	3	26542663-
2		6754-81-9220	Clip	3	26542663-
3		6754-81-9230	Clip	6	26542663-
4		6754-81-9440	Wiring Harness	1	26542663-
5		6732-21-4180	Bolt	3	26542663-
6		6162-23-5770	Spacer	1	26542663-
7		6732-61-6140	Bolt	1	26542663-
8		6754-81-9330	Spacer	1	26542663-
9		6731-61-1370	Bolt	1	26542663-
10		6216-74-6180	Bolt	2	26542663-
11		01584-00605	Nut	3	26542663-
12		6754-81-9340	Bracket	2	26542663-
13		6736-81-5110	Bolt	2	26542663-
14		6754-81-9280	Bracket	1	26542663-
15		6732-21-3120	Bolt	2	26542663-
16		6733-71-5680	Bolt	1	26542663-
17		6754-81-9270	Bracket	1	26542663-
18		6754-81-9390	Bolt	1	26542663-
19		04434-51308	Clip	1	26542663-
20		6216-74-6180	Bolt	1	26542663-

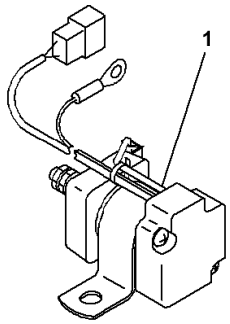

PJ6F066

Starting Motor Relay

Index	Code	Part Number	Description	Qty	Serial No.
1		600-815-8941	Relay	1	26542663-

ENGINE ACCESSORIES AND OTHERS

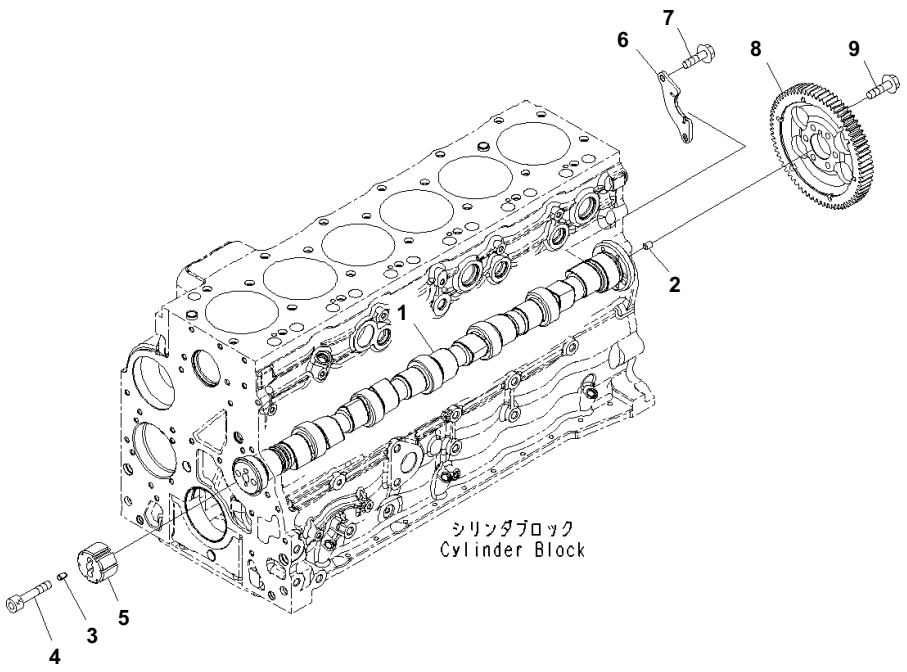

Parts Performance, Camshaft

Index	Code	Part Number	Description	Qty	Serial No.
		6754-41-1100	Camshaft Assembly	1	26542663-
		6754-41-1170	・Camshaft Assembly	1	26542663-
1	C1		・・Camshaft	1	26542663-
2	C1		・・Pin, Dowel	1	26542663-
3		6754-41-1120	・Ring	1	26542663-
4		6754-41-1130	・Bolt	2	26542663-
5		6754-41-1140	・Ring	1	26542663-
6		6754-41-1160	Support	1	26542663-
7		6736-21-5310	Bolt	2	26542663-
8		6754-41-1150	Gear	1	26542663-
9		01435-00825	Bolt	6	26542663-

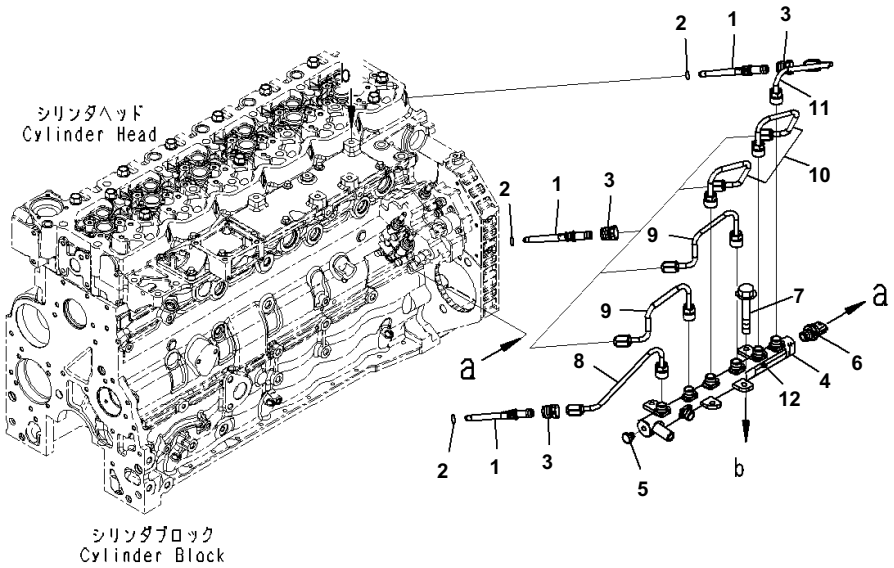

Index	Code	Part Number	Description	Qty	Serial No.
		6754-71-5510	Connector Assembly	6	26542663-
1	C1		・ Connector	6	26542663-
2		6754-71-5530	・ O-ring	6	26542663-
3		6754-71-5540	Retainer	6	26542663-
		6754-71-1210	Rail Assembly	1	26542663-
4	C1		・ Common Rail	1	26542663-
5		6754-72-1220	・ Valve	1	26542663-
6		6754-72-1210	・ Sensor, Pressure, Pressure	1	26542663-
7		6733-11-4150	Bolt	4	26542663-
8		6754-71-5210	Tube, NO.1	1	26542663-
9		6754-71-5220	Tube, NO.2.3	2	26542663-
10		6754-71-5230	Tube, NO.4.5	2	26542663-
11		6754-71-5240	Tube, NO.6	1	26542663-
12		6754-71-1991	Decal	1	26542663-

FIELD REPAIR SERVICE PARTS

Index	Code	Part Number	Description	Qty	Serial No.
1		6736-29-1410	Bushing, Cam.NO.1	1	26542663-
2		6736-29-1420	Bushing, Cam.NO.2.3.4.5.6.7	1	26542663-
		6736-39-1130	Sleeve,Rear	1	26542663-
3	C1		· Sleeve, Wear	1	26542663-
4	C1		· Seal	1	26542663-
		6754-29-8320	Bearing, T=0.25mm,Undersized	6	26542663-
5	C1		· Bearing,Upper	1	26542663-
6	C1		· Bearing,Lower	1	26542663-
		6754-29-8310	Bearing, Thrust, T=0.25mm,Oversized	1	26542663-
7	C1		· Bearing, Thrust,Upper	1	26542663-
8	C1		· Bearing,Lower	1	26542663-
		6754-28-8320	Bearing, T=0.50mm,Undersized	6	26542663-
9	C1		· Bearing,Upper	1	26542663-
10	C1		· Bearing, T=0.50mm,Lower	1	26542663-
		6754-28-8310	Bearing, Thrust, T=0.50mm,Oversized	1	26542663-
11	C1		· Bearing, Thrust,Upper	1	26542663-
12	C1		· Bearing, T=0.50mm,Lower	1	26542663-
		6754-27-8320	Bearing, T=0.75mm,Undersized	6	26542663-
13	C1		· Bearing,Upper	1	26542663-
14	C1		· Bearing,Lower	1	26542663-
		6754-27-8310	Bearing, Thrust, T=0.75mm,Oversized	1	26542663-
15	C1		· Bearing, Thrust,Upper	1	26542663-
16	C1		· Bearing,Lower	1	26542663-
		6754-26-8320	Bearing, T=1.00mm,Undersized	6	26542663-
17	C1		· Bearing,Upper	1	26542663-
18	C1		· Bearing, T=1.00mm,Lower	1	26542663-
		6754-26-8310	Bearing, Thrust, T=1.00mm,Oversized	1	26542663-
19	C1		· Bearing, Thrust,Upper	1	26542663-
20	C1		· Bearing, T=1.00mm,Lower	1	26542663-
		6754-28-8410	Bearing, Thrust, Oversize (Bore/Thrust)	1	26542663-
21	C1		· Bearing, Thrust, T=0.50/0.50mm,Upper	1	26542663-
22	C1		· Bearing, T=0.50mm,Lower	1	26542663-
		6754-26-8410	Bearing, Thrust, Oversize (Bore/Thrust)	1	26542663-
23	C1		· Bearing, Thrust, T=1.00/1.00mm,Upper	1	26542663-
24	C1		· Bearing, T=1.00mm,Lower	1	26542663-
25	C1		Metal, rod,lower,undersized,0.25mm	6	26542663-
26	C1		Metal, rod,lower,undersized,0.25mm	6	26542663-
27	C1		Metal, rod,lower,undersized,0.25mm	6	26542663-
28	C1		Metal, rod,lower,undersized,0.25mm	6	26542663-
29		6754-39-2111	Piston	6	26542663-
		6754-39-2010	Ring Assembly, Piston	6	26542663-
30	C1		· Ring, T=0.05mm,Oversized	1	26542663-
31	C1		· Ring	1	26542663-
32	C1		· Ring, Oil	1	26542663-
33		6754-39-3410	Bearing	6	26542663-
34		6754-38-3410	Bearing	6	26542663-
35		6754-37-3410	Bearing	6	26542663-
36		6754-36-3410	Bearing	6	26542663-

SAA6D107E-1C S/N 26542663-UP (For PC240LC-8)
Repair Service Parts

Reference:A8110-001001 Page:Y001001

ENGINE RELATED PARTS

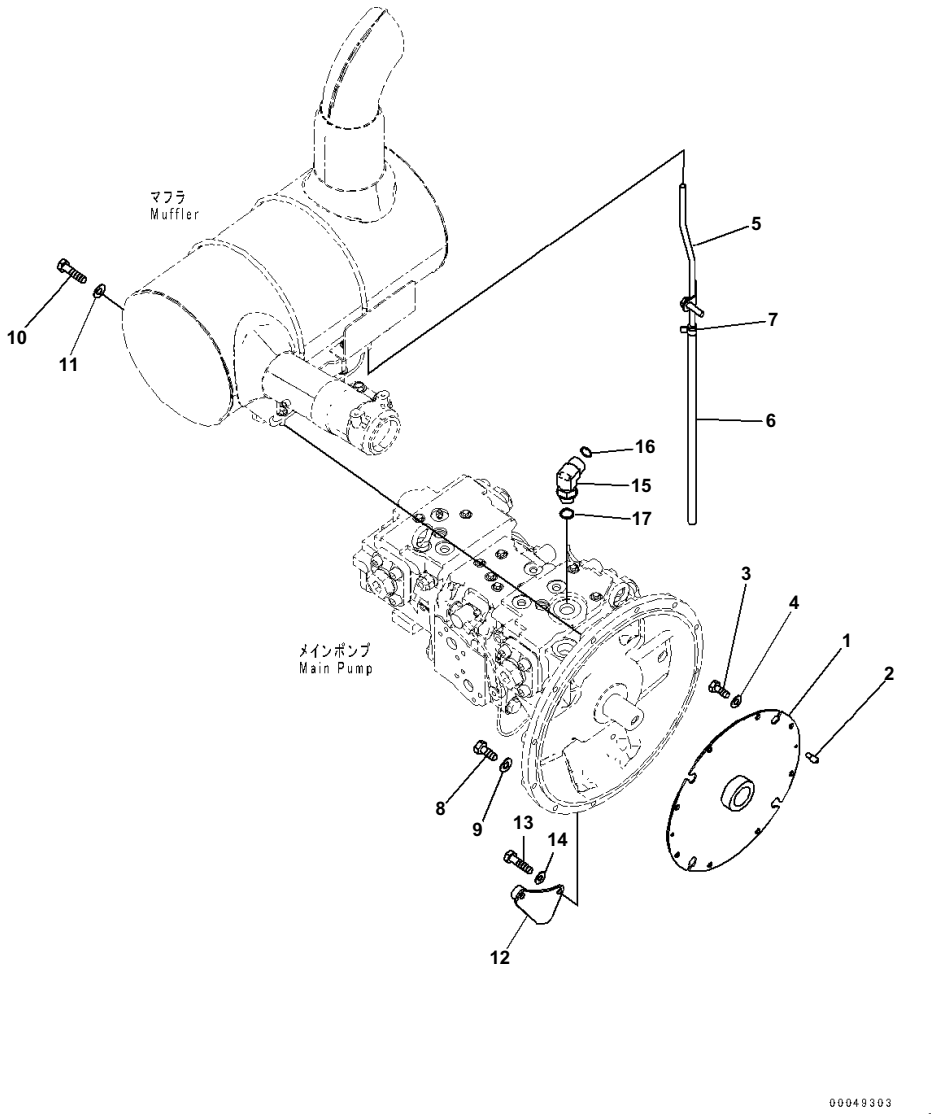

Index	Code	Part Number	Description	Qty	Serial No.
1		22U-01-21310	Dumper	1	B10001-
2		203-01-51120	Pin	2	B10001-
3		01010-81020	Bolt	8	B10001-
4		01643-31032	Washer	8	B10001-
5		6754-11-5440	Tube	1	B10001-
6		07260-20950	Hose	1	B10001-
7		07285-00155	Clip	1	B10001-
8		01010-81050	Bolt	8	B10001-
9		01643-31032	Washer	8	B10001-
10		01010-81060	Bolt	2	B10001-
11		01643-31032	Washer	2	B10001-
12		20Y-62-41572	Bracket	1	B10001-
13		01010-81050	Bolt	2	B10001-
14		01643-31032	Washer	2	B10001-
15		02782-10628	Elbow	1	B10001-
16		02896-11018	O-ring	1	B10001-
17		07002-12434	O-ring	1	B10001-

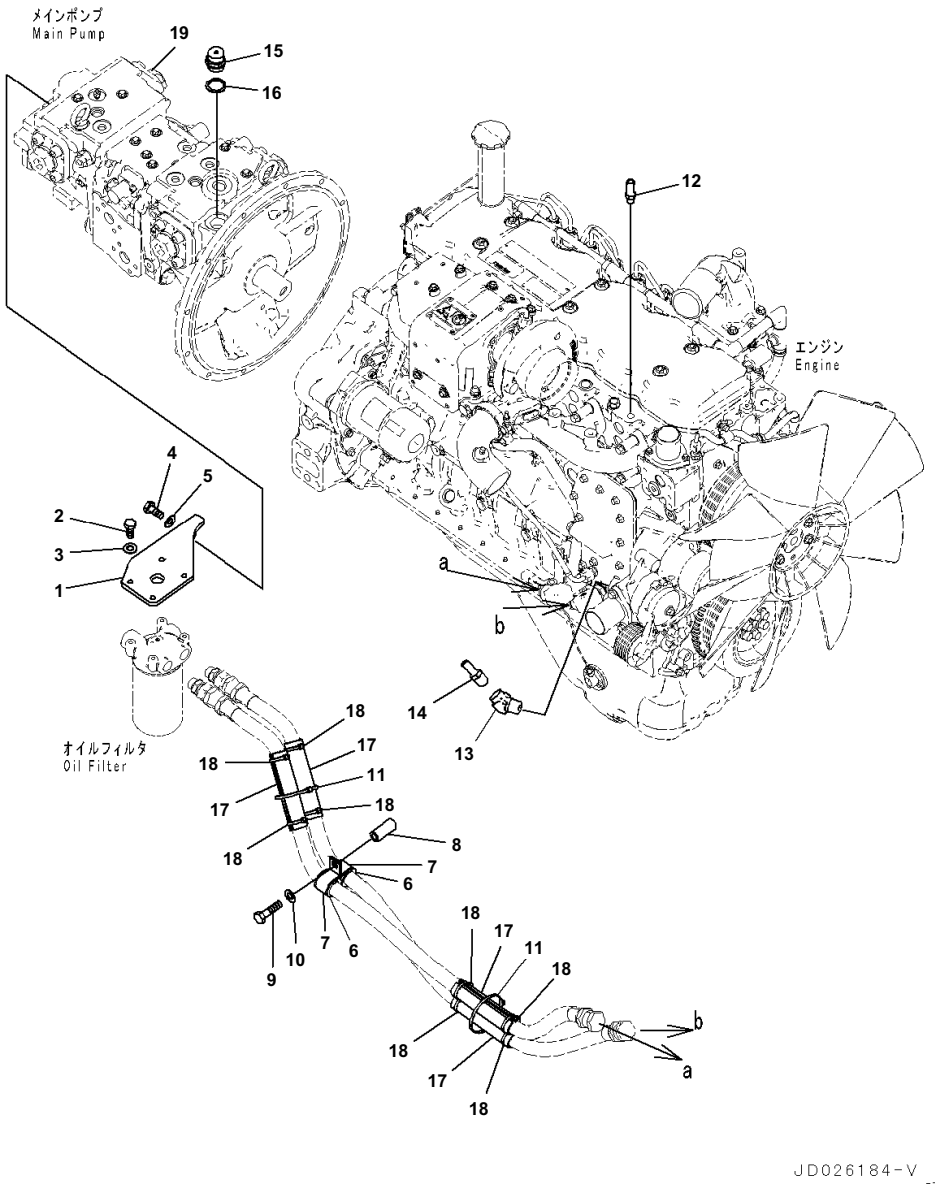

Index	Code	Part Number	Description	Qty	Serial No.
1		20Y-62-51432	Plate	1	B10001-
2		01010-80825	Bolt	4	B10001-
3		01643-30823	Washer	4	B10001-
4		01010-81230	Bolt	2	B10001-
5		01643-31232	Washer	2	B10001-
6		198-06-53630	Cushion	2	B10001-
7		04434-53412	Clip	2	B10001-
8		195-979-5190	Collar	1	B10001-
9		01010-81275	Bolt	1	B10001-
10		01643-31232	Washer	1	B10001-
11		08034-20536	Band	2	B10001-
12		20Y-810-1120	Nipple	1	B10001-
13		20Y-810-1161	Elbow	1	B10001-
14		22U-979-1930	Nipple	1	B10001-
15		07030-03034	Breather	1	B10001-
16		07005-03016	Gasket	1	B10001-
17		20Y-01-41250	Cover	4	B10001-
18		08034-20536	Band	8	B10001-
19		708-2L-00790	Pump Ass'y	1	B10001-

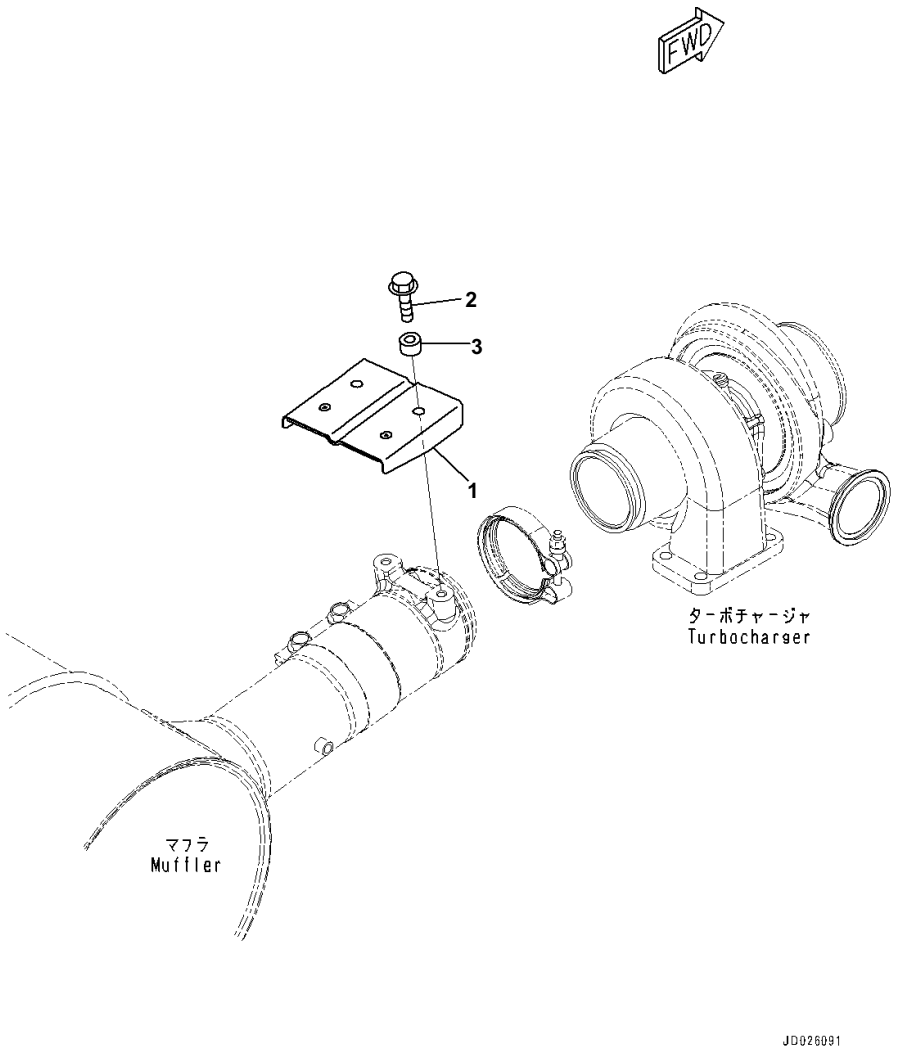

Heat Shield

Index	Code	Part Number	Description	Qty	Serial No.
1		6732-81-8451	Cover	1	B10001-
2		01435-00820	Bolt	2	B10001-
3		6131-12-4570	Spacer	2	B10001-

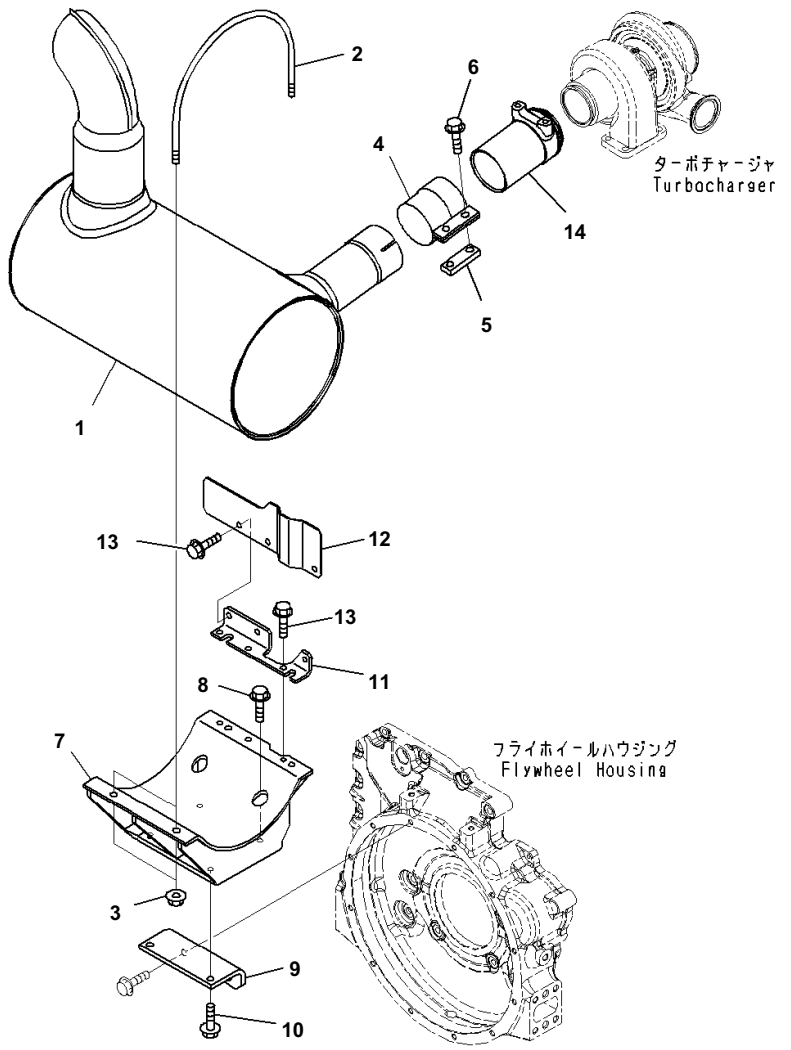

Index	Code	Part Number	Description	Qty	Serial No.
1		6754-11-5340	Muffler	1	B10001-
2		6754-11-5940	U-bolt	2	B10001-
3		01594-01008	Nut	4	B10001-
4		6210-11-5232	Clamp	1	B10001-
5		6206-11-5850	Plate	1	B10001-
6		01435-01235	Bolt	2	B10001-
7		6754-11-5490	Bracket	1	B10001-
8		01435-01030	Bolt	2	B10001-
9		6754-11-5420	Bracket	1	B10001-
10		01435-01025	Bolt	2	B10001-
11		6754-71-9740	Bracket	1	B10001-
12		6754-71-9730	Cover	1	B10001-
13		01435-00820	Bolt	6	B10001-
14		6735-11-5611	Tube	1	B10001-

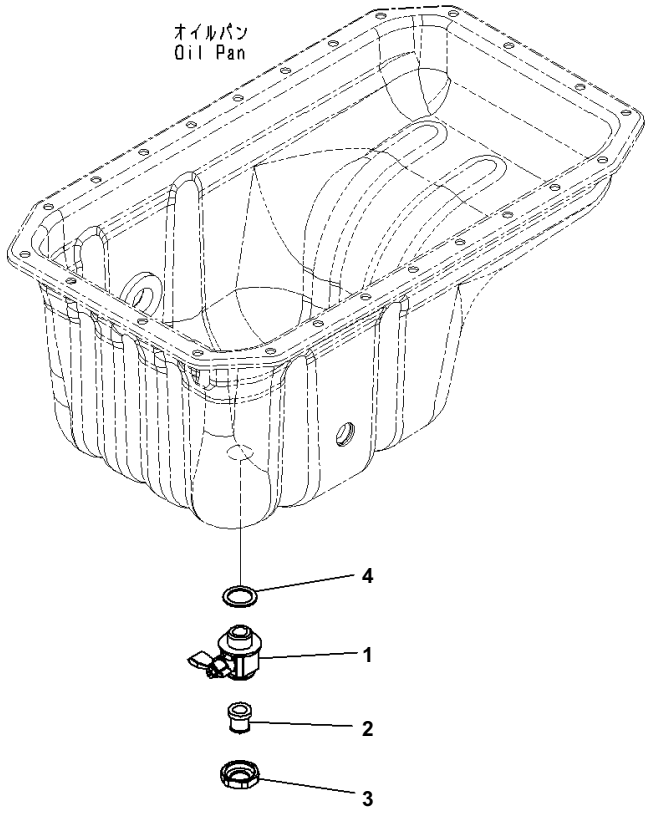

Index	Code	Part Number	Description	Qty	Serial No.
		6738-21-5610	Valve Assembly	1	B10001-
1			・ Valve	1	B10001-
2		6738-21-5630	・ Joint	1	B10001-
3		6738-21-5640	・ Union	1	B10001-
4		07005-02216	Gasket	1	B10001-

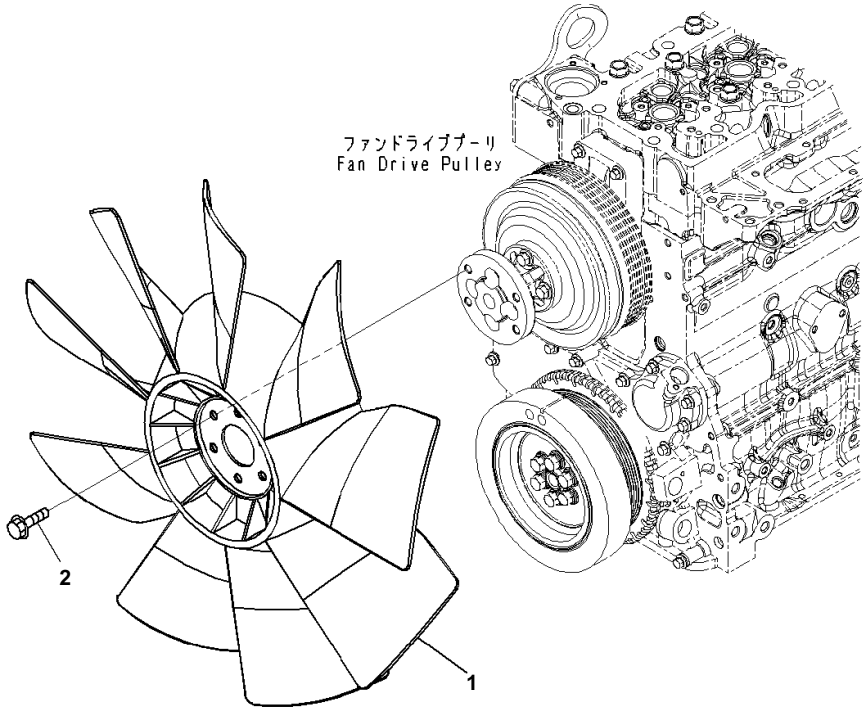

Index	Code	Part Number	Description	Qty	Serial No.
1		600-625-7620	Fan	1	B10001-
2		01435-01020	Bolt	4	B10001-

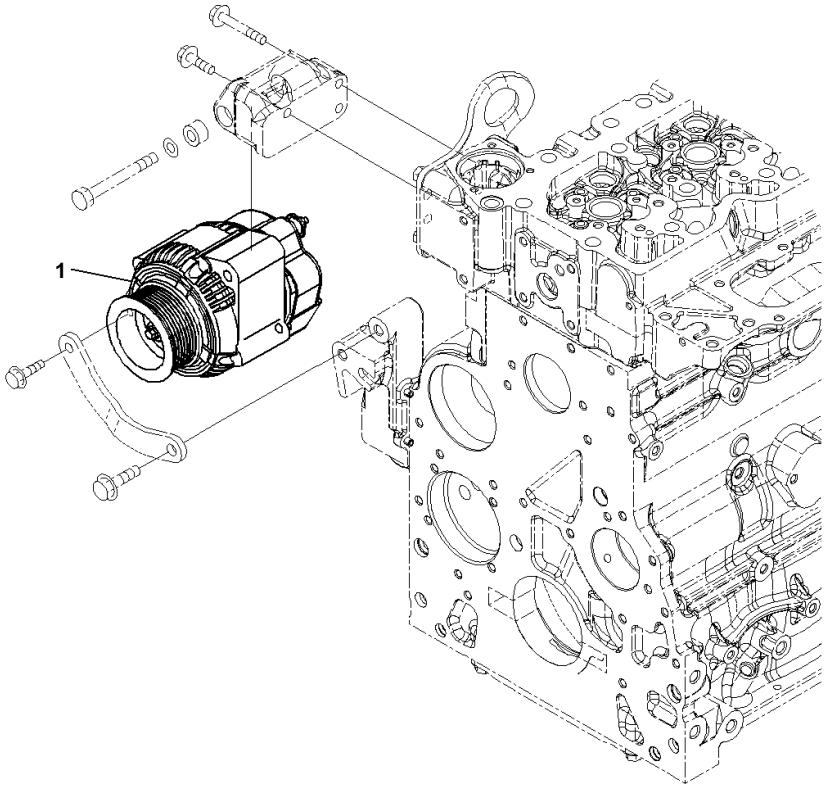

Index	Code	Part Number	Description	Qty	Serial No.
1		600-861-6420	Alternator Assembly, 60Amp.	1	B10001-

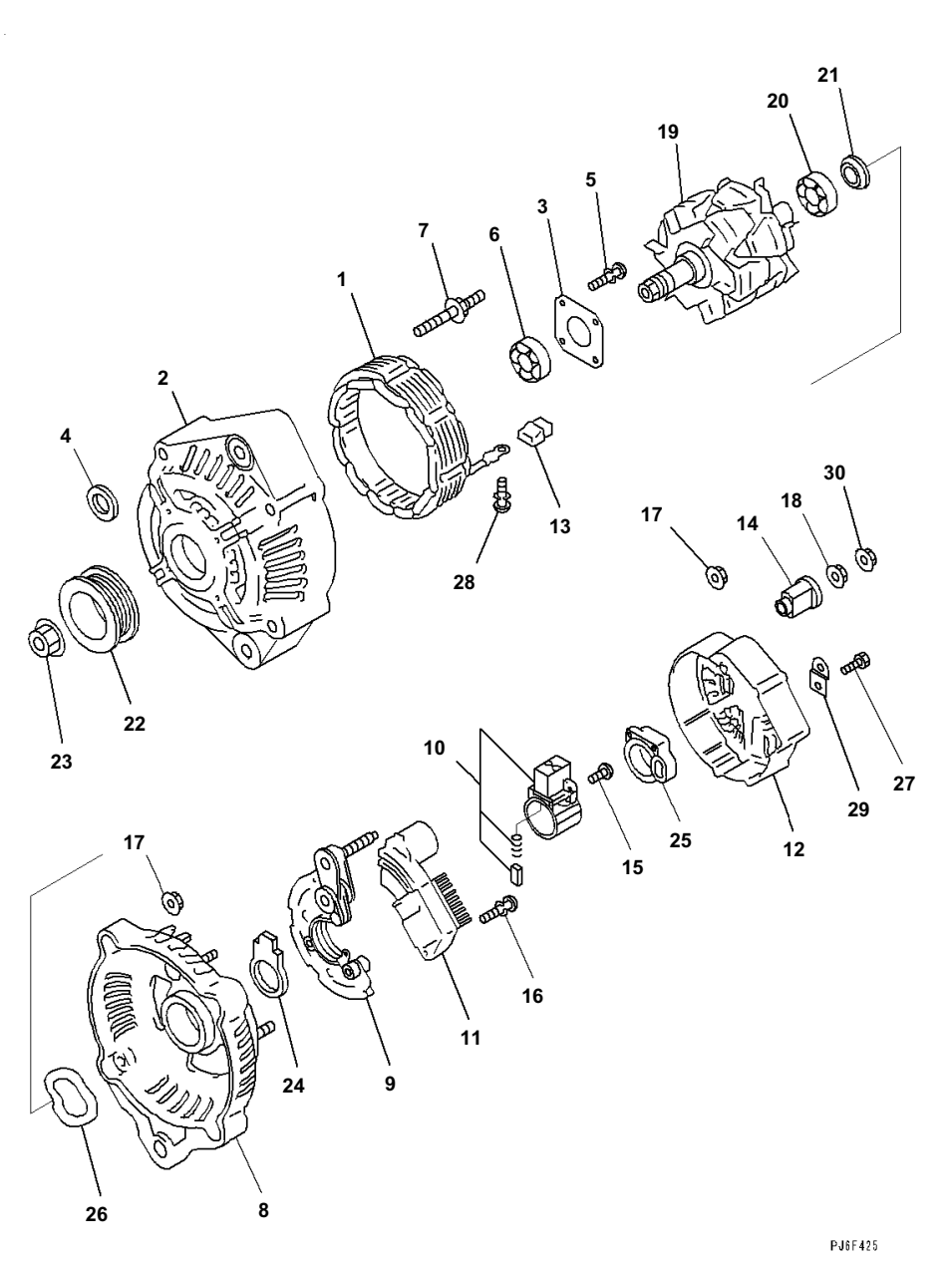

Alternator, 60 Amp., Inner Parts

Index	Code	Part Number	Description	Qty	Serial No.
		600-861-6420	Alternator Assembly, 60Amp.	1	B10001-
		ND121400-0800	· Frame Assembly	1	B10001-
1		ND021100-4210	· · Stator Assembly	1	B10001-
2		ND021401-4980	· · Frame	1	B10001-
3		ND021411-0570	· · Plate	1	B10001-
4		ND021045-0530	· · Collar	1	B10001-
5		ND949006-5590	· · Screw	4	B10001-
6		ND949100-5010	· · Bearing, Ball	1	B10001-
7		ND949043-2000	· · Bolt	4	B10001-
8		ND021501-8050	· Frame	1	B10001-
9		ND021580-4820	· Rectifier Assembly	1	B10001-
10		ND021620-2720	· Holder Assembly, Brush	1	B10001-
11		ND126000-2320	· Regulator Assembly, Brush	1	B10001-
12		ND021551-2480	· Cover	1	B10001-
13		ND021605-1970	· Bushing	4	B10001-
14		ND021605-2481	· Bushing	1	B10001-
15		ND949006-5460	· Screw	3	B10001-
		ND91310-04251	· Screw	2	B10001-
16		ND949007-5110	· Screw	2	B10001-
17		ND949056-2481	· Nut	7	B10001-
18		ND949056-3080	· Nut	1	B10001-
19		ND021200-8380	· Rotor Assembly	1	B10001-
20		ND949100-2790	· · Bearing, Ball	1	B10001-
21		ND021506-0070	· · Cover	1	B10001-
22		ND021041-8620	· Pulley	1	B10001-
23		ND949056-2520	· Nut	1	B10001-
24		ND021626-0190	· Seal	1	B10001-
25		ND021626-0250	· Seal	1	B10001-
26		ND021542-0160	· Washer	1	B10001-
27		ND949006-6401	· · Screw	1	B10001-
28		ND949007-6280	· · Screw	4	B10001-
29		ND021602-5230	· · Plate	1	B10001-
30		ND92150-06061	· Nut	1	B10001-

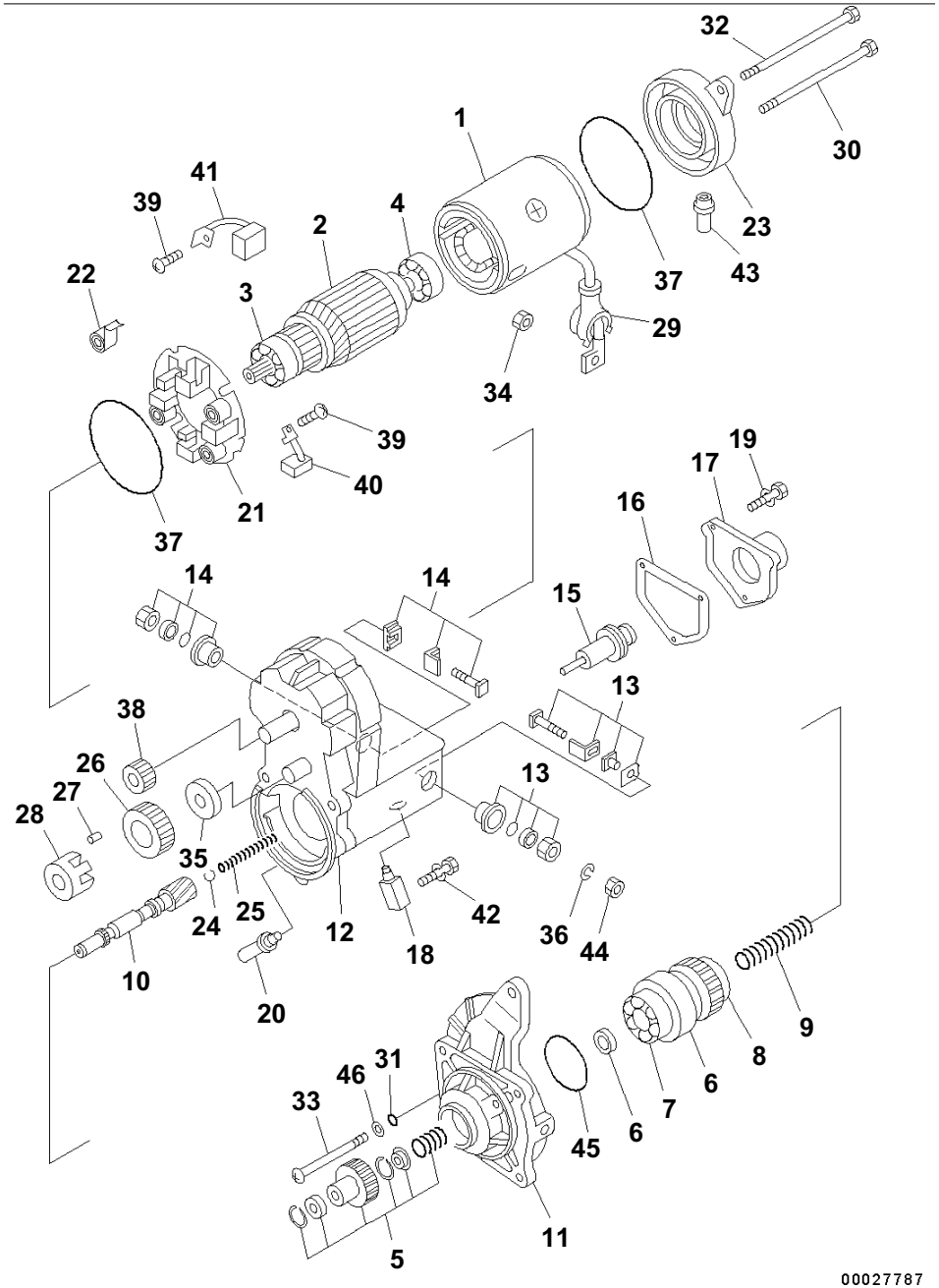

Index	Code	Part Number	Description	Qty	Serial No.
		600-863-5111	Starting Motor Assembly	1	B10001-
1		ND028100-5410	· Yoke Assembly	1	B10001-
2		ND028200-5250	· Armature Assembly	1	B10001-
		ND949100-3161	· · Bearing, Ball	1	B10001-
3		ND949100-5290	· · Bearing, Ball	1	B10001-
		ND949100-3540	· · Bearing, Ball	1	B10001-
4		ND028300-6551	· Clutch Assembly	1	B10001-
5		ND028099-3270	· · Starting Motor Kit	1	B10001-
6		ND028300-6751	· · Clutch Assembly	1	B10001-
7		ND949100-4500	· · · Bearing, Ball	1	B10001-
8		ND949100-1920	· · · Bearing, Ball	1	B10001-
9		ND949170-4040	· · Spring	1	B10001-
10		ND028381-0071	· · Shaft	1	B10001-
11		ND128401-5621	· Housing	1	B10001-
12		ND153400-6740	· Switch Assembly, Magnetic	1	B10001-
13		ND128099-5770	· · Starting Motor Kit	1	B10001-
14		ND028099-5100	· · Starting Motor Kit	1	B10001-
15		ND053660-0443	· · Plunger	1	B10001-
16		ND053404-0240	· · Gasket	1	B10001-
17		ND053505-0290	· · Cover	1	B10001-
18		ND053480-7560	· · Bolt Assembly, Terminal	1	B10001-
19		ND949047-4440	· · Bolt	3	B10001-
20		ND028065-0250	· · Bushing, Drain	1	B10001-
21		ND028510-0880	· Holder Assembly, Brush	1	B10001-
22		ND028520-0011	· · Spring, Brush	4	B10001-
23		ND028501-7711	· Frame	1	B10001-
24		ND128961-0010	· Ball	1	B10001-
25		ND949170-4070	· Spring	1	B10001-
26		ND028371-3210	· Pinion, Starter	1	B10001-
27		ND028306-0070	· Roller, Clutch	5	B10001-
28		ND028063-0030	· Retainer	1	B10001-
29		ND028062-0130	· Cover	1	B10001-
30		ND949042-3680	· Bolt	1	B10001-
31		ND90801-10050	· O-ring	3	B10001-
32		ND949042-3690	· Bolt	1	B10001-
33		ND949006-4720	· Screw	3	B10001-
34		ND949056-4480	· Nut	1	B10001-
35		ND028327-0171	· Retainer, Snap	1	B10001-
36		ND90258-10001	· Washer	1	B10001-
37		ND028901-0361	· Seal	2	B10001-
38		ND028371-3200	· Pinion	1	B10001-
39		ND949007-6530	· Screw	4	B10001-
40		ND028530-1090	· Brush Assembly	2	B10001-
41		ND028530-1100	· Brush Assembly	2	B10001-
42		ND949007-6850	· Screw	1	B10001-
43		ND028062-5790	· Cover	1	B10001-

PC240LC-8 S/N B10001-UP

Starting Motor, 5.5KW, Inner Parts

Index	Code	Part Number	Description	Qty	Serial No.
44		ND90170-10061	・ Nut	1	B10001-
45		ND028901-5190	・ Seal	1	B10001-
46		ND90200-06241	・ Washer	3	B10001-

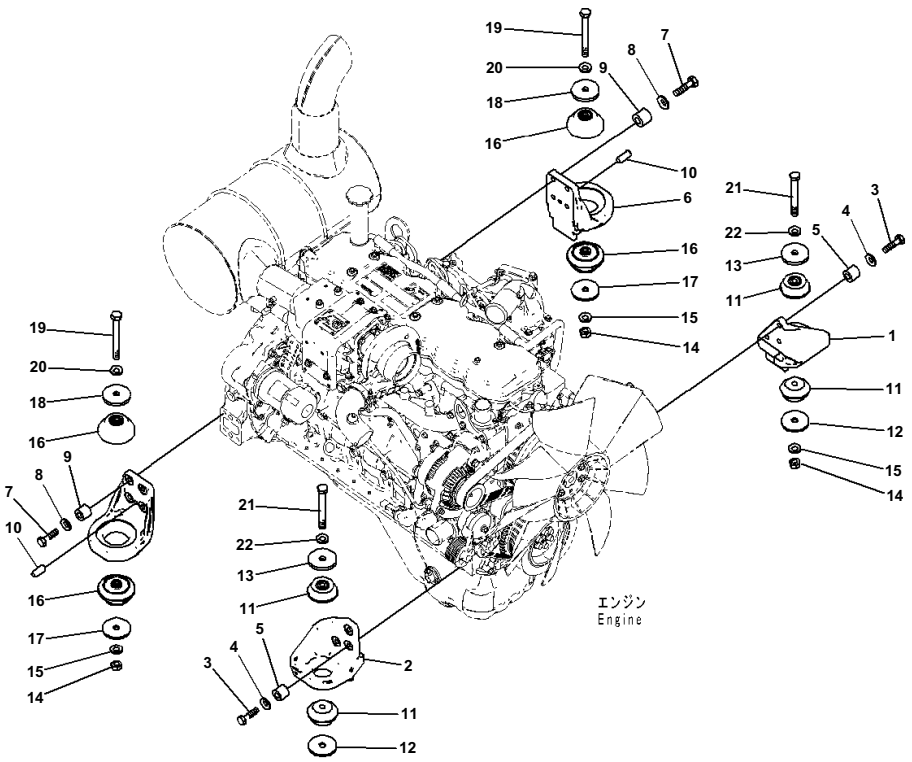

Index	Code	Part Number	Description	Qty	Serial No.
1		20Y-01-41161	Bracket	1	B10001-
2		20Y-01-41170	Bracket	1	B10001-
3		20Y-01-41230	Bolt	6	B10001-
4		01643-31232	Washer	6	B10001-
5		20Y-01-21260	Spacer	6	B10001-
6		20Y-01-41180	Bracket	2	B10001-
7		20Y-01-41230	Bolt	8	B10001-
8		01643-31232	Washer	8	B10001-
9		20Y-01-21260	Spacer	8	B10001-
10		04020-01228	Pin, Dowel	2	B10001-
11		20Y-01-12210	Cushion	4	B10001-
12		20Y-01-41210	Plate	2	B10001-
13		20Y-01-11141	Washer	2	B10001-
14		01580-11613	Nut	3	B10001-
15		01643-31645	Washer	3	B10001-
16		20Y-01-12222	Cushion	4	B10001-
17		20Y-01-41210	Plate	2	B10001-
18		20Y-01-11141	Washer	2	B10001-
19		01011-81655	Bolt	2	B10001-
20		01643-31645	Washer	2	B10001-
21		20Y-01-12270	Bolt	2	B10001-
22		01643-31645	Washer	2	B10001-

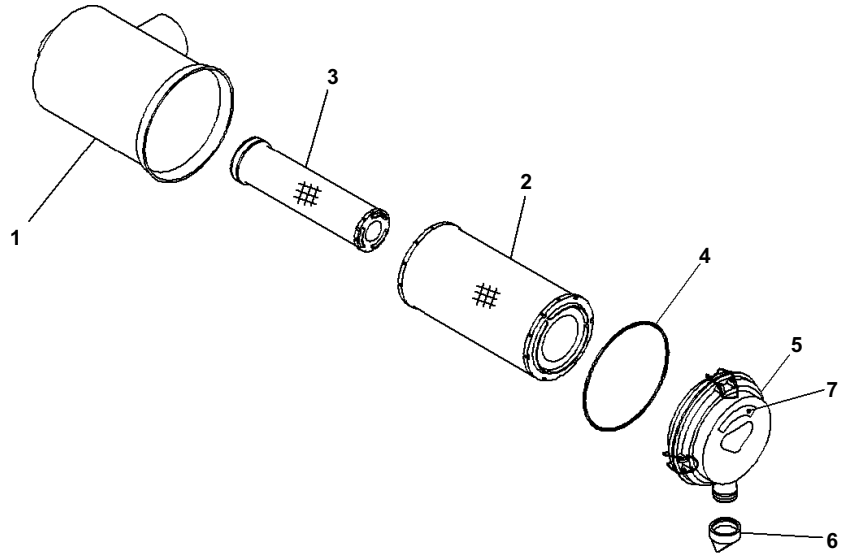

Air Intake Connector, Inner Parts, Air Cleaner

Index	Code	Part Number	Description	Qty	Serial No.
		6738-81-7200	Air Cleaner Assembly	1	B10001-
1	C1		・ Body	1	B10001-
		600-185-4100	・ Element Assembly	1	B10001-
2		600-185-4110	・・ Element	1	B10001-
3	C1		・・ Element	1	B10001-
4		600-184-1470	・・ O-ring	1	B10001-
5		600-184-1420	・ Cover	1	B10001-
6		600-184-1350	・ Valve, Vaquator	1	B10001-
7		600-181-1930	・ Plate, Service Instruction	1	B10001-

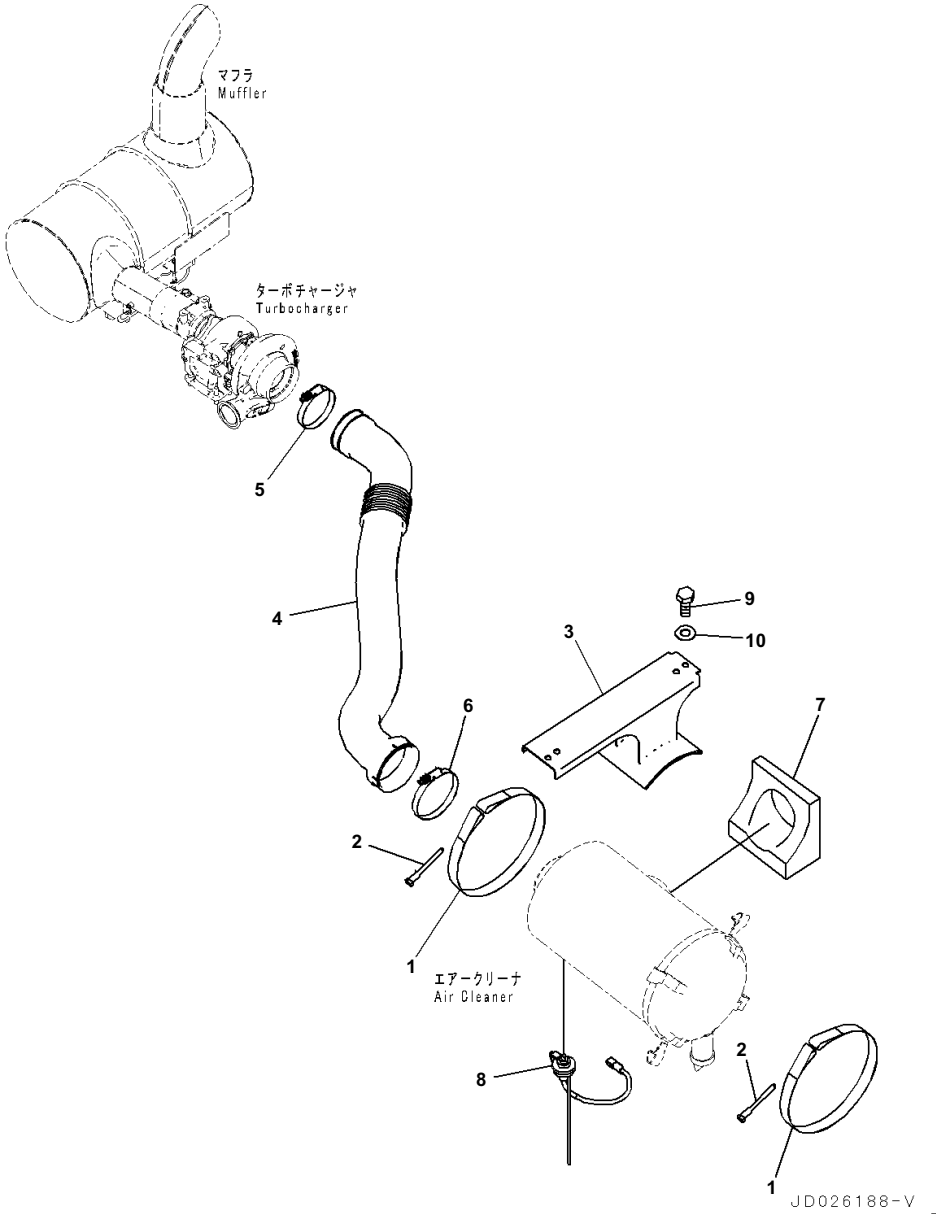

Index	Code	Part Number	Description	Qty	Serial No.
1		6222-81-7190	Band	2	B10001-
2		6643-11-4641	Bolt	2	B10001-
3		20Y-01-41190	Frame	1	B10001-
4		20Y-01-41110	Hose	1	B10001-
5		07299-00105	Clamp, Hose	1	B10001-
6		07299-00130	Clamp, Hose	1	B10001-
7		20Y-01-41340	Seal	1	B10001-
8		7861-93-1422	Sensor, Switch	1	B10001-
9		01010-81230	Bolt	4	B10001-
10		01643-31232	Washer	4	B10001-

COOLING SYSTEM

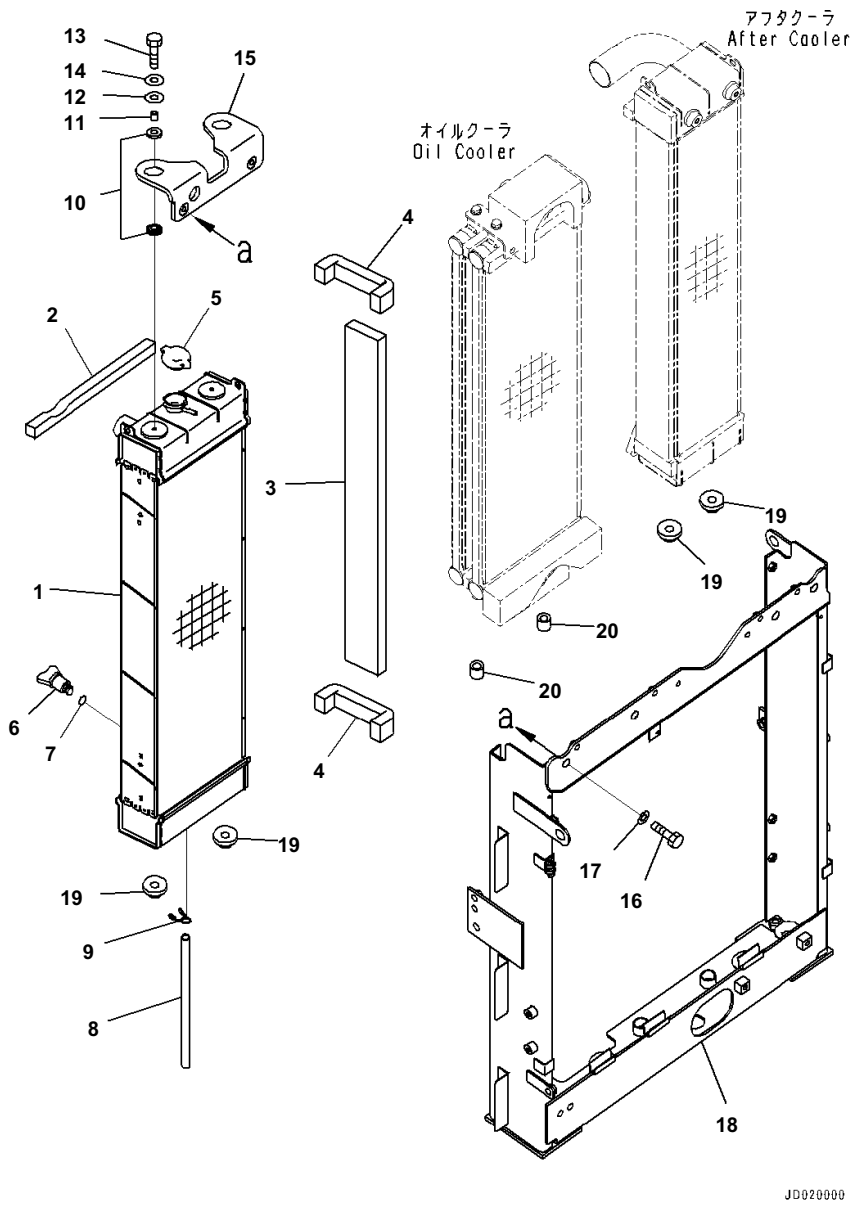

Index	Code	Part Number	Description	Qty	Serial No.
		20Y-03-43651	Radiator Assembly	1	B10001-
1	C1		・ Radiator	1	B10001-
2		20Y-03-43480	・ Sheet	1	B10001-
3		206-03-21331	・ Sheet	1	B10001-
4		206-03-21452	・ Sheet	2	B10001-
5		20Y-03-22110	Cap	1	B10001-
6		205-03-62660	Plug	1	B10001-
7		07000-11007	・ O-ring	1	B10001-
8		203-03-41410	Hose	1	B10001-
9		20Y-03-11330	Clip	1	B10001-
10		14X-03-51621	Cushion	4	B10001-
11		14X-03-51640	Spacer	2	B10001-
12		14X-03-51770	Washer	2	B10001-
13		01010-81045	Bolt	2	B10001-
14		01643-31032	Washer	2	B10001-
15		20Y-03-42840	Bracket	1	B10001-
16		01010-81225	Bolt	2	B10001-
17		01643-31232	Washer	2	B10001-
18		206-03-23162	Frame	1	B10001-
19		20Y-03-41580	Cushion	4	B10001-
20		20Y-03-41590	Cushion	2	B10001-

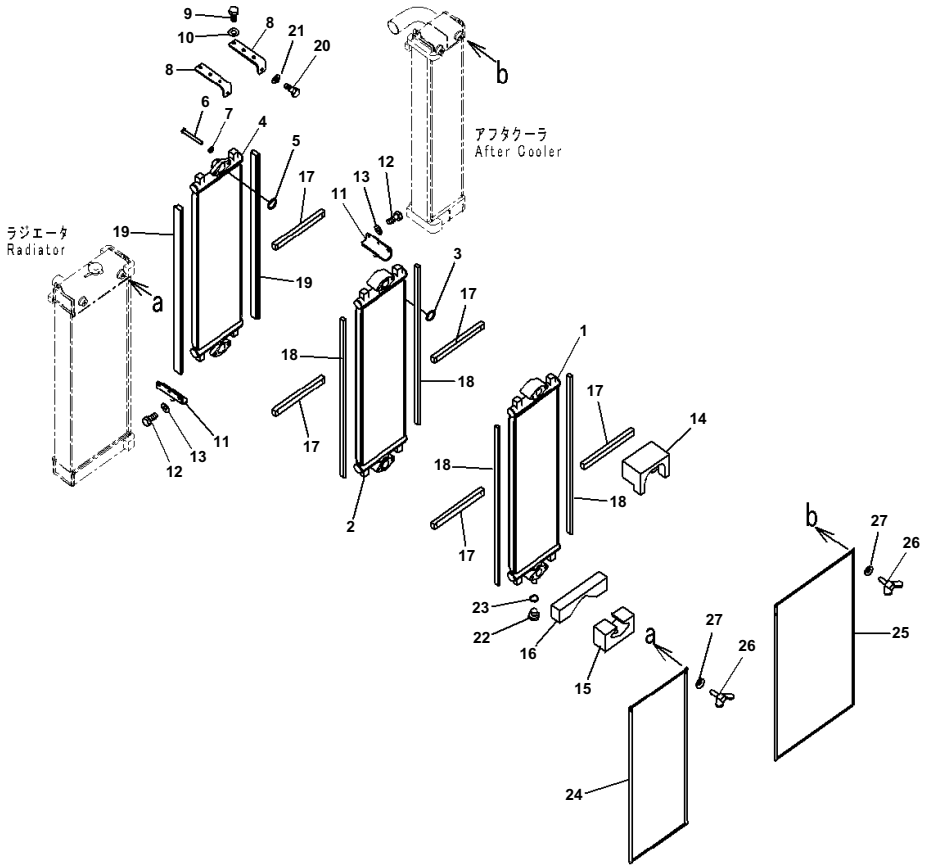

Index	Code	Part Number	Description	Qty	Serial No.
1		20Y-03-42120	Oil Cooler	1	B10001-
2		20Y-03-42790	Oil Cooler	1	B10001-
3		07000-13045	O-ring	2	B10001-
4		20Y-03-42680	Oil Cooler	1	B10001-
5		07000-13045	O-ring	2	B10001-
6		01011-81205	Bolt	4	B10001-
7		01643-31232	Washer	4	B10001-
8		20Y-03-41711	Bracket	2	B10001-
9		01010-81025	Bolt	6	B10001-
10		01643-31032	Washer	6	B10001-
11		20Y-03-41721	Bracket	2	B10001-
12		01010-81025	Bolt	6	B10001-
13		01643-31032	Washer	6	B10001-
14		206-03-21470	Sheet	1	B10001-
15		206-03-21520	Sheet	1	B10001-
16		20Y-03-42780	Sheet	1	B10001-
17		20Y-03-42690	Sheet	5	B10001-
18		206-03-21580	Sheet	4	B10001-
19		206-03-21511	Sheet	2	B10001-
20		01010-81030	Bolt	2	B10001-
21		01643-31032	Washer	2	B10001-
22		07040-11409	Plug	1	B10001-
23		07002-11423	O-ring	1	B10001-
24		20Y-03-43340	Net	1	B10001-
25		20Y-03-43350	Net	1	B10001-
26		01434-10616	Bolt, Wing	4	B10001-
27		01643-30623	Washer	4	B10001-

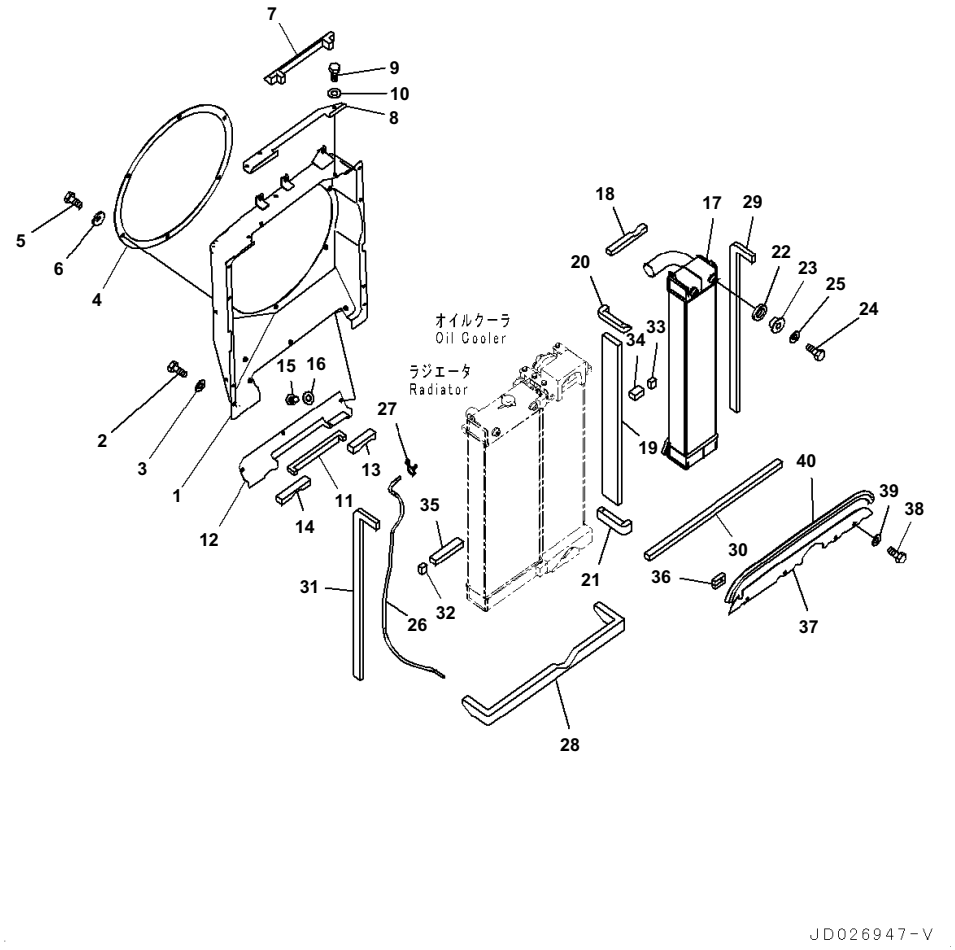

Index	Code	Part Number	Description	Qty	Serial No.
1		206-03-21222	Shroud	1	B10001-
2		01010-81020	Bolt	8	B10001-
3		01643-31032	Washer	8	B10001-
4		20Y-03-41321	Plate	1	B10001-
5		01010-81020	Bolt	6	B10001-
6		203-54-56970	Washer	6	B10001-
		206-03-23260	Cover Assembly	1	B10001-
7		20Y-03-42580	・ Sheet	1	B10001-
8	C1		・ Cover	1	B10001-
9		01010-81020	Bolt	3	B10001-
10		01643-31032	Washer	3	B10001-
		206-03-23220	Cover Assembly	1	B10001-
11		206-03-21551	・ Sheet	1	B10001-
12	C1		・ Cover	1	B10001-
13		206-03-23210	・ Sheet	1	B10001-
14		206-03-23240	・ Sheet	1	B10001-
15		01010-81020	Bolt	3	B10001-
16		01643-31032	Washer	3	B10001-
		206-03-21431	Aftercooler Assembly	1	B10001-
17	C1		・ Aftercooler	1	B10001-
18		206-03-21361	・ Sheet	1	B10001-
19		206-03-21290	・ Sheet	1	B10001-
20		206-03-21461	・ Sheet	1	B10001-
21		206-03-21540	・ Sheet	1	B10001-
22		22U-03-22860	Cushion	2	B10001-
23		6738-61-4952	Collar	2	B10001-
24		01010-81030	Bolt	2	B10001-
25		01643-31032	Washer	2	B10001-
26		20Y-03-42340	Hose	1	B10001-
27		206-03-43340	Clip	1	B10001-
28		206-03-21281	Sheet	1	B10001-
29		206-03-21310	Sheet	1	B10001-
30		206-03-21320	Sheet	1	B10001-
31		206-03-21310	Sheet	1	B10001-
32		206-03-21560	Sheet	1	B10001-
33		206-03-21570	Sheet	1	B10001-
34		206-03-21690	Sheet	1	B10001-
35		20Y-03-41521	Sheet	1	B10001-
36		20Y-03-41633	Sheet	1	B10001-
37		206-03-21251	Cover	1	B10001-
38		01010-81020	Bolt	4	B10001-
39		01643-31032	Washer	4	B10001-
40		20Y-03-41870	Seal	1	B10001-

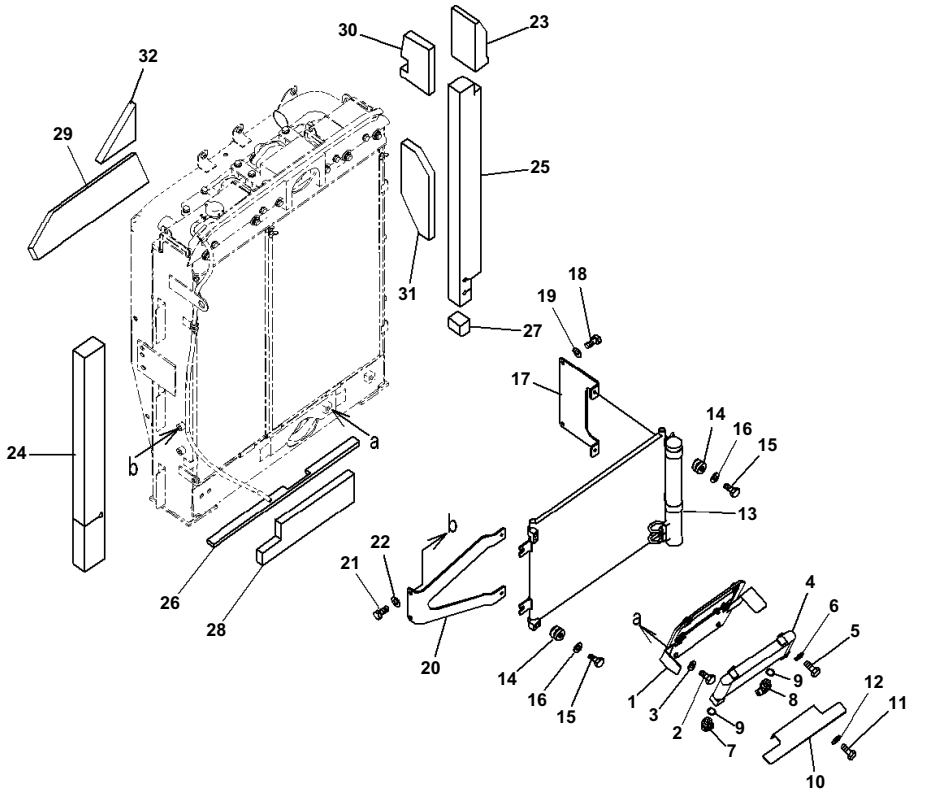

Cooling System, With Air Conditioner, Fuel Cooler and Condenser

Index	Code	Part Number	Description	Qty	Serial No.
1		20Y-03-41750	Bracket	1	B10001-
2		01010-81225	Bolt	2	B10001-
3		01643-31232	Washer	2	B10001-
4		208-03-71161	Oil Cooler	1	B10001-
5		01010-80825	Bolt	4	B10001-
6		01643-30823	Washer	4	B10001-
7		02782-10315	Elbow	1	B10001-
8		02782-10315	Elbow	1	B10001-
9		07002-12034	O-ring	2	B10001-
10		208-03-71290	Cover	1	B10001-
11		01010-81020	Bolt	2	B10001-
12		01643-31032	Washer	2	B10001-
		20Y-810-1221	Condenser Assembly	1	B10001-
13		20Y-810-1250	・ Filter	1	B10001-
14		20Y-810-1240	Cushion	4	B10001-
15		01010-80835	Bolt	4	B10001-
16		01643-30823	Washer	4	B10001-
17		20Y-03-41371	Bracket	1	B10001-
18		01010-81020	Bolt	2	B10001-
19		01643-31032	Washer	2	B10001-
20		20Y-03-42440	Bracket	1	B10001-
21		01010-81020	Bolt	2	B10001-
22		01643-31032	Washer	2	B10001-
23		206-03-21371	Sheet	1	B10001-
24		20Y-03-41541	Sheet	1	B10001-
25		20Y-03-41562	Sheet	1	B10001-
26		20Y-03-41572	Sheet	1	B10001-
27		20Y-03-41841	Sheet	1	B10001-
28		206-54-21670	Sheet	1	B10001-
29		20Y-54-73530	Sheet	1	B10001-
30		20Y-54-73511	Sheet	1	B10001-
31		20Y-54-73540	Sheet	1	B10001-
32		20Y-54-73520	Sheet	1	B10001-

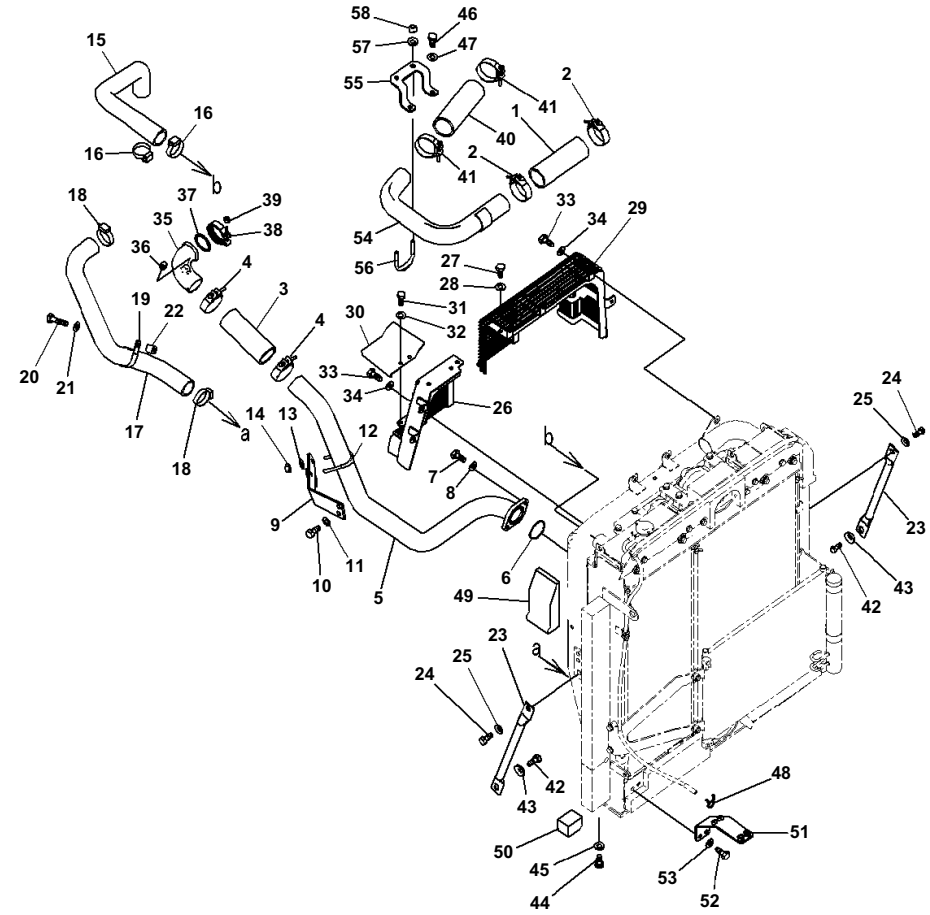

Cooling System, With Air Conditioner, Fan Guard and Aftercooler Piping

Index	Code	Part Number	Description	Qty	Serial No.
1		206-03-21151	Hose	1	B10001-
2		07299-00070	Clamp	2	B10001-
3		20Y-03-41181	Hose	1	B10001-
4		21T-62-69711	Clamp, Hose	2	B10001-
5		206-03-21621	Tube	1	B10001-
6		07000-E2065	O-ring	1	B10001-
7		01010-81030	Bolt	2	B10001-
8		01643-31032	Washer	2	B10001-
9		206-03-21651	Bracket	1	B10001-
10		01010-81230	Bolt	2	B10001-
11		01643-31232	Washer	2	B10001-
12		07283-37060	Clip, Pipe	1	B10001-
13		01643-31032	Washer	2	B10001-
14		01597-01009	Nut	2	B10001-
15		20Y-03-41141	Hose	1	B10001-
16		07289-00055	Clamp	2	B10001-
17		206-03-22570	Hose	1	B10001-
18		07289-00055	Clamp	2	B10001-
19		208-62-38370	Clip	1	B10001-
20		01010-81035	Bolt	1	B10001-
21		01643-31032	Washer	1	B10001-
22		201-03-29160	Spacer	1	B10001-
23		20Y-03-32660	Stay	2	B10001-
24		01010-81635	Bolt	2	B10001-
25		01643-31645	Washer	2	B10001-
26		20Y-03-41611	Guard	1	B10001-
27		01010-81025	Bolt	1	B10001-
28		01643-31032	Washer	1	B10001-
29		20Y-03-41622	Guard	1	B10001-
30		20Y-03-41811	Bracket	1	B10001-
31		01010-81020	Bolt	2	B10001-
32		01643-31032	Washer	2	B10001-
33		01010-81025	Bolt	6	B10001-
34		01643-31032	Washer	6	B10001-
35		6738-11-4320	Pipe	1	B10001-
36		07043-70108	Plug	1	B10001-
37		6738-11-4370	O-ring	1	B10001-
38		6738-11-4380	Clamp	1	B10001-
39		6738-11-4390	Nut	1	B10001-
40		20Y-03-41161	Hose	1	B10001-
41		21T-62-69711	Clamp, Hose	2	B10001-
42		01010-81635	Bolt	2	B10001-
43		21T-54-16150	Washer	2	B10001-
44		01010-81640	Bolt	4	B10001-
45		01643-31645	Washer	4	B10001-
46		01010-81030	Bolt	3	B10001-

PC240LC-8 S/N B10001-UP

Cooling System, With Air Conditioner, Fan Guard and Aftercooler Piping

Index	Code	Part Number	Description	Qty	Serial No.
47		01643-31032	Washer	3	B10001-
48		206-03-43340	Clip	1	B10001-
49		206-03-21371	Sheet	1	B10001-
50		20Y-03-41831	Sheet	1	B10001-
51		20Y-62-51481	Bracket	1	B10001-
52		01010-81225	Bolt	2	B10001-
53		01643-31232	Washer	2	B10001-
54		20Y-03-41171	Tube	1	B10001-
55		20Y-03-41740	Bracket	1	B10001-
56		07283-37060	Clip, Pipe	1	B10001-
57		01643-31032	Washer	2	B10001-
58		01597-01009	Nut	2	B10001-

FUEL SYSTEM

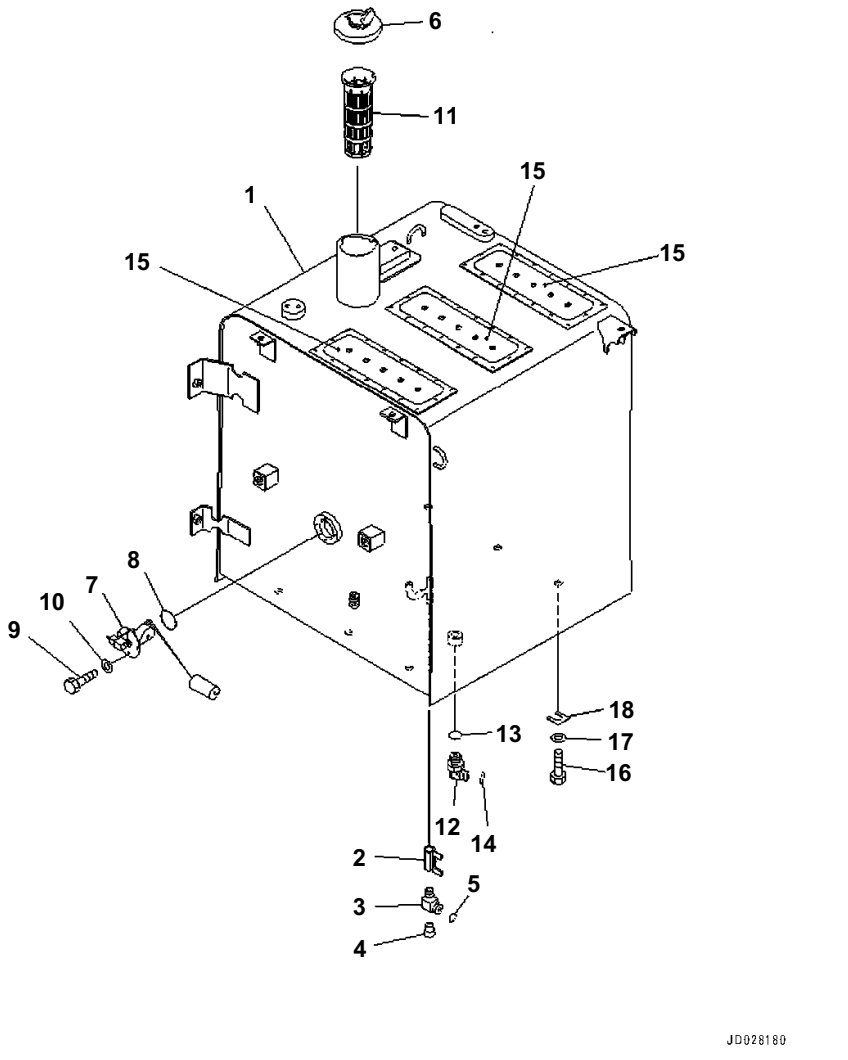

Index	Code	Part Number	Description	Qty	Serial No.
1		205-04-21310	Tank	1	B10001-
2		07700-50240	Valve	1	B10001-
3		20Y-04-41231	Elbow	1	B10001-
4		07043-A0108	Plug	1	B10001-
5		02896-11009	O-ring	1	B10001-
		134-04-71180	Cap	1	B10001-
6		20Y-04-11240	・ Packing	1	B10001-
7		7861-92-5810	Sensor	1	B10001-
8		07000-13050	O-ring	1	B10001-
9		01010-80612	Bolt	4	B10001-
10		01643-30623	Washer	4	B10001-
11		07056-18422	Strainer Assembly	1	B10001-
12		20Y-04-41590	Elbow	1	B10001-
13		07002-12034	O-Ring	1	B10001-
14		02896-11009	O-ring	1	B10001-
15		20Y-00-42001	Plate	3	B10001-
16		01010-81635	Bolt	6	B10001-
17		01643-31645	Washer	6	B10001-
18		195-03-11570	Shim, T=1.0mm	6	B10001-

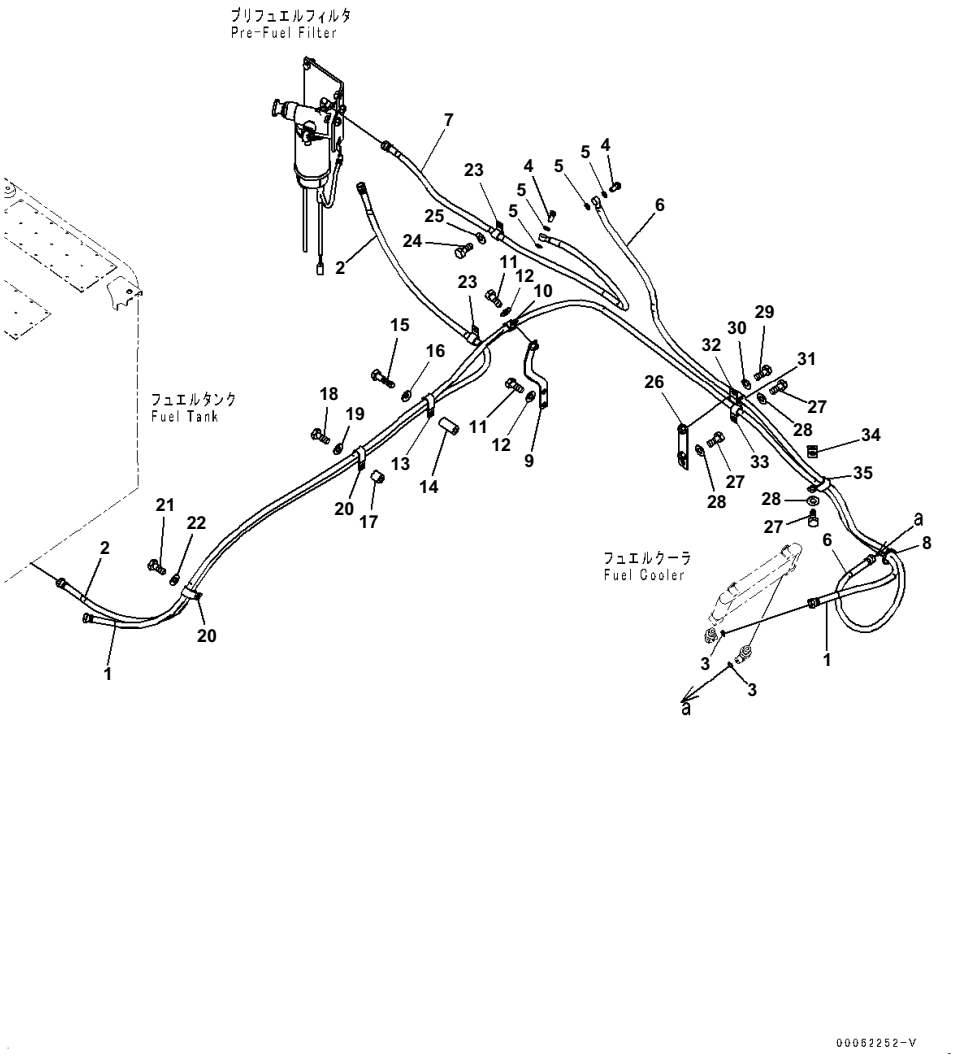

Index	Code	Part Number	Description	Qty	Serial No.
1		02762-00335	Hose	1	B10001-
2		02762-00325	Hose	1	B10001-
3		02896-11009	O-ring	2	B10001-
4		07206-30812	Bolt, Joint	2	B10001-
5		07005-01212	Seal, Washer	4	B10001-
6		20Y-04-41414	Hose	1	B10001-
7		20Y-04-41373	Hose	1	B10001-
8		08034-20519	Band	1	B10001-
9		20Y-04-41321	Bracket	1	B10001-
10		04434-51912	Clip	1	B10001-
11		01010-81225	Bolt	3	B10001-
12		01643-31232	Washer	3	B10001-
13		04435-51812	Clip	1	B10001-
14		154-979-1480	Collar	1	B10001-
15		01010-81275	Bolt	1	B10001-
16		01643-31232	Washer	1	B10001-
17		195-33-11220	Spacer	1	B10001-
18		01010-81250	Bolt	1	B10001-
19		01643-31232	Washer	1	B10001-
20		04435-51812	Clip	2	B10001-
21		01010-81225	Bolt	1	B10001-
22		01643-31232	Washer	1	B10001-
23		04434-51912	Clip	2	B10001-
24		01010-81225	Bolt	2	B10001-
25		01643-31232	Washer	2	B10001-
26		20Y-04-41421	Plate	1	B10001-
27		01010-81225	Bolt	4	B10001-
28		01643-31232	Washer	4	B10001-
29		01010-81235	Bolt	1	B10001-
30		01643-31232	Washer	1	B10001-
31		198-06-53560	Cushion	1	B10001-
32		04434-52512	Clip	1	B10001-
33		04434-51812	Clip	1	B10001-
34		21T-38-71260	Bracket	1	B10001-
35		04435-51812	Clip	1	B10001-

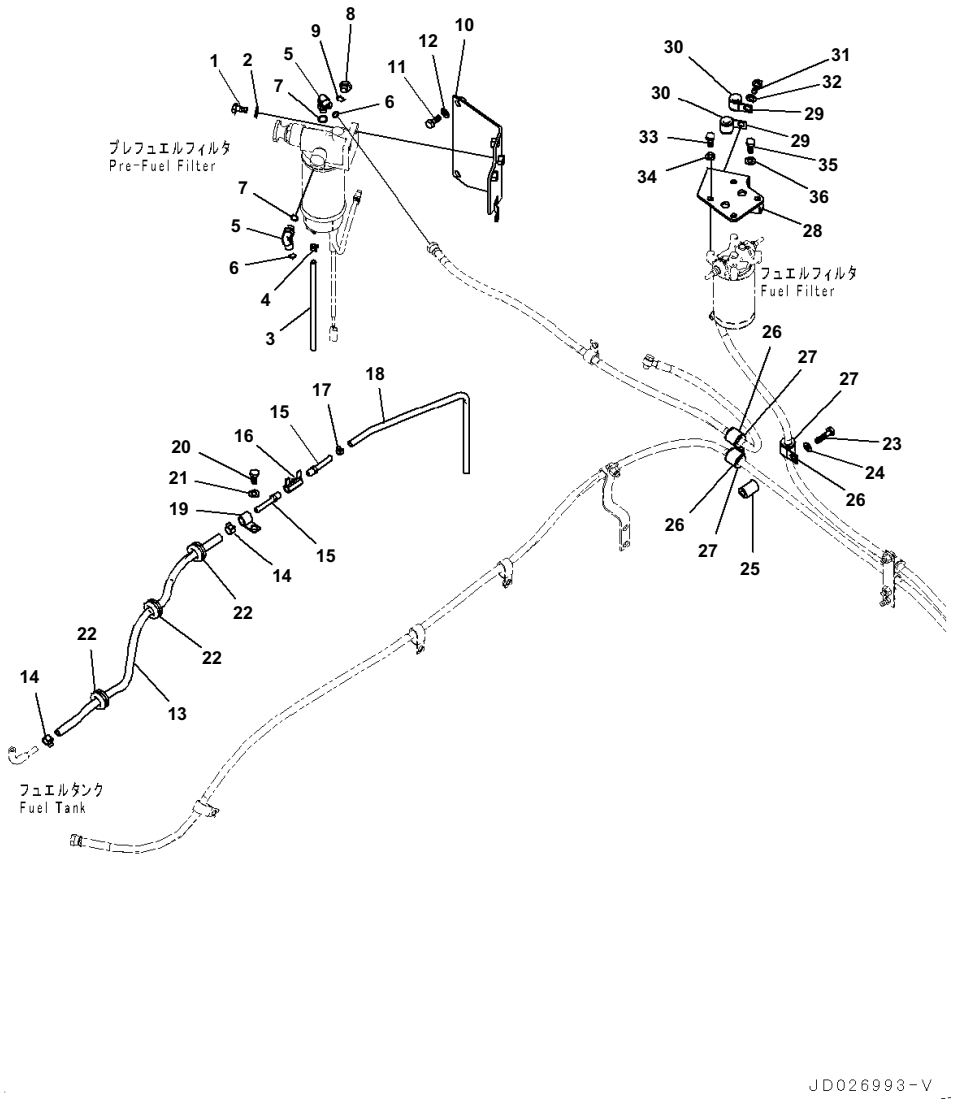

Index	Code	Part Number	Description	Qty	Serial No.
		(6754-71-7402)	Filter Ass'y (See Fig. D0200-002003)	1	B10001-
1		07372-21235	Bolt	2	B10001-
2		01643-51232	Washer	2	B10001-
3		07270-00827	Tube	1	B10001-
4		07285-00100	Clip	1	B10001-
5		02782-10311	Elbow	2	B10001-
6		02896-11009	O-ring	2	B10001-
7		07002-11423	O-ring	2	B10001-
8		07040-11409	Plug	1	B10001-
9		07002-11423	O-ring	1	B10001-
10		20Y-04-41272	Bracket	1	B10001-
11		01010-81225	Bolt	2	B10001-
12		01643-31232	Washer	2	B10001-
13		20Y-04-41281	Hose	1	B10001-
14		11Y-09-11140	Clip	2	B10001-
15		20Y-04-31170	Nipple	2	B10001-
16		07700-50240	Valve	1	B10001-
17		07285-00115	Clip	1	B10001-
18		07270-01070	Tube	1	B10001-
19		04434-51612	Clip	1	B10001-
20		01010-81225	Bolt	1	B10001-
21		01643-31232	Washer	1	B10001-
22		205-977-7310	Grommet	3	B10001-
23		01010-81275	Bolt	1	B10001-
24		01643-31232	Washer	1	B10001-
25		20Y-03-11220	Collar	1	B10001-
26		04434-52512	Clip	3	B10001-
27		198-06-53560	Cushion	3	B10001-
28		20Y-54-72441	Bracket	1	B10001-
29		04434-52112	Clip	2	B10001-
30		198-06-53550	Cushion	2	B10001-
31		01010-81225	Bolt	1	B10001-
32		01643-31232	Washer	1	B10001-
33		01010-80825	Bolt	4	B10001-
34		01643-30823	Washer	4	B10001-
35		01010-81225	Bolt	2	B10001-
36		01643-31232	Washer	2	B10001-

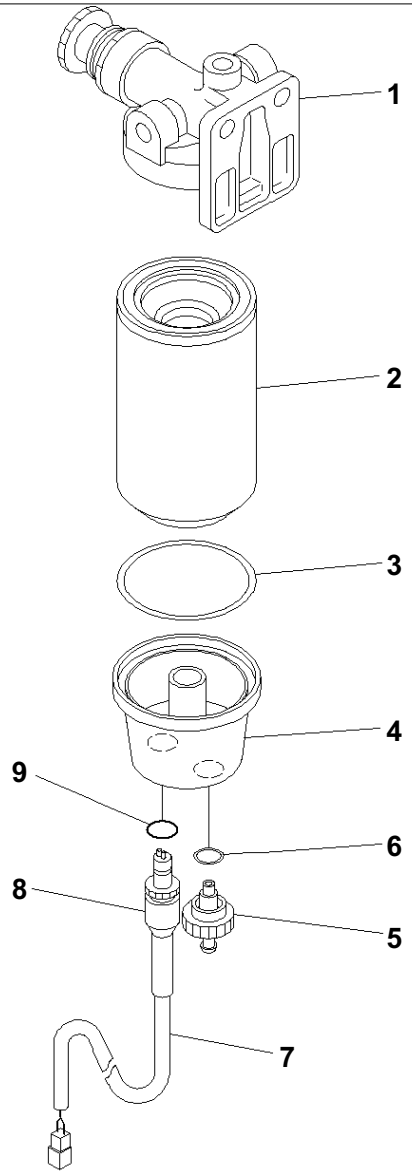

00065763

Index	Code	Part Number	Description	Qty	Serial No.
		6754-71-7402	Filter Assembly	1	B10001-
1		6754-71-7200	· Head	1	B10001-
		600-311-3602	· Filter Assembly	1	B10001-
		600-311-3610	· · Cartridge Assembly	1	B10001-
2	C1		· · · Cartridge	1	B10001-
3		600-311-3630	· · · Seal	1	B10001-
4		600-311-3640	· · Bowl	1	B10001-
		600-311-3660	· · Valve Assembly	1	B10001-
5		600-311-3711	· · · Valve	1	B10001-
6		600-311-3670	· · · Seal	1	B10001-
		600-311-3722	· · Sensor	1	B10001-
7	C1		· · · Tube	1	B10001-
8	C1		· · · Sensor	1	B10001-
9		600-311-3690	· · · O-ring	1	B10001-

ELECTRICAL SYSTEM

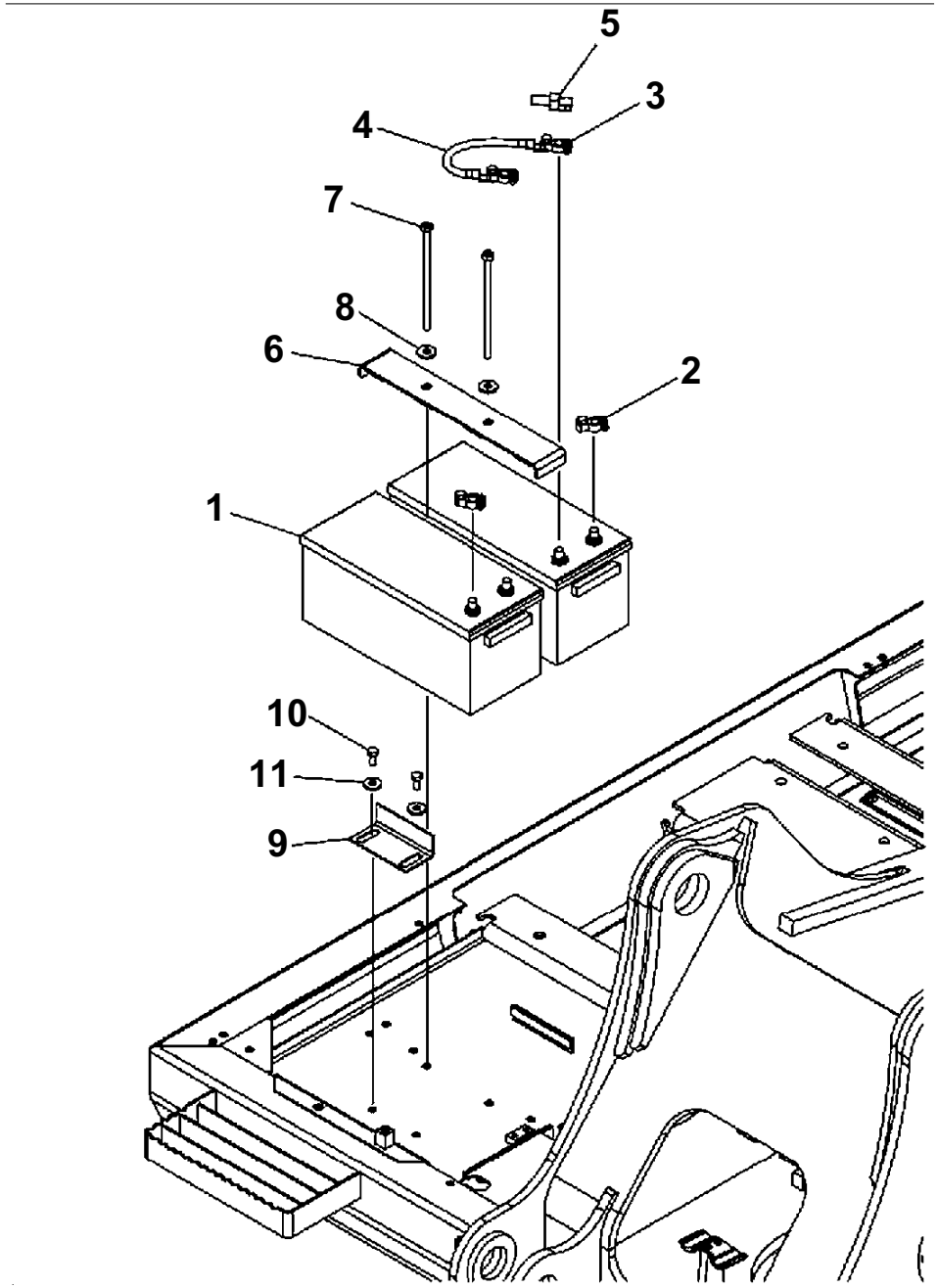

Battery

Index	Code	Part Number	Description	Qty	Serial No.
1		134-06-61540	Battery	2	B10001-
2		08000-00000	Terminal, (+)	2	B10001-
3		08000-00001	Terminal, (-)	2	B10001-
4		08028-63035	Wire	1	B10001-
5		08038-42511	Cap	2	B10001-
6		20Y-06-B1210	Bracket	1	B10001-
7		20Y-06-B1150	Bolt	2	B10001-
8		01643-31232	Washer	2	B10001-
9		207-06-61461	Bracket	1	B10001-
10		01010-81225	Bolt	2	B10001-
11		175-54-34170	Washer	2	B10001-

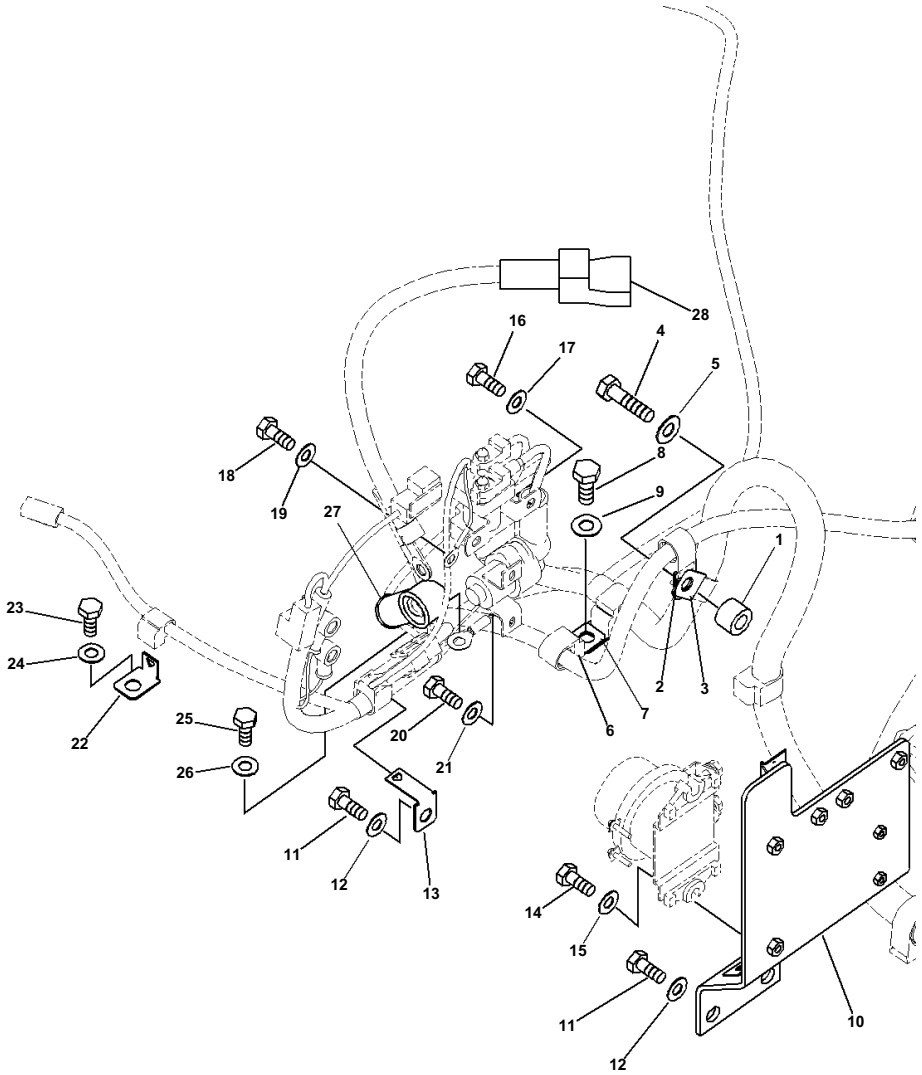

Index	Code	Part Number	Description	Qty	Serial No.
1		144-947-3490	Spacer	1	B10001-
2		08057-12012	Clip	1	B10001-
3		08057-12012	Clip	1	B10001-
4		01010-81245	Bolt	1	B10001-
5		01643-31232	Washer	1	B10001-
6		08057-12012	Clip	1	B10001-
7		08057-12012	Clip	1	B10001-
8		01010-81225	Bolt	1	B10001-
9		01643-31232	Washer	1	B10001-
10		20Y-06-41640	Bracket	1	B10001-
11		01010-81225	Bolt	2	B10001-
12		01643-31232	Washer	2	B10001-
13		08057-14012	Clip	1	B10001-
14		01010-80830	Bolt	2	B10001-
15		01643-30823	Washer	2	B10001-
16		01010-80820	Bolt	2	B10001-
17		01643-30823	Washer	2	B10001-
18		01010-80820	Bolt	1	B10001-
19		01643-30823	Washer	1	B10001-
20		01010-80620	Bolt	2	B10001-
21		01643-30623	Washer	2	B10001-
22		08057-12012	Clip	1	B10001-
23		01010-81225	Bolt	1	B10001-
24		01643-31232	Washer	1	B10001-
25		01010-81025	Bolt	1	B10001-
26		01643-31032	Washer	1	B10001-
27		08038-10035	Cap	1	B10001-
28		08038-42511	Cap	1	B10001-

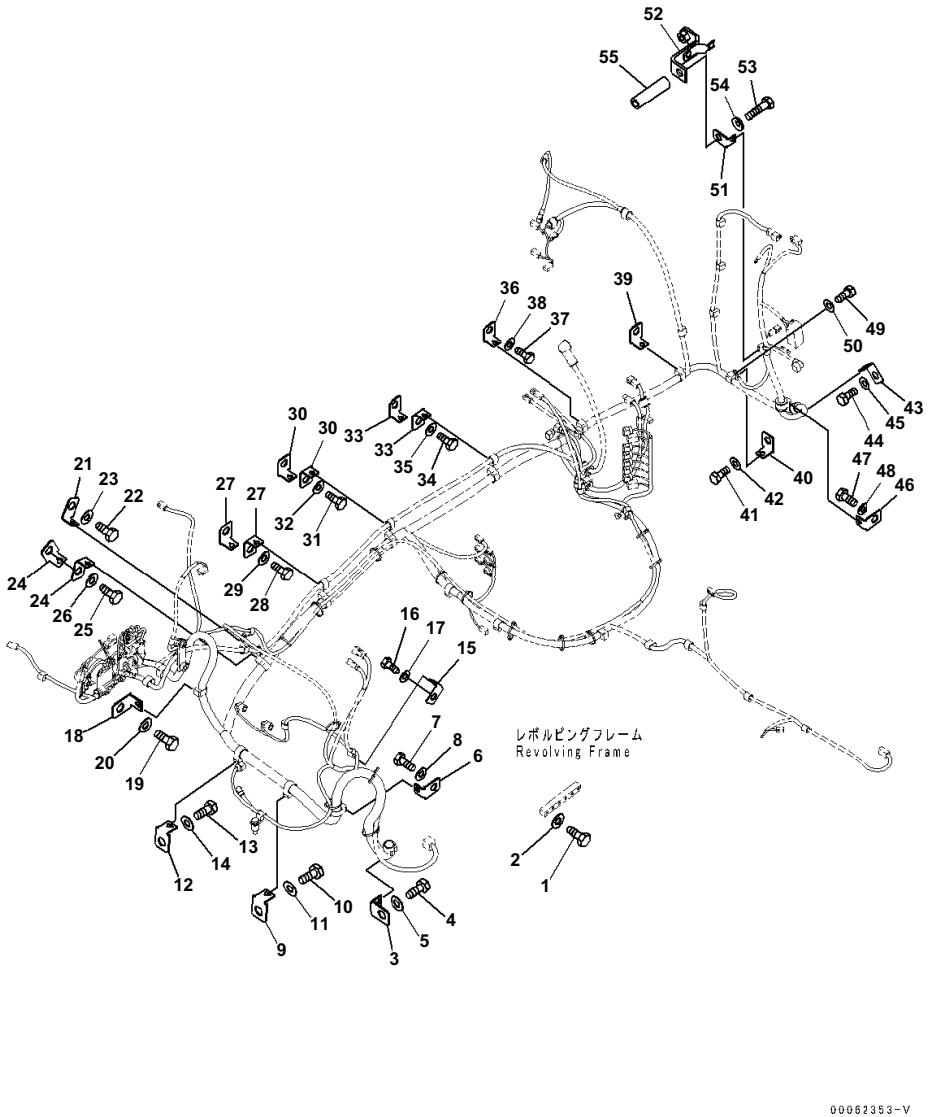

Index	Code	Part Number	Description	Qty	Serial No.
1		01010-81020	Bolt	6	B10001-
2		01643-31032	Washer	6	B10001-
3		08057-12012	Clip	1	B10001-
4		01010-81225	Bolt	1	B10001-
5		01643-31232	Washer	1	B10001-
6		08057-12012	Clip	1	B10001-
7		01010-81225	Bolt	1	B10001-
8		01643-31232	Washer	1	B10001-
9		08057-12012	Clip	1	B10001-
10		01010-81225	Bolt	1	B10001-
11		01643-31232	Washer	1	B10001-
12		08057-12012	Clip	1	B10001-
13		01010-81225	Bolt	1	B10001-
14		01643-31232	Washer	1	B10001-
15		08057-12012	Clip	1	B10001-
16		01010-81225	Bolt	1	B10001-
17		01643-31232	Washer	1	B10001-
18		08057-12012	Clip	1	B10001-
19		01010-81225	Bolt	1	B10001-
20		01643-31232	Washer	1	B10001-
21		08057-12012	Clip	1	B10001-
22		01010-81225	Bolt	1	B10001-
23		01643-31232	Washer	1	B10001-
24		08057-12012	Clip	2	B10001-
25		01010-81225	Bolt	1	B10001-
26		01643-31232	Washer	1	B10001-
27		08057-12012	Clip	2	B10001-
28		01010-81225	Bolt	1	B10001-
29		01643-31232	Washer	1	B10001-
30		08057-12012	Clip	2	B10001-
31		01010-81225	Bolt	1	B10001-
32		01643-31232	Washer	1	B10001-
33		08057-12012	Clip	2	B10001-
34		01010-81225	Bolt	1	B10001-
35		01643-31232	Washer	1	B10001-
36		08057-12012	Clip	1	B10001-
37		01010-81225	Bolt	1	B10001-
38		01643-31232	Washer	1	B10001-
39		08057-12012	Clip	1	B10001-
40		08057-12012	Clip	1	B10001-
41		01010-81225	Bolt	1	B10001-
42		01643-31232	Washer	1	B10001-
43		08057-12012	Clip	1	B10001-
44		01010-81225	Bolt	1	B10001-
45		01643-31232	Washer	1	B10001-
46		08057-12012	Clip	1	B10001-

PC240LC-8 S/N B10001-UP

Electric Wiring Harness, Main Wiring Harness (1/3)

Index	Code	Part Number	Description	Qty	Serial No.
47		01010-81020	Bolt	1	B10001-
48		01643-31032	Washer	1	B10001-
49		01010-81225	Bolt	1	B10001-
50		01643-31232	Washer	1	B10001-
51		08057-12012	Clip	1	B10001-
52		20Y-06-41630	Bracket	1	B10001-
53		01011-81210	Bolt	1	B10001-
54		01643-31232	Washer	1	B10001-
55		22S-62-26210	Spacer	1	B10001-

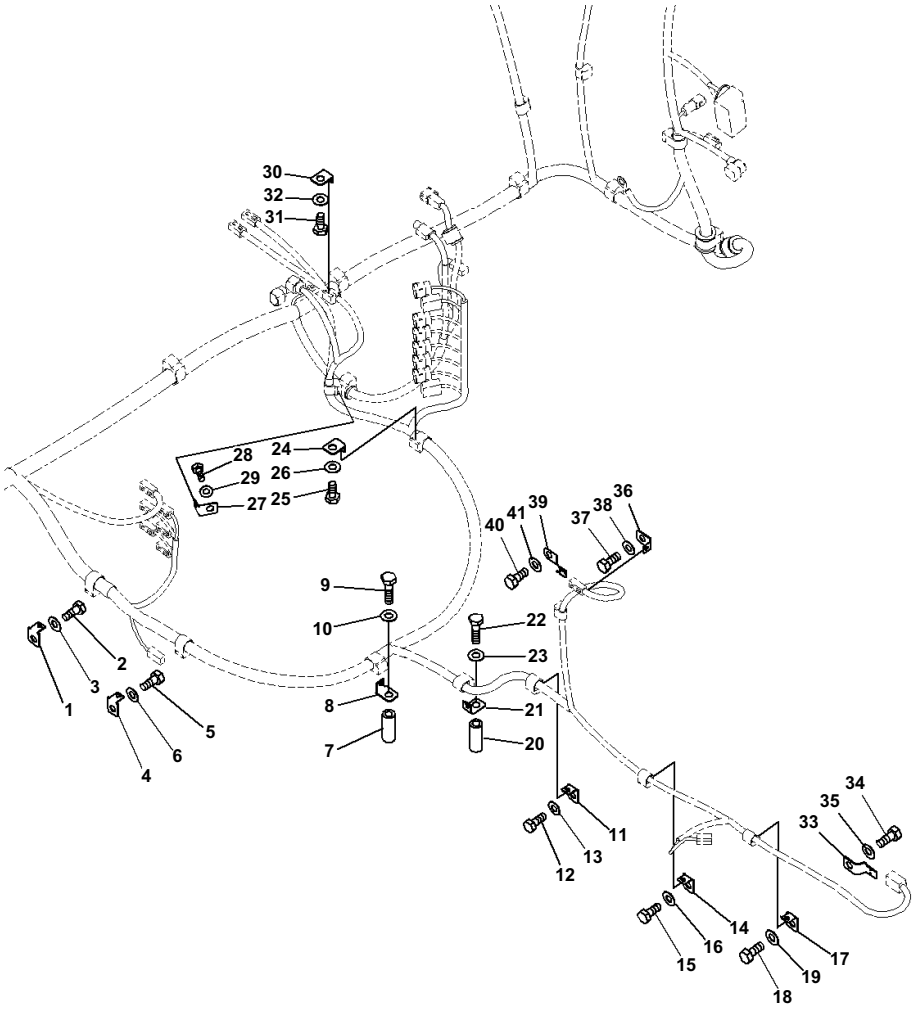

Index	Code	Part Number	Description	Qty	Serial No.
1		08057-12012	Clip	1	B10001-
2		01010-81225	Bolt	1	B10001-
3		01643-31232	Washer	1	B10001-
4		08057-12012	Clip	1	B10001-
5		01010-81225	Bolt	1	B10001-
6		01643-31232	Washer	1	B10001-
7		175-61-17240	Collar	1	B10001-
8		08057-12012	Clip	1	B10001-
9		01010-81285	Bolt	1	B10001-
10		01643-31232	Washer	1	B10001-
11		08057-12012	Clip	1	B10001-
12		01010-81225	Bolt	1	B10001-
13		01643-31232	Washer	1	B10001-
14		08057-12012	Clip	1	B10001-
15		01010-81225	Bolt	1	B10001-
16		01643-31232	Washer	1	B10001-
17		08057-12012	Clip	1	B10001-
18		01010-81225	Bolt	1	B10001-
19		01643-31232	Washer	1	B10001-
20		175-61-17240	Collar	1	B10001-
21		08057-12012	Clip	1	B10001-
22		01010-81285	Bolt	1	B10001-
23		01643-31232	Washer	1	B10001-
24		08057-12012	Clip	1	B10001-
25		01010-81225	Bolt	1	B10001-
26		01643-31232	Washer	1	B10001-
27		08057-12012	Clip	1	B10001-
28		01010-81225	Bolt	1	B10001-
29		01643-31232	Washer	1	B10001-
30		08057-12012	Clip	1	B10001-
31		01010-81225	Bolt	1	B10001-
32		01643-31232	Washer	1	B10001-
33		08053-01512	Clip	1	B10001-
34		01010-81225	Bolt	1	B10001-
35		01643-31232	Washer	1	B10001-
36		08057-12012	Clip	1	B10001-
37		01010-81225	Bolt	1	B10001-
38		01643-31232	Washer	1	B10001-
39		08193-21012	Clip	1	B10001-
40		01010-81225	Bolt	1	B10001-
41		01643-31232	Washer	1	B10001-

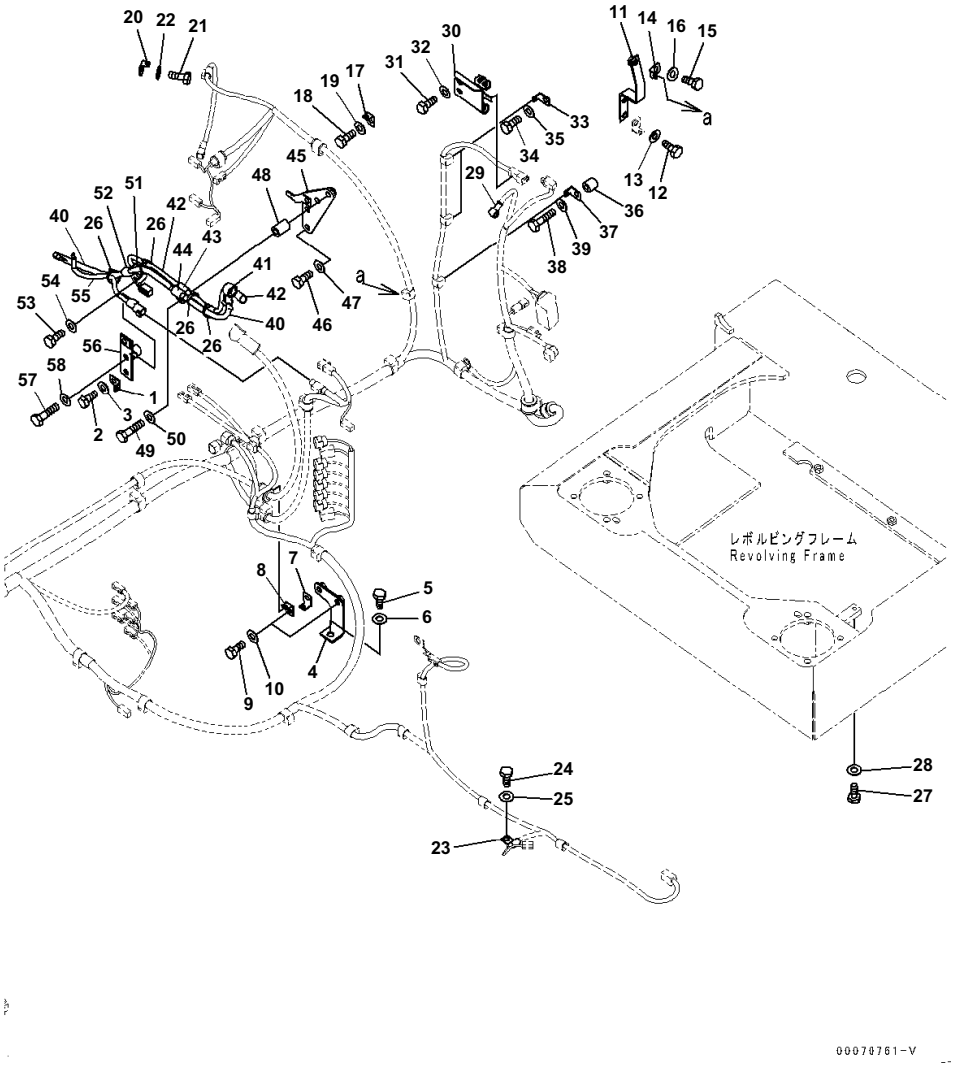

Index	Code	Part Number	Description	Qty	Serial No.
1		08057-12012	Clip	1	B10001-
2		01010-81225	Bolt	1	B10001-
3		01643-31232	Washer	1	B10001-
4		20Y-06-42520	Bracket	1	B10001-
5		01010-81225	Bolt	1	B10001-
6		01643-31232	Washer	1	B10001-
7		08057-12012	Clip	1	B10001-
8		08057-12012	Clip	1	B10001-
9		01010-81225	Bolt	2	B10001-
10		01643-31232	Washer	2	B10001-
11		20Y-04-31120	Bracket	1	B10001-
12		01010-81225	Bolt	2	B10001-
13		01643-31232	Washer	2	B10001-
14		08057-12012	Clip	1	B10001-
15		01010-81225	Bolt	1	B10001-
16		01643-31232	Washer	1	B10001-
17		08057-12012	Clip	1	B10001-
18		01010-81225	Bolt	1	B10001-
19		01643-31232	Washer	1	B10001-
20		08057-12012	Clip	1	B10001-
21		01010-81225	Bolt	1	B10001-
22		01643-31232	Washer	1	B10001-
23		04434-51012	Clip	1	B10001-
24		01010-81225	Bolt	1	B10001-
25		01643-31232	Washer	1	B10001-
26		08034-20536	Band	4	B10001-
27		01010-81020	Bolt	1	B10001-
28		01643-31032	Washer	1	B10001-
29		08038-12027	Cap	1	B10001-
30		20Y-54-76421	Bracket	1	B10001-
31		01010-81225	Bolt	2	B10001-
32		01643-31232	Washer	2	B10001-
33		08057-12012	Clip	2	B10001-
34		01010-81225	Bolt	2	B10001-
35		01643-31232	Washer	2	B10001-
36		195-33-11220	Spacer	1	B10001-
37		08057-12012	Clip	1	B10001-
38		01010-81260	Bolt	1	B10001-
39		01643-31232	Washer	1	B10001-
40		20Y-06-41351	Cable	1	B10001-
41		08038-12027	Cap	1	B10001-
42		20Y-06-41361	Wiring Harness	1	B10001-
43		04434-51412	Clip	1	B10001-
44		04434-51012	Clip	1	B10001-
45		20Y-06-41791	Bracket	1	B10001-
46		01010-81230	Bolt	2	B10001-

PC240LC-8 S/N B10001-UP

Electric Wiring Harness, Main Wiring Harness (3/3)

Index	Code	Part Number	Description	Qty	Serial No.
47		01643-31232	Washer	2	B10001-
48		20Y-03-11220	Collar	1	B10001-
49		01010-81265	Bolt	1	B10001-
50		01643-31232	Washer	1	B10001-
51		04434-51412	Clip	1	B10001-
52		04434-51012	Clip	1	B10001-
53		01010-81230	Bolt	1	B10001-
54		01643-31232	Washer	1	B10001-
55		20Y-06-41770	Cable	1	B10001-
56		20Y-06-41720	Bracket	1	B10001-
57		01010-81265	Bolt	1	B10001-
58		01643-31232	Washer	1	B10001-

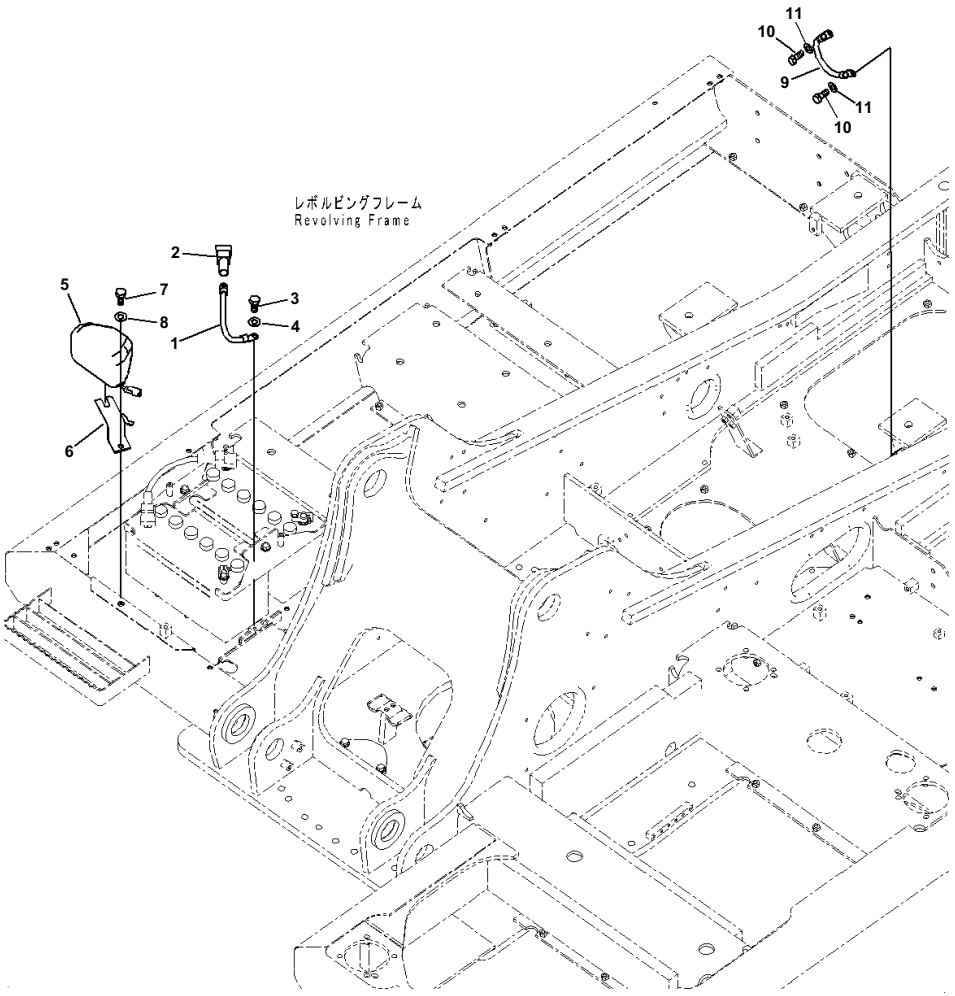

Electric Wiring Harness, Battery Case Side

Index	Code	Part Number	Description	Qty	Serial No.
1		08028-43030	Cable, Ground	1	B10001-
2		08038-22511	Cap	1	B10001-
3		01010-81025	Bolt	1	B10001-
4		01643-31032	Washer	1	B10001-
		21T-06-32810	Working Lamp Assembly, 24volt, 70watt	1	B10001-
5		421-06-23330	・ Bulb, 70watt	1	B10001-
6		20Y-06-41690	Bracket	1	B10001-
7		01010-81230	Bolt	1	B10001-
8		01643-31232	Washer	1	B10001-
9		08028-43030	Cable, Ground	1	B10001-
10		01010-81020	Bolt	2	B10001-
11		01643-31032	Washer	2	B10001-

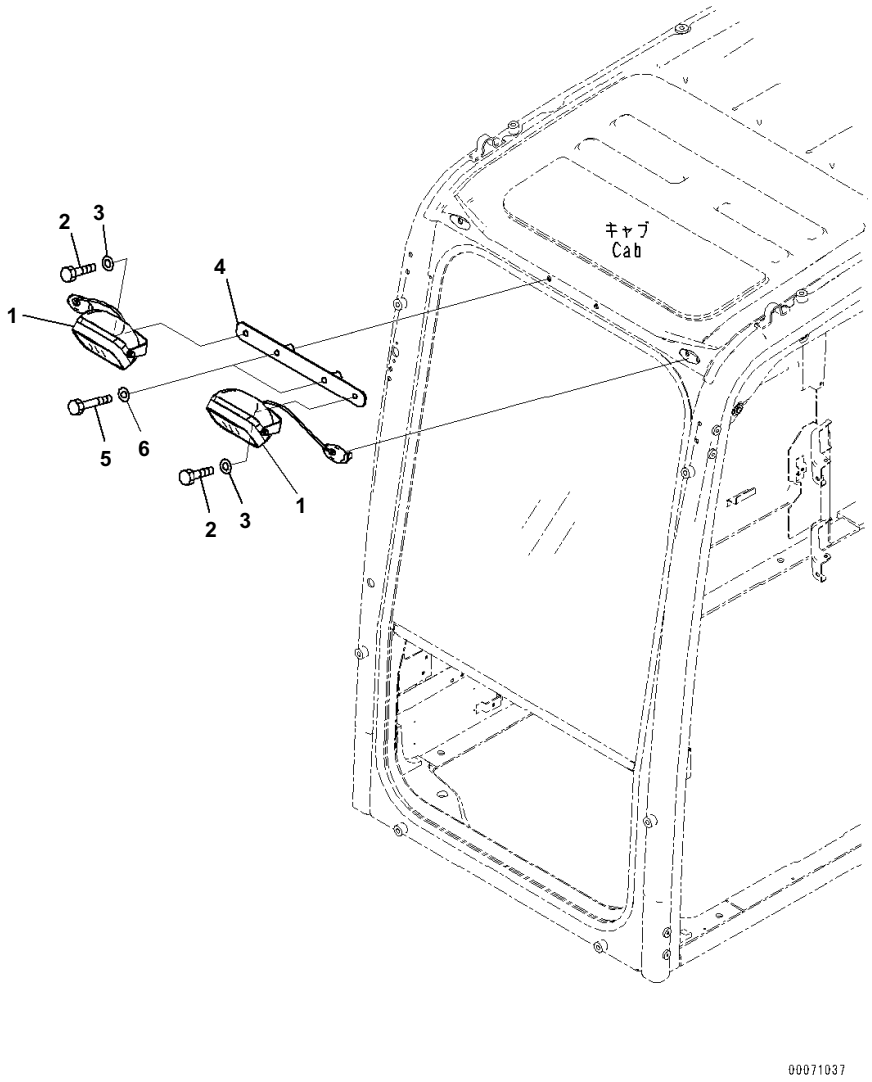

Index	Code	Part Number	Description	Qty	Serial No.
1		20Y-53-15210	Light Assembly, Working	2	B10001-
		421-06-23330	・ Bulb, 70watt	1	B10001-
2		01010-D1025	Bolt	2	B10001-
3		01643-71032	Washer	2	B10001-
4		20Y-53-15150	Bracket	1	B10001-
5		01010-D1060	Bolt	2	B10001-
6		01643-71032	Washer	2	B10001-

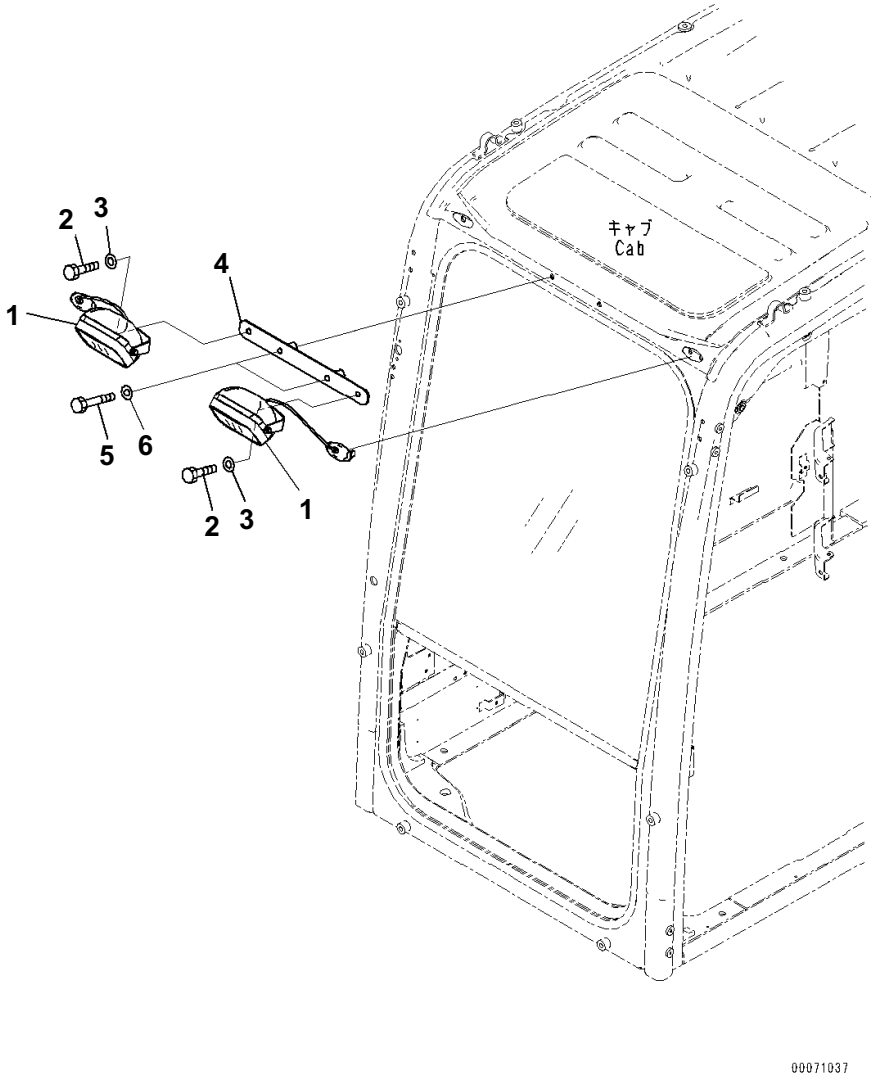

Index	Code	Part Number	Description	Qty	Serial No.
1		20Y-53-15210	Work Lamp Ass'y	2	B10001-
		421-06-23330	・ Bulb, 70watt	1	B10001-
2		01010-D1020	Bolt	2	B10001-
3		01643-71032	Washer	2	B10001-
4		20Y-53-15110	Bracket	1	B10001-
5		01010-D1060	Bolt	2	B10001-
6		01643-71032	Washer	2	B10001-

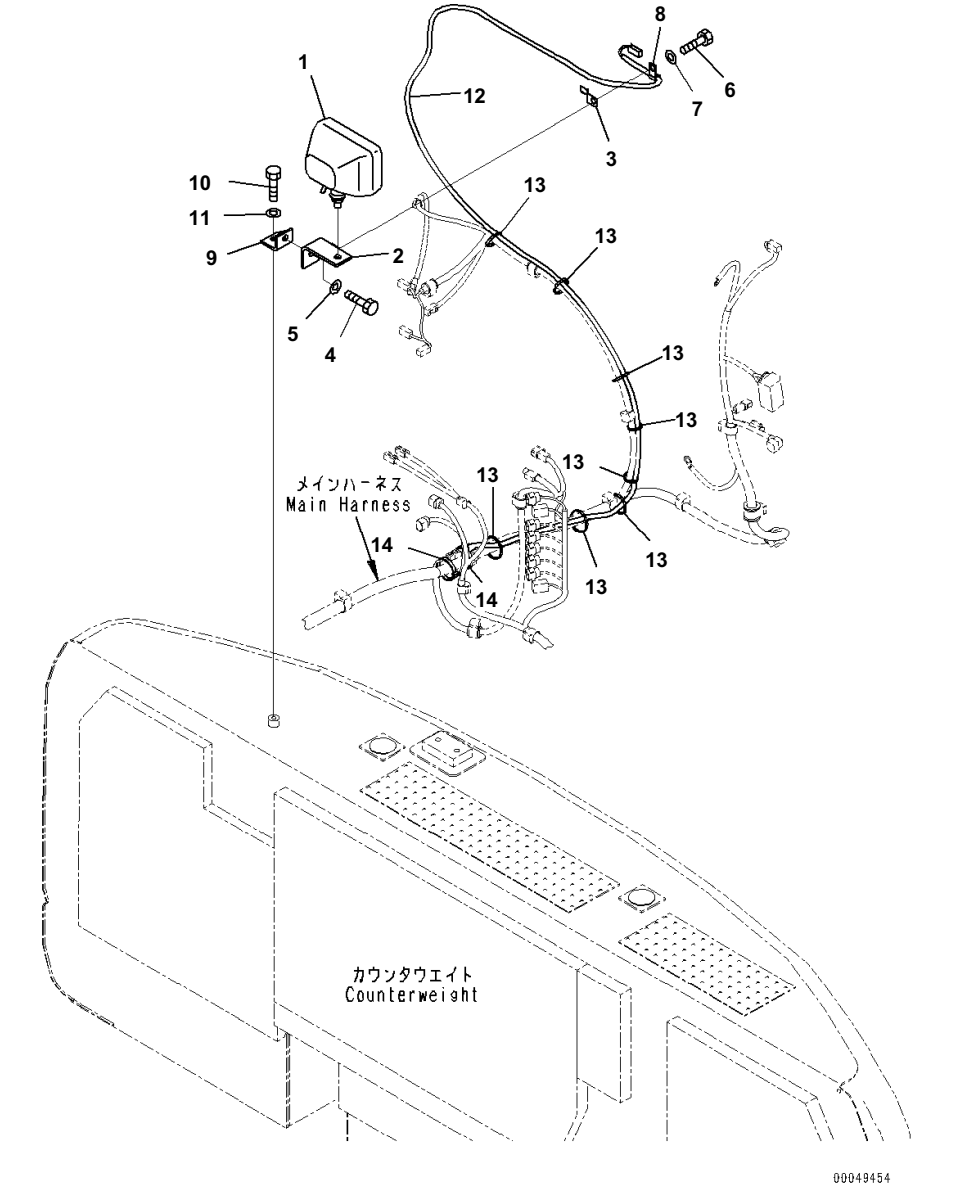

Additional Rear Working Lamp

Index	Code	Part Number	Description	Qty	Serial No.
1		21T-06-32810	Working Lamp Assembly, 24volt, 70watt	1	B10001-
		421-06-23330	・ Bulb, 70watt	1	B10001-
2		20Y-06-21551	Bracket	1	B10001-
3		08193-21012	Clip	1	B10001-
4		01010-81225	Bolt	1	B10001-
5		01643-31232	Washer	1	B10001-
6		01010-81225	Bolt	1	B10001-
7		01643-31232	Washer	1	B10001-
8		04434-51012	Clip	1	B10001-
9		20Y-06-21590	Bracket	1	B10001-
10		01010-81225	Bolt	1	B10001-
11		01643-31232	Washer	1	B10001-
12		206-06-21170	Wiring Harness	1	B10001-
13		08034-20536	Band	8	B10001-
14		08034-20834	Band	2	B10001-

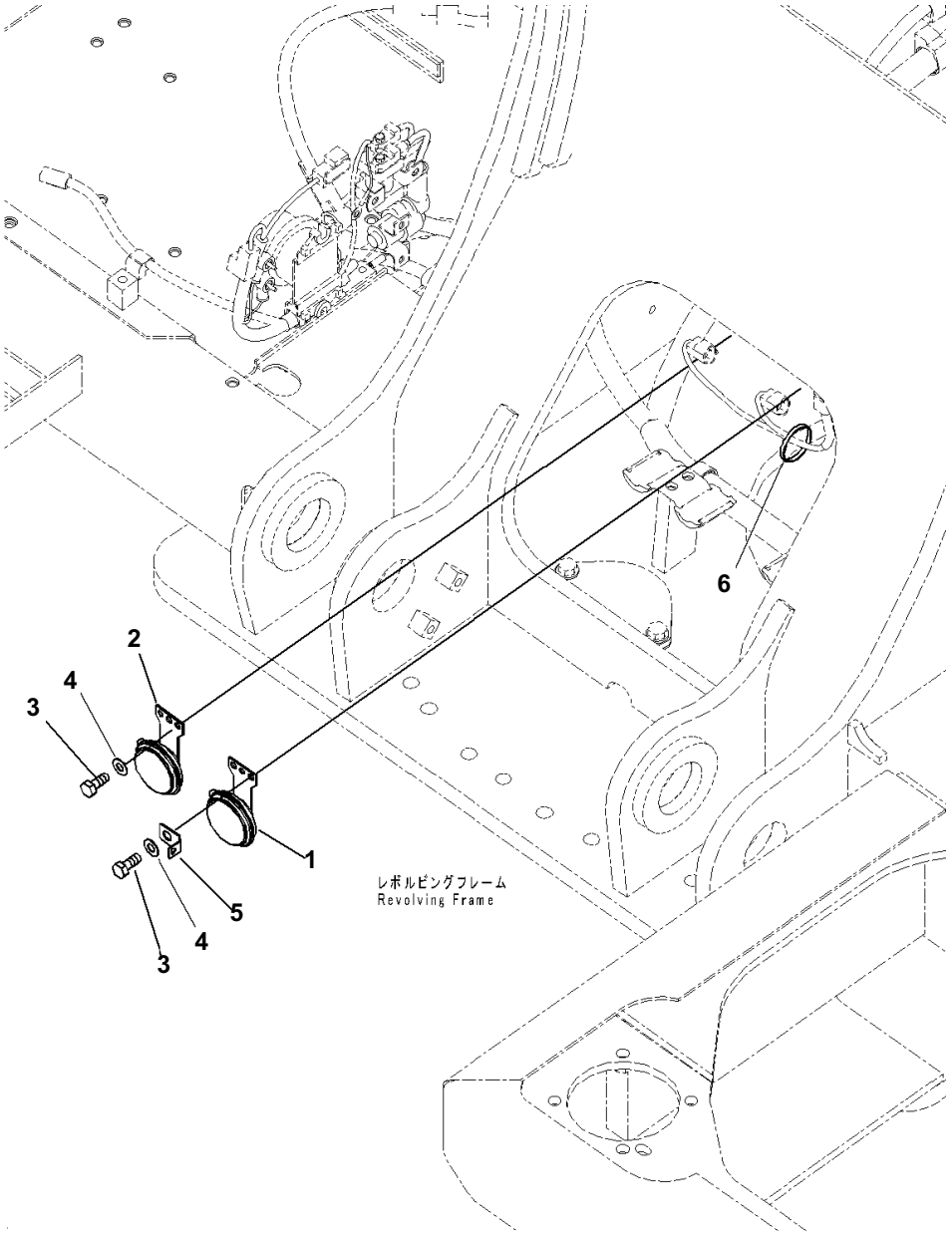

Horn

Index	Code	Part Number	Description	Qty	Serial No.
1		08160-72400	Horn	1	B10001-
2		08160-72420	Horn	1	B10001-
3		01010-80825	Bolt	4	B10001-
4		01643-30823	Washer	4	B10001-
5		08057-12008	Clip	1	B10001-
6		08034-20414	Band	1	B10001-

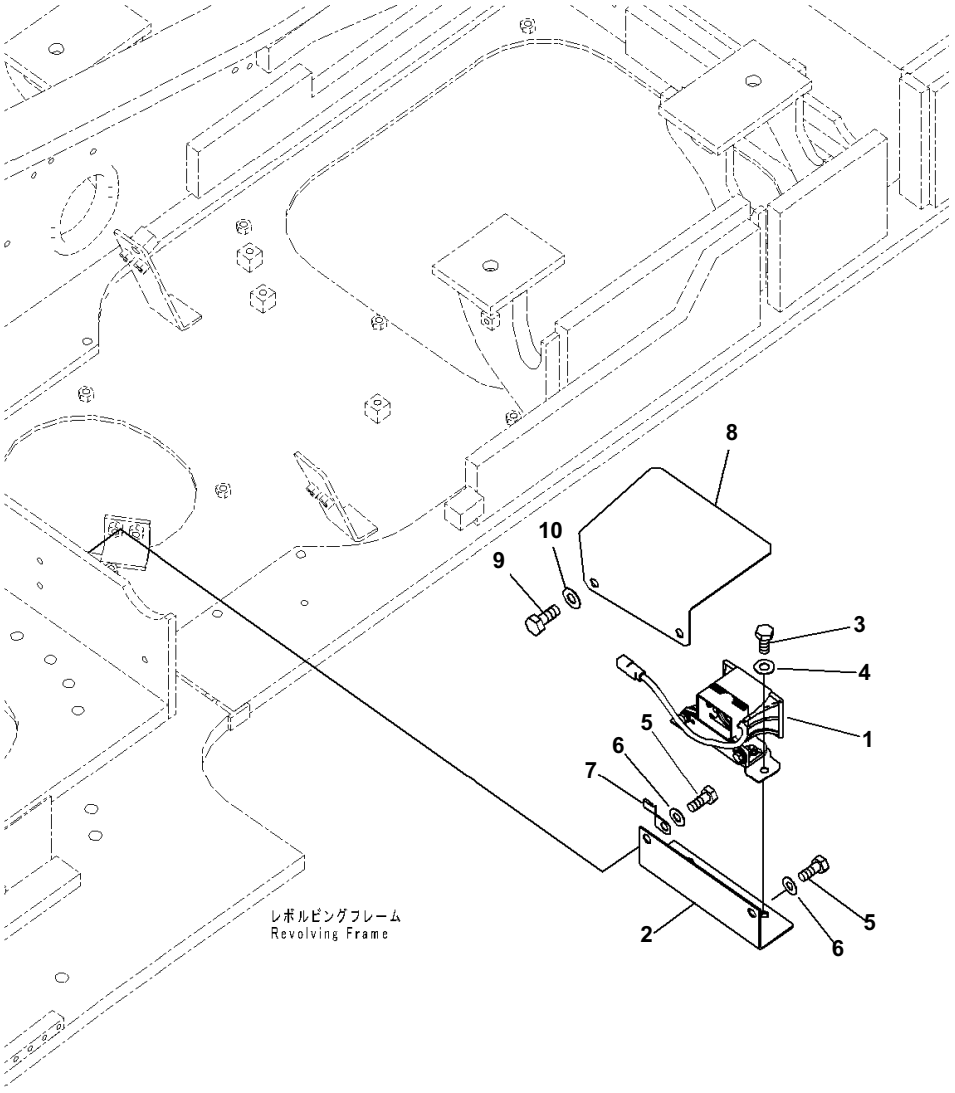

Index	Code	Part Number	Description	Qty	Serial No.
1		20Y-06-41812	Alarm, Back-up	1	B10001-
2		20Y-06-31710	Bracket	1	B10001-
3		01010-81020	Bolt	2	B10001-
4		01643-31032	Washer	2	B10001-
5		01010-81225	Bolt	2	B10001-
6		01643-31232	Washer	2	B10001-
7		08193-21012	Clip	1	B10001-
8		206-06-21120	Cover	1	B10001-
9		01010-81225	Bolt	2	B10001-
10		01643-31232	Washer	2	B10001-

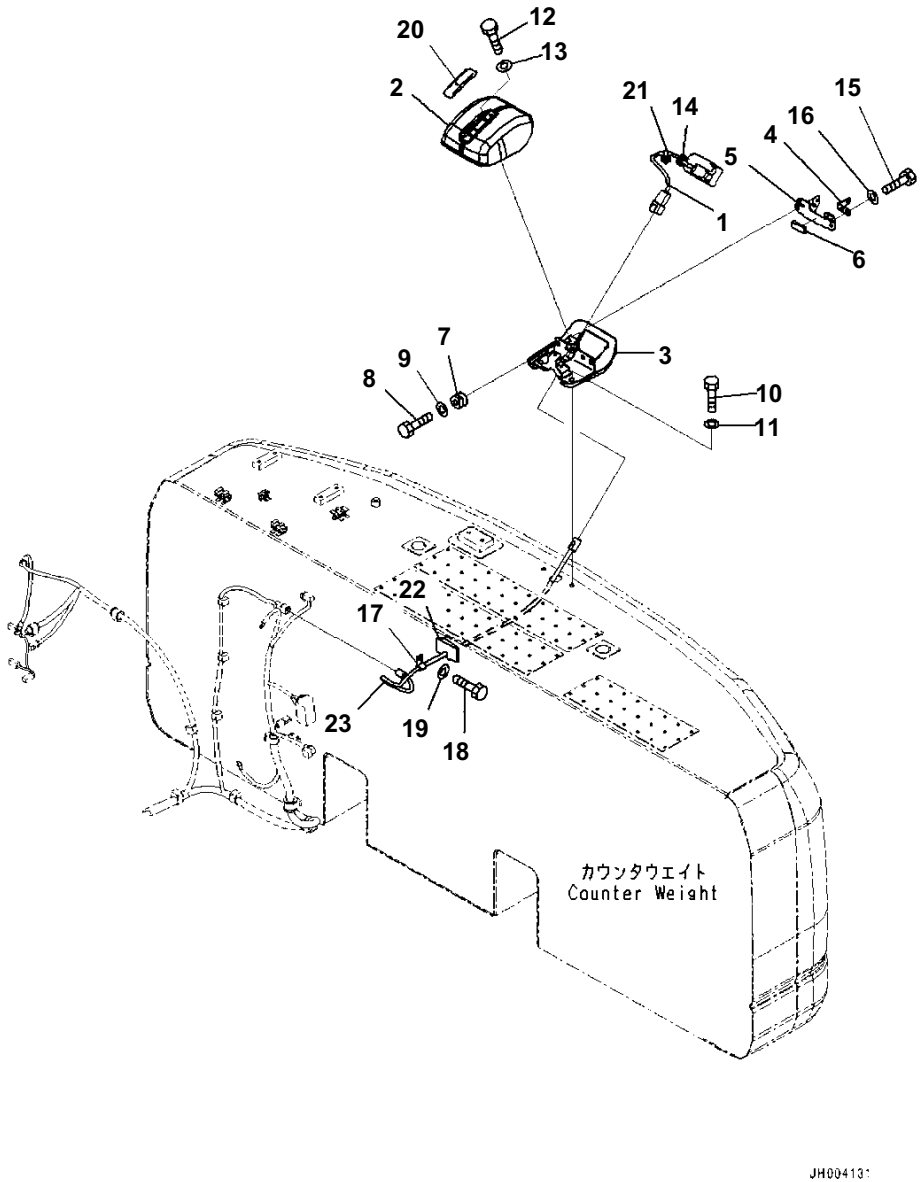

Index	Code	Part Number	Description	Qty	Serial No.
1		7835-33-2000	Camera Assembly	1	B10001-
2		207-06-76420	Cover	1	B10001-
3		20Y-06-71210	Cover	1	B10001-
4		22U-06-31440	Bracket	1	B10001-
5		22U-06-31430	Bracket	1	B10001-
6		207-06-76460	・ Sheet	1	B10001-
7		20Y-810-1240	Cushion	2	B10001-
8		01010-80835	Bolt	2	B10001-
9		01643-30823	Washer	2	B10001-
10		01010-81230	Bolt	2	B10001-
11		01643-31232	Washer	2	B10001-
12		01010-80616	Bolt	2	B10001-
13		01643-30623	Washer	2	B10001-
14		175-06-81610	Grommet	1	B10001-
15		01010-80616	Bolt	5	B10001-
16		01643-30623	Washer	5	B10001-
17		04434-51012	Clip	1	B10001-
18		01010-81225	Bolt	1	B10001-
19		01643-31232	Washer	1	B10001-
20		207-06-76490	Sheet	1	B10001-
21		08059-00310	Clip	1	B10001-
22		207-06-76490	Sheet	1	B10001-
23		20Y-06-42610	Cable	1	B10001-

HYDRAULIC SYSTEM

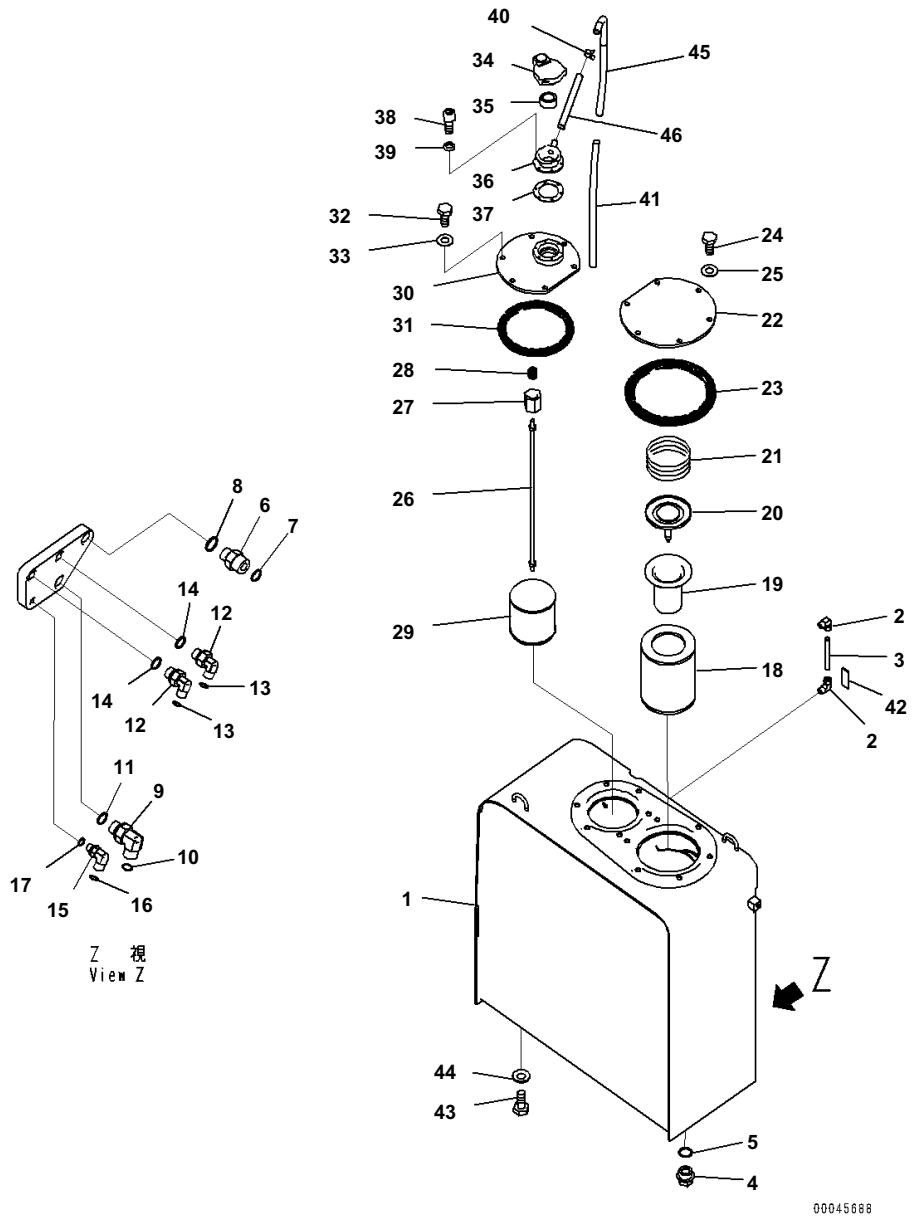

Index	Code	Part Number	Description	Qty	Serial No.
1		20Y-60-B2112	Tank	1	B10001-
2		203-60-31100	Elbow Assembly	2	B10001-
3		203-60-31160	Tube	1	B10001-
4		07044-12412	Plug	1	B10001-
5		07002-12434	O-ring	1	B10001-
6		02781-00628	Union	1	B10001-
7		02896-11018	O-ring	1	B10001-
8		07002-12434	O-ring	1	B10001-
9		02782-10522	Elbow	1	B10001-
10		02896-11015	O-ring	1	B10001-
11		07002-12434	O-ring	1	B10001-
12		02782-10315	Elbow	2	B10001-
13		02896-11009	O-ring	2	B10001-
14		07002-12034	O-ring	2	B10001-
15		02782-10311	Elbow	1	B10001-
16		02896-11009	O-ring	1	B10001-
17		07002-11423	O-ring	1	B10001-
18		207-60-71182	Element	1	B10001-
19		20Y-60-31140	Strainer	1	B10001-
20		20Y-60-31131	Valve Assembly	1	B10001-
21		07069-34075	Spring	1	B10001-
22		22U-60-21232	Cover	1	B10001-
23		07000-15195	O-ring	1	B10001-
24		01010-81230	Bolt	6	B10001-
25		01643-31232	Washer	6	B10001-
		20Y-60-31171	Strainer Assembly	1	B10001-
26		207-60-61150	・Rod Assembly	1	B10001-
27		20Y-60-21320	・・Holder	1	B10001-
28		12R-60-11230	・・Spring	1	B10001-
29		22B-60-11160	・Strainer	1	B10001-
30		20Y-60-B2130	Cover	1	B10001-
31		07000-15160	O-ring	1	B10001-
32		01010-81230	Bolt	6	B10001-
33		01643-31232	Washer	6	B10001-
34		17A-60-11310	Cap Assembly	1	B10001-
35		20Y-60-21470	・Element	1	B10001-
36		208-60-71181	Filler Neck, Neck	1	B10001-
37		20Y-60-21340	Gasket	1	B10001-
38		01252-70516	Bolt	6	B10001-
39		01601-20513	Washer	6	B10001-
40		07285-00155	Clip	1	B10001-
41		07270-01490	Tube	1	B10001-
42		205-00-73360	Plate, Operating	1	B10001-
43		01010-81635	Bolt	6	B10001-
44		01643-31645	Washer	6	B10001-
45		20Y-60-B2120	Hose	1	B10001-

PC240LC-8 S/N B10001-UP

Hydraulic Tank

Index	Code	Part Number	Description	Qty	Serial No.
46		07270-01420	Tube	1	B10001-

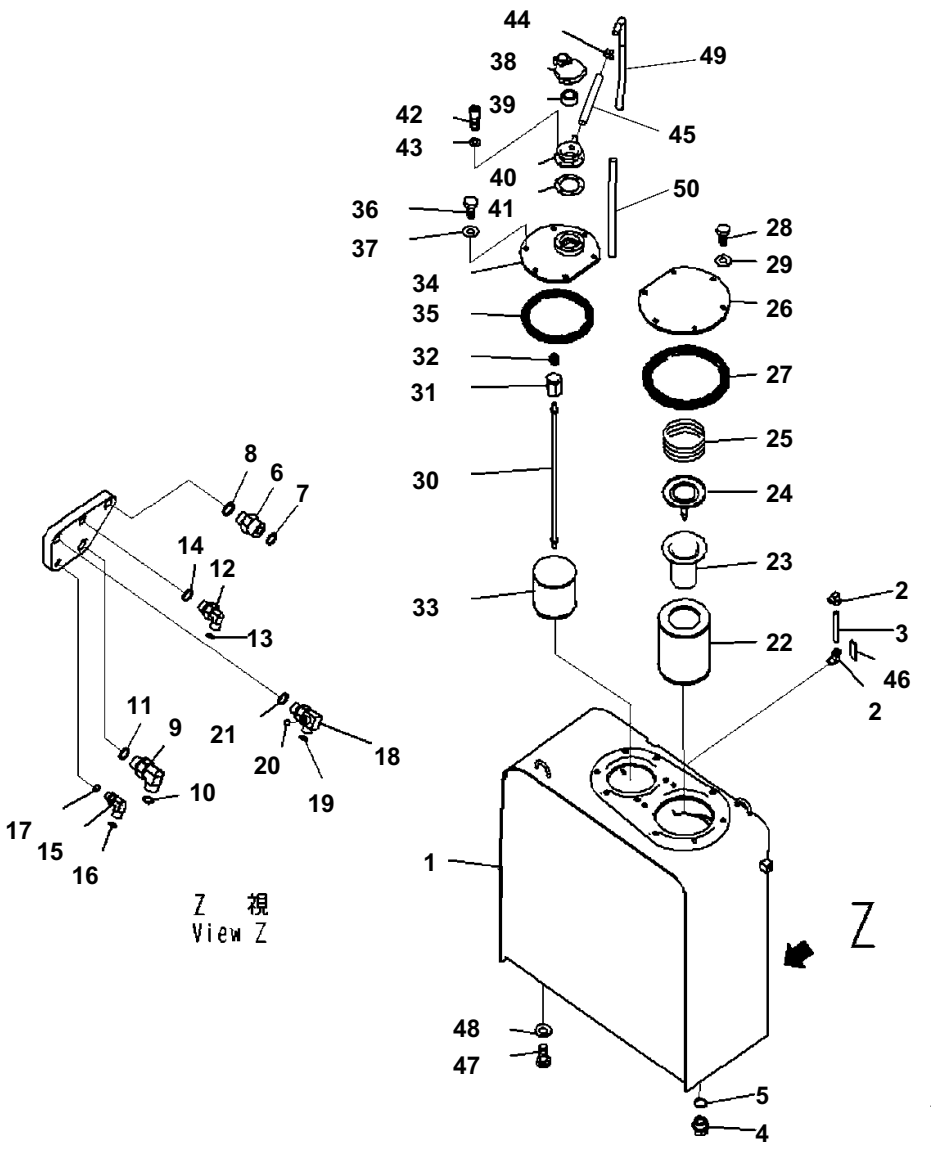

Index	Code	Part Number	Description	Qty	Serial No.
1		20Y-60-B2112	Tank	1	B10001-
2		203-60-31100	Elbow Assembly	2	B10001-
3		203-60-31160	Tube	1	B10001-
4		07044-12412	Plug	1	B10001-
5		07002-12434	O-ring	1	B10001-
6		02781-00628	Union	1	B10001-
7		02896-11018	O-ring	1	B10001-
8		07002-12434	O-ring	1	B10001-
9		02782-10522	Elbow	1	B10001-
10		02896-11015	O-ring	1	B10001-
11		07002-12434	O-ring	1	B10001-
12		02782-10315	Elbow	1	B10001-
13		02896-11009	O-ring	1	B10001-
14		07002-12034	O-ring	1	B10001-
15		02782-10311	Elbow	1	B10001-
16		02896-11009	O-ring	1	B10001-
17		07002-11423	O-ring	1	B10001-
18		20Y-62-45690	Tee	1	B10001-
19		02896-11009	O-ring	1	B10001-
20		02896-11008	O-ring	1	B10001-
21		07002-12034	O-ring	1	B10001-
22		207-60-71182	Element	1	B10001-
23		20Y-60-31140	Strainer	1	B10001-
24		20Y-60-31131	Valve Assembly	1	B10001-
25		07069-34075	Spring	1	B10001-
26		22U-60-21232	Cover	1	B10001-
27		07000-15195	O-ring	1	B10001-
28		01010-81230	Bolt	6	B10001-
29		01643-31232	Washer	6	B10001-
		20Y-60-31171	Strainer Assembly	1	B10001-
30		207-60-61150	・ Rod Assembly	1	B10001-
31		20Y-60-21320	・・ Holder	1	B10001-
32		12R-60-11230	・・ Spring	1	B10001-
33		22B-60-11160	・ Strainer	1	B10001-
34		20Y-60-B2130	Cover	1	B10001-
35		07000-15160	O-ring	1	B10001-
36		01010-81230	Bolt	6	B10001-
37		01643-31232	Washer	6	B10001-
38		17A-60-11310	Cap Assembly	1	B10001-
39		20Y-60-21470	・ Element	1	B10001-
40		208-60-71181	Filler Neck, Neck	1	B10001-
41		20Y-60-21340	Gasket	1	B10001-
42		01252-70516	Bolt	6	B10001-
43		01601-20513	Washer	6	B10001-
44		07285-00155	Clip	1	B10001-
45		07270-01420	Tube	1	B10001-
46		205-00-73360	Plate, Operating	1	B10001-

PC240LC-8 S/N B10001-UP
Hydraulic Tank, 1ATT

Index	Code	Part Number	Description	Qty	Serial No.
47		01010-81635	Bolt	6	B10001-
48		01643-31645	Washer	6	B10001-
49		20Y-60-B2120	Hose	1	B10001-
50		07270-01490	Tube	1	B10001-

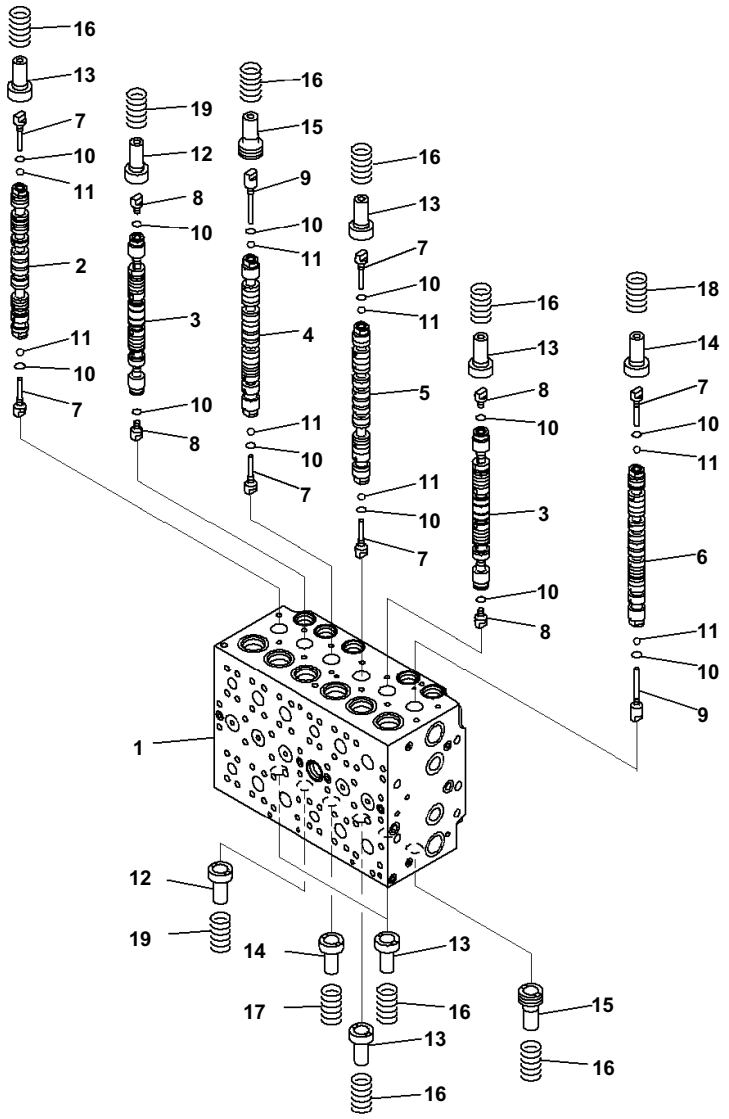

Index	Code	Part Number	Description	Qty	Serial No.
		723-47-23803	Valve Assembly	1	B10001-
	C1		・ Body Subassembly	1	B10001-
1	C1		・・ Block, Valve	1	B10001-
2	C1		・・ Spool	1	B10001-
3	C1		・・ Spool	2	B10001-
4	C1		・・ Spool	1	B10001-
5	C1		・・ Spool	1	B10001-
6	C1		・・ Spool	1	B10001-
7		723-46-15130	・・ Plug	6	B10001-
8		723-46-15140	・・ Plug	4	B10001-
9		723-46-15650	・・ Plug	2	B10001-
10		07002-10823	・・ O-ring	12	B10001-
11		708-7T-16460	・・ Ball	8	B10001-
12		723-46-15120	・・ Retainer	2	B10001-
13		723-46-15690	・・ Retainer	6	B10001-
14		723-46-15950	・・ Retainer	2	B10001-
15		723-46-15880	・・ Retainer	2	B10001-
16		723-46-14110	・・ Spring	8	B10001-
17		723-46-14280	・・ Spring	1	B10001-
18		723-46-14290	・・ Spring	1	B10001-
19		723-46-14131	・・ Spring	2	B10001-

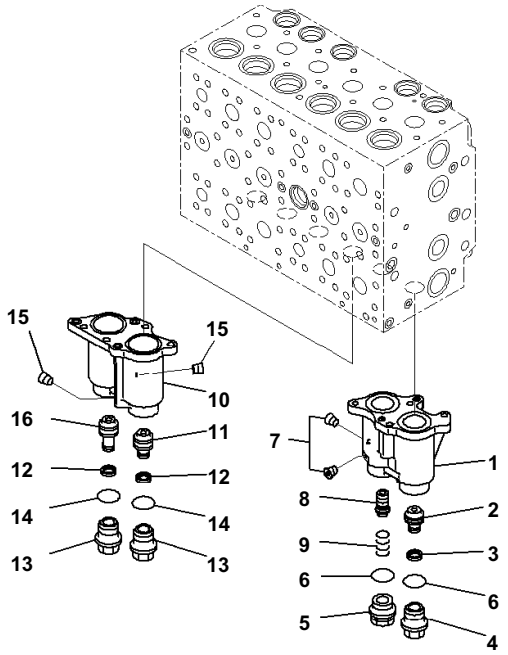

Index	Code	Part Number	Description	Qty	Serial No.
		723-47-23803	Valve Assembly	1	B10001-
	C1		・Body Subassembly	1	B10001-
		723-46-18300	・・Case Subassembly	1	B10001-
1	C1		・・・Case	1	B10001-
2	C1		・・・Piston	1	B10001-
3	C1		・・・Seal	1	B10001-
4		723-46-15630	・・・Plug	1	B10001-
5		723-46-17340	・・・Plug	1	B10001-
6		07000-13024	・・・O-ring	2	B10001-
7	C1		・・・Screw	3	B10001-
8		723-46-17320	・・・Spool	1	B10001-
9		723-46-17330	・・・Spring	1	B10001-
		723-46-19300	・・Case Subassembly	1	B10001-
10	C1		・・・Case	1	B10001-
11	C1		・・・Piston	1	B10001-
12	C1		・・・Seal	2	B10001-
13		723-46-15630	・・・Plug	2	B10001-
14		07000-13024	・・・O-ring	2	B10001-
15	C1		・・・Screw	2	B10001-
16		723-46-15640	・・・Piston	1	B10001-

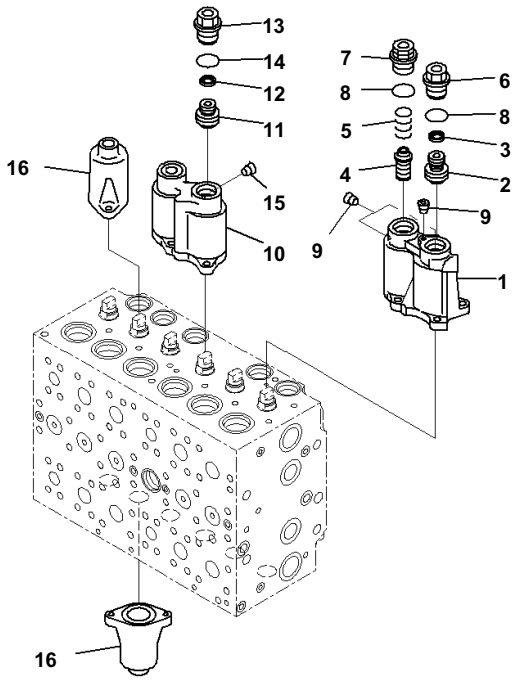

Main Control Valve, Inner Parts, Main Valve, 1ATT (3/21)

Index	Code	Part Number	Description	Qty	Serial No.
		723-47-23803	Valve Assembly	1	B10001-
	C1		・Body Subassembly	1	B10001-
		723-46-19200	・・Case Subassembly	1	B10001-
1	C1		・・・Case	1	B10001-
2	C1		・・・Piston	1	B10001-
3	C1		・・・Seal	1	B10001-
4		723-46-17320	・・・Spool	1	B10001-
5		723-46-17330	・・・Spring	1	B10001-
6		723-46-15630	・・・Plug	1	B10001-
7		723-46-17340	・・・Plug	1	B10001-
8		07000-13024	・・・O-ring	2	B10001-
9	C1		・・・Screw	3	B10001-
		723-46-19400	・・Case Subassembly	1	B10001-
10		723-46-17212	・・・Case	1	B10001-
11		723-46-15980	・・・Piston	1	B10001-
12		702-73-11510	・・・Seal	1	B10001-
13		723-46-15630	・・・Plug	1	B10001-
14		07000-13024	・・・O-ring	1	B10001-
15		702-16-54490	・・・Screw	1	B10001-
16		723-46-15111	・・Case	2	B10001-

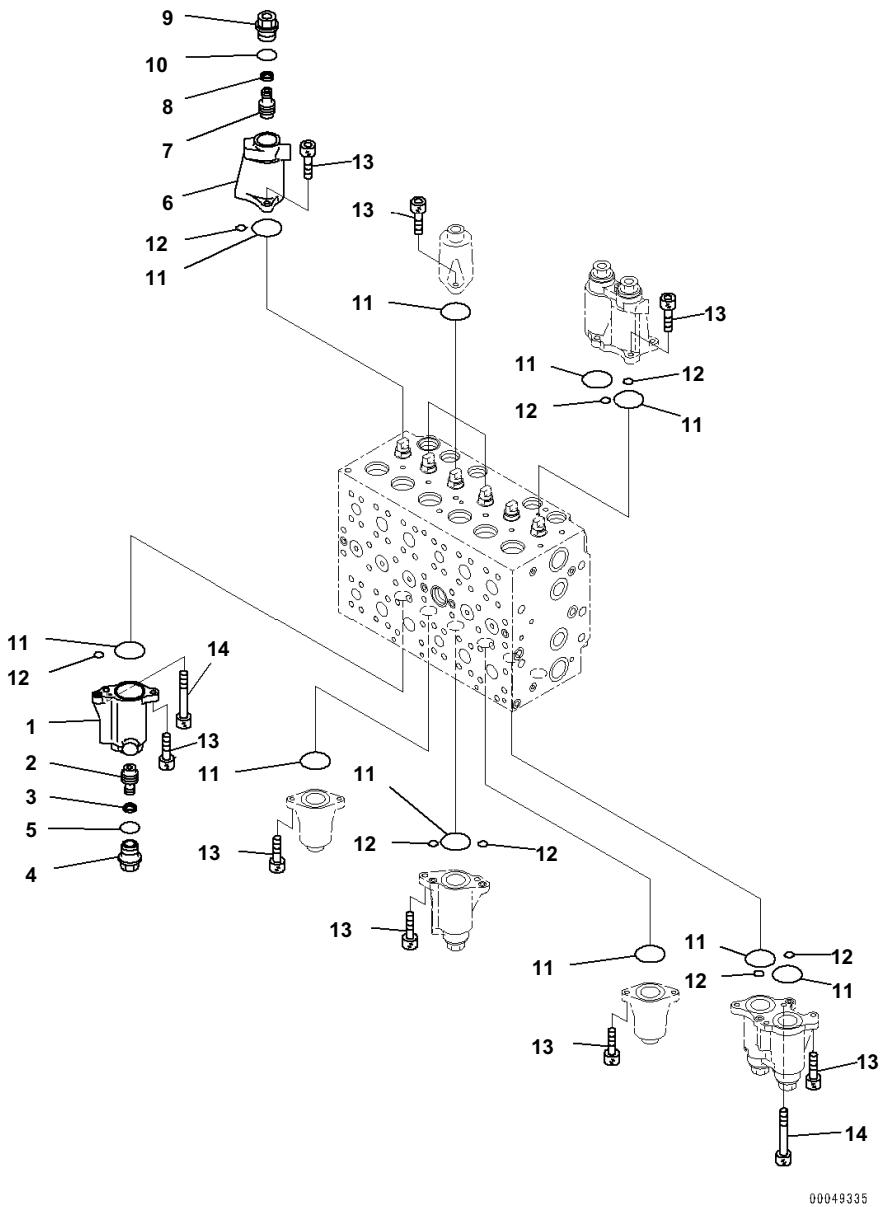

Index	Code	Part Number	Description	Qty	Serial No.
		723-47-23803	Valve Assembly	1	B10001-
	C1		· Body Subassembly	1	B10001-
		723-46-18500	· · Case Subassembly	1	B10001-
1	C1		· · · Case	1	B10001-
2	C1		· · · Piston	1	B10001-
3	C1		· · · Seal	1	B10001-
4		723-46-15630	· · · Plug	1	B10001-
5		07000-13024	· · · O-ring	1	B10001-
		723-46-18600	· · Case Subassembly	1	B10001-
6	C1		· · · Case	1	B10001-
7	C1		· · · Piston	1	B10001-
8	C1		· · · Seal	1	B10001-
9		723-46-15630	· · · Plug	1	B10001-
10		07000-13024	· · · O-ring	1	B10001-
11		07430-71380	· · O-ring	12	B10001-
12		702-16-53920	· · O-ring	10	B10001-
13		01252-60820	· · Bolt	22	B10001-
14		723-46-17350	· · Bolt	2	B10001-

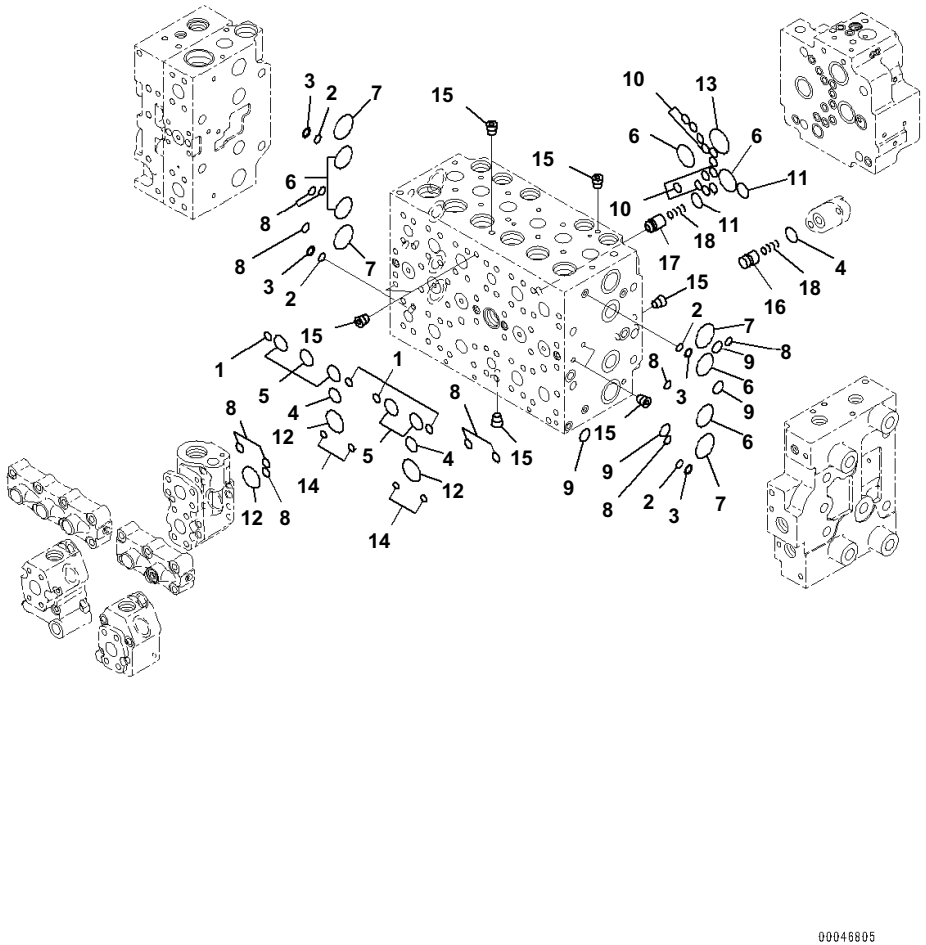

Index	Code	Part Number	Description	Qty	Serial No.
		723-47-23803	Valve Assembly	1	B10001-
	C1		・Body Subassembly	1	B10001-
1		07000-12012	・・O-ring	4	B10001-
2		723-11-19130	・・O-ring	4	B10001-
3		723-46-17520	・・Ring, Back-up	4	B10001-
4		07000-12021	・・O-ring	3	B10001-
5		07000-13028	・・O-ring	5	B10001-
6		07000-13032	・・O-ring	6	B10001-
7		723-46-17510	・・O-ring	4	B10001-
8		723-46-17530	・・O-ring	11	B10001-
9		723-11-18150	・・O-ring	4	B10001-
10		07000-12012	・・O-ring	12	B10001-
11		07000-12021	・・O-ring	2	B10001-
12		07000-13032	・・O-ring	3	B10001-
13		07000-13036	・・O-ring	1	B10001-
14		702-16-53920	・・O-ring	4	B10001-
15	C1		・・Plug	16	B10001-
16		723-46-17650	・・Valve	1	B10001-
17		723-46-15150	・・Valve	1	B10001-
18		723-46-14150	・・Spring	2	B10001-

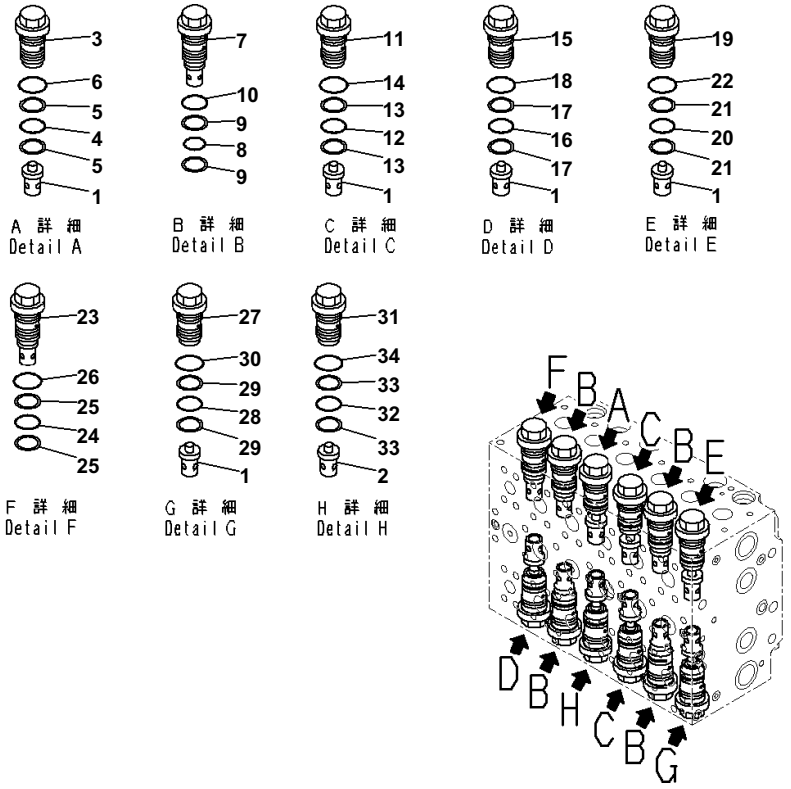

Index	Code	Part Number	Description	Qty	Serial No.
		723-47-23803	Valve Assembly	1	B10001-
	C1		・ Body Subassembly	1	B10001-
1		723-46-41210	・・ Valve	6	B10001-
2		723-46-41190	・・ Valve	1	B10001-
3		723-46-40100	・・ Valve Assembly	1	B10001-
4		700-93-11320	・・・ O-ring	1	B10001-
5		723-46-41950	・・・ Ring	2	B10001-
6		07002-13634	・・・ O-ring	1	B10001-
7		723-46-42700	・・ Valve Assembly	4	B10001-
8		700-93-11320	・・・ O-ring	1	B10001-
9		723-46-41950	・・・ Ring	2	B10001-
10		07002-13634	・・・ O-ring	1	B10001-
11		723-46-41100	・・ Valve Assembly	2	B10001-
12		700-93-11320	・・・ O-ring	1	B10001-
13		723-46-41950	・・・ Ring	2	B10001-
14		07002-13634	・・・ O-ring	1	B10001-
15		723-46-45100	・・ Valve Assembly	1	B10001-
16		700-93-11320	・・・ O-ring	1	B10001-
17		723-46-41950	・・・ Ring	2	B10001-
18		07002-13634	・・・ O-ring	1	B10001-
19		723-46-46300	・・ Valve Assembly	1	B10001-
20		700-93-11320	・・・ O-ring	1	B10001-
21		723-46-41950	・・・ Ring	2	B10001-
22		07002-13634	・・・ O-ring	1	B10001-
23		723-46-43400	・・ Valve Assembly	1	B10001-
24		700-93-11320	・・・ O-ring	1	B10001-
25		723-46-41950	・・・ Ring	2	B10001-
26		07002-13634	・・・ O-ring	1	B10001-
27		723-46-43100	・・ Valve Assembly	1	B10001-
28		700-93-11320	・・・ O-ring	1	B10001-
29		723-46-41950	・・・ Ring	2	B10001-
30		07002-13634	・・・ O-ring	1	B10001-
31		723-46-46101	・・ Valve Assembly	1	B10001-
32		700-93-11320	・・・ O-ring	1	B10001-
33		723-46-41950	・・・ Ring	2	B10001-
34		07002-13634	・・・ O-ring	1	B10001-

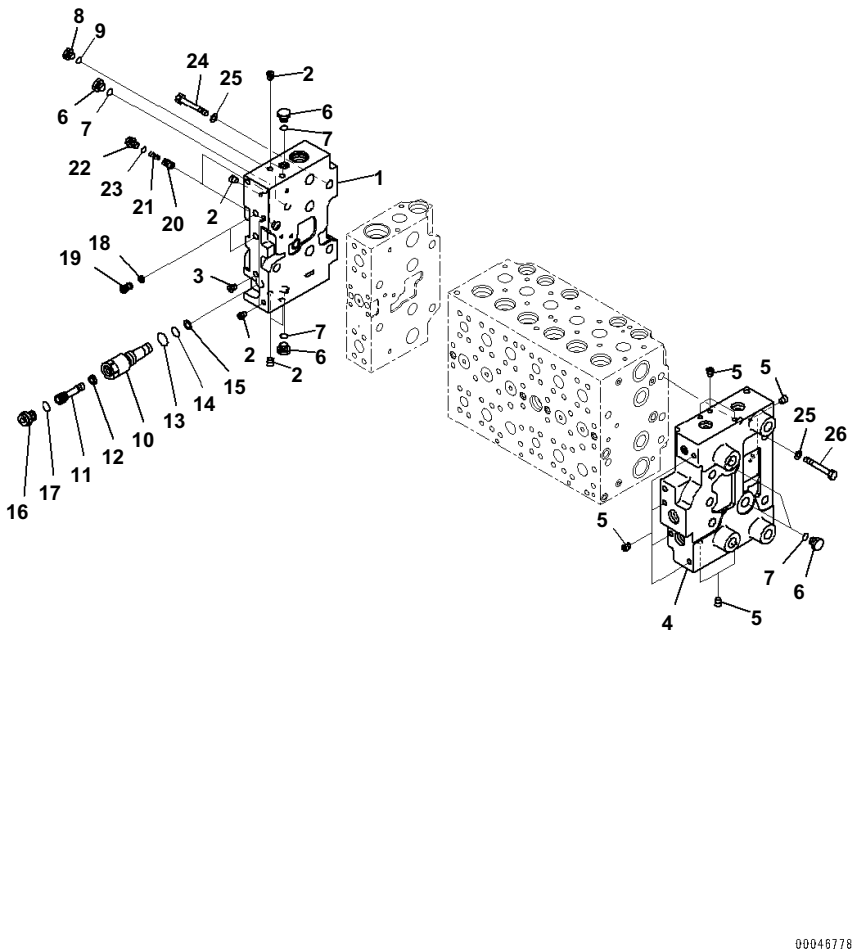

Index	Code	Part Number	Description	Qty	Serial No.
		723-47-23803	Valve Assembly	1	B10001-
		723-46-00750	・ Cover Assembly	1	B10001-
1	C1		・・ Cover	1	B10001-
2	C1		・・ Plug	7	B10001-
3	C1		・・ Plug	1	B10001-
		723-46-00790	・ Cover Assembly	1	B10001-
4	C1		・・ Cover	1	B10001-
5	C1		・・ Plug	12	B10001-
6		708-8E-16250	・ Plug	5	B10001-
7		07002-11823	・ O-ring	5	B10001-
8		708-8H-11530	・ Plug	1	B10001-
9		07002-11423	・ O-ring	1	B10001-
		723-46-17600	・ Plug Assembly	1	B10001-
10		723-46-17610	・・ Sleeve	1	B10001-
11		723-46-17640	・・ Plug	1	B10001-
12		702-21-55760	・・ Filter	1	B10001-
13		07002-11423	・・ O-ring	1	B10001-
14		07000-11007	・・ O-ring	1	B10001-
15		07001-01007	・・ Ring, Back-up	1	B10001-
16		708-8E-16160	・・ Plug	1	B10001-
17		07002-11023	・・ O-ring	1	B10001-
18		723-40-82220	・ Filter	2	B10001-
19		723-46-17550	・ Plug	2	B10001-
20		723-46-15190	・ Valve	2	B10001-
21		723-46-14140	・ Spring	2	B10001-
22		708-8E-16160	・ Plug	2	B10001-
23		07002-11023	・ O-ring	2	B10001-
24		01010-61490	・ Bolt	4	B10001-
25		01643-31445	・ Washer	8	B10001-
26		01011-61455	・ Bolt	4	B10001-

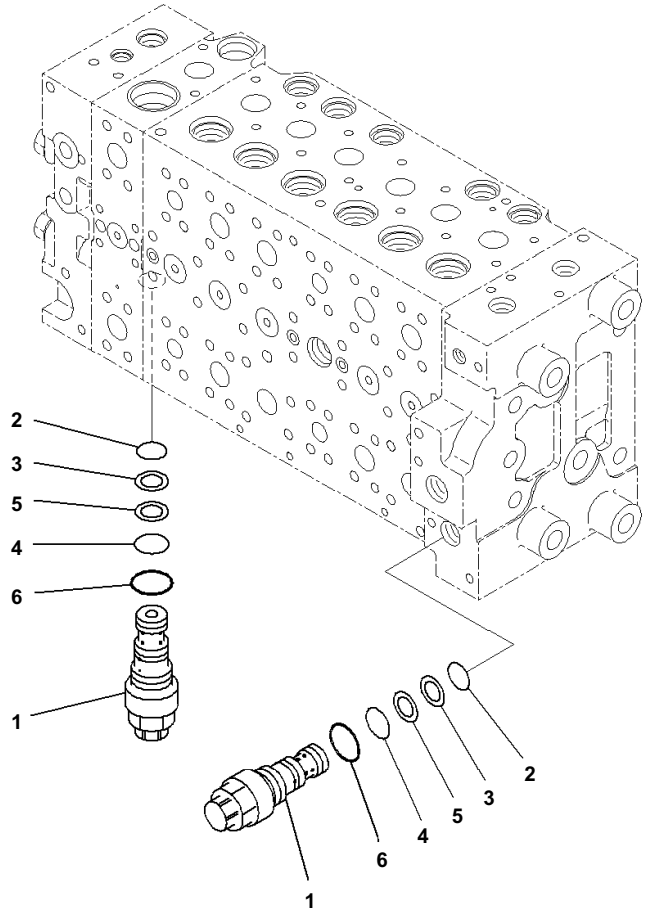

Index	Code	Part Number	Description	Qty	Serial No.
		723-47-23803	Valve Assembly	1	B10001-
1		723-40-57200	・Valve Assembly, Unloader	2	B10001-
2		07000-12014	・・O-ring	1	B10001-
3		723-40-56350	・・Ring	1	B10001-
4		07000-12016	・・O-ring	1	B10001-
5		723-60-22230	・・Ring, Back-up	1	B10001-
6		07002-12434	・・O-ring	1	B10001-

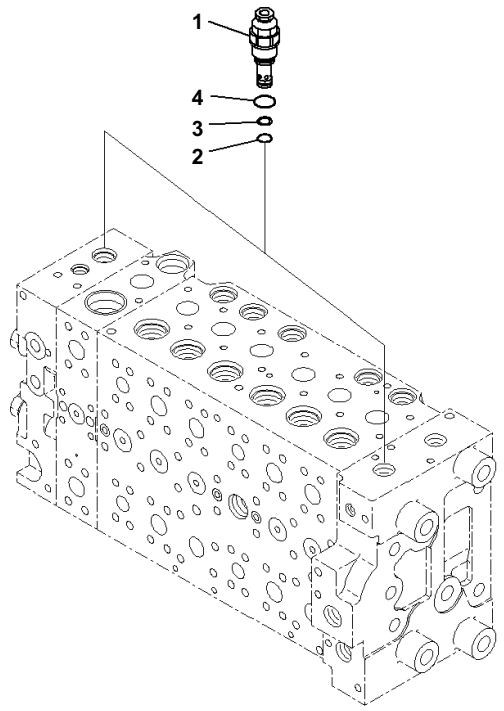

Index	Code	Part Number	Description	Qty	Serial No.
		723-47-23803	Valve Assembly	1	B10001-
1		723-40-93600	・ Valve Assembly, Relief	2	B10001-
2		700-22-11410	・・ O-ring	1	B10001-
3		700-80-64220	・・ Ring	1	B10001-
4		07002-12434	・・ O-ring	1	B10001-

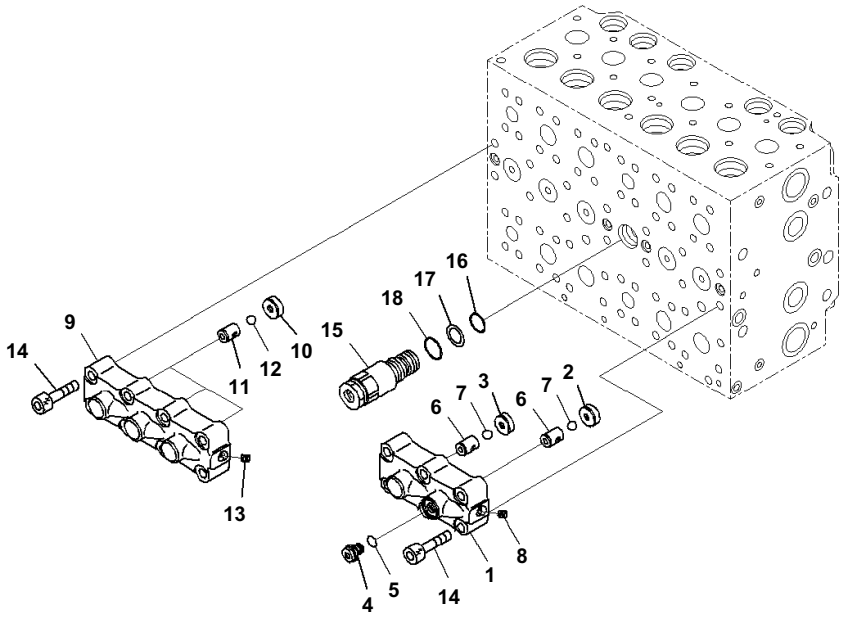

Index	Code	Part Number	Description	Qty	Serial No.
		723-47-23803	Valve Assembly	1	B10001-
		723-40-66701	・ Valve Assembly	1	B10001-
1	C1		・・ Case	1	B10001-
2	C1		・・ Seat	1	B10001-
3	C1		・・ Seat	1	B10001-
4		708-8H-11530	・・ Plug	1	B10001-
5		07002-11423	・・ O-ring	1	B10001-
6	C1		・・ Seat	2	B10001-
7	C1		・・ Ball	2	B10001-
8	C1		・・ Plug	1	B10001-
		723-40-66601	・ Valve Assembly	1	B10001-
9	C1		・・ Case	1	B10001-
10	C1		・・ Seat	3	B10001-
11	C1		・・ Seat	3	B10001-
12	C1		・・ Ball	3	B10001-
13	C1		・・ Plug	1	B10001-
14		01252-61045	・ Bolt, Hexagon Socket Head	14	B10001-
15		723-40-60101	・ Valve Assembly	1	B10001-
16		07000-12020	・・ O-ring	1	B10001-
17		07001-02020	・・ Ring, Back-up	1	B10001-
18		709-25-11390	・・ O-ring	1	B10001-

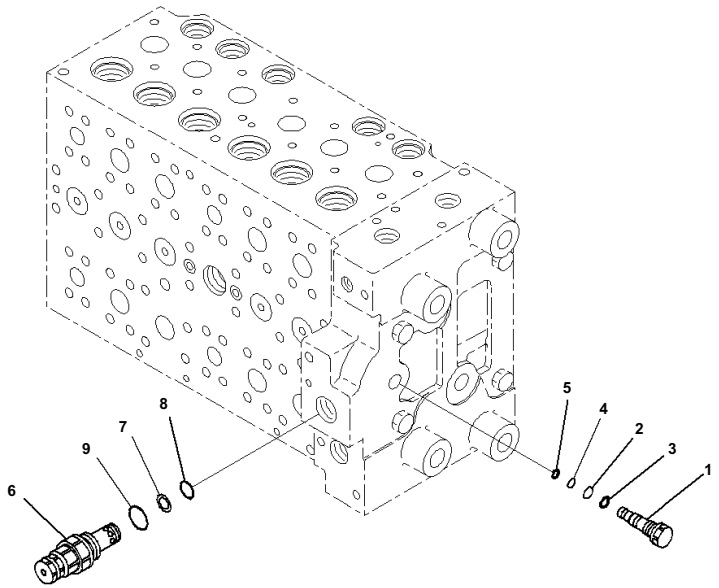

Index	Code	Part Number	Description	Qty	Serial No.
		723-47-23803	Valve Assembly	1	B10001-
		723-46-17701	・Plug Assembly	1	B10001-
1		723-46-17711	・・Plug	1	B10001-
2		07000-11009	・・O-ring	1	B10001-
3		07001-01009	・・Ring, Back-up	1	B10001-
4		07000-11007	・・O-ring	1	B10001-
5		07001-01007	・・Ring, Back-up	1	B10001-
6		723-40-91500	・Valve Assembly, Relief	1	B10001-
7		700-80-64220	・・Ring	1	B10001-
8		700-22-11410	・・O-ring	1	B10001-
9		709-25-11390	・・O-ring	1	B10001-

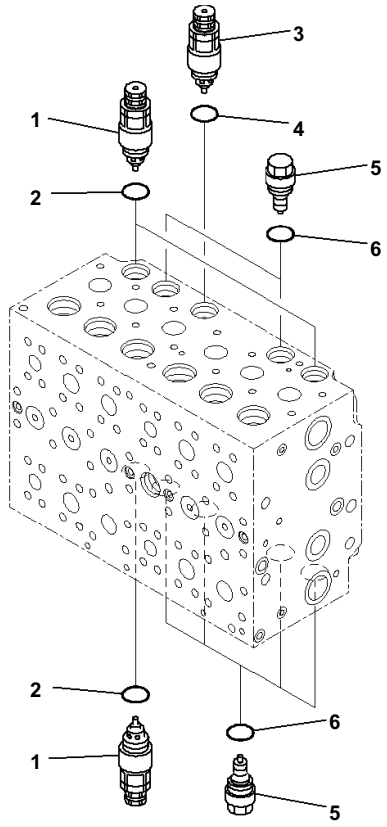

Main Control Valve, Inner Parts, Main Valve, 1ATT (12/21)

Index	Code	Part Number	Description	Qty	Serial No.
		723-47-23803	Valve Assembly	1	B10001-
1		723-40-91200	・Valve Assembly, Suction and Relief	3	B10001-
2		709-25-11390	・・O-ring	1	B10001-
3		723-90-61600	・Valve Assembly	1	B10001-
4		07000-13024	・・O-ring	1	B10001-
5		723-40-85100	・Valve Assembly, Suction	6	B10001-
6		709-25-11390	・・O-ring	1	B10001-

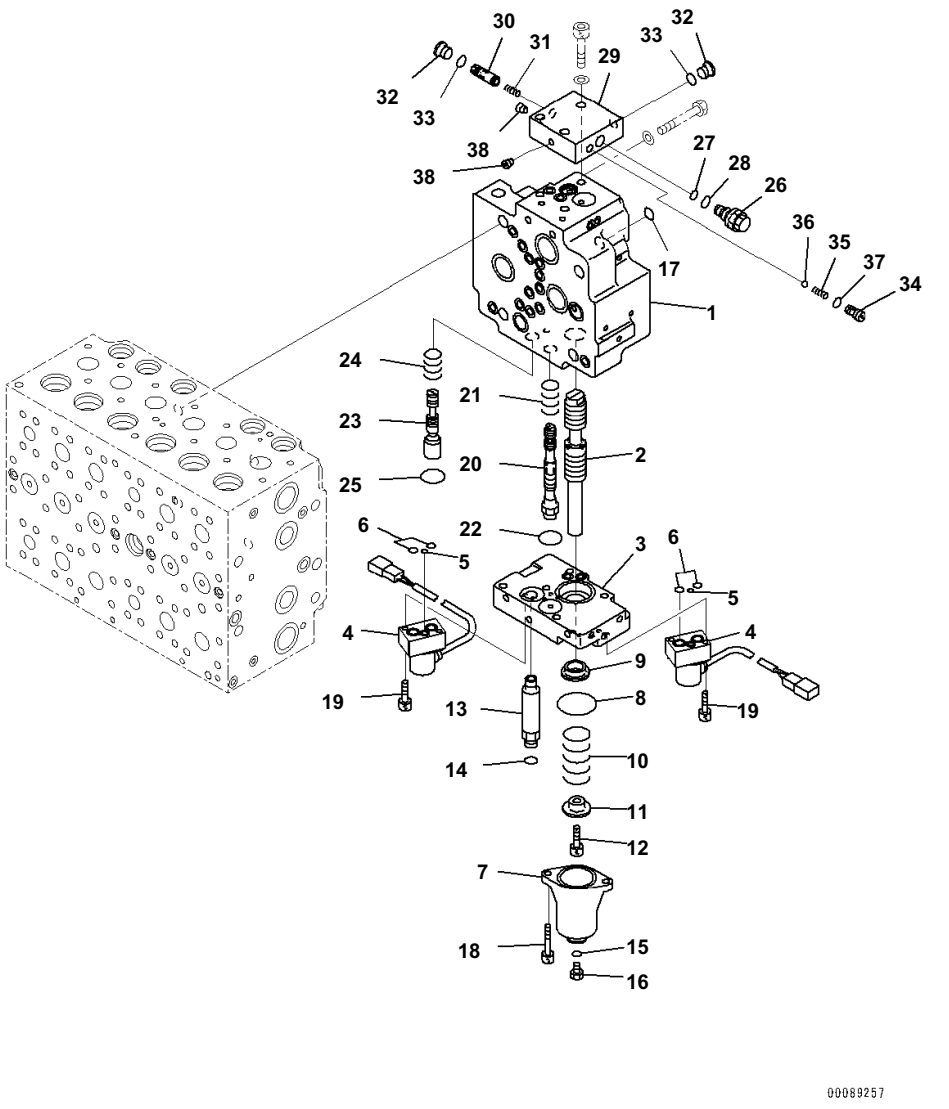

Index	Code	Part Number	Description	Qty	Serial No.
		723-47-23803	Valve Assembly	1	B10001-
		723-40-72100	· Valve Assembly	1	B10001-
1	C1		· · Body	1	B10001-
2	C1		· · Spool	1	B10001-
3		723-40-72800	· · Plate Assembly	1	B10001-
4		702-21-60500	· · Valve, Pilot	2	B10001-
5		723-11-19960	· · · O-ring	1	B10001-
6		702-21-54910	· · · O-ring	2	B10001-
7		723-46-15111	· · Case	1	B10001-
8		07430-71380	· · O-ring	1	B10001-
9		723-40-71330	· · Retainer	1	B10001-
10		723-40-71340	· · Spring	1	B10001-
11		723-40-71350	· · Retainer	1	B10001-
12		01252-60816	· · Bolt	1	B10001-
13		723-40-71870	· · Union	1	B10001-
14		02896-11008	· · O-ring	1	B10001-
15		07002-11423	· · O-ring	1	B10001-
16		07040-11409	· · Plug	1	B10001-
17		07002-11423	· · O-ring	1	B10001-
18		01252-60855	· · Bolt, Hexagon Socket Head	2	B10001-
19		01252-60635	· · Bolt	4	B10001-
		723-40-72900	· · Spool Assembly	1	B10001-
20	C1		· · · Spool	1	B10001-
21		723-40-71850	· · Spring	1	B10001-
22		723-46-18720	· · O-ring	1	B10001-
23	C1		· · Spool	1	B10001-
24		723-40-71390	· · Spring	1	B10001-
25		723-46-18720	· · O-ring	1	B10001-
		723-40-71900	· · Valve Assembly	1	B10001-
26	C1		· · · Valve Assembly, Relief	1	B10001-
27		702-16-53920	· · · · O-ring	1	B10001-
28		07002-11623	· · · · O-ring	1	B10001-
29	C1		· · · Block	1	B10001-
30	C1		· · · Spool	1	B10001-
31	C1		· · · Spring	1	B10001-
32		702-21-55620	· · · Plug	2	B10001-
33		07002-11423	· · · O-ring	2	B10001-
34		702-21-55710	· · · Seat	1	B10001-
35		702-21-55720	· · · Spring	1	B10001-
36		04260-00793	· · · Ball	1	B10001-
37		07000-11009	· · · O-ring	1	B10001-
38	C1		· · · Plug	2	B10001-

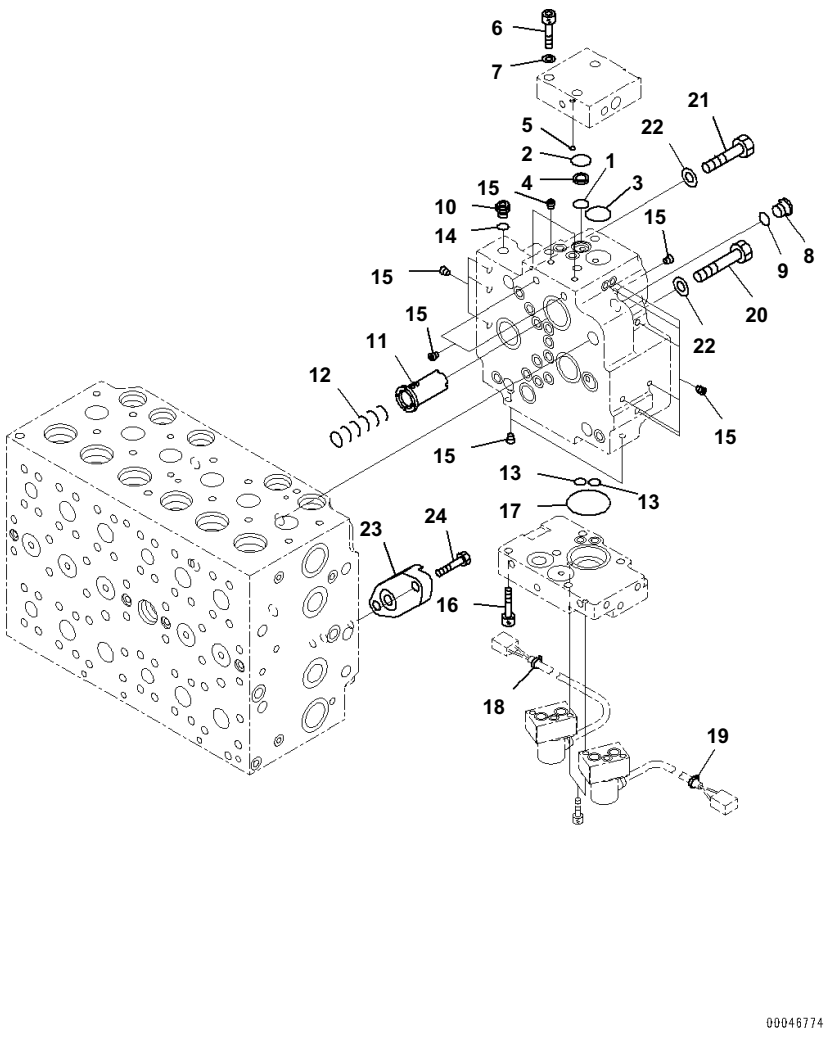

Index	Code	Part Number	Description	Qty	Serial No.
		723-47-23803	Valve Assembly	1	B10001-
		723-40-72100	・ Valve Assembly	1	B10001-
1		702-21-55420	・・ O-ring	1	B10001-
2		702-21-55520	・・ O-ring	1	B10001-
3		702-21-55440	・・ O-ring	1	B10001-
4		702-21-53120	・・ Filter	1	B10001-
5		07000-12011	・・ O-ring	2	B10001-
6		01252-61040	・・ Bolt	3	B10001-
7		01643-51032	・・ Washer	3	B10001-
8		702-21-55620	・・ Plug	1	B10001-
9		07002-11423	・・ O-ring	1	B10001-
10		708-8E-16160	・・ Plug	1	B10001-
11		723-40-71430	・・ Valve	1	B10001-
12		702-21-55460	・・ Spring	1	B10001-
13		07000-11010	・・ O-ring	2	B10001-
14		07002-11023	・・ O-ring	1	B10001-
15	C1		・・ Plug	17	B10001-
16		01252-60845	・・ Bolt	3	B10001-
17		07000-12035	・・ O-ring	1	B10001-
18		20Y-62-22790	・・ Band, Red	1	B10001-
19		20Y-62-22830	・・ Band, White	1	B10001-
20		01010-61470	・ Bolt	3	B10001-
21		01010-61460	・ Bolt	1	B10001-
22		01643-31445	・ Washer	4	B10001-
23		723-46-17680	・ Plate	1	B10001-
24		01010-81030	・ Bolt	2	B10001-

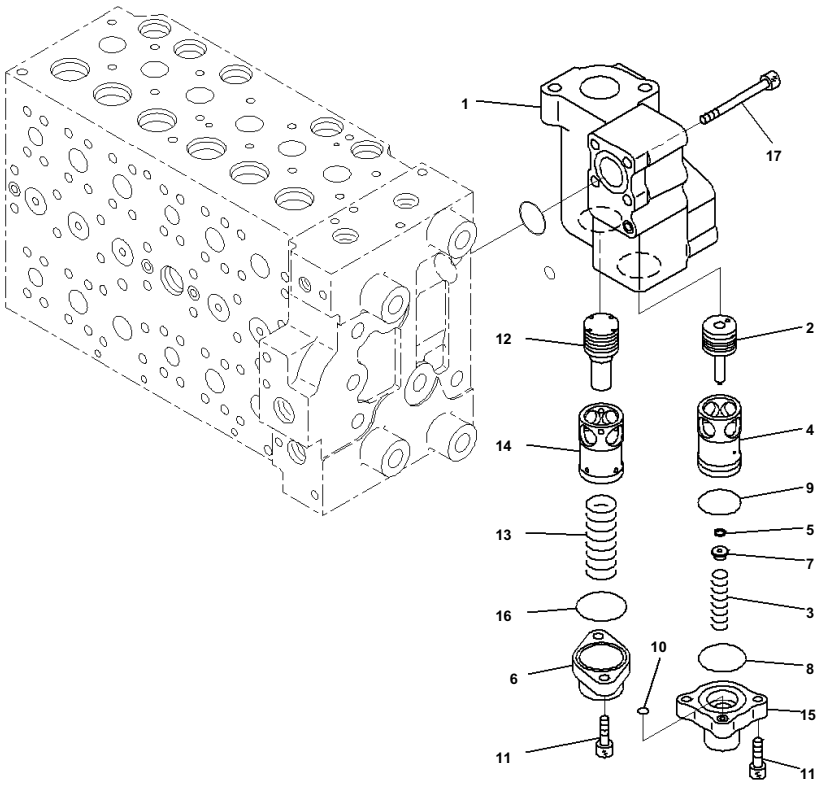

Index	Code	Part Number	Description	Qty	Serial No.
		723-47-23803	Valve Assembly	1	B10001-
		723-40-87601	・Valve Assembly	1	B10001-
1		723-40-87510	・・Body	1	B10001-
2		723-40-87240	・・Spool	1	B10001-
3		723-40-87260	・・Spring	1	B10001-
4	C1		・・Sleeve	1	B10001-
5	C1		・・Seal	1	B10001-
6	C1		・・Case	1	B10001-
7		723-40-87250	・・Retainer	1	B10001-
8		723-40-87170	・・O-ring	1	B10001-
9		07000-13035	・・O-ring	1	B10001-
10		07000-11007	・・O-ring	1	B10001-
11		01252-60825	・・Bolt	4	B10001-
12		723-40-87520	・・Piston	1	B10001-
13		723-40-87540	・・Spring	1	B10001-
14	C1		・・Sleeve	1	B10001-
15	C1		・・Case	1	B10001-
16		723-40-87170	・・O-ring	1	B10001-
17		01252-61080	・Bolt, Hexagon Socket Head	4	B10001-

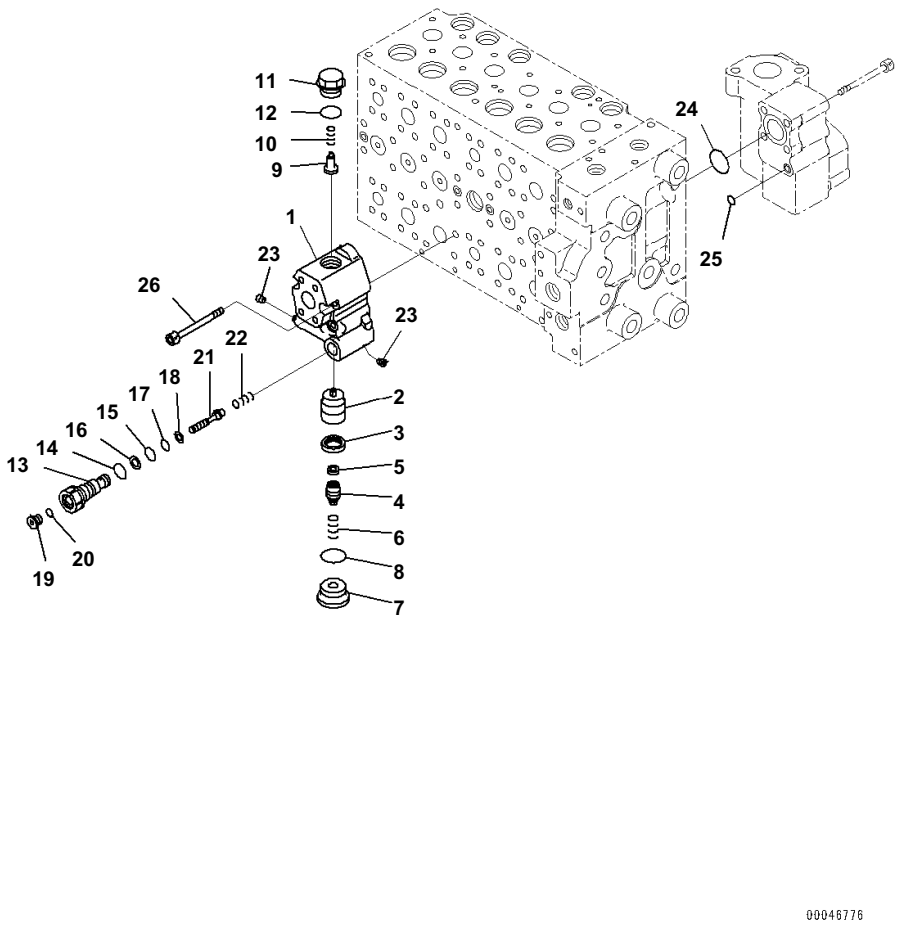

Index	Code	Part Number	Description	Qty	Serial No.
		723-47-23803	Valve Assembly	1	B10001-
		723-40-82501	・Valve Assembly	1	B10001-
1	C1		・・Body	1	B10001-
2	C1		・・Valve	1	B10001-
3	C1		・・Seal	1	B10001-
4		723-40-82210	・・Plug	1	B10001-
5		723-40-82220	・・Filter	1	B10001-
6		723-40-82140	・・Spring	1	B10001-
7		723-40-82150	・・Plug	1	B10001-
8		07002-13334	・・O-ring	1	B10001-
9		723-40-84420	・・Valve, Check	1	B10001-
10		723-40-84430	・・Spring	1	B10001-
11		723-40-84440	・・Plug	1	B10001-
12		07000-13024	・・O-ring	1	B10001-
13	C1		・・Plug	1	B10001-
14		07002-11823	・・O-ring	1	B10001-
15		07000-12011	・・O-ring	1	B10001-
16		07001-02011	・・Ring, Back-up	1	B10001-
17		07000-11010	・・O-ring	1	B10001-
18		07001-01010	・・Ring, Back-up	1	B10001-
19		723-11-18190	・・Plug	1	B10001-
20		07002-11023	・・O-ring	1	B10001-
21	C1		・・Piston	1	B10001-
22		723-40-82290	・・Spring	1	B10001-
23	C1		・・Plug	2	B10001-
24		07000-13038	・O-ring	1	B10001-
25		07000-11010	・O-ring	1	B10001-
26		01252-61075	・Bolt, Hexagon Socket Head	4	B10001-

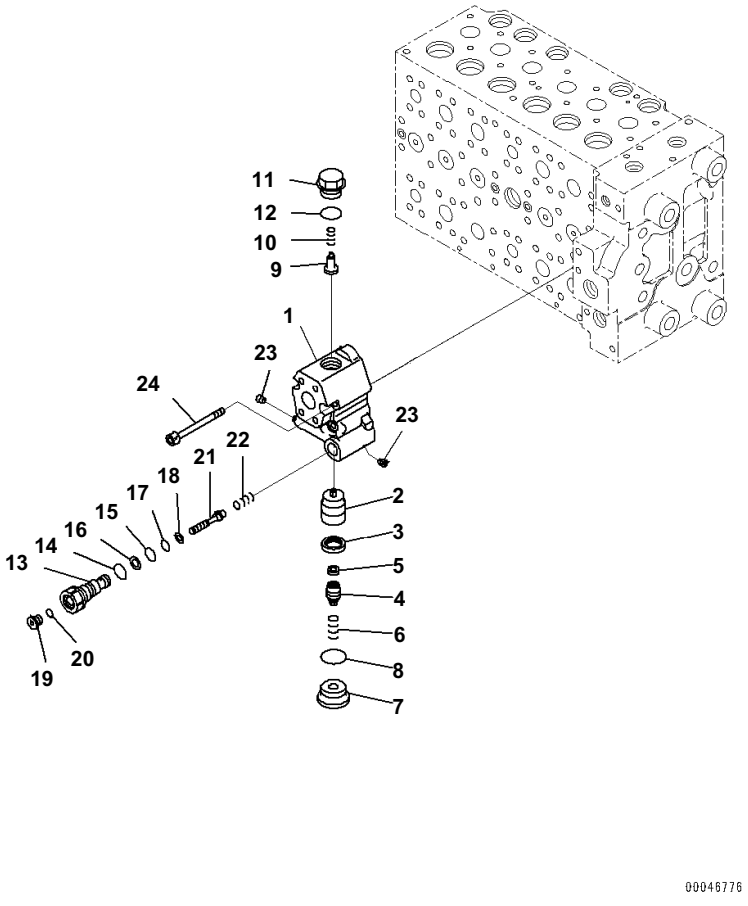

Index	Code	Part Number	Description	Qty	Serial No.
		723-47-23803	Valve Assembly	1	B10001-
		723-40-82501	・Valve Assembly	1	B10001-
1	C1		・・Body	1	B10001-
2	C1		・・Valve	1	B10001-
3	C1		・・Seal	1	B10001-
4		723-40-82210	・・Plug	1	B10001-
5		723-40-82220	・・Filter	1	B10001-
6		723-40-82140	・・Spring	1	B10001-
7		723-40-82150	・・Plug	1	B10001-
8		07002-13334	・・O-ring	1	B10001-
9		723-40-84420	・・Valve, Check	1	B10001-
10		723-40-84430	・・Spring	1	B10001-
11		723-40-84440	・・Plug	1	B10001-
12		07000-13024	・・O-ring	1	B10001-
13	C1		・・Plug	1	B10001-
14		07002-11823	・・O-ring	1	B10001-
15		07000-12011	・・O-ring	1	B10001-
16		07001-02011	・・Ring, Back-up	1	B10001-
17		07000-11010	・・O-ring	1	B10001-
18		07001-01010	・・Ring, Back-up	1	B10001-
19		723-11-18190	・・Plug	1	B10001-
20		07002-11023	・・O-ring	1	B10001-
21	C1		・・Piston	1	B10001-
22		723-40-82290	・・Spring	1	B10001-
23	C1		・・Plug	2	B10001-
26		01252-61075	・Bolt, Hexagon Socket Head	4	B10001-

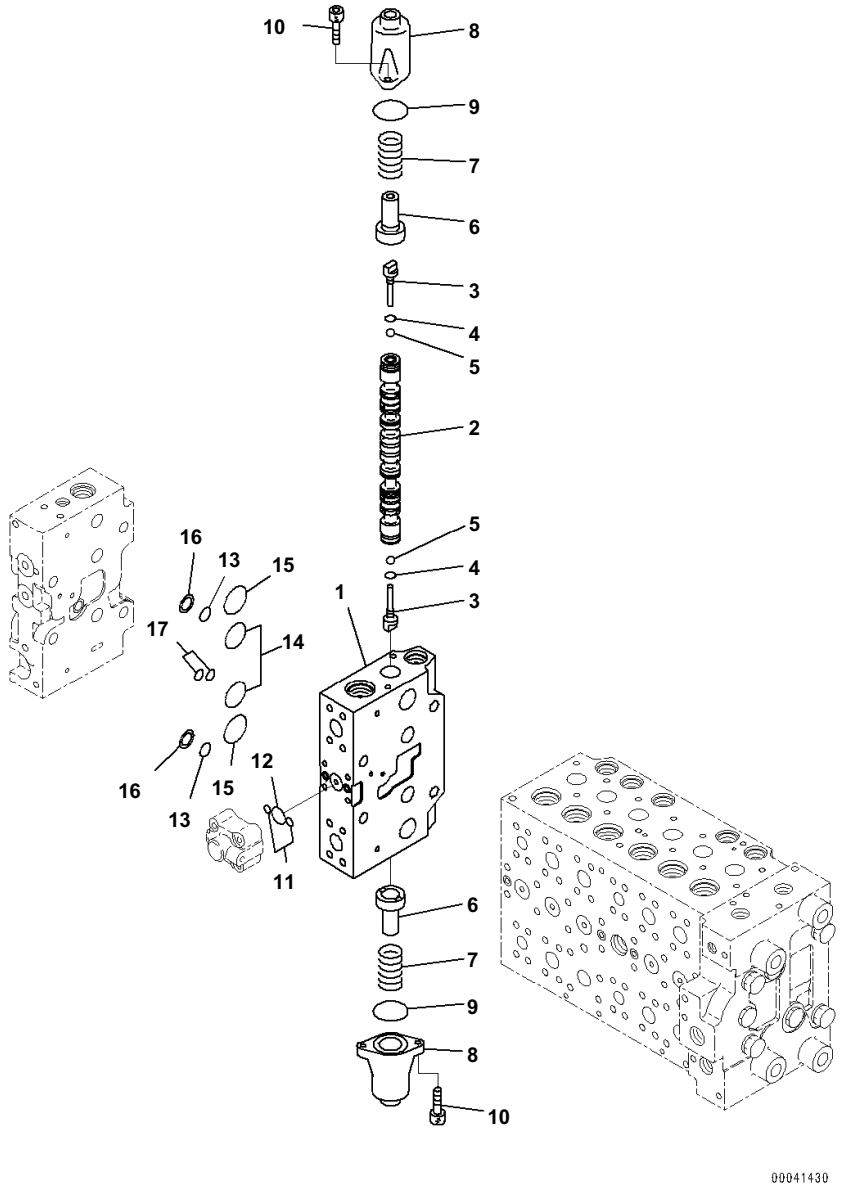

Index	Code	Part Number	Description	Qty	Serial No.
		723-47-23803	Valve Assembly	1	B10001-
	C1		・Body Subassembly	1	B10001-
1	C1		・・Block	1	B10001-
2	C1		・・Spool	1	B10001-
3		723-46-15130	・・Plug	2	B10001-
4		07002-10823	・・O-ring	2	B10001-
5		708-7T-16460	・・Ball	2	B10001-
6		723-46-15120	・・Retainer	2	B10001-
7		723-46-14110	・・Spring	2	B10001-
8		723-46-15111	・・Case	2	B10001-
9		07430-71380	・・O-ring	2	B10001-
10		01252-60820	・・Bolt	4	B10001-
11		07000-11009	・・O-ring	2	B10001-
12		07000-12021	・・O-ring	1	B10001-
13		723-11-19130	・・O-ring	2	B10001-
14		07000-13032	・・O-ring	2	B10001-
15		723-46-17510	・・O-ring	2	B10001-
16		723-46-17520	・・Ring, Back-up	2	B10001-
17		723-46-17530	・・O-ring	2	B10001-

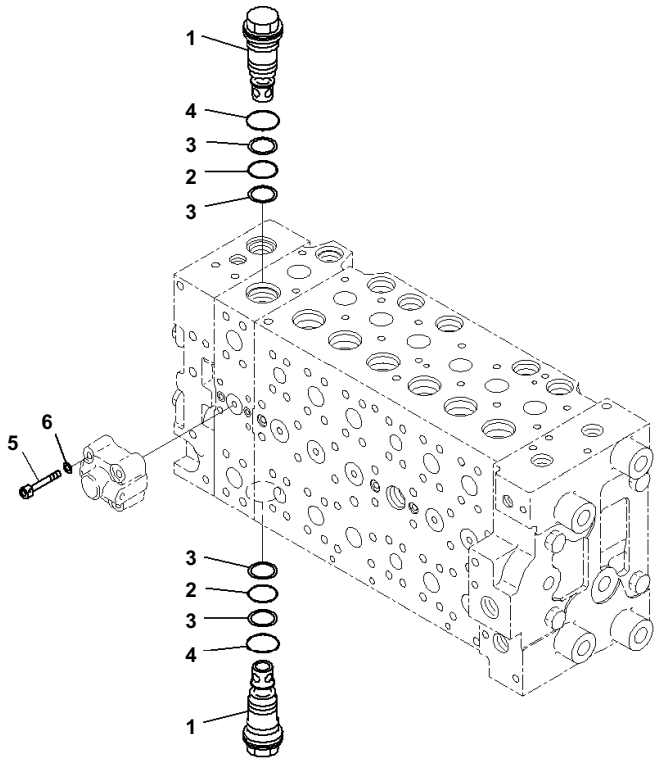

Index	Code	Part Number	Description	Qty	Serial No.
		723-47-23803	Valve Assembly	1	B10001-
	C1		・Body Subassembly	1	B10001-
1		723-46-45700	・・Valve Assembly	2	B10001-
2		700-93-11320	・・・O-ring	1	B10001-
3		723-46-41950	・・・Ring	2	B10001-
4		07002-13634	・・・O-ring	1	B10001-
5		01252-60845	・・Bolt	4	B10001-
6		01643-50823	・・Washer	4	B10001-

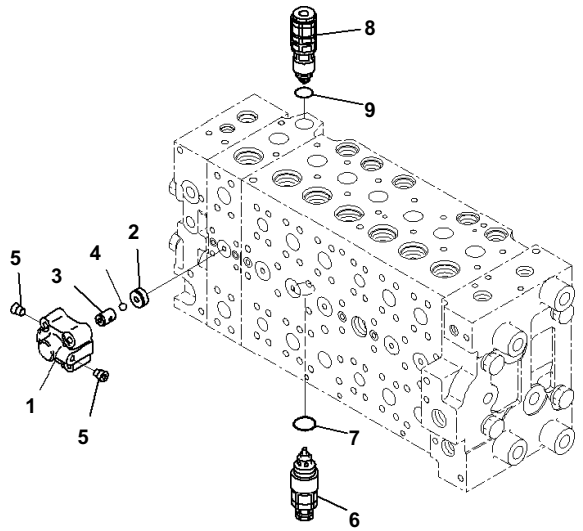

Index	Code	Part Number	Description	Qty	Serial No.
		723-47-23803	Valve Assembly	1	B10001-
		723-40-66300	・Valve Assembly	1	B10001-
1	C1		・・Case	1	B10001-
2	C1		・・Seat	1	B10001-
3	C1		・・Seat	1	B10001-
4	C1		・・Ball	1	B10001-
5	C1		・・Plug	2	B10001-
6		723-40-91300	・Valve Assembly, Suction and Relief	1	B10001-
7		709-25-11390	・・O-ring	1	B10001-
8		723-90-76101	・Valve Assembly, Suction and Relief	1	B10001-
9		07000-13024	・・O-ring	1	B10001-

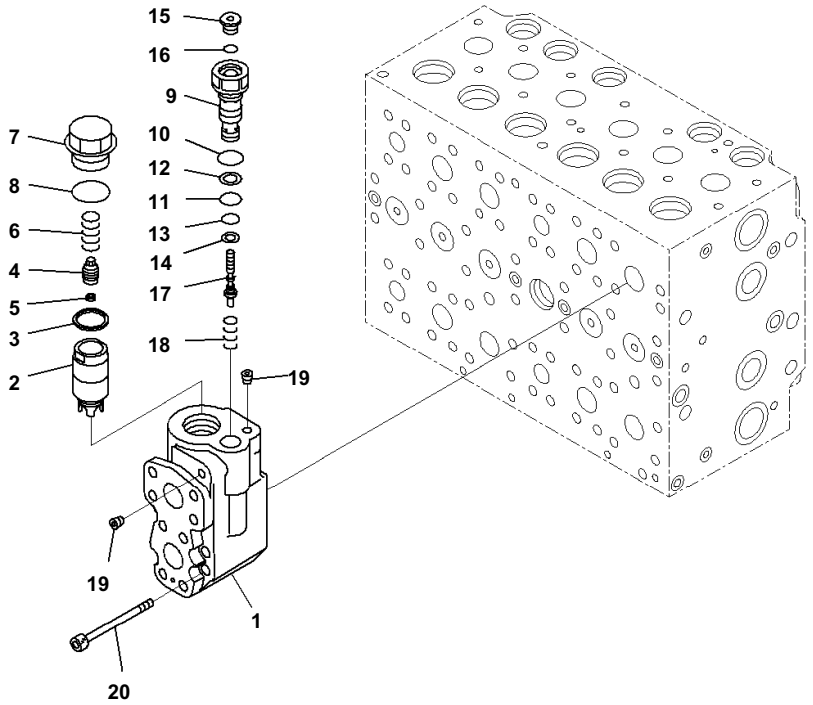

Index	Code	Part Number	Description	Qty	Serial No.
		723-47-23803	Valve Assembly	1	B10001-
		723-40-84501	・Valve Assembly	1	B10001-
1	C1		・・Body	1	B10001-
2	C1		・・Valve	1	B10001-
3	C1		・・Seal	1	B10001-
4		723-40-84330	・・Plug	1	B10001-
5		723-40-82220	・・Filter	1	B10001-
6		723-40-84340	・・Spring	1	B10001-
7		723-40-84350	・・Plug	1	B10001-
8		07002-13334	・・O-ring	1	B10001-
9	C1		・・Plug	1	B10001-
10		07002-11823	・・O-ring	1	B10001-
11		07000-12011	・・O-ring	1	B10001-
12		07001-02011	・・Ring, Back-up	1	B10001-
13		07000-11010	・・O-ring	1	B10001-
14		07001-01010	・・Ring, Back-up	1	B10001-
15		723-11-18190	・・Plug	1	B10001-
16		07002-11023	・・O-ring	1	B10001-
17	C1		・・Piston	1	B10001-
18		723-40-84382	・・Spring	1	B10001-
19	C1		・・Plug	2	B10001-
20		01252-61080	・Bolt, Hexagon Socket Head	4	B10001-

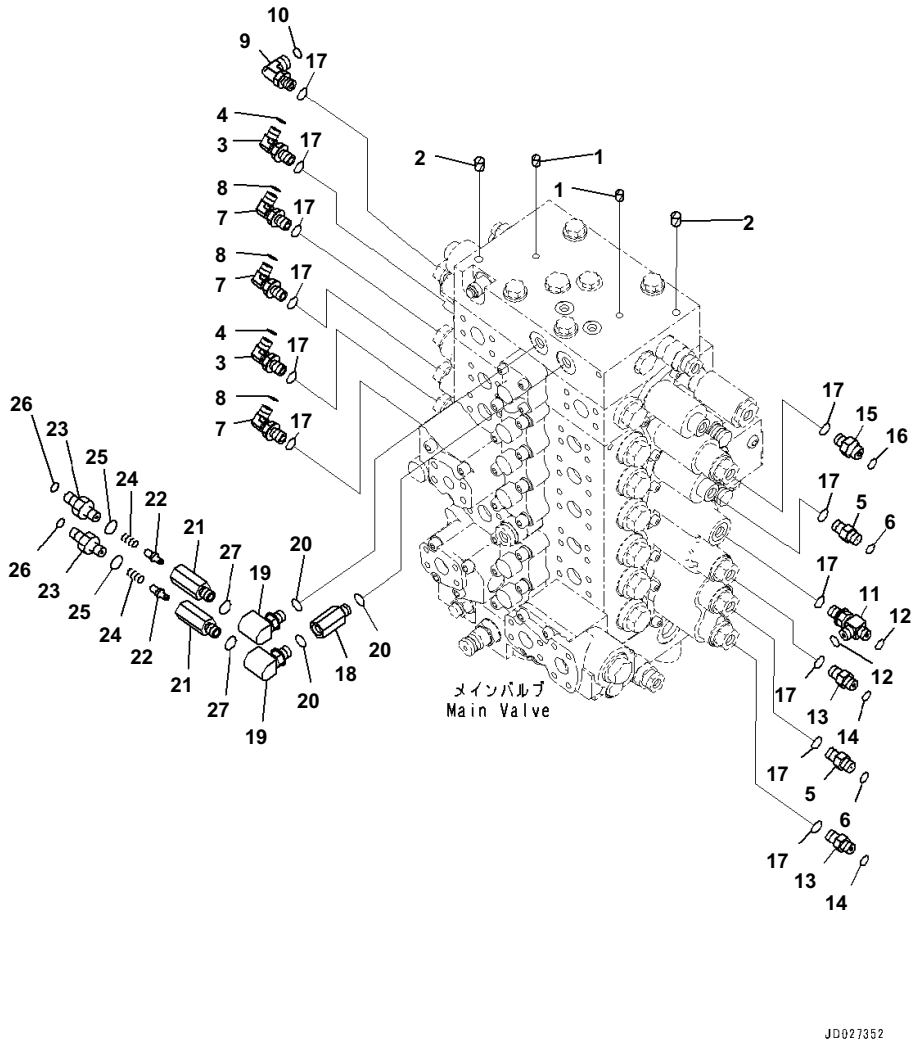

Main Control Valve, Main Valve, Connecting Parts, 1ATT (1/2)

Index	Code	Part Number	Description	Qty	Serial No.
1		07049-01012	Plug	2	B10001-
2		07049-01215	Plug	2	B10001-
3		20Y-62-45620	Elbow	2	B10001-
4		02896-11008	O-ring	2	B10001-
5		20Y-62-45610	Nipple	2	B10001-
6		02896-11008	O-ring	2	B10001-
7		11Y-62-12160	Elbow	3	B10001-
8		02896-11008	O-ring	3	B10001-
9		02782-10311	Elbow	1	B10001-
10		02896-11009	O-ring	1	B10001-
11		11Y-62-12330	Tee	1	B10001-
12		02896-11008	O-ring	2	B10001-
13		11Y-62-12130	Nipple	2	B10001-
14		02896-11008	O-ring	2	B10001-
15		11Y-62-12520	Union	1	B10001-
16		02896-11009	O-ring	1	B10001-
17		07002-11423	O-ring	12	B10001-
18		20Y-62-22160	Adapter	1	B10001-
19		20F-61-12460	Elbow	2	B10001-
20		07002-11423	O-ring	3	B10001-
		20Y-62-41602	Valve Assembly	2	B10001-
21	C1		・ Body	1	B10001-
22		20Y-60-22270	・ Poppet	1	B10001-
23		20Y-62-41971	・ Nipple	1	B10001-
24		701-20-61230	・ Spring	1	B10001-
25		07002-11423	・ O-ring	1	B10001-
26		02896-11008	O-ring	2	B10001-
27		07002-11423	O-ring	2	B10001-

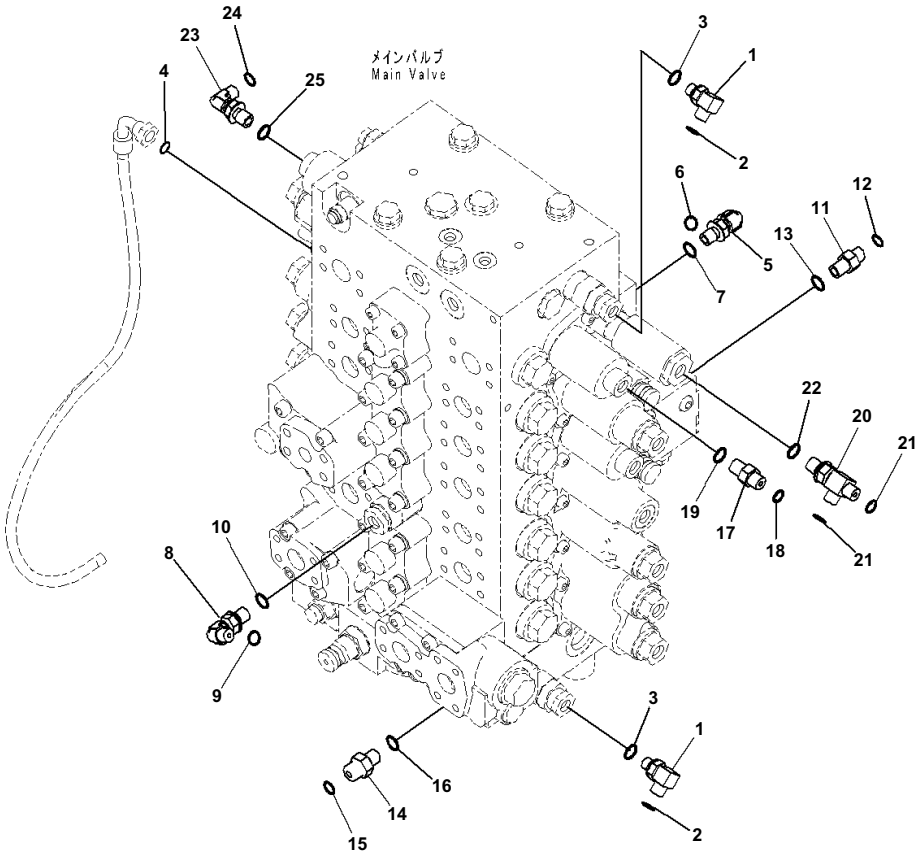

Index	Code	Part Number	Description	Qty	Serial No.
1		20Y-62-41920	Elbow	2	B10001-
2		02896-11008	O-ring	2	B10001-
3		07002-11223	O-ring	2	B10001-
4		02896-11008	O-ring	1	B10001-
5		11Y-62-12160	Elbow	1	B10001-
6		02896-11008	O-ring	1	B10001-
7		07002-11423	O-ring	1	B10001-
8		11Y-62-12160	Elbow	1	B10001-
9		02896-11008	O-ring	1	B10001-
10		07002-11423	O-ring	1	B10001-
11		11Y-62-12130	Nipple	1	B10001-
12		02896-11008	O-ring	1	B10001-
13		07002-11423	O-ring	1	B10001-
14		11Y-62-12520	Union	1	B10001-
15		02896-11009	O-ring	1	B10001-
16		07002-11423	O-ring	1	B10001-
17		11Y-62-12130	Nipple	1	B10001-
18		02896-11008	O-ring	1	B10001-
19		07002-11423	O-ring	1	B10001-
20		11Y-62-12330	Tee	1	B10001-
21		02896-11008	O-ring	2	B10001-
22		07002-11423	O-ring	1	B10001-
23		11Y-62-12160	Elbow	1	B10001-
24		02896-11008	O-ring	1	B10001-
25		07002-11423	O-ring	1	B10001-

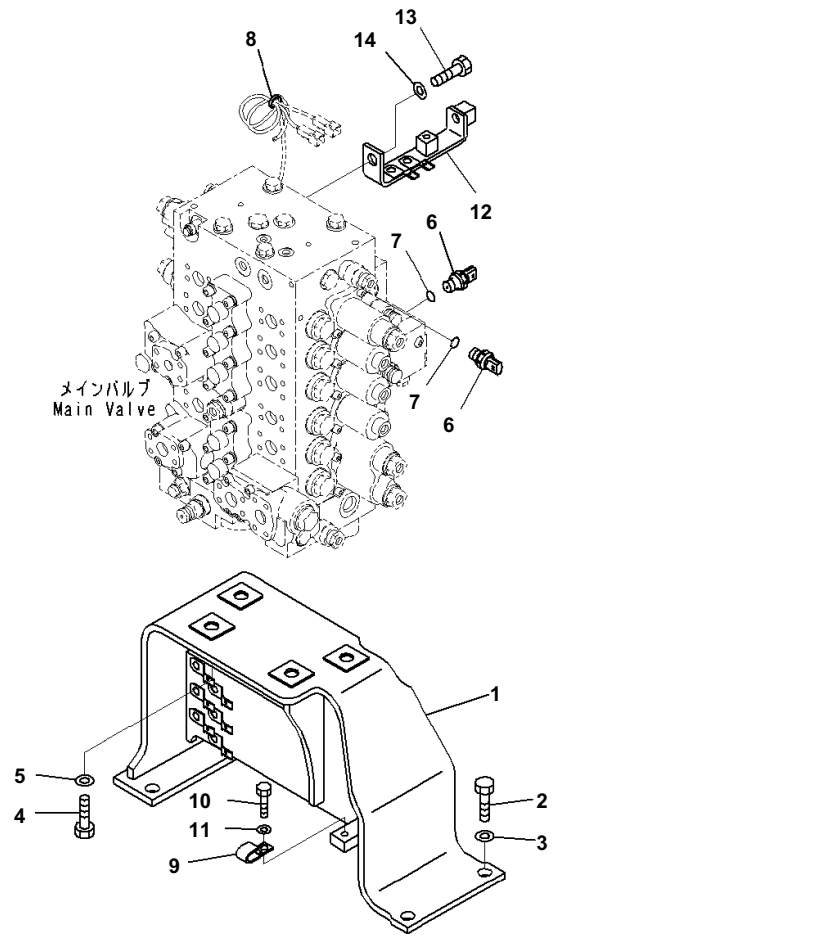

Main Control Valve, Valve Bracket and Sensor, 1ATT

Index	Code	Part Number	Description	Qty	Serial No.
1		20Y-62-51112	Bracket	1	B10001-
2		01010-81640	Bolt	4	B10001-
3		01643-31645	Washer	4	B10001-
4		01010-81645	Bolt	4	B10001-
5		01643-31645	Washer	4	B10001-
6		7861-93-1812	Sensor, Pressure	2	B10001-
7		07002-61823	O-ring	1	B10001-
8		08034-20536	Band	1	B10001-
9		04435-51512	Clip	1	B10001-
10		01010-81225	Bolt	1	B10001-
11		01643-31232	Washer	1	B10001-
12		20Y-62-51471	Bracket	1	B10001-
13		01010-81635	Bolt	1	B10001-
14		01643-31645	Washer	1	B10001-

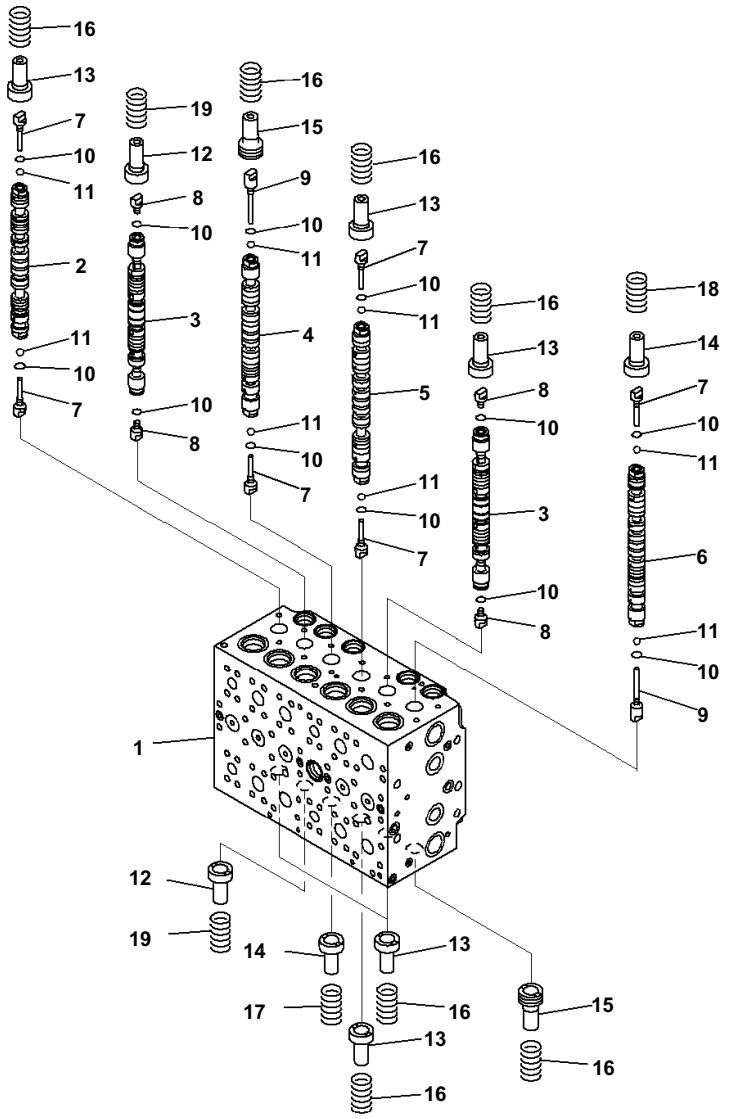

Index	Code	Part Number	Description	Qty	Serial No.
		723-47-23803	Valve Assembly	1	B10001-
	C1		・Body Subassembly	1	B10001-
1	C1		・・Block, Valve	1	B10001-
2	C1		・・Spool	1	B10001-
3	C1		・・Spool	2	B10001-
4	C1		・・Spool	1	B10001-
5	C1		・・Spool	1	B10001-
6	C1		・・Spool	1	B10001-
7		723-46-15130	・・Plug	6	B10001-
8		723-46-15140	・・Plug	4	B10001-
9		723-46-15650	・・Plug	2	B10001-
10		07002-10823	・・O-ring	12	B10001-
11		708-7T-16460	・・Ball	8	B10001-
12		723-46-15120	・・Retainer	2	B10001-
13		723-46-15690	・・Retainer	6	B10001-
14		723-46-15950	・・Retainer	2	B10001-
15		723-46-15880	・・Retainer	2	B10001-
16		723-46-14110	・・Spring	8	B10001-
17		723-46-14280	・・Spring	1	B10001-
18		723-46-14290	・・Spring	1	B10001-
19		723-46-14131	・・Spring	2	B10001-

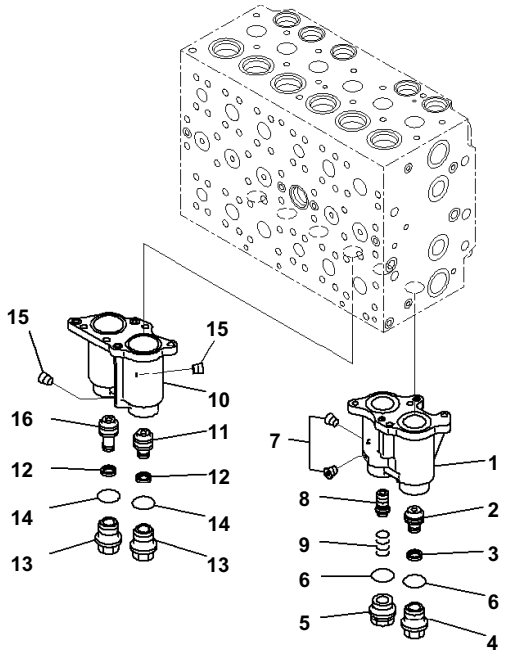

Index	Code	Part Number	Description	Qty	Serial No.
		723-47-23803	Valve Assembly	1	B10001-
	C1		・Body Subassembly	1	B10001-
		723-46-18300	・・Case Subassembly	1	B10001-
1	C1		・・・Case	1	B10001-
2	C1		・・・Piston	1	B10001-
3	C1		・・・Seal	1	B10001-
4		723-46-15630	・・・Plug	1	B10001-
5		723-46-17340	・・・Plug	1	B10001-
6		07000-13024	・・・O-ring	2	B10001-
7	C1		・・・Screw	3	B10001-
8		723-46-17320	・・・Spool	1	B10001-
9		723-46-17330	・・・Spring	1	B10001-
		723-46-19300	・・Case Subassembly	1	B10001-
10	C1		・・・Case	1	B10001-
11	C1		・・・Piston	1	B10001-
12	C1		・・・Seal	2	B10001-
13		723-46-15630	・・・Plug	2	B10001-
14		07000-13024	・・・O-ring	2	B10001-
15	C1		・・・Screw	2	B10001-
16		723-46-15640	・・・Piston	1	B10001-

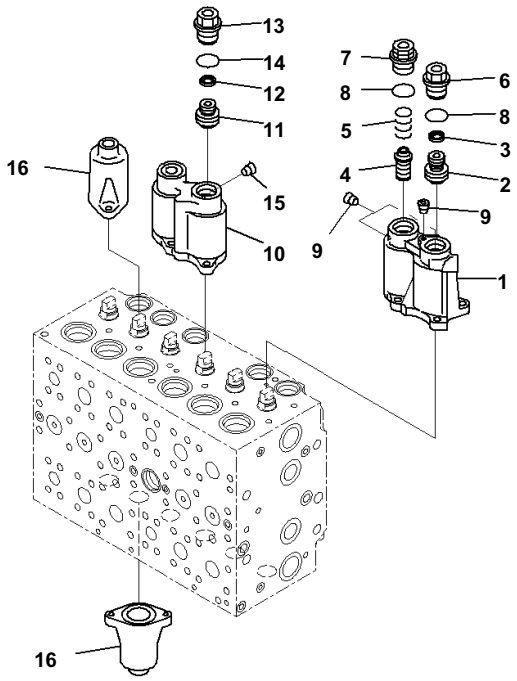

Index	Code	Part Number	Description	Qty	Serial No.
		723-47-23803	Valve Assembly	1	B10001-
	C1		・Body Subassembly	1	B10001-
		723-46-19200	・・Case Subassembly	1	B10001-
1	C1		・・・Case	1	B10001-
2	C1		・・・Piston	1	B10001-
3	C1		・・・Seal	1	B10001-
4		723-46-17320	・・・Spool	1	B10001-
5		723-46-17330	・・・Spring	1	B10001-
6		723-46-15630	・・・Plug	1	B10001-
7		723-46-17340	・・・Plug	1	B10001-
8		07000-13024	・・・O-ring	2	B10001-
9	C1		・・・Screw	3	B10001-
		723-46-19400	・・Case Subassembly	1	B10001-
10		723-46-17212	・・・Case	1	B10001-
11		723-46-15980	・・・Piston	1	B10001-
12		702-73-11510	・・・Seal	1	B10001-
13		723-46-15630	・・・Plug	1	B10001-
14		07000-13024	・・・O-ring	1	B10001-
15		702-16-54490	・・・Screw	1	B10001-
16		723-46-15111	・・Case	2	B10001-

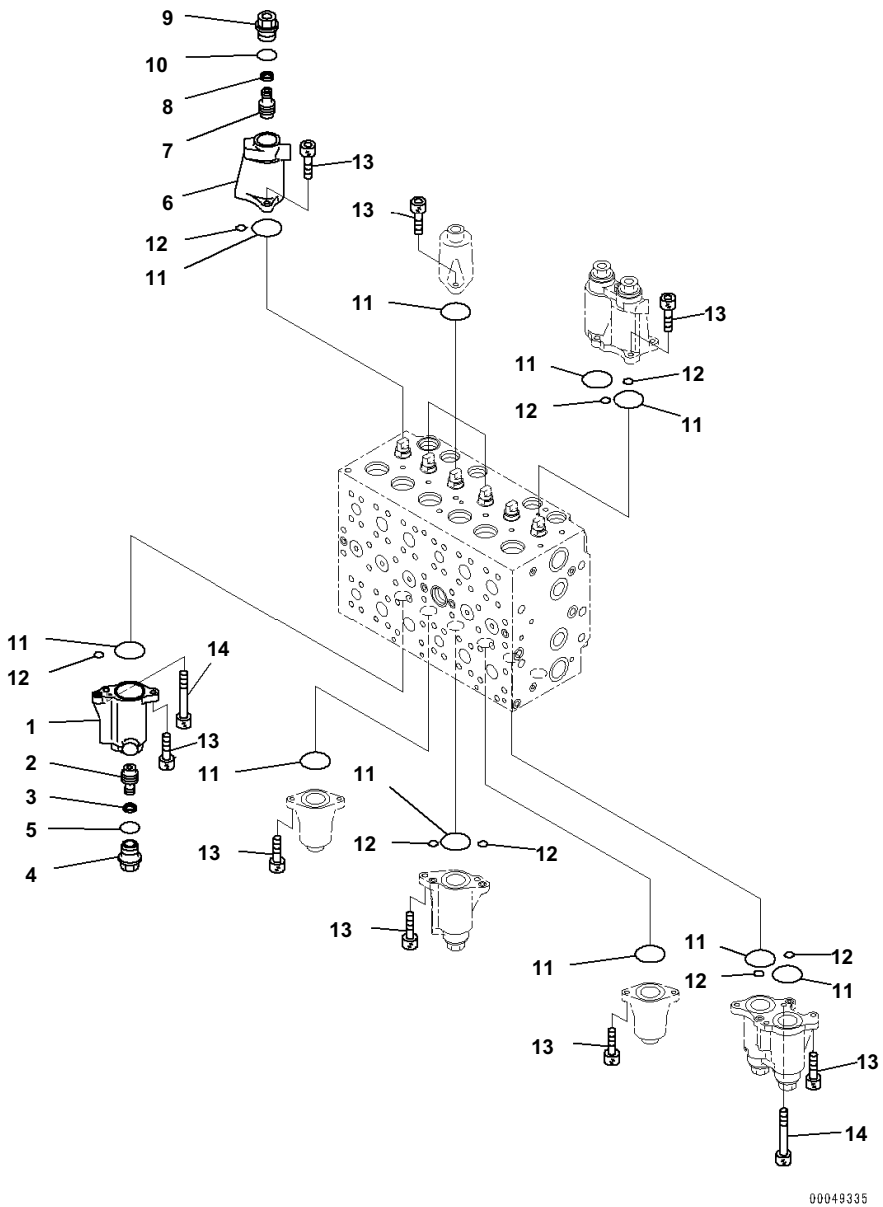

Index	Code	Part Number	Description	Qty	Serial No.
		723-47-23803	Valve Assembly	1	B10001-
	C1		· Body Subassembly	1	B10001-
		723-46-18500	· · Case Subassembly	1	B10001-
1	C1		· · · Case	1	B10001-
2	C1		· · · Piston	1	B10001-
3	C1		· · · Seal	1	B10001-
4		723-46-15630	· · · Plug	1	B10001-
5		07000-13024	· · · O-ring	1	B10001-
		723-46-18600	· · Case Subassembly	1	B10001-
6	C1		· · · Case	1	B10001-
7	C1		· · · Piston	1	B10001-
8	C1		· · · Seal	1	B10001-
9		723-46-15630	· · · Plug	1	B10001-
10		07000-13024	· · · O-ring	1	B10001-
11		07430-71380	· · O-ring	12	B10001-
12		702-16-53920	· · O-ring	10	B10001-
13		01252-60820	· · Bolt	22	B10001-
14		723-46-17350	· · Bolt	2	B10001-

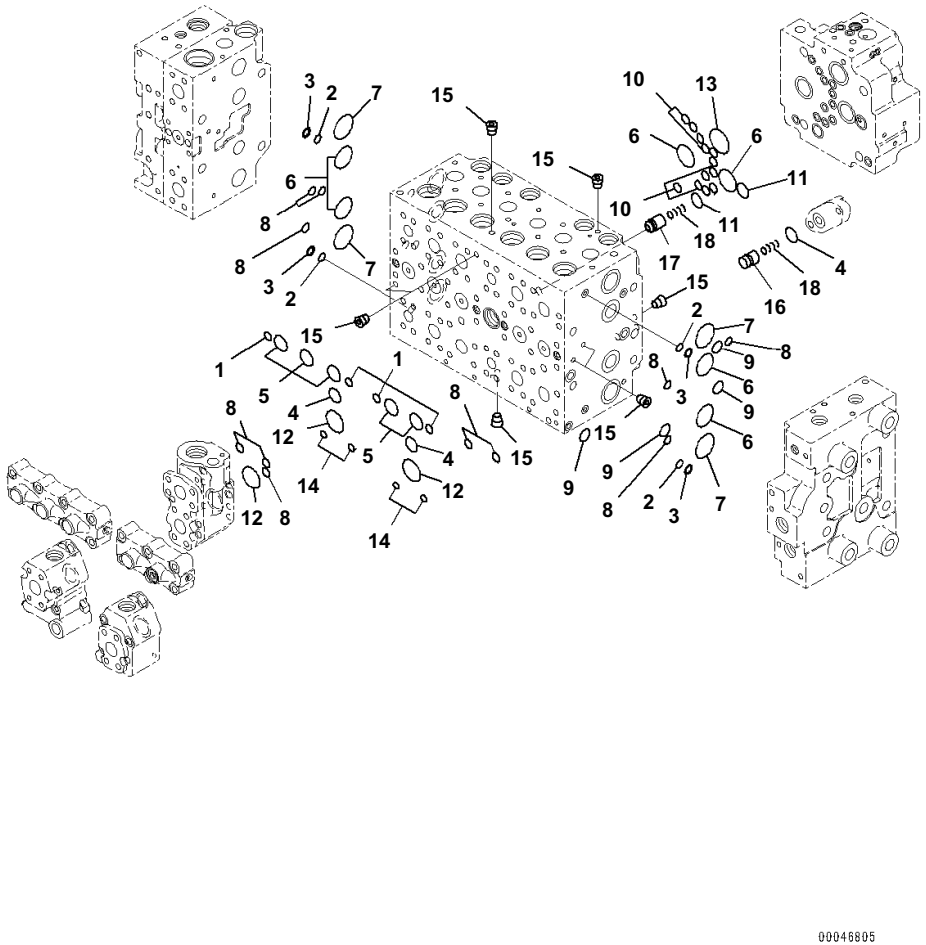

Index	Code	Part Number	Description	Qty	Serial No.
		723-47-23803	Valve Assembly	1	B10001-
	C1		・Body Subassembly	1	B10001-
1		07000-12012	・・O-ring	4	B10001-
2		723-11-19130	・・O-ring	4	B10001-
3		723-46-17520	・・Ring, Back-up	4	B10001-
4		07000-12021	・・O-ring	3	B10001-
5		07000-13028	・・O-ring	5	B10001-
6		07000-13032	・・O-ring	6	B10001-
7		723-46-17510	・・O-ring	4	B10001-
8		723-46-17530	・・O-ring	11	B10001-
9		723-11-18150	・・O-ring	4	B10001-
10		07000-12012	・・O-ring	12	B10001-
11		07000-12021	・・O-ring	2	B10001-
12		07000-13032	・・O-ring	3	B10001-
13		07000-13036	・・O-ring	1	B10001-
14		702-16-53920	・・O-ring	4	B10001-
15	C1		・・Plug	16	B10001-
16		723-46-17650	・・Valve	1	B10001-
17		723-46-15150	・・Valve	1	B10001-
18		723-46-14150	・・Spring	2	B10001-

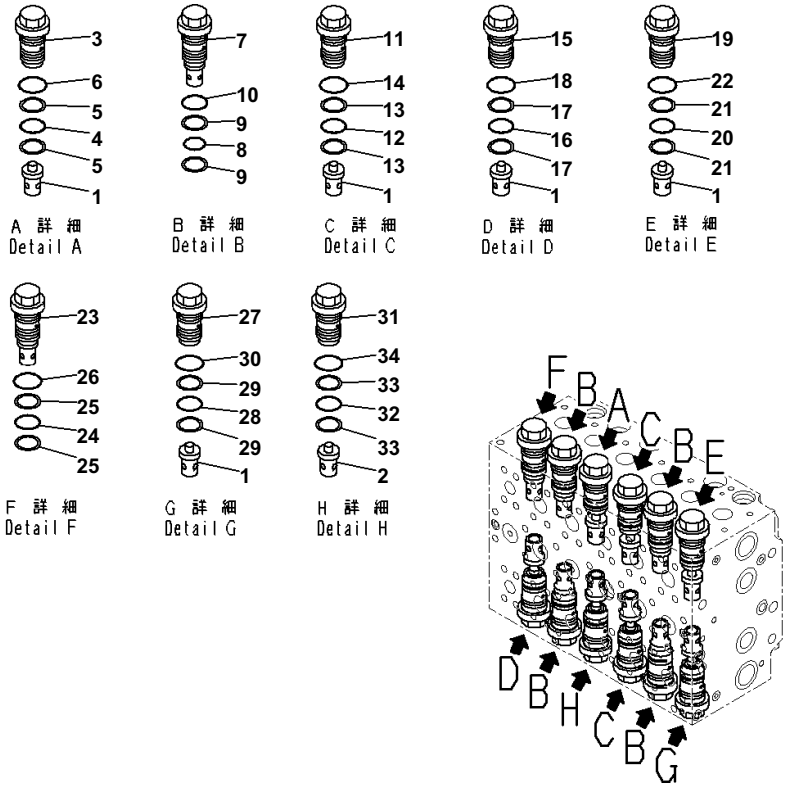

Main Control Valve, Inner Parts, Main Valve (6/21)

Index	Code	Part Number	Description	Qty	Serial No.
		723-47-23803	Valve Assembly	1	B10001-
	C1		・ Body Subassembly	1	B10001-
1		723-46-41210	・・ Valve	6	B10001-
2		723-46-41190	・・ Valve	1	B10001-
3		723-46-40100	・・ Valve Assembly	1	B10001-
4		700-93-11320	・・・ O-ring	1	B10001-
5		723-46-41950	・・・ Ring	2	B10001-
6		07002-13634	・・・ O-ring	1	B10001-
7		723-46-42700	・・ Valve Assembly	4	B10001-
8		700-93-11320	・・・ O-ring	1	B10001-
9		723-46-41950	・・・ Ring	2	B10001-
10		07002-13634	・・・ O-ring	1	B10001-
11		723-46-41100	・・ Valve Assembly	2	B10001-
12		700-93-11320	・・・ O-ring	1	B10001-
13		723-46-41950	・・・ Ring	2	B10001-
14		07002-13634	・・・ O-ring	1	B10001-
15		723-46-45100	・・ Valve Assembly	1	B10001-
16		700-93-11320	・・・ O-ring	1	B10001-
17		723-46-41950	・・・ Ring	2	B10001-
18		07002-13634	・・・ O-ring	1	B10001-
19		723-46-46300	・・ Valve Assembly	1	B10001-
20		700-93-11320	・・・ O-ring	1	B10001-
21		723-46-41950	・・・ Ring	2	B10001-
22		07002-13634	・・・ O-ring	1	B10001-
23		723-46-43400	・・ Valve Assembly	1	B10001-
24		700-93-11320	・・・ O-ring	1	B10001-
25		723-46-41950	・・・ Ring	2	B10001-
26		07002-13634	・・・ O-ring	1	B10001-
27		723-46-43100	・・ Valve Assembly	1	B10001-
28		700-93-11320	・・・ O-ring	1	B10001-
29		723-46-41950	・・・ Ring	2	B10001-
30		07002-13634	・・・ O-ring	1	B10001-
31		723-46-46101	・・ Valve Assembly	1	B10001-
32		700-93-11320	・・・ O-ring	1	B10001-
33		723-46-41950	・・・ Ring	2	B10001-
34		07002-13634	・・・ O-ring	1	B10001-

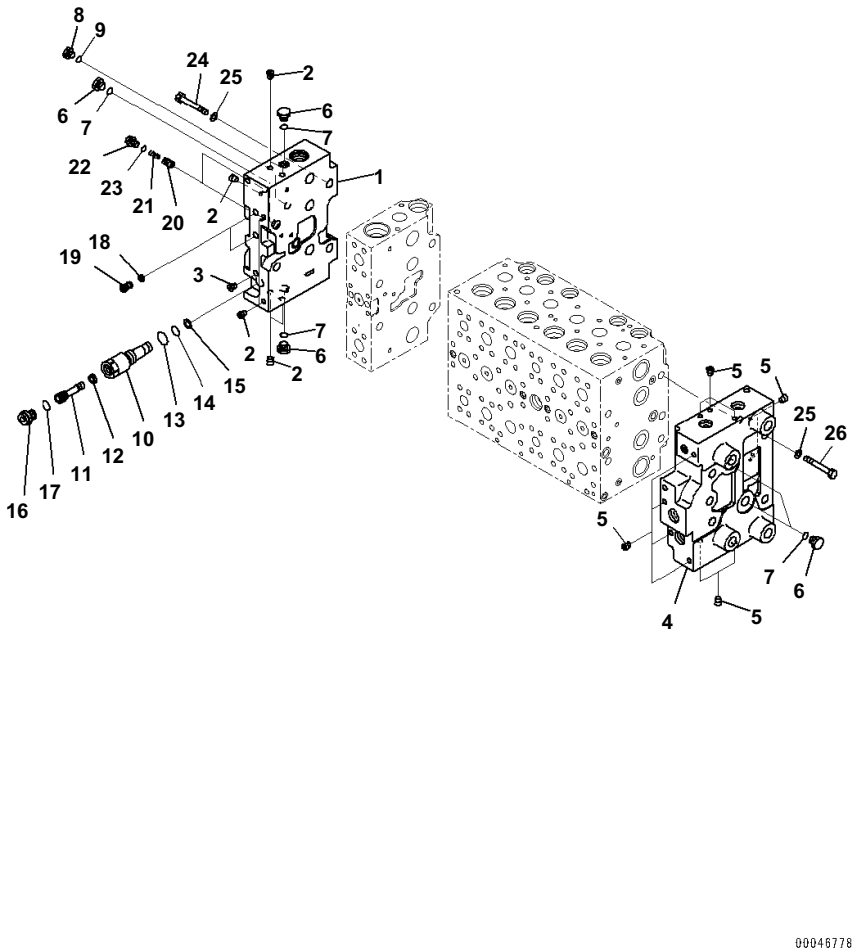

Index	Code	Part Number	Description	Qty	Serial No.
		723-47-23803	Valve Assembly	1	B10001-
		723-46-00750	· Cover Assembly	1	B10001-
1	C1		· · Cover	1	B10001-
2	C1		· · Plug	7	B10001-
3	C1		· · Plug	1	B10001-
		723-46-00790	· Cover Assembly	1	B10001-
4	C1		· · Cover	1	B10001-
5	C1		· · Plug	12	B10001-
6		708-8E-16250	· Plug	5	B10001-
7		07002-11823	· O-ring	5	B10001-
8		708-8H-11530	· Plug	1	B10001-
9		07002-11423	· O-ring	1	B10001-
		723-46-17600	· Plug Assembly	1	B10001-
10		723-46-17610	· · Sleeve	1	B10001-
11		723-46-17640	· · Plug	1	B10001-
12		702-21-55760	· · Filter	1	B10001-
13		07002-11423	· · O-ring	1	B10001-
14		07000-11007	· · O-ring	1	B10001-
15		07001-01007	· · Ring, Back-up	1	B10001-
16		708-8E-16160	· · Plug	1	B10001-
17		07002-11023	· · O-ring	1	B10001-
18		723-40-82220	· Filter	2	B10001-
19		723-46-17550	· Plug	2	B10001-
20		723-46-15190	· Valve	2	B10001-
21		723-46-14140	· Spring	2	B10001-
22		708-8E-16160	· Plug	2	B10001-
23		07002-11023	· O-ring	2	B10001-
24		01010-61490	· Bolt	4	B10001-
25		01643-31445	· Washer	8	B10001-
26		01011-61455	· Bolt	4	B10001-

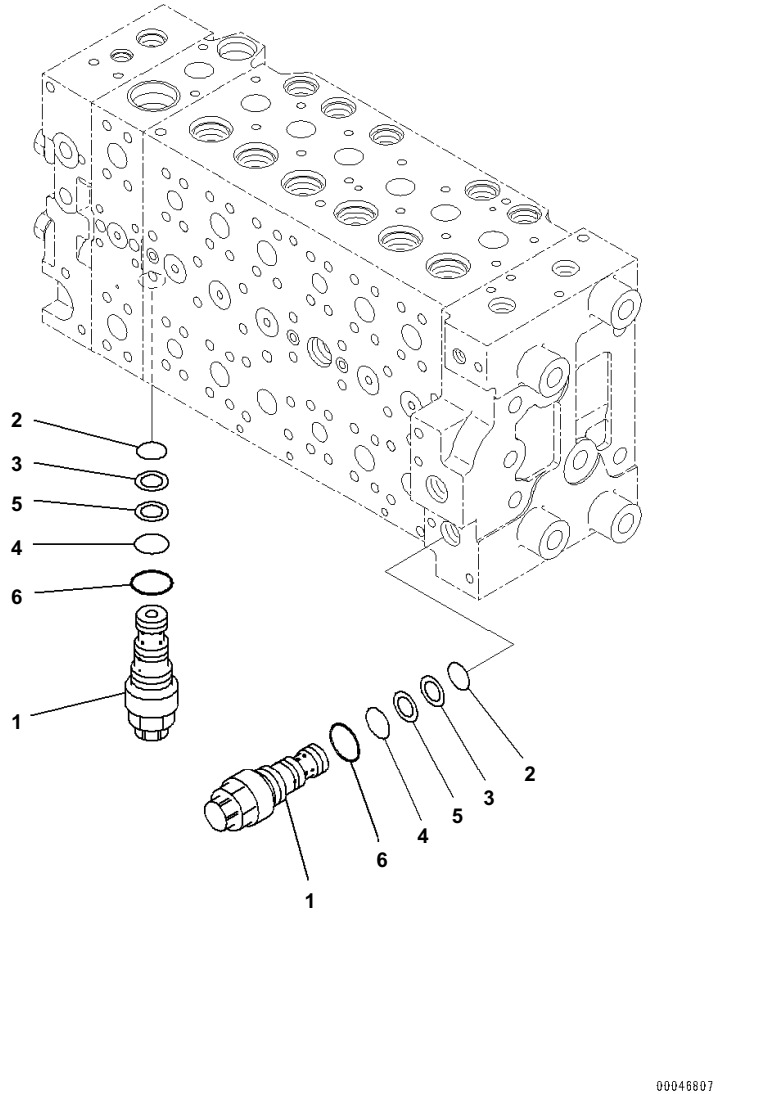

Index	Code	Part Number	Description	Qty	Serial No.
		723-47-23803	Valve Assembly	1	B10001-
1		723-40-57200	・Valve Assembly, Unloader	2	B10001-
2		07000-12014	・・O-ring	1	B10001-
3		723-40-56350	・・Ring	1	B10001-
4		07000-12016	・・O-ring	1	B10001-
5		723-60-22230	・・Ring, Back-up	1	B10001-
6		07002-12434	・・O-ring	1	B10001-

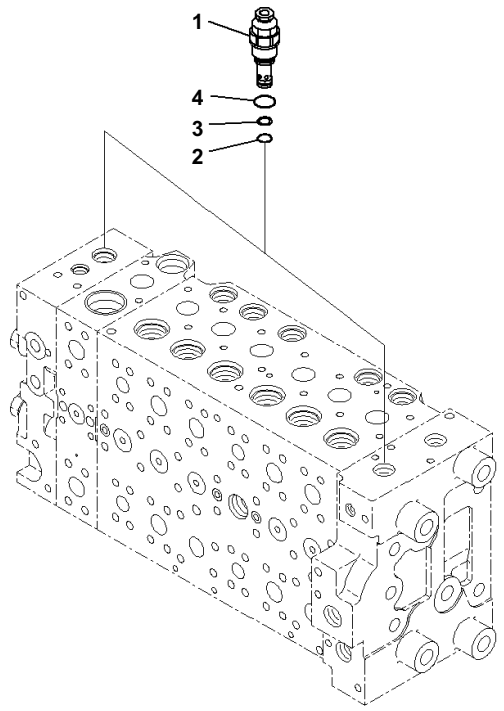

Index	Code	Part Number	Description	Qty	Serial No.
		723-47-23803	Valve Assembly	1	B10001-
1		723-40-93600	・Valve Assembly, Relief	2	B10001-
2		700-22-11410	・・O-ring	1	B10001-
3		700-80-64220	・・Ring	1	B10001-
4		07002-12434	・・O-ring	1	B10001-

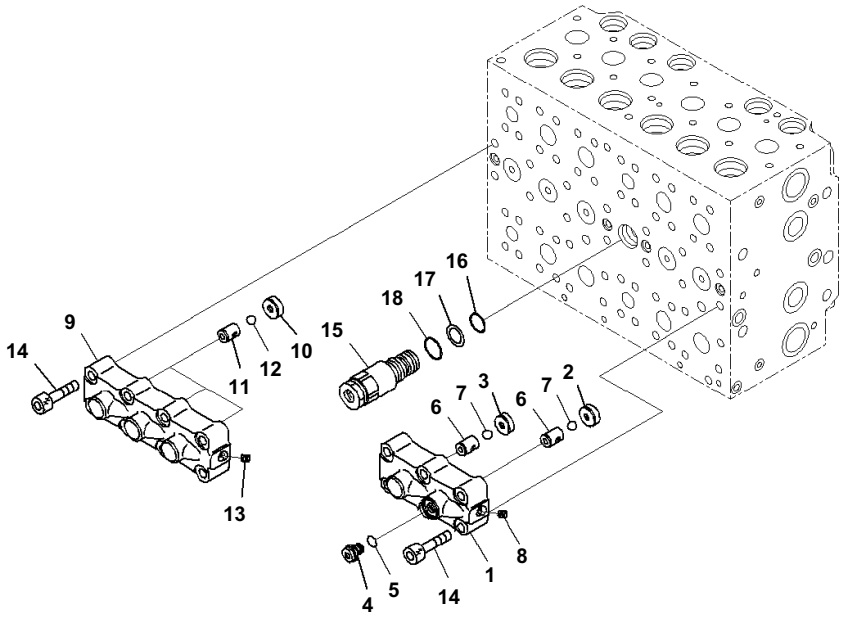

Index	Code	Part Number	Description	Qty	Serial No.
		723-47-23803	Valve Assembly	1	B10001-
		723-40-66701	・ Valve Assembly	1	B10001-
1	C1		・・ Case	1	B10001-
2	C1		・・ Seat	1	B10001-
3	C1		・・ Seat	1	B10001-
4		708-8H-11530	・・ Plug	1	B10001-
5		07002-11423	・・ O-ring	1	B10001-
6	C1		・・ Seat	2	B10001-
7	C1		・・ Ball	2	B10001-
8	C1		・・ Plug	1	B10001-
		723-40-66601	・ Valve Assembly	1	B10001-
9	C1		・・ Case	1	B10001-
10	C1		・・ Seat	3	B10001-
11	C1		・・ Seat	3	B10001-
12	C1		・・ Ball	3	B10001-
13	C1		・・ Plug	1	B10001-
14		01252-61045	・ Bolt, Hexagon Socket Head	14	B10001-
15		723-40-60101	・ Valve Assembly	1	B10001-
16		07000-12020	・・ O-ring	1	B10001-
17		07001-02020	・・ Ring, Back-up	1	B10001-
18		709-25-11390	・・ O-ring	1	B10001-

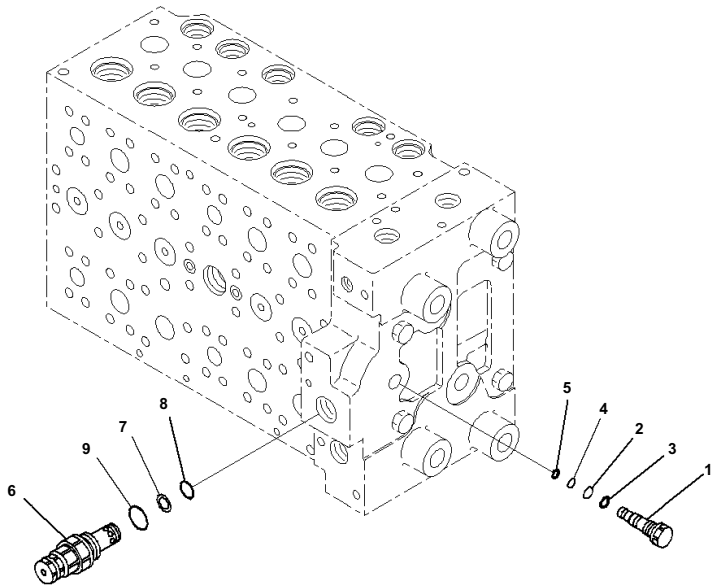

Index	Code	Part Number	Description	Qty	Serial No.
		723-47-23803	Valve Assembly	1	B10001-
		723-46-17701	・Plug Assembly	1	B10001-
1		723-46-17711	・・Plug	1	B10001-
2		07000-11009	・・O-ring	1	B10001-
3		07001-01009	・・Ring, Back-up	1	B10001-
4		07000-11007	・・O-ring	1	B10001-
5		07001-01007	・・Ring, Back-up	1	B10001-
6		723-40-91500	・Valve Assembly, Relief	1	B10001-
7		700-80-64220	・・Ring	1	B10001-
8		700-22-11410	・・O-ring	1	B10001-
9		709-25-11390	・・O-ring	1	B10001-

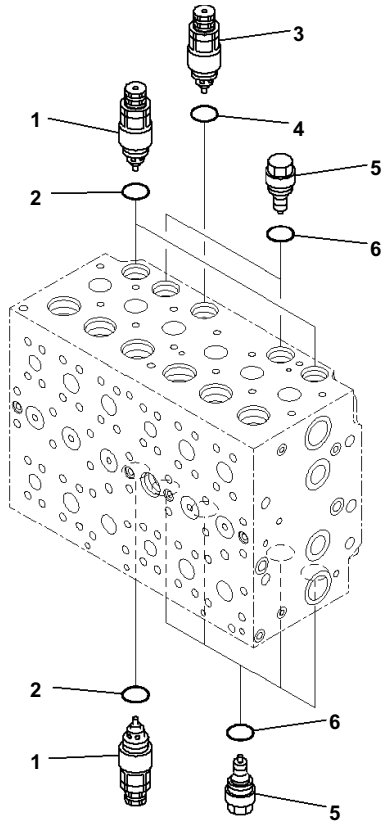

Index	Code	Part Number	Description	Qty	Serial No.
		723-47-23803	Valve Assembly	1	B10001-
1		723-40-91200	・Valve Assembly, Suction and Relief	3	B10001-
2		709-25-11390	・・O-ring	1	B10001-
3		723-90-61600	・Valve Assembly	1	B10001-
4		07000-13024	・・O-ring	1	B10001-
5		723-40-85100	・Valve Assembly, Suction	6	B10001-
6		709-25-11390	・・O-ring	1	B10001-

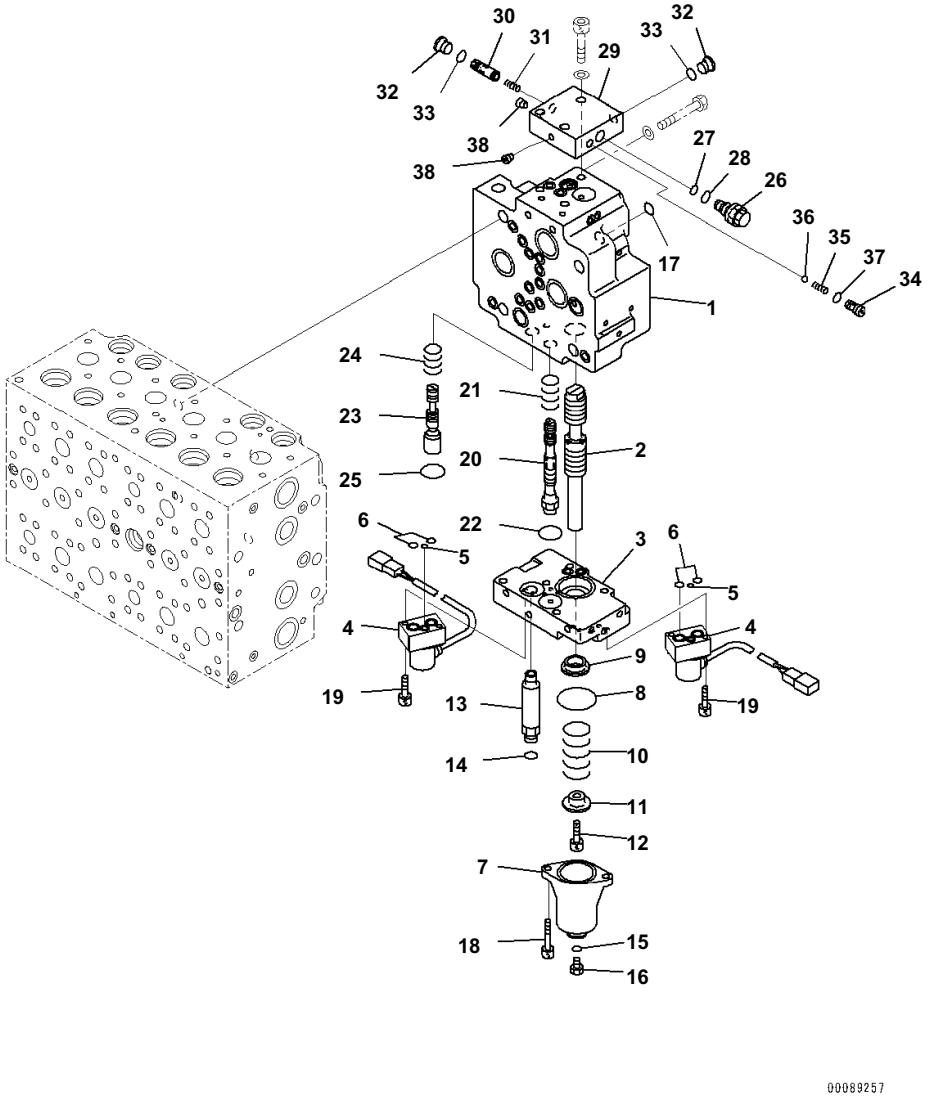

Index	Code	Part Number	Description	Qty	Serial No.
		723-47-23803	Valve Assembly	1	B10001-
		723-40-72100	・Valve Assembly	1	B10001-
1	C1		・・Body	1	B10001-
2	C1		・・Spool	1	B10001-
3		723-40-72800	・・Plate Assembly	1	B10001-
4		702-21-60500	・・Valve, Pilot	2	B10001-
5		723-11-19960	・・・O-ring	1	B10001-
6		702-21-54910	・・・O-ring	2	B10001-
7		723-46-15111	・・Case	1	B10001-
8		07430-71380	・・O-ring	1	B10001-
9		723-40-71330	・・Retainer	1	B10001-
10		723-40-71340	・・Spring	1	B10001-
11		723-40-71350	・・Retainer	1	B10001-
12		01252-60816	・・Bolt	1	B10001-
13		723-40-71870	・・Union	1	B10001-
14		02896-11008	・・O-ring	1	B10001-
15		07002-11423	・・O-ring	1	B10001-
16		07040-11409	・・Plug	1	B10001-
17		07002-11423	・・O-ring	1	B10001-
18		01252-60855	・・Bolt, Hexagon Socket Head	2	B10001-
19		01252-60635	・・Bolt	4	B10001-
		723-40-72900	・・Spool Assembly	1	B10001-
20	C1		・・・Spool	1	B10001-
21		723-40-71850	・・Spring	1	B10001-
22		723-46-18720	・・O-ring	1	B10001-
23	C1		・・Spool	1	B10001-
24		723-40-71390	・・Spring	1	B10001-
25		723-46-18720	・・O-ring	1	B10001-
		723-40-71900	・・Valve Assembly	1	B10001-
26	C1		・・・Valve Assembly, Relief	1	B10001-
27		702-16-53920	・・・・O-ring	1	B10001-
28		07002-11623	・・・・O-ring	1	B10001-
29	C1		・・・Block	1	B10001-
30	C1		・・・Spool	1	B10001-
31	C1		・・・Spring	1	B10001-
32		702-21-55620	・・・Plug	2	B10001-
33		07002-11423	・・・O-ring	2	B10001-
34		702-21-55710	・・・Seat	1	B10001-
35		702-21-55720	・・・Spring	1	B10001-
36		04260-00793	・・・Ball	1	B10001-
37		07000-11009	・・・O-ring	1	B10001-
38	C1		・・・Plug	2	B10001-

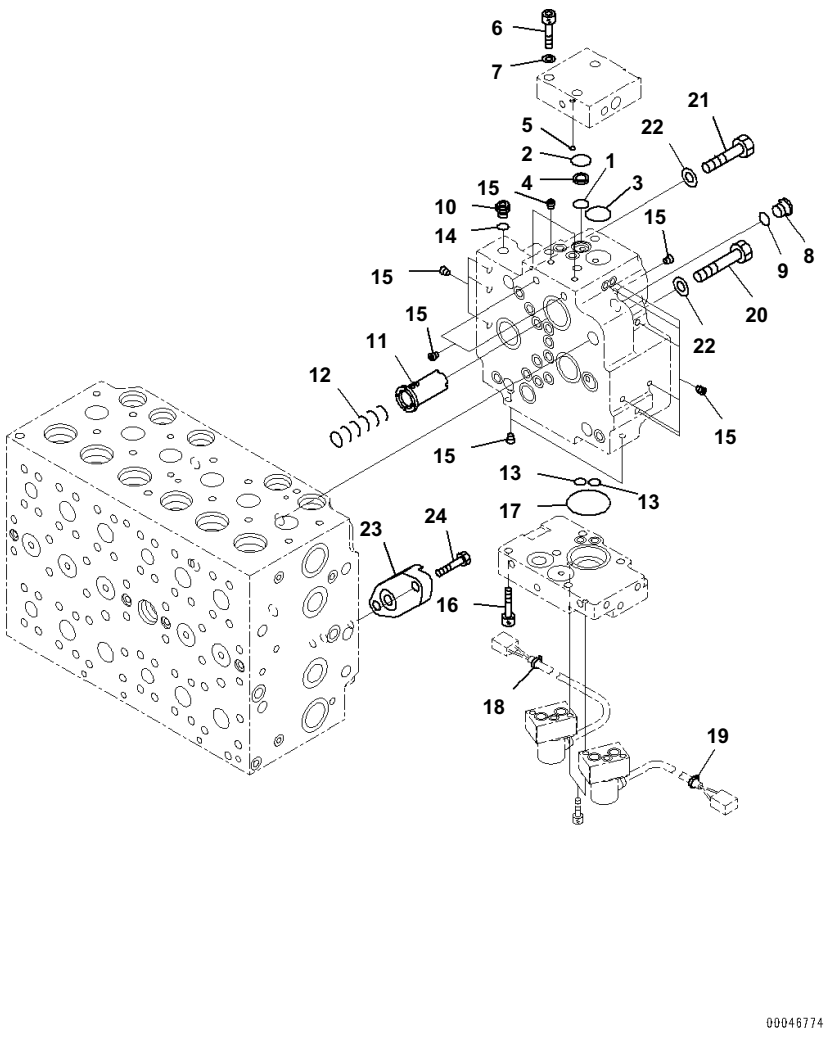

Index	Code	Part Number	Description	Qty	Serial No.
		723-47-23803	Valve Assembly	1	B10001-
		723-40-72100	・ Valve Assembly	1	B10001-
1		702-21-55420	・・ O-ring	1	B10001-
2		702-21-55520	・・ O-ring	1	B10001-
3		702-21-55440	・・ O-ring	1	B10001-
4		702-21-53120	・・ Filter	1	B10001-
5		07000-12011	・・ O-ring	2	B10001-
6		01252-61040	・・ Bolt	3	B10001-
7		01643-51032	・・ Washer	3	B10001-
8		702-21-55620	・・ Plug	1	B10001-
9		07002-11423	・・ O-ring	1	B10001-
10		708-8E-16160	・・ Plug	1	B10001-
11		723-40-71430	・・ Valve	1	B10001-
12		702-21-55460	・・ Spring	1	B10001-
13		07000-11010	・・ O-ring	2	B10001-
14		07002-11023	・・ O-ring	1	B10001-
15	C1		・・ Plug	17	B10001-
16		01252-60845	・・ Bolt	3	B10001-
17		07000-12035	・・ O-ring	1	B10001-
18		20Y-62-22790	・・ Band, Red	1	B10001-
19		20Y-62-22830	・・ Band, White	1	B10001-
20		01010-61470	・ Bolt	3	B10001-
21		01010-61460	・ Bolt	1	B10001-
22		01643-31445	・ Washer	4	B10001-
23		723-46-17680	・ Plate	1	B10001-
24		01010-81030	・ Bolt	2	B10001-

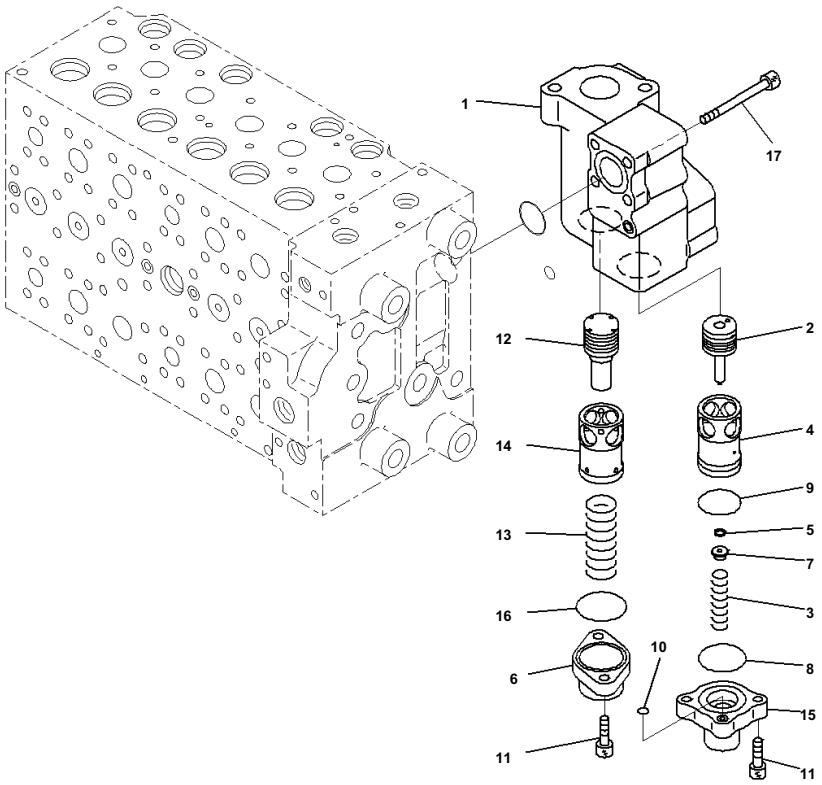

Index	Code	Part Number	Description	Qty	Serial No.
		723-47-23803	Valve Assembly	1	B10001-
		723-40-87601	・Valve Assembly	1	B10001-
1		723-40-87510	・・Body	1	B10001-
2		723-40-87240	・・Spool	1	B10001-
3		723-40-87260	・・Spring	1	B10001-
4	C1		・・Sleeve	1	B10001-
5	C1		・・Seal	1	B10001-
6	C1		・・Case	1	B10001-
7		723-40-87250	・・Retainer	1	B10001-
8		723-40-87170	・・O-ring	1	B10001-
9		07000-13035	・・O-ring	1	B10001-
10		07000-11007	・・O-ring	1	B10001-
11		01252-60825	・・Bolt	4	B10001-
12		723-40-87520	・・Piston	1	B10001-
13		723-40-87540	・・Spring	1	B10001-
14	C1		・・Sleeve	1	B10001-
15	C1		・・Case	1	B10001-
16		723-40-87170	・・O-ring	1	B10001-
17		01252-61080	・Bolt, Hexagon Socket Head	4	B10001-

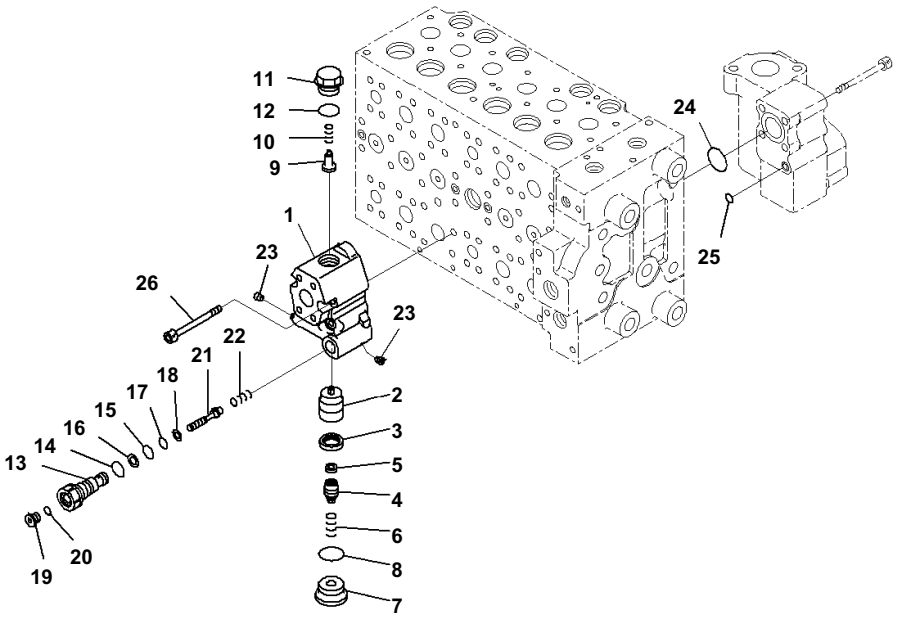

Index	Code	Part Number	Description	Qty	Serial No.
		723-47-23203	Valve Assembly	1	B10001-
		723-40-82501	・Valve Assembly	1	B10001-
1	C1		・・Body	1	B10001-
2	C1		・・Valve	1	B10001-
3	C1		・・Seal	1	B10001-
4		723-40-82210	・・Plug	1	B10001-
5		723-40-82220	・・Filter	1	B10001-
6		723-40-82140	・・Spring	1	B10001-
7		723-40-82150	・・Plug	1	B10001-
8		07002-13334	・・O-ring	1	B10001-
9		723-40-84420	・・Valve, Check	1	B10001-
10		723-40-84430	・・Spring	1	B10001-
11		723-40-84440	・・Plug	1	B10001-
12		07000-13024	・・O-ring	1	B10001-
13	C1		・・Plug	1	B10001-
14		07002-11823	・・O-ring	1	B10001-
15		07000-12011	・・O-ring	1	B10001-
16		07001-02011	・・Ring, Back-up	1	B10001-
17		07000-11010	・・O-ring	1	B10001-
18		07001-01010	・・Ring, Back-up	1	B10001-
19		723-11-18190	・・Plug	1	B10001-
20		07002-11023	・・O-ring	1	B10001-
21	C1		・・Piston	1	B10001-
22		723-40-82290	・・Spring	1	B10001-
23	C1		・・Plug	2	B10001-
24		07000-13038	・O-ring	1	B10001-
25		07000-11010	・O-ring	1	B10001-
26		01252-61075	・Bolt, Hexagon Socket Head	4	B10001-

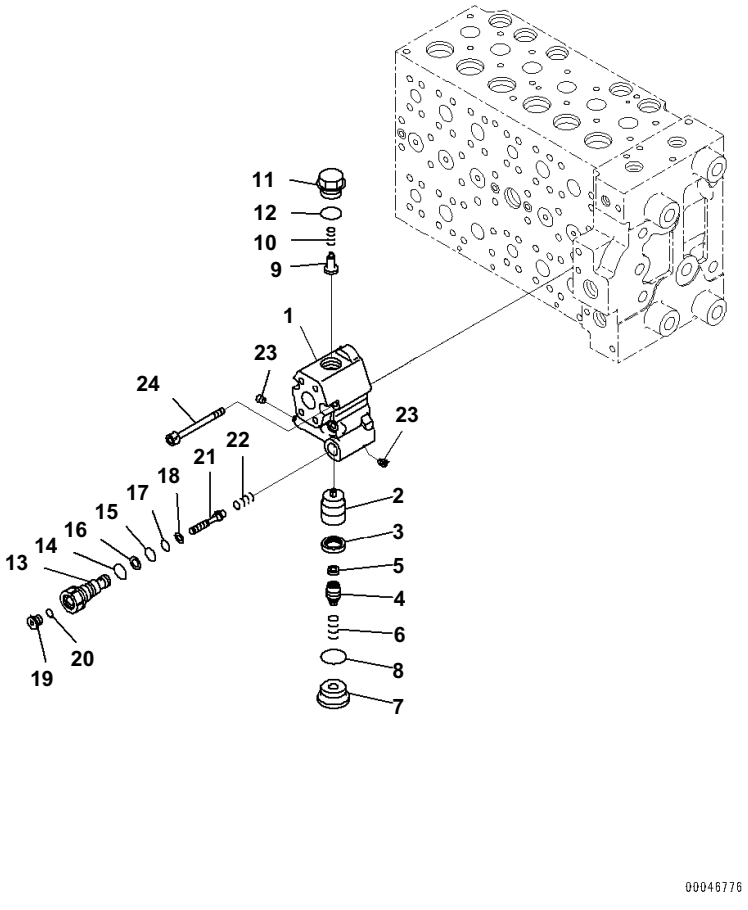

Index	Code	Part Number	Description	Qty	Serial No.
		723-47-23803	Valve Assembly	1	B10001-
		723-40-82501	・Valve Assembly	1	B10001-
1	C1		・・Body	1	B10001-
2	C1		・・Valve	1	B10001-
3	C1		・・Seal	1	B10001-
4		723-40-82210	・・Plug	1	B10001-
5		723-40-82220	・・Filter	1	B10001-
6		723-40-82140	・・Spring	1	B10001-
7		723-40-82150	・・Plug	1	B10001-
8		07002-13334	・・O-ring	1	B10001-
9		723-40-84420	・・Valve, Check	1	B10001-
10		723-40-84430	・・Spring	1	B10001-
11		723-40-84440	・・Plug	1	B10001-
12		07000-13024	・・O-ring	1	B10001-
13	C1		・・Plug	1	B10001-
14		07002-11823	・・O-ring	1	B10001-
15		07000-12011	・・O-ring	1	B10001-
16		07001-02011	・・Ring, Back-up	1	B10001-
17		07000-11010	・・O-ring	1	B10001-
18		07001-01010	・・Ring, Back-up	1	B10001-
19		723-11-18190	・・Plug	1	B10001-
20		07002-11023	・・O-ring	1	B10001-
21	C1		・・Piston	1	B10001-
22		723-40-82290	・・Spring	1	B10001-
23	C1		・・Plug	2	B10001-
26		01252-61075	・Bolt, Hexagon Socket Head	4	B10001-

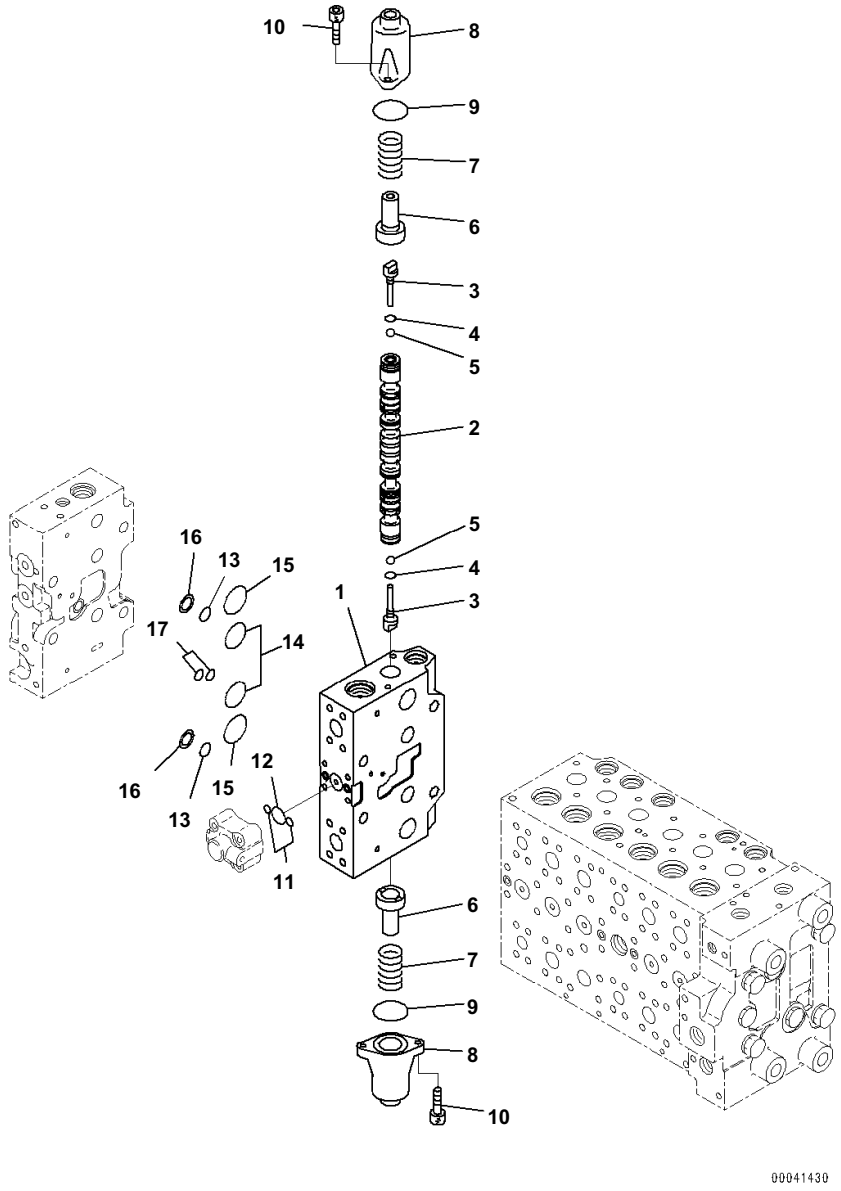

Index	Code	Part Number	Description	Qty	Serial No.
		723-47-23803	Valve Assembly	1	B10001-
	C1		・Body Subassembly	1	B10001-
1	C1		・・Block	1	B10001-
2	C1		・・Spool	1	B10001-
3		723-46-15130	・・Plug	2	B10001-
4		07002-10823	・・O-ring	2	B10001-
5		708-7T-16460	・・Ball	2	B10001-
6		723-46-15120	・・Retainer	2	B10001-
7		723-46-14110	・・Spring	2	B10001-
8		723-46-15111	・・Case	2	B10001-
9		07430-71380	・・O-ring	2	B10001-
10		01252-60820	・・Bolt	4	B10001-
11		07000-11009	・・O-ring	2	B10001-
12		07000-12021	・・O-ring	1	B10001-
13		723-11-19130	・・O-ring	2	B10001-
14		07000-13032	・・O-ring	2	B10001-
15		723-46-17510	・・O-ring	2	B10001-
16		723-46-17520	・・Ring, Back-up	2	B10001-
17		723-46-17530	・・O-ring	2	B10001-

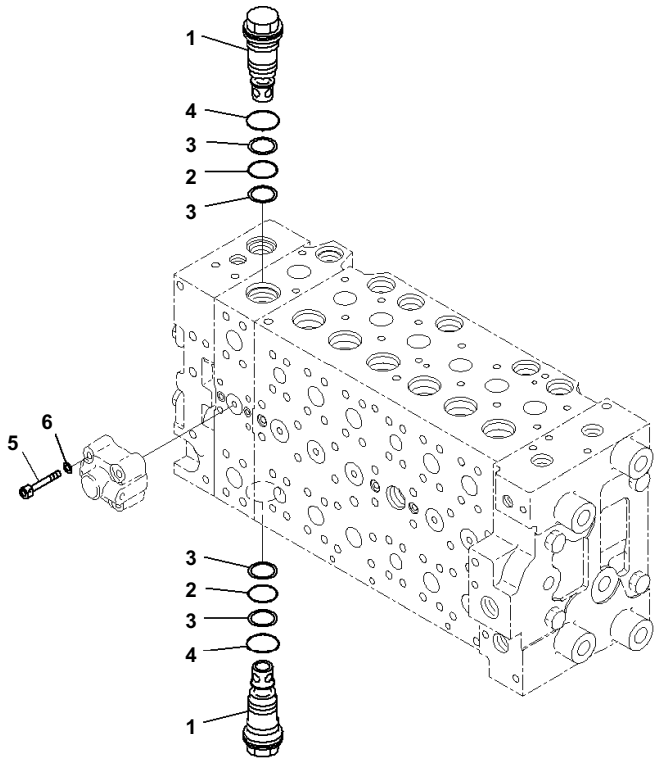

Index	Code	Part Number	Description	Qty	Serial No.
		723-47-23803	Valve Assembly	1	B10001-
	C1		・Body Subassembly	1	B10001-
1		723-46-45700	・・Valve Assembly	2	B10001-
2		700-93-11320	・・・O-ring	1	B10001-
3		723-46-41950	・・・Ring	2	B10001-
4		07002-13634	・・・O-ring	1	B10001-
5		01252-60845	・・Bolt	4	B10001-
6		01643-50823	・・Washer	4	B10001-

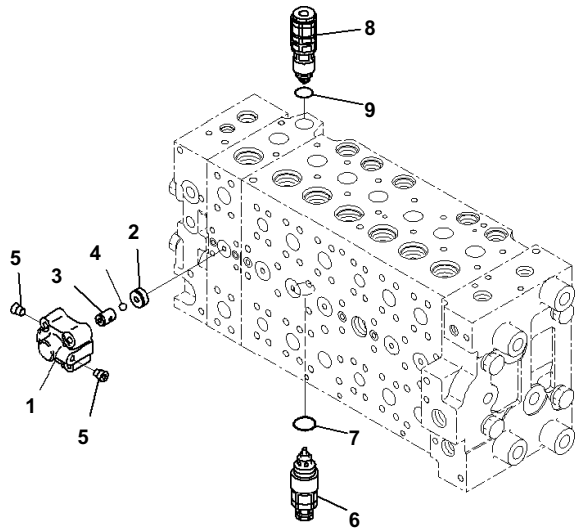

Index	Code	Part Number	Description	Qty	Serial No.
		723-47-23803	Valve Assembly	1	B10001-
		723-40-66300	・Valve Assembly	1	B10001-
1	C1		・・Case	1	B10001-
2	C1		・・Seat	1	B10001-
3	C1		・・Seat	1	B10001-
4	C1		・・Ball	1	B10001-
5	C1		・・Plug	2	B10001-
6		723-40-91300	・Valve Assembly, Suction and Relief	1	B10001-
7		709-25-11390	・・O-ring	1	B10001-
8		723-90-76101	・Valve Assembly, Suction and Relief	1	B10001-
9		07000-13024	・・O-ring	1	B10001-

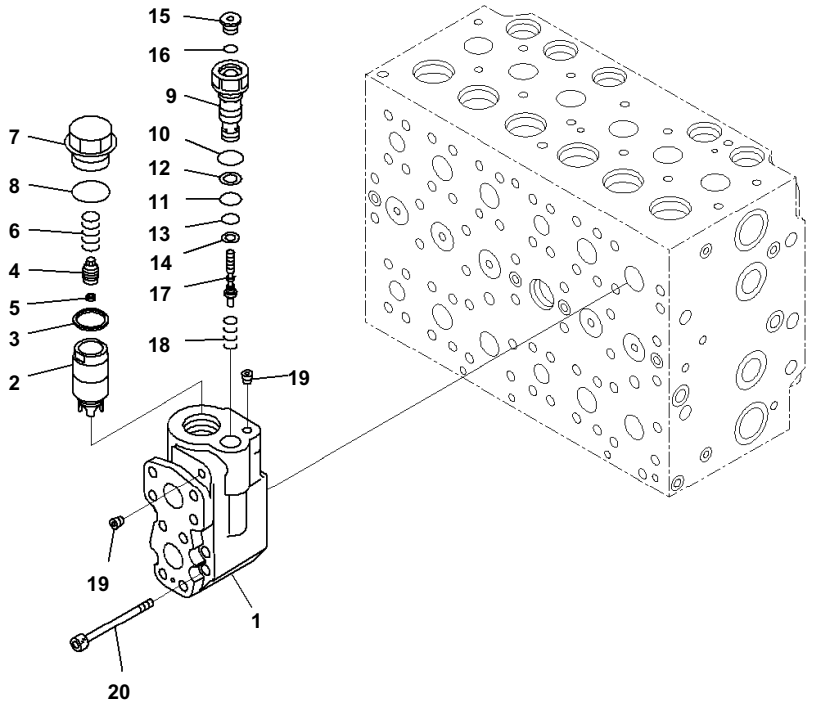

Index	Code	Part Number	Description	Qty	Serial No.
		723-47-23803	Valve Assembly	1	B10001-
		723-40-84501	・Valve Assembly	1	B10001-
1	C1		・・Body	1	B10001-
2	C1		・・Valve	1	B10001-
3	C1		・・Seal	1	B10001-
4		723-40-84330	・・Plug	1	B10001-
5		723-40-82220	・・Filter	1	B10001-
6		723-40-84340	・・Spring	1	B10001-
7		723-40-84350	・・Plug	1	B10001-
8		07002-13334	・・O-ring	1	B10001-
9	C1		・・Plug	1	B10001-
10		07002-11823	・・O-ring	1	B10001-
11		07000-12011	・・O-ring	1	B10001-
12		07001-02011	・・Ring, Back-up	1	B10001-
13		07000-11010	・・O-ring	1	B10001-
14		07001-01010	・・Ring, Back-up	1	B10001-
15		723-11-18190	・・Plug	1	B10001-
16		07002-11023	・・O-ring	1	B10001-
17	C1		・・Piston	1	B10001-
18		723-40-84382	・・Spring	1	B10001-
19	C1		・・Plug	2	B10001-
20		01252-61080	・Bolt, Hexagon Socket Head	4	B10001-

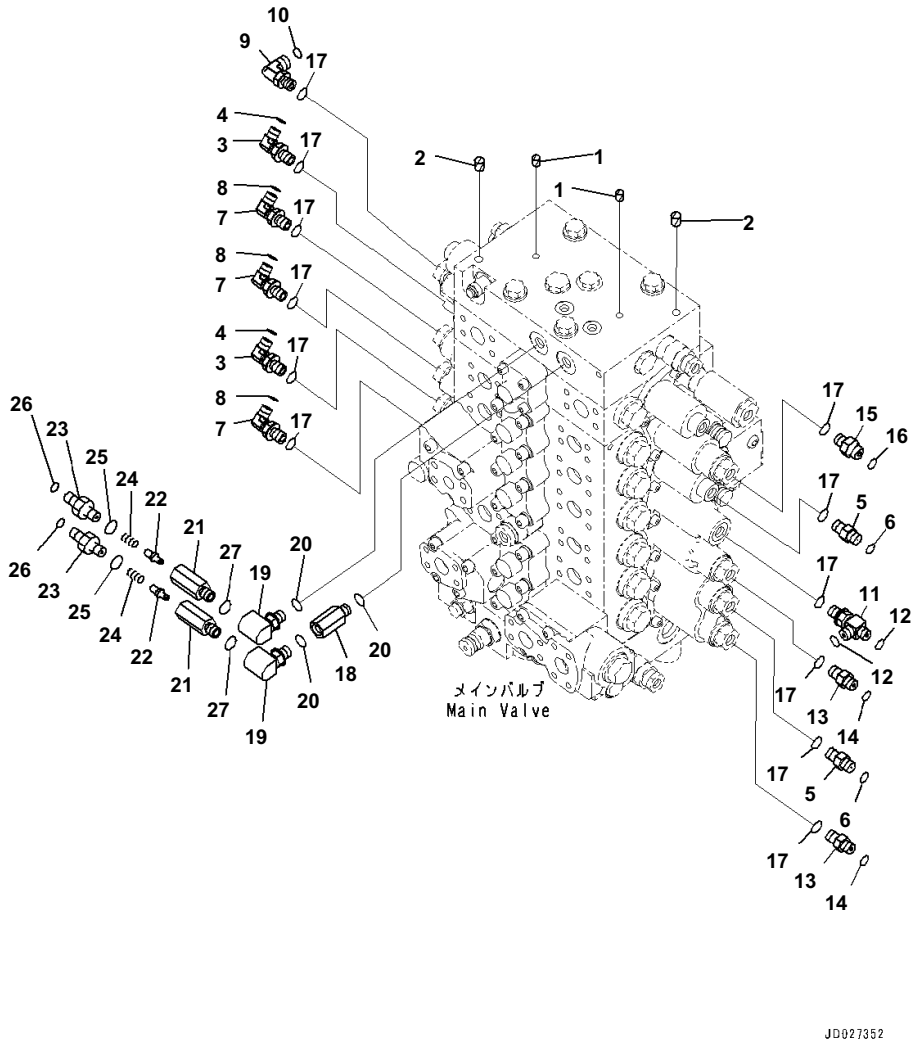

Main Control Valve, Connecting Parts (1/2)

Index	Code	Part Number	Description	Qty	Serial No.
1		07049-01012	Plug	2	B10001-
2		07049-01215	Plug	2	B10001-
3		20Y-62-45620	Elbow	2	B10001-
4		02896-11008	O-ring	2	B10001-
5		20Y-62-45610	Nipple	2	B10001-
6		02896-11008	O-ring	2	B10001-
7		11Y-62-12160	Elbow	3	B10001-
8		02896-11008	O-ring	3	B10001-
9		02782-10311	Elbow	1	B10001-
10		02896-11009	O-ring	1	B10001-
11		11Y-62-12330	Tee	1	B10001-
12		02896-11008	O-ring	2	B10001-
13		11Y-62-12130	Nipple	2	B10001-
14		02896-11008	O-ring	2	B10001-
15		11Y-62-12520	Union	1	B10001-
16		02896-11009	O-ring	1	B10001-
17		07002-11423	O-ring	12	B10001-
18		20Y-62-22160	Adapter	1	B10001-
19		20F-61-12460	Elbow	2	B10001-
20		07002-11423	O-ring	3	B10001-
		20Y-62-41602	Valve Assembly	2	B10001-
21	C1		・ Body	1	B10001-
22		20Y-60-22270	・ Poppet	1	B10001-
23		20Y-62-41971	・ Nipple	1	B10001-
24		701-20-61230	・ Spring	1	B10001-
25		07002-11423	・ O-ring	1	B10001-
26		02896-11008	O-ring	2	B10001-
27		07002-11423	O-ring	2	B10001-

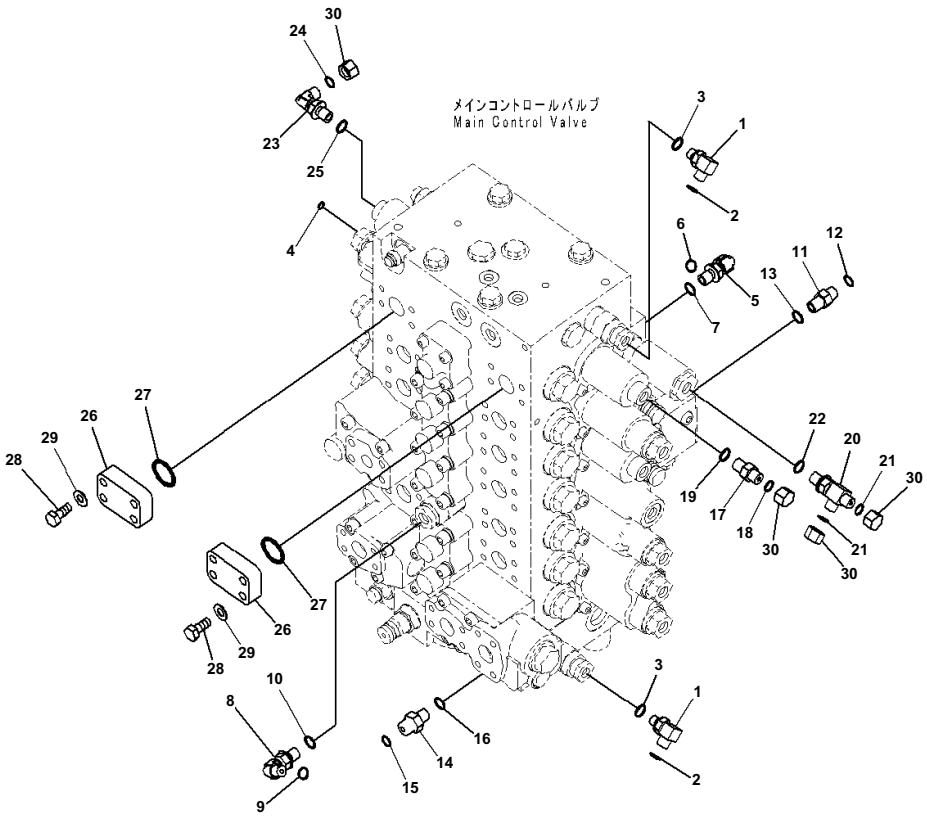

Index	Code	Part Number	Description	Qty	Serial No.
1		20Y-62-41920	Elbow	2	B10001-
2		02896-11008	O-ring	2	B10001-
3		07002-11223	O-ring	2	B10001-
4		02896-11008	O-ring	1	B10001-
5		11Y-62-12160	Elbow	1	B10001-
6		02896-11008	O-ring	1	B10001-
7		07002-11423	O-ring	1	B10001-
8		11Y-62-12160	Elbow	1	B10001-
9		02896-11008	O-ring	1	B10001-
10		07002-11423	O-ring	1	B10001-
11		11Y-62-12330	Tee	1	B10001-
12		02896-11008	O-ring	2	B10001-
13		07002-11423	O-ring	1	B10001-
14		11Y-62-12520	Union	1	B10001-
15		02896-11009	O-ring	1	B10001-
16		07002-11423	O-ring	1	B10001-
17		11Y-62-12130	Nipple	1	B10001-
18		02896-11008	O-ring	1	B10001-
19		07002-11423	O-ring	1	B10001-
20		11Y-62-12330	Tee	1	B10001-
21		02896-11008	O-ring	2	B10001-
22		07002-11423	O-ring	1	B10001-
23		11Y-62-12160	Elbow	1	B10001-
24		02896-11008	O-ring	1	B10001-
25		07002-11423	O-ring	1	B10001-
26		207-62-56190	Flange	2	B10001-
27		07000-13035	O-ring	2	B10001-
28		07372-21040	Bolt	8	B10001-
29		01643-51032	Washer	8	B10001-
30		02789-00210	Plug, Face Seal Type	4	B10001-

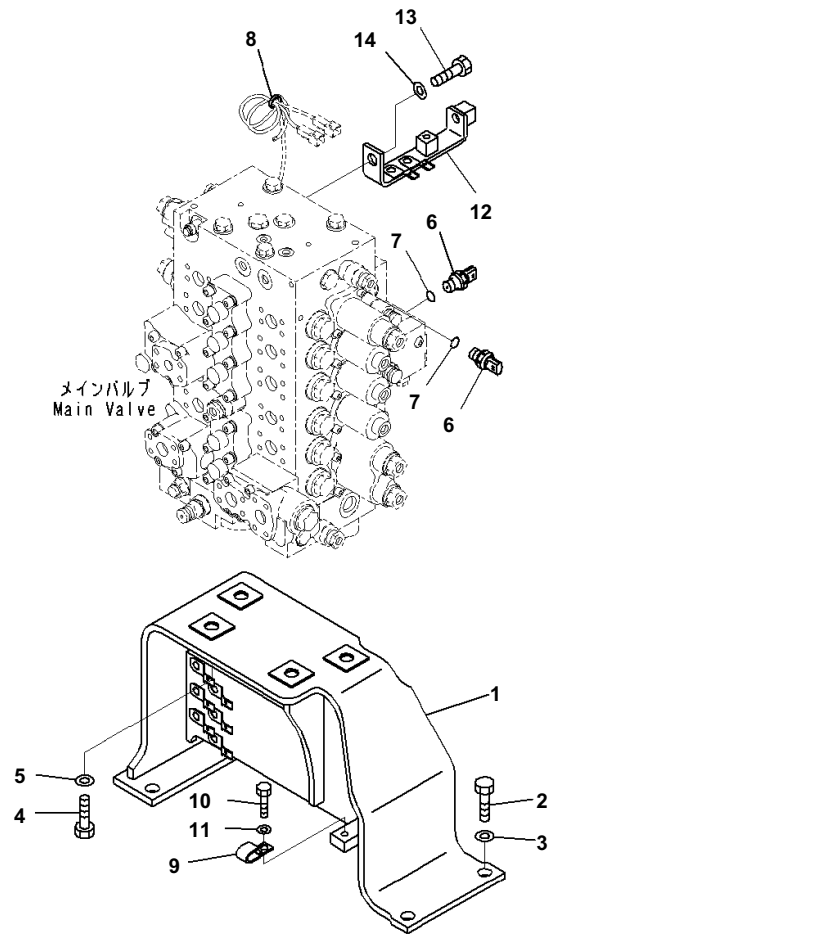

Index	Code	Part Number	Description	Qty	Serial No.
1		20Y-62-51112	Bracket	1	B10001-
2		01010-81640	Bolt	4	B10001-
3		01643-31645	Washer	4	B10001-
4		01010-81645	Bolt	4	B10001-
5		01643-31645	Washer	4	B10001-
6		7861-93-1812	Sensor, Pressure	2	B10001-
7		07002-61823	O-ring	1	B10001-
8		08034-20536	Band	1	B10001-
9		04435-51512	Clip	1	B10001-
10		01010-81225	Bolt	1	B10001-
11		01643-31232	Washer	1	B10001-
12		20Y-62-51471	Bracket	1	B10001-
13		01010-81635	Bolt	1	B10001-
14		01643-31645	Washer	1	B10001-

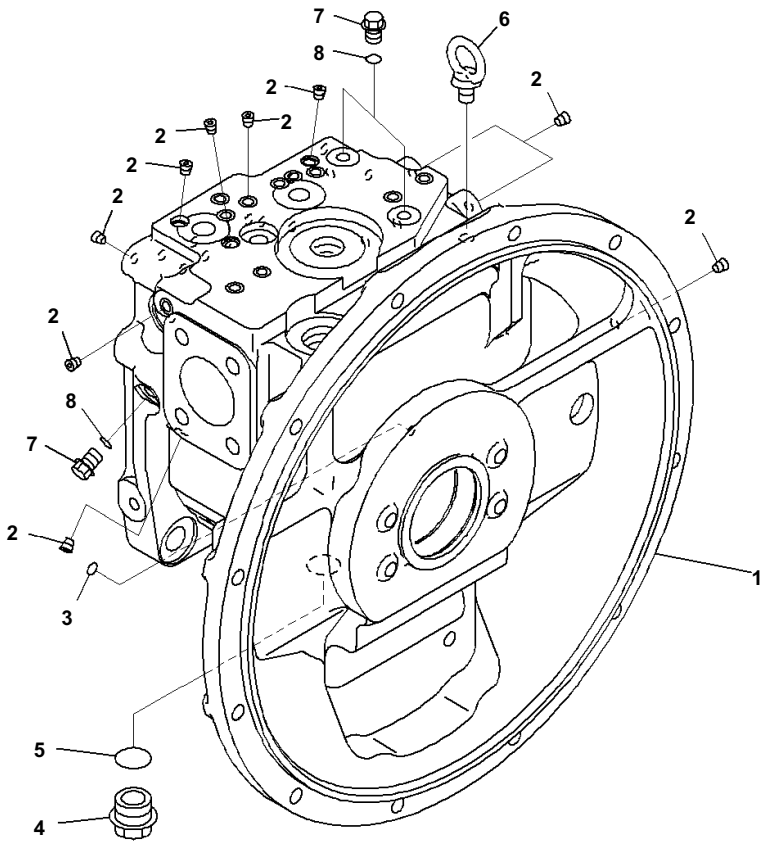

Index	Code	Part Number	Description	Qty	Serial No.
		708-2L-00790	Pump Assembly	1	B10001-
		708-2L-01600	・ Pump Subassembly	1	B10001-
	C2	708-2L-06440	・・ Case Assembly,Front	1	B10001-
1	C1		・・・ Case,Front	1	B10001-
2	C1		・・・ Plug	32	B10001-
3		07000-B1009	・・ O-ring	1	B10001-
4		07044-12412	・・ Plug	1	B10001-
5		07002-62434	・・ O-ring	1	B10001-
6		04530-11222	・・ Bolt, Eye	1	B10001-
7		708-8E-16150	・・ Plug	3	B10001-
8		07002-61023	・・ O-ring	3	B10001-

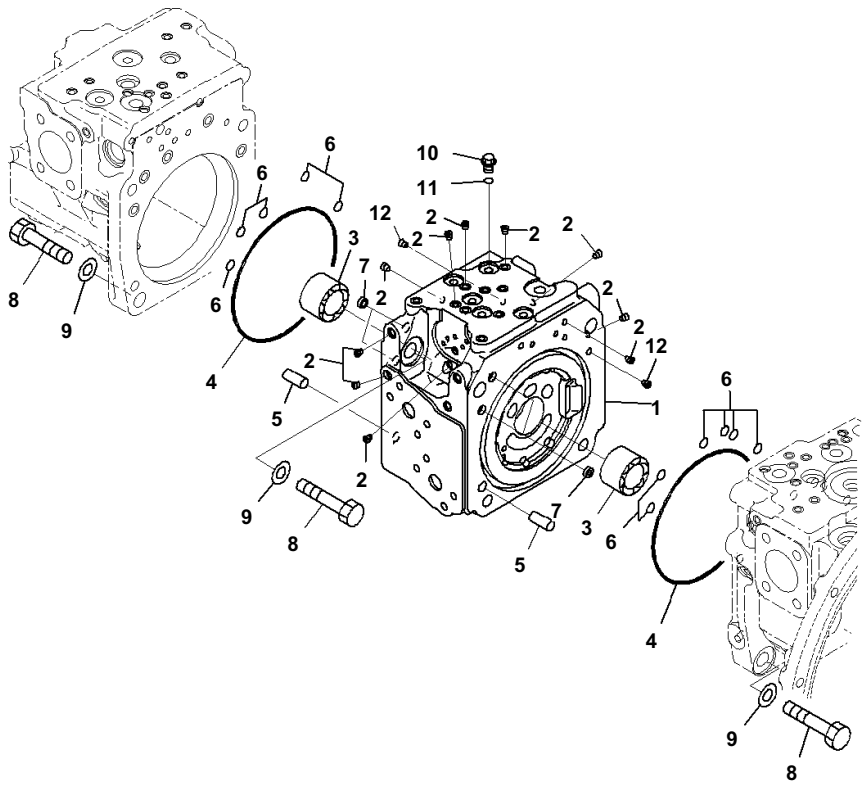

Index	Code	Part Number	Description	Qty	Serial No.
		708-2L-00790	Pump Assembly	1	B10001-
		708-2L-01600	・ Pump Subassembly	1	B10001-
	C2	708-2L-06450	・・ Cap Assembly, End	1	B10001-
1	C1		・・・ Cap, End	1	B10001-
2	C1		・・・ Plug	20	B10001-
3	C2	708-2L-32260	・・ Bearing	2	B10001-
4	C2	07000-A5165	・・ O-ring	2	B10001-
5	C2	04020-01228	・・ Pin, Dowel	2	B10001-
6	C2	07000-B2012	・・ O-ring	11	B10001-
7	C2	708-2L-25480	・・ Filter	4	B10001-
8	C2	01010-61655	・・ Bolt	8	B10001-
9	C2	01643-31645	・・ Washer	8	B10001-
10		708-8E-16150	・・ Plug	5	B10001-
11		07002-61023	・・ O-ring	5	B10001-
12		708-1L-29340	・・ Orifice	2	B10001-

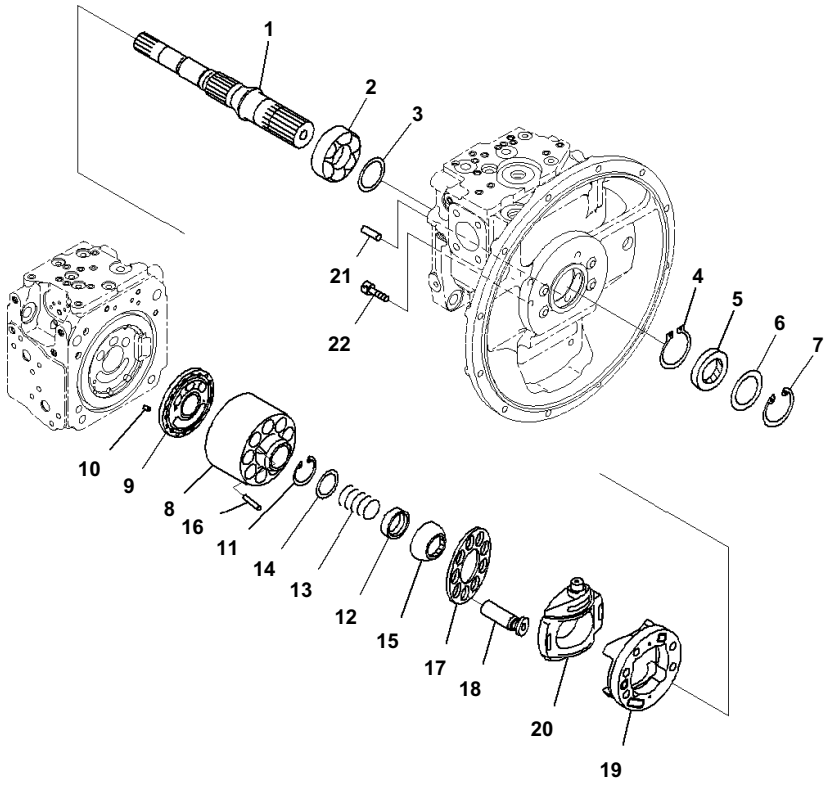

Index	Code	Part Number	Description	Qty	Serial No.
		708-2L-00790	Pump Assembly	1	B10001-
		708-2L-01600	・ Pump Subassembly	1	B10001-
1	C2	708-2L-32160	・・ Shaft,Front	1	B10001-
2	C2	708-2L-32150	・・ Bearing	1	B10001-
3	C2	708-2E-05040	・・ Washer Kit	1	B10001-
	C1		・・・ Washer, T=3.1mm	1	B10001-
	C1		・・・ Washer, T=3.0mm	1	B10001-
	C1		・・・ Washer, T=2.9mm	1	B10001-
	C1		・・・ Washer, T=2.8mm	1	B10001-
4	C2	708-25-12790	・・ Ring, Snap	1	B10001-
5		708-25-52861	・・ Seal, Oil	1	B10001-
6		708-2L-22160	・・ Spacer	1	B10001-
7		04065-06825	・・ Ring, Snap	1	B10001-
	C2	708-2L-06470	・・ Block Assembly,Front	1	B10001-
8	C1		・・・ Block, Cylinder	1	B10001-
9	C1		・・・ Plate	1	B10001-
10	C2	720-68-19610	・・ Pin	1	B10001-
11	C2	04065-04818	・・ Ring, Snap	1	B10001-
12	C2	708-2L-23131	・・ Seat	1	B10001-
13	C2	708-2L-33160	・・ Spring	1	B10001-
14	C2	708-7L-13140	・・ Seat	1	B10001-
15	C2	708-2L-23351	・・ Guide	1	B10001-
16	C2	708-2L-23360	・・ Pin	3	B10001-
17	C2	708-2L-33350	・・ Retainer	1	B10001-
18	C2	708-2L-33430	・・ Piston Subassembly	9	B10001-
	C2	708-2L-06630	・・ Cradle Assembly	1	B10001-
19	C1		・・・ Cradle	1	B10001-
20	C1		・・・ Cam, Rocker	1	B10001-
21	C2	04020-01228	・・ Pin, Dowel	1	B10001-
22	C2	01252-61230	・・ Bolt	4	B10001-

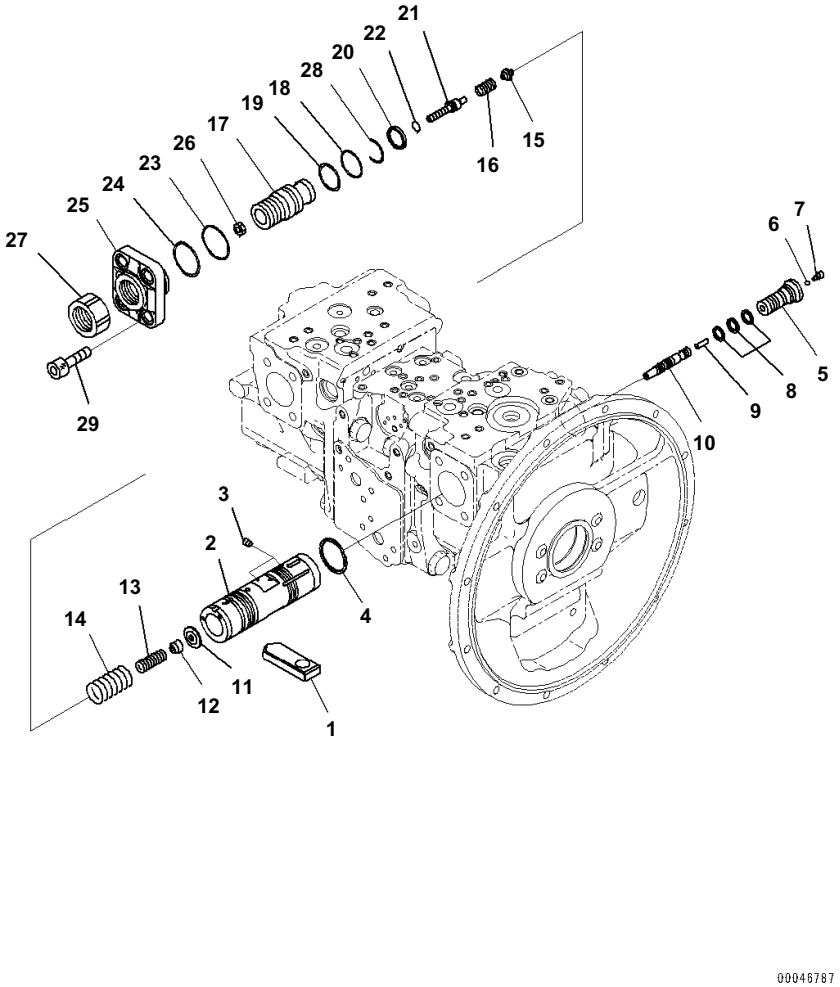

Main Piston Pump, Inner Parts, Main Pump (4/11)

Index	Code	Part Number	Description	Qty	Serial No.
		708-2L-00790	Pump Assembly	1	B10001-
		708-2L-01600	· Pump Subassembly	1	B10001-
	C2	708-2L-34180	· · Slider	1	B10001-
	C2	708-2L-06681	· · Valve Assembly	1	B10001-
1	C2	708-2L-06660	· · · Piston Assembly	1	B10001-
2	C1		· · · · Piston, Servo	1	B10001-
3	C1		· · · · Screw	8	B10001-
4	C2	708-2L-35680	· · · Seal	1	B10001-
5	C2	708-2L-35260	· · · Plug	1	B10001-
6	C2	708-2L-35760	· · · Ball	1	B10001-
7	C2	708-2L-35770	· · · Plug	1	B10001-
8	C2	708-2L-35690	· · · Seal	3	B10001-
9	C2	708-2L-35281	· · · Pin	1	B10001-
10	C2	708-2L-35860	· · · Spool	1	B10001-
11	C2	708-2L-35630	· · · Retainer	1	B10001-
12	C2	708-2L-35641	· · · Seat	1	B10001-
13	C2	708-2L-35240	· · · Spring	1	B10001-
14	C2	708-2L-35730	· · · Spring	1	B10001-
15	C2	708-2L-35650	· · · Seat	1	B10001-
16	C2	708-2L-35250	· · · Spring	1	B10001-
17	C2	708-2L-34330	· · · Screw	1	B10001-
18	C2	07000-B3034	· · · O-ring	1	B10001-
19	C2	708-2L-35210	· · · Ring, Back-up	1	B10001-
20	C2	708-2L-35710	· · · Seal	1	B10001-
21	C2	708-2L-35270	· · · Plug	1	B10001-
22	C2	07000-B2011	· · · O-ring	1	B10001-
23	C2	07000-B3045	· · · O-ring	1	B10001-
24	C2	708-2L-35750	· · · Ring	1	B10001-
25	C2	708-2L-34310	· · · Cover	1	B10001-
26	C2	01580-10806	· · · Nut	1	B10001-
27	C2	708-2L-35290	· · · Nut	1	B10001-
28	C2	708-2L-35670	· · · Ring	1	B10001-
29	C2	01252-61440	· · Bolt, Hexagon Socket Head	4	B10001-

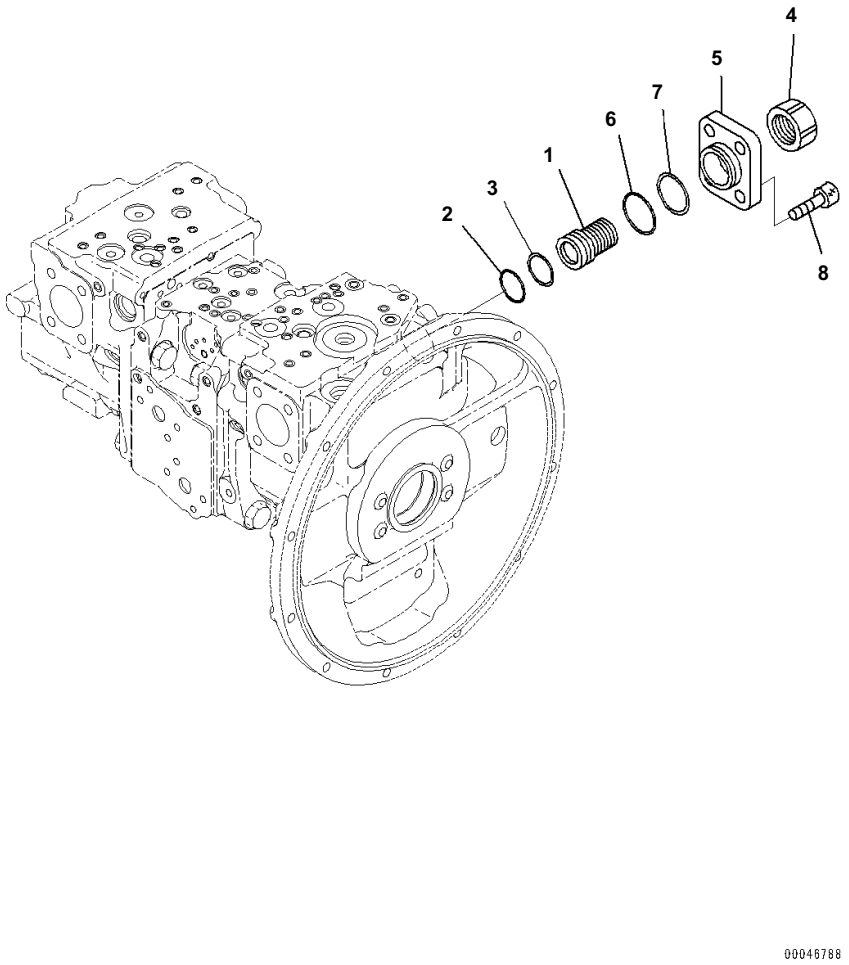

Main Piston Pump, Inner Parts, Main Pump (5/11)

Index	Code	Part Number	Description	Qty	Serial No.
		708-2L-00790	Pump Assembly	1	B10001-
		708-2L-01600	・Pump Subassembly	1	B10001-
	C2	708-2L-06670	・・Cover Assembly	1	B10001-
1	C2	708-2L-34340	・・・Screw	1	B10001-
2	C2	07000-B3034	・・・O-ring	1	B10001-
3	C2	708-2L-35210	・・・Ring, Back-up	1	B10001-
4	C2	708-2L-35290	・・・Nut	1	B10001-
5	C2	708-2L-34320	・・・Cover	1	B10001-
6	C2	07000-B3045	・・・O-ring	1	B10001-
7	C2	708-2L-35750	・・・Ring	1	B10001-
8	C2	01252-61440	・・Bolt, Hexagon Socket Head	4	B10001-

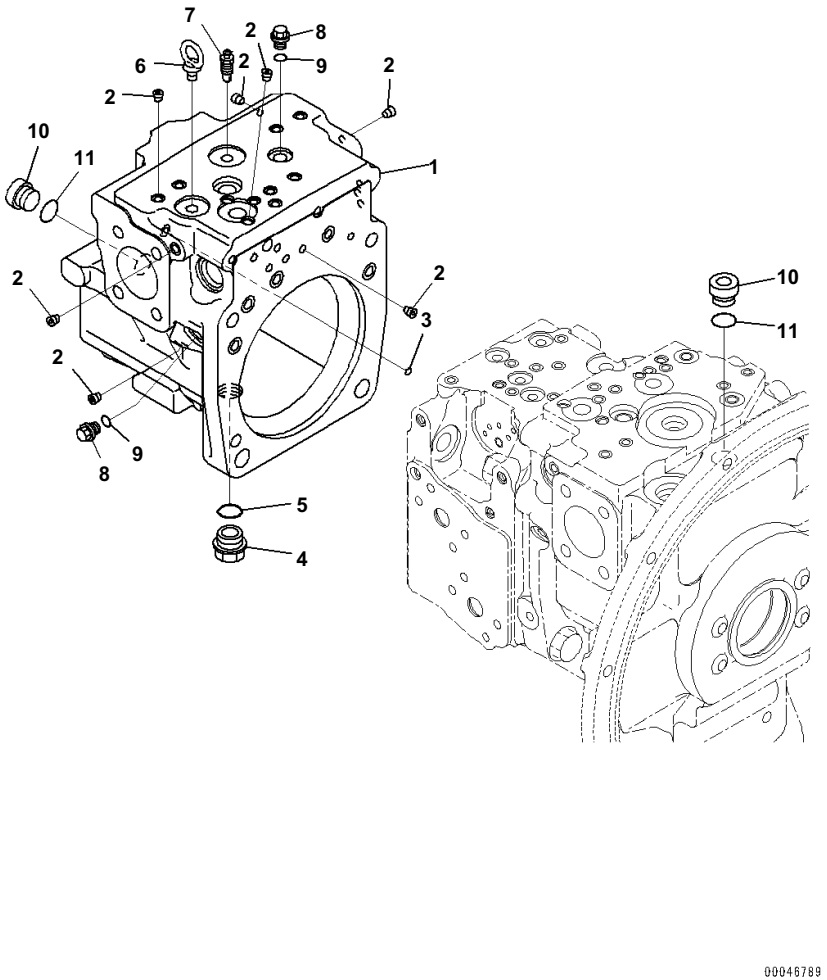

Index	Code	Part Number	Description	Qty	Serial No.
		708-2L-00790	Pump Assembly	1	B10001-
		708-2L-01600	・Pump Subassembly	1	B10001-
	C2	708-2L-06460	・・Case Assembly,Rear	1	B10001-
1	C1		・・・Case,Rear	1	B10001-
2	C1		・・・Plug	27	B10001-
3	C2	07000-B1009	・・O-ring	1	B10001-
4		07044-12412	・・Plug	1	B10001-
5		07002-62434	・・O-ring	1	B10001-
6		04530-11222	・・Bolt, Eye	1	B10001-
7		20B-27-11210	・・Bleeder	1	B10001-
8		708-8E-16150	・・Plug	2	B10001-
9		07002-61023	・・O-ring	2	B10001-
10		07040-12414	・・Plug	2	B10001-
11		07002-62434	・・O-ring	2	B10001-

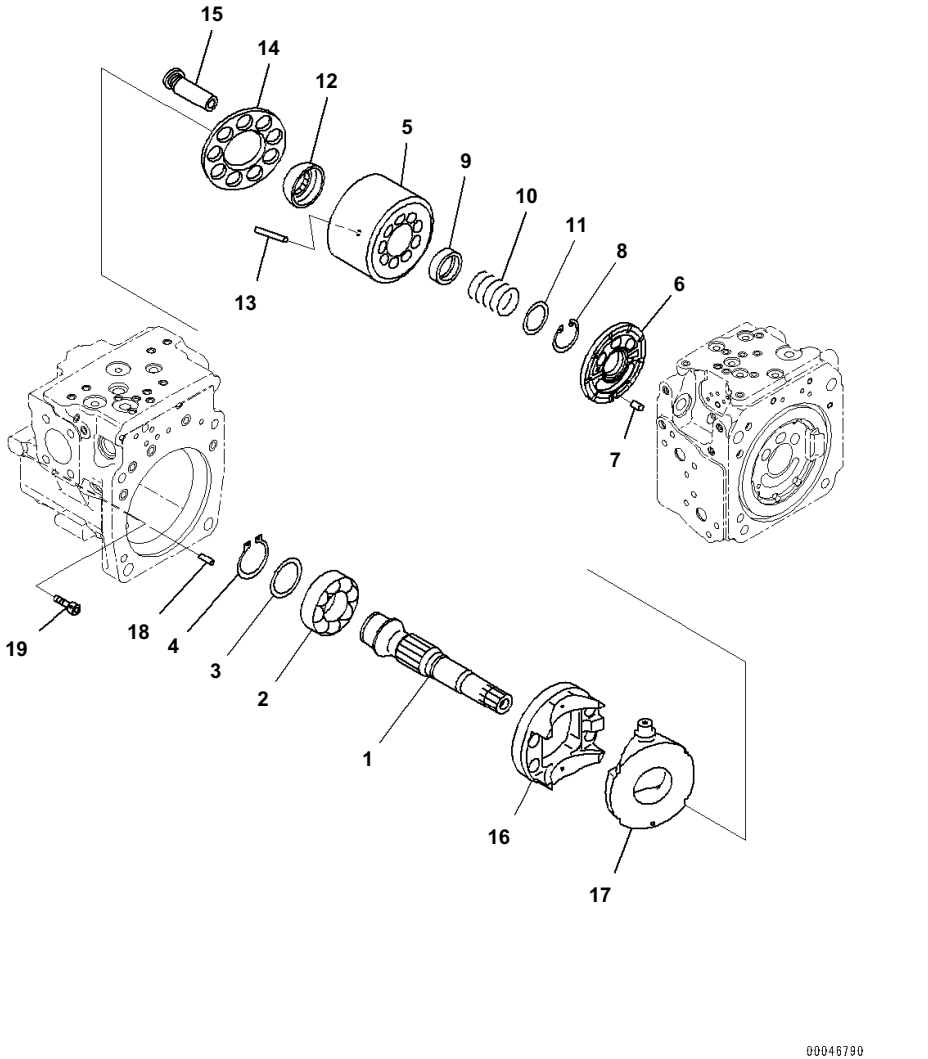

Index	Code	Part Number	Description	Qty	Serial No.
		708-2L-00790	Pump Assembly	1	B10001-
		708-2L-01600	· Pump Subassembly	1	B10001-
1	C2	708-2L-32170	· · Shaft,Rear	1	B10001-
2	C2	708-2L-32150	· · Bearing	1	B10001-
3	C2	708-2E-05040	· · Washer Kit	1	B10001-
	C1		· · · Washer, T=3.1mm	1	B10001-
	C1		· · · Washer, T=3.0mm	1	B10001-
	C1		· · · Washer, T=2.9mm	1	B10001-
	C1		· · · Washer, T=2.8mm	1	B10001-
4	C2	708-25-12790	· · Ring, Snap	1	B10001-
	C2	708-2L-06480	· · Block Assembly,Rear	1	B10001-
5	C1		· · · Block, Cylinder	1	B10001-
6	C1		· · · Plate, Valve	1	B10001-
7	C2	720-68-19610	· · Pin	1	B10001-
8	C2	04065-04818	· · Ring, Snap	1	B10001-
9	C2	708-2L-23131	· · Seat	1	B10001-
10	C2	708-2L-33160	· · Spring	1	B10001-
11	C2	708-7L-13140	· · Seat	1	B10001-
12	C2	708-2L-23351	· · Guide	1	B10001-
13	C2	708-2L-23360	· · Pin	3	B10001-
14	C2	708-2L-33350	· · Retainer	1	B10001-
15	C2	708-2L-33430	· · Piston Subassembly	9	B10001-
	C2	708-2L-06630	· · Cradle Assembly	1	B10001-
16	C1		· · · Cradle	1	B10001-
17	C1		· · · Cam, Rocker	1	B10001-
18	C2	04020-01228	· · Pin, Dowel	1	B10001-
19	C2	01252-61230	· · Bolt	4	B10001-

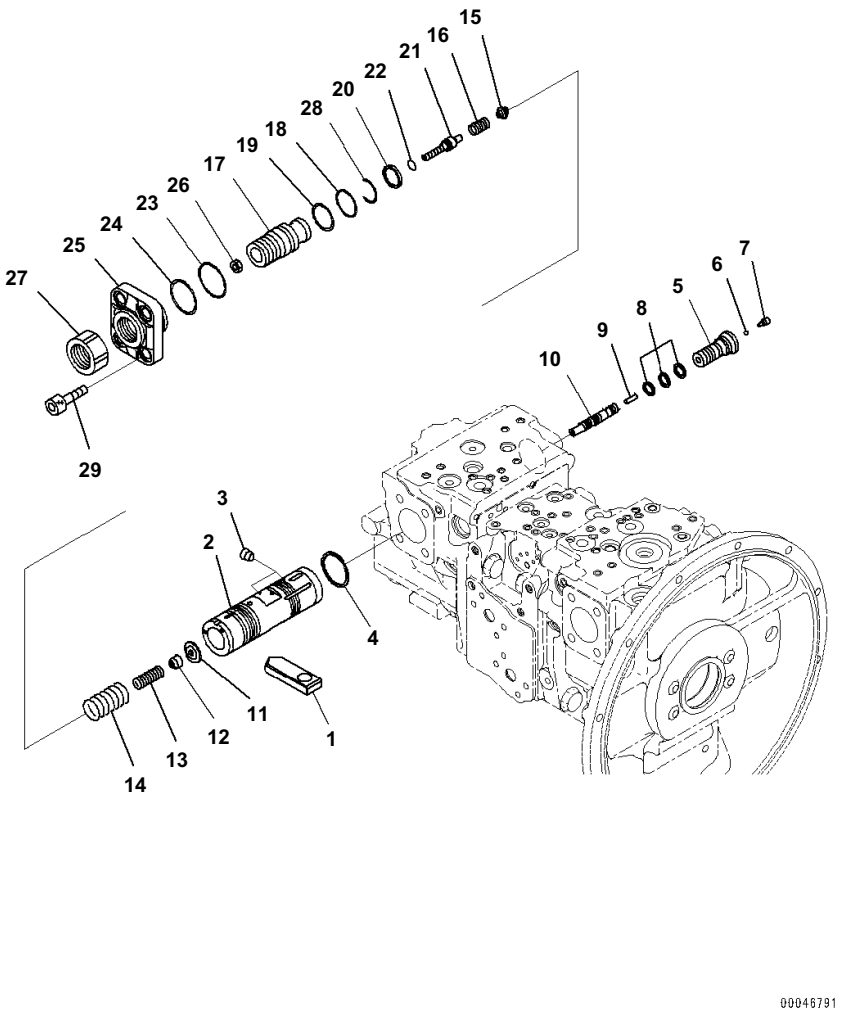

Index	Code	Part Number	Description	Qty	Serial No.
		708-2L-00790	Pump Assembly	1	B10001-
		708-2L-01600	・Pump Subassembly	1	B10001-
1	C2	708-2L-34180	・・Slider	1	B10001-
	C2	708-2L-06681	・・Valve Assembly	1	B10001-
	C2	708-2L-06660	・・・Piston Assembly, Servo	1	B10001-
2	C1		・・・・Piston, Servo	1	B10001-
3	C1		・・・・Screw	8	B10001-
4	C2	708-2L-35680	・・・Seal	1	B10001-
5	C2	708-2L-35260	・・・Plug	1	B10001-
6	C2	708-2L-35760	・・・Ball	1	B10001-
7	C2	708-2L-35770	・・・Plug	1	B10001-
8	C2	708-2L-35690	・・・Seal	3	B10001-
9	C2	708-2L-35281	・・・Pin	1	B10001-
10	C2	708-2L-35860	・・・Spool	1	B10001-
11	C2	708-2L-35630	・・・Retainer	1	B10001-
12	C2	708-2L-35641	・・・Seat	1	B10001-
13	C2	708-2L-35240	・・・Spring	1	B10001-
14	C2	708-2L-35730	・・・Spring	1	B10001-
15	C2	708-2L-35650	・・・Seat	1	B10001-
16	C2	708-2L-35250	・・・Spring	1	B10001-
17	C2	708-2L-34330	・・・Screw	1	B10001-
18	C2	07000-B3034	・・・O-ring	1	B10001-
19	C2	708-2L-35210	・・・Ring, Back-up	1	B10001-
20	C2	708-2L-35710	・・・Seal	1	B10001-
21	C2	708-2L-35270	・・・Plug	1	B10001-
22	C2	07000-B2011	・・・O-ring	1	B10001-
23	C2	07000-B3045	・・・O-ring	1	B10001-
24	C2	708-2L-35750	・・・Ring	1	B10001-
25	C2	708-2L-34310	・・・Cover	1	B10001-
26	C2	01580-10806	・・・Nut	1	B10001-
27	C2	708-2L-35290	・・・Nut	1	B10001-
28	C2	708-2L-35670	・・・Ring, Wire	1	B10001-
29	C2	01252-61440	・・Bolt, Hexagon Socket Head	4	B10001-

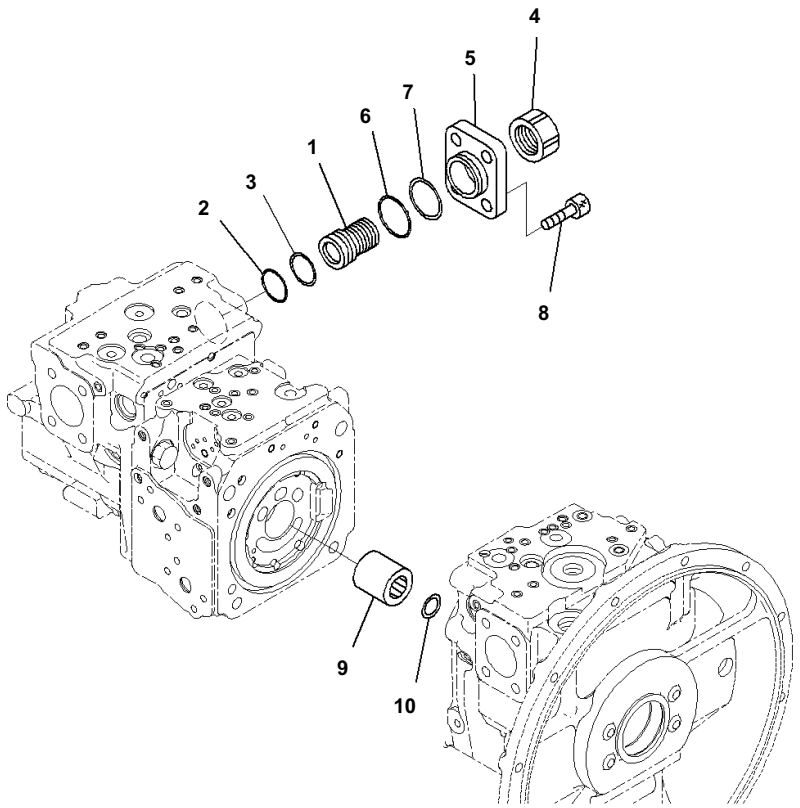

Index	Code	Part Number	Description	Qty	Serial No.
		708-2L-00790	Pump Assembly	1	B10001-
		708-2L-01600	・Pump Subassembly	1	B10001-
	C2	708-2L-06670	・・Cover Assembly	1	B10001-
1	C2	708-2L-34340	・・・Screw	1	B10001-
2	C2	07000-B3034	・・・O-ring	1	B10001-
3	C2	708-2L-35210	・・・Ring, Back-up	1	B10001-
4	C2	708-2L-35290	・・・Nut	1	B10001-
5	C2	708-2L-34320	・・・Cover	1	B10001-
6	C2	07000-B3045	・・・O-ring	1	B10001-
7	C2	708-2L-35750	・・・Ring	1	B10001-
8	C2	01252-61440	・・Bolt, Hexagon Socket Head	4	B10001-
9	C2	708-2L-32180	・・Coupling	1	B10001-
10	C2	708-2L-32190	・・Ring	1	B10001-

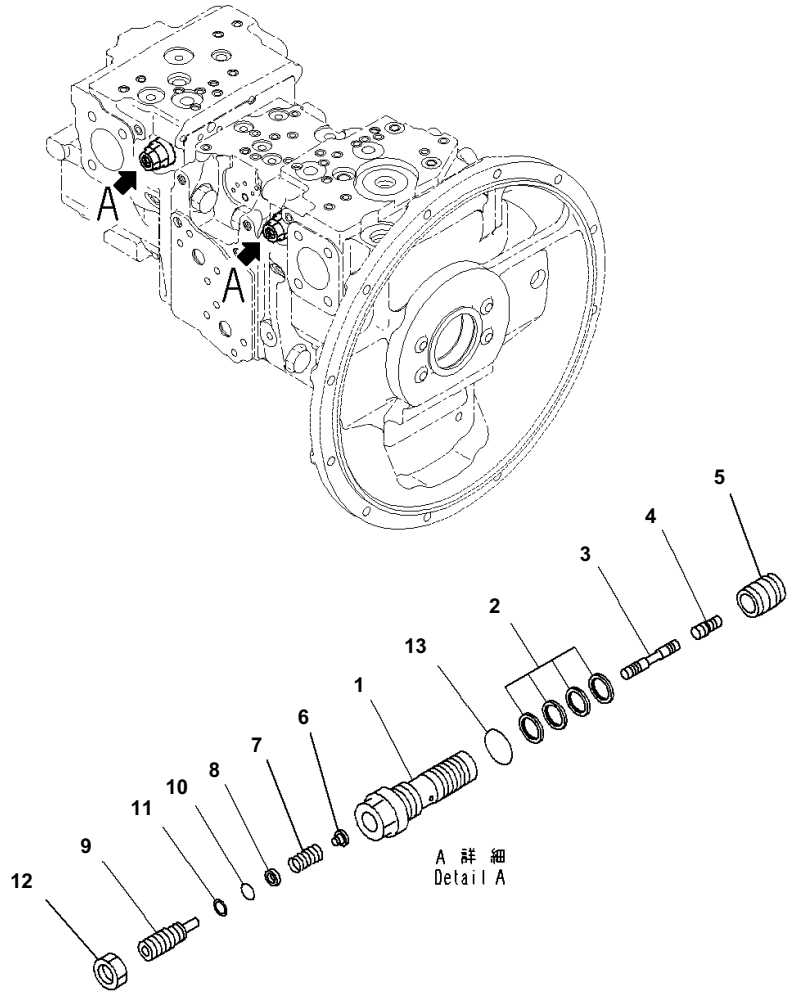

Main Piston Pump, Inner Parts, Main Pump (10/11)

Index	Code	Part Number	Description	Qty	Serial No.
		708-2L-00790	Pump Assembly	1	B10001-
		708-2L-07710	・Valve Assembly	2	B10001-
1	C2	708-2L-35311	・・Sleeve	1	B10001-
2		708-2L-24680	・・Seal	4	B10001-
3	C2	708-2L-35430	・・Spool	1	B10001-
4	C2	708-2L-28540	・・Piston	1	B10001-
5	C2	708-2L-35360	・・Sleeve	1	B10001-
6	C2	708-2L-35331	・・Seat	1	B10001-
7	C2	708-2L-35880	・・Spring	1	B10001-
8	C2	708-2L-35341	・・Seat	1	B10001-
9	C2	708-2L-35351	・・Plug	1	B10001-
10	C2	07000-B1009	・・O-ring	1	B10001-
11	C2	07001-01009	・・Ring, Back-up	1	B10001-
12		01583-11408	・・Nut	1	B10001-
13		07002-62434	・・O-ring	1	B10001-

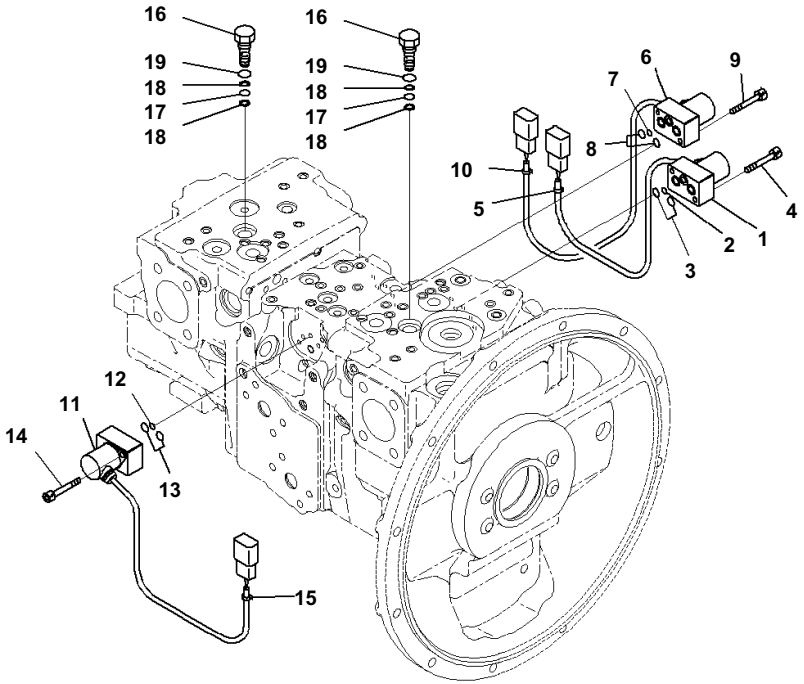

Index	Code	Part Number	Description	Qty	Serial No.
		708-2L-00790	Pump Assembly	1	B10001-
1		702-21-57400	· Valve, Pilot	1	B10001-
2		723-11-19960	· · O-ring	1	B10001-
3		702-21-54910	· · O-ring	2	B10001-
4		01252-60635	· Bolt	2	B10001-
5		20Y-62-22790	· Band, Red	1	B10001-
6		702-21-57400	· Valve, Pilot	1	B10001-
7		723-11-19960	· · O-ring	1	B10001-
8		702-21-54910	· · O-ring	2	B10001-
9		01252-60635	· Bolt	2	B10001-
10		20Y-62-22830	· Band, White	1	B10001-
11		702-21-57400	· Valve, Pilot	1	B10001-
12		723-11-19960	· · O-ring	1	B10001-
13		702-21-54910	· · O-ring	2	B10001-
14		01252-60635	· Bolt	2	B10001-
15		20Y-62-22810	· Band, Yellow	1	B10001-
16	C2	708-2L-35941	· Plug	2	B10001-
17		07000-B1008	· O-ring	2	B10001-
18		07001-01008	· Ring	4	B10001-
19		07002-61423	· O-ring	2	B10001-

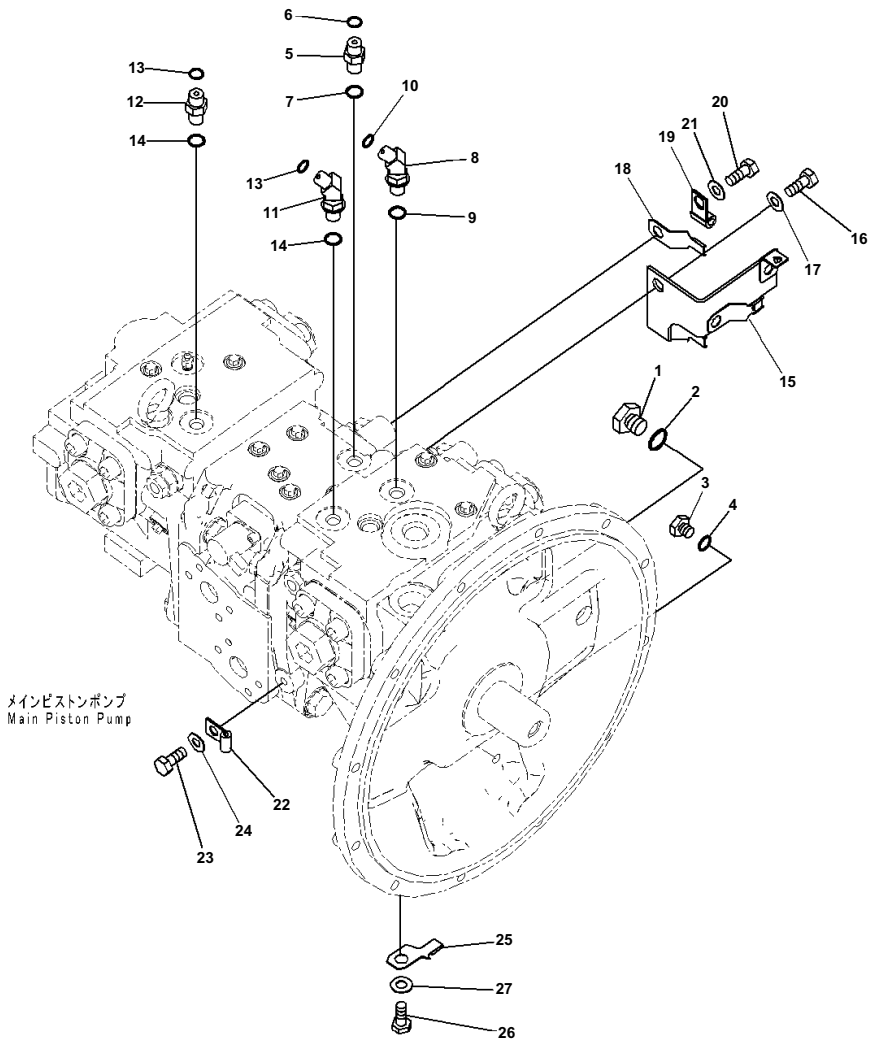

Index	Code	Part Number	Description	Qty	Serial No.
1		07040-12412	Plug	1	B10001-
2		07002-12434	O-ring	1	B10001-
3		07040-11209	Plug	1	B10001-
4		07002-11223	O-ring	1	B10001-
5		11Y-62-12130	Nipple	1	B10001-
6		02896-11008	O-ring	1	B10001-
7		07002-11423	O-ring	1	B10001-
8		11Y-62-12240	Elbow	1	B10001-
9		07002-11423	O-ring	1	B10001-
10		02896-11008	O-ring	1	B10001-
11		11Y-62-12240	Elbow	1	B10001-
12		11Y-62-12130	Nipple	1	B10001-
13		02896-11008	O-ring	2	B10001-
14		07002-11423	O-ring	2	B10001-
15		20Y-06-41530	Bracket	1	B10001-
16		01010-81225	Bolt	1	B10001-
17		01643-31232	Washer	1	B10001-
18		08193-21012	Clip	1	B10001-
19		04434-50812	Clip	1	B10001-
20		01010-81225	Bolt	1	B10001-
21		01643-31232	Washer	1	B10001-
22		04434-50510	Clip	1	B10001-
23		01010-81020	Bolt	1	B10001-
24		01643-31032	Washer	1	B10001-
25		08193-21012	Clip	1	B10001-
26		01010-81020	Bolt	1	B10001-
27		01643-31032	Washer	1	B10001-

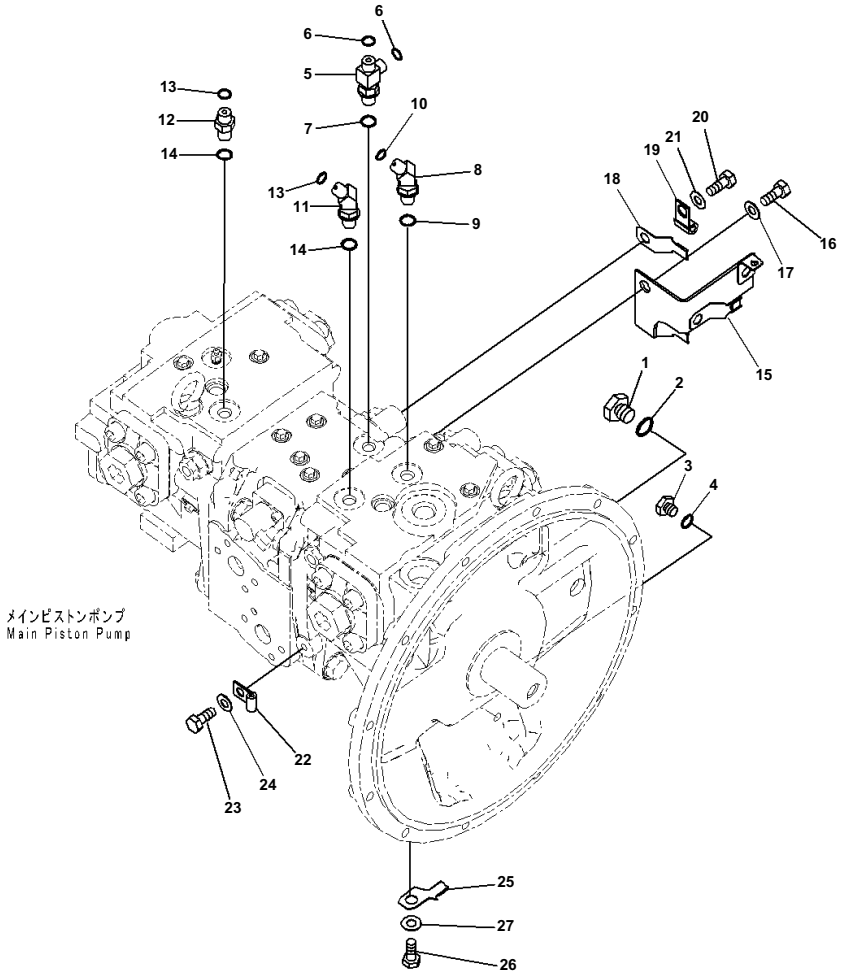

Index	Code	Part Number	Description	Qty	Serial No.
1		07040-12412	Plug	1	B10001-
2		07002-12434	O-ring	1	B10001-
3		07040-11209	Plug	1	B10001-
4		07002-11223	O-ring	1	B10001-
5		11Y-62-12330	Tee	1	B10001-
6		02896-11008	O-ring	2	B10001-
7		07002-11423	O-ring	1	B10001-
8		11Y-62-12240	Elbow	1	B10001-
9		07002-11423	O-ring	1	B10001-
10		02896-11008	O-ring	1	B10001-
11		11Y-62-12240	Elbow	1	B10001-
12		11Y-62-12130	Nipple	1	B10001-
13		02896-11008	O-ring	2	B10001-
14		07002-11423	O-ring	2	B10001-
15		20Y-06-41530	Bracket	1	B10001-
16		01010-81225	Bolt	1	B10001-
17		01643-31232	Washer	1	B10001-
18		08193-21012	Clip	1	B10001-
19		04434-50812	Clip	1	B10001-
20		01010-81225	Bolt	1	B10001-
21		01643-31232	Washer	1	B10001-
22		04434-50510	Clip	1	B10001-
23		01010-81020	Bolt	1	B10001-
24		01643-31032	Washer	1	B10001-
25		08193-21012	Clip	1	B10001-
26		01010-81020	Bolt	1	B10001-
27		01643-31032	Washer	1	B10001-

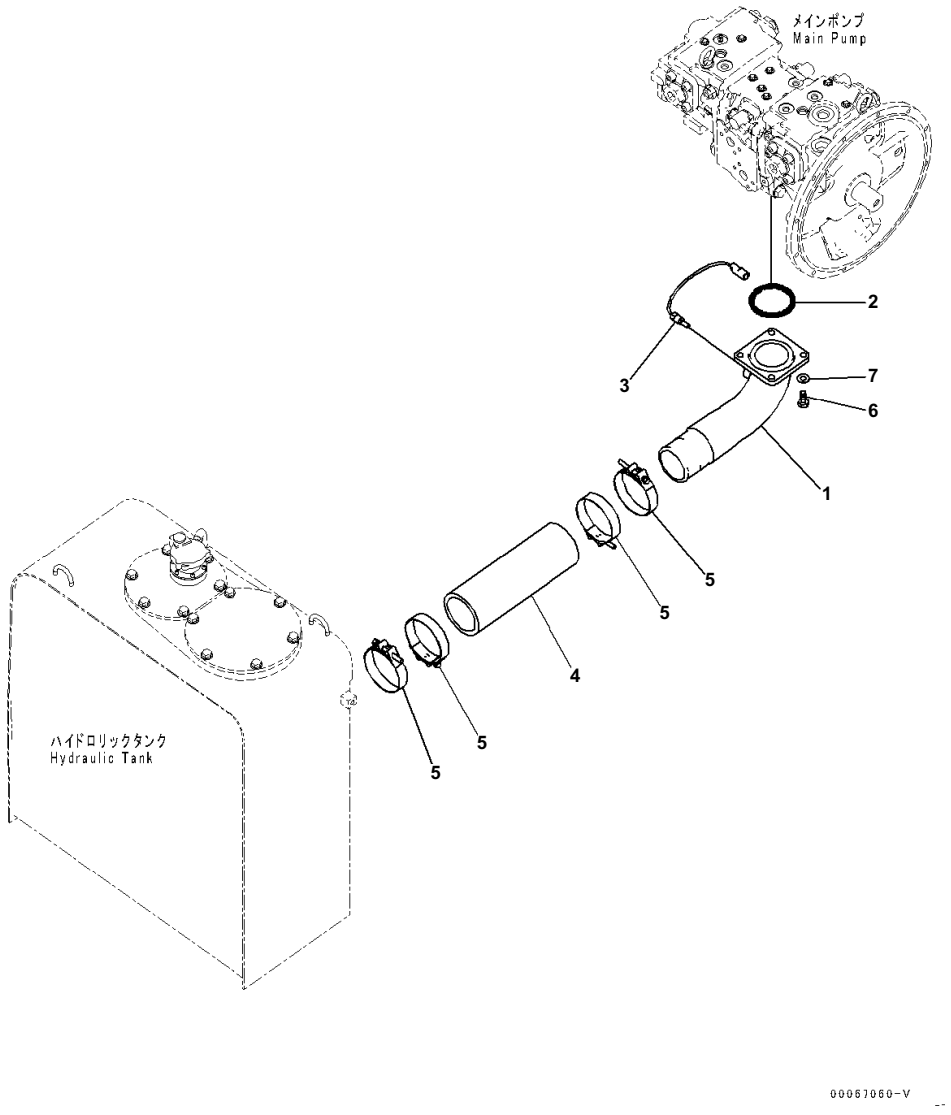

Index	Code	Part Number	Description	Qty	Serial No.
1		20Y-62-41321	Tube	1	B10001-
2		07000-12100	O-ring	1	B10001-
3		7861-93-3320	Sensor	1	B10001-
4		07260-08732	Hose	1	B10001-
5		20Y-62-51671	Clamp	4	B10001-
6		01010-81235	Bolt	4	B10001-
7		01643-31232	Washer	4	B10001-

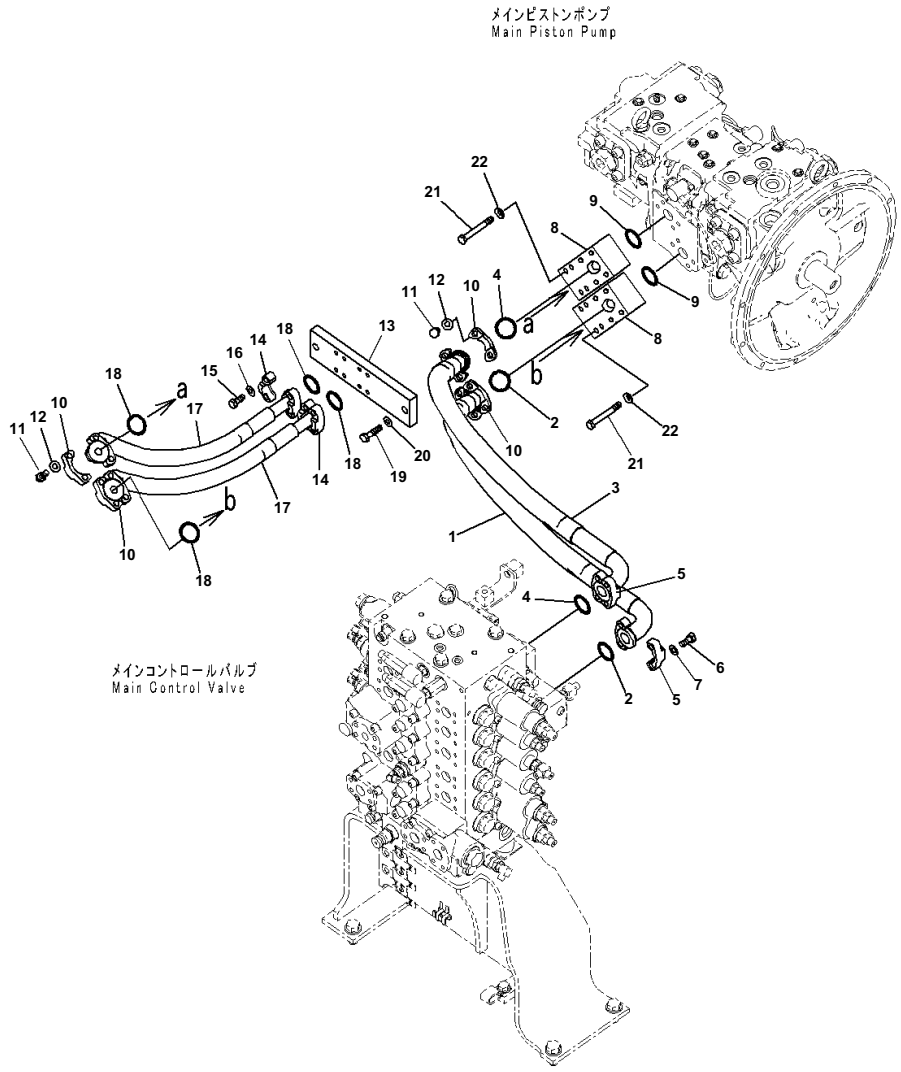

Index	Code	Part Number	Description	Qty	Serial No.
1		07084-01AA9	Hose, Flange Type	1	B10001-
2		07000-13032	O-ring	2	B10001-
3		20Y-62-52690	Hose	1	B10001-
4		07000-13032	O-ring	2	B10001-
5		07371-31049	Flange, Split	4	B10001-
6		07372-21035	Bolt	8	B10001-
7		01643-51032	Washer	8	B10001-
8		20Y-62-52790	Block	2	B10001-
9		07000-13032	O-ring	2	B10001-
10		07371-31049	Flange, Split	8	B10001-
11		07372-21035	Bolt	16	B10001-
12		01643-51032	Washer	16	B10001-
13		20Y-62-52474	Bracket	1	B10001-
14		07371-30640	Flange, Split	4	B10001-
15		07372-21035	Bolt	8	B10001-
16		01643-51032	Washer	8	B10001-
17		20Y-62-52461	Hose	2	B10001-
18		07000-13032	O-ring	2	B10001-
19		01010-81245	Bolt	2	B10001-
20		01643-31232	Washer	2	B10001-
21		01011-81025	Bolt	8	B10001-
22		01643-31032	Washer	8	B10001-

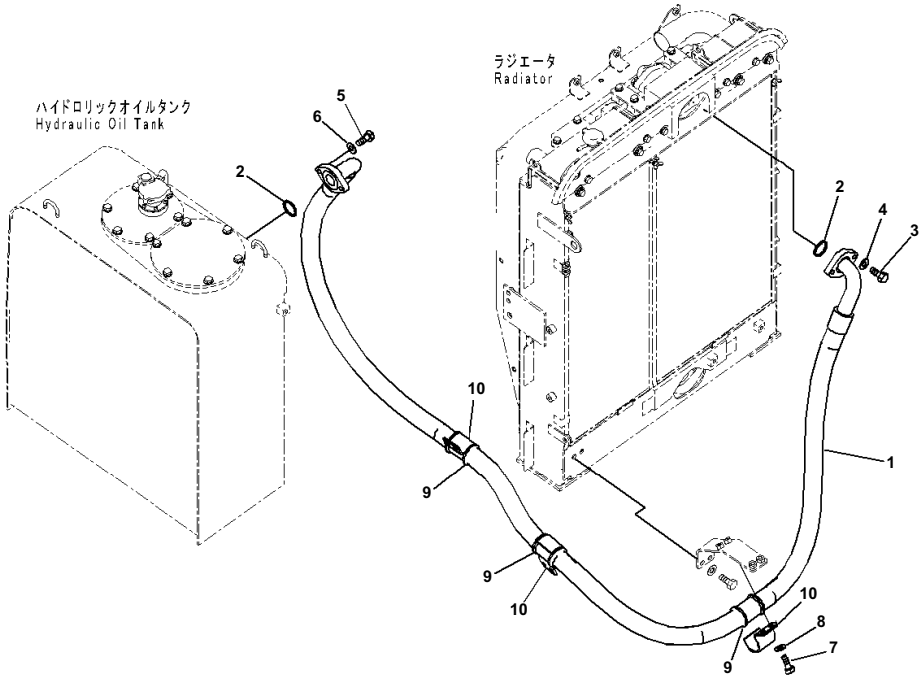

Index	Code	Part Number	Description	Qty	Serial No.
1		206-62-21171	Hose	1	B10001-
2		07000-13048	O-ring	2	B10001-
3		01010-81240	Bolt	2	B10001-
4		01643-31232	Washer	2	B10001-
5		01010-81235	Bolt	2	B10001-
6		01643-31232	Washer	2	B10001-
7		01010-81225	Bolt	6	B10001-
8		01643-31232	Washer	6	B10001-
9		07095-01245	Cushion	3	B10001-
10		22U-62-21551	Clamp	3	B10001-

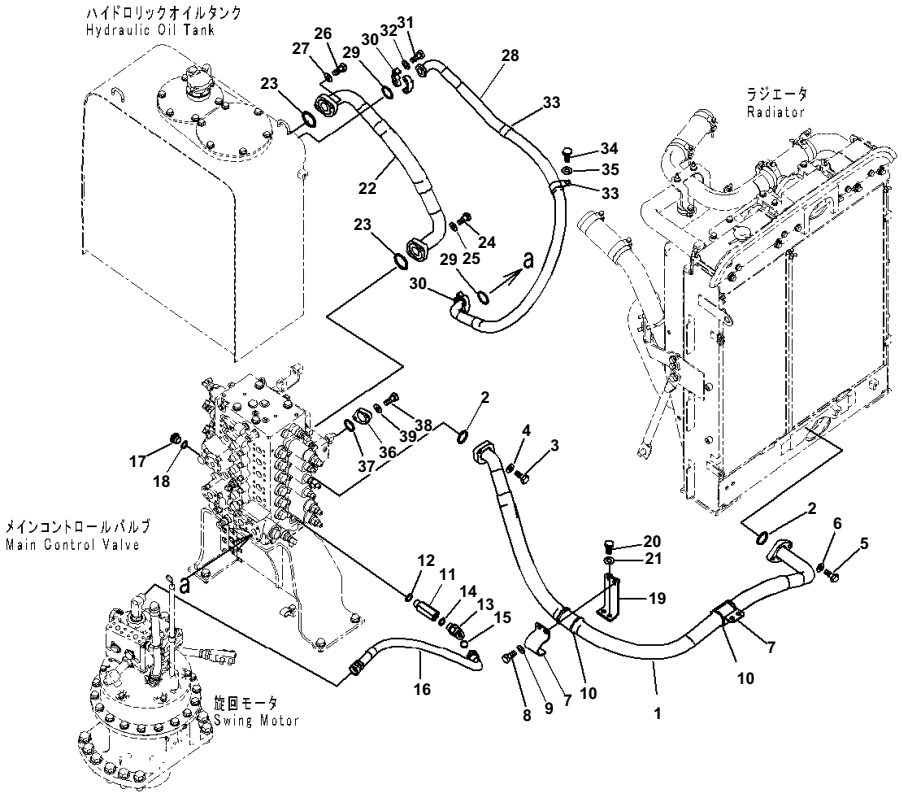

Index	Code	Part Number	Description	Qty	Serial No.
1		206-62-21181	Hose	1	B10001-
2		07000-13048	O-ring	2	B10001-
3		01010-81240	Bolt	2	B10001-
4		01643-31232	Washer	2	B10001-
5		01010-81240	Bolt	2	B10001-
6		01643-31232	Washer	2	B10001-
7		22U-62-21551	Clamp	2	B10001-
8		01010-81225	Bolt	4	B10001-
9		01643-31232	Washer	4	B10001-
10		07095-01245	Cushion	2	B10001-
11		203-62-61410	Joint	1	B10001-
12		07002-12434	O-ring	1	B10001-
13		02783-10628	Elbow	1	B10001-
14		07002-12434	O-ring	1	B10001-
15		02896-11018	O-ring	1	B10001-
16		02762-00608	Hose, Face Seal Type	1	B10001-
17		07040-12412	Plug	1	B10001-
18		07002-12434	O-ring	1	B10001-
19		20Y-62-51461	Bracket	1	B10001-
20		01010-81225	Bolt	2	B10001-
21		01643-31232	Washer	2	B10001-
22		20Y-62-51251	Hose	1	B10001-
23		07000-13048	O-ring	2	B10001-
24		01010-81240	Bolt	2	B10001-
25		01643-31232	Washer	2	B10001-
26		01010-81235	Bolt	2	B10001-
27		01643-31232	Washer	2	B10001-
28		20Y-62-51332	Hose	1	B10001-
29		07000-13032	O-ring	2	B10001-
30		07371-31049	Flange, Split	4	B10001-
31		07372-21035	Bolt	8	B10001-
32		01643-51032	Washer	8	B10001-
33		281-01-13180	Clip	2	B10001-
34		01010-81225	Bolt	2	B10001-
35		01643-31232	Washer	2	B10001-
36		20Y-62-53160	Flange	1	B10001-
37		07000-13040	O-ring	1	B10001-
38		01010-81035	Bolt	2	B10001-
39		01643-31032	Washer	2	B10001-

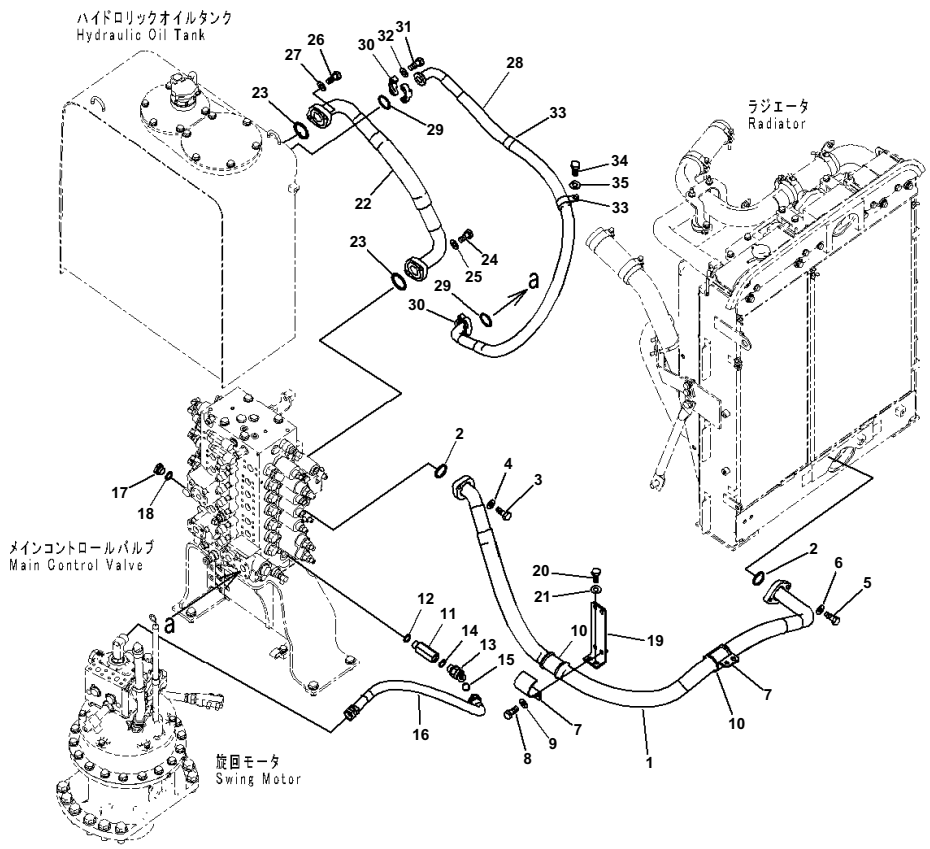

Index	Code	Part Number	Description	Qty	Serial No.
1		206-62-21181	Hose	1	B10001-
2		07000-13048	O-ring	2	B10001-
3		01010-81240	Bolt	2	B10001-
4		01643-31232	Washer	2	B10001-
5		01010-81240	Bolt	2	B10001-
6		01643-31232	Washer	2	B10001-
7		22U-62-21551	Clamp	2	B10001-
8		01010-81225	Bolt	4	B10001-
9		01643-31232	Washer	4	B10001-
10		07095-01245	Cushion	2	B10001-
11		203-62-61410	Joint	1	B10001-
12		07002-12434	O-ring	1	B10001-
13		02783-10628	Elbow	1	B10001-
14		07002-12434	O-ring	1	B10001-
15		02896-11018	O-ring	1	B10001-
16		02762-00608	Hose, Face Seal Type	1	B10001-
17		07040-12412	Plug	1	B10001-
18		07002-12434	O-ring	1	B10001-
19		20Y-62-51450	Bracket	1	B10001-
20		01010-81225	Bolt	2	B10001-
21		01643-31232	Washer	2	B10001-
22		20Y-62-51251	Hose	1	B10001-
23		07000-13048	O-ring	2	B10001-
24		01010-81240	Bolt	2	B10001-
25		01643-31232	Washer	2	B10001-
26		01010-81235	Bolt	2	B10001-
27		01643-31232	Washer	2	B10001-
28		20Y-62-51332	Hose	1	B10001-
29		07000-13032	O-ring	2	B10001-
30		07371-31049	Flange, Split	4	B10001-
31		07372-21035	Bolt	8	B10001-
32		01643-51032	Washer	8	B10001-
33		281-01-13180	Clip	2	B10001-
34		01010-81225	Bolt	2	B10001-
35		01643-31232	Washer	2	B10001-

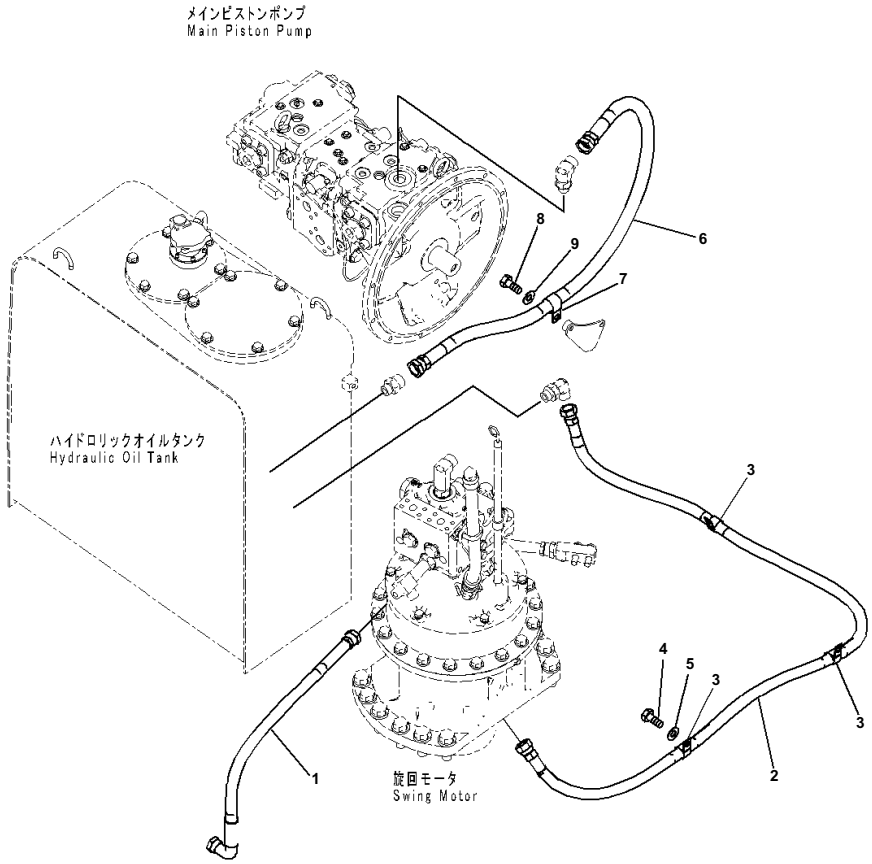

Drain Piping

Index	Code	Part Number	Description	Qty	Serial No.
1		02763-00508	Hose, Face Seal Type	1	B10001-
2		20Y-62-42471	Hose	1	B10001-
3		04434-52312	Clip	3	B10001-
4		01010-81225	Bolt	3	B10001-
5		01643-31232	Washer	3	B10001-
6		20Y-62-43870	Hose	1	B10001-
7		04434-52712	Clip	1	B10001-
8		01010-81225	Bolt	1	B10001-
9		01643-31232	Washer	1	B10001-

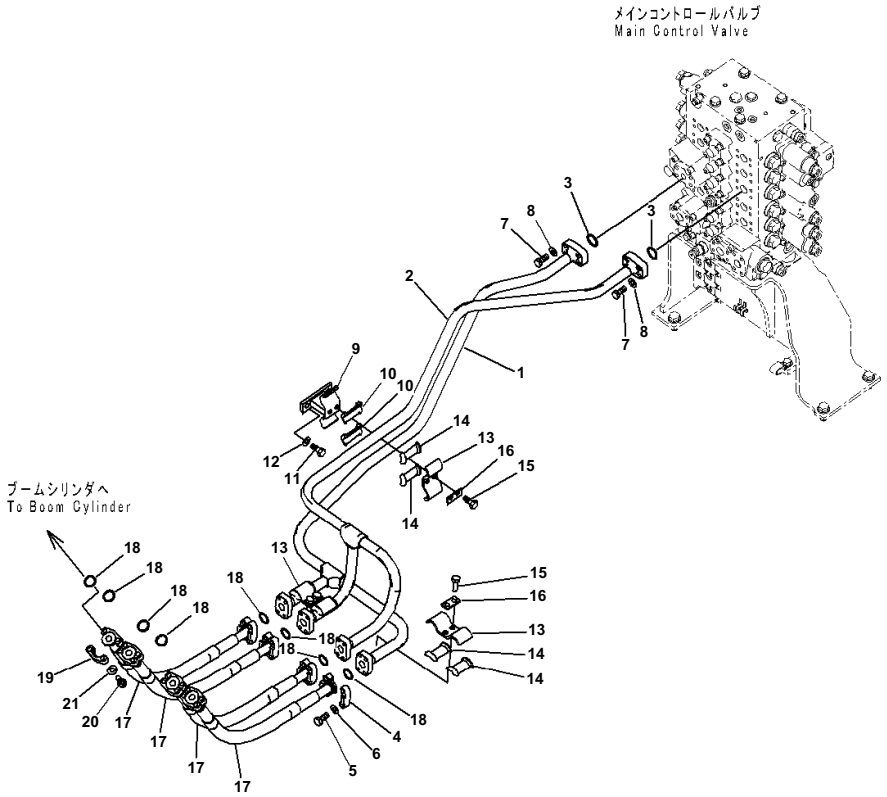

Index	Code	Part Number	Description	Qty	Serial No.
1		20Y-62-41140	Tube	1	B10001-
2		20Y-62-41150	Tube	1	B10001-
3		07000-13032	O-ring	2	B10001-
4		07371-30640	Flange, Split	8	B10001-
5		07372-21035	Bolt	16	B10001-
6		01643-51032	Washer	16	B10001-
7		07372-21040	Bolt	8	B10001-
8		01643-51032	Washer	8	B10001-
9		206-62-71180	Clamp	1	B10001-
10		20Y-62-13760	・ Seat	2	B10001-
11		01010-81235	Bolt	2	B10001-
12		01643-31232	Washer	2	B10001-
13		20Y-62-13230	Clamp	3	B10001-
14		20Y-62-13760	・ Seat	2	B10001-
15		01010-81235	Bolt	6	B10001-
16		20Y-62-13450	Plate	3	B10001-
17		20Y-62-17480	Hose	4	B10001-
18		07000-13025	O-ring	8	B10001-
19		07371-30640	Flange, Split	8	B10001-
20		07372-21035	Bolt	16	B10001-
21		01643-51032	Washer	16	B10001-

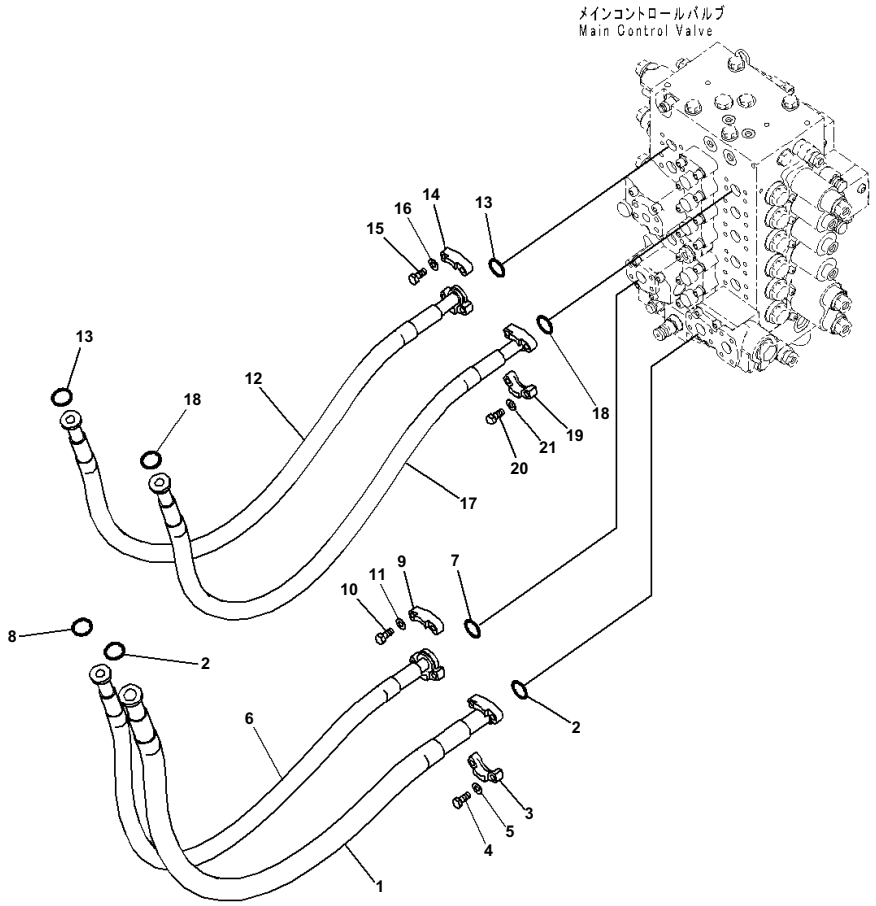

Index	Code	Part Number	Description	Qty	Serial No.
1		20Y-62-51240	Hose	1	B10001-
2		07000-13032	O-ring	2	B10001-
3		07371-31049	Flange, Split	2	B10001-
4		07372-21035	Bolt	4	B10001-
5		01643-51032	Washer	4	B10001-
6		20Y-62-41860	Hose	1	B10001-
7		07000-13025	O-ring	1	B10001-
8		07000-13032	O-ring	1	B10001-
9		07371-31049	Flange, Split	2	B10001-
10		07372-21035	Bolt	4	B10001-
11		01643-51032	Washer	4	B10001-
12		20Y-62-41181	Hose	1	B10001-
13		07000-13025	O-ring	2	B10001-
14		07371-30640	Flange, Split	2	B10001-
15		07372-21035	Bolt	4	B10001-
16		01643-51032	Washer	4	B10001-
17		20Y-62-41181	Hose	1	B10001-
18		07000-13025	O-ring	2	B10001-
19		07371-30640	Flange, Split	2	B10001-
20		07372-21035	Bolt	4	B10001-
21		01643-51032	Washer	4	B10001-

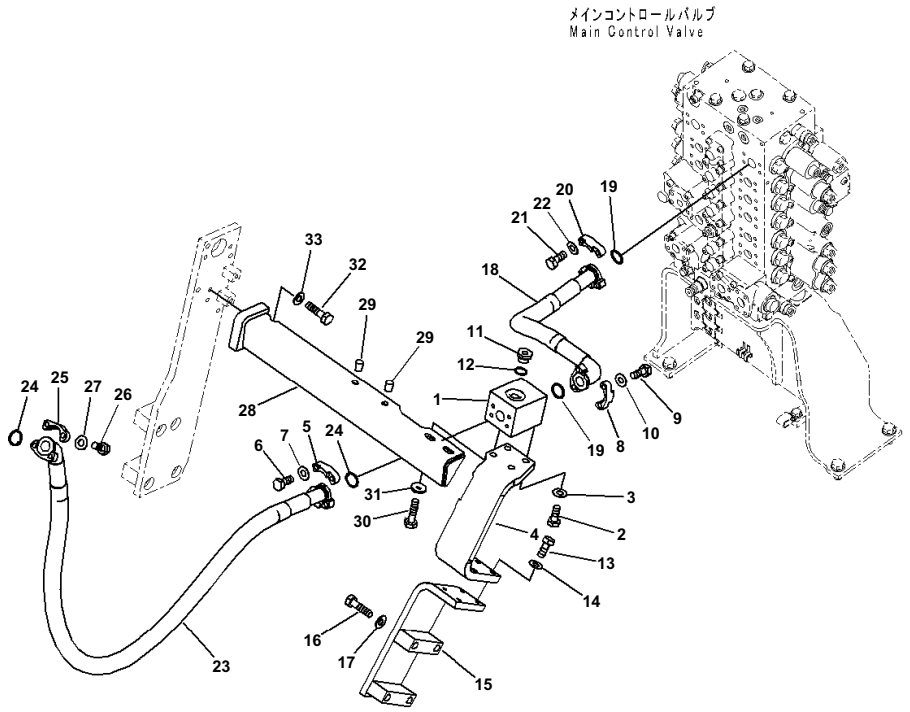

Index	Code	Part Number	Description	Qty	Serial No.
1		20Y-62-51580	Block	1	B10001-
2		01010-81240	Bolt	2	B10001-
3		01643-31232	Washer	2	B10001-
4		20Y-62-43222	Bracket	1	B10001-
5		07371-31049	Flange, Split	2	B10001-
6		07372-21035	Bolt	4	B10001-
7		01643-51032	Washer	4	B10001-
8		07371-31049	Flange, Split	2	B10001-
9		07372-21035	Bolt	4	B10001-
10		01643-51032	Washer	4	B10001-
11		07040-12412	Plug	1	B10001-
12		07002-12434	O-ring	1	B10001-
13		01010-81240	Bolt	4	B10001-
14		01643-31232	Washer	4	B10001-
15		20Y-62-51760	Bracket	1	B10001-
16		01010-81285	Bolt	4	B10001-
17		01643-31232	Washer	4	B10001-
18		07098-01007	Hose, Flange Type	1	B10001-
19		07000-13032	O-ring	2	B10001-
20		07371-31049	Flange, Split	2	B10001-
21		07372-21035	Bolt	4	B10001-
22		01643-51032	Washer	4	B10001-
23		07097-21017	Hose, Flange Type	1	B10001-
24		07000-13032	O-ring	2	B10001-
25		07371-31049	Flange, Split	2	B10001-
26		07372-21035	Bolt	4	B10001-
27		01643-51032	Washer	4	B10001-
28		20Y-62-51181	Frame	1	B10001-
29		07049-01215	Plug	2	B10001-
30		01010-81250	Bolt	2	B10001-
31		175-54-34170	Washer	2	B10001-
32		01010-81250	Bolt	2	B10001-
33		01643-31232	Washer	2	B10001-

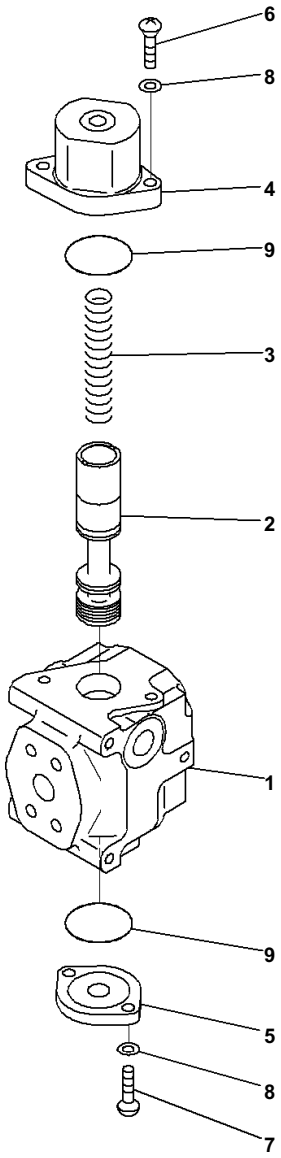

Index	Code	Part Number	Description	Qty	Serial No.
		702-21-01910	Valve Assembly	1	B10001-
1	C1		· Block	1	B10001-
2	C1		· Spool	1	B10001-
3		702-21-11930	· Spring	1	B10001-
4		702-21-11940	· Case	1	B10001-
5		709-10-91240	· Flange	1	B10001-
6		01252-61040	· Bolt	2	B10001-
7		01252-61030	· Bolt, Hexagon Socket Head	2	B10001-
8		01643-51032	· Washer	4	B10001-
9		07000-12055	· O-ring	2	B10001-

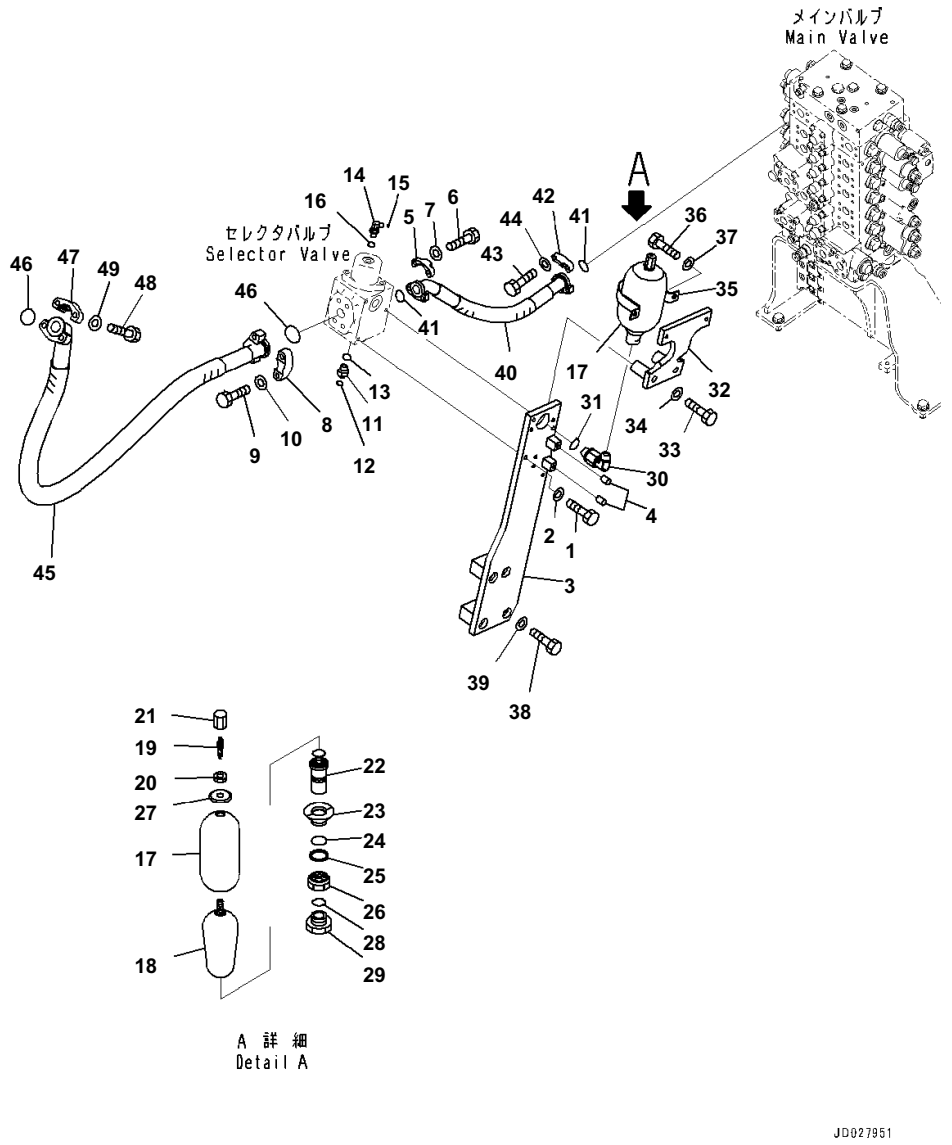

Index	Code	Part Number	Description	Qty	Serial No.
1		01010-81040	Bolt	3	B10001-
2		01643-31032	Washer	3	B10001-
3		20Y-62-51771	Bracket	1	B10001-
4		07049-01215	Plug	2	B10001-
5		07371-31049	Flange, Split	2	B10001-
6		07372-21035	Bolt	4	B10001-
7		01643-51032	Washer	4	B10001-
8		07371-51260	Flange	2	B10001-
9		01010-81245	Bolt	4	B10001-
10		01643-31232	Washer	4	B10001-
11		20Y-62-43460	Nipple	1	B10001-
12		02896-11008	O-ring	1	B10001-
13		07002-12034	O-ring	1	B10001-
14		11Y-62-12160	Elbow	1	B10001-
15		02896-11008	O-ring	1	B10001-
16		07002-11423	O-ring	1	B10001-
		20Y-970-6450	Accumulator Assembly	1	B10001-
	C1		・ Shell	1	B10001-
17		NFEB3401 A1	・ Bleeder Assembly	1	B10001-
18		NFEB3026 A1	・・ Bleeder	1	B10001-
19		NFEB4475 Z0	・・ Core	1	B10001-
20	C1		・ Nut	1	B10001-
21	C1		・ Cap	1	B10001-
22		NFEB0427 Z0	・ Body Assembly	1	B10001-
23		NFEB4477 Z0	・ Ring	1	B10001-
24	C1		・ O-ring	1	B10001-
25	C1		・ Ring, Back-up	1	B10001-
26	C1		・ Ring	1	B10001-
27	C1		・ Plate	1	B10001-
28		205-970-5560	・ O-ring	1	B10001-
29	C1		・ Bushing	1	B10001-
30		20Y-62-43290	Elbow	1	B10001-
31		07002-12434	O-ring	1	B10001-
32		20Y-62-43280	Bracket	1	B10001-
33		01010-81295	Bolt	2	B10001-
34		01643-31232	Washer	2	B10001-
35		175-61-51750	Plate	1	B10001-
36		01010-81225	Bolt	2	B10001-
37		01643-31232	Washer	2	B10001-
38		01010-81285	Bolt	4	B10001-
39		01643-31232	Washer	4	B10001-
40		07097-01005	Hose, Flange Type	1	B10001-
41		07000-13032	O-ring	2	B10001-
42		07371-31049	Flange, Split	2	B10001-
43		07372-21035	Bolt	4	B10001-
44		01643-51032	Washer	4	B10001-

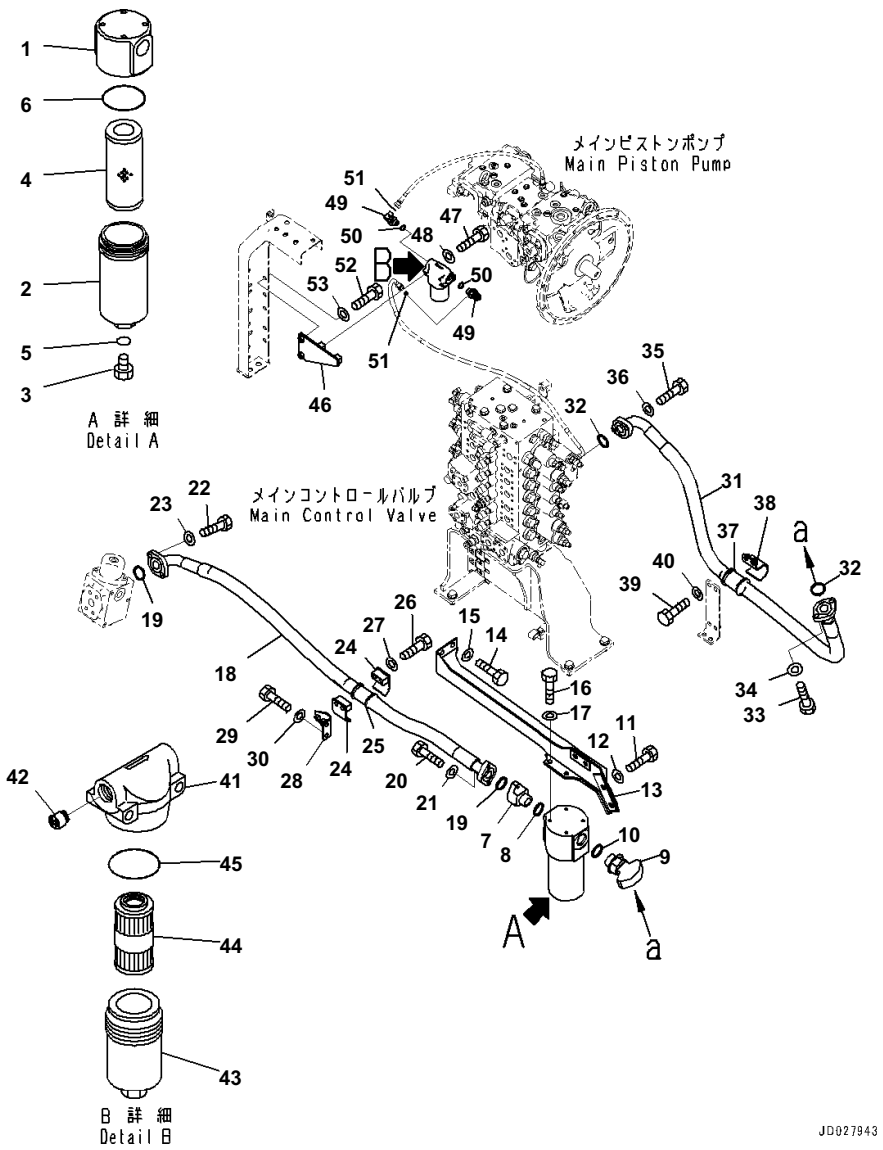

Attachment Piping, 1 ATT, Mounting

Index	Code	Part Number	Description	Qty	Serial No.
		20Y-970-2700	Filter	1	B10001-
1	C1		・ Head	1	B10001-
2	C1		・ Case	1	B10001-
3	C1		・ Plug	1	B10001-
4		20Y-970-1820	・ Filter	1	B10001-
		07000-13050	・・ O-ring	1	B10001-
5		07000-12014	・ O-ring	1	B10001-
6		07000-12115	・ O-ring	1	B10001-
7		20Y-62-43351	Flange	1	B10001-
8		07002-14234	O-ring	1	B10001-
9		20Y-62-43361	Elbow	1	B10001-
10		07002-14234	O-ring	1	B10001-
11		01010-81230	Bolt	4	B10001-
12		01643-31232	Washer	4	B10001-
13		20Y-62-51280	Frame	1	B10001-
14		01010-81225	Bolt	2	B10001-
15		01643-31232	Washer	2	B10001-
16		01010-81230	Bolt	4	B10001-
17		01643-31232	Washer	4	B10001-
18		20Y-62-43311	Hose	1	B10001-
19		07000-13038	O-ring	2	B10001-
20		01010-81035	Bolt	2	B10001-
21		01643-31032	Washer	2	B10001-
22		01010-81035	Bolt	2	B10001-
23		01643-31032	Washer	2	B10001-
24		07094-11024	Clamp	2	B10001-
25		07095-01038	Cushion	1	B10001-
26		01010-81280	Bolt	2	B10001-
27		01643-31232	Washer	2	B10001-
28		20Y-62-43320	Bracket	1	B10001-
29		01010-81225	Bolt	2	B10001-
30		01643-31232	Washer	2	B10001-
31		20Y-62-51321	Hose	1	B10001-
32		07000-13038	O-ring	2	B10001-
33		01010-81035	Bolt	2	B10001-
34		01643-31032	Washer	2	B10001-
35		01010-81040	Bolt	2	B10001-
36		01643-31032	Washer	2	B10001-
37		07095-01241	Cushion	1	B10001-
38		21K-62-72810	Clamp	1	B10001-
39		01010-81225	Bolt	2	B10001-
40		01643-31232	Washer	2	B10001-
		20Y-62-51681	Filter Assembly	1	B10001-
41	C1		・ Filter Assembly	1	B10001-
42	C1		・ Filter Assembly	1	B10001-
43	C1		・ Filter Assembly	1	B10001-

PC240LC-8 S/N B10001-UP

Attachment Piping, 1 ATT, Mounting

Index	Code	Part Number	Description	Qty	Serial No.
44		20Y-62-51691	・ Filter	1	B10001-
45		706-76-71390	・ O-ring	1	B10001-
46		20Y-62-51781	Bracket	1	B10001-
47		01010-81075	Bolt	2	B10001-
48		01643-31032	Washer	2	B10001-
49		02782-10214	Elbow	2	B10001-
50		07002-12034	O-ring	2	B10001-
51		02896-11008	O-ring	2	B10001-
52		01010-81225	Bolt	2	B10001-
53		01643-31232	Washer	2	B10001-

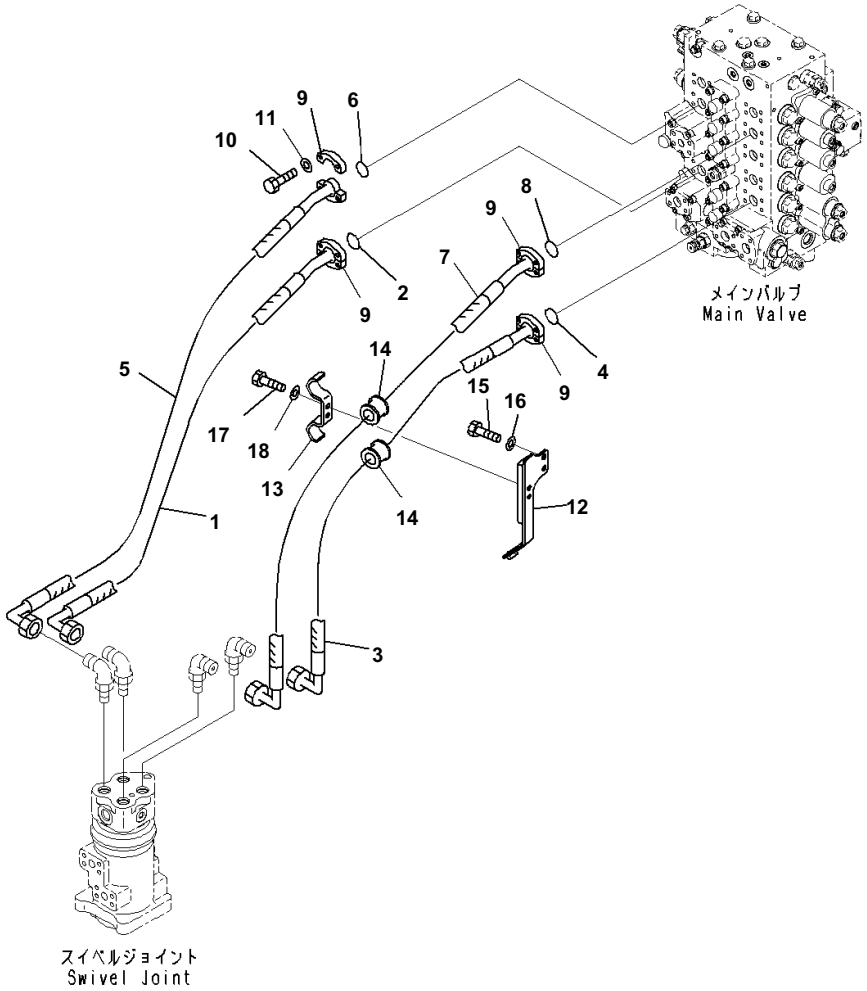

Travel Piping

Index	Code	Part Number	Description	Qty	Serial No.
1		20Y-62-51212	Hose	1	B10001-
2		07000-13032	O-ring	1	B10001-
3		20Y-62-41213	Hose	1	B10001-
4		07000-13032	O-ring	1	B10001-
5		20Y-62-51222	Hose	1	B10001-
6		07000-13032	O-ring	1	B10001-
7		20Y-62-51151	Hose	1	B10001-
8		07000-13032	O-ring	1	B10001-
9		07371-31049	Flange, Split	8	B10001-
10		07372-21035	Bolt	16	B10001-
11		01643-51032	Washer	16	B10001-
12		206-62-21131	Bracket	1	B10001-
13		206-62-71141	Clamp	1	B10001-
14		07095-00628	Cushion	2	B10001-
15		01010-81040	Bolt	2	B10001-
16		01643-31032	Washer	2	B10001-
17		01010-81025	Bolt	2	B10001-
18		01643-31032	Washer	2	B10001-

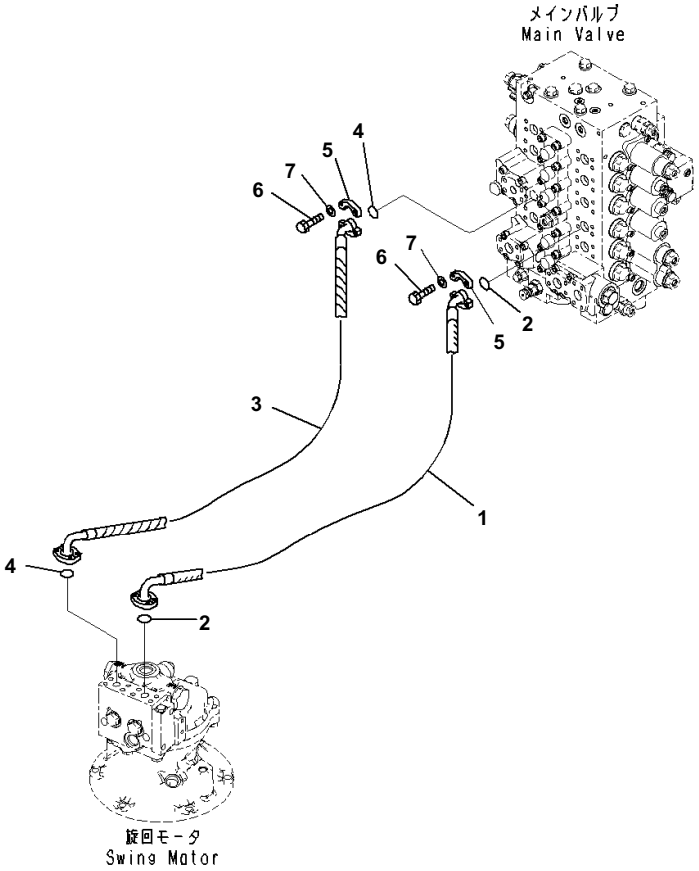

Index	Code	Part Number	Description	Qty	Serial No.
1		206-62-21120	Hose	1	B10001-
2		07000-13025	O-ring	2	B10001-
3		206-62-21110	Hose	1	B10001-
4		07000-13025	O-ring	2	B10001-
5		07371-30640	Flange, Split	8	B10001-
6		07372-21035	Bolt	16	B10001-
7		01643-51032	Washer	16	B10001-

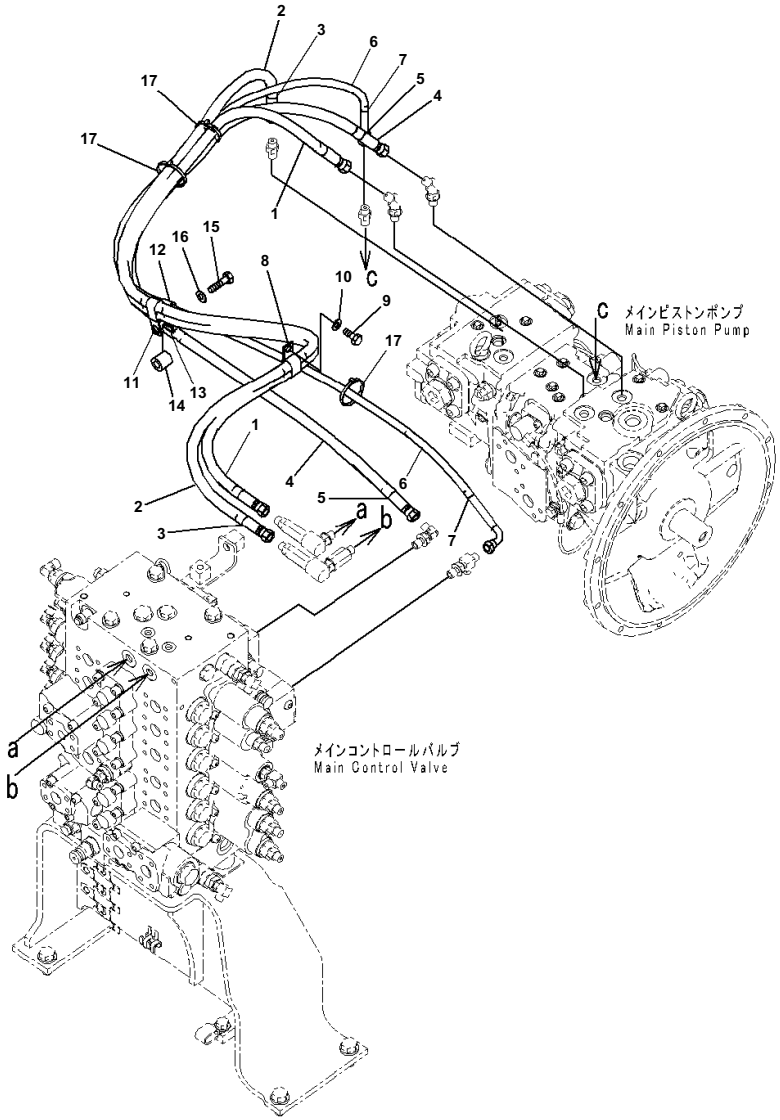

Index	Code	Part Number	Description	Qty	Serial No.
1		20Y-62-53650	Hose	1	B10001-
2		20Y-62-53660	Hose	1	B10001-
3		20Y-62-22790	Band, Red	2	B10001-
4		20Y-62-53670	Hose	1	B10001-
5		20Y-62-22820	Band, Blue	2	B10001-
6		20Y-62-52860	Hose Assembly	1	B10001-
7		20Y-62-22810	・ Band, Yellow	2	B10001-
8		04435-51612	Clip	1	B10001-
9		01010-81220	Bolt	1	B10001-
10		01643-31232	Washer	1	B10001-
11		04435-51612	Clip	1	B10001-
12		04434-51312	Clip	1	B10001-
13		04434-51612	Clip	1	B10001-
14		195-33-11220	Spacer	1	B10001-
15		01010-81255	Bolt	1	B10001-
16		01643-31232	Washer	1	B10001-
17		08034-20536	Band	3	B10001-

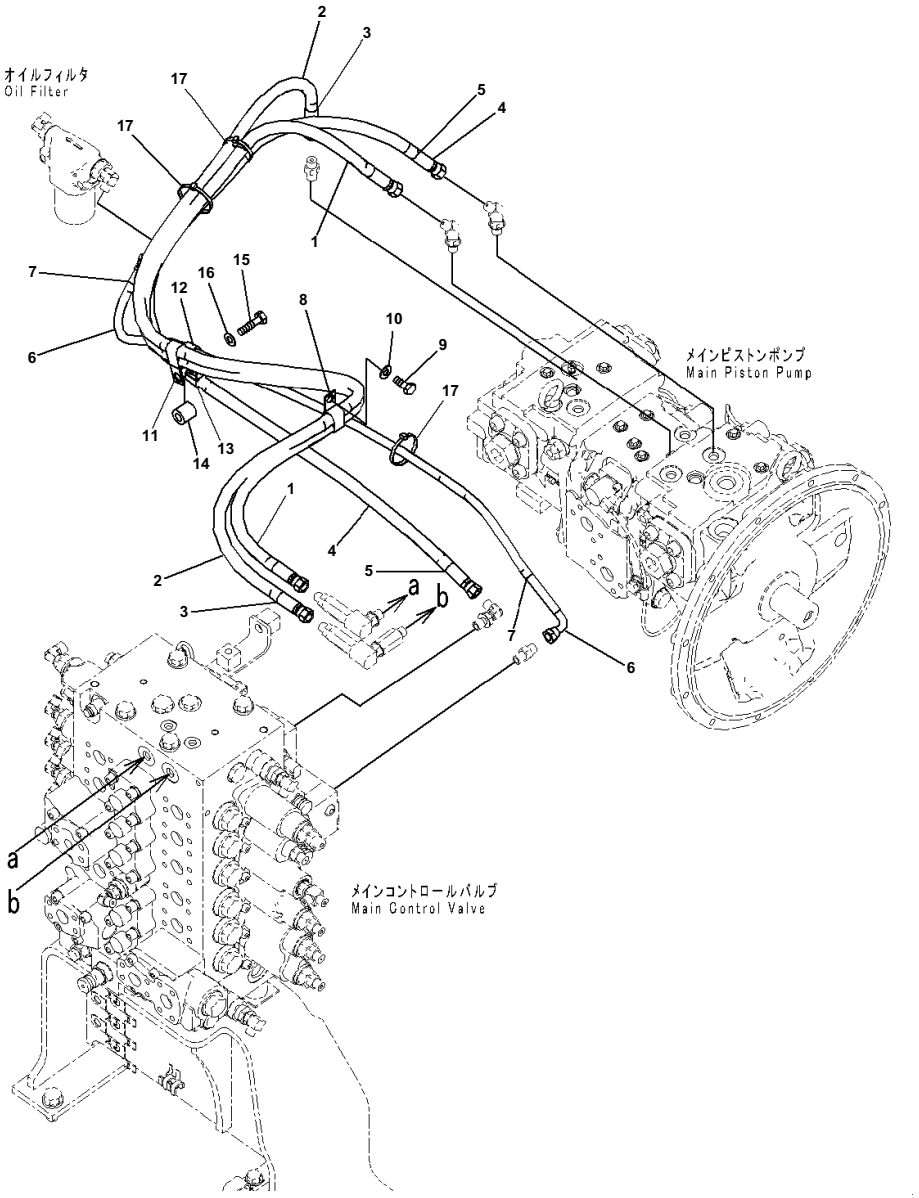

Index	Code	Part Number	Description	Qty	Serial No.
1		20Y-62-53650	Hose	1	B10001-
2		20Y-62-53660	Hose	1	B10001-
3		20Y-62-22790	Band, Red	2	B10001-
4		20Y-62-53670	Hose	1	B10001-
5		20Y-62-22820	Band, Blue	2	B10001-
6		20Y-62-51922	Hose Assembly	1	B10001-
7		20Y-62-22810	・ Band, Yellow	2	B10001-
8		04435-51612	Clip	1	B10001-
9		01010-81220	Bolt	1	B10001-
10		01643-31232	Washer	1	B10001-
11		04435-51612	Clip	1	B10001-
12		04434-51312	Clip	1	B10001-
13		04434-51612	Clip	1	B10001-
14		195-33-11220	Spacer	1	B10001-
15		01010-81255	Bolt	1	B10001-
16		01643-31232	Washer	1	B10001-
17		08034-20536	Band	3	B10001-

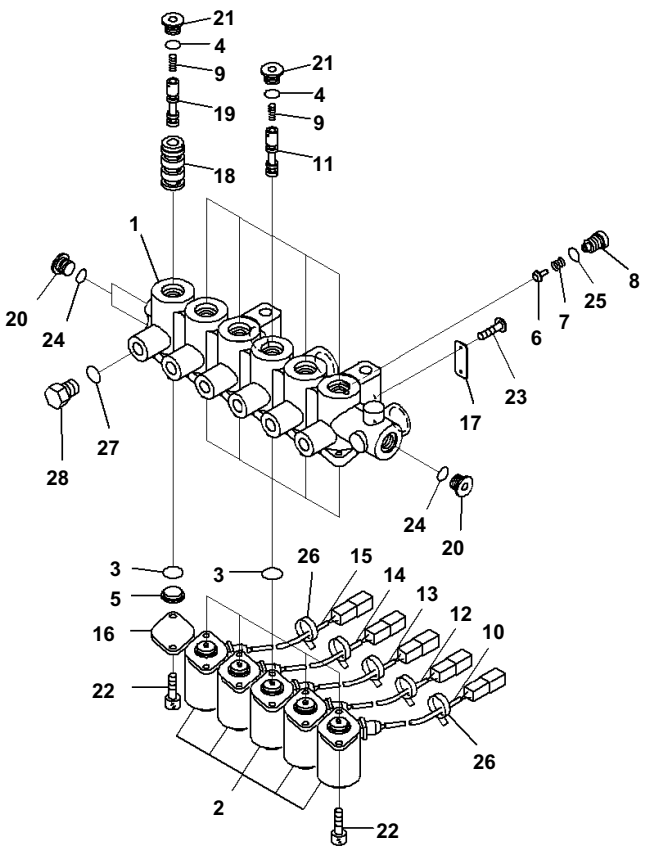

Solenoid Valve Piping, Without 1 ATT Piping, Accumulator, Inner Parts, Starting Motor

Index	Code	Part Number	Description	Qty	Serial No.
		20Y-60-41621	Solenoid Assembly	1	B10001-
1	C1		· Block	1	B10001-
2		20Y-60-32121	· Solenoid Assembly	5	B10001-
3		20Y-60-31240	· O-ring	6	B10001-
4		20Y-60-31250	· O-ring	6	B10001-
5		NY01720-10600	· Stopper	1	B10001-
6		NY05062-1170A	· Plunger	1	B10001-
7		NY05062-11800	· Spring	1	B10001-
8		NY06277-1320A	· Plug	1	B10001-
9		NY06339-10200	· Spring	6	B10001-
10		NY07207-11700	· Tube	1	B10001-
11		NY07493-10200	· Spool	5	B10001-
12		NY07529-10200	· Tube	1	B10001-
13		NY07529-10300	· Tube	1	B10001-
14		NY07529-10400	· Tube	1	B10001-
15		NY07529-10500	· Tube	1	B10001-
16		NY07926-10100	· Plate	1	B10001-
17		NY09000-11400	· Plate	1	B10001-
18		NY16207-10200	· Sleeve	1	B10001-
19		NY16207-10300	· Spool	1	B10001-
20		NY80000-02100	· Plug	3	B10001-
21		NY80000-02200	· Plug	6	B10001-
22		NY81416-05012	· Bolt, Hexagon Socket Head	12	B10001-
23		NY84110-00248	· Screw	2	B10001-
24		07000-11008	· O-ring	3	B10001-
25		07000-11010	· O-ring	1	B10001-
26		NY89103-00090	· Band	5	B10001-
27		07002-11423	· O-ring	1	B10001-
28		07040-11409	· Plug	1	B10001-

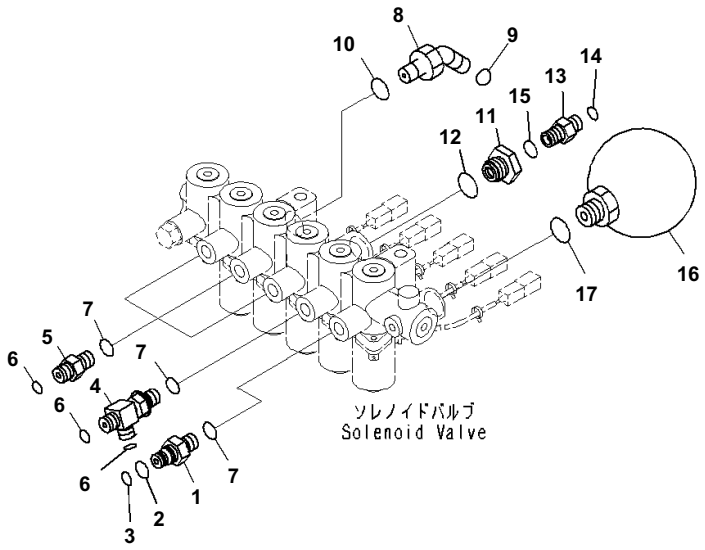

Solenoid Valve Piping, Without 1 ATT Piping, Accumulator, Related Parts

Index	Code	Part Number	Description	Qty	Serial No.
1		20Y-62-16630	Nipple	1	B10001-
2		201-60-11390	・ O-ring	1	B10001-
3		20Y-62-19560	・ O-ring	1	B10001-
4		20Y-62-41960	Tee	1	B10001-
5		11Y-62-12130	Nipple	3	B10001-
6		02896-11008	O-ring	5	B10001-
7		07002-11423	O-ring	5	B10001-
8		02783-10315	Elbow	1	B10001-
9		02896-11009	O-ring	1	B10001-
10		07002-12034	O-ring	1	B10001-
11		20Y-62-21940	Filter Assembly	1	B10001-
12		07002-12034	O-ring	1	B10001-
13		11Y-62-12130	Nipple	1	B10001-
14		02896-11008	O-ring	1	B10001-
15		07002-11423	O-ring	1	B10001-
16		22U-60-21330	Accumulator	1	B10001-
17		07002-12034	O-ring	1	B10001-

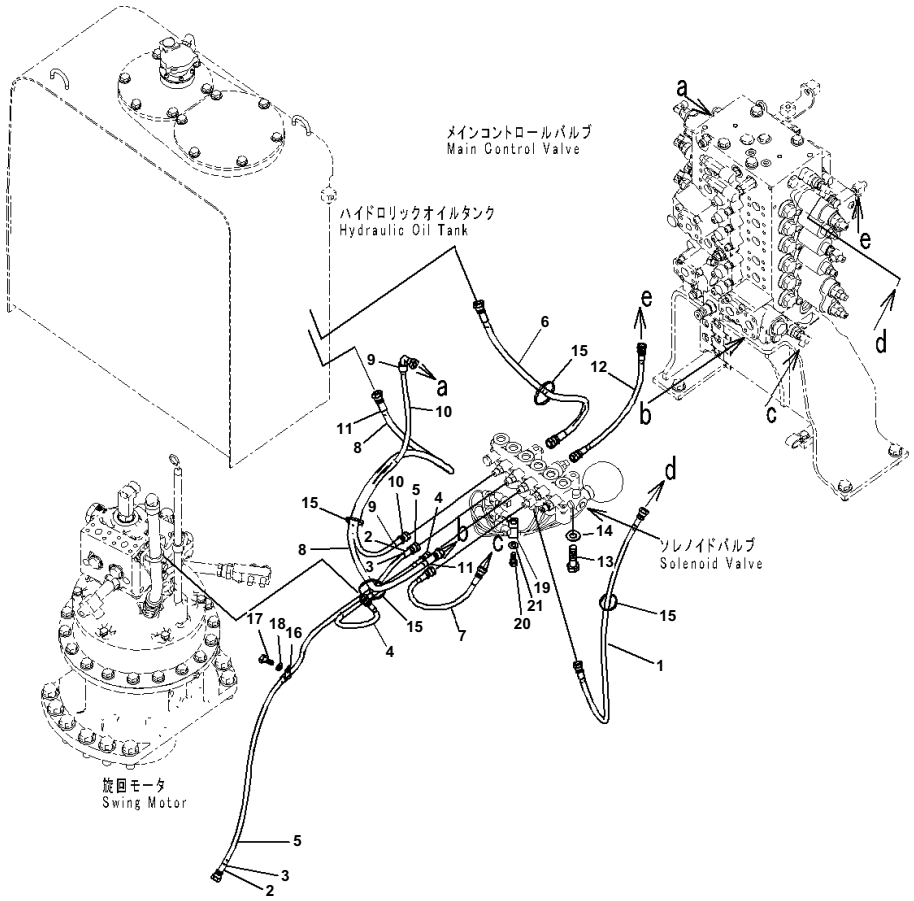

Solenoid Valve Piping, Without 1 ATT Piping, Accumulator, Solenoid Valve Piping

Index	Code	Part Number	Description	Qty	Serial No.
1		208-62-72310	Hose	1	B10001-
2		20Y-62-22790	Band, Red	2	B10001-
3		20Y-62-22810	Band, Yellow	2	B10001-
4		20Y-62-51930	Hose	1	B10001-
5		20Y-62-51940	Hose	1	B10001-
6		20Y-62-51993	Hose	1	B10001-
7		20Y-62-51910	Hose	1	B10001-
8		20Y-62-51260	Hose	1	B10001-
9		20Y-62-22860	Band, Brown	2	B10001-
10		20Y-62-51960	Hose	1	B10001-
11		20Y-62-22810	Band, Yellow	2	B10001-
12		208-62-72610	Hose	1	B10001-
13		01010-81085	Bolt	2	B10001-
14		01643-31032	Washer	2	B10001-
15		08034-20536	Band	4	B10001-
16		04434-51010	Clip	1	B10001-
17		01010-81020	Bolt	1	B10001-
18		01643-31032	Washer	1	B10001-
19		04434-51512	Clip	1	B10001-
20		01010-81225	Bolt	1	B10001-
21		01643-31232	Washer	1	B10001-

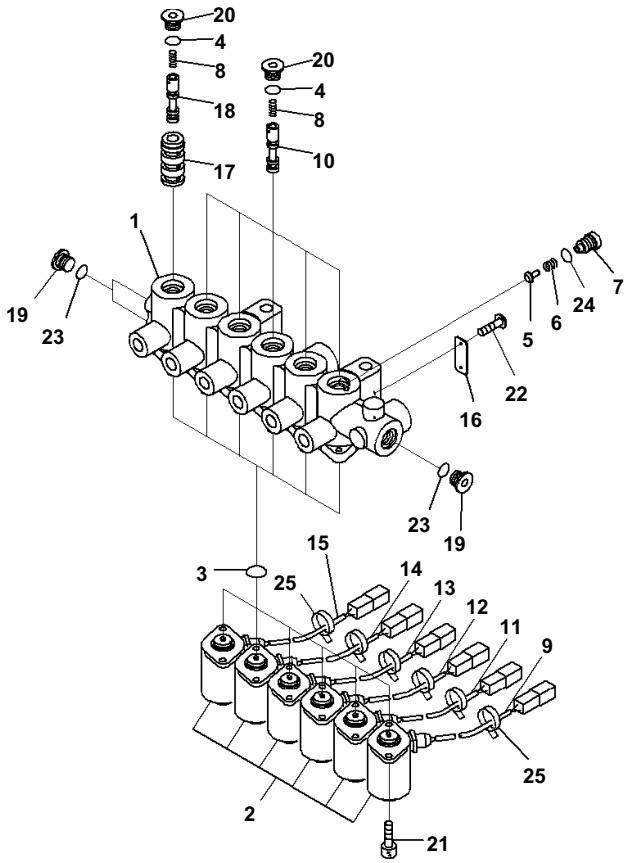

Solenoid Valve Piping, 1 ATT Piping, Accumulator, Inner Parts, Starting Motor

Index	Code	Part Number	Description	Qty	Serial No.
		20Y-60-41611	Solenoid Assembly	1	B10001-
1	C1		· Block	1	B10001-
2		20Y-60-32121	· Solenoid Assembly	6	B10001-
3		20Y-60-31240	· O-ring	6	B10001-
4		20Y-60-31250	· O-ring	6	B10001-
5		NY05062-1170A	· Plunger	1	B10001-
6		NY05062-11800	· Spring	1	B10001-
7		NY06277-1320A	· Plug	1	B10001-
8		NY06339-10200	· Spring	6	B10001-
9		NY07207-11700	· Tube	1	B10001-
10		NY07493-10200	· Spool	5	B10001-
11		NY07529-10200	· Tube	1	B10001-
12		NY07529-10300	· Tube	1	B10001-
13		NY07529-10400	· Tube	1	B10001-
14		NY07529-10500	· Tube	1	B10001-
15		NY07529-10600	· Tube	1	B10001-
16		NY09000-11400	· Plate	1	B10001-
17		NY16207-10200	· Sleeve	1	B10001-
18		NY16207-10300	· Spool	1	B10001-
19		NY80000-02100	· Plug	3	B10001-
20		NY80000-02200	· Plug	6	B10001-
21		NY81416-05012	· Bolt, Hexagon Socket Head	12	B10001-
22		NY84110-00248	· Screw	2	B10001-
23		07000-11008	· O-ring	3	B10001-
24		07000-11010	· O-ring	1	B10001-
25		NY89103-00090	· Band	6	B10001-

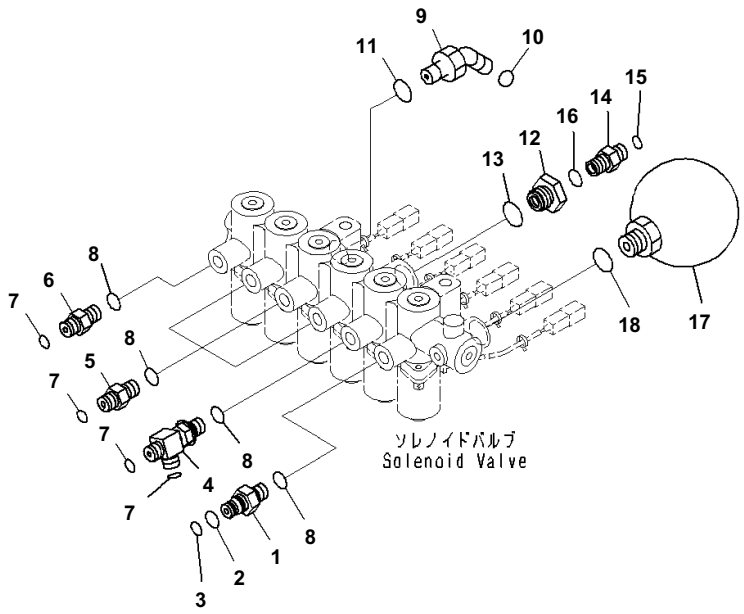

Solenoid Valve Piping, 1 ATT Piping, Accumulator, Related Parts

Index	Code	Part Number	Description	Qty	Serial No.
1		20Y-62-16630	Nipple	1	B10001-
2		201-60-11390	・ O-ring	1	B10001-
3		20Y-62-19560	・ O-ring	1	B10001-
4		20Y-62-41960	Tee	1	B10001-
5		11Y-62-12130	Nipple	3	B10001-
6		22B-26-11320	Union	1	B10001-
7		02896-11008	O-ring	6	B10001-
8		07002-11423	O-ring	6	B10001-
9		02783-10315	Elbow	1	B10001-
10		02896-11009	O-ring	1	B10001-
11		07002-12034	O-ring	1	B10001-
12		20Y-62-21940	Filter Assembly	1	B10001-
13		07002-12034	O-ring	1	B10001-
14		11Y-62-12130	Nipple	1	B10001-
15		02896-11008	O-ring	1	B10001-
16		07002-11423	O-ring	1	B10001-
17		22U-60-21330	Accumulator	1	B10001-
18		07002-12034	O-ring	1	B10001-

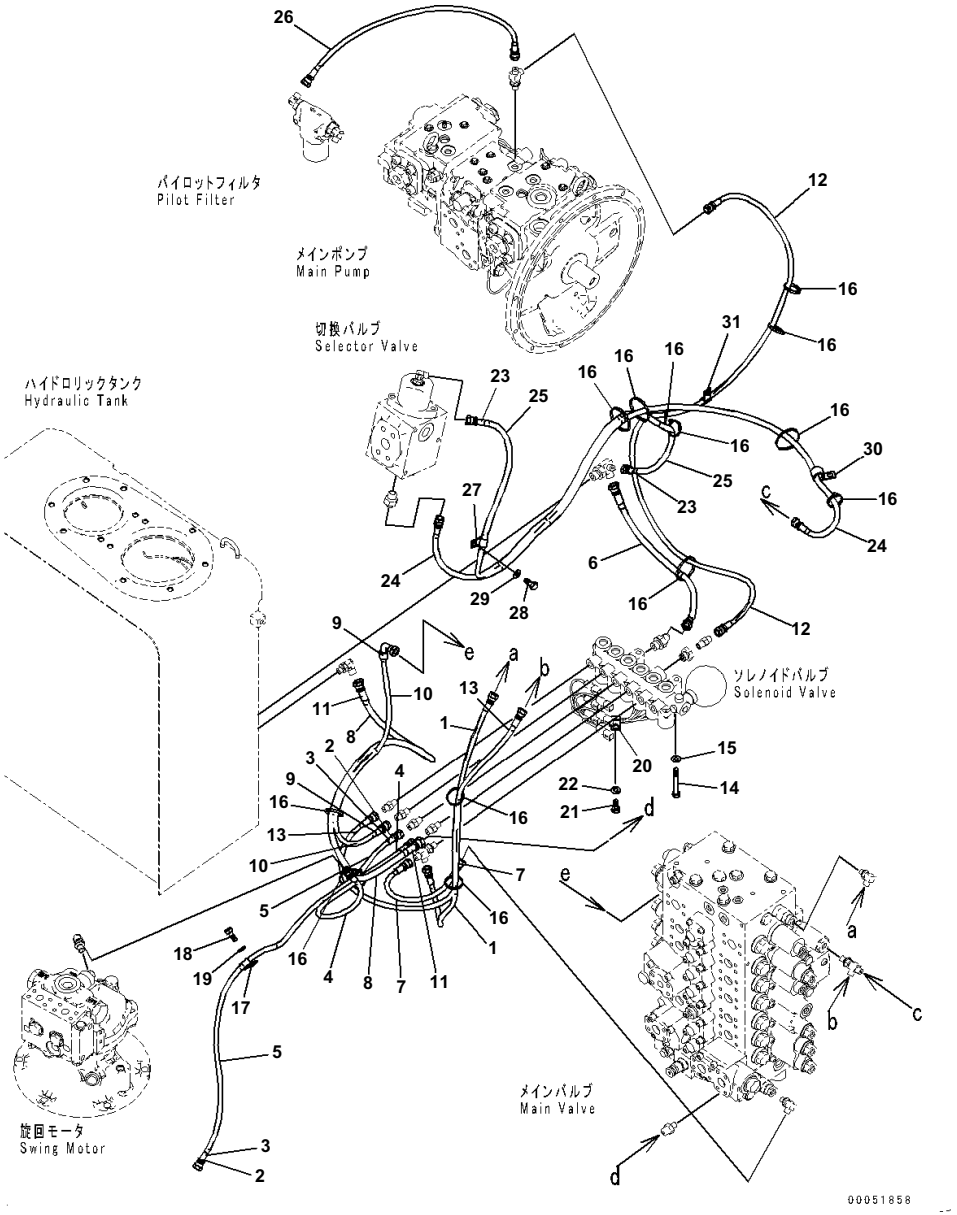

Index	Code	Part Number	Description	Qty	Serial No.
1		208-62-72310	Hose	1	B10001-
2		20Y-62-22790	Band, Red	2	B10001-
3		20Y-62-22810	Band, Yellow	2	B10001-
4		20Y-62-51930	Hose	1	B10001-
5		20Y-62-51940	Hose	1	B10001-
6		20Y-62-51993	Hose	1	B10001-
7		20Y-62-51910	Hose	1	B10001-
8		20Y-62-51260	Hose	1	B10001-
9		20Y-62-22860	Band, Brown	2	B10001-
10		20Y-62-51960	Hose	1	B10001-
11		20Y-62-22810	Band, Yellow	2	B10001-
12		20Y-62-52121	Hose	1	B10001-
13		208-62-72480	Hose	1	B10001-
14		01010-81085	Bolt	2	B10001-
15		01643-31032	Washer	2	B10001-
16		08034-20536	Band	13	B10001-
17		04434-51010	Clip	1	B10001-
18		01010-81020	Bolt	1	B10001-
19		01643-31032	Washer	1	B10001-
20		04434-51512	Clip	1	B10001-
21		01010-81225	Bolt	1	B10001-
22		01643-31232	Washer	1	B10001-
23		20Y-62-22820	Band, Blue	2	B10001-
24		02760-00219	Hose, Face Seal Type	1	B10001-
25		02760-00218	Hose, Face Seal Type	1	B10001-
26		20Y-62-51930	Hose	1	B10001-
27		04434-51212	Clip	1	B10001-
28		01010-81225	Bolt	1	B10001-
29		01643-31232	Washer	1	B10001-
30		04434-52212	Clip	1	B10001-
31		04434-51012	Clip	1	B10001-

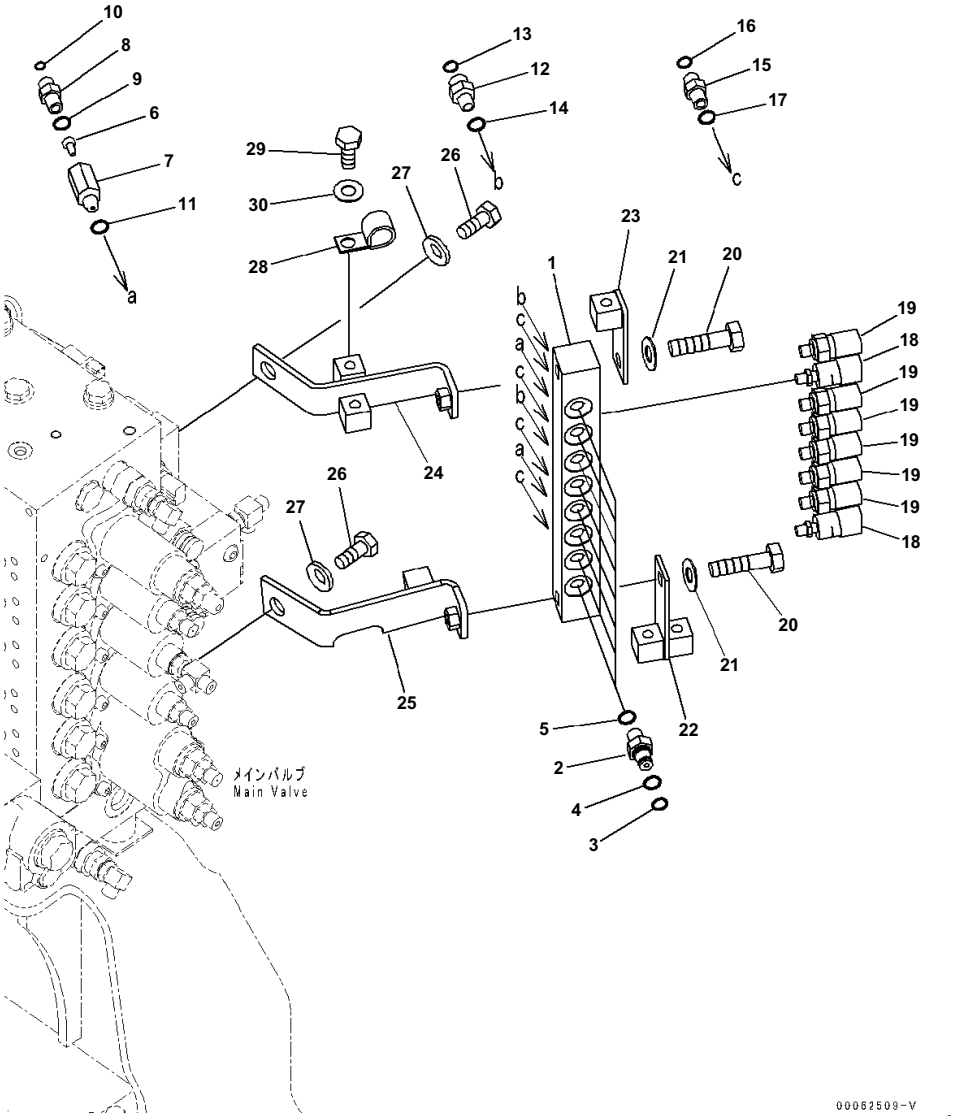

Pressure Switch Block

Index	Code	Part Number	Description	Qty	Serial No.
1		20Y-62-51381	Block	1	B10001-
2		20Y-62-16630	Nipple	8	B10001-
3		201-60-11390	· O-ring	1	B10001-
4		20Y-62-19560	· O-ring	1	B10001-
5		07002-11423	O-ring	8	B10001-
		20Y-60-32300	Valve Assembly	2	B10001-
6		20Y-62-41830	· Poppet	1	B10001-
7	C1		· Body	1	B10001-
8		21W-62-43930	· Nipple	1	B10001-
9		07002-11423	· O-ring	1	B10001-
10		02896-11008	O-ring	2	B10001-
11		07002-11423	O-ring	2	B10001-
12		11Y-62-12520	Union	2	B10001-
13		02896-11009	O-ring	2	B10001-
14		07002-11423	O-ring	2	B10001-
15		11Y-62-12130	Nipple	4	B10001-
16		02896-11008	O-ring	4	B10001-
17		07002-11423	O-ring	4	B10001-
18		206-06-61130	Switch	2	B10001-
19		7861-93-1840	Sensor	6	B10001-
20		01010-81265	Bolt	2	B10001-
21		01643-31232	Washer	2	B10001-
22		20Y-62-51371	Bracket	1	B10001-
23		20Y-62-51411	Bracket	1	B10001-
24		20Y-62-51392	Bracket	1	B10001-
25		20Y-62-51352	Bracket	1	B10001-
26		01010-81635	Bolt	2	B10001-
27		01643-31645	Washer	2	B10001-
28		04434-52112	Clip	1	B10001-
29		01010-81225	Bolt	1	B10001-
30		01643-31232	Washer	1	B10001-

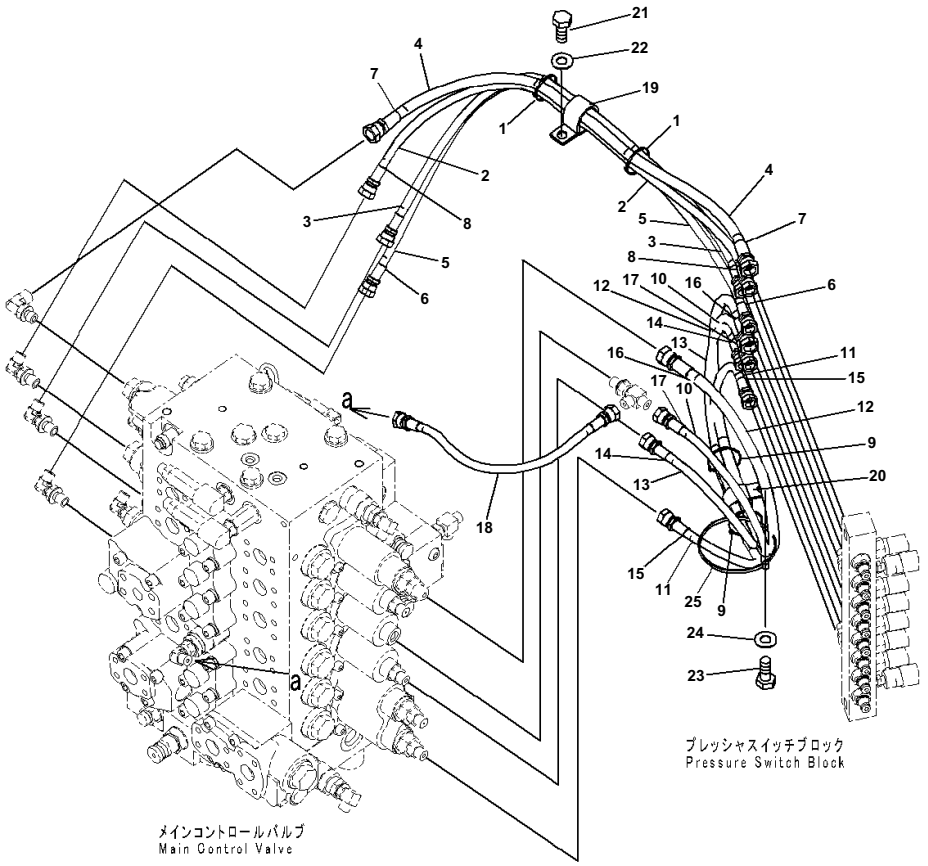

Proportional Pressure Control (PPC) Valve Piping

Index	Code	Part Number	Description	Qty	Serial No.
1		08034-20536	Band	2	B10001-
2		208-62-72160	Hose	1	B10001-
3		20Y-62-51160	Hose	1	B10001-
4		20Y-62-51870	Hose	1	B10001-
5		20Y-62-51890	Hose	1	B10001-
6		20Y-62-22820	Band, Blue	2	B10001-
7		20Y-62-22830	Band, White	2	B10001-
8		20Y-62-22860	Band, Brown	2	B10001-
9		08034-20536	Band	2	B10001-
10		208-62-72310	Hose	1	B10001-
11		208-62-72590	Hose	1	B10001-
12		20Y-62-51880	Hose	1	B10001-
13		20Y-62-51890	Hose	1	B10001-
14		20Y-62-22790	Band, Red	2	B10001-
15		20Y-62-22810	Band, Yellow	2	B10001-
16		20Y-62-22840	Band, Black	2	B10001-
17		20Y-62-22850	Band, Green	2	B10001-
18		20Y-62-51910	Hose	1	B10001-
19		04434-53212	Clip	1	B10001-
20		04434-52712	Clip	1	B10001-
21		01010-81225	Bolt	1	B10001-
22		01643-31232	Washer	1	B10001-
23		01010-81225	Bolt	1	B10001-
24		01643-31232	Washer	1	B10001-
25		08034-20536	Band	1	B10001-

FRAME AND ITS RELATED PARTS

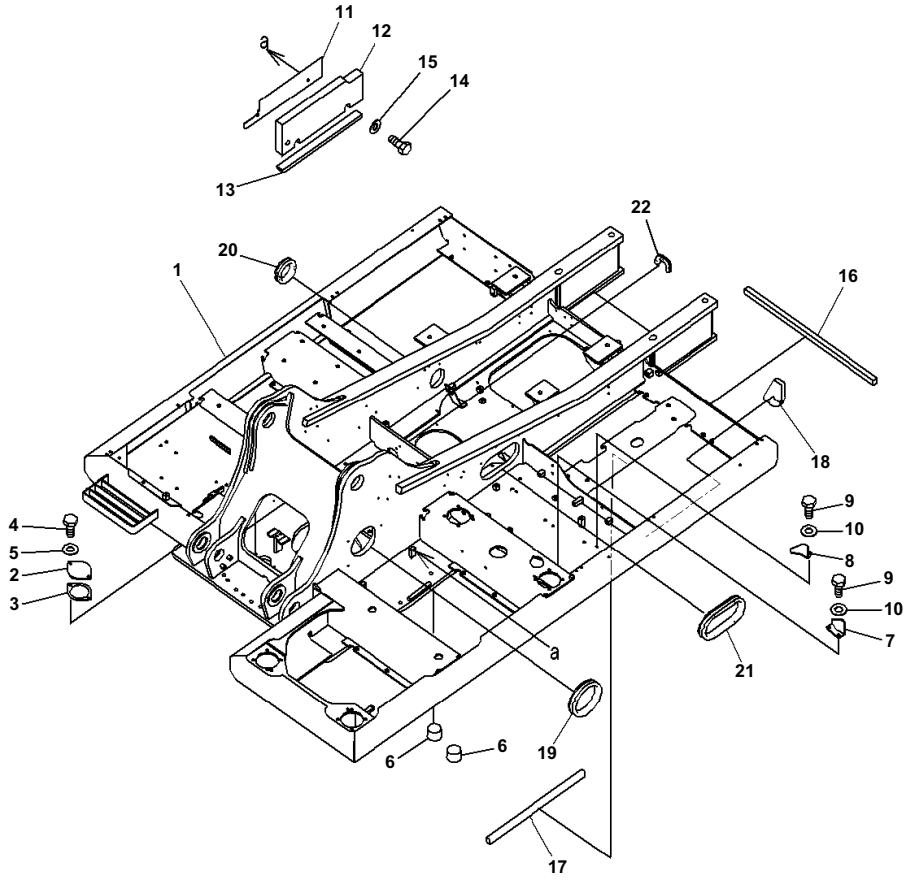

Index	Code	Part Number	Description	Qty	Serial No.
1		206-46-B2100	Frame	1	B10001-
2		205-30-71181	Cover	1	B10001-
3		205-30-71191	Gasket	1	B10001-
4		01010-81230	Bolt	2	B10001-
5		01643-31232	Washer	2	B10001-
6		20Y-46-41280	Plug	2	B10001-
7		20Y-54-61670	Bracket	1	B10001-
8		20Y-54-61680	Bracket	1	B10001-
9		01010-81230	Bolt	4	B10001-
10		01643-31232	Washer	4	B10001-
		20Y-46-52441	Cover	1	B10001-
11	C1		・ Cover	1	B10001-
12		20Y-46-52180	・ Sheet	1	B10001-
13		20Y-46-52172	・ Sheet	1	B10001-
14		01010-81230	Bolt	2	B10001-
15		01643-31232	Washer	2	B10001-
16		20Y-46-52150	Seal	1	B10001-
17		20Y-46-51162	Sheet	1	B10001-
18		20Y-46-52141	Sheet	1	B10001-
19		206-46-71170	Grommet	1	B10001-
20		206-46-21180	Grommet	1	B10001-
21		206-46-21190	Grommet	1	B10001-
22		20Y-46-51140	Grommet	1	B10001-

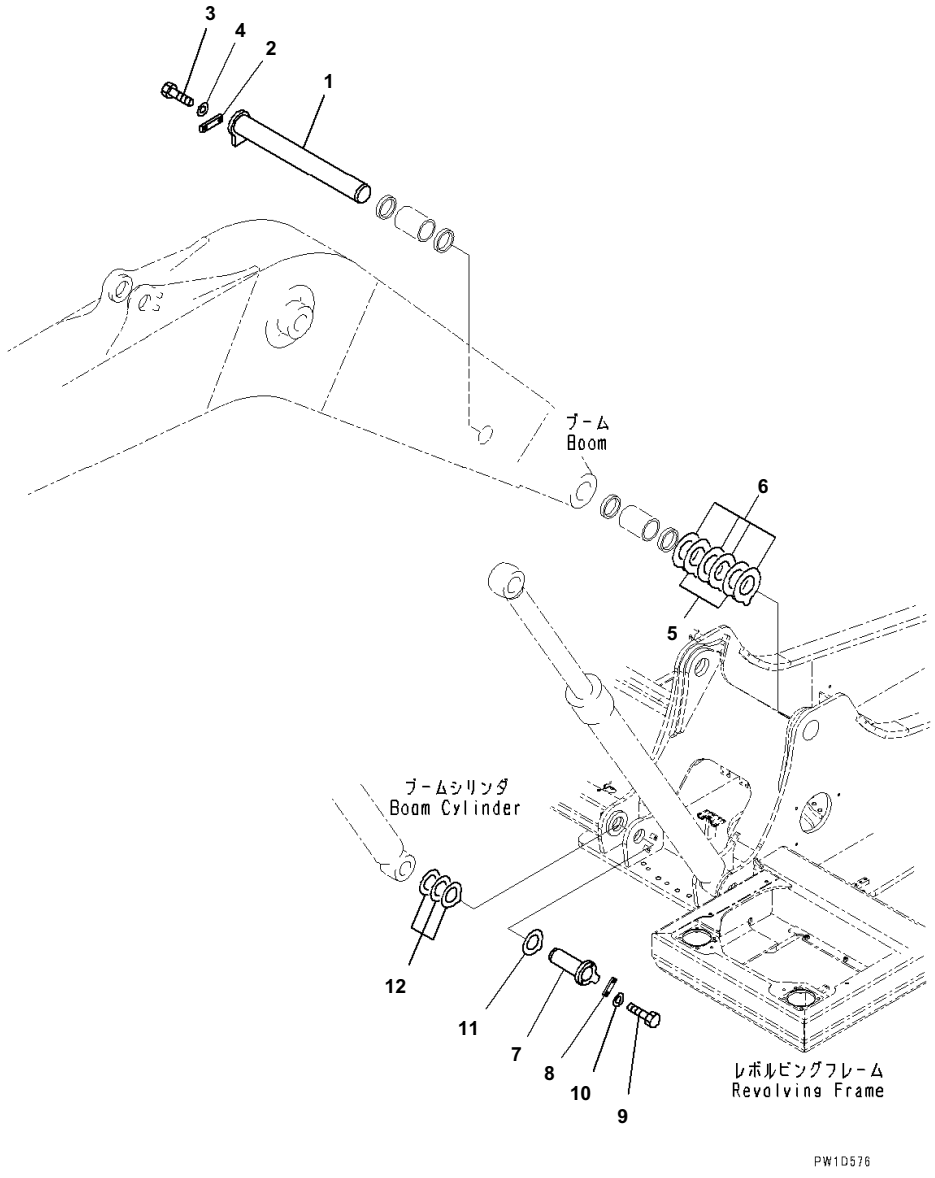

Index	Code	Part Number	Description	Qty	Serial No.
1		206-70-55270	Pin	1	B10001-
2		20Y-70-11190	Plate	1	B10001-
3		01010-81640	Bolt	2	B10001-
4		01643-31645	Washer	2	B10001-
5		206-70-55250	Spacer, T=0.8mm	2	B10001-
6		206-70-55260	Spacer, T=1.5mm	4	B10001-
7		205-70-65750	Pin	2	B10001-
8		205-70-66580	Plate	2	B10001-
9		01010-81235	Bolt	4	B10001-
10		01643-31232	Washer	4	B10001-
11		20Y-70-11350	Spacer, T=0.8mm	2	B10001-
12		206-70-55290	Spacer, T=1.5mm	6	B10001-

OPERATOR'S COMPARTMENT AND CONTROL SYSTEM

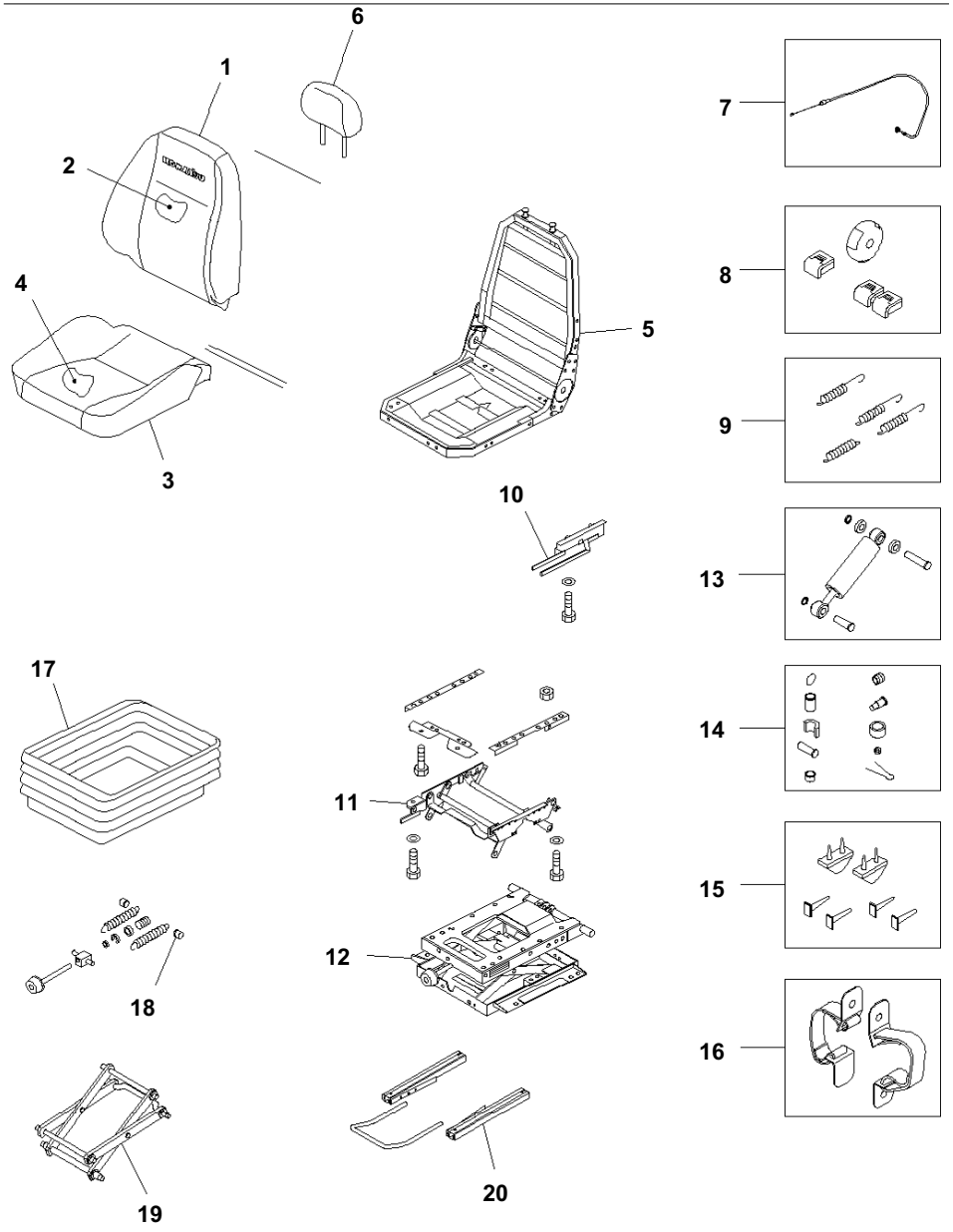

Operator's Seat, Suspension Type, Operator's Seat

Index	Code	Part Number	Description	Qty	Serial No.
		20Y-57-41103	Seat Assembly	1	B10001-
		AS195381	・ Seat Assembly	1	B10001-
1		AS195367	・・ Back Seat Cover Kit	1	B10001-
2		AS195369	・・ Back Seat Foam Kit	1	B10001-
3		AS195370	・・ Seat Cover Kit	1	B10001-
4		AS195372	・・ Seat Foam Kit	1	B10001-
5		AS195373	・・ Frame Kit	1	B10001-
6		AS195374	・・ Headrest Kit	1	B10001-
7		AS192161	・・ Cable Kit	1	B10001-
8		AS186833	・・ Handle Kit	1	B10001-
9		AS160122	・ Spring Kit	1	B10001-
10		AS195376	・ Latch Kit	1	B10001-
11		AS195377	・ Riser Kit	1	B10001-
12		AS195388	・ Suspension Kit	1	B10001-
13		AS164899	・ Damper Kit	1	B10001-
14		AS166011	・ Bearing Kit	1	B10001-
15		AS195389	・ Up Stop And Bump Stop Kit	1	B10001-
16		AS195390	・ Tether Belt Kit	1	B10001-
17		AS195391	・ Suspension Cover Kit	1	B10001-
18		AS195392	・ Adjuster Kit, Weight	1	B10001-
19		AS165989	・ Lever	1	B10001-
20		AS195393	・ Adjuster Kit	1	B10001-

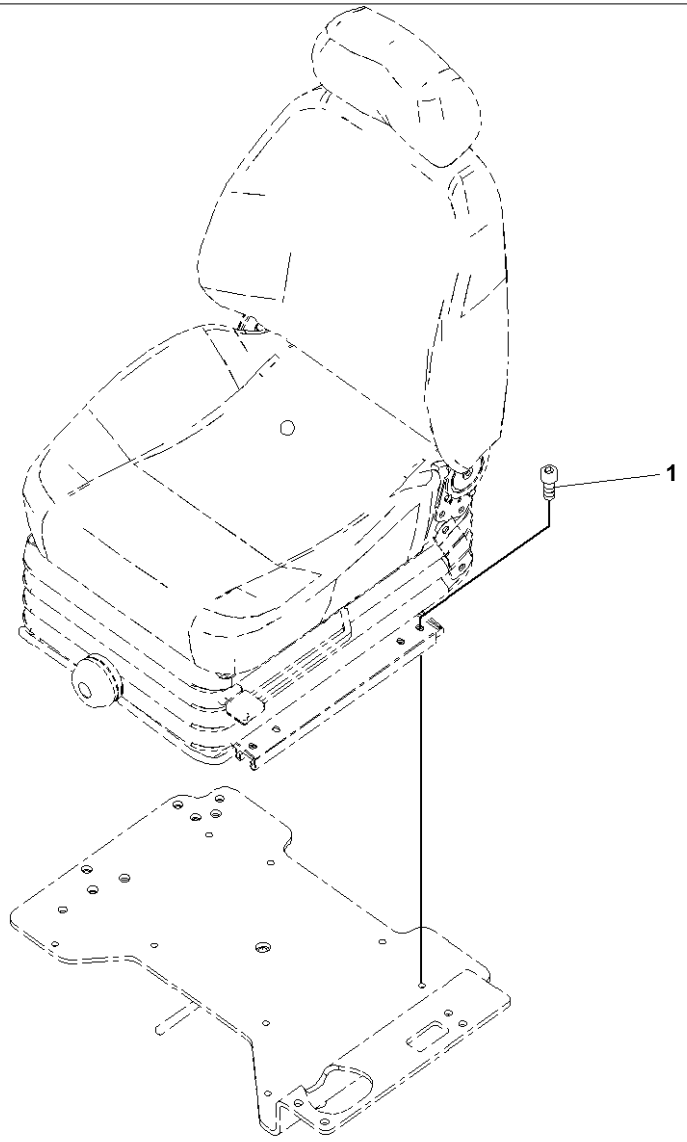

Index	Code	Part Number	Description	Qty	Serial No.
1		01252-80825	Bolt	4	B10001-

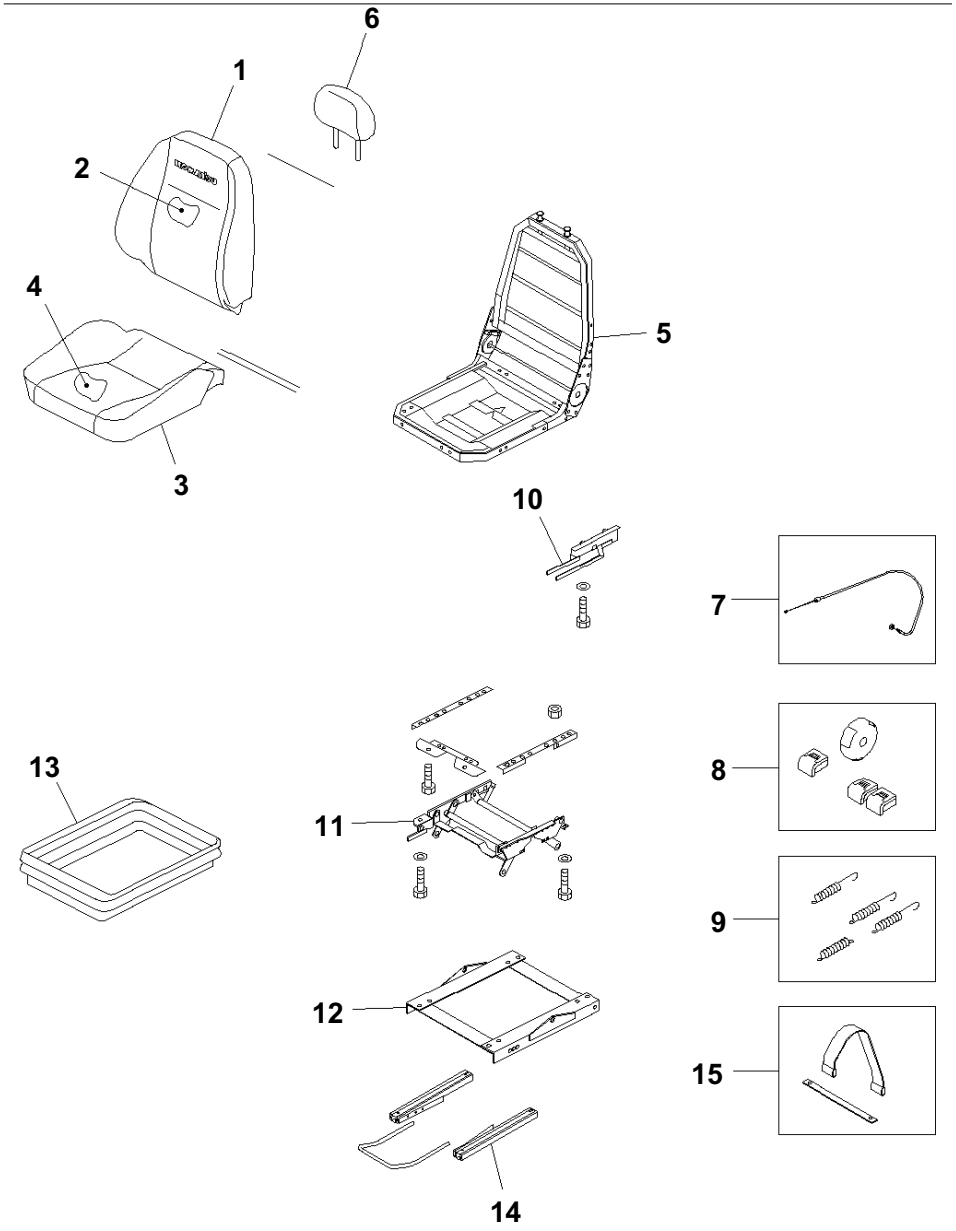

Index	Code	Part Number	Description	Qty	Serial No.
		(20Y-57-B1240)	Operator's Seat Assembly	1	B10001-
		AS195365	・Upper Assembly	1	B10001-
1		AS195367	・・Back Seat Cover Kit	1	B10001-
2		AS195369	・・Back Seat Foam Kit	1	B10001-
3		AS195370	・・Seat Cover Kit	1	B10001-
4		AS195372	・・Seat Foam Kit	1	B10001-
5		AS195373	・・Frame Kit	1	B10001-
6		AS195374	・・Headrest Kit	1	B10001-
7		AS192161	・Cable Kit	1	B10001-
8		AS186833	・Handle Kit	1	B10001-
9		AS160122	・Spring Kit	1	B10001-
10		AS195376	・Latch Kit	1	B10001-
11		AS195377	・Riser Kit	1	B10001-
12		AS195378	・Pliers Kit	1	B10001-
13		AS195379	・Cover Kit	1	B10001-
14		AS195380	・Adjuster Kit	1	B10001-
15		AS184718	・Belt Kit	1	B10001-

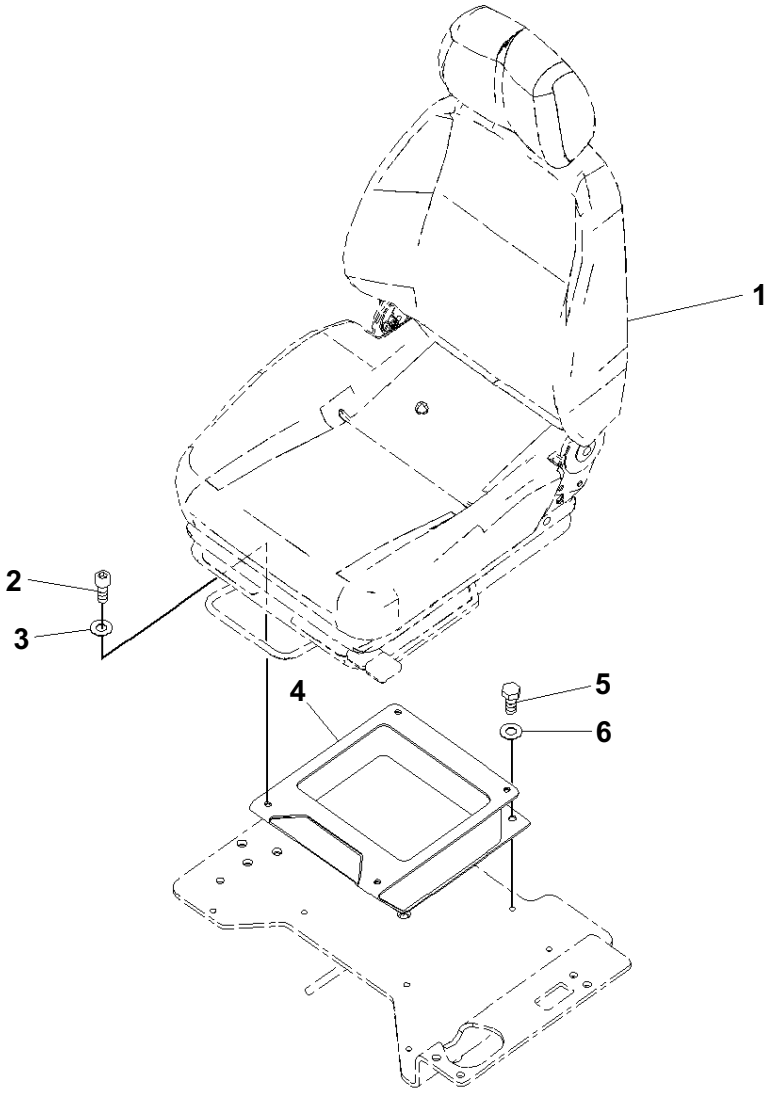

Index	Code	Part Number	Description	Qty	Serial No.
1		(20Y-57-B1240)	Seat Ass'y	1	B10001-
2		01252-70816	Bolt	4	B10001-
3		01643-30823	Washer	4	B10001-
4		20Y-57-B1230	Bracket	1	B10001-
5		01010-D0825	Bolt	4	B10001-
6		01643-70823	Washer	4	B10001-

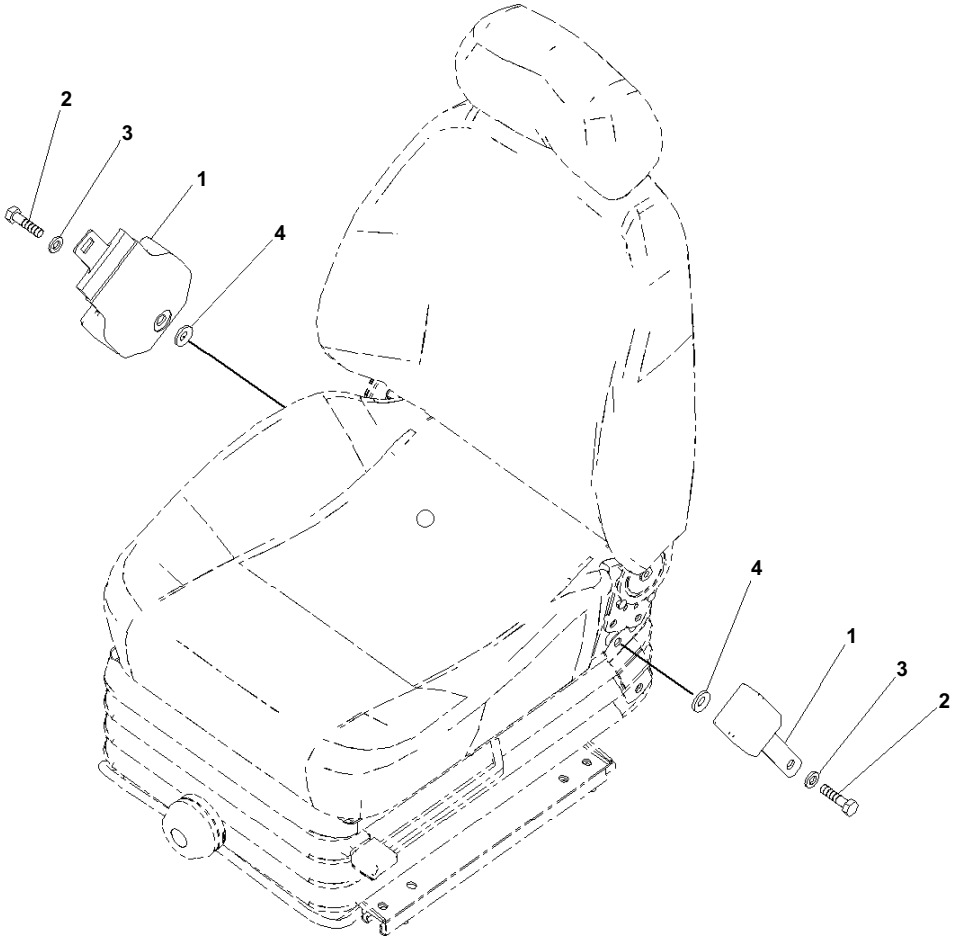

Index	Code	Part Number	Description	Qty	Serial No.
1		22B-57-11911	Belt	1	B10001-
2		02030-70757	· Bolt	2	B10001-
3		09409-00002	· Washer	2	B10001-
4		01643-11232	Washer	2	B10001-

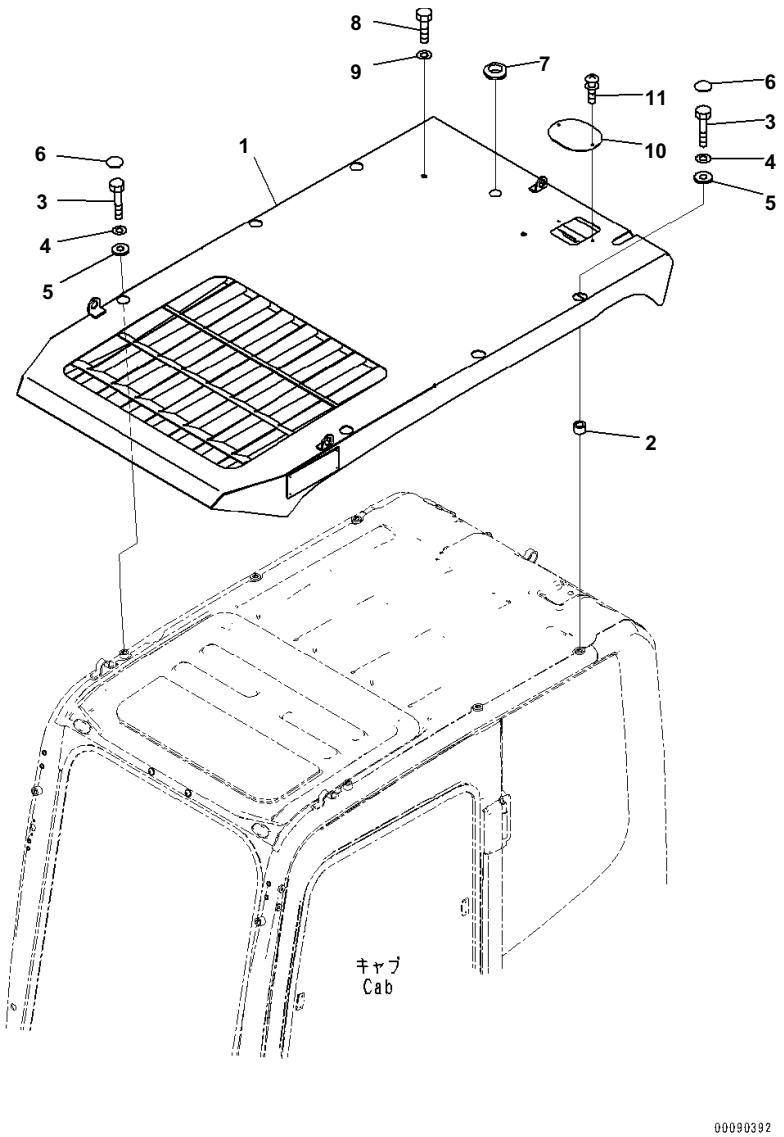

Index	Code	Part Number	Description	Qty	Serial No.
1		20Y-954-6122	Guard	1	B10001-
2		20Y-954-6241	Pipe	4	B10001-
3		01010-81280	Bolt	6	B10001-
4		01643-31232	Washer	6	B10001-
5		130-43-64260	Collar	6	B10001-
6		195-Z11-2970	Cap	6	B10001-
7		08037-02512	Grommet	1	B10001-
8		01010-D1220	Bolt	2	B10001-
9		01643-71232	Washer	2	B10001-
10		20Y-954-6250	Plate	1	B10001-
11		01023-20612	Screw	2	B10001-

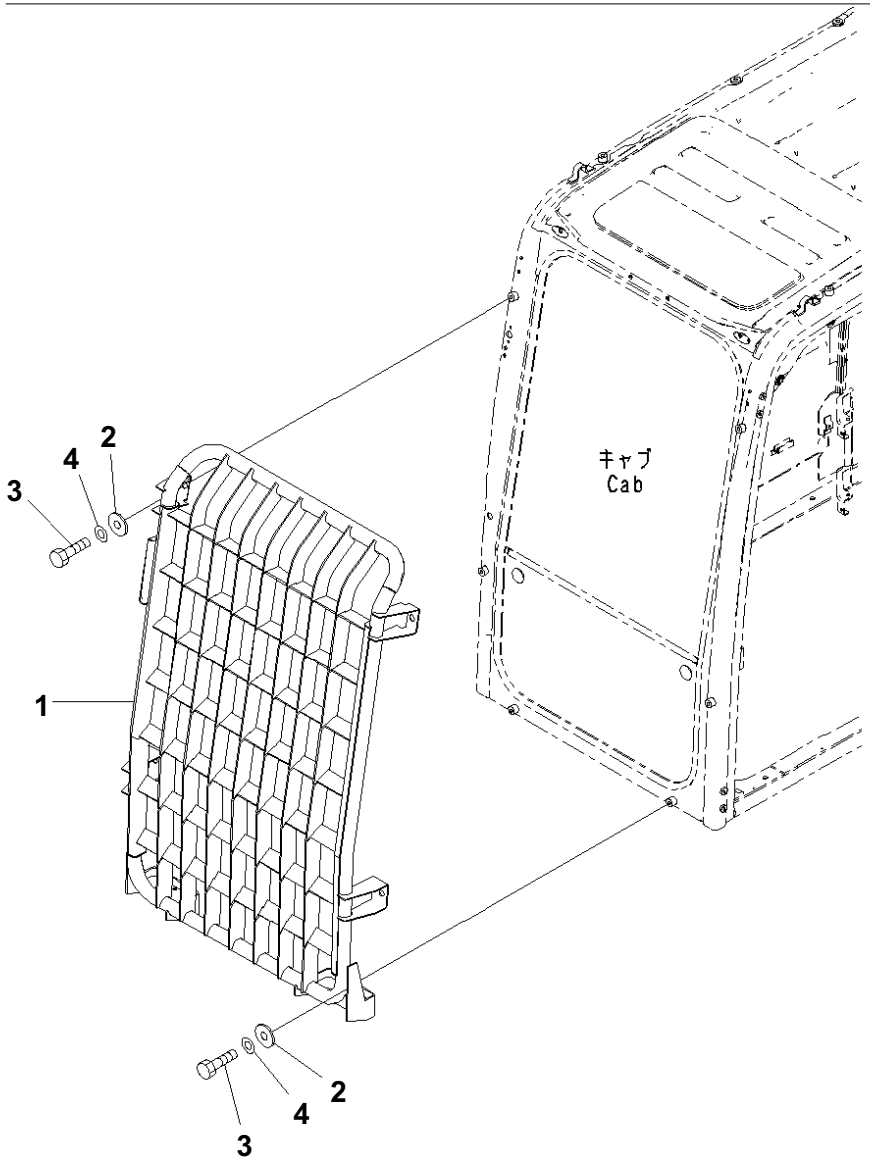

Front Guard

Index	Code	Part Number	Description	Qty	Serial No.
1		20Y-954-6111	Guard	1	B10001-
2		130-43-64260	Collar	6	B10001-
3		01010-D1225	Bolt	6	B10001-
4		01643-71232	Washer	6	B10001-

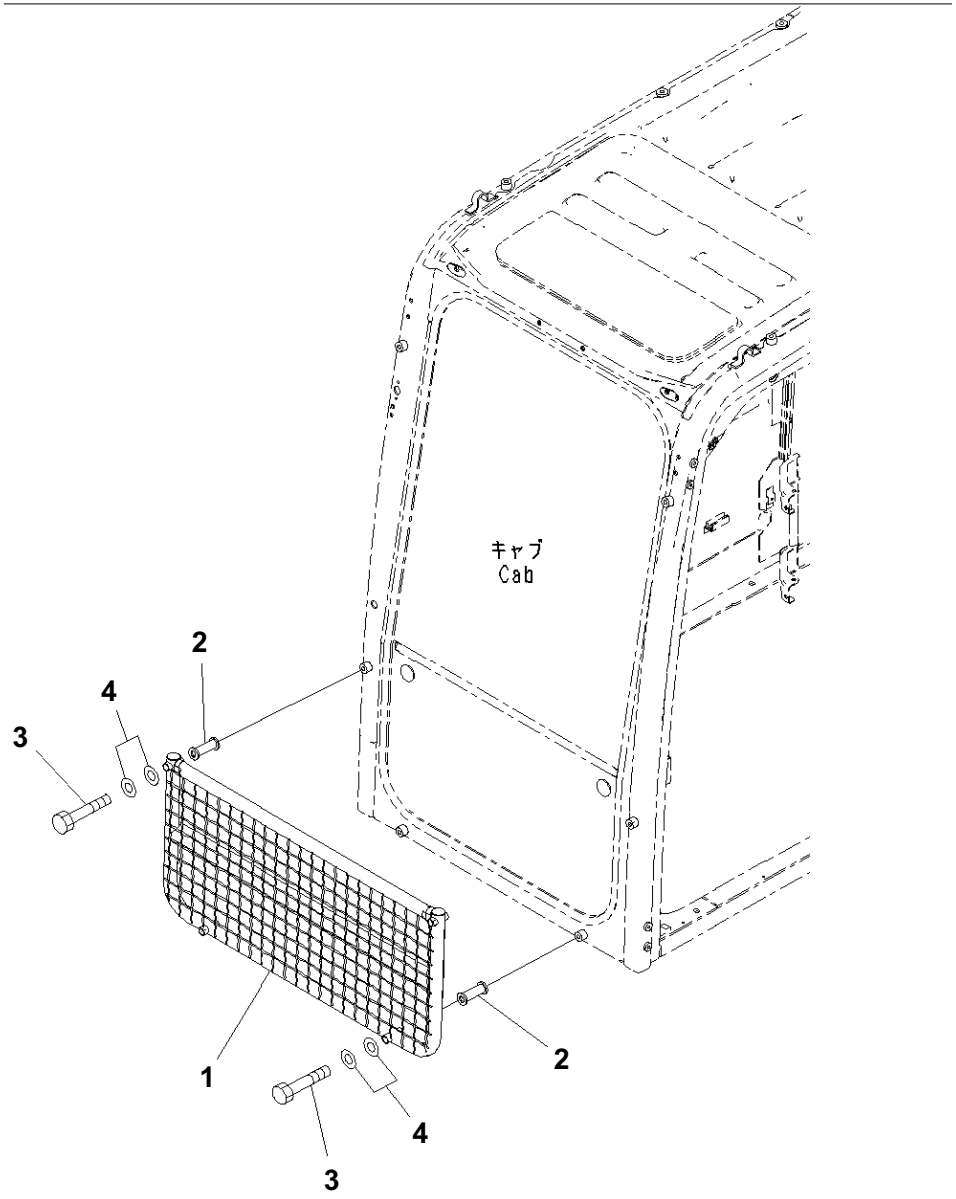

Index	Code	Part Number	Description	Qty	Serial No.
1		20Y-954-6132	Guard	1	B10001-
2		20Y-954-6192	Spacer	4	B10001-
3		01011-D1245	Bolt	4	B10001-
4		01643-71232	Washer	4	B10001-

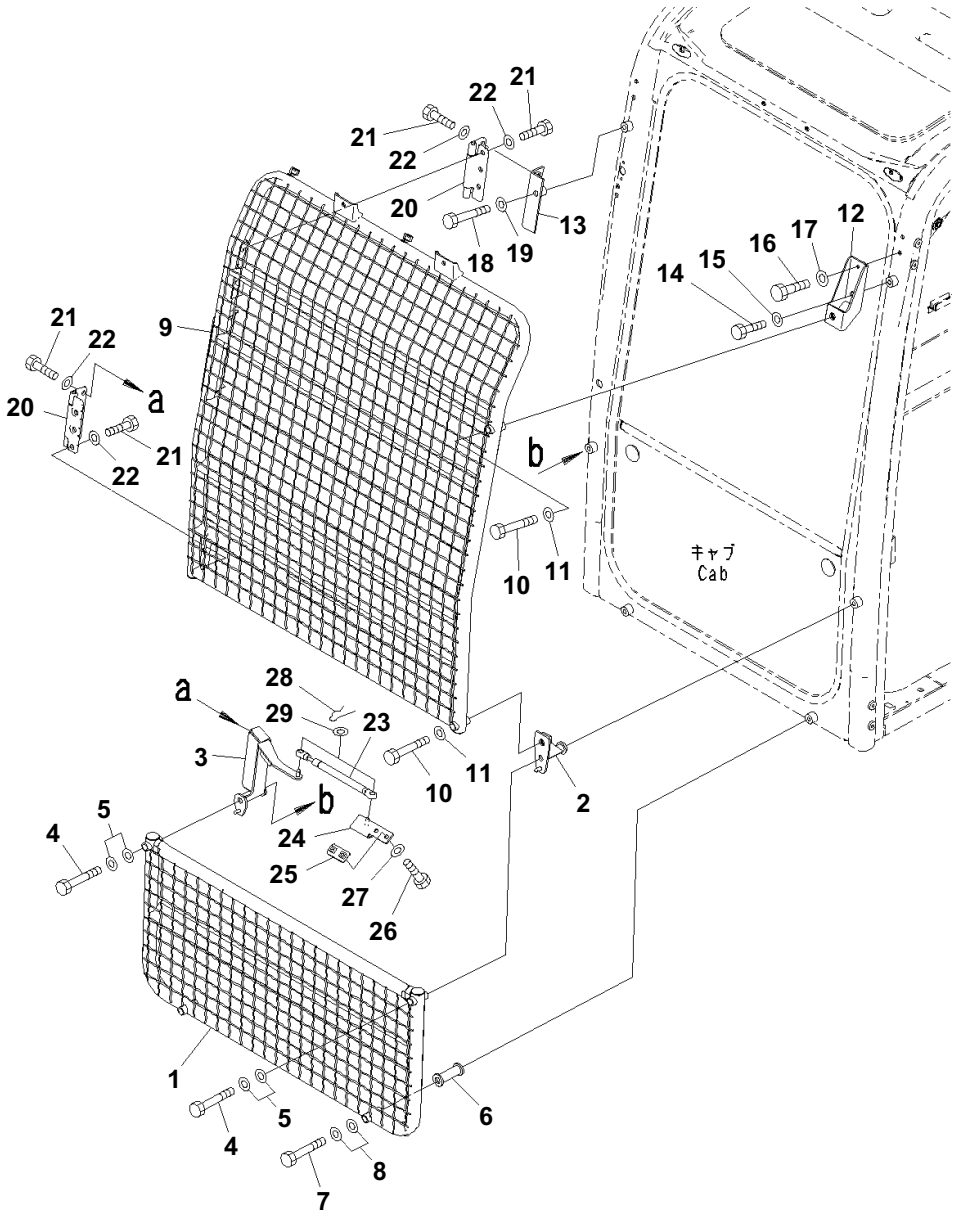

Index	Code	Part Number	Description	Qty	Serial No.
1		20Y-954-6132	Guard	1	B10001-
2		20Y-954-6171	Bracket	1	B10001-
3		20Y-954-6181	Bracket	1	B10001-
4		01011-D1245	Bolt	2	B10001-
5		01643-71232	Washer	2	B10001-
6		20Y-954-6192	Spacer	2	B10001-
7		01011-D1245	Bolt	2	B10001-
8		01643-71232	Washer	2	B10001-
9		20Y-954-6142	Guard	1	B10001-
10		01010-D1275	Bolt	2	B10001-
11		01643-71232	Washer	2	B10001-
12		20Y-954-6151	Bracket	1	B10001-
13		20Y-954-6161	Bracket	1	B10001-
14		01010-D1220	Bolt	1	B10001-
15		01643-71232	Washer	1	B10001-
16		01010-D0640	Bolt	1	B10001-
17		01643-70623	Washer	1	B10001-
18		01010-D1245	Bolt	1	B10001-
19		01643-71232	Washer	1	B10001-
20		14X-911-1330	Hinge	2	B10001-
21		01010-D1025	Bolt	12	B10001-
22		01643-71032	Washer	12	B10001-
23		20Y-54-36342	Gas Spring Assembly	1	B10001-
24		22B-954-1840	Plate	1	B10001-
25		22B-954-1660	Plate	1	B10001-
26		01010-D0820	Bolt	2	B10001-
27		01643-70823	Washer	2	B10001-
28		04052-10833	Pin, Snap	2	B10001-
29		01643-70823	Washer	2	B10001-

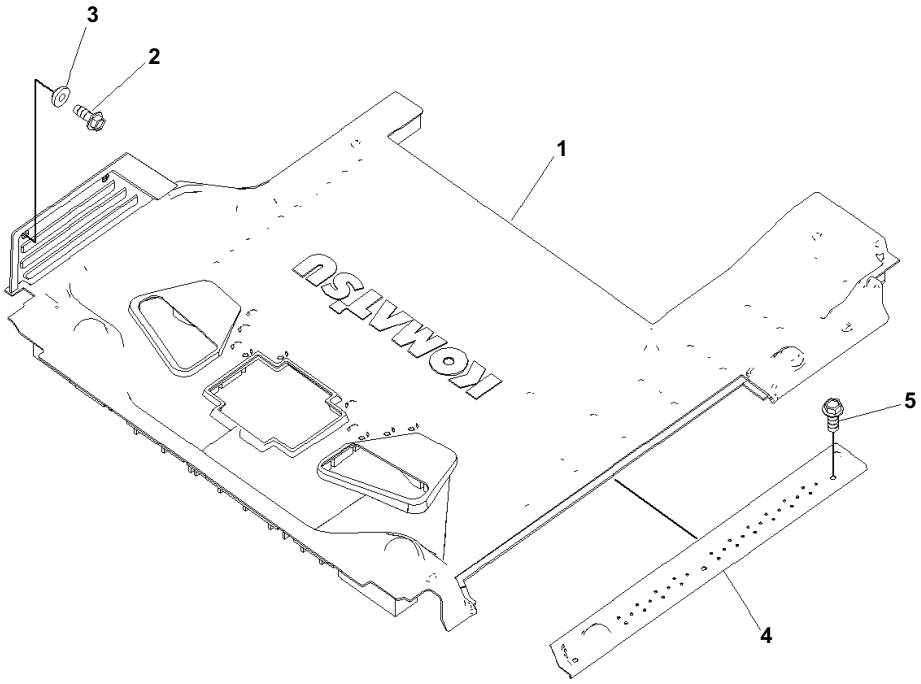

00055416-1

Floor Mat

Index	Code	Part Number	Description	Qty	Serial No.
1		20Y-53-14713	Floor Mat	1	B10001-
2		01435-40616	Bolt	2	B10001-
3		20Y-43-41290	Collar	2	B10001-
4		20Y-53-11953	Cover	1	B10001-
5		01435-40612	Bolt	3	B10001-

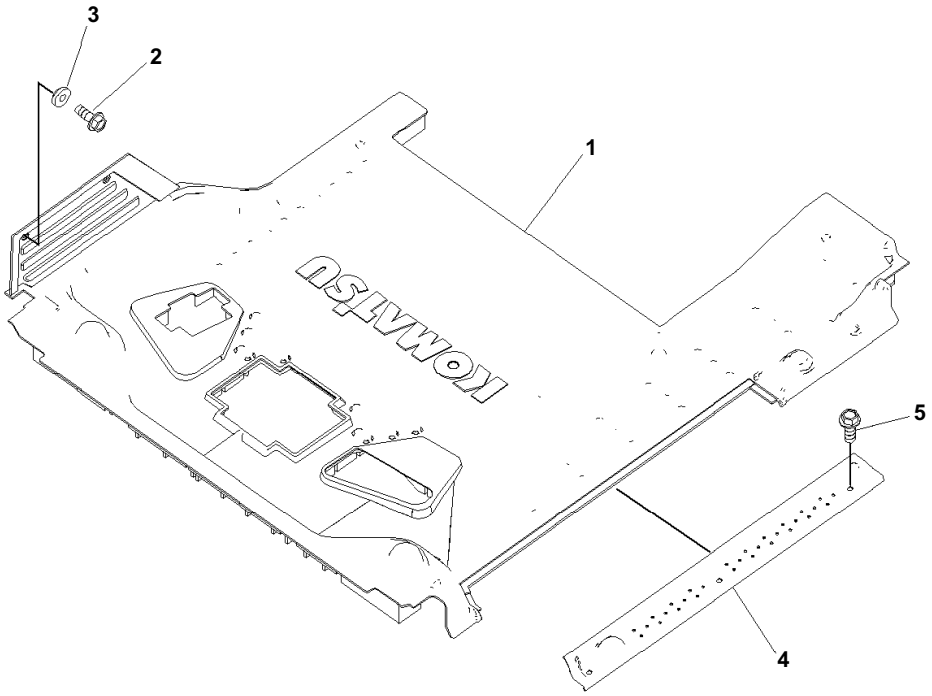

00055417-1

Index	Code	Part Number	Description	Qty	Serial No.
1		20Y-53-14723	Floor Mat	1	B10001-
2		01435-40616	Bolt	2	B10001-
3		20Y-43-41290	Collar	2	B10001-
4		20Y-53-11953	Cover	1	B10001-
5		01435-40612	Bolt	3	B10001-

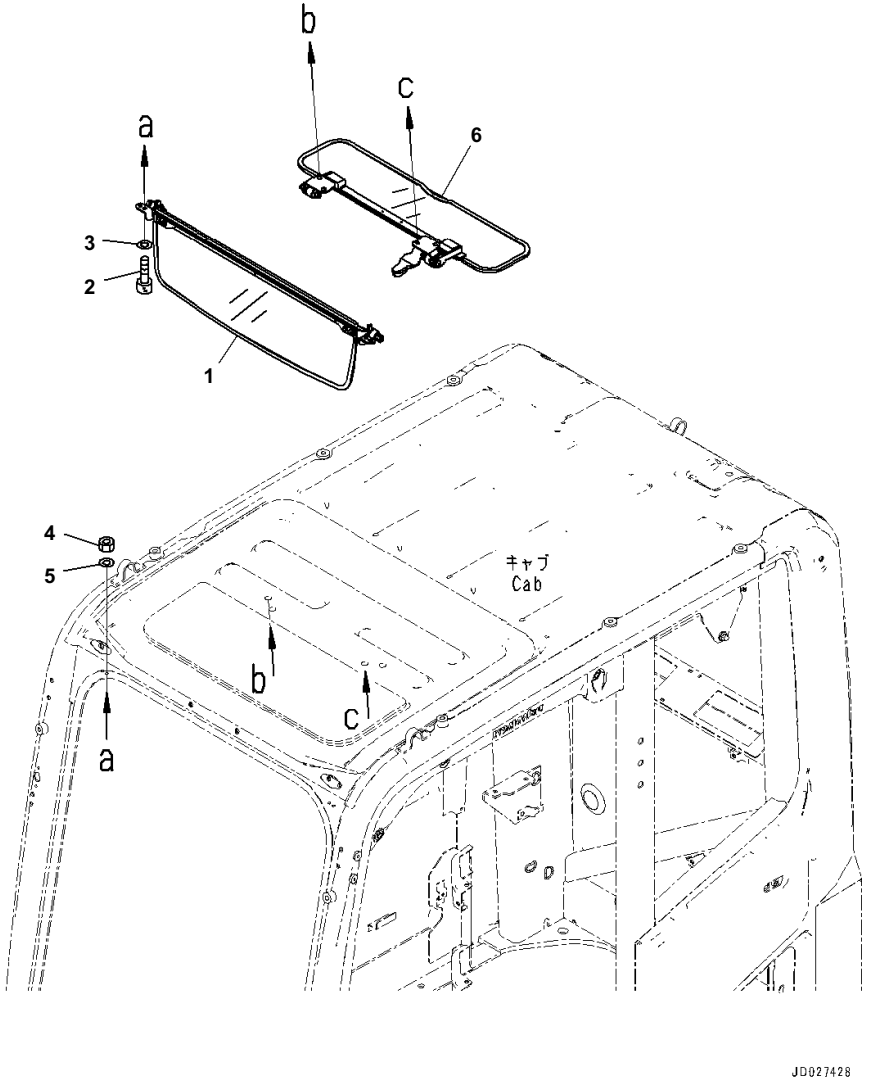

Index	Code	Part Number	Description	Qty	Serial No.
1		20Y-53-16741	Sunvisor	1	B10001-
2		01252-80616	Bolt	4	B10001-
3		01643-70623	Washer	4	B10001-
4		01580-10605	Nut	4	B10001-
5		01640-20610	Washer	4	B10001-
6		20Y-53-17411	Sunvisor	1	B10001-

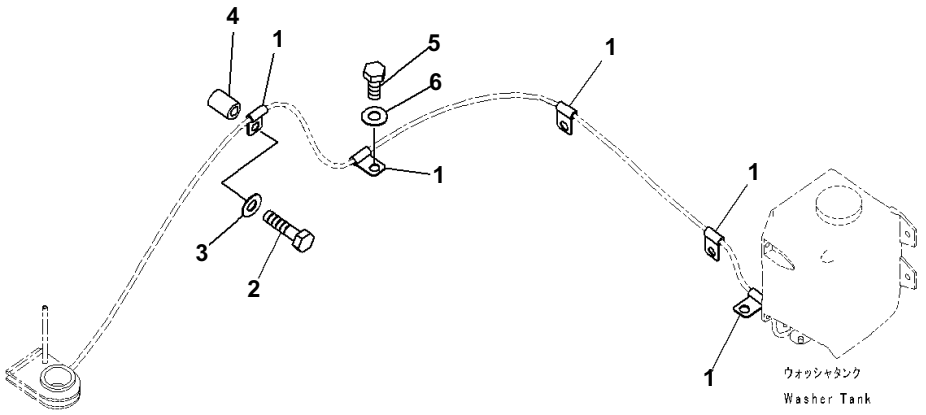

Index	Code	Part Number	Description	Qty	Serial No.
1		21T-38-12270	Clip	5	B10001-
2		01010-81250	Bolt	1	B10001-
3		01643-31232	Washer	1	B10001-
4		195-33-11220	Spacer	1	B10001-
5		01010-81225	Bolt	1	B10001-
6		01643-31232	Washer	1	B10001-

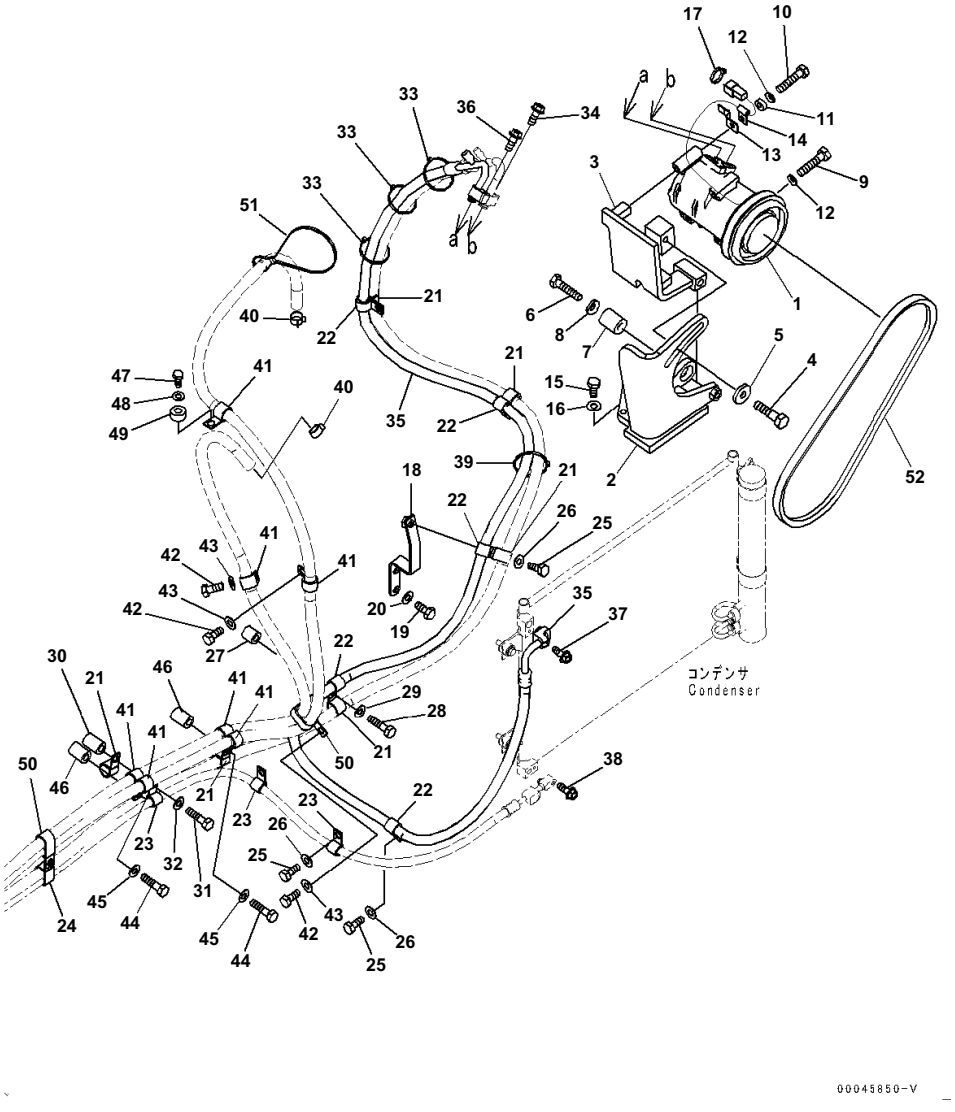

Index	Code	Part Number	Description	Qty	Serial No.
1		20Y-810-1260	Compressor Assembly	1	B10001-
2		20Y-810-1112	Bracket	1	B10001-
3		20Y-979-6612	Bracket	1	B10001-
4		01010-81440	Bolt	1	B10001-
5		195-71-32220	Washer	1	B10001-
6		20Y-810-1190	Bolt	1	B10001-
7		20Y-810-1180	Spacer	1	B10001-
8		01643-31445	Washer	1	B10001-
9		01010-80875	Bolt	3	B10001-
10		01010-80885	Bolt	1	B10001-
11		22N-957-1420	Collar	1	B10001-
12		01643-30823	Washer	4	B10001-
13		08053-01510	Clip	1	B10001-
14		04434-50508	Clip	1	B10001-
15		01010-81035	Bolt	3	B10001-
16		01643-31032	Washer	3	B10001-
17		08034-20519	Band	1	B10001-
18		20Y-810-1130	Bracket	1	B10001-
19		01010-81225	Bolt	2	B10001-
20		01643-31232	Washer	2	B10001-
21		04434-52112	Clip	6	B10001-
22		04434-51912	Clip	5	B10001-
23		04434-51512	Clip	3	B10001-
24		20Y-810-1170	Clip	1	B10001-
25		01010-81225	Bolt	4	B10001-
26		01643-31232	Washer	4	B10001-
27		195-33-11220	Spacer	1	B10001-
28		01010-81250	Bolt	1	B10001-
29		01643-31232	Washer	1	B10001-
30		20Y-03-11220	Collar	1	B10001-
31		01010-81260	Bolt	1	B10001-
32		01643-31232	Washer	1	B10001-
33		08034-20519	Band	3	B10001-
34		01435-00630	Bolt	1	B10001-
35		20Y-810-1141	Hose	1	B10001-
36		01435-00630	Bolt	1	B10001-
37		01435-00625	Bolt	1	B10001-
38		01435-00625	Bolt	1	B10001-
39		08034-20519	Band	1	B10001-
40		11Y-09-11160	Clip	2	B10001-
41		04434-52112	Clip	7	B10001-
42		01010-81225	Bolt	3	B10001-
43		01643-31232	Washer	3	B10001-
44		01010-81260	Bolt	2	B10001-
45		01643-31232	Washer	2	B10001-
46		20Y-03-11220	Collar	2	B10001-

Index	Code	Part Number	Description	Qty	Serial No.
47		01010-81240	Bolt	1	B10001-
48		01643-31232	Washer	1	B10001-
49		131-43-41631	Spacer	1	B10001-
50		04435-52112	Clip	2	B10001-
51		134-03-61410	Band	1	B10001-
52		04120-21747	V-belt	1	B10001-

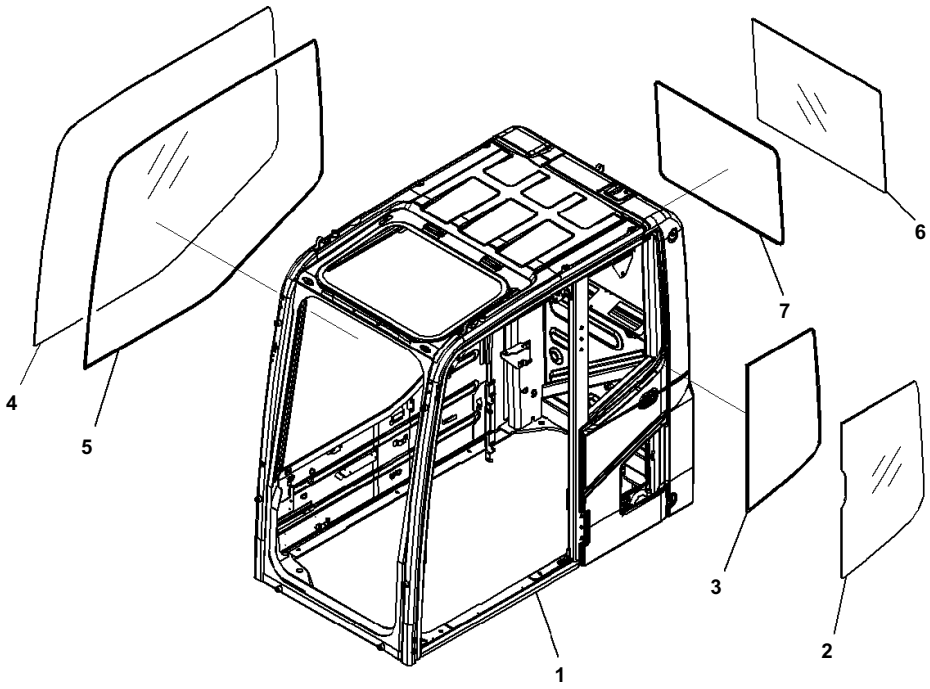

Index	Code	Part Number	Description	Qty	Serial No.
		20Y-53-00460	Cab Assembly	1	B10001-
1	C1		・Cab	1	B10001-
2		20Y-53-11241	・Glass	1	B10001-
3		20Y-53-11260	・Seal	1	B10001-
4		20Y-53-11841	・Glass	1	B10001-
5		20Y-53-11850	・Seal	1	B10001-
6		20Y-53-11271	・Glass	1	B10001-
7		20Y-53-11250	・Seal	1	B10001-

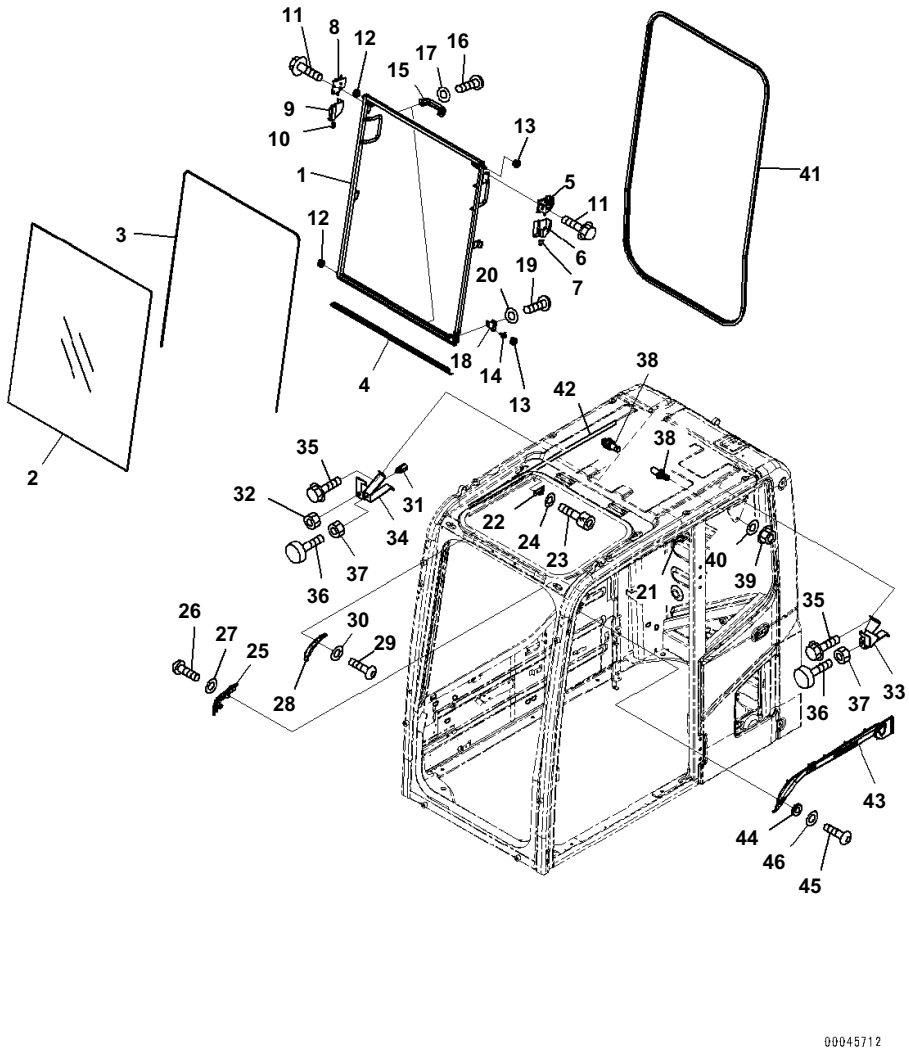

Index	Code	Part Number	Description	Qty	Serial No.
		20Y-53-00460	Cab Assembly	1	B10001-
		20Y-53-00031	· Window Assembly	1	B10001-
1		20Y-53-11511	· · Frame	1	B10001-
2		20Y-53-11520	· · Glass	1	B10001-
3		20Y-54-51531	· · Seal	1	B10001-
4		20Y-53-11551	· · Seal	1	B10001-
5		22B-54-15411	· · Lock Assembly	1	B10001-
6		22B-54-15440	· · Case	1	B10001-
7		22B-54-15470	· · Knob	1	B10001-
8		22B-54-15421	· · Lock Assembly	1	B10001-
9		22B-54-15450	· · Case	1	B10001-
10		22B-54-15480	· · Knob	1	B10001-
11		01435-40812	· · Bolt	4	B10001-
12		20Y-54-52621	· · Roller	2	B10001-
13		20Y-54-52681	· · Roller	2	B10001-
14		20Y-53-12330	· · Pin	1	B10001-
15		20Y-54-14590	· · Handle	2	B10001-
16		01245-00616	· · Screw, Hexagon Socket Head	4	B10001-
17		01643-70623	· · Washer	4	B10001-
18		20Y-53-12830	· · Bracket	1	B10001-
19		01245-00816	· · Screw	2	B10001-
20		01643-70823	· · Washer	2	B10001-
21		20Y-54-51670	· Stopper	1	B10001-
22		20Y-54-51680	· Stopper	1	B10001-
23		01252-80616	· Bolt	4	B10001-
24		01643-70623	· Washer	4	B10001-
25		20Y-53-11561	· Block Assembly	1	B10001-
26		01245-00816	· Screw	2	B10001-
27		01643-70823	· Washer	2	B10001-
28		20Y-53-11661	· Bracket	1	B10001-
29		01245-00816	· Screw	2	B10001-
30		01643-70823	· Washer	2	B10001-
31		21J-06-12440	· Switch	1	B10001-
32		01583-11811	· Nut	1	B10001-
33		20Y-53-11581	· Bracket	1	B10001-
34		20Y-53-11641	· Bracket	1	B10001-
35		01435-00612	· Bolt	4	B10001-
36		20Y-54-11611	· Stopper	2	B10001-
37		01580-11008	· Nut	2	B10001-
38		20Y-54-51621	· Striker	2	B10001-
39		01584-31008	· Nut	2	B10001-
40		01643-71032	· Washer	2	B10001-
41		20Y-53-11540	· Seal	1	B10001-
42		20Y-54-51420	· Seal	1	B10001-
43		20Y-53-12531	· Cover	1	B10001-
44		20Y-53-12310	· Collar	3	B10001-

PC240LC-8 S/N B10001-UP
Cab, Front Window

Index	Code	Part Number	Description	Qty	Serial No.
45		01245-00616	・ Screw, Hexagon Socket Head	3	B10001-
46		01643-70623	・ Washer	3	B10001-

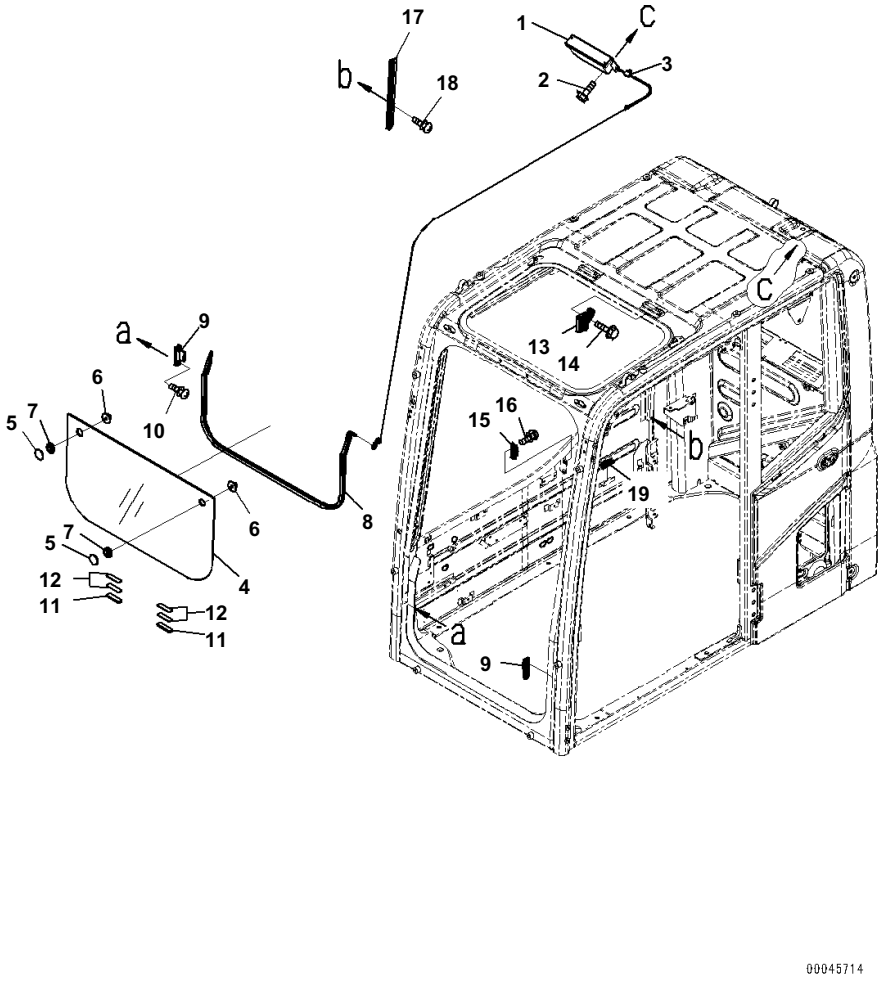

Index	Code	Part Number	Description	Qty	Serial No.
		20Y-53-00460	Cab Assembly	1	B10001-
1		20Y-53-11591	・ Spring Assembly	1	B10001-
2		01435-00616	・ Bolt	2	B10001-
3		20Y-54-51640	・ Holder	1	B10001-
		20Y-53-11601	・ Glass Assembly	1	B10001-
4		20Y-53-11611	・・ Glass	1	B10001-
5		22B-54-15970	・・ Retainer	2	B10001-
6		22B-54-15980	・・ Knob	2	B10001-
7		08037-02512	・・ Grommet	2	B10001-
8		208-53-11860	・ Trim	1	B10001-
9		20Y-53-11940	・ Seat	2	B10001-
10		01023-20612	・ Screw	4	B10001-
11		20Y-53-11973	・ Rubber	2	B10001-
12		20Y-53-12892	・ Rubber	4	B10001-
13		22B-54-15841	・ Lock Assembly	1	B10001-
14		01435-40616	・ Bolt	2	B10001-
15		20Y-53-12611	・ Seat	1	B10001-
16		01023-20616	・ Screw	2	B10001-
17		20Y-53-12631	・ Rail	1	B10001-
18		01023-20616	・ Screw	2	B10001-
19		20U-54-25140	・ Stopper	1	B10001-

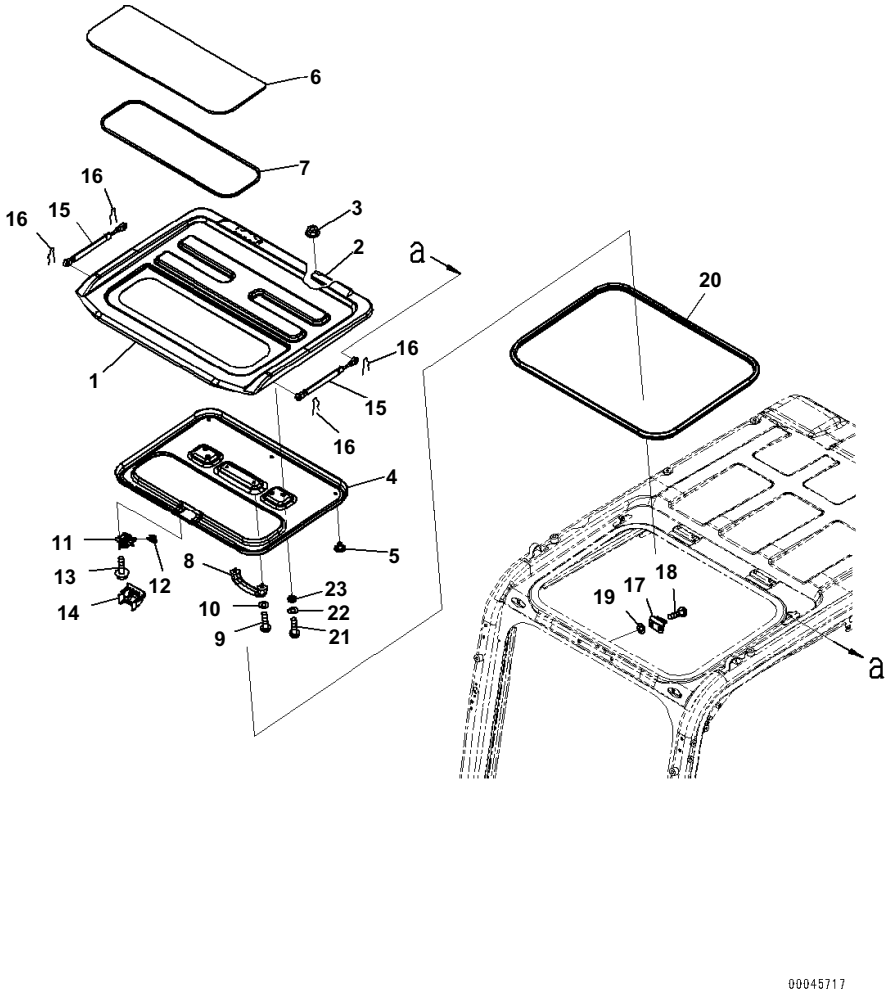

Index	Code	Part Number	Description	Qty	Serial No.
		20Y-53-00460	Cab Assembly	1	B10001-
1		20Y-53-11712	・ Roof	1	B10001-
2		208-53-22H70	・・ Hinge,Welded	2	B10001-
3		01584-30806	・ Nut	4	B10001-
4		20Y-53-11921	・ Cover	1	B10001-
5		09416-10200	・ Button	5	B10001-
6		20Y-53-11741	・ Plate	1	B10001-
7		20Y-53-11790	・ Seal	1	B10001-
8		20Y-54-14590	・ Handle	1	B10001-
9		01245-00616	・ Screw, Hexagon Socket Head	2	B10001-
10		01643-70623	・ Washer	2	B10001-
11		20Y-53-11721	・ Lock	1	B10001-
12		20Y-53-11781	・ Knob	1	B10001-
13		01435-40610	・ Bolt	3	B10001-
14		20Y-53-11931	・ Cover	1	B10001-
15		20Y-54-36342	・ Gas Spring Assembly	2	B10001-
16		04052-10833	・ Pin, Snap	4	B10001-
17		20Y-53-11771	・ Striker	1	B10001-
18		01245-00820	・ Screw	2	B10001-
19		20Y-54-52651	・ Spacer	2	B10001-
20		20Y-53-11861	・ Seal	1	B10001-
21		01245-00620	・ Screw	4	B10001-
22		01643-70623	・ Washer	4	B10001-
23		20Y-54-52651	・ Spacer	4	B10001-

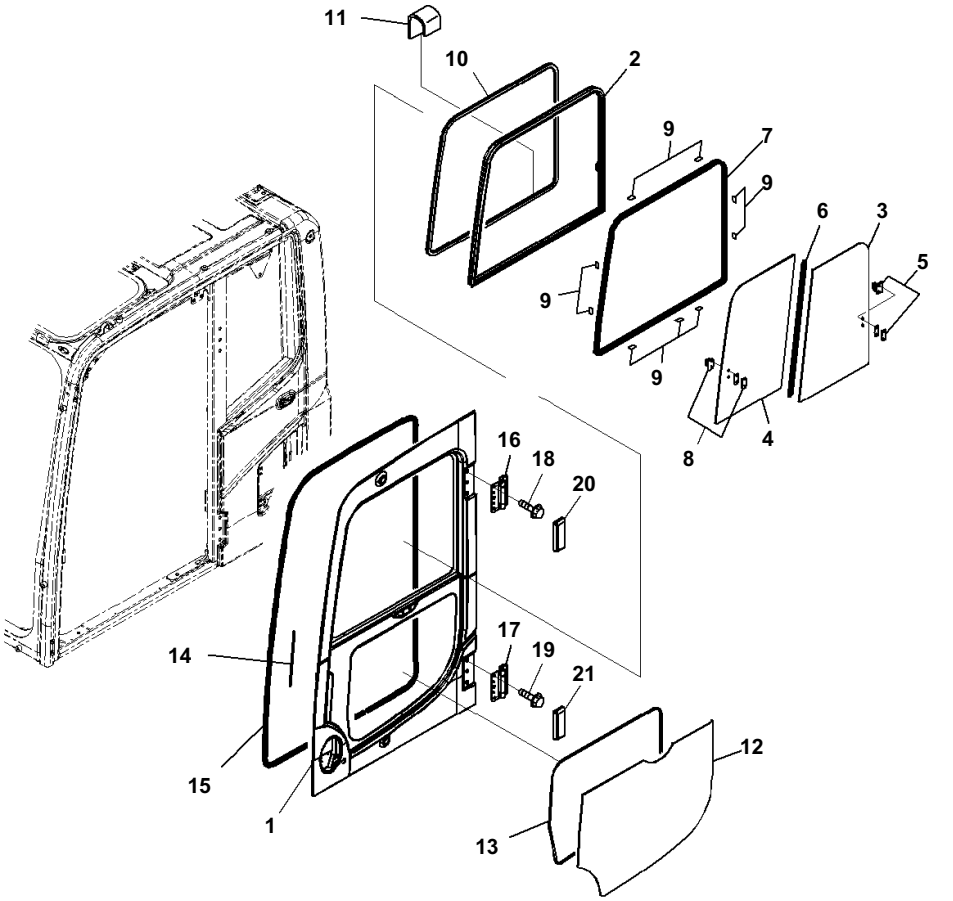

Index	Code	Part Number	Description	Qty	Serial No.
		20Y-53-00460	Cab Assembly	1	B10001-
		20Y-53-00072	・ Door Assembly	1	B10001-
1	C1		・・ Door	1	B10001-
		20Y-53-11402	・・ Sash Assembly	1	B10001-
2	C1		・・・ Sash	1	B10001-
3		20Y-53-12840	・・・ Glass	1	B10001-
4		20Y-53-12850	・・・ Glass	1	B10001-
5		20Y-54-52860	・・・ Lock Assembly	1	B10001-
6		20Y-53-12870	・・・ Seal	1	B10001-
7		20Y-53-12880	・・・ Seal	1	B10001-
8		20Y-54-13322	・・・ Lock Assembly	1	B10001-
9		20Y-53-12971	・・ Seat	9	B10001-
10		20Y-53-11470	・・ Trim	1	B10001-
11		20Y-53-13910	・・ Cover	1	B10001-
12		20Y-53-11451	・・ Glass	1	B10001-
13		20Y-53-11460	・・ Seal	1	B10001-
14		20Y-53-13880	・・ Seal	1	B10001-
15		20Y-53-11484	・・ Weather Strip	1	B10001-
16		20Y-53-11332	・・ Hinge	1	B10001-
17		20Y-53-11332	・・ Hinge	1	B10001-
18		01435-01220	・・ Bolt	6	B10001-
19		01435-01220	・・ Bolt	6	B10001-
20		20Y-53-11411	・・ Cover	1	B10001-
21		20Y-53-11421	・・ Cover	1	B10001-

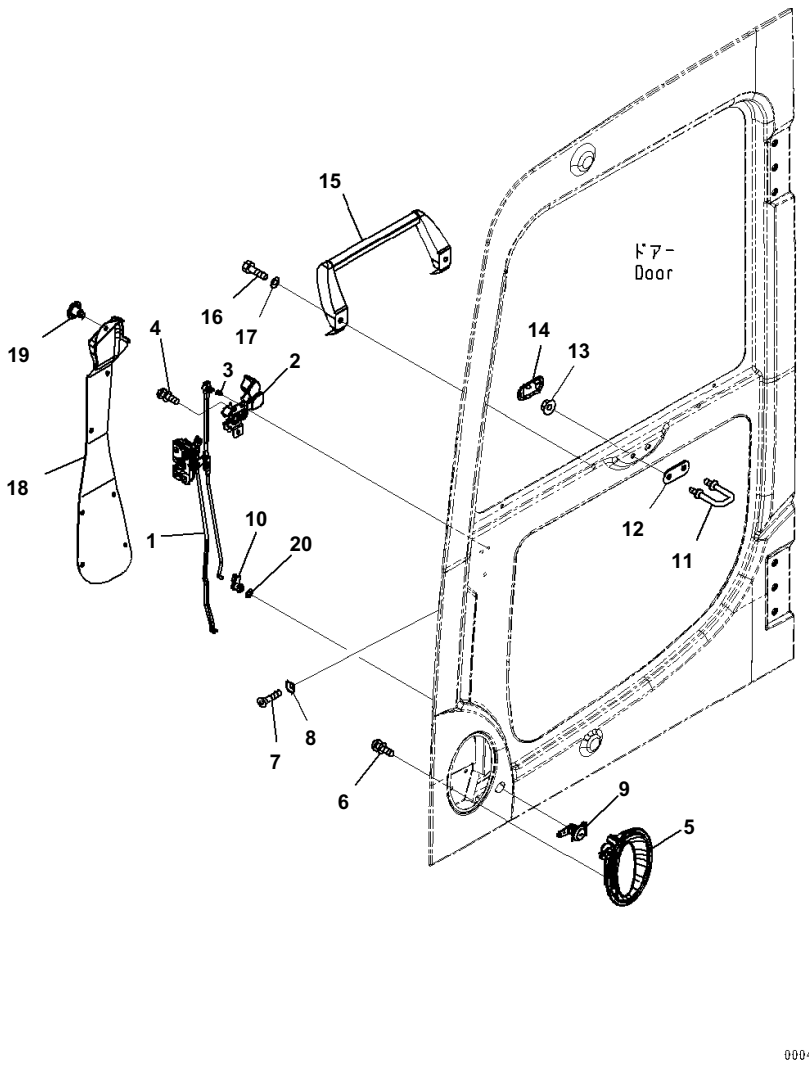

Index	Code	Part Number	Description	Qty	Serial No.
		20Y-53-00460	Cab Assembly	1	B10001-
		20Y-53-00072	・ Door Assembly	1	B10001-
1		20Y-53-12201	・・ Latch Assembly	1	B10001-
2		20Y-54-52300	・・ Handle Assembly	1	B10001-
3		22B-54-16340	・・・ Snap	1	B10001-
4		01023-10612	・・ Screw	3	B10001-
5		20Y-53-12991	・・ Handle	1	B10001-
6		01023-10612	・・ Screw	3	B10001-
7		01240-00616	・・ Screw	3	B10001-
8		195-Z11-1690	・・ Washer	3	B10001-
9		20Y-54-52820	・・ Lock Assembly	1	B10001-
10		22B-54-16330	・・ Snap	1	B10001-
11		20Y-53-11320	・・ Striker	1	B10001-
12		20Y-53-12940	・・ Plate	1	B10001-
13		01584-01008	・・ Nut	2	B10001-
14		20Y-53-12661	・・ Cover	1	B10001-
15		20Y-54-51393	・・ Grip	1	B10001-
16		01010-80820	・・ Bolt	2	B10001-
17		01643-30823	・・ Washer	2	B10001-
18		20Y-53-11441	・・ Cover	1	B10001-
19		22B-54-16461	・・ Rivet	7	B10001-
20		145-Z79-6270	・・ Washer	1	B10001-

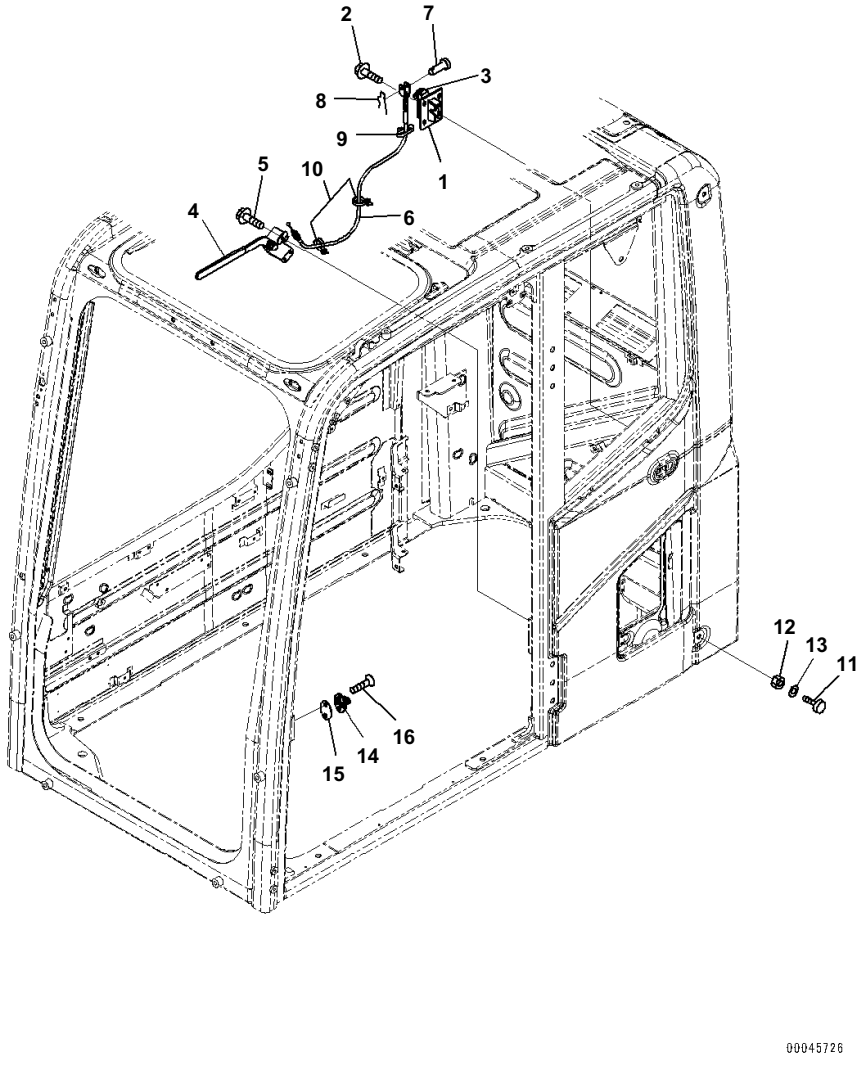

Index	Code	Part Number	Description	Qty	Serial No.
		20Y-53-00460	Cab Assembly	1	B10001-
1		20Y-53-11981	· Lock	1	B10001-
2		01435-40825	· Bolt	4	B10001-
3		20Y-53-12280	· Cover	1	B10001-
4		208-53-14540	· Lever Assembly	1	B10001-
5		01435-40616	· Bolt	3	B10001-
6		20Y-53-11990	· Cable	1	B10001-
7		04205-10520	· Pin	1	B10001-
8		04052-10530	· Pin	1	B10001-
9		08034-20414	· Band	1	B10001-
10		08059-00413	· Clip	2	B10001-
11		20Y-54-11611	· Stopper	2	B10001-
12		01580-11008	· Nut	2	B10001-
13		01643-31032	· Washer	2	B10001-
14		20Y-53-11810	· Striker	1	B10001-
15		20Y-53-11890	· Plate	1	B10001-
16		01240-01025	· Screw	2	B10001-

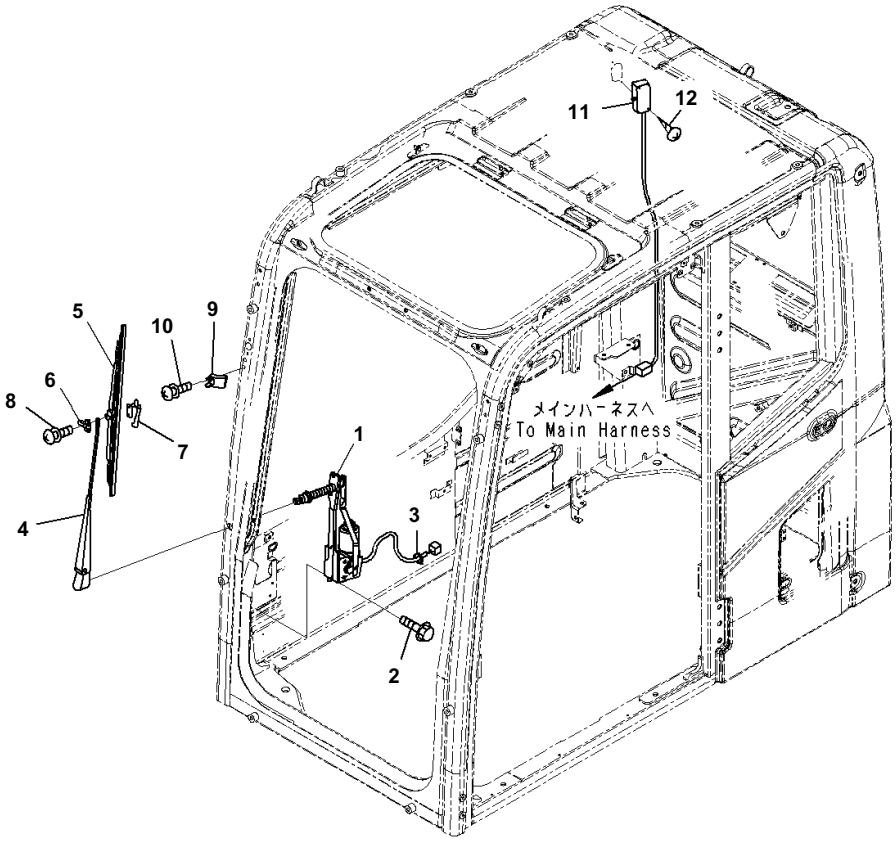

Index	Code	Part Number	Description	Qty	Serial No.
		20Y-53-00460	Cab Assembly	1	B10001-
1		20Y-54-52211	・ Wiper Motor Assembly	1	B10001-
2		01435-00616	・ Bolt	6	B10001-
3		08034-20414	・ Band	1	B10001-
		20Y-54-52221	・ Wiper Assembly	1	B10001-
4		20Y-54-52350	・・ Arm	1	B10001-
5		20Y-54-39450	・・ Wiper Blade	1	B10001-
6		20Y-54-39460	・・ Slider	1	B10001-
7		20Y-54-39480	・・ Plate	1	B10001-
8		ND949007-2350	・・ Screw and Washer	2	B10001-
9		20Y-53-12232	・ Stopper	1	B10001-
10		01023-20620	・ Screw	2	B10001-
11		20Y-53-12790	・ Light	1	B10001-
		08116-02410	・・ Bulb, 10watt	1	B10001-
12		01370-00420	・ Screw	2	B10001-

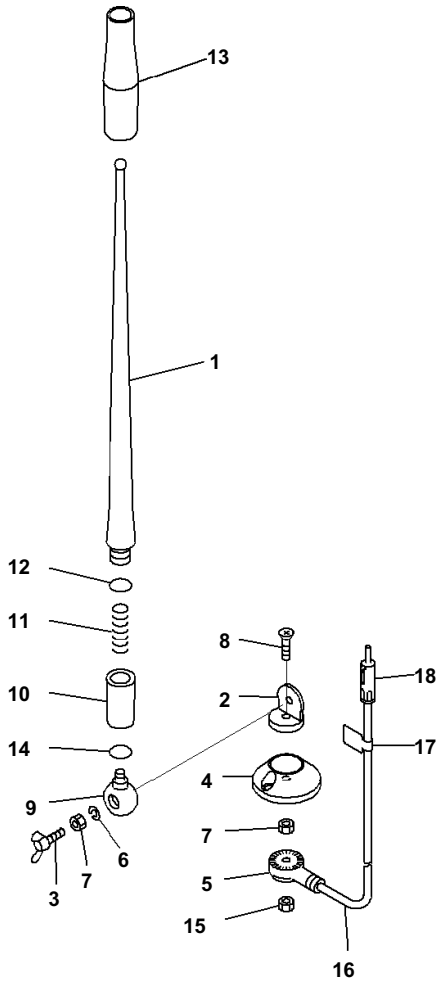

Index	Code	Part Number	Description	Qty	Serial No.
		20Y-53-00460	Cab Assembly	1	B10001-
		20Y-06-41990	· Antenna	1	B10001-
1		RFU419B-418-A	· Rod	1	B10001-
2	C1		· Holder	1	B10001-
3		RFU419B-418-D	· Bolt, Wing	1	B10001-
4		RFU419B-418-E	· Base	1	B10001-
5	C1		· Holder	1	B10001-
6		RFU419B-418-B	· Washer, Spring	1	B10001-
7		RFU419B-418-C	· Nut	2	B10001-
8	C1		· Screw	1	B10001-
9	C1		· Holder	1	B10001-
10	C1		· Holder Assembly	1	B10001-
11	C1		· Spring	1	B10001-
12	C1		· O-ring	1	B10001-
13	C1		· Tube	1	B10001-
14	C1		· O-ring	1	B10001-
15		RFU419B-418-C	· Nut	1	B10001-
16		RFU419B-418-F	· Cable	1	B10001-
17	C1		· Plate	1	B10001-
18	C1		· Plug	1	B10001-

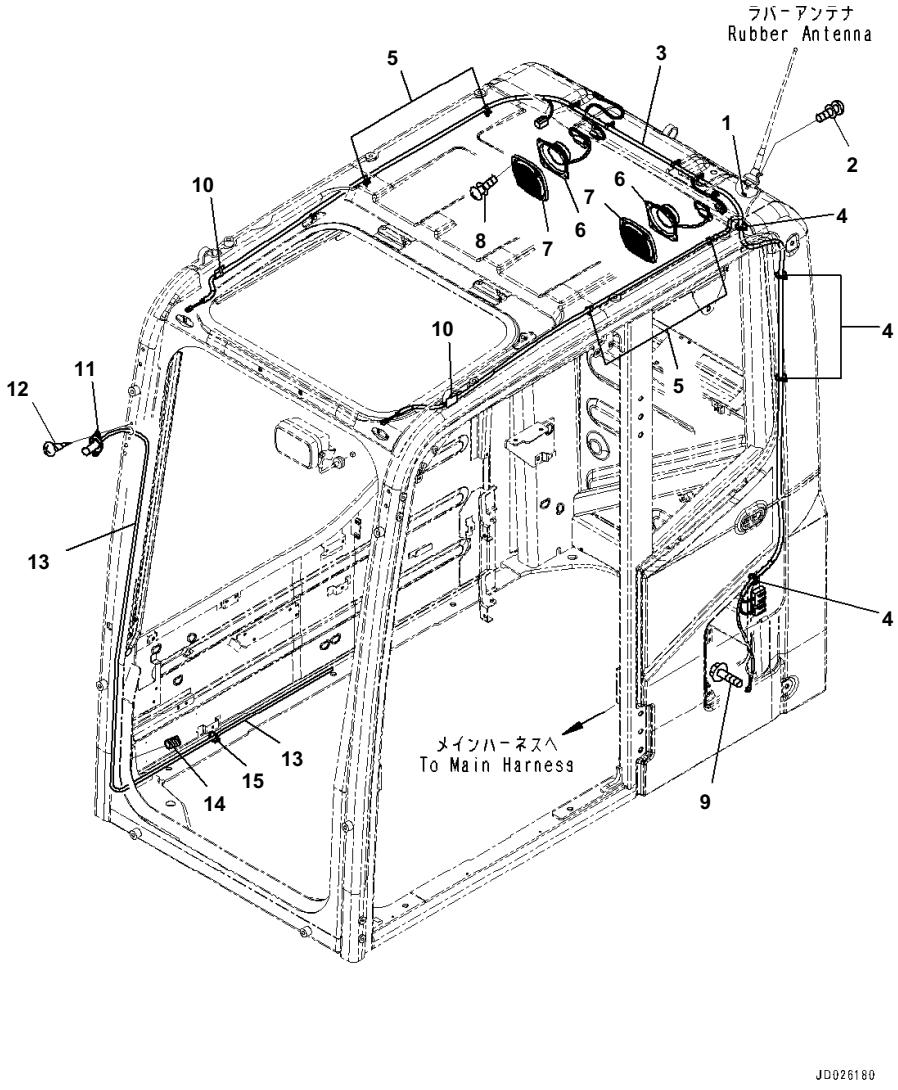

Index	Code	Part Number	Description	Qty	Serial No.
		20Y-53-00460	Cab Assembly	1	B10001-
1		01643-30623	・ Washer	1	B10001-
2		01023-20412	・ Screw	2	B10001-
3		20Y-06-41141	・ Wiring Harness	1	B10001-
4		08034-20414	・ Band	4	B10001-
5		08059-00413	・ Clip	8	B10001-
6		20Y-06-42180	・ Speaker	2	B10001-
7		20Y-53-12221	・ Cover	2	B10001-
8		01023-20416	・ Screw	8	B10001-
9		01435-40812	・ Bolt	1	B10001-
10		08051-00801	・ Clip	2	B10001-
11		20Y-54-39511	・ Nozzle	1	B10001-
12		01023-70412	・ Screw	2	B10001-
13		195-979-7770	・ Hose	1	B10001-
14		08017-B0701	・ Conduit	1	B10001-
15		08034-20414	・ Band	1	B10001-

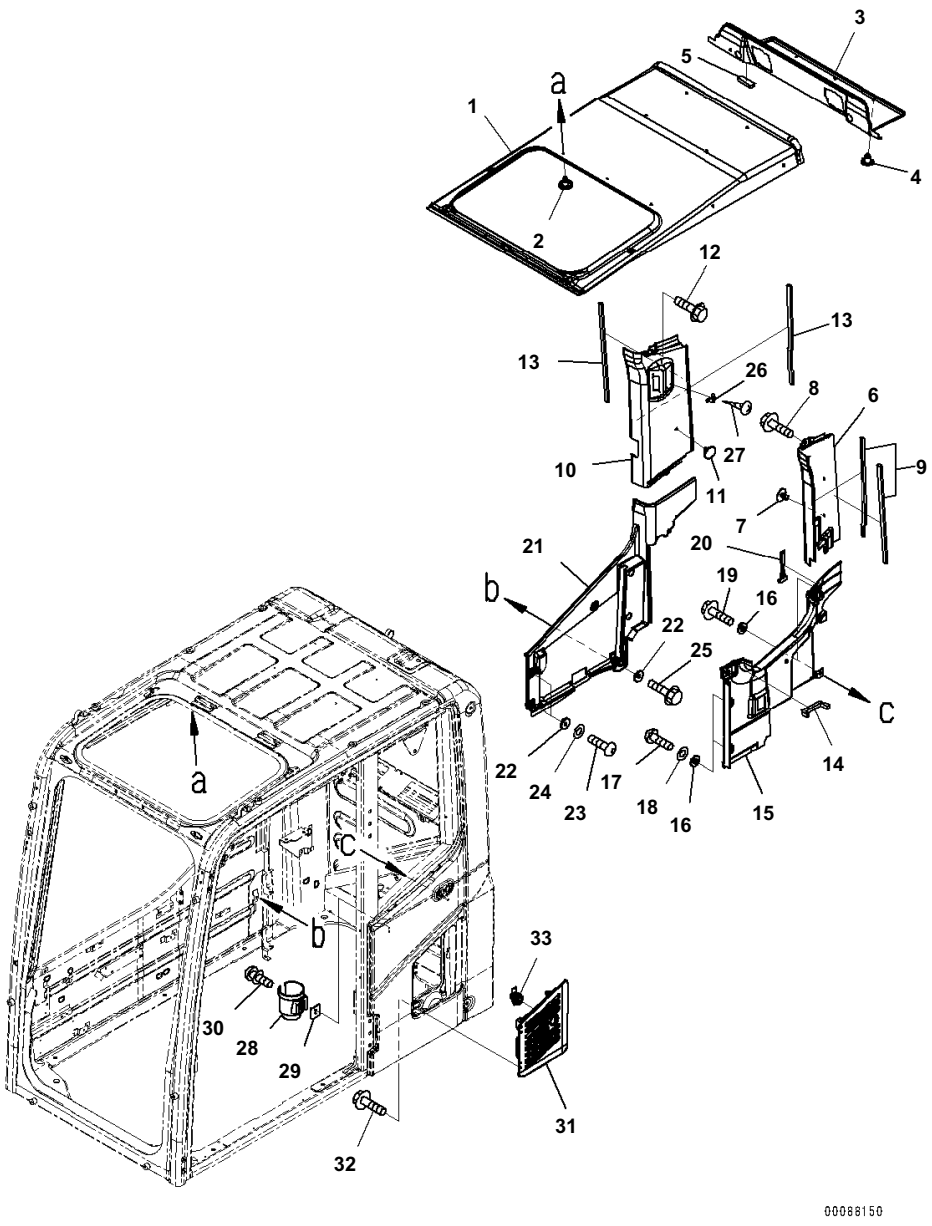

Index	Code	Part Number	Description	Qty	Serial No.
		20Y-53-00460	Cab Assembly	1	B10001-
1		20Y-53-12412	· Cover	1	B10001-
2		09416-10200	· Button	17	B10001-
3		20Y-53-12421	· Cover	1	B10001-
4		09416-10200	· Button	3	B10001-
5		20Y-53-13870	· Seal	1	B10001-
6		20Y-53-12431	· Cover	1	B10001-
7		208-53-13270	· Rivet	2	B10001-
8		01435-00612	· Bolt	1	B10001-
9		20Y-53-12710	· Seal	2	B10001-
10		20Y-53-12441	· Cover	1	B10001-
11		09416-10200	· Button	1	B10001-
12		01435-00612	· Bolt	1	B10001-
13		20Y-53-12710	· Seal	2	B10001-
14		20Y-53-12552	· Seal	1	B10001-
15		20Y-53-12463	· Cover	1	B10001-
16		20Y-53-12310	· Collar	4	B10001-
17		01245-00616	· Screw, Hexagon Socket Head	2	B10001-
18		01643-70623	· Washer	2	B10001-
19		01435-00612	· Bolt	2	B10001-
20		22B-54-17380	· Hammer	1	B10001-
21		20Y-53-12472	· Cover	1	B10001-
22		20Y-53-12310	· Collar	5	B10001-
23		01245-00616	· Screw, Hexagon Socket Head	3	B10001-
24		01643-70623	· Washer	3	B10001-
25		01435-00612	· Bolt	2	B10001-
26		205-54-51250	· Hanger	1	B10001-
27		01370-30416	· Screw	2	B10001-
28		208-53-12991	· Holder	1	B10001-
29		208-53-12980	· Plate	1	B10001-
30		01023-20616	· Screw	2	B10001-
31		20Y-53-11752	· Cover	1	B10001-
32		01435-40610	· Bolt	4	B10001-
33		20Y-53-11761	· Lock Assembly	1	B10001-

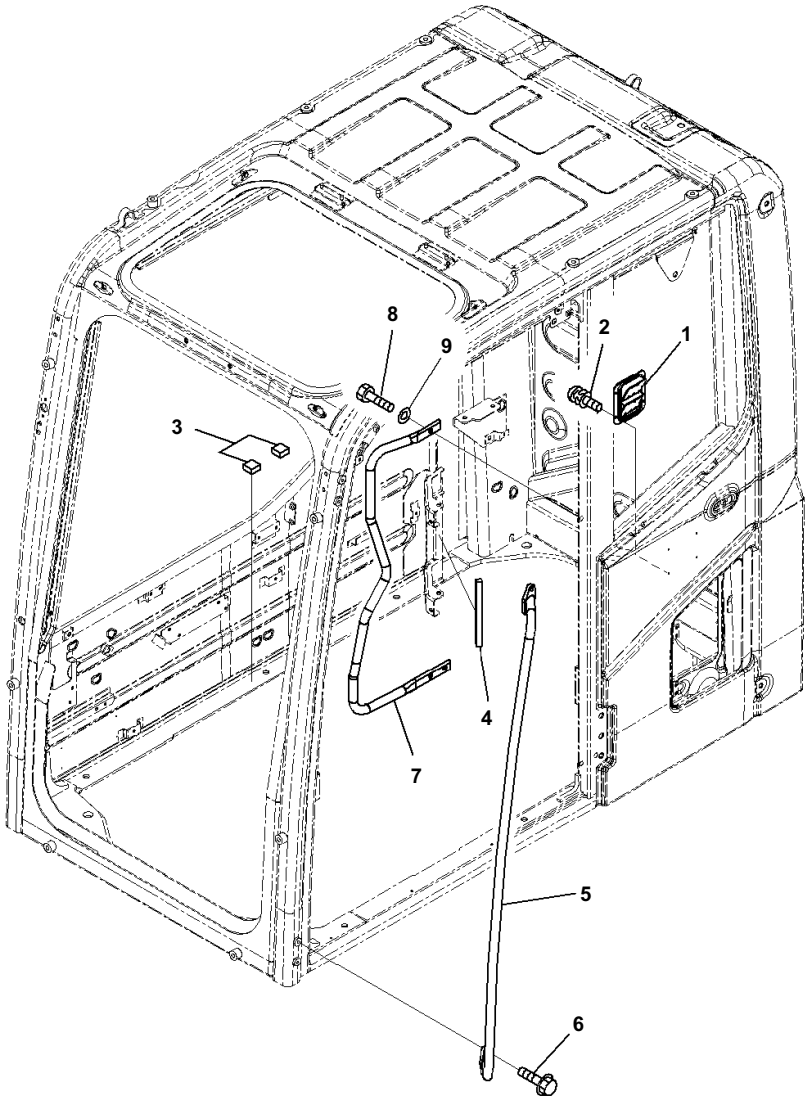

Index	Code	Part Number	Description	Qty	Serial No.
		20Y-53-00460	Cab Assembly	1	B10001-
1		20Y-53-11961	・ Valve Assembly	1	B10001-
2		01023-60512	・ Screw	4	B10001-
3		20Y-53-13490	・ Rubber	2	B10001-
4		20Y-53-12591	・ Seal	1	B10001-
5		20Y-53-11821	・ Grip	1	B10001-
6		01435-40825	・ Bolt	4	B10001-
7		20Y-53-11831	・ Grip	1	B10001-
8		01010-D1025	・ Bolt	3	B10001-
9		01643-71032	・ Washer	3	B10001-

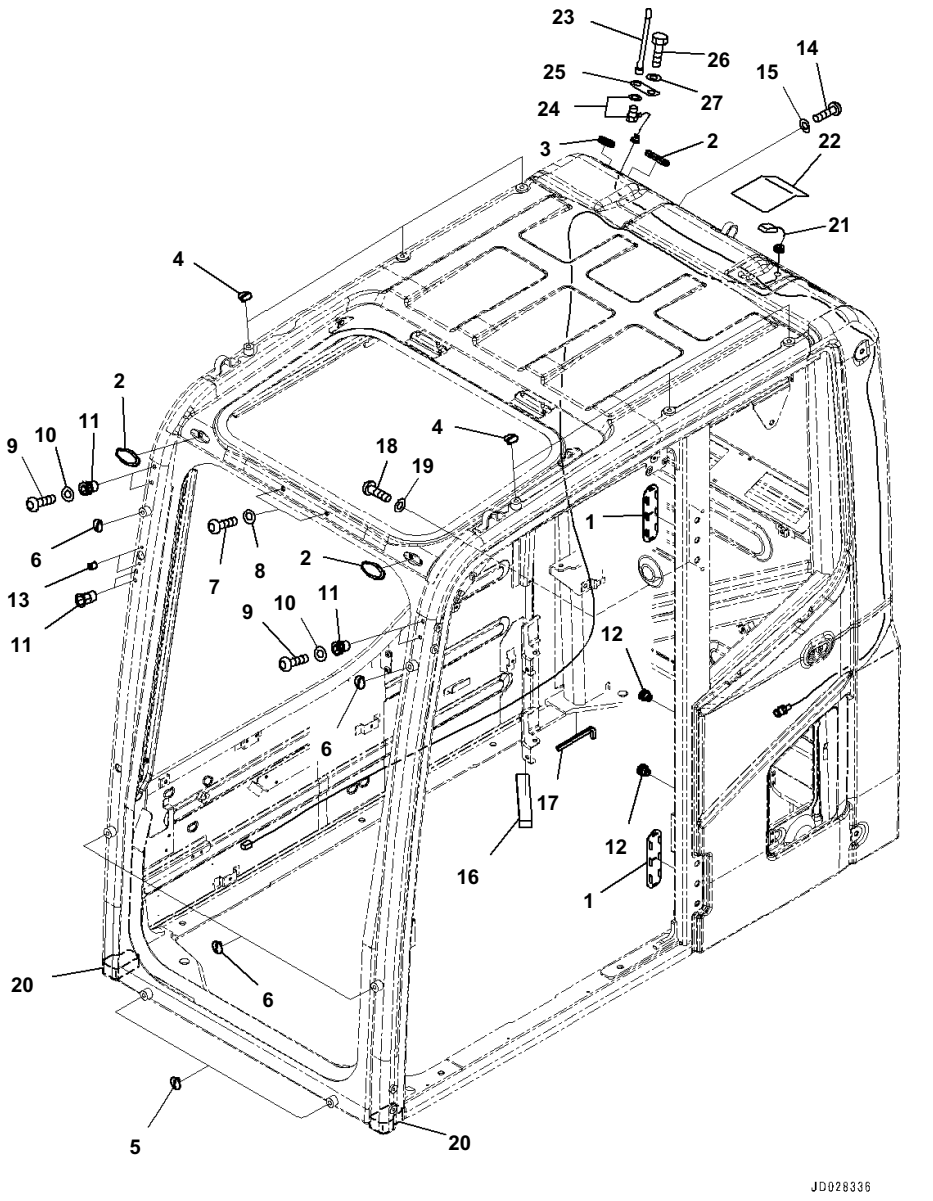

Index	Code	Part Number	Description	Qty	Serial No.
		20Y-53-00460	Cab Assembly	1	B10001-
1		20Y-53-12960	· Cover	2	B10001-
2		22B-54-17282	· Cap	3	B10001-
3		09415-02512	· Cap	1	B10001-
4		20Y-53-11390	· Cap	6	B10001-
5		20Y-53-11390	· Cap	2	B10001-
6		20Y-53-11380	· Cap	4	B10001-
7		01245-01016	· Screw	2	B10001-
8		01643-71032	· Washer	2	B10001-
9		01245-00616	· Screw, Hexagon Socket Head	4	B10001-
10		01643-70623	· Washer	4	B10001-
11		20Y-53-12260	· Nut	6	B10001-
12		20Y-54-35451	· Nut	2	B10001-
13		20Y-53-12320	· Nut	2	B10001-
14		01245-01016	· Screw	1	B10001-
15		01643-71032	· Washer	1	B10001-
16		20Y-53-12580	· Seal	1	B10001-
17		20Y-53-12740	· Trim	1	B10001-
18		01245-00816	· Screw	2	B10001-
19		01643-70823	· Washer	2	B10001-
20		20Y-53-18880	· Seal	2	B10001-
21		8A13-10-4300	· Antenna	1	B10001-
22		20Y-53-12951	· Cover	1	B10001-
23		8A13-10-2100	· Antenna	1	B10001-
24		8A13-10-2200	· Cable	1	B10001-
25		20Y-53-15140	· Plate	1	B10001-
26		01010-D1225	· Bolt	1	B10001-
27		01643-71232	· Washer	1	B10001-

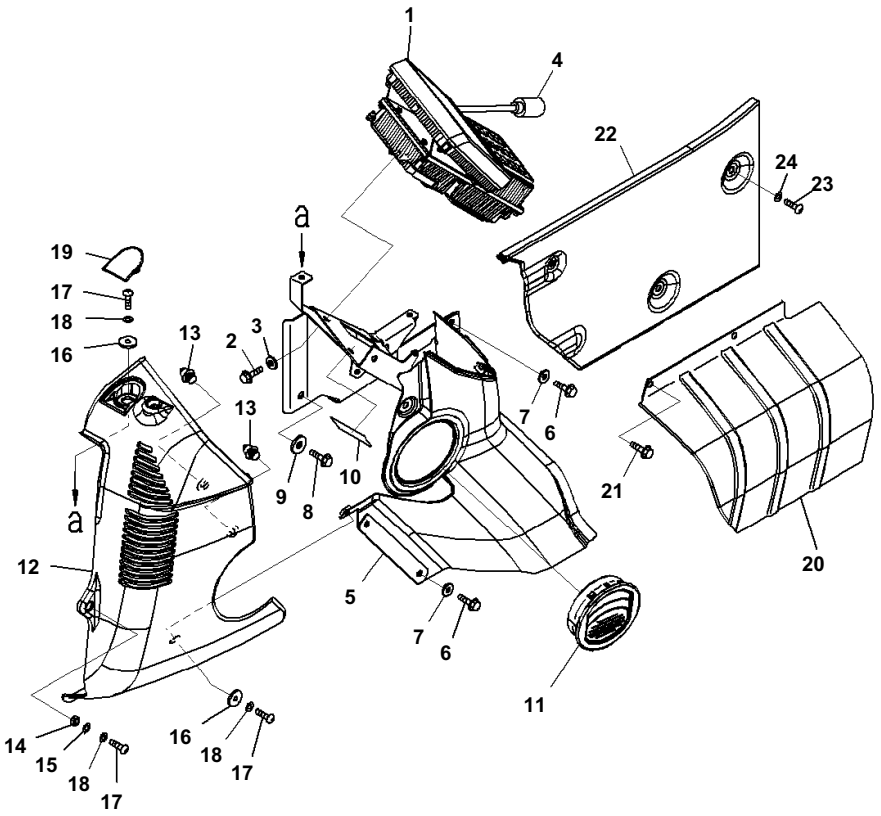

Index	Code	Part Number	Description	Qty	Serial No.
1		7835-31-1012	Monitor	1	B10001-
2		01435-00616	Bolt	4	B10001-
3		209-72-12230	Washer	4	B10001-
4		20Y-53-12810	Cover	1	B10001-
5		20Y-53-12154	Cover	1	B10001-
6		01435-00616	Bolt	4	B10001-
7		209-72-12230	Washer	4	B10001-
8		01435-00820	Bolt	1	B10001-
9		208-53-11330	Washer	1	B10001-
10		20Y-00-41330	Plate	1	B10001-
11		20Y-53-12172	Grille	1	B10001-
12		20Y-53-12122	Cover	1	B10001-
13		22U-54-25360	・ Clip	2	B10001-
14		205-54-75240	Collar	1	B10001-
15		01643-70823	Washer	1	B10001-
16		20Y-53-12310	Collar	2	B10001-
17		01245-00616	Screw, Hexagon Socket Head	3	B10001-
18		01643-70623	Washer	3	B10001-
19		20Y-53-12291	Cap	1	B10001-
20		20Y-53-12161	Cover	1	B10001-
21		01435-00616	Bolt	2	B10001-
22		20Y-53-12483	Cover	1	B10001-
23		01245-00612	Screw	3	B10001-
24		01643-70623	Washer	3	B10001-

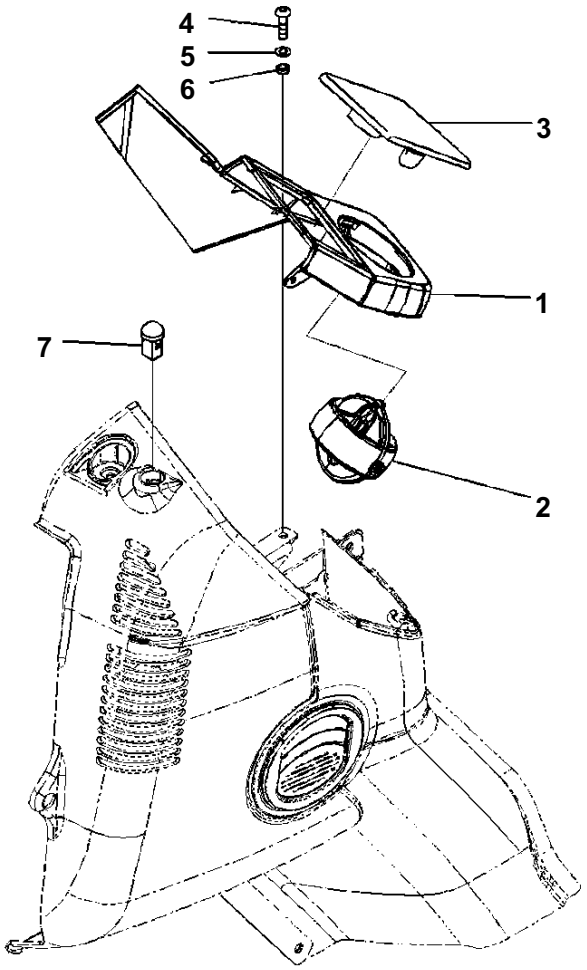

モニタカバー
Monitor Cover

JH004557

Index	Code	Part Number	Description	Qty	Serial No.
1		20Y-53-12111	Cover	1	B10001-
2		20Y-53-12240	Louver	1	B10001-
3		20Y-53-14230	Cover	1	B10001-
4		01245-00616	Screw, Hexagon Socket Head	1	B10001-
5		01643-70623	Washer	1	B10001-
6		20Y-43-41290	Collar	1	B10001-
7		20Y-979-6161	Sensor	1	B10001-

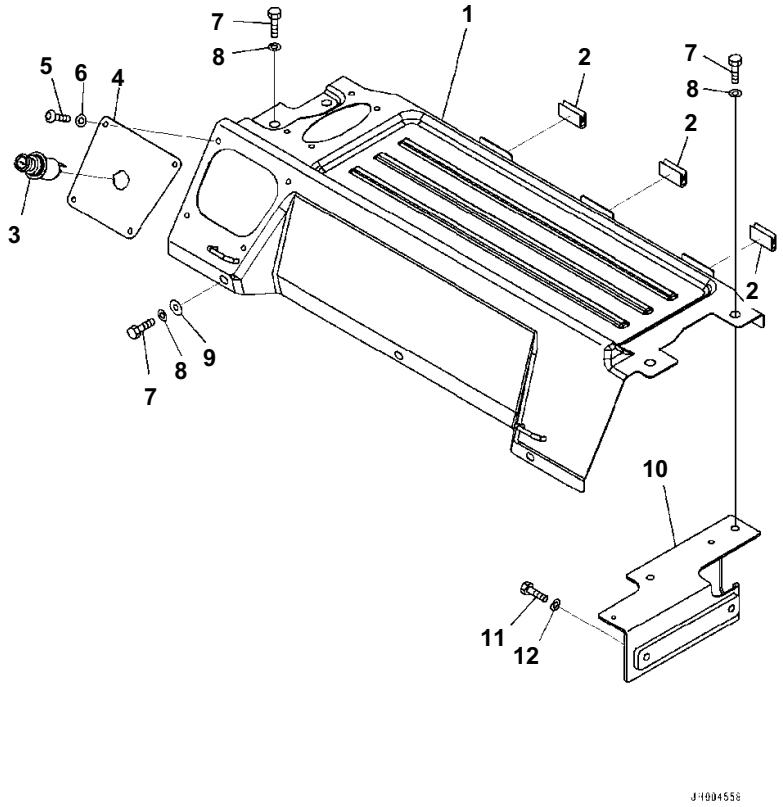

Index	Code	Part Number	Description	Qty	Serial No.
		20Y-53-13617	Cover Assembly	1	B10001-
1	C1		· Cover	1	B10001-
2		208-53-12460	· Seat	3	B10001-
3		20Y-06-23472	Cigarette Lighter	1	B10001-
4		20Y-53-13680	Plate	1	B10001-
5		01245-00616	Screw, Hezagon Socket Head	4	B10001-
6		01643-70823	Washer	4	B10001-
7		01010-D0825	Bolt	7	B10001-
8		01643-70823	Washer	7	B10001-
9		418-54-35450	Washer	3	B10001-
10		20Y-53-12771	Plate	1	B10001-
11		01010-D0825	Bolt	2	B10001-
12		01643-70823	Washer	2	B10001-

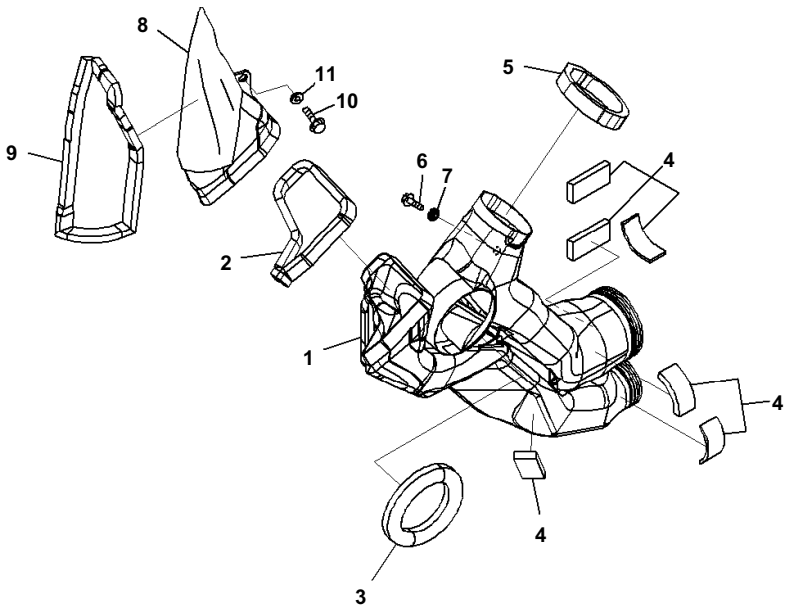

Index	Code	Part Number	Description	Qty	Serial No.
1		20Y-53-13371	Duct	1	B10001-
2		20Y-53-13480	Seal	1	B10001-
3		20Y-53-13280	Seal	1	B10001-
4		208-53-12440	Seal	6	B10001-
5		208-53-11941	Seal	1	B10001-
6		01435-00612	Bolt	1	B10001-
7		20Y-53-12310	Collar	1	B10001-
8		20Y-53-13421	Duct	1	B10001-
9		208-53-11920	Seal	1	B10001-
10		01435-00612	Bolt	1	B10001-
11		20Y-53-12310	Collar	1	B10001-

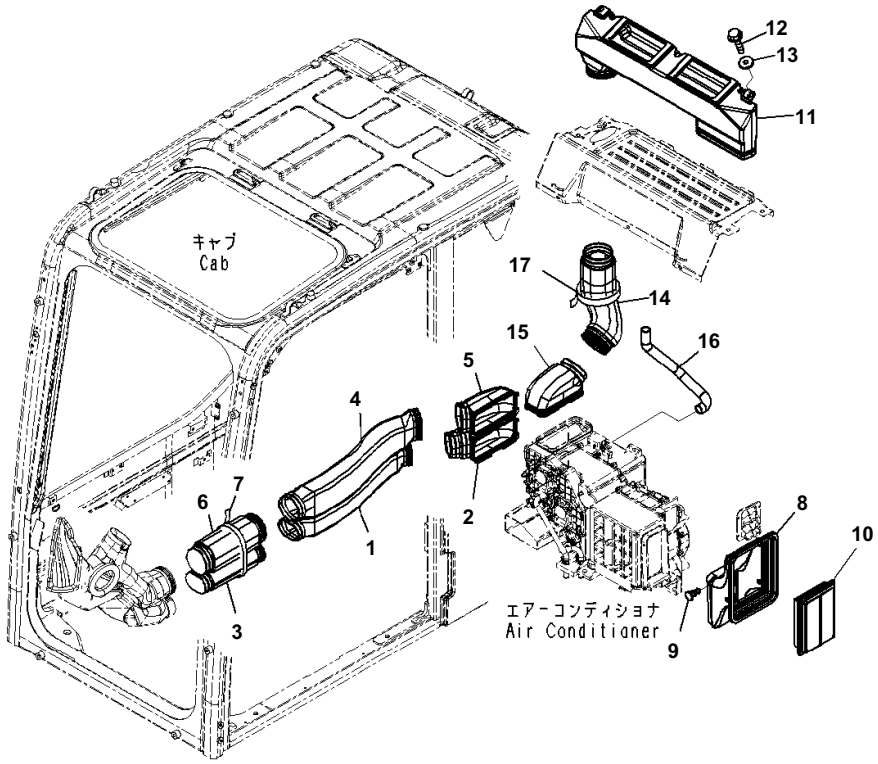

Index	Code	Part Number	Description	Qty	Serial No.
1		20Y-53-13311	Duct	1	B10001-
2		20Y-53-13331	Duct	1	B10001-
3		20Y-53-13351	Duct	1	B10001-
4		20Y-53-13321	Duct	1	B10001-
5		20Y-53-13341	Duct	1	B10001-
6		20Y-53-13361	Duct	1	B10001-
7		08034-20876	Band	1	B10001-
8		20Y-53-12522	Duct	1	B10001-
9		208-53-12680	Clip	1	B10001-
10		17M-911-3530	Element	1	B10001-
11		20Y-53-13451	Duct	1	B10001-
12		01435-40616	Bolt	2	B10001-
13		20Y-53-12310	Collar	2	B10001-
14		20Y-53-13461	Duct	1	B10001-
15		208-53-12120	Duct	1	B10001-
16		208-53-12432	Hose	1	B10001-
17		08034-20876	Band	1	B10001-

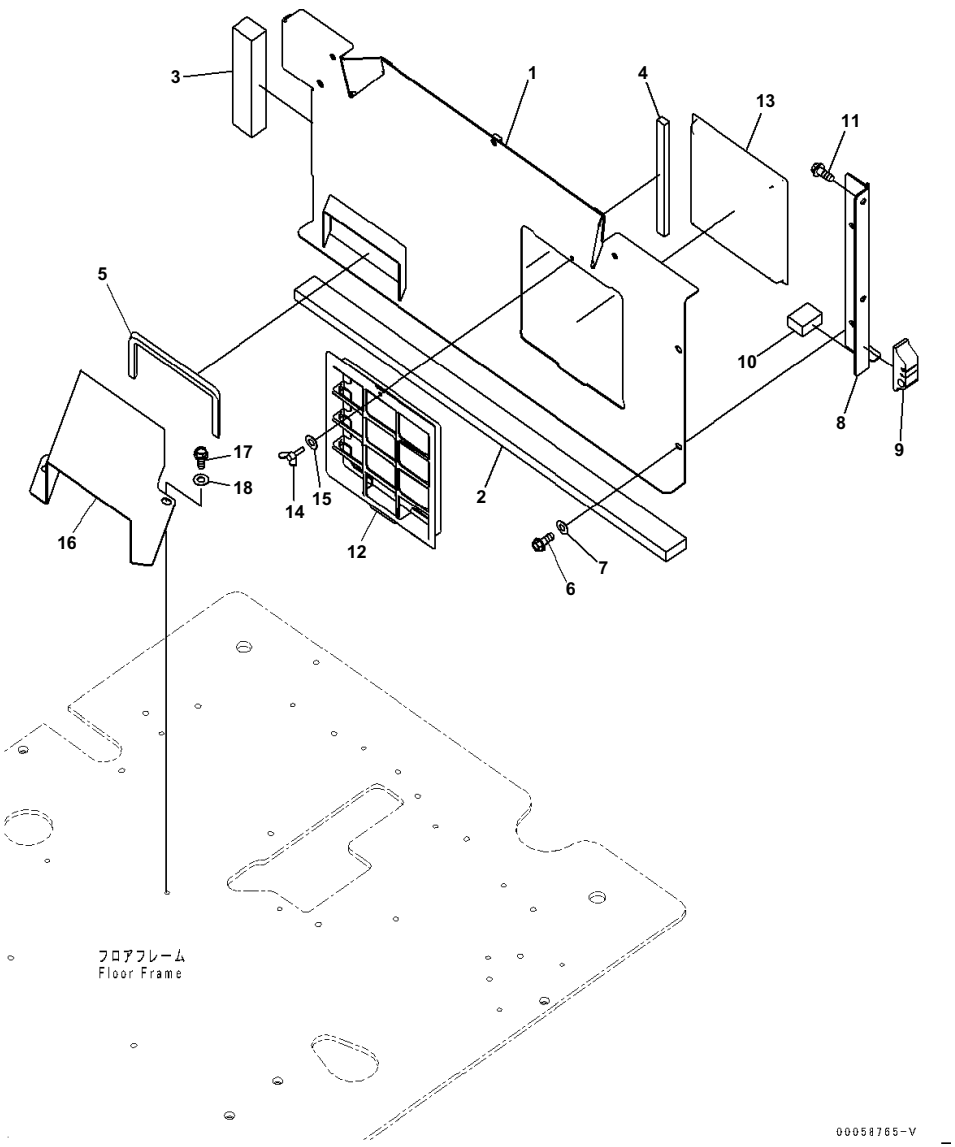

Index	Code	Part Number	Description	Qty	Serial No.
1		20Y-53-12564	Bracket	1	B10001-
2		20Y-53-11870	Seal	1	B10001-
3		20Y-53-11880	Seal	1	B10001-
4		208-53-11890	Seal	1	B10001-
5		208-53-12230	Seal	1	B10001-
6		01435-40820	Bolt	3	B10001-
7		418-54-35450	Washer	3	B10001-
8		20Y-53-12781	Plate	1	B10001-
9		20Y-53-12751	Seal	1	B10001-
10		20Y-53-12760	Seal	1	B10001-
11		01435-40820	Bolt	2	B10001-
12		208-979-7530	Holder	1	B10001-
13		208-979-7620	Filter	1	B10001-
14		20Y-54-65790	Bolt	1	B10001-
15		20Y-54-65690	Washer	1	B10001-
16		208-53-12551	Duct	1	B10001-
17		01010-D0820	Bolt	2	B10001-
18		01643-70823	Washer	2	B10001-

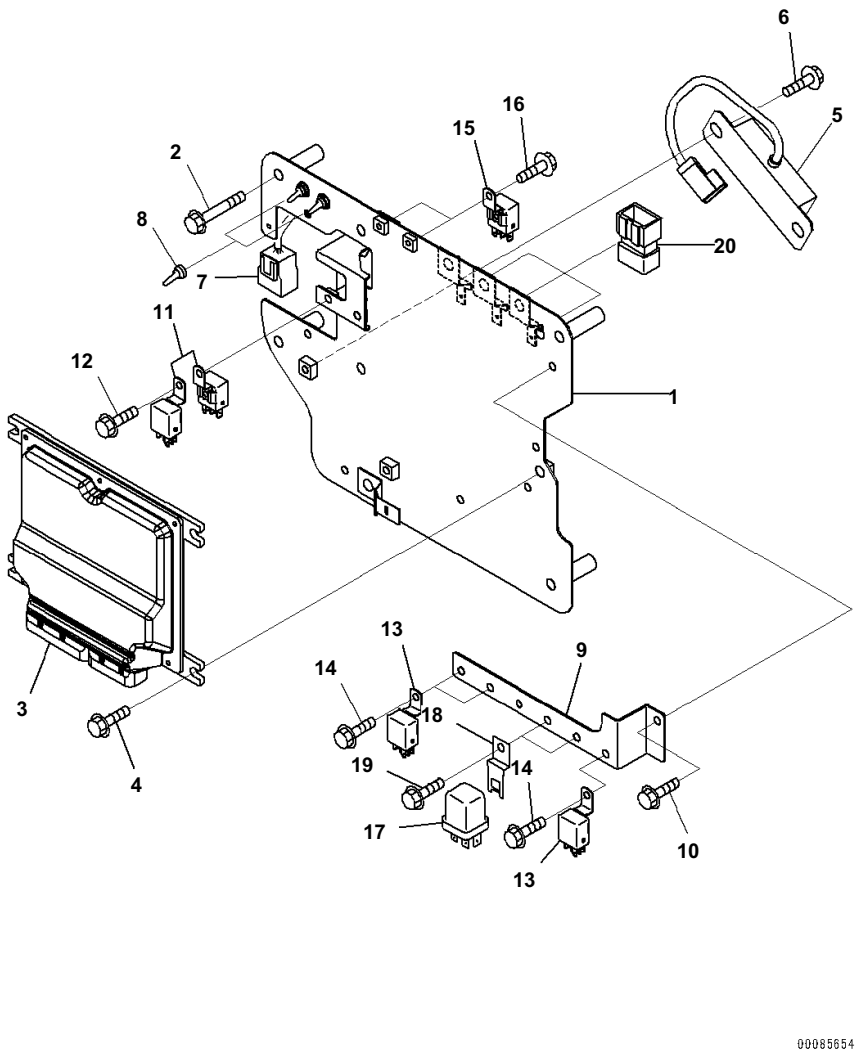

Index	Code	Part Number	Description	Qty	Serial No.
1		20Y-53-14812	Bracket	1	B10001-
2		01435-00860	Bolt	4	B10001-
3		7835-46-1007	Controller	1	B10001-
4		01435-00820	Bolt	4	B10001-
5		7861-94-2000	Resistor	1	B10001-
6		01435-00820	Bolt	2	B10001-
7		20Y-06-41150	Wiring Harness	1	B10001-
8		208-43-71420	Cap	2	B10001-
9		20Y-53-18211	Bracket	1	B10001-
10		01435-00610	Bolt	1	B10001-
11		7861-74-5100	Relay	2	B10001-
12		01435-00610	Bolt	1	B10001-
13		7861-74-5100	Relay	3	B10001-
14		01435-00610	Bolt	3	B10001-
15		7861-74-5100	Relay	2	B10001-
16		01435-00610	Bolt	2	B10001-
17		569-06-61960	Relay	2	B10001-
18		287-06-16420	Bracket	2	B10001-
19		01435-00610	Bolt	2	B10001-
20		8233-06-3350	Diode	3	B10001-

Reference:K1110-006020 Page:K013020

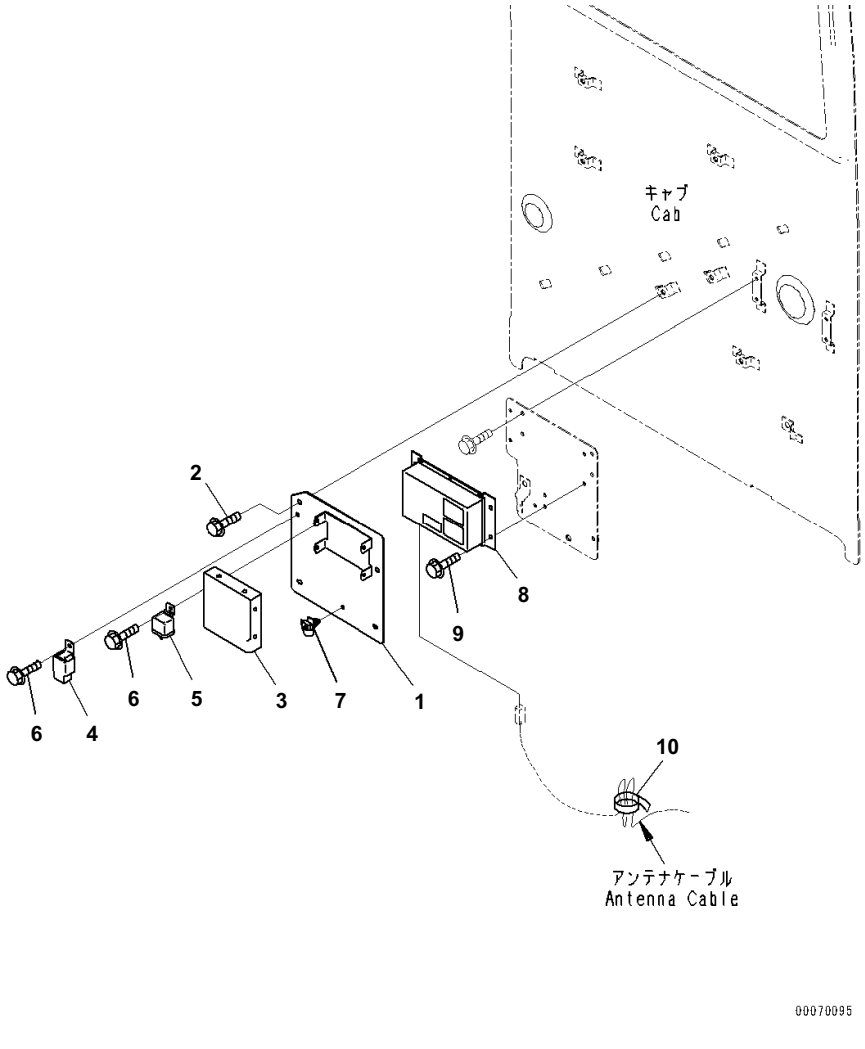

Index	Code	Part Number	Description	Qty	Serial No.
1		20Y-53-14820	Plate	1	B10001-
2		01435-40812	Bolt	2	B10001-
3		17A-979-3180	Controller	1	B10001-
4		421-07-31270	Relay	1	B10001-
5		20Y-979-6771	Relay	1	B10001-
6		01435-00610	Bolt	2	B10001-
7		08059-00515	Clip	1	B10001-
8		7826-23-3011	Controller	1	B10001-
9		01435-00612	Bolt	4	B10001-
10		08034-20414	Band	1	B10001-

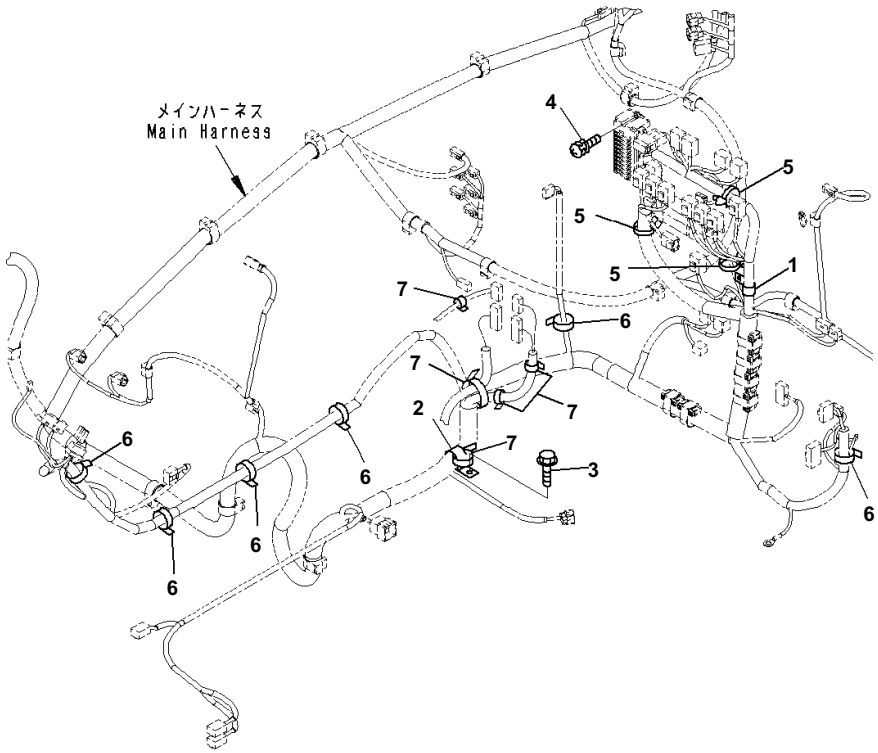

Index	Code	Part Number	Description	Qty	Serial No.
1		04434-52511	Clip	1	B10001-
2		04434-51708	Clip	1	B10001-
3		01435-00816	Bolt	1	B10001-
4		01023-60620	Screw	2	B10001-
5		08059-00515	Clip	3	B10001-
6		08034-20414	Band	6	B10001-
7		08034-20519	Band	5	B10001-

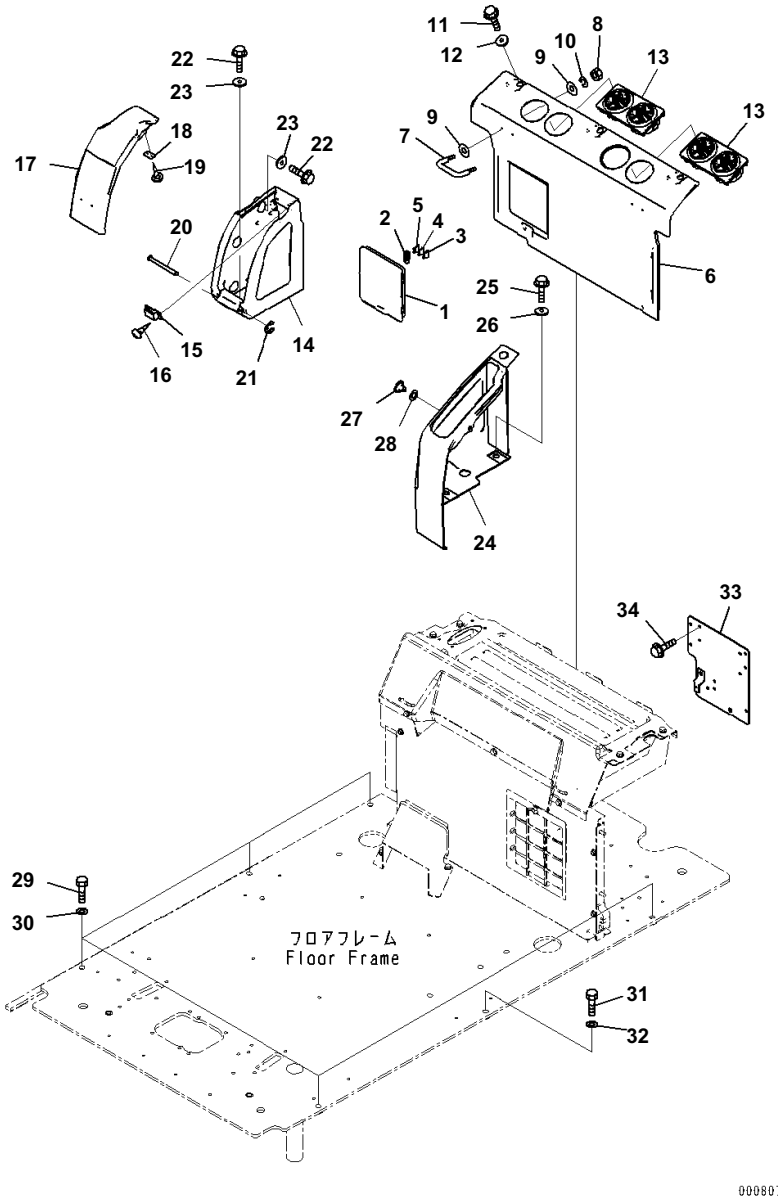

Index	Code	Part Number	Description	Qty	Serial No.
		20Y-53-13631	Cover Assembly	1	B10001-
1	C1		· Cover	1	B10001-
2		22U-43-22340	· Puller	1	B10001-
3		08041-01000	· Fuse, 10Amp.	1	B10001-
4		08041-02000	· Fuse, 20Amp.	1	B10001-
5		08041-03000	· Fuse, 30Amp.	1	B10001-
6		20Y-53-12371	Cover	1	B10001-
7		208-53-12290	· Hook	2	B10001-
8		01580-10403	· Nut	4	B10001-
9		01640-20408	· Washer, Flat	8	B10001-
10		01601-20410	· Washer	4	B10001-
11		01435-40616	Bolt	3	B10001-
12		20Y-53-12310	Collar	3	B10001-
13		208-979-7560	Grille	2	B10001-
14		20Y-53-12381	Cover	1	B10001-
15		09452-14503	Catcher	1	B10001-
16		01370-10308	Screw	2	B10001-
17		20Y-53-12391	Cover	1	B10001-
18		208-53-12410	Plate	1	B10001-
19		01370-20308	Screw	2	B10001-
20		208-53-12320	Pin	1	B10001-
21		208-53-12330	Ring	1	B10001-
22		01435-40616	Bolt	5	B10001-
23		20Y-53-12310	Collar	5	B10001-
24		20Y-53-12731	Cover	1	B10001-
25		01435-40620	Bolt	2	B10001-
26		20Y-53-12310	Collar	2	B10001-
27		23D-950-4450	Button	1	B10001-
28		20Y-53-12860	Spacer	1	B10001-
29		01010-81245	Bolt	5	B10001-
30		01643-31232	Washer	5	B10001-
31		01010-D1650	Bolt	1	B10001-
32		01643-31645	Washer	1	B10001-
33		20Y-53-18221	Bracket	1	B10001-
34		01435-00612	Bolt	4	B10001-

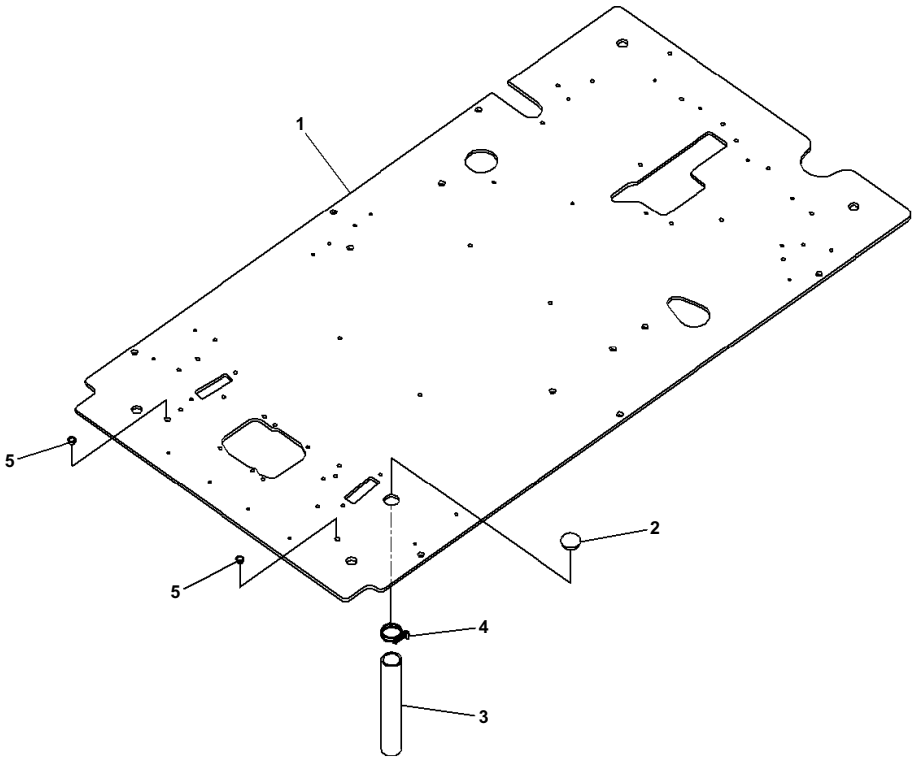

Index	Code	Part Number	Description	Qty	Serial No.
1		20Y-53-14116	Floor	1	B10001-
2		22U-54-25581	Grommet	1	B10001-
3		07286-03828	Hose	1	B10001-
4		07280-04726	Clamp	1	B10001-
5		07048-01310	Plug	2	B10001-

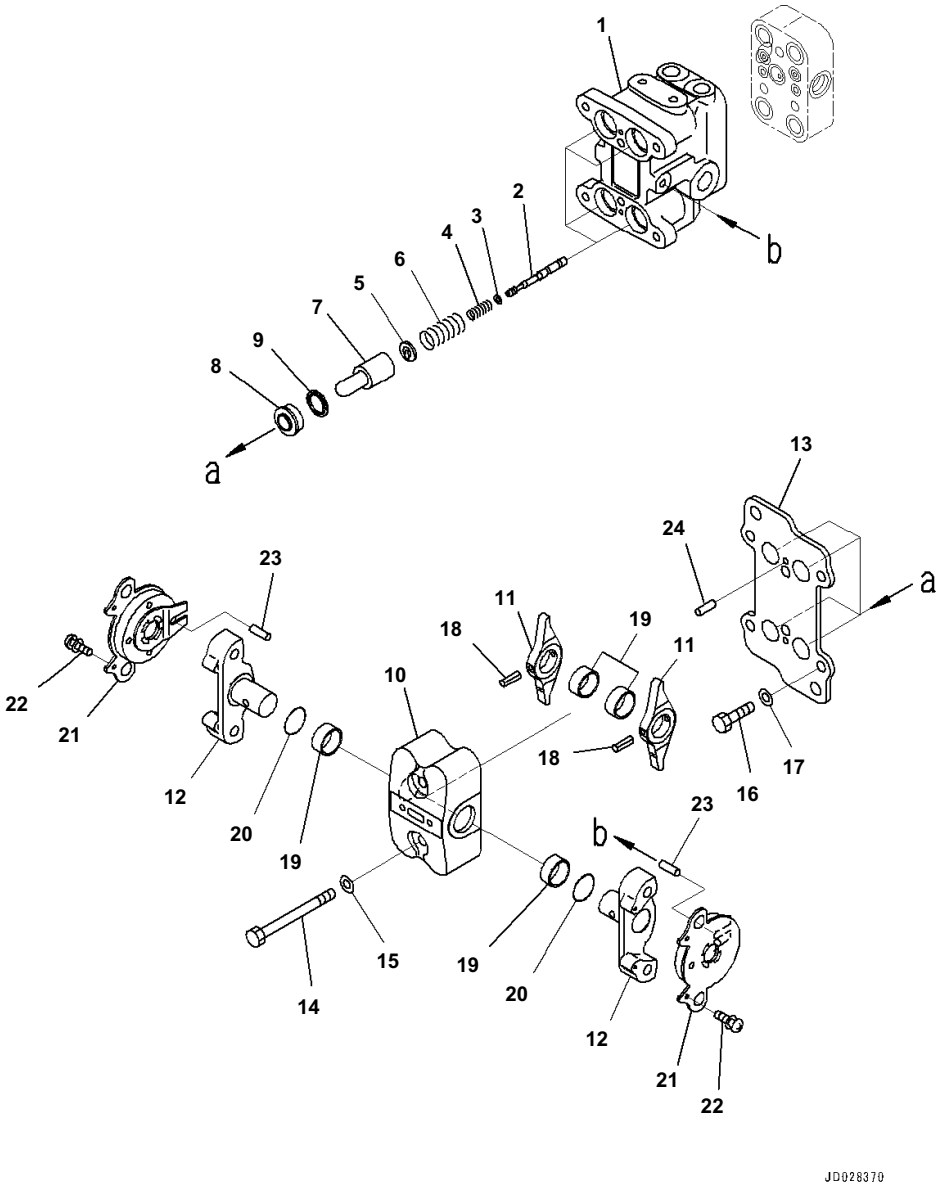

Index	Code	Part Number	Description	Qty	Serial No.
		702-16-04250	Valve, Pilot	1	B10001-
1	C1		· Valve Body	1	B10001-
2	C1		· Valve	4	B10001-
3	C1		· Shim, T=0.30mm	4	B10001-
4	C1		· Spring	4	B10001-
5	C1		· Retainer	4	B10001-
6	C1		· Spring	4	B10001-
7	C1		· Piston	4	B10001-
8		702-16-71150	· Seal	4	B10001-
9		702-16-71160	· Seat	4	B10001-
10	C1		· Case	1	B10001-
11	C1		· Lever	2	B10001-
12	C1		· Shaft	2	B10001-
13	C1		· Plate	1	B10001-
14		01010-80855	· Bolt	2	B10001-
15		01643-30823	· Washer	2	B10001-
16		01010-80816	· Bolt	4	B10001-
17		702-16-54331	· Washer, T=1.60mm	4	B10001-
		702-16-54341	· Washer, T=1.30mm	4	B10001-
		702-16-54351	· Washer, T=1.00mm	4	B10001-
		702-16-56380	· Washer, T=1.90mm	4	B10001-
		702-16-56390	· Washer, T=2.20mm	4	B10001-
18	C1		· Pin	2	B10001-
19	C1		· Bushing	4	B10001-
20		07000-12018	· O-ring	2	B10001-
21	C1		· Damper Assembly	2	B10001-
22		01023-10306	· Screw	4	B10001-
23		702-16-73650	· Pin	2	B10001-
24		04022-04016	· Pin, Dowel	2	B10001-

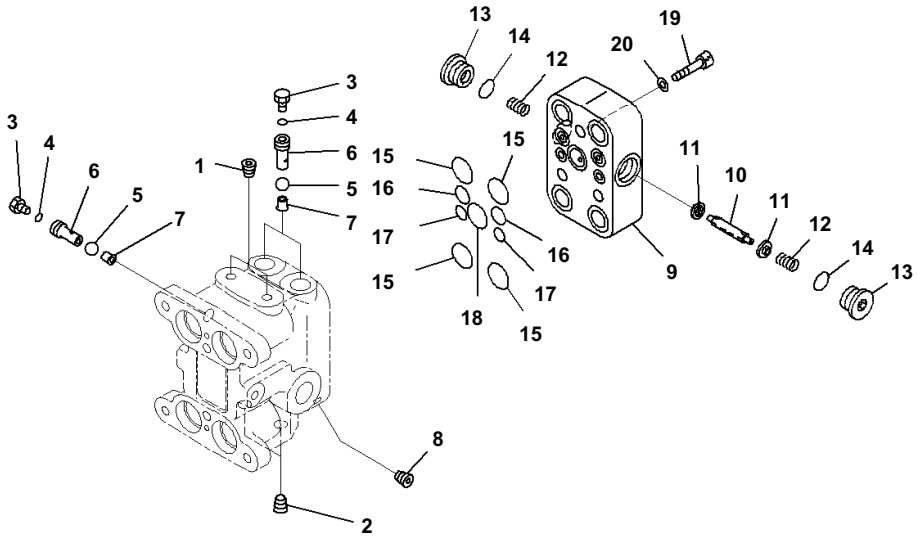

Index	Code	Part Number	Description	Qty	Serial No.
		702-16-04250	Valve, Pilot	1	B10001-
1	C1		· Plug	2	B10001-
2	C1		· Plug	2	B10001-
3		07040-11209	· Plug	3	B10001-
4		07002-11223	· O-ring	3	B10001-
5	C1		· Ball	3	B10001-
6		702-16-55940	· Plug	3	B10001-
7		702-16-55950	· Seat	3	B10001-
8	C1		· Screw	2	B10001-
9	C1		· Body, Valve	1	B10001-
10	C1		· Spool	1	B10001-
11		702-16-57440	· Retainer	2	B10001-
12		702-16-57450	· Spring	2	B10001-
13		723-11-15110	· Plug	2	B10001-
14		07002-11623	· O-ring	2	B10001-
15		07000-12015	· O-ring	4	B10001-
16		07000-11010	· O-ring	2	B10001-
17		07000-11007	· O-ring	2	B10001-
18		700-22-11410	· O-ring	1	B10001-
19		01252-60835	· Bolt	3	B10001-
20		01643-50823	· Washer	3	B10001-

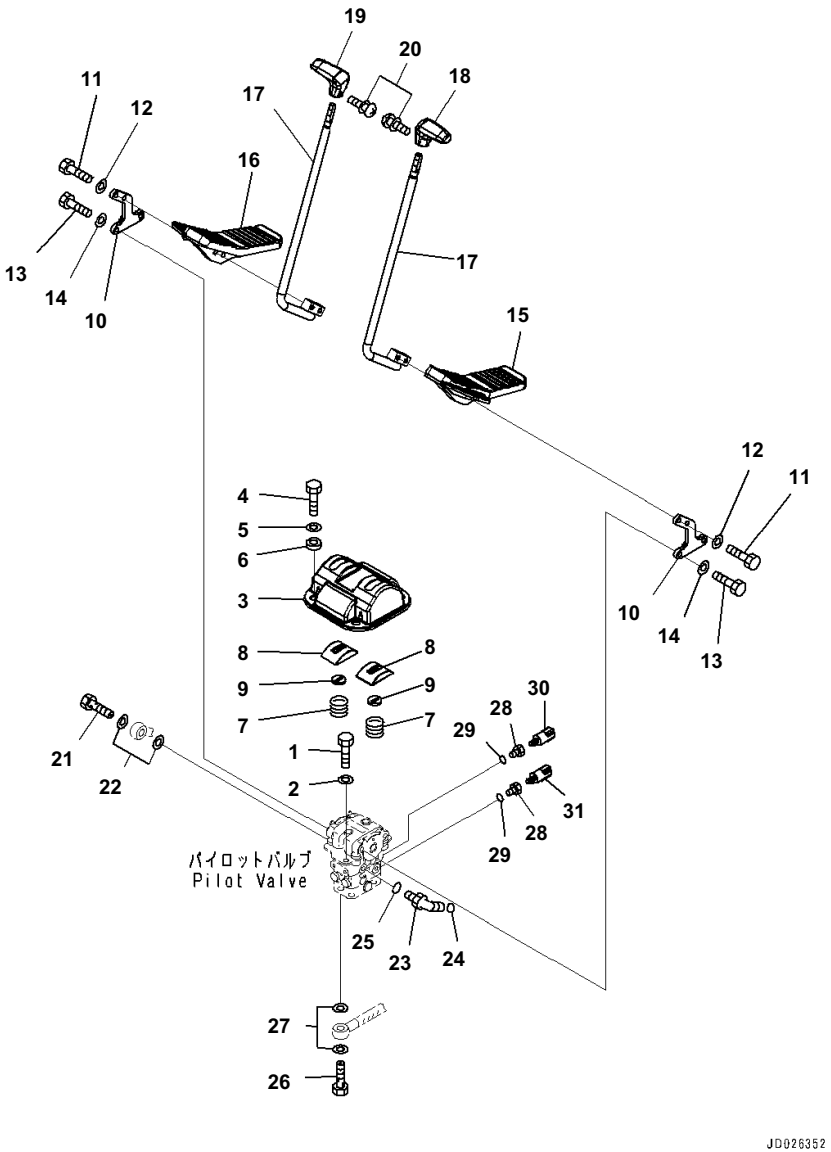

Index	Code	Part Number	Description	Qty	Serial No.
1		01010-81020	Bolt	2	B10001-
2		01643-31032	Washer	2	B10001-
3		20Y-43-41121	Cover	1	B10001-
4		01010-81020	Bolt	4	B10001-
5		01643-31032	Washer	4	B10001-
6		20Y-43-41361	Collar	4	B10001-
7		203-43-51620	Spring	2	B10001-
		22U-43-21350	Cover Assembly	2	B10001-
8	C1		・ Cover	1	B10001-
9		22U-43-21360	・ Seal	1	B10001-
10		20Y-43-41111	Lever	2	B10001-
11		01010-D1045	Bolt	4	B10001-
12		01643-71032	Washer	4	B10001-
13		01010-81030	Bolt	4	B10001-
14		01643-31032	Washer	4	B10001-
15		22U-43-21111	Pedal	1	B10001-
16		22U-43-21121	Pedal	1	B10001-
17		22U-43-21131	Lever	2	B10001-
18		20Y-43-21231	Knob	1	B10001-
19		20Y-43-21241	Knob	1	B10001-
20		01023-20416	Screw	2	B10001-
21		20Y-62-18910	Bolt	1	B10001-
22		07000-12018	O-ring	2	B10001-
23		11Y-62-12160	Elbow	1	B10001-
24		02896-11008	O-ring	1	B10001-
25		07002-11423	O-ring	1	B10001-
26		20Y-62-18890	Bolt	4	B10001-
27		07000-12015	O-ring	8	B10001-
28		20Y-62-41390	Adapter	2	B10001-
29		07002-11423	O-ring	2	B10001-
30		20Y-06-21710	Switch	1	B10001-
31		206-06-61130	Switch	1	B10001-

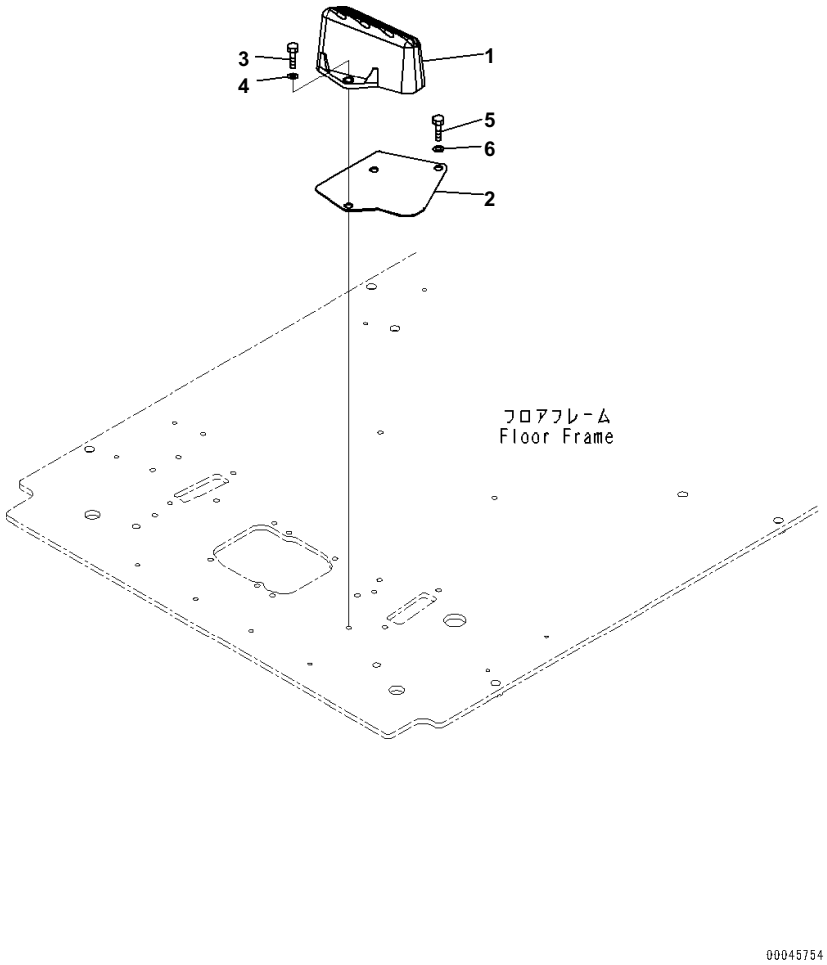

Index	Code	Part Number	Description	Qty	Serial No.
1		22U-54-25110	Footrest	1	B10001-
2		22U-54-25521	Plate	1	B10001-
3		01010-81025	Bolt	2	B10001-
4		01643-31032	Washer	2	B10001-
5		01010-81020	Bolt	2	B10001-
6		01643-31032	Washer	2	B10001-

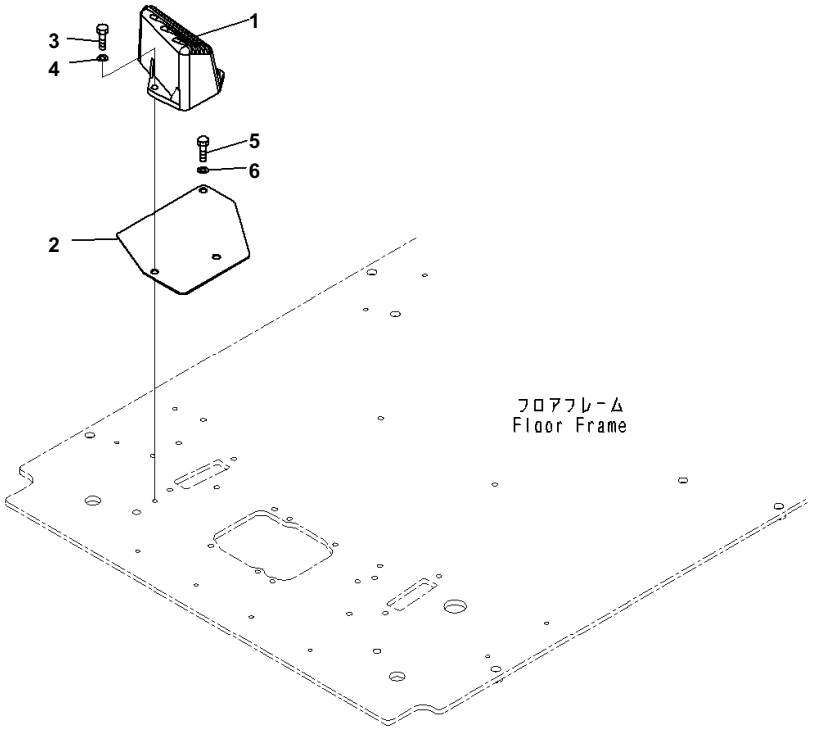

Index	Code	Part Number	Description	Qty	Serial No.
1		22U-54-25120	Footrest	1	B10001-
2		22U-54-25531	Plate	1	B10001-
3		01010-81025	Bolt	2	B10001-
4		01643-31032	Washer	2	B10001-
5		01010-81020	Bolt	1	B10001-
6		01643-31032	Washer	1	B10001-

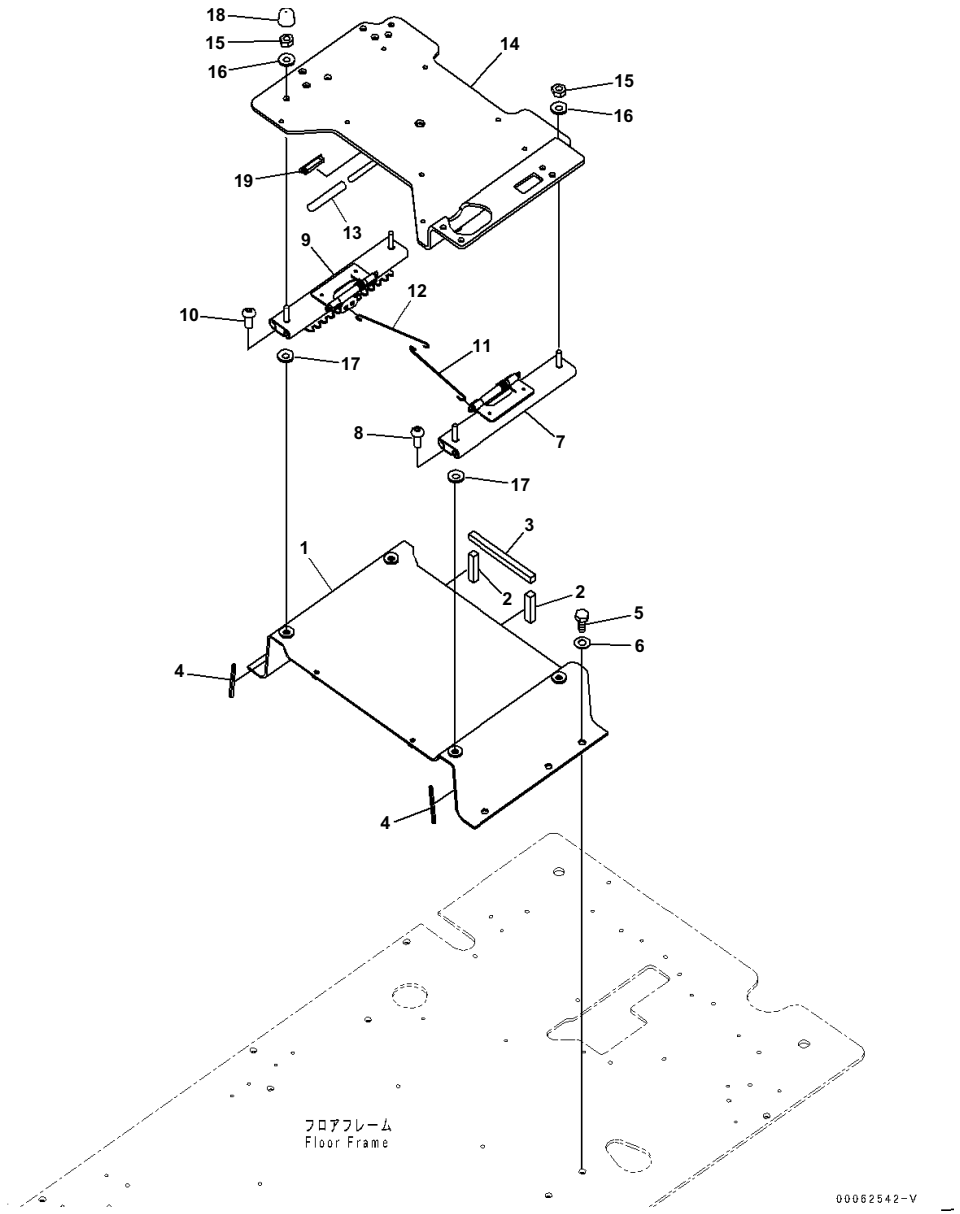

Index	Code	Part Number	Description	Qty	Serial No.
1		20Y-43-41230	Frame	1	B10001-
2		208-43-71520	・ Seal	2	B10001-
3		208-43-71530	・ Seal	1	B10001-
4		208-43-71590	・ Seal	2	B10001-
5		01010-81230	Bolt	5	B10001-
6		01643-31232	Washer	5	B10001-
7		20Y-43-41813	Adjuster	1	B10001-
8		01245-01025	Screw	2	B10001-
9		20Y-43-41823	Adjuster	1	B10001-
10		01245-01025	Screw	2	B10001-
11		20Y-43-41832	Wire	1	B10001-
12		20Y-43-41891	Wire	1	B10001-
13		22U-43-21390	Cap	1	B10001-
14		20Y-43-41252	Frame	1	B10001-
15		20Y-54-65340	Nut	4	B10001-
16		01643-71032	Washer	4	B10001-
17		01640-21016	Washer	4	B10001-
18		20Y-54-65540	Cap	2	B10001-
19		20Y-979-6630	Catcher	1	B10001-

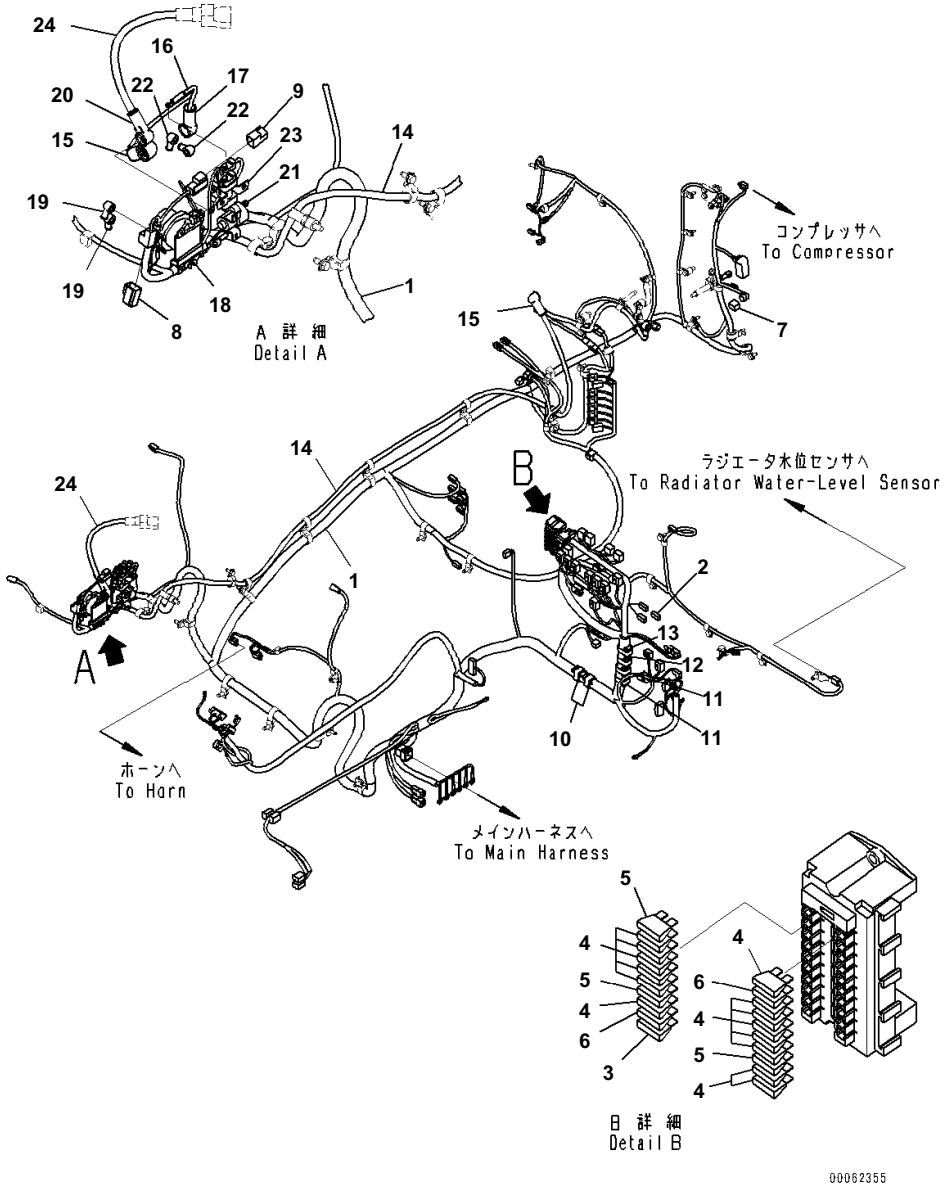

Index	Code	Part Number	Description	Qty	Serial No.
1		20Y-06-48314	Wiring Harness	1	B10001-
2		08020-20000	・ Diode	2	B10001-
3		08041-00500	・ Fuse, 5Amp.	1	B10001-
4		08041-01000	・ Fuse, 10Amp.	14	B10001-
5		08041-02000	・ Fuse, 20Amp.	3	B10001-
6		08041-03000	・ Fuse, 30Amp.	2	B10001-
7		19M-06-31720	・ Resistor	1	B10001-
8		20Y-06-31660	・ Fusible Link, 30Amp.	1	B10001-
9		22U-06-11270	・ Fusible Link, 65Amp.	1	B10001-
10		HM6400-0012	・ F-connector, Black	2	B10001-
		HM6409-0071	・ M-Connector, Black	2	B10001-
11		HM6400-0013	・ F-connector, Green	2	B10001-
		HM6409-0072	・ M-Connector, Green	2	B10001-
12		HM6440-0129	・ F-connector, Pink	1	B10001-
		HM6440-0128	・ M-Connector, Pink	1	B10001-
13		HM6400-0016	・ F-connector, Orange	1	B10001-
		HM6409-0075	・ M-Connector, Orange	1	B10001-
14		20Y-06-41283	Cable	1	B10001-
15		08038-00035	Cap, Terminal	1	B10001-
16		20Y-06-22872	Cable	1	B10001-
17		08038-06031	Cap	1	B10001-
18		08088-30000	Switch	1	B10001-
19		08038-00519	Cap	2	B10001-
20		08038-06031	Cap	1	B10001-
21		600-815-2170	Switch, Heater	1	B10001-
22		08038-00519	Cap	2	B10001-
23		600-815-8941	Relay	1	B10001-
24		08028-CC065	Cable	1	B10001-

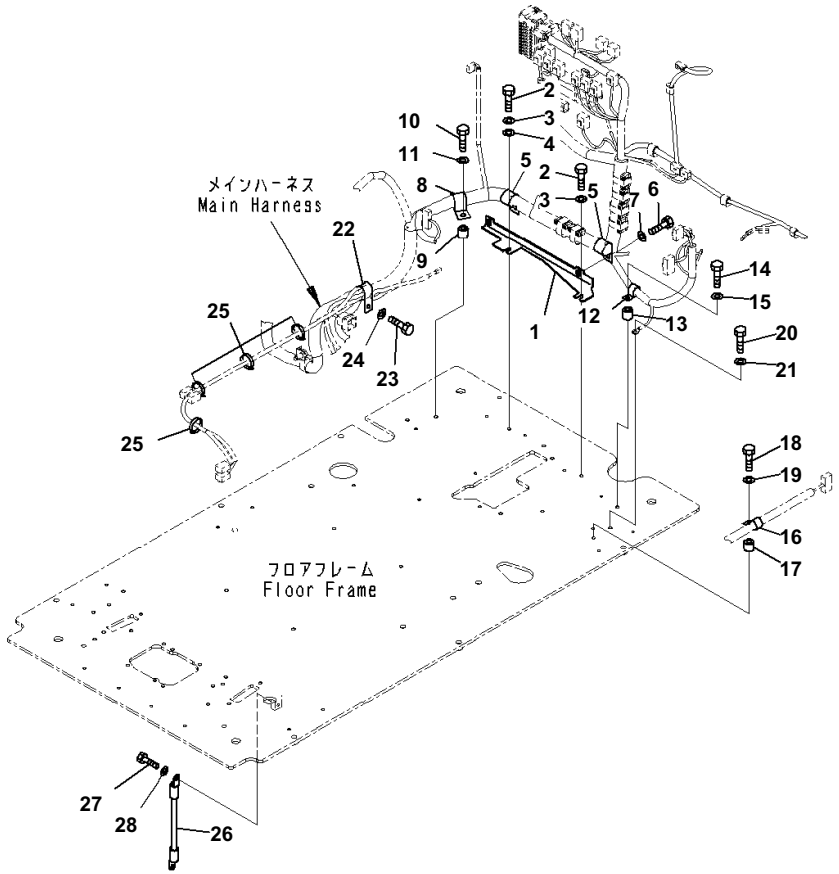

Index	Code	Part Number	Description	Qty	Serial No.
1		20Y-53-14121	Bracket	1	B10001-
2		01010-81016	Bolt	2	B10001-
3		01643-31032	Washer	2	B10001-
4		01643-31032	Washer	1	B10001-
5		04434-53411	Clip	2	B10001-
6		01010-81020	Bolt	2	B10001-
7		01643-31032	Washer	2	B10001-
8		04434-53411	Clip	1	B10001-
9		195-33-11220	Spacer	1	B10001-
10		01010-81040	Bolt	1	B10001-
11		01643-31032	Washer	1	B10001-
12		04434-51910	Clip	1	B10001-
13		195-33-11220	Spacer	1	B10001-
14		01010-81040	Bolt	1	B10001-
15		01643-31032	Washer	1	B10001-
16		04434-51410	Clip	1	B10001-
17		195-33-11220	Spacer	1	B10001-
18		01010-81040	Bolt	1	B10001-
19		01643-31032	Washer	1	B10001-
20		01010-81020	Bolt	1	B10001-
21		01643-31032	Washer	1	B10001-
22		04434-53411	Clip	1	B10001-
23		01010-81020	Bolt	1	B10001-
24		01643-31032	Washer	1	B10001-
25		08034-20519	Band	4	B10001-
26		08028-43030	Cable, Ground	1	B10001-
27		01010-81020	Bolt	1	B10001-
28		01643-31032	Washer	1	B10001-

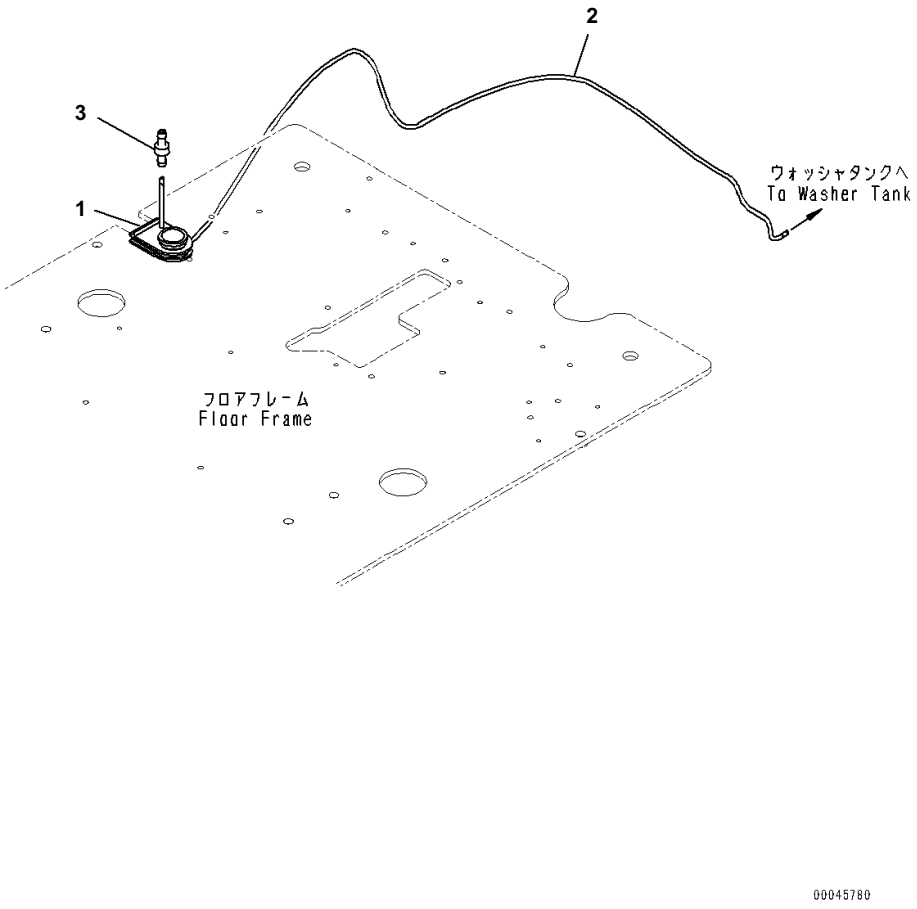

Index	Code	Part Number	Description	Qty	Serial No.
1		20Y-53-14991	Grommet	1	B10001-
2		195-979-7770	Hose	1	B10001-
3		207-06-61490	Valve	1	B10001-

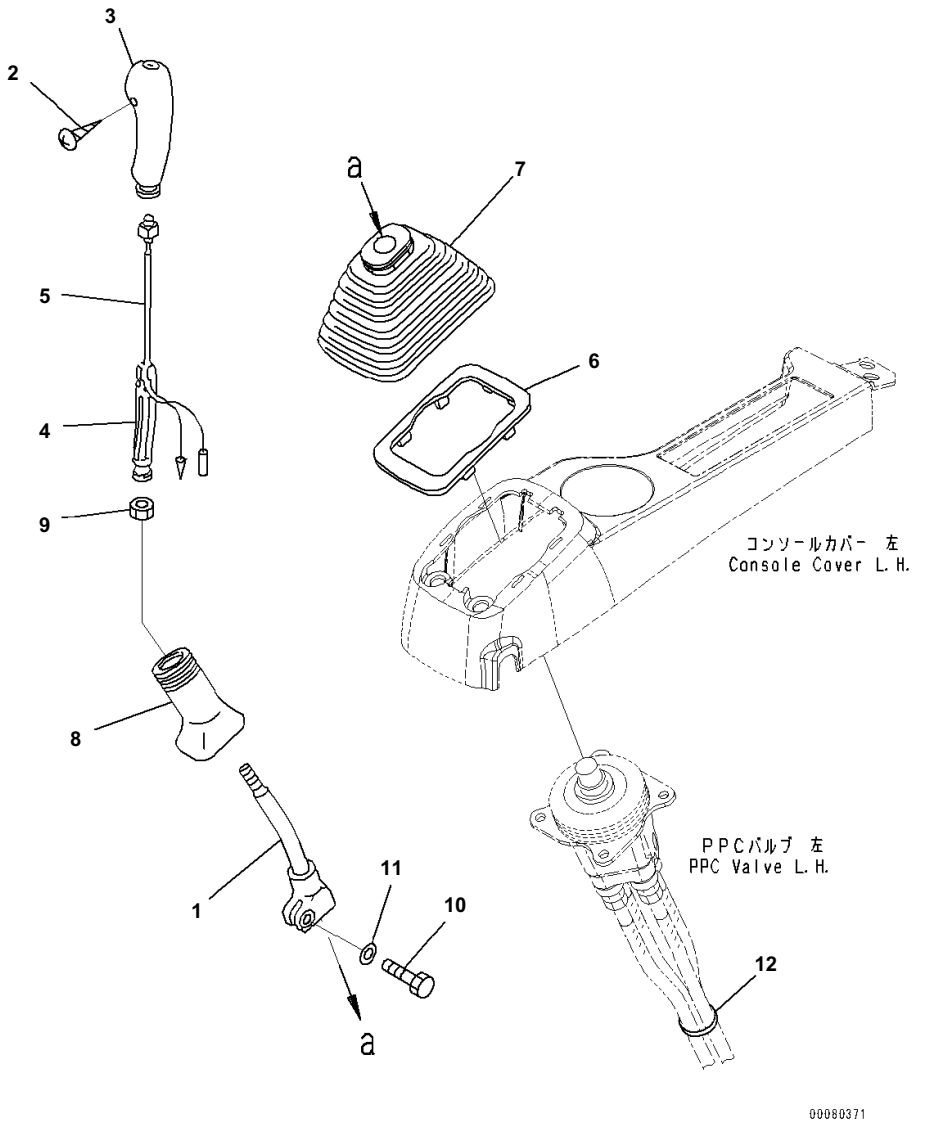

Index	Code	Part Number	Description	Qty	Serial No.
1		20Y-43-22211	Lever	1	B10001-
		22U-43-21182	Knob	1	B10001-
2	C1		・ Screw	1	B10001-
3		20Y-43-22381	・ Knob	1	B10001-
4		20Y-43-22421	・ Insert	1	B10001-
5		22U-43-21211	・ Switch	1	B10001-
6		20Y-43-22250	Plate	1	B10001-
7		20Y-43-22261	Boot	1	B10001-
8		20Y-43-22370	Boot	1	B10001-
9		600-411-1280	Nut	1	B10001-
10		01252-41025	Bolt	1	B10001-
11		01643-51032	Washer	1	B10001-
12		08034-20536	Band	1	B10001-

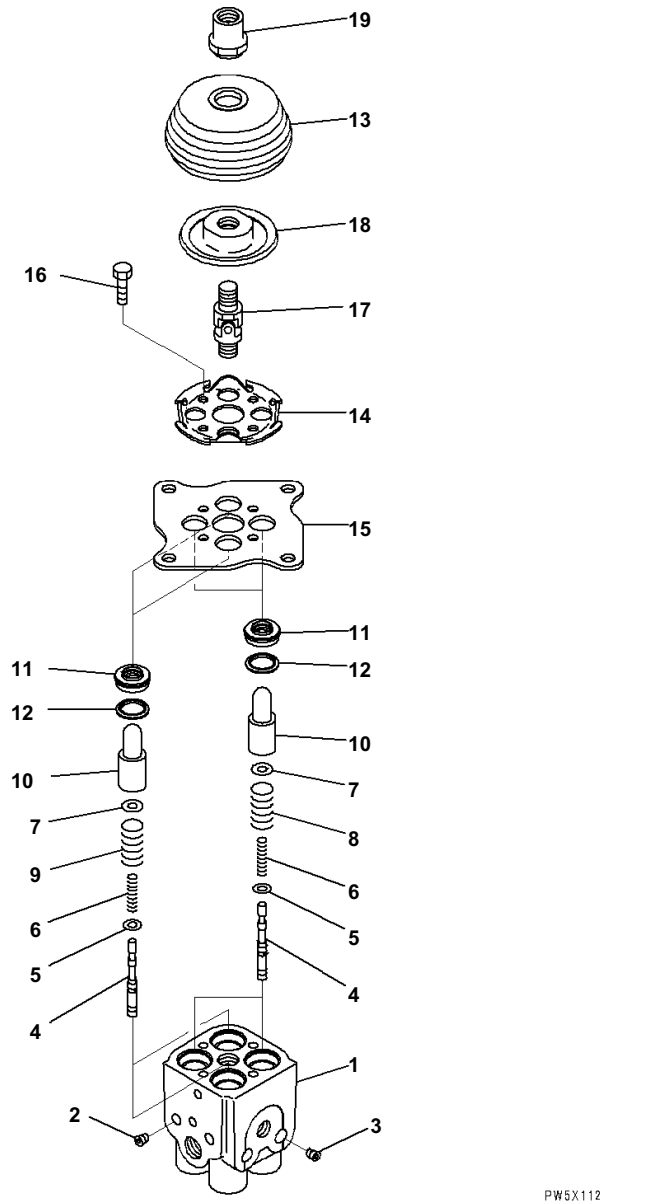

Index	Code	Part Number	Description	Qty	Serial No.
		702-16-03910	Valve, Pilot	1	B10001-
1	C1		· Valve Body	1	B10001-
2	C1		· Plug	2	B10001-
3	C1		· Plug	2	B10001-
4	C1		· Valve	4	B10001-
5		702-16-51140	· Shim, T=0.30mm	4	B10001-
6		702-16-53420	· Spring	4	B10001-
7		702-16-53140	· Retainer	4	B10001-
8		702-16-53470	· Spring	2	B10001-
9		702-16-53590	· Spring	2	B10001-
10		702-16-53170	· Piston	4	B10001-
11		702-16-71210	· Seal	4	B10001-
12		702-16-71160	· Seat	4	B10001-
13		702-16-71280	· Boot	1	B10001-
14		702-16-71131	· Plate	1	B10001-
15		702-16-71141	· Plate	1	B10001-
16		01010-80620	· Bolt	4	B10001-
17		702-16-51240	· Universal Joint	1	B10001-
18		702-16-71361	· Disc	1	B10001-
19		702-16-71441	· Nut	1	B10001-

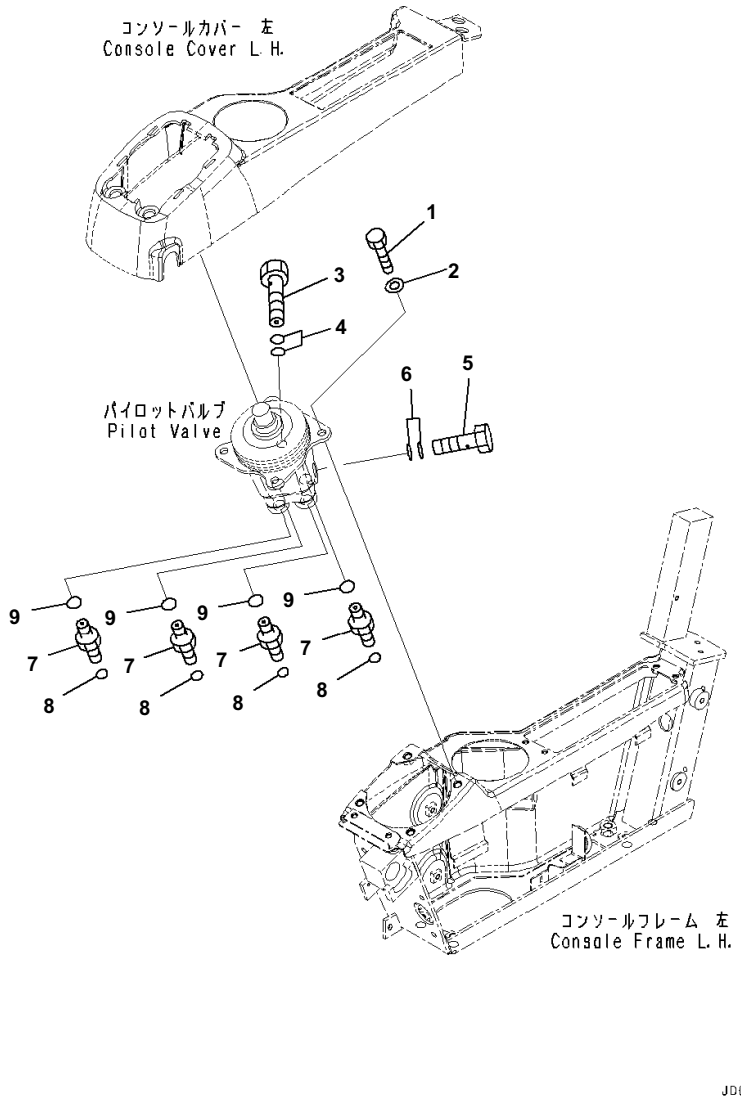

Index	Code	Part Number	Description	Qty	Serial No.
1		01010-80820	Bolt	4	B10001-
2		01643-30823	Washer	4	B10001-
3		20Y-62-18910	Bolt	1	B10001-
4		07000-12018	O-ring	2	B10001-
5		20Y-62-18890	Bolt	1	B10001-
6		07000-12015	O-ring	2	B10001-
7		11Y-62-12130	Nipple	4	B10001-
8		02896-11008	O-ring	4	B10001-
9		07002-11423	O-ring	4	B10001-

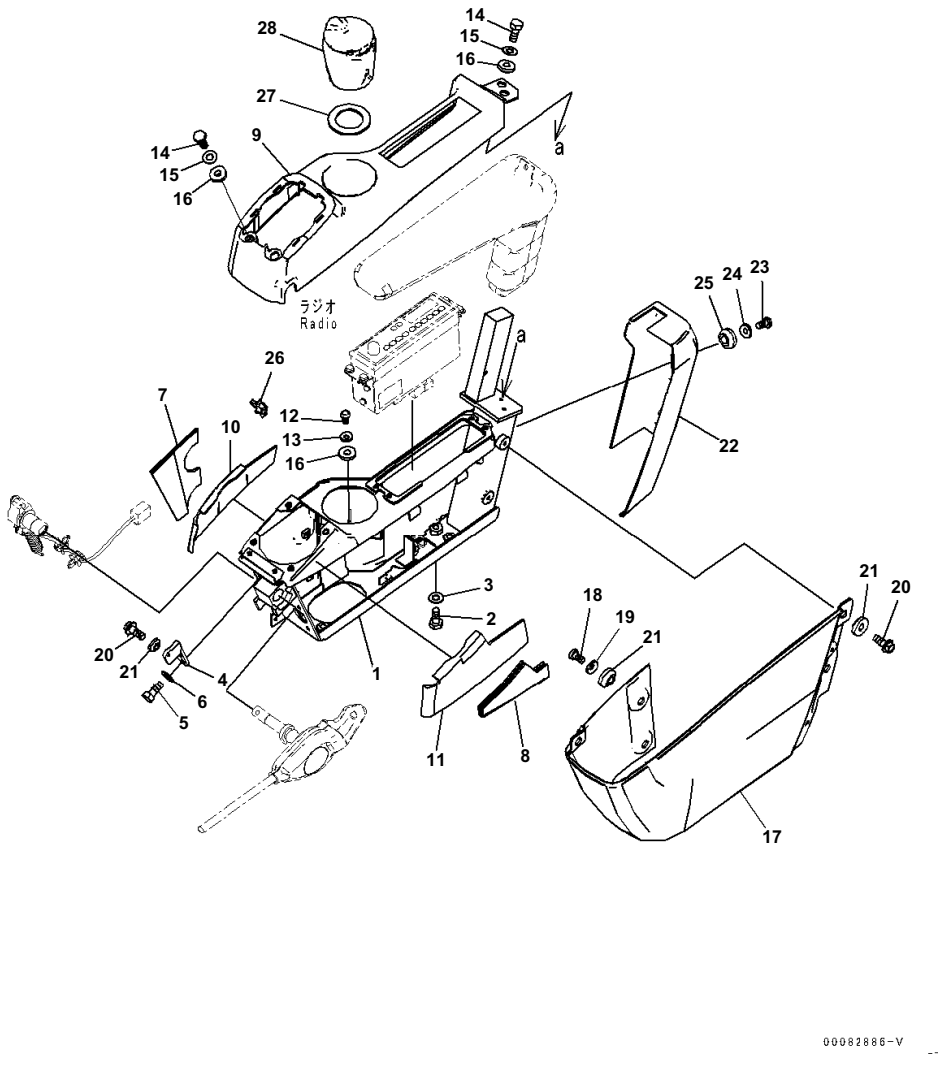

Index	Code	Part Number	Description	Qty	Serial No.
1		20Y-43-41415	Frame	1	B10001-
2		01010-81030	Bolt	4	B10001-
3		01643-31032	Washer	4	B10001-
4		20Y-43-41472	Bracket	1	B10001-
5		01010-80616	Bolt	2	B10001-
6		01643-30623	Washer	2	B10001-
7		20Y-43-41621	Sheet	1	B10001-
8		20Y-43-41641	Sheet	1	B10001-
9		20Y-43-41423	Cover	1	B10001-
10		20Y-43-41651	Sheet	1	B10001-
11		20Y-43-41661	Sheet	1	B10001-
12		01245-00616	Screw, Hexagon Socket Head	1	B10001-
13		01643-70623	Washer	1	B10001-
14		01010-80616	Bolt	4	B10001-
15		01643-30623	Washer	4	B10001-
16		20Y-43-41290	Collar	5	B10001-
17		20Y-43-41442	Cover	1	B10001-
18		01245-00616	Screw, Hexagon Socket Head	2	B10001-
19		01643-70623	Washer	2	B10001-
20		01435-00612	Bolt	3	B10001-
21		20Y-43-41290	Collar	5	B10001-
22		20Y-43-41453	Cover	1	B10001-
23		01245-00616	Screw, Hexagon Socket Head	2	B10001-
24		01643-70623	Washer	2	B10001-
25		20Y-43-41290	Collar	2	B10001-
26		22U-43-23260	Clip	1	B10001-
27		20Y-43-41970	Sheet	1	B10001-
28		20Y-43-41491	Ashtray	1	B10001-

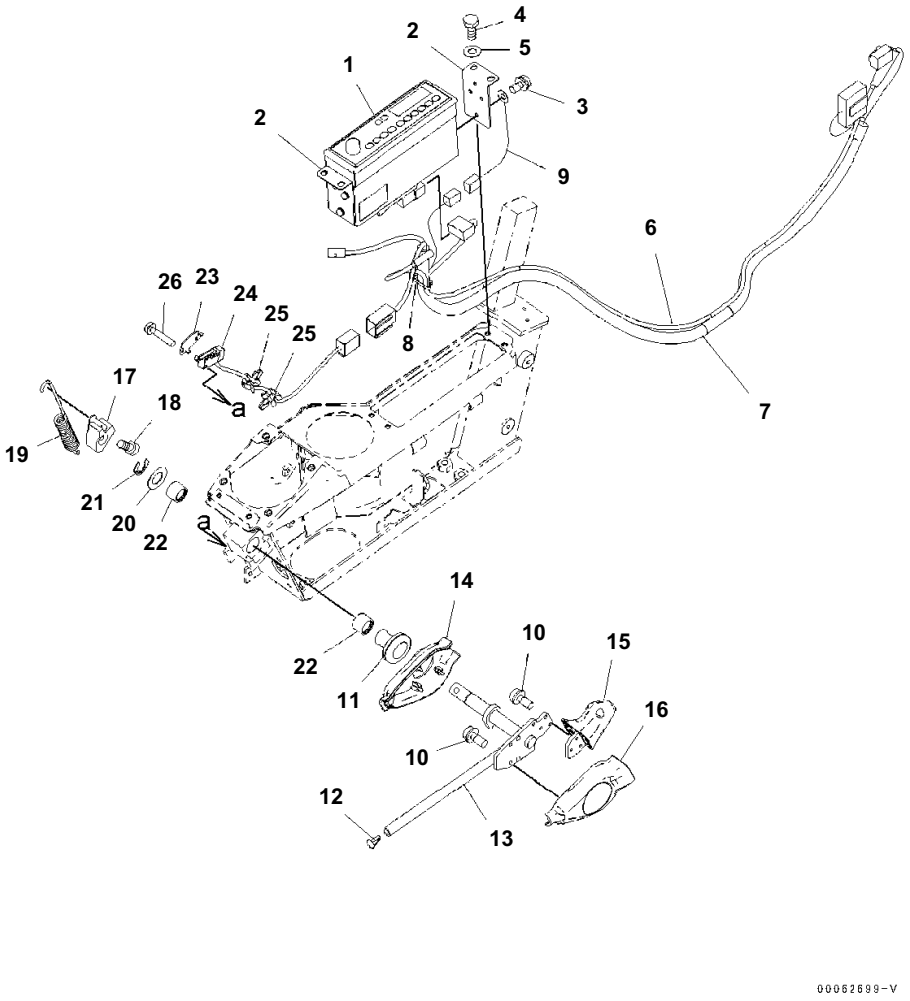

Index	Code	Part Number	Description	Qty	Serial No.
1		20Y-06-42440	Radio	1	B10001-
2		20Y-43-42130	Plate	2	B10001-
3		01023-60510	Screw	6	B10001-
4		01010-80616	Bolt	4	B10001-
5		01643-30623	Washer	4	B10001-
6		08912-51600	Cord	1	B10001-
7		21M-06-31170	Wiring Harness	1	B10001-
8		08034-20414	Band	1	B10001-
9		20Y-06-41830	Wiring Harness	1	B10001-
10		01023-60410	Screw	6	B10001-
11		08037-11425	Grommet	1	B10001-
12		208-53-12280	Cap	1	B10001-
13		20Y-43-31513	Lever	1	B10001-
14		20Y-43-31522	Cover	1	B10001-
15		20Y-43-31611	Knob	1	B10001-
16		20Y-43-31621	Cover	1	B10001-
17		20Y-43-31432	Cam	1	B10001-
18		01252-70816	Bolt	1	B10001-
19		20Y-43-31421	Spring	1	B10001-
20		20Y-43-31440	Ring	1	B10001-
21		20Y-43-31450	Plate	1	B10001-
22		06124-01616	Bearing	2	B10001-
23		22U-06-22490	Plate	1	B10001-
24		22U-06-22360	Switch Assembly	1	B10001-
25		22U-43-23260	Clip	2	B10001-
26		01023-60320	Screw	2	B10001-

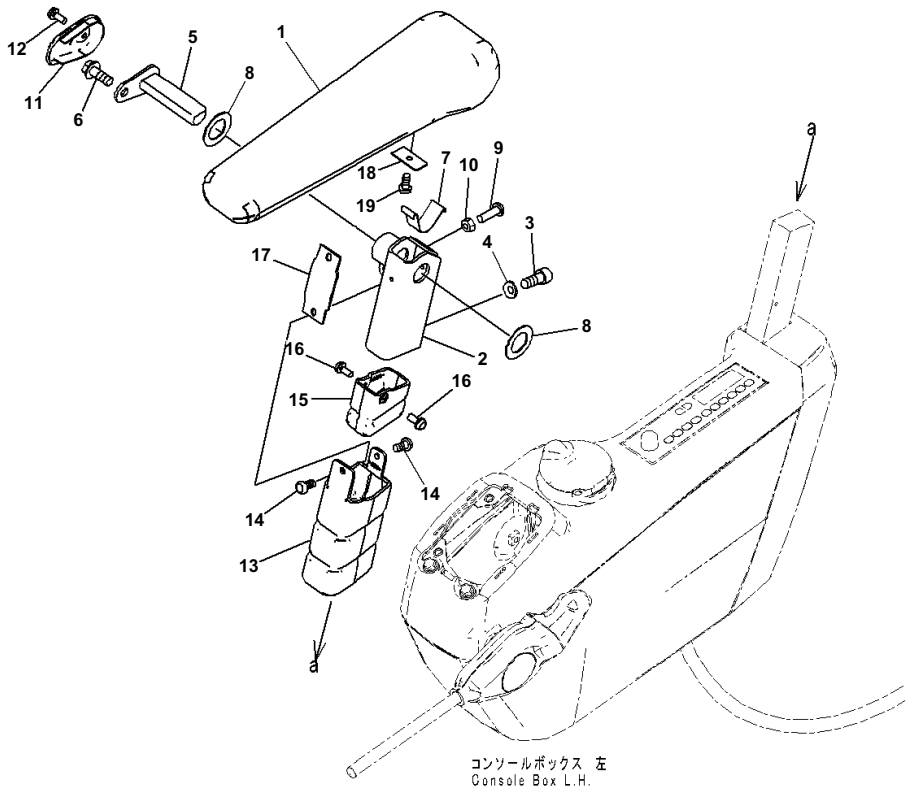

Index	Code	Part Number	Description	Qty	Serial No.
1		20Y-43-41143	Armrest	1	B10001-
2		20Y-43-41173	Bracket	1	B10001-
3		01252-80820	Bolt	2	B10001-
4		01643-70823	Washer	2	B10001-
5		20Y-43-41162	Pin	1	B10001-
6		01435-40816	Bolt	1	B10001-
7		20Y-43-41152	Spring	1	B10001-
8		437-40-26240	Washer	2	B10001-
9		01245-00620	Screw	1	B10001-
10		01580-40605	Nut	1	B10001-
11		20Y-43-41181	Cap	1	B10001-
12		01023-20512	Screw	1	B10001-
13		20Y-43-41191	Cover	1	B10001-
14		01370-40510	Screw	2	B10001-
15		20Y-43-41591	Cover	1	B10001-
16		01023-20512	Screw	2	B10001-
17		20Y-43-41281	Rubber	1	B10001-
18		20Y-43-41461	Plate	1	B10001-
19		01370-40610	Screw	1	B10001-

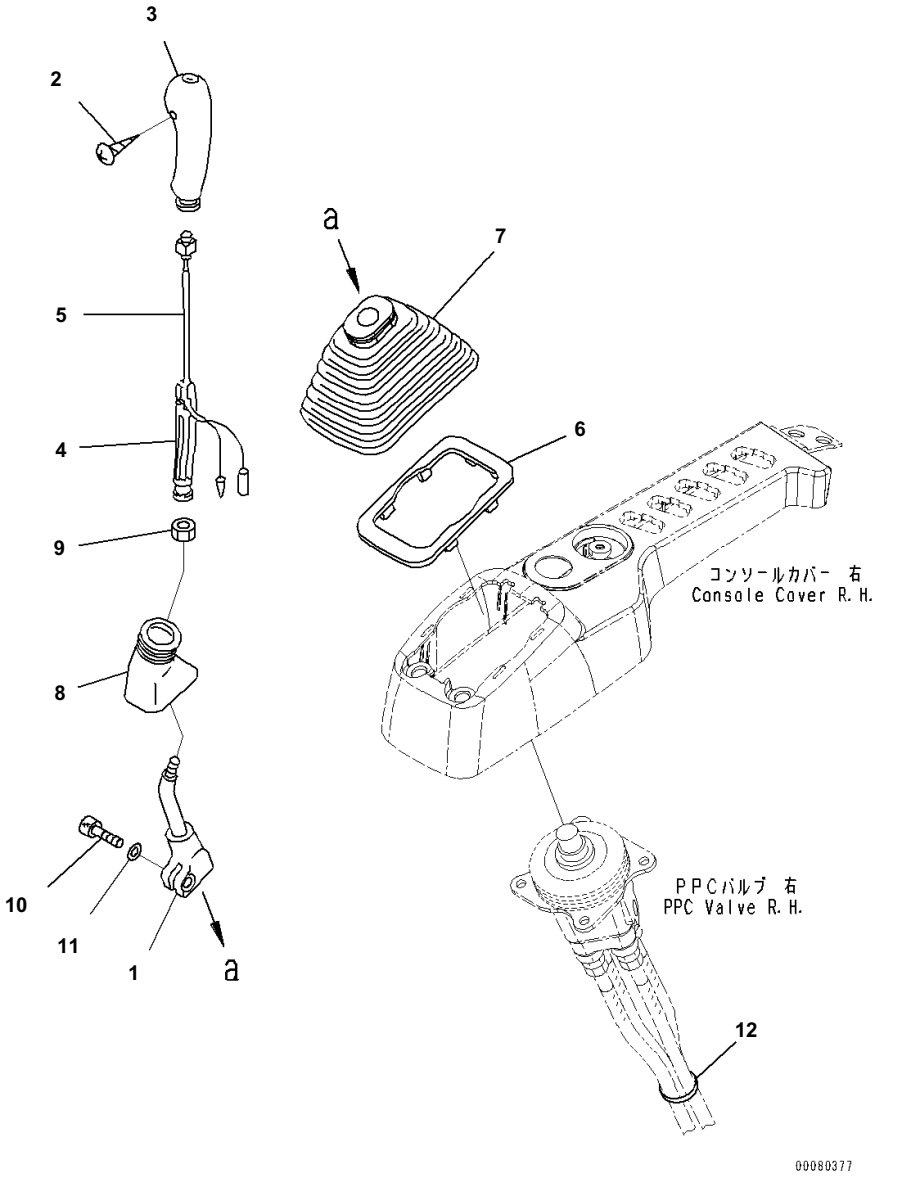

Index	Code	Part Number	Description	Qty	Serial No.
1		20Y-43-22221	Lever	1	B10001-
		22U-43-21192	Knob	1	B10001-
2	C1		・ Screw	1	B10001-
3		20Y-43-22390	・ Knob	1	B10001-
4		20Y-43-22421	・ Insert	1	B10001-
5		22U-43-21211	・ Switch	1	B10001-
6		20Y-43-22250	Plate	1	B10001-
7		20Y-43-22261	Boot	1	B10001-
8		20Y-43-22370	Boot	1	B10001-
9		600-411-1280	Nut	1	B10001-
10		01252-41025	Bolt	1	B10001-
11		01643-51032	Washer	1	B10001-
12		08034-20536	Band	1	B10001-

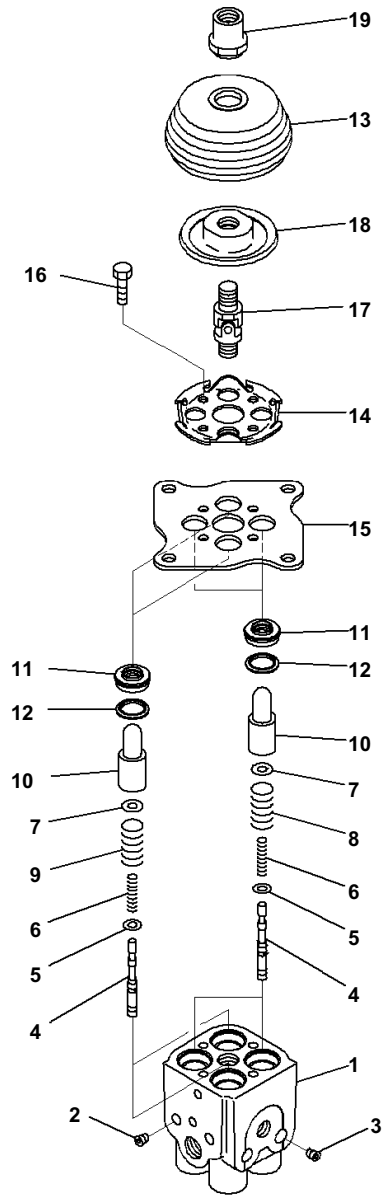

Index	Code	Part Number	Description	Qty	Serial No.
		702-16-03910	Valve, Pilot	1	B10001-
1	C1		· Valve Body	1	B10001-
2	C1		· Plug	2	B10001-
3	C1		· Plug	2	B10001-
4	C1		· Valve	4	B10001-
5		702-16-51140	· Shim, T=0.30mm	4	B10001-
6		702-16-53420	· Spring	4	B10001-
7		702-16-53140	· Retainer	4	B10001-
8		702-16-53470	· Spring	2	B10001-
9		702-16-53590	· Spring	2	B10001-
10		702-16-53170	· Piston	4	B10001-
11		702-16-71210	· Seal	4	B10001-
12		702-16-71160	· Seat	4	B10001-
13		702-16-71280	· Boot	1	B10001-
14		702-16-71131	· Plate	1	B10001-
15		702-16-71141	· Plate	1	B10001-
16		01010-80620	· Bolt	4	B10001-
17		702-16-51240	· Universal Joint	1	B10001-
18		702-16-71361	· Disc	1	B10001-
19		702-16-71441	· Nut	1	B10001-

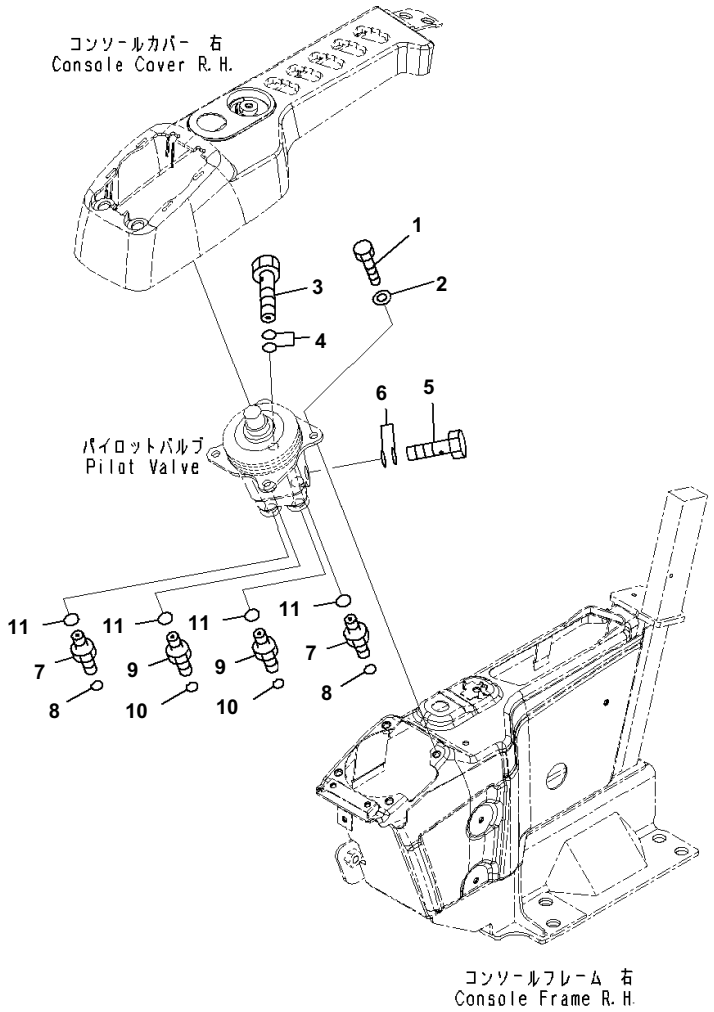

Index	Code	Part Number	Description	Qty	Serial No.
1		01010-80820	Bolt	4	B10001-
2		01643-30823	Washer	4	B10001-
3		20Y-62-18910	Bolt	1	B10001-
4		07000-12018	O-ring	2	B10001-
5		20Y-62-18890	Bolt	1	B10001-
6		07000-12015	O-ring	2	B10001-
7		11Y-62-12130	Nipple	2	B10001-
8		02896-11008	O-ring	2	B10001-
9		11Y-62-12520	Union	2	B10001-
10		02896-11009	O-ring	2	B10001-
11		07002-11423	O-ring	4	B10001-

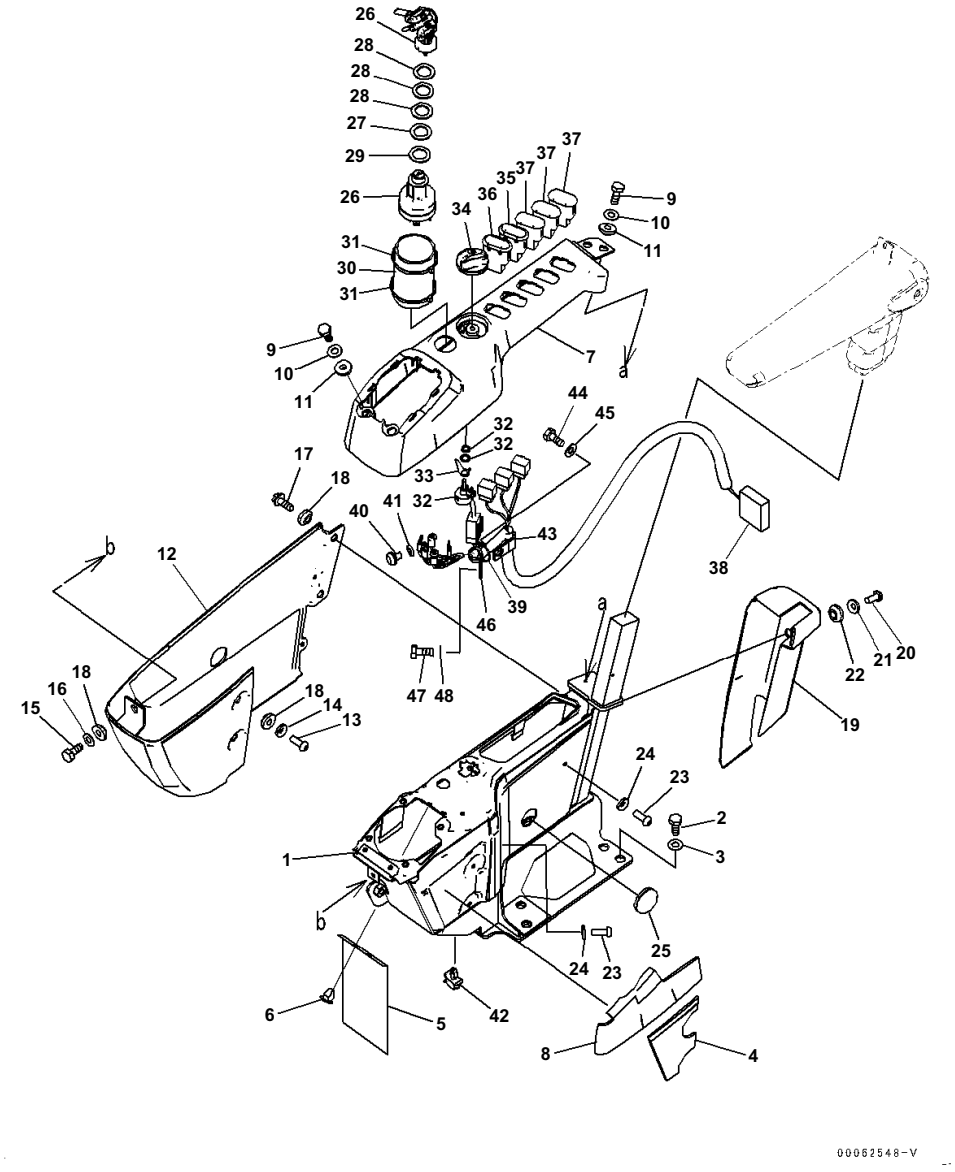

Index	Code	Part Number	Description	Qty	Serial No.
1		20Y-43-41313	Frame	1	B10001-
2		01010-D1230	Bolt	4	B10001-
3		01643-71232	Washer	4	B10001-
4		20Y-43-41631	Sheet	1	B10001-
5		22U-43-23251	Sheet	1	B10001-
6		22U-43-23290	Clip	2	B10001-
7		20Y-43-41323	Cover	1	B10001-
8		20Y-43-41661	Sheet	1	B10001-
9		01010-80616	Bolt	4	B10001-
10		01643-30623	Washer	4	B10001-
11		20Y-43-41290	Collar	4	B10001-
12		20Y-43-41332	Cover	1	B10001-
13		01245-00616	Screw, Hexagon Socket Head	2	B10001-
14		01643-70623	Washer	2	B10001-
15		01010-80616	Bolt	1	B10001-
16		01643-30623	Washer	1	B10001-
17		01435-00612	Bolt	2	B10001-
18		20Y-43-41290	Collar	5	B10001-
19		20Y-43-41353	Cover	1	B10001-
20		01245-00616	Screw, Hexagon Socket Head	2	B10001-
21		01643-70623	Washer	2	B10001-
22		20Y-43-41290	Collar	2	B10001-
23		01245-00616	Screw, Hexagon Socket Head	3	B10001-
24		01643-70623	Washer	3	B10001-
25		09415-02512	Cap	1	B10001-
26		08086-20000	Switch, Starting	1	B10001-
27		20Y-43-41740	Plate	1	B10001-
28		20Y-43-41750	Washer	3	B10001-
29		20Y-43-41790	Washer	1	B10001-
30		20Y-43-41671	Sheet	1	B10001-
31		08034-20519	Band	2	B10001-
32		22U-06-22380	Potentiometer	1	B10001-
33		22U-06-22460	Spring	1	B10001-
34		20Y-43-41780	Knob	1	B10001-
35		20Y-06-42110	Switch	1	B10001-
36		20Y-06-42121	Switch, Light	1	B10001-
37		20Y-06-42190	Cover	3	B10001-
38		20Y-06-41130	Wiring Harness	1	B10001-
39		08034-20414	Band	1	B10001-
40		01023-10508	Screw	5	B10001-
41		01601-20513	Washer	5	B10001-
42		22U-43-23260	Clip	1	B10001-
43		04434-51710	Clip	1	B10001-
44		01010-81016	Bolt	1	B10001-
45		01643-31032	Washer	1	B10001-
46		04434-51410	Clip	1	B10001-

PC240LC-8 S/N B10001-UP
Cab, Floor, Console, RHS

Index	Code	Part Number	Description	Qty	Serial No.
47		01010-81016	Bolt	1	B10001-
48		01643-31032	Washer	1	B10001-

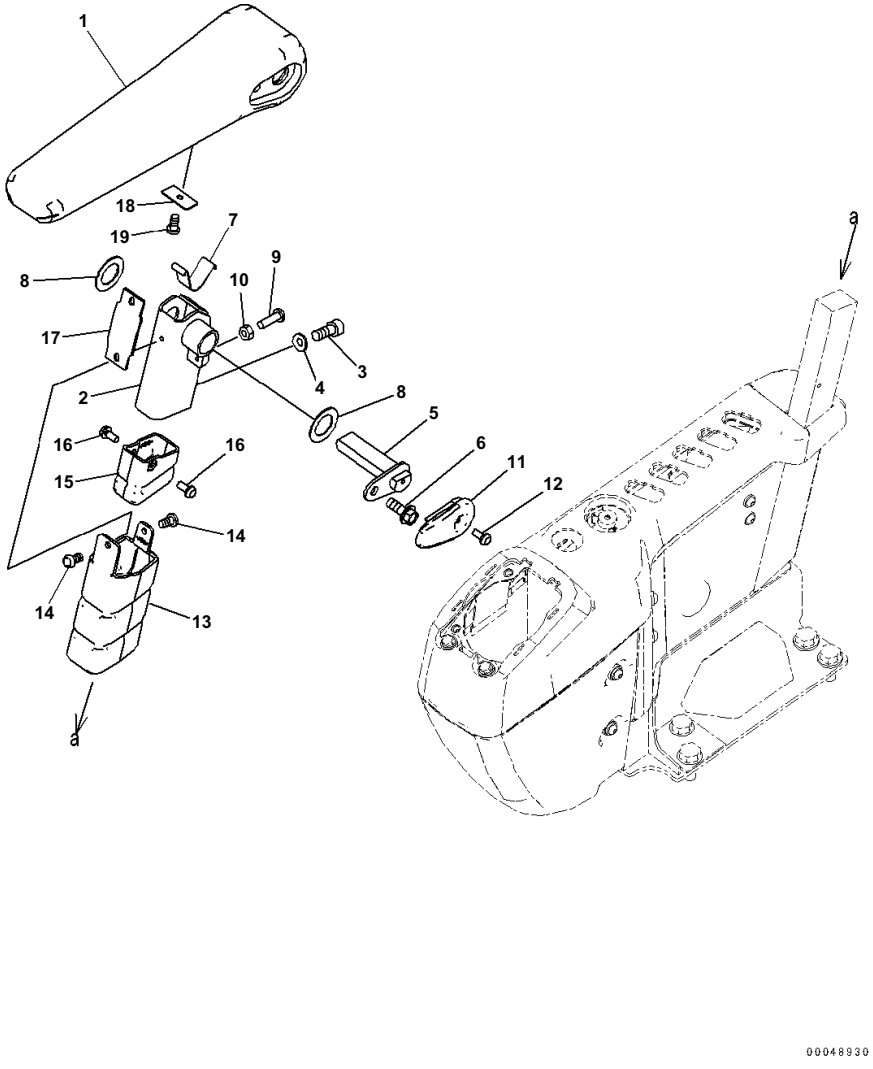

Index	Code	Part Number	Description	Qty	Serial No.
1		20Y-43-41343	Arm Rest	1	B10001-
2		20Y-43-41533	Bracket	1	B10001-
3		01252-80820	Bolt	2	B10001-
4		01643-70823	Washer	2	B10001-
5		20Y-43-41850	Pin	1	B10001-
6		01435-40816	Bolt	1	B10001-
7		20Y-43-41152	Spring	1	B10001-
8		437-40-26240	Washer	2	B10001-
9		01245-00620	Screw	1	B10001-
10		01580-40605	Nut	1	B10001-
11		20Y-43-41181	Cap	1	B10001-
12		01023-20512	Screw	1	B10001-
13		20Y-43-41191	Cover	1	B10001-
14		01370-40510	Screw	2	B10001-
15		20Y-43-41591	Cover	1	B10001-
16		01023-20512	Screw	2	B10001-
17		20Y-43-41281	Rubber	1	B10001-
18		20Y-43-41461	Plate	1	B10001-
19		01370-40610	Screw	1	B10001-

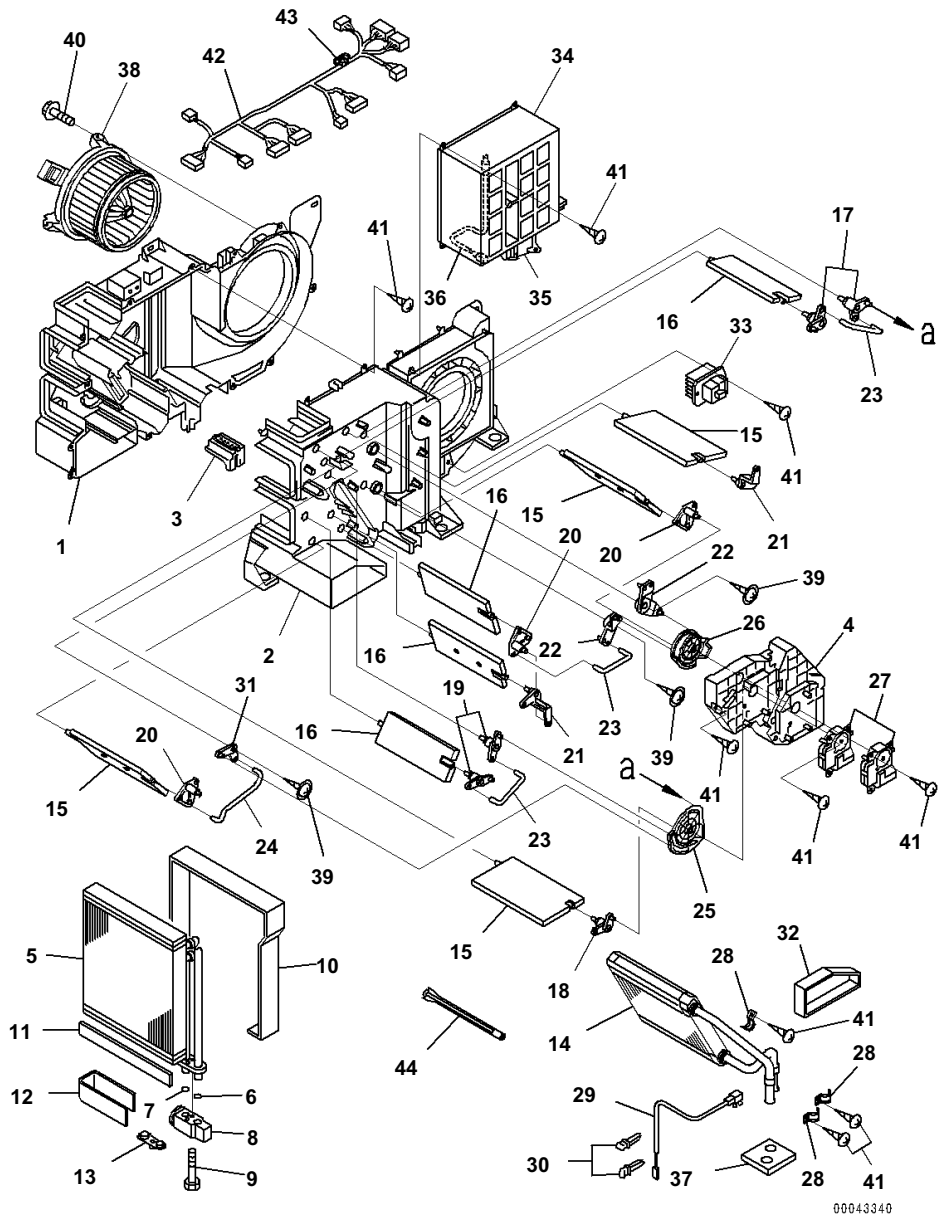

Index	Code	Part Number	Description	Qty	Serial No.
		20Y-810-1211	Air Conditioner Assembly	1	B10001-
1		ND245450-5831	・ Case, Cooling	1	B10001-
2		ND245450-5840	・ Case, Cooling	1	B10001-
3		ND116576-3810	・ Plate	1	B10001-
4		ND116576-3820	・ Plate	1	B10001-
		ND446010-3132	・ Evaporator, Parts	1	B10001-
5		ND446600-0991	・・ Evaporator Assembly	1	B10001-
6		ND949142-0020	・・ O-ring	1	B10001-
7		ND949142-0030	・・ O-ring	1	B10001-
8		ND447500-2750	・・ Valve	1	B10001-
9		ND949046-3100	・・ Bolt	2	B10001-
10		ND146657-8841	・・ Packing	1	B10001-
11		ND146657-9811	・・ Packing	3	B10001-
12		ND146657-8850	・・ Packing	1	B10001-
13		ND445021-3941	・・ Plug	1	B10001-
14		ND116140-0050	・ Core Subassembly, Heater	1	B10001-
15		ND116660-7570	・ Door Assembly	4	B10001-
16		ND116650-6850	・ Door Assembly	4	B10001-
17		ND116780-2481	・ Lever Subassembly, Link	2	B10001-
18		ND116780-2491	・ Lever Subassembly, Link	1	B10001-
19		ND116780-2501	・ Lever Subassembly, Link	2	B10001-
20		ND116780-2510	・ Lever Subassembly, Link	3	B10001-
21		ND116781-3000	・ Lever	2	B10001-
22		ND116780-3130	・ Lever Subassembly, Link	2	B10001-
23		ND116662-7670	・ Shaft	3	B10001-
24		ND116662-7681	・ Shaft	1	B10001-
25		ND116576-3852	・ Plate	1	B10001-
26		ND116576-3862	・ Plate	1	B10001-
27		ND063800-0300	・ Servo Motor Assembly	2	B10001-
28		ND017231-0700	・ Clamp	3	B10001-
29		ND077500-5890	・ Thermistor Assembly	1	B10001-
30		ND246790-2060	・ Clamp	2	B10001-
31		ND116780-3920	・ Lever Subassembly, Link	1	B10001-
32		ND146667-0440	・ Packing	1	B10001-
33		ND077800-0750	・ Transistor	1	B10001-
34		ND146340-0560	・ Box Assembly	1	B10001-
35		ND063600-4580	・・ Servo Motor Assembly	1	B10001-
36		ND077500-5650	・・ Thermistor Assembly	1	B10001-
37		ND146657-8860	・ Packing	1	B10001-
38		ND116340-7350	・ Motor Assembly, Fan	1	B10001-
39		ND949008-0460	・ Screw, Tapping	3	B10001-
40		ND949008-0330	・ Screw, Tapping	3	B10001-
41		ND949001-1730	・ Screw, Tapping	32	B10001-
42		ND246470-4311	・ Wiring Harness Assembly, Wire	1	B10001-
43		ND93950-05003	・・ Fuse	1	B10001-
44		ND116662-8320	・ Shaft	1	B10001-

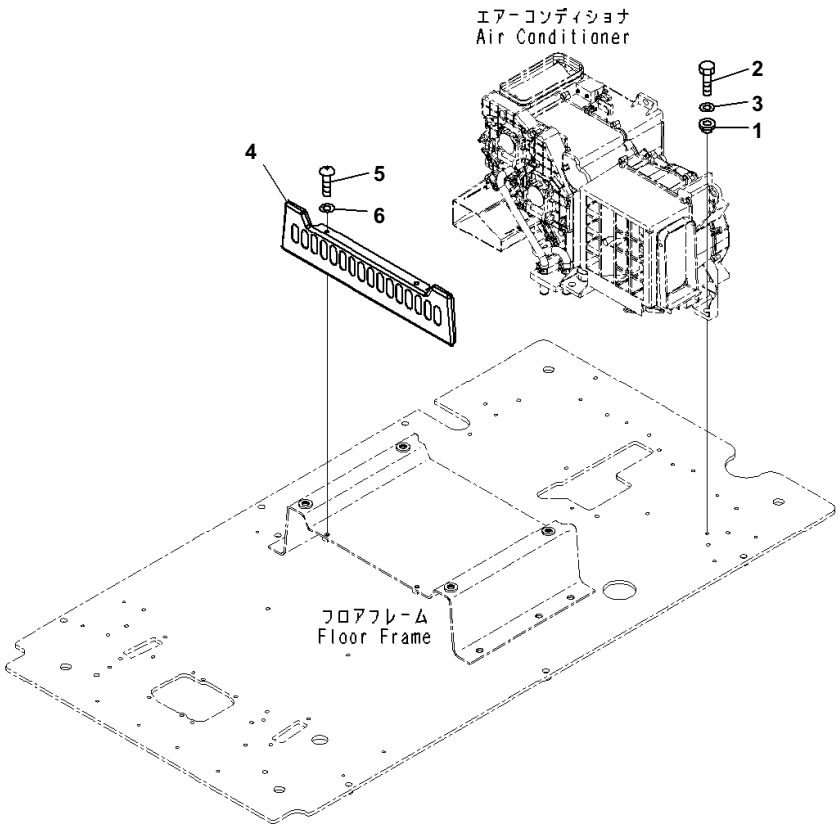

Index	Code	Part Number	Description	Qty	Serial No.
1		208-979-7540	Collar	7	B10001-
2		01010-80825	Bolt	7	B10001-
3		01643-30823	Washer	7	B10001-
4		20Y-43-41240	Cover	1	B10001-
5		01245-00820	Screw	2	B10001-
6		01643-70823	Washer	2	B10001-

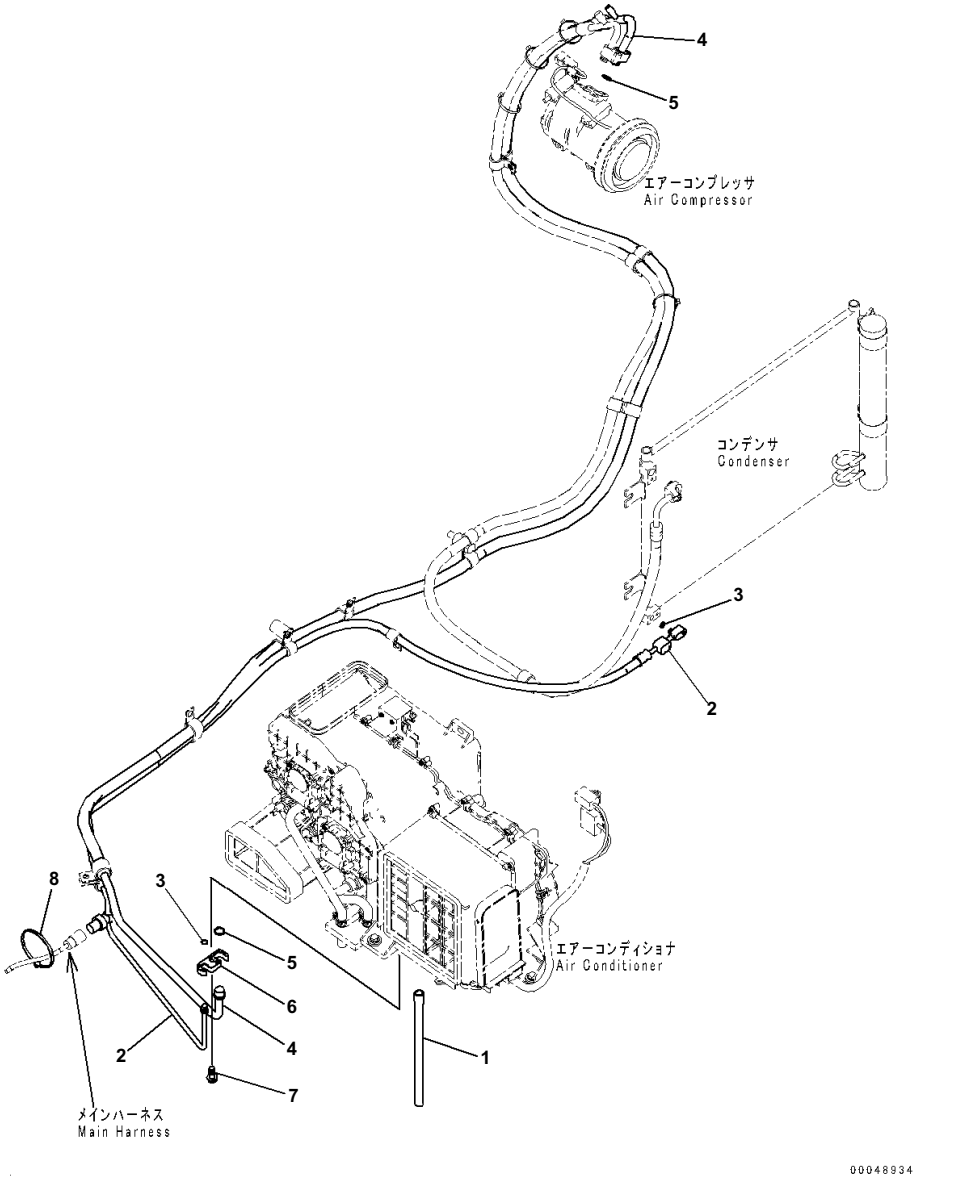

Index	Code	Part Number	Description	Qty	Serial No.
1		208-979-7640	Hose	1	B10001-
2		20Y-810-1311	Hose	1	B10001-
3		20Y-979-3150	・ O-ring	2	B10001-
4		20Y-810-1321	Hose	1	B10001-
5		20Y-979-3130	・ O-ring	2	B10001-
6		208-979-7650	Connector	1	B10001-
7		01435-40620	Bolt	1	B10001-
8		08034-20536	Band	1	B10001-

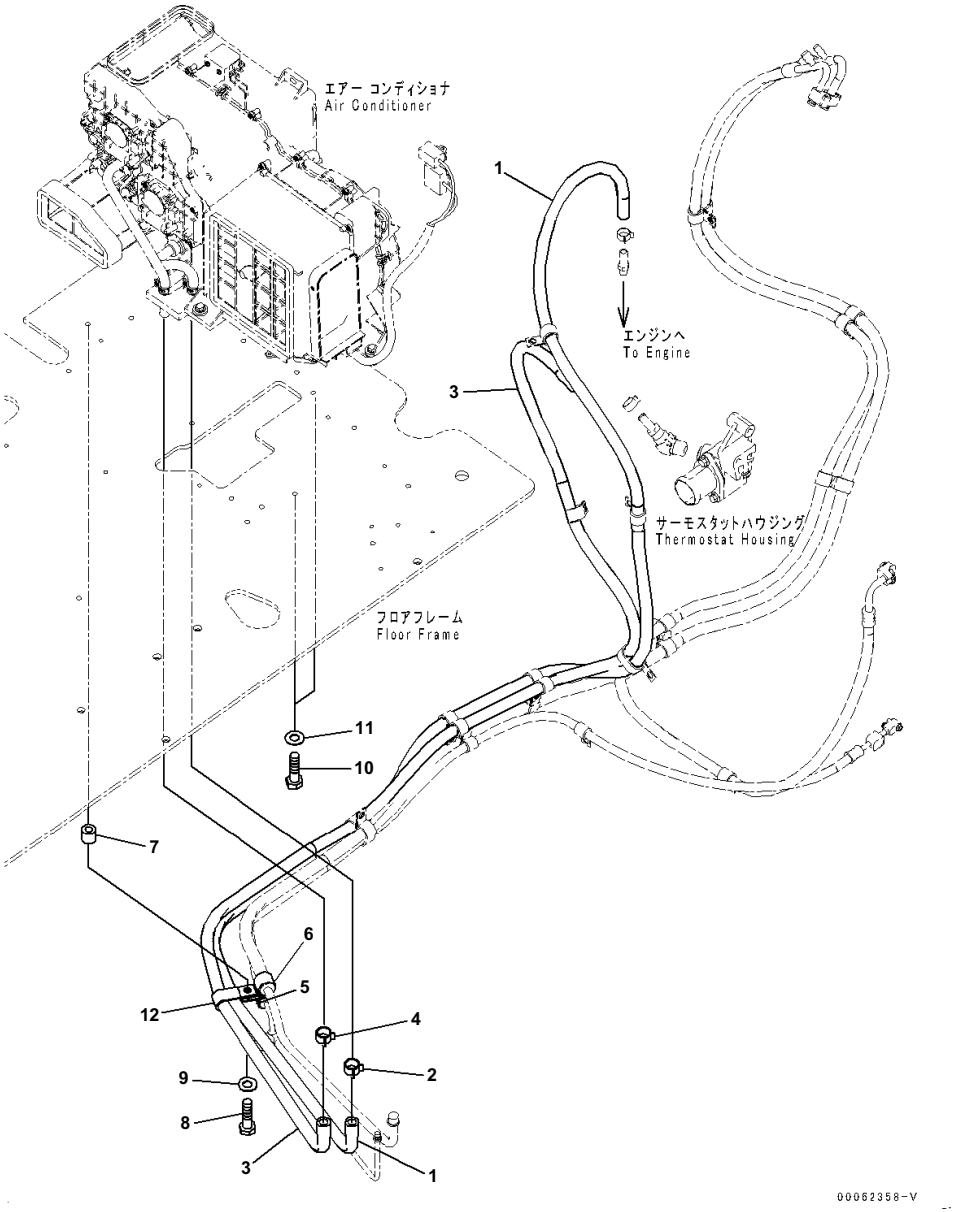

Index	Code	Part Number	Description	Qty	Serial No.
1		20Y-810-1332	Hose Assembly	1	B10001-
2		09479-02400	Clamp	1	B10001-
3		20Y-810-1342	Hose Assembly	1	B10001-
4		09479-02400	Clamp	1	B10001-
5		04434-52110	Clip	1	B10001-
6		04434-52511	Clip	1	B10001-
7		195-33-11220	Spacer	1	B10001-
8		01010-81045	Bolt	1	B10001-
9		01643-31032	Washer	1	B10001-
10		01010-81016	Bolt	2	B10001-
11		01643-31032	Washer	2	B10001-
12		141-06-11220	Clip	1	B10001-

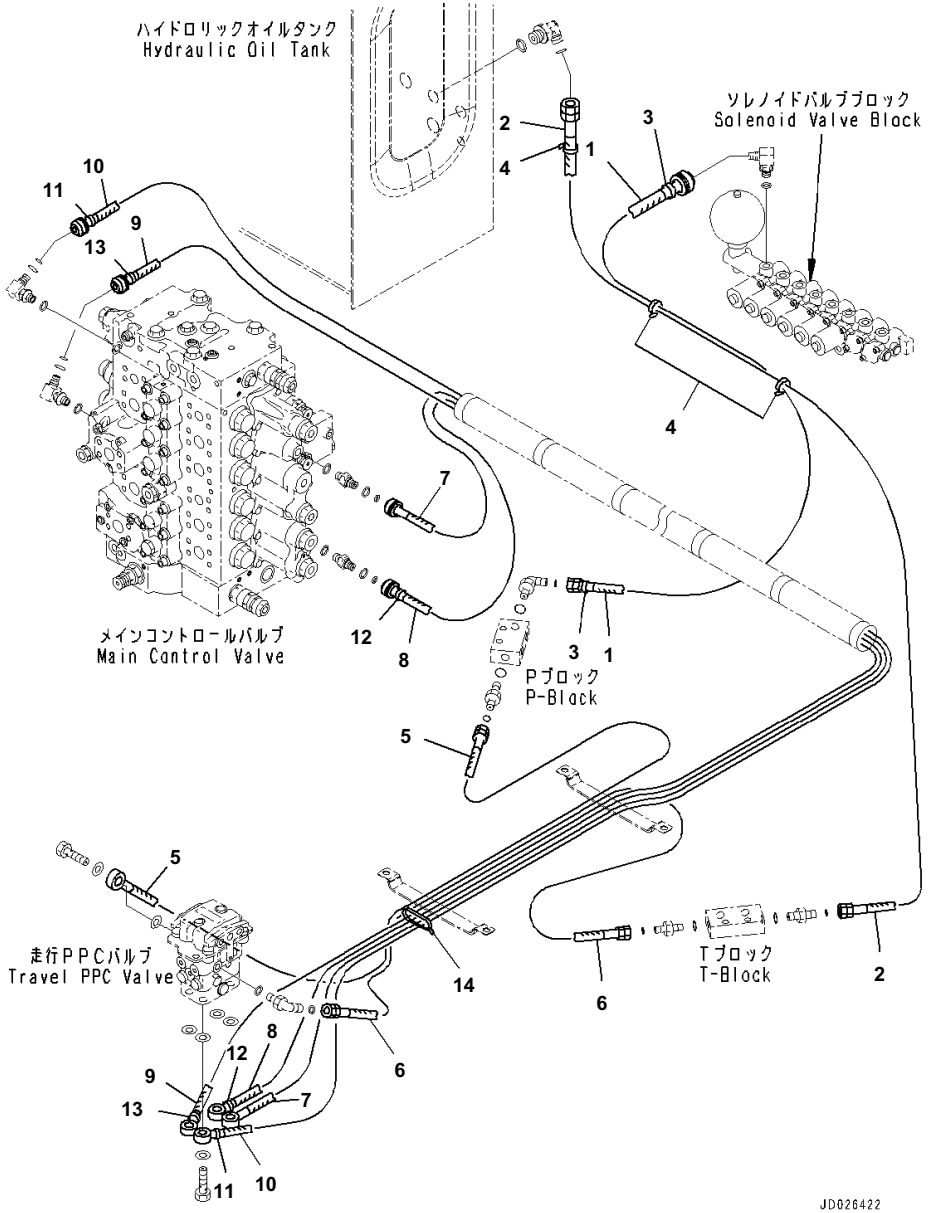

Index	Code	Part Number	Description	Qty	Serial No.
1		20Y-62-52210	Hose	1	B10001-
2		20Y-62-52220	Hose	1	B10001-
3		20Y-62-22790	Band, Red	2	B10001-
4		08034-20823	Band	3	B10001-
5		208-62-72290	Hose	1	B10001-
6		208-62-72310	Hose	1	B10001-
7		20Y-62-52230	Hose	1	B10001-
8		20Y-62-52240	Hose	1	B10001-
9		20Y-62-52250	Hose	1	B10001-
10		20Y-62-52260	Hose	1	B10001-
11		20Y-62-22790	Band, Red	2	B10001-
12		20Y-62-22820	Band, Blue	2	B10001-
13		20Y-62-22850	Band, Green	2	B10001-
14		08034-20536	Band	1	B10001-

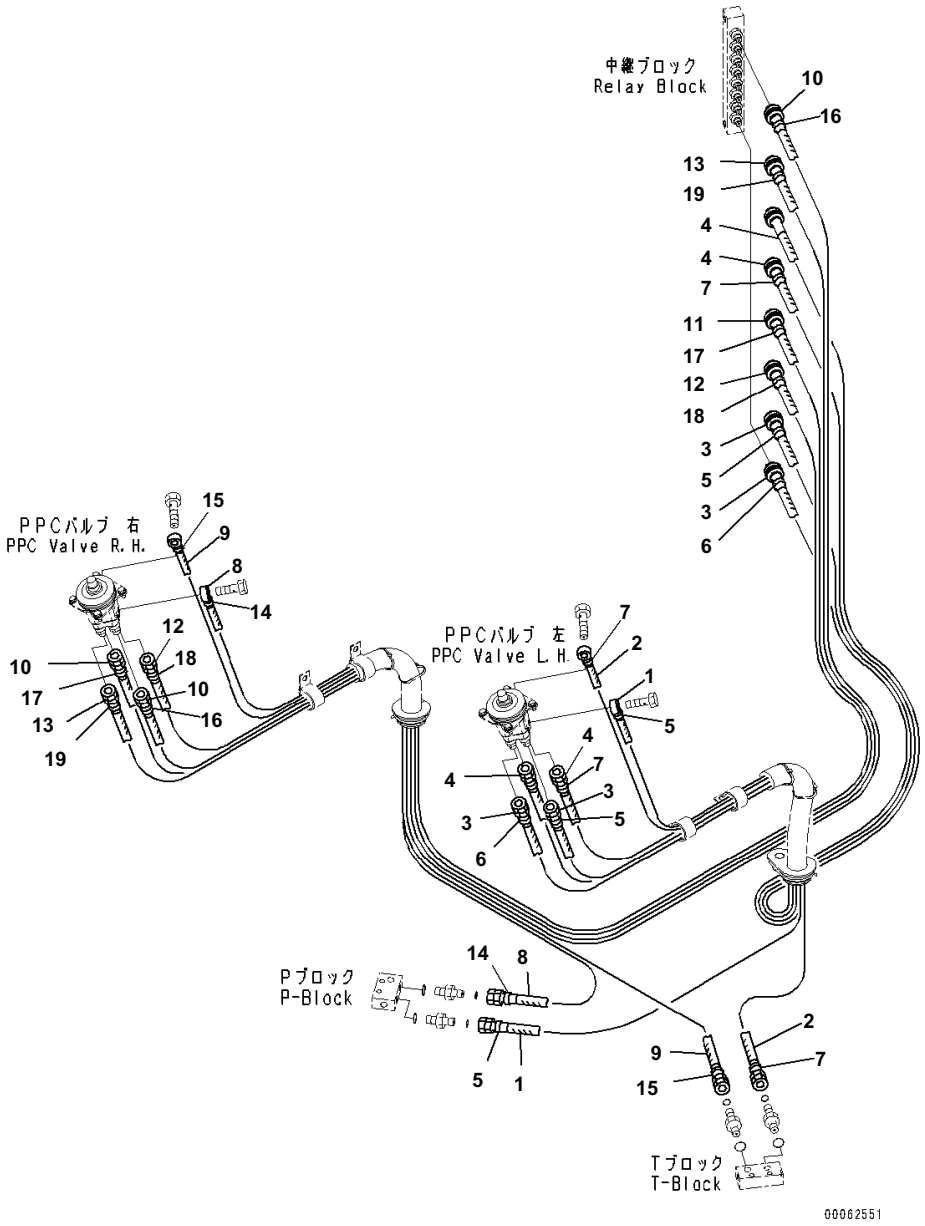

Index	Code	Part Number	Description	Qty	Serial No.
1		20Y-62-53410	Hose	1	B10001-
2		20Y-62-53420	Hose	1	B10001-
3		20Y-62-42271	Hose	2	B10001-
4		20Y-62-52280	Hose	2	B10001-
5		20Y-62-22790	Band, Red	4	B10001-
6		20Y-62-22810	Band, Yellow	2	B10001-
7		20Y-62-22820	Band, Blue	4	B10001-
8		20Y-62-42251	Hose	1	B10001-
9		208-62-72870	Hose	1	B10001-
10		209-64-16690	Hose	1	B10001-
11		209-64-16830	Hose	1	B10001-
12		20Y-62-52290	Hose	1	B10001-
13		20Y-62-52310	Hose	1	B10001-
14		20Y-62-22790	Band, Red	2	B10001-
15		20Y-62-22820	Band, Blue	2	B10001-
16		20Y-62-22830	Band, White	2	B10001-
17		20Y-62-22840	Band, Black	2	B10001-
18		20Y-62-22850	Band, Green	2	B10001-
19		20Y-62-22860	Band, Brown	2	B10001-

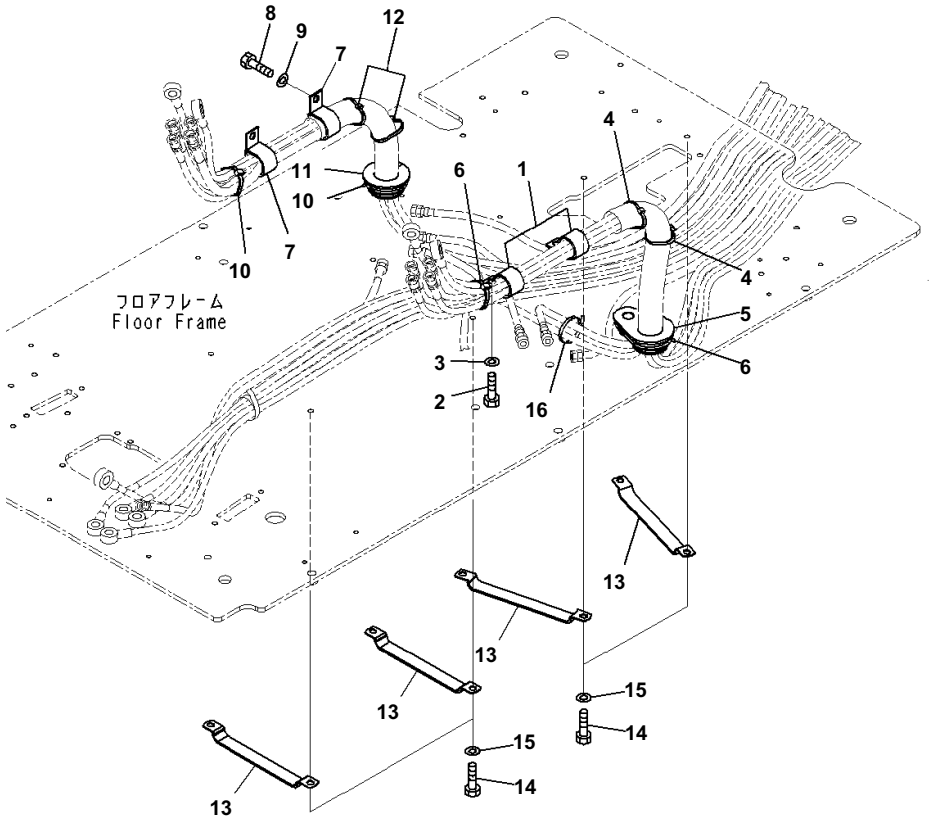

Index	Code	Part Number	Description	Qty	Serial No.
1		04434-53211	Clip	2	B10001-
2		01010-81020	Bolt	2	B10001-
3		01643-31032	Washer	2	B10001-
4		08034-20536	Band	2	B10001-
5		20Y-53-14140	Grommet	1	B10001-
6		08034-20536	Band	2	B10001-
7		04434-53411	Clip	2	B10001-
8		01010-81020	Bolt	2	B10001-
9		01643-31032	Washer	2	B10001-
10		08034-20536	Band	2	B10001-
11		20Y-54-65121	Grommet	1	B10001-
12		08034-20536	Band	2	B10001-
13		20Y-62-27770	Clamp	4	B10001-
14		01010-81016	Bolt	8	B10001-
15		01643-31032	Washer	8	B10001-
16		08034-20536	Band	1	B10001-

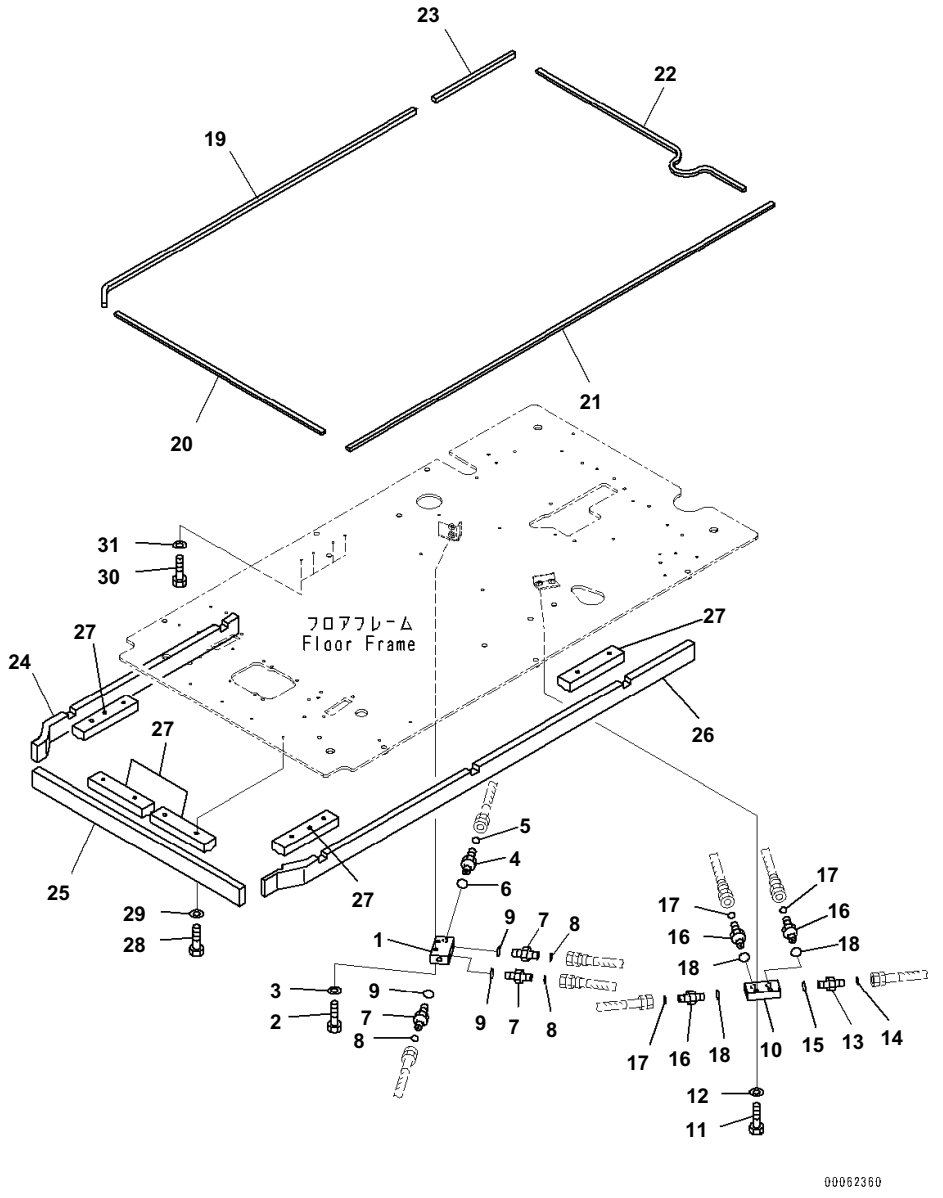

Index	Code	Part Number	Description	Qty	Serial No.
1		20Y-62-15831	Block	1	B10001-
2		01010-81045	Bolt	2	B10001-
3		01643-31032	Washer	2	B10001-
4		02781-0031D	Union	1	B10001-
5		02896-11009	O-ring	1	B10001-
6		07002-11423	O-ring	1	B10001-
7		02781-0021D	Union	3	B10001-
8		02896-11008	O-ring	3	B10001-
9		07002-11423	O-ring	3	B10001-
10		20Y-62-15831	Block	1	B10001-
11		01010-81045	Bolt	2	B10001-
12		01643-31032	Washer	2	B10001-
13		02781-0031D	Union	1	B10001-
14		02896-11009	O-ring	1	B10001-
15		07002-11423	O-ring	1	B10001-
16		02781-0021D	Union	3	B10001-
17		02896-11008	O-ring	3	B10001-
18		07002-11423	O-ring	3	B10001-
19		20Y-53-14910	Seal	1	B10001-
20		20Y-53-14920	Seal	1	B10001-
21		20Y-53-14930	Seal	1	B10001-
22		20Y-53-14940	Seal	1	B10001-
23		20Y-53-14950	Seal	1	B10001-
24		20Y-53-14963	Sheet	1	B10001-
25		20Y-53-14973	Sheet	1	B10001-
26		20Y-53-14983	Sheet	1	B10001-
27		20Y-53-14831	Sheet	5	B10001-
28		01010-80830	Bolt	10	B10001-
29		01643-30823	Washer	10	B10001-
30		01010-80816	Bolt	4	B10001-
31		01643-30823	Washer	4	B10001-

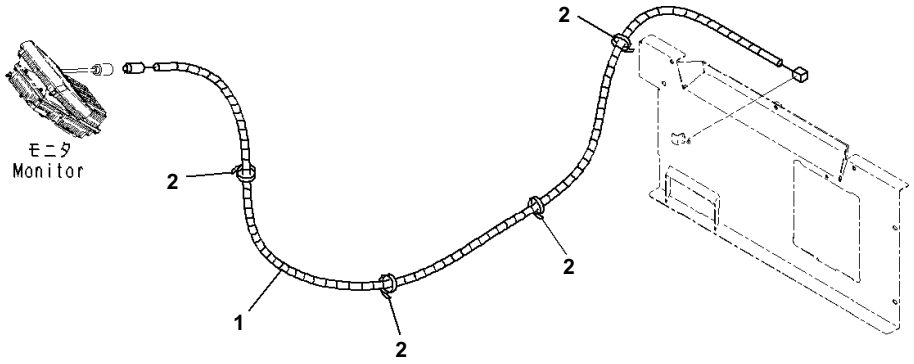

Cab, Floor, Rear View Camera Cable

Index	Code	Part Number	Description	Qty	Serial No.
1		20Y-06-42320	Cable	1	B10001-
2		08034-20519	Band	4	B10001-

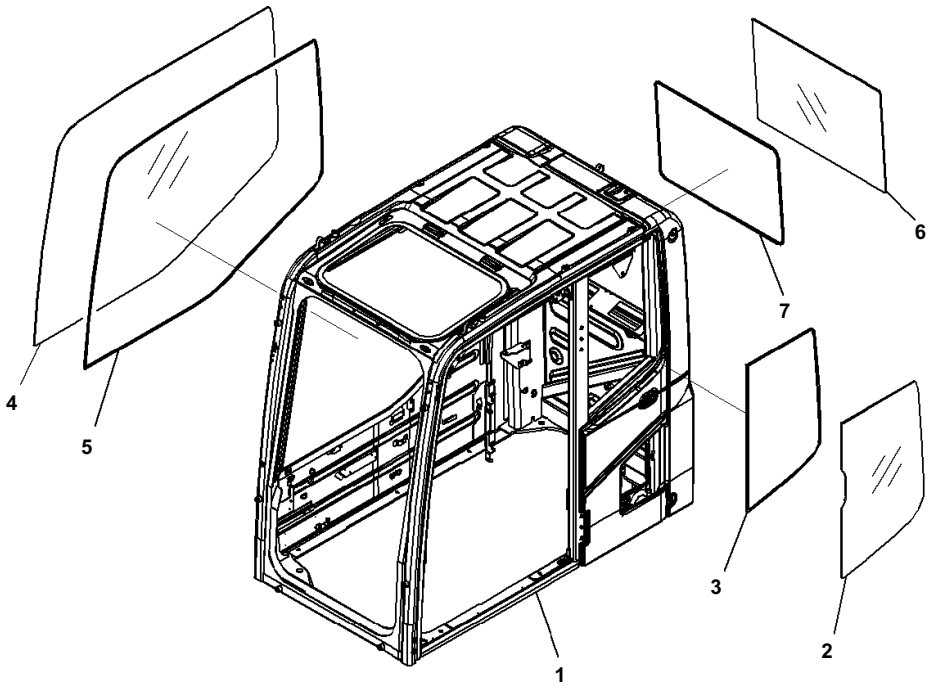

Index	Code	Part Number	Description	Qty	Serial No.
		20Y-53-00460	Cab Assembly	1	B10001-
1	C1		・Cab	1	B10001-
2		20Y-53-11241	・Glass	1	B10001-
3		20Y-53-11260	・Seal	1	B10001-
4		20Y-53-11841	・Glass	1	B10001-
5		20Y-53-11850	・Seal	1	B10001-
6		20Y-53-11271	・Glass	1	B10001-
7		20Y-53-11250	・Seal	1	B10001-

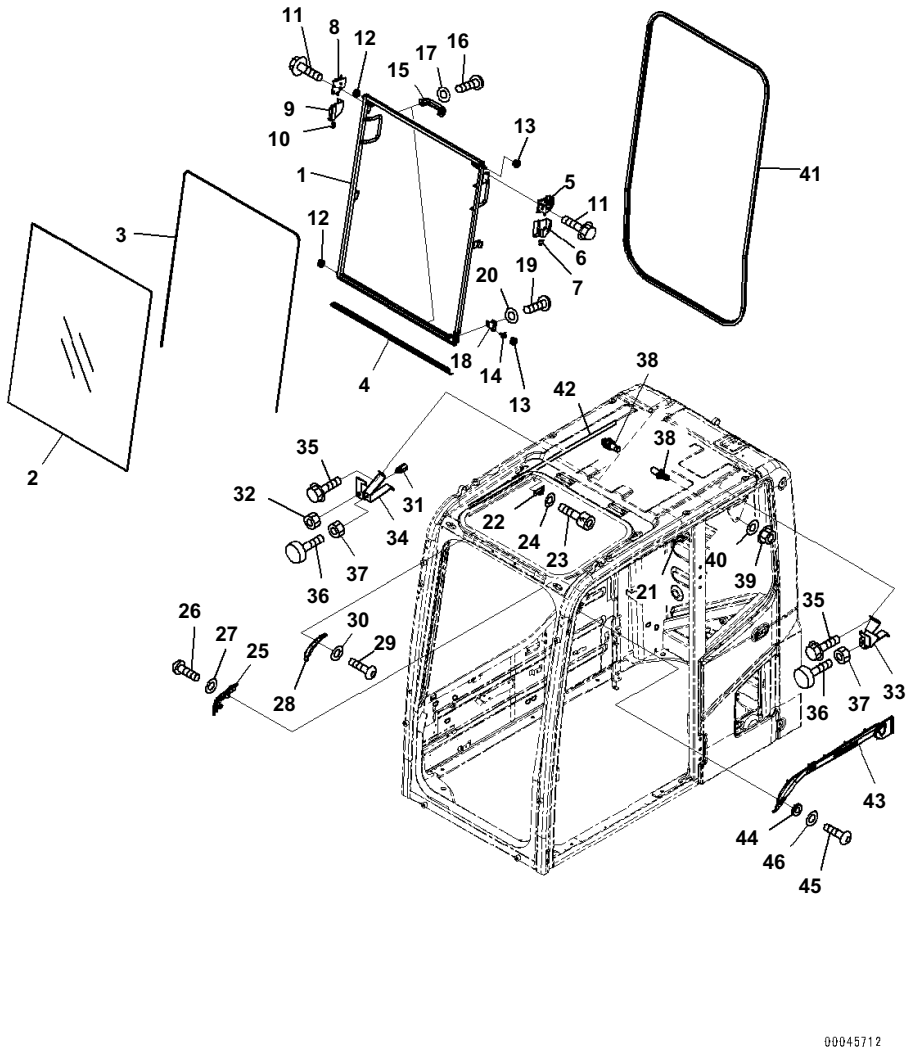

Index	Code	Part Number	Description	Qty	Serial No.
		20Y-53-00460	Cab Assembly	1	B10001-
		20Y-53-00031	・ Window Assembly	1	B10001-
1		20Y-53-11511	・・ Frame	1	B10001-
2		20Y-53-11520	・・ Glass	1	B10001-
3		20Y-54-51531	・・ Seal	1	B10001-
4		20Y-53-11551	・・ Seal	1	B10001-
5		22B-54-15411	・・ Lock Assembly	1	B10001-
6		22B-54-15440	・・ Case	1	B10001-
7		22B-54-15470	・・ Knob	1	B10001-
8		22B-54-15421	・・ Lock Assembly	1	B10001-
9		22B-54-15450	・・ Case	1	B10001-
10		22B-54-15480	・・ Knob	1	B10001-
11		01435-40812	・・ Bolt	4	B10001-
12		20Y-54-52621	・・ Roller	2	B10001-
13		20Y-54-52681	・・ Roller	2	B10001-
14		20Y-53-12330	・・ Pin	1	B10001-
15		20Y-54-14590	・・ Handle	2	B10001-
16		01245-00616	・・ Screw, Hexagon Socket Head	4	B10001-
17		01643-70623	・・ Washer	4	B10001-
18		20Y-53-12830	・・ Bracket	1	B10001-
19		01245-00816	・・ Screw	2	B10001-
20		01643-70823	・・ Washer	2	B10001-
21		20Y-54-51670	・ Stopper	1	B10001-
22		20Y-54-51680	・ Stopper	1	B10001-
23		01252-80616	・ Bolt	4	B10001-
24		01643-70623	・ Washer	4	B10001-
25		20Y-53-11561	・ Block Assembly	1	B10001-
26		01245-00816	・ Screw	2	B10001-
27		01643-70823	・ Washer	2	B10001-
28		20Y-53-11661	・ Bracket	1	B10001-
29		01245-00816	・ Screw	2	B10001-
30		01643-70823	・ Washer	2	B10001-
31		21J-06-12440	・ Switch	1	B10001-
32		01583-11811	・ Nut	1	B10001-
33		20Y-53-11581	・ Bracket	1	B10001-
34		20Y-53-11641	・ Bracket	1	B10001-
35		01435-00612	・ Bolt	4	B10001-
36		20Y-54-11611	・ Stopper	2	B10001-
37		01580-11008	・ Nut	2	B10001-
38		20Y-54-51621	・ Striker	2	B10001-
39		01584-31008	・ Nut	2	B10001-
40		01643-71032	・ Washer	2	B10001-
41		20Y-53-11540	・ Seal	1	B10001-
42		20Y-54-51420	・ Seal	1	B10001-
43		20Y-53-12531	・ Cover	1	B10001-
44		20Y-53-12310	・ Collar	3	B10001-

PC240LC-8 S/N B10001-UP
Cab, 1ATT, Front Window

Index	Code	Part Number	Description	Qty	Serial No.
45		01245-00616	・ Screw, Hexagon Socket Head	3	B10001-
46		01643-70623	・ Washer	3	B10001-

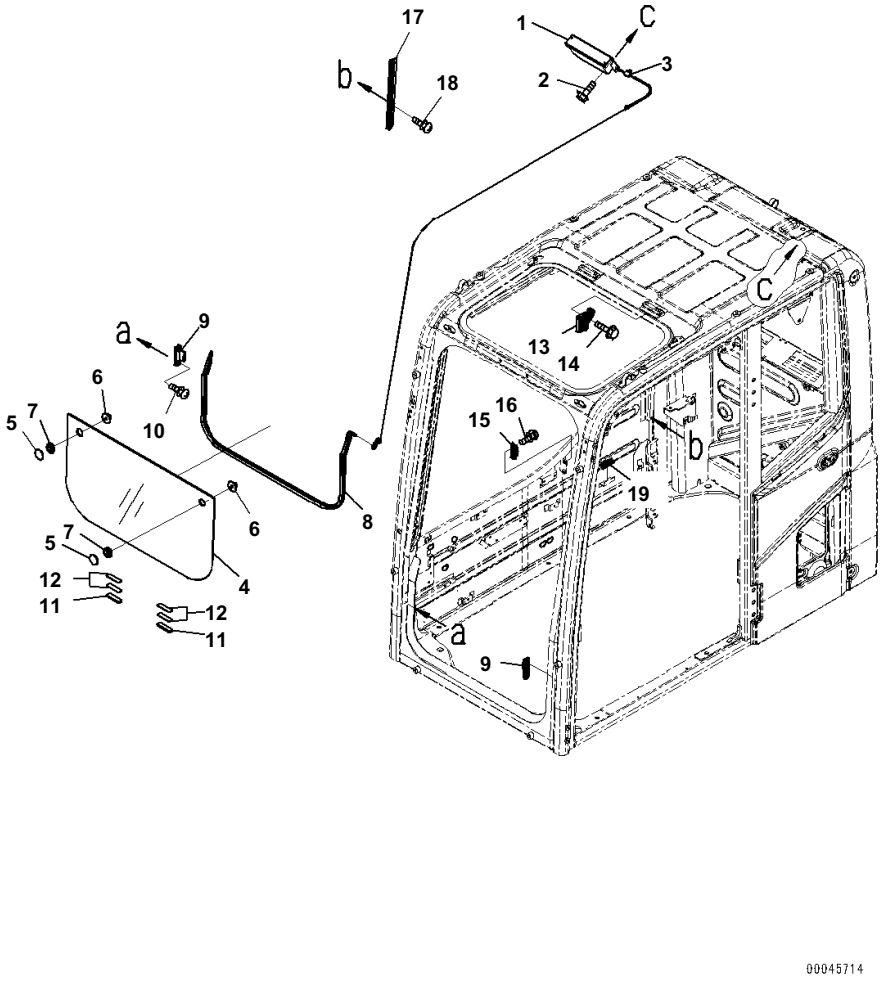

Index	Code	Part Number	Description	Qty	Serial No.
		20Y-53-00460	Cab Assembly	1	B10001-
1		20Y-53-11591	・ Spring Assembly	1	B10001-
2		01435-00616	・ Bolt	2	B10001-
3		20Y-54-51640	・ Holder	1	B10001-
		20Y-53-11601	・ Glass Assembly	1	B10001-
4		20Y-53-11611	・・ Glass	1	B10001-
5		22B-54-15970	・・ Retainer	2	B10001-
6		22B-54-15980	・・ Knob	2	B10001-
7		08037-02512	・・ Grommet	2	B10001-
8		208-53-11860	・ Trim	1	B10001-
9		20Y-53-11940	・ Seat	2	B10001-
10		01023-20612	・ Screw	4	B10001-
11		20Y-53-11973	・ Rubber	2	B10001-
12		20Y-53-12892	・ Rubber	4	B10001-
13		22B-54-15841	・ Lock Assembly	1	B10001-
14		01435-40616	・ Bolt	2	B10001-
15		20Y-53-12611	・ Seat	1	B10001-
16		01023-20616	・ Screw	2	B10001-
17		20Y-53-12631	・ Rail	1	B10001-
18		01023-20616	・ Screw	2	B10001-
19		20U-54-25140	・ Stopper	1	B10001-

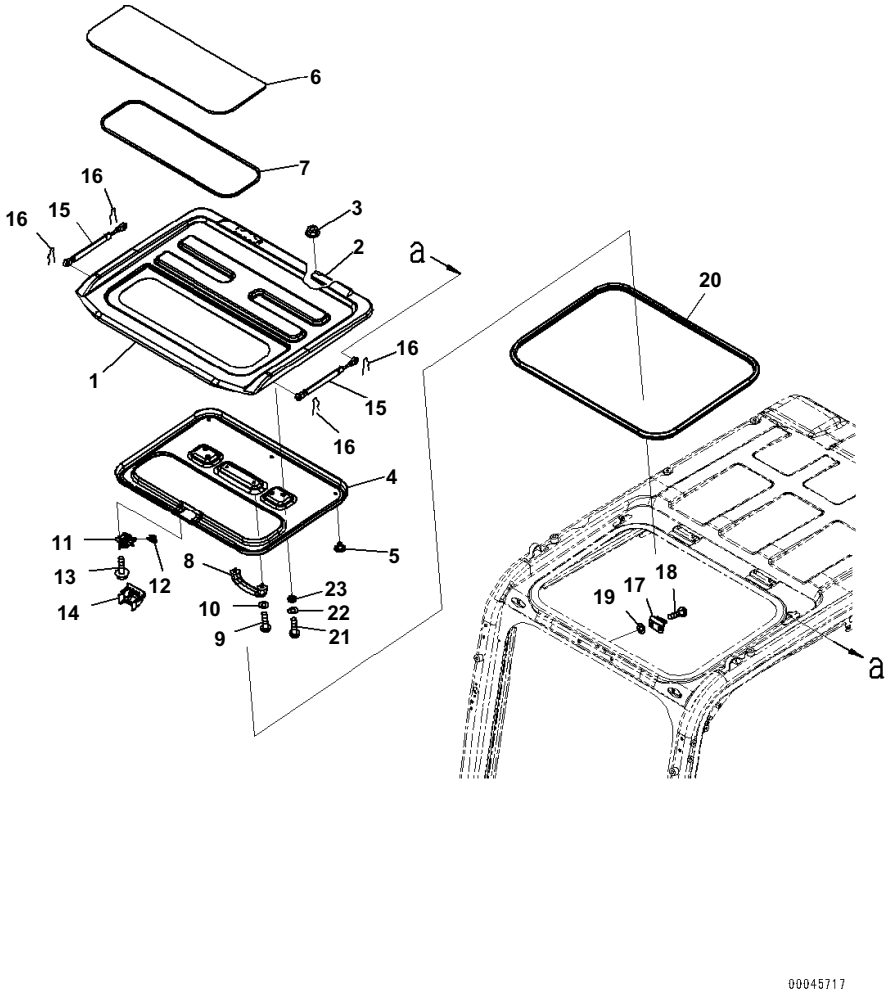

Index	Code	Part Number	Description	Qty	Serial No.
		20Y-53-00460	Cab Assembly	1	B10001-
1		20Y-53-11712	・ Roof	1	B10001-
2		208-53-22H70	・・ Hinge,Welded	2	B10001-
3		01584-30806	・ Nut	4	B10001-
4		20Y-53-11921	・ Cover	1	B10001-
5		09416-10200	・ Button	5	B10001-
6		20Y-53-11741	・ Plate	1	B10001-
7		20Y-53-11790	・ Seal	1	B10001-
8		20Y-54-14590	・ Handle	1	B10001-
9		01245-00616	・ Screw, Hexagon Socket Head	2	B10001-
10		01643-70623	・ Washer	2	B10001-
11		20Y-53-11721	・ Lock	1	B10001-
12		20Y-53-11781	・ Knob	1	B10001-
13		01435-40610	・ Bolt	3	B10001-
14		20Y-53-11931	・ Cover	1	B10001-
15		20Y-54-36342	・ Gas Spring Assembly	2	B10001-
16		04052-10833	・ Pin, Snap	4	B10001-
17		20Y-53-11771	・ Striker	1	B10001-
18		01245-00820	・ Screw	2	B10001-
19		20Y-54-52651	・ Spacer	2	B10001-
20		20Y-53-11861	・ Seal	1	B10001-
21		01245-00620	・ Screw	4	B10001-
22		01643-70623	・ Washer	4	B10001-
23		20Y-54-52651	・ Spacer	4	B10001-

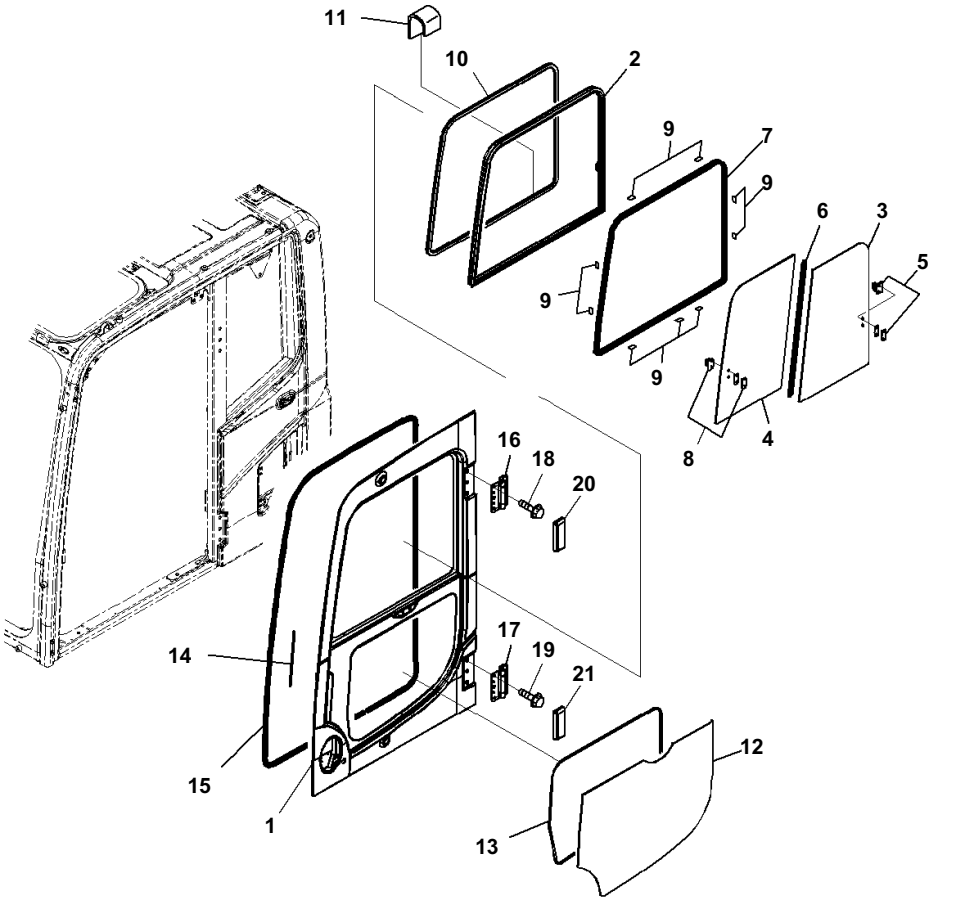

Index	Code	Part Number	Description	Qty	Serial No.
		20Y-53-00460	Cab Assembly	1	B10001-
		20Y-53-00072	・ Door Assembly	1	B10001-
1	C1		・・ Door	1	B10001-
		20Y-53-11402	・・ Sash Assembly	1	B10001-
2	C1		・・・ Sash	1	B10001-
3		20Y-53-12840	・・・ Glass	1	B10001-
4		20Y-53-12850	・・・ Glass	1	B10001-
5		20Y-54-52860	・・・ Lock Assembly	1	B10001-
6		20Y-53-12870	・・・ Seal	1	B10001-
7		20Y-53-12880	・・・ Seal	1	B10001-
8		20Y-54-13322	・・・ Lock Assembly	1	B10001-
9		20Y-53-12971	・・ Seat	9	B10001-
10		20Y-53-11470	・・ Trim	1	B10001-
11		20Y-53-13910	・・ Cover	1	B10001-
12		20Y-53-11451	・・ Glass	1	B10001-
13		20Y-53-11460	・・ Seal	1	B10001-
14		20Y-53-13880	・・ Seal	1	B10001-
15		20Y-53-11484	・・ Weather Strip	1	B10001-
16		20Y-53-11332	・・ Hinge	1	B10001-
17		20Y-53-11332	・・ Hinge	1	B10001-
18		01435-01220	・・ Bolt	6	B10001-
19		01435-01220	・・ Bolt	6	B10001-
20		20Y-53-11411	・・ Cover	1	B10001-
21		20Y-53-11421	・・ Cover	1	B10001-

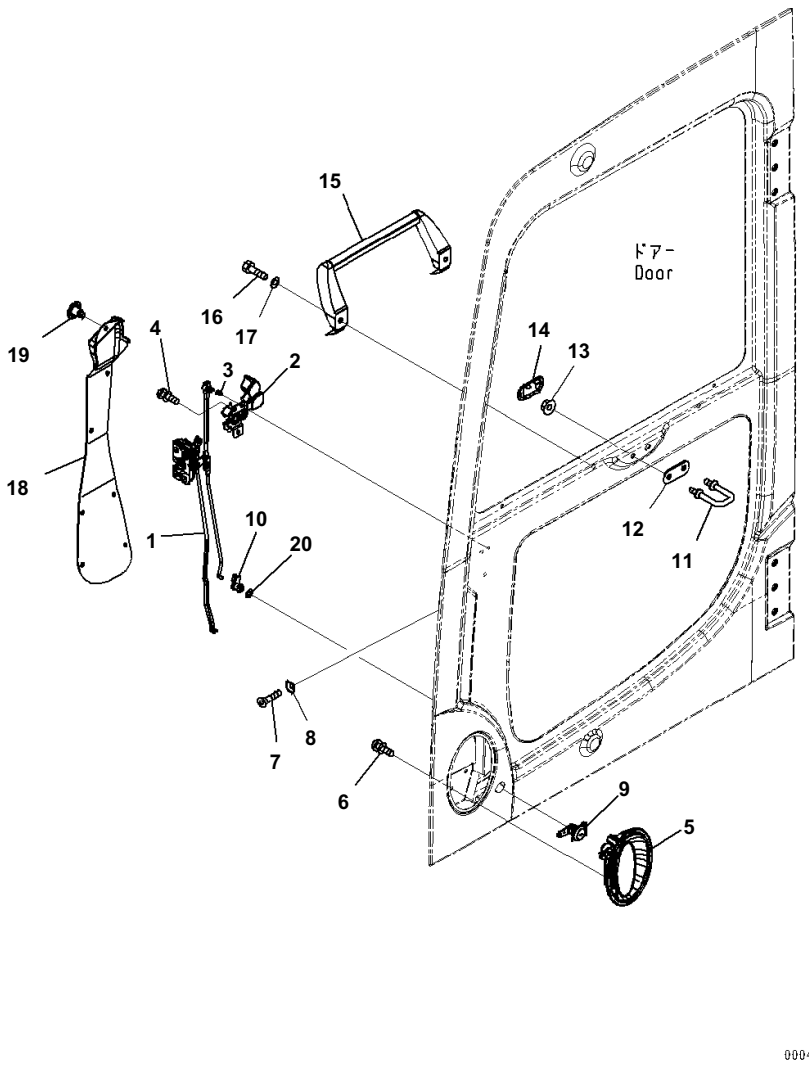

Index	Code	Part Number	Description	Qty	Serial No.
		20Y-53-00460	Cab Assembly	1	B10001-
		20Y-53-00072	・ Door Assembly	1	B10001-
1		20Y-53-12201	・・ Latch Assembly	1	B10001-
2		20Y-54-52300	・・ Handle Assembly	1	B10001-
3		22B-54-16340	・・・ Snap	1	B10001-
4		01023-10612	・・ Screw	3	B10001-
5		20Y-53-12991	・・ Handle	1	B10001-
6		01023-10612	・・ Screw	3	B10001-
7		01240-00616	・・ Screw	3	B10001-
8		195-Z11-1690	・・ Washer	3	B10001-
9		20Y-54-52820	・・ Lock Assembly	1	B10001-
10		22B-54-16330	・・ Snap	1	B10001-
11		20Y-53-11320	・・ Striker	1	B10001-
12		20Y-53-12940	・・ Plate	1	B10001-
13		01584-01008	・・ Nut	2	B10001-
14		20Y-53-12661	・・ Cover	1	B10001-
15		20Y-54-51393	・・ Grip	1	B10001-
16		01010-80820	・・ Bolt	2	B10001-
17		01643-30823	・・ Washer	2	B10001-
18		20Y-53-11441	・・ Cover	1	B10001-
19		22B-54-16461	・・ Rivet	7	B10001-
20		145-Z79-6270	・・ Washer	1	B10001-

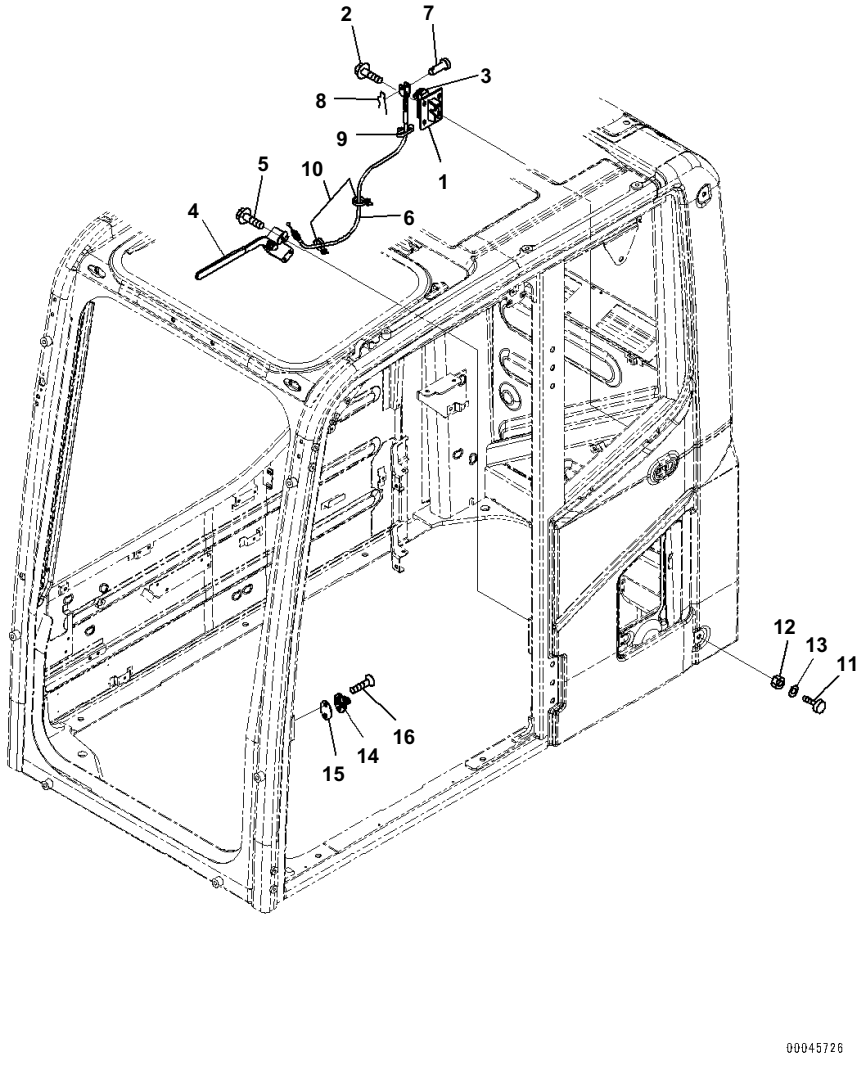

Index	Code	Part Number	Description	Qty	Serial No.
		20Y-53-00460	Cab Assembly	1	B10001-
1		20Y-53-11981	· Lock	1	B10001-
2		01435-40825	· Bolt	4	B10001-
3		20Y-53-12280	· Cover	1	B10001-
4		208-53-14540	· Lever Assembly	1	B10001-
5		01435-40616	· Bolt	3	B10001-
6		20Y-53-11990	· Cable	1	B10001-
7		04205-10520	· Pin	1	B10001-
8		04052-10530	· Pin	1	B10001-
9		08034-20414	· Band	1	B10001-
10		08059-00413	· Clip	2	B10001-
11		20Y-54-11611	· Stopper	2	B10001-
12		01580-11008	· Nut	2	B10001-
13		01643-31032	· Washer	2	B10001-
14		20Y-53-11810	· Striker	1	B10001-
15		20Y-53-11890	· Plate	1	B10001-
16		01240-01025	· Screw	2	B10001-

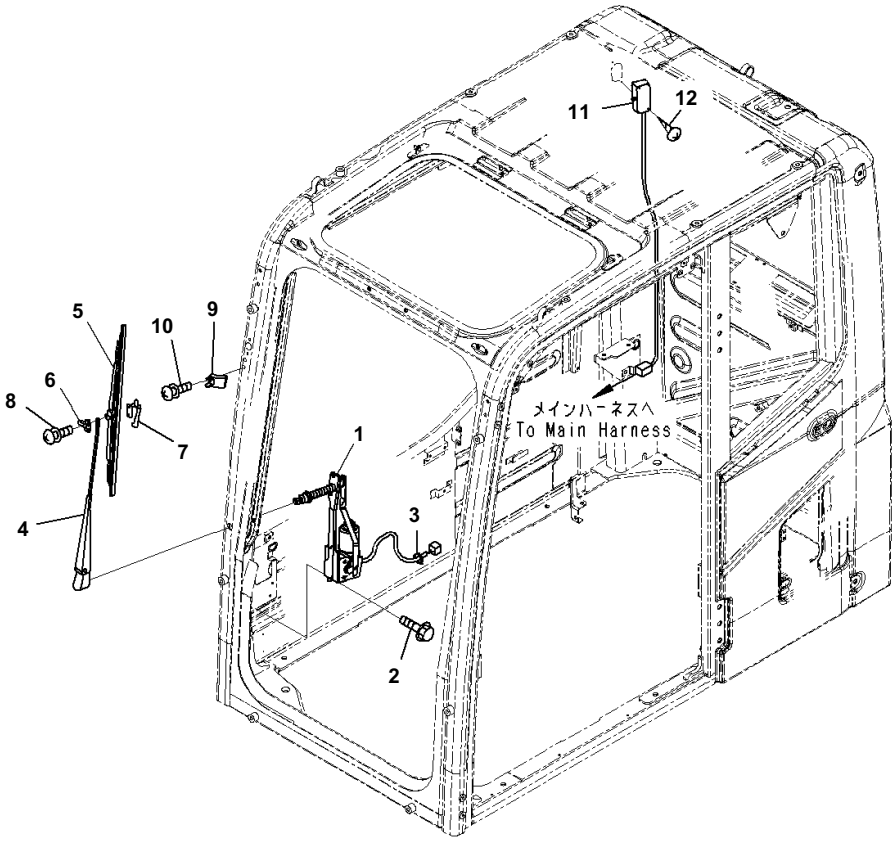

Index	Code	Part Number	Description	Qty	Serial No.
		20Y-53-00460	Cab Assembly	1	B10001-
1		20Y-54-52211	・ Wiper Motor Assembly	1	B10001-
2		01435-00616	・ Bolt	6	B10001-
3		08034-20414	・ Band	1	B10001-
		20Y-54-52221	・ Wiper Assembly	1	B10001-
4		20Y-54-52350	・・ Arm	1	B10001-
5		20Y-54-39450	・・ Wiper Blade	1	B10001-
6		20Y-54-39460	・・ Slider	1	B10001-
7		20Y-54-39480	・・ Plate	1	B10001-
8		ND949007-2350	・・ Screw and Washer	2	B10001-
9		20Y-53-12232	・ Stopper	1	B10001-
10		01023-20620	・ Screw	2	B10001-
11		20Y-53-12790	・ Light	1	B10001-
		08116-02410	・・ Bulb, 10watt	1	B10001-
12		01370-00420	・ Screw	2	B10001-

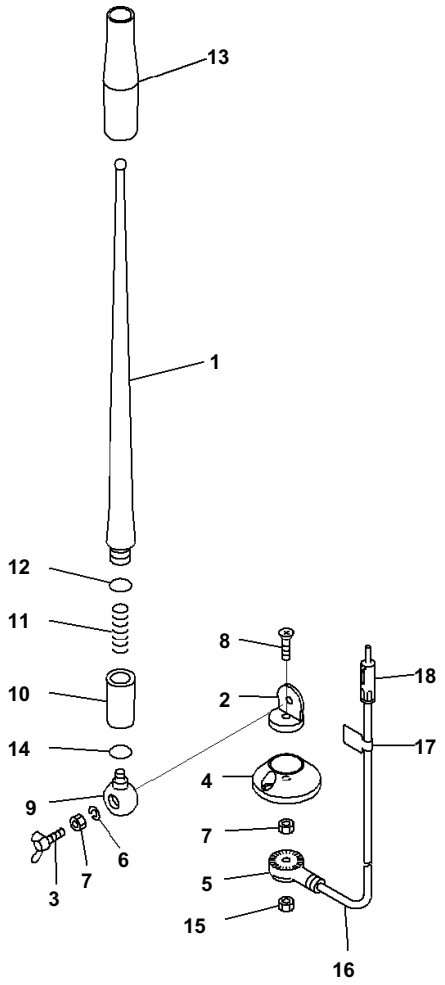

Index	Code	Part Number	Description	Qty	Serial No.
		20Y-53-00460	Cab Assembly	1	B10001-
		20Y-06-41990	・ Antenna	1	B10001-
1		RFU419B-418-A	・ Rod	1	B10001-
2	C1		・ Holder	1	B10001-
3		RFU419B-418-D	・ Bolt, Wing	1	B10001-
4		RFU419B-418-E	・ Base	1	B10001-
5	C1		・ Holder	1	B10001-
6		RFU419B-418-B	・ Washer, Spring	1	B10001-
7		RFU419B-418-C	・ Nut	2	B10001-
8	C1		・ Screw	1	B10001-
9	C1		・ Holder	1	B10001-
10	C1		・ Holder Assembly	1	B10001-
11	C1		・ Spring	1	B10001-
12	C1		・ O-ring	1	B10001-
13	C1		・ Tube	1	B10001-
14	C1		・ O-ring	1	B10001-
15		RFU419B-418-C	・ Nut	1	B10001-
16		RFU419B-418-F	・ Cable	1	B10001-
17	C1		・ Plate	1	B10001-
18	C1		・ Plug	1	B10001-

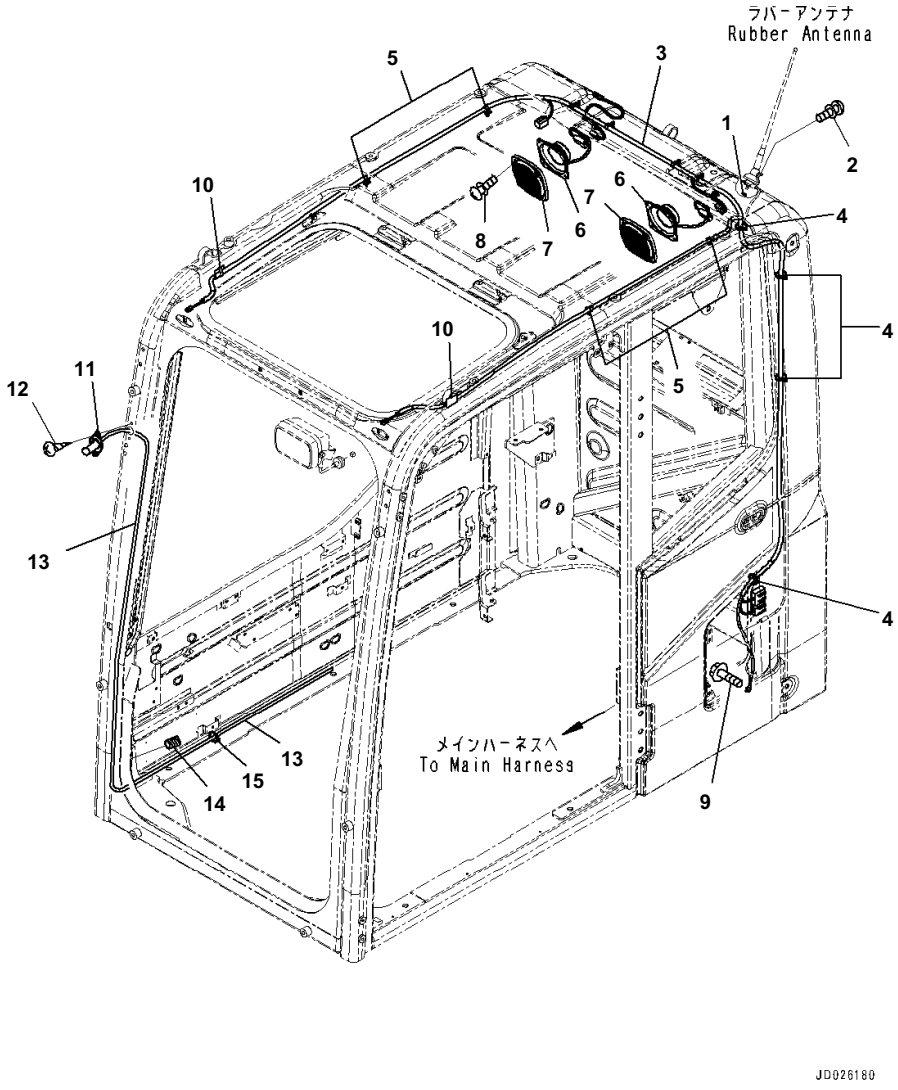

Index	Code	Part Number	Description	Qty	Serial No.
		20Y-53-00460	Cab Assembly	1	B10001-
1		01643-30623	・ Washer	1	B10001-
2		01023-20412	・ Screw	2	B10001-
3		20Y-06-41141	・ Wiring Harness	1	B10001-
4		08034-20414	・ Band	4	B10001-
5		08059-00413	・ Clip	8	B10001-
6		20Y-06-42180	・ Speaker	2	B10001-
7		20Y-53-12221	・ Cover	2	B10001-
8		01023-20416	・ Screw	8	B10001-
9		01435-40812	・ Bolt	1	B10001-
10		08051-00801	・ Clip	2	B10001-
11		20Y-54-39511	・ Nozzle	1	B10001-
12		01023-70412	・ Screw	2	B10001-
13		195-979-7770	・ Hose	1	B10001-
14		08017-B0701	・ Conduit	1	B10001-
15		08034-20414	・ Band	1	B10001-

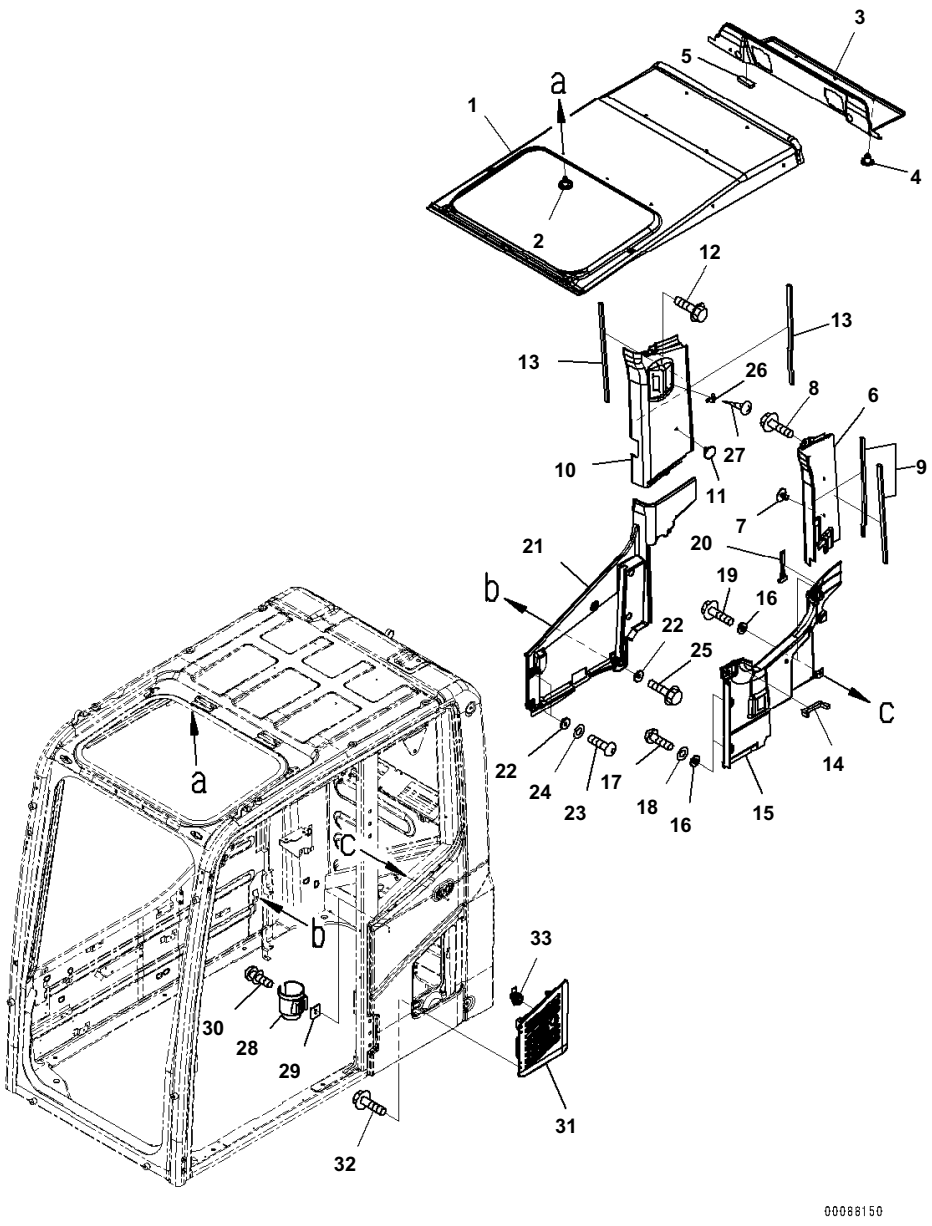

Index	Code	Part Number	Description	Qty	Serial No.
		20Y-53-00460	Cab Assembly	1	B10001-
1		20Y-53-12412	· Cover	1	B10001-
2		09416-10200	· Button	17	B10001-
3		20Y-53-12421	· Cover	1	B10001-
4		09416-10200	· Button	3	B10001-
5		20Y-53-13870	· Seal	1	B10001-
6		20Y-53-12431	· Cover	1	B10001-
7		208-53-13270	· Rivet	2	B10001-
8		01435-00612	· Bolt	1	B10001-
9		20Y-53-12710	· Seal	2	B10001-
10		20Y-53-12441	· Cover	1	B10001-
11		09416-10200	· Button	1	B10001-
12		01435-00612	· Bolt	1	B10001-
13		20Y-53-12710	· Seal	2	B10001-
14		20Y-53-12552	· Seal	1	B10001-
15		20Y-53-12463	· Cover	1	B10001-
16		20Y-53-12310	· Collar	4	B10001-
17		01245-00616	· Screw, Hexagon Socket Head	2	B10001-
18		01643-70623	· Washer	2	B10001-
19		01435-00612	· Bolt	2	B10001-
20		22B-54-17380	· Hammer	1	B10001-
21		20Y-53-12472	· Cover	1	B10001-
22		20Y-53-12310	· Collar	5	B10001-
23		01245-00616	· Screw, Hexagon Socket Head	3	B10001-
24		01643-70623	· Washer	3	B10001-
25		01435-00612	· Bolt	2	B10001-
26		205-54-51250	· Hanger	1	B10001-
27		01370-30416	· Screw	2	B10001-
28		208-53-12991	· Holder	1	B10001-
29		208-53-12980	· Plate	1	B10001-
30		01023-20616	· Screw	2	B10001-
31		20Y-53-11752	· Cover	1	B10001-
32		01435-40610	· Bolt	4	B10001-
33		20Y-53-11761	· Lock Assembly	1	B10001-

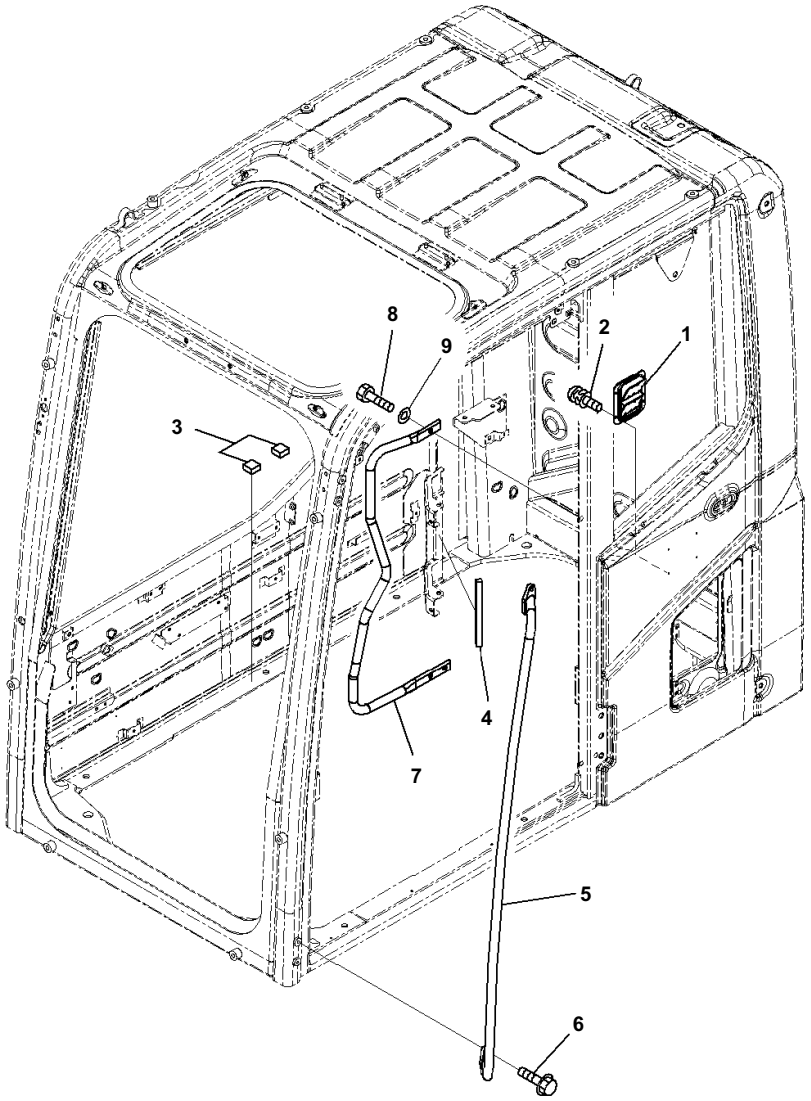

Index	Code	Part Number	Description	Qty	Serial No.
		20Y-53-00460	Cab Assembly	1	B10001-
1		20Y-53-11961	・ Valve Assembly	1	B10001-
2		01023-60512	・ Screw	4	B10001-
3		20Y-53-13490	・ Rubber	2	B10001-
4		20Y-53-12591	・ Seal	1	B10001-
5		20Y-53-11821	・ Grip	1	B10001-
6		01435-40825	・ Bolt	4	B10001-
7		20Y-53-11831	・ Grip	1	B10001-
8		01010-D1025	・ Bolt	3	B10001-
9		01643-71032	・ Washer	3	B10001-

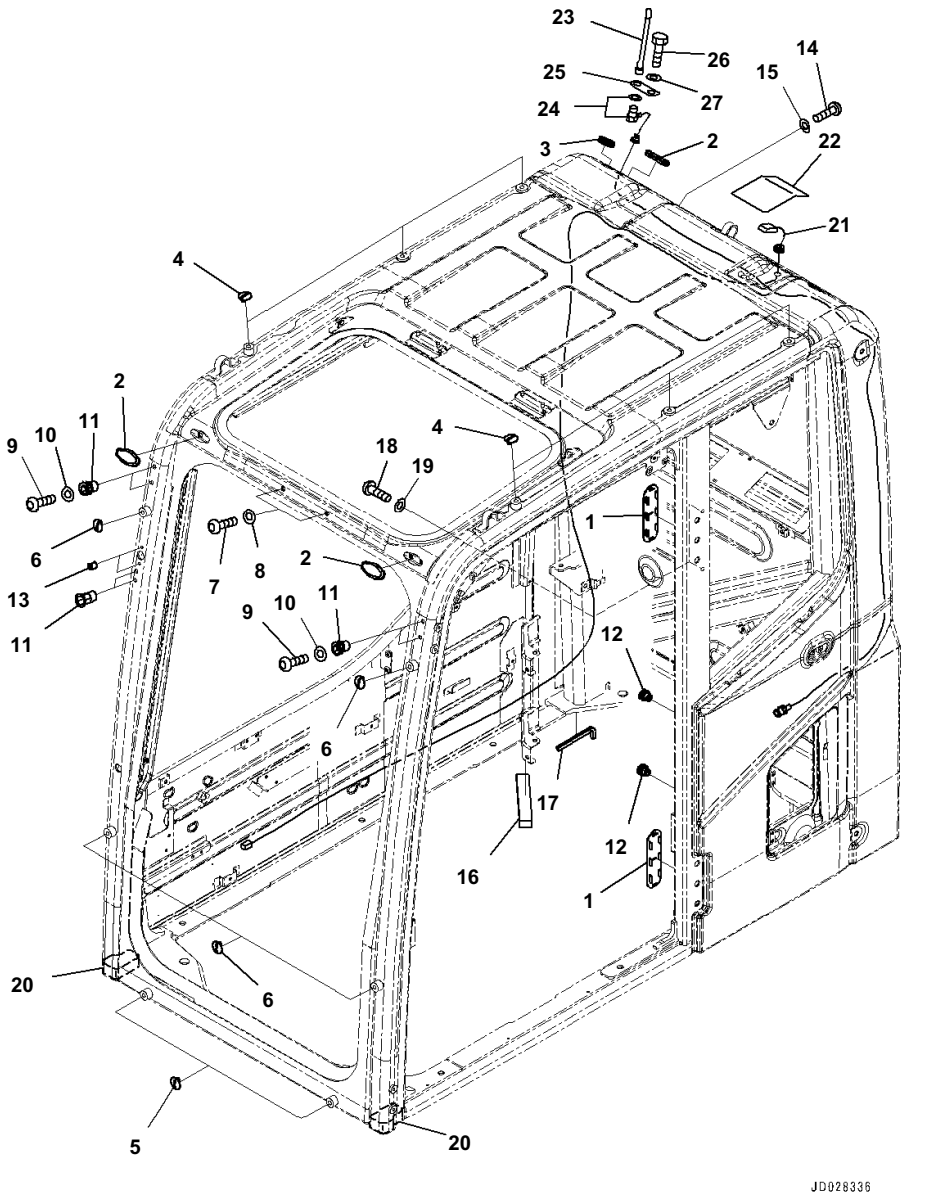

Index	Code	Part Number	Description	Qty	Serial No.
		20Y-53-00460	Cab Assembly	1	B10001-
1		20Y-53-12960	· Cover	2	B10001-
2		22B-54-17282	· Cap	3	B10001-
3		09415-02512	· Cap	1	B10001-
4		20Y-53-11390	· Cap	6	B10001-
5		20Y-53-11390	· Cap	2	B10001-
6		20Y-53-11380	· Cap	4	B10001-
7		01245-01016	· Screw	2	B10001-
8		01643-71032	· Washer	2	B10001-
9		01245-00616	· Screw, Hexagon Socket Head	4	B10001-
10		01643-70623	· Washer	4	B10001-
11		20Y-53-12260	· Nut	6	B10001-
12		20Y-54-35451	· Nut	2	B10001-
13		20Y-53-12320	· Nut	2	B10001-
14		01245-01016	· Screw	1	B10001-
15		01643-71032	· Washer	1	B10001-
16		20Y-53-12580	· Seal	1	B10001-
17		20Y-53-12740	· Trim	1	B10001-
18		01245-00816	· Screw	2	B10001-
19		01643-70823	· Washer	2	B10001-
20		20Y-53-18880	· Seal	2	B10001-
21		8A13-10-4300	· Antenna	1	B10001-
22		20Y-53-12951	· Cover	1	B10001-
23		8A13-10-2100	· Antenna	1	B10001-
24		8A13-10-2200	· Cable	1	B10001-
25		20Y-53-15140	· Plate	1	B10001-
26		01010-D1225	· Bolt	1	B10001-
27		01643-71232	· Washer	1	B10001-

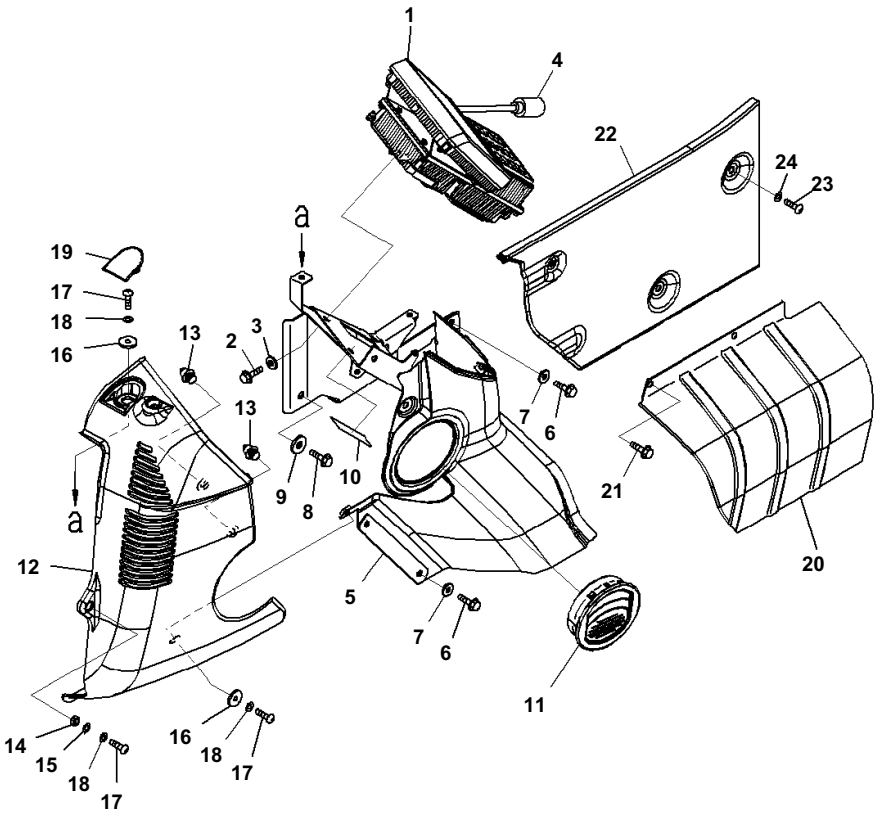

Index	Code	Part Number	Description	Qty	Serial No.
1		7835-31-1012	Monitor	1	B10001-
2		01435-00616	Bolt	4	B10001-
3		209-72-12230	Washer	4	B10001-
4		20Y-53-12810	Cover	1	B10001-
5		20Y-53-12154	Cover	1	B10001-
6		01435-00616	Bolt	4	B10001-
7		209-72-12230	Washer	4	B10001-
8		01435-00820	Bolt	1	B10001-
9		208-53-11330	Washer	1	B10001-
10		20Y-00-41330	Plate	1	B10001-
11		20Y-53-12172	Grille	1	B10001-
12		20Y-53-12122	Cover	1	B10001-
13		22U-54-25360	・ Clip	2	B10001-
14		205-54-75240	Collar	1	B10001-
15		01643-70823	Washer	1	B10001-
16		20Y-53-12310	Collar	2	B10001-
17		01245-00616	Screw, Hexagon Socket Head	3	B10001-
18		01643-70623	Washer	3	B10001-
19		20Y-53-12291	Cap	1	B10001-
20		20Y-53-12161	Cover	1	B10001-
21		01435-00616	Bolt	2	B10001-
22		20Y-53-12483	Cover	1	B10001-
23		01245-00612	Screw	3	B10001-
24		01643-70623	Washer	3	B10001-

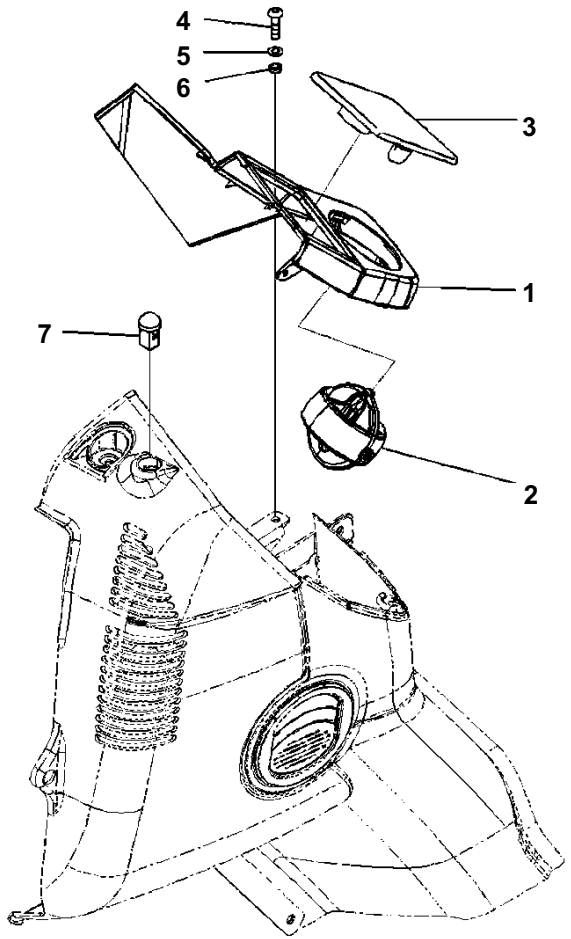

モニタカバー
Monitor Cover

JH004557

Index	Code	Part Number	Description	Qty	Serial No.
1		20Y-53-12111	Cover	1	B10001--
2		20Y-53-12240	Louver	1	B10001--
3		20Y-53-14230	Cover	1	B10001--
4		01245-00616	Screw, Hexagon Socket Head	1	B10001--
5		01643-70623	Washer	1	B10001--
6		20Y-43-41290	Collar	1	B10001--
7		20Y-979-6161	Sensor	1	B10001--

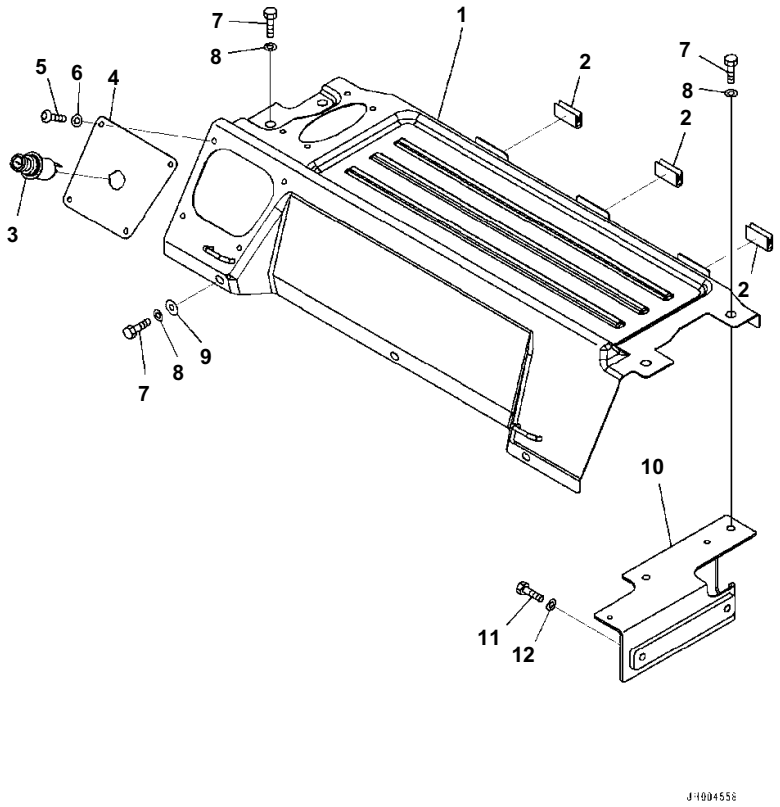

Index	Code	Part Number	Description	Qty	Serial No.
		20Y-53-13617	Cover Assembly	1	B10001-
1	C1		· Cover	1	B10001-
2		208-53-12460	· Seat	3	B10001-
3		20Y-06-23472	Cigarette Lighter	1	B10001-
4		20Y-53-13680	Plate	1	B10001-
5		01245-00616	Screw, Hezagon Socket Head	4	B10001-
6		01643-70823	Washer	4	B10001-
7		01010-D0825	Bolt	7	B10001-
8		01643-70823	Washer	7	B10001-
9		418-54-35450	Washer	3	B10001-
10		20Y-53-12771	Plate	1	B10001-
11		01010-D0825	Bolt	2	B10001-
12		01643-70823	Washer	2	B10001-

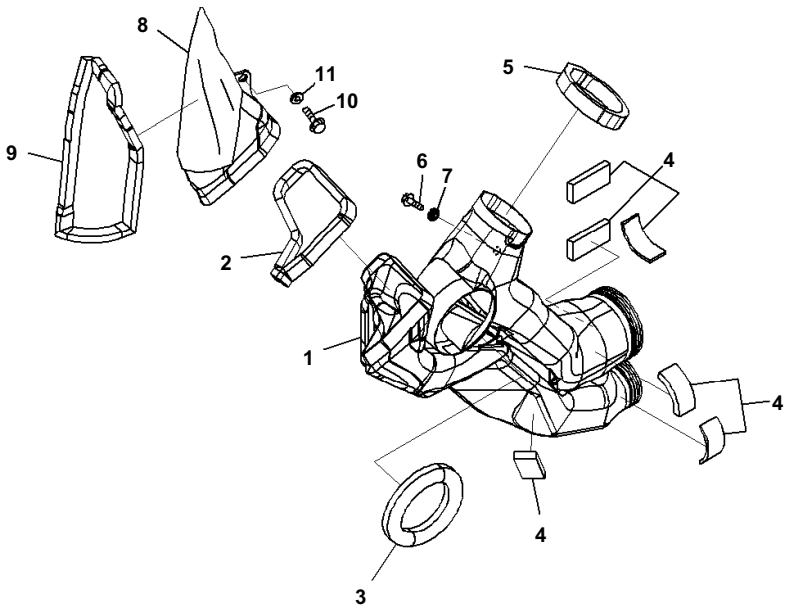

Index	Code	Part Number	Description	Qty	Serial No.
1		20Y-53-13371	Duct	1	B10001-
2		20Y-53-13480	Seal	1	B10001-
3		20Y-53-13280	Seal	1	B10001-
4		208-53-12440	Seal	6	B10001-
5		208-53-11941	Seal	1	B10001-
6		01435-00612	Bolt	1	B10001-
7		20Y-53-12310	Collar	1	B10001-
8		20Y-53-13421	Duct	1	B10001-
9		208-53-11920	Seal	1	B10001-
10		01435-00612	Bolt	1	B10001-
11		20Y-53-12310	Collar	1	B10001-

Reference:K1110-010017 Page:K014017

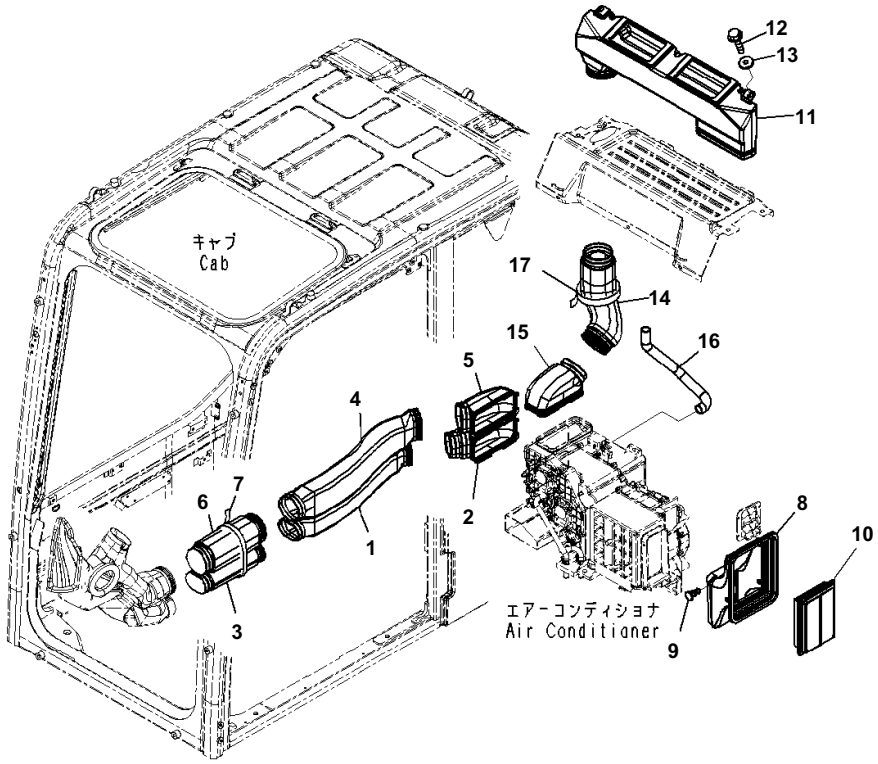

Index	Code	Part Number	Description	Qty	Serial No.
1		20Y-53-13311	Duct	1	B10001-
2		20Y-53-13331	Duct	1	B10001-
3		20Y-53-13351	Duct	1	B10001-
4		20Y-53-13321	Duct	1	B10001-
5		20Y-53-13341	Duct	1	B10001-
6		20Y-53-13361	Duct	1	B10001-
7		08034-20876	Band	1	B10001-
8		20Y-53-12522	Duct	1	B10001-
9		208-53-12680	Clip	1	B10001-
10		17M-911-3530	Element	1	B10001-
11		20Y-53-13451	Duct	1	B10001-
12		01435-40616	Bolt	2	B10001-
13		20Y-53-12310	Collar	2	B10001-
14		20Y-53-13461	Duct	1	B10001-
15		208-53-12120	Duct	1	B10001-
16		208-53-12432	Hose	1	B10001-
17		08034-20876	Band	1	B10001-

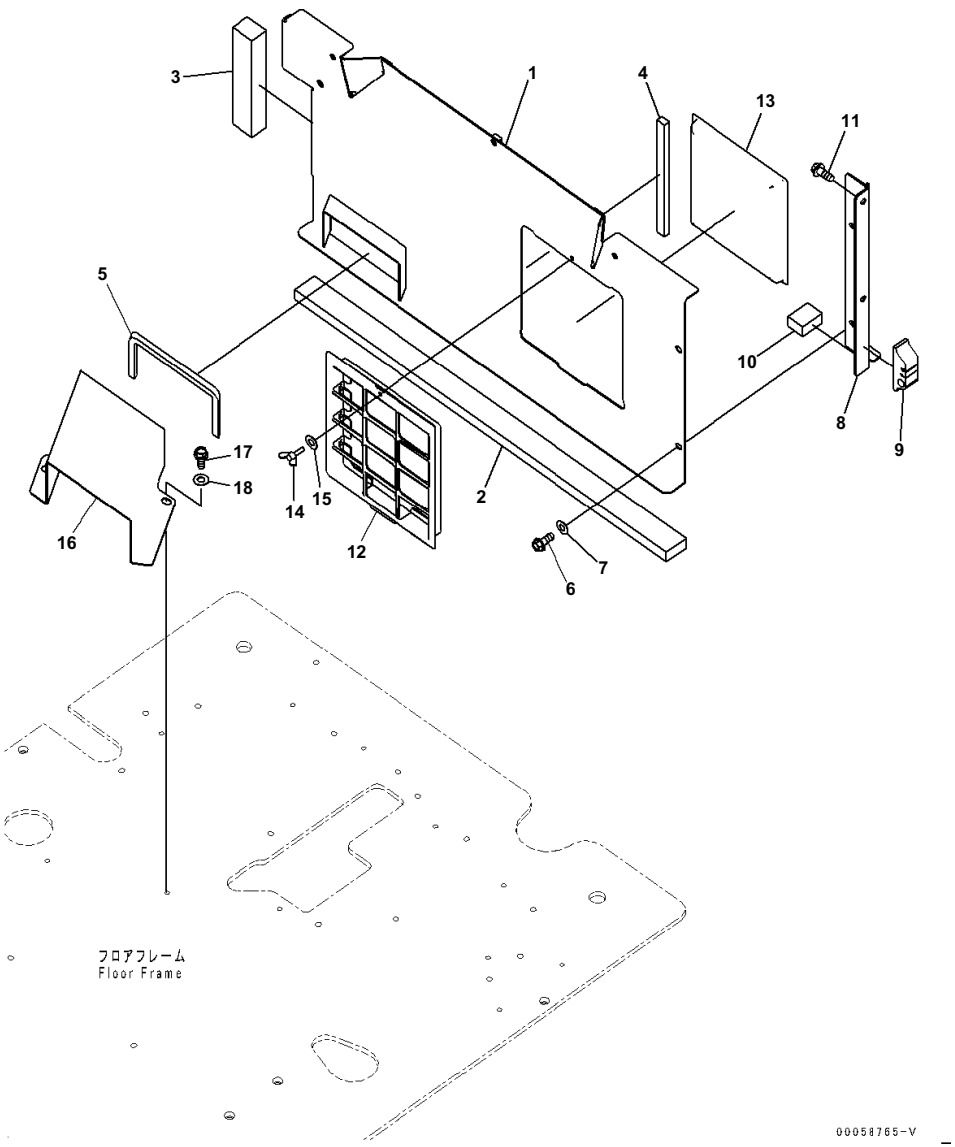

Index	Code	Part Number	Description	Qty	Serial No.
1		20Y-53-12564	Bracket	1	B10001-
2		20Y-53-11870	Seal	1	B10001-
3		20Y-53-11880	Seal	1	B10001-
4		208-53-11890	Seal	1	B10001-
5		208-53-12230	Seal	1	B10001-
6		01435-40820	Bolt	3	B10001-
7		418-54-35450	Washer	3	B10001-
8		20Y-53-12781	Plate	1	B10001-
9		20Y-53-12751	Seal	1	B10001-
10		20Y-53-12760	Seal	1	B10001-
11		01435-40820	Bolt	2	B10001-
12		208-979-7530	Holder	1	B10001-
13		208-979-7620	Filter	1	B10001-
14		20Y-54-65790	Bolt	1	B10001-
15		20Y-54-65690	Washer	1	B10001-
16		208-53-12551	Duct	1	B10001-
17		01010-D0820	Bolt	2	B10001-
18		01643-70823	Washer	2	B10001-

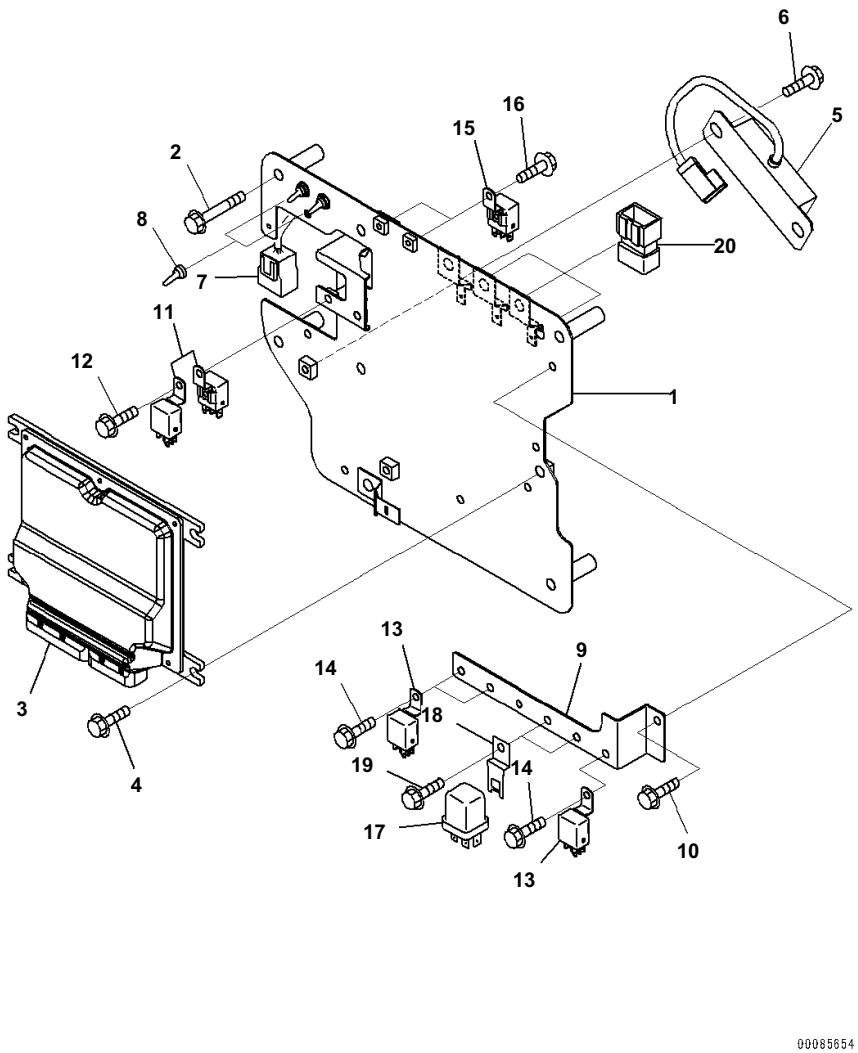

Index	Code	Part Number	Description	Qty	Serial No.
1		20Y-53-14812	Bracket	1	B10001-
2		01435-00860	Bolt	4	B10001-
3		7835-46-1007	Controller	1	B10001-
4		01435-00820	Bolt	4	B10001-
5		7861-94-2000	Resistor	1	B10001-
6		01435-00820	Bolt	2	B10001-
7		20Y-06-41150	Wiring Harness	1	B10001-
8		208-43-71420	Cap	2	B10001-
9		20Y-53-18211	Bracket	1	B10001-
10		01435-00610	Bolt	1	B10001-
11		7861-74-5100	Relay	2	B10001-
12		01435-00610	Bolt	1	B10001-
13		7861-74-5100	Relay	3	B10001-
14		01435-00610	Bolt	3	B10001-
15		7861-74-5100	Relay	2	B10001-
16		01435-00610	Bolt	2	B10001-
17		569-06-61960	Relay	2	B10001-
18		287-06-16420	Bracket	2	B10001-
19		01435-00610	Bolt	2	B10001-
20		8233-06-3350	Diode	3	B10001-

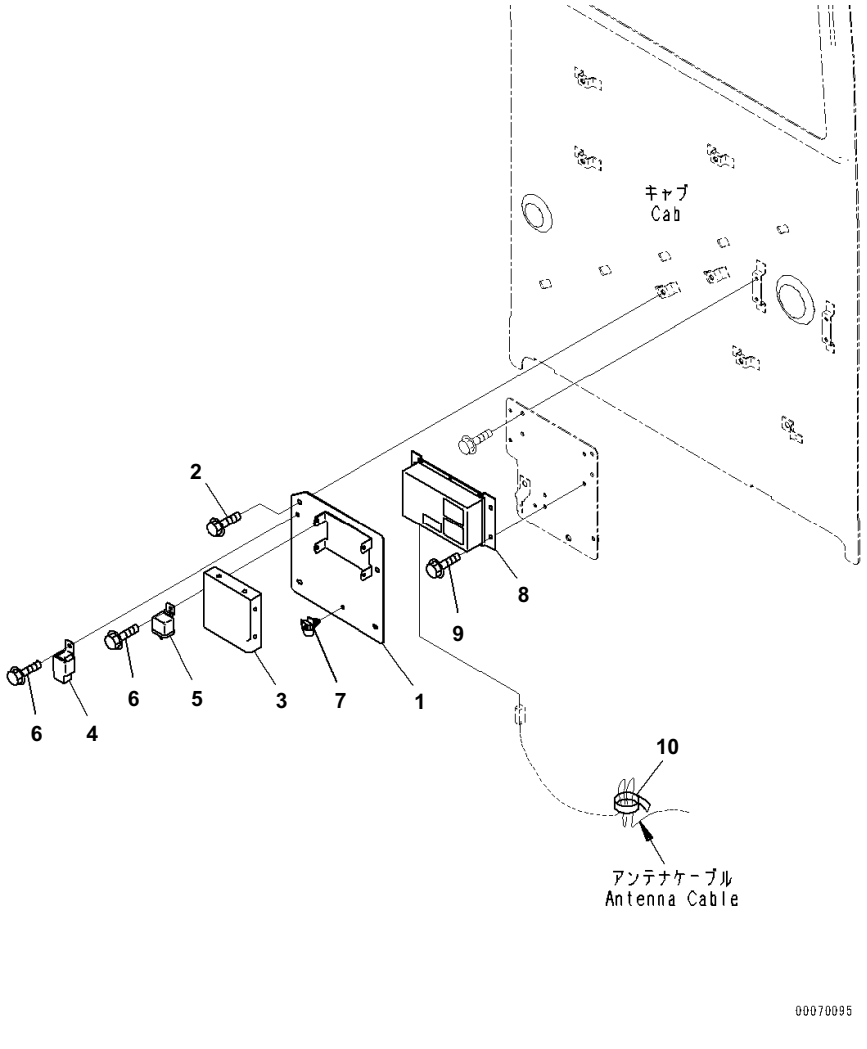

Index	Code	Part Number	Description	Qty	Serial No.
1		20Y-53-14820	Plate	1	B10001-
2		01435-40812	Bolt	2	B10001-
3		17A-979-3180	Controller	1	B10001-
4		421-07-31270	Relay	1	B10001-
5		20Y-979-6771	Relay	1	B10001-
6		01435-00610	Bolt	2	B10001-
7		08059-00515	Clip	1	B10001-
8		7826-23-3011	Controller	1	B10001-
9		01435-00612	Bolt	4	B10001-
10		08034-20414	Band	1	B10001-

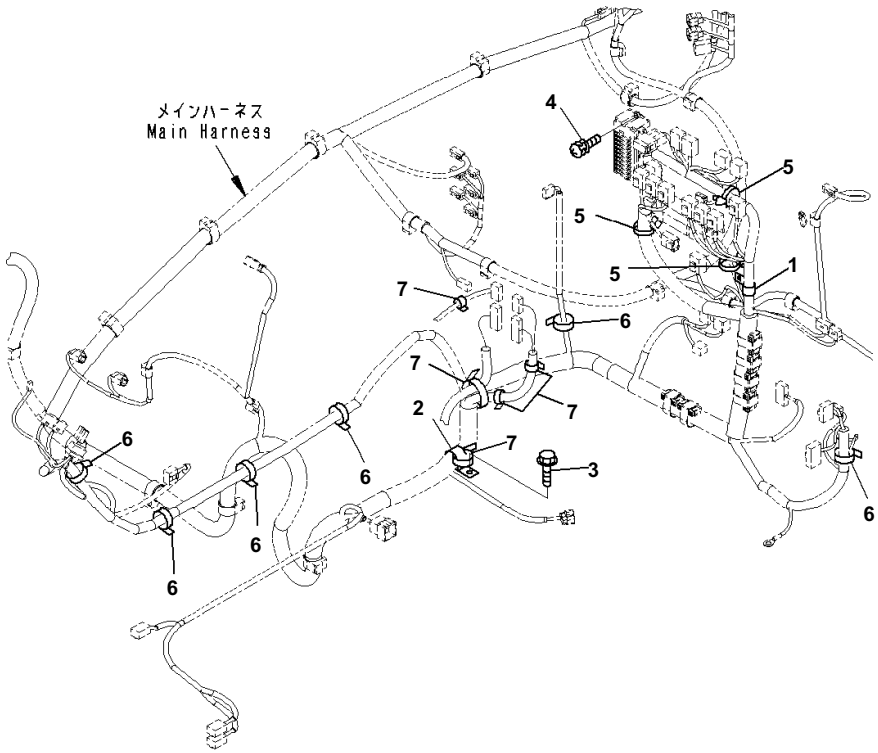

Index	Code	Part Number	Description	Qty	Serial No.
1		04434-52511	Clip	1	B10001-
2		04434-51708	Clip	1	B10001-
3		01435-00816	Bolt	1	B10001-
4		01023-60620	Screw	2	B10001-
5		08059-00515	Clip	3	B10001-
6		08034-20414	Band	6	B10001-
7		08034-20519	Band	5	B10001-

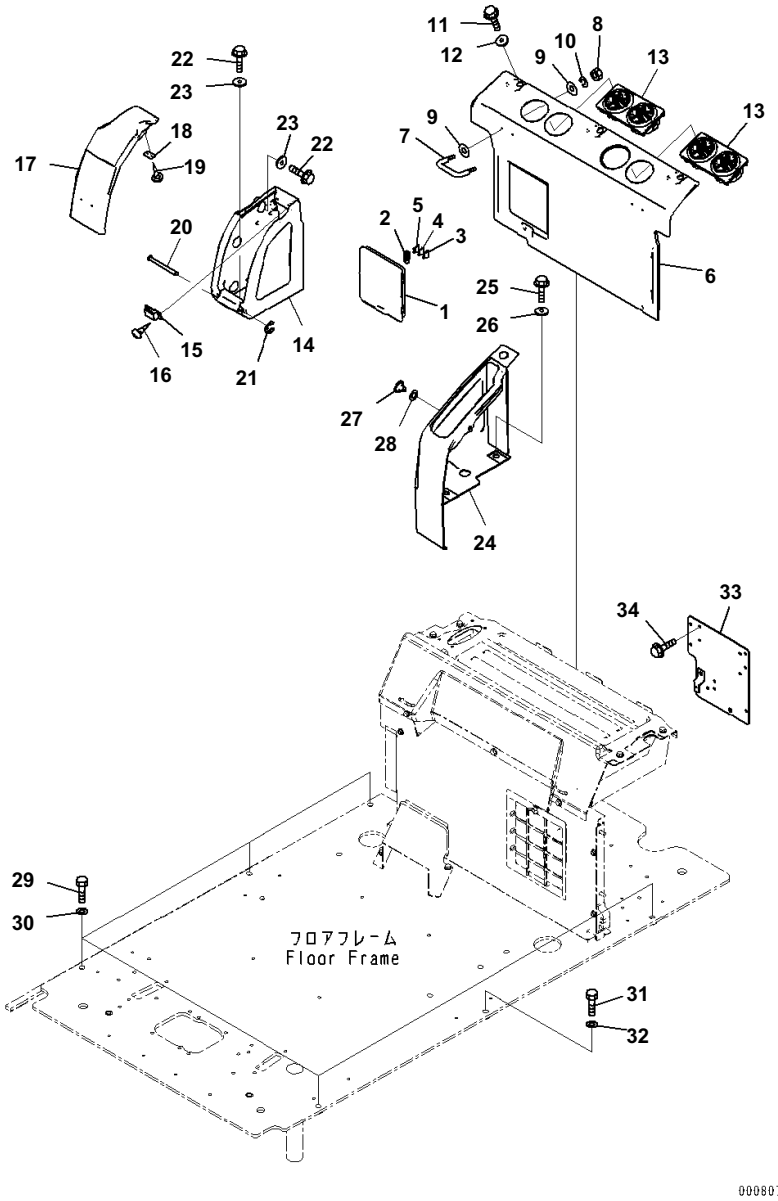

Index	Code	Part Number	Description	Qty	Serial No.
		20Y-53-13631	Cover Assembly	1	B10001-
1	C1		· Cover	1	B10001-
2		22U-43-22340	· Puller	1	B10001-
3		08041-01000	· Fuse, 10Amp.	1	B10001-
4		08041-02000	· Fuse, 20Amp.	1	B10001-
5		08041-03000	· Fuse, 30Amp.	1	B10001-
6		20Y-53-12371	Cover	1	B10001-
7		208-53-12290	· Hook	2	B10001-
8		01580-10403	· Nut	4	B10001-
9		01640-20408	· Washer, Flat	8	B10001-
10		01601-20410	· Washer	4	B10001-
11		01435-40616	Bolt	3	B10001-
12		20Y-53-12310	Collar	3	B10001-
13		208-979-7560	Grille	2	B10001-
14		20Y-53-12381	Cover	1	B10001-
15		09452-14503	Catcher	1	B10001-
16		01370-10308	Screw	2	B10001-
17		20Y-53-12391	Cover	1	B10001-
18		208-53-12410	Plate	1	B10001-
19		01370-20308	Screw	2	B10001-
20		208-53-12320	Pin	1	B10001-
21		208-53-12330	Ring	1	B10001-
22		01435-40616	Bolt	5	B10001-
23		20Y-53-12310	Collar	5	B10001-
24		20Y-53-12731	Cover	1	B10001-
25		01435-40620	Bolt	2	B10001-
26		20Y-53-12310	Collar	2	B10001-
27		23D-950-4450	Button	1	B10001-
28		20Y-53-12860	Spacer	1	B10001-
29		01010-81245	Bolt	5	B10001-
30		01643-31232	Washer	5	B10001-
31		01010-D1650	Bolt	1	B10001-
32		01643-31645	Washer	1	B10001-
33		20Y-53-18221	Bracket	1	B10001-
34		01435-00612	Bolt	4	B10001-

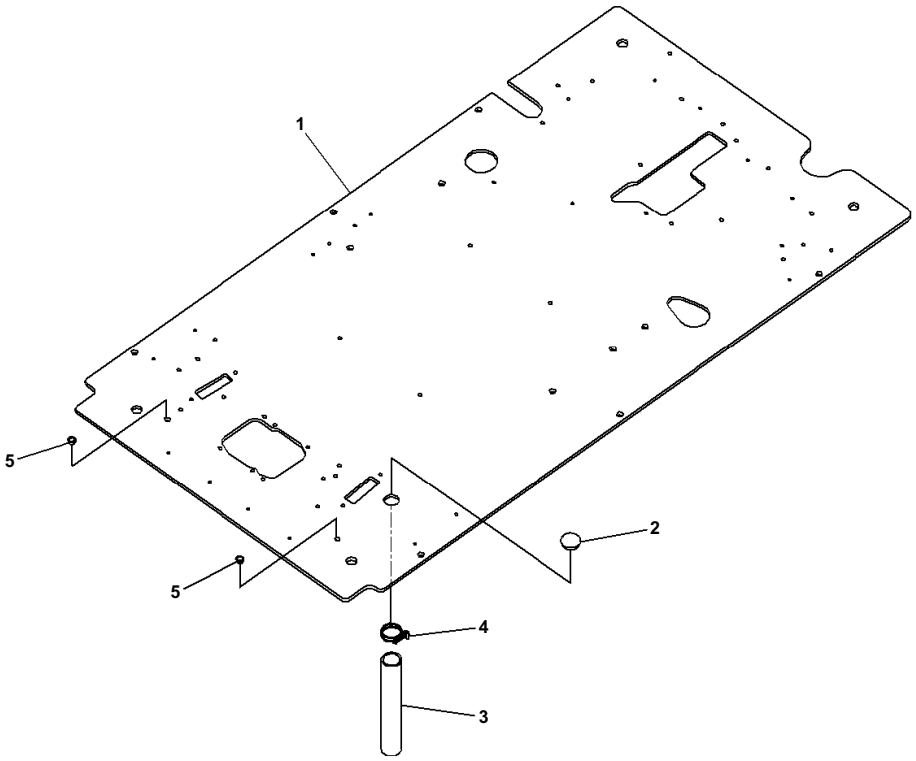

Index	Code	Part Number	Description	Qty	Serial No.
1		20Y-53-14116	Floor	1	B10001-
2		22U-54-25581	Grommet	1	B10001-
3		07286-03828	Hose	1	B10001-
4		07280-04726	Clamp	1	B10001-
5		07048-01310	Plug	2	B10001-

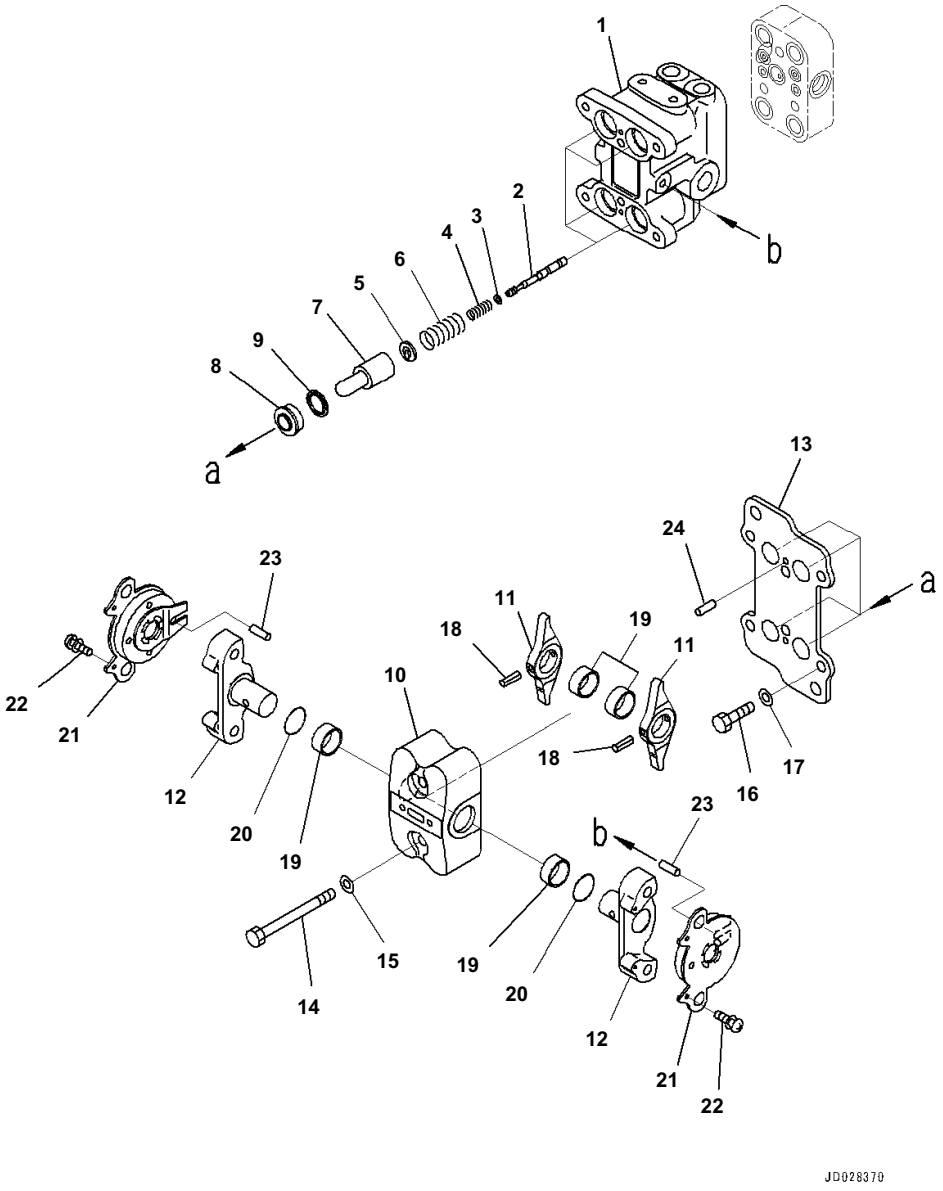

Index	Code	Part Number	Description	Qty	Serial No.
		702-16-04250	Valve, Pilot	1	B10001-
1	C1		· Valve Body	1	B10001-
2	C1		· Valve	4	B10001-
3	C1		· Shim, T=0.30mm	4	B10001-
4	C1		· Spring	4	B10001-
5	C1		· Retainer	4	B10001-
6	C1		· Spring	4	B10001-
7	C1		· Piston	4	B10001-
8		702-16-71150	· Seal	4	B10001-
9		702-16-71160	· Seat	4	B10001-
10	C1		· Case	1	B10001-
11	C1		· Lever	2	B10001-
12	C1		· Shaft	2	B10001-
13	C1		· Plate	1	B10001-
14		01010-80855	· Bolt	2	B10001-
15		01643-30823	· Washer	2	B10001-
16		01010-80816	· Bolt	4	B10001-
17		702-16-54331	· Washer, T=1.60mm	4	B10001-
		702-16-54341	· Washer, T=1.30mm	4	B10001-
		702-16-54351	· Washer, T=1.00mm	4	B10001-
		702-16-56380	· Washer, T=1.90mm	4	B10001-
		702-16-56390	· Washer, T=2.20mm	4	B10001-
18	C1		· Pin	2	B10001-
19	C1		· Bushing	4	B10001-
20		07000-12018	· O-ring	2	B10001-
21	C1		· Damper Assembly	2	B10001-
22		01023-10306	· Screw	4	B10001-
23		702-16-73650	· Pin	2	B10001-
24		04022-04016	· Pin, Dowel	2	B10001-

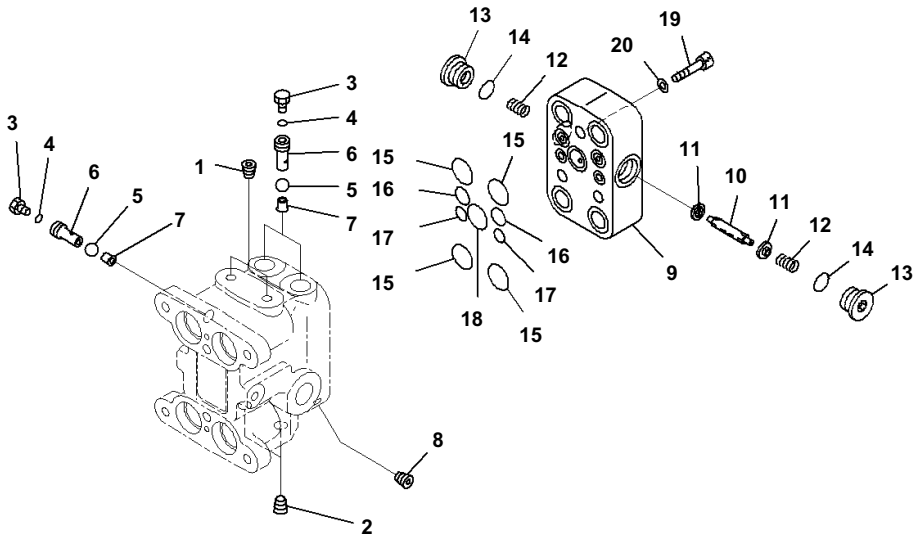

Index	Code	Part Number	Description	Qty	Serial No.
		702-16-04250	Valve, Pilot	1	B10001-
1	C1		· Plug	2	B10001-
2	C1		· Plug	2	B10001-
3		07040-11209	· Plug	3	B10001-
4		07002-11223	· O-ring	3	B10001-
5	C1		· Ball	3	B10001-
6		702-16-55940	· Plug	3	B10001-
7		702-16-55950	· Seat	3	B10001-
8	C1		· Screw	2	B10001-
9	C1		· Body, Valve	1	B10001-
10	C1		· Spool	1	B10001-
11		702-16-57440	· Retainer	2	B10001-
12		702-16-57450	· Spring	2	B10001-
13		723-11-15110	· Plug	2	B10001-
14		07002-11623	· O-ring	2	B10001-
15		07000-12015	· O-ring	4	B10001-
16		07000-11010	· O-ring	2	B10001-
17		07000-11007	· O-ring	2	B10001-
18		700-22-11410	· O-ring	1	B10001-
19		01252-60835	· Bolt	3	B10001-
20		01643-50823	· Washer	3	B10001-

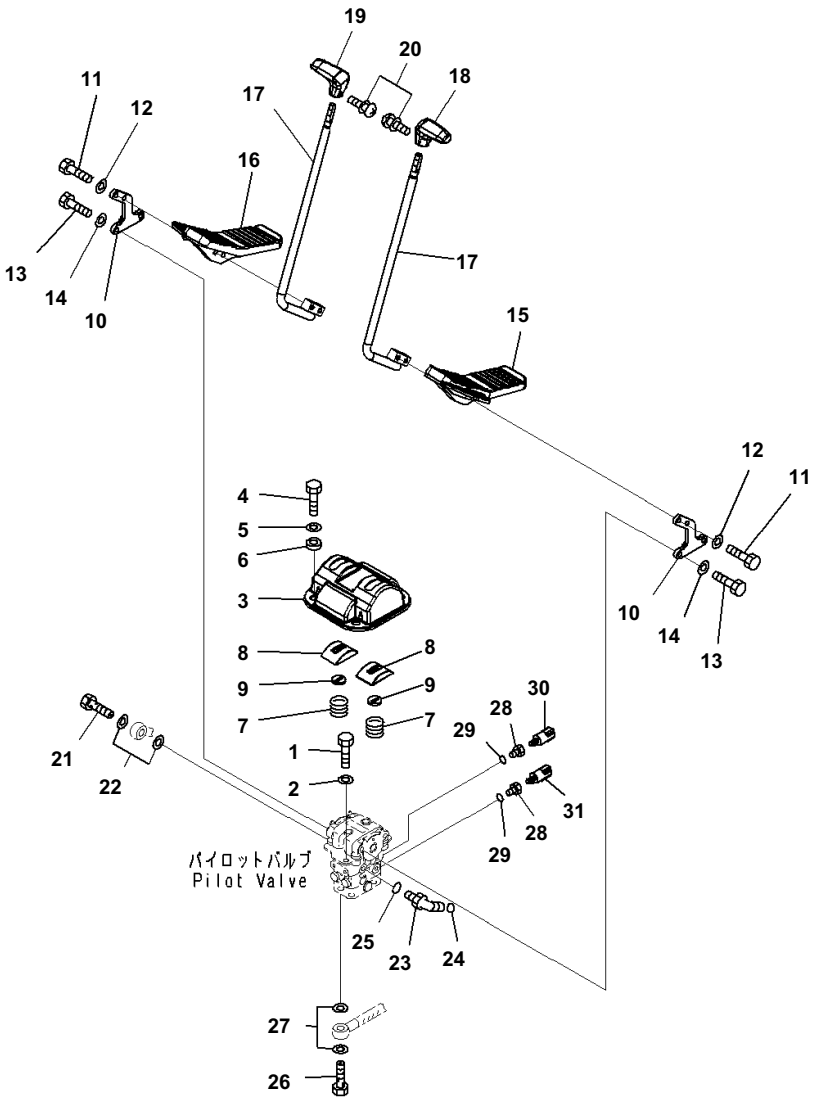

Index	Code	Part Number	Description	Qty	Serial No.
1		01010-81020	Bolt	2	B10001-
2		01643-31032	Washer	2	B10001-
3		20Y-43-41121	Cover	1	B10001-
4		01010-81020	Bolt	4	B10001-
5		01643-31032	Washer	4	B10001-
6		20Y-43-41361	Collar	4	B10001-
7		203-43-51620	Spring	2	B10001-
		22U-43-21350	Cover Assembly	2	B10001-
8	C1		・ Cover	1	B10001-
9		22U-43-21360	・ Seal	1	B10001-
10		20Y-43-41111	Lever	2	B10001-
11		01010-D1045	Bolt	4	B10001-
12		01643-71032	Washer	4	B10001-
13		01010-81030	Bolt	4	B10001-
14		01643-31032	Washer	4	B10001-
15		22U-43-21111	Pedal	1	B10001-
16		22U-43-21121	Pedal	1	B10001-
17		22U-43-21131	Lever	2	B10001-
18		20Y-43-21231	Knob	1	B10001-
19		20Y-43-21241	Knob	1	B10001-
20		01023-20416	Screw	2	B10001-
21		20Y-62-18910	Bolt	1	B10001-
22		07000-12018	O-ring	2	B10001-
23		11Y-62-12160	Elbow	1	B10001-
24		02896-11008	O-ring	1	B10001-
25		07002-11423	O-ring	1	B10001-
26		20Y-62-18890	Bolt	4	B10001-
27		07000-12015	O-ring	8	B10001-
28		20Y-62-41390	Adapter	2	B10001-
29		07002-11423	O-ring	2	B10001-
30		20Y-06-21710	Switch	1	B10001-
31		206-06-61130	Switch	1	B10001-

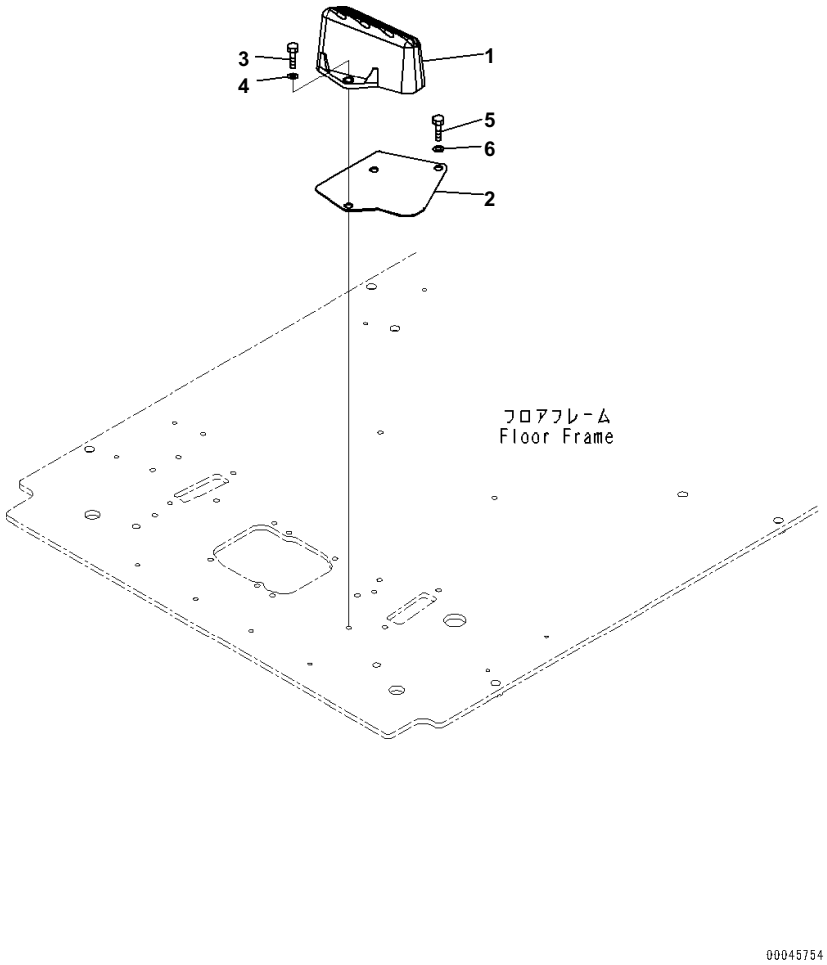

Index	Code	Part Number	Description	Qty	Serial No.
1		22U-54-25110	Footrest	1	B10001-
2		22U-54-25521	Plate	1	B10001-
3		01010-81025	Bolt	2	B10001-
4		01643-31032	Washer	2	B10001-
5		01010-81020	Bolt	2	B10001-
6		01643-31032	Washer	2	B10001-

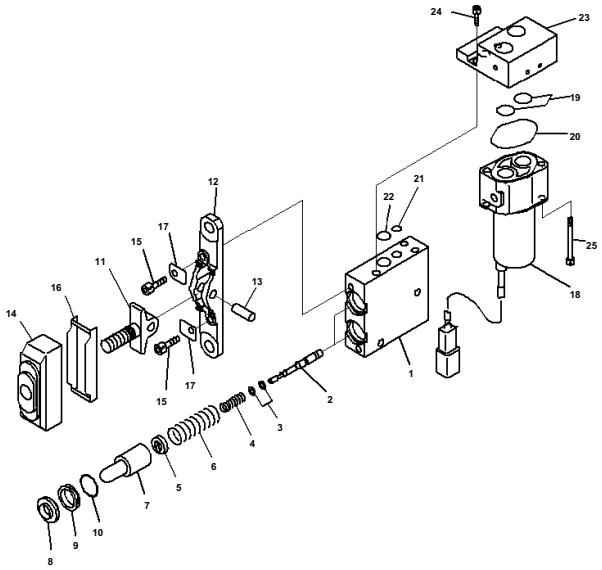

Index	Code	Part Number	Description	Qty	Serial No.
		702-16-04290	Valve, Pilot	1	B10001-
1	C1		· Valve Body	1	B10001-
2	C1		· Valve	2	B10001-
3		702-16-51140	· Shim, T=0.30mm	2	B10001-
4		702-16-54550	· Spring	2	B10001-
5		702-16-54571	· Retainer	2	B10001-
6		702-16-54560	· Spring	2	B10001-
7		702-16-53170	· Piston	2	B10001-
8		702-16-51270	· Seal	2	B10001-
9		702-16-54580	· Collar	2	B10001-
10		702-16-54590	· O-ring	2	B10001-
11	C1		· Lever	1	B10001-
12	C1		· Plate	1	B10001-
13	C1		· Shaft	1	B10001-
14		702-16-54641	· Boot	1	B10001-
15		01252-30625	· Bolt	2	B10001-
16		702-16-54660	· Plate	1	B10001-
17		702-16-54650	· Plate	2	B10001-
		702-16-54670	· Shim, T=0.20mm	4	B10001-
18		702-21-07610	· Valve, Solenoid	1	B10001-
19		700-22-11410	· O-ring	2	B10001-
20		702-21-39450	· O-ring	1	B10001-
21		07000-11008	· O-ring	1	B10001-
22		07000-12012	· O-ring	1	B10001-
23		702-16-62480	· Body	1	B10001-
24		01252-60612	· Bolt	3	B10001-
25		203-60-62220	· Bolt	2	B10001-

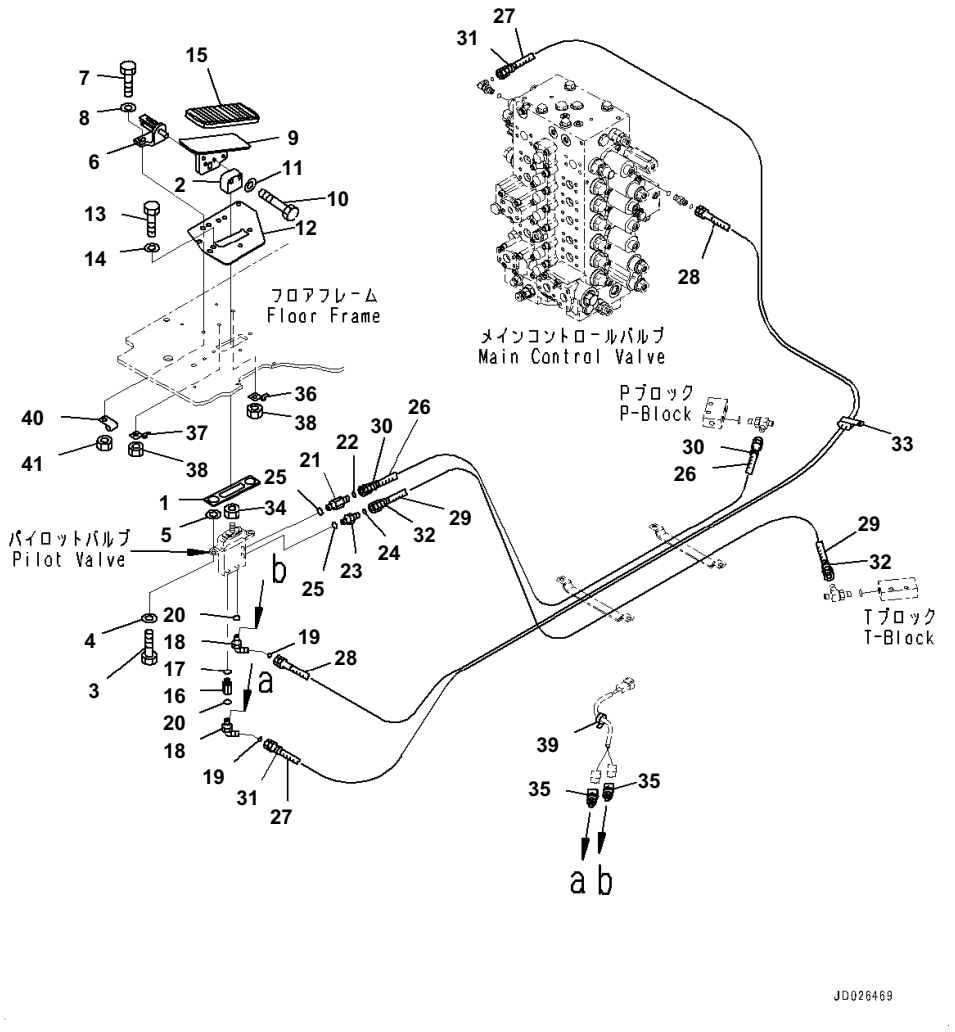

Index	Code	Part Number	Description	Qty	Serial No.
1		22U-54-25660	Seal	1	B10001-
2		20Y-43-41760	Seat	1	B10001-
3		01010-81025	Bolt	2	B10001-
4		01643-31032	Washer	2	B10001-
5		01643-31032	Washer	2	B10001-
6		20Y-62-25360	Bracket	1	B10001-
7		01010-D1035	Bolt	2	B10001-
8		01643-71032	Washer	2	B10001-
9		20Y-53-14220	Pedal	1	B10001-
10		01010-D1045	Bolt	2	B10001-
11		01643-71032	Washer	2	B10001-
12		22U-54-25541	Plate	1	B10001-
13		01010-81025	Bolt	3	B10001-
14		01643-31032	Washer	3	B10001-
15		207-43-81240	Cap	1	B10001-
16		20T-910-8660	Nipple	1	B10001-
17		07000-12011	O-ring	1	B10001-
18		20Y-62-52160	Elbow	2	B10001-
19		02896-11008	O-ring	2	B10001-
20		07000-12011	O-ring	2	B10001-
21		20Y-62-43470	Nipple	1	B10001-
22		02896-11008	O-ring	1	B10001-
23		11Y-62-12140	Nipple	1	B10001-
24		02896-11008	O-ring	1	B10001-
25		07000-12011	O-ring	2	B10001-
26		20Y-62-52330	Hose	1	B10001-
27		20Y-62-52340	Hose	1	B10001-
28		20Y-62-52350	Hose	1	B10001-
29		208-62-72480	Hose	1	B10001-
30		20Y-62-22790	Band, Red	2	B10001-
31		20Y-62-22810	Band, Yellow	2	B10001-
32		20Y-62-22820	Band, Blue	2	B10001-
33		04435-51210	Clip	1	B10001-
34		01583-11408	Nut	1	B10001-
35		206-06-61130	Switch	2	B10001-
36		08193-21012	Clip	1	B10001-
37		08053-01510	Clip	1	B10001-
38		01580-01008	Nut	2	B10001-
39		08034-20536	Band	1	B10001-
40		04434-50610	Clip	1	B10001-
41		01580-01008	Nut	1	B10001-

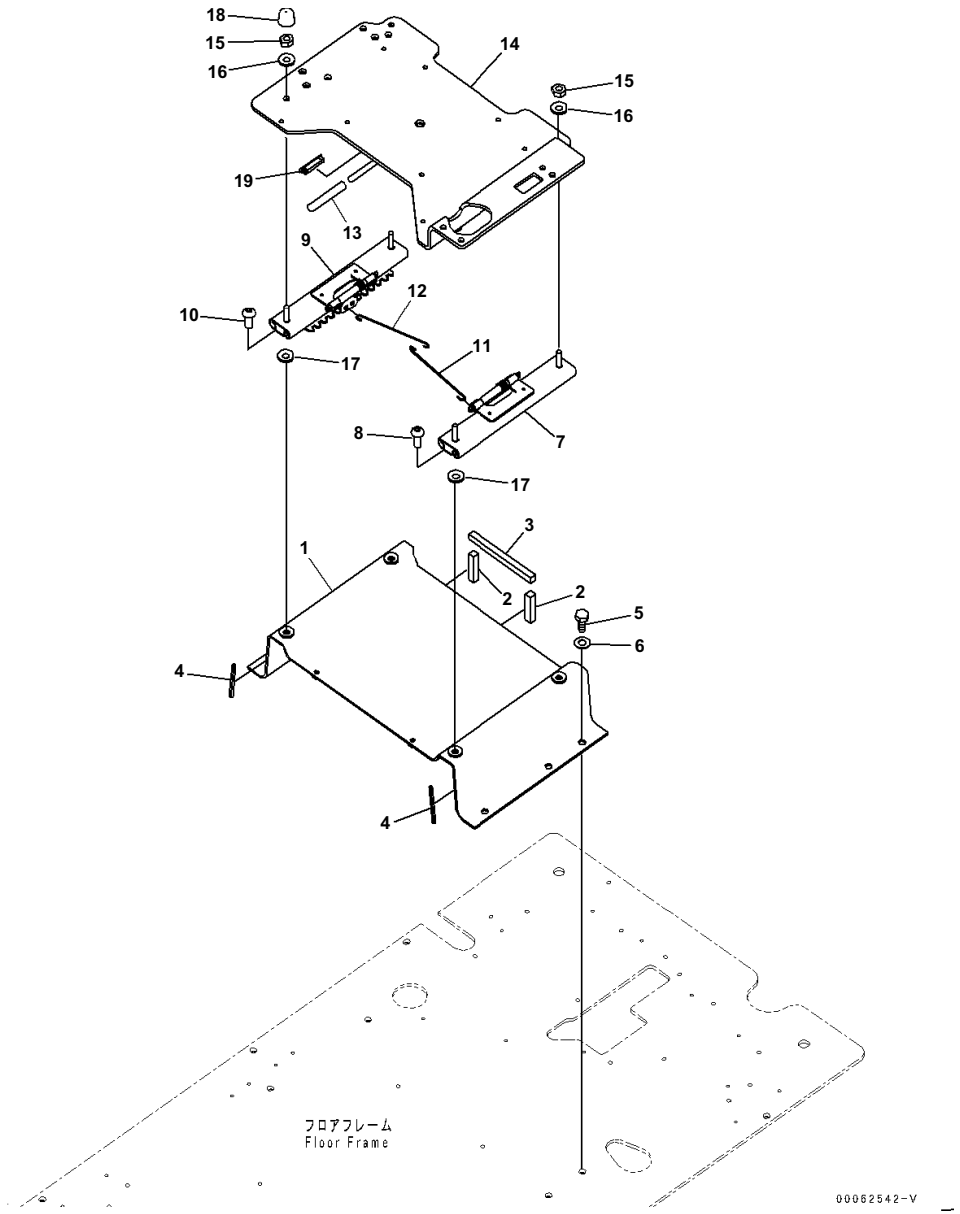

Index	Code	Part Number	Description	Qty	Serial No.
1		20Y-43-41230	Frame	1	B10001-
2		208-43-71520	・ Seal	2	B10001-
3		208-43-71530	・ Seal	1	B10001-
4		208-43-71590	・ Seal	2	B10001-
5		01010-81230	Bolt	5	B10001-
6		01643-31232	Washer	5	B10001-
7		20Y-43-41813	Adjuster	1	B10001-
8		01245-01025	Screw	2	B10001-
9		20Y-43-41823	Adjuster	1	B10001-
10		01245-01025	Screw	2	B10001-
11		20Y-43-41832	Wire	1	B10001-
12		20Y-43-41891	Wire	1	B10001-
13		22U-43-21390	Cap	1	B10001-
14		20Y-43-41252	Frame	1	B10001-
15		20Y-54-65340	Nut	4	B10001-
16		01643-71032	Washer	4	B10001-
17		01640-21016	Washer	4	B10001-
18		20Y-54-65540	Cap	2	B10001-
19		20Y-979-6630	Catcher	1	B10001-

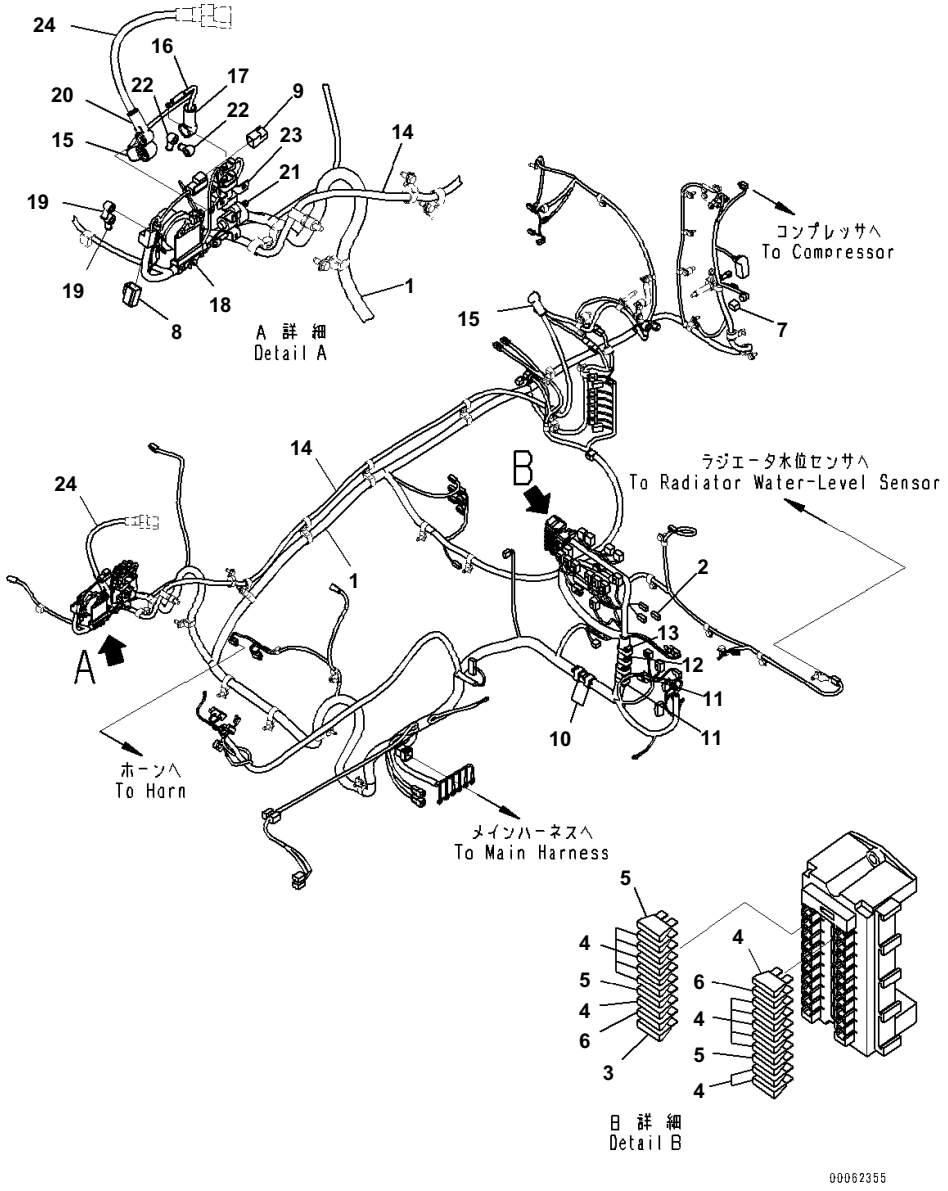

Index	Code	Part Number	Description	Qty	Serial No.
1		20Y-06-42751	Wiring Harness	1	B10001-
2		08020-20000	・ Diode	2	B10001-
3		08041-00500	・ Fuse, 5Amp.	1	B10001-
4		08041-01000	・ Fuse, 10Amp.	14	B10001-
5		08041-02000	・ Fuse, 20Amp.	3	B10001-
6		08041-03000	・ Fuse, 30Amp.	2	B10001-
7		19M-06-31720	・ Resistor	1	B10001-
8		20Y-06-31660	・ Fusible Link, 30Amp.	1	B10001-
9		22U-06-11270	・ Fusible Link, 65Amp.	1	B10001-
10		HM6400-0012	・ F-connector, Black	2	B10001-
		HM6409-0071	・ M-Connector, Black	2	B10001-
11		HM6400-0013	・ F-connector, Green	2	B10001-
		HM6409-0072	・ M-Connector, Green	2	B10001-
12		HM6440-0129	・ F-connector, Pink	1	B10001-
		HM6440-0128	・ M-Connector, Pink	1	B10001-
13		HM6400-0016	・ F-connector, Orange	1	B10001-
		HM6409-0075	・ M-Connector, Orange	1	B10001-
14		20Y-06-41283	Cable	1	B10001-
15		08038-00035	Cap, Terminal	1	B10001-
16		20Y-06-22872	Cable	1	B10001-
17		08038-06031	Cap	1	B10001-
18		08088-30000	Switch	1	B10001-
19		08038-00519	Cap	2	B10001-
20		08038-06031	Cap	1	B10001-
21		600-815-2170	Switch, Heater	1	B10001-
22		08038-00519	Cap	2	B10001-
23		600-815-8941	Relay	1	B10001-
24		08028-CC065	Cable	1	B10001-

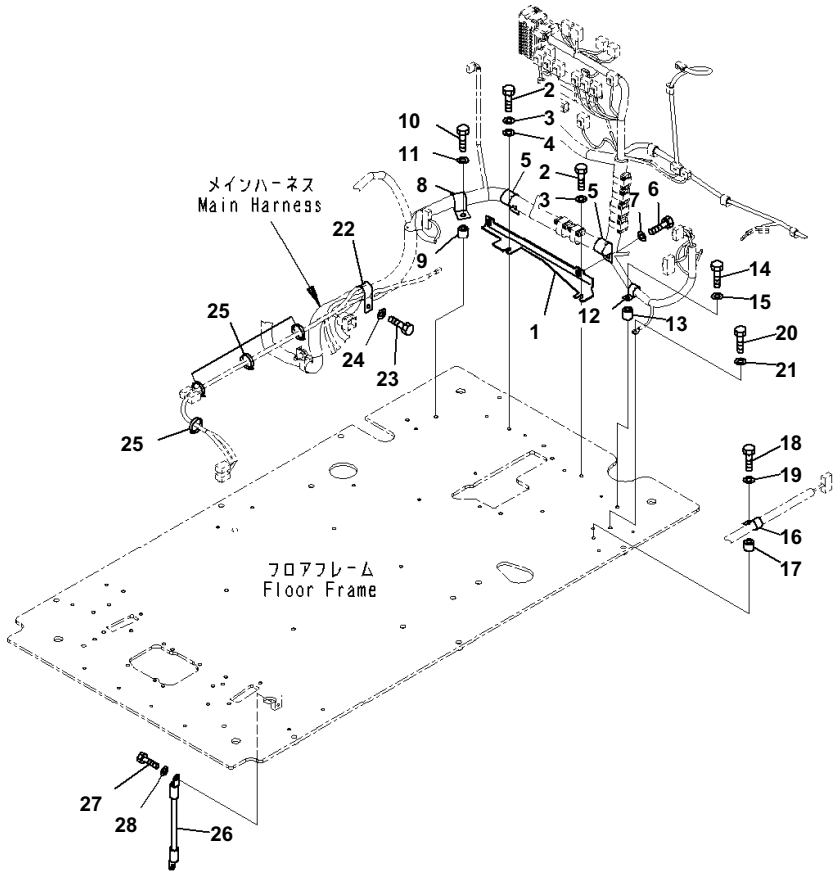

Index	Code	Part Number	Description	Qty	Serial No.
1		20Y-53-14121	Bracket	1	B10001-
2		01010-81016	Bolt	2	B10001-
3		01643-31032	Washer	2	B10001-
4		01643-31032	Washer	1	B10001-
5		04434-53411	Clip	2	B10001-
6		01010-81020	Bolt	2	B10001-
7		01643-31032	Washer	2	B10001-
8		04434-53411	Clip	1	B10001-
9		195-33-11220	Spacer	1	B10001-
10		01010-81040	Bolt	1	B10001-
11		01643-31032	Washer	1	B10001-
12		04434-51910	Clip	1	B10001-
13		195-33-11220	Spacer	1	B10001-
14		01010-81040	Bolt	1	B10001-
15		01643-31032	Washer	1	B10001-
16		04434-51410	Clip	1	B10001-
17		195-33-11220	Spacer	1	B10001-
18		01010-81040	Bolt	1	B10001-
19		01643-31032	Washer	1	B10001-
20		01010-81020	Bolt	1	B10001-
21		01643-31032	Washer	1	B10001-
22		04434-53411	Clip	1	B10001-
23		01010-81020	Bolt	1	B10001-
24		01643-31032	Washer	1	B10001-
25		08034-20519	Band	4	B10001-
26		08028-43030	Cable, Ground	1	B10001-
27		01010-81020	Bolt	1	B10001-
28		01643-31032	Washer	1	B10001-

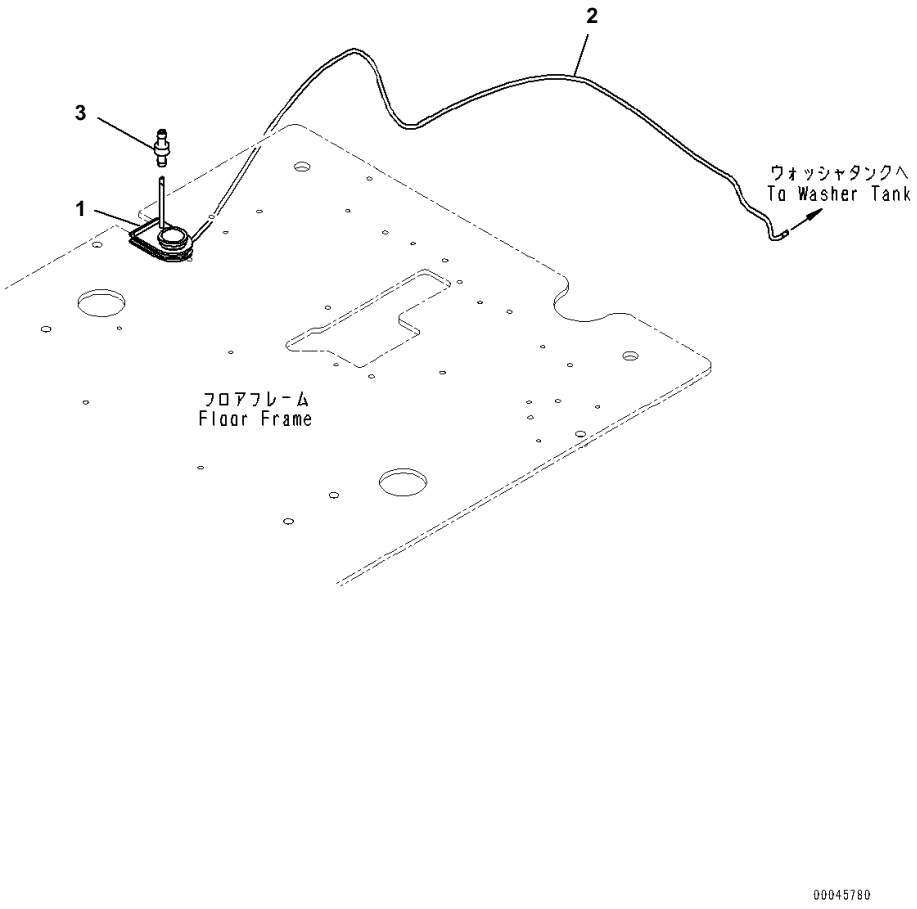

Index	Code	Part Number	Description	Qty	Serial No.
1		20Y-53-14991	Grommet	1	B10001-
2		195-979-7770	Hose	1	B10001-
3		207-06-61490	Valve	1	B10001-

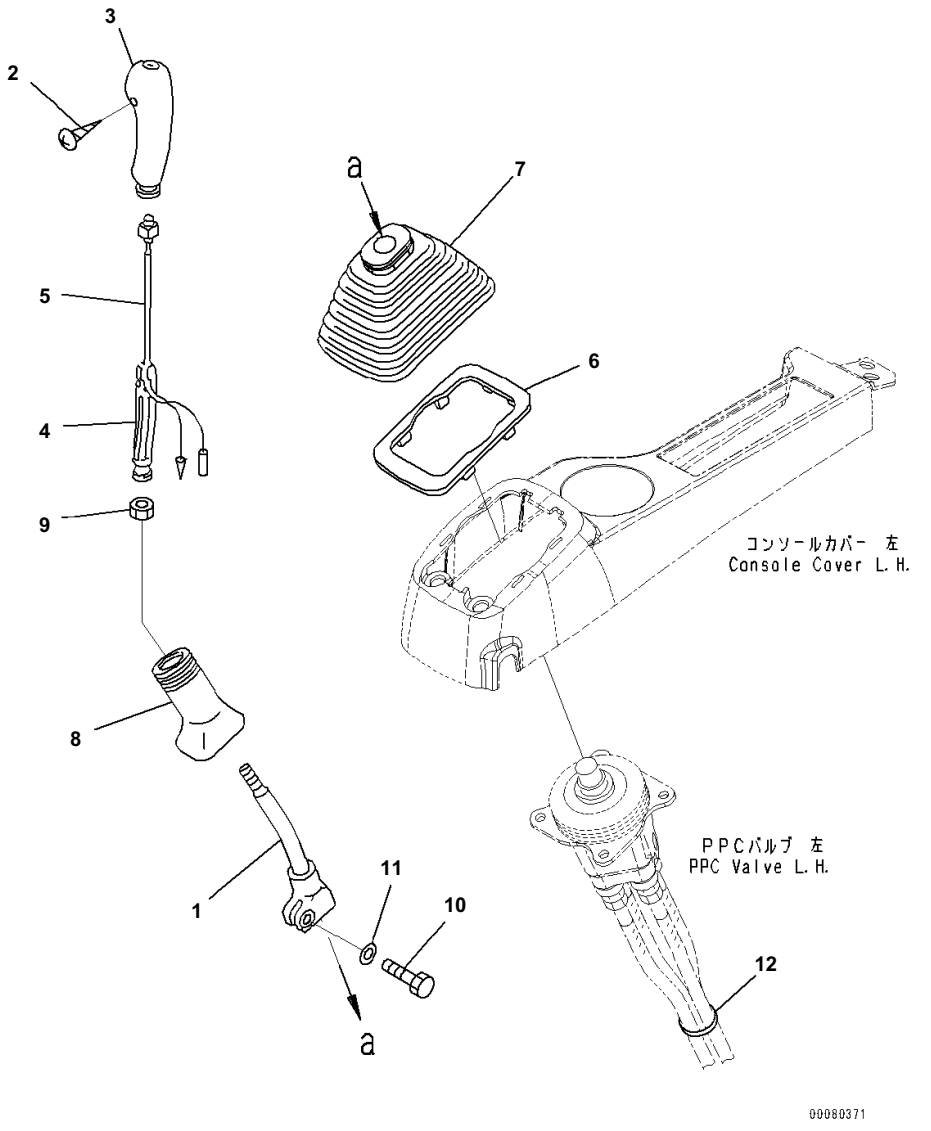

Index	Code	Part Number	Description	Qty	Serial No.
1		20Y-43-22211	Lever	1	B10001-
		22U-43-21182	Knob	1	B10001-
2	C1		・ Screw	1	B10001-
3		20Y-43-22381	・ Knob	1	B10001-
4		20Y-43-22421	・ Insert	1	B10001-
5		22U-43-21211	・ Switch	1	B10001-
6		20Y-43-22250	Plate	1	B10001-
7		20Y-43-22261	Boot	1	B10001-
8		20Y-43-22370	Boot	1	B10001-
9		600-411-1280	Nut	1	B10001-
10		01252-41025	Bolt	1	B10001-
11		01643-51032	Washer	1	B10001-
12		08034-20536	Band	1	B10001-

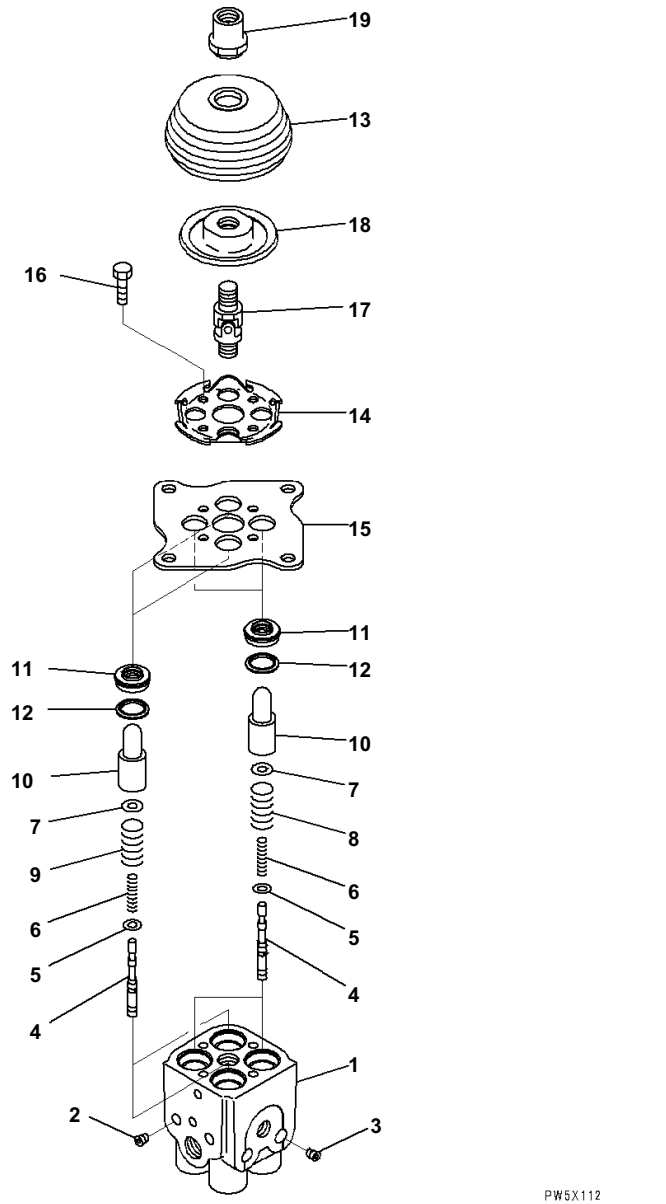

Index	Code	Part Number	Description	Qty	Serial No.
		702-16-03910	Valve, Pilot	1	B10001-
1	C1		· Valve Body	1	B10001-
2	C1		· Plug	2	B10001-
3	C1		· Plug	2	B10001-
4	C1		· Valve	4	B10001-
5		702-16-51140	· Shim, T=0.30mm	4	B10001-
6		702-16-53420	· Spring	4	B10001-
7		702-16-53140	· Retainer	4	B10001-
8		702-16-53470	· Spring	2	B10001-
9		702-16-53590	· Spring	2	B10001-
10		702-16-53170	· Piston	4	B10001-
11		702-16-71210	· Seal	4	B10001-
12		702-16-71160	· Seat	4	B10001-
13		702-16-71280	· Boot	1	B10001-
14		702-16-71131	· Plate	1	B10001-
15		702-16-71141	· Plate	1	B10001-
16		01010-80620	· Bolt	4	B10001-
17		702-16-51240	· Universal Joint	1	B10001-
18		702-16-71361	· Disc	1	B10001-
19		702-16-71441	· Nut	1	B10001-

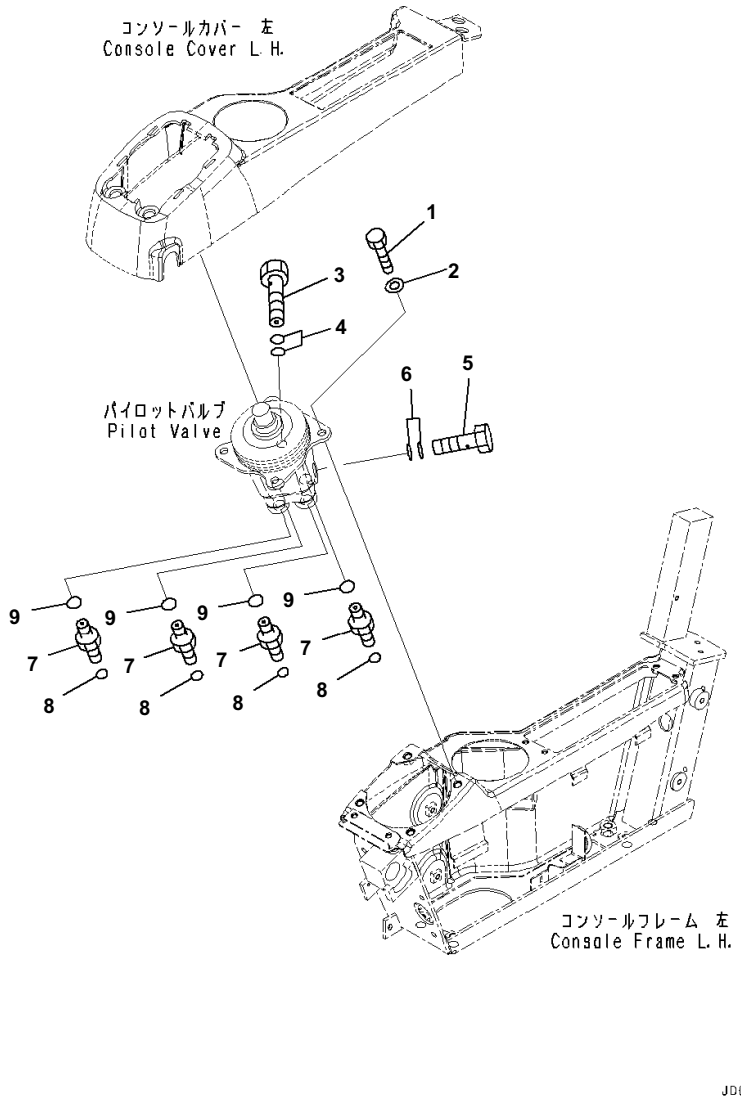

Index	Code	Part Number	Description	Qty	Serial No.
1		01010-80820	Bolt	4	B10001-
2		01643-30823	Washer	4	B10001-
3		20Y-62-18910	Bolt	1	B10001-
4		07000-12018	O-ring	2	B10001-
5		20Y-62-18890	Bolt	1	B10001-
6		07000-12015	O-ring	2	B10001-
7		11Y-62-12130	Nipple	4	B10001-
8		02896-11008	O-ring	4	B10001-
9		07002-11423	O-ring	4	B10001-

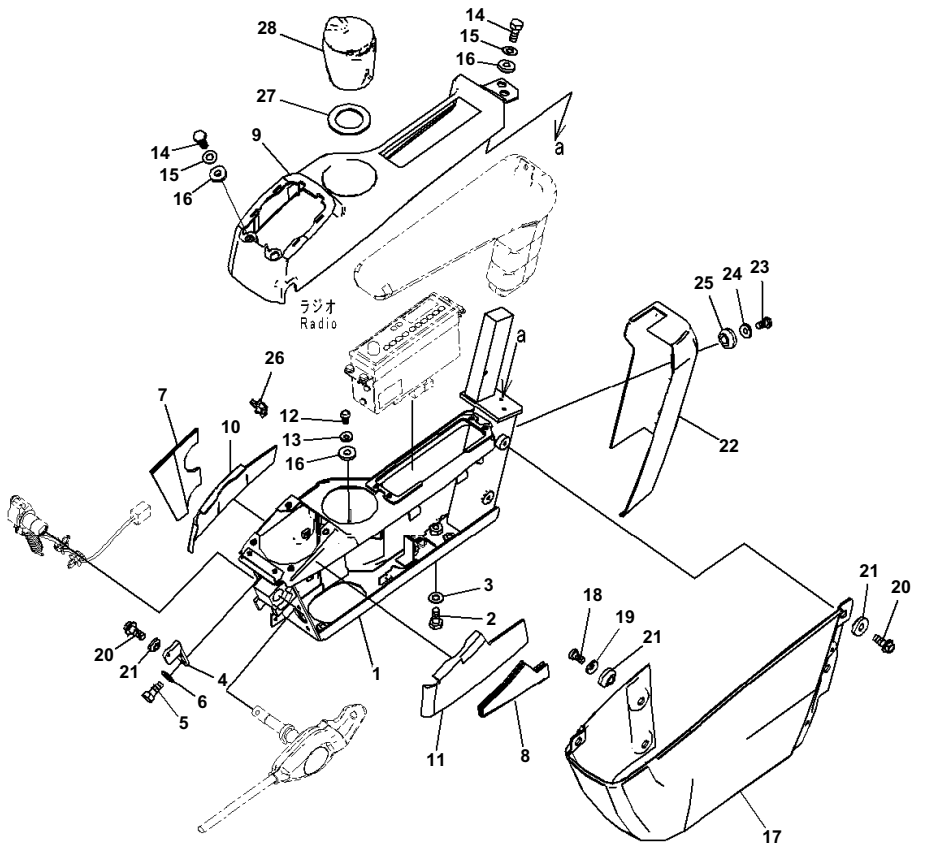

Index	Code	Part Number	Description	Qty	Serial No.
1		20Y-43-41415	Frame	1	B10001-
2		01010-81030	Bolt	4	B10001-
3		01643-31032	Washer	4	B10001-
4		20Y-43-41472	Bracket	1	B10001-
5		01010-80616	Bolt	2	B10001-
6		01643-30623	Washer	2	B10001-
7		20Y-43-41621	Sheet	1	B10001-
8		20Y-43-41641	Sheet	1	B10001-
9		20Y-43-41423	Cover	1	B10001-
10		20Y-43-41651	Sheet	1	B10001-
11		20Y-43-41661	Sheet	1	B10001-
12		01245-00616	Screw, Hexagon Socket Head	1	B10001-
13		01643-70623	Washer	1	B10001-
14		01010-80616	Bolt	4	B10001-
15		01643-30623	Washer	4	B10001-
16		20Y-43-41290	Collar	5	B10001-
17		20Y-43-41442	Cover	1	B10001-
18		01245-00616	Screw, Hexagon Socket Head	2	B10001-
19		01643-70623	Washer	2	B10001-
20		01435-00612	Bolt	3	B10001-
21		20Y-43-41290	Collar	5	B10001-
22		20Y-43-41453	Cover	1	B10001-
23		01245-00616	Screw, Hexagon Socket Head	2	B10001-
24		01643-70623	Washer	2	B10001-
25		20Y-43-41290	Collar	2	B10001-
26		22U-43-23260	Clip	1	B10001-
27		20Y-43-41970	Sheet	1	B10001-
28		20Y-43-41491	Ashtray	1	B10001-

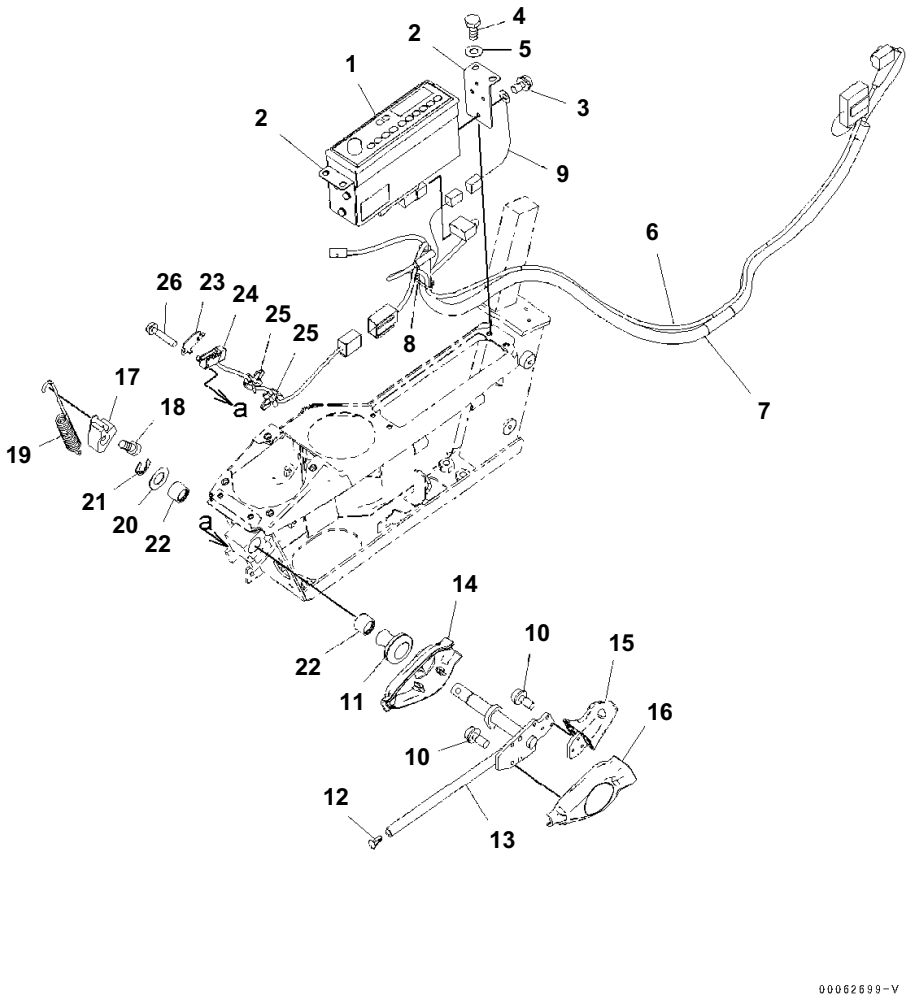

Index	Code	Part Number	Description	Qty	Serial No.
1		20Y-06-42440	Radio	1	B10001-
2		20Y-43-42130	Plate	2	B10001-
3		01023-60510	Screw	6	B10001-
4		01010-80616	Bolt	4	B10001-
5		01643-30623	Washer	4	B10001-
6		08912-51600	Cord	1	B10001-
7		21M-06-31170	Wiring Harness	1	B10001-
8		08034-20414	Band	1	B10001-
9		20Y-06-41830	Wiring Harness	1	B10001-
10		01023-60410	Screw	6	B10001-
11		08037-11425	Grommet	1	B10001-
12		208-53-12280	Cap	1	B10001-
13		20Y-43-31513	Lever	1	B10001-
14		20Y-43-31522	Cover	1	B10001-
15		20Y-43-31611	Knob	1	B10001-
16		20Y-43-31621	Cover	1	B10001-
17		20Y-43-31432	Cam	1	B10001-
18		01252-70816	Bolt	1	B10001-
19		20Y-43-31421	Spring	1	B10001-
20		20Y-43-31440	Ring	1	B10001-
21		20Y-43-31450	Plate	1	B10001-
22		06124-01616	Bearing	2	B10001-
23		22U-06-22490	Plate	1	B10001-
24		22U-06-22360	Switch Assembly	1	B10001-
25		22U-43-23260	Clip	2	B10001-
26		01023-60320	Screw	2	B10001-

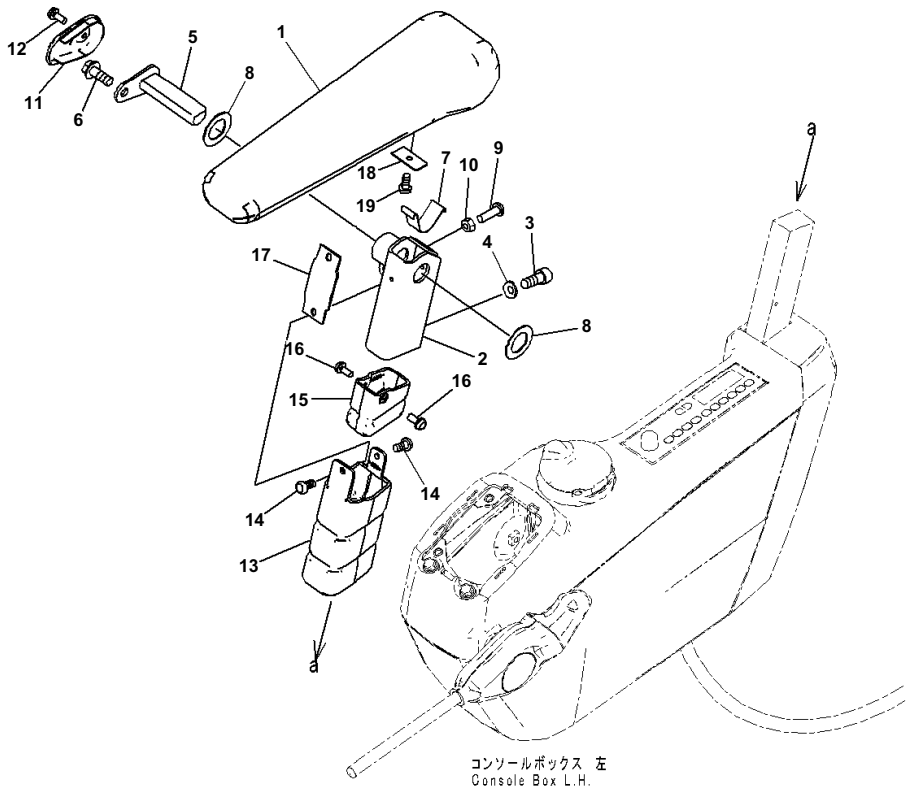

Index	Code	Part Number	Description	Qty	Serial No.
1		20Y-43-41143	Armrest	1	B10001-
2		20Y-43-41173	Bracket	1	B10001-
3		01252-80820	Bolt	2	B10001-
4		01643-70823	Washer	2	B10001-
5		20Y-43-41162	Pin	1	B10001-
6		01435-40816	Bolt	1	B10001-
7		20Y-43-41152	Spring	1	B10001-
8		437-40-26240	Washer	2	B10001-
9		01245-00620	Screw	1	B10001-
10		01580-40605	Nut	1	B10001-
11		20Y-43-41181	Cap	1	B10001-
12		01023-20512	Screw	1	B10001-
13		20Y-43-41191	Cover	1	B10001-
14		01370-40510	Screw	2	B10001-
15		20Y-43-41591	Cover	1	B10001-
16		01023-20512	Screw	2	B10001-
17		20Y-43-41281	Rubber	1	B10001-
18		20Y-43-41461	Plate	1	B10001-
19		01370-40610	Screw	1	B10001-

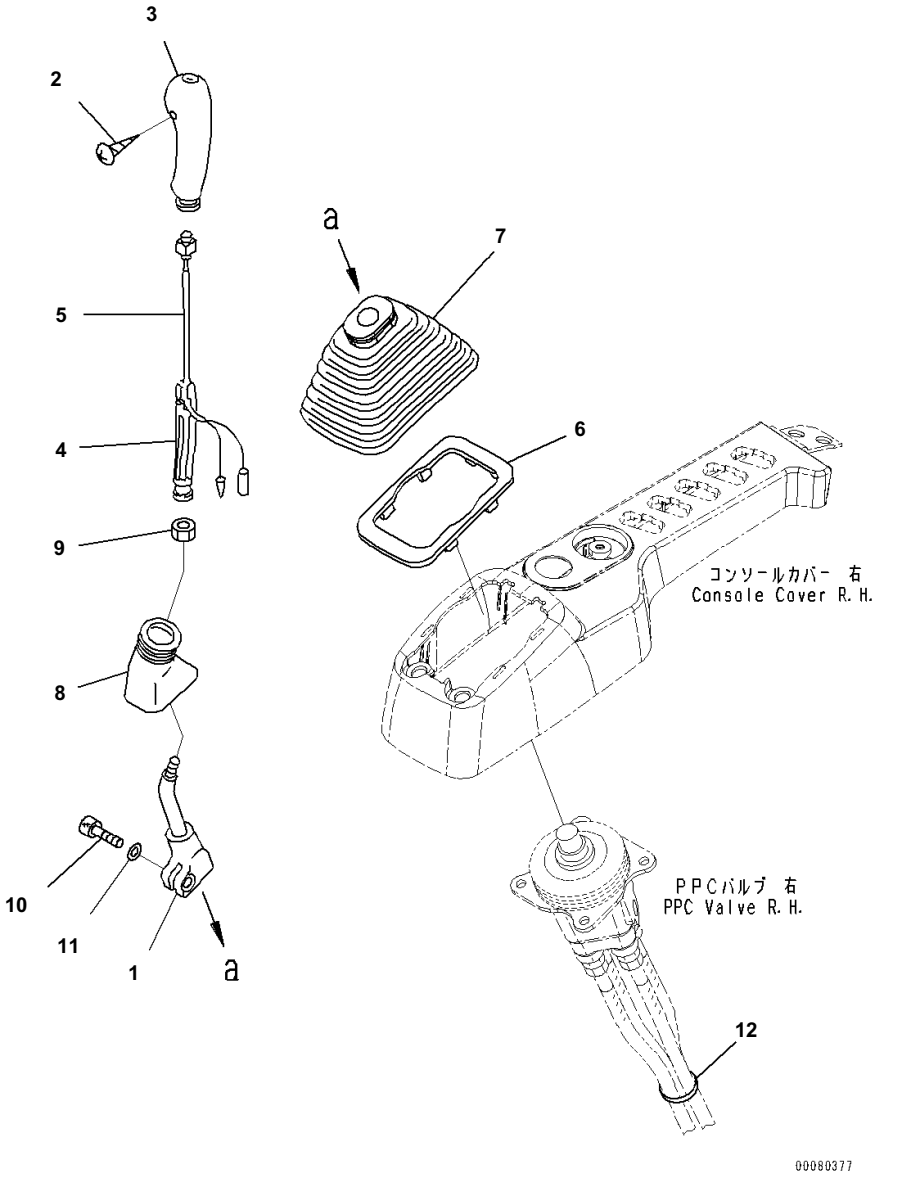

Index	Code	Part Number	Description	Qty	Serial No.
1		20Y-43-22221	Lever	1	B10001-
		22U-43-21192	Knob	1	B10001-
2	C1		・ Screw	1	B10001-
3		20Y-43-22390	・ Knob	1	B10001-
4		20Y-43-22421	・ Insert	1	B10001-
5		22U-43-21211	・ Switch	1	B10001-
6		20Y-43-22250	Plate	1	B10001-
7		20Y-43-22261	Boot	1	B10001-
8		20Y-43-22370	Boot	1	B10001-
9		600-411-1280	Nut	1	B10001-
10		01252-41025	Bolt	1	B10001-
11		01643-51032	Washer	1	B10001-
12		08034-20536	Band	1	B10001-

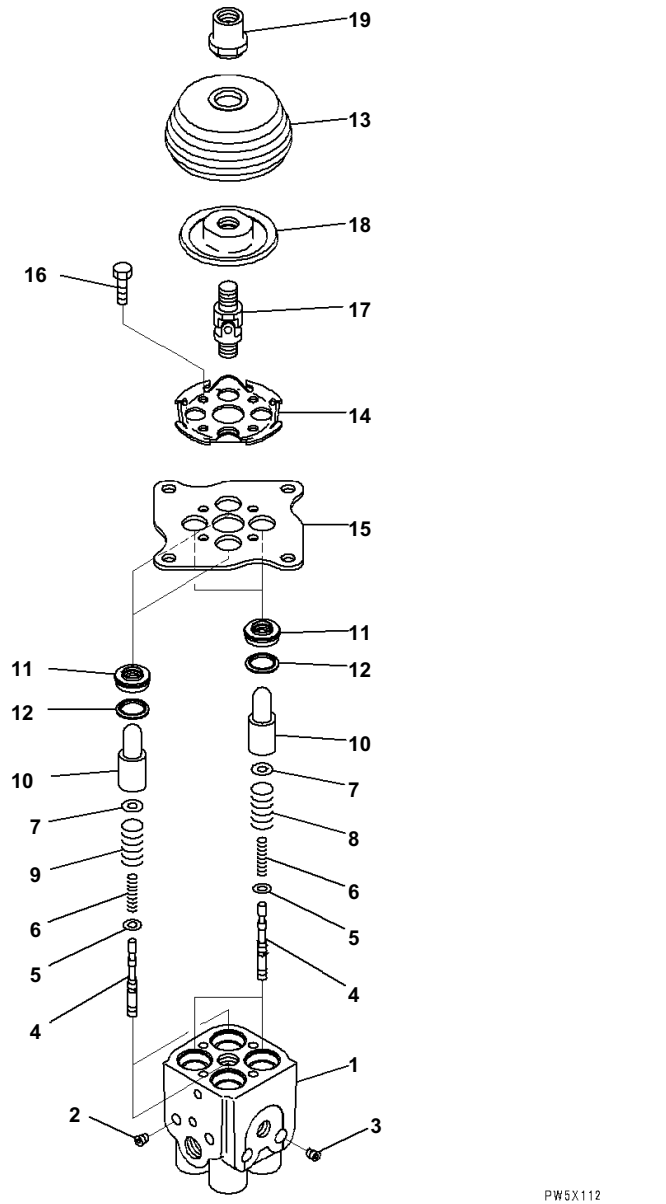

Index	Code	Part Number	Description	Qty	Serial No.
		702-16-03910	Valve, Pilot	1	B10001-
1	C1		· Valve Body	1	B10001-
2	C1		· Plug	2	B10001-
3	C1		· Plug	2	B10001-
4	C1		· Valve	4	B10001-
5		702-16-51140	· Shim, T=0.30mm	4	B10001-
6		702-16-53420	· Spring	4	B10001-
7		702-16-53140	· Retainer	4	B10001-
8		702-16-53470	· Spring	2	B10001-
9		702-16-53590	· Spring	2	B10001-
10		702-16-53170	· Piston	4	B10001-
11		702-16-71210	· Seal	4	B10001-
12		702-16-71160	· Seat	4	B10001-
13		702-16-71280	· Boot	1	B10001-
14		702-16-71131	· Plate	1	B10001-
15		702-16-71141	· Plate	1	B10001-
16		01010-80620	· Bolt	4	B10001-
17		702-16-51240	· Universal Joint	1	B10001-
18		702-16-71361	· Disc	1	B10001-
19		702-16-71441	· Nut	1	B10001-

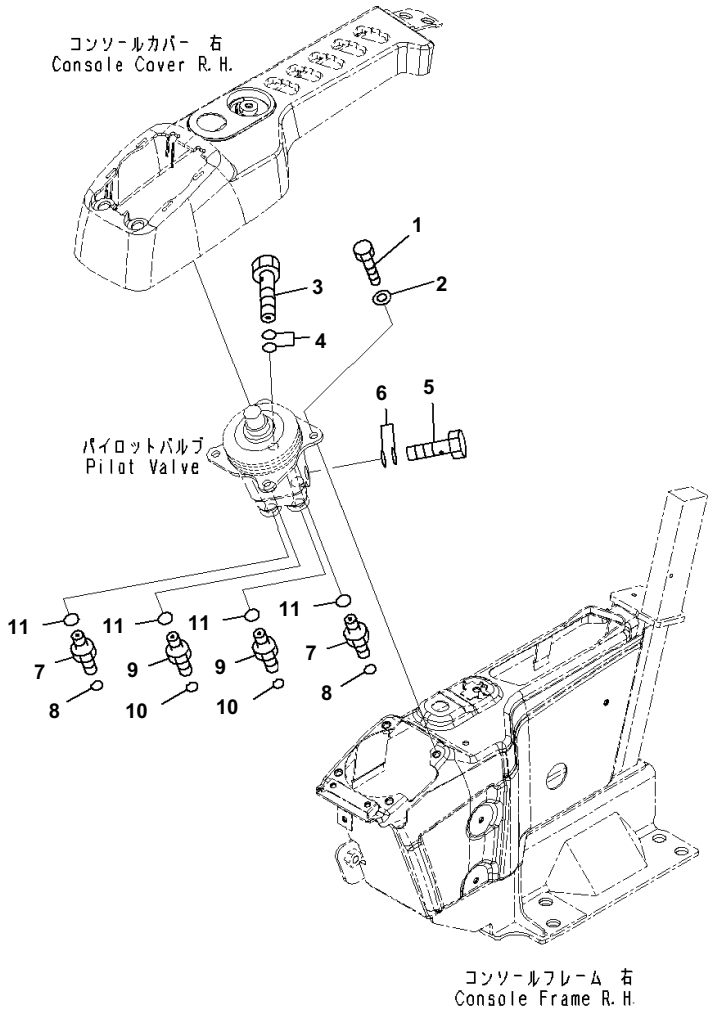

Index	Code	Part Number	Description	Qty	Serial No.
1		01010-80820	Bolt	4	B10001-
2		01643-30823	Washer	4	B10001-
3		20Y-62-18910	Bolt	1	B10001-
4		07000-12018	O-ring	2	B10001-
5		20Y-62-18890	Bolt	1	B10001-
6		07000-12015	O-ring	2	B10001-
7		11Y-62-12130	Nipple	2	B10001-
8		02896-11008	O-ring	2	B10001-
9		11Y-62-12520	Union	2	B10001-
10		02896-11009	O-ring	2	B10001-
11		07002-11423	O-ring	4	B10001-

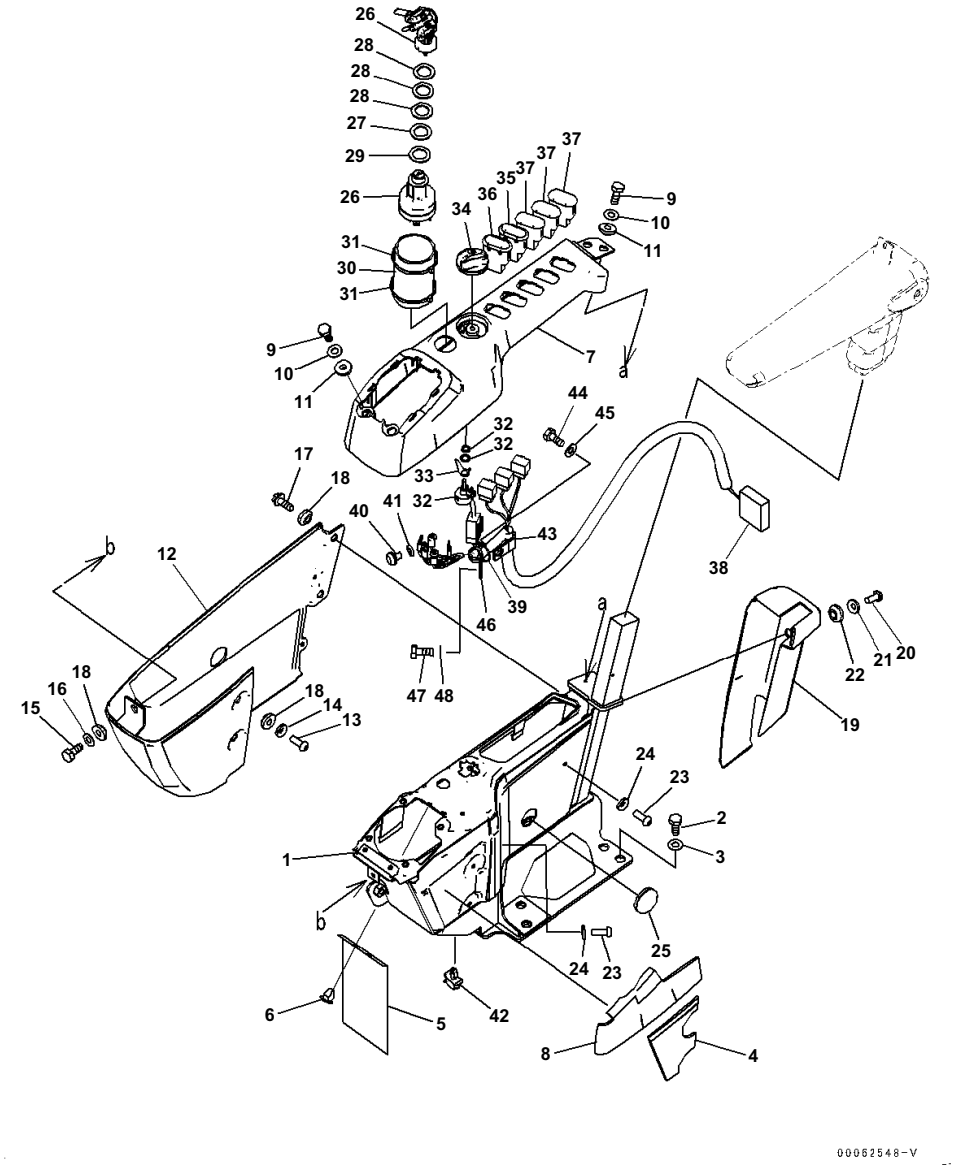

Index	Code	Part Number	Description	Qty	Serial No.
1		20Y-43-41313	Frame	1	B10001-
2		01010-D1230	Bolt	4	B10001-
3		01643-71232	Washer	4	B10001-
4		20Y-43-41631	Sheet	1	B10001-
5		22U-43-23251	Sheet	1	B10001-
6		22U-43-23290	Clip	2	B10001-
7		20Y-43-41323	Cover	1	B10001-
8		20Y-43-41661	Sheet	1	B10001-
9		01010-80616	Bolt	4	B10001-
10		01643-30623	Washer	4	B10001-
11		20Y-43-41290	Collar	4	B10001-
12		20Y-43-41332	Cover	1	B10001-
13		01245-00616	Screw, Hexagon Socket Head	2	B10001-
14		01643-70623	Washer	2	B10001-
15		01010-80616	Bolt	1	B10001-
16		01643-30623	Washer	1	B10001-
17		01435-00612	Bolt	2	B10001-
18		20Y-43-41290	Collar	5	B10001-
19		20Y-43-41353	Cover	1	B10001-
20		01245-00616	Screw, Hexagon Socket Head	2	B10001-
21		01643-70623	Washer	2	B10001-
22		20Y-43-41290	Collar	2	B10001-
23		01245-00616	Screw, Hexagon Socket Head	3	B10001-
24		01643-70623	Washer	3	B10001-
25		09415-02512	Cap	1	B10001-
26		08086-20000	Switch, Starting	1	B10001-
27		20Y-43-41740	Plate	1	B10001-
28		20Y-43-41750	Washer	3	B10001-
29		20Y-43-41790	Washer	1	B10001-
30		20Y-43-41671	Sheet	1	B10001-
31		08034-20519	Band	2	B10001-
32		22U-06-22380	Potentiometer	1	B10001-
33		22U-06-22460	Spring	1	B10001-
34		20Y-43-41780	Knob	1	B10001-
35		20Y-06-42110	Switch	1	B10001-
36		20Y-06-42121	Switch, Light	1	B10001-
37		20Y-06-42190	Cover	3	B10001-
38		20Y-06-41130	Wiring Harness	1	B10001-
39		08034-20414	Band	1	B10001-
40		01023-10508	Screw	5	B10001-
41		01601-20513	Washer	5	B10001-
42		22U-43-23260	Clip	1	B10001-
43		04434-51710	Clip	1	B10001-
44		01010-81016	Bolt	1	B10001-
45		01643-31032	Washer	1	B10001-
46		04434-51410	Clip	1	B10001-

PC240LC-8 S/N B10001-UP
Cab, 1ATT, Floor, Console, RHS

Index	Code	Part Number	Description	Qty	Serial No.
47		01010-81016	Bolt	1	B10001-
48		01643-31032	Washer	1	B10001-

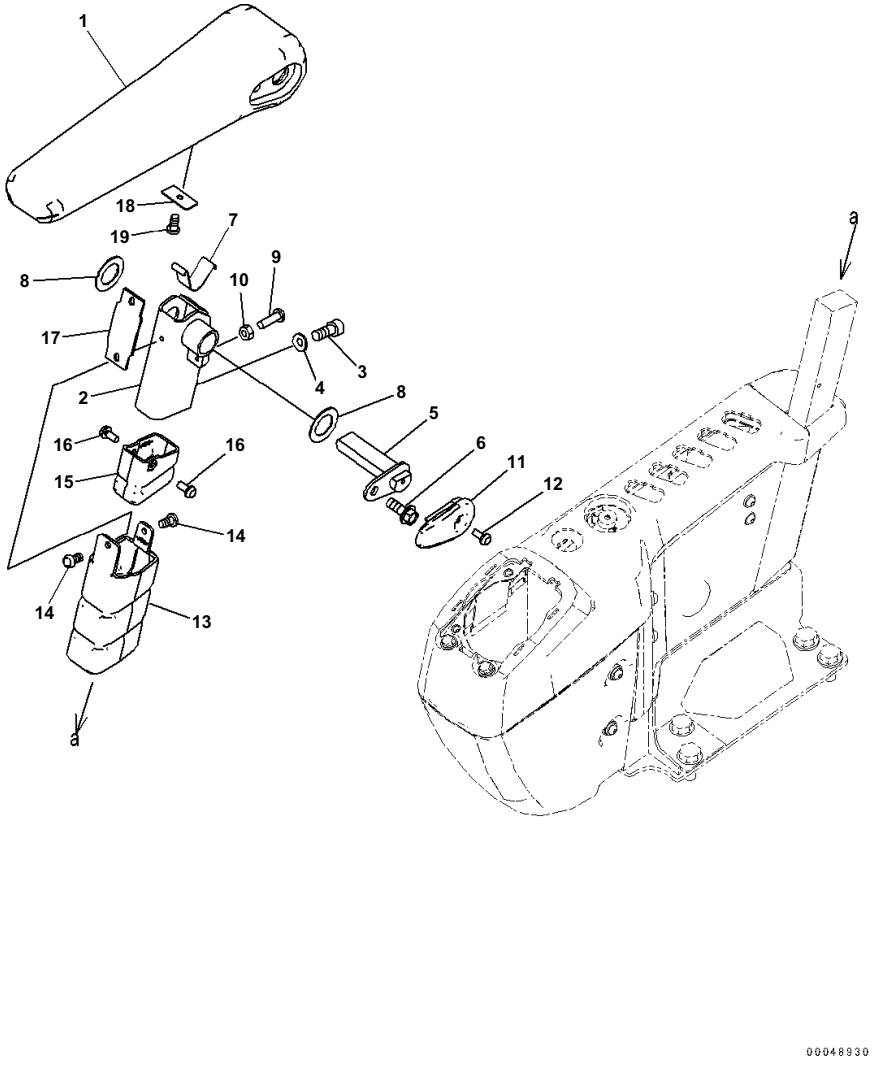

Index	Code	Part Number	Description	Qty	Serial No.
1		20Y-43-41343	Arm Rest	1	B10001-
2		20Y-43-41533	Bracket	1	B10001-
3		01252-80820	Bolt	2	B10001-
4		01643-70823	Washer	2	B10001-
5		20Y-43-41850	Pin	1	B10001-
6		01435-40816	Bolt	1	B10001-
7		20Y-43-41152	Spring	1	B10001-
8		437-40-26240	Washer	2	B10001-
9		01245-00620	Screw	1	B10001-
10		01580-40605	Nut	1	B10001-
11		20Y-43-41181	Cap	1	B10001-
12		01023-20512	Screw	1	B10001-
13		20Y-43-41191	Cover	1	B10001-
14		01370-40510	Screw	2	B10001-
15		20Y-43-41591	Cover	1	B10001-
16		01023-20512	Screw	2	B10001-
17		20Y-43-41281	Rubber	1	B10001-
18		20Y-43-41461	Plate	1	B10001-
19		01370-40610	Screw	1	B10001-

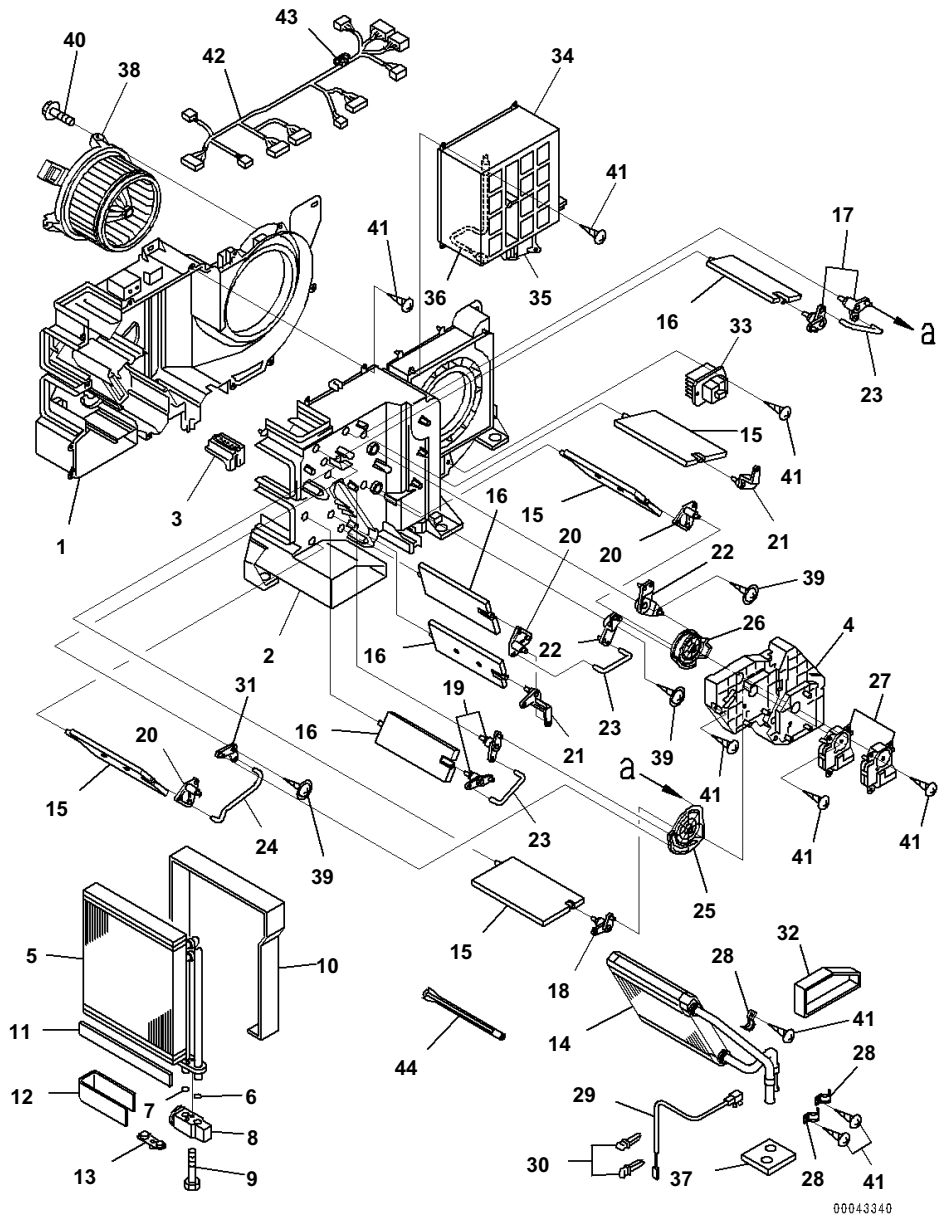

Index	Code	Part Number	Description	Qty	Serial No.
		20Y-810-1211	Air Conditioner Assembly	1	B10001-
1		ND245450-5831	・ Case, Cooling	1	B10001-
2		ND245450-5840	・ Case, Cooling	1	B10001-
3		ND116576-3810	・ Plate	1	B10001-
4		ND116576-3820	・ Plate	1	B10001-
		ND446010-3132	・ Evaporator, Parts	1	B10001-
5		ND446600-0991	・・ Evaporator Assembly	1	B10001-
6		ND949142-0020	・・ O-ring	1	B10001-
7		ND949142-0030	・・ O-ring	1	B10001-
8		ND447500-2750	・・ Valve	1	B10001-
9		ND949046-3100	・・ Bolt	2	B10001-
10		ND146657-8841	・・ Packing	1	B10001-
11		ND146657-9811	・・ Packing	3	B10001-
12		ND146657-8850	・・ Packing	1	B10001-
13		ND445021-3941	・・ Plug	1	B10001-
14		ND116140-0050	・ Core Subassembly, Heater	1	B10001-
15		ND116660-7570	・ Door Assembly	4	B10001-
16		ND116650-6850	・ Door Assembly	4	B10001-
17		ND116780-2481	・ Lever Subassembly, Link	2	B10001-
18		ND116780-2491	・ Lever Subassembly, Link	1	B10001-
19		ND116780-2501	・ Lever Subassembly, Link	2	B10001-
20		ND116780-2510	・ Lever Subassembly, Link	3	B10001-
21		ND116781-3000	・ Lever	2	B10001-
22		ND116780-3130	・ Lever Subassembly, Link	2	B10001-
23		ND116662-7670	・ Shaft	3	B10001-
24		ND116662-7681	・ Shaft	1	B10001-
25		ND116576-3852	・ Plate	1	B10001-
26		ND116576-3862	・ Plate	1	B10001-
27		ND063800-0300	・ Servo Motor Assembly	2	B10001-
28		ND017231-0700	・ Clamp	3	B10001-
29		ND077500-5890	・ Thermistor Assembly	1	B10001-
30		ND246790-2060	・ Clamp	2	B10001-
31		ND116780-3920	・ Lever Subassembly, Link	1	B10001-
32		ND146667-0440	・ Packing	1	B10001-
33		ND077800-0750	・ Transistor	1	B10001-
34		ND146340-0560	・ Box Assembly	1	B10001-
35		ND063600-4580	・・ Servo Motor Assembly	1	B10001-
36		ND077500-5650	・・ Thermistor Assembly	1	B10001-
37		ND146657-8860	・ Packing	1	B10001-
38		ND116340-7350	・ Motor Assembly, Fan	1	B10001-
39		ND949008-0460	・ Screw, Tapping	3	B10001-
40		ND949008-0330	・ Screw, Tapping	3	B10001-
41		ND949001-1730	・ Screw, Tapping	32	B10001-
42		ND246470-4311	・ Wiring Harness Assembly, Wire	1	B10001-
43		ND93950-05003	・・ Fuse	1	B10001-
44		ND116662-8320	・ Shaft	1	B10001-

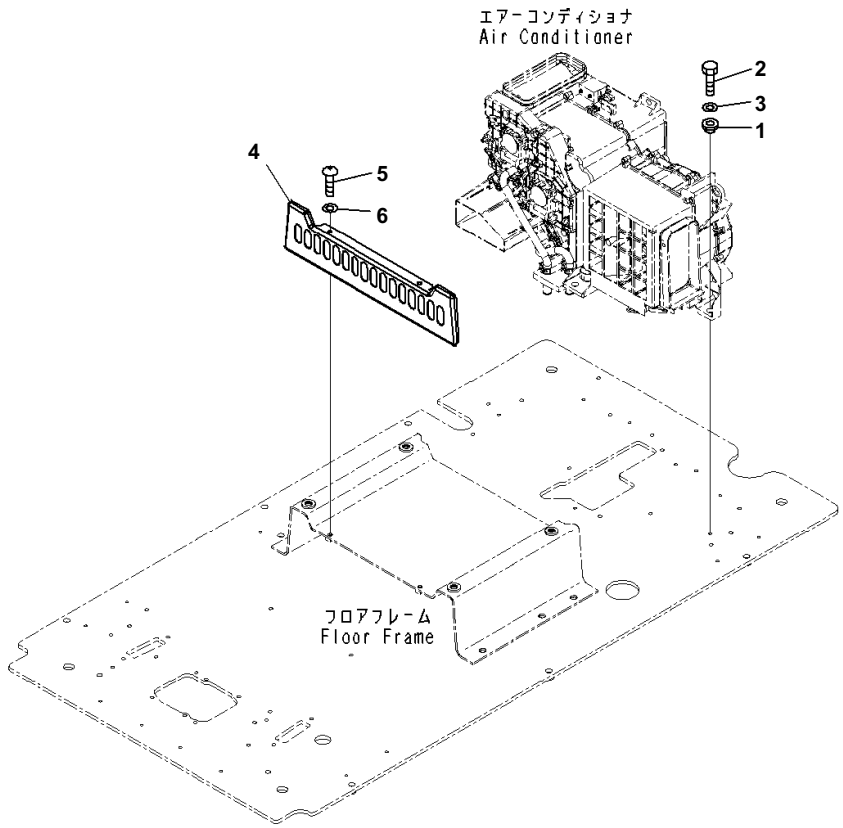

Index	Code	Part Number	Description	Qty	Serial No.
1		208-979-7540	Collar	7	B10001-
2		01010-80825	Bolt	7	B10001-
3		01643-30823	Washer	7	B10001-
4		20Y-43-41240	Cover	1	B10001-
5		01245-00820	Screw	2	B10001-
6		01643-70823	Washer	2	B10001-

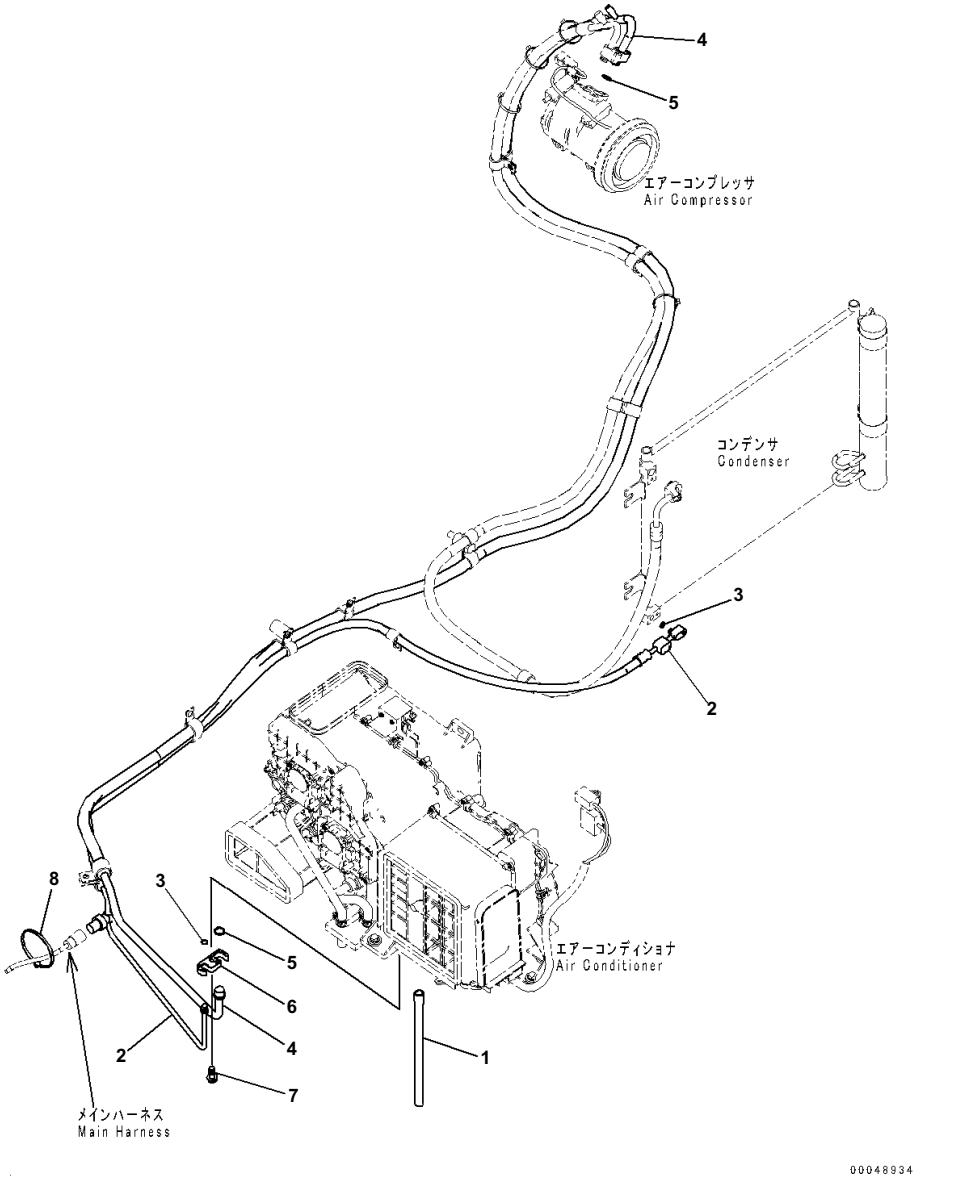

Index	Code	Part Number	Description	Qty	Serial No.
1		208-979-7640	Hose	1	B10001-
2		20Y-810-1311	Hose	1	B10001-
3		20Y-979-3150	・O-ring	2	B10001-
4		20Y-810-1321	Hose	1	B10001-
5		20Y-979-3130	・O-ring	2	B10001-
6		208-979-7650	Connector	1	B10001-
7		01435-40620	Bolt	1	B10001-
8		08034-20536	Band	1	B10001-

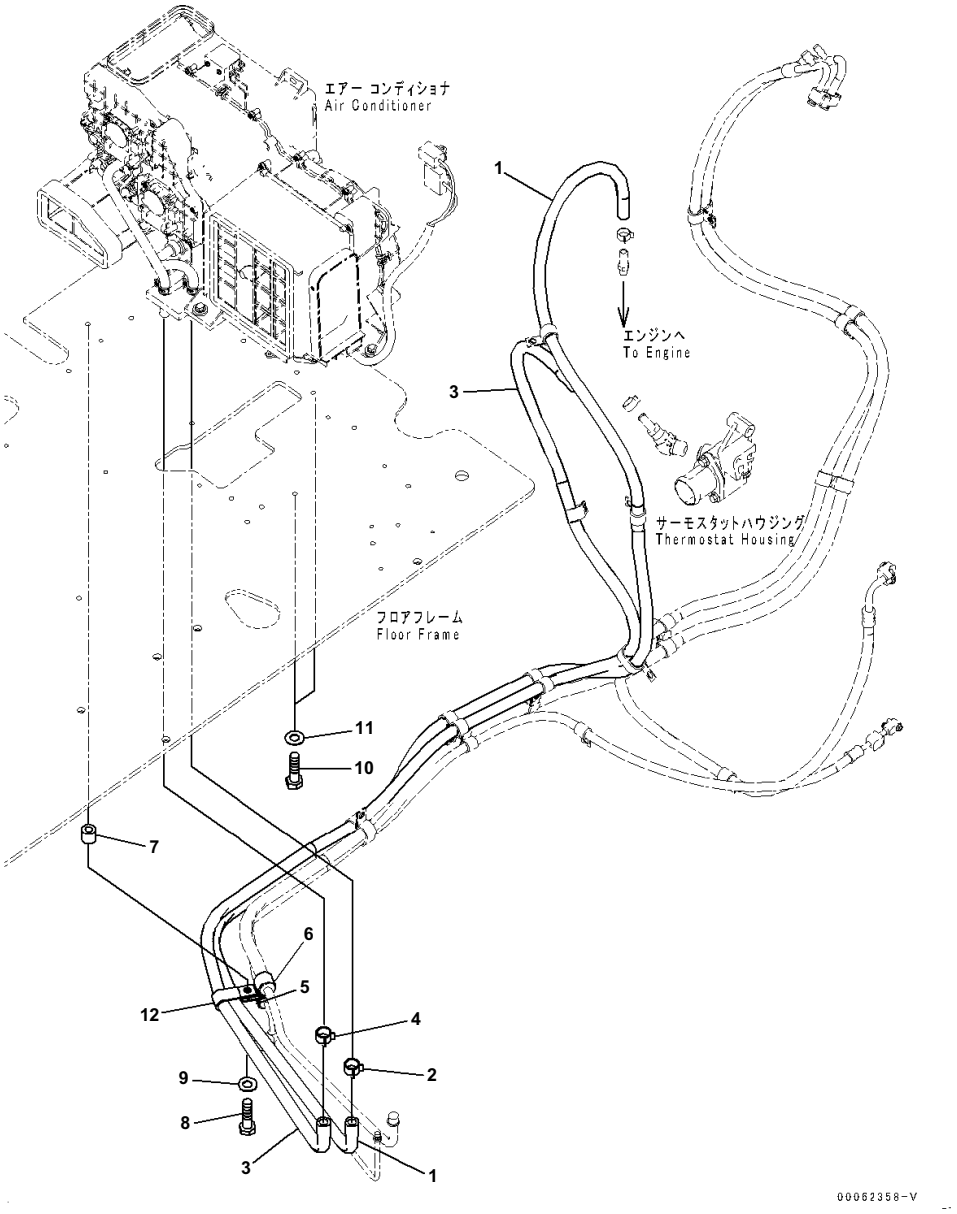

Index	Code	Part Number	Description	Qty	Serial No.
1		20Y-810-1332	Hose Assembly	1	B10001-
2		09479-02400	Clamp	1	B10001-
3		20Y-810-1342	Hose Assembly	1	B10001-
4		09479-02400	Clamp	1	B10001-
5		04434-52110	Clip	1	B10001-
6		04434-52511	Clip	1	B10001-
7		195-33-11220	Spacer	1	B10001-
8		01010-81045	Bolt	1	B10001-
9		01643-31032	Washer	1	B10001-
10		01010-81016	Bolt	2	B10001-
11		01643-31032	Washer	2	B10001-
12		141-06-11220	Clip	1	B10001-

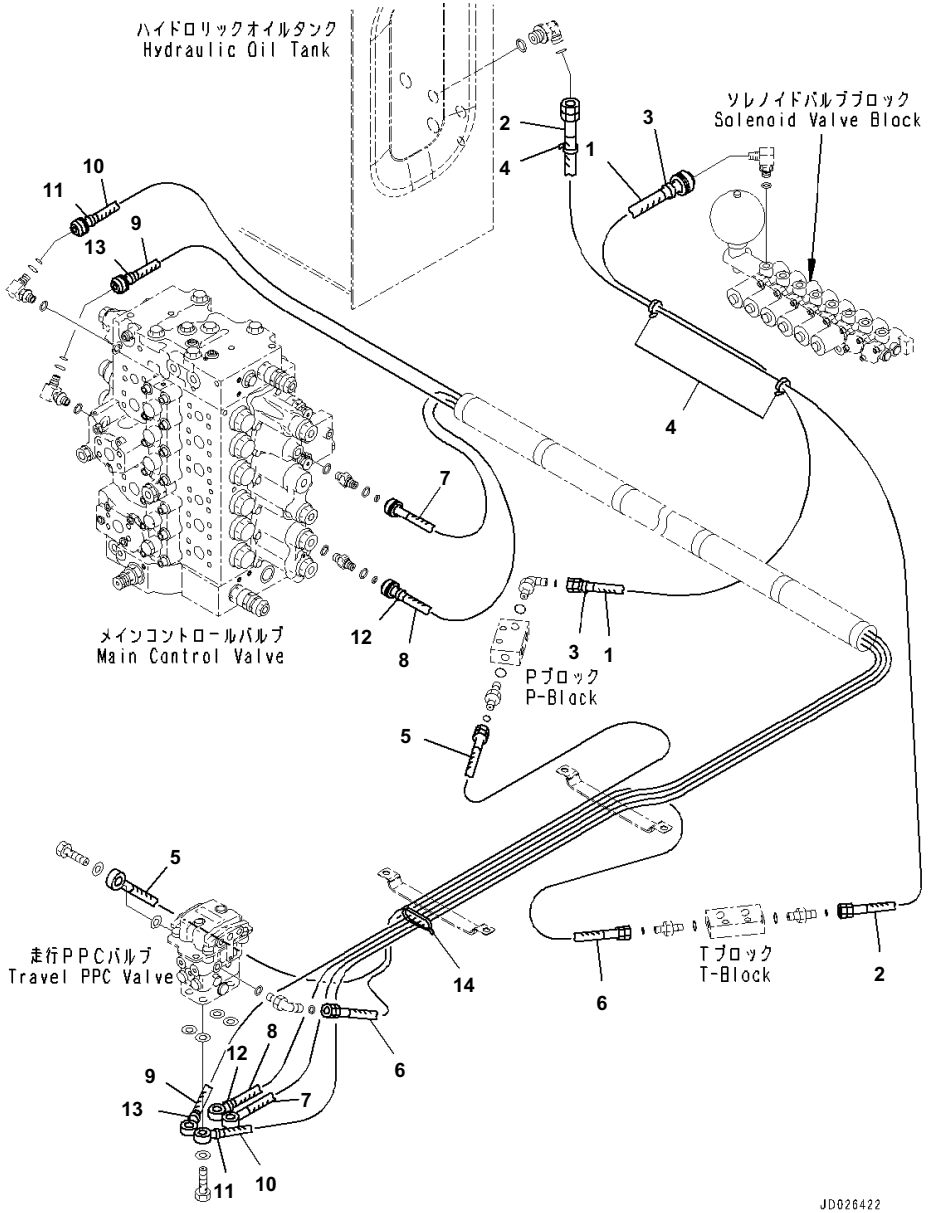

Index	Code	Part Number	Description	Qty	Serial No.
1		20Y-62-52210	Hose	1	B10001-
2		20Y-62-52220	Hose	1	B10001-
3		20Y-62-22790	Band, Red	2	B10001-
4		08034-20823	Band	3	B10001-
5		208-62-72290	Hose	1	B10001-
6		208-62-72310	Hose	1	B10001-
7		20Y-62-52230	Hose	1	B10001-
8		20Y-62-52240	Hose	1	B10001-
9		20Y-62-52250	Hose	1	B10001-
10		20Y-62-52260	Hose	1	B10001-
11		20Y-62-22790	Band, Red	2	B10001-
12		20Y-62-22820	Band, Blue	2	B10001-
13		20Y-62-22850	Band, Green	2	B10001-
14		08034-20536	Band	1	B10001-

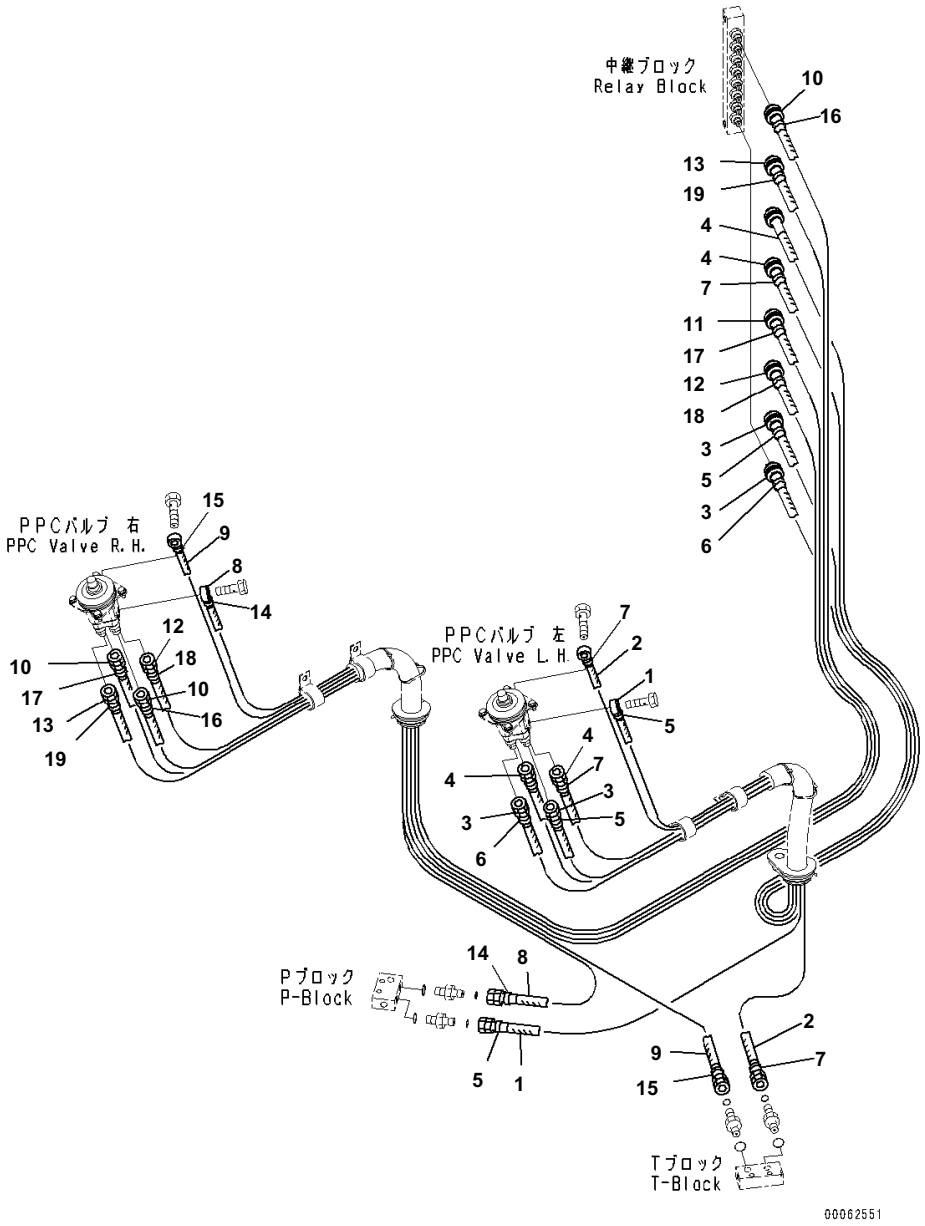

Index	Code	Part Number	Description	Qty	Serial No.
1		20Y-62-53410	Hose	1	B10001-
2		20Y-62-53420	Hose	1	B10001-
3		20Y-62-42271	Hose	2	B10001-
4		20Y-62-52280	Hose	2	B10001-
5		20Y-62-22790	Band, Red	4	B10001-
6		20Y-62-22810	Band, Yellow	2	B10001-
7		20Y-62-22820	Band, Blue	4	B10001-
8		20Y-62-42251	Hose	1	B10001-
9		208-62-72870	Hose	1	B10001-
10		209-64-16690	Hose	1	B10001-
11		209-64-16830	Hose	1	B10001-
12		20Y-62-52290	Hose	1	B10001-
13		20Y-62-52310	Hose	1	B10001-
14		20Y-62-22790	Band, Red	2	B10001-
15		20Y-62-22820	Band, Blue	2	B10001-
16		20Y-62-22830	Band, White	2	B10001-
17		20Y-62-22840	Band, Black	2	B10001-
18		20Y-62-22850	Band, Green	2	B10001-
19		20Y-62-22860	Band, Brown	2	B10001-

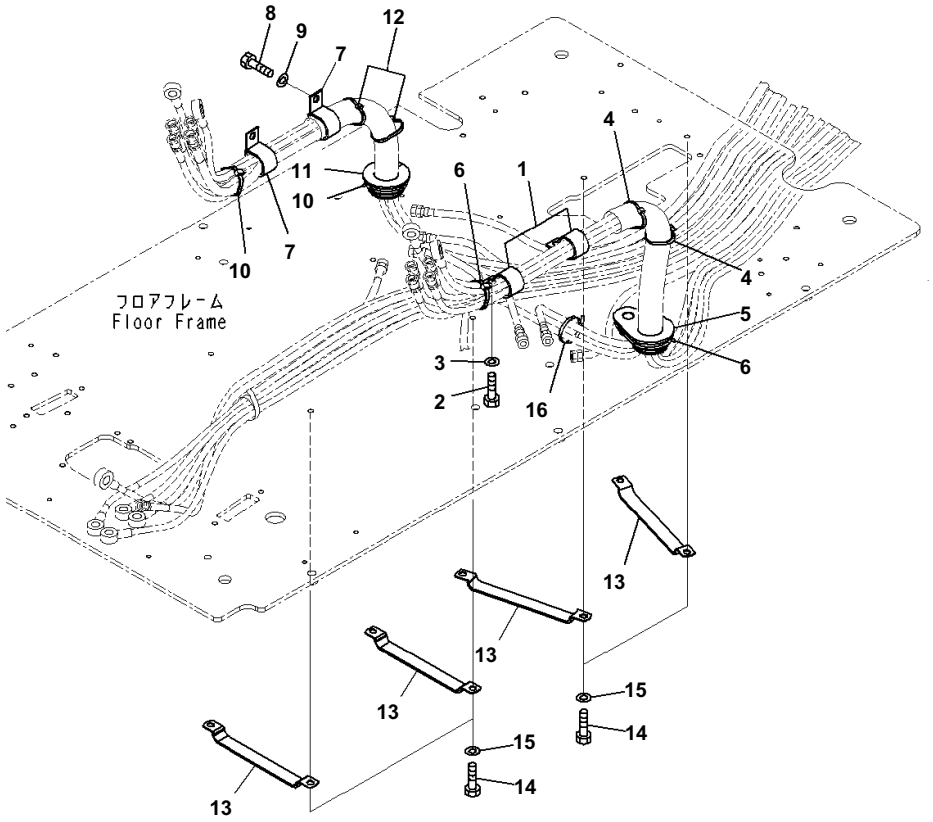

Index	Code	Part Number	Description	Qty	Serial No.
1		04434-53211	Clip	2	B10001-
2		01010-81020	Bolt	2	B10001-
3		01643-31032	Washer	2	B10001-
4		08034-20536	Band	2	B10001-
5		20Y-53-14140	Grommet	1	B10001-
6		08034-20536	Band	2	B10001-
7		04434-53411	Clip	2	B10001-
8		01010-81020	Bolt	2	B10001-
9		01643-31032	Washer	2	B10001-
10		08034-20536	Band	2	B10001-
11		20Y-54-65121	Grommet	1	B10001-
12		08034-20536	Band	2	B10001-
13		20Y-62-27770	Clamp	4	B10001-
14		01010-81016	Bolt	8	B10001-
15		01643-31032	Washer	8	B10001-
16		08034-20536	Band	1	B10001-

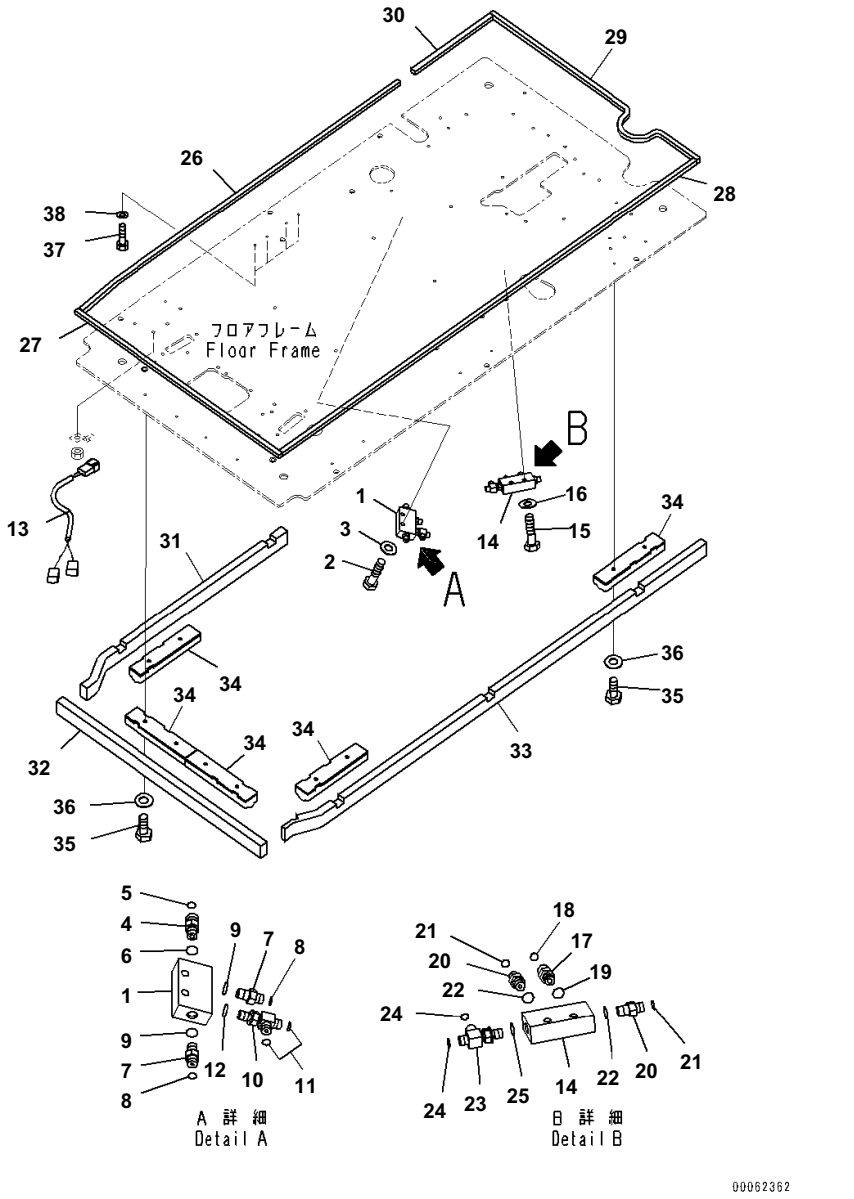

Index	Code	Part Number	Description	Qty	Serial No.
1		20Y-62-15831	Block	1	B10001-
2		01010-81045	Bolt	2	B10001-
3		01643-31032	Washer	2	B10001-
4		02781-0031D	Union	1	B10001-
5		02896-11009	O-ring	1	B10001-
6		07002-11423	O-ring	1	B10001-
7		02781-0021D	Union	2	B10001-
8		02896-11008	O-ring	2	B10001-
9		07002-11423	O-ring	2	B10001-
10		11Y-62-12330	Tee	1	B10001-
11		02896-11008	O-ring	2	B10001-
12		07002-11423	O-ring	1	B10001-
13		20Y-06-41251	Wiring Harness	1	B10001-
14		20Y-62-15831	Block	1	B10001-
15		01010-81045	Bolt	2	B10001-
16		01643-31032	Washer	2	B10001-
17		02781-0031D	Union	1	B10001-
18		02896-11009	O-ring	1	B10001-
19		07002-11423	O-ring	1	B10001-
20		02781-0021D	Union	2	B10001-
21		02896-11008	O-ring	2	B10001-
22		07002-11423	O-ring	2	B10001-
23		11Y-62-12330	Tee	1	B10001-
24		02896-11008	O-ring	2	B10001-
25		07002-11423	O-ring	1	B10001-
26		20Y-53-14910	Seal	1	B10001-
27		20Y-53-14920	Seal	1	B10001-
28		20Y-53-14930	Seal	1	B10001-
29		20Y-53-14940	Seal	1	B10001-
30		20Y-53-14950	Seal	1	B10001-
31		20Y-53-14963	Sheet	1	B10001-
32		20Y-53-14973	Sheet	1	B10001-
33		20Y-53-14983	Sheet	1	B10001-
34		20Y-53-14831	Sheet	5	B10001-
35		01010-80830	Bolt	10	B10001-
36		01643-30823	Washer	10	B10001-
37		01010-80816	Bolt	4	B10001-
38		01643-30823	Washer	4	B10001-

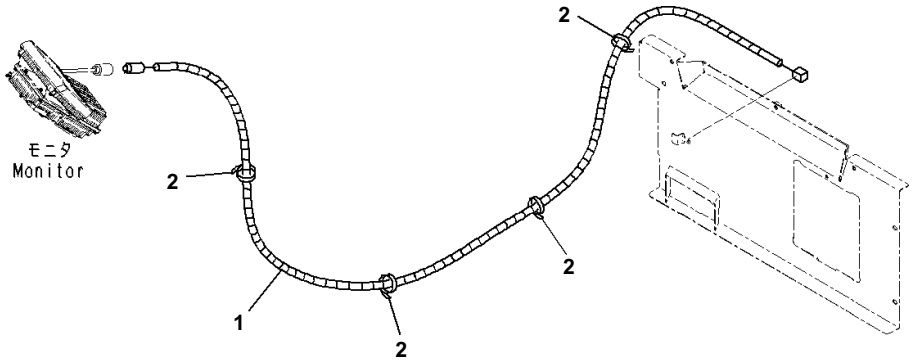

Cab, 1ATT, Rear View Camera Cable

Index	Code	Part Number	Description	Qty	Serial No.
1		20Y-06-42320	Cable	1	B10001-
2		08034-20519	Band	4	B10001-

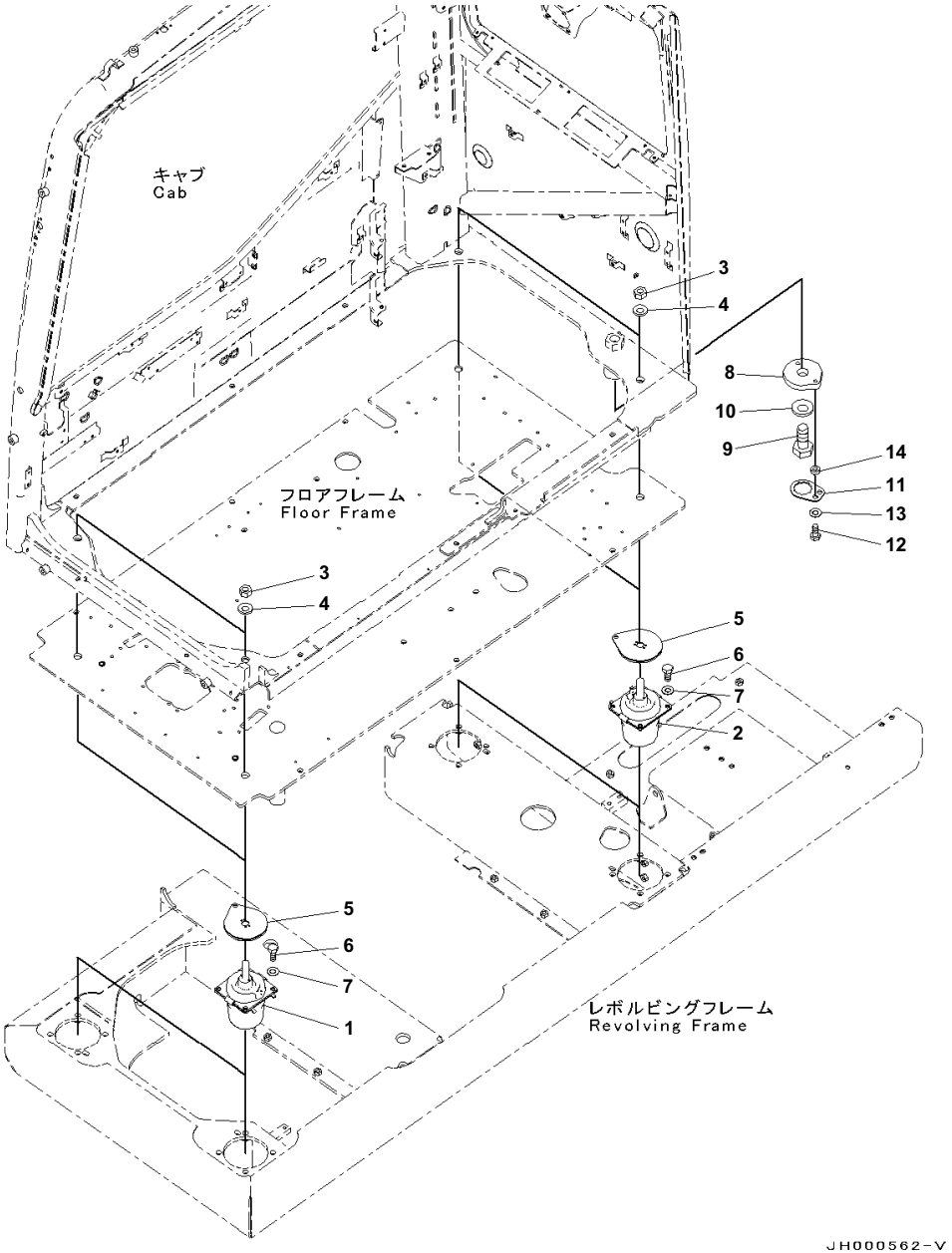

Floor Mounting

Index	Code	Part Number	Description	Qty	Serial No.
1		20Y-53-13113	Cushion	2	B10001-
2		20Y-53-13121	Cushion	2	B10001-
3		01580-12016	Nut	4	B10001-
4		01643-32060	Washer	4	B10001-
5		20Y-53-13130	Spacer	4	B10001-
6		01010-81240	Bolt	16	B10001-
7		01643-31232	Washer	16	B10001-
8		20Y-53-13141	Plate	1	B10001-
9		01011-83065	Bolt	1	B10001-
10		01643-33080	Washer	1	B10001-
11		20Y-53-13151	Lock	1	B10001-
12		01010-81235	Bolt	1	B10001-
13		01643-31232	Washer	1	B10001-
14		198-43-15310	Collar, T=10mm	1	B10001-

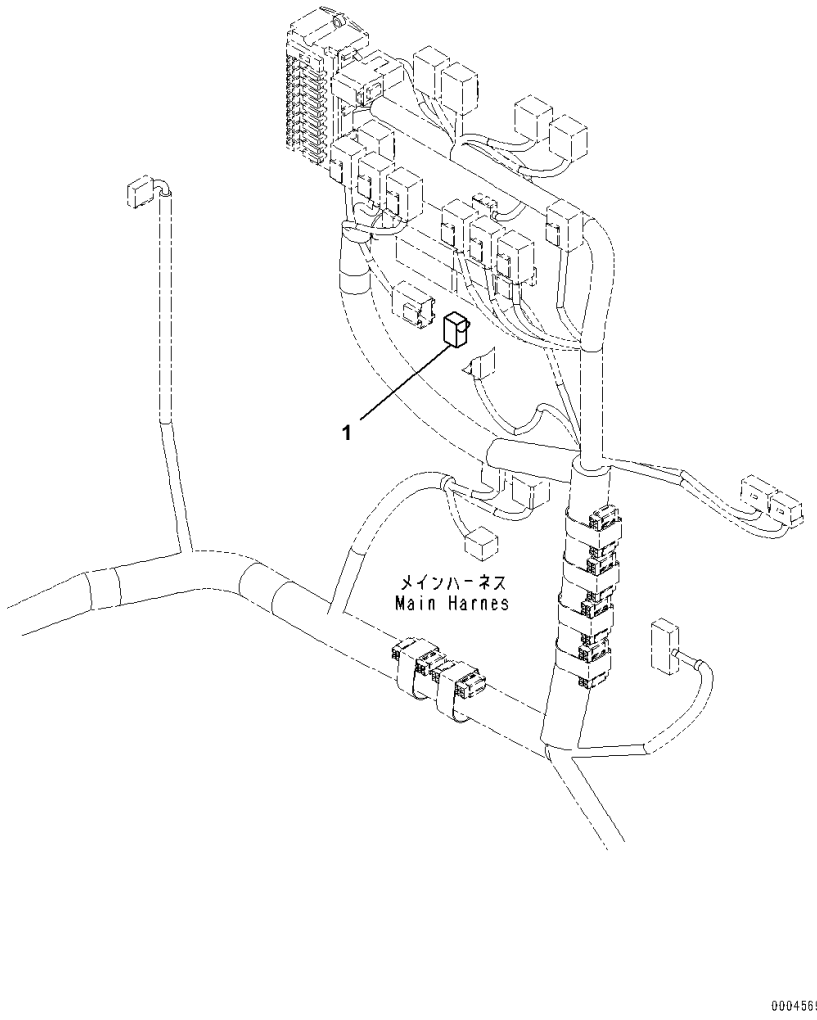

Index	Code	Part Number	Description	Qty	Serial No.
1		20Y-06-21441	Switch	1	B10001-

GUARDS AND COVERS

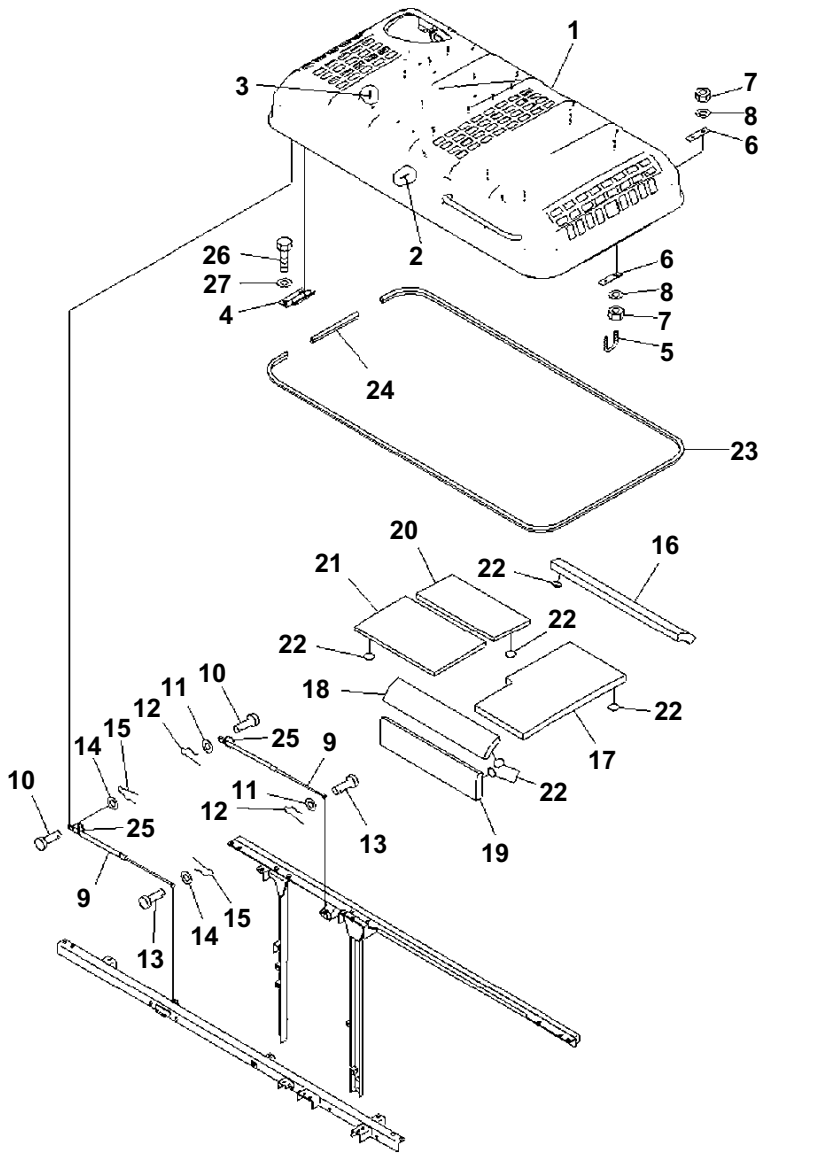

Index	Code	Part Number	Description	Qty	Serial No.
1		20Y-54-76450	Hood	1	B10001-
2		20Y-54-71460	・ Stud,Welded	10	B10001-
3		124-A62-1910	・ Stud,Welded	14	B10001-
4		20Y-54-K7321	・ Hinge,Welded	2	B10001-
5		20Y-54-27172	U-bolt	1	B10001-
6		20Y-54-27330	Plate	2	B10001-
7		01580-11210	Nut	4	B10001-
8		01643-31232	Washer	4	B10001-
9		20Y-54-71182	Damper	2	B10001-
10		04205-30825	Pin	2	B10001-
11		01640-20816	Washer	2	B10001-
12		04052-20833	Pin	2	B10001-
13		04205-30828	Pin	2	B10001-
14		01640-20816	Washer	2	B10001-
15		04052-20833	Pin	2	B10001-
16		20Y-54-72113	Sheet	1	B10001-
17		20Y-54-72191	Sheet	1	B10001-
18		20Y-54-72141	Sheet	1	B10001-
19		206-54-21130	Sheet	1	B10001-
20		206-54-21252	Sheet	1	B10001-
21		206-54-21161	Sheet	1	B10001-
22		124-A62-1920	Cap	24	B10001-
23		20Y-54-71470	Seal	1	B10001-
24		20Y-54-71480	Seal	1	B10001-
25		08034-20414	Band	2	B10001-
26		01010-81230	Bolt	4	B10001-
27		01643-31232	Washer	4	B10001-

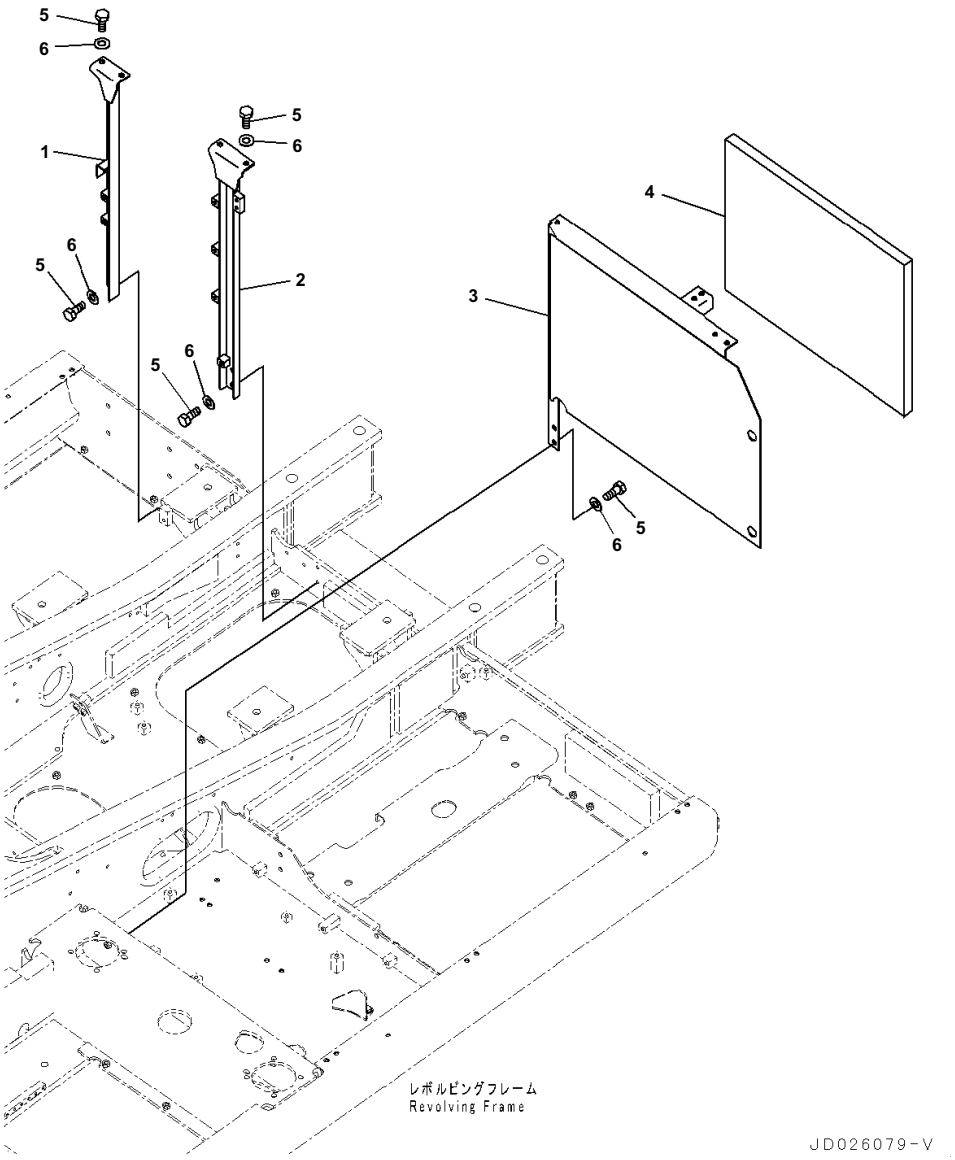

Index	Code	Part Number	Description	Qty	Serial No.
1		20Y-54-71211	Frame	1	B10001-
2		20Y-54-72431	Frame	1	B10001-
		20Y-54-71271	Frame	1	B10001-
3	C1		・Frame	1	B10001-
4		20Y-54-61760	・Sheet	1	B10001-
5		01010-81230	Bolt	10	B10001-
6		01643-31232	Washer	10	B10001-

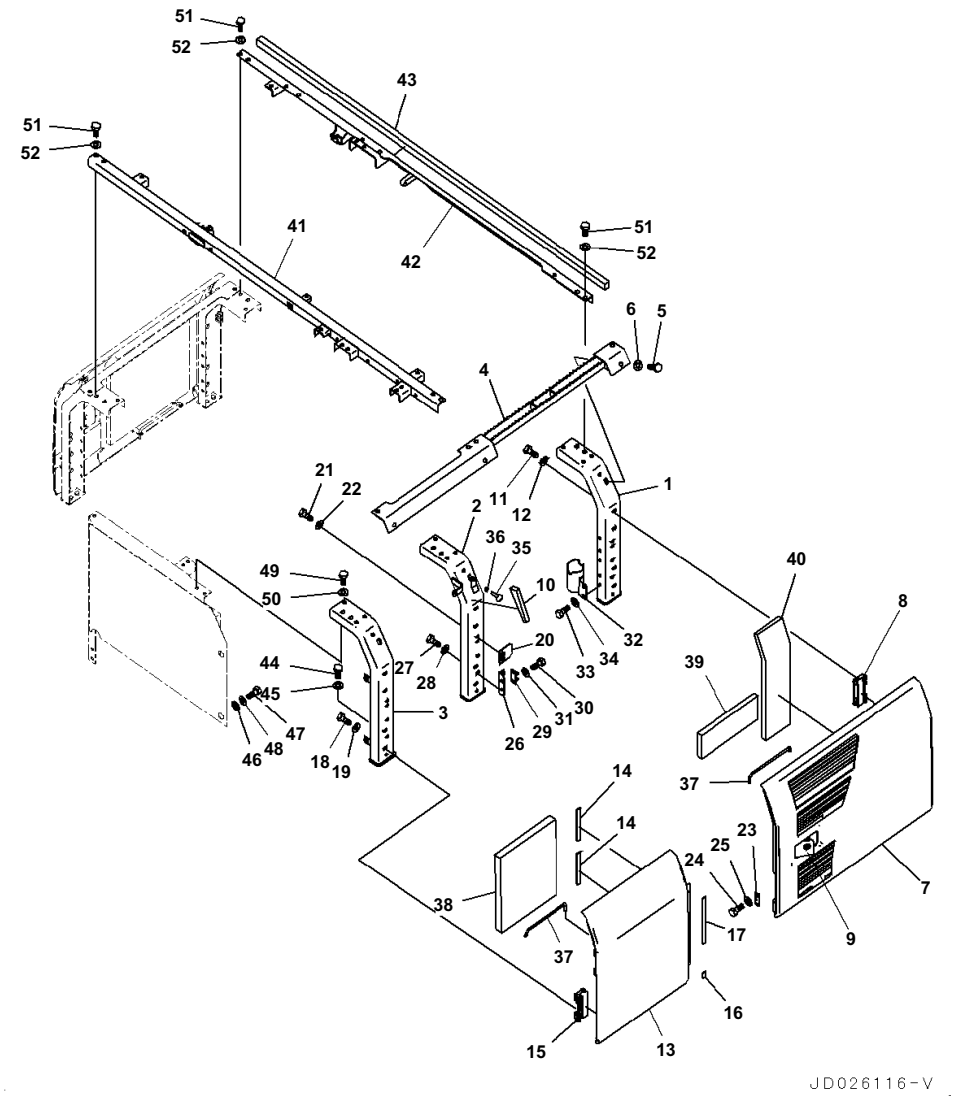

Index	Code	Part Number	Description	Qty	Serial No.
1		20Y-54-71312	Frame	1	B10001-
2		20Y-54-71323	Frame	1	B10001-
3		20Y-54-71331	Frame	1	B10001-
4		20Y-54-71341	Frame	1	B10001-
5		01010-81225	Bolt	3	B10001-
6		01643-31232	Washer	3	B10001-
7		206-54-21282	Cover	1	B10001-
8		20Y-54-63414	・ Hinge,Welded	2	B10001-
9		20Y-54-71372	・ Lock,Welded	1	B10001-
10		20Y-54-72870	Sheet	1	B10001-
11		01010-81225	Bolt	4	B10001-
12		01643-31232	Washer	4	B10001-
13		206-54-21261	Cover	1	B10001-
14		20Y-54-63390	・ Sheet	2	B10001-
15		20Y-54-63414	・ Hinge,Welded	2	B10001-
16		20Y-54-73841	・ Sheet	1	B10001-
17		20Y-54-73752	・ Sheet	1	B10001-
18		01010-81225	Bolt	4	B10001-
19		01643-31232	Washer	4	B10001-
20		20Y-54-61470	Plate	1	B10001-
21		01010-81225	Bolt	2	B10001-
22		01643-31232	Washer	2	B10001-
23		205-54-53550	Dovetail	1	B10001-
24		01010-80612	Bolt	2	B10001-
25		01643-30623	Washer	2	B10001-
26		20Y-54-28170	Bracket	1	B10001-
27		01010-81225	Bolt	2	B10001-
28		01643-31232	Washer	2	B10001-
29		205-54-51970	Dovetail	1	B10001-
30		01010-80616	Bolt	2	B10001-
31		01643-30623	Washer	2	B10001-
32		20Y-54-61372	Bracket	1	B10001-
33		01010-81225	Bolt	2	B10001-
34		01643-31232	Washer	2	B10001-
35		20Y-54-11611	Stopper	2	B10001-
36		01580-11008	Nut	2	B10001-
37		20Y-54-29232	Bar	2	B10001-
38		20Y-54-71361	Sheet	1	B10001-
39		20Y-54-72750	Sheet	1	B10001-
40		20Y-54-72740	Sheet	1	B10001-
41		20Y-54-71222	Frame	1	B10001-
		20Y-54-71283	Frame	1	B10001-
42		20Y-54-71233	・ Frame	1	B10001-
43		20Y-54-71241	・ Sheet	1	B10001-
44		01010-81230	Bolt	6	B10001-
45		01643-31232	Washer	6	B10001-

PC240LC-8 S/N B10001-UP

Side Cover, LHS

Index	Code	Part Number	Description	Qty	Serial No.
46		20Y-54-12550	Collar	2	B10001-
47		01010-81225	Bolt	2	B10001-
48		01643-31232	Washer	2	B10001-
49		01010-81230	Bolt	2	B10001-
50		01643-31232	Washer	2	B10001-
51		01010-81230	Bolt	5	B10001-
52		01643-31232	Washer	5	B10001-

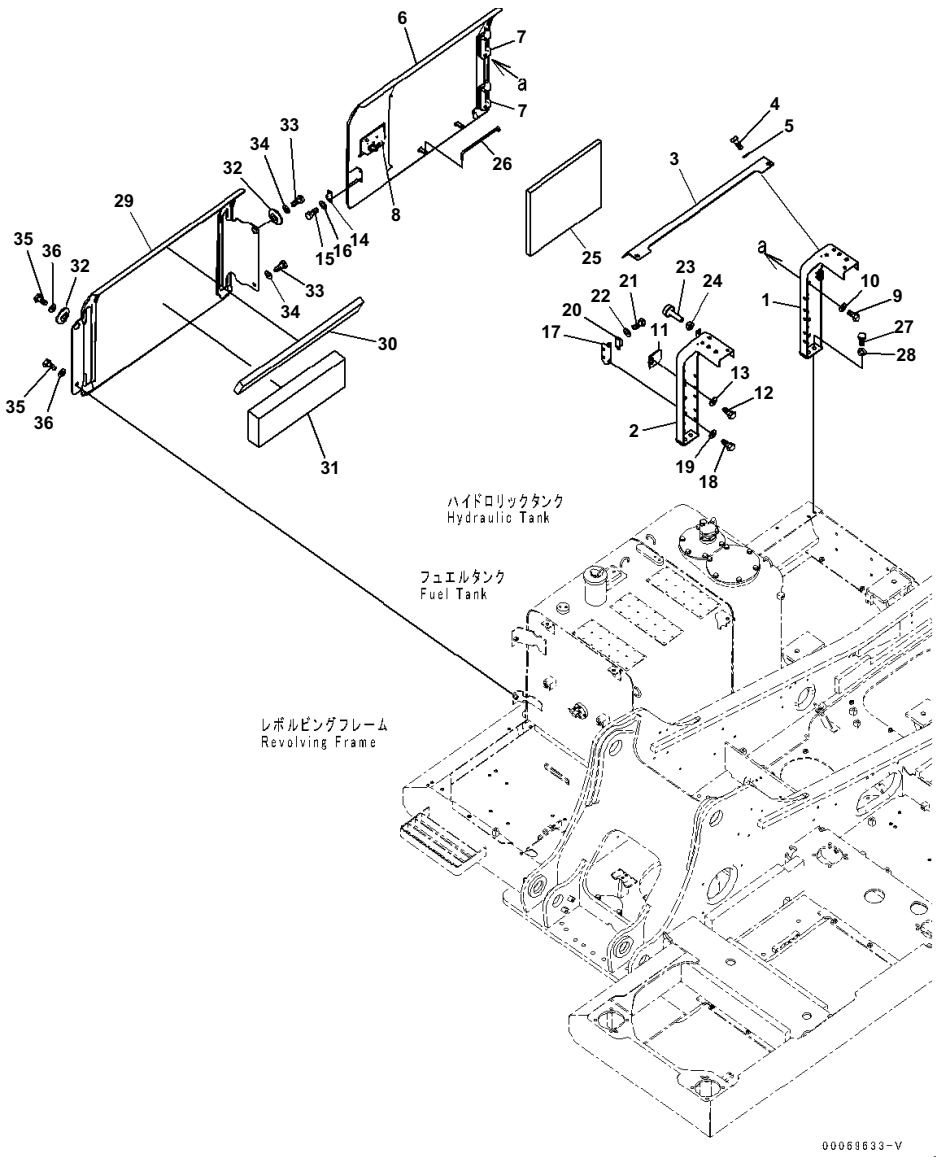

Index	Code	Part Number	Description	Qty	Serial No.
1		20Y-54-71411	Frame	1	B10001-
2		20Y-54-71421	Frame	1	B10001-
3		20Y-54-71431	Plate	1	B10001-
4		01010-81225	Bolt	2	B10001-
5		01643-31232	Washer	2	B10001-
6		206-54-21711	Cover	1	B10001-
7		20Y-54-63414	・ Hinge,Welded	2	B10001-
8		20Y-54-71491	・ Lock,Welded	1	B10001-
9		01010-81225	Bolt	4	B10001-
10		01643-31232	Washer	4	B10001-
11		20Y-54-61470	Plate	1	B10001-
12		01010-81225	Bolt	2	B10001-
13		01643-31232	Washer	2	B10001-
14		205-54-53550	Dovetail	1	B10001-
15		01010-80612	Bolt	2	B10001-
16		01643-30623	Washer	2	B10001-
17		20Y-54-28170	Bracket	1	B10001-
18		01010-81225	Bolt	2	B10001-
19		01643-31232	Washer	2	B10001-
20		205-54-51970	Dovetail	1	B10001-
21		01010-80616	Bolt	2	B10001-
22		01643-30623	Washer	2	B10001-
23		20Y-54-11611	Stopper	1	B10001-
24		01580-11008	Nut	1	B10001-
25		20Y-54-71440	Sheet	1	B10001-
26		20Y-54-29232	Bar	1	B10001-
27		01010-81230	Bolt	4	B10001-
28		01643-31232	Washer	4	B10001-
		20Y-54-71153	Cover	1	B10001-
29	C1		・ Cover	1	B10001-
30		20Y-54-61391	・ Sheet	1	B10001-
31		20Y-54-76910	・ Sheet	1	B10001-
32		208-54-57180	Collar	2	B10001-
33		01010-81230	Bolt	2	B10001-
34		01643-31232	Washer	2	B10001-
35		01010-81240	Bolt	2	B10001-
36		01643-31232	Washer	2	B10001-

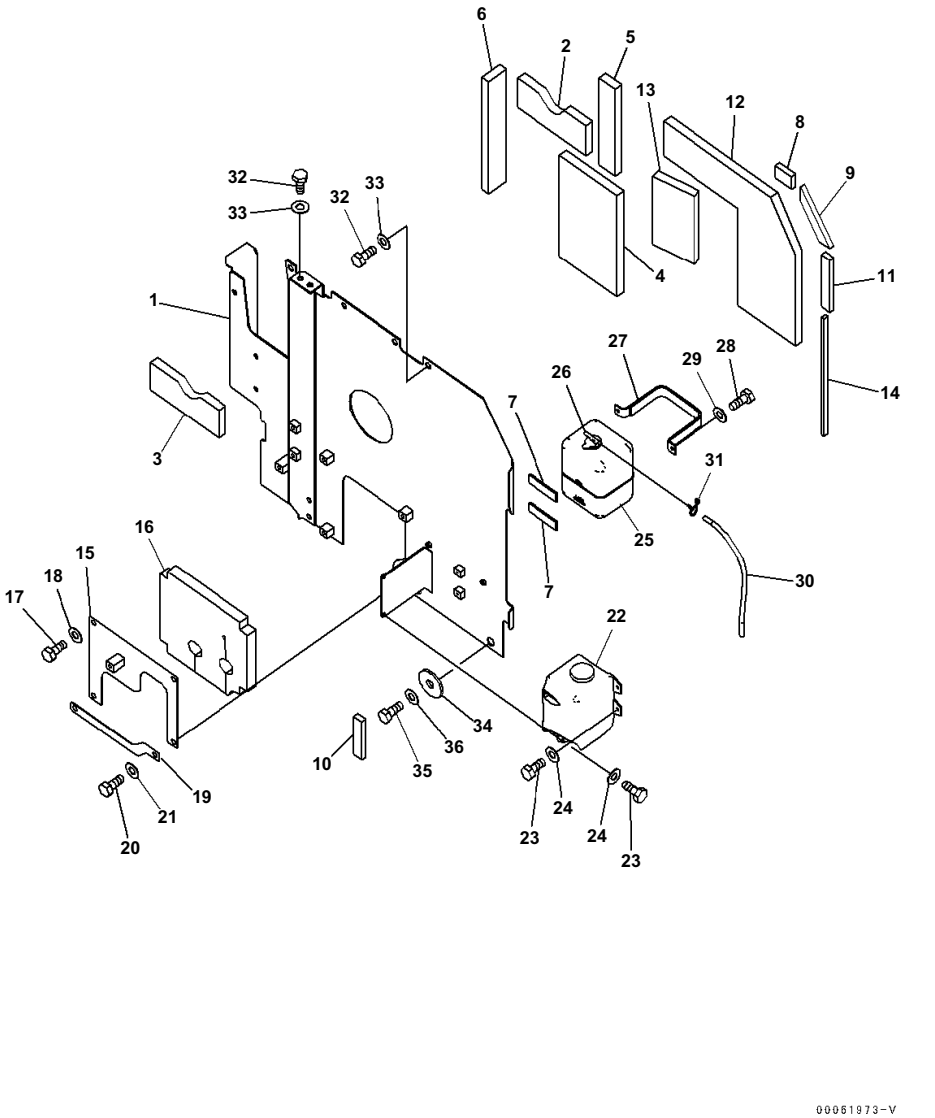

Machine Cab Partition, With Air Conditioner, LHS

Index	Code	Part Number	Description	Qty	Serial No.
		20Y-54-72313	Cover	1	B10001-
1	C1		・Cover	1	B10001-
2		20Y-54-71970	・Sheet	1	B10001-
3		20Y-54-71980	・Sheet	1	B10001-
4		20Y-54-72260	・Sheet	1	B10001-
5		20Y-54-72270	・Sheet	1	B10001-
6		20Y-54-72280	・Sheet	1	B10001-
7		205-03-71440	・Sheet	2	B10001-
8		20Y-54-72510	・Sheet	1	B10001-
9		20Y-54-72520	・Sheet	1	B10001-
10		20Y-54-72540	・Sheet	1	B10001-
11		20Y-54-72551	・Sheet	1	B10001-
12		20Y-54-72831	・Sheet	1	B10001-
13		20Y-54-73711	・Sheet	1	B10001-
14		20Y-54-75590	・Sheet	1	B10001-
		20Y-54-71613	Cover	1	B10001-
15	C1		・Cover	1	B10001-
16		20Y-54-71633	・Sheet	1	B10001-
17		01010-81225	Bolt	2	B10001-
18		01643-31232	Washer	2	B10001-
19		20Y-54-71670	Plate	1	B10001-
20		01010-81225	Bolt	2	B10001-
21		01643-31232	Washer	2	B10001-
22		21T-06-11350	Tank Assembly	1	B10001-
23		01010-80620	Bolt	4	B10001-
24		01643-30623	Washer	4	B10001-
25		20Y-06-15240	Tank	1	B10001-
26		205-03-71532	・Cap	1	B10001-
		205-03-71540	・・Packing	1	B10001-
27		203-03-56650	Bracket	1	B10001-
28		01010-80820	Bolt	2	B10001-
29		01643-30823	Washer	2	B10001-
30		20Y-03-41880	Hose	1	B10001-
31		206-03-43340	Clip	1	B10001-
32		01010-81230	Bolt	7	B10001-
33		01643-31232	Washer	7	B10001-
34		205-54-76411	Collar	2	B10001-
35		01010-81230	Bolt	2	B10001-
36		01643-31232	Washer	2	B10001-

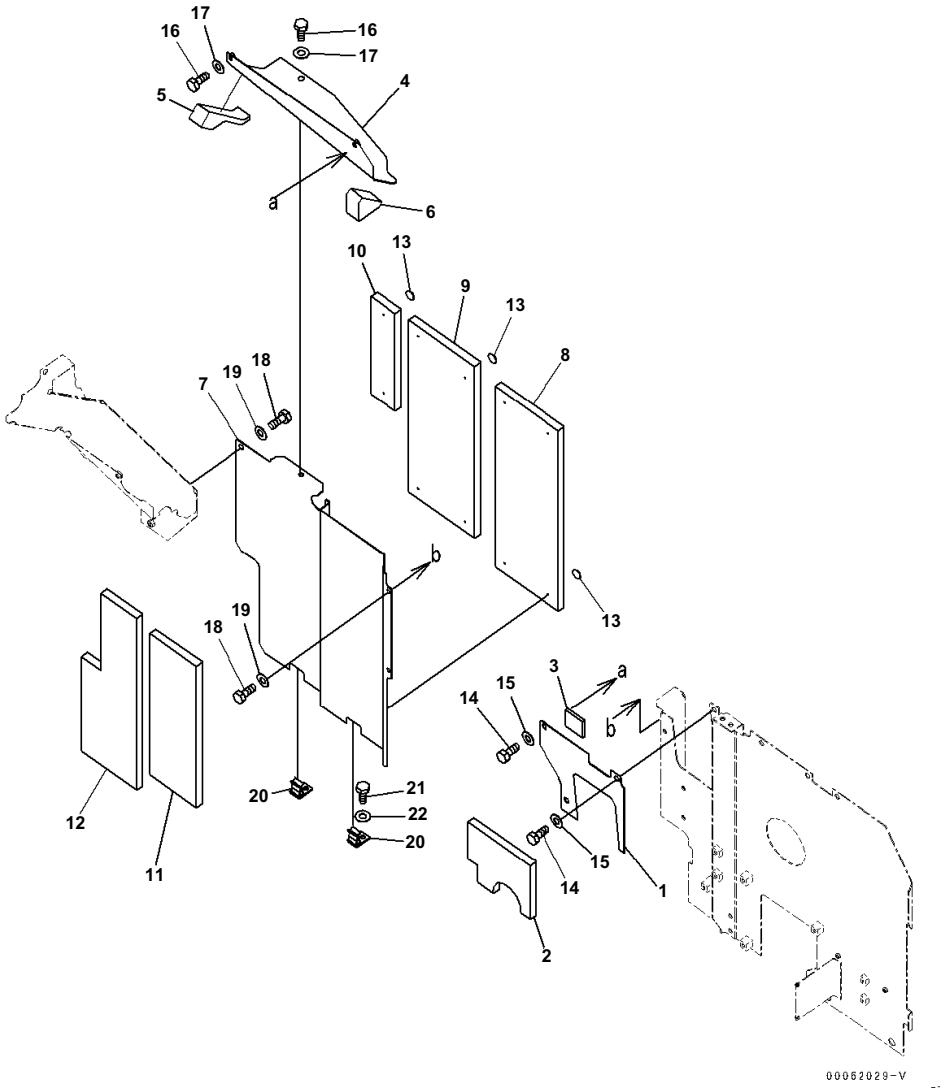

Machine Cab Partition, With Air Conditioner, Center

Index	Code	Part Number	Description	Qty	Serial No.
		20Y-54-72322	Cover	1	B10001-
1	C1		· Cover	1	B10001-
2		20Y-54-71991	· Sheet	1	B10001-
3		20Y-54-73830	· Sheet	1	B10001-
		20Y-54-76470	Cover	1	B10001-
4	C1		· Cover	1	B10001-
5		20Y-54-72251	· Sheet	1	B10001-
6		20Y-54-72491	· Sheet	1	B10001-
		20Y-54-72331	Cover	1	B10001-
7	C1		· Cover	1	B10001-
8		20Y-54-72221	· Sheet	1	B10001-
9		20Y-54-72231	· Sheet	1	B10001-
10		20Y-54-72351	· Sheet	1	B10001-
11		20Y-54-73390	· Sheet	1	B10001-
12		20Y-54-73411	· Sheet	1	B10001-
13		124-A62-1920	· Cap	10	B10001-
14		01010-81230	Bolt	3	B10001-
15		01643-31232	Washer	3	B10001-
16		01010-81230	Bolt	2	B10001-
17		01643-31232	Washer	2	B10001-
18		01010-81230	Bolt	3	B10001-
19		01643-31232	Washer	3	B10001-
20		20Y-54-12320	Catcher	2	B10001-
21		01010-81230	Bolt	2	B10001-
22		01643-31232	Washer	2	B10001-

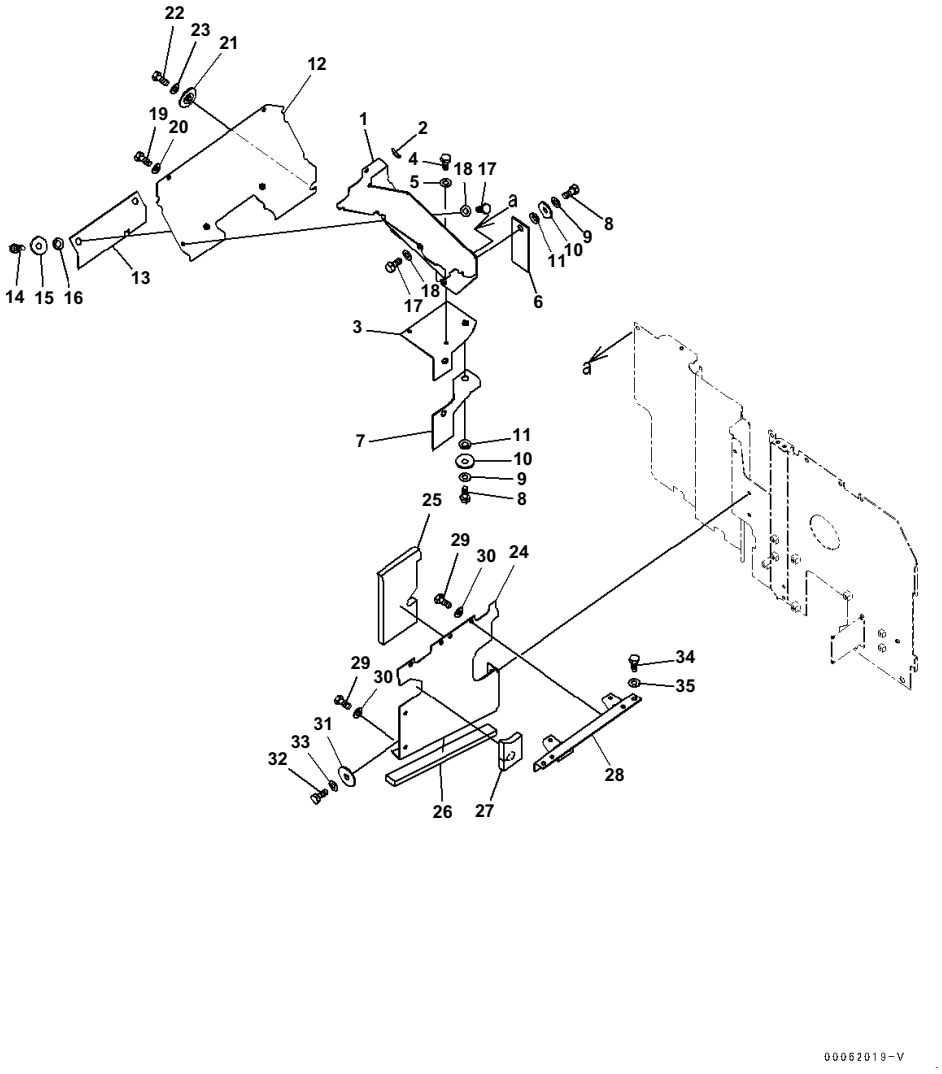

Machine Cab Partition, With Air Conditioner, Valve and Muffler Side

Index	Code	Part Number	Description	Qty	Serial No.
		20Y-54-73850	Cover Assembly	1	B10001-
1	C1		· Cover	1	B10001-
2		20Y-54-73781	· Sheet	1	B10001-
3		20Y-54-72481	Cover	1	B10001-
4		01010-81225	Bolt	2	B10001-
5		01643-31232	Washer	2	B10001-
6		20Y-54-73760	Sheet	1	B10001-
7		20Y-54-73770	Sheet	1	B10001-
8		01010-81225	Bolt	3	B10001-
9		01643-31232	Washer	3	B10001-
10		124-54-26540	Washer	3	B10001-
11		01643-51232	Washer	3	B10001-
12		20Y-54-71561	Cover	1	B10001-
13		20Y-54-72470	Sheet	1	B10001-
14		01010-81225	Bolt	2	B10001-
15		124-54-26540	Washer	2	B10001-
16		01643-51232	Washer	2	B10001-
17		01010-81230	Bolt	3	B10001-
18		01643-31232	Washer	3	B10001-
19		01010-81230	Bolt	2	B10001-
20		01643-31232	Washer	2	B10001-
21		20Y-54-12550	Collar	1	B10001-
22		01010-81230	Bolt	1	B10001-
23		01643-31232	Washer	1	B10001-
24		20Y-54-71572	Cover	1	B10001-
25		20Y-54-71950	· Sheet	1	B10001-
26		20Y-54-71962	· Sheet	1	B10001-
27		206-54-71460	· Sheet	1	B10001-
28		20Y-54-71262	Frame	1	B10001-
29		01010-81230	Bolt	6	B10001-
30		01643-31232	Washer	6	B10001-
31		203-54-62670	Collar	2	B10001-
32		01010-81230	Bolt	2	B10001-
33		01643-31232	Washer	2	B10001-
34		01010-81230	Bolt	2	B10001-
35		01643-31232	Washer	2	B10001-

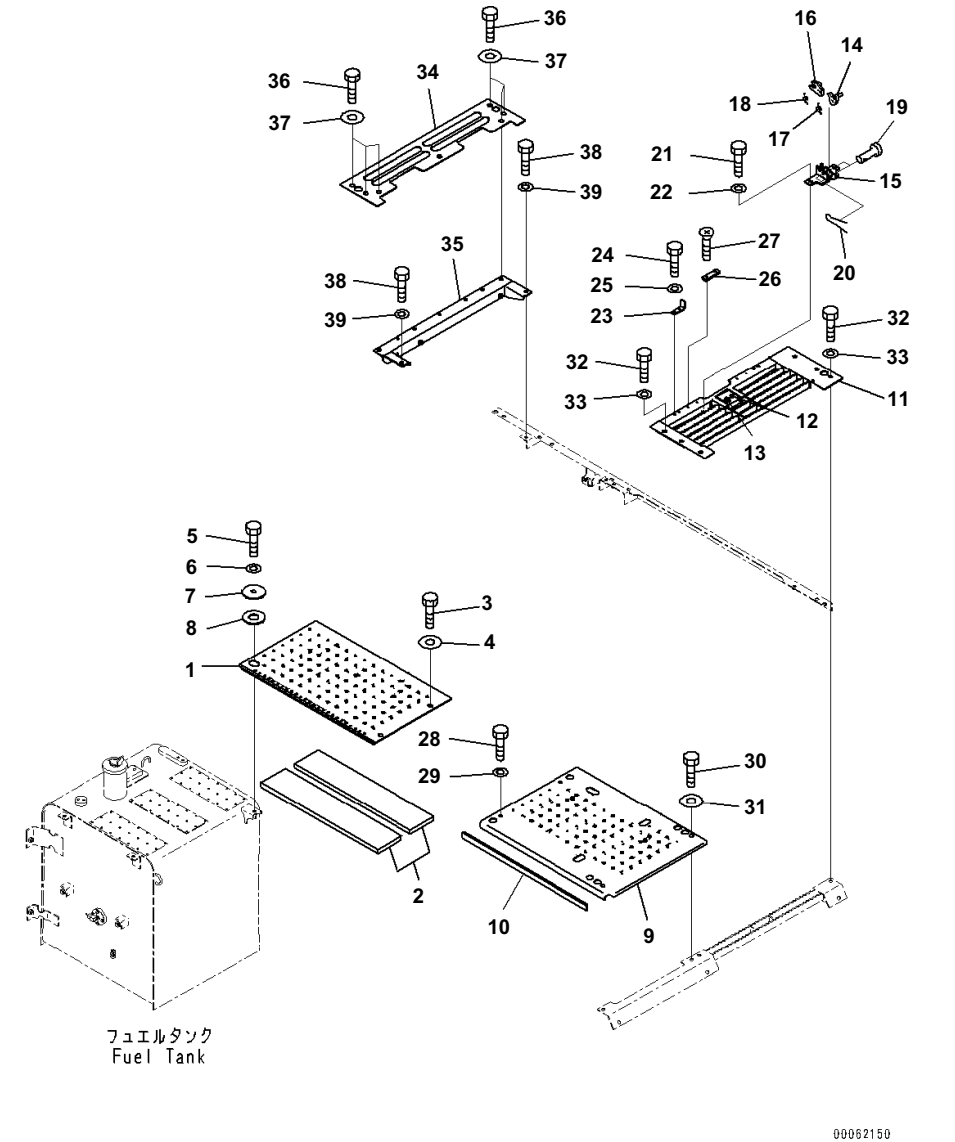

Index	Code	Part Number	Description	Qty	Serial No.
		20Y-54-76490	Cover	1	B10001
1	C1		・ Cover	1	B10001
2		20Y-54-76230	・ Sheet	2	B10001
3		01010-81230	Bolt	2	B10001
4		175-54-34170	Washer	2	B10001
5		01010-81230	Bolt	1	B10001
6		01643-31232	Washer	1	B10001
7		20Y-54-61990	Collar	1	B10001
8		20Y-54-61790	Plate	1	B10001
		20Y-54-73741	Cover	1	B10001
9	C1		・ Cover	1	B10001
10		20Y-54-73730	・ Sheet	1	B10001
11		20Y-54-71723	Cover	1	B10001
12		20Y-54-25852	・ Lock,Welded	1	B10001
13		20Y-54-73190	Lock Assembly	1	B10001
14		20Y-54-75910	Lever	1	B10001
15		20Y-54-75930	Bracket	1	B10001
16		20Y-54-75920	Lever	1	B10001
17		21K-54-26351	Spring	1	B10001
18		20X-54-21460	Spring	1	B10001
19		04205-11038	Pin	2	B10001
20		04050-13020	Pin, Cotter	2	B10001
21		01010-81025	Bolt	2	B10001
22		01643-31032	Washer	2	B10001
23		20Y-54-27182	Bracket	2	B10001
24		01010-81025	Bolt	4	B10001
25		01643-31032	Washer	4	B10001
26		205-54-68440	Plate	2	B10001
27		01224-40616	Screw	4	B10001
28		01010-81230	Bolt	2	B10001
29		01643-31232	Washer	2	B10001
30		01010-81230	Bolt	2	B10001
31		175-54-34170	Washer	2	B10001
32		01010-81230	Bolt	6	B10001
33		01643-31232	Washer	6	B10001
34		20Y-54-B1270	Cover	1	B10001
35		20Y-54-71172	Frame	1	B10001
36		01010-81230	Bolt	7	B10001
37		175-54-34170	Washer	7	B10001
38		01010-81230	Bolt	2	B10001
39		01643-31232	Washer	2	B10001

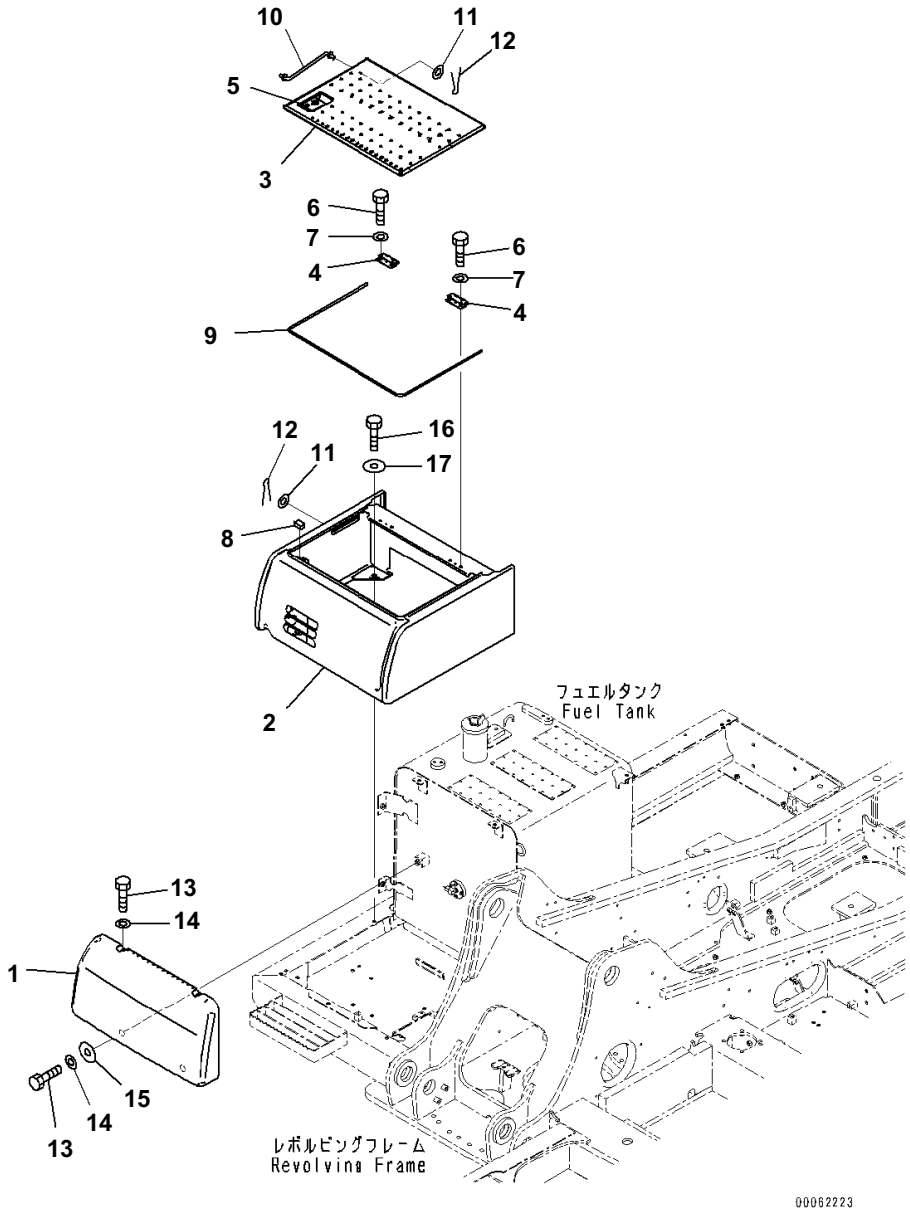

Index	Code	Part Number	Description	Qty	Serial No.
1		20Y-54-74143	Cover	1	B10001-
		20Y-54-74103	Cover Assembly	1	B10001-
2	C1		・ Cover	1	B10001-
3		20Y-54-74133	・ Cover	1	B10001-
4		20Y-54-74161	・・ Hinge,Welded	2	B10001-
5		20Y-54-74172	・・ Lock,Welded	1	B10001-
6		01010-81020	・ Bolt	4	B10001-
7		01643-31032	・ Washer	4	B10001-
8		20Y-54-29680	・ Sheet	1	B10001-
9		20Y-54-29660	・ Seal	1	B10001-
10		203-54-56630	・ Rod	1	B10001-
11		01643-30623	・ Washer	2	B10001-
12		04050-11612	・ Pin, Cotter	2	B10001-
13		01010-81230	Bolt	4	B10001-
14		01643-31232	Washer	4	B10001-
15		20Y-54-19930	Collar	2	B10001-
16		175-54-34170	Washer	4	B10001-
17		01010-81230	Bolt	4	B10001-

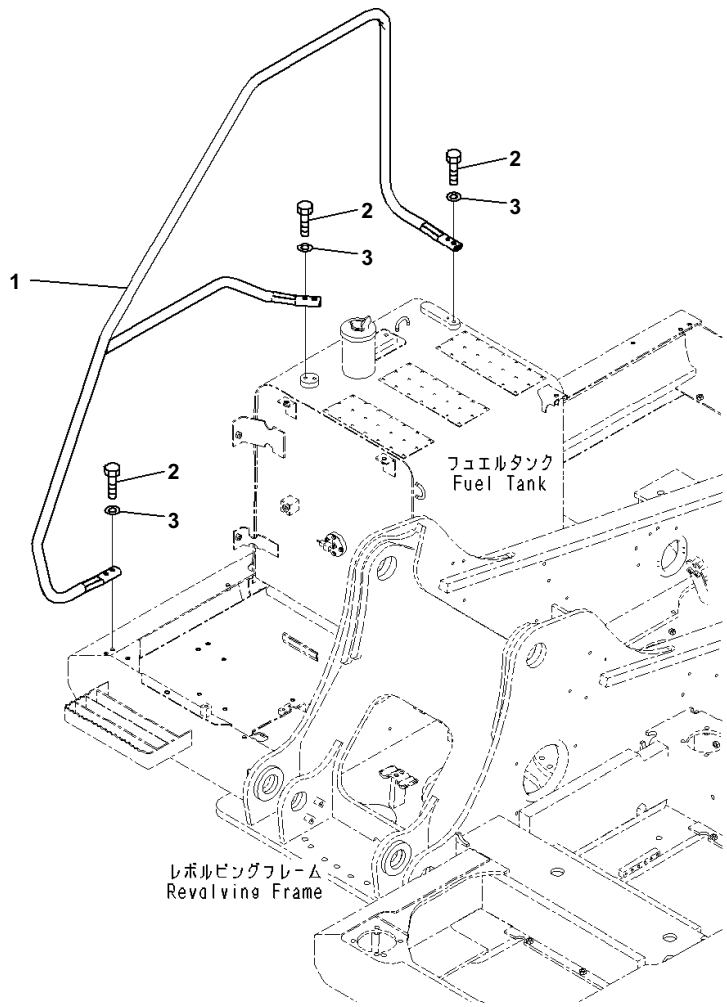

Index	Code	Part Number	Description	Qty	Serial No.
1		20Y-54-73991	Handrail	1	B10001-
2		01010-81240	Bolt	6	B10001-
3		01643-31232	Washer	6	B10001-

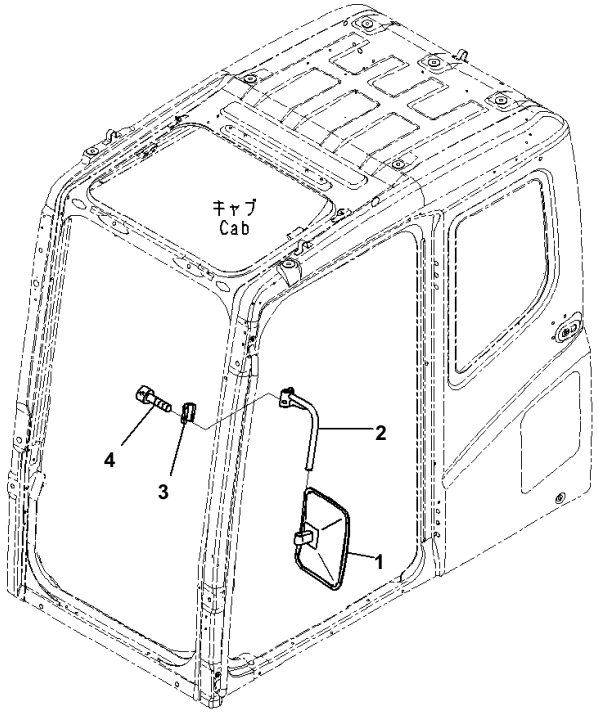

Index	Code	Part Number	Description	Qty	Serial No.
1		2A5-54-13420	Mirror	1	B10001-
2		20Y-54-74260	Support	1	B10001-
3		20Y-54-35430	Clamp	1	B10001-
4		01252-71030	Bolt	2	B10001-

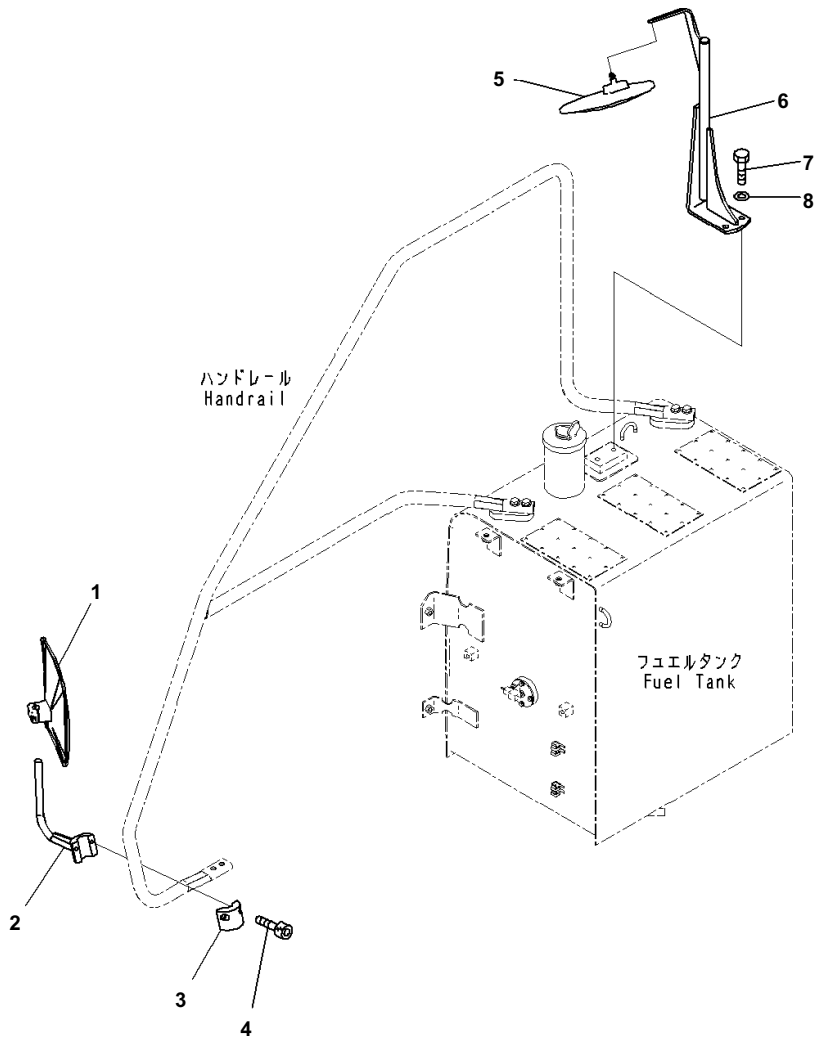

Index	Code	Part Number	Description	Qty	Serial No.
1		2A5-54-13420	Mirror	1	B10001-
2		20Y-54-74270	Support	1	B10001-
3		20Y-54-61630	Clamp	1	B10001-
4		01252-71030	Bolt	2	B10001-
5		207-54-75710	Mirror	1	B10001-
6		20Y-54-74240	Bracket	1	B10001-
7		01010-81230	Bolt	2	B10001-
8		01643-31232	Washer	2	B10001-

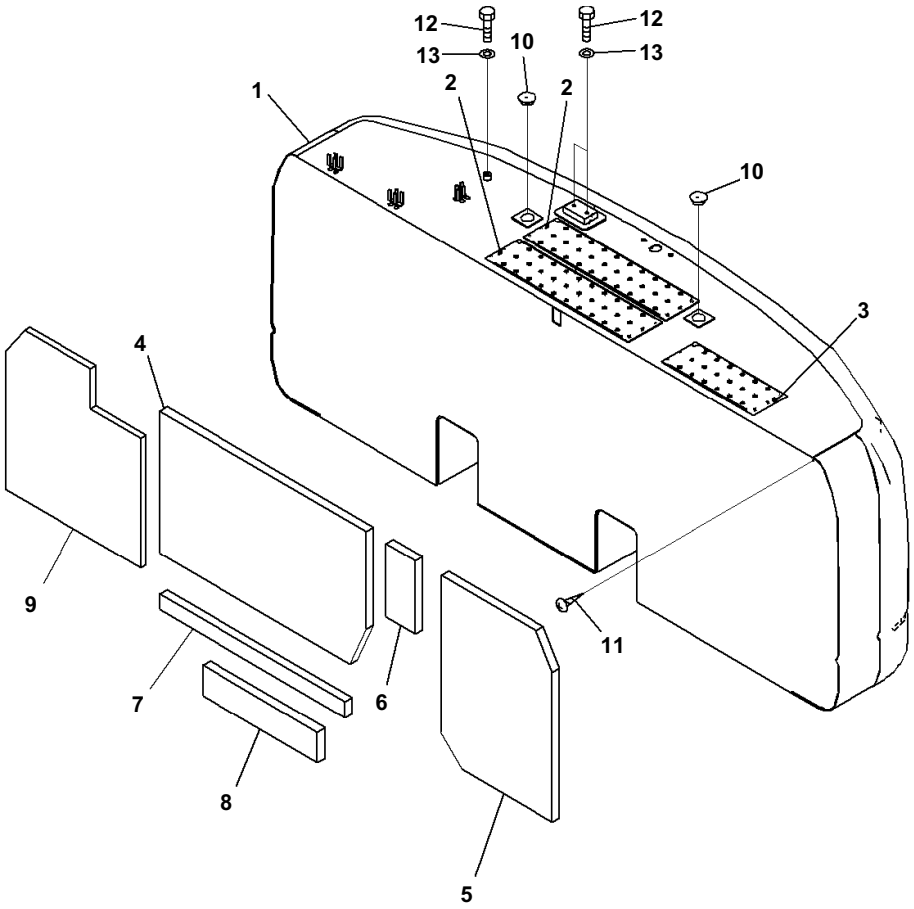

Index	Code	Part Number	Description	Qty	Serial No.
		206-46-B1110	Weight	1	B10001-
1	C1		· Weight	1	B10001-
2		20Y-46-54313	· · Plate,Welded	2	B10001-
3		20Y-46-54323	· · Plate,Welded	1	B10001-
4		20Y-46-54141	· Sheet	1	B10001-
5		20Y-46-54151	· Sheet	1	B10001-
6		20Y-46-54160	· Sheet	1	B10001-
7		20Y-46-54170	· Sheet	1	B10001-
8		20Y-46-54180	· Sheet	1	B10001-
9		20Y-46-54190	· Sheet	1	B10001-
10		20Y-46-11270	Cap	2	B10001-
11		01370-00508	Screw	1	B10001-
12		01010-81220	Bolt	3	B10001-
13		01643-31232	Washer	3	B10001-

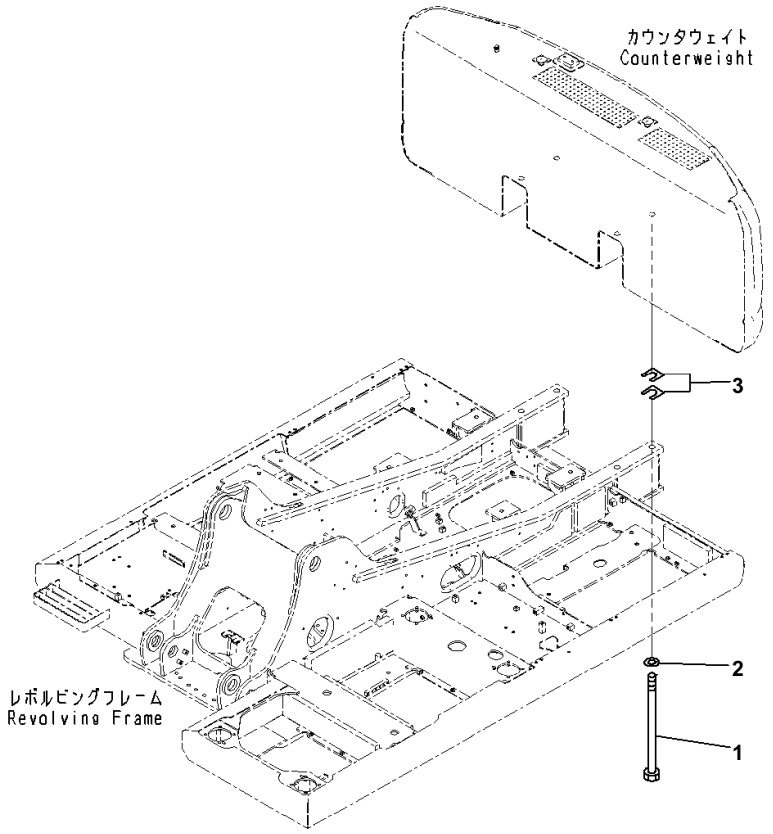

Index	Code	Part Number	Description	Qty	Serial No.
1		20Y-46-54130	Bolt	4	B10001-
2		207-46-32220	Washer	4	B10001-
3		20Y-46-11410	Plate, T=1.6mm	2	B10001-

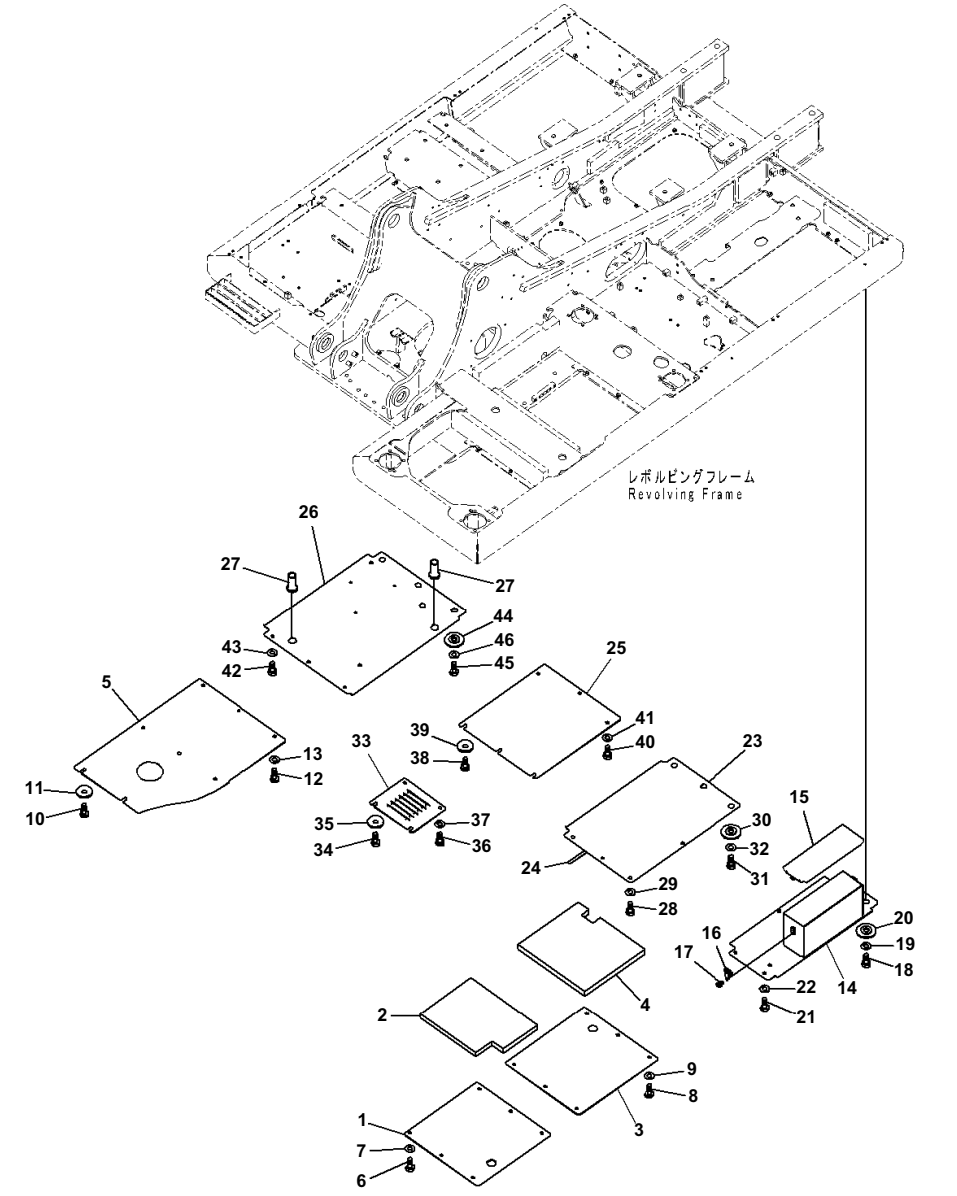

Index	Code	Part Number	Description	Qty	Serial No.
		20Y-54-73791	Cover	1	B10001-
1	C1		・Cover	1	B10001-
2		20Y-54-61770	・Sheet	1	B10001-
		20Y-54-73810	Cover	1	B10001-
3	C1		・Cover	1	B10001-
4		20Y-54-61780	・Sheet	1	B10001-
5		20Y-54-71863	Cover	1	B10001-
6		01010-81230	Bolt	6	B10001-
7		01643-31232	Washer	6	B10001-
8		01010-81230	Bolt	6	B10001-
9		01643-31232	Washer	6	B10001-
10		01010-81230	Bolt	2	B10001-
11		175-54-34170	Washer	2	B10001-
12		01010-81230	Bolt	6	B10001-
13		01643-31232	Washer	6	B10001-
		20Y-54-71811	Cover	1	B10001-
14	C1		・Cover	1	B10001-
15		20Y-54-73870	・Cover	1	B10001-
16		195-57-11530	・Clip	1	B10001-
17		01023-20512	・Screw	3	B10001-
18		01010-81230	Bolt	2	B10001-
19		01643-31232	Washer	2	B10001-
20		20Y-54-12550	Collar	2	B10001-
21		01010-81230	Bolt	2	B10001-
22		01643-31232	Washer	2	B10001-
23		20Y-54-71831	Cover	1	B10001-
24		20Y-54-61890	・Sheet	1	B10001-
25		20Y-54-71851	Cover	1	B10001-
		20Y-54-74780	Cover	1	B10001-
26	C1		・Cover	1	B10001-
27		22U-54-24760	・Grommet	2	B10001-
28		01010-81230	Bolt	4	B10001-
29		01643-31232	Washer	4	B10001-
30		20Y-54-12550	Collar	3	B10001-
31		01010-81230	Bolt	3	B10001-
32		01643-31232	Washer	3	B10001-
33		20Y-54-71890	Cover	1	B10001-
34		01010-81230	Bolt	2	B10001-
35		175-54-34170	Washer	2	B10001-
36		01010-81230	Bolt	2	B10001-
37		01643-31232	Washer	2	B10001-
38		01010-81230	Bolt	3	B10001-
39		175-54-34170	Washer	3	B10001-
40		01010-81230	Bolt	3	B10001-
41		01643-31232	Washer	3	B10001-
42		01010-81230	Bolt	3	B10001-

PC240LC-8 S/N B10001-UP
Under Cover, For Fuel Refill Pump

Index	Code	Part Number	Description	Qty	Serial No.
43		01643-31232	Washer	3	B10001-
44		20Y-54-12550	Collar	3	B10001-
45		01010-81230	Bolt	3	B10001-
46		01643-31232	Washer	3	B10001-

SWING CIRCLE AND ITS RELATED PARTS

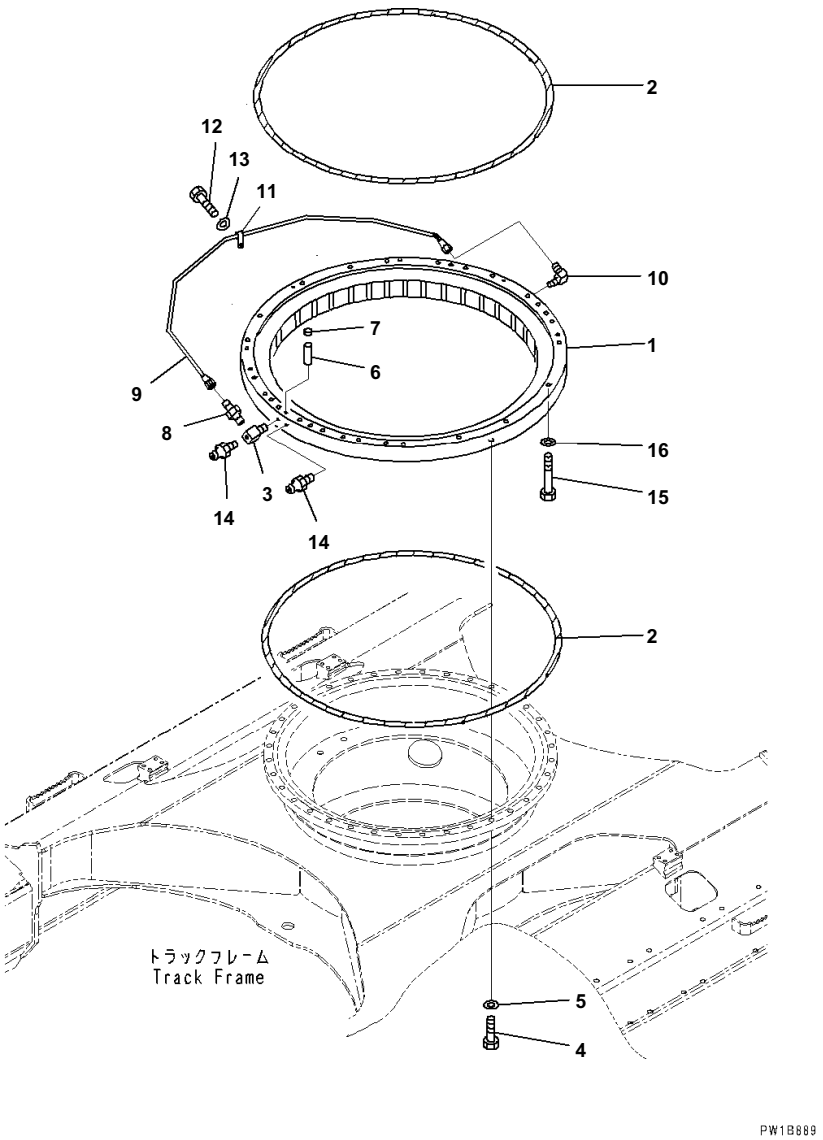

Swing Circle

Index	Code	Part Number	Description	Qty	Serial No.
1		206-25-00301	Swing Circle Assembly	1	B10001-
2		205-25-71152	· Seal	2	B10001-
3		205-25-71280	· Nipple	1	B10001-
4		206-25-71130	Bolt	36	B10001-
5		01643-72260	Washer	36	B10001-
6		04020-01842	Pin, Dowel	2	B10001-
7		20Y-46-21520	Cap	1	B10001-
8		07214-50813	Connector	1	B10001-
9		20Y-25-21123	Tube	1	B10001-
10		20Y-25-11270	Elbow	1	B10001-
11		08036-00814	Clip	1	B10001-
12		01010-81016	Bolt	1	B10001-
13		01643-31032	Washer	1	B10001-
14		07020-00000	Fitting, Grease	2	B10001-
15		206-25-61110	Bolt	32	B10001-
16		01643-72260	Washer	32	B10001-

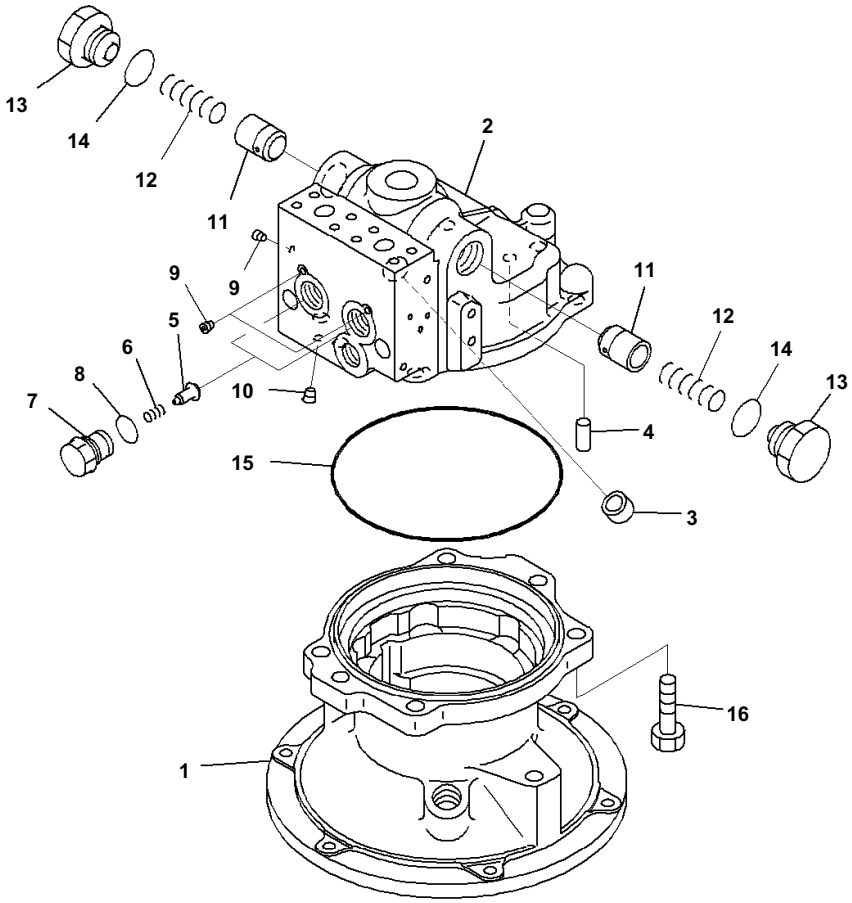

Index	Code	Part Number	Description	Qty	Serial No.
		706-7G-01170	Motor Assembly	1	B10001-
		706-7G-03130	・ Motor Subassembly	1	B10001-
1	C2	706-7G-41240	・・ Case	1	B10001-
2	C2	706-7G-71160	・・ Housing	1	B10001-
3	C2	706-7G-40110	・・ Bushing	1	B10001-
4	C2	708-8K-15190	・・ Pin, Dowel	1	B10001-
5		709-25-11650	・・ Valve, Check	2	B10001-
6		709-25-11361	・・ Spring	2	B10001-
7		709-25-11640	・・ Plug	2	B10001-
8		07000-12020	・・ O-ring	2	B10001-
9		708-21-12541	・・ Plug	3	B10001-
10		708-8F-31620	・・ Plug	1	B10001-
11		706-7G-71710	・・ Valve	2	B10001-
12		706-7G-71560	・・ Spring	2	B10001-
13		706-7G-71630	・・ Plug	2	B10001-
14		07002-13334	・・ O-ring	2	B10001-
15	C2	706-75-42370	・・ O-ring	1	B10001-
16		01010-61450	・・ Bolt	6	B10001-

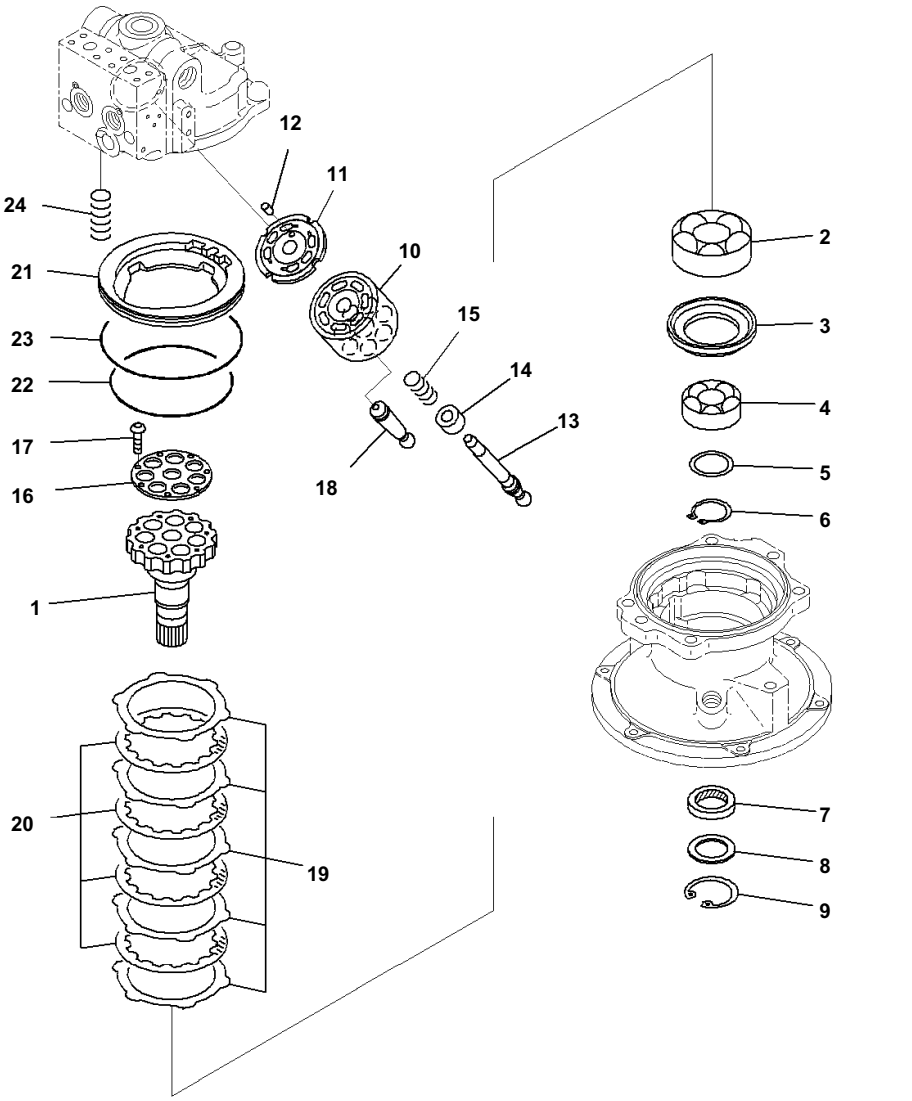

Index	Code	Part Number	Description	Qty	Serial No.
		706-7G-01170	Motor Assembly	1	B10001-
		706-7G-03130	・ Motor Subassembly	1	B10001-
1	C2	706-7G-41630	・・ Shaft, Drive	1	B10001-
2	C2	706-75-42880	・・ Bearing	1	B10001-
3	C2	706-7G-41660	・・ Spacer	1	B10001-
4	C2	706-76-40890	・・ Bearing	1	B10001-
5	C2	706-7G-41510	・・ Spacer Kit	1	B10001-
	C1		・・・ Spacer, T=3.1mm	1	B10001-
	C1		・・・ Spacer, T=3.4mm	1	B10001-
	C1		・・・ Spacer, T=3.7mm	1	B10001-
6		04064-04518	・・ Ring, Snap	1	B10001-
7		706-7E-11280	・・ Oil	1	B10001-
8		706-7G-41910	・・ Spacer	1	B10001-
9		04065-06220	・・ Ring, Snap	1	B10001-
10	C2	706-7G-41310	・・ Block, Cylinder	1	B10001-
11	C2	706-7G-41720	・・ Plate, Valve	1	B10001-
12	C2	706-75-43750	・・ Pin, Dowel	1	B10001-
13	C2	706-7G-41320	・・ Shaft,Center	1	B10001-
14	C2	706-7G-41130	・・ Ring,Center	1	B10001-
15	C2	706-7G-41140	・・ Spring	1	B10001-
	C2	706-7G-05010	・・ Retainer Kit	1	B10001-
16	C1		・・・ Retainer	1	B10001-
17	C1		・・・ Screw	7	B10001-
18	C2	706-7G-41410	・・ Piston Subassembly	7	B10001-
19	C2	706-7G-91441	・・ Plate	5	B10001-
20	C2	706-7G-91450	・・ Disc	4	B10001-
21	C2	706-7G-91120	・・ Piston, Brake	1	B10001-
22	C2	706-75-92310	・・ O-ring	1	B10001-
23	C2	708-8F-31610	・・ O-ring	1	B10001-
24	C2	706-7G-91360	・・ Spring	6	B10001-

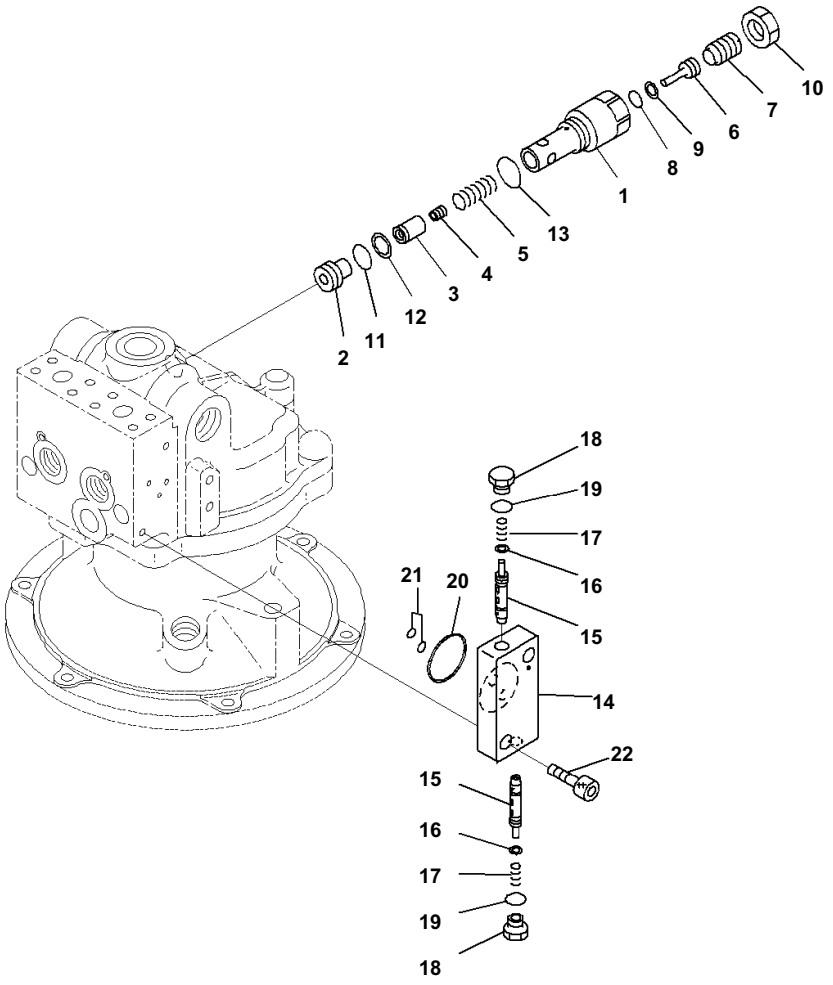

Index	Code	Part Number	Description	Qty	Serial No.
		706-7G-01170	Motor Assembly	1	B10001-
		702-75-01310	・ Valve, Relief	1	B10001-
1	C1		・・ Sleeve	1	B10001-
2	C1		・・ Seat, Valve	1	B10001-
3	C1		・・ Valve	1	B10001-
4	C1		・・ Piston	1	B10001-
5	C1		・・ Spring	1	B10001-
6	C1		・・ Rod	1	B10001-
7	C1		・・ Screw	1	B10001-
8	C1		・・ O-ring	1	B10001-
9	C1		・・ Ring, Back-up	1	B10001-
10	C1		・・ Nut	1	B10001-
11		07000-F2020	・・ O-ring	1	B10001-
12		07001-02020	・・ Ring, Back-up	1	B10001-
13		07002-13034	・・ O-ring	1	B10001-
		702-15-77000	・ Valve Assembly	1	B10001-
14	C1		・・ Body	1	B10001-
15	C1		・・ Spool	2	B10001-
16		709-70-71610	・・ Seal	2	B10001-
17		702-15-71130	・・ Spring	2	B10001-
18		702-15-71140	・・ Plug	2	B10001-
19		07002-01423	・・ O-ring	2	B10001-
20		07000-13042	・ O-ring	1	B10001-
21		07000-11009	・ O-ring	2	B10001-
22		01252-60825	・ Bolt	2	B10001-

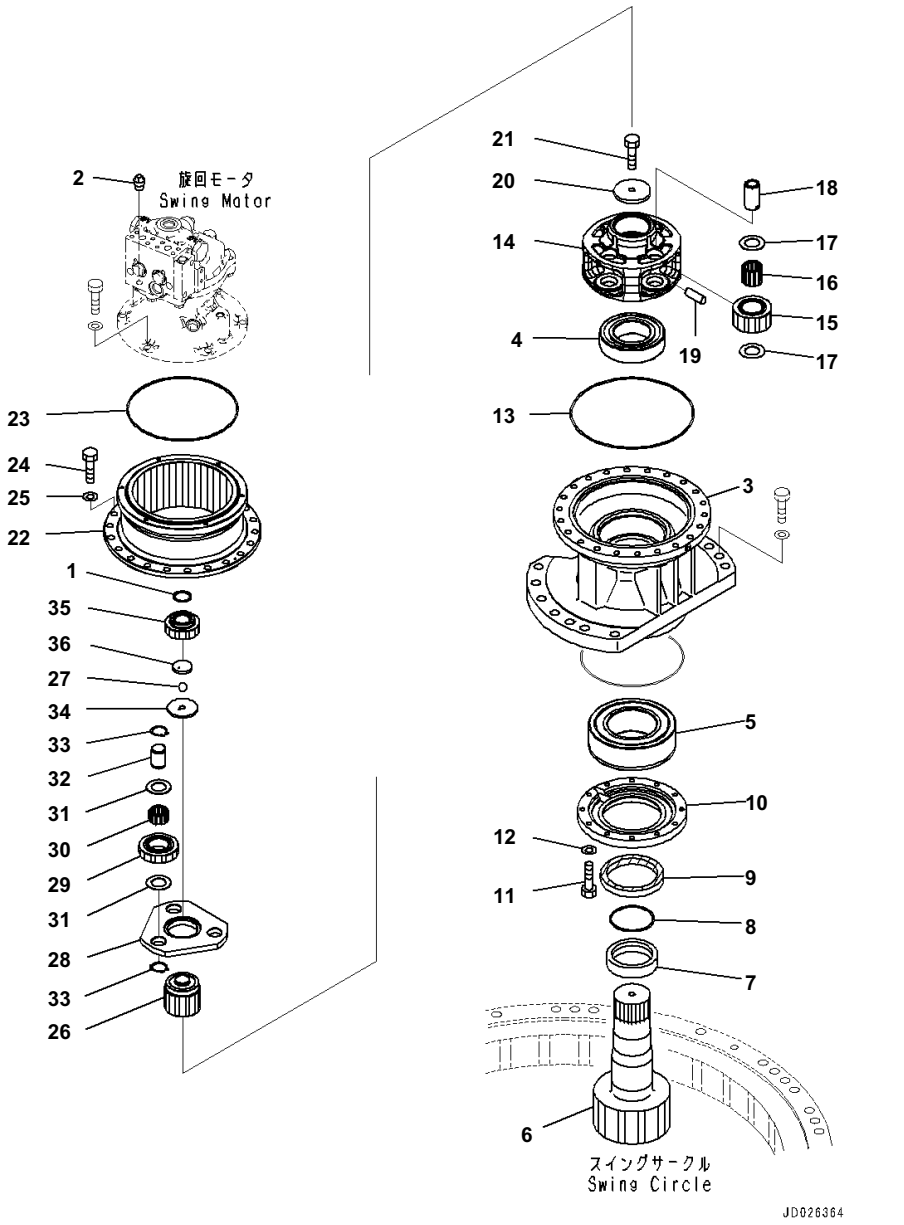

Index	Code	Part Number	Description	Qty	Serial No.
1		22U-26-21280	Ring	1	B10001-
2		07042-00312	Plug, Taper	1	B10001-
3		206-26-73310	Case	1	B10001-
4		206-26-73150	Bearing	1	B10001-
5		206-26-73160	Bearing	1	B10001-
6		206-26-73130	Shaft	1	B10001-
7		206-26-73140	Spacer	1	B10001-
8		07000-15100	O-ring	1	B10001-
9		20Y-26-22420	Seal	1	B10001-
10		206-26-73120	Cover	1	B10001-
11		01010-81040	Bolt	12	B10001-
12		01643-31032	Washer	12	B10001-
13		07000-15310	O-ring	1	B10001-
14		206-26-71480	Carrier	1	B10001-
15		206-26-71440	Gear	4	B10001-
16		22U-26-21320	Bearing	8	B10001-
17		206-26-71520	Washer, Thrust	8	B10001-
18		206-26-71510	Pin	4	B10001-
19		20Y-26-21330	Pin	4	B10001-
20		20Y-26-21240	Plate	1	B10001-
21		112-32-11211	Bolt	1	B10001-
22		206-26-71452	Gear	1	B10001-
23		20K-22-11190	O-ring	1	B10001-
24		01010-81440	Bolt	22	B10001-
25		01643-31445	Washer	22	B10001-
26		206-26-71430	Gear	1	B10001-
27		04260-01270	Ball	1	B10001-
28		206-26-71471	Carrier	1	B10001-
29		206-26-71420	Gear	3	B10001-
30		20Y-27-22210	Bearing	3	B10001-
31		22U-26-21230	Washer, Thrust	6	B10001-
32		206-26-71210	Pin	3	B10001-
33		04064-03515	Ring	6	B10001-
34		206-26-71350	Holder	1	B10001-
35		206-26-71410	Gear	1	B10001-
36		206-26-71341	Plate	1	B10001-

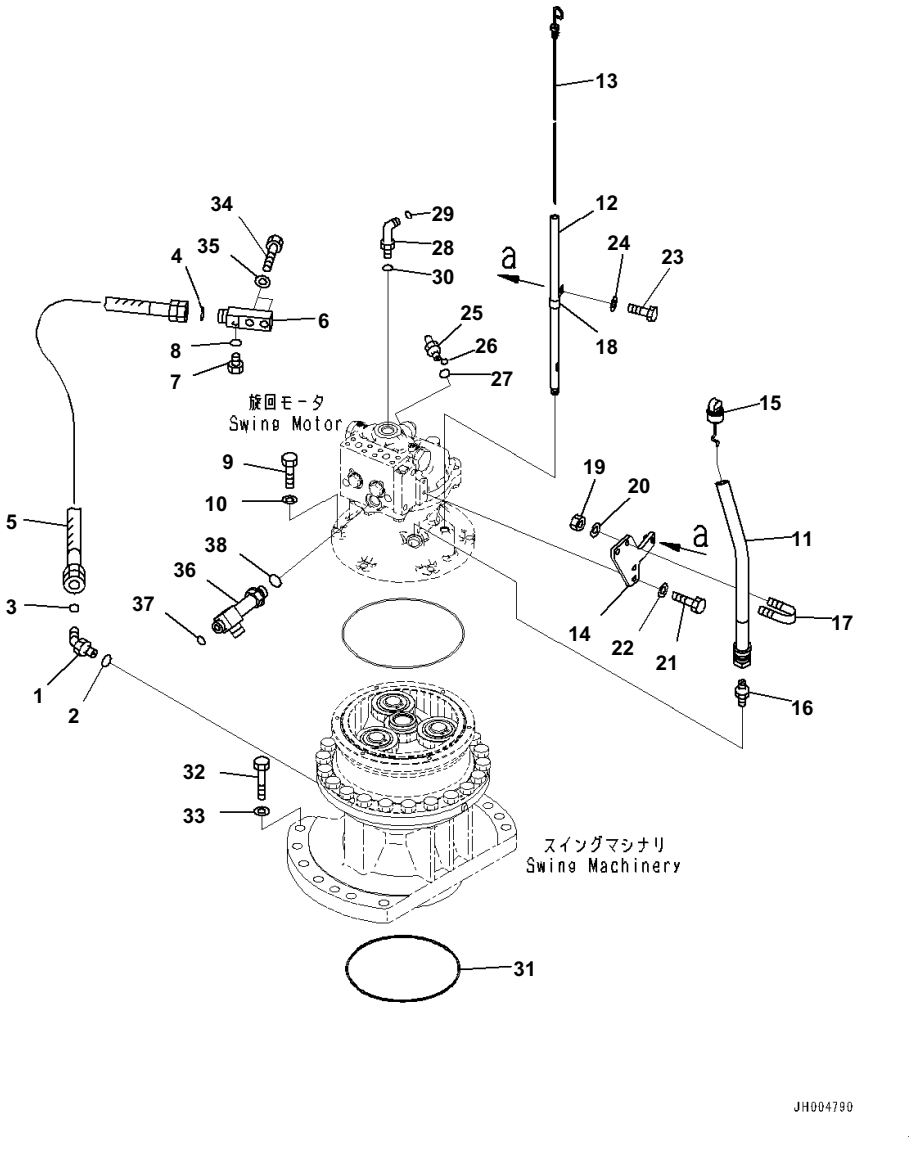

Index	Code	Part Number	Description	Qty	Serial No.
1		02783-10522	Elbow	1	B10001-
2		07002-12434	O-ring	1	B10001-
3		02896-11015	O-ring	1	B10001-
4		02896-11015	O-ring	1	B10001-
5		02762-005A5	Hose	1	B10001-
6		20Y-26-31211	Elbow	1	B10001-
7		07040-11409	Plug	1	B10001-
8		07002-11423	O-ring	1	B10001-
9		01010-81035	Bolt	6	B10001-
10		01643-51032	Washer	6	B10001-
11		20Y-26-31471	Tube	1	B10001-
12		20Y-26-31421	Filler	1	B10001-
13		20Y-26-31431	Gauge	1	B10001-
14		20Y-26-31460	Bracket	1	B10001-
15		22U-26-21920	Cap	1	B10001-
16		07238-10630	Connector	1	B10001-
17		07283-32738	Clip, Pipe	1	B10001-
18		04434-51710	Clip	1	B10001-
19		01597-01009	Nut	2	B10001-
20		01643-31032	Washer	2	B10001-
21		01010-81030	Bolt	2	B10001-
22		01643-31032	Washer	2	B10001-
23		01010-81025	Bolt	1	B10001-
24		01643-31032	Washer	1	B10001-
25		11Y-62-12160	Elbow	1	B10001-
26		02896-11008	O-ring	1	B10001-
27		07002-11423	O-ring	1	B10001-
28		02782-10630	Elbow	1	B10001-
29		02896-11018	O-ring	1	B10001-
30		07002-12434	O-ring	1	B10001-
31		07000-15250	O-ring	1	B10001-
32		01010-82070	Bolt	14	B10001-
33		01643-32060	Washer	14	B10001-
34		01010-81250	Bolt	2	B10001-
35		01643-31232	Washer	2	B10001-
36		20Y-62-41940	Elbow	1	B10001-
37		02896-11015	O-ring	2	B10001-
38		07002-12434	O-ring	1	B10001-

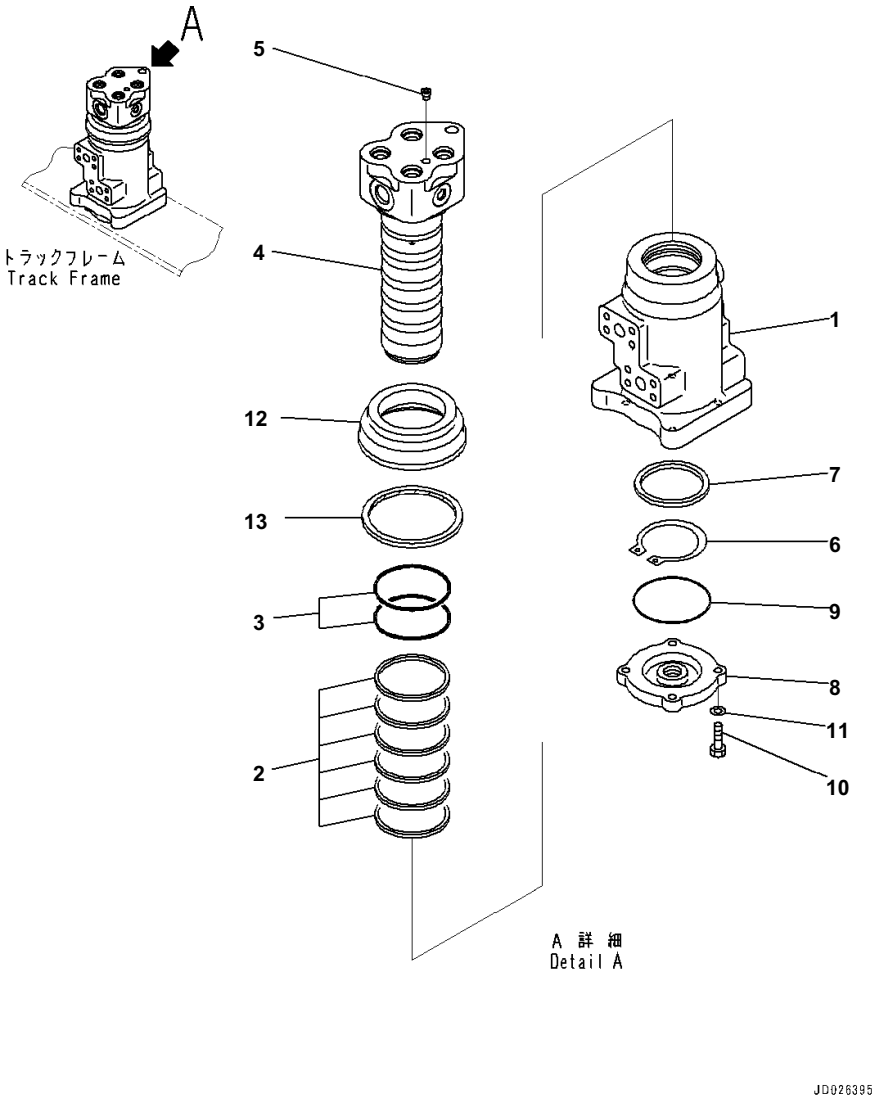

Index	Code	Part Number	Description	Qty	Serial No.
		703-08-33631	Swivel Joint Assembly	1	B10001-
1	C1		・ Rotor	1	B10001-
2		703-08-95620	・ Seal, Oil	6	B10001-
3		07000-15080	・ O-ring	2	B10001-
4	C1		・ Shaft	1	B10001-
5		703-08-98930	・・ Plug	1	B10001-
6		04064-07525	・ Ring, Snap	1	B10001-
7		703-08-94510	・ Ring	1	B10001-
8		703-08-93170	・ Cover	1	B10001-
9		07000-12105	・ O-ring	1	B10001-
10		01010-80835	・ Bolt	4	B10001-
11		01643-30823	・ Washer	4	B10001-
12		703-08-93771	・ Cover	1	B10001-
13		703-08-95770	・ Seal, Dust	1	B10001-

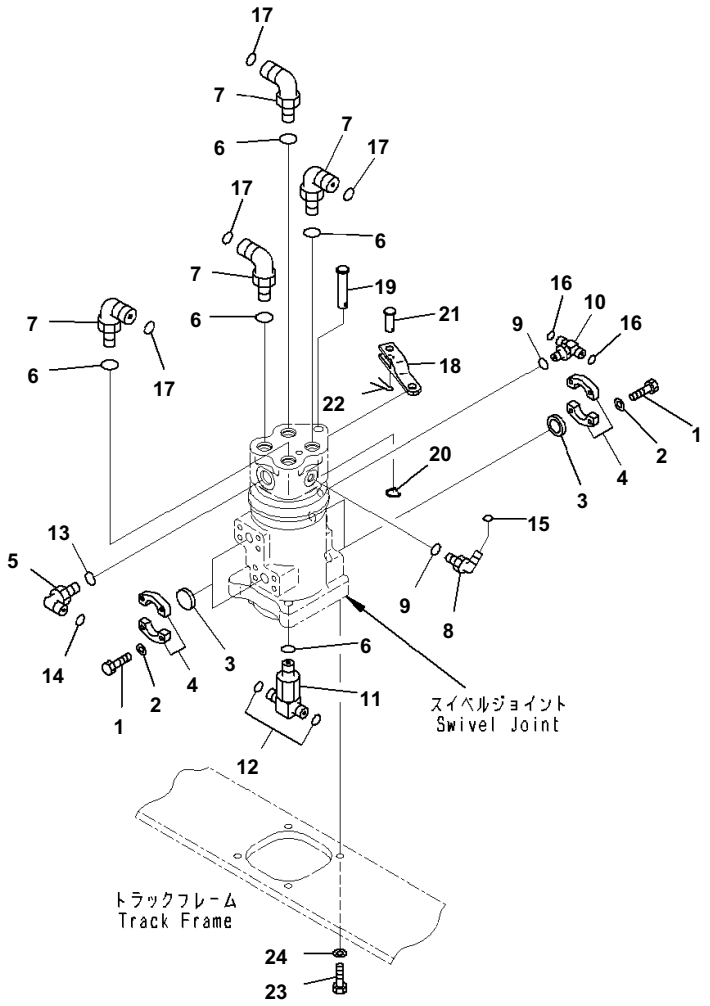

Index	Code	Part Number	Description	Qty	Serial No.
1		07372-21035	Bolt	16	B10001-
2		01643-51032	Washer	16	B10001-
3		707-88-33030	Cap	4	B10001-
4		07371-30640	Flange, Split	8	B10001-
5		02782-10522	Elbow	1	B10001-
6		07002-12434	O-ring	5	B10001-
7		02782-10628	Elbow	4	B10001-
8		11Y-62-12160	Elbow	1	B10001-
9		07002-11423	O-ring	2	B10001-
10		11Y-62-12250	Tee	1	B10001-
11		20Y-62-41930	Tee	1	B10001-
12		02896-11012	O-ring	2	B10001-
13		07002-12434	O-ring	1	B10001-
14		02896-11015	O-ring	1	B10001-
15		02896-11008	O-ring	1	B10001-
16		02896-11008	O-ring	2	B10001-
17		02896-11018	O-ring	4	B10001-
18		22U-62-21583	Bracket	1	B10001-
19		22U-62-21870	Pin	1	B10001-
20		22U-62-24420	Pin	1	B10001-
21		04205-11648	Pin	1	B10001-
22		04050-14028	Pin, Cotter	1	B10001-
23		01010-81255	Bolt	4	B10001-
24		01643-31232	Washer	4	B10001-

TRAVEL SYSTEM AND ITS RELATED PARTS

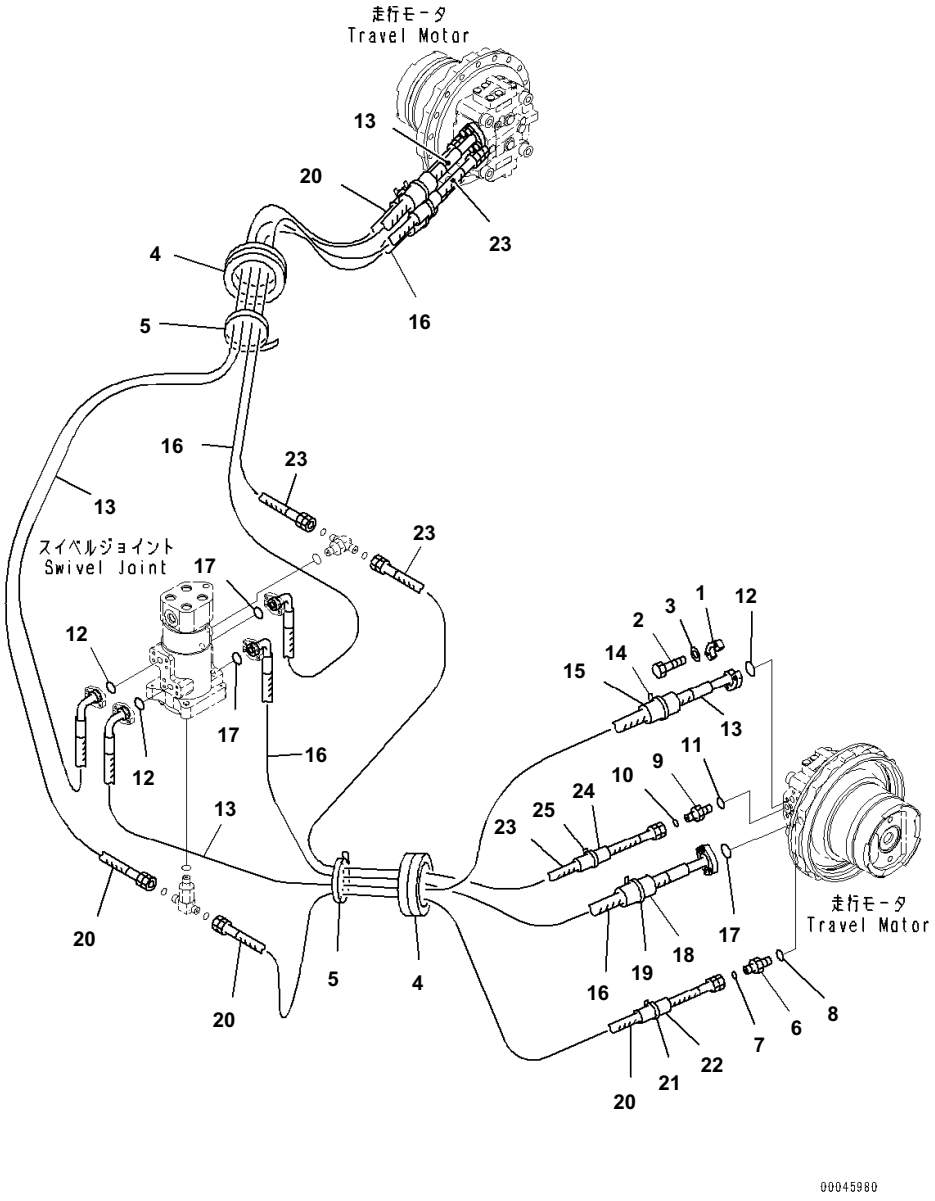

Index	Code	Part Number	Description	Qty	Serial No.
1		07371-30640	Flange, Split	8	B10001-
2		07372-21035	Bolt	16	B10001-
3		01643-51032	Washer	16	B10001-
4		20Y-62-12560	Grommet	2	B10001-
5		08034-20834	Band	2	B10001-
6		02781-00422	Union	2	B10001-
7		02896-11012	O-ring	2	B10001-
8		07002-12034	O-ring	2	B10001-
9		11Y-62-12130	Nipple	2	B10001-
10		02896-11008	O-ring	2	B10001-
11		07002-11423	O-ring	2	B10001-
12		07000-13025	O-ring	4	B10001-
13		07098-00626	Hose, Flange Type	2	B10001-
14		08034-00536	Band	2	B10001-
15		205-62-72240	Cover	2	B10001-
16		206-62-53150	Hose	2	B10001-
17		07000-13025	O-ring	4	B10001-
18		205-62-72240	Cover	2	B10001-
19		08034-00536	Band	2	B10001-
20		02762-00423	Hose, Face Seal Type	2	B10001-
21		08034-00536	Band	2	B10001-
22		205-62-72240	Cover	2	B10001-
23		02760-00224	Hose, Face Seal Type	2	B10001-
24		205-62-72140	Cover	2	B10001-
25		08034-00536	Band	2	B10001-

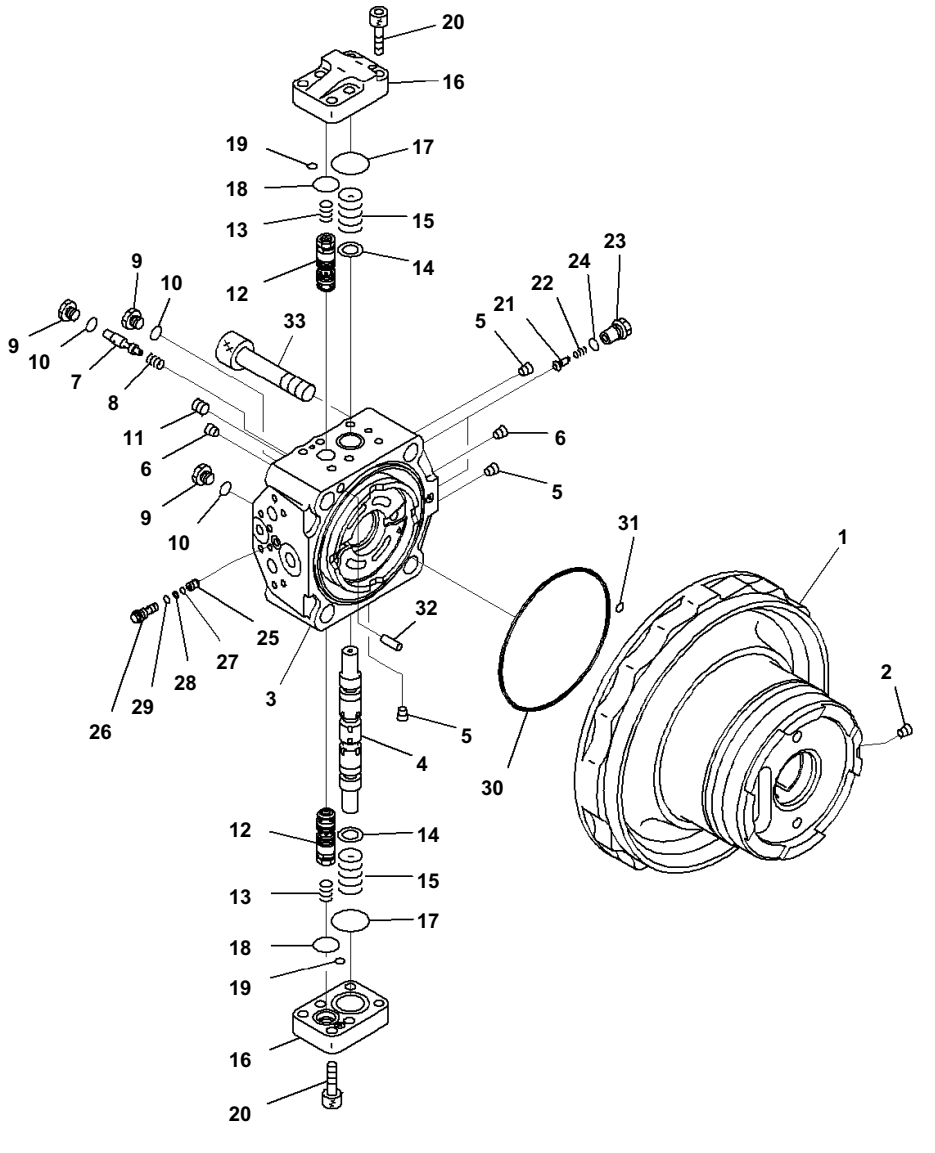

Final Drive, Inner Parts, Travel Motor (1/2)

Index	Code	Part Number	Description	Qty	Serial No.
		206-27-00423	Final Drive Assembly	2	B10005-
		206-27-00422	Final Drive Assembly	2	B10001-B10004
		708-8F-00192	・ Motor Assembly	1	B10001-
	C2	708-8F-04660	・・ Case Subassembly	1	B10001-
1	C1		・・・ Case, Motor	1	B10001-
2	C1		・・・ Plug	1	B10001-
	C2	708-8F-04192	・・ Cover Subassembly, End	1	B10001-
3	C1		・・・ Cover, End	1	B10001-
4	C1		・・・ Spool	1	B10001-
5	C1		・・・ Plug	3	B10001-
6	C1		・・・ Plug	2	B10001-
7	C1		・・・ Spool	1	B10001-
8	C2	708-8F-34220	・・・ Spring	1	B10001-
9		708-8H-11530	・・ Plug	3	B10001-
10		07002-11423	・・ O-ring	3	B10001-
11		20B-27-11210	・・ Bleeder	1	B10001-
12		702-73-02112	・・ Valve Assembly, Relief	2	B10001-
13		708-8F-36611	・・ Spring	2	B10001-
14	C1		・・ Ring	2	B10001-
15		708-8H-36121	・・ Spring	2	B10001-
16		708-8F-36311	・・ Cover	2	B10001-
17		07000-13040	・・ O-ring	2	B10001-
18		700-93-11320	・・ O-ring	2	B10001-
19		07000-11009	・・ O-ring	2	B10001-
20		01252-61235	・・ Bolt	12	B10001-
21		708-8F-34120	・・ Valve	2	B10001-
22		722-10-91130	・・ Spring	2	B10001-
23		708-8F-34110	・・ Plug	2	B10001-
24		07002-11823	・・ O-ring	2	B10001-
25		708-8E-16180	・・ Valve	1	B10001-
26		708-8F-31660	・・ Plug	1	B10001-
27		07000-11006	・・ O-ring	1	B10001-
28		07001-01006	・・ Ring, Back-up	1	B10001-
29		07002-11223	・・ O-ring	1	B10001-
30		708-8F-31610	・・ O-ring	1	B10001-
31		07000-11009	・・ O-ring	1	B10001-
32	C2	04020-01228	・・ Pin, Dowel	1	B10001-
33		708-8F-31210	・・ Bolt	4	B10001-

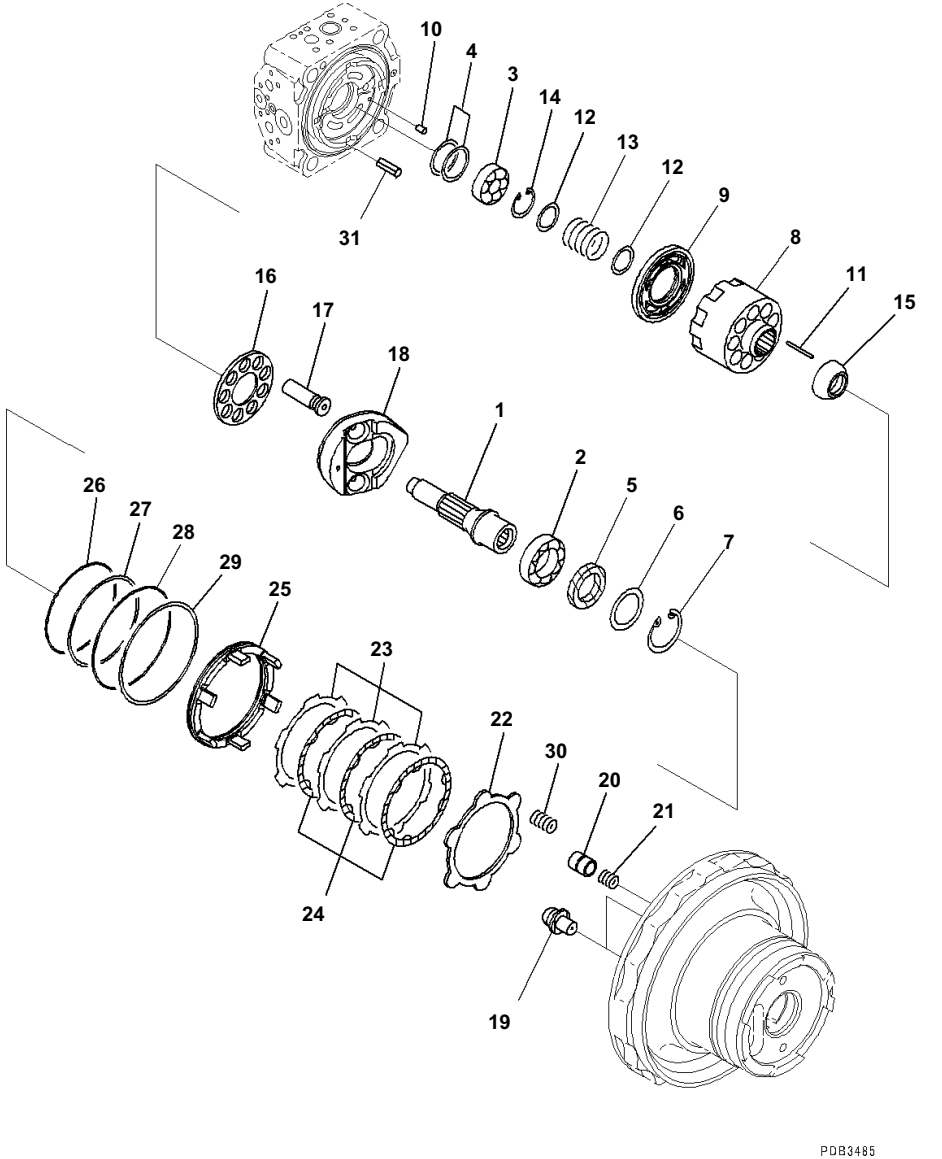

Index	Code	Part Number	Description	Qty	Serial No.
		206-27-00423	Final Drive Assembly	2	B10005-
		206-27-00422	Final Drive Assembly	2	B10001-B10004
		708-8F-00192	· Motor Assembly	1	B10001-
1	C2	708-8F-32121	· · Shaft	1	B10001-
2	C2	708-8F-12151	· · Bearing	1	B10001-
3	C2	708-7L-12140	· · Bearing	1	B10001-
4	C2	708-7L-05010	· · Spacer Kit	1	B10001-
	C1		· · · Spacer, T=1.5mm	1	B10001-
	C1		· · · Spacer, T=1.6mm	1	B10001-
	C1		· · · Spacer, T=1.7mm	1	B10001-
	C1		· · · Spacer, T=1.8mm	1	B10001-
	C1		· · · Spacer, T=1.9mm	1	B10001-
	C1		· · · Spacer, T=2.0mm	1	B10001-
5		706-7G-11291	· · Seal, Oil	1	B10001-
6		708-8F-12230	· · Spacer, T=3.2mm	1	B10001-
7		04065-07225	· · Ring, Snap	1	B10001-
8	C1		· · Block, Cylinder	1	B10001-
9	C1		· · Plate	1	B10001-
10	C1		· · Pin	1	B10001-
11	C2	708-8F-33360	· · Pin	3	B10001-
12	C2	708-7L-13140	· · Seat	2	B10001-
13	C2	708-8F-33160	· · Spring	1	B10001-
14	C2	04065-04818	· · Ring, Snap	1	B10001-
15	C2	708-8F-33350	· · Guide, Retainer	1	B10001-
16	C2	708-2L-33350	· · Retainer	1	B10001-
17	C2	708-8F-33310	· · Piston Subassembly	9	B10001-
18	C2	708-8F-33471	· · Cam, Rocker	1	B10001-
19	C2	708-8F-33710	· · Ball, Retainer	2	B10001-
20	C2	708-8F-34141	· · Piston	1	B10001-
21	C2	708-8F-34150	· · Spring	1	B10001-
22	C2	708-8F-35110	· · Plate	1	B10001-
23	C2	708-8F-35130	· · Plate	3	B10001-
24	C2	708-8F-35120	· · Disc	3	B10001-
25	C2	708-8F-35140	· · Piston, Brake	1	B10001-
26	C2	708-8F-35160	· · O-ring	1	B10001-
27	C2	708-8F-35170	· · Ring, Back-up	1	B10001-
28	C2	708-8F-35180	· · O-ring	1	B10001-
29	C2	708-8F-35190	· · Ring, Back-up	1	B10001-
30	C2	708-8F-35150	· · Spring	6	B10001-
31	C2	04025-00324	· · Pin, Spring	1	B10001-

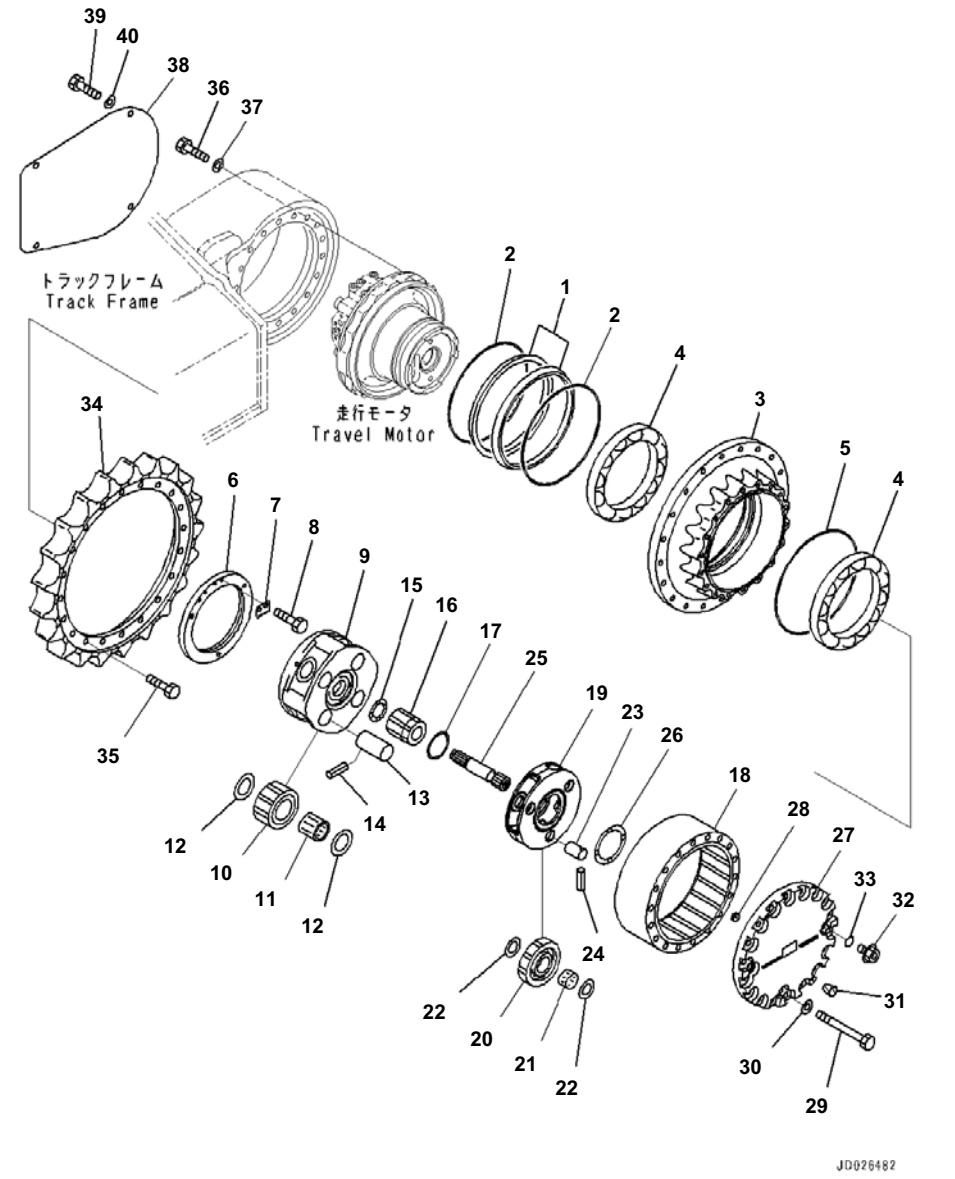

Index	Code	Part Number	Description	Qty	Serial No.
		206-27-00423	Final Drive Assembly	2	B10005-
		206-27-00422	Final Drive Assembly	2	B10001-B10004
		150-27-00410	・ Floating Seal Assembly	1	B10001-
1	C1		・・ Seal	2	B10001-
2	C1		・・ O-ring	2	B10001-
3		22U-27-21182	・ Hub	1	B10001-
4		20Y-27-22230	・ Bearing	2	B10001-
5		22U-27-21220	・ O-ring	1	B10001-
6		20Y-27-22261	・ Lock	1	B10001-
7		20Y-27-22270	・ Lock	1	B10001-
8		01010-81020	・ Bolt	2	B10001-
9		22U-27-21171	・ Carrier	1	B10005-
		22U-27-21170	・ Carrier	1	B10001-B10004
10		22U-27-21140	・ Gear	4	B10001-
11		20Y-27-22220	・ Bearing	4	B10001-
12		20Y-27-21250	・ Washer, Thrust	8	B10001-
13		22U-27-21230	・ Pin	4	B10001-
14		20Y-27-21290	・ Pin	4	B10001-
15		20Y-27-13310	・ Washer, Thrust	1	B10001-
16		22U-27-21130	・ Gear	1	B10001-
17		22U-27-21210	・ Washer, Thrust	1	B10001-
18		22U-27-21153	・ Gear	1	B10001-
19		22U-27-21161	・ Carrier	1	B10001-
20		22U-27-21120	・ Gear	3	B10001-
21		20Y-27-22210	・ Bearing	3	B10001-
22		22U-27-21240	・ Washer, Thrust	6	B10001-
23		20Y-27-21220	・ Pin	3	B10001-
24		20Y-27-21280	・ Pin	3	B10001-
25		22U-27-21110	・ Shaft	1	B10001-
26		20Y-27-21310	・ Washer	1	B10001-
27		22U-27-21192	・ Cover	1	B10001-
28		20Y-27-22250	・ Button	1	B10001-
29		20Y-27-13281	・ Bolt	20	B10001-
30		01643-31645	・ Washer	20	B10001-
31		07049-01012	・ Plug	2	B10001-
32		07044-12412	・ Plug	3	B10001-
33		07002-02434	・ O-ring	3	B10001-
34		20Y-27-11582	・ Sprocket	1	B10001-
35		20Y-27-11561	・ Bolt	20	B10001-
36		01010-61660	Bolt	36	B10001-
37		01643-31645	Washer	36	B10001-
38		20Y-30-21192	Cover	2	B10001-
39		01010-81230	Bolt	8	B10001-
40		01643-31232	Washer	8	B10001-

UNDERCARRIAGE

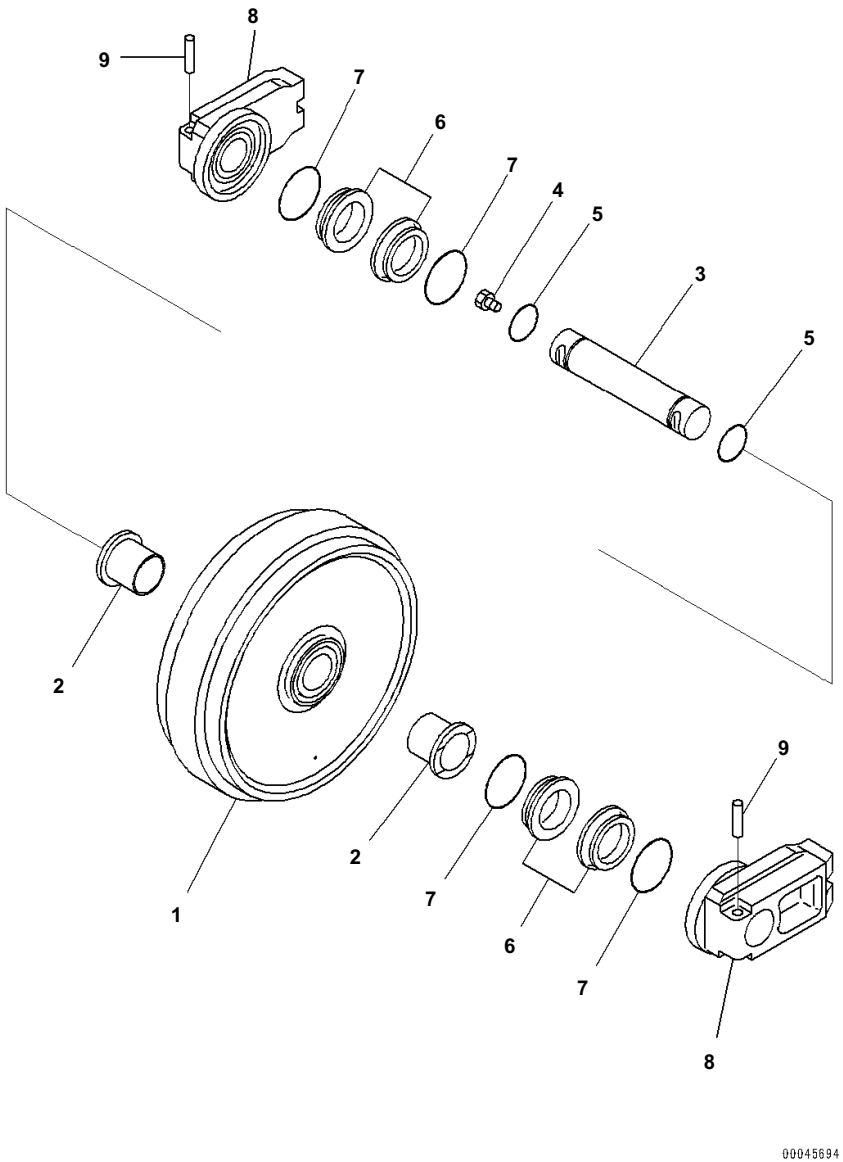

Front Idler and Idler Cushion, Rustproof Spring, Front Idler

Index	Code	Part Number	Description	Qty	Serial No.
		20Y-30-00322	Idler Assembly,Front	2	B10001-
1		20Y-30-43310	・ Idler	1	B10001-
2		20Y-30-43340	・ Bushing	2	B10001-
3		20Y-30-13131	・ Shaft	1	B10001-
4		07052-31624	・ Plug	1	B10001-
5		07000-12060	・ O-ring	2	B10001-
		195-30-00302	・ Floating Seal Assembly	2	B10001-
6	C1		・・ Ring	2	B10001-
7	C1		・・ O-ring	2	B10001-
8		20Y-30-31750	・ Support	2	B10001-
9		205-30-76190	・ Pin	2	B10001-

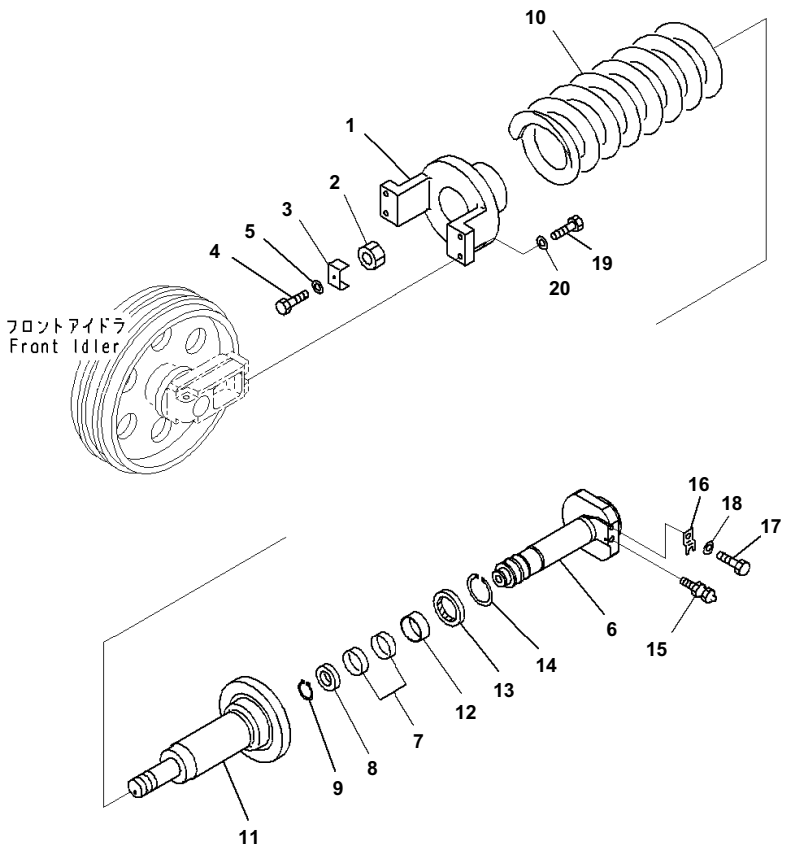

Front Idler and Idler Cushion, Rustproof Spring, Idler Cushion

Index	Code	Part Number	Description	Qty	Serial No.
1		20Y-30-42110	Yoke	2	B10001-
2		206-30-45381	Nut	2	B10001-
3		20Y-30-42160	Lock	2	B10001-
4		01010-81225	Bolt	2	B10001-
5		01643-31232	Washer	2	B10001-
6		206-30-72140	Shaft	2	B10001-
7		07155-00720	Ring, Wear	4	B10001-
8		09370-00070	U-packing	2	B10001-
9		04064-04518	Ring, Snap	2	B10001-
10		206-30-22130	Spring	2	B10001-
11		206-30-22120	Cylinder	2	B10001-
12		707-52-15430	Bushing	2	B10001-
13		707-56-70540	Seal, Dust	2	B10001-
14		04077-00085	Ring, Snap, for Hole Side	2	B10001-
15		07959-20001	Valve	2	B10001-
16		205-30-72170	Plate	2	B10001-
17		01010-81225	Bolt	2	B10001-
18		01643-31232	Washer	2	B10001-
19		01010-61655	Bolt	8	B10001-
20		01643-31645	Washer	8	B10001-

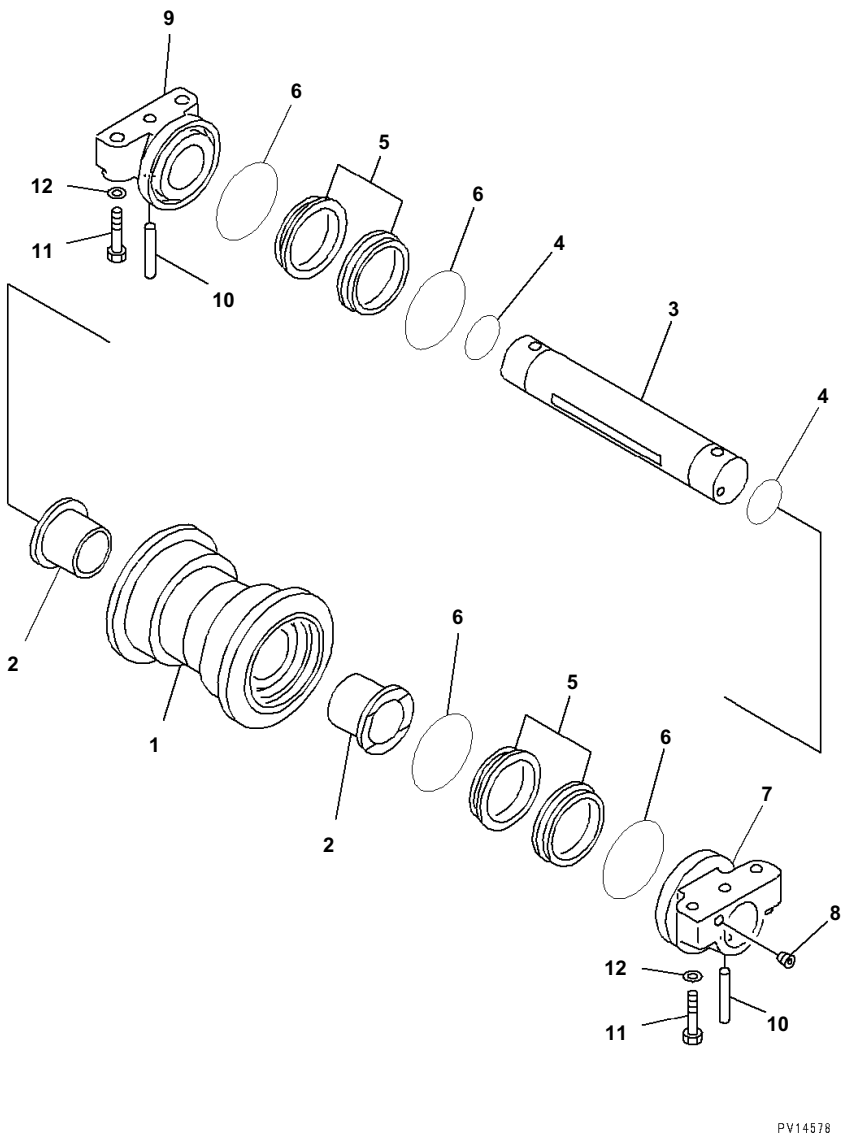

Index	Code	Part Number	Description	Qty	Serial No.
		20Y-30-07300	Track Roller Assembly	20	B10001-
1		20Y-30-16411	・ Roller	1	B10001-
2		22U-30-11450	・ Bushing	2	B10001-
3		22U-30-11420	・ Shaft	1	B10001-
4		205-30-76260	・ O-ring	2	B10001-
		22U-30-00060	・ Floating Seal Assembly	2	B10001-
5	C1		・・ Seal	2	B10001-
6	C1		・・ O-ring	2	B10001-
7		22U-30-11430	・ Collar	1	B10001-
8		20Y-30-16330	・ Plug	1	B10001-
9		22U-30-11440	・ Collar	1	B10001-
10		20Y-30-16170	・ Pin	2	B10001-
11		20Y-30-11340	Bolt	80	B10001-
12		01643-31845	Washer	80	B10001-

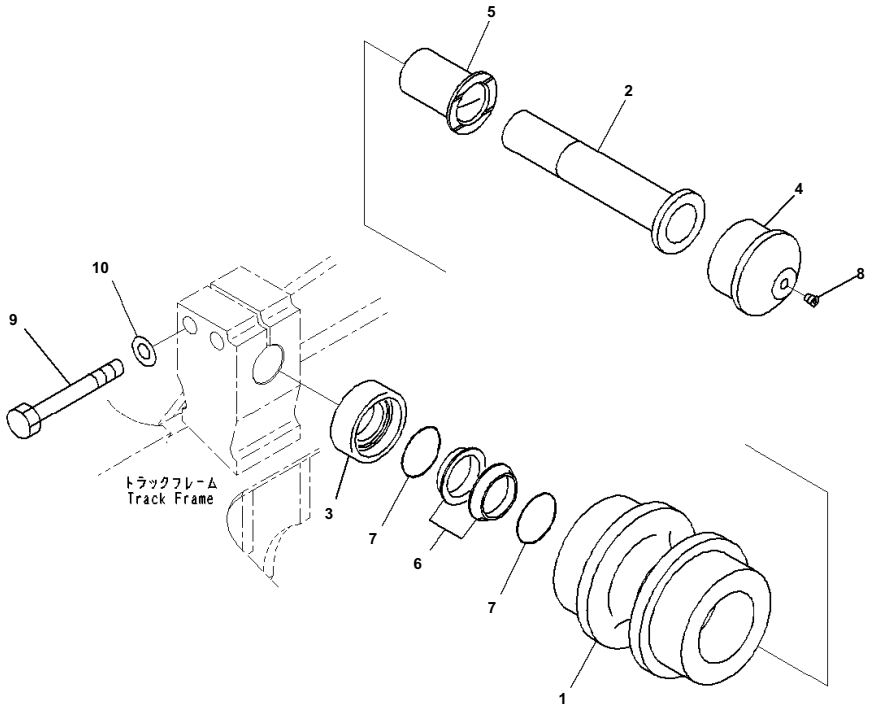

Carrier Roller

Index	Code	Part Number	Description	Qty	Serial No.
		20Y-30-00481	Roller Assembly, Carrier	4	B10001-
1		20Y-30-43260	・ Roller	1	B10001-
2		20Y-30-43221	・ Shaft	1	B10001-
3		20Y-30-43230	・ Ring	1	B10001-
4		20Y-30-43240	・ Cover	1	B10001-
5		20Y-30-43250	・ Bushing	1	B10001-
		110-30-00086	・ Floating Seal Assembly	1	B10001-
6	C1		・・ Seal	2	B10001-
7	C1		・・ O-ring	2	B10001-
8		20Y-30-16330	・ Plug	1	B10001-
9		01010-81680	Bolt	8	B10001-
10		01643-31645	Washer	8	B10001-

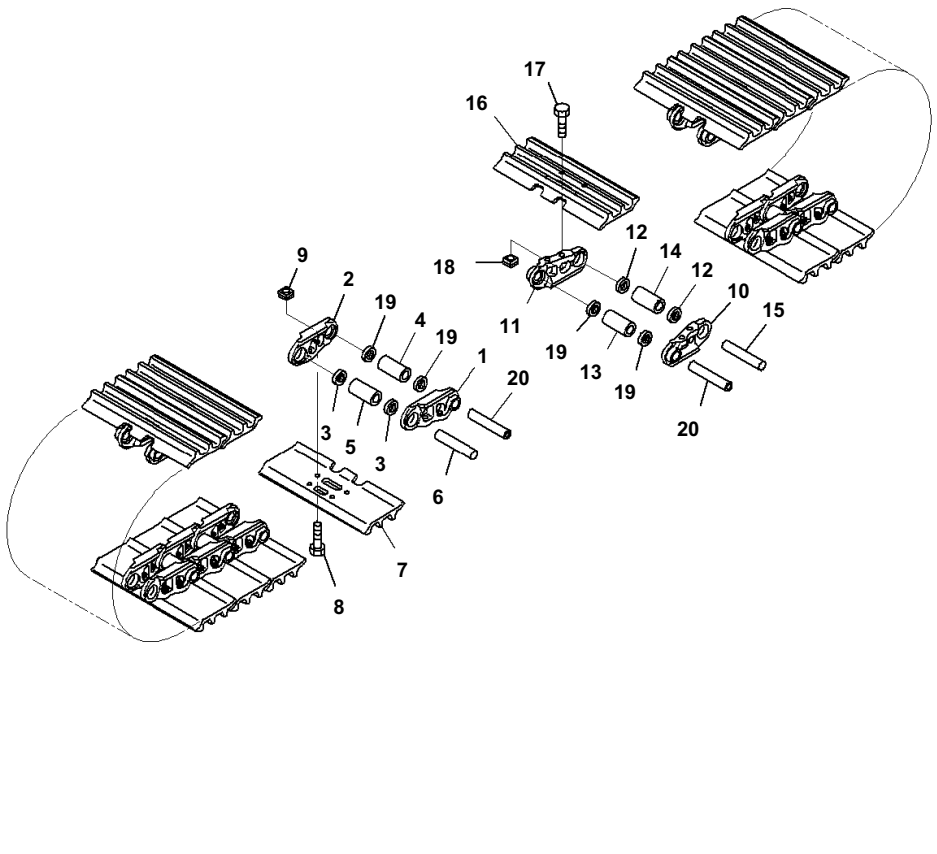

Track Shoe Assembly, Holed Triple Grouser Shoe, 600mm Width, Sealed and Greased Links

Index	Code	Part Number	Description	Qty	Serial No.
		206-32-03510	Track Shoe Assembly, W=600mm	1	B10001-
1		20Y-32-31120	・ Link	50	B10001-
2		20Y-32-31130	・ Link	50	B10001-
3		20Y-32-11240	・ Seal	96	B10001-
4		20Y-32-11171	・ Bushing, Master	2	B10001-
5		20Y-32-11141	・ Bushing, Regular	48	B10001-
6		20Y-32-31150	・ Pin	48	B10001-
7		206-32-61110	・ Shoe, W=600mm	50	B10001-
8		20Y-32-31210	・ Bolt, (Kit : K02)	200	B10001-
9		134-32-61221	・ Nut, Shoe, (Kit : K02)	200	B10001-
10		20Y-32-31120	・ Link	52	B10001-
11		20Y-32-31130	・ Link	52	B10001-
12		20Y-32-11240	・ Seal	100	B10001-
13		20Y-32-11171	・ Bushing, Master	2	B10001-
14		20Y-32-11141	・ Bushing, Regular	50	B10001-
15		20Y-32-31150	・ Pin	50	B10001-
16		206-32-61110	・ Shoe, W=600mm	52	B10001-
17		20Y-32-31210	・ Bolt, (Kit : K02)	208	B10001-
18		134-32-61221	・ Nut, Shoe, (Kit : K02)	208	B10001-
19		20Y-32-11260	・ Seal	8	B10001-
20		20Y-32-31190	・ Pin	4	B10001-

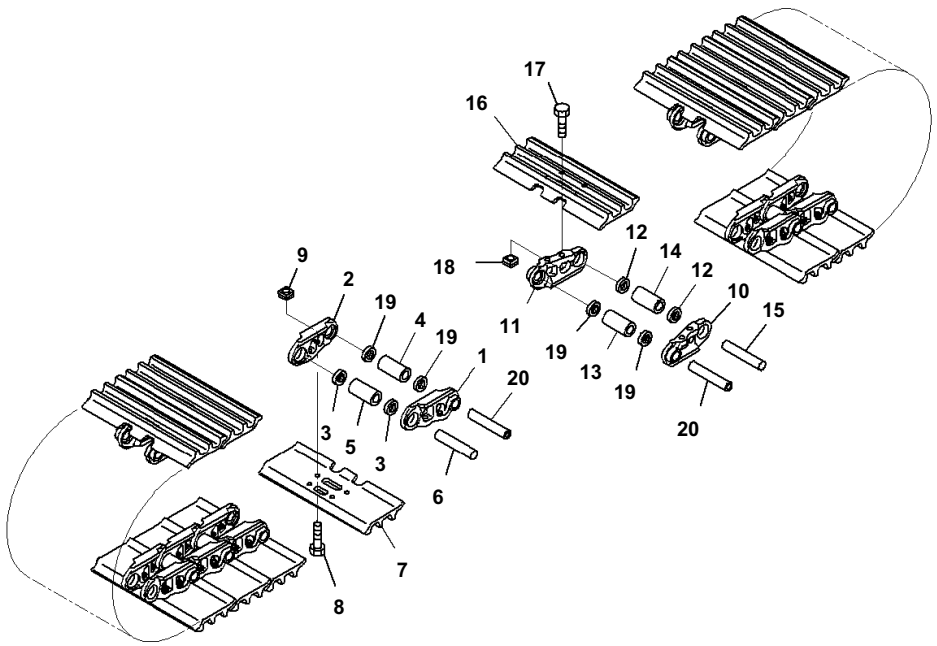

Track Shoe Assembly, Holed Triple Grouser Shoe, 700mm Width, Sealed and Greased Links

Index	Code	Part Number	Description	Qty	Serial No.
		206-32-03520	Track Shoe Assembly, W=700mm	1	B10001-
1		20Y-32-31120	・ Link	50	B10001-
2		20Y-32-31130	・ Link	50	B10001-
3		20Y-32-11240	・ Seal	96	B10001-
4		20Y-32-11171	・ Bushing, Master	2	B10001-
5		20Y-32-11141	・ Bushing, Regular	48	B10001-
6		20Y-32-31150	・ Pin	48	B10001-
7		20Y-32-31310	・ Shoe, W=700mm	50	B10001-
8		20Y-32-31210	・ Bolt, (Kit : K02)	200	B10001-
9		134-32-61221	・ Nut, Shoe, (Kit : K02)	200	B10001-
10		20Y-32-31120	・ Link	52	B10001-
11		20Y-32-31130	・ Link	52	B10001-
12		20Y-32-11240	・ Seal	100	B10001-
13		20Y-32-11171	・ Bushing, Master	2	B10001-
14		20Y-32-11141	・ Bushing, Regular	50	B10001-
15		20Y-32-31150	・ Pin	50	B10001-
16		20Y-32-31310	・ Shoe, W=700mm	52	B10001-
17		20Y-32-31210	・ Bolt, (Kit : K02)	208	B10001-
18		134-32-61221	・ Nut, Shoe, (Kit : K02)	208	B10001-
19		20Y-32-11260	・ Seal	8	B10001-
20		20Y-32-31190	・ Pin	4	B10001-

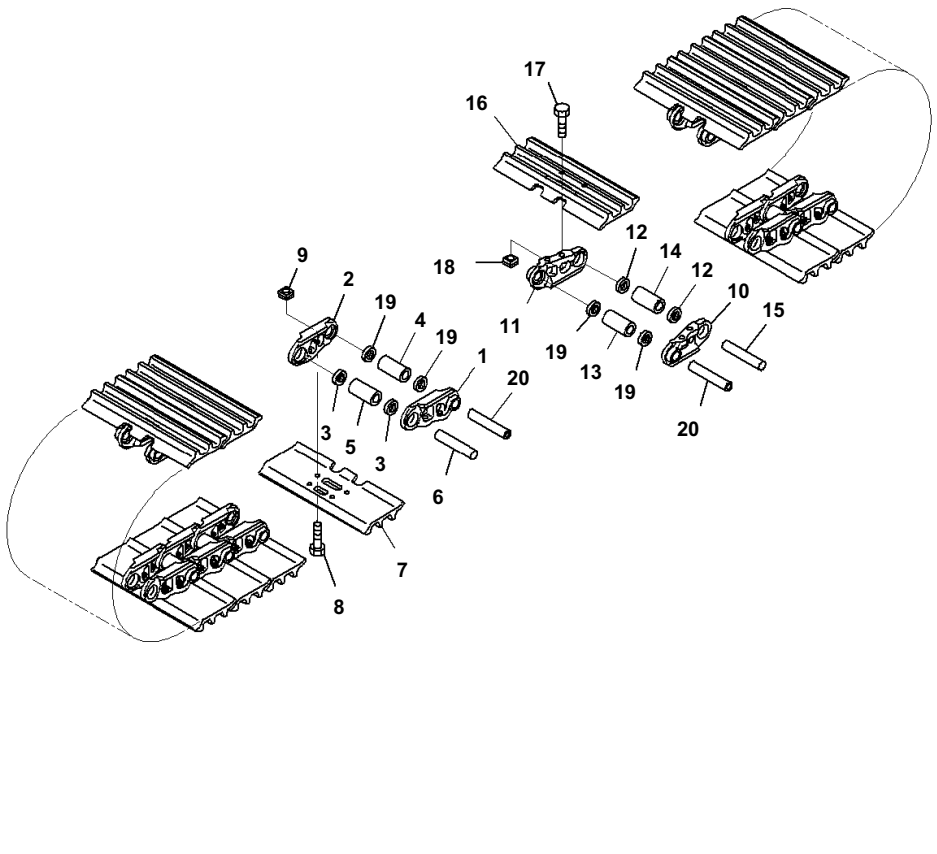

Track Shoe Assembly, Holed Triple Grouser Shoe, 800mm Width, Sealed and Greased Links

Index	Code	Part Number	Description	Qty	Serial No.
		206-32-03530	Track Shoe Assembly, W=800mm	1	B10001-
1		20Y-32-31120	・ Link	50	B10001-
2		20Y-32-31130	・ Link	50	B10001-
3		20Y-32-11240	・ Seal	96	B10001-
4		20Y-32-11171	・ Bushing, Master	2	B10001-
5		20Y-32-11141	・ Bushing, Regular	48	B10001-
6		20Y-32-31150	・ Pin	48	B10001-
7		20Y-32-31320	・ Shoe, W=800mm	50	B10001-
8		20Y-32-31210	・ Bolt, (Kit : K02)	200	B10001-
9		134-32-61221	・ Nut, Shoe, (Kit : K02)	200	B10001-
10		20Y-32-31120	・ Link	52	B10001-
11		20Y-32-31130	・ Link	52	B10001-
12		20Y-32-11240	・ Seal	100	B10001-
13		20Y-32-11171	・ Bushing, Master	2	B10001-
14		20Y-32-11141	・ Bushing, Regular	50	B10001-
15		20Y-32-31150	・ Pin	50	B10001-
16		20Y-32-31320	・ Shoe, W=800mm	52	B10001-
17		20Y-32-31210	・ Bolt, (Kit : K02)	208	B10001-
18		134-32-61221	・ Nut, Shoe, (Kit : K02)	208	B10001-
19		20Y-32-11260	・ Seal	8	B10001-
20		20Y-32-31190	・ Pin	4	B10001-

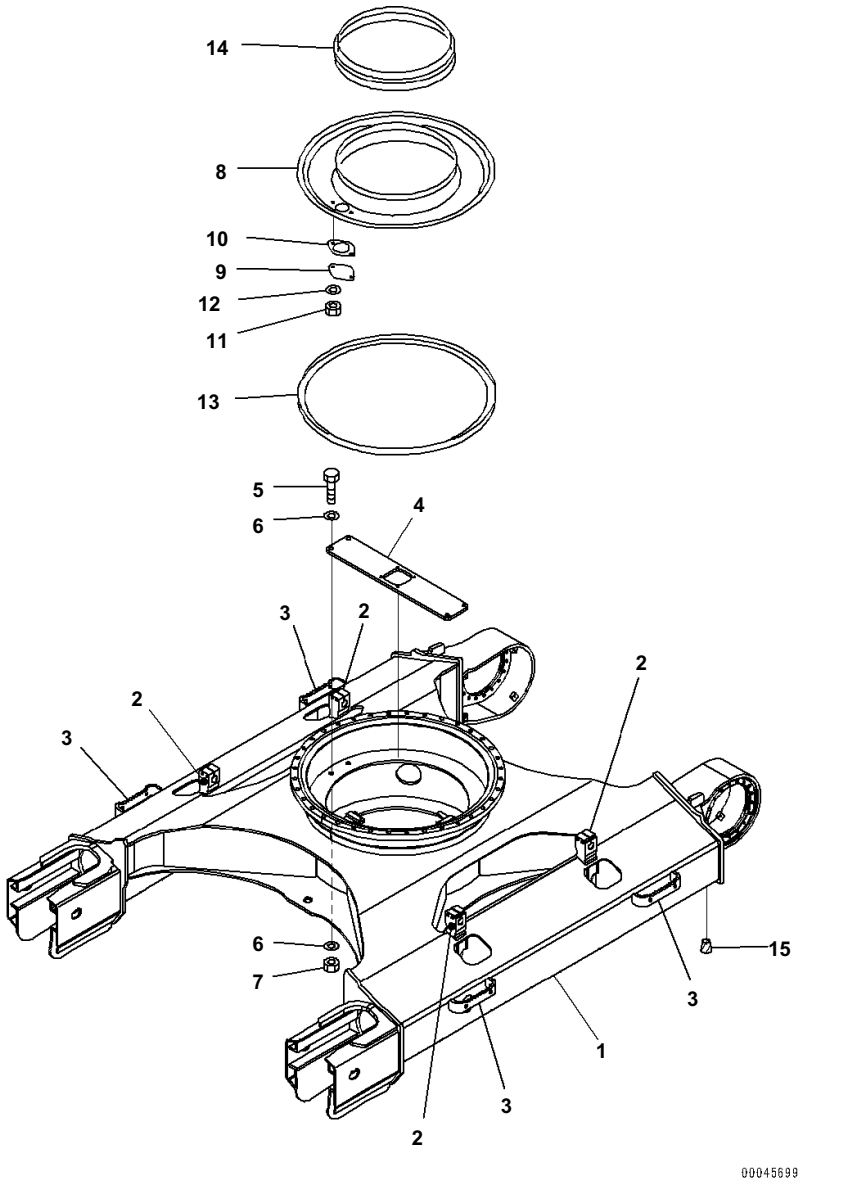

Index	Code	Part Number	Description	Qty	Serial No.
1		206-30-23211	Frame	1	B10001-
2		20Y-30-31D24	· Bracket,Welded	4	B10001-
3		20Y-30-41A10	· Plate,Welded	4	B10001-
4		206-30-71E81	Bracket	1	B10001-
5		01010-82065	Bolt	4	B10001-
6		01643-32060	Washer	8	B10001-
7		01580-12016	Nut	4	B10001-
8		206-30-71160	Cover	1	B10001-
9		205-30-71181	Cover	1	B10001-
10		205-30-71191	Gasket	1	B10001-
11		01580-11008	Nut	2	B10001-
12		01643-31032	Washer	2	B10001-
13		20Y-30-11370	Seal	1	B10001-
14		205-30-71171	Seal	1	B10001-
15		07049-02025	Plug	36	B10001-

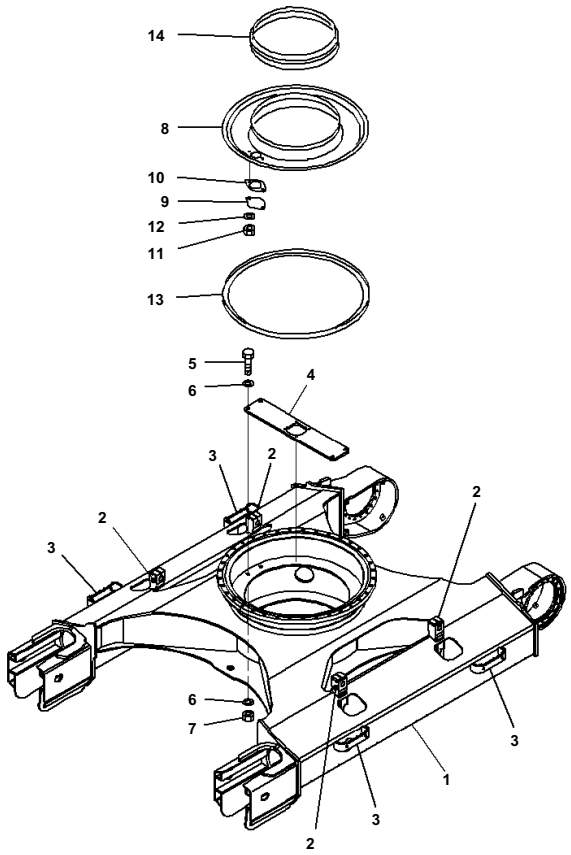

Track Frame

Index	Code	Part Number	Description	Qty	Serial No.
1		206-30-23111	Frame	1	B10001-
2		20Y-30-31D24	· Bracket,Welded	4	B10001-
3		20Y-30-41A10	· Plate,Welded	4	B10001-
4		206-30-71E81	Bracket	1	B10001-
5		01010-82065	Bolt	4	B10001-
6		01643-32060	Washer	8	B10001-
7		01580-12016	Nut	4	B10001-
8		206-30-71160	Cover	1	B10001-
9		205-30-71181	Cover	1	B10001-
10		205-30-71191	Gasket	1	B10001-
11		01580-11008	Nut	2	B10001-
12		01643-31032	Washer	2	B10001-
13		20Y-30-11370	Seal	1	B10001-
14		205-30-71171	Seal	1	B10001-

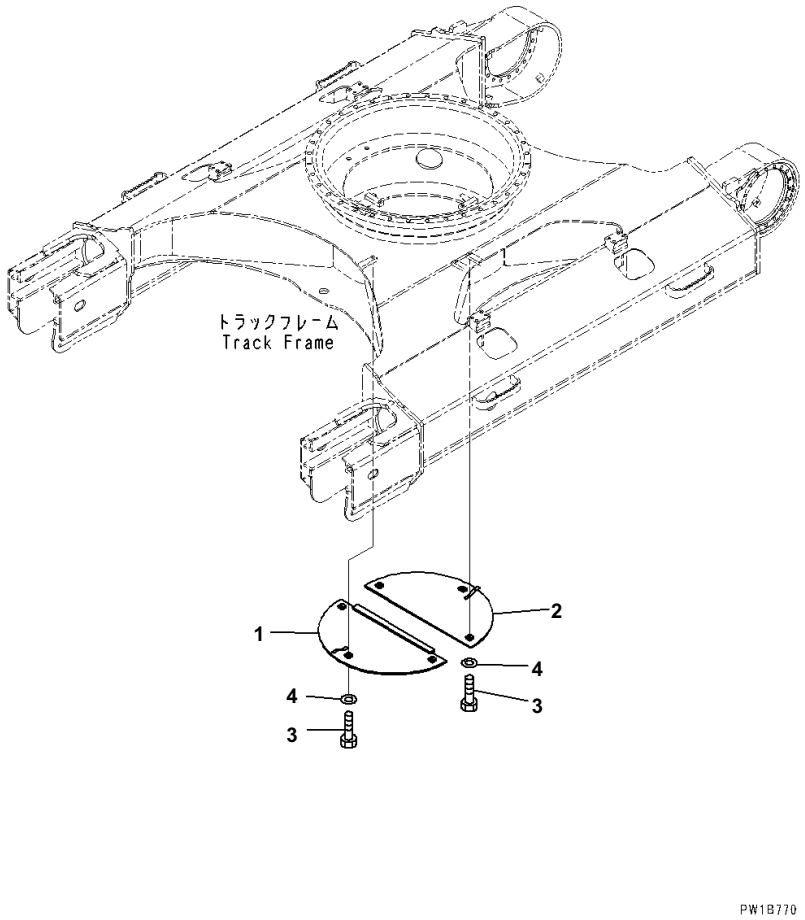

Index	Code	Part Number	Description	Qty	Serial No.
1		20Y-973-2220	Cover	1	B10001-
2		20Y-973-2230	Cover	1	B10001-
3		01010-81235	Bolt	6	B10001-
4		01643-31232	Washer	6	B10001-

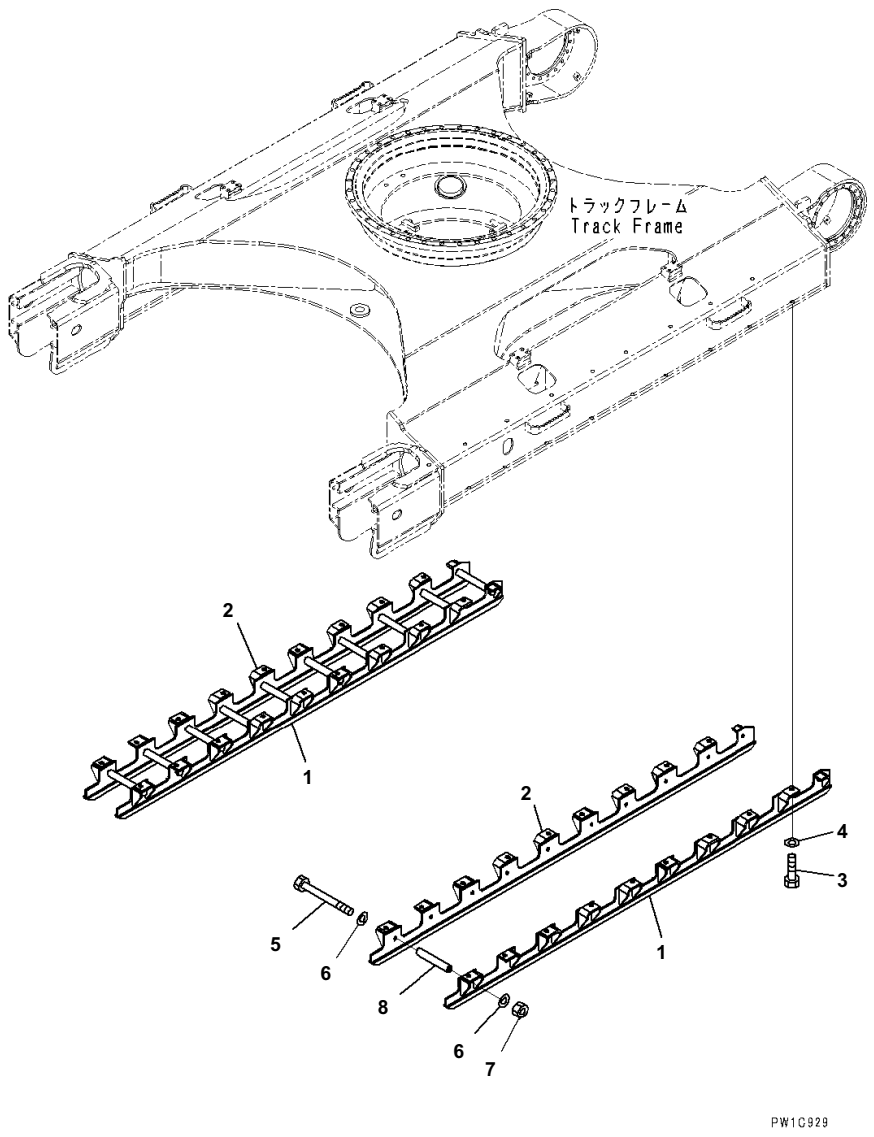

Track Roller Guard, Full Roller Guard

Index	Code	Part Number	Description	Qty	Serial No.
1		206-30-75170	Guard	2	B10001-
2		206-30-75180	Guard	2	B10001-
3		01010-62050	Bolt	36	B10001-
4		01643-32060	Washer	36	B10001-
5		09205-18295	Bolt	20	B10001-
6		01643-31845	Washer	40	B10001-
7		01580-11815	Nut	20	B10001-
8		20Y-30-23140	Collar	20	B10001-

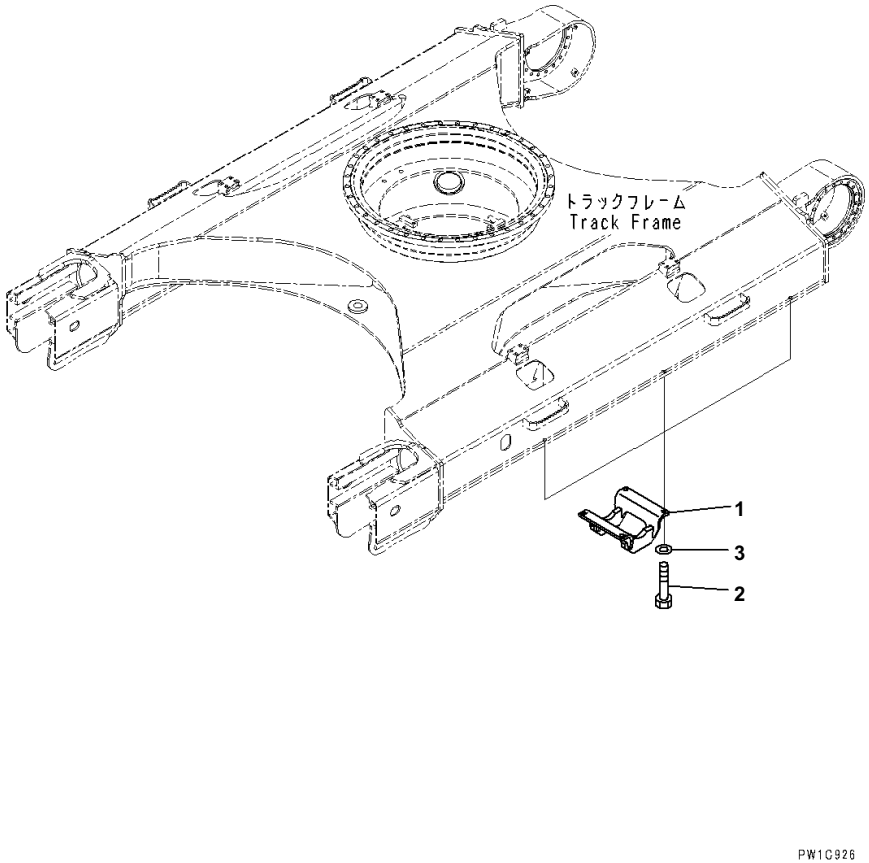

Index	Code	Part Number	Description	Qty	Serial No.
1		20Y-30-31160	Guard	6	B10001-
2		01010-62050	Bolt	24	B10001-
3		01643-32060	Washer	24	B10001-

WORK EQUIPMENT

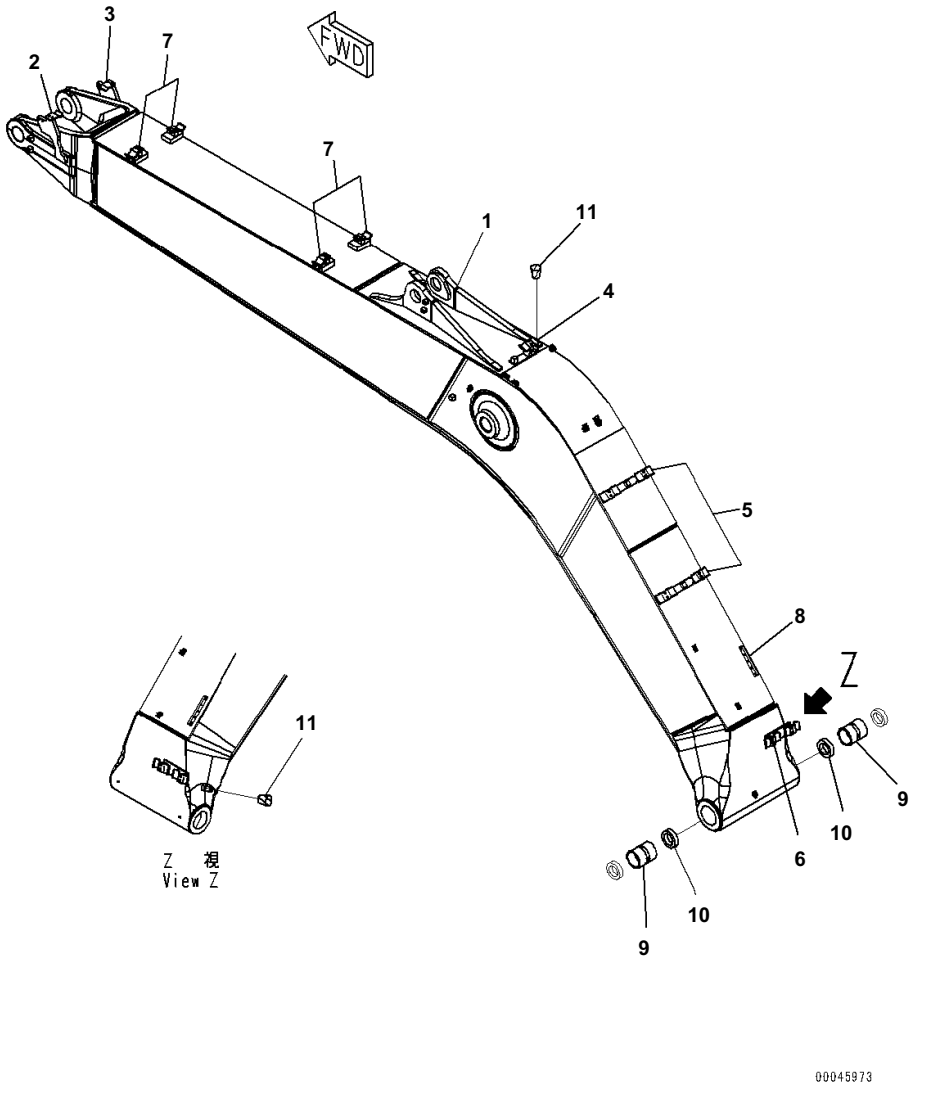

Boom, 5.9m, Heavy Duty, 100 Hours Greasing Type, 1 ATT, Boom

Index	Code	Part Number	Description	Qty	Serial No.
1		206-70-27140	Boom	1	B10001-
2		206-62-21470	・ Bracket,Welded	1	B10001-
3		206-62-21480	・ Bracket,Welded	1	B10001-
4		206-62-21450	・ Bracket,Welded	1	B10001-
5		20Y-62-52710	・ Bracket,Welded	2	B10001-
6		206-62-73120	・ Bracket,Welded	1	B10001-
7		20Y-62-52720	・ Bracket,Welded	4	B10001-
8		20Y-70-11651	・ Seat,Welded	1	B10001-
9		206-70-61310	Bushing	2	B10001-
10		07145-00100	Seal, Dust	2	B10001-
11		07049-01215	Plug	4	B10001-

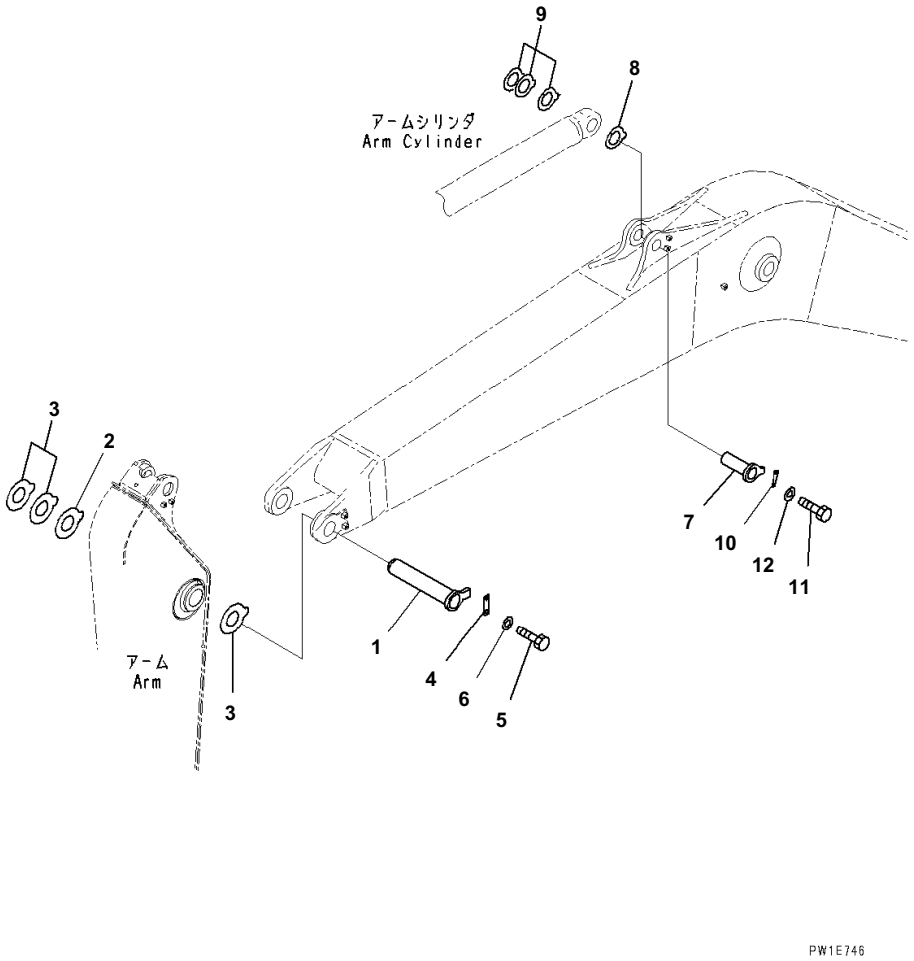

Boom, 5.9m, Heavy Duty, 100 Hours Greasing Type, 1 ATT, Top Pin and Bottom Pin

Index	Code	Part Number	Description	Qty	Serial No.
1		205-70-65681	Pin	1	B10001-
2		20Y-70-11360	Spacer, T=0.8mm	1	B10001-
3		206-70-45210	Spacer, T=1.5mm	3	B10001-
4		205-70-71312	Plate	1	B10001-
5		01010-81235	Bolt	2	B10001-
6		01643-31232	Washer	2	B10001-
7		206-70-51170	Pin	1	B10001-
8		20Y-70-11340	Spacer, T=0.8mm	1	B10001-
9		205-70-51530	Spacer, T=1.5mm	3	B10001-
10		205-70-66580	Plate	1	B10001-
11		01010-81230	Bolt	2	B10001-
12		01643-31232	Washer	2	B10001-

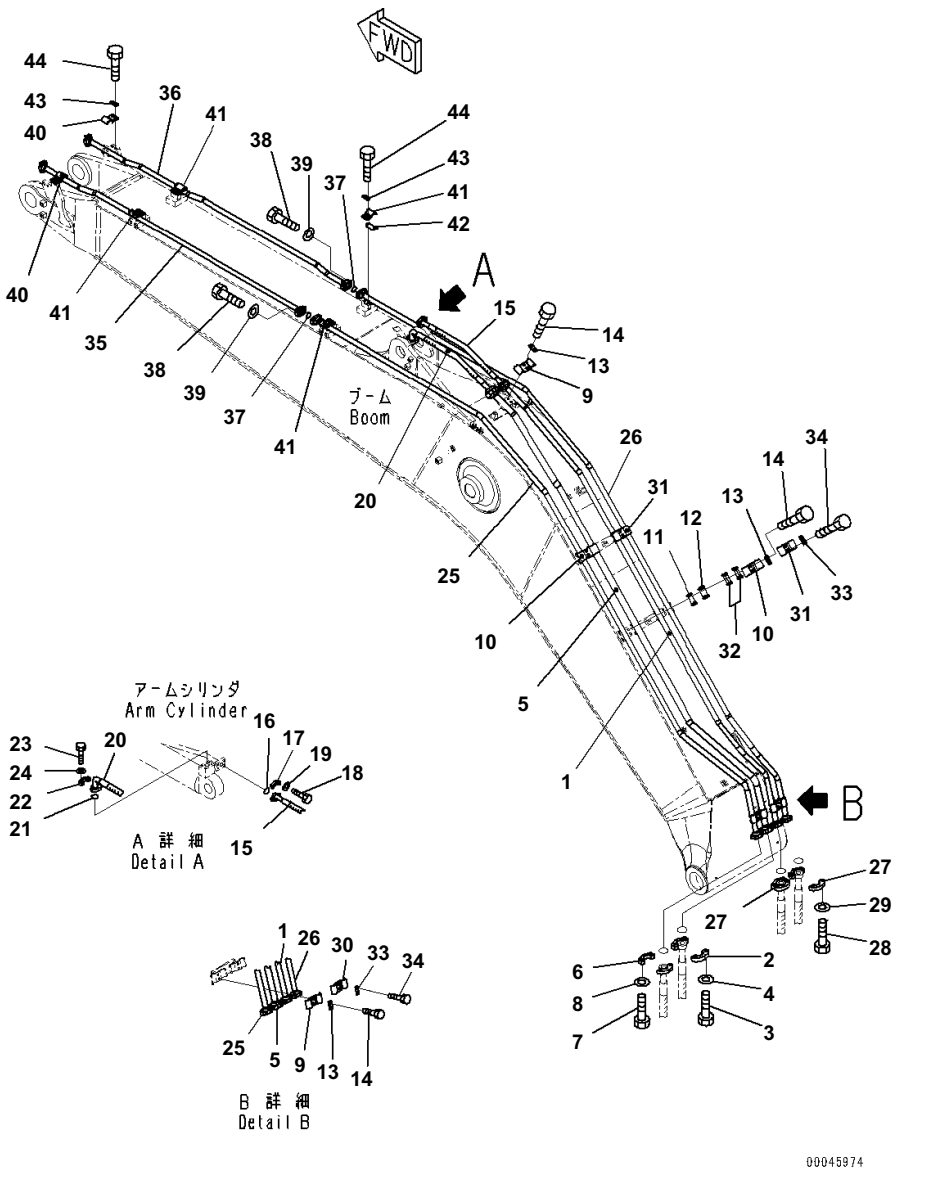

Boom, 5.9m, Heavy Duty, 100 Hours Greasing Type, 1 ATT, Arm and Bucket Cylinder Piping

Index	Code	Part Number	Description	Qty	Serial No.
1		206-62-21320	Tube	1	B10001-
2		07371-30640	Flange, Split	2	B10001-
3		07372-21035	Bolt	4	B10001-
4		01643-51032	Washer	4	B10001-
5		206-62-21310	Tube	1	B10001-
6		07371-31049	Flange, Split	2	B10001-
7		07372-21035	Bolt	4	B10001-
8		01643-51032	Washer	4	B10001-
9		20Y-62-13690	Clamp	2	B10001-
10		20Y-62-13730	Clamp	2	B10001-
11		205-62-73431	Seat	2	B10001-
12		20Y-62-13761	Seat	2	B10001-
13		20Y-62-13450	Plate	4	B10001-
14		01010-81230	Bolt	8	B10001-
15		20Y-62-13570	Hose	1	B10001-
16		07000-13025	O-ring	2	B10001-
17		07371-30640	Flange, Split	4	B10001-
18		07372-21035	Bolt	8	B10001-
19		01643-51032	Washer	8	B10001-
20		206-62-21210	Hose	1	B10001-
21		07000-13032	O-ring	2	B10001-
22		07371-31049	Flange, Split	4	B10001-
23		07372-21035	Bolt	8	B10001-
24		01643-51032	Washer	8	B10001-
25		206-62-21330	Tube	1	B10001-
26		206-62-21340	Tube	1	B10001-
27		07371-30640	Flange, Split	4	B10001-
28		07372-21035	Bolt	8	B10001-
29		01643-51032	Washer	8	B10001-
30		20Y-62-13710	Clamp	1	B10001-
31		20Y-62-13190	Clamp	2	B10001-
32		20Y-62-13761	Seat	4	B10001-
33		20Y-62-13450	Plate	3	B10001-
34		01010-81230	Bolt	6	B10001-
35		20Y-62-52651	Tube	1	B10001-
36		206-62-21370	Tube	1	B10001-
37		07000-13030	O-ring	2	B10001-
38		07372-21035	Bolt	8	B10001-
39		01643-51032	Washer	8	B10001-
40		206-62-73560	Clamp	2	B10001-
41		20Y-62-13180	Clamp	4	B10001-
42		20Y-62-13761	Seat	4	B10001-
43		20Y-62-13450	Plate	6	B10001-
44		01010-81230	Bolt	12	B10001-

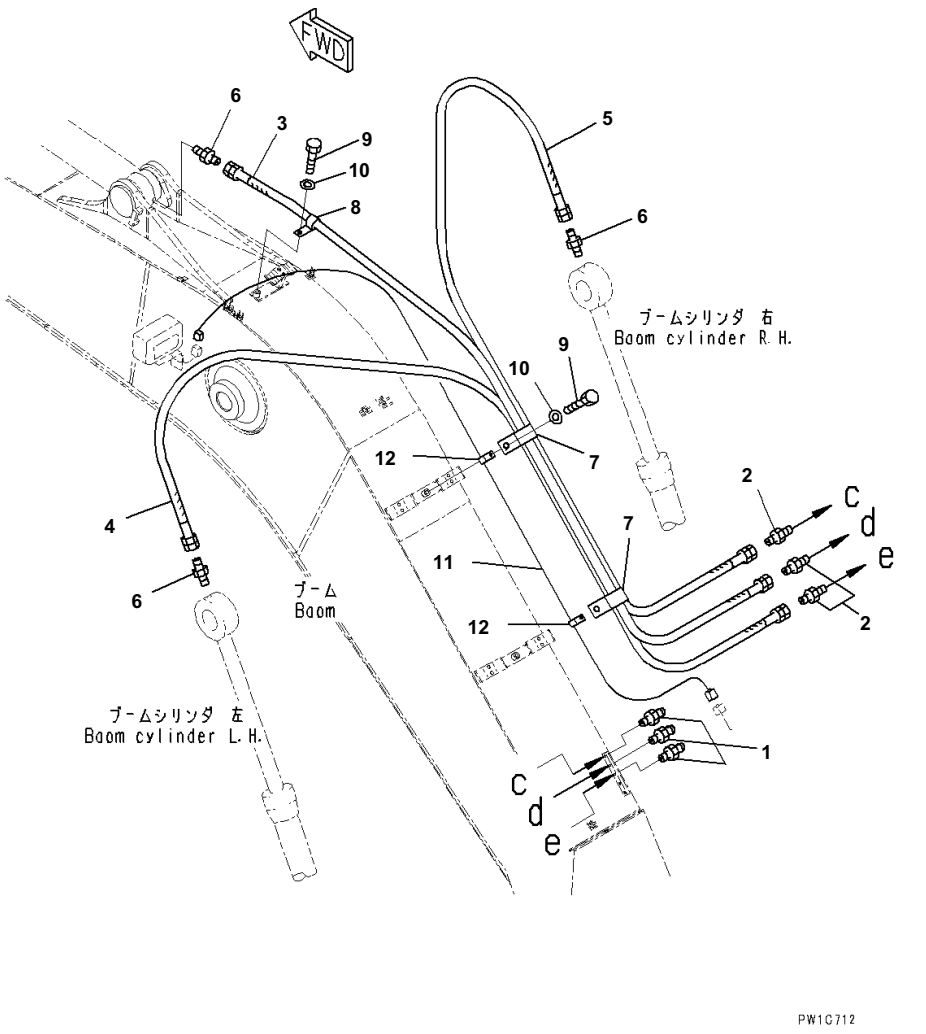

Boom, 5.9m, Heavy Duty, 100 Hours Greasing Type, 1 ATT, Lubrication Piping

Index	Code	Part Number	Description	Qty	Serial No.
1		07020-00000	Fitting, Grease	3	B10001-
2		205-70-51390	Nipple	3	B10001-
3		206-70-71460	Hose	1	B10001-
4		20Y-70-41230	Hose	1	B10001-
5		206-70-71480	Hose	1	B10001-
6		205-70-51390	Nipple	3	B10001-
7		04434-52112	Clip	2	B10001-
8		04434-51012	Clip	1	B10001-
9		01010-81220	Bolt	3	B10001-
10		01643-31232	Washer	3	B10001-
11		20Y-06-41161	Wiring Harness	1	B10001-
12		04434-51012	Clip	2	B10001-

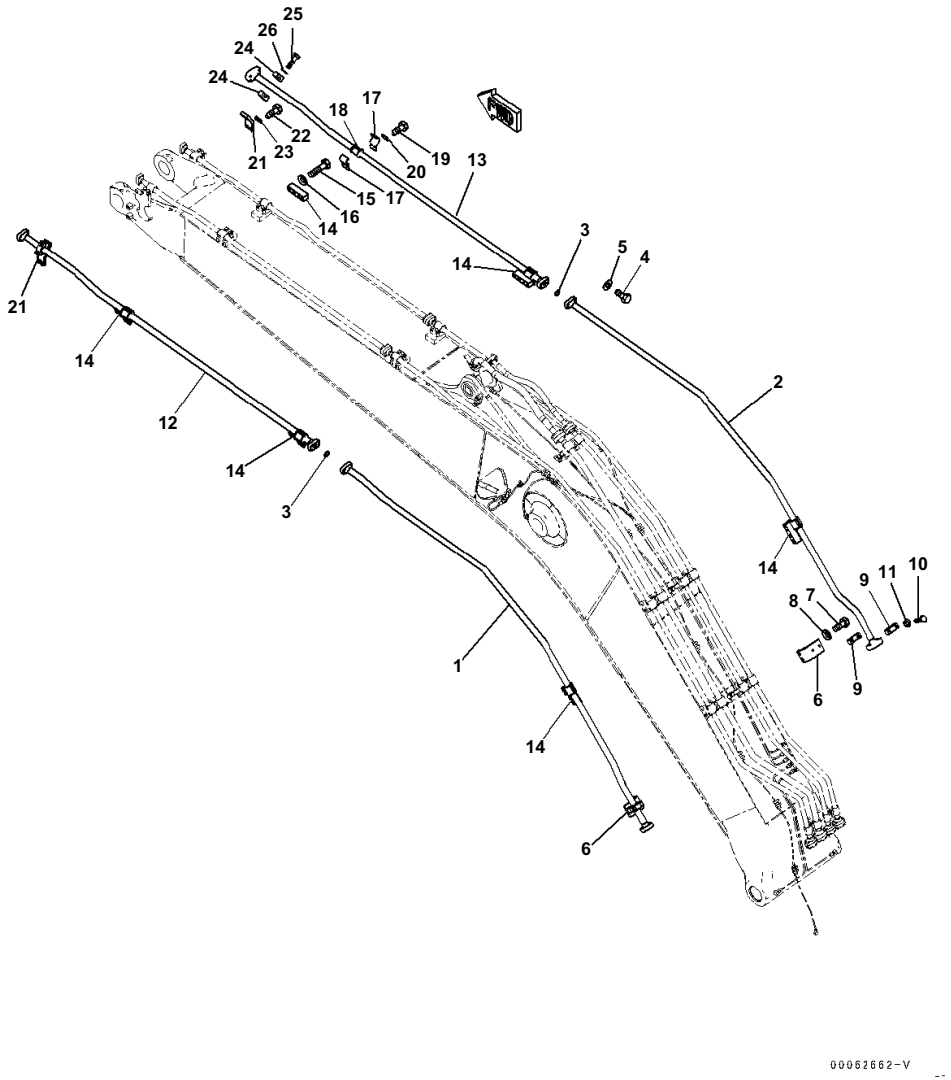

Boom, 5.9m, Heavy Duty, 100 Hours Greasing Type, 1 ATT, Additional Piping

Index	Code	Part Number	Description	Qty	Serial No.
1		206-62-21350	Tube	1	B10001-
2		206-62-21360	Tube	1	B10001-
3		07000-13035	O-ring	2	B10001-
4		07372-21040	Bolt	8	B10001-
5		01643-51032	Washer	8	B10001-
6		20Y-62-52731	Bracket	2	B10001-
7		01010-81645	Bolt	4	B10001-
8		01643-31645	Washer	4	B10001-
9		20Y-62-52671	Clamp	4	B10001-
10		01010-81275	Bolt	4	B10001-
11		01643-31232	Washer	4	B10001-
12		20Y-62-52770	Tube	1	B10001-
13		20Y-62-52780	Tube	1	B10001-
14		20Y-62-52740	Bracket	6	B10001-
15		01010-81665	Bolt	12	B10001-
16		01643-31645	Washer	12	B10001-
17		20Y-62-52680	Clamp	12	B10001-
18		205-62-73431	Seat	6	B10001-
19		01010-81230	Bolt	12	B10001-
20		20Y-62-13450	Plate	6	B10001-
21		206-62-73592	Bracket	2	B10001-
22		01010-81235	Bolt	4	B10001-
23		20Y-62-13450	Plate	2	B10001-
24		20Y-62-52671	Clamp	4	B10001-
25		01010-81275	Bolt	4	B10001-
26		01643-31232	Washer	4	B10001-

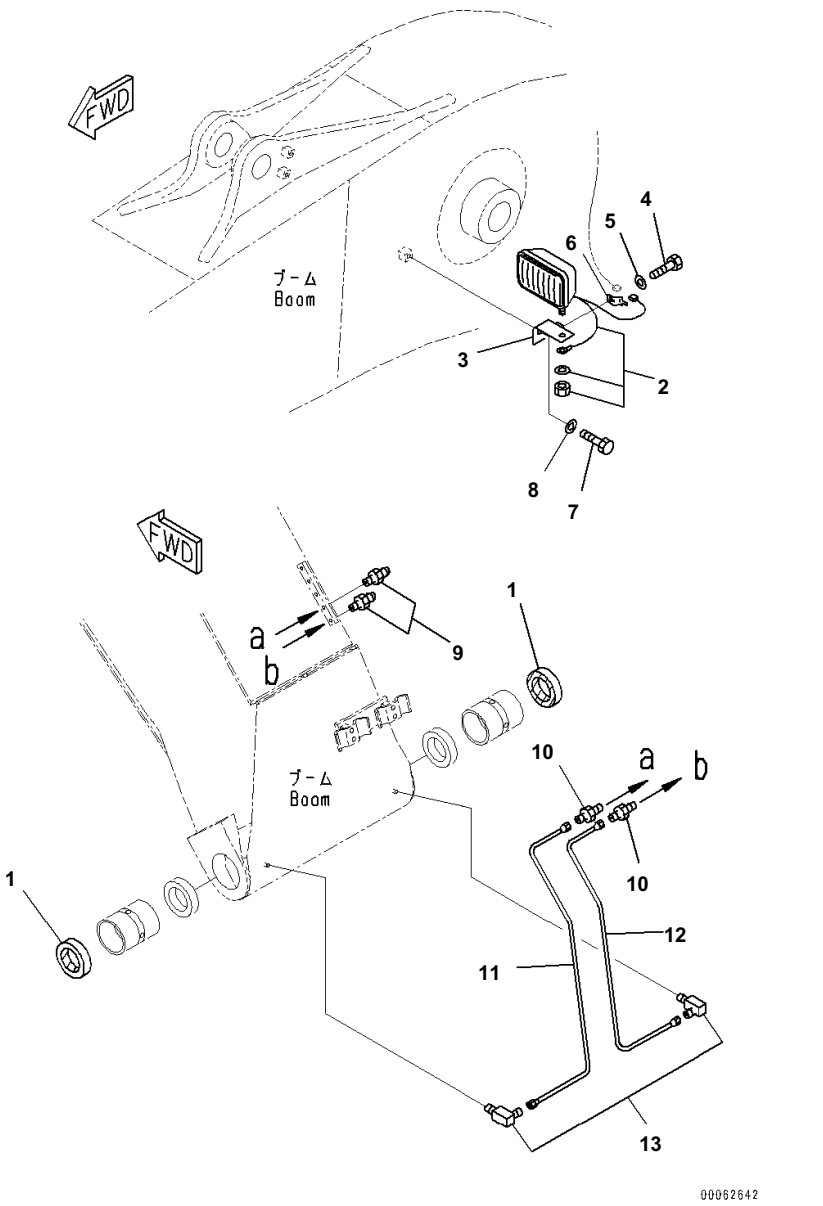

Boom, 5.9m, Heavy Duty, 100 Hours Greasing Type, 1 ATT, Lubrication Piping and Working Lamp

Index	Code	Part Number	Description	Qty	Serial No.
1		07145-00100	Seal, Dust	2	B10001-
2		21T-06-32810	Working Lamp Assembly, 24volt, 70watt	1	B10001-
		421-06-23330	・ Bulb, 70watt	1	B10001-
3		20Y-06-21551	Bracket	1	B10001-
4		01010-81220	Bolt	1	B10001-
5		01643-31232	Washer	1	B10001-
6		08193-21012	Clip	1	B10001-
7		01010-81230	Bolt	1	B10001-
8		01643-31232	Washer	1	B10001-
9		07020-00000	Fitting, Grease	2	B10001-
10		20Y-70-11540	Connector	2	B10001-
11		206-70-71250	Tube	1	B10001-
12		206-70-71260	Tube	1	B10001-
13		20Y-25-11270	Elbow	2	B10001-

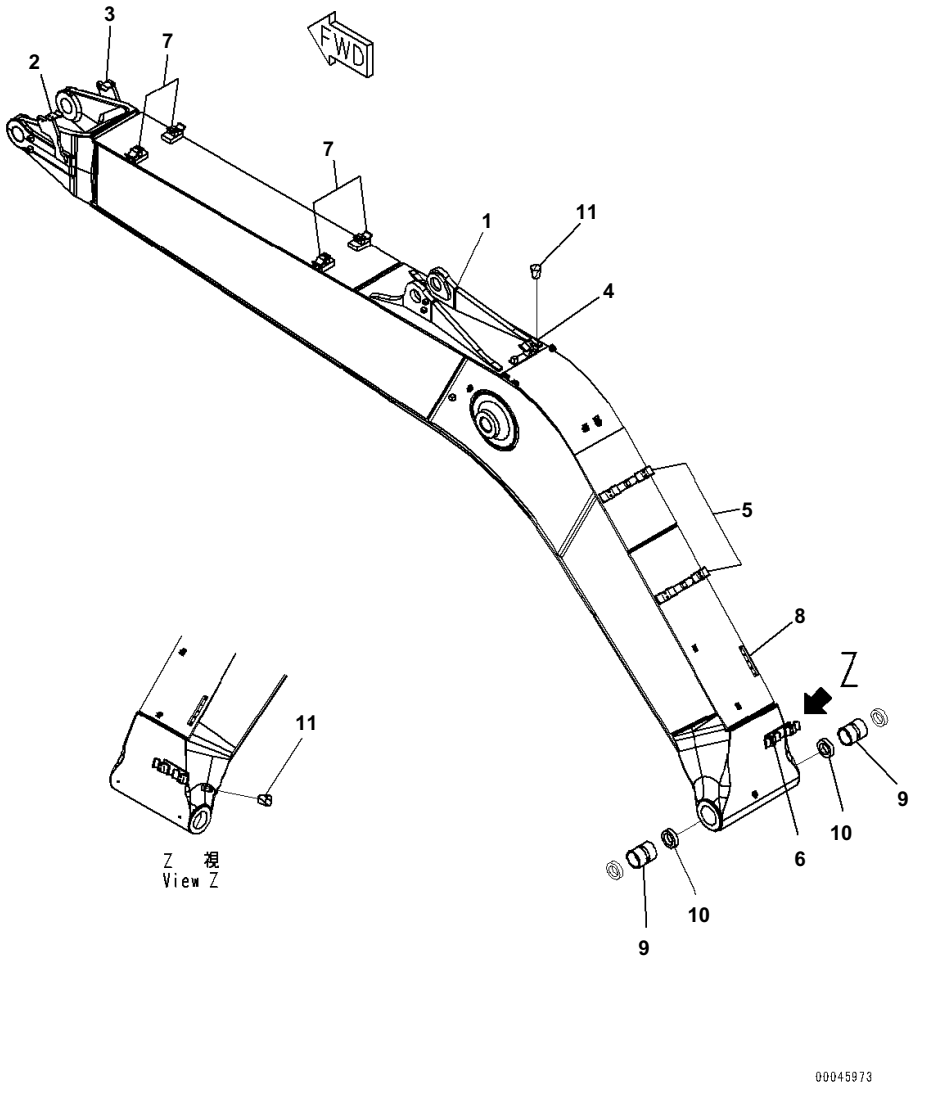

Boom, 5.9m, Heavy Duty, 100 Hours Greasing Type, Boom

Index	Code	Part Number	Description	Qty	Serial No.
1		206-70-27140	Boom	1	B10001-
2		206-62-21470	・ Bracket,Welded	1	B10001-
3		206-62-21480	・ Bracket,Welded	1	B10001-
4		206-62-21450	・ Bracket,Welded	1	B10001-
5		20Y-62-52710	・ Bracket,Welded	2	B10001-
6		206-62-73120	・ Bracket,Welded	1	B10001-
7		20Y-62-52720	・ Bracket,Welded	4	B10001-
8		20Y-70-11651	・ Seat,Welded	1	B10001-
9		206-70-61310	Bushing	2	B10001-
10		07145-00100	Seal, Dust	2	B10001-
11		07049-01215	Plug	4	B10001-

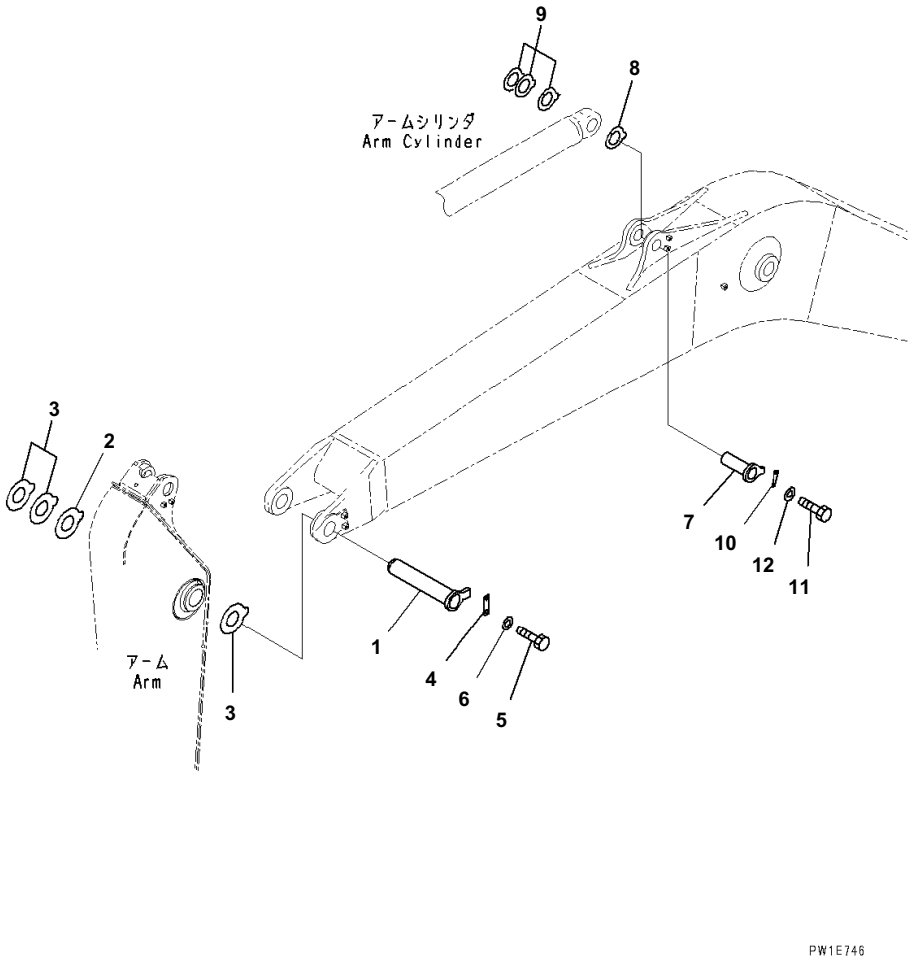

Boom, 5.9m, Heavy Duty, 100 Hours Greasing Type, Top Pin and Bottom Pin

Index	Code	Part Number	Description	Qty	Serial No.
1		205-70-65681	Pin	1	B10001-
2		20Y-70-11360	Spacer, T=0.8mm	1	B10001-
3		206-70-45210	Spacer, T=1.5mm	3	B10001-
4		205-70-71312	Plate	1	B10001-
5		01010-81235	Bolt	2	B10001-
6		01643-31232	Washer	2	B10001-
7		206-70-51170	Pin	1	B10001-
8		20Y-70-11340	Spacer, T=0.8mm	1	B10001-
9		205-70-51530	Spacer, T=1.5mm	3	B10001-
10		205-70-66580	Plate	1	B10001-
11		01010-81230	Bolt	2	B10001-
12		01643-31232	Washer	2	B10001-

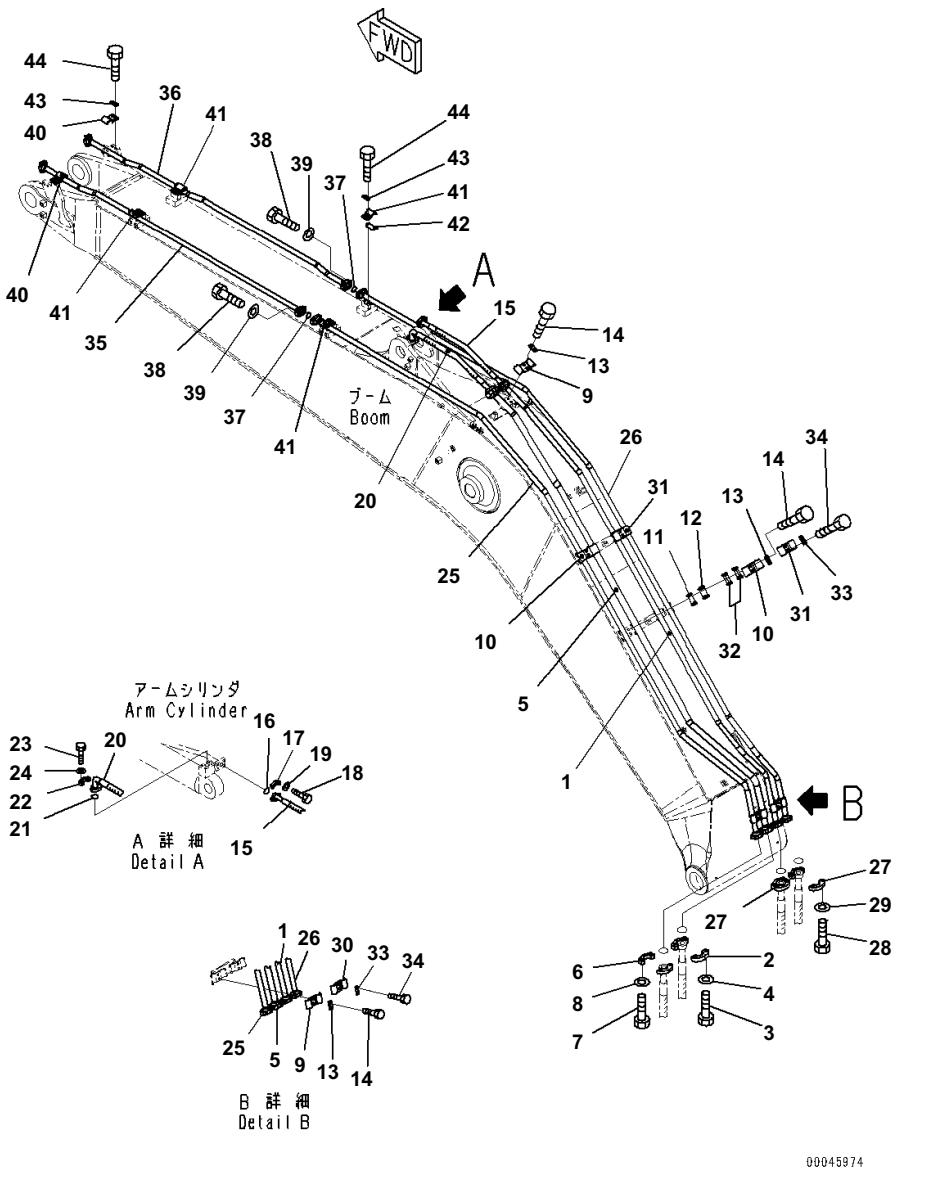

Boom, 5.9m, Heavy Duty, 100 Hours Greasing Type, Arm and Bucket Cylinder Piping

Index	Code	Part Number	Description	Qty	Serial No.
1		206-62-21320	Tube	1	B10001-
2		07371-30640	Flange, Split	2	B10001-
3		07372-21035	Bolt	4	B10001-
4		01643-51032	Washer	4	B10001-
5		206-62-21310	Tube	1	B10001-
6		07371-31049	Flange, Split	2	B10001-
7		07372-21035	Bolt	4	B10001-
8		01643-51032	Washer	4	B10001-
9		20Y-62-13690	Clamp	2	B10001-
10		20Y-62-13730	Clamp	2	B10001-
11		205-62-73431	Seat	2	B10001-
12		20Y-62-13761	Seat	2	B10001-
13		20Y-62-13450	Plate	4	B10001-
14		01010-81230	Bolt	8	B10001-
15		20Y-62-13570	Hose	1	B10001-
16		07000-13025	O-ring	2	B10001-
17		07371-30640	Flange, Split	4	B10001-
18		07372-21035	Bolt	8	B10001-
19		01643-51032	Washer	8	B10001-
20		206-62-21210	Hose	1	B10001-
21		07000-13032	O-ring	2	B10001-
22		07371-31049	Flange, Split	4	B10001-
23		07372-21035	Bolt	8	B10001-
24		01643-51032	Washer	8	B10001-
25		206-62-21330	Tube	1	B10001-
26		206-62-21340	Tube	1	B10001-
27		07371-30640	Flange, Split	4	B10001-
28		07372-21035	Bolt	8	B10001-
29		01643-51032	Washer	8	B10001-
30		20Y-62-13710	Clamp	1	B10001-
31		20Y-62-13190	Clamp	2	B10001-
32		20Y-62-13761	Seat	4	B10001-
33		20Y-62-13450	Plate	3	B10001-
34		01010-81230	Bolt	6	B10001-
35		20Y-62-52651	Tube	1	B10001-
36		206-62-21370	Tube	1	B10001-
37		07000-13030	O-ring	2	B10001-
38		07372-21035	Bolt	8	B10001-
39		01643-51032	Washer	8	B10001-
40		206-62-73560	Clamp	2	B10001-
41		20Y-62-13180	Clamp	4	B10001-
42		20Y-62-13761	Seat	4	B10001-
43		20Y-62-13450	Plate	6	B10001-
44		01010-81230	Bolt	12	B10001-

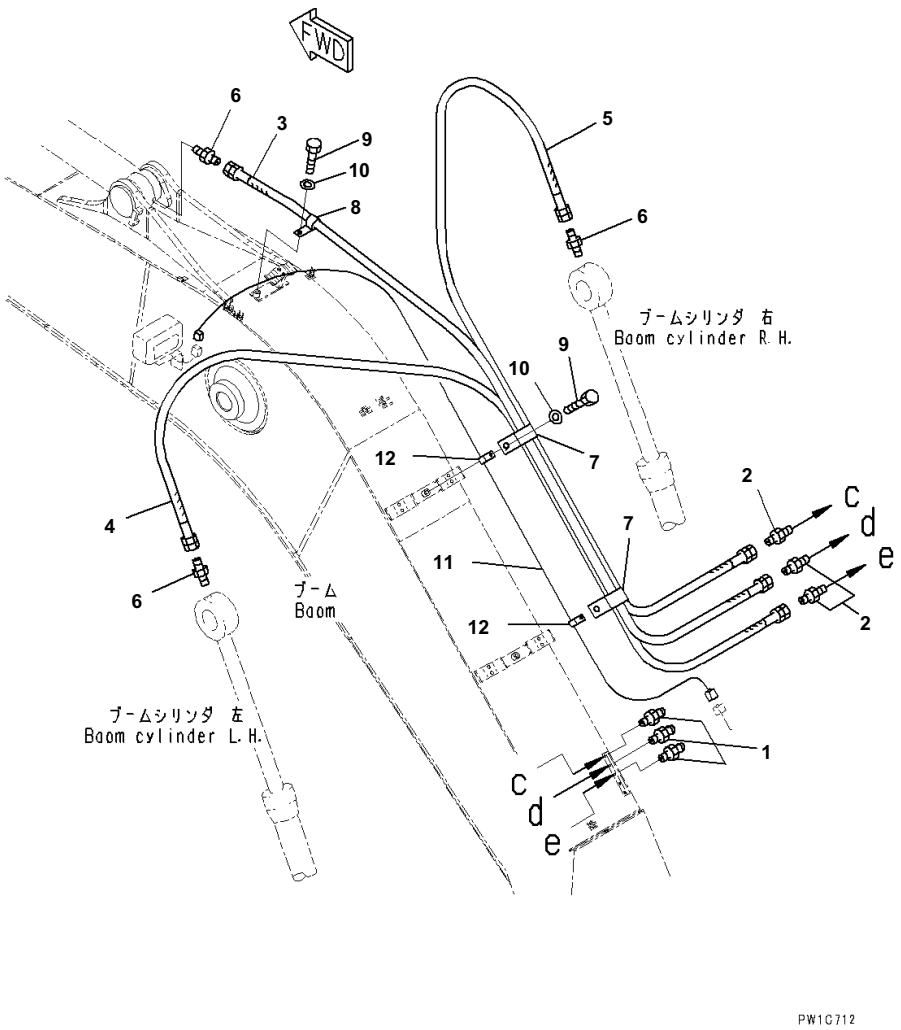

Boom, 5.9m, Heavy Duty, 100 Hours Greasing Type, Lubrication Piping

Index	Code	Part Number	Description	Qty	Serial No.
1		07020-00000	Fitting, Grease	3	B10001-
2		205-70-51390	Nipple	3	B10001-
3		206-70-71460	Hose	1	B10001-
4		20Y-70-41230	Hose	1	B10001-
5		206-70-71480	Hose	1	B10001-
6		205-70-51390	Nipple	3	B10001-
7		04434-52112	Clip	2	B10001-
8		04434-51012	Clip	1	B10001-
9		01010-81220	Bolt	3	B10001-
10		01643-31232	Washer	3	B10001-
11		20Y-06-41161	Wiring Harness	1	B10001-
12		04434-51012	Clip	2	B10001-

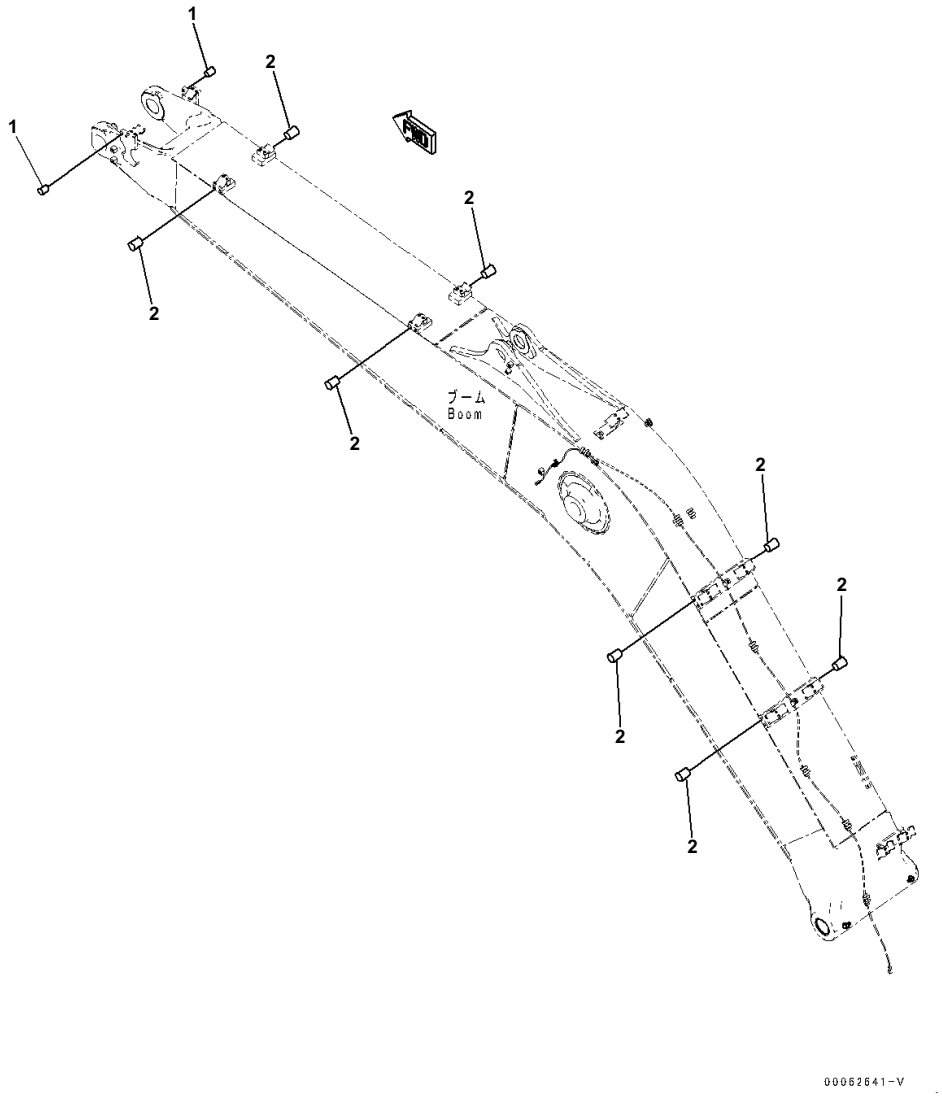

Boom, 5.9m, Heavy Duty, 100 Hours Greasing Type, Attachment Plug

Index	Code	Part Number	Description	Qty	Serial No.
1		07049-01215	Plug	4	B10001-
2		07049-01620	Plug	16	B10001-

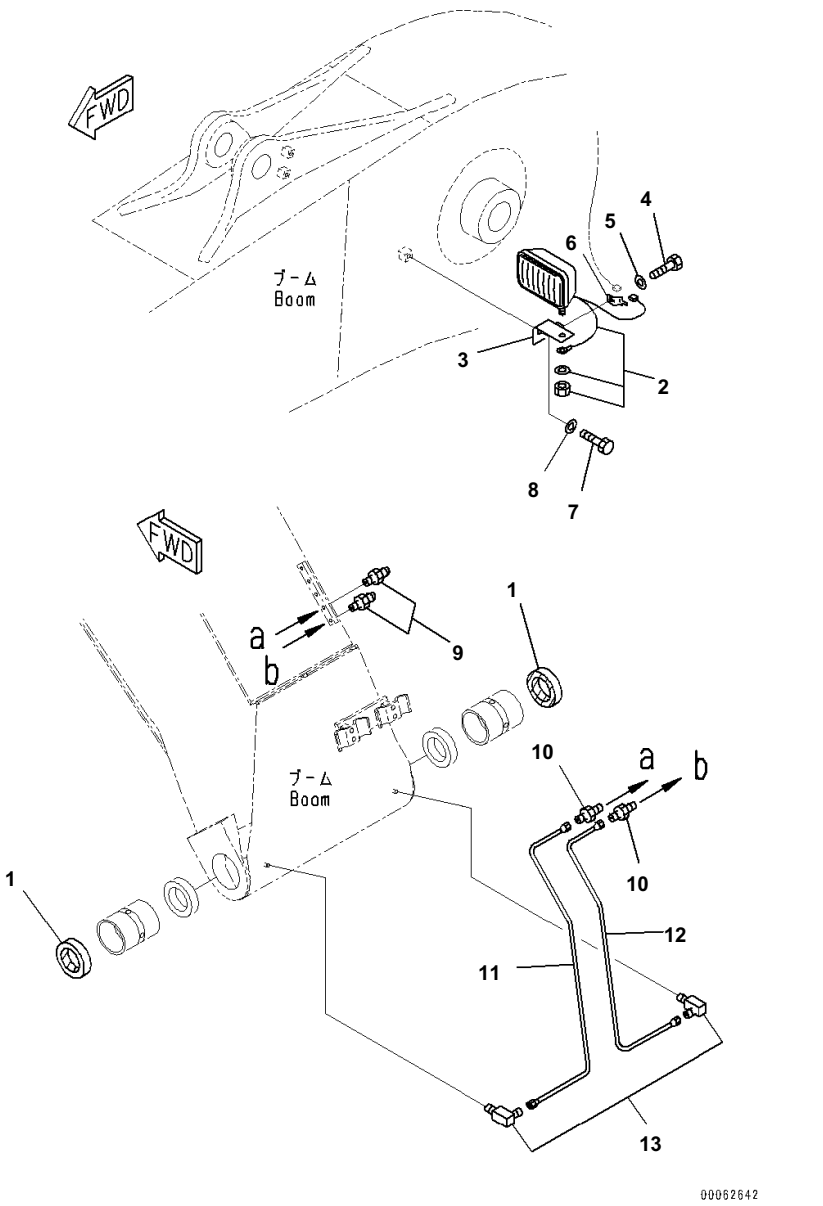

Boom, 5.9m, Heavy Duty, 100 Hours Greasing Type, Lubrication Piping and Working Lamp

Index	Code	Part Number	Description	Qty	Serial No.
1		07145-00100	Seal, Dust	2	B10001-
2		21T-06-32810	Working Lamp Assembly, 24volt, 70watt	1	B10001-
		421-06-23330	・ Bulb, 70watt	1	B10001-
3		20Y-06-21551	Bracket	1	B10001-
4		01010-81220	Bolt	1	B10001-
5		01643-31232	Washer	1	B10001-
6		08193-21012	Clip	1	B10001-
7		01010-81230	Bolt	1	B10001-
8		01643-31232	Washer	1	B10001-
9		07020-00000	Fitting, Grease	2	B10001-
10		20Y-70-11540	Connector	2	B10001-
11		206-70-71250	Tube	1	B10001-
12		206-70-71260	Tube	1	B10001-
13		20Y-25-11270	Elbow	2	B10001-

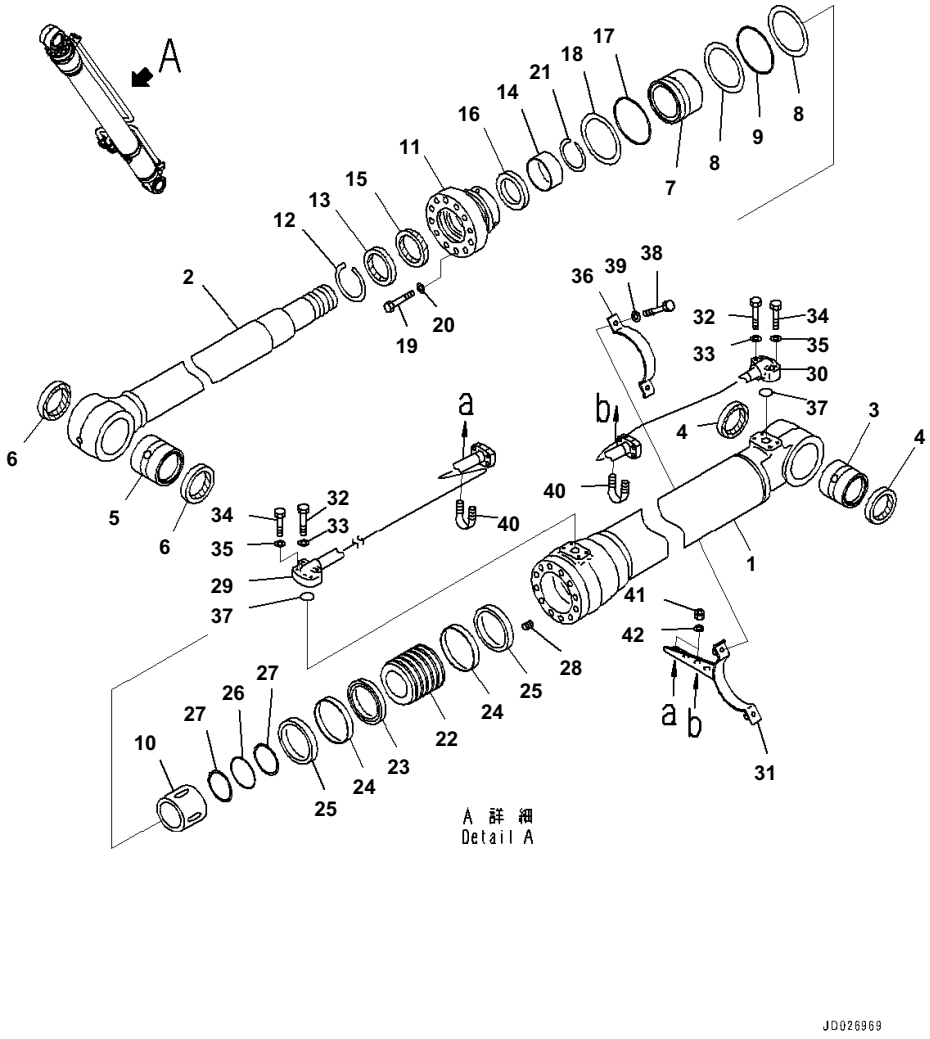

Boom Cylinder, 100 Hours Greasing Type, LHS

Index	Code	Part Number	Description	Qty	Serial No.
		707-01-0J790	Cylinder Assembly	1	B10001-
1		707-13-13890	· Cylinder	1	B10001-
2		707-58-90E50	· Rod, Piston	1	B10001-
3		206-70-55280	· Bushing	1	B10001-
4		07145-00080	· Seal, Dust, (Kit : K05)	2	B10001-
5		707-76-80010	· Bushing	1	B10001-
6		07145-00080	· Seal, Dust, (Kit : K05)	2	B10001-
7		707-71-34670	· Collar	1	B10001-
8		707-35-91320	· Ring, Back-up, (Kit : K05)	2	B10001-
9		07000-15120	· O-ring, (Kit : K05)	1	B10001-
10		707-71-60970	· Plunger	1	B10001-
11		707-27-13650	· Cylinder Head	1	B10001-
12		07179-13104	· Ring, Snap	1	B10001-
13		195-63-94170	· Seal, Dust, (Kit : K05)	1	B10001-
14		707-52-90681	· Bushing	1	B10001-
15		707-51-90030	· Packing, Rod, (Kit : K05)	1	B10001-
16		707-51-90650	· Ring, Buffer, (Kit : K05)	1	B10001-
17		07000-15120	· O-ring, (Kit : K05)	1	B10001-
18		707-35-91320	· Ring, Back-up, (Kit : K05)	1	B10001-
19		01010-81670	· Bolt	12	B10001-
20		01643-51645	· Washer	12	B10001-
21		707-75-90110	· Ring, Snap	1	B10001-
22		707-36-13780	· Piston	1	B10001-
23		707-44-13150	· Ring, Piston, (Kit : K05)	1	B10001-
24		707-39-13150	· Ring, Wear, (Kit : K05)	2	B10001-
25		707-44-13911	· Ring	2	B10001-
26		07000-15080	· O-ring, (Kit : K05)	1	B10001-
27		707-35-90940	· Ring, Back-up, (Kit : K05)	2	B10001-
28		01310-01216	· Screw	1	B10001-
29		707-86-67780	· Tube,LHS	1	B10001-
30		707-86-66310	· Tube,LHS	1	B10001-
31		707-88-28050	· Bracket,LHS	1	B10001-
32		07372-21060	· Bolt	4	B10001-
33		01643-51032	· Washer	4	B10001-
34		07372-21045	· Bolt	4	B10001-
35		01643-51032	· Washer	4	B10001-
36		707-88-21331	· Band	1	B10001-
37		07000-13030	· O-ring, (Kit : K05)	2	B10001-
38		07372-21035	· Bolt	2	B10001-
39		01643-51032	· Washer	2	B10001-
40		07283-32738	· Clip, Pipe	2	B10001-
41		01597-01009	· Nut	4	B10001-
42		01643-31032	· Washer	4	B10001-

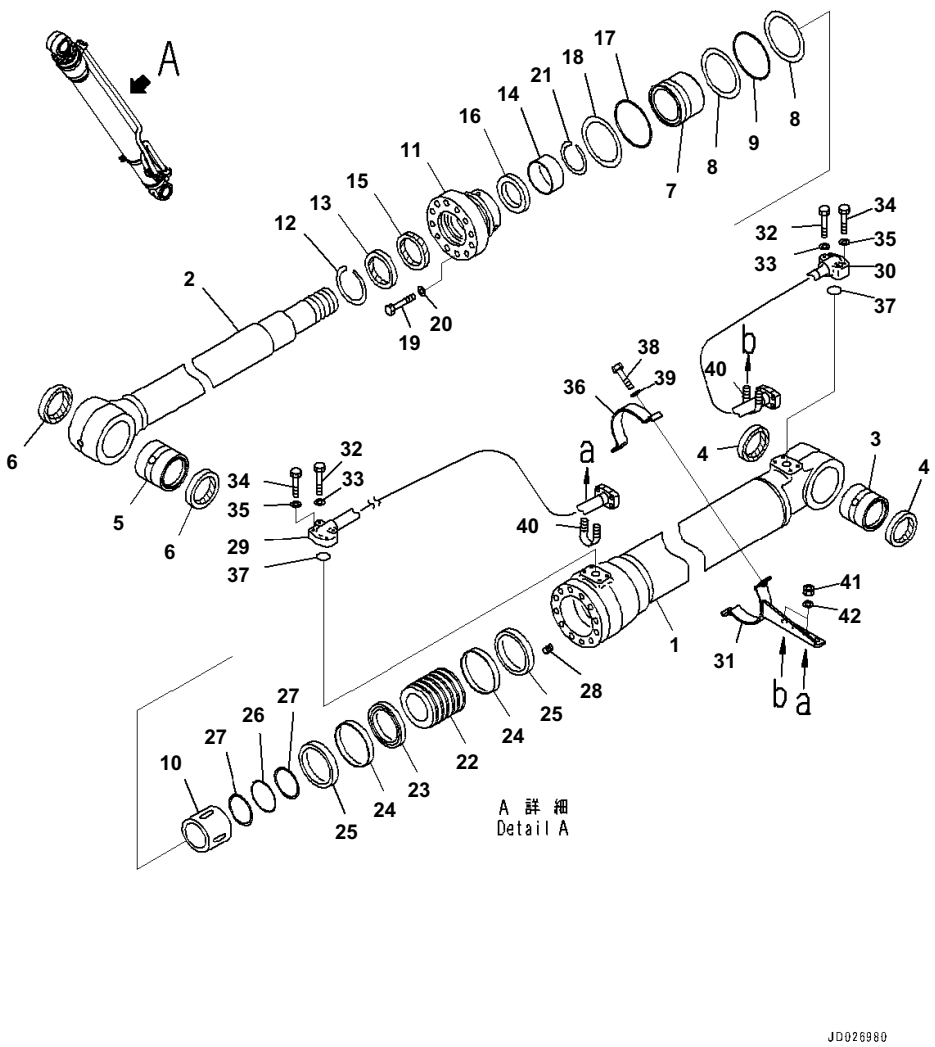

Boom Cylinder, 100 Hours Greasing Type, RHS

Index	Code	Part Number	Description	Qty	Serial No.
		707-01-0J790	Cylinder Assembly	1	B10001-
1		707-13-13890	· Cylinder	1	B10001-
2		707-58-90E50	· Rod, Piston	1	B10001-
3		206-70-55280	· Bushing	1	B10001-
4		07145-00080	· Seal, Dust, (Kit : K05)	2	B10001-
5		707-76-80010	· Bushing	1	B10001-
6		07145-00080	· Seal, Dust, (Kit : K05)	2	B10001-
7		707-71-34670	· Collar	1	B10001-
8		707-35-91320	· Ring, Back-up, (Kit : K05)	2	B10001-
9		07000-15120	· O-ring, (Kit : K05)	1	B10001-
10		707-71-60970	· Plunger	1	B10001-
11		707-27-13650	· Cylinder Head	1	B10001-
12		07179-13104	· Ring, Snap	1	B10001-
13		195-63-94170	· Seal, Dust, (Kit : K05)	1	B10001-
14		707-52-90681	· Bushing	1	B10001-
15		707-51-90030	· Packing, Rod, (Kit : K05)	1	B10001-
16		707-51-90650	· Ring, Buffer, (Kit : K05)	1	B10001-
17		07000-15120	· O-ring, (Kit : K05)	1	B10001-
18		707-35-91320	· Ring, Back-up, (Kit : K05)	1	B10001-
19		01010-81670	· Bolt	12	B10001-
20		01643-51645	· Washer	12	B10001-
21		707-75-90110	· Ring, Snap	1	B10001-
22		707-36-13780	· Piston	1	B10001-
23		707-44-13150	· Ring, Piston, (Kit : K05)	1	B10001-
24		707-39-13150	· Ring, Wear, (Kit : K05)	2	B10001-
25		707-44-13911	· Ring	2	B10001-
26		07000-15080	· O-ring, (Kit : K05)	1	B10001-
27		707-35-90940	· Ring, Back-up, (Kit : K05)	2	B10001-
28		01310-01216	· Screw	1	B10001-
29		707-86-67790	· Tube,RHS	1	B10001-
30		707-86-66330	· Tube,RHS	1	B10001-
31		707-88-28060	· Bracket,RHS	1	B10001-
32		07372-21060	· Bolt	4	B10001-
33		01643-51032	· Washer	4	B10001-
34		07372-21045	· Bolt	4	B10001-
35		01643-51032	· Washer	4	B10001-
36		707-88-21331	· Band	1	B10001-
37		07000-13030	· O-ring, (Kit : K05)	2	B10001-
38		07372-21035	· Bolt	2	B10001-
39		01643-51032	· Washer	2	B10001-
40		07283-32738	· Clip, Pipe	2	B10001-
41		01597-01009	· Nut	4	B10001-
42		01643-31032	· Washer	4	B10001-

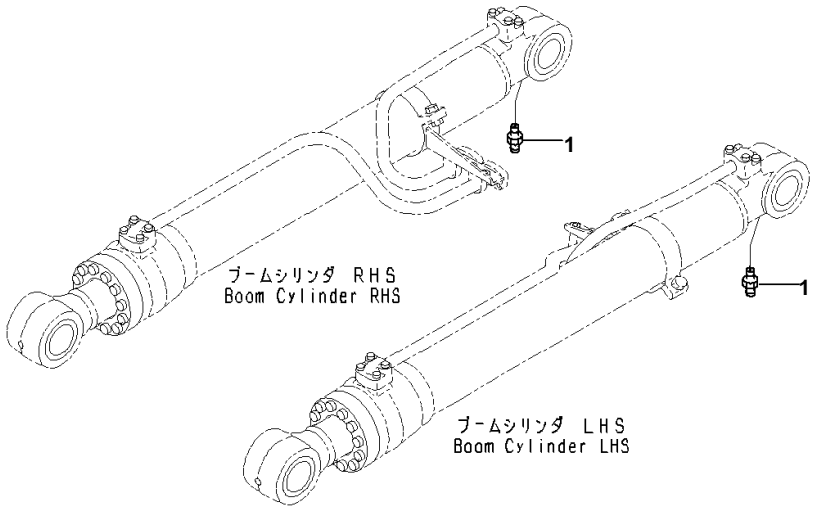

Index	Code	Part Number	Description	Qty	Serial No.
1		07020-00000	Fitting, Grease	2	B10001-

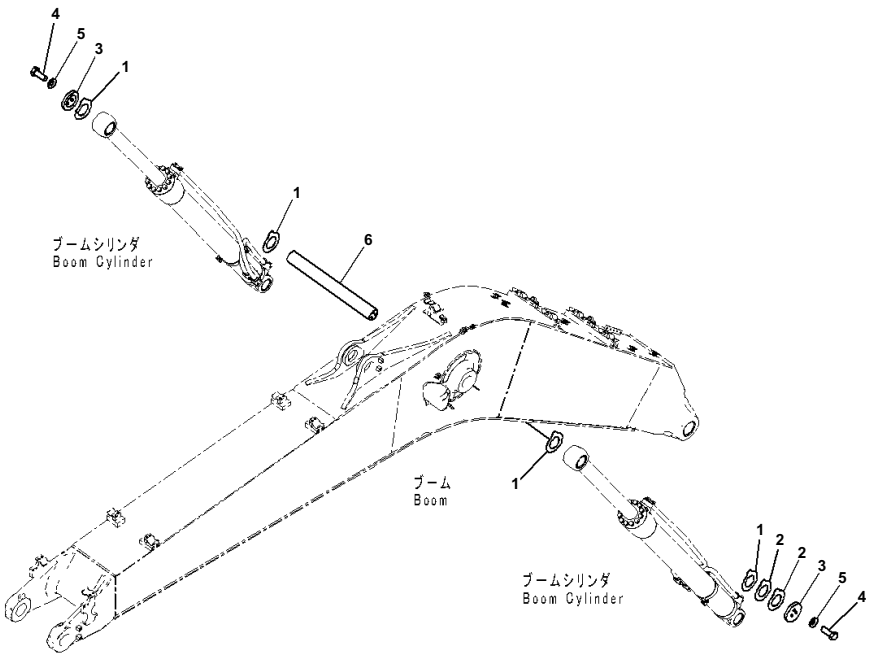

Boom Cylinder Head Pin, 100 Hours Greasing Type

Index	Code	Part Number	Description	Qty	Serial No.
1		20Y-70-11370	Spacer, T=1.5mm	7	B10001-
2		20Y-70-11390	Spacer, T=0.8mm	2	B10001-
3		20Y-70-41221	Plate	2	B10001-
4		01010-81640	Bolt	6	B10001-
5		01643-31645	Washer	6	B10001-
6		206-70-21210	Pin	1	B10001-

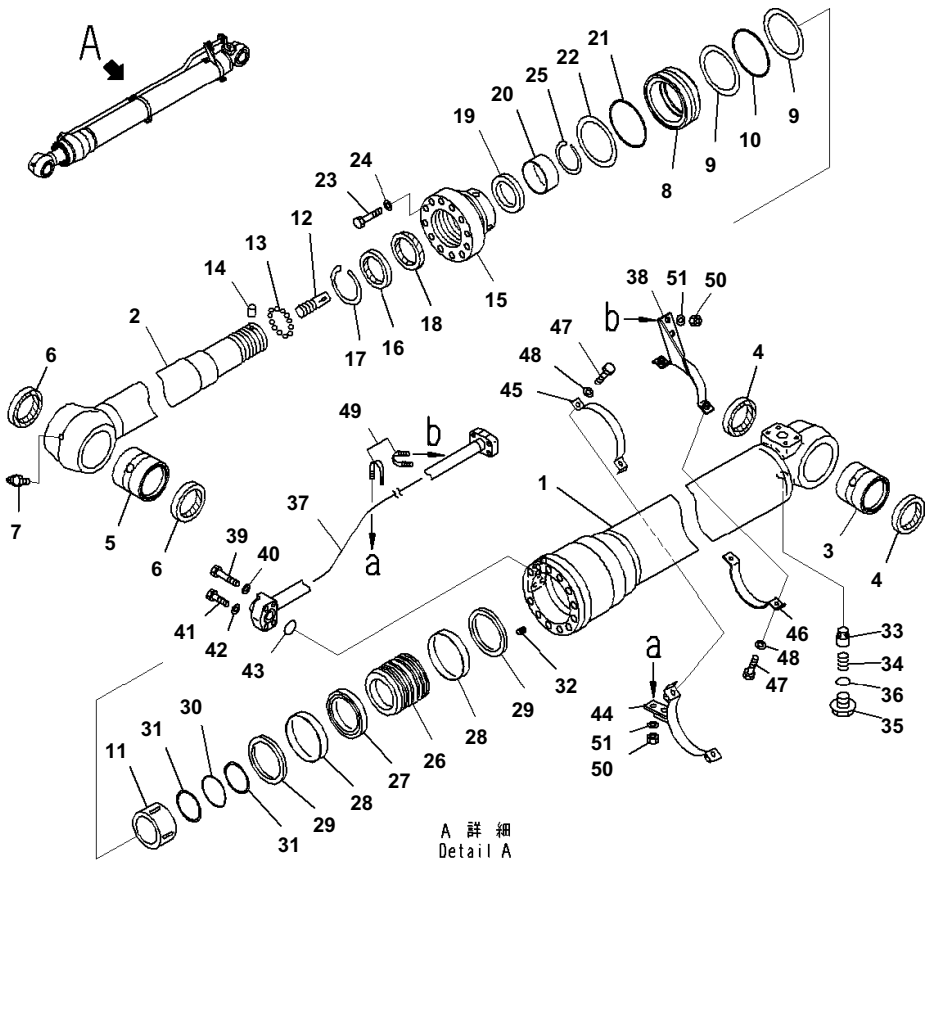

Index	Code	Part Number	Description	Qty	Serial No.
		707-01-0J840	Cylinder Assembly	1	B10001-
1		707-13-14820	・ Cylinder	1	B10001-
2		721-58-10070	・ Rod, Piston	1	B10001-
3		707-76-80010	・ Bushing	1	B10001-
4		07145-00080	・ Seal, Dust, (Kit : K07)	2	B10001-
5		707-76-80010	・ Bushing	1	B10001-
6		07145-00080	・ Seal, Dust, (Kit : K07)	2	B10001-
7		07020-00000	・ Fitting, Grease	1	B10001-
8		707-71-34990	・ Collar	1	B10001-
9		707-35-91420	・ Ring, Back-up, (Kit : K07)	2	B10001-
10		07000-15130	・ O-ring, (Kit : K07)	1	B10001-
11		707-71-71020	・ Plunger	1	B10001-
12		707-71-80270	・ Plunger	1	B10001-
13		04260-00635	・ Ball, Steel	12	B10001-
14		707-71-91270	・ Cap	1	B10001-
15		707-27-14690	・ Head, Cylinder	1	B10001-
16		176-63-56170	・ Seal, Dust, (Kit : K07)	1	B10001-
17		07179-13114	・ Ring, Snap	1	B10001-
18		707-51-10030	・ Packing, Rod, (Kit : K07)	1	B10001-
19		707-51-10650	・ Ring, Buffer, (Kit : K07)	1	B10001-
20		707-52-90781	・ Bushing	1	B10001-
21		07000-15130	・ O-ring, (Kit : K07)	1	B10001-
22		707-35-91420	・ Ring, Back-up, (Kit : K07)	1	B10001-
23		01010-81875	・ Bolt	12	B10001-
24		707-41-11840	・ Washer	12	B10001-
25		707-75-10160	・ Ring, Snap	1	B10001-
26		707-36-14650	・ Piston	1	B10001-
27		707-44-14150	・ Ring, Piston, (Kit : K07)	1	B10001-
28		707-39-14110	・ Ring, Wear, (Kit : K07)	2	B10001-
29		707-44-14910	・ Ring	2	B10001-
30		07000-15090	・ O-ring, (Kit : K07)	1	B10001-
31		07001-05090	・ Ring, Back-up, (Kit : K07)	2	B10001-
32		01310-01216	・ Screw	1	B10001-
33		707-83-13010	・ Valve	1	B10001-
34		07750-01628	・ Spring	1	B10001-
35		707-87-14070	・ Plug	1	B10001-
36		07002-12034	・ O-ring, (Kit : K07)	1	B10001-
37		707-86-67810	・ Tube	1	B10001-
38		707-88-22630	・ Bracket	1	B10001-
39		07372-21060	・ Bolt	2	B10001-
40		01643-51032	・ Washer	2	B10001-
41		07372-21045	・ Bolt	2	B10001-
42		01643-51032	・ Washer	2	B10001-
43		07000-13030	・ O-ring, (Kit : K07)	1	B10001-
44		707-88-28090	・ Bracket	1	B10001-
45		707-88-28140	・ Band	1	B10001-

PC240LC-8 S/N B10001-UP
Arm Cylinder, 100 Hours Greasing Type

Index	Code	Part Number	Description	Qty	Serial No.
46		707-88-21321	・ Band	1	B10001-
47		07372-21035	・ Bolt	4	B10001-
48		01643-51032	・ Washer	4	B10001-
49		07283-32738	・ Clip, Pipe	2	B10001-
50		01597-01009	・ Nut	4	B10001-
51		01643-31032	・ Washer	4	B10001-

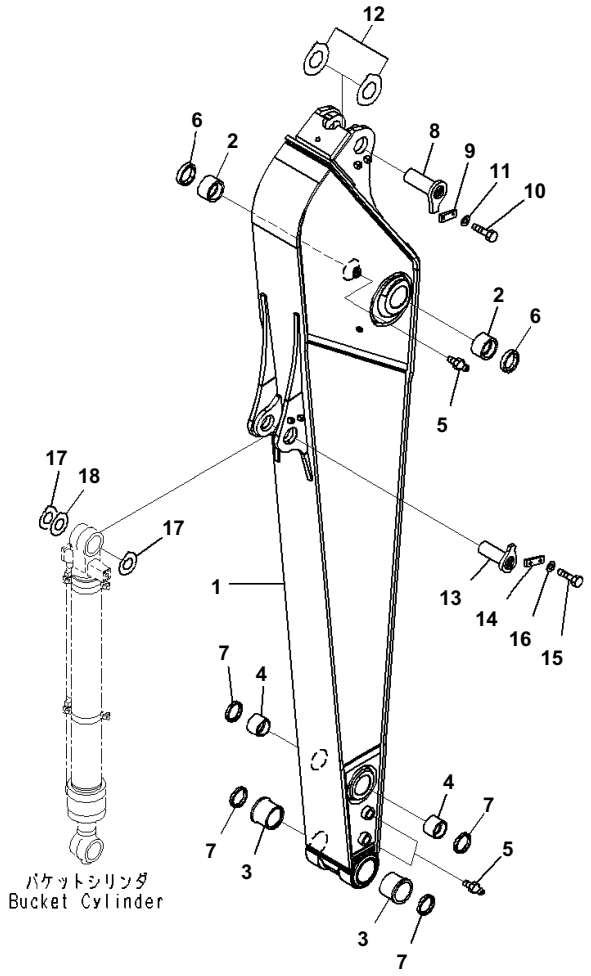

Arm, 3.0m, Heavy Duty, 100 Hours Greasing Type, Arm

Index	Code	Part Number	Description	Qty	Serial No.
		206-70-00880	Arm Assembly	1	B10001-
1	C1		・ Arm	1	B10001-
2		205-70-72180	・ Bushing	2	B10001-
3		20Y-70-32410	・ Bushing	2	B10001-
4		21K-70-12161	・ Bushing	2	B10001-
5		07020-00000	Fitting, Grease	3	B10001-
6		07145-00090	Seal, Dust	2	B10001-
7		20Y-70-23230	Seal, Dust	4	B10001-
8		20Y-70-42220	Pin	1	B10001-
9		205-70-66581	Plate	1	B10001-
10		01010-81230	Bolt	2	B10001-
11		01643-31232	Washer	2	B10001-
12		21K-70-71650	Spacer, T=1.5mm	1	B10001-
13		206-70-22220	Pin	1	B10001-
14		205-70-66581	Plate	1	B10001-
15		01010-81230	Bolt	2	B10001-
16		01643-31232	Washer	2	B10001-
17		20Y-70-11340	Spacer, T=0.8mm	1	B10001-
18		205-70-51530	Spacer, T=1.5mm	3	B10001-

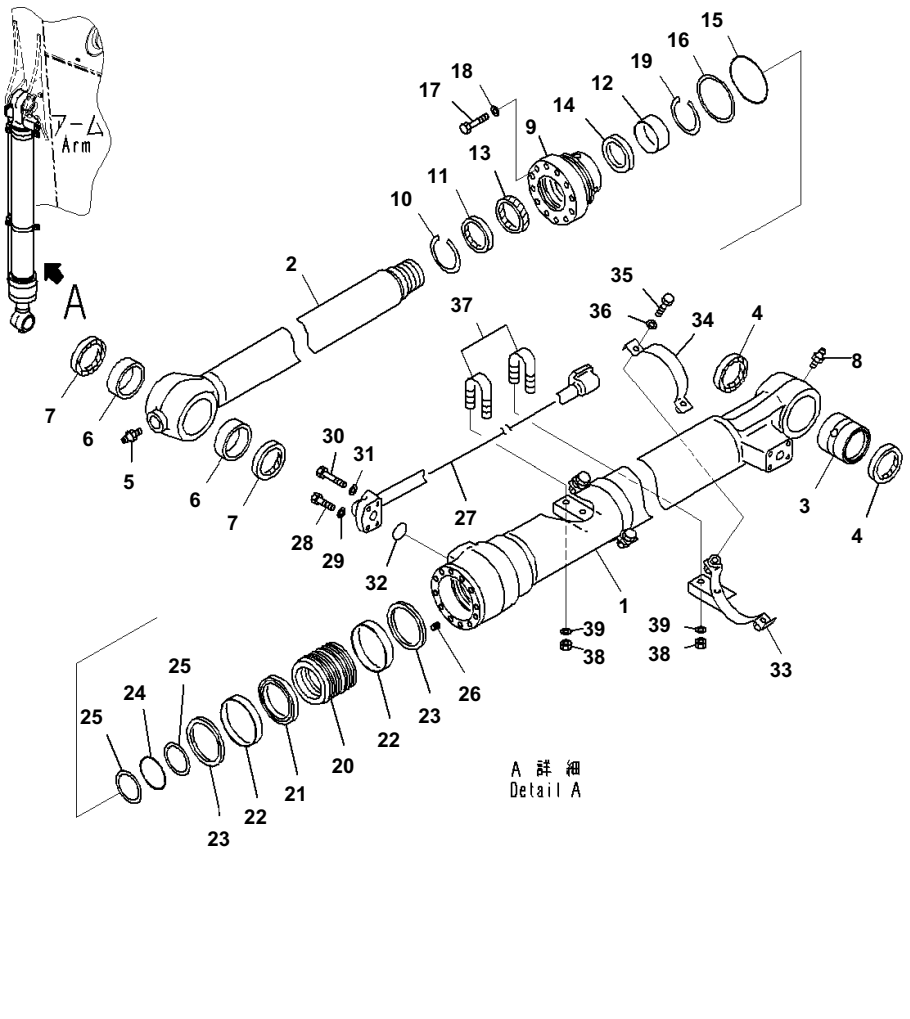

Arm, 3.0m, Heavy Duty, 100 Hours Greasing Type, Inner Parts, Bucket Cylinder

Index	Code	Part Number	Description	Qty	Serial No.
		707-01-0J870	Cylinder Assembly	1	B10001-
1		707-13-13880	・ Cylinder	1	B10001-
2		707-58-90E60	・ Rod, Piston	1	B10001-
3		707-76-80010	・ Bushing	1	B10001-
4		07145-00080	・ Seal, Dust, (Kit : K08)	2	B10001-
5		07020-00000	・ Fitting, Grease	1	B10001-
6		707-76-80020	・ Bushing	1	B10001-
7		20Y-70-23230	・ Seal, Dust, (Kit : K08)	2	B10001-
8		07020-00000	・ Fitting, Grease	1	B10001-
9		707-27-13750	・ Cylinder Head	1	B10001-
10		07179-13104	・ Ring, Snap	1	B10001-
11		195-63-94170	・ Seal, Dust, (Kit : K08)	1	B10001-
12		707-52-90681	・ Bushing	1	B10001-
13		707-51-90030	・ Packing, Rod, (Kit : K08)	1	B10001-
14		707-51-90650	・ Ring, Buffer, (Kit : K08)	1	B10001-
15		07000-15120	・ O-ring, (Kit : K08)	1	B10001-
16		707-35-91320	・ Ring, Back-up, (Kit : K08)	1	B10001-
17		01010-81875	・ Bolt	12	B10001-
18		707-41-11840	・ Washer	12	B10001-
19		707-75-90110	・ Ring, Snap	1	B10001-
20		707-36-13780	・ Piston	1	B10001-
21		707-44-13150	・ Ring, Piston, (Kit : K08)	1	B10001-
22		707-39-13150	・ Ring, Wear, (Kit : K08)	2	B10001-
23		707-44-13911	・ Ring	2	B10001-
24		07000-15080	・ O-ring, (Kit : K08)	1	B10001-
25		707-35-90940	・ Ring, Back-up, (Kit : K08)	2	B10001-
26		01310-01216	・ Screw	1	B10001-
27		707-86-67820	・ Tube	1	B10001-
28		07372-21045	・ Bolt	2	B10001-
29		01643-51032	・ Washer	2	B10001-
30		07372-21060	・ Bolt	2	B10001-
31		01643-51032	・ Washer	2	B10001-
32		07000-13030	・ O-ring, (Kit : K08)	1	B10001-
33		707-88-22640	・ Bracket	2	B10001-
34		707-88-21331	・ Band	2	B10001-
35		07372-21035	・ Bolt	4	B10001-
36		01643-51032	・ Washer	4	B10001-
37		07283-32738	・ Clip, Pipe	2	B10001-
38		01597-01009	・ Nut	4	B10001-
39		01643-31032	・ Washer	4	B10001-

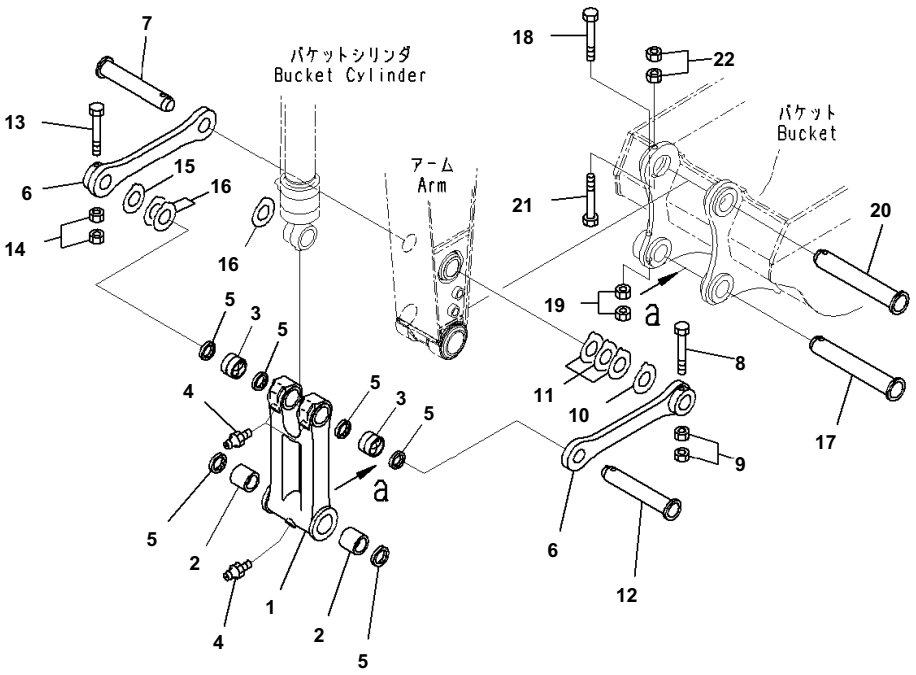

Arm, 3.0m, Heavy Duty, 100 Hours Greasing Type, Bucket Link

Index	Code	Part Number	Description	Qty	Serial No.
		206-70-00830	Link Assembly	1	B10001-
1	C1		・ Link	1	B10001-
2		21K-70-12161	・ Bushing	2	B10001-
3		206-70-53150	・ Bushing	2	B10001-
4		07020-00000	・ Fitting, Grease	3	B10001-
5		20Y-70-23230	・ Seal, Dust	6	B10001-
6		206-70-57120	Link	2	B10001-
7		206-70-53143	Pin	1	B10001-
8		20Y-70-32450	Bolt	1	B10001-
9		01580-12016	Nut	2	B10001-
10		20Y-70-11340	Spacer, T=0.8mm	1	B10001-
11		205-70-51530	Spacer, T=1.5mm	3	B10001-
12		206-70-53143	Pin	1	B10001-
13		20Y-70-32450	Bolt	1	B10001-
14		01580-12016	Nut	2	B10001-
15		20Y-70-11340	Spacer, T=0.8mm	1	B10001-
16		205-70-51530	Spacer, T=1.5mm	4	B10001-
17		205-70-73270	Pin	1	B10001-
18		20Y-70-32450	Bolt	1	B10001-
19		01580-12016	Nut	2	B10001-
20		205-70-73270	Pin	1	B10001-
21		20Y-70-32460	Bolt	1	B10001-
22		01580-12016	Nut	2	B10001-

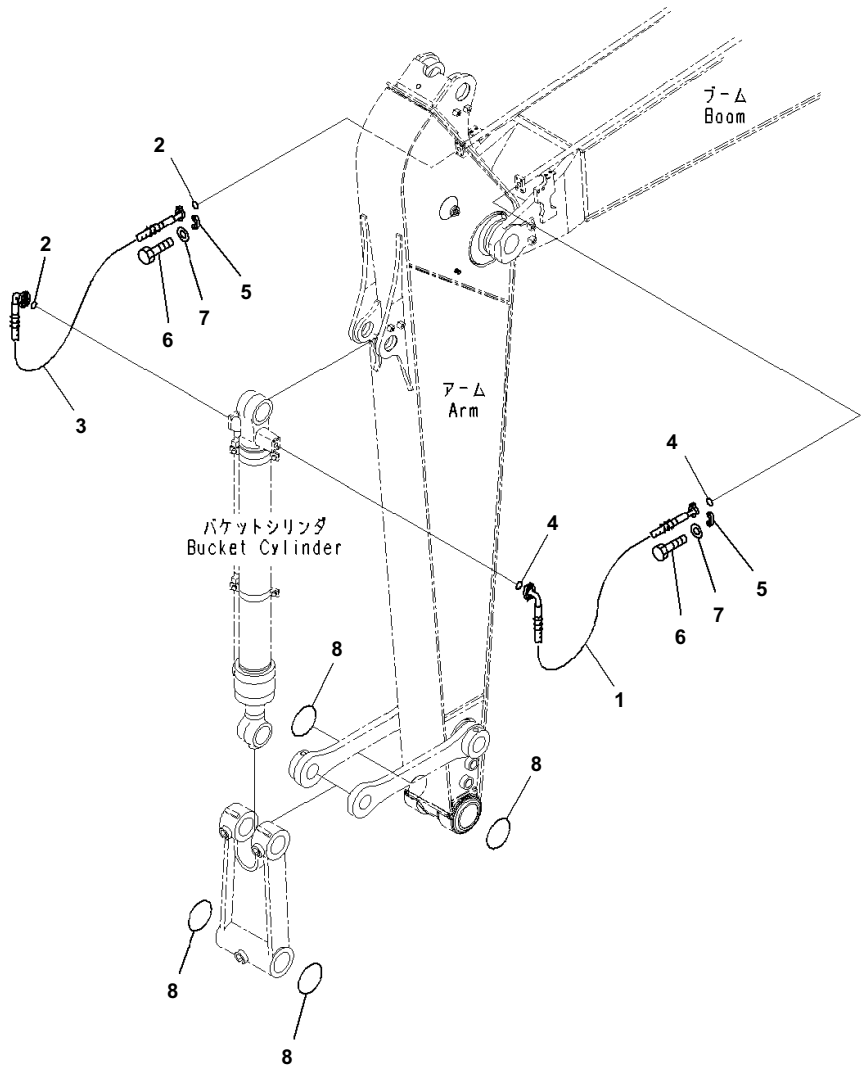

Arm, 3.0m, Heavy Duty, 100 Hours Greasing Type, Bucket Cylinder Hose

Index	Code	Part Number	Description	Qty	Serial No.
1		206-62-21220	Hose	1	B10001-
2		07000-13025	O-ring	2	B10001-
3		206-62-73210	Hose	1	B10001-
4		07000-13025	O-ring	2	B10001-
5		07371-30640	Flange, Split	8	B10001-
6		07372-21035	Bolt	16	B10001-
7		01643-51032	Washer	16	B10001-
8		205-70-73280	O-ring	4	B10001-

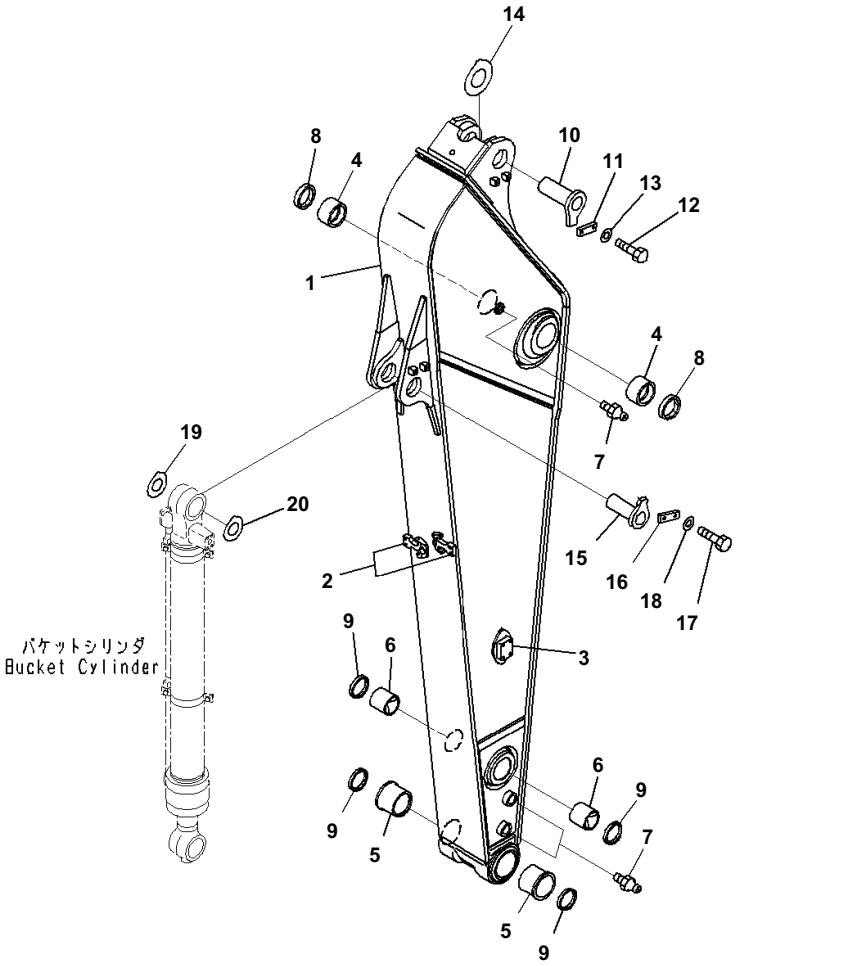

Index	Code	Part Number	Description	Qty	Serial No.
		206-70-00860	Arm Assembly	1	B10001-
1	C1		・Arm	1	B10001-
2		20Y-70-42E51	・・Plate,Welded	2	B10001-
3		20Y-970-3572	・・Bracket,Welded	2	B10001-
4		205-70-72180	・Bushing	2	B10001-
5		20Y-70-32410	・Bushing	2	B10001-
6		21K-70-12161	・Bushing	2	B10001-
7		07020-00000	Fitting, Grease	3	B10001-
8		07145-00090	Seal, Dust	2	B10001-
9		20Y-70-23230	Seal, Dust	4	B10001-
10		20Y-70-42220	Pin	1	B10001-
11		205-70-66581	Plate	1	B10001-
12		01010-81230	Bolt	2	B10001-
13		01643-31232	Washer	2	B10001-
14		21K-70-71650	Spacer, T=1.5mm	1	B10001-
15		206-70-22220	Pin	1	B10001-
16		205-70-66581	Plate	1	B10001-
17		01010-81230	Bolt	2	B10001-
18		01643-31232	Washer	2	B10001-
19		20Y-70-11340	Spacer, T=0.8mm	1	B10001-
20		205-70-51530	Spacer, T=1.5mm	3	B10001-

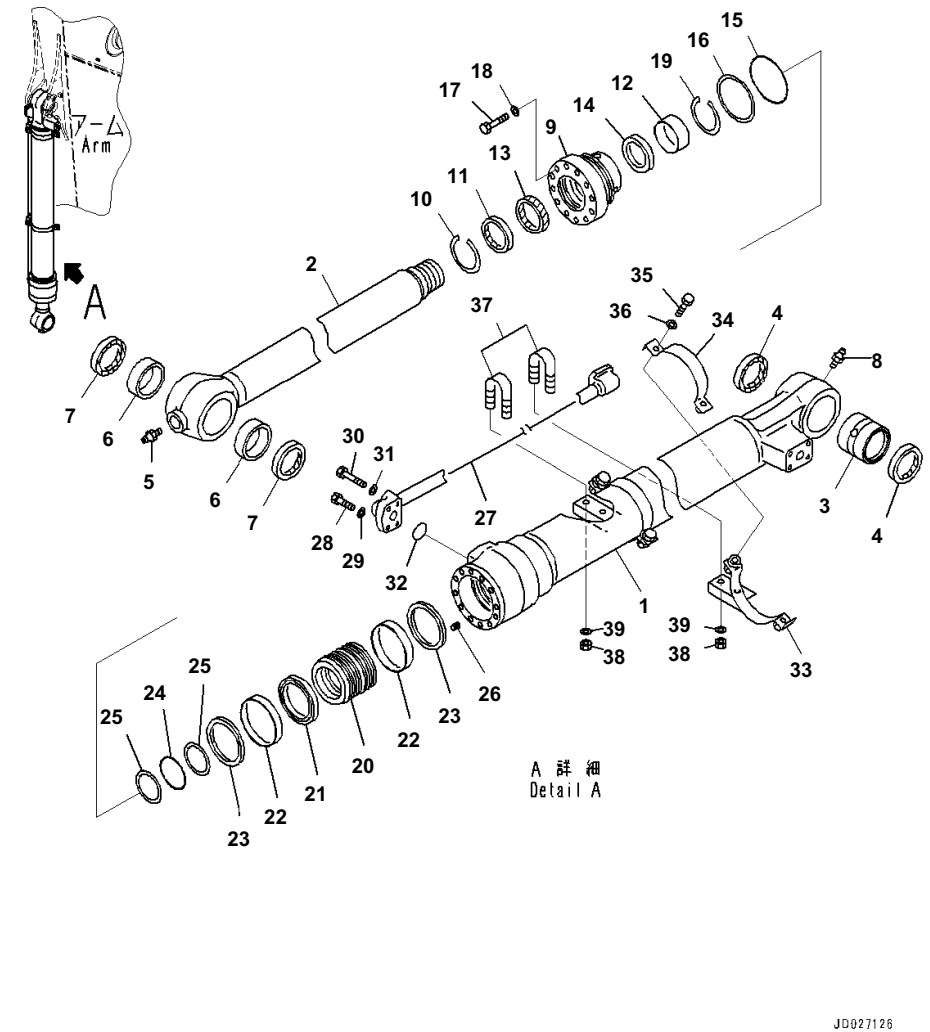

Arm, 3.0m, 100 Hours Greasing Type, 1 ATT, Inner Parts, Bucket Cylinder

Index	Code	Part Number	Description	Qty	Serial No.
		707-01-0J870	Cylinder Assembly	1	B10001-
1		707-13-13880	・ Cylinder	1	B10001-
2		707-58-90E60	・ Rod, Piston	1	B10001-
3		707-76-80010	・ Bushing	1	B10001-
4		07145-00080	・ Seal, Dust, (Kit : K08)	2	B10001-
5		07020-00000	・ Fitting, Grease	1	B10001-
6		707-76-80020	・ Bushing	1	B10001-
7		20Y-70-23230	・ Seal, Dust, (Kit : K08)	2	B10001-
8		07020-00000	・ Fitting, Grease	1	B10001-
9		707-27-13750	・ Cylinder Head	1	B10001-
10		07179-13104	・ Ring, Snap	1	B10001-
11		195-63-94170	・ Seal, Dust, (Kit : K08)	1	B10001-
12		707-52-90681	・ Bushing	1	B10001-
13		707-51-90030	・ Packing, Rod, (Kit : K08)	1	B10001-
14		707-51-90650	・ Ring, Buffer, (Kit : K08)	1	B10001-
15		07000-15120	・ O-ring, (Kit : K08)	1	B10001-
16		707-35-91320	・ Ring, Back-up, (Kit : K08)	1	B10001-
17		01010-81875	・ Bolt	12	B10001-
18		707-41-11840	・ Washer	12	B10001-
19		707-75-90110	・ Ring, Snap	1	B10001-
20		707-36-13780	・ Piston	1	B10001-
21		707-44-13150	・ Ring, Piston, (Kit : K08)	1	B10001-
22		707-39-13150	・ Ring, Wear, (Kit : K08)	2	B10001-
23		707-44-13911	・ Ring	2	B10001-
24		07000-15080	・ O-ring, (Kit : K08)	1	B10001-
25		707-35-90940	・ Ring, Back-up, (Kit : K08)	2	B10001-
26		01310-01216	・ Screw	1	B10001-
27		707-86-67820	・ Tube	1	B10001-
28		07372-21045	・ Bolt	2	B10001-
29		01643-51032	・ Washer	2	B10001-
30		07372-21060	・ Bolt	2	B10001-
31		01643-51032	・ Washer	2	B10001-
32		07000-13030	・ O-ring, (Kit : K08)	1	B10001-
33		707-88-22640	・ Bracket	2	B10001-
34		707-88-21331	・ Band	2	B10001-
35		07372-21035	・ Bolt	4	B10001-
36		01643-51032	・ Washer	4	B10001-
37		07283-32738	・ Clip, Pipe	2	B10001-
38		01597-01009	・ Nut	4	B10001-
39		01643-31032	・ Washer	4	B10001-

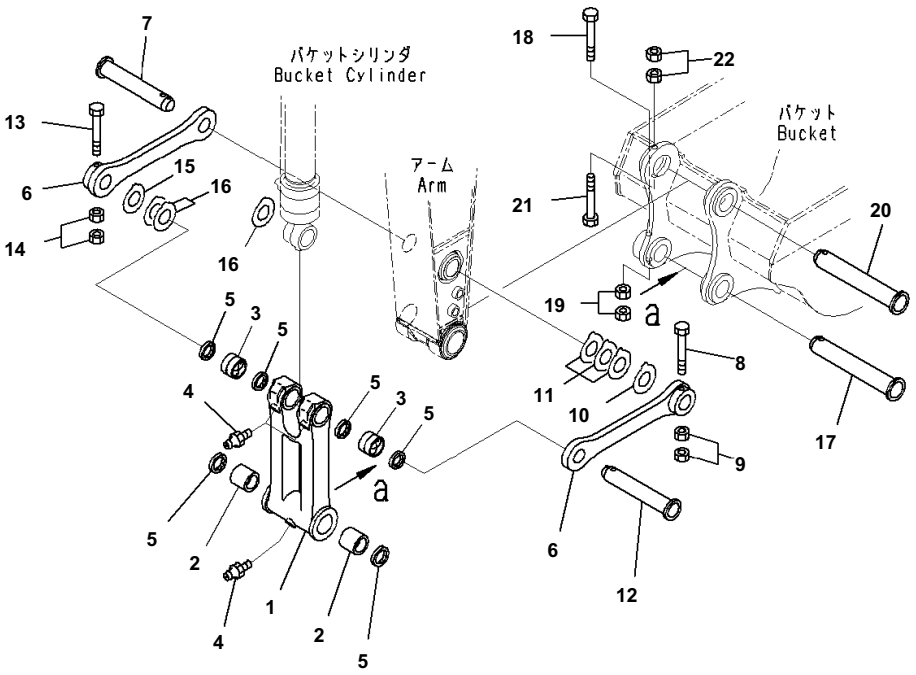

Index	Code	Part Number	Description	Qty	Serial No.
		206-70-00830	Link Assembly	1	B10001-
1	C1		・ Link	1	B10001-
2		21K-70-12161	・ Bushing	2	B10001-
3		206-70-53150	・ Bushing	2	B10001-
4		07020-00000	・ Fitting, Grease	3	B10001-
5		20Y-70-23230	・ Seal, Dust	6	B10001-
6		206-70-57120	Link	2	B10001-
7		206-70-53143	Pin	1	B10001-
8		20Y-70-32450	Bolt	1	B10001-
9		01580-12016	Nut	2	B10001-
10		20Y-70-11340	Spacer, T=0.8mm	1	B10001-
11		205-70-51530	Spacer, T=1.5mm	3	B10001-
12		206-70-53143	Pin	1	B10001-
13		20Y-70-32450	Bolt	1	B10001-
14		01580-12016	Nut	2	B10001-
15		20Y-70-11340	Spacer, T=0.8mm	1	B10001-
16		205-70-51530	Spacer, T=1.5mm	4	B10001-
17		205-70-73270	Pin	1	B10001-
18		20Y-70-32450	Bolt	1	B10001-
19		01580-12016	Nut	2	B10001-
20		205-70-73270	Pin	1	B10001-
21		20Y-70-32460	Bolt	1	B10001-
22		01580-12016	Nut	2	B10001-

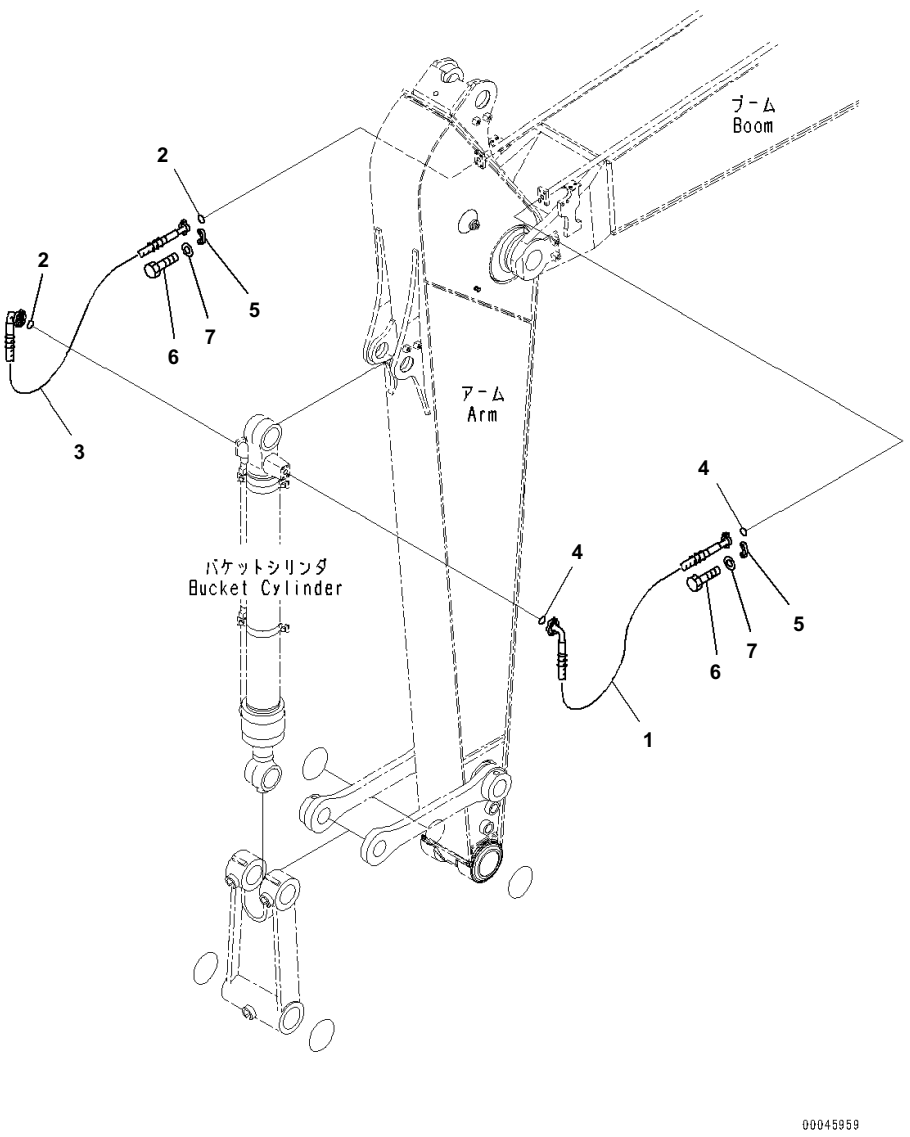

Arm, 3.0m, 100 Hours Greasing Type, 1 ATT, Bucket Cylinder Hose

Index	Code	Part Number	Description	Qty	Serial No.
1		206-62-21220	Hose	1	B10001-
2		07000-13025	O-ring	2	B10001-
3		206-62-73210	Hose	1	B10001-
4		07000-13025	O-ring	2	B10001-
5		07371-30640	Flange, Split	8	B10001-
6		07372-21035	Bolt	16	B10001-
7		01643-51032	Washer	16	B10001-

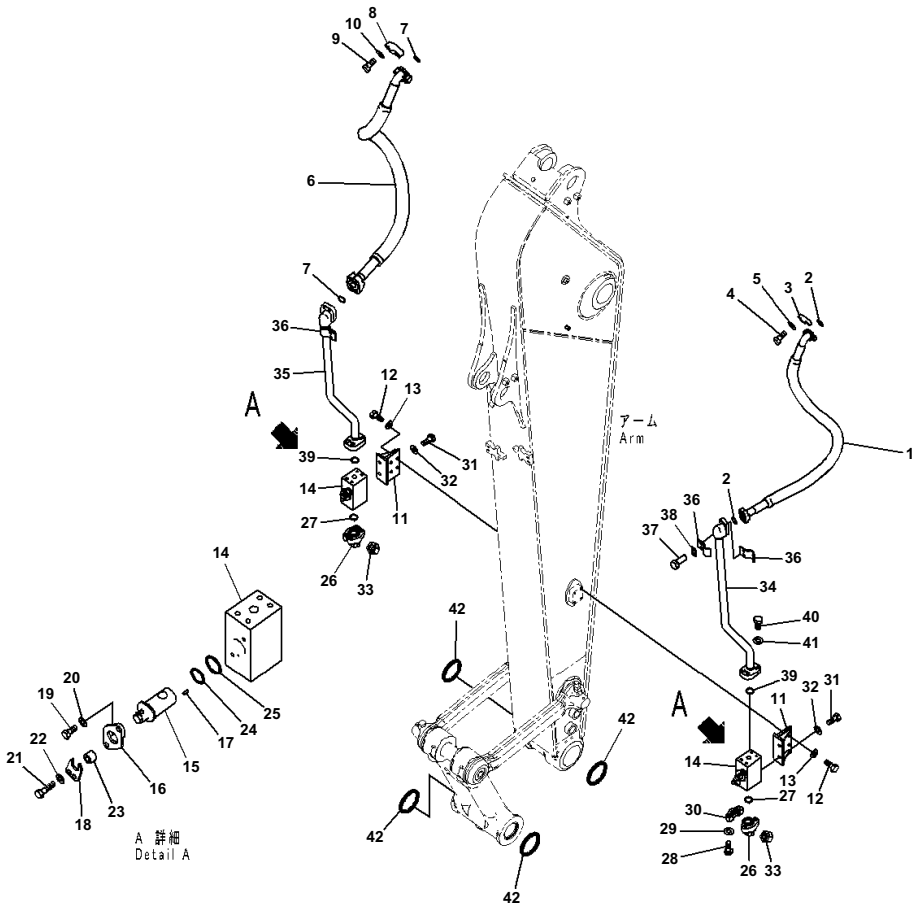

Arm, 3.0m, 100 Hours Greasing Type, 1 ATT, Additional Piping

Index	Code	Part Number	Description	Qty	Serial No.
1		07097-21016	Hose, Flange Type	1	B10001-
2		07000-13032	O-ring	2	B10001-
3		07371-31049	Flange, Split	4	B10001-
4		07372-21035	Bolt	8	B10001-
5		01643-51032	Washer	8	B10001-
6		07097-21217	Hose, Flange Type	1	B10001-
7		07000-13038	O-ring	2	B10001-
8		07371-51260	Flange	4	B10001-
9		01010-81245	Bolt	8	B10001-
10		01643-31232	Washer	8	B10001-
11		20Y-970-5321	Bracket	2	B10001-
12		01010-81230	Bolt	8	B10001-
13		01643-31232	Washer	8	B10001-
		20Y-970-5300	Valve Assembly	2	B10001-
14	C1		・ Body	1	B10001-
15		20Y-970-5240	・ Shaft	1	B10001-
16		20Y-970-3270	・ Cover	1	B10001-
17		04025-00412	・ Pin, Spring	1	B10001-
18		20Y-970-4612	・ Plate	1	B10001-
19		01010-81025	・ Bolt	1	B10001-
20		01643-31032	・ Washer	1	B10001-
21		01010-81045	・ Bolt	1	B10001-
22		01643-31032	・ Washer	1	B10001-
23		201-03-29160	・ Spacer	1	B10001-
24		07000-13032	・ O-ring	1	B10001-
25		07000-13038	・ O-ring	1	B10001-
26		207-970-2110	Elbow	2	B10001-
27		07000-13038	O-ring	2	B10001-
28		01010-81245	Bolt	8	B10001-
29		01643-31232	Washer	8	B10001-
30		07371-51260	Flange	4	B10001-
31		01010-81230	Bolt	4	B10001-
32		01643-31232	Washer	4	B10001-
33		205-970-5770	Cap	2	B10001-
34		20Y-62-55340	Tube	1	B10001-
35		206-62-23190	Tube	1	B10001-
36		207-62-31330	Clamp	4	B10001-
37		01010-81230	Bolt	4	B10001-
38		20Y-62-13450	Plate	2	B10001-
39		07000-13038	O-ring	2	B10001-
40		01010-81245	Bolt	8	B10001-
41		01643-31232	Washer	8	B10001-
42		205-70-73280	O-ring	4	B10001-

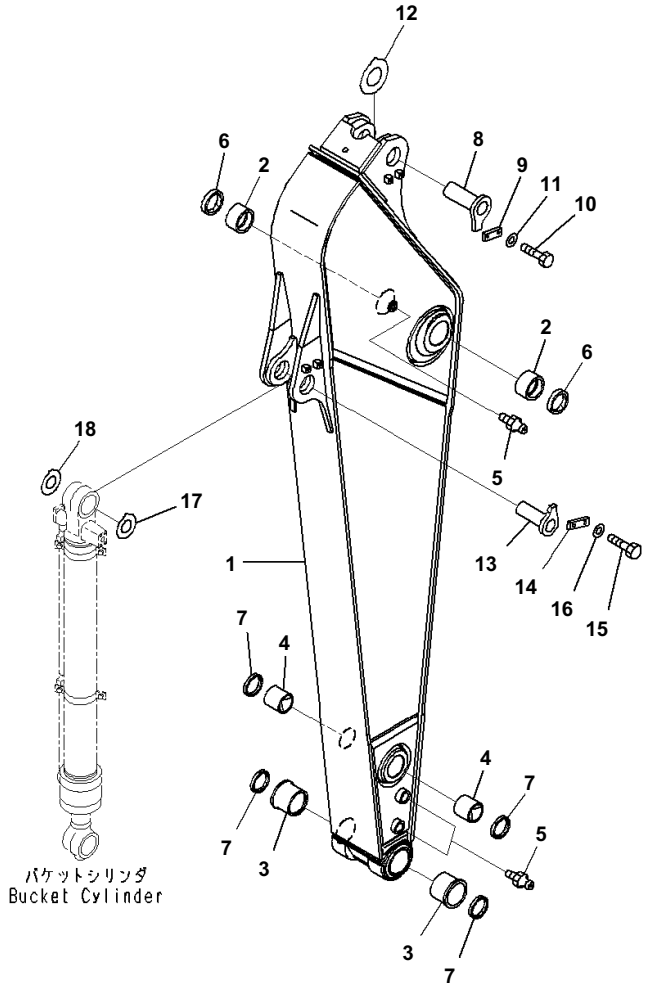

Arm, 2.5m, 100 Hours Greasing Type, Arm

Index	Code	Part Number	Description	Qty	Serial No.
1		206-944-7511	Arm	1	B10001-
2		205-70-72180	Bushing	2	B10001-
3		20Y-70-32410	Bushing	2	B10001-
4		21K-70-12161	Bushing	2	B10001-
5		07020-00000	Fitting, Grease	3	B10001-
6		07145-00090	Seal, Dust	2	B10001-
7		20Y-70-23230	Seal, Dust	4	B10001-
8		20Y-70-42220	Pin	1	B10001-
9		205-70-66581	Plate	1	B10001-
10		01010-81230	Bolt	2	B10001-
11		01643-31232	Washer	2	B10001-
12		21K-70-71650	Spacer, T=1.5mm	1	B10001-
13		206-70-22220	Pin	1	B10001-
14		205-70-66581	Plate	1	B10001-
15		01010-81230	Bolt	2	B10001-
16		01643-31232	Washer	2	B10001-
17		20Y-70-11340	Spacer, T=0.8mm	1	B10001-
18		205-70-51530	Spacer, T=1.5mm	3	B10001-

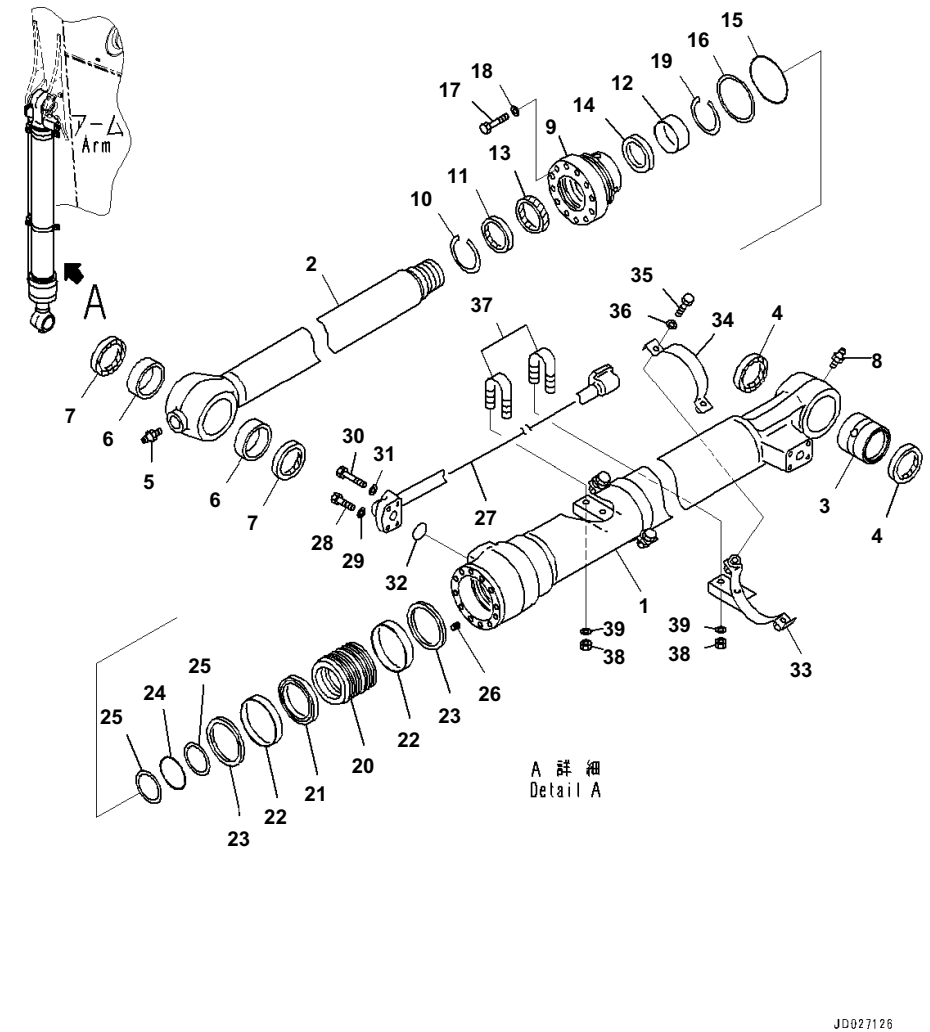

Arm, 2.5m, 100 Hours Greasing Type, Inner Parts, Bucket Cylinder

Index	Code	Part Number	Description	Qty	Serial No.
		707-01-0J870	Cylinder Assembly	1	B10001-
1		707-13-13880	・ Cylinder	1	B10001-
2		707-58-90E60	・ Rod, Piston	1	B10001-
3		707-76-80010	・ Bushing	1	B10001-
4		07145-00080	・ Seal, Dust, (Kit : K08)	2	B10001-
5		07020-00000	・ Fitting, Grease	1	B10001-
6		707-76-80020	・ Bushing	1	B10001-
7		20Y-70-23230	・ Seal, Dust, (Kit : K08)	2	B10001-
8		07020-00000	・ Fitting, Grease	1	B10001-
9		707-27-13750	・ Cylinder Head	1	B10001-
10		07179-13104	・ Ring, Snap	1	B10001-
11		195-63-94170	・ Seal, Dust, (Kit : K08)	1	B10001-
12		707-52-90681	・ Bushing	1	B10001-
13		707-51-90030	・ Packing, Rod, (Kit : K08)	1	B10001-
14		707-51-90650	・ Ring, Buffer, (Kit : K08)	1	B10001-
15		07000-15120	・ O-ring, (Kit : K08)	1	B10001-
16		707-35-91320	・ Ring, Back-up, (Kit : K08)	1	B10001-
17		01010-81875	・ Bolt	12	B10001-
18		707-41-11840	・ Washer	12	B10001-
19		707-75-90110	・ Ring, Snap	1	B10001-
20		707-36-13780	・ Piston	1	B10001-
21		707-44-13150	・ Ring, Piston, (Kit : K08)	1	B10001-
22		707-39-13150	・ Ring, Wear, (Kit : K08)	2	B10001-
23		707-44-13911	・ Ring	2	B10001-
24		07000-15080	・ O-ring, (Kit : K08)	1	B10001-
25		707-35-90940	・ Ring, Back-up, (Kit : K08)	2	B10001-
26		01310-01216	・ Screw	1	B10001-
27		707-86-67820	・ Tube	1	B10001-
28		07372-21045	・ Bolt	2	B10001-
29		01643-51032	・ Washer	2	B10001-
30		07372-21060	・ Bolt	2	B10001-
31		01643-51032	・ Washer	2	B10001-
32		07000-13030	・ O-ring, (Kit : K08)	1	B10001-
33		707-88-22640	・ Bracket	2	B10001-
34		707-88-21331	・ Band	2	B10001-
35		07372-21035	・ Bolt	4	B10001-
36		01643-51032	・ Washer	4	B10001-
37		07283-32738	・ Clip, Pipe	2	B10001-
38		01597-01009	・ Nut	4	B10001-
39		01643-31032	・ Washer	4	B10001-

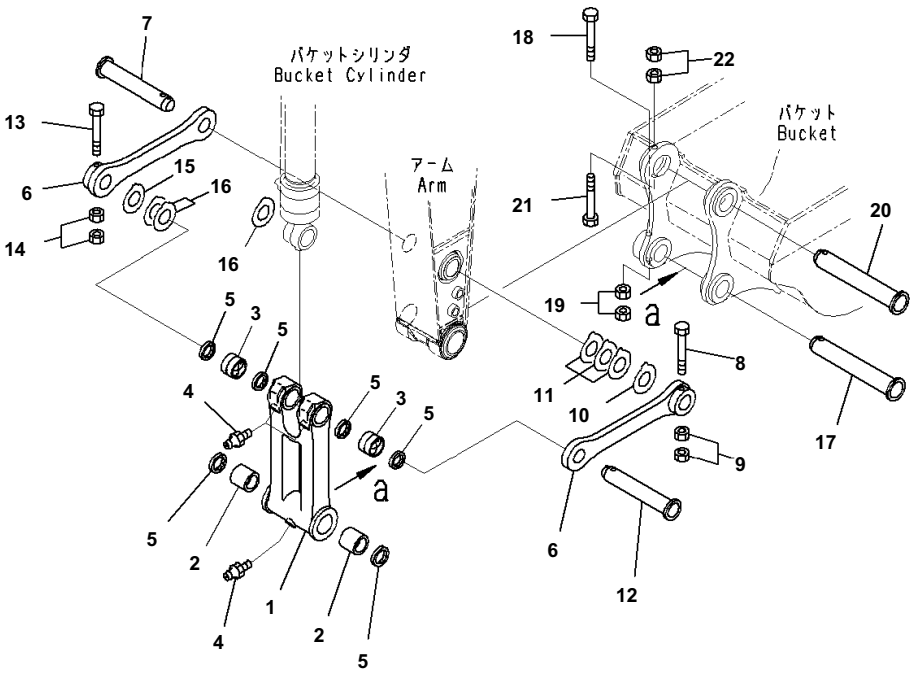

Arm, 2.5m, 100 Hours Greasing Type, Bucket Link

Index	Code	Part Number	Description	Qty	Serial No.
		206-70-00830	Link Assembly	1	B10001-
1	C1		・ Link	1	B10001-
2		21K-70-12161	・ Bushing	2	B10001-
3		206-70-53150	・ Bushing	2	B10001-
4		07020-00000	・ Fitting, Grease	3	B10001-
5		20Y-70-23230	・ Seal, Dust	6	B10001-
6		206-70-57120	Link	2	B10001-
7		206-70-53143	Pin	1	B10001-
8		20Y-70-32450	Bolt	1	B10001-
9		01580-12016	Nut	2	B10001-
10		20Y-70-11340	Spacer, T=0.8mm	1	B10001-
11		205-70-51530	Spacer, T=1.5mm	3	B10001-
12		206-70-53143	Pin	1	B10001-
13		20Y-70-32450	Bolt	1	B10001-
14		01580-12016	Nut	2	B10001-
15		20Y-70-11340	Spacer, T=0.8mm	1	B10001-
16		205-70-51530	Spacer, T=1.5mm	4	B10001-
17		205-70-73270	Pin	1	B10001-
18		20Y-70-32450	Bolt	1	B10001-
19		01580-12016	Nut	2	B10001-
20		205-70-73270	Pin	1	B10001-
21		20Y-70-32460	Bolt	1	B10001-
22		01580-12016	Nut	2	B10001-

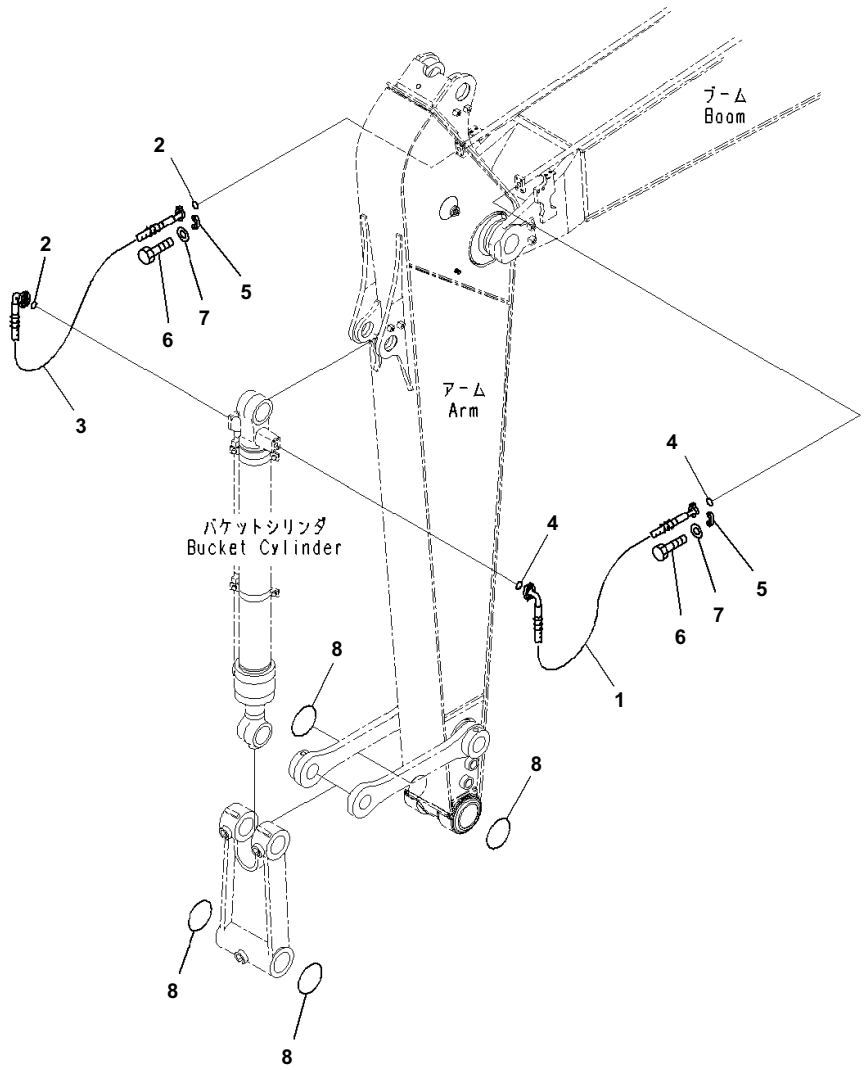

Arm, 2.5m, 100 Hours Greasing Type, Bucket Cylinder Hose

Index	Code	Part Number	Description	Qty	Serial No.
1		206-62-21220	Hose	1	B10001-
2		07000-13025	O-ring	2	B10001-
3		206-62-73210	Hose	1	B10001-
4		07000-13025	O-ring	2	B10001-
5		07371-30640	Flange, Split	8	B10001-
6		07372-21035	Bolt	16	B10001-
7		01643-51032	Washer	16	B10001-
8		205-70-73280	O-ring	4	B10001-

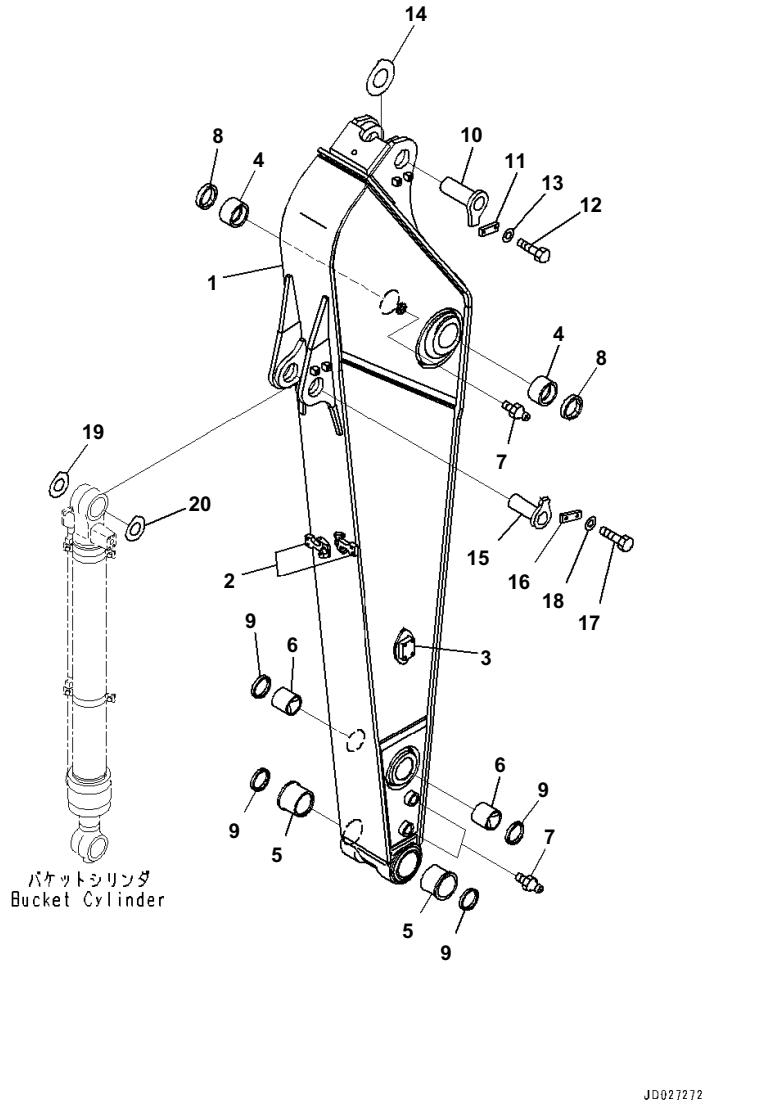

Arm, 2.5m, 100 Hours Greasing Type, 1 ATT, Arm

Index	Code	Part Number	Description	Qty	Serial No.
		206-70-00920	Arm Assembly	1	B10001-
1	C1		・Arm	1	B10001-
2		20Y-70-42E51	・・Plate,Welded	2	B10001-
3		20Y-970-3572	・・Bracket,Welded	2	B10001-
4		205-70-72180	・Bushing	2	B10001-
5		20Y-70-32410	・Bushing	2	B10001-
6		21K-70-12161	・Bushing	2	B10001-
7		07020-00000	Fitting, Grease	3	B10001-
8		07145-00090	Seal, Dust	2	B10001-
9		20Y-70-23230	Seal, Dust	4	B10001-
10		20Y-70-42220	Pin	1	B10001-
11		205-70-66581	Plate	1	B10001-
12		01010-81230	Bolt	2	B10001-
13		01643-31232	Washer	2	B10001-
14		21K-70-71650	Spacer, T=1.5mm	1	B10001-
15		206-70-22220	Pin	1	B10001-
16		205-70-66581	Plate	1	B10001-
17		01010-81230	Bolt	2	B10001-
18		01643-31232	Washer	2	B10001-
19		20Y-70-11340	Spacer, T=0.8mm	1	B10001-
20		205-70-51530	Spacer, T=1.5mm	3	B10001-

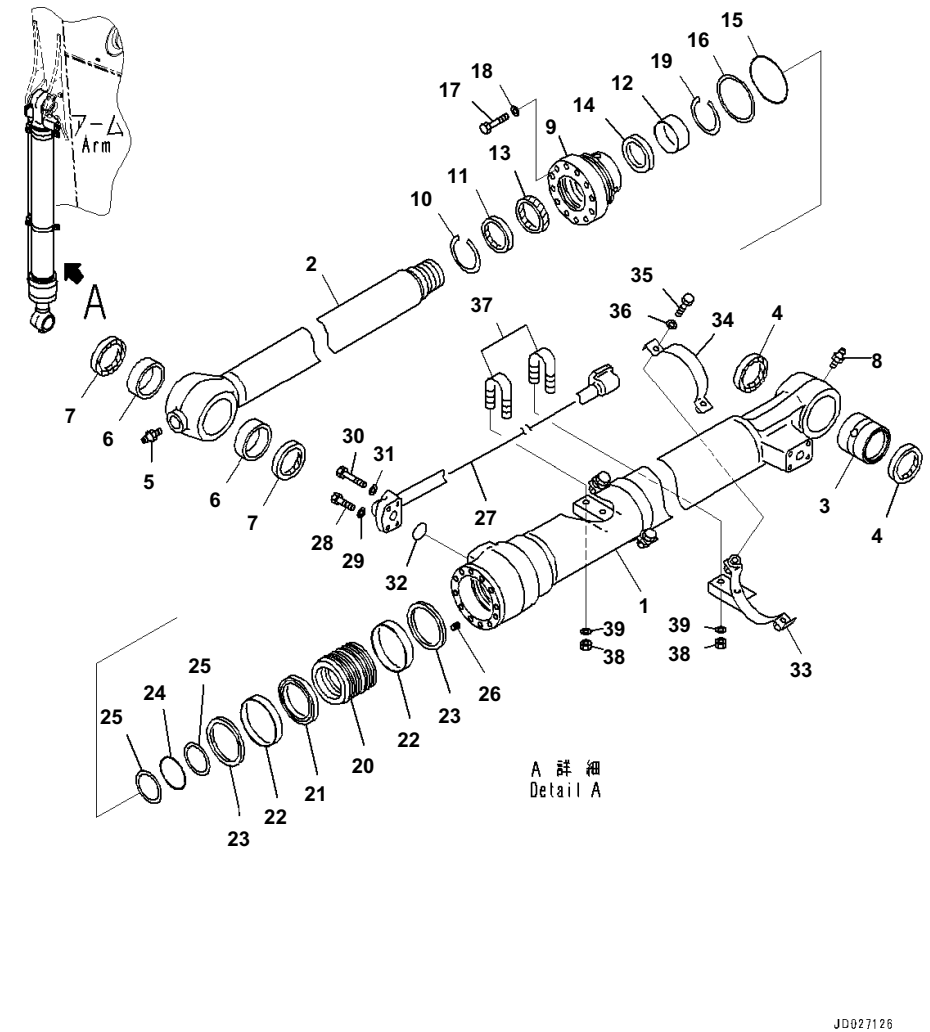

Arm, 2.5m, 100 Hours Greasing Type, 1 ATT, Inner Parts, Bucket Cylinder

Index	Code	Part Number	Description	Qty	Serial No.
		707-01-0J870	Cylinder Assembly	1	B10001-
1		707-13-13880	・ Cylinder	1	B10001-
2		707-58-90E60	・ Rod, Piston	1	B10001-
3		707-76-80010	・ Bushing	1	B10001-
4		07145-00080	・ Seal, Dust, (Kit : K08)	2	B10001-
5		07020-00000	・ Fitting, Grease	1	B10001-
6		707-76-80020	・ Bushing	1	B10001-
7		20Y-70-23230	・ Seal, Dust, (Kit : K08)	2	B10001-
8		07020-00000	・ Fitting, Grease	1	B10001-
9		707-27-13750	・ Cylinder Head	1	B10001-
10		07179-13104	・ Ring, Snap	1	B10001-
11		195-63-94170	・ Seal, Dust, (Kit : K08)	1	B10001-
12		707-52-90681	・ Bushing	1	B10001-
13		707-51-90030	・ Packing, Rod, (Kit : K08)	1	B10001-
14		707-51-90650	・ Ring, Buffer, (Kit : K08)	1	B10001-
15		07000-15120	・ O-ring, (Kit : K08)	1	B10001-
16		707-35-91320	・ Ring, Back-up, (Kit : K08)	1	B10001-
17		01010-81875	・ Bolt	12	B10001-
18		707-41-11840	・ Washer	12	B10001-
19		707-75-90110	・ Ring, Snap	1	B10001-
20		707-36-13780	・ Piston	1	B10001-
21		707-44-13150	・ Ring, Piston, (Kit : K08)	1	B10001-
22		707-39-13150	・ Ring, Wear, (Kit : K08)	2	B10001-
23		707-44-13911	・ Ring	2	B10001-
24		07000-15080	・ O-ring, (Kit : K08)	1	B10001-
25		707-35-90940	・ Ring, Back-up, (Kit : K08)	2	B10001-
26		01310-01216	・ Screw	1	B10001-
27		707-86-67820	・ Tube	1	B10001-
28		07372-21045	・ Bolt	2	B10001-
29		01643-51032	・ Washer	2	B10001-
30		07372-21060	・ Bolt	2	B10001-
31		01643-51032	・ Washer	2	B10001-
32		07000-13030	・ O-ring, (Kit : K08)	1	B10001-
33		707-88-22640	・ Bracket	2	B10001-
34		707-88-21331	・ Band	2	B10001-
35		07372-21035	・ Bolt	4	B10001-
36		01643-51032	・ Washer	4	B10001-
37		07283-32738	・ Clip, Pipe	2	B10001-
38		01597-01009	・ Nut	4	B10001-
39		01643-31032	・ Washer	4	B10001-

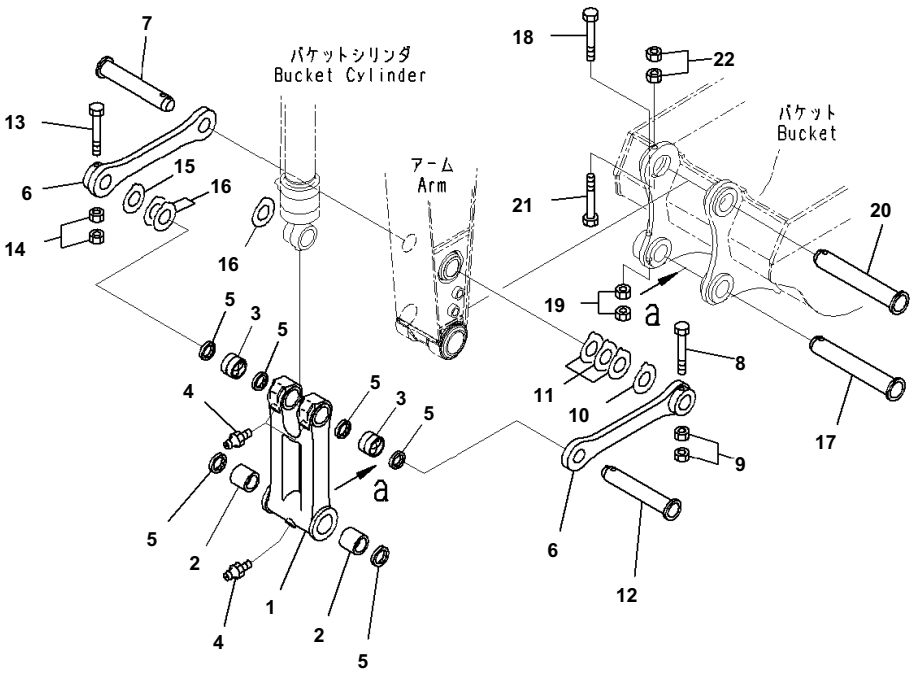

Index	Code	Part Number	Description	Qty	Serial No.
		206-70-00830	Link Assembly	1	B10001-
1	C1		・ Link	1	B10001-
2		21K-70-12161	・ Bushing	2	B10001-
3		206-70-53150	・ Bushing	2	B10001-
4		07020-00000	・ Fitting, Grease	3	B10001-
5		20Y-70-23230	・ Seal, Dust	6	B10001-
6		206-70-57120	Link	2	B10001-
7		206-70-53143	Pin	1	B10001-
8		20Y-70-32450	Bolt	1	B10001-
9		01580-12016	Nut	2	B10001-
10		20Y-70-11340	Spacer, T=0.8mm	1	B10001-
11		205-70-51530	Spacer, T=1.5mm	3	B10001-
12		206-70-53143	Pin	1	B10001-
13		20Y-70-32450	Bolt	1	B10001-
14		01580-12016	Nut	2	B10001-
15		20Y-70-11340	Spacer, T=0.8mm	1	B10001-
16		205-70-51530	Spacer, T=1.5mm	4	B10001-
17		205-70-73270	Pin	1	B10001-
18		20Y-70-32450	Bolt	1	B10001-
19		01580-12016	Nut	2	B10001-
20		205-70-73270	Pin	1	B10001-
21		20Y-70-32460	Bolt	1	B10001-
22		01580-12016	Nut	2	B10001-

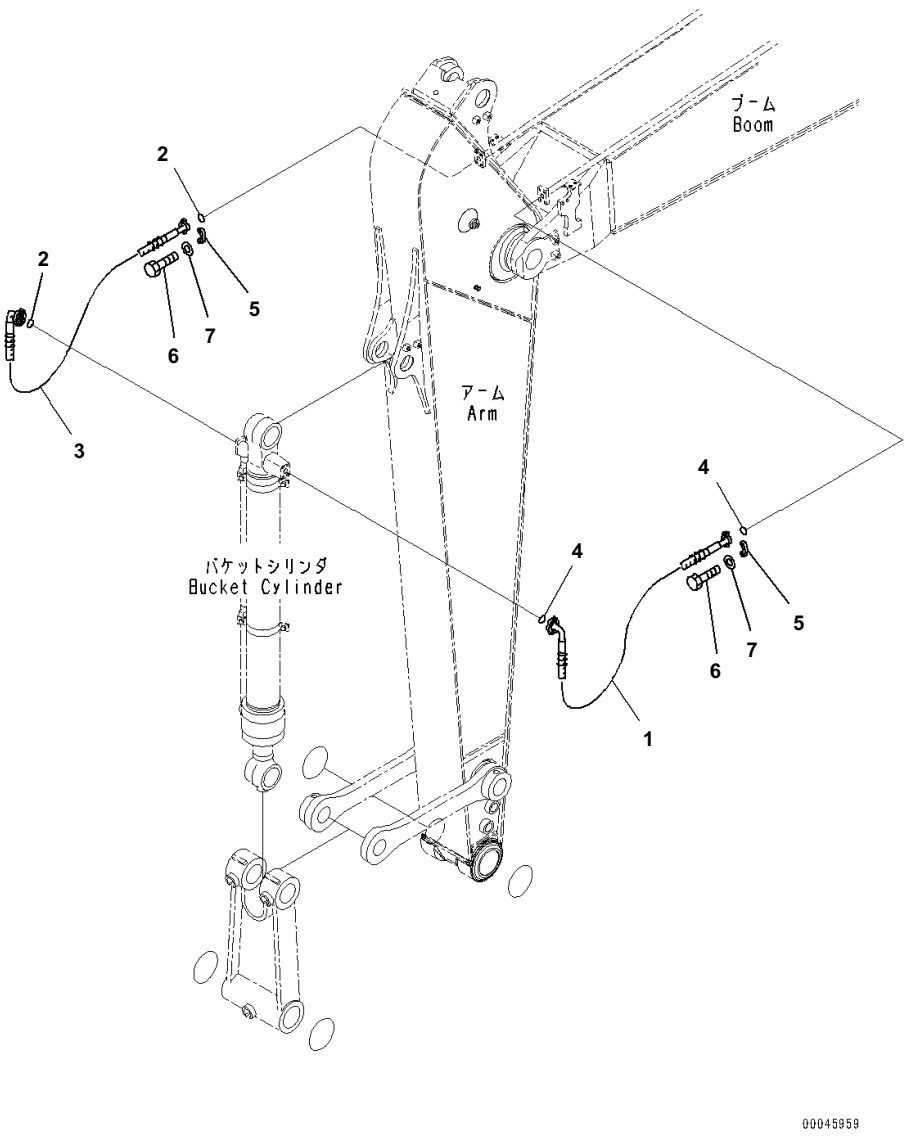

Arm, 2.5m, 100 Hours Greasing Type, 1 ATT, Bucket Cylinder Hose

Index	Code	Part Number	Description	Qty	Serial No.
1		206-62-21220	Hose	1	B10001-
2		07000-13025	O-ring	2	B10001-
3		206-62-73210	Hose	1	B10001-
4		07000-13025	O-ring	2	B10001-
5		07371-30640	Flange, Split	8	B10001-
6		07372-21035	Bolt	16	B10001-
7		01643-51032	Washer	16	B10001-

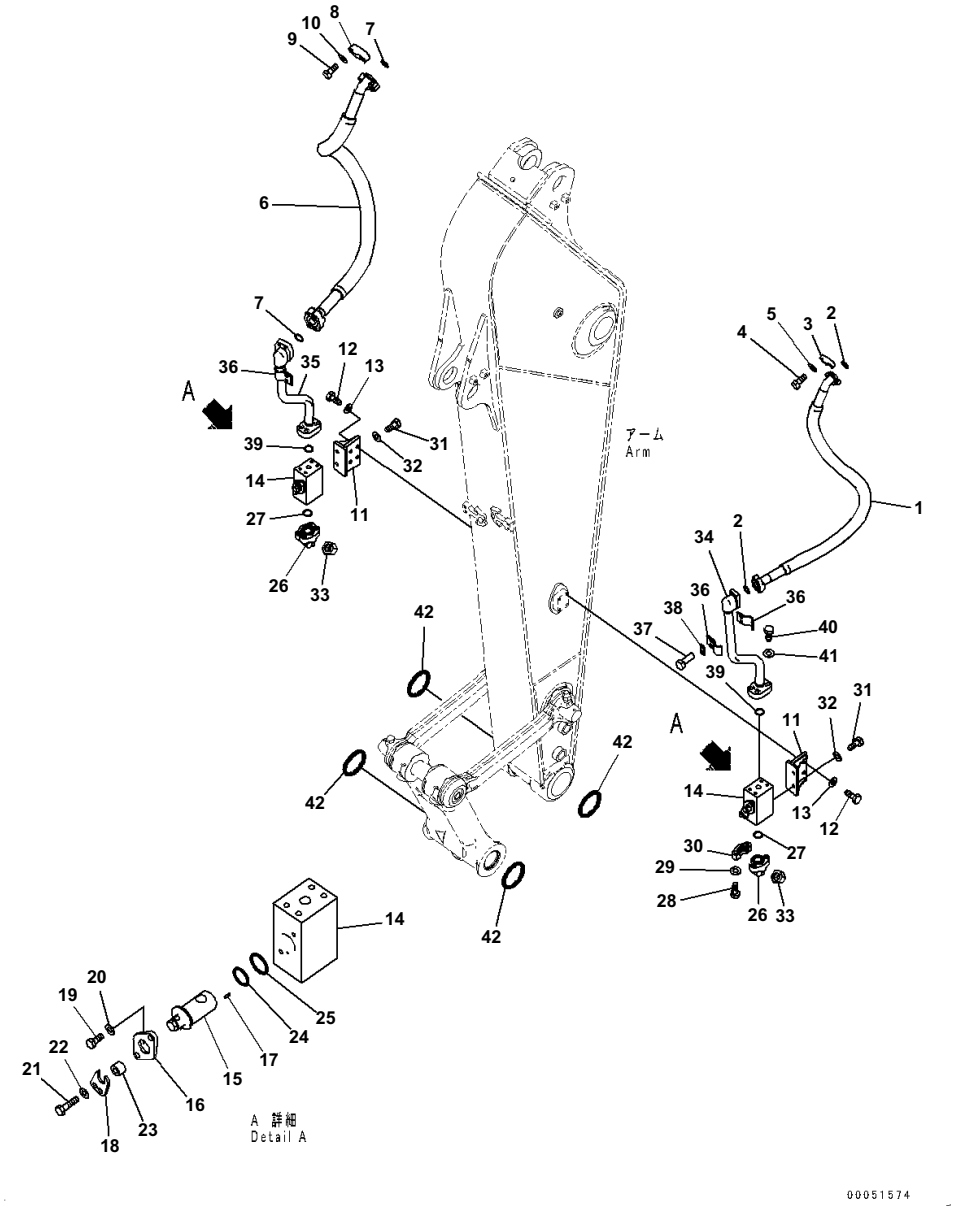

Index	Code	Part Number	Description	Qty	Serial No.
1		07097-21016	Hose, Flange Type	1	B10001-
2		07000-13032	O-ring	2	B10001-
3		07371-31049	Flange, Split	4	B10001-
4		07372-21035	Bolt	8	B10001-
5		01643-51032	Washer	8	B10001-
6		07097-21217	Hose, Flange Type	1	B10001-
7		07000-13038	O-ring	2	B10001-
8		07371-51260	Flange	4	B10001-
9		01010-81245	Bolt	8	B10001-
10		01643-31232	Washer	8	B10001-
11		20Y-970-5321	Bracket	2	B10001-
12		01010-81230	Bolt	8	B10001-
13		01643-31232	Washer	8	B10001-
		20Y-970-5300	Valve Assembly	2	B10001-
14	C1		・ Body	1	B10001-
15		20Y-970-5240	・ Shaft	1	B10001-
16		20Y-970-3270	・ Cover	1	B10001-
17		04025-00412	・ Pin, Spring	1	B10001-
18		20Y-970-4612	・ Plate	1	B10001-
19		01010-81025	・ Bolt	1	B10001-
20		01643-31032	・ Washer	1	B10001-
21		01010-81045	・ Bolt	1	B10001-
22		01643-31032	・ Washer	1	B10001-
23		201-03-29160	・ Spacer	1	B10001-
24		07000-13032	・ O-ring	1	B10001-
25		07000-13038	・ O-ring	1	B10001-
26		207-970-2110	Elbow	2	B10001-
27		07000-13038	O-ring	2	B10001-
28		01010-81245	Bolt	8	B10001-
29		01643-31232	Washer	8	B10001-
30		07371-51260	Flange	4	B10001-
31		01010-81230	Bolt	4	B10001-
32		01643-31232	Washer	4	B10001-
33		205-970-5770	Cap	2	B10001-
34		20Y-970-5631	Tube	1	B10001-
35		206-970-2660	Tube	1	B10001-
36		207-62-31330	Clamp	4	B10001-
37		01010-81230	Bolt	4	B10001-
38		20Y-62-13450	Plate	2	B10001-
39		07000-13038	O-ring	2	B10001-
40		01010-81245	Bolt	8	B10001-
41		01643-31232	Washer	8	B10001-
42		205-70-73280	O-ring	4	B10001-

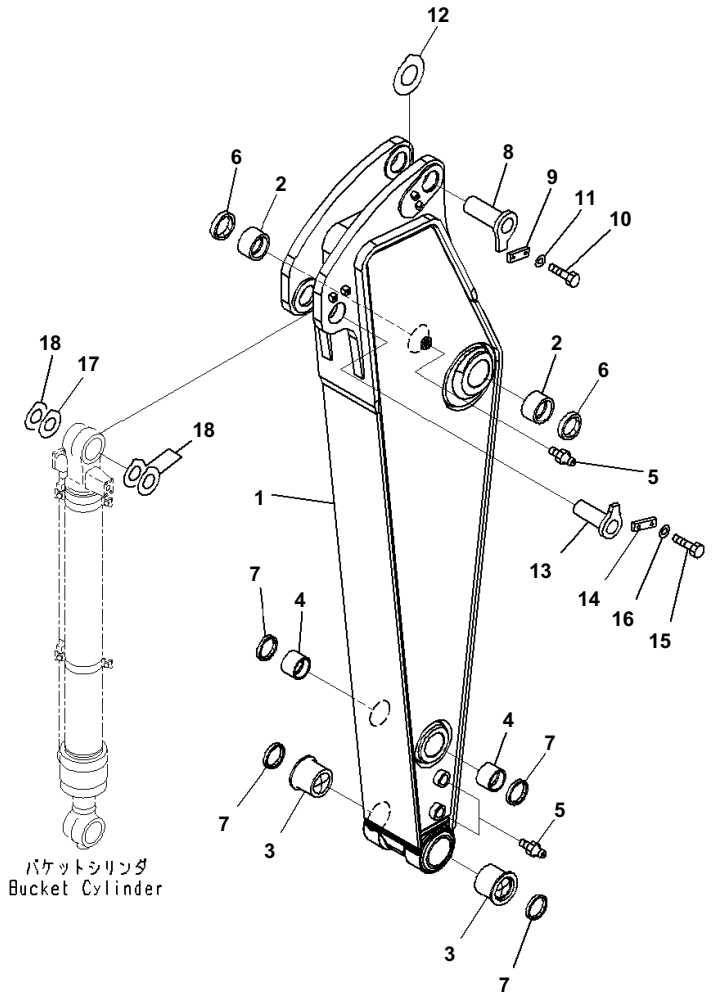

Arm, 2.5m, Heavy Duty, 100 Hours Greasing Type, Arm

Index	Code	Part Number	Description	Qty	Serial No.
1		206-944-B110	Arm	1	B10001-
2		205-70-72180	Bushing	2	B10001-
3		20Y-70-32410	Bushing	2	B10001-
4		21K-70-12161	Bushing	2	B10001-
5		07020-00000	Fitting, Grease	3	B10001-
6		07145-00090	Seal, Dust	2	B10001-
7		20Y-70-23230	Seal, Dust	4	B10001-
8		206-70-22250	Pin	1	B10001-
9		205-70-66581	Plate	1	B10001-
10		01010-81230	Bolt	2	B10001-
11		01643-31232	Washer	2	B10001-
12		21K-70-71650	Spacer, T=1.5mm	1	B10001-
13		206-70-22260	Pin	1	B10001-
14		205-70-66581	Plate	1	B10001-
15		01010-81230	Bolt	2	B10001-
16		01643-31232	Washer	2	B10001-
17		20Y-70-11340	Spacer, T=0.8mm	1	B10001-
18		205-70-51530	Spacer, T=1.5mm	3	B10001-

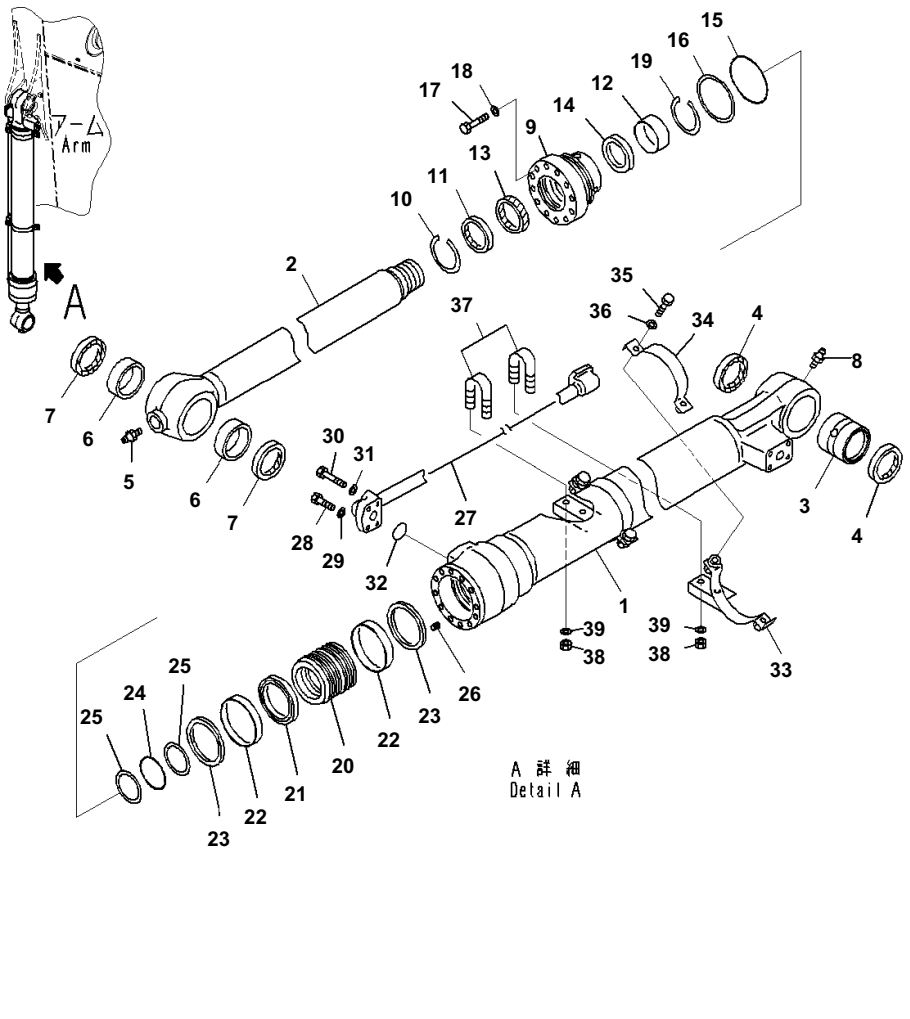

Arm, 2.5m, Heavy Duty, 100 Hours Greasing Type, Inner Parts, Bucket Cylinder

Index	Code	Part Number	Description	Qty	Serial No.
		707-01-0J870	Cylinder Assembly	1	B10001-
1		707-13-13880	・ Cylinder	1	B10001-
2		707-58-90E60	・ Rod, Piston	1	B10001-
3		707-76-80010	・ Bushing	1	B10001-
4		07145-00080	・ Seal, Dust, (Kit : K08)	2	B10001-
5		07020-00000	・ Fitting, Grease	1	B10001-
6		707-76-80020	・ Bushing	1	B10001-
7		20Y-70-23230	・ Seal, Dust, (Kit : K08)	2	B10001-
8		07020-00000	・ Fitting, Grease	1	B10001-
9		707-27-13750	・ Cylinder Head	1	B10001-
10		07179-13104	・ Ring, Snap	1	B10001-
11		195-63-94170	・ Seal, Dust, (Kit : K08)	1	B10001-
12		707-52-90681	・ Bushing	1	B10001-
13		707-51-90030	・ Packing, Rod, (Kit : K08)	1	B10001-
14		707-51-90650	・ Ring, Buffer, (Kit : K08)	1	B10001-
15		07000-15120	・ O-ring, (Kit : K08)	1	B10001-
16		707-35-91320	・ Ring, Back-up, (Kit : K08)	1	B10001-
17		01010-81875	・ Bolt	12	B10001-
18		707-41-11840	・ Washer	12	B10001-
19		707-75-90110	・ Ring, Snap	1	B10001-
20		707-36-13780	・ Piston	1	B10001-
21		707-44-13150	・ Ring, Piston, (Kit : K08)	1	B10001-
22		707-39-13150	・ Ring, Wear, (Kit : K08)	2	B10001-
23		707-44-13911	・ Ring	2	B10001-
24		07000-15080	・ O-ring, (Kit : K08)	1	B10001-
25		707-35-90940	・ Ring, Back-up, (Kit : K08)	2	B10001-
26		01310-01216	・ Screw	1	B10001-
27		707-86-67820	・ Tube	1	B10001-
28		07372-21045	・ Bolt	2	B10001-
29		01643-51032	・ Washer	2	B10001-
30		07372-21060	・ Bolt	2	B10001-
31		01643-51032	・ Washer	2	B10001-
32		07000-13030	・ O-ring, (Kit : K08)	1	B10001-
33		707-88-22640	・ Bracket	2	B10001-
34		707-88-21331	・ Band	2	B10001-
35		07372-21035	・ Bolt	4	B10001-
36		01643-51032	・ Washer	4	B10001-
37		07283-32738	・ Clip, Pipe	2	B10001-
38		01597-01009	・ Nut	4	B10001-
39		01643-31032	・ Washer	4	B10001-

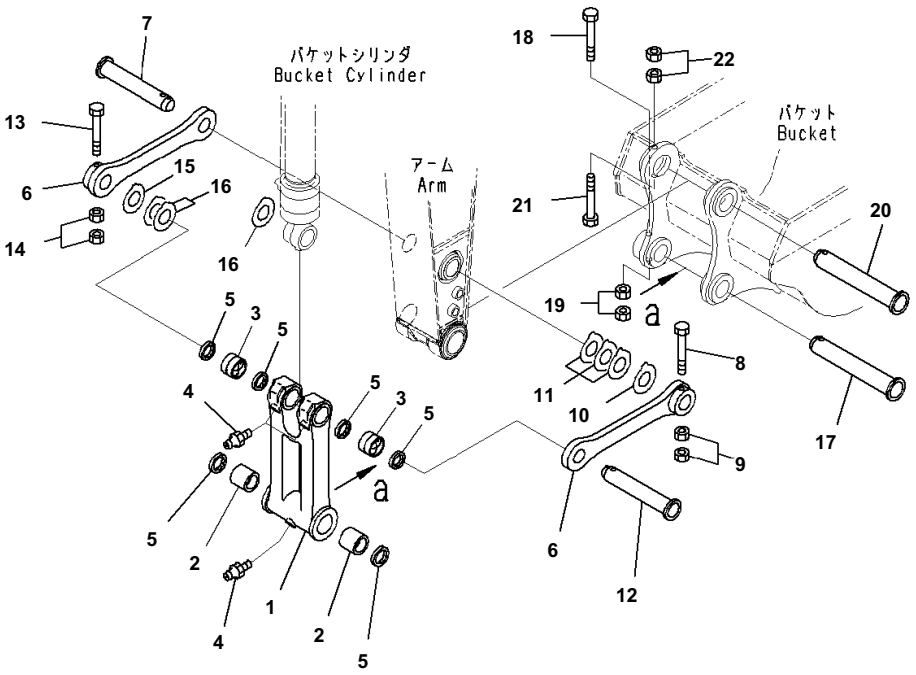

Arm, 2.5m, Heavy Duty, 100 Hours Greasing Type, Bucket Link

Index	Code	Part Number	Description	Qty	Serial No.
		206-70-00830	Link Assembly	1	B10001-
1	C1		・ Link	1	B10001-
2		21K-70-12161	・ Bushing	2	B10001-
3		206-70-53150	・ Bushing	2	B10001-
4		07020-00000	・ Fitting, Grease	3	B10001-
5		20Y-70-23230	・ Seal, Dust	6	B10001-
6		206-70-57120	Link	2	B10001-
7		206-70-53143	Pin	1	B10001-
8		20Y-70-32450	Bolt	1	B10001-
9		01580-12016	Nut	2	B10001-
10		20Y-70-11340	Spacer, T=0.8mm	1	B10001-
11		205-70-51530	Spacer, T=1.5mm	3	B10001-
12		206-70-53143	Pin	1	B10001-
13		20Y-70-32450	Bolt	1	B10001-
14		01580-12016	Nut	2	B10001-
15		20Y-70-11340	Spacer, T=0.8mm	1	B10001-
16		205-70-51530	Spacer, T=1.5mm	4	B10001-
17		205-70-73270	Pin	1	B10001-
18		20Y-70-32450	Bolt	1	B10001-
19		01580-12016	Nut	2	B10001-
20		205-70-73270	Pin	1	B10001-
21		20Y-70-32460	Bolt	1	B10001-
22		01580-12016	Nut	2	B10001-

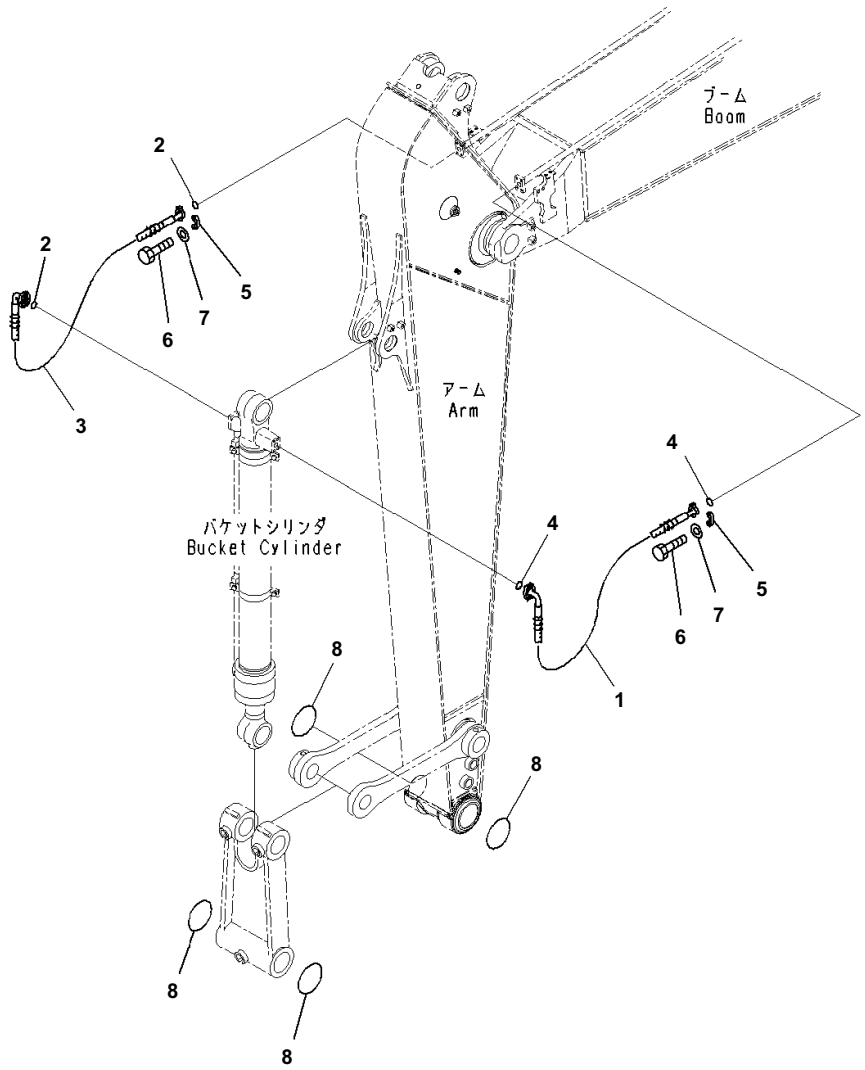

Arm, 2.5m, Heavy Duty, 100 Hours Greasing Type, Bucket Cylinder Hose

Index	Code	Part Number	Description	Qty	Serial No.
1		206-62-21220	Hose	1	B10001-
2		07000-13025	O-ring	2	B10001-
3		206-62-73210	Hose	1	B10001-
4		07000-13025	O-ring	2	B10001-
5		07371-30640	Flange, Split	8	B10001-
6		07372-21035	Bolt	16	B10001-
7		01643-51032	Washer	16	B10001-
8		205-70-73280	O-ring	4	B10001-

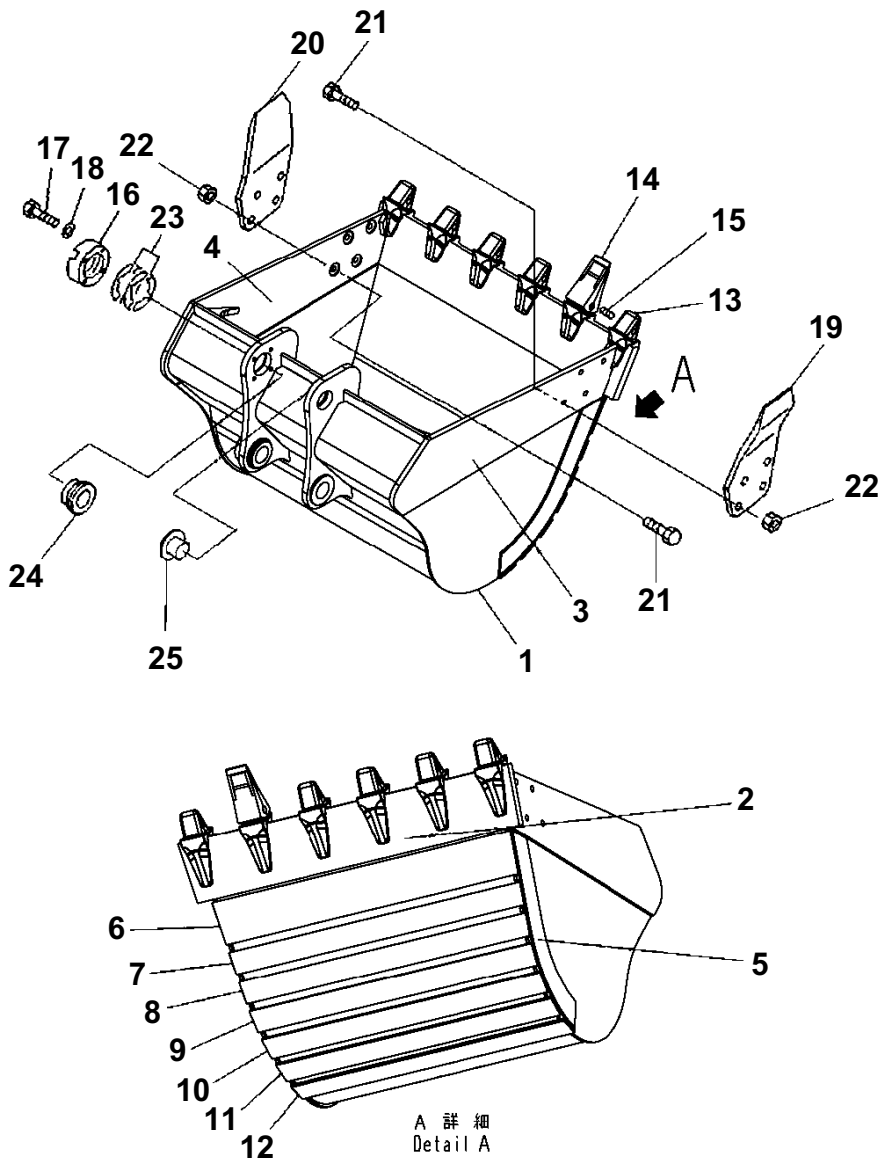

Bucket, 1.73m3, 1528mm Width, Horizontal Pin Type, Bucket and Side Cutter

Index	Code	Part Number	Description	Qty	Serial No.
1		206-920-B510	Bucket, Capacity 1.73m3	1	B10001-
2		206-920-B530	・ Plate,Welded	1	B10001-
3		206-920-BA70	・ Plate,LHS,Welded	1	B10001-
4		206-920-BA80	・ Plate,RHS,Welded	1	B10001-
5		206-920-B620	・ Plate,Welded	2	B10001-
6		206-920-B540	・ Plate,Welded	1	B10001-
7		206-920-B550	・ Plate,Welded	1	B10001-
8		206-920-B560	・ Plate,Welded	1	B10001-
9		206-920-B570	・ Plate,Welded	1	B10001-
10		206-920-B580	・ Plate,Welded	1	B10001-
11		206-920-B590	・ Plate,Welded	1	B10001-
12		206-920-B610	・ Plate,Welded	1	B10001-
13		206-70-58520	・ Adapter,Welded	6	B10001-
14		206-70-48610	Tooth	6	B10001-
15		09244-02516	Pin	6	B10001-
16		205-70-74391	Plate	1	B10001-
17		01010-62055	Bolt	4	B10001-
18		01643-32060	Washer	4	B10001-
19		20Y-70-B1361	Cutter,LHS	1	B10001-
20		20Y-70-B1371	Cutter,RHS	1	B10001-
21		176-32-11210	Bolt	8	B10001-
22		01803-02430	Nut	8	B10001-
23		205-70-00100	Shim Assembly	1	B10001-
	C1		・ Shim, T=1.0mm	8	B10001-
	C1		・ Shim, T=0.5mm	4	B10001-
24		205-70-74381	Spacer	1	B10001-
25		20Y-70-32420	Bushing	1	B10001-

MARKS AND PLATES

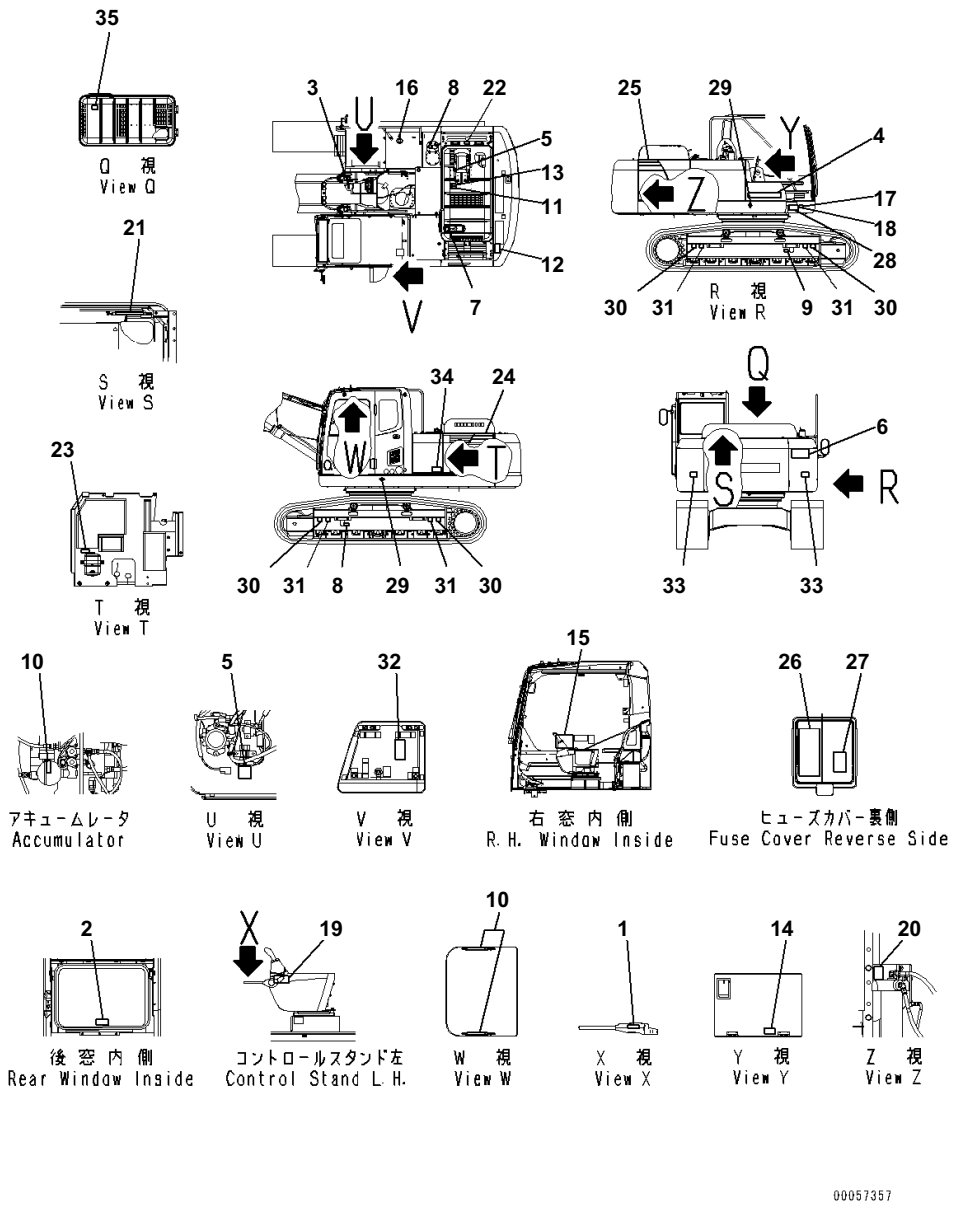

Index	Code	Part Number	Description	Qty	Serial No.
1		09685-00002	Plate, Symbol, Lock	1	B10001-
2		09844-00050	Plate, safety	1	B10001-
3		09690-M0063	Mark, Komatsu Logo	1	B10001-
4		09690-P0630	Plate, Mark	1	B10001-
5		09842-A0481	Plate, Caution, No Jump Start	1	B10001-
6		09133-27000	Plate, safety	1	B10001-
7		09653-07101	Plate, Warning, High Temperature, safety	1	B10001-
8		09668-07101	Plate, Warning, Hot Water, safety	1	B10001-
9		09657-07102	Plate, Warning, Track Adjustment, safety	2	B10001-
10		09659-57100	Plate, Warning, Explosive Hazard, safety	3	B10001-
11		09667-07101	Plate, Caution, Rotating Object, safety	1	B10001-
12		09805-27100	Plate, safety	1	B10001-
13		09805-17100	Plate, Caution, Hood, safety	1	B10001-
14		09808-07100	Plate, Warning, Battery Cables, safety	1	B10001-
15		207-00-71741	Plate, Caution	1	B10001-
16		09669-0000E	Plate, Symbol, Fuel Filler	1	B10001-
17	C2	09601-12051	Plate, Name (Limited Supply)	1	B10001-
18		04418-13060	Screw	4	B10001-
19		09963-07001	Tag, Danger, Do Not Operate	1	B10001-
20		207-00-B1230	Plate, Pre Filter Caution	1	B10001-
21		09659-57100	Plate, Warning, Explosive Hazard, safety	2	B10001-
22		09805-17100	Plate, safety	1	B10001-
23		20Y-00-B1370	Tag	1	B10001-
24		206-00-21230	Decal	1	B10001-
25		206-00-21240	Decal	1	B10001-
26		20Y-00-B1290	Decal	1	B10001-
27		20Y-00-B1280	Plate, Operating	1	B10001-
28		20Y-00-31840	Plate	1	B10001-
29		21U-98-31160	Plate, Mark, Location Of Center Of Gravity	2	B10001-
30		09960-00801	Decal, Lift Point Mark	4	B10001-
31		09960-00802	Decal, Tie Down Point Mark	4	B10001-
32		207-00-B1210	Plate	1	B10001-
33		14X-98-35181	Plate, Reflector	2	B10001-
34		20Y-00-41530	Plate, Symbol, Ecot3	1	B10001-
35		20Y-00-41490	Plate	1	B10001-

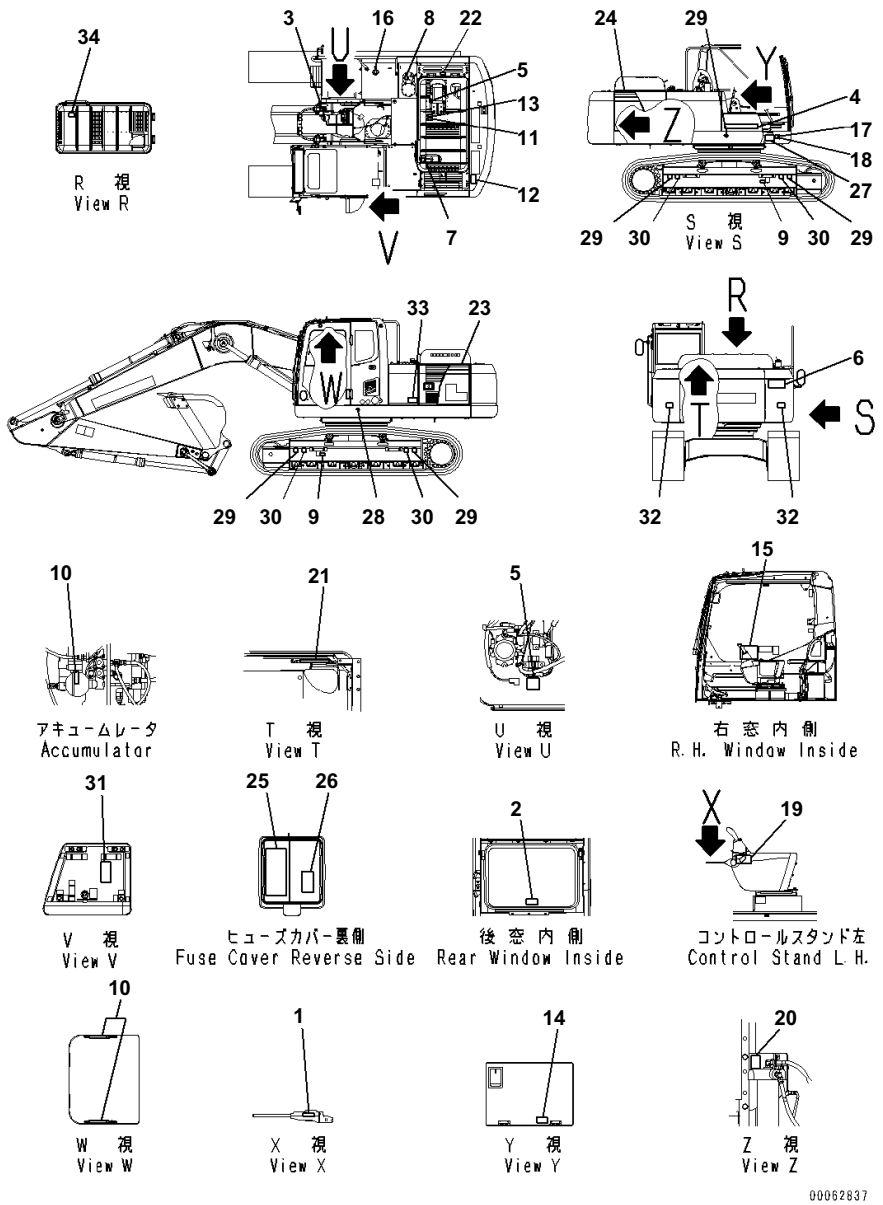

Index	Code	Part Number	Description	Qty	Serial No.
1		09685-00002	Plate, Symbol, Lock	1	B10001-
2		09844-00050	Plate, safety	1	B10001-
3		09690-M0063	Mark, Komatsu Logo	1	B10001-
4		09690-P0630	Plate, Mark	1	B10001-
5		09842-A0481	Plate, Caution, No Jump Start	1	B10001-
6		09133-21001	Decal, Danger, Keep Off Swing Area, safety	1	B10001-
7		09653-01001	Plate, Warning, High Temperature, safety	1	B10001-
8		09668-01001	Plate, Warning, Hot Water, safety	1	B10001-
9		09657-01004	Plate, safety	2	B10001-
10		09659-51000	Plate, Warning, Explosive Hazard, safety	3	B10001-
11		09667-01001	Plate, Caution, Rotating Object, safety	1	B10001-
12		09805-21000	Plate, safety	1	B10001-
13		09805-11000	Plate, Caution, Hood, safety	1	B10001-
14		09808-01000	Plate, Warning, Battery Cables, safety	1	B10001-
15		20Y-00-31680	Plate	1	B10001-
16		09669-0000E	Plate, Symbol, Fuel Filler	1	B10001-
17	C2	09601-12051	Plate, Name (Limited Supply)	1	B10001-
18		04418-13060	Screw	4	B10001-
19		09963-01001	Tag, Danger, Do Not Operate	1	B10001-
20		20Y-00-41710	Plate, Pre Filter Caution	1	B10001-
21		09659-51000	Plate, Warning, Explosive Hazard, safety	2	B10001-
22		09805-11000	Plate, safety	1	B10001-
23		206-00-21230	Decal	1	B10001-
24		206-00-21240	Decal	1	B10001-
25		20Y-00-41680	Decal	1	B10001-
26		20Y-00-31640	Plate	1	B10001-
27		20Y-00-31840	Plate	1	B10001-
28		21U-98-31160	Plate, Mark, Location Of Center Of Gravity	2	B10001-
29		09960-00801	Decal, Lift Point Mark	4	B10001-
30		09960-00802	Decal, Tie Down Point Mark	4	B10001-
31		208-00-71430	Plate	1	B10001-
32		14X-98-35181	Plate, Reflector	2	B10001-
33		20Y-00-41530	Plate, Symbol, Ecot3	1	B10001-
34		20Y-00-41480	Plate	1	B10001-

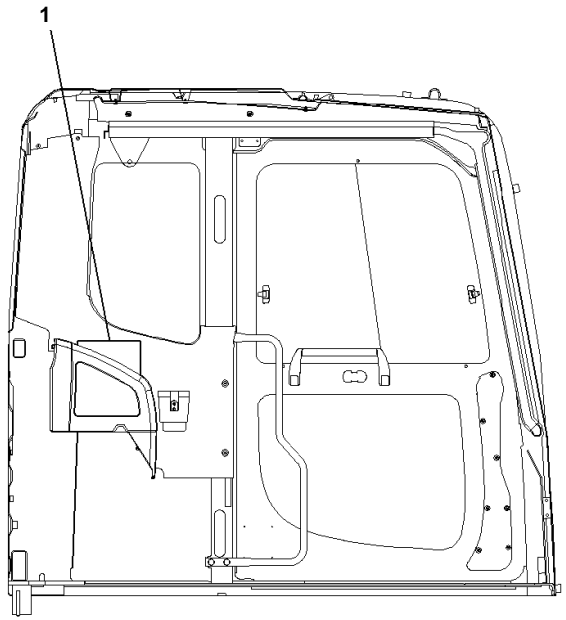

左ドアー内側
L.H. Door Inside

00045814

Index	Code	Part Number	Description	Qty	Serial No.
1		20Y-00-B1430	Plate	1	B10001-

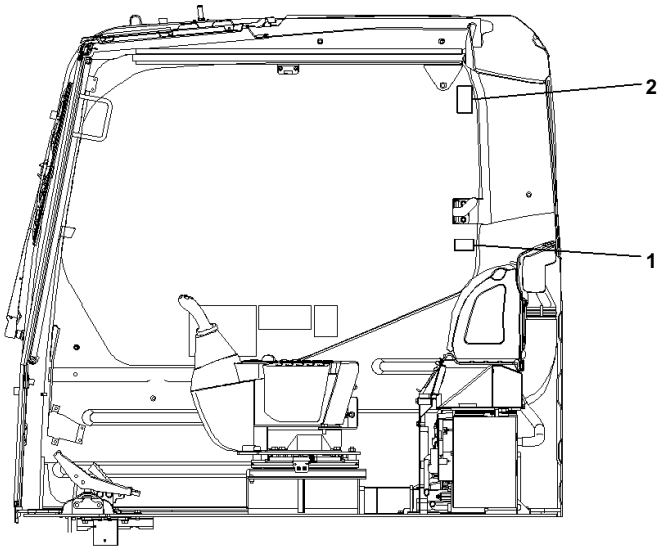

右窓内側
R.H. Window Inside

00045815

Caution Plates, Cab Windshield Lock Operation, Portuguese, Lettering Type

Index	Code	Part Number	Description	Qty	Serial No.
1		20Y-00-B1350	Plate	1	B10001-
2		09803-07100	Decal, Warning, Windshield Lock, safety	1	B10001-

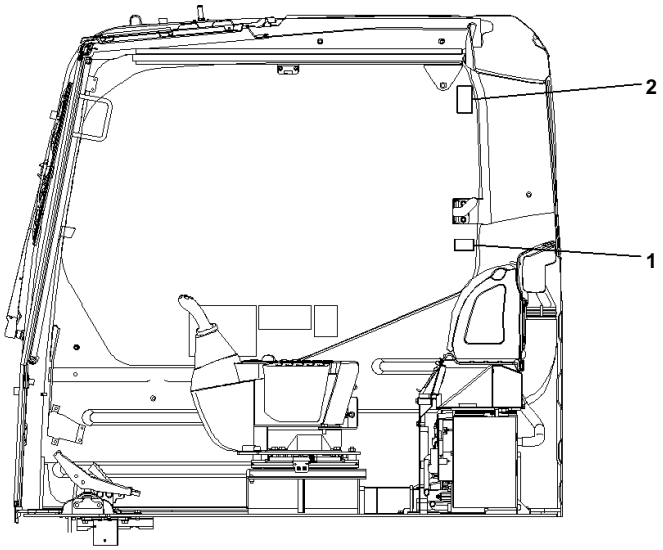

右窓内側
R.H. Window Inside

00045815

Index	Code	Part Number	Description	Qty	Serial No.
1		20Y-00-41690	Plate	1	B10001-
2		09803-01000	Decal, Warning, Windshield Lock, safety	1	B10001-

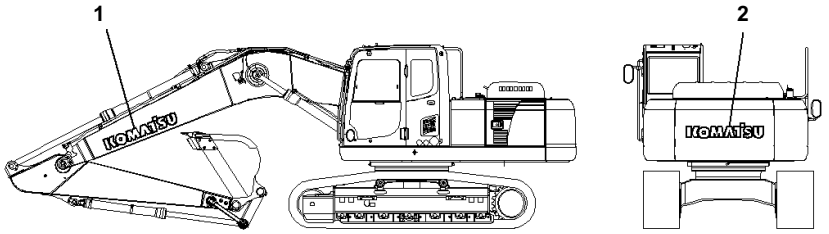

00045816

Index	Code	Part Number	Description	Qty	Serial No.
1		09690-P1250	Plate, Mark	2	B10001-
2		09690-P1250	Plate, Mark	1	B10001-

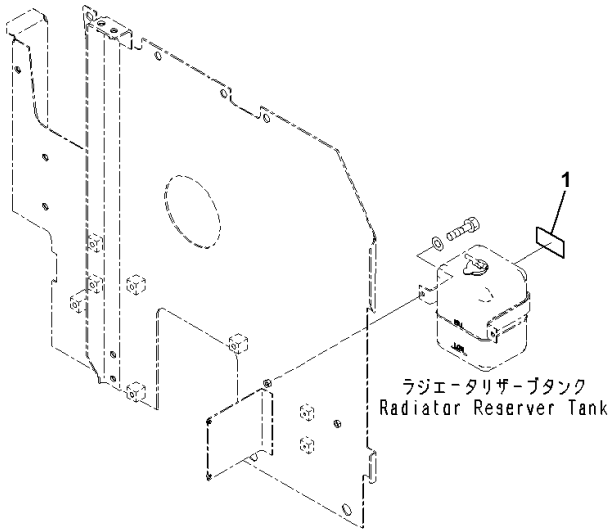

Index	Code	Part Number	Description	Qty	Serial No.
1		09642-17000	Plate, Service Instruction, Engine Coolant AF-NAC	1	B10001-

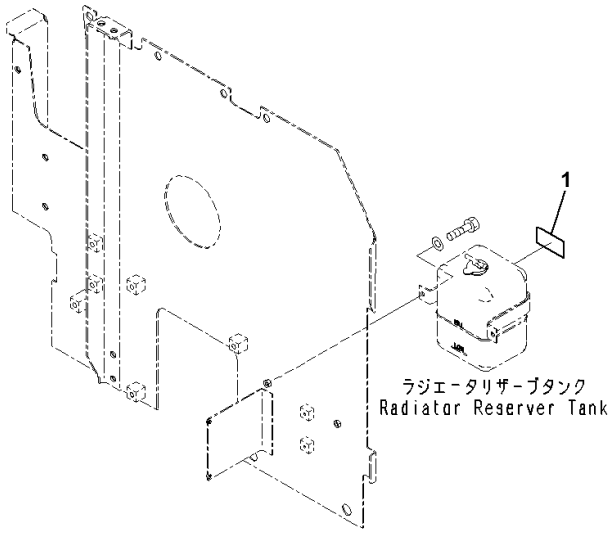

Index	Code	Part Number	Description	Qty	Serial No.
1		09642-11000	Plate, Service Instruction, Engine Coolant AF-NAC	1	B10001-

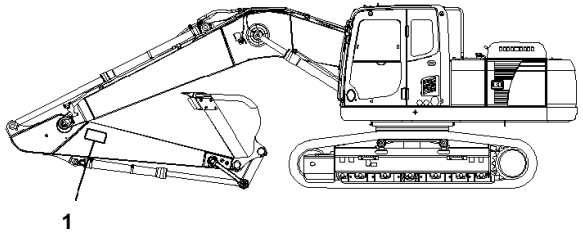

00045822

Index	Code	Part Number	Description	Qty	Serial No.
1		09134-A1681	Plate	2	B10001-

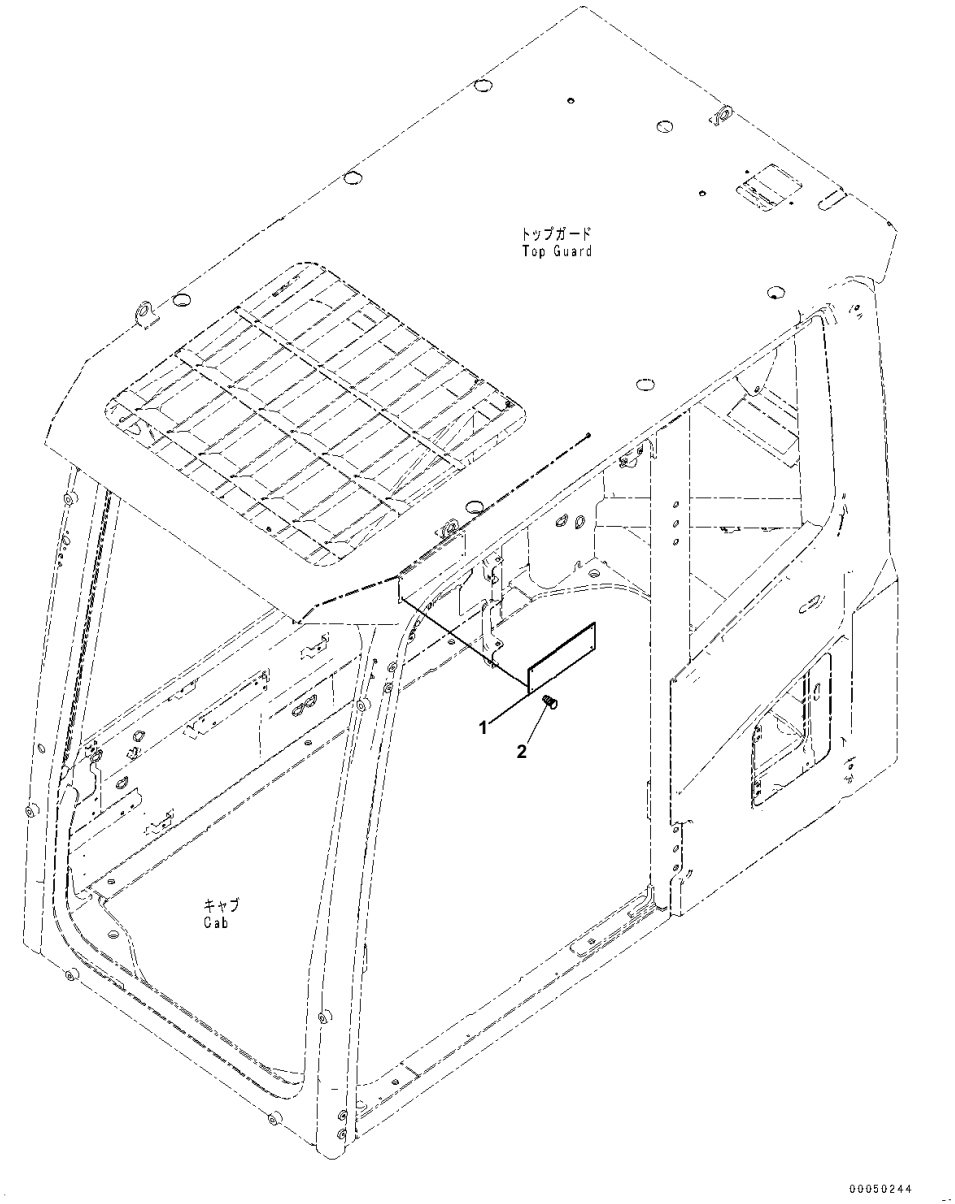

Index	Code	Part Number	Description	Qty	Serial No.
1	C2	09620-D2120	Plate, Name, Top Guard (Limited Supply)	1	B10001-
2		04418-13060	Screw	4	B10001-

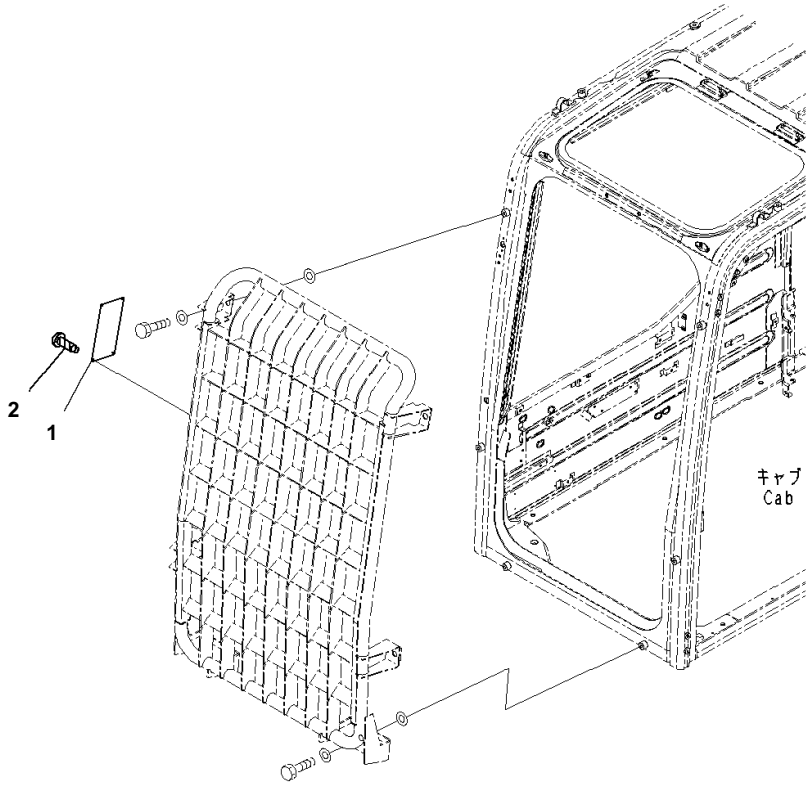

Index	Code	Part Number	Description	Qty	Serial No.
1	C2	09620-E2120	Plate, Name, Front Guard (Limited Supply)	1	B10001-
2		04418-13060	Screw	4	B10001-

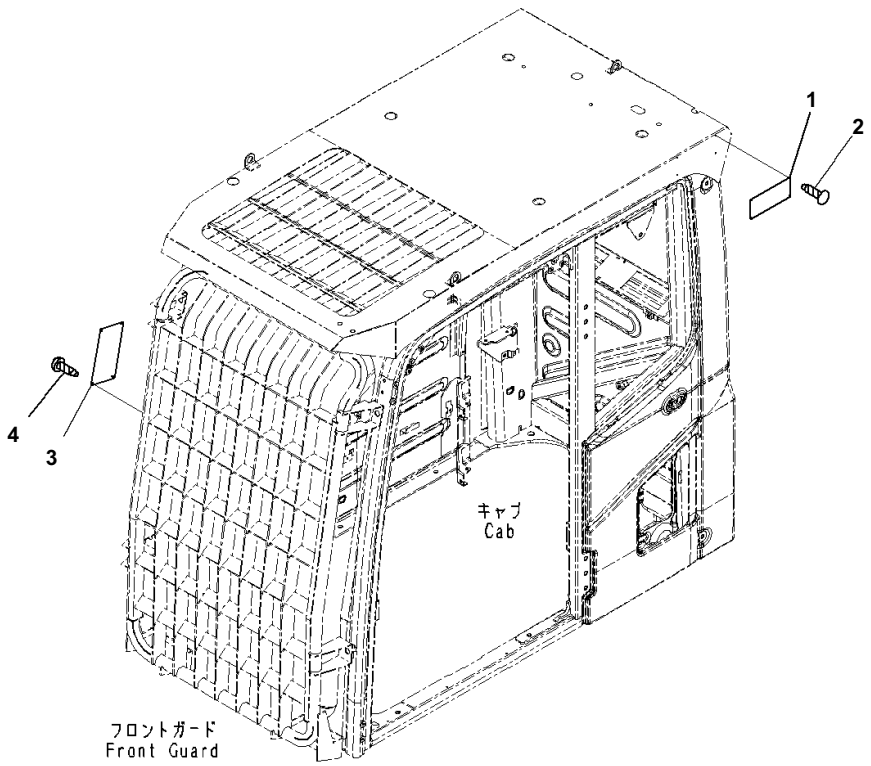

Index	Code	Part Number	Description	Qty	Serial No.
1	C2	09620-D2120	Plate, Name, Top Guard (Limited Supply)	1	B10001-
2		04418-13060	Screw	4	B10001-
3	C2	09620-E2120	Plate, Name, Front Guard (Limited Supply)	1	B10001-
4		04418-13060	Screw	4	B10001-

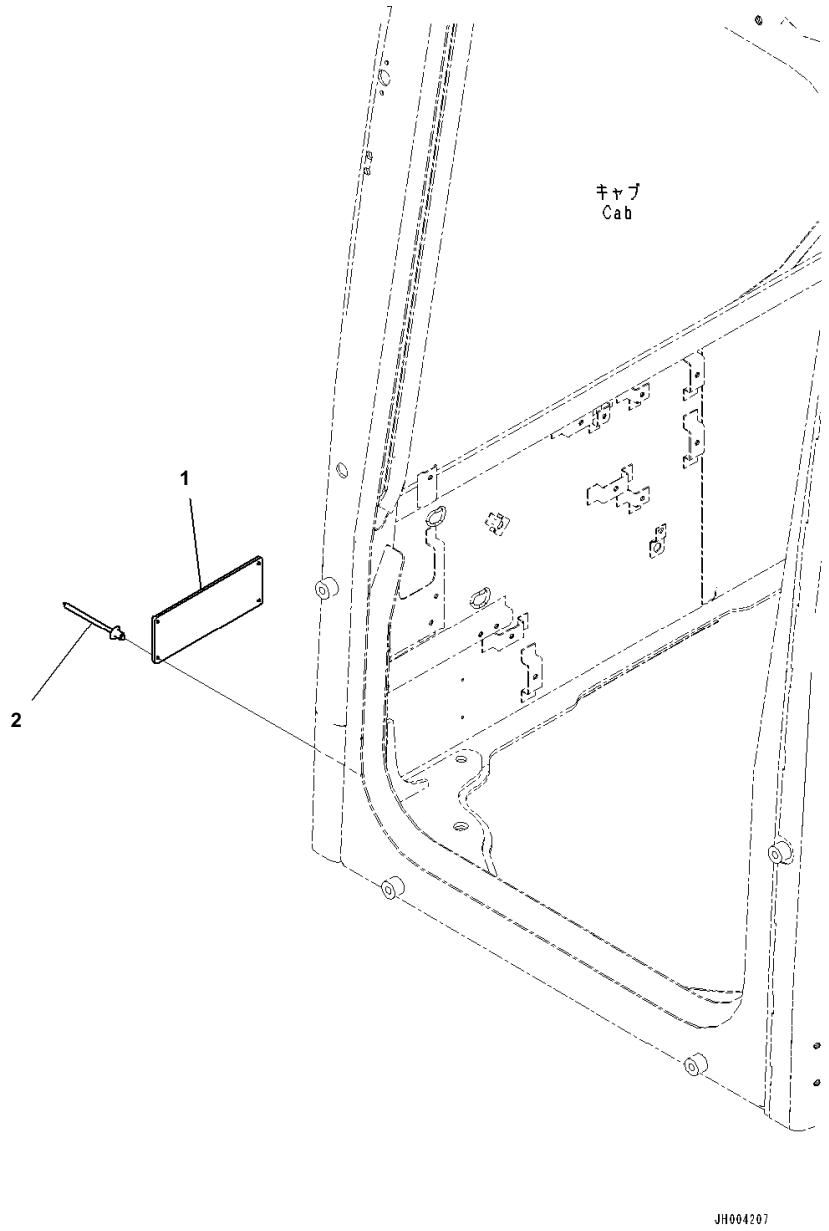

Caution Plates, Text Type, Portuguese

Index	Code	Part Number	Description	Qty	Serial No.
1	C2	20Y-00-B1420	Plate, Certification Mark, ROPS	1	B10001-
2		205-00-72430	Rivet	4	B10001-

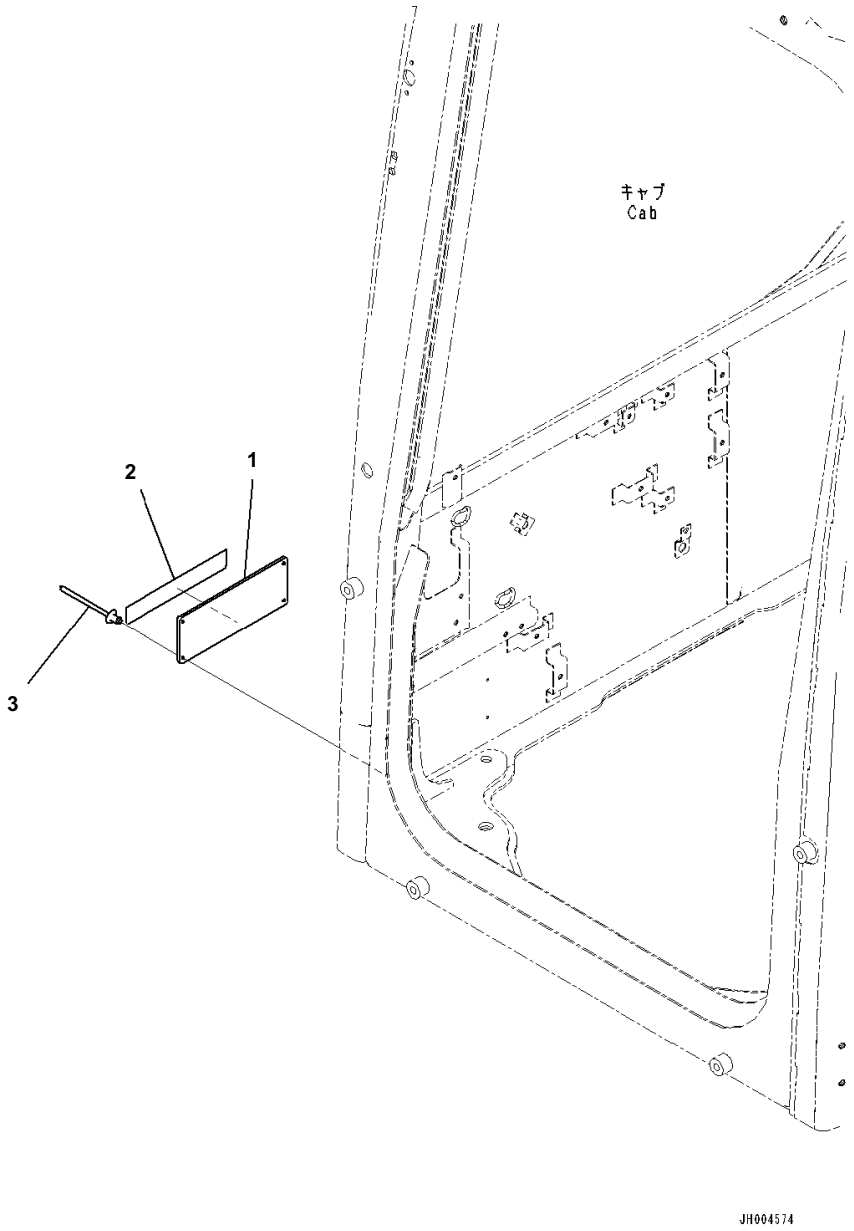

Index	Code	Part Number	Description	Qty	Serial No.
1	C2	20Y-00-B1420	Plate, Certification Mark, ROPS	1	B10001-
2		09620-B2070	Plate, Safety	1	B10001-
3		205-00-72430	Rivet	4	B10001-

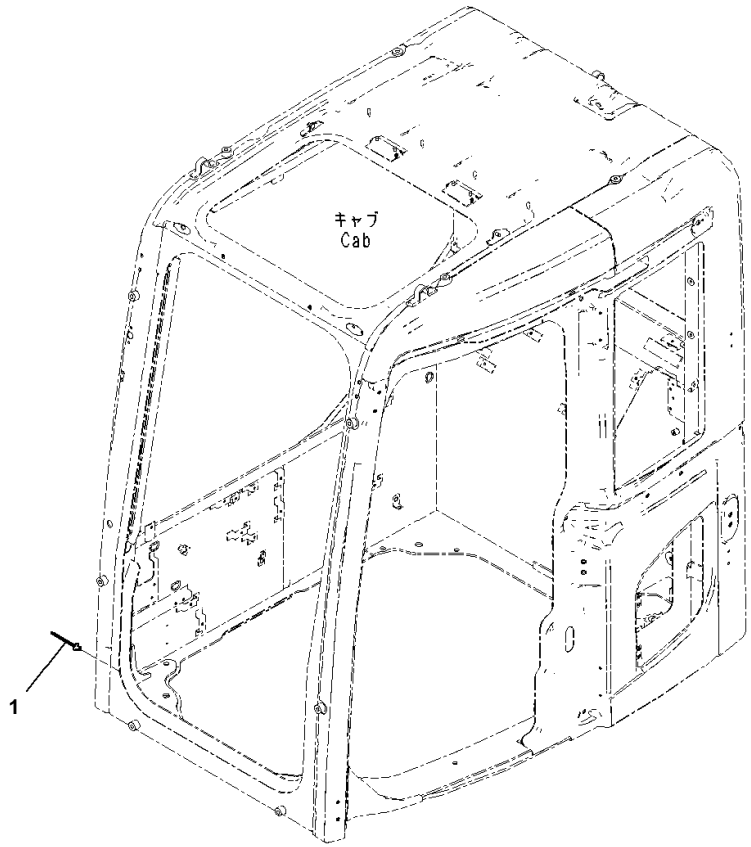

Index	Code	Part Number	Description	Qty	Serial No.
1		205-00-72430	Rivet	4	B10001-

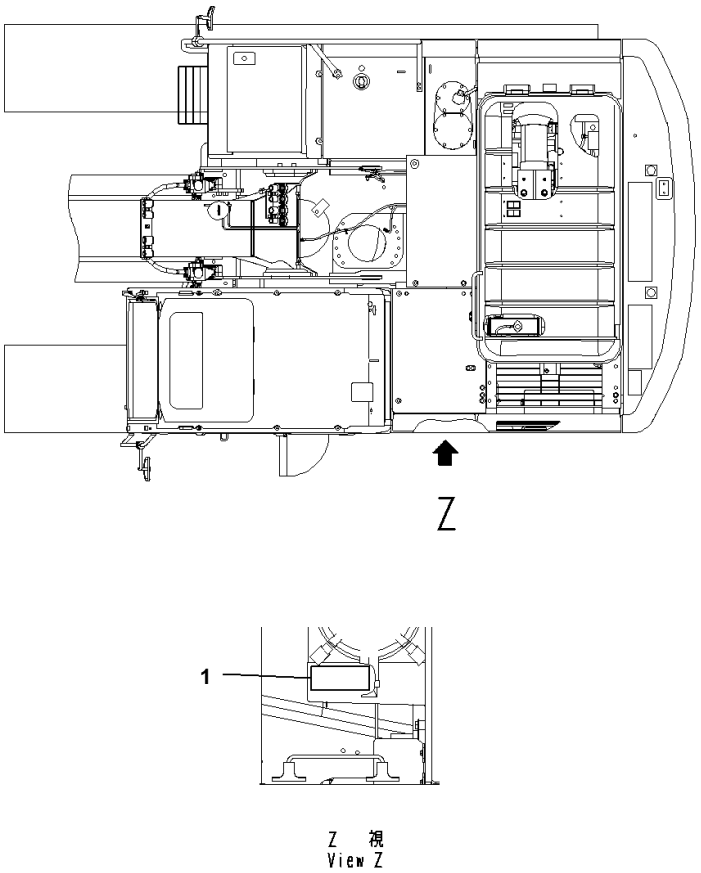

Index	Code	Part Number	Description	Qty	Serial No.
1		09637-51263	Plate, Service Instruction, Air Cleaner, instruction	1	B10001-

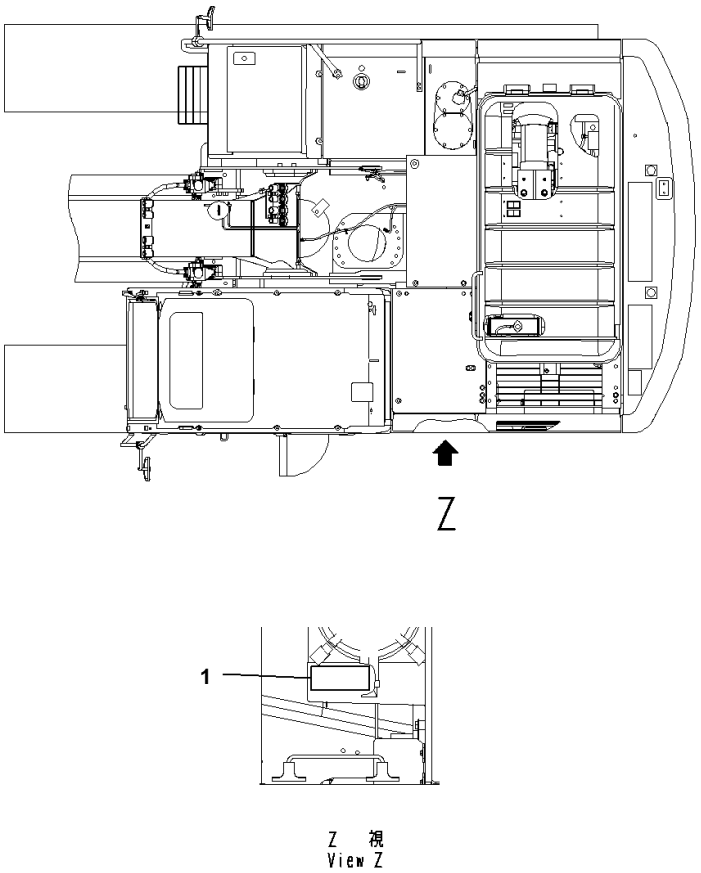

Index	Code	Part Number	Description	Qty	Serial No.
1		09637-70163	Decal, Service Instruction, Air Cleaner, Instruction	1	B10001-

AUXILIARY PARTS AND TOOL

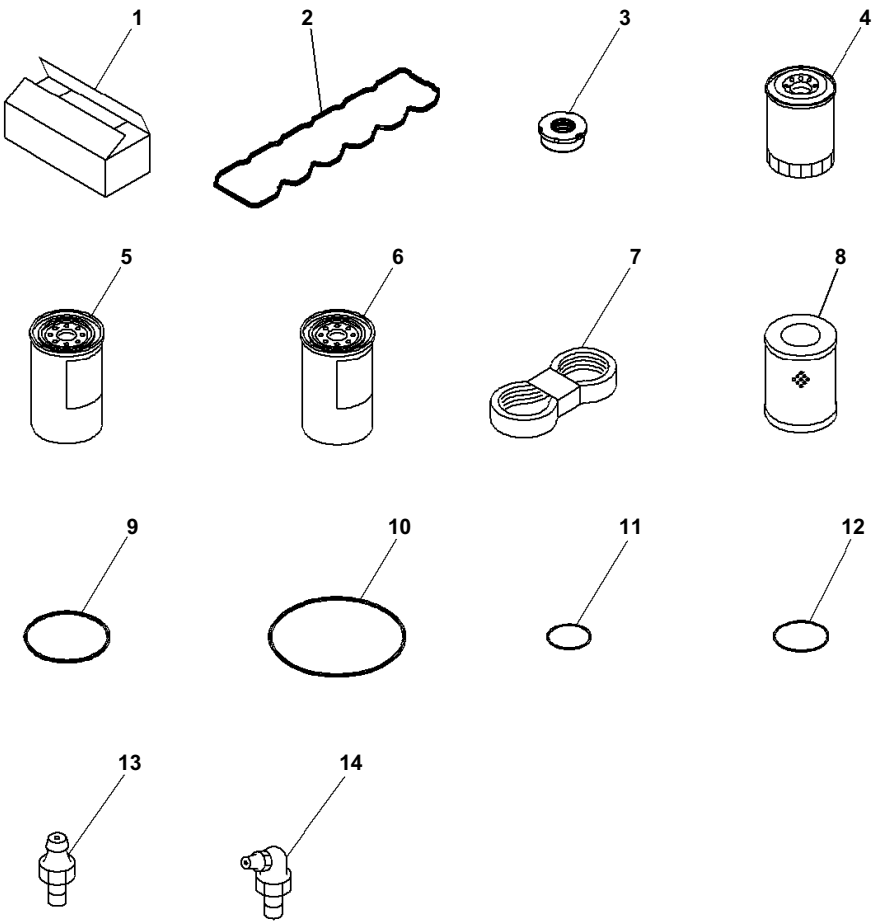

Index	Code	Part Number	Description	Qty	Serial No.
1		09059-00800	Box	1	B10001-
2		6754-11-8180	Packing	1	B10001-
3		6754-11-8210	Isolator	6	B10001-
4		6736-51-5142	Cartridge	1	B10001-
5		6754-79-6140	Cartridge	1	B10001-
6		600-319-3610	Cartridge Assembly	1	B10001-
7		6732-81-3531	Belt	1	B10001-
8		207-60-71182	Element	1	B10001-
9		07000-15160	O-ring	1	B10001-
10		07000-15195	O-ring	1	B10001-
11		07002-11223	O-ring	1	B10001-
12		07002-12434	O-ring	4	B10001-
13		07020-00000	Fitting, Grease	4	B10001-
14		07020-00675	Fitting, Grease	4	B10001-

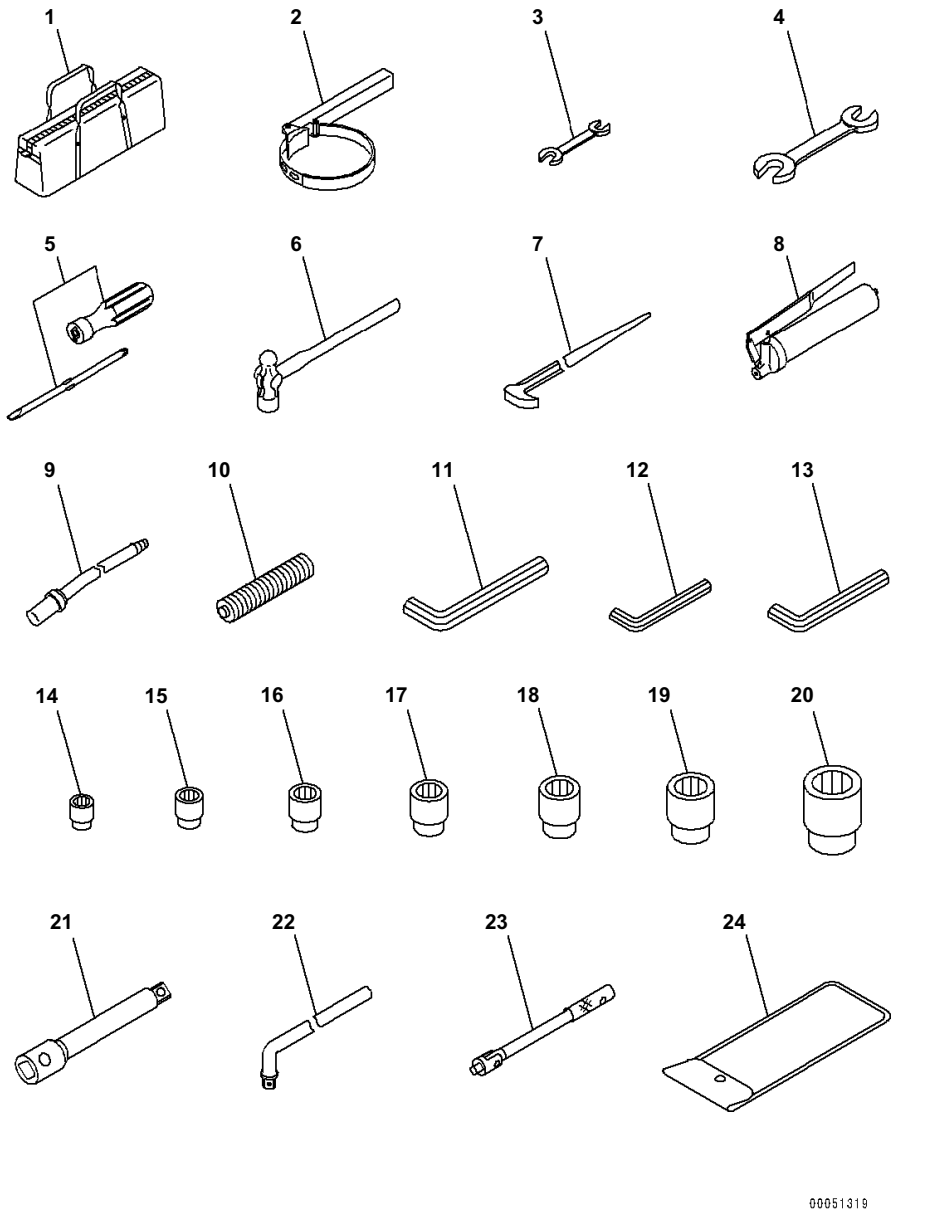

Index	Code	Part Number	Description	Qty	Serial No.
1		09056-04613	Bag	1	B10001-
2		09019-08035	Wrench	1	B10001-
3		09002-01417	Wrench, W=14X17mm	1	B10001-
4		09002-03032	Wrench, W=30X32mm	1	B10001-
5		09033-00190	Driver	1	B10001-
6		09039-00150	Hammer	1	B10001-
7		09055-10390	Bar	1	B10001-
		07952-70004	Pump Assembly	1	B10001-
8		07950-10450	· Pump Assembly	1	B10001-
9		07951-41017	· Pump Assembly	1	B10001-
10		07950-90403	Cartridge	1	B10001-
11		09007-00836	Wrench, W=8mm	1	B10001-
12		09007-00425	Wrench, W=4mm	1	B10001-
13		09007-00528	Wrench, W=5mm	1	B10001-
		20Y-98-21130	Tool Kit	1	B10001-
14		09021-01219	· Socket, W=12mm	1	B10001-
15		09021-01422	· Socket, W=14mm	1	B10001-
16		09021-01725	· Socket, W=17mm	1	B10001-
17		09021-01928	· Socket, W=19mm	1	B10001-
18		09021-02233	· Socket, W=22mm	1	B10001-
19		09021-02436	· Socket, W=24mm	1	B10001-
20		09021-03044	· Socket, W=30mm	1	B10001-
21		09022-00150	· Extension	1	B10001-
22		09023-00300	· Handle	1	B10001-
23		09024-00300	· Handle	1	B10001-
24		20Y-98-21140	· Tool Bag	1	B10001-

FIELD REPAIR SERVICE PARTS

Index	Code	Part Number	Description	Qty	Serial No.
K02		20Y-32-05070	Service Kit, Shoe Bolt and Nut		B10001-
		134-32-61221	· Nut	50	-
		20Y-32-31210	· Bolt	50	-
K04		20Y-32-05090	Service Kit, Shoe Bolt and Nut		B10001-
		134-32-61221	· Nut	50	-
		14X-32-11210	· Bolt	50	-
K05		707-98-47730	Service Kit, Boom Cylinder		B10001-
		07000-13030	· O-ring	2	-
		07000-15080	· O-ring	1	-
		07000-15120	· O-ring	2	-
		07145-00080	· Seal, Dust	4	-
		195-63-94170	· Seal, Dust	1	-
		707-35-90940	· Ring, Back-up	2	-
		707-35-91320	· Ring, Back-up	3	-
		707-39-13150	· Ring, Wear	2	-
		707-44-13150	· Ring, Piston	1	-
		707-51-90030	· Packing, Rod	1	-
		707-51-90650	· Ring, Buffer	1	-
K06		707-99-50680	Service Kit, Boom Cylinder		B10001-
		07000-13030	· O-ring	2	-
		07000-15085	· O-ring	1	-
		07000-15125	· O-ring	2	-
		07145-00080	· Seal, Dust	4	-
		707-35-90960	· Ring, Back-up	2	-
		707-35-91370	· Ring, Back-up	3	-
		707-39-13530	· Ring, Wear	2	-
		707-44-13250	· Ring, Piston	1	-
		707-51-95030	· Packing, Rod	1	-
		707-51-95650	· Ring, Buffer	1	-
		707-56-95510	· Seal, Dust	1	-
K07		707-98-58240	Service Kit, Arm Cylinder		B10001-
		07000-13030	· O-ring	1	-
		07000-15090	· O-ring	1	-
		07000-15130	· O-ring	2	-
		07001-05090	· Ring, Back-up	2	-
		07002-12034	· O-ring	1	-
		07145-00080	· Seal, Dust	4	-
		176-63-56170	· Seal, Dust	1	-
		707-35-91420	· Ring, Back-up	3	-
		707-39-14110	· Ring, Wear	2	-
		707-44-14150	· Ring, Piston	1	-
		707-51-10030	· Packing, Rod	1	-
		707-51-10650	· Ring, Buffer	1	-
K08		707-98-47720	Service Kit, Bucket Cylinder		B10001-
		07000-13030	· O-ring	1	-
		07000-15080	· O-ring	1	-

PC240LC-8 S/N B10001-UP
Service Kit Parts

Index	Code	Part Number	Description	Qty	Serial No.
		07000-15120	· O-ring	1	-
		07145-00080	· Seal, Dust	2	-
		195-63-94170	· Seal, Dust	1	-
		20Y-70-23230	· Seal, Dust	2	-
		707-35-90940	· Ring, Back-up	2	-
		707-35-91320	· Ring, Back-up	1	-
		707-39-13150	· Ring, Wear	2	-
		707-44-13150	· Ring, Piston	1	-
		707-51-90030	· Packing, Rod	1	-
		707-51-90650	· Ring, Buffer	1	-
K09		707-99-59020	Service Kit, Bucket Cylinder		B10001-
		07000-13030	· O-ring	1	-
		07000-15090	· O-ring	1	-
		07000-15130	· O-ring	1	-
		07001-05090	· Ring, Back-up	2	-
		07145-00080	· Seal, Dust	2	-
		176-63-56170	· Seal, Dust	1	-
		20Y-70-23230	· Seal, Dust	2	-
		707-35-91420	· Ring, Back-up	1	-
		707-39-14110	· Ring, Wear	2	-
		707-44-14150	· Ring, Piston	1	-
		707-51-10030	· Packing, Rod	1	-
		707-51-10650	· Ring, Buffer	1	-
		707-51-10660	· Ring	1	-

Reference:KIT
Page:Y001001

NUMERICAL INDEX

PARTS Nº	FIG. Nº	INDEX	PAGE
01010-61450	N1210-002001	16	N002001
01010-61460	H0120-002014	21	H003014
01010-61460	H0120-006014	21	H004014
01010-61470	H0120-002014	20	H003014
01010-61470	H0120-006014	20	H004014
01010-61490	H0120-002007	24	H003007
01010-61490	H0120-006007	24	H004007
01010-61655	H0210-001002	8	H005002
01010-61655	R0110-002002	19	R001002
01010-61660	P1210-001003	36	P002003
01010-62050	R1200-001001	3	R010001
01010-62050	R1200-002001	2	R011001
01010-62055	T1510-001001	17	T011001
01010-80612	D0100-001001	9	D001001
01010-80612	M1130-002001	24	M003001
01010-80612	M1140-002001	15	M004001
01010-80616	E0450-002001	12	E008001
01010-80616	E0450-002001	15	E008001
01010-80616	K1110-006037	14	K013037
01010-80616	K1110-006037	5	K013037
01010-80616	K1110-006038	4	K013038
01010-80616	K1110-006043	15	K013043
01010-80616	K1110-006043	9	K013043
01010-80616	K1110-010038	14	K014038
01010-80616	K1110-010038	5	K014038
01010-80616	K1110-010039	4	K014039
01010-80616	K1110-010044	15	K014044
01010-80616	K1110-010044	9	K014044
01010-80616	M1130-002001	30	M003001
01010-80616	M1140-002001	21	M004001
01010-80620	E0200-002001	20	E002001
01010-80620	K1110-006035	16	K013035
01010-80620	K1110-006041	16	K013041
01010-80620	K1110-010036	16	K014036
01010-80620	K1110-010042	16	K014042
01010-80620	M1150-002001	23	M005001
01010-80816	K1110-006025	16	K013025
01010-80816	K1110-006052	30	K013052
01010-80816	K1110-010025	16	K014025
01010-80816	K1110-010053	37	K014053
01010-80820	E0200-002001	16	E002001
01010-80820	E0200-002001	18	E002001
01010-80820	K1110-006006	16	K013006
01010-80820	K1110-006036	1	K013036
01010-80820	K1110-006042	1	K013042
01010-80820	K1110-010006	16	K014006
01010-80820	K1110-010037	1	K014037
01010-80820	K1110-010043	1	K014043
01010-80820	M1150-002001	28	M005001
01010-80825	B0000-001002	2	B001002
01010-80825	C0100-002004	5	C001004
01010-80825	D0200-002002	33	D002002
01010-80825	E0410-001001	3	E006001
01010-80825	K1110-006046	2	K013046
01010-80825	K1110-010047	2	K014047
01010-80830	E0200-002001	14	E002001
01010-80830	K1110-006052	28	K013052
01010-80830	K1110-010053	35	K014053
01010-80835	C0100-002004	15	C001004
01010-80835	E0450-002001	8	E008001
01010-80835	N1310-001001	10	N003001
01010-80855	K1110-006025	14	K013025
01010-80855	K1110-010025	14	K014025
01010-80875	K0700-001001	9	K012001
01010-80885	K0700-001001	10	K012001
01010-81016	K1110-006032	2	K013032
01010-81016	K1110-006043	44	K013043
01010-81016	K1110-006043	47	K013043
01010-81016	K1110-006048	10	K013048
01010-81016	K1110-006051	14	K013051
01010-81016	K1110-010033	2	K014033
01010-81016	K1110-010044	44	K014044
01010-81016	K1110-010044	47	K014044
01010-81016	K1110-010049	10	K014049
01010-81016	K1110-010052	14	K014052
01010-81016	N1110-001001	12	N001001
01010-81020	B0000-001001	3	B001001
01010-81020	C0100-002003	15	C001003
01010-81020	C0100-002003	2	C001003
01010-81020	C0100-002003	38	C001003
01010-81020	C0100-002003	5	C001003
01010-81020	C0100-002003	9	C001003
01010-81020	C0100-002004	11	C001004
01010-81020	C0100-002004	18	C001004
01010-81020	C0100-002004	21	C001004
01010-81020	C0100-002005	31	C001005
01010-81020	E0200-002002	1	E002002
01010-81020	E0200-002002	47	E002002
01010-81020	E0200-002004	27	E002004
01010-81020	E0200-002005	10	E002005
01010-81020	E0420-001001	3	E007001
01010-81020	H0210-002001	23	H006001
01010-81020	H0210-002001	26	H006001
01010-81020	H0210-003001	23	H007001
01010-81020	H0210-003001	26	H007001
01010-81020	H1831-001003	17	H021003
01010-81020	H1831-002003	18	H022003
01010-81020	K1110-006027	1	K013027
01010-81020	K1110-006027	4	K013027
01010-81020	K1110-006028	5	K013028
01010-81020	K1110-006029	5	K013029
01010-81020	K1110-006032	20	K013032
01010-81020	K1110-006032	23	K013032
01010-81020	K1110-006032	27	K013032
01010-81020	K1110-006032	6	K013032
01010-81020	K1110-006051	2	K013051
01010-81020	K1110-006051	8	K013051
01010-81020	K1110-010027	1	K014027
01010-81020	K1110-010027	4	K014027
01010-81020	K1110-010028	5	K014028
01010-81020	K1110-010033	20	K014033
01010-81020	K1110-010033	23	K014033
01010-81020	K1110-010033	27	K014033
01010-81020	K1110-010033	6	K014033
01010-81020	K1110-010052	2	K014052
01010-81020	K1110-010052	8	K014052
01010-81020	M1220-001001	6	M007001
01010-81020	P1210-001003	8	P002003
01010-81025	C0100-002002	12	C001002
01010-81025	C0100-002002	9	C001002
01010-81025	C0100-002005	27	C001005
01010-81025	C0100-002005	33	C001005
01010-81025	E0200-002001	25	E002001
01010-81025	E0200-002005	3	E002005
01010-81025	H1310-001001	17	H017001
01010-81025	K1110-006028	3	K013028
01010-81025	K1110-006029	3	K013029
01010-81025	K1110-010028	3	K014028
01010-81025	K1110-010030	13	K014030
01010-81025	K1110-010030	3	K014030
01010-81025	M1210-002001	21	M006001
01010-81025	M1210-002001	24	M006001
01010-81025	N1210-002005	23	N002005
01010-81025	T1200-008005	19	T007005
01010-81025	T1200-018005	19	T009005
01010-81030	C0100-002002	20	C001002
01010-81030	C0100-002003	24	C001003
01010-81030	C0100-002005	46	C001005
01010-81030	C0100-002005	7	C001005
01010-81030	H0120-002014	24	H003014
01010-81030	H0120-006014	24	H004014
01010-81030	K1110-006027	13	K013027
01010-81030	K1110-006037	2	K013037
01010-81030	K1110-010027	13	K014027
01010-81030	K1110-010038	2	K014038
01010-81030	N1210-002005	21	N002005
01010-81035	C0100-002005	20	C001005
01010-81035	H0330-001001	38	H011001
01010-81035	H1270-008004	20	H016004
01010-81035	H1270-008004	22	H016004

PARTS Nº	FIG. Nº	INDEX	PAGE
01010-81035	H1270-008004	33	H016004
01010-81035	K0700-001001	15	K012001
01010-81035	N1210-002005	9	N002005
01010-81040	H1270-008003	1	H016003
01010-81040	H1270-008004	35	H016004
01010-81040	H1310-001001	15	H017001
01010-81040	K1110-006032	10	K013032
01010-81040	K1110-006032	14	K013032
01010-81040	K1110-006032	18	K013032
01010-81040	K1110-010033	10	K014033
01010-81040	K1110-010033	14	K014033
01010-81040	K1110-010033	18	K014033
01010-81040	N1210-002004	11	N002004
01010-81045	C0100-002001	13	C001001
01010-81045	K1110-006048	8	K013048
01010-81045	K1110-006052	11	K013052
01010-81045	K1110-006052	2	K013052
01010-81045	K1110-010049	8	K014049
01010-81045	K1110-010053	15	K014053
01010-81045	K1110-010053	2	K014053
01010-81045	T1200-008005	21	T007005
01010-81045	T1200-018005	21	T009005
01010-81050	B0000-001001	13	B001001
01010-81050	B0000-001001	8	B001001
01010-81060	B0000-001001	10	B001001
01010-81075	H1270-008004	47	H016004
01010-81085	H1831-001003	13	H021003
01010-81085	H1831-002003	14	H022003
01010-81220	H1810-001001	9	H019001
01010-81220	H1810-002001	9	H020001
01010-81220	M1510-002001	12	M011001
01010-81220	T1110-002004	9	T001004
01010-81220	T1110-002006	4	T001006
01010-81220	T1110-005004	9	T002004
01010-81220	T1110-005006	4	T002006
01010-81225	C0100-002001	16	C001001
01010-81225	C0100-002004	2	C001004
01010-81225	C0100-002005	52	C001005
01010-81225	D0200-002001	11	D002001
01010-81225	D0200-002001	21	D002001
01010-81225	D0200-002001	24	D002001
01010-81225	D0200-002001	27	D002001
01010-81225	D0200-002002	11	D002002
01010-81225	D0200-002002	20	D002002
01010-81225	D0200-002002	31	D002002
01010-81225	D0200-002002	35	D002002
01010-81225	E0100-001001	10	E001001
01010-81225	E0200-002001	11	E002001
01010-81225	E0200-002001	23	E002001
01010-81225	E0200-002001	8	E002001
01010-81225	E0200-002002	10	E002002
01010-81225	E0200-002002	13	E002002
01010-81225	E0200-002002	16	E002002
01010-81225	E0200-002002	19	E002002
01010-81225	E0200-002002	22	E002002
01010-81225	E0200-002002	25	E002002
01010-81225	E0200-002002	28	E002002
01010-81225	E0200-002002	31	E002002
01010-81225	E0200-002002	34	E002002
01010-81225	E0200-002002	37	E002002
01010-81225	E0200-002002	4	E002002
01010-81225	E0200-002002	41	E002002
01010-81225	E0200-002002	44	E002002
01010-81225	E0200-002002	49	E002002
01010-81225	E0200-002002	7	E002002
01010-81225	E0200-002003	12	E002003
01010-81225	E0200-002003	15	E002003
01010-81225	E0200-002003	18	E002003
01010-81225	E0200-002003	2	E002003
01010-81225	E0200-002003	25	E002003
01010-81225	E0200-002003	28	E002003
01010-81225	E0200-002003	31	E002003
01010-81225	E0200-002003	34	E002003
01010-81225	E0200-002003	37	E002003
01010-81225	E0200-002003	40	E002003
01010-81225	E0200-002003	5	E002003
01010-81225	E0200-002004	12	E002004
01010-81225	E0200-002004	15	E002004
01010-81225	E0200-002004	18	E002004
01010-81225	E0200-002004	2	E002004
01010-81225	E0200-002004	21	E002004
01010-81225	E0200-002004	24	E002004
01010-81225	E0200-002004	31	E002004
01010-81225	E0200-002004	34	E002004
01010-81225	E0200-002004	5	E002004
01010-81225	E0200-002004	9	E002004
01010-81225	E0320-002001	10	E005001
01010-81225	E0320-002001	4	E005001
01010-81225	E0320-002001	6	E005001
01010-81225	E0420-001001	5	E007001
01010-81225	E0420-001001	9	E007001
01010-81225	E0450-002001	18	E008001
01010-81225	H0120-002024	10	H003024
01010-81225	H0120-006024	10	H004024
01010-81225	H0210-002001	16	H006001
01010-81225	H0210-002001	20	H006001
01010-81225	H0210-003001	16	H007001
01010-81225	H0210-003001	20	H007001
01010-81225	H0320-001001	7	H010001
01010-81225	H0330-001001	20	H011001
01010-81225	H0330-001001	34	H011001
01010-81225	H0330-001001	8	H011001
01010-81225	H0330-002001	20	H012001
01010-81225	H0330-002001	34	H012001
01010-81225	H0330-002001	8	H012001
01010-81225	H0340-001001	4	H013001
01010-81225	H0340-001001	8	H013001
01010-81225	H1270-008003	36	H016003
01010-81225	H1270-008004	14	H016004
01010-81225	H1270-008004	29	H016004
01010-81225	H1270-008004	39	H016004
01010-81225	H1270-008004	52	H016004
01010-81225	H1831-001003	20	H021003
01010-81225	H1831-002003	21	H022003
01010-81225	H1831-002003	28	H022003
01010-81225	H1833-002001	29	H023001
01010-81225	H1840-002001	21	H024001
01010-81225	H1840-002001	23	H024001
01010-81225	K0350-001001	5	K011001
01010-81225	K0700-001001	19	K012001
01010-81225	K0700-001001	25	K012001
01010-81225	K0700-001001	42	K012001
01010-81225	M1130-002001	11	M003001
01010-81225	M1130-002001	18	M003001
01010-81225	M1130-002001	21	M003001
01010-81225	M1130-002001	27	M003001
01010-81225	M1130-002001	33	M003001
01010-81225	M1130-002001	47	M003001
01010-81225	M1130-002001	5	M003001
01010-81225	M1140-002001	12	M004001
01010-81225	M1140-002001	18	M004001
01010-81225	M1140-002001	4	M004001
01010-81225	M1140-002001	9	M004001
01010-81225	M1150-002001	17	M005001
01010-81225	M1150-002001	20	M005001
01010-81225	M1150-002003	14	M005003
01010-81225	M1150-002003	4	M005003
01010-81225	M1150-002003	8	M005003
01010-81225	R0110-002002	17	R001002
01010-81225	R0110-002002	4	R001002
01010-81230	B0000-001002	4	B001002
01010-81230	B0200-009002	9	B009002
01010-81230	C0100-002005	10	C001005
01010-81230	E0200-002004	46	E002004
01010-81230	E0200-002004	53	E002004
01010-81230	E0200-002005	7	E002005
01010-81230	E0450-002001	10	E008001
01010-81230	H0110-001001	24	H001001
01010-81230	H0110-001001	32	H001001
01010-81230	H0110-002001	28	H002001

PARTS Nº	FIG. Nº	INDEX	PAGE
01010-81230	H0110-002001	36	H002001
01010-81230	H1270-008004	11	H016004
01010-81230	H1270-008004	16	H016004
01010-81230	J1110-002001	14	J001001
01010-81230	J1110-002001	4	J001001
01010-81230	J1110-002001	9	J001001
01010-81230	K1110-006030	5	K013030
01010-81230	K1110-010031	5	K014031
01010-81230	M1110-002001	26	M001001
01010-81230	M1120-003001	5	M002001
01010-81230	M1130-002001	44	M003001
01010-81230	M1130-002001	49	M003001
01010-81230	M1130-002001	51	M003001
01010-81230	M1140-002001	27	M004001
01010-81230	M1140-002001	33	M004001
01010-81230	M1150-002001	32	M005001
01010-81230	M1150-002001	35	M005001
01010-81230	M1150-002002	14	M005002
01010-81230	M1150-002002	16	M005002
01010-81230	M1150-002002	18	M005002
01010-81230	M1150-002002	21	M005002
01010-81230	M1150-002003	17	M005003
01010-81230	M1150-002003	19	M005003
01010-81230	M1150-002003	22	M005003
01010-81230	M1150-002003	29	M005003
01010-81230	M1150-002003	32	M005003
01010-81230	M1150-002003	34	M005003
01010-81230	M1210-002001	28	M006001
01010-81230	M1210-002001	3	M006001
01010-81230	M1210-002001	30	M006001
01010-81230	M1210-002001	32	M006001
01010-81230	M1210-002001	36	M006001
01010-81230	M1210-002001	38	M006001
01010-81230	M1210-002001	5	M006001
01010-81230	M1220-001001	13	M007001
01010-81230	M1220-001001	17	M007001
01010-81230	M1420-003001	7	M010001
01010-81230	M1810-002001	10	M013001
01010-81230	M1810-002001	12	M013001
01010-81230	M1810-002001	18	M013001
01010-81230	M1810-002001	21	M013001
01010-81230	M1810-002001	28	M013001
01010-81230	M1810-002001	31	M013001
01010-81230	M1810-002001	34	M013001
01010-81230	M1810-002001	36	M013001
01010-81230	M1810-002001	38	M013001
01010-81230	M1810-002001	40	M013001
01010-81230	M1810-002001	42	M013001
01010-81230	M1810-002001	45	M013001
01010-81230	M1810-002001	6	M013001
01010-81230	M1810-002001	8	M013001
01010-81230	P1210-001003	39	P002003
01010-81230	T1110-002002	11	T001002
01010-81230	T1110-002003	14	T001003
01010-81230	T1110-002003	34	T001003
01010-81230	T1110-002003	44	T001003
01010-81230	T1110-002005	19	T001005
01010-81230	T1110-002006	7	T001006
01010-81230	T1110-005002	11	T002002
01010-81230	T1110-005003	14	T002003
01010-81230	T1110-005003	34	T002003
01010-81230	T1110-005003	44	T002003
01010-81230	T1110-005006	7	T002006
01010-81230	T1200-004001	10	T006001
01010-81230	T1200-004001	15	T006001
01010-81230	T1200-008001	12	T007001
01010-81230	T1200-008001	17	T007001
01010-81230	T1200-008005	12	T007005
01010-81230	T1200-008005	31	T007005
01010-81230	T1200-008005	37	T007005
01010-81230	T1200-014001	10	T008001
01010-81230	T1200-014001	15	T008001
01010-81230	T1200-018001	12	T009001
01010-81230	T1200-018001	17	T009001
01010-81230	T1200-018005	12	T009005
01010-81230	T1200-018005	31	T009005
01010-81230	T1200-018005	37	T009005
01010-81230	T1200-022001	10	T010001
01010-81230	T1200-022001	15	T010001
01010-81235	D0200-002001	29	D002001
01010-81235	H0311-001001	6	H008001
01010-81235	H0320-001001	5	H010001
01010-81235	H0330-001001	26	H011001
01010-81235	H0330-002001	26	H012001
01010-81235	H1210-001001	11	H014001
01010-81235	H1210-001001	15	H014001
01010-81235	J1310-002001	9	J002001
01010-81235	K1120-001001	12	K015001
01010-81235	R1140-001001	3	R009001
01010-81235	T1110-002002	5	T001002
01010-81235	T1110-002005	22	T001005
01010-81235	T1110-005002	5	T002002
01010-81240	H0320-001001	3	H010001
01010-81240	H0330-001001	24	H011001
01010-81240	H0330-001001	3	H011001
01010-81240	H0330-001001	5	H011001
01010-81240	H0330-002001	24	H012001
01010-81240	H0330-002001	3	H012001
01010-81240	H0330-002001	5	H012001
01010-81240	H1270-008001	13	H016001
01010-81240	H1270-008001	2	H016001
01010-81240	K0700-001001	47	K012001
01010-81240	K1120-001001	6	K015001
01010-81240	M1140-002001	35	M004001
01010-81240	M1310-001001	2	M008001
01010-81245	E0200-002001	4	E002001
01010-81245	H0312-002001	19	H009001
01010-81245	H1270-008003	48	H016003
01010-81245	H1270-008003	9	H016003
01010-81245	K1110-006023	29	K013023
01010-81245	K1110-010023	29	K014023
01010-81245	T1200-008005	28	T007005
01010-81245	T1200-008005	40	T007005
01010-81245	T1200-008005	9	T007005
01010-81245	T1200-018005	28	T009005
01010-81245	T1200-018005	40	T009005
01010-81245	T1200-018005	9	T009005
01010-81250	D0200-002001	18	D002001
01010-81250	H1270-008001	30	H016001
01010-81250	H1270-008001	32	H016001
01010-81250	K0350-001001	2	K011001
01010-81250	K0700-001001	28	K012001
01010-81250	N1210-002005	34	N002005
01010-81255	H1810-001001	15	H019001
01010-81255	H1810-002001	15	H020001
01010-81255	N1310-001002	23	N003002
01010-81260	E0200-002004	38	E002004
01010-81260	K0700-001001	31	K012001
01010-81260	K0700-001001	44	K012001
01010-81265	E0200-002004	49	E002004
01010-81265	E0200-002004	57	E002004
01010-81265	H1833-002001	20	H023001
01010-81275	B0000-001002	9	B001002
01010-81275	D0200-002001	15	D002001
01010-81275	D0200-002002	23	D002002
01010-81275	T1110-002005	10	T001005
01010-81275	T1110-002005	25	T001005
01010-81280	H1270-008004	26	H016004
01010-81280	K0220-001001	3	K004001
01010-81285	E0200-002003	22	E002003
01010-81285	E0200-002003	9	E002003
01010-81285	H1270-008001	16	H016001
01010-81285	H1270-008003	38	H016003
01010-81295	H1270-008003	33	H016003
01010-81440	K0700-001001	4	K012001
01010-81440	N1210-002004	24	N002004
01010-81635	C0100-002005	24	C001005
01010-81635	C0100-002005	42	C001005
01010-81635	D0100-001001	16	D001001
01010-81635	H0110-001001	43	H001001
01010-81635	H0110-002001	47	H002001
01010-81635	H0120-002024	13	H003024
01010-81635	H0120-006024	13	H004024
01010-81635	H1833-002001	26	H023001
01010-81640	C0100-002005	44	C001005
01010-81640	H0120-002024	2	H003024
01010-81640	H0120-006024	2	H004024
01010-81640	J1310-002001	3	J002001
01010-81640	T1125-002001	4	T004001
01010-81645	H0120-002024	4	H003024
01010-81645	H0120-006024	4	H004024
01010-81645	T1110-002005	7	T001005
01010-81665	T1110-002005	15	T001005
01010-81670	T1120-002001	19	T003001
01010-81670	T1120-002002	19	T003002
01010-81680	R0300-001001	9	R003001
01010-81875	T1140-002001	23	T005001
01010-81875	T1200-004002	17	T006002
01010-81875	T1200-008002	17	T007002
01010-81875	T1200-014002	17	T008002
01010-81875	T1200-018002	17	T009002
01010-81875	T1200-022002	17	T010002
01010-82065	R1100-001001	5	R007001
01010-82065	R1100-002001	5	R008001
01010-82070	N1210-002005	32	N002005
01010-D0640	K0230-003001	16	K007001
01010-D0820	K0230-003001	26	K007001
01010-D0820	K1110-006019	17	K013019
01010-D0820	K1110-010019	17	K014019
01010-D0825	K0110-002002	5	K002002
01010-D0825	K1110-006016	11	K013016
01010-D0825	K1110-006016	7	K013016
01010-D0825	K1110-010016	11	K014016
01010-D0825	K1110-010016	7	K014016
01010-D1020	E0310-004001	2	E004001
01010-D1025	E0310-003001	2	E003001
01010-D1025	K0230-003001	21	K007001
01010-D1025	K1110-006012	8	K013012
01010-D1025	K1110-010012	8	K014012
01010-D1035	K1110-010030	7	K014030
01010-D1045	K1110-006027	11	K013027
01010-D1045	K1110-010027	11	K014027
01010-D1045	K1110-010030	10	K014030
01010-D1060	E0310-003001	5	E003001
01010-D1060	E0310-004001	5	E004001
01010-D1220	K0220-001001	8	K004001
01010-D1220	K0230-003001	14	K007001
01010-D1225	K0230-001001	3	K005001
01010-D1225	K1110-006013	26	K013013
01010-D1225	K1110-010013	26	K014013
01010-D1230	K1110-006043	2	K013043
01010-D1230	K1110-010044	2	K014044
01010-D1245	K0230-003001	18	K007001
01010-D1275	K0230-003001	10	K007001
01010-D1650	K1110-006023	31	K013023
01010-D1650	K1110-010023	31	K014023
01011-61455	H0120-002007	26	H003007
01011-61455	H0120-006007	26	H004007
01011-81025	H0312-002001	21	H009001
01011-81205	C0100-002002	6	C001002
01011-81210	E0200-002002	53	E002002
01011-81655	B0100-008001	19	B008001
01011-83065	K1120-001001	9	K015001
01011-D1245	K0230-002001	3	K006001
01011-D1245	K0230-003001	4	K007001
01011-D1245	K0230-003001	7	K007001
01023-10306	K1110-006025	22	K013025
01023-10306	K1110-010025	22	K014025
01023-10508	K1110-006043	40	K013043
01023-10508	K1110-010044	40	K014044
01023-10612	K1110-006006	4	K013006
01023-10612	K1110-006006	6	K013006
01023-10612	K1110-010006	4	K014006
01023-10612	K1110-010006	6	K014006
01023-20412	K1110-006010	2	K013010
01023-20412	K1110-010010	2	K014010
01023-20416	K1110-006010	8	K013010
01023-20416	K1110-006027	20	K013027
01023-20416	K1110-010010	8	K014010
01023-20416	K1110-010027	20	K014027
01023-20512	K1110-006039	12	K013039
01023-20512	K1110-006039	16	K013039
01023-20512	K1110-006044	12	K013044
01023-20512	K1110-006044	16	K013044
01023-20512	K1110-010040	12	K014040
01023-20512	K1110-010040	16	K014040
01023-20512	K1110-010045	12	K014045
01023-20512	K1110-010045	16	K014045
01023-20512	M1810-002001	17	M013001
01023-20612	K0220-001001	11	K004001
01023-20612	K1110-006003	10	K013003
01023-20612	K1110-010003	10	K014003
01023-20616	K1110-006003	16	K013003
01023-20616	K1110-006003	18	K013003
01023-20616	K1110-006011	30	K013011
01023-20616	K1110-010003	16	K014003
01023-20616	K1110-010003	18	K014003
01023-20616	K1110-010011	30	K014011
01023-20620	K1110-006008	10	K013008
01023-20620	K1110-010008	10	K014008
01023-60320	K1110-006038	26	K013038
01023-60320	K1110-010039	26	K014039
01023-60410	K1110-006038	10	K013038
01023-60410	K1110-010039	10	K014039
01023-60510	K1110-006038	3	K013038
01023-60510	K1110-010039	3	K014039
01023-60512	K1110-006012	2	K013012
01023-60512	K1110-010012	2	K014012
01023-60620	K1110-006022	4	K013022
01023-60620	K1110-010022	4	K014022
01023-70412	K1110-006010	12	K013010
01023-70412	K1110-010010	12	K014010
01224-40616	M1210-002001	27	M006001
01240-00616	K1110-006006	7	K013006
01240-00616	K1110-010006	7	K014006
01240-01025	K1110-006007	16	K013007
01240-01025	K1110-010007	16	K014007
01245-00612	K1110-006014	23	K013014
01245-00612	K1110-010014	23	K014014
01245-00616	K1110-006002	16	K013002
01245-00616	K1110-006002	45	K013002
01245-00616	K1110-006004	9	K013004
01245-00616	K1110-006011	17	K013011
01245-00616	K1110-006011	23	K013011
01245-00616	K1110-006013	9	K013013
01245-00616	K1110-006014	17	K013014
01245-00616	K1110-006015	4	K013015
01245-00616	K1110-006016	5	K013016
01245-00616	K1110-006037	12	K013037
01245-00616	K1110-006037	18	K013037
01245-00616	K1110-006037	23	K013037
01245-00616	K1110-006043	13	K013043
01245-00616	K1110-006043	20	K013043
01245-00616	K1110-006043	23	K013043
01245-00616	K1110-010002	16	K014002
01245-00616	K1110-010002	45	K014002
01245-00616	K1110-010004	9	K014004
01245-00616	K1110-010011	17	K014011
01245-00616	K1110-010011	23	K014011
01245-00616	K1110-010013	9	K014013
01245-00616	K1110-010014	17	K014014
01245-00616	K1110-010015	4	K014015
01245-00616	K1110-010016	5	K014016
01245-00616	K1110-010038	12	K014038
01245-00616	K1110-010038	18	K014038
01245-00616	K1110-010038	23	K014038
01245-00616	K1110-010044	13	K014044
01245-00616	K1110-010044	20	K014044
01245-00616	K1110-010044	23	K014044
01245-00620	K1110-006004	21	K013004

PARTS Nº	FIG. Nº	INDEX	PAGE
01245-00620	K1110-006039	9	K013039
01245-00620	K1110-006044	9	K013044
01245-00620	K1110-010004	21	K014004
01245-00620	K1110-010040	9	K014040
01245-00620	K1110-010045	9	K014045
01245-00816	K1110-006002	19	K013002
01245-00816	K1110-006002	26	K013002
01245-00816	K1110-006002	29	K013002
01245-00816	K1110-006013	18	K013013
01245-00816	K1110-010002	19	K014002
01245-00816	K1110-010002	26	K014002
01245-00816	K1110-010002	29	K014002
01245-00816	K1110-010013	18	K014013
01245-00820	K1110-006004	18	K013004
01245-00820	K1110-006046	5	K013046
01245-00820	K1110-010004	18	K014004
01245-00820	K1110-010047	5	K014047
01245-01016	K1110-006013	14	K013013
01245-01016	K1110-006013	7	K013013
01245-01016	K1110-010013	14	K014013
01245-01016	K1110-010013	7	K014013
01245-01025	K1110-006030	10	K013030
01245-01025	K1110-006030	8	K013030
01245-01025	K1110-010031	10	K014031
01245-01025	K1110-010031	8	K014031
01252-30625	K1110-010029	15	K014029
01252-41025	K1110-006034	10	K013034
01252-41025	K1110-006040	10	K013040
01252-41025	K1110-010035	10	K014035
01252-41025	K1110-010041	10	K014041
01252-60612	K1110-010029	24	K014029
01252-60635	H0120-002013	19	H003013
01252-60635	H0120-006013	19	H004013
01252-60635	H0210-001011	14	H005011
01252-60635	H0210-001011	4	H005011
01252-60635	H0210-001011	9	H005011
01252-60816	H0120-002013	12	H003013
01252-60816	H0120-006013	12	H004013
01252-60820	H0120-002004	13	H003004
01252-60820	H0120-002018	10	H003018
01252-60820	H0120-006004	13	H004004
01252-60820	H0120-006018	10	H004018
01252-60825	H0120-002015	11	H003015
01252-60825	H0120-006015	11	H004015
01252-60825	N1210-002003	22	N002003
01252-60835	K1110-006026	19	K013026
01252-60835	K1110-010026	19	K014026
01252-60845	H0120-002014	16	H003014
01252-60845	H0120-002019	5	H003019
01252-60845	H0120-006014	16	H004014
01252-60845	H0120-006019	5	H004019
01252-60855	H0120-002013	18	H003013
01252-60855	H0120-006013	18	H004013
01252-61030	H1270-008002	7	H016002
01252-61040	H0120-002014	6	H003014
01252-61040	H0120-006014	6	H004014
01252-61040	H1270-008002	6	H016002
01252-61045	H0120-002010	14	H003010
01252-61045	H0120-006010	14	H004010
01252-61075	H0120-002016	26	H003016
01252-61075	H0120-002017	26	H003017
01252-61075	H0120-006016	26	H004016
01252-61075	H0120-006017	26	H004017
01252-61080	H0120-002015	17	H003015
01252-61080	H0120-002021	20	H003021
01252-61080	H0120-006015	17	H004015
01252-61080	H0120-006021	20	H004021
01252-61230	H0210-001003	22	H005003
01252-61230	H0210-001007	19	H005007
01252-61235	P1210-001001	20	P002001
01252-61440	H0210-001004	29	H005004
01252-61440	H0210-001005	8	H005005
01252-61440	H0210-001008	29	H005008
01252-61440	H0210-001009	8	H005009
01252-70516	H0110-001001	38	H001001
01252-70516	H0110-002001	42	H002001
01252-70816	K0110-002002	2	K002002
01252-70816	K1110-006038	18	K013038
01252-70816	K1110-010039	18	K014039
01252-71030	M1410-002001	4	M009001
01252-71030	M1420-003001	4	M010001
01252-80616	K0330-001001	2	K010001
01252-80616	K1110-006002	23	K013002
01252-80616	K1110-010002	23	K014002
01252-80820	K1110-006039	3	K013039
01252-80820	K1110-006044	3	K013044
01252-80820	K1110-010040	3	K014040
01252-80820	K1110-010045	3	K014045
01252-80825	K0110-002001	1	K002001
01310-01216	T1120-002001	28	T003001
01310-01216	T1120-002002	28	T003002
01310-01216	T1140-002001	32	T005001
01310-01216	T1200-004002	26	T006002
01310-01216	T1200-008002	26	T007002
01310-01216	T1200-014002	26	T008002
01310-01216	T1200-018002	26	T009002
01310-01216	T1200-022002	26	T010002
01370-00420	K1110-006008	12	K013008
01370-00420	K1110-010008	12	K014008
01370-00508	M1510-002001	11	M011001
01370-10308	K1110-006023	16	K013023
01370-10308	K1110-010023	16	K014023
01370-20308	K1110-006023	19	K013023
01370-20308	K1110-010023	19	K014023
01370-30416	K1110-006011	27	K013011
01370-30416	K1110-010011	27	K014011
01370-40510	K1110-006039	14	K013039
01370-40510	K1110-006044	14	K013044
01370-40510	K1110-010040	14	K014040
01370-40510	K1110-010045	14	K014045
01370-40610	K1110-006039	19	K013039
01370-40610	K1110-006044	19	K013044
01370-40610	K1110-010040	19	K014040
01370-40610	K1110-010045	19	K014045
01434-10616	C0100-002002	26	C001002
01435-00610	K1110-006020	10	K013020
01435-00610	K1110-006020	12	K013020
01435-00610	K1110-006020	14	K013020
01435-00610	K1110-006020	16	K013020
01435-00610	K1110-006020	19	K013020
01435-00610	K1110-006021	6	K013021
01435-00610	K1110-010020	10	K014020
01435-00610	K1110-010020	12	K014020
01435-00610	K1110-010020	14	K014020
01435-00610	K1110-010020	16	K014020
01435-00610	K1110-010020	19	K014020
01435-00610	K1110-010021	6	K014021
01435-00612	K1110-006002	35	K013002
01435-00612	K1110-006011	12	K013011
01435-00612	K1110-006011	19	K013011
01435-00612	K1110-006011	25	K013011
01435-00612	K1110-006011	8	K013011
01435-00612	K1110-006017	10	K013017
01435-00612	K1110-006017	6	K013017
01435-00612	K1110-006021	9	K013021
01435-00612	K1110-006023	34	K013023
01435-00612	K1110-006037	20	K013037
01435-00612	K1110-006043	17	K013043
01435-00612	K1110-010002	35	K014002
01435-00612	K1110-010011	12	K014011
01435-00612	K1110-010011	19	K014011
01435-00612	K1110-010011	25	K014011
01435-00612	K1110-010011	8	K014011
01435-00612	K1110-010017	10	K014017
01435-00612	K1110-010017	6	K014017
01435-00612	K1110-010021	9	K014021
01435-00612	K1110-010023	34	K014023
01435-00612	K1110-010038	20	K014038
01435-00612	K1110-010044	17	K014044
01435-00616	K1110-006003	2	K013003

PARTS Nº	FIG. Nº	INDEX	PAGE
01435-00616	K1110-006008	2	K013008
01435-00616	K1110-006014	2	K013014
01435-00616	K1110-006014	21	K013014
01435-00616	K1110-006014	6	K013014
01435-00616	K1110-010003	2	K014003
01435-00616	K1110-010008	2	K014008
01435-00616	K1110-010014	2	K014014
01435-00616	K1110-010014	21	K014014
01435-00616	K1110-010014	6	K014014
01435-00625	K0700-001001	37	K012001
01435-00625	K0700-001001	38	K012001
01435-00630	K0700-001001	34	K012001
01435-00630	K0700-001001	36	K012001
01435-00816	K1110-006022	3	K013022
01435-00816	K1110-010022	3	K014022
01435-00820	A2210-001001	2	B001001
01435-00820	B0000-002001	2	B002001
01435-00820	B0000-003001	13	B003001
01435-00820	K1110-006014	8	K013014
01435-00820	K1110-006020	4	K013020
01435-00820	K1110-006020	6	K013020
01435-00820	K1110-010014	8	K014014
01435-00820	K1110-010020	4	K014020
01435-00820	K1110-010020	6	K014020
01435-00825	APP10-001001	9	G001001
01435-00825	AWP00-001001	2	E005001
01435-00860	K1110-006020	2	K013020
01435-00860	K1110-010020	2	K014020
01435-01020	B0000-005001	2	B005001
01435-01025	B0000-003001	10	B003001
01435-01030	B0000-003001	8	B003001
01435-01035	ASP00-001001	2	E002001
01435-01220	K1110-006005	18	K013005
01435-01220	K1110-006005	19	K013005
01435-01220	K1110-010005	18	K014005
01435-01220	K1110-010005	19	K014005
01435-01235	B0000-003001	6	B003001
01435-40610	K1110-006004	13	K013004
01435-40610	K1110-006011	32	K013011
01435-40610	K1110-010004	13	K014004
01435-40610	K1110-010011	32	K014011
01435-40612	K0310-001001	5	K008001
01435-40612	K0310-002001	5	K009001
01435-40616	K0310-001001	2	K008001
01435-40616	K0310-002001	2	K009001
01435-40616	K1110-006003	14	K013003
01435-40616	K1110-006007	5	K013007
01435-40616	K1110-006018	12	K013018
01435-40616	K1110-006023	11	K013023
01435-40616	K1110-006023	22	K013023
01435-40616	K1110-010003	14	K014003
01435-40616	K1110-010007	5	K014007
01435-40616	K1110-010018	12	K014018
01435-40616	K1110-010023	11	K014023
01435-40616	K1110-010023	22	K014023
01435-40620	K1110-006023	25	K013023
01435-40620	K1110-006047	7	K013047
01435-40620	K1110-010023	25	K014023
01435-40620	K1110-010048	7	K014048
01435-40812	K1110-006002	11	K013002
01435-40812	K1110-006010	9	K013010
01435-40812	K1110-006021	2	K013021
01435-40812	K1110-010002	11	K014002
01435-40812	K1110-010010	9	K014010
01435-40812	K1110-010021	2	K014021
01435-40816	K1110-006039	6	K013039
01435-40816	K1110-006044	6	K013044
01435-40816	K1110-010040	6	K014040
01435-40816	K1110-010045	6	K014045
01435-40820	K1110-006019	11	K013019
01435-40820	K1110-006019	6	K013019
01435-40820	K1110-010019	11	K014019
01435-40820	K1110-010019	6	K014019
01435-40825	K1110-006007	2	K013007
01435-40825	K1110-006012	6	K013012
01435-40825	K1110-010007	2	K014007
01435-40825	K1110-010012	6	K014012
01580-01008	K1110-010030	38	K014030
01580-01008	K1110-010030	41	K014030
01580-10403	K1110-006023	8	K013023
01580-10403	K1110-010023	8	K014023
01580-10605	K0330-001001	4	K010001
01580-10806	H0210-001004	26	H005004
01580-10806	H0210-001008	26	H005008
01580-11008	K1110-006002	37	K013002
01580-11008	K1110-006007	12	K013007
01580-11008	K1110-010002	37	K014002
01580-11008	K1110-010007	12	K014007
01580-11008	M1130-002001	36	M003001
01580-11008	M1140-002001	24	M004001
01580-11008	R1100-001001	11	R007001
01580-11008	R1100-002001	11	R008001
01580-11210	M1110-002001	7	M001001
01580-11613	B0100-008001	14	B008001
01580-11815	R1200-001001	7	R010001
01580-12016	K1120-001001	3	K015001
01580-12016	R1100-001001	7	R007001
01580-12016	R1100-002001	7	R008001
01580-12016	T1200-004003	14	T006003
01580-12016	T1200-004003	19	T006003
01580-12016	T1200-004003	22	T006003
01580-12016	T1200-004003	9	T006003
01580-12016	T1200-008003	14	T007003
01580-12016	T1200-008003	19	T007003
01580-12016	T1200-008003	22	T007003
01580-12016	T1200-008003	9	T007003
01580-12016	T1200-014003	14	T008003
01580-12016	T1200-014003	19	T008003
01580-12016	T1200-014003	22	T008003
01580-12016	T1200-014003	9	T008003
01580-12016	T1200-018003	14	T009003
01580-12016	T1200-018003	19	T009003
01580-12016	T1200-018003	22	T009003
01580-12016	T1200-018003	9	T009003
01580-12016	T1200-022003	14	T010003
01580-12016	T1200-022003	19	T010003
01580-12016	T1200-022003	22	T010003
01580-12016	T1200-022003	9	T010003
01580-40605	K1110-006039	10	K013039
01580-40605	K1110-006044	10	K013044
01580-40605	K1110-010040	10	K014040
01580-40605	K1110-010045	10	K014045
01583-11408	H0210-001010	12	H005010
01583-11408	K1110-010030	34	K014030
01583-11811	K1110-006002	32	K013002
01583-11811	K1110-010002	32	K014002
01584-00605	AOP10-001001	7	B010001
01584-00605	AWR00-001001	11	F002001
01584-01008	K1110-006006	13	K013006
01584-01008	K1110-010006	13	K014006
01584-30806	K1110-006004	3	K013004
01584-30806	K1110-010004	3	K014004
01584-31008	K1110-006002	39	K013002
01584-31008	K1110-010002	39	K014002
01594-01008	B0000-003001	3	B003001
01597-01009	C0100-002005	14	C001005
01597-01009	C0100-002005	58	C001005
01597-01009	N1210-002005	19	N002005
01597-01009	T1120-002001	41	T003001
01597-01009	T1120-002002	41	T003002
01597-01009	T1140-002001	50	T005001
01597-01009	T1200-004002	38	T006002
01597-01009	T1200-008002	38	T007002
01597-01009	T1200-014002	38	T008002
01597-01009	T1200-018002	38	T009002
01597-01009	T1200-022002	38	T010002
01601-20410	K1110-006023	10	K013023
01601-20410	K1110-010023	10	K014023
01601-20513	H0110-001001	39	H001001
01601-20513	H0110-002001	43	H002001

PARTS Nº	FIG. Nº	INDEX	PAGE
01601-20513	K1110-006043	41	K013043
01601-20513	K1110-010044	41	K014044
01640-20408	K1110-006023	9	K013023
01640-20408	K1110-010023	9	K014023
01640-20610	K0330-001001	5	K010001
01640-20816	M1110-002001	11	M001001
01640-20816	M1110-002001	14	M001001
01640-21016	K1110-006030	17	K013030
01640-21016	K1110-010031	17	K014031
01643-11232	K0160-002001	4	K003001
01643-30623	C0100-002002	27	C001002
01643-30623	D0100-001001	10	D001001
01643-30623	E0200-002001	21	E002001
01643-30623	E0450-002001	13	E008001
01643-30623	E0450-002001	16	E008001
01643-30623	K1110-006010	1	K013010
01643-30623	K1110-006037	15	K013037
01643-30623	K1110-006037	6	K013037
01643-30623	K1110-006038	5	K013038
01643-30623	K1110-006043	10	K013043
01643-30623	K1110-006043	16	K013043
01643-30623	K1110-010010	1	K014010
01643-30623	K1110-010038	15	K014038
01643-30623	K1110-010038	6	K014038
01643-30623	K1110-010039	5	K014039
01643-30623	K1110-010044	10	K014044
01643-30623	K1110-010044	16	K014044
01643-30623	M1130-002001	25	M003001
01643-30623	M1130-002001	31	M003001
01643-30623	M1140-002001	16	M004001
01643-30623	M1140-002001	22	M004001
01643-30623	M1150-002001	24	M005001
01643-30823	M1220-001001	11	M007001
01643-30823	B0000-001002	3	B001002
01643-30823	C0100-002004	16	C001004
01643-30823	C0100-002004	6	C001004
01643-30823	D0200-002002	34	D002002
01643-30823	E0200-002001	15	E002001
01643-30823	E0200-002001	17	E002001
01643-30823	E0200-002001	19	E002001
01643-30823	E0410-001001	4	E006001
01643-30823	E0450-002001	9	E008001
01643-30823	K0110-002002	3	K002002
01643-30823	K0700-001001	12	K012001
01643-30823	K1110-006006	17	K013006
01643-30823	K1110-006025	15	K013025
01643-30823	K1110-006036	2	K013036
01643-30823	K1110-006042	2	K013042
01643-30823	K1110-006046	3	K013046
01643-30823	K1110-006052	29	K013052

PARTS Nº	FIG. Nº	INDEX	PAGE
01643-30823	K1110-006052	31	K013052
01643-30823	K1110-010006	17	K014006
01643-30823	K1110-010025	15	K014025
01643-30823	K1110-010037	2	K014037
01643-30823	K1110-010043	2	K014043
01643-30823	K1110-010047	3	K014047
01643-30823	K1110-010053	36	K014053
01643-30823	K1110-010053	38	K014053
01643-30823	M1150-002001	29	M005001
01643-30823	N1310-001001	11	N003001
01643-31032	B0000-001001	11	B001001
01643-31032	B0000-001001	14	B001001
01643-31032	B0000-001001	4	B001001
01643-31032	B0000-001001	9	B001001
01643-31032	C0100-002001	14	C001001
01643-31032	C0100-002002	10	C001002
01643-31032	C0100-002002	13	C001002
01643-31032	C0100-002002	21	C001002
01643-31032	C0100-002003	10	C001003
01643-31032	C0100-002003	16	C001003
01643-31032	C0100-002003	25	C001003
01643-31032	C0100-002003	3	C001003
01643-31032	C0100-002003	39	C001003
01643-31032	C0100-002004	12	C001004
01643-31032	C0100-002004	19	C001004
01643-31032	C0100-002004	22	C001004
01643-31032	C0100-002005	13	C001005
01643-31032	C0100-002005	21	C001005
01643-31032	C0100-002005	28	C001005
01643-31032	C0100-002005	32	C001005
01643-31032	C0100-002005	34	C001005
01643-31032	C0100-002005	47	C001005
01643-31032	C0100-002005	57	C001005
01643-31032	C0100-002005	8	C001005
01643-31032	E0200-002001	26	E002001
01643-31032	E0200-002002	2	E002002
01643-31032	E0200-002002	48	E002002
01643-31032	E0200-002004	28	E002004
01643-31032	E0200-002005	11	E002005
01643-31032	E0200-002005	4	E002005
01643-31032	E0420-001001	4	E007001
01643-31032	H0210-002001	24	H006001
01643-31032	H0210-002001	27	H006001
01643-31032	H0210-003001	24	H007001
01643-31032	H0210-003001	27	H007001
01643-31032	H0312-002001	22	H009001
01643-31032	H0330-001001	39	H011001
01643-31032	H1270-008003	2	H016003
01643-31032	H1270-008004	21	H016004
01643-31032	H1270-008004	23	H016004

PARTS Nº	FIG. Nº	INDEX	PAGE
01643-31032	H1270-008004	34	H016004
01643-31032	H1270-008004	36	H016004
01643-31032	H1270-008004	48	H016004
01643-31032	H1310-001001	16	H017001
01643-31032	H1310-001001	18	H017001
01643-31032	H1831-001003	14	H021003
01643-31032	H1831-001003	18	H021003
01643-31032	H1831-002003	15	H022003
01643-31032	H1831-002003	19	H022003
01643-31032	K0700-001001	16	K012001
01643-31032	K1110-006007	13	K013007
01643-31032	K1110-006027	14	K013027
01643-31032	K1110-006027	2	K013027
01643-31032	K1110-006027	5	K013027
01643-31032	K1110-006028	4	K013028
01643-31032	K1110-006028	6	K013028
01643-31032	K1110-006029	4	K013029
01643-31032	K1110-006029	6	K013029
01643-31032	K1110-006032	11	K013032
01643-31032	K1110-006032	15	K013032
01643-31032	K1110-006032	19	K013032
01643-31032	K1110-006032	21	K013032
01643-31032	K1110-006032	24	K013032
01643-31032	K1110-006032	28	K013032
01643-31032	K1110-006032	3	K013032
01643-31032	K1110-006032	4	K013032
01643-31032	K1110-006032	7	K013032
01643-31032	K1110-006037	3	K013037
01643-31032	K1110-006043	45	K013043
01643-31032	K1110-006043	48	K013043
01643-31032	K1110-006048	11	K013048
01643-31032	K1110-006048	9	K013048
01643-31032	K1110-006051	15	K013051
01643-31032	K1110-006051	3	K013051
01643-31032	K1110-006051	9	K013051
01643-31032	K1110-006052	12	K013052
01643-31032	K1110-006052	3	K013052
01643-31032	K1110-010007	13	K014007
01643-31032	K1110-010027	14	K014027
01643-31032	K1110-010027	2	K014027
01643-31032	K1110-010027	5	K014027
01643-31032	K1110-010028	4	K014028
01643-31032	K1110-010028	6	K014028
01643-31032	K1110-010030	14	K014030
01643-31032	K1110-010030	4	K014030
01643-31032	K1110-010030	5	K014030
01643-31032	K1110-010033	11	K014033
01643-31032	K1110-010033	15	K014033
01643-31032	K1110-010033	19	K014033
01643-31032	K1110-010033	21	K014033

PARTS Nº	FIG. Nº	INDEX	PAGE
01643-31032	K1110-010033	24	K014033
01643-31032	K1110-010033	28	K014033
01643-31032	K1110-010033	3	K014033
01643-31032	K1110-010033	4	K014033
01643-31032	K1110-010033	7	K014033
01643-31032	K1110-010038	3	K014038
01643-31032	K1110-010044	45	K014044
01643-31032	K1110-010044	48	K014044
01643-31032	K1110-010049	11	K014049
01643-31032	K1110-010049	9	K014049
01643-31032	K1110-010052	15	K014052
01643-31032	K1110-010052	3	K014052
01643-31032	K1110-010052	9	K014052
01643-31032	K1110-010053	16	K014053
01643-31032	K1110-010053	3	K014053
01643-31032	M1210-002001	22	M006001
01643-31032	M1210-002001	25	M006001
01643-31032	M1220-001001	7	M007001
01643-31032	N1110-001001	13	N001001
01643-31032	N1210-002004	12	N002004
01643-31032	N1210-002005	20	N002005
01643-31032	N1210-002005	22	N002005
01643-31032	N1210-002005	24	N002005
01643-31032	R1100-001001	12	R007001
01643-31032	R1100-002001	12	R008001
01643-31032	T1120-002001	42	T003001
01643-31032	T1120-002002	42	T003002
01643-31032	T1140-002001	51	T005001
01643-31032	T1200-004002	39	T006002
01643-31032	T1200-008002	39	T007002
01643-31032	T1200-008005	20	T007005
01643-31032	T1200-008005	22	T007005
01643-31032	T1200-014002	39	T008002
01643-31032	T1200-018002	39	T009002
01643-31032	T1200-018005	20	T009005
01643-31032	T1200-018005	22	T009005
01643-31032	T1200-022002	39	T010002
01643-31232	B0000-001002	10	B001002
01643-31232	B0000-001002	5	B001002
01643-31232	B0100-008001	4	B008001
01643-31232	B0100-008001	8	B008001
01643-31232	B0200-009002	10	B009002
01643-31232	C0100-002001	17	C001001
01643-31232	C0100-002002	7	C001002
01643-31232	C0100-002004	3	C001004
01643-31232	C0100-002005	11	C001005
01643-31232	C0100-002005	53	C001005
01643-31232	D0200-002001	12	D002001
01643-31232	D0200-002001	16	D002001
01643-31232	D0200-002001	19	D002001

PARTS Nº	FIG. Nº	INDEX	PAGE
01643-31232	D0200-002001	22	D002001
01643-31232	D0200-002001	25	D002001
01643-31232	D0200-002001	28	D002001
01643-31232	D0200-002001	30	D002001
01643-31232	D0200-002002	12	D002002
01643-31232	D0200-002002	21	D002002
01643-31232	D0200-002002	24	D002002
01643-31232	D0200-002002	32	D002002
01643-31232	D0200-002002	36	D002002
01643-31232	E0100-001001	8	E001001
01643-31232	E0200-002001	12	E002001
01643-31232	E0200-002001	24	E002001
01643-31232	E0200-002001	5	E002001
01643-31232	E0200-002001	9	E002001
01643-31232	E0200-002002	11	E002002
01643-31232	E0200-002002	14	E002002
01643-31232	E0200-002002	17	E002002
01643-31232	E0200-002002	20	E002002
01643-31232	E0200-002002	23	E002002
01643-31232	E0200-002002	26	E002002
01643-31232	E0200-002002	29	E002002
01643-31232	E0200-002002	32	E002002
01643-31232	E0200-002002	35	E002002
01643-31232	E0200-002002	38	E002002
01643-31232	E0200-002002	42	E002002
01643-31232	E0200-002002	45	E002002
01643-31232	E0200-002002	5	E002002
01643-31232	E0200-002002	50	E002002
01643-31232	E0200-002002	54	E002002
01643-31232	E0200-002002	8	E002002
01643-31232	E0200-002003	10	E002003
01643-31232	E0200-002003	13	E002003
01643-31232	E0200-002003	16	E002003
01643-31232	E0200-002003	19	E002003
01643-31232	E0200-002003	23	E002003
01643-31232	E0200-002003	26	E002003
01643-31232	E0200-002003	29	E002003
01643-31232	E0200-002003	3	E002003
01643-31232	E0200-002003	32	E002003
01643-31232	E0200-002003	35	E002003
01643-31232	E0200-002003	38	E002003
01643-31232	E0200-002003	41	E002003
01643-31232	E0200-002003	6	E002003
01643-31232	E0200-002004	10	E002004
01643-31232	E0200-002004	13	E002004
01643-31232	E0200-002004	16	E002004
01643-31232	E0200-002004	19	E002004
01643-31232	E0200-002004	22	E002004
01643-31232	E0200-002004	25	E002004
01643-31232	E0200-002004	3	E002004

PARTS Nº	FIG. Nº	INDEX	PAGE
01643-31232	E0200-002004	32	E002004
01643-31232	E0200-002004	35	E002004
01643-31232	E0200-002004	39	E002004
01643-31232	E0200-002004	47	E002004
01643-31232	E0200-002004	50	E002004
01643-31232	E0200-002004	54	E002004
01643-31232	E0200-002004	58	E002004
01643-31232	E0200-002004	6	E002004
01643-31232	E0200-002005	8	E002005
01643-31232	E0320-002001	11	E005001
01643-31232	E0320-002001	5	E005001
01643-31232	E0320-002001	7	E005001
01643-31232	E0420-001001	10	E007001
01643-31232	E0420-001001	6	E007001
01643-31232	E0450-002001	11	E008001
01643-31232	E0450-002001	19	E008001
01643-31232	H0110-001001	25	H001001
01643-31232	H0110-001001	33	H001001
01643-31232	H0110-002001	29	H002001
01643-31232	H0110-002001	37	H002001
01643-31232	H0120-002024	11	H003024
01643-31232	H0120-006024	11	H004024
01643-31232	H0210-002001	17	H006001
01643-31232	H0210-002001	21	H006001
01643-31232	H0210-003001	17	H007001
01643-31232	H0210-003001	21	H007001
01643-31232	H0311-001001	7	H008001
01643-31232	H0312-002001	20	H009001
01643-31232	H0320-001001	4	H010001
01643-31232	H0320-001001	6	H010001
01643-31232	H0320-001001	8	H010001
01643-31232	H0330-001001	21	H011001
01643-31232	H0330-001001	25	H011001
01643-31232	H0330-001001	27	H011001
01643-31232	H0330-001001	35	H011001
01643-31232	H0330-001001	4	H011001
01643-31232	H0330-001001	6	H011001
01643-31232	H0330-001001	9	H011001
01643-31232	H0330-002001	21	H012001
01643-31232	H0330-002001	25	H012001
01643-31232	H0330-002001	27	H012001
01643-31232	H0330-002001	35	H012001
01643-31232	H0330-002001	4	H012001
01643-31232	H0330-002001	6	H012001
01643-31232	H0330-002001	9	H012001
01643-31232	H0340-001001	5	H013001
01643-31232	H0340-001001	9	H013001
01643-31232	H1210-001001	12	H014001
01643-31232	H1270-008001	14	H016001
01643-31232	H1270-008001	17	H016001

PARTS Nº	FIG. Nº	INDEX	PAGE
01643-31232	H1270-008001	3	H016001
01643-31232	H1270-008001	33	H016001
01643-31232	H1270-008003	10	H016003
01643-31232	H1270-008003	34	H016003
01643-31232	H1270-008003	37	H016003
01643-31232	H1270-008003	39	H016003
01643-31232	H1270-008003	49	H016003
01643-31232	H1270-008004	12	H016004
01643-31232	H1270-008004	15	H016004
01643-31232	H1270-008004	17	H016004
01643-31232	H1270-008004	27	H016004
01643-31232	H1270-008004	30	H016004
01643-31232	H1270-008004	40	H016004
01643-31232	H1270-008004	53	H016004
01643-31232	H1810-001001	10	H019001
01643-31232	H1810-001001	16	H019001
01643-31232	H1810-002001	10	H020001
01643-31232	H1810-002001	16	H020001
01643-31232	H1831-001003	21	H021003
01643-31232	H1831-002003	22	H022003
01643-31232	H1831-002003	29	H022003
01643-31232	H1833-002001	21	H023001
01643-31232	H1833-002001	30	H023001
01643-31232	H1840-002001	22	H024001
01643-31232	H1840-002001	24	H024001
01643-31232	J1110-002001	10	J001001
01643-31232	J1110-002001	15	J001001
01643-31232	J1110-002001	5	J001001
01643-31232	J1310-002001	10	J002001
01643-31232	K0220-001001	4	K004001
01643-31232	K0350-001001	3	K011001
01643-31232	K0350-001001	6	K011001
01643-31232	K0700-001001	20	K012001
01643-31232	K0700-001001	26	K012001
01643-31232	K0700-001001	29	K012001
01643-31232	K0700-001001	32	K012001
01643-31232	K0700-001001	43	K012001
01643-31232	K0700-001001	45	K012001
01643-31232	K0700-001001	48	K012001
01643-31232	K1110-006023	30	K013023
01643-31232	K1110-006030	6	K013030
01643-31232	K1110-010023	30	K014023
01643-31232	K1110-010031	6	K014031
01643-31232	K1120-001001	13	K015001
01643-31232	K1120-001001	7	K015001
01643-31232	M1110-002001	27	M001001
01643-31232	M1110-002001	8	M001001
01643-31232	M1120-003001	6	M002001
01643-31232	M1130-002001	12	M003001
01643-31232	M1130-002001	19	M003001
01643-31232	M1130-002001	22	M003001
01643-31232	M1130-002001	28	M003001
01643-31232	M1130-002001	34	M003001
01643-31232	M1130-002001	45	M003001
01643-31232	M1130-002001	48	M003001
01643-31232	M1130-002001	50	M003001
01643-31232	M1130-002001	52	M003001
01643-31232	M1130-002001	6	M003001
01643-31232	M1140-002001	10	M004001
01643-31232	M1140-002001	13	M004001
01643-31232	M1140-002001	19	M004001
01643-31232	M1140-002001	28	M004001
01643-31232	M1140-002001	34	M004001
01643-31232	M1140-002001	36	M004001
01643-31232	M1140-002001	5	M004001
01643-31232	M1150-002001	18	M005001
01643-31232	M1150-002001	21	M005001
01643-31232	M1150-002001	33	M005001
01643-31232	M1150-002001	36	M005001
01643-31232	M1150-002002	15	M005002
01643-31232	M1150-002002	17	M005002
01643-31232	M1150-002002	19	M005002
01643-31232	M1150-002002	22	M005002
01643-31232	M1150-002003	18	M005003
01643-31232	M1150-002003	20	M005003
01643-31232	M1150-002003	23	M005003
01643-31232	M1150-002003	30	M005003
01643-31232	M1150-002003	33	M005003
01643-31232	M1150-002003	35	M005003
01643-31232	M1150-002003	5	M005003
01643-31232	M1150-002003	9	M005003
01643-31232	M1210-002001	29	M006001
01643-31232	M1210-002001	33	M006001
01643-31232	M1210-002001	39	M006001
01643-31232	M1210-002001	6	M006001
01643-31232	M1220-001001	14	M007001
01643-31232	M1310-001001	3	M008001
01643-31232	M1420-003001	8	M010001
01643-31232	M1510-002001	13	M011001
01643-31232	M1810-002001	13	M013001
01643-31232	M1810-002001	19	M013001
01643-31232	M1810-002001	22	M013001
01643-31232	M1810-002001	29	M013001
01643-31232	M1810-002001	32	M013001
01643-31232	M1810-002001	37	M013001
01643-31232	M1810-002001	41	M013001
01643-31232	M1810-002001	43	M013001
01643-31232	M1810-002001	46	M013001
01643-31232	M1810-002001	7	M013001
01643-31232	M1810-002001	9	M013001
01643-31232	N1210-002005	35	N002005
01643-31232	N1310-001002	24	N003002
01643-31232	P1210-001003	40	P002003
01643-31232	R0110-002024	18	R001002
01643-31232	R0110-002002	5	R001002
01643-31232	R1140-001001	4	R009001
01643-31232	T1110-002002	12	T001002
01643-31232	T1110-002002	6	T001002
01643-31232	T1110-002004	10	T001004
01643-31232	T1110-002005	11	T001005
01643-31232	T1110-002005	26	T001005
01643-31232	T1110-002006	5	T001006
01643-31232	T1110-002006	8	T001006
01643-31232	T1110-005002	12	T002002
01643-31232	T1110-005002	6	T002002
01643-31232	T1110-005004	10	T002004
01643-31232	T1110-005006	5	T002006
01643-31232	T1110-005006	8	T002006
01643-31232	T1200-004001	11	T006001
01643-31232	T1200-004001	16	T006001
01643-31232	T1200-008001	13	T007001
01643-31232	T1200-008001	18	T007001
01643-31232	T1200-008005	10	T007005
01643-31232	T1200-008005	13	T007005
01643-31232	T1200-008005	29	T007005
01643-31232	T1200-008005	32	T007005
01643-31232	T1200-008005	41	T007005
01643-31232	T1200-014001	11	T008001
01643-31232	T1200-014001	16	T008001
01643-31232	T1200-018001	13	T009001
01643-31232	T1200-018001	18	T009001
01643-31232	T1200-018005	10	T009005
01643-31232	T1200-018005	13	T009005
01643-31232	T1200-018005	29	T009005
01643-31232	T1200-018005	32	T009005
01643-31232	T1200-018005	41	T009005
01643-31232	T1200-022001	11	T010001
01643-31232	T1200-022001	16	T010001
01643-31445	H0120-002007	25	H003007
01643-31445	H0120-002014	22	H003014
01643-31445	H0120-006007	25	H004007
01643-31445	H0120-006014	22	H004014
01643-31445	K0700-001001	8	K012001
01643-31445	N1210-002004	25	N002004
01643-31645	B0100-008001	15	B008001
01643-31645	B0100-008001	20	B008001
01643-31645	B0100-008001	22	B008001
01643-31645	C0100-002005	25	C001005
01643-31645	C0100-002005	45	C001005
01643-31645	D0100-001001	17	D001001

PARTS Nº	FIG. Nº	INDEX	PAGE
01643-31645	H0110-001001	44	H001001
01643-31645	H0110-002001	48	H002001
01643-31645	H0120-002024	14	H003024
01643-31645	H0120-002024	3	H003024
01643-31645	H0120-002024	5	H003024
01643-31645	H0120-006024	14	H004024
01643-31645	H0120-006024	3	H004024
01643-31645	H0120-006024	5	H004024
01643-31645	H0210-001002	9	H005002
01643-31645	H1833-002001	27	H023001
01643-31645	J1310-002001	4	J002001
01643-31645	K1110-006023	32	K013023
01643-31645	K1110-010023	32	K014023
01643-31645	P1210-001003	30	P002003
01643-31645	P1210-001003	37	P002003
01643-31645	R0110-002002	20	R001002
01643-31645	R0300-001001	10	R003001
01643-31645	T1110-002005	16	T001005
01643-31645	T1110-002005	8	T001005
01643-31645	T1125-002001	5	T004001
01643-31845	R0200-001001	12	R002001
01643-31845	R1200-001001	6	R010001
01643-32060	K1120-001001	4	K015001
01643-32060	N1210-002005	33	N002005
01643-32060	R1100-001001	6	R007001
01643-32060	R1100-002001	6	R008001
01643-32060	R1200-001001	4	R010001
01643-32060	R1200-002001	3	R011001
01643-32060	T1510-001001	18	T011001
01643-33080	K1120-001001	10	K015001
01643-50823	H0120-002019	6	H003019
01643-50823	H0120-006019	6	H004019
01643-50823	K1110-006026	20	K013026
01643-50823	K1110-010026	20	K014026
01643-51032	H0120-002014	7	H003014
01643-51032	H0120-006014	7	H004014
01643-51032	H0120-006023	29	H004023
01643-51032	H0312-002001	12	H009001
01643-51032	H0312-002001	16	H009001
01643-51032	H0312-002001	7	H009001
01643-51032	H0330-001001	32	H011001
01643-51032	H0330-002001	32	H012001
01643-51032	H1210-001001	21	H014001
01643-51032	H1210-001001	6	H014001
01643-51032	H1210-001001	8	H014001
01643-51032	H1220-001001	11	H015001
01643-51032	H1220-001001	16	H015001
01643-51032	H1220-001001	21	H015001
01643-51032	H1220-001001	5	H015001
01643-51032	H1270-008001	10	H016001
01643-51032	H1270-008001	22	H016001
01643-51032	H1270-008001	27	H016001
01643-51032	H1270-008001	7	H016001
01643-51032	H1270-008002	8	H016002
01643-51032	H1270-008003	44	H016003
01643-51032	H1270-008003	7	H016003
01643-51032	H1310-001001	11	H017001
01643-51032	H1340-001001	7	H018001
01643-51032	K1110-006034	11	K013034
01643-51032	K1110-006040	11	K013040
01643-51032	K1110-010035	11	K014035
01643-51032	K1110-010041	11	K014041
01643-51032	N1210-002005	10	N002005
01643-51032	N1310-001002	2	N003002
01643-51032	P1120-001001	3	P001001
01643-51032	T1110-002003	19	T001003
01643-51032	T1110-002003	24	T001003
01643-51032	T1110-002003	29	T001003
01643-51032	T1110-002003	39	T001003
01643-51032	T1110-002003	4	T001003
01643-51032	T1110-002003	8	T001003
01643-51032	T1110-002005	5	T001005
01643-51032	T1110-005003	19	T002003
01643-51032	T1110-005003	24	T002003
01643-51032	T1110-005003	29	T002003
01643-51032	T1110-005003	39	T002003
01643-51032	T1110-005003	4	T002003
01643-51032	T1110-005003	8	T002003
01643-51032	T1120-002001	33	T003001
01643-51032	T1120-002001	35	T003001
01643-51032	T1120-002001	39	T003001
01643-51032	T1120-002002	33	T003002
01643-51032	T1120-002002	35	T003002
01643-51032	T1120-002002	39	T003002
01643-51032	T1140-002001	40	T005001
01643-51032	T1140-002001	42	T005001
01643-51032	T1140-002001	48	T005001
01643-51032	T1200-004002	29	T006002
01643-51032	T1200-004002	31	T006002
01643-51032	T1200-004002	36	T006002
01643-51032	T1200-004004	7	T006004
01643-51032	T1200-008002	29	T007002
01643-51032	T1200-008002	31	T007002
01643-51032	T1200-008002	36	T007002
01643-51032	T1200-008004	7	T007004
01643-51032	T1200-008005	5	T007005
01643-51032	T1200-014002	29	T008002
01643-51032	T1200-014002	31	T008002
01643-51032	T1200-014002	36	T008002
01643-51032	T1200-014004	7	T008004
01643-51032	T1200-018002	29	T009002
01643-51032	T1200-018002	31	T009002
01643-51032	T1200-018002	36	T009002
01643-51032	T1200-018004	7	T009004
01643-51032	T1200-018005	5	T009005
01643-51032	T1200-022002	29	T010002
01643-51032	T1200-022002	31	T010002
01643-51032	T1200-022002	36	T010002
01643-51032	T1200-022004	7	T010004
01643-51232	D0200-002002	2	D002002
01643-51232	M1150-002003	11	M005003
01643-51232	M1150-002003	16	M005003
01643-51645	T1120-002001	20	T003001
01643-51645	T1120-002002	20	T003002
01643-70623	K0230-003001	17	K007001
01643-70623	K0330-001001	3	K010001
01643-70623	K1110-006002	17	K013002
01643-70623	K1110-006002	24	K013002
01643-70623	K1110-006002	46	K013002
01643-70623	K1110-006004	10	K013004
01643-70623	K1110-006004	22	K013004
01643-70623	K1110-006011	18	K013011
01643-70623	K1110-006011	24	K013011
01643-70623	K1110-006013	10	K013013
01643-70623	K1110-006014	18	K013014
01643-70623	K1110-006014	24	K013014
01643-70623	K1110-006015	5	K013015
01643-70623	K1110-006037	13	K013037
01643-70623	K1110-006037	19	K013037
01643-70623	K1110-006037	24	K013037
01643-70623	K1110-006043	14	K013043
01643-70623	K1110-006043	21	K013043
01643-70623	K1110-006043	24	K013043
01643-70623	K1110-010002	17	K014002
01643-70623	K1110-010002	24	K014002
01643-70623	K1110-010002	46	K014002
01643-70623	K1110-010004	10	K014004
01643-70623	K1110-010004	22	K014004
01643-70623	K1110-010011	18	K014011
01643-70623	K1110-010011	24	K014011
01643-70623	K1110-010013	10	K014013
01643-70623	K1110-010014	18	K014014
01643-70623	K1110-010014	24	K014014
01643-70623	K1110-010015	5	K014015
01643-70623	K1110-010038	13	K014038
01643-70623	K1110-010038	19	K014038
01643-70623	K1110-010038	24	K014038
01643-70623	K1110-010044	14	K014044
01643-70623	K1110-010044	21	K014044
01643-70623	K1110-010044	24	K014044

PARTS Nº	FIG. Nº	INDEX	PAGE
01643-70823	K0110-002002	6	K002002
01643-70823	K0230-003001	27	K007001
01643-70823	K0230-003001	29	K007001
01643-70823	K1110-006002	20	K013002
01643-70823	K1110-006002	27	K013002
01643-70823	K1110-006002	30	K013002
01643-70823	K1110-006013	19	K013013
01643-70823	K1110-006014	15	K013014
01643-70823	K1110-006016	12	K013016
01643-70823	K1110-006016	6	K013016
01643-70823	K1110-006016	8	K013016
01643-70823	K1110-006019	18	K013019
01643-70823	K1110-006039	4	K013039
01643-70823	K1110-006044	4	K013044
01643-70823	K1110-006046	6	K013046
01643-70823	K1110-010002	20	K014002
01643-70823	K1110-010002	27	K014002
01643-70823	K1110-010002	30	K014002
01643-70823	K1110-010013	19	K014013
01643-70823	K1110-010014	15	K014014
01643-70823	K1110-010016	12	K014016
01643-70823	K1110-010016	6	K014016
01643-70823	K1110-010016	8	K014016
01643-70823	K1110-010019	18	K014019
01643-70823	K1110-010040	4	K014040
01643-70823	K1110-010045	4	K014045
01643-70823	K1110-010047	6	K014047
01643-71032	E0310-003001	3	E003001
01643-71032	E0310-003001	6	E003001
01643-71032	E0310-004001	3	E004001
01643-71032	E0310-004001	6	E004001
01643-71032	K0230-003001	22	K007001
01643-71032	K1110-006002	40	K013002
01643-71032	K1110-006012	9	K013012
01643-71032	K1110-006013	15	K013013
01643-71032	K1110-006013	8	K013013
01643-71032	K1110-006027	12	K013027
01643-71032	K1110-006030	16	K013030
01643-71032	K1110-010002	40	K014002
01643-71032	K1110-010012	9	K014012
01643-71032	K1110-010013	15	K014013
01643-71032	K1110-010013	8	K014013
01643-71032	K1110-010027	12	K014027
01643-71032	K1110-010030	11	K014030
01643-71032	K1110-010030	8	K014030
01643-71032	K1110-010031	16	K014031
01643-71232	K0220-001001	9	K004001
01643-71232	K0230-001001	4	K005001
01643-71232	K0230-002001	4	K006001
01643-71232	K0230-003001	11	K007001
01643-71232	K0230-003001	15	K007001
01643-71232	K0230-003001	19	K007001
01643-71232	K0230-003001	5	K007001
01643-71232	K0230-003001	8	K007001
01643-71232	K1110-006013	27	K013013
01643-71232	K1110-006043	3	K013043
01643-71232	K1110-010013	27	K014013
01643-71232	K1110-010044	3	K014044
01643-72260	N1110-001001	16	N001001
01643-72260	N1110-001001	5	N001001
01803-02430	T1510-001001	22	T011001
02030-70757	K0160-002001	2	K003001
02760-00218	H1831-002003	25	H022003
02760-00219	H1831-002003	24	H022003
02760-00224	P1120-001001	23	P001001
02762-00325	D0200-002001	2	D002001
02762-00335	D0200-002001	1	D002001
02762-00423	P1120-001001	20	P001001
02762-005A5	N1210-002005	5	N002005
02762-00608	H0330-001001	16	H011001
02762-00608	H0330-002001	16	H012001
02763-00508	H0340-001001	1	H013001
02781-0021D	K1110-006052	16	K013052
02781-0021D	K1110-006052	7	K013052
02781-0021D	K1110-010053	20	K014053
02781-0021D	K1110-010053	7	K014053
02781-0031D	K1110-006052	13	K013052
02781-0031D	K1110-006052	4	K013052
02781-0031D	K1110-010053	17	K014053
02781-0031D	K1110-010053	4	K014053
02781-00422	P1120-001001	6	P001001
02781-00628	H0110-001001	6	H001001
02781-00628	H0110-002001	6	H002001
02782-10214	H1270-008004	49	H016004
02782-10311	D0200-002002	5	D002002
02782-10311	H0110-001001	15	H001001
02782-10311	H0110-002001	15	H002001
02782-10311	H0120-002022	9	H003022
02782-10311	H0120-006022	9	H004022
02782-10315	C0100-002004	7	C001004
02782-10315	C0100-002004	8	C001004
02782-10315	H0110-001001	12	H001001
02782-10315	H0110-002001	12	H002001
02782-10522	H0110-001001	9	H001001
02782-10522	H0110-002001	9	H002001
02782-10522	N1310-001002	5	N003002
02782-10628	B0000-001001	15	B001001
02782-10628	N1310-001002	7	N003002
02782-10630	N1210-002005	28	N002005
02783-10315	H1831-001002	8	H021002
02783-10315	H1831-002001	9	H022002
02783-10522	N1210-002005	1	N002005
02783-10628	H0330-001001	13	H011001
02783-10628	H0330-002001	13	H012001
02789-00210	H0120-006023	30	H004023
02896-11008	H0110-002001	20	H002001
02896-11008	H0120-002013	14	H003013
02896-11008	H0120-002022	12	H003022
02896-11008	H0120-002022	14	H003022
02896-11008	H0120-002022	26	H003022
02896-11008	H0120-002022	4	H003022
02896-11008	H0120-002022	6	H003022
02896-11008	H0120-002022	8	H003022
02896-11008	H0120-002023	12	H003023
02896-11008	H0120-002023	18	H003023
02896-11008	H0120-002023	2	H003023
02896-11008	H0120-002023	21	H003023
02896-11008	H0120-002023	24	H003023
02896-11008	H0120-002023	4	H003023
02896-11008	H0120-002023	6	H003023
02896-11008	H0120-002023	9	H003023
02896-11008	H0120-006013	14	H004013
02896-11008	H0120-006022	12	H004022
02896-11008	H0120-006022	14	H004022
02896-11008	H0120-006022	26	H004022
02896-11008	H0120-006022	4	H004022
02896-11008	H0120-006022	6	H004022
02896-11008	H0120-006022	8	H004022
02896-11008	H0120-006023	12	H004023
02896-11008	H0120-006023	18	H004023
02896-11008	H0120-006023	2	H004023
02896-11008	H0120-006023	21	H004023
02896-11008	H0120-006023	24	H004023
02896-11008	H0120-006023	4	H004023
02896-11008	H0120-006023	6	H004023
02896-11008	H0120-006023	9	H004023
02896-11008	H0210-002001	10	H006001
02896-11008	H0210-002001	6	H006001
02896-11008	H0210-003001	10	H007001
02896-11008	H0210-003001	13	H007001
02896-11008	H0210-003001	6	H007001
02896-11008	H1270-008003	12	H016003
02896-11008	H1270-008003	15	H016003
02896-11008	H1270-008004	51	H016004
02896-11008	H1831-001002	14	H021002
02896-11008	H1831-001002	6	H021002
02896-11008	H1831-002002	15	H022002
02896-11008	H1831-002002	7	H022002
02896-11008	H1833-002001	10	H023001

PARTS Nº	FIG. Nº	INDEX	PAGE
02896-11008	H1833-002001	16	H023001
02896-11008	K1110-006027	24	K013027
02896-11008	K1110-006036	8	K013036
02896-11008	K1110-006042	8	K013042
02896-11008	K1110-006052	17	K013052
02896-11008	K1110-006052	8	K013052
02896-11008	K1110-010027	24	K014027
02896-11008	K1110-010030	19	K014030
02896-11008	K1110-010030	22	K014030
02896-11008	K1110-010030	24	K014030
02896-11008	K1110-010037	8	K014037
02896-11008	K1110-010043	8	K014043
02896-11008	K1110-010053	11	K014053
02896-11008	K1110-010053	21	K014053
02896-11008	K1110-010053	24	K014053
02896-11008	K1110-010053	8	K014053
02896-11008	N1210-002005	26	N002005
02896-11008	N1310-001002	15	N003002
02896-11008	N1310-001002	16	N003002
02896-11008	P1120-001001	10	P001001
02896-11009	D0100-001001	14	D001001
02896-11009	D0100-001001	5	D001001
02896-11009	D0200-002001	3	D002001
02896-11009	D0200-002002	6	D002002
02896-11009	H0110-001001	13	H001001
02896-11009	H0110-001001	16	H001001
02896-11009	H0110-002001	13	H002001
02896-11009	H0110-002001	16	H002001
02896-11009	H0110-002001	19	H002001
02896-11009	H0120-002022	10	H003022
02896-11009	H0120-002022	16	H003022
02896-11009	H0120-002023	15	H003023
02896-11009	H0120-006022	10	H004022
02896-11009	H0120-006022	16	H004022
02896-11009	H0120-006023	15	H004023
02896-11009	H1831-001002	9	H021002
02896-11009	H1831-002002	10	H022002
02896-11009	H1833-002001	13	H023001
02896-11009	K1110-006042	10	K013042
02896-11009	K1110-006052	14	K013052
02896-11009	K1110-006052	5	K013052
02896-11009	K1110-010043	10	K014043
02896-11009	K1110-010053	18	K014053
02896-11009	K1110-010053	5	K014053
02896-11012	N1310-001002	12	N003002
02896-11012	P1120-001001	7	P001001
02896-11015	H0110-001001	10	H001001
02896-11015	H0110-002001	10	H002001
02896-11015	N1210-002005	3	N002005
02896-11015	N1210-002005	37	N002005
02896-11015	N1210-002005	4	N002005
02896-11015	N1310-001002	14	N003002
02896-11018	B0000-001001	16	B001001
02896-11018	H0110-001001	7	H001001
02896-11018	H0110-002001	7	H002001
02896-11018	H0330-001001	15	H011001
02896-11018	H0330-002001	15	H012001
02896-11018	N1210-002005	29	N002005
02896-11018	N1310-001002	17	N003002
02896-11018	B0100-008001	10	B008001
04020-01228	H0210-001002	5	H005002
04020-01228	H0210-001003	21	H005003
04020-01228	H0210-001007	18	H005007
04020-01228	P1210-001001	32	P002001
04020-01842	N1110-001001	6	N001001
04022-04016	K1110-006025	24	K013025
04022-04016	K1110-010025	24	K014025
04025-00324	P1210-001002	31	P002002
04025-00412	T1200-008005	17	T007005
04025-00412	T1200-018005	17	T009005
04050-11612	M1220-001001	12	M007001
04050-13020	M1210-002001	20	M006001
04050-14028	N1310-001002	22	N003002
04052-10530	K1110-006007	8	K013007
04052-10530	K1110-010007	8	K014007
04052-10833	K0230-003001	28	K007001
04052-10833	K1110-006004	16	K013004
04052-10833	K1110-010004	16	K014004
04052-20833	M1110-002001	12	M001001
04052-20833	M1110-002001	15	M001001
04064-03515	N1210-002004	33	N002004
04064-04518	N1210-002002	6	N002002
04064-04518	R0110-002002	9	R001002
04064-07525	N1310-001001	6	N003001
04065-04818	H0210-001003	11	H005003
04065-04818	H0210-001007	8	H005007
04065-04818	P1210-001002	14	P002002
04065-06220	N1210-002002	9	N002002
04065-06825	H0210-001003	7	H005003
04065-07225	P1210-001002	7	P002002
04077-00085	R0110-002002	14	R001002
04120-21747	K0700-001001	52	K012001
04205-10520	K1110-006007	7	K013007
04205-10520	K1110-010007	7	K014007
04205-11038	M1210-002001	19	M006001
04205-11648	N1310-001002	21	N003002
04205-30825	M1110-002001	10	M001001
04205-30828	M1110-002001	13	M001001
04260-00635	T1140-002001	13	T005001
04260-00793	H0120-002013	36	H003013
04260-00793	H0120-006013	36	H004013
04260-01270	N1210-002004	27	N002004
04418-13060	U0100-002001	18	U001001
04418-13060	U0100-006001	18	U002001
04418-13060	U0520-003001	2	U010001
04418-13060	U0520-010001	2	U011001
04418-13060	U0520-017001	2	U012001
04418-13060	U0520-017001	4	U012001
04434-50508	K0700-001001	14	K012001
04434-50510	ASD00-001001	8	B011001
04434-50510	H0210-002001	22	H006001
04434-50510	H0210-003001	22	H007001
04434-50610	K1110-010030	40	K014030
04434-50812	H0210-002001	19	H006001
04434-50812	H0210-003001	19	H007001
04434-51010	H1831-001003	16	H021003
04434-51010	H1831-002003	17	H022003
04434-51012	E0200-002004	23	E002004
04434-51012	E0200-002004	44	E002004
04434-51012	E0200-002004	52	E002004
04434-51012	E0320-002001	8	E005001
04434-51012	E0450-002001	17	E008001
04434-51012	H1831-002003	31	H022003
04434-51012	T1110-002004	12	T001004
04434-51012	T1110-002004	8	T001004
04434-51012	T1110-005004	12	T002004
04434-51012	T1110-005004	8	T002004
04434-51208	ALG00-001001	8	B016001
04434-51212	H1831-002003	27	H022003
04434-51308	AWR00-001001	19	F002001
04434-51312	H1810-001001	12	H019001
04434-51312	H1810-002001	12	H020001
04434-51410	K1110-006032	16	K013032
04434-51410	K1110-006043	46	K013043
04434-51410	K1110-010033	16	K014033
04434-51410	K1110-010044	46	K014044
04434-51412	E0200-002004	43	E002004
04434-51412	E0200-002004	51	E002004
04434-51512	H1831-001003	19	H021003
04434-51512	H1831-002003	20	H022003
04434-51512	K0700-001001	23	K012001
04434-51612	D0200-002002	19	D002002
04434-51612	H1810-001001	13	H019001
04434-51612	H1810-002001	13	H020001
04434-51708	AFT00-001001	13	D008001
04434-51708	ALG00-001001	10	B016001
04434-51708	K1110-006022	2	K013022
04434-51708	K1110-010022	2	K014022
04434-51710	K1110-006043	43	K013043
04434-51710	K1110-010044	43	K014044

PARTS Nº	FIG. Nº	INDEX	PAGE
04434-51710	N1210-002005	18	N002005
04434-51812	D0200-002001	33	D002001
04434-51910	K1110-006032	12	K013032
04434-51910	K1110-010033	12	K014033
04434-51912	D0200-002001	10	D002001
04434-51912	D0200-002001	23	D002001
04434-51912	K0700-001001	22	K012001
04434-52110	K1110-006048	5	K013048
04434-52110	K1110-010049	5	K014049
04434-52112	D0200-002002	29	D002002
04434-52112	H1833-002001	28	H023001
04434-52112	K0700-001001	21	K012001
04434-52112	K0700-001001	41	K012001
04434-52112	T1110-002004	7	T001004
04434-52112	T1110-005004	7	T002004
04434-52212	H1831-002003	30	H022003
04434-52312	H0340-001001	3	H013001
04434-52511	A2210-001001	1	B001001
04434-52511	K1110-006022	1	K013022
04434-52511	K1110-006048	6	K013048
04434-52511	K1110-010022	1	K014022
04434-52511	K1110-010049	6	K014049
04434-52512	D0200-002001	32	D002001
04434-52512	D0200-002002	26	D002002
04434-52712	H0340-001001	7	H013001
04434-52712	H1840-002001	20	H024001
04434-53211	K1110-006051	1	K013051
04434-53211	K1110-010052	1	K014052
04434-53212	H1840-002001	19	H024001
04434-53411	K1110-006032	22	K013032
04434-53411	K1110-006032	5	K013032
04434-53411	K1110-006032	8	K013032
04434-53411	K1110-006051	7	K013051
04434-53411	K1110-010033	22	K014033
04434-53411	K1110-010033	5	K014033
04434-53411	K1110-010033	8	K014033
04434-53411	K1110-010052	7	K014052
04434-53412	B0000-001002	7	B001002
04435-51210	K1110-010030	33	K014030
04435-51512	H0120-002024	9	H003024
04435-51512	H0120-006024	9	H004024
04435-51612	H1810-001001	11	H019001
04435-51612	H1810-001001	8	H019001
04435-51612	H1810-002001	11	H020001
04435-51612	H1810-002001	8	H020001
04435-51812	D0200-002001	13	D002001
04435-51812	D0200-002001	20	D002001
04435-51812	D0200-002001	35	D002001
04435-52112	K0700-001001	50	K012001
04530-11222	H0210-001001	6	H005001
04530-11222	H0210-001006	6	H005006
06124-01616	K1110-006038	22	K013038
06124-01616	K1110-010039	22	K014039
07000-11006	P1210-001001	27	P002001
07000-11007	C0100-002001	7	C001001
07000-11007	H0120-002007	14	H003007
07000-11007	H0120-002011	4	H003011
07000-11007	H0120-002015	10	H003015
07000-11007	H0120-006007	14	H004007
07000-11007	H0120-006011	4	H004011
07000-11007	H0120-006015	10	H004015
07000-11007	K1110-006026	17	K013026
07000-11007	K1110-010026	17	K014026
07000-11008	H1831-001001	24	H021001
07000-11008	H1831-002001	23	H022001
07000-11008	K1110-010029	21	K014029
07000-11009	H0120-002011	2	H003011
07000-11009	H0120-002013	37	H003013
07000-11009	H0120-002018	11	H003018
07000-11009	H0120-006011	2	H004011
07000-11009	H0120-006013	37	H004013
07000-11009	H0120-006018	11	H004018
07000-11009	N1210-002003	21	N002003
07000-11009	P1210-001001	19	P002001
07000-11009	P1210-001001	31	P002001
07000-11010	H0120-002014	13	H003014
07000-11010	H0120-002016	17	H003016
07000-11010	H0120-002016	25	H003016
07000-11010	H0120-002017	17	H003017
07000-11010	H0120-002021	13	H003021
07000-11010	H0120-006014	13	H004014
07000-11010	H0120-006016	17	H004016
07000-11010	H0120-006016	25	H004016
07000-11010	H0120-006017	17	H004017
07000-11010	H0120-006021	13	H004021
07000-11010	H1831-001001	25	H021001
07000-11010	H1831-002001	24	H022001
07000-11010	K1110-006026	16	K013026
07000-11010	K1110-010026	16	K014026
07000-12011	H0120-002014	5	H003014
07000-12011	H0120-002016	15	H003016
07000-12011	H0120-002017	15	H003017
07000-12011	H0120-002021	11	H003021
07000-12011	H0120-006014	5	H004014
07000-12011	H0120-006016	15	H004016
07000-12011	H0120-006017	15	H004017
07000-12011	H0120-006021	11	H004021
07000-12011	K1110-010030	17	K014030
07000-12011	K1110-010030	20	K014030
07000-12011	K1110-010030	25	K014030
07000-12012	H0120-002005	1	H003005
07000-12012	H0120-002005	10	H003005
07000-12012	H0120-006005	1	H004005
07000-12012	H0120-006005	10	H004005
07000-12012	K1110-010029	22	K014029
07000-12014	H0120-002008	2	H003008
07000-12014	H0120-006008	2	H004008
07000-12014	H1270-008004	5	H016004
07000-12015	K1110-006026	15	K013026
07000-12015	K1110-006027	27	K013027
07000-12015	K1110-006036	6	K013036
07000-12015	K1110-006042	6	K013042
07000-12015	K1110-010026	15	K014026
07000-12015	K1110-010027	27	K014027
07000-12015	K1110-010037	6	K014037
07000-12015	K1110-010043	6	K014043
07000-12016	H0120-002008	4	H003008
07000-12016	H0120-006008	4	H004008
07000-12018	K1110-006025	20	K013025
07000-12018	K1110-006027	22	K013027
07000-12018	K1110-006036	4	K013036
07000-12018	K1110-006042	4	K013042
07000-12018	K1110-010025	20	K014025
07000-12018	K1110-010027	22	K014027
07000-12018	K1110-010037	4	K014037
07000-12018	K1110-010043	4	K014043
07000-12020	H0120-002010	16	H003010
07000-12020	H0120-006010	16	H004010
07000-12020	N1210-002001	8	N002001
07000-12021	H0120-002005	11	H003005
07000-12021	H0120-002005	4	H003005
07000-12021	H0120-002018	12	H003018
07000-12021	H0120-006005	11	H004005
07000-12021	H0120-006005	4	H004005
07000-12021	H0120-006018	12	H004018
07000-12035	H0120-002014	17	H003014
07000-12035	H0120-006014	17	H004014
07000-12055	H1270-008002	9	H016002
07000-12060	R0110-002001	5	R001001
07000-12100	H0311-001001	2	H008001
07000-12105	N1310-001001	9	N003001
07000-12115	H1270-008004	6	H016004
07000-13024	H0120-002002	14	H003002
07000-13024	H0120-002002	6	H003002
07000-13024	H0120-002003	14	H003003
07000-13024	H0120-002003	8	H003003
07000-13024	H0120-002004	10	H003004
07000-13024	H0120-002004	5	H003004
07000-13024	H0120-002012	4	H003012
07000-13024	H0120-002016	12	H003016

PARTS Nº	FIG. Nº	INDEX	PAGE
07000-13024	H0120-002017	12	H003017
07000-13024	H0120-002020	9	H003020
07000-13024	H0120-006002	14	H004002
07000-13024	H0120-006002	6	H004002
07000-13024	H0120-006003	14	H004003
07000-13024	H0120-006003	8	H004003
07000-13024	H0120-006004	10	H004004
07000-13024	H0120-006004	5	H004004
07000-13024	H0120-006012	4	H004012
07000-13024	H0120-006016	12	H004016
07000-13024	H0120-006017	12	H004017
07000-13024	H0120-006020	9	H004020
07000-13025	H1210-001001	18	H014001
07000-13025	H1220-001001	13	H015001
07000-13025	H1220-001001	18	H015001
07000-13025	H1220-001001	7	H015001
07000-13025	H1340-001001	2	H018001
07000-13025	H1340-001001	4	H018001
07000-13025	P1120-001001	12	P001001
07000-13025	P1120-001001	17	P001001
07000-13025	T1110-002003	16	T001003
07000-13025	T1110-005003	16	T002003
07000-13025	T1200-004004	2	T006004
07000-13025	T1200-004004	4	T006004
07000-13025	T1200-008004	2	T007004
07000-13025	T1200-008004	4	T007004
07000-13025	T1200-014004	2	T008004
07000-13025	T1200-014004	4	T008004
07000-13025	T1200-018004	2	T009004
07000-13025	T1200-018004	4	T009004
07000-13025	T1200-022004	2	T010004
07000-13025	T1200-022004	4	T010004
07000-13028	H0120-002005	5	H003005
07000-13028	H0120-006005	5	H004005
07000-13030	KIT	K05	Y001001
07000-13030	KIT	K06	Y001001
07000-13030	KIT	K07	Y001001
07000-13030	KIT	K08	Y001001
07000-13030	KIT	K09	Y001001
07000-13030	T1110-002003	37	T001003
07000-13030	T1110-005003	37	T002003
07000-13030	T1120-002001	37	T003001
07000-13030	T1120-002002	37	T003002
07000-13030	T1140-002001	43	T005001
07000-13030	T1200-004002	32	T006002
07000-13030	T1200-008002	32	T007002
07000-13030	T1200-014002	32	T008002
07000-13030	T1200-018002	32	T009002
07000-13030	T1200-022002	32	T010002
07000-13032	H0120-002005	12	H003005
07000-13032	H0120-002005	6	H003005
07000-13032	H0120-002018	14	H003018
07000-13032	H0120-006005	12	H004005
07000-13032	H0120-006005	6	H004005
07000-13032	H0120-006018	14	H004018
07000-13032	H0312-002001	18	H009001
07000-13032	H0312-002001	2	H009001
07000-13032	H0312-002001	4	H009001
07000-13032	H0312-002001	9	H009001
07000-13032	H0330-001001	29	H011001
07000-13032	H0330-002001	29	H012001
07000-13032	H1210-001001	3	H014001
07000-13032	H1220-001001	2	H015001
07000-13032	H1220-001001	8	H015001
07000-13032	H1270-008001	19	H016001
07000-13032	H1270-008001	24	H016001
07000-13032	H1270-008003	41	H016003
07000-13032	H1310-001001	2	H017001
07000-13032	H1310-001001	4	H017001
07000-13032	H1310-001001	6	H017001
07000-13032	H1310-001001	8	H017001
07000-13032	T1110-002003	21	T001003
07000-13032	T1110-005003	21	T002003
07000-13032	T1200-008005	2	T007005
07000-13032	T1200-008005	24	T007005
07000-13032	T1200-018005	2	T009005
07000-13032	T1200-018005	24	T009005
07000-13035	H0120-002015	9	H003015
07000-13035	H0120-006015	9	H004015
07000-13035	H0120-006023	27	H004023
07000-13035	T1110-002005	3	T001005
07000-13036	H0120-002005	13	H003005
07000-13036	H0120-006005	13	H004005
07000-13038	H0120-002016	24	H003016
07000-13038	H0120-006016	24	H004016
07000-13038	H1270-008003	46	H016003
07000-13038	H1270-008004	19	H016004
07000-13038	H1270-008004	32	H016004
07000-13038	T1200-008005	25	T007005
07000-13038	T1200-008005	27	T007005
07000-13038	T1200-008005	39	T007005
07000-13038	T1200-008005	7	T007005
07000-13038	T1200-018005	27	T009005
07000-13038	T1200-018005	39	T009005
07000-13038	T1200-018005	7	T009005
07000-13040	H0330-001001	37	H011001
07000-13040	P1210-001001	17	P002001
07000-13042	N1210-002003	20	N002003
07000-13045	C0100-002002	3	C001002
07000-13045	C0100-002002	5	C001002
07000-13048	H0320-001001	2	H010001
07000-13048	H0330-001001	2	H011001
07000-13048	H0330-001001	23	H011001
07000-13048	H0330-002001	2	H012001
07000-13048	H0330-002001	23	H012001
07000-13050	D0100-001001	8	D001001
07000-13050	H1270-008004	4	H016004
07000-15080	KIT	K05	Y001001
07000-15080	KIT	K08	Y001001
07000-15080	N1310-001001	3	N003001
07000-15080	T1120-002001	26	T003001
07000-15080	T1120-002002	26	T003002
07000-15080	T1200-004002	24	T006002
07000-15080	T1200-008002	24	T007002
07000-15080	T1200-014002	24	T008002
07000-15080	T1200-018002	24	T009002
07000-15080	T1200-022002	24	T010002
07000-15085	KIT	K06	Y001001
07000-15090	KIT	K07	Y001001
07000-15090	KIT	K09	Y001001
07000-15090	T1140-002001	30	T005001
07000-15100	N1210-002004	8	N002004
07000-15120	KIT	K05	Y001001
07000-15120	KIT	K08	Y001001
07000-15120	T1120-002001	17	T003001
07000-15120	T1120-002001	9	T003001
07000-15120	T1120-002002	17	T003002
07000-15120	T1120-002002	9	T003002
07000-15120	T1200-004002	15	T006002
07000-15120	T1200-008002	15	T007002
07000-15120	T1200-014002	15	T008002
07000-15120	T1200-018002	15	T009002
07000-15120	T1200-022002	15	T010002
07000-15125	KIT	K06	Y001001
07000-15130	KIT	K07	Y001001
07000-15130	KIT	K09	Y001001
07000-15130	T1140-002001	10	T005001
07000-15130	T1140-002001	21	T005001
07000-15160	H0110-001001	31	H001001
07000-15160	H0110-002001	35	H002001
07000-15160	V0100-001001	9	V001001
07000-15195	H0110-001001	23	H001001
07000-15195	H0110-002001	27	H002001
07000-15195	V0100-001001	10	V001001
07000-15250	N1210-002005	31	N002005
07000-15310	N1210-002004	13	N002004
07000-A5165	H0210-001002	4	H005002
07000-B1008	H0210-001011	17	H005011
07000-B1009	H0210-001001	3	H005001

PARTS Nº	FIG. Nº	INDEX	PAGE
07000-B1009	H0210-001006	3	H005006
07000-B1009	H0210-001010	10	H005010
07000-B2011	H0210-001004	22	H005004
07000-B2011	H0210-001008	22	H005008
07000-B2012	H0210-001002	6	H005002
07000-B3034	H0210-001004	18	H005004
07000-B3034	H0210-001005	2	H005005
07000-B3034	H0210-001008	18	H005008
07000-B3034	H0210-001009	2	H005009
07000-B3045	H0210-001004	23	H005004
07000-B3045	H0210-001005	6	H005005
07000-B3045	H0210-001008	23	H005008
07000-B3045	H0210-001009	6	H005009
07000-E2065	C0100-002005	6	C001005
07000-F2020	N1210-002003	11	N002003
07001-01006	P1210-001001	28	P002001
07001-01007	H0120-002007	15	H003007
07001-01007	H0120-002011	5	H003011
07001-01007	H0120-006007	15	H004007
07001-01007	H0120-006011	5	H004011
07001-01008	H0210-001011	18	H005011
07001-01009	H0120-002011	3	H003011
07001-01009	H0120-006011	3	H004011
07001-01009	H0210-001010	11	H005010
07001-01010	H0120-002016	18	H003016
07001-01010	H0120-002017	18	H003017
07001-01010	H0120-002021	14	H003021
07001-01010	H0120-006016	18	H004016
07001-01010	H0120-006017	18	H004017
07001-01010	H0120-006021	14	H004021
07001-02011	H0120-002016	16	H003016
07001-02011	H0120-002017	16	H003017
07001-02011	H0120-002021	12	H003021
07001-02011	H0120-006016	16	H004016
07001-02011	H0120-006017	16	H004017
07001-02011	H0120-006021	12	H004021
07001-02020	H0120-002010	17	H003010
07001-02020	H0120-006010	17	H004010
07001-02020	N1210-002003	12	N002003
07001-05090	KIT	K07	Y001001
07001-05090	KIT	K09	Y001001
07001-05090	T1140-002001	31	T005001
07002-01423	N1210-002003	19	N002003
07002-02434	P1210-001003	33	P002003
07002-10823	H0120-002001	10	H003001
07002-10823	H0120-002018	4	H003018
07002-10823	H0120-006001	10	H004001
07002-10823	H0120-006018	4	H004018
07002-11023	H0120-002007	17	H003007
07002-11023	H0120-002007	23	H003007

PARTS Nº	FIG. Nº	INDEX	PAGE
07002-11023	H0120-002014	14	H003014
07002-11023	H0120-002016	20	H003016
07002-11023	H0120-002017	20	H003017
07002-11023	H0120-002021	16	H003021
07002-11023	H0120-006007	17	H004007
07002-11023	H0120-006007	23	H004007
07002-11023	H0120-006014	14	H004014
07002-11023	H0120-006016	20	H004016
07002-11023	H0120-006017	20	H004017
07002-11023	H0120-006021	16	H004021
07002-11223	H0120-002023	3	H003023
07002-11223	H0120-006023	3	H004023
07002-11223	H0210-002001	4	H006001
07002-11223	H0210-003001	4	H007001
07002-11223	K1110-006026	4	K013026
07002-11223	K1110-010026	4	K014026
07002-11223	P1210-001001	29	P002001
07002-11223	V0100-001001	11	V001001
07002-11423	C0100-002002	23	C001002
07002-11423	D0200-002002	7	D002002
07002-11423	D0200-002002	9	D002002
07002-11423	H0110-001001	17	H001001
07002-11423	H0110-002001	17	H002001
07002-11423	H0120-002007	13	H003007
07002-11423	H0120-002007	9	H003007
07002-11423	H0120-002010	5	H003010
07002-11423	H0120-002013	15	H003013
07002-11423	H0120-002013	17	H003013
07002-11423	H0120-002013	33	H003013
07002-11423	H0120-002014	9	H003014
07002-11423	H0120-002022	17	H003022
07002-11423	H0120-002022	20	H003022
07002-11423	H0120-002022	25	H003022
07002-11423	H0120-002022	27	H003022
07002-11423	H0120-002023	10	H003023
07002-11423	H0120-002023	13	H003023
07002-11423	H0120-002023	16	H003023
07002-11423	H0120-002023	19	H003023
07002-11423	H0120-002023	22	H003023
07002-11423	H0120-002023	25	H003023
07002-11423	H0120-002023	7	H003023
07002-11423	H0120-006007	13	H004007
07002-11423	H0120-006007	9	H004007
07002-11423	H0120-006010	5	H004010
07002-11423	H0120-006013	15	H004013
07002-11423	H0120-006013	17	H004013
07002-11423	H0120-006013	33	H004013
07002-11423	H0120-006014	9	H004014
07002-11423	H0120-006022	17	H004022
07002-11423	H0120-006022	20	H004022

PARTS Nº	FIG. Nº	INDEX	PAGE
07002-11423	H0120-006022	25	H004022
07002-11423	H0120-006022	27	H004022
07002-11423	H0120-006023	10	H004023
07002-11423	H0120-006023	13	H004023
07002-11423	H0120-006023	16	H004023
07002-11423	H0120-006023	19	H004023
07002-11423	H0120-006023	22	H004023
07002-11423	H0120-006023	25	H004023
07002-11423	H0120-006023	7	H004023
07002-11423	H0210-002001	14	H006001
07002-11423	H0210-002001	7	H006001
07002-11423	H0210-002001	9	H006001
07002-11423	H0210-003001	14	H007001
07002-11423	H0210-003001	7	H007001
07002-11423	H0210-003001	9	H007001
07002-11423	H1270-008003	16	H016003
07002-11423	H1831-001001	27	H021001
07002-11423	H1831-001002	15	H021002
07002-11423	H1831-001002	7	H021002
07002-11423	H1831-002002	16	H022002
07002-11423	H1831-002002	8	H022002
07002-11423	H1833-002001	11	H023001
07002-11423	H1833-002001	14	H023001
07002-11423	H1833-002001	17	H023001
07002-11423	H1833-002001	5	H023001
07002-11423	H1833-002001	9	H023001
07002-11423	K1110-006027	25	K013027
07002-11423	K1110-006027	29	K013027
07002-11423	K1110-006036	9	K013036
07002-11423	K1110-006042	11	K013042
07002-11423	K1110-006052	15	K013052
07002-11423	K1110-006052	18	K013052
07002-11423	K1110-006052	6	K013052
07002-11423	K1110-006052	9	K013052
07002-11423	K1110-010027	25	K014027
07002-11423	K1110-010027	29	K014027
07002-11423	K1110-010037	9	K014037
07002-11423	K1110-010043	11	K014043
07002-11423	K1110-010053	12	K014053
07002-11423	K1110-010053	19	K014053
07002-11423	K1110-010053	22	K014053
07002-11423	K1110-010053	25	K014053
07002-11423	K1110-010053	6	K014053
07002-11423	K1110-010053	9	K014053
07002-11423	N1210-002005	27	N002005
07002-11423	N1210-002005	8	N002005
07002-11423	N1310-001002	9	N003002
07002-11423	P1120-001001	11	P001001
07002-11423	P1210-001001	10	P002001
07002-11623	H0120-002013	28	H003013

PARTS Nº	FIG. Nº	INDEX	PAGE
07002-11623	H0120-006013	28	H004013
07002-11623	K1110-006026	14	K013026
07002-11623	K1110-010026	14	K014026
07002-11823	H0120-002007	7	H003007
07002-11823	H0120-002016	14	H003016
07002-11823	H0120-002017	14	H003017
07002-11823	H0120-002021	10	H003021
07002-11823	H0120-006007	7	H004007
07002-11823	H0120-006016	14	H004016
07002-11823	H0120-006017	14	H004017
07002-11823	H0120-006021	10	H004021
07002-11823	P1210-001001	24	P002001
07002-12034	C0100-002004	9	C001004
07002-12034	D0100-001001	13	D001001
07002-12034	H0110-001001	14	H001001
07002-12034	H0110-002001	14	H002001
07002-12034	H0110-002001	21	H002001
07002-12034	H1270-008003	13	H016003
07002-12034	H1270-008004	50	H016004
07002-12034	H1831-001002	10	H021002
07002-12034	H1831-001002	12	H021002
07002-12034	H1831-001002	17	H021002
07002-12034	H1831-002002	11	H022002
07002-12034	H1831-002002	13	H022002
07002-12034	H1831-002002	18	H022002
07002-12034	KIT	K07	Y001001
07002-12034	P1120-001001	8	P001001
07002-12034	T1140-002001	36	T005001
07002-12434	B0000-001001	17	B001001
07002-12434	H0110-001001	11	H001001
07002-12434	H0110-001001	5	H001001
07002-12434	H0110-001001	8	H001001
07002-12434	H0110-002001	11	H002001
07002-12434	H0110-002001	5	H002001
07002-12434	H0110-002001	8	H002001
07002-12434	H0120-002008	6	H003008
07002-12434	H0120-002009	4	H003009
07002-12434	H0120-006008	6	H004008
07002-12434	H0120-006009	4	H004009
07002-12434	H0210-002001	2	H006001
07002-12434	H0210-003001	2	H007001
07002-12434	H0330-001001	12	H011001
07002-12434	H0330-001001	14	H011001
07002-12434	H0330-001001	18	H011001
07002-12434	H0330-002001	12	H012001
07002-12434	H0330-002001	14	H012001
07002-12434	H0330-002001	18	H012001
07002-12434	H1270-008001	12	H016001
07002-12434	H1270-008003	31	H016003
07002-12434	N1210-002005	2	N002005

PARTS Nº	FIG. Nº	INDEX	PAGE
07002-12434	N1210-002005	30	N002005
07002-12434	N1210-002005	38	N002005
07002-12434	N1310-001002	13	N003002
07002-12434	N1310-001002	6	N003002
07002-12434	V0100-001001	12	V001001
07002-13034	N1210-002003	13	N002003
07002-13334	H0120-002016	8	H003016
07002-13334	H0120-002017	8	H003017
07002-13334	H0120-002021	8	H003021
07002-13334	H0120-006016	8	H004016
07002-13334	H0120-006017	8	H004017
07002-13334	H0120-006017	8	H004021
07002-13334	N1210-002001	14	N002001
07002-13634	H0120-002006	10	H003006
07002-13634	H0120-002006	14	H003006
07002-13634	H0120-002006	18	H003006
07002-13634	H0120-002006	22	H003006
07002-13634	H0120-002006	26	H003006
07002-13634	H0120-002006	30	H003006
07002-13634	H0120-002006	34	H003006
07002-13634	H0120-002006	6	H003006
07002-13634	H0120-002019	4	H003019
07002-13634	H0120-006006	10	H004006
07002-13634	H0120-006006	14	H004006
07002-13634	H0120-006006	18	H004006
07002-13634	H0120-006006	22	H004006
07002-13634	H0120-006006	26	H004006
07002-13634	H0120-006006	30	H004006
07002-13634	H0120-006006	34	H004006
07002-13634	H0120-006006	6	H004006
07002-13634	H0120-006019	4	H004019
07002-14234	H1270-008004	10	H016004
07002-14234	H1270-008004	8	H016004
07002-61023	H0210-001001	8	H005001
07002-61023	H0210-001002	11	H005002
07002-61023	H0210-001006	9	H005006
07002-61423	H0210-001011	19	H005011
07002-61823	H0120-002024	7	H003024
07002-61823	H0120-006024	7	H004024
07002-62434	H0210-001001	5	H005001
07002-62434	H0210-001006	11	H005006
07002-62434	H0210-001006	5	H005006
07002-62434	H0210-001010	13	H005010
07005-01212	AFT00-001001	8	D008001
07005-01212	AFT00-001001	8	D008001
07005-01212	D0200-002001	5	D002001
07005-02216	B0000-004001	4	B004001
07005-03016	B0000-001002	16	B001002
07020-00000	N1110-001001	14	N001001
07020-00000	T1110-002004	1	T001004

PARTS Nº	FIG. Nº	INDEX	PAGE
07020-00000	T1110-002006	9	T001006
07020-00000	T1110-005004	1	T002004
07020-00000	T1110-005006	9	T002006
07020-00000	T1120-002003	1	T003003
07020-00000	T1140-002001	7	T005001
07020-00000	T1200-004001	5	T006001
07020-00000	T1200-004002	5	T006002
07020-00000	T1200-004002	8	T006002
07020-00000	T1200-004003	4	T006003
07020-00000	T1200-008001	7	T007001
07020-00000	T1200-008002	5	T007002
07020-00000	T1200-008002	8	T007002
07020-00000	T1200-008003	4	T007003
07020-00000	T1200-014001	5	T008001
07020-00000	T1200-014002	5	T008002
07020-00000	T1200-014002	8	T008002
07020-00000	T1200-014003	4	T008003
07020-00000	T1200-018001	7	T009001
07020-00000	T1200-018002	5	T009002
07020-00000	T1200-018002	8	T009002
07020-00000	T1200-018003	4	T009003
07020-00000	T1200-022001	5	T010001
07020-00000	T1200-022002	5	T010002
07020-00000	T1200-022002	8	T010002
07020-00000	T1200-022003	4	T010003
07020-00000	V0100-001001	13	V001001
07020-00675	V0100-001001	14	V001001
07030-03034	B0000-001002	15	B001002
07040-11209	H0210-002001	3	H006001
07040-11209	H0210-003001	3	H007001
07040-11209	K1110-006026	3	K013026
07040-11209	K1110-010026	3	K014026
07040-11409	C0100-002002	22	C001002
07040-11409	D0200-002002	8	D002002
07040-11409	H0120-002013	16	H003013
07040-11409	H0120-006013	16	H004013
07040-11409	H1831-001001	28	H021001
07040-11409	N1210-002005	7	N002005
07040-12412	H0210-002001	1	H006001
07040-12412	H0210-003001	1	H007001
07040-12412	H0330-001001	17	H011001
07040-12412	H0330-002001	17	H012001
07040-12412	H1270-008001	11	H016001
07040-12414	H0210-001006	10	H005006
07042-00312	N1210-002004	2	N002004
07043-70108	AIC00-001001	2	A010001
07043-70108	B9999-508001	2	A012001
07043-70108	C0100-002005	36	C001005
07043-A0108	D0100-001001	4	D001001
07044-12412	H0110-001001	4	H001001

PARTS Nº	FIG. Nº	INDEX	PAGE
07044-12412	H0110-002001	4	H002001
07044-12412	H0210-001001	4	H005001
07044-12412	H0210-001006	4	H005006
07044-12412	P1210-001003	32	P002003
07048-01310	K1110-006024	5	K013024
07048-01310	K1110-010024	5	K014024
07049-01012	H0120-002022	1	H003022
07049-01012	H0120-006022	1	H004022
07049-01012	P1210-001003	31	P002003
07049-01215	H0120-002022	2	H003022
07049-01215	H0120-006022	2	H004022
07049-01215	H1270-008001	29	H016001
07049-01215	H1270-008003	4	H016003
07049-01215	T1110-002001	11	T001001
07049-01215	T1110-005001	11	T002001
07049-01215	T1110-005005	1	T002005
07049-01620	T1110-005005	2	T002005
07049-02025	R1100-001001	15	R007001
07052-31624	R0110-002001	4	R001001
07056-18422	D0100-001001	11	D001001
07069-34075	H0110-001001	21	H001001
07084-01AA9	H0312-002001	1	H009001
07094-11024	H1270-008004	24	H016004
07095-00628	H1310-001001	14	H017001
07095-01038	H1270-008004	25	H016004
07095-01241	H1270-008004	37	H016004
07095-01245	H0320-001001	9	H010001
07095-01245	H0330-001001	10	H011001
07095-01245	H0330-002001	10	H012001
07095-20211	AFT00-001001	14	D008001
07095-20211	ALG00-001001	11	B016001
07097-01005	H1270-008003	40	H016003
07097-21016	T1200-008005	1	T007005
07097-21016	T1200-018005	1	T009005
07097-21017	H1270-008001	23	H016001
07097-21217	T1200-008005	6	T007005
07097-21217	T1200-018005	6	T009005
07097-21218	H1270-008003	45	H016003
07098-00626	P1120-001001	13	P001001
07098-01007	H1270-008001	18	H016001
07145-00080	KIT	K05	Y001001
07145-00080	KIT	K06	Y001001
07145-00080	KIT	K07	Y001001
07145-00080	KIT	K08	Y001001
07145-00080	KIT	K09	Y001001
07145-00080	T1120-002001	4	T003001
07145-00080	T1120-002001	6	T003001
07145-00080	T1120-002002	4	T003002
07145-00080	T1120-002002	6	T003002
07145-00080	T1140-002001	4	T005001
07145-00080	T1140-002001	6	T005001
07145-00080	T1200-004002	4	T006002
07145-00080	T1200-008002	4	T007002
07145-00080	T1200-014002	4	T008002
07145-00080	T1200-018002	4	T009002
07145-00080	T1200-022002	4	T010002
07145-00090	T1200-004001	6	T006001
07145-00090	T1200-008001	8	T007001
07145-00090	T1200-014001	6	T008001
07145-00090	T1200-018001	8	T009001
07145-00090	T1200-022001	6	T010001
07145-00100	T1110-002001	10	T001001
07145-00100	T1110-002006	1	T001006
07145-00100	T1110-005001	10	T002001
07145-00100	T1110-005006	1	T002006
07155-00720	R0110-002002	7	R001002
07179-13104	T1120-002001	12	T003001
07179-13104	T1120-002002	12	T003002
07179-13104	T1200-004002	10	T006002
07179-13104	T1200-008002	10	T007002
07179-13104	T1200-014002	10	T008002
07179-13104	T1200-018002	10	T009002
07179-13104	T1200-022002	10	T010002
07179-13114	T1140-002001	17	T005001
07206-30812	D0200-002001	4	D002001
07214-50813	N1110-001001	8	N001001
07238-10630	N1210-002005	16	N002005
07260-08732	H0311-001001	4	H008001
07260-20950	B0000-001001	6	B001001
07270-00827	D0200-002002	3	D002002
07270-01070	D0200-002002	18	D002002
07270-01420	H0110-002001	45	H002001
07270-01490	H0110-001001	41	H001001
07280-04726	K1110-006024	4	K013024
07280-04726	K1110-010024	4	K014024
07283-32738	N1210-002005	17	N002005
07283-32738	T1120-002001	40	T003001
07283-32738	T1120-002002	40	T003002
07283-32738	T1140-002001	49	T005001
07283-32738	T1200-004002	37	T006002
07283-32738	T1200-008002	37	T007002
07283-32738	T1200-014002	37	T008002
07283-32738	T1200-018002	37	T009002
07283-32738	T1200-022002	37	T010002
07283-37060	C0100-002005	12	C001005
07283-37060	C0100-002005	56	C001005
07285-00100	D0200-002002	4	D002002
07285-00115	D0200-002002	17	D002002
07285-00155	B0000-001001	7	B001001
07285-00155	H0110-001001	40	H001001
07285-00155	H0110-002001	44	H002001
07286-03828	K1110-006024	3	K013024
07286-03828	K1110-010024	3	K014024
07289-00055	C0100-002005	16	C001005
07289-00055	C0100-002005	18	C001005
07299-00070	C0100-002005	2	C001005
07299-00105	B0200-009002	5	B009002
07299-00130	B0200-009002	6	B009002
07371-30640	H0312-002001	14	H009001
07371-30640	H1210-001001	19	H014001
07371-30640	H1210-001001	4	H014001
07371-30640	H1220-001001	14	H015001
07371-30640	H1220-001001	19	H015001
07371-30640	H1340-001001	5	H018001
07371-30640	N1310-001002	4	N003002
07371-30640	P1120-001001	1	P001001
07371-30640	T1110-002003	17	T001003
07371-30640	T1110-002003	2	T001003
07371-30640	T1110-005003	27	T001003
07371-30640	T1110-005003	17	T002003
07371-30640	T1110-005003	2	T002003
07371-30640	T1110-005003	27	T002003
07371-30640	T1200-004004	5	T006004
07371-30640	T1200-008004	5	T007004
07371-30640	T1200-014004	5	T008004
07371-30640	T1200-018004	5	T009004
07371-30640	T1200-022004	5	T010004
07371-31049	H0312-002001	10	H009001
07371-31049	H0312-002001	5	H009001
07371-31049	H0330-001001	30	H011001
07371-31049	H0330-002001	30	H012001
07371-31049	H1220-001001	3	H015001
07371-31049	H1220-001001	9	H015001
07371-31049	H1270-008001	20	H016001
07371-31049	H1270-008001	25	H016001
07371-31049	H1270-008001	5	H016001
07371-31049	H1270-008001	8	H016001
07371-31049	H1270-008003	42	H016003
07371-31049	H1310-001001	9	H017001
07371-31049	T1110-002003	22	T001003
07371-31049	T1110-002003	6	T001003
07371-31049	T1110-005003	22	T002003
07371-31049	T1110-005003	6	T002003
07371-31049	T1200-008005	3	T007005
07371-31049	T1200-018005	3	T009005
07371-51260	H1270-008003	47	H016003
07371-51260	H1270-008003	8	H016003
07371-51260	T1200-008005	30	T007005
07371-51260	T1200-008005	8	T007005

PARTS Nº	FIG. Nº	INDEX	PAGE
07371-51260	T1200-018005	30	T009005
07371-51260	T1200-018005	8	T009005
07372-21035	H0312-002001	11	H009001
07372-21035	H0312-002001	15	H009001
07372-21035	H0312-002001	6	H009001
07372-21035	H0330-001001	31	H011001
07372-21035	H0330-002001	31	H012001
07372-21035	H1210-001001	20	H014001
07372-21035	H1210-001001	5	H014001
07372-21035	H1220-001001	10	H015001
07372-21035	H1220-001001	15	H015001
07372-21035	H1220-001001	20	H015001
07372-21035	H1220-001001	4	H015001
07372-21035	H1270-008001	21	H016001
07372-21035	H1270-008001	26	H016001
07372-21035	H1270-008001	6	H016001
07372-21035	H1270-008001	9	H016001
07372-21035	H1270-008003	43	H016003
07372-21035	H1270-008003	6	H016003
07372-21035	H1310-001001	10	H017001
07372-21035	H1340-001001	6	H018001
07372-21035	N1310-001002	1	N003002
07372-21035	P1120-001001	2	P001001
07372-21035	T1110-002003	18	T001003
07372-21035	T1110-002003	23	T001003
07372-21035	T1110-002003	28	T001003
07372-21035	T1110-002003	3	T001003
07372-21035	T1110-002003	38	T001003
07372-21035	T1110-002003	7	T001003
07372-21035	T1110-005003	18	T002003
07372-21035	T1110-005003	23	T002003
07372-21035	T1110-005003	28	T002003
07372-21035	T1110-005003	3	T002003
07372-21035	T1110-005003	38	T002003
07372-21035	T1110-005003	7	T002003
07372-21035	T1120-002001	38	T003001
07372-21035	T1120-002002	38	T003002
07372-21035	T1140-002001	47	T005001
07372-21035	T1200-004002	35	T006002
07372-21035	T1200-004004	6	T006004
07372-21035	T1200-008002	35	T007002
07372-21035	T1200-008004	6	T007004
07372-21035	T1200-008005	4	T007005
07372-21035	T1200-014002	35	T008002
07372-21035	T1200-014004	6	T008004
07372-21035	T1200-018002	35	T009002
07372-21035	T1200-018004	6	T009004
07372-21035	T1200-018005	4	T009005
07372-21035	T1200-022002	35	T010002
07372-21035	T1200-022004	6	T010004
07372-21040	H0120-006023	28	H004023
07372-21040	H1210-001001	7	H014001
07372-21040	T1110-002005	4	T001005
07372-21045	T1120-002001	34	T003001
07372-21045	T1120-002002	34	T003002
07372-21045	T1140-002001	41	T005001
07372-21045	T1200-004002	28	T006002
07372-21045	T1200-008002	28	T007002
07372-21045	T1200-014002	28	T008002
07372-21045	T1200-018002	28	T009002
07372-21045	T1200-022002	28	T010002
07372-21060	T1120-002001	32	T003001
07372-21060	T1120-002002	32	T003002
07372-21060	T1140-002001	39	T005001
07372-21060	T1200-004002	30	T006002
07372-21060	T1200-008002	30	T007002
07372-21060	T1200-014002	30	T008002
07372-21060	T1200-018002	30	T009002
07372-21060	T1200-022002	30	T010002
07372-21235	D0200-002002	1	D002002
07430-71380	H0120-002004	11	H003004
07430-71380	H0120-002013	8	H003013
07430-71380	H0120-002018	9	H003018
07430-71380	H0120-006004	11	H004004
07430-71380	H0120-006013	8	H004013
07430-71380	H0120-006018	9	H004018
07700-50240	D0100-001001	2	D001001
07700-50240	D0200-002002	16	D002002
07750-01628	T1140-002001	34	T005001
07950-10450	V0300-001001	8	V002001
07950-90403	V0300-001001	10	V002001
07951-41017	V0300-001001	9	V002001
07952-70004	V0300-001001	8	V002001
07959-20001	R0110-002002	15	R001002
08000-00000	E0100-001001	2	E001001
08000-00001	E0100-001001	3	E001001
08017-B0701	K1110-006010	14	K013010
08017-B0701	K1110-010010	14	K014010
08020-20000	K1110-006031	2	K013031
08020-20000	K1110-010032	2	K014032
08028-43030	E0200-002005	1	E002005
08028-43030	E0200-002005	9	E002005
08028-43030	K1110-006032	26	K013032
08028-43030	K1110-010033	26	K014033
08028-63035	E0100-001001	4	E001001
08028-CC065	K1110-006031	24	K013031
08028-CC065	K1110-010032	24	K014032
08034-00536	P1120-001001	14	P001001
08034-00536	P1120-001001	19	P001001
08034-00536	P1120-001001	21	P001001
08034-00536	P1120-001001	25	P001001
08034-20414	E0410-001001	6	E006001
08034-20414	K1110-006007	9	K013007
08034-20414	K1110-006008	3	K013008
08034-20414	K1110-006010	15	K013010
08034-20414	K1110-006010	4	K013010
08034-20414	K1110-006021	10	K013021
08034-20414	K1110-006022	6	K013022
08034-20414	K1110-006038	8	K013038
08034-20414	K1110-006043	39	K013043
08034-20414	K1110-010007	9	K014007
08034-20414	K1110-010008	3	K014008
08034-20414	K1110-010010	15	K014010
08034-20414	K1110-010010	4	K014010
08034-20414	K1110-010021	10	K014021
08034-20414	K1110-010022	6	K014022
08034-20414	K1110-010039	8	K014039
08034-20414	K1110-010044	39	K014044
08034-20414	M1110-002001	25	M001001
08034-20519	D0200-002001	8	D002001
08034-20519	K0700-001001	17	K012001
08034-20519	K0700-001001	33	K012001
08034-20519	K0700-001001	39	K012001
08034-20519	K1110-006022	7	K013022
08034-20519	K1110-006032	25	K013032
08034-20519	K1110-006043	31	K013043
08034-20519	K1110-006053	2	K013053
08034-20519	K1110-010022	7	K014022
08034-20519	K1110-010033	25	K014033
08034-20519	K1110-010044	31	K014044
08034-20519	K1110-010054	2	K014054
08034-20536	B0000-001002	11	B001002
08034-20536	B0000-001002	18	B001002
08034-20536	E0200-002004	26	E002004
08034-20536	E0320-002001	13	E005001
08034-20536	H0120-002024	8	H003024
08034-20536	H0120-006024	8	H004024
08034-20536	H1810-001001	17	H019001
08034-20536	H1810-002001	17	H020001
08034-20536	H1831-001003	15	H021003
08034-20536	H1831-002003	16	H022003
08034-20536	H1840-002001	1	H024001
08034-20536	H1840-002001	25	H024001
08034-20536	H1840-002001	9	H024001
08034-20536	K1110-006034	12	K013034
08034-20536	K1110-006040	12	K013040
08034-20536	K1110-006047	8	K013047
08034-20536	K1110-006049	14	K013049
08034-20536	K1110-006051	10	K013051
08034-20536	K1110-006051	12	K013051

PARTS Nº	FIG. Nº	INDEX	PAGE
08034-20536	K1110-006051	16	K013051
08034-20536	K1110-006051	4	K013051
08034-20536	K1110-006051	6	K013051
08034-20536	K1110-010030	39	K014030
08034-20536	K1110-010035	12	K014035
08034-20536	K1110-010041	12	K014041
08034-20536	K1110-010048	8	K014048
08034-20536	K1110-010050	14	K014050
08034-20536	K1110-010052	10	K014052
08034-20536	K1110-010052	12	K014052
08034-20536	K1110-010052	16	K014052
08034-20536	K1110-010052	4	K014052
08034-20536	K1110-010052	6	K014052
08034-20823	K1110-006049	4	K013049
08034-20823	K1110-010050	4	K014050
08034-20834	E0320-002001	14	E005001
08034-20834	P1120-001001	5	P001001
08034-20876	K1110-006018	17	K013018
08034-20876	K1110-006018	7	K013018
08034-20876	K1110-010018	17	K014018
08034-20876	K1110-010018	7	K014018
08036-00814	N1110-001001	11	N001001
08037-02512	K0220-001001	7	K004001
08037-02512	K1110-006003	7	K013003
08037-02512	K1110-010003	7	K014003
08037-11425	K1110-006038	11	K013038
08037-11425	K1110-010039	11	K014039
08038-00035	K1110-006031	15	K013031
08038-00035	K1110-010032	15	K014032
08038-00519	K1110-006031	19	K013031
08038-00519	K1110-006031	22	K013031
08038-00519	K1110-010032	19	K014032
08038-00519	K1110-010032	22	K014032
08038-06031	K1110-006031	17	K013031
08038-06031	K1110-006031	20	K013031
08038-06031	K1110-010032	17	K014032
08038-06031	K1110-010032	20	K014032
08038-10035	E0200-002001	27	E002001
08038-12027	E0200-002004	29	E002004
08038-12027	E0200-002004	41	E002004
08038-22511	E0200-002005	2	E002005
08038-42511	E0100-001001	5	E001001
08038-42511	E0200-002001	28	E002001
08041-00500	K1110-006031	3	K013031
08041-00500	K1110-010032	3	K014032
08041-01000	K1110-006023	3	K013023
08041-01000	K1110-006031	4	K013031
08041-01000	K1110-010023	3	K014023
08041-01000	K1110-010032	4	K014032
08041-02000	K1110-006023	4	K013023
08041-02000	K1110-006031	5	K013031
08041-02000	K1110-010023	4	K014023
08041-02000	K1110-010032	5	K014032
08041-03000	K1110-006023	5	K013023
08041-03000	K1110-006031	6	K013031
08041-03000	K1110-010023	5	K014023
08041-03000	K1110-010032	6	K014032
08051-00801	K1110-006010	10	K013010
08051-00801	K1110-010010	10	K014010
08053-01510	K0700-001001	13	K012001
08053-01510	K1110-010030	37	K014030
08053-01512	E0200-002003	33	E002003
08057-12008	E0410-001001	5	E006001
08057-12012	E0200-002001	2	E002001
08057-12012	E0200-002001	22	E002001
08057-12012	E0200-002001	3	E002001
08057-12012	E0200-002001	6	E002001
08057-12012	E0200-002001	7	E002001
08057-12012	E0200-002002	12	E002002
08057-12012	E0200-002002	15	E002002
08057-12012	E0200-002002	18	E002002
08057-12012	E0200-002002	21	E002002
08057-12012	E0200-002002	24	E002002
08057-12012	E0200-002002	27	E002002
08057-12012	E0200-002002	3	E002002
08057-12012	E0200-002002	30	E002002
08057-12012	E0200-002002	33	E002002
08057-12012	E0200-002002	36	E002002
08057-12012	E0200-002002	39	E002002
08057-12012	E0200-002002	40	E002002
08057-12012	E0200-002002	43	E002002
08057-12012	E0200-002002	46	E002002
08057-12012	E0200-002002	51	E002002
08057-12012	E0200-002002	6	E002002
08057-12012	E0200-002002	9	E002002
08057-12012	E0200-002003	1	E002003
08057-12012	E0200-002003	11	E002003
08057-12012	E0200-002003	14	E002003
08057-12012	E0200-002003	17	E002003
08057-12012	E0200-002003	21	E002003
08057-12012	E0200-002003	24	E002003
08057-12012	E0200-002003	27	E002003
08057-12012	E0200-002003	30	E002003
08057-12012	E0200-002003	36	E002003
08057-12012	E0200-002003	4	E002003
08057-12012	E0200-002003	8	E002003
08057-12012	E0200-002004	1	E002004
08057-12012	E0200-002004	14	E002004
08057-12012	E0200-002004	17	E002004
08057-12012	E0200-002004	20	E002004
08057-12012	E0200-002004	33	E002004
08057-12012	E0200-002004	37	E002004
08057-12012	E0200-002004	7	E002004
08057-12012	E0200-002004	8	E002004
08057-14012	E0200-002001	13	E002001
08059-00310	E0450-002001	21	E008001
08059-00413	K1110-006007	10	K013007
08059-00413	K1110-006010	5	K013010
08059-00413	K1110-010007	10	K014007
08059-00413	K1110-010010	5	K014010
08059-00515	K1110-006021	7	K013021
08059-00515	K1110-006022	5	K013022
08059-00515	K1110-010021	7	K014021
08059-00515	K1110-010022	5	K014022
08086-20000	K1110-006043	26	K013043
08086-20000	K1110-010044	26	K014044
08088-30000	K1110-006031	18	K013031
08088-30000	K1110-010032	18	K014032
08116-02410	K1110-006008	11	K013008
08116-02410	K1110-010008	11	K014008
08160-72400	E0410-001001	1	E006001
08160-72420	E0410-001001	2	E006001
08193-20010	ASD00-001001	7	B011001
08193-21012	E0200-002003	39	E002003
08193-21012	E0320-002001	3	E005001
08193-21012	E0420-001001	7	E007001
08193-21012	H0210-002001	18	H006001
08193-21012	H0210-002001	25	H006001
08193-21012	H0210-003001	18	H007001
08193-21012	H0210-003001	25	H007001
08193-21012	K1110-010030	36	K014030
08193-21012	T1110-002006	6	T001006
08193-21012	T1110-005006	6	T002006
08912-51600	K1110-006038	6	K013038
08912-51600	K1110-010039	6	K014039
09002-01417	V0300-001001	3	V002001
09002-03032	V0300-001001	4	V002001
09007-00425	V0300-001001	12	V002001
09007-00528	V0300-001001	13	V002001
09007-00836	V0300-001001	11	V002001
09019-08035	V0300-001001	2	V002001
09021-01219	V0300-001001	14	V002001
09021-01422	V0300-001001	15	V002001
09021-01725	V0300-001001	16	V002001
09021-01928	V0300-001001	17	V002001
09021-02233	V0300-001001	18	V002001
09021-02436	V0300-001001	19	V002001
09021-03044	V0300-001001	20	V002001
09022-00150	V0300-001001	21	V002001
09023-00300	V0300-001001	22	V002001
09024-00300	V0300-001001	23	V002001
09033-00190	V0300-001001	5	V002001
09039-00150	V0300-001001	6	V002001
09055-10390	V0300-001001	7	V002001
09056-04613	V0300-001001	1	V002001
09059-00800	V0100-001001	1	V001001
09133-21001	U0100-006001	6	U002001
09133-27000	U0100-002001	6	U001001
09134-A1681	U0510-002001	1	U009001
09205-18295	R1200-001001	5	R010001
09244-02516	T1510-001001	15	T011001
09370-00070	R0110-002002	8	R001002
09409-00002	K0160-002001	3	K003001
09415-02512	K1110-006013	3	K013013
09415-02512	K1110-006043	25	K013043
09415-02512	K1110-010013	3	K014013
09415-02512	K1110-010044	25	K014044
09416-10200	K1110-006004	5	K013004
09416-10200	K1110-006011	11	K013011
09416-10200	K1110-006011	2	K013011
09416-10200	K1110-006011	4	K013011
09416-10200	K1110-010004	5	K014004
09416-10200	K1110-010011	11	K014011
09416-10200	K1110-010011	2	K014011
09416-10200	K1110-010011	4	K014011
09452-14503	K1110-006023	15	K013023
09452-14503	K1110-010023	15	K014023
09479-02400	K1110-006048	2	K013048
09479-02400	K1110-006048	4	K013048
09479-02400	K1110-010049	2	K014049
09479-02400	K1110-010049	4	K014049
09601-12051	U0100-002001	17	U001001
09601-12051	U0100-006001	17	U002001
09620-B2070	U0521-007001	2	U014001
09620-D2120	U0520-003001	1	U010001
09620-D2120	U0520-017001	1	U012001
09620-E2120	U0520-010001	1	U011001
09620-E2120	U0520-017001	3	U012001
09637-51263	U0550-003001	1	U016001
09637-70163	U0550-004001	1	U017001
09642-11000	U0202-004001	1	U008001
09642-17000	U0202-002001	1	U007001
09653-01001	U0100-006001	7	U002001
09653-07101	U0100-002001	7	U001001
09657-01004	U0100-006001	9	U002001
09657-07102	U0100-002001	9	U001001
09659-51000	U0100-006001	10	U002001
09659-51000	U0100-006001	21	U002001
09659-57100	U0100-002001	10	U001001
09659-57100	U0100-002001	21	U001001
09667-01001	U0100-006001	11	U002001
09667-07101	U0100-002001	11	U001001
09668-01001	U0100-006001	8	U002001
09668-07101	U0100-002001	8	U001001
09669-0000E	U0100-002001	16	U001001
09669-0000E	U0100-006001	16	U002001
09685-00002	U0100-002001	1	U001001
09685-00002	U0100-006001	1	U002001
09690-M0063	U0100-002001	3	U001001
09690-M0063	U0100-006001	3	U002001
09690-P0630	U0100-002001	4	U001001
09690-P0630	U0100-006001	4	U002001
09690-P1250	U0150-001001	1	U006001
09690-P1250	U0150-001001	2	U006001
09803-01000	U0120-006001	2	U005001
09803-07100	U0120-002001	2	U004001
09805-11000	U0100-006001	13	U002001
09805-11000	U0100-006001	22	U002001
09805-17100	U0100-002001	13	U001001
09805-17100	U0100-002001	22	U001001
09805-21000	U0100-006001	12	U002001
09805-27100	U0100-002001	12	U001001
09808-01000	U0100-006001	14	U002001
09808-07100	U0100-002001	14	U001001
09842-A0481	U0100-002001	5	U001001
09842-A0481	U0100-006001	5	U002001
09844-00050	U0100-002001	2	U001001
09844-00050	U0100-006001	2	U002001
09920-00150	A2219-001001	18	B008001
09920-00150	ABB20-001001	8	B017001
09920-00150	AGG00-001001	6	B004001
09920-00150	AOP10-001001	16	B010001
09960-00801	U0100-002001	30	U001001
09960-00801	U0100-006001	29	U002001
09960-00802	U0100-002001	31	U001001
09960-00802	U0100-006001	30	U002001
09963-01001	U0100-006001	19	U002001
09963-07001	U0100-002001	19	U001001
110-30-00086	R0300-001001	6	R003001
112-32-11211	N1210-002004	21	N002004
11Y-09-11140	D0200-002002	14	D002002
11Y-09-11160	K0700-001001	40	K012001
11Y-62-12130	H0120-002022	13	H003022
11Y-62-12130	H0120-002023	11	H003023
11Y-62-12130	H0120-002023	17	H003023
11Y-62-12130	H0120-006022	13	H004022
11Y-62-12130	H0120-006023	17	H004023
11Y-62-12130	H0210-002001	12	H006001
11Y-62-12130	H0210-002001	5	H006001
11Y-62-12130	H0210-003001	12	H007001
11Y-62-12130	H1831-001002	13	H021002
11Y-62-12130	H1831-001002	5	H021002
11Y-62-12130	H1831-002002	14	H022002
11Y-62-12130	H1831-002002	5	H022002
11Y-62-12130	H1833-002001	15	H023001
11Y-62-12130	K1110-006036	7	K013036
11Y-62-12130	K1110-006042	7	K013042
11Y-62-12130	K1110-010037	7	K014037
11Y-62-12130	K1110-010043	7	K014043
11Y-62-12130	P1120-001001	9	P001001
11Y-62-12140	K1110-010030	23	K014030
11Y-62-12160	H0120-002022	7	H003022
11Y-62-12160	H0120-002023	23	H003023
11Y-62-12160	H0120-002023	5	H003023
11Y-62-12160	H0120-002023	8	H003023
11Y-62-12160	H0120-006022	7	H004022
11Y-62-12160	H0120-006023	23	H004023
11Y-62-12160	H0120-006023	5	H004023
11Y-62-12160	H0120-006023	8	H004023
11Y-62-12160	H1270-008003	14	H016003
11Y-62-12160	K1110-006027	23	K013027
11Y-62-12160	K1110-010027	23	K014027
11Y-62-12160	N1210-002005	25	N002005
11Y-62-12160	N1310-001002	8	N003002
11Y-62-12240	H0210-002001	11	H006001
11Y-62-12240	H0210-002001	8	H006001
11Y-62-12240	H0210-003001	11	H007001
11Y-62-12240	H0210-003001	8	H007001
11Y-62-12250	N1310-001002	10	N003002
11Y-62-12330	H0120-002022	11	H003022
11Y-62-12330	H0120-002023	20	H003023
11Y-62-12330	H0120-006022	11	H004022
11Y-62-12330	H0120-006023	11	H004023
11Y-62-12330	H0120-006023	20	H004023
11Y-62-12330	H0210-003001	5	H007001
11Y-62-12330	K1110-010053	10	K014053
11Y-62-12330	K1110-010053	23	K014053
11Y-62-12520	H0120-002022	15	H003022
11Y-62-12520	H0120-002023	14	H003023
11Y-62-12520	H0120-006022	15	H004022
11Y-62-12520	H0120-006023	14	H004023
11Y-62-12520	H1833-002001	12	H023001
11Y-62-12520	K1110-006042	9	K013042
11Y-62-12520	K1110-010043	9	K014043
1241155H1	ABR00-001001	2	A005001
124-54-26540	M1150-002003	10	M005003
124-54-26540	M1150-002003	15	M005003
124-A62-1910	M1110-002001	3	M001001
124-A62-1920	M1110-002001	22	M001001
124-A62-1920	M1150-002002	13	M005002

PARTS Nº	FIG. Nº	INDEX	PAGE
12R-60-11230	H0110-001001	28	H001001
12R-60-11230	H0110-002001	32	H002001
130-43-64260	K0220-001001	5	K004001
130-43-64260	K0230-001001	2	K005001
131-43-41631	K0700-001001	49	K012001
134-03-61410	K0700-001001	51	K012001
134-04-71180	D0100-001001	6	D001001
134-06-61540	E0100-001001	1	E001001
134-32-61221	KIT	K02	Y001001
134-32-61221	KIT	K04	Y001001
134-32-61221	R0500-001001	18	R004001
134-32-61221	R0500-001001	9	R004001
134-32-61221	R0500-002001	18	R005001
134-32-61221	R0500-002001	9	R005001
134-32-61221	R0500-003001	18	R006001
134-32-61221	R0500-003001	9	R006001
141-06-11220	K1110-006048	12	K013048
141-06-11220	K1110-010049	12	K014049
144-947-3490	E0200-002001	1	E002001
145-Z79-6270	K1110-006006	20	K013006
145-Z79-6270	K1110-010006	20	K014006
14X-03-51621	C0100-002001	10	C001001
14X-03-51640	C0100-002001	11	C001001
14X-03-51770	C0100-002001	12	C001001
14X-32-11210	KIT	K04	Y001001
14X-911-1330	K0230-003001	20	K007001
14X-98-35181	U0100-002001	33	U001001
14X-98-35181	U0100-006001	32	U002001
150-27-00410	P1210-001003	1	P002003
154-61-16570	AFT00-001001	16	D008001
154-979-1480	D0200-002001	14	D002001
175-06-81610	E0450-002001	14	E008001
175-54-34170	E0100-001001	11	E001001
175-54-34170	H1270-008001	31	H016001
175-54-34170	M1210-002001	31	M006001
175-54-34170	M1210-002001	37	M006001
175-54-34170	M1210-002001	4	M006001
175-54-34170	M1220-001001	16	M007001
175-54-34170	M1810-002001	11	M013001
175-54-34170	M1810-002001	35	M013001
175-54-34170	M1810-002001	39	M013001
175-61-17240	E0200-002003	20	E002003
175-61-17240	E0200-002003	7	E002003
175-61-51750	H1270-008003	35	H016003
176-32-11210	T1510-001001	21	T011001
176-63-56170	KIT	K07	Y001001
176-63-56170	KIT	K09	Y001001
176-63-56170	T1140-002001	16	T005001
17A-60-11310	H0110-001001	34	H001001
17A-60-11310	H0110-002001	38	H002001

PARTS Nº	FIG. Nº	INDEX	PAGE
17A-979-3180	K1110-006021	3	K013021
17A-979-3180	K1110-010021	3	K014021
17M-911-3530	K1110-006018	10	K013018
17M-911-3530	K1110-010018	10	K014018
195-03-11570	D0100-001001	18	D001001
195-30-00302	R0110-002001	6	R001001
195-33-11220	D0200-002001	17	D002001
195-33-11220	E0200-002004	36	E002004
195-33-11220	H1810-001001	14	H019001
195-33-11220	H1810-002001	14	H020001
195-33-11220	K0350-001001	4	K011001
195-33-11220	K0700-001001	27	K012001
195-33-11220	K1110-006032	13	K013032
195-33-11220	K1110-006032	17	K013032
195-33-11220	K1110-006032	9	K013032
195-33-11220	K1110-006048	7	K013048
195-33-11220	K1110-010033	13	K014033
195-33-11220	K1110-010033	17	K014033
195-33-11220	K1110-010033	9	K014033
195-33-11220	K1110-010049	7	K014049
195-57-11530	M1810-002001	16	M013001
195-63-94170	KIT	K05	Y001001
195-63-94170	KIT	K08	Y001001
195-63-94170	T1120-002001	13	T003001
195-63-94170	T1120-002002	13	T003002
195-63-94170	T1200-004002	11	T006002
195-63-94170	T1200-008002	11	T007002
195-63-94170	T1200-014002	11	T008002
195-63-94170	T1200-018002	11	T009002
195-63-94170	T1200-022002	11	T010002
195-71-32220	K0700-001001	5	K012001
195-979-5190	B0000-001002	8	B001002
195-979-7770	K1110-006010	13	K013010
195-979-7770	K1110-006033	2	K013033
195-979-7770	K1110-010010	13	K014010
195-979-7770	K1110-010034	2	K014034
195-Z11-1690	K1110-006006	8	K013006
195-Z11-1690	K1110-010006	8	K014006
195-Z11-2970	K0220-001001	6	K004001
198-06-53550	D0200-002002	30	D002002
198-06-53560	D0200-002001	31	D002001
198-06-53560	D0200-002002	27	D002002
198-06-53630	B0000-001002	6	B001002
198-43-15310	K1120-001001	14	K015001
19M-06-31720	K1110-006031	7	K013031
19M-06-31720	K1110-010032	7	K014032
201-03-29160	C0100-002005	22	C001005
201-03-29160	T1200-008005	23	T007005
201-03-29160	T1200-018005	23	T009005
201-60-11390	H1831-002002	2	H021002

PARTS Nº	FIG. Nº	INDEX	PAGE
201-60-11390	H1831-002002	2	H022002
201-60-11390	H1833-002001	3	H023001
203-01-51120	B0000-001001	2	B001001
203-03-41410	C0100-002001	8	C001001
203-03-56650	M1150-002001	27	M005001
203-43-51620	K1110-006027	7	K013027
203-43-51620	K1110-010027	7	K014027
203-54-56630	M1220-001001	10	M007001
203-54-56970	C0100-002003	6	C001003
203-54-62670	M1150-002003	31	M005003
203-60-31100	H0110-001001	2	H001001
203-60-31100	H0110-002001	2	H002001
203-60-31160	H0110-001001	3	H001001
203-60-31160	H0110-002001	3	H002001
203-60-62220	K1110-010029	25	K014029
203-62-61410	H0330-001001	11	H011001
203-62-61410	H0330-002001	11	H012001
205-00-72430	U0521-002001	2	U013001
205-00-72430	U0521-007001	3	U014001
205-00-72430	U0521-008001	1	U015001
205-00-73360	H0110-001001	42	H001001
205-00-73360	H0110-002001	46	H002001
205-03-62660	C0100-002001	6	C001001
205-03-71440	M1150-002001	7	M005001
205-03-71532	M1150-002001	26	M005001
205-03-71540	M1150-002001	26	M005001
205-04-21310	D0100-001001	1	D001001
205-25-71152	N1110-001001	2	N001001
205-25-71280	N1110-001001	3	N001001
205-30-71171	R1100-001001	14	R007001
205-30-71171	R1100-002001	14	R008001
205-30-71181	J1110-002001	2	J001001
205-30-71181	R1100-001001	9	R007001
205-30-71181	R1100-002001	9	R008001
205-30-71191	J1110-002001	3	J001001
205-30-71191	R1100-001001	10	R007001
205-30-71191	R1100-002001	10	R008001
205-30-72170	R0110-002002	16	R001002
205-30-76190	R0110-002001	9	R001001
205-30-76260	R0200-001001	4	R002001
205-54-51250	K1110-006011	26	K013011
205-54-51250	K1110-010011	26	K014011
205-54-51970	M1130-002001	29	M003001
205-54-51970	M1140-002001	20	M004001
205-54-53550	M1130-002001	23	M003001
205-54-53550	M1140-002001	14	M004001
205-54-68440	M1210-002001	26	M006001
205-54-75240	K1110-006014	14	K013014
205-54-75240	K1110-010014	14	K014014
205-54-76411	M1150-002001	34	M005001

PARTS Nº	FIG. Nº	INDEX	PAGE
205-62-72140	P1120-001001	24	P001001
205-62-72240	P1120-001001	15	P001001
205-62-72240	P1120-001001	18	P001001
205-62-72240	P1120-001001	22	P001001
205-62-73431	T1110-002003	11	T001003
205-62-73431	T1110-002005	18	T001005
205-62-73431	T1110-005003	11	T002003
205-70-00100	T1510-001001	23	T011001
205-70-51390	T1110-002004	2	T001004
205-70-51390	T1110-002004	6	T001004
205-70-51390	T1110-005004	2	T002004
205-70-51390	T1110-005004	6	T002004
205-70-51530	T1110-002002	9	T001002
205-70-51530	T1110-005002	9	T002002
205-70-51530	T1200-004001	18	T006001
205-70-51530	T1200-004003	11	T006003
205-70-51530	T1200-004003	16	T006003
205-70-51530	T1200-008001	20	T007001
205-70-51530	T1200-008003	11	T007003
205-70-51530	T1200-008003	16	T007003
205-70-51530	T1200-014001	18	T008001
205-70-51530	T1200-014003	11	T008003
205-70-51530	T1200-014003	16	T008003
205-70-51530	T1200-018001	20	T009001
205-70-51530	T1200-018003	11	T009003
205-70-51530	T1200-018003	16	T009003
205-70-51530	T1200-022001	18	T010001
205-70-51530	T1200-022003	11	T010003
205-70-51530	T1200-022003	16	T010003
205-70-65681	T1110-002002	1	T001002
205-70-65681	T1110-005002	1	T002002
205-70-65750	J1310-002001	7	J002001
205-70-66580	J1310-002001	8	J002001
205-70-66580	T1110-002002	10	T001002
205-70-66580	T1110-005002	10	T002002
205-70-66581	T1200-004001	14	T006001
205-70-66581	T1200-004001	9	T006001
205-70-66581	T1200-008001	11	T007001
205-70-66581	T1200-008001	16	T007001
205-70-66581	T1200-014001	14	T008001
205-70-66581	T1200-014001	9	T008001
205-70-66581	T1200-018001	11	T009001
205-70-66581	T1200-018001	16	T009001
205-70-66581	T1200-022001	14	T010001
205-70-66581	T1200-022001	9	T010001
205-70-71312	T1110-002002	4	T001002
205-70-71312	T1110-005002	4	T002002
205-70-72180	T1200-004001	2	T006001
205-70-72180	T1200-008001	4	T007001
205-70-72180	T1200-014001	2	T008001

PARTS Nº	FIG. Nº	INDEX	PAGE
205-70-72180	T1200-018001	4	T009001
205-70-72180	T1200-022001	2	T010001
205-70-73270	T1200-004003	17	T006003
205-70-73270	T1200-004003	20	T006003
205-70-73270	T1200-008003	17	T007003
205-70-73270	T1200-008003	20	T007003
205-70-73270	T1200-014003	17	T008003
205-70-73270	T1200-014003	20	T008003
205-70-73270	T1200-018003	17	T009003
205-70-73270	T1200-018003	20	T009003
205-70-73270	T1200-022003	17	T010003
205-70-73270	T1200-022003	20	T010003
205-70-73280	T1200-004004	8	T006004
205-70-73280	T1200-008005	42	T007005
205-70-73280	T1200-014004	8	T008004
205-70-73280	T1200-018005	42	T009005
205-70-73280	T1200-022004	8	T010004
205-70-74381	T1510-001001	24	T011001
205-70-74391	T1510-001001	16	T011001
205-970-5560	H1270-008003	28	H016003
205-970-5770	T1200-008005	33	T007005
205-970-5770	T1200-018005	33	T009005
205-977-7310	D0200-002002	22	D002002
206-00-21230	U0100-002001	24	U001001
206-00-21230	U0100-006001	23	U002001
206-00-21240	U0100-002001	25	U001001
206-00-21240	U0100-006001	24	U002001
206-03-21151	C0100-002005	1	C001005
206-03-21222	C0100-002003	1	C001003
206-03-21251	C0100-002003	37	C001003
206-03-21281	C0100-002003	28	C001003
206-03-21290	C0100-002003	19	C001003
206-03-21310	C0100-002003	29	C001003
206-03-21310	C0100-002003	31	C001003
206-03-21320	C0100-002003	30	C001003
206-03-21331	C0100-002001	3	C001001
206-03-21361	C0100-002003	18	C001003
206-03-21371	C0100-002004	23	C001004
206-03-21371	C0100-002005	49	C001005
206-03-21431	C0100-002003	17	C001003
206-03-21452	C0100-002001	4	C001001
206-03-21461	C0100-002003	20	C001003
206-03-21470	C0100-002002	14	C001002
206-03-21511	C0100-002002	19	C001002
206-03-21520	C0100-002002	15	C001002
206-03-21540	C0100-002003	21	C001003
206-03-21551	C0100-002003	11	C001003
206-03-21560	C0100-002003	32	C001003
206-03-21570	C0100-002003	33	C001003
206-03-21580	C0100-002002	18	C001002

PARTS Nº	FIG. Nº	INDEX	PAGE
206-03-21621	C0100-002005	5	C001005
206-03-21651	C0100-002005	9	C001005
206-03-21690	C0100-002003	34	C001003
206-03-22570	C0100-002005	17	C001005
206-03-23162	C0100-002001	18	C001001
206-03-23210	C0100-002003	13	C001003
206-03-23220	C0100-002003	10	C001003
206-03-23240	C0100-002003	14	C001003
206-03-23260	C0100-002003	6	C001003
206-03-43340	C0100-002003	27	C001003
206-03-43340	C0100-002005	48	C001005
206-03-43340	M1150-002001	31	M005001
206-06-21120	E0420-001001	8	E007001
206-06-21170	E0320-002001	12	E005001
206-06-61130	H1833-002001	18	H023001
206-06-61130	K1110-006027	31	K013027
206-06-61130	K1110-010027	31	K014027
206-06-61130	K1110-010030	35	K014030
206-25-00301	N1110-001001	1	N001001
206-25-61110	N1110-001001	15	N001001
206-25-71130	N1110-001001	4	N001001
206-26-71210	N1210-002004	32	N002004
206-26-71341	N1210-002004	36	N002004
206-26-71350	N1210-002004	34	N002004
206-26-71410	N1210-002004	35	N002004
206-26-71420	N1210-002004	29	N002004
206-26-71430	N1210-002004	26	N002004
206-26-71440	N1210-002004	15	N002004
206-26-71452	N1210-002004	22	N002004
206-26-71471	N1210-002004	28	N002004
206-26-71480	N1210-002004	14	N002004
206-26-71510	N1210-002004	18	N002004
206-26-71520	N1210-002004	17	N002004
206-26-73120	N1210-002004	10	N002004
206-26-73130	N1210-002004	6	N002004
206-26-73140	N1210-002004	7	N002004
206-26-73150	N1210-002004	4	N002004
206-26-73160	N1210-002004	5	N002004
206-26-73310	N1210-002004	3	N002004
206-27-00422	P1210-001001	1	P002001
206-27-00422	P1210-001002	1	P002002
206-27-00422	P1210-001003	1	P002003
206-27-00423	P1210-001001	1	P002001
206-27-00423	P1210-001002	1	P002002
206-27-00423	P1210-001003	1	P002003
206-30-22120	R0110-002002	11	R001002
206-30-22130	R0110-002002	10	R001002
206-30-23111	R1100-002001	1	R008001
206-30-23211	R1100-001001	1	R007001
206-30-45381	R0110-002002	2	R001002

PARTS Nº	FIG. Nº	INDEX	PAGE
206-30-71160	R1100-001001	8	R007001
206-30-71160	R1100-002001	8	R008001
206-30-71E81	R1100-001001	4	R007001
206-30-71E81	R1100-002001	4	R008001
206-30-72140	R0110-002002	6	R001002
206-30-75170	R1200-001001	1	R010001
206-30-75180	R1200-001001	2	R010001
206-32-03510	R0500-001001	1	R004001
206-32-03520	R0500-002001	1	R005001
206-32-03530	R0500-003001	1	R006001
206-32-61110	R0500-001001	16	R004001
206-32-61110	R0500-001001	7	R004001
206-46-21180	J1110-002001	20	J001001
206-46-21190	J1110-002001	21	J001001
206-46-71170	J1110-002001	19	J001001
206-46-B1110	M1510-002001	1	M011001
206-46-B2100	J1110-002001	1	J001001
206-54-21130	M1110-002001	19	M001001
206-54-21161	M1110-002001	21	M001001
206-54-21252	M1110-002001	20	M001001
206-54-21261	M1130-002001	13	M003001
206-54-21282	M1130-002001	7	M003001
206-54-21670	C0100-002004	28	C001004
206-54-21711	M1140-002001	6	M004001
206-54-71460	M1150-002003	27	M005003
206-62-21110	H1340-001001	3	H018001
206-62-21120	H1340-001001	1	H018001
206-62-21131	H1310-001001	12	H017001
206-62-21171	H0320-001001	1	H010001
206-62-21181	H0330-001001	1	H011001
206-62-21181	H0330-002001	1	H012001
206-62-21210	T1110-002003	20	T001003
206-62-21210	T1110-005003	20	T002003
206-62-21220	T1200-004004	1	T006004
206-62-21220	T1200-008004	1	T007004
206-62-21220	T1200-014004	1	T008004
206-62-21220	T1200-018004	1	T009004
206-62-21220	T1200-022004	1	T010004
206-62-21310	T1110-002003	5	T001003
206-62-21310	T1110-005003	5	T002003
206-62-21320	T1110-002003	1	T001003
206-62-21320	T1110-005003	1	T002003
206-62-21330	T1110-002003	25	T001003
206-62-21330	T1110-005003	25	T002003
206-62-21340	T1110-002003	26	T001003
206-62-21340	T1110-005003	26	T002003
206-62-21350	T1110-002005	1	T001005
206-62-21360	T1110-002005	2	T001005
206-62-21370	T1110-002003	36	T001003
206-62-21370	T1110-005003	36	T002003
206-62-21450	T1110-002001	4	T001001
206-62-21450	T1110-005001	4	T002001
206-62-21470	T1110-002001	2	T001001
206-62-21470	T1110-005001	2	T002001
206-62-21480	T1110-002001	3	T001001
206-62-21480	T1110-005001	3	T002001
206-62-23190	T1200-008005	35	T007005
206-62-53150	P1120-001001	16	P001001
206-62-71141	H1310-001001	13	H017001
206-62-71180	H1210-001001	9	H014001
206-62-73120	T1110-002001	6	T001001
206-62-73120	T1110-005001	6	T002001
206-62-73210	T1200-004004	3	T006004
206-62-73210	T1200-008004	3	T007004
206-62-73210	T1200-014004	3	T008004
206-62-73210	T1200-018004	3	T009004
206-62-73210	T1200-022004	3	T010004
206-62-73560	T1110-002003	40	T001003
206-62-73560	T1110-005003	40	T002003
206-62-73592	T1110-002005	21	T001005
206-70-00830	T1200-004003	1	T006003
206-70-00830	T1200-008003	1	T007003
206-70-00830	T1200-014003	1	T008003
206-70-00830	T1200-018003	1	T009003
206-70-00830	T1200-022003	1	T010003
206-70-00860	T1200-008001	1	T007001
206-70-00880	T1200-004001	1	T006001
206-70-00920	T1200-018001	1	T009001
206-70-21210	T1125-002001	6	T004001
206-70-22220	T1200-004001	13	T006001
206-70-22220	T1200-008001	15	T007001
206-70-22220	T1200-014001	13	T008001
206-70-22220	T1200-018001	15	T009001
206-70-22250	T1200-022001	8	T010001
206-70-22260	T1200-022001	13	T010001
206-70-27140	T1110-002001	1	T001001
206-70-27140	T1110-005001	1	T002001
206-70-45210	T1110-002002	3	T001002
206-70-45210	T1110-005002	3	T002002
206-70-48610	T1510-001001	14	T011001
206-70-51170	T1110-002002	7	T001002
206-70-51170	T1110-005002	7	T002002
206-70-53143	T1200-004003	12	T006003
206-70-53143	T1200-004003	7	T006003
206-70-53143	T1200-008003	12	T007003
206-70-53143	T1200-008003	7	T007003
206-70-53143	T1200-014003	12	T008003
206-70-53143	T1200-014003	7	T008003
206-70-53143	T1200-018003	12	T009003
206-70-53143	T1200-018003	7	T009003
206-70-53143	T1200-022003	12	T010003
206-70-53143	T1200-022003	7	T010003
206-70-53150	T1200-004003	3	T006003
206-70-53150	T1200-008003	3	T007003
206-70-53150	T1200-014003	3	T008003
206-70-53150	T1200-018003	3	T009003
206-70-53150	T1200-022003	3	T010003
206-70-55250	J1310-002001	5	J002001
206-70-55260	J1310-002001	6	J002001
206-70-55270	J1310-002001	1	J002001
206-70-55280	T1120-002001	3	T003001
206-70-55280	T1120-002002	3	T003002
206-70-55290	J1310-002001	12	J002001
206-70-57120	T1200-004003	6	T006003
206-70-57120	T1200-008003	6	T007003
206-70-57120	T1200-014003	6	T008003
206-70-57120	T1200-018003	6	T009003
206-70-57120	T1200-022003	6	T010003
206-70-58520	T1510-001001	13	T011001
206-70-61310	T1110-002001	9	T001001
206-70-61310	T1110-005001	9	T002001
206-70-71250	T1110-002006	11	T001006
206-70-71250	T1110-005006	11	T002006
206-70-71260	T1110-002006	12	T001006
206-70-71260	T1110-005006	12	T002006
206-70-71460	T1110-002004	3	T001004
206-70-71460	T1110-005004	3	T002004
206-70-71480	T1110-002004	5	T001004
206-70-71480	T1110-005004	5	T002004
206-920-B510	T1510-001001	1	T011001
206-920-B530	T1510-001001	2	T011001
206-920-B540	T1510-001001	6	T011001
206-920-B550	T1510-001001	7	T011001
206-920-B560	T1510-001001	8	T011001
206-920-B570	T1510-001001	9	T011001
206-920-B580	T1510-001001	10	T011001
206-920-B590	T1510-001001	11	T011001
206-920-B610	T1510-001001	12	T011001
206-920-B620	T1510-001001	5	T011001
206-920-BA70	T1510-001001	3	T011001
206-920-BA80	T1510-001001	4	T011001
206-944-7511	T1200-014001	1	T008001
206-944-B110	T1200-022001	1	T010001
206-970-2660	T1200-018005	35	T009005
207-00-71741	U0100-002001	15	U001001
207-00-B1210	U0100-002001	32	U001001
207-00-B1230	U0100-002001	20	U001001
207-06-61461	E0100-001001	9	E001001
207-06-61490	K1110-006033	3	K013033
207-06-61490	K1110-010034	3	K014034

PARTS Nº	FIG. Nº	INDEX	PAGE
207-06-76420	E0450-002001	2	E008001
207-06-76460	E0450-002001	6	E008001
207-06-76490	E0450-002001	20	E008001
207-06-76490	E0450-002001	22	E008001
207-43-81240	K1110-010030	15	K014030
207-46-32220	M1520-001001	2	M012001
207-54-75710	M1420-003001	5	M010001
207-60-61150	H0110-001001	26	H001001
207-60-61150	H0110-002001	30	H002001
207-60-71182	H0110-001001	18	H001001
207-60-71182	H0110-002001	22	H002001
207-60-71182	V0100-001001	8	V001001
207-62-31330	T1200-008005	36	T007005
207-62-31330	T1200-018005	36	T009005
207-62-56190	H0120-006023	26	H004023
207-970-2110	T1200-008005	26	T007005
207-970-2110	T1200-018005	26	T009005
208-00-71181	H0110-001001	36	H001001
208-00-71181	H0110-002001	40	H002001
208-00-71430	U0100-006001	31	U002001
208-03-71161	C0100-002004	4	C001004
208-03-71290	C0100-002004	10	C001004
208-43-71420	K1110-006020	8	K013020
208-43-71420	K1110-010020	8	K014020
208-43-71520	K1110-006030	2	K013030
208-43-71520	K1110-010031	2	K014031
208-43-71530	K1110-006030	3	K013030
208-43-71530	K1110-010031	3	K014031
208-43-71590	K1110-006030	4	K013030
208-43-71590	K1110-010031	4	K014031
208-53-11330	K1110-006014	9	K013014
208-53-11330	K1110-010014	9	K014014
208-53-11860	K1110-006003	8	K013003
208-53-11860	K1110-010003	8	K014003
208-53-11890	K1110-006019	4	K013019
208-53-11890	K1110-010019	4	K014019
208-53-11920	K1110-006017	9	K013017
208-53-11920	K1110-010017	9	K014017
208-53-11941	K1110-006017	5	K013017
208-53-11941	K1110-010017	5	K014017
208-53-12120	K1110-006018	15	K013018
208-53-12120	K1110-010018	15	K014018
208-53-12230	K1110-006019	5	K013019
208-53-12230	K1110-010019	5	K014019
208-53-12280	K1110-006038	12	K013038
208-53-12280	K1110-010039	12	K014039
208-53-12290	K1110-006023	7	K013023
208-53-12290	K1110-010023	7	K014023
208-53-12320	K1110-006023	20	K013023
208-53-12320	K1110-010023	20	K014023
208-53-12330	K1110-006023	21	K013023
208-53-12330	K1110-010023	21	K014023
208-53-12410	K1110-006023	18	K013023
208-53-12410	K1110-010023	18	K014023
208-53-12432	K1110-006018	16	K013018
208-53-12432	K1110-010018	16	K014018
208-53-12440	K1110-006017	4	K013017
208-53-12440	K1110-010017	4	K014017
208-53-12460	K1110-006016	2	K013016
208-53-12460	K1110-010016	2	K014016
208-53-12551	K1110-006019	16	K013019
208-53-12551	K1110-010019	16	K014019
208-53-12680	K1110-006018	9	K013018
208-53-12680	K1110-010018	9	K014018
208-53-12980	K1110-006011	29	K013011
208-53-12980	K1110-010011	29	K014011
208-53-12991	K1110-006011	28	K013011
208-53-12991	K1110-010011	28	K014011
208-53-13270	K1110-006011	7	K013011
208-53-13270	K1110-010011	7	K014011
208-53-14540	K1110-006007	4	K013007
208-53-14540	K1110-010007	4	K014007
208-53-22H70	K1110-006004	2	K013004
208-53-22H70	K1110-010004	2	K014004
208-54-57180	M1140-002001	32	M004001
208-62-38370	C0100-002005	19	C001005
208-62-72160	H1840-002001	2	H024001
208-62-72290	K1110-006049	5	K013049
208-62-72290	K1110-010050	5	K014050
208-62-72310	H1831-001003	1	H021003
208-62-72310	H1831-002003	1	H022003
208-62-72310	H1840-002001	10	H024001
208-62-72310	K1110-006049	6	K013049
208-62-72310	K1110-010050	6	K014050
208-62-72480	H1831-002003	13	H022003
208-62-72480	K1110-010030	29	K014030
208-62-72590	H1840-002001	11	H024001
208-62-72610	H1831-001003	12	H021003
208-62-72870	K1110-006050	9	K013050
208-62-72870	K1110-010051	9	K014051
208-979-7530	K1110-006019	12	K013019
208-979-7530	K1110-010019	12	K014019
208-979-7540	K1110-006046	1	K013046
208-979-7540	K1110-010047	1	K014047
208-979-7560	K1110-006023	13	K013023
208-979-7560	K1110-010023	13	K014023
208-979-7620	K1110-006019	13	K013019
208-979-7620	K1110-010019	13	K014019
208-979-7640	K1110-006047	1	K013047
208-979-7640	K1110-010048	1	K014048
208-979-7650	K1110-006047	6	K013047
208-979-7650	K1110-010048	6	K014048
209-64-16690	K1110-006050	10	K013050
209-64-16690	K1110-010051	10	K014051
209-64-16830	K1110-006050	11	K013050
209-64-16830	K1110-010051	11	K014051
209-72-12230	K1110-006014	3	K013014
209-72-12230	K1110-006014	7	K013014
209-72-12230	K1110-010014	3	K014014
209-72-12230	K1110-010014	7	K014014
20B-27-11210	H0210-001006	7	H005006
20B-27-11210	P1210-001001	11	P002001
20F-61-12460	H0120-002022	19	H003022
20F-61-12460	H0120-006022	19	H004022
20K-22-11190	N1210-002004	23	N002004
20T-910-8660	K1110-010030	16	K014030
20U-54-25140	K1110-006003	19	K013003
20U-54-25140	K1110-010003	19	K014003
20X-54-21460	M1210-002001	18	M006001
20Y-00-31640	U0100-006001	26	U002001
20Y-00-31680	U0100-006001	15	U002001
20Y-00-31840	U0100-002001	28	U001001
20Y-00-31840	U0100-006001	27	U002001
20Y-00-41330	K1110-006014	10	K013014
20Y-00-41330	K1110-010014	10	K014014
20Y-00-41480	U0100-006001	34	U002001
20Y-00-41490	U0100-002001	35	U001001
20Y-00-41530	U0100-002001	34	U001001
20Y-00-41530	U0100-006001	33	U002001
20Y-00-41680	U0100-006001	25	U002001
20Y-00-41690	U0120-006001	1	U005001
20Y-00-41710	U0100-006001	20	U002001
20Y-00-42001	D0100-001001	15	D001001
20Y-00-B1280	U0100-002001	27	U001001
20Y-00-B1290	U0100-002001	26	U001001
20Y-00-B1350	U0120-002001	1	U004001
20Y-00-B1370	U0100-002001	23	U001001
20Y-00-B1420	U0521-002001	1	U013001
20Y-00-B1420	U0521-007001	1	U014001
20Y-00-B1430	U0110-003001	1	U003001
20Y-01-11141	B0100-008001	13	B008001
20Y-01-11141	B0100-008001	18	B008001
20Y-01-12210	B0100-008001	11	B008001
20Y-01-12222	B0100-008001	16	B008001
20Y-01-12270	B0100-008001	21	B008001
20Y-01-21260	B0100-008001	5	B008001
20Y-01-21260	B0100-008001	9	B008001
20Y-01-41110	B0200-009002	4	B009002
20Y-01-41161	B0100-008001	1	B008001
20Y-01-41170	B0100-008001	2	B008001

PARTS Nº	FIG. Nº	INDEX	PAGE
20Y-01-41180	B0100-008001	6	B008001
20Y-01-41190	B0200-009002	3	B009002
20Y-01-41210	B0100-008001	12	B008001
20Y-01-41210	B0100-008001	17	B008001
20Y-01-41230	B0100-008001	3	B008001
20Y-01-41230	B0100-008001	7	B008001
20Y-01-41250	B0000-001002	17	B001002
20Y-01-41340	B0200-009002	7	B009002
20Y-03-11220	D0200-002002	25	D002002
20Y-03-11220	E0200-002004	48	E002004
20Y-03-11220	K0700-001001	30	K012001
20Y-03-11220	K0700-001001	46	K012001
20Y-03-11330	C0100-002001	9	C001001
20Y-03-22110	C0100-002001	5	C001001
20Y-03-32660	C0100-002005	23	C001005
20Y-03-41141	C0100-002005	15	C001005
20Y-03-41161	C0100-002005	40	C001005
20Y-03-41171	C0100-002005	54	C001005
20Y-03-41181	C0100-002005	3	C001005
20Y-03-41321	C0100-002003	4	C001003
20Y-03-41371	C0100-002004	17	C001004
20Y-03-41521	C0100-002003	35	C001003
20Y-03-41541	C0100-002004	24	C001004
20Y-03-41562	C0100-002004	25	C001004
20Y-03-41572	C0100-002004	26	C001004
20Y-03-41580	C0100-002001	19	C001001
20Y-03-41590	C0100-002001	20	C001001
20Y-03-41611	C0100-002005	26	C001005
20Y-03-41622	C0100-002005	29	C001005
20Y-03-41633	C0100-002003	36	C001003
20Y-03-41711	C0100-002002	8	C001002
20Y-03-41721	C0100-002002	11	C001002
20Y-03-41740	C0100-002005	55	C001005
20Y-03-41750	C0100-002004	1	C001004
20Y-03-41811	C0100-002005	30	C001005
20Y-03-41831	C0100-002005	50	C001005
20Y-03-41841	C0100-002004	27	C001004
20Y-03-41870	C0100-002003	40	C001003
20Y-03-41880	M1150-002001	30	M005001
20Y-03-42120	C0100-002002	1	C001002
20Y-03-42340	C0100-002003	26	C001003
20Y-03-42440	C0100-002004	20	C001004
20Y-03-42580	C0100-002003	7	C001003
20Y-03-42680	C0100-002002	4	C001002
20Y-03-42690	C0100-002002	17	C001002
20Y-03-42780	C0100-002002	16	C001002
20Y-03-42790	C0100-002002	2	C001002
20Y-03-42840	C0100-002001	15	C001001
20Y-03-43340	C0100-002002	24	C001002
20Y-03-43350	C0100-002002	25	C001002
20Y-03-43480	C0100-002001	2	C001001
20Y-03-43651	C0100-002001	1	C001001
20Y-04-11240	D0100-001001	6	D001001
20Y-04-31120	E0200-002004	11	E002004
20Y-04-31170	D0200-002002	15	D002002
20Y-04-41231	D0100-001001	3	D001001
20Y-04-41272	D0200-002002	10	D002002
20Y-04-41281	D0200-002002	13	D002002
20Y-04-41321	D0200-002001	9	D002001
20Y-04-41373	D0200-002001	7	D002001
20Y-04-41414	D0200-002001	6	D002001
20Y-04-41421	D0200-002001	26	D002001
20Y-04-41590	D0100-001001	12	D001001
20Y-06-15240	M1150-002001	25	M005001
20Y-06-21441	K1730-001001	1	K016001
20Y-06-21551	E0320-002001	2	E005001
20Y-06-21551	T1110-002006	3	T001006
20Y-06-21551	T1110-005006	3	T002006
20Y-06-21590	E0320-002001	9	E005001
20Y-06-21710	K1110-006027	30	K013027
20Y-06-21710	K1110-010027	30	K014027
20Y-06-22872	K1110-006031	16	K013031
20Y-06-22872	K1110-010032	16	K014032
20Y-06-23472	K1110-006016	3	K013016
20Y-06-23472	K1110-010016	3	K014016
20Y-06-31660	K1110-006031	8	K013031
20Y-06-31660	K1110-010032	8	K014032
20Y-06-31710	E0420-001001	2	E007001
20Y-06-41130	K1110-006043	38	K013043
20Y-06-41130	K1110-010044	38	K014044
20Y-06-41141	K1110-006010	3	K013010
20Y-06-41141	K1110-010010	3	K014010
20Y-06-41150	K1110-006020	7	K013020
20Y-06-41150	K1110-010020	7	K014020
20Y-06-41161	T1110-002004	11	T001004
20Y-06-41161	T1110-005004	11	T002004
20Y-06-41251	K1110-010053	13	K014053
20Y-06-41283	K1110-006031	14	K013031
20Y-06-41283	K1110-010032	14	K014032
20Y-06-41351	E0200-002004	40	E002004
20Y-06-41361	E0200-002004	42	E002004
20Y-06-41530	H0210-002001	15	H006001
20Y-06-41530	H0210-003001	15	H007001
20Y-06-41630	E0200-002002	52	E002002
20Y-06-41640	E0200-002001	10	E002001
20Y-06-41690	E0200-002005	6	E002005
20Y-06-41720	E0200-002004	56	E002004
20Y-06-41770	E0200-002004	55	E002004
20Y-06-41791	E0200-002004	45	E002004
20Y-06-41812	E0420-001001	1	E007001
20Y-06-41830	K1110-006038	9	K013038
20Y-06-41830	K1110-010039	9	K014039
20Y-06-41990	K1110-006009	1	K013009
20Y-06-41990	K1110-010009	1	K014009
20Y-06-42110	K1110-006043	35	K013043
20Y-06-42110	K1110-010044	35	K014044
20Y-06-42121	K1110-006043	36	K013043
20Y-06-42121	K1110-010044	36	K014044
20Y-06-42180	K1110-006010	6	K013010
20Y-06-42180	K1110-010010	6	K014010
20Y-06-42190	K1110-006043	37	K013043
20Y-06-42190	K1110-010044	37	K014044
20Y-06-42320	K1110-006053	1	K013053
20Y-06-42320	K1110-010054	1	K014054
20Y-06-42440	K1110-006038	1	K013038
20Y-06-42440	K1110-010039	1	K014039
20Y-06-42520	E0200-002004	4	E002004
20Y-06-42610	E0450-002001	23	E008001
20Y-06-42751	K1110-010032	1	K014032
20Y-06-48314	K1110-006031	1	K013031
20Y-06-71210	E0450-002001	3	E008001
20Y-06-B1150	E0100-001001	7	E001001
20Y-06-B1210	E0100-001001	6	E001001
20Y-25-11270	N1110-001001	10	N001001
20Y-25-11270	T1110-002006	13	T001006
20Y-25-11270	T1110-005006	13	T002006
20Y-25-21123	N1110-001001	9	N001001
20Y-26-21240	N1210-002004	20	N002004
20Y-26-21330	N1210-002004	19	N002004
20Y-26-22420	N1210-002004	9	N002004
20Y-26-31211	N1210-002005	6	N002005
20Y-26-31421	N1210-002005	12	N002005
20Y-26-31431	N1210-002005	13	N002005
20Y-26-31460	N1210-002005	14	N002005
20Y-26-31471	N1210-002005	11	N002005
20Y-27-11561	P1210-001003	35	P002003
20Y-27-11582	P1210-001003	34	P002003
20Y-27-13281	P1210-001003	29	P002003
20Y-27-13310	P1210-001003	15	P002003
20Y-27-21220	P1210-001003	23	P002003
20Y-27-21250	P1210-001003	12	P002003
20Y-27-21280	P1210-001003	24	P002003
20Y-27-21290	P1210-001003	14	P002003
20Y-27-21310	P1210-001003	26	P002003
20Y-27-22210	N1210-002004	30	N002004
20Y-27-22210	P1210-001003	21	P002003
20Y-27-22220	P1210-001003	11	P002003
20Y-27-22230	P1210-001003	4	P002003
20Y-27-22250	P1210-001003	28	P002003
20Y-27-22261	P1210-001003	6	P002003

PARTS Nº	FIG. Nº	INDEX	PAGE
20Y-27-22270	P1210-001003	7	P002003
20Y-30-00322	R0110-002001	1	R001001
20Y-30-00481	R0300-001001	1	R003001
20Y-30-07300	R0200-001001	1	R002001
20Y-30-11340	R0200-001001	11	R002001
20Y-30-11370	R1100-001001	13	R007001
20Y-30-11370	R1100-002001	13	R008001
20Y-30-13131	R0110-002001	3	R001001
20Y-30-16170	R0200-001001	10	R002001
20Y-30-16330	R0200-001001	8	R002001
20Y-30-16330	R0300-001001	8	R003001
20Y-30-16411	R0200-001001	1	R002001
20Y-30-21192	P1210-001003	38	P002003
20Y-30-23140	R1200-001001	8	R010001
20Y-30-31160	R1200-002001	1	R011001
20Y-30-31750	R0110-002001	8	R001001
20Y-30-31D24	R1100-001001	2	R007001
20Y-30-31D24	R1100-002001	2	R008001
20Y-30-41A10	R1100-001001	3	R007001
20Y-30-41A10	R1100-002001	3	R008001
20Y-30-42110	R0110-002002	1	R001002
20Y-30-42160	R0110-002002	3	R001002
20Y-30-43221	R0300-001001	2	R003001
20Y-30-43230	R0300-001001	3	R003001
20Y-30-43240	R0300-001001	4	R003001
20Y-30-43250	R0300-001001	5	R003001
20Y-30-43260	R0300-001001	1	R003001
20Y-30-43310	R0110-002001	1	R001001
20Y-30-43340	R0110-002001	2	R001001
20Y-32-05070	KIT	K02	Y001001
20Y-32-05090	KIT	K04	Y001001
20Y-32-11141	R0500-001001	14	R004001
20Y-32-11141	R0500-001001	5	R004001
20Y-32-11141	R0500-002001	14	R005001
20Y-32-11141	R0500-002001	5	R005001
20Y-32-11141	R0500-003001	14	R006001
20Y-32-11141	R0500-003001	5	R006001
20Y-32-11171	R0500-001001	13	R004001
20Y-32-11171	R0500-001001	4	R004001
20Y-32-11171	R0500-002001	13	R005001
20Y-32-11171	R0500-002001	4	R005001
20Y-32-11171	R0500-003001	13	R006001
20Y-32-11171	R0500-003001	4	R006001
20Y-32-11240	R0500-001001	12	R004001
20Y-32-11240	R0500-001001	3	R004001
20Y-32-11240	R0500-002001	12	R005001
20Y-32-11240	R0500-002001	3	R005001
20Y-32-11240	R0500-003001	12	R006001
20Y-32-11240	R0500-003001	3	R006001
20Y-32-11260	R0500-001001	19	R004001
20Y-32-11260	R0500-002001	19	R005001
20Y-32-11260	R0500-003001	19	R006001
20Y-32-31120	R0500-001001	1	R004001
20Y-32-31120	R0500-001001	10	R004001
20Y-32-31120	R0500-002001	1	R005001
20Y-32-31120	R0500-002001	10	R005001
20Y-32-31120	R0500-003001	1	R006001
20Y-32-31120	R0500-003001	10	R006001
20Y-32-31130	R0500-001001	11	R004001
20Y-32-31130	R0500-001001	2	R004001
20Y-32-31130	R0500-002001	11	R005001
20Y-32-31130	R0500-002001	2	R005001
20Y-32-31130	R0500-003001	11	R006001
20Y-32-31130	R0500-003001	2	R006001
20Y-32-31150	R0500-001001	15	R004001
20Y-32-31150	R0500-001001	6	R004001
20Y-32-31150	R0500-002001	15	R005001
20Y-32-31150	R0500-002001	6	R005001
20Y-32-31150	R0500-003001	15	R006001
20Y-32-31150	R0500-003001	6	R006001
20Y-32-31190	R0500-001001	20	R004001
20Y-32-31190	R0500-002001	20	R005001
20Y-32-31190	R0500-003001	20	R006001
20Y-32-31210	KIT	K02	Y001001
20Y-32-31210	R0500-001001	17	R004001
20Y-32-31210	R0500-001001	8	R004001
20Y-32-31210	R0500-002001	17	R005001
20Y-32-31210	R0500-002001	8	R005001
20Y-32-31210	R0500-003001	17	R006001
20Y-32-31210	R0500-003001	8	R006001
20Y-32-31310	R0500-002001	16	R005001
20Y-32-31310	R0500-002001	7	R005001
20Y-32-31320	R0500-003001	16	R006001
20Y-32-31320	R0500-003001	7	R006001
20Y-43-21231	K1110-006027	18	K013027
20Y-43-21231	K1110-010027	18	K014027
20Y-43-21241	K1110-006027	19	K013027
20Y-43-21241	K1110-010027	19	K014027
20Y-43-22211	K1110-006034	1	K013034
20Y-43-22211	K1110-010035	1	K014035
20Y-43-22221	K1110-006040	1	K013040
20Y-43-22221	K1110-010041	1	K014041
20Y-43-22250	K1110-006034	6	K013034
20Y-43-22250	K1110-006040	6	K013040
20Y-43-22250	K1110-010035	6	K014035
20Y-43-22250	K1110-010041	6	K014041
20Y-43-22261	K1110-006034	7	K013034
20Y-43-22261	K1110-006040	7	K013040
20Y-43-22261	K1110-010035	7	K014035
20Y-43-22261	K1110-010041	7	K014041
20Y-43-22370	K1110-006034	8	K013034
20Y-43-22370	K1110-006040	8	K013040
20Y-43-22370	K1110-010035	8	K014035
20Y-43-22370	K1110-010041	8	K014041
20Y-43-22381	K1110-006034	3	K013034
20Y-43-22381	K1110-010035	3	K014035
20Y-43-22390	K1110-006040	3	K013040
20Y-43-22390	K1110-010041	3	K014041
20Y-43-22421	K1110-006034	4	K013034
20Y-43-22421	K1110-006040	4	K013040
20Y-43-22421	K1110-010035	4	K014035
20Y-43-22421	K1110-010041	4	K014041
20Y-43-31421	K1110-006038	19	K013038
20Y-43-31421	K1110-010039	19	K014039
20Y-43-31432	K1110-006038	17	K013038
20Y-43-31432	K1110-010039	17	K014039
20Y-43-31440	K1110-006038	20	K013038
20Y-43-31440	K1110-010039	20	K014039
20Y-43-31450	K1110-006038	21	K013038
20Y-43-31450	K1110-010039	21	K014039
20Y-43-31513	K1110-006038	13	K013038
20Y-43-31513	K1110-010039	13	K014039
20Y-43-31522	K1110-006038	14	K013038
20Y-43-31522	K1110-010039	14	K014039
20Y-43-31611	K1110-006038	15	K013038
20Y-43-31611	K1110-010039	15	K014039
20Y-43-31621	K1110-006038	16	K013038
20Y-43-31621	K1110-010039	16	K014039
20Y-43-41111	K1110-006027	10	K013027
20Y-43-41111	K1110-010027	10	K014027
20Y-43-41121	K1110-006027	3	K013027
20Y-43-41121	K1110-010027	3	K014027
20Y-43-41143	K1110-006039	1	K013039
20Y-43-41143	K1110-010040	1	K014040
20Y-43-41152	K1110-006039	7	K013039
20Y-43-41152	K1110-006044	7	K013044
20Y-43-41152	K1110-010040	7	K014040
20Y-43-41152	K1110-010045	7	K014045
20Y-43-41162	K1110-006039	5	K013039
20Y-43-41162	K1110-010040	5	K014040
20Y-43-41173	K1110-006039	2	K013039
20Y-43-41173	K1110-010040	2	K014040
20Y-43-41181	K1110-006039	11	K013039
20Y-43-41181	K1110-006044	11	K013044
20Y-43-41181	K1110-010040	11	K014040
20Y-43-41181	K1110-010045	11	K014045
20Y-43-41191	K1110-006039	13	K013039
20Y-43-41191	K1110-006044	13	K013044
20Y-43-41191	K1110-010040	13	K014040
20Y-43-41191	K1110-010045	13	K014045

PARTS Nº	FIG. Nº	INDEX	PAGE
20Y-43-41230	K1110-006030	1	K013030
20Y-43-41230	K1110-010031	1	K014031
20Y-43-41240	K1110-006046	4	K013046
20Y-43-41240	K1110-010047	4	K014047
20Y-43-41252	K1110-006030	14	K013030
20Y-43-41252	K1110-010031	14	K014031
20Y-43-41281	K1110-006039	17	K013039
20Y-43-41281	K1110-006044	17	K013044
20Y-43-41281	K1110-010040	17	K014040
20Y-43-41281	K1110-010045	17	K014045
20Y-43-41290	K0310-001001	3	K008001
20Y-43-41290	K0310-002001	3	K009001
20Y-43-41290	K1110-006015	6	K013015
20Y-43-41290	K1110-006037	16	K013037
20Y-43-41290	K1110-006037	21	K013037
20Y-43-41290	K1110-006037	25	K013037
20Y-43-41290	K1110-006043	11	K013043
20Y-43-41290	K1110-006043	18	K013043
20Y-43-41290	K1110-006043	22	K013043
20Y-43-41290	K1110-010015	6	K014015
20Y-43-41290	K1110-010038	16	K014038
20Y-43-41290	K1110-010038	21	K014038
20Y-43-41290	K1110-010038	25	K014038
20Y-43-41290	K1110-010044	11	K014044
20Y-43-41290	K1110-010044	18	K014044
20Y-43-41290	K1110-010044	22	K014044
20Y-43-41313	K1110-006043	1	K013043
20Y-43-41313	K1110-010044	1	K014044
20Y-43-41323	K1110-006043	7	K013043
20Y-43-41323	K1110-010044	7	K014044
20Y-43-41332	K1110-006043	12	K013043
20Y-43-41332	K1110-010044	12	K014044
20Y-43-41343	K1110-006044	1	K013044
20Y-43-41343	K1110-010045	1	K014045
20Y-43-41353	K1110-006043	19	K013043
20Y-43-41353	K1110-010044	19	K014044
20Y-43-41361	K1110-006027	6	K013027
20Y-43-41361	K1110-010027	6	K014027
20Y-43-41415	K1110-006037	1	K013037
20Y-43-41415	K1110-010038	1	K014038
20Y-43-41423	K1110-006037	9	K013037
20Y-43-41423	K1110-010038	9	K014038
20Y-43-41442	K1110-006037	17	K013037
20Y-43-41442	K1110-010038	17	K014038
20Y-43-41453	K1110-006037	22	K013037
20Y-43-41453	K1110-010038	22	K014038
20Y-43-41461	K1110-006039	18	K013039
20Y-43-41461	K1110-006044	18	K013044
20Y-43-41461	K1110-010040	18	K014040
20Y-43-41461	K1110-010045	18	K014045

PARTS Nº	FIG. Nº	INDEX	PAGE
20Y-43-41472	K1110-006037	4	K013037
20Y-43-41472	K1110-010038	4	K014038
20Y-43-41491	K1110-006037	28	K013037
20Y-43-41491	K1110-010038	28	K014038
20Y-43-41533	K1110-006044	2	K013044
20Y-43-41533	K1110-010045	2	K014045
20Y-43-41591	K1110-006039	15	K013039
20Y-43-41591	K1110-006044	15	K013044
20Y-43-41591	K1110-010040	15	K014040
20Y-43-41591	K1110-010045	15	K014045
20Y-43-41621	K1110-006037	7	K013037
20Y-43-41621	K1110-010038	7	K014038
20Y-43-41631	K1110-006043	4	K013043
20Y-43-41631	K1110-010044	4	K014044
20Y-43-41641	K1110-006037	8	K013037
20Y-43-41641	K1110-010038	8	K014038
20Y-43-41651	K1110-006037	10	K013037
20Y-43-41651	K1110-010038	10	K014038
20Y-43-41661	K1110-006037	11	K013037
20Y-43-41661	K1110-006043	8	K013043
20Y-43-41661	K1110-010038	11	K014038
20Y-43-41661	K1110-010044	8	K014044
20Y-43-41671	K1110-006043	30	K013043
20Y-43-41671	K1110-010044	30	K014044
20Y-43-41740	K1110-006043	27	K013043
20Y-43-41740	K1110-010044	27	K014044
20Y-43-41750	K1110-006043	28	K013043
20Y-43-41750	K1110-010044	28	K014044
20Y-43-41760	K1110-010030	2	K014030
20Y-43-41780	K1110-006043	34	K013043
20Y-43-41780	K1110-010044	34	K014044
20Y-43-41790	K1110-006043	29	K013043
20Y-43-41790	K1110-010044	29	K014044
20Y-43-41813	K1110-006030	7	K013030
20Y-43-41813	K1110-010031	7	K014031
20Y-43-41823	K1110-006030	9	K013030
20Y-43-41823	K1110-010031	9	K014031
20Y-43-41832	K1110-006030	11	K013030
20Y-43-41832	K1110-010031	11	K014031
20Y-43-41850	K1110-006044	5	K013044
20Y-43-41850	K1110-010045	5	K014045
20Y-43-41891	K1110-006030	12	K013030
20Y-43-41891	K1110-010031	12	K014031
20Y-43-41970	K1110-006037	27	K013037
20Y-43-41970	K1110-010038	27	K014038
20Y-43-42130	K1110-006038	2	K013038
20Y-43-42130	K1110-010039	2	K014039
20Y-46-11270	M1510-002001	10	M011001
20Y-46-11410	M1520-001001	3	M012001
20Y-46-21520	N1110-001001	7	N001001

PARTS Nº	FIG. Nº	INDEX	PAGE
20Y-46-41280	J1110-002001	6	J001001
20Y-46-51140	J1110-002001	22	J001001
20Y-46-51162	J1110-002001	17	J001001
20Y-46-52141	J1110-002001	18	J001001
20Y-46-52150	J1110-002001	16	J001001
20Y-46-52172	J1110-002001	13	J001001
20Y-46-52180	J1110-002001	12	J001001
20Y-46-52441	J1110-002001	11	J001001
20Y-46-54130	M1520-001001	1	M012001
20Y-46-54141	M1510-002001	4	M011001
20Y-46-54151	M1510-002001	5	M011001
20Y-46-54160	M1510-002001	6	M011001
20Y-46-54170	M1510-002001	7	M011001
20Y-46-54180	M1510-002001	8	M011001
20Y-46-54190	M1510-002001	9	M011001
20Y-46-54313	M1510-002001	2	M011001
20Y-46-54323	M1510-002001	3	M011001
20Y-53-00031	K1110-006002	1	K013002
20Y-53-00031	K1110-010002	1	K014002
20Y-53-00072	K1110-006005	1	K013005
20Y-53-00072	K1110-006006	1	K013006
20Y-53-00072	K1110-010005	1	K014005
20Y-53-00072	K1110-010006	1	K014006
20Y-53-00460	K1110-006001	1	K013001
20Y-53-00460	K1110-006002	1	K013002
20Y-53-00460	K1110-006003	1	K013003
20Y-53-00460	K1110-006004	1	K013004
20Y-53-00460	K1110-006005	1	K013005
20Y-53-00460	K1110-006006	1	K013006
20Y-53-00460	K1110-006007	1	K013007
20Y-53-00460	K1110-006008	1	K013008
20Y-53-00460	K1110-006009	1	K013009
20Y-53-00460	K1110-006010	1	K013010
20Y-53-00460	K1110-006011	1	K013011
20Y-53-00460	K1110-006012	1	K013012
20Y-53-00460	K1110-006013	1	K013013
20Y-53-00460	K1110-010001	1	K014001
20Y-53-00460	K1110-010002	1	K014002
20Y-53-00460	K1110-010003	1	K014003
20Y-53-00460	K1110-010004	1	K014004
20Y-53-00460	K1110-010005	1	K014005
20Y-53-00460	K1110-010006	1	K014006
20Y-53-00460	K1110-010007	1	K014007
20Y-53-00460	K1110-010008	1	K014008
20Y-53-00460	K1110-010009	1	K014009
20Y-53-00460	K1110-010010	1	K014010
20Y-53-00460	K1110-010011	1	K014011
20Y-53-00460	K1110-010012	1	K014012
20Y-53-00460	K1110-010013	1	K014013
20Y-53-11241	K1110-006001	2	K013001

PARTS Nº	FIG. Nº	INDEX	PAGE
20Y-53-11241	K1110-010001	2	K014001
20Y-53-11250	K1110-006001	7	K013001
20Y-53-11250	K1110-010001	7	K014001
20Y-53-11260	K1110-006001	3	K013001
20Y-53-11260	K1110-010001	3	K014001
20Y-53-11271	K1110-006001	6	K013001
20Y-53-11271	K1110-010001	6	K014001
20Y-53-11320	K1110-006006	11	K013006
20Y-53-11320	K1110-010006	11	K014006
20Y-53-11332	K1110-006005	16	K013005
20Y-53-11332	K1110-006005	17	K013005
20Y-53-11332	K1110-010005	16	K014005
20Y-53-11332	K1110-010005	17	K014005
20Y-53-11380	K1110-006013	6	K013013
20Y-53-11380	K1110-010013	6	K014013
20Y-53-11390	K1110-006013	4	K013013
20Y-53-11390	K1110-006013	5	K013013
20Y-53-11390	K1110-010013	4	K014013
20Y-53-11390	K1110-010013	5	K014013
20Y-53-11402	K1110-006005	2	K013005
20Y-53-11402	K1110-010005	2	K014005
20Y-53-11411	K1110-006005	20	K013005
20Y-53-11411	K1110-010005	20	K014005
20Y-53-11421	K1110-006005	21	K013005
20Y-53-11421	K1110-010005	21	K014005
20Y-53-11441	K1110-006006	18	K013006
20Y-53-11441	K1110-010006	18	K014006
20Y-53-11451	K1110-006005	12	K013005
20Y-53-11451	K1110-010005	12	K014005
20Y-53-11460	K1110-006005	13	K013005
20Y-53-11460	K1110-010005	13	K014005
20Y-53-11470	K1110-006005	10	K013005
20Y-53-11470	K1110-010005	10	K014005
20Y-53-11484	K1110-006005	15	K013005
20Y-53-11484	K1110-010005	15	K014005
20Y-53-11511	K1110-006002	1	K013002
20Y-53-11511	K1110-010002	1	K014002
20Y-53-11520	K1110-006002	2	K013002
20Y-53-11520	K1110-010002	2	K014002
20Y-53-11540	K1110-006002	41	K013002
20Y-53-11540	K1110-010002	41	K014002
20Y-53-11551	K1110-006002	4	K013002
20Y-53-11551	K1110-010002	4	K014002
20Y-53-11561	K1110-006002	25	K013002
20Y-53-11561	K1110-010002	25	K014002
20Y-53-11581	K1110-006002	33	K013002
20Y-53-11581	K1110-010002	33	K014002
20Y-53-11591	K1110-006003	1	K013003
20Y-53-11591	K1110-010003	1	K014003
20Y-53-11601	K1110-006003	4	K013003

PARTS Nº	FIG. Nº	INDEX	PAGE
20Y-53-11601	K1110-010003	4	K014003
20Y-53-11611	K1110-006003	4	K013003
20Y-53-11611	K1110-010003	4	K014003
20Y-53-11641	K1110-006002	34	K013002
20Y-53-11641	K1110-010002	34	K014002
20Y-53-11661	K1110-006002	28	K013002
20Y-53-11661	K1110-010002	28	K014002
20Y-53-11712	K1110-006004	1	K013004
20Y-53-11712	K1110-010004	1	K014004
20Y-53-11721	K1110-006004	11	K013004
20Y-53-11721	K1110-010004	11	K014004
20Y-53-11741	K1110-006004	6	K013004
20Y-53-11741	K1110-010004	6	K014004
20Y-53-11752	K1110-006011	31	K013011
20Y-53-11752	K1110-010011	31	K014011
20Y-53-11761	K1110-006011	33	K013011
20Y-53-11761	K1110-010011	33	K014011
20Y-53-11771	K1110-006004	17	K013004
20Y-53-11771	K1110-010004	17	K014004
20Y-53-11781	K1110-006004	12	K013004
20Y-53-11781	K1110-010004	12	K014004
20Y-53-11790	K1110-006004	7	K013004
20Y-53-11790	K1110-010004	7	K014004
20Y-53-11810	K1110-006007	14	K013007
20Y-53-11810	K1110-010007	14	K014007
20Y-53-11821	K1110-006012	5	K013012
20Y-53-11821	K1110-010012	5	K014012
20Y-53-11831	K1110-006012	7	K013012
20Y-53-11831	K1110-010012	7	K014012
20Y-53-11841	K1110-006001	4	K013001
20Y-53-11841	K1110-010001	4	K014001
20Y-53-11850	K1110-006001	5	K013001
20Y-53-11850	K1110-010001	5	K014001
20Y-53-11861	K1110-006004	20	K013004
20Y-53-11861	K1110-010004	20	K014004
20Y-53-11870	K1110-006019	2	K013019
20Y-53-11870	K1110-010019	2	K014019
20Y-53-11880	K1110-006019	3	K013019
20Y-53-11880	K1110-010019	3	K014019
20Y-53-11890	K1110-006007	15	K013007
20Y-53-11890	K1110-010007	15	K014007
20Y-53-11921	K1110-006004	4	K013004
20Y-53-11921	K1110-010004	4	K014004
20Y-53-11931	K1110-006004	14	K013004
20Y-53-11931	K1110-010004	14	K014004
20Y-53-11940	K1110-006003	9	K013003
20Y-53-11940	K1110-010003	9	K014003
20Y-53-11953	K0310-001001	4	K008001
20Y-53-11953	K0310-002001	4	K009001
20Y-53-11961	K1110-006012	1	K013012

PARTS Nº	FIG. Nº	INDEX	PAGE
20Y-53-11961	K1110-010012	1	K014012
20Y-53-11973	K1110-006003	11	K013003
20Y-53-11973	K1110-010003	11	K014003
20Y-53-11981	K1110-006007	1	K013007
20Y-53-11981	K1110-010007	1	K014007
20Y-53-11990	K1110-006007	6	K013007
20Y-53-11990	K1110-010007	6	K014007
20Y-53-12111	K1110-006015	1	K013015
20Y-53-12111	K1110-010015	1	K014015
20Y-53-12122	K1110-006014	12	K013014
20Y-53-12122	K1110-010014	12	K014014
20Y-53-12154	K1110-006014	5	K013014
20Y-53-12154	K1110-010014	5	K014014
20Y-53-12161	K1110-006014	20	K013014
20Y-53-12161	K1110-010014	20	K014014
20Y-53-12172	K1110-006014	11	K013014
20Y-53-12172	K1110-010014	11	K014014
20Y-53-12201	K1110-006006	1	K013006
20Y-53-12201	K1110-010006	1	K014006
20Y-53-12221	K1110-006010	7	K013010
20Y-53-12221	K1110-010010	7	K014010
20Y-53-12232	K1110-006008	9	K013008
20Y-53-12232	K1110-010008	9	K014008
20Y-53-12240	K1110-006015	2	K013015
20Y-53-12240	K1110-010015	2	K014015
20Y-53-12260	K1110-006013	11	K013013
20Y-53-12260	K1110-010013	11	K014013
20Y-53-12280	K1110-006007	3	K013007
20Y-53-12280	K1110-010007	3	K014007
20Y-53-12291	K1110-006014	19	K013014
20Y-53-12291	K1110-010014	19	K014014
20Y-53-12310	K1110-006002	44	K013002
20Y-53-12310	K1110-006011	16	K013011
20Y-53-12310	K1110-006011	22	K013011
20Y-53-12310	K1110-006014	16	K013014
20Y-53-12310	K1110-006017	11	K013017
20Y-53-12310	K1110-006017	7	K013017
20Y-53-12310	K1110-006018	13	K013018
20Y-53-12310	K1110-006023	12	K013023
20Y-53-12310	K1110-006023	23	K013023
20Y-53-12310	K1110-006023	26	K013023
20Y-53-12310	K1110-010002	44	K014002
20Y-53-12310	K1110-010011	16	K014011
20Y-53-12310	K1110-010011	22	K014011
20Y-53-12310	K1110-010014	16	K014014
20Y-53-12310	K1110-010017	11	K014017
20Y-53-12310	K1110-010017	7	K014017
20Y-53-12310	K1110-010018	13	K014018
20Y-53-12310	K1110-010023	12	K014023
20Y-53-12310	K1110-010023	23	K014023

PARTS Nº	FIG. Nº	INDEX	PAGE
20Y-53-12310	K1110-010023	26	K014023
20Y-53-12320	K1110-006013	13	K013013
20Y-53-12320	K1110-010013	13	K014013
20Y-53-12330	K1110-006002	14	K013002
20Y-53-12330	K1110-010002	14	K014002
20Y-53-12371	K1110-006023	6	K013023
20Y-53-12371	K1110-010023	6	K014023
20Y-53-12381	K1110-006023	14	K013023
20Y-53-12381	K1110-010023	14	K014023
20Y-53-12391	K1110-006023	17	K013023
20Y-53-12391	K1110-010023	17	K014023
20Y-53-12412	K1110-006011	1	K013011
20Y-53-12412	K1110-010011	1	K014011
20Y-53-12421	K1110-006011	3	K013011
20Y-53-12421	K1110-010011	3	K014011
20Y-53-12431	K1110-006011	6	K013011
20Y-53-12431	K1110-010011	6	K014011
20Y-53-12441	K1110-006011	10	K013011
20Y-53-12441	K1110-010011	10	K014011
20Y-53-12463	K1110-006011	15	K013011
20Y-53-12463	K1110-010011	15	K014011
20Y-53-12472	K1110-006011	21	K013011
20Y-53-12472	K1110-010011	21	K014011
20Y-53-12483	K1110-006014	22	K013014
20Y-53-12483	K1110-010014	22	K014014
20Y-53-12522	K1110-006018	8	K013018
20Y-53-12522	K1110-010018	8	K014018
20Y-53-12531	K1110-006002	43	K013002
20Y-53-12531	K1110-010002	43	K014002
20Y-53-12552	K1110-006011	14	K013011
20Y-53-12552	K1110-010011	14	K014011
20Y-53-12564	K1110-006019	1	K013019
20Y-53-12564	K1110-010019	1	K014019
20Y-53-12580	K1110-006013	16	K013013
20Y-53-12580	K1110-010013	16	K014013
20Y-53-12591	K1110-006012	4	K013012
20Y-53-12591	K1110-010012	4	K014012
20Y-53-12611	K1110-006003	15	K013003
20Y-53-12611	K1110-010003	15	K014003
20Y-53-12631	K1110-006003	17	K013003
20Y-53-12631	K1110-010003	17	K014003
20Y-53-12661	K1110-006006	14	K013006
20Y-53-12661	K1110-010006	14	K014006
20Y-53-12710	K1110-006011	13	K013011
20Y-53-12710	K1110-006011	9	K013011
20Y-53-12710	K1110-010011	13	K014011
20Y-53-12710	K1110-010011	9	K014011
20Y-53-12731	K1110-006023	24	K013023
20Y-53-12731	K1110-010023	24	K014023
20Y-53-12740	K1110-006013	17	K013013

PARTS Nº	FIG. Nº	INDEX	PAGE
20Y-53-12740	K1110-010013	17	K014013
20Y-53-12751	K1110-006019	9	K013019
20Y-53-12751	K1110-010019	9	K014019
20Y-53-12760	K1110-006019	10	K013019
20Y-53-12760	K1110-010019	10	K014019
20Y-53-12771	K1110-006016	10	K013016
20Y-53-12771	K1110-010016	10	K014016
20Y-53-12781	K1110-006019	8	K013019
20Y-53-12781	K1110-010019	8	K014019
20Y-53-12790	K1110-006008	11	K013008
20Y-53-12790	K1110-010008	11	K014008
20Y-53-12810	K1110-006014	4	K013014
20Y-53-12810	K1110-010014	4	K014014
20Y-53-12830	K1110-006002	18	K013002
20Y-53-12830	K1110-010002	18	K014002
20Y-53-12840	K1110-006005	3	K013005
20Y-53-12840	K1110-010005	3	K014005
20Y-53-12850	K1110-006005	4	K013005
20Y-53-12850	K1110-010005	4	K014005
20Y-53-12860	K1110-006023	28	K013023
20Y-53-12860	K1110-010023	28	K014023
20Y-53-12870	K1110-006005	6	K013005
20Y-53-12870	K1110-010005	6	K014005
20Y-53-12880	K1110-006005	7	K013005
20Y-53-12880	K1110-010005	7	K014005
20Y-53-12892	K1110-006003	12	K013003
20Y-53-12892	K1110-010003	12	K014003
20Y-53-12940	K1110-006006	12	K013006
20Y-53-12940	K1110-010006	12	K014006
20Y-53-12951	K1110-006013	22	K013013
20Y-53-12951	K1110-010013	22	K014013
20Y-53-12960	K1110-006013	1	K013013
20Y-53-12960	K1110-010013	1	K014013
20Y-53-12971	K1110-006005	9	K013005
20Y-53-12971	K1110-010005	9	K014005
20Y-53-12991	K1110-006006	5	K013006
20Y-53-12991	K1110-010006	5	K014006
20Y-53-13113	K1120-001001	1	K015001
20Y-53-13121	K1120-001001	2	K015001
20Y-53-13130	K1120-001001	5	K015001
20Y-53-13141	K1120-001001	8	K015001
20Y-53-13151	K1120-001001	11	K015001
20Y-53-13280	K1110-006017	3	K013017
20Y-53-13280	K1110-010017	3	K014017
20Y-53-13311	K1110-006018	1	K013018
20Y-53-13311	K1110-010018	1	K014018
20Y-53-13321	K1110-006018	4	K013018
20Y-53-13321	K1110-010018	4	K014018
20Y-53-13331	K1110-006018	2	K013018
20Y-53-13331	K1110-010018	2	K014018

PARTS Nº	FIG. Nº	INDEX	PAGE
20Y-53-13341	K1110-006018	5	K013018
20Y-53-13341	K1110-010018	5	K014018
20Y-53-13351	K1110-006018	3	K013018
20Y-53-13351	K1110-010018	3	K014018
20Y-53-13361	K1110-006018	6	K013018
20Y-53-13361	K1110-010018	6	K014018
20Y-53-13371	K1110-006017	1	K013017
20Y-53-13371	K1110-010017	1	K014017
20Y-53-13421	K1110-006017	8	K013017
20Y-53-13421	K1110-010017	8	K014017
20Y-53-13451	K1110-006018	11	K013018
20Y-53-13451	K1110-010018	11	K014018
20Y-53-13461	K1110-006018	14	K013018
20Y-53-13461	K1110-010018	14	K014018
20Y-53-13480	K1110-006017	2	K013017
20Y-53-13480	K1110-010017	2	K014017
20Y-53-13490	K1110-006012	3	K013012
20Y-53-13490	K1110-010012	3	K014012
20Y-53-13617	K1110-006016	1	K013016
20Y-53-13617	K1110-010016	1	K014016
20Y-53-13631	K1110-006023	1	K013023
20Y-53-13631	K1110-010023	1	K014023
20Y-53-13680	K1110-006016	4	K013016
20Y-53-13680	K1110-010016	4	K014016
20Y-53-13870	K1110-006011	5	K013011
20Y-53-13870	K1110-010011	5	K014011
20Y-53-13880	K1110-006005	14	K013005
20Y-53-13880	K1110-010005	14	K014005
20Y-53-13910	K1110-006005	11	K013005
20Y-53-13910	K1110-010005	11	K014005
20Y-53-14116	K1110-006024	1	K013024
20Y-53-14116	K1110-010024	1	K014024
20Y-53-14121	K1110-006032	1	K013032
20Y-53-14121	K1110-010033	1	K014033
20Y-53-14140	K1110-006051	5	K013051
20Y-53-14140	K1110-010052	5	K014052
20Y-53-14220	K1110-010030	9	K014030
20Y-53-14230	K1110-006015	3	K013015
20Y-53-14230	K1110-010015	3	K014015
20Y-53-14713	K0310-001001	1	K008001
20Y-53-14723	K0310-002001	1	K009001
20Y-53-14812	K1110-006020	1	K013020
20Y-53-14812	K1110-010020	1	K014020
20Y-53-14820	K1110-006021	1	K013021
20Y-53-14820	K1110-010021	1	K014021
20Y-53-14831	K1110-006052	27	K013052
20Y-53-14831	K1110-010053	34	K014053
20Y-53-14910	K1110-006052	19	K013052
20Y-53-14910	K1110-010053	26	K014053
20Y-53-14920	K1110-006052	20	K013052

PARTS Nº	FIG. Nº	INDEX	PAGE
20Y-53-14920	K1110-010053	27	K014053
20Y-53-14930	K1110-006052	21	K013052
20Y-53-14930	K1110-010053	28	K014053
20Y-53-14940	K1110-006052	22	K013052
20Y-53-14940	K1110-010053	29	K014053
20Y-53-14950	K1110-006052	23	K013052
20Y-53-14950	K1110-010053	30	K014053
20Y-53-14963	K1110-006052	24	K013052
20Y-53-14963	K1110-010053	31	K014053
20Y-53-14973	K1110-006052	25	K013052
20Y-53-14973	K1110-010053	32	K014053
20Y-53-14983	K1110-006052	26	K013052
20Y-53-14983	K1110-010053	33	K014053
20Y-53-14991	K1110-006033	1	K013033
20Y-53-14991	K1110-010034	1	K014034
20Y-53-15110	E0310-004001	4	E004001
20Y-53-15140	K1110-006013	25	K013013
20Y-53-15140	K1110-010013	25	K014013
20Y-53-15150	E0310-003001	4	E003001
20Y-53-15210	E0310-003001	1	E003001
20Y-53-15210	E0310-004001	1	E004001
20Y-53-16741	K0330-001001	1	K010001
20Y-53-17411	K0330-001001	6	K010001
20Y-53-18211	K1110-006020	9	K013020
20Y-53-18211	K1110-010020	9	K014020
20Y-53-18221	K1110-006023	33	K013023
20Y-53-18221	K1110-010023	33	K014023
20Y-53-18880	K1110-006013	20	K013013
20Y-53-18880	K1110-010013	20	K014013
20Y-54-11611	K1110-006002	36	K013002
20Y-54-11611	K1110-006007	11	K013007
20Y-54-11611	K1110-010002	36	K014002
20Y-54-11611	K1110-010007	11	K014007
20Y-54-11611	M1130-002001	35	M003001
20Y-54-11611	M1140-002001	23	M004001
20Y-54-12320	M1150-002002	20	M005002
20Y-54-12550	M1130-002001	46	M003001
20Y-54-12550	M1150-002003	21	M005003
20Y-54-12550	M1810-002001	20	M013001
20Y-54-12550	M1810-002001	30	M013001
20Y-54-12550	M1810-002001	44	M013001
20Y-54-13322	K1110-006005	8	K013005
20Y-54-13322	K1110-010005	8	K014005
20Y-54-14590	K1110-006002	15	K013002
20Y-54-14590	K1110-006004	8	K013004
20Y-54-14590	K1110-010002	15	K014002
20Y-54-14590	K1110-010004	8	K014004
20Y-54-19930	M1220-001001	15	M007001
20Y-54-25852	M1210-002001	12	M006001
20Y-54-27172	M1110-002001	5	M001001

PARTS Nº	FIG. Nº	INDEX	PAGE
20Y-54-27182	M1210-002001	23	M006001
20Y-54-27330	M1110-002001	6	M001001
20Y-54-28170	M1130-002001	26	M003001
20Y-54-28170	M1140-002001	17	M004001
20Y-54-29232	M1130-002001	37	M003001
20Y-54-29232	M1140-002001	26	M004001
20Y-54-29660	M1220-001001	9	M007001
20Y-54-29680	M1220-001001	8	M007001
20Y-54-35430	M1410-002001	3	M009001
20Y-54-35451	K1110-006013	12	K013013
20Y-54-35451	K1110-010013	12	K014013
20Y-54-36342	K0230-003001	23	K007001
20Y-54-36342	K1110-006004	15	K013004
20Y-54-36342	K1110-010004	15	K014004
20Y-54-39450	K1110-006008	5	K013008
20Y-54-39450	K1110-010008	5	K014008
20Y-54-39460	K1110-006008	6	K013008
20Y-54-39460	K1110-010008	6	K014008
20Y-54-39480	K1110-006008	7	K013008
20Y-54-39480	K1110-010008	7	K014008
20Y-54-39511	K1110-006010	11	K013010
20Y-54-39511	K1110-010010	11	K014010
20Y-54-51393	K1110-006006	15	K013006
20Y-54-51393	K1110-010006	15	K014006
20Y-54-51420	K1110-006002	42	K013002
20Y-54-51420	K1110-010002	42	K014002
20Y-54-51531	K1110-006002	3	K013002
20Y-54-51531	K1110-010002	3	K014002
20Y-54-51621	K1110-006002	38	K013002
20Y-54-51621	K1110-010002	38	K014002
20Y-54-51640	K1110-006003	3	K013003
20Y-54-51640	K1110-010003	3	K014003
20Y-54-51670	K1110-006002	21	K013002
20Y-54-51670	K1110-010002	21	K014002
20Y-54-51680	K1110-006002	22	K013002
20Y-54-51680	K1110-010002	22	K014002
20Y-54-52211	K1110-006008	1	K013008
20Y-54-52211	K1110-010008	1	K014008
20Y-54-52221	K1110-006008	4	K013008
20Y-54-52221	K1110-010008	4	K014008
20Y-54-52300	K1110-006006	2	K013006
20Y-54-52300	K1110-010006	2	K014006
20Y-54-52350	K1110-006008	4	K013008
20Y-54-52350	K1110-010008	4	K014008
20Y-54-52621	K1110-006002	12	K013002
20Y-54-52621	K1110-010002	12	K014002
20Y-54-52651	K1110-006004	19	K013004
20Y-54-52651	K1110-006004	23	K013004
20Y-54-52651	K1110-010004	19	K014004
20Y-54-52651	K1110-010004	23	K014004

PARTS Nº	FIG. Nº	INDEX	PAGE
20Y-54-52681	K1110-006002	13	K013002
20Y-54-52681	K1110-010002	13	K014002
20Y-54-52820	K1110-006006	9	K013006
20Y-54-52820	K1110-010006	9	K014006
20Y-54-52860	K1110-006005	5	K013005
20Y-54-52860	K1110-010005	5	K014005
20Y-54-61372	M1130-002001	32	M003001
20Y-54-61391	M1140-002001	30	M004001
20Y-54-61470	M1130-002001	20	M003001
20Y-54-61470	M1140-002001	11	M004001
20Y-54-61630	M1420-003001	3	M010001
20Y-54-61670	J1110-002001	7	J001001
20Y-54-61680	J1110-002001	8	J001001
20Y-54-61760	M1120-003001	4	M002001
20Y-54-61770	M1810-002001	2	M013001
20Y-54-61780	M1810-002001	4	M013001
20Y-54-61790	M1210-002001	8	M006001
20Y-54-61890	M1810-002001	24	M013001
20Y-54-61990	M1210-002001	7	M006001
20Y-54-63390	M1130-002001	14	M003001
20Y-54-63414	M1130-002001	15	M003001
20Y-54-63414	M1130-002001	8	M003001
20Y-54-63414	M1140-002001	7	M004001
20Y-54-65121	K1110-006051	11	K013051
20Y-54-65121	K1110-010052	11	K014052
20Y-54-65340	K1110-006030	15	K013030
20Y-54-65340	K1110-010031	15	K014031
20Y-54-65540	K1110-006030	18	K013030
20Y-54-65540	K1110-010031	18	K014031
20Y-54-65690	K1110-006019	15	K013019
20Y-54-65690	K1110-010019	15	K014019
20Y-54-65790	K1110-006019	14	K013019
20Y-54-65790	K1110-010019	14	K014019
20Y-54-71153	M1140-002001	29	M004001
20Y-54-71172	M1210-002001	35	M006001
20Y-54-71182	M1110-002001	9	M001001
20Y-54-71211	M1120-003001	1	M002001
20Y-54-71222	M1130-002001	41	M003001
20Y-54-71233	M1130-002001	42	M003001
20Y-54-71241	M1130-002001	43	M003001
20Y-54-71262	M1150-002003	28	M005003
20Y-54-71271	M1120-003001	3	M002001
20Y-54-71283	M1130-002001	42	M003001
20Y-54-71312	M1130-002001	1	M003001
20Y-54-71323	M1130-002001	2	M003001
20Y-54-71331	M1130-002001	3	M003001
20Y-54-71341	M1130-002001	4	M003001
20Y-54-71361	M1130-002001	38	M003001
20Y-54-71372	M1130-002001	9	M003001
20Y-54-71411	M1140-002001	1	M004001

PARTS Nº	FIG. Nº	INDEX	PAGE
20Y-54-71421	M1140-002001	2	M004001
20Y-54-71431	M1140-002001	3	M004001
20Y-54-71440	M1140-002001	25	M004001
20Y-54-71460	M1110-002001	2	M001001
20Y-54-71470	M1110-002001	23	M001001
20Y-54-71480	M1110-002001	24	M001001
20Y-54-71491	M1140-002001	8	M004001
20Y-54-71561	M1150-002003	12	M005003
20Y-54-71572	M1150-002003	24	M005003
20Y-54-71613	M1150-002001	15	M005001
20Y-54-71633	M1150-002001	16	M005001
20Y-54-71670	M1150-002001	19	M005001
20Y-54-71723	M1210-002001	11	M006001
20Y-54-71811	M1810-002001	14	M013001
20Y-54-71831	M1810-002001	23	M013001
20Y-54-71851	M1810-002001	25	M013001
20Y-54-71863	M1810-002001	5	M013001
20Y-54-71890	M1810-002001	33	M013001
20Y-54-71950	M1150-002003	25	M005003
20Y-54-71962	M1150-002003	26	M005003
20Y-54-71970	M1150-002001	2	M005001
20Y-54-71980	M1150-002001	3	M005001
20Y-54-71991	M1150-002002	2	M005002
20Y-54-72113	M1110-002001	16	M001001
20Y-54-72141	M1110-002001	18	M001001
20Y-54-72191	M1110-002001	17	M001001
20Y-54-72221	M1150-002002	8	M005002
20Y-54-72231	M1150-002002	9	M005002
20Y-54-72251	M1150-002002	5	M005002
20Y-54-72260	M1150-002001	4	M005001
20Y-54-72270	M1150-002001	5	M005001
20Y-54-72280	M1150-002001	6	M005001
20Y-54-72313	M1150-002001	1	M005001
20Y-54-72322	M1150-002002	1	M005002
20Y-54-72331	M1150-002002	7	M005002
20Y-54-72351	M1150-002002	10	M005002
20Y-54-72431	M1120-003001	2	M002001
20Y-54-72441	D0200-002002	28	D002002
20Y-54-72470	M1150-002003	13	M005003
20Y-54-72481	M1150-002003	3	M005003
20Y-54-72491	M1150-002002	6	M005002
20Y-54-72510	M1150-002001	8	M005001
20Y-54-72520	M1150-002001	9	M005001
20Y-54-72540	M1150-002001	10	M005001
20Y-54-72551	M1150-002001	11	M005001
20Y-54-72740	M1130-002001	40	M003001
20Y-54-72750	M1130-002001	39	M003001
20Y-54-72831	M1150-002001	12	M005001
20Y-54-72870	M1130-002001	10	M003001
20Y-54-73190	M1210-002001	13	M006001
20Y-54-73390	M1150-002002	11	M005002
20Y-54-73411	M1150-002002	12	M005002
20Y-54-73511	C0100-002004	30	C001004
20Y-54-73520	C0100-002004	32	C001004
20Y-54-73530	C0100-002004	29	C001004
20Y-54-73540	C0100-002004	31	C001004
20Y-54-73711	M1150-002001	13	M005001
20Y-54-73730	M1210-002001	10	M006001
20Y-54-73741	M1210-002001	9	M006001
20Y-54-73752	M1130-002001	17	M003001
20Y-54-73760	M1150-002003	6	M005003
20Y-54-73770	M1150-002003	7	M005003
20Y-54-73781	M1150-002003	2	M005003
20Y-54-73791	M1810-002001	1	M013001
20Y-54-73810	M1810-002001	3	M013001
20Y-54-73830	M1150-002002	3	M005002
20Y-54-73841	M1130-002001	16	M003001
20Y-54-73850	M1150-002003	1	M005003
20Y-54-73870	M1810-002001	15	M013001
20Y-54-73991	M1310-001001	1	M008001
20Y-54-74103	M1220-001001	2	M007001
20Y-54-74133	M1220-001001	3	M007001
20Y-54-74143	M1220-001001	1	M007001
20Y-54-74161	M1220-001001	4	M007001
20Y-54-74172	M1220-001001	5	M007001
20Y-54-74240	M1420-003001	6	M010001
20Y-54-74260	M1410-002001	2	M009001
20Y-54-74270	M1420-003001	2	M010001
20Y-54-74780	M1810-002001	25	M013001
20Y-54-75590	M1150-002001	14	M005001
20Y-54-75910	M1210-002001	14	M006001
20Y-54-75920	M1210-002001	16	M006001
20Y-54-75930	M1210-002001	15	M006001
20Y-54-76230	M1210-002001	2	M006001
20Y-54-76421	E0200-002004	30	E002004
20Y-54-76450	M1110-002001	1	M001001
20Y-54-76470	M1150-002002	4	M005002
20Y-54-76490	M1210-002001	1	M006001
20Y-54-76910	M1140-002001	31	M004001
20Y-54-B1270	M1210-002001	34	M006001
20Y-54-K7321	M1110-002001	4	M001001
20Y-57-41103	K0110-001001	1	K001001
20Y-57-B1230	K0110-002002	4	K002002
20Y-57-B1240	K0110-002001	1	K002001
20Y-57-B1240	K0110-002002	1	K002002
20Y-60-21240	H0110-002001	25	H002001
20Y-60-21320	H0110-001001	27	H001001
20Y-60-21320	H0110-002001	31	H002001
20Y-60-21340	H0110-001001	37	H001001
20Y-60-21340	H0110-002001	41	H002001
20Y-60-21470	H0110-001001	35	H001001
20Y-60-21470	H0110-002001	39	H002001
20Y-60-22270	H0120-002022	22	H003022
20Y-60-22270	H0120-006022	22	H004022
20Y-60-31131	H0110-001001	20	H001001
20Y-60-31131	H0110-002001	24	H002001
20Y-60-31140	H0110-001001	19	H001001
20Y-60-31140	H0110-002001	23	H002001
20Y-60-31171	H0110-001001	26	H001001
20Y-60-31171	H0110-002001	30	H002001
20Y-60-31240	H1831-001001	3	H021001
20Y-60-31240	H1831-002001	3	H022001
20Y-60-31250	H1831-001001	4	H021001
20Y-60-31250	H1831-002001	4	H022001
20Y-60-32121	H1831-001001	2	H021001
20Y-60-32121	H1831-002001	2	H022001
20Y-60-32300	H1833-002001	5	H023001
20Y-60-41611	H1831-002001	1	H022001
20Y-60-41621	H1831-001001	1	H021001
20Y-60-B2112	H0110-001001	1	H001001
20Y-60-B2112	H0110-002001	1	H002001
20Y-60-B2130	H0110-001001	30	H001001
20Y-60-B2130	H0110-002001	34	H002001
20Y-62-12560	P1120-001001	4	P001001
20Y-62-13180	T1110-002003	41	T001003
20Y-62-13180	T1110-005003	41	T002003
20Y-62-13190	T1110-002003	31	T001003
20Y-62-13190	T1110-005003	31	T002003
20Y-62-13230	H1210-001001	13	H014001
20Y-62-13450	H1210-001001	16	H014001
20Y-62-13450	T1110-002003	13	T001003
20Y-62-13450	T1110-002003	33	T001003
20Y-62-13450	T1110-002003	43	T001003
20Y-62-13450	T1110-002005	20	T001005
20Y-62-13450	T1110-002005	23	T001005
20Y-62-13450	T1110-005003	13	T002003
20Y-62-13450	T1110-005003	33	T002003
20Y-62-13450	T1110-005003	43	T002003
20Y-62-13450	T1200-008005	38	T007005
20Y-62-13450	T1200-018005	38	T009005
20Y-62-13570	T1110-002003	15	T001003
20Y-62-13570	T1110-005003	15	T002003
20Y-62-13690	T1110-002003	9	T001003
20Y-62-13690	T1110-005003	9	T002003
20Y-62-13710	T1110-002003	30	T001003
20Y-62-13710	T1110-005003	30	T002003
20Y-62-13730	T1110-002003	10	T001003
20Y-62-13730	T1110-005003	10	T002003
20Y-62-13760	H1210-001001	10	H014001
20Y-62-13760	H1210-001001	14	H014001

PARTS Nº	FIG. Nº	INDEX	PAGE
20Y-62-13761	T1110-002003	12	T001003
20Y-62-13761	T1110-002003	32	T001003
20Y-62-13761	T1110-002003	42	T001003
20Y-62-13761	T1110-005003	12	T002003
20Y-62-13761	T1110-005003	32	T002003
20Y-62-13761	T1110-005003	42	T002003
20Y-62-15831	K1110-006052	1	K013052
20Y-62-15831	K1110-006052	10	K013052
20Y-62-15831	K1110-010053	1	K014053
20Y-62-15831	K1110-010053	14	K014053
20Y-62-16630	H1831-001002	1	H021002
20Y-62-16630	H1831-002002	1	H022002
20Y-62-16630	H1833-002001	2	H023001
20Y-62-17480	H1210-001001	17	H014001
20Y-62-18890	K1110-006027	26	K013027
20Y-62-18890	K1110-006036	5	K013036
20Y-62-18890	K1110-006042	5	K013042
20Y-62-18890	K1110-010027	26	K014027
20Y-62-18890	K1110-010037	5	K014037
20Y-62-18890	K1110-010043	5	K014043
20Y-62-18910	K1110-006027	21	K013027
20Y-62-18910	K1110-006036	3	K013036
20Y-62-18910	K1110-006042	3	K013042
20Y-62-18910	K1110-010027	21	K014027
20Y-62-18910	K1110-010037	3	K014037
20Y-62-18910	K1110-010043	3	K014043
20Y-62-19560	H1831-001002	3	H021002
20Y-62-19560	H1831-002002	3	H022002
20Y-62-19560	H1833-002001	4	H023001
20Y-62-21940	H1831-001002	11	H021002
20Y-62-21940	H1831-002002	12	H022002
20Y-62-22160	H0120-002022	18	H003022
20Y-62-22160	H0120-006022	18	H004022
20Y-62-22790	H0120-002014	18	H003014
20Y-62-22790	H0120-006014	18	H004014
20Y-62-22790	H0210-001011	5	H005011
20Y-62-22790	H1810-001001	3	H019001
20Y-62-22790	H1810-002001	3	H020001
20Y-62-22790	H1831-001003	2	H021003
20Y-62-22790	H1831-002003	2	H022003
20Y-62-22790	H1840-002001	14	H024001
20Y-62-22790	K1110-006049	11	K013049
20Y-62-22790	K1110-006049	3	K013049
20Y-62-22790	K1110-006050	14	K013050
20Y-62-22790	K1110-006050	5	K013050
20Y-62-22790	K1110-010030	30	K014030
20Y-62-22790	K1110-010050	11	K014050
20Y-62-22790	K1110-010050	3	K014050
20Y-62-22790	K1110-010051	14	K014051
20Y-62-22790	K1110-010051	5	K014051
20Y-62-22810	H0210-001011	15	H005011
20Y-62-22810	H1810-001001	7	H019001
20Y-62-22810	H1810-002001	7	H020001
20Y-62-22810	H1831-001003	11	H021003
20Y-62-22810	H1831-001003	3	H021003
20Y-62-22810	H1831-002003	11	H022003
20Y-62-22810	H1831-002003	3	H022003
20Y-62-22810	H1840-002001	15	H024001
20Y-62-22810	K1110-006050	6	K013050
20Y-62-22810	K1110-010030	31	K014030
20Y-62-22810	K1110-010051	6	K014051
20Y-62-22820	H1810-001001	5	H019001
20Y-62-22820	H1810-002001	5	H020001
20Y-62-22820	H1831-002003	23	H022003
20Y-62-22820	H1840-002001	6	H024001
20Y-62-22820	K1110-006049	12	K013049
20Y-62-22820	K1110-006050	15	K013050
20Y-62-22820	K1110-006050	7	K013050
20Y-62-22820	K1110-010030	32	K014030
20Y-62-22820	K1110-010050	12	K014050
20Y-62-22820	K1110-010051	15	K014051
20Y-62-22830	H0120-002014	19	H003014
20Y-62-22830	H0120-006014	19	H004014
20Y-62-22830	H0210-001011	10	H005011
20Y-62-22830	H1840-002001	7	H024001
20Y-62-22830	K1110-006050	16	K013050
20Y-62-22830	K1110-010051	16	K014051
20Y-62-22840	H1840-002001	16	H024001
20Y-62-22840	K1110-006050	17	K013050
20Y-62-22840	K1110-010051	17	K014051
20Y-62-22850	H1840-002001	17	H024001
20Y-62-22850	K1110-006049	13	K013049
20Y-62-22850	K1110-006050	18	K013050
20Y-62-22850	K1110-010050	13	K014050
20Y-62-22850	K1110-010051	18	K014051
20Y-62-22860	H1831-001003	9	H021003
20Y-62-22860	H1831-002003	9	H022003
20Y-62-22860	H1840-002001	8	H024001
20Y-62-22860	K1110-006050	19	K013050
20Y-62-22860	K1110-010051	19	K014051
20Y-62-25360	K1110-010030	6	K014030
20Y-62-27770	K1110-006051	13	K013051
20Y-62-27770	K1110-010052	13	K014052
20Y-62-41140	H1210-001001	1	H014001
20Y-62-41150	H1210-001001	2	H014001
20Y-62-41181	H1220-001001	12	H015001
20Y-62-41181	H1220-001001	17	H015001
20Y-62-41213	H1310-001001	3	H017001
20Y-62-41321	H0311-001001	1	H008001
20Y-62-41390	K1110-006027	28	K013027
20Y-62-41390	K1110-010027	28	K014027
20Y-62-41572	B0000-001001	12	B001001
20Y-62-41602	H0120-002022	20	H003022
20Y-62-41602	H0120-006022	20	H004022
20Y-62-41830	H1833-002001	6	H023001
20Y-62-41860	H1220-001001	6	H015001
20Y-62-41920	H0120-002023	1	H003023
20Y-62-41920	H0120-006023	1	H004023
20Y-62-41930	N1310-001002	11	N003002
20Y-62-41940	N1210-002005	36	N002005
20Y-62-41960	H1831-001002	4	H021002
20Y-62-41960	H1831-002002	4	H022002
20Y-62-41971	H0120-002022	23	H003022
20Y-62-41971	H0120-006022	23	H004022
20Y-62-42251	K1110-006050	8	K013050
20Y-62-42251	K1110-010051	8	K014051
20Y-62-42271	K1110-006050	3	K013050
20Y-62-42271	K1110-010051	3	K014051
20Y-62-42471	H0340-001001	2	H013001
20Y-62-43222	H1270-008001	4	H016001
20Y-62-43280	H1270-008003	32	H016003
20Y-62-43290	H1270-008003	30	H016003
20Y-62-43311	H1270-008004	18	H016004
20Y-62-43320	H1270-008004	28	H016004
20Y-62-43351	H1270-008004	7	H016004
20Y-62-43361	H1270-008004	9	H016004
20Y-62-43460	H1270-008003	11	H016003
20Y-62-43470	K1110-010030	21	K014030
20Y-62-43870	H0340-001001	6	H013001
20Y-62-45610	H0120-002022	5	H003022
20Y-62-45610	H0120-006022	5	H004022
20Y-62-45620	H0120-002022	3	H003022
20Y-62-45620	H0120-006022	3	H004022
20Y-62-45690	H0110-002001	18	H002001
20Y-62-51112	H0120-002024	1	H003024
20Y-62-51112	H0120-006024	1	H004024
20Y-62-51151	H1310-001001	7	H017001
20Y-62-51160	H1840-002001	3	H024001
20Y-62-51181	H1270-008001	28	H016001
20Y-62-51212	H1310-001001	1	H017001
20Y-62-51222	H1310-001001	5	H017001
20Y-62-51240	H1220-001001	1	H015001
20Y-62-51251	H0330-001001	22	H011001
20Y-62-51251	H0330-002001	22	H012001
20Y-62-51260	H1831-001003	8	H021003
20Y-62-51260	H1831-002003	8	H022003
20Y-62-51280	H1270-008004	13	H016004
20Y-62-51321	H1270-008004	31	H016004
20Y-62-51332	H0330-001001	28	H011001

PARTS Nº	FIG. Nº	INDEX	PAGE
20Y-62-51332	H0330-002001	28	H012001
20Y-62-51352	H1833-002001	25	H023001
20Y-62-51371	H1833-002001	22	H023001
20Y-62-51381	H1833-002001	1	H023001
20Y-62-51392	H1833-002001	24	H023001
20Y-62-51411	H1833-002001	23	H023001
20Y-62-51432	B0000-001002	1	B001002
20Y-62-51450	H0330-002001	19	H012001
20Y-62-51461	H0330-001001	19	H011001
20Y-62-51471	H0120-002024	12	H003024
20Y-62-51471	H0120-006024	12	H004024
20Y-62-51481	C0100-002005	51	C001005
20Y-62-51580	H1270-008001	1	H016001
20Y-62-51671	H0311-001001	5	H008001
20Y-62-51681	H1270-008004	41	H016004
20Y-62-51691	H1270-008004	44	H016004
20Y-62-51760	H1270-008001	15	H016001
20Y-62-51771	H1270-008003	3	H016003
20Y-62-51781	H1270-008004	46	H016004
20Y-62-51870	H1840-002001	4	H024001
20Y-62-51880	H1840-002001	12	H024001
20Y-62-51890	H1840-002001	13	H024001
20Y-62-51890	H1840-002001	5	H024001
20Y-62-51910	H1831-001003	7	H021003
20Y-62-51910	H1831-002003	7	H022003
20Y-62-51910	H1840-002001	18	H024001
20Y-62-51922	H1810-002001	6	H020001
20Y-62-51930	H1831-001003	4	H021003
20Y-62-51930	H1831-002003	26	H022003
20Y-62-51930	H1831-002003	4	H022003
20Y-62-51940	H1831-001003	5	H021003
20Y-62-51940	H1831-002003	5	H022003
20Y-62-51960	H1831-001003	10	H021003
20Y-62-51960	H1831-002003	10	H022003
20Y-62-51993	H1831-001003	6	H021003
20Y-62-51993	H1831-002003	6	H022003
20Y-62-52121	H1831-002003	12	H022003
20Y-62-52160	K1110-010030	18	K014030
20Y-62-52210	K1110-006049	1	K013049
20Y-62-52210	K1110-010050	1	K014050
20Y-62-52220	K1110-006049	2	K013049
20Y-62-52220	K1110-010050	2	K014050
20Y-62-52230	K1110-006049	7	K013049
20Y-62-52230	K1110-010050	7	K014050
20Y-62-52240	K1110-006049	8	K013049
20Y-62-52240	K1110-010050	8	K014050
20Y-62-52250	K1110-006049	9	K013049
20Y-62-52250	K1110-010050	9	K014050
20Y-62-52260	K1110-006049	10	K013049
20Y-62-52260	K1110-010050	10	K014050
20Y-62-52280	K1110-006050	4	K013050
20Y-62-52280	K1110-010051	4	K014051
20Y-62-52290	K1110-006050	12	K013050
20Y-62-52290	K1110-010051	12	K014051
20Y-62-52310	K1110-006050	13	K013050
20Y-62-52310	K1110-010051	13	K014051
20Y-62-52330	K1110-010030	26	K014030
20Y-62-52340	K1110-010030	27	K014030
20Y-62-52350	K1110-010030	28	K014030
20Y-62-52461	H0312-002001	17	H009001
20Y-62-52474	H0312-002001	13	H009001
20Y-62-52651	T1110-002003	35	T001003
20Y-62-52651	T1110-005003	35	T002003
20Y-62-52671	T1110-002005	24	T001005
20Y-62-52671	T1110-002005	9	T001005
20Y-62-52680	T1110-002005	17	T001005
20Y-62-52690	H0312-002001	3	H009001
20Y-62-52710	T1110-002001	5	T001001
20Y-62-52710	T1110-005001	5	T002001
20Y-62-52720	T1110-002001	7	T001001
20Y-62-52720	T1110-005001	7	T002001
20Y-62-52731	T1110-002005	6	T001005
20Y-62-52740	T1110-002005	14	T001005
20Y-62-52770	T1110-002005	12	T001005
20Y-62-52780	T1110-002005	13	T001005
20Y-62-52790	H0312-002001	8	H009001
20Y-62-52860	H1810-001001	6	H019001
20Y-62-53160	H0330-001001	36	H011001
20Y-62-53410	K1110-006050	1	K013050
20Y-62-53410	K1110-010051	1	K014051
20Y-62-53420	K1110-006050	2	K013050
20Y-62-53420	K1110-010051	2	K014051
20Y-62-53650	H1810-001001	1	H019001
20Y-62-53650	H1810-002001	1	H020001
20Y-62-53660	H1810-001001	2	H019001
20Y-62-53660	H1810-002001	2	H020001
20Y-62-53670	H1810-001001	4	H019001
20Y-62-53670	H1810-002001	4	H020001
20Y-62-55340	T1200-008005	34	T007005
20Y-70-11190	J1310-002001	2	J002001
20Y-70-11340	T1110-002002	8	T001002
20Y-70-11340	T1110-005002	8	T002002
20Y-70-11340	T1200-004001	17	T006001
20Y-70-11340	T1200-004003	10	T006003
20Y-70-11340	T1200-004003	15	T006003
20Y-70-11340	T1200-008001	19	T007001
20Y-70-11340	T1200-008003	10	T007003
20Y-70-11340	T1200-008003	15	T007003
20Y-70-11340	T1200-014001	17	T008001
20Y-70-11340	T1200-014003	10	T008003
20Y-70-11340	T1200-014003	15	T008003
20Y-70-11340	T1200-018001	19	T009001
20Y-70-11340	T1200-018003	10	T009003
20Y-70-11340	T1200-018003	15	T009003
20Y-70-11340	T1200-022001	17	T010001
20Y-70-11340	T1200-022003	10	T010003
20Y-70-11340	T1200-022003	15	T010003
20Y-70-11350	J1310-002001	11	J002001
20Y-70-11360	T1110-002002	2	T001002
20Y-70-11360	T1110-005002	2	T002002
20Y-70-11370	T1125-002001	1	T004001
20Y-70-11390	T1125-002001	2	T004001
20Y-70-11540	T1110-002006	10	T001006
20Y-70-11540	T1110-005006	10	T002006
20Y-70-11651	T1110-002001	8	T001001
20Y-70-11651	T1110-005001	8	T002001
20Y-70-23230	KIT	K08	Y001001
20Y-70-23230	KIT	K09	Y001001
20Y-70-23230	T1200-004001	7	T006001
20Y-70-23230	T1200-004002	7	T006002
20Y-70-23230	T1200-004003	5	T006003
20Y-70-23230	T1200-008001	9	T007001
20Y-70-23230	T1200-008002	7	T007002
20Y-70-23230	T1200-008003	5	T007003
20Y-70-23230	T1200-014001	7	T008001
20Y-70-23230	T1200-014002	7	T008002
20Y-70-23230	T1200-014003	5	T008003
20Y-70-23230	T1200-018001	9	T009001
20Y-70-23230	T1200-018002	7	T009002
20Y-70-23230	T1200-018003	5	T009003
20Y-70-23230	T1200-022001	7	T010001
20Y-70-23230	T1200-022002	7	T010002
20Y-70-23230	T1200-022003	5	T010003
20Y-70-32410	T1200-004001	3	T006001
20Y-70-32410	T1200-008001	5	T007001
20Y-70-32410	T1200-014001	3	T008001
20Y-70-32410	T1200-018001	5	T009001
20Y-70-32410	T1200-022001	3	T010001
20Y-70-32420	T1510-001001	25	T011001
20Y-70-32450	T1200-004003	13	T006003
20Y-70-32450	T1200-004003	18	T006003
20Y-70-32450	T1200-004003	8	T006003
20Y-70-32450	T1200-008003	13	T007003
20Y-70-32450	T1200-008003	18	T007003
20Y-70-32450	T1200-008003	8	T007003
20Y-70-32450	T1200-014003	13	T008003
20Y-70-32450	T1200-014003	18	T008003
20Y-70-32450	T1200-014003	8	T008003
20Y-70-32450	T1200-018003	13	T009003
20Y-70-32450	T1200-018003	18	T009003

PARTS Nº	FIG. Nº	INDEX	PAGE
20Y-70-32450	T1200-018003	8	T009003
20Y-70-32450	T1200-022003	13	T010003
20Y-70-32450	T1200-022003	18	T010003
20Y-70-32450	T1200-022003	8	T010003
20Y-70-32460	T1200-004003	21	T006003
20Y-70-32460	T1200-008003	21	T007003
20Y-70-32460	T1200-014003	21	T008003
20Y-70-32460	T1200-018003	21	T009003
20Y-70-32460	T1200-022003	21	T010003
20Y-70-41221	T1125-002001	3	T004001
20Y-70-41230	T1110-002004	4	T001004
20Y-70-41230	T1110-005004	4	T002004
20Y-70-42220	T1200-004001	8	T006001
20Y-70-42220	T1200-008001	10	T007001
20Y-70-42220	T1200-014001	8	T008001
20Y-70-42220	T1200-018001	10	T009001
20Y-70-42E51	T1200-008001	2	T007001
20Y-70-42E51	T1200-018001	2	T009001
20Y-70-B1361	T1510-001001	19	T011001
20Y-70-B1371	T1510-001001	20	T011001
20Y-810-1112	K0700-001001	2	K012001
20Y-810-1120	B0000-001002	12	B001002
20Y-810-1130	K0700-001001	18	K012001
20Y-810-1141	K0700-001001	35	K012001
20Y-810-1161	B0000-001002	13	B001002
20Y-810-1170	K0700-001001	24	K012001
20Y-810-1180	K0700-001001	7	K012001
20Y-810-1190	K0700-001001	6	K012001
20Y-810-1211	K1110-006045	1	K013045
20Y-810-1211	K1110-010046	1	K014046
20Y-810-1221	C0100-002004	13	C001004
20Y-810-1240	C0100-002004	14	C001004
20Y-810-1240	E0450-002001	7	E008001
20Y-810-1250	C0100-002004	13	C001004
20Y-810-1260	K0700-001001	1	K012001
20Y-810-1311	K1110-006047	2	K013047
20Y-810-1311	K1110-010048	2	K014048
20Y-810-1321	K1110-006047	4	K013047
20Y-810-1321	K1110-010048	4	K014048
20Y-810-1332	K1110-006048	1	K013048
20Y-810-1332	K1110-010049	1	K014049
20Y-810-1342	K1110-006048	3	K013048
20Y-810-1342	K1110-010049	3	K014049
20Y-954-6111	K0230-001001	1	K005001
20Y-954-6122	K0220-001001	1	K004001
20Y-954-6132	K0230-002001	1	K006001
20Y-954-6132	K0230-003001	1	K007001
20Y-954-6142	K0230-003001	9	K007001
20Y-954-6151	K0230-003001	12	K007001
20Y-954-6161	K0230-003001	13	K007001
20Y-954-6171	K0230-003001	2	K007001
20Y-954-6181	K0230-003001	3	K007001
20Y-954-6192	K0230-002001	2	K006001
20Y-954-6192	K0230-003001	6	K007001
20Y-954-6241	K0220-001001	2	K004001
20Y-954-6250	K0220-001001	10	K004001
20Y-970-1820	H1270-008004	4	H016004
20Y-970-2700	H1270-008004	1	H016004
20Y-970-3270	T1200-008005	16	T007005
20Y-970-3270	T1200-018005	16	T009005
20Y-970-3572	T1200-008001	3	T007001
20Y-970-3572	T1200-018001	3	T009001
20Y-970-4612	T1200-008005	18	T007005
20Y-970-4612	T1200-018005	18	T009005
20Y-970-5240	T1200-008005	15	T007005
20Y-970-5240	T1200-018005	15	T009005
20Y-970-5300	T1200-008005	14	T007005
20Y-970-5300	T1200-018005	14	T009005
20Y-970-5321	T1200-008005	11	T007005
20Y-970-5321	T1200-018005	11	T009005
20Y-970-5631	T1200-018005	34	T009005
20Y-970-6450	H1270-008003	17	H016003
20Y-973-2220	R1140-001001	1	R009001
20Y-973-2230	R1140-001001	2	R009001
20Y-979-3130	K1110-006047	5	K013047
20Y-979-3130	K1110-010048	5	K014048
20Y-979-3150	K1110-006047	3	K013047
20Y-979-3150	K1110-010048	3	K014048
20Y-979-6161	K1110-006015	7	K013015
20Y-979-6161	K1110-010015	7	K014015
20Y-979-6612	K0700-001001	3	K012001
20Y-979-6630	K1110-006030	19	K013030
20Y-979-6630	K1110-010031	19	K014031
20Y-979-6771	K1110-006021	5	K013021
20Y-979-6771	K1110-010021	5	K014021
20Y-98-21130	V0300-001001	14	V002001
20Y-98-21140	V0300-001001	24	V002001
21J-06-12440	K1110-006002	31	K013002
21J-06-12440	K1110-010002	31	K014002
21K-54-26351	M1210-002001	17	M006001
21K-62-72810	H1270-008004	38	H016004
21K-70-12161	T1200-004001	4	T006001
21K-70-12161	T1200-004003	2	T006003
21K-70-12161	T1200-008001	6	T007001
21K-70-12161	T1200-008003	2	T007003
21K-70-12161	T1200-014001	4	T008001
21K-70-12161	T1200-014003	2	T008003
21K-70-12161	T1200-018001	6	T009001
21K-70-12161	T1200-018003	2	T009003
21K-70-12161	T1200-022001	4	T010001
21K-70-12161	T1200-022003	2	T010003
21K-70-71650	T1200-004001	12	T006001
21K-70-71650	T1200-008001	14	T007001
21K-70-71650	T1200-014001	12	T008001
21K-70-71650	T1200-018001	14	T009001
21K-70-71650	T1200-022001	12	T010001
21M-06-31170	K1110-006038	7	K013038
21M-06-31170	K1110-010039	7	K014039
21T-06-11350	M1150-002001	22	M005001
21T-06-32810	E0200-002005	5	E002005
21T-06-32810	E0320-002001	1	E005001
21T-06-32810	T1110-002006	2	T001006
21T-06-32810	T1110-005006	2	T002006
21T-38-12270	K0350-001001	1	K011001
21T-38-71260	D0200-002001	34	D002001
21T-54-16150	C0100-002005	43	C001005
21T-62-69711	C0100-002005	4	C001005
21T-62-69711	C0100-002005	41	C001005
21U-98-31160	U0100-002001	29	U001001
21U-98-31160	U0100-006001	28	U002001
21W-62-43930	H1833-002001	8	H023001
22B-26-11320	H1831-002002	6	H022002
22B-54-15411	K1110-006002	5	K013002
22B-54-15411	K1110-010002	5	K014002
22B-54-15421	K1110-006002	8	K013002
22B-54-15421	K1110-010002	8	K014002
22B-54-15440	K1110-006002	6	K013002
22B-54-15440	K1110-010002	6	K014002
22B-54-15450	K1110-006002	9	K013002
22B-54-15450	K1110-010002	9	K014002
22B-54-15470	K1110-006002	7	K013002
22B-54-15470	K1110-010002	7	K014002
22B-54-15480	K1110-006002	10	K013002
22B-54-15480	K1110-010002	10	K014002
22B-54-15841	K1110-006003	13	K013003
22B-54-15841	K1110-010003	13	K014003
22B-54-15970	K1110-006003	5	K013003
22B-54-15970	K1110-010003	5	K014003
22B-54-15980	K1110-006003	6	K013003
22B-54-15980	K1110-010003	6	K014003
22B-54-16330	K1110-006006	10	K013006
22B-54-16330	K1110-010006	10	K014006
22B-54-16340	K1110-006006	3	K013006
22B-54-16340	K1110-010006	3	K014006
22B-54-16461	K1110-006006	19	K013006
22B-54-16461	K1110-010006	19	K014006
22B-54-17282	K1110-006013	2	K013013
22B-54-17282	K1110-010013	2	K014013
22B-54-17380	K1110-006011	20	K013011
22B-54-17380	K1110-010011	20	K014011

PARTS Nº	FIG. Nº	INDEX	PAGE
22B-57-11911	K0160-002001	1	K003001
22B-60-11160	H0110-001001	29	H001001
22B-60-11160	H0110-002001	33	H002001
22B-954-1660	K0230-003001	25	K007001
22B-954-1840	K0230-003001	24	K007001
22N-957-1420	K0700-001001	11	K012001
22S-62-26210	E0200-002002	55	E002002
22U-01-21310	B0000-001001	1	B001001
22U-03-22860	C0100-002003	22	C001003
22U-06-11270	K1110-006031	9	K013031
22U-06-11270	K1110-010032	9	K014032
22U-06-22360	K1110-006038	24	K013038
22U-06-22360	K1110-010039	24	K014039
22U-06-22380	K1110-006043	32	K013043
22U-06-22380	K1110-010044	32	K014044
22U-06-22460	K1110-006043	33	K013043
22U-06-22460	K1110-010044	33	K014044
22U-06-22490	K1110-006038	23	K013038
22U-06-22490	K1110-010039	23	K014039
22U-06-31430	E0450-002001	5	E008001
22U-06-31440	E0450-002001	4	E008001
22U-26-21230	N1210-002004	31	N002004
22U-26-21280	N1210-002004	1	N002004
22U-26-21320	N1210-002004	16	N002004
22U-26-21920	N1210-002005	15	N002005
22U-27-21110	P1210-001003	25	P002003
22U-27-21120	P1210-001003	20	P002003
22U-27-21130	P1210-001003	16	P002003
22U-27-21140	P1210-001003	10	P002003
22U-27-21153	P1210-001003	18	P002003
22U-27-21161	P1210-001003	19	P002003
22U-27-21170	P1210-001003	9	P002003
22U-27-21171	P1210-001003	9	P002003
22U-27-21182	P1210-001003	3	P002003
22U-27-21192	P1210-001003	27	P002003
22U-27-21210	P1210-001003	17	P002003
22U-27-21220	P1210-001003	5	P002003
22U-27-21230	P1210-001003	13	P002003
22U-27-21240	P1210-001003	22	P002003
22U-30-00060	R0200-001001	5	R002001
22U-30-11420	R0200-001001	3	R002001
22U-30-11430	R0200-001001	7	R002001
22U-30-11440	R0200-001001	9	R002001
22U-30-11450	R0200-001001	2	R002001
22U-43-21111	K1110-006027	15	K013027
22U-43-21111	K1110-010027	15	K014027
22U-43-21121	K1110-006027	16	K013027
22U-43-21121	K1110-010027	16	K014027
22U-43-21131	K1110-006027	17	K013027
22U-43-21131	K1110-010027	17	K014027
22U-43-21182	K1110-006034	2	K013034
22U-43-21182	K1110-010035	1	K014035
22U-43-21192	K1110-006040	2	K013040
22U-43-21192	K1110-010041	2	K014041
22U-43-21211	K1110-006034	5	K013034
22U-43-21211	K1110-006040	5	K013040
22U-43-21211	K1110-010035	5	K014035
22U-43-21211	K1110-010041	5	K014041
22U-43-21350	K1110-006027	8	K013027
22U-43-21350	K1110-010027	8	K014027
22U-43-21360	K1110-006027	9	K013027
22U-43-21360	K1110-010027	9	K014027
22U-43-21390	K1110-006030	13	K013030
22U-43-21390	K1110-010031	13	K014031
22U-43-22340	K1110-006023	2	K013023
22U-43-22340	K1110-010023	2	K014023
22U-43-23251	K1110-006043	5	K013043
22U-43-23251	K1110-010044	5	K014044
22U-43-23260	K1110-006037	26	K013037
22U-43-23260	K1110-006038	25	K013038
22U-43-23260	K1110-006043	42	K013043
22U-43-23260	K1110-010038	26	K014038
22U-43-23260	K1110-010039	25	K014039
22U-43-23260	K1110-010044	42	K014044
22U-43-23290	K1110-006043	6	K013043
22U-43-23290	K1110-010044	6	K014044
22U-54-24760	M1810-002001	27	M013001
22U-54-25110	K1110-006028	1	K013028
22U-54-25110	K1110-010028	1	K014028
22U-54-25120	K1110-006029	1	K013029
22U-54-25360	K1110-006014	13	K013014
22U-54-25360	K1110-010014	13	K014014
22U-54-25521	K1110-006028	2	K013028
22U-54-25521	K1110-010028	2	K014028
22U-54-25531	K1110-006029	2	K013029
22U-54-25541	K1110-010030	12	K014030
22U-54-25581	K1110-006024	2	K013024
22U-54-25581	K1110-010024	2	K014024
22U-54-25660	K1110-010030	1	K014030
22U-60-21232	H0110-001001	22	H001001
22U-60-21232	H0110-002001	26	H002001
22U-60-21330	H1831-001002	16	H021002
22U-60-21330	H1831-002002	17	H022002
22U-62-21551	H0320-001001	10	H010001
22U-62-21551	H0330-001001	7	H011001
22U-62-21551	H0330-002001	7	H012001
22U-62-21583	N1310-001002	18	N003002
22U-62-21870	N1310-001002	19	N003002
22U-62-24420	N1310-001002	20	N003002
22U-979-1930	B0000-001002	14	B001002
23D-950-4450	K1110-006023	27	K013023
23D-950-4450	K1110-010023	27	K014023
281-01-13180	H0330-001001	33	H011001
281-01-13180	H0330-002001	33	H012001
287-06-16420	K1110-006020	18	K013020
287-06-16420	K1110-010020	18	K014020
2A5-54-13420	M1410-002001	1	M009001
2A5-54-13420	M1420-003001	1	M010001
418-54-35450	K1110-006016	9	K013016
418-54-35450	K1110-006019	7	K013019
418-54-35450	K1110-010016	9	K014016
418-54-35450	K1110-010019	7	K014019
421-06-23330	E0200-002005	5	E002005
421-06-23330	E0310-003001	1	E003001
421-06-23330	E0310-004001	1	E004001
421-06-23330	E0320-002001	1	E005001
421-06-23330	T1110-002006	2	T001006
421-06-23330	T1110-005006	2	T002006
421-07-31270	K1110-006021	4	K013021
421-07-31270	K1110-010021	4	K014021
437-40-26240	K1110-006039	8	K013039
437-40-26240	K1110-006044	8	K013044
437-40-26240	K1110-010040	8	K014040
437-40-26240	K1110-010045	8	K014045
569-06-61960	K1110-006020	17	K013020
569-06-61960	K1110-010020	17	K014020
600-181-1930	B0200-009001	7	B009001
600-184-1350	B0200-009001	6	B009001
600-184-1420	B0200-009001	5	B009001
600-184-1470	B0200-009001	4	B009001
600-185-4100	B0200-009001	1	B009001
600-185-4110	B0200-009001	2	B009001
600-311-3602	D0200-002003	1	D002003
600-311-3610	D0200-002003	1	D002003
600-311-3630	D0200-002003	3	D002003
600-311-3640	D0200-002003	4	D002003
600-311-3660	D0200-002003	5	D002003
600-311-3670	D0200-002003	6	D002003
600-311-3690	D0200-002003	9	D002003
600-311-3711	D0200-002003	5	D002003
600-311-3722	D0200-002003	7	D002003
600-319-3610	V0100-001001	6	V001001
600-411-1280	K1110-006034	9	K013034
600-411-1280	K1110-006040	9	K013040
600-411-1280	K1110-010035	9	K014035
600-411-1280	K1110-010041	9	K014041
600-467-1200	A4719-001001	1	D005001
600-625-7620	B0000-005001	1	B005001
600-815-2170	B9999-502001	1	C001001
600-815-2170	K1110-006031	21	K013031

PARTS Nº	FIG. Nº	INDEX	PAGE
600-815-2170	K1110-010032	21	K014032
600-815-8941	B9999-504001	1	F003001
600-815-8941	K1110-006031	23	K013031
600-815-8941	K1110-010032	23	K014032
600-861-6420	B0000-006001	1	B006001
600-861-6420	B0000-006002	1	B006002
600-863-5111	B0000-007001	1	B007001
6130-12-1961	A2219-001001	12	B008001
6130-12-8610	AVC00-001001	4	A004001
6131-12-4570	B0000-002001	3	B002001
6131-12-5920	ALG00-001001	7	B016001
6144-81-6680	ASD00-001001	4	B011001
6162-23-5770	AWR00-001001	6	F002001
6206-11-5850	B0000-003001	5	B003001
6210-11-5232	B0000-003001	4	B003001
6215-11-6330	ASD00-001001	5	B011001
6215-81-9510	A2019-001001	19	B012001
6215-81-9510	AFF10-003001	2	D009001
6215-81-9710	A2019-001001	20	B012001
6216-14-6820	A1009-001001	12	A008001
6216-14-6830	ADR20-001001	5	B002001
6216-14-6840	ADR20-001001	6	B002001
6216-14-6860	A1009-001001	12	A008001
6216-24-5130	A2019-001001	26	B012001
6216-74-6180	APH00-001001	7	D007001
6216-74-6180	AWR00-001001	10	F002001
6216-74-6180	AWR00-001001	20	F002001
6216-84-9220	APH00-001001	9	D007001
6216-84-9740	APH00-001001	15	D007001
6217-71-5770	AFS20-001001	2	D002001
6217-71-6660	AFT00-001001	20	D008001
6217-71-6670	AFT00-001001	19	D008001
6219-81-1990	APH00-001001	10	D007001
6222-81-7190	B0200-009002	1	B009002
6261-81-1900	APH00-001001	11	D007001
6261-81-6901	APH00-001001	15	D007001
6271-81-9200	APH00-001001	8	D007001
6271-81-9201	APH00-001001	8	D007001
6271-81-9220	APH00-001001	8	D007001
6301-11-4630	A2219-001001	13	B008001
6560-81-7110	A2019-001001	17	B012001
6560-81-7120	A2019-001001	17	B012001
6560-81-7130	A2019-001001	18	B012001
6643-11-4641	B0200-009002	2	B009002
6731-21-6220	A2219-001001	4	B008001
6731-21-6220	AWI10-002001	5	A006001
6731-21-6220	AWP20-001001	2	E004001
6731-51-5250	ALC00-001001	7	C003001
6731-51-5260	ALF00-001001	2	C004001
6731-51-5290	ALC00-001001	10	C003001
6731-51-5290	ALC00-001001	8	C003001
6731-51-5290	ALF00-001001	3	C004001
6731-51-5290	ALF00-001001	5	C004001
6731-61-1370	ATP00-001001	3	A015001
6731-61-1370	AWR00-001001	9	F002001
6731-61-2151	ALC00-001001	6	C003001
6731-82-6810	ASM00-001001	2	F001001
6732-11-1720	ABB20-001001	6	B017001
6732-11-1910	A1009-001001	9	A008001
6732-11-1910	AWI10-002001	6	A006001
6732-11-1920	A1009-001001	10	A008001
6732-11-1920	A2019-001001	25	B012001
6732-11-1920	A2219-001001	17	B008001
6732-11-1920	ADR20-001001	4	B002001
6732-11-1920	AWI10-002001	7	A006001
6732-11-4160	AIM00-001001	5	A009001
6732-11-5860	ATB30-001001	4	A013001
6732-21-1411	A2019-001001	6	B012001
6732-21-1611	A2019-001001	7	B012001
6732-21-1812	A2019-001001	10	B012001
6732-21-1812	A2019-001001	12	B012001
6732-21-1820	A1009-001001	5	A008001
6732-21-1820	A2019-001001	11	B012001
6732-21-1831	A2019-001001	1	B012001
6732-21-1831	A2019-001001	28	B012001
6732-21-1960	A2019-001001	19	B012001
6732-21-1960	AFF10-003001	2	D009001
6732-21-3120	AFT00-001001	15	D008001
6732-21-3120	ALG00-001001	12	B016001
6732-21-3120	AWR00-001001	15	F002001
6732-21-4130	A2219-001001	8	B008001
6732-21-4150	A2219-001001	10	B008001
6732-21-4161	A2219-001001	11	B008001
6732-21-4180	AWR00-001001	5	F002001
6732-21-5160	A2219-001001	14	B008001
6732-21-5160	AOP10-001001	3	B010001
6732-21-5170	A2219-001001	16	B008001
6732-21-5170	AOP10-001001	15	B010001
6732-21-5491	ALG00-001001	2	B016001
6732-21-5530	A2019-001001	22	B012001
6732-21-5530	ALG00-001001	1	B016001
6732-21-6140	A2019-001001	13	B012001
6732-21-6160	A2019-001001	23	B012001
6732-21-6610	AOP10-001001	13	B010001
6732-21-6630	AFT00-001001	12	D008001
6732-21-6630	AGG00-001001	4	B004001
6732-21-6630	ALG00-001001	9	B016001
6732-31-2420	A2359-001001	3	B015001
6732-31-3132	A2359-001001	8	B015001
6732-31-3320	A2359-001001	7	B015001
6732-31-3420	A2359-001001	11	B015001
6732-31-4120	AFW10-001001	1	B003001
6732-31-4130	AFW10-001001	2	B003001
6732-31-4180	AFW00-001001	1	B009001
6732-51-4420	ALC00-001001	5	C003001
6732-51-5130	ADR20-001001	1	B002001
6732-51-8180	ATP00-001001	6	A015001
6732-51-8330	ATP00-001001	2	A015001
6732-61-2240	A1009-001001	11	A008001
6732-61-3110	AFT00-001001	22	D008001
6732-61-3110	APH00-001001	5	D007001
6732-61-3120	AFA10-001001	1	E001001
6732-61-3170	AFA10-001001	8	E001001
6732-61-3340	AFA10-001001	5	E001001
6732-61-3410	AFA10-001001	4	E001001
6732-61-3420	AFA10-001001	3	E001001
6732-61-3430	AFA10-001001	6	E001001
6732-61-3440	AFA10-001001	2	E001001
6732-61-3450	AFA10-001001	1	E001001
6732-61-3610	ASP00-001001	1	E002001
6732-61-6131	AWI10-002001	3	A006001
6732-61-6140	AFT00-001001	2	D008001
6732-61-6140	AWR00-001001	7	F002001
6732-61-6150	ARL00-001001	15	B005001
6732-71-3210	A4019-001001	9	D004001
6732-71-3220	A2219-001001	9	B008001
6732-71-3220	AFP10-001001	3	D003001
6732-71-3220	ALG00-001001	6	B016001
6732-71-6510	AFT00-001001	9	D008001
6732-81-3531	AWP10-002001	1	E003001
6732-81-3531	V0100-001001	7	V001001
6732-81-8220	AXS00-001001	1	A007001
6732-81-8451	B0000-002001	1	B002001
6732-81-8810	A1539-001001	1	A014001
6732-81-8820	A1539-001001	3	A014001
6732-81-8860	ATP00-001001	8	A015001
6733-11-4150	APP10-001002	7	G001002
6733-71-5680	ASD00-001001	3	B011001
6733-71-5680	AWR00-001001	16	F002001
6733-71-5830	AFT00-001001	21	D008001
6734-11-5210	AIC20-001001	1	A003001
6734-71-5520	APH00-001001	12	D007001
6734-71-5610	ASD00-001001	9	B011001
6735-11-5611	B0000-003001	14	B003001
6735-21-1910	AIM00-001001	1	A009001
6735-21-1920	AIM00-001001	2	A009001
6735-21-1930	A2019-001001	27	B012001
6735-21-1930	AIM00-001001	3	A009001
6735-21-1970	AFF10-003001	3	D009001
6735-21-5530	A1009-001001	6	A008001

PARTS Nº	FIG. Nº	INDEX	PAGE
6735-21-5530	A2019-001001	21	B012001
6735-21-5530	ATP00-001001	9	A015001
6735-21-5540	AOP10-001001	12	B010001
6735-41-5550	ARL00-001001	6	B005001
6735-41-5550	ARL00-001001	9	B005001
6735-51-1120	ALP00-001001	1	C002001
6735-61-2120	ABB20-001001	4	B017001
6735-61-2120	AGG00-001001	3	B004001
6735-61-2120	ALC00-001001	14	C003001
6735-61-2120	APH00-001001	3	D007001
6735-61-2140	ALC00-001001	2	C003001
6735-61-2160	ALC00-001001	3	C003001
6735-61-2190	ALC00-001001	4	C003001
6735-61-3810	ABB20-001001	5	B017001
6735-61-6411	AFP10-001001	2	D003001
6735-71-3220	ABB00-001001	2	B006001
6735-71-3220	ALA10-001001	1	A001001
6735-71-3220	ALG00-001001	13	B016001
6735-71-3821	AFT00-001001	5	D008001
6735-71-5190	AOP10-001001	5	B010001
6735-71-5190	AWO00-001001	2	E007001
6735-81-6170	ASM00-001001	3	F001001
6736-21-3210	ARL00-001001	14	B005001
6736-21-3230	ALC00-001001	15	C003001
6736-21-4221	A2219-001001	1	B008001
6736-21-5310	APP10-001001	7	G001001
6736-21-5320	A2219-001001	15	B008001
6736-21-5320	AOP10-001001	14	B010001
6736-21-5350	A2219-001001	6	B008001
6736-29-1410	A8110-001001	1	Y001001
6736-29-1420	A8110-001001	2	Y001001
6736-39-1130	A8110-001001	3	Y001001
6736-51-5142	ALF00-001001	8	C004001
6736-51-5142	V0100-001001	4	V001001
6736-51-8710	A1539-001001	8	A014001
6736-51-8710	ATP00-001001	6	A015001
6736-61-1520	A5019-001001	2	E006001
6736-61-1520	AWP00-001001	3	E005001
6736-71-5811	AFP10-001001	1	D003001
6736-81-5110	AWR00-001001	13	F002001
6736-81-6170	ASM00-001001	4	F001001
6736-81-8730	AFT00-001001	3	D008001
6737-32-2110	AWI10-002001	2	A006001
6737-32-3121	A2359-001001	7	B015001
6737-62-6220	AWI10-002001	1	A006001
6738-11-4320	B9999-508001	1	A012001
6738-11-4320	C0100-002005	35	C001005
6738-11-4370	A1539-001001	7	A014001
6738-11-4370	B9999-508001	3	A012001
6738-11-4370	C0100-002005	37	C001005
6738-11-4380	B9999-508001	4	A012001
6738-11-4380	C0100-002005	38	C001005
6738-11-4390	B9999-508001	5	A012001
6738-11-4390	C0100-002005	39	C001005
6738-21-5610	B0000-004001	1	B004001
6738-21-5630	B0000-004001	2	B004001
6738-21-5640	B0000-004001	3	B004001
6738-31-4100	AFW00-001001	1	B009001
6738-51-5240	ALC00-001001	9	C003001
6738-51-5260	ALF00-001001	4	C004001
6738-61-3150	AFA10-001001	7	E001001
6738-61-4952	C0100-002003	23	C001003
6738-81-7200	B0200-009001	1	B009001
6738-82-8810	A1539-001001	2	A014001
6738-91-1510	APA00-001001	1	B007001
6741-81-9220	ASD00-001001	1	B011001
6742-01-1420	A2019-001001	24	B012001
6742-01-1420	A2019-001001	8	B012001
6742-01-2630	A4219-001001	5	D006001
6742-01-2690	AOP10-001001	6	B010001
6742-01-5504	A2219-001001	5	B008001
6742-01-5504	ABB00-001001	6	B006001
6743-12-4110	AIM00-001001	8	A009001
6744-11-1020	A1009-001001	15	A008001
6744-11-1020	A1009-001001	18	A008001
6744-11-1070	A1009-001001	7	A008001
6744-81-4010	APH00-001001	10	D007001
6745-71-1130	AFT00-001001	7	D008001
6754-01-1310	A2319-001001	1	B013001
6754-11-1150	A1009-001001	4	A008001
6754-11-1160	A1009-001001	8	A008001
6754-11-1211	A1009-001001	1	A008001
6754-11-1610	A1009-001001	21	A008001
6754-11-1710	ALA00-001001	1	A002001
6754-11-1811	A1009-001001	22	A008001
6754-11-1960	ALA00-001001	2	A002001
6754-11-3011	A4219-001001	1	D006001
6754-11-3110	A4219-001001	1	D006001
6754-11-3130	A4219-001001	3	D006001
6754-11-3140	A4219-001001	4	D006001
6754-11-4120	AAH00-001001	2	A011001
6754-11-4120	AIC00-001001	3	A010001
6754-11-4130	ALA10-001001	2	A001001
6754-11-4221	AIM00-001001	6	A009001
6754-11-4230	AIM00-001001	1	A009001
6754-11-4280	AIM00-001001	4	A009001
6754-11-4390	AIM00-001001	7	A009001
6754-11-4410	AIC00-001001	1	A010001
6754-11-5110	ATB30-001001	1	A013001
6754-11-5140	ATB30-001001	2	A013001
6754-11-5150	ATB30-001001	3	A013001
6754-11-5340	B0000-003001	1	B003001
6754-11-5420	B0000-003001	9	B003001
6754-11-5440	B0000-001001	5	B001001
6754-11-5490	B0000-003001	7	B003001
6754-11-5940	B0000-003001	2	B003001
6754-11-7110	ARL00-001001	12	B005001
6754-11-7120	ARL00-001001	13	B005001
6754-11-8100	AVC00-001001	1	A004001
6754-11-8110	AVC00-001001	1	A004001
6754-11-8140	AVC00-001001	2	A004001
6754-11-8150	AVC00-001001	5	A004001
6754-11-8160	AVC00-001001	7	A004001
6754-11-8180	AVC00-001001	3	A004001
6754-11-8180	V0100-001001	2	V001001
6754-11-8210	AVC00-001001	6	A004001
6754-11-8210	V0100-001001	3	V001001
6754-21-1180	A2019-001001	15	B012001
6754-21-1191	A2019-001001	14	B012001
6754-21-1220	A2019-001001	2	B012001
6754-21-1240	A2019-001001	4	B012001
6754-21-1310	A2019-001001	1	B012001
6754-21-1320	A2019-001001	13	B012001
6754-21-1920	ABB00-001001	3	B006001
6754-21-3102	ABB20-001001	1	B017001
6754-21-3120	ABB20-001001	2	B017001
6754-21-3140	ABB20-001001	7	B017001
6754-21-3150	ABB20-001001	3	B017001
6754-21-4111	A2219-001001	2	B008001
6754-21-4210	A2219-001001	3	B008001
6754-21-4220	A2219-001001	7	B008001
6754-21-5120	AOP10-001001	8	B010001
6754-21-5130	AOP10-001001	10	B010001
6754-21-5140	AOP10-001001	11	B010001
6754-21-5150	ABB00-001001	1	B006001
6754-21-5170	ABB00-001001	5	B006001
6754-21-5510	AOP10-001001	1	B010001
6754-21-5520	AOP10-001001	4	B010001
6754-21-5530	AOP10-001001	2	B010001
6754-21-5610	ALG00-001001	3	B016001
6754-21-5810	ALG00-001001	4	B016001
6754-21-5820	ALG00-001001	5	B016001
6754-21-5830	AOP10-001001	9	B010001
6754-21-6100	ABR00-001001	7	A005001
6754-21-6140	ABR00-001001	1	A005001
6754-21-6150	ABR00-001001	3	A005001
6754-21-6160	ABR00-001001	4	A005001
6754-21-6170	ABR00-001001	5	A005001
6754-21-6180	ABR00-001001	6	A005001
6754-21-6211	AGG00-001001	1	B004001

PARTS Nº	FIG. Nº	INDEX	PAGE
6754-21-6220	A2019-001001	16	B012001
6754-21-6220	AGG00-001001	2	B004001
6754-21-6230	AGG00-001001	5	B004001
6754-21-6240	ABR00-001001	9	A005001
6754-21-6250	ABR00-001001	8	A005001
6754-21-6280	ABR00-001001	10	A005001
6754-21-9110	ADR20-001001	2	B002001
6754-22-8100	A2319-001001	5	B013001
6754-22-9110	ADR20-001001	3	B002001
6754-26-8310	A8110-001001	19	Y001001
6754-26-8320	A8110-001001	17	Y001001
6754-26-8410	A8110-001001	23	Y001001
6754-27-8310	A8110-001001	15	Y001001
6754-27-8320	A8110-001001	13	Y001001
6754-28-8310	A8110-001001	11	Y001001
6754-28-8320	A8110-001001	9	Y001001
6754-28-8410	A8110-001001	21	Y001001
6754-29-8310	A8110-001001	7	Y001001
6754-29-8320	A8110-001001	5	Y001001
6754-31-1190	A2319-001001	4	B013001
6754-31-1330	A2319-001001	2	B013001
6754-31-1340	A2319-001001	3	B013001
6754-31-2010	A2359-001001	4	B015001
6754-31-2111	A2359-001001	1	B015001
6754-31-2410	A2359-001001	2	B015001
6754-31-3410	A2359-001001	10	B015001
6754-31-8110	ADA00-001001	2	B014001
6754-31-8120	ADA00-001001	1	B014001
6754-31-8130	ADA00-001001	3	B014001
6754-36-3410	A8110-001001	36	Y001001
6754-37-3410	A8110-001001	35	Y001001
6754-38-3410	A8110-001001	34	Y001001
6754-39-2010	A8110-001001	30	Y001001
6754-39-2111	A8110-001001	29	Y001001
6754-39-3410	A8110-001001	33	Y001001
6754-41-1100	APP10-001001	1	G001001
6754-41-1120	APP10-001001	3	G001001
6754-41-1130	APP10-001001	4	G001001
6754-41-1140	APP10-001001	5	G001001
6754-41-1150	APP10-001001	8	G001001
6754-41-1160	APP10-001001	6	G001001
6754-41-1170	APP10-001001	1	G001001
6754-41-2110	ABB00-001001	4	B006001
6754-41-3110	ARL00-001001	1	B005001
6754-41-4100	A1009-001001	14	A008001
6754-41-4110	A1009-001001	14	A008001
6754-41-4200	A1009-001001	17	A008001
6754-41-4210	A1009-001001	17	A008001
6754-41-4430	A1009-001001	19	A008001
6754-41-4510	A1009-001001	20	A008001
6754-41-4540	A1009-001001	13	A008001
6754-41-4540	A1009-001001	16	A008001
6754-41-5111	ARL00-001001	7	B005001
6754-41-5140	ARL00-001001	5	B005001
6754-41-5140	ARL00-001001	8	B005001
6754-41-5180	ARL00-001001	3	B005001
6754-41-5190	ARL00-001001	11	B005001
6754-41-5211	ARL00-001001	4	B005001
6754-41-5260	ARL00-001001	10	B005001
6754-41-5310	ARL00-001001	2	B005001
6754-51-1110	ALP00-001001	2	C002001
6754-51-4440	ALC00-001001	11	C003001
6754-51-8100	ATP00-001001	1	A015001
6754-51-8121	A1539-001001	5	A014001
6754-51-8121	ATP00-001001	4	A015001
6754-51-8210	ATP00-001001	5	A015001
6754-51-9810	ALF00-001001	6	C004001
6754-51-9910	ALF00-001001	7	C004001
6754-52-5310	ALF00-001001	1	C004001
6754-61-1010	A5019-001001	1	E006001
6754-61-1100	A5019-001001	1	E006001
6754-61-1100	AWP00-001001	1	E005001
6754-61-2110	ALC00-001001	12	C003001
6754-61-2220	ALC00-001001	1	C003001
6754-61-2320	ALC00-001001	13	C003001
6754-61-4111	AWP20-001001	1	E004001
6754-61-6130	AWI10-002001	4	A006001
6754-61-6211	AEC00-001001	1	E008001
6754-61-6230	AEC00-001001	2	E008001
6754-61-6320	AWO00-001001	1	E007001
6754-71-1012	A4019-001001	1	D004001
6754-71-1210	APP10-001002	4	G001002
6754-71-1320	A4019-001001	1	D004001
6754-71-1330	A4019-001001	2	D004001
6754-71-1340	A4019-001001	5	D004001
6754-71-1350	A4019-001001	6	D004001
6754-71-1991	APP10-001002	12	G001002
6754-71-3110	A4019-001001	7	D004001
6754-71-3131	A4019-001001	8	D004001
6754-71-5120	AFT00-001001	17	D008001
6754-71-5130	AFT00-001001	17	D008001
6754-71-5140	AFT00-001001	18	D008001
6754-71-5150	AFT00-001001	10	D008001
6754-71-5210	APP10-001002	8	G001002
6754-71-5220	APP10-001002	9	G001002
6754-71-5230	APP10-001002	10	G001002
6754-71-5240	APP10-001002	11	G001002
6754-71-5340	AFF20-001001	1	D001001
6754-71-5350	A4019-001001	3	D004001
6754-71-5350	AFF20-001001	2	D001001
6754-71-5410	AFT00-001001	1	D008001
6754-71-5420	AFT00-001001	4	D008001
6754-71-5421	AFT00-001001	4	D008001
6754-71-5430	AFT00-001001	6	D008001
6754-71-5450	AFT00-001001	11	D008001
6754-71-5510	APP10-001002	1	G001002
6754-71-5530	APP10-001002	2	G001002
6754-71-5540	APP10-001002	3	G001002
6754-71-6140	AFF10-003001	1	D009001
6754-71-7200	D0200-002003	1	D002003
6754-71-7402	D0200-002002	1	D002002
6754-71-7402	D0200-002003	1	D002003
6754-71-9710	AFS20-001001	1	D002001
6754-71-9730	B0000-003001	12	B003001
6754-71-9740	B0000-003001	11	B003001
6754-71-9910	AFF20-001001	3	D001001
6754-71-9920	AFF20-001001	4	D001001
6754-72-1012	A4019-001001	1	D004001
6754-72-1210	APP10-001002	6	G001002
6754-72-1220	APP10-001002	5	G001002
6754-72-6110	AFF10-003001	4	D009001
6754-72-6330	AFF10-003001	1	D009001
6754-79-6140	V0100-001001	5	V001001
6754-81-2701	APH00-001001	13	D007001
6754-81-2710	APH00-001001	13	D007001
6754-81-5110	AAH00-001001	1	A011001
6754-81-6810	ASM00-001001	1	F001001
6754-81-8710	A1539-001001	6	A014001
6754-81-9160	APH00-001001	4	D007001
6754-81-9170	APH00-001001	6	D007001
6754-81-9180	APH00-001001	14	D007001
6754-81-9190	ASD00-001001	6	B011001
6754-81-9220	AWR00-001001	2	F002001
6754-81-9230	AWR00-001001	3	F002001
6754-81-9270	AWR00-001001	17	F002001
6754-81-9280	AWR00-001001	14	F002001
6754-81-9330	AWR00-001001	8	F002001
6754-81-9340	AWR00-001001	12	F002001
6754-81-9390	AWR00-001001	18	F002001
6754-81-9440	AWR00-001001	4	F002001
6754-81-9450	AWR00-001001	1	F002001
6754-81-9460	APH00-001001	2	D007001
6754-81-9470	APH00-001001	1	D007001
6754-82-8020	A1539-001001	4	A014001
700-22-11410	H0120-002009	2	H003009
700-22-11410	H0120-002011	8	H003011
700-22-11410	H0120-006009	2	H004009
700-22-11410	H0120-006011	8	H004011
700-22-11410	K1110-006026	18	K013026
700-22-11410	K1110-010026	18	K014026

PARTS Nº	FIG. Nº	INDEX	PAGE
700-22-11410	K1110-010029	19	K014029
700-80-64220	H0120-002009	3	H003009
700-80-64220	H0120-002011	7	H003011
700-80-64220	H0120-006009	3	H004009
700-80-64220	H0120-006011	7	H004011
700-93-11320	H0120-002006	12	H003006
700-93-11320	H0120-002006	16	H003006
700-93-11320	H0120-002006	20	H003006
700-93-11320	H0120-002006	24	H003006
700-93-11320	H0120-002006	28	H003006
700-93-11320	H0120-002006	32	H003006
700-93-11320	H0120-002006	4	H003006
700-93-11320	H0120-002006	8	H003006
700-93-11320	H0120-002019	2	H003019
700-93-11320	H0120-006006	12	H004006
700-93-11320	H0120-006006	16	H004006
700-93-11320	H0120-006006	20	H004006
700-93-11320	H0120-006006	24	H004006
700-93-11320	H0120-006006	28	H004006
700-93-11320	H0120-006006	32	H004006
700-93-11320	H0120-006006	4	H004006
700-93-11320	H0120-006006	8	H004006
700-93-11320	H0120-006019	2	H004019
700-93-11320	P1210-001001	18	P002001
701-20-61230	H0120-002022	24	H003022
701-20-61230	H0120-006022	24	H004022
702-15-71130	N1210-002003	17	N002003
702-15-71140	N1210-002003	18	N002003
702-15-77000	N1210-002003	14	N002003
702-16-03910	K1110-006035	1	K013035
702-16-03910	K1110-006041	1	K013041
702-16-03910	K1110-010036	1	K014036
702-16-03910	K1110-010042	1	K014042
702-16-04250	K1110-006025	1	K013025
702-16-04250	K1110-006026	1	K013026
702-16-04250	K1110-010025	1	K014025
702-16-04250	K1110-010026	1	K014026
702-16-04290	K1110-010029	1	K014029
702-16-51140	K1110-006035	5	K013035
702-16-51140	K1110-006041	5	K013041
702-16-51140	K1110-010029	3	K014029
702-16-51140	K1110-010036	5	K014036
702-16-51140	K1110-010042	5	K014042
702-16-51240	K1110-006035	17	K013035
702-16-51240	K1110-006041	17	K013041
702-16-51240	K1110-010036	17	K014036
702-16-51240	K1110-010042	17	K014042
702-16-51270	K1110-010029	8	K014029
702-16-53140	K1110-006035	7	K013035
702-16-53140	K1110-006041	7	K013041

PARTS Nº	FIG. Nº	INDEX	PAGE
702-16-53140	K1110-010036	7	K014036
702-16-53140	K1110-010042	7	K014042
702-16-53170	K1110-006035	10	K013035
702-16-53170	K1110-006041	10	K013041
702-16-53170	K1110-010029	7	K014029
702-16-53170	K1110-010036	10	K014036
702-16-53170	K1110-010042	10	K014042
702-16-53420	K1110-006035	6	K013035
702-16-53420	K1110-006041	6	K013041
702-16-53420	K1110-010036	6	K014036
702-16-53420	K1110-010042	6	K014042
702-16-53470	K1110-006035	8	K013035
702-16-53470	K1110-006041	8	K013041
702-16-53470	K1110-010036	8	K014036
702-16-53470	K1110-010042	8	K014042
702-16-53590	K1110-006035	9	K013035
702-16-53590	K1110-006041	9	K013041
702-16-53590	K1110-010036	9	K014036
702-16-53590	K1110-010042	9	K014042
702-16-53920	H0120-002004	12	H003004
702-16-53920	H0120-002005	14	H003005
702-16-53920	H0120-002013	27	H003013
702-16-53920	H0120-006004	12	H004004
702-16-53920	H0120-006005	14	H004005
702-16-53920	H0120-006013	27	H004013
702-16-54331	K1110-006025	17	K013025
702-16-54331	K1110-010025	17	K014025
702-16-54341	K1110-006025	17	K013025
702-16-54341	K1110-010025	17	K014025
702-16-54351	K1110-006025	17	K013025
702-16-54351	K1110-010025	17	K014025
702-16-54490	H0120-002003	15	H003003
702-16-54490	H0120-006003	15	H004003
702-16-54550	K1110-010029	4	K014029
702-16-54560	K1110-010029	6	K014029
702-16-54571	K1110-010029	5	K014029
702-16-54580	K1110-010029	9	K014029
702-16-54590	K1110-010029	10	K014029
702-16-54641	K1110-010029	14	K014029
702-16-54650	K1110-010029	17	K014029
702-16-54660	K1110-010029	16	K014029
702-16-54670	K1110-010029	17	K014029
702-16-55940	K1110-006026	6	K013026
702-16-55940	K1110-010026	6	K014026
702-16-55950	K1110-006026	7	K013026
702-16-55950	K1110-010026	7	K014026
702-16-56380	K1110-006025	17	K013025
702-16-56380	K1110-010025	17	K014025
702-16-56390	K1110-006025	17	K013025
702-16-56390	K1110-010025	17	K014025

PARTS Nº	FIG. Nº	INDEX	PAGE
702-16-57440	K1110-006026	11	K013026
702-16-57440	K1110-010026	11	K014026
702-16-57450	K1110-006026	12	K013026
702-16-57450	K1110-010026	12	K014026
702-16-62480	K1110-010029	23	K014029
702-16-71131	K1110-006035	14	K013035
702-16-71131	K1110-006041	14	K013041
702-16-71131	K1110-010036	14	K014036
702-16-71131	K1110-010042	14	K014042
702-16-71141	K1110-006035	15	K013035
702-16-71141	K1110-006041	15	K013041
702-16-71141	K1110-010036	15	K014036
702-16-71141	K1110-010042	15	K014042
702-16-71150	K1110-006025	8	K013025
702-16-71150	K1110-010025	8	K014025
702-16-71160	K1110-006025	9	K013025
702-16-71160	K1110-006035	12	K013035
702-16-71160	K1110-006041	12	K013041
702-16-71160	K1110-010025	9	K014025
702-16-71160	K1110-010036	12	K014036
702-16-71160	K1110-010042	12	K014042
702-16-71210	K1110-006035	11	K013035
702-16-71210	K1110-006041	11	K013041
702-16-71210	K1110-010036	11	K014036
702-16-71210	K1110-010042	11	K014042
702-16-71280	K1110-006035	13	K013035
702-16-71280	K1110-006041	13	K013041
702-16-71280	K1110-010036	13	K014036
702-16-71280	K1110-010042	13	K014042
702-16-71361	K1110-006035	18	K013035
702-16-71361	K1110-006041	18	K013041
702-16-71361	K1110-010036	18	K014036
702-16-71361	K1110-010042	18	K014042
702-16-71441	K1110-006035	19	K013035
702-16-71441	K1110-006041	19	K013041
702-16-71441	K1110-010036	19	K014036
702-16-71441	K1110-010042	19	K014042
702-16-73650	K1110-006025	23	K013025
702-16-73650	K1110-010025	23	K014025
702-21-01910	H1270-008002	1	H016002
702-21-07610	K1110-010029	18	K014029
702-21-11930	H1270-008002	3	H016002
702-21-11940	H1270-008002	4	H016002
702-21-39450	K1110-010029	20	K014029
702-21-53120	H0120-002014	4	H003014
702-21-53120	H0120-006014	4	H004014
702-21-54910	H0120-002013	6	H003013
702-21-54910	H0120-006013	6	H004013
702-21-54910	H0210-001011	13	H005011
702-21-54910	H0210-001011	3	H005011

PARTS Nº	FIG. Nº	INDEX	PAGE
702-21-54910	H0210-001011	8	H005011
702-21-55420	H0120-002014	1	H003014
702-21-55420	H0120-006014	1	H004014
702-21-55440	H0120-002014	3	H003014
702-21-55440	H0120-006014	3	H004014
702-21-55460	H0120-002014	12	H003014
702-21-55460	H0120-006014	12	H004014
702-21-55520	H0120-002014	2	H003014
702-21-55520	H0120-006014	2	H004014
702-21-55620	H0120-002013	32	H003013
702-21-55620	H0120-002014	8	H003014
702-21-55620	H0120-006013	32	H004013
702-21-55620	H0120-006014	8	H004014
702-21-55710	H0120-002013	34	H003013
702-21-55710	H0120-006013	34	H004013
702-21-55720	H0120-002013	35	H003013
702-21-55720	H0120-006013	35	H004013
702-21-55760	H0120-002007	12	H003007
702-21-55760	H0120-006007	12	H004007
702-21-57400	H0210-001011	1	H005011
702-21-57400	H0210-001011	11	H005011
702-21-57400	H0210-001011	6	H005011
702-21-60500	H0120-002013	4	H003013
702-21-60500	H0120-006013	4	H004013
702-73-02112	P1210-001001	12	P002001
702-73-11510	H0120-002003	12	H003003
702-73-11510	H0120-006003	12	H004003
702-75-01310	N1210-002003	1	N002003
703-08-33631	N1310-001001	1	N003001
703-08-93170	N1310-001001	8	N003001
703-08-93771	N1310-001001	12	N003001
703-08-94510	N1310-001001	7	N003001
703-08-95620	N1310-001001	2	N003001
703-08-95770	N1310-001001	13	N003001
703-08-98930	N1310-001001	5	N003001
706-75-42370	N1210-002001	15	N002001
706-75-42880	N1210-002002	2	N002002
706-75-43750	N1210-002002	12	N002002
706-75-92310	N1210-002002	22	N002002
706-76-40890	N1210-002002	4	N002002
706-76-71390	H1270-008004	45	H016004
706-7E-11280	N1210-002002	7	N002002
706-7G-01170	N1210-002001	1	N002001
706-7G-01170	N1210-002002	1	N002002
706-7G-01170	N1210-002003	1	N002003
706-7G-03130	N1210-002001	1	N002001
706-7G-03130	N1210-002002	1	N002002
706-7G-05010	N1210-002002	16	N002002
706-7G-11291	P1210-001002	5	P002002
706-7G-40110	N1210-002001	3	N002001

PARTS Nº	FIG. Nº	INDEX	PAGE
706-7G-41130	N1210-002002	14	N002002
706-7G-41140	N1210-002002	15	N002002
706-7G-41240	N1210-002001	1	N002001
706-7G-41310	N1210-002002	10	N002002
706-7G-41320	N1210-002002	13	N002002
706-7G-41410	N1210-002002	18	N002002
706-7G-41510	N1210-002002	5	N002002
706-7G-41630	N1210-002002	1	N002002
706-7G-41660	N1210-002002	3	N002002
706-7G-41720	N1210-002002	11	N002002
706-7G-41910	N1210-002002	8	N002002
706-7G-71160	N1210-002001	2	N002001
706-7G-71560	N1210-002001	12	N002001
706-7G-71630	N1210-002001	13	N002001
706-7G-71710	N1210-002001	11	N002001
706-7G-91120	N1210-002002	21	N002002
706-7G-91360	N1210-002002	24	N002002
706-7G-91441	N1210-002002	19	N002002
706-7G-91450	N1210-002002	20	N002002
707-01-0J790	T1120-002001	1	T003001
707-01-0J790	T1120-002002	1	T003002
707-01-0J840	T1140-002001	1	T005001
707-01-0J870	T1200-004002	1	T006002
707-01-0J870	T1200-008002	1	T007002
707-01-0J870	T1200-014002		T008002
707-01-0J870	T1200-018002	1	T009002
707-01-0J870	T1200-022002	1	T010002
707-13-13880	T1200-004002	1	T006002
707-13-13880	T1200-008002	1	T007002
707-13-13880	T1200-014002	1	T008002
707-13-13880	T1200-018002	1	T009002
707-13-13880	T1200-022002	1	T010002
707-13-13890	T1120-002001	1	T003001
707-13-13890	T1120-002002	1	T003002
707-13-14820	T1140-002001	1	T005001
707-27-13650	T1120-002001	11	T003001
707-27-13650	T1120-002002	11	T003002
707-27-13750	T1200-004002	9	T006002
707-27-13750	T1200-008002	9	T007002
707-27-13750	T1200-014002	9	T008002
707-27-13750	T1200-018002	9	T009002
707-27-13750	T1200-022002	9	T010002
707-27-14690	T1140-002001	15	T005001
707-35-90940	KIT	K05	Y001001
707-35-90940	KIT	K08	Y001001
707-35-90940	T1120-002001	27	T003001
707-35-90940	T1120-002002	27	T003002
707-35-90940	T1200-004002	25	T006002
707-35-90940	T1200-008002	25	T007002
707-35-90940	T1200-014002	25	T008002

PARTS Nº	FIG. Nº	INDEX	PAGE
707-35-90940	T1200-018002	25	T009002
707-35-90940	T1200-022002	25	T010002
707-35-90960	KIT	K06	Y001001
707-35-91320	KIT	K05	Y001001
707-35-91320	KIT	K08	Y001001
707-35-91320	T1120-002001	18	T003001
707-35-91320	T1120-002001	8	T003001
707-35-91320	T1120-002002	18	T003002
707-35-91320	T1120-002002	8	T003002
707-35-91320	T1200-004002	16	T006002
707-35-91320	T1200-008002	16	T007002
707-35-91320	T1200-014002	16	T008002
707-35-91320	T1200-018002	16	T009002
707-35-91320	T1200-022002	16	T010002
707-35-91370	KIT	K06	Y001001
707-35-91420	KIT	K07	Y001001
707-35-91420	KIT	K09	Y001001
707-35-91420	T1140-002001	22	T005001
707-35-91420	T1140-002001	9	T005001
707-36-13780	T1120-002001	22	T003001
707-36-13780	T1120-002002	22	T003002
707-36-13780	T1200-004002	20	T006002
707-36-13780	T1200-008002	20	T007002
707-36-13780	T1200-014002	20	T008002
707-36-13780	T1200-018002	20	T009002
707-36-13780	T1200-022002	20	T010002
707-36-14650	T1140-002001	26	T005001
707-39-13150	KIT	K05	Y001001
707-39-13150	KIT	K08	Y001001
707-39-13150	T1120-002001	24	T003001
707-39-13150	T1120-002002	24	T003002
707-39-13150	T1200-004002	22	T006002
707-39-13150	T1200-008002	22	T007002
707-39-13150	T1200-014002	22	T008002
707-39-13150	T1200-018002	22	T009002
707-39-13150	T1200-022002	22	T010002
707-39-13530	KIT	K06	Y001001
707-39-14110	KIT	K07	Y001001
707-39-14110	KIT	K09	Y001001
707-39-14110	T1140-002001	28	T005001
707-41-11840	T1140-002001	24	T005001
707-41-11840	T1200-004002	18	T006002
707-41-11840	T1200-008002	18	T007002
707-41-11840	T1200-014002	18	T008002
707-41-11840	T1200-018002	18	T009002
707-41-11840	T1200-022002	18	T010002
707-44-13150	KIT	K05	Y001001
707-44-13150	KIT	K08	Y001001
707-44-13150	T1120-002001	23	T003001
707-44-13150	T1120-002002	23	T003002

PARTS Nº	FIG. Nº	INDEX	PAGE
707-44-13150	T1200-004002	21	T006002
707-44-13150	T1200-008002	21	T007002
707-44-13150	T1200-014002	21	T008002
707-44-13150	T1200-018002	21	T009002
707-44-13150	T1200-022002	21	T010002
707-44-13250	KIT	K06	Y001001
707-44-13911	T1120-002001	25	T003001
707-44-13911	T1120-002002	25	T003002
707-44-13911	T1200-004002	23	T006002
707-44-13911	T1200-008002	23	T007002
707-44-13911	T1200-014002	23	T008002
707-44-13911	T1200-018002	23	T009002
707-44-13911	T1200-022002	23	T010002
707-44-14150	KIT	K07	Y001001
707-44-14150	KIT	K09	Y001001
707-44-14150	T1140-002001	27	T005001
707-44-14910	T1140-002001	29	T005001
707-51-10030	KIT	K07	Y001001
707-51-10030	KIT	K09	Y001001
707-51-10030	T1140-002001	18	T005001
707-51-10650	KIT	K07	Y001001
707-51-10650	KIT	K09	Y001001
707-51-10650	T1140-002001	19	T005001
707-51-10660	KIT	K09	Y001001
707-51-90030	KIT	K05	Y001001
707-51-90030	KIT	K08	Y001001
707-51-90030	T1120-002001	15	T003001
707-51-90030	T1120-002002	15	T003002
707-51-90030	T1200-004002	13	T006002
707-51-90030	T1200-008002	13	T007002
707-51-90030	T1200-014002	13	T008002
707-51-90030	T1200-018002	13	T009002
707-51-90030	T1200-022002	13	T010002
707-51-90650	KIT	K05	Y001001
707-51-90650	KIT	K08	Y001001
707-51-90650	T1120-002001	16	T003001
707-51-90650	T1120-002002	16	T003002
707-51-90650	T1200-004002	14	T006002
707-51-90650	T1200-008002	14	T007002
707-51-90650	T1200-014002	14	T008002
707-51-90650	T1200-018002	14	T009002
707-51-90650	T1200-022002	14	T010002
707-51-95030	KIT	K06	Y001001
707-51-95650	KIT	K06	Y001001
707-52-15430	R0110-002002	12	R001002
707-52-90681	T1120-002001	14	T003001
707-52-90681	T1120-002002	14	T003002
707-52-90681	T1200-004002	12	T006002
707-52-90681	T1200-008002	12	T007002
707-52-90681	T1200-014002	12	T008002

PARTS Nº	FIG. Nº	INDEX	PAGE
707-52-90681	T1200-018002	12	T009002
707-52-90681	T1200-022002	12	T010002
707-52-90781	T1140-002001	20	T005001
707-56-70540	R0110-002002	13	R001002
707-56-95510	KIT	K06	Y001001
707-58-90E50	T1120-002001	2	T003001
707-58-90E50	T1120-002002	2	T003002
707-58-90E60	T1200-004002	2	T006002
707-58-90E60	T1200-008002	2	T007002
707-58-90E60	T1200-014002	2	T008002
707-58-90E60	T1200-018002	2	T009002
707-58-90E60	T1200-022002	2	T010002
707-71-34670	T1120-002001	7	T003001
707-71-34670	T1120-002002	7	T003002
707-71-34990	T1140-002001	8	T005001
707-71-60970	T1120-002001	10	T003001
707-71-60970	T1120-002002	10	T003002
707-71-71020	T1140-002001	11	T005001
707-71-80270	T1140-002001	12	T005001
707-71-91270	T1140-002001	14	T005001
707-75-10160	T1140-002001	25	T005001
707-75-90110	T1120-002001	21	T003001
707-75-90110	T1120-002002	21	T003002
707-75-90110	T1200-004002	19	T006002
707-75-90110	T1200-008002	19	T007002
707-75-90110	T1200-014002	19	T008002
707-75-90110	T1200-018002	19	T009002
707-75-90110	T1200-022002	19	T010002
707-76-80010	T1120-002001	5	T003001
707-76-80010	T1120-002002	5	T003002
707-76-80010	T1140-002001	3	T005001
707-76-80010	T1140-002001	5	T005001
707-76-80010	T1200-004002	3	T006002
707-76-80010	T1200-008002	3	T007002
707-76-80010	T1200-014002	3	T008002
707-76-80010	T1200-018002	3	T009002
707-76-80010	T1200-022002	3	T010002
707-76-80020	T1200-004002	6	T006002
707-76-80020	T1200-008002	6	T007002
707-76-80020	T1200-014002	6	T008002
707-76-80020	T1200-018002	6	T009002
707-76-80020	T1200-022002	6	T010002
707-83-13010	T1140-002001	33	T005001
707-86-66310	T1120-002001	30	T003001
707-86-66330	T1120-002002	30	T003002
707-86-67780	T1120-002001	29	T003001
707-86-67790	T1120-002002	29	T003002
707-86-67810	T1140-002001	37	T005001
707-86-67820	T1200-004002	27	T006002
707-86-67820	T1200-008002	27	T007002

PARTS Nº	FIG. Nº	INDEX	PAGE
707-86-67820	T1200-014002	27	T008002
707-86-67820	T1200-018002	27	T009002
707-86-67820	T1200-022002	27	T010002
707-87-14070	T1140-002001	35	T005001
707-88-21321	T1140-002001	46	T005001
707-88-21331	T1120-002001	36	T003001
707-88-21331	T1120-002002	36	T003002
707-88-21331	T1200-004002	34	T006002
707-88-21331	T1200-008002	34	T007002
707-88-21331	T1200-014002	34	T008002
707-88-21331	T1200-018002	34	T009002
707-88-21331	T1200-022002	34	T010002
707-88-22630	T1140-002001	38	T005001
707-88-22640	T1200-004002	33	T006002
707-88-22640	T1200-008002	33	T007002
707-88-22640	T1200-014002	33	T008002
707-88-22640	T1200-018002	33	T009002
707-88-22640	T1200-022002	33	T010002
707-88-28050	T1120-002001	31	T003001
707-88-28060	T1120-002002	31	T003002
707-88-28090	T1140-002001	44	T005001
707-88-28140	T1140-002001	45	T005001
707-88-33030	N1310-001002	3	N003002
707-98-47720	KIT	K08	Y001001
707-98-47730	KIT	K05	Y001001
707-98-58240	KIT	K07	Y001001
707-99-50680	KIT	K06	Y001001
707-99-59020	KIT	K09	Y001001
708-1L-29340	H0210-001002	12	H005002
708-21-12541	N1210-002001	9	N002001
708-25-12790	H0210-001003	4	H005003
708-25-12790	H0210-001007	4	H005007
708-25-52861	H0210-001003	5	H005003
708-2E-05040	H0210-001003	3	H005003
708-2E-05040	H0210-001007	3	H005007
708-2L-00790	B0000-001002	19	B001002
708-2L-00790	H0210-001001	1	H005001
708-2L-00790	H0210-001002	1	H005002
708-2L-00790	H0210-001003	1	H005003
708-2L-00790	H0210-001004	1	H005004
708-2L-00790	H0210-001005	1	H005005
708-2L-00790	H0210-001006	1	H005006
708-2L-00790	H0210-001007	1	H005007
708-2L-00790	H0210-001008	1	H005008
708-2L-00790	H0210-001009	1	H005009
708-2L-01600	H0210-001001	1	H005001
708-2L-01600	H0210-001002	1	H005002
708-2L-01600	H0210-001003	1	H005003

PARTS Nº	FIG. Nº	INDEX	PAGE
708-2L-01600	H0210-001004	1	H005004
708-2L-01600	H0210-001005	1	H005005
708-2L-01600	H0210-001006	1	H005006
708-2L-01600	H0210-001007	1	H005007
708-2L-01600	H0210-001008	1	H005008
708-2L-01600	H0210-001009	1	H005009
708-2L-06440	H0210-001001	1	H005001
708-2L-06450	H0210-001002	1	H005002
708-2L-06460	H0210-001006	1	H005006
708-2L-06470	H0210-001003	8	H005003
708-2L-06480	H0210-001007	5	H005007
708-2L-06630	H0210-001003	19	H005003
708-2L-06630	H0210-001007	16	H005007
708-2L-06660	H0210-001004	1	H005004
708-2L-06660	H0210-001008	1	H005008
708-2L-06670	H0210-001005	1	H005005
708-2L-06670	H0210-001009	1	H005009
708-2L-06681	H0210-001004	1	H005004
708-2L-06681	H0210-001008	1	H005008
708-2L-07710	H0210-001010	1	H005010
708-2L-22160	H0210-001003	6	H005003
708-2L-23131	H0210-001003	12	H005003
708-2L-23131	H0210-001007	9	H005007
708-2L-23351	H0210-001003	15	H005003
708-2L-23351	H0210-001007	12	H005007
708-2L-23360	H0210-001003	16	H005003
708-2L-23360	H0210-001007	13	H005007
708-2L-24680	H0210-001010	2	H005010
708-2L-25480	H0210-001002	7	H005002
708-2L-28540	H0210-001010	4	H005010
708-2L-32150	H0210-001003	2	H005003
708-2L-32150	H0210-001007	2	H005007
708-2L-32160	H0210-001003	1	H005003
708-2L-32170	H0210-001007	1	H005007
708-2L-32180	H0210-001009	9	H005009
708-2L-32190	H0210-001009	10	H005009
708-2L-32260	H0210-001002	3	H005002
708-2L-33160	H0210-001003	13	H005003
708-2L-33160	H0210-001007	10	H005007
708-2L-33350	H0210-001003	17	H005003
708-2L-33350	H0210-001007	14	H005007
708-2L-33350	P1210-001002	16	P002002
708-2L-33430	H0210-001003	18	H005003
708-2L-33430	H0210-001007	15	H005007
708-2L-34180	H0210-001004	1	H005004
708-2L-34180	H0210-001008	1	H005008
708-2L-34310	H0210-001004	25	H005004
708-2L-34310	H0210-001008	25	H005008
708-2L-34320	H0210-001005	5	H005005
708-2L-34320	H0210-001009	5	H005009

PARTS Nº	FIG. Nº	INDEX	PAGE
708-2L-34330	H0210-001004	17	H005004
708-2L-34330	H0210-001008	17	H005008
708-2L-34340	H0210-001005	1	H005005
708-2L-34340	H0210-001009	1	H005009
708-2L-35210	H0210-001004	19	H005004
708-2L-35210	H0210-001005	3	H005005
708-2L-35210	H0210-001008	19	H005008
708-2L-35210	H0210-001009	3	H005009
708-2L-35240	H0210-001004	13	H005004
708-2L-35240	H0210-001008	13	H005008
708-2L-35250	H0210-001004	16	H005004
708-2L-35250	H0210-001008	16	H005008
708-2L-35260	H0210-001004	5	H005004
708-2L-35260	H0210-001008	5	H005008
708-2L-35270	H0210-001004	21	H005004
708-2L-35270	H0210-001008	21	H005008
708-2L-35281	H0210-001004	9	H005004
708-2L-35281	H0210-001008	9	H005008
708-2L-35290	H0210-001004	27	H005004
708-2L-35290	H0210-001005	4	H005005
708-2L-35290	H0210-001008	27	H005008
708-2L-35290	H0210-001009	4	H005009
708-2L-35311	H0210-001010	1	H005010
708-2L-35331	H0210-001010	6	H005010
708-2L-35341	H0210-001010	8	H005010
708-2L-35351	H0210-001010	9	H005010
708-2L-35360	H0210-001010	5	H005010
708-2L-35430	H0210-001010	3	H005010
708-2L-35630	H0210-001004	11	H005004
708-2L-35630	H0210-001008	11	H005008
708-2L-35641	H0210-001004	12	H005004
708-2L-35641	H0210-001008	12	H005008
708-2L-35650	H0210-001004	15	H005004
708-2L-35650	H0210-001008	15	H005008
708-2L-35670	H0210-001004	28	H005004
708-2L-35670	H0210-001008	28	H005008
708-2L-35680	H0210-001004	4	H005004
708-2L-35680	H0210-001008	4	H005008
708-2L-35690	H0210-001004	8	H005004
708-2L-35690	H0210-001008	8	H005008
708-2L-35710	H0210-001004	20	H005004
708-2L-35710	H0210-001008	20	H005008
708-2L-35730	H0210-001004	14	H005004
708-2L-35730	H0210-001008	14	H005008
708-2L-35750	H0210-001004	24	H005004
708-2L-35750	H0210-001005	7	H005005
708-2L-35750	H0210-001008	24	H005008
708-2L-35750	H0210-001009	7	H005009
708-2L-35760	H0210-001004	6	H005004
708-2L-35760	H0210-001008	6	H005008

PARTS Nº	FIG. Nº	INDEX	PAGE
708-2L-35770	H0210-001004	7	H005004
708-2L-35770	H0210-001008	7	H005008
708-2L-35860	H0210-001004	10	H005004
708-2L-35860	H0210-001008	10	H005008
708-2L-35880	H0210-001010	7	H005010
708-2L-35941	H0210-001011	16	H005011
708-7L-05010	P1210-001002	4	P002002
708-7L-12140	P1210-001002	3	P002002
708-7L-13140	H0210-001003	14	H005003
708-7L-13140	H0210-001007	11	H005007
708-7L-13140	P1210-001002	12	P002002
708-7T-16460	H0120-002001	11	H003001
708-7T-16460	H0120-002018	5	H003018
708-7T-16460	H0120-006001	11	H004001
708-7T-16460	H0120-006018	5	H004018
708-8E-16150	H0210-001001	7	H005001
708-8E-16150	H0210-001002	10	H005002
708-8E-16150	H0210-001006	8	H005006
708-8E-16160	H0120-002007	16	H003007
708-8E-16160	H0120-002007	22	H003007
708-8E-16160	H0120-002014	10	H003014
708-8E-16160	H0120-006007	16	H004007
708-8E-16160	H0120-006007	22	H004007
708-8E-16160	H0120-006014	10	H004014
708-8E-16180	P1210-001001	25	P002001
708-8E-16250	H0120-002007	6	H003007
708-8E-16250	H0120-006007	6	H004007
708-8F-00192	P1210-001001	1	P002001
708-8F-00192	P1210-001002	1	P002002
708-8F-04192	P1210-001001	3	P002001
708-8F-04660	P1210-001001	1	P002001
708-8F-12151	P1210-001002	2	P002002
708-8F-12230	P1210-001002	6	P002002
708-8F-31210	P1210-001001	33	P002001
708-8F-31610	N1210-002002	23	N002002
708-8F-31610	P1210-001001	30	P002001
708-8F-31620	N1210-002001	10	N002001
708-8F-31660	P1210-001001	26	P002001
708-8F-32121	P1210-001002	1	P002002
708-8F-33160	P1210-001002	13	P002002
708-8F-33310	P1210-001002	17	P002002
708-8F-33350	P1210-001002	15	P002002
708-8F-33360	P1210-001002	11	P002002
708-8F-33471	P1210-001002	18	P002002
708-8F-33710	P1210-001002	19	P002002
708-8F-34110	P1210-001001	23	P002001
708-8F-34120	P1210-001001	21	P002001
708-8F-34141	P1210-001002	20	P002002
708-8F-34150	P1210-001002	21	P002002
708-8F-34220	P1210-001001	8	P002001

PARTS Nº	FIG. Nº	INDEX	PAGE
708-8F-35110	P1210-001002	22	P002002
708-8F-35120	P1210-001002	24	P002002
708-8F-35130	P1210-001002	23	P002002
708-8F-35140	P1210-001002	25	P002002
708-8F-35150	P1210-001002	30	P002002
708-8F-35160	P1210-001002	26	P002002
708-8F-35170	P1210-001002	27	P002002
708-8F-35180	P1210-001002	28	P002002
708-8F-35190	P1210-001002	29	P002002
708-8F-36311	P1210-001001	16	P002001
708-8F-36611	P1210-001001	13	P002001
708-8H-11530	H0120-002007	8	H003007
708-8H-11530	H0120-002010	4	H003010
708-8H-11530	H0120-006007	8	H004007
708-8H-11530	H0120-006010	4	H004010
708-8H-11530	P1210-001001	9	P002001
708-8H-36121	P1210-001001	15	P002001
708-8K-15190	N1210-002001	4	N002001
709-10-91240	H1270-008002	5	H016002
709-25-11361	N1210-002001	6	N002001
709-25-11390	H0120-002010	18	H003010
709-25-11390	H0120-002011	9	H003011
709-25-11390	H0120-002012	2	H003012
709-25-11390	H0120-002012	6	H003012
709-25-11390	H0120-002020	7	H003020
709-25-11390	H0120-006010	18	H004010
709-25-11390	H0120-006011	9	H004011
709-25-11390	H0120-006012	2	H004012
709-25-11390	H0120-006012	6	H004012
709-25-11390	H0120-006020	7	H004020
709-25-11640	N1210-002001	7	N002001
709-25-11650	N1210-002001	5	N002001
709-70-71610	N1210-002003	16	N002003
720-68-19610	H0210-001003	10	H005003
720-68-19610	H0210-001007	7	H005007
721-58-10070	T1140-002001	2	T005001
722-10-91130	P1210-001001	22	P002001
723-11-15110	K1110-006026	13	K013026
723-11-15110	K1110-010026	13	K014026
723-11-18150	H0120-002005	9	H003005
723-11-18150	H0120-006005	9	H004005
723-11-18190	H0120-002016	19	H003016
723-11-18190	H0120-002017	19	H003017
723-11-18190	H0120-002021	15	H003021
723-11-18190	H0120-006016	19	H004016
723-11-18190	H0120-006017	19	H004017
723-11-18190	H0120-006021	15	H004021
723-11-19130	H0120-002005	2	H003005
723-11-19130	H0120-002018	13	H003018
723-11-19130	H0120-006005	2	H004005

PARTS Nº	FIG. Nº	INDEX	PAGE
723-11-19130	H0120-006018	13	H004018
723-11-19960	H0120-002013	5	H003013
723-11-19960	H0120-006013	5	H004013
723-11-19960	H0210-001011	12	H005011
723-11-19960	H0210-001011	2	H005011
723-11-19960	H0210-001011	7	H005011
723-40-56350	H0120-002008	3	H003008
723-40-56350	H0120-006008	3	H004008
723-40-57200	H0120-002008	1	H003008
723-40-57200	H0120-006008	1	H004008
723-40-60101	H0120-002010	15	H003010
723-40-60101	H0120-006010	15	H004010
723-40-66300	H0120-002020	1	H003020
723-40-66300	H0120-006020	1	H004020
723-40-66601	H0120-002010	8	H003010
723-40-66601	H0120-006010	8	H004010
723-40-66701	H0120-002010	1	H003010
723-40-66701	H0120-006010	1	H004010
723-40-71330	H0120-002013	9	H003013
723-40-71330	H0120-006013	9	H004013
723-40-71340	H0120-002013	10	H003013
723-40-71340	H0120-006013	10	H004013
723-40-71350	H0120-002013	11	H003013
723-40-71350	H0120-006013	11	H004013
723-40-71390	H0120-002013	24	H003013
723-40-71390	H0120-006013	24	H004013
723-40-71430	H0120-002014	11	H003014
723-40-71430	H0120-006014	11	H004014
723-40-71850	H0120-002013	21	H003013
723-40-71850	H0120-006013	21	H004013
723-40-71870	H0120-002013	13	H003013
723-40-71870	H0120-006013	13	H004013
723-40-71900	H0120-002013	25	H003013
723-40-71900	H0120-006013	25	H004013
723-40-72100	H0120-002013	1	H003013
723-40-72100	H0120-002014	1	H003014
723-40-72100	H0120-006013	1	H004013
723-40-72100	H0120-006014	1	H004014
723-40-72800	H0120-002013	3	H003013
723-40-72800	H0120-006013	3	H004013
723-40-72900	H0120-002013	19	H003013
723-40-72900	H0120-006013	19	H004013
723-40-82140	H0120-002016	6	H003016
723-40-82140	H0120-002017	6	H003017
723-40-82140	H0120-006016	6	H004016
723-40-82140	H0120-006017	6	H004017
723-40-82150	H0120-002016	7	H003016
723-40-82150	H0120-002017	7	H003017
723-40-82150	H0120-006016	7	H004016
723-40-82150	H0120-006017	7	H004017

PARTS Nº	FIG. Nº	INDEX	PAGE
723-40-82210	H0120-002016	4	H003016
723-40-82210	H0120-002017	4	H003017
723-40-82210	H0120-006016	4	H004016
723-40-82210	H0120-006017	4	H004017
723-40-82220	H0120-002007	18	H003007
723-40-82220	H0120-002016	5	H003016
723-40-82220	H0120-002017	5	H003017
723-40-82220	H0120-002021	5	H003021
723-40-82220	H0120-006007	18	H004007
723-40-82220	H0120-006016	5	H004016
723-40-82220	H0120-006017	5	H004017
723-40-82220	H0120-006021	5	H004021
723-40-82290	H0120-002016	22	H003016
723-40-82290	H0120-002017	22	H003017
723-40-82290	H0120-006016	22	H004016
723-40-82290	H0120-006017	22	H004017
723-40-82501	H0120-002016	1	H003016
723-40-82501	H0120-002017	1	H003017
723-40-82501	H0120-006016	1	H004016
723-40-82501	H0120-006017	1	H004017
723-40-84330	H0120-002021	4	H003021
723-40-84330	H0120-006021	4	H004021
723-40-84340	H0120-002021	6	H003021
723-40-84340	H0120-006021	6	H004021
723-40-84350	H0120-002021	7	H003021
723-40-84350	H0120-006021	7	H004021
723-40-84382	H0120-002021	18	H003021
723-40-84382	H0120-006021	18	H004021
723-40-84420	H0120-002016	9	H003016
723-40-84420	H0120-002017	9	H003017
723-40-84420	H0120-006016	9	H004016
723-40-84420	H0120-006017	9	H004017
723-40-84430	H0120-002016	10	H003016
723-40-84430	H0120-002017	10	H003017
723-40-84430	H0120-006016	10	H004016
723-40-84430	H0120-006017	10	H004017
723-40-84440	H0120-002016	11	H003016
723-40-84440	H0120-002017	11	H003017
723-40-84440	H0120-006016	11	H004016
723-40-84440	H0120-006017	11	H004017
723-40-84501	H0120-002021	1	H003021
723-40-84501	H0120-006021	1	H004021
723-40-85100	H0120-002012	5	H003012
723-40-85100	H0120-006012	5	H004012
723-40-87170	H0120-002015	16	H003015
723-40-87170	H0120-002015	8	H003015
723-40-87170	H0120-006015	16	H004015
723-40-87170	H0120-006015	8	H004015
723-40-87240	H0120-002015	2	H003015
723-40-87240	H0120-006015	2	H004015

PARTS Nº	FIG. Nº	INDEX	PAGE
723-40-87250	H0120-002015	7	H003015
723-40-87250	H0120-006015	7	H004015
723-40-87260	H0120-002015	3	H003015
723-40-87260	H0120-006015	3	H004015
723-40-87510	H0120-002015	1	H003015
723-40-87510	H0120-006015	1	H004015
723-40-87520	H0120-002015	12	H003015
723-40-87520	H0120-006015	12	H004015
723-40-87540	H0120-002015	13	H003015
723-40-87540	H0120-006015	13	H004015
723-40-87601	H0120-002015	1	H003015
723-40-87601	H0120-006015	1	H004015
723-40-91200	H0120-002012	1	H003012
723-40-91200	H0120-006012	1	H004012
723-40-91300	H0120-002020	6	H003020
723-40-91300	H0120-006020	6	H004020
723-40-91500	H0120-002011	6	H003011
723-40-91500	H0120-006011	6	H004011
723-40-93600	H0120-002009	1	H003009
723-40-93600	H0120-006009	1	H004009
723-46-00750	H0120-002007	1	H003007
723-46-00750	H0120-006007	1	H004007
723-46-00790	H0120-002007	3	H003007
723-46-00790	H0120-006007	3	H004007
723-46-14110	H0120-002001	16	H003001
723-46-14110	H0120-002018	7	H003018
723-46-14110	H0120-006001	16	H004001
723-46-14110	H0120-006018	7	H004018
723-46-14131	H0120-002001	19	H003001
723-46-14131	H0120-006001	19	H004001
723-46-14140	H0120-002007	21	H003007
723-46-14140	H0120-006007	21	H004007
723-46-14150	H0120-002005	18	H003005
723-46-14150	H0120-006005	18	H004005
723-46-14280	H0120-002001	17	H003001
723-46-14280	H0120-006001	17	H004001
723-46-14290	H0120-002001	18	H003001
723-46-14290	H0120-006001	18	H004001
723-46-15111	H0120-002003	16	H003003
723-46-15111	H0120-002013	7	H003013
723-46-15111	H0120-002018	8	H003018
723-46-15111	H0120-006003	16	H004003
723-46-15111	H0120-006013	7	H004013
723-46-15111	H0120-006018	8	H004018
723-46-15120	H0120-002001	12	H003001
723-46-15120	H0120-002018	6	H003018
723-46-15120	H0120-006001	12	H004001
723-46-15120	H0120-006018	6	H004018
723-46-15130	H0120-002001	7	H003001
723-46-15130	H0120-002018	3	H003018

PARTS Nº	FIG. Nº	INDEX	PAGE
723-46-15130	H0120-006001	7	H004001
723-46-15130	H0120-006018	3	H004018
723-46-15140	H0120-002001	8	H003001
723-46-15140	H0120-006001	8	H004001
723-46-15150	H0120-002005	17	H003005
723-46-15150	H0120-006005	17	H004005
723-46-15190	H0120-002007	20	H003007
723-46-15190	H0120-006007	20	H004007
723-46-15630	H0120-002002	13	H003002
723-46-15630	H0120-002002	4	H003002
723-46-15630	H0120-002003	13	H003003
723-46-15630	H0120-002003	6	H003003
723-46-15630	H0120-002004	4	H003004
723-46-15630	H0120-002004	9	H003004
723-46-15630	H0120-006002	13	H004002
723-46-15630	H0120-006002	4	H004002
723-46-15630	H0120-006003	13	H004003
723-46-15630	H0120-006003	6	H004003
723-46-15630	H0120-006004	4	H004004
723-46-15630	H0120-006004	9	H004004
723-46-15640	H0120-002002	16	H003002
723-46-15640	H0120-006002	16	H004002
723-46-15650	H0120-002001	9	H003001
723-46-15650	H0120-006001	9	H004001
723-46-15690	H0120-002001	13	H003001
723-46-15690	H0120-006001	13	H004001
723-46-15880	H0120-002001	15	H003001
723-46-15880	H0120-006001	15	H004001
723-46-15950	H0120-002001	14	H003001
723-46-15950	H0120-006001	14	H004001
723-46-15980	H0120-002003	11	H003003
723-46-15980	H0120-006003	11	H004003
723-46-17212	H0120-002003	10	H003003
723-46-17212	H0120-006003	10	H004003
723-46-17320	H0120-002002	8	H003002
723-46-17320	H0120-002003	4	H003003
723-46-17320	H0120-006002	8	H004002
723-46-17320	H0120-006003	4	H004003
723-46-17330	H0120-002002	9	H003002
723-46-17330	H0120-002003	5	H003003
723-46-17330	H0120-006002	9	H004002
723-46-17330	H0120-006003	5	H004003
723-46-17340	H0120-002002	5	H003002
723-46-17340	H0120-002003	7	H003003
723-46-17340	H0120-006002	5	H004002
723-46-17340	H0120-006003	7	H004003
723-46-17350	H0120-002004	14	H003004
723-46-17350	H0120-006004	14	H004004
723-46-17510	H0120-002005	7	H003005
723-46-17510	H0120-002018	15	H003018

PARTS Nº	FIG. Nº	INDEX	PAGE
723-46-17510	H0120-006005	7	H004005
723-46-17510	H0120-006018	15	H004018
723-46-17520	H0120-002005	3	H003005
723-46-17520	H0120-002018	16	H003018
723-46-17520	H0120-006005	3	H004005
723-46-17520	H0120-006018	16	H004018
723-46-17530	H0120-002005	8	H003005
723-46-17530	H0120-002018	17	H003018
723-46-17530	H0120-006005	8	H004005
723-46-17530	H0120-006018	17	H004018
723-46-17550	H0120-002007	19	H003007
723-46-17550	H0120-006007	19	H004007
723-46-17600	H0120-002007	9	H003007
723-46-17600	H0120-006007	9	H004007
723-46-17610	H0120-002007	10	H003007
723-46-17610	H0120-006007	10	H004007
723-46-17640	H0120-002007	11	H003007
723-46-17640	H0120-006007	11	H004007
723-46-17650	H0120-002005	16	H003005
723-46-17650	H0120-006005	16	H004005
723-46-17680	H0120-002014	23	H003014
723-46-17680	H0120-006014	23	H004014
723-46-17701	H0120-002011	1	H003011
723-46-17701	H0120-006011	1	H004011
723-46-17711	H0120-002011	1	H003011
723-46-17711	H0120-006011	1	H004011
723-46-18300	H0120-002002	1	H003002
723-46-18300	H0120-006002	1	H004002
723-46-18500	H0120-002004	1	H003004
723-46-18500	H0120-006004	1	H004004
723-46-18600	H0120-002004	5	H003004
723-46-18600	H0120-006004	5	H004004
723-46-18720	H0120-002013	22	H003013
723-46-18720	H0120-002013	25	H003013
723-46-18720	H0120-006013	22	H004013
723-46-18720	H0120-006013	25	H004013
723-46-19200	H0120-002003	1	H003003
723-46-19200	H0120-006003	1	H004003
723-46-19300	H0120-002002	9	H003002
723-46-19300	H0120-006002	9	H004002
723-46-19400	H0120-002003	9	H003003
723-46-19400	H0120-006003	9	H004003
723-46-40100	H0120-002006	3	H003006
723-46-40100	H0120-006006	3	H004006
723-46-41100	H0120-002006	11	H003006
723-46-41100	H0120-006006	11	H004006
723-46-41190	H0120-002006	2	H003006
723-46-41190	H0120-006006	2	H004006
723-46-41210	H0120-002006	1	H003006
723-46-41210	H0120-006006	1	H004006

PARTS Nº	FIG. Nº	INDEX	PAGE
723-46-41950	H0120-002006	13	H003006
723-46-41950	H0120-002006	17	H003006
723-46-41950	H0120-002006	21	H003006
723-46-41950	H0120-002006	25	H003006
723-46-41950	H0120-002006	29	H003006
723-46-41950	H0120-002006	33	H003006
723-46-41950	H0120-002006	5	H003006
723-46-41950	H0120-002006	9	H003006
723-46-41950	H0120-002019	3	H003019
723-46-41950	H0120-006006	13	H004006
723-46-41950	H0120-006006	17	H004006
723-46-41950	H0120-006006	21	H004006
723-46-41950	H0120-006006	25	H004006
723-46-41950	H0120-006006	29	H004006
723-46-41950	H0120-006006	33	H004006
723-46-41950	H0120-006006	5	H004006
723-46-41950	H0120-006006	9	H004006
723-46-41950	H0120-006019	3	H004019
723-46-42700	H0120-002006	7	H003006
723-46-42700	H0120-006006	7	H004006
723-46-43100	H0120-002006	27	H003006
723-46-43100	H0120-006006	27	H004006
723-46-43400	H0120-002006	23	H003006
723-46-43400	H0120-006006	23	H004006
723-46-45100	H0120-002006	15	H003006
723-46-45100	H0120-006006	15	H004006
723-46-45700	H0120-002019	1	H003019
723-46-45700	H0120-006019	1	H004019
723-46-46101	H0120-002006	31	H003006
723-46-46101	H0120-006006	31	H004006
723-46-46300	H0120-002006	19	H003006
723-46-46300	H0120-006006	19	H004006
723-47-23203	H0120-006016	1	H004016
723-47-23803	H0120-002001	1	H003001
723-47-23803	H0120-002002	1	H003002
723-47-23803	H0120-002003	1	H003003
723-47-23803	H0120-002004	1	H003004
723-47-23803	H0120-002005	1	H003005
723-47-23803	H0120-002006	1	H003006
723-47-23803	H0120-002007	1	H003007
723-47-23803	H0120-002008	1	H003008
723-47-23803	H0120-002009	1	H003009
723-47-23803	H0120-002010	1	H003010
723-47-23803	H0120-002011	1	H003011
723-47-23803	H0120-002012	1	H003012
723-47-23803	H0120-002013	1	H003013
723-47-23803	H0120-002014	1	H003014
723-47-23803	H0120-002015	1	H003015
723-47-23803	H0120-002016	1	H003016
723-47-23803	H0120-002017	1	H003017
723-47-23803	H0120-002018	1	H003018
723-47-23803	H0120-002019	1	H003019
723-47-23803	H0120-002020	1	H003020
723-47-23803	H0120-002021	1	H003021
723-47-23803	H0120-006001	1	H004001
723-47-23803	H0120-006002	1	H004002
723-47-23803	H0120-006003	1	H004003
723-47-23803	H0120-006004	1	H004004
723-47-23803	H0120-006005	1	H004005
723-47-23803	H0120-006006	1	H004006
723-47-23803	H0120-006007	1	H004007
723-47-23803	H0120-006008	1	H004008
723-47-23803	H0120-006009	1	H004009
723-47-23803	H0120-006010	1	H004010
723-47-23803	H0120-006011	1	H004011
723-47-23803	H0120-006012	1	H004012
723-47-23803	H0120-006013	1	H004013
723-47-23803	H0120-006014	1	H004014
723-47-23803	H0120-006015	1	H004015
723-47-23803	H0120-006017	1	H004017
723-47-23803	H0120-006018	1	H004018
723-47-23803	H0120-006019	1	H004019
723-47-23803	H0120-006020	1	H004020
723-47-23803	H0120-006021	1	H004021
723-60-22230	H0120-002008	5	H003008
723-60-22230	H0120-006008	5	H004008
723-90-61600	H0120-002012	3	H003012
723-90-61600	H0120-006012	3	H004012
723-90-76101	H0120-002020	8	H003020
723-90-76101	H0120-006020	8	H004020
7826-23-3011	K1110-006021	8	K013021
7826-23-3011	K1110-010021	8	K014021
7835-31-1012	K1110-006014	1	K013014
7835-31-1012	K1110-010014	1	K014014
7835-33-2000	E0450-002001	1	E008001
7835-46-1007	K1110-006020	3	K013020
7835-46-1007	K1110-010020	3	K014020
7861-74-5100	K1110-006020	11	K013020
7861-74-5100	K1110-006020	13	K013020
7861-74-5100	K1110-006020	15	K013020
7861-74-5100	K1110-010020	11	K014020
7861-74-5100	K1110-010020	13	K014020
7861-74-5100	K1110-010020	15	K014020
7861-91-4220	ASD00-001001	2	B011001
7861-92-5810	D0100-001001	7	D001001
7861-93-1422	B0200-009002	8	B009002
7861-93-1812	H0120-002024	6	H003024
7861-93-1812	H0120-006024	6	H004024
7861-93-1840	H1833-002001	19	H023001
7861-93-3320	H0311-001001	3	H008001
7861-94-2000	K1110-006020	5	K013020
7861-94-2000	K1110-010020	5	K014020
8233-06-3350	K1110-006020	20	K013020
8233-06-3350	K1110-010020	20	K014020
8A13-10-2100	K1110-006013	23	K013013
8A13-10-2100	K1110-010013	23	K014013
8A13-10-2200	K1110-006013	24	K013013
8A13-10-2200	K1110-010013	24	K014013
8A13-10-4300	K1110-006013	21	K013013
8A13-10-4300	K1110-010013	21	K014013
AS160122	K0110-001001	9	K001001
AS160122	K0110-002001	9	K002001
AS164899	K0110-001001	13	K001001
AS165989	K0110-001001	19	K001001
AS166011	K0110-001001	14	K001001
AS184718	K0110-002001	15	K002001
AS186833	K0110-001001	8	K001001
AS186833	K0110-002001	8	K002001
AS192161	K0110-001001	7	K001001
AS192161	K0110-002001	7	K002001
AS195365	K0110-002001	1	K002001
AS195367	K0110-001001	1	K001001
AS195367	K0110-002001	1	K002001
AS195369	K0110-001001	2	K001001
AS195369	K0110-002001	2	K002001
AS195370	K0110-001001	3	K001001
AS195370	K0110-002001	3	K002001
AS195372	K0110-001001	4	K001001
AS195372	K0110-002001	4	K002001
AS195373	K0110-001001	5	K001001
AS195373	K0110-002001	5	K002001
AS195374	K0110-001001	6	K001001
AS195374	K0110-002001	6	K002001
AS195376	K0110-001001	10	K001001
AS195376	K0110-002001	10	K002001
AS195377	K0110-001001	11	K001001
AS195377	K0110-002001	11	K002001
AS195378	K0110-002001	12	K002001
AS195379	K0110-002001	13	K002001
AS195380	K0110-002001	14	K002001
AS195381	K0110-001001	1	K001001
AS195388	K0110-001001	12	K001001
AS195389	K0110-001001	15	K001001
AS195390	K0110-001001	16	K001001
AS195391	K0110-001001	17	K001001
AS195392	K0110-001001	18	K001001
AS195393	K0110-001001	20	K001001
HM6400-0012	K1110-006031	10	K013031
HM6400-0012	K1110-010032	10	K014032
HM6400-0013	K1110-006031	11	K013031
HM6400-0013	K1110-010032	11	K014032
HM6400-0016	K1110-006031	13	K013031
HM6400-0016	K1110-010032	13	K014032
HM6409-0071	K1110-006031	10	K013031
HM6409-0071	K1110-010032	10	K014032
HM6409-0072	K1110-006031	11	K013031
HM6409-0072	K1110-010032	11	K014032
HM6409-0075	K1110-006031	13	K013031
HM6409-0075	K1110-010032	13	K014032
HM6440-0128	K1110-006031	12	K013031
HM6440-0128	K1110-010032	12	K014032
HM6440-0129	K1110-006031	12	K013031
HM6440-0129	K1110-010032	12	K014032
ND017231-0700	K1110-006045	28	K013045
ND017231-0700	K1110-010046	28	K014046
ND021041-8620	B0000-006002	22	B006002
ND021045-0530	B0000-006002	4	B006002
ND021100-4210	B0000-006002	1	B006002
ND021200-8380	B0000-006002	19	B006002
ND021401-4980	B0000-006002	2	B006002
ND021411-0570	B0000-006002	3	B006002
ND021501-8050	B0000-006002	8	B006002
ND021506-0070	B0000-006002	21	B006002
ND021542-0160	B0000-006002	26	B006002
ND021551-2480	B0000-006002	12	B006002
ND021580-4820	B0000-006002	9	B006002
ND021602-5230	B0000-006002	29	B006002
ND021605-1970	B0000-006002	13	B006002
ND021605-2481	B0000-006002	14	B006002
ND021620-2720	B0000-006002	10	B006002
ND021626-0190	B0000-006002	24	B006002
ND021626-0250	B0000-006002	25	B006002
ND028062-0130	B0000-007001	29	B007001
ND028062-5790	B0000-007001	43	B007001
ND028063-0030	B0000-007001	28	B007001
ND028065-0250	B0000-007001	20	B007001
ND028099-3270	B0000-007001	5	B007001
ND028099-5100	B0000-007001	14	B007001
ND028100-5410	B0000-007001	1	B007001
ND028200-5250	B0000-007001	2	B007001
ND028300-6551	B0000-007001	4	B007001
ND028300-6751	B0000-007001	6	B007001
ND028306-0070	B0000-007001	27	B007001
ND028327-0171	B0000-007001	35	B007001
ND028371-3200	B0000-007001	38	B007001
ND028371-3210	B0000-007001	26	B007001
ND028381-0071	B0000-007001	10	B007001
ND028501-7711	B0000-007001	23	B007001
ND028510-0880	B0000-007001	21	B007001
ND028520-0011	B0000-007001	22	B007001
ND028530-1090	B0000-007001	40	B007001
ND028530-1100	B0000-007001	41	B007001
ND028901-0361	B0000-007001	37	B007001
ND028901-5190	B0000-007001	45	B007001
ND053404-0240	B0000-007001	16	B007001
ND053480-7560	B0000-007001	18	B007001
ND053505-0290	B0000-007001	17	B007001
ND053660-0443	B0000-007001	15	B007001
ND063600-4580	K1110-006045	35	K013045
ND063600-4580	K1110-010046	35	K014046
ND063800-0300	K1110-006045	27	K013045
ND063800-0300	K1110-010046	27	K014046
ND077500-5650	K1110-006045	36	K013045
ND077500-5650	K1110-010046	36	K014046
ND077500-5890	K1110-006045	29	K013045
ND077500-5890	K1110-010046	29	K014046
ND077800-0750	K1110-006045	33	K013045
ND077800-0750	K1110-010046	33	K014046
ND116140-0050	K1110-006045	14	K013045
ND116140-0050	K1110-010046	14	K014046
ND116340-7350	K1110-006045	38	K013045
ND116340-7350	K1110-010046	38	K014046
ND116576-3810	K1110-006045	3	K013045
ND116576-3810	K1110-010046	3	K014046
ND116576-3820	K1110-006045	4	K013045
ND116576-3820	K1110-010046	4	K014046
ND116576-3852	K1110-006045	25	K013045
ND116576-3852	K1110-010046	25	K014046
ND116576-3862	K1110-006045	26	K013045
ND116576-3862	K1110-010046	26	K014046
ND116650-6850	K1110-006045	16	K013045
ND116650-6850	K1110-010046	16	K014046
ND116660-7570	K1110-006045	15	K013045
ND116660-7570	K1110-010046	15	K014046
ND116662-7670	K1110-006045	23	K013045
ND116662-7670	K1110-010046	23	K014046
ND116662-7681	K1110-006045	24	K013045
ND116662-7681	K1110-010046	24	K014046
ND116662-8320	K1110-006045	44	K013045
ND116662-8320	K1110-010046	44	K014046
ND116780-2481	K1110-006045	17	K013045
ND116780-2481	K1110-010046	17	K014046
ND116780-2491	K1110-006045	18	K013045
ND116780-2491	K1110-010046	18	K014046
ND116780-2501	K1110-006045	19	K013045
ND116780-2501	K1110-010046	19	K014046
ND116780-2510	K1110-006045	20	K013045
ND116780-2510	K1110-010046	20	K014046
ND116780-3130	K1110-006045	22	K013045
ND116780-3130	K1110-010046	22	K014046
ND116780-3920	K1110-006045	31	K013045
ND116780-3920	K1110-010046	31	K014046
ND116781-3000	K1110-006045	21	K013045
ND116781-3000	K1110-010046	21	K014046
ND121400-0800	B0000-006002	1	B006002
ND126000-2320	B0000-006002	11	B006002
ND128099-5770	B0000-007001	13	B007001
ND128401-5621	B0000-007001	11	B007001
ND128961-0010	B0000-007001	24	B007001
ND146340-0560	K1110-006045	34	K013045
ND146340-0560	K1110-010046	34	K014046
ND146657-8841	K1110-006045	10	K013045
ND146657-8841	K1110-010046	10	K014046
ND146657-8850	K1110-006045	12	K013045
ND146657-8850	K1110-010046	12	K014046
ND146657-8860	K1110-006045	37	K013045
ND146657-8860	K1110-010046	37	K014046
ND146657-9811	K1110-006045	11	K013045
ND146657-9811	K1110-010046	11	K014046
ND146667-0440	K1110-006045	32	K013045
ND146667-0440	K1110-010046	32	K014046
ND153400-6740	B0000-007001	12	B007001
ND245450-5831	K1110-006045	1	K013045
ND245450-5831	K1110-010046	1	K014046
ND245450-5840	K1110-006045	2	K013045
ND245450-5840	K1110-010046	2	K014046
ND246470-4311	K1110-006045	42	K013045
ND246470-4311	K1110-010046	42	K014046
ND246790-2060	K1110-006045	30	K013045
ND246790-2060	K1110-010046	30	K014046
ND445021-3941	K1110-006045	13	K013045
ND445021-3941	K1110-010046	13	K014046
ND446010-3132	K1110-006045	4	K013045
ND446010-3132	K1110-010046	4	K014046
ND446600-0991	K1110-006045	5	K013045
ND446600-0991	K1110-010046	5	K014046
ND447500-2750	K1110-006045	8	K013045
ND447500-2750	K1110-010046	8	K014046
ND90170-10061	B0000-007001	44	B007001
ND90200-06241	B0000-007001	46	B007001
ND90258-10001	B0000-007001	36	B007001
ND90801-10050	B0000-007001	31	B007001
ND91310-04251	B0000-006002	16	B006002
ND92150-06061	B0000-006002	30	B006002
ND93950-05003	K1110-006045	43	K013045
ND93950-05003	K1110-010046	43	K014046
ND949001-1730	K1110-006045	41	K013045
ND949001-1730	K1110-010046	41	K014046
ND949006-4720	B0000-007001	33	B007001
ND949006-5460	B0000-006002	15	B006002

PARTS Nº	FIG. Nº	INDEX	PAGE
ND949006-5590	B0000-006002	5	B006002
ND949006-6401	B0000-006002	27	B006002
ND949007-2350	K1110-006008	8	K013008
ND949007-2350	K1110-010008	8	K014008
ND949007-5110	B0000-006002	16	B006002
ND949007-6280	B0000-006002	28	B006002
ND949007-6530	B0000-007001	39	B007001
ND949007-6850	B0000-007001	42	B007001
ND949008-0330	K1110-006045	40	K013045
ND949008-0330	K1110-010046	40	K014046
ND949008-0460	K1110-006045	39	K013045
ND949008-0460	K1110-010046	39	K014046
ND949042-3680	B0000-007001	30	B007001
ND949042-3690	B0000-007001	32	B007001
ND949043-2000	B0000-006002	7	B006002
ND949046-3100	K1110-006045	9	K013045
ND949046-3100	K1110-010046	9	K014046
ND949047-4440	B0000-007001	19	B007001
ND949056-2481	B0000-006002	17	B006002
ND949056-2520	B0000-006002	23	B006002
ND949056-3080	B0000-006002	18	B006002
ND949056-4480	B0000-007001	34	B007001
ND949100-1920	B0000-007001	8	B007001
ND949100-2790	B0000-006002	20	B006002
ND949100-3161	B0000-007001	3	B007001
ND949100-3540	B0000-007001	4	B007001
ND949100-4500	B0000-007001	7	B007001
ND949100-5010	B0000-006002	6	B006002
ND949100-5290	B0000-007001	3	B007001
ND949142-0020	K1110-006045	6	K013045
ND949142-0020	K1110-010046	6	K014046
ND949142-0030	K1110-006045	7	K013045
ND949142-0030	K1110-010046	7	K014046
ND949170-4040	B0000-007001	9	B007001
ND949170-4070	B0000-007001	25	B007001
NFEB0427 Z0	H1270-008003	22	H016003
NFEB3026 A1	H1270-008003	18	H016003
NFEB3401 A1	H1270-008003	17	H016003
NFEB4475 Z0	H1270-008003	19	H016003
NFEB4477 Z0	H1270-008003	23	H016003
NY01720-10600	H1831-001001	5	H021001
NY05062-1170A	H1831-001001	6	H021001
NY05062-1170A	H1831-002001	5	H022001
NY05062-11800	H1831-001001	7	H021001
NY05062-11800	H1831-002001	6	H022001
NY06277-1320A	H1831-001001	8	H021001
NY06277-1320A	H1831-002001	7	H022001
NY06339-10200	H1831-001001	9	H021001
NY06339-10200	H1831-002001	8	H022001
NY07207-11700	H1831-001001	10	H021001

PARTS Nº	FIG. Nº	INDEX	PAGE
NY07207-11700	H1831-002001	9	H022001
NY07493-10200	H1831-001001	11	H021001
NY07493-10200	H1831-002001	10	H022001
NY07529-10200	H1831-001001	12	H021001
NY07529-10200	H1831-002001	11	H022001
NY07529-10300	H1831-001001	13	H021001
NY07529-10300	H1831-002001	12	H022001
NY07529-10400	H1831-001001	14	H021001
NY07529-10400	H1831-002001	13	H022001
NY07529-10500	H1831-001001	15	H021001
NY07529-10500	H1831-002001	14	H022001
NY07529-10600	H1831-002001	15	H022001
NY07926-10100	H1831-001001	16	H021001
NY09000-11400	H1831-001001	17	H021001
NY09000-11400	H1831-002001	16	H022001
NY16207-10200	H1831-001001	18	H021001
NY16207-10200	H1831-002001	17	H022001
NY16207-10300	H1831-001001	19	H021001
NY16207-10300	H1831-002001	18	H022001
NY80000-02100	H1831-001001	20	H021001
NY80000-02100	H1831-002001	19	H022001
NY80000-02200	H1831-001001	21	H021001
NY80000-02200	H1831-002001	20	H022001
NY81416-05012	H1831-001001	22	H021001
NY81416-05012	H1831-002001	21	H022001
NY84110-00248	H1831-001001	23	H021001
NY84110-00248	H1831-002001	22	H022001
NY89103-00090	H1831-001001	26	H021001
NY89103-00090	H1831-002001	25	H022001
RFU419B-418-A	K1110-006009	1	K013009
RFU419B-418-A	K1110-010009	1	K014009
RFU419B-418-B	K1110-006009	6	K013009
RFU419B-418-B	K1110-010009	6	K014009
RFU419B-418-C	K1110-006009	15	K013009
RFU419B-418-C	K1110-006009	7	K013009
RFU419B-418-C	K1110-010009	15	K014009
RFU419B-418-C	K1110-010009	7	K014009
RFU419B-418-D	K1110-006009	3	K013009
RFU419B-418-D	K1110-010009	3	K014009
RFU419B-418-E	K1110-006009	4	K013009
RFU419B-418-E	K1110-010009	4	K014009
RFU419B-418-F	K1110-006009	16	K013009
RFU419B-418-F	K1110-010009	16	K014009

PARTS Nº	FIG. Nº	INDEX	PAGE

PARTS Nº	FIG. Nº	INDEX	PAGE

PARTS Nº	FIG. Nº	INDEX	PAGE

PC240LC-8 Hydraulic Excavator (Track Type)
Form No. KEPB095600

©2011 KOMATSU
All Rights Reserved
Printed in Brazil 02-11