RUTHZIL TRATOR COMERCIAL DE PEÇAS LTDA 11 97083-6812 ROLANDO CITRANGULO

FRU01263-00

PARTS BOOK

KOMATSU

PC300-8
Serial No. Y300001 and up

SAA6D114E-3D
Serial No. 26858255 and up

FOREWORD

When ordering a spare part, specify the part number, part name, and quantity required, and also specify your machine model code, machine serial number, engine serial number and the service meter reading.

This Parts Book describes not only standard items but also optional equipment and attachments. To order a part, please contact your nearest Komatsu distributor.

This Parts Book contains the information and special codes as follows:

ILLUSTRATION AND PARTS LIST

When you open this Parts Book, you will find an illustration following its figure number (FIG.) Each individual part in the illustration is given an index number. Following the illustration, the component parts of the unit are listed in the order of the index numbers shown in the illustration. The part number, part name, quantity and applicable serial number are given for each part as a parts list.

FIGURE NUMBER (FIG.)

The figure number (FIG.) is the number which shows the figure of the page. It is not the spare part number. The numbers are not always continuous.

PARTS LIST

Spare parts information are listed in the parts list page as follows:

Index:

This is the same as the index number in the illustration. The parts are listed in index number order.

Code:

Codes are used in this column and represent as follows:

A1 This part and the part specified in the line immediately above are interchangeable.

A2 The part specified in the line above can be used instead of this part.

A3 This part can be used instead of the part specified in the line immediately above.

A4 The part specified in the description column can be used instead of this part if it is used as a set.

B1 This shows discontinued part. The part specified in the above line is supplied instead.

B2 This shows a discontinued part. The part specified in the description column is supplied instead as a set.

C1 This part cannot be supplied as an individual part. It is supplied as an assembly.

C2 This part is supplied for authorized Komatsu distributors only. It cannot be supplied as an individual part. It is supplied as an assembly.

C3 This indicates a part supplied as semi-finished. It requires additional work before installation.

Part Number:

The number given in the part number column is the part number for the part shown. It is the identification code used when ordering that part. It is important that there be no mistake in this code number when ordering.

Description:

This gives the name of part that has the part number listed. The mark "·" is put in front of the component part name of an assembly part and the item is entered following the assembly. If a part marked with "·" is a sub assembly, its components are marked with "··".

Example: Tank Assembly
·Tank
·Cap
··Packing

Furthermore, the following marks and abbreviations are used in this column.

Kit This indicates kit parts. For kit parts, refer to the section FIELD REPAIR SERVICE PARTS in this Parts Book.
D Diameter
L Length
LHS Left-hand side
RHS Right-hand side
T Thickness
W Width

Quantity (Qty):

This specifies the number of pieces used for one machine. However, if a part is included in the assembly and/or component, the quantity per such assembly and/or component is specified.
Code AR (as required) shall be used in the Quantity column if the part cannot be specified numbers requires per machine and/or component. In such case, any number of quantities may be ordered depend on the field service requirement.

Serial Numbers:

Applicable engine serial number is indicated for the engine volume. In the chassis volume, this indicates the machine serial number in which the part is used.

If the serial number is enclosed in parenthesis, it shows that it is the applicable serial number for exclusive use of the equipment of figure number (FIG.)

ПРЕДИСЛОВИЕ

При заказе запчасти укажите номер части, наименование части и нужное количество; кроме того, укажите код модели вашей машины, серийный номер машины, серийный номер двигателя и показания счетчика мото-часов.

В Каталоге приведены не только стандартные изделия, но и дополнительное оборудование и принадлежности. Для заказа запчасти пожалуйста обратитесь к ближайшему дилеру "Комацу".

Содержащаяся в Каталоге информация и специальные коды разъясняются ниже:

РИСУНОК И ПЕРЕЧЕНЬ ЧАСТЕЙ

Раскрыв Каталог, вы увидите рисунок после номера рисунка (ПОЗ). Каждой отдельной части на рисунке присвоен позиционный номер. За рисунком следует перечень составных частей устройства в порядке номеров позиций рисунка. Перечень частей указывает для каждой части ее номер, наименование, количество и применимый серийный номер.

НОМЕР РИСУНКА (ПОЗ)

Номер рисунка (ПОЗ) – это номер, который указывает рисунок на странице. Он не является номером запчасти. Последовательность номеров не обязательно непрерывна.

ПЕРЕЧЕНЬ ЧАСТЕЙ

Данные запасных частей приведены на странице перечня частей следующим образом:

Индекс (Index):

То же, что номер позиции на рисунке. Части перечислены в порядке их позиционных номеров.

Код: (Code):

В этой колонке находятся коды, обозначающие следующее:

A1 Данная часть и часть, указанная в предыдущей строке, взаимозаменяемы.

A2 Вместо данной части можно использовать часть, указанную в предыдущей строке.

A3 Данную часть можно использовать вместо части, указанной в предыдущей строке.

A4 В комплекте, вместо данной части можно использовать указанную в колонке описания.

B1 Поставки этой части прекращены. Взамен поставляется часть, указанная в предыдущей строке.

B2 Поставки этой части прекращены. Взамен комплектом поставляется часть, указанная в колонке описания.

C1 Данная часть отдельно не поставляется. Она поставляется с узлом.

C2 Данная часть поставляется лишь уполномоченным дилерам "Комацу". Отдельно не поставляется. Поставляется с узлом.

C3 Обозначает часть, поставляемую без доводки. Требует предустановочной подготовки.

Номер части (Part Number):

Приведенный в колонке номеров частей номер является номером изображенной части. Это код-идентификатор для заказа данной части. Важно, чтобы при заказе этот кодовый номер был указан без ошибок.

Описание (Description):

Здесь приводится наименование части, обозначенной номером в перечне. Значок "·" ставится перед наименованием детали компонента, причем деталь записана после узла. Если помеченная "·" часть является подсборкой узла, то ее составные части обозначаются значком "··".

Пример: Tank Assembly
·Tank
·Cap
··Packing

Далее, в этой колонке используются следующие обозначения и сокращения.

Kit	Указывает на элементы комплекта. Элементы комплекта смотри в разделе ЗАПАСНЫЕ ЧАСТИ ДЛЯ РЕМОНТА В УСЛОВИЯХ ЭКСПЛУАТАЦИИ данного Каталога.
D	Диаметр
L	Длина
LHS	Левая сторона
RHS	Правая сторона
T	Толщина
W	Ширина

Количество (Qty):

Указывает общее число изделий в одной машине. Если же изделие является частью узла и/или устройства, то указывается количество в таком узле и/или устройстве.
При невозможности указать количество частей на машину и/или устройство, в колонке Количество проставляется код AR (по потребности). В таком случае можно заказывать любые количества в зависимости от потребностей обслуживания на месте.

Серийные номера (Serial Numbers):

В книге по двигателю приводится соответствующий серийный номер двигателя. В книге по шасси указывает на серийный номер машины, где используется данная часть.

Серийный номер, заключенный в круглые скобки означает, что он применяется только для оборудования с номером рисунка (ПОЗ.)

CONTENTS

FOREWORD 2

fig no page

ENGINE CYLINDER HEAD AND ITS RELATED PARTS

Cylinder Head ..... (X16-0A90280)
A1009-001001 35
Cylinder Head Cover ..... (VC 9293)
AVC00-001001 36
Breather ..... (BR 9302)
ABR00-002001 37
Air Intake Manifold ..... (IM 9081)
AIM00-001001 38
Air Intake Connector ..... (IC 9467)
AIC00-001001 39
Air Intake Connector Mounts ..... (IC 9426)
AIC20-001001 40
Air Intake Heater ..... (AH 9155)
AAH00-001001 41
Air Cleaner ..... (X16-0A02160)
B9999-002001 42
After Cooler ..... (X16-0A02180)
B9999-004001 43
Exhaust Manifold ..... (TB912-06)
ATB30-001001 44
Turbocharger ..... (X16-0A90300)
A1539-001001 45
Turbocharger Exhaust Gas Connector ..... (XS -9258)
AXS00-001001 46
Turbocharger Oil Piping ..... (TP972-18)
ATP00-001001 47
Exhaust Muffler And Mount Bracket, For EU ..... (X16-0A10040)
A1610-001001 48
Exhaust Muffler Drain ..... (X16-0A02170)
B9999-003001 49
Exhaust Connection ..... (IT 9039)
AIT00-001001 50
Heat Shield ..... (X16-0A10010)
A1570-001001 51

Rocker Arm Housing And Rocker Arm ..... (RL 9753)
ARL00-001001 52
Lifting Arrangement ..... (LA 9151)
ALA00-001001 53
Lifting Arrangement Bolt ..... (LA 9120)
ALA10-001001 54

ENGINE CYLINDER BLOCK AND ITS RELATED PARTS

Flywheel Mounting ..... (FW 9704)
AFW10-001001 56
Camshaft ..... (X16-0A90490)
A2419-001001 57
Front Gear Train Cover ..... (DF 9706)
ADF10-001001 58
Front Cover ..... (X16-0A90450)
A2049-001001 59
Accessory Drive Pulley ..... (PA 9004)
APA00-001001 60
Accessory Drive Pulley,
Sandy Terrain Specification ..... (PA90K645)
APA00-002001 61
Flywheel Housing ..... (X16-0A90570)
A2219-001001 62
Flywheel ..... (FW 9575)
AFW00-001001 63
Engine Oil Pan ..... (X16-0A90510)
A2119-001001 64
Engine Oil Level Sensor ..... (SD 9077)
ASD00-001001 65
Crank Pulley, For EU ..... (AF 9186)
AAF00-002001 66
Cylinder Block ..... (X16-0A90310)
A2019-001001 67
Cylinder Block Cover ..... (OB 9351)
AOB10-001001 68
Breather Hose ..... (X16-0A10310)
A2080-001001 69
Cabin Heater Plug ..... (HC 9046)
AHC00-001001 70

Crankshaft ..... (X16-0A90340)
A2319-001001 71
Piston and Connecting Rod ..... (X16-0A90350)
A2359-001001 72
Oil Level Gauge ..... (LG90327)
ALG00-002001 73

ENGINE LUBRICATING SYSTEM

Coolant Piping ..... (RP 9097)
ARP00-001001 75
Engine Oil Pump ..... (LP 9724)
ALP00-001001 76
Engine Oil Filter, Related Parts ..... (X16-0A01910)
A3119-001001 77
Engine Oil Filter And Engine
Oil Cooler, Piping ..... (LF 9167)
ALF00-001001 78
Engine Oil Cooler ..... (LC 9268)
ALC00-001001A 79

ENGINE FUEL SYSTEM

Fuel Supply Pump Support ..... (FP90238)
AFP20-001001 81
Fuel Injection Pump ..... (X16-0A90360)
A4019-001001 82
Fuel Injector ..... (X16-0A90550)
A4219-001001 83
Fuel Injection Piping ..... (PP98356)
APP50-001001 84
Fuel Piping ..... (FT 9172)
AFT00-001001 85
Fuel Filter Plumbing, Piping ..... (FF 9581)
AFF20-001001 86
Fuel Filter Cartridge ..... (X16-0B90200)
A4119-001001 87
Fuel Filter ..... (FF 9692)
AFF10-001001 88
Fuel Filter, With Additional Fuel Filter ..... (X16-0A20130)
A4110-001001 89

Pre Filter ..... (X16-0A10970)
B9999-005001 90
Water Separator ..... (X16-0A20120)
B9999-006001 91
Fuel System Accessory ..... (FS 9907)
AFS20-001001 92
Fuel Transfer Pump ..... (FS 9746)
AFS00-001001.....93
Fuel Inlet Fitting ..... (FI 9088)
AFI00-001001 94

ENGINE COOLING SYSTEM

Cooling Fan Drive Mounts ..... (FA 9406)
Bolt AFA20-001001.....96
Cooling Fan Drive Pulley ..... (FA 9332)
AFA10-001001 97
Cooling Fan ..... (X16-0A0019B)
A5030-001001 98
Cooling Fan Belt ..... (FA 9737)
AFA30-001001 99
Cooling Fan Belt Tensioner ..... (WP 9144)
AWP20-001001 100
Water Pump ..... (X16-0A90210)
A5019-001001 101
Water Pump Drive Belt, Drive Belt ..... (WP 9389)
AWP10-001001 102
Water Outlet Connector ..... (WO 9111)
AWO00-001001 103
Thermostat ..... (EC 9061)
AEC00-001001 104
Coolant Inlet Connector ..... (WI 9160)
AWI10-001001 105
Plug, Torque Converter Cooling ..... (TK 90-22)
ATK00-001001 106
Plug, With Corrosion Resistor ..... (WF90K915)
AWF00-002001 107
Corrosion Piping ..... (WF 9136)
AWF00-001001 108

ENGINE ELECTRICAL SYSTEM

Damper ..... (DA 9728)
ADA00-001001 110
Alternator Mounts ..... (EH97427)
AEH20-001001 111
Alternator, 60Amp..... (EE 9186)
(1/2) AEE00-001001 112
(2/2) AEE00-001002 113
Starter Motor Mounts ..... (SM 9785)
ASM00-001001 114
Starter Motor, 7 5KW ..... (ST 9199)
AST00-001001 115
Starter Motor, 11KW ..... (ST 9259)
AST00-002001 117
Electric Wiring ..... (WR 9423)
AWR00-002001 119
Electric Controller ..... (PH 9139)
Piping APH10-001001 120
Electric Controller ..... (X16-0A90370)
A4719-001001 121
Electric Controller Mounts, North America EPA 3rd Regulations, EU Exhaust Emissions 3rd Regulations ..... (PH90K923)
APH00-001001 122

ENGINE MARKS AND PLATES

Caution Plates ..... (X16-0A80010)
A9810-001001 124

FIELD REPAIR SERVICE PARTS

Repair Service Parts ..... X16-0A90560)
A8110-001001 126

ENGINE RELATED PARTS

Engine Mounts ..... (X21-1077180)
B0100-001001 128
Air Cleaner ..... (X21-1295420)
(1/2) B0200-001001 129
(2/2) B0200-001002 130

Air Cleaner, With Pre-cleaner ..... (X21-1295430)
(1/2) B0200-002001 131
(2/2) B0200-002002 132

COOLING SYSTEM

Cooling System, With Auto Air Conditioner,
Big Wind Quantity ..... (X21-1291071)
Radiator and Oil Cooler C0100-001001A 134
Shroud C0100-001002B 136
Aftercooler and Condenser C0100-001003A 138
Radiator Piping C0100-001004 139
Stay and Sound Sheet C0100-001005 141
Air Cooler Piping and Sub Tank C0100-001006A 142

FUEL SYSTEM

Fuel Tank ..... (X21-1060210)
D0100-001001A 144
Fuel Tank, For Machine
With Fuel Refill Pump ..... (X21-1141030)
D0100-002001A 145
Fuel Supply Piping,
For Extra Poor Fuel ..... (X21-1261501)
Fuel Piping D0200-001001 146
Pre Filter Bracket D0200-001002 147
Clamp D0200-001003 148

ELECTRICAL SYSTEM

Battery, With Large Capacity Battery ..... (X21-1109780)
E0100-002001 150
Electric Wiring ..... (X21-1263520)
Starting Harness E0200-001001A 151
Main Harness (1/3) E0200-001002 152
Main Harness (2/3) E0200-001003 153
Main Harness (3/3) E0200-001004A 155
Working Lamp E0200-001005 156
Additional Working Lamp ..... (X21-1338690)
E0310-005001 157
Additional Working Lamp, Front Guard ..... (X21-1172570)
E0310-002001 158
Additional Rear Working Light ..... (X21-1317040)
E0320-001001 159

Beacon Lamp, Amber Color Beacon ..... (X21-1088762)
E0340-001001 160
Horn ..... (X21-1134660)
E0410-001001 161
Travel Alarm ..... (X21-1298260)
E0420-001001 162
Rear View Camera Less ..... (X21-1322690)
E0450-003001 163

HYDRAULIC SYSTEM

Hydraulic Oil Tank ..... (X21-1322560)
H0110-001001 165
Main Control Valve, 2-actuator ..... (X21-1295610)
Inner Parts (1/25) H0120-006001 167
Inner Parts (2/25) H0120-006002 168
Inner Parts (3/25) H0120-006003 169
Inner Parts (4/25) H0120-006004 170
Inner Parts (5/25) H0120-006005 171
Inner Parts (6/25) H0120-006006 172
Inner Parts (7/25) H0120-006007 173
Inner Parts (8/25) H0120-006008 174
Inner Parts (9/25) H0120-006009 175
Inner Parts (10/25) H0120-006010 176
Inner Parts (11/25) H0120-006011 177
Inner Parts (12/25) H0120-006012 178
Inner Parts (13/25) H0120-006013 179
Inner Parts (14/25) H0120-006014 180
Inner Parts (15/25) H0120-006015 181
Inner Parts (16/25) H0120-006016 182
Inner Parts (17/25) H0120-006017 183
Inner Parts (18/25) H0120-006018 184
Inner Parts (19/25) H0120-006019 185
Inner Parts (20/25) H0120-006020 186
Inner Parts (21/25) H0120-006021 187
Inner Parts (22/25) H0120-006022 188
Inner Parts (23/25) H0120-006023 189
Inner Parts (24/25) H0120-006024 190
Inner Parts (25/25) H0120-006025 191
Control Valve Related Parts (1/2) H0120-006026 192
Control Valve Related Parts (2/2) H0120-006027 193

Valve Bracket H0120-006028 194
Main Control Valve, 1-actuator ..... (X21-1292410)
Inner Parts (1/23) H0120-005001 195
Inner Parts (2/23) H0120-005002 196
Inner Parts (3/23) H0120-005003 197
Inner Parts (4/23) H0120-005004 198
Inner Parts (5/23) H0120-005005 199
Inner Parts (6/23) H0120-005006 200
Inner Parts (7/23) H0120-005007 201
Inner Parts (8/23) H0120-005008 202
Inner Parts (9/23) H0120-005009 203
Inner Parts (10/23) H0120-005010 204
Inner Parts (11/23) H0120-005011 205
Inner Parts (12/23) H0120-005012 206
Inner Parts (13/23) H0120-005013 207
Inner Parts (14/23) H0120-005014 208
Inner Parts (15/23) H0120-005015 209
Inner Parts (16/23) H0120-005016 210
Inner Parts (17/23) H0120-005017 211
Inner Parts (18/23) H0120-005018 212
Inner Parts (19/23) H0120-005019 213
Inner Parts (20/23) H0120-005020 214
Inner Parts (21/23) H0120-005021 215
Inner Parts (22/23) H0120-005022 216
Inner Parts (23/23) H0120-005023 217
Control Valve Related Parts (1/2) H0120-005024 218
Control Valve Related Parts (2/2) H0120-005025 219
Valve Bracket H0120-005026 220
Main Control Valve, 1-actuator, Piping Less..... (X21-1164560)
Inner Parts (1/23) H0120-005001 195
Inner Parts (2/23) H0120-004002 221
Inner Parts (3/23) H0120-004003 222
Inner Parts (4/23) H0120-004004 223
Inner Parts (5/23) H0120-004005 224
Inner Parts (6/23) H0120-005006 200
Inner Parts (7/23) H0120-004007 225
Inner Parts (8/23) H0120-004008 226
Inner Parts (9/23) H0120-004009 227
Inner Parts (10/23) H0120-004010 228
Inner Parts (11/23) H0120-004011 229

Inner Parts (12/23) H0120-005012 206
Inner Parts (13/23) H0120-005013 207
Inner Parts (14/23) H0120-005014 208
Inner Parts (15/23) H0120-005015 209
Inner Parts (16/23) H0120-005016 210
Inner Parts (17/23) H0120-005017 211
Inner Parts (18/23) H0120-005018 212
Inner Parts (19/23) H0120-004019 230
Inner Parts (20/23) H0120-005020 214
Inner Parts (21/23) H0120-005021 215
Inner Parts (22/23) H0120-004022 231
Inner Parts (23/23) H0120-004023 232
Control Valve Related Parts (1/2) H0120-005024 218
Control Valve Related Parts (2/2) H0120-004025 233
Valve Bracket H0120-005026 220
Blind Parts H0120-004027 234
Main Control Valve .....(X21-1080590)
Inner Parts (1/20) H0120-003001 235
Inner Parts (2/20) H0120-003002 236
Inner Parts (3/20) H0120-003003 237
Inner Parts (4/20) H0120-003004 238
Inner Parts (5/20) H0120-003005 239
Inner Parts (6/20) H0120-003006 240
Inner Parts (7/20) H0120-003007 241
Inner Parts (8/20) H0120-003008 242
Inner Parts (9/20) H0120-003009 243
Inner Parts (10/20) H0120-003010 244
Inner Parts (11/20) H0120-003011 245
Inner Parts (12/20) H0120-003012 246
Inner Parts (13/20) H0120-003013 247
Inner Parts (14/20) H0120-003014 248
Inner Parts (15/20) H0120-003015 249
Inner Parts (16/20) H0120-003016 250
Inner Parts (17/20) H0120-003017 251
Inner Parts (18/20) H0120-003018 252
Inner Parts (19/20) H0120-003019 253
Inner Parts (20/20) H0120-003020 254
Control Valve Related Parts (1/2) H0120-003021 255
Control Valve Related Parts (2/2) H0120-003022 256
Valve Bracket H0120-003023 257

Damper ..... (X21-1162170)
H0210-003001 258
Main Piston Pump, Related Parts ..... (X21-0670740)
H0210-001001 259
Main Piston Pump ..... (708-2G-00700)
Inner Parts (1/11) H0210-002001 260
Inner Parts (2/11) H0210-002002 261
Inner Parts (3/11) H0210-002003 262
Inner Parts (4/11) H0210-002004 263
Inner Parts (5/11) H0210-002005 264
Inner Parts (6/11) H0210-002006 265
Inner Parts (7/11) H0210-002007 266
Inner Parts (8/11) H0210-002008 267
Inner Parts (9/11) H0210-002009 268
Inner Parts (10/11) H0210-002010 269
Inner Parts (11/11) H0210-002011 270
Suction Circuit ..... (X21-1080610)
H0311-001001 271
Delivery Circuit ..... (X21-1080790)
H0312-001001 272
Delivery Circuit, With In-line Filter ..... (X21-1162920)
H0312-002001A 273
Oil Cooler Circuit ..... (X21-1080630)
H0320-001001 274
Return Circuit ..... (X21-1322650)
H0330-001001 275
Return Circuit, For Additional Piping ..... (X21-1322660)
H0330-002001A 276
Drain Circuit ..... (X21-1080650)
H0340-001001 277
Boom Circuit ..... (X21-1163220)
Valve Boom Lines H1210-001001 278
Bracket and Clamp H1210-001002 279
Arm And Bucket Circuit ..... (X21-1163290)
H1220-001001 280
Arm And Bucket Circuit, 2-actuator ..... (X21-1164670)
H1220-002001 281
Arm And Bucket Circuit, For Machine
With Arm Holding Valve ..... (X21-1164680)
H1220-003001 282

Drift Preventive Valve, Arm ..... (X21-0869660)
(1/2) H1240-001001 283
(2/2) H1240-001002 284
Actuator Circuit ..... (X21-1292620)
Main Line, LHS H1270-003001 285
Solenoid Valve H1270-003002 286
Main Line, RHS H1270-003003 287
Return Filter H1270-003004 288
Accumulator H1270-003005 289
Accumulator, LHS H1270-003006 290
Pilot Filter H1270-003007 291
2-additional Actuator Circuit ..... (X21-0911640)
H1272-001001 292
Travel Circuit ..... (X21-1163340)
H1310-001001 293
Swing Circuit ..... (X21-0670840)
H1340-001001 294
LS Circuit, For Additional
Actuator Circuit ..... (X21-1292650)
H1810-001001 295
LS Circuit ..... (X21-1298890)
H1810-002001 296
Solenoid Valve Circuit ..... (X21-1085150)
Solenoid Valve (1/2) H1831-001001 297
Solenoid Valve (2/2) H1831-001002 298
Hose and Bracket H1831-001003 299
Clamp H1831-001004 300
Solenoid Valve Circuit,
For Additional Actuator Circuit ..... (X21-1292690)
Solenoid Valve H1831-002001 301
H1831-002002 302
Hose and Bracket H1831-002003 303
Clamp H1831-002004 304
Pressure Switch Block ..... (X21-1080730)
H1833-001001 305
Proportional Pressure Control (PPC)
Valve Circuit ..... (X21-1080710)
H1840-001001 306

FRAME AND ITS RELATED PARTS

Revolving Frame ..... (X21-1256611)
J1110-001001 308
Revolving Frame, With Deck Guard ..... (X21-1256621)
J1110-002001 309
Revolving Frame, For Machine
With WEBASTO Coolant Heater ..... (X21-1398470)
J1110-004001 310
Boom Foot Pin,
100 Hours Greasing Type ..... (X21-0859560)
J1310-002001 311

OPERATOR'S COMPARTMENT AND CONTROL SYSTEM

Operator's Seat, Suspension Type ..... (X21-1045171)
(1/2) K0110-001001 313
(2/2) K0110-001002 314
Operator's Seat, With Heater ..... (X21-1104261)
(1/2) K0110-003001 315
(2/2) K0110-003002 316
Seat Belt, 78mm Width ..... (X21-1145200)
K0160-002001 317
Luggage Box Net ..... (X21-1008810)
K0190-001001 318
Head Guard, Top Guard ..... (X21-1045251)
K0220-001001A 319
Front Guard, Half ..... (X21-1077310)
K0230-002001 320
Front Guard, Full, Level 1 ..... (X21-1077321)
K0230-003001 321
Front Guard, Full, Level 2 ..... (X21-1045261)
K0230-001001 322
Floor Mat ..... (X21-1181540)
K0310-001001 323
Floor Mat, 1-actuator ..... (X21-1181550)
K0310-002001 324
Floor Mat, 2-actuator ..... (X21-1181560)
K0310-003001 325
Rain Visor ..... (X21-1045271)
K0320-001001 326

Sun Visor ..... (X21-1045280)
K0330-001001 327
Windshield Washer Tank ..... (X21-1295730)
K0350-001001 328
Air Conditioner Unit ..... (X21-1340230)
Compressor K0700-003001 329
Hose K0700-003002 330
Air Conditioner Unit, Webasto Heater ..... (X21-1398490)
Compressor K0700-004001 331
Hose K0700-004002 332
Air Conditioner Unit, Webasto Heater ..... (X21-1971670)
K0700-005002 334
Fire Extinguisher, Russian ..... (X21-0920541)
K0830-004001 336
First Aid Box ..... (X21-1284890)
K0840-001001 337
Thermos Bottle ..... (X21-1283910)
K0850-001001 338
Cab, ... (X21-1910912)
Cab Body and Window K1110-005001 339
Front Window K1110-005002 340
Front Lower Window K1110-005003 342
Roof Window K1110-005004 343
Door K1110-005005A.....344
Door Lock K1110-005006 345
Open Lock and Door Catch K1110-005007 346
Wiper and Room Lamp K1110-005008 347
Rubber Antenna K1110-005009A.....348
Speaker and Window Washer K1110-005010 349
Roof Cover and Air Intake K1110-005011 350
Pressure Valve and Grip K1110-005012 351
Plug Bolt K1110-005013 352
Cab In Parts, Monitor and Cover K1110-005014 353
Cab In Parts, Monitor Cover K1110-005015 354
Cab In Parts, Luggage Plate K1110-005016 355
Cab In Parts, Monitor Duct K1110-005017 356
Cab In Parts, Air Duct K1110-005018 357
Cab In Parts, Partition and Filter K1110-005019 358
Cab In Parts, Sub Plate and Relay K1110-005020 359
Cab In Parts, Air Conditioner Controller K1110-005021 360

Cab In Parts, Main Harness Clamp K1110-005022A.....361
Cab In Parts, Rear Cover K1110-005023 362
Floor, Frame K1110-005024 363
Floor, P P C Valve, For Travel (1/2) K1110-005025 364
Floor, P P C Valve, For Travel (2/2) K1110-005026 366
Floor, Travel Control K1110-005027 367
Floor, Foot Rest, LHS K1110-005028 369
Floor, Base K1110-005030 373
Floor, Harness K1110-005031 374
Floor, Harness Clamp and Earth K1110-005032 375
Floor, Window Washer Hose K1110-005033 376
Floor, Lever, LHS K1110-005034A.....377
Floor, P P C Valve,
For Work Equipment, LHS K1110-005035 378
Floor, Valve, LHS K1110-005036 379
Floor, Console, LHS K1110-005037A.....380
410
Floor, P P C Lock Lever K1110-005038 381
Arm Rest (1/2) K1110-005039 382
Floor, Lever, RHS K1110-005040A.....383
Floor, P P C Valve,
For Work Equipment, RHS K1110-005041 384
Floor, Valve, RHS K1110-005042 385
Floor, Console, RHS K1110-005043 386
Arm Rest (2/2) K1110-005044 388
Air Conditioner Unit K1110-005045 389
Floor, Air Conditioner Unit K1110-005046 391
Floor, Air Conditioner Hose K1110-005047 392
Floor, Heater Hose K1110-005048 393
Floor, P P C Piping For Travel Valve K1110-005049 394
Floor, P P C Piping For Pilot Valve K1110-005050 395
Floor, PPC Piping Clamp K1110-005051 396
Floor, P, T Block and Seal K1110-005052 397
Cab, With 1 Actuator ..... (X21-1910932)
Cab Body and Window K1110-006001 398
Front Window K1110-005002 340
Front Lower Window K1110-006003 399
Roof Window K1110-006004 400
Door K1110-006005A 401
Door Lock K1110-005006 345

Open Lock and Door Catch	K1110-006007	402
Wiper and Room Lamp	K1110-006008	403
Rubber Antenna	K1110-005009A	348
Speaker and Window Washer	K1110-005010	349
Roof Cover and Air Intake	K1110-005011	350
Pressure Valve and Grip	K1110-006012	404
Plug Bolt	K1110-006013	405
Cab In Parts, Monitor and Cover	K1110-005014	353
Cab In Parts, Monitor Cover	K1110-005015	354
Cab In Parts, Luggage Plate	K1110-005016	355
Cab In Parts, Monitor Duct	K1110-005017	356
Air Conditioner Duct	K1110-006018	406
Cab In Parts, Partition and Filter, With Air Conditioner	K1110-006019	407
Cab In Parts, Sub Plate and Relay	K1110-005020	359
Cab In Parts, Main Harness Clamp	K1110-005022A	361
Cab In Parts, Rear Cover	K1110-006023	408
Floor, Frame	K1110-005024	363
Floor, P P C Valve, For Travel (1/2)	K1110-005025	364
Floor, P P C Valve, For Travel (2/2)	K1110-005026	366
Floor, Travel Control	K1110-005027	367
Floor, Foot Rest, LHS	K1110-005028	369
Floor, PPC Valve For 1-Attachment	K1110-005029A	370
1-st Attachment Control	K1110-5029B	371
Floor, Base	K1110-005030	373
Floor, Harness	K1110-005031	374
Floor, Harness Clamp and Earth	K1110-005032	375
Window Washer Hoses	K1110-006033	409
Floor, Lever, LHS	K1110-005034A	377
Floor, P P C Valve, For Work Equipment, LHS	K1110-005035	378
Floor, Valve, LHS	K1110-005036	379
Floor, Console, LHS	K1110-005037A	308 410
Floor, P P C Lock Lever and Radio	K1110-006038	411
Arm Rest (1/2)	K1110-006039	412
Floor, Lever, RHS	K1110-005040A	383
Floor, P P C Valve, For Work Equipment, RHS	K1110-005041	384
Floor, Valve, RHS	K1110-005042	385
Floor, Console, RHS	K1110-005043	386

Arm Rest (2/2) K1110-005044 388
Air Conditioner Unit K1110-005045 389
Floor, Air Conditioner Unit K1110-005046 391
Floor, Air Conditioner Hose K1110-005047 392
Floor, Heater Hose K1110-005048 393
Floor, P P C Piping For Travel Valve K1110-005049 394
Floor, P P C Piping For Pilot Valve K1110-005050 395
Floor, PPC Piping Clamp K1110-005051 396
Floor, P, T Block and Seal K1110-005052 397
Cab, with Webasto ..... (X21-1910992)
Cab Body and Window K1110-005001 339
Front Window K1110-005002 340
Front Lower Window K1110-006003 399
Roof Window K1110-006004 400
Door K1110-006005A 401
Door Lock K1110-005006 345
Open Lock and Door Catch K1110-006007 402
Wiper and Room Lamp K1110-007008 413
Rubber Antenna K1110-005009A 348
Speaker and Window Washer K1110-005010 349
Roof Cover and Air Intake K1110-005011 350
Pressure Valve and Grip K1110-006012 404
Plug Bolt K1110-007013 414
Cab In Parts, Monitor and Cover K1110-005014 353
Cab In Parts, Monitor Cover K1110-005015 354
Cab In Parts, Luggage Plate K1110-005016 355
Cab In Parts, Monitor Duct K1110-005017 356
Cab In Parts, Air Conditioner D u c t K1110-007018 415
Cab In Parts, Partition and Filter, With Air Conditioner K1110-006019 407
Cab In Parts, Sub Plate and Relay K1110-005020 359
Cab In Parts, Air Conditioner Controller K1110-005021 360
Cab In Parts, Main Harness Clamp K1110-005022A 361
Cab In Parts, Rear Cover K1110-005023 362
Floor, Frame K1110-005024 363
Floor, P P C Valve, For Travel (1/2) K1110-005025 364
Floor, P P C Valve, For Travel (2/2) K1110-005026 366
Floor, Travel Control K1110-005027 367
Floor, Foot Rest, LHS K1110-005028 369
Floor, Base K1110-005030 373

Floor, Harness K1110-005031 374
Floor, Harness Clamp and Earth K1110-005032 375
Floor, Window Washer Hose K1110-005033 376
Floor, Lever, LHS K1110-005034A 377
Floor, P P C Valve,
For Work Equipment, LHS K1110-005035 378
Floor, Valve, LHS K1110-005036 379
Floor, Console, LHS K1110-005037A 308
410
Floor, P P C Lock Lever and Radio K1110-006038 411
Arm Rest (1/2) K1110-006039 412
Floor, Lever, RHS K1110-005040A 383
Floor, P P C Valve,
For Work Equipment, RHS K1110-005041 384
Floor, Valve, RHS K1110-005042 385
Floor, Console, RHS K1110-005043 386
Arm Rest (2/2) K1110-005044 388
Air Conditioner Unit K1110-005045 389
Floor, Air Conditioner Unit K1110-005046 391
Floor, Air Conditioner Hose K1110-005047 392
Floor, Heater Hose K1110-005048 393
Floor, P P C Piping For Travel Valve K1110-005049 394
Floor, P P C Piping For Pilot Valve K1110-005050 395
Floor, PPC Piping Clamp K1110-005051 396
Floor, P, T Block and Seal K1110-005052 397
Cab, 1Actuator, Webasto..... (X21-1973740)
Cab Body and Window K1110-005001 339
Front Window K1110-005002 340
Front Lower Window K1110-005003 342
Roof Window K1110-005004 343
Door K1110-005005A 344
Door Lock K1110-005006 345
Open Lock and Door Catch K1110-005007 346
Wiper and Room Lamp K1110-005008 347
Rubber Antenna K1110-005009A 348
Speaker and Window Washer K1110-005010 349
Roof Cover and Air Intake K1110-005011 350
Pressure Valve and Grip K1110-008012 416
Plug Bolt K1110-005013 352
Cab In Parts, Monitor and Cover K1110-005014 353

Cab In Parts, Monitor Cover	K1110-005015	354
Cab In Parts, Luggage Plate	K1110-005016	355
Cab In Parts, Monitor Duct	K1110-005017	356
Cab In Parts, With Air Conditioner Duct	K1110-007018	415
Cab In Parts, Partition and Filter, With Air Conditioner	K1110-006019	407
Cab In Parts, Sub Plate and Relay	K1110-005020	359
Cab In Parts, Air Conditioner Controller	K1110-005021	360
Cab In Parts, Main Harness Clamp	K1110-005022A	361
Cab In Parts, Rear Cover	K1110-005023	362
Floor, Frame	K1110-005024	363
Floor, P P C Valve, For Travel (1/2)	K1110-005025	364
Floor, P P C Valve, For Travel (2/2)	K1110-005026	366
Floor, Travel Control	K1110-005027	367
Floor, Foot Rest, LHS	K1110-005028	369
Floor, PPC Valve For 1-Attachment	K1110-005029A	370
1-st Attachment Control	K1110-5029B	371
Floor, Base	K1110-005030	373
Floor, Harness	K1110-005031	374
Floor, Harness Clamp and Earth	K1110-005032	375
Floor, Window Washer Hose	K1110-005033	376
Floor, Lever, LHS	K1110-005034A	377
Floor, P P C Valve, For Work Equipment, LHS	K1110-005035	378
Floor, Valve, LHS	K1110-005036	379
Floor, Console, LHS	K1110-005037A	308 410
Floor, P P C Lock Lever and Radio	K1110-008038	417
Arm Rest (1/2)	K1110-006039	412
Floor, Lever, RHS	K1110-005040A	383
Floor, P P C Valve, For Work Equipment, RHS	K1110-005041	384
Floor, Valve, RHS	K1110-005042	385
Floor, Console, RHS	K1110-005043	386
Arm Rest (2/2)	K1110-005044	388
Floor, Air Conditioner	K1110-008045	418
Floor, Air Conditioner Unit	K1110-005046	391
Floor, Air Conditioner Hose	K1110-005047	392
Floor, Heater Hose	K1110-005048	393
Floor, P P C Piping For Travel Valve	K1110-005049	394
Floor, P P C Piping For Pilot Valve	K1110-005050	395

Floor, PPC Piping Clamp K1110-005051 396
Floor, P, T Block and Seal K1110-005052 397
Proportional Pressure Control (PPC) Circuit,
For Additional Actuator Circuit (X21-1293310)
K1520-002001 428
Mode Selection Connectors .....(X21-0359571)
K1730-001001 429

GUARDS AND COVERS

Hood .....(X21-1058700)
M1110-001001 431
Hood, With Dustproof Net .....(X21-105870A)
Hood M1110-002001 432
Hood, Net M1110-002002 433
Hood, With Dustproof Net .....(X21-105870B)
Hood M1110-002001 432
Hood, Net M1110-003002 434
Machine Cab Frame .....(X21-1261510)
M1120-001001 435
Side Cover, LHS .....(X21-1277570)
M1130-001001 436
Side Cover, RHS .....(X21-1277690)
M1140-001001 438
Machine Cab Partition .....X21-1331960)
(1/2) M1150-001001 440
(2/2) M1150-001002 441
Machine Cab Cover, With Pre-cleaner ..... (X21-1305360)
(1/2) M1210-001001 443
(2/2) M1210-001002 445
Machine Cab Cover .....(X21-1322470)
M1210-002001 446
Battery Case .....(X21-1278611)
M1220-001001 448
Handrail .....(X21-117256A)
M1310-002001 449
Rear View Mirror, LHS .....(X21-1169980)
M1410-001001 450
Rearview Mirror, RHS .....(X21-132692A)
M1420-001001.....451

Rearview Mirror, Mounted
On Counterweight ..... (X21-1170000)
M1430-002001 452
Counterweight, 5471kg ..... (X21-1256641)
M1510-001001 453
Counterweight Mounts ..... (X21-0669000)
M1520-001001 454
Under Cover ..... (X21-125939A)
(1/3) M1810-001001 455
(2/3) M1810-001002A 457
(3/3) M1810-001003 458
Under Cover, Reinforced Type ..... (X21-1326250)
(1/3) M1810-002001 459
(2/3) M1810-002002 461
(3/3) M1810-002003 462
Under Cover, For Machine
With Fuel Refill Pump ..... (X21-1326260)
(1/3) M1810-003001 463
(2/3) M1810-003002A 465
(3/3) M1810-003003 466
Under Cover, Reinforced Type,
For Machine With Fuel Refill Pump ..... (X21-1326270)
(1/3) M1810-004001 467
(2/3) M1810-004002 469
(3/3) M1810-004003 470
Under Cover, For Machine
With WEBASTO Coolant Heater ..... (X21-1398350)
(1/3) M1810-008001 471
(2/3) M1810-008002 472
(3/3) M1810-008003A.....473

SWING CIRCLE AND ITS RELATED PARTS

Swing Circle ..... (X21-1160640)
N1110-001001 475
Swing Circle, For Machine
With WEBASTO Coolant Heater ..... (X21-1396880)
N1110-002001 476
Swing Machinery ..... (X21-1159431)
Inner Parts (1/3) N1210-001001 477
Inner Parts (2/3) N1210-001002 478
Inner Parts (3/3) N1210-001003 479

N1210-001004 480
Swing Machinery, Supply Parts ..... (207-26-00220)
N1210-002001 482
Swing Machinery, For Machine
With WEBASTO Coolant Heater ..... (X21-1396441)
Inner Parts (1/3) N1210-003001 483
Inner Parts (2/3) N1210-003002 484
Inner Parts (3/3) N1210-003003 485
N1210-003004 486
Swing Motor, Related Parts ..... (X21-0822770)
N1220-001001 488
Swivel Joint ..... (X21-0670900)
(1/2) N1310-001001 489
(2/2) N1310-001002 490

TRAVEL SYSTEM AND ITS RELATED PARTS

Travel Circuit ..... (X21-0817020)
P1120-001001 492
Travel Circuit, For Machine
With WEBASTO Coolant Heater ..... (X21-081702A)
P1120-002001 493
Travel Motor And Final Drive ..... (X21-1164740)
(1/4) P1210-001001 494
(2/4) P1210-001002 495
(3/4) P1210-001003 497
(4/4) P1210-001004 498
Travel Motor And Final Drive,
Extreme Cold Area Arrangement (-50deg C) ..... (X21-0954441)
Inner Parts (1/3) P1210-002001 500
Inner Parts (2/3) P1210-002002 501
Inner Parts (3/3) P1210-002003 503
P1210-002004 504

UNDERCARRIAGE

Front Idler And Idler Cushion ..... (X21-0845860)
(1/2) R0110-001001 507
(2/2) R0110-001002 508
Front Idler And Idler Cushion,
With Rustproof Spring ..... (X21-084586A)
(1/2) R0110-002001 509
(2/2) R0110-002002 510

Front Idler And Idler Cushion,
Extreme Cold Area Arrangement (-50deg C) ..... (X21-0990980)
(1/2) R0110-003001 511
(2/2) R0110-003002 512
Track Roller ..... (X21-0020272)
R0200-001001 513
Track Roller, Extreme
Cold Area Arrangement (-50deg C) ..... (X21-0951430)
R0200-002001 514
Carrier Roller ..... (X21-0020293)
R0300-003001 515
Carrier Roller, Extreme Cold Area
Arrangement (-50deg C)..... (X21-0951482)
R0300-002001 516
Track Shoe Assembly, Triple Shoe Grouser,
With Holed, 600mm Width ..... (X21-0736960)
R0500-001001 517
Track Shoe Assembly, Triple Shoe Grouser,
With Holed, 800mm Width ..... (X21-0825840)
R0500-003001 518
Track Shoe Assembly, Triple Shoe Grouser,
With Holed, 700mm Width ..... (X21-0825830)
R0500-002001 519
Track Link Assembly ..... (207-32-00340)
R0501-001001 520
Track Frame, With Under Cover ..... (X21-1089741)
R1100-002001 521
Track Frame Under Cover ..... (X21-0379060)
R1140-001001 522
Track Roller Guard ..... (X21-0379010)
R1200-001001 523
Track Guard, Full Length ..... (X21-0818590)
R1200-002001 524

WORK EQUIPMENT

Boom, 6.5m, Strengthened,
100 Hours Greasing Type..... (X21-1214060)
Boom and Top Pin T1110-009001 533
Arm Cylinder Piping T1110-003002 527
Lubrication Piping T1110-004003 529
Bucket Cylinder Piping T1110-003004 528

Cylinder Pin and Working Lamp T1110-007005 532
Boom, 6.5m, Strengthened,
1-attachment, 100 Hours Greasing Type ..... (X21-1214070)
Boom and Top Pin T1110-011001 534
Arm Cylinder Piping T1110-003002 527
Lubrication Piping T1110-004003 529
Bucket Cylinder Piping T1110-003004 528
Cylinder Pin and Working Lamp T1110-007005 532
Additional Piping, For Machine
with WEBASTO Coolant Heater T1110-005006 530
Additional Piping, For Machine
with WEBASTO Coolant Heater T1110-005006A.....540
Clamp T1110-005007 531
Boom, 6.5m, Strengthened, 1-actuator,
100 Hours Greasing Type,
For Machine w\WEBASTO Heater ..... (X21-121407A)
Boom and Top Pin T1110-011001 534
Arm Cylinder Piping T1110-003002 527
Lubrication Piping T1110-004003 529
Bucket Cylinder Piping T1110-003004 528
Cylinder Pin and Working Lamp T1110-007005 532
Boom, 100 Hours Greasing Type, For Machine
With WEBASTO Coolant Heater ..... (X21-1398410)
Boom and Top Pin T1110-014001 535
Arm Cylinder Piping T1110-014002 536
Lubrication Piping T1110-014003 537
Bucket Cylinder Piping T1110-014004 538
Cylinder Pin and Working Lamp T1110-014005 539
Boom Cylinder, 100 Hours Greasing Type ..... (X21-0859670)
Boom Cylinder, LHS T1120-003001A 541
Boom Cylinder, RHS T1120-003002A 543
Boom Cylinder, 100 Hours Greasing Type,
Extreme Cold Area Arrangement (-50deg C) ..... (X21-085967A)
Boom Cylinder, LHS T1120-005001 545
Boom Cylinder, RHS T1120-005002 547
Arm Cylinder, 100 Hours Greasing Type ..... (X21-0859680)
T1140-004001A 549
Arm Cylinder, 100 Hours Greasing Type,
Extreme Cold Area
Arrangement (-50deg C) ..... (X21-085968A)
T1140-005001 551

Parts For Less Arm ..... (X21-0566920)
..... T1190-002001 553
Arm, 4.0m, 100 Hours Greasing Type ..... (X21-0859420)
T1200-020001 562
Bucket Cylinder T1200-032002A 557
Bucket Link T1200-001003 554
Bucket Cylinder Hose and Pin T1200-020004 563
Arm, 3.2m, Strengthened, 1-attachment,
100 Hours Greasing Type ..... (X21-0859410)
T1200-019001 564
Bucket Cylinder T1200-032002A 557
Bucket Link T1200-001003 554
Bucket Cylinder Hose and Pin T1200-032004 559
Additional Piping T1200-003005 555
Valve, For Additional Piping T1200-003006 556
Arm, 3.2m, Strengthened,
100 Hours Greasing Type ..... (X21-0859400)
T1200-017001 565
Bucket Cylinder T1200-032002A 557
Bucket Link T1200-001003 554
Bucket Cylinder Hose and Pin T1200-032004 559
Arm, 2.6m, 1-attachment,
100 Hours Greasing Type..... (X21-0859370)
T1200-014001.....566
Bucket Cylinder T1200-025002A 560
Bucket Link T1200-001003 554
Bucket Cylinder Hose and Pin T1200-032004 559
Additional Piping T1200-027005 569
Valve, For Additional Piping T1200-003006 556
Arm, 2.6m, 100 Hours Greasing Type ..... (X21-0859360)
T1200-013001 567
Bucket Cylinder T1200-025002A 560
Bucket Link T1200-001003 554
Bucket Cylinder Hose and Pin T1200-032004 559
Arm, 2.2m, 100 Hours Greasing Type ..... (X21-0859350)
T1200-012001 570
Bucket Cylinder T1200-025002A 560
Bucket Link T1200-029003 568
Bucket Cylinder Hose and Pin T1200-032004 559

Arm, 3.2m, 100 Hours Greasing Type, For Machine With WEBASTO Coolant Heater ..... (X21-085938B)
T1200-042001 571
Bucket Cylinder T1200-042002 572
Bucket Link T1200-042003 574
Bucket Cylinder Hose and Pin T1200-042004 575
Arm, 3.2m, 100 Hours Greasing Type, For Machine With WEBASTO Coolant Heater ..... (X21-085938B)
T1200-042005 576
Arm, 3.2m, 1-attachment, For Machine With WEBASTO Coolant Heater, 100 Hours Greasing Type..... (X21-085941A)
Arm T1200-043001 577
Bucket Cylinder T1200-043002 578
Bucket Link T1200-029003 568
Bucket Cylinder Hose and Pin T1200-032004 559
Additional Piping T1200-043005 580
Valve For Additional Piping T1200-043006 581
Parts For Less Bucket ..... (X21-0332420)
T1290-002001 582
Backhoe Bucket, 1.6m^3, 1515mm, Horizontal Pin Type, With Hook, With Adjusting ..... (X21-0023770)
(1/2) T1510-016001 583
(2/2) T1510-016002 584
Backhoe Bucket, 1.1m^3, 1145mm, Horizontal Pin Type, With Hook ..... (X21-0023730)
(1/3) T1510-015001 585
(2/3) T1510-015002 586
(3/3) T1510-015003 587
Backhoe Bucket, 1.6m^3, 1515mm, Horizontal Pin Type, With Side Cutter, With Hook, With Adjusting ..... (X21-0021860)
(1/2) T1510-012001.....588
(2/2) T1510-012002 589
Backhoe Bucket, 1.1m^3, 1145mm, Horizontal Pin Type, With Side Cutter, With Hook ..... (X21-0021820)
(1/4) T1510-010001.....590
(2/4) T1510-010002 591
(3/4) T1510-010003 592

(4/4) T1510-010004 593
Backhoe Bucket, 1.6m^3, 1515mm,
Horizontal Pin Type, With Adjusting .....(X21-0021300)
T1510-009001 594
Ripper Bucket, 0.9m^3, 1200mm .....(X21-0020870)
T1510-008001 595
Backhoe Bucket, 1.1m^3, 1145mm, Horizontal
Pin Type, With Side Cutter .....(X21-0020670)
(1/3) T1510-005001 596
(2/3) T1510-005002 597
(3/3) T1510-005003 598
Backhoe Bucket, 1.6m^3, 1515mm, Horizontal
Pin Type, With Side Cutter, With Adjusting .....(X21-0020660)
T1510-004001 599
Backhoe Bucket, 1.1m^3, 1145mm,
Horizontal Pin Type .....(X21-0020200)
(1/2) T1510-003001.....600
(2/2) T1510-003002.....601
Backhoe Bucket, 1.4m^3, 1340mm,
Horizontal Pin Type, Strengthened,
With Side Cutter, With Adjusting .....(X21-1324680)
T1510-024001A 602
Backhoe Bucket, 1.4m^3, 1340mm,
Horizontal Pin Type, Strengthened,
With Side Cutter, With Hook, With Adjusting .....(X21-1324640)
(1/2) T1510-022001 603
(2/2) T1510-022002A 604
Breaker Adapter, For Okada .....(207-970-X430)
T1920-001001 605
Breaker Adapter, For KRUPP .....(X21-0842640)
T1920-002001 606
Breaker Adapter, For Matsuda, For Furukawa ..(X21-1022590)
T1920-005001 607
Accumulator Kit .....(X21-1087591)
(1/2) T1920-010001 608
(2/2) T1920-010002 609
Breaker Adapter, For Montaber .....(X21-0842663)
(1/2) T1920-009001 610
(2/2) T1920-009002.....611
Breaker Adapter, For Nippon Pneumatic .....(X21-0842653)
(1/2) T1920-008001 612
(2/2) T1920-008002.....613

Parts For Less Bucket ..... (X21-1324650)
T1930-001001 614

MARKS AND PLATES

Marks And Plates, Russian,
Pictorial Type ..... (X21-134150A)
U0100-006001 616
Lubrication Chart,
100 Hours Greasing Type ..... (X21-1331481)
U0110-007001 617
Caution Plates, Cab Windshield
Lock Operation, Russian ..... (X21-1209550)
U0120-011001 618
Coolant Decal, Russian ..... (X21-1392240)
U0202-001001 620
Caution Plates, Arm ..... (X21-1134080)
U0510-002001 621
Caution Plates, Front Guard, Russian ..... (X21-117196G)
U0520-017001 622
Caution Plates, Top And Front Guard, Russian . (X21-117197G)
U0520-026001 623
Caution Plates, Top Guard, Russian ..... (X21-117195G)
U0520-008001 624
Service Instruction, Air Cleaner, Double
Element Type, Russian ..... (X21-0369361)
U0550-001001 625
Caution Plates, 2-accumulator, Pictorial Type ... (X21-0568970)
U0580-004001 626
Caution Plates, 1-accumulator, Pictorial Type ... (X21-0568650)
U0580-003001 627
Caution Plates, With 12volt Power Outlet,
EU Safety Regulation ..... (X21-0786551)
U0710-007001 628

AUXILIARY PARTS AND TOOL

Spare Parts ..... (X21-1326780)
V0100-001001 630
Cap And Overall ..... (X21-0291910)
V0200-001001 631
General Tool Set ..... (X21-0835600)
V0300-001001 632

OTHER EQUIPMENT

Webasto Heater ..... (X21-1971790)
(1/3) W1111-005001 634
(2/3) W1111-005002 635
(3/3) W1111-005003 636
Webasto Heater, Related Parts, For Machine With WEBASTO Coolant Heater ..... (X21-1398921)
W1112-002001 637
Fuel Self Charge Pump ..... (X21-1082300)
W1113-001001 638
Fuel Self Charge Pump, Extremely Bad Fuel And Poor Fuel Arrangement Spec Water+Dust ..... (X21-1337510)
W1113-002001 639
Additional Track Frame Step ..... (X21-1093810)
W1114-001001 640
Grease Pump, Electric Type ..... (X21-1024100)
W1117-001001 641
Engine Drain Hose ..... (X21-0507990)
W9960-001001 642

FIELD REPAIR SERVICE PARTS

Service Kit Parts ..... (Y99-0000002)
KIT 644

ENGINE CYLINDER HEAD AND ITS RELATED PARTS

FIG. A1009-001001 Cylinder Head

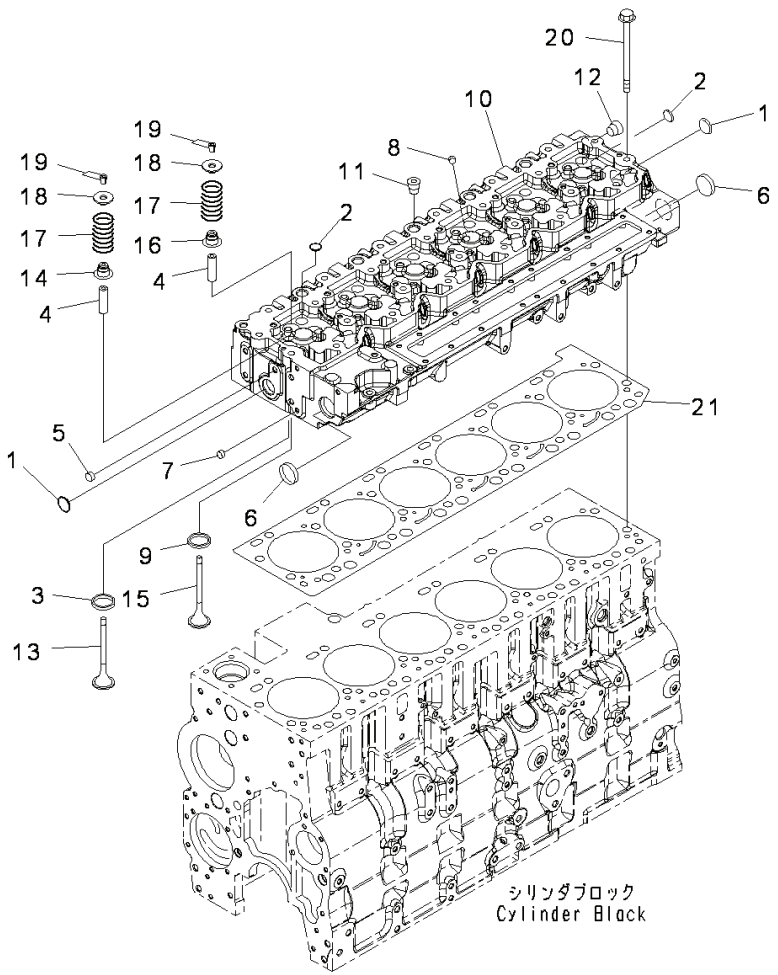

Index	Code	Part Number	Descreption	Qty	Serial Number
		6745-11-1190	Head Assembly, Cylinder	1	26852077-
		6745-11-1121	• Head Assembly, Cylinder	1	26854438-
1		6742-01-2920	• • Plug	2	26852077-
2		6735-21-5530	• • Plug	18	26852077-
3	C1		• • Insert, Exhaust	12	26852077-
4	C1		• • Guide	24	26852906-
5		6744-41-4110	• • Plug	1	26852077-
6		6744-11-1070	• • Plug	2	26852077-
7		6744-41-4120	• • Plug	1	26852077-
8		6754-11-1160	• • Plug	6	26854438-
9	C1		• • Insert, Exhaust Valve	12	26852077-
10		6745-11-1131	• • Head, Cylinder	1	26854438-
11		6732-11-1910	• Plug	5	26852077-
12		6732-11-1920	• Plug	1	26852077-
		6732-21-1960	• Plug Assembly, (Not Shwon)	1	26854438-
13		6745-41-4160	Valve, Intake	12	26852077-
14		6744-41-4070	Seal, Intake	12	26852077-
15		6745-41-4150	Valve, Exhaust	12	26852077-
16		6744-41-4080	Seal, Exhaust	12	26852077-
17		6744-41-4031	Spring	24	26852077-
18		6744-41-4050	Retainer	24	26852077-
19		6732-41-4520	Collet	48	26852077-
20		6743-11-1610	Bolt	26	26852077-
21		6745-11-1811	Gasket	1	26856495-

SAA6D114E-3D (FEN01263-00)

FIG. AVC00-001001 Cylinder Head Cover

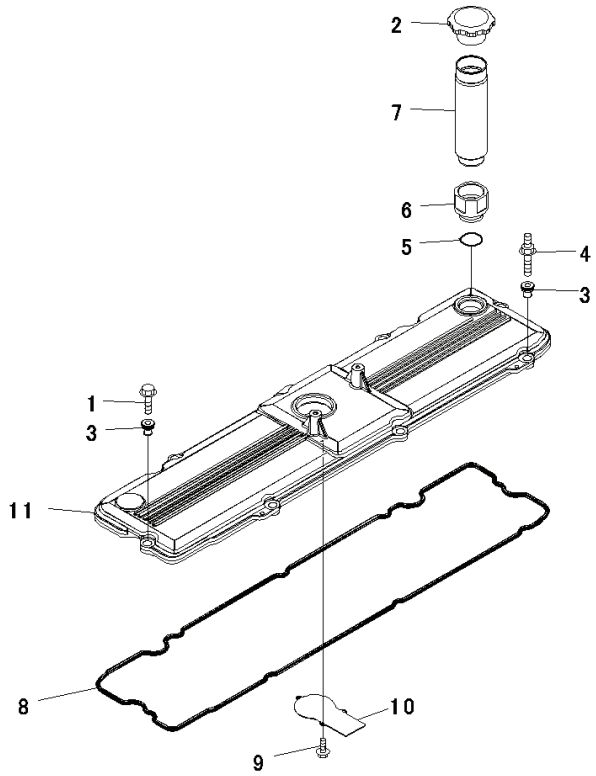

JY012022

Index	Code	Part Number	Descreption	Qty	Serial Number
1		6732-61-6140	Bolt	7	26852077-
2		6130-12-8610	Cap	1	26852077-
3		6745-11-8160	Isolator	8	26852077-
4		6745-11-8170	Screw	1	26852077-
5		07002-23634	O-ring	1	26852077-
		6745-11-8100	Cover	1	26852077-
6		6745-11-8190	• Adapter	1	26852077-
7		6754-11-8140	• Filler, Oil	1	26852077-
		6745-11-8180	Cover	1	26852077-
8		6745-11-8810	• Gasket	1	26852077-
		6745-11-8220	• Cover	1	26852077-
9		6745-11-8150	• • Bolt	3	26852077-
10		6745-11-8120	• • Plate	1	26852077-
11		6745-11-8110	• • Cover	1	26852077-

SAA6D114E-3D (FEN01263-00)

FIG. ABR00-002001 Breather

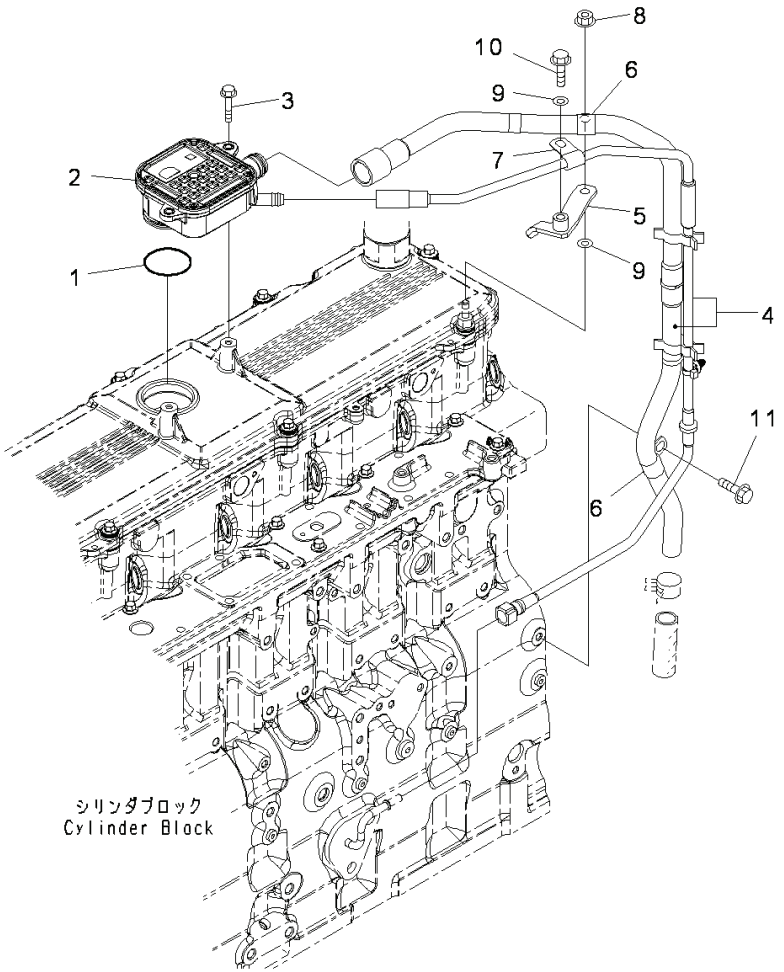

Index	Code	Part Number	Descreption	Qty	Serial Number
		6745-21-7110	Housing Assembly	1	26852077-
1		6745-21-7120	• O-ring	1	26852077-
2	C1		• Housing	1	26852077-
3		6735-71-5190	Bolt	2	26852077-
4		6745-21-7180	Tube	1	26852077-
5		6745-11-8250	Brace	1	26852077-
6		6216-24-5730	Clip	2	26852077-
7		04434-51008	Clip	1	26852077-
8		6732-71-3210	Nut	1	26852077-
9		01643-30823	Washer	2	26852077-
10		6731-71-6270	Screw	1	26852077-
11		6736-21-5310	Bolt	1	26852077-

SAA6D114E-3D (FEN01263-00)

FIG. AIM00-001001 Air Intake Manifold

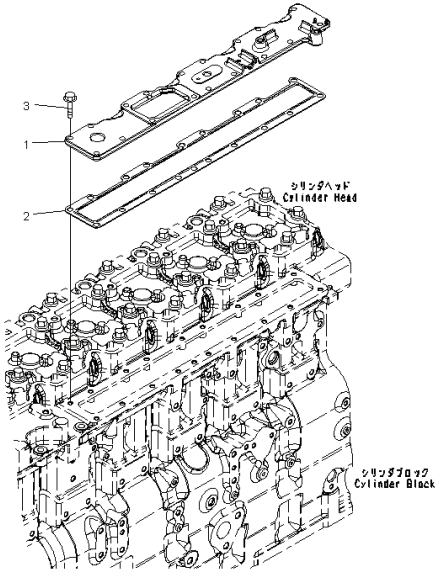

Index	Code	Part Number	Descreption	Qty	Serial Number
1		6745-11-4110	Cover	1	26852077-
2		6745-11-4120	Gasket	1	26852077-
3		6732-21-6630	Screw	9	26852077-

SAA6D114E-3D (FEN01263-00)

FIG. AIC00-001001 Air Intake Connector

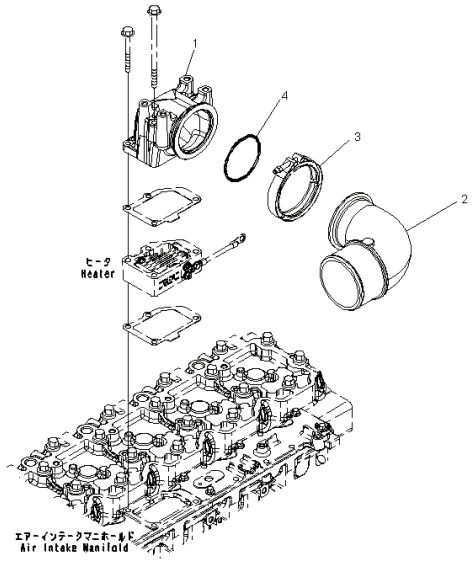

Index	Code	Part Number	Descreption	Qty	Serial Number
1		6745-11-4190	Connector	1	26852077-
2		6745-11-4140	Connector	1	26852077-
3		6745-11-4150	Clamp	1	26852077-
4		6745-11-4161	O-ring	1	26856687-

SAA6D114E-3D (FEN01263-00)

FIG. AIC20-001001 Air Intake Connector Mounts

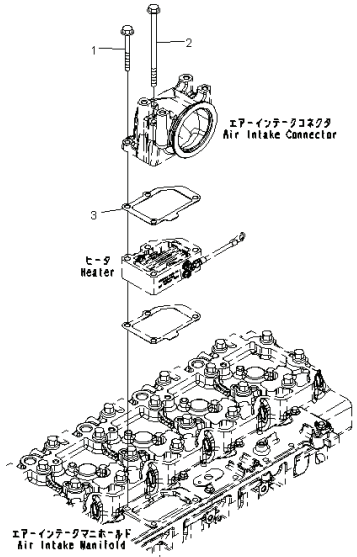

Index	Code	Part Number	Descreption	Qty	Serial Number
1		6736-81-8730	Bolt	2	26852077-
2		6745-11-4180	Bolt	2	26852077-
3		6745-81-4120	Gasket	1	26852077-

SAA6D114E-3D (FEN01263-00)

FIG. AAH00-001001 Air Intake Heater

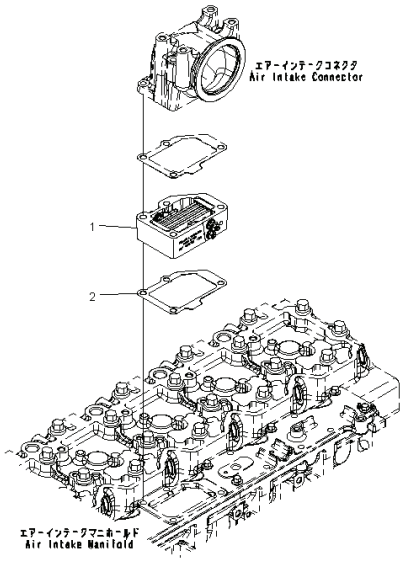

Index	Code	Part Number	Descreption	Qty	Serial Number
1		6745-81-4111	Heater	1	26853733-
2		6745-81-4120	Gasket	1	26852077-

SAA6D114E-3D (FEN01263-00)

FIG. B9999-002001 Air Cleaner

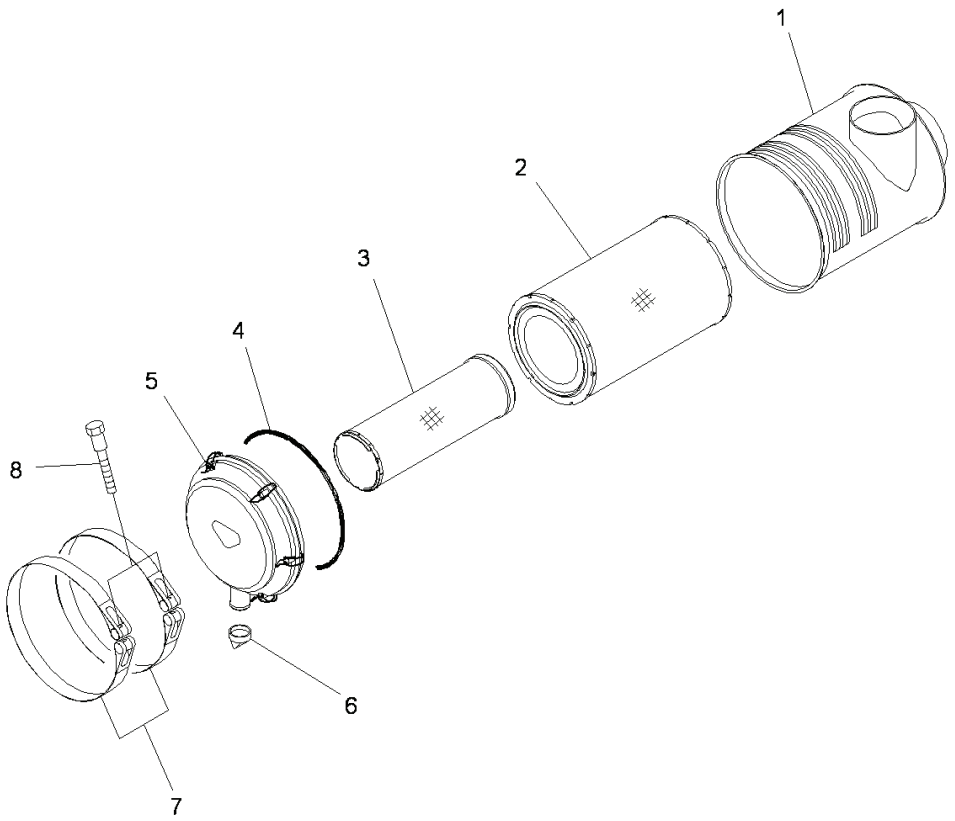

Index	Code	Part Number	Descreption	Qty	Serial Number
		6156-81-7200	Air Cleaner Assembly	1	26852077-
1		6156-81-7210	• Body	1	26852077-
		600-185-6100	• Element Assembly	1	26852077-
2		600-185-6110	• • Element	1	26852077-
3	C1		• • Element	1	26852077-
4		600-184-1671	• • O-ring	1	26852077-
5		600-184-1610	• Cover Assembly	1	26852077-
6		600-184-1350	• Valve, Vaquator	1	26852077-
7		6151-11-9970	Band Assembly	2	26852077-
8		6643-11-4641	Bolt	2	26852077-

SAA6D114E-3D (FEN01263-00)

FIG. B9999-004001 After Cooler

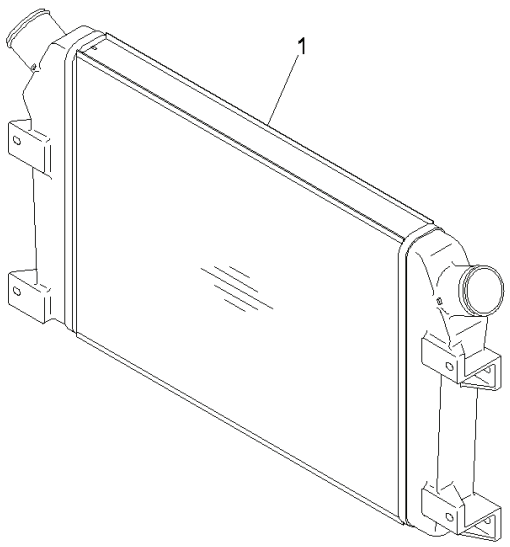

00065676

Index	Code	Part Number	Descreption	Qty	Serial Number
1		6152-62-5110	After Cooler Assembly	1	26852077-

SAA6D114E-3D (FEN01263-00)

FIG. ATB30-001001 Exhaust Manifold

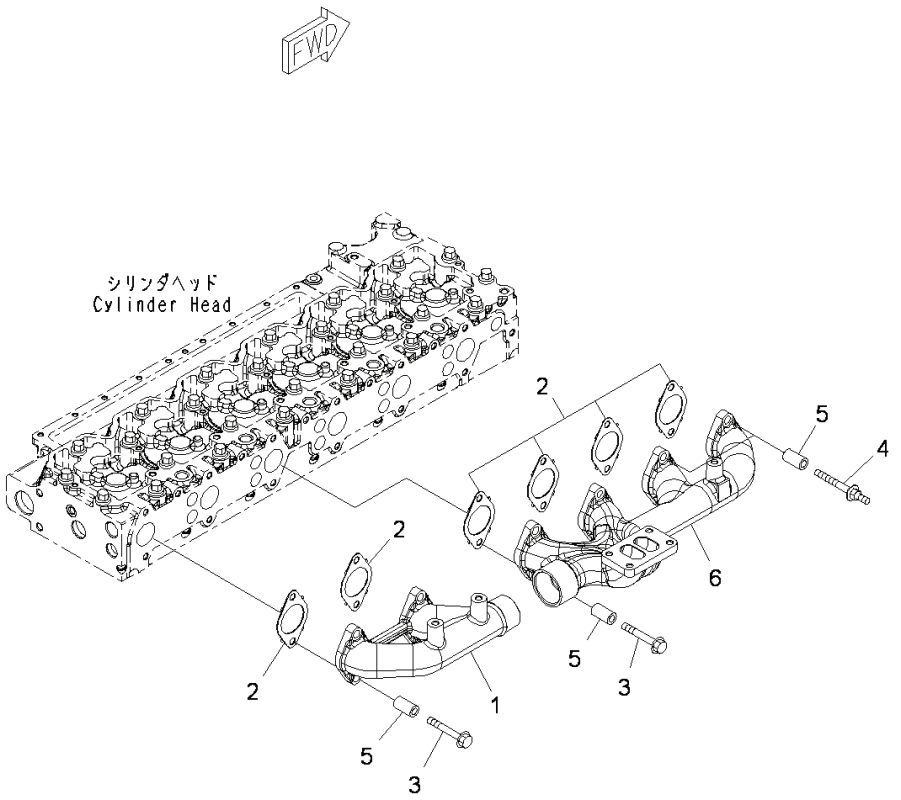

Index	Code	Part Number	Descreption	Qty	Serial Number
1		6745-11-5110	Manifold	1	26852077-
2		6745-11-5811	Gasket	6	26857285-
3		6732-11-5860	Bolt	8	26852077-
4		6745-11-5170	Bolt	4	26852077-
5		6754-11-5150	Spacer	12	26852077-
6		6745-11-5120	Manifold	1	26852077-

SAA6D114E-3D (FEN01263-00)

FIG. A1539-001001 Turbocharger

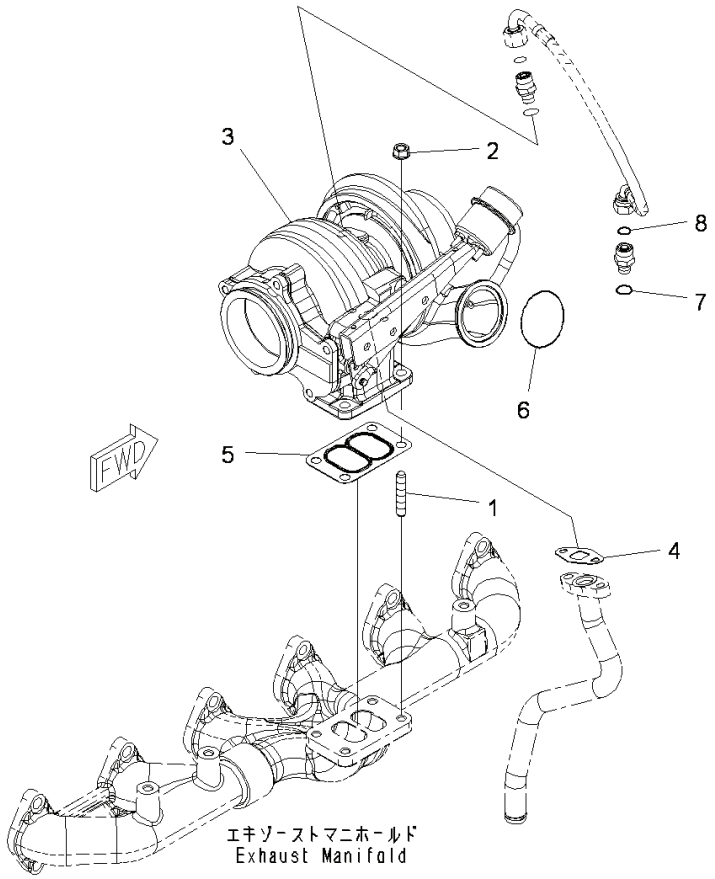

Index	Code	Part Number	Descreption	Qty	Serial Number
1		6732-81-8810	Stud	4	26852077-
2		6732-81-8820	Nut	4	26852077-
		6745-81-8040	Turbocharger Kit	1	26852077-
3	C1		• Turbocharger	1	26852077-
4		6207-51-7690	• Gasket, Oil Drain	1	26852077-
5		6732-81-8830	• Gasket	1	26852077-
6		6738-11-4370	• O-ring	1	26852077-
7		6736-51-8710	• O-ring	1	26852077-
8		6732-81-8860	• O-ring	1	26852077-

SAA6D114E-3D (FEN01263-00)

FIG. AXS00-001001 Turbocharger Exhaust Gas Connector

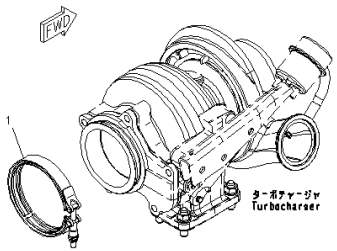

Index	Code	Part Number	Descreption	Qty	Serial Number
1		6742-01-3620	Clamp	1	26852077-

SAA6D114E-3D (FEN01263-00)

FIG. ATP00-001001 Turbocharger Oil Piping

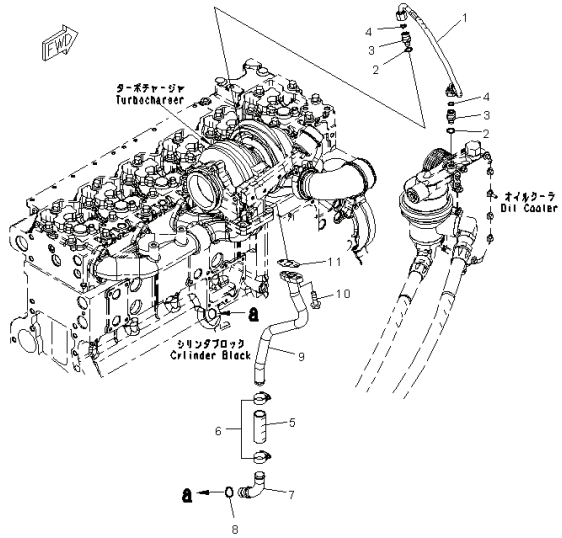

Index	Code	Part Number	Descreption	Qty	Serial Number
1		6745-51-8130	Hose	1	26852077-
		6732-51-8180	Connector Assembly	2	26852077-
2		6736-51-8710	• O-ring	1	26852077-
3		6732-81-8850	• Connector	1	26852077-
4		6732-81-8860	• O-ring	1	26852077-
5		6732-51-8370	Hose	1	26852077-
6		07281-00359	Clamp	2	26852077-
7		6745-51-8110	Tube	1	26852077-
8		6731-51-8150	O-ring	1	26852077-
9		6745-51-8120	Connector	1	26852077-
10		6732-71-3220	Bolt	2	26852077-
11		6207-51-7690	Gasket	1	26852077-

SAA6D114E-3D (FEN01263-00)

FIG. A1610-001001 Exhaust Muffler And Mount Bracket, For EU

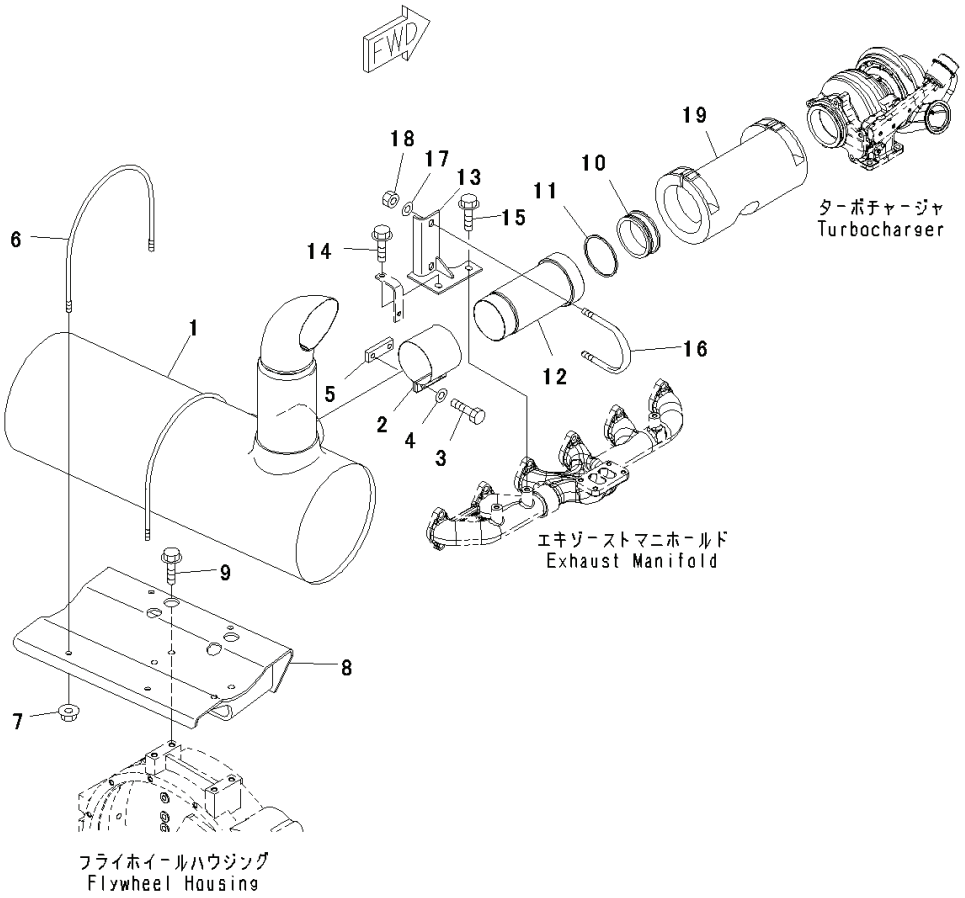

Index	Code	Part Number	Descreption	Qty	Serial Number
1		6745-11-5720	Muffler	1	26852077-
2		6743-11-5230	Clamp	1	26852077-
3		01010-E1235	Bolt	2	26852077-
4		01643-31232	Washer	2	26852077-
5		6206-11-5850	Plate	1	26852077-
6		6222-11-5940	U-bolt	2	26852077-
7		01594-01008	Nut	4	26852077-
8		6745-11-5730	Bracket	1	26852077-
9		01435-01225	Bolt	4	26852077-
10		207-01-68170	Tube	1	26852077-
11		6151-11-5280	Seal Ring	1	26852077-
12		6745-11-5710	Tube	1	26852077-
13		6743-11-5750	Bracket	1	26852077-
14		01435-01025	Bolt	1	26852077-
15		01435-01020	Bolt	1	26852077-
16		07283-31079	Clip, Pipe	1	26852077-
17		01643-31232	Washer	2	26852077-
18		01597-01211	Nut	2	26852077-
19		6745-81-8464	Cover	1	26852324-

SAA6D114E-3D (FEN01263-00)

FIG. B9999-003001 Exhaust Muffler Drain

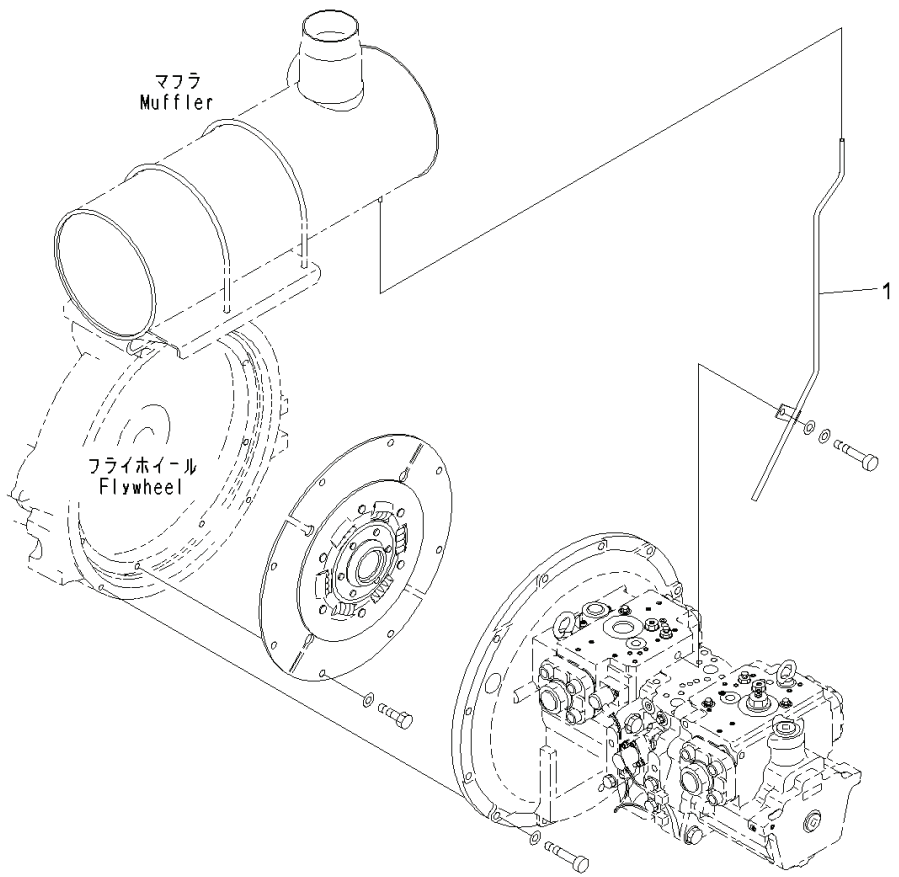

Index	Code	Part Number	Descreption	Qty	Serial Number
1		6745-11-5740	Tube	1	26852077-

SAA6D114E-3D (FEN01263-00)

FIG. AIT00-001001 Exhaust Connection

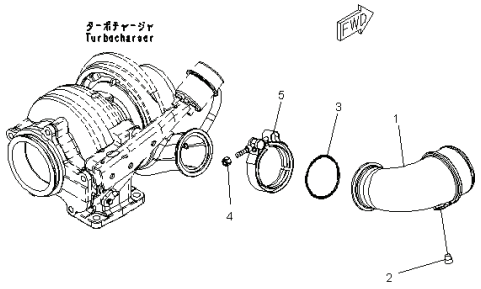

Index	Code	Part Number	Descreption	Qty	Serial Number
1		130-76-82H1	Pipe	1	26852077-
2		124-01-01H1	Plug	1	26852077-
3		6738-11-4370	O-ring	1	26852077-
4		6738-11-4390	Nut	1	26852077-
5		6738-11-4380	Clamp	1	26852077-

SAA6D114E-3D (FEN01263-00)

FIG. A1570-001001 Heat Shield

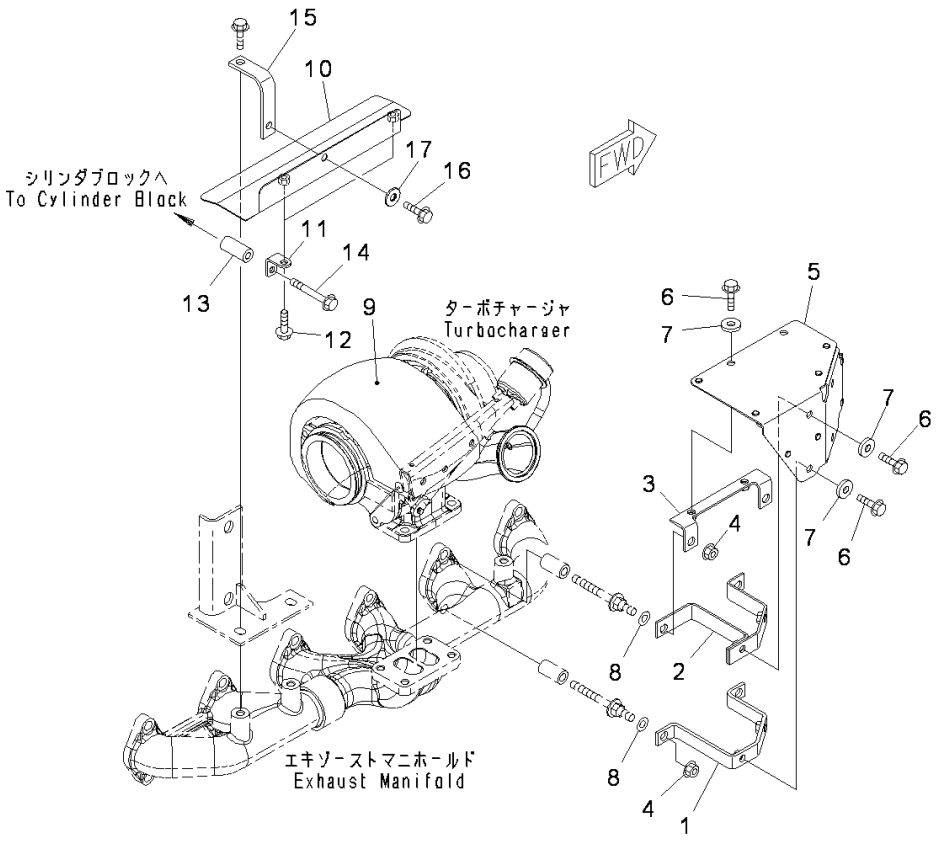

Index	Code	Part Number	Descreption	Qty	Serial Number
1		6745-81-8410	Bracket	1	26852077-
2		6745-81-8420	Bracket	1	26852077-
3		6745-81-8430	Bracket	1	26852077-
4		01581-01008	Nut	4	26852077-
5		6745-81-8440	Cover	1	26852077-
6		01435-00820	Bolt	6	26852077-
7		154-61-16570	Washer	6	26852077-
8		01643-31032	Washer	4	26852077-
9		6745-81-8451	Cover	1	26852077-
10		6745-11-5310	Cover	1	26852077-
11		6050-71-5710	Bracket	2	26852077-
12		01435-00816	Bolt	2	26852077-
13		6138-81-8660	Spacer	2	26852077-
14		01435-00855	Bolt	2	26852077-
15		6743-81-8490	Bracket	1	26852077-
16		01435-00820	Bolt	1	26852077-
17		154-61-16570	Washer	1	26852077-

SAA6D114E-3D (FEN01263-00)

FIG. ARL00-001001 Rocker Arm Housing And Rocker Arm

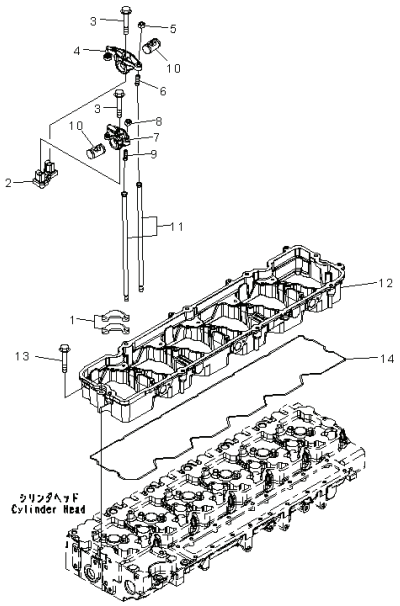

Index	Code	Part Number	Descreption	Qty	Serial Number
1		6744-41-5010	Crosshead	12	26852077-
		5253887	Lever Assembly	6	26858484-
		6745-41-5100	Lever Assembly	6	26852077-26858483
2		6744-41-5030	• Support	1	26852077-
3		6744-41-3020	• Bolt	2	26852077-
4		6745-41-5401	• Lever Assembly	1	26858484-
		6745-41-5400	• Lever Assembly	1	26852077-26858483
5		6732-41-5430	• • Nut	1	26852077-
6		6745-41-5430	• • Screw	1	26852077-
7		6745-41-5201	• Lever Assembly	1	26858484-
		6745-41-5200	• Lever Assembly	1	26852077-26858483
8		6732-41-5430	• • Nut	1	26852077-
9		6745-41-5430	• • Screw	1	26852077-
10		6745-41-5110	• Shaft	2	26852077-
11		6745-41-3100	Rod, Push	12	26852077-
12		6745-11-7112	Housing	1	26857001-
13		6733-61-3150	Bolt	7	26852077-
14		6745-11-7810	Gasket	1	26852077-

SAA6D114E-3D (FEN01263-00)

FIG. ALA00-001001 Lifting Arrangement

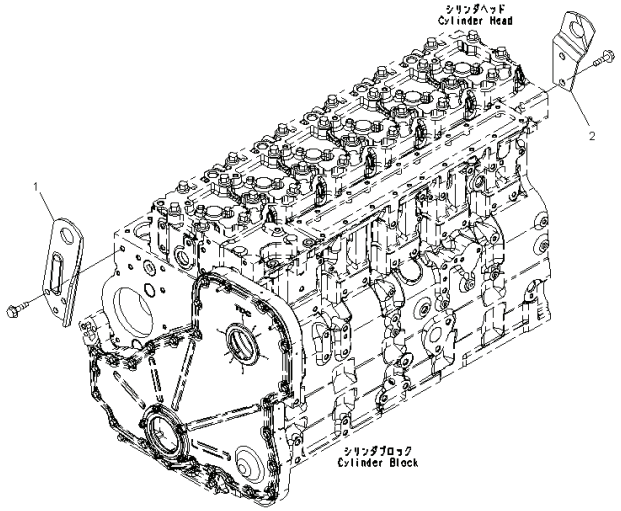

Index	Code	Part Number	Descreption	Qty	Serial Number
1		6745-21-1311	Bracket	1	26856064-
2		6745-21-1330	Bracket	1	26852077-

SAA6D114E-3D (FEN01263-00)

FIG. ALA10-001001 Lifting Arrangement Bolt

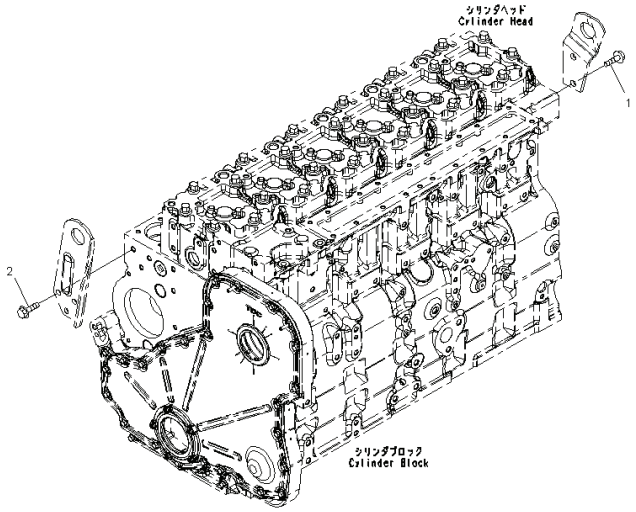

Index	Code	Part Number	Descreption	Qty	Serial Number
1		6732-51-5130	Bolt	2	26852077-
2		6732-61-3140	Bolt	1	26852077-

SAA6D114E-3D (FEN01263-00)

ENGINE CYLINDER BLOCK AND ITS RELATED PARTS

FIG. AFW10-001001 Flywheel Mounting

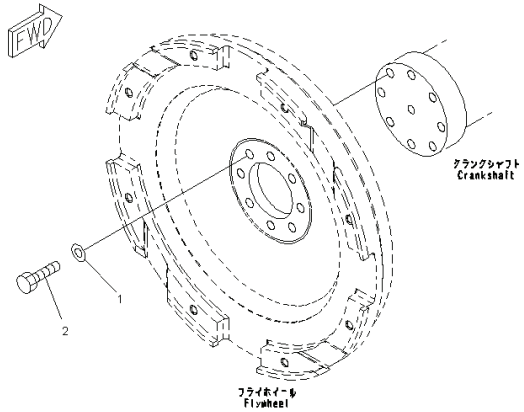

Index	Code	Part Number	Descreption	Qty	Serial Number
1		6732-31-4120	Washer	8	26852077-
2		6732-31-4130	Bolt	8	26852077-

SAA6D114E-3D (FEN01263-00)

FIG. A2419-001001 Camshaft

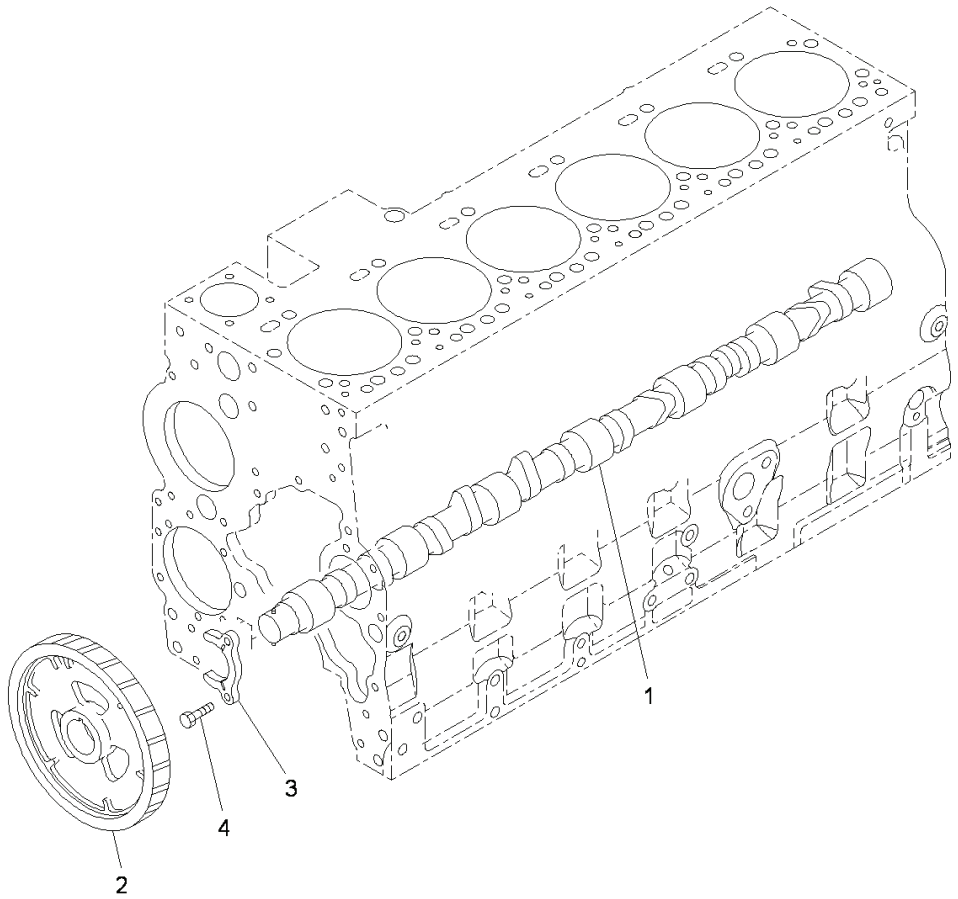

Index	Code	Part Number	Descreption	Qty	Serial Number
1		6745-41-1110	Camshaft Assembly	1	26852077-
2		6745-41-1130	Gear	1	26852077-
3		6744-41-1010	Support	1	26852077-
4		6732-41-1260	Bolt	2	26852077-

SAA6D114E-3D (FEN01263-00)

FIG. ADF10-001001 Front Gear Train Cover

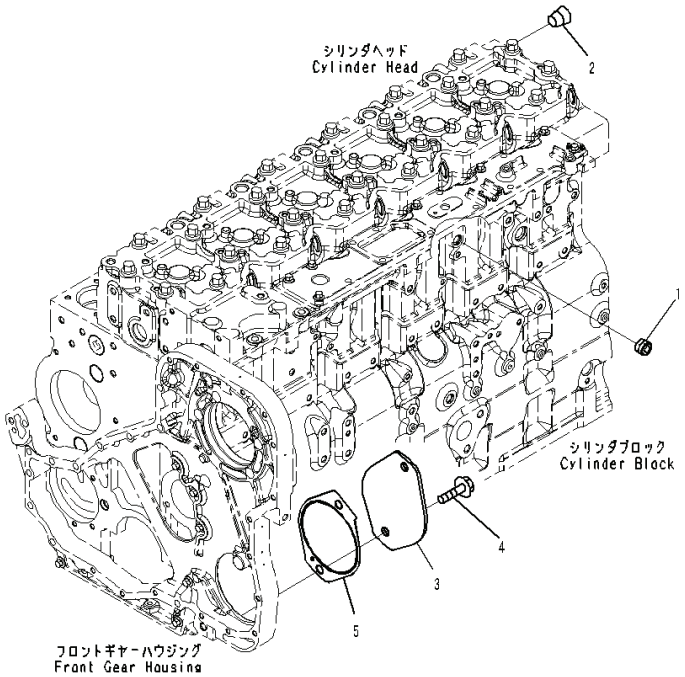

Index	Code	Part Number	Descreption	Qty	Serial Number
1		6732-11-1910	Plug	2	26852077-
2		6732-11-1920	Plug	1	26852077-
3		6741-21-3320	Plate	1	26852077-
4		6732-51-5130	Bolt	2	26852077-
5		6741-21-3330	Gasket	1	26852077-

SAA6D114E-3D (FEN01263-00)

FIG. A2049-001001 Front Cover

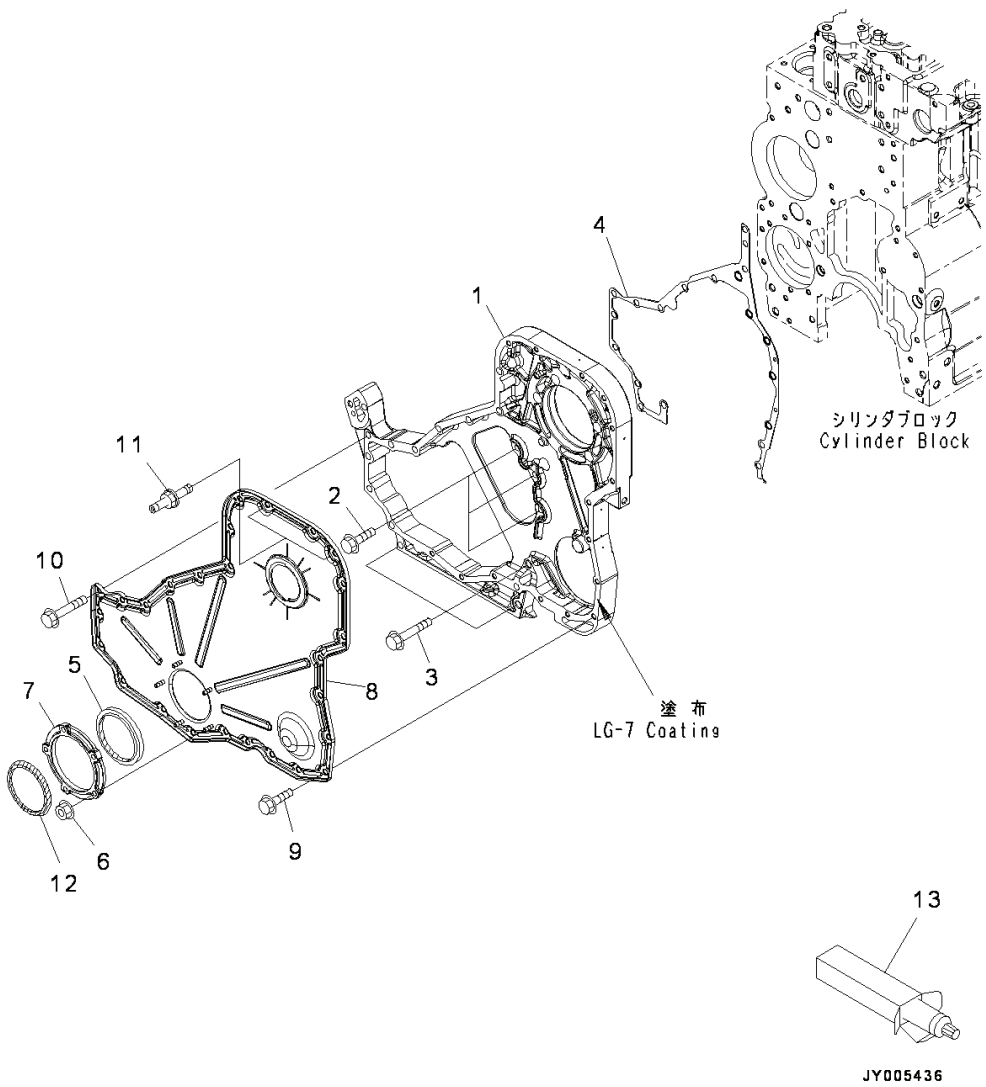

Index	Code	Part Number	Descreption	Qty	Serial Number
1		6745-21-3111	Housing	1	26852077-
2		6742-01-0540	Bolt	3	26852077-
3		6741-21-3820	Bolt	3	26852077-
4		6741-21-3810	Gasket	1	26852077-
		6742-01-0550	Seal Kit	1	26852077-
		6742-01-5542	• Tool, Not Shown	1	26852077-
5		6742-01-0950	• Seal	1	26852077-
6		6741-21-3540	• Nut	5	26852077-
7		6741-21-3530	Carrier	1	26852077-
8		6745-21-3210	Cover	1	26852077-
9		6736-21-5310	Bolt	13	26852077-
10		6742-01-0530	Bolt	11	26852077-
11		6735-21-7240	Screw	2	26852077-
12		6742-01-3320	Seal, Dust	1	26852077-
13		09920-00150	Liquid gasket, LG-7, 150G	AR	26852077-

SAA6D114E-3D (FEN01263-00)

FIG. APA00-001001 Accessory Drive Pulley

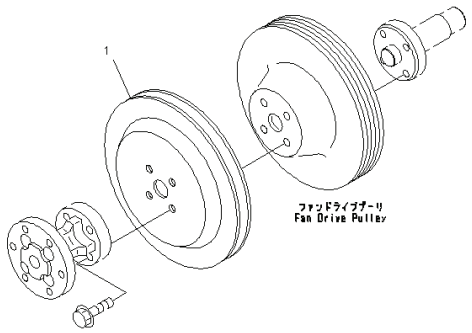

Index	Code	Part Number	Descreption	Qty	Serial Number
1		6743-91-6110	Pulley	1	26852077-

SAA6D114E-3D (FEN01263-00)

FIG. APA00-002001 Accessory Drive Pulley, Sandy Terrain Specification

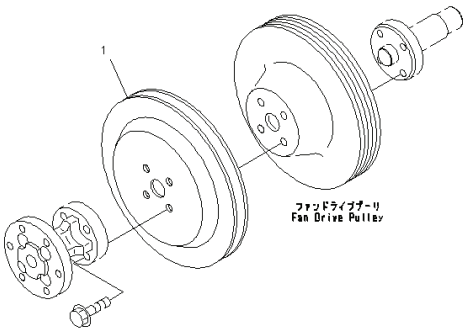

Index	Code	Part Number	Descreption	Qty	Serial Number
1		6743-91-6120	Pulley	1	26852077-

SAA6D114E-3D (FEN01263-00)

FIG. A2219-001001 Flywheel Housing

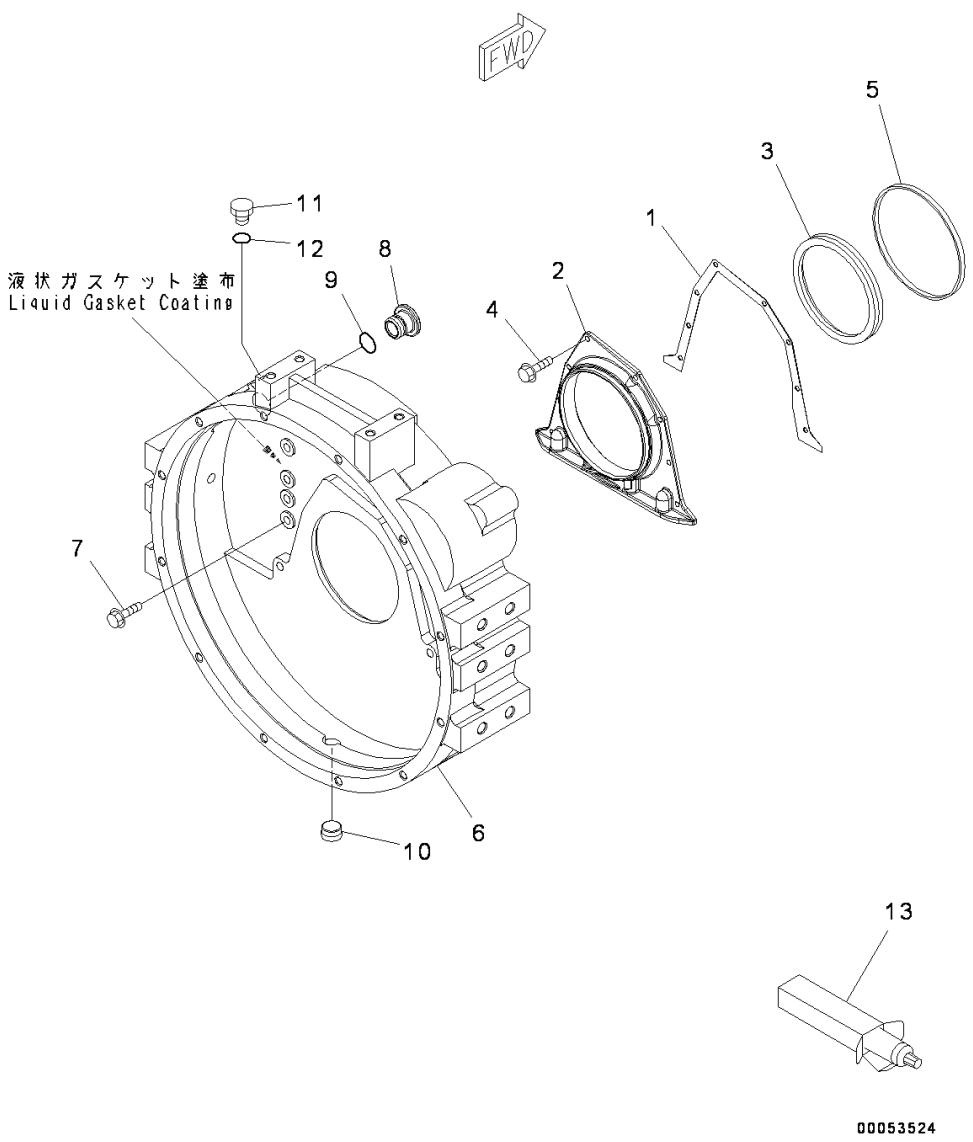

Index	Code	Part Number	Descreption	Qty	Serial Number
1		6743-21-4190	Gasket	1	26852077-
2		6742-01-5053	Cover	1	26852077-
3		6732-21-1311	Seal	1	26852077-
4		6732-21-4290	Bolt	8	26852077-
5		6732-21-4171	Seal Ring	1	26852077-
6		6741-21-4110	Housing, Flywheel	1	26852077-
7		6732-21-4220	Bolt	12	26852077-
8		6732-21-4150	Plug	1	26852077-
9		6732-21-4161	O-ring	1	26852077-
10		6732-11-1920	Plug	1	26852077-
11		6215-81-9530	Plug	1	26852077-
12		6215-81-9730	O-ring	1	26852077-
13		09920-00150	Liquid gasket, LG-7, 150G	AR	26852077-

SAA6D114E-3D (FEN01263-00)

FIG. AFW00-001001 Flywheel

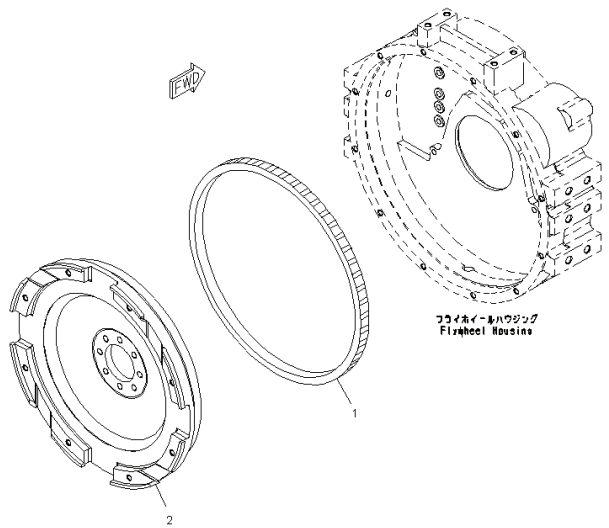

Index	Code	Part Number	Descreption	Qty	Serial Number
		6741-31-4100	Flywheel Assembly	1	26852077-
1		6741-31-4180	• Gear, Ring	1	26852077-
2	C1		• Flywheel	1	26852077-

SAA6D114E-3D (FEN01263-00)

FIG. A2119-001001 Engine Oil Pan

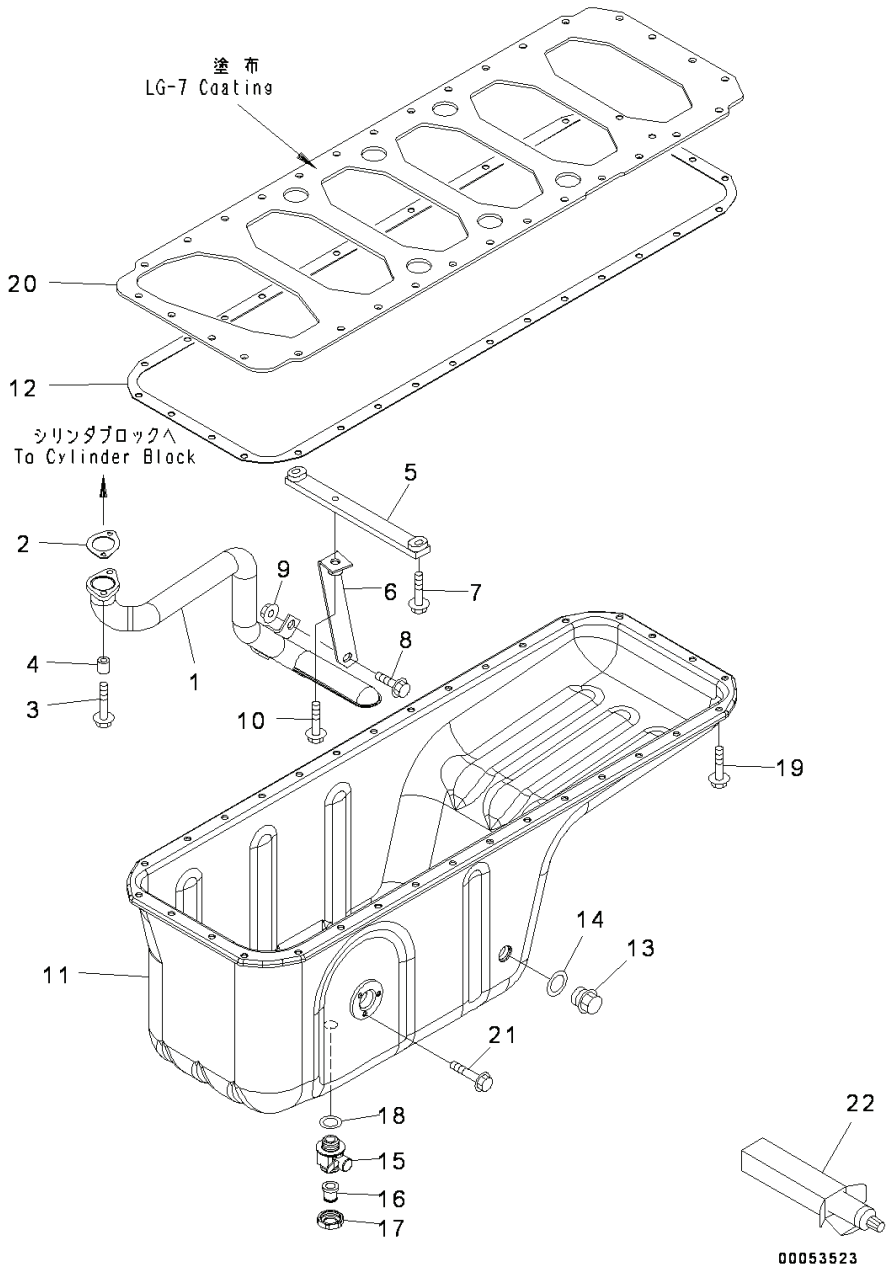

Index	Code	Part Number	Descreption	Qty	Serial Number
1		6743-51-5522	Connector	1	26856445-
2		6743-51-5550	Gasket	1	26852077-
3		6742-01-2630	Bolt	2	26852077-
4		6742-01-0310	Spacer	2	26852077-
5		6743-51-6121	Brace	1	26852077-
6		6743-51-6161	Brace	1	26852077-
7		6733-71-5840	Bolt	2	26852077-
8		01435-01020	Bolt	1	26852077-
9		6736-81-6170	Nut	1	26852077-
10		6735-71-3220	Bolt	1	26852077-
11		6745-21-5210	Pan	1	26852077-
12		6745-21-5130	Gasket	1	26852077-
13		6736-21-5320	Plug	1	26852077-
14		6732-21-5170	Gasket	1	26852077-
		6738-21-5610	Valve Assembly	1	26852077-
15		6738-21-5620	• Valve	1	26852077-
16		6738-21-5630	• Joint	1	26852077-
17		6738-21-5640	• Union	1	26852077-
18		07005-02216	Gasket	1	26852077-
19		6732-21-5160	Bolt	32	26852077-
20		1304891H1	Plate	1	26852077-
21		6733-71-5680	Bolt	3	26852077-
22		09920-00150	Liquid gasket, LG-7, 150G	AR	26852077-

SAA6D114E-3D (FEN01263-00)

FIG. ASD00-001001 Engine Oil Level Sensor

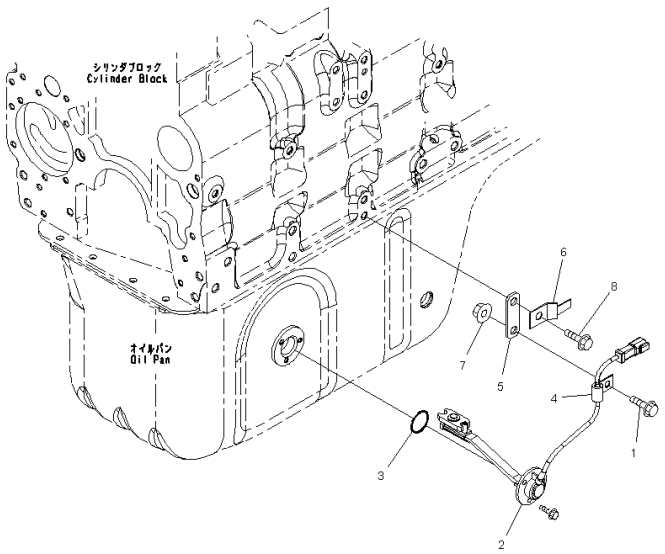

Index	Code	Part Number	Descreption	Qty	Serial Number
1		6734-71-5610	Bolt	1	26852077-
2		6741-81-9220	Sensor	1	26852077-
3		7831-91-4220	• O-ring	1	26852077-
4		6738-82-5810	Clip	1	26852077-
5		6301-11-4630	Plate	1	26852077-
6		08193-20010	Clip	1	26852077-
7		6736-81-6170	Nut	1	26852077-
8		6732-61-3140	Bolt	1	26852077-

SAA6D114E-3D (FEN01263-00)

FIG. AAF00-002001 Crank Pulley, For EU

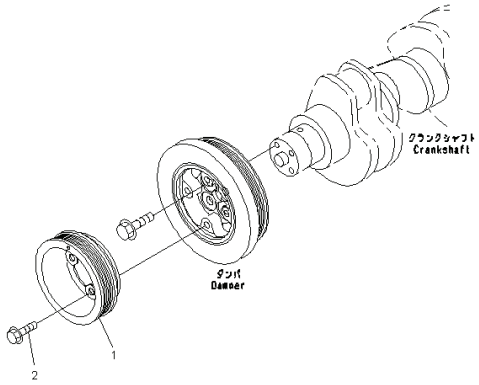

Index	Code	Part Number	Descreption	Qty	Serial Number
1		6745-61-3210	Pulley	1	26852077-
2		6732-11-1720	Bolt	4	26852077-

SAA6D114E-3D (FEN01263-00)

FIG. A2019-001001 Cylinder Block

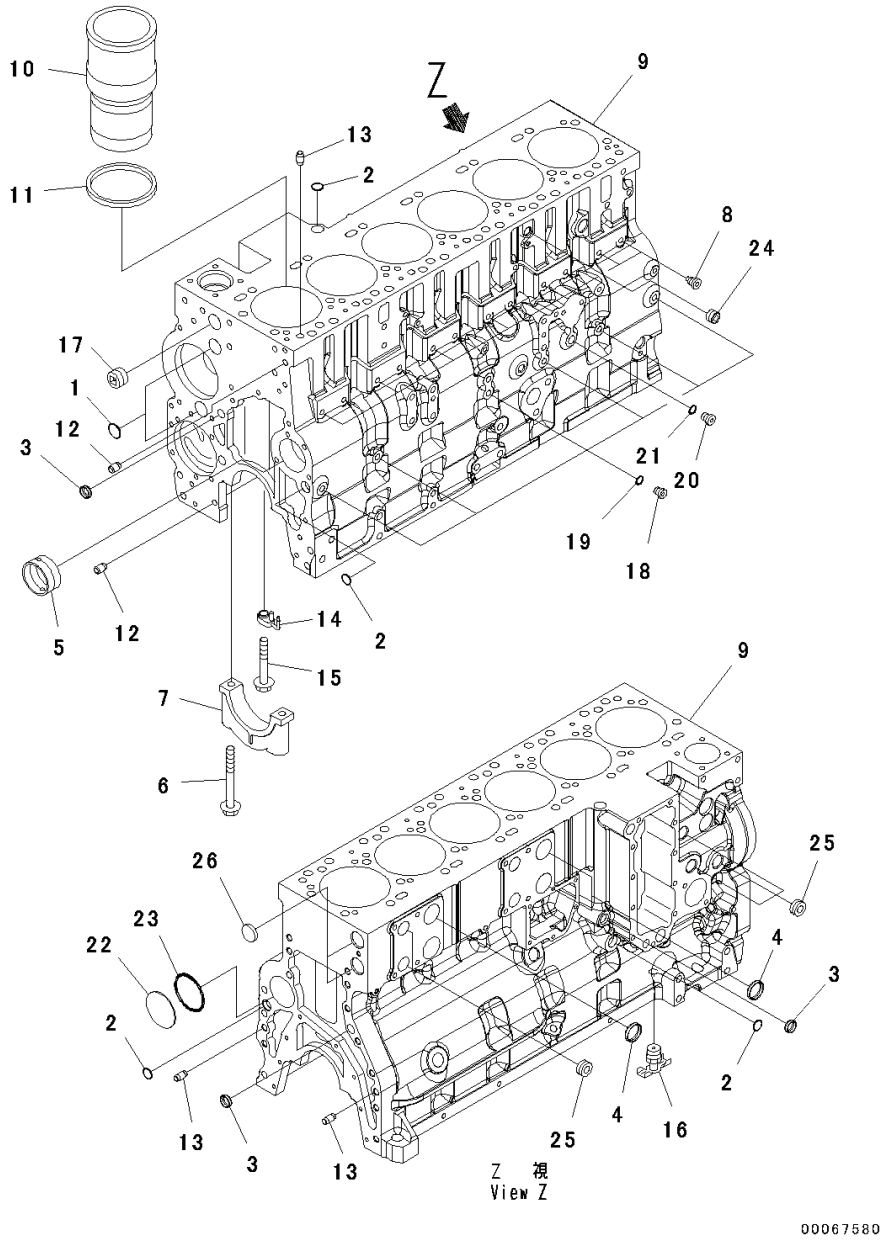

Index	Code	Part Number	Descreption	Qty	Serial Number
		6745-21-1190	Cylinder Block, Kit	1	26852077-
	C1		• Block Assembly	1	26852918-
1		6742-01-1360	• • Plug	3	26852077-
2		6742-01-1370	• • Plug	4	26852077-
3		6732-21-1810	• • Plug	3	26852077-
4		6742-01-1420	• • Plug	3	26852918-
5		6742-01-5160	• • Bushing	7	26852077-
6		6741-21-1140	• • Bolt	14	26852077-
7	C3	6741-21-1130	• • Cap, Main Metal	7	26852077-
8		6745-41-2151	• • Guide, Tappet	12	26852360-
9	C1		• • BLOCK,CYLINDER	1	26852918-
		6742-01-5159	Liner Kit	6	26852077-
10	C1		• Liner, Cylinder	1	26852077-
11		6742-01-1520	• Seal	1	26852077-
		6745-21-1290	Cylinder Block, Kit	1	26852077-
12		6732-21-6120	• Pin, Dowel	2	26852077-
13		6742-01-1470	• Pin	4	26852077-
14		6745-21-1611	• Nozzle, Cooling	6	26852077-
15		6736-11-4460	• Bolt	6	26852077-
16		6216-94-3450	• Cock, Drain	1	26852077-
17		6742-01-1460	• Plug	1	26852077-
		6732-21-1960	• Plug Assembly	6	26852077-
18		6215-81-9510	• • Plug	1	26852077-
19		6215-81-9710	• • O-ring	1	26852077-
		6735-21-1910	• Plug Assembly	2	26852077-
20		6735-21-1920	• • Plug	1	26852077-
21		6735-21-1930	• • O-ring	1	26852077-
22		6742-01-1480	• Plug	1	26852077-
23		6742-01-4080	• O-ring	1	26852077-
24		6732-11-1910	• Plug	1	26852077-
25		6732-11-1920	• Plug	7	26852077-
26		6742-01-1380	• Plug	2	26852077-

SAA6D114E-3D (FEN01263-00)

FIG. AOB10-001001 Cylinder Block Cover

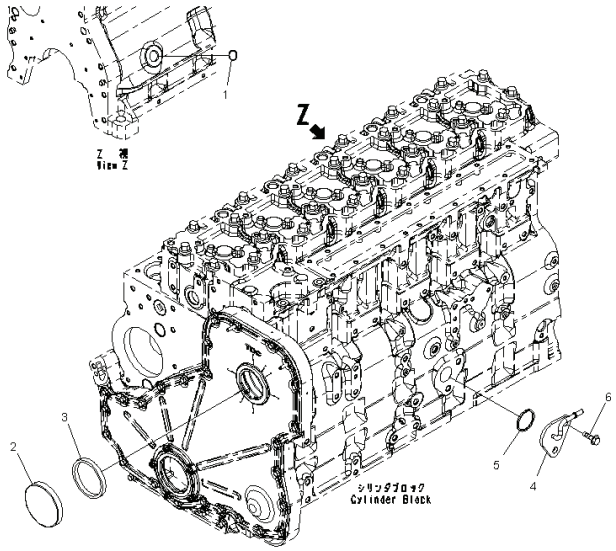

Index	Code	Part Number	Descreption	Qty	Serial Number
1		6735-21-5530	Plug	1	26852077-
2		6732-21-3190	Cover	1	26852077-
3		6732-21-3220	Seal Ring	1	26852077-
4		6745-21-7210	Connector	1	26852077-
5		6736-21-3360	Seal Ring	1	26852077-
6		6732-11-1720	Bolt	2	26852077-

SAA6D114E-3D (FEN01263-00)

FIG. A2080-001001 Breather Hose

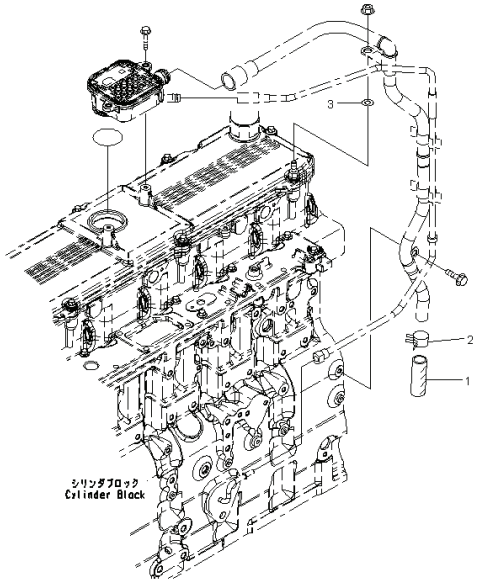

Index	Code	Part Number	Descreption	Qty	Serial Number
1		07286-01960	Hose	1	26852077-
2		07285-00220	Clip	1	26852077-
3		01643-30823	Washer	1	26852077-

SAA6D114E-3D (FEN01263-00)

FIG. AHC00-001001 Cabin Heater Plug

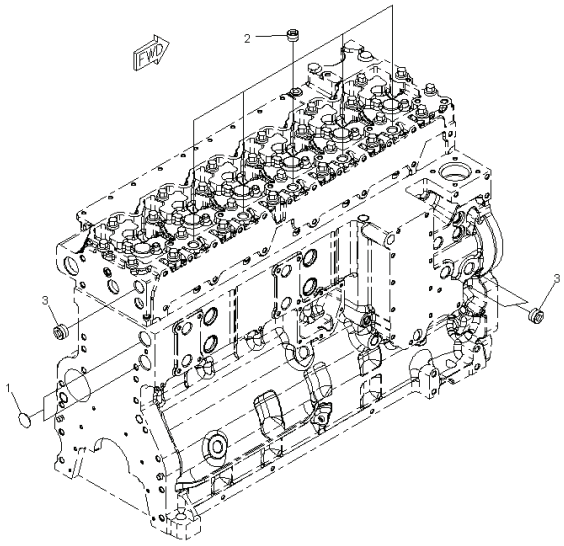

Index	Code	Part Number	Descreption	Qty	Serial Number
1		6742-01-1380	Plug	2	26852077-
2		6732-11-1910	Plug	5	26852077-
3		6732-11-1920	Plug	3	26852077-

SAA6D114E-3D (FEN01263-00)

FIG. A2319-001001 Crankshaft

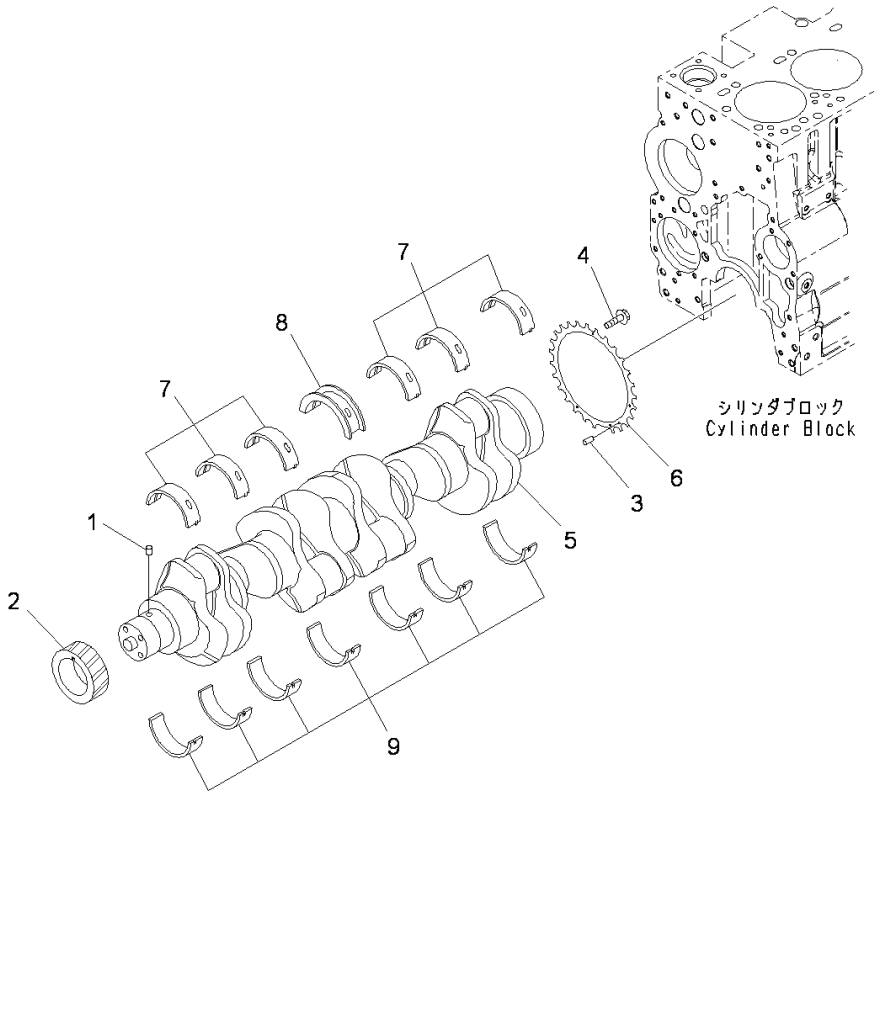

Index	Code	Part Number	Descreption	Qty	Serial Number
		6745-31-1120	Crankshaft	1	26852077-
1	C1		• Pin, Dowel	1	26852077-
2	C1		• Gear	1	26852077-
	C1		• Crankshaft Assembly	1	26852077-
3	C1		• • Pin, Dowel	1	26852077-
4	C1		• • Bolt	4	26852077-
5	C1		• • Crankshaft	1	26852077-
6	C1		• • Ring	1	26852077-
		6742-01-5199	Main Metal Assembly	1	26852077-
7	C1		• Metal	6	26852077-
8	C1		• Metal	1	26852077-
9	C1		• Metal	7	26852077-
		6742-21-8500	Thrust Metal Assembly	1	26852077-
	C1		• Metal	1	26852077-
	C1		• Metal	1	26852077-

SAA6D114E-3D (FEN01263-00)

FIG. A2359-001001 Piston and Connecting Rod

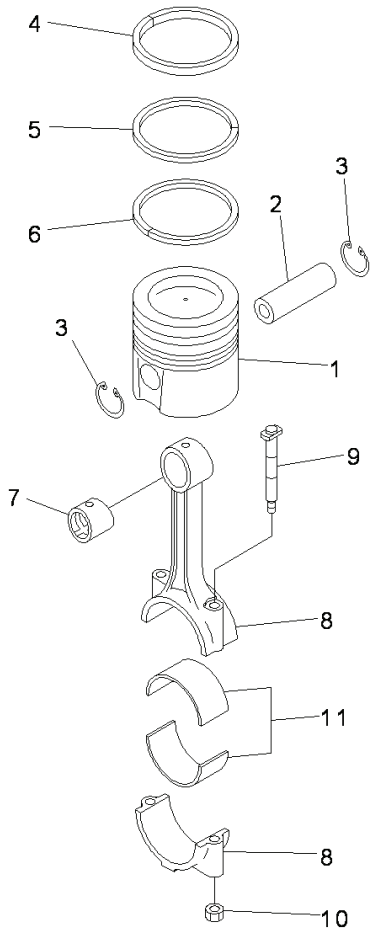

00049566

Index	Code	Part Number	Descreption	Qty	Serial Number
1		6745-31-2110	Piston	6	26852077-
2		6745-31-2140	Pin	6	26852077-
3		6742-01-5309	Ring, Snap	12	26852077-
		6745-31-2010	Piston Ring Assembly	6	26852077-
4	C1		• Ring, Top	1	26852077-
5	C1		• Ring, Second	1	26852077-
6	C1		• Ring, Oil	1	26852077-
		6743-31-3101	Rod Assembly	6	26856799-
7		6743-31-3121	• Bushing	1	26856799-
8	C1		• Rod	1	26852077-
9		1304869H1	• Bolt	2	26852077-
10		6742-01-4340	• Nut	2	26852077-
11		6743-31-3210	Metal	12	26852077-

SAA6D114E-3D (FEN01263-00)

FIG. ALG00-002001 Oil Level Gauge

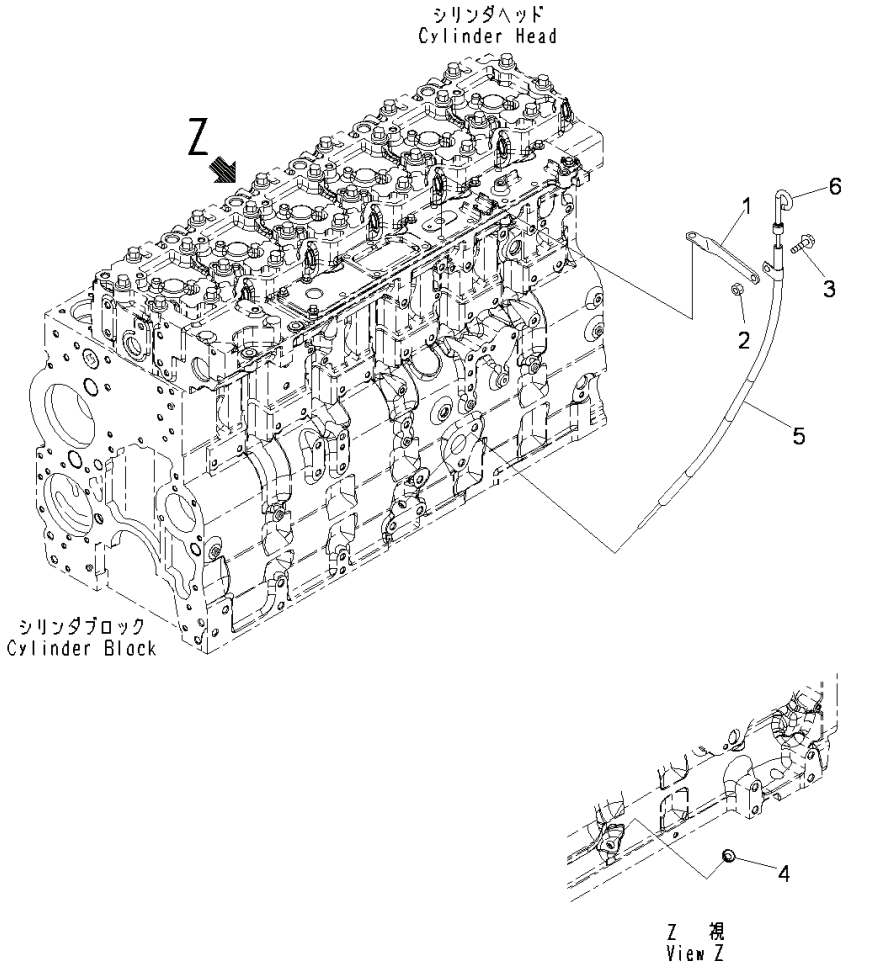

Index	Code	Part Number	Descreption	Qty	Serial Number
1		6745-21-5640	Brace	1	26852077-
2		6732-41-6210	Nut	1	26852077-
3		6736-21-5310	Bolt	1	26852077-
4		6743-22-5110	Plug	1	26852077-
5		6743-21-5540	Tube, OIL LEVEL	1	26852077-
6		6743-21-5610	Gauge	1	26852077-

SAA6D114E-3D (FEN01263-00)

ENGINE LUBRICATING SYSTEM

FIG. ARP00-001001 Coolant Piping

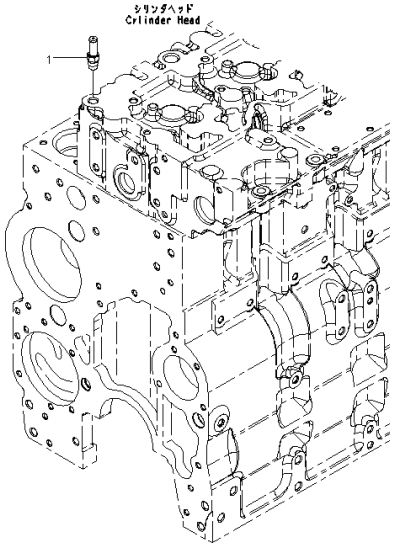

Index	Code	Part Number	Descreption	Qty	Serial Number
1		6745-61-6120	Fitting	1	26852077-

SAA6D114E-3D (FEN01263-00)

FIG. ALP00-001001 Engine Oil Pump

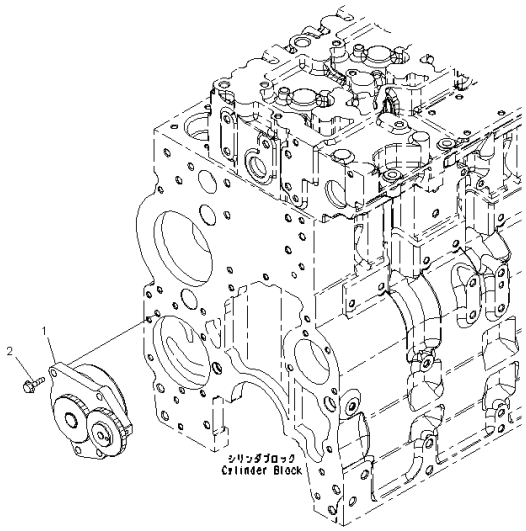

Index	Code	Part Number	Descreption	Qty	Serial Number
1		6745-51-1110	Pump Assembly, OIL	1	26852077-
2		6735-51-1120	Bolt	4	26852077-

SAA6D114E-3D (FEN01263-00)

FIG. A3119-001001 Engine Oil Filter, Related Parts

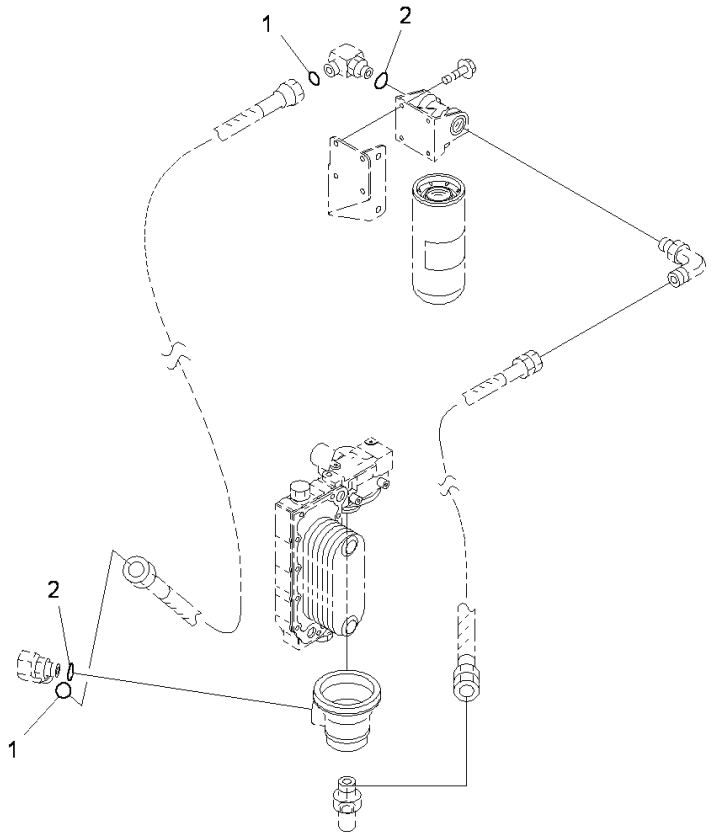

00026894

Index	Code	Part Number	Descreption	Qty	Serial Number
1		6743-51-9950	O-ring	2	26852077-
2		6743-51-9960	O-ring	2	26852077-

SAA6D114E-3D (FEN01263-00)

FIG. ALF00-001001 Engine Oil Filter And Engine Oil Cooler, Piping

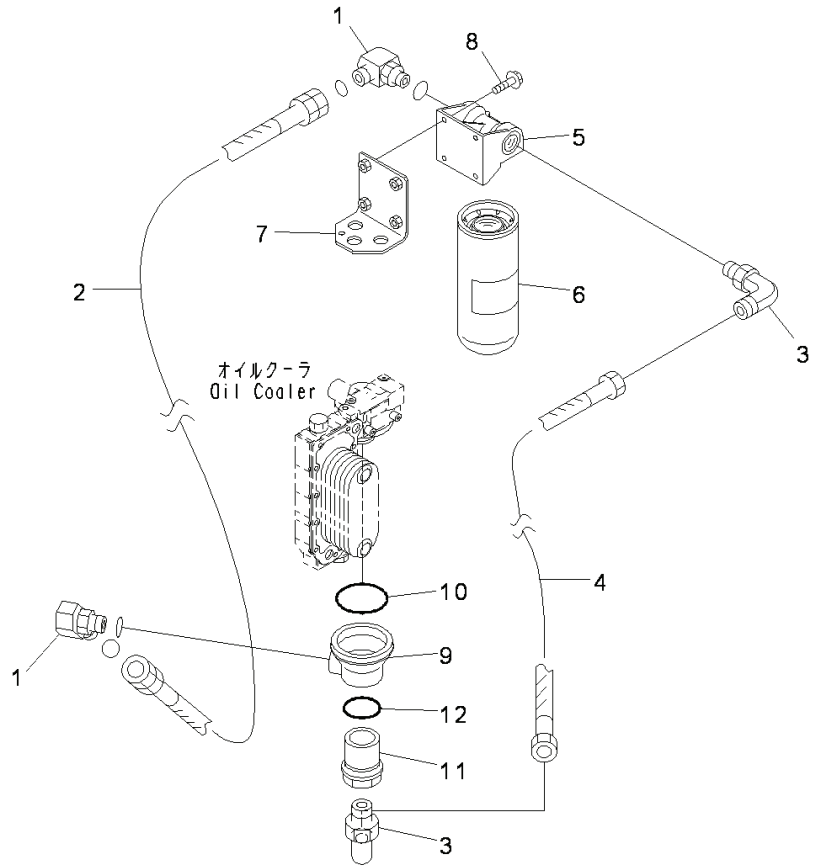

00049571

Index	Code	Part Number	Descreption	Qty	Serial Number
1		6741-51-5210	Elbow	2	26852077-
2		6743-51-9930	Hose	1	26852077-
3		6741-51-5230	Elbow	2	26852077-
4		6743-51-9940	Hose	1	26852077-
5		6743-51-5110	Head	1	26852077-
6		6742-01-4540	Cartridge	1	26852077-
7		6745-51-5220	Bracket	1	26852077-
8		6735-71-3220	Bolt	4	26852077-
9		6731-51-6280	Filter	1	26852077-
10		6741-61-2120	O-ring	1	26852077-
11		6731-51-6291	Filter	1	26856994-
12		6731-11-8290	Seal	1	26852077-

SAA6D114E-3D (FEN01263-00)

FIG. ALC00-001001A Engine Oil Cooler

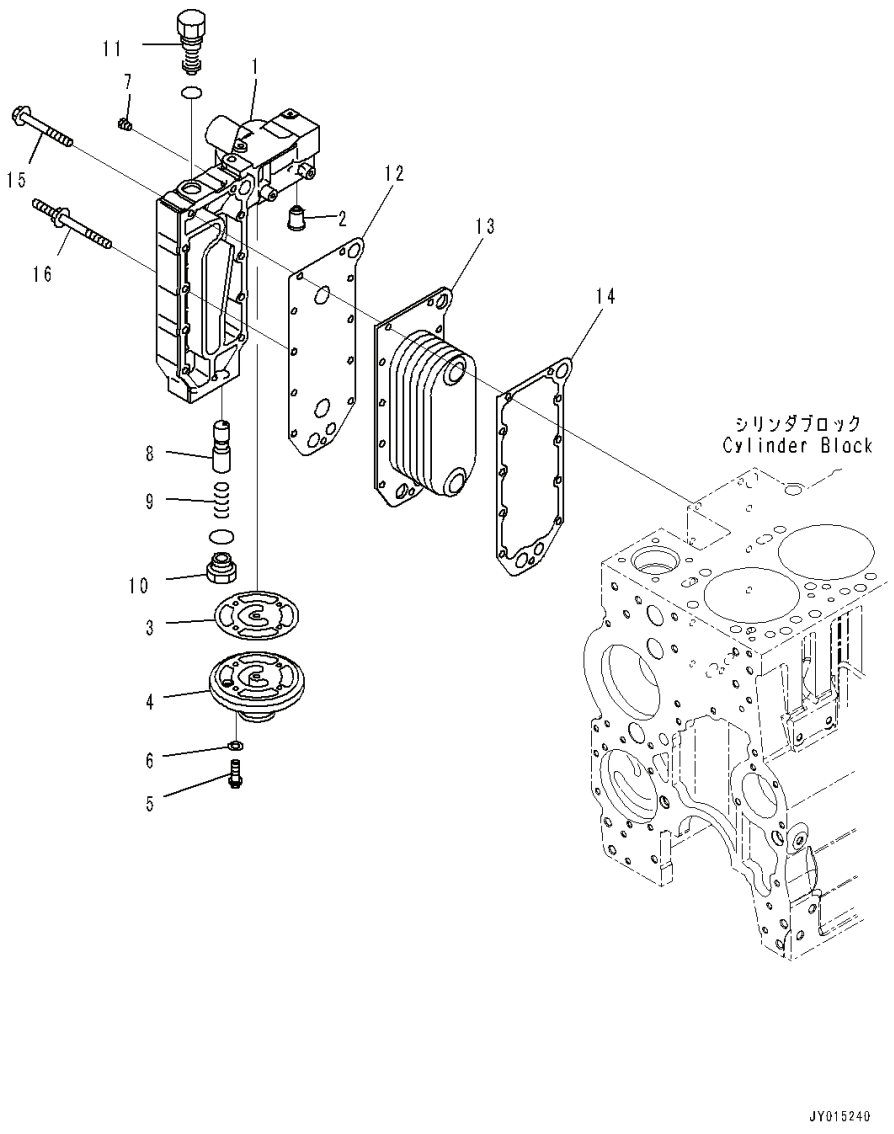

Index	Code	Part Number	Descreption	Qty	Serial Number
1		6743-61-2112	Cover	1	26855044-
2		6731-61-2151	Valve	1	26852077-
3		6742-01-2492	Gasket	1	26858255-
4		6742-01-2500	Head	1	26852077-
5		01437-00825	Bolt	4	26858255-
6		01641-20812	Washer	4	26858255-
7		6732-11-1930	Plug	2	26852077-
8		6742-01-5202	Plunger	1	26852077-
9		6743-61-2150	Spring	1	26852077-
10		6742-01-4220	Plug	1	26852077-
11		6742-01-5117	Valve	1	26852077-
12		6743-51-4430	Gasket	1	26852077-
13		6743-61-2210	Core	1	26852077-
14		6742-01-1080	Gasket	1	26852077-
15		6742-01-2441	Bolt	9	26852077-
16		6741-61-6110	Screw	2	26852077-

SAA6D114E-3D (FEN01263-00)

ENGINE FUEL SYSTEM

FIG. AFP20-001001 Fuel Supply Pump Support

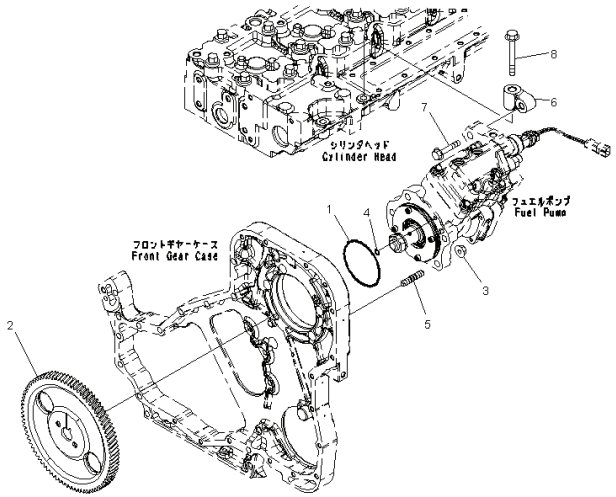

Index	Code	Part Number	Descreption	Qty	Serial Number
1		6741-61-2120	O-ring	1	26852077-
2		6745-71-3210	Gear	1	26852077-
3		6736-81-6170	Nut	4	26852077-
4		6742-01-5507	Seal	1	26852077-
5		6734-71-5270	Stud	4	26852077-
6		6745-71-1210	Support	1	26852077-
7		6742-01-3780	Bolt	1	26852077-
8		6732-61-4120	Bolt	1	26852077-

SAA6D114E-3D (FEN01263-00)

FIG. A4019-001001 Fuel Injection Pump

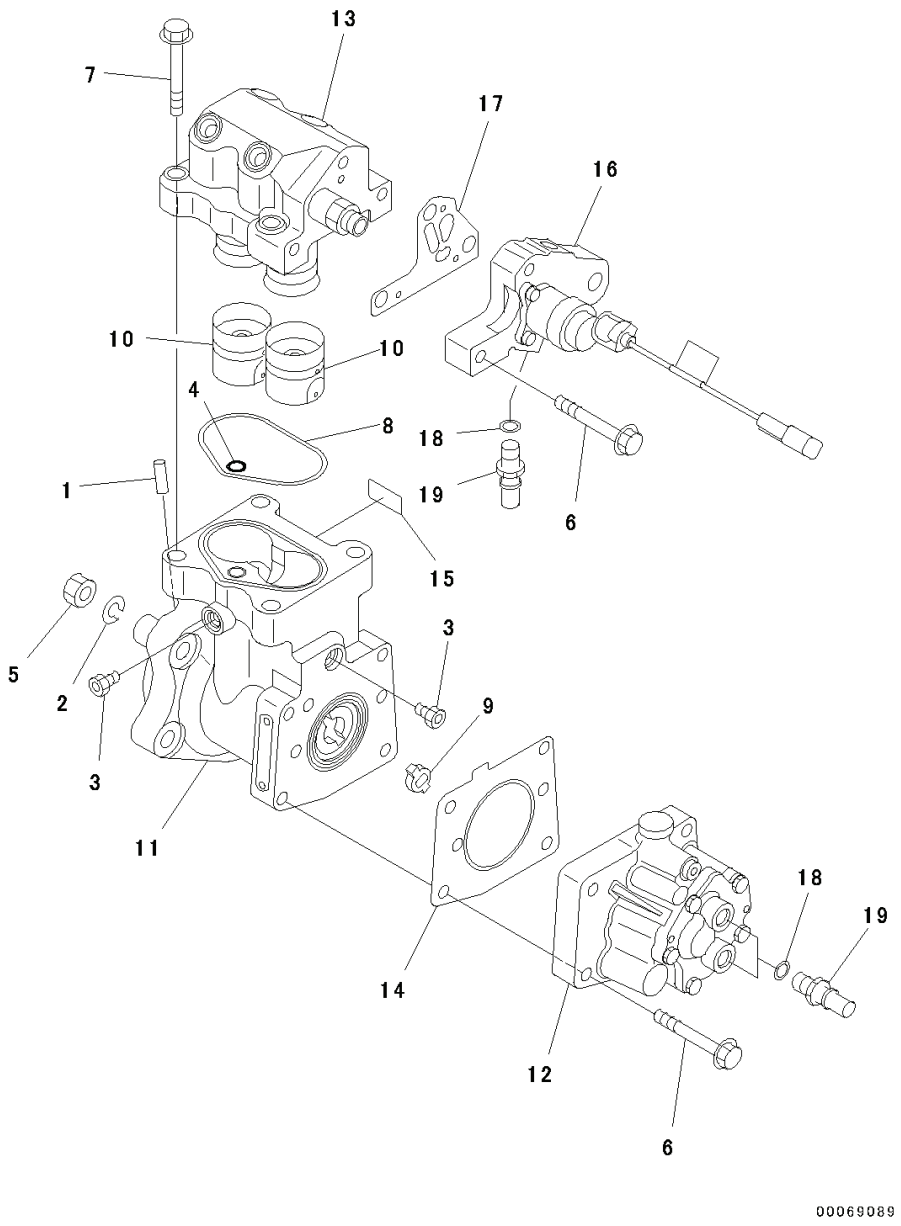

Index	Code	Part Number	Descreption	Qty	Serial Number
		6745-71-1170	Pump Assembly	1	26852077-
1		6744-71-1020	• Pin, Dowel	1	26852077-
2		6744-71-1040	• Washer, Spring	1	26852077-
3		6732-21-1960	• Plug Assembly	2	26852077-
4		6560-81-4530	• O-ring	1	26852077-
5		6744-71-1250	• Nut	1	26852077-
6		6732-61-3170	• Bolt	7	26852077-
7		6745-71-1220	• Bolt	4	26852077-
8		6745-71-1230	• Seal	1	26852077-
9	C1		• Hub	1	26852077-
10	C1		• Tappet	2	26852077-
11	C1		• Body	1	26852077-
12		6745-71-1180	• Pump, Fuel	1	26852077-
13		6745-71-1240	• Head	1	26852077-
14		6745-71-1250	• Gasket	1	26852077-
15	C1		• Tag	1	26852077-
16	C1		• Adapter	1	26852077-
17		6745-71-1260	• Gasket	1	26852077-
18		6745-71-1130	Washer	3	26852077-
19		6745-71-6130	Connector	3	26852077-

SAA6D114E-3D (FEN01263-00)

FIG. A4219-001001 Fuel Injector

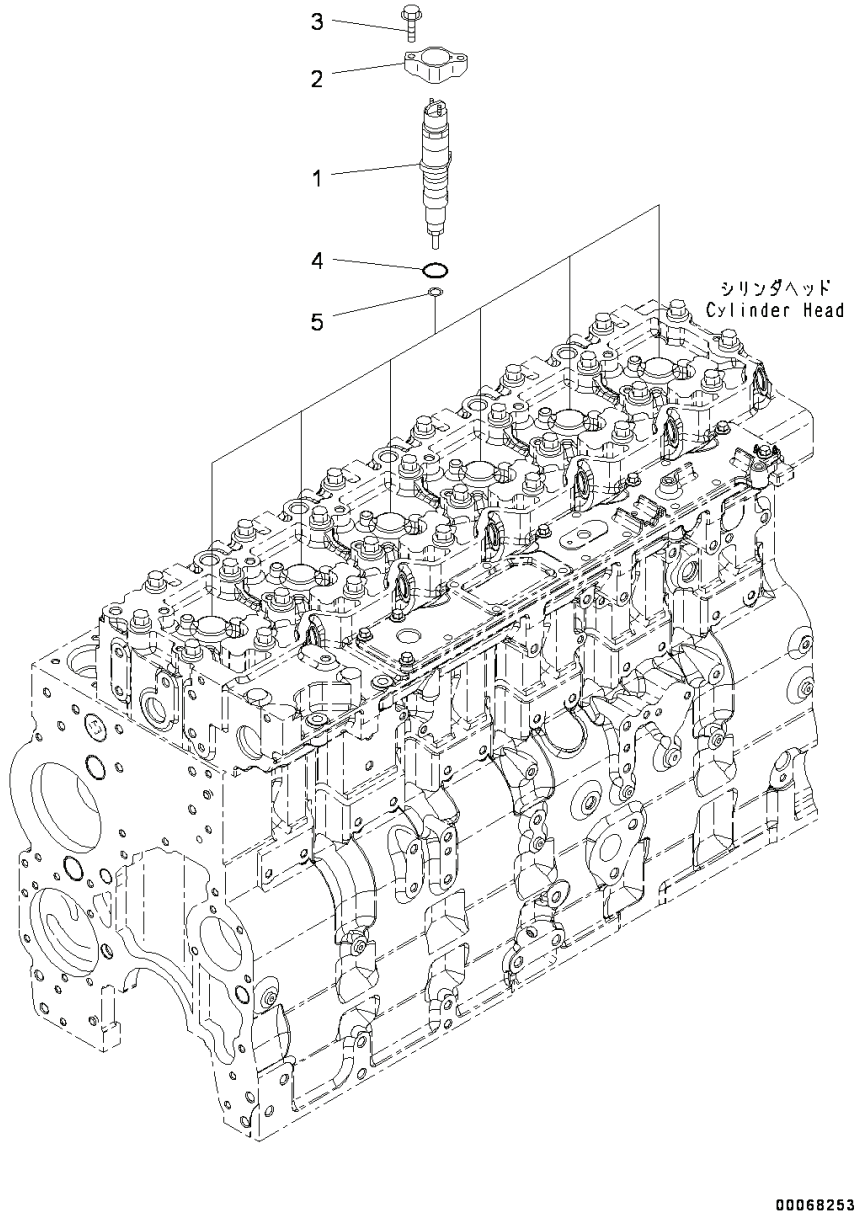

Index	Code	Part Number	Descreption	Qty	Serial Number
1		6745-11-3102	Injector	6	26852174-
2		6745-11-3110	Clamp	6	26852077-
3		6745-11-3150	Bolt	12	26852077-
4		6754-11-3120	O-ring	1	26852077-
5		6743-11-3230	Gasket	1	26852077-

SAA6D114E-3D (FEN01263-00)

FIG. APP50-001001 Fuel Injection Piping

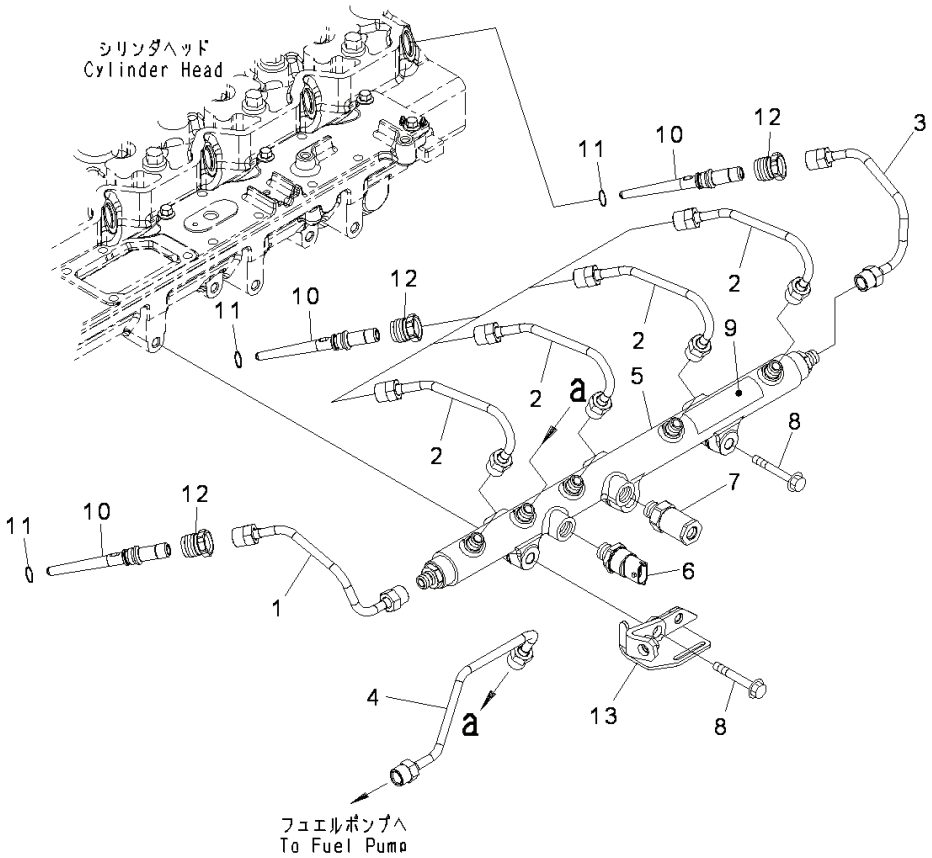

Index	Code	Part Number	Descreption	Qty	Serial Number
1		6745-71-4110	Tube	1	26852077-
2		6745-71-4120	Tube	4	26852077-
3		6745-71-4140	Tube	1	26852077-
4		6745-71-4150	Tube	1	26852077-
5		6745-71-4310	Manifold Assembly	1	26852077-
6		6745-71-4320	• Sensor, Pressure	1	26852077-
7		6745-71-4330	• Valve, Relief	1	26852077-
8		6732-61-4120	Bolt	3	26852077-
9		6754-71-1991	Decal	2	26852077-
		6745-71-5540	Connector Assembly	6	26852077-
10	C1		• Connector	1	26852077-
11		6745-71-5550	• O-ring	1	26852077-
12		6754-71-5540	Retainer	6	26852077-
13		6745-81-9380	Brace	1	26852780-

SAA6D114E-3D (FEN01263-00)

FIG. AFT00-001001 Fuel Piping

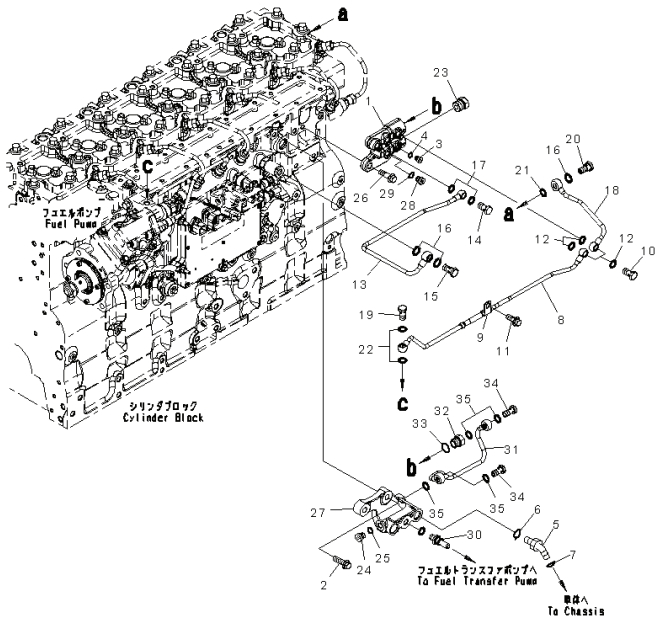

Index	Code	Part Number	Descreption	Qty	Serial Number
1		6745-71-5610	Connector	1	26852077-
2		6732-22-3110	Bolt	2	26852077-
		6732-21-1960	Plug Assembly	1	26852077-
3		6215-81-9510	• Plug	1	26852077-
4		6215-81-9710	• O-ring	1	26852077-
5		6745-71-5180	Elbow	1	26852077-
6		6735-21-4160	O-ring	1	26852077-26854799
7		02896-11009	O-ring	1	26852077-
8		6745-71-5440	Tube	1	26852077-
9		6745-71-5450	Clip	1	26852077-
10		6732-71-6510	Bolt	2	26852077-
11		6732-61-3140	Bolt	1	26852077-
12		6745-71-1130	Washer	4	26852077-
13		6745-71-5460	Tube	1	26852077-
14		6732-71-6510	Bolt	1	26852077-
15		6732-71-5620	Connector	1	26852077-
16		6731-74-5910	Washer	2	26852077-
17		6745-71-1130	Washer	2	26852077-
18		6745-71-5470	Tube	1	26852077-
19		6732-71-6510	Bolt	1	26852077-
20		6754-71-5430	Valve, Check	1	26852077-
21		6731-74-5910	Washer	1	26852077-
22		6745-71-1130	Washer	3	26852077-
23		6745-71-5190	Plug	1	26852077-
		6744-71-3050	Plug Assembly	1	26852077-
24		6744-71-3060	• Plug, Threaded	1	26852077-
25		6737-51-8770	• O-ring	1	26852077-
26		6216-74-6190	Bolt	2	26852077-
27		6745-71-5580	Connector	1	26852077-
		6744-71-3050	Plug Assembly	1	26852077-
28		6744-71-3060	• Plug, Threaded	1	26852077-
29		6737-51-8770	• O-ring	1	26852077-
30		6745-71-6130	Connector	1	26852077-
31		6745-71-5480	Tube	1	26852077-
		6745-71-5490	Union Assembly	1	26852077-
32		6745-71-5620	• Union	1	26852077-
33		6735-21-4160	• O-ring	1	26852077-
34		6732-71-6510	Bolt	2	26852077-
35		6745-71-1130	Washer	5	26852077-

SAA6D114E-3D (FEN01263-00)

FIG. AFF20-001001 Fuel Filter Plumbing, Piping

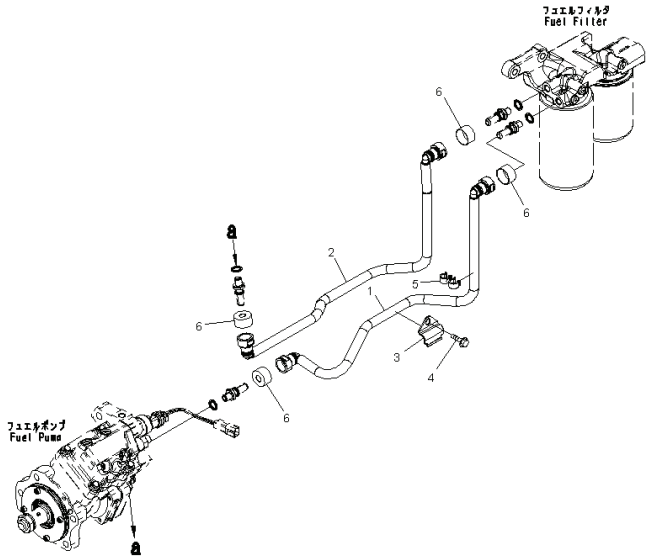

Index	Code	Part Number	Descreption	Qty	Serial Number
1		6745-71-5110	Tube	1	26852077-
2		6745-71-5120	Tube	1	26852077-
3		6745-71-5210	Brace	1	26852077-
4		6736-21-5310	Bolt	1	26852077-
5		6745-71-5220	Clamp	1	26852077-
6		6745-71-5160	Cover	4	26852077-

SAA6D114E-3D (FEN01263-00)

FIG. A4119-001001 Fuel Filter Cartridge

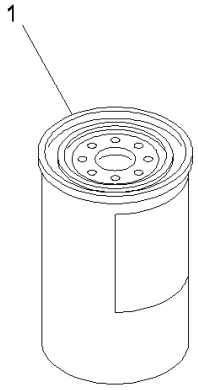

00060578

Index	Code	Part Number	Descreption	Qty	Serial Number
1		6754-79-6140	Cartridge	1	26854093-

SAA6D114E-3D (FEN01263-00)

FIG. AFF10-001001 Fuel Filter

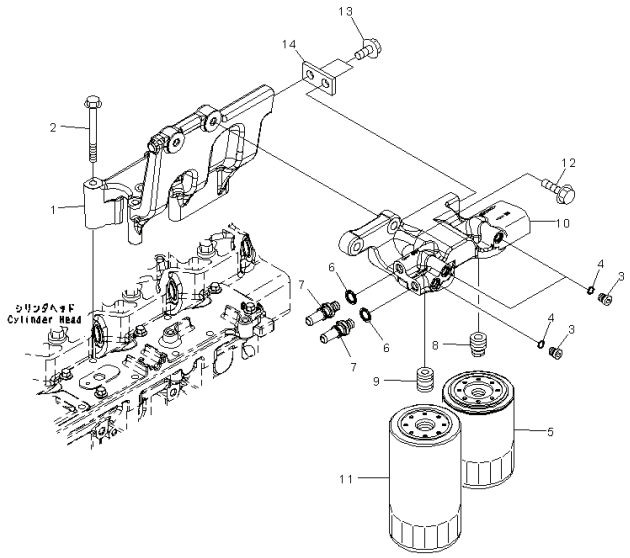

Index	Code	Part Number	Descreption	Qty	Serial Number
1		6745-71-6240	Support	1	26852077-
2		6732-11-4150	Bolt	5	26852077-
		6745-71-6110	Head Assembly	1	26852077-
		6732-21-1960	• Plug Assembly	3	26852077-
3		6215-81-9510	• • Plug	1	26852077-
4		6215-81-9710	• • O-ring	1	26852077-
5		600-411-1191	• Cartridge, Corrosion Resi	1	26852077-
6		6745-71-1130	• Washer	2	26852077-
7		6745-71-6130	• Connector	2	26852077-
8		6745-71-6170	• Adapter	1	26852077-
9		6754-71-6330	• Adapter	1	26852077-
10		6745-71-6150	• Head	1	26852077-
11	C1		• Filter	1	26854422-
12		6732-22-3110	Bolt	2	26852077-
13		6731-61-4250	Bolt	2	26852077-
14		6745-71-6230	Brace	1	26852077-

SAA6D114E-3D (FEN01263-00)

FIG. A4110-001001 Fuel Filter, With Additional Fuel Filter

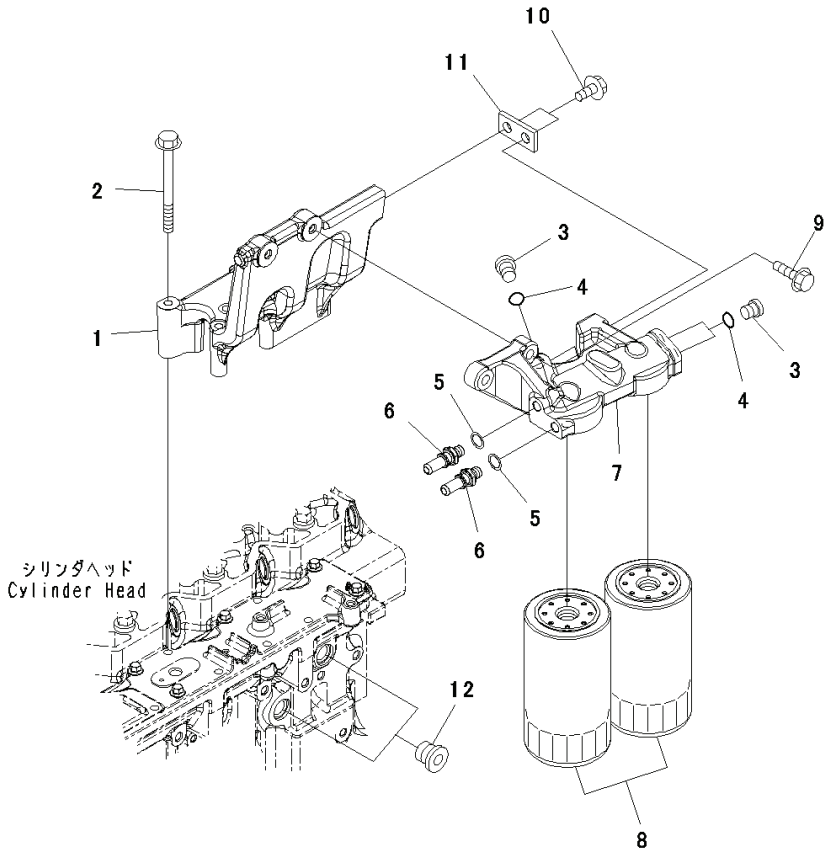

Index	Code	Part Number	Descreption	Qty	Serial Number
1		6745-71-6240	Support	1	26852077-
2		6732-11-4150	Bolt	5	26852077-
		6735-21-1910	Plug Assembly	3	26852077-
3		6735-21-1920	• Plug	1	26852077-
4		6735-21-1930	• O-ring	1	26852077-
5		6745-71-1130	Washer	2	26852077-
6		6745-71-6130	Connector	2	26852077-
7		6745-71-6180	Head	1	26852077-
8		6754-79-6140	Cartridge	2	26852990-
9		6732-22-3110	Bolt	2	26852077-
10		6731-61-4250	Bolt	2	26852077-
11		6745-71-6230	Brace	1	26852077-
12		6732-11-1910	Plug	2	26852077-

SAA6D114E-3D (FEN01263-00)

FIG. B9999-005001 Pre Filter

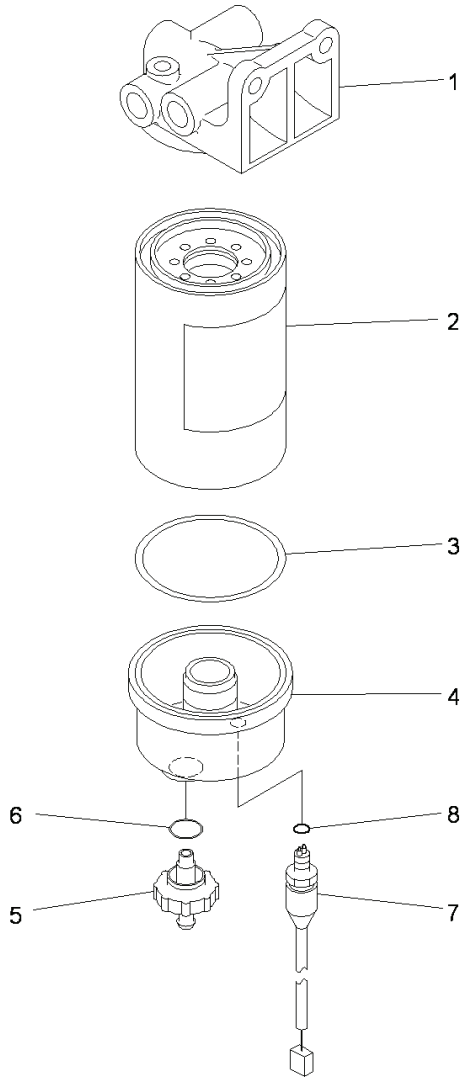

00050939

Index	Code	Part Number	Descreption	Qty	Serial Number
		6745-71-7203	Filter Assembly	1	26856495-
1		6745-71-7211	• Head	1	26852077-
		600-319-3602	• Filter Assembly	1	26856495-
2		600-319-3610	• • Cartridge Assembly	1	26852077-
3		600-311-3630	• • • Seal	1	26852077-
4		600-311-3640	• • Bowl	1	26852077-
5		600-311-3660	• • Valve Assembly	1	26852077-
6		600-311-3670	• • • Seal	1	26852077-
7		600-311-3722	• • Sensor	1	26856495-
8		600-311-3690	• • • O-ring	1	26852077-

SAA6D114E-3D (FEN01263-00)

FIG. B9999-006001 Water Separator

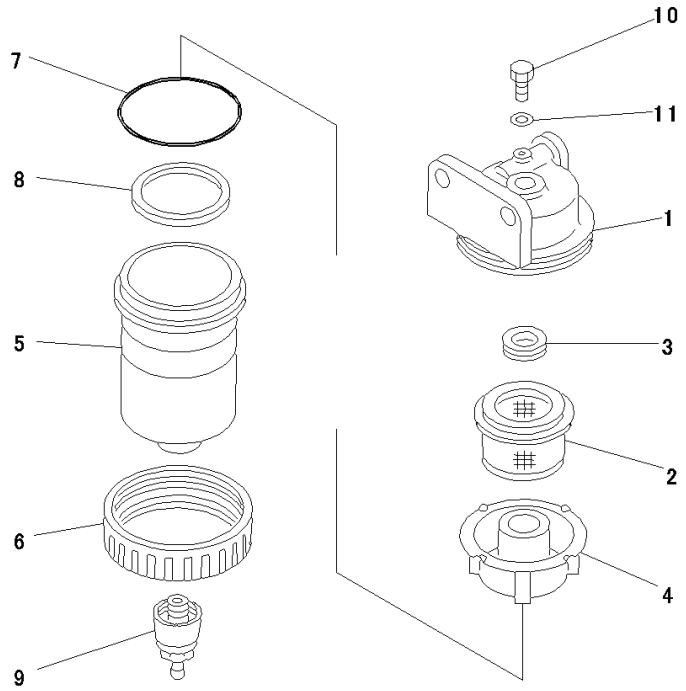

Index	Code	Part Number	Descreption	Qty	Serial Number
		600-311-7610	Water Separator	1	26852077-
1		600-311-9550	• Head	1	26852077-
2		600-311-9971	• Screen	1	26852077-
3		600-311-9961	• Gasket	1	26852077-
4		600-311-9941	• Baffle	1	26852077-
5		600-311-9430	• Case	1	26852077-
6		600-311-9931	• Nut	1	26852077-
7		600-311-9890	• Ring	1	26852077-
8		600-311-9950	• Ring	1	26852077-
9		600-311-9760	• Plug	1	26852077-
10		6110-73-6231	• Plug	1	26852077-
11		07005-00812	• Gasket	1	26852077-

SAA6D114E-3D (FEN01263-00)

FIG. AFS20-001001 Fuel System Accessory

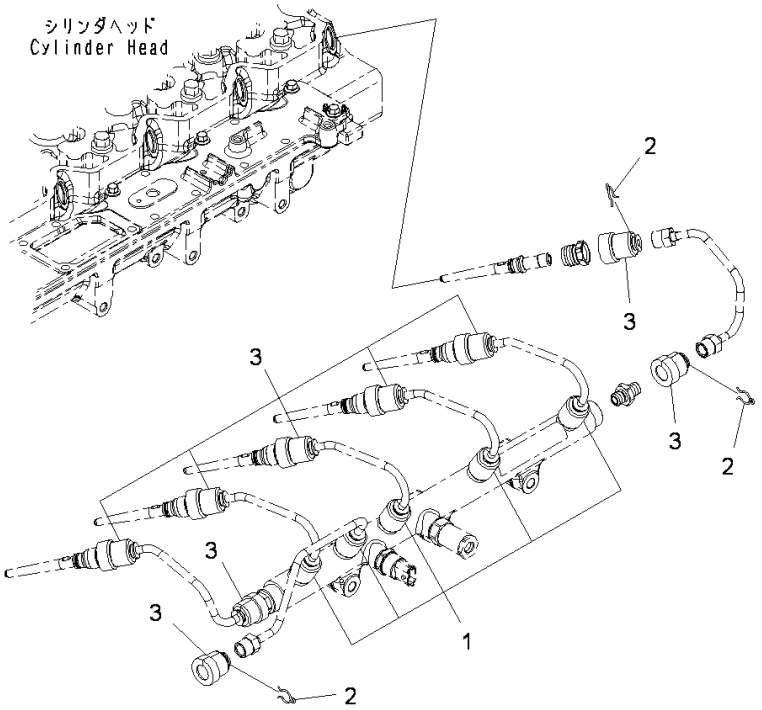

Index	Code	Part Number	Descreption	Qty	Serial Number
1		6745-71-9710	Cover	5	26852077-
2		6217-71-5770	Clamp	14	26852077-
3		6754-71-9710	Cover	9	26852077-

SAA6D114E-3D (FEN01263-00)

FIG. AFS00-001001 Fuel Transfer Pump

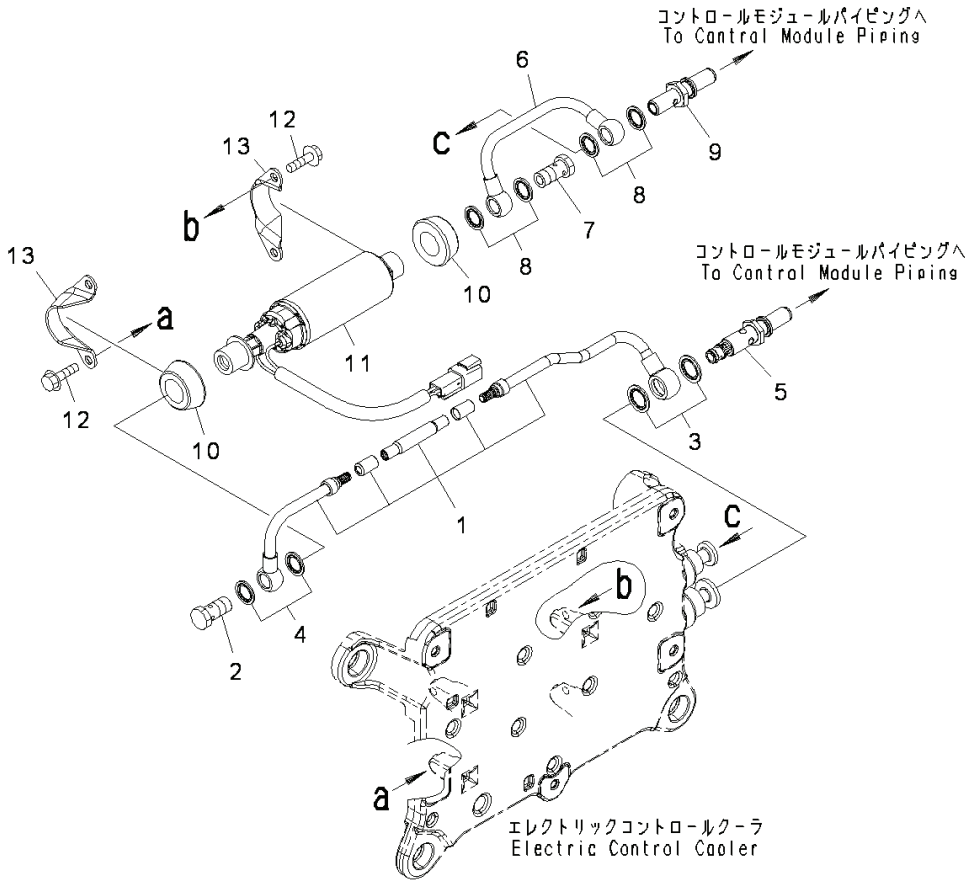

Index	Code	Part Number	Descreption	Qty	Serial Number
1		6745-71-5311	Tube	1	26857027-
2		6732-71-6510	Bolt	1	26852077-
3		6745-71-5860	Seal, Washer	2	26857027-
4		6745-71-1130	Washer	2	26852077-
5		6745-71-5391	Valve, Check	1	26857027-
6		6745-71-5410	Tube	1	26852077-
7		6732-71-6510	Bolt	1	26852077-
8		6745-71-1130	Washer	4	26852077-
9		6745-71-5430	Connector	1	26852077-
		6745-71-1820	Pump Assembly, Fuel	1	26852077-
10		6745-71-1830	• Isolator	2	26852077-
11		6745-71-1840	• Pump, Fuel	1	26852077-
12		6732-21-4180	Bolt	4	26852077-
13		6745-71-1860	Bracket	2	26852077-

SAA6D114E-3D (FEN01263-00)

FIG. AFI00-001001 Fuel Inlet Fitting

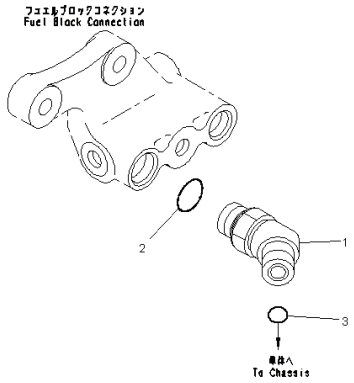

Index	Code	Part Number	Descreption	Qty	Serial Number
1		6745-71-5170	Elbow	1	26852077-
2		6216-74-6220	O-ring	1	26852077-26854799
3		02896-11012	O-ring	1	26852077-

SAA6D114E-3D (FEN01263-00)

ENGINE COOLING SYSTEM

FIG. AFA20-001001 Cooling Fan Drive Mounts, Bolt

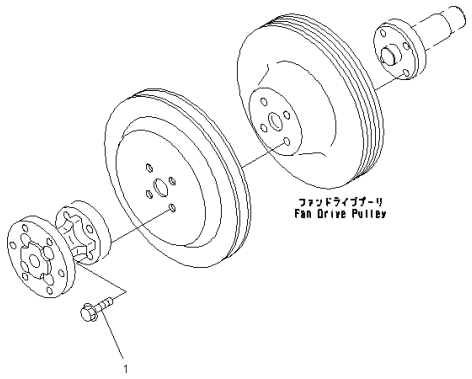

Index	Code	Part Number	Descreption	Qty	Serial Number
1		6735-71-3220	Bolt	4	26852077-

SAA6D114E-3D (FEN01263-00)

FIG. AFA10-001001 Cooling Fan Drive Pulley

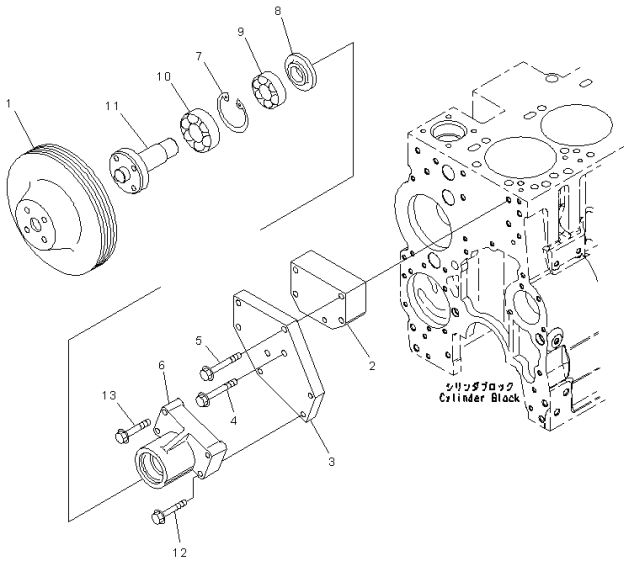

Index	Code	Part Number	Descreption	Qty	Serial Number
1		6743-61-3310	Pulley	1	26852077-
2		6743-61-3210	Spacer	1	26852077-
3		6743-61-3220	Plate	1	26852077-
4		01435-01095	Bolt	1	26852077-
5		01435-01085	Bolt	1	26852077-
		6743-61-3501	Support Assembly	1	26852077-
6	C1		• Support	1	26852077-
7		6731-61-3420	• Ring, Snap	2	26852077-
8		6731-61-3430	• Retainer	1	26852077-
9		6743-61-3530	• Bearing, Ball	1	26852077-
10		6743-61-3560	• Bearing, Ball	1	26852077-
11		6743-61-3550	• Hub	1	26852077-
12		6743-61-3610	Bolt	3	26852077-
13		01435-01075	Bolt	1	26852077-

SAA6D114E-3D (FEN01263-00)

FIG. A5030-001001 Cooling Fan

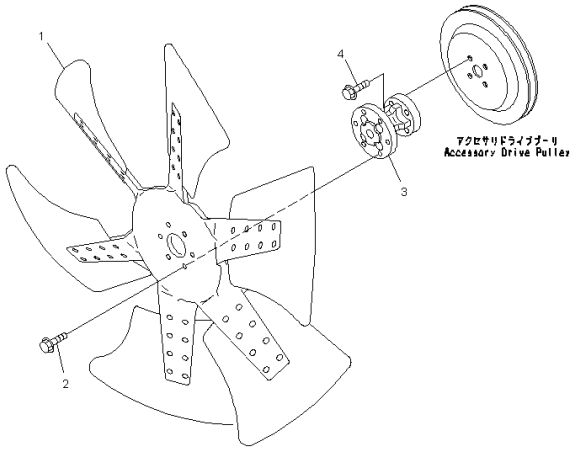

Index	Code	Part Number	Descreption	Qty	Serial Number
1		600-635-7870	Fan, Cooling	1	26852077-
2		01435-01030	Bolt	6	26852077-
3		6743-61-3810	Spacer	1	26852077-
4		01435-01045	Bolt	4	26852077-

SAA6D114E-3D (FEN01263-00)

FIG. AFA30-001001 Cooling Fan Belt

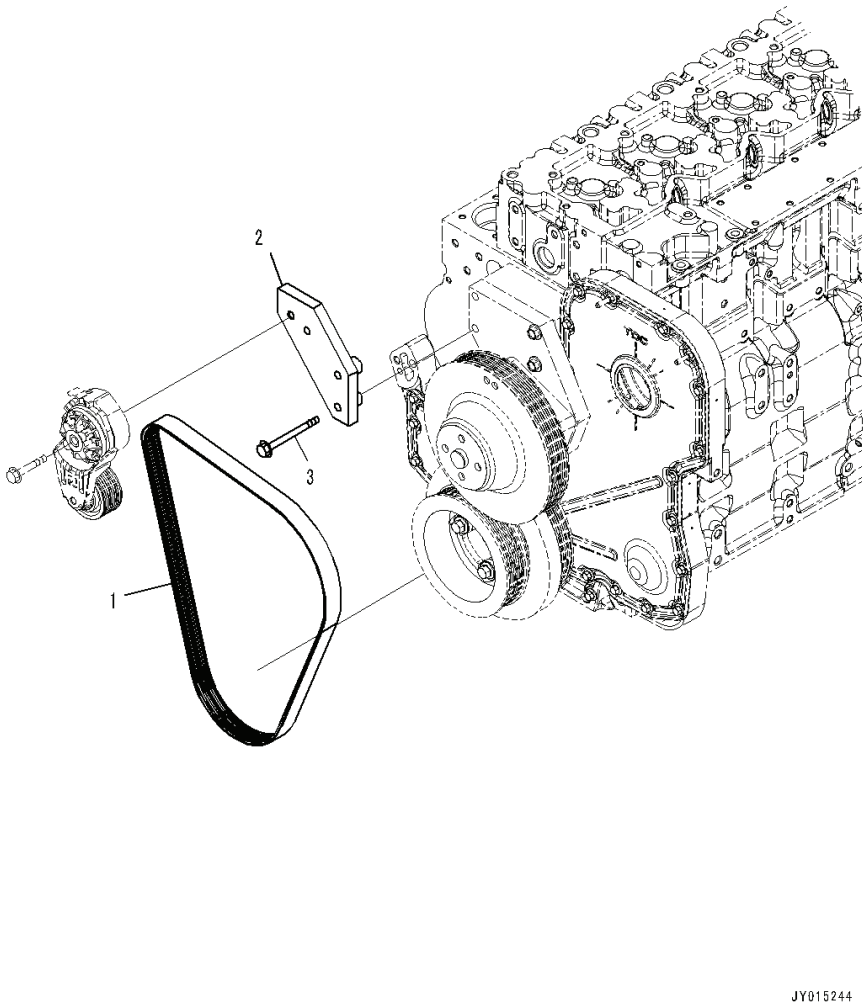

Index	Code	Part Number	Descreption	Qty	Serial Number
1		6743-61-3710	Belt	1	26852077-
2		6743-61-4110	Bracket	1	26852077-
3		01436-01020	Bolt	2	26852077-

SAA6D114E-3D (FEN01263-00)

FIG. AWP20-001001 Cooling Fan Belt Tensioner

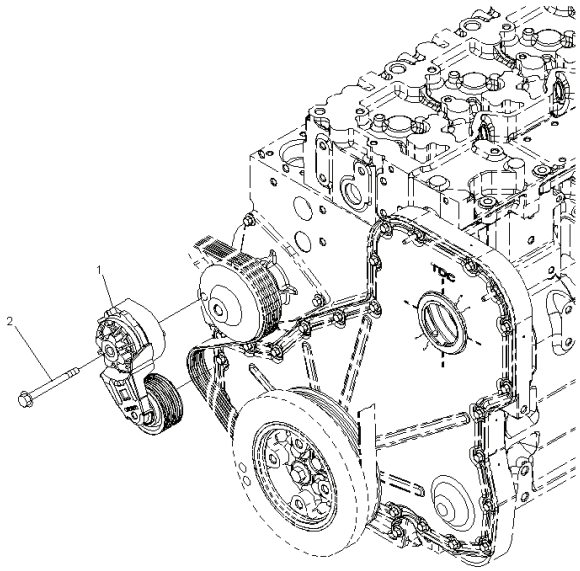

Index	Code	Part Number	Descreption	Qty	Serial Number
1		6754-61-4111	Tensioner, Belt	1	20852077-
	A2	6743-61-4120	Tensioner, Belt	1	26852077-26858483
2		6732-61-3260	Bolt	1	26852077-

SAA6D114E-3D (FEN01263-00)

FIG. A5019-001001 Water Pump

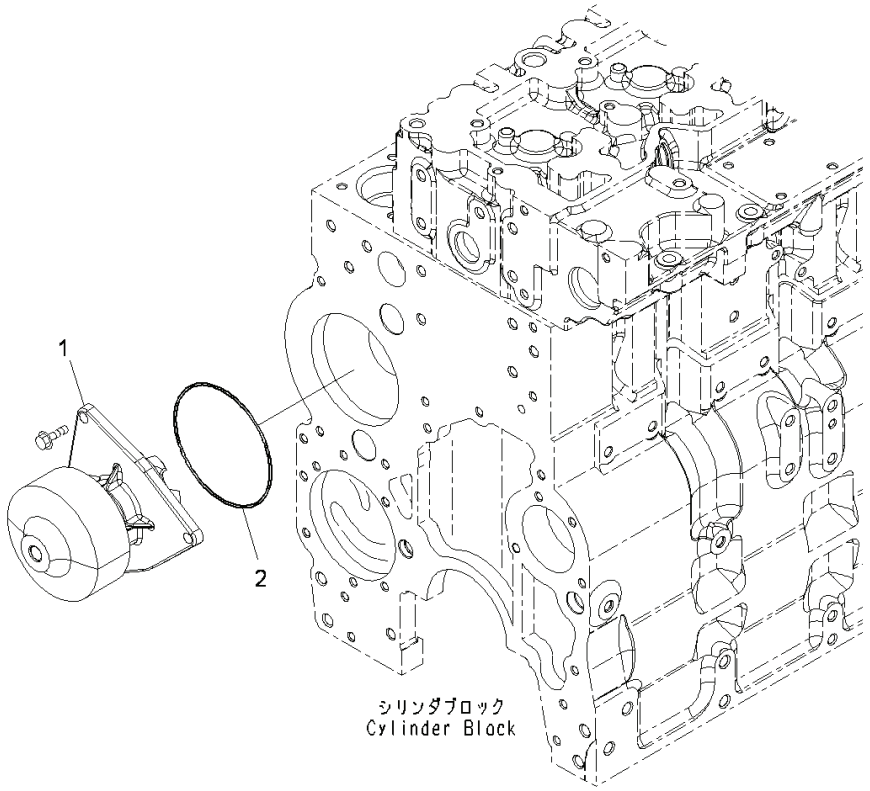

Index	Code	Part Number	Descreption	Qty	Serial Number
		6743-61-1531	Water Pump Assembly	1	26852077-
1	C1		• Pump	1	26852077-
2		6741-61-1520	• Seal	1	26852077-

SAA6D114E-3D (FEN01263-00)

FIG. AWP10-001001 Water Pump Drive Belt, Drive Belt

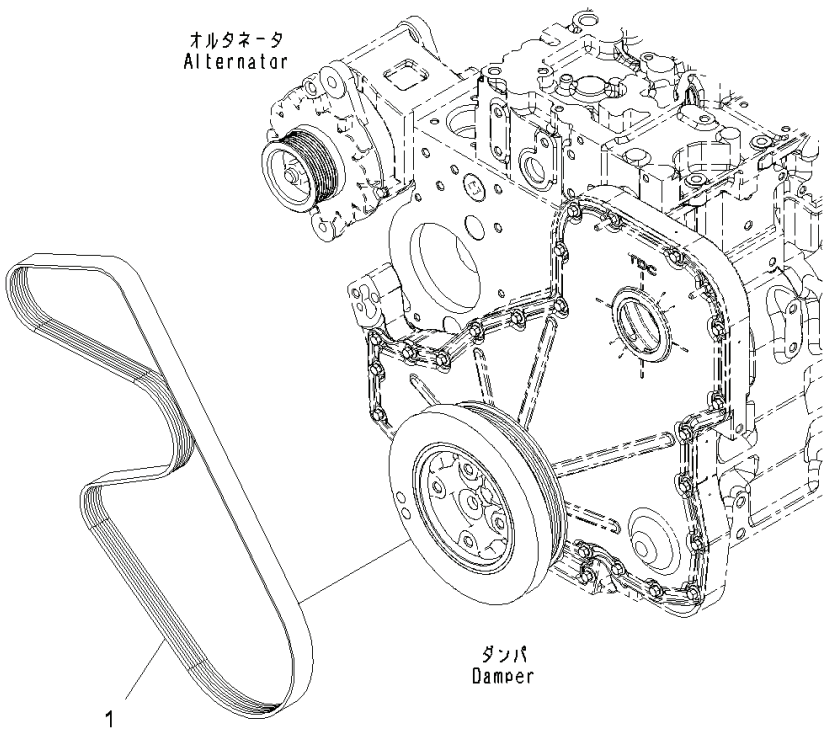

Index	Code	Part Number	Descreption	Qty	Serial Number
1		6743-62-3710	Belt	1	26852077-

SAA6D114E-3D (FEN01263-00)

FIG. AWO00-001001 Water Outlet Connector

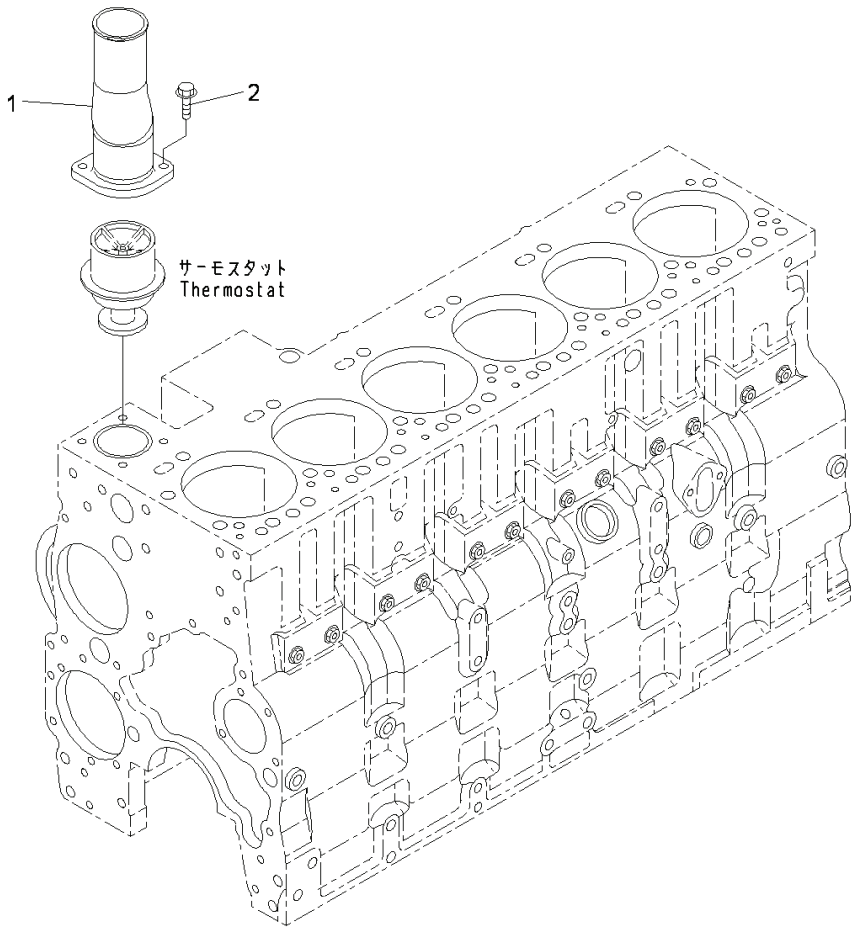

Index	Code	Part Number	Descreption	Qty	Serial Number
1		6745-61-6130	Connection	1	26852077-
2		6732-21-5160	Bolt	2	26852077-

SAA6D114E-3D (FEN01263-00)

FIG. AEC00-001001 Thermostat

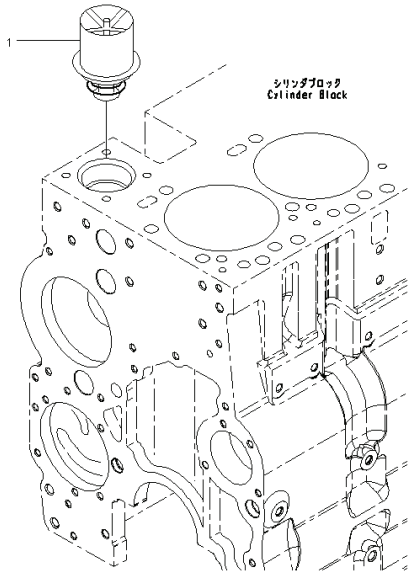

Index	Code	Part Number	Descreption	Qty	Serial Number
1		6741-61-1610	Thermostat	1	26852735-

SAA6D114E-3D (FEN01263-00)

FIG. AWI10-001001 Coolant Inlet Connector

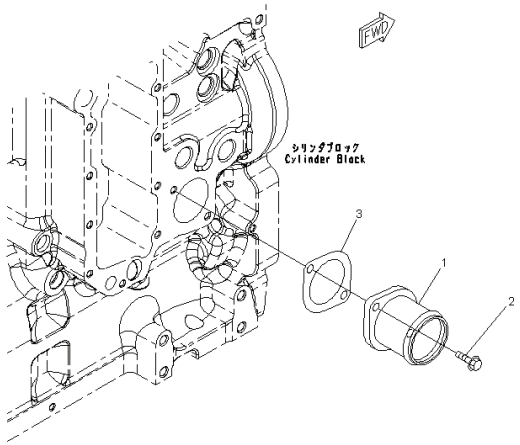

Index	Code	Part Number	Descreption	Qty	Serial Number
1		6742-01-4490	Connector	1	26852077-
2		6732-71-3220	Bolt	2	26852077-
3		6741-61-6130	Gasket	1	26852077-

SAA6D114E-3D (FEN01263-00)

FIG. ATK00-001001 Plug, Torque Converter Cooling

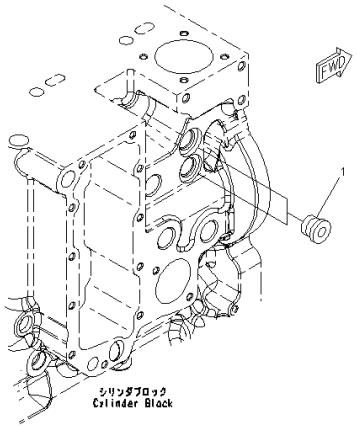

Index	Code	Part Number	Descreption	Qty	Serial Number
1		6216-14-6820	Plug Assembly	2	26852077-

SAA6D114E-3D (FEN01263-00)

FIG. AWF00-002001 Plug, With Corrosion Resistor

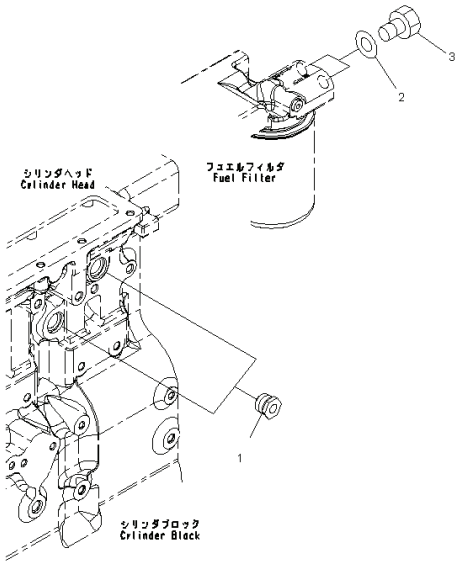

Index	Code	Part Number	Descreption	Qty	Serial Number
1		6732-11-1910	Plug	2	26852077-
2		07005-01412	Gasket	2	26852077-
3		07040-11409	Plug	2	26852077-

SAA6D114E-3D (FEN01263-00)

FIG. AWF00-001001 Corrosion Piping

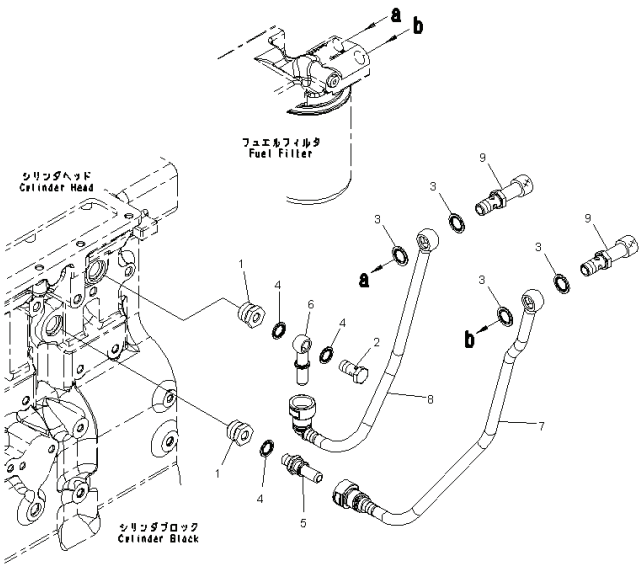

Index	Code	Part Number	Descreption	Qty	Serial Number
1		6745-61-8110	Union	2	26852077-
2		6732-71-6510	Bolt	1	26852077-
3		6731-74-5910	Washer	4	26852077-
4		6745-71-1130	Washer	3	26852077-
5		6745-71-6130	Connector	1	26852077-
6		6745-61-8120	Connector	1	26852077-
7		6745-61-8130	Tube	1	26852077-
8		6745-61-8140	Tube	1	26852077-
9		6745-61-8151	Valve	2	26852077-

SAA6D114E-3D (FEN01263-00)

ENGINE ELECTRICAL SYSTEM

FIG. ADA00-001001 Damper

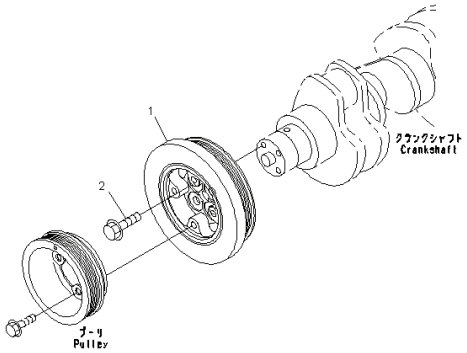

Index	Code	Part Number	Descreption	Qty	Serial Number
1		6742-01-5289	Damper	1	26852077-
2		6742-01-1890	Bolt	4	26852077-

SAA6D114E-3D (FEN01263-00)

FIG. AEH20-001001 Alternator Mounts

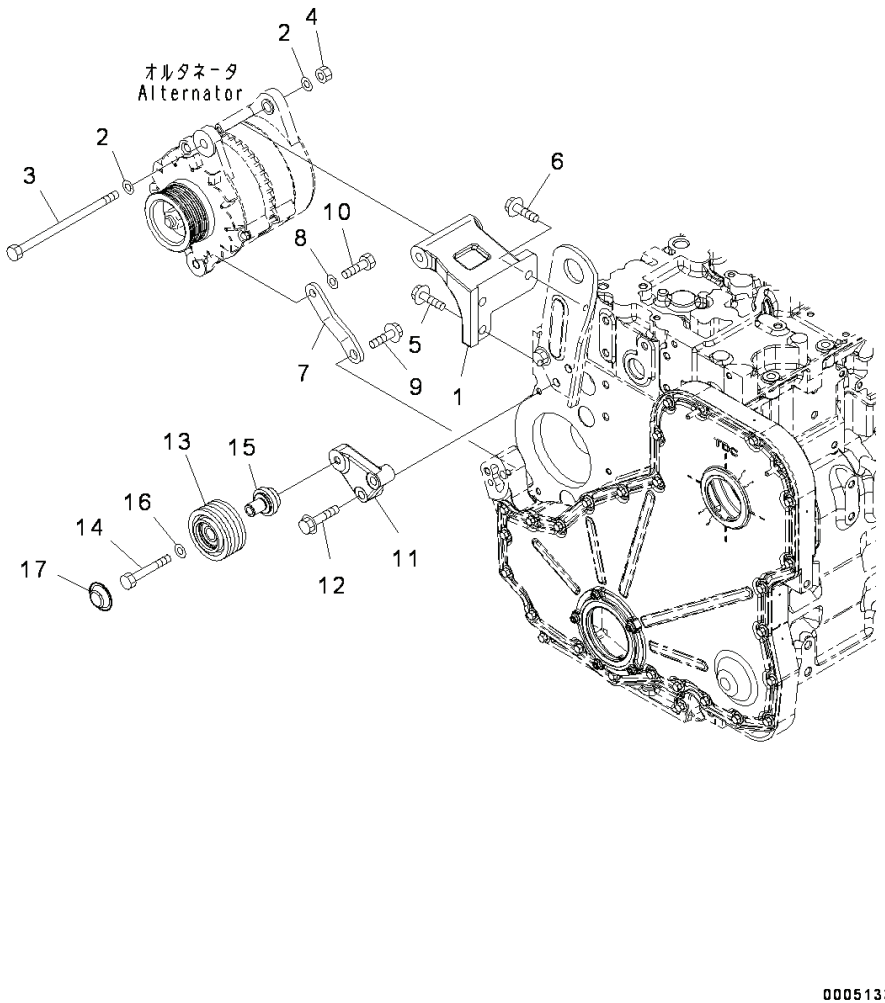

Index	Code	Part Number	Descreption	Qty	Serial Number
1		6741-81-6520	Bracket	1	26852077-
2		01643-31232	Washer	2	26852077-
3		6207-81-6980	Bolt	1	26852077-
4		01580-11210	Nut	1	26852077-
5		6735-71-3220	Bolt	1	26852077-
6		6735-61-3810	Bolt	2	26852077-
7		6741-81-6510	Brace	1	26852077-
8		01643-31232	Washer	1	26852077-
9		01435-01020	Bolt	1	26852077-
10		01050-31230	Bolt	1	26852077-
11		6745-61-4130	Support	1	26852077-
12		6745-61-4230	Bolt	2	26852077-
13		6743-61-3441	Pulley	1	26855671-
14		6745-61-4120	Bolt	1	26852077-
15		6742-01-5123	Shaft	1	26852077-
16		01643-31032	Washer	1	26852077-
17		6742-01-4560	Cover	1	26852077-

SAA6D114E-3D (FEN01263-00)

FIG. AEE00-001001 Alternator, 60Amp., (1/2)

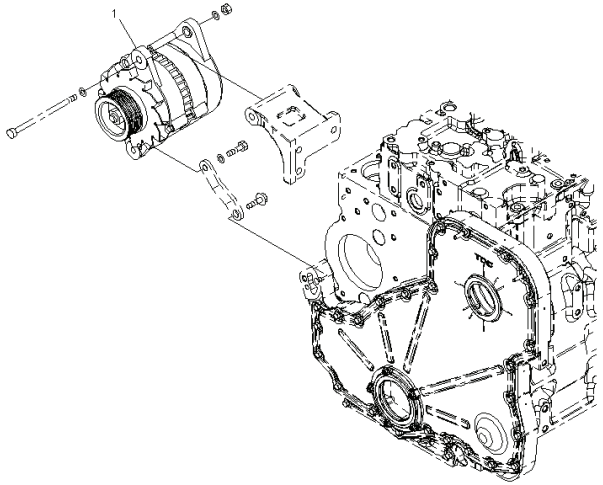

Index	Code	Part Number	Descreption	Qty	Serial Number
1		600-861-6110	Alternator, 60Amp.	1	26852077-

SAA6D114E-3D (FEN01263-00)

FIG. AEE00-001002 Alternator, 60Amp., (2/2)

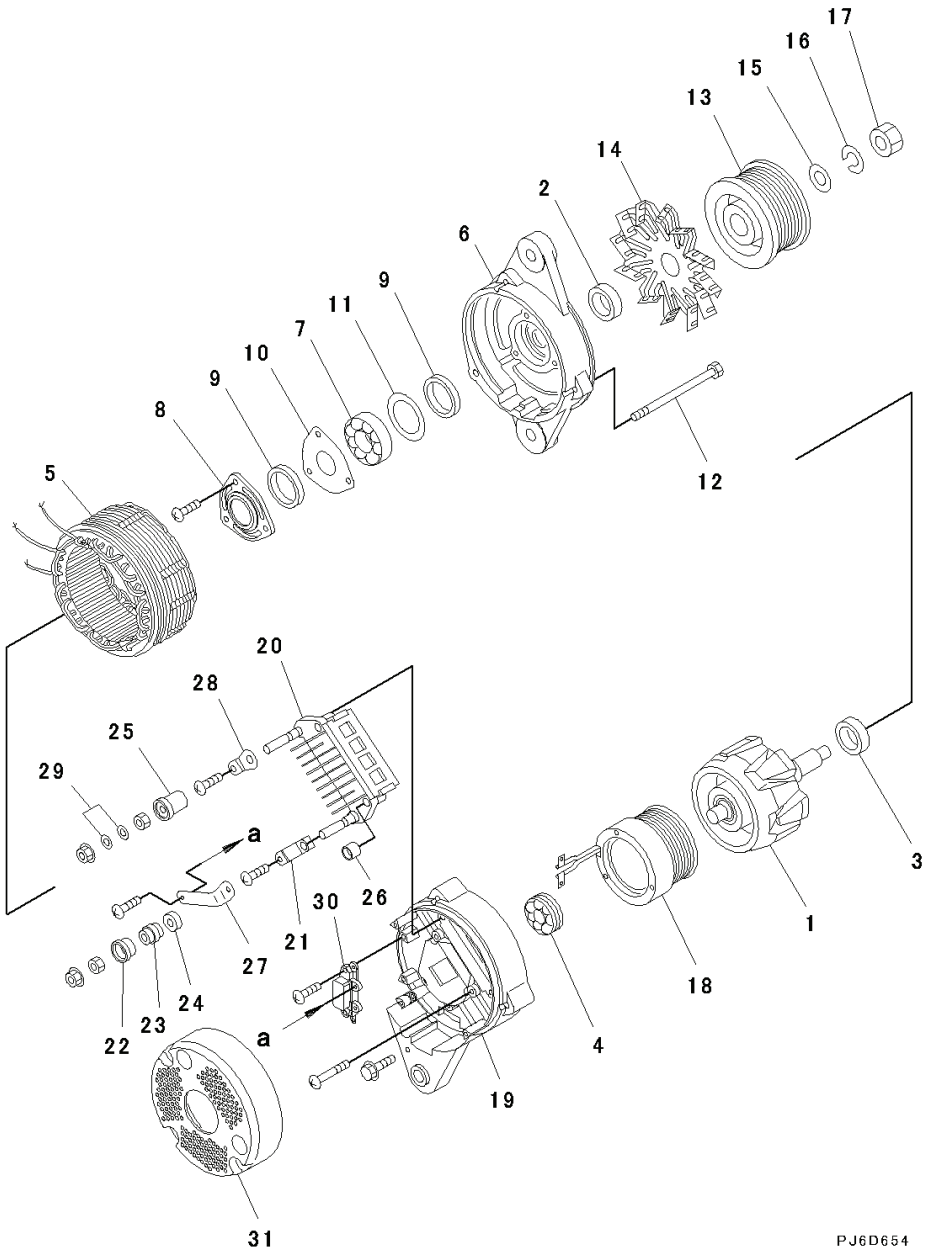

SAA6D114E-3D (FEN01263-00)

Index	Code	Part Number	Descreption	Qty	Serial Number
		600-861-6110	Alternator, 60Amp.	1	26852077-
1		KD0-35100-0300	• Rotor Assembly	1	26852077-
2		KD1-33923-0790	• Collar	1	26852077-
3		KD1-35923-0160	• Collar	1	26852077-
4		KD0-09201-0980	• Bearing, Ball	1	26852077-
5		KD0-35200-0460	• Stator Assembly	1	26852077-
6		KD0-35300-0350	• Bracket Assembly	1	26852077-
7		KD0-09201-1140	• • Bearing, Ball	1	26852077-
8		KD0-35926-0070	• • Retainer	1	26852077-
9		KD0-35951-0060	• • Packing	2	26852077-
10		KD0-35926-0090	• • Retainer	1	26852077-
11		KD1-33926-0730	• • Retainer	1	26852077-
12		KD0-0275-06802	• Bolt	3	26852077-
13		KD0-35411-0640	• Pulley	1	26852077-
14		KD0-35421-0240	• Fan	1	26852077-
15		KD1-0330-16012	• Washer	1	26852077-
16		KD1-0335-16002	• Washer, Spring	1	26852077-
17		KD0-0280-16022	• Nut	1	26852077-
18		KD0-35120-0290	• Coil, Field	1	26852077-
		KD0-35700-0950	• Bracket Assembly	1	26852077-
19		KD0-35710-1150	• • Bracket	1	26852077-
20		KD0-35730-0700	• • Rectifier Assembly	1	26852077-
21		KD0-09170-2501	• • Condenser	1	26852077-
22		KD0-35943-0150	• • Bushing, Insulate	1	26852077-
23		KD0-35923-0130	• • Collar	1	26852077-
24		KD0-35943-0160	• • Bushing, Insulate	1	26852077-
25		KD0-35943-0140	• • Bushing, Insulate	1	26852077-
26		KD0-35943-0170	• • Bushing, Insulate	2	26852077-
27		KD0-35784-0210	• • Bar, Connect	1	26852077-
28		KD0-35784-0290	• • Bar, Plate	1	26852077-
29		KD0-09057-0220	• • Washer	2	26852077-
30		KD7-35719-0211	• • Regulator Assembly	1	26852077-
31		KD0-35761-0250	• Cover	1	26852077-

FIG. ASM00-001001 Starter Motor Mounts

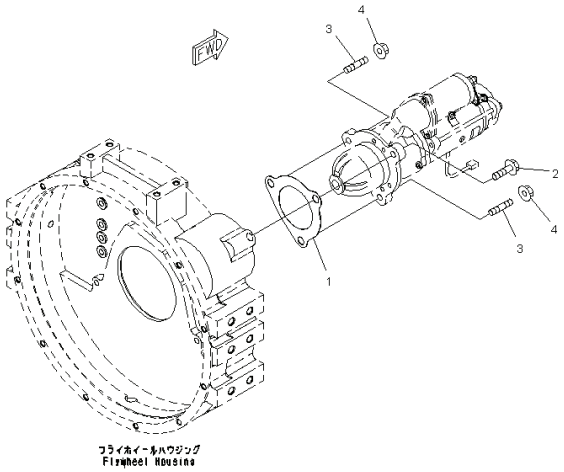

Index	Code	Part Number	Descreption	Qty	Serial Number
1		6221-81-6810	Gasket	1	26852077-
2		01435-01240	Bolt	1	26852077-
3		6743-81-6310	Stud	2	26852077-
4		01584-01210	Nut	2	26852077-

SAA6D114E-3D (FEN01263-00)

FIG. AST00-001001 Starter Motor, 7.5KW

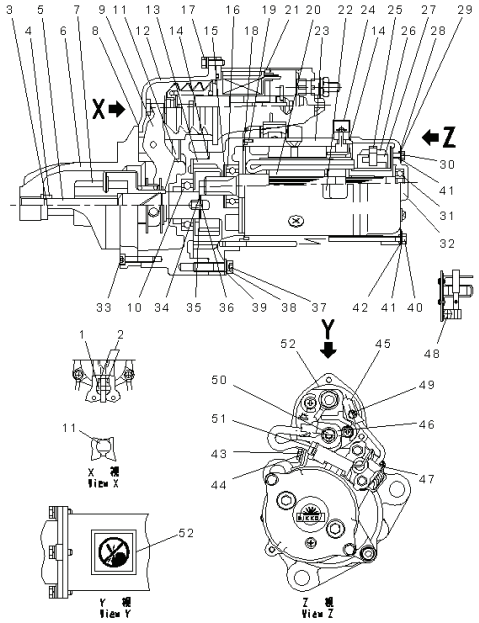

Index	Code	Part Number	Descreption	Qty	Serial Number
		600-863-5711	Starting Motor Assembly, 7.5Kw	1	26852077-
1		KD0-23904-0070	• Pin	1	26852077-
2		KD0-23927-0071	• Holder	2	26852077-
3		KD1-23914-0020	• Ring	1	26852077-
4		KD1-23181-0020	• Stopper	1	26852077-
5		KD1-23111-0160	• Shaft	1	26852077-
6		KD0-23310-1730	• Bracket,Front	1	26852077-
7		KD0-23500-0970	• Clutch Assembly, Over Running	1	26852077-
8		KD0-23951-0301	• Packing	1	26852077-
9		KD0-23320-0220	• Lever Assembly	1	26852077-
10		KD1-0454-60067	• Bearing, Ball	1	26852077-
11		KD0-23951-0331	• Packing	1	26852077-
12		KD0-23600-0460	• Bracket Assembly	1	26852077-
13		KD0-23611-0690	• Bracket,Center	1	26852077-
14		KD1-09211-0980	• O-ring	2	26852077-
15		KD0-23921-0230	• Washer	1	26852077-
16		KD1-0454-62047	• Bearing, Ball	1	26852077-
17		KD0-0274-06202	• Bolt	3	26852077-
18		KD1-23951-0020	• Packing	1	26852077-
19		KD1-0400-20100	• Pin, Straight	1	26852077-
20		KD0-23100-0251	• Armature Assembly	1	26852077-
21		KD0-47100-4800	• Switch Assembly, Magnetic	1	26852077-
22		KD0-09271-3620	• Name Plate	1	26852077-
23		KD0-23200-0331	• Yoke Assembly	1	26852077-
24		KD0-47761-2691	• Cover	1	26852077-
25		KD1-23913-0040	• Spring, Brush	4	26852077-
26		KD0-23740-0250	• Brush Assembly	4	26852077-
27		KD0-23750-0250	• Holder Assembly, Brush	1	26852077-
28		KD1-0505-00601	• O-ring	2	26852077-
29		KD1-47921-0790	• Washer	2	26852077-
30		KD0-09001-4580	• Bolt	2	26852077-
31		KD1-0454-62007	• Bearing, Ball	1	26852077-
32		KD0-23700-0130	• Bracket Assembly	1	26852077-
33		KD1-0240-06305	• Bolt	6	26852077-
34		KD1-23921-0130	• Washer	1	26852077-
35		KD1-23921-0140	• Washer	1	26852077-
36		KD1-23941-0040	• Washer, Insulate	1	26852077-
37		KD1-0240-08405	• Bolt	3	26852077-
38		KD1-0335-08002	• Washer, Spring	3	26852077-
39		KD1-0330-08022	• Washer	3	26852077-

SAA6D114E-3D (FEN01263-00)

FIG. AST00-001001 Starter Motor, 7.5KW

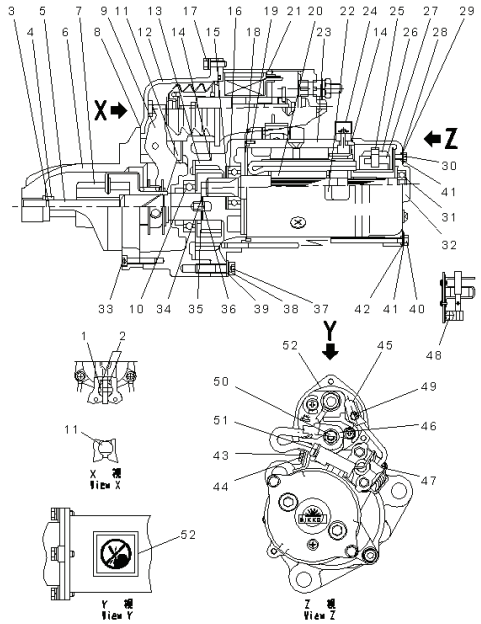

Index	Code	Part Number	Descreption	Qty	Serial Number
40		KD0-23901-0170	• Bolt	2	26852077-
41		KD1-0335-06002	• Washer, Spring	4	26852077-
42		KD1-0330-06012	• Washer, Prain	2	26852077-
43		KD0-0270-06402	• Bolt	1	26852077-
44		KD1-47927-1250	• Holder	1	26852077-
45		KD0-47761-2671	• Cover	1	26852077-
46		KD0-47761-2681	• Cover	1	26852077-
47		KD0-25000-8332	• Switch Assembly	1	26852077-
48		KD0-0055-05082	• Screw	4	26852077-
49		KD0-09006-0660	• Nut	1	26852077-
50		KD0-09006-0670	• Nut	1	26852077-
51		KD1-09257-0050	• Band	1	26852077-
52		KD0-09275-1430	• Plate, Caution	1	26852077-

SAA6D114E-3D (FEN01263-00)

FIG. AST00-002001 Starter Motor, 11KW

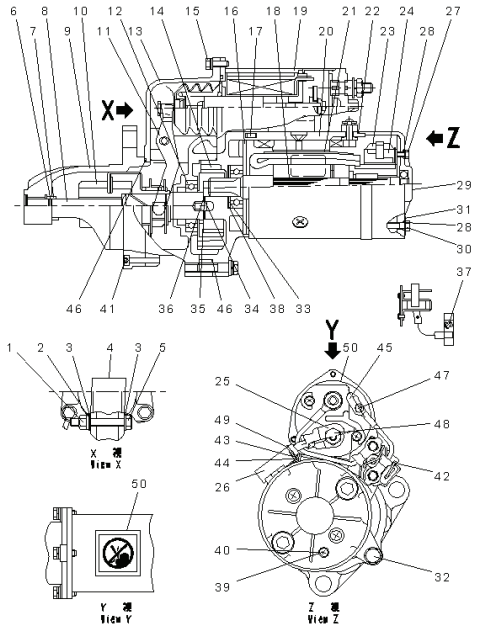

Index	Code	Part Number	Descreption	Qty	Serial Number
		600-863-8112	Starting Motor Assembly, 11Kw	1	26852864-
1		KD1-09279-0090	• Nut	1	26852077-
2		KD1-0335-08002	• Washer, Spring	4	26852077-
3		KD1-0330-08022	• Washer, Plain	5	26852077-
4		KD1-0345-08001	• Washer, Seal, Seal	2	26852077-
5		KD0-23303-0020	• Pin	1	26852077-
6		KD1-23914-0020	• Ring	1	26852077-
7		KD1-23181-0020	• Stopper	1	26852077-
8		KD0-23120-0180	• Shaft Assembly	1	26852077-
9		KD0-23310-1740	• Bracket Assembly	1	26852077-
10		KD1-23500-0970	• Clutch Assembly	1	26852077-
11		KD1-23320-0290	• Lever Assembly	1	26852077-
12		KD0-09201-0850	• Bearing, Ball	1	26852077-
13		KD0-23600-0410	• Bracket Assembly	1	26852077-
14		KD0-23611-1101	• Bracket	1	26852077-
15		KD0-0274-06202	• Bolt	3	26852077-
16		KD1-23951-0051	• Packing	1	26852077-
17		KD1-0400-30100	• Pin	1	26852077-
18		KD0-23100-0430	• Armature Assembly	1	26852077-
19		KD0-47100-4651	• Switch Assembly	1	26852077-
20		KD0-23200-0671	• Yoke Assembly	1	26852077-
21		KD0-09271-3620	• Name Plate	1	26852077-
22		KD1-09211-1120	• O-ring	1	26852077-
23		KD0-23740-0351	• Brush Assembly	2	26852077-
24		KD0-23750-0490	• Holder Assembly	1	26852077-
25		KD0-47761-2681	• Cover	1	26852077-
26		KD0-47761-2691	• Cover	1	26852077-
27		KD0-09011-3140	• Screw	2	26852077-
28		KD1-09211-0081	• O-ring	4	26852077-
29		KD0-23710-0221	• Bracket	1	26852077-
30		KD0-09001-4380	• Bolt	2	26852077-
31		KD1-47921-0790	• Washer, Insulate	2	26852077-
32		KD0-0276-08402	• Bolt	3	26852077-
33		KD0-09057-0110	• Washer	1	26852077-
34		KD1-23941-0040	• Washer, Insulate	1	26852077-
35		KD1-23921-0140	• Washer	1	26852077-
36		KD1-23921-0130	• Washer	1	26852077-
37		KD0-0055-05082	• Screw	2	26852077-
38		KD0-09057-0190	• Washer	1	26852077-
39		KD0-0020-05062	• Screw	1	26852077-

SAA6D114E-3D (FEN01263-00)

FIG. AST00-002001 Starter Motor, 11KW

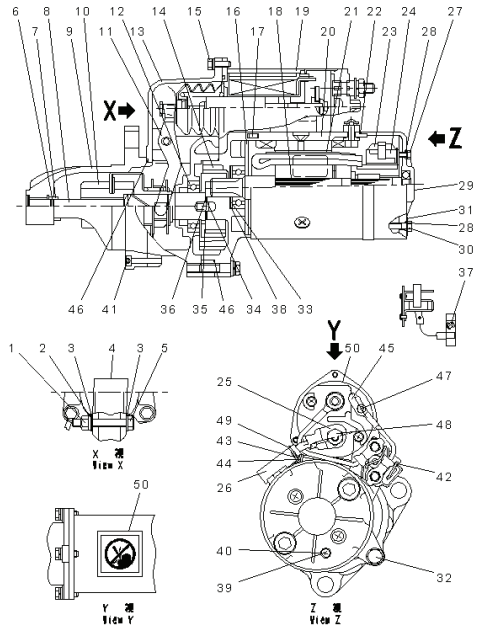

Index	Code	Part Number	Descreption	Qty	Serial Number
40		KD1-0345-05001	• Washer, Seal, Seal	1	26852077-
41		KD1-0240-06305	• Bolt	6	26852077-
42		KD0-25000-8521	• Switch Assembly	1	26852864-
43		KD0-0270-06602	• Bolt	1	26852077-
44		KD0-47927-1390	• Holder	1	26852077-
45		KD0-47761-2671	• Cover	1	26852077-
46		KD1-09211-0981	• O-ring	2	26852077-
47		KD0-09006-0660	• Nut	1	26852077-
48		KD0-09006-0670	• Nut	1	26852077-
49		KD1-09257-0050	• Band	1	26852077-
50		KD0-09275-1430	• Plate, Caution	1	26852077-

SAA6D114E-3D (FEN01263-00)

FIG. AWR00-002001 Electric Wiring

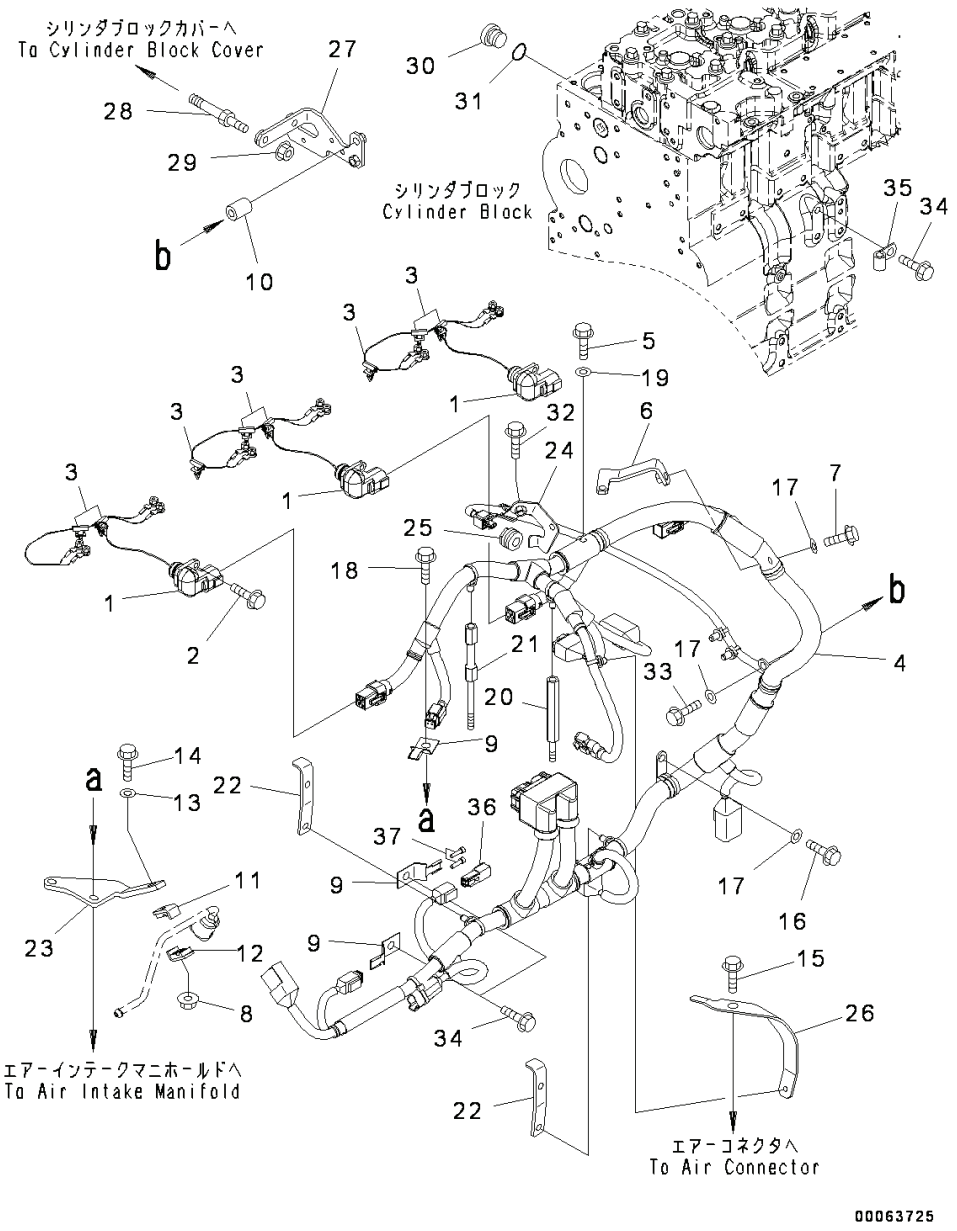

Index	Code	Part Number	Descreption	Qty	Serial Number
1		6745-81-9240	Wiring Harness	3	26854680-
2		6732-21-4180	Bolt	3	26852077-
3		6745-81-9390	Clip	8	26852077-
4		6745-81-9230	Wiring Harness	1	26852077-
5		6742-01-3770	Bolt	1	26852077-
6		6745-81-9710	Bracket	1	26852077-
7		6732-71-3220	Bolt	1	26852077-
8		01584-00605	Nut	1	26852077-
9		08193-20010	Clip	3	26852077-
10		6130-12-4581	Spacer	1	26852077-
11		6155-71-5810	Clamp	1	26852077-
12		6155-71-5820	Clamp	1	26852077-
13		01643-30623	Washer	1	26852077-
14		6745-81-9430	Bolt	1	26852077-
15		6732-61-3140	Bolt	1	26852077-
16		6732-21-3120	Bolt	1	26852077-
17		01640-20816	Washer	3	26852077-
18		6732-61-6140	Bolt	2	26852077-
19		01640-20716	Washer	1	26852077-
20		6745-81-9720	Spacer	1	26852077-
21		6745-81-9730	Spacer	1	26852077-
22		6745-81-9740	Bracket	2	26852077-
23		6745-81-9750	Brace	1	26852077-
24		6745-81-9810	Bracket	1	26852077-
25		6745-81-9770	Bushing	1	26852077-
26		6745-81-9780	Bracket	1	26852077-
27		6745-81-9790	Brace	1	26852077-
28		6745-81-9580	Bolt	2	26852077-
29		6732-71-3210	Nut	2	26852077-
		6735-21-1910	Plug Assembly	1	26852077-
30		6735-21-1920	• Plug	1	26852077-
31		6735-21-1930	• O-ring	1	26852077-
32		6216-74-6180	Bolt	2	26852077-
33		6754-81-9390	Bolt	1	26852077-
34		6216-54-7320	Bolt	3	26852077-
35		04434-51010	Clip	1	26852077-
36		08192-12100	Connector Assembly	1	26852077-
37		08191-00770	Plug, Connector	2	26852077-

SAA6D114E-3D (FEN01263-00)

FIG. APH10-001001 Electric Controller, Piping

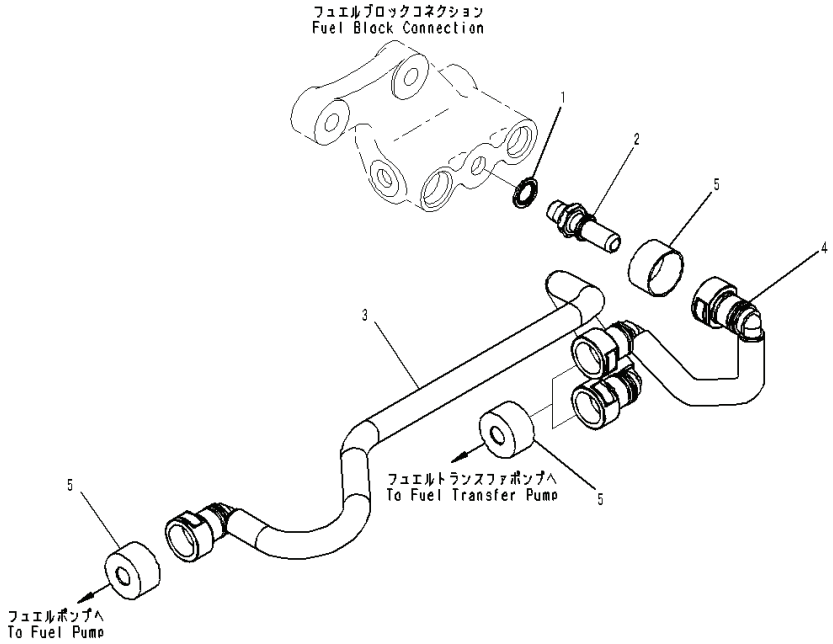

Index	Code	Part Number	Descreption	Qty	Serial Number
1		6745-71-1130	Washer	1	26852077-
2		6745-71-6130	Connector	1	26852077-
3		6745-71-5230	Tube	1	26852077-
4		6745-71-5240	Tube	1	26852077-
5		6745-71-5160	Cover	4	26852077-

SAA6D114E-3D (FEN01263-00)

FIG. A4719-001001 Electric Controller

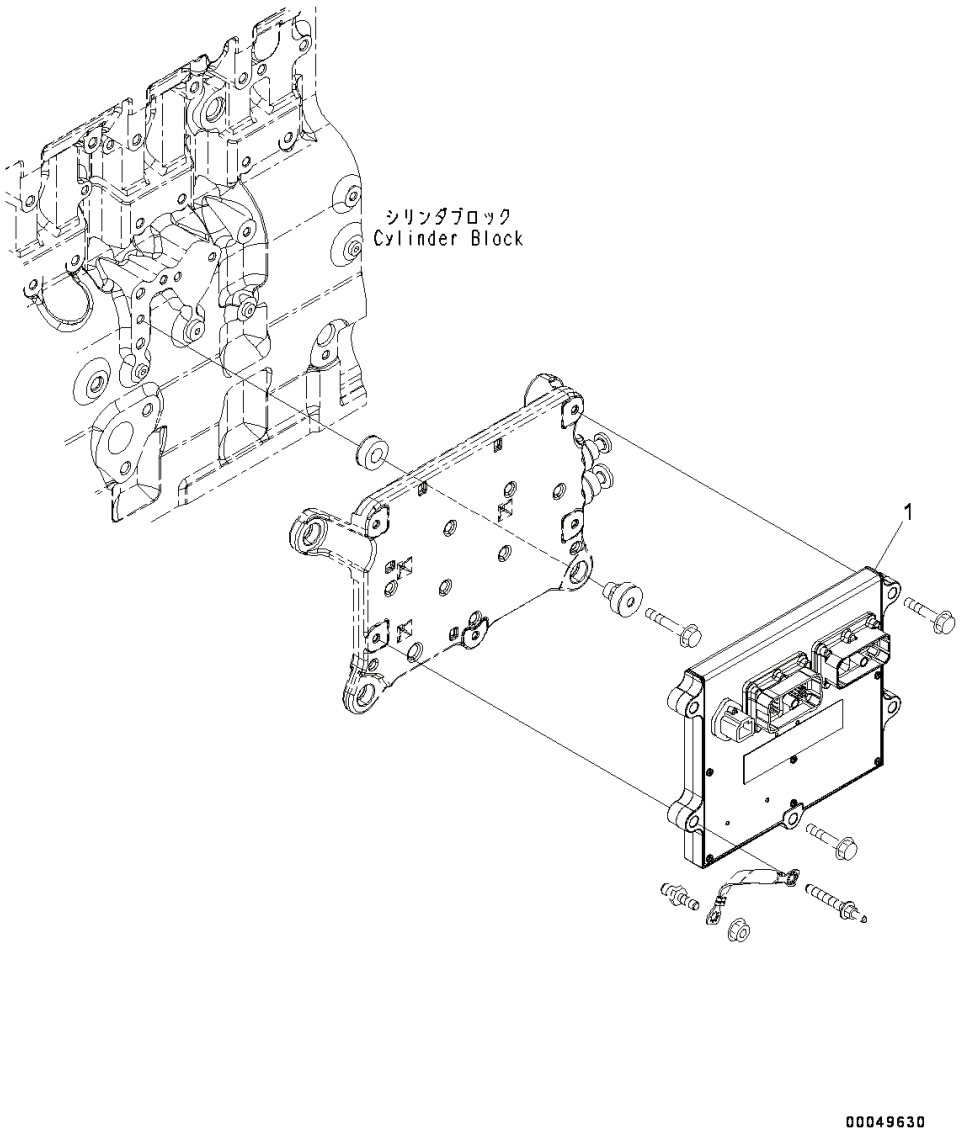

Index	Code	Part Number	Descreption	Qty	Serial Number
1		600-468-1200	Controller Assembly	1	26852077-

SAA6D114E-3D (FEN01263-00)

FIG. APH00-001001 Electric Controller Mounts, North America EPA 3rd Regulations, EU Exhaust Emissions 3rd Regulations

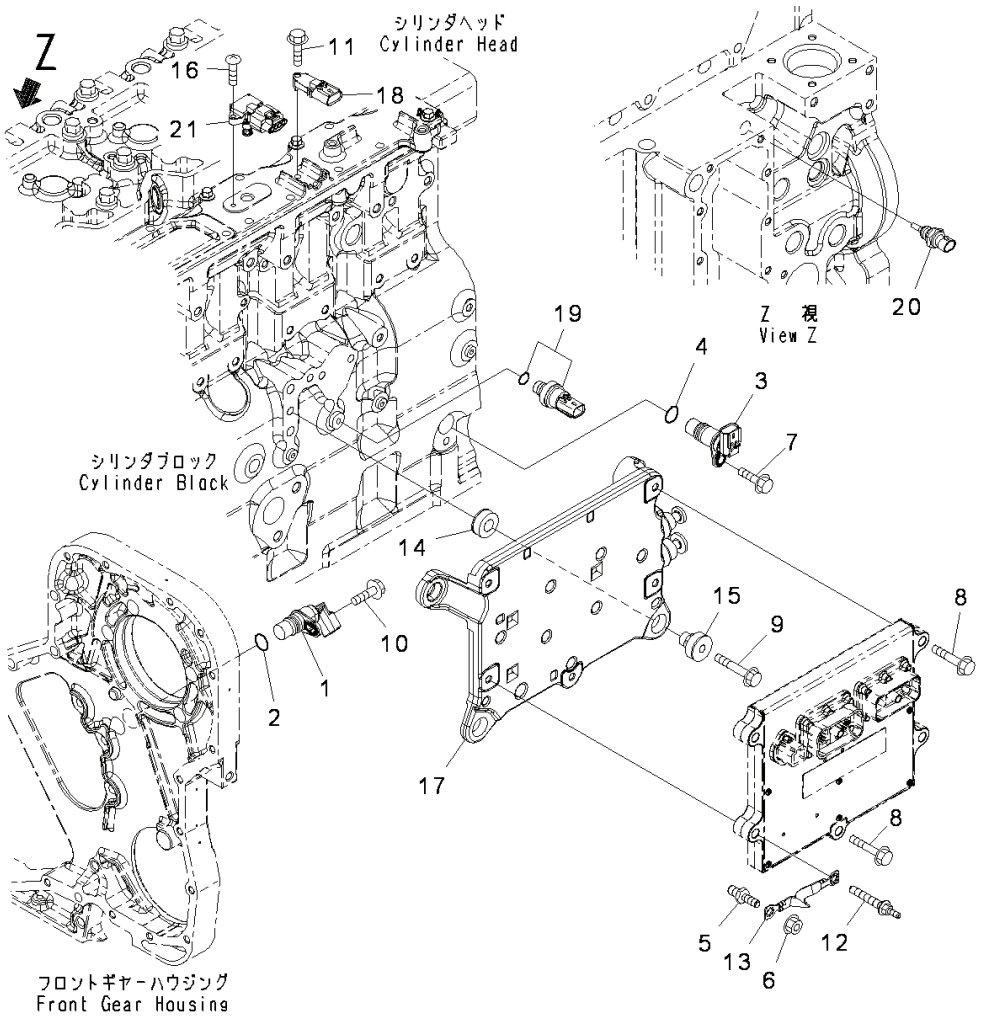

Index	Code	Part Number	Descreption	Qty	Serial Number
		6271-81-9200	Sensor Assembly, Position	1	26852077-
1		6754-81-9410	• Sensor Assembly, Position	1	26852077-
2		6271-81-9220	• O-ring	1	26852077-
		6261-81-2901	Sensor Assembly, Speed	1	26852077-
3		6261-81-2911	• Sensor	1	26852077-
4		6271-81-9220	• O-ring	1	26852077-
5		6745-81-9440	Bolt	1	26852077-
6		6732-71-3210	Nut	1	26852077-
7		6732-71-3220	Bolt	1	26852077-
8		6732-61-3110	Bolt	2	26852077-
9		6735-61-2120	Bolt	4	26852077-
10		6732-21-4180	Bolt	1	26852077-
11		6734-71-5520	Bolt	1	26852077-
12		6745-81-9560	Bolt	3	26852077-
13		6745-81-9570	Wire	1	26852077-
14		6754-81-9110	Isolator	4	26852077-
15		6754-81-9130	Isolator	4	26852077-
16		6754-81-9180	Screw	1	26852077-
17		6745-81-9510	Cooler	1	26852077-
18		6261-81-1900	Sensor	1	26852077-
19		6744-81-4010	Switch, Pressure	1	26852077-
20		6261-81-6900	Sensor Assembly	1	26852077-
21		6754-81-2701	Sensor, Temperature	1	26852077-

SAA6D114E-3D (FEN01263-00)

ENGINE MARKS AND PLATES

FIG. A9810-001001 Caution Plates

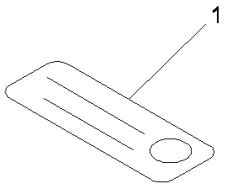

00059246

Index	Code	Part Number	Descreption	Qty	Serial Number
1		600-021-2060	Decal	1	26852077-

SAA6D114E-3D (FEN01263-00)

FIELD REPAIR SERVICE PARTS

FIG. A8110-001001 Repair Service Parts

Index	Code	Part Number	Descreption	Qty	Serial Number
		12954-65-H92	Seal Assembly	1	26852077-
1		6741-39-1220	• Tool	1	26852077-
2		6741-39-1110	• Seal	1	26852077-
3		6741-39-1120	• Sleeve	1	26852077-
4		6741-39-1130	• Shield	1	26852077-
		6736-39-1140	Sleeve	1	26852077-
5		6736-39-1150	• Sleeve, Dry	1	26852077-
6		6736-39-1160	• Sleeve, Wear	1	26852077-
		6742-01-5199	Main Metal Assembly, Lower,Standard	1	26852077-
7	C1		• Metal, Upper,Standard	7	26852077-
8	C1		• Metal, Thrust,Standard	6	26852077-
9	C1		• Metal, Standard	1	26852077-
		6742-01-5233	Main Metal Assembly, Undersized, 0.25mm, Undersize 0.25mm	1	26852077-
10	C1		• Metal, Lower,Undersize 0.25mm	7	26852077-
11	C1		• Metal, Upper,Undersize 0.25mm	6	26852077-
12	C1		• Metal, Thrust,Undersize 0.25mm	1	26852077-
		6742-01-5240	Main Metal Assembly, Undersized, 0.50mm, Undersize 0.50mm	1	26852077-
13	C1		• Metal, lower,Undersize 0.50mm	7	26852077-
14	C1		• Metal, Upper,Undersize 0.50mm	6	26852077-
15	C1		• Metal, Thrust,Undersize 0.50mm	1	26852077-
		6742-01-5287	Main Metal Assembly, Undersized, 0.75mm, Undersize 0.75mm	1	26852077-
16	C1		• Metal, Lower,Undersize 0.75mm	7	26852077-
17	C1		• Metal, Upper,Undersize 0.75mm	6	26852077-
18	C1		• Metal, Thrust,Undersize 0.75mm	1	26852077-
		6742-01-5288	Main Metal Assembly, Undersized, 1.00mm, Undersize 1.00mm	1	26852077-
19	C1		• Metal, Lower,Undersize 1.00mm	7	26852077-
20	C1		• Metal, Upper,Undersize 1.00mm	6	26852077-
21	C1		• Metal, Thrust,Undersize 1.00mm	1	26852077-
22		6745-41-4220	Insert, Exhaust Valve	12	26852077-

SAA6D114E-3D (FEN01263-00)

ENGINE RELATED PARTS

FIG. B0100-001001 Engine Mounts

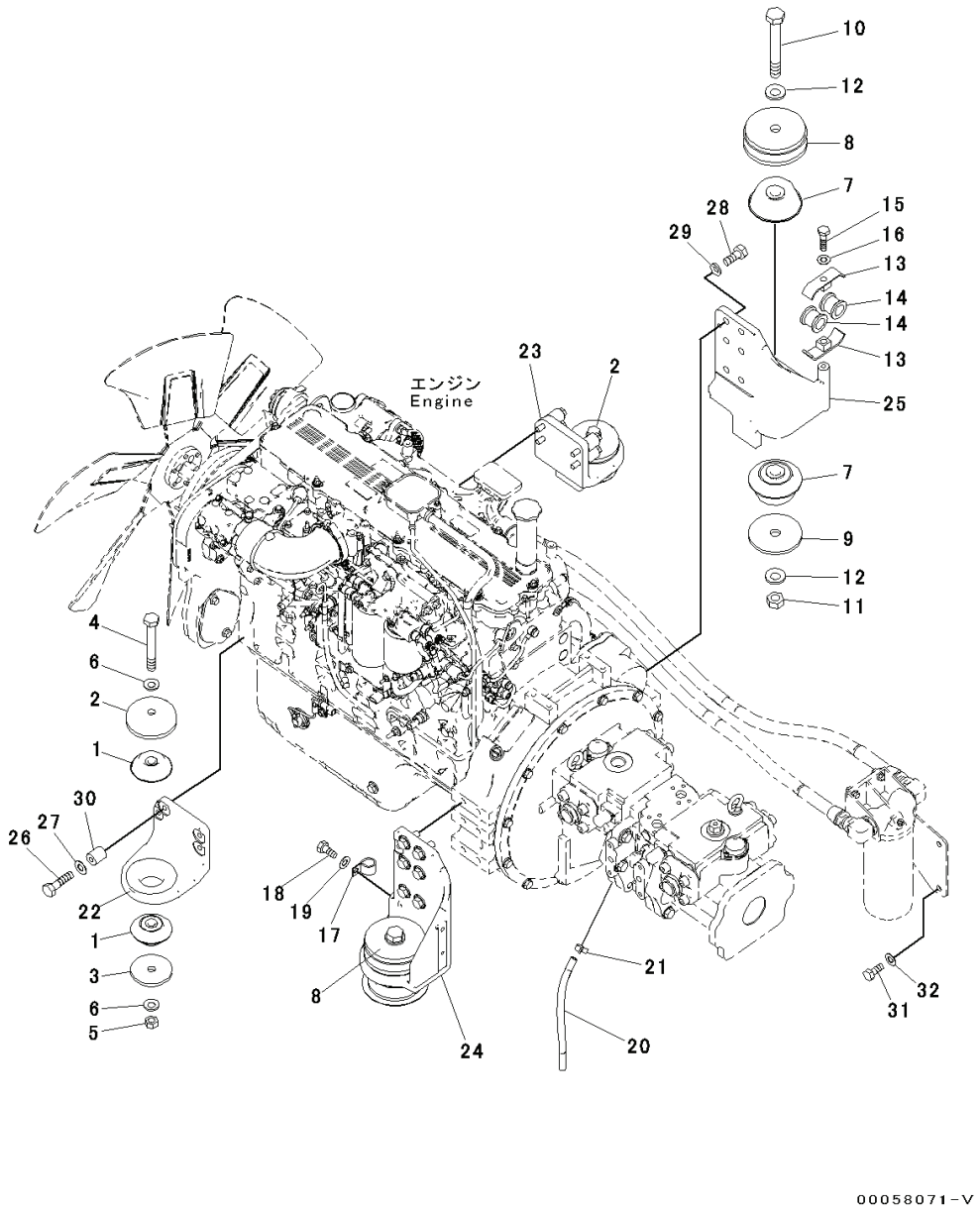

Index	Code	Part Number	Descreption	Qty	Serial Number
1		23S-01-11140	Cushion	4	Y300001-
2		207-01-61150	Stopper	2	Y300001-
3		207-01-75150	Plate	2	Y300001-
4		207-01-55181	Bolt	2	Y300001-
5		01580-01815	Nut	2	Y300001-
6		01643-31845	Washer	4	Y300001-
7		208-01-55220	Cushion	4	Y300001-
8		207-01-61170	Stopper	2	Y300001-
9		208-01-11161	Washer	2	Y300001-
10		208-01-11181	Bolt	2	Y300001-
11		01580-02419	Nut	2	Y300001-
12		01643-32460	Washer	4	Y300001-
13		07094-30620	Clamp	2	Y300001-
14		07095-00630	Cushion	2	Y300001-
15		01010-81275	Bolt	1	Y300001-
16		01643-31232	Washer	1	Y300001-
17		04434-52512	Clip	1	Y300001-
18		01010-81220	Bolt	1	Y300001-
19		01643-31232	Washer	1	Y300001-
20		07260-20932	Hose	1	Y300001-
21		07285-00155	Clip	1	Y300001-
22		207-01-75110	Bracket	1	Y300001-
23		207-01-75120	Bracket	1	Y300001-
24		207-01-75130	Bracket	1	Y300001-
25		207-01-75140	Bracket	1	Y300001-
26		01010-81275	Bolt	8	Y300001-
27		01643-31232	Washer	8	Y300001-
28		01010-81645	Bolt	12	Y300001-
29		01643-31645	Washer	12	Y300001-
30		195-43-41530	Collar	8	Y300001-
31		01010-81230	Bolt	2	Y300001-
32		01643-31232	Washer	2	Y300001-

PC300-8 (FEN01263-00)

FIG. B0200-001001 Air Cleaner, (1/2)

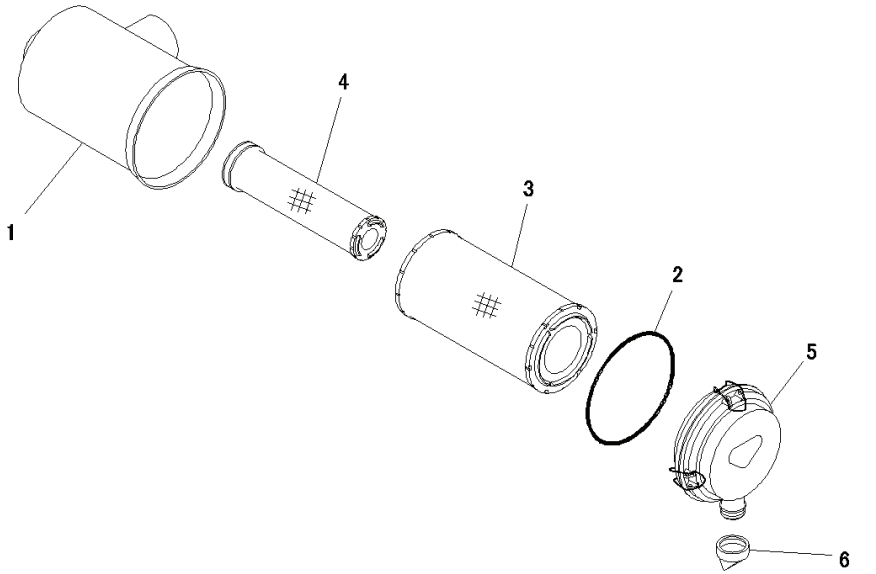

Index	Code	Part Number	Descreption	Qty	Serial Number
		6156-81-7201	Air Cleaner Assembly	1	Y300001-
1		6156-81-7210	• Body	1	Y300001-
		600-185-6100	• Element Assembly	1	Y300001-
2		600-184-1671	• • O-ring	1	Y300001-
3		600-185-6110	• • Element	1	Y300001-
4	C1		• • Element	1	Y300001-
5		600-184-1611	• Cover Assembly	1	Y300001-
		600-184-2810	• • Plate, Mark	1	Y300001-
6		600-184-1350	• Valve, Vaquator	1	Y300001-

FIG. B0200-001002 Air Cleaner, (2/2)

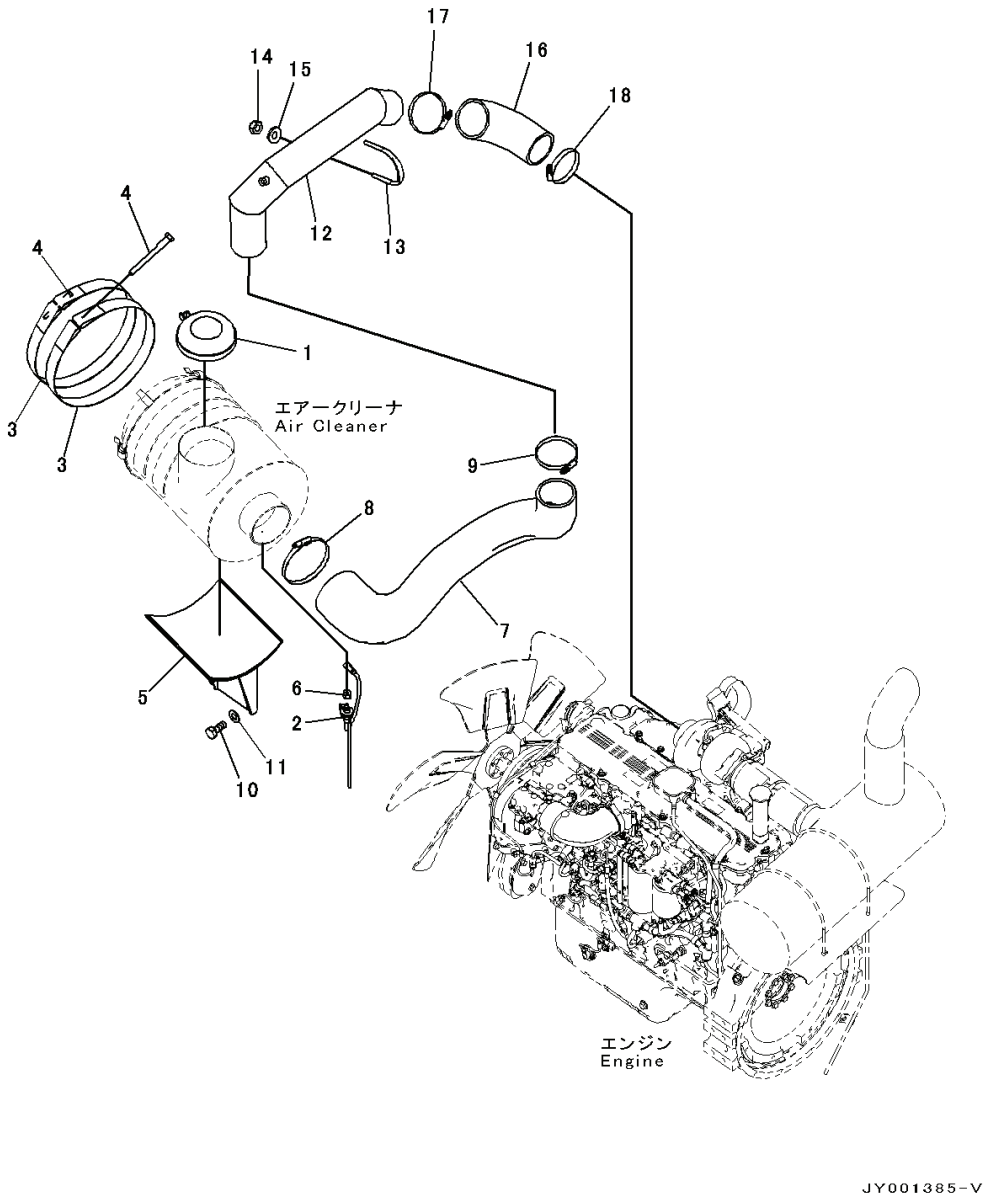

Index	Code	Part Number	Descreption	Qty	Serial Number
1		6128-81-7420	Screen	1	Y300001-
2		7861-93-1421	Sensor	1	Y300001-
3		6151-11-9970	Band Assembly	2	Y300001-
4		6643-11-4641	Bolt	2	Y300001-
5		207-01-75160	Bracket	1	Y300001-
6		11Y-01-11920	Joint	1	Y300001-
7		207-01-75170	Hose	1	Y300001-
8		208-01-72180	Clamp	1	Y300001-
9		07299-00130	Clamp, Hose	1	Y300001-
10		01010-81225	Bolt	4	Y300001-
11		01643-31232	Washer	4	Y300001-
12		207-01-75180	Tube	1	Y300001-
13		07283-31185	Clip	1	Y300001-
14		01597-01211	Nut	2	Y300001-
15		01643-31232	Washer	2	Y300001-
16		207-01-75190	Hose	1	Y300001-
17		07299-00130	Clamp, Hose	1	Y300001-
18		07299-00120	Clamp	1	Y300001-

FIG. B0200-002001 Air Cleaner, With Pre-cleaner, (1/2)

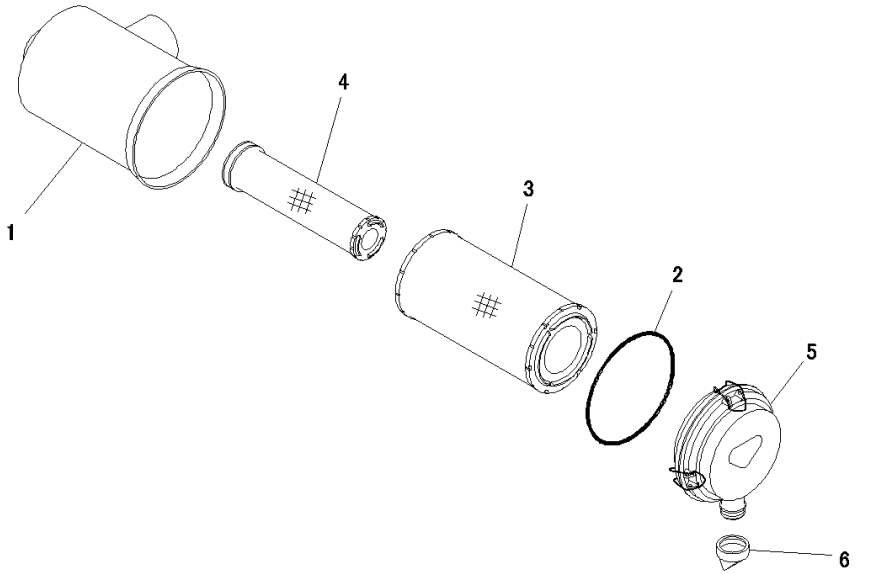

Index	Code	Part Number	Descreption	Qty	Serial Number
		6156-81-7201	Air Cleaner Assembly	1	Y300001-
1		6156-81-7210	• Body	1	Y300001-
		600-185-6100	• Element Assembly	1	Y300001-
2		600-184-1671	• • O-ring	1	Y300001-
3		600-185-6110	• • Element	1	Y300001-
4	C1		• • Element	1	Y300001-
5		600-184-1611	• Cover Assembly	1	Y300001-
		600-184-2810	• • Plate, Mark	1	Y300001-
6		600-184-1350	• Valve, Vaquator	1	Y300001-

FIG. B0200-002002 Air Cleaner, With Pre-cleaner, (2/2)

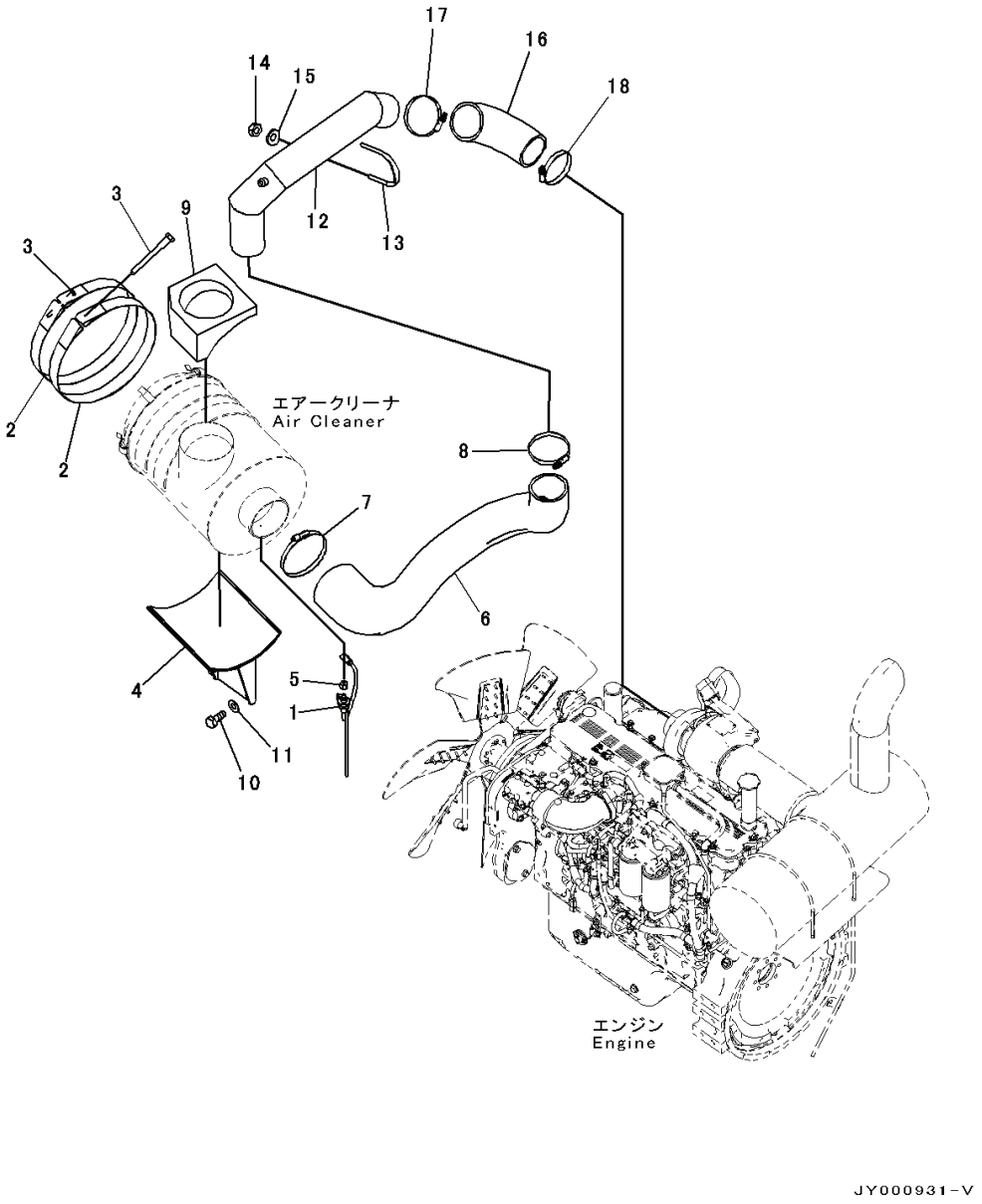

Index	Code	Part Number	Descreption	Qty	Serial Number
1		7861-93-1421	Sensor	1	61238-
2		6151-11-9970	Band Assembly	2	Y300001-
3		6643-11-4641	Bolt	2	Y300001-
4		207-01-75160	Bracket	1	Y300001-
5		11Y-01-11920	Joint	1	Y300001-
6		207-01-75170	Hose	1	Y300001-
7		208-01-72180	Clamp	1	Y300001-
8		07299-00130	Clamp, Hose	1	Y300001-
9		208-01-72310	Seal	1	Y300001-
10		01010-81225	Bolt	4	Y300001-
11		01643-31232	Washer	4	Y300001-
12		207-01-75180	Tube	1	Y300001-
13		07283-31185	Clip	1	Y300001-
14		01597-01211	Nut	2	Y300001-
15		01643-31232	Washer	2	Y300001-
16		207-01-75190	Hose	1	Y300001-
17		07299-00130	Clamp, Hose	1	Y300001-
18		07299-00120	Clamp	1	Y300001-

PC300-8 (FEN01263-00)

COOLING SYSTEM

FIG. C0100-001001A Cooling System, Radiator and Oil Cooler

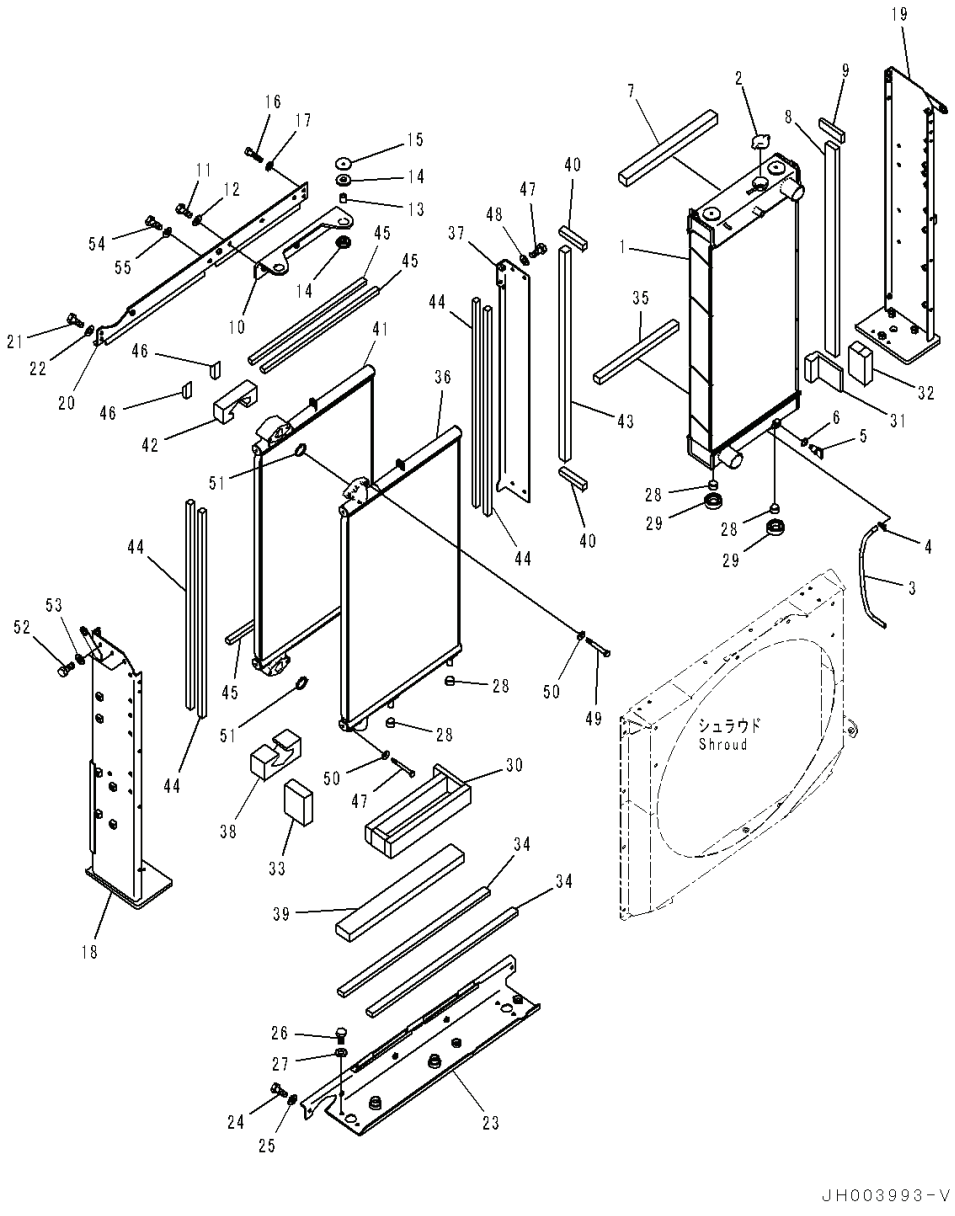

Index	Code	Part Number	Descreption	Qty	Serial Number
		Note: This list covers following specifications.			
		With Auto Air Conditioner, Big Wind Quantity			
		Without Auto Air Conditioner			
1		207-03-75121	Radiator Assembly	1	Y300001-
2		20Y-03-22110	Cap	1	Y300001-
3		205-03-71230	Hose	1	Y300001-
4		20Y-03-11330	Clip	1	Y300001-
5		205-03-62660	Plug	1	Y300001-
6		07000-11007	• O-ring	1	Y300001-
7		208-03-71731	Seal	1	Y300001-
8		208-03-71810	Seal	1	Y300001-
9		208-03-71840	Seal	1	Y300001-
10		207-03-76450	Bracket	1	Y300001-
11		01010-81235	Bolt	3	Y300001-
12		01643-31232	Washer	3	Y300001-
13		14X-03-51640	Spacer	2	Y300001-
14		14X-03-51621	Cushion	4	Y300001-
15		14X-03-51770	Washer	2	Y300001-
16		01010-81055	Bolt	2	Y300001-
17		01643-31032	Washer	2	Y300001-
18		207-03-75171	Frame	1	Y300001-
19		207-03-75181	Frame	1	Y300001-
20		207-03-76341	Frame	1	Y300001-
21		01010-81225	Bolt	2	Y300001-
22		01643-31232	Washer	2	Y300001-
23		207-03-76350	Frame	1	Y300001-
24		01010-81030	Bolt	2	Y300001-
25		01643-31032	Washer	2	Y300001-
26		01010-81020	Bolt	4	Y300001-
27		01643-31032	Washer	4	Y300001-
28		22B-03-12590	Cushion	4	Y300001-
29		208-03-71380	Cushion	2	Y300001-
30		208-03-71480	Seal	1	Y300001-
31		208-03-71490	Seal	1	Y300001-
32		208-03-71780	Seal	1	Y300001-
33		207-03-76410	Seal	1	Y300001-
34		208-03-71821	Seal	2	Y300001-
35		208-03-71830	Seal	1	Y300001-
36		207-03-76320	Oil Cooler Assembly	1	Y300001-
37		207-03-76330	Frame	1	Y300001-

PC300-8 (FEN01263-00)

FIG. C0100-001001A Cooling System, Radiator and Oil Cooler

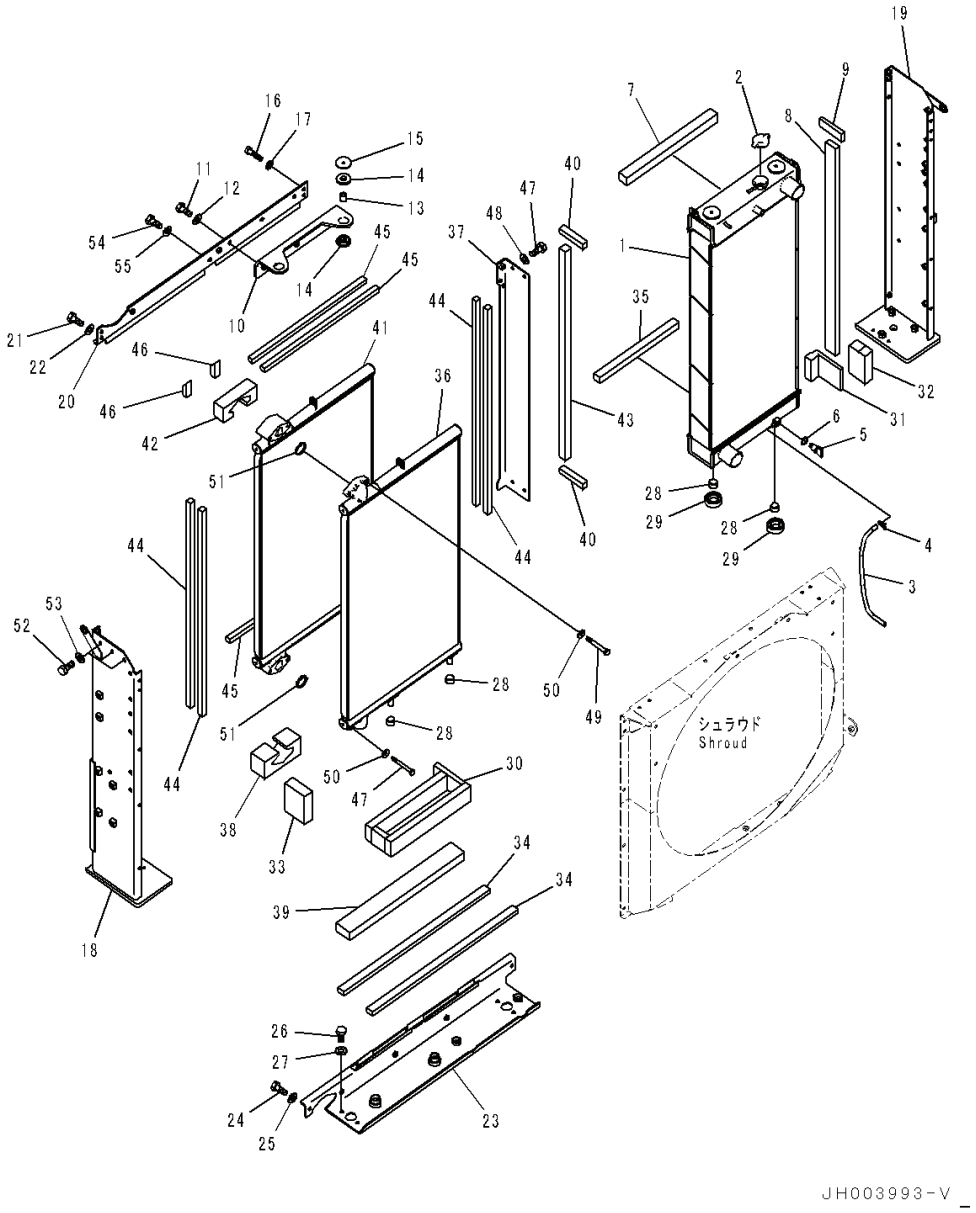

Index	Code	Part Number	Descreption	Qty	Serial Number
38		207-03-76380	Seal	1	Y300001-
39		207-03-76390	Seal	1	Y300001-
40		207-03-76420	Seal	2	Y300001-
41		208-03-71131	Oil Cooler	1	Y300001-
42		208-03-71690	Seal	1	Y300001-
43		208-03-71850	Seal	1	Y300001-
44		208-03-71860	Seal	4	Y300001-
45		208-03-71870	Seal	3	Y300001-
46		208-03-71890	Seal	2	Y300001-
47		01010-81020	Bolt	4	Y300001-
48		01643-31032	Washer	4	Y300001-
49		01010-81240	Bolt	4	Y300001-
50		01643-31232	Washer	4	Y300001-
51		07000-13045	O-ring	2	Y300001-
52		01010-81030	Bolt	3	Y300001-
53		01643-31032	Washer	3	Y300001-
54		01010-81225	Bolt	1	Y300001-
55		01643-31232	Washer	1	Y300001-

PC300-8 (FEN01263-00)

FIG. C0100-001002B Cooling System, Shroud

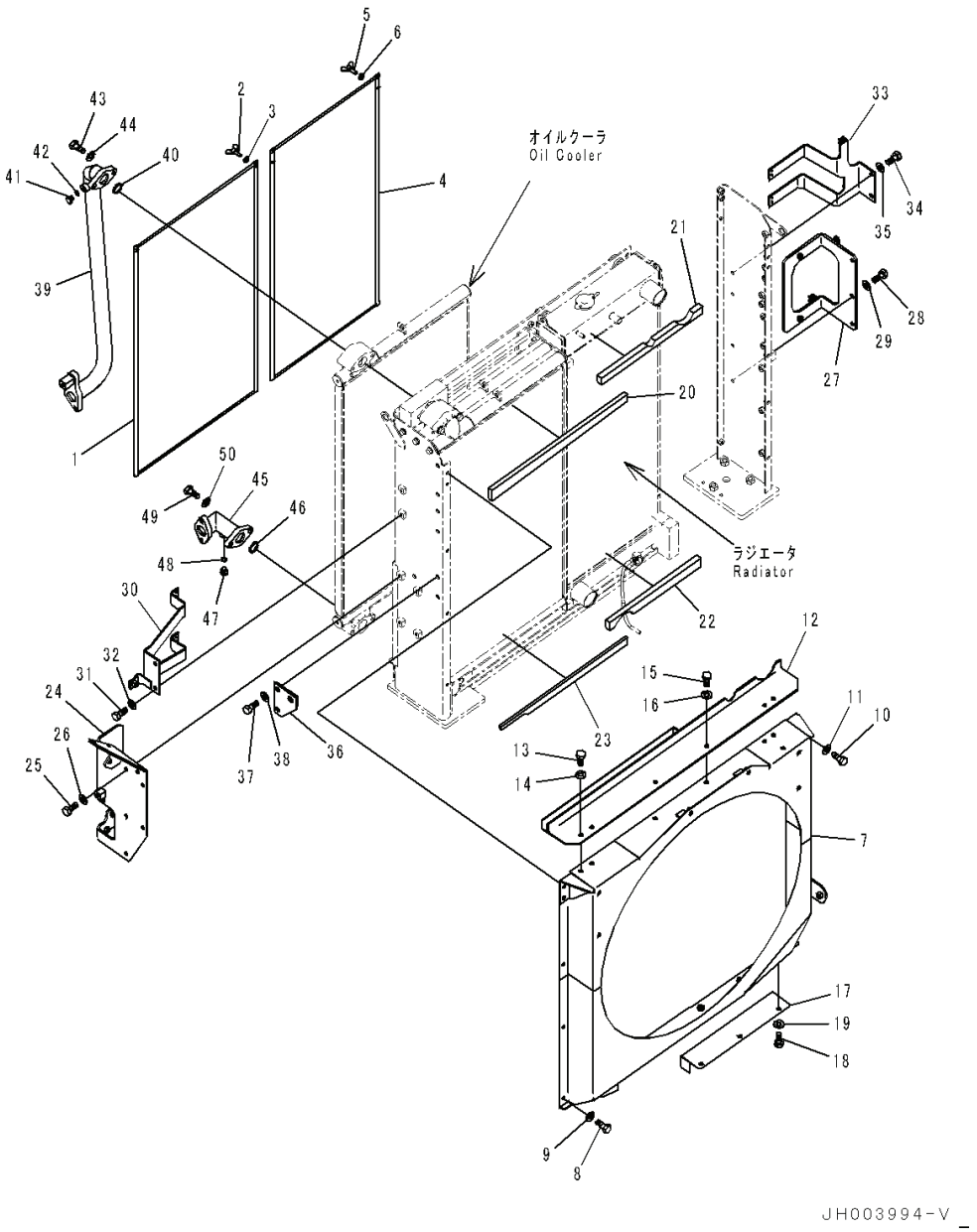

Index	Code	Part Number	Description	Qty	Serial Number
		Note: This list covers following specifications.			
		With Auto Air Conditioner, Big Wind Quantity			
		With Auto Air Conditioner, EU Safety Regulation			
1		208-03-71360	Net	1	Y300001-
2		01434-10616	Bolt, Wing	2	Y300001-
3		01643-30623	Washer	2	Y300001-
4		208-03-71370	Net	1	Y300001-
5		01434-10616	Bolt, Wing	2	Y300001-
6		01643-30623	Washer	2	Y300001-
7		207-03-75252	Cover	1	Y300001-
8		01010-81020	Bolt	7	Y300001-
9		01643-31032	Washer	7	Y300001-
10		01010-81030	Bolt	4	Y300001-
11		01643-31032	Washer	4	Y300001-
12		207-03-76371	Cover	1	Y300001-
13		01010-81030	Bolt	4	Y300001-
14		01643-31032	Washer	4	Y300001-
15		01010-81020	Bolt	2	Y300001-
16		01643-31032	Washer	2	Y300001-
17		207-03-75270	Cover	1	Y300001-
18		01010-81020	Bolt	3	Y300001-
19		01643-31032	Washer	3	Y300001-
20		208-03-71720	Seal	1	Y300001-
21		208-03-71741	Seal	1	Y300001-
22		208-03-71751	Seal	1	Y300001-
23		208-03-71760	Seal	1	Y300001-
24		207-03-75231	Bracket	1	Y300001-
25		01010-81030	Bolt	4	Y300001-
26		01643-31032	Washer	4	Y300001-
27		207-03-75241	Bracket	1	Y300001-
28		01010-81020	Bolt	2	Y300001-
29		01643-31032	Washer	2	Y300001-
30		207-979-7623	Bracket	1	Y300001-
31		01010-81020	Bolt	2	Y300001-
32		01643-31032	Washer	2	Y300001-
33		207-979-7631	Bracket	1	Y300001-
34		01010-81020	Bolt	2	Y300001-
35		01643-31032	Washer	2	Y300001-
36		207-03-75190	Bracket	1	Y300001-
37		01010-81225	Bolt	2	Y300001-

PC300-8 (FEN01263-00)

FIG. C0100-001002B Cooling System, Shroud

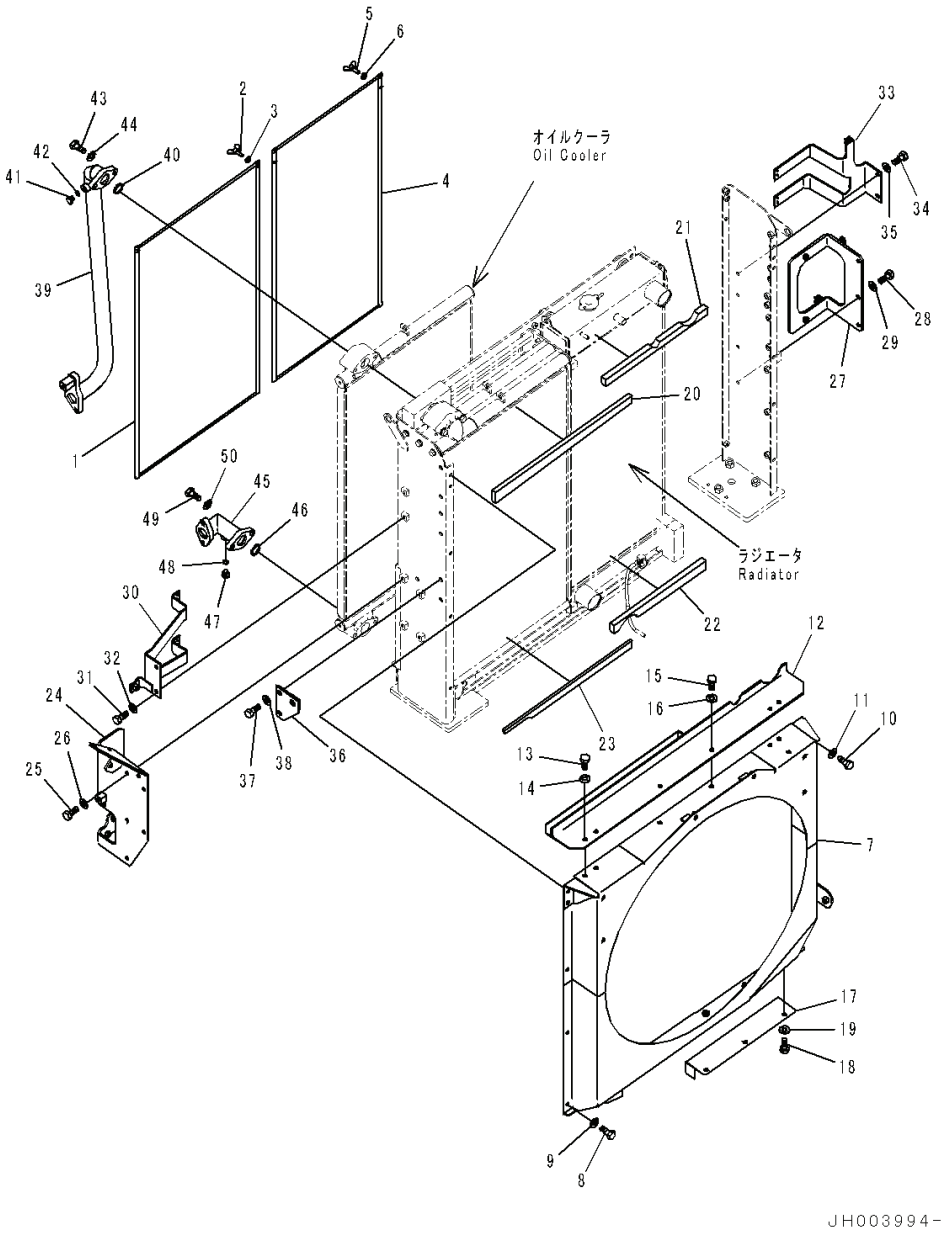

Index	Code	Part Number	Descreption	Qty	Serial Number
38		01643-31232	Washer	2	Y300001-
39		207-03-75211	Tube	3	Y300001-
40		07002-11423	O-ring	1	Y300001-
41		07040-11409	Plug	1	Y300001-
42		07000-13045	O-ring	1	Y300001-
43		01010-81235	Bolt	3	Y300001-
44		01643-31232	Washer	3	Y300001-
45		208-03-71350	Tube	1	Y300001-
46		07000-13045	O-ring	1	Y300001-
47		07040-11409	Plug	1	Y300001-
48		07002-11423	O-ring	1	Y300001-
49		01010-81235	Bolt	2	Y300001-
50		01643-31232	Washer	2	Y300001-

PC300-8 (FEN01263-00)

FIG. C0100-001003A Cooling System, With Auto Air Conditioner, Big Wind Quantity, Aftercooler and Condenser

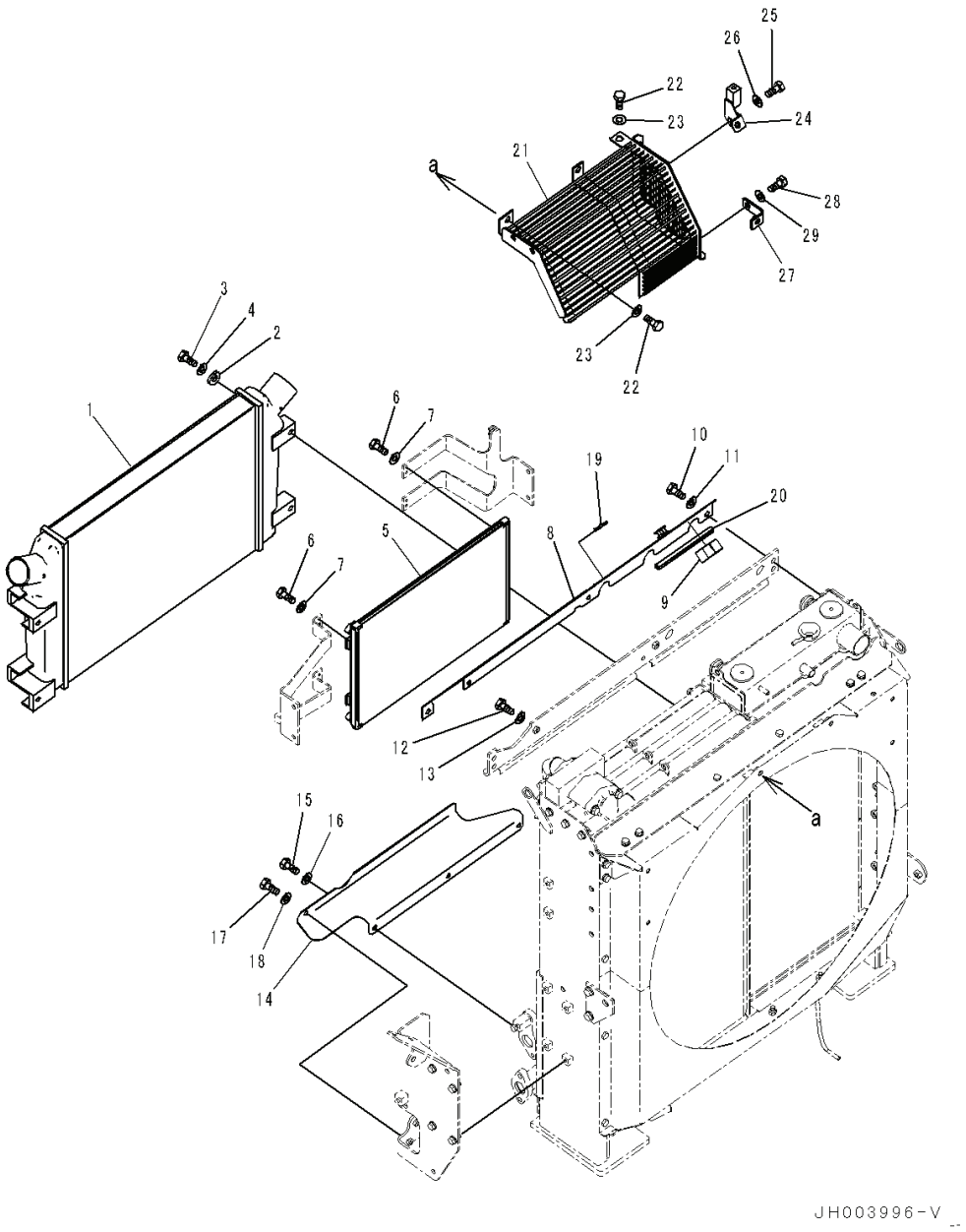

Index	Code	Part Number	Descreption	Qty	Serial Number
1		6152-62-5110	After Cooler Assembly	1	Y300001-
2		6110-23-6490	Spacer	4	Y300001-
3		01010-81045	Bolt	4	Y300001-
4		01643-31032	Washer	4	Y300001-
5		208-979-7520	Condenser Assembly	1	Y300001-
6		01010-80616	Bolt	8	Y300001-
7		01643-30623	Washer	8	Y300001-
8		207-03-76361	Cover	1	Y300001-
9		208-03-71770	Seal	1	Y300001-
10		01010-81225	Bolt	2	Y300001-
11		01643-31232	Washer	2	Y300001-
12		01010-81020	Bolt	2	Y300001-
13		01643-31032	Washer	2	Y300001-
14		207-03-75471	Cover	1	Y300001-
15		01010-81020	Bolt	4	Y300001-
16		01643-31032	Washer	4	Y300001-
17		01010-81020	Bolt	1	Y300001-
18		01643-31032	Washer	1	Y300001-
19		207-03-76460	Seal	1	Y300001-
20		208-60-75120	Trim	1	Y300001-
21		207-03-75521	Guard	1	Y300001-
22		01010-81225	Bolt	5	Y300001-
23		01643-31232	Washer	5	Y300001-
24		207-03-75610	Bracket	1	Y300001-
25		01010-81225	Bolt	1	Y300001-
26		01643-31232	Washer	1	Y300001-
27		207-979-6180	Bracket	1	Y300001-
28		01010-81225	Bolt	1	Y300001-
29		01643-31232	Washer	1	Y300001-

PC300-8 (FEN01263-00)

FIG. C0100-001004 Cooling System, Radiator Piping

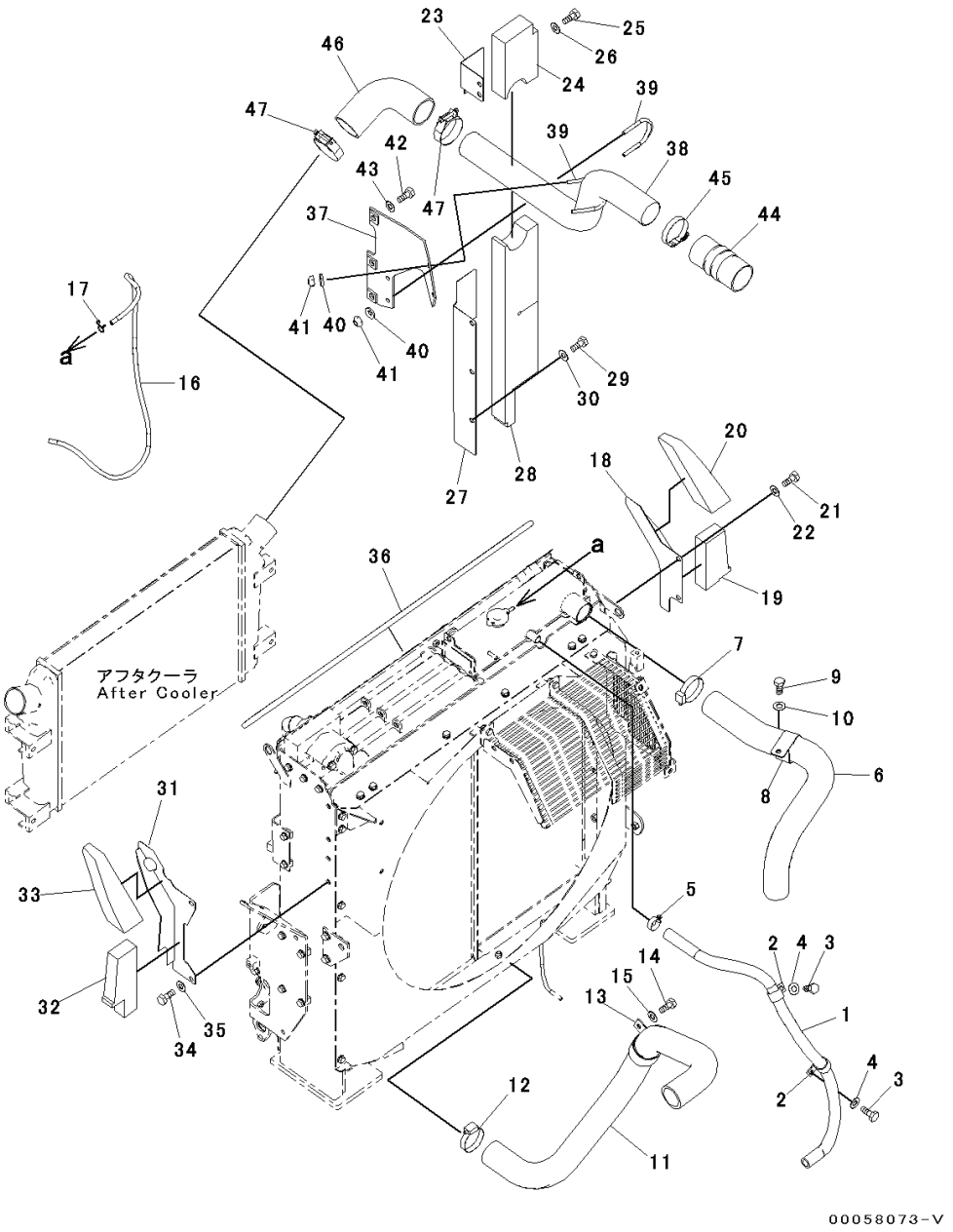

Index	Code	Part Number	Descreption	Qty	Serial Number
		Note: This list covers following specifications.			
		With Auto Air Conditioner, Big Wind Quantity			
		With Auto Air Conditioner, EU Safety Regulation			
1		208-03-72151	Hose	1	Y300001-
2		04434-53212	Clip	2	Y300001-
3		01010-81220	Bolt	2	Y300001-
4		01643-31232	Washer	2	Y300001-
5		07281-00359	Clamp	1	Y300001-
6		207-03-75640	Hose	1	Y300001-
7		07289-00070	Clamp	1	Y300001-
8		207-03-51530	Clip	1	Y300001-
9		01010-81230	Bolt	1	Y300001-
10		01643-31232	Washer	1	Y300001-
11		207-03-75311	Hose	1	Y300001-
12		07289-00070	Clamp	1	Y300001-
13		207-03-51530	Clip	1	Y300001-
14		01010-81230	Bolt	1	Y300001-
15		01643-31232	Washer	1	Y300001-
16		21M-03-15260	Hose	1	Y300001-
17		206-03-43340	Clip	1	Y300001-
18		207-03-75360	Cover	1	Y300001-
19		207-03-75410	• Seal	1	Y300001-
20		207-03-75460	• Seal	1	Y300001-
21		01010-81225	Bolt	2	Y300001-
22		01643-31232	Washer	2	Y300001-
23		207-03-75371	Cover	1	Y300001-
24		207-03-75431	• Seal	1	Y300001-
25		01010-81225	Bolt	2	Y300001-
26		01643-31232	Washer	2	Y300001-
27		207-03-75381	Cover	1	Y300001-
28		207-03-75441	• Seal	1	Y300001-
29		01010-81225	Bolt	3	Y300001-
30		01643-31232	Washer	3	Y300001-
31		207-03-75351	Cover	1	Y300001-
32		207-03-75391	• Seal	1	Y300001-
33		207-03-75450	• Seal	1	Y300001-
34		01010-81225	Bolt	2	Y300001-
35		01643-31232	Washer	2	Y300001-
36		208-03-71410	Seal	1	Y300001-
37		207-01-75220	Bracket	1	Y300001-

PC300-8 (FEN01263-00)

FIG. C0100-001004 Cooling System, Radiator Piping

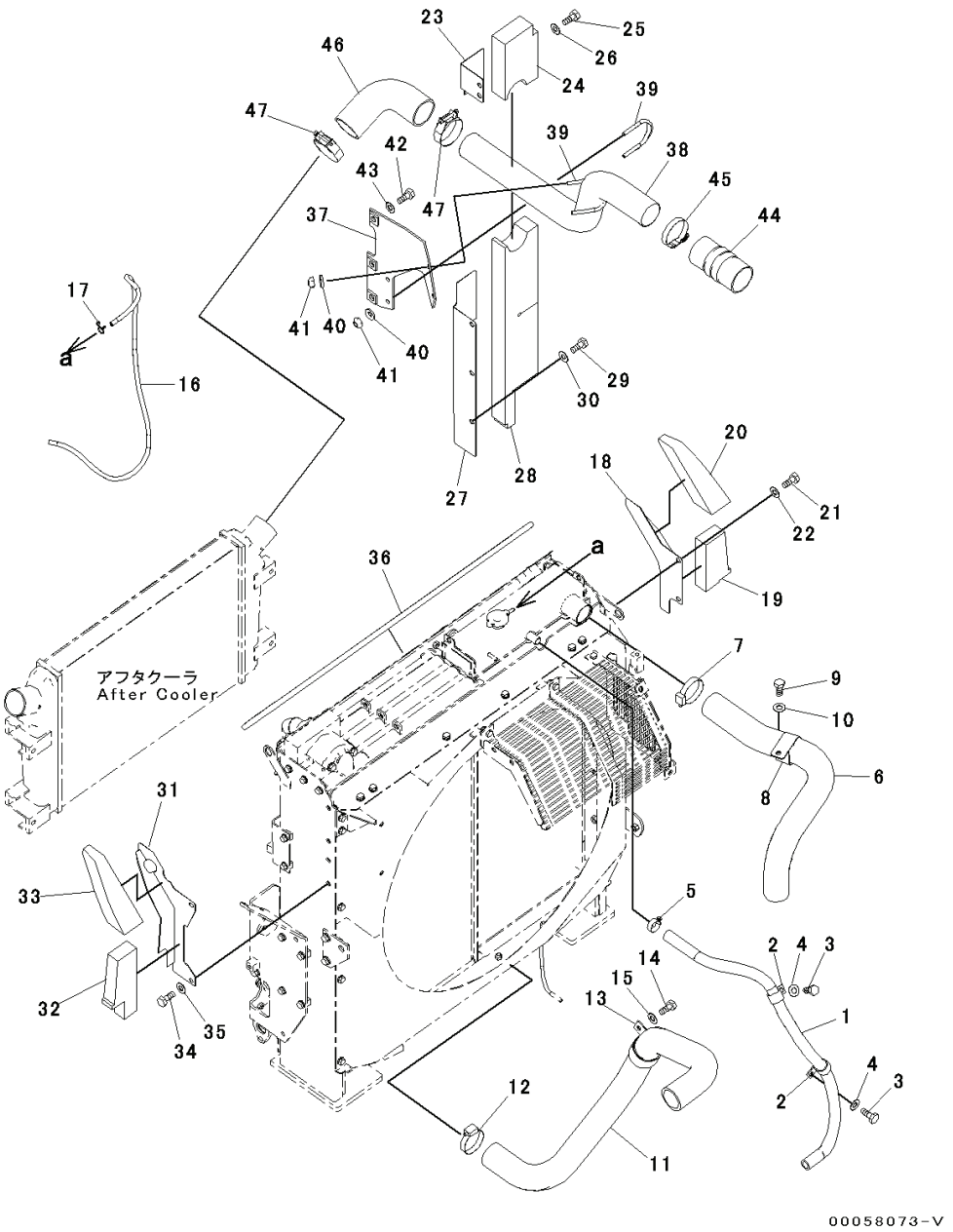

Index	Code	Part Number	Descreption	Qty	Serial Number
38		207-01-75231	Tube	1	Y300001-
39		07283-37663	Clip	2	Y300001-
40		01643-31032	Washer	4	Y300001-
41		01597-01009	Nut	4	Y300001-
42		01010-81235	Bolt	3	Y300001-
43		01643-31232	Washer	3	Y300001-
44		6152-12-4420	Hose	1	Y300001-
45		07299-00080	Clamp	1	Y300001-
46		207-01-75270	Hose	1	Y300001-
47		207-01-75340	Clamp	2	Y300001-

PC300-8 (FEN01263-00)

FIG. C0100-001005 Cooling System, Stay and Sound Sheet

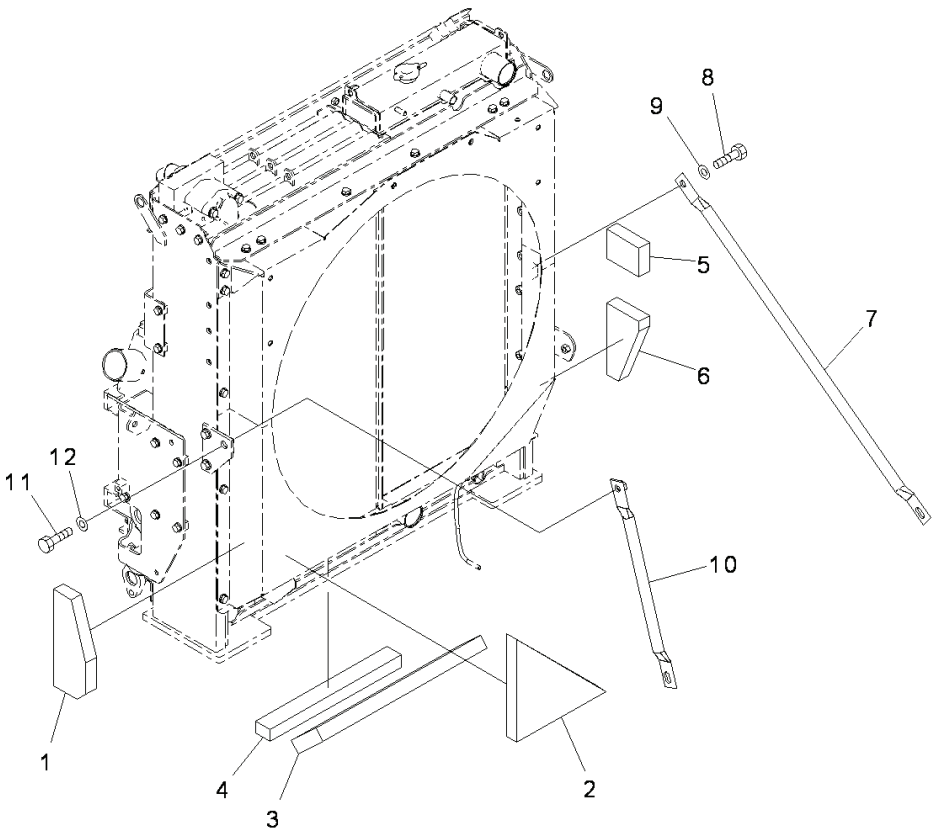

Index	Code	Part Number	Descreption	Qty	Serial Number
		Note: This list covers following specifications.			
		With Auto Air Conditioner, Big Wind Quantity			
		With Auto Air Conditioner, EU Safety Regulation			
1		207-03-76130	Sheet	1	Y300001-
2		207-03-76140	Sheet	1	Y300001-
3		207-03-76150	Sheet	1	Y300001-
4		207-03-76160	Sheet	1	Y300001-
5		207-03-76181	Sheet	1	Y300001-
6		207-03-76190	Sheet	1	Y300001-
7		207-03-71211	Stay	1	Y300001-
8		01010-81640	Bolt	1	Y300001-
9		01643-31645	Washer	1	Y300001-
10		22U-03-22280	Stay	1	Y300001-
11		01010-81635	Bolt	1	Y300001-
12		01643-31645	Washer	1	Y300001-

FIG. C0100-001006A Cooling System, With Auto Air Conditioner, Big Wind Quantity, Air Cooler Piping and Sub Tank

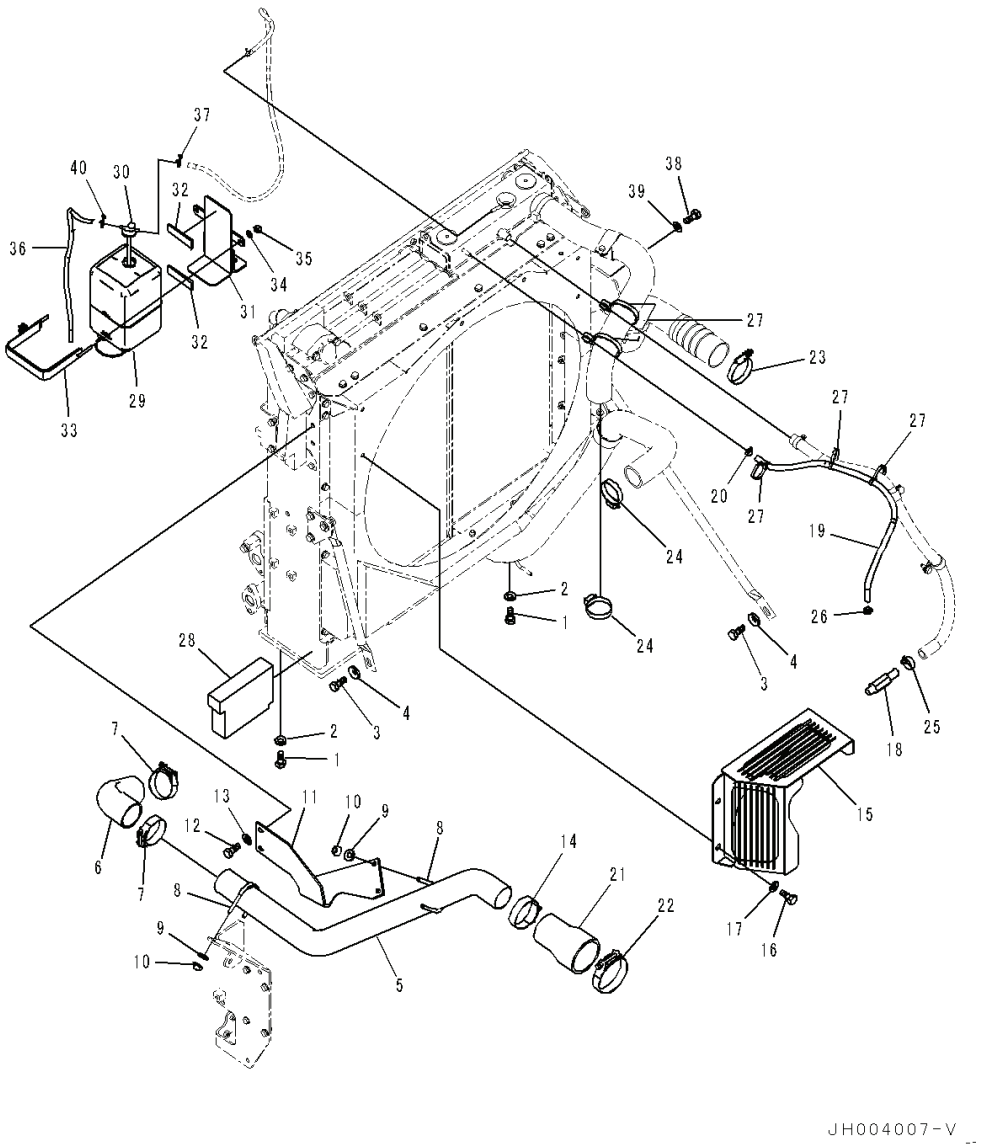

Index	Code	Part Number	Descreption	Qty	Serial Number
1		01010-81640	Bolt	6	Y300001-
2		01643-31645	Washer	6	Y300001-
3		01010-81640	Bolt	2	Y300001-
4		21T-54-16150	Washer	2	Y300001-
5		207-01-75241	Tube	1	Y300001-
6		207-01-75250	Hose	1	Y300001-
7		207-01-75340	Clamp	2	Y300001-
8		07283-37663	Clip	2	Y300001-
9		01643-31032	Washer	4	Y300001-
10		01597-01009	Nut	4	Y300001-
11		207-01-75210	Bracket	1	Y300001-
12		01010-81230	Bolt	2	Y300001-
13		01643-31232	Washer	2	Y300001-
14		207-03-76440	Clamp	1	Y300001-
15		207-03-75511	Guard	1	Y300001-
16		01010-81225	Bolt	4	Y300001-
17		01643-31232	Washer	4	Y300001-
18		207-03-75330	Nipple	1	Y300001-
19		09483-10309	Hose	1	Y300001-
20		11Y-09-11140	Clip	1	Y300001-
21		207-03-76430	Hose	1	Y300001-
22		14X-01-35570	Clamp	1	Y300001-
23		07299-00080	Clamp	1	Y300001-
24		07289-00070	Clamp	2	Y300001-
25		07281-00359	Clamp	1	Y300001-
26		11Y-09-11140	Clip	1	Y300001-
27		134-03-61410	Band	5	Y300001-
28		207-46-77340	Seal	1	Y300001-
29		419-03-21320	Tank, Reservoir	1	Y300001-
30		421-03-22170	• Cap	1	Y300001-
31		207-03-75620	Bracket	1	Y300001-
32		205-03-71440	• Sheet	2	Y300001-
33		207-03-75630	Band	1	Y300001-
34		01643-30823	Washer	2	Y300001-
35		01580-10806	Nut	2	Y300001-
36		208-03-58310	Hose	1	Y300001-
37		206-03-43340	Clip	1	Y300001-
38		01010-81230	Bolt	2	Y300001-
39		01643-31232	Washer	2	Y300001-
40		206-03-43340	Clip	1	Y300001-

PC300-8 (FEN01263-00)

FUEL SYSTEM

FIG. D0100-001001A Fuel Tank

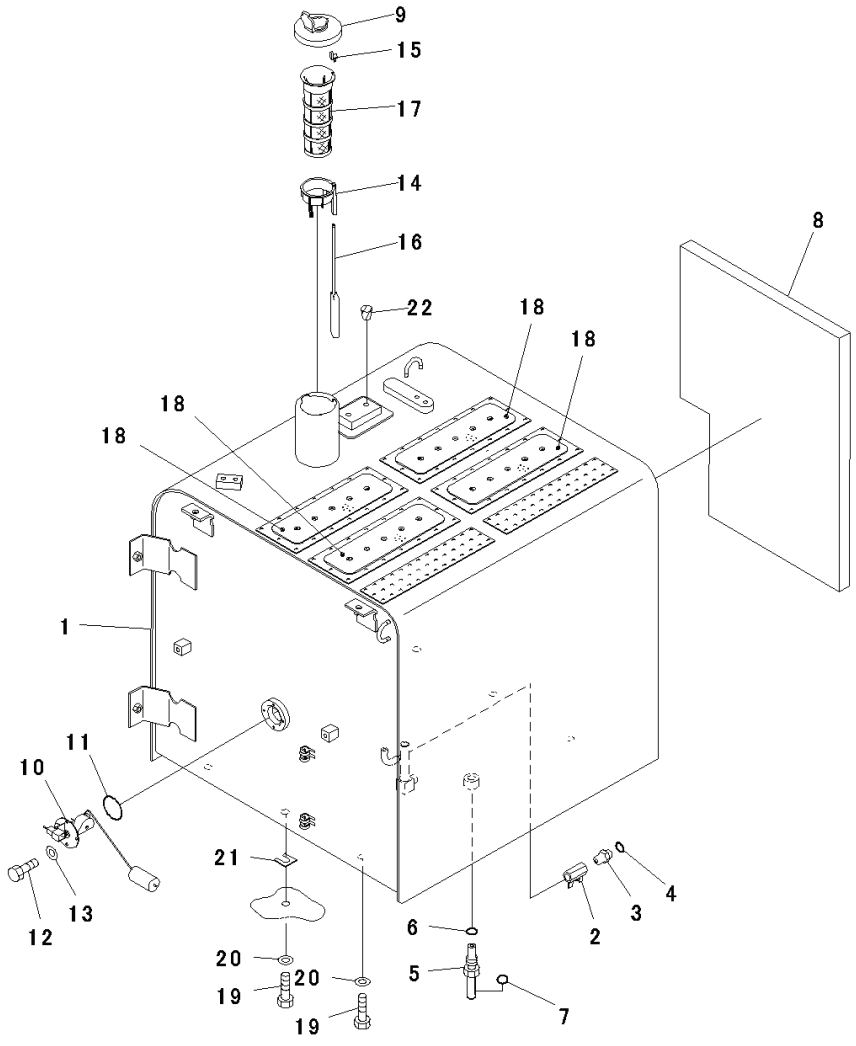

Index	Code	Part Number	Descreption	Qty	Serial Number
1		207-04-75111	Tank	1	Y300001-
2		07700-50455	Valve, Fuel Drain	1	Y300001-
3		8255-62-4591	Connector	1	Y300001-
4		02896-11012	O-ring	1	Y300001-
5		207-04-75390	Elbow	1	Y300001-
6		07002-12034	O-ring	1	Y300001-
7		02896-11009	O-ring	1	Y300001-
8		207-04-75310	Sheet	1	Y300001-
9		20Y-04-11161	Cap	1	Y300001-
		20Y-04-11240	• Packing	1	Y300001-
10		7861-92-5810	Sensor	1	Y300001-
11		07000-13050	O-ring	1	Y300001-
12		01010-80612	Bolt	4	Y300001-
13		01643-30623	Washer	4	Y300001-
		22U-04-21241	Strainer Assembly	1	Y300001-
		22U-04-21200	• Float Assembly	1	Y300001-
14		22U-04-21210	• • Guide	1	Y300001-
15		20Y-04-21580	• • Cap	1	Y300001-
16		22U-04-21220	• • Float	1	Y300001-
17		07056-18425	• Strainer	1	Y300001-
18		20Y-00-42110	Plate	4	Y300001-
19		01010-81635	Bolt	6	Y300001-
20		01643-31645	Washer	6	Y300001-
21		195-03-11570	Shim, T=1.0mm	2	Y300001-
22		07049-01215	Plug	2	Y300001-

PC300-8 (FEN01263-00)

FIG. D0100-002001A Fuel Tank, For Machine With Fuel Refill Pump

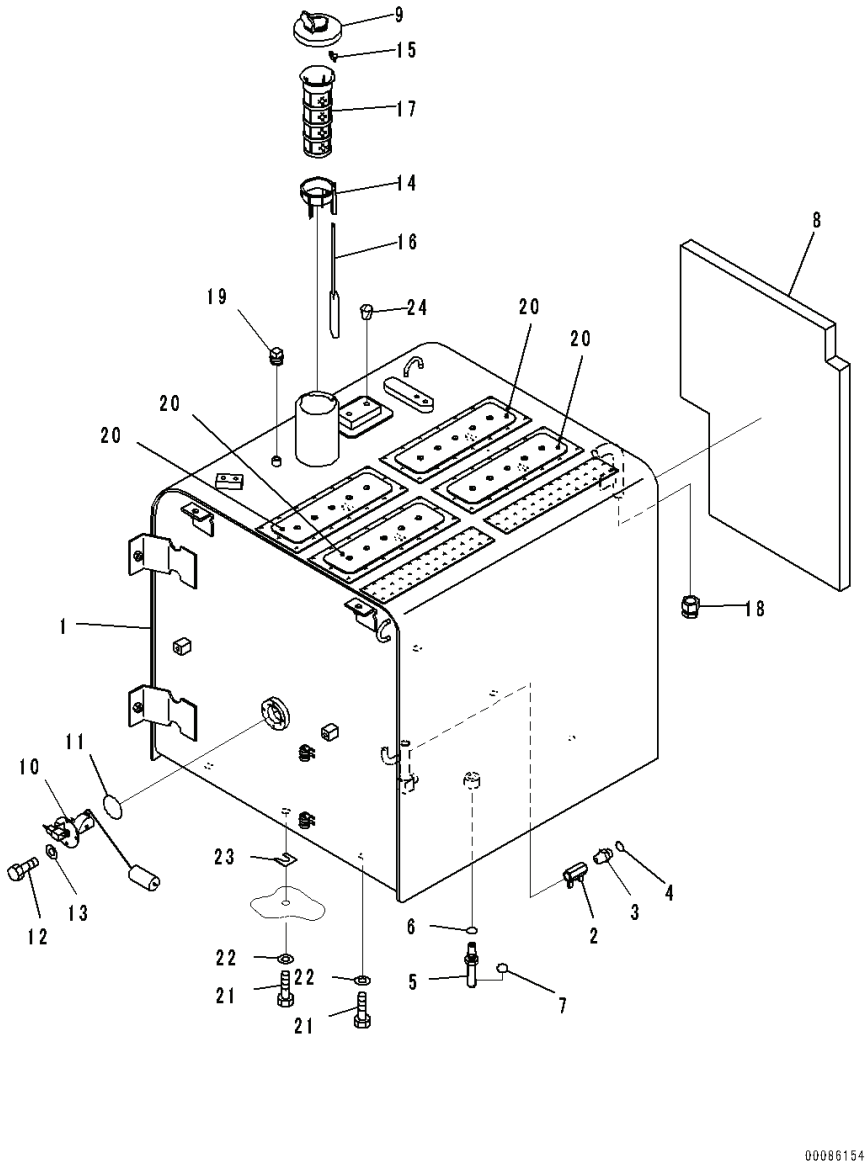

Index	Code	Part Number	Descreption	Qty	Serial Number
1		207-04-75171	Tank	1	Y300001-
2		07700-50455	Valve, Fuel Drain	1	Y300001-
3		8255-62-4591	Connector	1	Y300001-
4		02896-11012	O-ring	1	Y300001-
5		207-04-75390	Elbow	1	Y300001-
6		07002-12034	O-ring	1	Y300001-
7		02896-11009	O-ring	1	Y300001-
8		207-04-75250	Sheet	1	Y300001-
9		20Y-04-11161	Cap	1	Y300001-
		20Y-04-11240	• Packing	1	Y300001-
10		7861-92-5810	Sensor	1	Y300001-
11		07000-13050	O-ring	1	Y300001-
12		01010-80612	Bolt	4	Y300001-
13		01643-30623	Washer	4	Y300001-
		22U-04-21241	Strainer Assembly	1	Y300001-
		22U-04-21200	• Float Assembly	1	Y300001-
14		22U-04-21210	• • Guide	1	Y300001-
15		20Y-04-21580	• • Cap	1	Y300001-
16		22U-04-21220	• • Float	1	Y300001-
17		07056-18425	• Strainer	1	Y300001-
18		203-04-K1140	End	1	Y300001-
19		07042-30211	Plug, Taper	1	Y300001-
20		20Y-00-42110	Plate	4	Y300001-
21		01010-81635	Bolt	6	Y300001-
22		01643-31645	Washer	6	Y300001-
23		195-03-11570	Shim, T=1.0mm	2	Y300001-
24		07049-01215	Plug	2	Y300001-

PC300-8 (FEN01263-00)

FIG. D0200-001001 Fuel Supply Piping, For Extra Poor Fuel, Fuel Piping

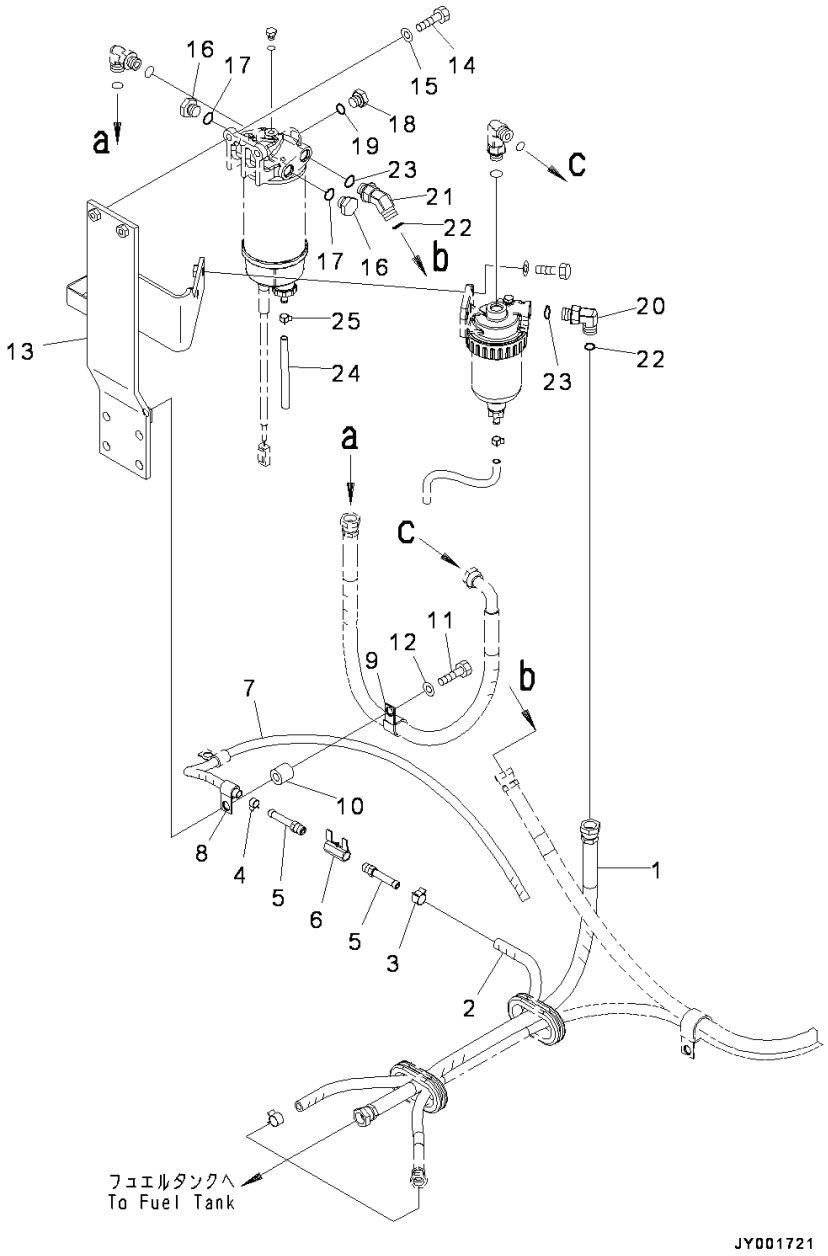

Index	Code	Part Number	Descreption	Qty	Serial Number
1		02762-00407	Hose	1	Y300001-
2		07288-01007	Hose	1	Y300001-
3		11Y-09-11140	Clip	1	Y300001-
4		07285-00115	Clip	1	Y300001-
5		20Y-04-31170	Nipple	2	Y300001-
6		07700-50240	Valve	1	Y300001-
7		07270-01085	Tube	1	Y300001-
8		04434-51312	Clip	1	Y300001-
9		04434-52112	Clip	1	Y300001-
10		195-33-11220	Spacer	1	Y300001-
11		01010-81250	Bolt	1	Y300001-
12		01643-31232	Washer	1	Y300001-
13		207-04-75350	Bracket	1	Y300001-
14		01010-81035	Bolt	2	Y300001-
15		01643-31032	Washer	2	Y300001-
16		07040-11812	Plug	2	Y300001-
17		07002-11823	O-ring	2	Y300001-
18		07040-11612	Plug	1	Y300001-
19		07002-11623	O-ring	1	Y300001-
20		02782-10420	Elbow	1	Y300001-
21		20U-62-41610	Elbow	1	Y300001-
22		07002-11823	O-ring	2	Y300001-
23		02896-11012	O-ring	2	Y300001-
24		07270-00825	Tube	1	Y300001-
25		07285-00100	Clip	1	Y300001-

PC300-8 (FEN01263-00)

FIG. D0200-001002 Fuel Supply Piping, For Extra Poor Fuel, Pre Filter Bracket

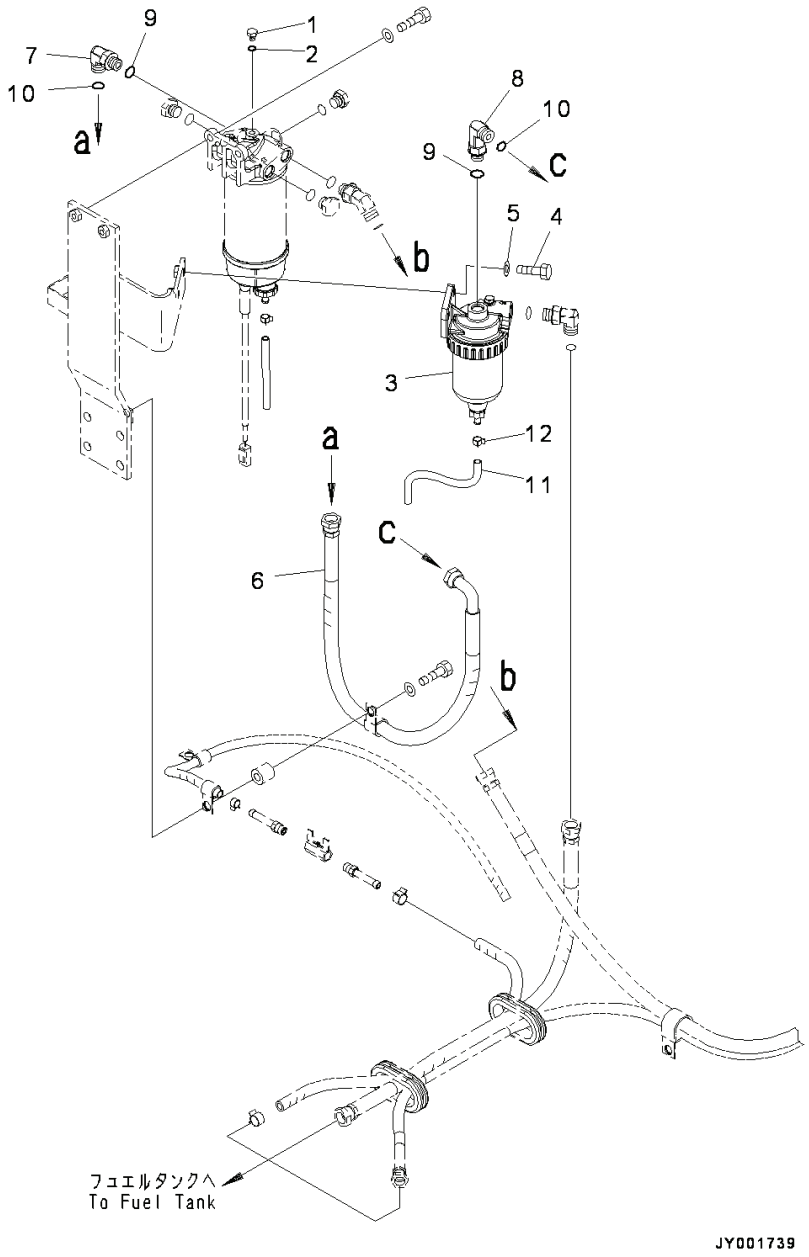

Index	Code	Part Number	Descreption	Qty	Serial Number
1		07040-10807	Plug	1	Y300001-
2		07002-10823	O-ring	1	Y300001-
3		600-311-7610	Water Separator	1	Y300001-
4		01010-81035	Bolt	2	Y300001-
5		01643-31032	Washer	2	Y300001-
6		207-04-75370	Hose Assembly	1	Y300001-
7		02782-10420	Elbow	1	Y300001-
8		02782-1042A	Elbow	1	Y300001-
9		07002-11823	O-ring	2	Y300001-
10		02896-11012	O-ring	2	Y300001-
11		07270-00835	Tube	1	Y300001-
12		07285-00100	Clip	1	Y300001-

PC300-8 (FEN01263-00)

FIG. D0200-001003 Fuel Supply Piping, For Extra Poor Fuel, Clamp

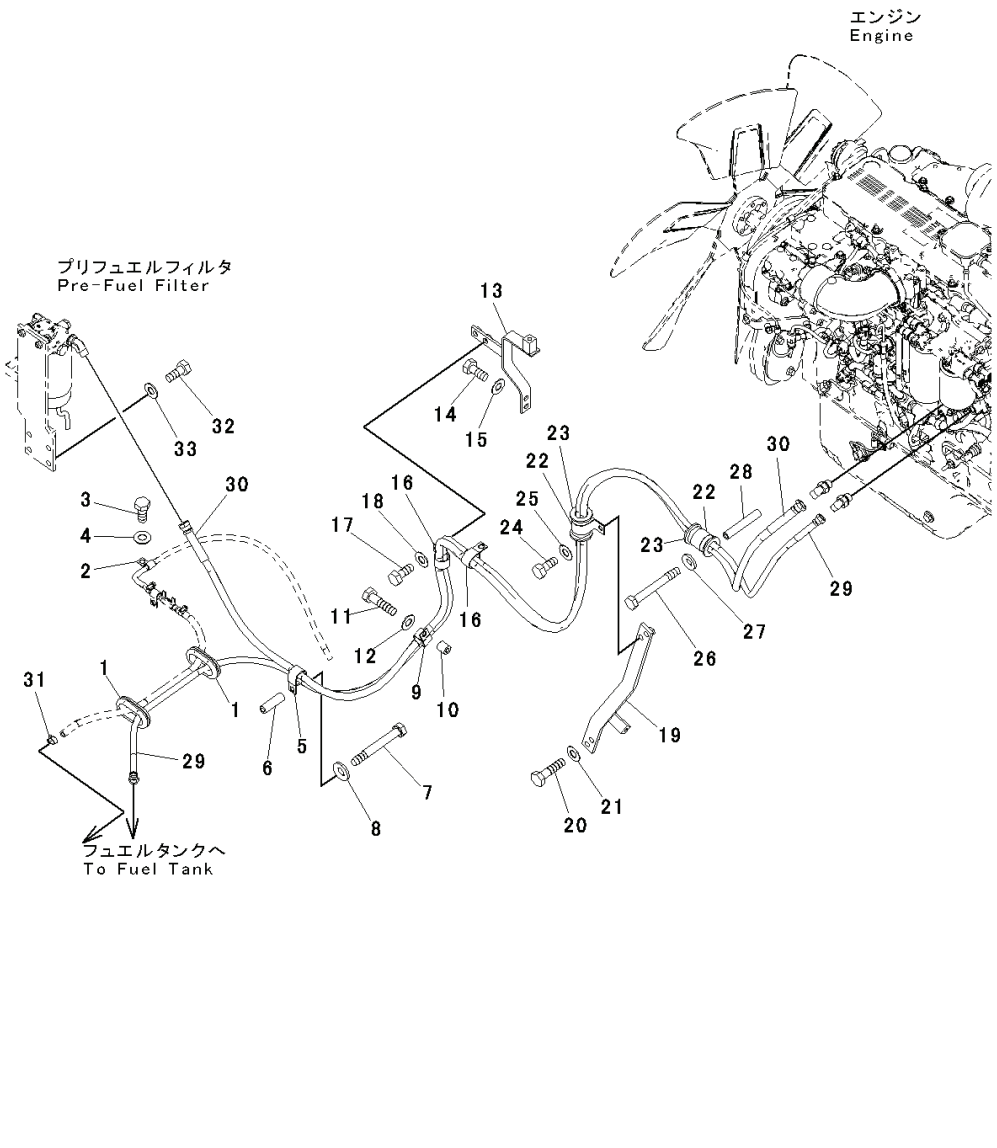

Index	Code	Part Number	Descreption	Qty	Serial Number
1		150-952-7160	Grommet	2	Y300001-
2		04434-51312	Clip	1	Y300001-
3		01010-81225	Bolt	1	Y300001-
4		01643-31232	Washer	1	Y300001-
5		04434-53412	Clip	1	Y300001-
6		195-979-3570	Collar	1	Y300001-
7		01011-81200	Bolt	1	Y300001-
8		01643-31232	Washer	1	Y300001-
9		04434-53412	Clip	1	Y300001-
10		195-33-11220	Spacer	1	Y300001-
11		01010-81245	Bolt	1	Y300001-
12		01643-31232	Washer	1	Y300001-
13		207-04-75130	Bracket	1	Y300001-
14		01010-81225	Bolt	2	Y300001-
15		01643-31232	Washer	2	Y300001-
16		04434-53412	Clip	2	Y300001-
17		01010-81225	Bolt	2	Y300001-
18		01643-31232	Washer	2	Y300001-
19		207-04-71161	Bracket	1	Y300001-
20		01010-81245	Bolt	2	Y300001-
21		01643-31232	Washer	2	Y300001-
22		21T-62-76850	Clip	2	Y300001-
23		07095-01034	Cushion	2	Y300001-
24		01010-81225	Bolt	1	Y300001-
25		01643-31232	Washer	1	Y300001-
26		01011-81040	Bolt	1	Y300001-
27		01643-31032	Washer	1	Y300001-
28		6151-51-5490	Spacer	1	Y300001-
29		02762-00335	Hose	1	Y300001-
30		02762-00432	Hose, Face Seal Type	1	Y300001-
31		11Y-09-11140	Clip	1	Y300001-
32		01010-81240	Bolt	4	Y300001-
33		01643-31232	Washer	4	Y300001-

ELECTRICAL SYSTEM

FIG. E0100-002001 Battery, With Large Capacity Battery

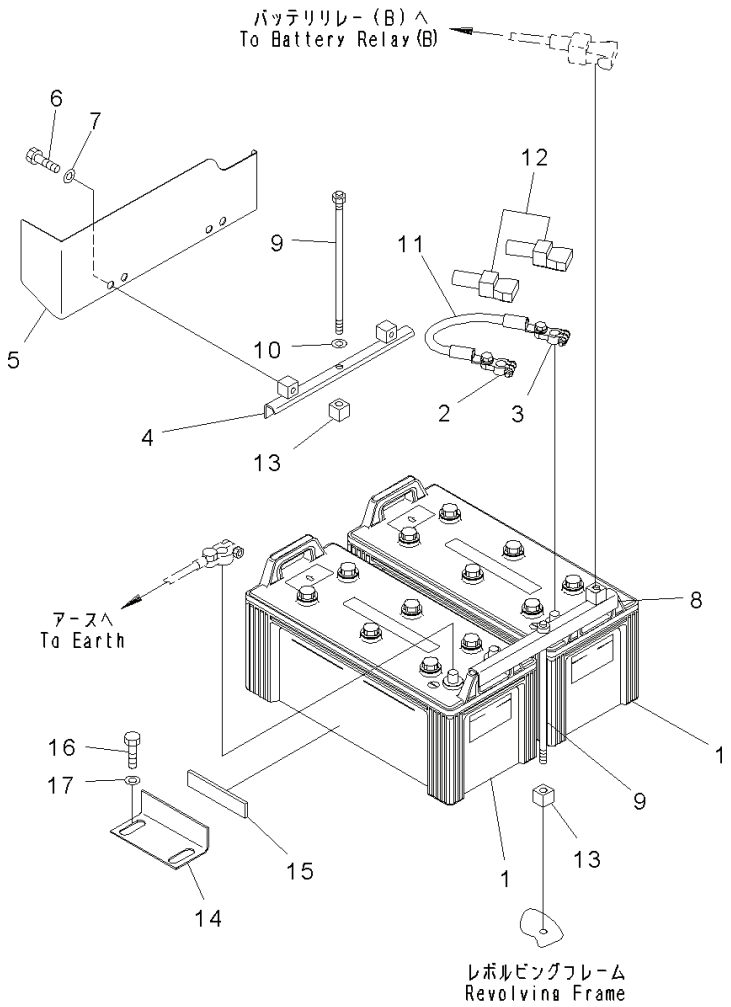

Index	Code	Part Number	Descreption	Qty	Serial Number
1		207-06-61280	Battery, Wet, (195G51)	2	Y300001-
2		08000-00000	Terminal, (+)	2	Y300001-
3		08000-00001	Terminal, (-)	2	Y300001-
4		207-06-75310	Clamp	1	Y300001-
5		207-06-75322	Cover	1	Y300001-
6		01010-81225	Bolt	2	Y300001-
7		01643-31232	Washer	2	Y300001-
8		207-06-51470	Clamp	1	Y300001-
9		207-06-11370	Bolt	2	Y300001-
10		01643-31232	Washer	2	Y300001-
11		08028-64035	Cable, Ground	1	Y300001-
12		08038-42511	Cap	2	Y300001-
13		207-06-51461	Block	2	Y300001-
14		207-06-61461	Bracket	1	Y300001-
15		207-06-51330	• Sheet	1	Y300001-
16		01010-81225	Bolt	2	Y300001-
17		175-54-34170	Washer	2	Y300001-

FIG. E0200-001001A Electric Wiring, Starting Harness

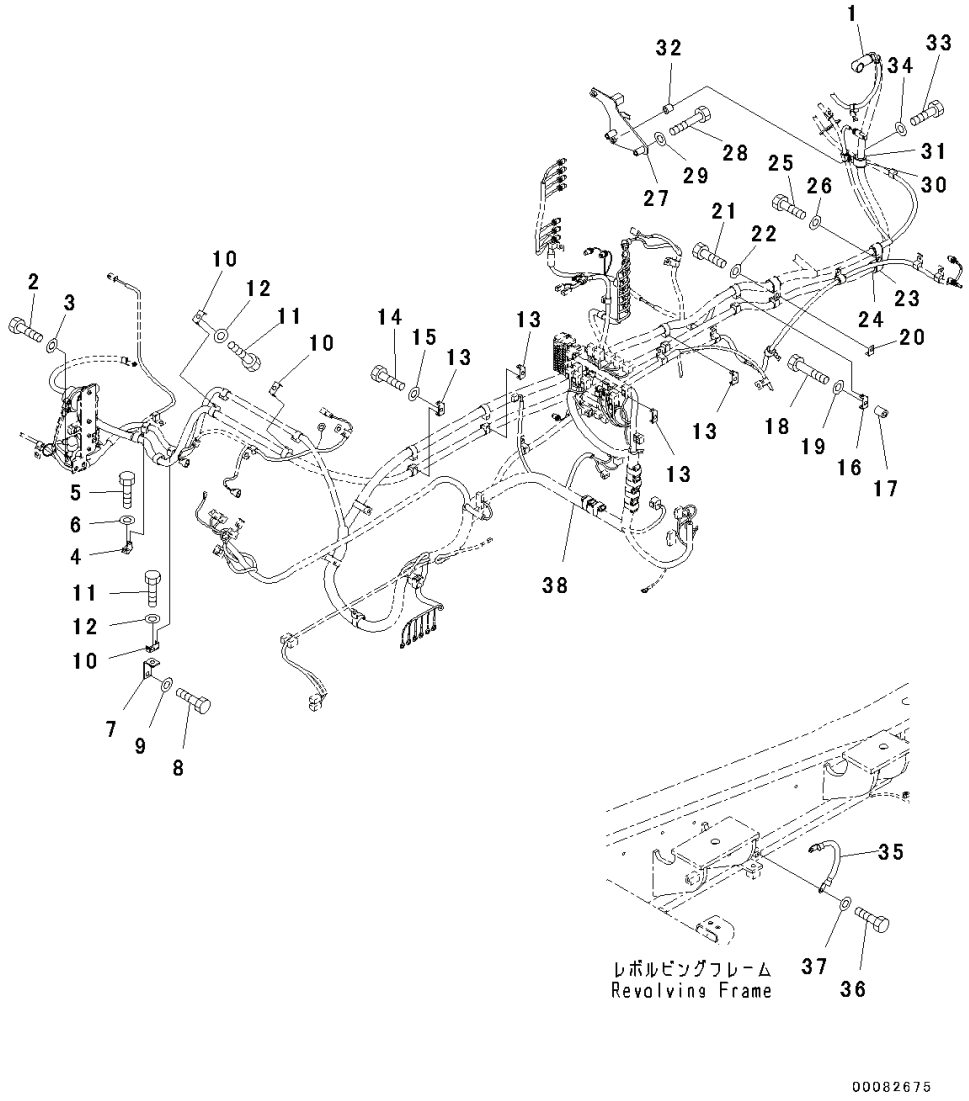

Index	Code	Part Number	Descreption	Qty	Serial Number
1		08038-10035	Cap	1	Y300001-
2		01010-81225	Bolt	2	Y300001-
3		01643-31232	Washer	2	Y300001-
4		08057-22012	Clip	1	Y300001-
5		01010-81225	Bolt	1	Y300001-
6		01643-31232	Washer	1	Y300001-
7		207-979-6180	Bracket	1	Y300001-
8		01010-81225	Bolt	1	Y300001-
9		01643-31232	Washer	1	Y300001-
10		08057-22012	Clip	3	Y300001-
11		01010-81225	Bolt	3	Y300001-
12		01643-31232	Washer	3	Y300001-
13		08057-22012	Clip	4	Y300001-
14		01010-81225	Bolt	4	Y300001-
15		01643-31232	Washer	4	Y300001-
16		08057-22012	Clip	1	Y300001-
17		142-03-11160	Spacer	1	Y300001-
18		01010-81260	Bolt	1	Y300001-
19		01643-31232	Washer	1	Y300001-
20		08057-12012	Clip	1	Y300001-
21		01010-81225	Bolt	1	Y300001-
22		01643-31232	Washer	1	Y300001-
23		04434-53212	Clip	1	Y300001-
24		07095-20523	Cushion	1	Y300001-
25		01010-81225	Bolt	1	Y300001-
26		01643-31232	Washer	1	Y300001-
27		207-06-75190	Bracket	1	Y300001-
28		01010-80855	Bolt	2	Y300001-
29		01643-30823	Washer	2	Y300001-
30		04434-53212	Clip	1	Y300001-
31		198-06-53610	Cushion	1	Y300001-
32		195-33-11220	Spacer	1	Y300001-
33		01010-81250	Bolt	1	Y300001-
34		01643-31232	Washer	1	Y300001-
35		08028-44035	Cable, Ground	1	Y300001-
36		01010-81020	Bolt	2	Y300001-
37		01643-31032	Washer	2	Y300001-

FIG. E0200-001002 Electric Wiring, Main Harness (1/3)

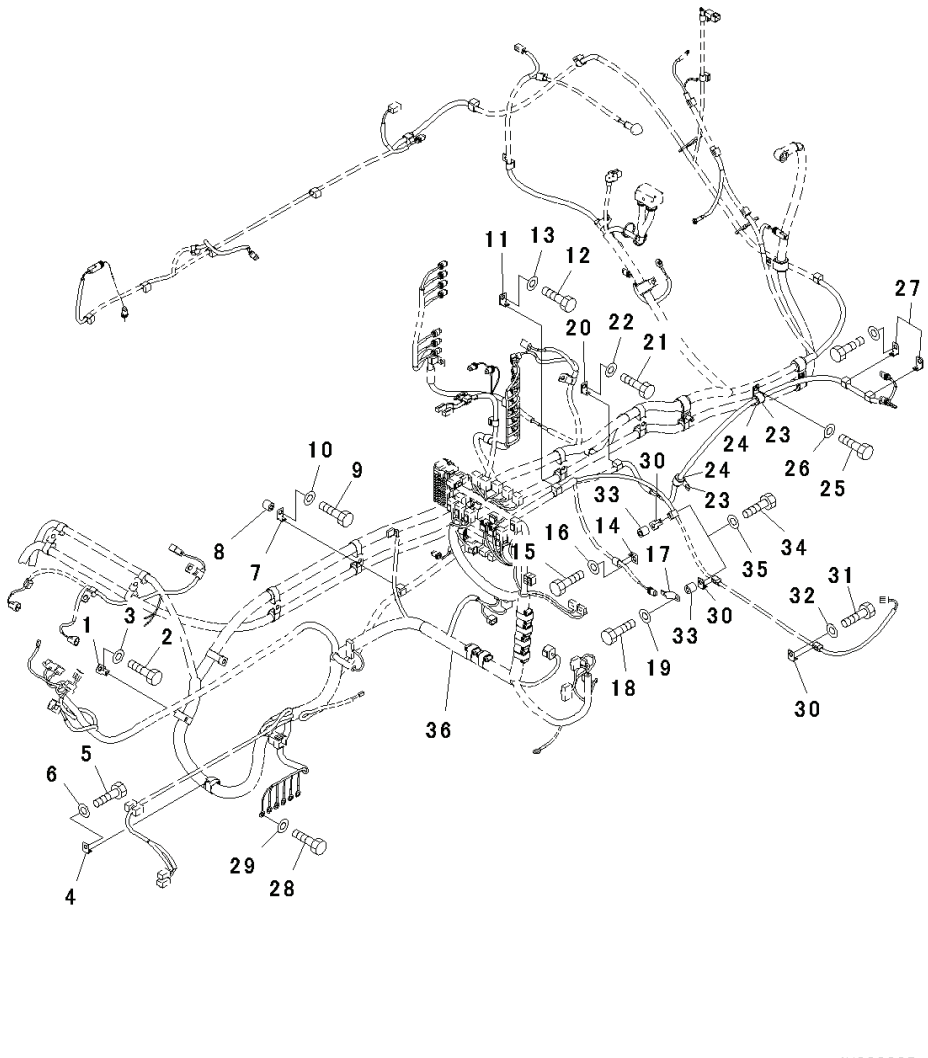

Index	Code	Part Number	Descreption	Qty	Serial Number
1		08057-12012	Clip	1	Y300001-
2		01010-81225	Bolt	1	Y300001-
3		01643-31232	Washer	1	Y300001-
4		08057-12012	Clip	1	Y300001-
5		01010-81225	Bolt	1	Y300001-
6		01643-31232	Washer	1	Y300001-
7		08057-12012	Clip	2	Y300001-
8		195-33-11220	Spacer	2	Y300001-
9		01010-81250	Bolt	2	Y300001-
10		01643-31232	Washer	2	Y300001-
11		08057-12012	Clip	1	Y300001-
12		01010-81225	Bolt	1	Y300001-
13		01643-31232	Washer	1	Y300001-
14		08057-12012	Clip	1	Y300001-
15		01010-81220	Bolt	1	Y300001-
16		01643-31232	Washer	1	Y300001-
17		08193-20012	Clip	1	Y300001-
18		01010-81220	Bolt	1	Y300001-
19		01643-31232	Washer	1	Y300001-
20		08057-12012	Clip	1	Y300001-
21		01010-81225	Bolt	1	Y300001-
22		01643-31232	Washer	1	Y300001-
23		04434-52112	Clip	2	Y300001-
24		07095-20314	Cushion	2	Y300001-
25		01010-81225	Bolt	2	Y300001-
26		01643-31232	Washer	2	Y300001-
27		08057-12012	Clip	2	Y300001-
28		01010-81020	Bolt	6	Y300001-
29		01643-31032	Washer	6	Y300001-
30		08057-12012	Clip	3	Y300001-
31		01010-81225	Bolt	1	Y300001-
32		01643-31232	Washer	1	Y300001-
33		195-33-11220	Spacer	2	Y300001-
34		01010-81250	Bolt	2	Y300001-
35		01643-31232	Washer	2	Y300001-
36		(207-06-76111)	Wiring Harness(Refer to Page 540)		-

FIG. E0200-001003 Electric Wiring, Main Harness (2/3)

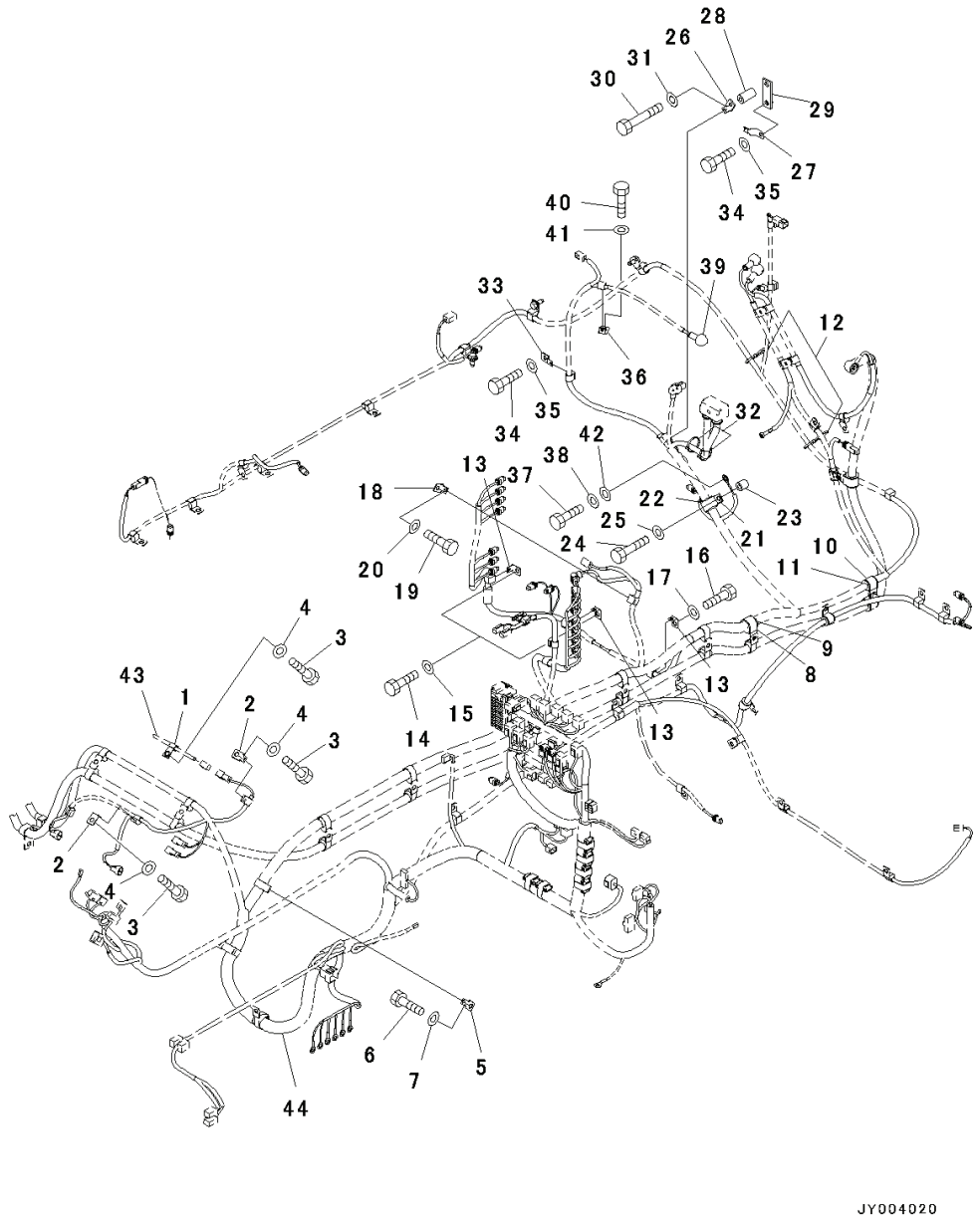

Index	Code	Part Number	Descreption	Qty	Serial Number
1		04434-51012	Clip	1	Y300001-
2		08057-12012	Clip	2	Y300001-
3		01010-81225	Bolt	3	Y300001-
4		01643-31232	Washer	3	Y300001-
5		08057-12012	Clip	1	Y300001-
6		01010-81225	Bolt	1	Y300001-
7		01643-31232	Washer	1	Y300001-
8		04434-53412	Clip	1	Y300001-
9		07095-20625	Cushion	1	Y300001-
10		04434-52712	Clip	1	Y300001-
11		07095-20418	Cushion	1	Y300001-
12		134-03-61410	Band	2	Y300001-
13		08057-12012	Clip	3	Y300001-
14		01010-81225	Bolt	2	Y300001-
15		01643-31232	Washer	2	Y300001-
16		01010-81225	Bolt	1	Y300001-
17		01643-31232	Washer	1	Y300001-
18		08057-12012	Clip	1	Y300001-
19		01010-81225	Bolt	1	Y300001-
20		01643-31232	Washer	1	Y300001-
21		04434-53212	Clip	1	Y300001-
22		198-06-53610	Cushion	1	Y300001-
23		195-33-11220	Spacer	1	Y300001-
24		01010-81245	Bolt	1	Y300001-
25		01643-31232	Washer	1	Y300001-
26		08057-12010	Clip	1	Y300001-
27		08193-20012	Clip	1	Y300001-
28		175-40-22540	Spacer	1	Y300001-
29		198-61-44110	Plate	1	Y300001-
30		01010-81075	Bolt	1	Y300001-
31		01643-31032	Washer	1	Y300001-
32		08034-20519	Band	3	Y300001-
33		08057-00810	Clip	1	Y300001-
34		01010-81020	Bolt	2	Y300001-
35		01643-31032	Washer	2	Y300001-
36		08057-12012	Clip	1	Y300001-
37		01010-81220	Bolt	1	Y300001-
38		01643-31232	Washer	1	Y300001-
39		08038-02027	Cap	1	Y300001-
40		01010-81220	Bolt	1	Y300001-

PC300-8 (FEN01263-00)

FIG. E0200-001003 Electric Wiring, Main Harness (2/3)

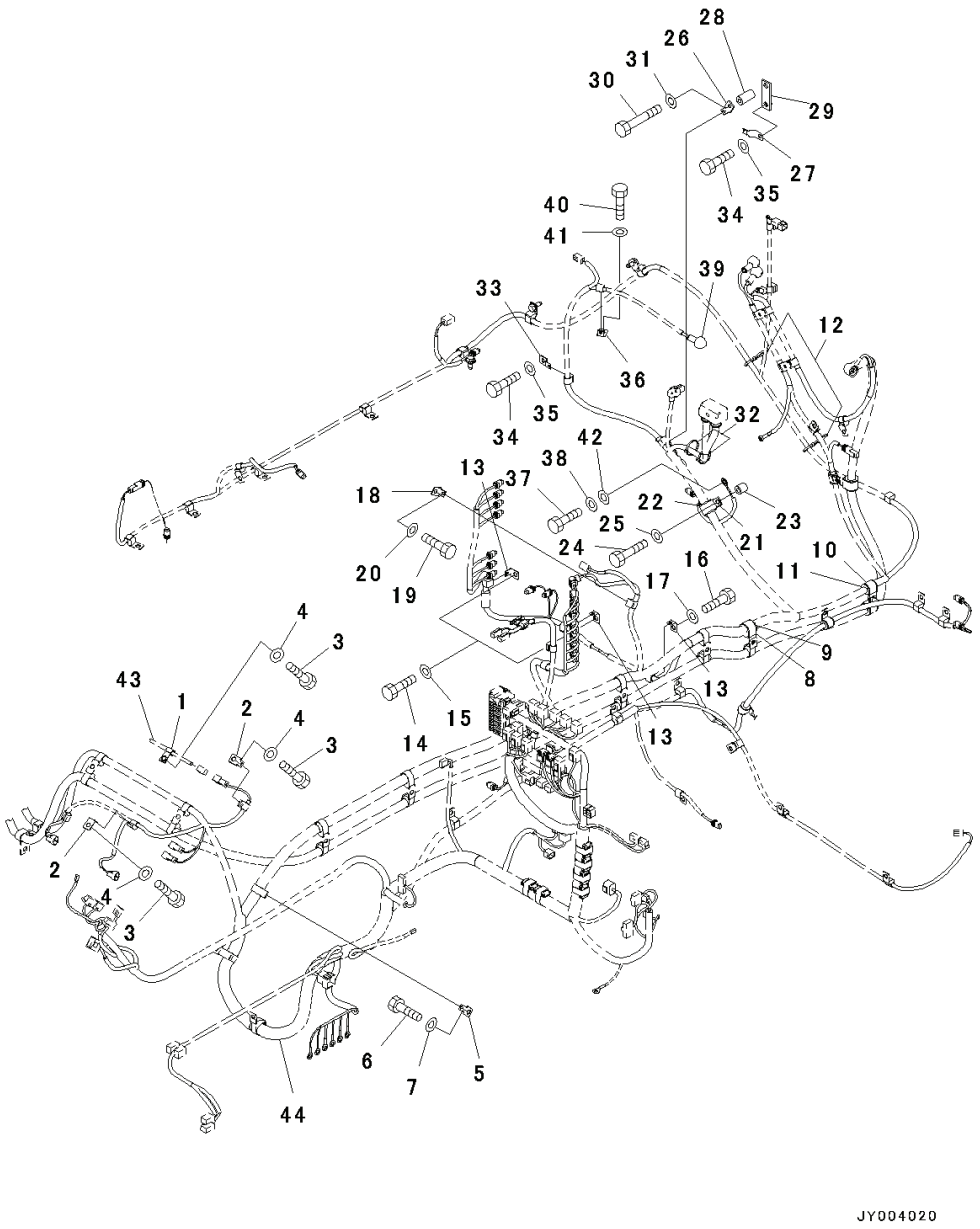

Index	Code	Part Number	Descreption	Qty	Serial Number
41		01643-31232	Washer	1	Y300001-
42		01643-31232	Washer	1	Y300001-
43		(207-70-31172)	Pin(Refer to Page 883)		-
44		(207-06-76111)	Wiring Harness(Refer to Page 540)		-

PC300-8 (FEN01263-00)

FIG. E0200-001004A Electric Wiring, Main Harness (3/3)

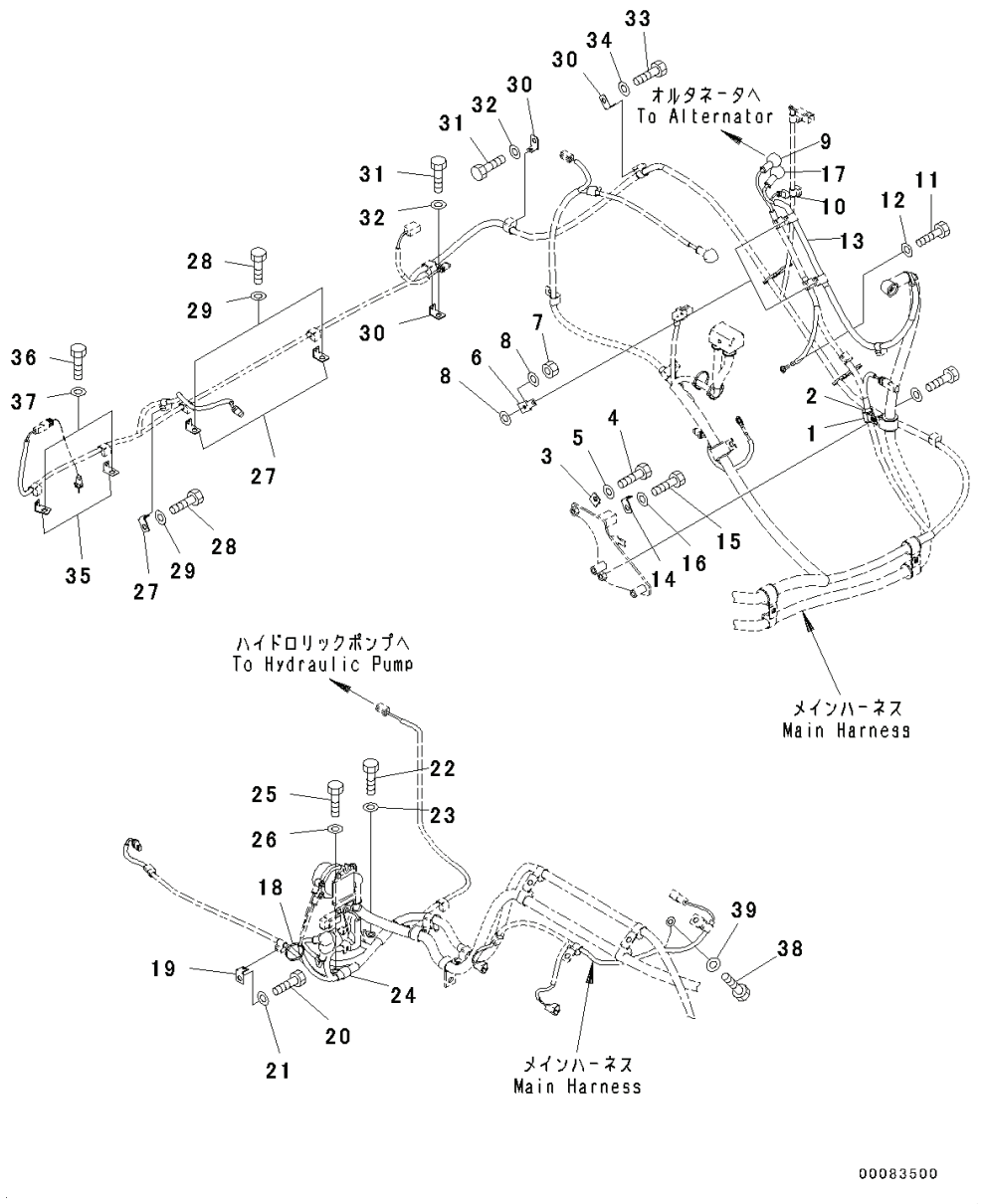

Index	Code	Part Number	Descreption	Qty	Serial Number
1		04434-51912	Clip	1	Y300001-
2		198-06-53540	Cushion	1	Y300001-
3		08057-12012	Clip	1	Y300001-
4		01010-81225	Bolt	1	Y300001-
5		01643-31232	Washer	1	Y300001-
6		08057-22008	Clip	2	Y300001-
7		01580-10605	Nut	2	Y300001-
8		01643-30623	Washer	4	Y300001-
9		08038-02027	Cap	1	Y300001-
10		08038-00519	Cap	1	Y300001-
11		01010-80816	Bolt	1	Y300001-
12		01643-30823	Washer	1	Y300001-
13		207-06-75150	Cable	1	Y300001-
14		08057-12012	Clip	1	Y300001-
15		01010-81225	Bolt	1	Y300001-
16		01643-31232	Washer	1	Y300001-
17		08038-02027	Cap	1	Y300001-
18		08034-20519	Band	1	Y300001-
19		08057-12012	Clip	2	Y300001-
20		01010-81225	Bolt	2	Y300001-
21		01643-31232	Washer	2	Y300001-
22		01010-81025	Bolt	1	Y300001-
23		01643-31032	Washer	1	Y300001-
24		04434-51912	Clip	1	Y300001-
25		01010-81225	Bolt	1	Y300001-
26		01643-31232	Washer	1	Y300001-
27		08057-12012	Clip	3	Y300001-
28		01010-81225	Bolt	3	Y300001-
29		01643-31232	Washer	3	Y300001-
30		08057-12012	Clip	3	Y300001-
31		01010-81225	Bolt	2	Y300001-
32		01643-31232	Washer	2	Y300001-
33		01010-81220	Bolt	1	Y300001-
34		01643-31232	Washer	1	Y300001-
35		08057-12012	Clip	2	Y300001-
36		01010-81225	Bolt	2	Y300001-
37		01643-31232	Washer	2	Y300001-
38		01010-81225	Bolt	1	Y300001-
39		01643-31232	Washer	1	Y300001-

PC300-8 (FEN01263-00)

FIG. E0200-001005 Electric Wiring, Working Lamp

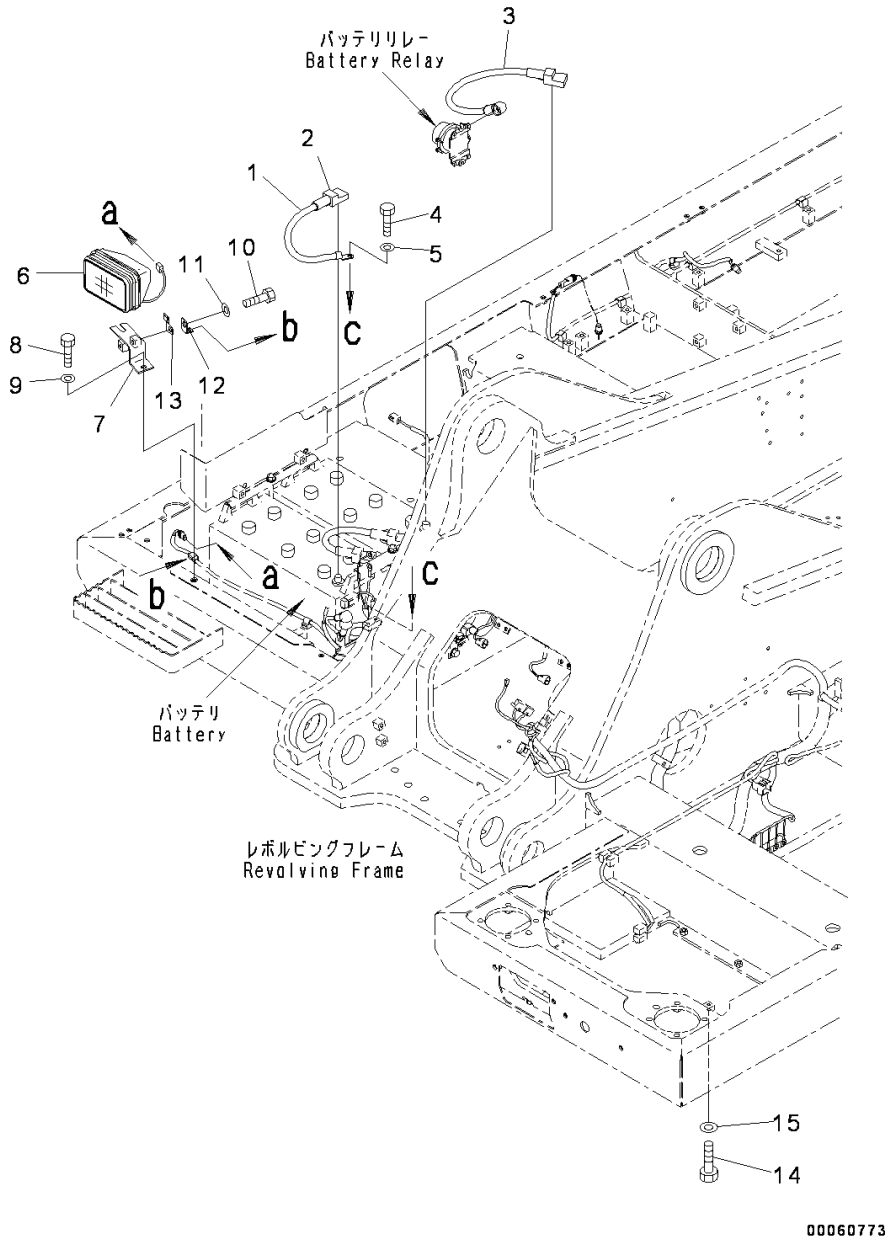

Index	Code	Part Number	Descreption	Qty	Serial Number
1		08028-44040	Cable, Ground	1	Y300001-
2		08038-22511	Cap	1	Y300001-
3		08038-42511	Cap	1	Y300001-
4		01010-81025	Bolt	1	Y300001-
5		01643-31032	Washer	1	Y300001-
6		21T-06-32810	Working Lamp Assembly, 24volt, 70watt	1	Y300001-
		421-06-23330	• Bulb, 70watt	1	Y300001-
7		20Y-06-31680	Bracket	1	Y300001-
8		01010-81230	Bolt	1	Y300001-
9		01643-31232	Washer	1	Y300001-
10		01010-81220	Bolt	1	Y300001-
11		01643-31232	Washer	1	Y300001-
12		08057-12012	Clip	1	Y300001-
13		08193-20012	Clip	1	Y300001-
14		01010-81016	Bolt	1	Y300001-
15		01643-31032	Washer	1	Y300001-

PC300-8 (FEN01263-00)

FIG. E0310-005001 Additional Working Lamp

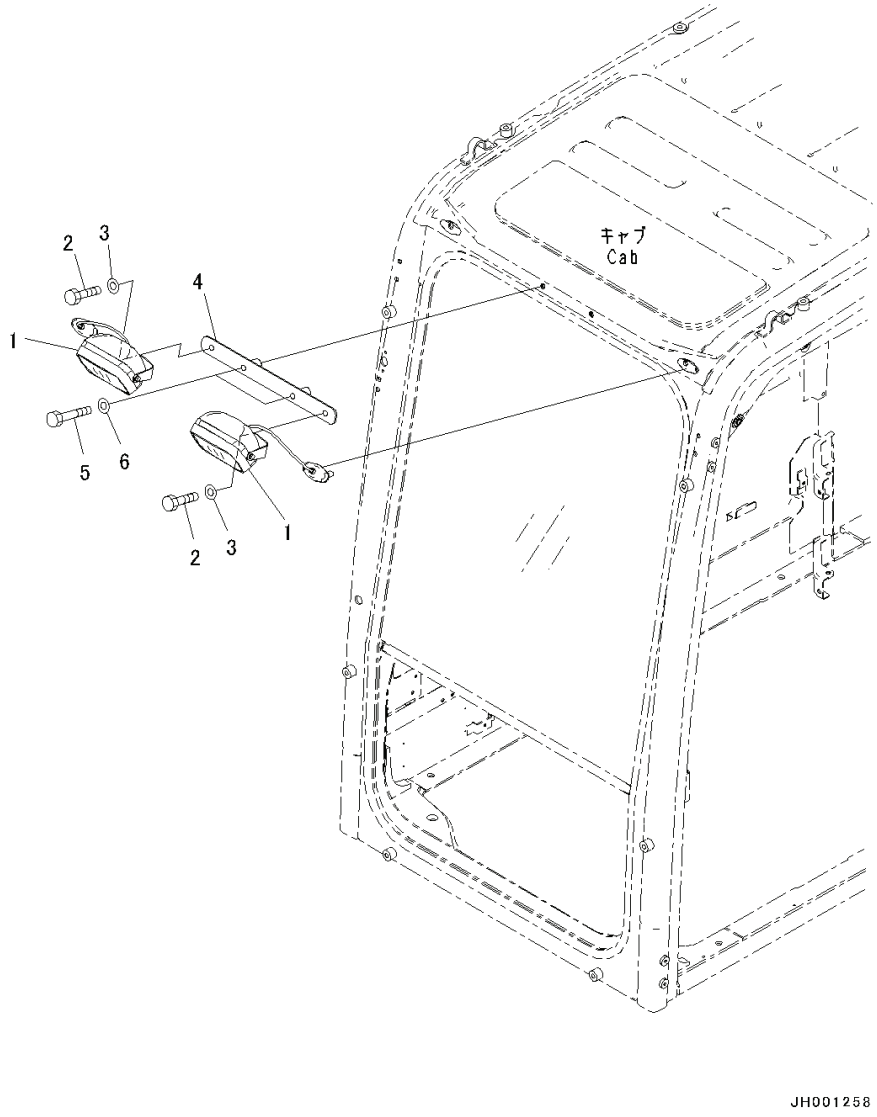

Index	Code	Part Number	Descreption	Qty	Serial Number
1		20Y-53-15210	Light Assembly, Working	2	Y300001-
		421-06-23330	• Bulb, 70watt	1	Y300001-
2		01010-D1025	Bolt	2	Y300001-
3		01643-71032	Washer	2	Y300001-
4		20Y-53-15150	Bracket	1	Y300001-
5		01010-D1060	Bolt	2	Y300001-
6		01643-71032	Washer	2	Y300001-

PC300-8 (FEN01263-00)

FIG. E0310-002001 Additional Working Lamp, Front Guard

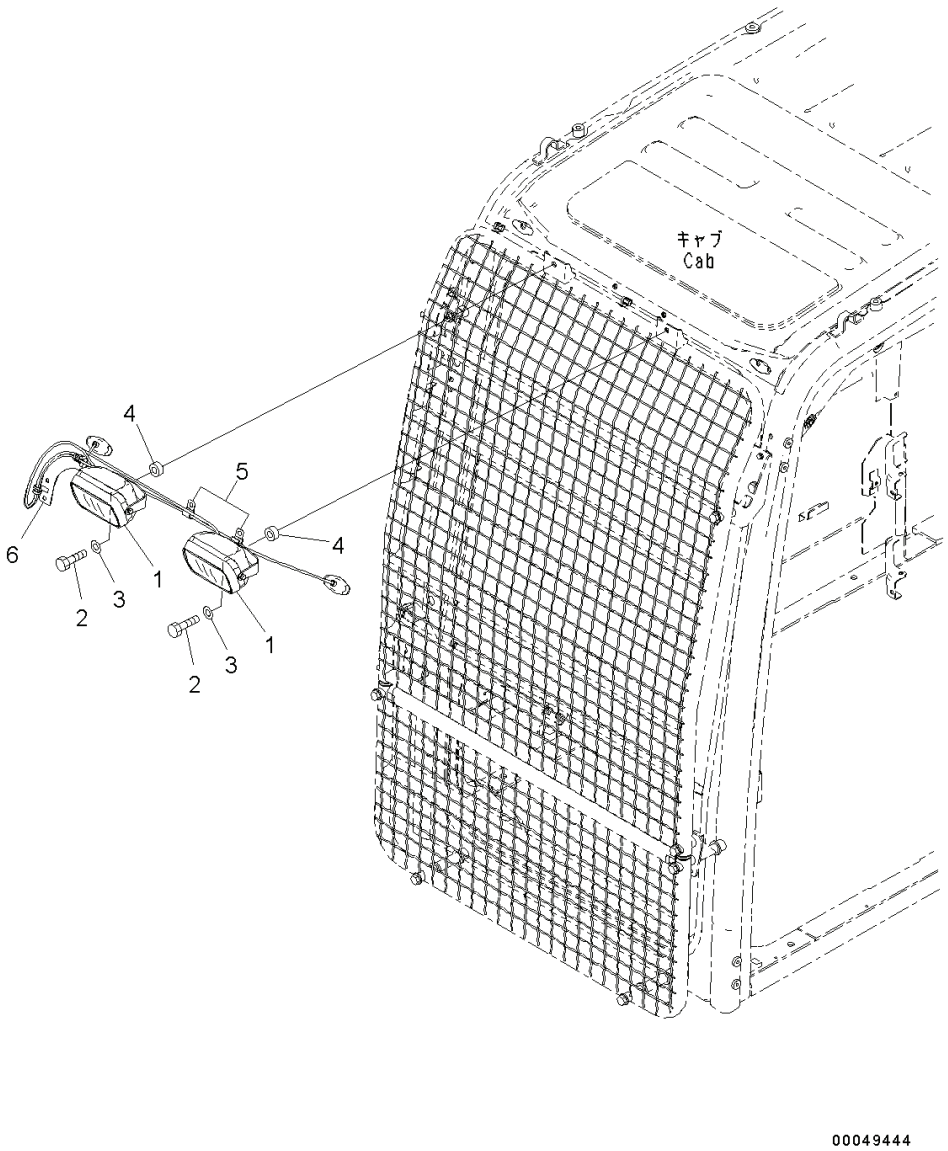

Index	Code	Part Number	Descreption	Qty	Serial Number
1		20Y-53-15220	Light Assembly, Working	2	Y300001-
		421-06-23330	• Bulb, 70watt, 24volt	1	Y300001-
2		01010-D1030	Bolt	2	Y300001-
3		01643-71032	Washer	2	Y300001-
4		560-43-15220	Washer	2	Y300001-
5		08036-10810	Clip	2	Y300001-
6		20Y-54-54480	Plate	1	Y300001-

PC300-8 (FEN01263-00)

FIG. E0320-001001 Additional Rear Working Light

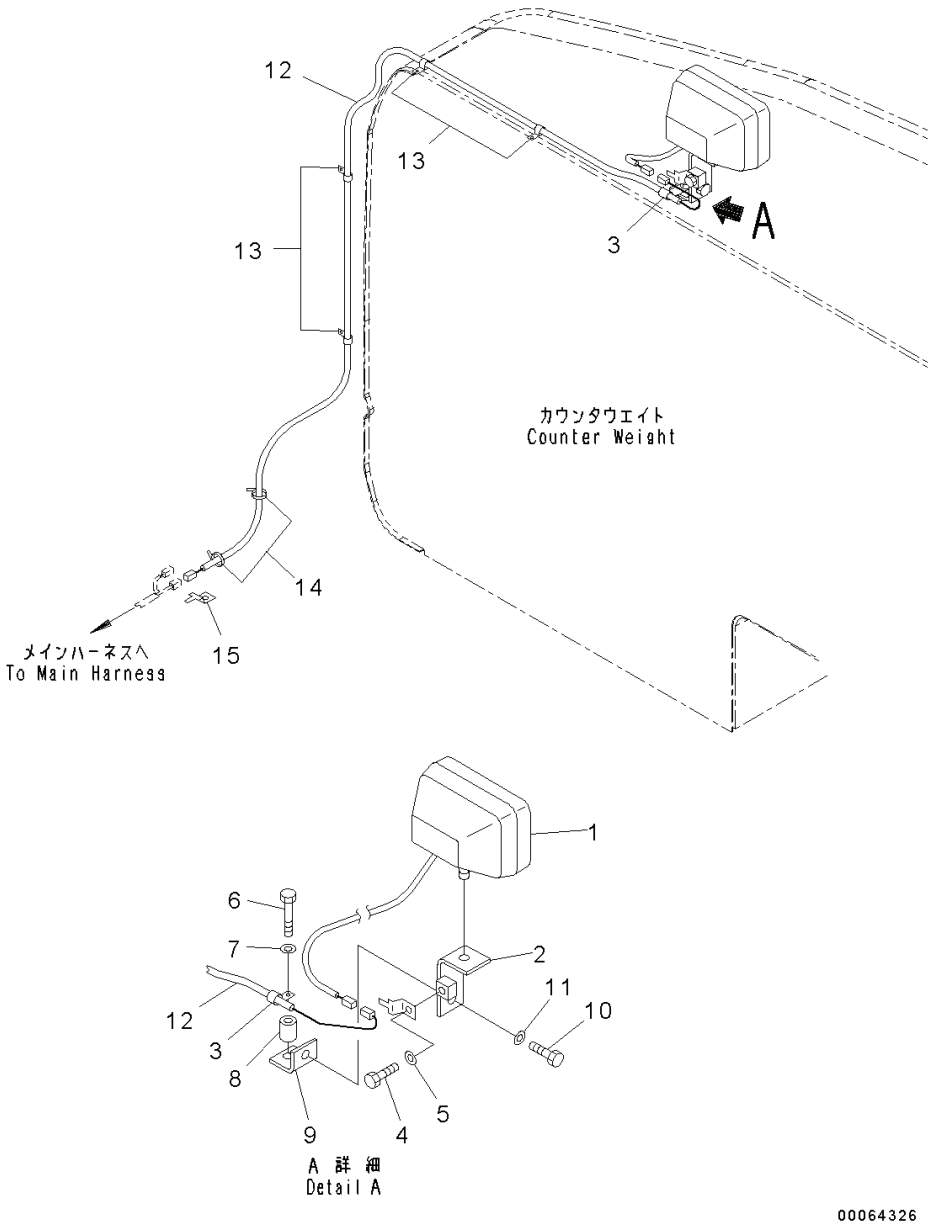

Index	Code	Part Number	Descreption	Qty	Serial Number
1		21T-06-32810	Working Lamp Assembly, 24volt, 70watt ..	1	Y300001-
		421-06-23330	• Bulb, 70watt, 24volt	1	Y300001-
2		20Y-06-21551	Bracket	1	Y300001-
3		04434-51012	Clip	1	Y300001-
4		01010-81225	Bolt	1	Y300001-
5		01643-31232	Washer	1	Y300001-
6		01010-81260	Bolt	1	Y300001-
7		01643-31232	Washer	1	Y300001-
8		142-03-11160	Spacer	1	Y300001-
9		20Y-06-21590	Bracket	1	Y300001-
10		01010-81225	Bolt	1	Y300001-
11		01643-31232	Washer	1	Y300001-
12		207-06-75180	Wiring Harness	1	Y300001-
13		04434-51012	Clip	4	Y300001-
14		08034-20519	Band	2	Y300001-
15		08193-20012	Clip	2	Y300001-

PC300-8 (FEN01263-00)

FIG. E0340-001001 Beacon Lamp, Amber Color Beacon

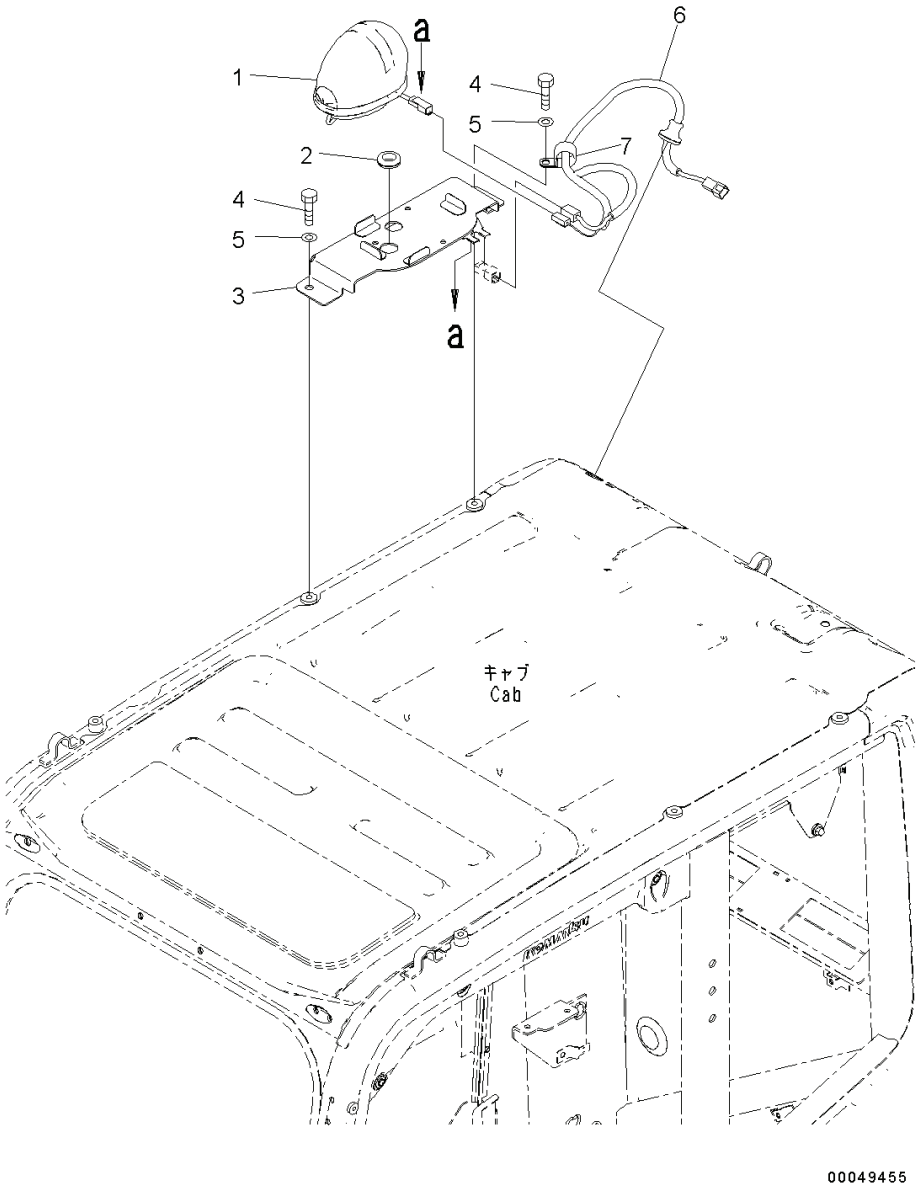

Index	Code	Part Number	Descreption	Qty	Serial Number
1		22B-54-17612	Lamp Assembly, Working	1	Y300001-
		22B-54-17660	• Bulb, 62watt, 28volt	1	Y300001-
2		08037-02512	Grommet	1	Y300001-
3		20Y-53-15121	Bracket	1	Y300001-
4		01010-D1220	Bolt	2	Y300001-
5		01643-71232	Washer	2	Y300001-
6		20Y-06-41542	Wiring Harness	1	Y300001-
7		04434-51412	Clip	1	Y300001-

PC300-8 (FEN01263-00)

FIG. E0410-001001 Horn

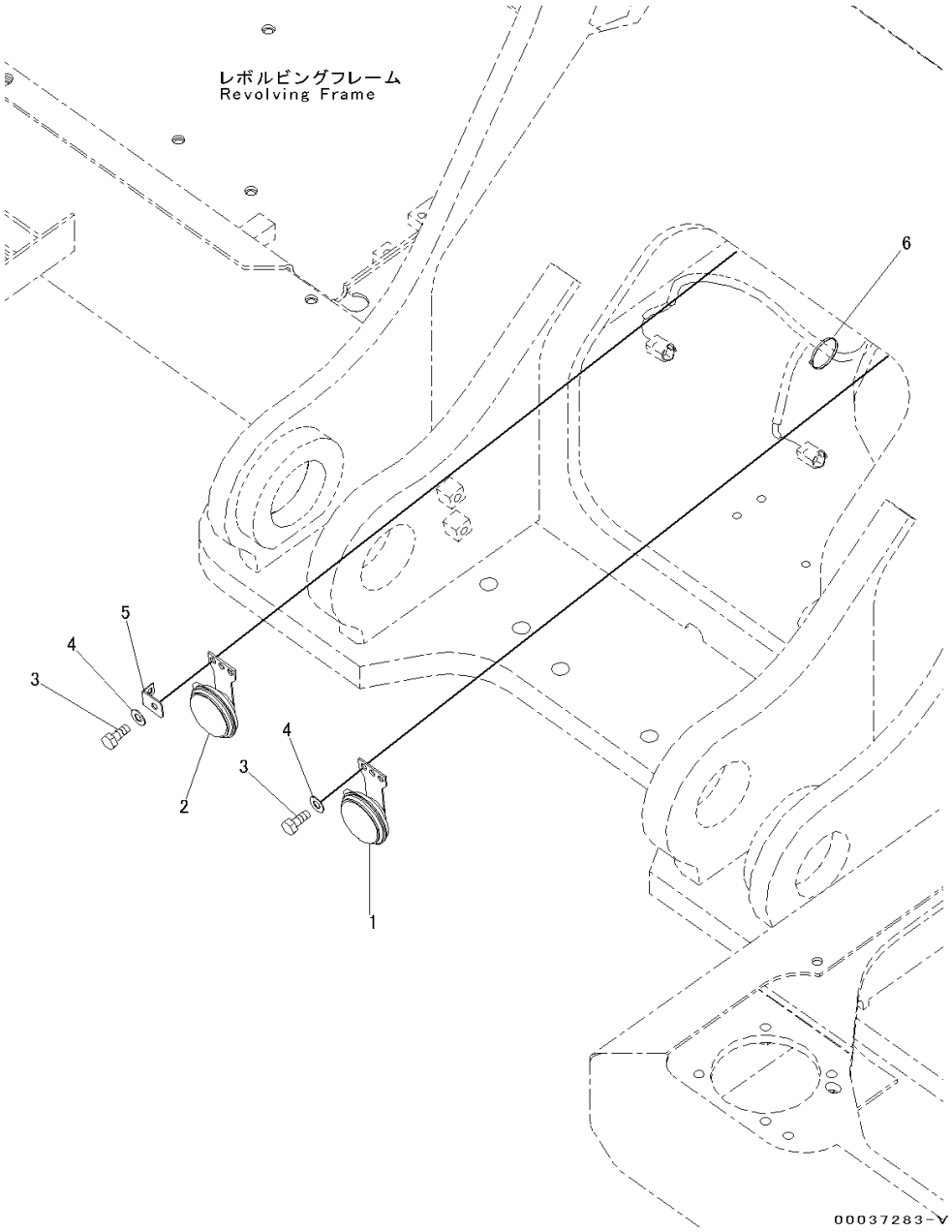

Index	Code	Part Number	Descreption	Qty	Serial Number
1		08160-72400	Horn	1	Y300001-
2		08160-72420	Horn	1	Y300001-
3		01010-80825	Bolt	4	Y300001-
4		01643-30823	Washer	4	Y300001-
5		08057-12008	Clip	1	Y300001-
6		08034-20414	Band	1	Y300001-

PC300-8 (FEN01263-00)

FIG. E0420-001001 Travel Alarm

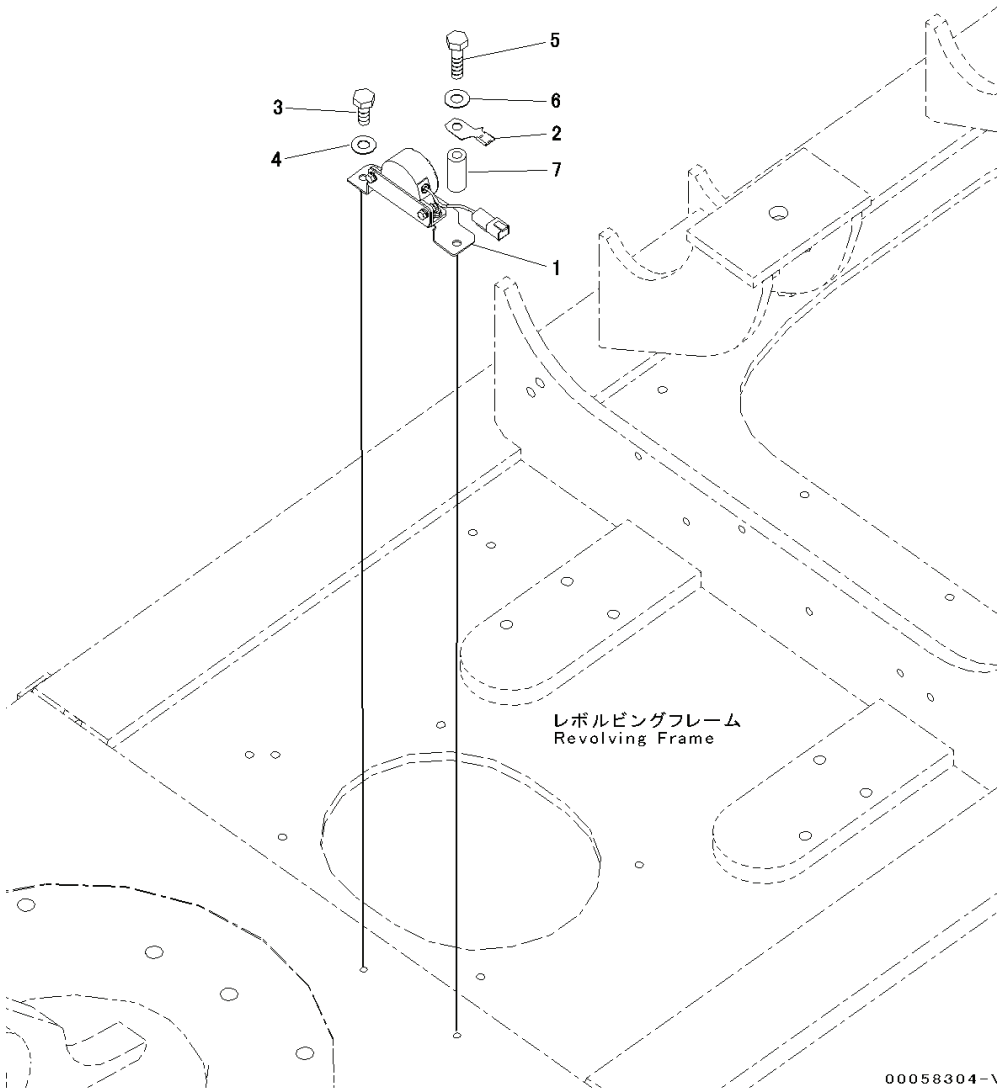

Index	Code	Part Number	Descreption	Qty	Serial Number
1		20Y-06-41822	Back-up Alarm	1	Y300001-
2		08193-20010	Clip	1	Y300001-
3		01010-81020	Bolt	1	Y300001-
4		01643-31032	Washer	1	Y300001-
5		01011-81015	Bolt	1	Y300001-
6		01643-31032	Washer	1	Y300001-
7		195-01-16420	Collar	1	Y300001-

PC300-8 (FEN01263-00)

FIG. E0450-003001 Rear View Camera Less

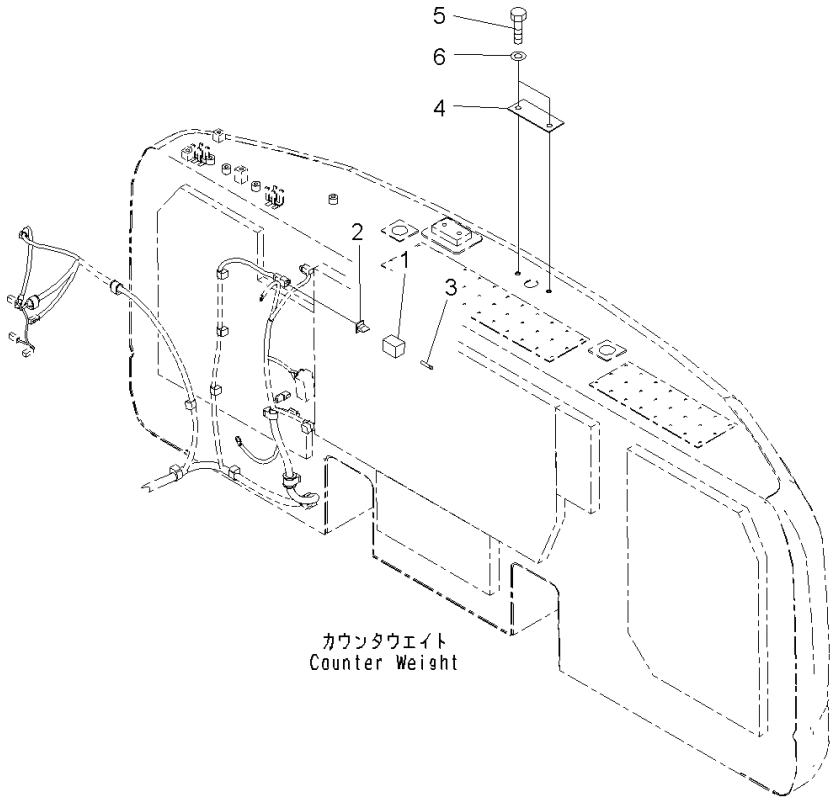

Index	Code	Part Number	Descreption	Qty	Serial Number
1		08192-24200	Connector	1	Y300001-
2		08192-14400	Wedge	1	Y300001-
3		08191-00770	Plug, Connector	4	Y300001-
4		207-06-76270	Plate	1	Y300001-
5		01010-81220	Bolt	2	Y300001-
6		01643-31232	Washer	2	Y300001-

HYDRAULIC SYSTEM

FIG. H0110-001001 Hydraulic Oil Tank

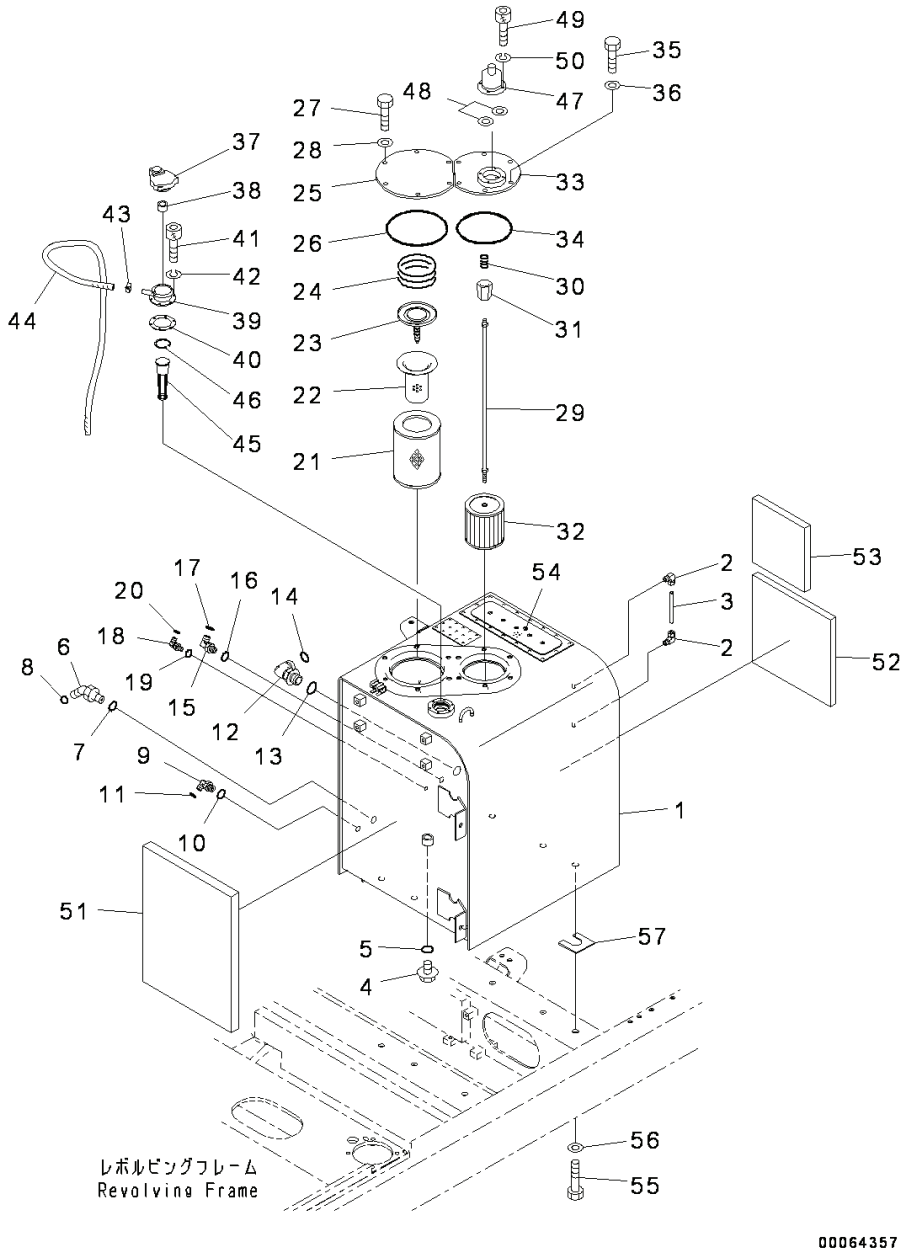

Index	Code	Part Number	Descreption	Qty	Serial Number
1		207-60-75110	Tank	1	Y300001-
2		203-60-31100	Elbow Assembly	2	Y300001-
3		203-60-31160	Tube	1	Y300001-
4		07044-12412	Plug	1	Y300001-
5		07002-12434	O-ring	1	Y300001-
6		02783-10628	Elbow	1	Y300001-
7		07002-12434	O-ring	1	Y300001-
8		02896-11018	O-ring	1	Y300001-
9		02782-10315	Elbow	1	Y300001-
10		07002-12034	O-ring	1	Y300001-
11		02896-11009	O-ring	1	Y300001-
12		21W-62-42640	Elbow	1	Y300001-
13		07002-13334	O-ring	1	Y300001-
14		207-62-64740	O-ring	1	Y300001-
15		02782-10422	Elbow	1	Y300001-
16		07002-12034	O-ring	1	Y300001-
17		02896-11012	O-ring	1	Y300001-
18		11Y-62-12160	Elbow	1	Y300001-
19		07002-11423	O-ring	1	Y300001-
20		02896-11008	O-ring	1	Y300001-
21		207-60-71182	Element	1	Y300001-
22		20Y-60-31140	Strainer	1	Y300001-
23		20Y-60-31131	Valve Assembly	1	Y300001-
24		20Y-60-21240	Spring	1	Y300001-
25		22U-60-21232	Cover	1	Y300001-
26		07000-15195	O-ring	1	Y300001-
27		01010-81230	Bolt	6	Y300001-
28		01643-31232	Washer	6	Y300001-
		207-60-75120	Strainer Assembly	1	Y300001-
29		208-60-71150	• Rod Assembly	1	Y300001-
30		12R-60-11230	• • Spring	1	Y300001-
31		20Y-60-21320	• • Holder	1	Y300001-
32		22B-60-11160	• Strainer	1	Y300001-
33		207-60-75131	Cover	1	Y300001-
34		07000-15160	O-ring	1	Y300001-
35		01010-81230	Bolt	6	Y300001-
36		01643-31232	Washer	6	Y300001-
37		17A-60-11310	Cap Assembly	1	Y300001-
38		20Y-60-21470	• Element	1	Y300001-
39		208-60-71180	Filler Neck	1	Y300001-

PC300-8 (FEN01263-00)

FIG. H0110-001001 Hydraulic Oil Tank

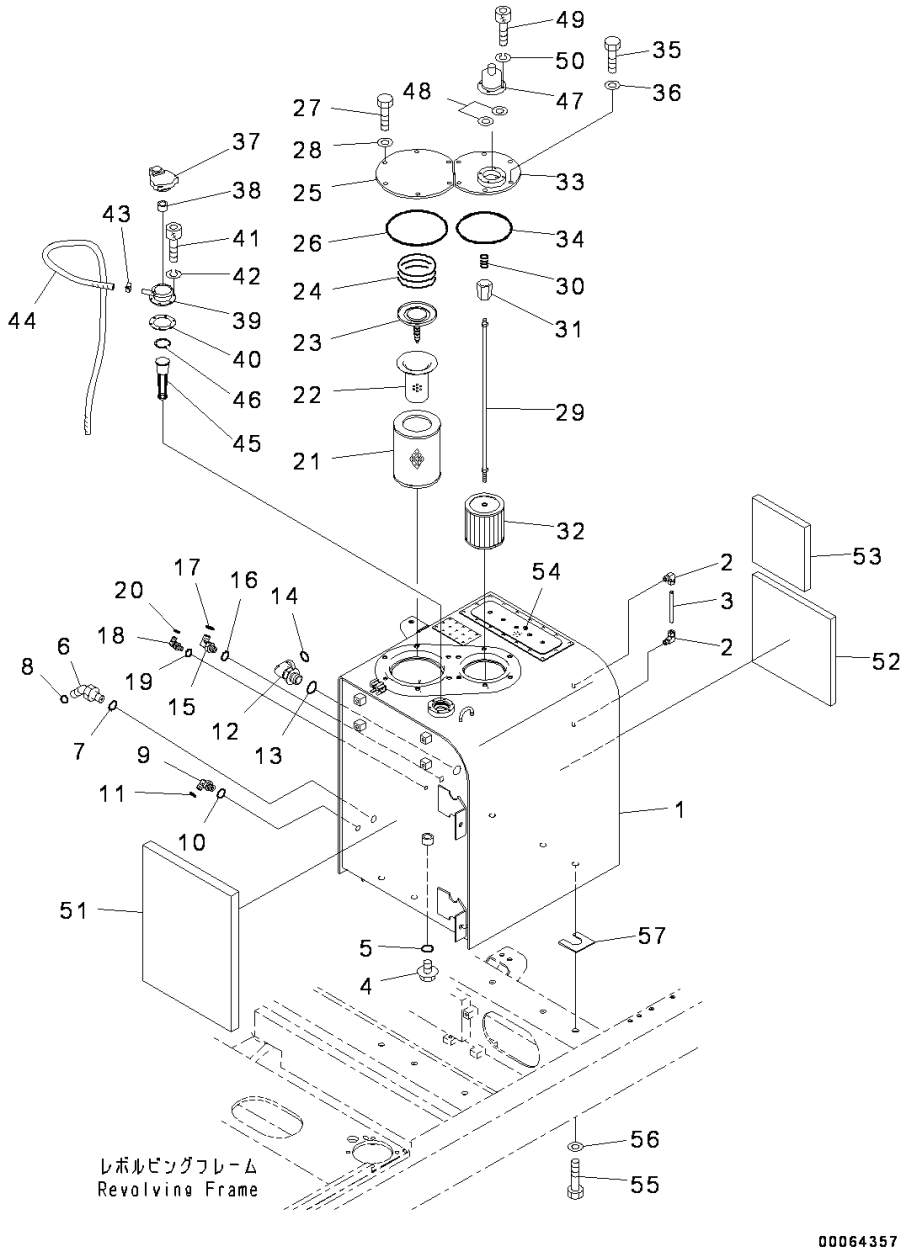

Index	Code	Part Number	Descreption	Qty	Serial Number
40		20Y-60-21340	Gasket .	1	Y300001-
41		01252-70516	Bolt .	6	Y300001-
42		01601-20513	Washer .	6	Y300001-
43		07285-00155	Clip .	1	Y300001-
44		07270-61415	Tube .	1	Y300001-
45		07056-10045	Strainer .	1	Y300001-
46		04065-04718	Ring, Snap .	1	Y300001-
		20Y-60-31271	Breather Assembly .	1	Y300001-
47		207-60-51311	• Element .	1	Y300001-
48		207-60-51320	• Seal .	2	Y300001-
49		01252-70516	Bolt .	4	Y300001-
50		01601-20513	Washer .	4	Y300001-
51		207-60-75910	Sheet .	1	Y300001-
52		207-60-75920	Sheet .	1	Y300001-
53		207-60-75930	Sheet .	1	Y300001-
54		20Y-00-42110	Plate .	1	Y300001-
55		01010-81635	Bolt .	6	Y300001-
56		01643-31645	Washer .	6	Y300001-
57		195-03-11570	Shim, T=1.0mm .	2	Y300001-

PC300-8 (FEN01263-00)

FIG. H0120-006001 Main Control Valve, 2-actuator, Inner Parts (1/25)

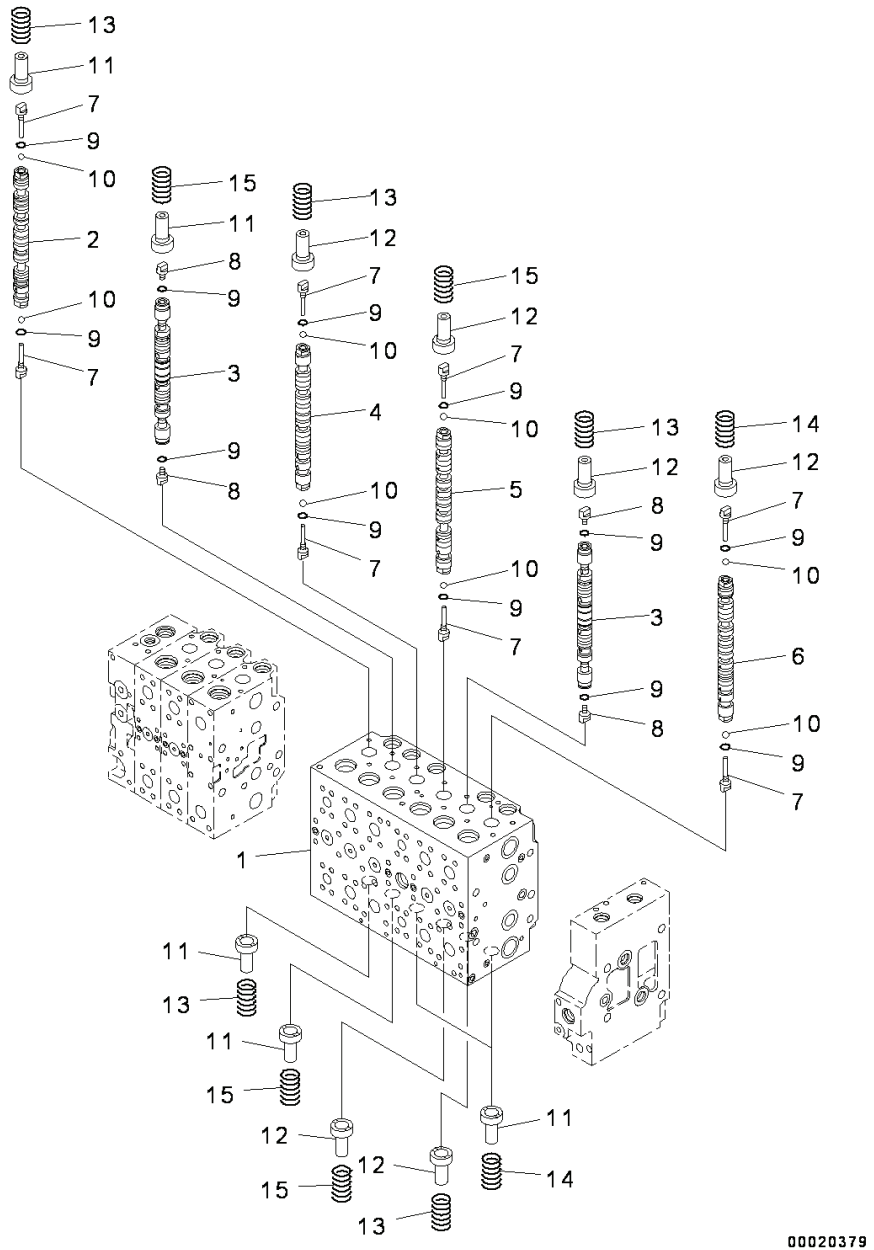

Index	Code	Part Number	Descreption	Qty	Serial Number
		723-49-26500	Valve Assembly, Control	1	Y300001-
	C1		• Body Subassembly	1	Y300001-
1	C1		• • Block	1	Y300001-
2	C1		• • Spool	1	Y300001-
3	C1		• • Spool	2	Y300001-
4	C1		• • Spool	1	Y300001-
5	C1		• • Spool	1	Y300001-
6	C1		• • Spool	1	Y300001-
7		723-46-15130	• • Plug	8	Y300001-
8		723-46-15140	• • Plug	4	Y300001-
9		07002-10823	• • O-ring	12	Y300001-
10		708-7T-16460	• • Ball	8	Y300001-
11		723-46-15120	• • Retainer	6	Y300001-
12		723-46-15690	• • Retainer	6	Y300001-
13		723-46-14110	• • Spring	5	Y300001-
14		723-46-14170	• • Spring	3	Y300001-
15		723-46-14131	• • Spring	4	Y300001-

PC300-8 (FEN01263-00)

FIG. H0120-006002 Main Control Valve, 2-actuator, Inner Parts (2/25)

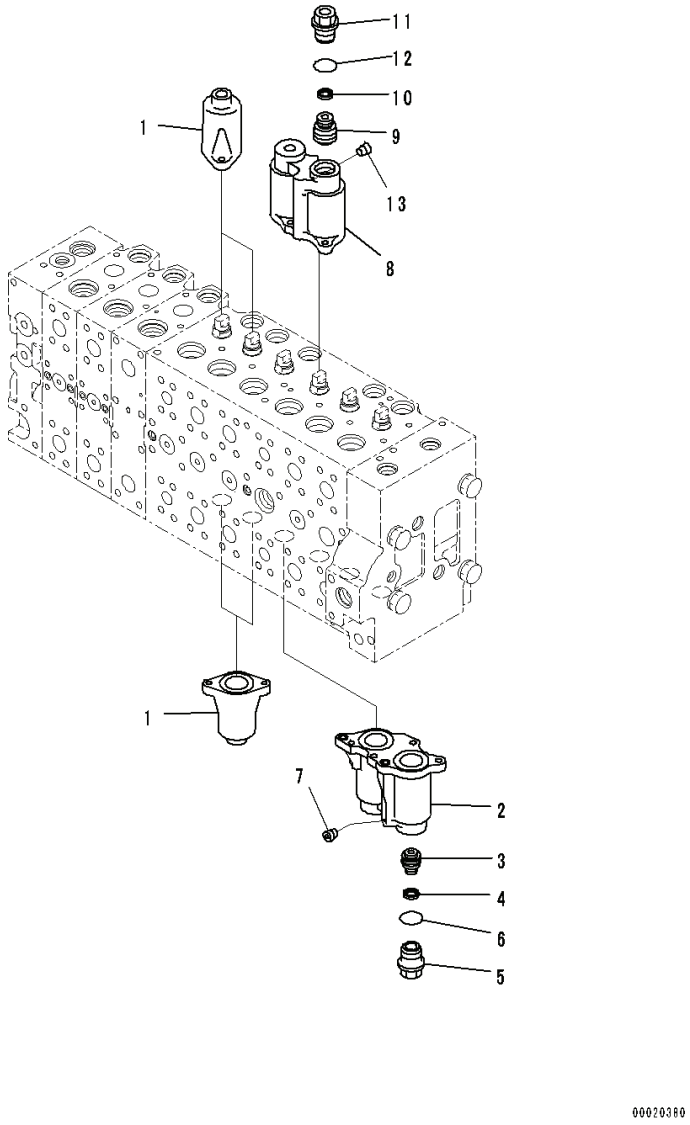

Index	Code	Part Number	Descreption	Qty	Serial Number
		723-49-26500	Valve Assembly, Control	1	Y300001-
	C1		• Body Subassembly	1	Y300001-
1		723-46-15111	• • Case	4	Y300001-
		723-46-18131	• • Case Subassembly	1	Y300001-
2	C1		• • • Case	1	Y300001-
3	C1		• • • Piston	1	Y300001-
4	C1		• • • Seal	1	Y300001-
5		723-46-15630	• • • Plug	1	Y300001-
6		07000-13024	• • • O-ring	1	Y300001-
7	C1		• • • Screw	1	Y300001-
		723-46-18231	• • Case Subassembly	1	Y300001-
8	C1		• • • Case	1	Y300001-
9	C1		• • • Piston	1	Y300001-
10	C1		• • • Seal	1	Y300001-
11		723-46-15630	• • • Plug	1	Y300001-
12		07000-13024	• • • O-ring	1	Y300001-
13	C1		• • • Screw	1	Y300001-

FIG. H0120-006003 Main Control Valve, 2-actuator, Inner Parts (3/25)

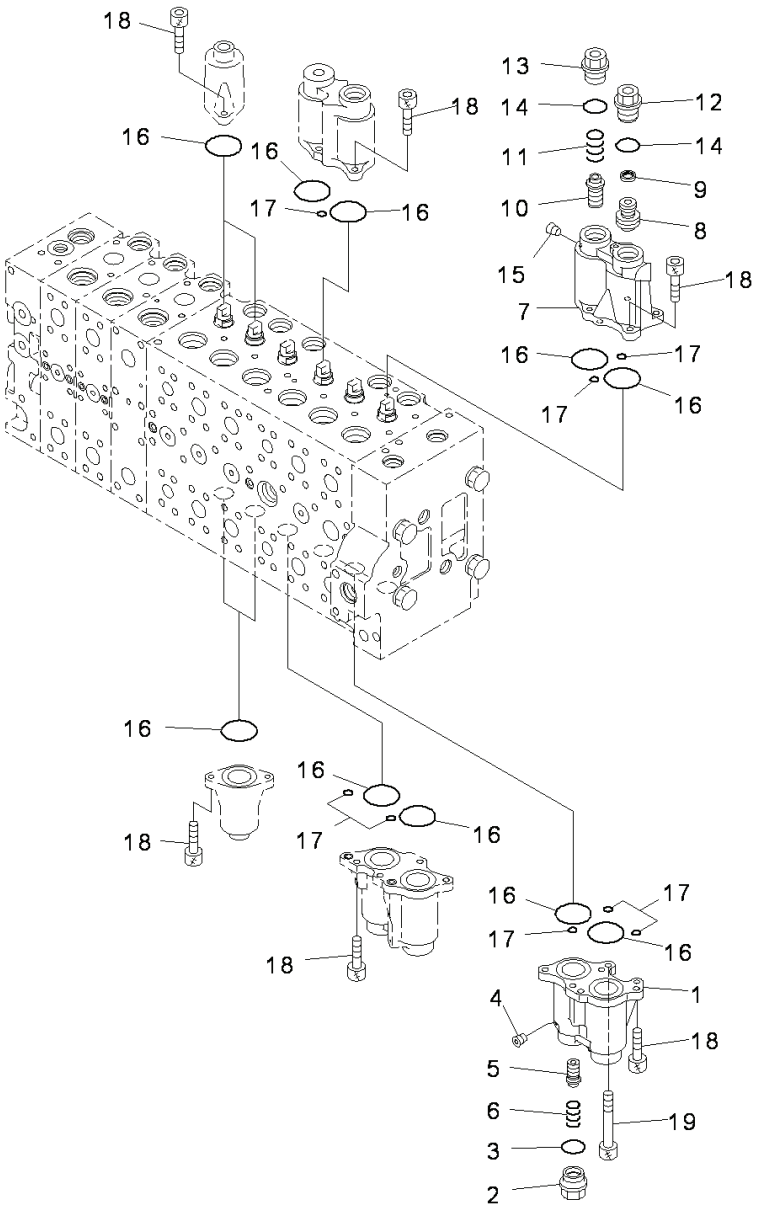

Index	Code	Part Number	Descreption	Qty	Serial Number
		723-49-26500	Valve Assembly, Control	1	Y300001-
	C1		• Body Subassembly	1	Y300001-
		723-46-18330	• • Case Subassembly	1	Y300001-
1	C1		• • • Case	1	Y300001-
2		723-46-17340	• • • Plug	1	Y300001-
3		07000-13024	• • • O-ring	1	Y300001-
4	C1		• • • Screw	1	Y300001-
5		723-46-17320	• • • Spool	1	Y300001-
6		723-46-17330	• • • Spring	1	Y300001-
		723-46-18431	• • Case Subassembly	1	Y300001-
7	C1		• • • Case	1	Y300001-
8	C1		• • • Piston	1	Y300001-
9	C1		• • • Seal	1	Y300001-
10		723-46-17320	• • • Spool	1	Y300001-
11		723-46-17330	• • • Spring	1	Y300001-
12		723-46-15630	• • • Plug	1	Y300001-
13		723-46-17340	• • • Plug	1	Y300001-
14		07000-13024	• • • O-ring	2	Y300001-
15	C1		• • • Screw	3	Y300001-
16		07430-71380	• • O-ring	12	Y300001-
17		702-16-53920	• • O-ring	8	Y300001-
18		01252-60820	• • Bolt	23	Y300001-
19		723-46-17350	• • Bolt	1	Y300001-

PC300-8 (FEN01263-00)

FIG. H0120-006004 Main Control Valve, 2-actuator, Inner Parts (4/25)

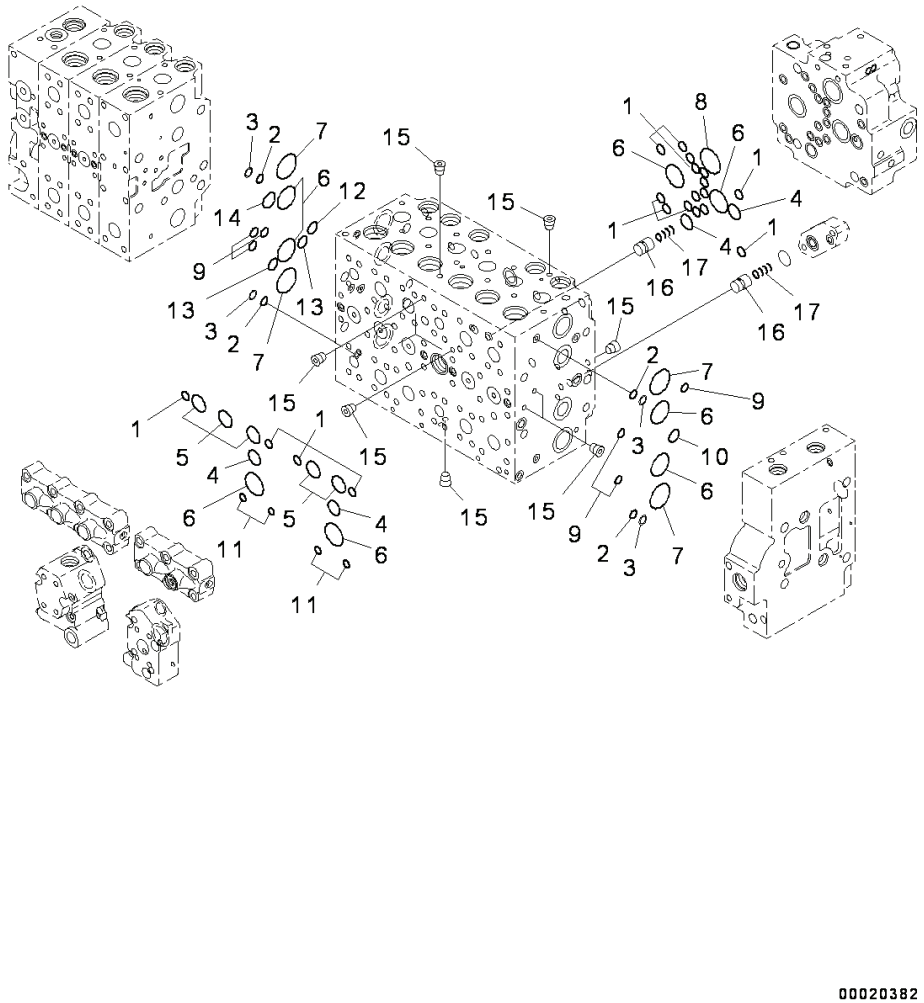

Index	Code	Part Number	Descreption	Qty	Serial Number
		723-49-26500	Valve Assembly, Control	1	Y300001-
	C1		• Body Subassembly	1	Y300001-
1		07000-12012	• • O-ring	19	Y300001-
2		723-11-19130	• • O-ring	4	Y300001-
3		723-46-17520	• • Ring, Back-up	4	Y300001-
4		07000-12021	• • O-ring	4	Y300001-
5		07000-13028	• • O-ring	5	Y300001-
6		07000-13032	• • O-ring	8	Y300001-
7		723-46-17510	• • O-ring	4	Y300001-
8		07000-13036	• • O-ring	1	Y300001-
9		723-46-17530	• • O-ring	11	Y300001-
10		723-11-18150	• • O-ring	2	Y300001-
11		702-16-53920	• • O-ring	4	Y300001-
12		723-46-18710	• • O-ring	1	Y300001-
13		722-12-19070	• • O-ring	2	Y300001-
14		723-46-18720	• • O-ring	1	Y300001-
15	C1		• • Plug	14	Y300001-
16		723-46-17650	• • Valve	2	Y300001-
17		723-46-14150	• • Spring	2	Y300001-

FIG. H0120-006005 Main Control Valve, 2-actuator, Inner Parts (5/25)

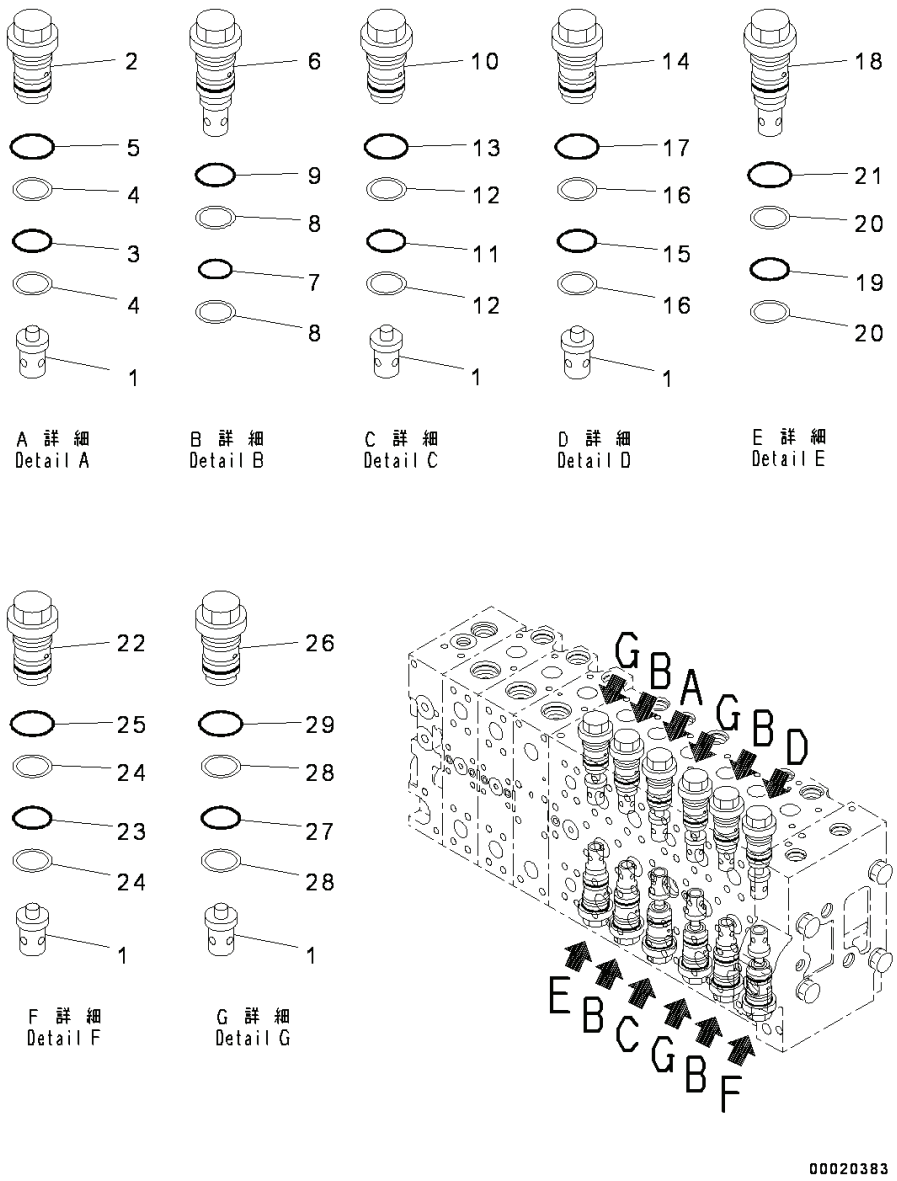

Index	Code	Part Number	Descreption	Qty	Serial Number
		723-49-26500	Valve Assembly, Control	1	Y300001-
	C1		• Body Subassembly	1	Y300001-
1		723-46-41210	• • Valve	7	Y300001-
2		723-46-40100	• • Valve Assembly	1	Y300001-
3		700-93-11320	• • • O-ring	1	Y300001-
4		723-46-41950	• • • Ring	2	Y300001-
5		07002-13634	• • • O-ring	1	Y300001-
6		723-46-42800	• • Valve Assembly	4	Y300001-
7		700-93-11320	• • • O-ring	1	Y300001-
8		723-46-41950	• • • Ring	2	Y300001-
9		07002-13634	• • • O-ring	1	Y300001-
10		723-46-40601	• • Valve Assembly	1	Y300001-
11		700-93-11320	• • • O-ring	1	Y300001-
12		723-46-41950	• • • Ring	2	Y300001-
13		07002-13634	• • • O-ring	1	Y300001-
14		723-46-43100	• • Valve Assembly	1	Y300001-
15		700-93-11320	• • • O-ring	1	Y300001-
16		723-46-41950	• • • Ring	2	Y300001-
17		07002-13634	• • • O-ring	1	Y300001-
18		723-46-43400	• • Valve Assembly	1	Y300001-
19		700-93-11320	• • • O-ring	1	Y300001-
20		723-46-41950	• • • Ring	2	Y300001-
21		07002-13634	• • • O-ring	1	Y300001-
22		723-46-44100	• • Valve Assembly	1	Y300001-
23		700-93-11320	• • • O-ring	1	Y300001-
24		723-46-41950	• • • Ring	2	Y300001-
25		07002-13634	• • • O-ring	1	Y300001-
26		723-46-45100	• • Valve Assembly	3	Y300001-
27		700-93-11320	• • • O-ring	1	Y300001-
28		723-46-41950	• • • Ring	2	Y300001-
29		07002-13634	• • • O-ring	1	Y300001-

FIG. H0120-006006 Main Control Valve, 2-actuator, Inner Parts (6/25)

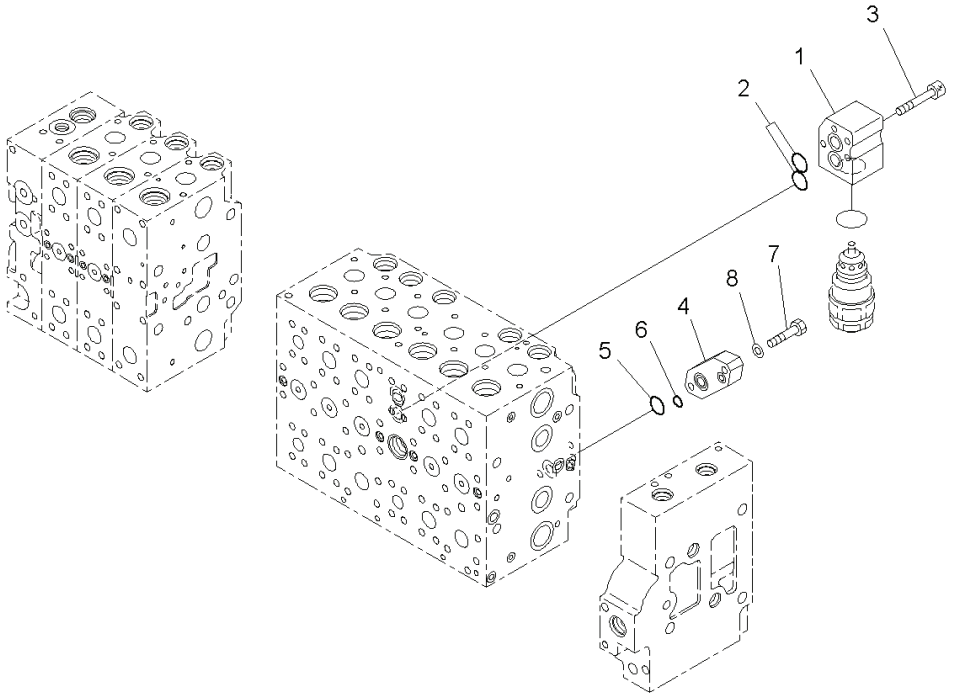

Index	Code	Part Number	Descreption	Qty	Serial Number
		723-49-26500	Valve Assembly, Control	1	Y300001-
	C1		• Body Subassembly	1	Y300001-
1		723-46-11910	• • Block	1	Y300001-
2		723-46-15510	• • O-ring	2	Y300001-
3		01252-60865	• • Bolt, Hexagon Socket Head	4	Y300001-
4		723-46-18730	• • Plate	1	Y300001-
5		07000-12021	• • O-ring	1	Y300001-
6		07000-12011	• • O-ring	1	Y300001-
7		01010-81040	• • Bolt	2	Y300001-
8		01643-51032	• • Washer	2	Y300001-

FIG. H0120-006007 Main Control Valve, 2-actuator, Inner Parts (7/25)

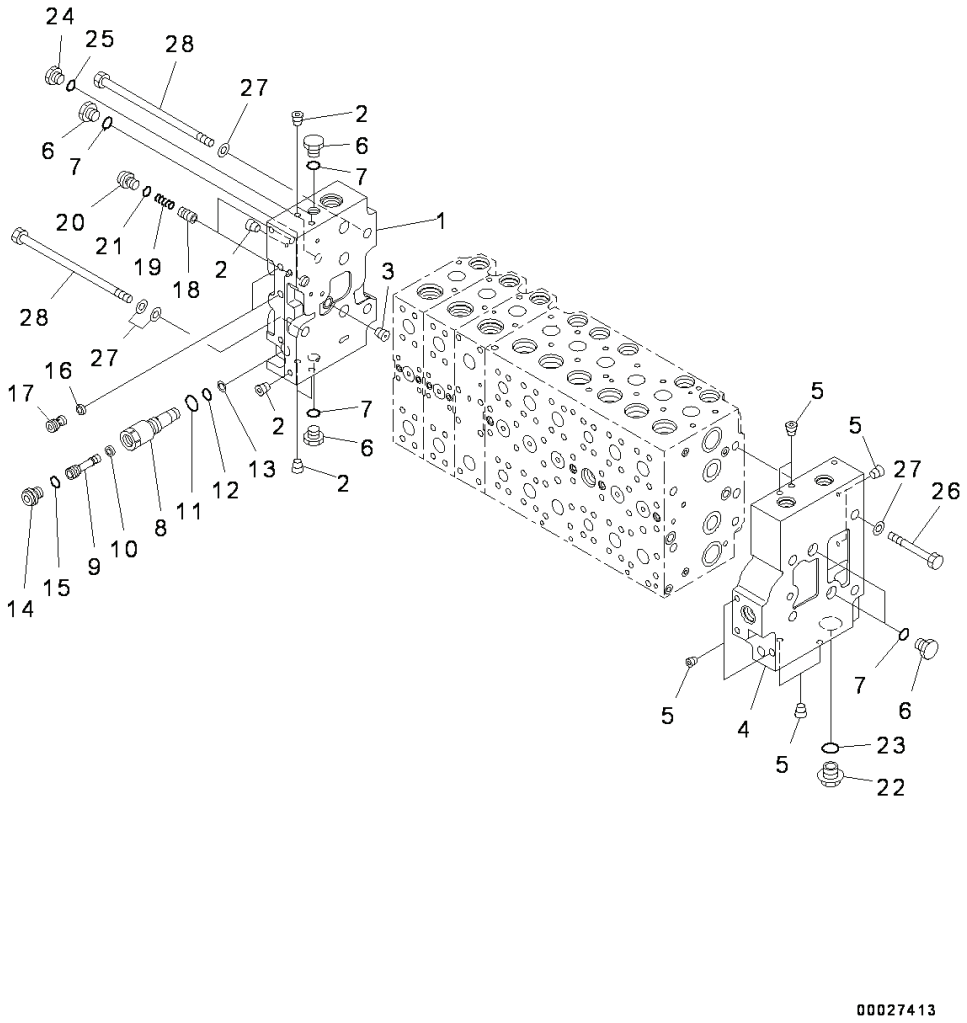

Index	Code	Part Number	Descreption	Qty	Serial Number
		723-49-26500	Valve Assembly, Control	1	Y300001-
		723-46-00760	• Cover Assembly	1	Y300001-
1	C1		• • Cover, a	1	Y300001-
2	C1		• • Plug	7	Y300001-
3	C1		• • Plug	1	Y300001-
		723-46-00742	• Cover Assembly	1	Y300001-
4	C1		• • Cover, b	1	Y300001-
5	C1		• • Plug	8	Y300001-
6		708-8E-16250	• Plug	5	Y300001-
7		07002-11823	• O-ring	5	Y300001-
		723-46-17600	• Plug Assembly	1	Y300001-
8		723-46-17610	• • Sleeve	1	Y300001-
9		723-46-17640	• • Plug	1	Y300001-
10		702-21-55760	• • Filter	1	Y300001-
11		07002-11423	• • O-ring	1	Y300001-
12		07000-11007	• • O-ring	1	Y300001-
13		07001-01007	• • Ring, Back-up	1	Y300001-
14		708-8E-16160	• • Plug	1	Y300001-
15		07002-11023	• • O-ring	1	Y300001-
16		723-40-82220	• Filter	2	Y300001-
17		723-46-17550	• Plug	2	Y300001-
18		723-46-15190	• Valve	2	Y300001-
19		723-46-14140	• Spring	2	Y300001-
20		708-8E-16160	• Plug	2	Y300001-
21		07002-11023	• O-ring	2	Y300001-
22		709-74-91860	• Plug	1	Y300001-
23		07002-12434	• O-ring	1	Y300001-
24		708-8H-11530	• Plug	1	Y300001-
25		07002-11423	• O-ring	1	Y300001-
26		01010-61490	• Bolt	4	Y300001-
27		01643-31445	• Washer	10	Y300001-
28		723-46-15480	• Bolt	4	Y300001-

FIG. H0120-006008 Main Control Valve, 2-actuator, Inner Parts (8/25)

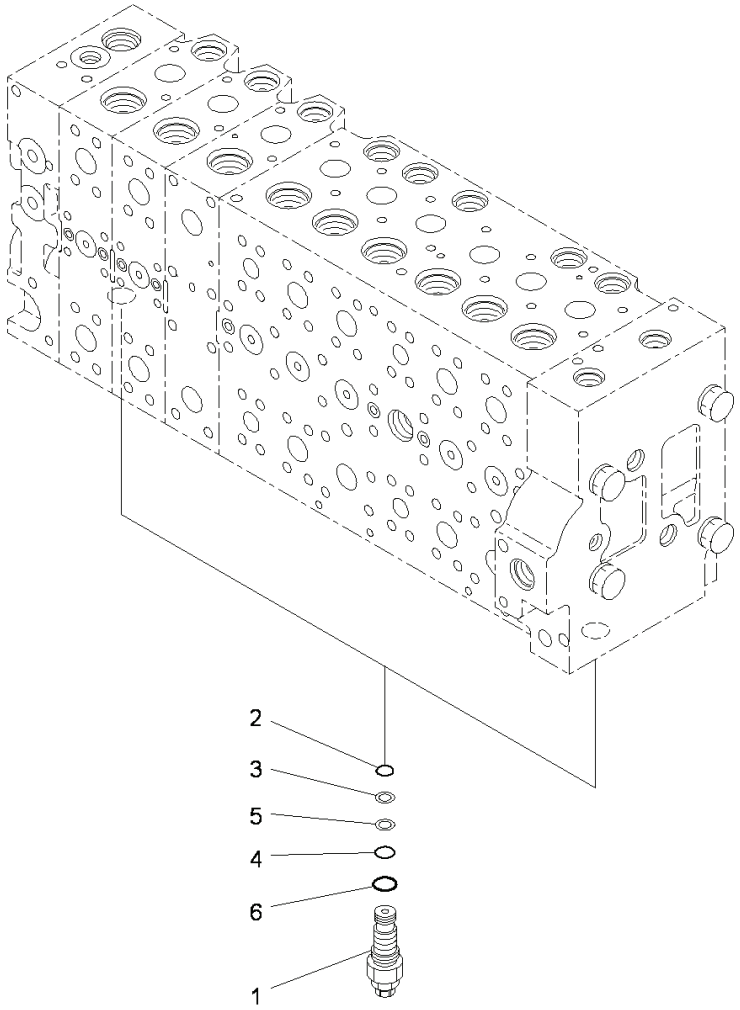

Index	Code	Part Number	Descreption	Qty	Serial Number
		723-49-26500	Valve Assembly, Control	1	Y300001-
1		723-40-56800	• Valve Assembly, Unloader, UNLOAD	2	Y300001-
2		07000-12014	• • O-ring	1	Y300001-
3		723-40-56350	• • Ring	1	Y300001-
4		07000-12016	• • O-ring	1	Y300001-
5		723-60-22230	• • Ring, Back-up	1	Y300001-
6		07002-12434	• • O-ring	1	Y300001-

FIG. H0120-006009 Main Control Valve, 2-actuator, Inner Parts (9/25)

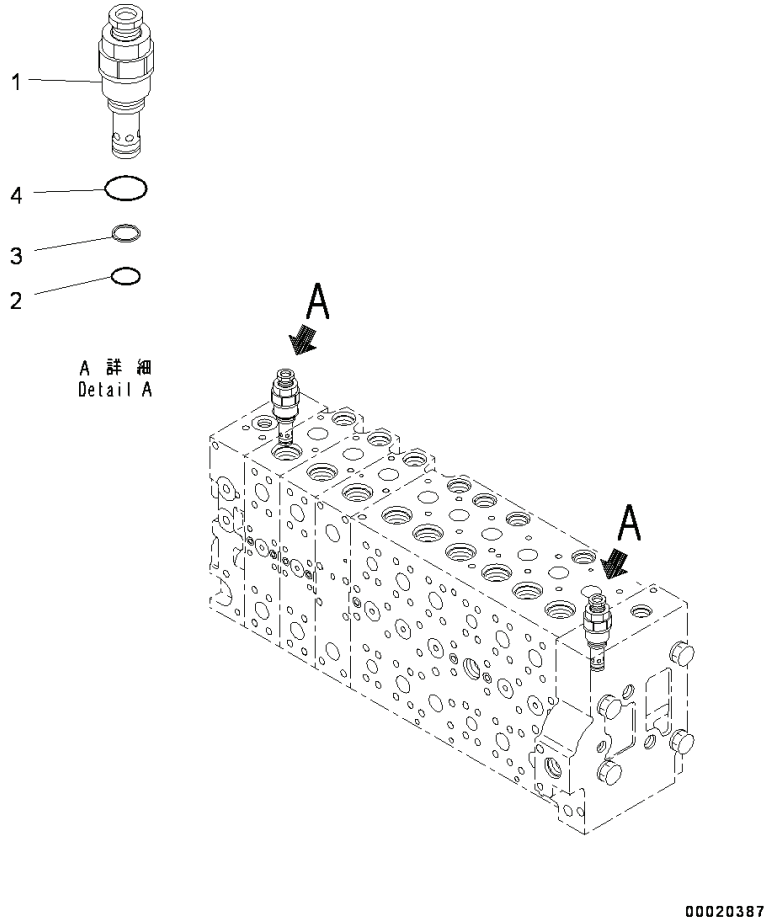

Index	Code	Part Number	Descreption	Qty	Serial Number
		723-49-26500	Valve Assembly, Control	1	Y300001-
1		723-40-93800	• Valve, Relief	2	Y300001-
2		700-22-11410	• • O-ring	1	Y300001-
3		700-80-64220	• • Ring	1	Y300001-
4		07002-12434	• • O-ring	1	Y300001-

FIG. H0120-006010 Main Control Valve, 2-actuator, Inner Parts (10/25)

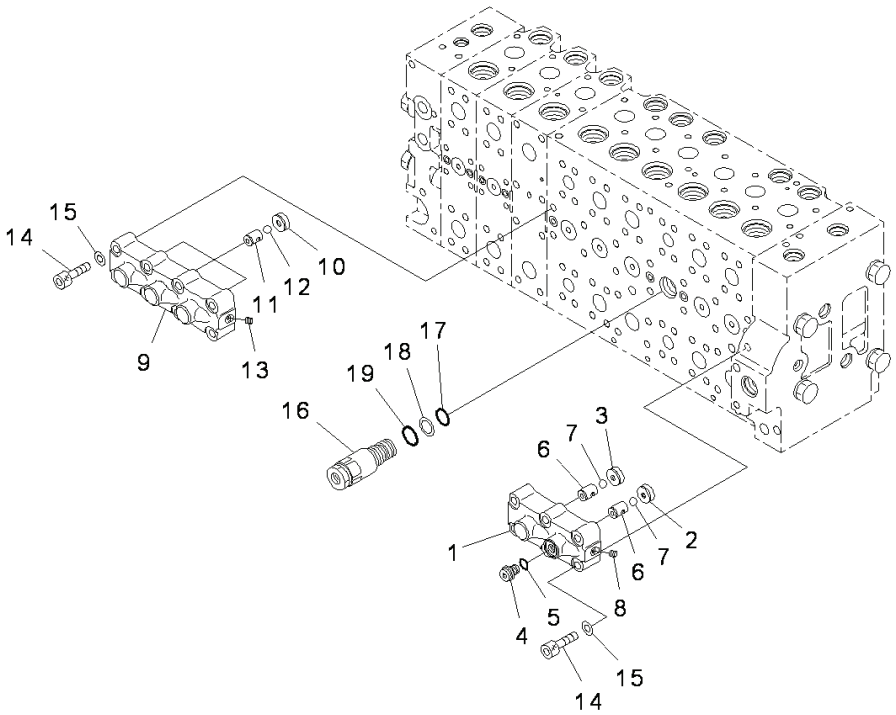

Index	Code	Part Number	Descreption	Qty	Serial Number
		723-49-26500	Valve Assembly, Control	1	Y300001-
		723-40-93800	• Valve, Relief	2	Y300001-
		723-40-66701	• Valve Assembly	1	Y300001-
1	C1		• • Case	1	Y300001-
2	C1		• • Seat	1	Y300001-
3	C1		• • Seat	1	Y300001-
4		708-8H-11530	• • Plug	1	Y300001-
5		07002-11423	• • O-ring	1	Y300001-
6	C1		• • Seat	2	Y300001-
7	C1		• • Ball	2	Y300001-
8	C1		• • Plug	1	Y300001-
		723-40-66601	• Valve Assembly	1	Y300001-
9	C1		• • Case	1	Y300001-
10	C1		• • Seat	3	Y300001-
11	C1		• • Seat	3	Y300001-
12	C1		• • Ball	3	Y300001-
13	C1		• • Plug	1	Y300001-
14		01252-61050	• Bolt, Hexagon Socket Head	14	Y300001-
15		01643-51032	• Washer	14	Y300001-
16		723-40-60101	• Valve Assembly	1	Y300001-
17		07000-12020	• • O-ring	1	Y300001-
18		07001-02020	• • Ring, Back-up	1	Y300001-
19		709-25-11390	• • O-ring	1	Y300001-

FIG. H0120-006011 Main Control Valve, 2-actuator, Inner Parts (11/25)

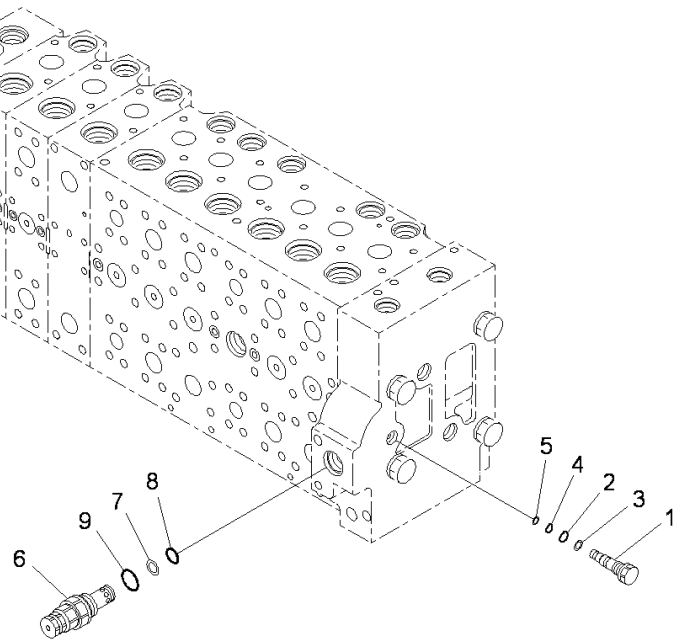

00020389

Index	Code	Part Number	Descreption	Qty	Serial Number
		723-49-26500	Valve Assembly, Control	1	Y300001-
		723-40-60101	• Valve Assembly	1	Y300001-
		723-46-17701	• Plug Assembly	1	Y300001-
1		723-46-17711	• • Plug	1	Y300001-
2		07000-11009	• • O-ring	1	Y300001-
3		07001-01009	• • Ring, Back-up	1	Y300001-
4		07000-11007	• • O-ring	1	Y300001-
5		07001-01007	• • Ring, Back-up	1	Y300001-
6		723-40-91500	• Valve Assembly, Relief	1	Y300001-
7		700-80-64220	• • Ring	1	Y300001-
8		700-22-11410	• • O-ring	1	Y300001-
9		709-25-11390	• • O-ring	1	Y300001-

FIG. H0120-006012 Main Control Valve, 2-actuator, Inner Parts (12/25)

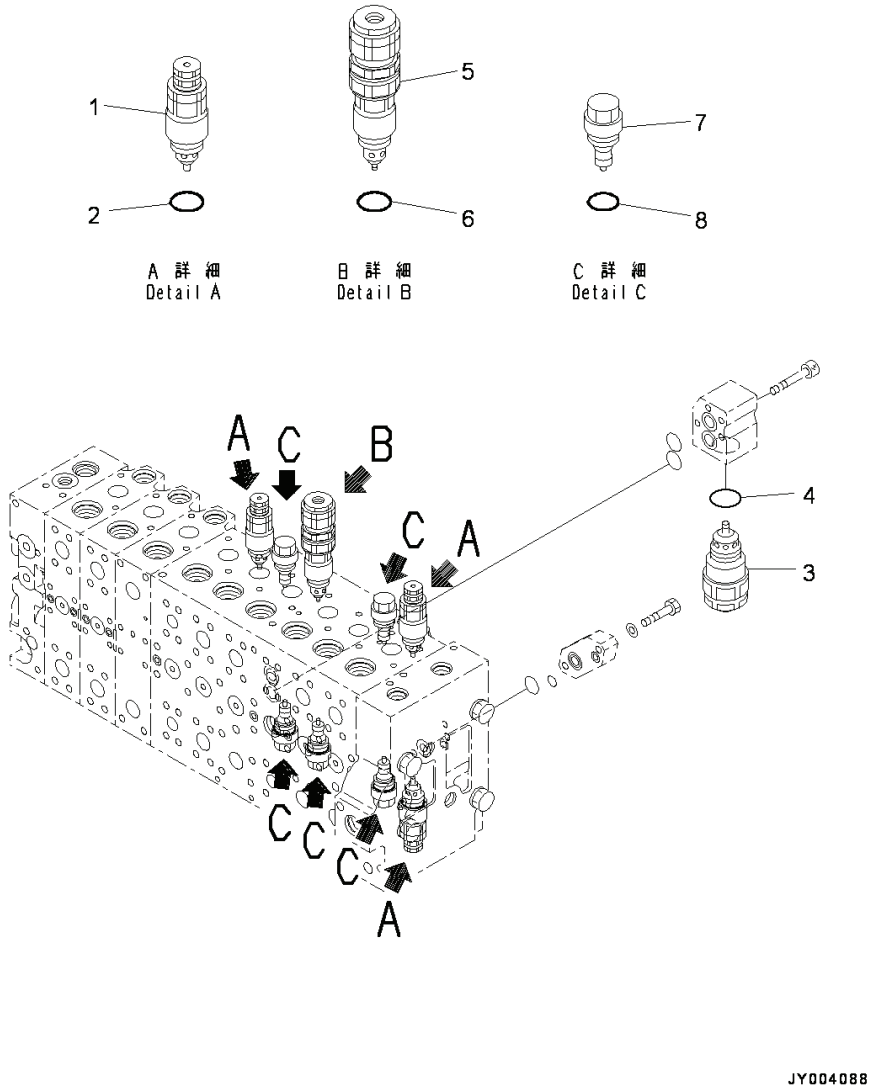

Index	Code	Part Number	Descreption	Qty	Serial Number
		723-49-26500	Valve Assembly, Control	1	Y300001-
		723-40-91500	• Valve Assembly, Relief	1	Y300001-
1		723-40-91200	• Valve Assembly, Suction and Relief	3	Y300001-
2		709-25-11390	• • O-ring	1	Y300001-
3		723-90-69100	• Valve Assembly, Suction and Relief	1	Y300001-
4		07002-13634	• • O-ring	1	Y300001-
5		723-90-76201	• Valve Assembly, Suction and Relief	1	Y300001-
6		07000-13024	• • O-ring	1	Y300001-
7		723-40-85100	• Valve Assembly, Suction	5	Y300001-
8		709-25-11390	• • O-ring	1	Y300001-

FIG. H0120-006013 Main Control Valve, 2-actuator, Inner Parts (13/25)

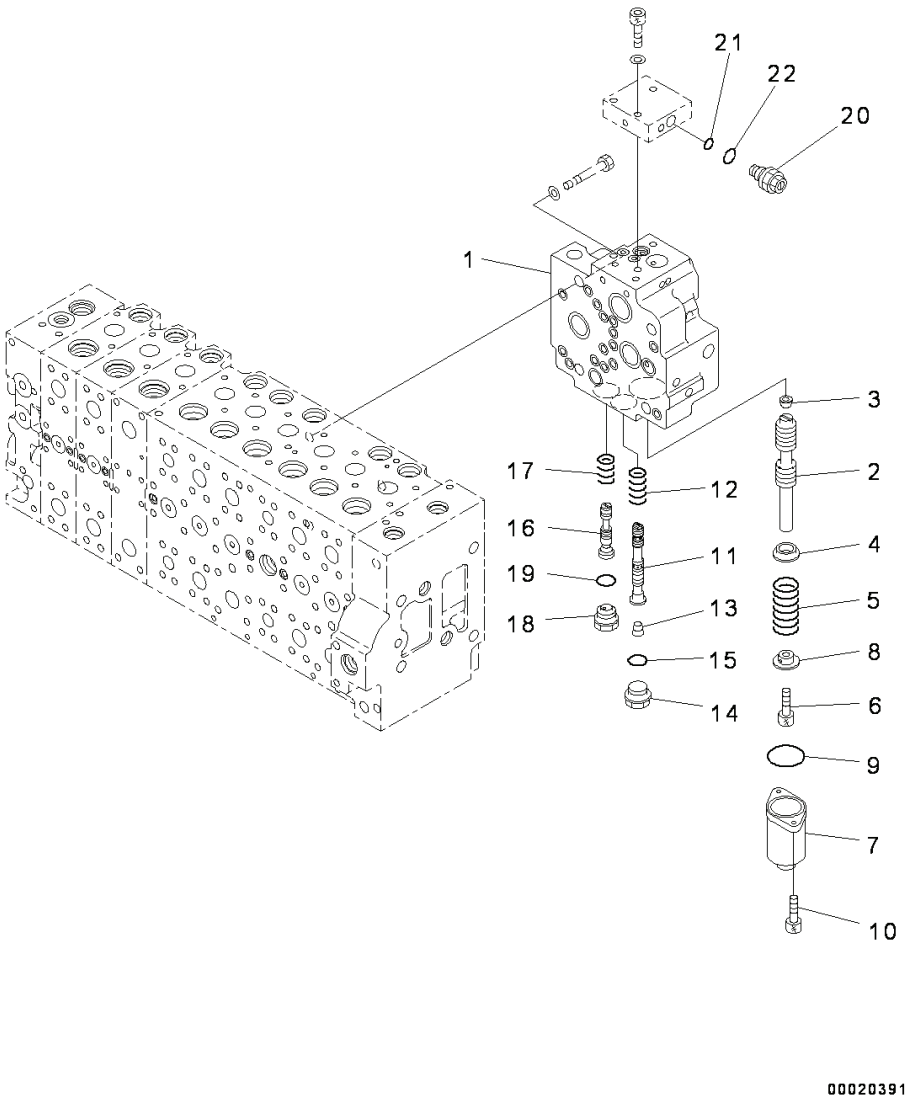

Index	Code	Part Number	Descreption	Qty	Serial Number
		723-49-26500	Valve Assembly, Control	1	Y300001-
		723-40-71201	• Valve Assembly	1	Y300001-
1	C1		• • Valve Body	1	Y300001-
2	C1		• • Spool	1	Y300001-
3	C1		• • Plug	1	Y300001-
4		723-40-71330	• • Retainer	1	Y300001-
5		723-40-71340	• • Spring	1	Y300001-
6		01252-60816	• • Bolt	1	Y300001-
7		723-46-15111	• • Case	1	Y300001-
8		723-40-71350	• • Retainer	1	Y300001-
9		07430-71380	• • O-ring	1	Y300001-
10		01252-60820	• • Bolt	2	Y300001-
11	C1		• • Spool	1	Y300001-
12		723-40-71440	• • Spring	1	Y300001-
13	C1		• • Plug	1	Y300001-
14		709-74-91860	• • Plug	1	Y300001-
15		07002-12434	• • O-ring	1	Y300001-
16	C1		• • Spool	1	Y300001-
17		723-40-71390	• • Spring	1	Y300001-
18		723-40-61150	• • Plug	1	Y300001-
19		07002-12434	• • O-ring	1	Y300001-
		723-40-71800	• • Valve Assembly	1	Y300001-
20		723-40-91600	• • • Valve Assembly, Relief	1	Y300001-
21		702-16-53920	• • • • O-ring	1	Y300001-
22		07002-11623	• • • • O-ring	1	Y300001-

PC300-8 (FEN01263-00)

FIG. H0120-006014 Main Control Valve, 2-actuator, Inner Parts (14/25)

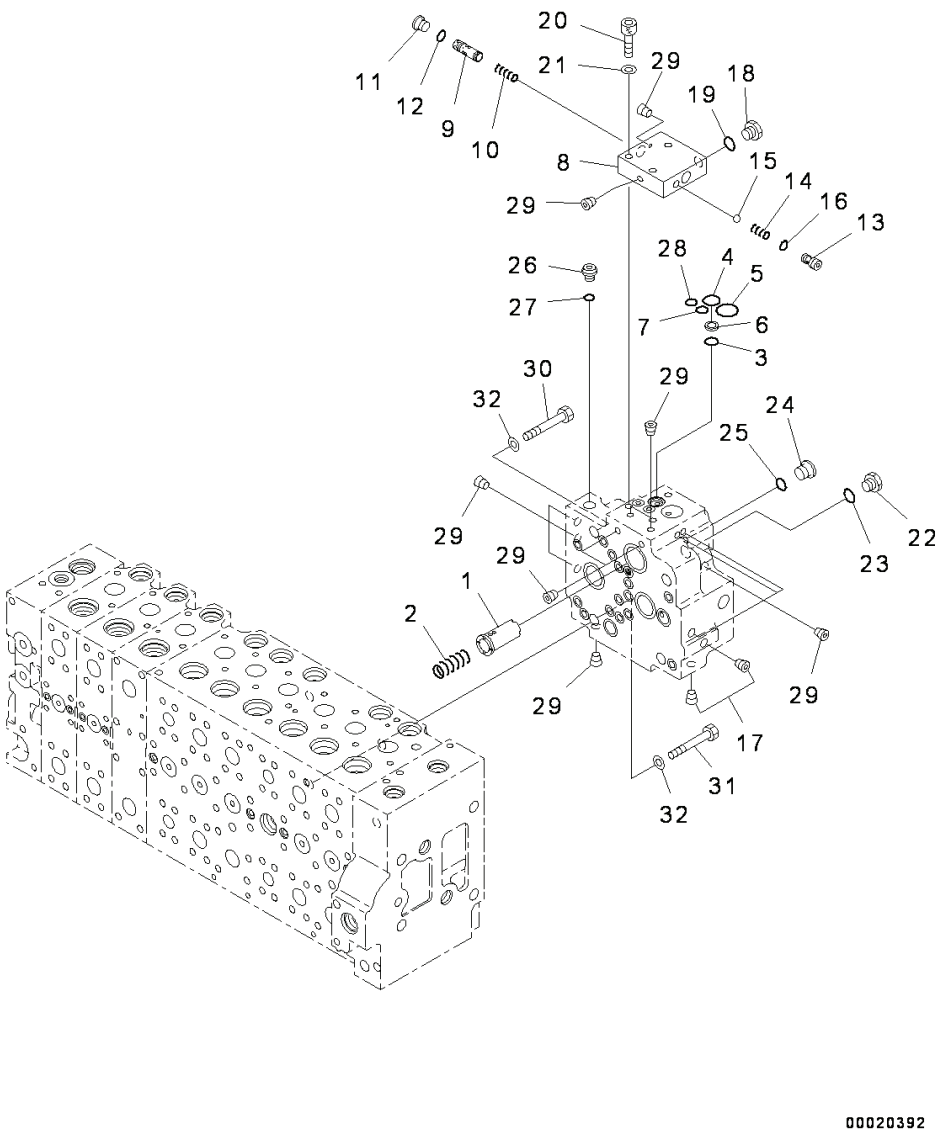

Index	Code	Part Number	Descreption	Qty	Serial Number
		723-49-26500	Valve Assembly, Control	1	Y300001-
		723-40-71201	• Valve Assembly	1	Y300001-
		723-40-71800	• • Valve Assembly	1	Y300001-
1		723-40-71430	• • Valve	1	Y300001-
2		702-21-55460	• • Spring	1	Y300001-
3		702-21-55420	• • O-ring	1	Y300001-
4		702-21-55520	• • O-ring	1	Y300001-
5		702-21-55440	• • O-ring	1	Y300001-
6		702-21-53120	• • Filter	1	Y300001-
7		07000-12011	• • O-ring	1	Y300001-
8	C1		• • Block	1	Y300001-
9	C1		• • Spool	1	Y300001-
10	C1		• • Spring	1	Y300001-
11		702-21-55620	• • Plug	1	Y300001-
12		07002-11423	• • O-ring	1	Y300001-
13		702-21-55710	• • Seat	1	Y300001-
14		702-21-55720	• • Spring	1	Y300001-
15		04260-00793	• • Ball	1	Y300001-
16		07000-11009	• • O-ring	1	Y300001-
17	C1		• • Plug	2	Y300001-
18		708-8H-11530	• • Plug	1	Y300001-
19		07002-11423	• • O-ring	1	Y300001-
20		01252-61040	• • Bolt	3	Y300001-
21		01643-51032	• • Washer	3	Y300001-
22		708-8H-11530	• • Plug	1	Y300001-
23		07002-11423	• • O-ring	1	Y300001-
24		702-21-55620	• • Plug	1	Y300001-
25		07002-11423	• • O-ring	1	Y300001-
26		708-8E-16160	• • Plug	1	Y300001-
27		07002-11023	• • O-ring	1	Y300001-
28		07000-12011	• • O-ring	1	Y300001-
29	C1		• • Plug	17	Y300001-
30		01010-61460	• Bolt	1	Y300001-
31		01010-61470	• Bolt	3	Y300001-
32		01643-31445	• Washer	4	Y300001-

FIG. H0120-006015 Main Control Valve, 2-actuator, Inner Parts (15/25)

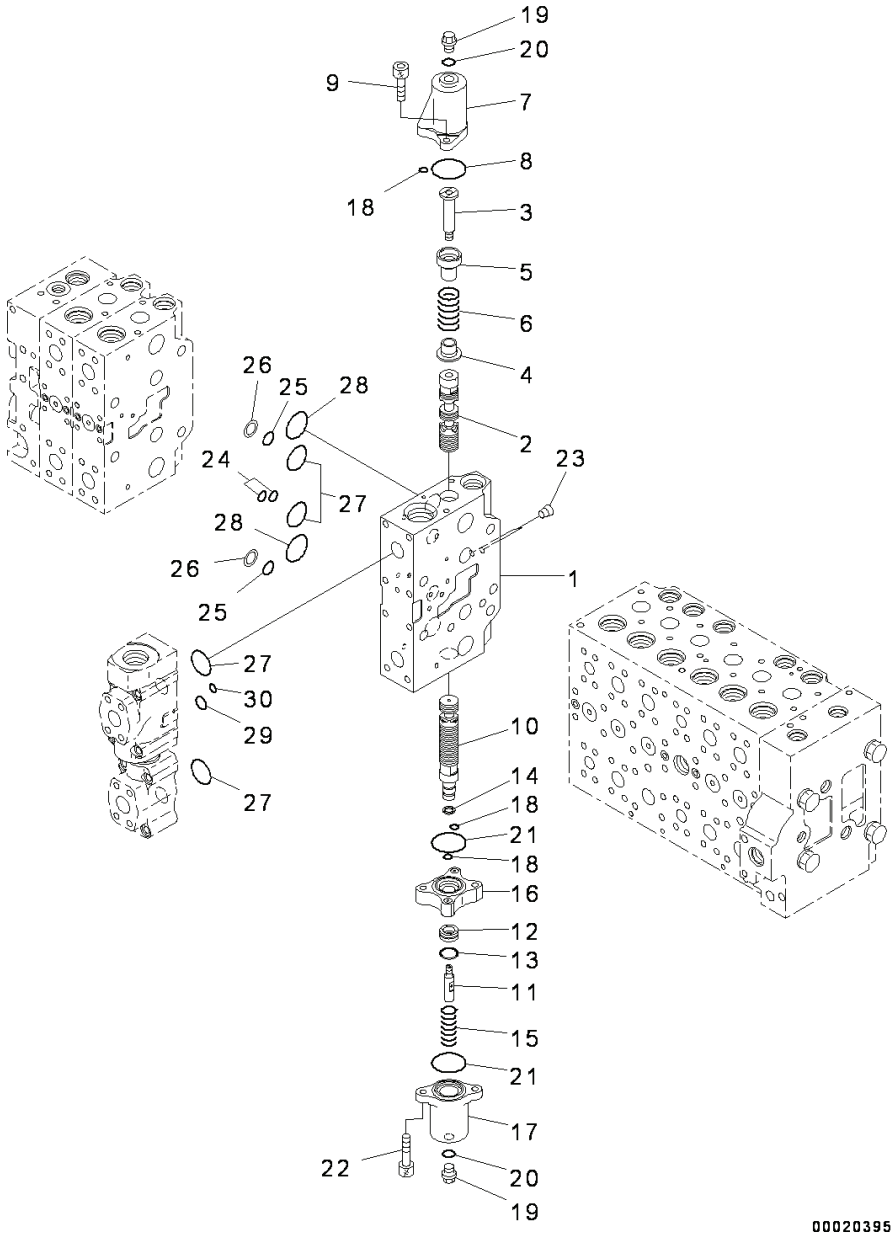

Index	Code	Part Number	Descreption	Qty	Serial Number
		723-49-26500	Valve Assembly, Control	1	Y300001-
	C1		• Body Subassembly	1	Y300001-
1	C1		• • Valve Body	1	Y300001-
2	C1		• • Spool	1	Y300001-
3		723-46-15390	• • Plug	1	Y300001-
4		723-46-15370	• • Retainer	1	Y300001-
5		723-46-15380	• • Retainer	1	Y300001-
6		723-46-14110	• • Spring	1	Y300001-
7		723-46-17840	• • Case	1	Y300001-
8		07430-71380	• • O-ring	1	Y300001-
9		01252-60820	• • Bolt	2	Y300001-
10	C1		• • Spool	1	Y300001-
11		723-46-15330	• • Bolt	1	Y300001-
12	C1		• • Piston	1	Y300001-
13	C1		• • Seal	1	Y300001-
14	C1		• • Seal	1	Y300001-
15		723-46-14180	• • Spring	1	Y300001-
16		723-46-17850	• • Case	1	Y300001-
17		723-46-17860	• • Case	1	Y300001-
18		723-11-19960	• • O-ring	3	Y300001-
19		706-73-71450	• • Plug	2	Y300001-
20		07002-11423	• • O-ring	2	Y300001-
21		07430-71380	• • O-ring	2	Y300001-
22		01252-60845	• • Bolt	2	Y300001-
23	C1		• • Plug	2	Y300001-
24		723-46-17530	• • O-ring	2	Y300001-
25		723-11-19130	• • O-ring	2	Y300001-
26		723-46-17520	• • Ring, Back-up	2	Y300001-
27		07000-13032	• • O-ring	4	Y300001-
28		723-46-17510	• • O-ring	2	Y300001-
29		07000-12016	• • O-ring	1	Y300001-
30		702-16-53920	• • O-ring	1	Y300001-

PC300-8 (FEN01263-00)

FIG. H0120-006016 Main Control Valve, 2-actuator, Inner Parts (16/25)

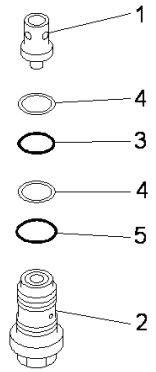

A 詳 細
Detail A

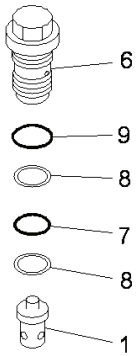

B 詳 細
Detail B

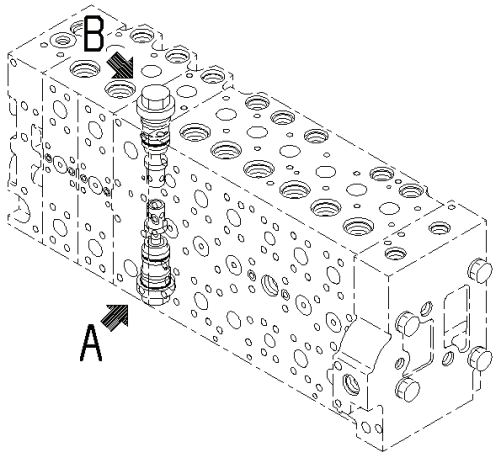

00020396

Index	Code	Part Number	Descreption	Qty	Serial Number
		723-49-26500	Valve Assembly, Control	1	Y300001-
	C1		• Body Subassembly	1	Y300001-
1		723-46-41210	• • Valve	2	Y300001-
2		723-46-40601	• • Valve Assembly	1	Y300001-
3		700-93-11320	• • • O-ring	1	Y300001-
4		723-46-41950	• • • Ring	2	Y300001-
5		07002-13634	• • • O-ring	1	Y300001-
6		723-46-43100	• • Valve Assembly	1	Y300001-
7		700-93-11320	• • • O-ring	1	Y300001-
8		723-46-41950	• • • Ring	2	Y300001-
9		07002-13634	• • • O-ring	1	Y300001-

FIG. H0120-006017 Main Control Valve, 2-actuator, Inner Parts (17/25)

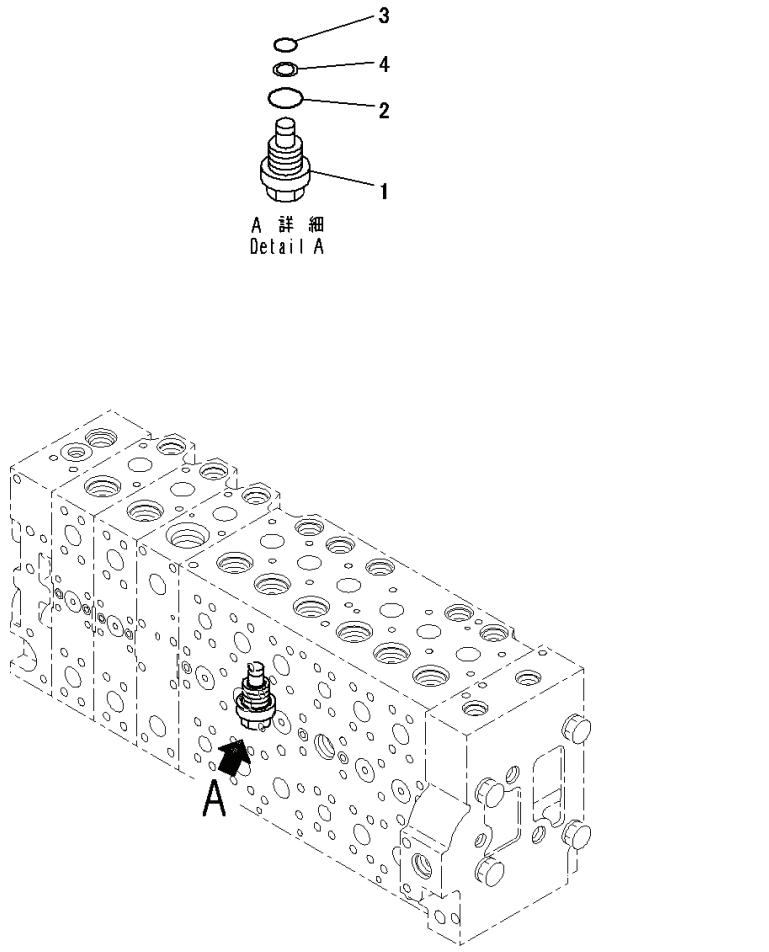

JH001414

Index	Code	Part Number	Descreption	Qty	Serial Number
		723-49-26500	Valve Assembly, Control	1	Y300001-
	C1		• Body Subassembly	1	Y300001-
1		709-74-91510	• • Plug	1	Y300001-
2		07000-13024	• • O-ring	1	Y300001-
3		07000-11009	• • O-ring	1	Y300001-
4		07001-01009	• • Ring, Back-up	1	Y300001-

FIG. H0120-006018 Main Control Valve, 2-actuator, Inner Parts (18/25)

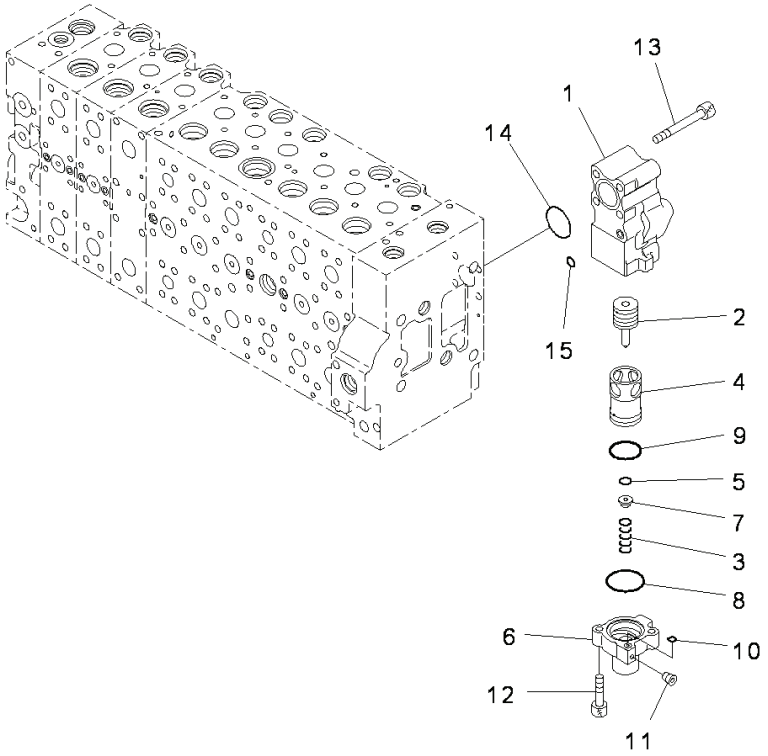

Index	Code	Part Number	Descreption	Qty	Serial Number
		723-49-26500	Valve Assembly, Control	1	Y300001-
		723-40-87100	• Valve Assembly	1	Y300001-
1		723-40-87110	• • Body	1	Y300001-
2		723-40-87140	• • Spool	1	Y300001-
3		723-40-87160	• • Spring	1	Y300001-
4	C1		• • Sleeve	1	Y300001-
5	C1		• • Seal	1	Y300001-
6	C1		• • Case	1	Y300001-
7		723-40-87150	• • Retainer	1	Y300001-
8		723-40-87170	• • O-ring	1	Y300001-
9		07000-13035	• • O-ring	1	Y300001-
10		07000-11007	• • O-ring	1	Y300001-
11	C1		• • Screw	1	Y300001-
12		01252-60830	• • Bolt	2	Y300001-
13		01252-61075	• Bolt, Hexagon Socket Head	4	Y300001-
14		07000-13038	• O-ring	1	Y300001-
15		07000-11010	• O-ring	1	Y300001-

FIG. H0120-006019 Main Control Valve, 2-actuator, Inner Parts (19/25)

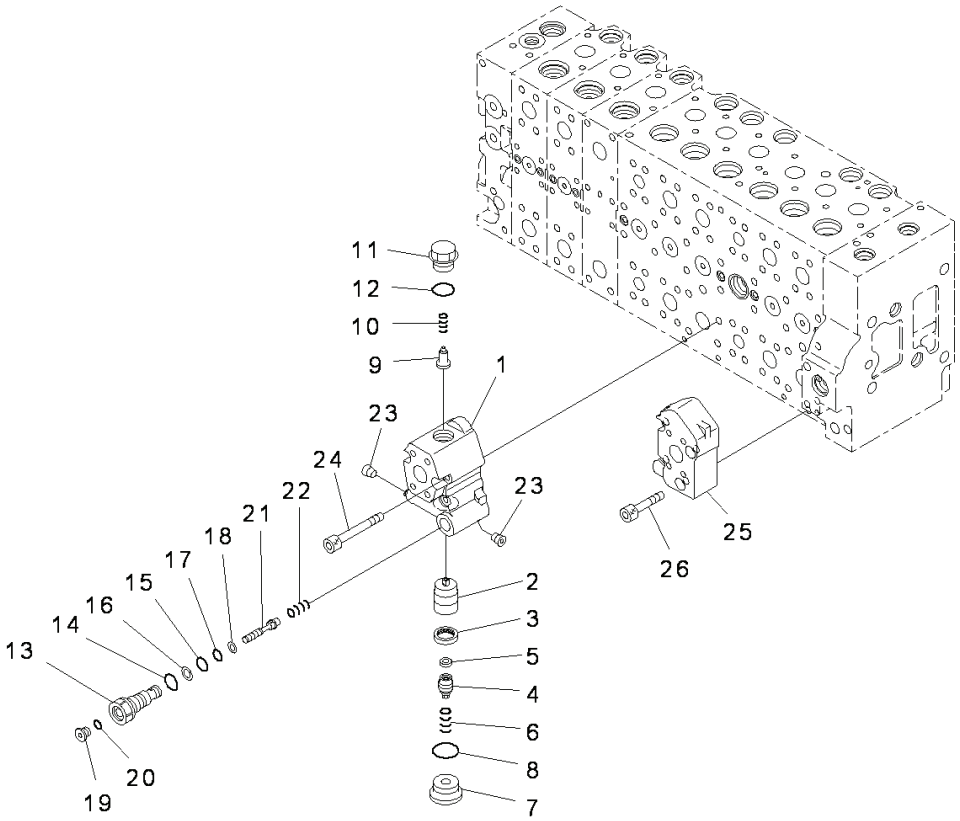

Index	Code	Part Number	Descreption	Qty	Serial Number
		723-49-26500	Valve Assembly, Control	1	Y300001-
		723-40-82401	• Valve Assembly	1	Y300001-
1		723-40-82410	• • Body	1	Y300001-
2		723-40-82120	• • Valve	1	Y300001-
3		723-40-82130	• • Seal	1	Y300001-
4		723-40-82210	• • Plug	1	Y300001-
5		723-40-82220	• • Filter	1	Y300001-
6		723-40-82140	• • Spring	1	Y300001-
7		723-40-82150	• • Plug	1	Y300001-
8		07002-13334	• • O-ring	1	Y300001-
9		723-40-84420	• • Valve, Check	1	Y300001-
10		723-40-84430	• • Spring	1	Y300001-
11		723-40-84440	• • Plug	1	Y300001-
12		07000-13024	• • O-ring	1	Y300001-
13		723-40-82310	• • Plug	1	Y300001-
14		07002-11823	• • O-ring	1	Y300001-
15		07000-12011	• • O-ring	1	Y300001-
16		07001-02011	• • Ring, Back-up	1	Y300001-
17		07000-11010	• • O-ring	1	Y300001-
18		07001-01010	• • Ring, Back-up	1	Y300001-
19		723-11-18190	• • Plug	1	Y300001-
20		07002-11023	• • O-ring	1	Y300001-
21		723-40-82280	• • Piston	1	Y300001-
22		723-40-82290	• • Spring	1	Y300001-
23		708-1S-19810	• • Plug	2	60022-
24		01252-61075	• Bolt, Hexagon Socket Head	4	Y300001-
25		723-46-17570	• Block	1	Y300001-
26		01252-61045	• Bolt, Hexagon Socket Head	4	Y300001-

FIG. H0120-006020 Main Control Valve, 2-actuator, Inner Parts (20/25)

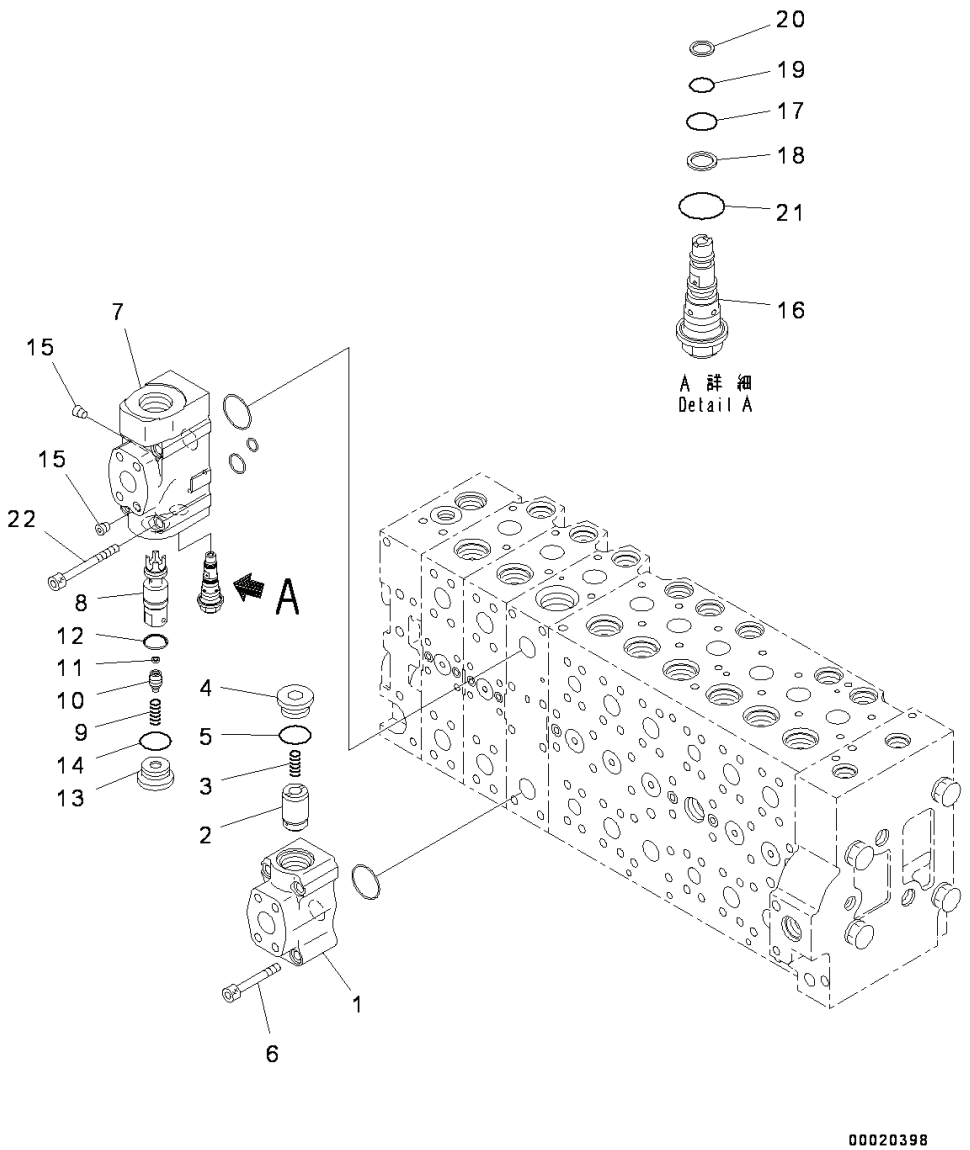

Index	Code	Part Number	Descreption	Qty	Serial Number
		723-49-26500	Valve Assembly, Control	1	Y300001-
		723-40-84100	• Valve Assembly	1	Y300001-
1	C1		• • Body	1	Y300001-
2	C1		• • Valve	1	Y300001-
3		723-40-82140	• • Spring	1	Y300001-
4		723-40-84130	• • Plug	1	Y300001-
5		07002-13034	• • O-ring	1	Y300001-
6		01252-61065	• Bolt	4	Y300001-
		723-40-84200	• Valve Assembly	1	Y300001-
7	C1		• • Body	1	Y300001-
8	C1		• • Valve	1	Y300001-
9		723-40-82140	• • Spring	1	Y300001-
10		723-40-84230	• • Plug	1	Y300001-
11		723-40-82220	• • Filter	1	Y300001-
12		723-46-15350	• • Seal	1	Y300001-
13		723-40-84130	• • Plug	1	Y300001-
14		07002-13034	• • O-ring	1	Y300001-
15		708-21-12541	• • Plug	2	Y300001-
16		723-40-92900	• • Valve Assembly	1	Y300001-
17		07000-12012	• • • O-ring	1	Y300001-
18		07001-02012	• • • Ring, Back-up	1	Y300001-
19		07000-11010	• • • O-ring	1	Y300001-
20		07001-01010	• • • Ring, Back-up	1	Y300001-
21		07002-12034	• • • O-ring	1	Y300001-
22		723-46-18770	• Bolt	4	Y300001-

FIG. H0120-006021 Main Control Valve, 2-actuator, Inner Parts (21/25)

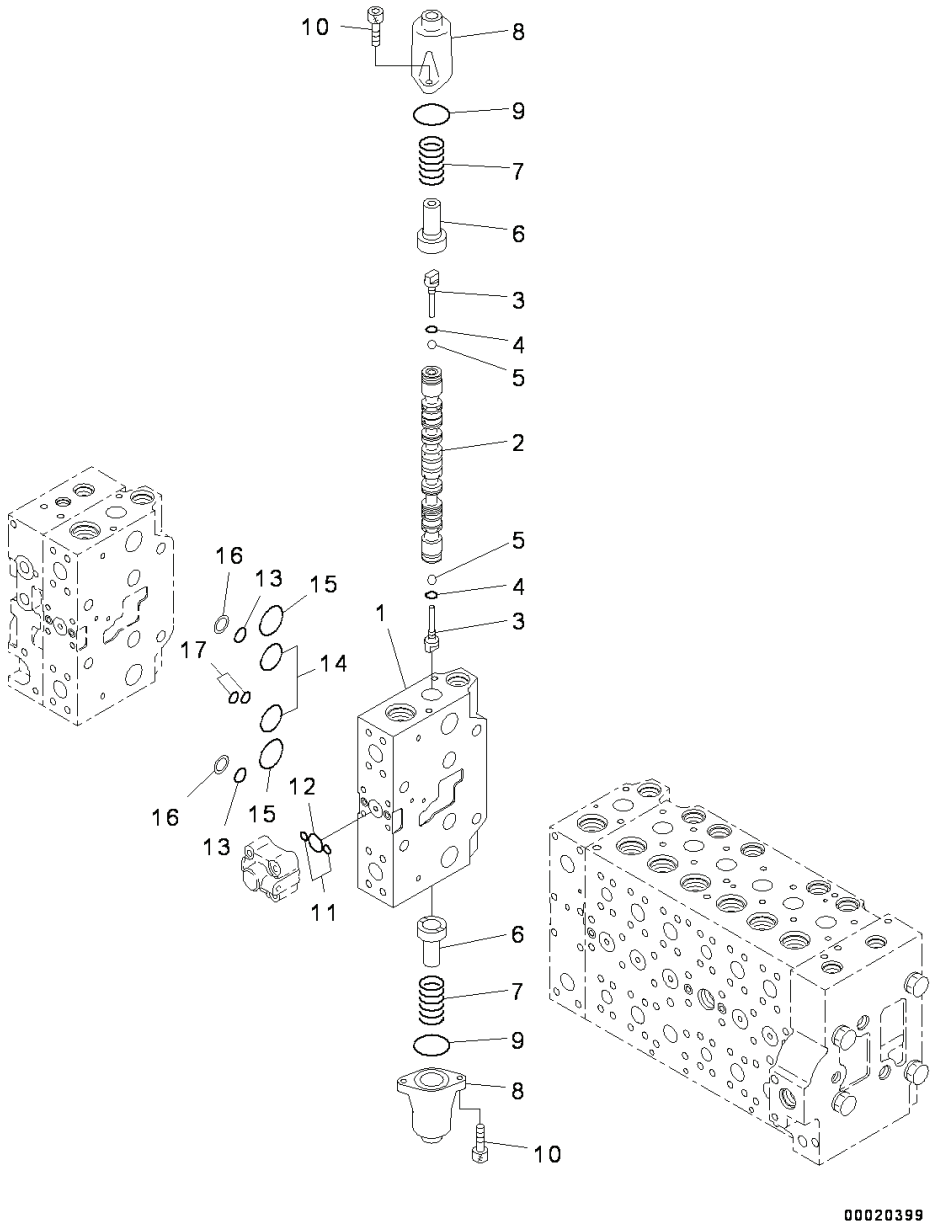

Index	Code	Part Number	Descreption	Qty	Serial Number
		723-49-26500	Valve Assembly, Control	1	Y300001-
	C1		• Body Subassembly	1	Y300001-
1	C1		• • Block	1	Y300001-
2	C1		• • Spool	1	Y300001-
3		723-46-15130	• • Plug	2	Y300001-
4		07002-10823	• • O-ring	2	Y300001-
5		708-7T-16460	• • Ball	2	Y300001-
6		723-46-15120	• • Retainer	2	Y300001-
7		723-46-14110	• • Spring	2	Y300001-
8		723-46-15111	• • Case	2	Y300001-
9		07430-71380	• • O-ring	2	Y300001-
10		01252-60820	• • Bolt	4	Y300001-
11		07000-11009	• • O-ring	2	Y300001-
12		07000-12021	• • O-ring	1	Y300001-
13		723-11-19130	• • O-ring	2	Y300001-
14		07000-13032	• • O-ring	2	Y300001-
15		723-46-17510	• • O-ring	2	Y300001-
16		723-46-17520	• • Ring, Back-up	2	Y300001-
17		723-46-17530	• • O-ring	2	Y300001-

PC300-8 (FEN01263-00)

FIG. H0120-006022 Main Control Valve, 2-actuator, Inner Parts (22/25)

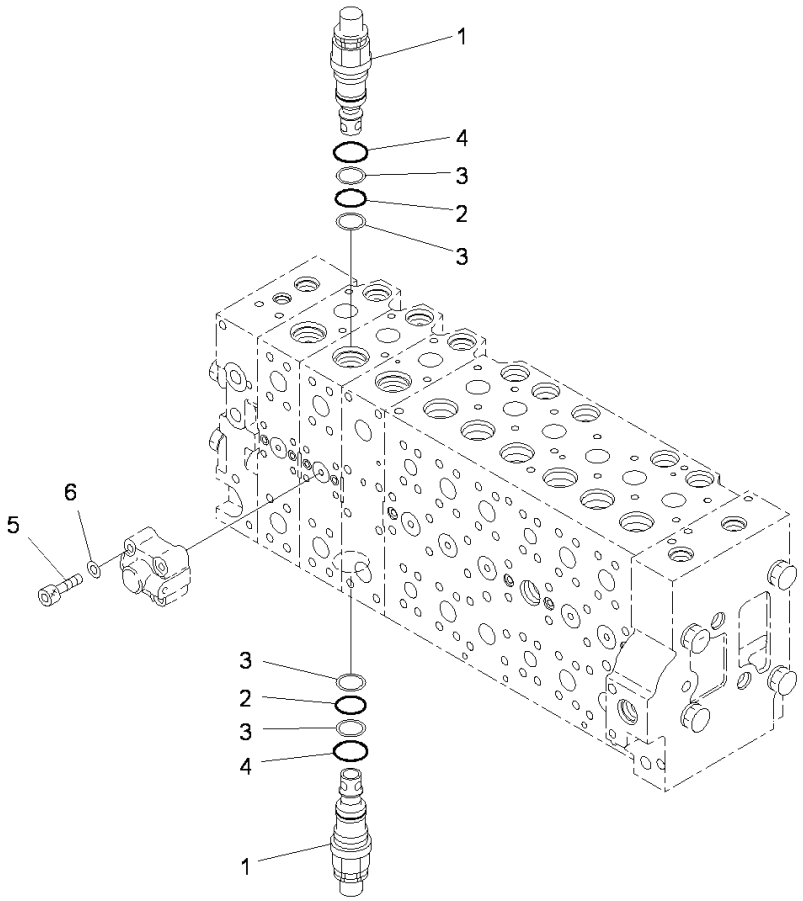

Index	Code	Part Number	Descreption	Qty	Serial Number
		723-49-26500	Valve Assembly, Control	1	Y300001-
	C1		• Body Subassembly	1	Y300001-
1		723-46-48100	• • Valve Assembly	2	Y300001-
2		700-93-11320	• • • O-ring	1	Y300001-
3		723-46-41950	• • • Ring	2	Y300001-
4		07002-13634	• • • O-ring	1	Y300001-
5		01252-60845	• • Bolt	4	Y300001-
6		01643-50823	• • Washer	4	Y300001-

FIG. H0120-006023 Main Control Valve, 2-actuator, Inner Parts (23/25)

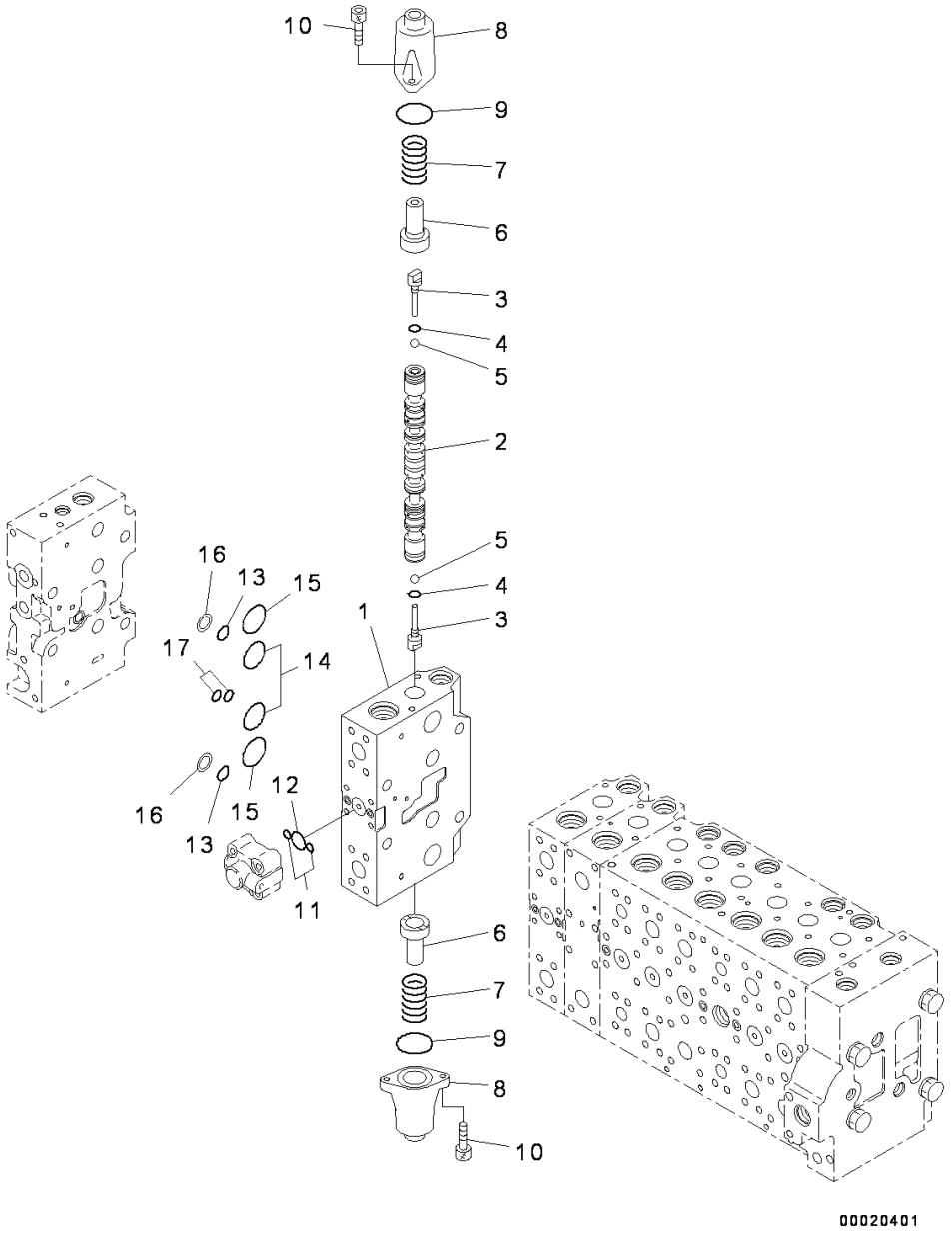

Index	Code	Part Number	Descreption	Qty	Serial Number
		723-49-26500	Valve Assembly, Control	1	Y300001-
	C1		• Body Subassembly	1	Y300001-
1	C1		• • Valve Body	1	Y300001-
2	C1		• • Spool	1	Y300001-
3		723-46-15130	• • Plug	2	Y300001-
4		07002-10823	• • O-ring	2	Y300001-
5		708-7T-16460	• • Ball	2	Y300001-
6		723-46-15120	• • Retainer	2	Y300001-
7		723-46-14110	• • Spring	2	Y300001-
8		723-46-15111	• • Case	2	Y300001-
9		07430-71380	• • O-ring	2	Y300001-
10		01252-60820	• • Bolt	4	Y300001-
11		07000-11009	• • O-ring	2	Y300001-
12		07000-12021	• • O-ring	1	Y300001-
13		723-11-19130	• • O-ring	2	Y300001-
14		07000-13032	• • O-ring	2	Y300001-
15		723-46-17510	• • O-ring	2	Y300001-
16		723-46-17520	• • Ring, Back-up	2	Y300001-
17		723-46-17530	• • O-ring	2	Y300001-

PC300-8 (FEN01263-00)

FIG. H0120-006024 Main Control Valve, 2-actuator, Inner Parts (24/25)

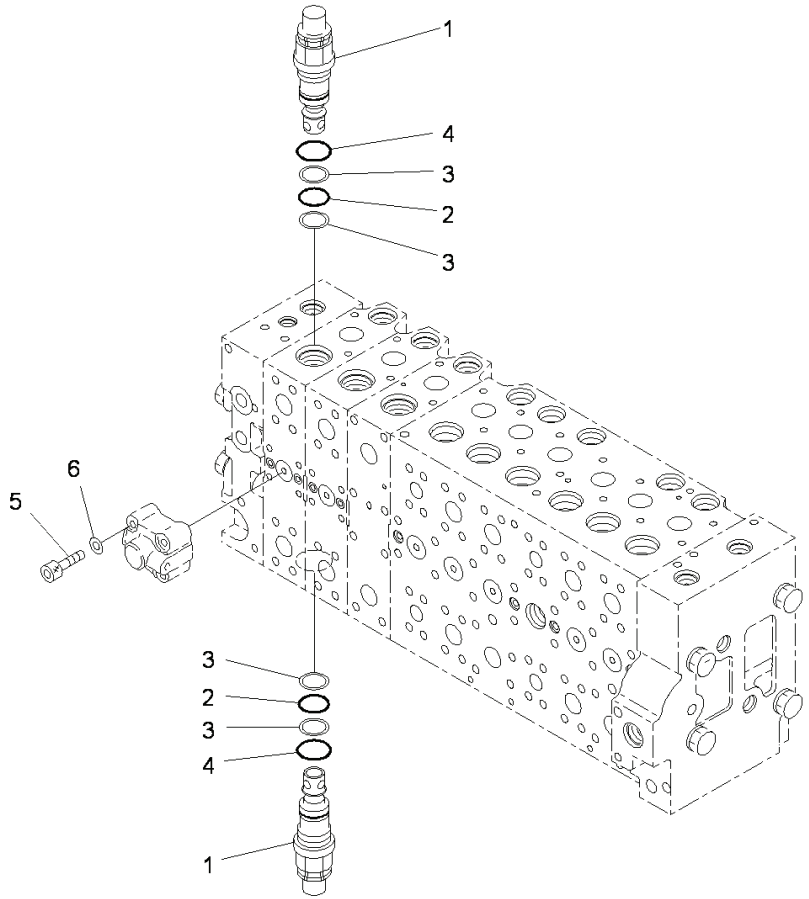

Index	Code	Part Number	Descreption	Qty	Serial Number
		723-49-26500	Valve Assembly, Control	1	Y300001-
	C1		• Body Subassembly	1	Y300001-
1		723-46-48100	• • Valve Assembly	2	Y300001-
2		700-93-11320	• • • O-ring	1	Y300001-
3		723-46-41950	• • • Ring	2	Y300001-
4		07002-13634	• • • O-ring	1	Y300001-
5		01252-60845	• • Bolt	4	Y300001-
6		01643-50823	• • Washer	4	Y300001-

PC300-8 (FEN01263-00)

FIG. H0120-006025 Main Control Valve, 2-actuator, Inner Parts (25/25)

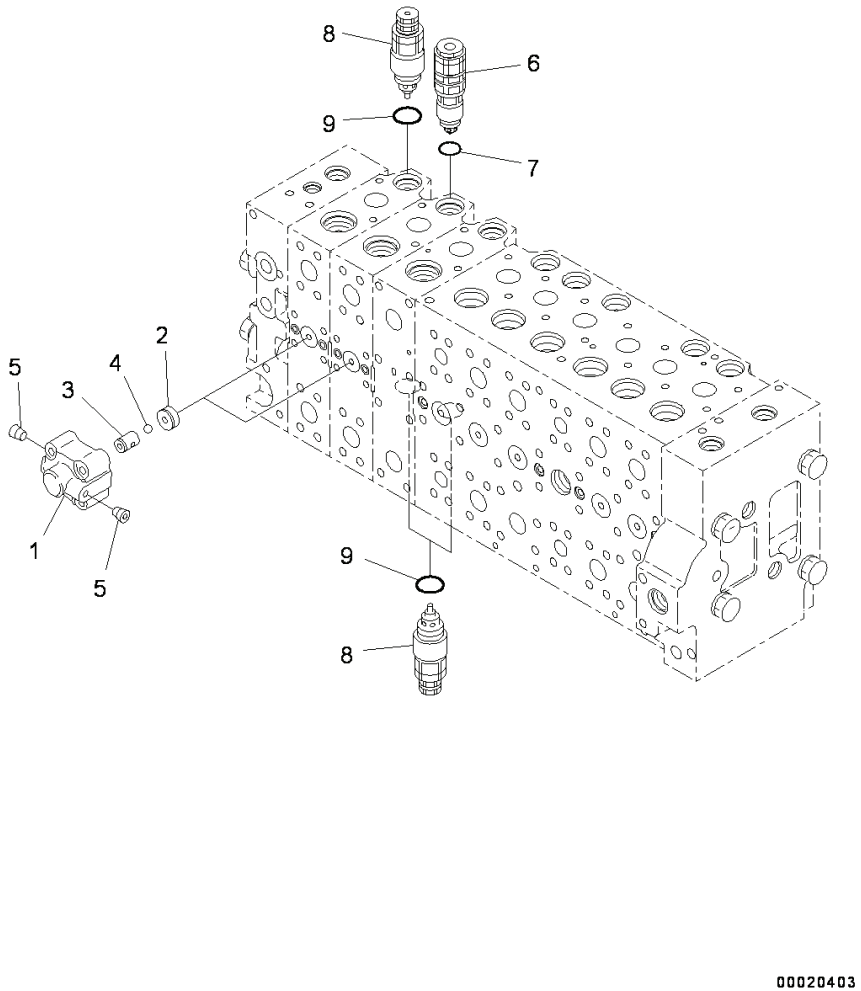

Index	Code	Part Number	Descreption	Qty	Serial Number
		723-49-26500	Valve Assembly, Control	1	Y300001-
		723-40-66300	• Valve Assembly	2	Y300001-
1	C1		• • Case	1	Y300001-
2	C1		• • Seat	1	Y300001-
3	C1		• • Seat	1	Y300001-
4	C1		• • Ball	1	Y300001-
5	C1		• • Plug	2	Y300001-
6		723-90-76501	• Valve Assembly, Suction and Relief, Suction and Safety	1	Y300001-
7		07000-13024	• • O-ring	1	Y300001-
8		723-90-61700	• Valve Assembly, Suction and Relief, Suction and Safety	3	Y300001-
9		07000-13024	• • O-ring	1	Y300001-

FIG. H0120-006026 Main Control Valve, 2-actuator, Control Valve Related Parts (1/2)

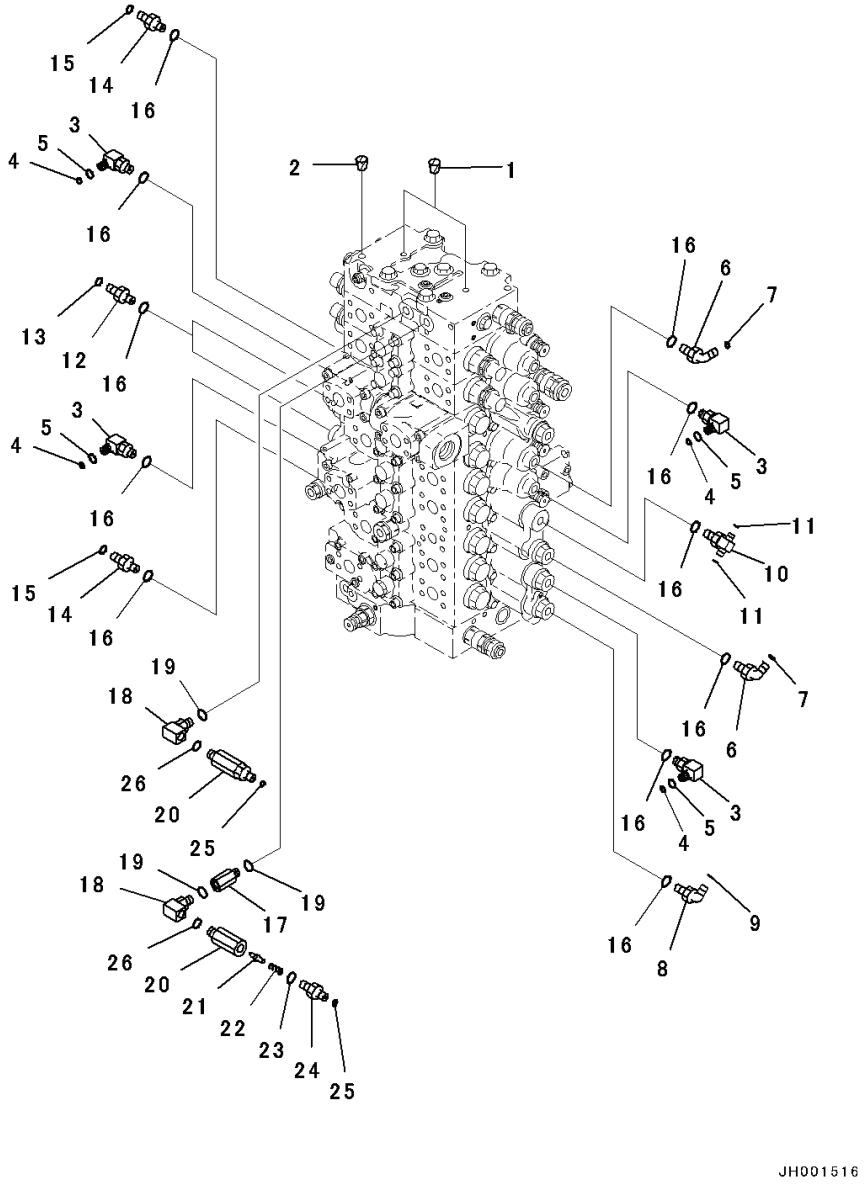

Index	Code	Part Number	Descreption	Qty	Serial Number
1		07049-01012	Plug	2	Y300001-
2		07049-01215	Plug	1	Y300001-
3		22U-62-22480	Elbow	4	Y300001-
4		201-60-11390	• O-ring	1	Y300001-
5		20Y-62-19560	• O-ring	1	Y300001-
6		11Y-62-12160	Elbow	2	Y300001-
7		02896-11008	O-ring	2	Y300001-
8		21W-62-42490	Elbow	1	Y300001-
9		02896-11009	O-ring	1	Y300001-
10		11Y-62-12250	Tee	1	Y300001-
11		02896-11008	O-ring	2	Y300001-
12		11Y-62-12130	Nipple	2	Y300001-
13		02896-11008	O-ring	2	Y300001-
14		11Y-62-12520	Union	2	Y300001-
15		02896-11009	O-ring	2	Y300001-
16		07002-11423	O-ring	12	Y300001-
17		20Y-62-22160	Adapter	1	Y300001-
18		20Y-62-23541	Elbow	2	Y300001-
19		07002-11423	O-ring	3	Y300001-
		20Y-62-41701	Valve Assembly	2	Y300001-
20	C1		• Body	1	Y300001-
21		20Y-60-22270	• Poppet	1	Y300001-
22		701-20-61230	• Spring	1	Y300001-
23		07002-11423	• O-ring	1	Y300001-
24		20Y-62-47630	• Nipple	1	Y300001-
25		02896-11008	O-ring	2	Y300001-
26		07002-11423	O-ring	2	Y300001-

PC300-8 (FEN01263-00)

FIG. H0120-006027 Main Control Valve, 2-actuator, Control Valve Related Parts (2/2)

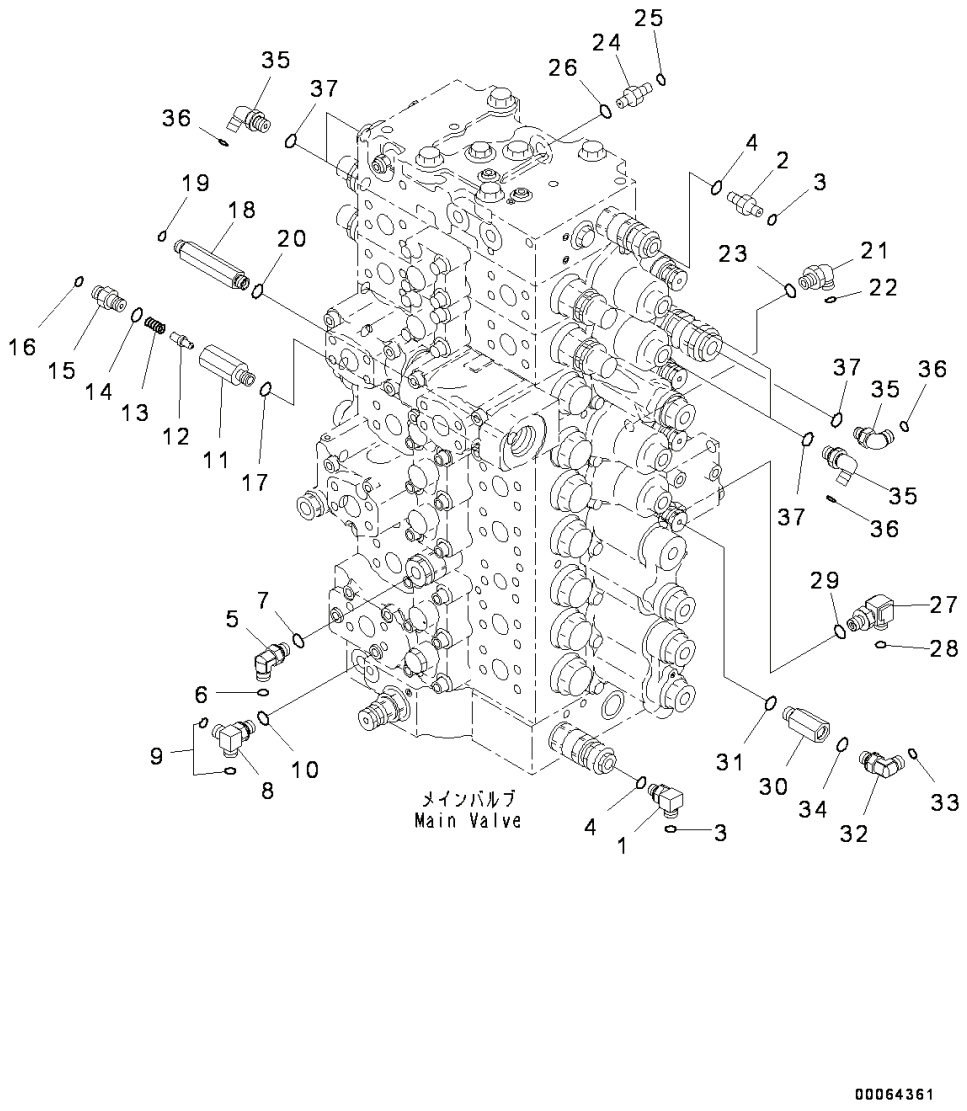

Index	Code	Part Number	Descreption	Qty	Serial Number
1		20Y-62-41920	Elbow	1	Y300001-
2		208-62-71540	Nipple	1	Y300001-
3		02896-11008	O-ring	2	Y300001-
4		07002-11223	O-ring	2	Y300001-
5		11Y-62-12160	Elbow	1	Y300001-
6		02896-11008	O-ring	1	Y300001-
7		07002-11423	O-ring	1	Y300001-
8		207-62-72141	Elbow	1	Y300001-
9		02896-11008	O-ring	2	Y300001-
10		07002-11423	O-ring	1	Y300001-
		20Y-62-41701	Valve Assembly	1	Y300001-
11		20Y-60-22210	• Body	1	Y300001-
12		20Y-60-22270	• Poppet	1	Y300001-
13		701-20-61230	• Spring	1	Y300001-
14		07002-11423	• O-ring	1	Y300001-
15		20Y-62-47630	• Nipple	1	Y300001-
16		02896-11008	O-ring	1	Y300001-
17		07002-11423	O-ring	1	Y300001-
18		207-62-71531	Union	1	Y300001-
19		02896-11008	O-ring	1	Y300001-
20		07002-11423	O-ring	1	Y300001-
21		11Y-62-12160	Elbow	1	Y300001-
22		02896-11008	O-ring	1	Y300001-
23		07002-11423	O-ring	1	Y300001-
24		11Y-62-12130	Nipple	1	Y300001-
25		02896-11008	O-ring	1	Y300001-
26		07002-11423	O-ring	1	Y300001-
27		21W-62-42490	Elbow	1	Y300001-
28		02896-11009	O-ring	1	Y300001-
29		07002-11423	O-ring	1	Y300001-
30		20Y-62-22160	Adapter	1	Y300001-
31		07002-11423	O-ring	1	Y300001-
32		11Y-62-12160	Elbow	1	Y300001-
33		02896-11008	O-ring	1	Y300001-
34		07002-11423	O-ring	1	Y300001-
35		11Y-62-12160	Elbow	5	Y300001-
36		02896-11008	O-ring	5	Y300001-
37		07002-11423	O-ring	5	Y300001-

FIG. H0120-006028 Main Control Valve, 2-actuator, Valve Bracket

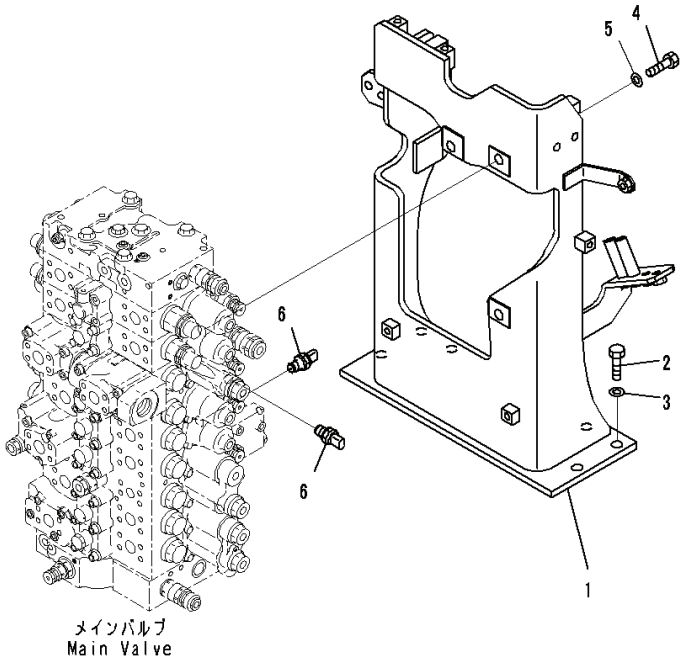

Index	Code	Part Number	Descreption	Qty	Serial Number
1		207-62-74610	Bracket	1	Y300001-
2		01010-81640	Bolt	6	Y300001-
3		01643-31645	Washer	6	Y300001-
4		01010-81645	Bolt	3	Y300001-
5		01643-31645	Washer	3	Y300001-
6		7861-93-1811	Sensor	2	Y300001-

FIG. H0120-005001 Main Control Valve, Inner Parts (1/23)

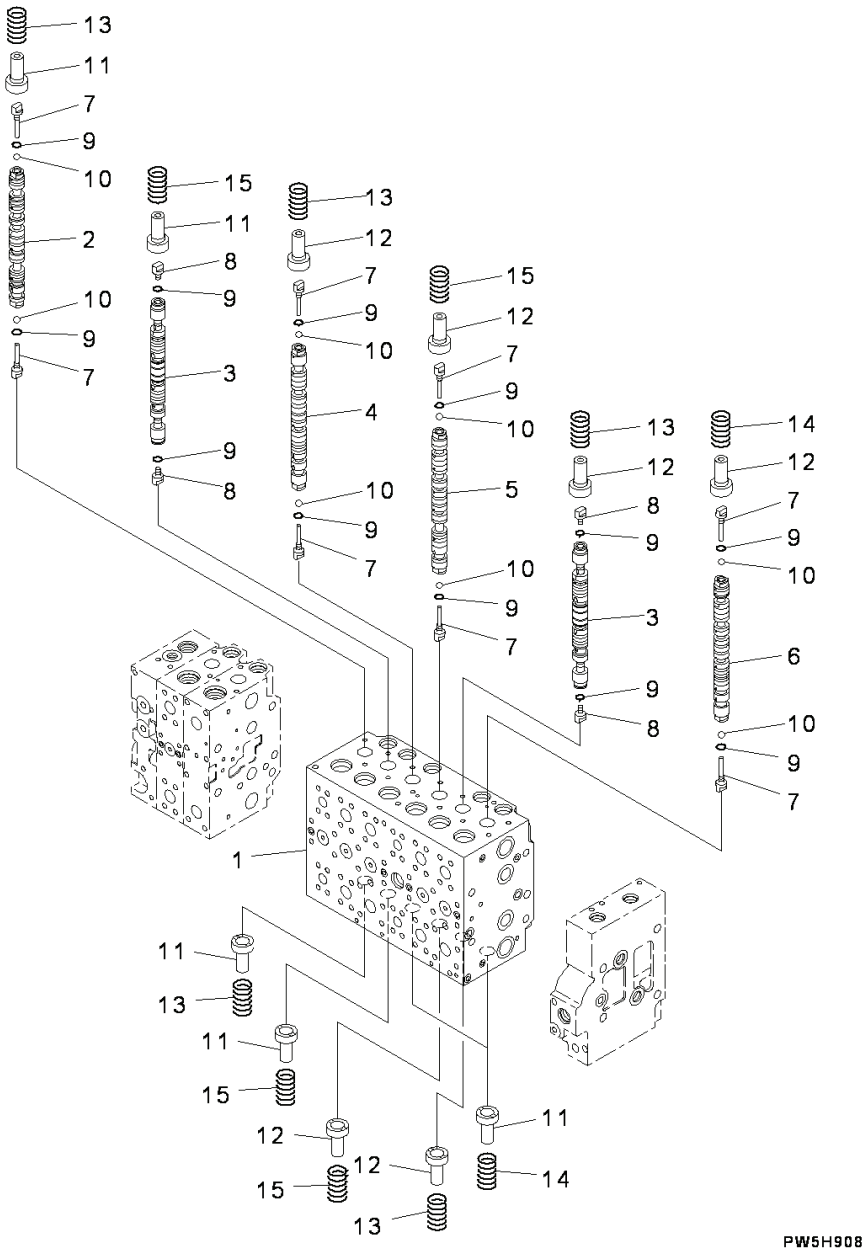

Index	Code	Part Number	Descreption	Qty	Serial Number
		Note: This list covers following specifications.			
		1-actuator			
		1-actuator, Piping Less			
		723-48-26500	Valve Assembly, Control	1	Y300001-
	C1		• Body Subassembly	1	Y300001-
1	C1		• • Block	1	Y300001-
2	C1		• • Spool	1	Y300001-
3	C1		• • Spool	2	Y300001-
4	C1		• • Spool	1	Y300001-
5	C1		• • Spool	1	Y300001-
6	C1		• • Spool	1	Y300001-
7		723-46-15130	• • Plug	8	Y300001-
8		723-46-15140	• • Plug	4	Y300001-
9		07002-10823	• • O-ring	12	Y300001-
10		708-7T-16460	• • Ball	8	Y300001-
11		723-46-15120	• • Retainer	6	Y300001-
12		723-46-15690	• • Retainer	6	Y300001-
13		723-46-14110	• • Spring	5	Y300001-
14		723-46-14170	• • Spring	3	Y300001-
15		723-46-14131	• • Spring	4	Y300001-

PC300-8 (FEN01263-00)

FIG. H0120-005002 Main Control Valve, 1-actuator, Inner Parts (2/23)

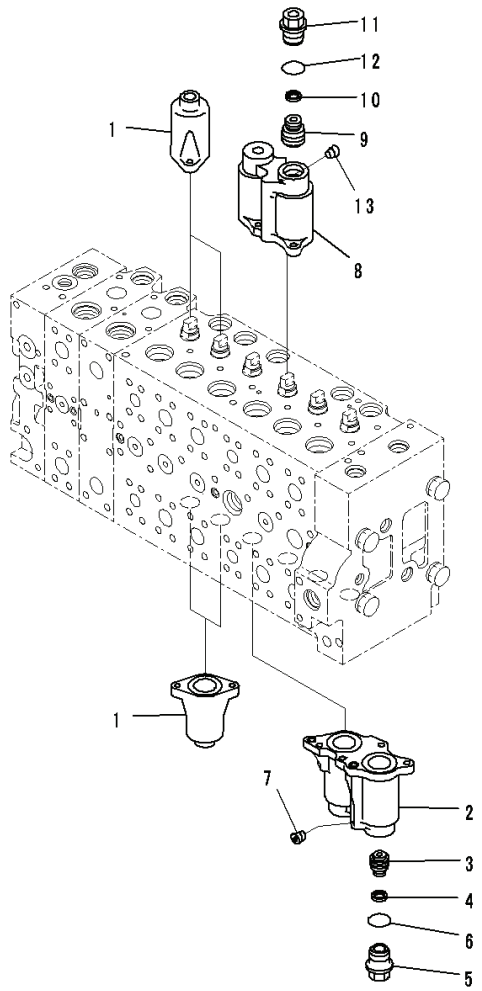

Index	Code	Part Number	Descreption	Qty	Serial Number
		723-48-26500	Valve Assembly, Control	1	Y300001-
	C1		• Body Subassembly	1	Y300001-
1		723-46-15111	• • Case	4	Y300001-
		723-46-18131	• • Case Subassembly	1	Y300001-
2	C1		• • • Case	1	Y300001-
3	C1		• • • Piston	1	Y300001-
4	C1		• • • Seal	1	Y300001-
5		723-46-15630	• • • Plug	1	Y300001-
6		07000-13024	• • • O-ring	1	Y300001-
7	C1		• • • Screw	1	Y300001-
		723-46-18231	• • Case Subassembly	1	Y300001-
8	C1		• • • Case	1	Y300001-
9	C1		• • • Piston	1	Y300001-
10	C1		• • • Seal	1	Y300001-
11		723-46-15630	• • • Plug	1	Y300001-
12		07000-13024	• • • O-ring	1	Y300001-
13	C1		• • • Screw	1	Y300001-

FIG. H0120-005003 Main Control Valve, 1-actuator, Inner Parts (3/23)

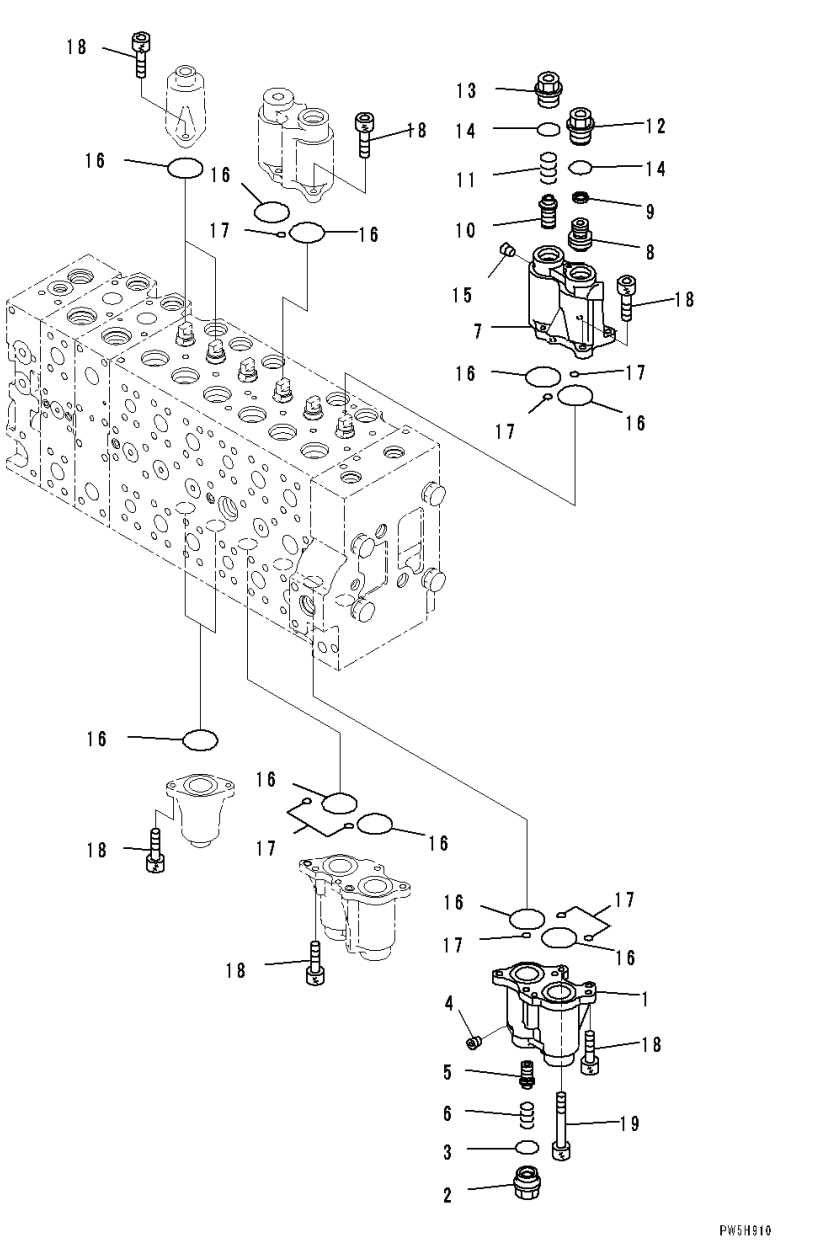

Index	Code	Part Number	Descreption	Qty	Serial Number
		723-48-26500	Valve Assembly, Control	1	Y300001-
	C1		• Body Subassembly	1	Y300001-
		723-46-18330	• • Case Subassembly	1	Y300001-
1	C1		• • • Case	1	Y300001-
2		723-46-17340	• • • Plug	1	Y300001-
3		07000-13024	• • • O-ring	1	Y300001-
4	C1		• • • Screw	1	Y300001-
5		723-46-17320	• • • Spool	1	Y300001-
6		723-46-17330	• • • Spring	1	Y300001-
		723-46-18431	• • Case Subassembly	1	Y300001-
7	C1		• • • Case	1	Y300001-
8	C1		• • • Piston	1	Y300001-
9	C1		• • • Seal	1	Y300001-
10		723-46-17320	• • • Spool	1	Y300001-
11		723-46-17330	• • • Spring	1	Y300001-
12		723-46-15630	• • • Plug	1	Y300001-
13		723-46-17340	• • • Plug	1	Y300001-
14		07000-13024	• • • O-ring	2	Y300001-
15	C1		• • • Screw	3	Y300001-
16		07430-71380	• • O-ring	12	Y300001-
17		702-16-53920	• • O-ring	8	Y300001-
18		01252-60820	• • Bolt	23	Y300001-
19		723-46-17350	• • Bolt	1	Y300001-

FIG. H0120-005004 Main Control Valve, 1-actuator, Inner Parts (4/23)

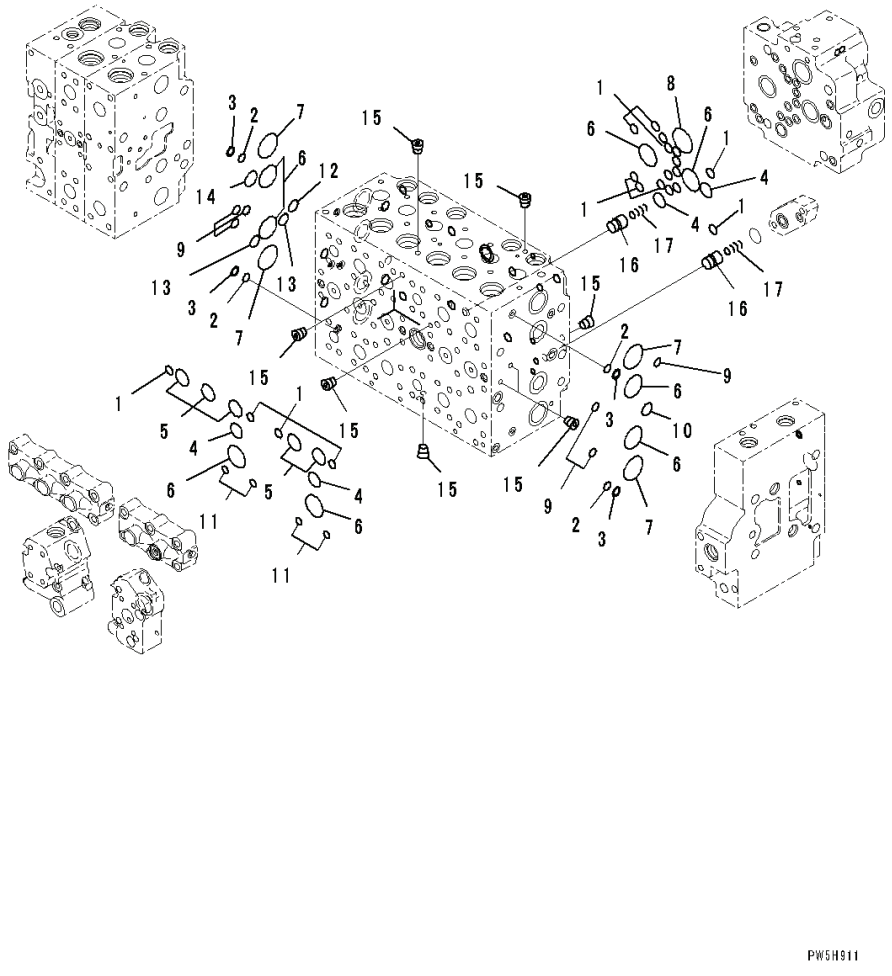

Index	Code	Part Number	Descreption	Qty	Serial Number
		723-48-26500	Valve Assembly, Control	1	Y300001-
	C1		• Body Subassembly	1	Y300001-
1		07000-12012	• • O-ring	19	Y300001-
2		723-11-19130	• • O-ring	4	Y300001-
3		723-46-17520	• • Ring, Back-up	4	Y300001-
4		07000-12021	• • O-ring	4	Y300001-
5		07000-13028	• • O-ring	5	Y300001-
6		07000-13032	• • O-ring	8	Y300001-
7		723-46-17510	• • O-ring	4	Y300001-
8		07000-13036	• • O-ring	1	Y300001-
9		723-46-17530	• • O-ring	11	Y300001-
10		723-11-18150	• • O-ring	2	Y300001-
11		702-16-53920	• • O-ring	4	Y300001-
12		723-46-18710	• • O-ring	1	Y300001-
13		722-12-19070	• • O-ring	2	Y300001-
14		723-46-18720	• • O-ring	1	Y300001-
15	C1		• • Plug	14	Y300001-
16		723-46-17650	• • Valve	2	Y300001-
17		723-46-14150	• • Spring	2	Y300001-

PC300-8 (FEN01263-00)

FIG. H0120-005005 Main Control Valve, 1-actuator, Inner Parts (5/23)

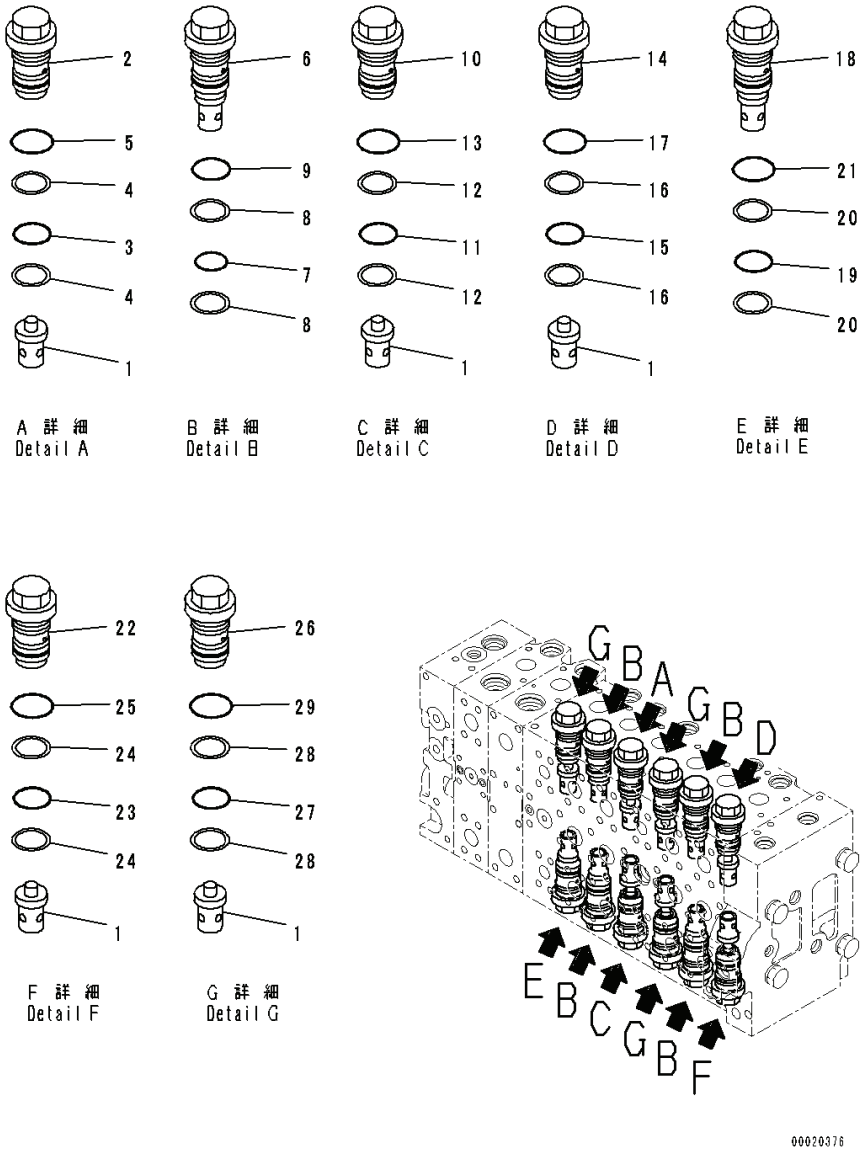

Index	Code	Part Number	Descreption	Qty	Serial Number
		723-48-26500	Valve Assembly, Control	1	Y300001-
	C1		• Body Subassembly	1	Y300001-
1		723-46-41210	• • Valve	7	Y300001-
2		723-46-40100	• • Valve Assembly	1	Y300001-
3		700-93-11320	• • • O-ring	1	Y300001-
4		723-46-41950	• • • Ring	2	Y300001-
5		07002-13634	• • • O-ring	1	Y300001-
6		723-46-42800	• • Valve Assembly	4	Y300001-
7		700-93-11320	• • • O-ring	1	Y300001-
8		723-46-41950	• • • Ring	2	Y300001-
9		07002-13634	• • • O-ring	1	Y300001-
10		723-46-40601	• • Valve Assembly	1	Y300001-
11		700-93-11320	• • • O-ring	1	Y300001-
12		723-46-41950	• • • Ring	2	Y300001-
13		07002-13634	• • • O-ring	1	Y300001-
14		723-46-43100	• • Valve Assembly	1	Y300001-
15		700-93-11320	• • • O-ring	1	Y300001-
16		723-46-41950	• • • Ring	2	Y300001-
17		07002-13634	• • • O-ring	1	Y300001-
18		723-46-43400	• • Valve Assembly	1	Y300001-
19		700-93-11320	• • • O-ring	1	Y300001-
20		723-46-41950	• • • Ring	2	Y300001-
21		07002-13634	• • • O-ring	1	Y300001-
22		723-46-44100	• • Valve Assembly	1	Y300001-
23		700-93-11320	• • • O-ring	1	Y300001-
24		723-46-41950	• • • Ring	2	Y300001-
25		07002-13634	• • • O-ring	1	Y300001-
26		723-46-45100	• • Valve Assembly	3	Y300001-
27		700-93-11320	• • • O-ring	1	Y300001-
28		723-46-41950	• • • Ring	2	Y300001-
29		07002-13634	• • • O-ring	1	Y300001-

PC300-8 (FEN01263-00)

FIG. H0120-005006 Main Control Valve, Inner Parts (6/23)

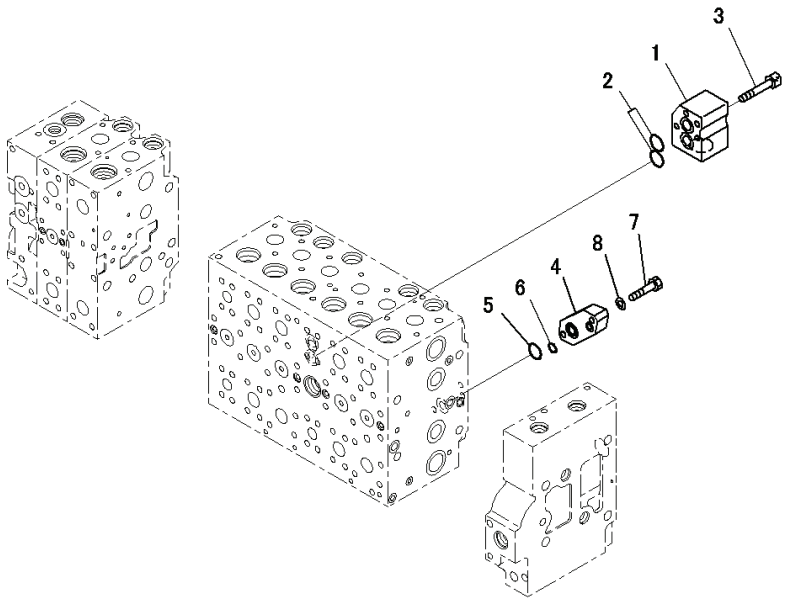

JH001410

Index	Code	Part Number	Descreption	Qty	Serial Number
		Note: This list covers following specifications.			
		1-actuator			
		1-actuator, Piping Less			
		723-48-26500	Valve Assembly, Control	1	Y300001-
	C1		• Body Subassembly	1	Y300001-
1		723-46-11910	• • Block	1	Y300001-
2		723-46-15510	• • O-ring	2	Y300001-
3		01252-60865	• • Bolt, Hexagon Socket Head	4	Y300001-
4		723-46-18730	• • Plate	1	Y300001-
5		07000-12021	• • O-ring	1	Y300001-
6		07000-12011	• • O-ring	1	Y300001-
7		01010-81040	• • Bolt	2	Y300001-
8		01643-51032	• • Washer	2	Y300001-

FIG. H0120-005007 Main Control Valve, 1-actuator, Inner Parts (7/23)

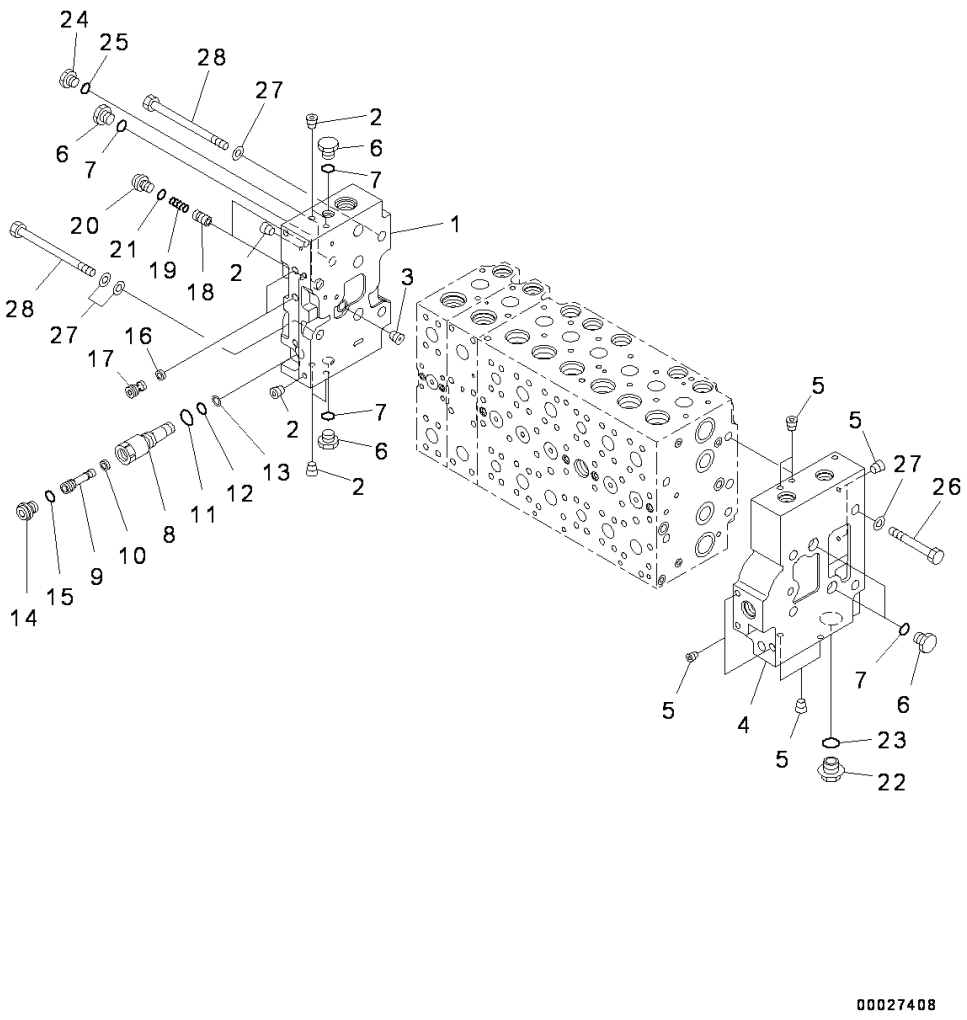

Index	Code	Part Number	Descreption	Qty	Serial Number
		723-48-26500	Valve Assembly, Control	1	Y300001-
		723-46-00760	• Cover Assembly	1	Y300001-
1	C1		• • Cover, A	1	Y300001-
2	C1		• • Plug	7	Y300001-
3	C1		• • Plug	1	Y300001-
		723-46-00742	• Cover Assembly	1	Y300001-
4	C1		• • Cover, B	1	Y300001-
5	C1		• • Plug	8	Y300001-
6		708-8E-16250	• Plug	5	Y300001-
7		07002-11823	• O-ring	5	Y300001-
		723-46-17600	• Plug Assembly	1	Y300001-
8		723-46-17610	• • Sleeve	1	Y300001-
9		723-46-17640	• • Plug	1	Y300001-
10		702-21-55760	• • Filter	1	Y300001-
11		07002-11423	• • O-ring	1	Y300001-
12		07000-11007	• • O-ring	1	Y300001-
13		07001-01007	• • Ring, Back-up	1	Y300001-
14		708-8E-16160	• • Plug	1	Y300001-
15		07002-11023	• • O-ring	1	Y300001-
16		723-40-82220	• Filter	2	Y300001-
17		723-46-17550	• Plug	2	Y300001-
18		723-46-15190	• Valve	2	Y300001-
19		723-46-14140	• Spring	2	Y300001-
20		708-8E-16160	• Plug	2	Y300001-
21		07002-11023	• O-ring	2	Y300001-
22		709-74-91860	• Plug	1	Y300001-
23		07002-12434	• O-ring	1	Y300001-
24		708-8H-11530	• Plug	1	Y300001-
25		07002-11423	• O-ring	1	Y300001-
26		01010-61490	• Bolt	4	Y300001-
27		01643-31445	• Washer	10	Y300001-
28		723-46-15220	• Bolt	4	Y300001-

FIG. H0120-005008 Main Control Valve, 1-actuator, Inner Parts (8/23)

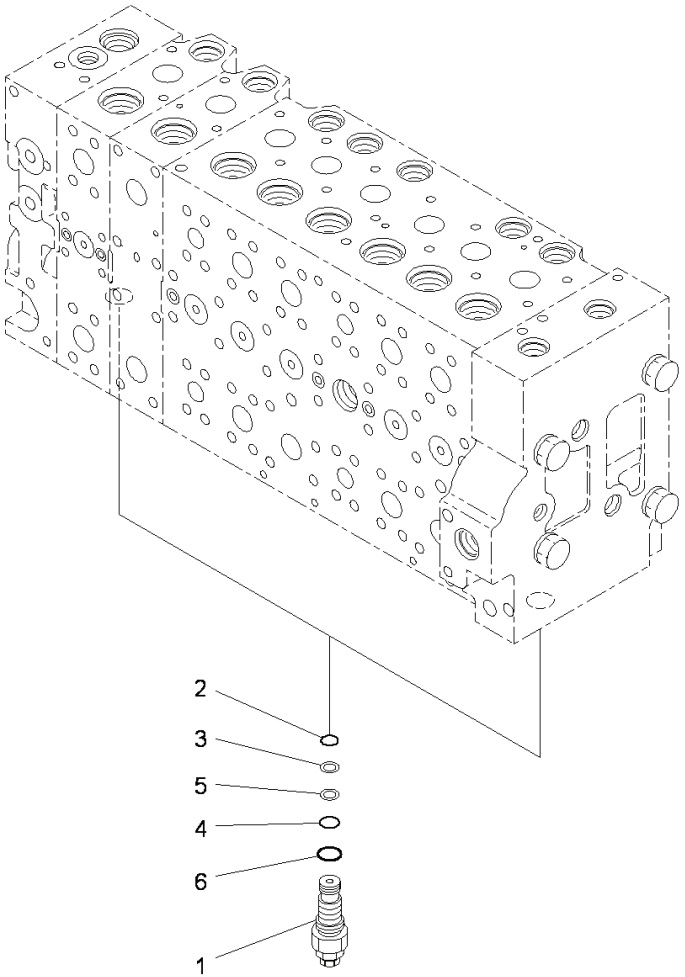

Index	Code	Part Number	Descreption	Qty	Serial Number
		723-48-26500	Valve Assembly, Control	1	Y300001-
1		723-40-56800	• Valve Assembly, Unloader, UNLOAD	2	Y300001-
2		07000-12014	• • O-ring	1	Y300001-
3		723-40-56350	• • Ring	1	Y300001-
4		07000-12016	• • O-ring	1	Y300001-
5		723-60-22230	• • Ring, Back-up	1	Y300001-
6		07002-12434	• • O-ring	1	Y300001-

FIG. H0120-005009 Main Control Valve, 1-actuator, Inner Parts (9/23)

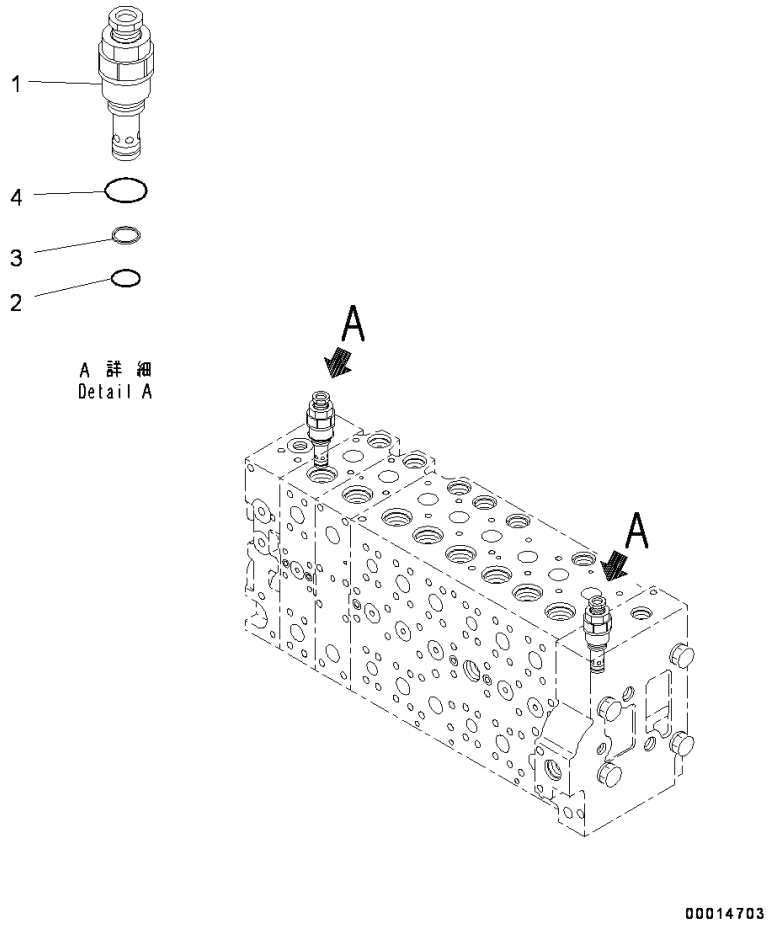

Index	Code	Part Number	Descreption	Qty	Serial Number
		723-48-26500	Valve Assembly, Control	1	Y300001-
1		723-40-93800	• Valve, Relief	2	Y300001-
2		700-22-11410	• • O-ring	1	Y300001-
3		700-80-64220	• • Ring	1	Y300001-
4		07002-12434	• • O-ring	1	Y300001-

FIG. H0120-005010 Main Control Valve, 1-actuator, Inner Parts (10/23)

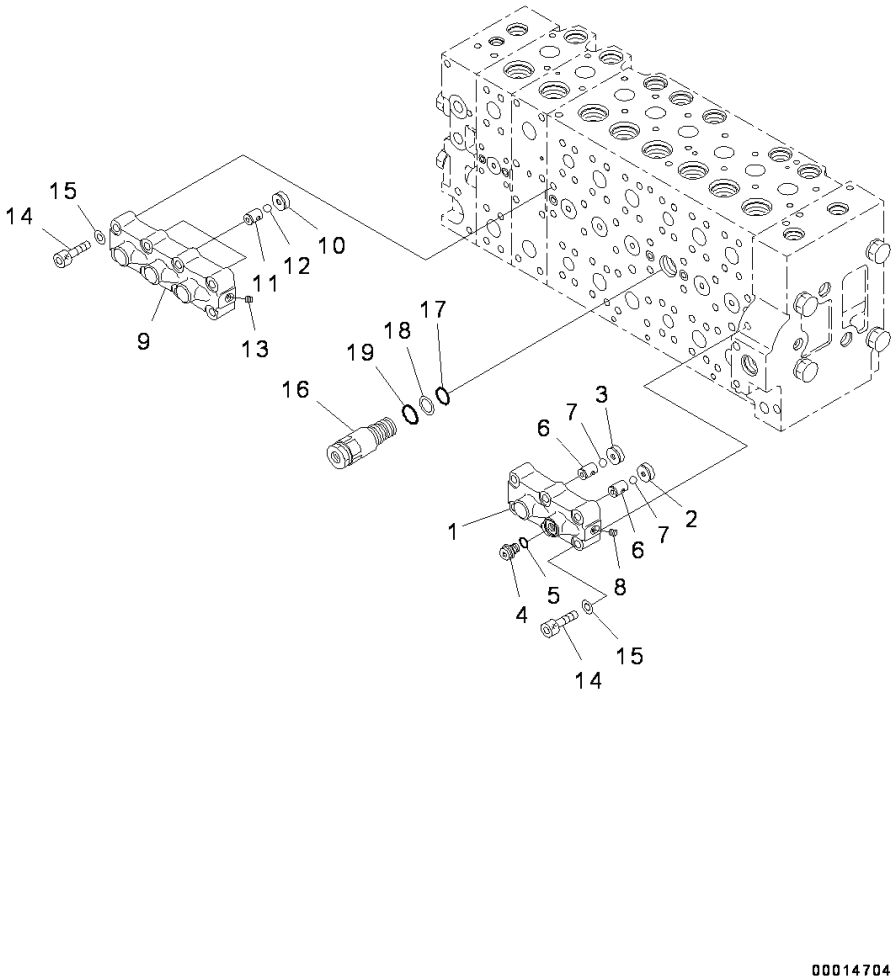

Index	Code	Part Number	Descreption	Qty	Serial Number
		723-48-26500	Valve Assembly, Control	1	Y300001-
		723-40-93800	• Valve, Relief	2	Y300001-
		723-40-66701	• Valve Assembly	1	Y300001-
1	C1		• • Case	1	Y300001-
2	C1		• • Seat	1	Y300001-
3	C1		• • Seat	1	Y300001-
4		708-8H-11530	• • Plug	1	Y300001-
5		07002-11423	• • O-ring	1	Y300001-
6	C1		• • Seat	2	Y300001-
7	C1		• • Ball	2	Y300001-
8	C1		• • Plug	1	Y300001-
		723-40-66601	• Valve Assembly	1	Y300001-
9	C1		• • Case	1	Y300001-
10	C1		• • Seat	3	Y300001-
11	C1		• • Seat	3	Y300001-
12	C1		• • Ball	3	Y300001-
13	C1		• • Plug	1	Y300001-
14		01252-61050	• Bolt, Hexagon Socket Head	14	Y300001-
15		01643-51032	• Washer	14	Y300001-
16		723-40-60101	• Valve Assembly	1	Y300001-
17		07000-12020	• • O-ring	1	Y300001-
18		07001-02020	• • Ring, Back-up	1	Y300001-
19		709-25-11390	• • O-ring	1	Y300001-

PC300-8 (FEN01263-00)

FIG. H0120-005011 Main Control Valve, 1-actuator, Inner Parts (11/23)

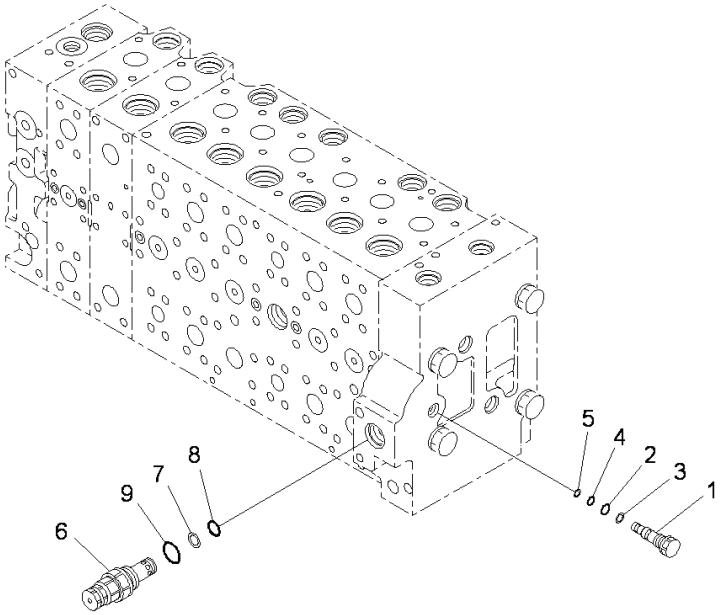

00014705

Index	Code	Part Number	Descreption	Qty	Serial Number
		723-48-26500	Valve Assembly, Control	1	Y300001-
		723-40-60101	• Valve Assembly	1	Y300001-
		723-46-17701	• Plug Assembly	1	Y300001-
1		723-46-17711	• • Plug	1	Y300001-
2		07000-11009	• • O-ring	1	Y300001-
3		07001-01009	• • Ring, Back-up	1	Y300001-
4		07000-11007	• • O-ring	1	Y300001-
5		07001-01007	• • Ring, Back-up	1	Y300001-
6		723-40-91500	• Valve Assembly, Relief	1	Y300001-
7		700-80-64220	• • Ring	1	Y300001-
8		700-22-11410	• • O-ring	1	Y300001-
9		709-25-11390	• • O-ring	1	Y300001-

FIG. H0120-005012 Main Control Valve, Inner Parts (12/23)

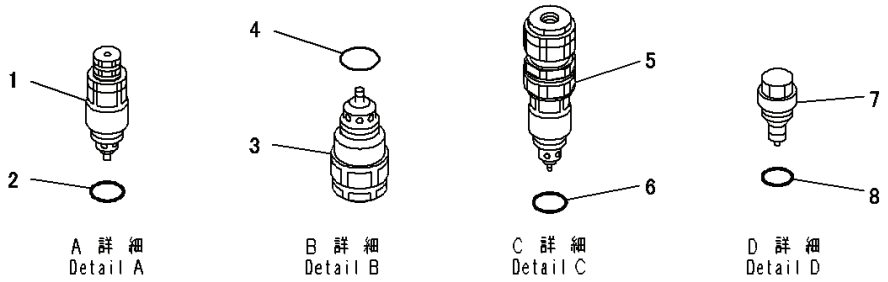

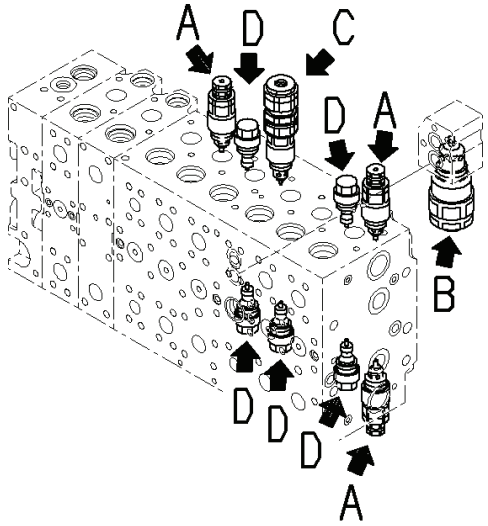

JH000519

Index	Code	Part Number	Descreption	Qty	Serial Number
		Note: This list covers following specifications.			
		1-actuator			
		1-actuator, Piping Less			
		723-48-26500	Valve Assembly, Control	1	Y300001-
		723-40-91500	• Valve Assembly, Relief	1	Y300001-
1		723-40-91200	• Valve Assembly, Suction and Relief	3	Y300001-
2		709-25-11390	• • O-ring	1	Y300001-
3		723-90-69100	• Valve Assembly, Suction and Relief	1	Y300001-
4		07002-13634	• • O-ring	1	Y300001-
5		723-90-76201	• Valve Assembly, Suction and Relief	1	Y300001-
6		07000-13024	• • O-ring	1	Y300001-
7		723-40-85100	• Valve Assembly, Suction	5	Y300001-
8		709-25-11390	• • O-ring	1	Y300001-

FIG. H0120-005013 Main Control Valve, Inner Parts (13/23)

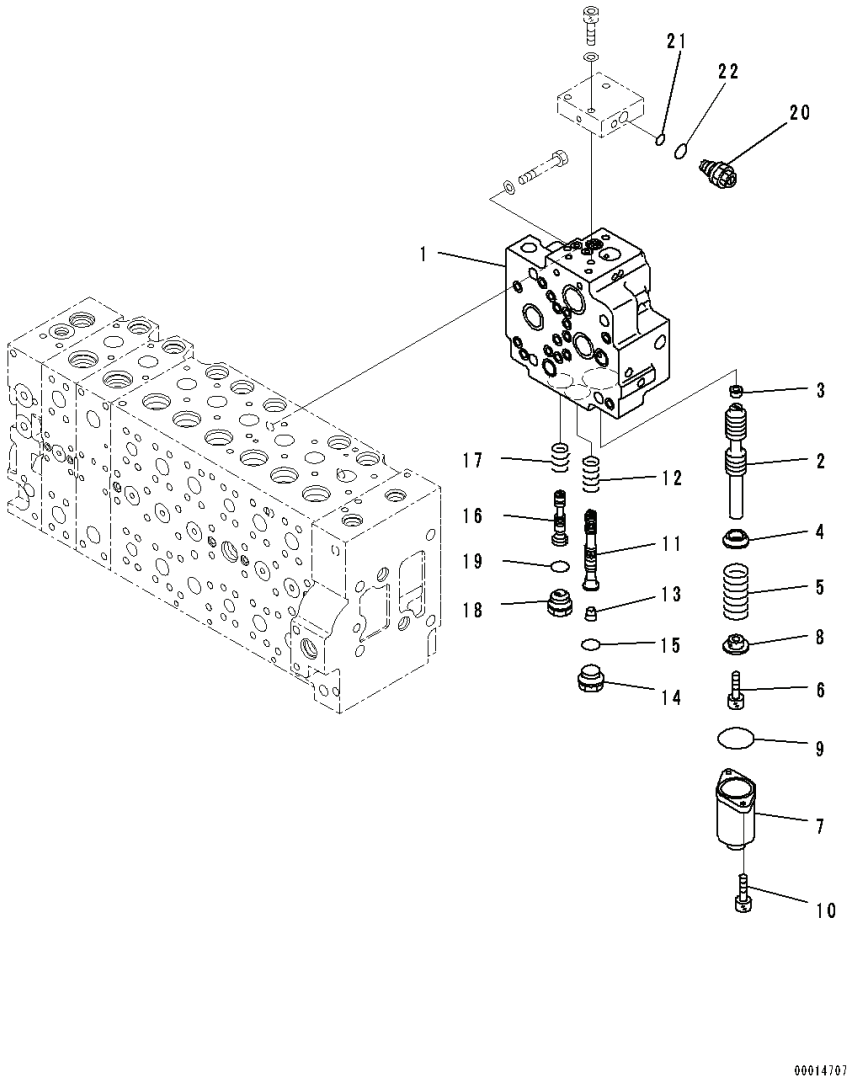

Index	Code	Part Number	Descreption	Qty	Serial Number
		Note: This list covers following specifications.			
		1-actuator			
		1-actuator, Piping Less			
		723-48-26500	Valve Assembly, Control	1	Y300001-
		723-40-71201	• Valve Assembly	1	Y300001-
1	C1		• • Valve Body	1	Y300001-
2	C1		• • Spool	1	Y300001-
3	C1		• • Plug	1	Y300001-
4		723-40-71330	• • Retainer	1	Y300001-
5		723-40-71340	• • Spring	1	Y300001-
6		01252-60816	• • Bolt	1	Y300001-
7		723-46-15111	• • Case	1	Y300001-
8		723-40-71350	• • Retainer	1	Y300001-
9		07430-71380	• • O-ring	1	Y300001-
10		01252-60820	• • Bolt	2	Y300001-
11	C1		• • Spool	1	Y300001-
12		723-40-71440	• • Spring	1	Y300001-
13	C1		• • Plug	1	Y300001-
14		709-74-91860	• • Plug	1	Y300001-
15		07002-12434	• • O-ring	1	Y300001-
16	C1		• • Spool	1	Y300001-
17		723-40-71390	• • Spring	1	Y300001-
18		723-40-61150	• • Plug	1	Y300001-
19		07002-12434	• • O-ring	1	Y300001-
		723-40-71800	• • Valve Assembly	1	Y300001-
20		723-40-91600	• • • Valve Assembly, Relief	1	Y300001-
21		702-16-53920	• • • • O-ring	1	Y300001-
22		07002-11623	• • • • O-ring	1	Y300001-

PC300-8 (FEN01263-00)

FIG. H0120-005014 Main Control Valve, Inner Parts (14/23)

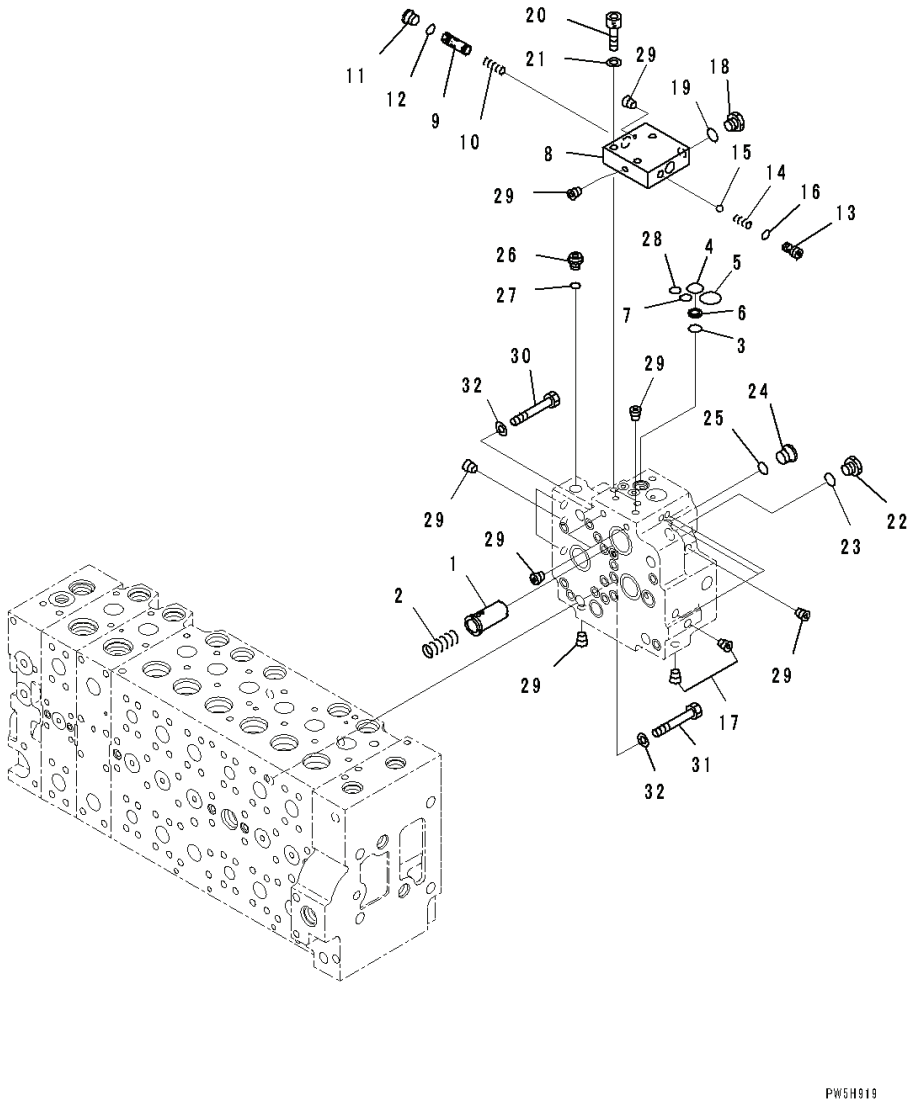

Index	Code	Part Number	Descreption	Qty	Serial Number
		Note: This list covers following specifications.			
		1-actuator			
		1-actuator, Piping Less			
		723-48-26500	Valve Assembly, Control	1	Y300001-
		723-40-71201	• Valve Assembly	1	Y300001-
		723-40-71800	• • Valve Assembly	1	Y300001-
1		723-40-71430	• • Valve	1	Y300001-
2		702-21-55460	• • Spring	1	Y300001-
3		702-21-55420	• • O-ring	1	Y300001-
4		702-21-55520	• • O-ring	1	Y300001-
5		702-21-55440	• • O-ring	1	Y300001-
6		702-21-53120	• • Filter	1	Y300001-
7		07000-12011	• • O-ring	1	Y300001-
8	C1		• • Block	1	Y300001-
9	C1		• • Spool	1	Y300001-
10	C1		• • Spring	1	Y300001-
11		702-21-55620	• • Plug	1	Y300001-
12		07002-11423	• • O-ring	1	Y300001-
13		702-21-55710	• • Seat	1	Y300001-
14		702-21-55720	• • Spring	1	Y300001-
15		04260-00793	• • Ball	1	Y300001-
16		07000-11009	• • O-ring	1	Y300001-
17	C1		• • Plug	2	Y300001-
18		708-8H-11530	• • Plug	1	Y300001-
19		07002-11423	• • O-ring	1	Y300001-
20		01252-61040	• • Bolt	3	Y300001-
21		01643-51032	• • Washer	3	Y300001-
22		708-8H-11530	• • Plug	1	Y300001-
23		07002-11423	• • O-ring	1	Y300001-
24		702-21-55620	• • Plug	1	Y300001-
25		07002-11423	• • O-ring	1	Y300001-
26		708-8E-16160	• • Plug	1	Y300001-
27		07002-11023	• • O-ring	1	Y300001-
28		07000-12011	• • O-ring	1	Y300001-
29	C1		• • Plug	17	Y300001-
30		01010-61460	• Bolt	1	Y300001-
31		01010-61470	• Bolt	3	Y300001-
32		01643-31445	• Washer	4	Y300001-

FIG. H0120-005015 Main Control Valve, Inner Parts (15/23)

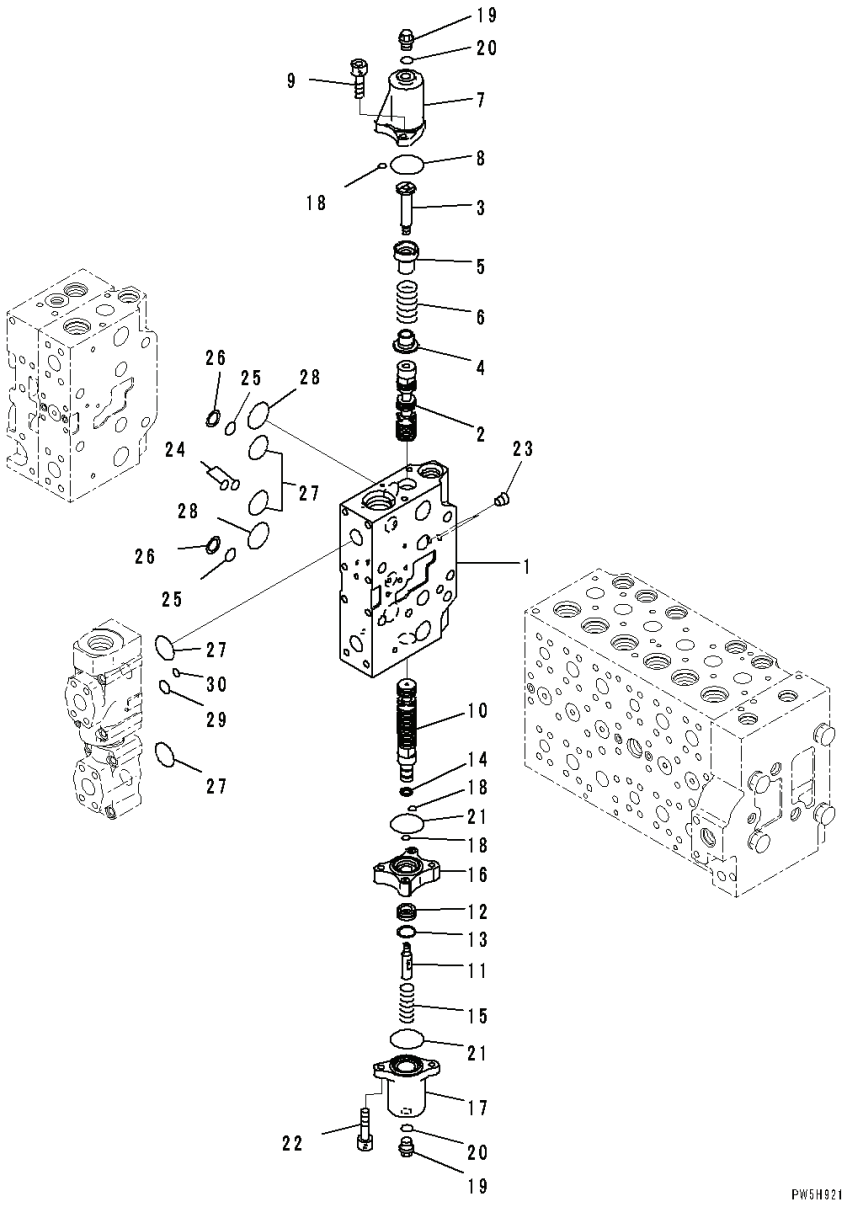

Index	Code	Part Number	Descreption	Qty	Serial Number
		Note: This list covers following specifications.			
		1-actuator			
		1-actuator, Piping Less			
		723-48-26500	Valve Assembly, Control	1	Y300001-
	C1		• Body Subassembly	1	Y300001-
1	C1		• • Valve Body	1	Y300001-
2	C1		• • Spool	1	Y300001-
3		723-46-15390	• • Plug	1	Y300001-
4		723-46-15370	• • Retainer	1	Y300001-
5		723-46-15380	• • Retainer	1	Y300001-
6		723-46-14110	• • Spring	1	Y300001-
7		723-46-17840	• • Case	1	Y300001-
8		07430-71380	• • O-ring	1	Y300001-
9		01252-60820	• • Bolt	2	Y300001-
10	C1		• • Spool	1	Y300001-
11		723-46-15330	• • Bolt	1	Y300001-
12	C1		• • Piston	1	Y300001-
13	C1		• • Seal	1	Y300001-
14	C1		• • Seal	1	Y300001-
15		723-46-14180	• • Spring	1	Y300001-
16		723-46-17850	• • Case	1	Y300001-
17		723-46-17860	• • Case	1	Y300001-
18		723-11-19960	• • O-ring	3	Y300001-
19		706-73-71450	• • Plug	2	Y300001-
20		07002-11423	• • O-ring	2	Y300001-
21		07430-71380	• • O-ring	2	Y300001-
22		01252-60845	• • Bolt	2	Y300001-
23	C1		• • Plug	2	Y300001-
24		723-46-17530	• • O-ring	2	Y300001-
25		723-11-19130	• • O-ring	2	Y300001-
26		723-46-17520	• • Ring, Back-up	2	Y300001-
27		07000-13032	• • O-ring	4	Y300001-
28		723-46-17510	• • O-ring	2	Y300001-
29		07000-12016	• • O-ring	1	Y300001-
30		702-16-53920	• • O-ring	1	Y300001-

PC300-8 (FEN01263-00)

FIG. H0120-005016 Main Control Valve, Inner Parts (16/23)

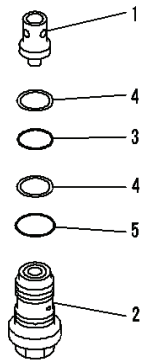

A 詳 細
Detail A

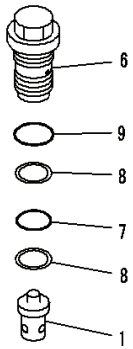

B 詳 細
Detail B

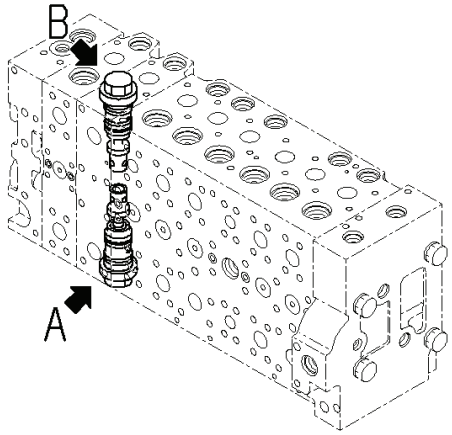

00014709

Index	Code	Part Number	Descreption	Qty	Serial Number
		Note: This list covers following specifications.			
		1-actuator			
		1-actuator, Piping Less			
		723-48-26500	Valve Assembly, Control	1	Y300001-
	C1		• Body Subassembly	1	Y300001-
1		723-46-41210	• • Valve	2	Y300001-
2		723-46-40601	• • Valve Assembly	1	Y300001-
3		700-93-11320	• • • O-ring	1	Y300001-
4		723-46-41950	• • • Ring	2	Y300001-
5		07002-13634	• • • O-ring	1	Y300001-
6		723-46-43100	• • Valve Assembly	1	Y300001-
7		700-93-11320	• • • O-ring	1	Y300001-
8		723-46-41950	• • • Ring	2	Y300001-
9		07002-13634	• • • O-ring	1	Y300001-

FIG. H0120-005017 Main Control Valve, Inner Parts (17/23)

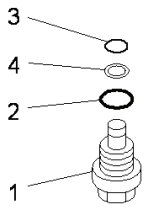

A 詳 細
Detail A

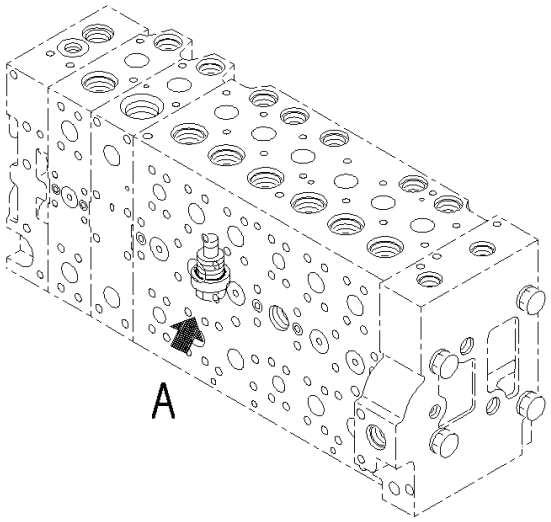

JY002726

Index	Code	Part Number	Descreption	Qty	Serial Number
		Note: This list covers following specifications.			
		1-actuator			
		1-actuator, Piping Less			
		723-48-26500	Valve Assembly, Control	1	Y300001-
	C1		• Body Subassembly	1	Y300001-
1		709-74-91510	• • Plug	1	Y300001-
2		07000-13024	• • O-ring	1	Y300001-
3		07000-11009	• • O-ring	1	Y300001-
4		07001-01009	• • Ring, Back-up	1	Y300001-

FIG. H0120-005018 Main Control Valve, Inner Parts (18/23)

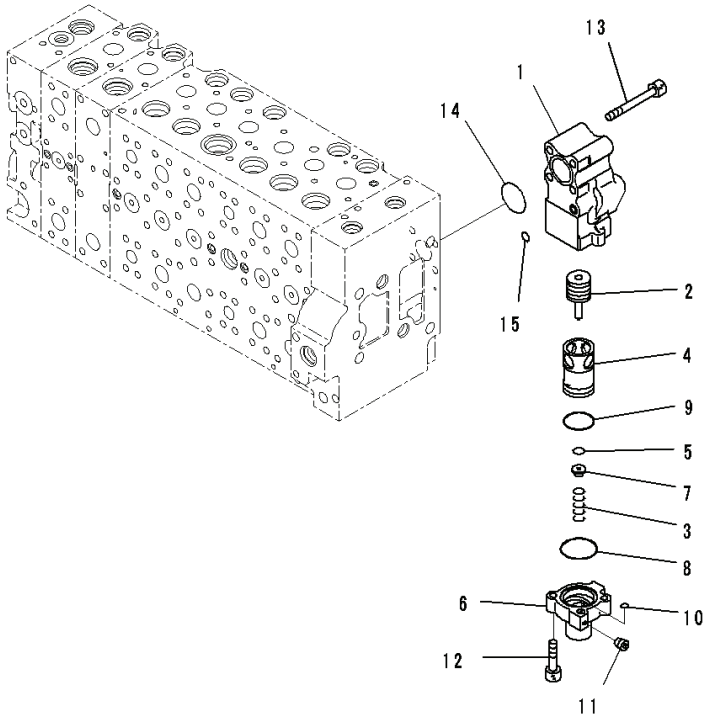

Index	Code	Part Number	Descreption	Qty	Serial Number
		Note: This list covers following specifications.			
		1-actuator			
		1-actuator, Piping Less			
		723-48-26500	Valve Assembly, Control	1	Y300001-
		723-40-87100	• Valve Assembly	1	Y300001-
1		723-40-87110	• • Body	1	Y300001-
2		723-40-87140	• • Spool	1	Y300001-
3		723-40-87160	• • Spring	1	Y300001-
4	C1		• • Sleeve	1	Y300001-
5	C1		• • Seal	1	Y300001-
6	C1		• • Case	1	Y300001-
7		723-40-87150	• • Retainer	1	Y300001-
8		723-40-87170	• • O-ring	1	Y300001-
9		07000-13035	• • O-ring	1	Y300001-
10		07000-11007	• • O-ring	1	Y300001-
11	C1		• • Screw	1	Y300001-
12		01252-60830	• • Bolt	2	Y300001-
13		01252-61075	• Bolt, Hexagon Socket Head	4	Y300001-
14		07000-13038	• O-ring	1	Y300001-
15		07000-11010	• O-ring	1	Y300001-

FIG. H0120-005019 Main Control Valve, 1-actuator, Inner Parts (19/23)

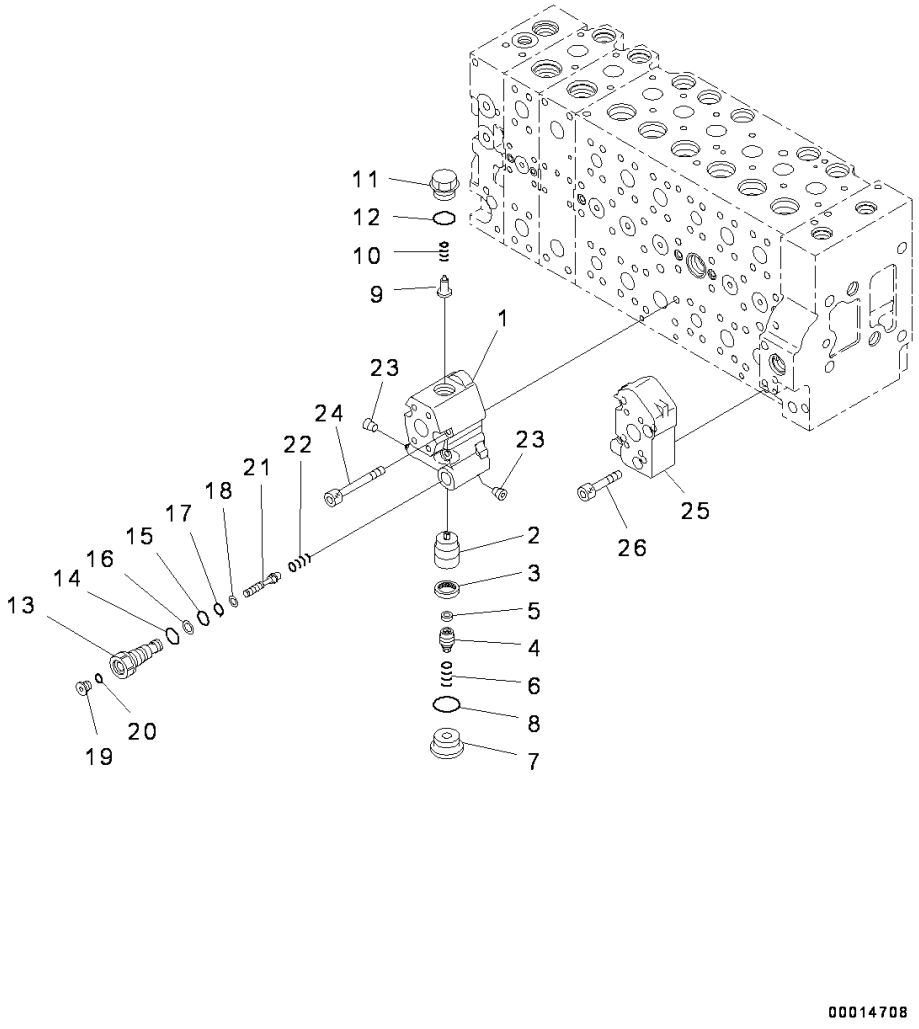

Index	Code	Part Number	Descreption	Qty	Serial Number
		723-48-26500	Valve Assembly, Control	1	Y300001-
		723-40-82401	• Valve Assembly	1	Y300001-
1		723-40-82410	• • Body	1	Y300001-
2		723-40-82120	• • Valve	1	Y300001-
3		723-40-82130	• • Seal	1	Y300001-
4		723-40-82210	• • Plug	1	Y300001-
5		723-40-82220	• • Filter	1	Y300001-
6		723-40-82140	• • Spring	1	Y300001-
7		723-40-82150	• • Plug	1	Y300001-
8		07002-13334	• • O-ring	1	Y300001-
9		723-40-84420	• • Valve, Check	1	Y300001-
10		723-40-84430	• • Spring	1	Y300001-
11		723-40-84440	• • Plug	1	Y300001-
12		07000-13024	• • O-ring	1	Y300001-
13		723-40-82310	• • Plug	1	Y300001-
14		07002-11823	• • O-ring	1	Y300001-
15		07000-12011	• • O-ring	1	Y300001-
16		07001-02011	• • Ring, Back-up	1	Y300001-
17		07000-11010	• • O-ring	1	Y300001-
18		07001-01010	• • Ring, Back-up	1	Y300001-
19		723-11-18190	• • Plug	1	Y300001-
20		07002-11023	• • O-ring	1	Y300001-
21		723-40-82280	• • Piston	1	Y300001-
22		723-40-82290	• • Spring	1	Y300001-
23		708-1S-19810	• • Plug	2	60022-
24		01252-61075	• Bolt, Hexagon Socket Head	4	Y300001-
25		723-46-17570	• Block	1	Y300001-
26		01252-61045	• Bolt, Hexagon Socket Head	4	Y300001-

PC300-8 (FEN01263-00)

FIG. H0120-005020 Main Control Valve, Inner Parts (20/23)

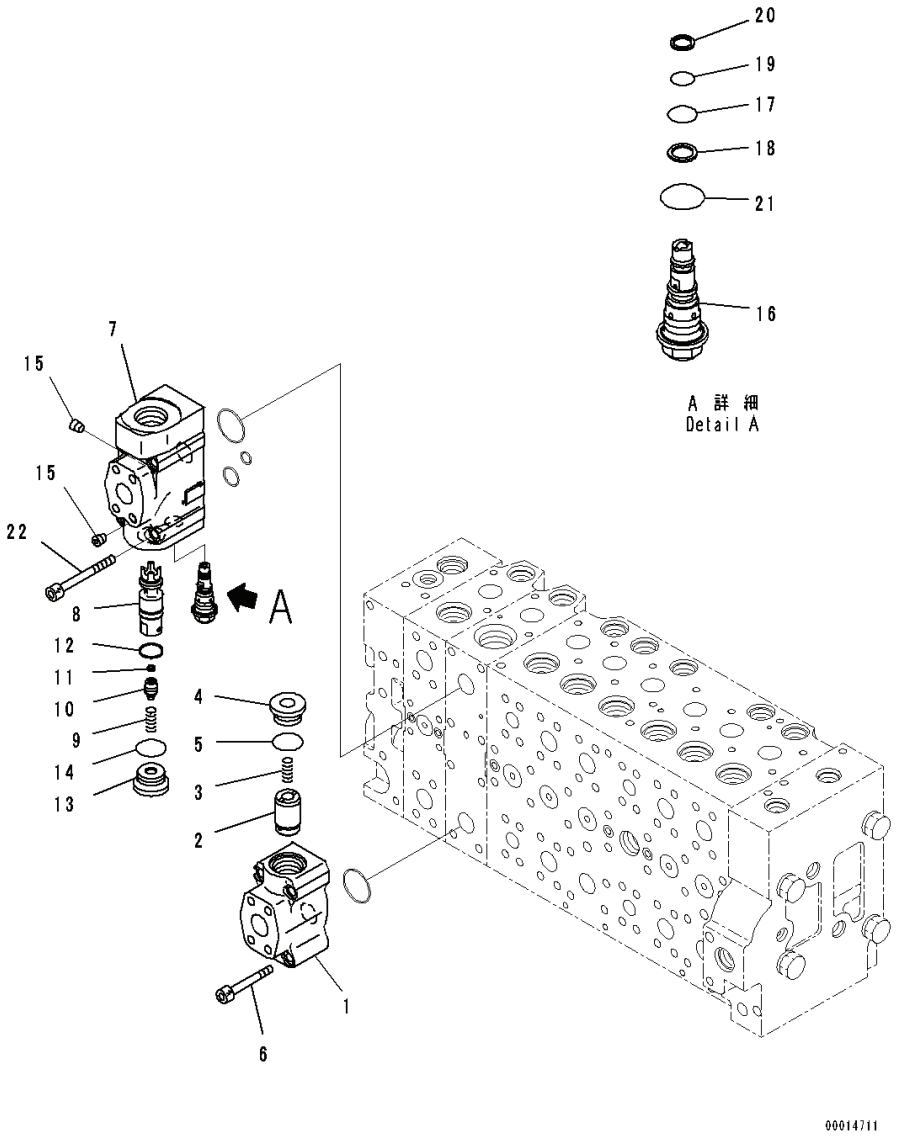

Index	Code	Part Number	Descreption	Qty	Serial Number
		Note: This list covers following specifications.			
		1-actuator			
		1-actuator, Piping Less			
		723-48-26500	Valve Assembly, Control	1	Y300001-
		723-40-84100	• Valve Assembly	1	Y300001-
1	C1		• • Body	1	Y300001-
2	C1		• • Valve	1	Y300001-
3		723-40-82140	• • Spring	1	Y300001-
4		723-40-84130	• • Plug	1	Y300001-
5		07002-13034	• • O-ring	1	Y300001-
6		01252-61065	• Bolt	4	Y300001-
		723-40-84200	• Valve Assembly	1	Y300001-
7	C1		• • Body	1	Y300001-
8	C1		• • Valve	1	Y300001-
9		723-40-82140	• • Spring	1	Y300001-
10		723-40-84230	• • Plug	1	Y300001-
11		723-40-82220	• • Filter	1	Y300001-
12		723-46-15350	• • Seal	1	Y300001-
13		723-40-84130	• • Plug	1	Y300001-
14		07002-13034	• • O-ring	1	Y300001-
15		708-21-12541	• • Plug	2	Y300001-
16		723-40-92900	• • Valve Assembly	1	Y300001-
17		07000-12012	• • • O-ring	1	Y300001-
18		07001-02012	• • • Ring, Back-up	1	Y300001-
19		07000-11010	• • • O-ring	1	Y300001-
20		07001-01010	• • • Ring, Back-up	1	Y300001-
21		07002-12034	• • • O-ring	1	Y300001-
22		723-46-18770	• Bolt	4	Y300001-

PC300-8 (FEN01263-00)

FIG. H0120-005021 Main Control Valve, Inner Parts (21/23)

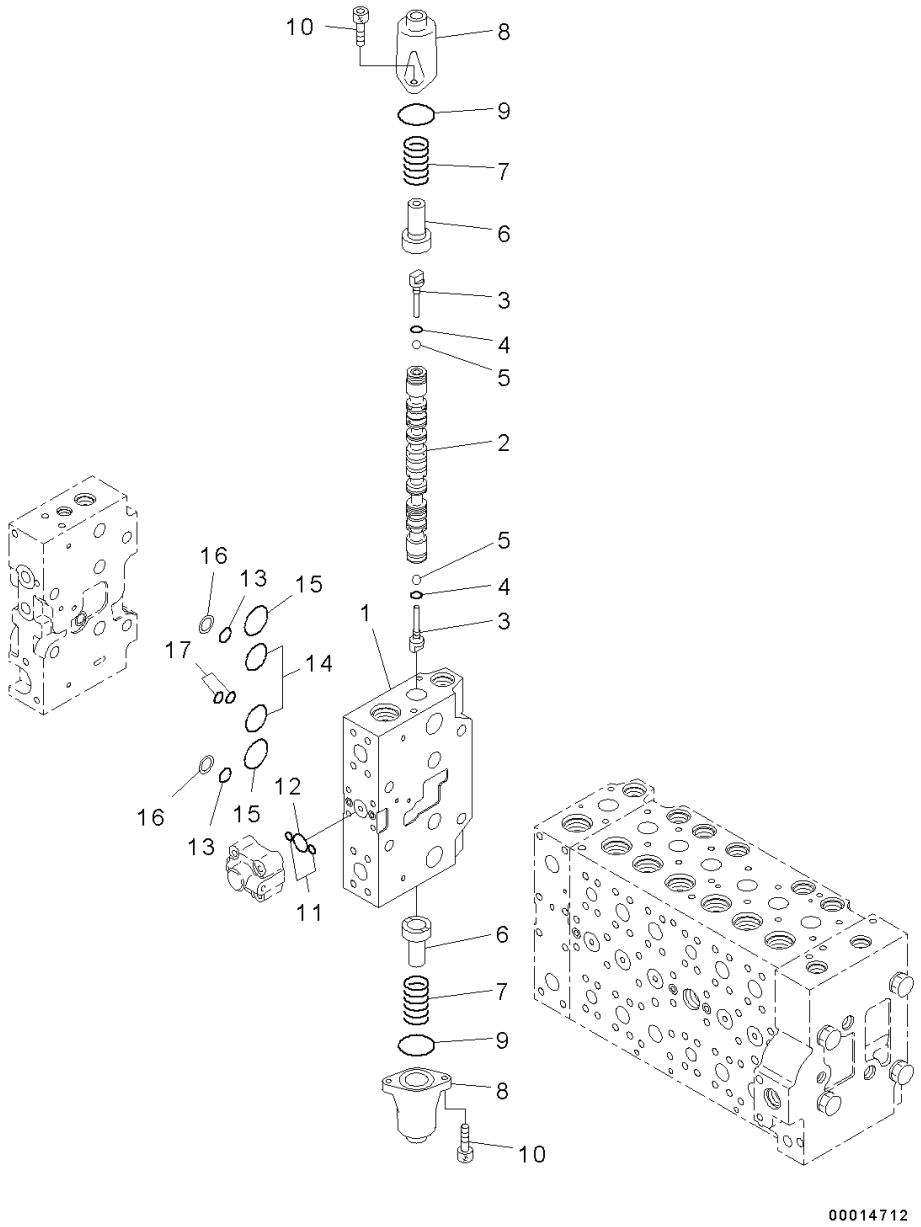

Index	Code	Part Number	Descreption	Qty	Serial Number
		Note: This list covers following specifications.			
		1-actuator			
		1-actuator, Piping Less			
		723-48-26500	Valve Assembly, Control	1	Y300001-
	C1		• Body Subassembly	1	Y300001-
1	C1		• • Block	1	Y300001-
2	C1		• • Spool	1	Y300001-
3		723-46-15130	• • Plug	2	Y300001-
4		07002-10823	• • O-ring	2	Y300001-
5		708-7T-16460	• • Ball	2	Y300001-
6		723-46-15120	• • Retainer	2	Y300001-
7		723-46-14110	• • Spring	2	Y300001-
8		723-46-15111	• • Case	2	Y300001-
9		07430-71380	• • O-ring	2	Y300001-
10		01252-60820	• • Bolt	4	Y300001-
11		07000-11009	• • O-ring	2	Y300001-
12		07000-12021	• • O-ring	1	Y300001-
13		723-11-19130	• • O-ring	2	Y300001-
14		07000-13032	• • O-ring	2	Y300001-
15		723-46-17510	• • O-ring	2	Y300001-
16		723-46-17520	• • Ring, Back-up	2	Y300001-
17		723-46-17530	• • O-ring	2	Y300001-

FIG. H0120-005022 Main Control Valve, 1-actuator, Inner Parts (22/23)

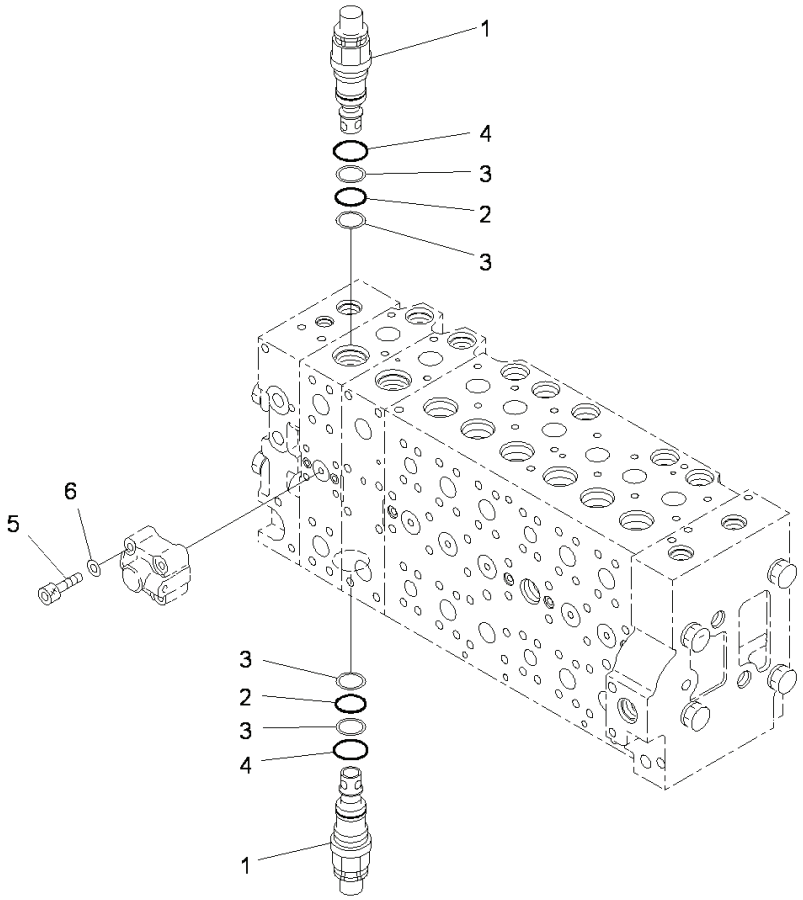

Index	Code	Part Number	Descreption	Qty	Serial Number
		723-48-26500	Valve Assembly, Control	1	Y300001-
	C1		• Body Subassembly	1	Y300001-
1		723-46-48100	• • Valve Assembly	2	Y300001-
2		700-93-11320	• • • O-ring	1	Y300001-
3		723-46-41950	• • • Ring	2	Y300001-
4		07002-13634	• • • O-ring	1	Y300001-
5		01252-60845	• • Bolt	4	Y300001-
6		01643-50823	• • Washer	4	Y300001-

PC300-8 (FEN01263-00)

FIG. H0120-005023 Main Control Valve, 1-actuator, Inner Parts (23/23)

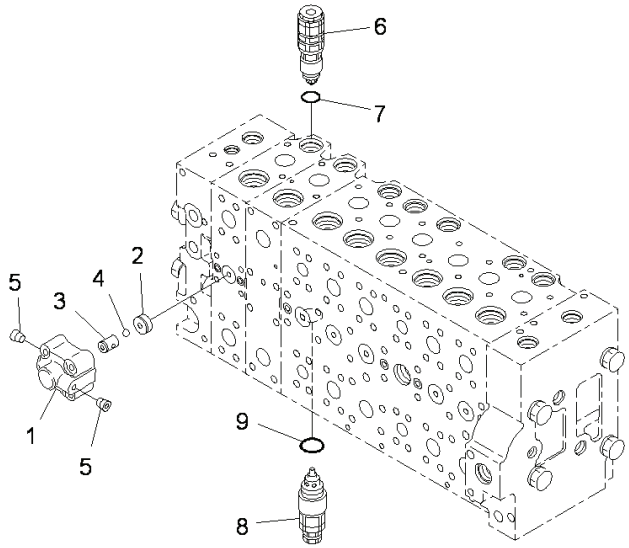

00014714

Index	Code	Part Number	Descreption	Qty	Serial Number
		723-48-26500	Valve Assembly, Control	1	Y300001-
		723-40-66300	• Valve Assembly	2	Y300001-
1	C1		• • Case	1	Y300001-
2	C1		• • Seat	1	Y300001-
3	C1		• • Seat	1	Y300001-
4	C1		• • Ball	1	Y300001-
5	C1		• • Plug	2	Y300001-
6		723-90-76501	• Valve Assembly, Suction and Relief, Suction and Safety	1	Y300001-
7		07000-13024	• • O-ring	1	Y300001-
8		723-90-61700	• Valve Assembly, Suction and Relief, Suction and Safety	3	Y300001-
9		07000-13024	• • O-ring	1	Y300001-

FIG. H0120-005024 Main Control Valve, Control Valve Related Parts (1/2)

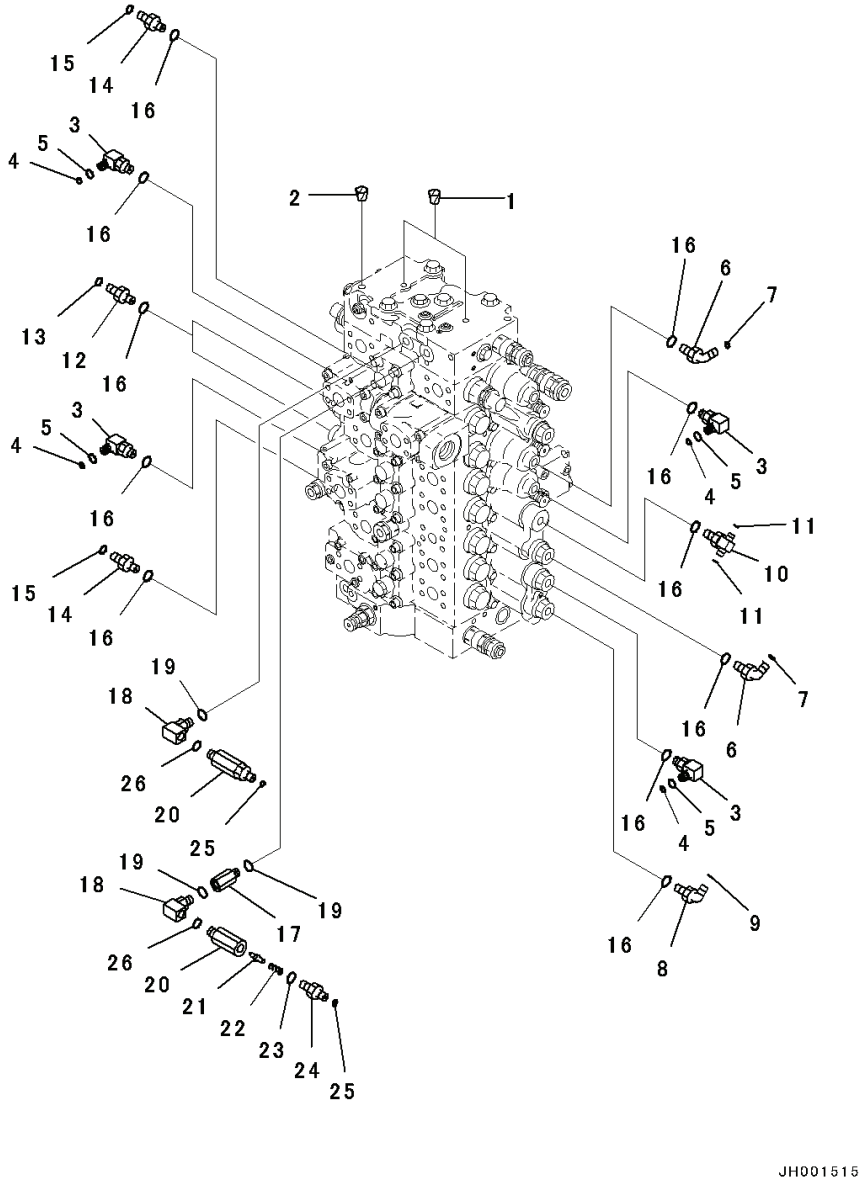

Index	Code	Part Number	Descreption	Qty	Serial Number
		Note: This list covers following specifications.			
		1-actuator			
		1-actuator, Piping Less			
1		07049-01012	Plug	2	Y300001-
2		07049-01215	Plug	1	Y300001-
3		22U-62-22480	Elbow	4	Y300001-
4		201-60-11390	• O-ring	1	Y300001-
5		20Y-62-19560	• O-ring	1	Y300001-
6		11Y-62-12160	Elbow	2	Y300001-
7		02896-11008	O-ring	2	Y300001-
8		21W-62-42490	Elbow	1	Y300001-
9		02896-11009	O-ring	1	Y300001-
10		11Y-62-12250	Tee	1	Y300001-
11		02896-11008	O-ring	2	Y300001-
12		11Y-62-12130	Nipple	2	Y300001-
13		02896-11008	O-ring	2	Y300001-
14		11Y-62-12520	Union	2	Y300001-
15		02896-11009	O-ring	2	Y300001-
16		07002-11423	O-ring	12	Y300001-
17		20Y-62-22160	Adapter	1	Y300001-
18		20Y-62-23541	Elbow	2	Y300001-
19		07002-11423	O-ring	3	Y300001-
		20Y-62-41701	Valve Assembly	2	Y300001-
20	C1		• Body	1	Y300001-
21		20Y-60-22270	• Poppet	1	Y300001-
22		701-20-61230	• Spring	1	Y300001-
23		07002-11423	• O-ring	1	Y300001-
24		20Y-62-47630	• Nipple	1	Y300001-
25		02896-11008	O-ring	2	Y300001-
26		07002-11423	O-ring	2	Y300001-

FIG. H0120-005025 Main Control Valve, 1-actuator, Control Valve Related Parts (2/2)

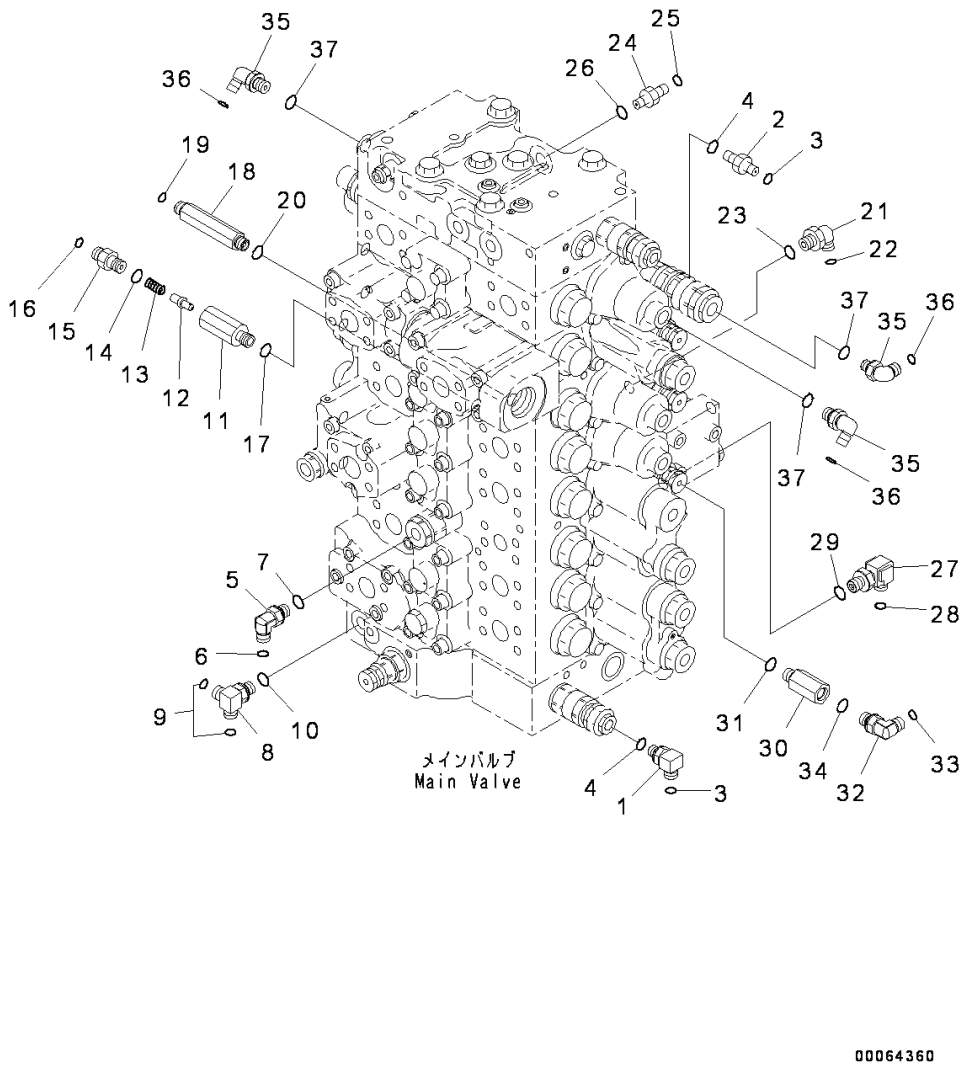

Index	Code	Part Number	Descreption	Qty	Serial Number
1		20Y-62-41920	Elbow	1	Y300001-
2		208-62-71540	Nipple	1	Y300001-
3		02896-11008	O-ring	2	Y300001-
4		07002-11223	O-ring	2	Y300001-
5		11Y-62-12160	Elbow	1	Y300001-
6		02896-11008	O-ring	1	Y300001-
7		07002-11423	O-ring	1	Y300001-
8		207-62-72141	Elbow	1	Y300001-
9		02896-11008	O-ring	2	Y300001-
10		07002-11423	O-ring	1	Y300001-
		20Y-62-41701	Valve Assembly	1	Y300001-
11		20Y-60-22210	• Body	1	Y300001-
12		20Y-60-22270	• Poppet	1	Y300001-
13		701-20-61230	• Spring	1	Y300001-
14		07002-11423	• O-ring	1	Y300001-
15		20Y-62-47630	• Nipple	1	Y300001-
16		02896-11008	O-ring	1	Y300001-
17		07002-11423	O-ring	1	Y300001-
18		207-62-71531	Union	1	Y300001-
19		02896-11008	O-ring	1	Y300001-
20		07002-11423	O-ring	1	Y300001-
21		11Y-62-12160	Elbow	1	Y300001-
22		02896-11008	O-ring	1	Y300001-
23		07002-11423	O-ring	1	Y300001-
24		11Y-62-12130	Nipple	1	Y300001-
25		02896-11008	O-ring	1	Y300001-
26		07002-11423	O-ring	1	Y300001-
27		21W-62-42490	Elbow	1	Y300001-
28		02896-11009	O-ring	1	Y300001-
29		07002-11423	O-ring	1	Y300001-
30		20Y-62-22160	Adapter	1	Y300001-
31		07002-11423	O-ring	1	Y300001-
32		11Y-62-12160	Elbow	1	Y300001-
33		02896-11008	O-ring	1	Y300001-
34		07002-11423	O-ring	1	Y300001-
35		11Y-62-12160	Elbow	3	Y300001-
36		02896-11008	O-ring	3	Y300001-
37		07002-11423	O-ring	3	Y300001-

FIG. H0120-005026 Main Control Valve, Valve Bracket

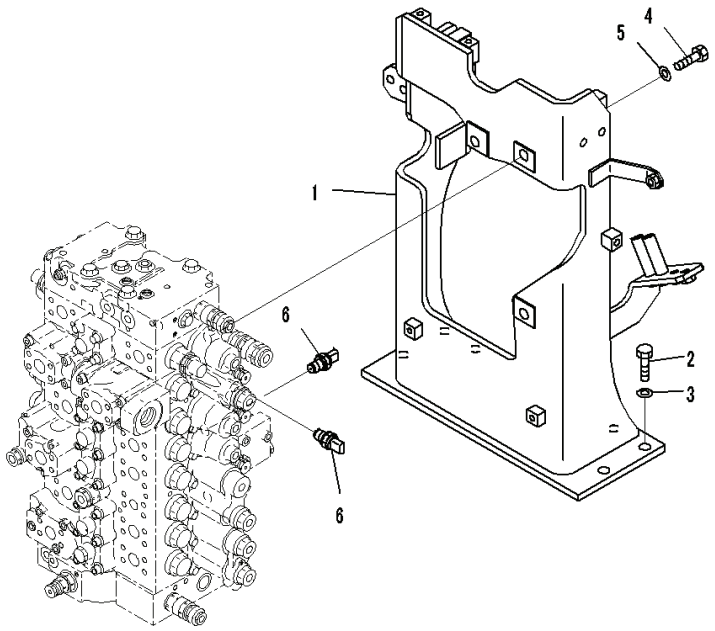

Index	Code	Part Number	Descreption	Qty	Serial Number
		Note: This list covers following specifications.			
		1-actuator			
		1-actuator, Piping Less			
1		207-62-74610	Bracket	1	Y300001-
2		01010-81640	Bolt	6	Y300001-
3		01643-31645	Washer	6	Y300001-
4		01010-81645	Bolt	3	Y300001-
5		01643-31645	Washer	3	Y300001-
6		7861-93-1811	Sensor	2	Y300001-

FIG. H0120-004002 Main Control Valve, 1-actuator, Piping Less, Inner Parts (2/23)

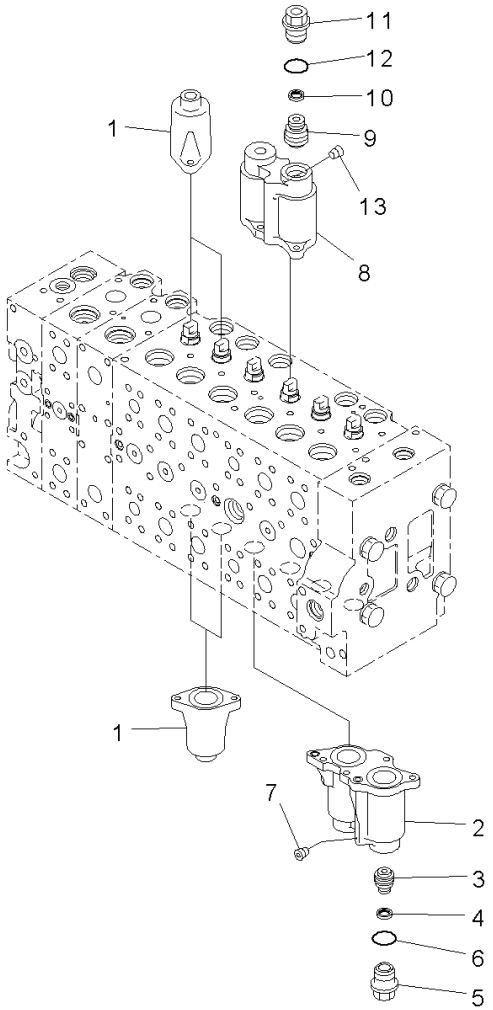

PW5H909

Index	Code	Part Number	Descreption	Qty	Serial Number
		723-48-26500	Valve Assembly, Control	1	Y300001-
	C1		• Body Subassembly	1	Y300001-
1		723-46-15111	• • Case	4	Y300001-
		723-46-18131	• • Case Subassembly	1	Y300001-
2	C1		• • • Case	1	Y300001-
3	C1		• • • Piston	1	Y300001-
4	C1		• • • Seal	1	Y300001-
5		723-46-15630	• • • Plug	1	Y300001-
6		07000-13024	• • • O-ring	1	Y300001-
7	C1		• • • Screw	1	Y300001-
		723-46-18231	• • Case Subassembly	1	Y300001-
8	C1		• • • Case	1	Y300001-
9	C1		• • • Piston	1	Y300001-
10	C1		• • • Seal	1	Y300001-
11		723-46-15630	• • • Plug	1	Y300001-
12		07000-13024	• • • O-ring	1	Y300001-
13	C1		• • • Screw	1	Y300001-

FIG. H0120-004003 Main Control Valve, 1-actuator, Piping Less, Inner Parts (3/23)

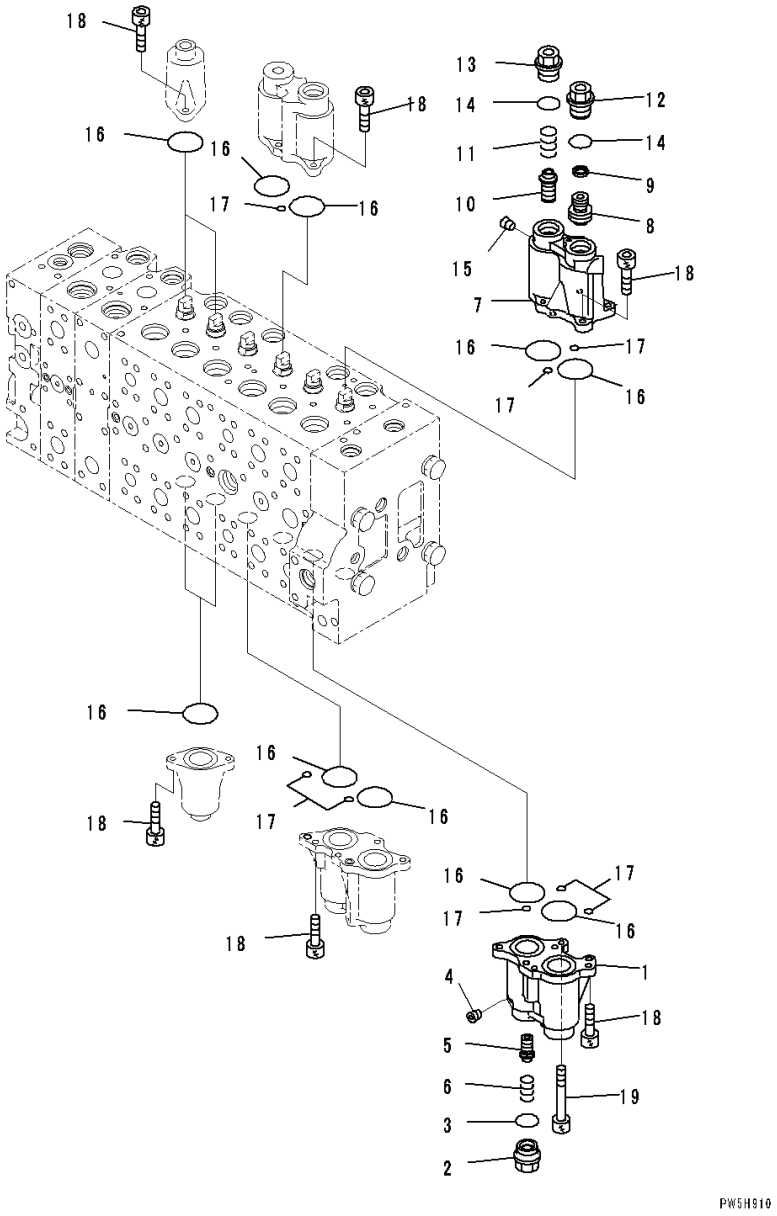

Index	Code	Part Number	Descreption	Qty	Serial Number
		723-48-26500	Valve Assembly, Control	1	Y300001-
	C1		• Body Subassembly	1	Y300001-
		723-46-18330	• • Case Subassembly	1	Y300001-
1	C1		• • • Case	1	Y300001-
2		723-46-17340	• • • Plug	1	Y300001-
3		07000-13024	• • • O-ring	1	Y300001-
4	C1		• • • Screw	1	Y300001-
5		723-46-17320	• • • Spool	1	Y300001-
6		723-46-17330	• • • Spring	1	Y300001-
		723-46-18431	• • Case Subassembly	1	Y300001-
7	C1		• • • Case	1	Y300001-
8	C1		• • • Piston	1	Y300001-
9	C1		• • • Seal	1	Y300001-
10		723-46-17320	• • • Spool	1	Y300001-
11		723-46-17330	• • • Spring	1	Y300001-
12		723-46-15630	• • • Plug	1	Y300001-
13		723-46-17340	• • • Plug	1	Y300001-
14		07000-13024	• • • O-ring	2	Y300001-
15	C1		• • • Screw	3	Y300001-
16		07430-71380	• • O-ring	12	Y300001-
17		702-16-53920	• • O-ring	8	Y300001-
18		01252-60820	• • Bolt	23	Y300001-
19		723-46-17350	• • Bolt	1	Y300001-

FIG. H0120-004004 Main Control Valve, 1-actuator, Piping Less, Inner Parts (4/23)

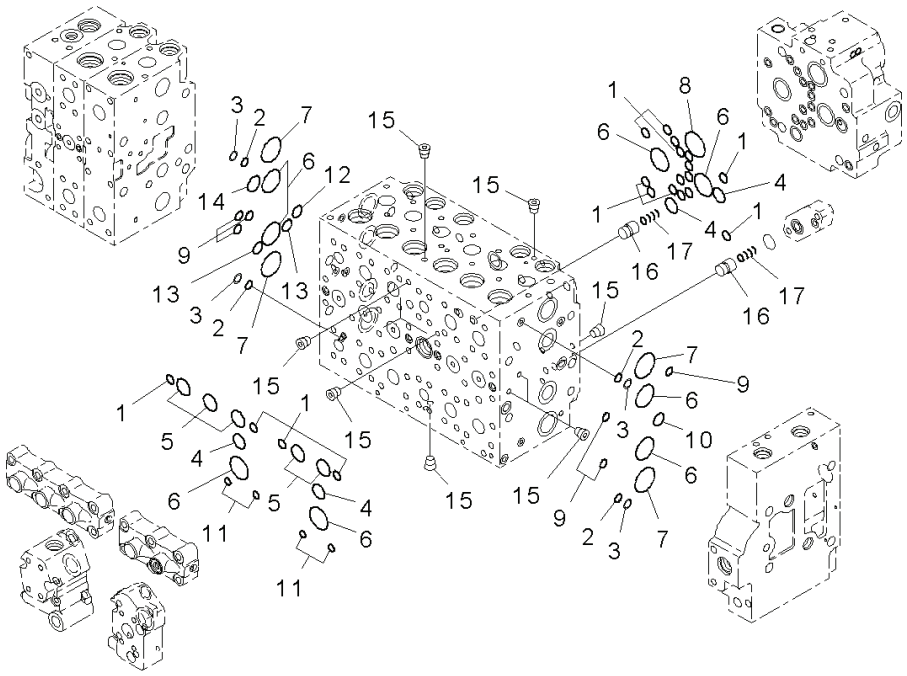

Index	Code	Part Number	Descreption	Qty	Serial Number
		723-48-26500	Valve Assembly, Control	1	Y300001-
	C1		• Body Subassembly	1	Y300001-
1		07000-12012	• • O-ring	19	Y300001-
2		723-11-19130	• • O-ring	4	Y300001-
3		723-46-17520	• • Ring, Back-up	4	Y300001-
4		07000-12021	• • O-ring	4	Y300001-
5		07000-13028	• • O-ring	5	Y300001-
6		07000-13032	• • O-ring	8	Y300001-
7		723-46-17510	• • O-ring	4	Y300001-
8		07000-13036	• • O-ring	1	Y300001-
9		723-46-17530	• • O-ring	11	Y300001-
10		723-11-18150	• • O-ring	2	Y300001-
11		702-16-53920	• • O-ring	4	Y300001-
12		723-46-18710	• • O-ring	1	Y300001-
13		722-12-19070	• • O-ring	2	Y300001-
14		723-46-18720	• • O-ring	1	Y300001-
15	C1		• • Plug	14	Y300001-
16		723-46-17650	• • Valve	2	Y300001-
17		723-46-14150	• • Spring	2	Y300001-

FIG. H0120-004005 Main Control Valve, 1-actuator, Piping Less, Inner Parts (5/23)

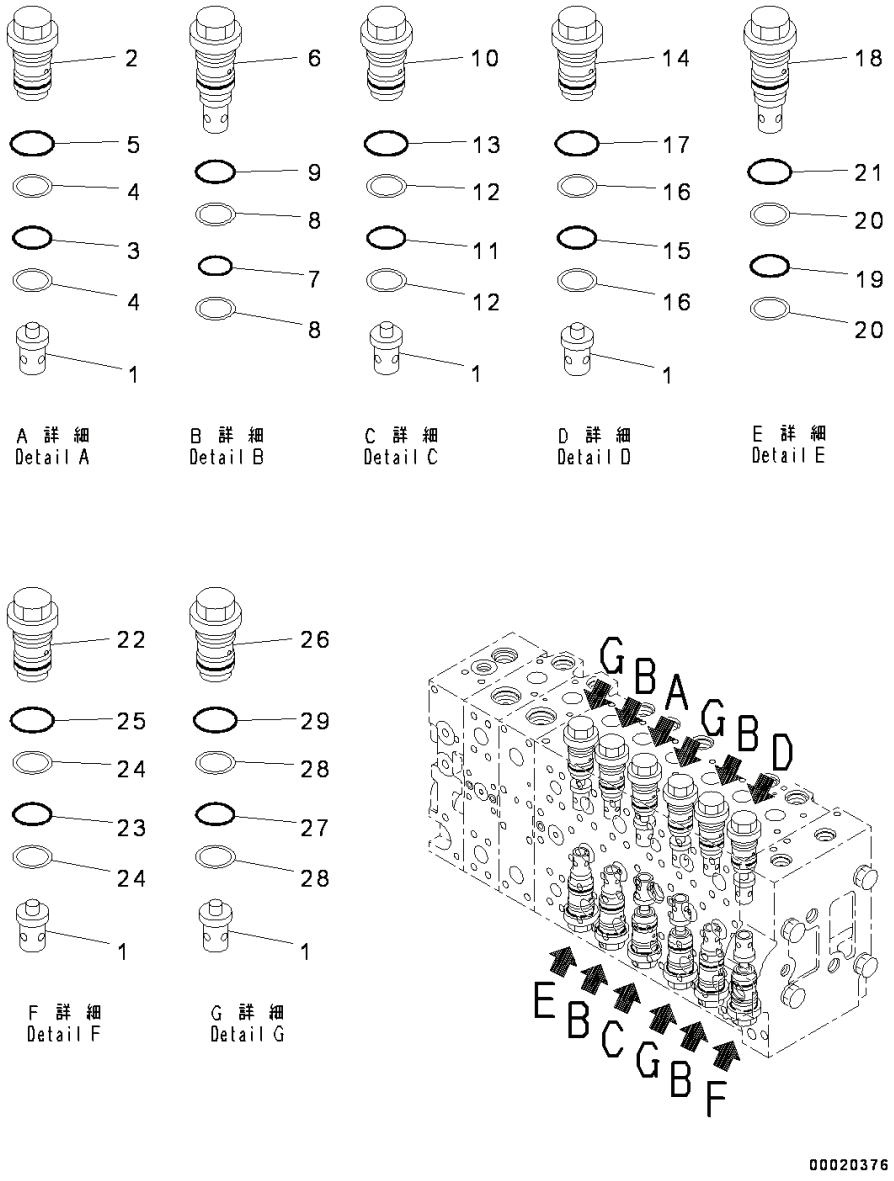

Index	Code	Part Number	Descreption	Qty	Serial Number
		723-48-26500	Valve Assembly, Control	1	Y300001-
	C1		• Body Subassembly	1	Y300001-
1		723-46-41210	• • Valve	7	Y300001-
2		723-46-40100	• • Valve Assembly	1	Y300001-
3		700-93-11320	• • • O-ring	1	Y300001-
4		723-46-41950	• • • Ring	2	Y300001-
5		07002-13634	• • • O-ring	1	Y300001-
6		723-46-42800	• • Valve Assembly	4	Y300001-
7		700-93-11320	• • • O-ring	1	Y300001-
8		723-46-41950	• • • Ring	2	Y300001-
9		07002-13634	• • • O-ring	1	Y300001-
10		723-46-40601	• • Valve Assembly	1	Y300001-
11		700-93-11320	• • • O-ring	1	Y300001-
12		723-46-41950	• • • Ring	2	Y300001-
13		07002-13634	• • • O-ring	1	Y300001-
14		723-46-43100	• • Valve Assembly	1	Y300001-
15		700-93-11320	• • • O-ring	1	Y300001-
16		723-46-41950	• • • Ring	2	Y300001-
17		07002-13634	• • • O-ring	1	Y300001-
18		723-46-43400	• • Valve Assembly	1	Y300001-
19		700-93-11320	• • • O-ring	1	Y300001-
20		723-46-41950	• • • Ring	2	Y300001-
21		07002-13634	• • • O-ring	1	Y300001-
22		723-46-44100	• • Valve Assembly	1	Y300001-
23		700-93-11320	• • • O-ring	1	Y300001-
24		723-46-41950	• • • Ring	2	Y300001-
25		07002-13634	• • • O-ring	1	Y300001-
26		723-46-45100	• • Valve Assembly	3	Y300001-
27		700-93-11320	• • • O-ring	1	Y300001-
28		723-46-41950	• • • Ring	2	Y300001-
29		07002-13634	• • • O-ring	1	Y300001-

FIG. H0120-004007 Main Control Valve, 1-actuator, Piping Less, Inner Parts (7/23)

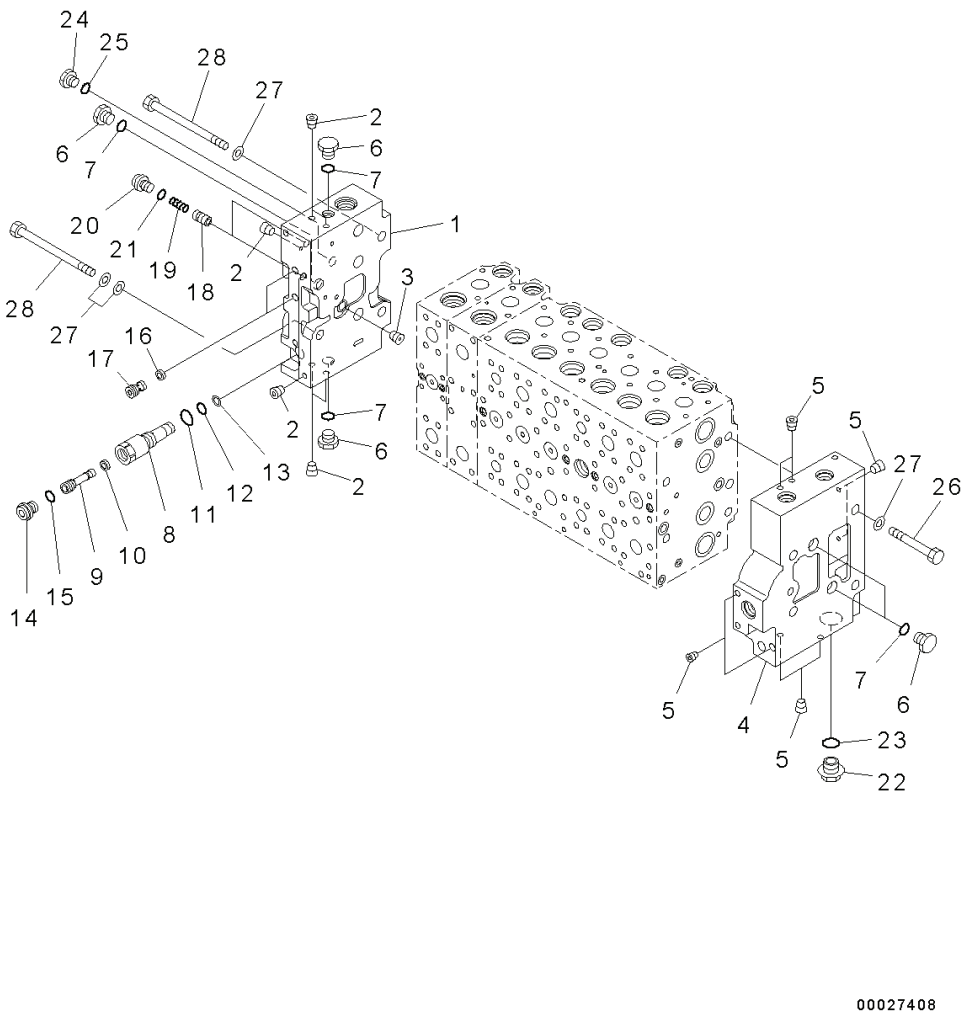

Index	Code	Part Number	Descreption	Qty	Serial Number
		723-48-26500	Valve Assembly, Control	1	Y300001-
		723-46-00760	• Cover Assembly	1	Y300001-
1	C1		• • Cover	1	Y300001-
2	C1		• • Plug	7	Y300001-
3	C1		• • Plug	1	Y300001-
		723-46-00742	• Cover Assembly	1	Y300001-
4	C1		• • Cover	1	Y300001-
5	C1		• • Plug	8	Y300001-
6		708-8E-16250	• Plug	5	Y300001-
7		07002-11823	• O-ring	5	Y300001-
		723-46-17600	• Plug Assembly	1	Y300001-
8		723-46-17610	• • Sleeve	1	Y300001-
9		723-46-17640	• • Plug	1	Y300001-
10		702-21-55760	• • Filter	1	Y300001-
11		07002-11423	• • O-ring	1	Y300001-
12		07000-11007	• • O-ring	1	Y300001-
13		07001-01007	• • Ring, Back-up	1	Y300001-
14		708-8E-16160	• • Plug	1	Y300001-
15		07002-11023	• • O-ring	1	Y300001-
16		723-40-82220	• Filter	2	Y300001-
17		723-46-17550	• Plug	2	Y300001-
18		723-46-15190	• Valve	2	Y300001-
19		723-46-14140	• Spring	2	Y300001-
20		708-8E-16160	• Plug	2	Y300001-
21		07002-11023	• O-ring	2	Y300001-
22		709-74-91860	• Plug	1	Y300001-
23		07002-12434	• O-ring	1	Y300001-
24		708-8H-11530	• Plug	1	Y300001-
25		07002-11423	• O-ring	1	Y300001-
26		01010-61490	• Bolt	4	Y300001-
27		01643-31445	• Washer	10	Y300001-
28		723-46-15220	• Bolt	4	Y300001-

FIG. H0120-004008 Main Control Valve, 1-actuator, Piping Less, Inner Parts (8/23)

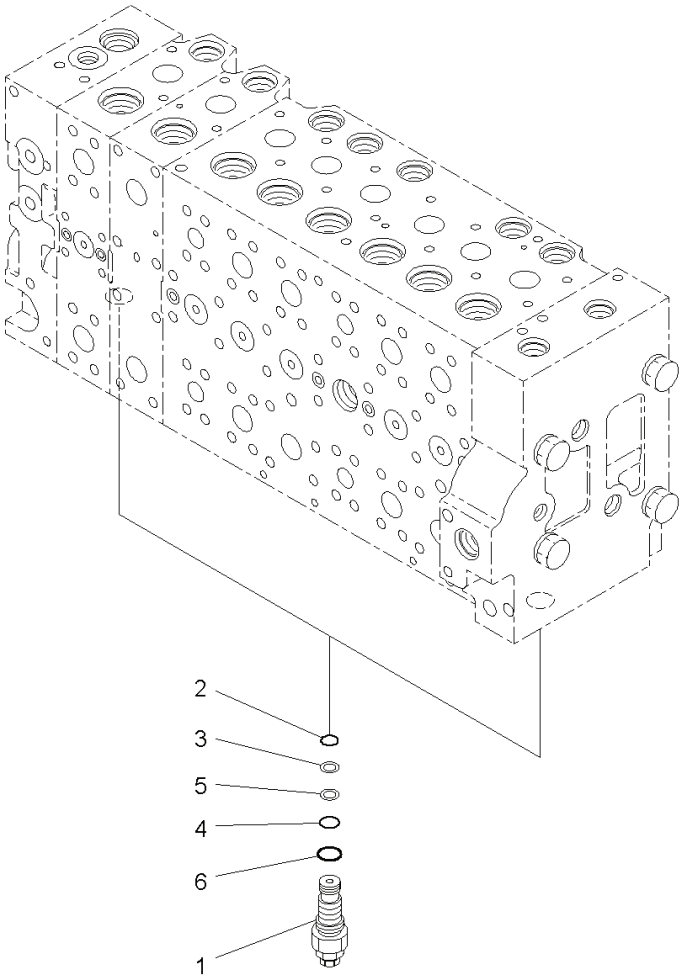

00014702

Index	Code	Part Number	Descreption	Qty	Serial Number
		723-48-26500	Valve Assembly, Control	1	Y300001-
1		723-40-56800	• Valve Assembly, Unloader	2	Y300001-
2		07000-12014	• • O-ring	1	Y300001-
3		723-40-56350	• • Ring	1	Y300001-
4		07000-12016	• • O-ring	1	Y300001-
5		723-60-22230	• • Ring, Back-up	1	Y300001-
6		07002-12434	• • O-ring	1	Y300001-

PC300-8 (FEN01263-00)

FIG. H0120-004009 Main Control Valve, 1-actuator, Piping Less, Inner Parts (9/23)

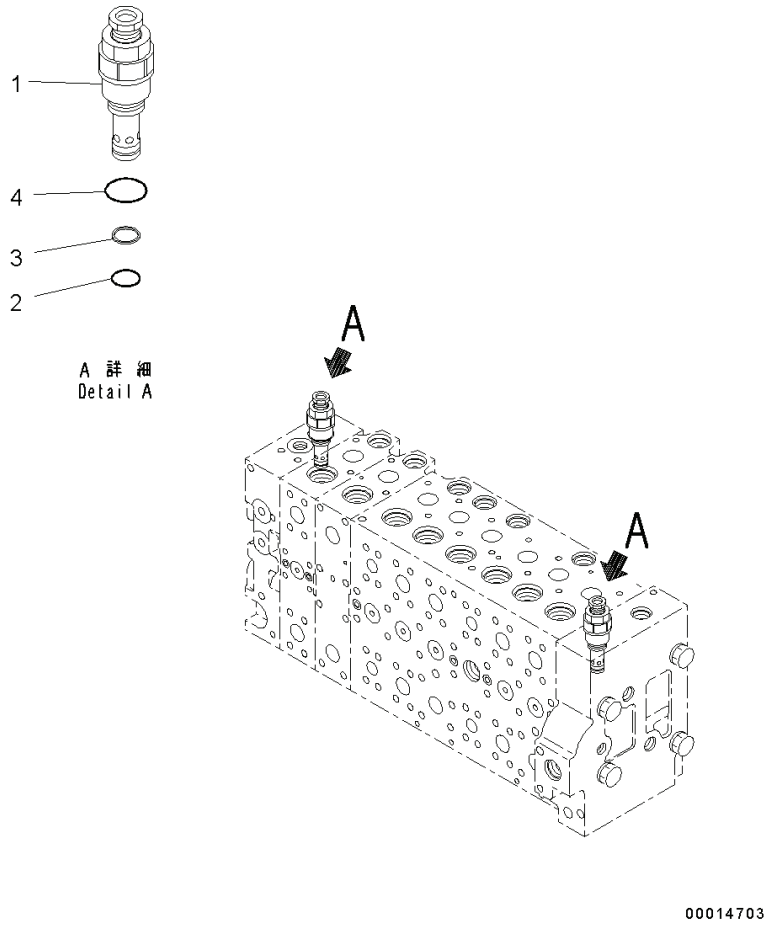

Index	Code	Part Number	Descreption	Qty	Serial Number
		723-48-26500	Valve Assembly, Control	1	Y300001-
1		723-40-93800	• Valve, Relief	2	Y300001-
2		700-22-11410	• • O-ring	1	Y300001-
3		700-80-64220	• • Ring	1	Y300001-
4		07002-12434	• • O-ring	1	Y300001-

FIG. H0120-004010 Main Control Valve, 1-actuator, Piping Less, Inner Parts (10/23)

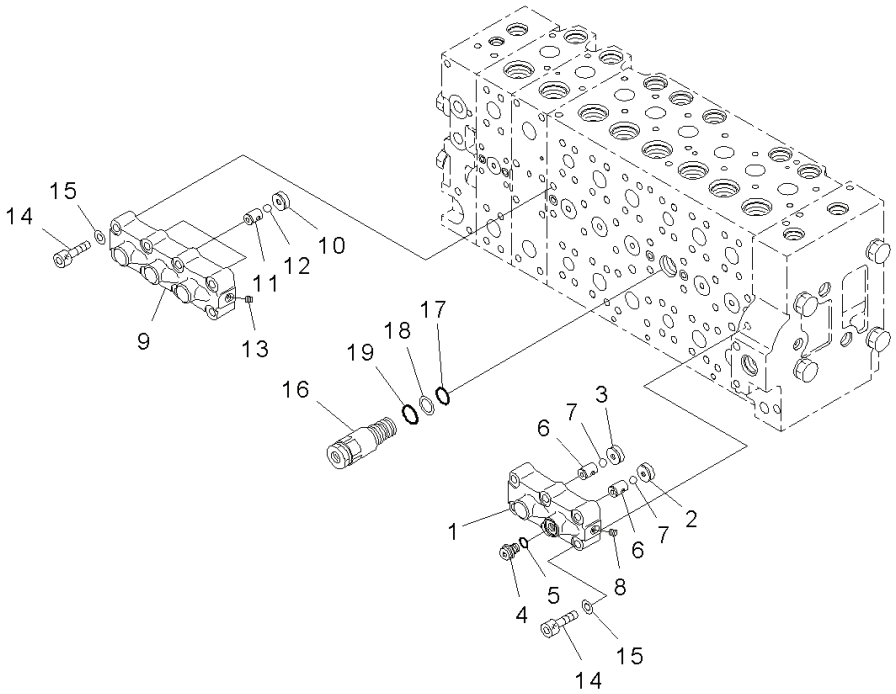

Index	Code	Part Number	Descreption	Qty	Serial Number
		723-48-26500	Valve Assembly, Control	1	Y300001-
		723-40-93800	• Valve, Relief	2	Y300001-
		723-40-66701	• Valve Assembly	1	Y300001-
1	C1		• • Case	1	Y300001-
2	C1		• • Seat	1	Y300001-
3	C1		• • Seat	1	Y300001-
4		708-8H-11530	• • Plug	1	Y300001-
5		07002-11423	• • O-ring	1	Y300001-
6	C1		• • Seat	2	Y300001-
7	C1		• • Ball	2	Y300001-
8	C1		• • Plug	1	Y300001-
		723-40-66601	• Valve Assembly	1	Y300001-
9	C1		• • Case	1	Y300001-
10	C1		• • Seat	3	Y300001-
11	C1		• • Seat	3	Y300001-
12	C1		• • Ball	3	Y300001-
13	C1		• • Plug	1	Y300001-
14		01252-61050	• Bolt, Hexagon Socket Head	14	Y300001-
15		01643-51032	• Washer	14	Y300001-
16		723-40-60101	• Valve Assembly	1	Y300001-
17		07000-12020	• • O-ring	1	Y300001-
18		07001-02020	• • Ring, Back-up	1	Y300001-
19		709-25-11390	• • O-ring	1	Y300001-

FIG. H0120-004011 Main Control Valve, 1-actuator, Piping Less, Inner Parts (11/23)

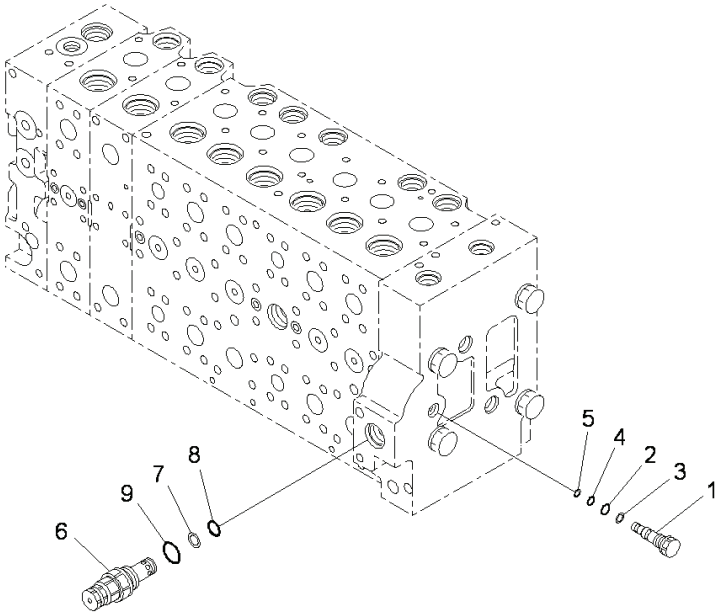

Index	Code	Part Number	Descreption	Qty	Serial Number
		723-48-26500	Valve Assembly, Control	1	Y300001-
		723-40-60101	• Valve Assembly	1	Y300001-
		723-46-17701	• Plug Assembly	1	Y300001-
1		723-46-17711	• • Plug	1	Y300001-
2		07000-11009	• • O-ring	1	Y300001-
3		07001-01009	• • Ring, Back-up	1	Y300001-
4		07000-11007	• • O-ring	1	Y300001-
5		07001-01007	• • Ring, Back-up	1	Y300001-
6		723-40-91500	• Valve Assembly, Relief	1	Y300001-
7		700-80-64220	• • Ring	1	Y300001-
8		700-22-11410	• • O-ring	1	Y300001-
9		709-25-11390	• • O-ring	1	Y300001-

FIG. H0120-004019 Main Control Valve, 1-actuator, Piping Less, Inner Parts (19/23)

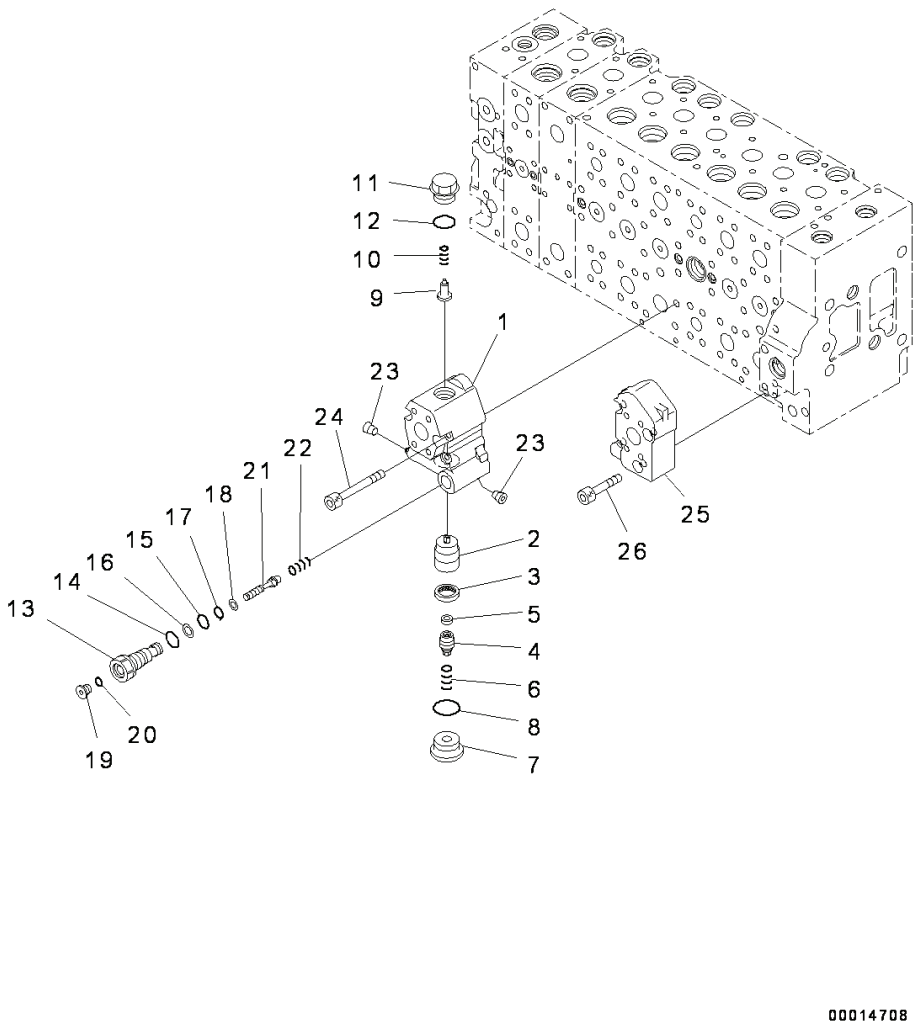

Index	Code	Part Number	Descreption	Qty	Serial Number
		723-48-26500	Valve Assembly, Control	1	Y300001-
		723-40-82401	• Valve Assembly	1	Y300001-
1		723-40-82410	• • Body	1	Y300001-
2		723-40-82120	• • Valve	1	Y300001-
3		723-40-82130	• • Seal	1	Y300001-
4		723-40-82210	• • Plug	1	Y300001-
5		723-40-82220	• • Filter	1	Y300001-
6		723-40-82140	• • Spring	1	Y300001-
7		723-40-82150	• • Plug	1	Y300001-
8		07002-13334	• • O-ring	1	Y300001-
9		723-40-84420	• • Valve, Check	1	Y300001-
10		723-40-84430	• • Spring	1	Y300001-
11		723-40-84440	• • Plug	1	Y300001-
12		07000-13024	• • O-ring	1	Y300001-
13		723-40-82310	• • Plug	1	Y300001-
14		07002-11823	• • O-ring	1	Y300001-
15		07000-12011	• • O-ring	1	Y300001-
16		07001-02011	• • Ring, Back-up	1	Y300001-
17		07000-11010	• • O-ring	1	Y300001-
18		07001-01010	• • Ring, Back-up	1	Y300001-
19		723-11-18190	• • Plug	1	Y300001-
20		07002-11023	• • O-ring	1	Y300001-
21		723-40-82280	• • Piston	1	Y300001-
22		723-40-82290	• • Spring	1	Y300001-
23		708-1S-19810	• • Plug	2	60022-
24		01252-61075	• Bolt, Hexagon Socket Head	4	Y300001-
25		723-46-17570	• Block	1	Y300001-
26		01252-61045	• Bolt, Hexagon Socket Head	4	Y300001-

FIG. H0120-004022 Main Control Valve, 1-actuator, Piping Less, Inner Parts (22/23)

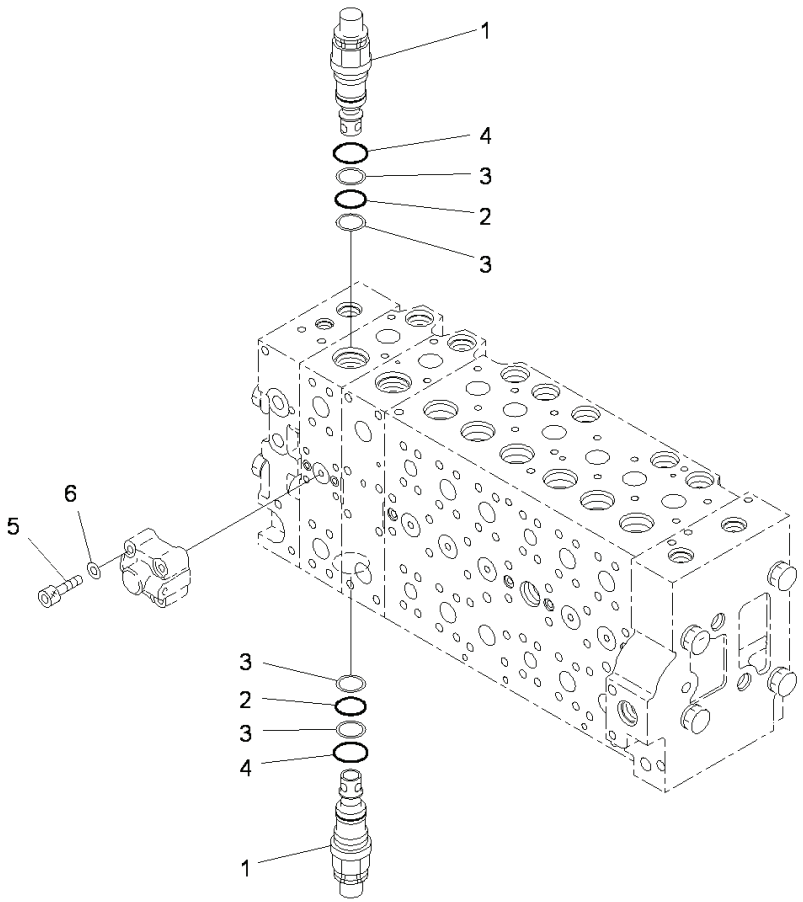

Index	Code	Part Number	Descreption	Qty	Serial Number
		723-48-26500	Valve Assembly, Control	1	Y300001-
	C1		• Body Subassembly	1	Y300001-
1		723-46-48100	• • Valve Assembly	2	Y300001-
2		700-93-11320	• • • O-ring	1	Y300001-
3		723-46-41950	• • • Ring	2	Y300001-
4		07002-13634	• • • O-ring	1	Y300001-
5		01252-60845	• • Bolt	4	Y300001-
6		01643-50823	• • Washer	4	Y300001-

PC300-8 (FEN01263-00)

FIG. H0120-004023 Main Control Valve, 1-actuator, Piping Less, Inner Parts (23/23)

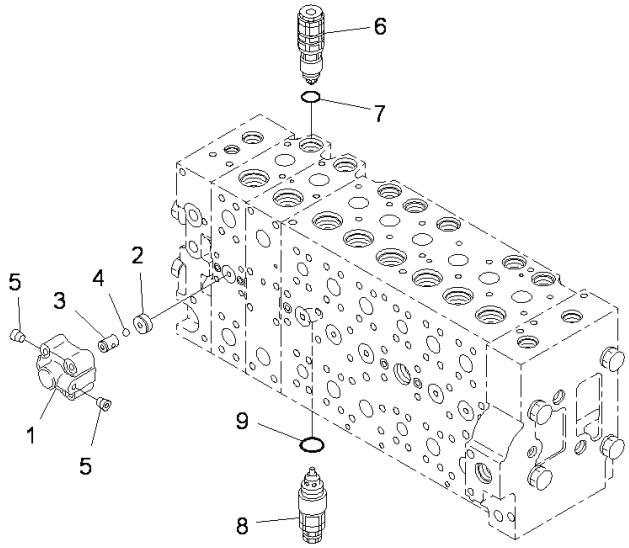

00014714

Index	Code	Part Number	Descreption	Qty	Serial Number
		723-48-26500	Valve Assembly, Control	1	Y300001-
		723-40-66300	• Valve Assembly	1	Y300001-
1	C1		• • Case	1	Y300001-
2	C1		• • Seat	1	Y300001-
3	C1		• • Seat	1	Y300001-
4	C1		• • Ball	1	Y300001-
5	C1		• • Plug	2	Y300001-
6		723-90-76501	• Valve Assembly, Suction and Relief	1	Y300001-
7		07000-13024	• • O-ring	1	Y300001-
8		723-90-61700	• Valve Assembly, Suction and Relief	1	Y300001-
9		07000-13024	• • O-ring	1	Y300001-

FIG. H0120-004025 Main Control Valve, 1-actuator, Piping Less, Control Valve Related Parts (2/2)

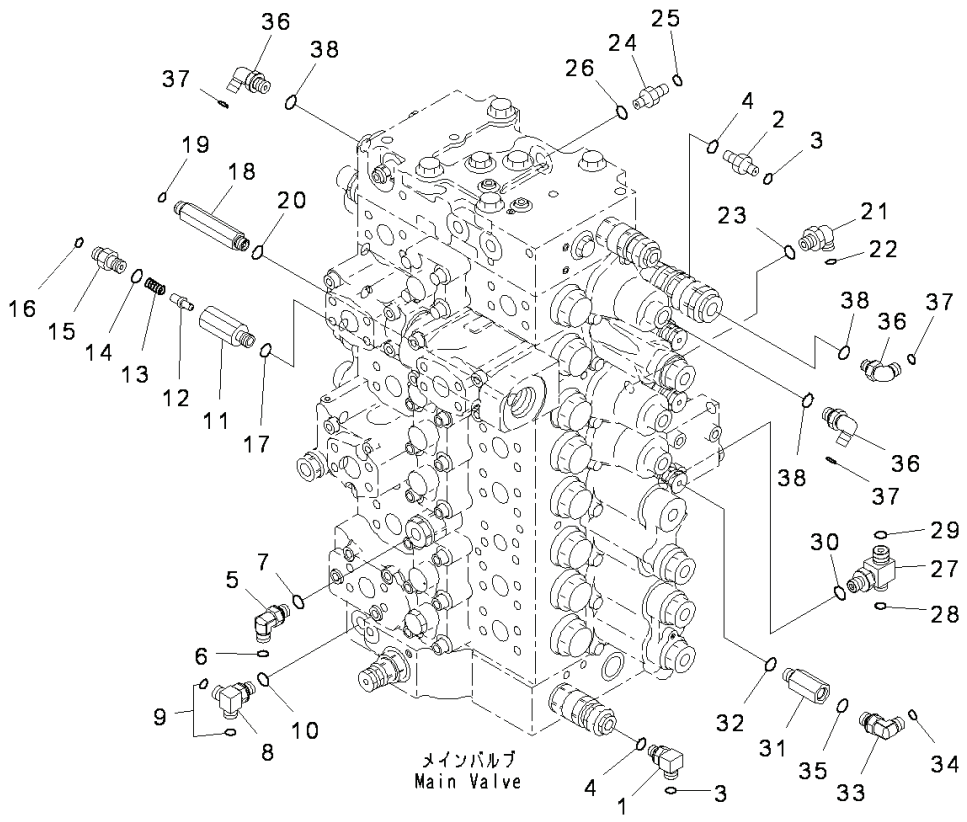

Index	Code	Part Number	Descreption	Qty	Serial Number
1		20Y-62-41920	Elbow	1	Y300001-
2		208-62-71540	Nipple	1	Y300001-
3		02896-11008	O-ring	2	Y300001-
4		07002-11223	O-ring	2	Y300001-
5		11Y-62-12160	Elbow	1	Y300001-
6		02896-11008	O-ring	1	Y300001-
7		07002-11423	O-ring	1	Y300001-
8		207-62-72141	Elbow	1	Y300001-
9		02896-11008	O-ring	2	Y300001-
10		07002-11423	O-ring	1	Y300001-
		20Y-62-41701	Valve Assembly	1	Y300001-
11	C1		• Body	1	Y300001-
12		20Y-60-22270	• Poppet	1	Y300001-
13		701-20-61230	• Spring	1	Y300001-
14		07002-11423	• O-ring	1	Y300001-
15		20Y-62-47630	• Nipple	1	Y300001-
16		02896-11008	O-ring	1	Y300001-
17		07002-11423	O-ring	1	Y300001-
18		207-62-71531	Union	1	Y300001-
19		02896-11008	O-ring	1	Y300001-
20		07002-11423	O-ring	1	Y300001-
21		11Y-62-12160	Elbow	1	Y300001-
22		02896-11008	O-ring	1	Y300001-
23		07002-11423	O-ring	1	Y300001-
24		11Y-62-12130	Nipple	1	Y300001-
25		02896-11008	O-ring	1	Y300001-
26		07002-11423	O-ring	1	Y300001-
27		11Y-62-12820	Tee	1	Y300001-
28		02896-11008	O-ring	1	Y300001-
29		02896-11009	O-ring	1	Y300001-
30		07002-11423	O-ring	1	Y300001-
31		20Y-62-22160	Adapter	1	Y300001-
32		07002-11423	O-ring	1	Y300001-
33		11Y-62-12160	Elbow	1	Y300001-
34		02896-11008	O-ring	1	Y300001-
35		07002-11423	O-ring	1	Y300001-
36		11Y-62-12160	Elbow	3	Y300001-
37		02896-11008	O-ring	3	Y300001-
38		07002-11423	O-ring	3	Y300001-

FIG. H0120-004027 Main Control Valve, 1-actuator, Piping Less, Blind Parts

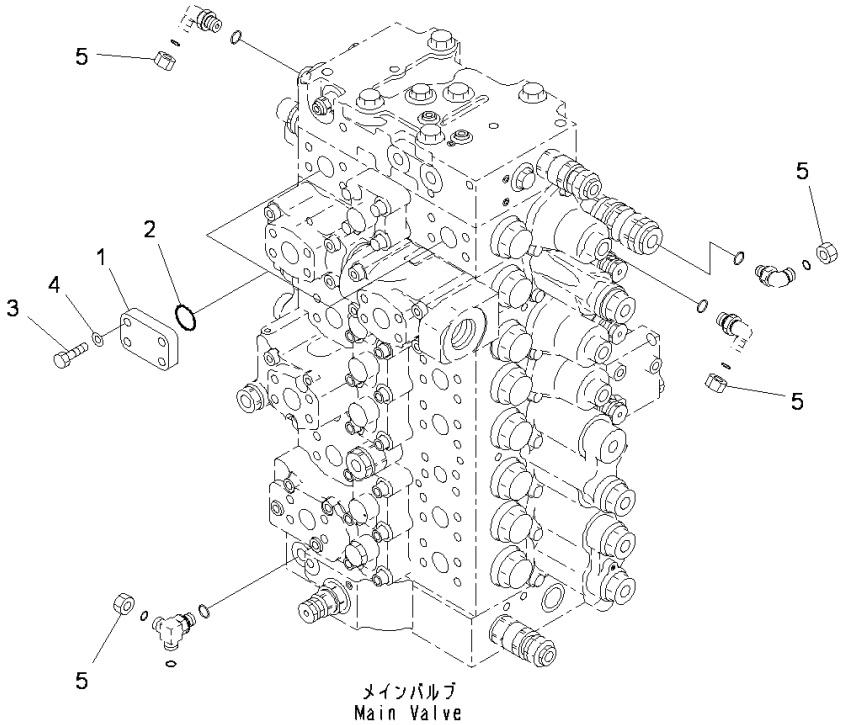

Index	Code	Part Number	Descreption	Qty	Serial Number
1		207-62-56190	Flange	2	Y300001-
2		07000-13035	O-ring	2	Y300001-
3		07372-21040	Bolt	8	Y300001-
4		01643-51032	Washer	8	Y300001-
5		02789-00210	Plug, Face Seal Type	4	Y300001-

FIG. H0120-003001 Main Control Valve, Inner Parts (1/20)

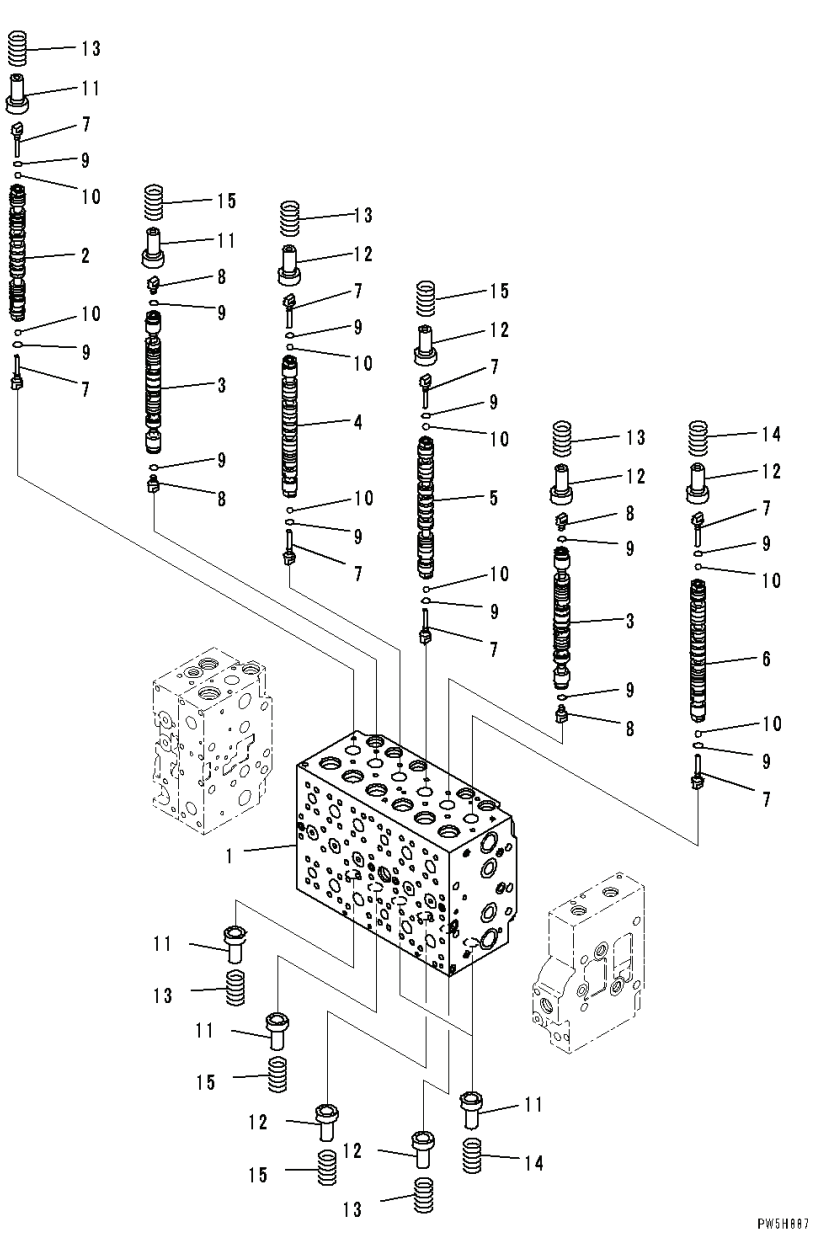

Index	Code	Part Number	Descreption	Qty	Serial Number
		723-47-26500	Valve Assembly, Control	1	Y300001-
	C1		• Body Subassembly	1	Y300001-
1	C1		• • Block	1	Y300001-
2	C1		• • Spool	1	Y300001-
3	C1		• • Spool	2	Y300001-
4	C1		• • Spool	1	Y300001-
5	C1		• • Spool	1	Y300001-
6	C1		• • Spool	1	Y300001-
7		723-46-15130	• • Plug	8	Y300001-
8		723-46-15140	• • Plug	4	Y300001-
9		07002-10823	• • O-ring	12	Y300001-
10		708-7T-16460	• • Ball	8	Y300001-
11		723-46-15120	• • Retainer	6	Y300001-
12		723-46-15690	• • Retainer	6	Y300001-
13		723-46-14110	• • Spring	5	Y300001-
14		723-46-14170	• • Spring	3	Y300001-
15		723-46-14131	• • Spring	4	Y300001-

FIG. H0120-003002 Main Control Valve, Inner Parts (2/20)

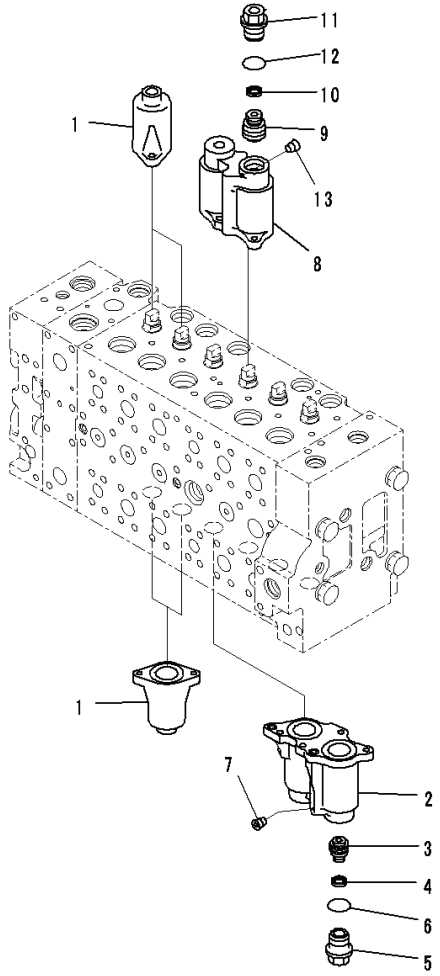

PW5H888

Index	Code	Part Number	Descreption	Qty	Serial Number
		723-47-26500	Valve Assembly, Control	1	Y300001-
	C1		• Body Subassembly	1	Y300001-
1		723-46-15111	• • Case	4	Y300001-
		723-46-18131	• • Case Subassembly	1	Y300001-
2	C1		• • • Case	1	Y300001-
3	C1		• • • Piston	1	Y300001-
4	C1		• • • Seal	1	Y300001-
5		723-46-15630	• • • Plug	1	Y300001-
6		07000-13024	• • • O-ring	1	Y300001-
7	C1		• • • Screw	1	Y300001-
		723-46-18231	• • Case Subassembly	1	Y300001-
8	C1		• • • Case	1	Y300001-
9	C1		• • • Piston	1	Y300001-
10	C1		• • • Seal	1	Y300001-
11		723-46-15630	• • • Plug	1	Y300001-
12		07000-13024	• • • O-ring	1	Y300001-
13	C1		• • • Screw	1	Y300001-

FIG. H0120-003003 Main Control Valve, Inner Parts (3/20)

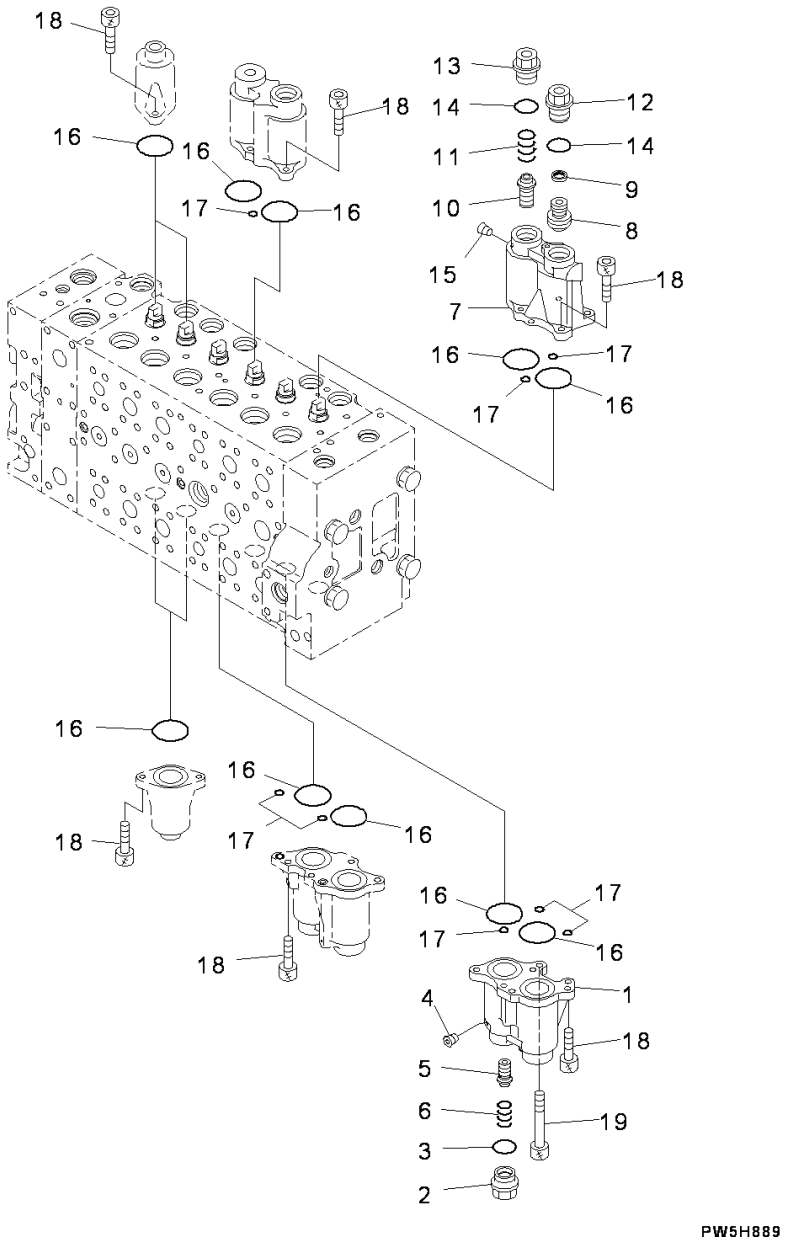

Index	Code	Part Number	Descreption	Qty	Serial Number
		723-47-26500	Valve Assembly, Control	1	Y300001-
	C1		• Body Subassembly	1	Y300001-
		723-46-18330	• • Case Subassembly	1	Y300001-
1	C1		• • • Case	1	Y300001-
2		723-46-17340	• • • Plug	1	Y300001-
3		07000-13024	• • • O-ring	1	Y300001-
4	C1		• • • Screw	1	Y300001-
5		723-46-17320	• • • Spool	1	Y300001-
6		723-46-17330	• • • Spring	1	Y300001-
		723-46-18431	• • Case Subassembly	1	Y300001-
7	C1		• • • Case	1	Y300001-
8	C1		• • • Piston	1	Y300001-
9	C1		• • • Seal	1	Y300001-
10		723-46-17320	• • • Spool	1	Y300001-
11		723-46-17330	• • • Spring	1	Y300001-
12		723-46-15630	• • • Plug	1	Y300001-
13		723-46-17340	• • • Plug	1	Y300001-
14		07000-13024	• • • O-ring	2	Y300001-
15	C1		• • • Screw	3	Y300001-
16		07430-71380	• • O-ring	12	Y300001-
17		702-16-53920	• • O-ring	8	Y300001-
18		01252-60820	• • Bolt	23	Y300001-
19		723-46-17350	• • Bolt	1	Y300001-

FIG. H0120-003004 Main Control Valve, Inner Parts (4/20)

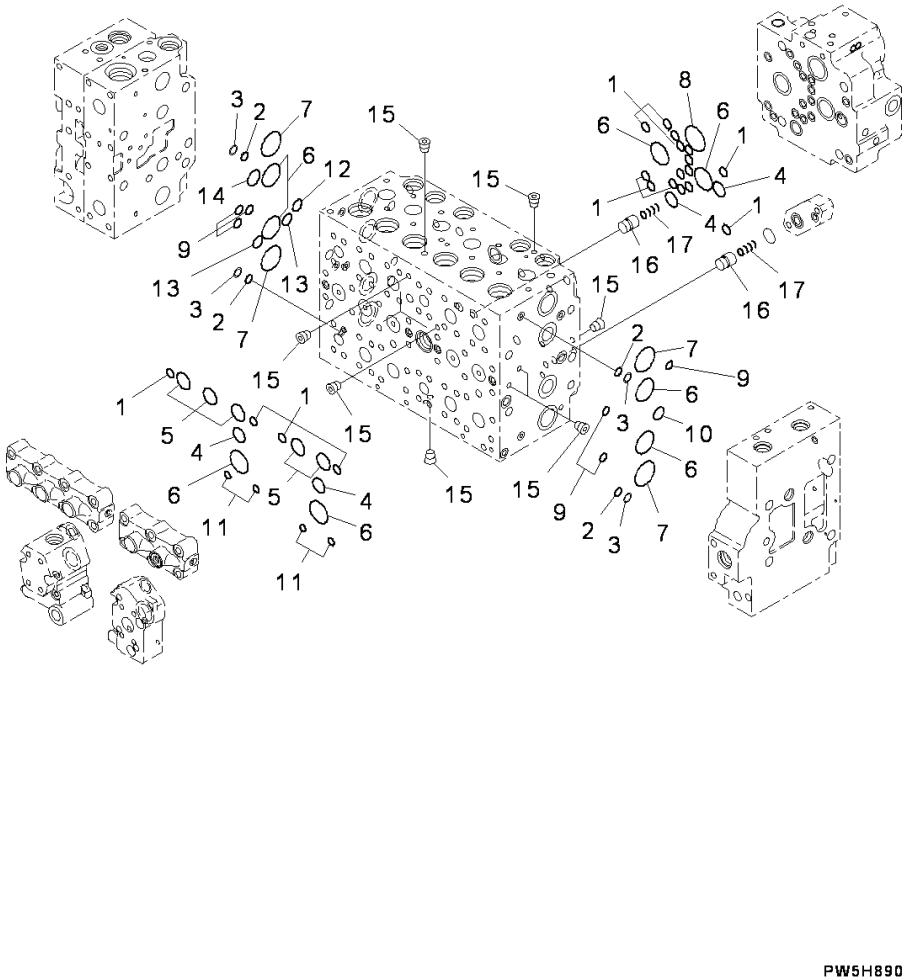

Index	Code	Part Number	Descreption	Qty	Serial Number
		723-47-26500	Valve Assembly, Control	1	Y300001-
	C1		• Body Subassembly	1	Y300001-
1		07000-12012	• • O-ring	19	Y300001-
2		723-11-19130	• • O-ring	4	Y300001-
3		723-46-17520	• • Ring, Back-up	4	Y300001-
4		07000-12021	• • O-ring	4	Y300001-
5		07000-13028	• • O-ring	5	Y300001-
6		07000-13032	• • O-ring	8	Y300001-
7		723-46-17510	• • O-ring	4	Y300001-
8		07000-13036	• • O-ring	1	Y300001-
9		723-46-17530	• • O-ring	11	Y300001-
10		723-11-18150	• • O-ring	2	Y300001-
11		702-16-53920	• • O-ring	4	Y300001-
12		723-46-18710	• • O-ring	1	Y300001-
13		722-12-19070	• • O-ring	2	Y300001-
14		723-46-18720	• • O-ring	1	Y300001-
15	C1		• • Plug	14	Y300001-
16		723-46-17650	• • Valve	2	Y300001-
17		723-46-14150	• • Spring	2	Y300001-

FIG. H0120-003005 Main Control Valve, Inner Parts (5/20)

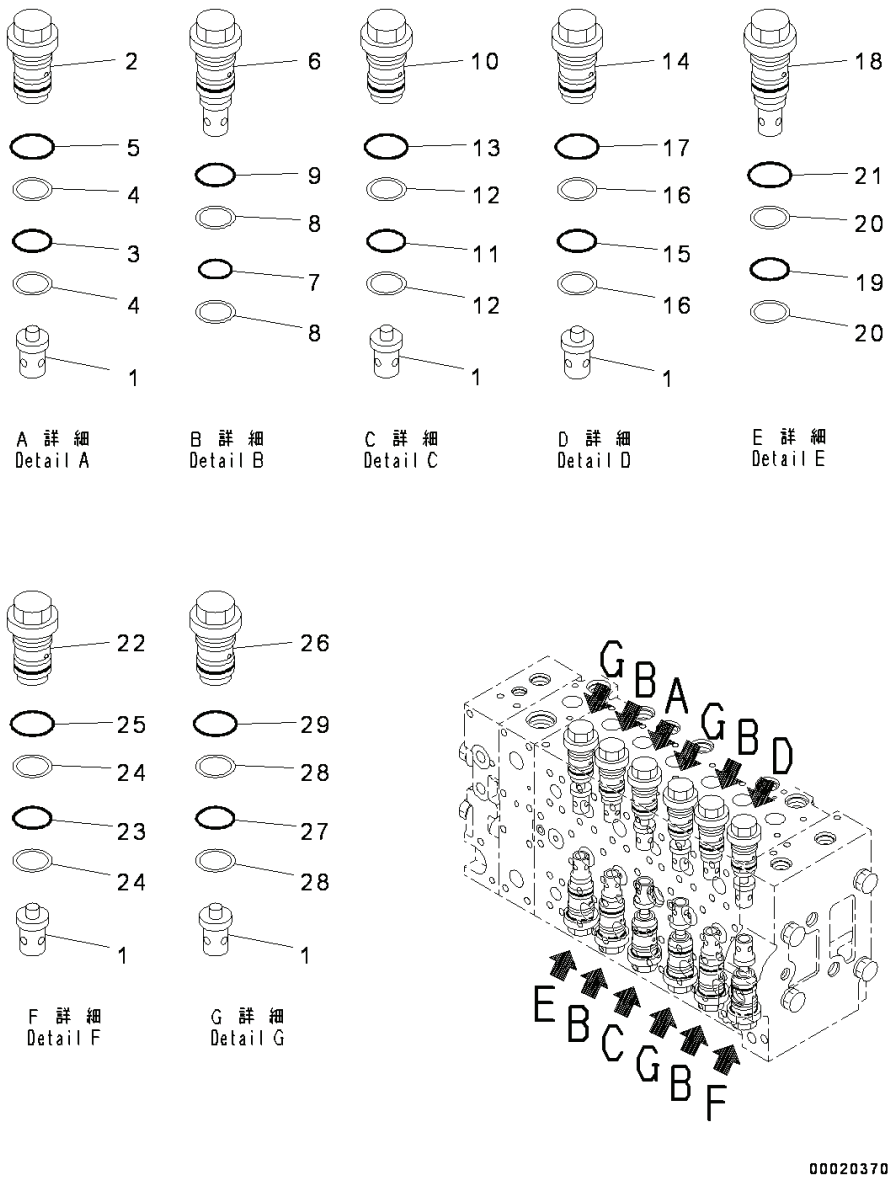

Index	Code	Part Number	Descreption	Qty	Serial Number
		723-47-26500	Valve Assembly, Control	1	Y300001-
	C1		• Body Subassembly	1	Y300001-
1		723-46-41210	• • Valve	7	Y300001-
2		723-46-40100	• • Valve Assembly	1	Y300001-
3		700-93-11320	• • • O-ring	1	Y300001-
4		723-46-41950	• • • Ring	2	Y300001-
5		07002-13634	• • • O-ring	1	Y300001-
6		723-46-42800	• • Valve Assembly	4	Y300001-
7		700-93-11320	• • • O-ring	1	Y300001-
8		723-46-41950	• • • Ring	2	Y300001-
9		07002-13634	• • • O-ring	1	Y300001-
10		723-46-40601	• • Valve Assembly	1	Y300001-
11		700-93-11320	• • • O-ring	1	Y300001-
12		723-46-41950	• • • Ring	2	Y300001-
13		07002-13634	• • • O-ring	1	Y300001-
14		723-46-43100	• • Valve Assembly	1	Y300001-
15		700-93-11320	• • • O-ring	1	Y300001-
16		723-46-41950	• • • Ring	2	Y300001-
17		07002-13634	• • • O-ring	1	Y300001-
18		723-46-43400	• • Valve Assembly	1	Y300001-
19		700-93-11320	• • • O-ring	1	Y300001-
20		723-46-41950	• • • Ring	2	Y300001-
21		07002-13634	• • • O-ring	1	Y300001-
22		723-46-44100	• • Valve Assembly	1	Y300001-
23		700-93-11320	• • • O-ring	1	Y300001-
24		723-46-41950	• • • Ring	2	Y300001-
25		07002-13634	• • • O-ring	1	Y300001-
26		723-46-45100	• • Valve Assembly	3	Y300001-
27		700-93-11320	• • • O-ring	1	Y300001-
28		723-46-41950	• • • Ring	2	Y300001-
29		07002-13634	• • • O-ring	1	Y300001-

FIG. H0120-003006 Main Control Valve, Inner Parts (6/20)

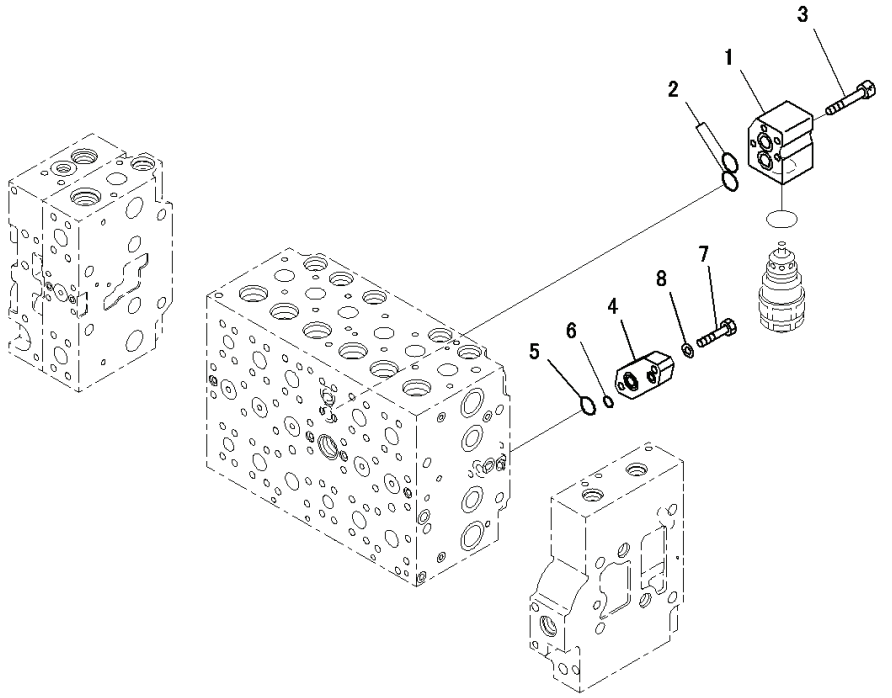

Index	Code	Part Number	Descreption	Qty	Serial Number
		723-47-26500	Valve Assembly, Control	1	Y300001-
	C1		• Body Subassembly	1	Y300001-
1		723-46-11910	• • Block	1	Y300001-
2		723-46-15510	• • O-ring	2	Y300001-
3		01252-60865	• • Bolt, Hexagon Socket Head	4	Y300001-
4		723-46-18730	• • Plate	1	Y300001-
5		07000-12021	• • O-ring	1	Y300001-
6		07000-12011	• • O-ring	1	Y300001-
7		01010-81040	• • Bolt	2	Y300001-
8		01643-51032	• • Washer	2	Y300001-

FIG. H0120-003007 Main Control Valve, Inner Parts (7/20)

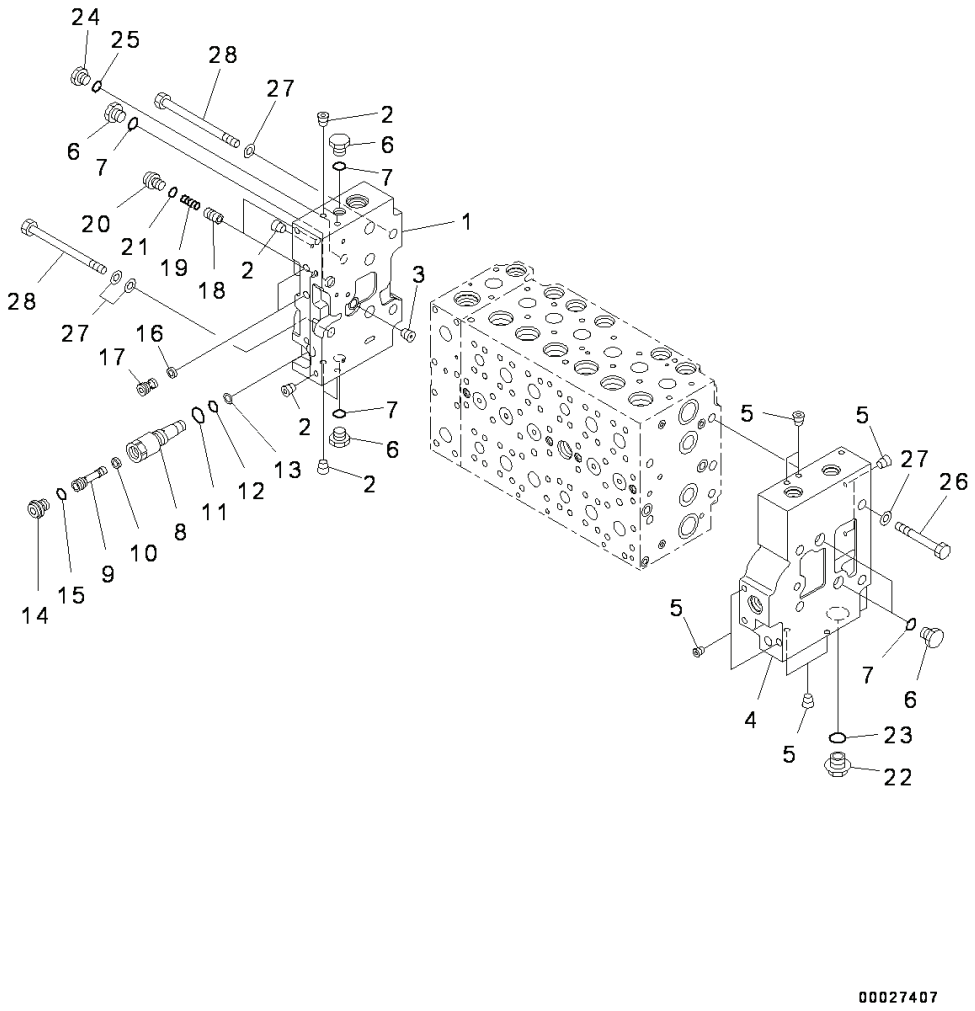

Index	Code	Part Number	Descreption	Qty	Serial Number
		723-47-26500	Valve Assembly, Control	1	Y300001-
		723-46-00760	• Cover Assembly	1	Y300001-
1	C1		• • Cover	1	Y300001-
2	C1		• • Plug	7	Y300001-
3	C1		• • Plug	1	Y300001-
		723-46-00742	• Cover Assembly	1	Y300001-
4	C1		• • Cover	1	Y300001-
5	C1		• • Plug	8	Y300001-
6		708-8E-16250	• Plug	5	Y300001-
7		07002-11823	• O-ring	5	Y300001-
		723-46-17600	• Plug Assembly	1	Y300001-
8		723-46-17610	• • Sleeve	1	Y300001-
9		723-46-17640	• • Plug	1	Y300001-
10		702-21-55760	• • Filter	1	Y300001-
11		07002-11423	• • O-ring	1	Y300001-
12		07000-11007	• • O-ring	1	Y300001-
13		07001-01007	• • Ring, Back-up	1	Y300001-
14		708-8E-16160	• • Plug	1	Y300001-
15		07002-11023	• • O-ring	1	Y300001-
16		723-40-82220	• Filter	2	Y300001-
17		723-46-17550	• Plug	2	Y300001-
18		723-46-15190	• Valve	2	Y300001-
19		723-46-14140	• Spring	2	Y300001-
20		708-8E-16160	• Plug	2	Y300001-
21		07002-11023	• O-ring	2	Y300001-
22		709-74-91860	• Plug	1	Y300001-
23		07002-12434	• O-ring	1	Y300001-
24		708-8H-11530	• Plug	1	Y300001-
25		07002-11423	• O-ring	1	Y300001-
26		01010-61490	• Bolt	4	Y300001-
27		01643-31445	• Washer	10	Y300001-
28		01011-61455	• Bolt	4	Y300001-

FIG. H0120-003008 Main Control Valve, Inner Parts (8/20)

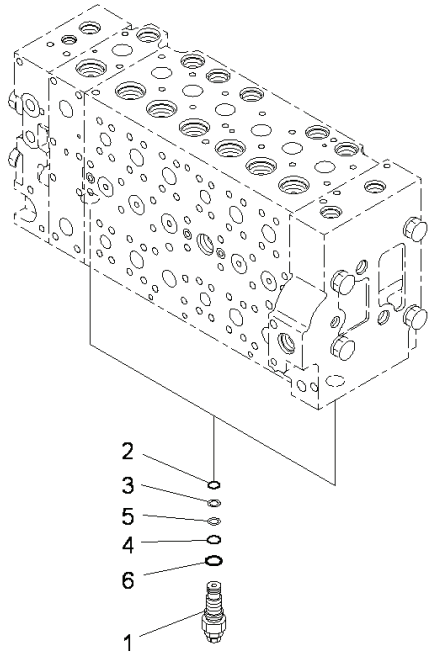

00011436

Index	Code	Part Number	Descreption	Qty	Serial Number
		723-47-26500	Valve Assembly, Control	1	Y300001-
1		723-40-56800	• Valve Assembly, Unloader	2	Y300001-
2		07000-12014	• • O-ring	1	Y300001-
3		723-40-56350	• • Ring	1	Y300001-
4		07000-12016	• • O-ring	1	Y300001-
5		723-60-22230	• • Ring, Back-up	1	Y300001-
6		07002-12434	• • O-ring	1	Y300001-

FIG. H0120-003009 Main Control Valve, Inner Parts (9/20)

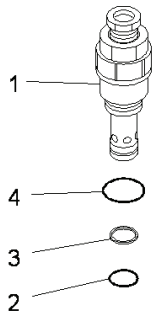

A 詳 細
Detail A

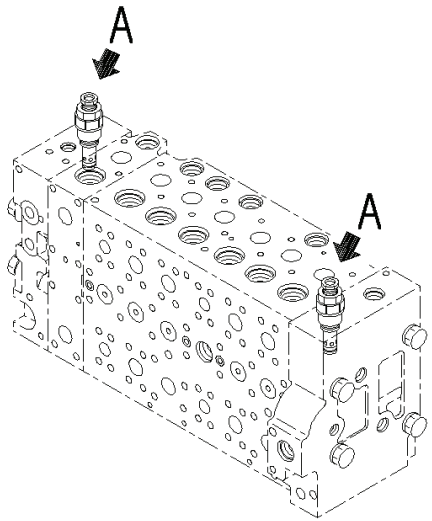

00011437

Index	Code	Part Number	Descreption	Qty	Serial Number
		723-47-26500	Valve Assembly, Control	1	Y300001-
1		723-40-93800	• Valve, Relief	2	Y300001-
2		700-22-11410	• • O-ring	1	Y300001-
3		700-80-64220	• • Ring	1	Y300001-
4		07002-12434	• • O-ring	1	Y300001-

FIG. H0120-003010 Main Control Valve, Inner Parts (10/20)

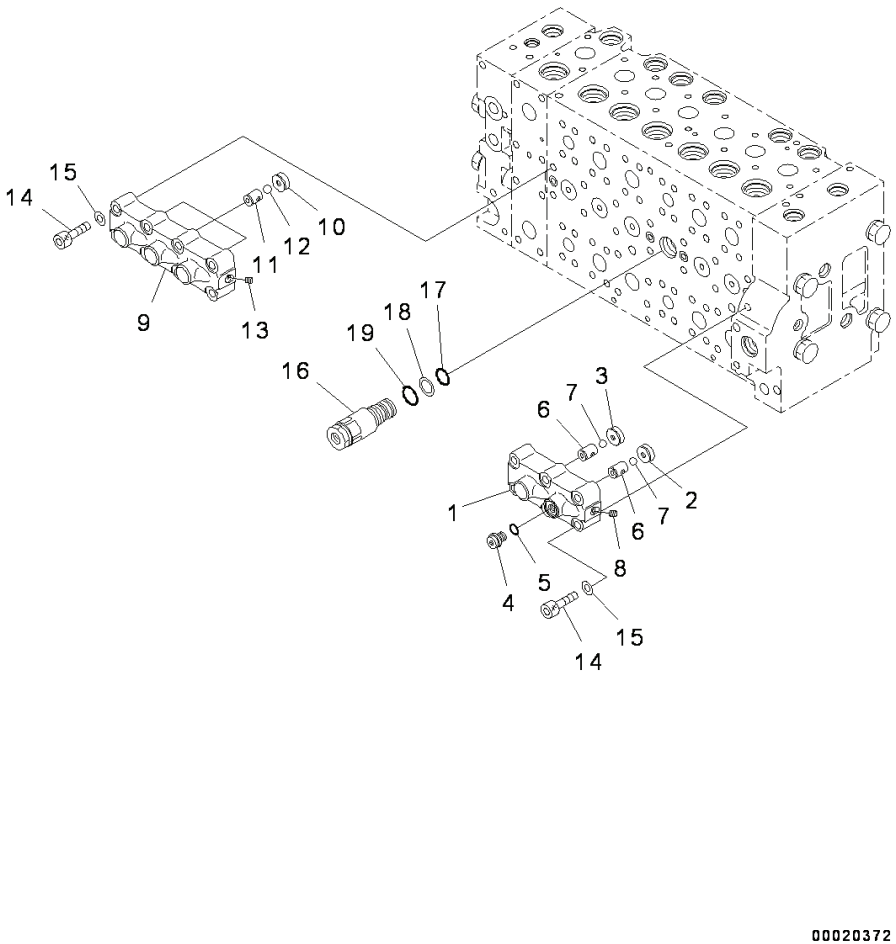

Index	Code	Part Number	Descreption	Qty	Serial Number
		723-47-26500	Valve Assembly, Control	1	Y300001-
		723-40-93800	• Valve, Relief	2	Y300001-
		723-40-66701	• Valve Assembly	1	Y300001-
1	C1		• • Case	1	Y300001-
2	C1		• • Seat	1	Y300001-
3	C1		• • Seat	1	Y300001-
4		708-8H-11530	• • Plug	1	Y300001-
5		07002-11423	• • O-ring	1	Y300001-
6	C1		• • Seat	2	Y300001-
7	C1		• • Ball	2	Y300001-
8	C1		• • Plug	1	Y300001-
		723-40-66601	• Valve Assembly	1	Y300001-
9	C1		• • Case	1	Y300001-
10	C1		• • Seat	3	Y300001-
11	C1		• • Seat	3	Y300001-
12	C1		• • Ball	3	Y300001-
13	C1		• • Plug	1	Y300001-
14		01252-61050	• Bolt, Hexagon Socket Head	14	Y300001-
15		01643-51032	• Washer	14	Y300001-
16		723-40-60101	• Valve Assembly	1	Y300001-
17		07000-12020	• • O-ring	1	Y300001-
18		07001-02020	• • Ring, Back-up	1	Y300001-
19		709-25-11390	• • O-ring	1	Y300001-

FIG. H0120-003011 Main Control Valve, Inner Parts (11/20)

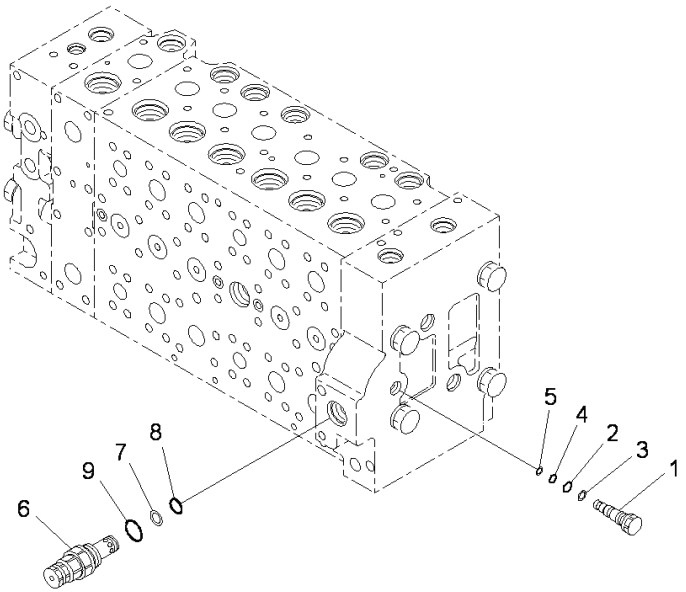

00020373

Index	Code	Part Number	Descreption	Qty	Serial Number
		723-47-26500	Valve Assembly, Control	1	Y300001-
		723-40-60101	• Valve Assembly	1	Y300001-
		723-46-17701	• Plug Assembly	1	Y300001-
1		723-46-17711	• • Plug	1	Y300001-
2		07000-11009	• • O-ring	1	Y300001-
3		07001-01009	• • Ring, Back-up	1	Y300001-
4		07000-11007	• • O-ring	1	Y300001-
5		07001-01007	• • Ring, Back-up	1	Y300001-
6		723-40-91500	• Valve Assembly, Relief	1	Y300001-
7		700-80-64220	• • Ring	1	Y300001-
8		700-22-11410	• • O-ring	1	Y300001-
9		709-25-11390	• • O-ring	1	Y300001-

FIG. H0120-003012 Main Control Valve, Inner Parts (12/20)

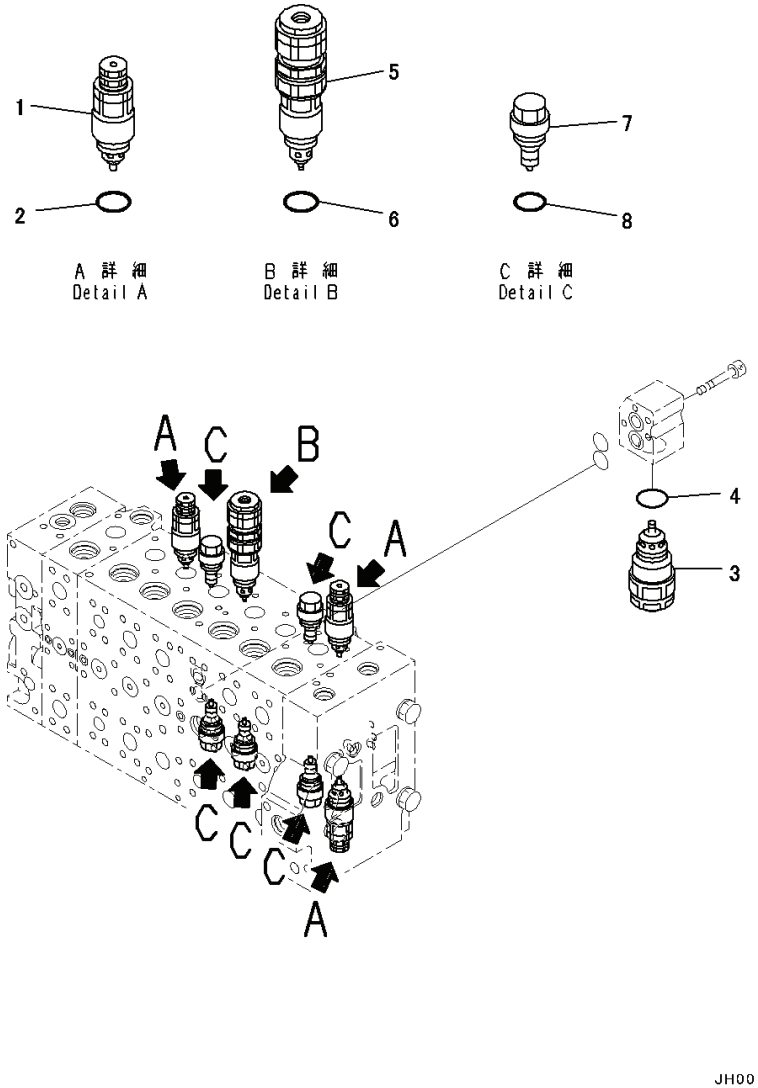

Index	Code	Part Number	Descreption	Qty	Serial Number
		723-47-26500	Valve Assembly, Control	1	Y300001-
		723-40-91500	• Valve Assembly, Relief	1	Y300001-
1		723-40-91200	• Valve Assembly, Suction and Relief	3	Y300001-
2		709-25-11390	• • O-ring	1	Y300001-
3		723-90-69100	• Valve Assembly, Suction and Relief	1	Y300001-
4		07002-13634	• • O-ring	1	Y300001-
5		723-90-76201	• Valve Assembly, Suction and Relief	1	Y300001-
6		07000-13024	• • O-ring	1	Y300001-
7		723-40-85100	• Valve Assembly, Suction	5	Y300001-
8		709-25-11390	• • O-ring	1	Y300001-

FIG. H0120-003013 Main Control Valve, Inner Parts (13/20)

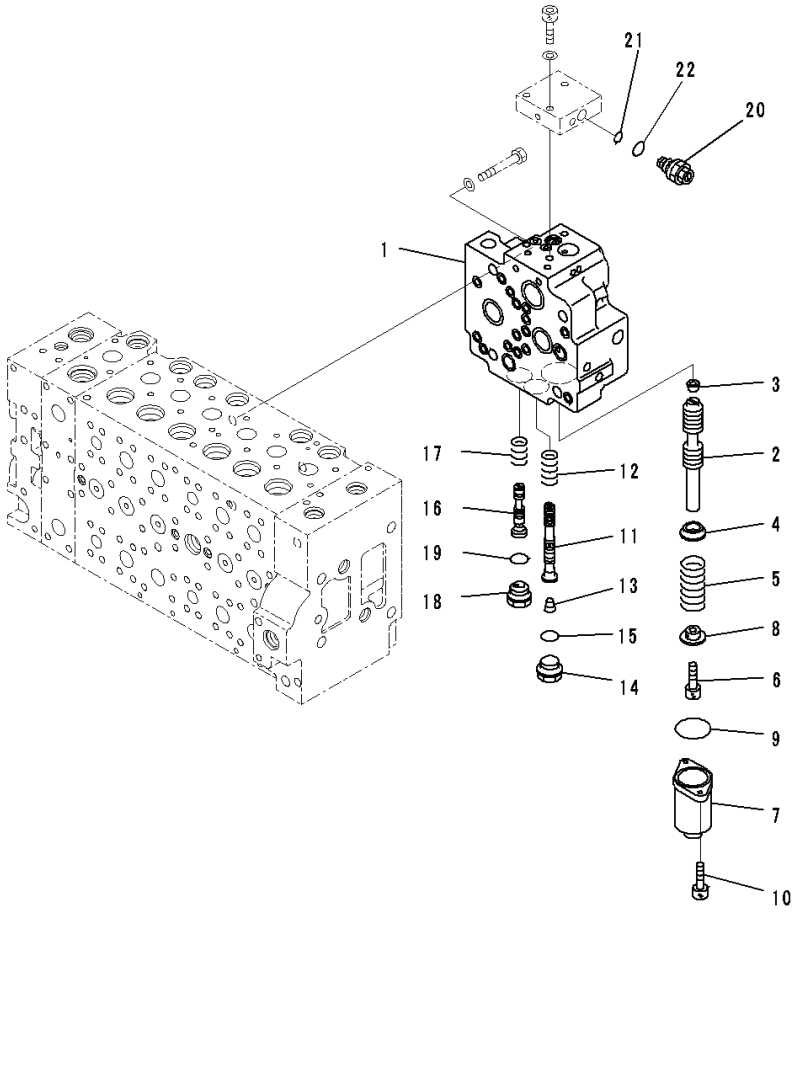

Index	Code	Part Number	Descreption	Qty	Serial Number
		723-47-26500	Valve Assembly, Control	1	Y300001-
		723-40-71201	• Valve Assembly	1	Y300001-
1	C1		• • Valve Body	1	Y300001-
2	C1		• • Spool	1	Y300001-
3	C1		• • Plug	1	Y300001-
4		723-40-71330	• • Retainer	1	Y300001-
5		723-40-71340	• • Spring	1	Y300001-
6		01252-60816	• • Bolt	1	Y300001-
7		723-46-15111	• • Case	1	Y300001-
8		723-40-71350	• • Retainer	1	Y300001-
9		07430-71380	• • O-ring	1	Y300001-
10		01252-60820	• • Bolt	2	Y300001-
11	C1		• • Spool	1	Y300001-
12		723-40-71440	• • Spring	1	Y300001-
13	C1		• • Plug	1	Y300001-
14		709-74-91860	• • Plug	1	Y300001-
15		07002-12434	• • O-ring	1	Y300001-
16	C1		• • Spool	1	Y300001-
17		723-40-71390	• • Spring	1	Y300001-
18		723-40-61150	• • Plug	1	Y300001-
19		07002-12434	• • O-ring	1	Y300001-
		723-40-71800	• • Valve Assembly	1	Y300001-
20		723-40-91600	• • • Valve Assembly, Relief	1	Y300001-
21		702-16-53920	• • • • O-ring	1	Y300001-
22		07002-11623	• • • • O-ring	1	Y300001-

PC300-8 (FEN01263-00)

FIG. H0120-003014 Main Control Valve, Inner Parts (14/20)

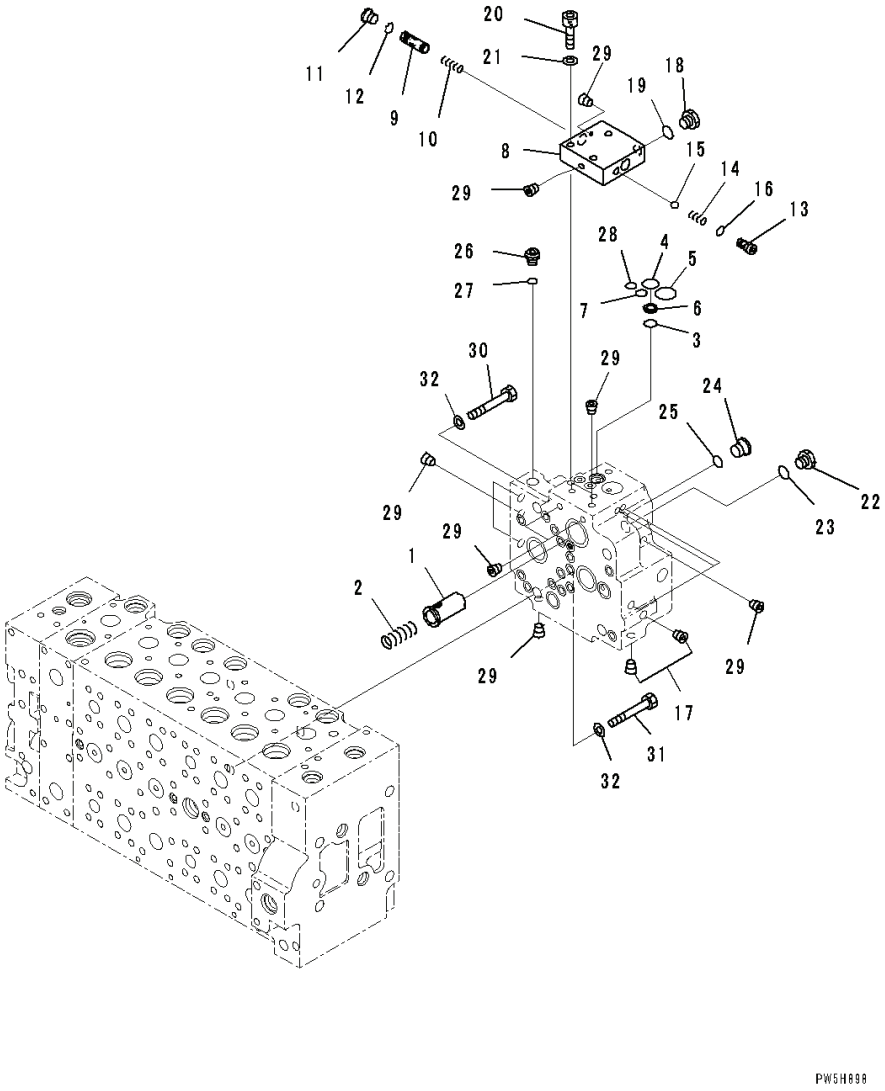

Index	Code	Part Number	Descreption	Qty	Serial Number
		723-47-26500	Valve Assembly, Control	1	Y300001-
		723-40-71201	• Valve Assembly	1	Y300001-
		723-40-71800	• • Valve Assembly	1	Y300001-
1		723-40-71430	• • Valve	1	Y300001-
2		702-21-55460	• • Spring	1	Y300001-
3		702-21-55420	• • O-ring	1	Y300001-
4		702-21-55520	• • O-ring	1	Y300001-
5		702-21-55440	• • O-ring	1	Y300001-
6		702-21-53120	• • Filter	1	Y300001-
7		07000-12011	• • O-ring	1	Y300001-
8	C1		• • Block	1	Y300001-
9	C1		• • Spool	1	Y300001-
10	C1		• • Spring	1	Y300001-
11		702-21-55620	• • Plug	1	Y300001-
12		07002-11423	• • O-ring	1	Y300001-
13		702-21-55710	• • Seat	1	Y300001-
14		702-21-55720	• • Spring	1	Y300001-
15		04260-00793	• • Ball	1	Y300001-
16		07000-11009	• • O-ring	1	Y300001-
17	C1		• • Plug	2	Y300001-
18		708-8H-11530	• • Plug	1	Y300001-
19		07002-11423	• • O-ring	1	Y300001-
20		01252-61040	• • Bolt	3	Y300001-
21		01643-51032	• • Washer	3	Y300001-
22		708-8H-11530	• • Plug	1	Y300001-
23		07002-11423	• • O-ring	1	Y300001-
24		702-21-55620	• • Plug	1	Y300001-
25		07002-11423	• • O-ring	1	Y300001-
26		708-8E-16160	• • Plug	1	Y300001-
27		07002-11023	• • O-ring	1	Y300001-
28		07000-12011	• • O-ring	1	Y300001-
29	C1		• • Plug	17	Y300001-
30		01010-61460	• Bolt	1	Y300001-
31		01010-61470	• Bolt	3	Y300001-
32		01643-31445	• Washer	4	Y300001-

PC300-8 (FEN01263-00)

FIG. H0120-003015 Main Control Valve, Inner Parts (15/20)

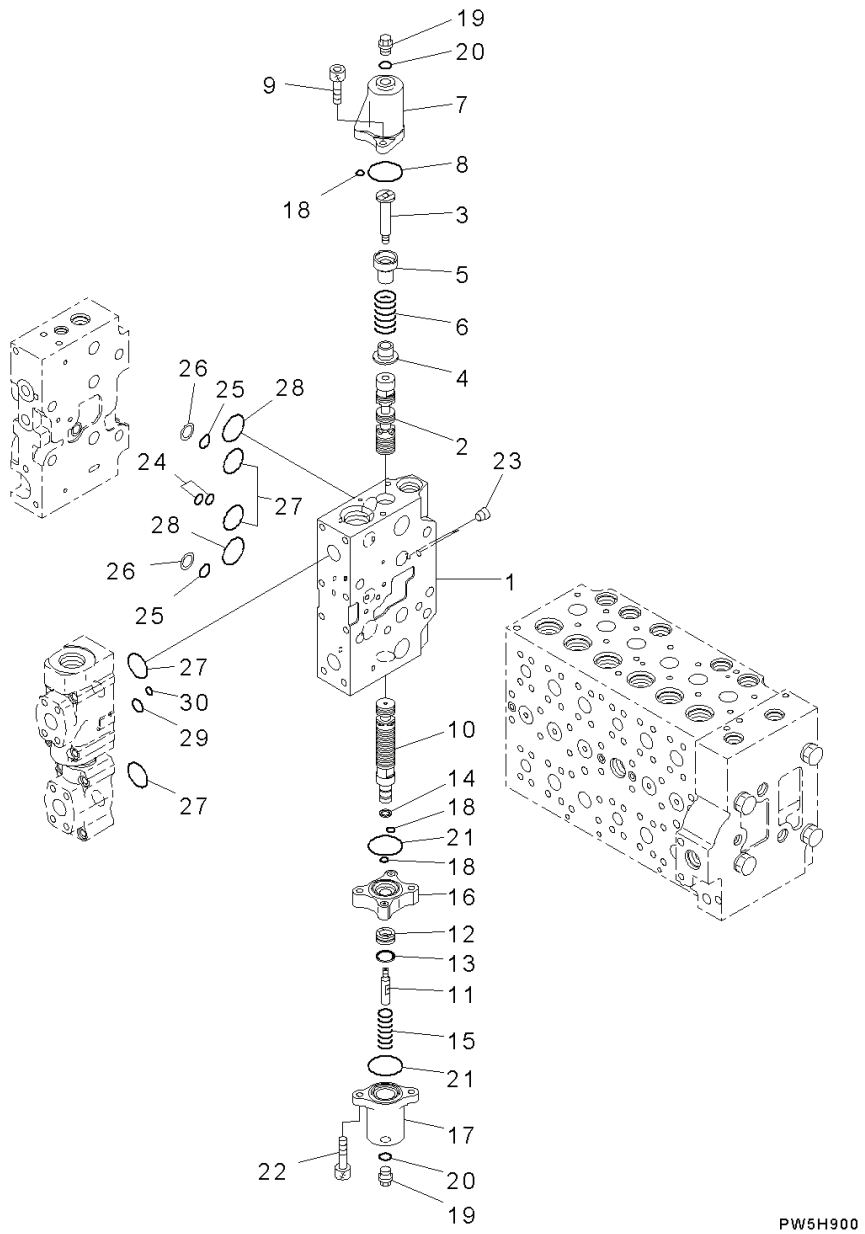

Index	Code	Part Number	Descreption	Qty	Serial Number
		723-47-26500	Valve Assembly, Control	1	Y300001-
	C1		• Body Subassembly	1	Y300001-
1	C1		• • Valve Body	1	Y300001-
2	C1		• • Spool	1	Y300001-
3		723-46-15390	• • Plug	1	Y300001-
4		723-46-15370	• • Retainer	1	Y300001-
5		723-46-15380	• • Retainer	1	Y300001-
6		723-46-14110	• • Spring	1	Y300001-
7		723-46-17840	• • Case	1	Y300001-
8		07430-71380	• • O-ring	1	Y300001-
9		01252-60820	• • Bolt	2	Y300001-
10	C1		• • Spool	1	Y300001-
11		723-46-15330	• • Bolt	1	Y300001-
12	C1		• • Piston	1	Y300001-
13	C1		• • Seal	1	Y300001-
14	C1		• • Seal	1	Y300001-
15		723-46-14180	• • Spring	1	Y300001-
16		723-46-17850	• • Case	1	Y300001-
17		723-46-17860	• • Case	1	Y300001-
18		723-11-19960	• • O-ring	3	Y300001-
19		706-73-71450	• • Plug	2	Y300001-
20		07002-11423	• • O-ring	2	Y300001-
21		07430-71380	• • O-ring	2	Y300001-
22		01252-60845	• • Bolt	2	Y300001-
23	C1		• • Plug	2	Y300001-
24		723-46-17530	• • O-ring	2	Y300001-
25		723-11-19130	• • O-ring	2	Y300001-
26		723-46-17520	• • Ring, Back-up	2	Y300001-
27		07000-13032	• • O-ring	4	Y300001-
28		723-46-17510	• • O-ring	2	Y300001-
29		07000-12016	• • O-ring	1	Y300001-
30		702-16-53920	• • O-ring	1	Y300001-

PC300-8 (FEN01263-00)

FIG. H0120-003016 Main Control Valve, Inner Parts (16/20)

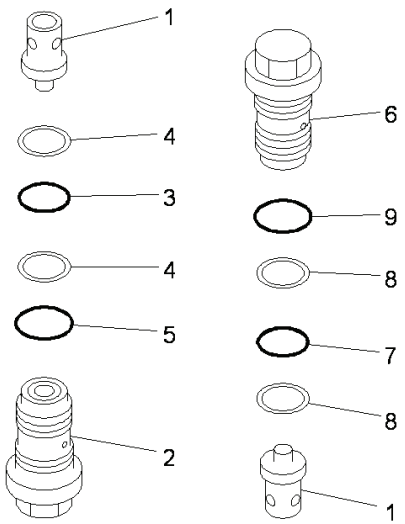

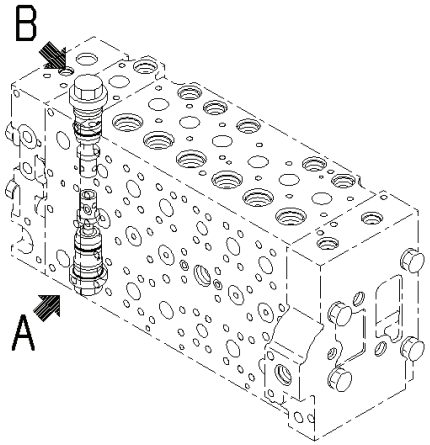

Index	Code	Part Number	Descreption	Qty	Serial Number
		723-47-26500	Valve Assembly, Control	1	Y300001-
	C1		• Body Subassembly	1	Y300001-
1		723-46-41210	• • Valve	2	Y300001-
2		723-46-40601	• • Valve Assembly	1	Y300001-
3		700-93-11320	• • • O-ring	1	Y300001-
4		723-46-41950	• • • Ring	2	Y300001-
5		07002-13634	• • • O-ring	1	Y300001-
6		723-46-43100	• • Valve Assembly	1	Y300001-
7		700-93-11320	• • • O-ring	1	Y300001-
8		723-46-41950	• • • Ring	2	Y300001-
9		07002-13634	• • • O-ring	1	Y300001-

FIG. H0120-003017 Main Control Valve, Inner Parts (17/20)

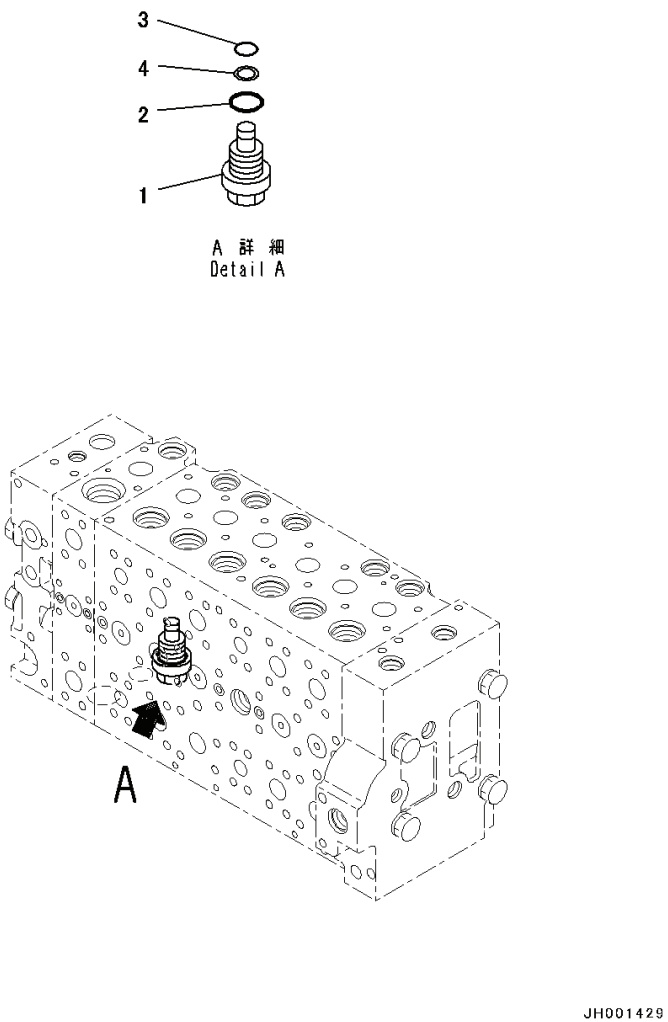

JH001429

Index	Code	Part Number	Descreption	Qty	Serial Number
		723-47-26500	Valve Assembly, Control	1	Y300001-
	C1		• Body Subassembly	1	Y300001-
1		709-74-91510	• • Plug	1	Y300001-
2		07000-13024	• • O-ring	1	Y300001-
3		07000-11009	• • O-ring	1	Y300001-
4		07001-01009	• • Ring, Back-up	1	Y300001-

FIG. H0120-003018 Main Control Valve, Inner Parts (18/20)

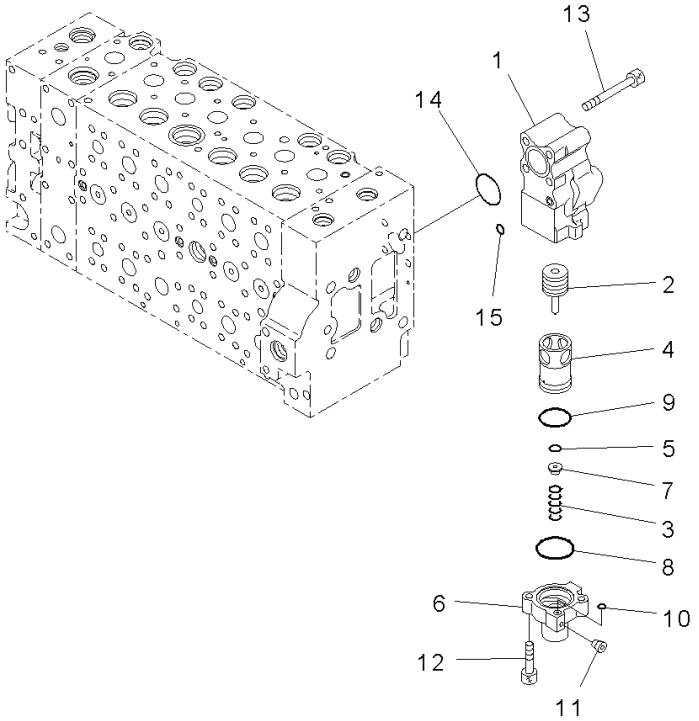

PW5H899

Index	Code	Part Number	Descreption	Qty	Serial Number
		723-47-26500	Valve Assembly, Control	1	Y300001-
		723-40-87100	• Valve Assembly	1	Y300001-
1		723-40-87110	• • Body	1	Y300001-
2		723-40-87140	• • Spool	1	Y300001-
3		723-40-87160	• • Spring	1	Y300001-
4	C1		• • Sleeve	1	Y300001-
5	C1		• • Seal	1	Y300001-
6	C1		• • Case	1	Y300001-
7		723-40-87150	• • Retainer	1	Y300001-
8		723-40-87170	• • O-ring	1	Y300001-
9		07000-13035	• • O-ring	1	Y300001-
10		07000-11007	• • O-ring	1	Y300001-
11	C1		• • Screw	1	Y300001-
12		01252-60830	• • Bolt	2	Y300001-
13		01252-61075	• Bolt, Hexagon Socket Head	4	Y300001-
14		07000-13038	• O-ring	1	Y300001-
15		07000-11010	• O-ring	1	Y300001-

FIG. H0120-003019 Main Control Valve, Inner Parts (19/20)

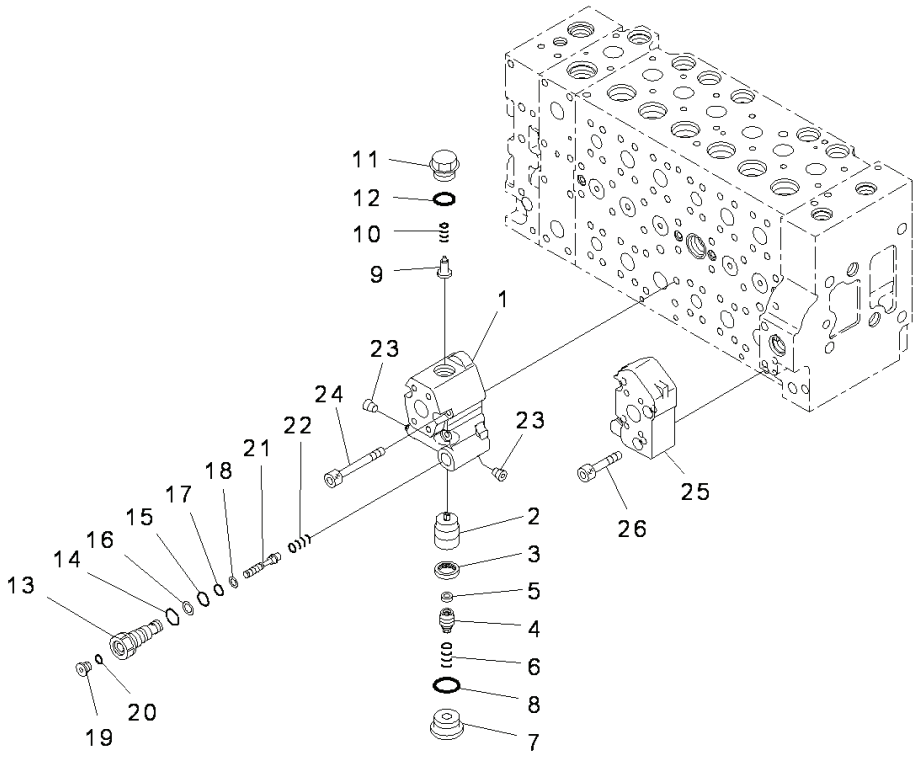

Index	Code	Part Number	Descreption	Qty	Serial Number
		723-47-26500	Valve Assembly, Control	1	Y300001-
		723-40-82401	• Valve Assembly	1	Y300001-
1		723-40-82410	• • Body	1	Y300001-
2		723-40-82120	• • Valve	1	Y300001-
3		723-40-82130	• • Seal	1	Y300001-
4		723-40-82210	• • Plug	1	Y300001-
5		723-40-82220	• • Filter	1	Y300001-
6		723-40-82140	• • Spring	1	Y300001-
7		723-40-82150	• • Plug	1	Y300001-
8		07002-13334	• • O-ring	1	Y300001-
9		723-40-84420	• • Valve, Check	1	Y300001-
10		723-40-84430	• • Spring	1	Y300001-
11		723-40-84440	• • Plug	1	Y300001-
12		07000-13024	• • O-ring	1	Y300001-
13		723-40-82310	• • Plug	1	Y300001-
14		07002-11823	• • O-ring	1	Y300001-
15		07000-12011	• • O-ring	1	Y300001-
16		07001-02011	• • Ring, Back-up	1	Y300001-
17		07000-11010	• • O-ring	1	Y300001-
18		07001-01010	• • Ring, Back-up	1	Y300001-
19		723-11-18190	• • Plug	1	Y300001-
20		07002-11023	• • O-ring	1	Y300001-
21		723-40-82280	• • Piston	1	Y300001-
22		723-40-82290	• • Spring	1	Y300001-
23		708-1S-19810	• • Plug	2	60022-
24		01252-61075	• Bolt, Hexagon Socket Head	4	Y300001-
25		723-46-17570	• Block	1	Y300001-
26		01252-61045	• Bolt, Hexagon Socket Head	4	Y300001-

FIG. H0120-003020 Main Control Valve, Inner Parts (20/20)

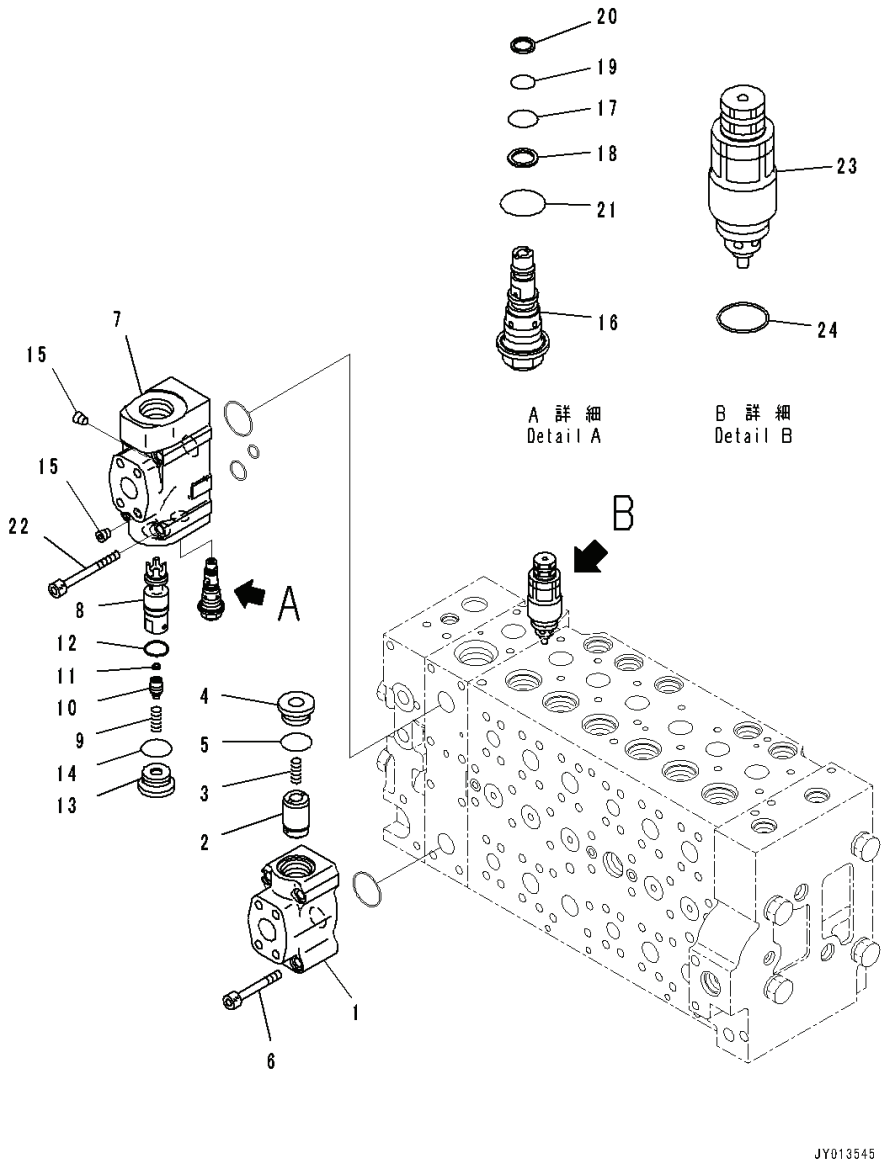

Index	Code	Part Number	Descreption	Qty	Serial Number
		723-47-26500	Valve Assembly, Control	1	Y300001-
		723-40-84100	• Valve Assembly	1	Y300001-
1	C1		• • Body	1	Y300001-
2	C1		• • Valve	1	Y300001-
3		723-40-82140	• • Spring	1	Y300001-
4		723-40-84130	• • Plug	1	Y300001-
5		07002-13034	• • O-ring	1	Y300001-
6		01252-61065	• Bolt	4	Y300001-
		723-40-84200	• Valve Assembly	1	Y300001-
7	C1		• • Body	1	Y300001-
8	C1		• • Valve	1	Y300001-
9		723-40-82140	• • Spring	1	Y300001-
10		723-40-84230	• • Plug	1	Y300001-
11		723-40-82220	• • Filter	1	Y300001-
12		723-46-15350	• • Seal	1	Y300001-
13		723-40-84130	• • Plug	1	Y300001-
14		07002-13034	• • O-ring	1	Y300001-
15		708-21-12541	• • Plug	2	Y300001-
16		723-40-92900	• • Valve Assembly	1	Y300001-
17		07000-12012	• • • O-ring	1	Y300001-
18		07001-02012	• • • Ring, Back-up	1	Y300001-
19		07000-11010	• • • O-ring	1	Y300001-
20		07001-01010	• • • Ring, Back-up	1	Y300001-
21		07002-12034	• • • O-ring	1	Y300001-
22		723-46-18770	• Bolt	4	Y300001-
23		723-40-91200	• Valve Assembly, Suction and Relief	1	Y300001-
24		709-25-11390	• • O-ring	1	Y300001-

PC300-8 (FEN01263-00)

FIG. H0120-003021 Main Control Valve, Control Valve Related Parts (1/2)

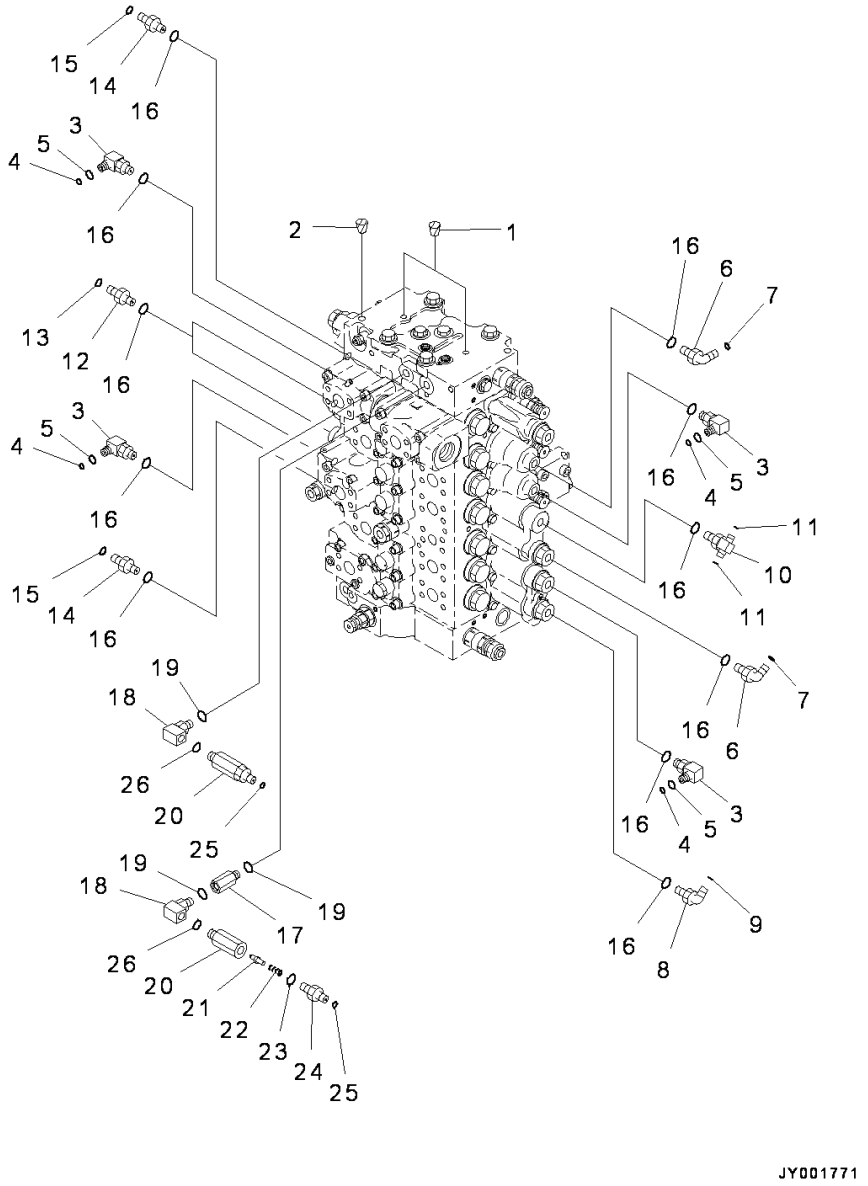

Index	Code	Part Number	Descreption	Qty	Serial Number
1		07049-01012	Plug	2	Y300001-
2		07049-01215	Plug	1	Y300001-
3		22U-62-22480	Elbow	4	Y300001-
4		201-60-11390	• O-ring	1	Y300001-
5		20Y-62-19560	• O-ring	1	Y300001-
6		11Y-62-12160	Elbow	2	Y300001-
7		02896-11008	O-ring	2	Y300001-
8		21W-62-42490	Elbow	1	Y300001-
9		02896-11009	O-ring	1	Y300001-
10		11Y-62-12250	Tee	1	Y300001-
11		02896-11008	O-ring	2	Y300001-
12		11Y-62-12130	Nipple	2	Y300001-
13		02896-11008	O-ring	2	Y300001-
14		11Y-62-12520	Union	2	Y300001-
15		02896-11009	O-ring	2	Y300001-
16		07002-11423	O-ring	12	Y300001-
17		20Y-62-22160	Adapter	1	Y300001-
18		20Y-62-23541	Elbow	2	Y300001-
19		07002-11423	O-ring	3	Y300001-
		20Y-62-41701	Valve Assembly	2	Y300001-
20	C1		• Body	1	Y300001-
21		20Y-60-22270	• Poppet	1	Y300001-
22		701-20-61230	• Spring	1	Y300001-
23		07002-11423	• O-ring	1	Y300001-
24		20Y-62-47630	• Nipple	1	Y300001-
25		02896-11008	O-ring	2	Y300001-
26		07002-11423	O-ring	2	Y300001-

FIG. H0120-003022 Main Control Valve, Control Valve Related Parts (2/2)

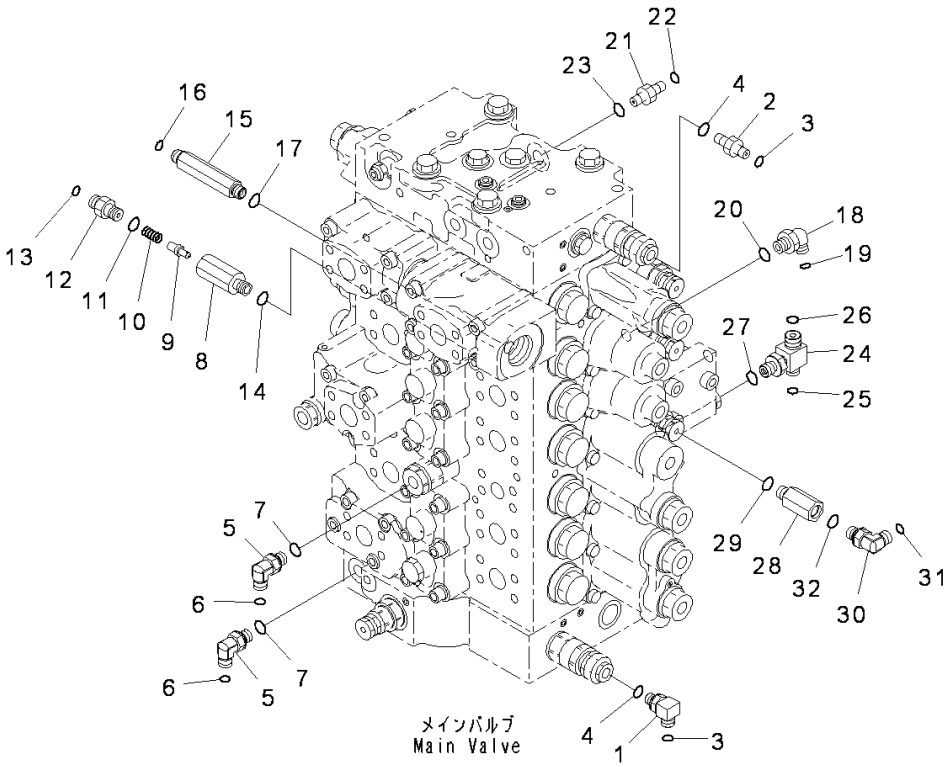

Index	Code	Part Number	Descreption	Qty	Serial Number
1		20Y-62-41920	Elbow	1	Y300001-
2		208-62-71540	Nipple	1	Y300001-
3		02896-11008	O-ring	2	Y300001-
4		07002-11223	O-ring	2	Y300001-
5		11Y-62-12160	Elbow	2	Y300001-
6		02896-11008	O-ring	2	Y300001-
7		07002-11423	O-ring	2	Y300001-
		20Y-62-41701	Valve Assembly	1	Y300001-
8	C1		• Body	1	Y300001-
9		20Y-60-22270	• Poppet	1	Y300001-
10		701-20-61230	• Spring	1	Y300001-
11		07002-11423	• O-ring	1	Y300001-
12		20Y-62-47630	• Nipple	1	Y300001-
13		02896-11008	O-ring	1	Y300001-
14		07002-11423	O-ring	1	Y300001-
15		207-62-71531	Union	1	Y300001-
16		02896-11008	O-ring	1	Y300001-
17		07002-11423	O-ring	1	Y300001-
18		11Y-62-12160	Elbow	1	Y300001-
19		02896-11008	O-ring	1	Y300001-
20		07002-11423	O-ring	1	Y300001-
21		11Y-62-12130	Nipple	1	Y300001-
22		02896-11008	O-ring	1	Y300001-
23		07002-11423	O-ring	1	Y300001-
24		11Y-62-12820	Tee	1	Y300001-
25		02896-11008	O-ring	1	Y300001-
26		02896-11009	O-ring	1	Y300001-
27		07002-11423	O-ring	1	Y300001-
28		20Y-62-22160	Adapter	1	Y300001-
29		07002-11423	O-ring	1	Y300001-
30		11Y-62-12160	Elbow	1	Y300001-
31		02896-11008	O-ring	1	Y300001-
32		07002-11423	O-ring	1	Y300001-

FIG. H0120-003023 Main Control Valve, Valve Bracket

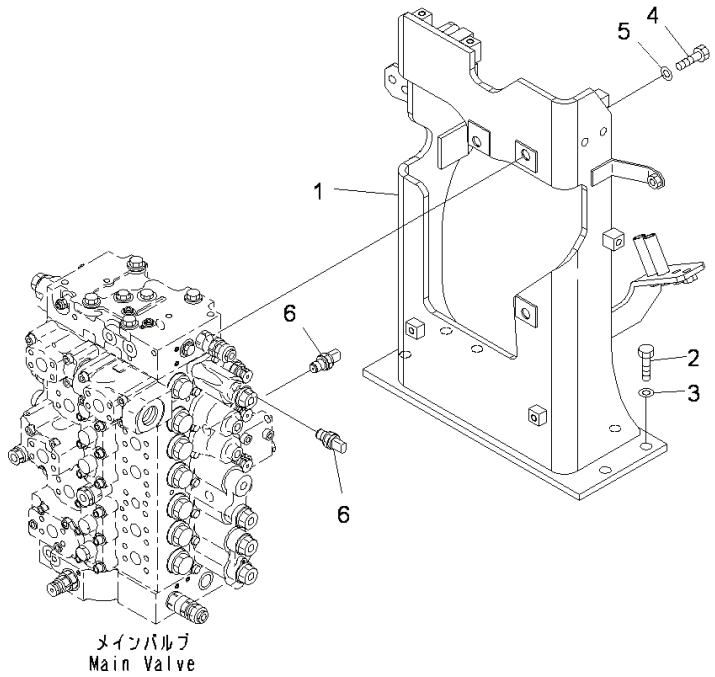

Index	Code	Part Number	Descreption	Qty	Serial Number
1		207-62-74610	Bracket	1	Y300001-
2		01010-81640	Bolt	6	Y300001-
3		01643-31645	Washer	6	Y300001-
4		01010-81645	Bolt	3	Y300001-
5		01643-31645	Washer	3	Y300001-
6		7861-93-1811	Sensor	2	Y300001-

FIG. H0210-003001 Damper

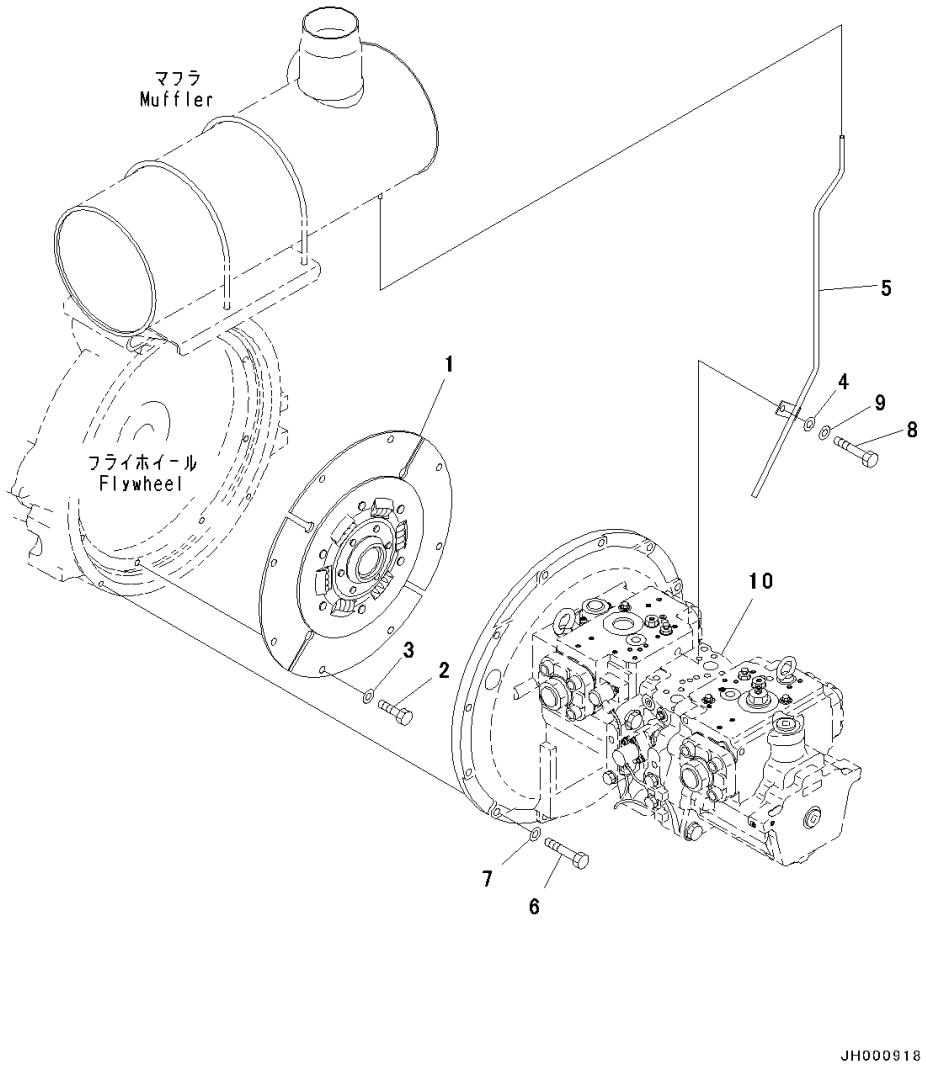

Index	Code	Part Number	Descreption	Qty	Serial Number
1		207-01-71310	Disc	1	Y300001-
2		01010-81225	Bolt	8	Y300001-
3		01643-31232	Washer	8	Y300001-
4		6691-21-6360	Washer	1	Y300001-
5		6745-11-5740	Tube	1	Y300001-
6		01010-81240	Bolt	11	Y300001-
7		01643-31232	Washer	11	Y300001-
8		01010-81245	Bolt	1	Y300001-
9		01643-31232	Washer	1	Y300001-
10		(708-2G-00700)	Pump Assembly(Refer to Page 359)		-

FIG. H0210-001001 Main Piston Pump, Related Parts

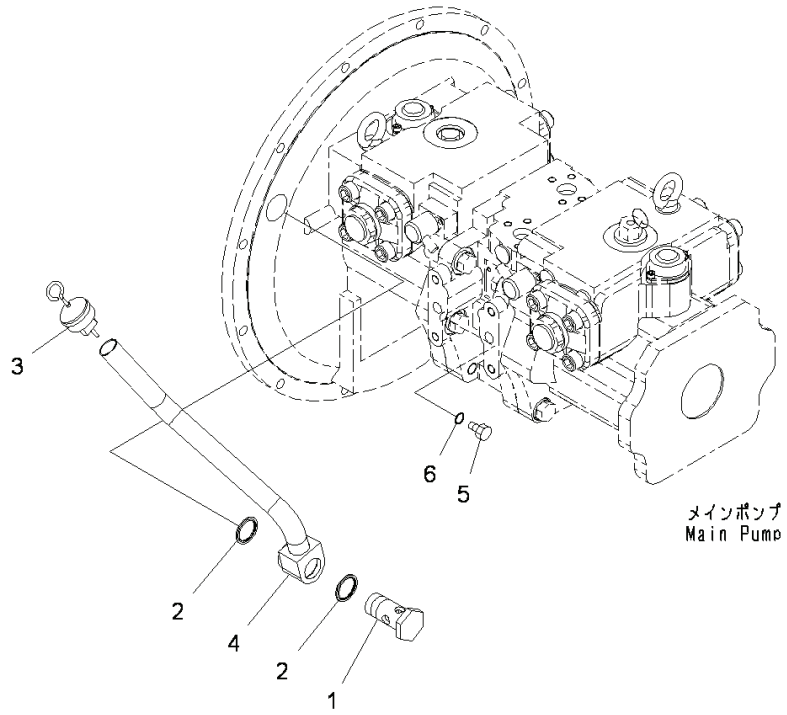

Index	Code	Part Number	Descreption	Qty	Serial Number
1		207-01-31141	Joint	1	Y300001-
2		07005-03016	Gasket	2	Y300001-
3		207-01-31150	Gauge	1	Y300001-
4		207-01-71320	Tube	1	Y300001-
5		07040-11209	Plug	1	Y300001-
6		07002-11223	O-ring	1	Y300001-

FIG. H0210-002001 Main Piston Pump, Inner Parts (1/11)

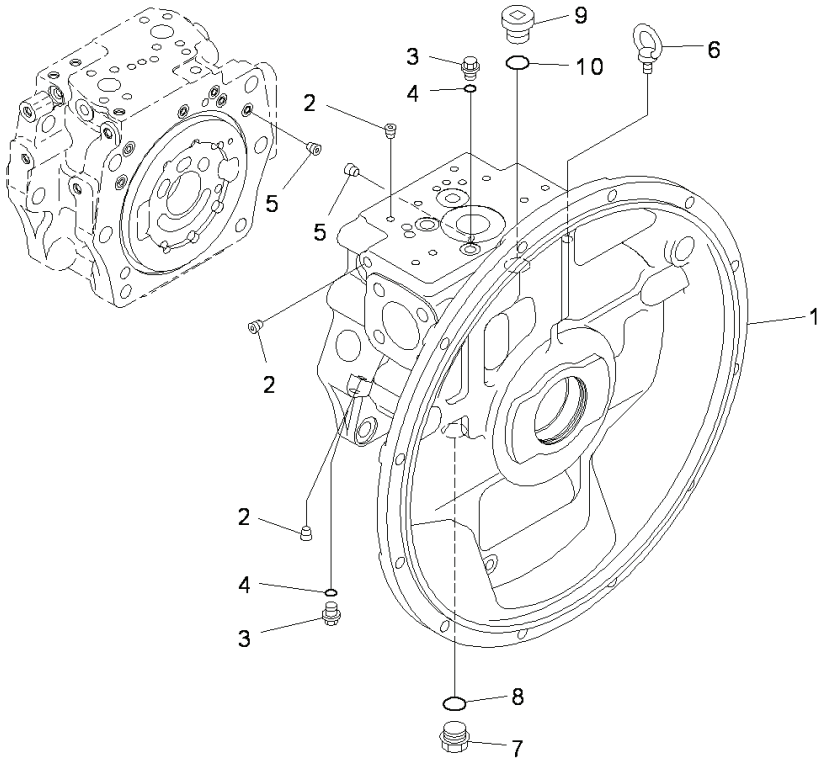

Index	Code	Part Number	Descreption	Qty	Serial Number
		708-2G-00700	Pump Assembly	1	Y300001-
		708-2G-01070	• Pump Subassembly	1	Y300001-
	C2	708-2G-04240	• • Case Assembly	1	Y300001-
1	C1		• • • Case	1	Y300001-
2	C1		• • • Plug	33	Y300001-
3		708-8E-16150	• • Plug	2	Y300001-
4		07002-61023	• • O-ring	2	Y300001-
5		708-1L-29340	• • Orifice	2	Y300001-
6		04530-01222	• • Bolt, Eye	1	Y300001-
7		07044-12412	• • Plug	1	Y300001-
8		07002-62434	• • O-ring	1	Y300001-
9		07040-12414	• • Plug	1	Y300001-
10		07002-62434	• • O-ring	1	Y300001-

FIG. H0210-002002 Main Piston Pump, Inner Parts (2/11)

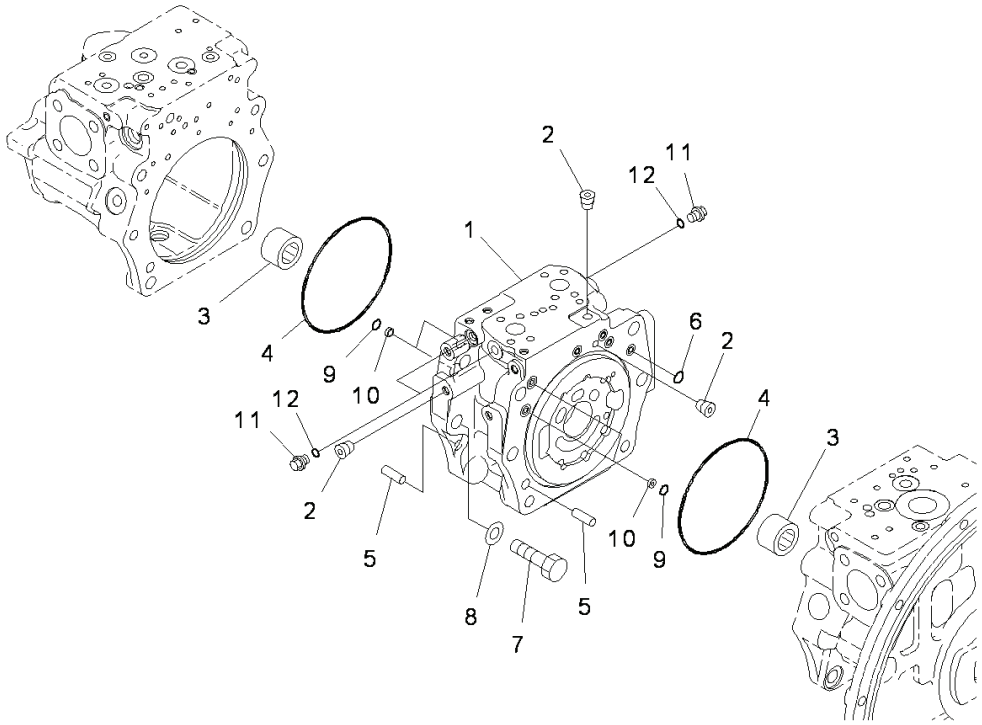

Index	Code	Part Number	Descreption	Qty	Serial Number
		708-2G-00700	Pump Assembly	1	Y300001-
		708-2G-01070	• Pump Subassembly	1	Y300001-
	C2	708-2G-04430	• • Cap Assembly	1	Y300001-
1	C1		• • • Cap	1	Y300001-
2	C1		• • • Plug	18	Y300001-
3	C2	708-2G-12151	• • Bearing	2	Y300001-
4	C2	07000-A5185	• • O-ring	2	Y300001-
5	C2	04020-01434	• • Pin, Dowel	2	Y300001-
6	C2	07000-B2012	• • O-ring	7	Y300001-
7	C2	01010-61655	• • Bolt	12	Y300001-
8	C2	01643-51645	• • Washer	12	Y300001-
9	C2	07000-B2014	• • O-ring	4	Y300001-
10	C2	708-2L-25480	• • Filter	4	Y300001-
11		708-8E-16150	• • Plug	3	Y300001-
12		07002-61023	• • O-ring	3	Y300001-

FIG. H0210-002003 Main Piston Pump, Inner Parts (3/11)

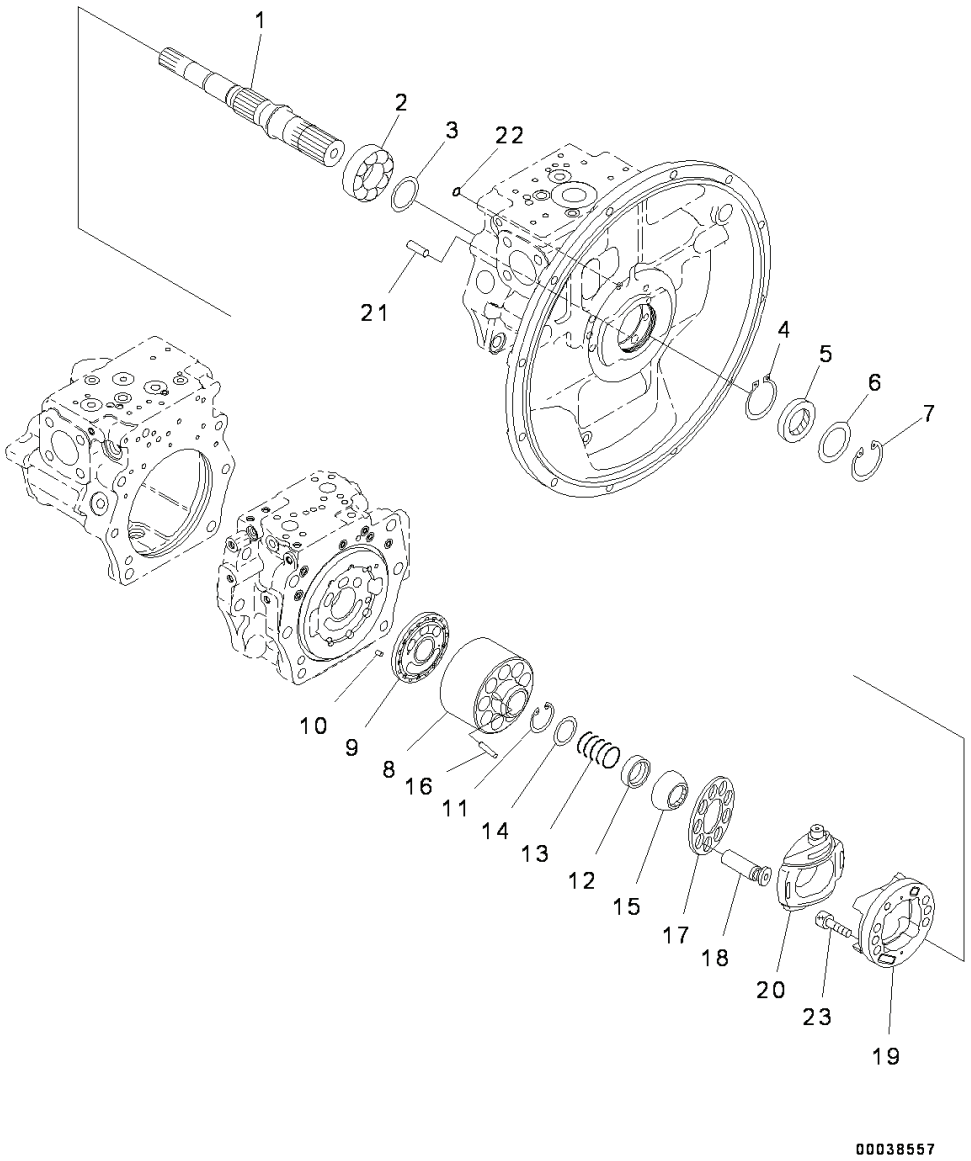

Index	Code	Part Number	Descreption	Qty	Serial Number
		708-2G-00700	Pump Assembly	1	Y300001-
		708-2G-01070	• Pump Subassembly	1	Y300001-
1	C2	708-2G-12180	• • Shaft	1	Y300001-
2	C2	708-2G-12251	• • Bearing	1	Y300001-
3	C2	708-2G-05010	• • Washer Kit	1	Y300001-
	C1		• • • Washer, T=3.0mm	1	Y300001-
	C1		• • • Washer, T=3.1mm	1	Y300001-
	C1		• • • Washer, T=3.2mm	1	Y300001-
4	C2	708-1F-12270	• • Ring, Snap	1	Y300001-
5		708-2G-12220	• • Seal, Oil	1	Y300001-
6		708-8H-32160	• • Spacer	1	Y300001-
7		04065-07825	• • Ring, Snap	1	Y300001-
	C2	708-2G-04260	• • Cylinder Block Assembly	1	Y300001-
8	C1		• • • Block	1	Y300001-
9	C1		• • • Plate, (VALVE)	1	Y300001-
10	C2	708-18-13230	• • Pin	1	Y300001-
11	C2	04065-05520	• • Ring, Snap, for Hole Side	1	Y300001-
12	C2	708-2G-13131	• • Seat	1	Y300001-
13	C2	708-2G-13152	• • Spring	1	Y300001-
14	C2	708-2G-13141	• • Seat	1	Y300001-
15	C2	708-2G-13510	• • Guide	1	Y300001-
16	C2	708-2H-23360	• • Pin	3	Y300001-
17	C2	708-2G-13341	• • Retainer	1	Y300001-
18	C2	708-2G-13370	• • Piston Subassembly	9	Y300001-
	C2	708-2G-04290	• • Cradle Subassembly	1	Y300001-
19	C1		• • • Cradle	1	Y300001-
20	C1		• • • Cam, (ROCKER)	1	Y300001-
21	C2	04020-01434	• • Pin, Dowel	1	Y300001-
22	C2	07000-B1009	• • O-ring	1	Y300001-
23	C2	01252-61230	• • Bolt	6	Y300001-

PC300-8 (FEN01263-00)

FIG. H0210-002004 Main Piston Pump, Inner Parts (4/11)

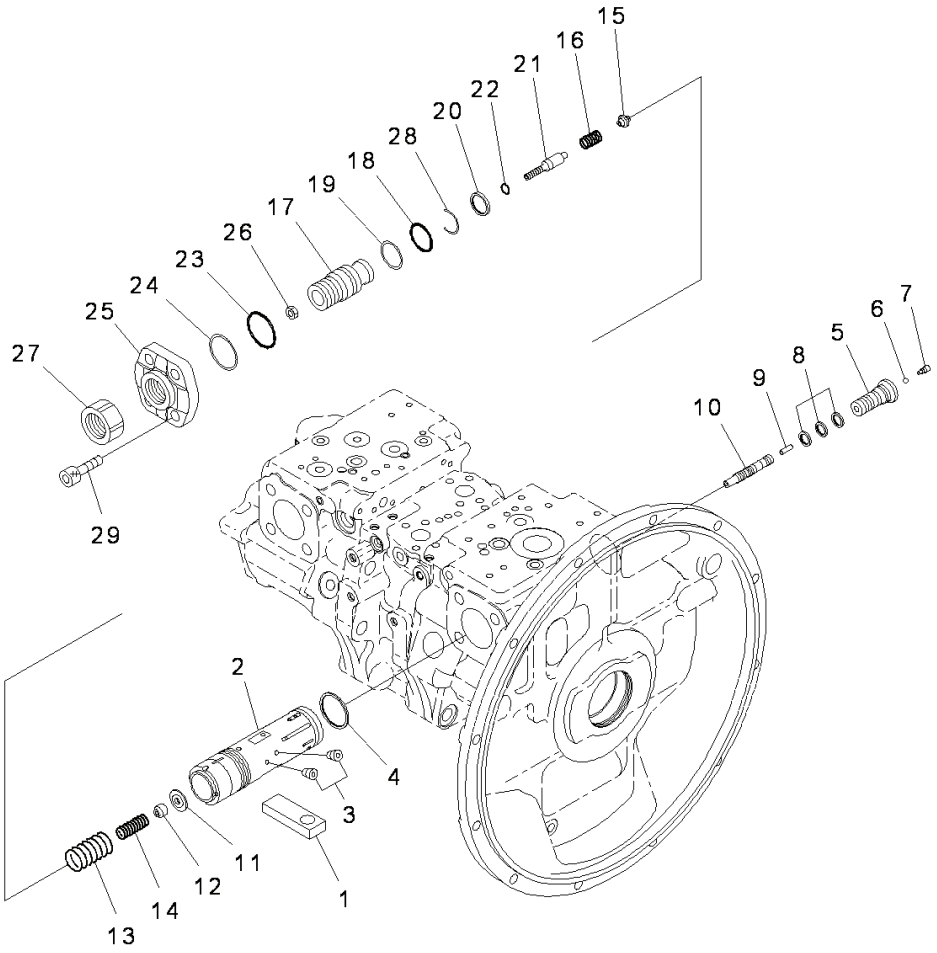

Index	Code	Part Number	Descreption	Qty	Serial Number
		708-2G-00700	Pump Assembly	1	Y300001-
		708-2G-01070	• Pump Subassembly	1	Y300001-
1	C2	708-2G-14120	• • Slider	1	Y300001-
	C2	708-2G-03580	• • Valve Assembly	1	Y300001-
	C2	708-2G-03590	• • • Piston Assembly	1	Y300001-
2	C1		• • • • Piston	1	Y300001-
3	C1		• • • • Screw	8	Y300001-
4	C2	708-2G-15320	• • • Seal	1	Y300001-
5	C2	708-2G-15221	• • • Plug	1	Y300001-
6	C2	708-2L-35760	• • • Ball	1	Y300001-
7	C2	708-2L-35770	• • • Plug	1	Y300001-
8	C2	708-2L-35690	• • • Seal	3	Y300001-
9	C2	708-2L-35170	• • • Pin	1	Y300001-
10	C2	708-2G-15211	• • • Spool	1	Y300001-
11	C2	708-2G-15290	• • • Retainer	1	Y300001-
12	C2	708-2G-15140	• • • Seat	1	Y300001-
13	C2	708-2G-15270	• • • Spring	1	Y300001-
14	C2	708-2G-15280	• • • Spring	1	Y300001-
15	C2	708-2G-15151	• • • Seat	1	Y300001-
16	C2	708-2G-15250	• • • Spring	1	Y300001-
17	C2	708-2G-14340	• • • Screw	1	Y300001-
18	C2	07000-B3038	• • • O-ring	1	Y300001-
19	C2	708-2G-15230	• • • Ring, Back-up	1	Y300001-
20	C2	708-2G-15260	• • • Seal	1	Y300001-
21	C2	708-2G-15240	• • • Plug	1	Y300001-
22	C2	07000-B2012	• • • O-ring	1	Y300001-
23	C2	07000-B2050	• • • O-ring	1	Y300001-
24	C2	708-2G-15310	• • • Ring	1	Y300001-
25	C2	708-2G-14190	• • • Cover	1	Y300001-
26	C2	01580-10806	• • • Nut	1	Y300001-
27	C2	708-2L-35290	• • • Nut	1	Y300001-
28	C2	708-2G-15330	• • • Ring, Wear	1	Y300001-
29	C2	01252-61645	• • Bolt	4	Y300001-

FIG. H0210-002005 Main Piston Pump, Inner Parts (5/11)

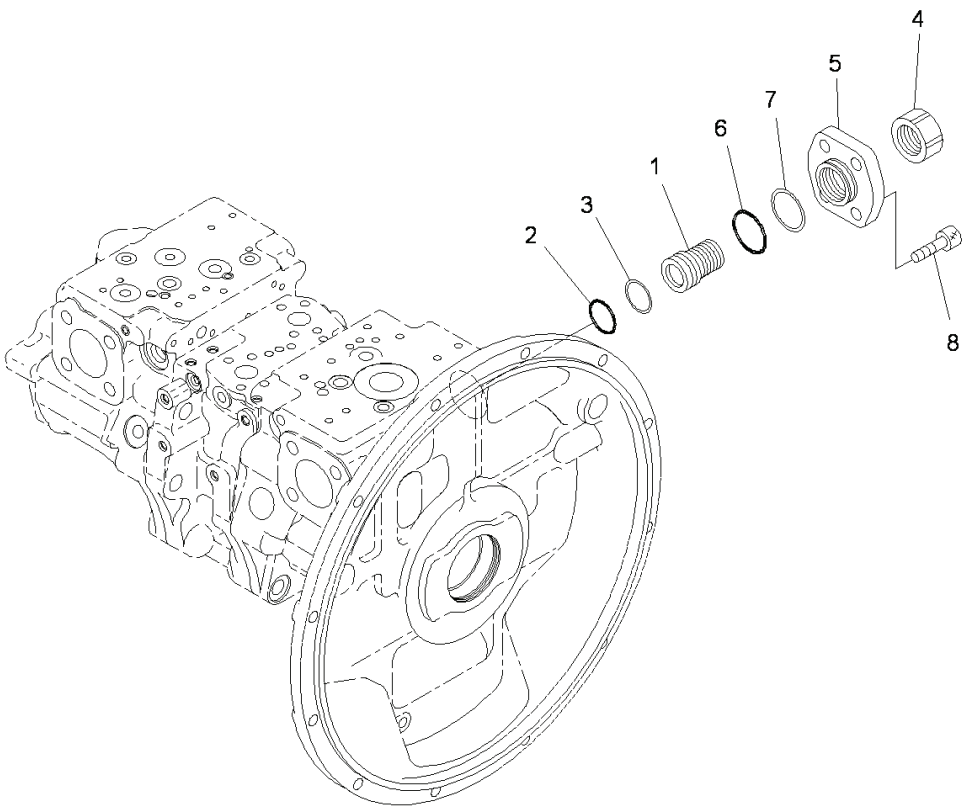

Index	Code	Part Number	Descreption	Qty	Serial Number
		708-2G-00700	Pump Assembly	1	Y300001-
		708-2G-01070	• Pump Subassembly	1	Y300001-
	C2	708-2G-03480	• • Cover Assembly	1	Y300001-
1	C2	708-2G-14310	• • • Screw	1	Y300001-
2	C2	07000-B3038	• • • O-ring	1	Y300001-
3	C2	708-2G-15230	• • • Ring, Back-up	1	Y300001-
4	C2	708-2L-35290	• • • Nut	1	Y300001-
5	C2	708-2G-14170	• • • Cover	1	Y300001-
6	C2	07000-B2050	• • • O-ring	1	Y300001-
7	C2	708-2G-15310	• • • Ring	1	Y300001-
8	C2	01252-61645	• • Bolt	4	Y300001-

PC300-8 (FEN01263-00)

FIG. H0210-002006 Main Piston Pump, Inner Parts (6/11)

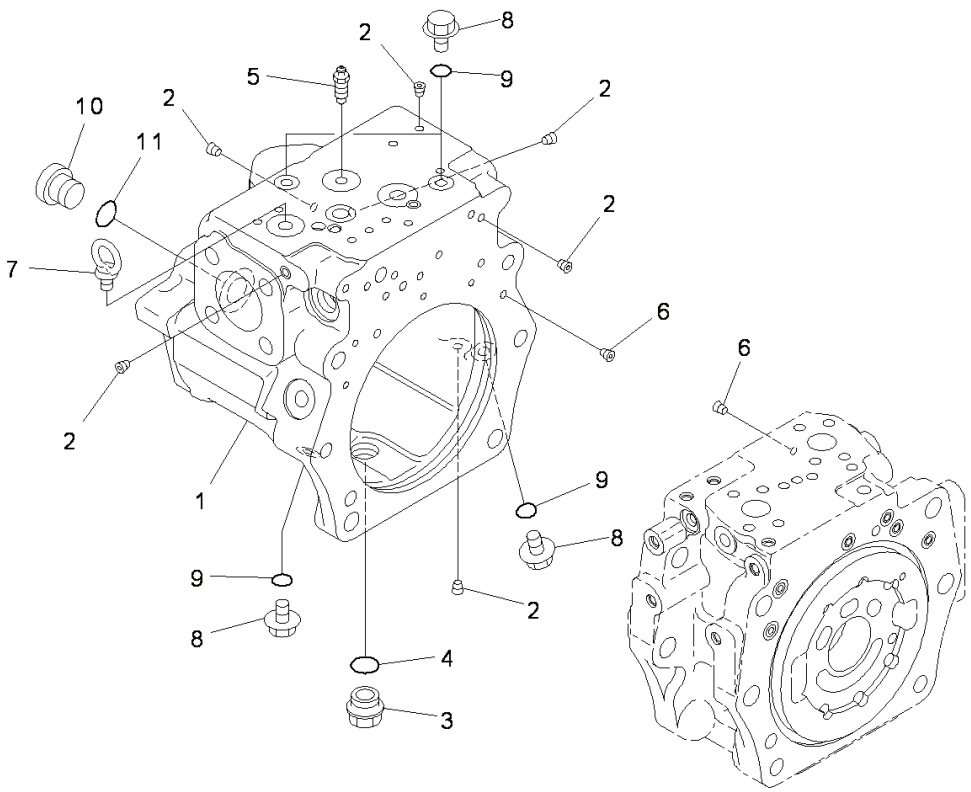

Index	Code	Part Number	Descreption	Qty	Serial Number
		708-2G-00700	Pump Assembly	1	Y300001-
		708-2G-01070	• Pump Subassembly	1	Y300001-
	C2	708-2G-04250	• • Case Assembly, (REAR)	1	Y300001-
1	C1		• • • Case, (REAR)	1	Y300001-
2	C1		• • • Plug	36	Y300001-
3		07044-12412	• • Plug	1	Y300001-
4		07002-62434	• • O-ring	1	Y300001-
5		20B-27-11210	• • Bleeder	1	Y300001-
6		708-1L-29340	• • Orifice	2	Y300001-
7		04530-01222	• • Bolt, Eye	1	Y300001-
8		708-8E-16150	• • Plug	4	Y300001-
9		07002-61023	• • O-ring	4	Y300001-
10		07040-12414	• • Plug	1	Y300001-
11		07002-62434	• • O-ring	1	Y300001-

FIG. H0210-002007 Main Piston Pump, Inner Parts (7/11)

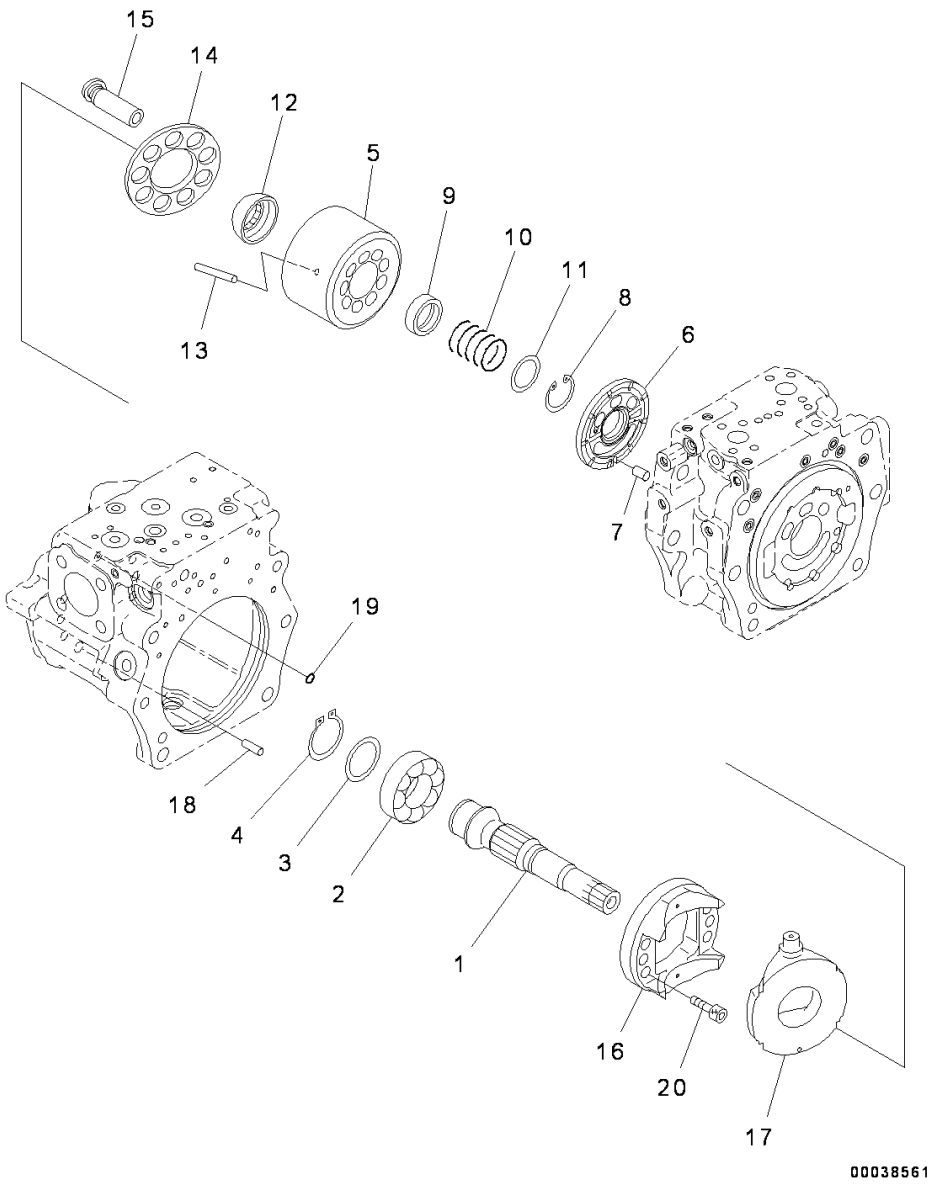

Index	Code	Part Number	Descreption	Qty	Serial Number
		708-2G-00700	Pump Assembly	1	Y300001-
		708-2G-01070	• Pump Subassembly	1	Y300001-
1	C2	708-2G-12190	• • Shaft	1	Y300001-
2	C2	708-2G-12251	• • Bearing	1	Y300001-
3	C2	708-2G-05010	• • Washer Kit	1	Y300001-
	C1		• • • Washer, T=3.0mm	1	Y300001-
	C1		• • • Washer, T=3.1mm	1	Y300001-
	C1		• • • Washer, T=3.2mm	1	Y300001-
4	C2	708-1F-12270	• • Ring, Snap	1	Y300001-
	C2	708-2G-04270	• • Block Assembly, (REAR)	1	Y300001-
5	C1		• • • Block	1	Y300001-
6	C1		• • • Plate, (VALVE)	1	Y300001-
7	C2	708-18-13230	• • Pin	1	Y300001-
8	C2	04065-05520	• • Ring, Snap, for Hole Side	1	Y300001-
9	C2	708-2G-13131	• • Seat	1	Y300001-
10	C2	708-2G-13152	• • Spring	1	Y300001-
11	C2	708-2G-13141	• • Seat	1	Y300001-
12	C2	708-2G-13510	• • Guide	1	Y300001-
13	C2	708-2H-23360	• • Pin	3	Y300001-
14	C2	708-2G-13341	• • Retainer	1	Y300001-
15	C2	708-2G-13370	• • Piston Subassembly	9	Y300001-
	C2	708-2G-04290	• • Cradle Subassembly	1	Y300001-
16	C1		• • • Cradle	1	Y300001-
17	C1		• • • Cam, (ROCKER)	1	Y300001-
18	C2	04020-01434	• • Pin, Dowel	1	Y300001-
19	C2	07000-B1009	• • O-ring	1	Y300001-
20	C2	01252-61230	• • Bolt	6	Y300001-

PC300-8 (FEN01263-00)

FIG. H0210-002008 Main Piston Pump, Inner Parts (8/11)

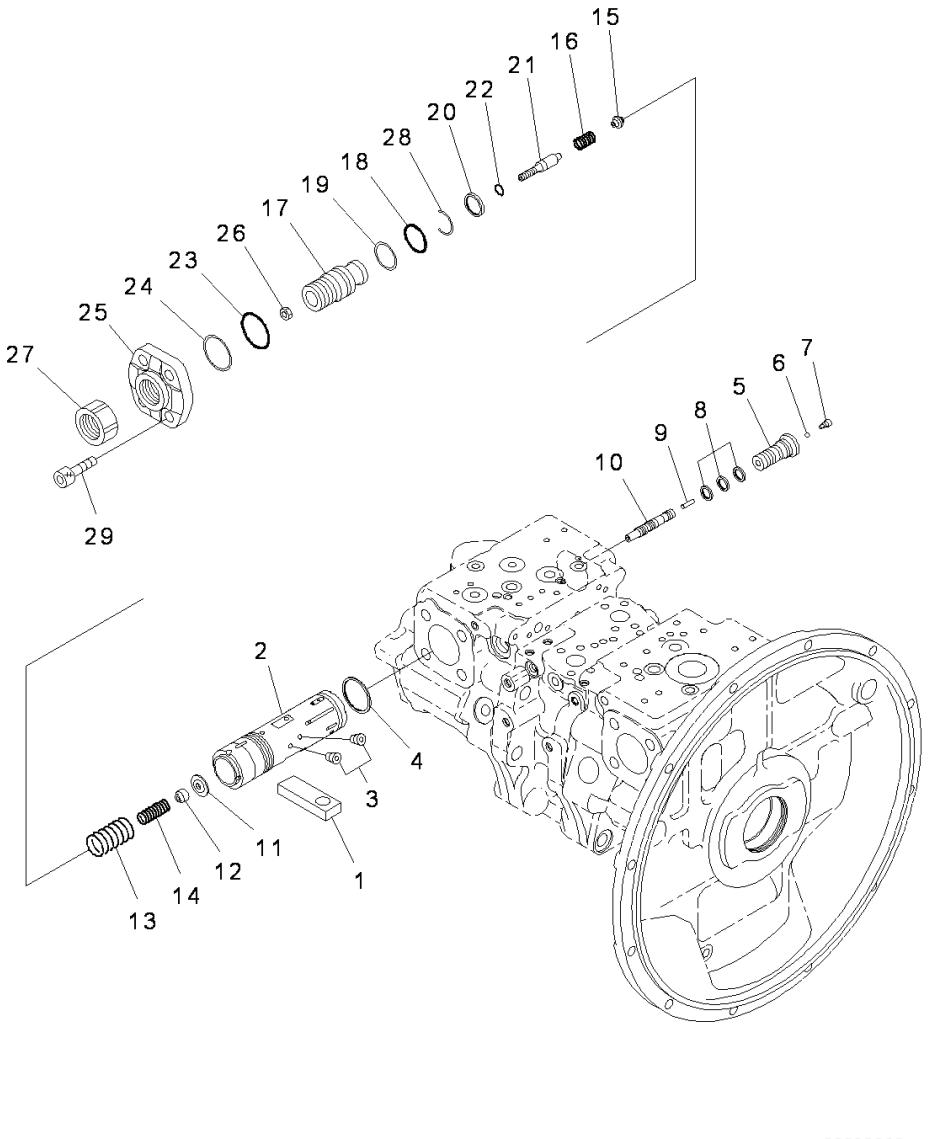

Index	Code	Part Number	Descreption	Qty	Serial Number
		708-2G-00700	Pump Assembly	1	Y300001-
		708-2G-01070	• Pump Subassembly	1	Y300001-
1	C2	708-2G-14120	• • Slider	1	Y300001-
	C2	708-2G-03580	• • Valve Assembly, (PC)	1	Y300001-
	C2	708-2G-03590	• • • Piston Assembly	1	Y300001-
2	C1		• • • • Piston	1	Y300001-
3	C1		• • • • Screw	8	Y300001-
4	C2	708-2G-15320	• • • Seal	1	Y300001-
5	C2	708-2G-15221	• • • Plug	1	Y300001-
6	C2	708-2L-35760	• • • Ball	1	Y300001-
7	C2	708-2L-35770	• • • Plug	1	Y300001-
8	C2	708-2L-35690	• • • Seal	3	Y300001-
9	C2	708-2L-35170	• • • Pin	1	Y300001-
10	C2	708-2G-15211	• • • Spool	1	Y300001-
11	C2	708-2G-15290	• • • Retainer	1	Y300001-
12	C2	708-2G-15140	• • • Seat	1	Y300001-
13	C2	708-2G-15270	• • • Spring	1	Y300001-
14	C2	708-2G-15280	• • • Spring	1	Y300001-
15	C2	708-2G-15151	• • • Seat	1	Y300001-
16	C2	708-2G-15250	• • • Spring	1	Y300001-
17	C2	708-2G-14340	• • • Screw	1	Y300001-
18	C2	07000-B3038	• • • O-ring	1	Y300001-
19	C2	708-2G-15230	• • • Ring, Back-up	1	Y300001-
20	C2	708-2G-15260	• • • Seal	1	Y300001-
21	C2	708-2G-15240	• • • Plug	1	Y300001-
22	C2	07000-B2012	• • • O-ring	1	Y300001-
23	C2	07000-B2050	• • • O-ring	1	Y300001-
24	C2	708-2G-15310	• • • Ring	1	Y300001-
25	C2	708-2G-14190	• • • Cover	1	Y300001-
26	C2	01580-10806	• • • Nut	1	Y300001-
27	C2	708-2L-35290	• • • Nut	1	Y300001-
28	C2	708-2G-15330	• • • Ring, Wear	1	Y300001-
29	C2	01252-61645	• • Bolt	4	Y300001-

PC300-8 (FEN01263-00)

FIG. H0210-002009 Main Piston Pump, Inner Parts (9/11)

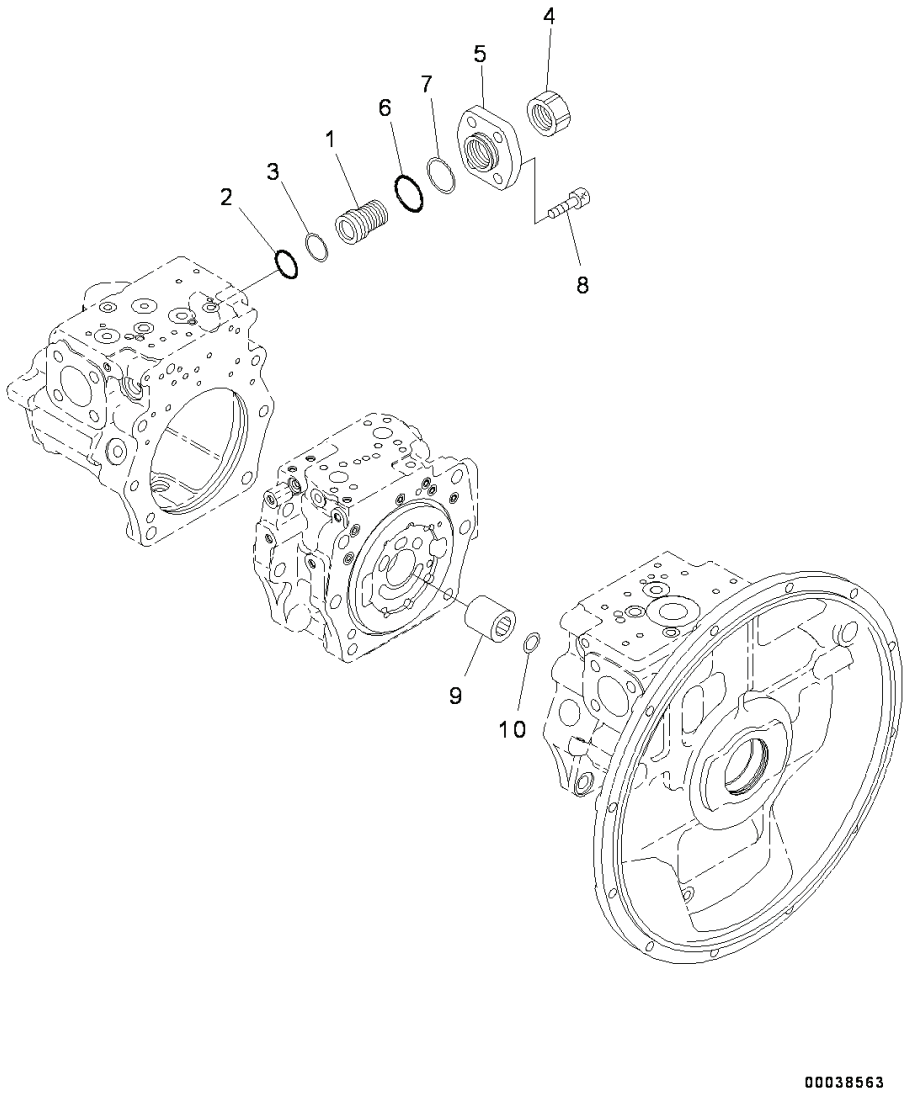

Index	Code	Part Number	Descreption	Qty	Serial Number
		708-2G-00700	Pump Assembly	1	Y300001-
		708-2G-01070	• Pump Subassembly	1	Y300001-
	C2	708-2G-03480	• • Cover Assembly	1	Y300001-
1	C2	708-2G-14310	• • • Screw	1	Y300001-
2	C2	07000-B3038	• • • O-ring	1	Y300001-
3	C2	708-2G-15230	• • • Ring, Back-up	1	Y300001-
4	C2	708-2L-35290	• • • Nut	1	Y300001-
5	C2	708-2G-14170	• • • Cover	1	Y300001-
6	C2	07000-B2050	• • • O-ring	1	Y300001-
7	C2	708-2G-15310	• • • Ring	1	Y300001-
8	C2	01252-61645	• • Bolt	4	Y300001-
9	C2	708-2G-12340	• • Coupling	1	Y300001-
10	C2	708-2F-12420	• • Ring	1	Y300001-

FIG. H0210-002010 Main Piston Pump, Inner Parts (10/11)

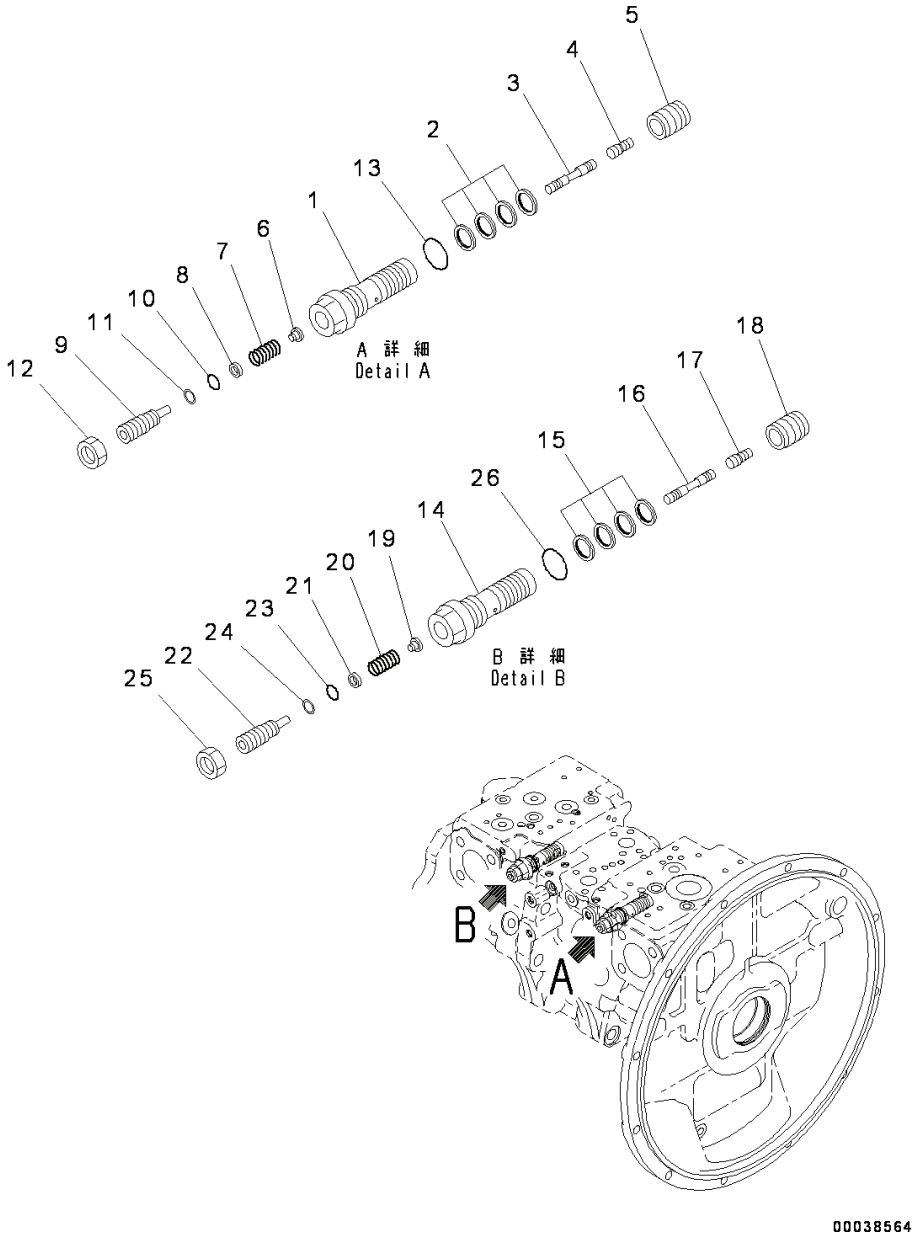

Index	Code	Part Number	Descreption	Qty	Serial Number
		708-2G-00700	Pump Assembly	1	Y300001-
		708-2G-03710	• Valve Assembly, (LS)	1	Y300001-
1	C2	708-2L-35311	• • Sleeve	1	Y300001-
2		708-2L-24680	• • Seal	4	Y300001-
3	C2	708-2G-15412	• • Spool	1	Y300001-
4	C2	708-2L-28540	• • Piston	1	Y300001-
5	C2	708-2L-35360	• • Sleeve	1	Y300001-
6	C2	708-2L-35331	• • Seat	1	Y300001-
7	C2	708-2L-35410	• • Spring	1	Y300001-
8	C2	708-2L-35341	• • Seat	1	Y300001-
9	C2	708-2L-35351	• • Plug	1	Y300001-
10	C2	07000-B1009	• • O-ring	1	Y300001-
11	C2	07001-01009	• • Ring, Back-up	1	Y300001-
12		01583-11408	• • Nut	1	Y300001-
13		07002-62434	• • O-ring	1	Y300001-
		708-2G-03910	• Valve Assembly, (LS)	1	Y300001-
14	C2	708-2L-35311	• • Sleeve	1	Y300001-
15		708-2L-24680	• • Seal	4	Y300001-
16	C2	708-2G-15412	• • Spool	1	Y300001-
17	C2	708-2L-28540	• • Piston	1	Y300001-
18	C2	708-2L-35360	• • Sleeve	1	Y300001-
19	C2	708-2G-15420	• • Seat	1	Y300001-
20	C2	708-2L-35410	• • Spring	1	Y300001-
21	C2	708-2L-35341	• • Seat	1	Y300001-
22	C2	708-2L-35351	• • Plug	1	Y300001-
23	C2	07000-B1009	• • O-ring	1	Y300001-
24	C2	07001-01009	• • Ring, Back-up	1	Y300001-
25		01583-11408	• • Nut	1	Y300001-
26		07002-62434	• • O-ring	1	Y300001-

FIG. H0210-002011 Main Piston Pump, Inner Parts (11/11)

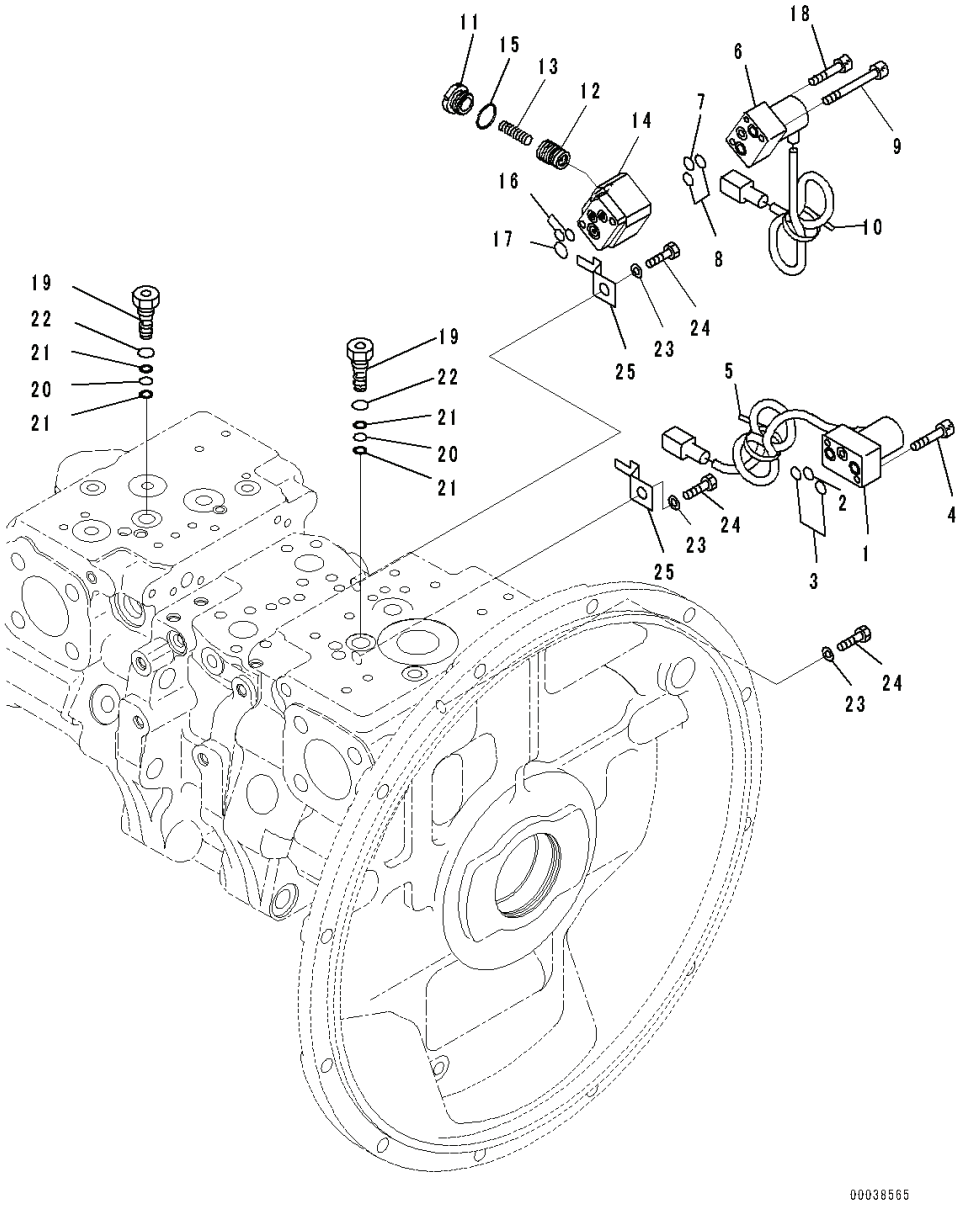

Index	Code	Part Number	Descreption	Qty	Serial Number
		708-2G-00700	Pump Assembly	1	Y300001-
1		702-21-57600	• Valve, Pilot	1	Y300001-
2		723-11-19960	• • O-ring	1	Y300001-
3		702-21-54910	• • O-ring	2	Y300001-
4		01252-60635	• Bolt	2	Y300001-
5		20Y-62-22790	• Band, Red	1	Y300001-
6		702-21-57500	• Valve, Pilot	1	Y300001-
7		723-11-19960	• • O-ring	1	Y300001-
8		702-21-54910	• • O-ring	2	Y300001-
9		702-16-55260	• Bolt	2	Y300001-
10		20Y-62-22830	• Band, White	1	Y300001-
		702-21-56600	• Valve Assembly	1	Y300001-
11		702-21-55920	• • Plug	1	Y300001-
12		702-21-55930	• • Piston	1	Y300001-
13		702-21-56610	• • Spring	1	Y300001-
14		702-21-55951	• • Block	1	Y300001-
15		07002-12034	• • O-ring	1	Y300001-
16		07000-11008	• O-ring	2	Y300001-
17		722-12-18240	• O-ring	1	Y300001-
18		01252-60530	• Bolt, Hexagon Socket Head	1	Y300001-
19		708-2G-15680	• Plug	2	Y300001-
20		07000-B1008	• O-ring	2	Y300001-
21		07001-01008	• Ring	4	Y300001-
22		07002-61423	• O-ring	2	Y300001-
23		01643-51232	• Washer	3	Y300001-
24		01010-81220	• Bolt	3	Y300001-
25		08193-21012	• Clip	2	Y300001-

PC300-8 (FEN01263-00)

FIG. H0311-001001 Suction Circuit

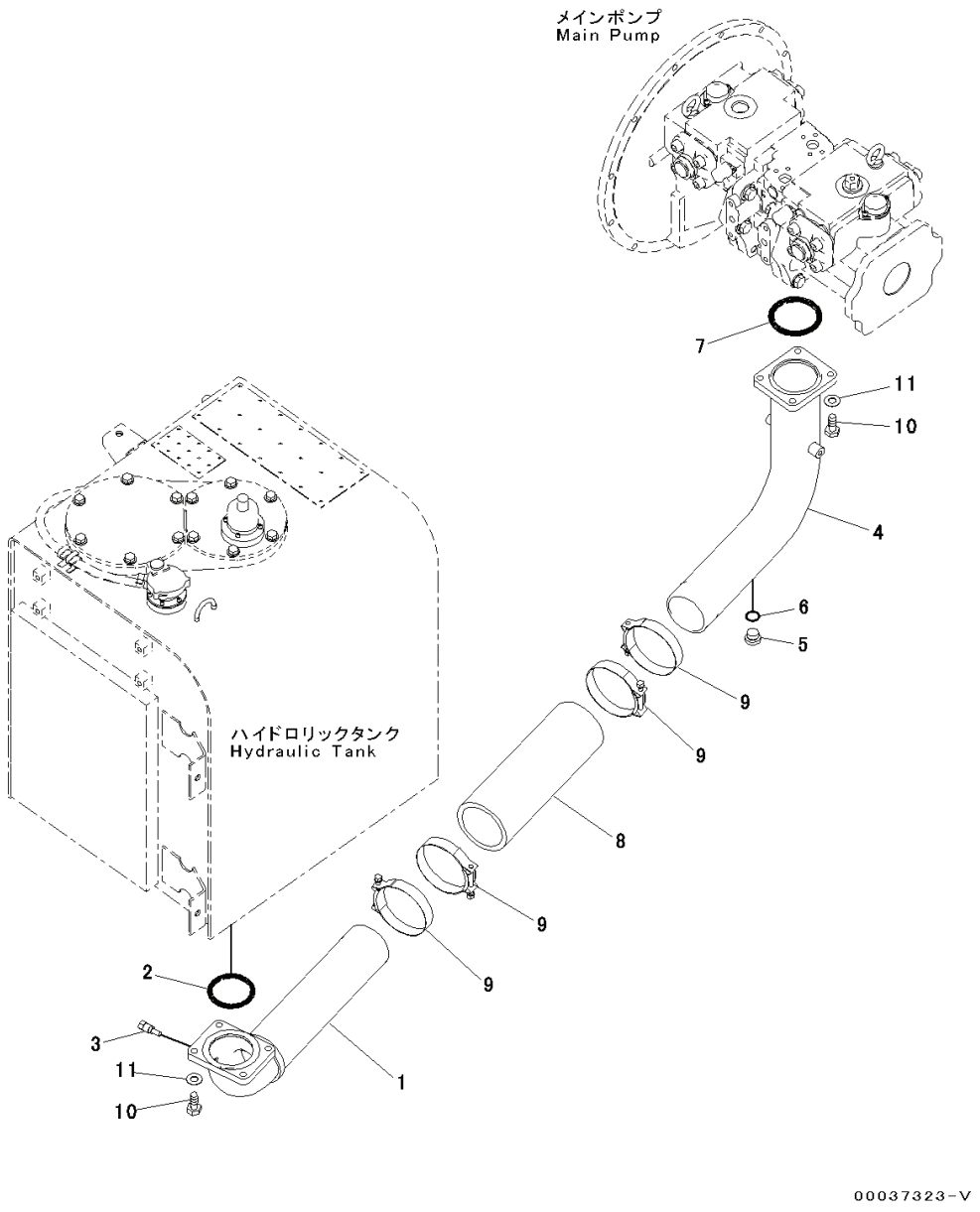

Index	Code	Part Number	Descreption	Qty	Serial Number
1		207-62-71141	Tube	1	Y300001-
2		07000-12105	O-ring	1	Y300001-
3		7861-93-3320	Sensor	1	Y300001-
4		207-62-74640	Tube	1	Y300001-
5		07040-12414	Plug	1	Y300001-
6		07002-12434	O-ring	1	Y300001-
7		07000-12105	O-ring	1	Y300001-
8		07260-09936	Hose	1	Y300001-
9		208-62-73910	Clamp	4	Y300001-
10		01010-81240	Bolt	8	Y300001-
11		01643-31232	Washer	8	Y300001-

PC300-8 (FEN01263-00)

FIG. H0312-001001 Delivery Circuit

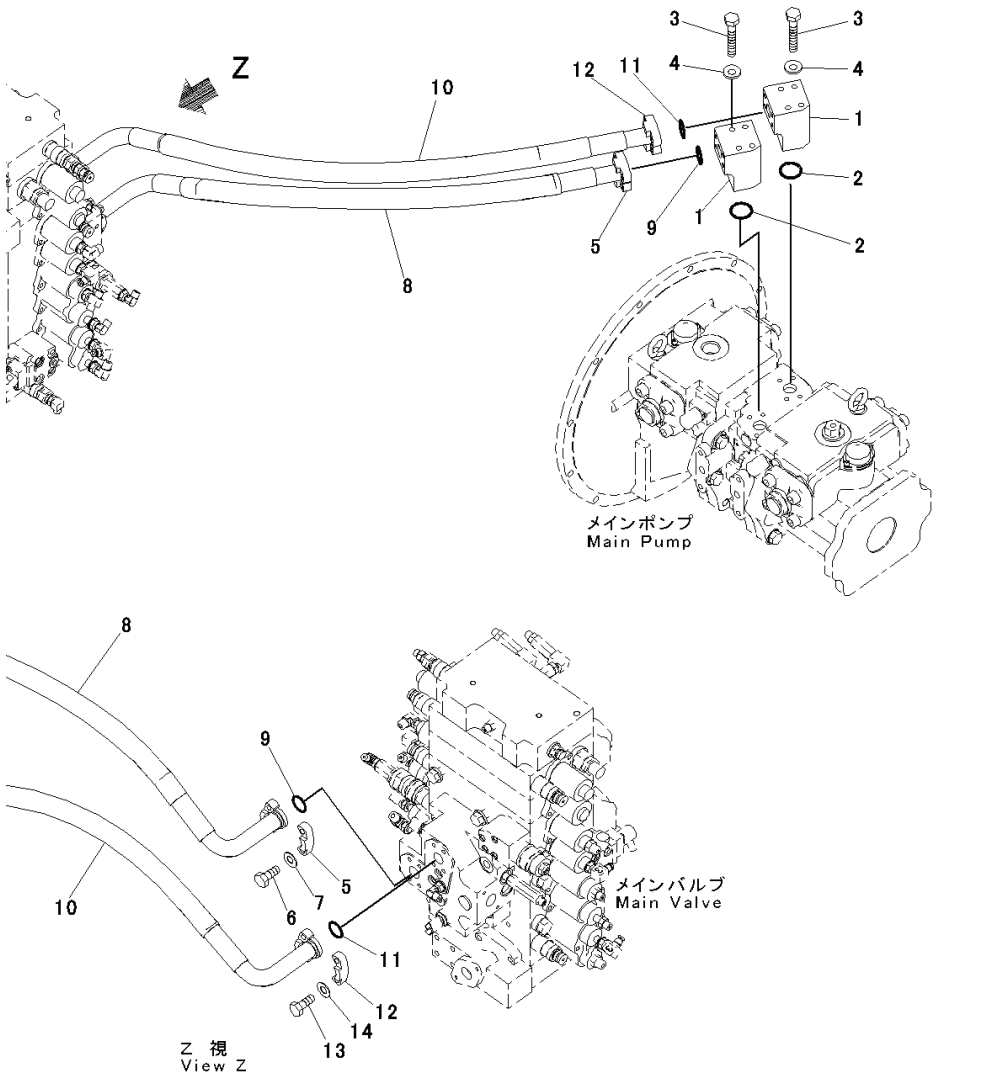

Index	Code	Part Number	Descreption	Qty	Serial Number
1		208-62-71820	Block	2	Y300001-
2		07000-13035	O-ring	2	Y300001-
3		01011-81020	Bolt	8	Y300001-
4		01643-31032	Washer	8	Y300001-
5		07371-31049	Flange, Split	4	Y300001-
6		07372-21035	Bolt	8	Y300001-
7		01643-51032	Washer	8	Y300001-
8		207-62-71750	Hose	1	Y300001-
9		07000-13032	O-ring	2	Y300001-
10		207-62-71380	Hose	1	Y300001-
11		07000-13032	O-ring	2	Y300001-
12		07371-31049	Flange, Split	4	Y300001-
13		07372-21035	Bolt	8	Y300001-
14		01643-51032	Washer	8	Y300001-

PC300-8 (FEN01263-00)

FIG. H0312-002001A Delivery Circuit, With In-line Filter

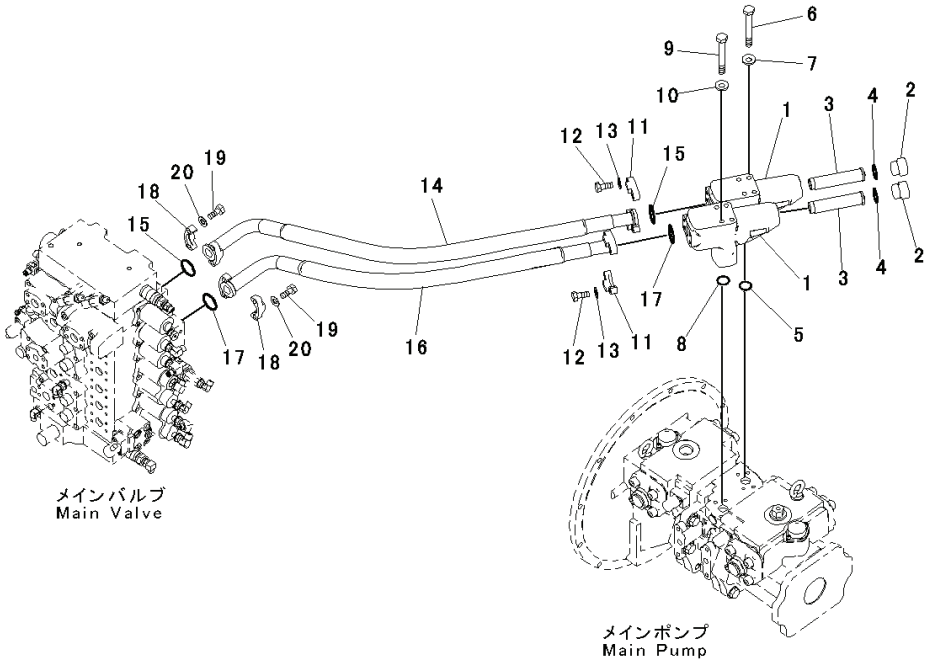

Index	Code	Part Number	Descreption	Qty	Serial Number
		208-62-71101	Filter Assembly	2	60018-
1		208-62-71810	• Case	1	Y300001-
2		20Y-60-22372	• Plug	1	60018-
3		207-60-61250	• Strainer	1	Y300001-
4		07002-13634	• O-ring	1	Y300001-
5		07000-13035	O-ring	1	Y300001-
6		01011-81070	Bolt	4	Y300001-
7		01643-31032	Washer	4	Y300001-
8		07000-13035	O-ring	1	Y300001-
9		01011-81070	Bolt	4	Y300001-
10		01643-31032	Washer	4	Y300001-
11		07371-31049	Flange, Split	4	Y300001-
12		07372-21035	Bolt	8	Y300001-
13		01643-51032	Washer	8	Y300001-
14		207-62-71750	Hose	1	Y300001-
15		07000-13032	O-ring	2	Y300001-
16		207-62-71880	Hose	1	Y300001-
17		07000-13032	O-ring	2	Y300001-
18		07371-31049	Flange, Split	4	Y300001-
19		07372-21035	Bolt	8	Y300001-
20		01643-51032	Washer	8	Y300001-

PC300-8 (FEN01263-00)

FIG. H0320-001001 Oil Cooler Circuit

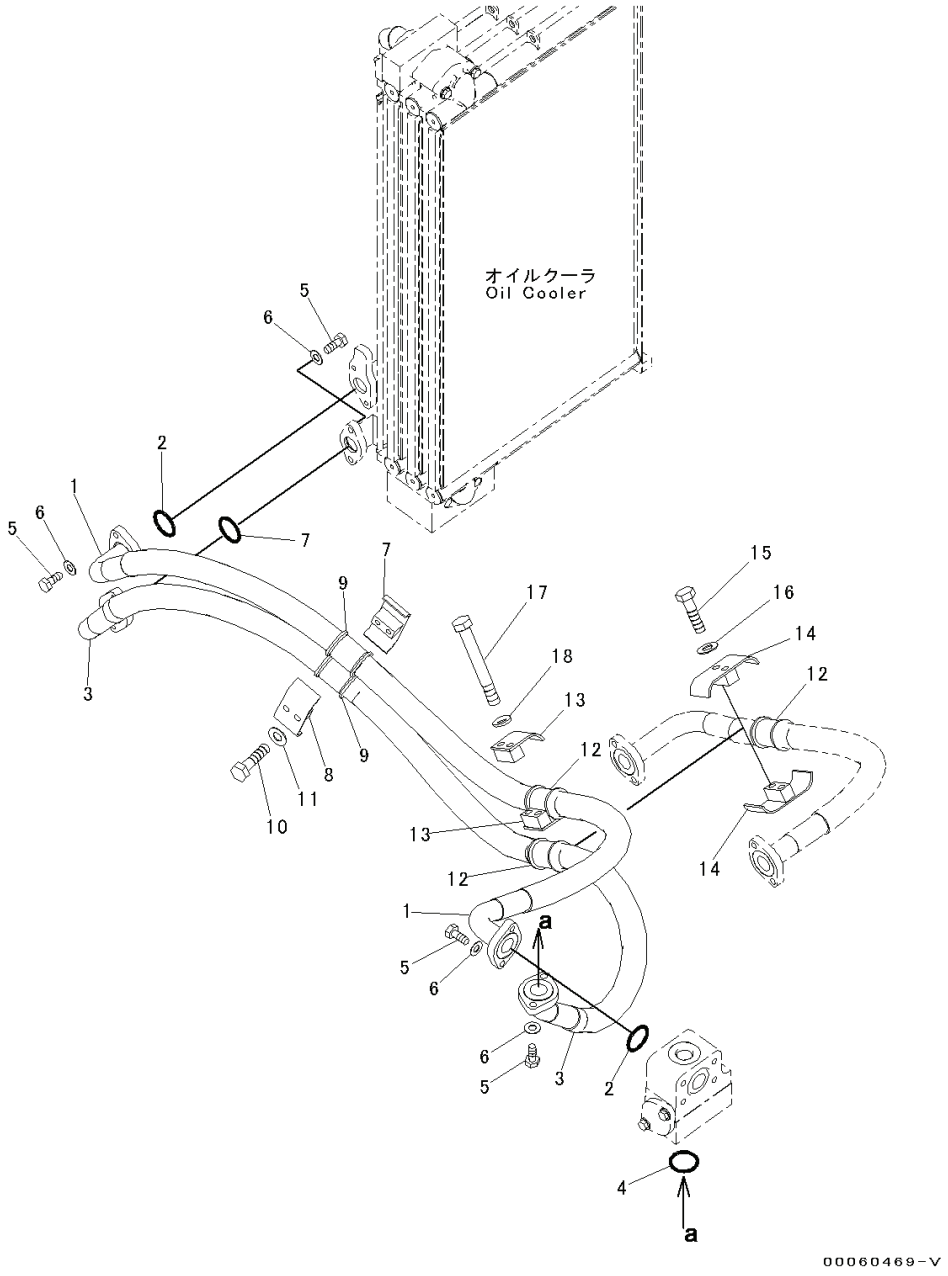

Index	Code	Part Number	Descreption	Qty	Serial Number
1		207-62-74650	Hose	1	Y300001-
2		07000-13048	O-ring	2	Y300001-
3		207-62-74660	Hose	1	Y300001-
4		07000-13048	O-ring	2	Y300001-
5		01010-81240	Bolt	8	Y300001-
6		01643-31232	Washer	8	Y300001-
7		207-62-71490	Clamp	1	Y300001-
8		07094-31228	Clip	1	Y300001-
9		07095-01245	Cushion	2	Y300001-
10		01010-81270	Bolt	2	Y300001-
11		01643-31232	Washer	2	Y300001-
12		07095-01245	Cushion	3	Y300001-
13		07094-11228	Clamp	2	Y300001-
14		07094-31228	Clip	2	Y300001-
15		01010-81295	Bolt	2	Y300001-
16		01643-31232	Washer	2	Y300001-
17		01011-81265	Bolt	2	Y300001-
18		01643-31232	Washer	2	Y300001-

PC300-8 (FEN01263-00)

FIG. H0330-001001 Return Circuit

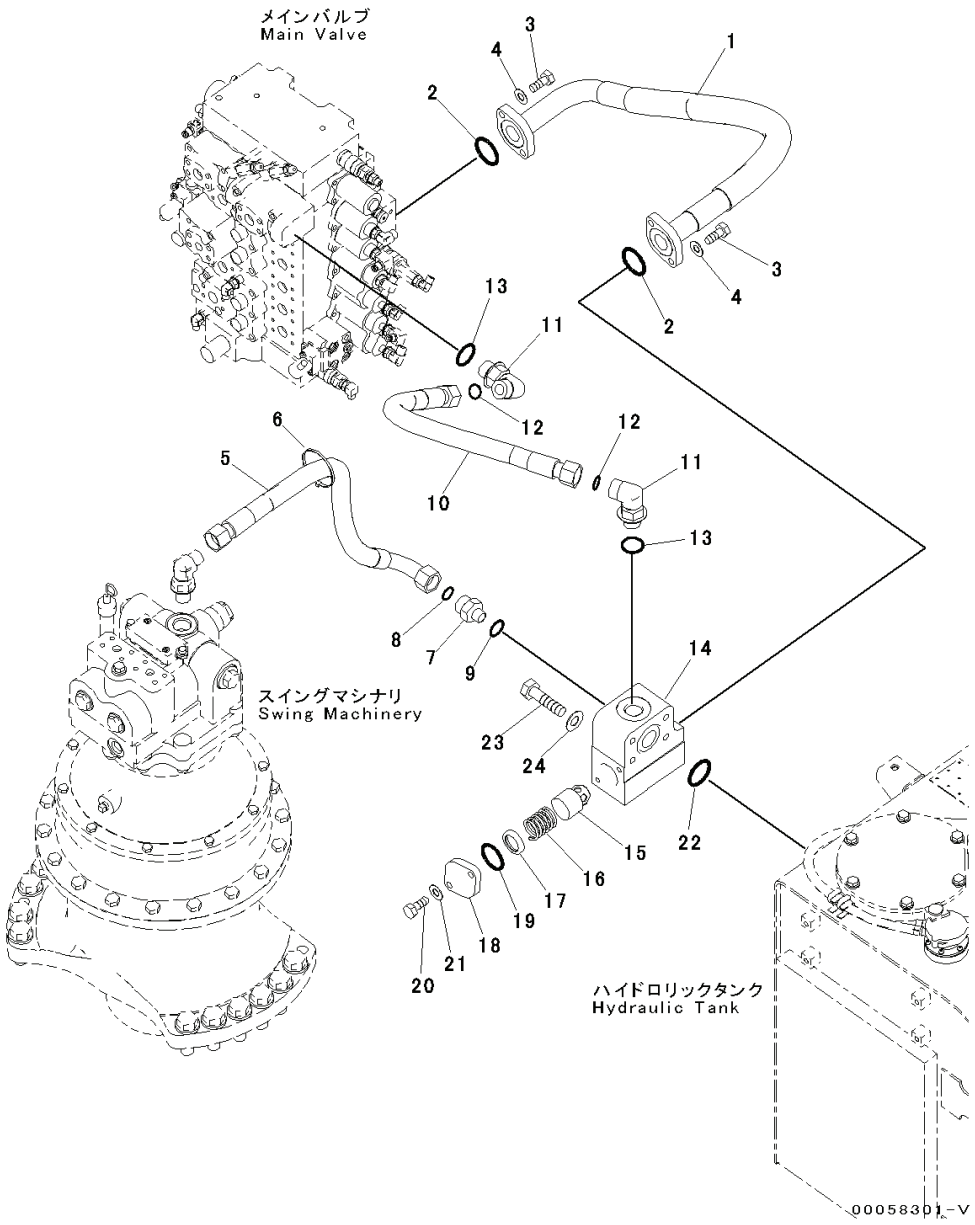

Index	Code	Part Number	Descreption	Qty	Serial Number
1		207-62-74670	Hose	1	Y300001-
2		07000-13048	O-ring	2	Y300001-
3		01010-81240	Bolt	4	Y300001-
4		01643-31232	Washer	4	Y300001-
5		207-62-74781	Hose	1	Y300001-
6		08034-20536	Band	1	Y300001-
7		20U-62-41810	Nipple	1	Y300001-
8		207-62-64740	O-ring	1	Y300001-
9		07002-12434	O-ring	1	Y300001-
10		207-62-74681	Hose	1	Y300001-
11		21W-62-42640	Elbow	2	Y300001-
12		207-62-64740	O-ring	2	Y300001-
13		07002-13334	O-ring	2	Y300001-
14		208-62-71410	Block	1	Y300001-
15		207-60-75160	Valve	1	Y300001-
16		706-76-71190	Spring	1	Y300001-
17		207-60-51170	Spacer	1	Y300001-
18		207-62-75250	Flange	1	Y300001-
19		07000-12060	O-ring	1	Y300001-
20		01010-81235	Bolt	2	Y300001-
21		01643-31232	Washer	2	Y300001-
22		07000-12060	O-ring	1	Y300001-
23		01010-81290	Bolt	4	Y300001-
24		01643-31232	Washer	4	Y300001-

PC300-8 (FEN01263-00)

FIG. H0330-002001A Return Circuit, For Additional Piping

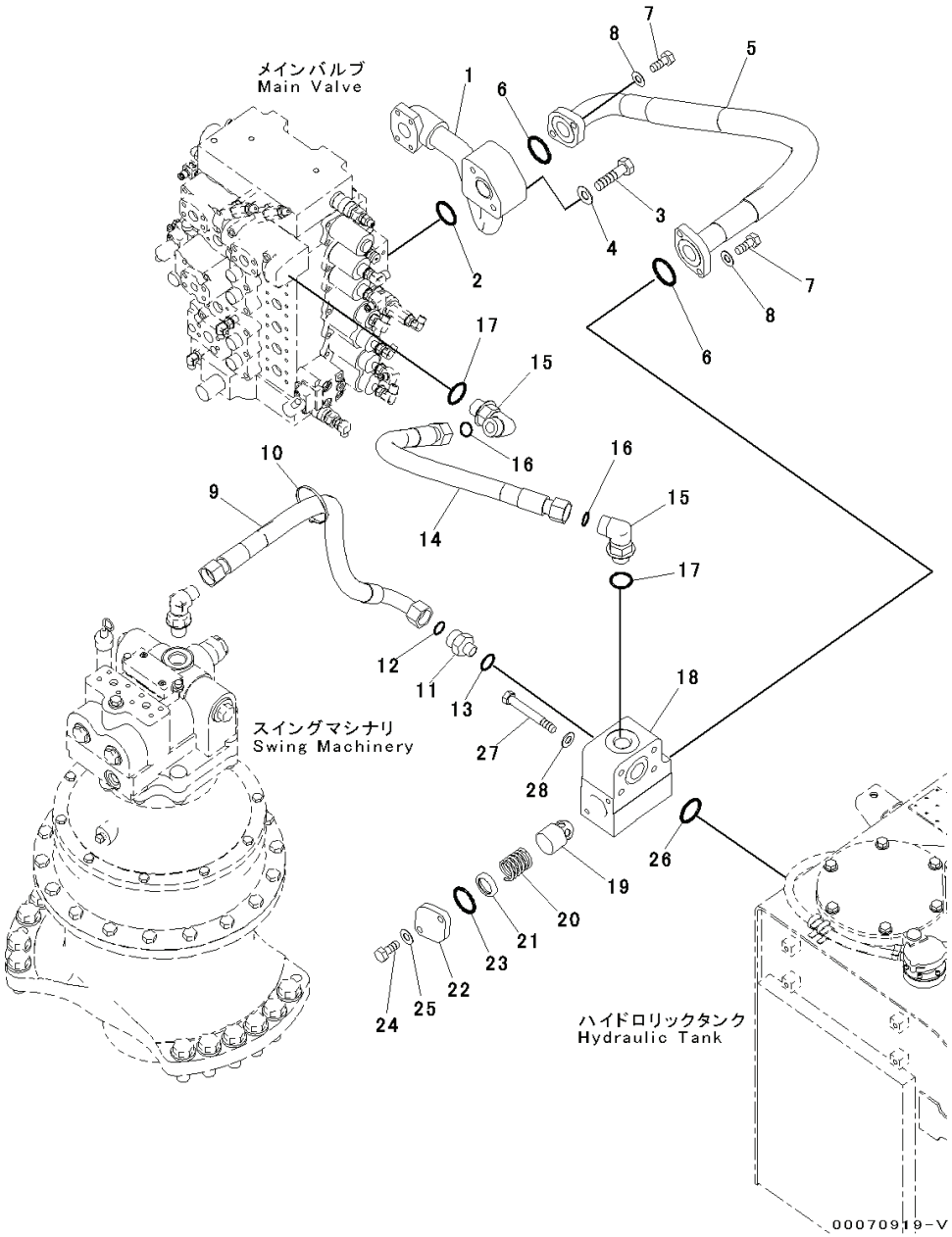

Index	Code	Part Number	Descreption	Qty	Serial Number
1		207-62-73211	Tube	1	Y300001-
2		07000-13045	O-ring	1	Y300001-
3		01010-81275	Bolt	2	Y300001-
4		01643-31232	Washer	2	Y300001-
5		207-62-74791	Hose	1	Y300001-
6		07000-13048	O-ring	2	Y300001-
7		01010-81240	Bolt	4	Y300001-
8		01643-31232	Washer	4	Y300001-
9		207-62-74781	Hose	1	Y300001-
10		08034-20536	Band	1	Y300001-
11		20U-62-41810	Nipple	1	Y300001-
12		207-62-64740	O-ring	1	Y300001-
13		07002-12434	O-ring	1	Y300001-
14		207-62-74681	Hose	1	Y300001-
15		21W-62-42640	Elbow	2	Y300001-
16		207-62-64740	O-ring	2	Y300001-
17		07002-13334	O-ring	2	Y300001-
18		208-62-71410	Block	1	Y300001-
19		207-60-75160	Valve	1	Y300001-
20		706-76-71190	Spring	1	Y300001-
21		207-60-51170	Spacer	1	Y300001-
22		207-62-75250	Flange	1	Y300001-
23		07000-12060	O-ring	1	Y300001-
24		01010-81235	Bolt	2	Y300001-
25		01643-31232	Washer	2	Y300001-
26		07000-12060	O-ring	1	Y300001-
27		01010-81290	Bolt	4	Y300001-
28		01643-31232	Washer	4	Y300001-

PC300-8 (FEN01263-00)

FIG. H0340-001001 Drain Circuit

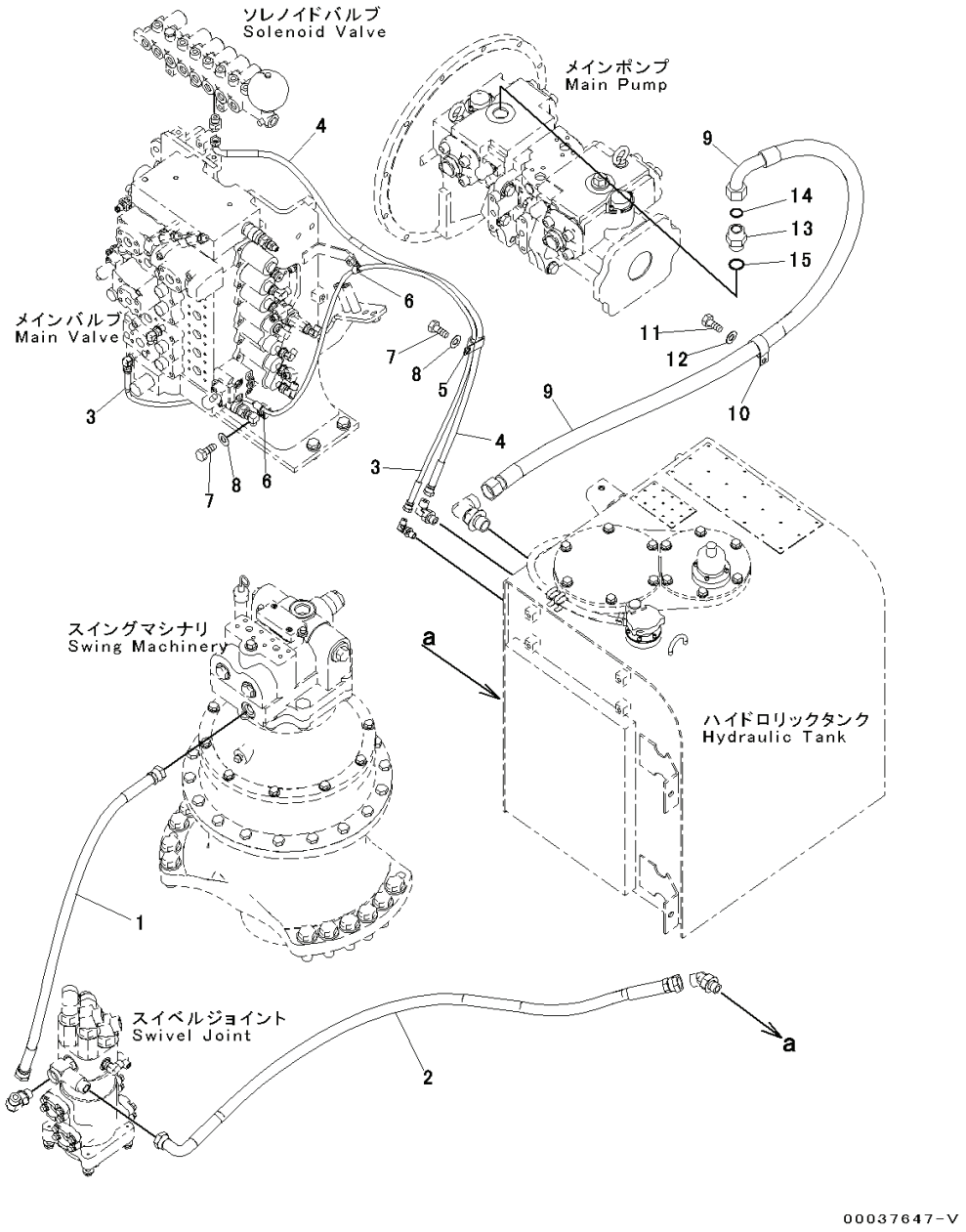

Index	Code	Part Number	Descreption	Qty	Serial Number
1		02762-00509	Hose, Face Seal Type	1	Y300001-
2		207-62-74170	Hose	1	Y300001-
3		207-62-74760	Hose	1	Y300001-
4		02763-00415	Hose, Face Seal Type	1	Y300001-
5		04435-51812	Clip	1	Y300001-
6		04434-51012	Clip	2	Y300001-
7		01010-81220	Bolt	2	Y300001-
8		01643-31232	Washer	2	Y300001-
9		208-62-71390	Hose	1	Y300001-
10		113-899-7950	Clip	1	Y300001-
11		01010-81220	Bolt	1	Y300001-
12		01643-31232	Washer	1	Y300001-
13		207-62-72110	Union	1	Y300001-
14		207-62-64740	O-ring	1	Y300001-
15		07002-13334	O-ring	1	Y300001-

FIG. H1210-001001 Boom Circuit, Valve Boom Lines

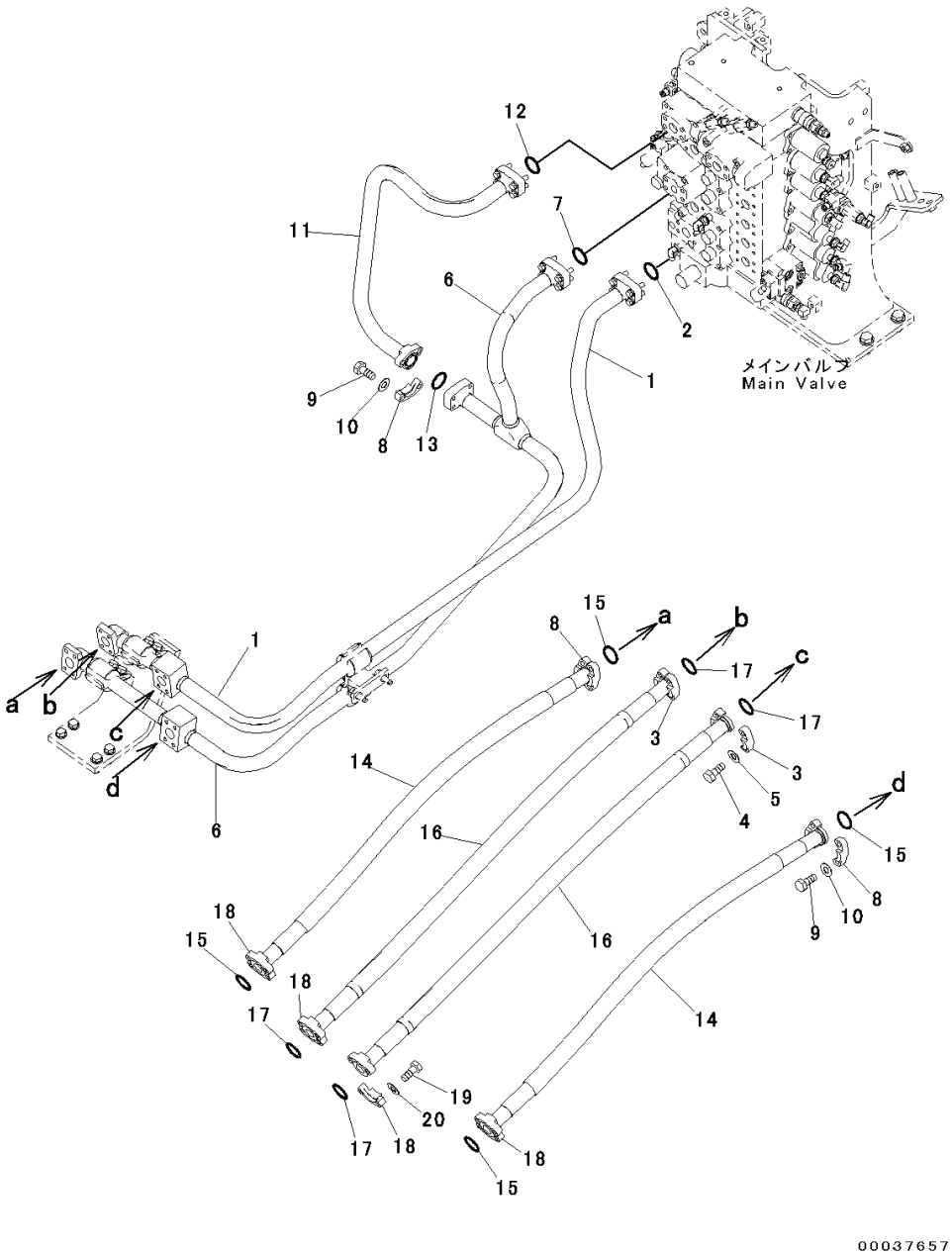

Index	Code	Part Number	Descreption	Qty	Serial Number
1		207-62-71211	Tube	1	Y300001-
2		07000-13035	O-ring	1	Y300001-
3		07371-31049	Flange, Split	4	Y300001-
4		07372-21035	Bolt	8	Y300001-
5		01643-51032	Washer	8	Y300001-
6		207-62-71223	Tube	1	60287-
7		07000-13035	O-ring	1	Y300001-
8		07371-31049	Flange, Split	6	Y300001-
9		07372-21035	Bolt	12	Y300001-
10		01643-51032	Washer	12	Y300001-
11		207-62-71231	Tube	1	Y300001-
12		07000-13035	O-ring	1	Y300001-
13		07000-13032	O-ring	1	Y300001-
14		207-62-52621	Hose	2	Y300001-
15		07000-13032	O-ring	4	Y300001-
16		207-62-52610	Hose	2	Y300001-
17		07000-13032	O-ring	4	Y300001-
18		07371-31049	Flange, Split	8	Y300001-
19		07372-21035	Bolt	16	Y300001-
20		01643-51032	Washer	16	Y300001-

PC300-8 (FEN01263-00)

FIG. H1210-001002 Boom Circuit, Bracket and Clamp

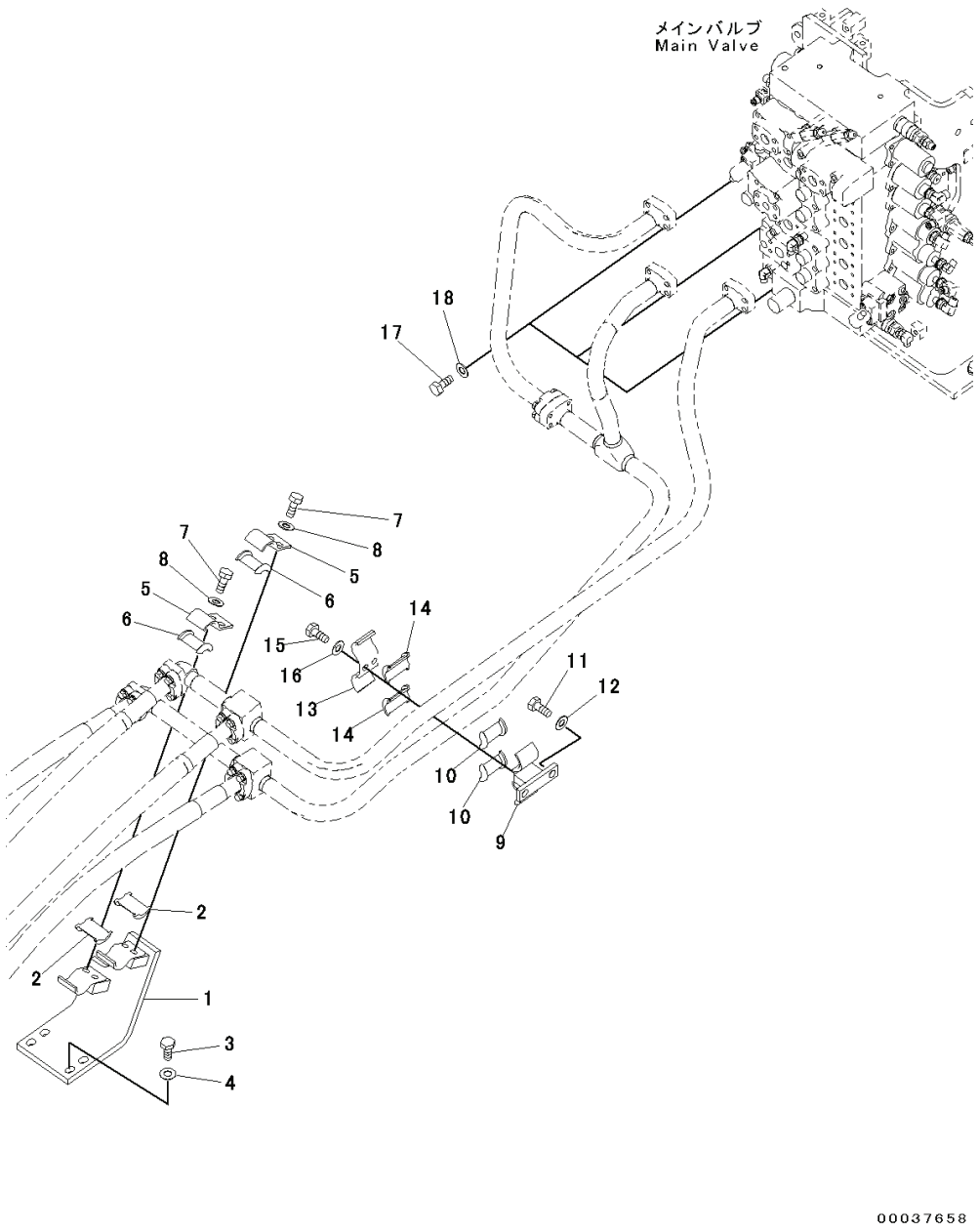

Index	Code	Part Number	Descreption	Qty	Serial Number
1		207-62-71321	Bracket	1	Y300001-
2		205-62-73430	• Seat	2	Y300001-
3		01010-81235	Bolt	4	Y300001-
4		01643-31232	Washer	4	Y300001-
5		207-62-52430	Clamp	2	Y300001-
6		205-62-73430	• Seat	1	Y300001-
7		01010-81230	Bolt	4	Y300001-
8		01643-31232	Washer	4	Y300001-
9		207-62-71330	Clamp	1	Y300001-
10		205-62-73430	• Seat	2	Y300001-
11		01010-81230	Bolt	2	Y300001-
12		01643-31232	Washer	2	Y300001-
13		207-62-54770	Clamp	1	Y300001-
14		205-62-73430	• Seat	2	Y300001-
15		01010-81230	Bolt	2	Y300001-
16		01643-31232	Washer	2	Y300001-
17		07372-21040	Bolt	12	Y300001-
18		01643-51032	Washer	12	Y300001-

PC300-8 (FEN01263-00)

FIG. H1220-001001 Arm And Bucket Circuit

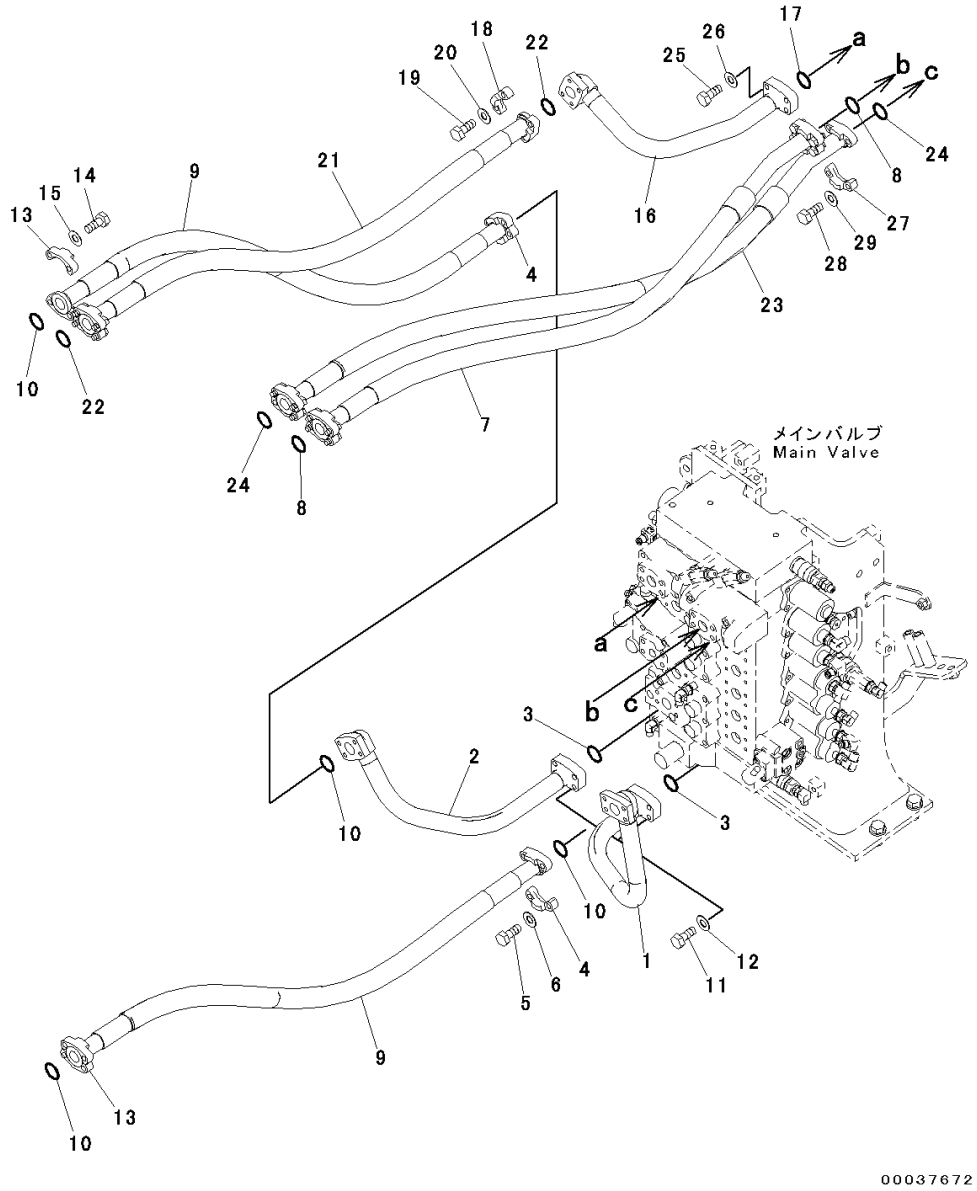

Index	Code	Part Number	Descreption	Qty	Serial Number
1		207-62-71261	Tube	1	Y300001-
2		207-62-71291	Tube	1	Y300001-
3		07000-13035	O-ring	2	Y300001-
4		07371-31049	Flange, Split	4	Y300001-
5		07372-21035	Bolt	8	Y300001-
6		01643-51032	Washer	8	Y300001-
7		207-62-71740	Hose Assembly	1	Y300001-
8		07000-13032	O-ring	2	Y300001-
9		207-62-71360	Hose Assembly	2	Y300001-
10		07000-13032	O-ring	4	Y300001-
11		07372-21040	Bolt	8	Y300001-
12		01643-51032	Washer	8	Y300001-
13		07371-31049	Flange, Split	4	Y300001-
14		07372-21035	Bolt	8	Y300001-
15		01643-51032	Washer	8	Y300001-
16		207-62-71311	Tube	1	Y300001-
17		07000-13035	O-ring	1	Y300001-
18		07371-31049	Flange, Split	2	Y300001-
19		07372-21035	Bolt	4	Y300001-
20		01643-51032	Washer	4	Y300001-
21		207-62-71350	Hose	1	Y300001-
22		07000-13032	O-ring	2	Y300001-
23		207-62-71370	Hose Assembly	1	Y300001-
24		07000-13032	O-ring	2	Y300001-
25		07372-21040	Bolt	4	Y300001-
26		01643-51032	Washer	4	Y300001-
27		07371-31049	Flange, Split	2	Y300001-
28		07372-21035	Bolt	4	Y300001-
29		01643-51032	Washer	4	Y300001-

PC300-8 (FEN01263-00)

FIG. H1220-002001 Arm And Bucket Circuit, 2-actuator

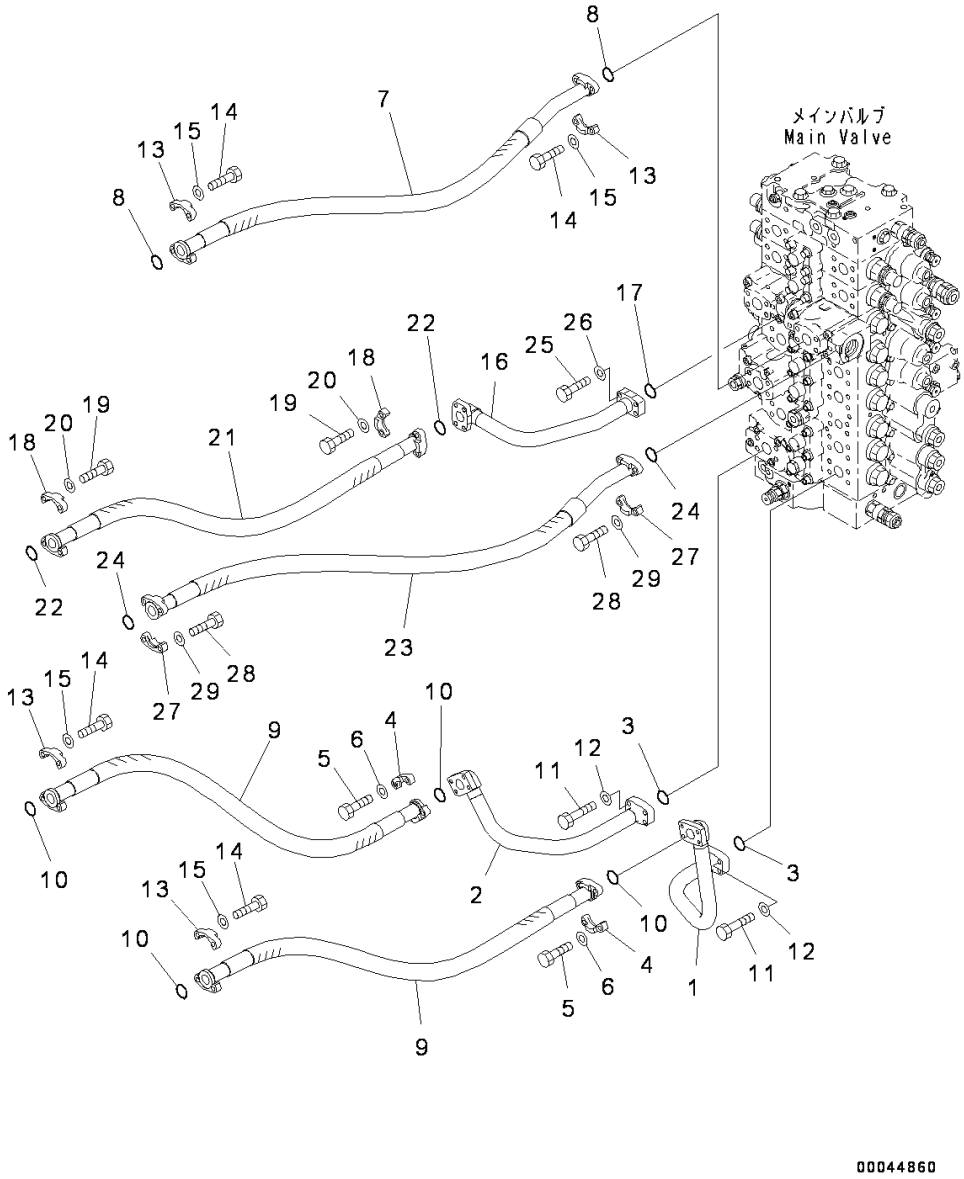

Index	Code	Part Number	Descreption	Qty	Serial Number
1		207-62-71261	Tube	1	Y300001-
2		207-62-71291	Tube	1	Y300001-
3		07000-13035	O-ring	2	Y300001-
4		07371-31049	Flange, Split	4	Y300001-
5		07372-21035	Bolt	8	Y300001-
6		01643-51032	Washer	8	Y300001-
7		207-62-71740	Hose Assembly	1	Y300001-
8		07000-13032	O-ring	2	Y300001-
9		207-62-71360	Hose Assembly	2	Y300001-
10		07000-13032	O-ring	4	Y300001-
11		07372-21040	Bolt	8	Y300001-
12		01643-51032	Washer	8	Y300001-
13		07371-31049	Flange, Split	4	Y300001-
14		07372-21035	Bolt	8	Y300001-
15		01643-51032	Washer	8	Y300001-
16		207-62-73660	Tube	1	Y300001-
17		07000-13035	O-ring	1	Y300001-
18		07371-31049	Flange, Split	2	Y300001-
19		07372-21035	Bolt	4	Y300001-
20		01643-51032	Washer	4	Y300001-
21		207-62-71350	Hose	1	Y300001-
22		07000-13032	O-ring	2	Y300001-
23		207-62-71370	Hose Assembly	1	Y300001-
24		07000-13032	O-ring	2	Y300001-
25		07372-21040	Bolt	4	Y300001-
26		01643-51032	Washer	4	Y300001-
27		07371-31049	Flange, Split	2	Y300001-
28		07372-21035	Bolt	4	Y300001-
29		01643-51032	Washer	4	Y300001-

PC300-8 (FEN01263-00)

FIG. H1220-003001 Arm And Bucket Circuit, For Machine With Arm Holding Valve

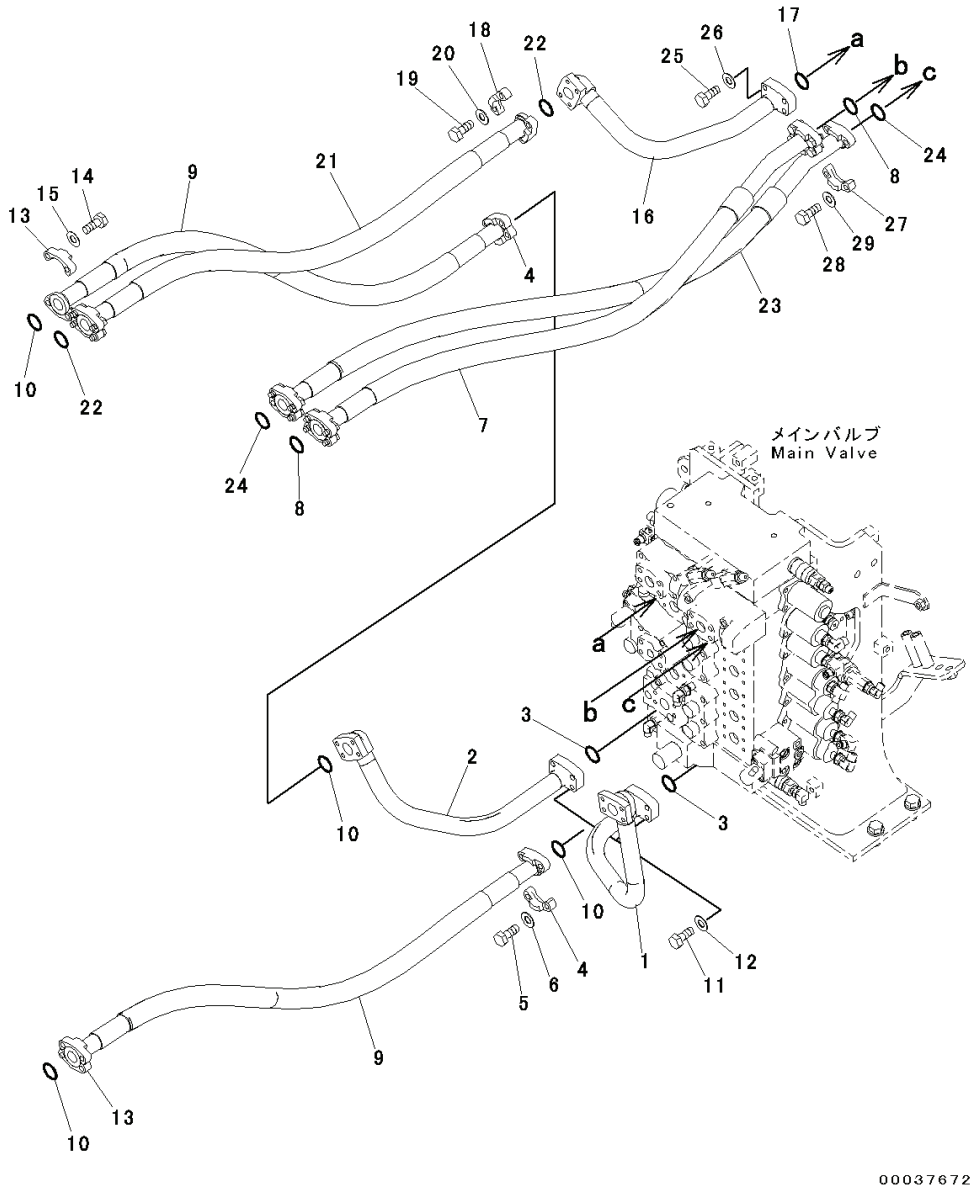

Index	Code	Part Number	Descreption	Qty	Serial Number
1		207-62-71261	Tube	1	Y300001-
2		207-62-71280	Tube	1	Y300001-
3		07000-13035	O-ring	2	Y300001-
4		07371-31049	Flange, Split	4	Y300001-
5		07372-21035	Bolt	8	Y300001-
6		01643-51032	Washer	8	Y300001-
7		207-62-71740	Hose Assembly	1	Y300001-
8		07000-13032	O-ring	2	Y300001-
9		207-62-71360	Hose Assembly	2	Y300001-
10		07000-13032	O-ring	4	Y300001-
11		07372-21040	Bolt	8	Y300001-
12		01643-51032	Washer	8	Y300001-
13		07371-31049	Flange, Split	4	Y300001-
14		07372-21035	Bolt	8	Y300001-
15		01643-51032	Washer	8	Y300001-
16		207-62-71311	Tube	1	Y300001-
17		07000-13035	O-ring	1	Y300001-
18		07371-31049	Flange, Split	2	Y300001-
19		07372-21035	Bolt	4	Y300001-
20		01643-51032	Washer	4	Y300001-
21		207-62-71350	Hose	1	Y300001-
22		07000-13032	O-ring	2	Y300001-
23		207-62-71370	Hose Assembly	1	Y300001-
24		07000-13032	O-ring	2	Y300001-
25		07372-21040	Bolt	4	Y300001-
26		01643-51032	Washer	4	Y300001-
27		07371-31049	Flange, Split	2	Y300001-
28		07372-21035	Bolt	4	Y300001-
29		01643-51032	Washer	4	Y300001-

FIG. H1240-001001 Drift Preventive Valve, Arm, (1/2)

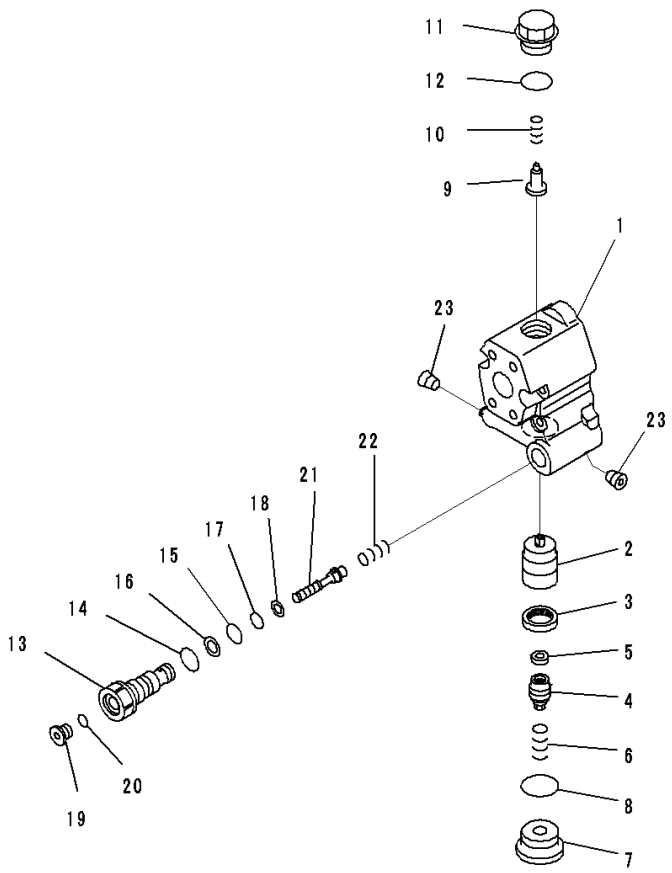

Index	Code	Part Number	Descreption	Qty	Serial Number
		723-40-82701	Valve Assembly	1	Y300001-
1	C1		• Body	1	Y300001-
2	C1		• Valve	1	Y300001-
3	C1		• Seal	1	Y300001-
4	C1		• Plug	1	Y300001-
5	C1		• Filter	1	Y300001-
6	C1		• Spring	1	Y300001-
7	C1		• Plug	1	Y300001-
8		07002-13334	• O-ring	1	Y300001-
9		723-40-84420	• Valve, Check	1	Y300001-
10		723-40-84430	• Spring	1	Y300001-
11	C1		• Plug	1	Y300001-
12		07000-13024	• O-ring	1	Y300001-
13	C1		• Plug	1	Y300001-
14		07002-11823	• O-ring	1	Y300001-
15		07000-12011	• O-ring	1	Y300001-
16		07001-02011	• Ring, Back-up	1	Y300001-
17		07000-11010	• O-ring	1	Y300001-
18		07001-01010	• Ring, Back-up	1	Y300001-
19		723-11-18190	• Plug	1	Y300001-
20		07002-11023	• O-ring	1	Y300001-
21	C1		• Piston	1	Y300001-
22	C1		• Spring	1	Y300001-
23	C1		• Screw	2	Y300001-

FIG. H1240-001002 Drift Preventive Valve, Arm, (2/2)

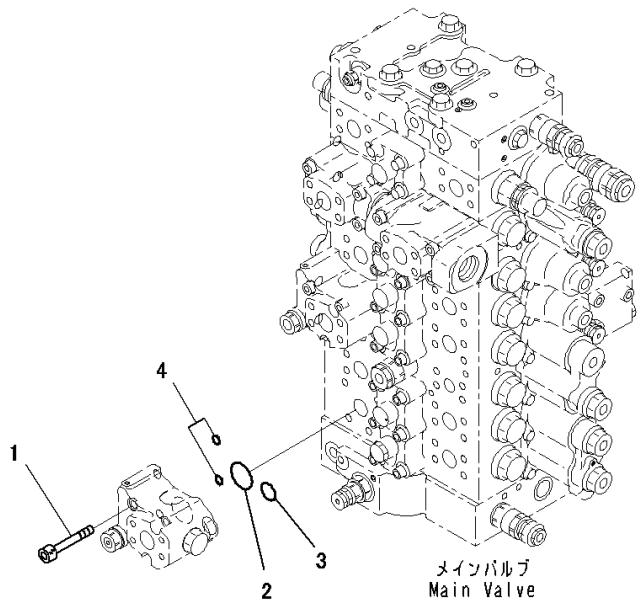

JH001430

Index	Code	Part Number	Descreption	Qty	Serial Number
1		01252-61075	Bolt, Hexagon Socket Head	4	Y300001-
2		07000-13032	O-ring	1	Y300001-
3		07000-12021	O-ring	1	Y300001-
4		702-16-53920	O-ring	2	Y300001-

FIG. H1270-003001 Actuator Circuit, Main Line, LHS

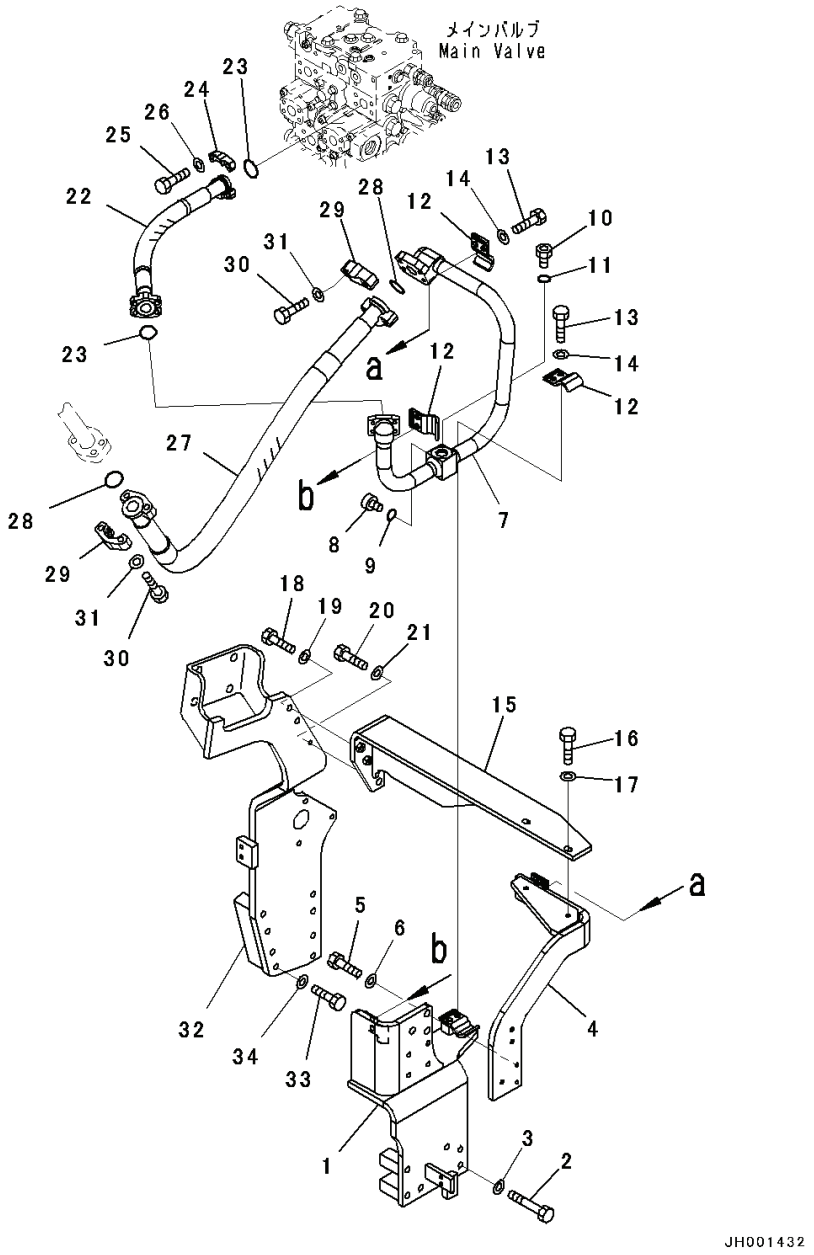

Index	Code	Part Number	Descreption	Qty	Serial Number
1		207-62-73112	Bracket	1	Y300001-
2		01011-81200	Bolt	6	Y300001-
3		01643-31232	Washer	6	Y300001-
4		207-62-73131	Bracket	1	Y300001-
5		01010-81235	Bolt	3	Y300001-
6		01643-31232	Washer	3	Y300001-
7		207-62-73120	Tube	1	Y300001-
8		07040-11007	Plug	1	Y300001-
9		07002-11023	O-ring	1	Y300001-
10		07040-12412	Plug	1	Y300001-
11		07002-12434	O-ring	1	Y300001-
12		207-62-31330	Clamp	3	Y300001-
13		01010-81235	Bolt	6	Y300001-
14		01643-31232	Washer	6	Y300001-
15		207-62-73621	Bracket	1	Y300001-
16		01010-81240	Bolt	2	Y300001-
17		01643-31232	Washer	2	Y300001-
18		01010-81245	Bolt	2	Y300001-
19		01643-31232	Washer	2	Y300001-
20		01010-81235	Bolt	1	Y300001-
21		01643-31232	Washer	1	Y300001-
22		207-62-73340	Hose	1	Y300001-
23		07000-13032	O-ring	2	Y300001-
24		07371-31049	Flange, Split	4	Y300001-
25		07372-21035	Bolt	8	Y300001-
26		01643-51032	Washer	8	Y300001-
27		207-62-73390	Hose	1	Y300001-
28		07000-13038	O-ring	2	Y300001-
29		07371-51260	Flange	4	Y300001-
30		01010-81245	Bolt	8	Y300001-
31		01643-31232	Washer	8	Y300001-
32		207-62-73141	Bracket	1	Y300001-
33		01011-81200	Bolt	8	Y300001-
34		01643-31232	Washer	8	Y300001-

PC300-8 (FEN01263-00)

FIG. H1270-003002 Actuator Circuit, Solenoid Valve

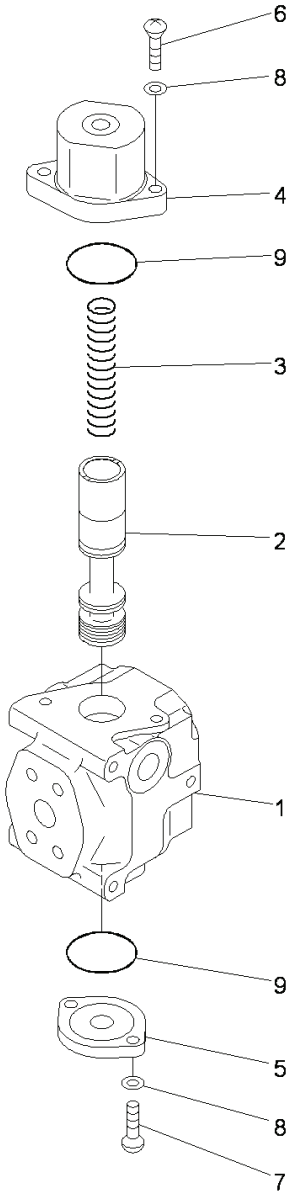

PW5X053

Index	Code	Part Number	Descreption	Qty	Serial Number
		702-21-01920	Valve Assembly	1	Y300001-
1	C1		• Block	1	Y300001-
2	C1		• Spool	1	Y300001-
3		702-21-11930	• Spring	1	Y300001-
4		702-21-11940	• Case	1	Y300001-
5		709-10-91240	• Flange	1	Y300001-
6		01252-61040	• Bolt	2	Y300001-
7		01252-61030	• Bolt, Hexagon Socket Head	2	Y300001-
8		01643-51032	• Washer	4	Y300001-
9		07000-12055	• O-ring	2	Y300001-

FIG. H1270-003003 Actuator Circuit, Main Line, RHS

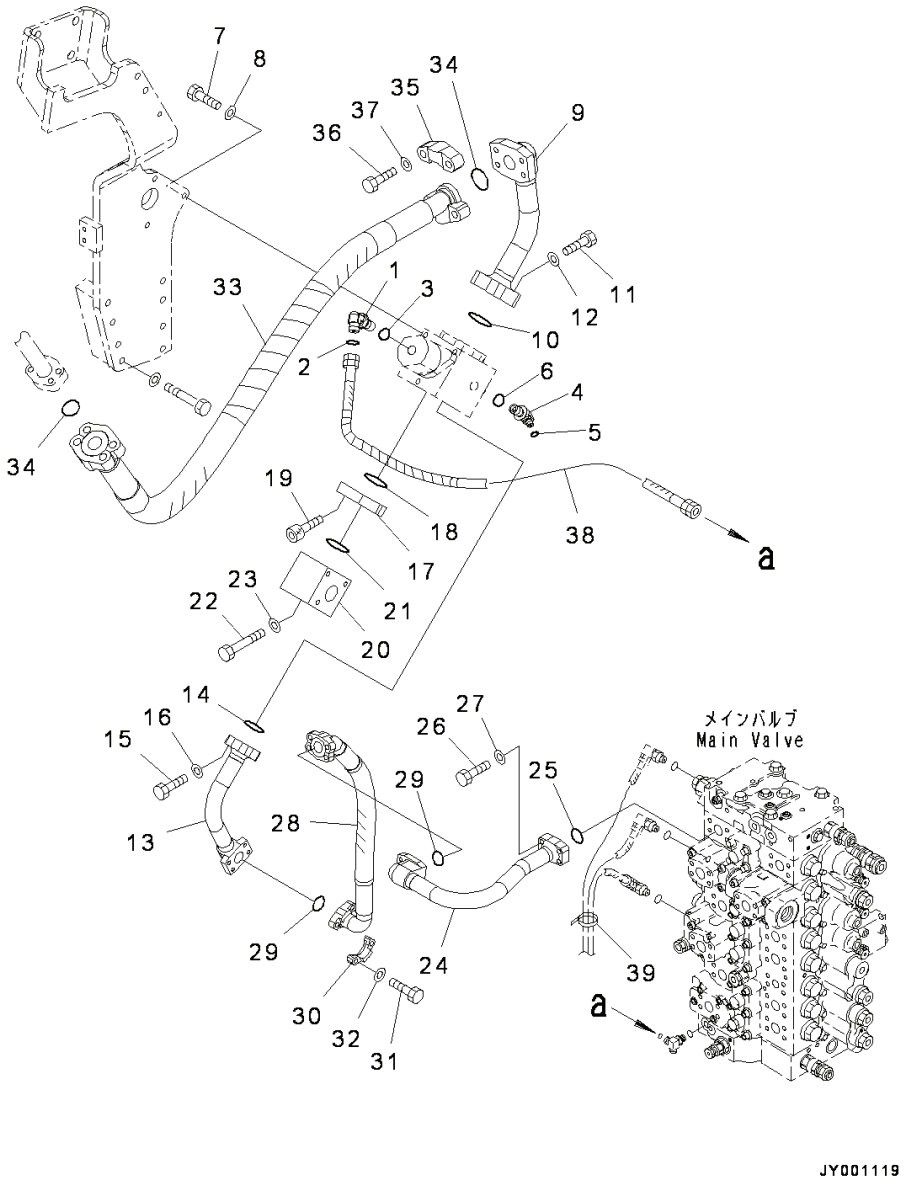

Index	Code	Part Number	Descreption	Qty	Serial Number
1		11Y-62-12160	Elbow	1	Y300001-
2		02896-11008	O-ring	1	Y300001-
3		07002-11423	O-ring	1	Y300001-
4		11Y-62-12170	Elbow	1	Y300001-
5		02896-11008	O-ring	1	Y300001-
6		07002-12034	O-ring	1	Y300001-
7		01010-81040	Bolt	3	Y300001-
8		01643-31032	Washer	3	Y300001-
9		207-62-73150	Tube	1	Y300001-
10		07000-13048	O-ring	1	Y300001-
11		01010-81455	Bolt	4	Y300001-
12		01643-31445	Washer	1	Y300001-
13		207-62-73190	Tube	1	Y300001-
14		07000-13035	O-ring	1	Y300001-
15		07372-21040	Bolt	4	Y300001-
16		01643-51032	Washer	4	Y300001-
17		207-62-73260	Plate	1	Y300001-
18		07000-13048	O-ring	1	Y300001-
19		01252-71225	Bolt	2	Y300001-
20		207-62-73230	Block	1	Y300001-
21		07000-13048	O-ring	1	Y300001-
22		01011-81210	Bolt	2	Y300001-
23		01643-31232	Washer	2	Y300001-
24		207-62-73180	Tube	1	Y300001-
25		07000-13035	O-ring	1	Y300001-
26		07372-21040	Bolt	4	Y300001-
27		01643-51032	Washer	4	Y300001-
28		207-62-73290	Hose	1	Y300001-
29		07000-13032	O-ring	2	Y300001-
30		07371-31049	Flange, Split	4	Y300001-
31		07372-21035	Bolt	8	Y300001-
32		01643-51032	Washer	8	Y300001-
33		207-62-73280	Hose	1	Y300001-
34		07000-13048	O-ring	2	Y300001-
35		07371-51470	Flange, Split	4	Y300001-
36		01010-81455	Bolt	8	Y300001-
37		01643-31445	Washer	8	Y300001-
38		207-62-73380	Hose	1	Y300001-
39		08034-20536	Band	1	Y300001-

PC300-8 (FEN01263-00)

FIG. H1270-003004 Actuator Circuit, Return Filter

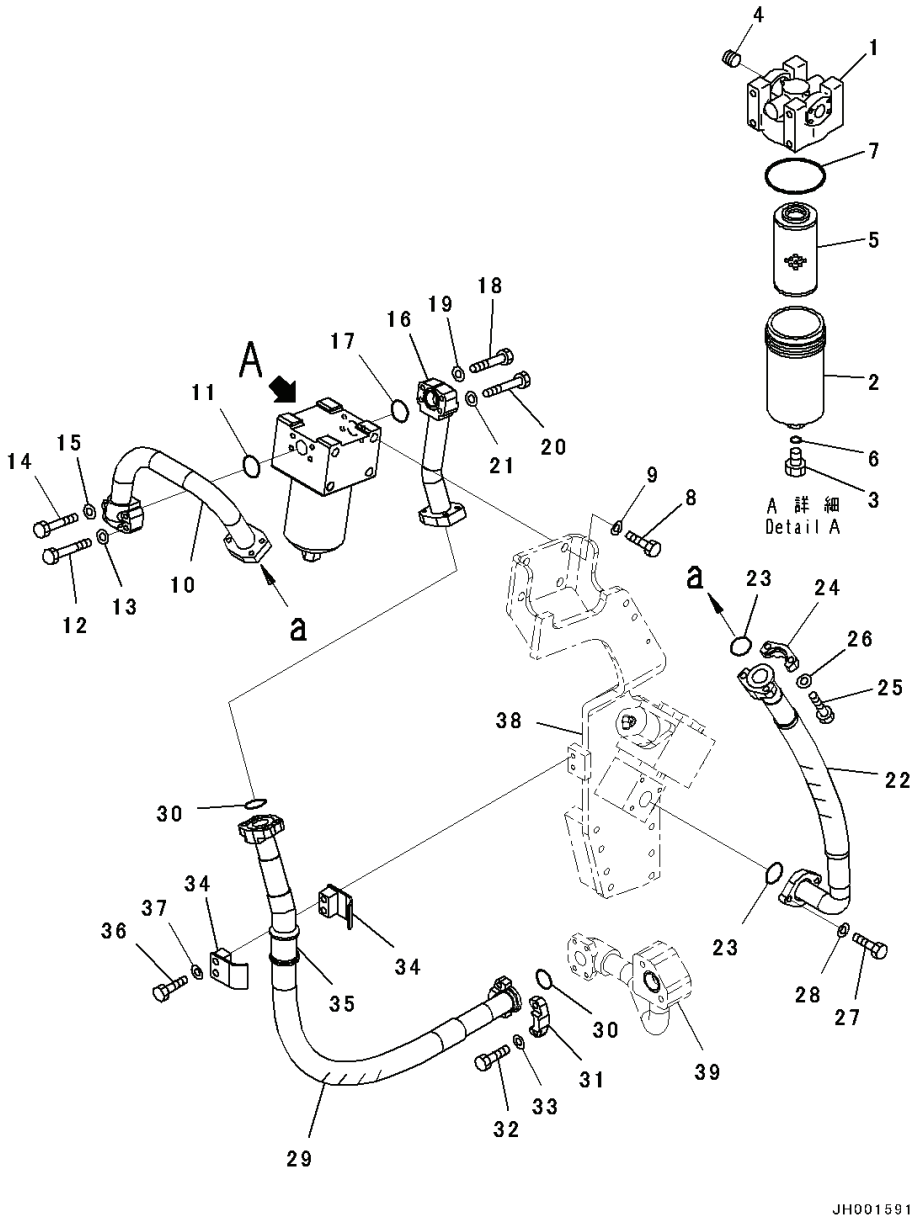

Index	Code	Part Number	Descreption	Qty	Serial Number
		207-970-5111	Filter	1	Y300001-
1		207-970-511101	• Cover	1	Y300001-
2		207-970-511102	• Case	1	Y300001-
3		207-970-511103	• Bolt	1	Y300001-
4		207-970-511104	• Valve	1	Y300001-
5		207-970-5121	• Element	1	Y300001-
6		07000-12011	• O-ring	1	Y300001-
7		07000-12125	• O-ring	1	Y300001-
8		01010-81635	Bolt	4	Y300001-
9		01643-31645	Washer	4	Y300001-
10		207-62-73160	Tube	1	Y300001-
11		07000-13040	O-ring	1	Y300001-
12		01010-81055	Bolt	2	Y300001-
13		01643-31032	Washer	2	Y300001-
14		01010-81070	Bolt	2	Y300001-
15		01643-31032	Washer	2	Y300001-
16		207-62-73170	Tube	1	Y300001-
17		07000-13040	O-ring	1	Y300001-
18		01010-81055	Bolt	2	Y300001-
19		01643-31032	Washer	2	Y300001-
20		01010-81070	Bolt	2	Y300001-
21		01643-31032	Washer	2	Y300001-
22		207-62-73310	Hose	1	Y300001-
23		07000-13048	O-ring	2	Y300001-
24		07371-31465	Flange	2	Y300001-
25		07372-21240	Bolt	4	Y300001-
26		01643-51232	Washer	4	Y300001-
27		01010-81240	Bolt	2	Y300001-
28		01643-31232	Washer	2	Y300001-
29		207-62-73320	Hose	1	Y300001-
30		07000-13048	O-ring	2	Y300001-
31		07371-31465	Flange	4	Y300001-
32		07372-21240	Bolt	8	Y300001-
33		01643-51232	Washer	8	Y300001-
34		07094-11228	Clamp	2	Y300001-
35		07095-01245	Cushion	1	Y300001-
36		01010-81285	Bolt	2	Y300001-
37		01643-31232	Washer	2	Y300001-
38		(207-62-73141)	Bracket(Refer to Page 412)		-
39		(207-62-73211)	Tube(Refer to Page 375)		-

PC300-8 (FEN01263-00)

FIG. H1270-003005 Actuator Circuit, Accumulator

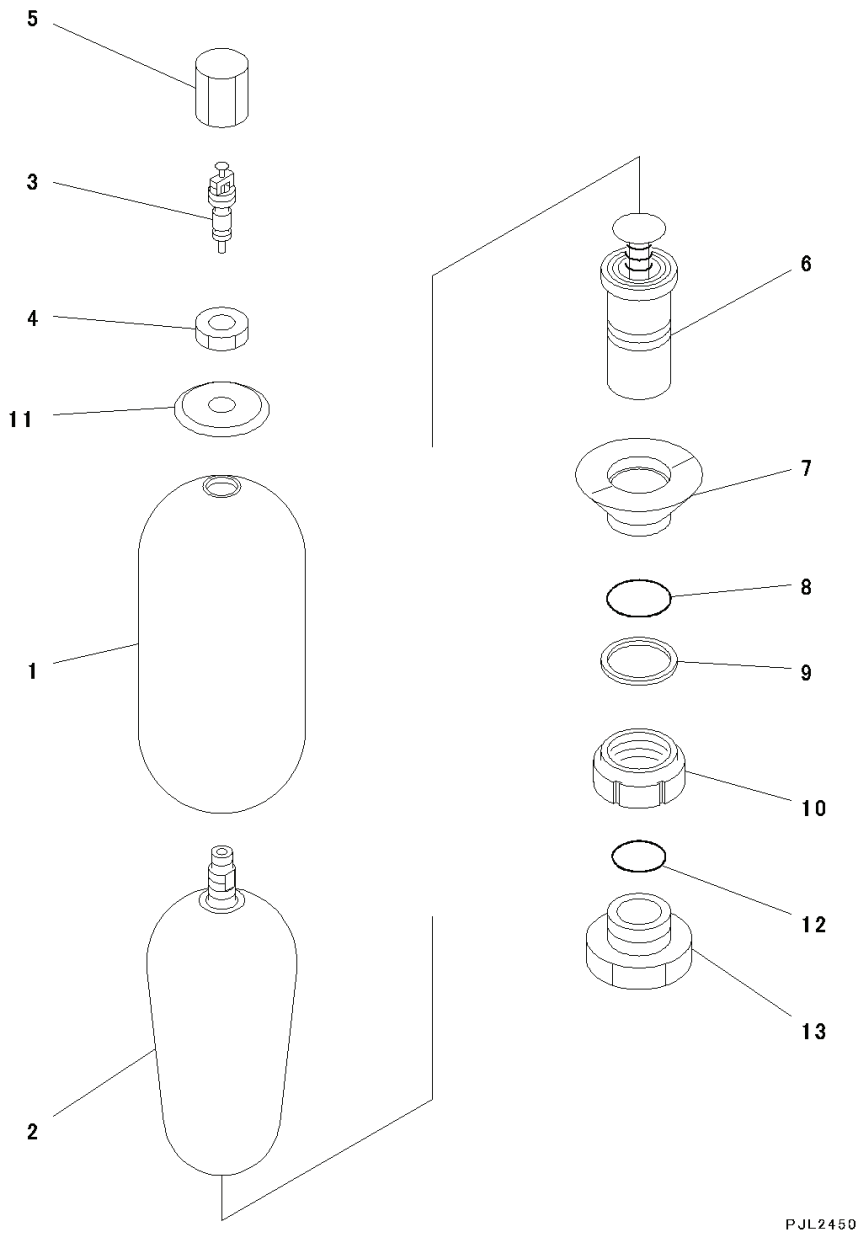

PC300-8 (FEN01263-00)

Index	Code	Part Number	Descreption	Qty	Serial Number
		20Y-970-6450	Accumulator Assembly	1	Y300001-
1	C1		• Shell	1	Y300001-
		NFEB3401 A1	• Bleeder Assembly	1	Y300001-
2		NFEB3026 A1	• • Bleeder	1	Y300001-
3		NFEB4475 Z0	• • Core	1	Y300001-
4	C1		• Nut	1	Y300001-
5	C1		• Cap	1	Y300001-
6		NFEB0427 Z0	• Body Assembly	1	Y300001-
7		NFEB4477 Z0	• Ring	1	Y300001-
8	C1		• O-ring, (Kit : K01)	1	Y300001-
9	C1		• Ring, Back-up, (Kit : K01)	1	Y300001-
10	C1		• Ring	1	Y300001-
11	C1		• Plate	1	Y300001-
12		205-970-5560	• O-ring, (Kit : K01)	1	Y300001-
13	C1		• Bushing	1	Y300001-

FIG. H1270-003006 Actuator Circuit, Accumulator, LHS

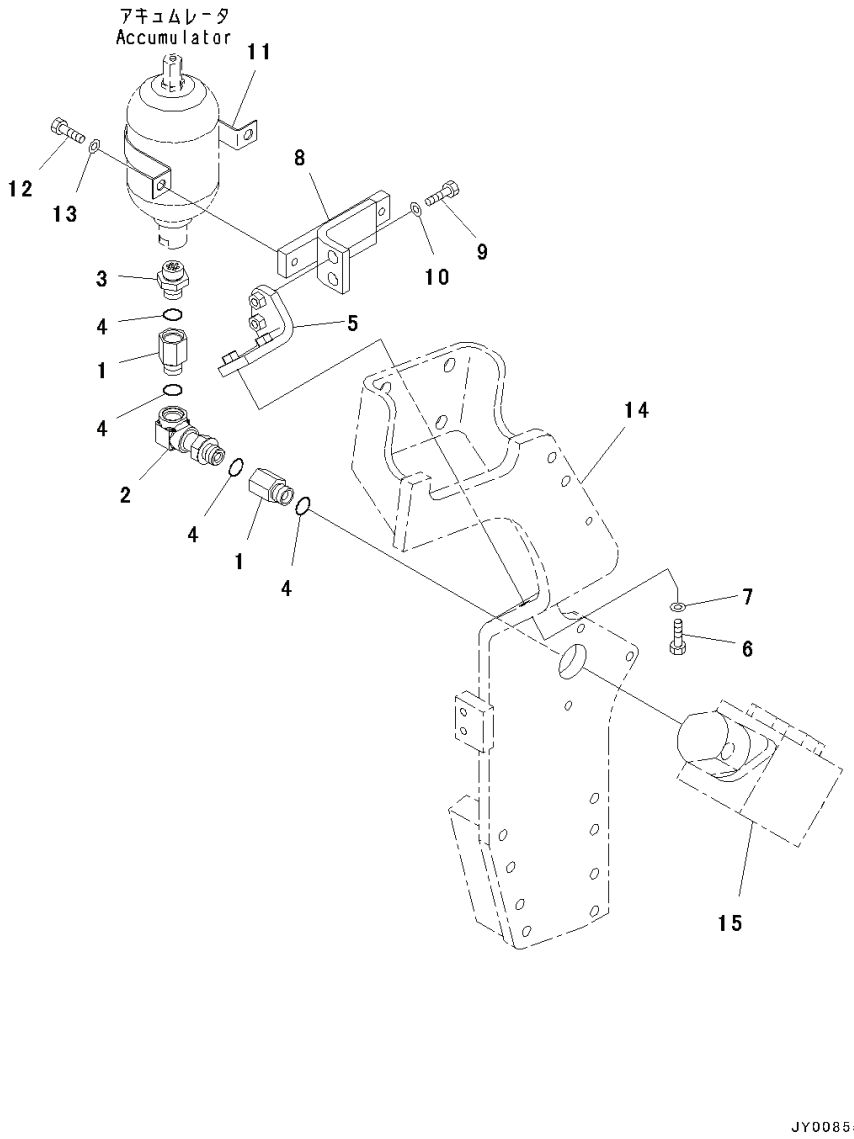

Index	Code	Part Number	Descreption	Qty	Serial Number
		20Y-970-6450	Accumulator Assembly	1	Y300001-
1		201-62-71810	Joint	2	Y300001-
2		207-62-73350	Elbow	1	Y300001-
3		205-970-5550	Nipple	1	Y300001-
4		07002-12434	O-ring	4	Y300001-
5		207-62-73251	Bracket	1	Y300001-
6		01010-81250	Bolt	2	Y300001-
7		01643-31232	Washer	2	Y300001-
8		207-62-73240	Bracket	1	Y300001-
9		01010-81240	Bolt	2	Y300001-
10		01643-31232	Washer	2	Y300001-
11		175-61-51750	Plate	1	Y300001-
12		01010-81225	Bolt	2	Y300001-
13		01643-31232	Washer	2	Y300001-
14		(207-62-73141)	Bracket(Refer to Page 412)		-
15		(702-21-01920)	Valve Assembly(Refer to Page 413)		-

FIG. H1270-003007 Actuator Circuit, Pilot Filter

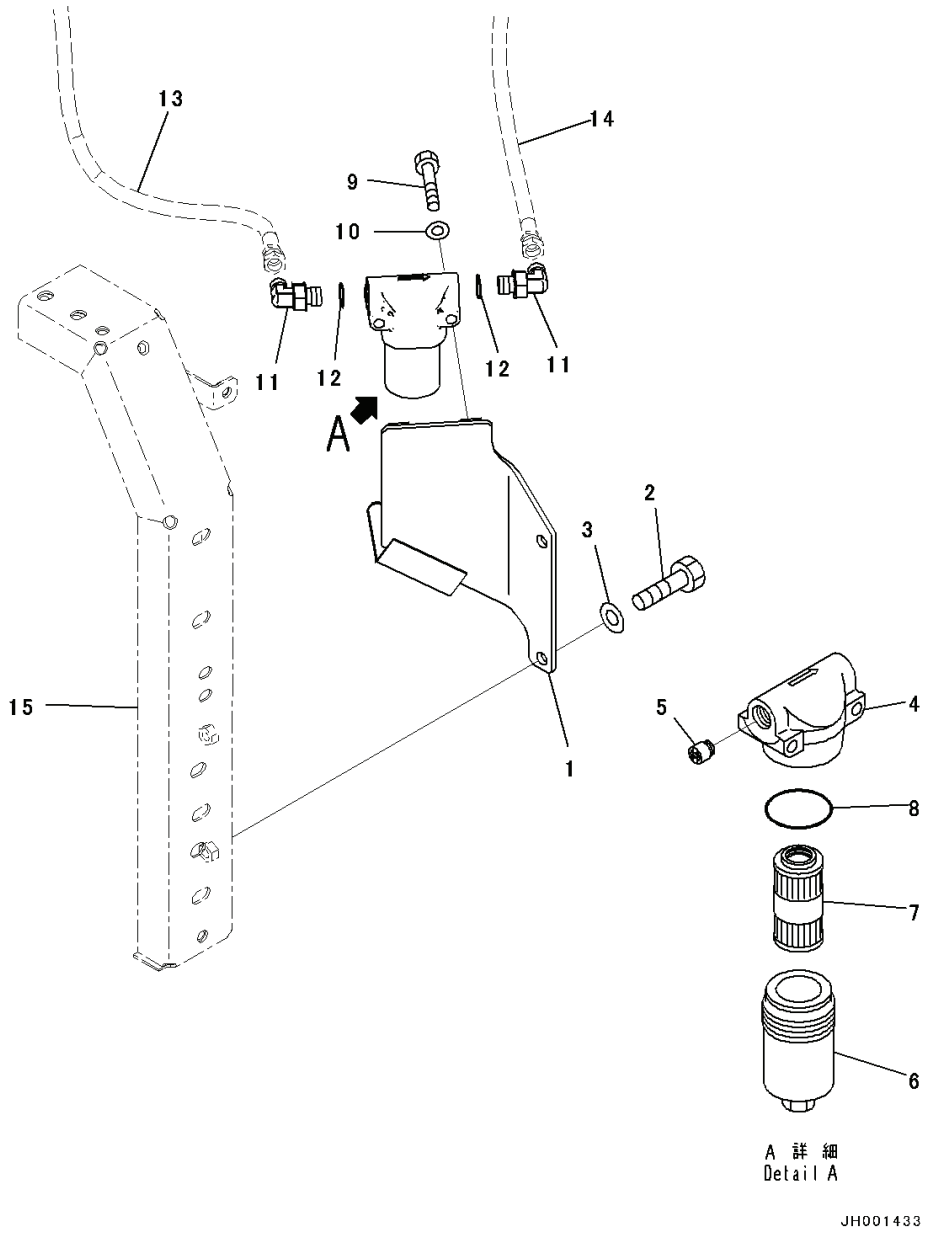

Index	Code	Part Number	Descreption	Qty	Serial Number
1		207-62-75120	Bracket	1	Y300001-
2		01010-81225	Bolt	2	Y300001-
3		01643-31232	Washer	2	Y300001-
		20Y-62-51681	Filter Assembly	1	Y300001-
4	C1		• Head	1	Y300001-
5	C1		• Valve Assembly	1	Y300001-
6	C1		• Case	1	Y300001-
7		20Y-62-51691	• Filter	1	Y300001-
8		706-76-71390	• O-ring	1	Y300001-
9		01010-81075	Bolt	2	Y300001-
10		01643-31032	Washer	2	Y300001-
11		02782-10315	Elbow	2	Y300001-
12		07002-12034	O-ring	2	Y300001-
13		(02760-00321)	Hose(Refer to Page 430)		-
14		(207-62-75180)	Hose(Refer to Page 430)		-
15		(207-54-76140)	Frame(Refer to Page 768)		-

PC300-8 (FEN01263-00)

FIG. H1272-001001 2-additional Actuator Circuit

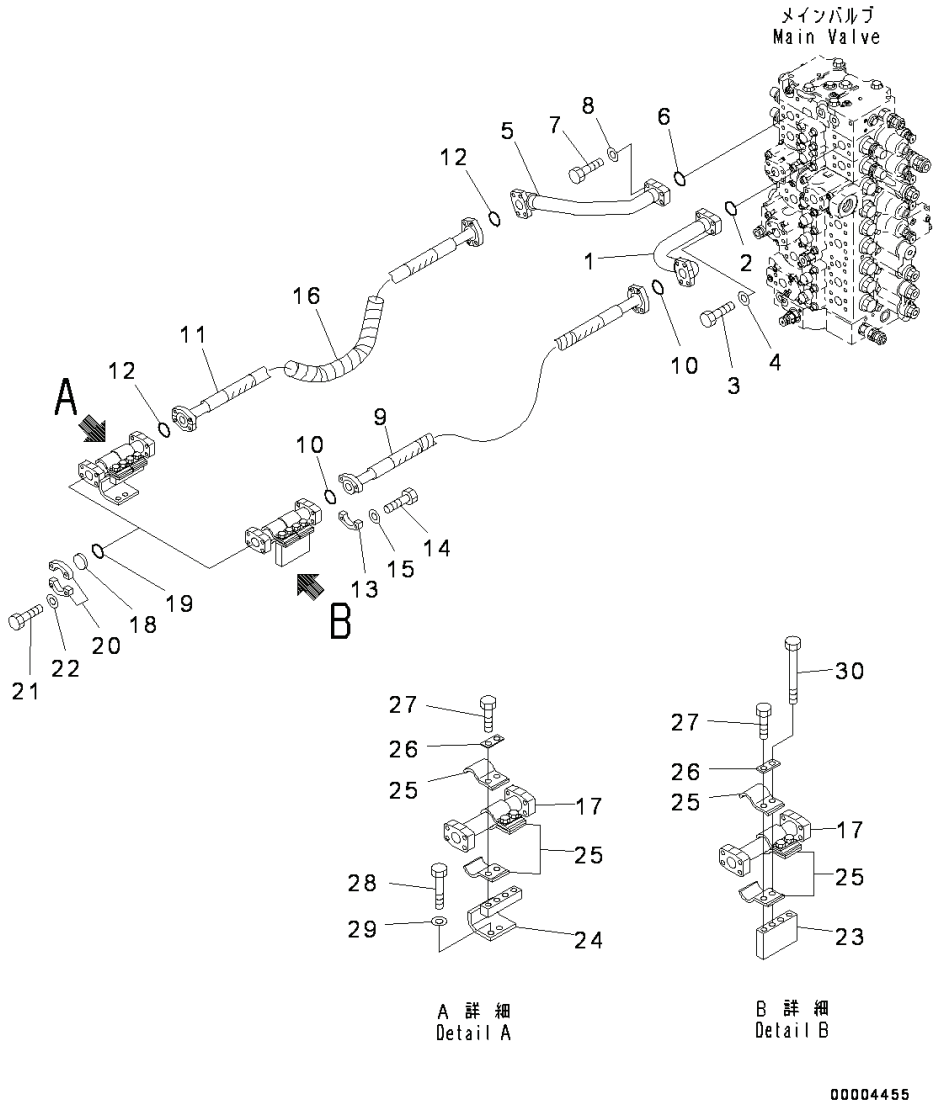

Index	Code	Part Number	Descreption	Qty	Serial Number
1		207-62-73640	Tube	1	Y300001-
2		07000-13032	O-ring	1	Y300001-
3		07372-21040	Bolt	4	Y300001-
4		01643-51032	Washer	4	Y300001-
5		207-62-73650	Tube	1	Y300001-
6		07000-13032	O-ring	1	Y300001-
7		07372-21040	Bolt	4	Y300001-
8		01643-51032	Washer	4	Y300001-
9		207-62-71360	Hose Assembly	1	Y300001-
10		07000-13032	O-ring	2	Y300001-
11		207-62-71350	Hose	1	Y300001-
12		07000-13032	O-ring	2	Y300001-
13		07371-31049	Flange, Split	8	Y300001-
14		07372-21035	Bolt	16	Y300001-
15		01643-51032	Washer	16	Y300001-
16		421-62-35180	Cover	1	Y300001-
17		207-62-73670	Tube	2	Y300001-
18		07378-11000	Head	2	Y300001-
19		07000-13032	O-ring	2	Y300001-
20		07371-31049	Flange, Split	4	Y300001-
21		07372-21035	Bolt	8	Y300001-
22		01643-51032	Washer	8	Y300001-
23		207-62-73680	Bracket	1	Y300001-
24		207-62-73690	Bracket	1	Y300001-
25		207-62-31330	Clamp	8	Y300001-
26		20Y-62-13450	Plate	4	Y300001-
27		01010-81230	Bolt	6	Y300001-
28		01010-81260	Bolt	2	Y300001-
29		01643-31232	Washer	2	Y300001-
30		01011-81210	Bolt	2	Y300001-

FIG. H1310-001001 Travel Circuit

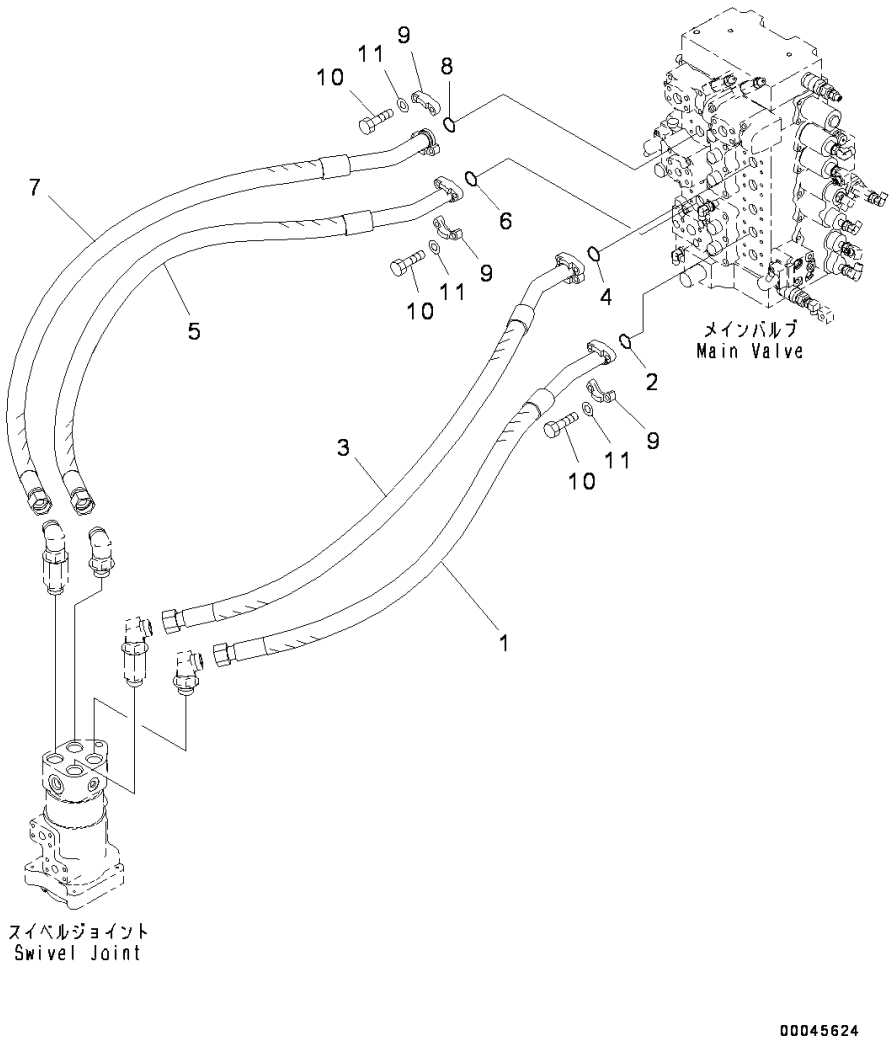

Index	Code	Part Number	Descreption	Qty	Serial Number
1		207-62-71430	Hose Assembly	1	Y300001-
2		07000-13032	O-ring	1	Y300001-
3		207-62-71440	Hose Assembly	1	Y300001-
4		07000-13032	O-ring	1	Y300001-
5		207-62-71450	Hose Assembly	1	Y300001-
6		07000-13032	O-ring	1	Y300001-
7		207-62-71460	Hose Assembly	1	Y300001-
8		07000-13032	O-ring	1	Y300001-
9		07371-31049	Flange, Split	8	Y300001-
10		07372-21035	Bolt	16	Y300001-
11		01643-51032	Washer	16	Y300001-

PC300-8 (FEN01263-00)

FIG. H1340-001001 Swing Circuit

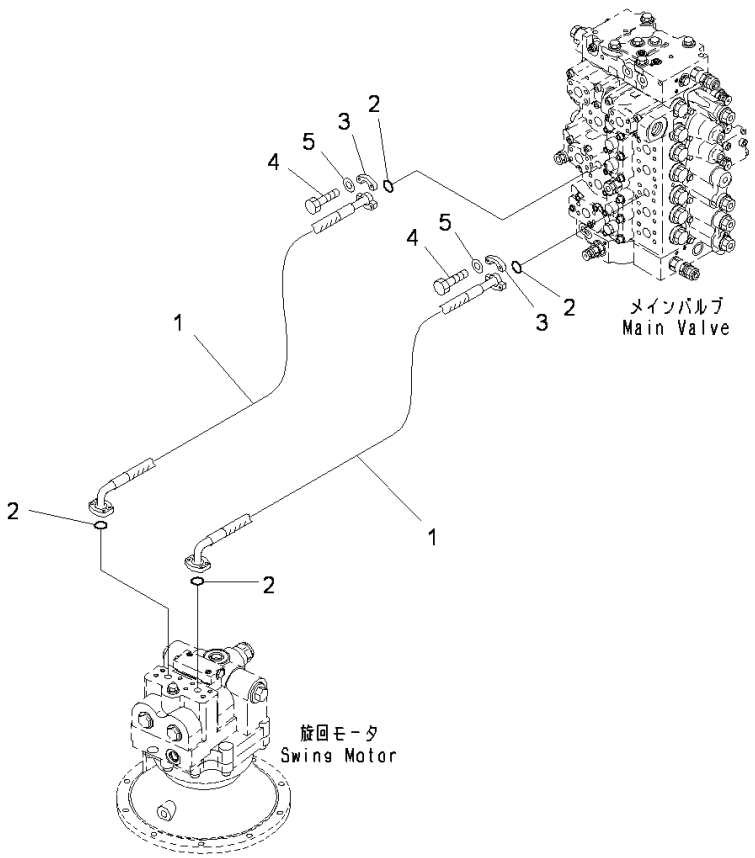

PJ1C618

Index	Code	Part Number	Descreption	Qty	Serial Number
1		07098-010A9	Hose, Flange Type	2	Y300001-
2		07000-13032	O-ring	4	Y300001-
3		07371-31049	Flange, Split	8	Y300001-
4		07372-21035	Bolt	16	Y300001-
5		01643-51032	Washer	16	Y300001-

FIG. H1810-001001 LS Circuit, For Additional Actuator Circuit

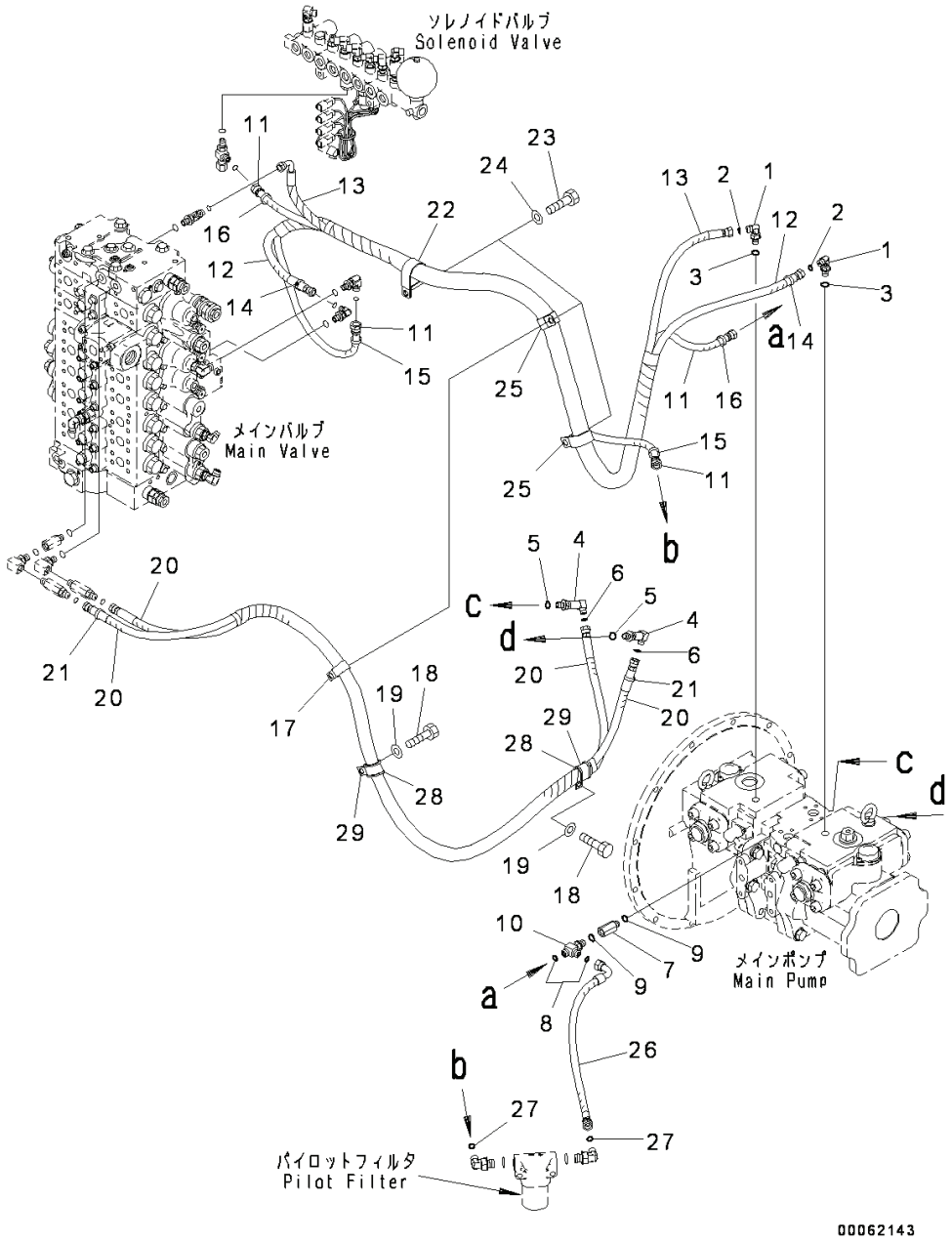

Index	Code	Part Number	Descreption	Qty	Serial Number
1		11Y-62-12160	Elbow	2	Y300001-
2		02896-11008	O-ring	2	Y300001-
3		07002-11423	O-ring	2	Y300001-
4		11Y-62-12370	Elbow	2	Y300001-
5		02896-11008	O-ring	2	Y300001-
6		07002-11423	O-ring	2	Y300001-
7		20Y-62-22160	Adapter	1	Y300001-
8		02896-11009	O-ring	2	Y300001-
9		07002-11423	O-ring	2	Y300001-
10		21N-64-36680	Tee	1	Y300001-
11		02760-00321	Hose	2	Y300001-
12		207-62-74860	Hose	1	Y300001-
13		207-62-74870	Hose	1	Y300001-
14		20Y-62-22790	Band, Red	2	Y300001-
15		20Y-62-22810	Band, Yellow	2	Y300001-
16		20Y-62-22830	Band, White	2	Y300001-
17		04435-51812	Clip	1	Y300001-
18		01010-81220	Bolt	2	Y300001-
19		01643-31232	Washer	2	Y300001-
20		207-62-74850	Hose	2	Y300001-
21		20Y-62-22790	Band, Red	2	Y300001-
22		20Y-62-15951	Clip	1	Y300001-
23		01010-81225	Bolt	3	Y300001-
24		01643-31232	Washer	3	Y300001-
25		208-06-19170	Clip	2	Y300001-
26		207-62-75180	Hose	1	Y300001-
27		02896-11009	O-ring	2	Y300001-
28		198-06-53630	Cushion	2	Y300001-
29		04435-52112	Clip	2	Y300001-

PC300-8 (FEN01263-00)

FIG. H1810-002001 LS Circuit

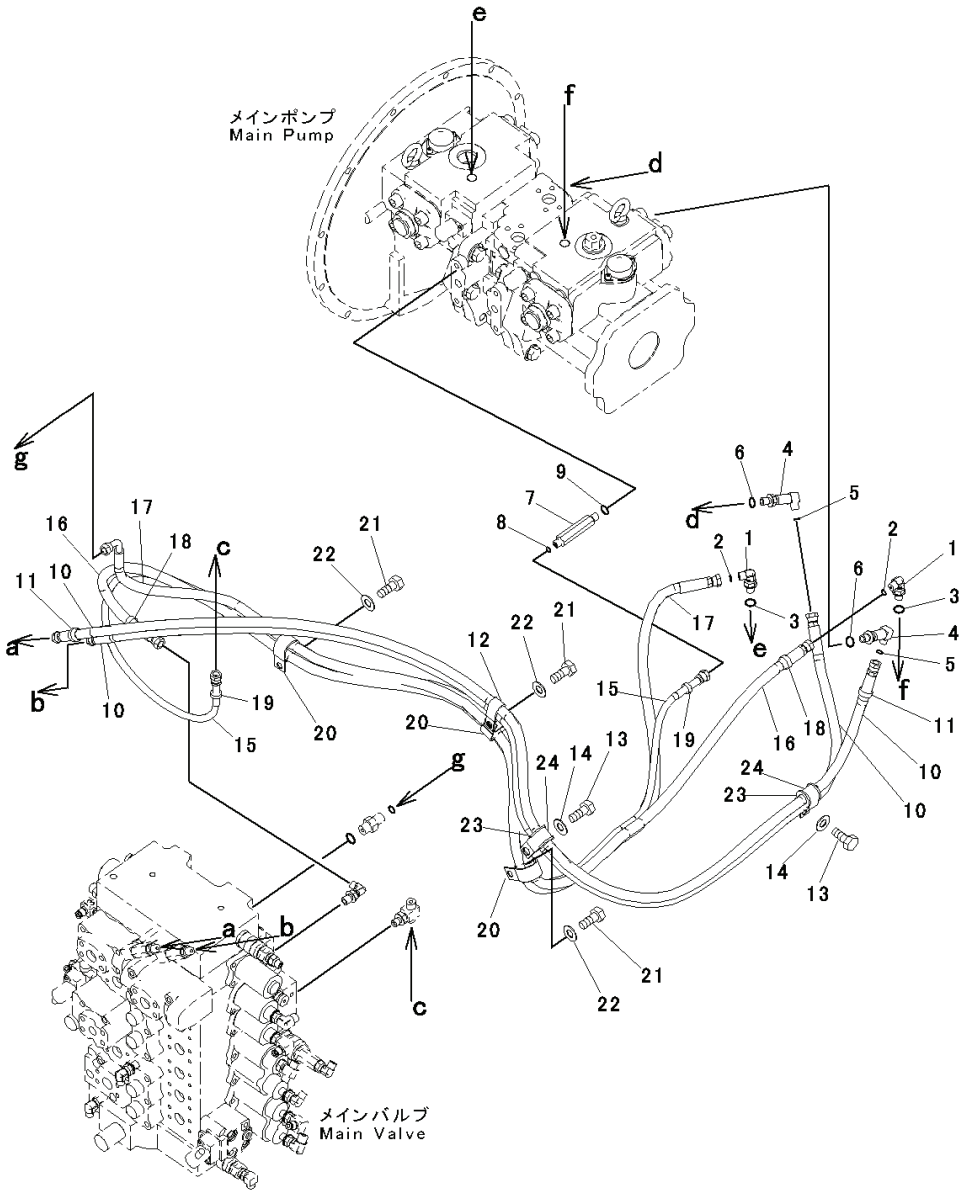

Index	Code	Part Number	Descreption	Qty	Serial Number
1		11Y-62-12160	Elbow	2	Y300001-
2		02896-11008	O-ring	2	Y300001-
3		07002-11423	O-ring	2	Y300001-
4		11Y-62-12370	Elbow	2	Y300001-
5		02896-11008	O-ring	2	Y300001-
6		07002-11423	O-ring	2	Y300001-
7		207-62-71531	Union	1	Y300001-
8		02896-11008	O-ring	1	Y300001-
9		07002-11423	O-ring	1	Y300001-
10		207-62-74850	Hose	2	Y300001-
11		20Y-62-22790	Band, Red	2	Y300001-
12		04435-51812	Clip	1	Y300001-
13		01010-81220	Bolt	2	Y300001-
14		01643-31232	Washer	2	Y300001-
15		02760-00227	Hose, Face Seal Type	1	Y300001-
16		207-62-74860	Hose	1	Y300001-
17		207-62-74870	Hose	1	Y300001-
18		20Y-62-22790	Band, Red	2	Y300001-
19		20Y-62-22810	Band, Yellow	2	Y300001-
20		113-899-7950	Clip	3	61170-
21		01010-81225	Bolt	3	Y300001-
22		01643-31232	Washer	3	Y300001-
23		198-06-53630	Cushion	2	Y300001-
24		04435-52112	Clip	2	Y300001-

PC300-8 (FEN01263-00)

FIG. H1831-001001 Solenoid Valve Circuit, Solenoid Valve (1/2)

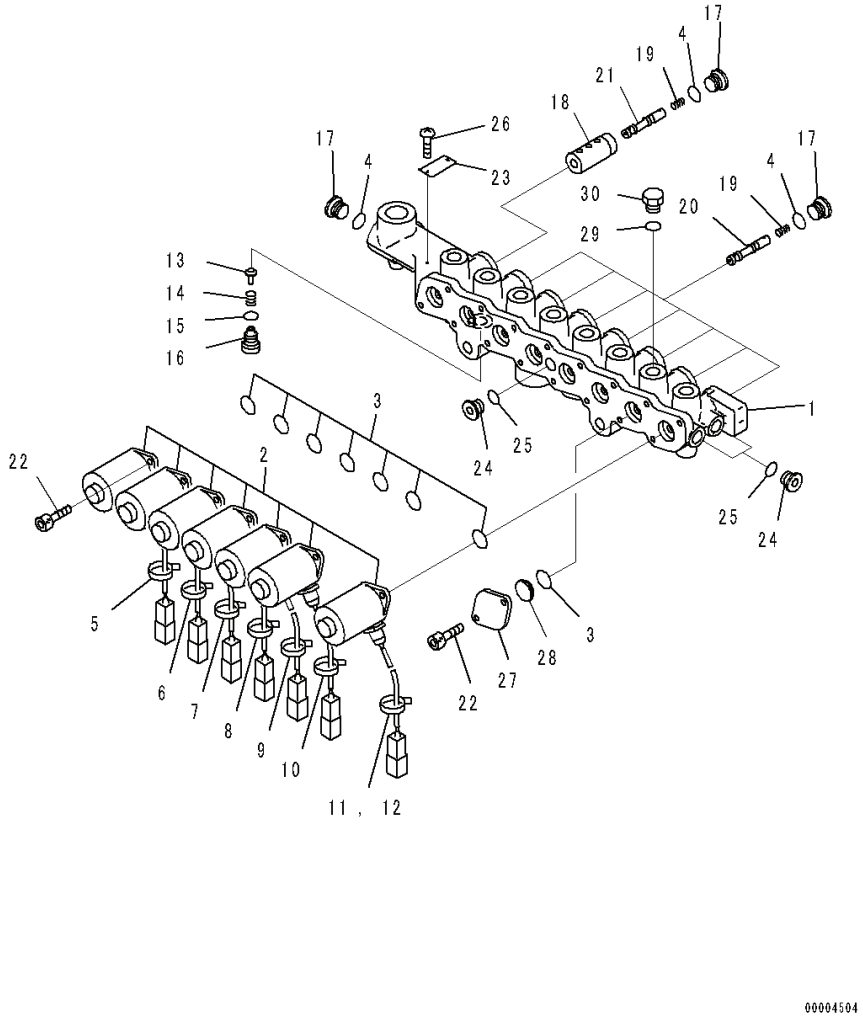

Index	Code	Part Number	Descreption	Qty	Serial Number
		207-60-71311	Valve Assembly	1	Y300001-
1		20Y-60-31221	• Block	1	Y300001-
2		20Y-60-32121	• Solenoid Assembly	7	Y300001-
3		20Y-60-31240	• O-ring	8	Y300001-
4		20Y-60-31250	• O-ring	9	Y300001-
5		NY07207-11700	• Tube	1	Y300001-
6		NY07529-10200	• Tube	1	Y300001-
7		NY07529-10300	• Tube	1	Y300001-
8		NY07529-10400	• Tube	1	Y300001-
9		NY07529-10500	• Tube	1	Y300001-
10		NY07529-10600	• Tube	1	Y300001-
11		NY07207-11800	• Tube	1	Y300001-
12		NY89103-00090	• Band	7	Y300001-
13		NY05062-1170A	• Plunger	1	Y300001-
14		NY05062-11800	• Spring	1	Y300001-
15		NY86711-01010	• O-ring	1	Y300001-
16		NY06277-1320A	• Plug	1	Y300001-
17		NY80000-02200	• Plug	9	Y300001-
18		NY16207-10200	• Sleeve	1	Y300001-
19		NY06339-10200	• Spring	8	Y300001-
20		NY07493-10200	• Spool	7	Y300001-
21		NY16207-10300	• Spool	1	Y300001-
22		NY81446-05012	• Bolt	16	Y300001-
23		NY09000-11400	• Plate	1	Y300001-
24		NY80000-02100	• Plug	3	Y300001-
25		07000-11008	• O-ring	3	Y300001-
26		NY84110-00248	• Screw	2	Y300001-
27		NY07926-10100	• Plate	1	Y300001-
28		NY01720-10600	• Stopper	1	Y300001-
29		07002-11423	• O-ring	1	Y300001-
30		07040-11409	• Plug	1	Y300001-

FIG. H1831-001002 Solenoid Valve Circuit, Solenoid Valve (2/2)

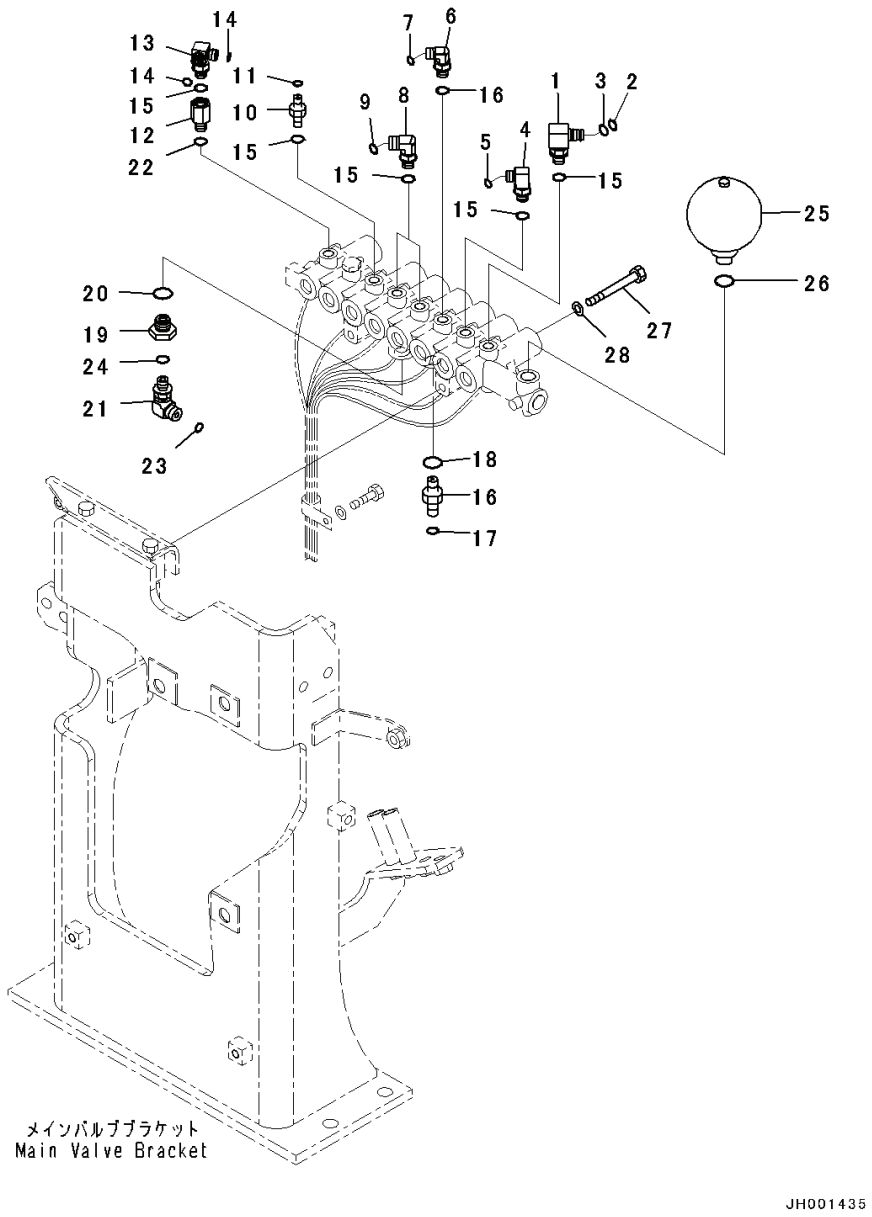

Index	Code	Part Number	Descreption	Qty	Serial Number
1		20Y-62-22271	Elbow	1	Y300001-
2		201-60-11390	• O-ring	1	Y300001-
3		20Y-62-19560	• O-ring	1	Y300001-
4		207-62-72120	Elbow	1	Y300001-
5		02896-11008	O-ring	1	Y300001-
6		11Y-62-12160	Elbow	1	Y300001-
7		02896-11008	O-ring	1	Y300001-
8		21W-62-42490	Elbow	2	Y300001-
9		02896-11009	O-ring	2	Y300001-
10		11Y-62-12130	Nipple	1	Y300001-
11		02896-11009	O-ring	1	Y300001-
12		21M-62-16350	Adapter	1	Y300001-
13		207-62-72141	Elbow	1	Y300001-
14		02896-11008	O-ring	2	Y300001-
15		07002-11423	O-ring	7	Y300001-
16		02781-00422	Union	1	Y300001-
17		02896-11012	O-ring	1	Y300001-
18		07002-12034	O-ring	1	Y300001-
19		20Y-62-21940	Filter Assembly	1	Y300001-
20		07002-12034	O-ring	1	Y300001-
21		21W-62-42490	Elbow	1	Y300001-
22		07002-11423	O-ring	1	Y300001-
23		02896-11009	O-ring	1	Y300001-
24		07002-11423	O-ring	1	Y300001-
25		22U-60-21330	Accumulator	1	Y300001-
26		07002-12034	O-ring	1	Y300001-
27		01010-81095	Bolt	2	Y300001-
28		01643-31032	Washer	2	Y300001-

PC300-8 (FEN01263-00)

FIG. H1831-001003 Solenoid Valve Circuit, Hose and Bracket

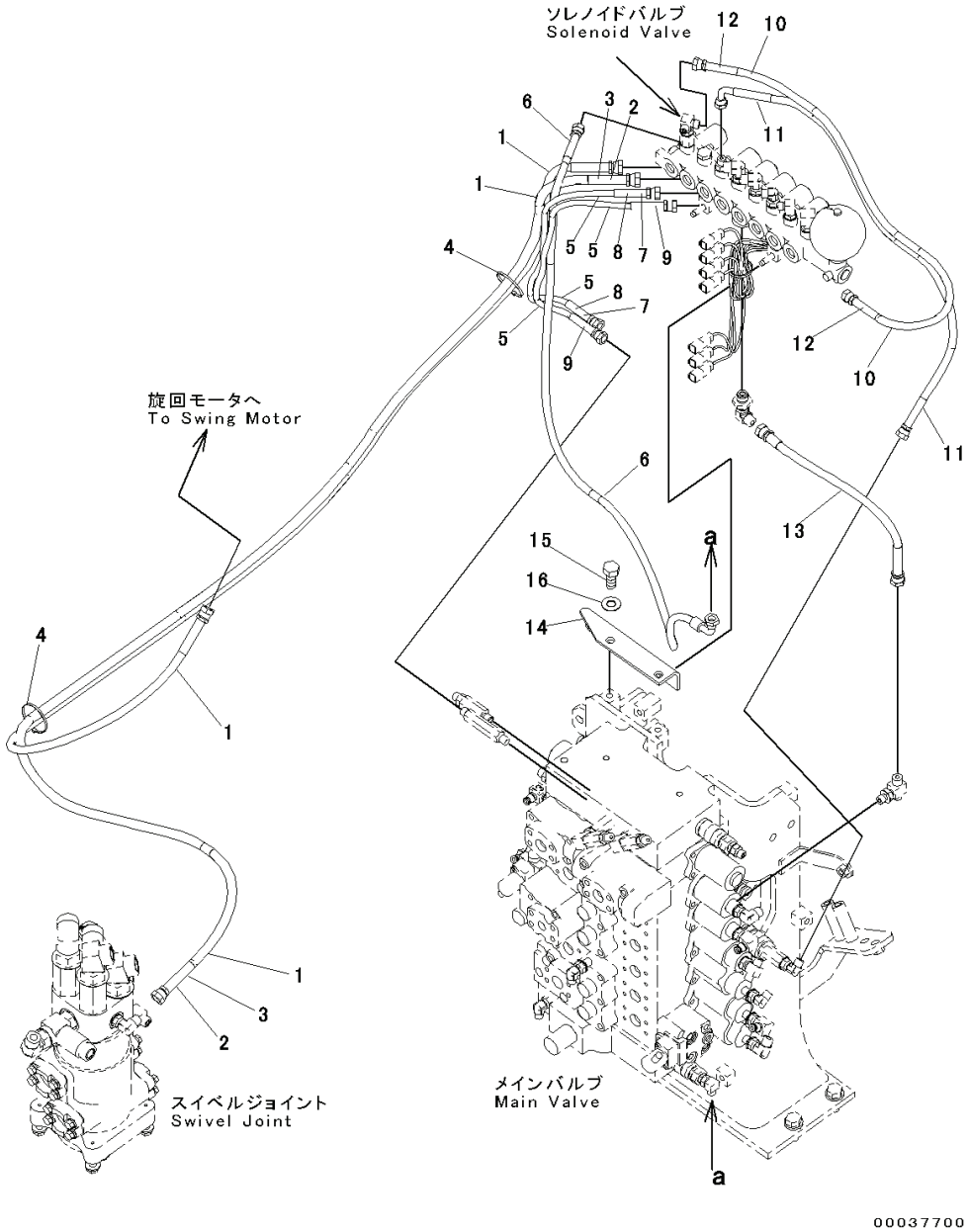

Index	Code	Part Number	Descreption	Qty	Serial Number
1		208-62-72131	Hose	2	Y300001-
2		20Y-62-22790	Band, Red	2	Y300001-
3		20Y-62-22810	Band, Yellow	2	Y300001-
4		08034-20519	Band	2	Y300001-
5		02760-002A6	Hose, Face Seal Type	2	Y300001-
6		02760-00215	Hose, Face Seal Type	1	Y300001-
7		20Y-62-22810	Band, Yellow	2	Y300001-
8		20Y-62-22820	Band, Blue	2	Y300001-
9		20Y-62-22860	Band, Brown	2	Y300001-
10		208-62-72180	Hose	1	Y300001-
11		208-62-72190	Hose	1	Y300001-
12		20Y-62-22820	Band, Blue	2	Y300001-
13		208-62-71640	Hose	1	Y300001-
14		207-62-71510	Bracket	1	Y300001-
15		01010-81230	Bolt	2	Y300001-
16		01643-31232	Washer	2	Y300001-

PC300-8 (FEN01263-00)

FIG. H1831-001004 Solenoid Valve Circuit, Clamp

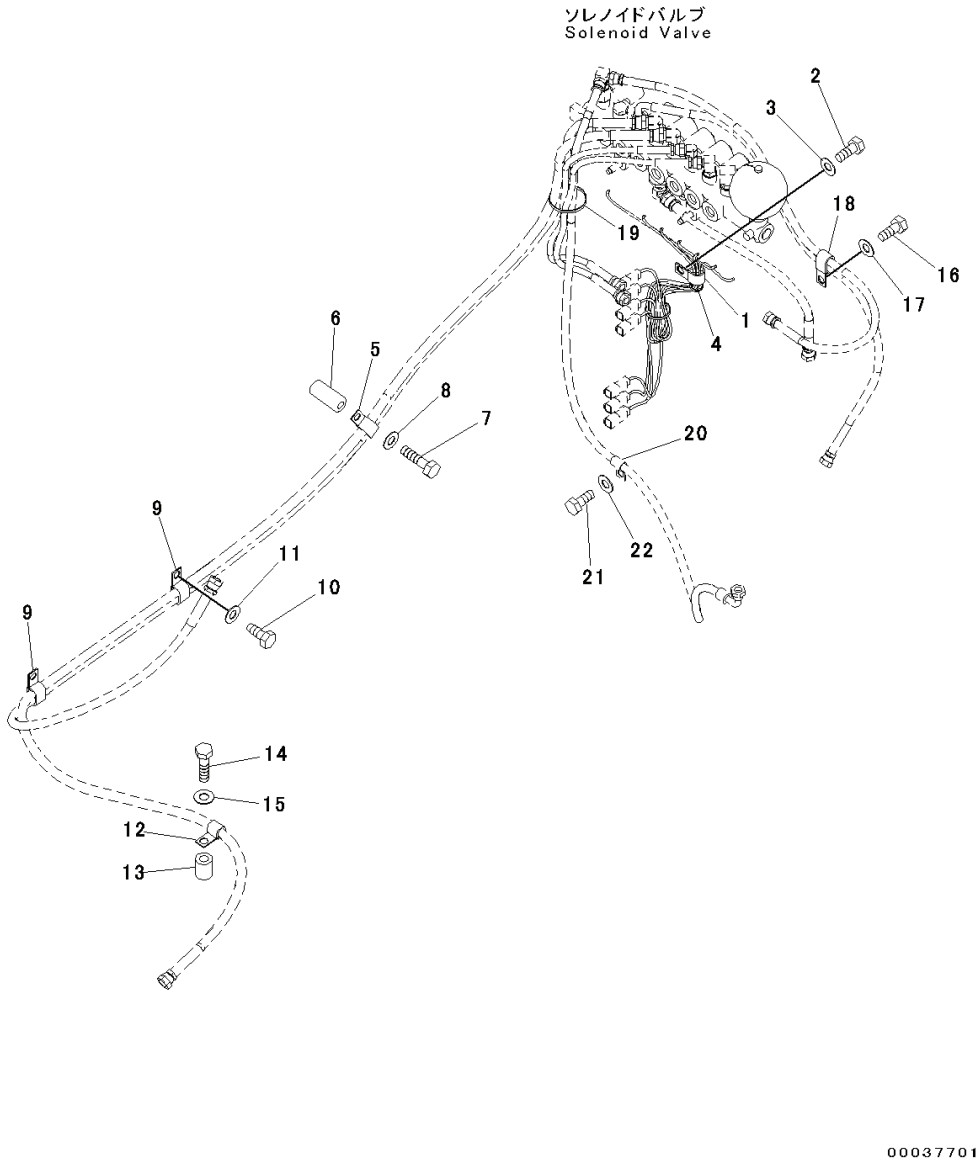

Index	Code	Part Number	Descreption	Qty	Serial Number
1		04434-51912	Clip	1	Y300001-
2		01010-81225	Bolt	1	Y300001-
3		01643-31232	Washer	1	Y300001-
4		08034-20536	Band	1	Y300001-
5		04435-51512	Clip	1	Y300001-
6		176-38-41350	Spacer	1	Y300001-
7		01010-81285	Bolt	1	Y300001-
8		01643-31232	Washer	1	Y300001-
9		04435-51512	Clip	2	Y300001-
10		01010-81225	Bolt	2	Y300001-
11		01643-31232	Washer	2	Y300001-
12		04434-51512	Clip	1	Y300001-
13		142-03-11160	Spacer	1	Y300001-
14		01010-81260	Bolt	1	Y300001-
15		01643-31232	Washer	1	Y300001-
16		01010-81225	Bolt	1	Y300001-
17		01643-31232	Washer	1	Y300001-
18		04435-51512	Clip	1	Y300001-
19		08034-20536	Band	1	Y300001-
20		04434-51212	Clip	1	Y300001-
21		01010-81220	Bolt	1	Y300001-
22		01643-31232	Washer	1	Y300001-

PC300-8 (FEN01263-00)

FIG. H1831-002001 Solenoid Valve Circuit, For Additional Actuator Circuit, Solenoid Valve

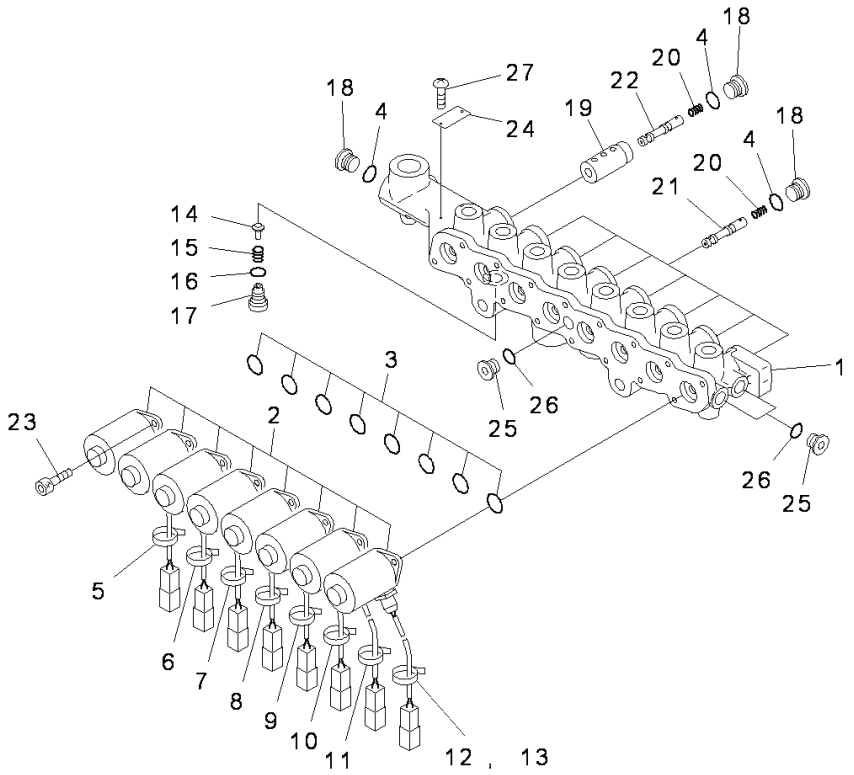

00004505

Index	Code	Part Number	Descreption	Qty	Serial Number
		207-60-71320	Valve Assembly	1	Y300001-
1	C1		• Block	1	Y300001-
2		20Y-60-32120	• Solenoid Assembly	8	Y300001-
3		07000-12016	• O-ring	8	Y300001-
4		07000-12011	• O-ring	9	Y300001-
5		NY07207-11700	• Tube	1	Y300001-
6		NY07529-10200	• Tube	1	Y300001-
7		NY07529-10300	• Tube	1	Y300001-
8		NY07529-10400	• Tube	1	Y300001-
9		NY07529-10500	• Tube	1	Y300001-
10		NY07529-10600	• Tube	1	Y300001-
11		NY07505-10200	• Tube	1	Y300001-
12		NY07880-10900	• Tube	1	Y300001-
13		NY89103-00090	• Band	8	Y300001-
14		NY05062-1170A	• Plunger	1	Y300001-
15		NY05062-11800	• Spring	1	Y300001-
16		07000-11010	• O-ring	1	Y300001-
17		NY06277-1320A	• Plug	1	Y300001-
18		NY80000-02200	• Plug	9	Y300001-
19		NY16207-10200	• Sleeve	1	Y300001-
20		NY06339-10200	• Spring	8	Y300001-
21		NY07493-10200	• Spool	7	Y300001-
22		NY16207-10300	• Spool	1	Y300001-
23		NY81446-05012	• Bolt	16	Y300001-
24		NY09000-11400	• Plate	1	Y300001-
25		NY80000-02100	• Plug	3	Y300001-
26		07000-11008	• O-ring	3	Y300001-
27		NY84110-00248	• Screw	2	Y300001-

FIG. H1831-002002 Solenoid Valve Circuit, For Additional Actuator Circuit

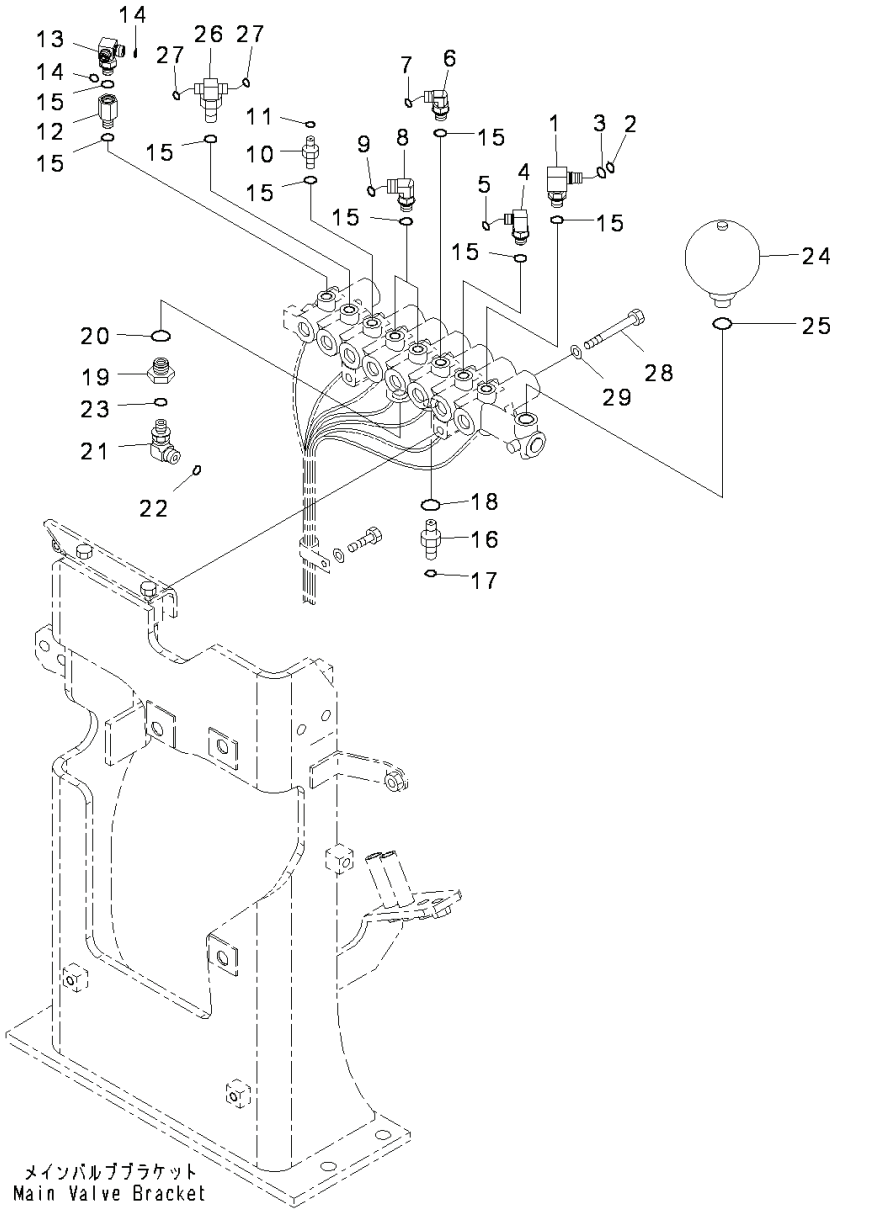

Index	Code	Part Number	Descreption	Qty	Serial Number
1		20Y-62-22271	Elbow	1	Y300001-
2		201-60-11390	• O-ring	1	Y300001-
3		20Y-62-19560	• O-ring	1	Y300001-
4		207-62-72120	Elbow	1	Y300001-
5		02896-11008	O-ring	1	Y300001-
6		11Y-62-12160	Elbow	1	Y300001-
7		02896-11008	O-ring	1	Y300001-
8		21W-62-42490	Elbow	2	Y300001-
9		02896-11009	O-ring	2	Y300001-
10		11Y-62-12130	Nipple	1	Y300001-
11		02896-11009	O-ring	1	Y300001-
12		21M-62-16350	Adapter	1	Y300001-
13		207-62-72141	Elbow	1	Y300001-
14		02896-11008	O-ring	2	Y300001-
15		07002-11423	O-ring	8	Y300001-
16		02781-00422	Union	1	Y300001-
17		02896-11012	O-ring	1	Y300001-
18		07002-12034	O-ring	1	Y300001-
19		20Y-62-21940	Filter Assembly	1	Y300001-
20		07002-12034	O-ring	1	Y300001-
21		21W-62-42490	Elbow	1	Y300001-
22		02896-11009	O-ring	1	Y300001-
23		07002-11423	O-ring	1	Y300001-
24		22U-60-21330	Accumulator	1	Y300001-
25		07002-12034	O-ring	1	Y300001-
26		20Y-62-43690	Tee	1	Y300001-
27		02896-11008	O-ring	2	Y300001-
28		01010-81095	Bolt	2	Y300001-
29		01643-31032	Washer	2	Y300001-

PC300-8 (FEN01263-00)

FIG. H1831-002003 Solenoid Valve Circuit, For Additional Actuator Circuit, Hose and Bracket

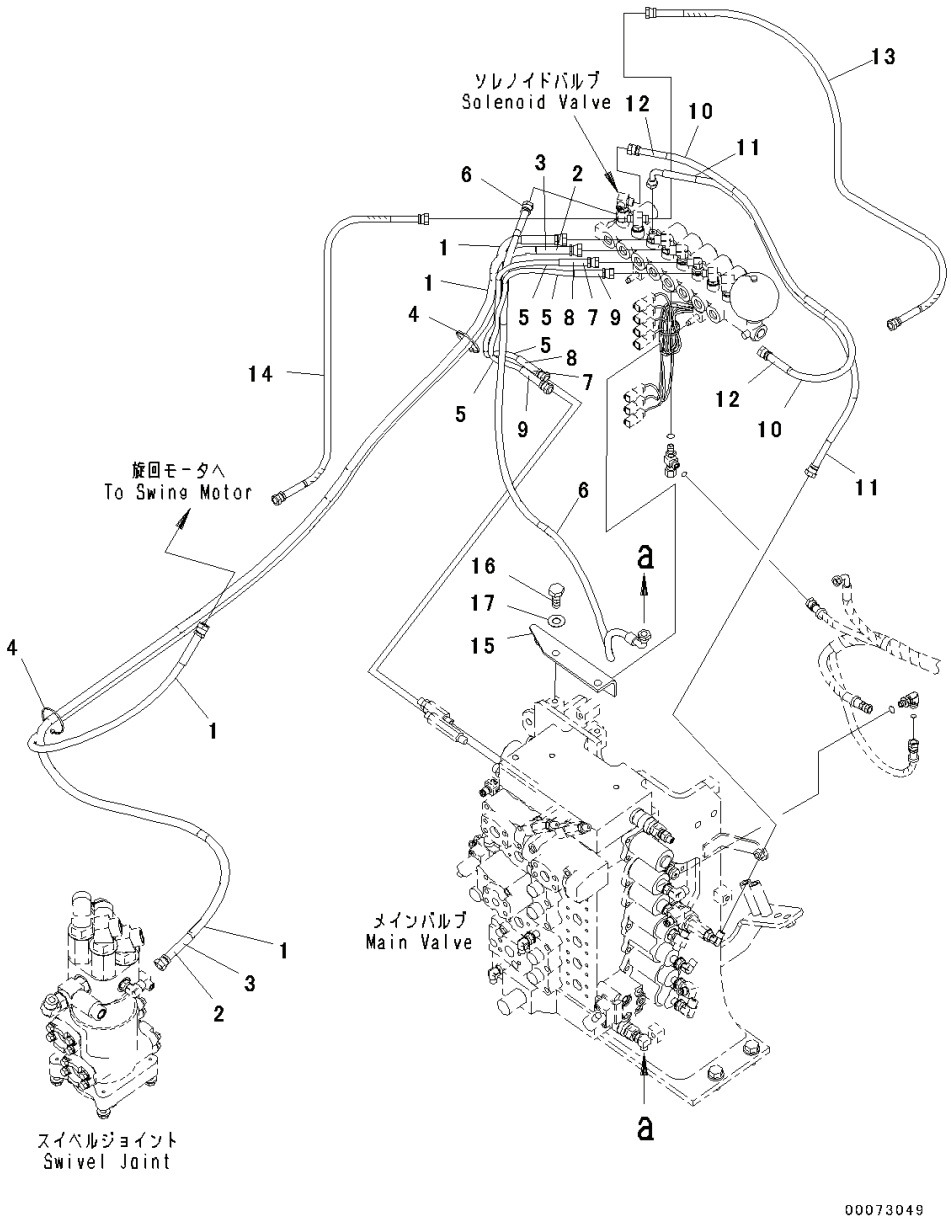

Index	Code	Part Number	Descreption	Qty	Serial Number
1		208-62-72131	Hose	2	Y300001-
2		20Y-62-22790	Band, Red	2	Y300001-
3		20Y-62-22810	Band, Yellow	2	Y300001-
4		08034-20519	Band	2	Y300001-
5		02760-002A6	Hose, Face Seal Type	2	Y300001-
6		02760-00215	Hose, Face Seal Type	1	Y300001-
7		20Y-62-22810	Band, Yellow	2	Y300001-
8		20Y-62-22820	Band, Blue	2	Y300001-
9		20Y-62-22860	Band, Brown	2	Y300001-
10		208-62-72180	Hose	1	Y300001-
11		208-62-72190	Hose	1	Y300001-
12		20Y-62-22820	Band, Blue	2	Y300001-
13		207-62-73380	Hose	1	Y300001-
14		02760-002A5	Hose, Face Seal Type	1	Y300001-
15		207-62-71510	Bracket	1	Y300001-
16		01010-81230	Bolt	2	Y300001-
17		01643-31232	Washer	2	Y300001-

PC300-8 (FEN01263-00)

FIG. H1831-002004 Solenoid Valve Circuit, For Additional Actuator Circuit, Clamp

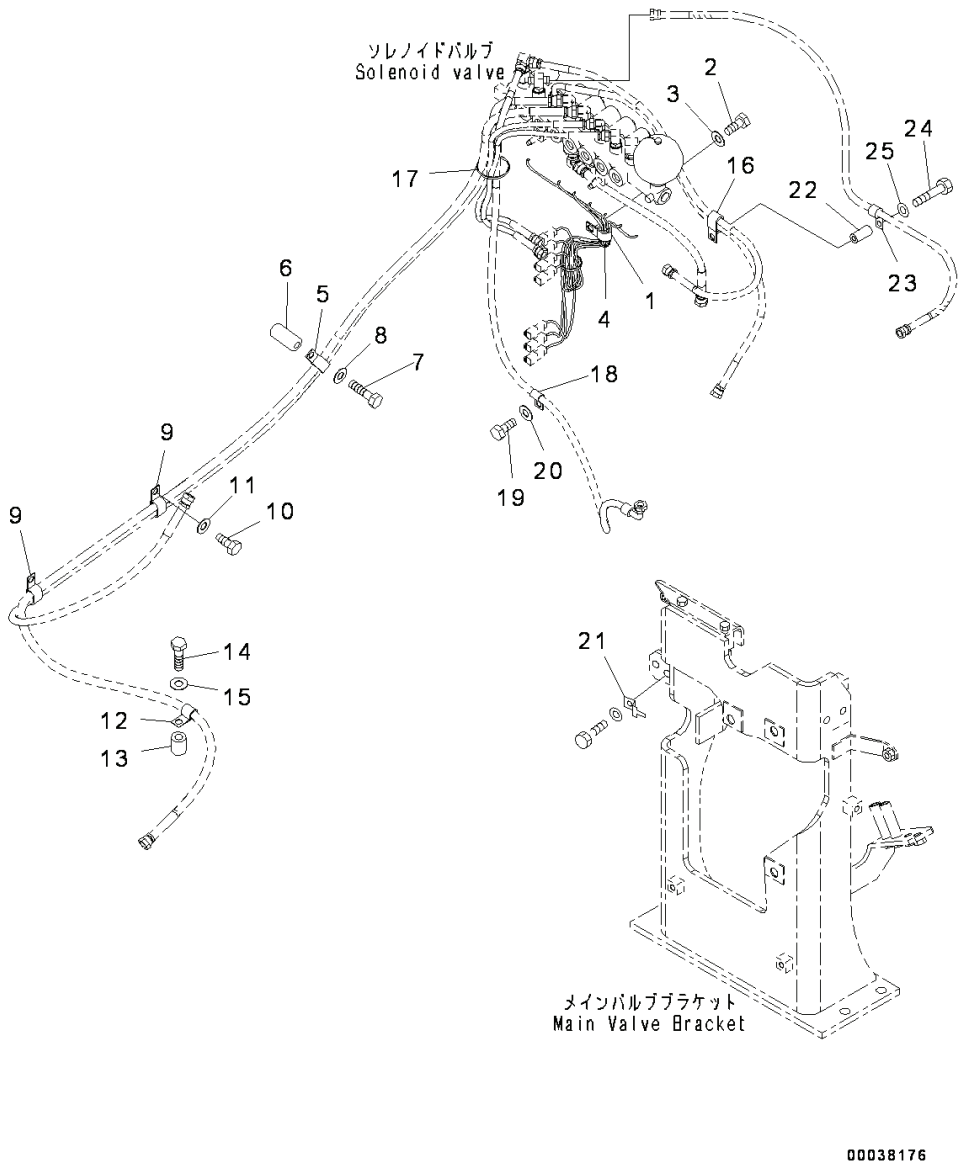

Index	Code	Part Number	Descreption	Qty	Serial Number
1		04434-51912	Clip	1	Y300001-
2		01010-81225	Bolt	1	Y300001-
3		01643-31232	Washer	1	Y300001-
4		08034-20536	Band	2	Y300001-
5		04435-51512	Clip	1	Y300001-
6		142-03-11160	Spacer	1	Y300001-
7		01010-81260	Bolt	1	Y300001-
8		01643-31232	Washer	1	Y300001-
9		04435-51512	Clip	2	Y300001-
10		01010-81225	Bolt	2	Y300001-
11		01643-31232	Washer	2	Y300001-
12		04434-51512	Clip	1	Y300001-
13		142-03-11160	Spacer	1	Y300001-
14		01010-81260	Bolt	1	Y300001-
15		01643-31232	Washer	1	Y300001-
16		04435-51512	Clip	1	Y300001-
17		08034-20536	Band	1	Y300001-
18		04434-51212	Clip	1	Y300001-
19		01010-81220	Bolt	1	Y300001-
20		01643-31232	Washer	1	Y300001-
21		08193-21012	Clip	1	Y300001-
22		142-03-11160	Spacer	1	Y300001-
23		04434-51012	Clip	1	Y300001-
24		01010-81260	Bolt	1	Y300001-
25		01643-31232	Washer	1	Y300001-

PC300-8 (FEN01263-00)

FIG. H1833-001001 Pressure Switch Block

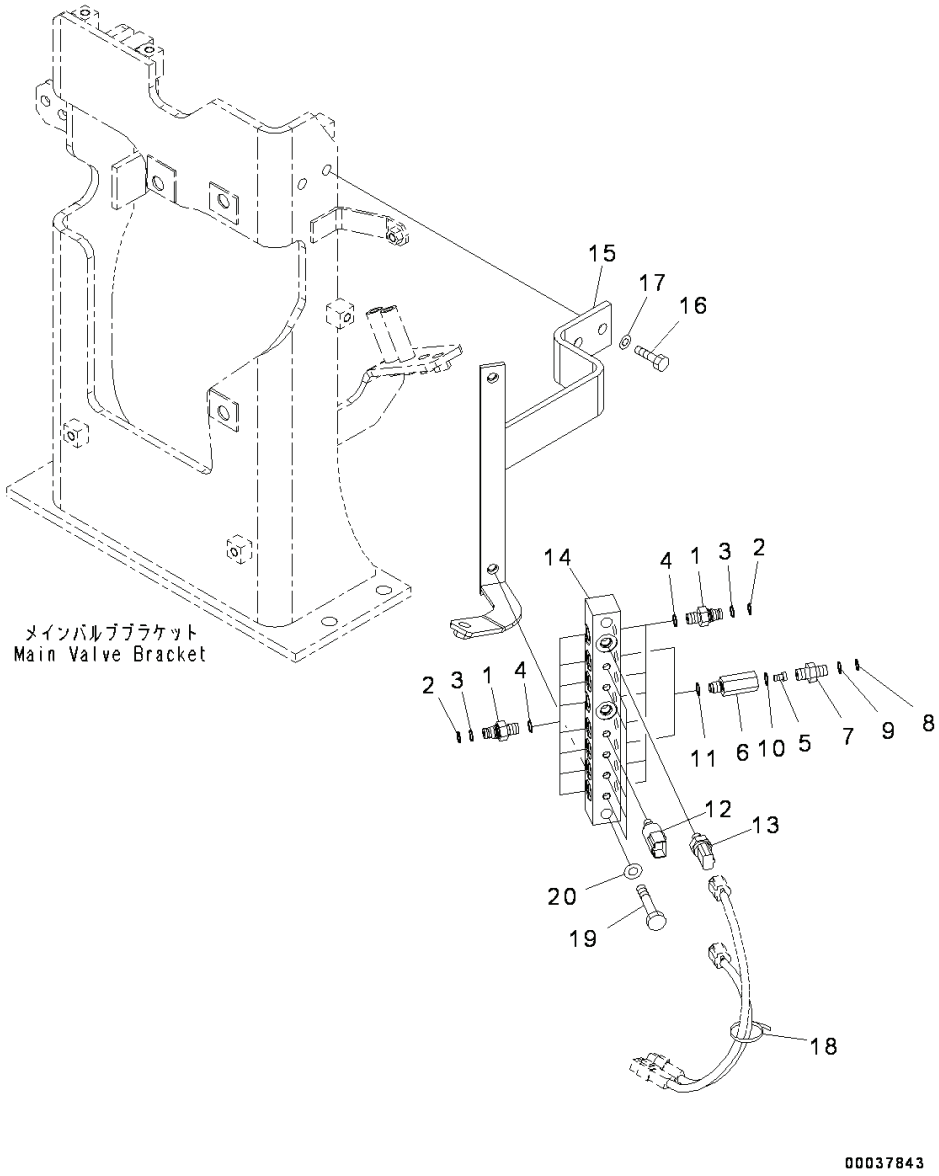

Index	Code	Part Number	Descreption	Qty	Serial Number
1		20Y-62-16630	Nipple	14	Y300001-
2		201-60-11390	• O-ring	1	Y300001-
3		20Y-62-19560	• O-ring	1	Y300001-
4		07002-11423	O-ring	14	Y300001-
		20Y-60-22201	Valve Assembly	2	Y300001-
5		20Y-60-11750	• Poppet	1	Y300001-
6		20Y-60-22350	• Body	1	Y300001-
7		20Y-62-22410	• Nipple	1	Y300001-
8		201-60-11390	• • O-ring	1	Y300001-
9		20Y-62-19560	• • O-ring	1	Y300001-
10		07002-01423	• O-ring	1	Y300001-
11		07002-11423	O-ring	2	Y300001-
12		206-06-61130	Switch	6	Y300001-
13		7861-93-1840	Sensor	2	Y300001-
14		207-62-74980	Block	1	Y300001-
15		207-62-74622	Bracket	1	61290-
16		01010-81245	Bolt	2	61290-
17		01643-31232	Washer	2	61290-
18		08034-20536	Band	1	Y300001-
19		01010-81260	Bolt	2	Y300001-
20		01643-31232	Washer	2	Y300001-

PC300-8 (FEN01263-00)

FIG. H1840-001001 Proportional Pressure Control (PPC) Valve Circuit

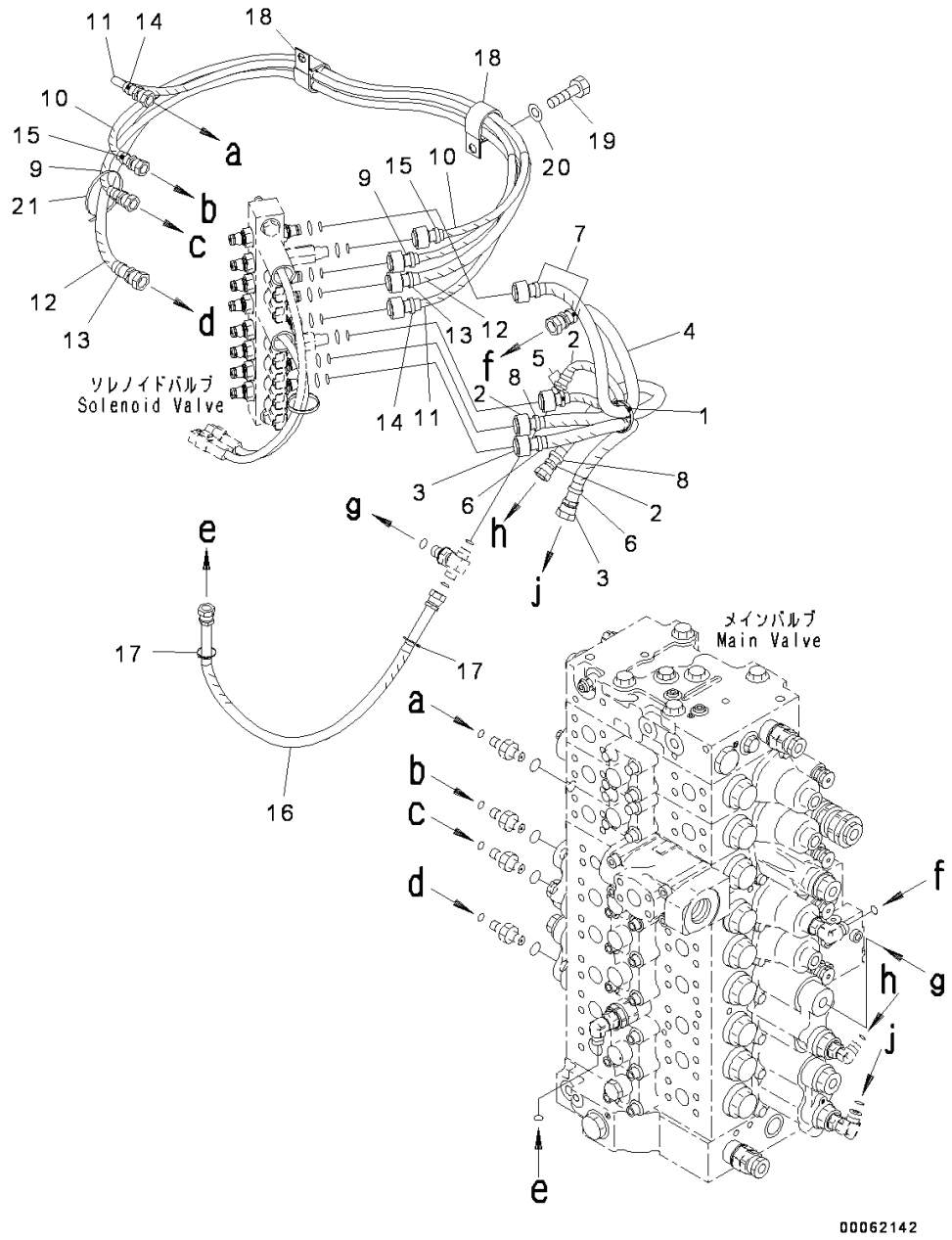

Index	Code	Part Number	Descreption	Qty	Serial Number
1		08034-20536	Band	1	Y300001-
2		208-62-72210	Hose	2	Y300001-
3		208-62-72230	Hose	1	Y300001-
4		208-62-72240	Hose	1	Y300001-
5		20Y-62-22790	Band, Red	2	Y300001-
6		20Y-62-22810	Band, Yellow	2	Y300001-
7		20Y-62-22830	Band, White	2	Y300001-
8		20Y-62-22850	Band, Green	2	Y300001-
9		207-62-72550	Hose	1	Y300001-
10		207-62-72560	Hose	1	Y300001-
11		207-62-72630	Hose	1	Y300001-
12		207-62-72640	Hose	1	Y300001-
13		20Y-62-22820	Band, Blue	2	Y300001-
14		20Y-62-22840	Band, Black	2	Y300001-
15		20Y-62-22860	Band, Brown	2	Y300001-
16		208-62-71670	Hose	1	Y300001-
17		08034-20536	Band	2	Y300001-
18		113-899-7950	Clip	2	Y300001-
19		01010-81225	Bolt	2	Y300001-
20		01643-31232	Washer	2	Y300001-
21		08034-20536	Band	1	Y300001-

PC300-8 (FEN01263-00)

FRAME AND ITS RELATED PARTS

FIG. J1110-001001 Revolving Frame

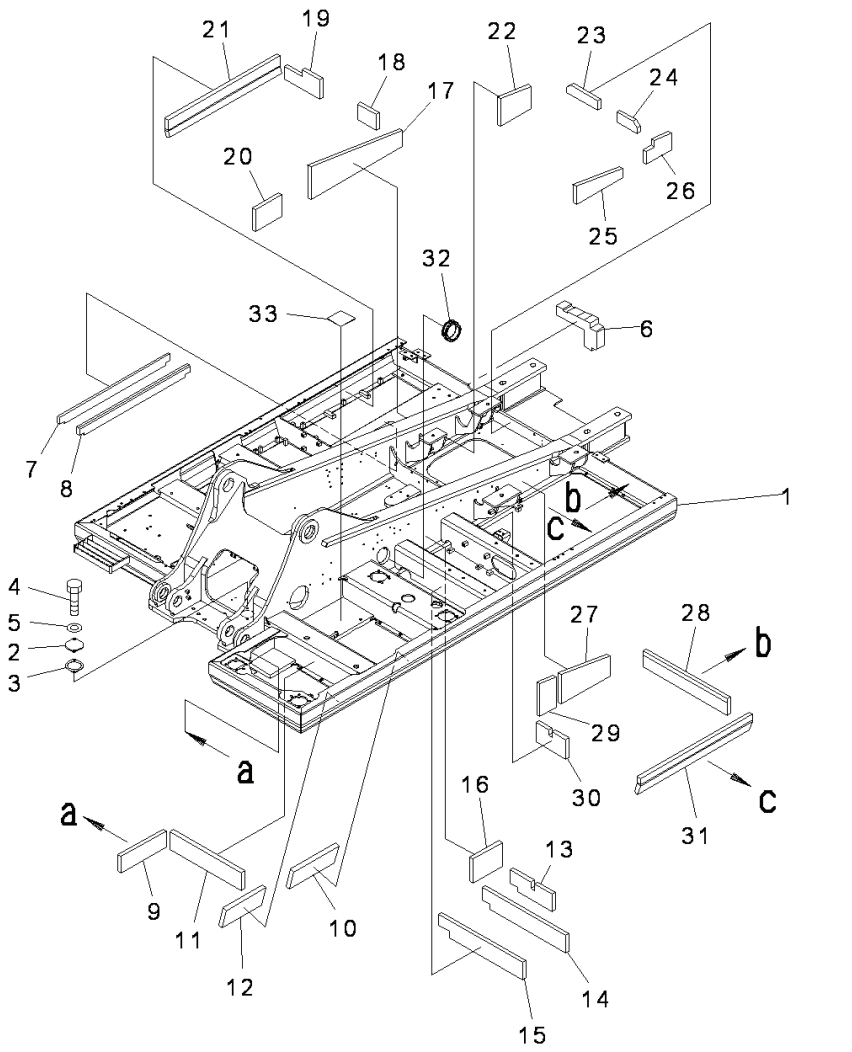

Index	Code	Part Number	Descreption	Qty	Serial Number
1		207-46-75502	Frame	1	60772-
2		205-30-71181	Cover	1	Y300001-
3		205-30-71191	Gasket	1	Y300001-
4		01010-81230	Bolt	2	Y300001-
5		01643-31232	Washer	2	Y300001-
6		207-46-77310	Sheet	1	Y300001-
7		207-46-77321	Sheet	1	Y300001-
8		207-46-77331	Sheet	1	Y300001-
9		20Y-46-42320	Sheet	1	Y300001-
10		20Y-46-42330	Sheet	1	Y300001-
11		20Y-46-42340	Sheet	1	Y300001-
12		207-46-71510	Sheet	1	Y300001-
13		207-46-78430	Sheet	1	Y300001-
14		207-46-78440	Sheet	1	Y300001-
15		207-46-78450	Sheet	1	Y300001-
16		207-46-78421	Sheet	1	Y300001-
17		207-46-78120	Sheet	1	Y300001-
18		207-46-78230	Sheet	1	Y300001-
19		207-46-78480	Sheet	1	Y300001-
20		207-46-78520	Sheet	1	Y300001-
21		208-46-75110	Sheet	1	Y300001-
22		207-46-78130	Sheet	1	Y300001-
23		207-46-78210	Sheet	1	Y300001-
24		207-46-78221	Sheet	1	Y300001-
25		207-46-78291	Sheet	1	Y300001-
26		207-46-78311	Sheet	1	Y300001-
27		207-46-78110	Sheet	1	Y300001-
28		207-46-78160	Sheet	1	Y300001-
29		207-46-78320	Sheet	1	Y300001-
30		207-46-78410	Sheet	1	Y300001-
31		208-46-75110	Sheet	1	Y300001-
32		207-62-71791	Grommet	1	Y300001-
33		203-62-52210	Rubber	1	Y300001-

PC300-8 (FEN01263-00)

FIG. J1110-002001 Revolving Frame, With Deck Guard

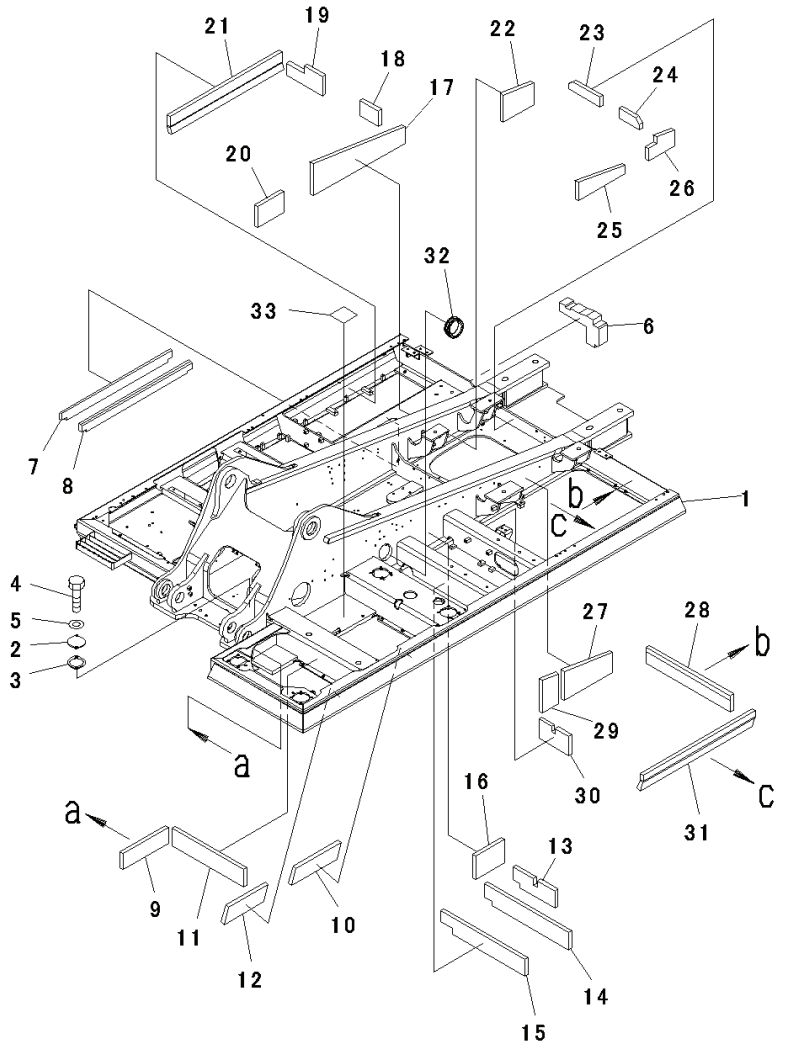

Index	Code	Part Number	Descreption	Qty	Serial Number
1		207-46-75602	Frame	1	Y300001-
2		205-30-71181	Cover	1	Y300001-
3		205-30-71191	Gasket	1	Y300001-
4		01010-81230	Bolt	2	Y300001-
5		01643-31232	Washer	2	Y300001-
6		207-46-77310	Sheet	1	Y300001-
7		207-46-77321	Sheet	1	Y300001-
8		207-46-77331	Sheet	1	Y300001-
9		20Y-46-42320	Sheet	1	Y300001-
10		20Y-46-42330	Sheet	1	Y300001-
11		20Y-46-42340	Sheet	1	Y300001-
12		207-46-71510	Sheet	1	Y300001-
13		207-46-78430	Sheet	1	Y300001-
14		207-46-78440	Sheet	1	Y300001-
15		207-46-78450	Sheet	1	Y300001-
16		207-46-78421	Sheet	1	Y300001-
17		207-46-78120	Sheet	1	Y300001-
18		207-46-78230	Sheet	1	Y300001-
19		207-46-78480	Sheet	1	Y300001-
20		207-46-78520	Sheet	1	Y300001-
21		208-46-75110	Sheet	1	Y300001-
22		207-46-78130	Sheet	1	Y300001-
23		207-46-78210	Sheet	1	Y300001-
24		207-46-78221	Sheet	1	Y300001-
25		207-46-78291	Sheet	1	Y300001-
26		207-46-78311	Sheet	1	Y300001-
27		207-46-78110	Sheet	1	Y300001-
28		207-46-78160	Sheet	1	Y300001-
29		207-46-78320	Sheet	1	Y300001-
30		207-46-78410	Sheet	1	Y300001-
31		208-46-75110	Sheet	1	Y300001-
32		207-62-71791	Grommet	1	Y300001-
33		203-62-52210	Rubber	1	Y300001-

PC300-8 (FEN01263-00)

FIG. J1110-004001 Revolving Frame, For Machine With WEBASTO Coolant Heater

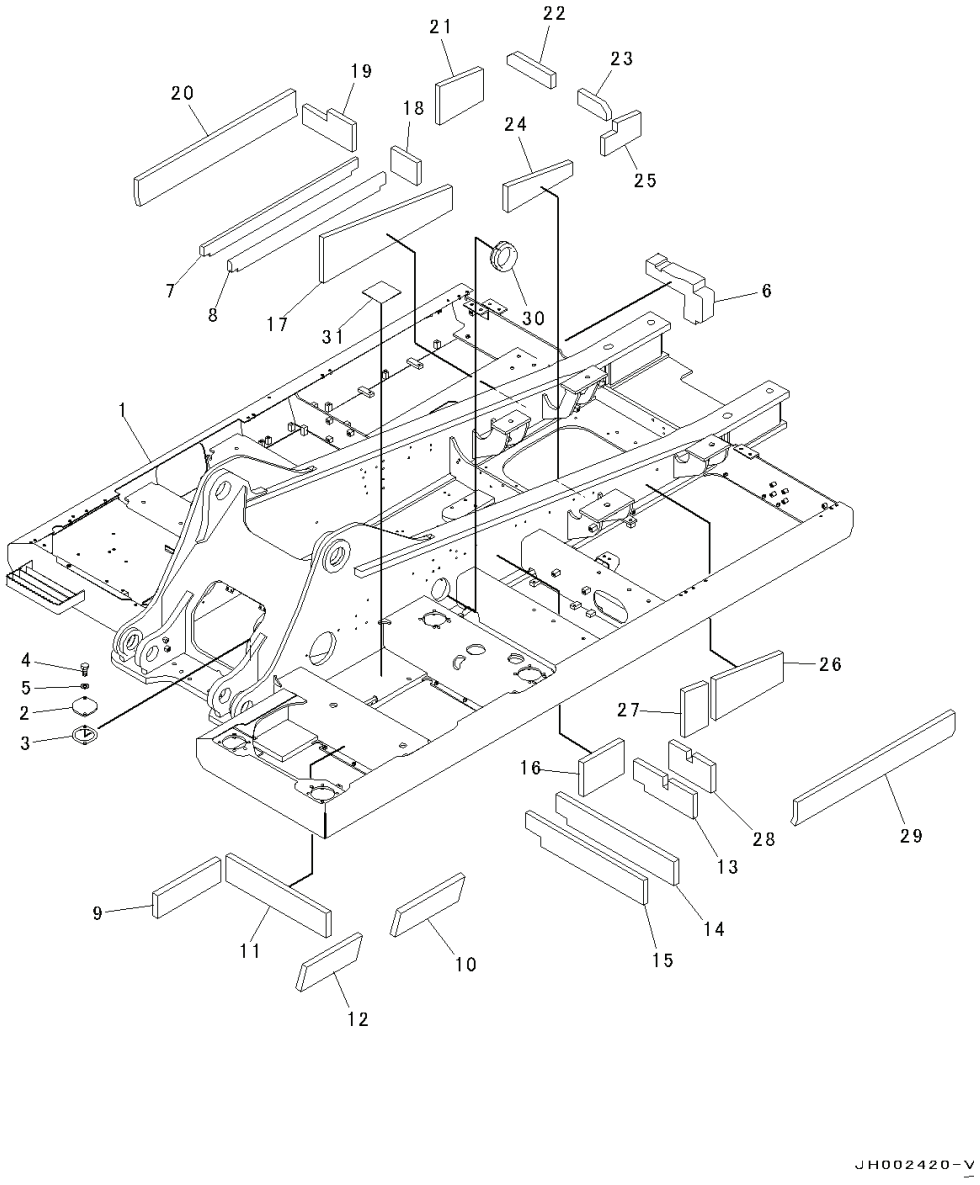

Index	Code	Part Number	Descreption	Qty	Serial Number
1		207-46-75900	Frame	1	Y300001-
2		205-30-71181	Cover	1	Y300001-
3		205-30-71191	Gasket	1	Y300001-
4		01010-81230	Bolt	2	Y300001-
5		01643-31232	Washer	2	Y300001-
6		207-46-77310	Sheet	1	Y300001-
7		207-46-77321	Sheet	1	Y300001-
8		207-46-77331	Sheet	1	Y300001-
9		20Y-46-42320	Sheet	1	Y300001-
10		20Y-46-42330	Sheet	1	Y300001-
11		20Y-46-42340	Sheet	1	Y300001-
12		207-46-71510	Sheet	1	Y300001-
13		207-46-78430	Sheet	1	Y300001-
14		207-46-78440	Sheet	1	Y300001-
15		207-46-78450	Sheet	1	Y300001-
16		207-46-78421	Sheet	1	Y300001-
17		207-46-78120	Sheet	1	Y300001-
18		207-46-78230	Sheet	1	Y300001-
19		207-46-78480	Sheet	1	Y300001-
20		208-46-75110	Sheet	1	Y300001-
21		207-46-78130	Sheet	1	Y300001-
22		207-46-78210	Sheet	1	Y300001-
23		207-46-78221	Sheet	1	Y300001-
24		207-46-78291	Sheet	1	Y300001-
25		207-46-78311	Sheet	1	Y300001-
26		207-46-78110	Sheet	1	Y300001-
27		207-46-78320	Sheet	1	Y300001-
28		207-46-78410	Sheet	1	Y300001-
29		208-46-75110	Sheet	1	Y300001-
30		207-62-71791	Grommet	1	Y300001-
31		203-62-52210	Rubber	1	Y300001-

PC300-8 (FEN01263-00)

FIG. J1310-002001 Boom Foot Pin, 100 Hours Greasing Type

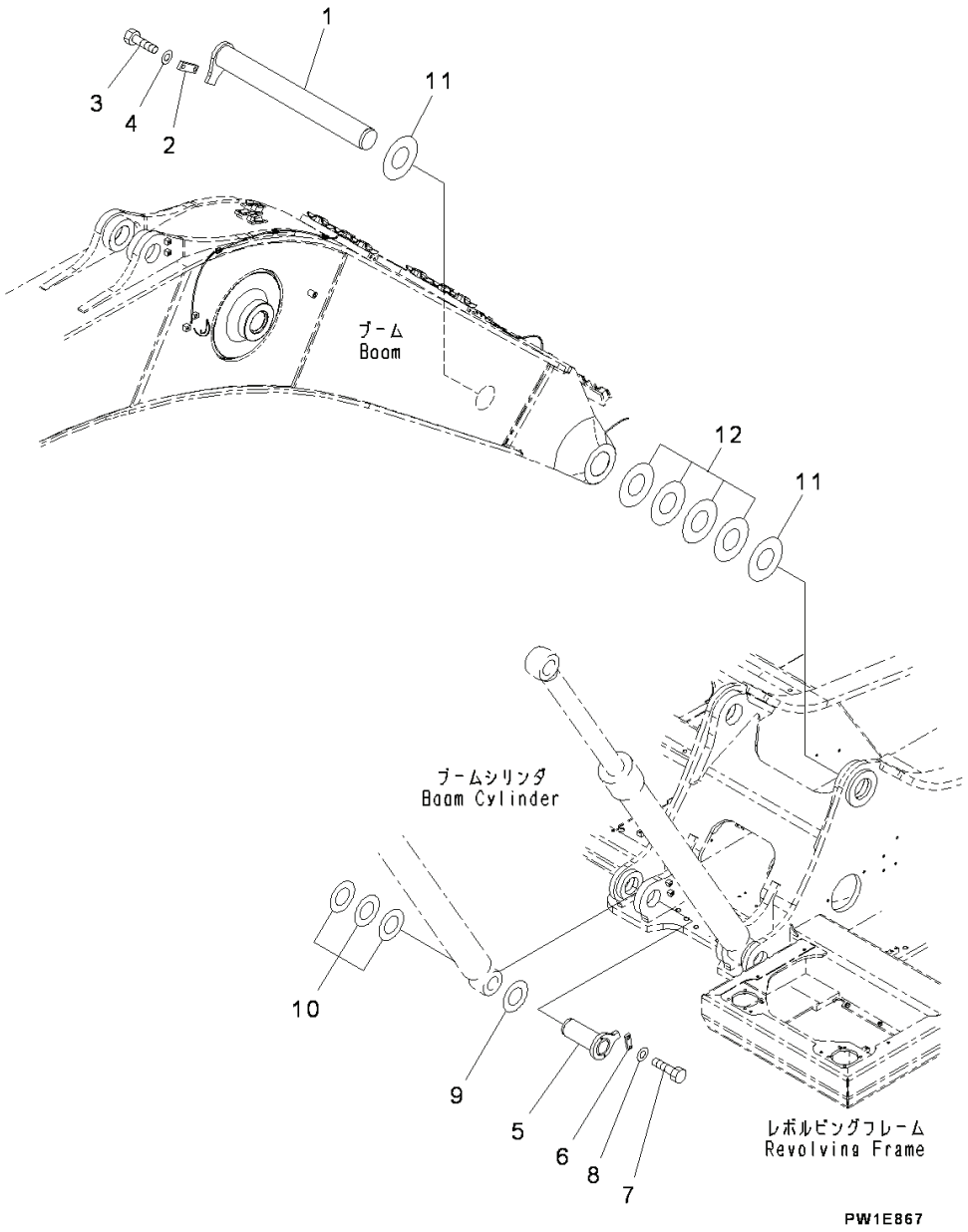

Index	Code	Part Number	Descreption	Qty	Serial Number
1		207-70-71130	Pin	1	Y300001-
2		207-70-31230	Plate	1	Y300001-
3		01010-81640	Bolt	2	Y300001-
4		01643-31645	Washer	2	Y300001-
5		207-70-61210	Pin	2	Y300001-
6		205-70-66580	Plate	2	Y300001-
7		01010-81235	Bolt	4	Y300001-
8		01643-31232	Washer	4	Y300001-
9		207-70-24190	Spacer, T=0.8mm, 0.8MM	2	Y300001-
10		207-70-24210	Spacer, T=1.5mm, 1.5MM	6	Y300001-
11		207-70-31290	Spacer, T=0.8mm, 0.8MM	2	Y300001-
12		207-70-51310	Spacer, T=1.5mm, 1.5MM	4	Y300001-

PC300-8 (FEN01263-00)

OPERATOR'S COMPARTMENT AND CONTROL SYSTEM

FIG. K0110-001001 Operator's Seat, Suspension Type, (1/2)

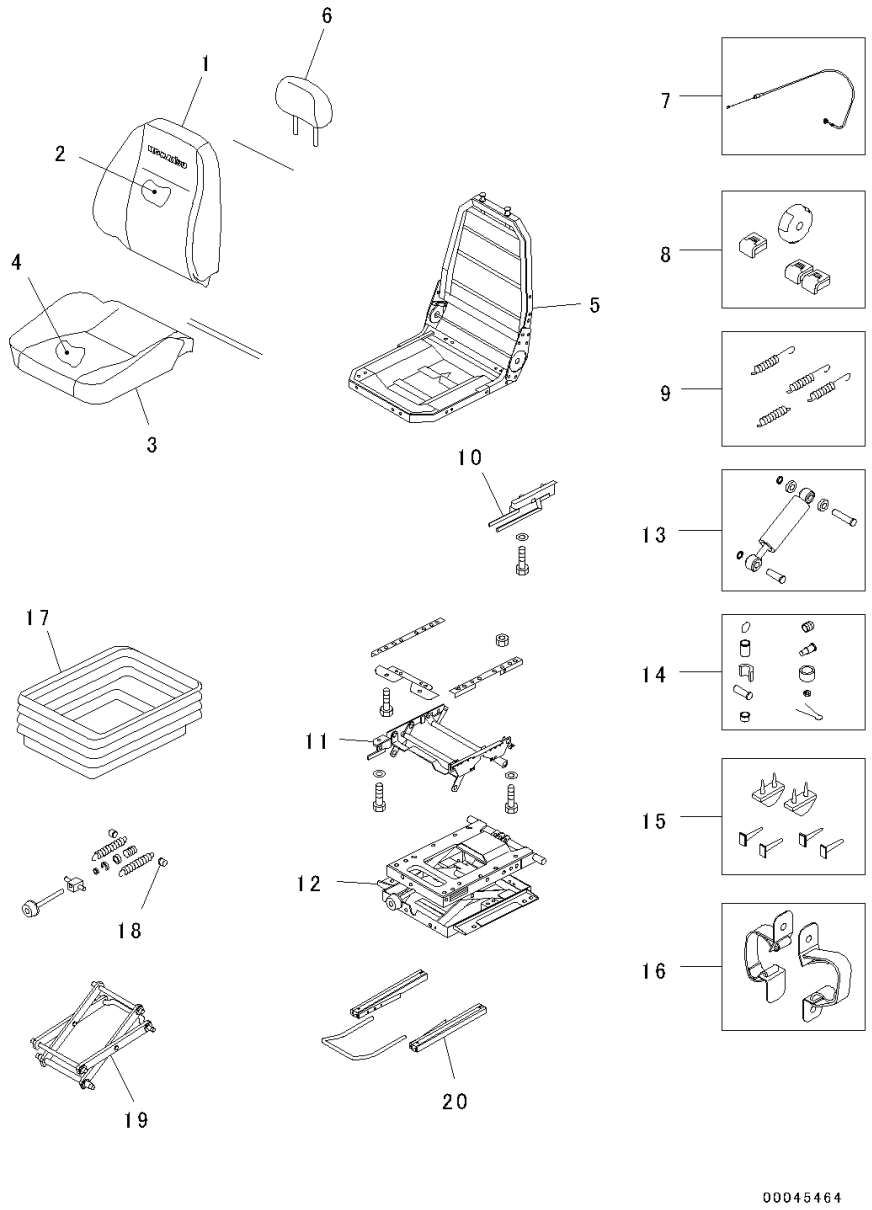

Index	Code	Part Number	Descreption	Qty	Serial Number
		20Y-57-41102	Seat Assembly	1	Y300001-
		AS195381	• Seat Assembly	1	Y300001-
1		AS195367	• • Back Seat Cover Kit	1	Y300001-
2		AS195369	• • Back Seat Foam Kit	1	Y300001-
3		AS195370	• • Seat Cover Kit	1	Y300001-
4		AS195372	• • Seat Foam Kit	1	Y300001-
5		AS195373	• • Frame Kit	1	Y300001-
6		AS195374	• • Headrest Kit	1	Y300001-
7		AS192161	• • Cable Kit	1	Y300001-
8		AS186833	• • Handle Kit	1	Y300001-
9		AS160122	• Spring Kit	1	Y300001-
10		AS195376	• Latch Kit	1	Y300001-
11		AS195377	• Riser Kit	1	Y300001-
12		AS195388	• Suspension Kit	1	Y300001-
13		AS164899	• Damper Kit	1	Y300001-
14		AS166011	• Bearing Kit	1	Y300001-
15		AS195389	• Up Stop And Bump Stop Kit	1	Y300001-
16		AS195390	• Tether Belt Kit	1	Y300001-
17		AS195391	• Suspension Cover Kit	1	Y300001-
18		AS195392	• Adjuster Kit, Weight	1	Y300001-
19		AS165989	• Lever	1	Y300001-
20		AS195393	• Adjuster Kit	1	Y300001-

PC300-8 (FEN01263-00)

FIG. K0110-001002 Operator's Seat, Suspension Type, (2/2)

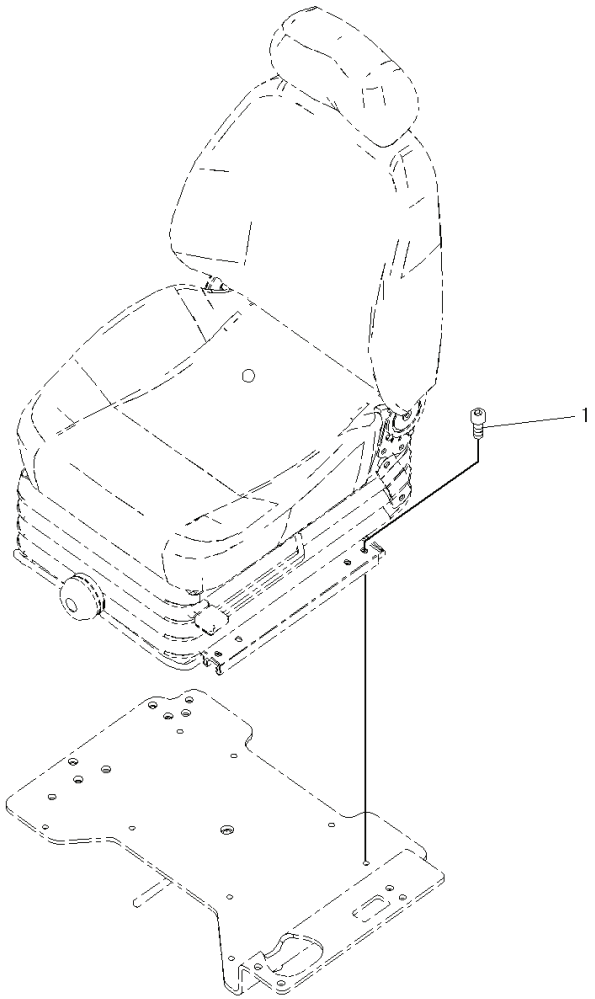

JH000550-V

Index	Code	Part Number	Descreption	Qty	Serial Number
1		01252-80825	Bolt	4	Y300001-

FIG. K0110-003001 Operator's Seat, With Heater, (1/2)

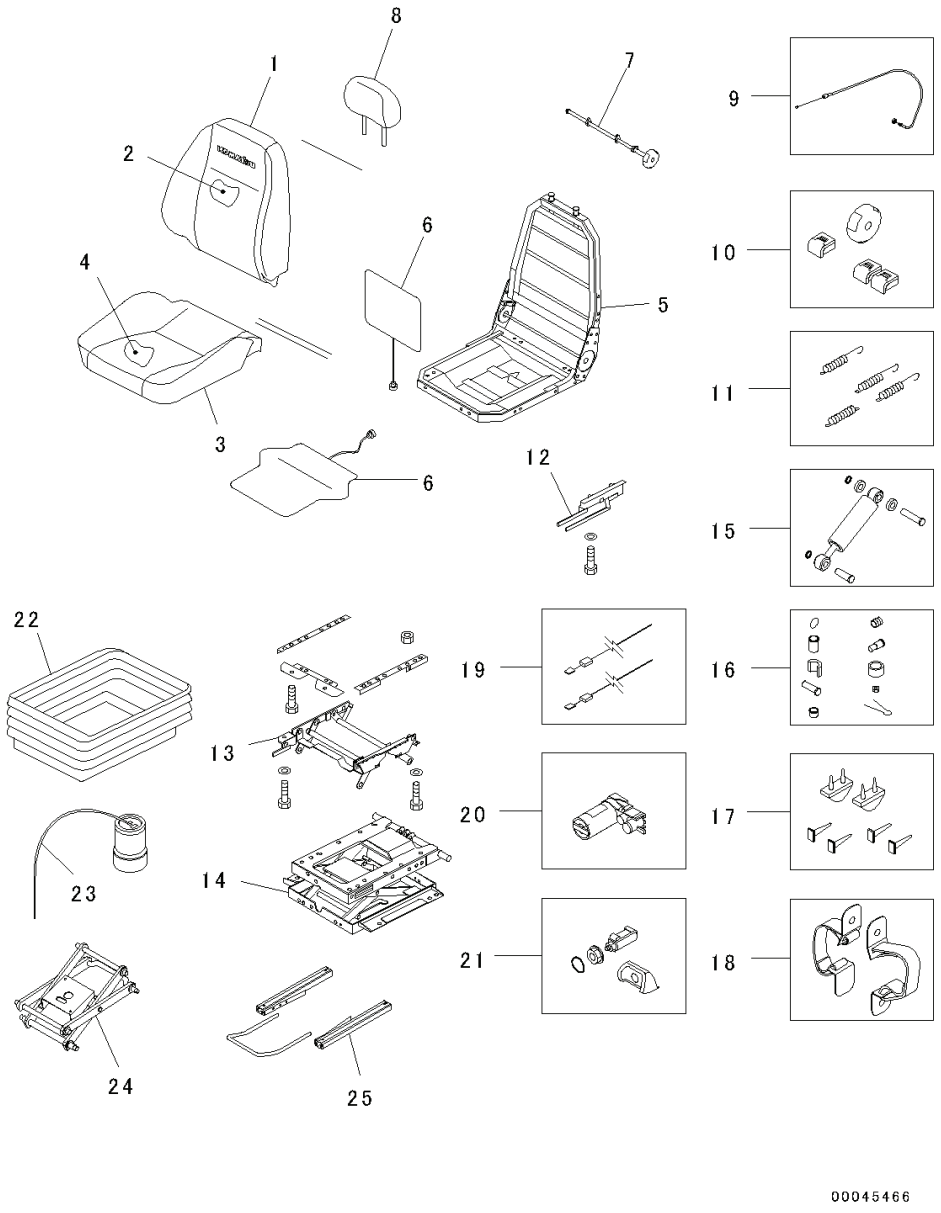

Index	Code	Part Number	Descreption	Qty	Serial Number
		20Y-57-41302	Seat Assembly	1	Y300001-
		AS195382	• Upper Assembly	1	Y300001-
1		AS195367	• • Back Seat Cover Kit	1	Y300001-
2		AS195369	• • Back Seat Foam Kit	1	Y300001-
3		AS195370	• • Seat Cover Kit	1	Y300001-
4		AS195372	• • Seat Foam Kit	1	Y300001-
5		AS195373	• • Frame Kit	1	Y300001-
6		AS157335	• • Heater Kit	1	Y300001-
7		AS156790	• • Mechanical Lumber Kit	1	Y300001-
8		AS195374	• • Headrest Kit	1	Y300001-
9		AS192161	• Cable Kit	1	Y300001-
10		AS186833	• Handle Kit	1	Y300001-
11		AS160122	• Spring Kit	1	Y300001-
12		AS195376	• Latch Kit	1	Y300001-
13		AS195377	• Riser Kit	1	Y300001-
14		AS195395	• Suspension Kit	1	Y300001-
15		AS164899	• Damper Kit	1	Y300001-
16		AS166011	• Bearing Kit	1	Y300001-
17		AS195389	• Up Stop And Bump Stop Kit	1	Y300001-
18		AS195390	• Tether Belt Kit	1	Y300001-
19		AS195394	• Fly Lead Kit	1	Y300001-
20		AS187498	• Compressor Kit	1	Y300001-
21		AS182831	• Valve Kit	1	Y300001-
22		AS195396	• Suspension Cover Kit	1	Y300001-
23		AS189761	• Air Spring Kit	1	Y300001-
24		AS166007	• Lever And Center Pivot	1	Y300001-
25		AS195393	• Adjuster Kit	1	Y300001-

PC300-8 (FEN01263-00)

FIG. K0110-003002 Operator's Seat, With Heater, (2/2)

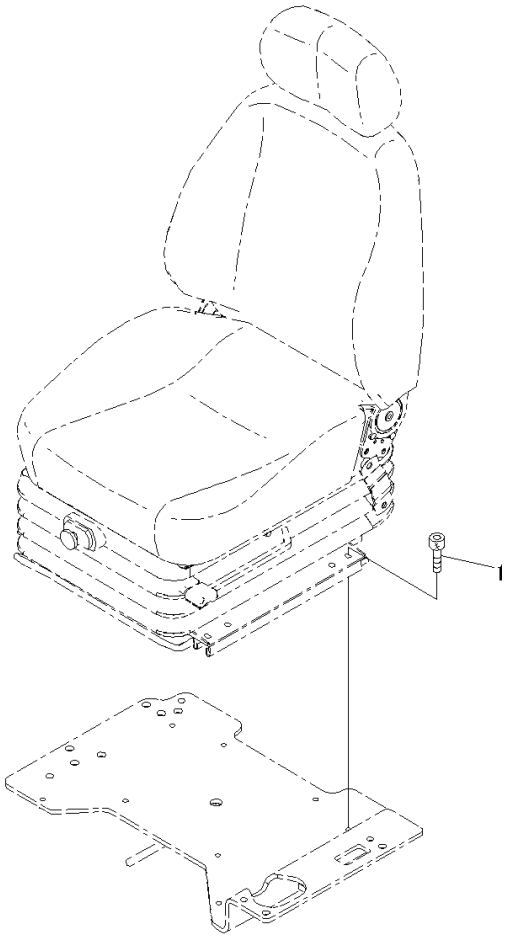

JH000552

Index	Code	Part Number	Descreption	Qty	Serial Number
1		01252-80825	Bolt	4	Y300001-

FIG. K0160-002001 Seat Belt, 78mm Width

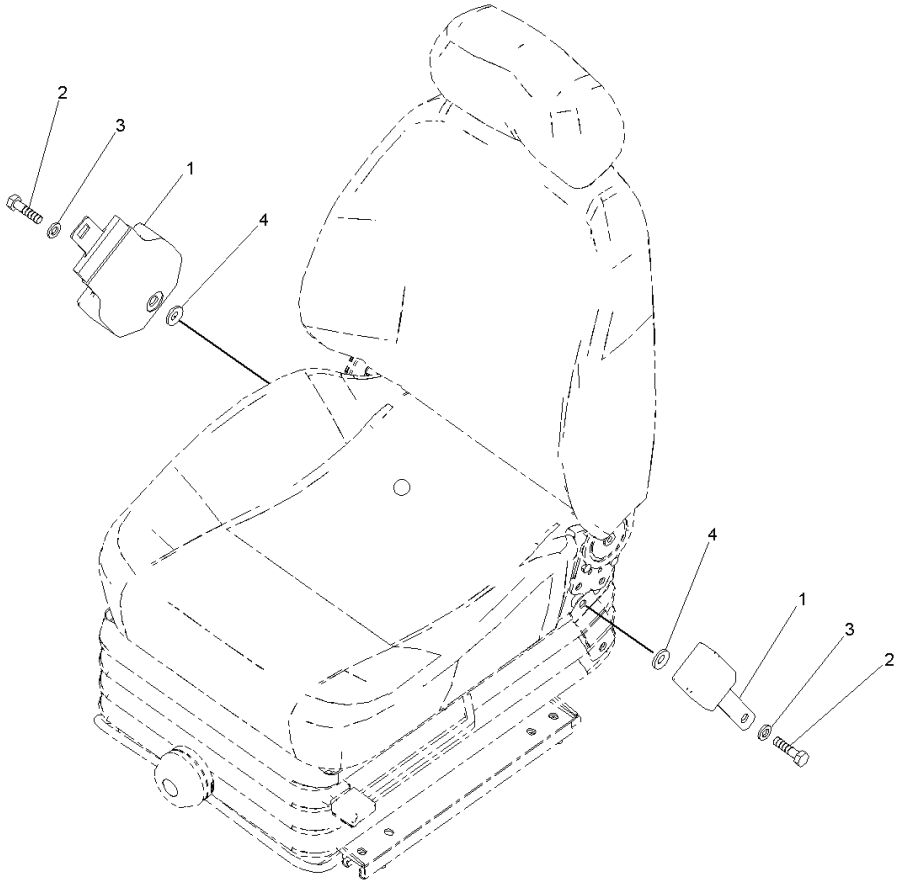

Index	Code	Part Number	Descreption	Qty	Serial Number
1		22B-57-11911	Belt	1	Y300001-
2		02030-70751	• Bolt	2	Y300001-
3		09409-00002	• Washer	2	Y300001-
4		01643-11232	Washer	2	Y300001-

PC300-8 (FEN01263-00)

FIG. K0190-001001 Luggage Box Net

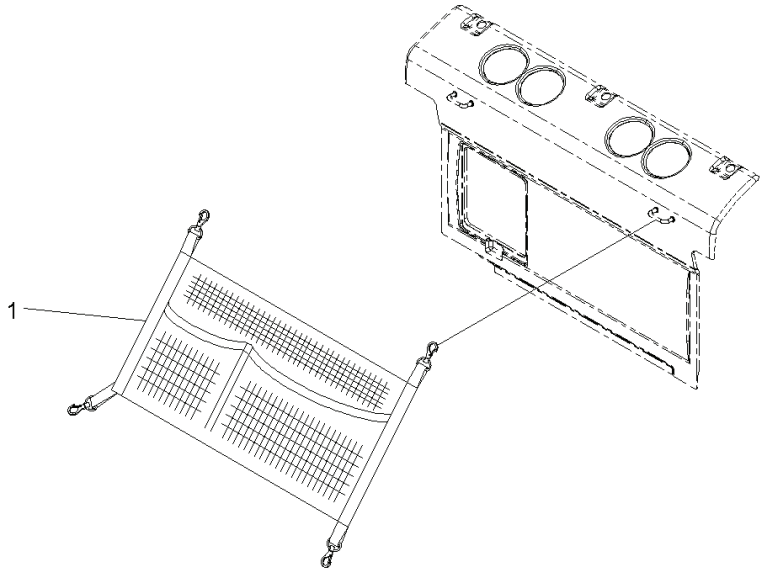

00040720

Index	Code	Part Number	Descreption	Qty	Serial Number
1		208-53-13720	Net	1	Y300001-

FIG. K0220-001001A Head Guard, Top Guard

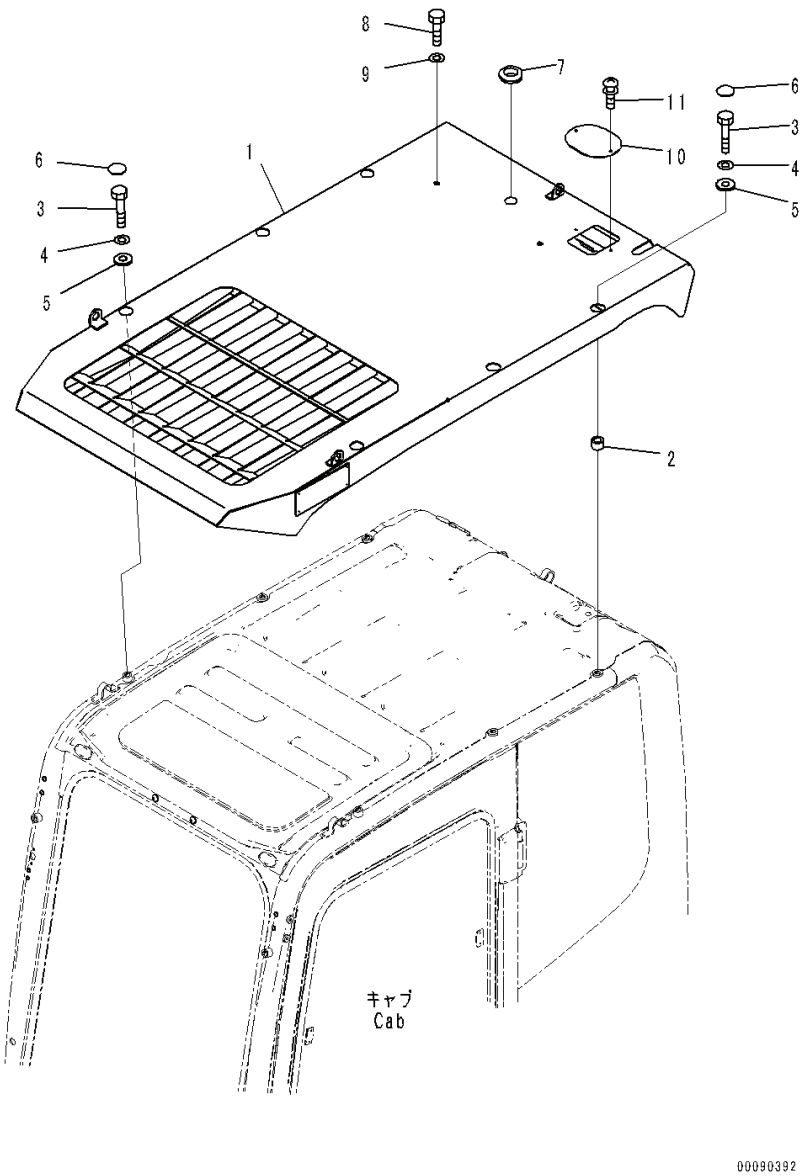

Index	Code	Part Number	Descreption	Qty	Serial Number
1		20Y-954-6122	Guard,Top	1	Y300001-
2		20Y-954-6241	Pipe	4	Y300001-
3		01010-81280	Bolt	6	Y300001-
4		01643-31232	Washer	6	Y300001-
5		130-43-64260	Collar	6	Y300001-
6		195-Z11-2970	Cap	6	Y300001-
7		08037-02512	Grommet	1	61218-
8		01010-D1220	Bolt	2	Y300001-
9		01643-71232	Washer	2	Y300001-
10		20Y-954-6250	Plate	1	Y300001-
11		01023-20612	Screw	2	Y300001-

PC300-8 (FEN01263-00)

FIG. K0230-002001 Front Guard, Half

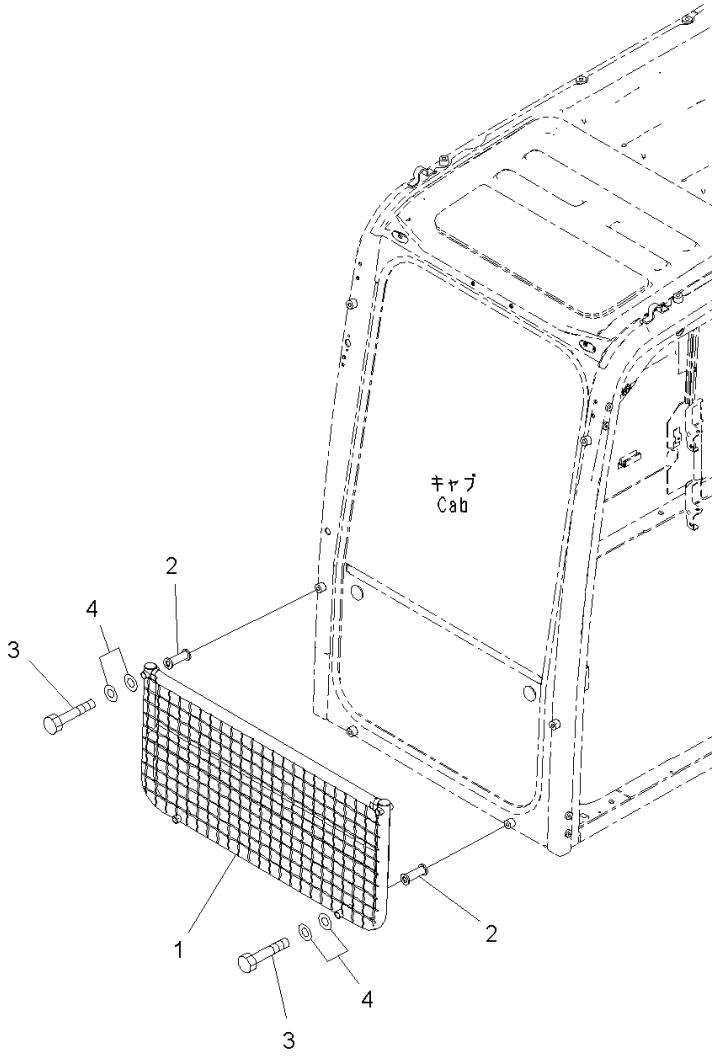

00051545

Index	Code	Part Number	Descreption	Qty	Serial Number
1		20Y-954-6132	Guard	1	Y300001-
2		20Y-954-6192	Spacer	4	Y300001-
3		01011-D1245	Bolt	4	Y300001-
4		01643-71232	Washer	4	Y300001-

PC300-8 (FEN01263-00)

FIG. K0230-003001 Front Guard, Full, Level 1

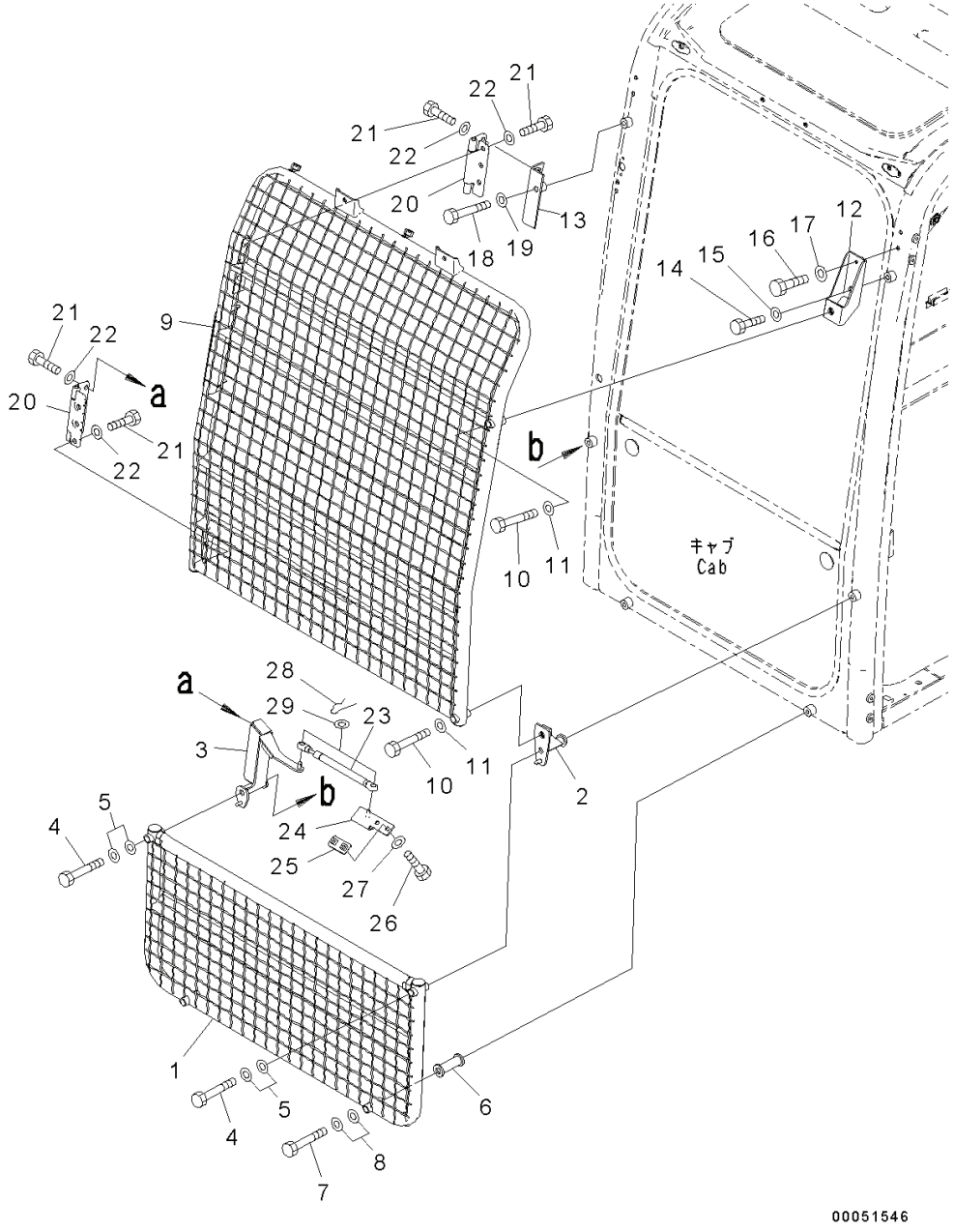

Index	Code	Part Number	Descreption	Qty	Serial Number
1		20Y-954-6132	Guard	1	Y300001-
2		20Y-954-6171	Bracket	1	Y300001-
3		20Y-954-6181	Bracket	1	Y300001-
4		01011-D1245	Bolt	2	Y300001-
5		01643-71232	Washer	4	Y300001-
6		20Y-954-6192	Spacer	2	Y300001-
7		01011-D1245	Bolt	2	Y300001-
8		01643-71232	Washer	4	Y300001-
9		20Y-954-6142	Guard	1	Y300001-
10		01010-D1275	Bolt	2	Y300001-
11		01643-71232	Washer	2	Y300001-
12		20Y-954-6151	Bracket	1	Y300001-
13		20Y-954-6161	Bracket	1	Y300001-
14		01010-D1220	Bolt	1	Y300001-
15		01643-71232	Washer	1	Y300001-
16		01010-D0640	Bolt	1	Y300001-
17		01643-70623	Washer	1	Y300001-
18		01010-D1245	Bolt	1	Y300001-
19		01643-71232	Washer	1	Y300001-
20		14X-911-1330	Hinge	2	Y300001-
21		01010-D1025	Bolt	12	Y300001-
22		01643-71032	Washer	12	Y300001-
23		20Y-54-36342	Gas Spring Assembly	1	Y300001-
24		22B-954-1840	Plate	1	Y300001-
25		22B-954-1660	Plate	1	Y300001-
26		01010-D0820	Bolt	2	Y300001-
27		01643-70823	Washer	2	Y300001-
28		04052-10833	Pin, Snap	2	Y300001-
29		01643-70823	Washer	2	Y300001-

PC300-8 (FEN01263-00)

FIG. K0230-001001 Front Guard, Full, Level 2

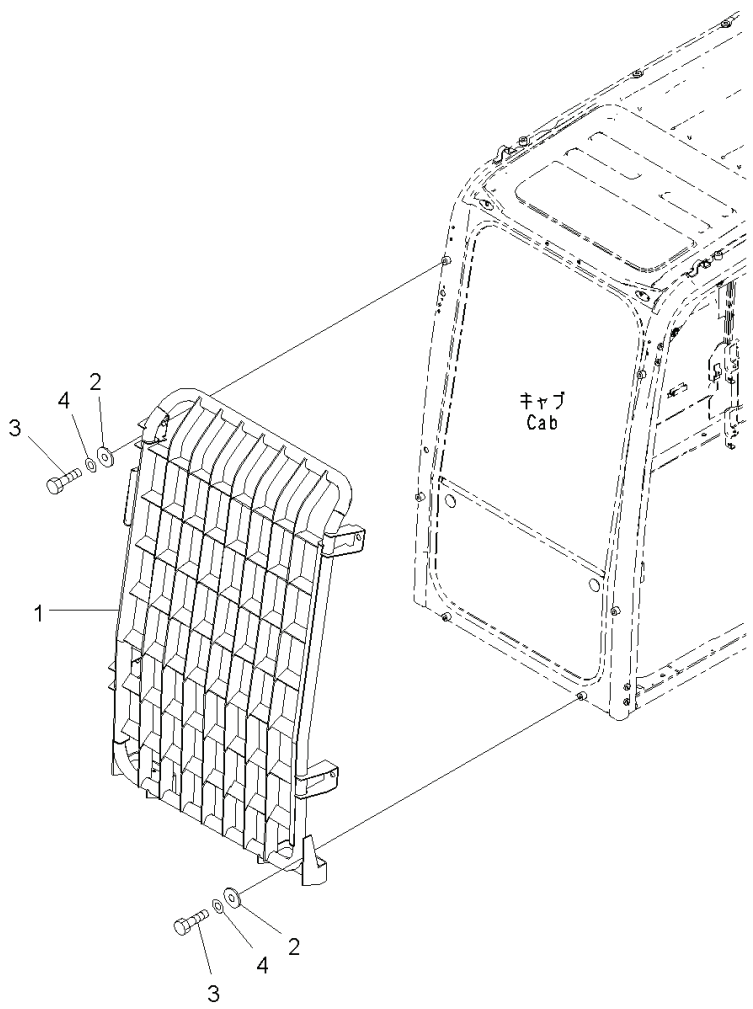

Index	Code	Part Number	Descreption	Qty	Serial Number
1		20Y-954-6111	Guard	1	Y300001-
2		130-43-64260	Collar	6	Y300001-
3		01010-D1225	Bolt	6	Y300001-
4		01643-71232	Washer	6	Y300001-

PC300-8 (FEN01263-00)

FIG. K0310-001001 Floor Mat

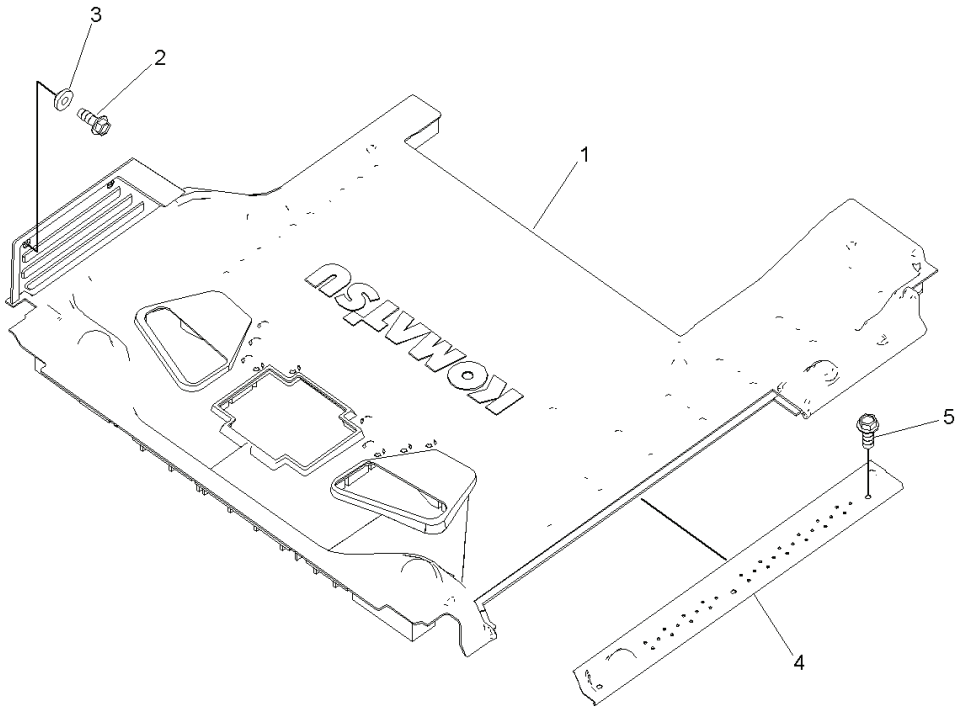

Index	Code	Part Number	Descreption	Qty	Serial Number
1		206-53-14711	Floor Mat	1	Y300001-
2		01435-40616	Bolt	2	Y300001-
3		20Y-43-41290	Collar	2	Y300001-
4		20Y-53-11953	Cover	1	Y300001-
5		01435-40612	Bolt	3	Y300001-

FIG. K0310-002001 Floor Mat, 1-actuator

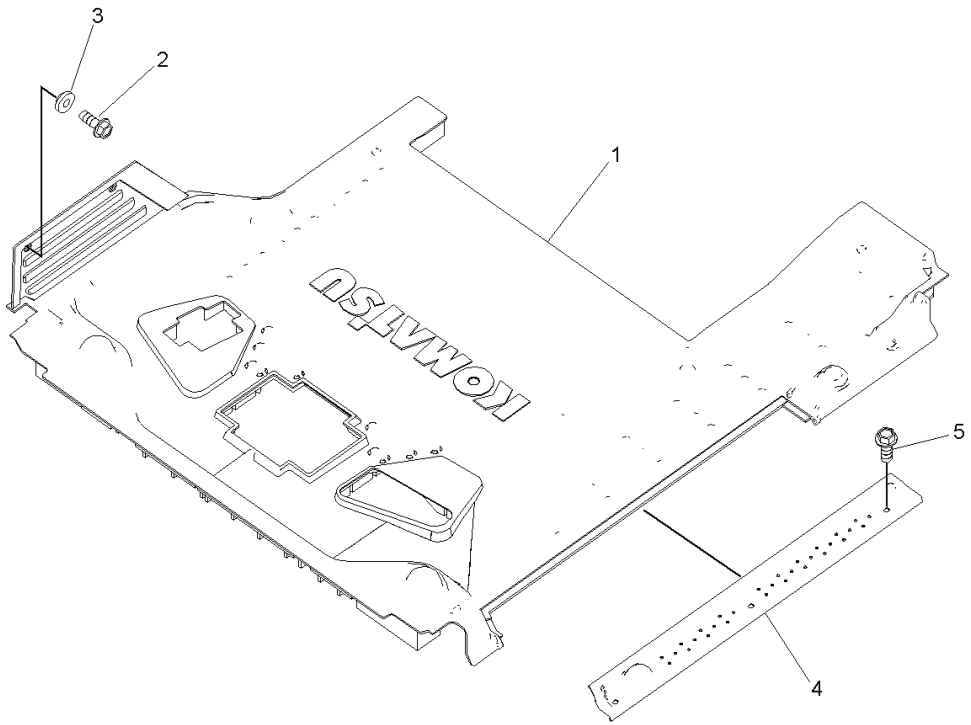

Index	Code	Part Number	Descreption	Qty	Serial Number
1		206-53-14721	Mat	1	Y300001-
2		01435-40616	Bolt	2	Y300001-
3		20Y-43-41290	Collar	2	Y300001-
4		20Y-53-11953	Cover	1	Y300001-
5		01435-40612	Bolt	3	Y300001-

FIG. K0310-003001 Floor Mat, 2-actuator

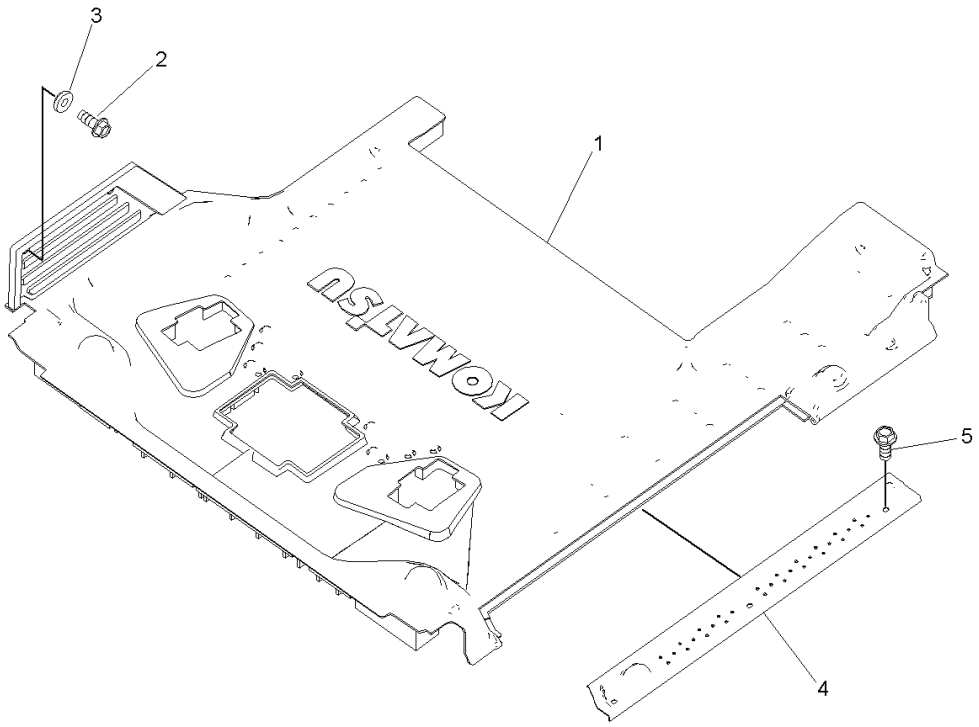

Index	Code	Part Number	Descreption	Qty	Serial Number
1		206-53-14731	Mat	1	Y300001-
2		01435-40616	Bolt	2	Y300001-
3		20Y-43-41290	Collar	2	Y300001-
4		20Y-53-11953	Cover	1	Y300001-
5		01435-40612	Bolt	3	Y300001-

FIG. K0320-001001 Rain Visor

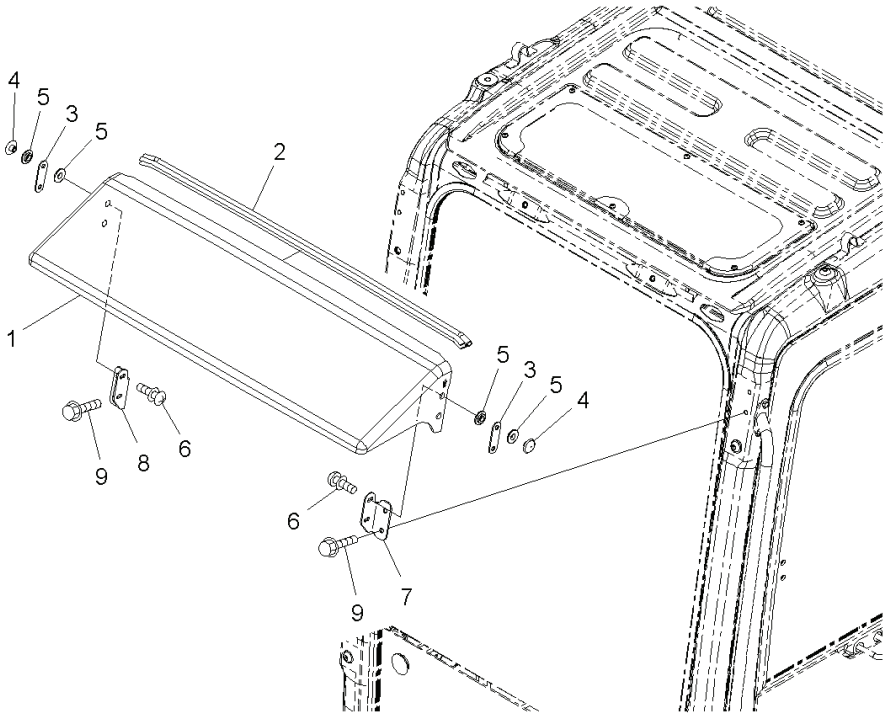

Index	Code	Part Number	Descreption	Qty	Serial Number
1		20Y-53-15710	Rain Visor	1	Y300001-
2		20Y-53-15750	• Seal	1	Y300001-
3		20Y-54-52530	Plate	2	Y300001-
4		205-54-51720	Retainer	4	Y300001-
5		205-54-51730	Packing	8	Y300001-
6		01023-20612	Screw	4	Y300001-
7		20Y-53-15780	Plate	1	Y300001-
8		20Y-53-15790	Plate	1	Y300001-
9		01435-40620	Bolt	4	Y300001-

FIG. K0330-001001 Sun Visor

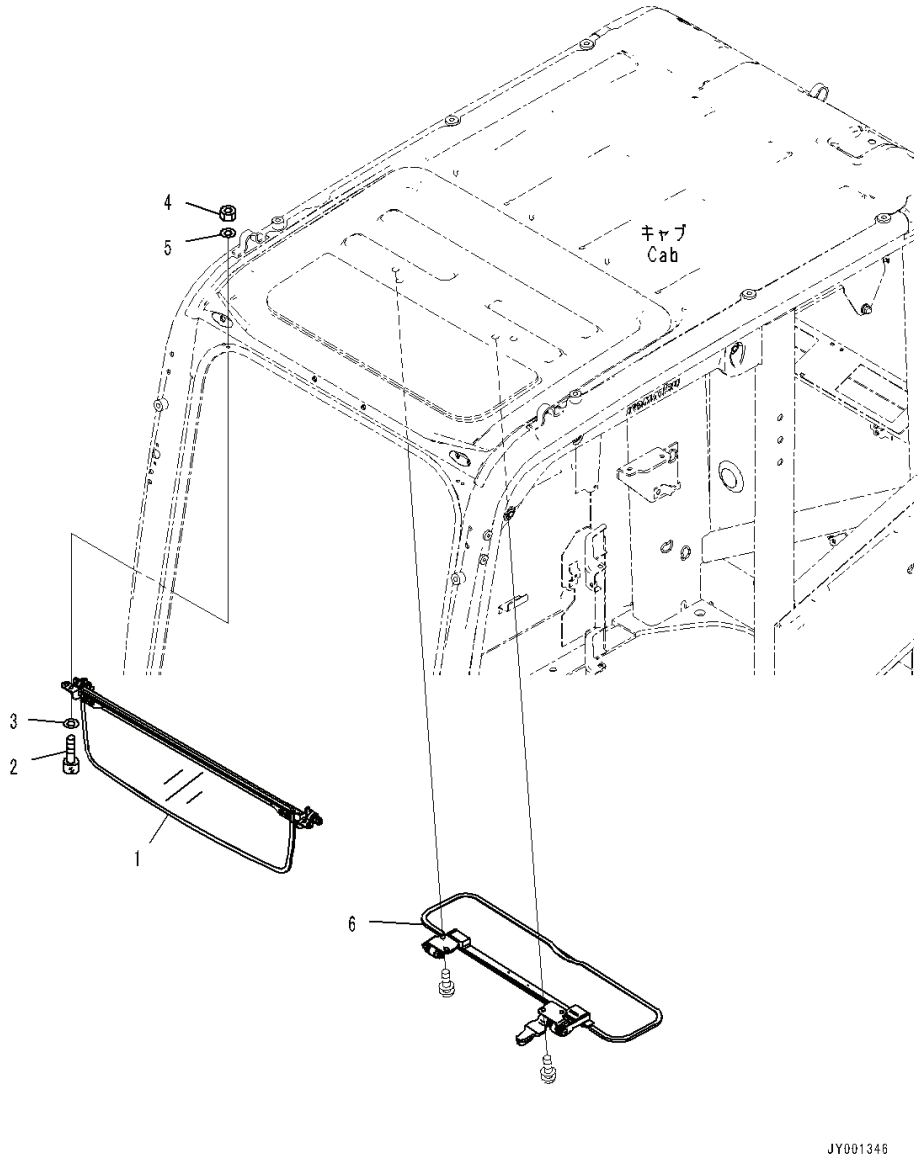

Index	Code	Part Number	Descreption	Qty	Serial Number
1		20Y-53-16741	Sun Visor,Front	1	Y300001-
2		01252-80616	Bolt	4	Y300001-
3		01643-70623	Washer	4	Y300001-
4		01580-10605	Nut	4	Y300001-
5		01640-20610	Washer	4	Y300001-
6		20Y-53-17411	Sun Visor	1	Y300001-

PC300-8 (FEN01263-00)

FIG. K0350-001001 Windshield Washer Tank

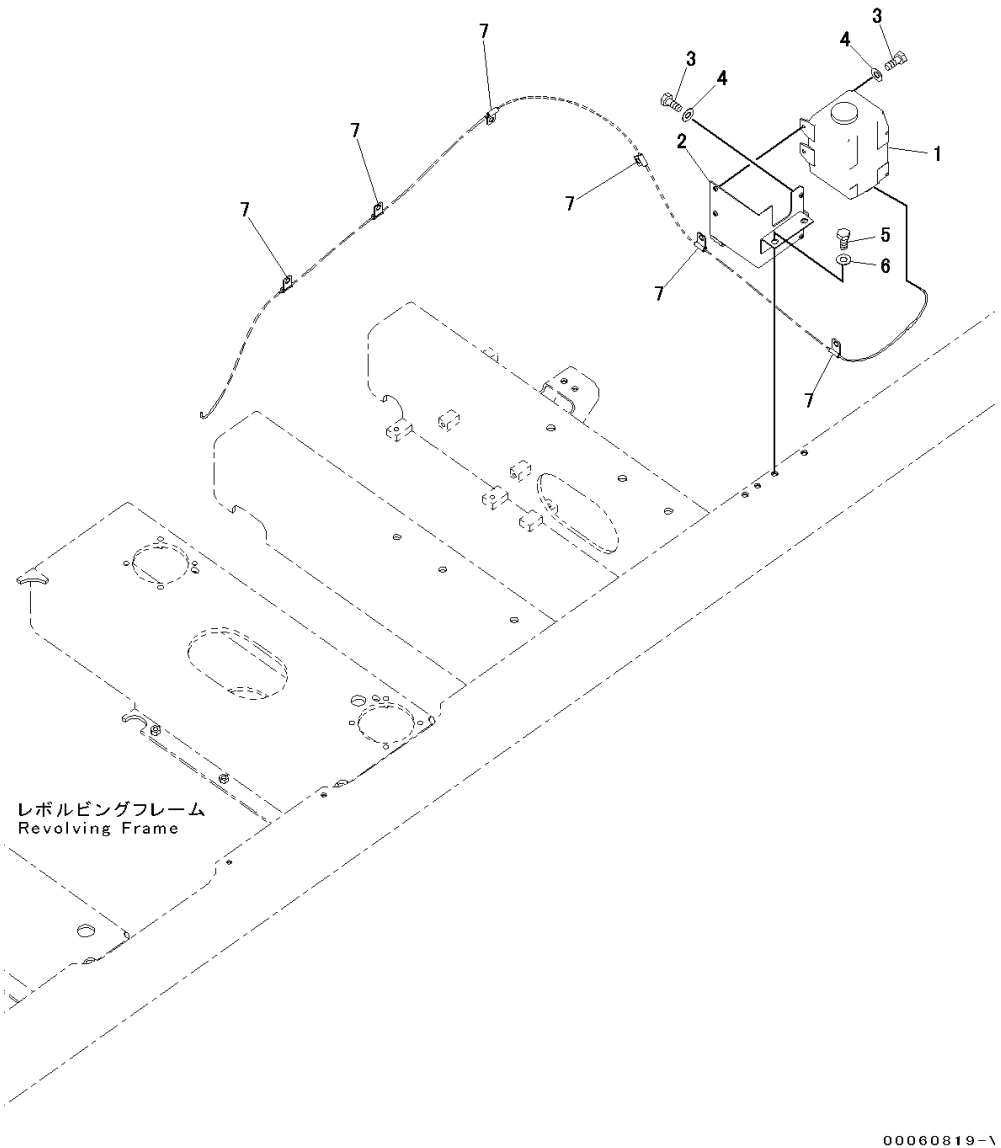

Index	Code	Part Number	Descreption	Qty	Serial Number
1		21T-06-11350	Tank Assembly	1	Y300001-
2		207-06-71132	Bracket	1	Y300001-
3		01010-80616	Bolt	4	Y300001-
4		01643-30623	Washer	4	Y300001-
5		01010-81225	Bolt	2	Y300001-
6		01643-31232	Washer	2	Y300001-
7		21T-38-12270	Clip	6	Y300001-

PC300-8 (FEN01263-00)

FIG. K0700-003001 Air Conditioner Unit, Compressor

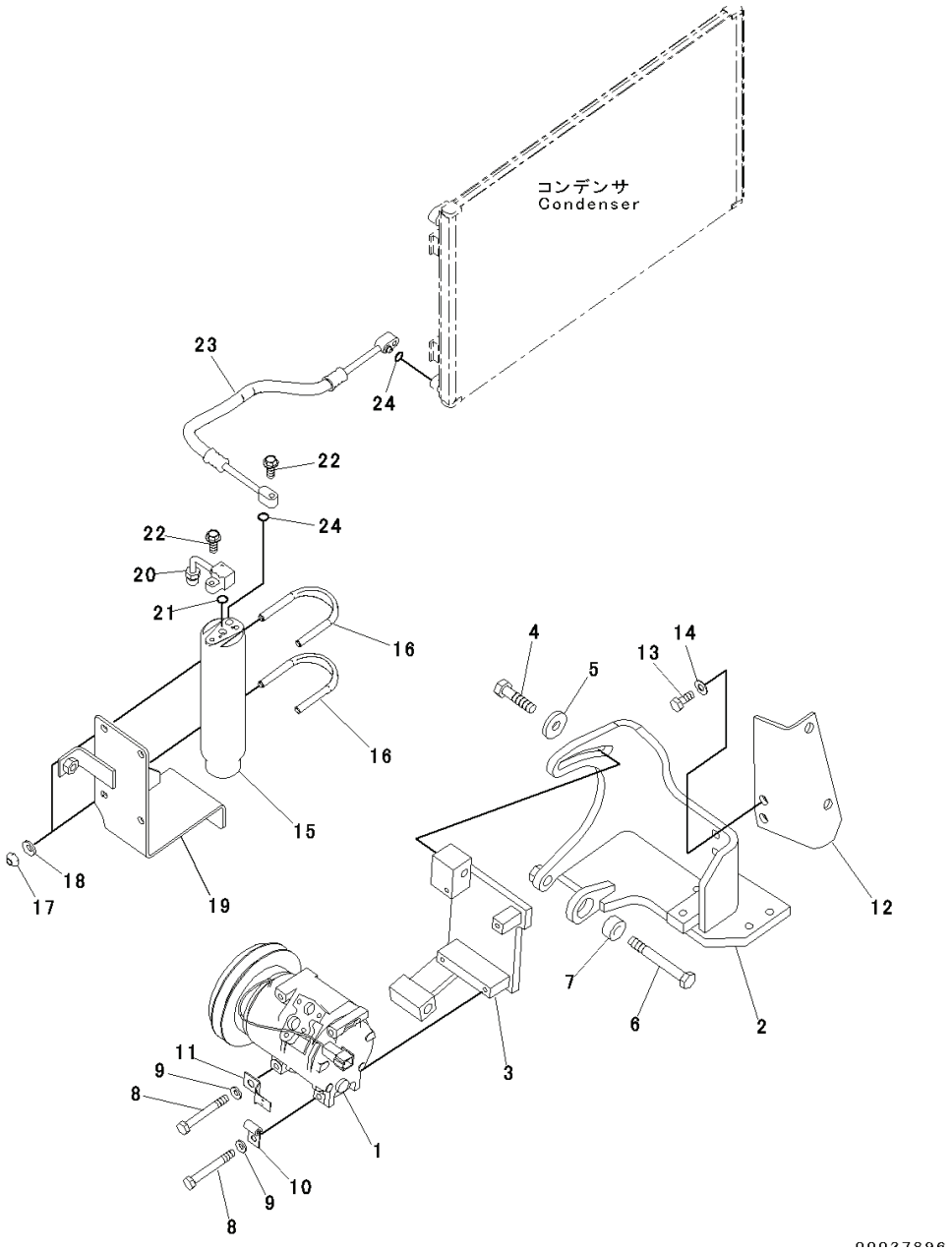

Index	Code	Part Number	Descreption	Qty	Serial Number
1		20Y-810-1260	Compressor Assembly	1	Y300001-
2		207-979-7440	Bracket	1	Y300001-
3		20Y-979-6612	Bracket	1	Y300001-
4		01010-81440	Bolt	1	Y300001-
5		195-71-32220	Washer	1	Y300001-
6		01019-31400	Bolt	1	Y300001-
7		198-38-12460	Spacer	1	Y300001-
8		01010-80875	Bolt	4	Y300001-
9		01643-30823	Washer	4	Y300001-
10		04434-50608	Clip	1	Y300001-
11		08053-01510	Clip	1	Y300001-
12		207-979-7450	Bracket	1	Y300001-
13		01010-81235	Bolt	2	Y300001-
14		01643-31232	Washer	2	Y300001-
15		20Y-979-3120	Tank	1	Y300001-
16		07283-36155	Clip, Pipe	2	Y300001-
17		01597-01009	Nut	4	Y300001-
18		01643-31032	Washer	4	Y300001-
19		207-979-7610	Bracket	1	Y300001-
20		20Y-979-6650	Tube	1	Y300001-
21		20Y-979-3150	• O-ring	1	Y300001-
22		01435-00625	Bolt	2	Y300001-
23		207-979-7470	Hose	1	Y300001-
24		20Y-979-3150	• O-ring	2	Y300001-

PC300-8 (FEN01263-00)

FIG. K0700-003002 Air Conditioner Unit, Hose

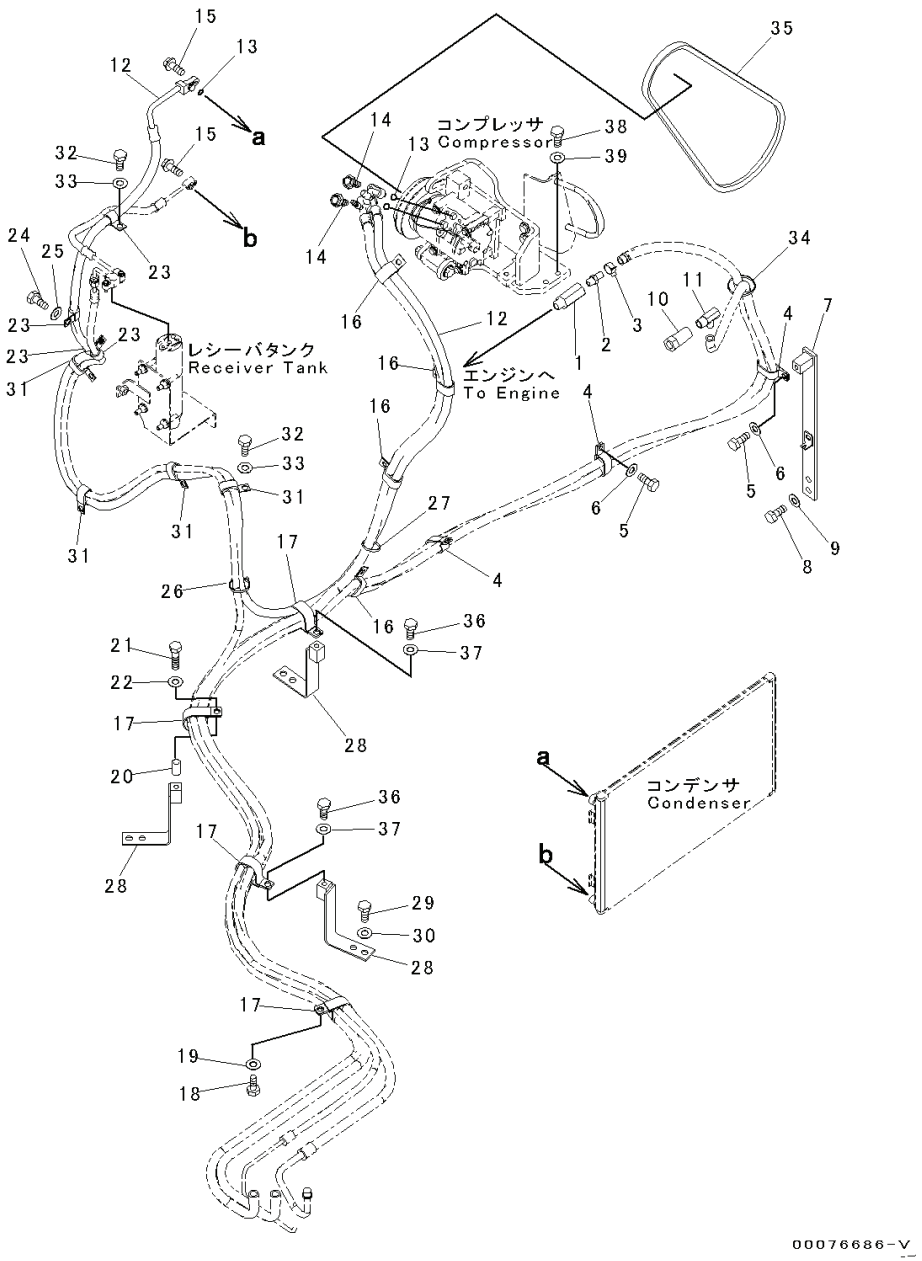

Index	Code	Part Number	Descreption	Qty	Serial Number
1		207-979-7390	Nipple	1	Y300001-
2		20T-54-42510	Nipple	1	Y300001-
3		11Y-09-11160	Clip	2	Y300001-
4		155-06-15180	Clamp	3	Y300001-
5		01010-81225	Bolt	3	Y300001-
6		01643-31232	Washer	3	Y300001-
7		207-979-7540	Bracket	1	Y300001-
8		01010-81225	Bolt	2	Y300001-
9		01643-31232	Washer	2	Y300001-
10		209-98-81280	Nipple	1	Y300001-
11		202-98-11340	Joint	1	Y300001-
12		207-979-7462	Hose	1	Y300001-
13		20Y-979-3140	• O-ring	2	Y300001-
14		01435-00630	Bolt	2	Y300001-
15		01435-00625	Bolt	2	Y300001-
16		141-06-11220	Clip	4	Y300001-
17		21T-06-11950	Clip	4	Y300001-
18		01010-81225	Bolt	5	Y300001-
19		01643-31232	Washer	5	Y300001-
20		195-01-16140	Spacer	1	Y300001-
21		01010-81260	Bolt	1	Y300001-
22		01643-31232	Washer	1	Y300001-
23		04434-51812	Clip	4	Y300001-
24		01010-81225	Bolt	2	Y300001-
25		01643-31232	Washer	2	Y300001-
26		08034-20519	Band	1	Y300001-
27		08034-20536	Band	2	Y300001-
28		207-979-7381	Bracket	3	Y300001-
29		01010-81225	Bolt	6	Y300001-
30		01643-31232	Washer	6	Y300001-
31		04435-51812	Clip	4	Y300001-
32		01010-81225	Bolt	5	Y300001-
33		01643-31232	Washer	5	Y300001-
34		08034-20536	Band	2	Y300001-
35		04120-21761	V-belt	1	Y300001-
36		01010-81225	Bolt	2	Y300001-
37		01643-31232	Washer	2	Y300001-
38		01010-81035	Bolt	4	Y300001-
39		01643-31032	Washer	4	Y300001-

PC300-8 (FEN01263-00)

FIG. K0700-004001 Air Conditioner Unit, Webasto Heater, Compressor

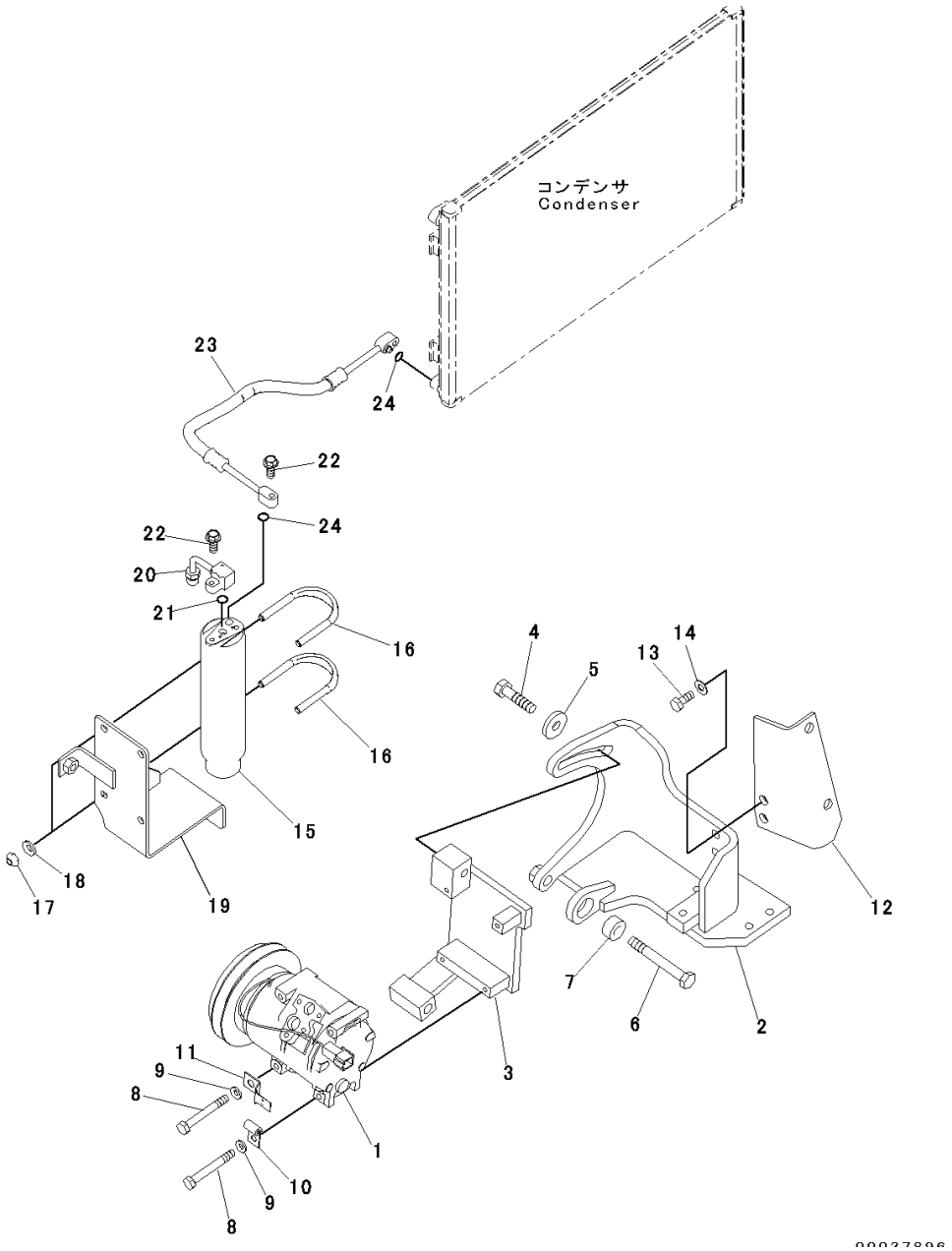

Index	Code	Part Number	Descreption	Qty	Serial Number
1		20Y-810-1260	Compressor Assembly	1	Y300001-
2		207-979-7440	Bracket	1	Y300001-
3		20Y-979-6612	Bracket	1	Y300001-
4		01010-81440	Bolt	1	Y300001-
5		195-71-32220	Washer	1	Y300001-
6		01019-31400	Bolt	1	Y300001-
7		198-38-12460	Spacer	1	Y300001-
8		01010-80875	Bolt	4	Y300001-
9		01643-30823	Washer	4	Y300001-
10		04434-50608	Clip	1	Y300001-
11		08053-01510	Clip	1	Y300001-
12		207-979-7450	Bracket	1	Y300001-
13		01010-81235	Bolt	2	Y300001-
14		01643-31232	Washer	2	Y300001-
15		20Y-979-3120	Tank	1	Y300001-
16		07283-36155	Clip, Pipe	2	Y300001-
17		01597-01009	Nut	4	Y300001-
18		01643-31032	Washer	4	Y300001-
19		207-979-7610	Bracket	1	Y300001-
20		20Y-979-6650	Tube	1	Y300001-
21		20Y-979-3150	• O-ring	1	Y300001-
22		01435-00625	Bolt	2	Y300001-
23		207-979-7470	Hose	1	Y300001-
24		20Y-979-3150	• O-ring	2	Y300001-

PC300-8 (FEN01263-00)

FIG. K0700-004002 Air Conditioner Unit, Webasto Heater, Hose

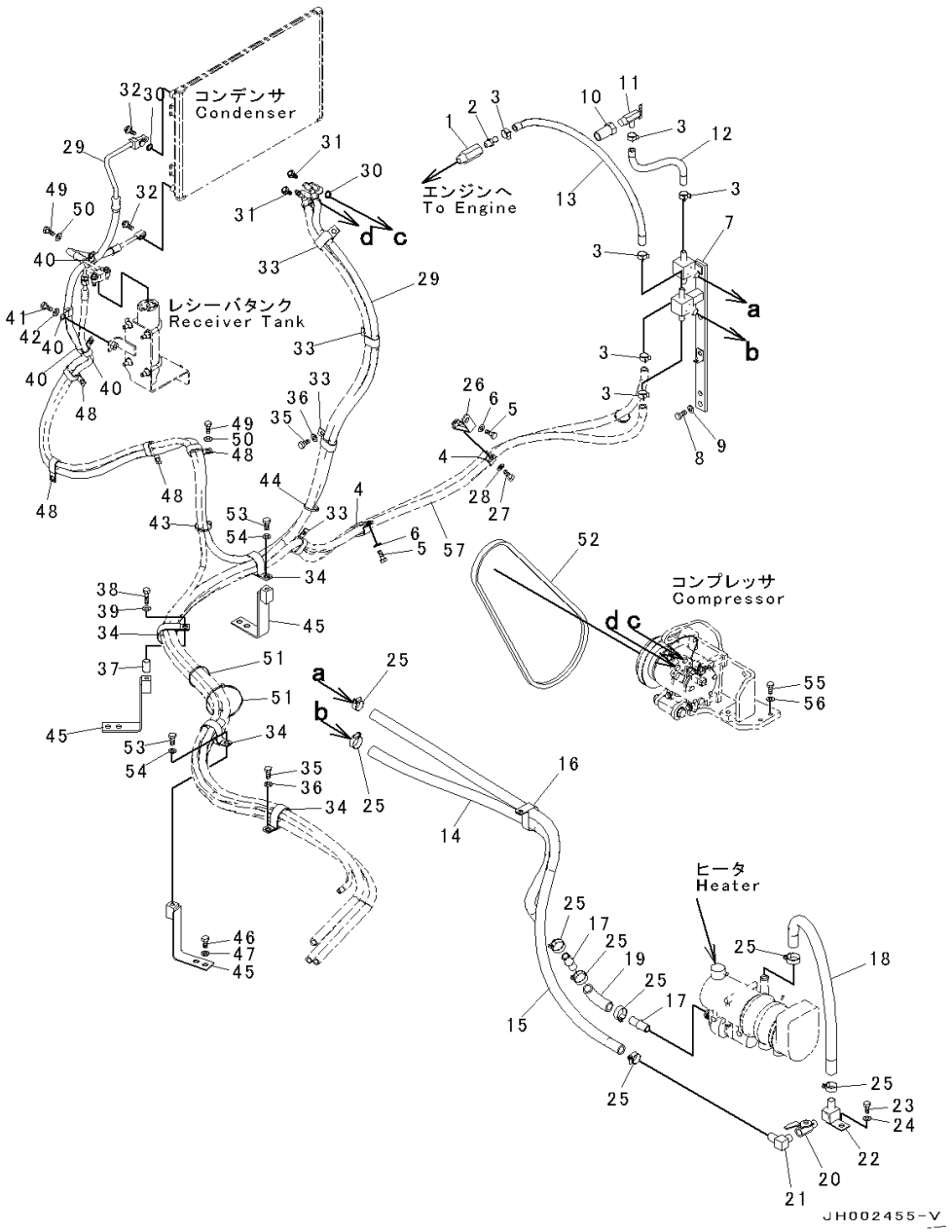

Index	Code	Part Number	Descreption	Qty	Serial Number
1		207-979-7390	Nipple	1	Y300001-
2		20T-54-42510	Nipple	1	Y300001-
3		11Y-09-11160	Clip	6	Y300001-
4		155-06-15180	Clamp	2	Y300001-
5		01010-81225	Bolt	2	Y300001-
6		01643-31232	Washer	2	Y300001-
7		207-979-7750	Bracket	1	Y300001-
8		01010-81225	Bolt	2	Y300001-
9		01643-31232	Washer	2	Y300001-
10		209-98-81280	Nipple	1	Y300001-
11		09482-20000	Valve, Water	1	Y300001-
12		207-979-7710	Hose Assembly	1	Y300001-
13		207-979-7720	Hose Assembly	1	Y300001-
14		207-979-7760	Hose Assembly	1	Y300001-
15		207-979-7770	Hose Assembly	1	Y300001-
16		207-979-7780	Clip	1	Y300001-
17		207-979-7790	Adapter	2	Y300001-
18		207-979-7810	Hose	1	Y300001-
19		207-979-7820	Hose	1	Y300001-
20		207-979-7830	Valve	1	Y300001-
21		207-979-7840	Elbow	1	Y300001-
22		207-979-7850	Elbow	1	Y300001-
23		01010-81225	Bolt	1	Y300001-
24		01643-31232	Washer	1	Y300001-
25		07281-00359	Clamp	8	Y300001-
26		207-46-75920	Bracket	1	Y300001-
27		01010-81225	Bolt	1	Y300001-
28		01643-31232	Washer	1	Y300001-
29		207-979-7462	Hose	1	Y300001-
30		20Y-979-3140	• O-ring	2	Y300001-
31		01435-00630	Bolt	2	Y300001-
32		01435-00625	Bolt	2	Y300001-
33		141-06-11220	Clip	4	Y300001-
34		21T-06-11950	Clip	4	Y300001-
35		01010-81225	Bolt	5	Y300001-
36		01643-31232	Washer	5	Y300001-
37		195-01-16140	Spacer	1	Y300001-
38		01010-81260	Bolt	1	Y300001-
39		01643-31232	Washer	1	Y300001-
40		04434-51812	Clip	4	Y300001-

PC300-8 (FEN01263-00)

FIG. K0700-004002 Air Conditioner Unit, Webasto Heater, Hose

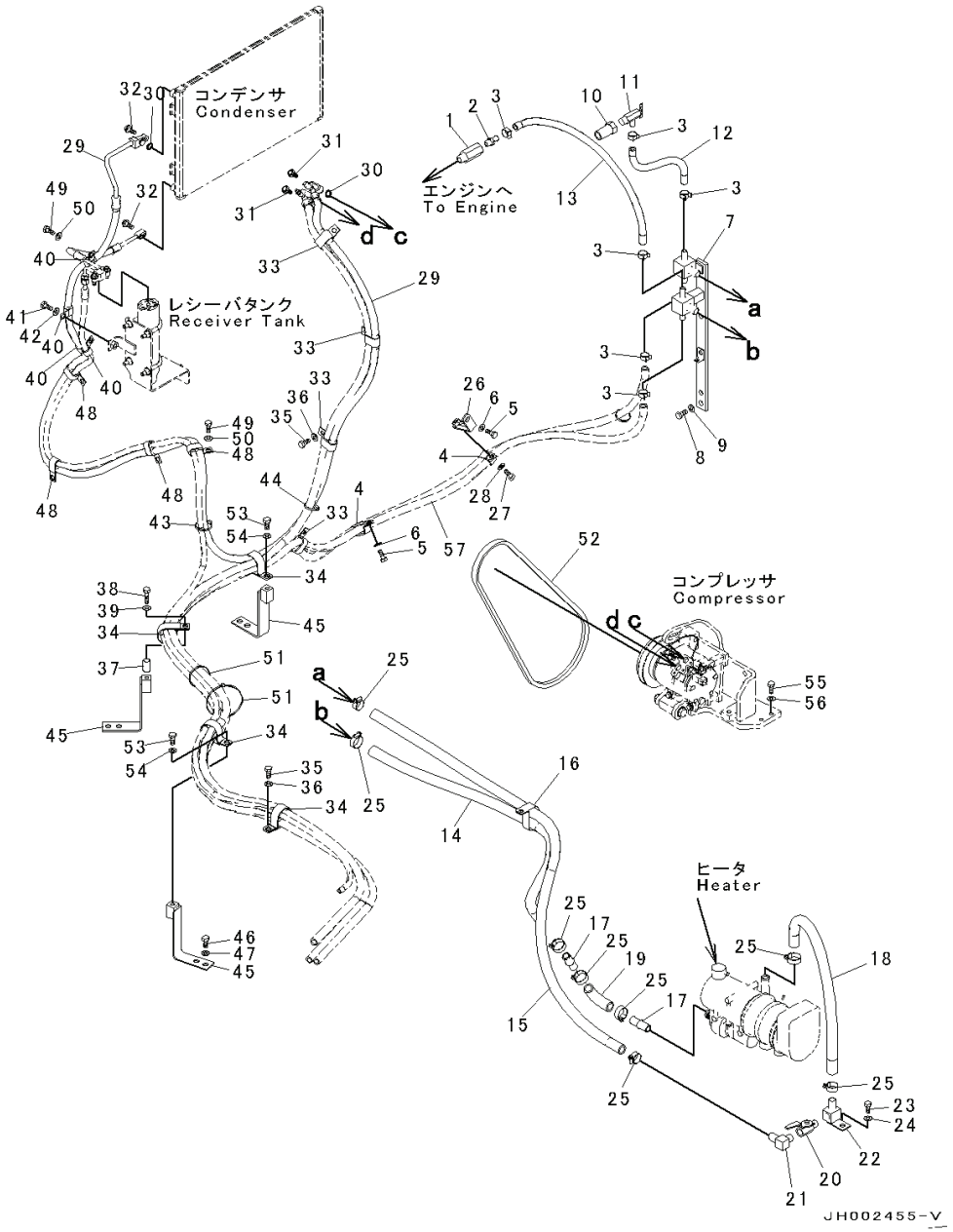

Index	Code	Part Number	Descreption	Qty	Serial Number
41		01010-81225	Bolt	2	Y300001-
42		01643-31232	Washer	2	Y300001-
43		08034-20519	Band	1	Y300001-
44		08034-20536	Band	2	Y300001-
45		207-979-7381	Bracket	3	Y300001-
46		01010-81225	Bolt	6	Y300001-
47		01643-31232	Washer	6	Y300001-
48		04435-51812	Clip	4	Y300001-
49		01010-81225	Bolt	5	Y300001-
50		01643-31232	Washer	5	Y300001-
51		08034-20536	Band	2	Y300001-
52		04120-21761	V-belt	1	Y300001-
53		01010-81225	Bolt	2	Y300001-
54		01643-31232	Washer	2	Y300001-
55		01010-81035	Bolt	4	Y300001-
56		01643-31032	Washer	4	Y300001-
57		(207-979-7740)	Hose Assembly(Refer to Page 725)		-

PC300-8 (FEN01263-00)

FIG. K0700-005002 Air Conditioner Unit, Webasto Heater

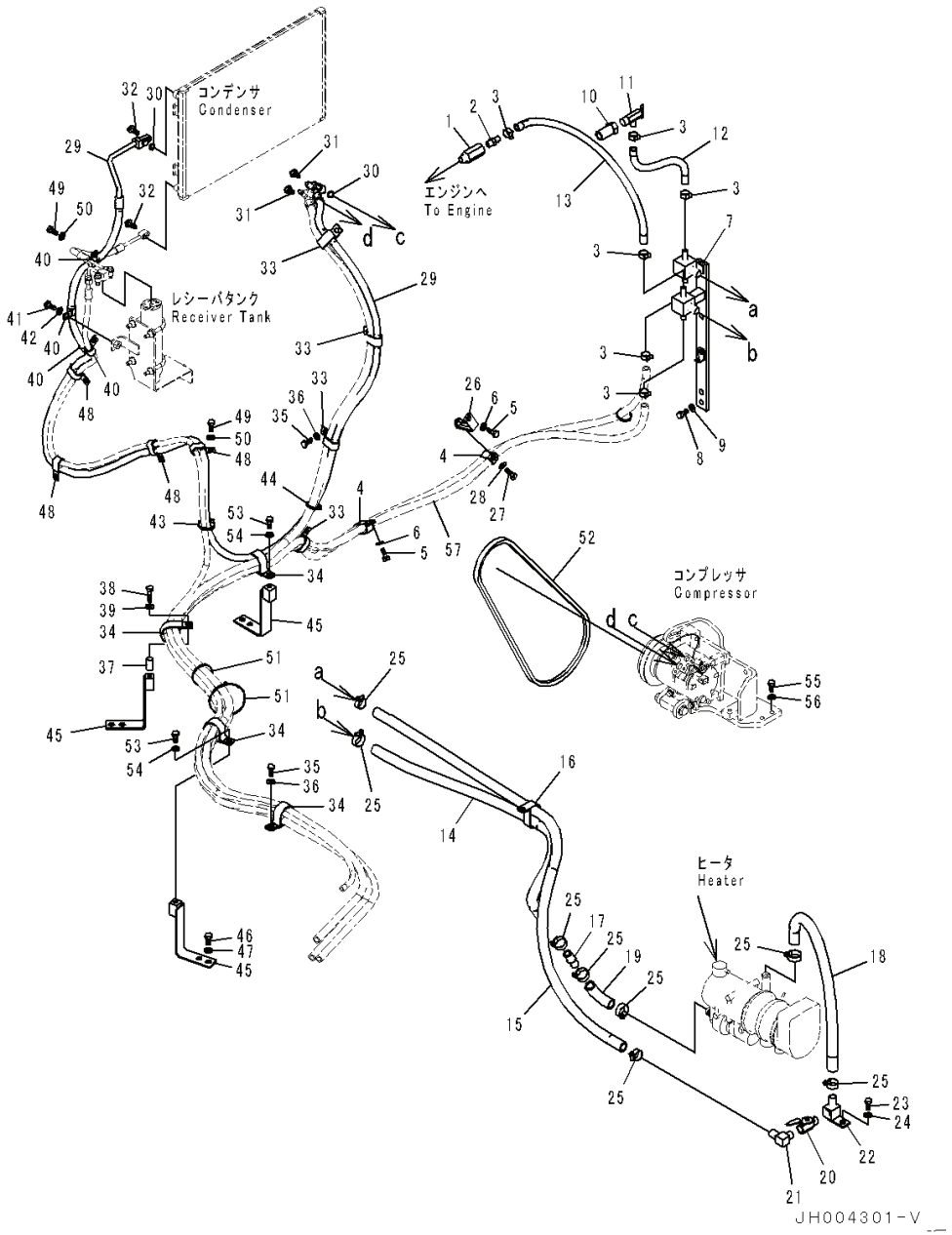

Index	Code	Part Number	Descreption	Qty	Serial Number
1		207-979-7390	Nipple	1	Y300001-
2		20T-54-42510	Nipple	1	Y300001-
3		11Y-09-11160	Clip	6	Y300001-
4		155-06-15180	Clamp	2	Y300001-
5		01010-81225	Bolt	2	Y300001-
6		01643-31232	Washer	2	Y300001-
7		207-979-7750	Bracket	1	Y300001-
8		01010-81225	Bolt	2	Y300001-
9		01643-31232	Washer	2	Y300001-
10		209-98-81280	Nipple	1	Y300001-
11		09482-20000	Valve, Water	1	Y300001-
12		207-979-7710	Hose Assembly	1	Y300001-
13		207-979-7720	Hose Assembly	1	Y300001-
14		207-979-7760	Hose Assembly	1	Y300001-
15		207-979-7770	Hose Assembly	1	Y300001-
16		207-979-7780	Clip	1	Y300001-
17		207-979-7790	Adapter	1	Y300001-
18		207-979-7810	Hose	1	Y300001-
19		207-979-7820	Hose	1	Y300001-
20		207-979-7831	Valve Assembly	1	Y300001-
21		207-979-7840	Elbow	1	Y300001-
22		207-979-7850	Elbow	1	Y300001-
23		01010-81225	Bolt	1	Y300001-
24		01643-31232	Washer	1	Y300001-
25		07281-00359	Clamp	8	Y300001-
26		207-46-75920	Bracket	1	Y300001-
27		01010-81225	Bolt	1	Y300001-
28		01643-31232	Washer	1	Y300001-
29		207-979-7462	Hose	1	Y300001-
30		20Y-979-3140	• O-ring	2	Y300001-
31		01435-00630	Bolt	2	Y300001-
32		01435-00625	Bolt	2	Y300001-
33		141-06-11220	Clip	4	Y300001-
34		21T-06-11950	Clip	4	Y300001-
35		01010-81225	Bolt	5	Y300001-
36		01643-31232	Washer	5	Y300001-
37		195-01-16140	Spacer	1	Y300001-
38		01010-81260	Bolt	1	Y300001-
39		01643-31232	Washer	1	Y300001-
40		04434-51812	Clip	4	Y300001-

PC300-8 (FEN01263-00)

FIG. K0700-005002 Air Conditioner Unit, Webasto Heater

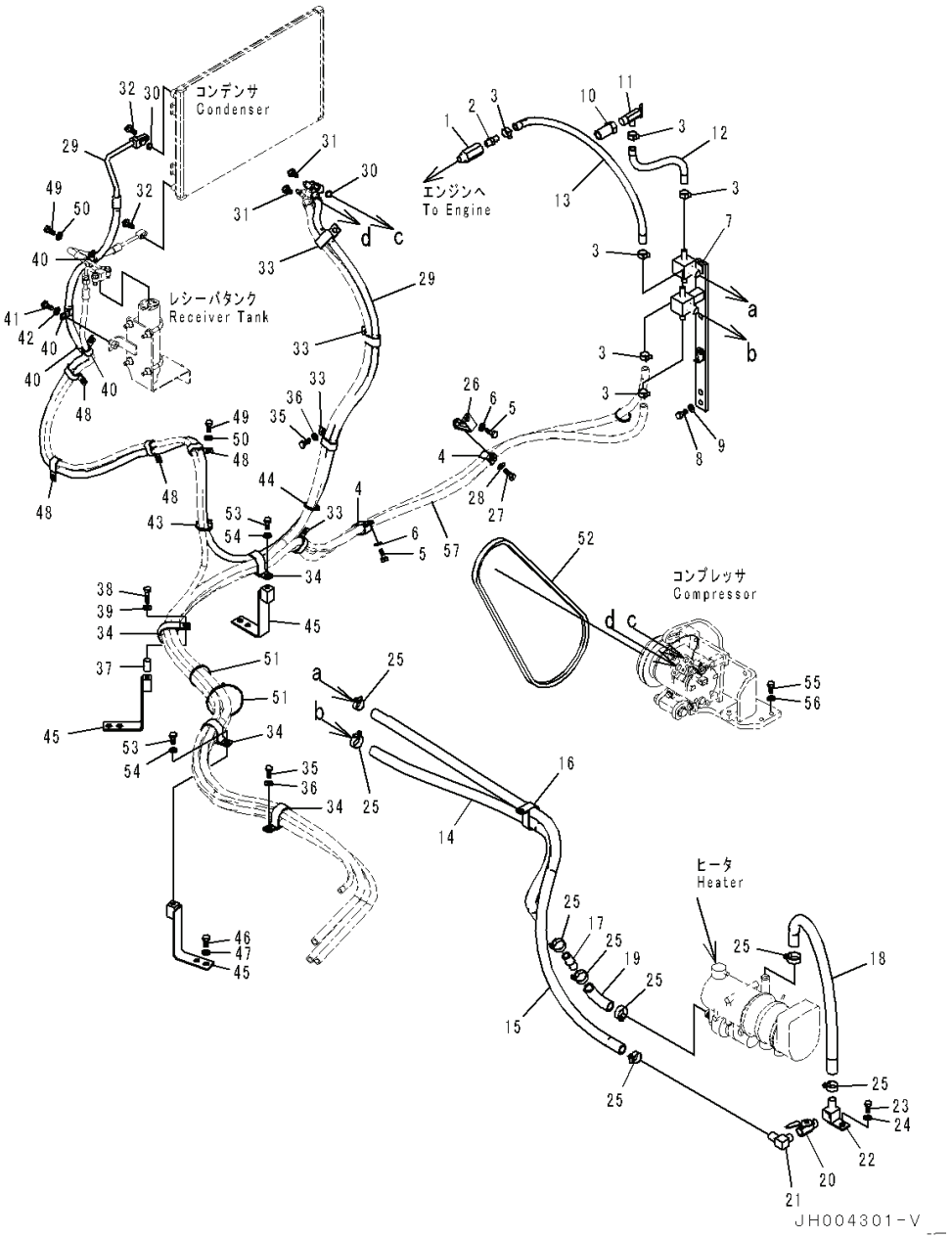

Index	Code	Part Number	Descreption	Qty	Serial Number
41		01010-81225	Bolt	2	Y300001-
42		01643-31232	Washer	2	Y300001-
43		08034-20519	Band	1	Y300001-
44		08034-20536	Band	2	Y300001-
45		207-979-7381	Bracket	3	Y300001-
46		01010-81225	Bolt	6	Y300001-
47		01643-31232	Washer	6	Y300001-
48		04435-51812	Clip	4	Y300001-
49		01010-81225	Bolt	5	Y300001-
50		01643-31232	Washer	5	Y300001-
51		08034-20536	Band	2	Y300001-
52		04120-21761	V-belt	1	Y300001-
53		01010-81225	Bolt	2	Y300001-
54		01643-31232	Washer	2	Y300001-
55		01010-81035	Bolt	4	Y300001-
56		01643-31032	Washer	4	Y300001-
57		(207-979-7740)	Hose Assembly(Refer to Page 725)		-

PC300-8 (FEN01263-00)

FIG. K0830-004001 Fire Extinguisher, Russian

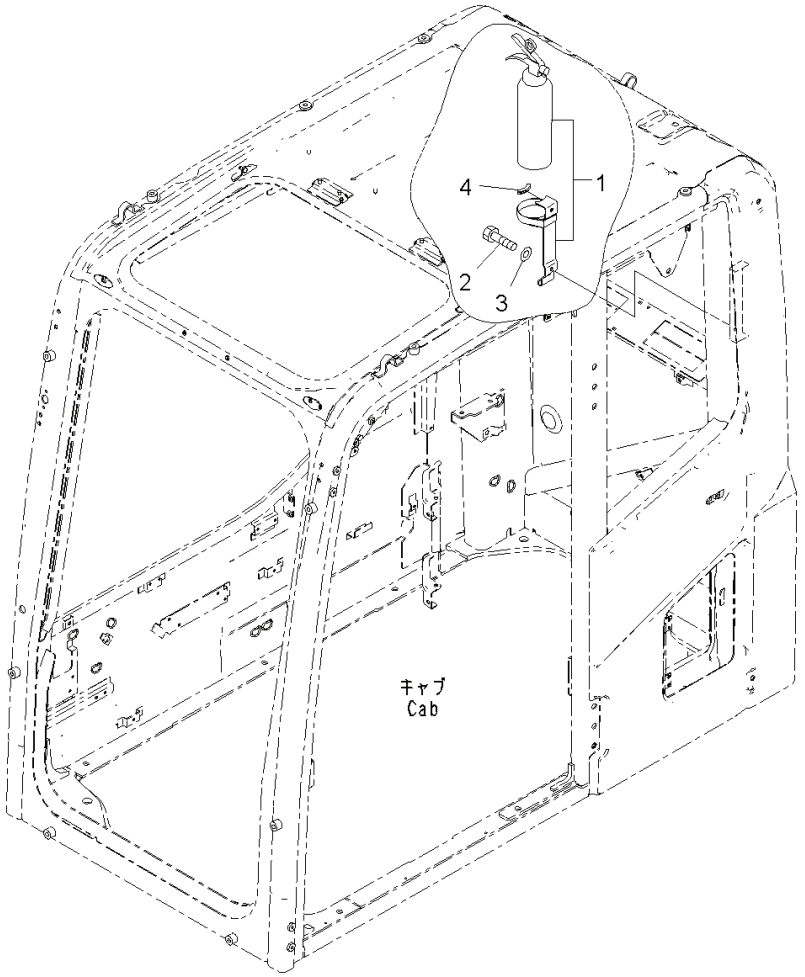

00049580

Index	Code	Part Number	Descreption	Qty	Serial Number
1		22B-98-11140	Fire Extinguisher	1	Y300001-
2		01010-D0820	Bolt	2	Y300001-
3		01643-70823	Washer	2	Y300001-
4		208-53-11780	Trim	1	Y300001-

FIG. K0840-001001 First Aid Box

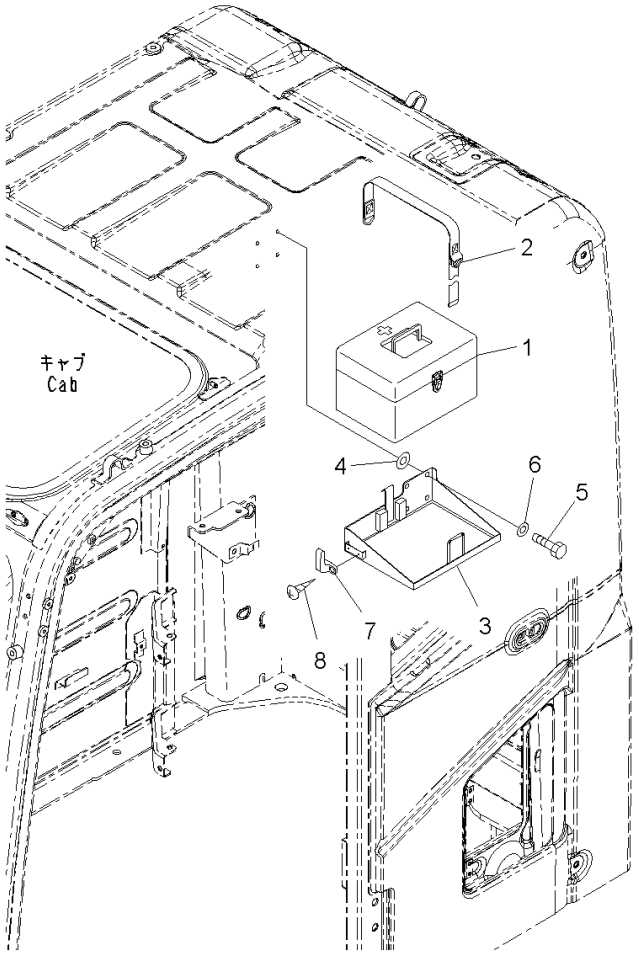

00064613

Index	Code	Part Number	Descreption	Qty	Serial Number
1		195-911-6531	Box	1	Y300001-
2		195-911-6562	Band	1	Y300001-
3		20Y-54-53370	Bracket	1	Y300001-
4		20D-62-17620	Collar	4	Y300001-
5		01010-80835	Bolt	4	Y300001-
6		01643-30823	Washer	4	Y300001-
7		205-54-51250	Hanger	1	Y300001-
8		01370-30412	Screw	2	Y300001-

FIG. K0850-001001 Thermos Bottle

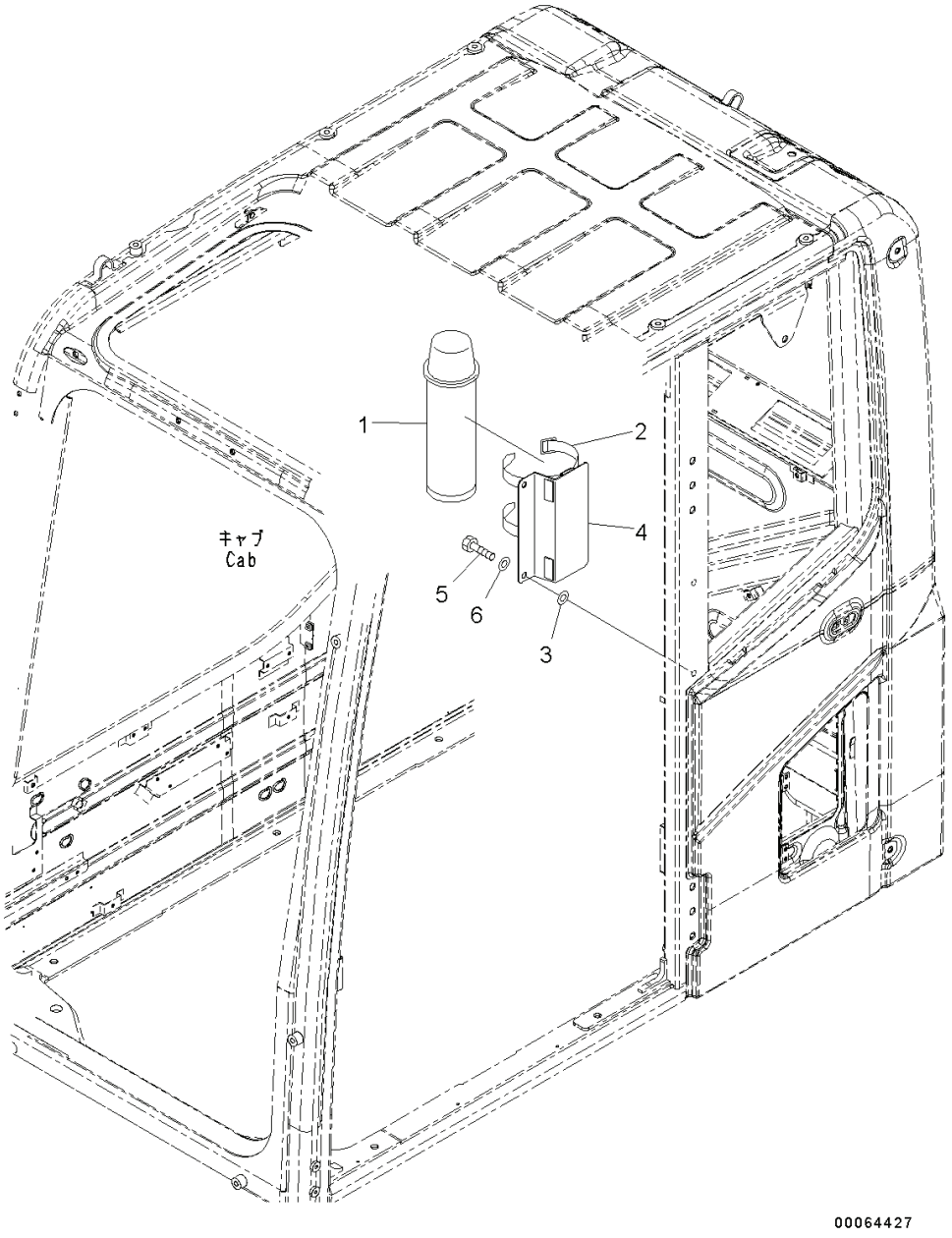

Index	Code	Part Number	Descreption	Qty	Serial Number
1		195-911-1722	Thermos Bottle	1	Y300001-
2		195-911-1330	Band	2	Y300001-
3		01643-70823	Washer	2	Y300001-
4		20Y-53-17811	Bracket	1	Y300001-
5		01245-00825	Screw	2	Y300001-
6		01643-70823	Washer	2	Y300001-

PC300-8 (FEN01263-00)

FIG. K1110-005001 Cab, Cab Body and Window

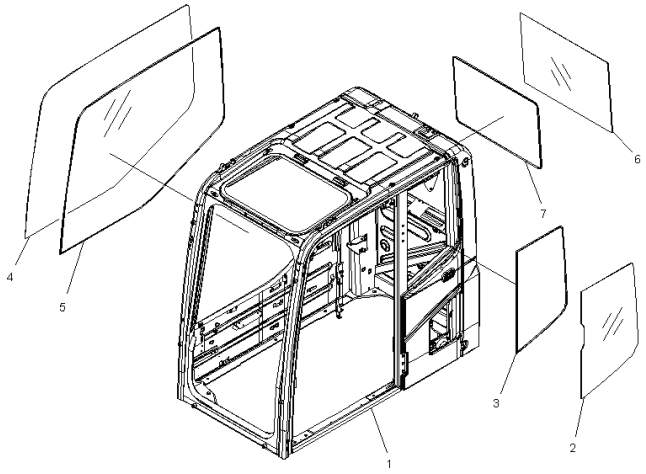

Index	Code	Part Number	Description	Qty	Serial Number
		Note: This list covers following specifications. With AM-FM Radio 1-actuator, With AM-FM Radio WEBASTO, With AM-FM Radio 1-actuator, WEBASTO, With AM-FM Radio			
		206-53-00451	Cab Assembly ..... With AM-FM Radio For Asia	1	Y300001-
		206-53-00451	Cab Assembly ..... 1-actuator, Without Radio	1	Y300001-
		206-53-00451	Cab Assembly . ..... With Overload Alarm	1	Y300001-
		206-53-00451	Cab Assembly ..... 1-actuator, With AM-FM Radio For Asia	1	Y300001-
1	C1		• Cab	1	Y300001-
2		20Y-53-11241	• Glass	1	Y300001-
3		20Y-53-11260	• Seal	1	Y300001-
4		20Y-53-11841	• Glass	1	Y300001-
5		20Y-53-11850	• Seal	1	Y300001-
6		20Y-53-11271	• Glass	1	Y300001-
7		20Y-53-11250	• Seal	1	Y300001-

FIG. K1110-005002 Cab, Front Window

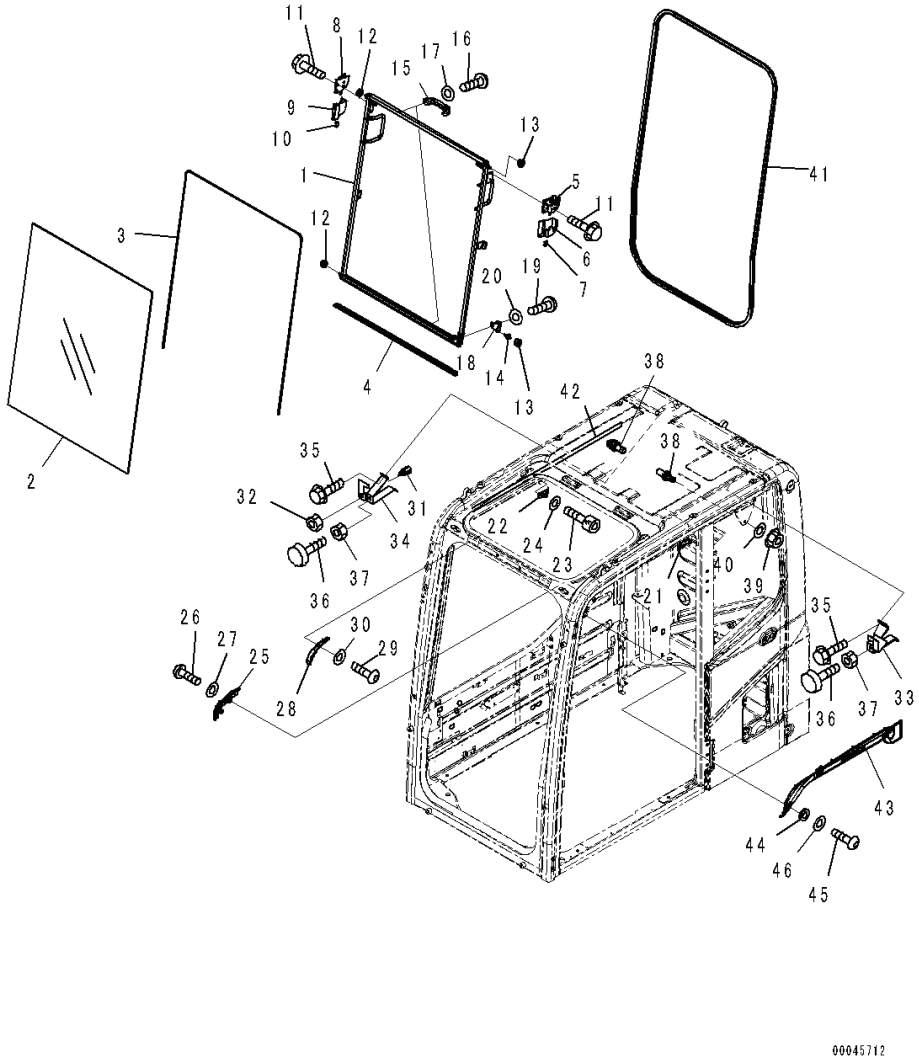

Index	Code	Part Number	Descreption	Qty	Serial Number
			Note: This list covers following specifications. With AM-FM Radio 1-actuator, With AM-FM Radio WEBASTO, With AM-FM Radio 1-actuator, WEBASTO, With AM-FM		
		206-53-00451	RadioCab Assembly	1	Y300001-
		20Y-53-00031	• Window Assembly	1	Y300001-
1		20Y-53-11511	• • Frame	1	Y300001-
2		20Y-53-11520	• • Glass	1	Y300001-
3		20Y-54-51531	• • Seal	1	Y300001-
4		20Y-53-11551	• • Seal	1	Y300001-
5		22B-54-15411	• • Lock Assembly	1	Y300001-
6		22B-54-15440	• • Case	1	Y300001-
7		22B-54-15470	• • Knob	1	Y300001-

FIG. K1110-005002 Cab, Front Window

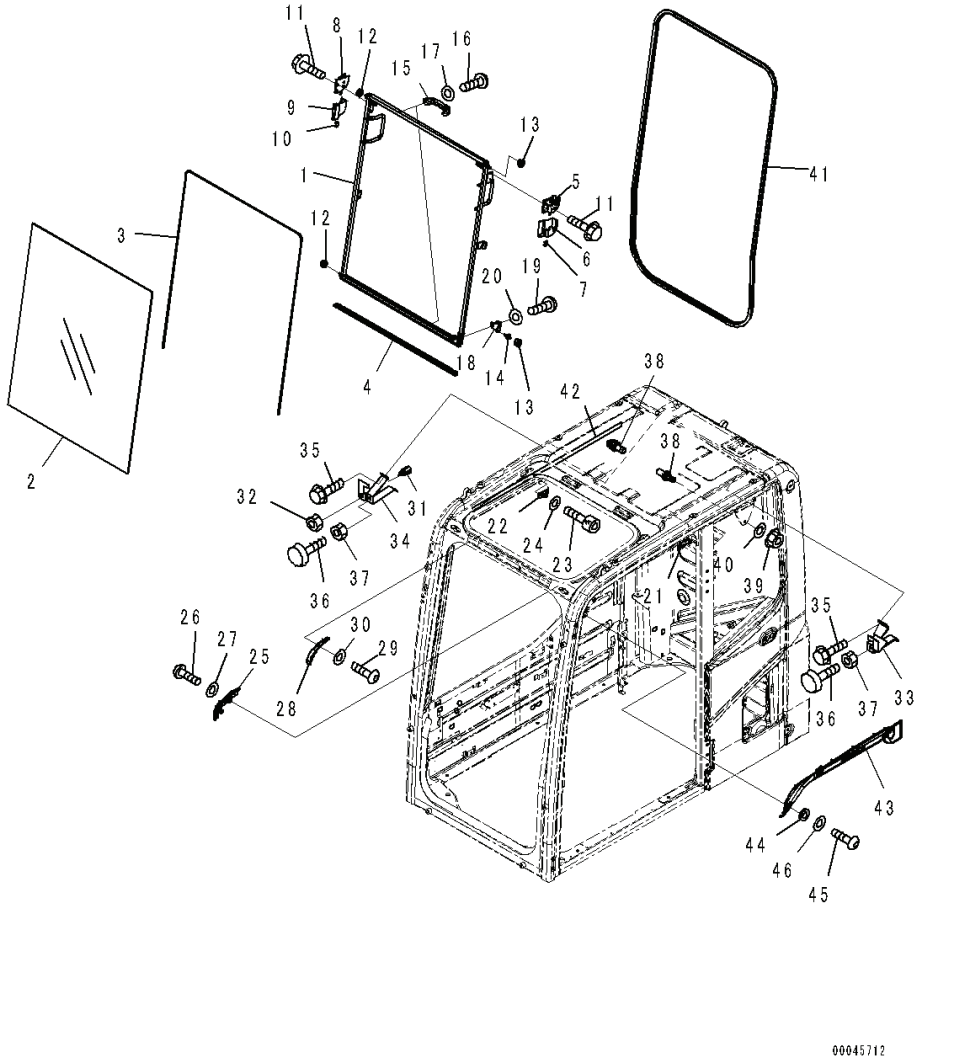

Index	Code	Part Number	Descreption	Qty	Serial Number
8		22B-54-15421	• • Lock Assembly	1	Y300001-
9		22B-54-15450	• • Case	1	Y300001-
10		22B-54-15480	• • Knob	1	Y300001-
11		01435-40812	• • Bolt	4	Y300001-
12		20Y-54-52621	• • Roller	2	Y300001-
13		20Y-54-52681	• • Roller	2	Y300001-
14		20Y-53-12330	• • Pin	1	Y300001-
15		20Y-54-14590	• • Handle	2	Y300001-
16		01245-00616	• • Screw, Hexagon Socket Head	4	Y300001-
17		01643-70623	• • Washer	4	Y300001-
18		20Y-53-12830	• • Bracket	1	Y300001-
19		01245-00816	• • Screw	2	Y300001-
20		01643-70823	• • Washer	2	Y300001-
21		20Y-54-51670	• Stopper	1	Y300001-
22		20Y-54-51680	• Stopper	1	Y300001-
23		01252-80616	• Bolt	4	Y300001-
24		01643-70623	• Washer	4	Y300001-
25		20Y-53-11561	• Block Assembly	1	Y300001-
26		01245-00816	• Screw	2	Y300001-
27		01643-70823	• Washer	2	Y300001-
28		20Y-53-11661	• Bracket	1	Y300001-
29		01245-00816	• Screw	2	Y300001-
30		01643-70823	• Washer	2	Y300001-
31		21J-06-12440	• Switch	1	Y300001-
32		01583-11811	• Nut	1	Y300001-
33		20Y-53-11581	• Bracket	1	Y300001-
34		20Y-53-11641	• Bracket	1	Y300001-
35		01435-00612	• Bolt	4	Y300001-
36		20Y-54-11611	• Stopper	2	Y300001-
37		01580-11008	• Nut	2	Y300001-
38		20Y-54-51621	• Striker	2	Y300001-
39		01584-31008	• Nut	2	Y300001-
40		01643-71032	• Washer	2	Y300001-
41		20Y-53-11540	• Seal	1	Y300001-
42		20Y-54-51420	• Seal	1	Y300001-
43		20Y-53-12531	• Cover	1	Y300001-
44		20Y-53-12310	• Collar	3	Y300001-
45		01245-00616	• Screw, Hexagon Socket Head	3	Y300001-
46		01643-70623	• Washer	3	Y300001-

PC300-8 (FEN01263-00)

FIG. K1110-005003 Cab, Front Lower Window

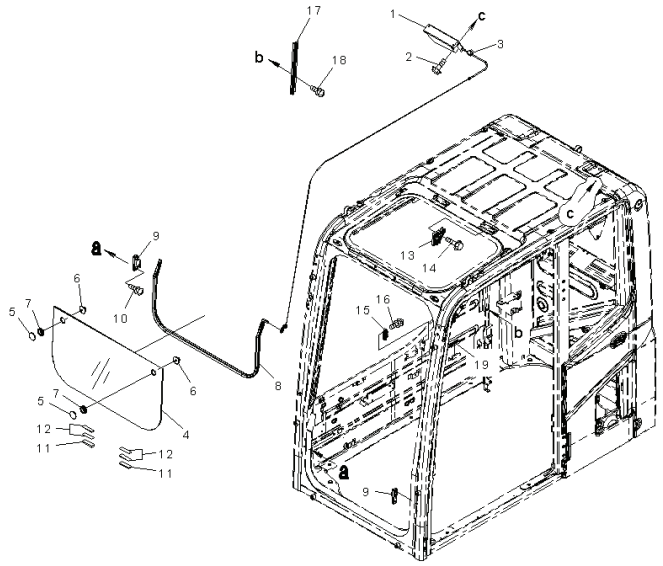

Index	Code	Part Number	Descreption	Qty	Serial Number
		Note: This list covers following specifications.			
		With AM-FM Radio			
		1-actuator, With AM-FM Radio			
		WEBASTO, With AM-FM Radio			
		1-actuator, WEBASTO, With AM-FM Radio			
		207-53-00451	Cab Assembly	1	Y300001-
1		20Y-53-11591	• Spring Assembly	1	Y300001-
2		01435-00616	• Bolt	2	Y300001-
3		20Y-54-51640	• Holder	1	Y300001-
		20Y-53-11601	• Glass Assembly	1	Y300001-
4		20Y-53-11611	• • Glass	1	Y300001-
5		22B-54-15970	• • Retainer	2	Y300001-
6		22B-54-15980	• • Knob	2	Y300001-
7		08037-02512	• • Grommet	2	Y300001-
8		208-53-11860	• Trim	1	Y300001-
9		20Y-53-11940	• Seat	2	Y300001-
10		01023-20612	• Screw	4	Y300001-
11		20Y-53-11973	• Rubber	2	Y300001-
12		20Y-53-12892	• Rubber	4	Y300001-
13		22B-54-15841	• Lock Assembly	1	Y300001-
14		01435-40616	• Bolt	2	Y300001-
15		20Y-53-12611	• Seat	1	Y300001-
16		01023-20616	• Screw	2	Y300001-
17		20Y-53-12631	• Rail	1	Y300001-
18		01023-20616	• Screw	2	Y300001-
19		20U-54-25140	• Stopper	1	Y300001-

FIG. K1110-005004 Cab, Roof Window

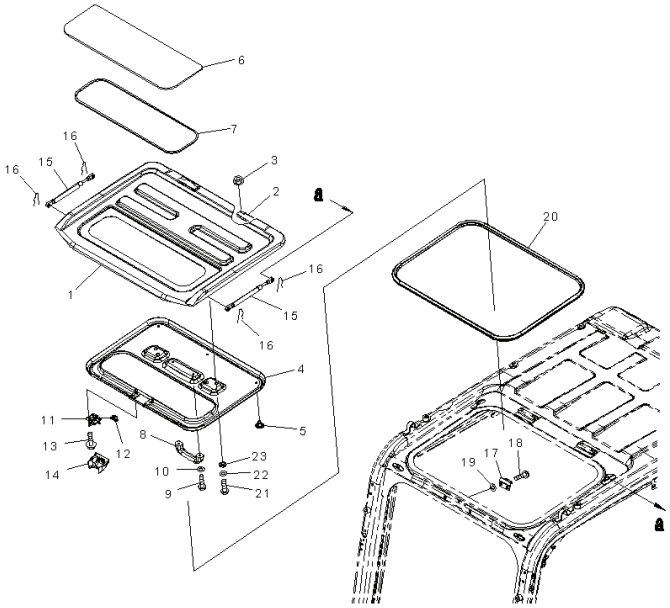

Index	Code	Part Number	Descreption	Qty	Serial Number
		Note: This list covers following specifications.			
		With AM-FM Radio			
		1-actuator, With AM-FM Radio			
		WEBASTO, With AM-FM Radio			
		1-actuator, WEBASTO, With AM-FM Radio			
		206-53-00451	Cab Assembly ..... 1-actuator, Without Radio	1	Y300001-
1		208-53-22710	• Roof	1	Y300001-
2		208-53-22H70	• • Hinge	2	Y300001-
3		01584-30806	• Nut	4	Y300001-
4		20Y-53-11921	• Cover	1	Y300001-
5		09416-10200	• Button	5	Y300001-
6		20Y-53-11741	• Plate	1	Y300001-
7		20Y-53-11790	• Seal	1	Y300001-
8		20Y-54-14590	• Handle	1	Y300001-
9		01245-00616	• Screw, Hexagon Socket Head	2	Y300001-
10		01643-70623	• Washer	2	Y300001-
11		20Y-53-11721	• Lock	1	Y300001-
12		20Y-53-11781	• Knob	1	Y300001-
13		01435-40610	• Bolt	3	Y300001-
14		20Y-53-11931	• Cover	1	Y300001-
15		208-53-22162	• Gas Spring Assembly	2	Y300001-
16		04052-10833	• Pin, Snap	4	Y300001-
17		20Y-53-11771	• Striker	1	Y300001-
18		01245-00820	• Screw	2	Y300001-
19		20Y-54-52651	• Spacer	2	Y300001-
20		20Y-53-11861	• Seal	1	Y300001-
21		01245-00620	• Screw	4	Y300001-
22		01643-70623	• Washer	4	Y300001-
23		20Y-54-52651	• Spacer	4	Y300001-

FIG. K1110-005005A Cab, Door

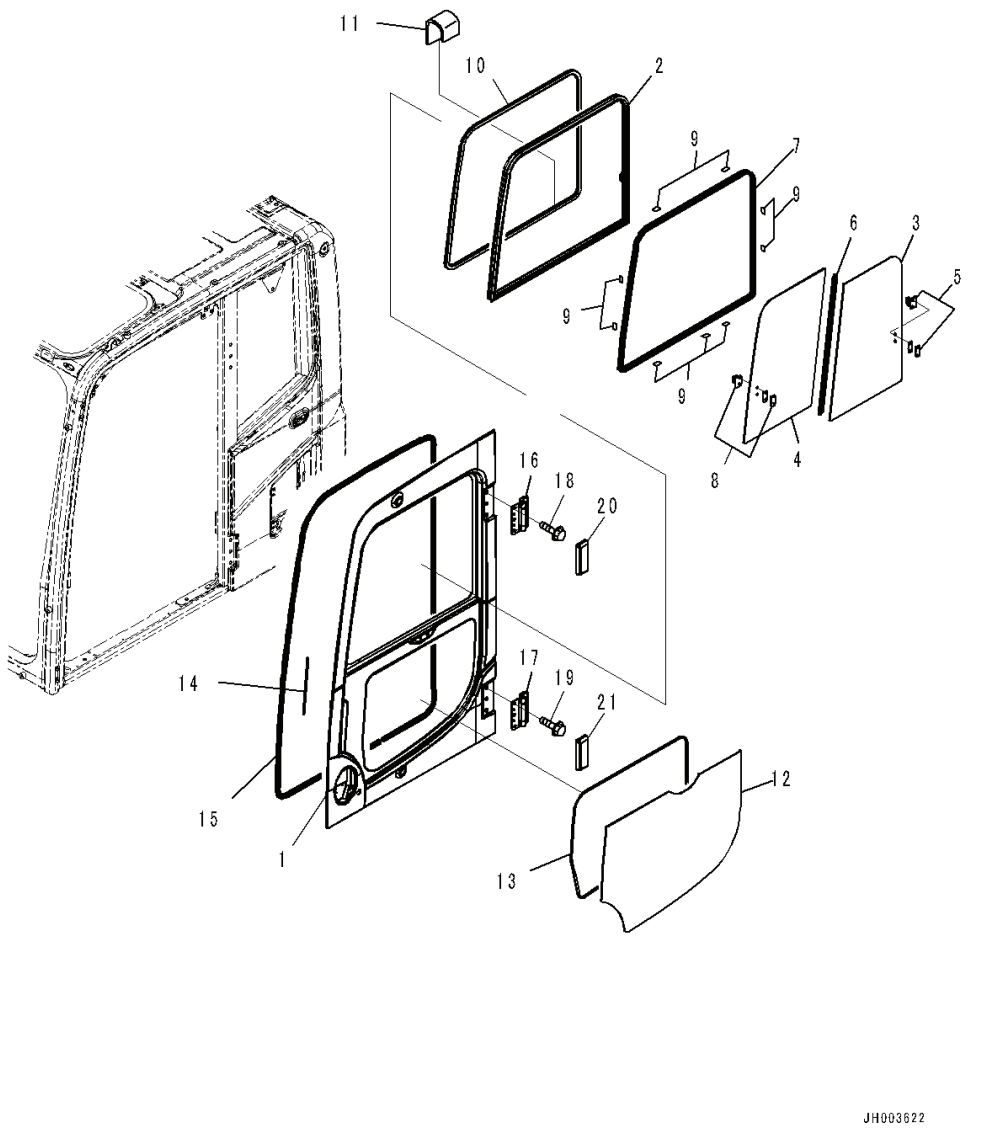

Index	Code	Part Number	Descreption	Qty	Serial Number
		Note: This list covers following specifications.			
		With AM-FM Radio			
		1-actuator, With AM-FM Radio			
		WEBASTO, With AM-FM Radio			
		1-actuator, WEBASTO, With AM-FM Radio			
		207-53-00451	Cab Assembly	1	Y300001-
			Separate Packing For Cab		
		20Y-53-00072	• Door Assembly	1	Y300001-
1	C1		• • Door	1	Y300001-
		20Y-53-11402	• • Sash Assembly	1	Y300001-
2	C1		• • • Sash	1	Y300001-
3		20Y-53-12840	• • • Glass	1	Y300001-
4		20Y-53-12850	• • • Glass	1	Y300001-
5		20Y-54-52860	• • • Lock Assembly	1	Y300001-
6		20Y-53-12870	• • • Seal	1	Y300001-
7		20Y-53-12880	• • • Seal	1	Y300001-
8		20Y-54-13322	• • • Lock Assembly	1	Y300001-
9		20Y-53-12971	• • Seat	9	Y300001-
10		20Y-53-11470	• • Trim	1	Y300001-
11		20Y-53-13910	• • Cover	1	Y300001-
12		20Y-53-11451	• • Glass	1	Y300001-
13		20Y-53-11460	• • Seal	1	Y300001-
14		20Y-53-13880	• • Seal	1	Y300001-
15		20Y-53-11484	• • Weather Strip	1	Y300001-
16		20Y-53-11332	• • Hinge	1	Y300001-
17		20Y-53-11332	• • Hinge	1	Y300001-
18		01435-01220	• • Bolt	6	Y300001-
19		01435-01220	• • Bolt	6	Y300001-
20		20Y-53-11411	• • Cover	1	Y300001-
21		20Y-53-11421	• • Cover	1	Y300001-

FIG. K1110-005006 Cab, Door Lock

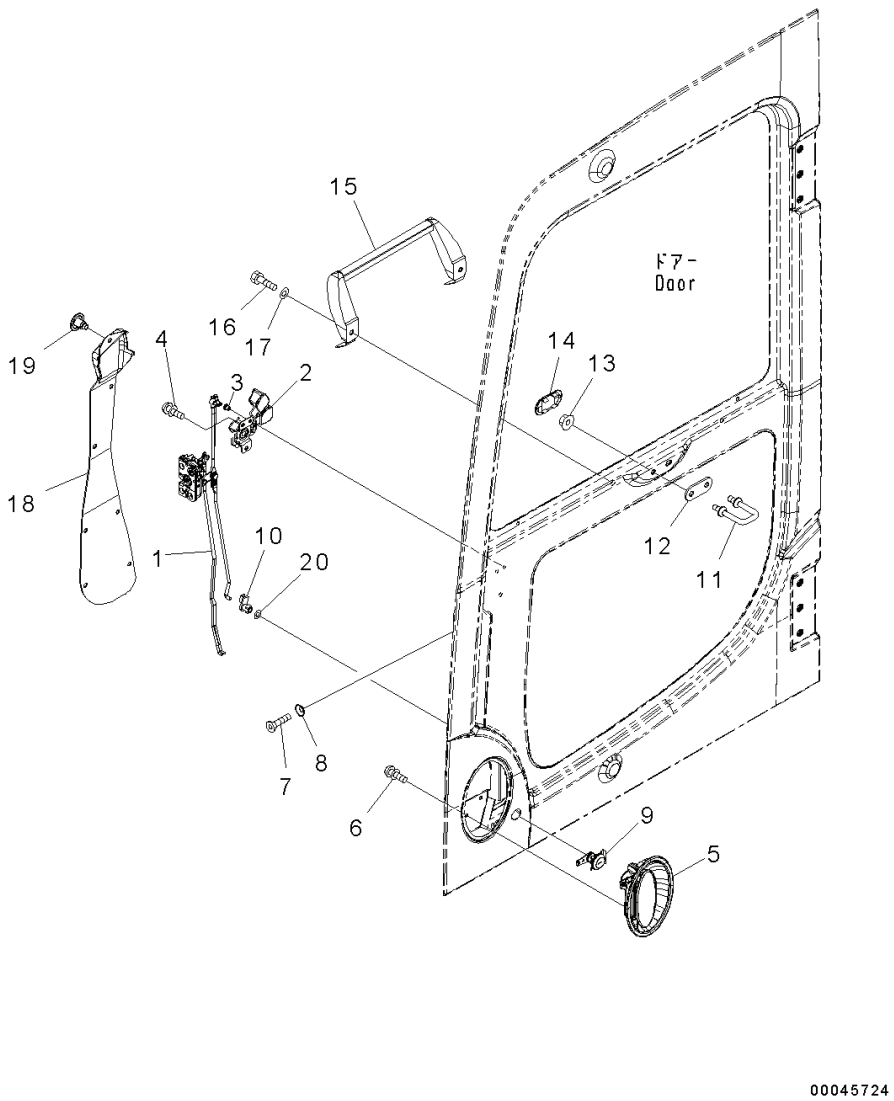

Index	Code	Part Number	Descreption	Qty	Serial Number
		206-53-00451	• Cab Assembly .	1	Y3000010-
		20Y-53-00072	• Door Assembly .	1	Y300001-
1		20Y-53-12201	• • Latch Assembly	1	Y300001-
2		20Y-54-52300	• • Handle Assembly .	1	Y300001-
3		22B-54-16340	• • • Snap .	1	Y300001-
4		01023-10612	• • Screw	3	Y300001-
5		20Y-53-12991	• • Handle .	1	Y300001-
6		01023-10612	• • Screw	3	Y300001-
7		01240-00616	• • Screw	3	Y300001-
8		195-Z11-1690	• • Washer	3	Y300001-
9		20Y-54-52820	• • Lock Assembly	1	Y300001-
10		22B-54-16330	• • Snap .	1	Y300001-
11		20Y-53-11320	• • Striker	1	Y300001-
12		20Y-53-12940	• • Plate .	1	Y300001-
13		01584-01008	• • Nut .	2	Y300001-
14		20Y-53-12661	• • Cover	1	Y300001-
15		20Y-54-51393	• • Grip .	1	Y300001-
16		01010-80820	• • Bolt .	2	Y300001-
17		01643-30823	• • Washer	2	Y300001-
18		20Y-53-11441	• • Cover	1	Y300001-
19		22B-54-16461	• • Rivet .	7	Y300001-
20		145-Z79-6270	• • Washer	1	Y300001-

FIG. K1110-005007 Cab, Open Lock and Door Catch

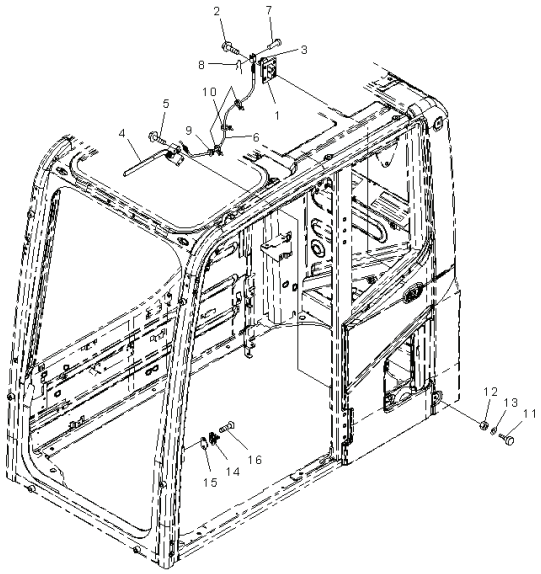

Index	Code	Part Number	Descreption	Qty	Serial Number
		Note: This list covers following specifications.			
		With AM-FM Radio			
		1-actuator, With AM-FM Radio			
		WEBASTO, With AM-FM Radio			
		1-actuator, WEBASTO, With AM-FM Radio			
		206-53-00213	Cab Assembly ..... 1-actuator, With AM-FM Radio For Asia	1	Y300001-
1		20Y-53-11981	• Lock	1	Y300001-
2		01435-40825	• Bolt	4	Y300001-
3		20Y-53-12280	• Cover	1	Y300001-
4		208-53-14540	• Lever Assembly	1	Y300001-
5		01435-40616	• Bolt	3	Y300001-
6		20Y-53-11990	• Cable	1	Y300001-
7		04205-10520	• Pin	1	Y300001-
8		04052-10530	• Pin	1	Y300001-
9		08034-20414	• Band	1	Y300001-
10		08059-00413	• Clip	2	Y300001-
11		20Y-54-11611	• Stopper	2	Y300001-
12		01580-11008	• Nut	2	Y300001-
13		01643-31032	• Washer	2	Y300001-
14		208-53-22810	• Striker	1	Y300001-
15		20Y-53-11890	• Plate	1	Y300001-
16		01240-01025	• Screw	2	Y300001-

FIG. K1110-005008 Cab, Wiper and Room Lamp

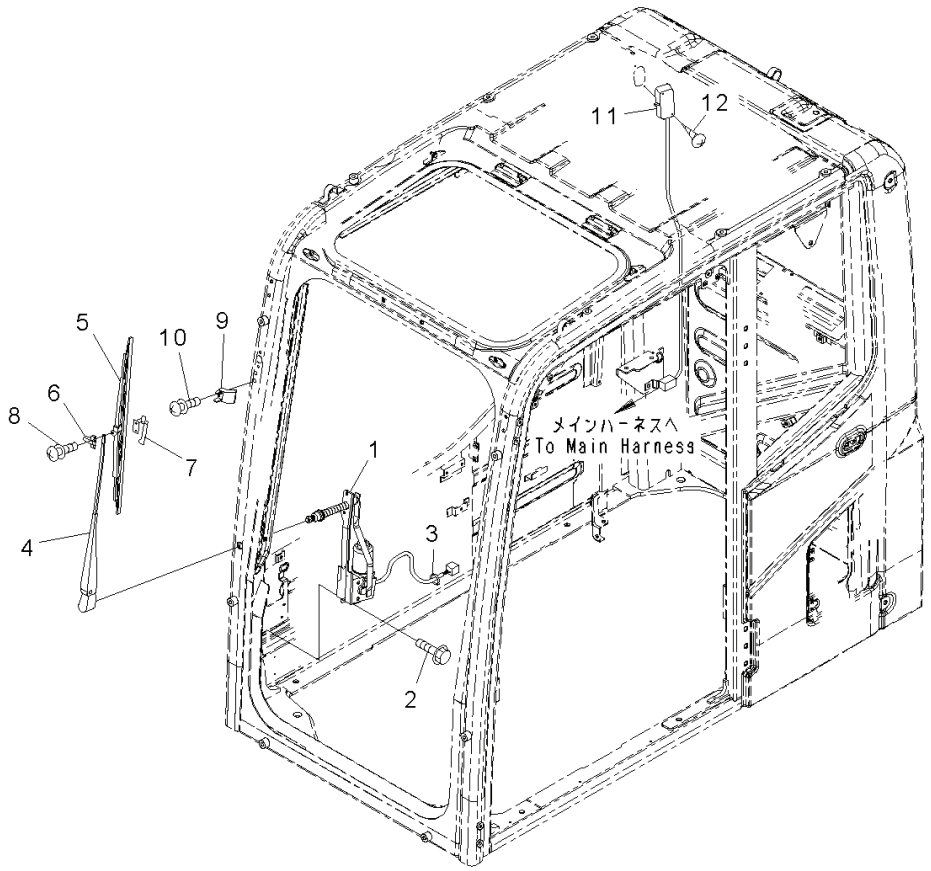

Index	Code	Part Number	Descreption	Qty	Serial Number
		Note: This list covers following specifications.			
		With AM-FM Radio			
		1-actuator, With AM-FM Radio			
		WEBASTO, With AM-FM Radio			
		1-actuator, WEBASTO, With AM-FM Radio			
		206-53-00213	Cab Assembly ..... 1-actuator, With AM-FM Radio For Asia	1	Y300001-
1		20Y-54-52211	• Wiper Motor Assembly	1	Y300001-
2		01435-00616	• Bolt	6	Y300001-
3		08034-20414	• Band	1	Y300001-
		20Y-54-52221	• Wiper Assembly	1	Y300001-
4		20Y-54-52350	• • Arm	1	Y300001-
5		20Y-54-39450	• • Wiper Blade	1	Y300001-
6		20Y-54-39460	• • Slider	1	Y300001-
7		20Y-54-39480	• • Plate	1	Y300001-
8		ND949007-2350	• • Screw and Washer	2	Y300001-
9		20Y-53-12232	• Stopper	1	Y300001-
10		01023-20620	• Screw	2	Y300001-
11		20Y-53-12790	• Light	1	Y300001-
		08116-02410	• • Bulb, 10watt	1	Y300001-
12		01370-00420	• Screw	2	Y300001-

FIG. K1110-005009A Cab, Rubber Antenna

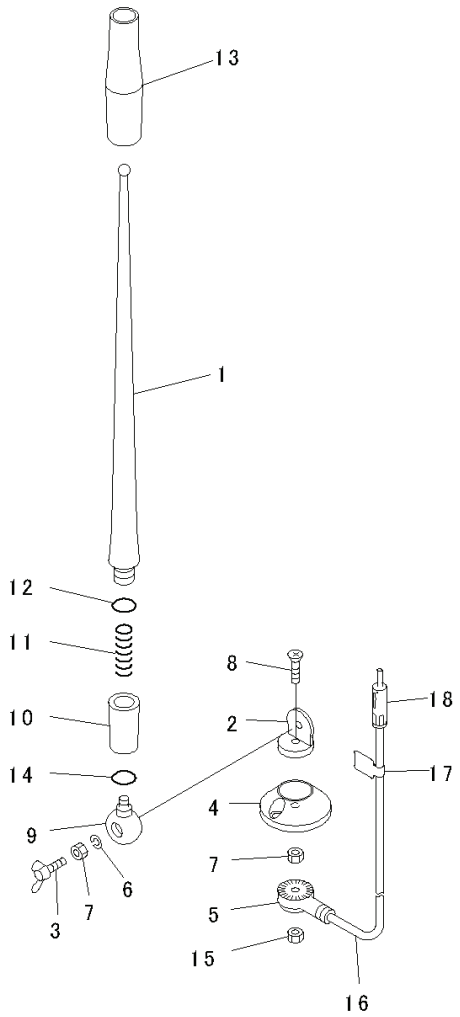

JH002177

Index	Code	Part Number	Descreption	Qty	Serial Number
		206-53-00451	Cab Assembly ..... With AM-FM Radio For Asia, For KOMTRAX	1	Y300001-
		20Y-06-41990	• Antenna	1	Y300001-
1		RFU419B-418-A	• • Rod	1	Y300001-
2	C1		• • Holder	1	Y300001-
3		RFU419B-418-D	• • Bolt, Wing	1	Y300001-
4		RFU419B-418-E	• • Base	1	Y300001-
5	C1		• • Holder	1	Y300001-
6		RFU419B-418-B	• • Washer, Spring	1	Y300001-
7		RFU419B-418-C	• • Nut	2	Y300001-
8	C1		• • Screw	1	Y300001-
9	C1		• • Holder	1	Y300001-
10	C1		• • Holder Assembly	1	Y300001-
11	C1		• • Spring	1	Y300001-
12	C1		• • O-ring	1	Y300001-
13	C1		• • Tube	1	Y300001-
14	C1		• • O-ring	1	Y300001-
15		REU419B-418-C	• • Nut	1	Y300001-
16		RFU419B-418-F	• • Cable	1	Y300001-
17	C1		• • Plate	1	Y300001-
18	C1		• • Plug	1	Y300001-

FIG. K1110-005010 Cab, Speaker and Window Washer

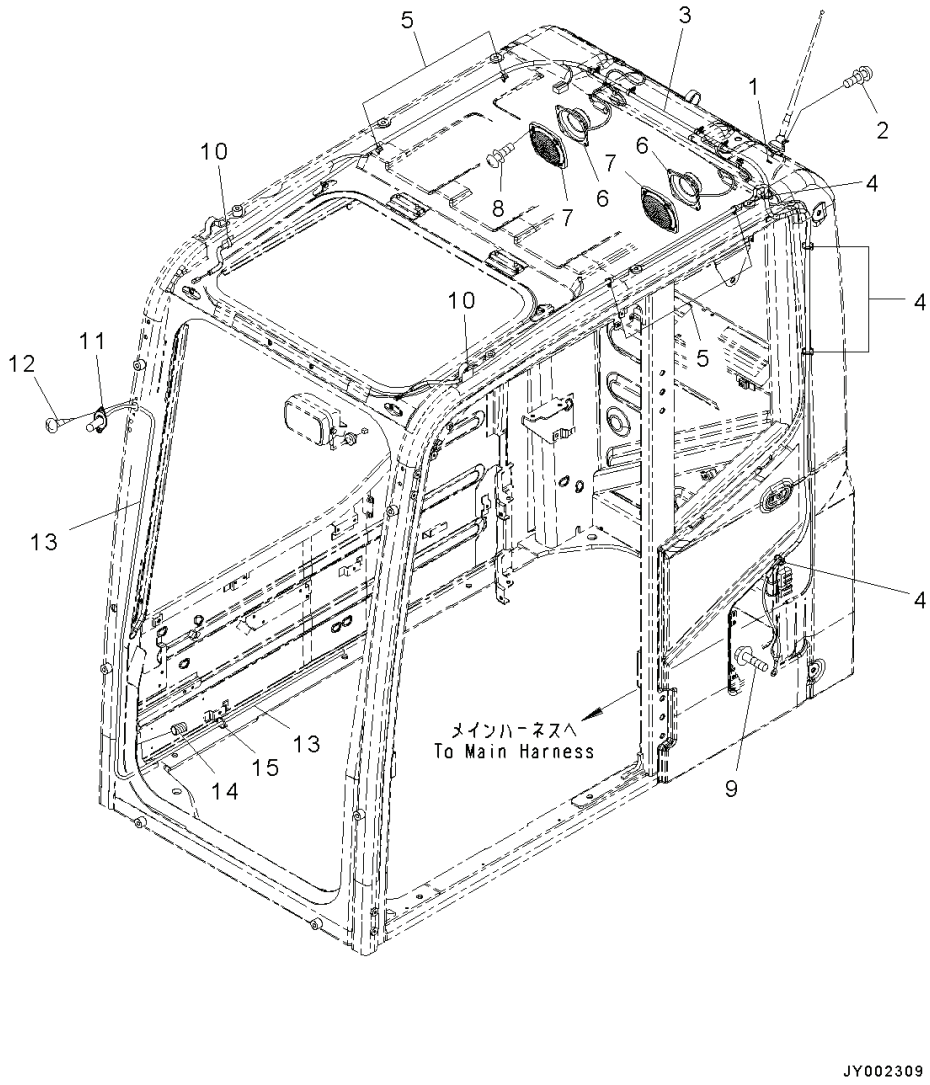

Index	Code	Part Number	Descreption	Qty	Serial Number
		206-53-00451	Cab Assembly	1	Y300001-
			1-actuator, With AM-FM Radio For Asia		
1		01643-30623	• Washer	1	Y300001-
2		01023-20412	• Screw	2	Y300001-
3		20Y-06-41141	• Wiring Harness	1	Y300001-
4		08034-20414	• Band	4	Y300001-
5		08059-00413	• Clip	8	Y300001-
6		20Y-06-42180	• Speaker	2	Y300001-
7		20Y-53-12221	• Cover	2	Y300001-
8		01023-20416	• Screw	8	Y300001-
9		01435-40812	• Bolt	1	Y300001-
10		08051-00801	• Clip	2	Y300001-
11		20Y-54-39511	• Nozzle	1	Y300001-
12		01023-70412	• Screw	2	Y300001-
13		195-979-7770	• Hose	1	Y300001-
14		08017-B0701	• Conduit	1	Y300001-
15		08034-20414	• Band	1	Y300001-

FIG. K1110-005011 Cab, Roof Cover and Air Intake

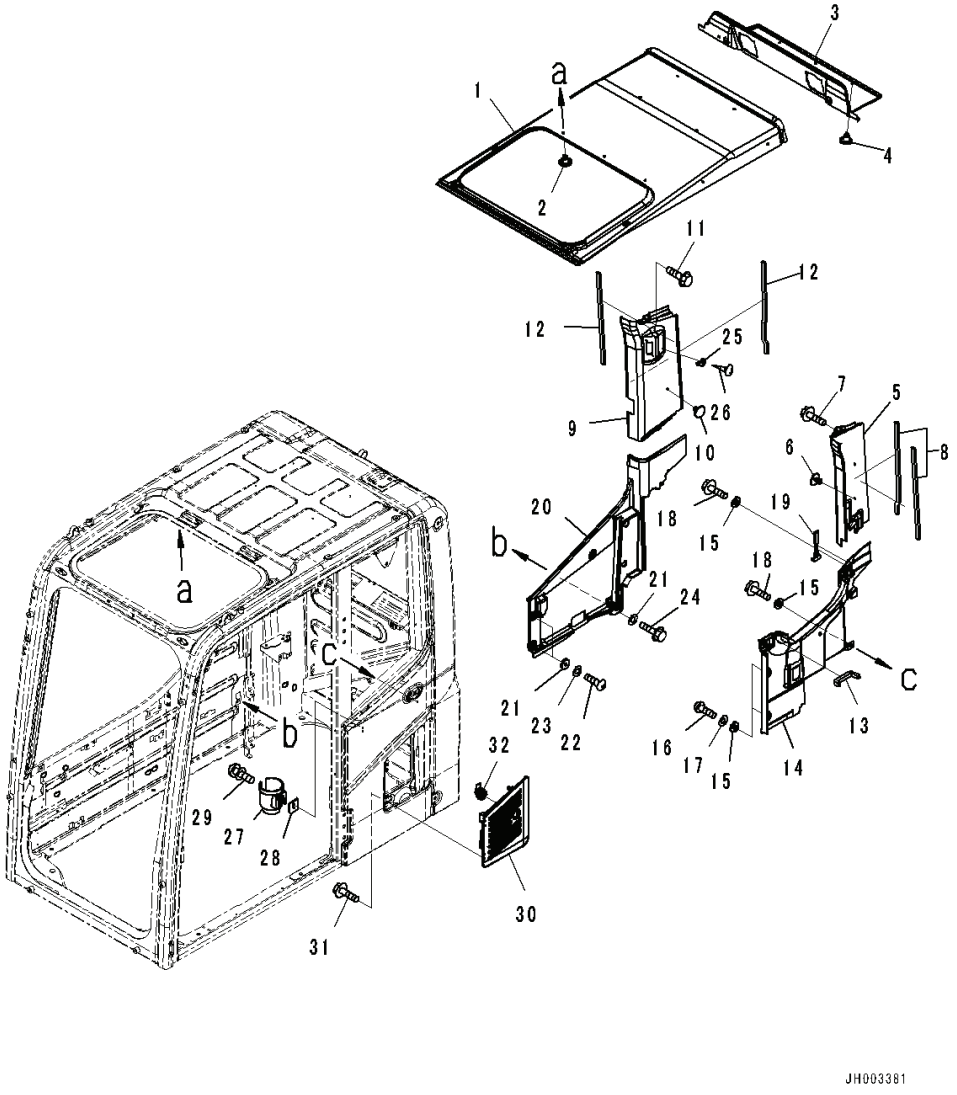

Index	Code	Part Number	Descreption	Qty	Serial Number
		208-53-00530	Cab Assembly	1	Y300001-
			1-actuator, With AM-FM Radio For Asia		
1		20Y-53-12412	• Cover	1	Y300001-
2		09416-10200	• Button	17	Y300001-
3		20Y-53-12421	• Cover	1	Y300001-
4		09416-10200	• Button	3	Y300001-
5		20Y-53-12431	• Cover	1	Y300001-
6		208-53-13270	• Rivet	2	Y300001-
7		01435-00612	• Bolt	1	Y300001-
8		20Y-53-12710	• Seal	2	Y300001-
9		20Y-53-12441	• Cover	1	Y300001-
10		09416-10200	• Button	1	Y300001-
11		01435-00612	• Bolt	1	Y300001-
12		20Y-53-12710	• Seal	2	Y300001-
13		20Y-53-12552	• Seal	1	Y300001-
14		20Y-53-12463	• Cover	1	Y300001-
15		20Y-53-12310	• Collar	4	Y300001-
16		01245-00616	• Screw, Hexagon Socket Head	2	Y300001-
17		01643-70623	• Washer	2	Y300001-
18		01435-00612	• Bolt	2	Y300001-
19		22B-54-17380	• Hammer	1	Y300001-
20		20Y-53-12472	• Cover	1	Y300001-
21		20Y-53-12310	• Collar	5	Y300001-
22		01245-00616	• Screw, Hexagon Socket Head	3	Y300001-
23		01643-70623	• Washer	3	Y300001-
24		01435-00612	• Bolt	2	Y300001-
25		205-54-51250	• Hanger	1	Y300001-
26		01370-30416	• Screw	2	Y300001-
27		208-53-12991	• Holder	1	Y300001-
28		208-53-12980	• Plate	1	Y300001-
29		01023-20616	• Screw	2	Y300001-
30		20Y-53-11752	• Cover	1	Y300001-
31		01435-40610	• Bolt	4	Y300001-
32		20Y-53-11761	• Lock Assembly	1	Y300001-

FIG. K1110-005012 Cab, Without Radio, Pressure Valve and Grip

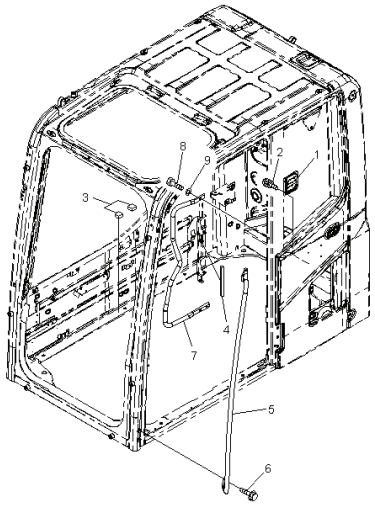

Index	Code	Part Number	Descreption	Qty	Serial Number
		206-53-00451	Cab Assembly	1	Y300001-
1		20Y-53-11961	• Valve Assembly .	1	Y300001-
2		01023-60512	• Screw .	4	Y300001-
3		20Y-53-13490	• Rubber	2	Y300001-
4		20Y-53-12591	• Seal .	1	Y300001-
5		20Y-53-11821	• Grip	1	Y300001-
6		01435-40825	• Bolt	4	Y300001-
7		20Y-53-11831	• Grip	1	Y300001-
8		01010-D1025	• Bolt	3	Y300001-
9		01643-71032	• Washer	3	Y300001-

FIG. K1110-005013 Cab, Plug Bolt

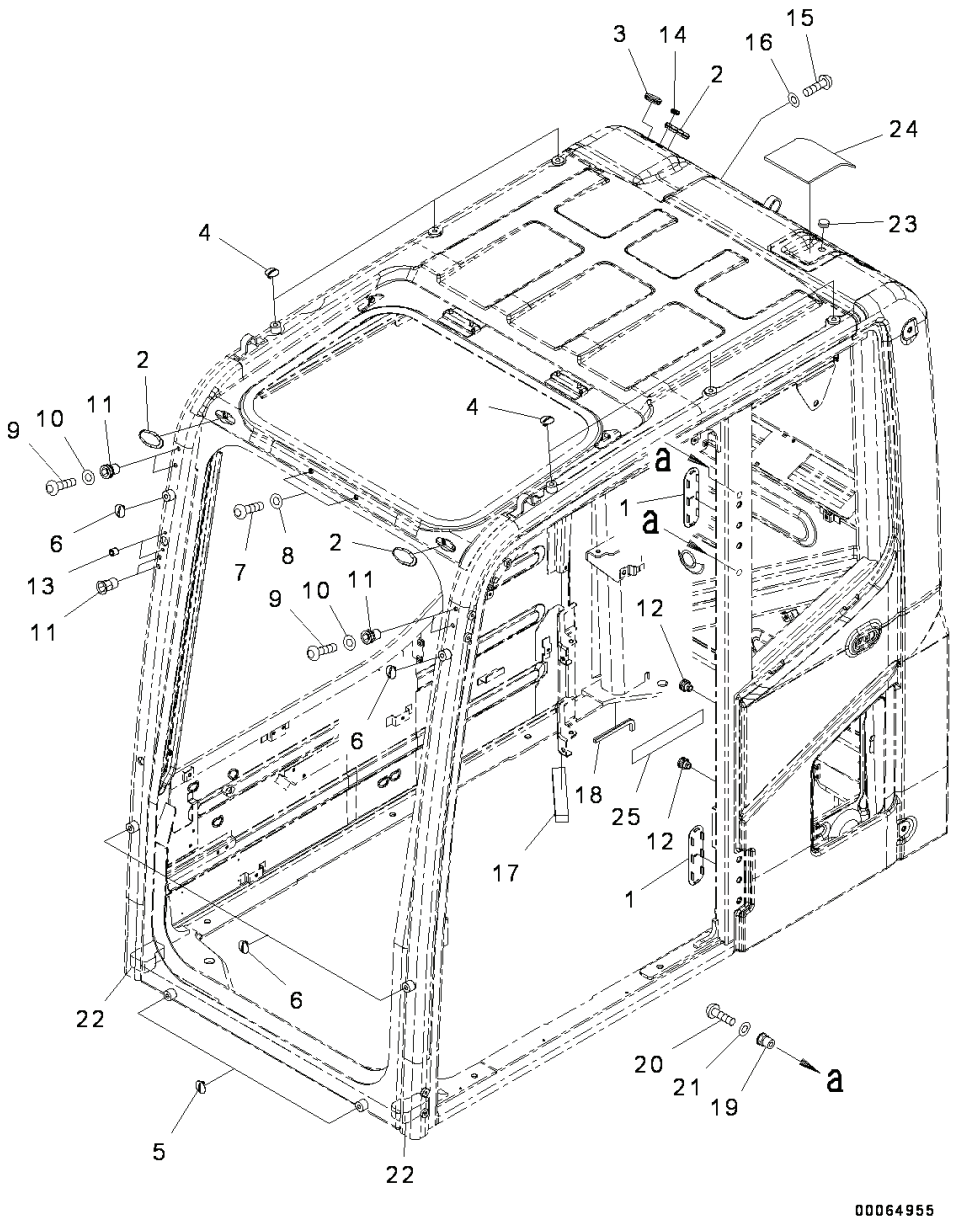

PC300-8 (FEN01263-00)

Index	Code	Part Number	Descreption	Qty	Serial Number
		Note: This list covers following specifications.			
		With AM-FM Radio			
		1-actuator, With AM-FM Radio			
		WEBASTO, With AM-FM Radio			
		1-actuator, WEBASTO, With AM-FM Radio			
		206-53-00451	Cab Assembly Without Air Conditioner, Without Radio	1	Y300001-
1		20Y-53-12960	• Cover	2	Y300001-
2		22B-54-17282	• Cap	3	Y300001-
3		09415-02512	• Cap	1	Y300001-
4		20Y-53-11390	• Cap	6	Y300001-
5		20Y-53-11390	• Cap	2	Y300001-
6		20Y-53-11380	• Cap	4	Y300001-
7		01245-01016	• Screw	2	Y300001-
8		01643-71032	• Washer	2	Y300001-
9		01245-00616	• Screw, Hexagon Socket Head	4	Y300001-
10		01643-70623	• Washer	4	Y300001-
11		20Y-53-12260	• Nut	6	Y300001-
12		20Y-54-35451	• Nut	2	Y300001-
13		20Y-53-12320	• Nut	2	Y300001-
14		09415-01008	• Cap	1	Y300001-
15		01245-01016	• Screw	1	Y300001-
16		01643-71032	• Washer	1	Y300001-
17		20Y-53-12580	• Seal	1	Y300001-
18		20Y-53-12740	• Trim	1	Y300001-
19		20Y-53-12270	• Nut	2	Y300001-
20		01245-00816	• Screw	2	Y300001-
21		01643-70823	• Washer	2	Y300001-
22		20Y-53-18880	• Seal	2	Y300001-
23		09415-01008	• Cap	1	Y300001-
24		20Y-53-12951	• Cover	1	Y300001-

FIG. K1110-005014 Cab, Cab In Parts, Monitor and Cover

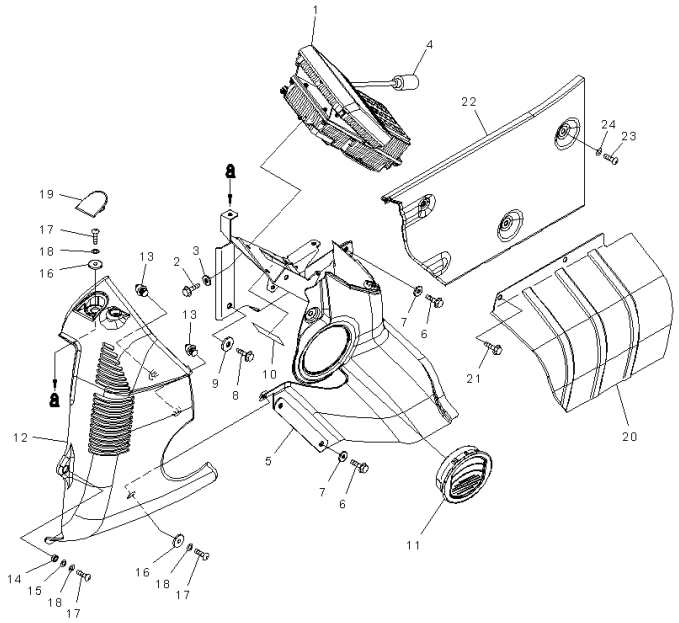

Index	Code	Part Number	Descreption	Qty	Serial Number
		Note: This list covers following specifications.			
		With AM-FM Radio			
		1-actuator, With AM-FM Radio			
		WEBASTO, With AM-FM Radio			
		1-actuator, WEBASTO, With AM-FM Radio			
1		7835-31-5007	Monitor	1	Y300001-
2		01435-00616	Bolt	4	Y300001-
3		209-72-12230	Washer	4	Y300001-
4		20Y-53-12810	Cover	1	Y300001-
5		20Y-53-12154	Cover	1	Y300001-
6		01435-00616	Bolt	4	Y300001-
7		209-72-12230	Washer	4	Y300001-
8		01435-00820	Bolt	1	Y300001-
9		208-53-11330	Washer	1	Y300001-
10		20Y-00-41330	Plate	1	Y300001-
11		20Y-53-12172	Grille	1	Y300001-
12		20Y-53-12122	Cover	1	Y300001-
13		22U-54-25340	• Clip	2	Y300001-
14		205-54-75240	Collar	1	Y300001-
15		01643-70823	Washer	1	Y300001-
16		20Y-53-12310	Collar	2	Y300001-
17		01245-00616	Screw, Hexagon Socket Head	3	Y300001-
18		01643-70623	Washer	3	Y300001-
19		20Y-53-12291	Cap	1	Y300001-
20		20Y-53-12161	Cover	1	Y300001-
21		01435-00616	Bolt	2	Y300001-
22		20Y-53-12483	Cover	1	Y300001-
23		01245-00612	Screw	3	Y300001-
24		01643-70623	Washer	3	Y300001-

FIG. K1110-005015 Cab, Cab In Parts, Monitor Cover

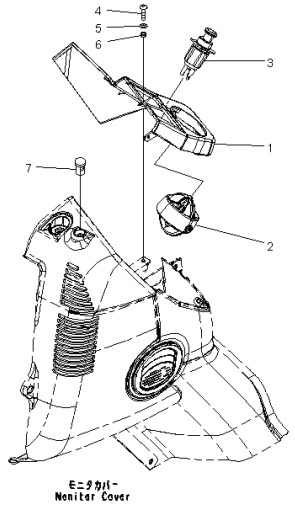

Index	Code	Part Number	Descreption	Qty	Serial Number
		Note: This list covers following specifications.			
		With AM-FM Radio			
		1-actuator, With AM-FM Radio			
		WEBASTO, With AM-FM Radio			
		1-actuator, WEBASTO, With AM-FM Radio			
1		20Y-53-12111	Cover	1	Y300001-
2		20Y-53-12240	Louver	1	Y300001-
3		20Y-06-23472	Cigarette Lighter	1	Y300001-
4		01245-00616	Screw, Hexagon Socket Head	1	Y300001-
5		01643-70623	Washer	1	Y300001-
6		20Y-43-41290	Collar	1	Y300001-
7		20Y-979-6161	Sensor	1	Y300001-

FIG. K1110-005016 Cab, Cab In Parts, Luggage Plate

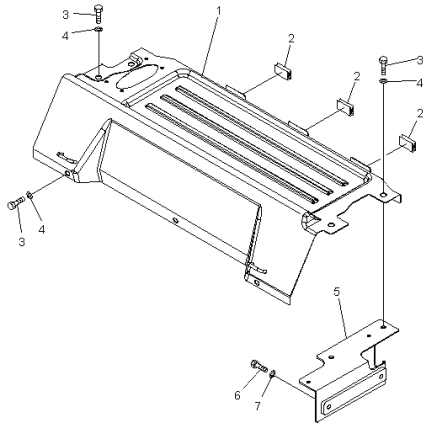

Index	Code	Part Number	Descreption	Qty	Serial Number
		Note: This list covers following specifications.			
		With AM-FM Radio			
		1-actuator, With AM-FM Radio			
		WEBASTO, With AM-FM Radio			
		1-actuator, WEBASTO, With AM-FM Radio			
		20Y-53-13617	Cover Assembly	1	Y300001-
1	C1		• Cover	1	Y300001-
2		208-53-12460	• Seat	3	Y300001-
3		01010-D0825	Bolt	7	Y300001-
4		01643-70823	Washer	7	Y300001-
5		20Y-53-12771	Plate	1	Y300001-
6		01010-D0825	Bolt	2	Y300001-
7		01643-70823	Washer	2	Y300001-

FIG. K1110-005017 Cab, Cab In Parts, Monitor Duct

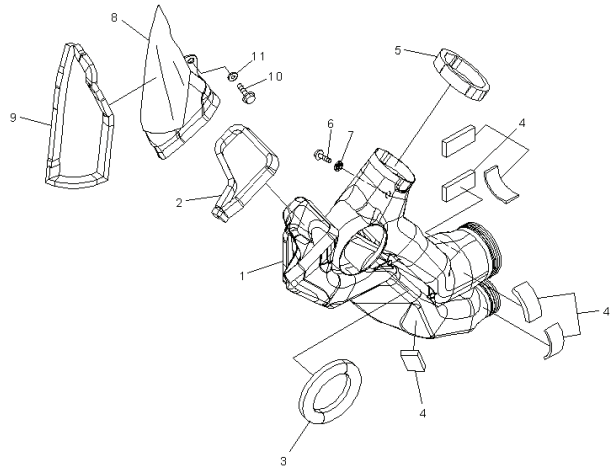

Index	Code	Part Number	Descreption	Qty	Serial Number
		Note: This list covers following specifications.			
		With AM-FM Radio			
		1-actuator, With AM-FM Radio			
		WEBASTO, With AM-FM Radio			
		1-actuator, WEBASTO, With AM-FM Radio			
1		20Y-53-13371	Duct	1	Y300001-
2		20Y-53-13480	Seal	1	Y300001-
3		20Y-53-13280	Seal	1	Y300001-
4		208-53-12440	Seal	6	Y300001-
5		208-53-11941	Seal	1	Y300001-
6		01435-00612	Bolt	1	Y300001-
7		20Y-53-12310	Collar	1	Y300001-
8		20Y-53-13421	Duct	1	Y300001-
9		208-53-11920	Seal	1	Y300001-
10		01435-00612	Bolt	1	Y300001-
11		20Y-53-12310	Collar	1	Y300001-

FIG. K1110-005018 Cab, Cab In Parts, Air Duct

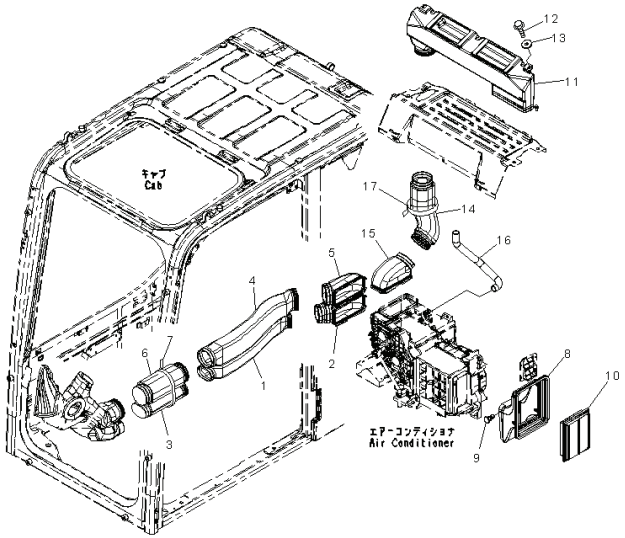

Index	Code	Part Number	Descreption	Qty	Serial Number
		Note: This list covers following specifications.			
		With AM-FM Radio			
		1-actuator, With AM-FM Radio			
		WEBASTO, With AM-FM Radio			
		1-actuator, WEBASTO, With AM-FM Radio			
1		20Y-53-13311	Duct	1	Y300001-
2		20Y-53-13331	Duct	1	Y300001-
3		20Y-53-13351	Duct	1	Y300001-
4		20Y-53-13321	Duct	1	Y300001-
5		20Y-53-13341	Duct	1	Y300001-
6		20Y-53-13361	Duct	1	Y300001-
7		08034-20876	Band	1	Y300001-
8		20Y-53-12522	Duct	1	Y300001-
9		208-53-12680	Clip	1	Y300001-
10		17M-911-3530	Element	1	Y300001-
11		20Y-53-13451	Duct	1	Y300001-
12		01435-40616	Bolt	2	Y300001-
13		20Y-53-12310	Collar	2	Y300001-
14		20Y-53-13461	Duct	1	Y300001-
15		208-53-12120	Duct	1	Y300001-
16		208-53-12432	Hose	1	Y300001-
17		08034-20876	Band	1	Y300001-

FIG. K1110-005019 Cab, Cab In Parts, Partition and Filter

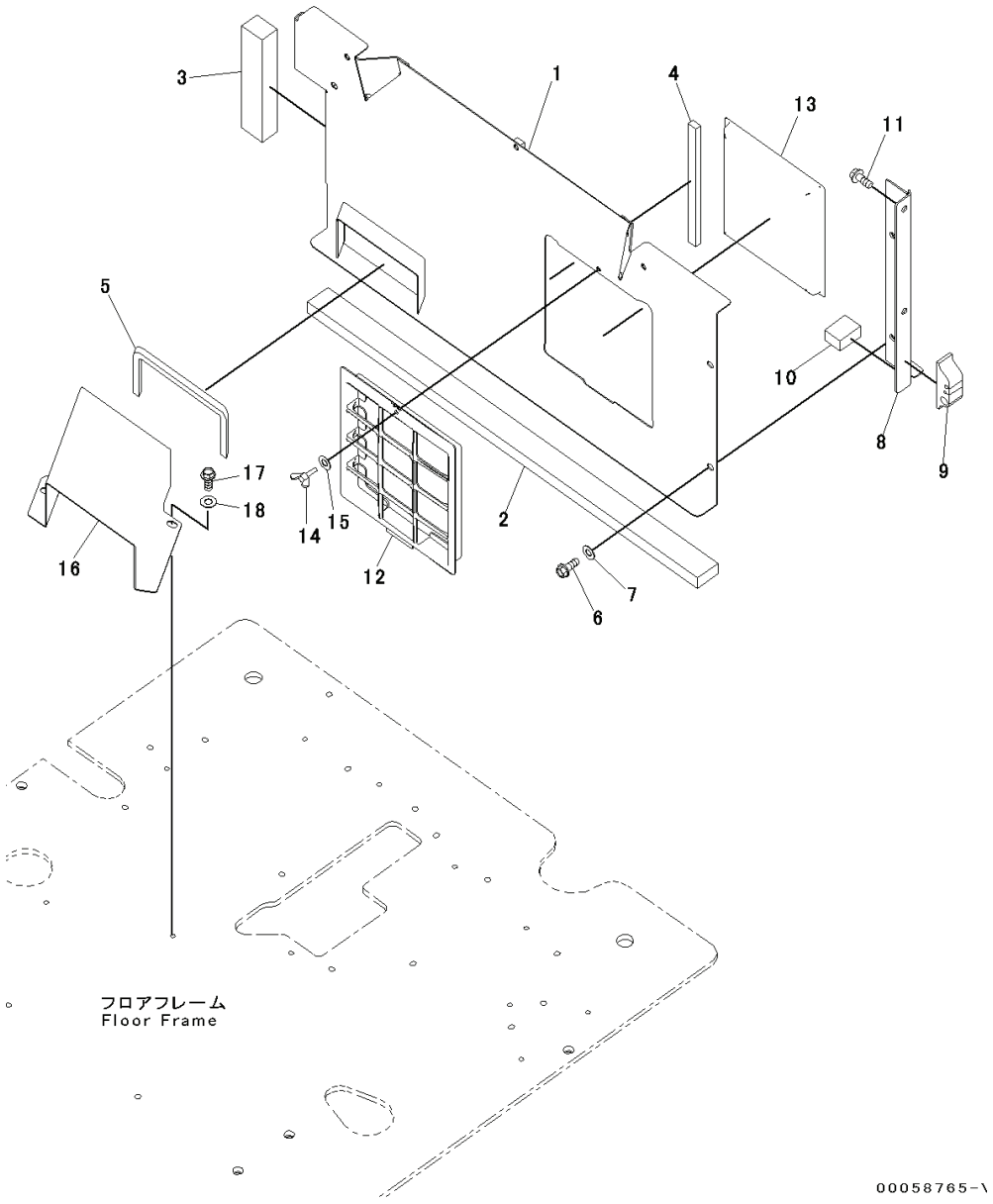

Index	Code	Part Number	Descreption	Qty	Serial Number
1		20Y-53-12565	Bracket	1	Y300001-
2		20Y-53-11870	Seal	1	Y300001-
3		20Y-53-11880	Seal	1	Y300001-
4		208-53-11890	Seal	1	Y300001-
5		208-53-12230	Seal	1	Y300001-
6		01435-40820	Bolt	3	Y300001-
7		418-54-35450	Washer	3	Y300001-
8		20Y-53-12781	Plate	1	Y300001-
9		20Y-53-12751	Seal	1	Y300001-
10		20Y-53-12760	Seal	1	Y300001-
11		01435-40820	Bolt	2	Y300001-
12		208-979-7530	Holder	1	Y300001-
13		208-979-7620	Filter	1	Y300001-
14		20Y-54-65790	Bolt	1	Y300001-
15		20Y-54-65690	Washer	1	Y300001-
16		208-53-12551	Duct	1	Y300001-
17		01010-D0820	Bolt	2	Y300001-
18		01643-70823	Washer	2	Y300001-

PC300-8 (FEN01263-00)

FIG. K1110-005020 Cab, Cab In Parts, Sub Plate and Relay

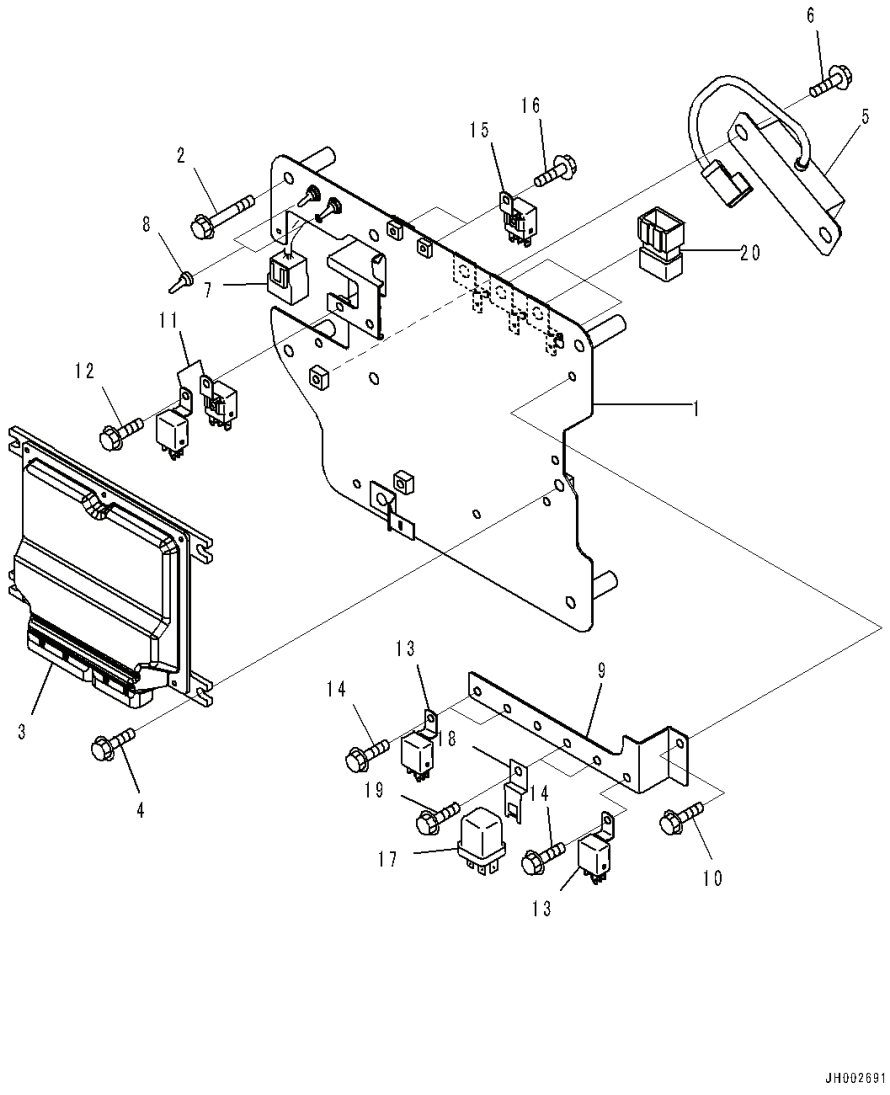

Index	Code	Part Number	Descreption	Qty	Serial Number
1		20Y-53-14812	Bracket	1	Y300001-
2		01435-00860	Bolt	4	Y300001-
3		7835-46-3003	Controller	1	Y300001-
4		01435-00820	Bolt	4	Y300001-
5		7861-94-2000	Resistor	1	Y300001-
6		01435-00820	Bolt	2	Y300001-
7		20Y-06-41150	Wiring Harness	1	Y300001-
8		208-43-71420	Cap	2	Y300001-
9		20Y-53-18211	Bracket	1	Y300001-
10		01435-00610	Bolt	1	Y300001-
11		7861-74-5100	Relay	2	Y300001-
12		01435-00610	Bolt	1	Y300001-
13		7861-74-5100	Relay	3	Y300001-
14		01435-00610	Bolt	3	Y300001-
15		7861-74-5100	Relay	2	Y300001-
16		01435-00610	Bolt	2	Y300001-
17		569-06-61960	Relay	2	Y300001-
18		287-06-16420	Bracket	2	Y300001-
19		01435-00610	Bolt	2	Y300001-
20		8233-06-3350	Diode	3	Y300001-

PC300-8 (FEN01263-00)

FIG. K1110-005021 Cab, Cab In Parts, Air Conditioner Controller

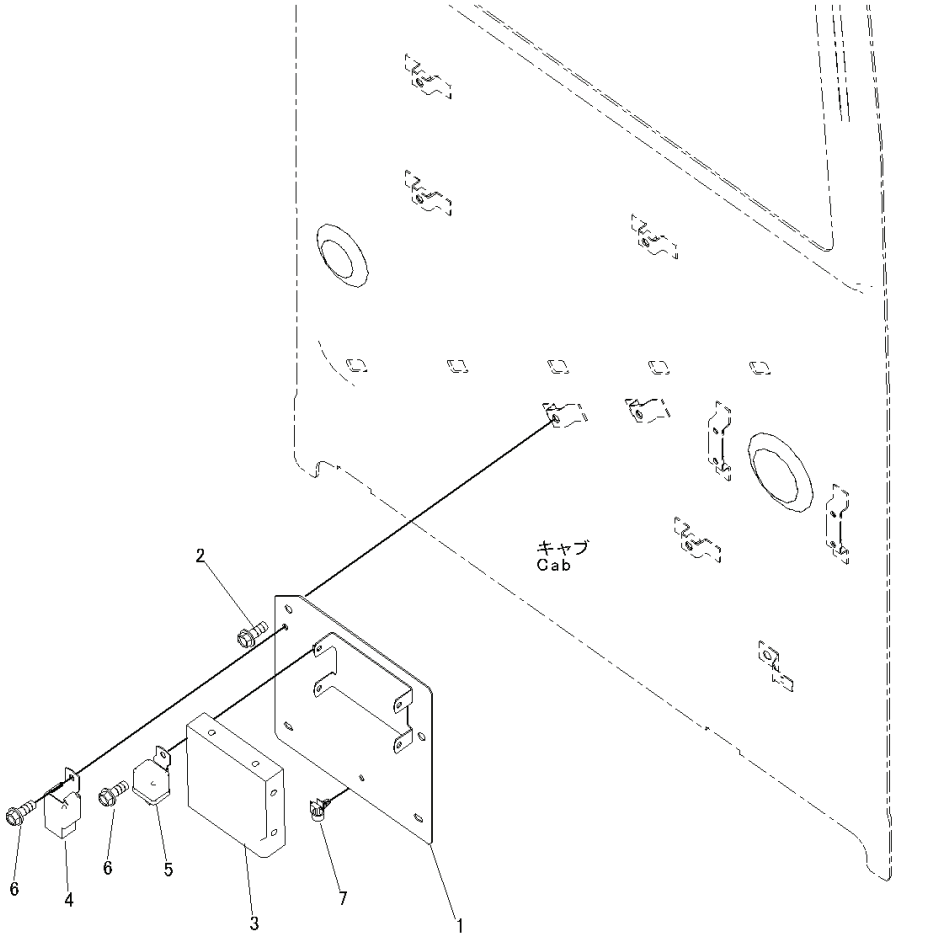

Index	Code	Part Number	Descreption	Qty	Serial Number
1		20Y-53-14820	Plate	1	Y300001-
2		01435-40812	Bolt	2	Y300001-
3		17A-979-3180	Controller	1	Y300001-
4		421-07-31270	Relay	1	Y300001-
5		20Y-979-6771	Relay	1	Y300001-
6		01435-00610	Bolt	2	Y300001-
7		08059-00515	Clip	1	Y300001-

FIG. K1110-005022A Cab, Cab In Parts, Main Harness Clamp

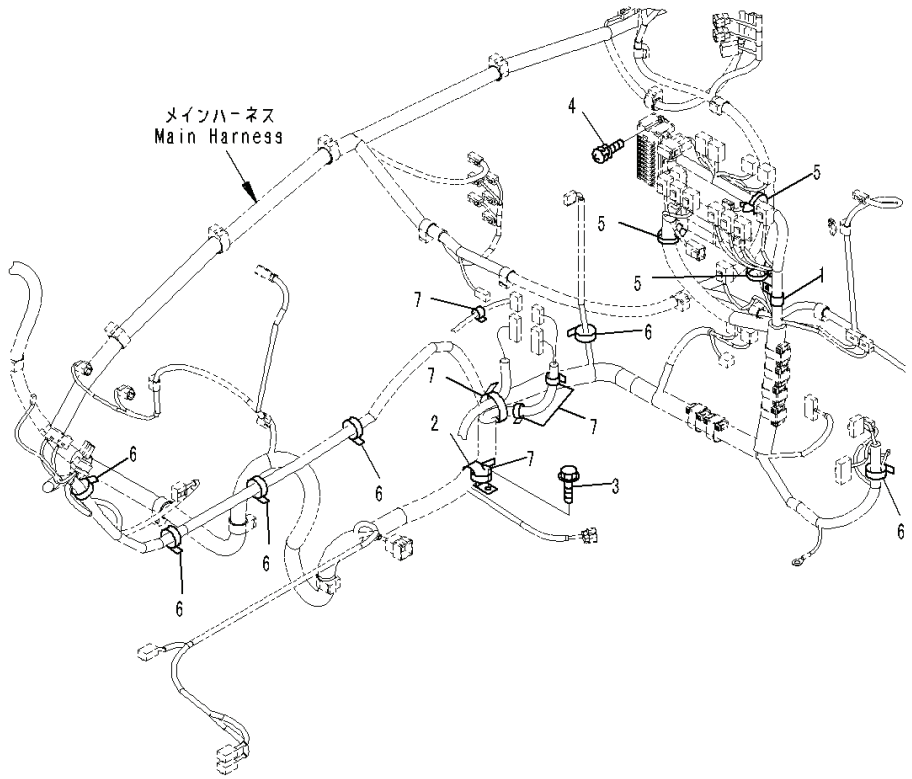

Index	Code	Part Number	Descreption	Qty	Serial Number
1		04434-53411	Clip	1	Y300001-
2		04434-51708	Clip	1	Y300001-
3		01435-00816	Bolt	1	Y300001-
4		01023-60620	Screw	2	Y300001-
5		08059-00515	Clip	3	Y300001-
6		08034-20414	Band	6	Y300001-
7		08034-20519	Band	5	Y300001-

PC300-8 (FEN01263-00)

FIG. K1110-005023 Cab, Cab In Parts, Rear Cover

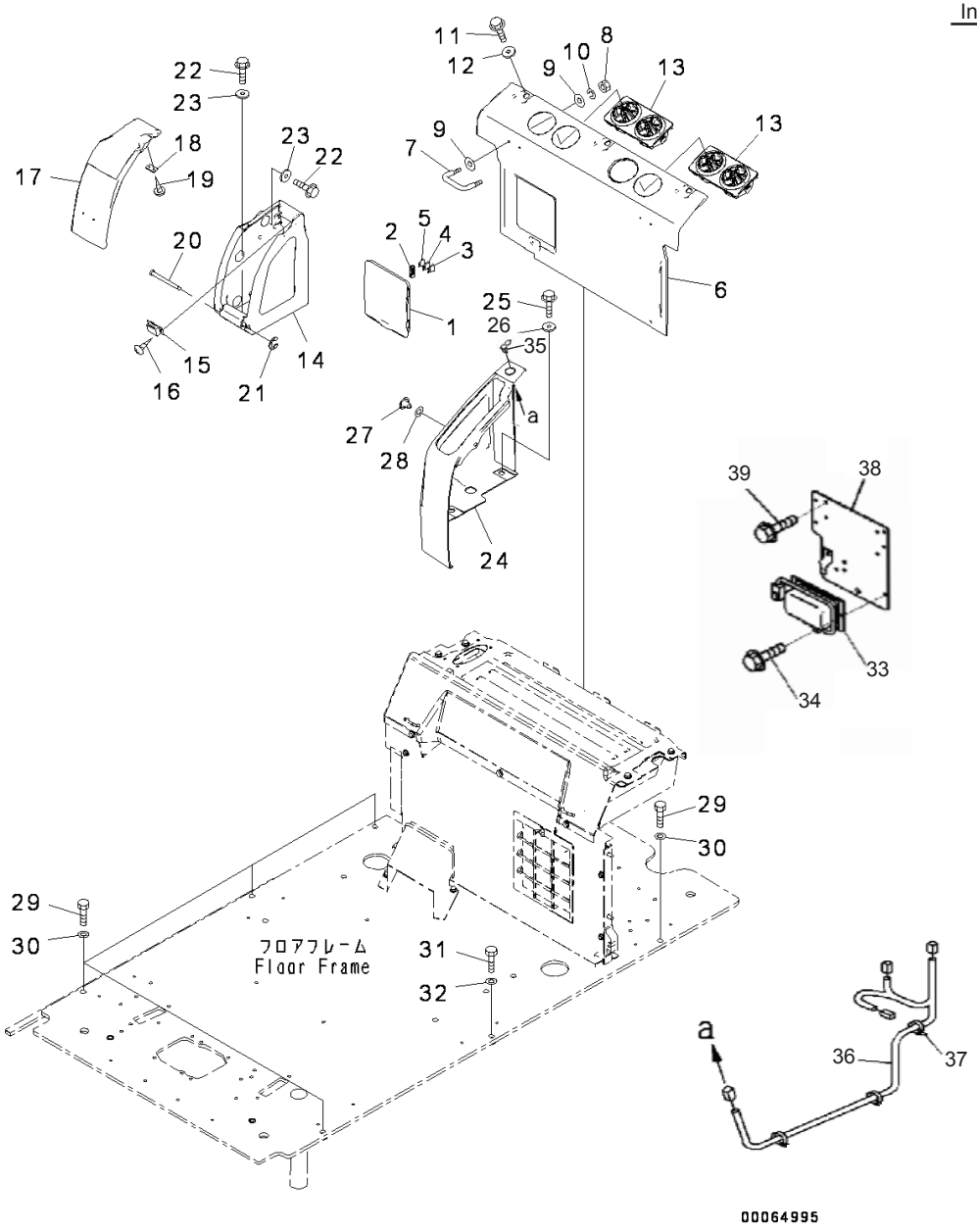

Index	Code	Part Number	Descreption	Qty	Serial Number
		20Y-53-13631	Cover Assembly	1	Y300001-
1	C1		• Cover	1	Y300001-
2		22U-43-22340	• Puller	1	Y300001-
3		08041-01000	• Fuse, 10Amp.	1	Y300001-
4		08041-02000	• Fuse, 20Amp.	1	Y300001-
5		08041-03000	• Fuse, 30Amp.	1	Y300001-
6		20Y-53-12371	Cover	1	Y300001-
7		208-53-12290	• Hook	2	Y300001-
8		01580-10403	• Nut	4	Y300001-
9		01640-20408	• Washer, Flat	8	Y300001-
10		01601-20410	• Washer	4	Y300001-
11		01435-40616	Bolt	3	Y300001-
12		20Y-53-12310	Collar	3	Y300001-
13		208-979-7560	Grille	2	Y300001-
14		20Y-53-12381	Cover	1	Y300001-
15		09452-14503	Catcher	1	Y300001-
16		01370-10308	Screw	2	Y300001-
17		20Y-53-12391	Cover	1	Y300001-
18		208-53-12410	Plate	1	Y300001-
19		01370-20308	Screw	2	Y300001-
20		208-53-12320	Pin	1	Y300001-
21		208-53-12330	Ring	1	Y300001-
22		01435-40616	Bolt	5	Y300001-
23		20Y-53-12310	Collar	5	Y300001-
24		20Y-53-12731	Cover	1	Y300001-
25		01435-40620	Bolt	2	Y300001-
26		20Y-53-12310	Collar	2	Y300001-
27		23D-950-4450	Button	1	Y300001-
28		20Y-53-12860	Spacer	1	Y300001-
29		01010-81245	Bolt	5	Y300001-
30		01643-31232	Washer	5	Y300001-
31		01010-81655	Bolt	1	Y300001-
32		01643-31645	Washer	1	Y300001-
33		22U-06-22251	Converter	1	Y300001-
34		01435-00610	Bolt	2	Y300001-
35		198-Z11-2640	Socket Assembly	1	Y300001-
36		20Y-06-41270	Wiring Harness	1	Y300001-
37		08034-20414	Band	1	Y300001-
38		20Y-53-18221	Bracket	1	Y300001-
39		01435-00612	Bolt	4	Y300001-

PC300-8 (FEN01263-00)

FIG. K1110-005024 Cab, Floor, Frame

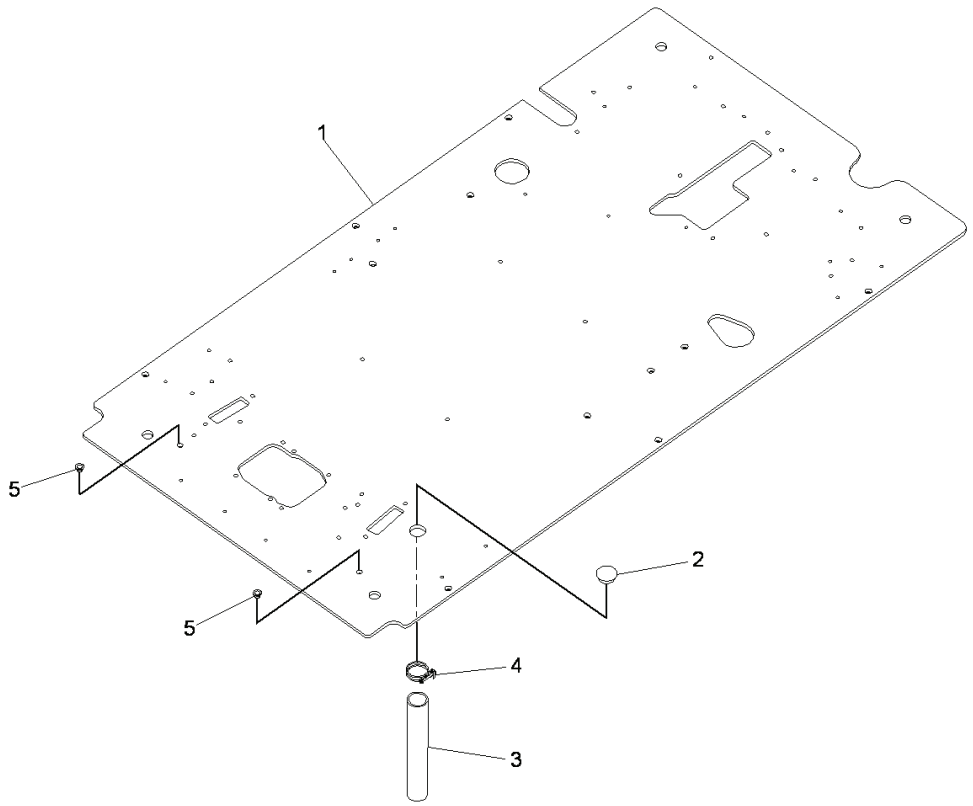

Index	Code	Part Number	Descreption	Qty	Serial Number
1		20Y-53-14116	Floor, Frame .	1	Y300001-
2		22U-54-25581	Grommet	1	Y300001-
3		07286-03828	Hose	1	Y300001-
4		07280-04726	Clamp .	1	Y300001-
5		07048-01310	Plug .	2	Y300001-

PC300-8 (FEN01263-00)

FIG. K1110-005025 Cab, Floor, P.P.C. Valve, For Travel (1/2)

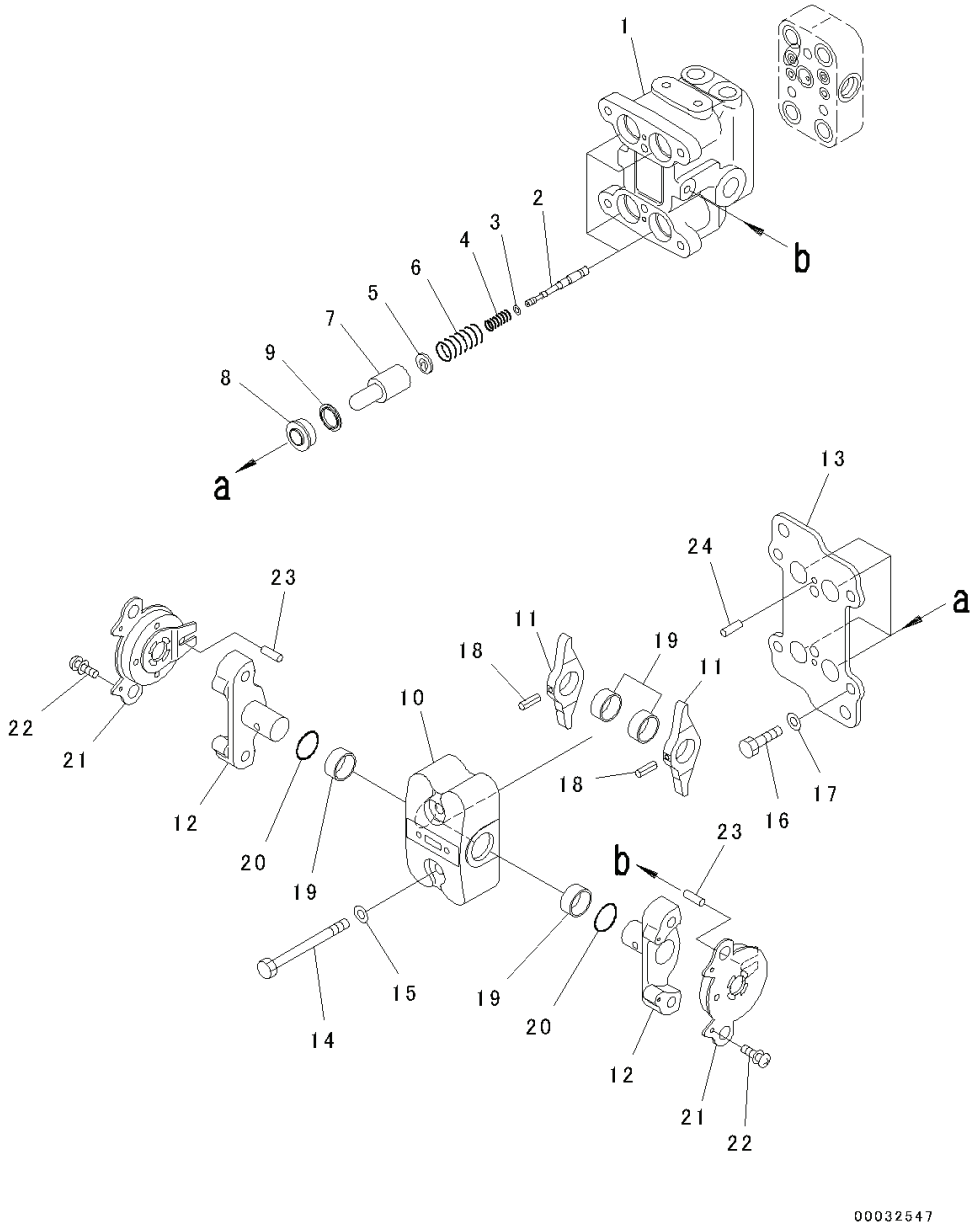

Index	Code	Part Number	Descreption	Qty	Serial Number
		702-16-51140	Valve, Pilot	1	Y300001-
1	C1		• Valve Body	1	Y300001-
2	C1		• Valve	4	Y300001-
3		702-16-51140	• Shim, T=0.30mm	4	Y300001-
4		702-16-53420	• Spring	4	Y300001-
5		702-16-53140	• Retainer	4	Y300001-
6		702-16-54420	• Spring	4	Y300001-
7		702-16-53170	• Piston	4	Y300001-
8		702-16-71150	• Seal	4	Y300001-
9		702-16-71160	• Seat	4	Y300001-
10		702-16-73630	• Case	1	Y300001-
11	C1		• Lever	2	Y300001-
12	C1		• Shaft	2	Y300001-
13	C1		• Plate	1	Y300001-
14		01010-80855	• Bolt	2	Y300001-
15		01643-30823	• Washer	2	Y300001-
16		01010-80816	• Bolt	4	Y300001-
17		702-16-54331	• Washer, T=1.60mm	4	Y300001-
		702-16-54341	• Washer, T=1.30mm	4	Y300001-
		702-16-54351	• Washer, T=1.00mm	4	Y300001-

PC300-8 (FEN01263-00)

FIG. K1110-005025 Cab, Floor, P.P.C. Valve, For Travel (1/2)

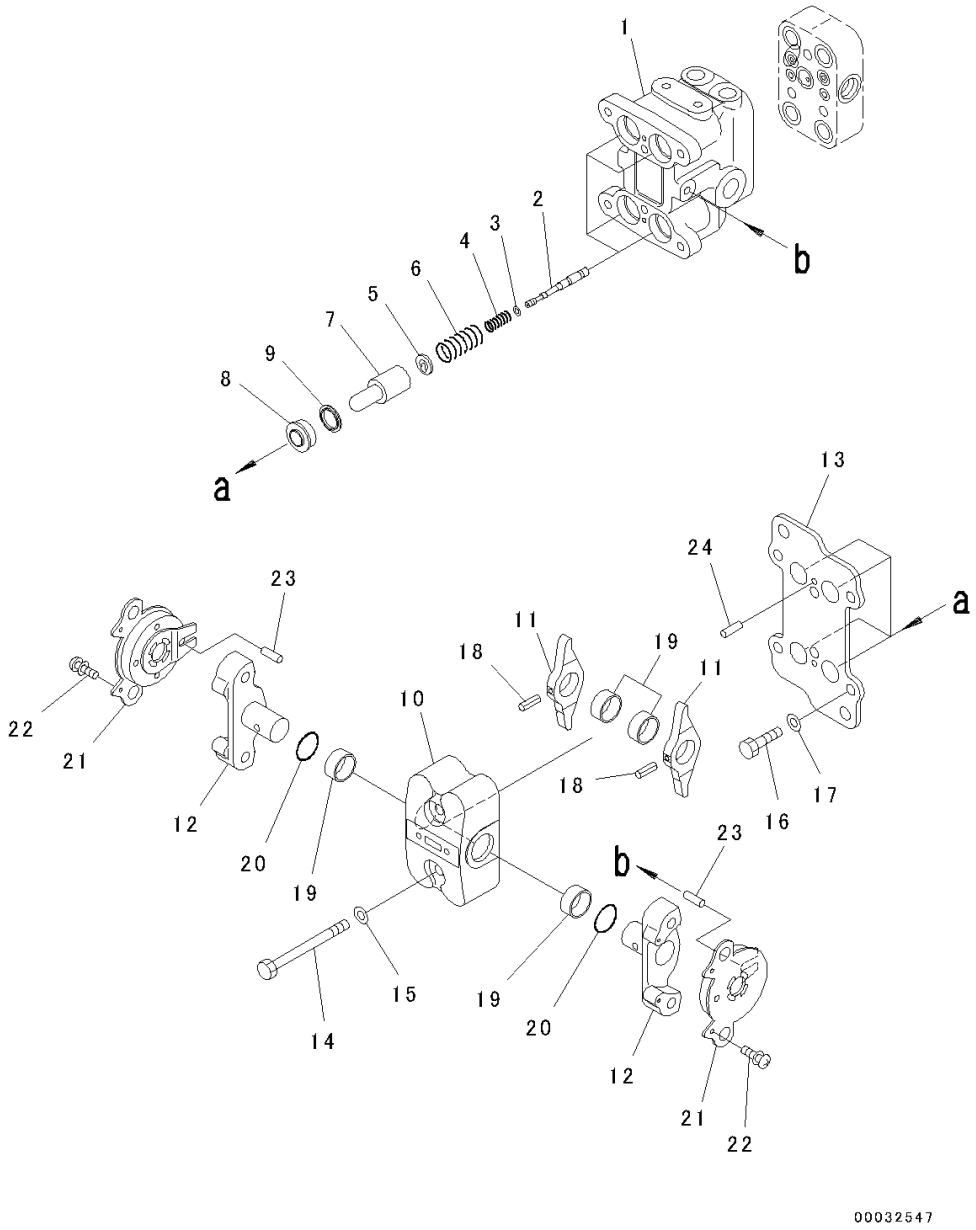

Index	Code	Part Number	Descreption	Qty	Serial Number
		702-16-56380	• Washer, T=1.90mm	4	Y300001-
		702-16-56390	• Washer, T=2.20mm	4	Y300001-
18		04025-00432	• Pin	2	Y300001-
19		702-16-54430	• Bushing	4	Y300001-
20		07000-12018	• O-ring	2	Y300001-
21	C2	702-16-73610	• Damper Assembly	2	Y300001-
22		01023-10306	• Screw	4	Y300001-
23		702-16-73650	• Pin	2	Y300001-
24		04022-04016	• Pin, Dowel	2	Y300001-

PC300-8 (FEN01263-00)

FIG. K1110-005026 Cab, Floor, P.P.C. Valve, For Travel (2/2)

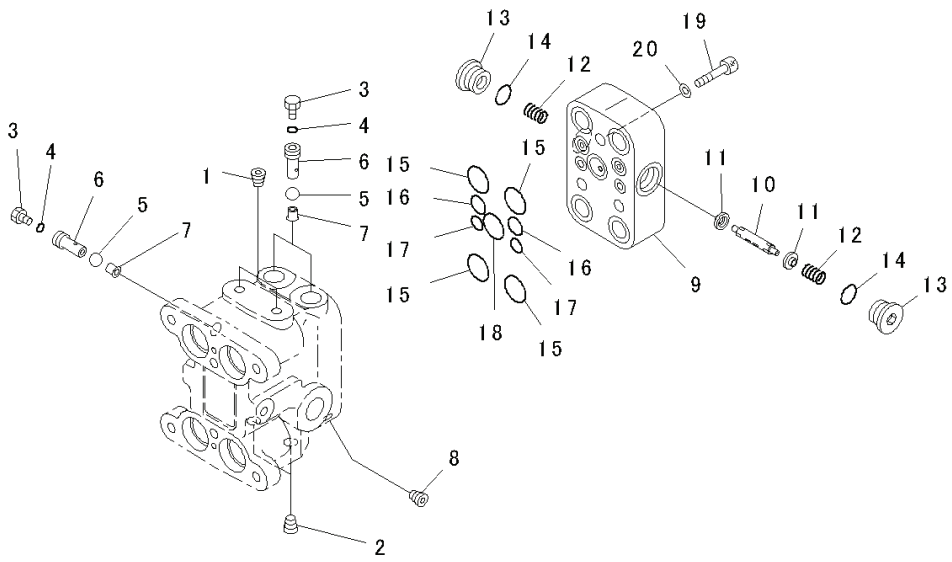

Index	Code	Part Number	Descreption	Qty	Serial Number
		702-16-04250	Valve, Pilot	1	Y300001-
1	C1		• Plug	2	Y300001-
2	C1		• Plug	2	Y300001-
3		07040-11209	• Plug	3	Y300001-
4		07002-11223	• O-ring	3	Y300001-
5	C1		• Ball	3	Y300001-
6		702-16-55940	• Plug	3	Y300001-
7		702-16-55950	• Seat	3	Y300001-
8	C1		• Screw	2	Y300001-
9	C1		• Body, Valve, Valve	1	Y300001-
10	C1		• Spool	1	Y300001-
11		702-16-57440	• Retainer	2	Y300001-
12		702-16-57450	• Spring	2	Y300001-
13		723-11-15110	• Plug	2	Y300001-
14		07002-11623	• O-ring	2	Y300001-
15		07000-12015	• O-ring	4	Y300001-
16		07000-11010	• O-ring	2	Y300001-
17		07000-11007	• O-ring	2	Y300001-
18		700-22-11410	• O-ring	1	Y300001-
19		01252-60835	• Bolt	3	Y300001-
20		01643-50823	• Washer	3	Y300001-

PC300-8 (FEN01263-00)

FIG. K1110-005027 Cab, Floor, Travel Control

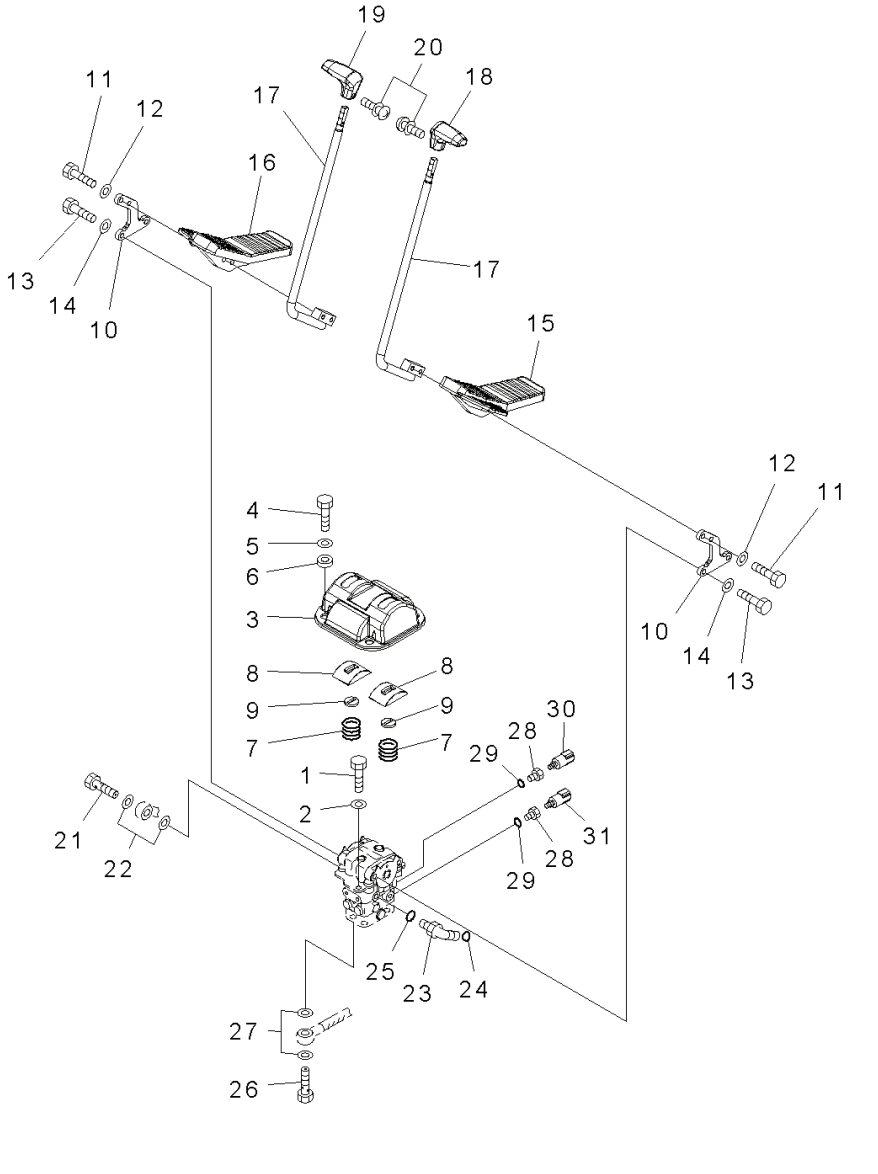

Index	Code	Part Number	Descreption	Qty	Serial Number
1		01010-81020	Bolt	2	Y300001-
2		01643-31032	Washer	2	Y300001-
3		20Y-43-41121	Cover	1	Y300001-
4		01010-81020	Bolt	4	Y300001-
5		01643-31032	Washer	4	Y300001-
6		20Y-43-41361	Collar	4	Y300001-
7		203-43-51620	Spring	2	Y300001-
		22U-43-21350	Cover Assembly	2	Y300001-
8	C1		• Cover	1	Y300001-
9		22U-43-21360	• Seal	1	Y300001-
10		20Y-43-41111	Lever	2	Y300001-
11		01010-D1045	Bolt	4	Y300001-
12		01643-71032	Washer	4	Y300001-
13		01010-81030	Bolt	4	Y300001-
14		01643-31032	Washer	4	Y300001-
15		22U-43-21111	Pedal	1	Y300001-
16		22U-43-21121	Pedal	1	Y300001-
17		22U-43-21131	Lever	2	Y300001-

PC300-8 (FEN01263-00)

FIG. K1110-005027 Cab, Floor, Travel Control

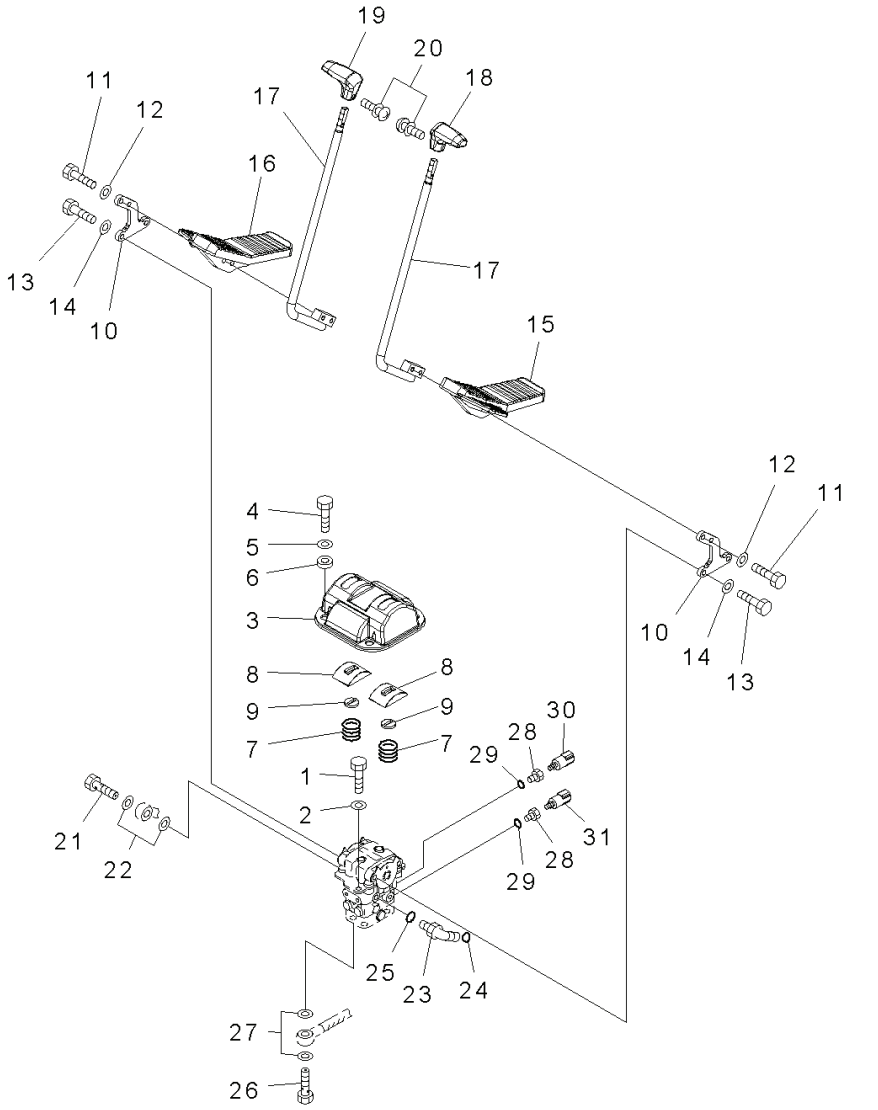

Index	Code	Part Number	Descreption	Qty	Serial Number
18		20Y-43-21231	Knob	1	Y300001-
19		20Y-43-21241	Knob	1	Y300001-
20		01023-20416	Screw	2	Y300001-
21		20Y-62-18910	Bolt	1	Y300001-
22		07000-12018	O-ring	2	Y300001-
23		11Y-62-12160	Elbow	1	Y300001-
24		02896-11008	O-ring	1	Y300001-
25		07002-11423	O-ring	1	Y300001-
26		20Y-62-18890	Bolt	4	Y300001-
27		07000-12015	O-ring	8	Y300001-
28		20Y-62-41390	Adapter	2	Y300001-
29		07002-11423	O-ring	2	Y300001-
30		20Y-06-21710	Switch	1	Y300001-
31		206-06-61130	Switch	1	Y300001-

PC300-8 (FEN01263-00)

FIG. K1110-005028 Cab, Floor, Foot Rest, LHS

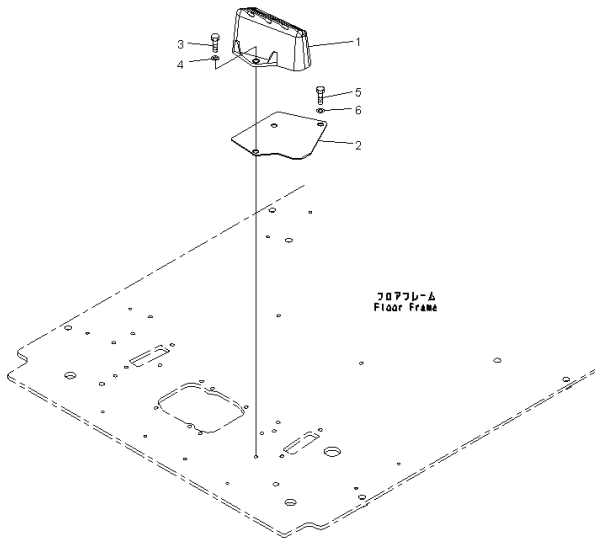

Index	Code	Part Number	Descreption	Qty	Serial Number
1		22U-54-25110	Foot Rest .	1	Y300001-
2		22U-54-25521	Plate .	1	Y300001-
3		01010-81025	Bolt .	2	Y300001-
4		01643-31032	Washer .	2	Y300001-
5		01010-81020	Bolt .	2	Y300001-
6		01643-31032	Washer .	2	Y300001-

FIG. K1110-009029 Cab, Floor, P.P.C. Valve, For 1-Attachment

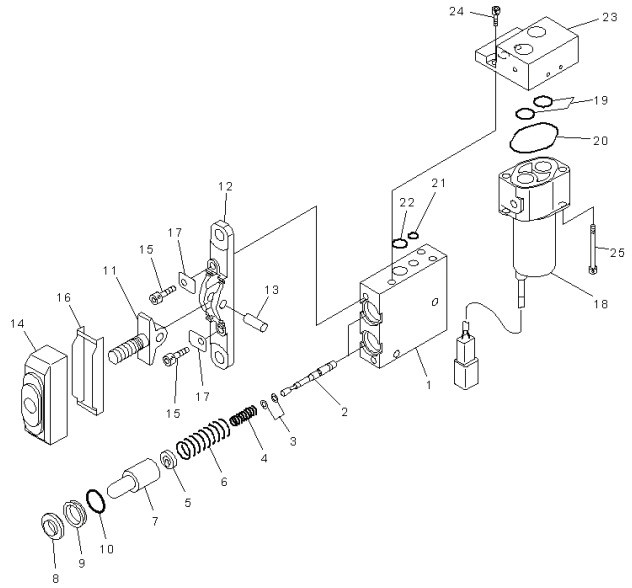

00041433

Index	Code	Part Number	Descreption	Qty	Serial Number
		702-16-04290	Valve, Pilot	1	Y300001-
1	C1		• Valve Body	1	Y300001-
2	C1		• Valve	2	Y300001-
3		702-16-51140	• Shim, T=0.30mm	2	Y300001-
		702-16-54670	• Shim, T=0.20mm	4	Y300001-
4		702-16-54550	• Spring	2	Y300001-
5		702-16-54571	• Retainer	2	Y300001-
6		702-16-54560	• Spring	2	Y300001-
7		702-16-53170	• Piston	2	Y300001-
8		702-16-51270	• Seal	2	Y300001-
9		702-16-54580	• Collar	2	Y300001-
10		702-16-54590	• O-ring	2	Y300001-
11	C1		• Lever	1	Y300001-
12	C1		• Plate	1	Y300001-
13	C1		• Shaft	1	Y300001-
14		702-16-54641	• Boot	1	Y300001-
15		01252-30625	• Bolt	2	Y300001-
16		702-16-54660	• Plate	1	Y300001-
17		702-16-54650	• Plate	2	Y300001-
18		702-21-07610	• Valve, Solenoid	1	Y300001-
19		700-22-11410	• O-ring	2	Y300001-
20		702-21-39450	• O-ring	1	Y300001-
21		07000-11008	• O-ring	1	Y300001-
22		07000-12012	• O-ring	1	Y300001-
23	C1		• Body	1	Y300001-
24		01252-60612	• Bolt	3	Y300001-
25		203-60-62220	• Bolt	2	Y300001-

FIG. K1110-009030 Cab, Floor, 1st. Attachment Control

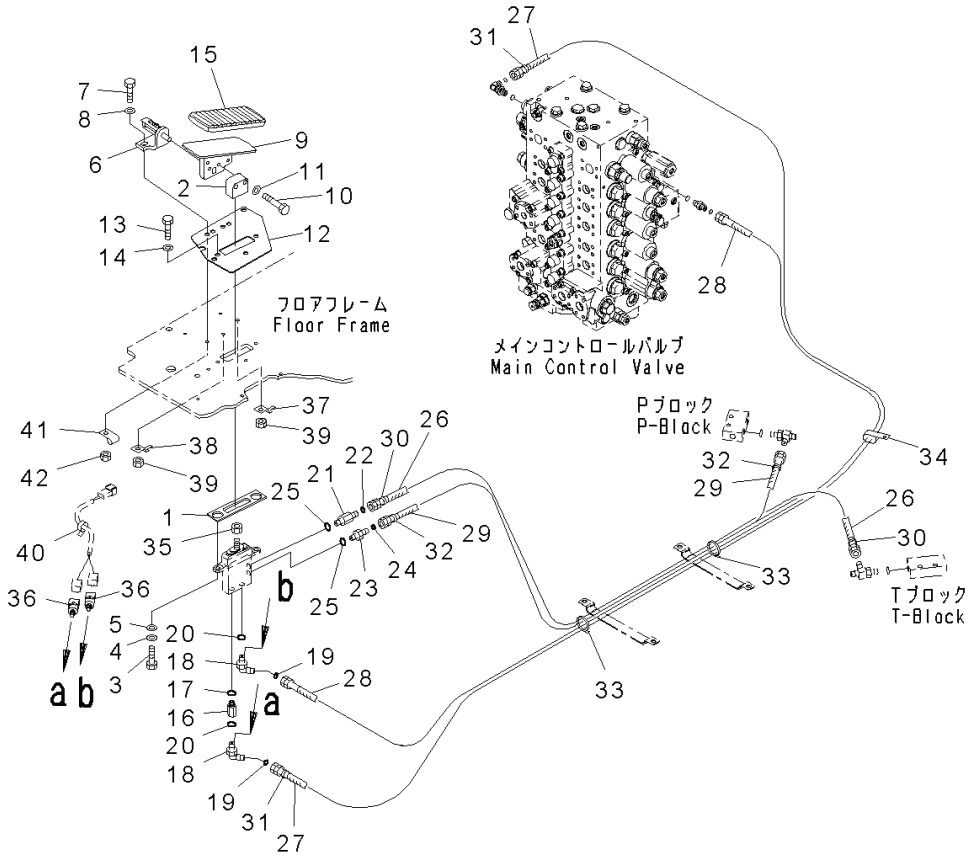

Index	Code	Part Number	Descreption	Qty	Serial Number
1		22U-54-25660	Seal	1	Y300001-
2		20Y-43-41760	Seat	1	Y300001-
3		01010-81025	Bolt	2	Y300001-
4		01643-31032	Washer	2	Y300001-
5		01643-31032	Washer	2	Y300001-
6		20Y-62-25360	Bracket	1	Y300001-
7		01010-D1035	Bolt	2	Y300001-
8		01643-71032	Washer	2	Y300001-
9		20Y-53-14220	Pedal	1	Y300001-
10		01010-D1045	Bolt	2	Y300001-
11		01643-71032	Washer	2	Y300001-
12		22U-54-25541	Plate	1	Y300001-
13		01010-81025	Bolt	3	Y300001-
14		01643-31032	Washer	3	Y300001-
15		207-43-81240	Cap	1	Y300001-
16		20T-910-8660	Nipple	1	Y300001-
17		07000-12011	O-ring	1	Y300001-
18		20Y-62-52160	Elbow	2	Y300001-
19		02896-11008	O-ring	2	Y300001-
20		07000-12011	O-ring	2	Y300001-
21		20Y-62-43470	Nipple	1	Y300001-
22		02896-11008	O-ring	1	Y300001-
23		11Y-62-12140	Nipple	1	Y300001-
24		02896-11008	O-ring	1	Y300001-
25		07000-12011	O-ring	2	Y300001-
26		20Y-62-52330	Hose	1	Y300001-
27		207-62-75840	Hose	1	Y300001-
28		207-62-75830	Hose	1	Y300001-
29		208-62-72480	Hose	1	Y300001-
30		20Y-62-22790	Band, Red	2	Y300001-
31		20Y-62-22810	Band, Yellow	2	Y300001-
32		20Y-62-22820	Band, Blue	2	Y300001-
33		08034-20519	Band	2	Y300001-
34		04435-51210	Clip	1	Y300001-

FIG. K1110-009030 Cab, Floor, 1st. Attachment Control

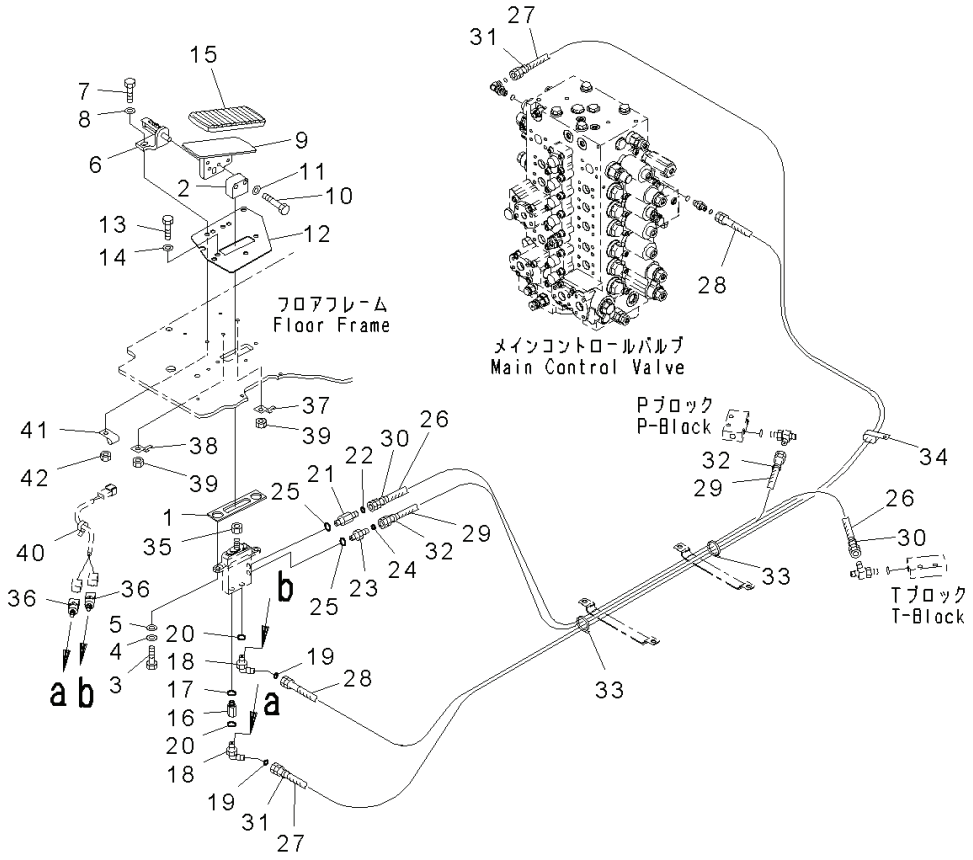

Index	Code	Part Number	Descreption	Qty	Serial Number
35		01583-11408	Nut	1	60001-
36		206-06-61130	Switch	2	60001-
37		08193-21012	Clip	1	60001-
38		08053-01510	Clip	1	60001-
39		01580-01008	Nut	2	60001-
40		08034-20536	Band	1	60001-
41		04434-50610	Clip	1	60001-
42		01580-01008	Nut	1	60001-

FIG. K1110-005030 Cab, Floor, Base

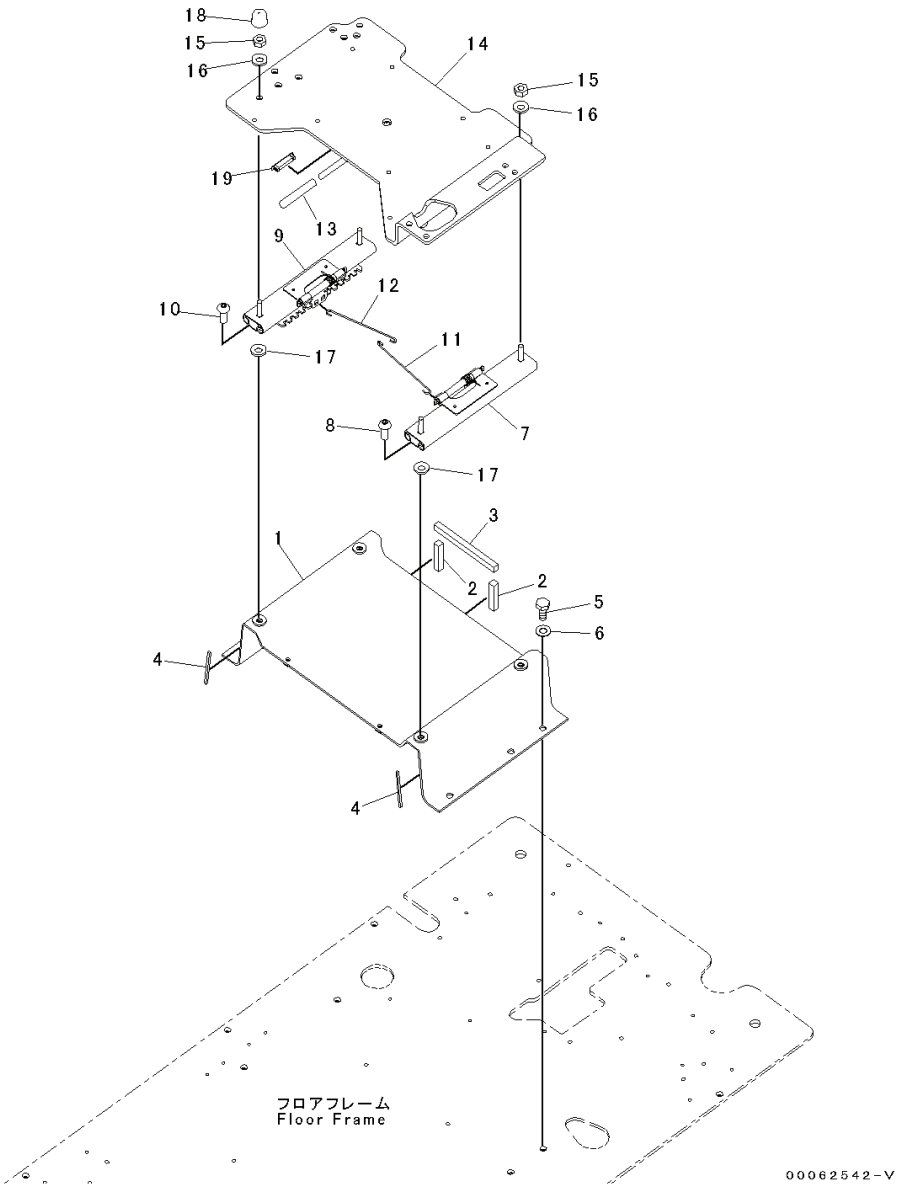

Index	Code	Part Number	Descreption	Qty	Serial Number
1		20Y-43-41230	Frame	1	Y300001-
2		208-43-71520	• Seal	2	Y300001-
3		208-43-71530	• Seal	1	Y300001-
4		208-43-71590	• Seal	2	Y300001-
5		01010-81230	Bolt	5	Y300001-
6		01643-31232	Washer	5	Y300001-
7		20Y-43-41813	Adjuster	1	Y300001-
8		01245-01025	Screw	2	Y300001-
9		20Y-43-41823	Adjuster	1	Y300001-
10		01245-01025	Screw	2	Y300001-
11		20Y-43-41832	Wire	1	Y300001-
12		20Y-43-41891	Wire	1	Y300001-
13		22U-43-21390	Cap	1	Y300001-
14		20Y-43-41252	Frame	1	Y300001-
15		20Y-54-65340	Nut	4	Y300001-
16		01643-71032	Washer	4	Y300001-
17		01640-21016	Washer	4	Y300001-
18		20Y-54-65540	Cap	2	Y300001-
19		20Y-979-6630	Catcher	1	Y300001-

PC300-8 (FEN01263-00)

FIG. K1110-005031 Cab, Floor, Harness

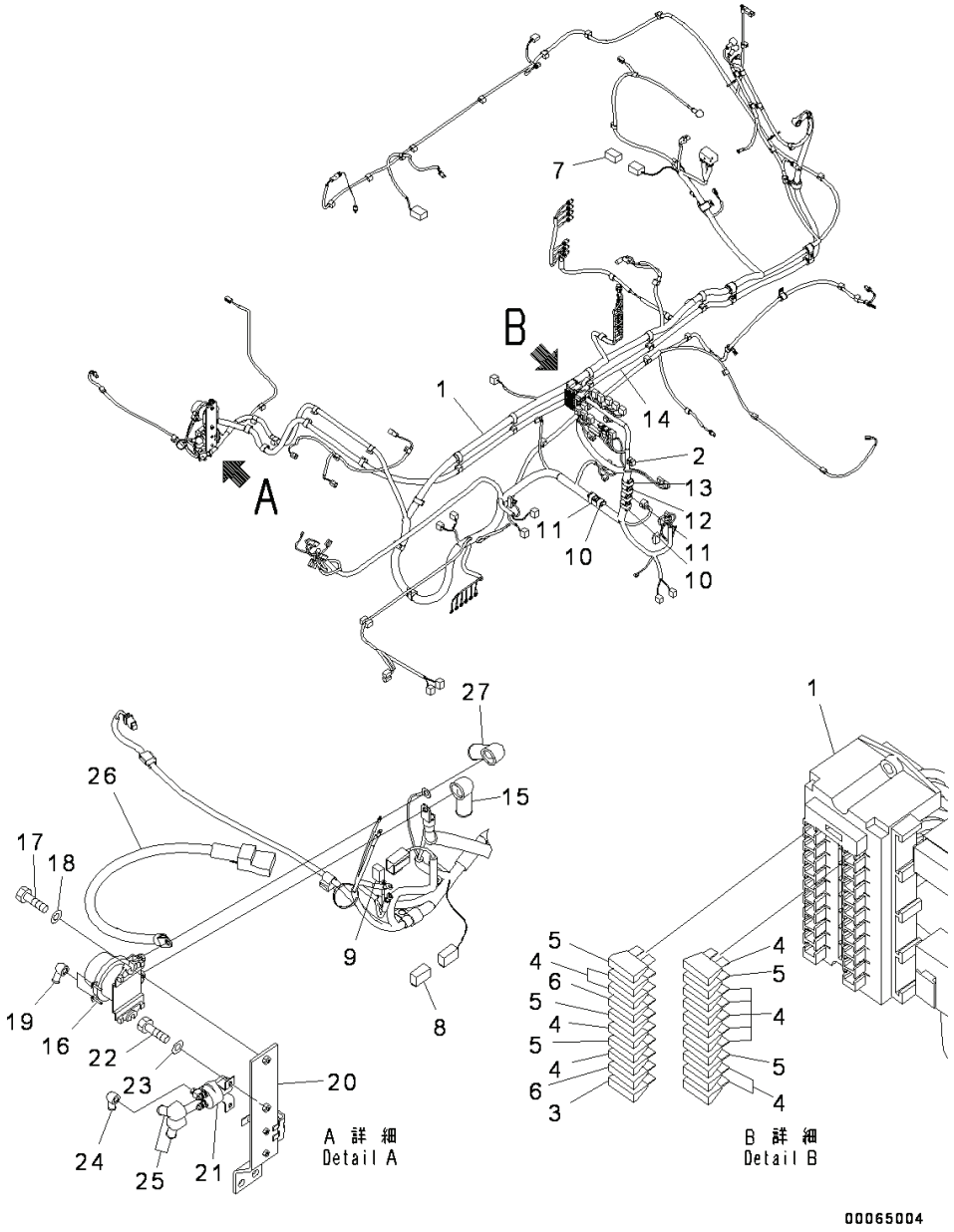

Index	Code	Part Number	Descreption	Qty	Serial Number
1		207-06-76110	Wiring Harness .	1	Y300001-
2		08020-20000	• Diode .	2	Y300001-
3		08041-00500	• Fuse, 5Amp. .	1	Y300001-
4		08041-01000	• Fuse, 10Amp. .	12	Y300001-
5		08041-02000	• Fuse, 20Amp. .	5	Y300001-
6		08041-03000	• Fuse, 30Amp. .	2	Y300001-
7		19M-06-31720	• Resistor .	1	Y300001-
8		20Y-06-31660	• Fusible Link, 30Amp. .	1	Y300001-
9		22U-06-11270	• Fusible Link, 65Amp. .	1	Y300001-
10		HM6400-0012	• F-Connector, Black .	2	Y300001-
		HM6400-0071	• M-Connector, Black	2	Y300001-
11		HM6400-0013	• F-Connector, Green	2	Y300001-
		HM6400-0072	• M-Connector, Green	2	Y300001-
12		HM6400-0129	• F-Connector, Pink	1	Y300001-
		HM6400-0128	• M-Connector, Pink	1	Y300001-
13		HM6400-0016	• F-Connector, Orange	1	Y300001-
		HM6400-0075	• M-Connector, Orange	1	Y300001-
14		207-06-75140	Cable .	1	Y300001-
15		08038-00035	Cap, Terminal .	1	Y300001-
16		08088-30000	Switch .	1	Y300001-
17		01010-80830	Bolt .	2	Y300001-
18		01643-30823	Washer .	2	Y300001-
19		08038-00519	Cap .	2	Y300001-
20		207-06-75122	Bracket .	1	Y300001-
21		600-815-2170	Switch, Heater	1	Y300001-
22		01010-80616	Bolt .	2	Y300001-
23		01643-30623	Washer .	2	Y300001-
24		08038-00519	Cap .	1	Y300001-
25		08038-02027	Cap .	2	Y300001-
26		08028-CD065	Cable, Ground	1	Y300001-
27		08038-00035	Cap, Terminal .	1	Y300001-

PC300-8 (FEN01263-00)

FIG. K1110-005032 Cab, Floor, Harness Clamp and Earth

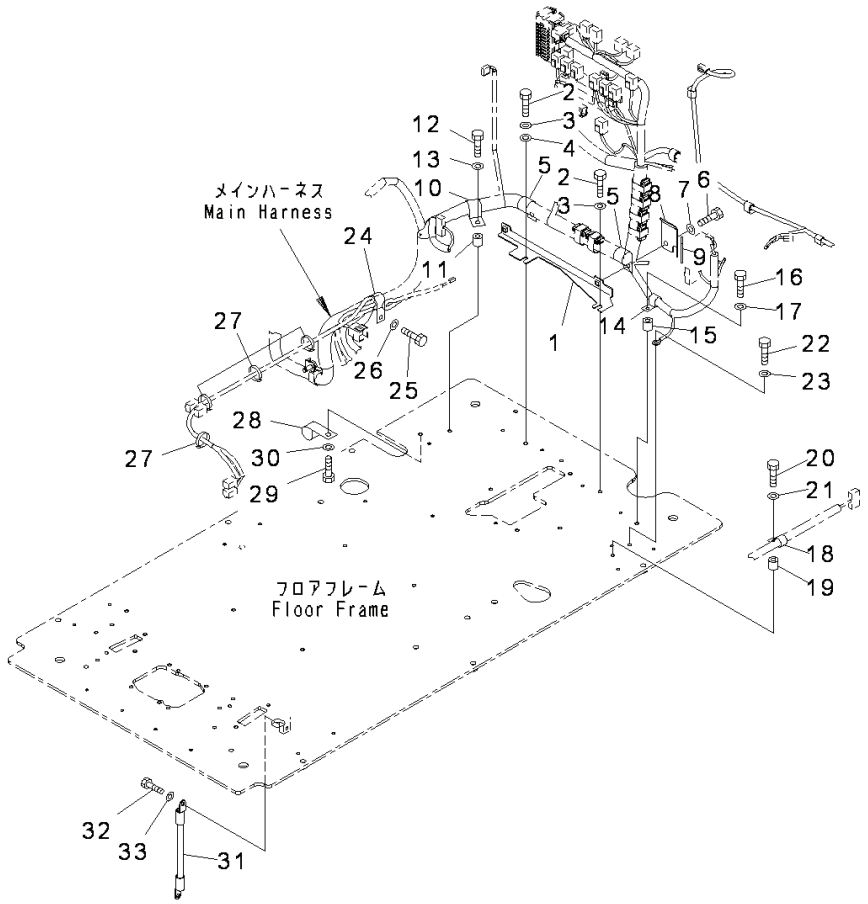

Index	Code	Part Number	Descreption	Qty	Serial Number
1		20Y-53-14121	Bracket	1	Y300001-
2		01010-81016	Bolt	2	Y300001-
3		01643-31032	Washer	2	Y300001-
4		01643-31032	Washer	1	Y300001-
5		04434-53411	Clip	2	Y300001-
6		01010-81025	Bolt	2	Y300001-
7		01643-31032	Washer	2	Y300001-
		20Y-53-14150	Plate Assembly	1	Y300001-
8	C1		• Plate	1	Y300001-
9		20Y-53-14170	• Trim	1	Y300001-
10		04434-53411	Clip	1	Y300001-
11		195-33-11220	Spacer	1	Y300001-
12		01010-81040	Bolt	1	Y300001-
13		01643-31032	Washer	1	Y300001-
14		04434-51910	Clip	1	Y300001-
15		195-33-11220	Spacer	1	Y300001-
16		01010-81040	Bolt	1	Y300001-
17		01643-31032	Washer	1	Y300001-
18		04434-51410	Clip	1	Y300001-
19		195-33-11220	Spacer	1	Y300001-
20		01010-81040	Bolt	1	Y300001-
21		01643-31032	Washer	1	Y300001-
22		01010-81020	Bolt	1	Y300001-
23		01643-31032	Washer	1	Y300001-
24		04434-53411	Clip	1	Y300001-
25		01010-81020	Bolt	1	Y300001-
26		01643-31032	Washer	1	Y300001-
27		08034-20519	Band	4	Y300001-
28		04434-51910	Clip	1	Y300001-
29		01010-81020	Bolt	1	Y300001-
30		01643-31032	Washer	1	Y300001-
31		08028-43030	Cable, Ground	1	Y300001-
32		01010-81020	Bolt	1	Y300001-
33		01643-31032	Washer	1	Y300001-

FIG. K1110-005033 Cab, Floor, Window Washer Hose

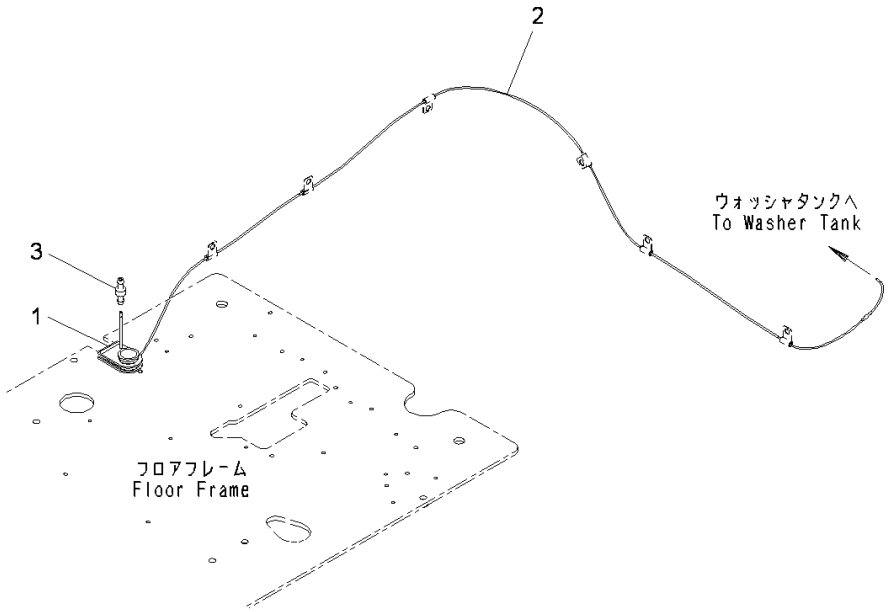

Index	Code	Part Number	Descreption	Qty	Serial Number
1		20Y-53-14991	Grommet	1	Y300001-
2		195-979-8580	Hose	1	Y300001-
3		207-06-61490	Valve	1	Y300001-

PC300-8 (FEN01263-00)

FIG. K1110-005034A Cab, Floor, Lever, LHS

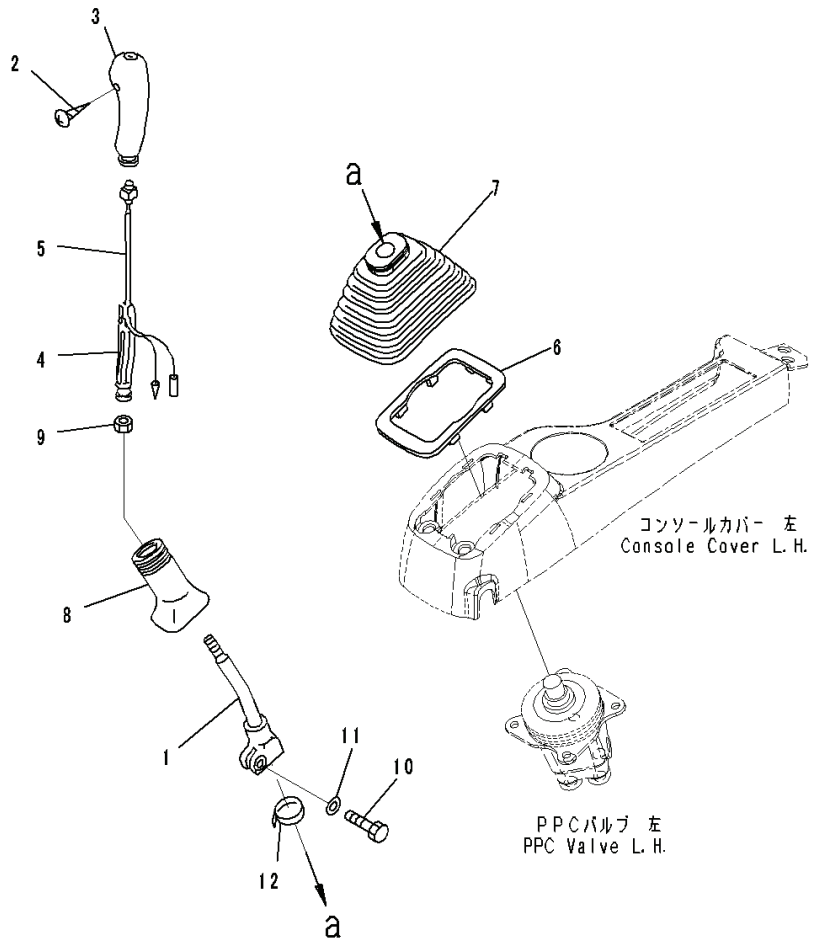

Index	Code	Part Number	Descreption	Qty	Serial Number
1		20Y-43-22211	Lever	1	Y300001-
		22U-43-21182	Knob	1	Y300001-
2	C1		• Screw	1	Y300001-
3		20Y-43-22381	• Knob	1	Y300001-
4		20Y-43-22421	• Insert	1	Y300001-
5		22U-43-21211	• Switch	1	Y300001-
6		20Y-43-22250	Plate	1	Y300001-
7		20Y-43-22261	Boot	1	Y300001-
8		20Y-43-22370	Boot	1	Y300001-
9		600-411-1280	Nut	1	Y300001-
10		01252-41025	Bolt	1	Y300001-
11		01643-51032	Washer	1	Y300001-
12		08034-20536	Band	1	Y300001-

FIG. K1110-005035 Cab, Floor, P.P.C. Valve, For Work Equipment, LHS

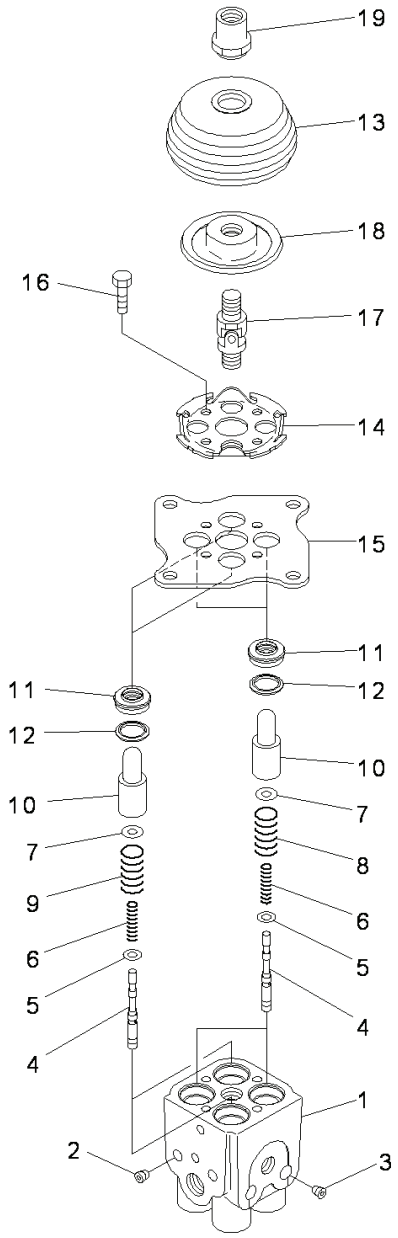

PW5X112

Index	Code	Part Number	Descreption	Qty	Serial Number
		702-16-03910	Valve, Pilot .	1	Y300001-
1	C1		• Valve Body, Valve	1	Y300001-
2	C1		• Plug .	2	Y300001-
3	C1		• Plug .	2	Y300001-
4	C1		• Valve .	4	Y300001-
5		702-16-51140	• Shim, T=0.30mm	4	Y300001-
6		702-16-53420	• Spring .	4	Y300001-
7		702-16-53140	• Retainer .	4	Y300001-
8		702-16-53470	• Spring .	2	Y300001-
9		702-16-53590	• Spring .	2	Y300001-
10		702-16-53170	• Piston .	4	Y300001-
11		702-16-71210	• Seal .	4	Y300001-
12		702-16-71160	• Seat .	4	Y300001-
13		702-16-71280	• Boot .	1	Y300001-
14		702-16-71131	• Plate .	1	Y300001-
15		702-16-71141	• Plate .	1	Y300001-
16		01010-80620	• Bolt	4	Y300001-
17		702-16-51240	• Universal Joint .	1	Y300001-
18		702-16-71361	• Disc .	1	Y300001-
19		702-16-71441	• Nut .	1	Y300001-

PC300-8 (FEN01263-00)

FIG. K1110-005036 Cab, Floor, Valve, LHS

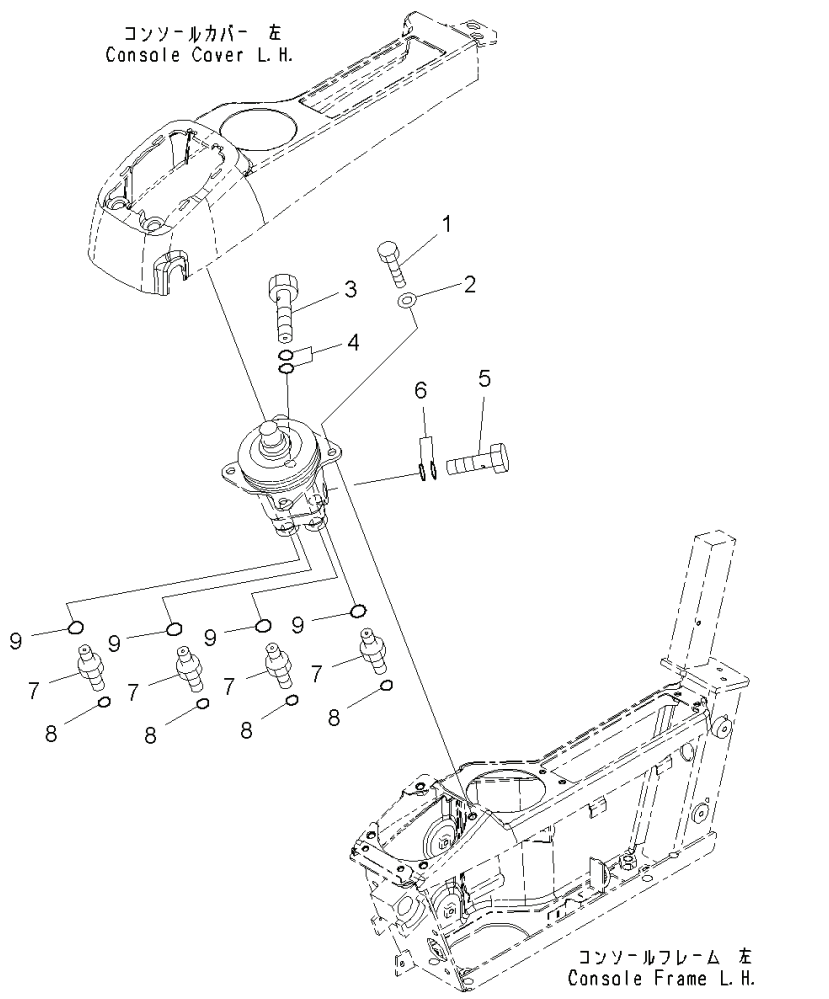

Index	Code	Part Number	Descreption	Qty	Serial Number
1		01010-80820	Bolt	4	Y300001-
2		01643-30823	Washer	4	Y300001-
3		20Y-62-18910	Bolt	1	Y300001-
4		07000-12018	O-ring	2	Y300001-
5		20Y-62-18890	Bolt	1	Y300001-
6		07000-12015	O-ring	2	Y300001-
7		11Y-62-12520	Union	4	Y300001-
8		02896-11009	O-ring	4	Y300001-
9		07002-11423	O-ring	4	Y300001-

FIG. K1110-005037A Cab, Floor, Console, LHS

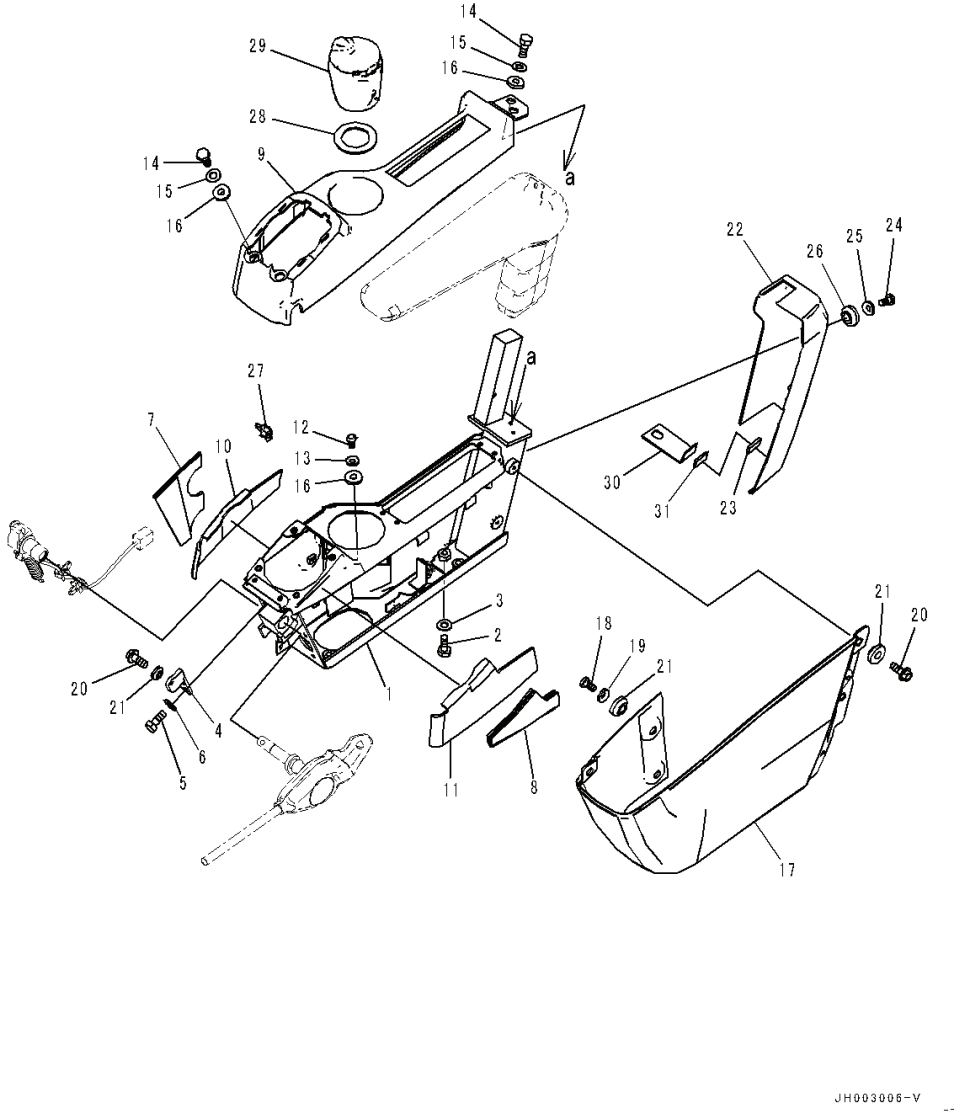

Index	Code	Part Number	Descreption	Qty	Serial Number
1		20Y-43-41416	Frame	1	Y300001-
2		01010-81030	Bolt	4	Y300001-
3		01643-31032	Washer	4	Y300001-
4		20Y-43-41472	Bracket	1	Y300001-
5		01010-80616	Bolt	2	Y300001-
6		01643-30623	Washer	2	Y300001-
7		20Y-43-41621	Sheet	1	Y300001-
8		20Y-43-41641	Sheet	1	Y300001-
9		20Y-43-41423	Cover	1	Y300001-
10		20Y-43-41651	Sheet	1	Y300001-
11		20Y-43-41661	Sheet	1	Y300001-
12		01245-00616	Screw, Hexagon Socket Head	1	Y300001-
13		01643-70623	Washer	1	Y300001-
14		01010-80616	Bolt	4	Y300001-
15		01643-30623	Washer	4	Y300001-
16		20Y-43-41290	Collar	5	Y300001-
17		20Y-43-41442	Cover	1	Y300001-
18		01245-00616	Screw, Hexagon Socket Head	2	Y300001-
19		01643-70623	Washer	2	Y300001-
20		01435-00612	Bolt	3	Y300001-
21		20Y-43-41290	Collar	5	Y300001-
		20Y-43-42450	Cover	1	Y300001-
22	C1		• Cover	1	Y300001-
23		20Y-43-42170	• Tape	1	Y300001-
24		01245-00616	Screw, Hexagon Socket Head	2	Y300001-
25		01643-70623	Washer	2	Y300001-
26		20Y-43-41290	Collar	2	Y300001-
27		22U-43-23260	Clip	1	Y300001-
28		20Y-43-41970	Sheet	1	Y300001-
29		20Y-43-41491	Ashtray	1	Y300001-
30		20Y-43-41981	Bracket	1	Y300001-
31		20Y-43-42180	• Tape	1	Y300001-

FIG. K1110-006038 Cab, Floor, P.P.C. Lock Lever and Radio

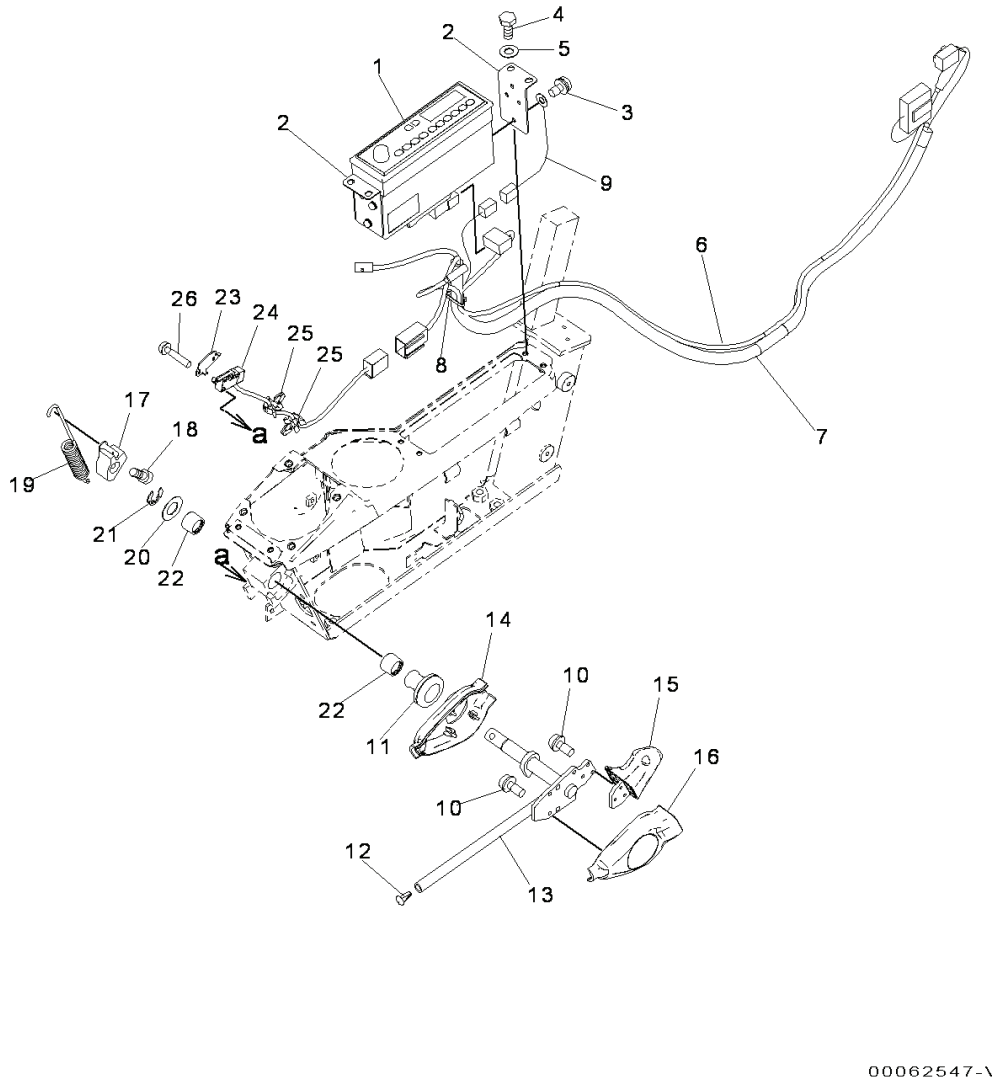

Index	Code	Part Number	Descreption	Qty	Serial Number
1		20Y-06-41248	Radio	1	Y300001-
2		20Y-43-42130	Plate	2	Y300001-
3		01023-60510	Screw	6	Y300001-
4		01010-80616	Bolt	4	Y300001-
5		01643-30623	Washer	4	Y300001-
6		08912-51600	Cord	1	Y300001-
7		20Y-06-41121	Wiring Harness	1	Y300001-
8		08034-20414	Band	1	Y300001-
9		20Y-06-41830	Wiring Harness	1	Y300001-
10		01023-60410	Screw	6	Y300001-
11		08037-11425	Grommet	1	Y300001-
12		208-53-12280	Cap	1	Y300001-
13		20Y-43-31513	Lever	1	Y300001-
14		20Y-43-31522	Cover	1	Y300001-
15		20Y-43-31611	Knob	1	Y300001-
16		20Y-43-31621	Cover	1	Y300001-
17		20Y-43-31432	Cam	1	Y300001-
18		01252-70816	Bolt	1	Y300001-
19		20Y-43-31421	Spring	1	Y300001-
20		20Y-43-31440	Ring	1	Y300001-
21		20Y-43-31450	Plate	1	Y300001-
22		06124-01616	Bearing	2	Y300001-
23		22U-06-22490	Plate	1	Y300001-
24		22U-06-22360	Switch Assembly	1	Y300001-
25		22U-43-23260	Clip	2	Y300001-
26		01023-60320	Screw	2	Y300001-

PC300-8 (FEN01263-00)

FIG. K1110-005039 Cab, Arm Rest (1/2)

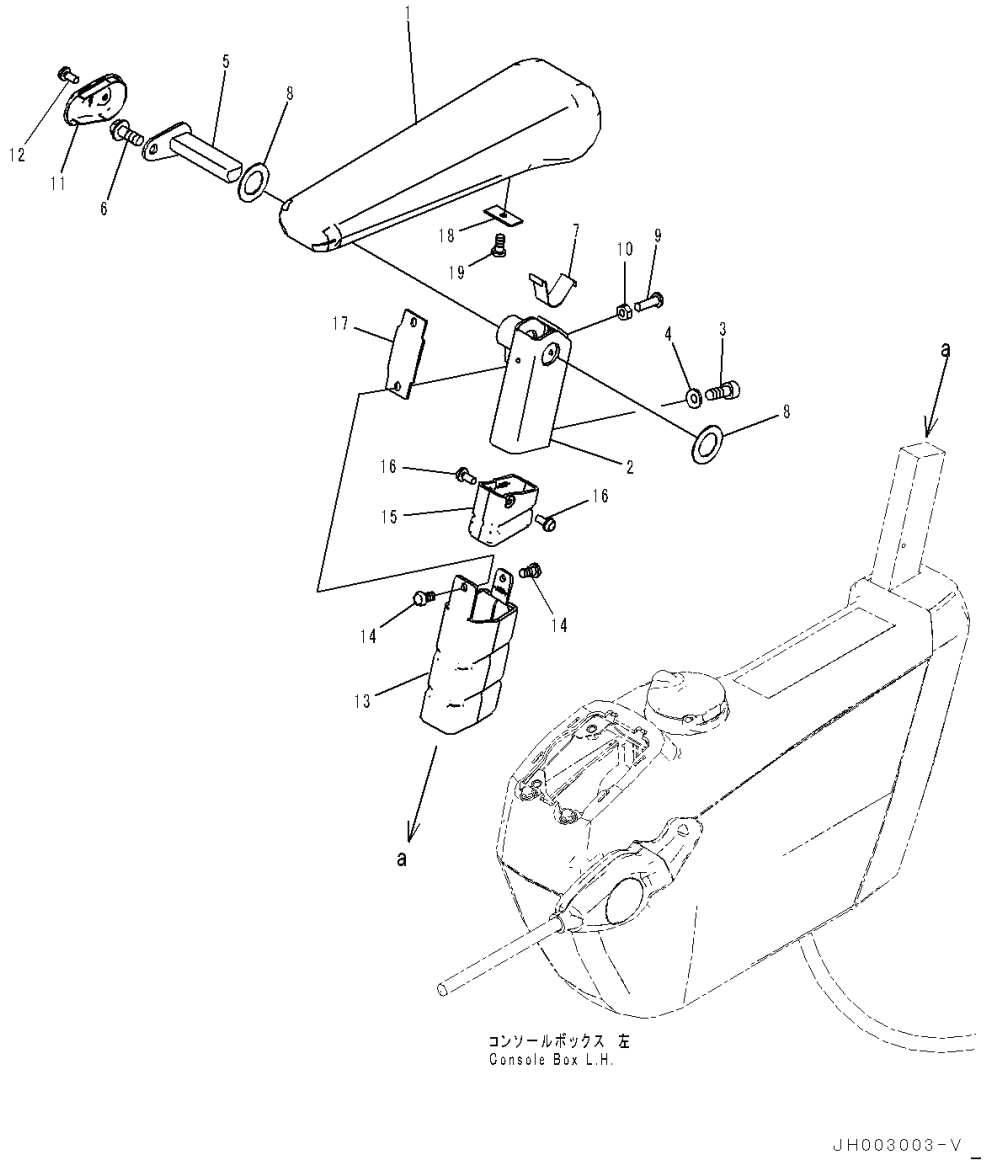

Index	Code	Part Number	Descreption	Qty	Serial Number
1		20Y-43-41143	Armrest	1	Y300001-
2		20Y-43-41173	Bracket	1	Y300001-
3		01252-80820	Bolt	2	Y300001-
4		01643-70823	Washer	2	Y300001-
5		20Y-43-41162	Pin	1	Y300001-
6		01435-40816	Bolt	1	Y300001-
7		20Y-43-41152	Spring	1	Y300001-
8		437-40-26240	Washer	2	Y300001-
9		01245-00620	Screw	1	Y300001-
10		01580-40605	Nut	1	Y300001-
11		20Y-43-41181	Cap	1	Y300001-
12		01023-20512	Screw	1	Y300001-
13		20Y-43-41191	Cover	1	Y300001-
14		01370-40510	Screw	2	Y300001-
15		20Y-43-41591	Cover	1	Y300001-
16		01023-20512	Screw	2	Y300001-
17		20Y-43-41281	Rubber	1	Y300001-
18		20Y-43-41461	Plate	1	Y300001-
19		01370-40610	Screw	1	Y300001-

FIG. K1110-005040A Cab, Floor, Lever, RHS

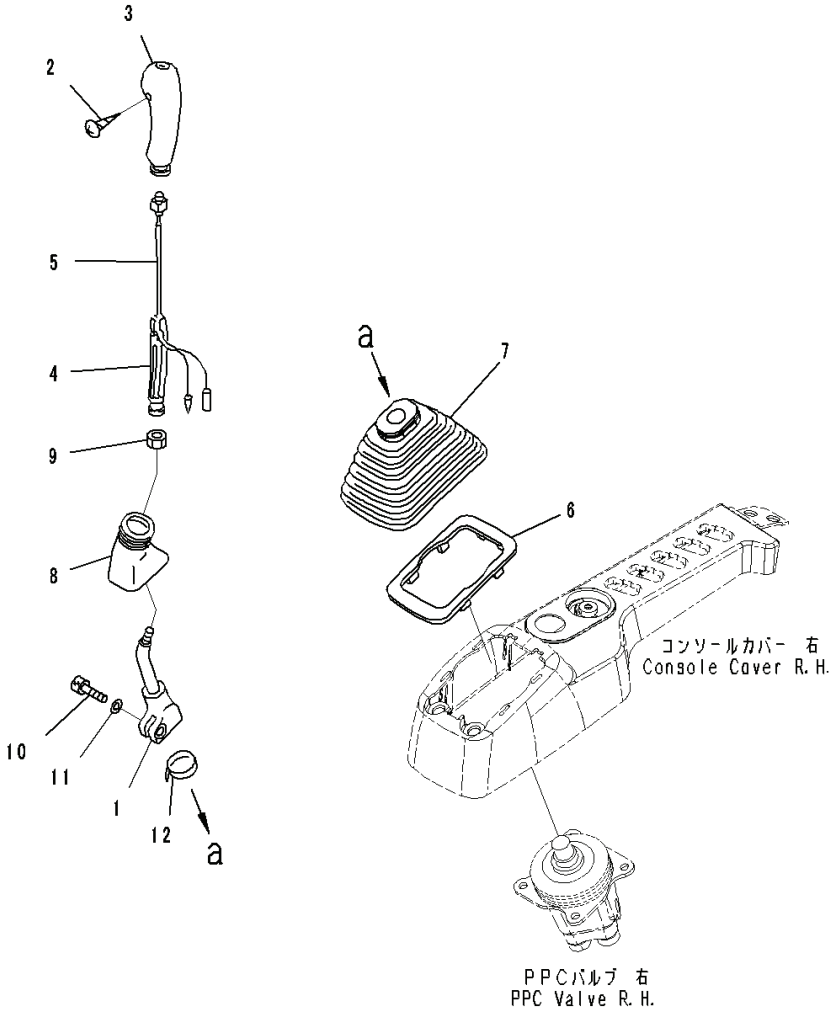

Index	Code	Part Number	Descreption	Qty	Serial Number
1		20Y-43-22221	Lever	1	Y300001-
		22U-43-21192	Knob	1	Y300001-
2	C1		• Screw	1	Y300001-
3		20Y-43-22390	• Knob	1	Y300001-
4		20Y-43-22421	• Insert	1	Y300001-
5		22U-43-21211	• Switch	1	Y300001-
6		20Y-43-22250	Plate	1	Y300001-
7		20Y-43-22261	Boot	1	Y300001-
8		20Y-43-22370	Boot	1	Y300001-
9		600-411-1280	Nut	1	Y300001-
10		01252-41025	Bolt	1	Y300001-
11		01643-51032	Washer	1	Y300001-
12		08034-20536	Band	1	60703-

FIG. K1110-005041 Cab, Floor, P.P.C. Valve, For Work Equipment, RHS

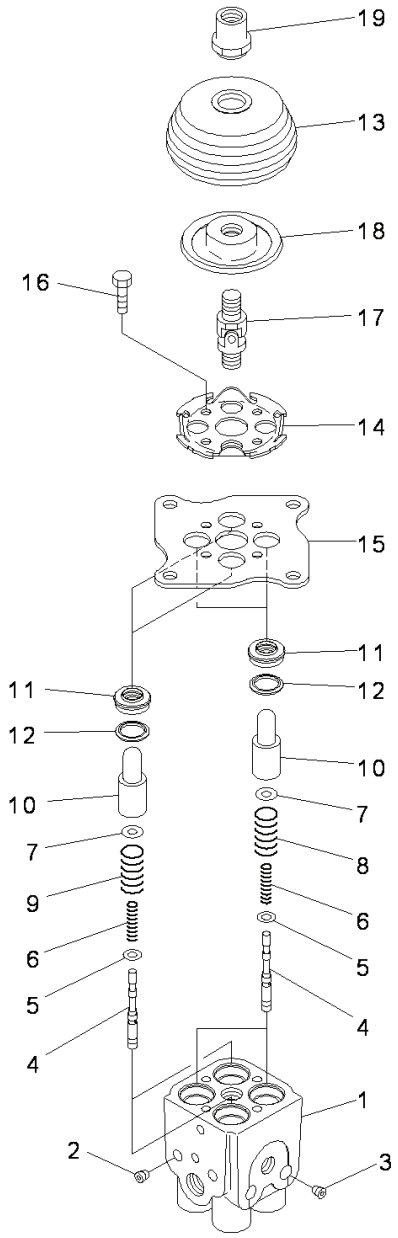

PW5X112

Index	Code	Part Number	Descreption	Qty	Serial Number
		702-16-51140	Valve, Pilot	1	Y300001-
1	C1		• Valve Body, Valve	1	Y300001-
2	C1		• Plug	2	Y300001-
3	C1		• Plug	2	Y300001-
4	C1		• Valve	4	Y300001-
5		702-16-51140	• Shim, T=0.30mm	4	Y300001-
6		702-16-53420	• Spring	4	Y300001-
7		702-16-53140	• Retainer	4	Y300001-
8		702-16-53470	• Spring	2	Y300001-
9		702-16-53590	• Spring	2	Y300001-
10		702-16-53170	• Piston	4	Y300001-
11		702-16-71150	• Seal	4	Y300001-
12		702-16-71160	• Seat	4	Y300001-
13		702-16-71280	• Boot	1	Y300001-
14		702-16-71131	• Plate	1	Y300001-
15		702-16-71141	• Plate	1	Y300001-
16		01010-80620	• Bolt	4	Y300001-
17		702-16-51240	• Universal Joint	1	Y300001-
18		702-16-71361	• Disc	1	Y300001-
19		702-16-71441	• Nut	1	Y300001-

PC300-8 (FEN01263-00)

FIG. K1110-005042 Cab, Floor, Valve, RHS

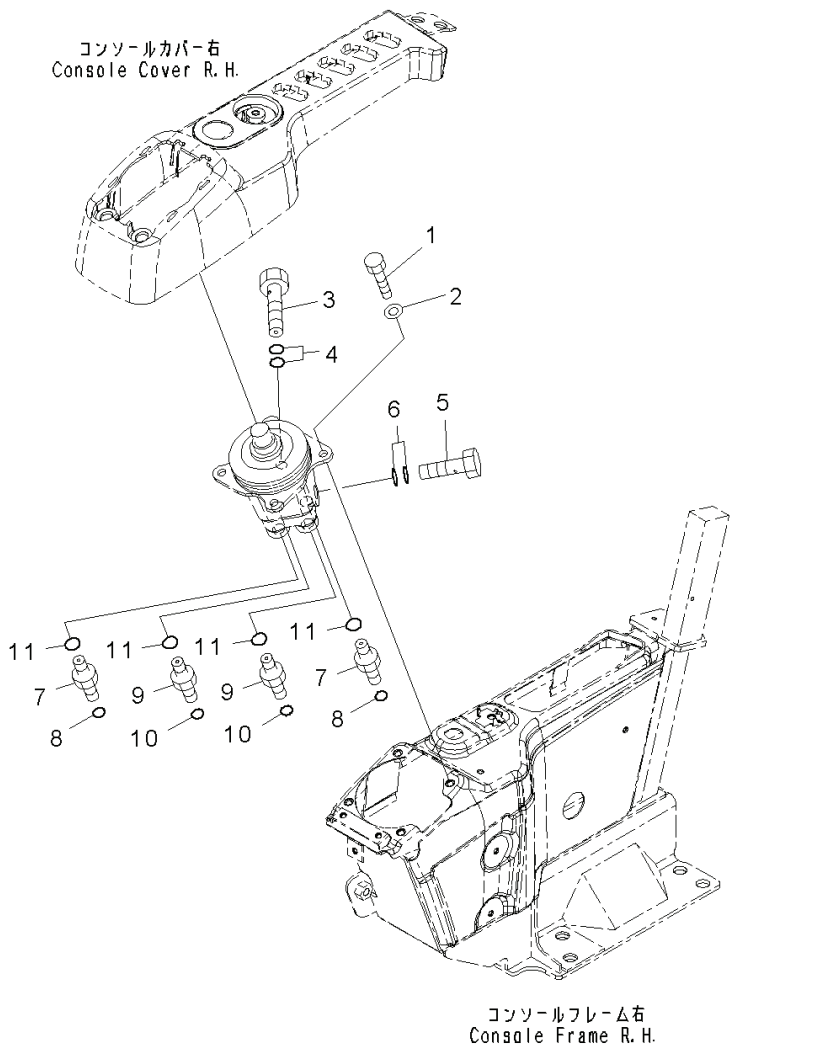

Index	Code	Part Number	Descreption	Qty	Serial Number
1		01010-80820	Bolt	4	Y300001-
2		01643-30823	Washer	4	Y300001-
3		20Y-62-18910	Bolt	1	Y300001-
4		07000-12018	O-ring	2	Y300001-
5		20Y-62-18890	Bolt	1	Y300001-
6		07000-12015	O-ring	2	Y300001-
7		11Y-62-12130	Nipple	2	Y300001-
8		02896-11008	O-ring	2	Y300001-
9		11Y-62-12520	Union	2	Y300001-
10		02896-11009	O-ring	2	Y300001-
11		07002-11423	O-ring	4	Y300001-

FIG. K1110-005043 Cab, Floor, Console, RHS

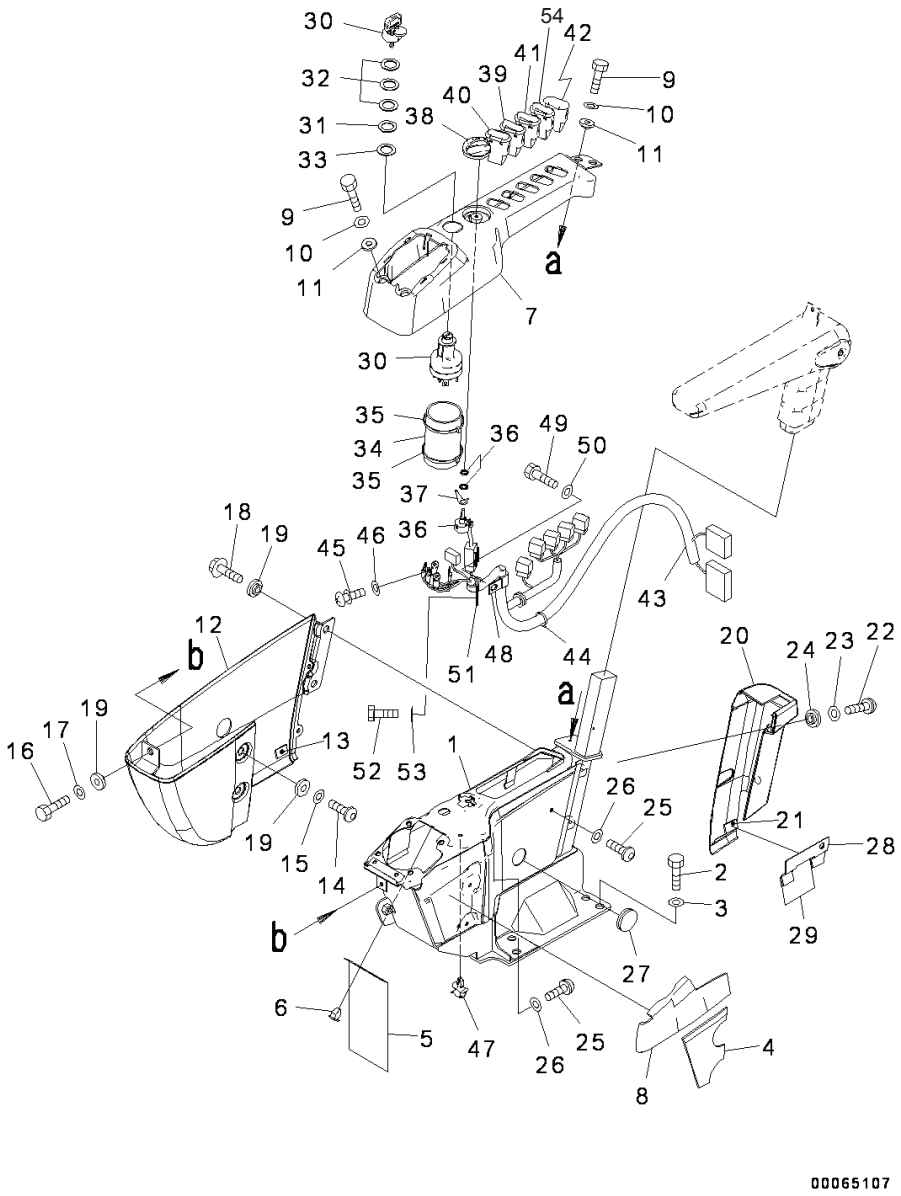

Index	Code	Part Number	Descreption	Qty	Serial Number
1		20Y-43-41314	Frame	1	Y300001-
2		01010-D1230	Bolt	4	Y300001-
3		01643-71232	Washer	4	Y300001-
4		20Y-43-41631	Sheet	1	Y300001-
5		22U-43-23251	Sheet	1	Y300001-
6		22U-43-23290	Clip	2	Y300001-
7		20Y-43-41323	Cover	1	Y300001-
8		20Y-43-41661	Sheet	1	Y300001-
9		01010-80616	Bolt	4	Y300001-
10		01643-30623	Washer	4	Y300001-
11		20Y-43-41290	Collar	4	Y300001-
		20Y-43-42330	Cover	1	Y300001-
12	C1		• Cover	1	Y300001-
13		20Y-43-42170	• Tape	1	Y300001-
14		01245-00616	Screw, Hexagon Socket Head	2	Y300001-
15		01643-70623	Washer	2	Y300001-
16		01010-80616	Bolt	1	Y300001-
17		01643-30623	Washer	1	Y300001-
18		01435-00612	Bolt	2	Y300001-
19		20Y-43-41290	Collar	5	Y300001-
		20Y-43-42350	Cover	1	Y300001-
20	C1		• Cover	1	Y300001-

PC300-8 (FEN01263-00)

FIG. K1110-005043 Cab, Floor, Console, RHS

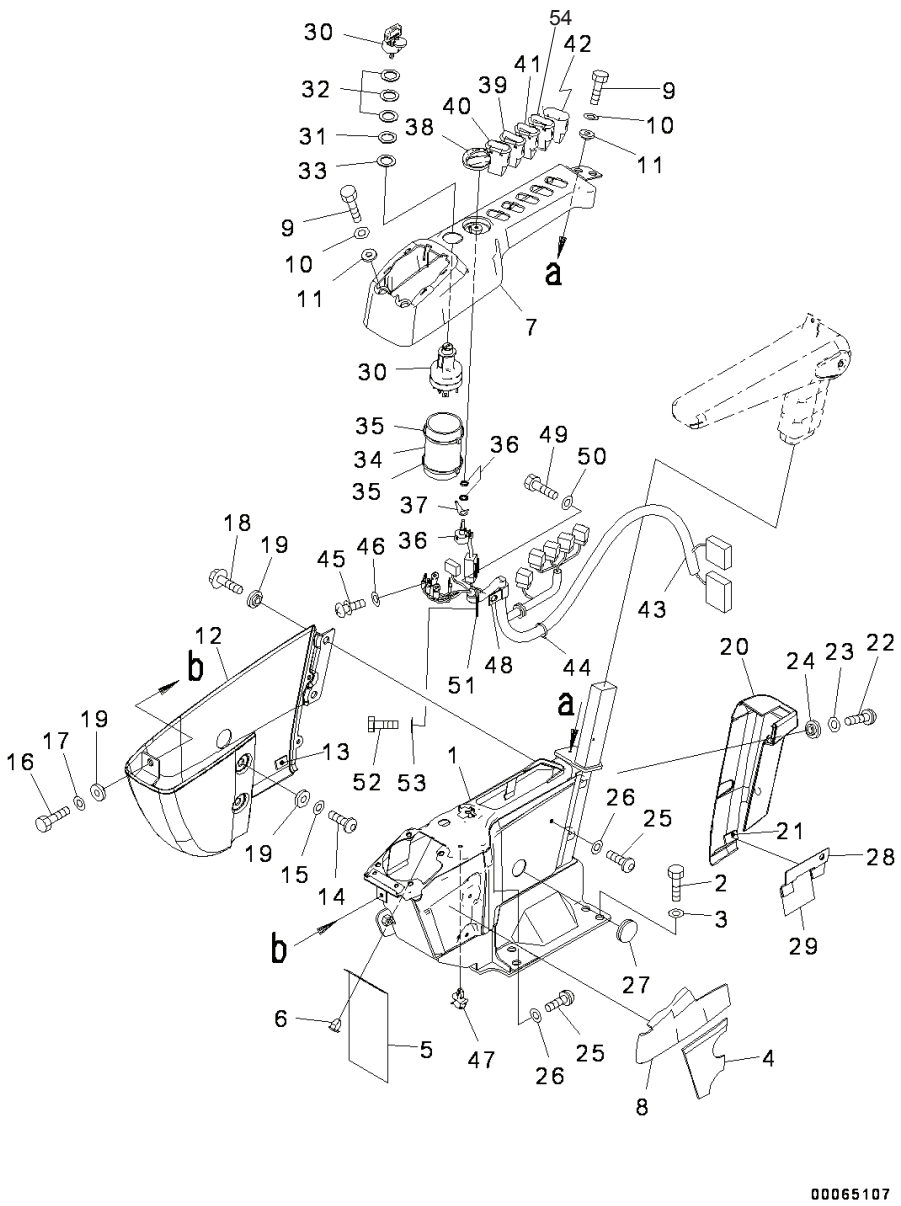

Index	Code	Part Number	Descreption	Qty	Serial Number
21		20Y-43-42170	• Tape	1	Y300001-
22		01245-00616	Screw, Hexagon Socket Head	2	Y300001-
23		01643-70623	Washer	2	Y300001-
24		20Y-43-41290	Collar	2	Y300001-
25		01245-00616	Screw, Hexagon Socket Head	3	Y300001-
26		01643-70623	Washer	3	Y300001-
27		09415-02512	Cap	1	Y300001-
28		20Y-43-41991	Bracket	1	Y300001-
29		20Y-43-42180	• Tape	1	Y300001-
30		08086-20000	Switch, Starting	1	Y300001-
31		20Y-43-41740	Plate	1	Y300001-
32		20Y-43-41750	Washer	3	Y300001-
33		20Y-43-41790	Washer	1	Y300001-
34		20Y-43-41671	Sheet	1	Y300001-
35		08034-20519	Band	2	Y300001-
36		22U-06-22380	Potentiometer	1	Y300001-
37		22U-06-22460	Spring	1	Y300001-
38		20Y-43-41780	Knob	1	Y300001-
39		20Y-06-42110	Switch	1	Y300001-
40		20Y-06-42121	Switch, Light	1	Y300001-
41		21T-06-33760	Switch Assembly	1	Y300001-
42		20Y-06-42190	Cover	2	Y300001-
43		207-06-76130	Wiring Harness	1	Y300001-
44		08034-20414	Band	1	Y300001-
45		01023-10508	Screw	5	Y300001-
46		01601-20513	Washer	5	Y300001-
47		22U-43-23260	Clip	1	Y300001-
48		04434-51710	Clip	1	Y300001-
49		01010-81016	Bolt	1	Y300001-
50		01643-31032	Washer	1	Y300001-
51		04434-51410	Clip	1	Y300001-
52		01010-81016	Bolt	1	Y300001-
53		01643-31032	Washer	1	Y300001-
54		20Y-06-42130	Switch.	1	Y300001-

PC300-8 (FEN01263-00)

FIG. K1110-005044 Cab, Arm Rest (2/2)

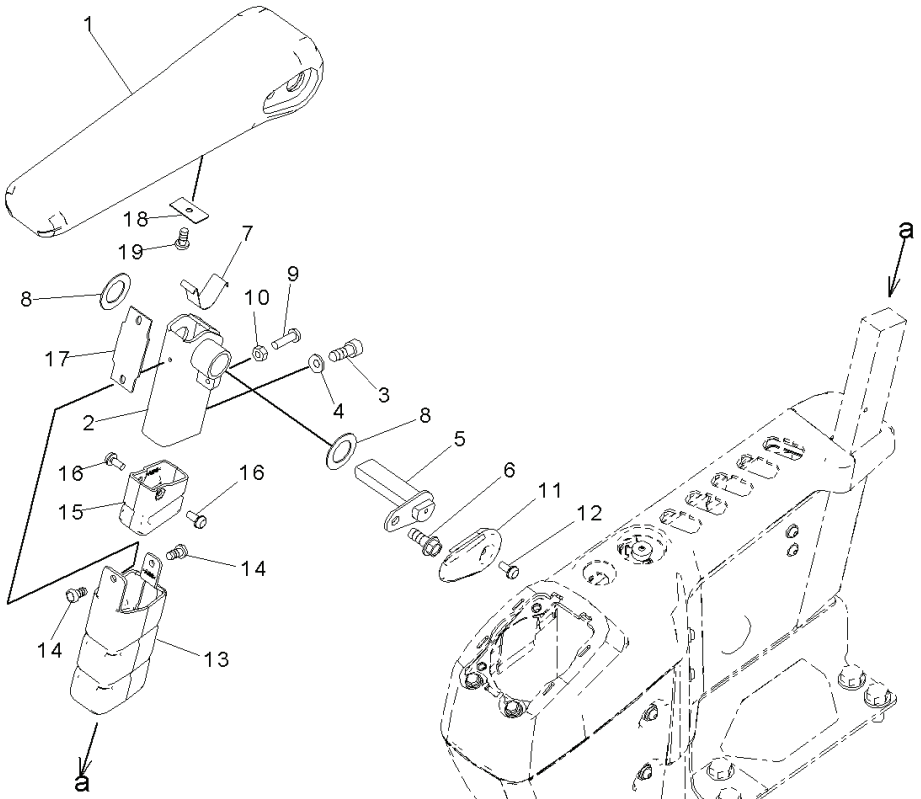

Index	Code	Part Number	Descreption	Qty	Serial Number
1		20Y-43-41343	Arm Rest	1	Y300001-
2		20Y-43-41533	Bracket	1	Y300001-
3		01252-80820	Bolt	2	Y300001-
4		01643-70823	Washer	2	Y300001-
5		20Y-43-41850	Pin	1	Y300001-
6		01435-40816	Bolt	1	Y300001-
7		20Y-43-41152	Spring	1	Y300001-
8		437-40-26240	Washer	2	Y300001-
9		01245-00620	Screw	1	Y300001-
10		01580-40605	Nut	1	Y300001-
11		20Y-43-41181	Cap	1	Y300001-
12		01023-20512	Screw	1	Y300001-
13		20Y-43-41191	Cover	1	Y300001-
14		01370-40510	Screw	2	Y300001-
15		20Y-43-41591	Cover	1	Y300001-
16		01023-20512	Screw	2	Y300001-
17		20Y-43-41281	Rubber	1	Y300001-
18		20Y-43-41461	Plate	1	Y300001-
19		01370-40610	Screw	1	Y300001-

PC300-8 (FEN01263-00)

FIG. K1110-005045 Cab, Air Conditioner Unit

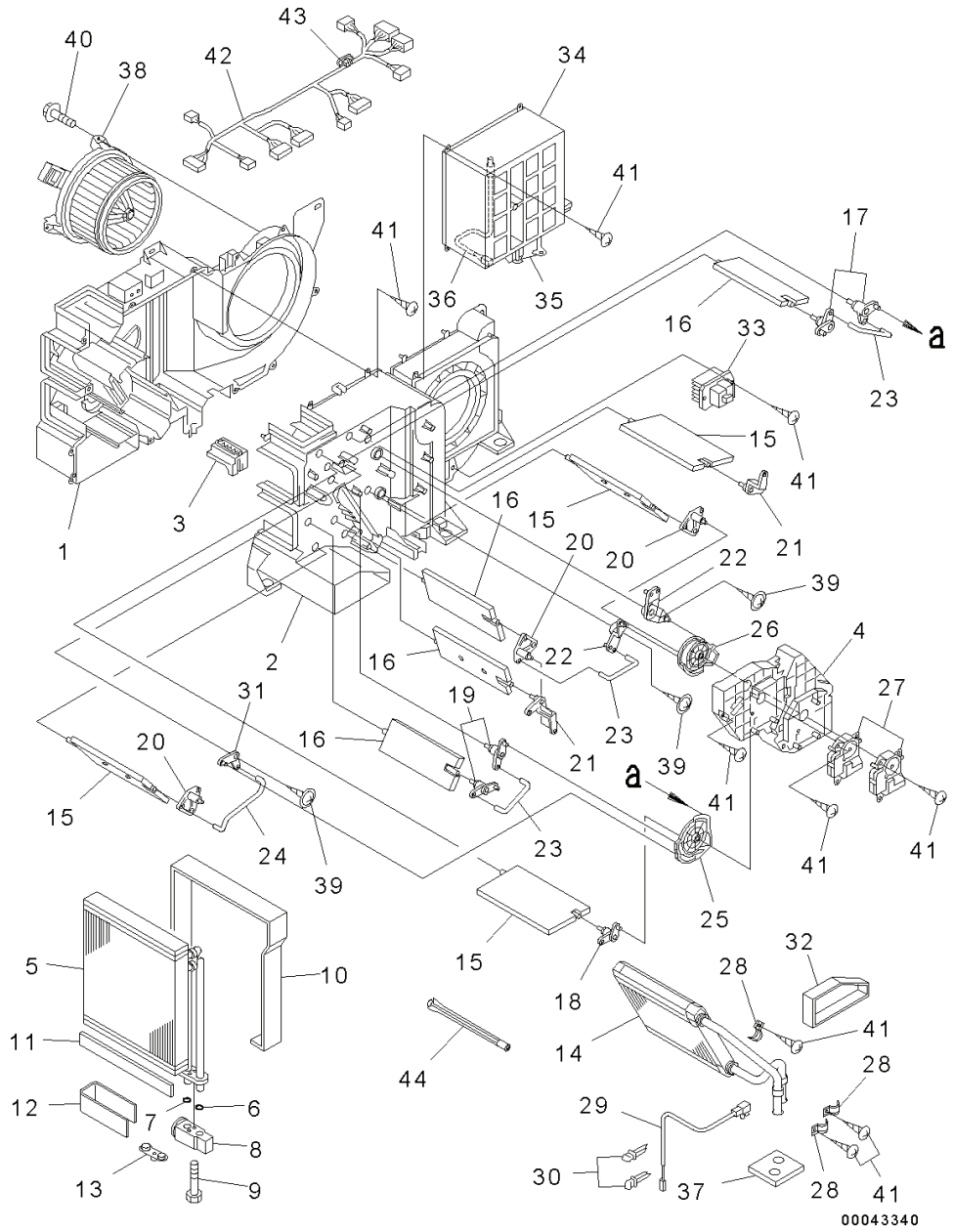

Index	Code	Part Number	Descreption	Qty	Serial Number
		20Y-810-1211	Air Conditioner Assembly .	1	Y300001-
1		ND245450-5831	• Case, Cooling, COOLING	1	Y300001-
2		ND245450-5840	• Case, Cooling, COOLING	1	Y300001-
3		ND116576-3810	• Plate .	1	Y300001-
4		ND116576-3820	• Plate	1	Y300001-
		ND446010-3132	• Evaporator, PART	1	Y300001-
5		ND446600-0991	• • Evaporator Assembly	1	Y300001-
6		ND949142-0020	• • O-ring	1	Y300001-
7		ND949142-0030	• • O-ring	1	Y300001-
8		ND447500-2750	• • Valve, EXPANSION	1	Y300001-
9		ND949046-3100	• • Bolt .	2	Y300001-
10		ND146657-8841	• • Packing .	1	Y300001-
11		ND146657-9811	• • Packing .	3	Y300001-
12		ND146657-8850	• • Packing .	1	Y300001-
13		ND445021-3941	• • Plug .	1	Y300001-
14		ND116140-0050	• Core Subassembly, Heater, HEATER	1	Y300001-
15		ND116660-7570	• Door Assembly .	4	Y300001-
16		ND116650-6850	• Door Assembly .	4	Y300001-
17		ND116780-2481	• Lever Subassembly, Link, LINK .	2	Y300001-
18		ND116780-2491	• Lever Subassembly, Link, LINK .	1	Y300001-
19		ND116780-2501	• Lever Subassembly, Link, LINK .	2	Y300001-
20		ND116780-2510	• Lever Subassembly, Link, LINK .	3	Y300001-
21		ND116781-3000	• Lever .	2	Y300001-
22		ND116780-3130	• Lever Subassembly, Link, LINK .	2	Y300001-
23		ND116662-7670	• Shaft .	3	Y300001-
24		ND116662-7681	• Shaft .	1	Y300001-

PC300-8 (FEN01263-00)

FIG. K1110-005045 Cab, Air Conditioner Unit

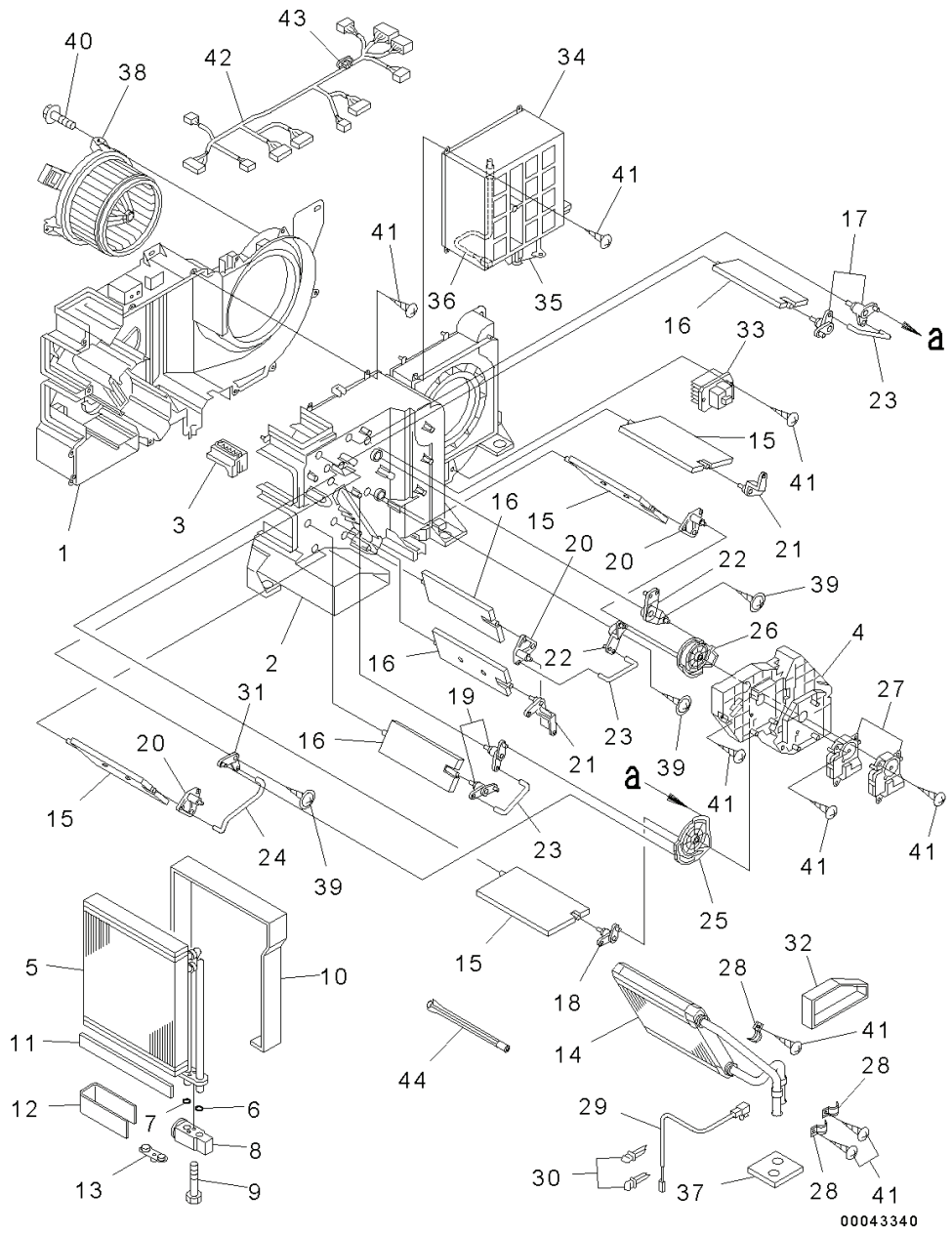

Index	Code	Part Number	Descreption	Qty	Serial Number
25		ND116576-3852	• Plate	1	Y300001-
26		ND116576-3862	• Plate	1	Y300001-
27		ND063800-0300	• Servo Motor Assembly	2	Y300001-
28		ND017231-0700	• Clamp	3	Y300001-
29		ND077500-5890	• Thermistor Assembly	1	Y300001-
30		ND246790-2060	• Clamp	2	Y300001-
31		ND116780-3920	• Lever Subassembly, Link, LINK	1	Y300001-
32		ND146667-0440	• Packing	1	Y300001-
33		ND077800-0750	• Transistor	1	Y300001-
34		ND146340-0560	• Box Assembly	1	Y300001-
35		ND063600-4580	• • Servo Motor Assembly	1	Y300001-
36		ND077500-5650	• • Thermistor Assembly	1	Y300001-
37		ND146657-8860	• Packing	1	Y300001-
38		ND116340-7350	• Motor Assembly, Fan, FAN	1	Y300001-
39		ND949008-0460	• Screw, Tapping	3	Y300001-
40		ND949008-0330	• Screw, Tapping	3	Y300001-
41		ND949001-1730	• Screw, Tapping	32	Y300001-
42		ND246470-4311	• Wiring Harness Assembly, WIRE	1	Y300001-
43		ND93950-05003	• • Fuse	1	Y300001-
44		ND116662-8320	• Shaft	1	Y300001-

PC300-8 (FEN01263-00)

FIG. K1110-005046 Cab, Floor, Air Conditioner Unit

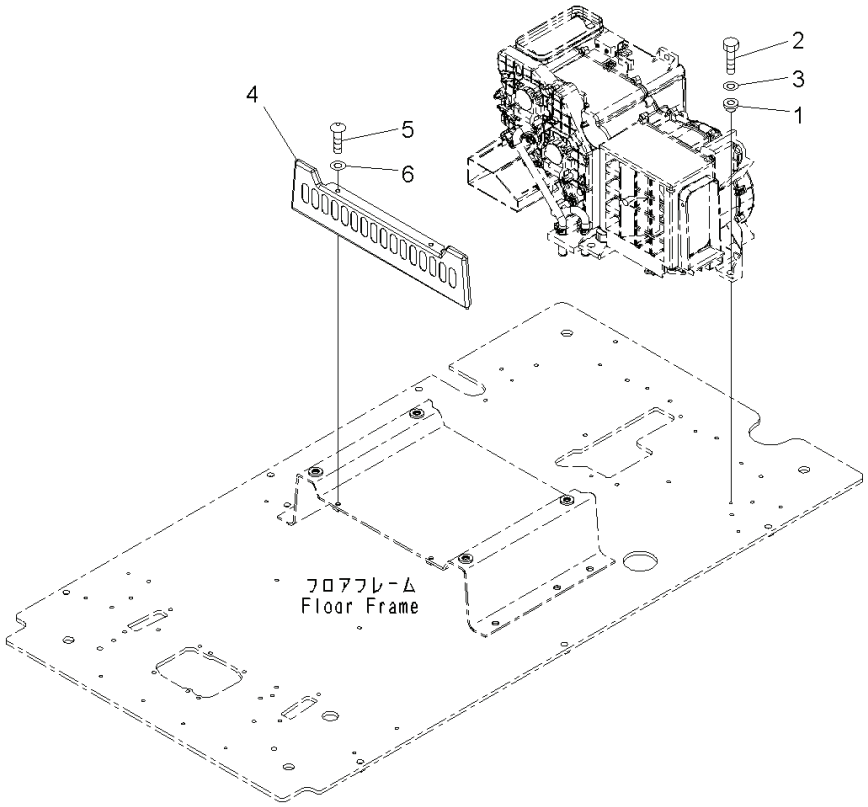

Index	Code	Part Number	Descreption	Qty	Serial Number
1		208-979-7540	Collar	7	Y300001-
2		01010-80825	Bolt	7	Y300001-
3		01643-30823	Washer	7	Y300001-
4		20Y-43-41240	Cover	1	Y300001-
5		01245-00820	Screw	2	Y300001-
6		01643-70823	Washer	2	Y300001-

FIG. K1110-005047 Cab, Floor, Air Conditioner Hose

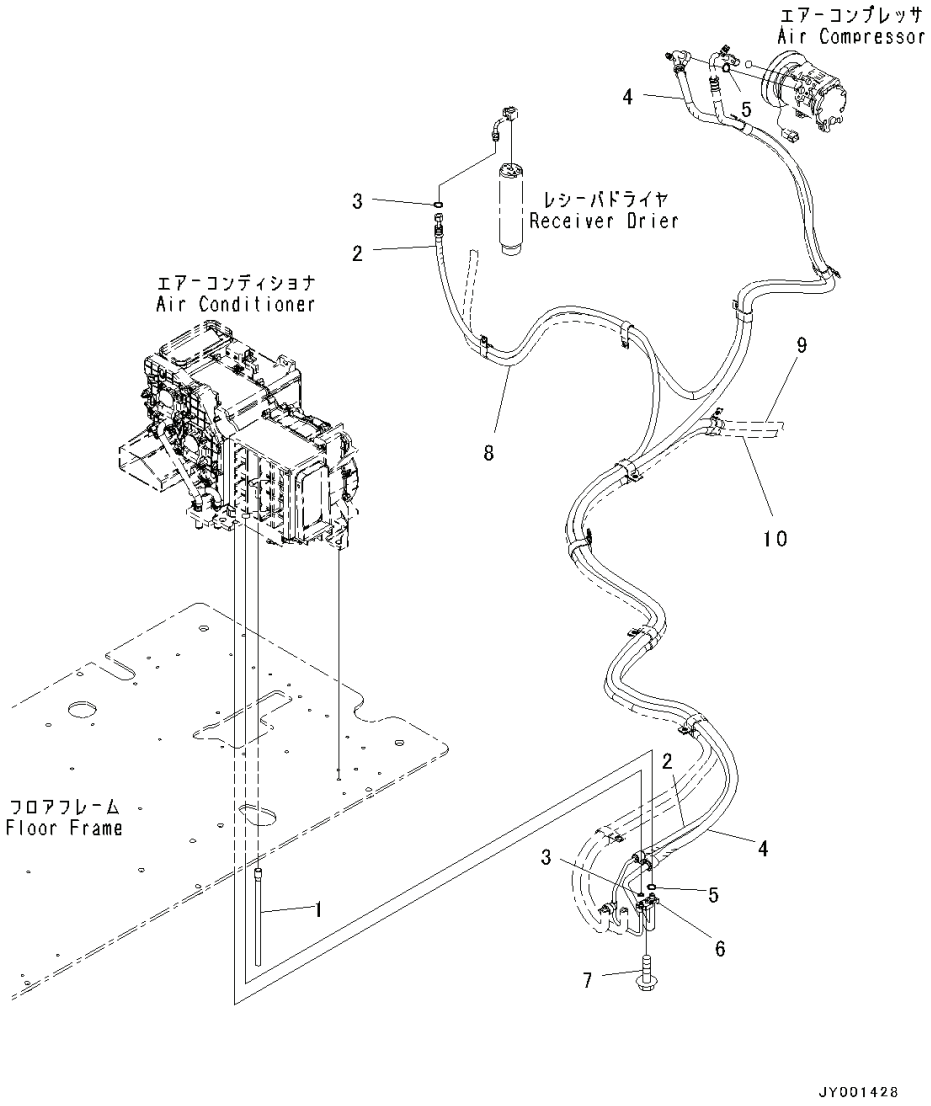

Index	Code	Part Number	Descreption	Qty	Serial Number
1		208-979-7640	Hose	1	Y300001-
2		207-810-1311	Hose	1	Y300001-
3		20Y-979-3150	• O-ring	2	Y300001-
4		207-810-1321	Hose	1	Y300001-
5		20Y-979-3130	• O-ring	2	Y300001-
6		208-979-7650	Connector	1	Y300001-
7		01435-40620	Bolt	1	Y300001-
8		(207-979-7462)	Hose(Refer to Page 474)		-
9		(207-810-1332)	Hose Assembly(Refer to Page 561)		-
10		(207-810-1342)	Hose Assembly(Refer to Page 561)		-

FIG. K1110-005048 Cab, Floor, Heater Hose

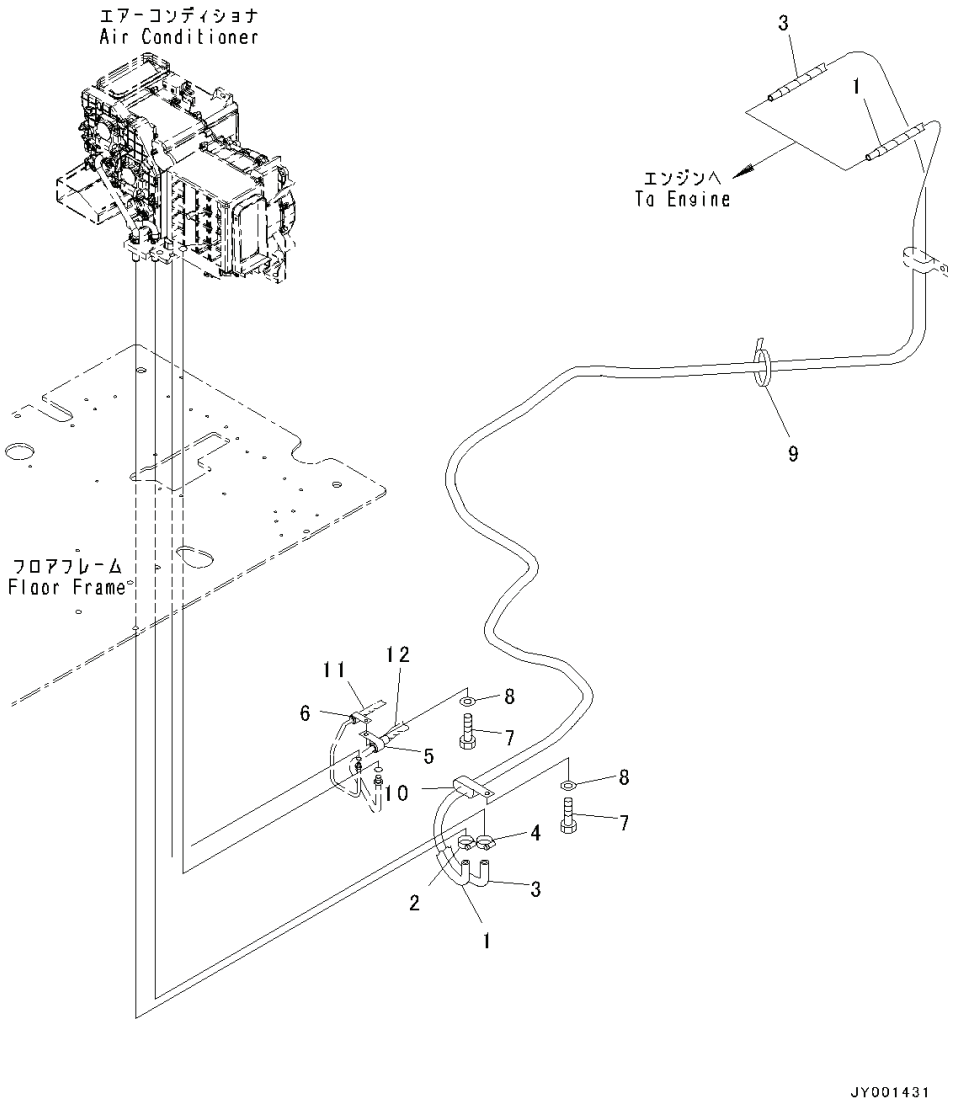

Index	Code	Part Number	Descreption	Qty	Serial Number
1		207-810-1332	Hose Assembly .	1	Y300001-
2		09479-02400	Clamp .	1	Y300001-
3		207-810-1342	Hose Assembly .	1	Y300001-
4		09479-02400	Clamp .	1	Y300001-
5		04434-52110	Clip .	1	Y300001-
6		04434-52511	Clip .	1	Y300001-
7		01010-81020	Bolt .	2	Y300001-
8		01643-31032	Washer .	2	Y300001-
9		08034-20536	Band	1	Y300001-
10		141-06-11220	Clip .	1	Y300001-
11		(207-810-1311)	Hose(Refer to Page 560)		-
12		(207-810-1321)	Hose(Refer to Page 560)		-

PC300-8 (FEN01263-00)

FIG. K1110-005049 Cab, Floor, P.P.C. Piping For Travel Valve

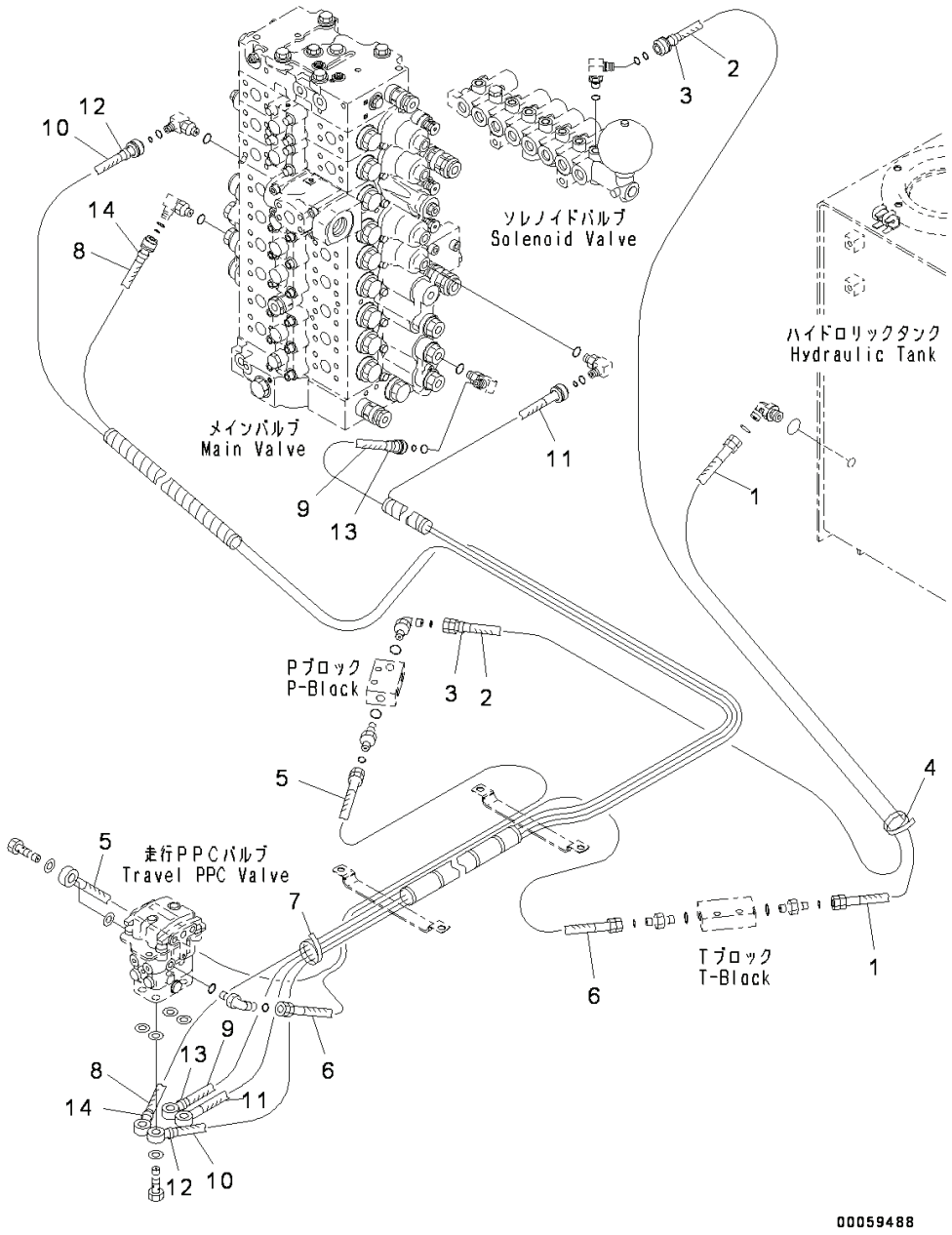

Index	Code	Part Number	Descreption	Qty	Serial Number
1		22U-62-31180	Hose	1	Y300001-
2		208-62-72331	Hose	1	Y300001-
3		20Y-62-22790	Band, Red	2	Y300001-
4		08034-20519	Band	1	Y300001-
5		208-62-72290	Hose	1	Y300001-
6		208-62-72310	Hose	1	Y300001-
7		08034-20519	Band	1	Y300001-
8		208-62-72360	Hose	1	Y300001-
9		207-62-75870	Hose	1	Y300001-
10		207-62-75880	Hose	1	Y300001-
11		207-62-75890	Hose	1	Y300001-
12		20Y-62-22790	Band, Red	2	Y300001-
13		20Y-62-22820	Band, Blue	2	Y300001-
14		20Y-62-22850	Band, Green	2	Y300001-

PC300-8 (FEN01263-00)

FIG. K1110-005050 Cab, Floor, P.P.C. Piping For Pilot Valve

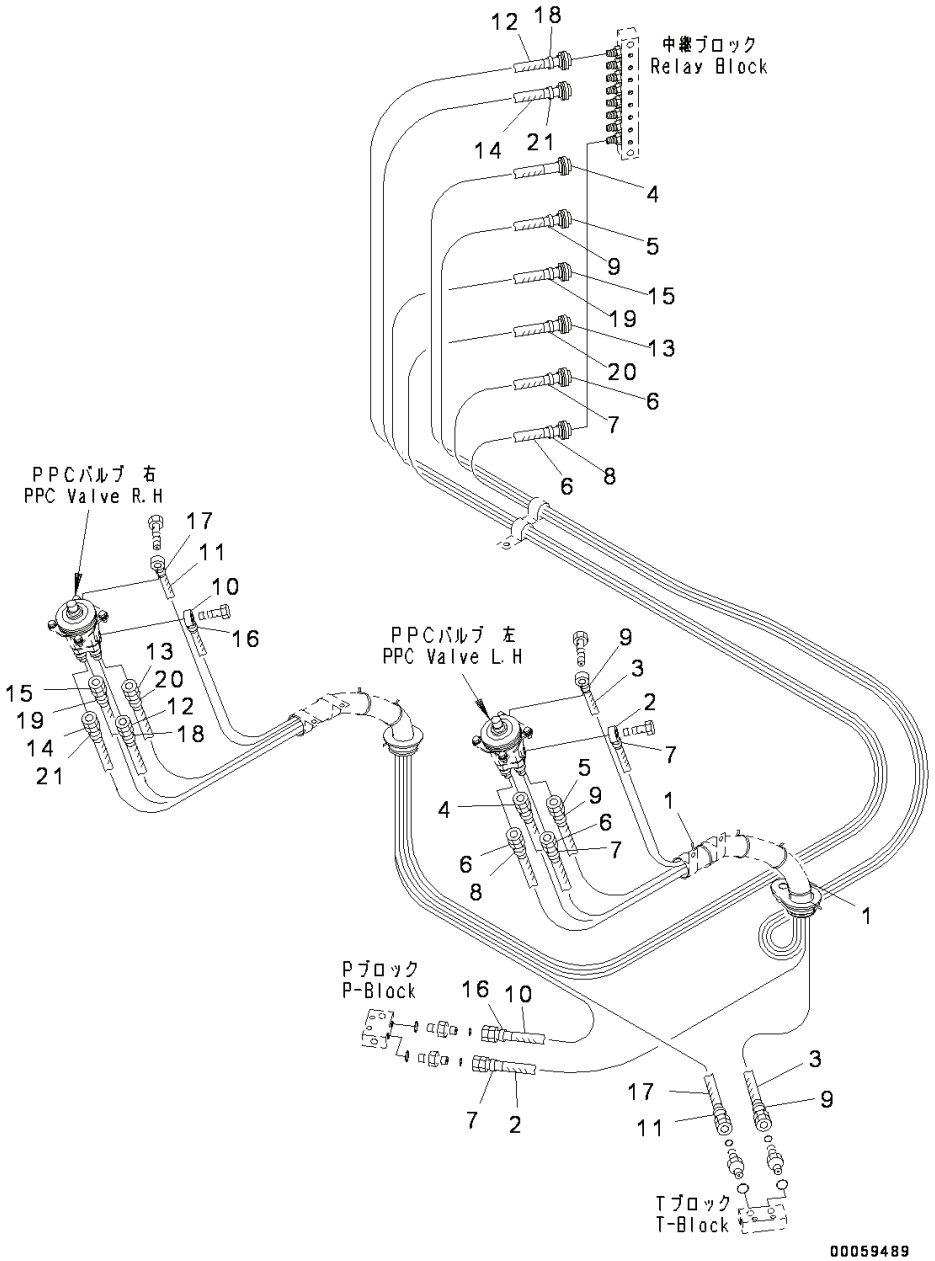

Index	Code	Part Number	Descreption	Qty	Serial Number
1		08034-20536	Band	2	Y300001-
2		20Y-62-53410	Hose	1	Y300001-
3		20Y-62-53420	Hose	1	Y300001-
4		207-62-72590	Hose	1	Y300001-
5		207-62-75810	Hose	1	Y300001-
6		207-62-75820	Hose	2	Y300001-
7		20Y-62-22790	Band, Red	4	Y300001-
8		20Y-62-22810	Band, Yellow	2	Y300001-
9		20Y-62-22820	Band, Blue	4	Y300001-
10		20Y-62-42251	Hose	1	Y300001-
11		208-62-72870	Hose	1	Y300001-
12		207-62-72670	Hose	1	Y300001-
13		20Y-62-42271	Hose	1	Y300001-
14		20Y-62-42290	Hose	1	Y300001-
15		21N-62-36790	Hose	1	Y300001-
16		20Y-62-22790	Band, Red	2	Y300001-
17		20Y-62-22820	Band, Blue	2	Y300001-
18		20Y-62-22830	Band, White	2	Y300001-
19		20Y-62-22840	Band, Black	2	Y300001-
20		20Y-62-22850	Band, Green	2	Y300001-
21		20Y-62-22860	Band, Brown	2	Y300001-

PC300-8 (FEN01263-00)

FIG. K1110-005051 Cab, Floor, PPC Piping Clamp

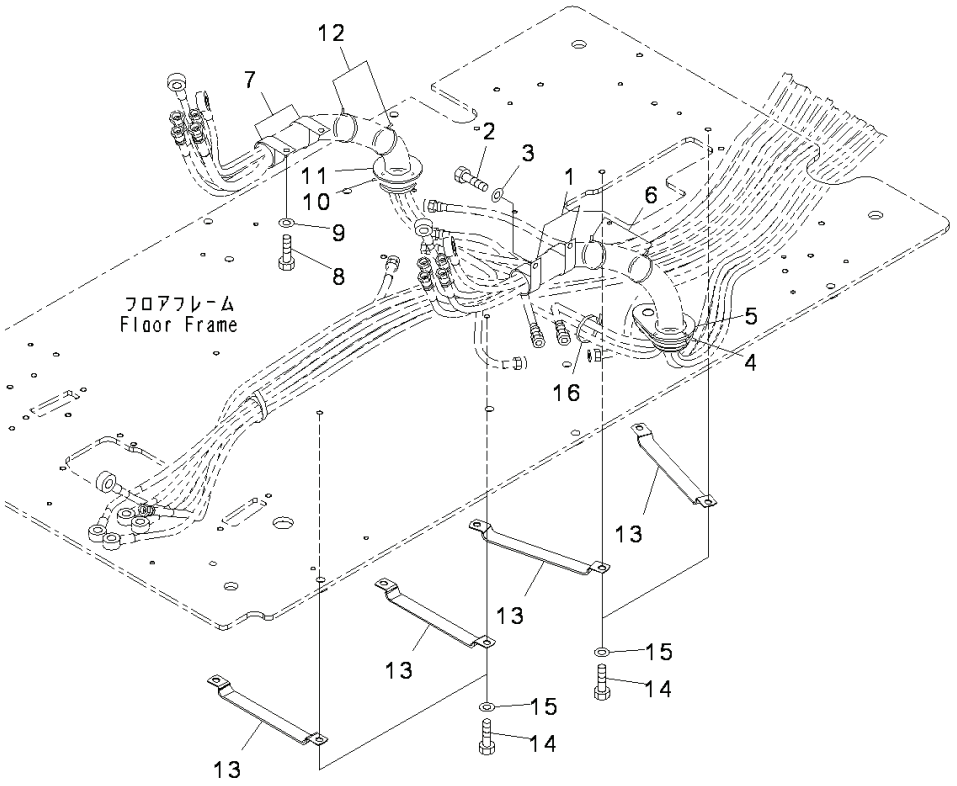

Index	Code	Part Number	Descreption	Qty	Serial Number
1		208-06-19170	Clip	2	Y300001-
2		01010-81025	Bolt	2	Y300001-
3		01643-31032	Washer	2	Y300001-
4		08034-20536	Band	2	Y300001-
5		207-53-14140	Grommet	1	Y300001-
6		08034-20536	Band	2	Y300001-
7		04434-53411	Clip	2	Y300001-
8		01010-81025	Bolt	2	Y300001-
9		01643-31032	Washer	2	Y300001-
10		08034-20536	Band	2	Y300001-
11		20Y-54-65121	Grommet	1	Y300001-
12		08034-20536	Band	2	Y300001-
13		20Y-62-27770	Clamp	4	Y300001-
14		01010-81016	Bolt	8	Y300001-
15		01643-31032	Washer	8	Y300001-
16		08034-20536	Band	1	Y300001-

PC300-8 (FEN01263-00)

FIG. K1110-005052 Cab, Floor, P, T Block and Seal

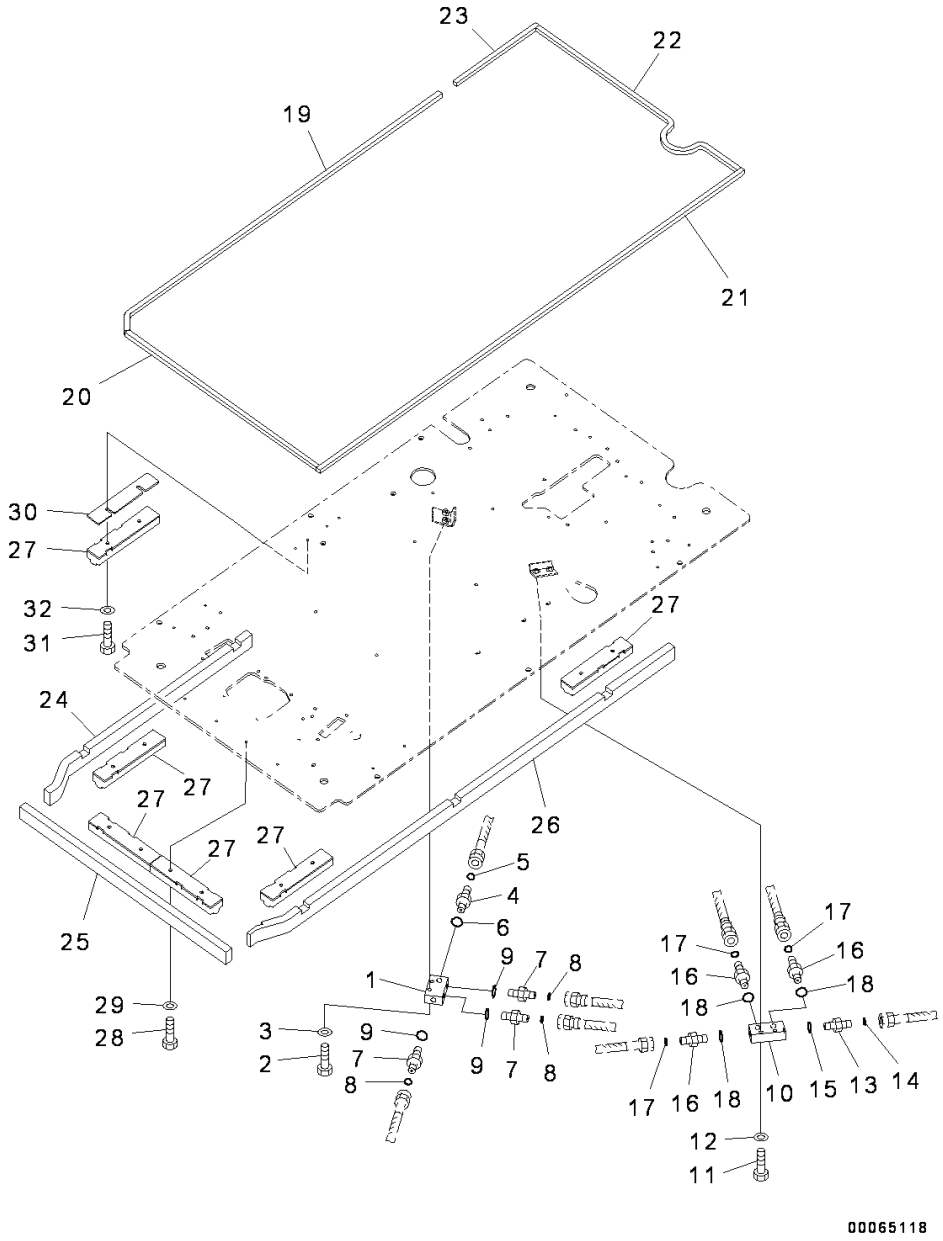

Index	Code	Part Number	Descreption	Qty	Serial Number
1		20Y-62-15831	Block	1	Y300001-
2		01010-81045	Bolt	2	Y300001-
3		01643-31032	Washer	2	Y300001-
4		02781-0031D	Union	1	Y300001-
5		02896-11009	O-ring	1	Y300001-
6		07002-11423	O-ring	1	Y300001-
7		02781-0021D	Union	3	Y300001-
8		02896-11008	O-ring	3	Y300001-
9		07002-11423	O-ring	3	Y300001-
10		20Y-62-15831	Block	1	Y300001-
11		01010-81045	Bolt	2	Y300001-
12		01643-31032	Washer	2	Y300001-
13		02781-0031D	Union	1	Y300001-
14		02896-11009	O-ring	1	Y300001-
15		07002-11423	O-ring	1	Y300001-
16		02781-0021D	Union	3	Y300001-
17		02896-11008	O-ring	3	Y300001-
18		07002-11423	O-ring	3	Y300001-
19		20Y-53-14910	Seal	1	Y300001-
20		20Y-53-14920	Seal	1	Y300001-
21		20Y-53-14930	Seal	1	Y300001-
22		20Y-53-14940	Seal	1	Y300001-
23		20Y-53-14950	Seal	1	Y300001-
24		20Y-53-14963	Sheet	1	Y300001-
25		20Y-53-14973	Sheet	1	Y300001-
26		20Y-53-14983	Sheet	1	Y300001-
27		20Y-53-14831	Sheet	6	Y300001-
28		01010-80830	Bolt	10	Y300001-
29		01643-30823	Washer	10	Y300001-
30		20Y-53-14841	Plate	1	Y300001-
31		01010-80840	Bolt	2	Y300001-
32		01643-30823	Washer	2	Y300001-

PC300-8 (FEN01263-00)

FIG. K1110-006001 Cab, Cab Body and Window

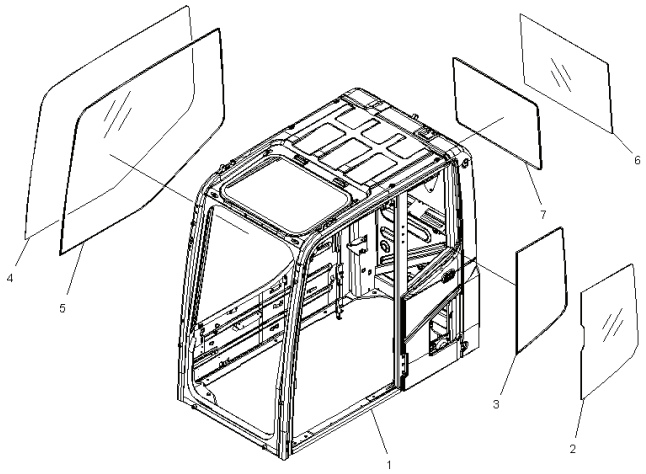

Index	Code	Part Number	Descreption	Qty	Serial Number
			Cab Assembly	1	Y300001-
1	C1		• Cab	1	Y300001-
2		20Y-53-11241	• Glass	1	Y300001-
3		20Y-53-11260	• Seal	1	Y300001-
4		20Y-53-11841	• Glass	1	Y300001-
5		20Y-53-11850	• Seal	1	Y300001-
6		20Y-53-11271	• Glass	1	Y300001-
7		20Y-53-11250	• Seal	1	Y300001-

FIG. K1110-006003 Cab, Front Lower Window

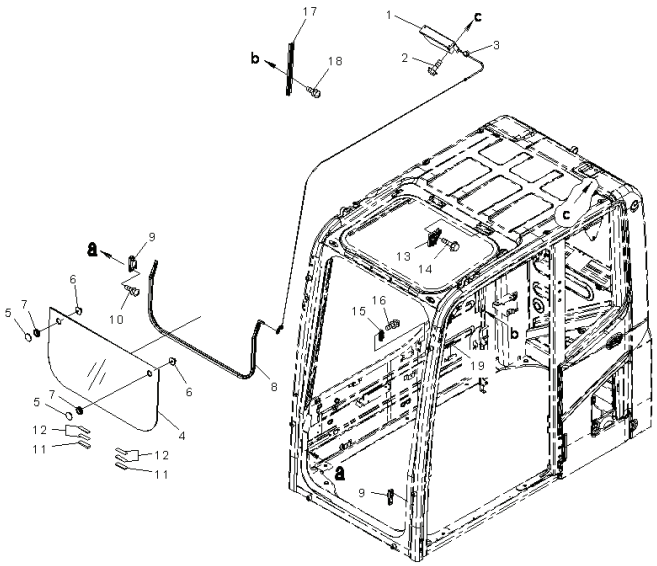

Index	Code	Part Number	Descreption	Qty	Serial Number
		206-53-00451	Cab Assembly	1	Y300001-
			With AM-FM Radio 1Actuator		
1		20Y-53-11591	• Spring Assembly	1	Y300001-
2		01435-00616	• Bolt	2	Y300001-
3		20Y-54-51640	• Holder	1	Y300001-
		20Y-53-11601	• Glass Assembly	1	Y300001-
4		20Y-53-11611	• • Glass	1	Y300001-
5		22B-54-15970	• • Retainer	2	Y300001-
6		22B-54-15980	• • Knob	2	Y300001-
7		08037-02512	• • Grommet	2	Y300001-
8		208-53-11860	• Trim	1	Y300001-
9		20Y-53-11940	• Seat	2	Y300001-
10		01023-20612	• Screw	4	Y300001-
11		20Y-53-11973	• Rubber	2	Y300001-
12		20Y-53-12892	• Rubber	4	Y300001-
13		22B-54-15841	• Lock Assembly	1	Y300001-
14		01435-40616	• Bolt	2	Y300001-
15		20Y-53-12611	• Seat	1	Y300001-
16		01023-20616	• Screw	2	Y300001-
17		20Y-53-12631	• Rail	1	Y300001-
18		01023-20616	• Screw	2	Y300001-
19		20U-54-25140	• Stopper	1	Y300001-

FIG. K1110-006004 Cab, Roof Window

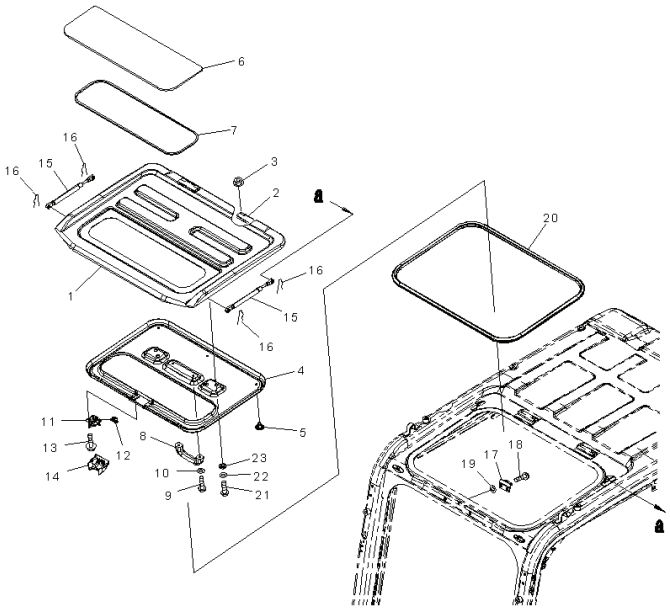

Index	Code	Part Number	Descreption	Qty	Serial Number
		206-53-00451	Cab Assembly	1	Y300001-
			With AM-FM Radio, 1-actuator		
1		20Y-53-11712	• Roof	1	Y300001-
2		20Y-53-11H71	• • Hinge	2	Y300001-
3		01584-30806	• Nut	4	Y300001-
4		20Y-53-11921	• Cover	1	Y300001-
5		09416-10200	• Button	5	Y300001-
6		20Y-53-11741	• Plate	1	Y300001-
7		20Y-53-11790	• Seal	1	Y300001-
8		20Y-54-14590	• Handle	1	Y300001-
9		01245-00616	• Screw, Hexagon Socket Head	2	Y300001-
10		01643-70623	• Washer	2	Y300001-
11		20Y-53-11721	• Lock	1	Y300001-
12		20Y-53-11781	• Knob	1	Y300001-
13		01435-40610	• Bolt	3	Y300001-
14		20Y-53-11931	• Cover	1	Y300001-
15		20Y-54-36342	• Gas Spring Assembly	2	Y300001-
16		04052-10833	• Pin, Snap	4	Y300001-
17		20Y-53-11771	• Striker	1	Y300001-
18		01245-00820	• Screw	2	Y300001-
19		20Y-54-52651	• Spacer	2	Y300001-
20		20Y-53-11861	• Seal	1	Y300001-
21		01245-00620	• Screw	4	Y300001-
22		01643-70623	• Washer	4	Y300001-
23		20Y-54-52651	• Spacer	4	Y300001-

FIG. K1110-006005A Cab, Door

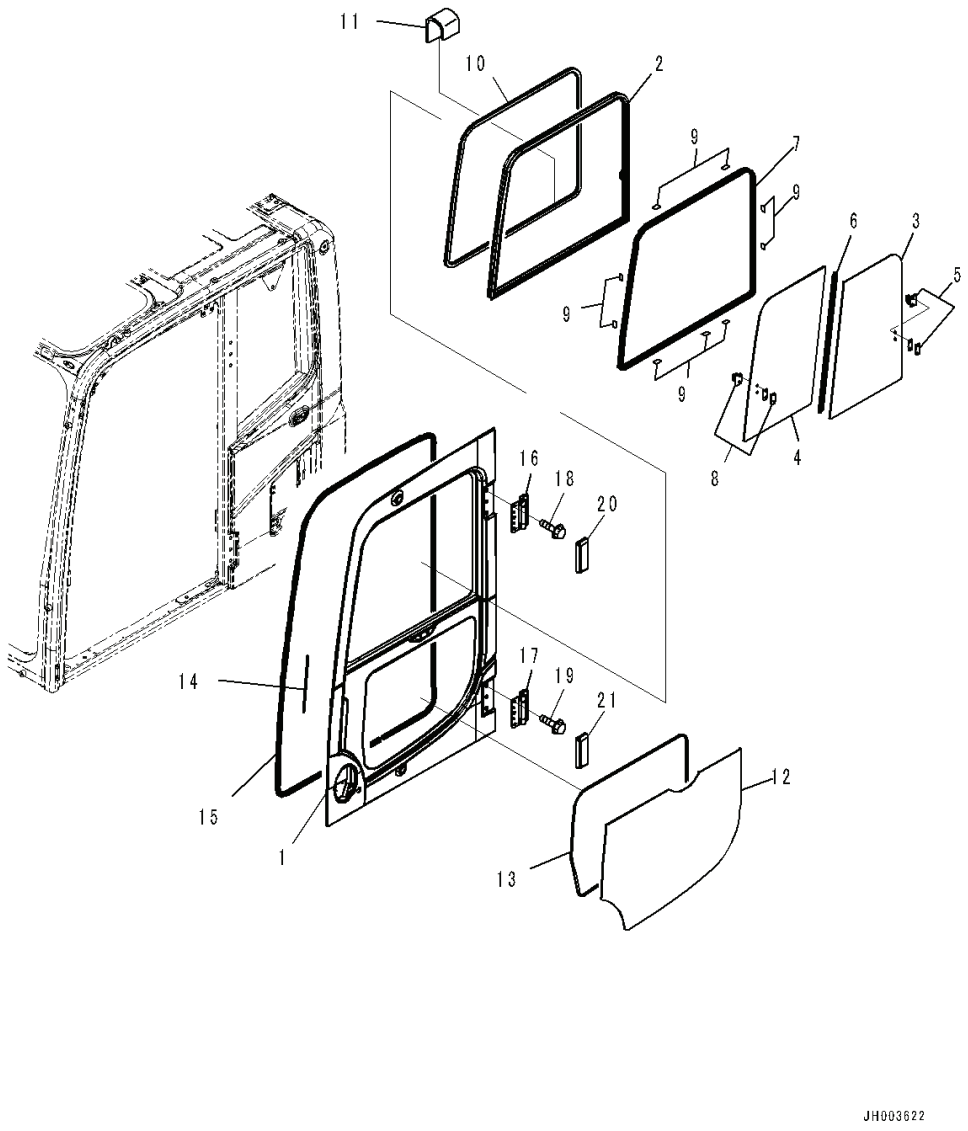

Index	Code	Part Number	Descreption	Qty	Serial Number
		206-53-00451	Cab Assembly	1	Y300001-
			1-actuator, For KOMTRAX		
		20Y-53-00072	• Door Assembly	1	Y300001-
1	C1		• • Door	1	Y300001-
		20Y-53-11402	• • Sash Assembly	1	Y300001-
2	C1		• • • Sash	1	Y300001-
3		20Y-53-12840	• • • Glass	1	Y300001-
4		20Y-53-12850	• • • Glass	1	Y300001-
5		20Y-54-52860	• • • Lock Assembly	1	Y300001-
6		20Y-53-12870	• • • Seal	1	Y300001-
7		20Y-53-12880	• • • Seal	1	Y300001-
8		20Y-54-13322	• • • Lock Assembly	1	Y300001-
9		20Y-53-12971	• • Seat	9	Y300001-
10		20Y-53-11470	• • Trim	1	Y300001-
11		20Y-53-13910	• • Cover	1	Y300001-
12		20Y-53-11451	• • Glass	1	Y300001-
13		20Y-53-11460	• • Seal	1	Y300001-
14		20Y-53-13880	• • Seal	1	Y300001-
15		20Y-53-11484	• • Weather Strip	1	Y300001-
16		20Y-53-11332	• • Hinge	1	Y300001-
17		20Y-53-11332	• • Hinge	1	Y300001-
18		01435-01220	• • Bolt	6	Y300001-
19		01435-01220	• • Bolt	6	Y300001-
20		20Y-53-11411	• • Cover	1	Y300001-
21		20Y-53-11421	• • Cover	1	Y300001-

PC300-8 (FEN01263-00)

FIG. K1110-006007 Cab, Open Lock and Door Catch

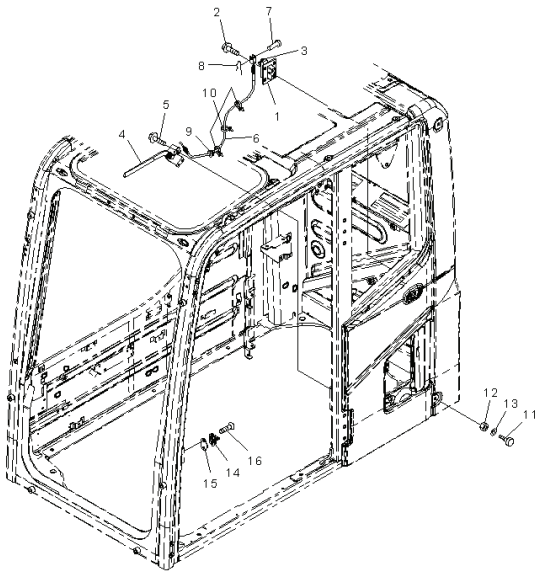

Index	Code	Part Number	Descreption	Qty	Serial Number
		206-53-00451	Cab Assembly	1	Y300001-
			With AM-FM Radio, 1-actuator		
1		20Y-53-11981	• Lock	1	Y300001-
2		01435-40825	• Bolt	4	Y300001-
3		20Y-53-12280	• Cover	1	Y300001-
4		208-53-14540	• Lever Assembly	1	Y300001-
5		01435-40616	• Bolt	3	Y300001-
6		20Y-53-11990	• Cable	1	Y300001-
7		04205-10520	• Pin	1	Y300001-
8		04052-10530	• Pin	1	Y300001-
9		08034-20414	• Band	1	Y300001-
10		08059-00413	• Clip	2	Y300001-
11		20Y-54-11611	• Stopper	2	Y300001-
12		01580-11008	• Nut	2	Y300001-
13		01643-31032	• Washer	2	Y300001-
14		20Y-53-11810	• Striker	1	Y300001-
15		20Y-53-11890	• Plate	1	Y300001-
16		01240-01025	• Screw	2	Y300001-

PC300-8 (FEN01263-00)

FIG. K1110-006008 Cab, Wiper and Room Lamp

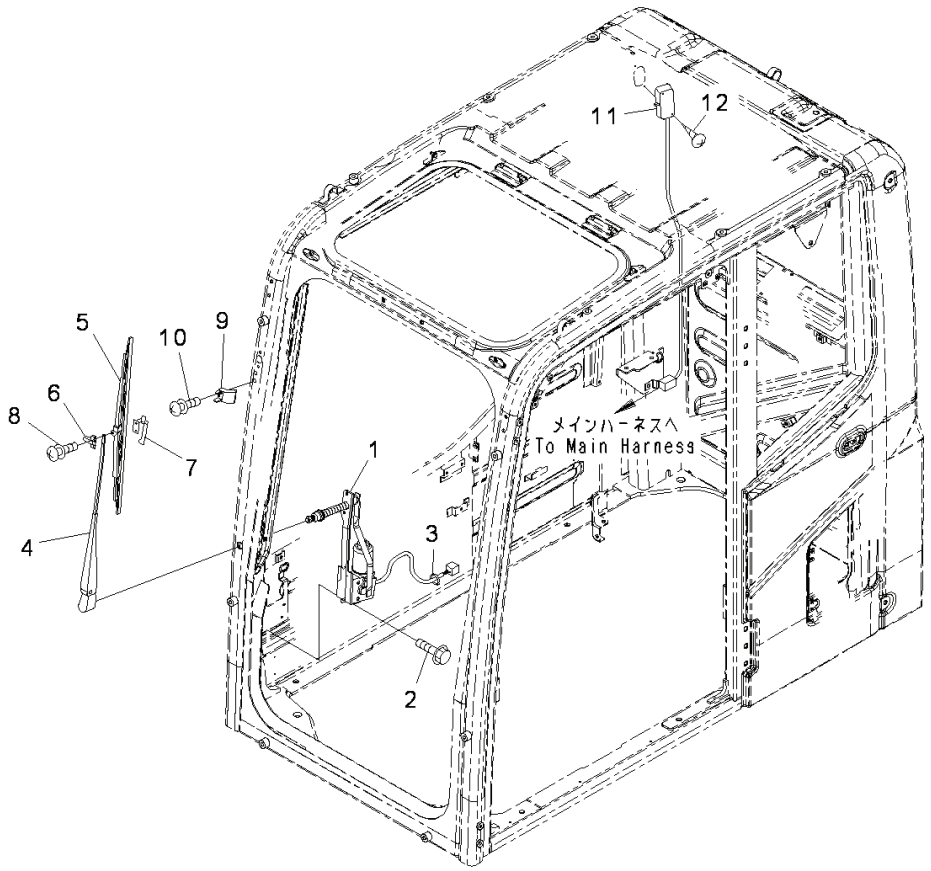

Index	Code	Part Number	Descreption	Qty	Serial Number
		206-53-00063	Cab Assembly	1	Y300001-
1		20Y-54-52211	• Wiper Motor Assembly	1	Y300001-
2		01435-00616	• Bolt	6	Y300001-
3		08034-20414	• Band	1	Y300001-
		20Y-54-52221	• Wiper Assembly	1	Y300001-
4		20Y-54-52350	• • Arm	1	Y300001-
5		20Y-54-39450	• • Wiper Blade	1	Y300001-
6		20Y-54-39460	• • Slider	1	Y300001-
7		20Y-54-39480	• • Plate	1	Y300001-
8		ND979007-2350	• • Screw and Washer	2	Y300001-
9		20Y-53-12232	• Stopper	1	Y300001-
10		01023-20620	• Screw	2	Y300001-
11		20Y-53-12790	• Light	1	Y300001-
		08116-02410	• • Bulb, 10watt	1	Y300001-
12		01370-00420	• Screw	2	Y300001-

PC300-8 (FEN01263-00)

FIG. K1110-006012 Cab, Pressure Valve and Grip

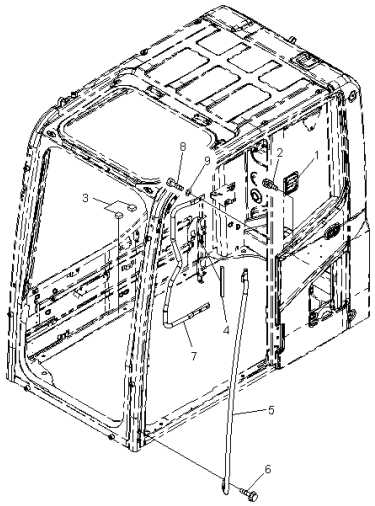

Index	Code	Part Number	Descreption	Qty	Serial Number
		206-53-00451	Cab Assembly With AM-FM Radio, 1-actuator	1	Y300001-
1		20Y-53-11961	• Valve Assembly	1	Y300001-
2		01023-60512	• Screw	4	Y300001-
3		20Y-53-13490	• Rubber	2	Y300001-
4		20Y-53-12591	• Seal	1	Y300001-
5		20Y-53-11821	• Grip	1	Y300001-
6		01435-40825	• Bolt	4	Y300001-
7		20Y-53-11831	• Grip	1	Y300001-
8		01010-D1025	• Bolt	3	Y300001-
9		01643-71032	• Washer	3	Y300001-

FIG. K1110-006013 Cab, Plug bolt

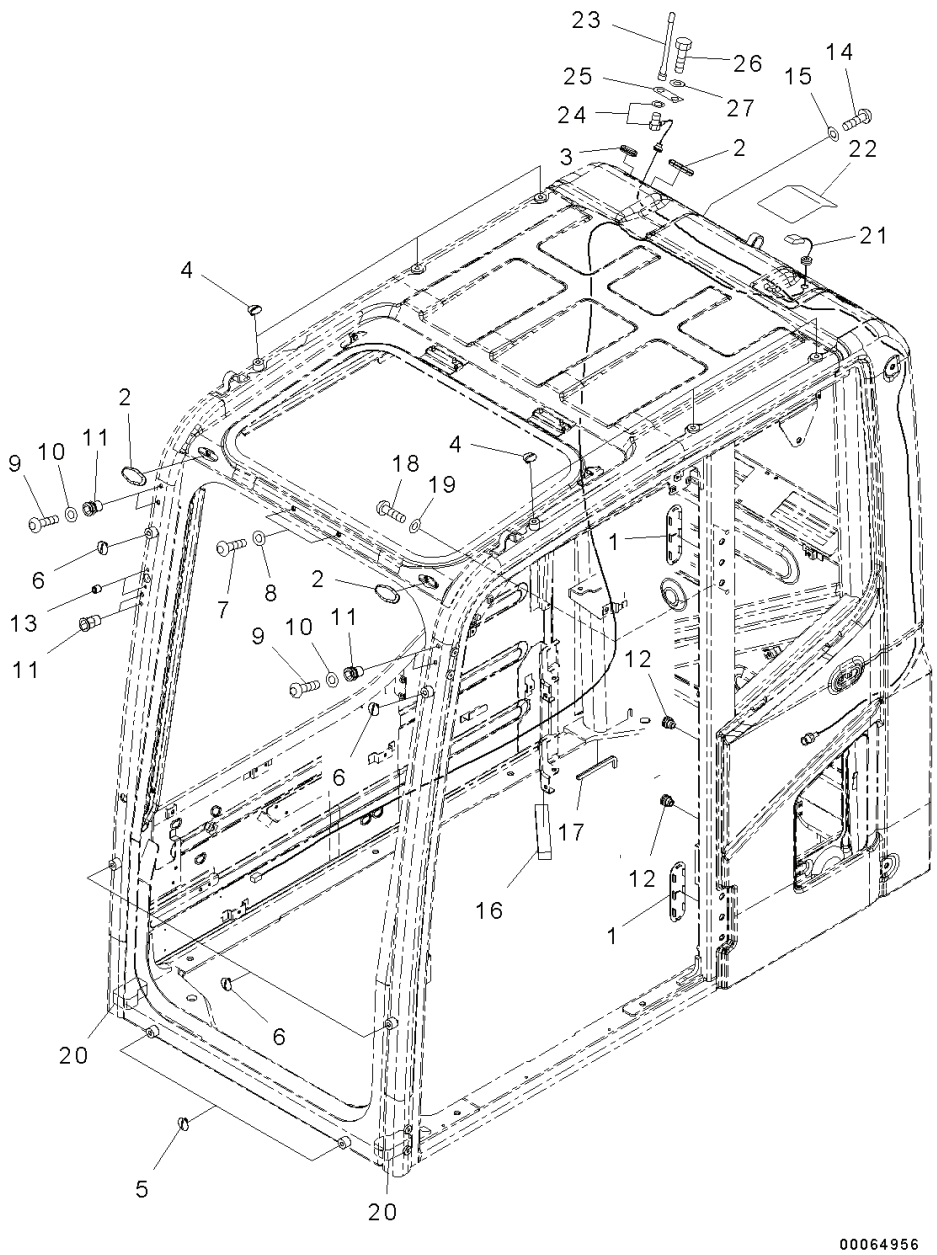

Index	Code	Part Number	Descreption	Qty	Serial Number
		206-53-00451	Cab Assembly With AM-FM Radio, 1-actuator	1	Y300001-
1		20Y-53-12960	• Cover	2	Y300001-
2		22B-54-17282	• Cap	3	Y300001-
3		09415-02512	• Cap	1	Y300001-
4		20Y-53-11390	• Cap	6	Y300001-
5		20Y-53-11390	• Cap	2	Y300001-
6		20Y-53-11380	• Cap	4	Y300001-
7		01245-01016	• Screw	2	Y300001-
8		01643-71032	• Washer	2	Y300001-
9		01245-00616	• Screw, Hexagon Socket Head	4	Y300001-
10		01643-70623	• Washer	4	Y300001-
11		20Y-53-12260	• Nut	6	Y300001-
12		20Y-54-35451	• Nut	2	Y300001-
13		20Y-53-12320	• Nut	2	Y300001-
14		01245-01016	• Screw	1	Y300001-
15		01643-71032	• Washer	1	Y300001-
16		20Y-53-12580	• Seal	1	Y300001-
17		20Y-53-12740	• Trim	1	Y300001-
18		01245-00816	• Screw	2	Y300001-
19		01643-70823	• Washer	2	Y300001-
20		20Y-53-18880	• Seal	2	Y300001-
21		8A13-10-4300	• Antenna	1	Y300001-
22		20Y-53-12951	• Cover	1	Y300001-
23		8A13-10-2100	• Antenna	1	Y300001-
24		8A13-10-2200	• Cable	1	Y300001-
25		20Y-53-15140	• Plate	1	Y300001-
26		01010-D1225	• Bolt	1	Y300001-
27		01643-71232	• Washer	1	Y300001-

PC300-8 (FEN01263-00)

FIG. K1110-006018 Cab, Air Conditioner Duct

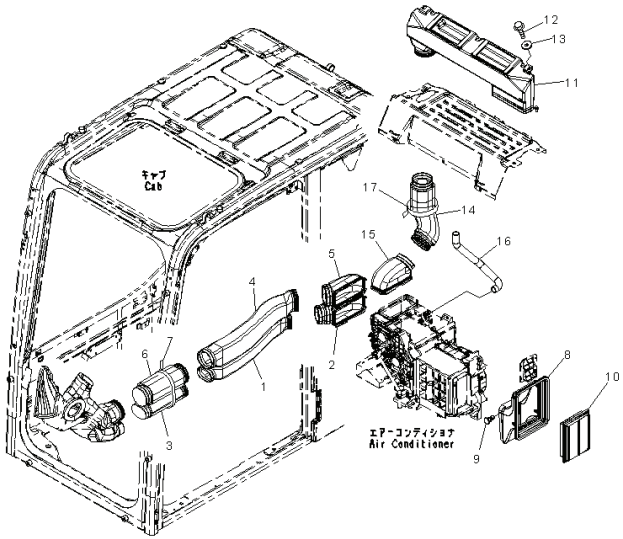

Index	Code	Part Number	Descreption	Qty	Serial Number
1		20Y-53-13311	Duct	1	Y300001-
2		20Y-53-13331	Duct	1	Y300001-
3		20Y-53-13351	Duct	1	Y300001-
4		20Y-53-13321	Duct	1	Y300001-
5		20Y-53-13341	Duct	1	Y300001-
6		20Y-53-13361	Duct	1	Y300001-
7		08034-20876	Band	1	Y300001-
8		20Y-53-12522	Duct	1	Y300001-
9		208-53-12680	Clip	1	Y300001-
10		17M-911-3530	Element	1	Y300001-
11		20Y-53-13451	Duct	1	Y300001-
12		01435-40616	Bolt	2	Y300001-
13		20Y-53-12310	Collar	2	Y300001-
14		20Y-53-13461	Duct	1	Y300001-
15		208-53-12120	Duct	1	Y300001-
16		208-53-12432	Hose	1	Y300001-
17		08034-20876	Band	1	Y300001-

PC300-8 (FEN01263-00)

FIG. K1110-006019 Cab, Cab In Parts, Partition and Filter, With Air Conditioner

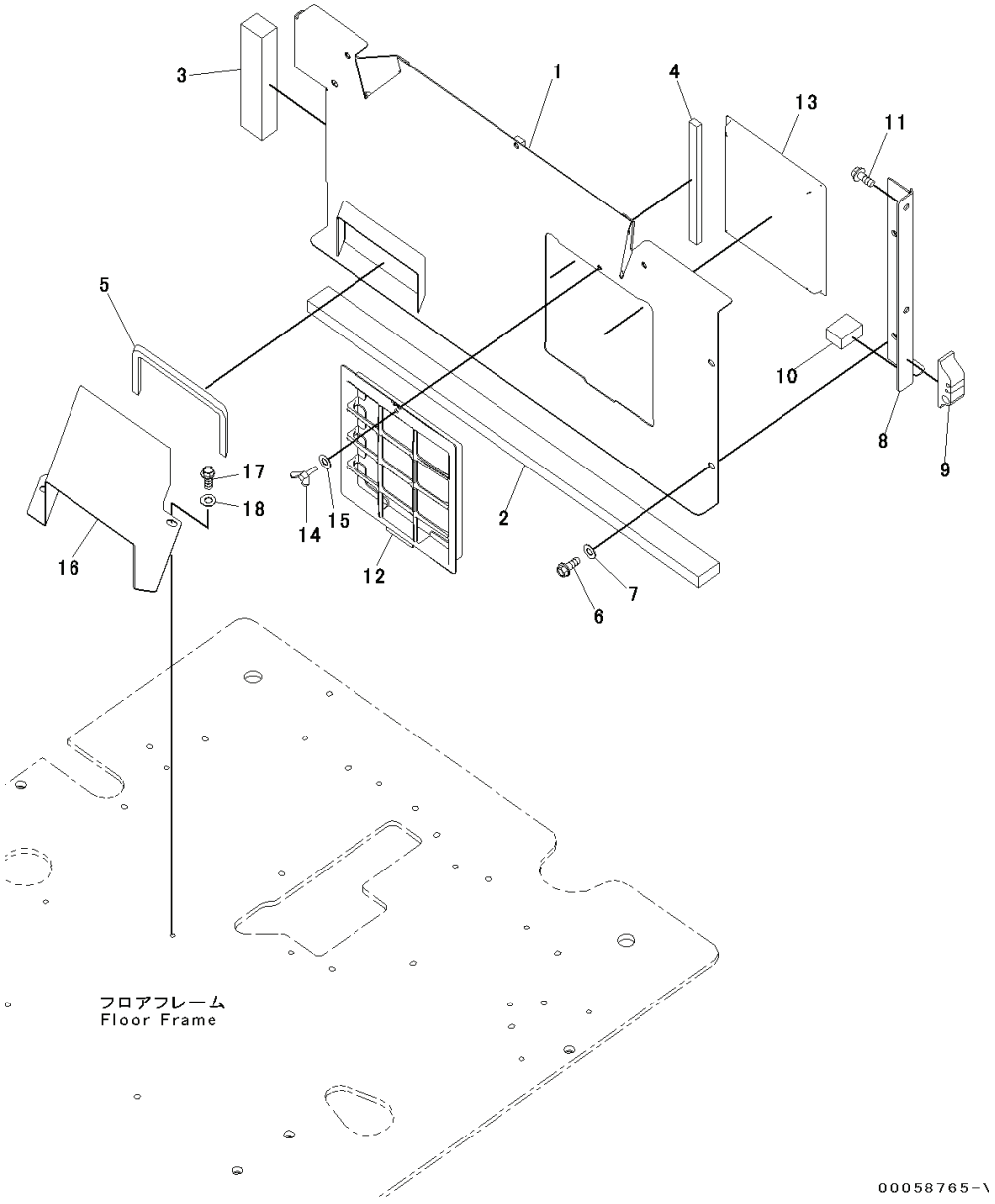

Index	Code	Part Number	Descreption	Qty	Serial Number
		Note: This list covers following specifications. With AM-FM Radio 1-actuator,			
1		20Y-53-12564	Bracket	1	Y300001-
2		20Y-53-11870	Seal	1	Y300001-
3		20Y-53-11880	Seal	1	Y300001-
4		208-53-11890	Seal	1	Y300001-
5		208-53-12230	Seal	1	Y300001-
6		01435-40820	Bolt	3	Y300001-
7		418-54-35450	Washer	3	Y300001-
8		20Y-53-12781	Plate	1	Y300001-
9		20Y-53-12751	Seal	1	Y300001-
10		20Y-53-12760	Seal	1	Y300001-
11		01435-40820	Bolt	2	Y300001-
12		208-979-7530	Holder	1	Y300001-
13		208-979-7620	Filter	1	Y300001-
14		20Y-54-65790	Bolt	1	Y300001-
15		20Y-54-65690	Washer	1	Y300001-
16		208-53-12551	Duct	1	Y300001-
17		01010-D0820	Bolt	2	Y300001-
18		01643-70823	Washer	2	Y300001-

PC300-8 (FEN01263-00)

FIG. K1110-006023 Cab, Cab In Parts, Rear Cover

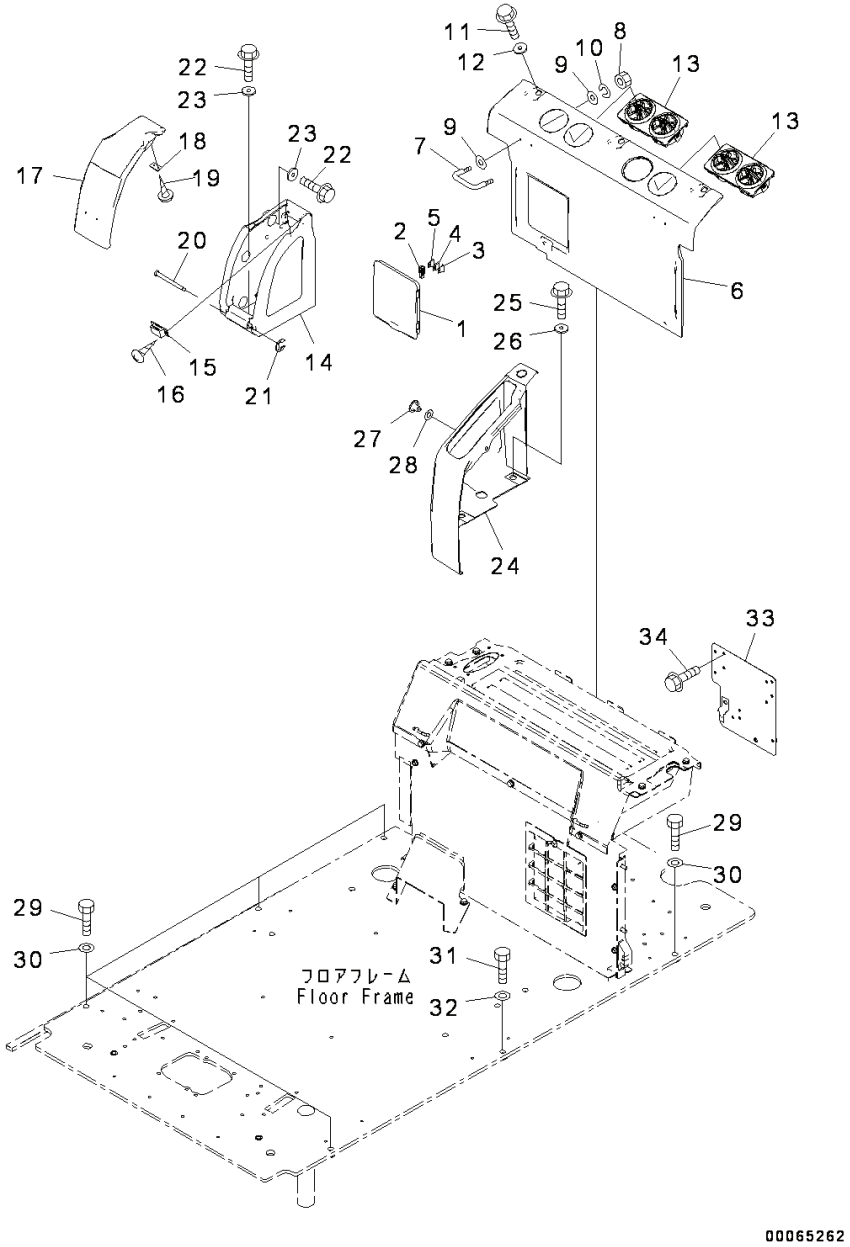

Index	Code	Part Number	Descreption	Qty	Serial Number
		20Y-53-13631	Cover Assembly	1	Y300001-
1	C1		• Cover	1	Y300001-
2		22U-43-22340	• Puller	1	Y300001-
3		08041-01000	• Fuse, 10Amp.	1	Y300001-
4		08041-02000	• Fuse, 20Amp.	1	Y300001-
5		08041-03000	• Fuse, 30Amp.	1	Y300001-
6		20Y-53-12371	Cover	1	Y300001-
7		208-53-12290	• Hook	2	Y300001-
8		01580-10403	• Nut	4	Y300001-
9		01640-20408	• Washer, Flat	8	Y300001-
10		01601-20410	• Washer	4	Y300001-
11		01435-40616	Bolt	3	Y300001-
12		20Y-53-12310	Collar	3	Y300001-
13		208-979-7560	Grille	2	Y300001-
14		20Y-53-12381	Cover	1	Y300001-
15		09452-14503	Catcher	1	Y300001-
16		01370-10308	Screw	2	Y300001-
17		20Y-53-12391	Cover	1	Y300001-
18		208-53-12410	Plate	1	Y300001-
19		01370-20308	Screw	2	Y300001-
20		208-53-12320	Pin	1	Y300001-
21		208-53-12330	Ring	1	Y300001-
22		01435-40616	Bolt	5	Y300001-
23		20Y-53-12310	Collar	5	Y300001-
24		20Y-53-12731	Cover	1	Y300001-
25		01435-40620	Bolt	2	Y300001-
26		20Y-53-12310	Collar	2	Y300001-
27		23D-950-4450	Button	1	Y300001-
28		20Y-53-12860	Spacer	1	Y300001-
29		01010-81245	Bolt	5	Y300001-
30		01643-31232	Washer	5	Y300001-
31		208-53-23221	Bolt	1	Y300001-
32		01643-31232	Washer	1	Y300001-
33		20Y-53-18221	Bracket	1	Y300001-
34		01435-00612	Bolt	4	Y300001-

PC300-8 (FEN01263-00)

FIG. K1110-006033 Cab, Window Washer Hoses

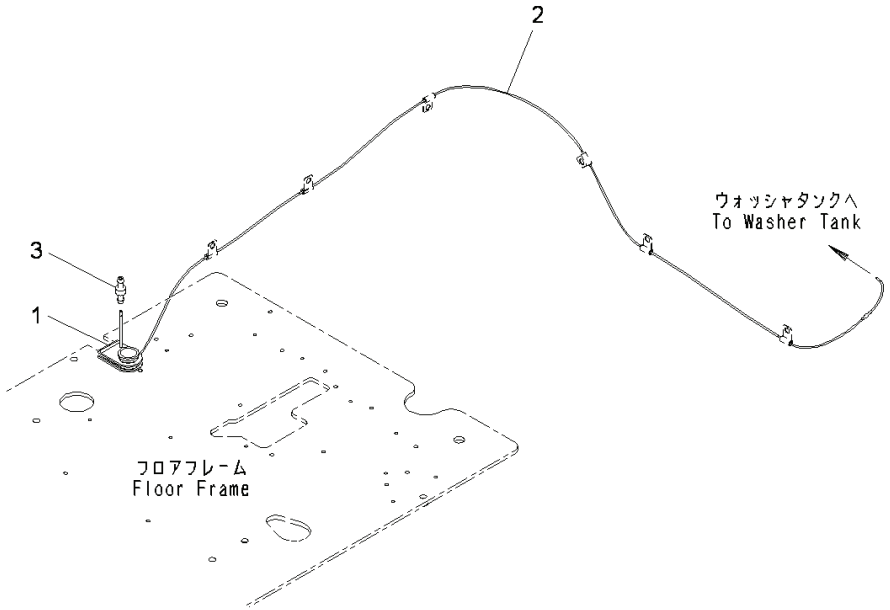

Index	Code	Part Number	Descreption	Qty	Serial Number
1		20Y-53-14991	Grommet	1	Y300001-
2		195-979-8580	Hose	1	Y300001-
3		207-06-61490	Valve	1	Y300001-

PC300-8 (FEN01263-00)

FIG. K1110-005037A Cab, Floor, Console, LHS

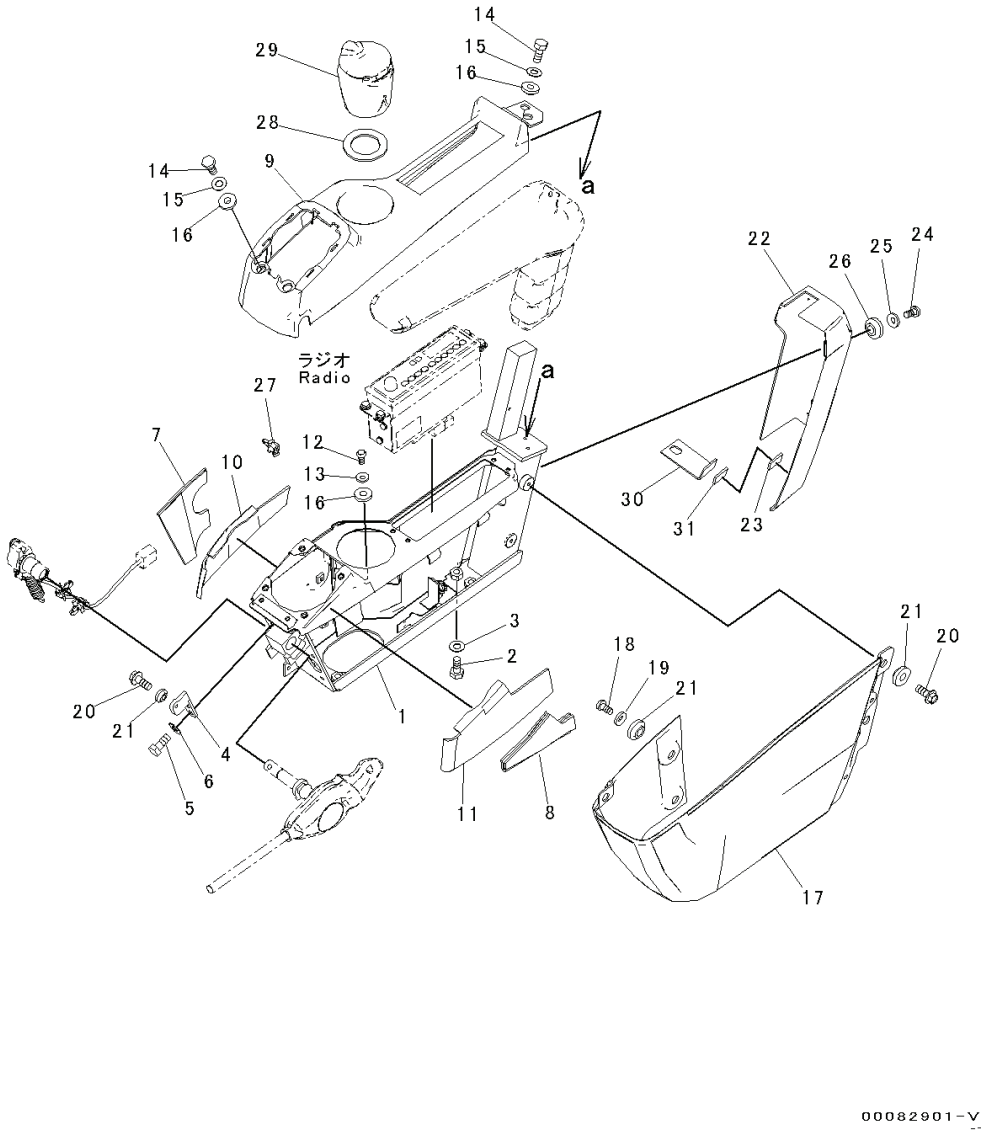

Index	Code	Part Number	Descreption	Qty	Serial Number
1		20Y-43-41416	Frame	1	Y300001-
2		01010-81030	Bolt	4	Y300001-
3		01643-31032	Washer	4	Y300001-
4		20Y-43-41472	Bracket	1	Y300001-
5		01010-80616	Bolt	2	Y300001-
6		01643-30623	Washer	2	Y300001-
7		20Y-43-41621	Sheet	1	Y300001-
8		20Y-43-41641	Sheet	1	Y300001-
9		20Y-43-41423	Cover	1	Y300001-
10		20Y-43-41651	Sheet	1	Y300001-
11		20Y-43-41661	Sheet	1	Y300001-
12		01245-00616	Screw, Hexagon Socket Head	1	Y300001-
13		01643-70623	Washer	1	Y300001-
14		01010-80616	Bolt	4	Y300001-
15		01643-30623	Washer	4	Y300001-
16		20Y-43-41290	Collar	5	Y300001-
17		20Y-43-41442	Cover	1	Y300001-
18		01245-00616	Screw, Hexagon Socket Head	2	Y300001-
19		01643-70623	Washer	2	Y300001-
20		01435-00612	Bolt	3	Y300001-
21		20Y-43-41290	Collar	5	Y300001-
		20Y-43-42450	Cover	1	Y300001-
22	C1		• Cover	1	Y300001-
23		20Y-43-42170	• Tape	1	Y300001-
24		01245-00616	Screw, Hexagon Socket Head	2	Y300001-
25		01643-70623	Washer	2	Y300001-
26		20Y-43-41290	Collar	2	Y300001-
27		22U-43-23260	Clip	1	Y300001-
28		20Y-43-41970	Sheet	1	Y300001-
29		20Y-43-41491	Ashtray	1	Y300001-
30		20Y-43-41981	Bracket	1	Y300001-
31		20Y-43-42180	• Tape	1	Y300001-

PC300-8 (FEN01263-00)

FIG. K1110-006038 Cab, Floor, P.P.C. Lock Lever and Radio

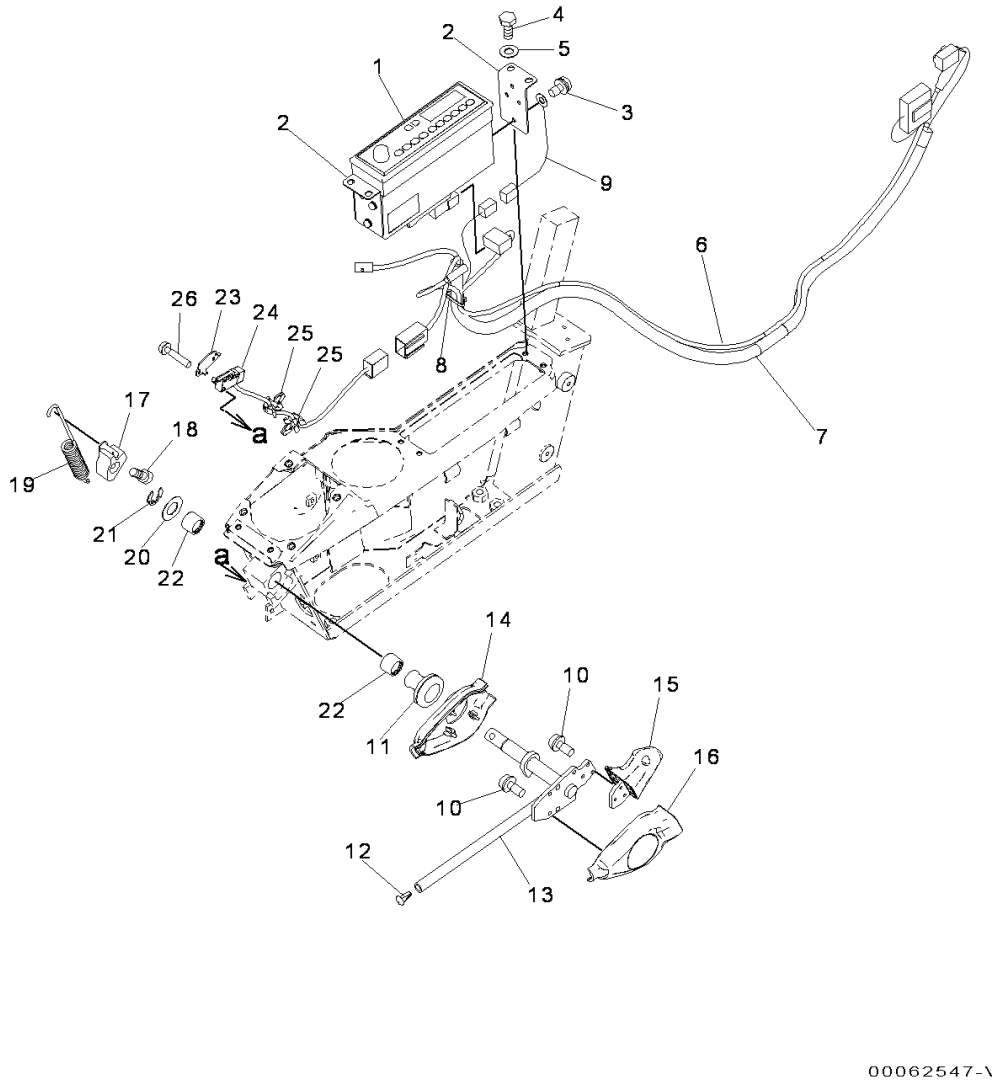

Index	Code	Part Number	Descreption	Qty	Serial Number
1		20Y-06-42430	Radio	1	Y300001-
2		20Y-43-42130	Plate	2	Y300001-
3		01023-60510	Screw	6	Y300001-
4		01010-80616	Bolt	4	Y300001-
5		01643-30623	Washer	4	Y300001-
6		08912-51600	Cord	1	Y300001-
7		21M-06-31170	Wiring Harness	1	Y300001-
8		08034-20414	Band	1	Y300001-
9		20Y-06-41830	Wiring Harness	1	Y300001-
10		01023-60410	Screw	6	Y300001-
11		08037-11425	Grommet	1	Y300001-
12		208-53-12280	Cap	1	Y300001-
13		20Y-43-31513	Lever	1	Y300001-
14		20Y-43-31522	Cover	1	Y300001-
15		20Y-43-31611	Knob	1	Y300001-
16		20Y-43-31621	Cover	1	Y300001-
17		20Y-43-31432	Cam	1	Y300001-
18		01252-70816	Bolt	1	Y300001-
19		20Y-43-31421	Spring	1	Y300001-
20		20Y-43-31440	Ring	1	Y300001-
21		20Y-43-31450	Plate	1	Y300001-
22		06124-01616	Bearing	2	Y300001-
23		22U-06-22490	Plate	1	Y300001-
24		22U-06-22360	Switch Assembly	1	Y300001-
25		22U-43-23260	Clip	2	Y300001-
26		01023-60320	Screw	2	Y300001-

PC300-8 (FEN01263-00)

FIG. K1110-006039 Cab, Arm Rest (1/2)

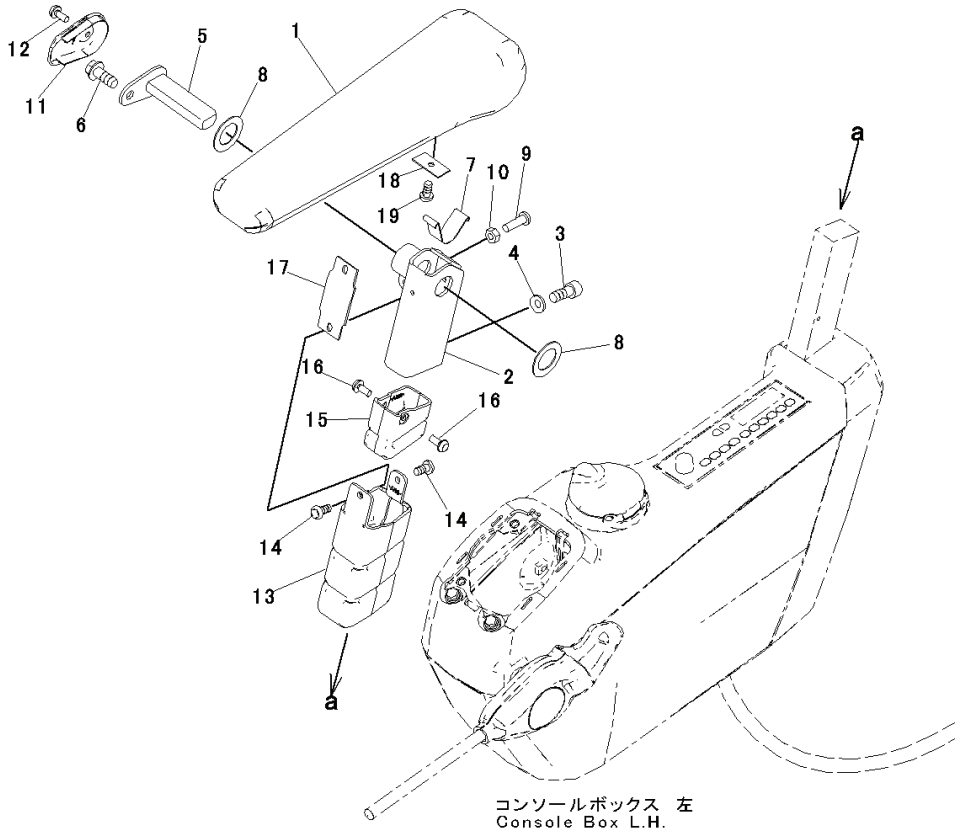

Index	Code	Part Number	Descreption	Qty	Serial Number
1		20Y-43-41143	Armrest	1	Y300001-
2		20Y-43-41173	Bracket	1	Y300001-
3		01252-80820	Bolt	2	Y300001-
4		01643-70823	Washer	2	Y300001-
5		20Y-43-41162	Pin	1	Y300001-
6		01435-40816	Bolt	1	Y300001-
7		20Y-43-41152	Spring	1	Y300001-
8		437-40-26240	Washer	2	Y300001-
9		01245-00620	Screw	1	Y300001-
10		01580-40605	Nut	1	Y300001-
11		20Y-43-41181	Cap	1	Y300001-
12		01023-20512	Screw	1	Y300001-
13		20Y-43-41191	Cover	1	Y300001-
14		01370-40510	Screw	2	Y300001-
15		20Y-43-41591	Cover	1	Y300001-
16		01023-20512	Screw	2	Y300001-
17		20Y-43-41281	Rubber	1	Y300001-
18		20Y-43-41461	Plate	1	Y300001-
19		01370-40610	Screw	1	Y300001-

FIG. K1110-007008 Cab, Wiper and Room Lamp

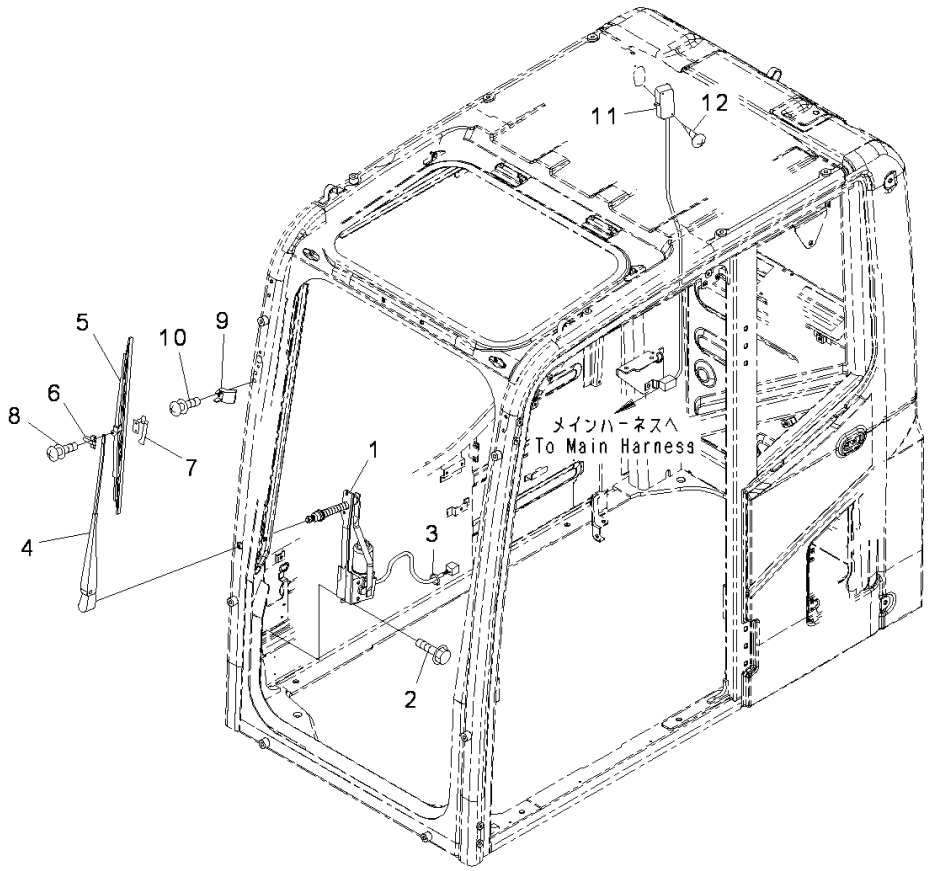

Index	Code	Part Number	Descreption	Qty	Serial Number
		206-53-00451	Cab Assembly ..... With AM-FM Radio, 1-actuator	1	Y300001-
1		20Y-54-52211	• Wiper Motor Assembly	1	Y300001-
2		01435-00616	• Bolt	6	Y300001-
3		08034-20414	• Band	1	Y300001-
		20Y-54-52221	• Wiper Assembly	1	Y300001-
4		20Y-54-52350	• • Arm	1	Y300001-
5		20Y-54-39450	• • Wiper Blade	1	Y300001-
6		20Y-54-39460	• • Slider	1	Y300001-
7		20Y-54-39480	• • Plate	1	Y300001-
8		ND949007-2350	• • Screw and Washer	2	Y300001-
9		20Y-53-12232	• Stopper	1	Y300001-
10		01023-20620	• Screw	2	Y300001-
11		20Y-53-12790	• Light	1	Y300001-
		08116-02410	• • Bulb, 10watt	1	Y300001-
12		01370-00420	• Screw	2	Y300001-

PC300-8 (FEN01263-00)

FIG. K1110-007013 Cab, Vandalism Protection, Plug Bolt

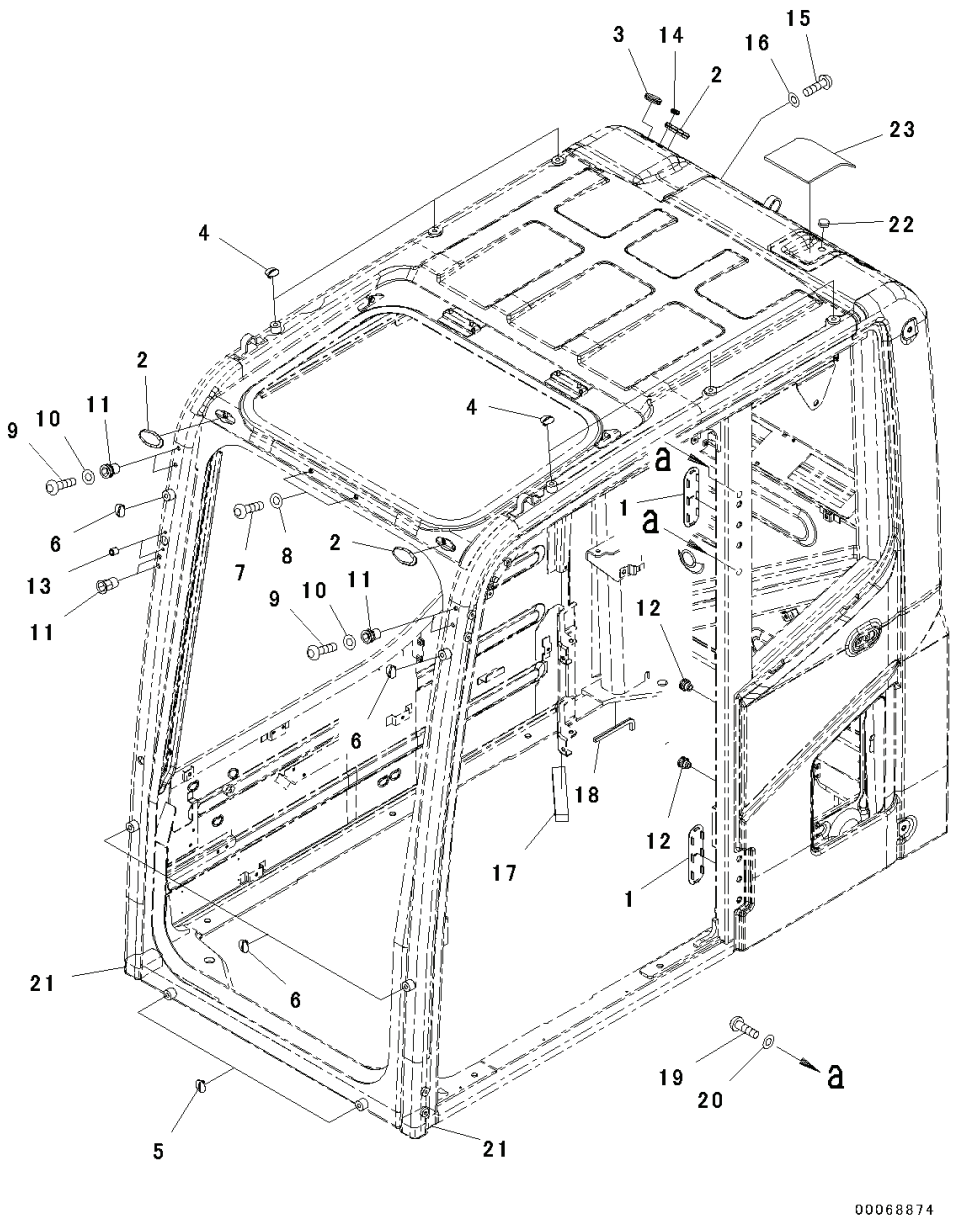

Index	Code	Part Number	Descreption	Qty	Serial Number
		206-53-00150	Cab Assembly	1	Y300001-
1		20Y-53-12960	• Cover	2	Y300001-
2		22B-54-17282	• Cap	3	Y300001-
3		09415-02512	• Cap	1	Y300001-
4		20Y-53-11390	• Cap	6	Y300001-
5		20Y-53-11390	• Cap	2	Y300001-
6		20Y-53-11380	• Cap	4	Y300001-
7		01245-01016	• Screw	2	Y300001-
8		01643-71032	• Washer	2	Y300001-
9		01245-00616	• Screw, Hexagon Socket Head	4	Y300001-
10		01643-70623	• Washer	4	Y300001-
11		20Y-53-12260	• Nut	6	Y300001-
12		20Y-54-35451	• Nut	2	Y300001-
13		20Y-53-12320	• Nut	2	Y300001-
14		09415-01008	• Cap	1	Y300001-
15		01245-01016	• Screw	1	Y300001-
16		01643-71032	• Washer	1	Y300001-
17		20Y-53-12580	• Seal	1	Y300001-
18		20Y-53-12740	• Trim	1	Y300001-
19		01245-00816	• Screw	2	Y300001-
20		01643-70823	• Washer	2	Y300001-
21		20Y-53-18880	• Seal	2	Y300001-
22		09415-01008	• Cap	1	Y300001-
23		20Y-53-12951	• Cover	1	Y300001-

PC300-8 (FEN01263-00)

FIG. K1110-007018 Cab, Cab In Parts, Air Conditioner Duct

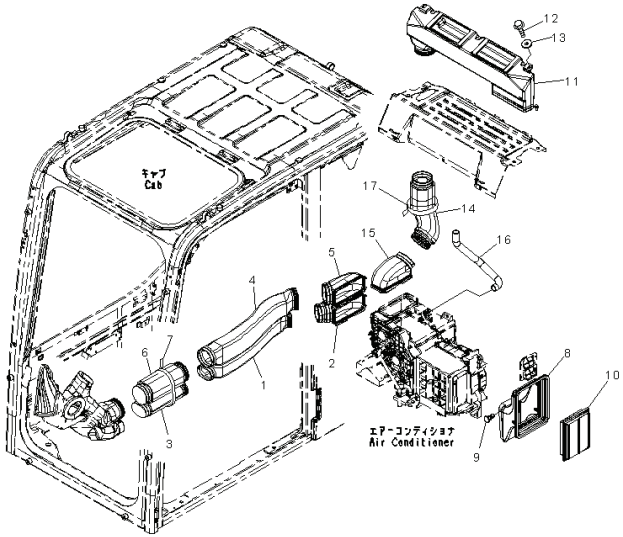

Index	Code	Part Number	Descreption	Qty	Serial Number
1		20Y-53-13311	Duct	1	Y300001-
2		20Y-53-13331	Duct	1	Y300001-
3		20Y-53-13351	Duct	1	Y300001-
4		20Y-53-13321	Duct	1	Y300001-
5		20Y-53-13341	Duct	1	Y300001-
6		20Y-53-13361	Duct	1	Y300001-
7		08034-20876	Band	1	Y300001-
8		20Y-53-12522	Duct	1	Y300001-
9		208-53-12680	Clip	1	Y300001-
10		17M-911-3530	Element	1	Y300001-
11		20Y-53-13451	Duct	1	Y300001-
12		01435-40616	Bolt	2	Y300001-
13		20Y-53-12310	Collar	2	Y300001-
14		20Y-53-13461	Duct	1	Y300001-
15		208-53-12120	Duct	1	Y300001-
16		208-53-12432	Hose	1	Y300001-
17		08034-20876	Band	1	Y300001-

PC300-8 (FEN01263-00)

FIG. K1110-008012 Cab, Pressure Valve and Grip

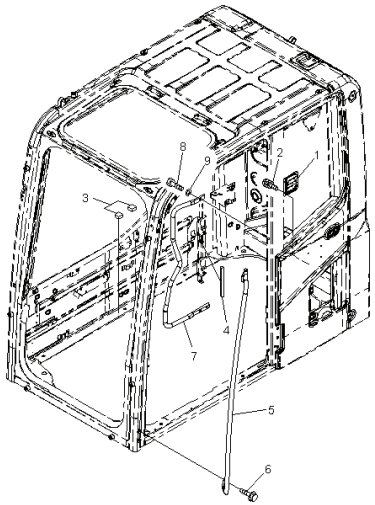

Index	Code	Part Number	Descreption	Qty	Serial Number
		206-53-00451	Cab Assembly	1	Y300001-
			1-actuator, With AM-FM Radio		
1		20Y-53-11961	• Valve Assembly	1	Y300001-
2		01023-60512	• Screw	4	Y300001-
3		20Y-53-13490	• Rubber	2	Y300001-
4		20Y-53-12591	• Seal	1	Y300001-
5		20Y-53-11821	• Grip	1	Y300001-
6		01435-40825	• Bolt	4	Y300001-
7		20Y-53-11831	• Grip	1	Y300001-
8		01010-D1025	• Bolt	3	Y300001-
9		01643-71032	• Washer	3	Y300001-

FIG. K1110-008038 Cab, Floor, P.P.C. Lock Lever and Radio

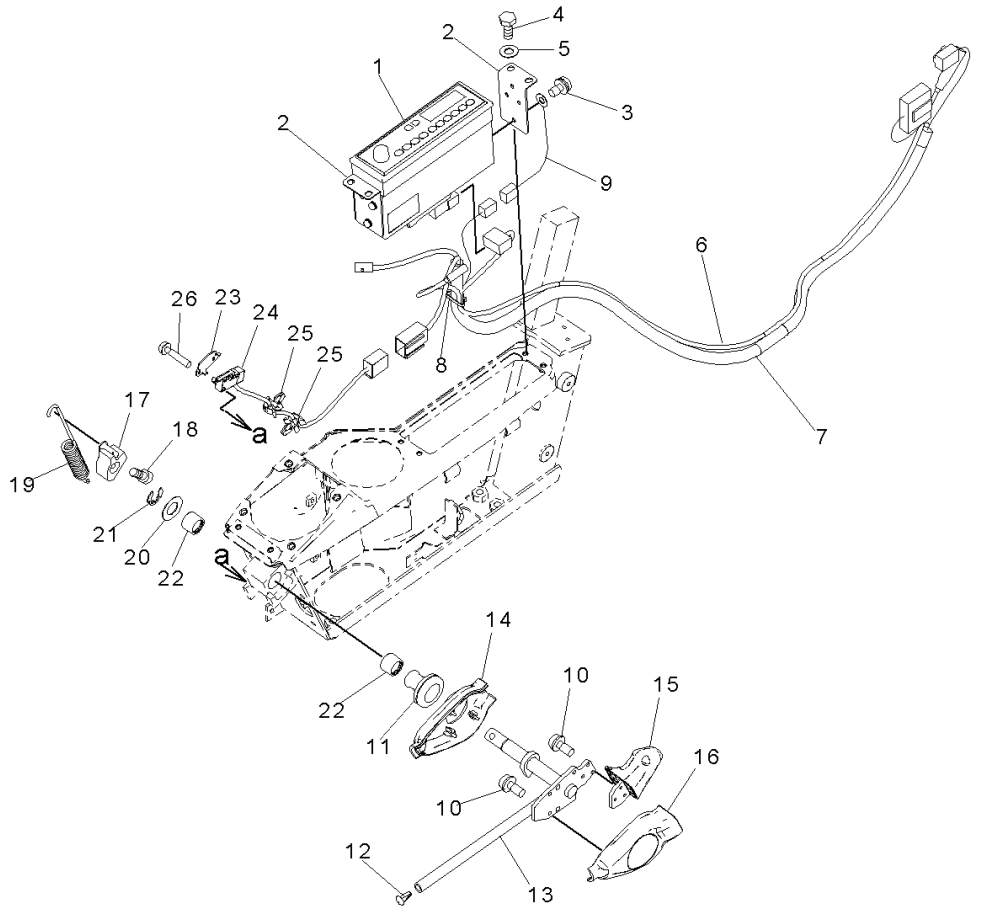

Index	Code	Part Number	Descreption	Qty	Serial Number
1		20Y-06-41238	Radio	1	Y300001-
2		20Y-43-42130	Plate	2	Y300001-
3		01023-60510	Screw	6	Y300001-
4		01010-80616	Bolt	4	Y300001-
5		01643-30623	Washer	4	Y300001-
6		08912-51600	Cord	1	Y300001-
7		20Y-06-41121	Wiring Harness	1	Y300001-
8		08034-20414	Band	1	Y300001-
9		20Y-06-41830	Wiring Harness	1	Y300001-
10		01023-60410	Screw	6	Y300001-
11		08037-11425	Grommet	1	Y300001-
12		208-53-12280	Cap	1	Y300001-
13		20Y-43-31513	Lever	1	Y300001-
14		20Y-43-31522	Cover	1	Y300001-
15		20Y-43-31611	Knob	1	Y300001-
16		20Y-43-31621	Cover	1	Y300001-
17		20Y-43-31432	Cam	1	Y300001-
18		01252-70816	Bolt	1	Y300001-
19		20Y-43-31421	Spring	1	Y300001-
20		20Y-43-31440	Ring	1	Y300001-
21		20Y-43-31450	Plate	1	Y300001-
22		06124-01616	Bearing	2	Y300001-
23		22U-06-22490	Plate	1	Y300001-
24		22U-06-22360	Switch Assembly	1	Y300001-
25		22U-43-23260	Clip	2	Y300001-
26		01023-60320	Screw	2	Y300001-

PC300-8 (FEN01263-00)

FIG. K1110-008045 Cab, Floor, Air Conditioner

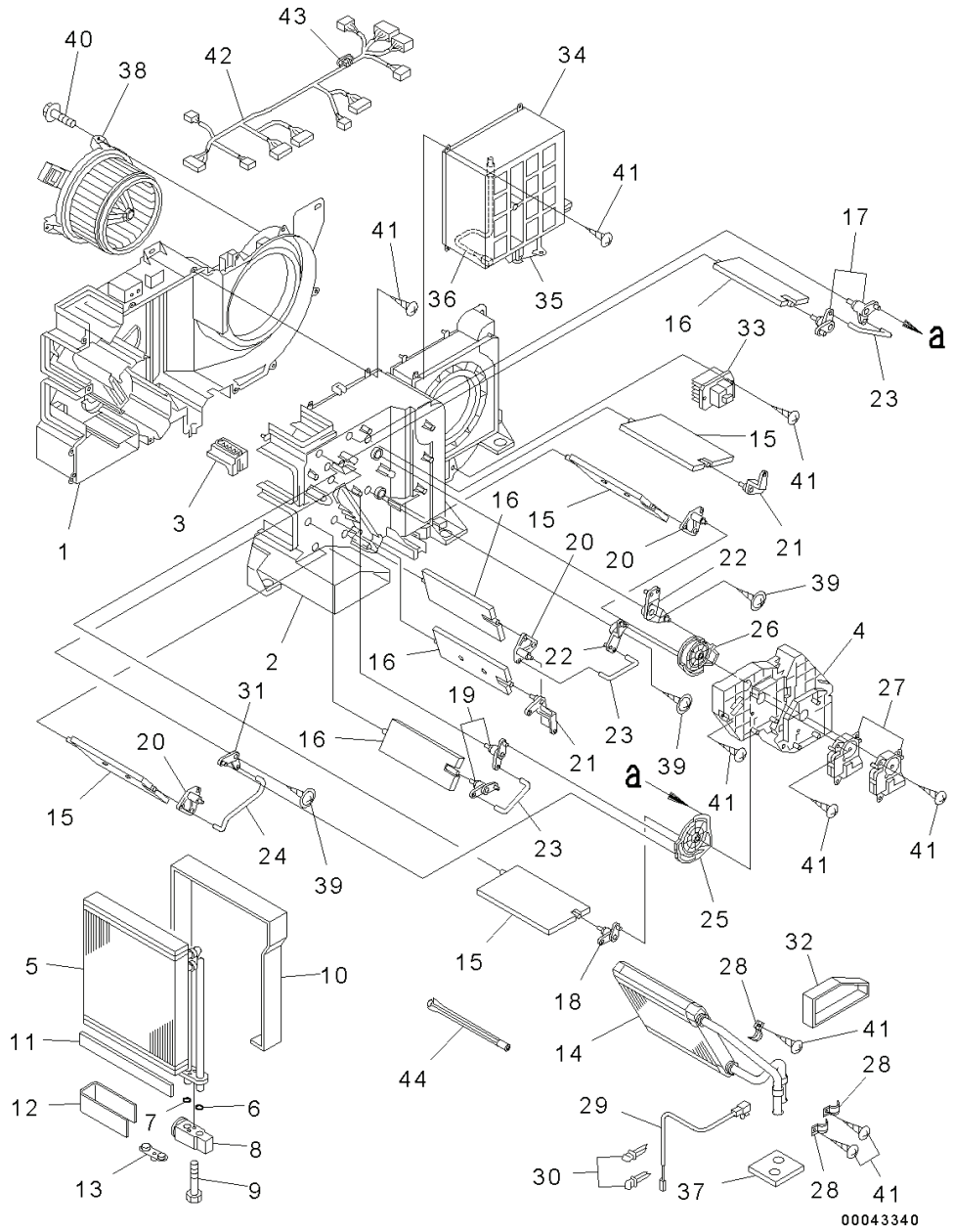

PC300-8 (FEN01263-00)

Index	Code	Part Number	Descreption	Qty	Serial Number
		20Y-810-1211	Air Conditioner Assembly	1	Y300001-
1		ND245450-5831	• Case, Cooling, COOLING	1	Y300001-
2		ND245450-5840	• Case, Cooling, COOLING	1	Y300001-
3		ND116576-3810	• Plate	1	Y300001-
4		ND116576-3820	• Plate	1	Y300001-
		ND446010-3132	• Evaporator, PART	1	Y300001-
5		ND446600-0991	• • Evaporator Assembly	1	Y300001-
6		ND949142-0020	• • O-ring	1	Y300001-
7		ND949142-0030	• • O-ring	1	Y300001-
8		ND447500-2750	• • Valve, EXPANSION	1	Y300001-
9		ND949046-3100	• • Bolt	2	Y300001-
10		ND146657-8841	• • Packing	1	Y300001-
11		ND146657-9811	• • Packing	3	Y300001-
12		ND146657-8850	• • Packing	1	Y300001-
13		ND445021-3941	• • Plug	1	Y300001-
14		ND116140-0050	• Core Subassembly, Heater, HEATER	1	Y300001-
15		ND116660-7570	• Door Assembly	4	Y300001-
16		ND116650-6850	• Door Assembly	4	Y300001-
17		ND116780-2481	• Lever Subassembly, Link, LINK	2	Y300001-
18		ND116780-2491	• Lever Subassembly, Link, LINK	1	Y300001-
19		ND116780-2501	• Lever Subassembly, Link, LINK	2	Y300001-
20		ND116780-2510	• Lever Subassembly, Link, LINK	3	Y300001-
21		ND116781-3000	• Lever	2	Y300001-
22		ND116780-3130	• Lever Subassembly, Link, LINK	2	Y300001-
23		ND116662-7670	• Shaft	3	Y300001-
24		ND116662-7681	• Shaft	1	Y300001-
25		ND116576-3852	• Plate	1	Y300001-
26		ND116576-3862	• Plate	1	Y300001-
27		ND063800-0300	• Servo Motor Assembly	2	Y300001-
28		ND017231-0700	• Clamp	3	Y300001-
29		ND077500-5890	• Thermistor Assembly	1	Y300001-
30		ND246790-2060	• Clamp	2	Y300001-
31		ND116780-3920	• Lever Subassembly, Link, LINK	1	Y300001-

FIG. K1110-008045 Cab, Floor, Air Conditioner

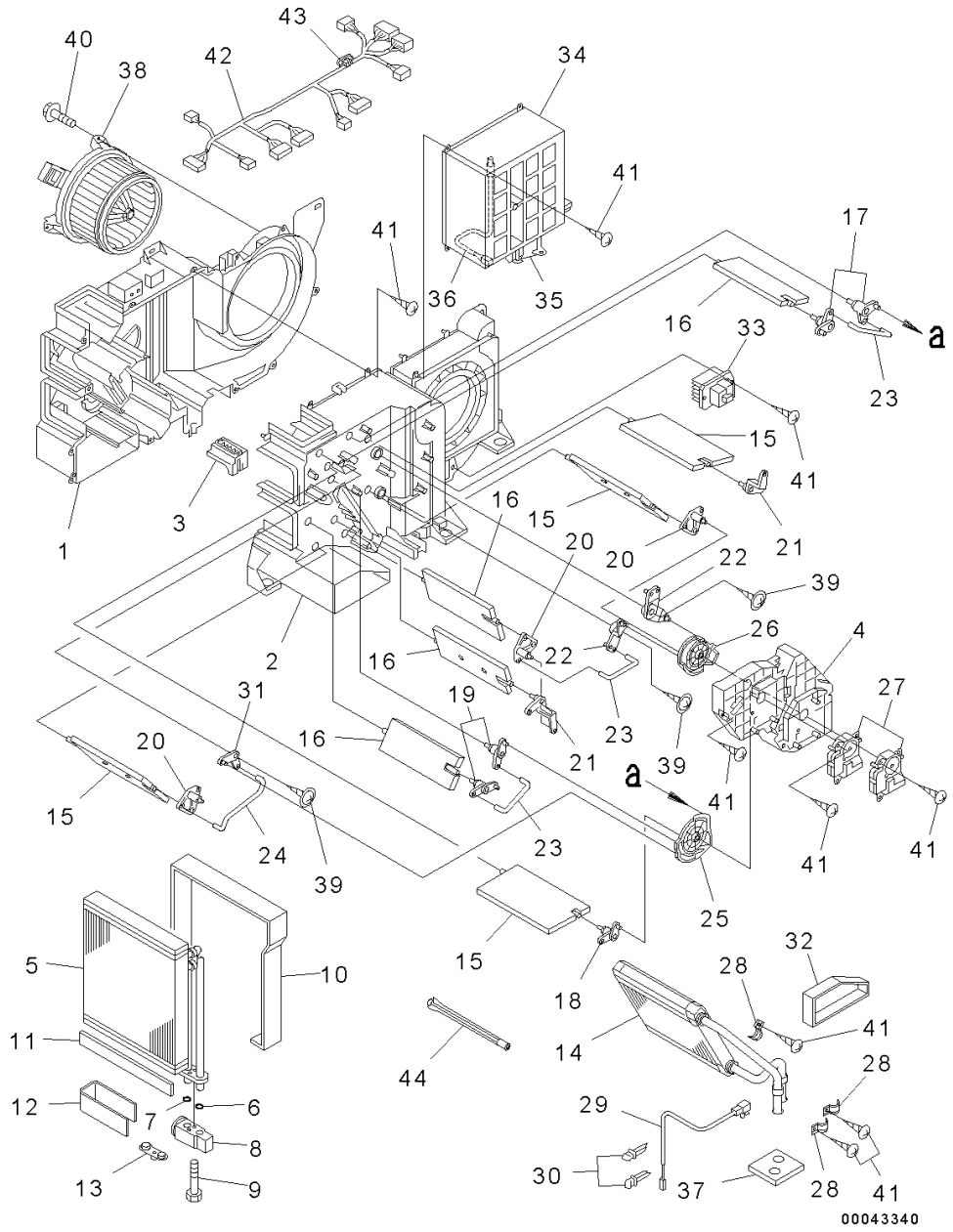

Index	Code	Part Number	Descreption	Qty	Serial Number
32		ND146667-0440	• Packing	1	Y300001-
33		ND077800-0750	• Transistor	1	Y300001-
34		ND146340-0560	• Box Assembly	1	Y300001-
35		ND063600-4580	• • Servo Motor Assembly	1	Y300001-
36		ND077500-5650	• • Thermistor Assembly	1	Y300001-
37		ND146657-8860	• Packing	1	Y300001-
38		ND116340-7350	• Motor Assembly, Fan, FAN	1	Y300001-
39		ND949008-0460	• Screw, Tapping	3	Y300001-
40		ND949008-0330	• Screw, Tapping	3	Y300001-
41		ND949001-1730	• Screw, Tapping	32	Y300001-
42		ND246470-4311	• Wiring Harness Assembly, WIRE	1	Y300001-
43		ND93950-05003	• • Fuse	1	Y300001-
44		ND116662-8320	• Shaft	1	Y300001-

PC300-8 (FEN01263-00)

FIG. K1110-009029 Cab, Floor, P.P.C. Valve, For 1-Attachment

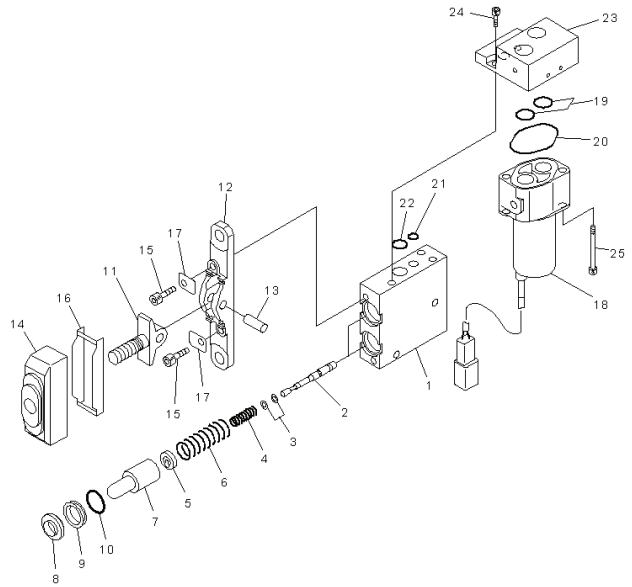

00041433

Index	Code	Part Number	Descreption	Qty	Serial Number
		702-16-04290	Valve, Pilot	1	Y300001-
1	C1		• Valve Body	1	Y300001-
2	C1		• Valve	2	Y300001-
3		702-16-51140	• Shim, T=0.30mm	2	Y300001-
		702-16-54670	• Shim, T=0.20mm	4	Y300001-
4		702-16-54550	• Spring	2	Y300001-
5		702-16-54571	• Retainer	2	Y300001-
6		702-16-54560	• Spring	2	Y300001-
7		702-16-53170	• Piston	2	Y300001-
8		702-16-51270	• Seal	2	Y300001-
9		702-16-54580	• Collar	2	Y300001-
10		702-16-54590	• O-ring	2	Y300001-
11	C1		• Lever	1	Y300001-
12	C1		• Plate	1	Y300001-
13	C1		• Shaft	1	Y300001-
14		702-16-54641	• Boot	1	Y300001-
15		01252-30625	• Bolt	2	Y300001-
16		702-16-54660	• Plate	1	Y300001-
17		702-16-54650	• Plate	2	Y300001-
18		702-21-07610	• Valve, Solenoid	1	Y300001-
19		700-22-11410	• O-ring	2	Y300001-
20		702-21-39450	• O-ring	1	Y300001-
21		07000-11008	• O-ring	1	Y300001-
22		07000-12012	• O-ring	1	Y300001-
23	C1		• Body	1	Y300001-
24		01252-60612	• Bolt	3	Y300001-
25		203-60-62220	• Bolt	2	Y300001-

FIG. K1110-009030 Cab, Floor, 1st. Attachment Control

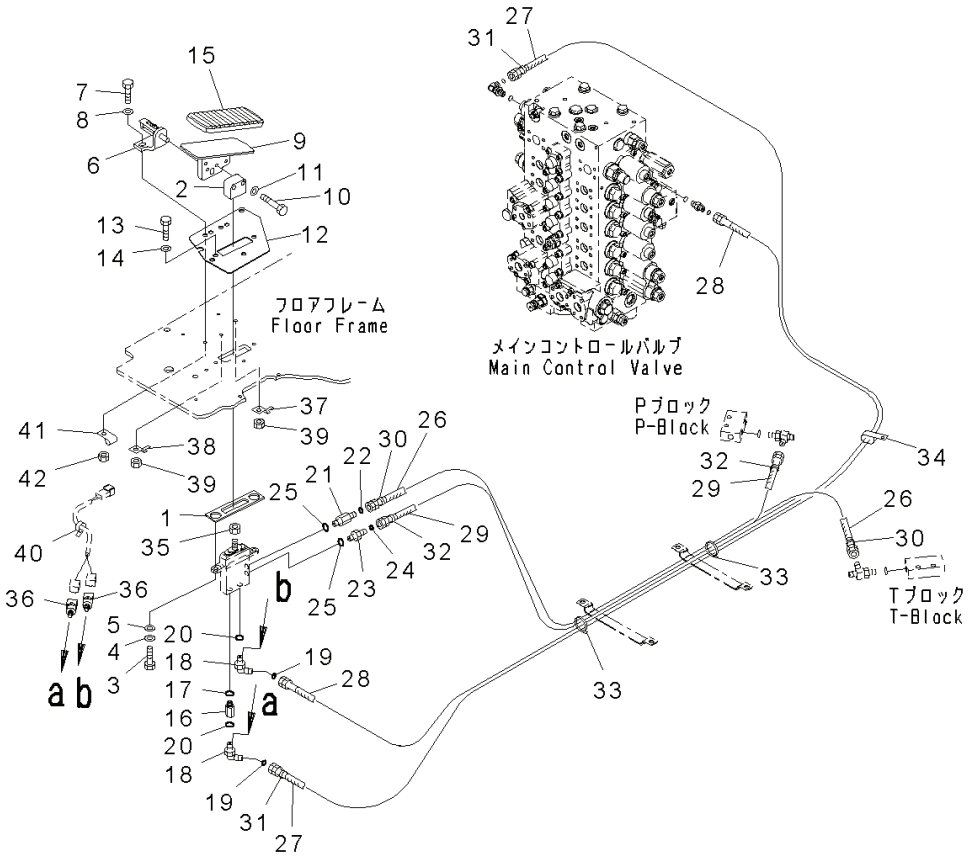

Index	Code	Part Number	Descreption	Qty	Serial Number
1		22U-54-25660	Seal	1	Y300001-
2		20Y-43-41760	Seat	1	Y300001-
3		01010-81025	Bolt	2	Y300001-
4		01643-31032	Washer	2	Y300001-
5		01643-31032	Washer	2	Y300001-
6		20Y-62-25360	Bracket	1	Y300001-
7		01010-D1035	Bolt	2	Y300001-
8		01643-71032	Washer	2	Y300001-
9		20Y-53-14220	Pedal	1	Y300001-
10		01010-D1045	Bolt	2	Y300001-
11		01643-71032	Washer	2	Y300001-
12		22U-54-25541	Plate	1	Y300001-
13		01010-81025	Bolt	3	Y300001-
14		01643-31032	Washer	3	Y300001-
15		207-43-81240	Cap	1	Y300001-
16		20T-910-8660	Nipple	1	Y300001-
17		07000-12011	O-ring	1	Y300001-
18		20Y-62-52160	Elbow	2	Y300001-
19		02896-11008	O-ring	2	Y300001-
20		07000-12011	O-ring	2	Y300001-
21		20Y-62-43470	Nipple	1	Y300001-
22		02896-11008	O-ring	1	Y300001-
23		11Y-62-12140	Nipple	1	Y300001-
24		02896-11008	O-ring	1	Y300001-
25		07000-12011	O-ring	2	Y300001-
26		20Y-62-52330	Hose	1	Y300001-
27		207-62-75840	Hose	1	Y300001-
28		207-62-75830	Hose	1	Y300001-
29		208-62-72480	Hose	1	Y300001-
30		20Y-62-22790	Band, Red	2	Y300001-
31		20Y-62-22810	Band, Yellow	2	Y300001-
32		20Y-62-22820	Band, Blue	2	Y300001-
33		08034-20519	Band	2	Y300001-
34		04435-51210	Clip	1	Y300001-

PC300-8 (FEN01263-00)

FIG. K1110-009030 Cab, Floor, 1st. Attachment Control

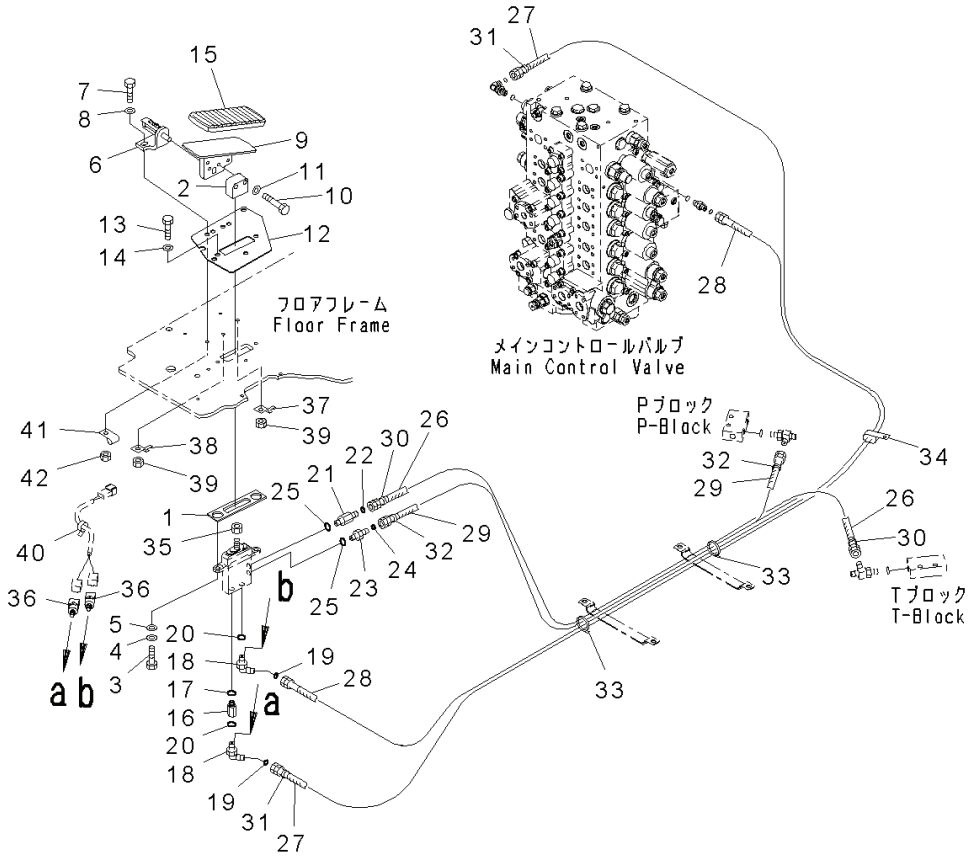

Index	Code	Part Number	Descreption	Qty	Serial Number
35		01583-11408	Nut .	1	Y300001-
36		206-06-61130	Switch .	2	Y300001-
37		08193-21012	Clip .	1	Y300001-
38		08053-01510	Clip .	1	Y300001-
39		01580-01008	Nut .	2	Y300001-
40		08034-20536	Band	1	Y300001-
41		04434-50610	Clip .	1	Y300001-
42		01580-01008	Nut .	1	Y300001-

PC300-8 (FEN01263-00)

FIG. K1110-009053 Cab, Floor, P, T Block and Seal

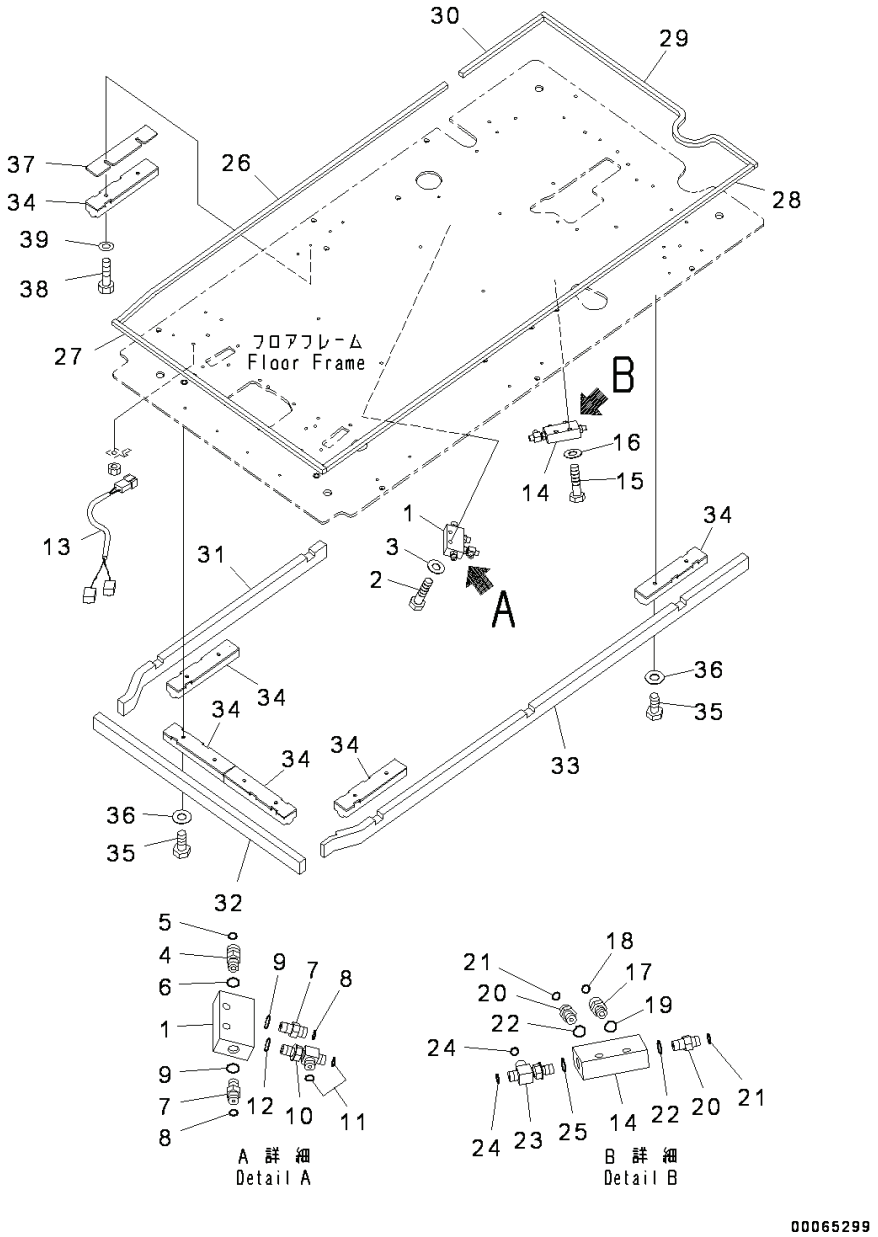

Index	Code	Part Number	Descreption	Qty	Serial Number
1		20Y-62-15831	Block	1	Y300001-
2		01010-81045	Bolt	2	Y300001-
3		01643-31032	Washer	2	Y300001-
4		02781-0031D	Union	1	Y300001-
5		02896-11009	O-ring	1	Y300001-
6		07002-11423	O-ring	1	Y300001-
7		02781-0021D	Union	2	Y300001-
8		02896-11008	O-ring	2	Y300001-
9		07002-11423	O-ring	2	Y300001-
10		11Y-62-12330	Tee	1	Y300001-
11		02896-11008	O-ring	2	Y300001-
12		07002-11423	O-ring	1	Y300001-
13		20Y-06-41251	Wiring Harness	1	Y300001-
14		20Y-62-15831	Block	1	Y300001-
15		01010-81045	Bolt	2	Y300001-
16		01643-31032	Washer	2	Y300001-
17		02781-0031D	Union	1	Y300001-
18		02896-11009	O-ring	1	Y300001-
19		07002-11423	O-ring	1	Y300001-
20		02781-0021D	Union	2	Y300001-
21		02896-11008	O-ring	2	Y300001-
22		07002-11423	O-ring	2	Y300001-
23		11Y-62-12330	Tee	1	Y300001-
24		02896-11008	O-ring	2	Y300001-
25		07002-11423	O-ring	1	Y300001-
26		20Y-53-14910	Seal	1	Y300001-
27		20Y-53-14920	Seal	1	Y300001-
28		20Y-53-14930	Seal	1	Y300001-
29		20Y-53-14940	Seal	1	Y300001-
30		20Y-53-14950	Seal	1	Y300001-
31		20Y-53-14963	Sheet	1	Y300001-
32		20Y-53-14973	Sheet	1	Y300001-
33		20Y-53-14983	Sheet	1	Y300001-
34		20Y-53-14831	Sheet	6	Y300001-
35		01010-80830	Bolt	10	Y300001-
36		01643-30823	Washer	10	Y300001-
37		20Y-53-14841	Plate	1	Y300001-
38		01010-80840	Bolt	2	Y300001-
39		01643-30823	Washer	2	Y300001-

FIG. K1110-016045 Cab, Floor, Air Conditioner Hose

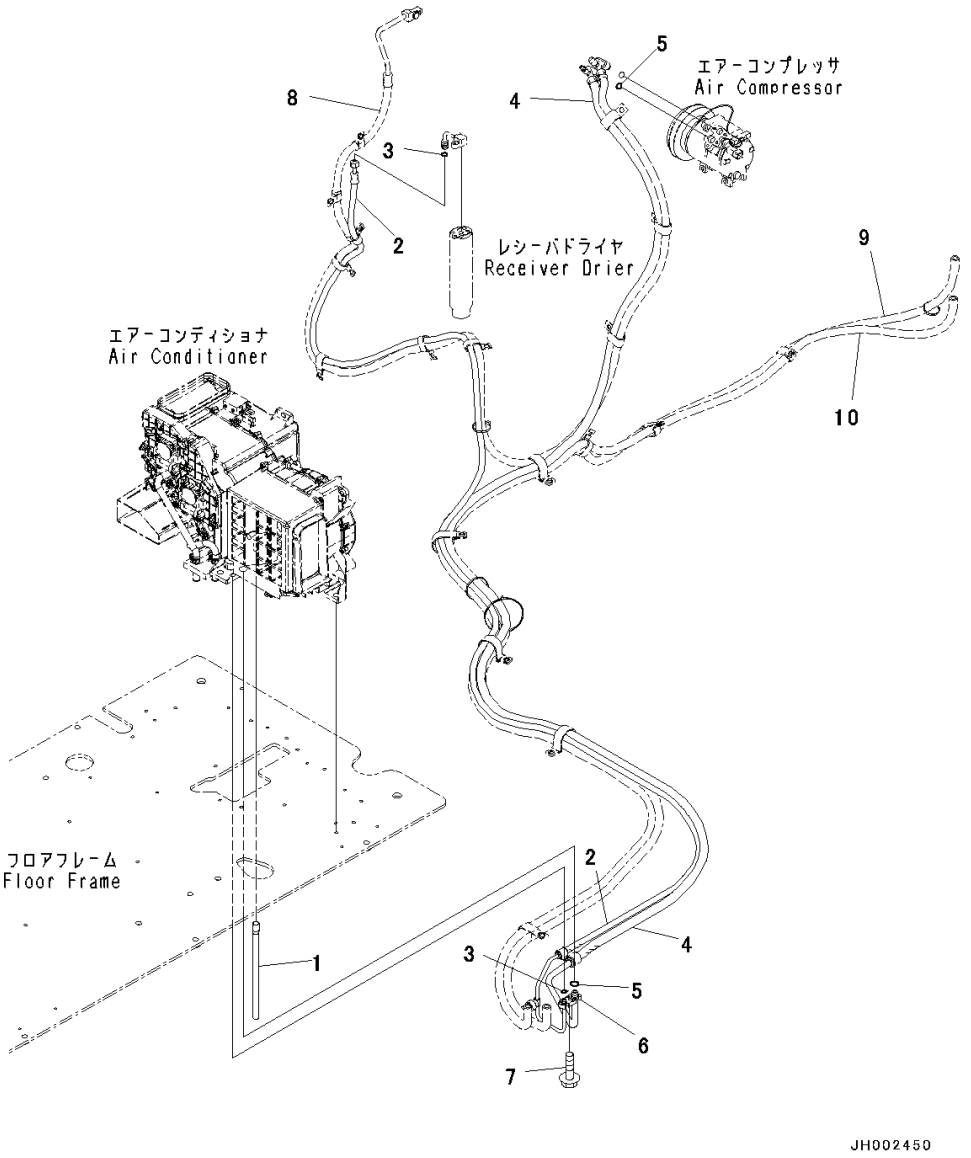

Index	Code	Part Number	Descreption	Qty	Serial Number
		Note: This list covers following specifications.			
		For Machine With WEBASTO Coolant Heater			
		Separate Packing For Cab			
1		208-979-7640	Hose	1	Y300001-
2		207-810-1311	Hose	1	Y300001-
3		20Y-979-3150	• O-ring	2	Y300001-
4		207-810-1321	Hose	1	Y300001-
5		20Y-979-3130	• O-ring	2	Y300001-
6		208-979-7650	Connector	1	Y300001-
7		01435-40620	Bolt	1	Y300001-
8		(207-979-7462)	Hose(Refer to Page 480)		-
9		(207-979-7731)	Hose Assembly(Refer to Page 725)		-
10		(207-979-7741)	Hose Assembly(Refer to Page 725)		-

PC300-8 (FEN01263-00)

FIG. K1110-016046 Cab, For Machine With WEBASTO Coolant Heater, Floor, Heater Hose

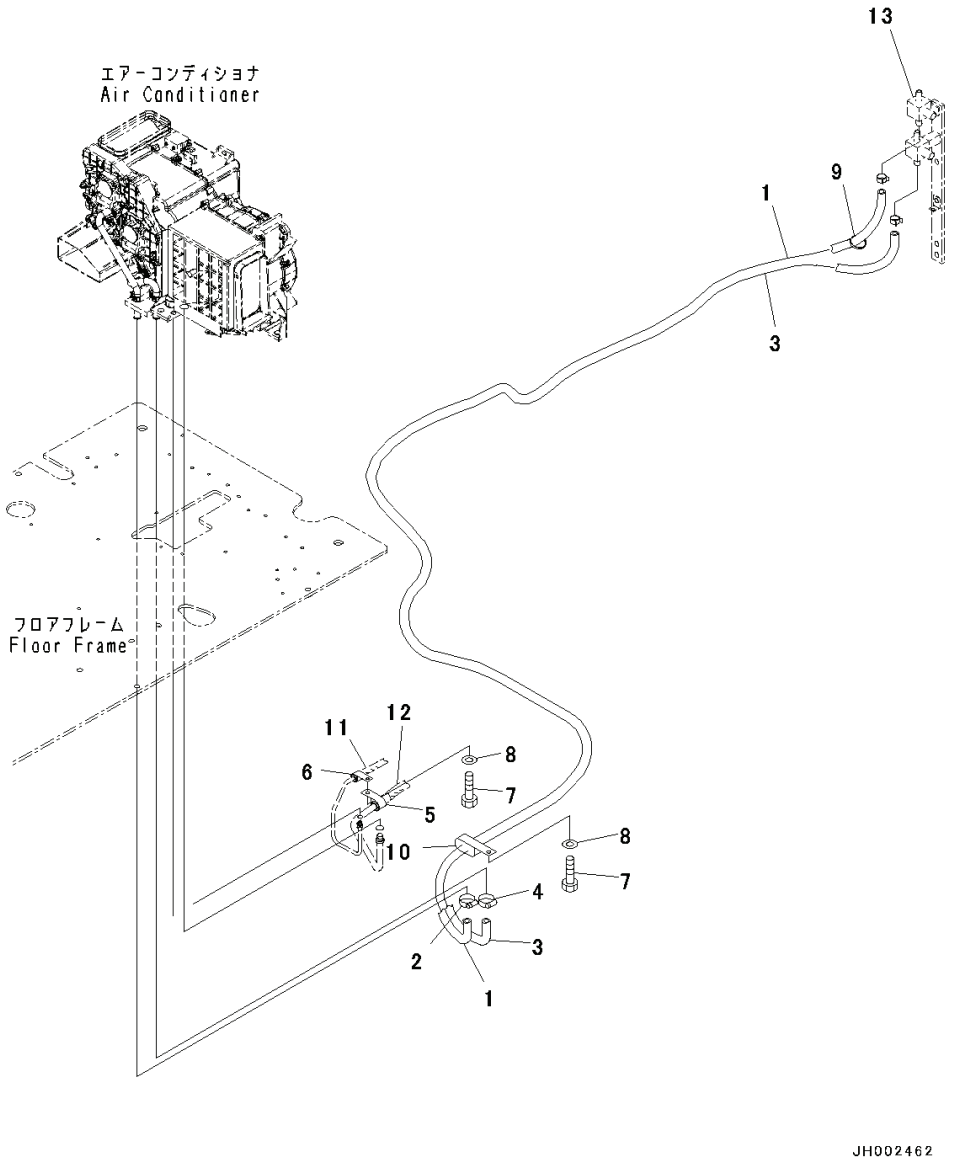

Index	Code	Part Number	Descreption	Qty	Serial Number
1		207-979-7731	Hose Assembly	1	Y300001-
2		09479-02400	Clamp	1	Y300001-
3		207-979-7741	Hose Assembly	1	Y300001-
4		09479-02400	Clamp	1	Y300001-
5		04434-52110	Clip	1	Y300001-
6		04434-52511	Clip	1	Y300001-
7		01010-81020	Bolt	2	Y300001-
8		01643-31032	Washer	2	Y300001-
9		08034-20536	Band	1	Y300001-
10		141-06-11220	Clip	1	Y300001-
11		(207-810-1311)	Hose(Refer to Page 724)		-
12		(207-810-1321)	Hose(Refer to Page 724)		-
13		(207-979-7750)	Bracket(Refer to Page 480)		-

FIG. K1120-001001 Floor Mounts

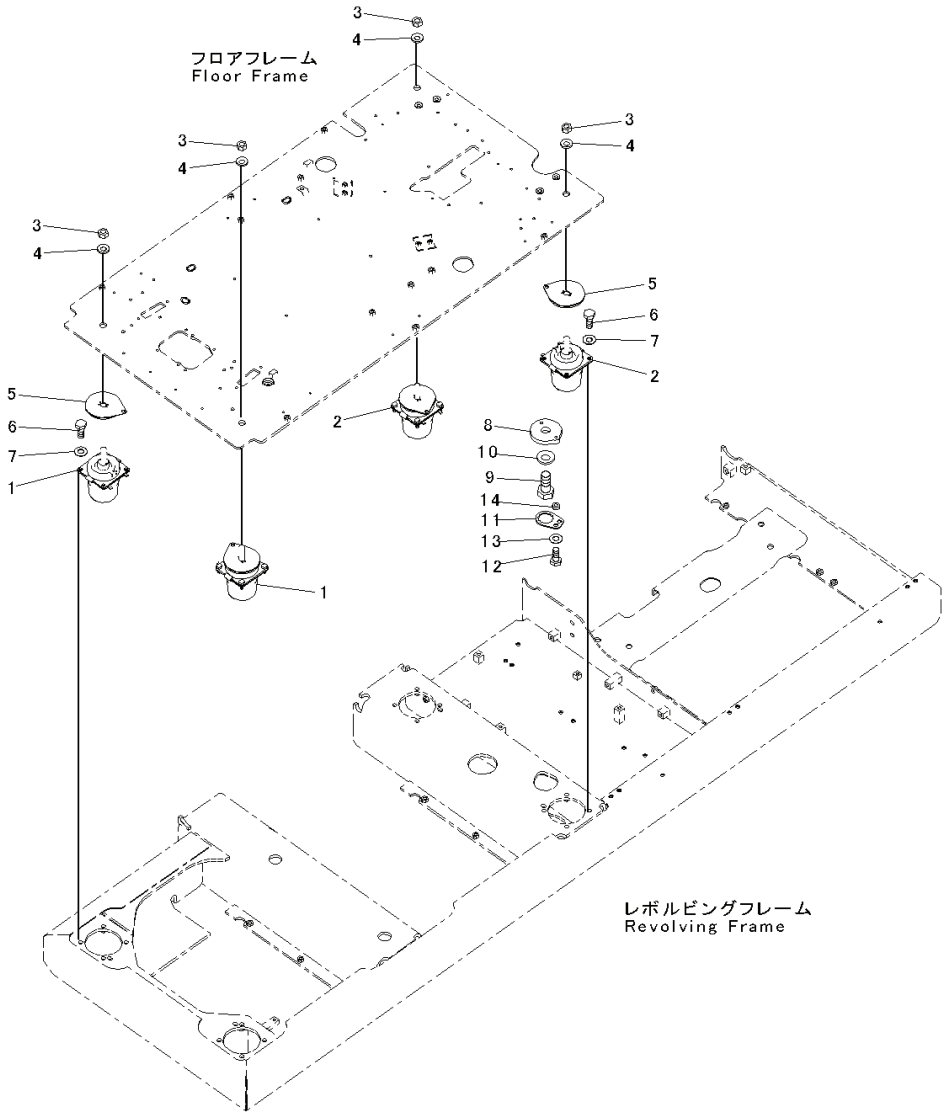

Index	Code	Part Number	Descreption	Qty	Serial Number
1		208-53-23210	Cushion	2	Y300001-
2		206-53-13121	Cushion	2	Y300001-
3		01580-12016	Nut	4	Y300001-
4		01643-32060	Washer	4	Y300001-
5		20Y-53-13130	Spacer	4	Y300001-
6		01010-81235	Bolt	16	Y300001-
7		01643-31232	Washer	16	Y300001-
8		20Y-53-13142	Plate	1	Y300001-
9		01010-83080	Bolt	1	Y300001-
10		01643-33080	Washer	1	Y300001-
11		20Y-53-13151	Lock	1	Y300001-
12		01010-81235	Bolt	1	Y300001-
13		01643-31232	Washer	1	Y300001-
14		198-43-15310	Collar, T=10mm	1	Y300001-

PC300-8 (FEN01263-00)

FIG. K1520-001001 Proportional Pressure Control (PPC) Circuit

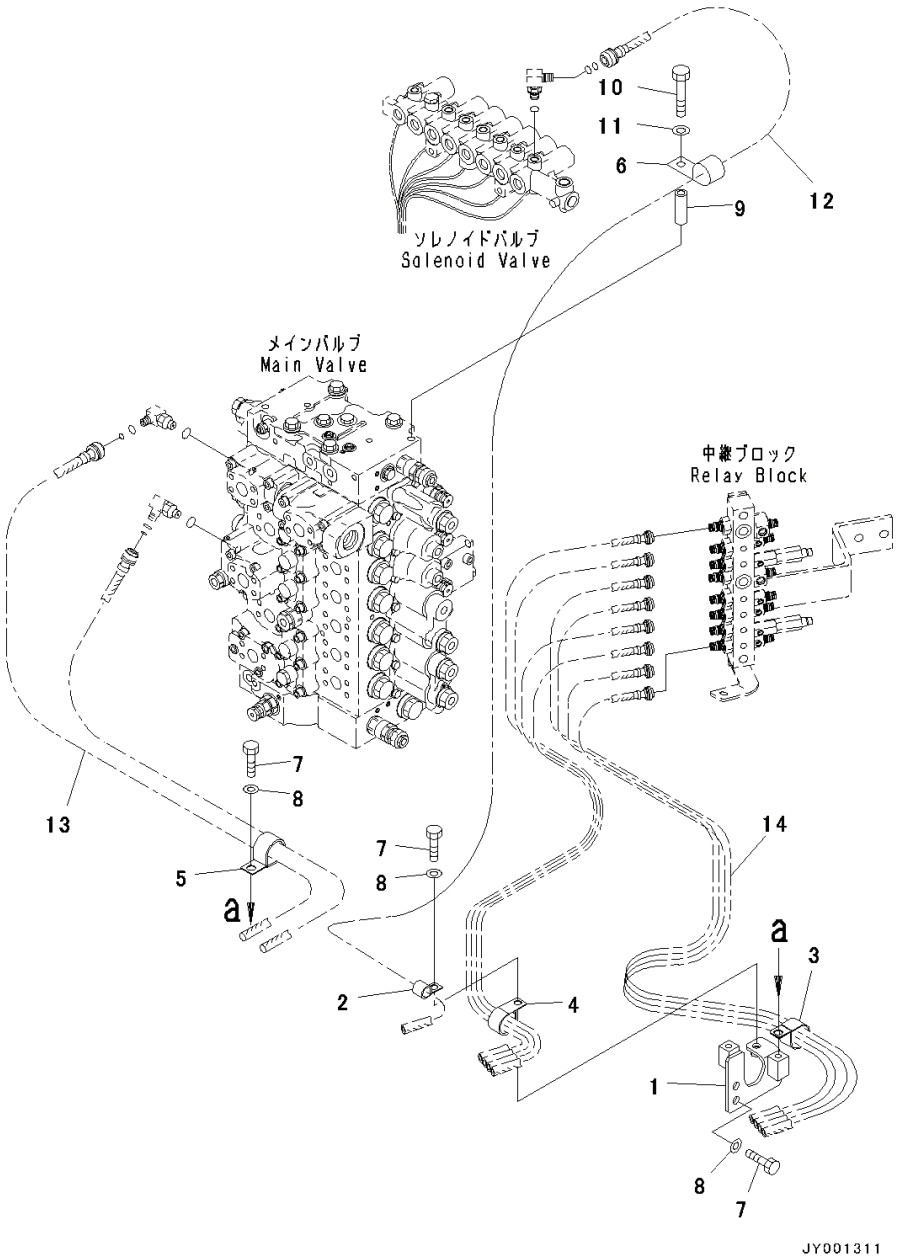

Index	Code	Part Number	Descreption	Qty	Serial Number
1		207-62-75190	Bracket	1	Y300001-
2		04434-51812	Clip	2	Y300001-
3		20Y-62-15951	Clip	1	Y300001-
4		581-04-22290	Clip	1	Y300001-
5		04434-53412	Clip	1	Y300001-
6		04435-51512	Clip	2	Y300001-
7		01010-81225	Bolt	6	Y300001-
8		01643-31232	Washer	6	Y300001-
9		175-61-17240	Collar	1	Y300001-
10		01010-81285	Bolt	1	Y300001-
11		01643-31232	Washer	1	Y300001-
12		(208-62-72331)	Hose(Refer to Page 562)		-
13		(207-62-75880)	Hose(Refer to Page 562)		-
14		(207-62-75820)	Hose(Refer to Page 563)		-

PC300-8 (FEN01263-00)

FIG. K1520-002001 Proportional Pressure Control (PPC) Circuit, For Additional Actuator Circuit

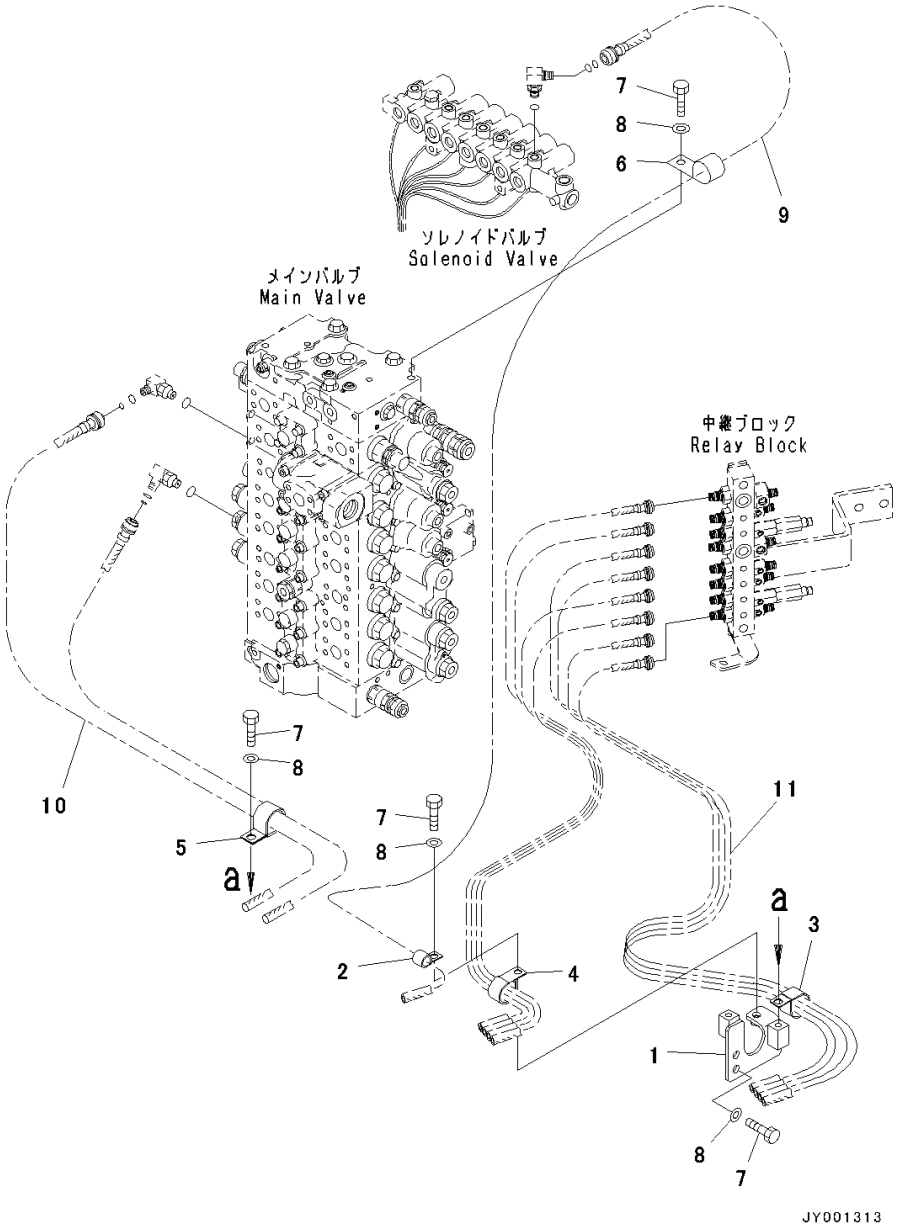

Index	Code	Part Number	Descreption	Qty	Serial Number
1		207-62-75190	Bracket	1	Y300001-
2		04434-51812	Clip	1	Y300001-
3		20Y-62-15951	Clip	1	Y300001-
4		581-04-22290	Clip	2	Y300001-
5		04434-53412	Clip	1	Y300001-
6		04435-51512	Clip	2	Y300001-
7		01010-81225	Bolt	6	Y300001-
8		01643-31232	Washer	6	Y300001-
9		(208-62-72331)	Hose(Refer to Page 562)		-
10		(207-62-75880)	Hose(Refer to Page 562)		-
11		(207-62-75820)	Hose(Refer to Page 563)		-

PC300-8 (FEN01263-00)

FIG. K1730-001001 Mode Selection Connectors

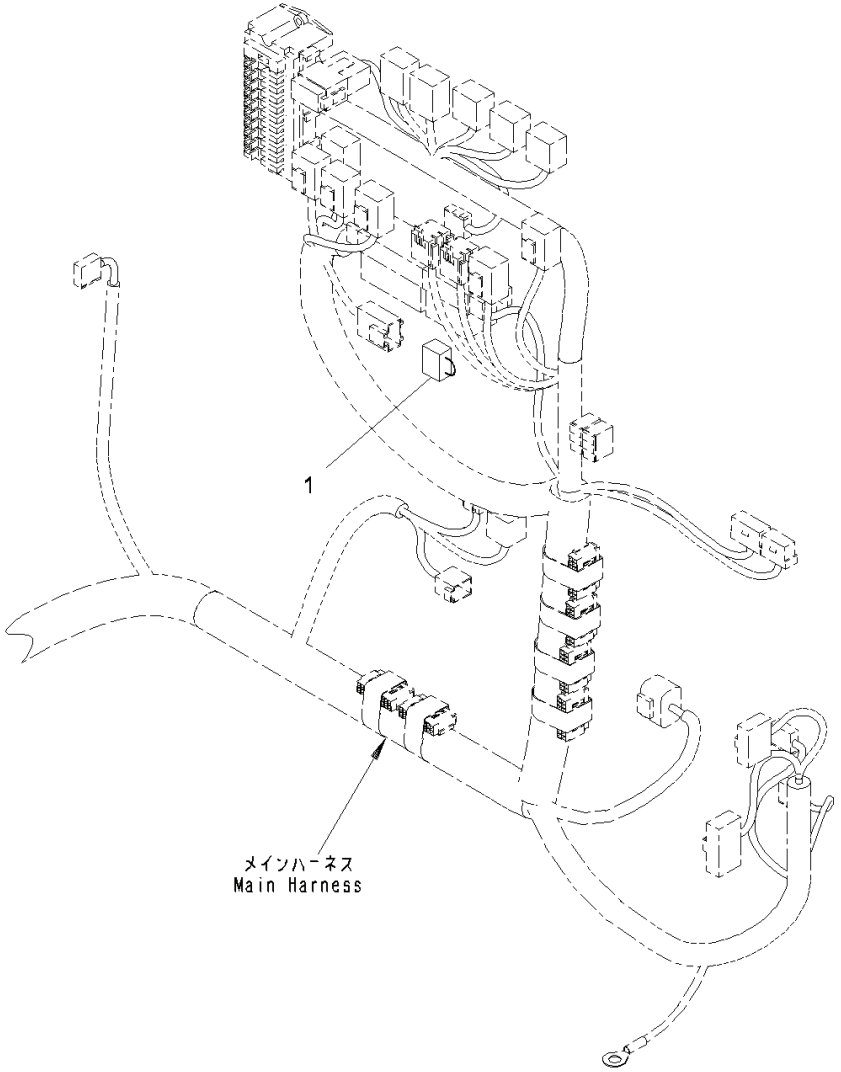

Index	Code	Part Number	Descreption	Qty	Serial Number
1		207-06-61250	Switch	1	Y300001-

GUARDS AND COVERS

FIG. M1110-001001 Hood

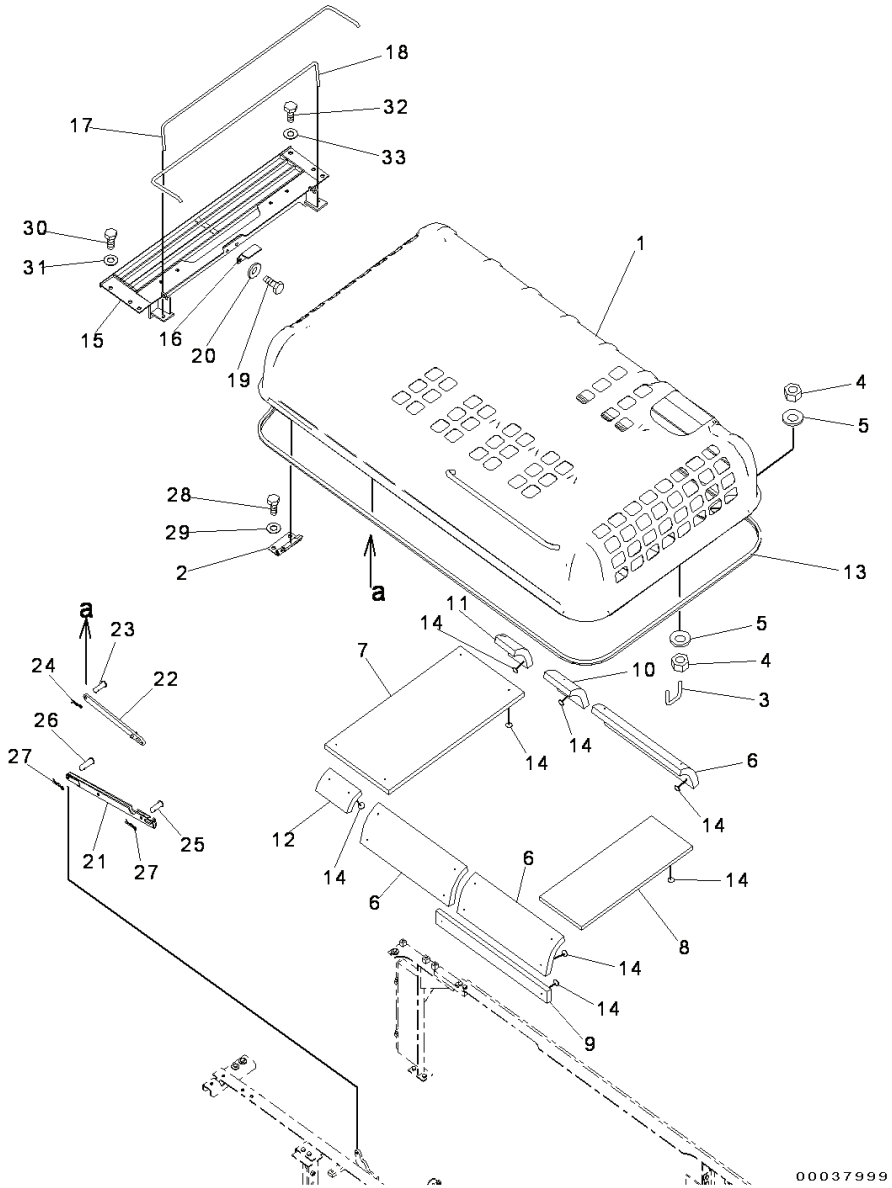

Index	Code	Part Number	Descreption	Qty	Serial Number
1		207-54-78110	Hood	1	Y300001-
2		20Y-54-27123	• Hinge,Welded	2	Y300001-
3		207-54-61270	U-bolt	1	Y300001-
4		01580-11613	Nut	4	Y300001-
5		01643-31645	Washer	4	Y300001-
6		207-54-77630	Sheet	3	Y300001-
7		207-54-77860	Sheet	1	Y300001-
8		207-54-77871	Sheet	1	Y300001-
9		207-54-78130	Sheet	1	Y300001-
10		207-54-78170	Sheet	1	Y300001-
11		207-54-78180	Sheet	1	Y300001-
12		207-54-78190	Sheet	1	Y300001-
13		207-54-62131	Seal	1	Y300001-
14		124-A62-1920	Cap	30	Y300001-
15		207-54-78121	Frame	1	Y300001-
16		20Y-54-27360	Bracket	1	Y300001-
17		207-54-62150	Spring	1	Y300001-
18		207-54-62160	Spring	1	Y300001-
19		01010-81230	Bolt	2	Y300001-
20		01643-31232	Washer	2	Y300001-
21		207-54-72150	Stay	1	Y300001-
22		20Y-54-27290	Stay	1	Y300001-
23		04205-31230	Pin	1	Y300001-
24		04052-01253	Pin	1	Y300001-
25		04205-31230	Pin	1	Y300001-
26		04205-31238	Pin	1	Y300001-
27		04052-01253	Pin	2	Y300001-
28		01010-81230	Bolt	4	Y300001-
29		01643-31232	Washer	4	Y300001-
30		01010-81230	Bolt	3	Y300001-
31		01643-31232	Washer	3	Y300001-
32		01010-81225	Bolt	3	Y300001-
33		01643-31232	Washer	3	Y300001-

PC300-8 (FEN01263-00)

FIG. M1110-002001 Hood, Hood

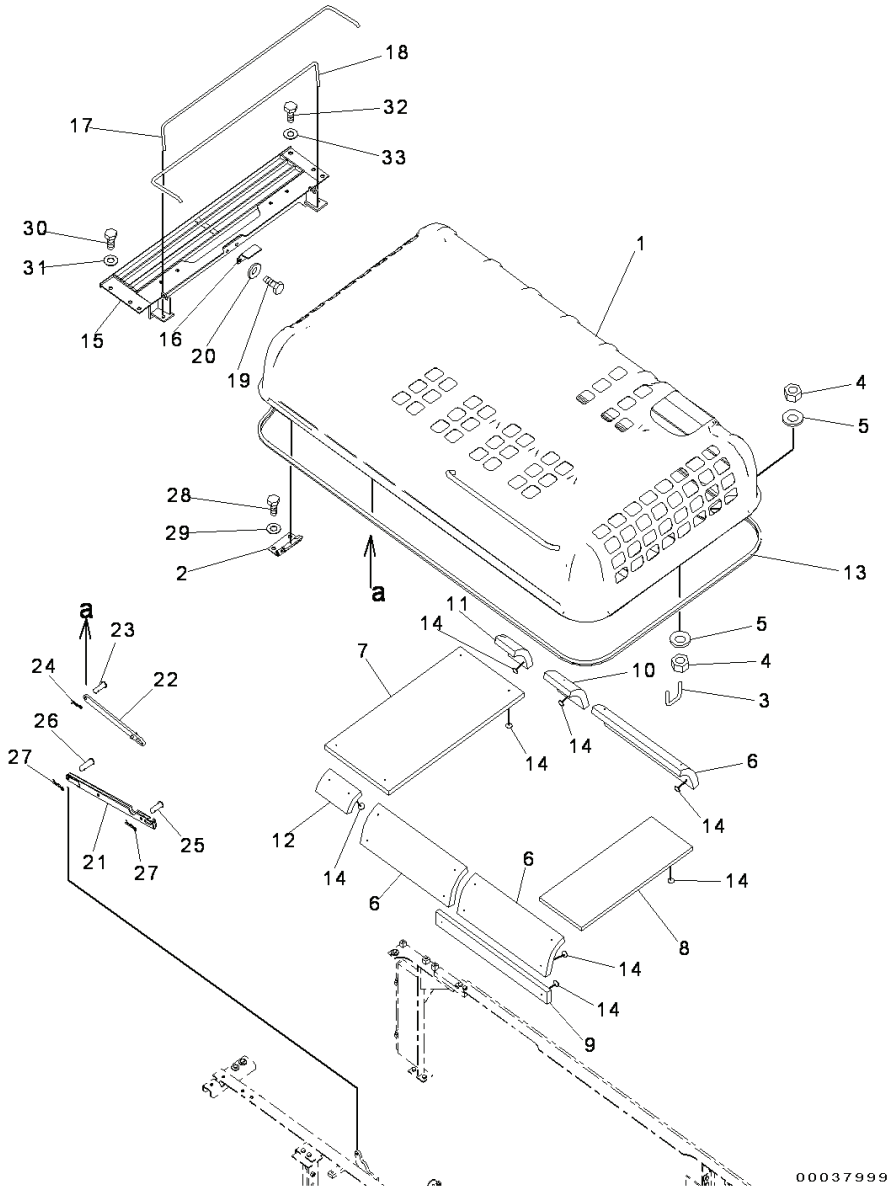

Index	Code	Part Number	Descreption	Qty	Serial Number
		Note: This list covers following specifications.			
		With Dustproof Net			
		With Dustproof Net			
1		207-54-78110	Hood	1	Y300001-
2		20Y-54-27123	• Hinge,Welded	2	Y300001-
3		207-54-61270	U-bolt	1	Y300001-
4		01580-11613	Nut	4	Y300001-
5		01643-31645	Washer	4	Y300001-
6		207-54-77630	Sheet	3	Y300001-
7		207-54-77860	Sheet	1	Y300001-
8		207-54-77870	Sheet	1	Y300001-
9		207-54-78130	Sheet	1	Y300001-
10		207-54-78170	Sheet	1	Y300001-
11		207-54-78180	Sheet	1	Y300001-
12		207-54-78190	Sheet	1	Y300001-
13		207-54-62131	Seal	1	Y300001-
14		124-A62-1920	Cap	30	Y300001-
15		207-54-78121	Frame	1	Y300001-
16		20Y-54-27360	Bracket	1	Y300001-
17		207-54-62150	Spring	1	Y300001-
18		207-54-62160	Spring	1	Y300001-
19		01010-81230	Bolt	2	Y300001-
20		01643-31232	Washer	2	Y300001-
21		207-54-72150	Stay	1	Y300001-
22		20Y-54-27290	Stay	1	Y300001-
23		04205-31230	Pin	1	Y300001-
24		04052-01253	Pin	1	Y300001-
25		04205-31230	Pin	1	Y300001-
26		04205-31238	Pin	1	Y300001-
27		04052-01253	Pin	2	Y300001-
28		01010-81230	Bolt	4	Y300001-
29		01643-31232	Washer	4	Y300001-
30		01010-81230	Bolt	3	Y300001-
31		01643-31232	Washer	3	Y300001-
32		01010-81225	Bolt	3	Y300001-
33		01643-31232	Washer	3	Y300001-

PC300-8 (FEN01263-00)

FIG. M1110-002002 Hood, With Dustproof Net, Hood, Net

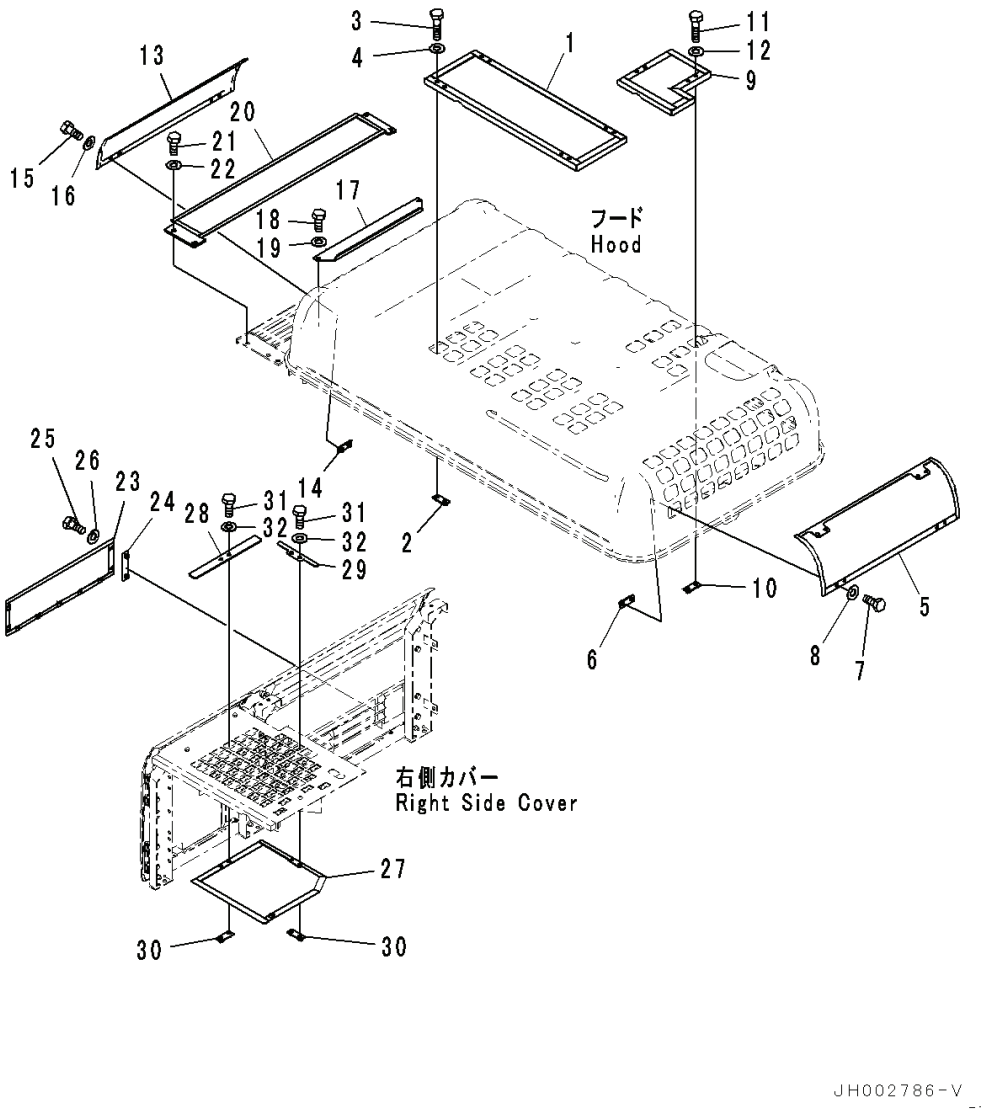

Index	Code	Part Number	Descreption	Qty	Serial Number
1		207-54-78510	Net	1	Y300001-
2		20Y-54-74560	Plate	4	Y300001-
3		01010-81255	Bolt	8	Y300001-
4		01643-31232	Washer	8	Y300001-
5		208-54-74320	Net	1	Y300001-
6		20Y-54-74560	Plate	4	Y300001-
7		01010-D1230	Bolt	8	Y300001-
8		01643-71232	Washer	8	Y300001-
9		207-54-78520	Net	1	Y300001-
10		20Y-54-74560	Plate	2	Y300001-
11		01010-81255	Bolt	4	Y300001-
12		01643-31232	Washer	4	Y300001-
13		208-54-74380	Net	1	Y300001-
14		20Y-54-74560	Plate	4	Y300001-
15		01010-D1230	Bolt	8	Y300001-
16		01643-71232	Washer	8	Y300001-
17		207-54-72290	Cover	1	Y300001-
18		01010-D1230	Bolt	2	Y300001-
19		01643-71232	Washer	2	Y300001-
20		207-54-78530	Net	1	Y300001-
21		01010-D1240	Bolt	4	Y300001-
22		01643-71232	Washer	4	Y300001-
23		207-54-78540	Net	1	Y300001-
24		207-54-78550	Plate	1	Y300001-
25		01010-D1230	Bolt	2	Y300001-
26		01643-71232	Washer	2	Y300001-
27		207-54-78560	Net	1	Y300001-
28		207-54-78570	Plate	1	Y300001-
29		207-54-78580	Plate	1	Y300001-
30		20Y-54-74560	Plate	2	Y300001-
31		01010-D1235	Bolt	4	Y300001-
32		01643-71232	Washer	4	Y300001-

PC300-8 (FEN01263-00)

FIG. M1110-003002 Hood, With Dustproof Net, Hood, Net

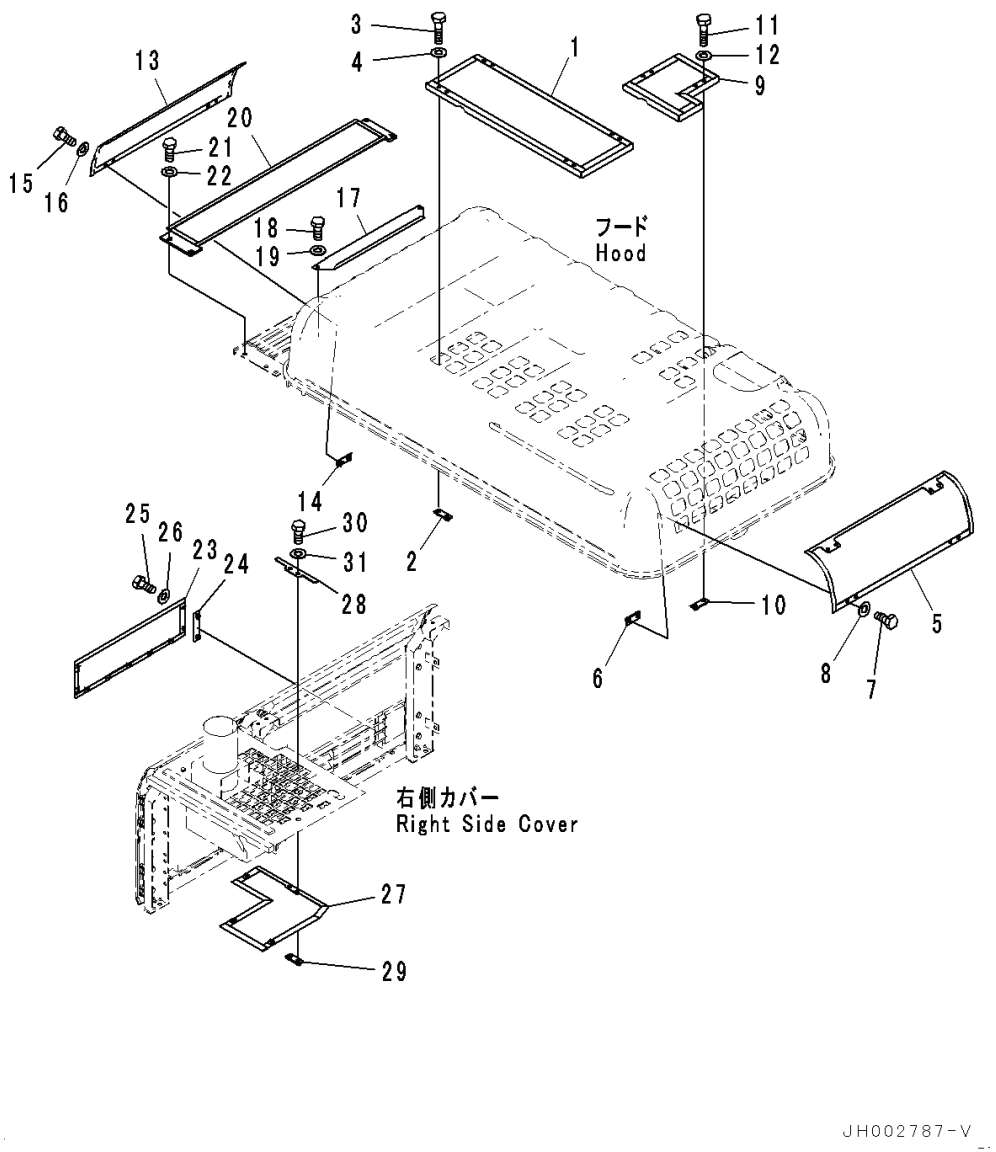

Index	Code	Part Number	Descreption	Qty	Serial Number
1		207-54-78510	Net	1	Y300001-
2		20Y-54-74560	Plate	4	Y300001-
3		01010-81255	Bolt	8	Y300001-
4		01643-31232	Washer	8	Y300001-
5		208-54-74320	Net	1	Y300001-
6		20Y-54-74560	Plate	4	Y300001-
7		01010-D1230	Bolt	8	Y300001-
8		01643-71232	Washer	8	Y300001-
9		207-54-78520	Net	1	Y300001-
10		20Y-54-74560	Plate	2	Y300001-
11		01010-81255	Bolt	4	Y300001-
12		01643-31232	Washer	4	Y300001-
13		208-54-74380	Net	1	Y300001-
14		20Y-54-74560	Plate	4	Y300001-
15		01010-D1230	Bolt	8	Y300001-
16		01643-71232	Washer	8	Y300001-
17		207-54-72290	Cover	1	Y300001-
18		01010-D1230	Bolt	2	Y300001-
19		01643-71232	Washer	2	Y300001-
20		207-54-78530	Net	1	Y300001-
21		01010-D1240	Bolt	4	Y300001-
22		01643-71232	Washer	4	Y300001-
23		207-54-78540	Net	1	Y300001-
24		207-54-78550	Plate	1	Y300001-
25		01010-D1230	Bolt	2	Y300001-
26		01643-71232	Washer	2	Y300001-
27		207-54-78590	Net	1	Y300001-
28		207-54-78580	Plate	1	Y300001-
29		20Y-54-74560	Plate	1	Y300001-
30		01010-D1235	Bolt	2	Y300001-
31		01643-71232	Washer	2	Y300001-

PC300-8 (FEN01263-00)

FIG. M1120-001001 Machine Cab Frame

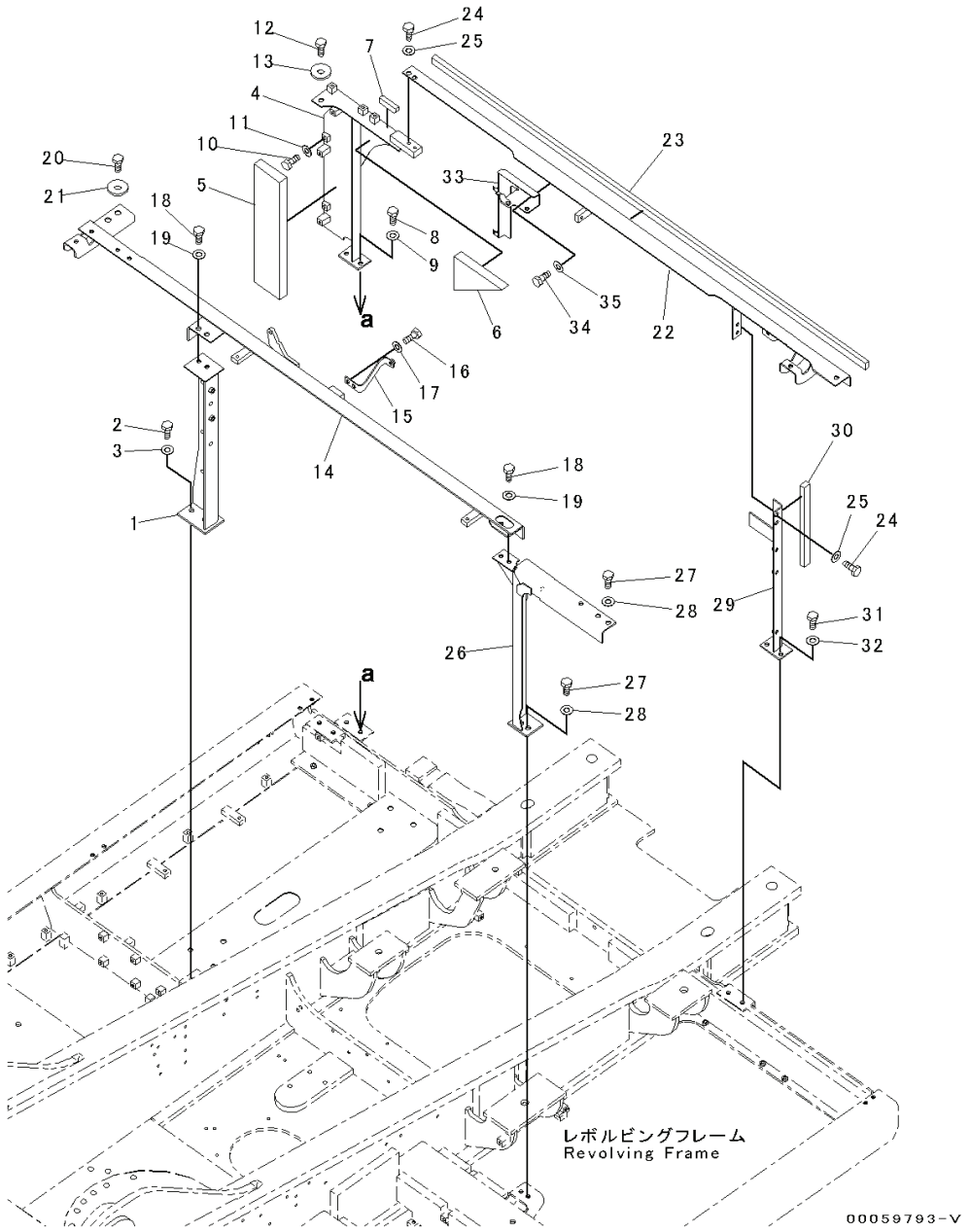

Index	Code	Part Number	Descreption	Qty	Serial Number
1		207-54-76451	Frame	1	Y300001-
2		01010-81240	Bolt	2	Y300001-
3		01643-31232	Washer	2	Y300001-
4		207-54-78690	Frame	1	Y300001-
5		207-54-77690	• Sheet	1	Y300001-
6		207-54-77710	• Sheet	1	Y300001-
7		207-54-77190	• Sheet	1	Y300001-
8		01010-81230	Bolt	2	Y300001-
9		01643-31232	Washer	2	Y300001-
10		01010-81225	Bolt	2	Y300001-
11		01643-31232	Washer	2	Y300001-
12		01010-81230	Bolt	1	Y300001-
13		175-54-34170	Washer	1	Y300001-
14		207-54-76421	Frame	1	Y300001-
15		207-979-7560	Bracket	1	Y300001-
16		01010-81230	Bolt	2	Y300001-
17		01643-31232	Washer	2	Y300001-
18		01010-81230	Bolt	4	Y300001-
19		01643-31232	Washer	4	Y300001-
20		01010-81230	Bolt	2	Y300001-
21		175-54-34170	Washer	2	Y300001-
22		207-54-78670	Frame	1	Y300001-
23		207-54-71721	• Sheet	1	Y300001-
24		01010-81230	Bolt	5	Y300001-
25		01643-31232	Washer	5	Y300001-
26		207-54-76410	Frame	1	Y300001-
27		01010-81230	Bolt	3	Y300001-
28		01643-31232	Washer	3	Y300001-
29		207-54-76480	Frame	1	Y300001-
30		207-54-76491	• Sheet	1	Y300001-
31		01010-81230	Bolt	2	Y300001-
32		01643-31232	Washer	2	Y300001-
33		207-54-78680	Bracket	1	Y300001-
34		01010-81230	Bolt	2	Y300001-
35		01643-31232	Washer	2	Y300001-

PC300-8 (FEN01263-00)

FIG. M1130-001001 Side Cover, LHS

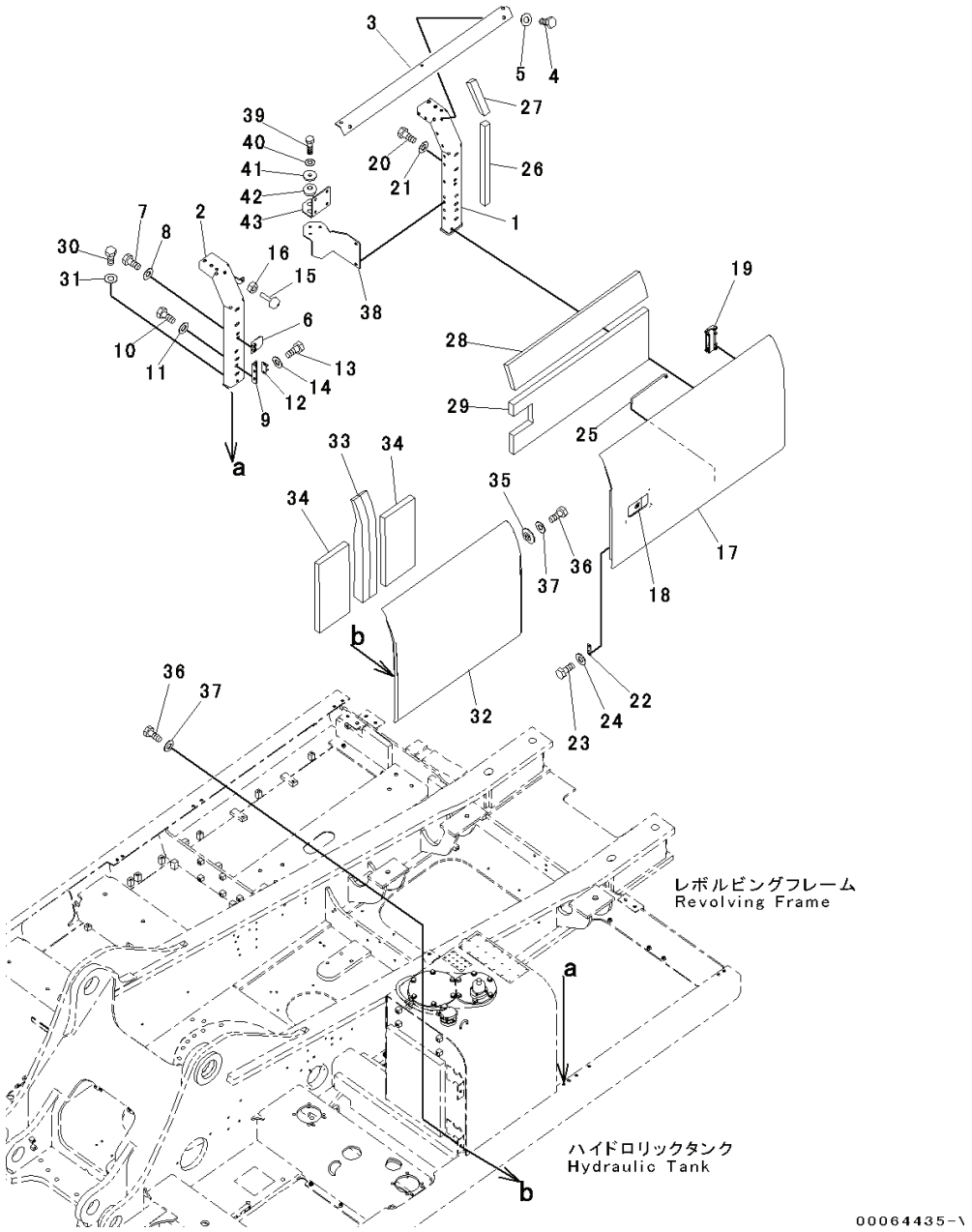

Index	Code	Part Number	Descreption	Qty	Serial Number
1		207-54-76121	Frame	1	Y300001-
2		207-54-76140	Frame	1	Y300001-
3		208-54-71380	Frame	1	Y300001-
4		01010-81225	Bolt	2	Y300001-
5		01643-31232	Washer	2	Y300001-
6		20Y-54-61470	Plate	1	Y300001-
7		01010-81225	Bolt	2	Y300001-
8		01643-31232	Washer	2	Y300001-
9		20Y-54-28170	Bracket	1	Y300001-
10		01010-81225	Bolt	2	Y300001-
11		01643-31232	Washer	2	Y300001-
12		205-54-51970	Dovetail	1	Y300001-
13		01010-80616	Bolt	2	Y300001-
14		01643-30623	Washer	2	Y300001-
15		20Y-54-11611	Stopper	1	Y300001-
16		01580-11008	Nut	1	Y300001-
17		207-54-78810	Cover	1	Y300001-
18		20Y-54-71372	• Lock,Welded	1	Y300001-
19		20Y-54-63414	• Hinge,Welded	2	Y300001-
20		01010-81225	Bolt	4	Y300001-
21		01643-31232	Washer	4	Y300001-
22		205-54-53550	Dovetail	1	Y300001-
23		01010-80612	Bolt	2	Y300001-
24		01643-30623	Washer	2	Y300001-
25		20Y-54-29232	Bar	1	Y300001-
26		208-54-73710	Sheet	1	Y300001-
27		208-54-73720	Sheet	1	Y300001-
28		208-54-73821	Sheet	1	Y300001-
29		208-54-73830	Sheet	1	Y300001-
30		01010-81230	Bolt	4	Y300001-
31		01643-31232	Washer	4	Y300001-
32		207-54-78431	Cover	1	Y300001-
33		208-54-73131	• Sheet	2	Y300001-
34		207-54-76130	• Sheet	2	Y300001-
35		203-54-62670	Collar	1	Y300001-
36		01010-81230	Bolt	4	Y300001-
37		01643-31232	Washer	4	Y300001-
38		207-54-76161	Bracket	1	Y300001-
39		01010-81050	Bolt	3	Y300001-
40		01643-31032	Washer	3	Y300001-

PC300-8 (FEN01263-00)

FIG. M1130-001001 Side Cover, LHS

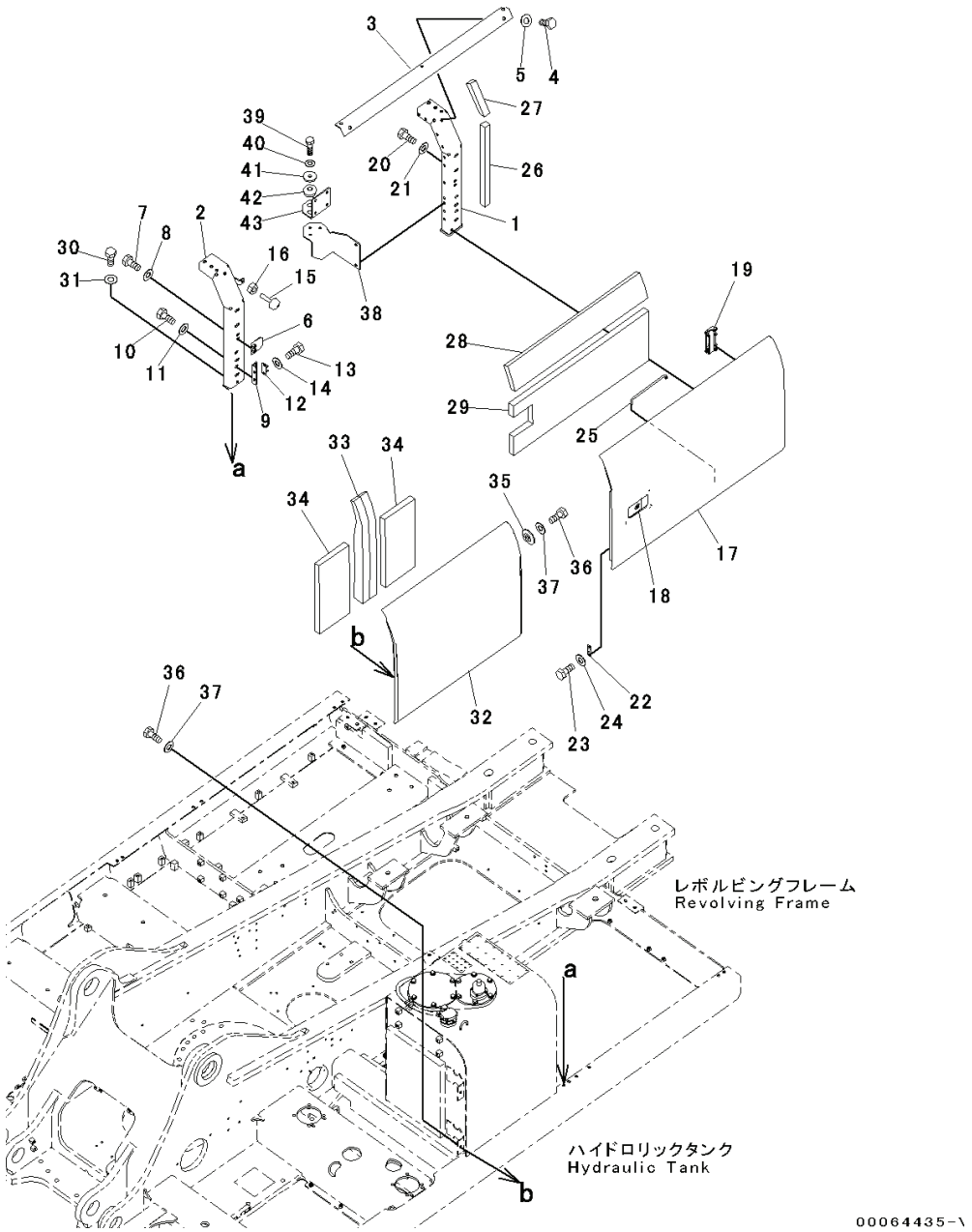

Index	Code	Part Number	Descreption	Qty	Serial Number
41		207-03-75590	Plate	3	Y300001-
42		195-03-41380	Cushion	3	Y300001-
43		207-54-76190	Sheet	1	Y300001-

PC300-8 (FEN01263-00)

FIG. M1140-001001 Side Cover, RHS

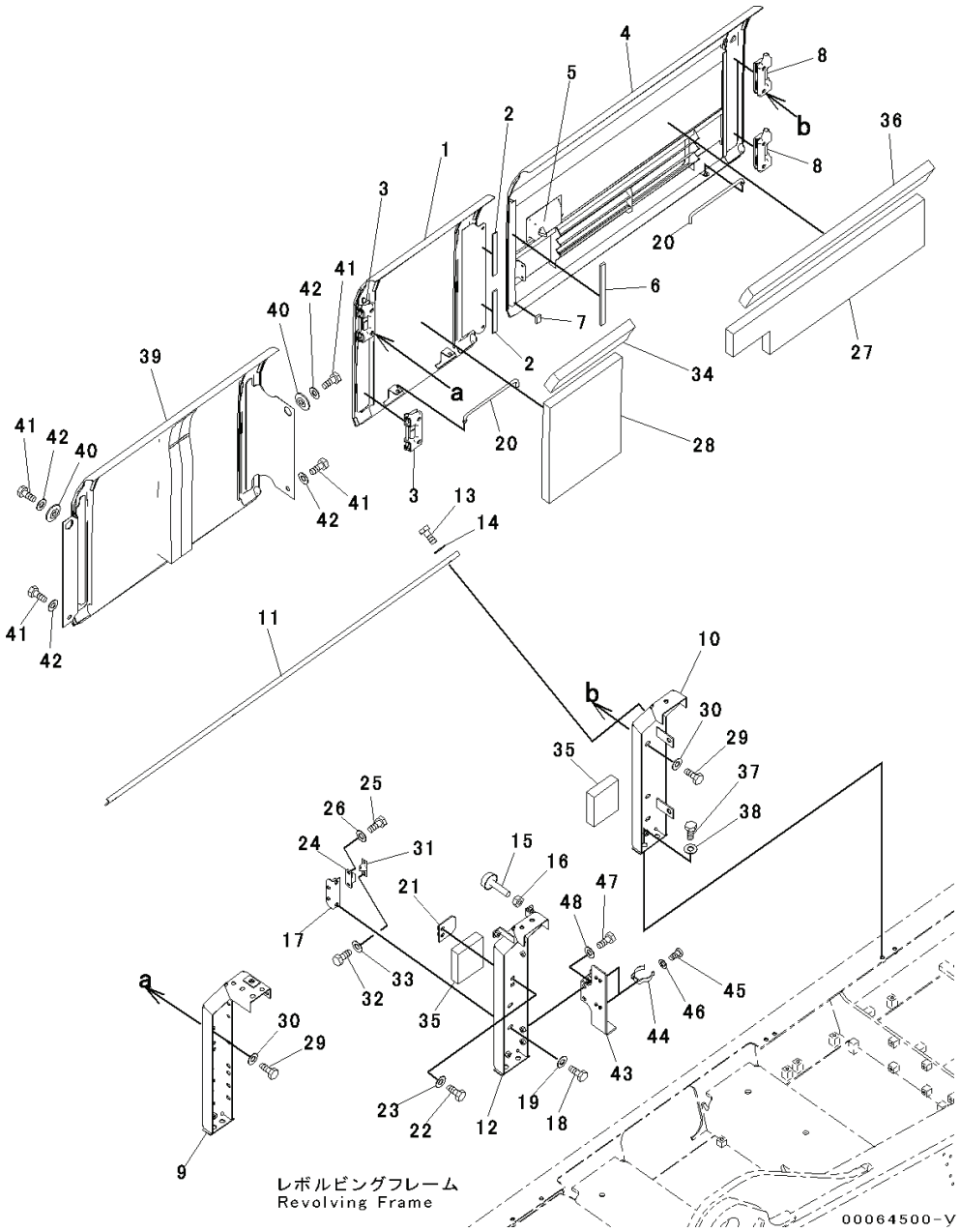

Index	Code	Part Number	Descreption	Qty	Serial Number
1		207-54-78830	Cover	1	Y300001-
2		20Y-54-63390	• Sheet	2	Y300001-
3		20Y-54-63414	• Hinge,Welded	2	Y300001-
4		207-54-78910	Cover	1	Y300001-
5		20Y-54-71491	• Lock,Welded	1	Y300001-
6		207-54-76330	• Sheet	1	Y300001-
7		207-54-76360	• Sheet	1	Y300001-
8		20Y-54-63414	• Hinge,Welded	2	Y300001-
9		207-54-76340	Frame	1	Y300001-
10		207-54-71221	Frame	1	Y300001-
11		207-54-71241	Plate	1	Y300001-
12		207-54-71251	Frame	1	Y300001-
13		01010-81225	Bolt	3	Y300001-
14		01643-31232	Washer	3	Y300001-
15		20Y-54-11611	Stopper	2	Y300001-
16		01580-11008	Nut	2	Y300001-
17		20Y-54-28170	Bracket	1	Y300001-
18		01010-81225	Bolt	2	Y300001-
19		01643-31232	Washer	2	Y300001-
20		20Y-54-29232	Bar	2	Y300001-
21		20Y-54-61470	Plate	1	Y300001-
22		01010-81225	Bolt	2	Y300001-
23		01643-31232	Washer	2	Y300001-
24		205-54-51970	Dovetail	1	Y300001-
25		01010-80616	Bolt	2	Y300001-
26		01643-30623	Washer	2	Y300001-
27		207-54-76321	Sheet	1	Y300001-
28		207-54-78930	Sheet	1	Y300001-
29		01010-81225	Bolt	8	Y300001-
30		01643-31232	Washer	8	Y300001-
31		205-54-53550	Dovetail	1	Y300001-
32		01010-80612	Bolt	2	Y300001-
33		01643-30623	Washer	2	Y300001-
34		207-54-77560	Sheet	1	Y300001-
35		207-54-77640	Sheet	2	Y300001-
36		207-54-77880	Sheet	1	Y300001-
37		01010-81230	Bolt	6	Y300001-
38		01643-31232	Washer	6	Y300001-
39		207-54-76350	Cover	1	Y300001-
40		203-54-62670	Collar	2	Y300001-

PC300-8 (FEN01263-00)

FIG. M1140-001001 Side Cover, RHS

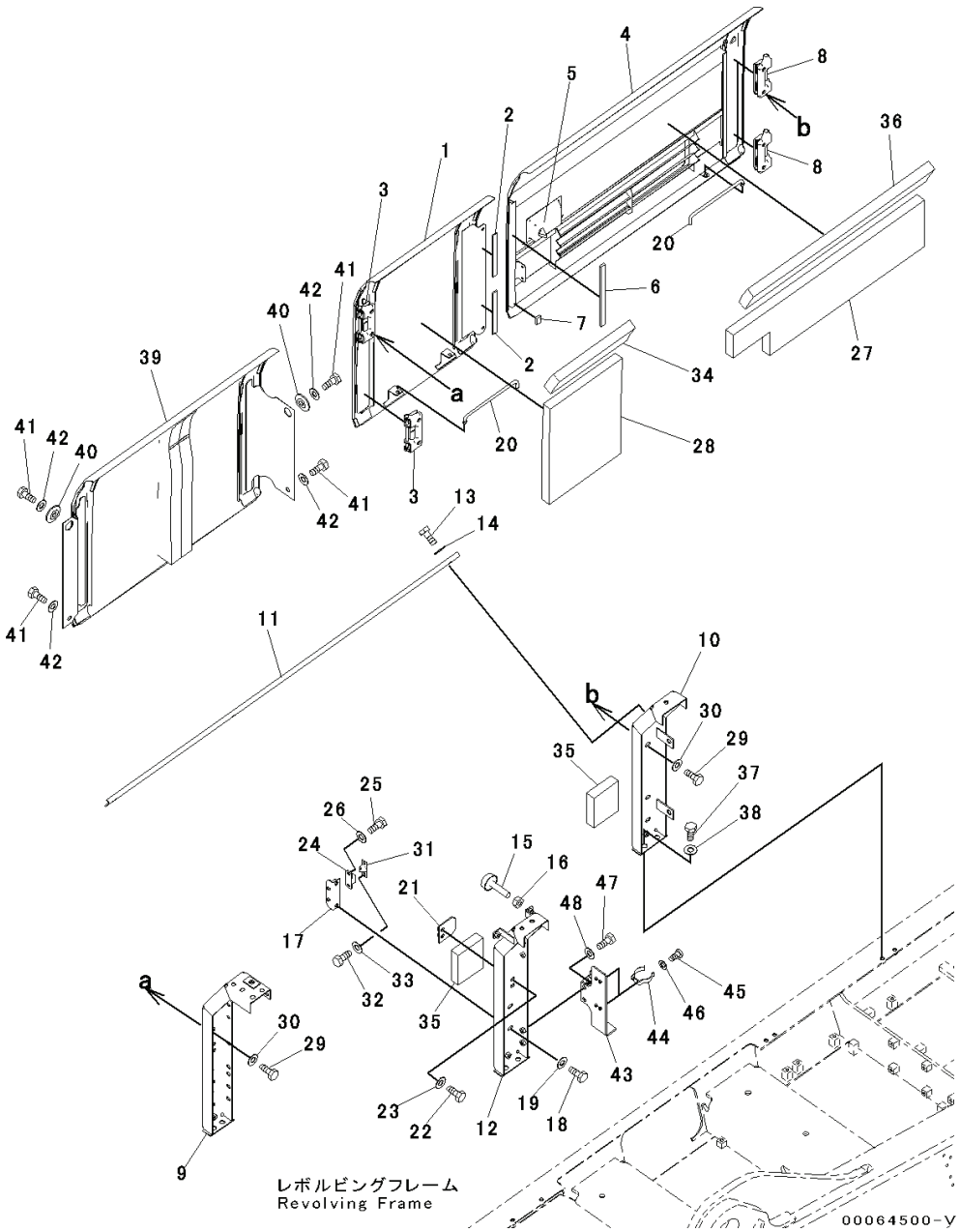

Index	Code	Part Number	Descreption	Qty	Serial Number
41		01010-81230	Bolt	4	Y300001-
42		01643-31232	Washer	4	Y300001-
43		207-54-78890	Bracket	1	Y300001-
44		203-54-63230	Clamp	2	Y300001-
45		01220-40612	Screw, Philips Head	4	Y300001-
46		01641-20608	Washer	4	Y300001-
47		01010-81230	Bolt	2	Y300001-
48		01643-31232	Washer	2	Y300001-

PC300-8 (FEN01263-00)

FIG. M1150-001001 Machine Cab Partition, (1/2)

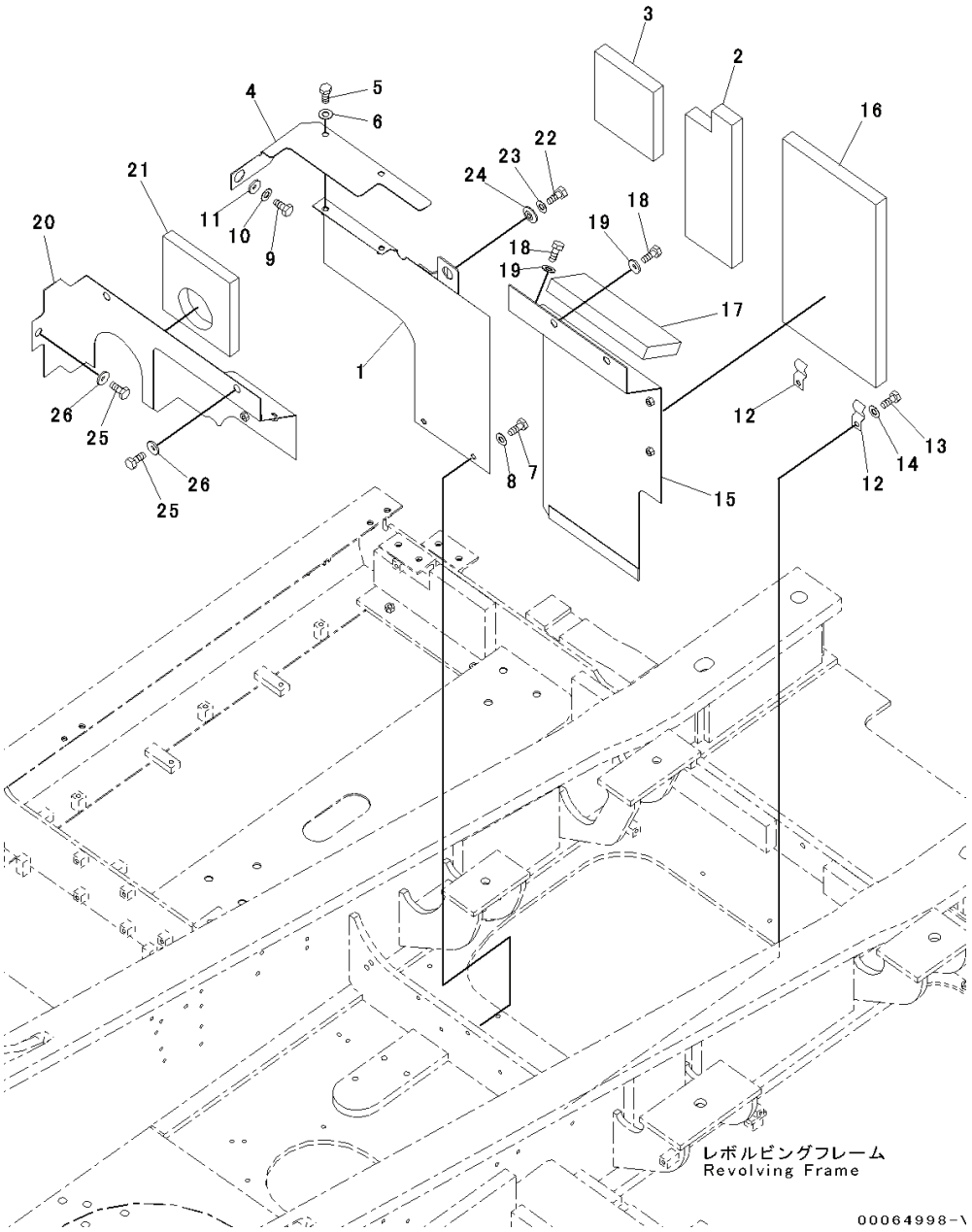

Index	Code	Part Number	Descreption	Qty	Serial Number
1		207-54-72511	Cover	1	Y300001-
2		207-54-72861	• Sheet	1	Y300001-
3		207-54-72871	• Sheet	1	Y300001-
4		207-54-76591	Cover	1	Y300001-
5		01010-81230	Bolt	2	Y300001-
6		01643-31232	Washer	2	Y300001-
7		01010-81230	Bolt	2	Y300001-
8		01643-31232	Washer	2	Y300001-
9		01010-81230	Bolt	1	Y300001-
10		01643-31232	Washer	1	Y300001-
11		203-54-62670	Collar	1	Y300001-
12		20Y-54-27761	Catcher	2	Y300001-
13		01010-81230	Bolt	2	Y300001-
14		01643-31232	Washer	2	Y300001-
15		207-54-76512	Cover	1	Y300001-
16		207-54-72851	• Sheet	1	Y300001-
17		207-54-77840	• Sheet	1	Y300001-
18		01010-81230	Bolt	3	Y300001-
19		175-54-34170	Washer	3	Y300001-
20		207-54-76521	Cover	1	Y300001-
21		207-54-76570	• Sheet	1	Y300001-
22		01010-81230	Bolt	1	Y300001-
23		01643-31232	Washer	1	Y300001-
24		208-54-57180	Collar	1	Y300001-
25		01010-81230	Bolt	3	Y300001-
26		175-54-34170	Washer	3	Y300001-

PC300-8 (FEN01263-00)

FIG. M1150-001002 Machine Cab Partition, (2/2)

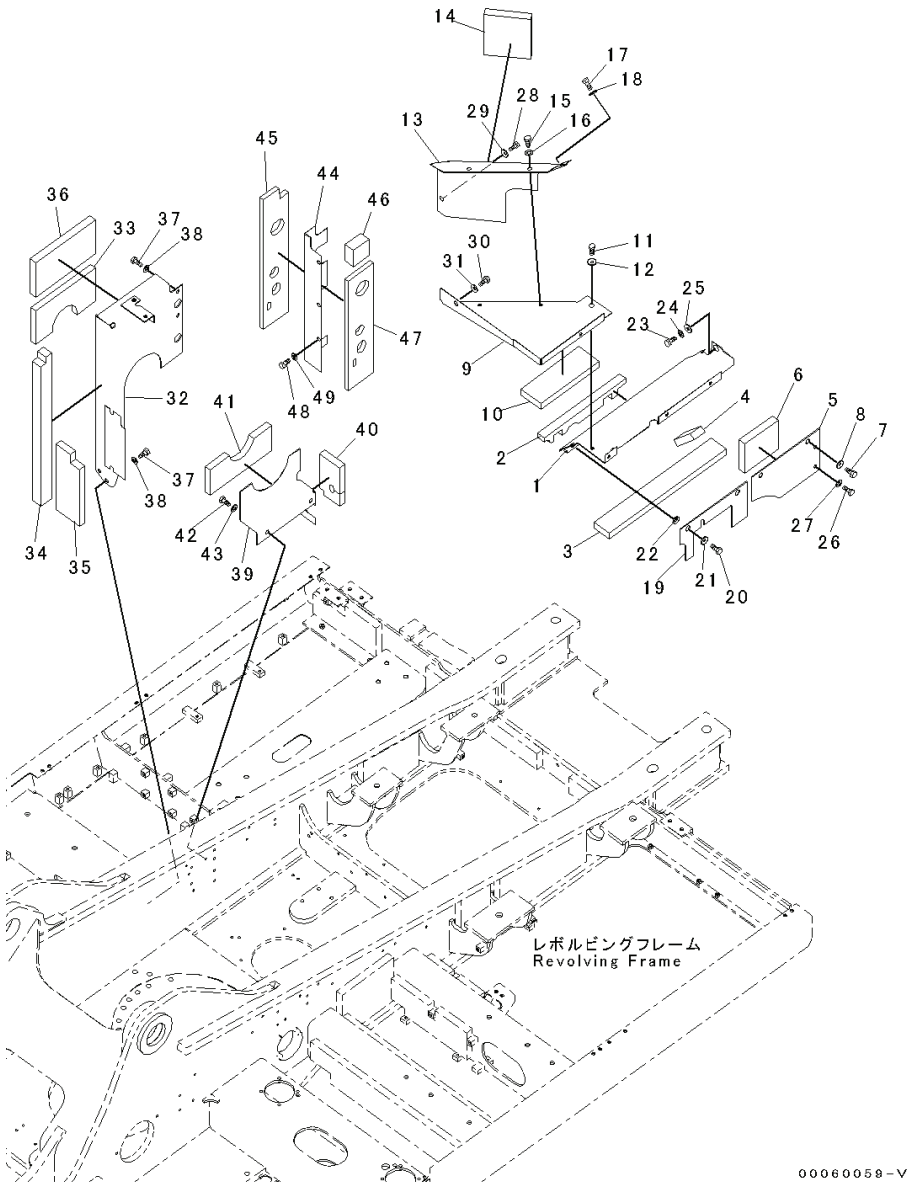

Index	Code	Part Number	Descreption	Qty	Serial Number
1		207-54-76840	Cover	1	Y300001-
2		207-54-76860	• Sheet	1	Y300001-
3		207-54-77770	• Sheet	1	Y300001-
4		207-54-77980	• Sheet	1	Y300001-
5		207-54-76950	Cover	1	Y300001-
6		207-54-72990	• Sheet	1	Y300001-
7		01010-81220	Bolt	2	Y300001-
8		175-54-34170	Washer	2	Y300001-
9		207-54-76850	Cover	1	Y300001-
10		207-54-77780	• Sheet	1	Y300001-
11		01010-81220	Bolt	1	Y300001-
12		175-54-34170	Washer	1	Y300001-
13		207-54-72552	Cover	1	Y300001-
14		207-54-72871	• Sheet	1	Y300001-
15		01010-81220	Bolt	2	Y300001-
16		01643-31232	Washer	2	Y300001-
17		01010-81220	Bolt	1	Y300001-
18		175-54-34170	Washer	1	Y300001-
19		207-54-76870	Sheet	1	Y300001-
20		01010-81230	Bolt	2	Y300001-
21		175-54-34170	Washer	2	Y300001-
22		01643-51232	Washer	2	Y300001-
23		01010-81230	Bolt	1	Y300001-
24		01643-31232	Washer	1	Y300001-
25		205-54-76410	Collar	1	Y300001-
26		01010-81230	Bolt	2	Y300001-
27		01643-31232	Washer	2	Y300001-
28		01010-81220	Bolt	2	Y300001-
29		175-54-34170	Washer	2	Y300001-
30		01010-81230	Bolt	1	Y300001-
31		175-54-34170	Washer	1	Y300001-
32		207-54-76611	Cover	1	Y300001-
33		207-54-76630	• Sheet	1	Y300001-
34		208-54-73351	• Sheet	1	Y300001-
35		207-54-76640	• Sheet	1	Y300001-
36		207-54-76651	• Sheet	1	Y300001-
37		01010-81230	Bolt	4	Y300001-
38		01643-31232	Washer	4	Y300001-
39		207-54-76621	Cover	1	Y300001-
40		207-54-76690	• Sheet	1	Y300001-

PC300-8 (FEN01263-00)

FIG. M1150-001002 Machine Cab Partition, (2/2)

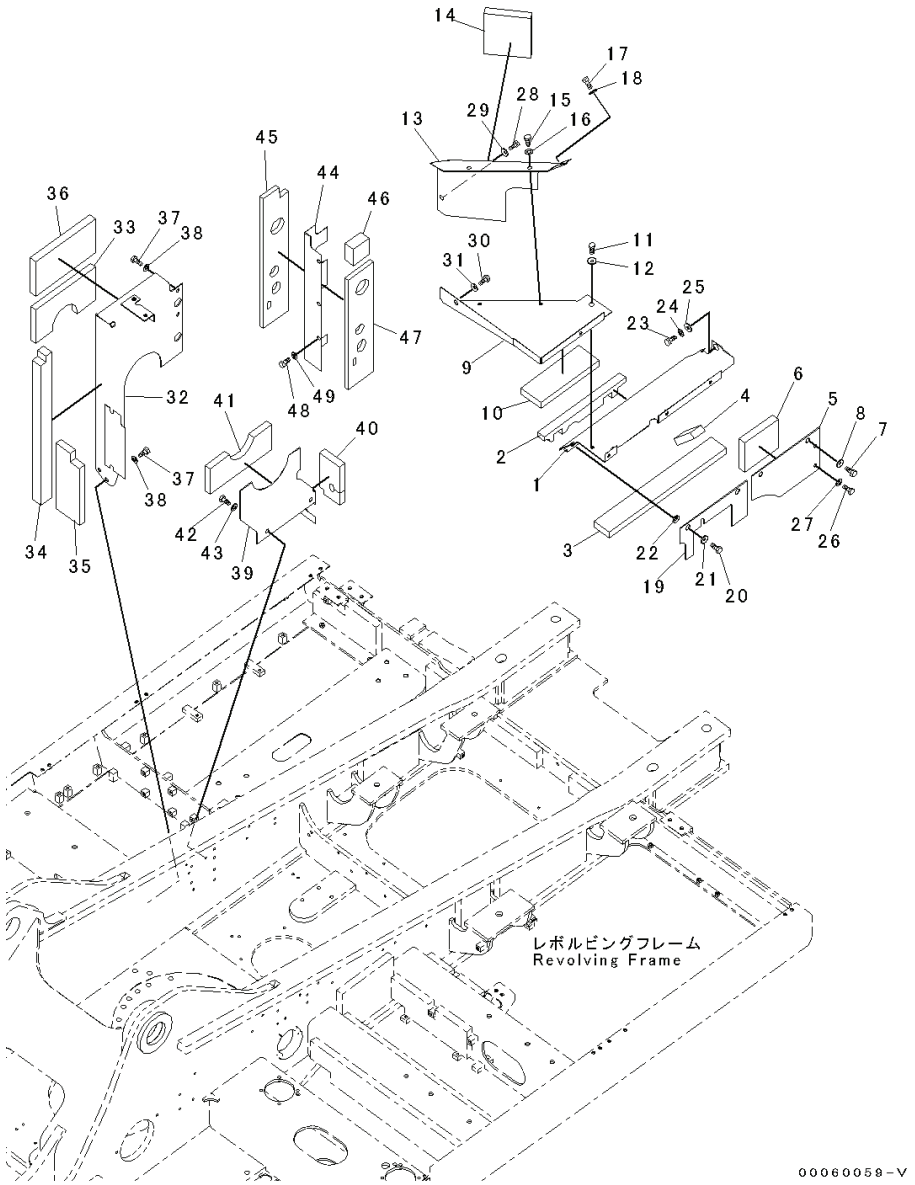

Index	Code	Part Number	Descreption	Qty	Serial Number
41		207-54-76661	• Sheet	1	Y300001-
42		01010-81230	Bolt	2	Y300001-
43		01643-31232	Washer	2	Y300001-
44		207-54-76552	Cover	1	Y300001-
45		207-54-76541	• Sheet	1	Y300001-
46		207-54-76560	• Sheet	1	Y300001-
47		207-54-76810	• Sheet	1	Y300001-
48		01010-81230	Bolt	3	Y300001-
49		01643-31232	Washer	3	Y300001-

PC300-8 (FEN01263-00)

FIG. M1210-001001 Machine Cab Cover, With Pre-cleaner, (1/2)

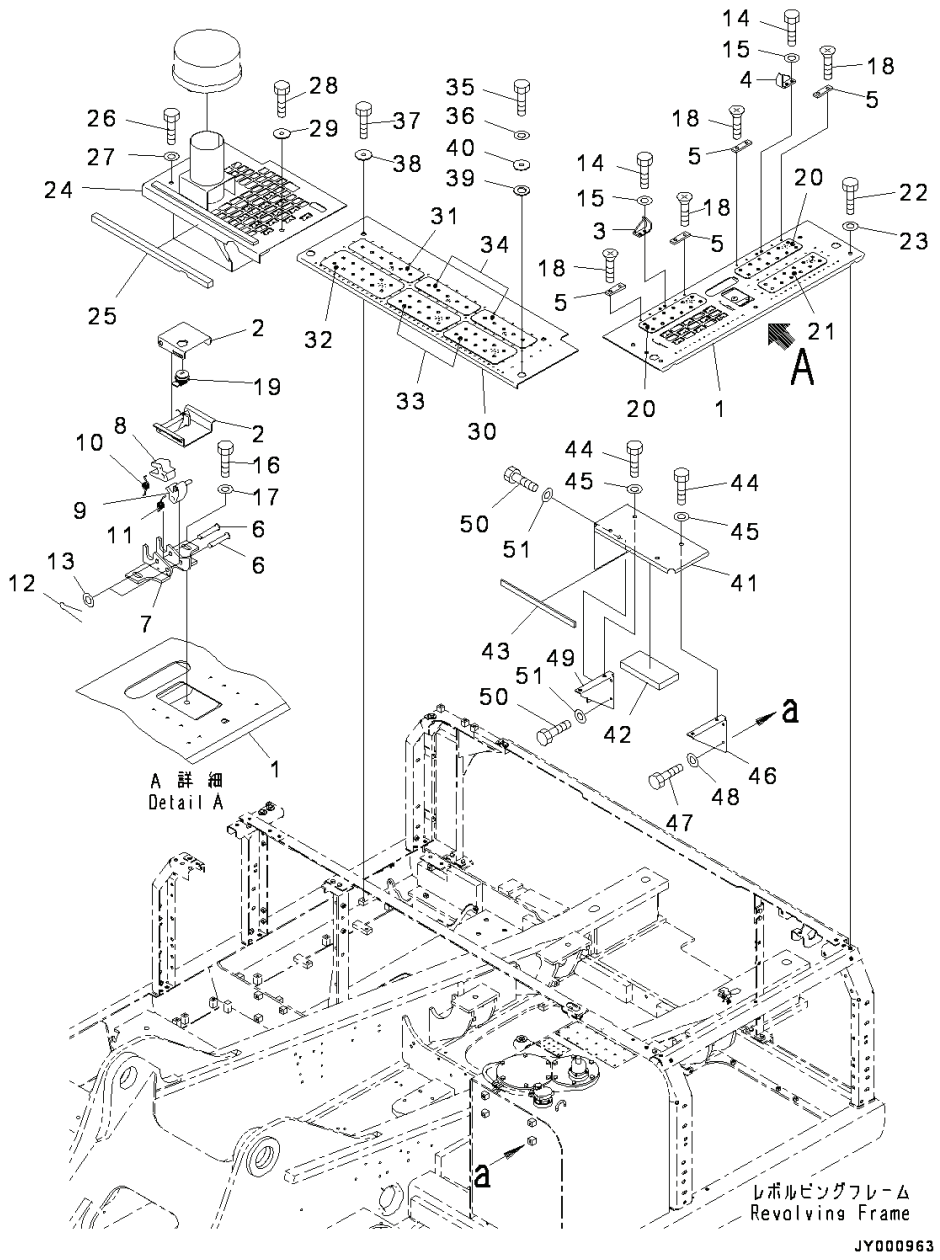

Index	Code	Part Number	Descreption	Qty	Serial Number
1		207-54-78950	Cover	1	Y300001-
2		20Y-54-25852	• Lock	1	Y300001-
		207-54-77610	• Sheet	1	Y300001-
3		207-54-61441	Bracket,LHS	1	Y300001-
4		207-54-61450	Bracket,RHS	1	Y300001-
5		205-54-68440	Plate	4	Y300001-
6		154-54-22520	Pin	2	Y300001-
7		208-54-71920	Bracket	1	Y300001-
8		208-54-71910	Lever	1	Y300001-
9		207-54-72230	Lever	1	Y300001-
10		20X-54-21460	Spring	1	Y300001-
11		21K-54-26351	Spring	1	Y300001-
12		04050-13020	Pin, Cotter	2	Y300001-
13		01640-21123	Washer, Flat	2	Y300001-
14		01010-81025	Bolt	4	Y300001-
15		01643-31032	Washer	4	Y300001-
16		01010-81030	Bolt	2	Y300001-
17		01643-31032	Washer	2	Y300001-
18		01224-40616	Screw	8	Y300001-
19		20Y-54-73190	Lock Assembly	1	Y300001-
20		207-00-76310	Plate	2	Y300001-
21		207-00-76320	Plate	1	Y300001-
22		01010-81230	Bolt	10	Y300001-
23		01643-31232	Washer	10	Y300001-
24		207-54-78410	Cover	1	Y300001-
25		207-54-76780	• Sheet	1	Y300001-
26		01010-81230	Bolt	2	Y300001-
27		01643-31232	Washer	2	Y300001-
28		01010-81230	Bolt	1	Y300001-
29		175-54-34170	Washer	1	Y300001-
30		207-54-76720	Cover	1	Y300001-
31		20Y-00-42120	Plate	1	Y300001-
32		20Y-00-42140	Plate	1	Y300001-
33		207-00-76250	Plate	2	Y300001-
34		20Y-00-42110	Plate	2	Y300001-
35		01010-81230	Bolt	2	Y300001-
36		01643-31232	Washer	2	Y300001-
37		01010-81230	Bolt	2	Y300001-
38		175-54-34170	Washer	2	Y300001-
39		20Y-54-19920	Plate	2	Y300001-

PC300-8 (FEN01263-00)

FIG. M1210-001001 Machine Cab Cover, With Pre-cleaner, (1/2)

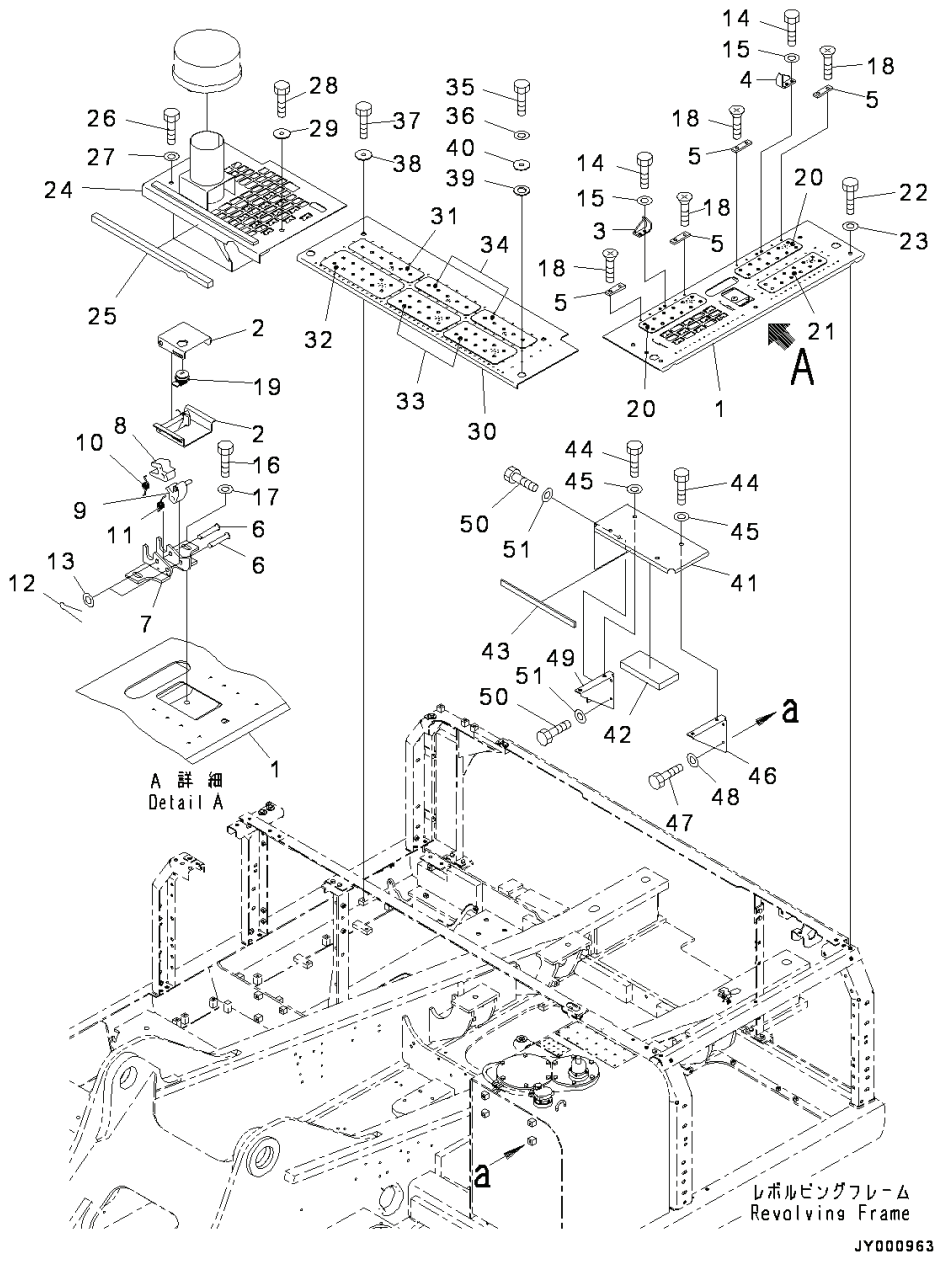

Index	Code	Part Number	Descreption	Qty	Serial Number
40		20Y-54-19930	Collar	2	Y300001-
41		207-54-78440	Cover Assembly	1	Y300001-
42		207-54-76760	• Sheet	1	Y300001-
43		207-54-78460	• Sheet	1	Y300001-
44		01010-81225	Bolt	4	Y300001-
45		01643-31232	Washer	4	Y300001-
46		207-54-76770	Bracket	1	Y300001-
47		01010-81225	Bolt	2	Y300001-
48		01643-31232	Washer	2	Y300001-
49		207-54-76890	Bracket	1	Y300001-
50		01010-81225	Bolt	3	Y300001-
51		01643-31232	Washer	3	Y300001-

PC300-8 (FEN01263-00)

FIG. M1210-001002 Machine Cab Cover, With Pre-cleaner, (2/2)

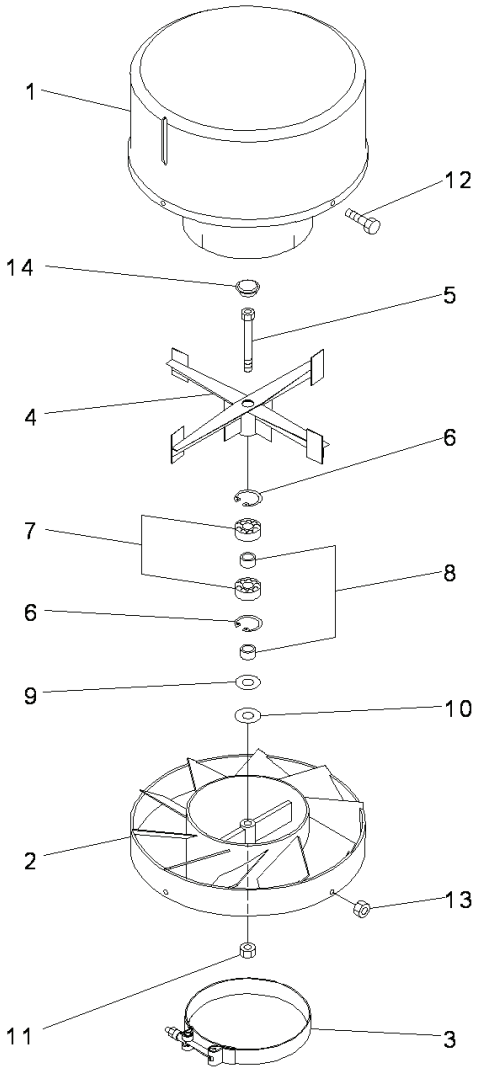

00002318

Index	Code	Part Number	Descreption	Qty	Serial Number
		421-U12-3100	Pre-cleaner	1	Y300001-
1		421-U12-3120	• Hood, precleaner	1	Y300001-
2		421-U12-3130	• Body, precleaner	1	Y300001-
3		421-U12-3140	• Clamp	1	Y300001-
4		421-U12-3150	• Rotor	1	Y300001-
5		421-U12-3160	• Bolt	1	Y300001-
6		421-U12-3170	• Ring, Snap	2	Y300001-
7		421-U12-3180	• Bearing, Ball	2	Y300001-
8		421-U12-3190	• Bushing	2	Y300001-
9		421-U12-3210	• Washer	1	Y300001-
10		421-U12-3220	• Washer, Flat	1	Y300001-
11		421-U12-3230	• Nut	1	Y300001-
12		421-U12-3240	• Bolt	4	Y300001-
13		421-U12-3250	• Nut	4	Y300001-
14		421-U12-3260	• Plug, Plastic	1	Y300001-

FIG. M1210-002001 Machine Cab Cover

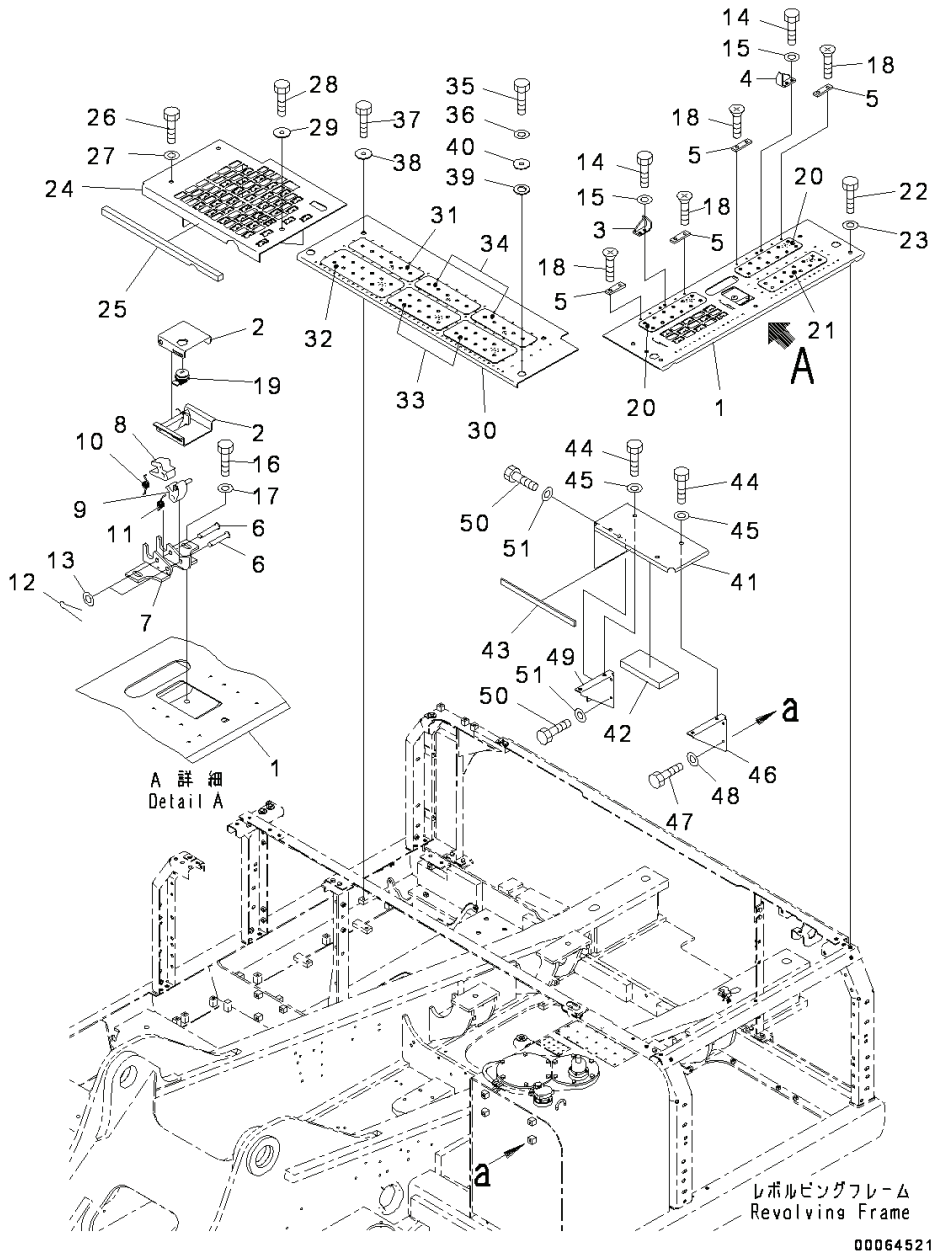

PC300-8 (FEN01263-00)

Index	Code	Part Number	Descreption	Qty	Serial Number
1		207-54-78950	Cover	1	Y300001-
2		20Y-54-25852	• Lock	1	Y300001-
		207-54-77610	• Sheet	1	Y300001-
3		207-54-61441	Bracket,LHS	1	Y300001-
4		207-54-61450	Bracket,RHS	1	Y300001-
5		205-54-68440	Plate	4	Y300001-
6		154-54-22520	Pin	2	Y300001-
7		208-54-71920	Bracket	1	Y300001-
8		208-54-71910	Lever	1	Y300001-
9		207-54-72230	Lever	1	Y300001-
10		20X-54-21460	Spring	1	Y300001-
11		21K-54-26351	Spring	1	Y300001-
12		04050-13020	Pin, Cotter	2	Y300001-
13		01640-21123	Washer, Flat	2	Y300001-
14		01010-81025	Bolt	4	Y300001-
15		01643-31032	Washer	4	Y300001-
16		01010-81030	Bolt	2	Y300001-
17		01643-31032	Washer	2	Y300001-
18		01224-40616	Screw	8	Y300001-
19		20Y-54-73190	Lock Assembly	1	Y300001-
20		207-00-76310	Plate	2	Y300001-
21		207-00-76320	Plate	1	Y300001-
22		01010-81230	Bolt	10	Y300001-
23		01643-31232	Washer	10	Y300001-
24		207-54-76731	Cover	1	Y300001-
25		207-54-76780	• Sheet	1	Y300001-
26		01010-81230	Bolt	2	Y300001-
27		01643-31232	Washer	2	Y300001-
28		01010-81230	Bolt	1	Y300001-
29		175-54-34170	Washer	1	Y300001-
30		207-54-76720	Cover	1	Y300001-
31		20Y-00-42120	Plate	1	Y300001-
32		20Y-00-42140	Plate	1	Y300001-
33		207-00-76250	Plate	2	Y300001-
34		20Y-00-42110	Plate	2	Y300001-
35		01010-81230	Bolt	2	Y300001-
36		01643-31232	Washer	2	Y300001-
37		01010-81230	Bolt	2	Y300001-
38		175-54-34170	Washer	2	Y300001-
39		20Y-54-19920	Plate	2	Y300001-

FIG. M1210-002001 Machine Cab Cover

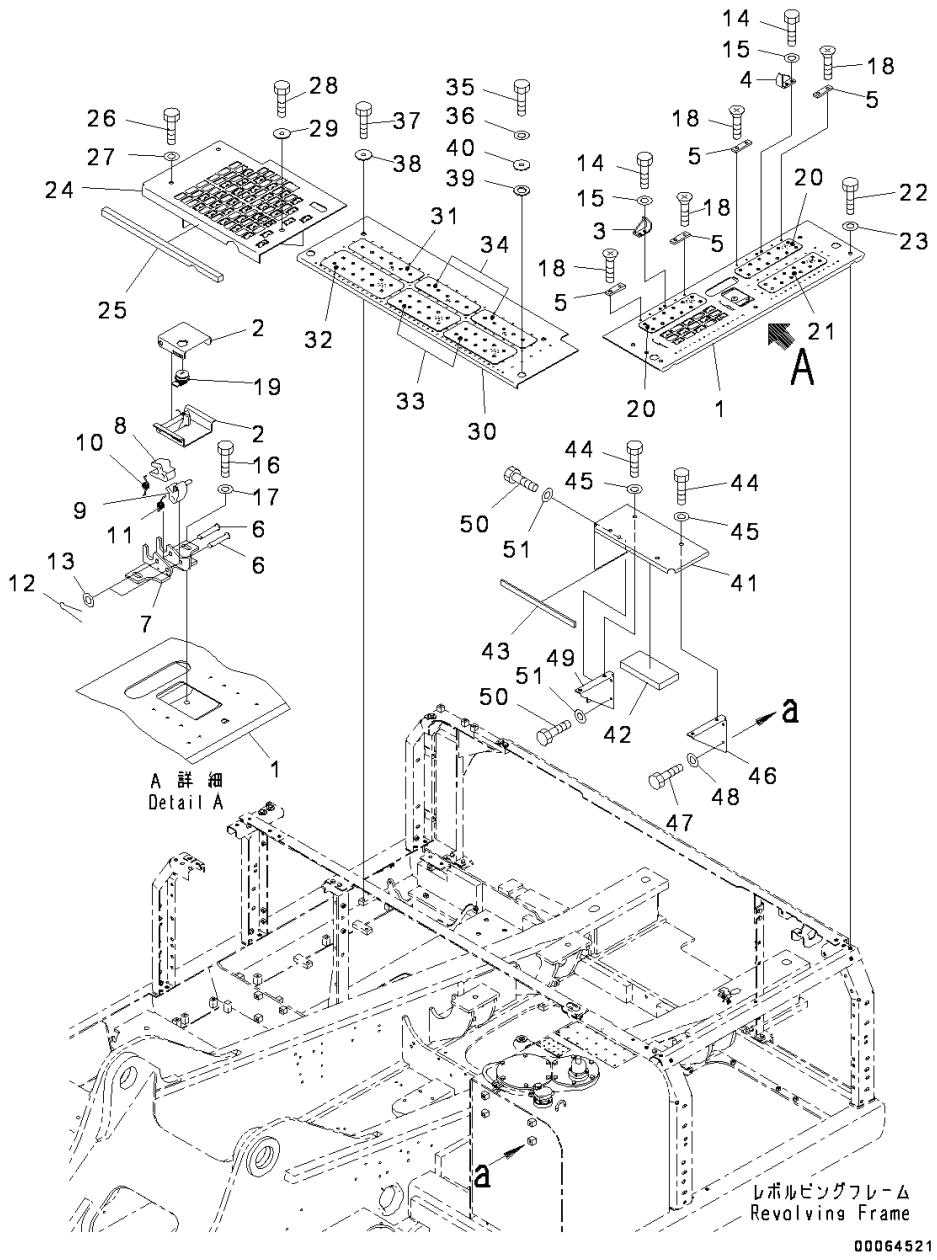

Index	Code	Part Number	Descreption	Qty	Serial Number
40		20Y-54-19930	Collar	2	Y300001-
41		207-54-78440	Cover Assembly	1	Y300001-
42		207-54-76760	• Sheet	1	Y300001-
43		207-54-78460	• Sheet	1	Y300001-
44		01010-81225	Bolt	4	Y300001-
45		01643-31232	Washer	4	Y300001-
46		207-54-76770	Bracket	1	Y300001-
47		01010-81225	Bolt	2	Y300001-
48		01643-31232	Washer	2	Y300001-
49		207-54-76890	Bracket	1	Y300001-
50		01010-81225	Bolt	3	Y300001-
51		01643-31232	Washer	3	Y300001-

PC300-8 (FEN01263-00)

FIG. M1220-001001 Battery Case

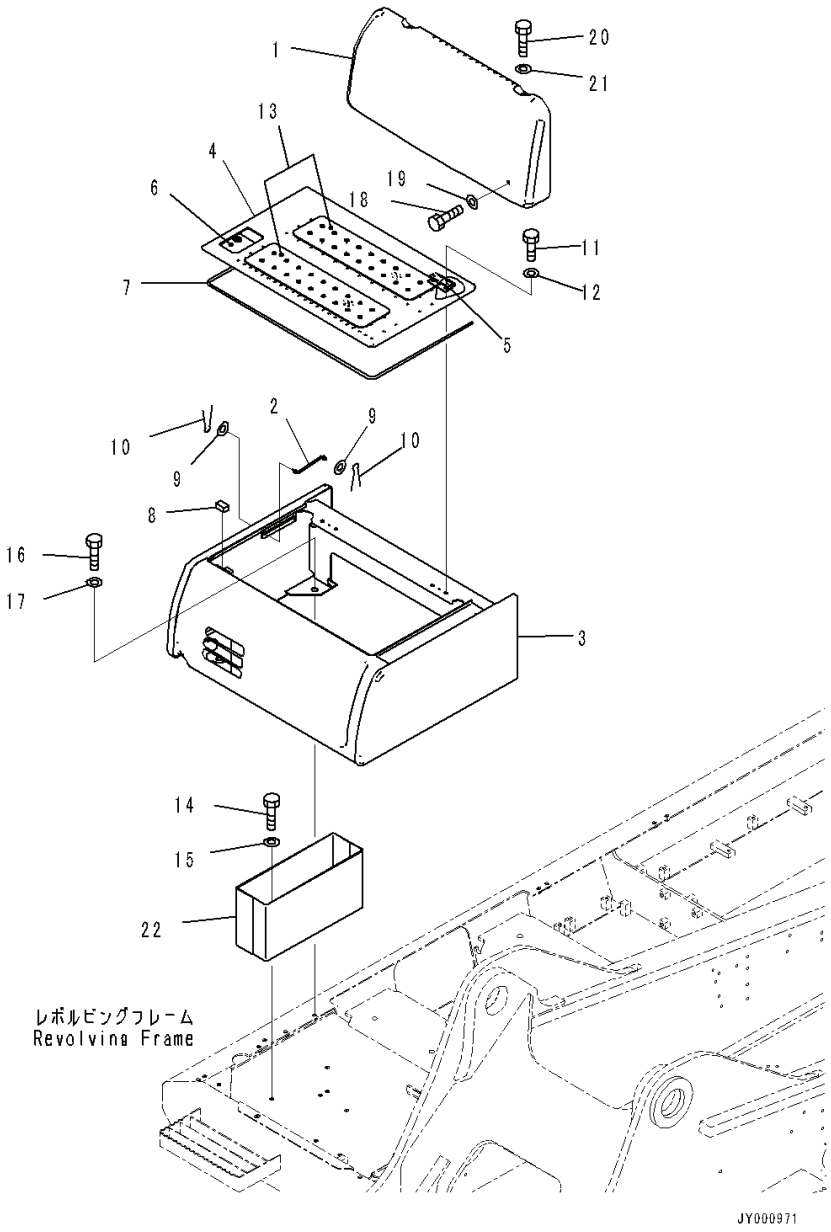

Index	Code	Part Number	Descreption	Qty	Serial Number
1		207-54-77451	Cover	1	Y300001-
2		203-54-56630	Rod	1	Y300001-
3		207-54-77421	Cover	1	Y300001-
4		207-54-78820	Cover	1	Y300001-
5		20Y-54-74161	• Hinge,Welded	2	Y300001-
6		20Y-54-74172	• Lock,Welded	1	Y300001-
7		208-54-71470	Seal	1	Y300001-
8		20Y-54-29680	Sheet	1	Y300001-
9		01643-30623	Washer	2	Y300001-
10		04050-11612	Pin, Cotter	2	Y300001-
11		01010-81020	Bolt	4	Y300001-
12		01643-31032	Washer	4	Y300001-
13		209-00-41550	Plate	2	Y300001-
14		01010-81230	Bolt	2	Y300001-
15		01643-31232	Washer	2	Y300001-
16		01010-81230	Bolt	4	Y300001-
17		175-54-34170	Washer	4	Y300001-
18		01010-81230	Bolt	2	Y300001-
19		175-54-34170	Washer	2	Y300001-
20		01010-81230	Bolt	2	Y300001-
21		01643-31232	Washer	2	Y300001-
22		207-54-77441	Box, Tool	1	Y300001-

PC300-8 (FEN01263-00)

FIG. M1310-002001 Handrail

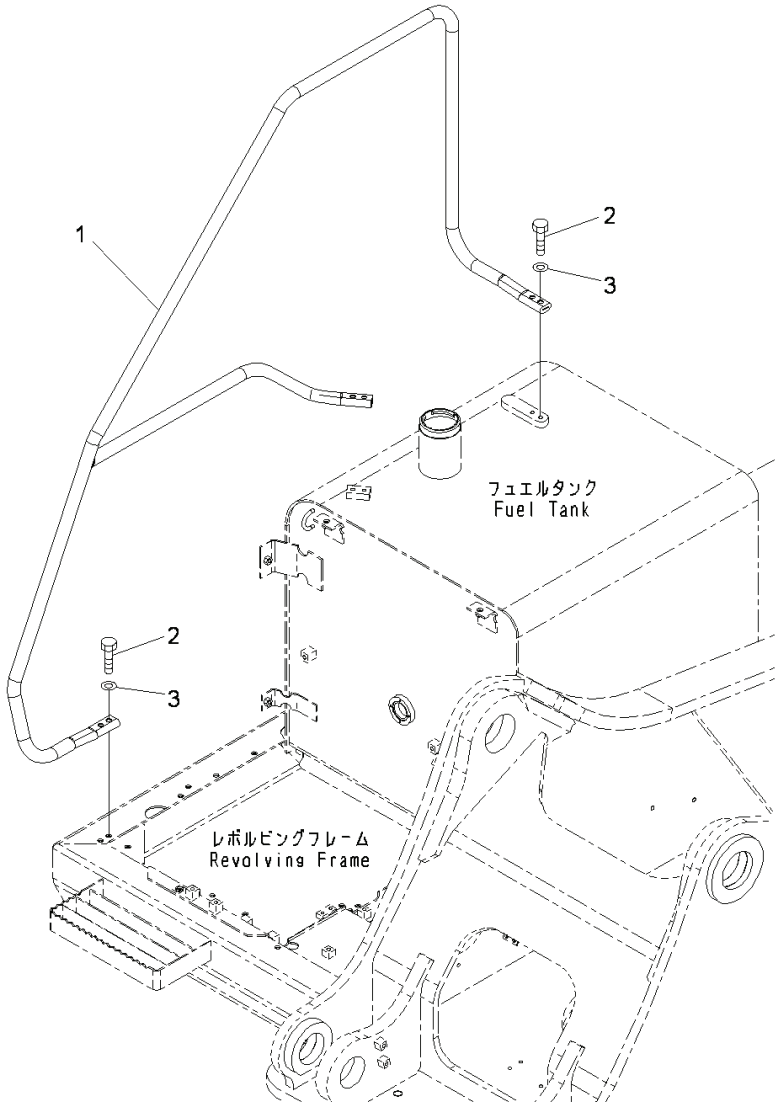

Index	Code	Part Number	Descreption	Qty	Serial Number
1		207-54-75220	Handrail	1	Y300001-
2		01010-81240	Bolt	6	Y300001-
3		01643-31232	Washer	6	Y300001-

PC300-8 (FEN01263-00)

FIG. M1410-001001 Rear View Mirror, LHS

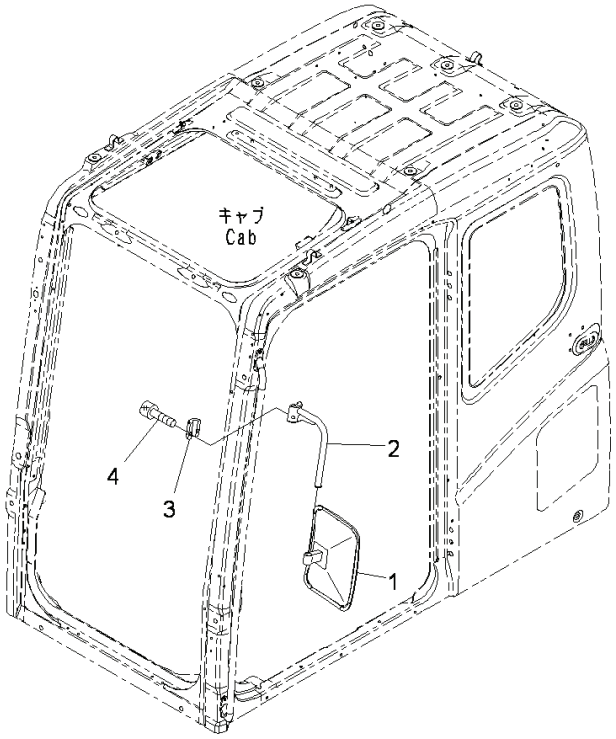

00039854

Index	Code	Part Number	Descreption	Qty	Serial Number
1		20Y-54-74280	Mirror	1	Y300001-
2		20Y-54-74260	Support	1	Y300001-
3		20Y-54-35430	Clamp	1	Y300001-
4		01252-71030	Bolt	2	Y300001-

FIG. M1420-001001 Rearview Mirror, RHS

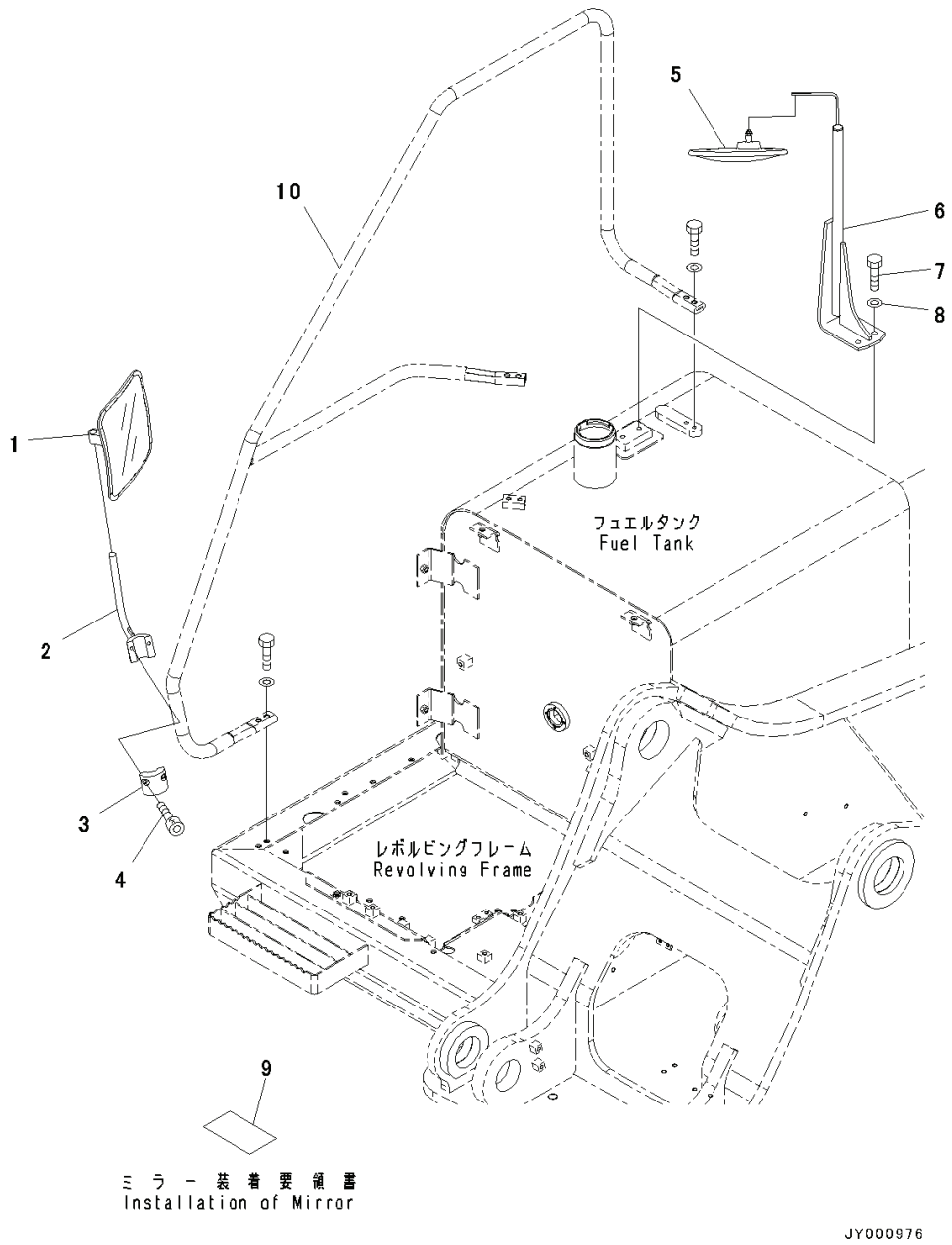

Index	Code	Part Number	Descreption	Qty	Serial Number
1		20Y-54-74280	Mirror	1	Y300001-
2		20Y-54-74270	Support	1	Y300001-
3		20Y-54-61630	Clamp	1	Y300001-
4		01252-71030	Bolt	2	Y300001-
5		207-54-75710	Mirror	1	Y300001-
6		207-54-77930	Bracket	1	Y300001-
7		01010-81230	Bolt	2	Y300001-
8		01643-31232	Washer	2	Y300001-
9		207-98-75311	Plate	1	Y300001-
10		(207-54-75220)	Handrail(Refer to Page 782)		-

PC300-8 (FEN01263-00)

FIG. M1430-002001 Rearview Mirror, Mounted On Counterweight

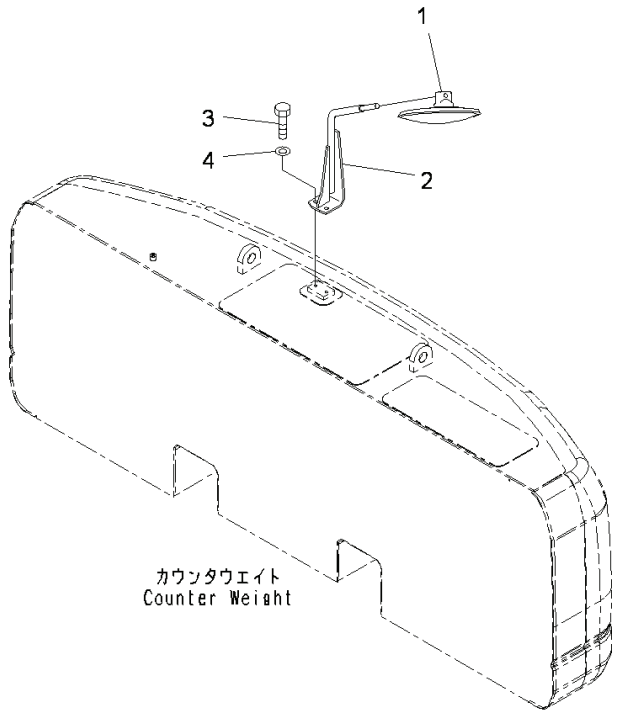

00039837

Index	Code	Part Number	Descreption	Qty	Serial Number
1		207-54-77960	Mirror, Rearview	1	Y300001-
2		207-54-77940	Bracket	1	Y300001-
3		01010-81230	Bolt	2	Y300001-
4		01643-31232	Washer	2	Y300001-

FIG. M1510-001001 Counterweight, 5471kg

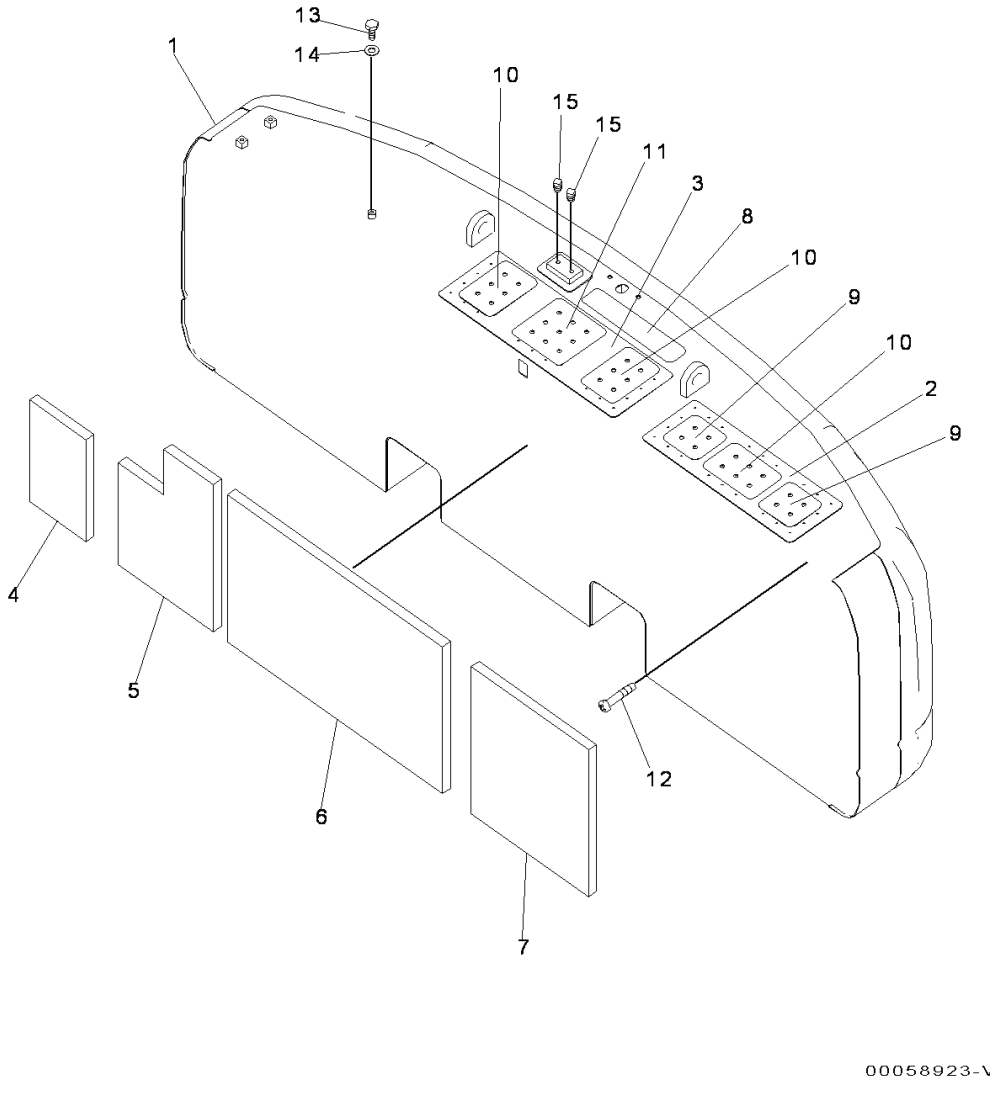

Index	Code	Part Number	Descreption	Qty	Serial Number
		207-46-74601	Weight	1	Y300001-
1		207-46-74611	• Weight	1	Y300001-
2		207-46-74430	• • Plate,Welded	1	Y300001-
3		207-46-74621	• • Plate,Welded	1	Y300001-
4		207-46-78610	• Sheet	1	Y300001-
5		207-46-78620	• Sheet	1	Y300001-
6		207-46-78630	• Sheet	1	Y300001-
7		207-46-78640	• Sheet	1	Y300001-
8		20Y-00-42170	Plate	1	Y300001-
9		207-00-76220	Plate	2	Y300001-
10		207-00-76230	Plate	3	Y300001-
11		207-00-76330	Plate	1	Y300001-
12		01370-00508	Screw	1	Y300001-
13		01010-81220	Bolt	1	Y300001-
14		01643-31232	Washer	1	Y300001-
15		07049-01215	Plug	4	Y300001-

PC300-8 (FEN01263-00)

FIG. M1520-001001 Counterweight Mounts

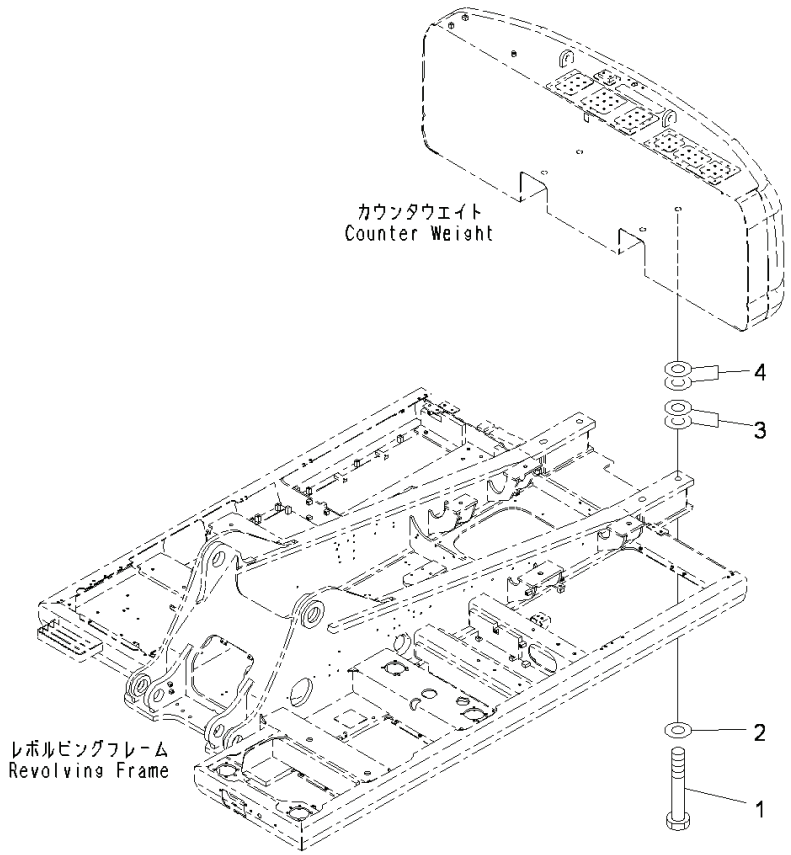

Index	Code	Part Number	Descreption	Qty	Serial Number
1		21T-09-11240	Bolt	4	Y300001-
2		207-46-52130	Washer	4	Y300001-
3		207-46-32150	Shim, T=1.0mm	4	Y300001-
4		207-46-32140	Shim, T=0.5mm	4	Y300001-

FIG. M1810-001001 Under Cover, (1/3)

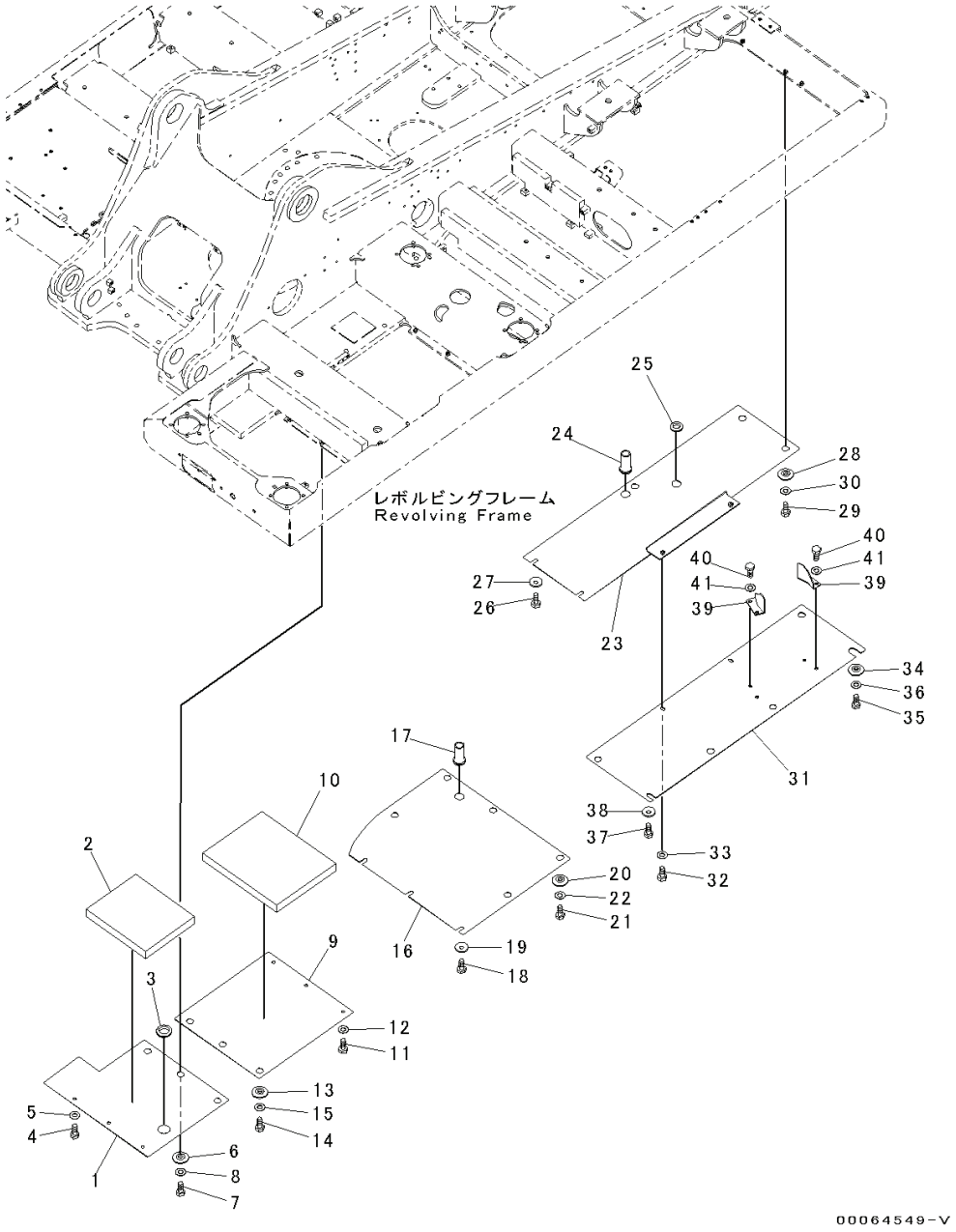

PC300-8 (FEN01263-00)

Index	Code	Part Number	Descreption	Qty	Serial Number
1		208-54-78320	Cover	1	Y300001-
2		208-54-73520	Sheet	1	Y300001-
3		08037-05016	Grommet	1	Y300001-
4		01010-81230	Bolt	3	Y300001-
5		01643-31232	Washer	3	Y300001-
6		20Y-54-12550	Collar	3	Y300001-
7		01010-81230	Bolt	3	Y300001-
8		01643-31232	Washer	3	Y300001-
9		207-54-78220	Cover	1	Y300001-
10		208-54-73490	Sheet	1	Y300001-
11		01010-81230	Bolt	3	Y300001-
12		01643-31232	Washer	3	Y300001-
13		20Y-54-12550	Collar	3	Y300001-
14		01010-81230	Bolt	3	Y300001-
15		01643-31232	Washer	3	Y300001-
16		207-54-78650	Cover	1	Y300001-
17		22U-54-24760	Grommet	1	Y300001-
18		01010-81230	Bolt	3	Y300001-
19		175-54-34170	Washer	3	Y300001-
20		20Y-54-12550	Collar	5	Y300001-
21		01010-81230	Bolt	5	Y300001-
22		01643-31232	Washer	5	Y300001-
23		207-54-78740	Cover	1	Y300001-
24		22U-54-24760	Grommet	1	Y300001-
25		08037-03614	Grommet	1	Y300001-
26		01010-81230	Bolt	2	Y300001-
27		175-54-34170	Washer	2	Y300001-
28		20Y-54-12550	Collar	3	Y300001-
29		01010-81230	Bolt	3	Y300001-
30		01643-31232	Washer	3	Y300001-
31		207-54-77220	Cover	1	Y300001-
32		01010-81230	Bolt	2	Y300001-
33		01643-31232	Washer	2	Y300001-
34		208-54-57180	Collar	5	Y300001-
35		01010-81230	Bolt	5	Y300001-
36		01643-31232	Washer	5	Y300001-
37		01010-81230	Bolt	1	Y300001-
38		175-54-34170	Washer	1	Y300001-
39		20Y-54-61670	Bracket	2	Y300001-
40		01010-81230	Bolt	4	Y300001-

FIG. M1810-001001 Under Cover, (1/3)

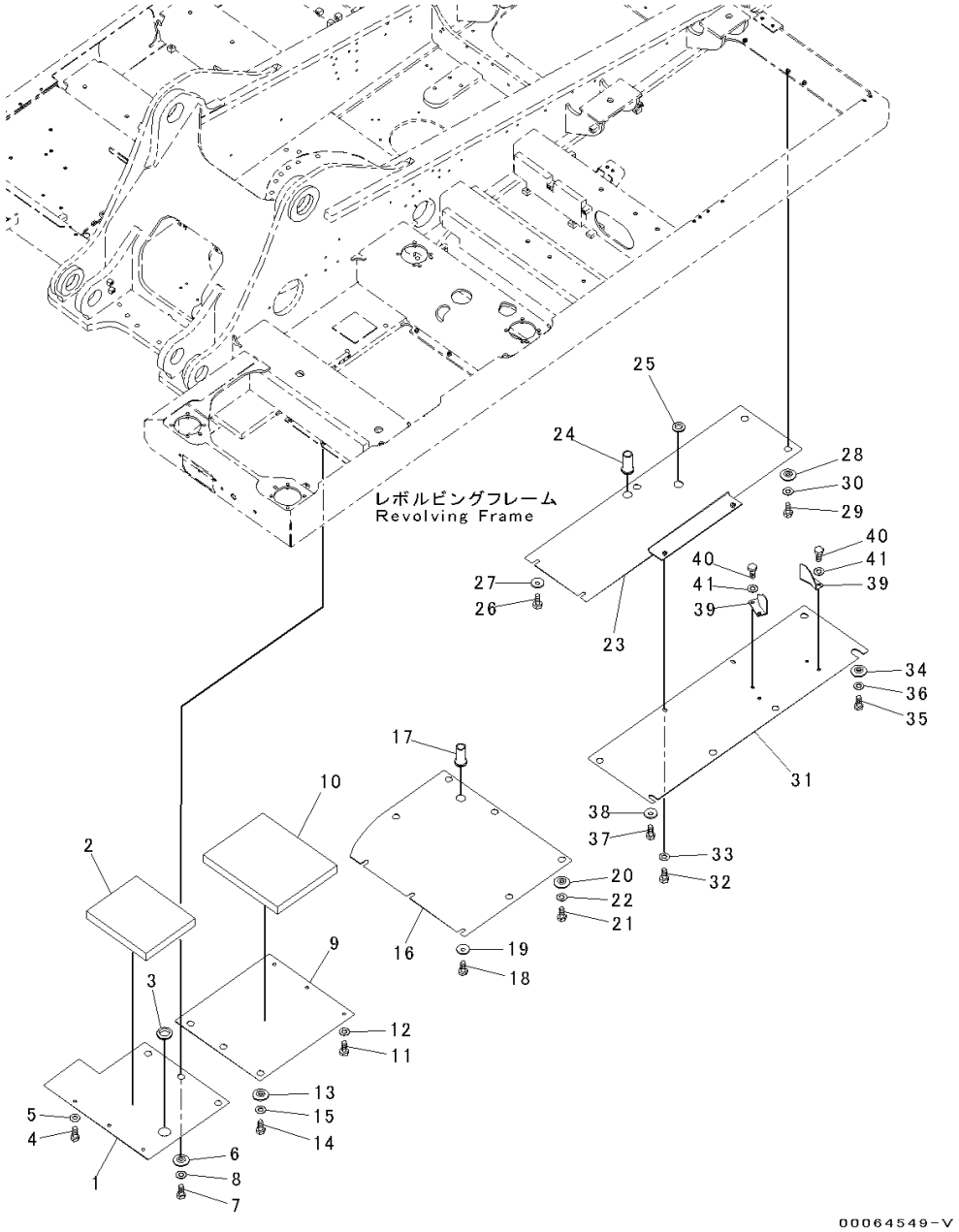

PC300-8 (FEN01263-00)

Index	Code	Part Number	Descreption	Qty	Serial Number
41		01643-31232	Washer	4	Y300001-

FIG. M1810-001002A Under Cover, (2/3)

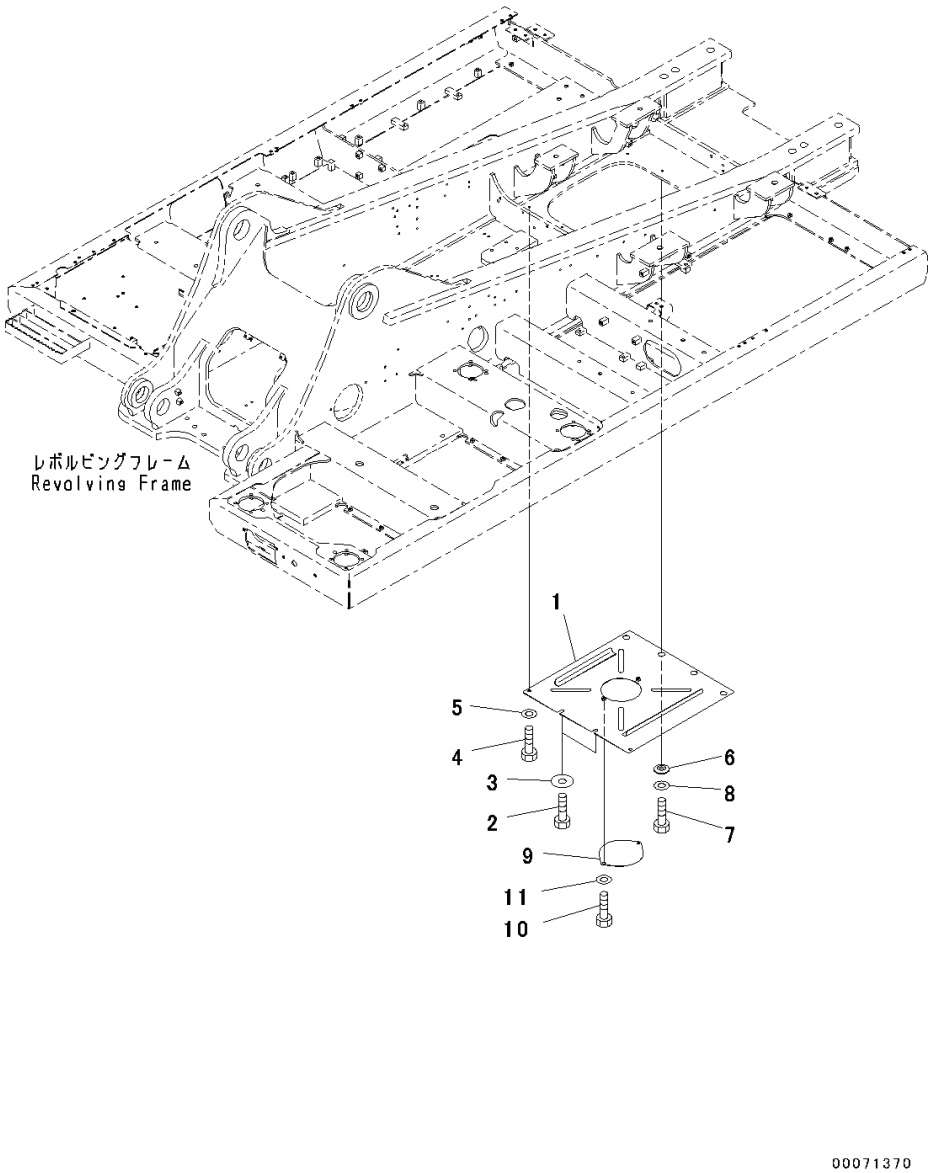

Index	Code	Part Number	Descreption	Qty	Serial Number
1		207-54-77172	Cover	1	Y300001-
2		01010-81230	Bolt	2	Y300001-
3		175-54-34170	Washer	2	Y300001-
4		01010-81230	Bolt	2	Y300001-
5		01643-31232	Washer	2	Y300001-
6		20Y-54-12550	Collar	4	Y300001-
7		01010-81230	Bolt	4	Y300001-
8		01643-31232	Washer	4	Y300001-
9		207-54-51440	Plate	1	Y300001-
10		01010-81230	Bolt	2	Y300001-
11		01643-31232	Washer	2	Y300001-

PC300-8 (FEN01263-00)

FIG. M1810-001003 Under Cover, (3/3)

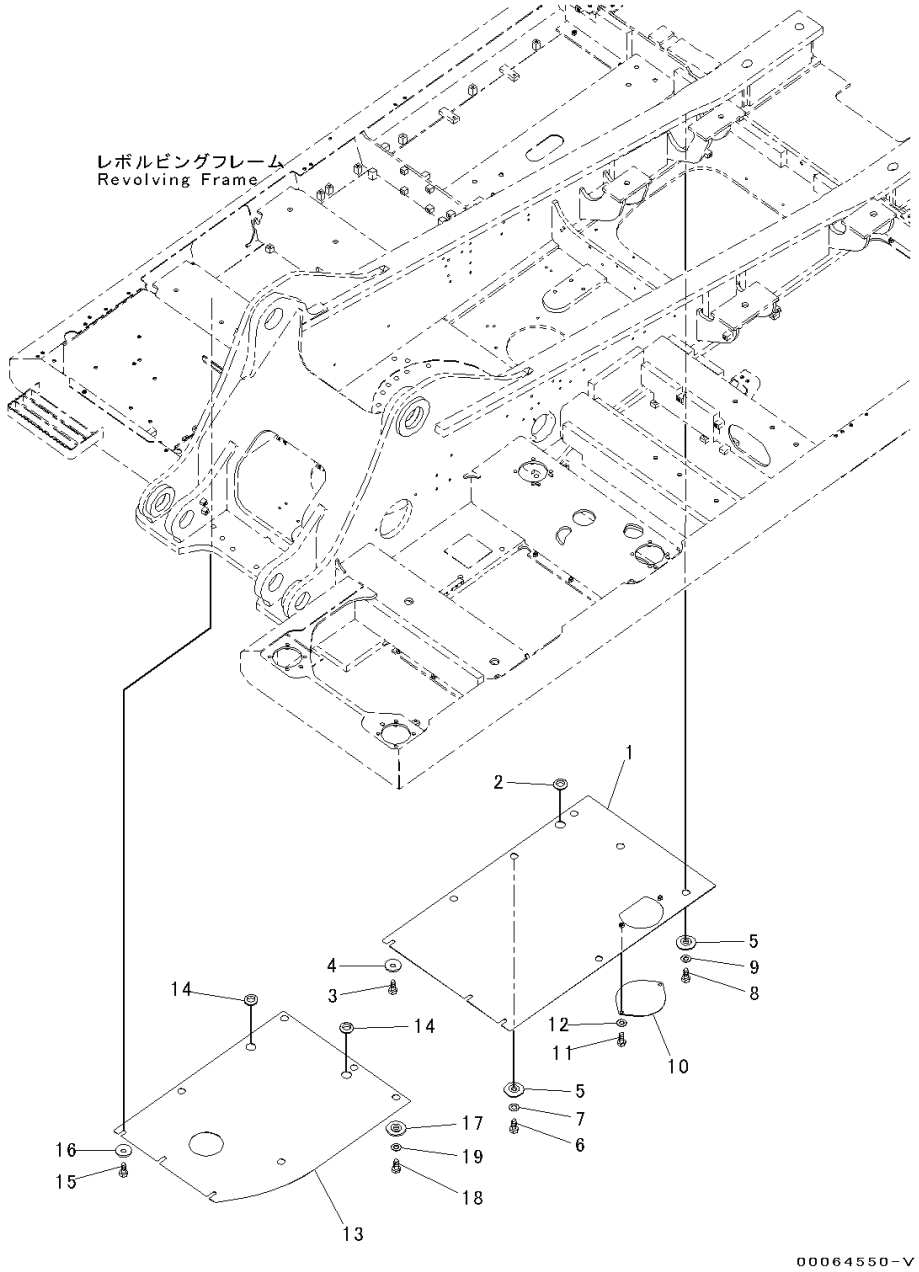

Index	Code	Part Number	Descreption	Qty	Serial Number
1		207-54-78760	Cover	1	Y300001-
2		08037-03614	Grommet	1	Y300001-
3		01010-81230	Bolt	3	Y300001-
4		175-54-34170	Washer	3	Y300001-
5		203-54-62670	Collar	6	Y300001-
6		01010-81230	Bolt	3	Y300001-
7		01643-31232	Washer	3	Y300001-
8		01010-81235	Bolt	3	Y300001-
9		01643-31232	Washer	3	Y300001-
10		207-54-51440	Plate	1	Y300001-
11		01010-81230	Bolt	2	Y300001-
12		01643-31232	Washer	2	Y300001-
13		207-54-78781	Cover	1	Y300001-
14		08037-03614	Grommet	2	Y300001-
15		01010-81230	Bolt	3	Y300001-
16		175-54-34170	Washer	3	Y300001-
17		20Y-54-12550	Collar	5	Y300001-
18		01010-81230	Bolt	5	Y300001-
19		01643-31232	Washer	5	Y300001-

PC300-8 (FEN01263-00)

FIG. M1810-002001 Under Cover, Reinforced Type, (1/3)

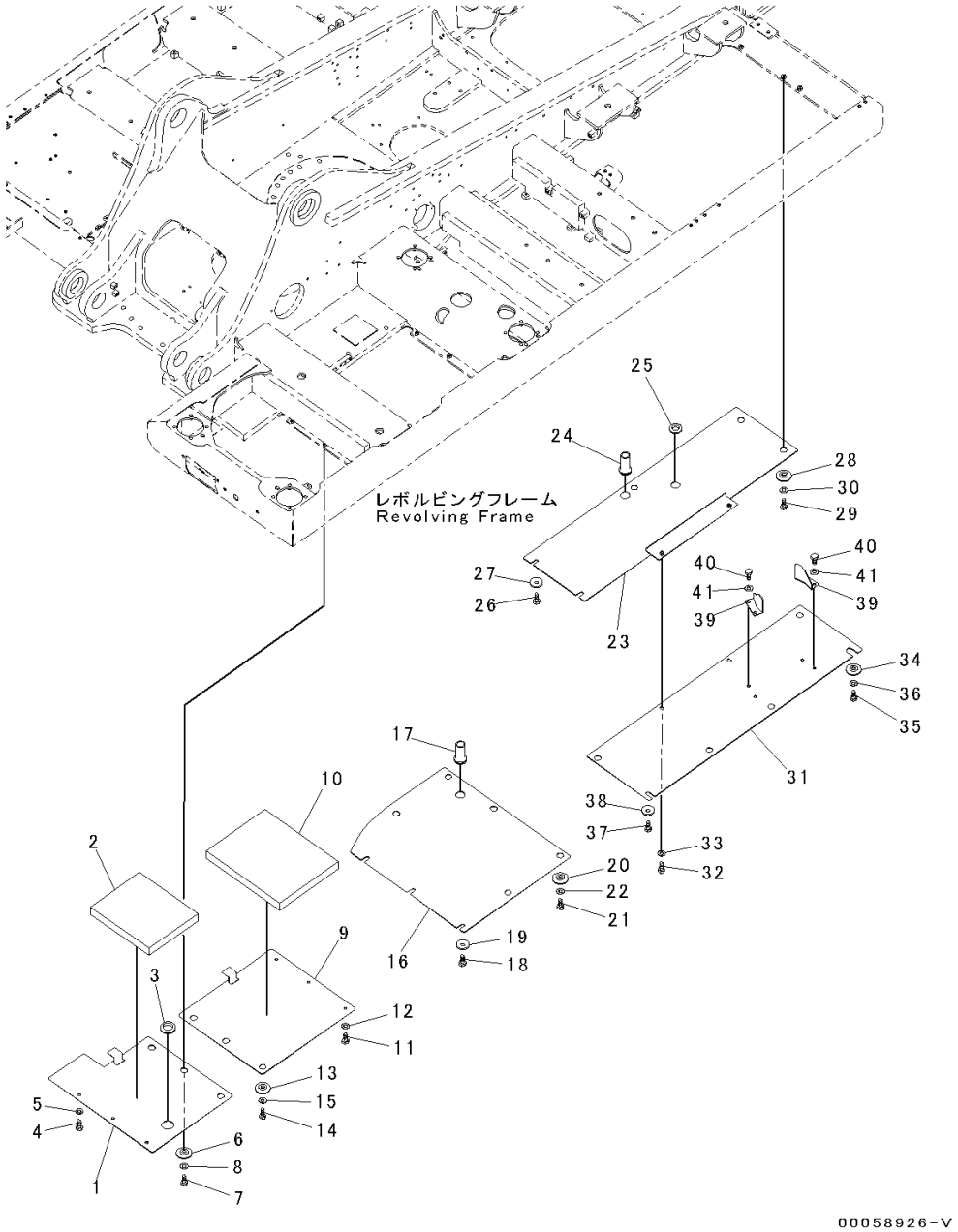

PC300-8 (FEN01263-00)

Index	Code	Part Number	Descreption	Qty	Serial Number
1		208-54-78340	Cover	1	Y300001-
2		208-54-73520	Sheet	1	Y300001-
3		08037-05016	Grommet	1	Y300001-
4		01010-81230	Bolt	3	Y300001-
5		01643-31232	Washer	3	Y300001-
6		208-54-57180	Collar	3	Y300001-
7		01010-81230	Bolt	3	Y300001-
8		01643-31232	Washer	3	Y300001-
9		207-54-78240	Cover	1	Y300001-
10		208-54-73490	Sheet	1	Y300001-
11		01010-81230	Bolt	3	Y300001-
12		01643-31232	Washer	3	Y300001-
13		208-54-57180	Collar	3	Y300001-
14		01010-81230	Bolt	3	Y300001-
15		01643-31232	Washer	3	Y300001-
16		207-54-78660	Cover	1	Y300001-
17		22U-54-24760	Grommet	1	Y300001-
18		01010-81230	Bolt	3	Y300001-
19		175-54-34170	Washer	3	Y300001-
20		208-54-57180	Collar	5	Y300001-
21		01010-81230	Bolt	5	Y300001-
22		01643-31232	Washer	5	Y300001-
23		207-54-78750	Cover	1	Y300001-
24		22U-54-24760	Grommet	1	Y300001-
25		08037-03614	Grommet	1	Y300001-
26		01010-81230	Bolt	2	Y300001-
27		175-54-34170	Washer	2	Y300001-
28		208-54-57180	Collar	3	Y300001-
29		01010-81230	Bolt	3	Y300001-
30		01643-31232	Washer	3	Y300001-
31		207-54-77220	Cover	1	Y300001-
32		01010-81230	Bolt	2	Y300001-
33		01643-31232	Washer	2	Y300001-
34		208-54-57180	Collar	5	Y300001-
35		01010-81230	Bolt	5	Y300001-
36		01643-31232	Washer	5	Y300001-
37		01010-81230	Bolt	1	Y300001-
38		175-54-34170	Washer	1	Y300001-
39		20Y-54-61670	Bracket	2	Y300001-
40		01010-81230	Bolt	4	Y300001-

FIG. M1810-002001 Under Cover, Reinforced Type, (1/3)

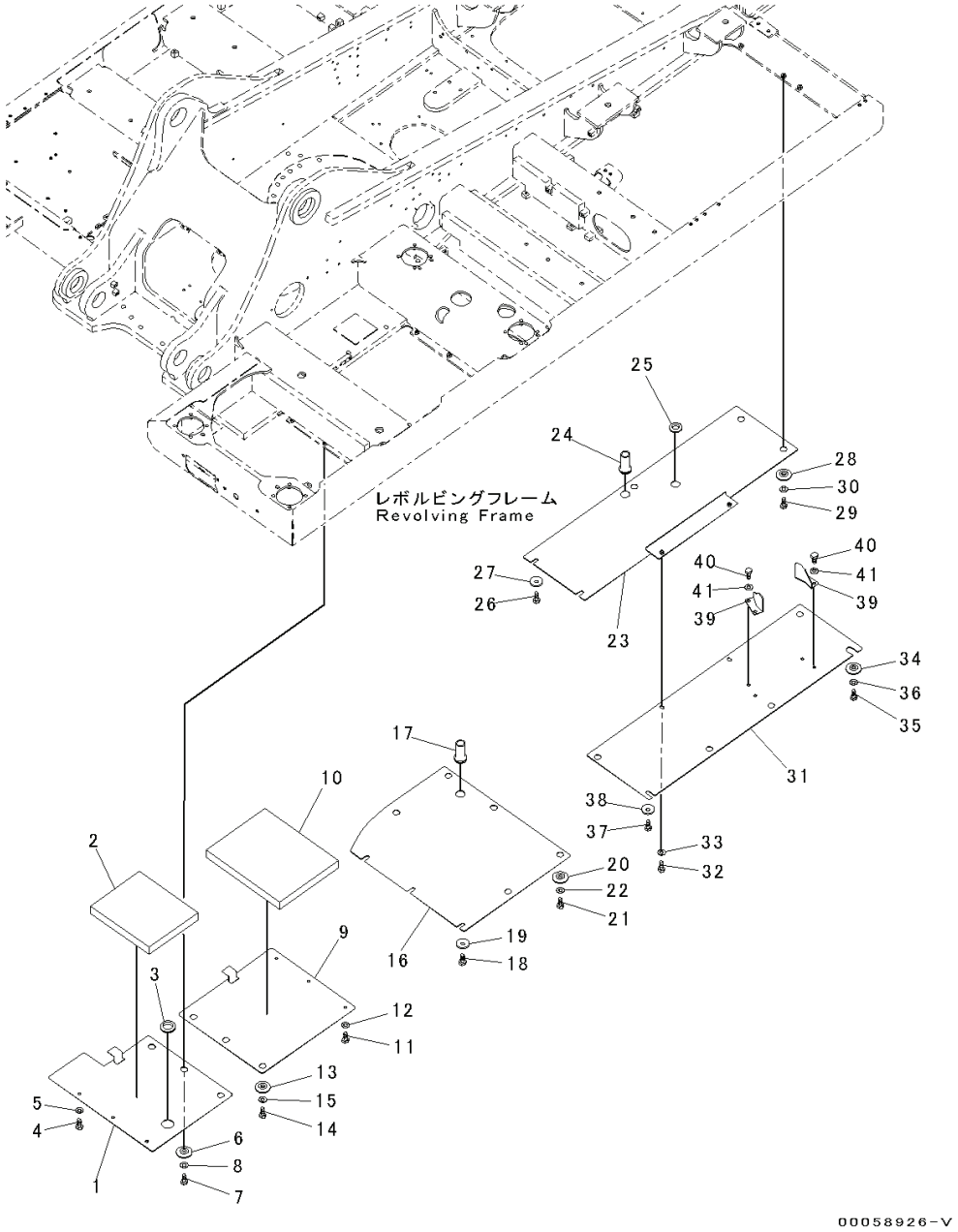

Index	Code	Part Number	Descreption	Qty	Serial Number
41		01643-31232	Washer	4	Y300001-

PC300-8 (FEN01263-00)

FIG. M1810-002002 Under Cover, Reinforced Type, (2/3)

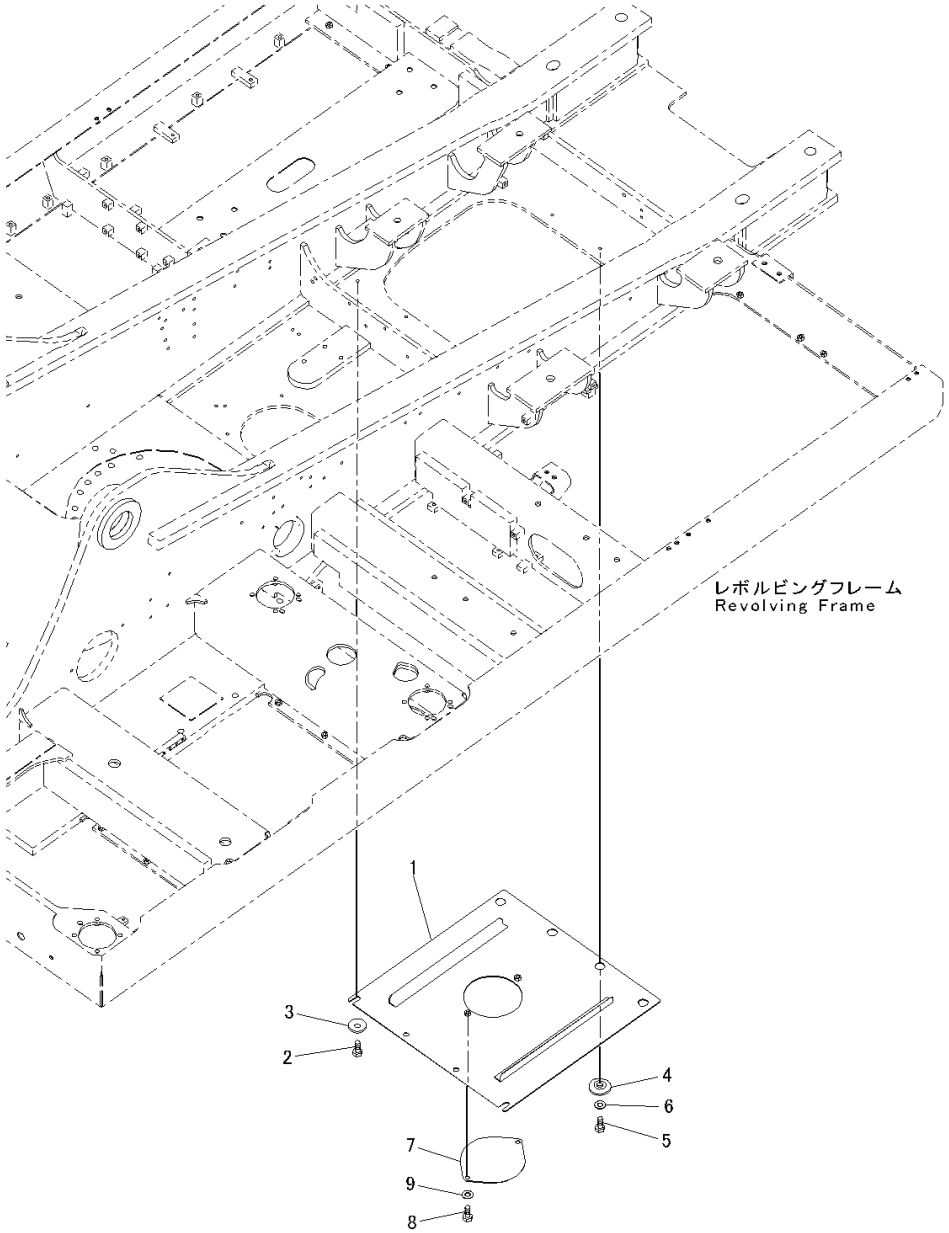

Index	Code	Part Number	Descreption	Qty	Serial Number
1		207-54-77272	Cover	1	Y300001-
2		01010-81230	Bolt	2	Y300001-
3		175-54-34170	Washer	2	Y300001-
4		208-54-57180	Collar	4	Y300001-
5		01010-81230	Bolt	4	Y300001-
6		01643-31232	Washer	4	Y300001-
7		207-54-51440	Plate	1	Y300001-
8		01010-81230	Bolt	2	Y300001-
9		01643-31232	Washer	2	Y300001-

PC300-8 (FEN01263-00)

FIG. M1810-002003 Under Cover, Reinforced Type, (3/3)

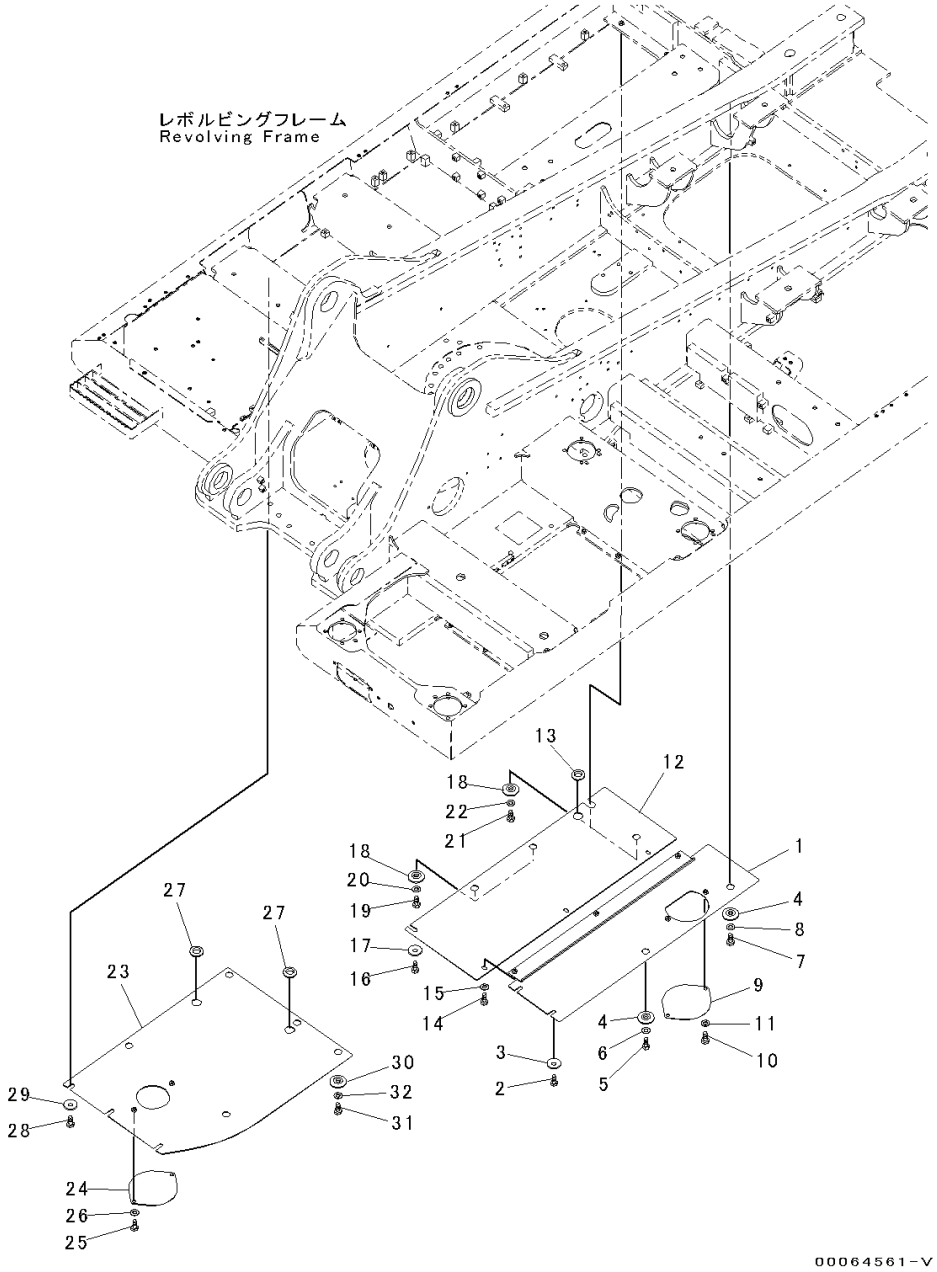

PC300-8 (FEN01263-00)

Index	Code	Part Number	Descreption	Qty	Serial Number
1		207-54-77260	Cover	1	Y300001-
2		01010-81230	Bolt	2	Y300001-
3		175-54-34170	Washer	2	Y300001-
4		208-54-57180	Collar	2	Y300001-
5		01010-81230	Bolt	1	Y300001-
6		01643-31232	Washer	1	Y300001-
7		01010-81235	Bolt	1	Y300001-
8		01643-31232	Washer	1	Y300001-
9		207-54-51440	Plate	1	Y300001-
10		01010-81230	Bolt	2	Y300001-
11		01643-31232	Washer	2	Y300001-
12		207-54-78770	Cover	1	Y300001-
13		08037-03614	Grommet	1	Y300001-
14		01010-81230	Bolt	3	Y300001-
15		01643-31232	Washer	3	Y300001-
16		01010-81230	Bolt	1	Y300001-
17		175-54-34170	Washer	1	Y300001-
18		208-54-57180	Collar	4	Y300001-
19		01010-81230	Bolt	2	Y300001-
20		01643-31232	Washer	2	Y300001-
21		01010-81235	Bolt	2	Y300001-
22		01643-31232	Washer	2	Y300001-
23		207-54-78860	Cover	1	Y300001-
24		207-54-51440	Plate	1	Y300001-
25		01010-81230	Bolt	2	Y300001-
26		01643-31232	Washer	2	Y300001-
27		08037-03614	Grommet	2	Y300001-
28		01010-81230	Bolt	3	Y300001-
29		175-54-34170	Washer	3	Y300001-
30		208-54-57180	Collar	5	Y300001-
31		01010-81230	Bolt	5	Y300001-
32		01643-31232	Washer	5	Y300001-

FIG. M1810-003001 Under Cover, For Machine With Fuel Refill Pump, (1/3)

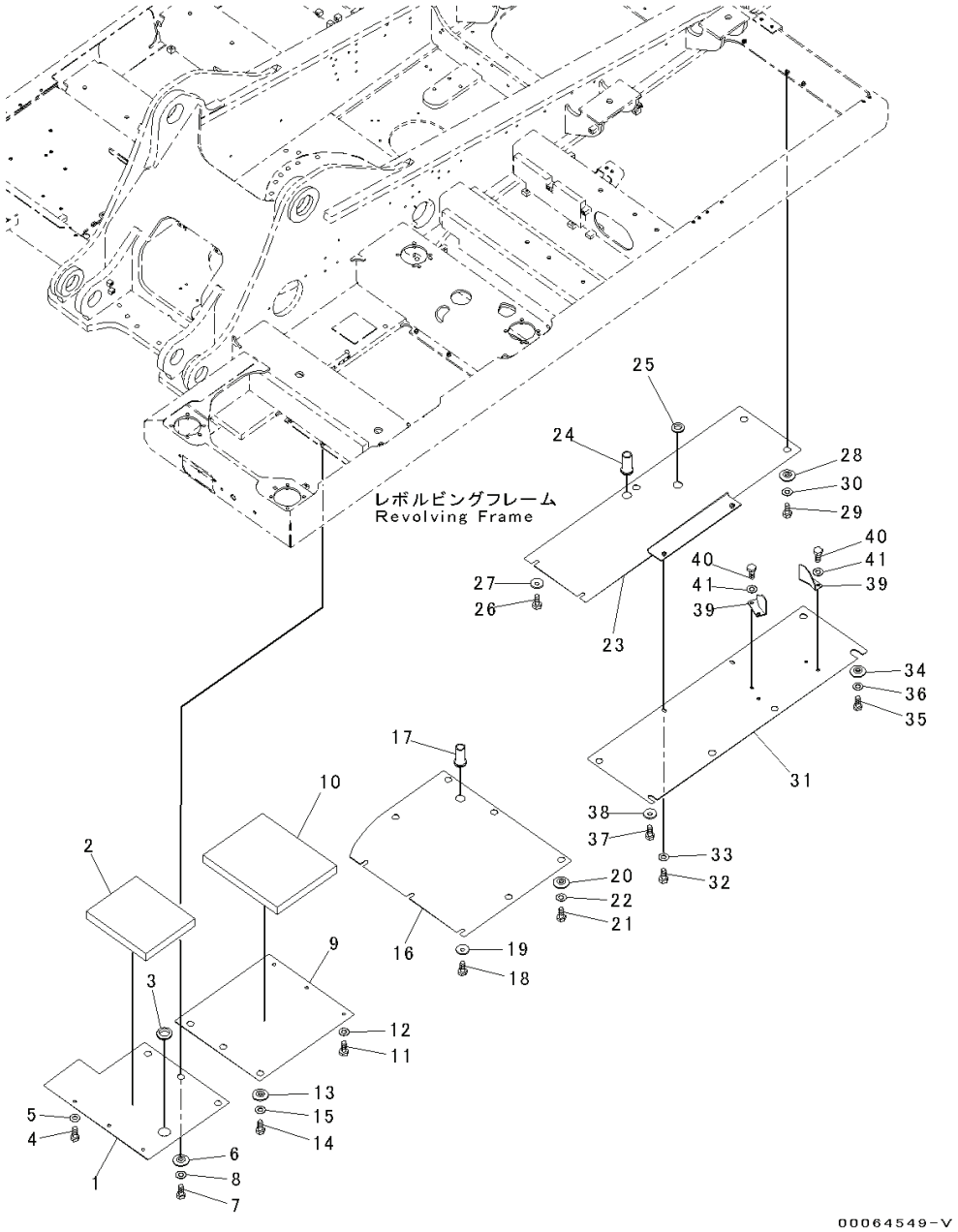

PC300-8 (FEN01263-00)

Index	Code	Part Number	Descreption	Qty	Serial Number
1		208-54-78320	Cover	1	Y300001-
2		208-54-73520	Sheet	1	Y300001-
3		08037-05016	Grommet	1	Y300001-
4		01010-81230	Bolt	3	Y300001-
5		01643-31232	Washer	3	Y300001-
6		20Y-54-12550	Collar	3	Y300001-
7		01010-81230	Bolt	3	Y300001-
8		01643-31232	Washer	3	Y300001-
9		207-54-78220	Cover	1	Y300001-
10		208-54-73490	Sheet	1	Y300001-
11		01010-81230	Bolt	3	Y300001-
12		01643-31232	Washer	3	Y300001-
13		20Y-54-12550	Collar	3	Y300001-
14		01010-81230	Bolt	3	Y300001-
15		01643-31232	Washer	3	Y300001-
16		207-54-78650	Cover	1	Y300001-
17		22U-54-24760	Grommet	1	Y300001-
18		01010-81230	Bolt	3	Y300001-
19		175-54-34170	Washer	3	Y300001-
20		20Y-54-12550	Collar	5	Y300001-
21		01010-81230	Bolt	5	Y300001-
22		01643-31232	Washer	5	Y300001-
23		207-54-78740	Cover	1	Y300001-
24		22U-54-24760	Grommet	1	Y300001-
25		08037-03614	Grommet	1	Y300001-
26		01010-81230	Bolt	2	Y300001-
27		175-54-34170	Washer	2	Y300001-
28		20Y-54-12550	Collar	3	Y300001-
29		01010-81230	Bolt	3	Y300001-
30		01643-31232	Washer	3	Y300001-
31		207-54-77220	Cover	1	Y300001-
32		01010-81230	Bolt	2	Y300001-
33		01643-31232	Washer	2	Y300001-
34		208-54-57180	Collar	5	Y300001-
35		01010-81230	Bolt	5	Y300001-
36		01643-31232	Washer	5	Y300001-
37		01010-81230	Bolt	1	Y300001-
38		175-54-34170	Washer	1	Y300001-
39		20Y-54-61670	Bracket	2	Y300001-
40		01010-81230	Bolt	4	Y300001-

FIG. M1810-003001 Under Cover, For Machine With Fuel Refill Pump, (1/3)

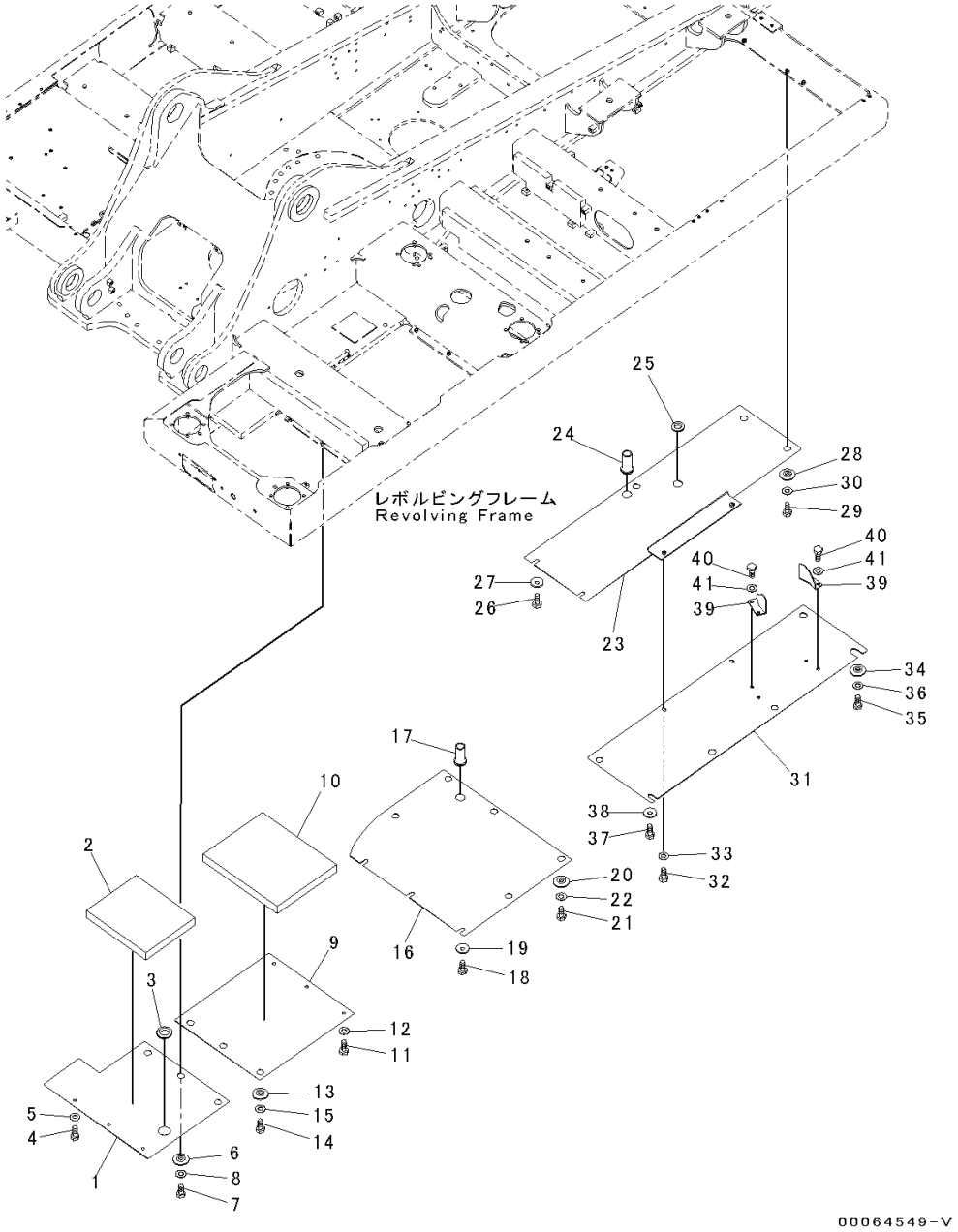

Index	Code	Part Number	Descreption	Qty	Serial Number
41		01643-31232	Washer	4	Y300001-

PC300-8 (FEN01263-00)

FIG. M1810-003002A Under Cover, For Machine With Fuel Refill Pump, (2/3)

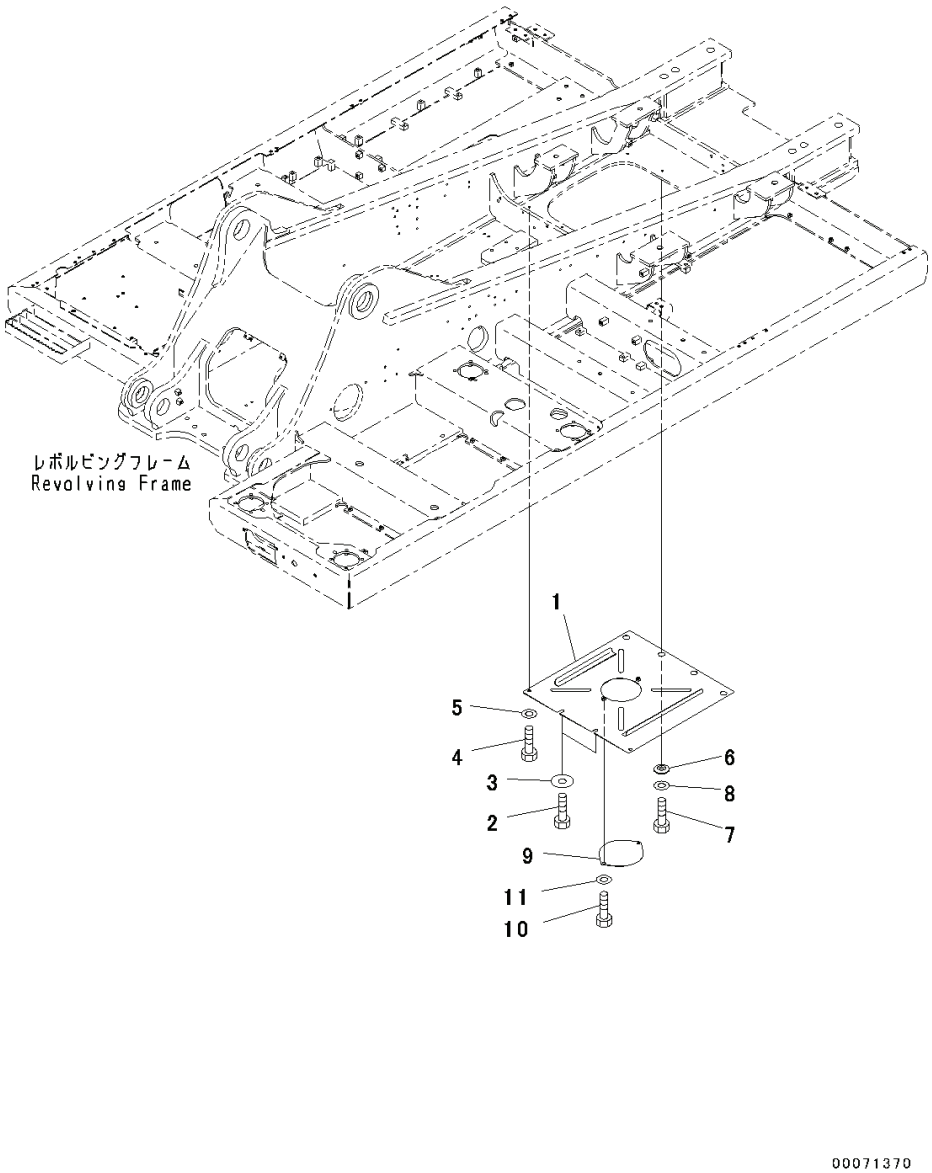

Index	Code	Part Number	Descreption	Qty	Serial Number
1		207-54-77172	Cover	1	Y300001-
2		01010-81230	Bolt	2	Y300001-
3		175-54-34170	Washer	2	Y300001-
4		01010-81230	Bolt	2	Y300001-
5		01643-31232	Washer	2	Y300001-
6		20Y-54-12550	Collar	4	Y300001-
7		01010-81230	Bolt	4	Y300001-
8		01643-31232	Washer	4	Y300001-
9		207-54-51440	Plate	1	Y300001-
10		01010-81230	Bolt	2	Y300001-
11		01643-31232	Washer	2	Y300001-

FIG. M1810-003003 Under Cover, For Machine With Fuel Refill Pump, (3/3)

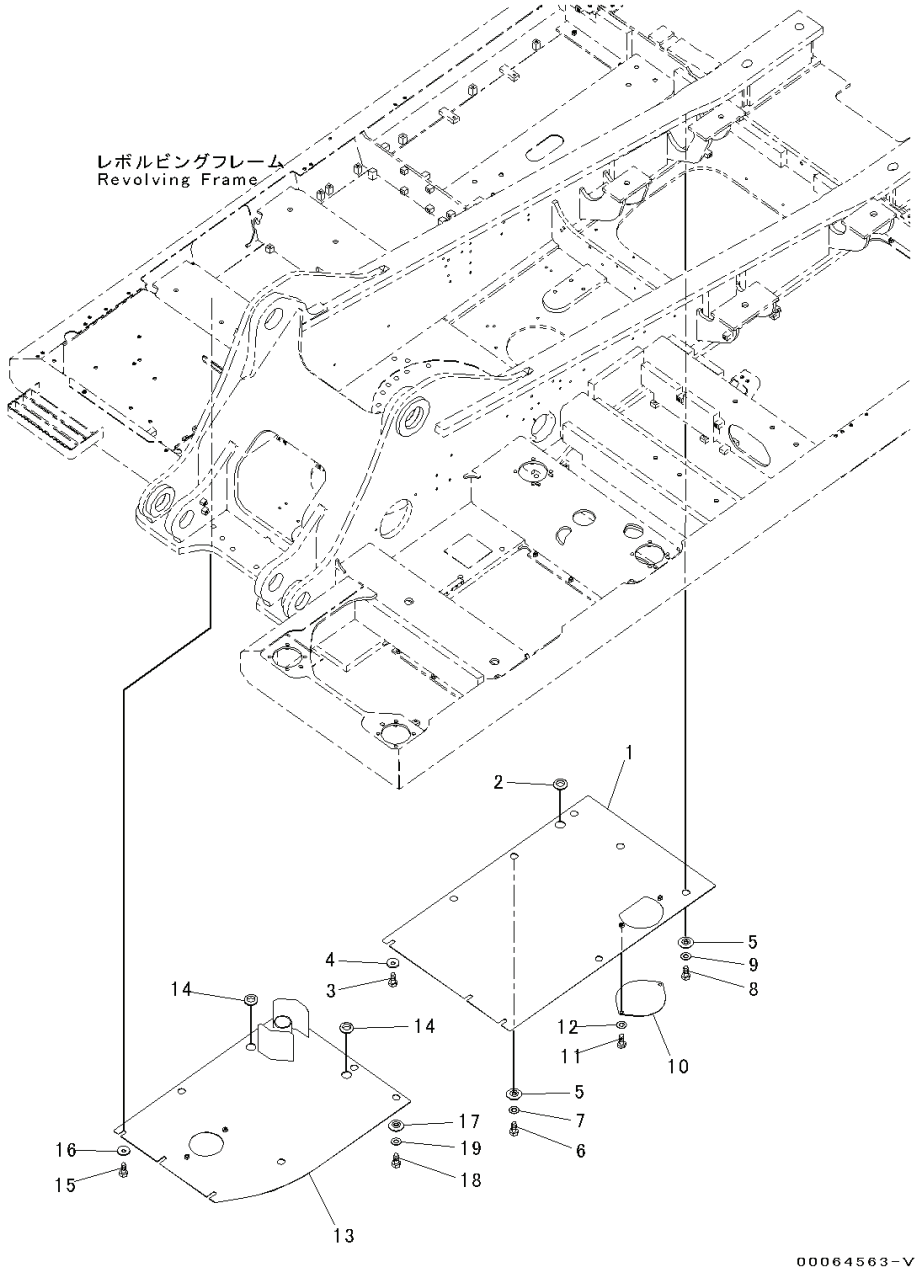

Index	Code	Part Number	Descreption	Qty	Serial Number
1		207-54-78760	Cover	1	Y300001-
2		08037-03614	Grommet	1	Y300001-
3		01010-81230	Bolt	3	Y300001-
4		175-54-34170	Washer	3	Y300001-
5		203-54-62670	Collar	6	Y300001-
6		01010-81230	Bolt	3	Y300001-
7		01643-31232	Washer	3	Y300001-
8		01010-81235	Bolt	3	Y300001-
9		01643-31232	Washer	3	Y300001-
10		207-54-51440	Plate	1	Y300001-
11		01010-81230	Bolt	2	Y300001-
12		01643-31232	Washer	2	Y300001-
13		207-54-78870	Cover	1	Y300001-
14		08037-03614	Grommet	2	Y300001-
15		01010-81230	Bolt	3	Y300001-
16		175-54-34170	Washer	3	Y300001-
17		208-54-57180	Collar	5	Y300001-
18		01010-81230	Bolt	5	Y300001-
19		01643-31232	Washer	5	Y300001-

PC300-8 (FEN01263-00)

FIG. M1810-004001 Under Cover, Reinforced Type, For Machine With Fuel Refill Pump, (1/3)

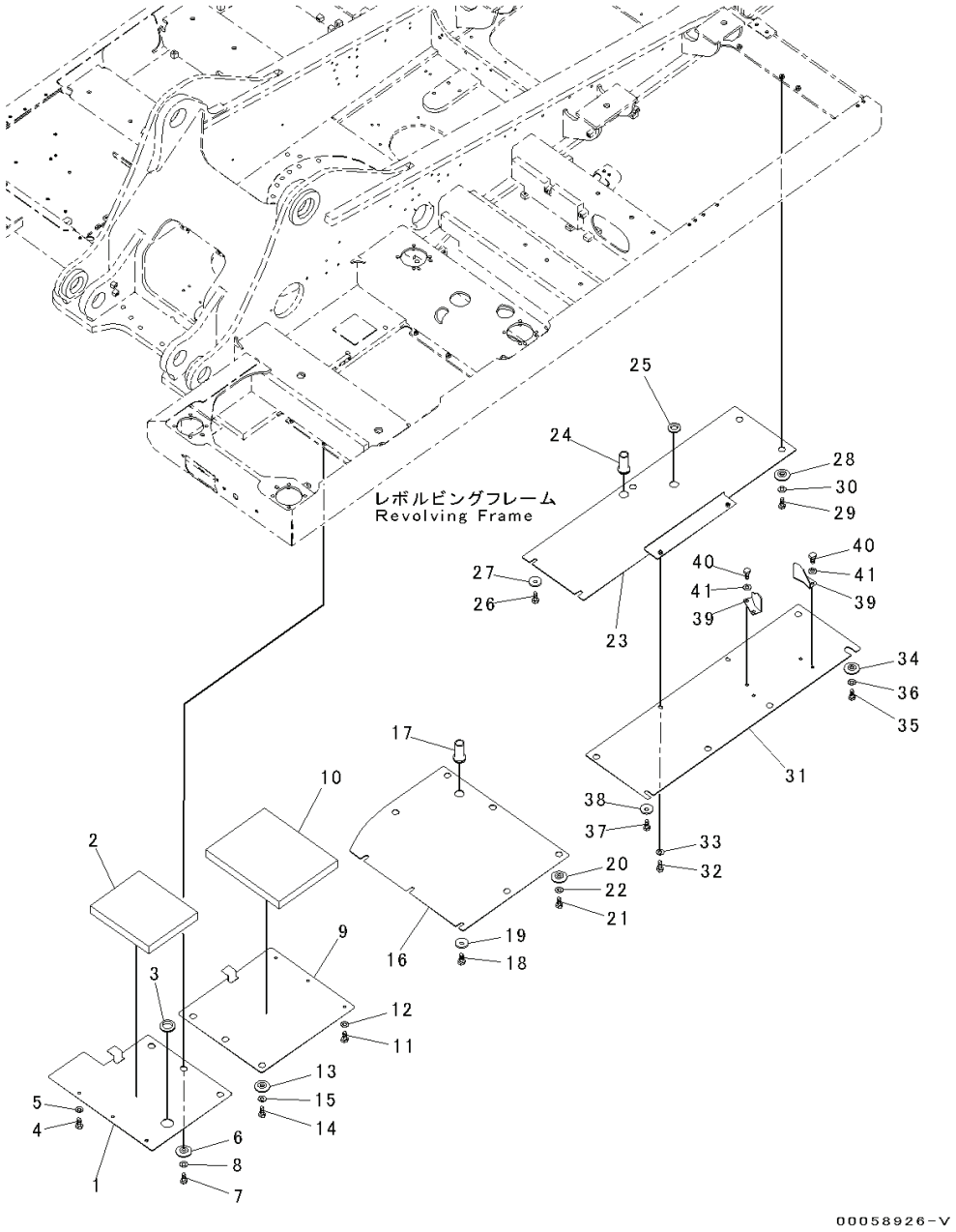

Index	Code	Part Number	Descreption	Qty	Serial Number
1		208-54-78340	Cover	1	Y300001-
2		208-54-73520	Sheet	1	Y300001-
3		08037-05016	Grommet	1	Y300001-
4		01010-81230	Bolt	3	Y300001-
5		01643-31232	Washer	3	Y300001-
6		208-54-57180	Collar	3	Y300001-
7		01010-81230	Bolt	3	Y300001-
8		01643-31232	Washer	3	Y300001-
9		207-54-78240	Cover	1	Y300001-
10		208-54-73490	Sheet	1	Y300001-
11		01010-81230	Bolt	3	Y300001-
12		01643-31232	Washer	3	Y300001-
13		208-54-57180	Collar	3	Y300001-
14		01010-81230	Bolt	3	Y300001-
15		01643-31232	Washer	3	Y300001-
16		207-54-78660	Cover	1	Y300001-
17		22U-54-24760	Grommet	1	Y300001-
18		01010-81230	Bolt	3	Y300001-
19		175-54-34170	Washer	3	Y300001-
20		208-54-57180	Collar	5	Y300001-
21		01010-81230	Bolt	5	Y300001-
22		01643-31232	Washer	5	Y300001-
23		207-54-78750	Cover	1	Y300001-
24		22U-54-24760	Grommet	1	Y300001-
25		08037-03614	Grommet	1	Y300001-
26		01010-81230	Bolt	2	Y300001-
27		175-54-34170	Washer	2	Y300001-
28		208-54-57180	Collar	3	Y300001-
29		01010-81230	Bolt	3	Y300001-
30		01643-31232	Washer	3	Y300001-
31		207-54-77220	Cover	1	Y300001-
32		01010-81230	Bolt	2	Y300001-
33		01643-31232	Washer	2	Y300001-
34		208-54-57180	Collar	5	Y300001-
35		01010-81230	Bolt	5	Y300001-
36		01643-31232	Washer	5	Y300001-
37		01010-81230	Bolt	1	Y300001-
38		175-54-34170	Washer	1	Y300001-
39		20Y-54-61670	Bracket	2	Y300001-
40		01010-81230	Bolt	4	Y300001-

PC300-8 (FEN01263-00)

FIG. M1810-004001 Under Cover, Reinforced Type, For Machine With Fuel Refill Pump, (1/3)

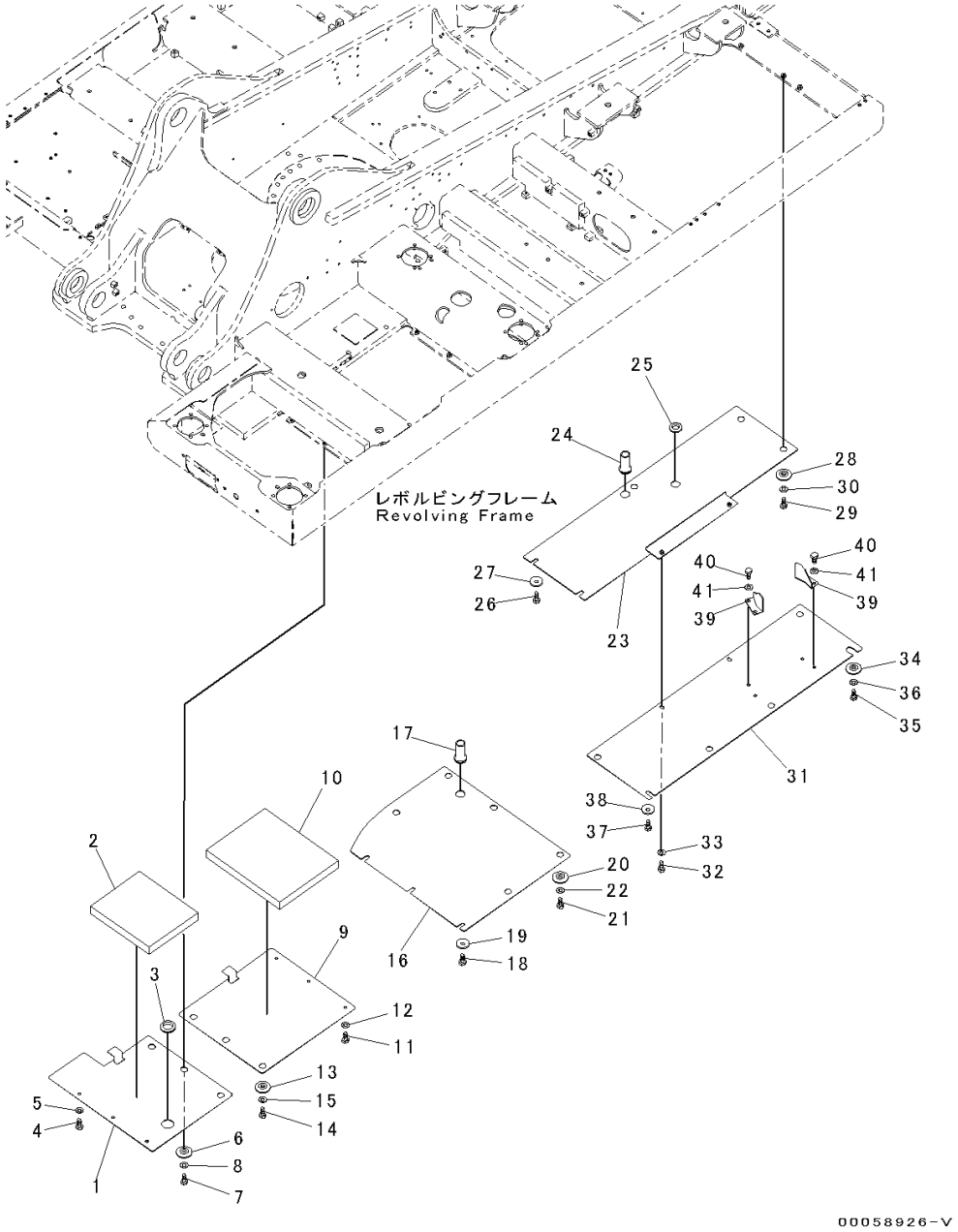

Index	Code	Part Number	Descreption	Qty	Serial Number
41		01643-31232	Washer	4	Y300001-

PC300-8 (FEN01263-00)

FIG. M1810-004002 Under Cover, Reinforced Type, For Machine With Fuel Refill Pump, (2/3)

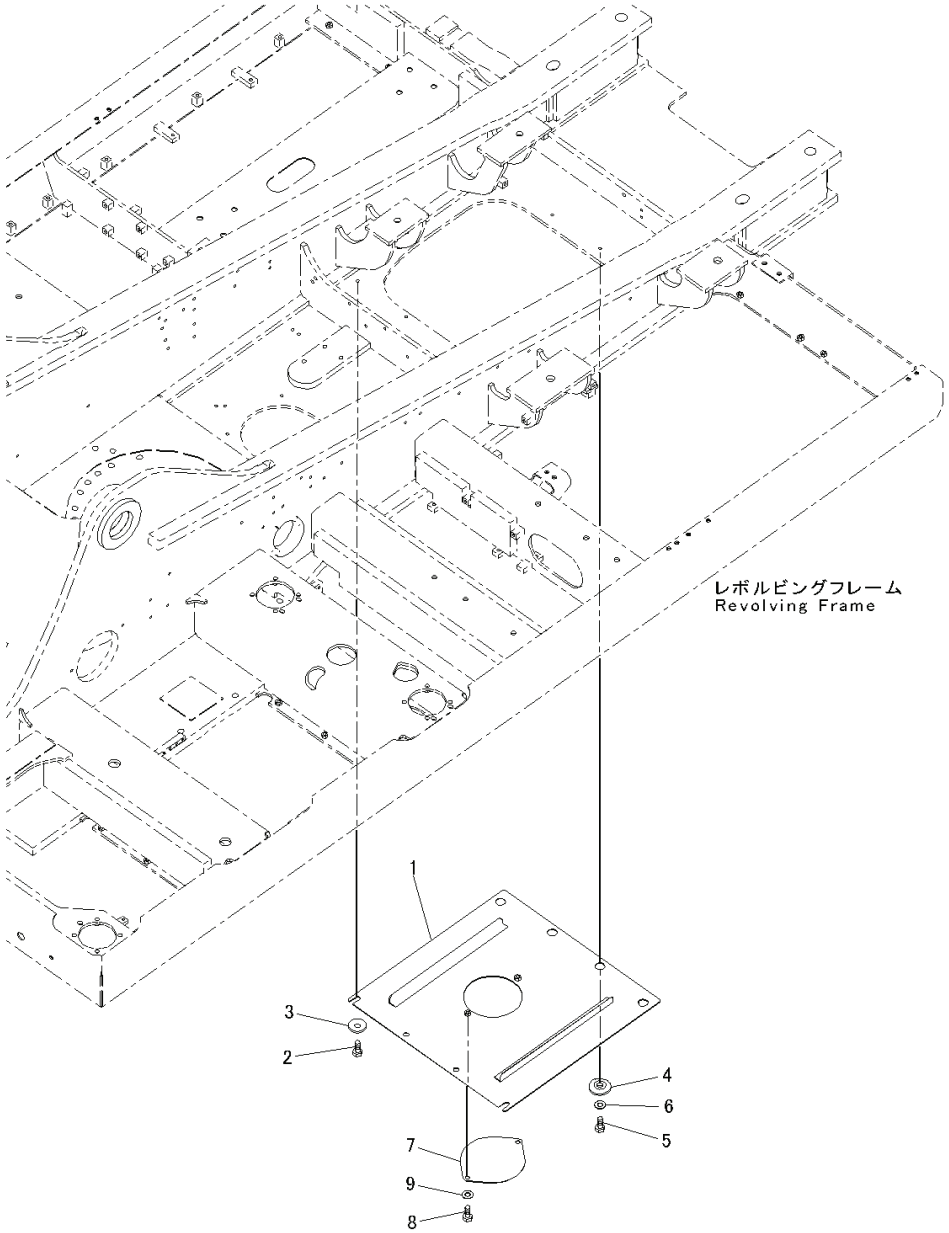

Index	Code	Part Number	Descreption	Qty	Serial Number
1		207-54-77272	Cover	1	Y300001-
2		01010-81230	Bolt	2	Y300001-
3		175-54-34170	Washer	2	Y300001-
4		208-54-57180	Collar	4	Y300001-
5		01010-81230	Bolt	4	Y300001-
6		01643-31232	Washer	4	Y300001-
7		207-54-51440	Plate	1	Y300001-
8		01010-81230	Bolt	2	Y300001-
9		01643-31232	Washer	2	Y300001-

PC300-8 (FEN01263-00)

FIG. M1810-004003 Under Cover, Reinforced Type, For Machine With Fuel Refill Pump, (3/3)

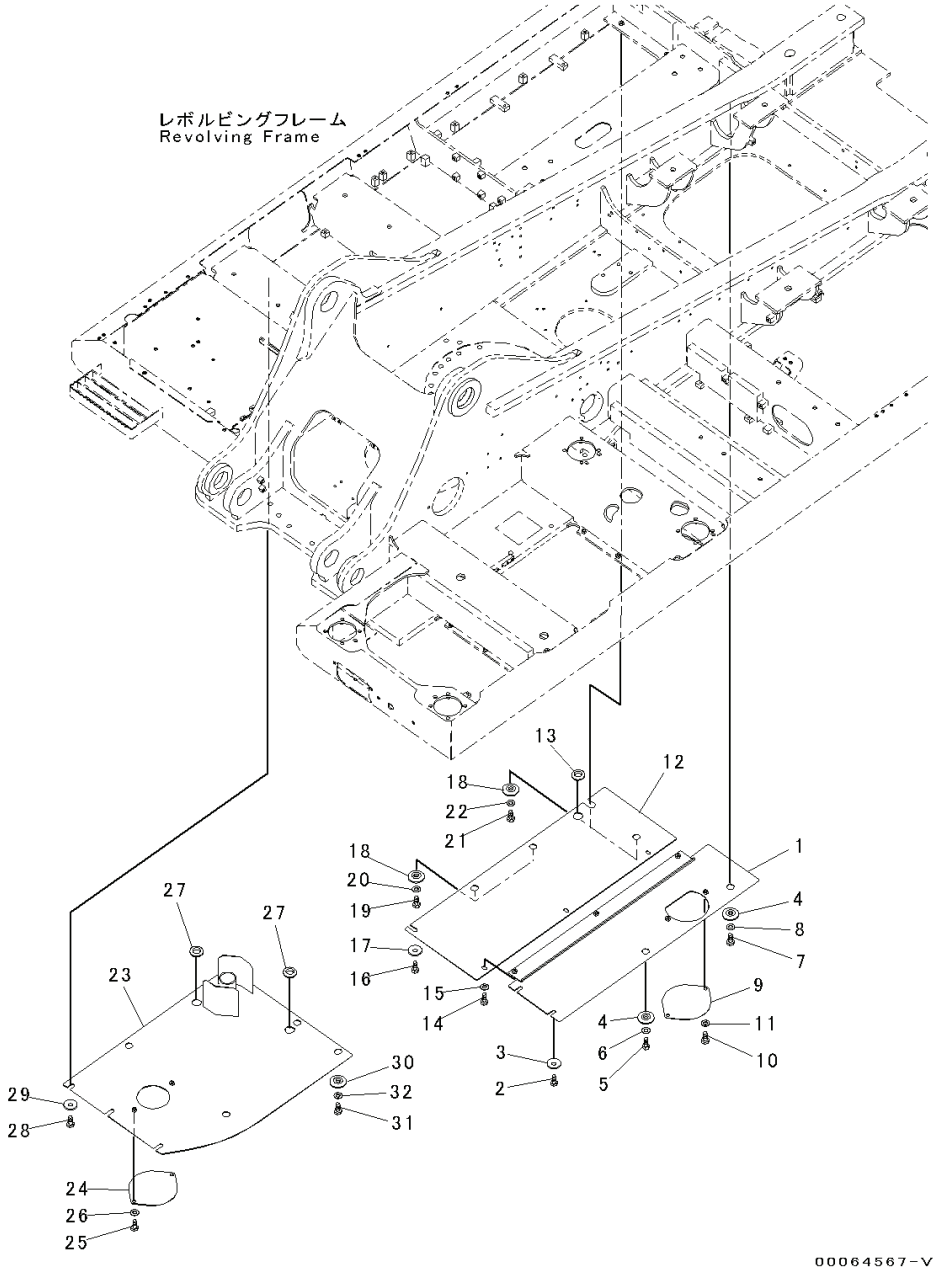

Index	Code	Part Number	Descreption	Qty	Serial Number
1		207-54-77260	Cover	1	Y300001-
2		01010-81230	Bolt	2	Y300001-
3		175-54-34170	Washer	2	Y300001-
4		208-54-57180	Collar	2	Y300001-
5		01010-81230	Bolt	1	Y300001-
6		01643-31232	Washer	1	Y300001-
7		01010-81235	Bolt	1	Y300001-
8		01643-31232	Washer	1	Y300001-
9		207-54-51440	Plate	1	Y300001-
10		01010-81230	Bolt	2	Y300001-
11		01643-31232	Washer	2	Y300001-
12		207-54-78770	Cover	1	Y300001-
13		08037-03614	Grommet	1	Y300001-
14		01010-81230	Bolt	3	Y300001-
15		01643-31232	Washer	3	Y300001-
16		01010-81230	Bolt	1	Y300001-
17		175-54-34170	Washer	1	Y300001-
18		208-54-57180	Collar	4	Y300001-
19		01010-81230	Bolt	2	Y300001-
20		01643-31232	Washer	2	Y300001-
21		01010-81235	Bolt	2	Y300001-
22		01643-31232	Washer	2	Y300001-
23		207-54-78870	Cover	1	Y300001-
24		207-54-51440	Plate	1	Y300001-
25		01010-81230	Bolt	2	Y300001-
26		01643-31232	Washer	2	Y300001-
27		08037-03614	Grommet	2	Y300001-
28		01010-81230	Bolt	3	Y300001-
29		175-54-34170	Washer	3	Y300001-
30		208-54-57180	Collar	5	Y300001-
31		01010-81230	Bolt	5	Y300001-
32		01643-31232	Washer	5	Y300001-

PC300-8 (FEN01263-00)

FIG. M1810-008001 Under Cover, For Machine With WEBASTO Coolant Heater, (1/3)

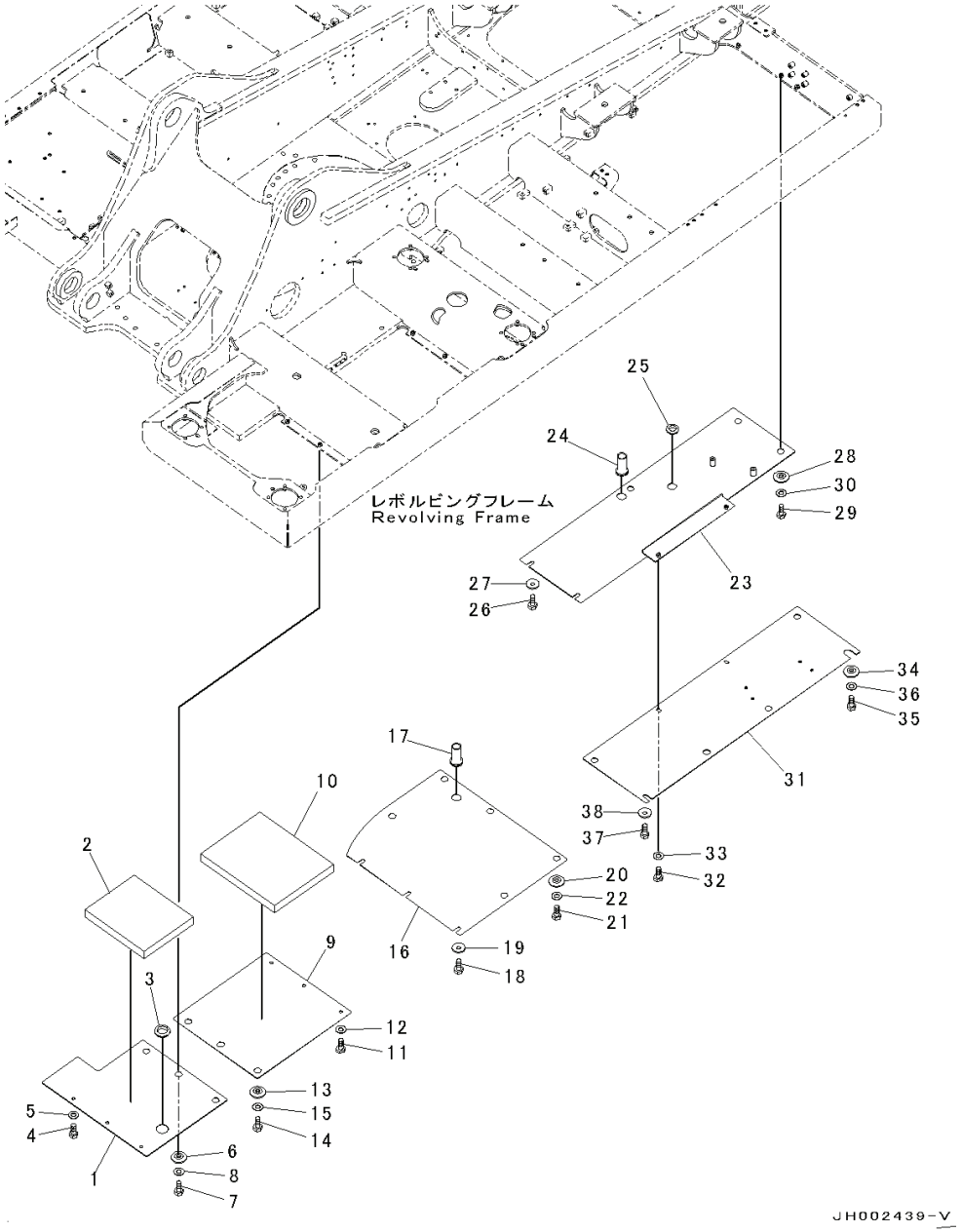

Index	Code	Part Number	Descreption	Qty	Serial Number
1		208-54-78320	Cover	1	Y300001-
2		208-54-73520	Sheet	1	Y300001-
3		08037-05016	Grommet	1	Y300001-
4		01010-81230	Bolt	3	Y300001-
5		01643-31232	Washer	3	Y300001-
6		20Y-54-12550	Collar	3	Y300001-
7		01010-81230	Bolt	3	Y300001-
8		01643-31232	Washer	3	Y300001-
9		207-54-78220	Cover	1	Y300001-
10		208-54-73490	Sheet	1	Y300001-
11		01010-81230	Bolt	3	Y300001-
12		01643-31232	Washer	3	Y300001-
13		20Y-54-12550	Collar	3	Y300001-
14		01010-81230	Bolt	3	Y300001-
15		01643-31232	Washer	3	Y300001-
16		207-54-78650	Cover	1	Y300001-
17		22U-54-24760	Grommet	1	Y300001-
18		01010-81230	Bolt	3	Y300001-
19		175-54-34170	Washer	3	Y300001-
20		20Y-54-12550	Collar	5	Y300001-
21		01010-81230	Bolt	5	Y300001-
22		01643-31232	Washer	5	Y300001-
23		207-54-79611	Cover	1	Y300001-
24		22U-54-24760	Grommet	1	Y300001-
25		08037-03614	Grommet	1	Y300001-
26		01010-81230	Bolt	2	Y300001-
27		175-54-34170	Washer	2	Y300001-
28		20Y-54-12550	Collar	3	Y300001-
29		01010-81230	Bolt	3	Y300001-
30		01643-31232	Washer	3	Y300001-
31		207-54-77220	Cover	1	Y300001-
32		01010-81230	Bolt	2	Y300001-
33		01643-31232	Washer	2	Y300001-
34		208-54-57180	Collar	5	Y300001-
35		01010-81230	Bolt	5	Y300001-
36		01643-31232	Washer	5	Y300001-
37		01010-81230	Bolt	1	Y300001-
38		175-54-34170	Washer	1	Y300001-

PC300-8 (FEN01263-00)

FIG. M1810-008002 Under Cover, For Machine With WEBASTO Coolant Heater, (2/3)

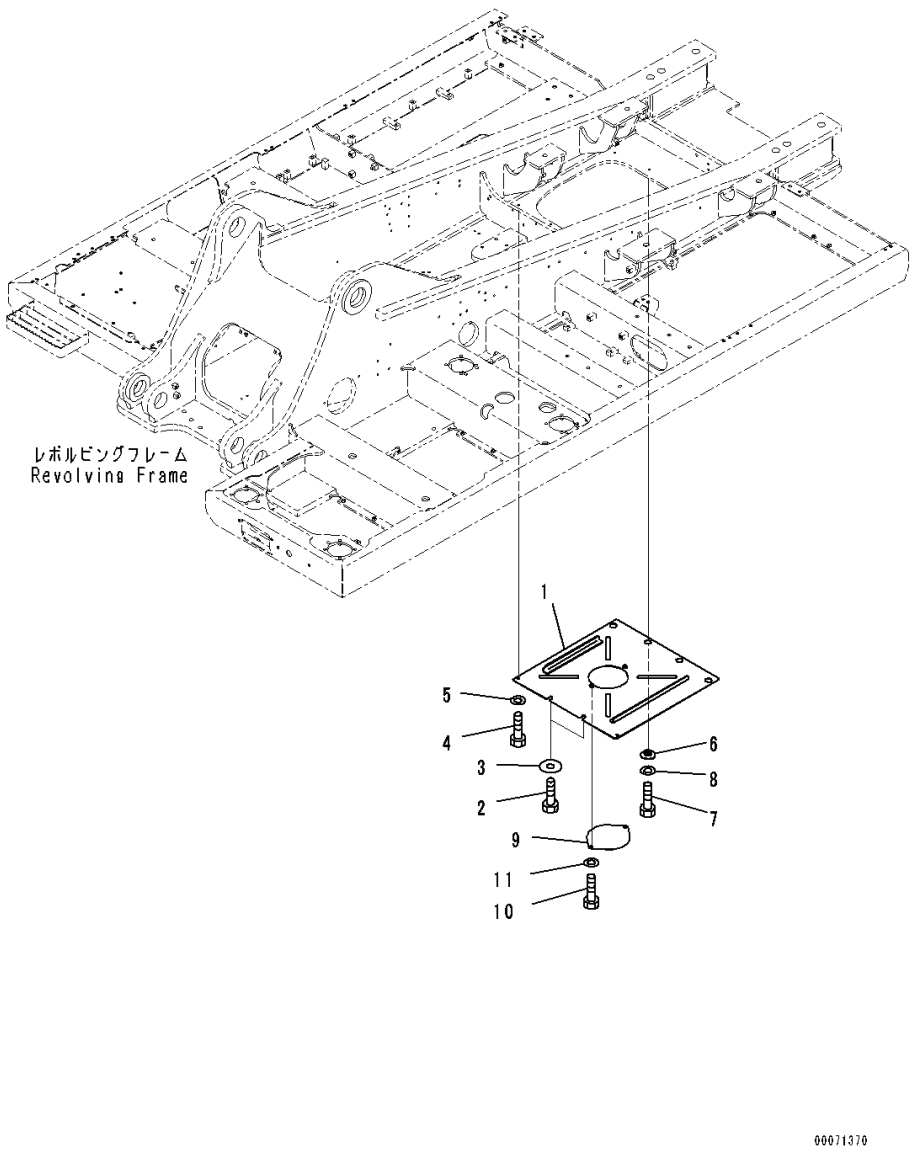

Index	Code	Part Number	Descreption	Qty	Serial Number
1		207-54-77172	Cover	1	Y300001-
2		01010-81230	Bolt	2	Y300001-
3		175-54-34170	Washer	2	Y300001-
4		01010-81230	Bolt	2	Y300001-
5		01643-31232	Washer	2	Y300001-
6		20Y-54-12550	Collar	4	Y300001-
7		01010-81230	Bolt	4	Y300001-
8		01643-31232	Washer	4	Y300001-
9		207-54-51440	Plate	1	Y300001-
10		01010-81230	Bolt	2	Y300001-
11		01643-31232	Washer	2	Y300001-

FIG. M1810-008003A Under Cover, For Machine With WEBASTO Coolant Heater, (3/3)

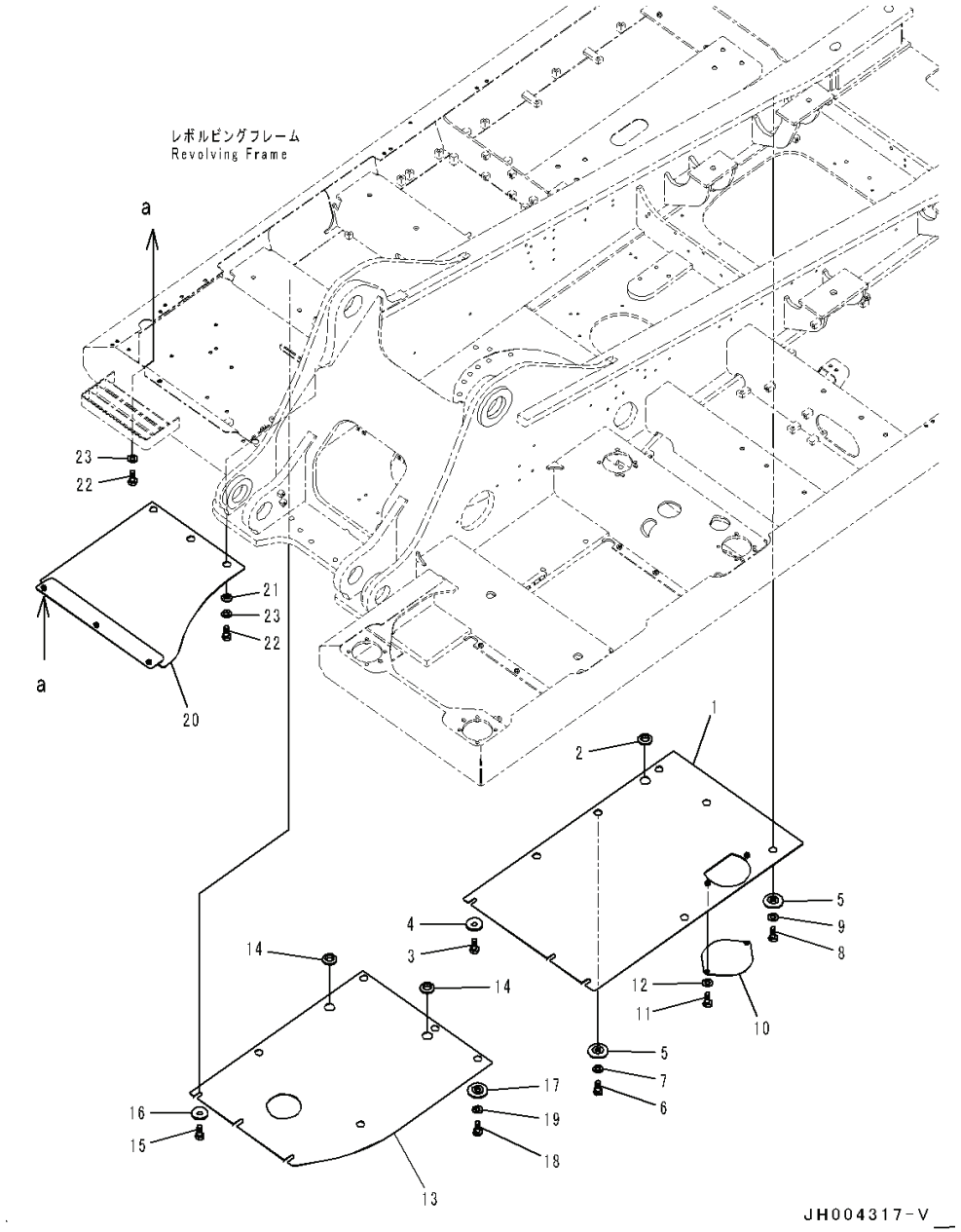

Index	Code	Part Number	Descreption	Qty	Serial Number
1		207-54-78760	Cover	1	Y300001-
2		08037-03614	Grommet	1	Y300001-
3		01010-81230	Bolt	3	Y300001-
4		175-54-34170	Washer	3	Y300001-
5		203-54-62670	Collar	6	Y300001-
6		01010-81230	Bolt	3	Y300001-
7		01643-31232	Washer	3	Y300001-
8		01010-81235	Bolt	3	Y300001-
9		01643-31232	Washer	3	Y300001-
10		207-54-51440	Plate	1	Y300001-
11		01010-81230	Bolt	2	Y300001-
12		01643-31232	Washer	2	Y300001-
13		207-54-78781	Cover	1	Y300001-
14		08037-03614	Grommet	2	Y300001-
15		01010-81230	Bolt	3	Y300001-
16		175-54-34170	Washer	3	Y300001-
17		20Y-54-12550	Collar	5	Y300001-
18		01010-81230	Bolt	5	Y300001-
19		01643-31232	Washer	5	Y300001-
20		207-54-78990	Cover	1	Y300001-
21		208-54-57180	Collar	3	Y300001-
22		01010-81235	Bolt	6	Y300001-
23		01643-31232	Washer	6	Y300001-

PC300-8 (FEN01263-00)

SWING CIRCLE AND ITS RELATED PARTS

FIG. N1110-001001 Swing Circle

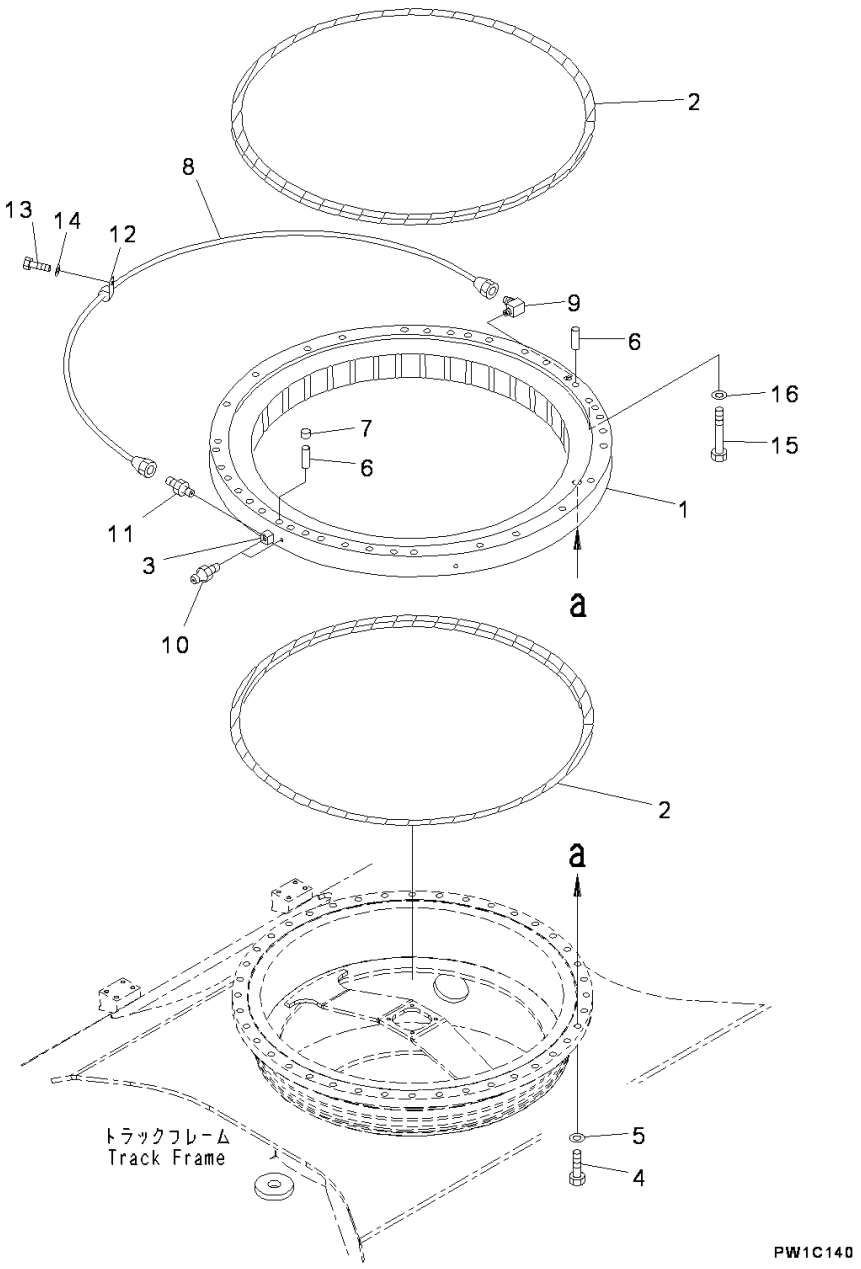

Index	Code	Part Number	Descreption	Qty	Serial Number
1		207-25-61100	Swing Circle Assembly	1	Y300001-
2		207-25-61160	• Seal	2	Y300001-
3		205-25-71280	• Nipple	1	Y300001-
4		207-25-31180	Bolt	40	Y300001-
5		01643-72460	Washer, Flat	40	Y300001-
6		04020-01842	Pin, Dowel	2	Y300001-
7		20Y-46-21520	Cap	1	Y300001-
8		207-25-62110	Tube	1	Y300001-
9		20Y-25-11270	Elbow	1	Y300001-
10		07020-00000	Fitting, Grease	2	Y300001-
11		07214-50813	Connector	1	Y300001-
12		08036-00814	Clip	2	Y300001-
13		01010-81020	Bolt	2	Y300001-
14		01643-31032	Washer	2	Y300001-
15		207-25-75110	Bolt	35	Y300001-
16		01643-72460	Washer, Flat	35	Y300001-

PC300-8 (FEN01263-00)

FIG. N1110-002001 Swing Circle, For Machine With WEBASTO Coolant Heater

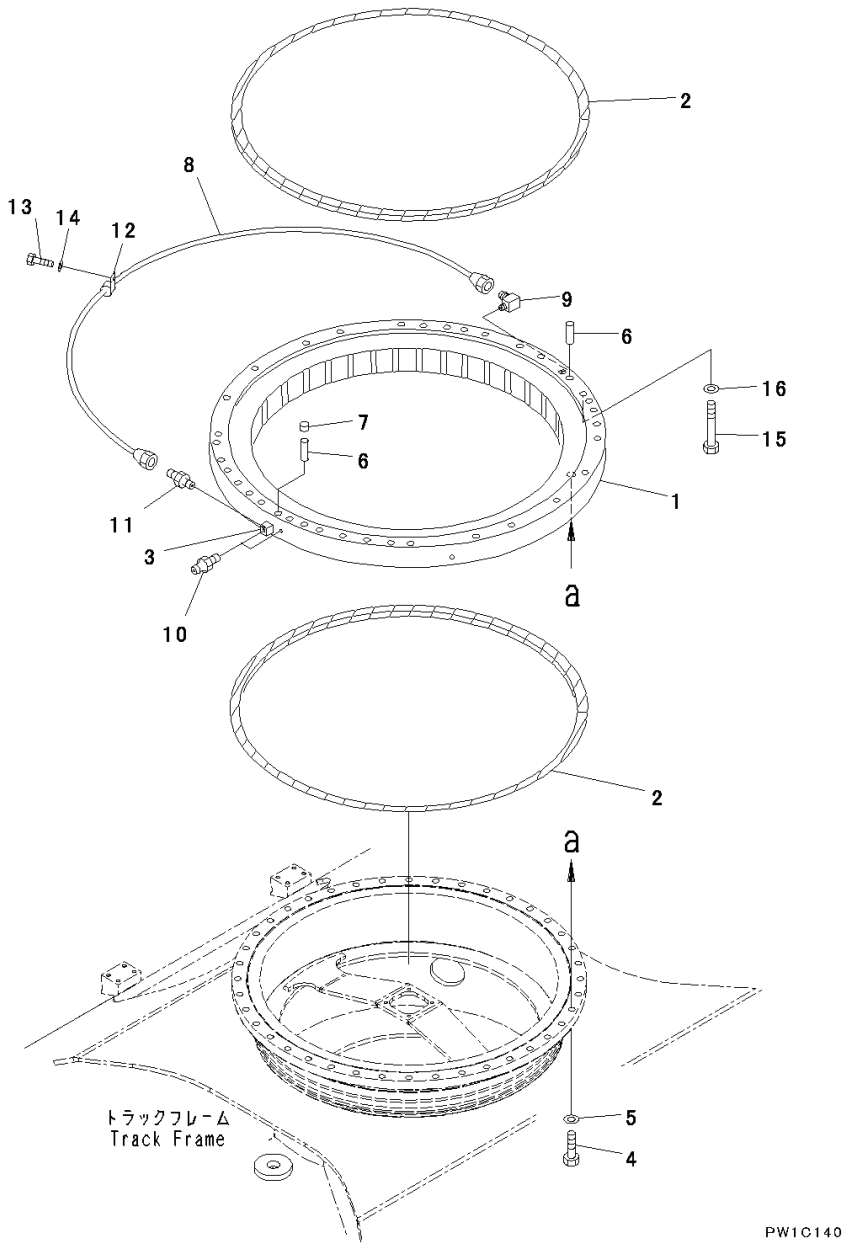

Index	Code	Part Number	Descreption	Qty	Serial Number
1		207-25-61700	Swing Circle	1	Y300001-
2		207-25-61170	• Seal	2	Y300001-
3		205-25-71280	• Nipple	1	Y300001-
4		207-25-31180	Bolt	40	Y300001-
5		01643-72460	Washer, Flat	40	Y300001-
6		04020-01842	Pin, Dowel	2	Y300001-
7		20Y-46-21520	Cap	1	Y300001-
8		207-25-62110	Tube	1	Y300001-
9		20Y-25-11270	Elbow	1	Y300001-
10		07020-00000	Fitting, Grease	2	Y300001-
11		07214-50813	Connector	1	Y300001-
12		08036-00814	Clip	2	Y300001-
13		01010-81020	Bolt	2	Y300001-
14		01643-31032	Washer	2	Y300001-
15		207-25-75110	Bolt	35	Y300001-
16		01643-72460	Washer, Flat	35	Y300001-

PC300-8 (FEN01263-00)

FIG. N1210-001001 Swing Machinery, Inner Parts (1/3)

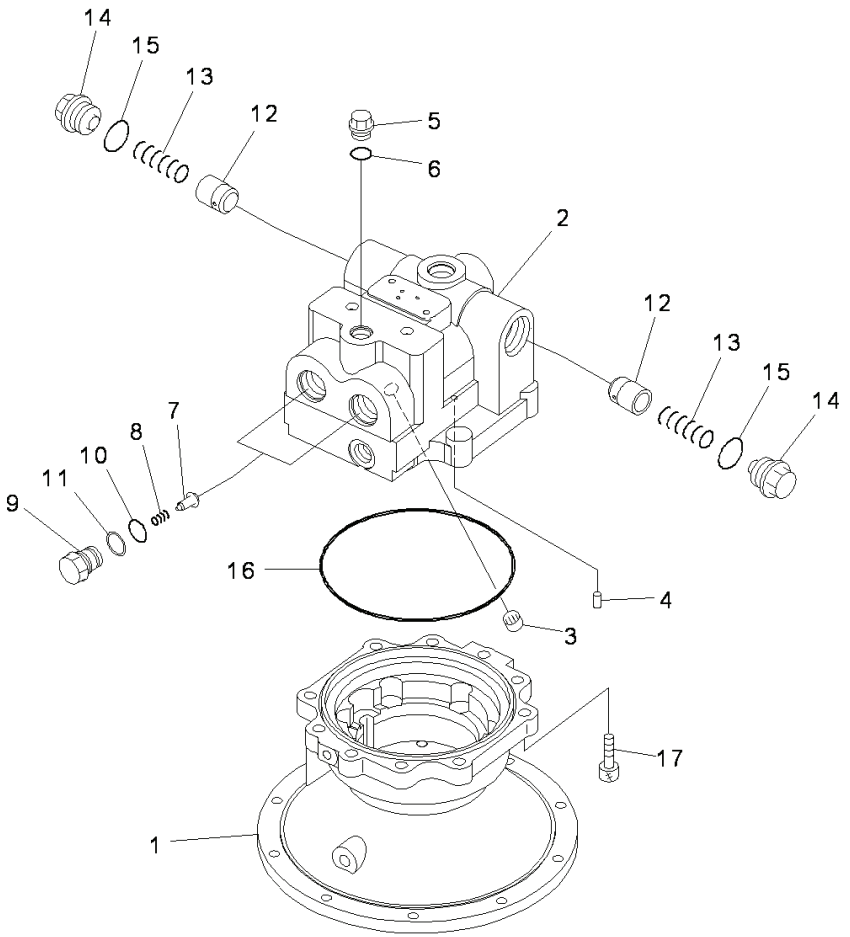

Index	Code	Part Number	Descreption	Qty	Serial Number
		706-7K-01040	Swing Motor Assembly	1	Y300001-
		706-7K-03030	• Motor Subassembly	1	Y300001-
1	C2	706-7K-41150	• • Case	1	Y300001-
2	C2	706-7K-71110	• • Housing	1	Y300001-
3	C2	706-7K-40010	• • Bearing	1	Y300001-
4	C2	706-75-42830	• • Pin, Dowel	1	Y300001-
5		706-77-72280	• • Plug	1	Y300001-
6		07002-12034	• • O-ring	1	Y300001-
7		709-74-92810	• • Valve	2	Y300001-
8		709-75-92220	• • Spring	2	Y300001-
9		709-74-92821	• • Plug	2	Y300001-
10		700-93-11320	• • O-ring	2	Y300001-
11		700-93-11330	• • Ring, Back-up	2	Y300001-
12		706-77-72130	• • Valve	2	Y300001-
13		706-77-72140	• • Spring	2	Y300001-
14		706-77-72150	• • Plug	2	Y300001-
15		07002-14234	• • O-ring	2	Y300001-
16	C2	706-7K-40020	• • O-ring	1	Y300001-
17		01252-61450	• • Bolt	10	Y300001-

FIG. N1210-001002 Swing Machinery, Inner Parts (2/3)

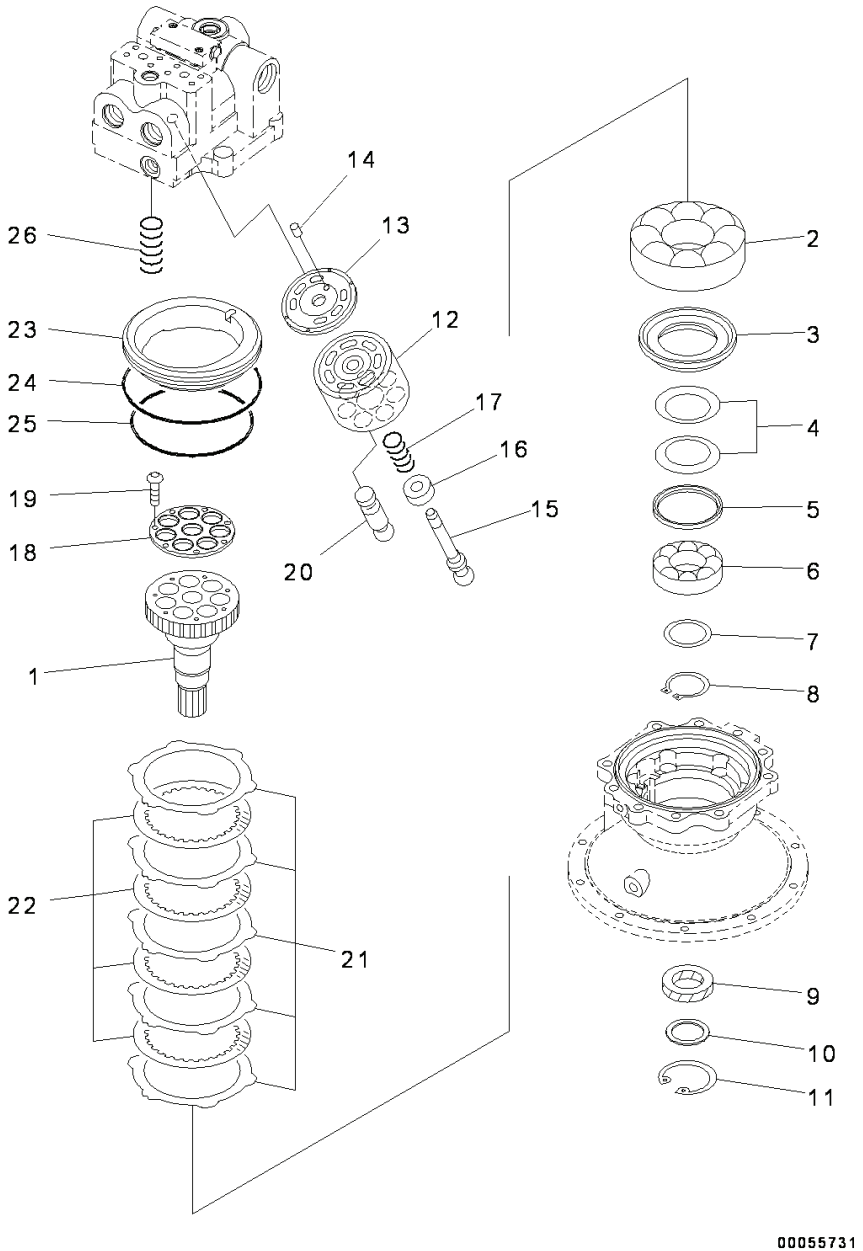

Index	Code	Part Number	Descreption	Qty	Serial Number
		706-7K-01040	Swing Motor Assembly	1	Y300001-
		706-7K-03030	• Motor Subassembly	1	Y300001-
1	C2	706-7K-41610	• • Shaft	1	Y300001-
2	C2	706-77-43880	• • Bearing	1	Y300001-
3	C2	706-7K-41810	• • Spacer	1	Y300001-
4	C2	706-77-42051	• • Spring	2	Y300001-
5	C2	706-77-42041	• • Seat	1	Y300001-
6	C2	706-77-42890	• • Bearing	1	Y300001-
7	C2	706-77-05010	• • Spacer Kit	1	Y300001-
		706-77-42440	• • • Spacer, T=2.3mm	2	Y300001-
		706-77-42450	• • • Spacer, T=2.5mm	2	Y300001-
		706-77-42460	• • • Spacer, T=2.7mm	2	Y300001-
8		04064-06525	• • Ring	1	Y300001-
9		706-7K-41650	• • Seal, Oil	1	Y300001-
10		706-7K-41920	• • Spacer	1	Y300001-
11		04065-07525	• • Ring, Snap, for Hole Side	1	Y300001-
12	C2	706-7K-41210	• • Cylinder Block	1	Y300001-
13	C2	706-7K-41710	• • Plate	1	Y300001-
14	C2	708-18-13230	• • Pin	1	Y300001-
15	C2	706-7K-41120	• • Shaft	1	Y300001-
16	C2	706-77-42130	• • Ring	1	Y300001-
17	C2	706-7K-41140	• • Spring	1	Y300001-
	C2	706-7K-05010	• • Retainer Kit	1	Y300001-
18	C1		• • • Retainer	1	Y300001-
19	C1		• • • Screw	7	Y300001-
20	C2	706-7K-41160	• • Piston Subassembly	7	Y300001-
21	C2	706-7K-91340	• • Plate	5	Y300001-
22	C2	706-7K-91350	• • Disc	4	Y300001-
23	C2	706-7K-91111	• • Brake Piston	1	Y300001-
24	C2	07000-15230	• • O-ring	1	Y300001-
25	C2	708-8H-15220	• • O-ring	1	Y300001-
26	C2	706-7K-91360	• • Spring	6	Y300001-

PC300-8 (FEN01263-00)

FIG. N1210-001003 Swing Machinery, Inner Parts (3/3)

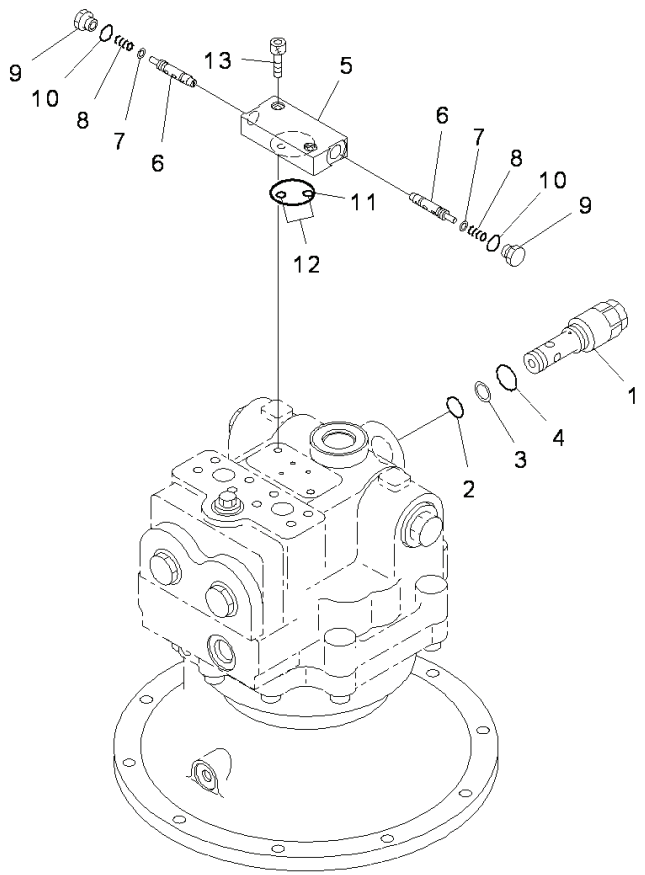

Index	Code	Part Number	Descreption	Qty	Serial Number
		706-7K-01170	Swing Motor Assembly	1	Y300001-
1		702-77-02170	• Valve, Relief	1	Y300001-
2		07000-F3022	• • O-ring	1	Y300001-
3		07001-03022	• • Ring, Back-up	2	Y300001-
4		07002-63634	• • O-ring	1	Y300001-
		702-15-80000	• Valve Assembly	1	Y300001-
5	C1		• • Body	1	Y300001-
6	C1		• • Spool	2	Y300001-
7		706-7K-40050	• • Seal	2	Y300001-
8		702-15-71130	• • Spring	2	Y300001-
9		702-15-71140	• • Plug	2	Y300001-
10		07002-61423	• • O-ring	2	Y300001-
11		07000-B3042	• O-ring	1	Y300001-
12		07000-B1009	• O-ring	2	Y300001-
13		01252-60825	• Bolt	2	Y300001-

FIG. N1210-001004 Swing Machinery

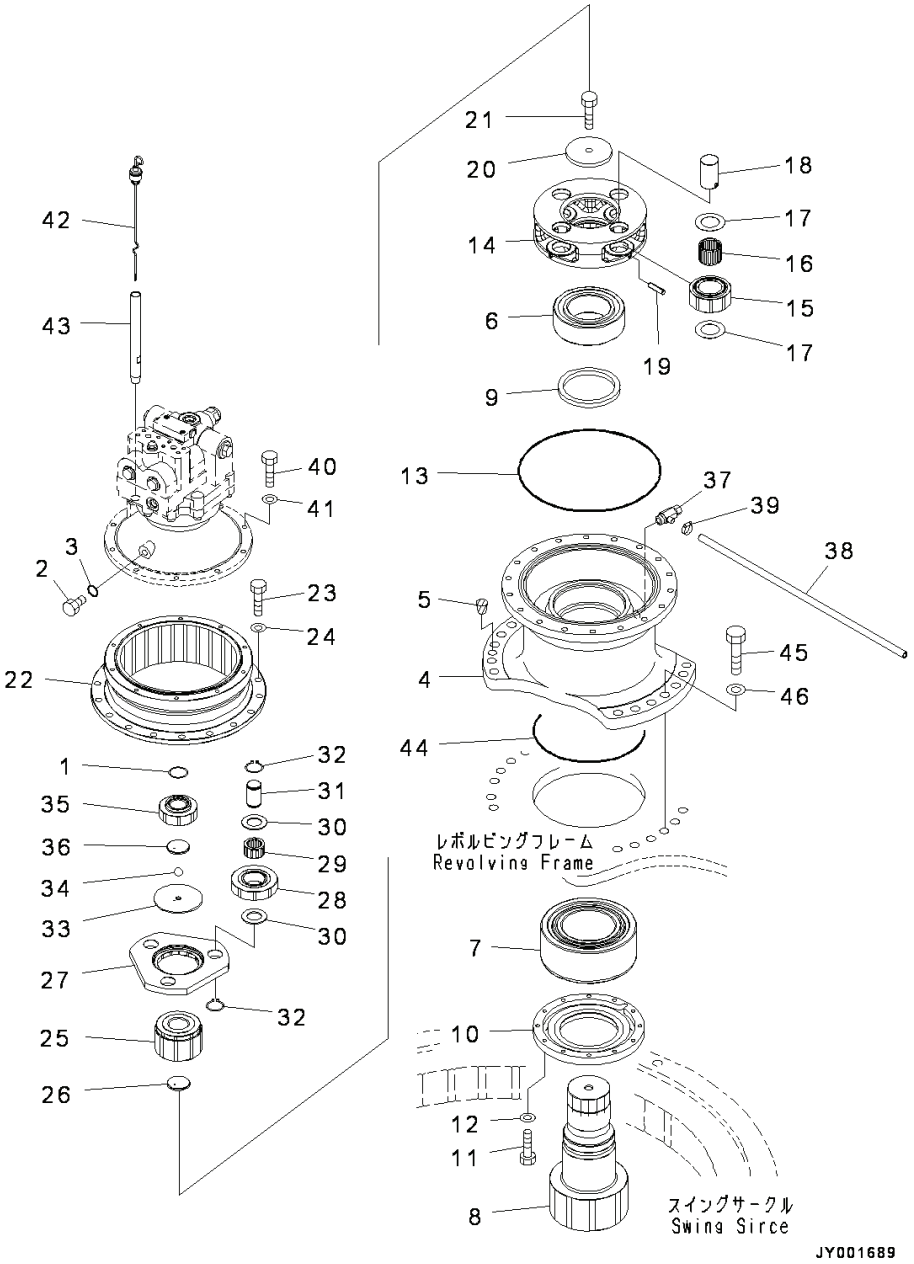

Index	Code	Part Number	Descreption	Qty	Serial Number
1		207-26-71240	Ring	1	Y300001-
2		07040-11209	Plug	1	Y300001-
3		07002-11223	O-ring	1	Y300001-
4		207-26-75110	Case	1	Y300001-
5		07049-02430	Plug	2	Y300001-
6		06000-22222	Bearing	1	Y300001-
7		06000-22324	Bearing	1	Y300001-
8		207-26-62180	Shaft	1	Y300001-
9		207-26-61210	Seal	1	Y300001-
10		207-26-75120	Cover	1	Y300001-
11		01010-81030	Bolt	12	Y300001-
12		01643-31032	Washer	12	Y300001-
13		07000-15390	O-ring	1	Y300001-
14		207-26-71581	Carrier	1	Y300001-
15		207-26-71540	Gear	4	Y300001-
16		206-26-71270	Bearing	4	Y300001-
17		20Y-27-21250	Washer, Thrust	8	Y300001-
18		20Y-26-21320	Pin	4	Y300001-
19		20Y-26-21330	Pin	4	Y300001-
20		207-26-54230	Plate	1	Y300001-
21		205-32-51211	Bolt	1	Y300001-
22		207-26-71551	Gear, Ring	1	Y300001-
23		01010-81645	Bolt	18	Y300001-
24		01643-31645	Washer	18	Y300001-
25		207-26-71530	Gear	1	Y300001-
26		207-26-71261	Plate	1	Y300001-
27		207-26-71570	Carrier	1	Y300001-
28		207-26-71520	Gear	3	Y300001-
29		22U-26-21320	Bearing	3	Y300001-
30		22U-26-21240	Washer	6	Y300001-
31		207-26-71210	Pin	3	Y300001-
32		04064-04018	Ring, Snap	6	Y300001-
33		207-26-71250	Holder	1	Y300001-
34		04260-01270	Ball	1	Y300001-
35		207-26-71510	Gear	1	Y300001-
36		207-26-71261	Plate	1	Y300001-
37		144-60-11151	Valve	1	Y300001-
38		07270-21590	Tube	1	Y300001-
39		07281-00197	Clamp	1	Y300001-
40		01010-81240	Bolt	10	Y300001-

PC300-8 (FEN01263-00)

FIG. N1210-001004 Swing Machinery

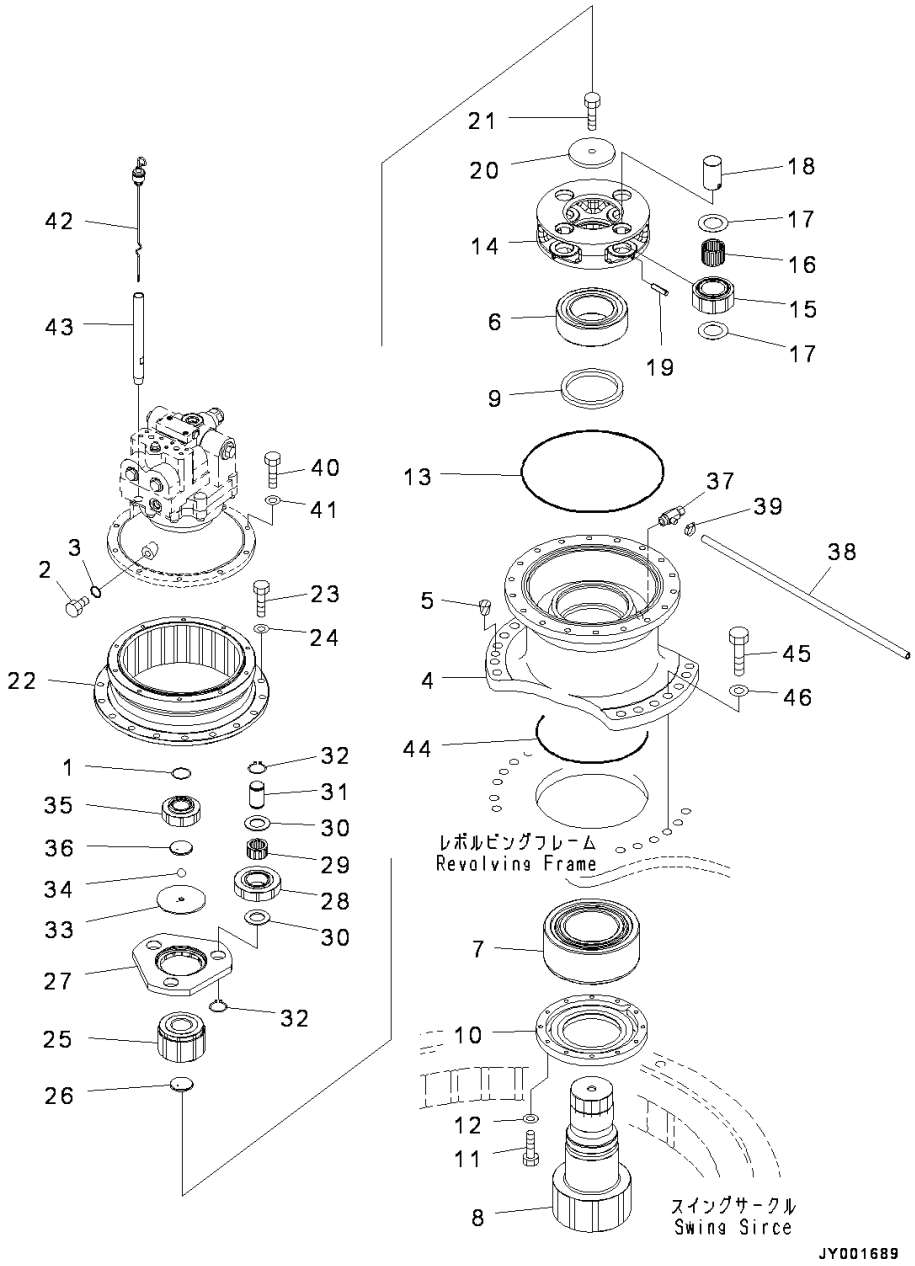

Index	Code	Part Number	Descreption	Qty	Serial Number
41		01643-31232	Washer	10	Y300001-
42		207-26-71410	Gauge	1	Y300001-
43		20Y-26-21350	Filler	1	Y300001-
44		07000-15290	O-ring	1	Y300001-
45		01010-82475	Bolt	12	Y300001-
46		01643-32460	Washer	12	Y300001-

PC300-8 (FEN01263-00)

FIG. N1210-002001 Swing Machinery, Supply Parts

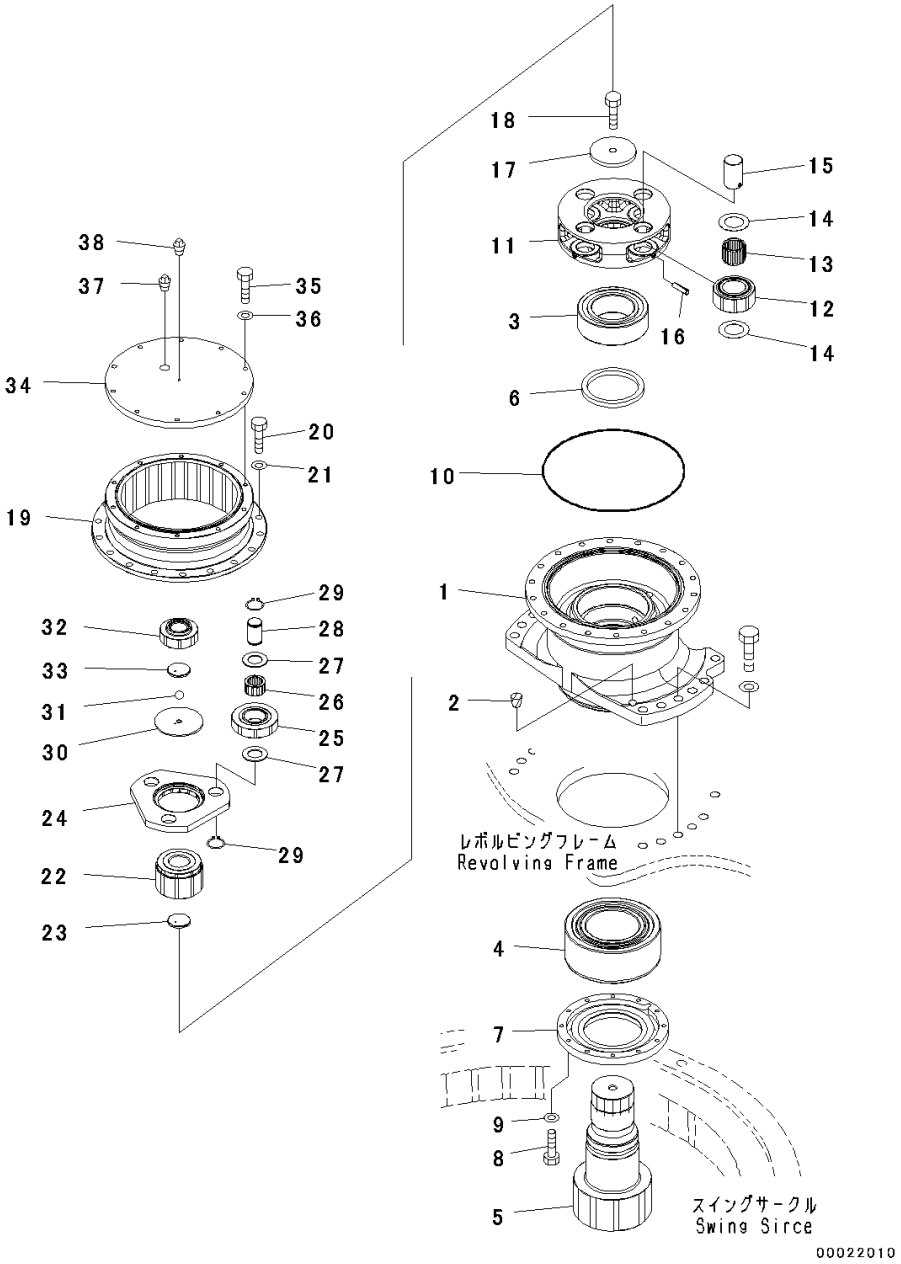

Index	Code	Part Number	Descreption	Qty	Serial Number
		207-26-00220	Swing Machinery Assembly	1	Y300001-
1		207-26-75110	• Case	1	Y300001-
2		07049-02430	• Plug	2	Y300001-
3		06000-22222	• Bearing	1	Y300001-
4		06000-22324	• Bearing	1	Y300001-
5		207-26-62180	• Shaft	1	Y300001-
6		207-26-61210	• Seal	1	Y300001-
7		207-26-75120	• Cover	1	Y300001-
8		01010-81030	• Bolt	12	Y300001-
9		01643-31032	• Washer	12	Y300001-
10		07000-15390	• O-ring	1	Y300001-
11		207-26-71581	• Carrier	1	Y300001-
12		207-26-71540	• Gear	4	Y300001-
13		206-26-71270	• Bearing	4	Y300001-
14		20Y-27-21250	• Washer, Thrust	8	Y300001-
15		20Y-26-21320	• Pin	4	Y300001-
16		20Y-26-21330	• Pin	4	Y300001-
17		207-26-54230	• Plate	1	Y300001-
18		205-32-51211	• Bolt	1	Y300001-
19		207-26-71551	• Gear, Ring	1	Y300001-
20		01010-81645	• Bolt	18	Y300001-
21		01643-31645	• Washer	18	Y300001-
22		207-26-71530	• Gear	1	Y300001-
23		207-26-71261	• Plate	1	Y300001-
24		207-26-71570	• Carrier	1	Y300001-
25		207-26-71520	• Gear	3	Y300001-
26		22U-26-21320	• Bearing	3	Y300001-
27		22U-26-21240	• Washer	6	Y300001-
28		207-26-71210	• Pin	3	Y300001-
29		04064-04018	• Ring, Snap	6	Y300001-
30		207-26-71250	• Holder	1	Y300001-
31		04260-01270	• Ball	1	Y300001-
32		207-26-71510	• Gear	1	Y300001-
33		207-26-71261	• Plate	1	Y300001-
34		207-26-71610	• Cover	1	Y300001-
35		01010-81240	• Bolt	10	Y300001-
36		01643-31232	• Washer	10	Y300001-
37		07042-30617	• Plug, Taper	2	Y300001-
38		07042-30108	• Plug	1	Y300001-

PC300-8 (FEN01263-00)

FIG. N1210-003001 Swing Machinery, For Machine With WEBASTO Coolant Heater, Inner Parts (1/3)

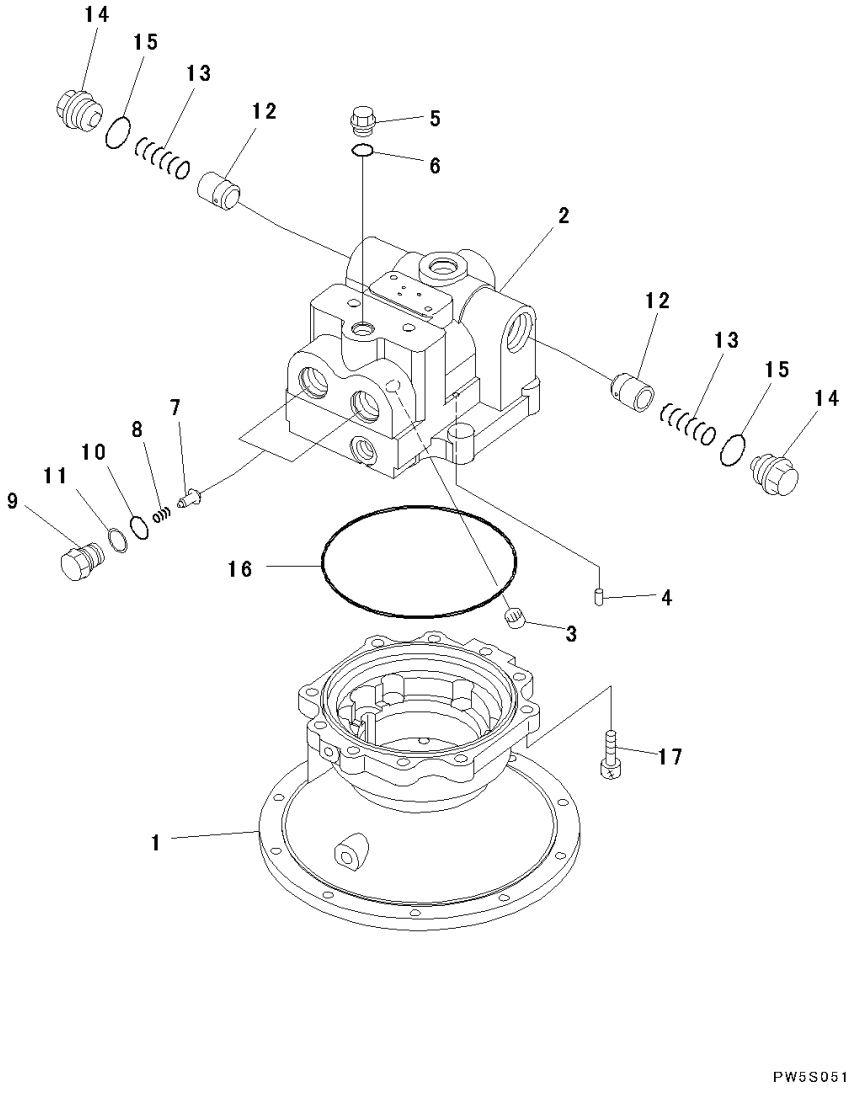

Index	Code	Part Number	Descreption	Qty	Serial Number
		706-7K-01081	Swing Motor Assembly	1	Y300001-
		706-7K-03061	• Motor Subassembly	1	Y300001-
1	C2	706-7K-41150	• • Case	1	Y300001-
2	C2	706-7K-71110	• • Housing	1	Y300001-
3	C2	706-7K-40010	• • Bearing	1	Y300001-
4	C2	706-75-42830	• • Pin, Dowel	1	Y300001-
5		706-77-72280	• • Plug	1	Y300001-
6		07002-52034	• • O-ring	1	Y300001-
7		709-74-92810	• • Valve	2	Y300001-
8		709-75-92220	• • Spring	2	Y300001-
9		709-74-92821	• • Plug	2	Y300001-
10		723-46-41820	• • O-ring	2	Y300001-
11		700-93-11330	• • Ring, Back-up	2	Y300001-
12		706-77-72130	• • Valve	2	Y300001-
13		706-77-72140	• • Spring	2	Y300001-
14		706-77-72150	• • Plug	2	Y300001-
15		07002-54234	• • O-ring	2	Y300001-
16	C2	706-7K-40030	• • O-ring	1	Y300001-
17		01252-61450	• • Bolt	10	Y300001-

PC300-8 (FEN01263-00)

FIG. N1210-003002 Swing Machinery, For Machine With WEBASTO Coolant Heater, Inner Parts (2/3)

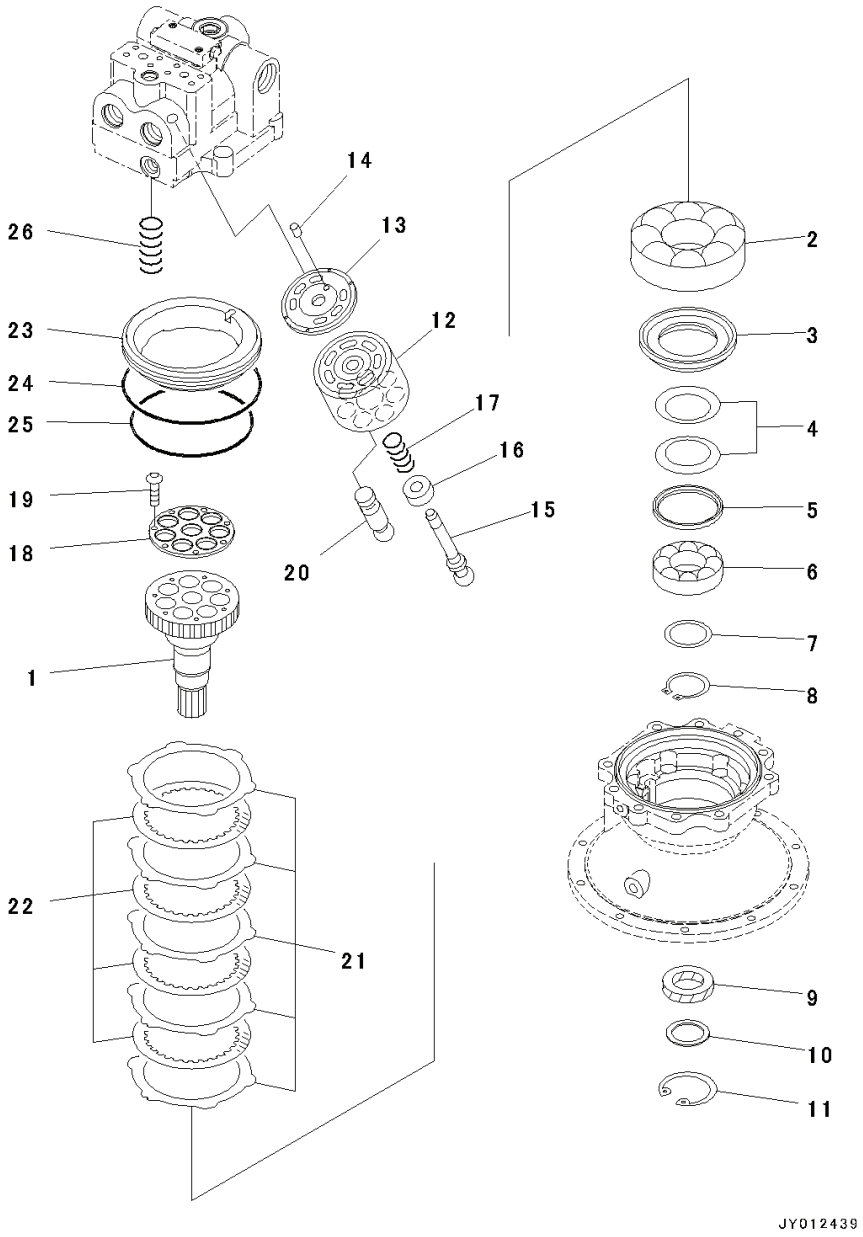

Index	Code	Part Number	Descreption	Qty	Serial Number
		706-7K-01081	Swing Motor Assembly	1	Y300001-
		706-7K-03061	• Motor Subassembly	1	Y300001-
1	C2	706-7K-41610	• • Shaft	1	Y300001-
2	C2	706-77-43890	• • Bearing	1	Y300001-
3	C2	706-7K-41810	• • Spacer	1	Y300001-
4	C2	706-77-42150	• • Spring	2	Y300001-
5	C2	706-77-42041	• • Seat	1	Y300001-
6	C2	706-77-42890	• • Bearing	1	Y300001-
7	C2	706-77-05010	• • Spacer Kit	1	Y300001-
	C1		• • • Spacer, T=2.3mm	2	Y300001-
	C1		• • • Spacer, T=2.5mm	2	Y300001-
	C1		• • • Spacer, T=2.7mm	2	Y300001-
8		04064-06525	• • Ring	1	Y300001-
9		706-7K-41660	• • Seal, Oil	1	Y300001-
10		706-7K-41920	• • Spacer	1	Y300001-
11		04065-07525	• • Ring, Snap, for Hole Side	1	Y300001-
12	C2	706-7K-41210	• • Cylinder Block	1	Y300001-
13	C2	706-7K-41710	• • Plate	1	Y300001-
14	C2	708-18-13230	• • Pin	1	Y300001-
15	C2	706-7K-41120	• • Shaft	1	Y300001-
16	C2	706-77-42130	• • Ring	1	Y300001-
17	C2	706-7K-41140	• • Spring	1	Y300001-
	C2	706-7K-05010	• • Retainer Kit	1	Y300001-
18	C1		• • • Retainer	1	Y300001-
19	C1		• • • Screw	7	Y300001-
20	C2	706-7K-41160	• • Piston Subassembly	7	Y300001-
21	C2	706-7K-91340	• • Plate	5	Y300001-
22	C2	706-7K-91350	• • Disc	4	Y300001-
23	C2	706-7K-91111	• • Brake Piston	1	Y300001-
24	C2	07000-55230	• • O-ring	1	Y300001-
25	C2	706-77-91560	• • O-ring	1	Y300001-
26	C2	706-7K-91360	• • Spring	6	Y300001-

PC300-8 (FEN01263-00)

FIG. N1210-003003 Swing Machinery, For Machine With WEBASTO Coolant Heater, Inner Parts (3/3)

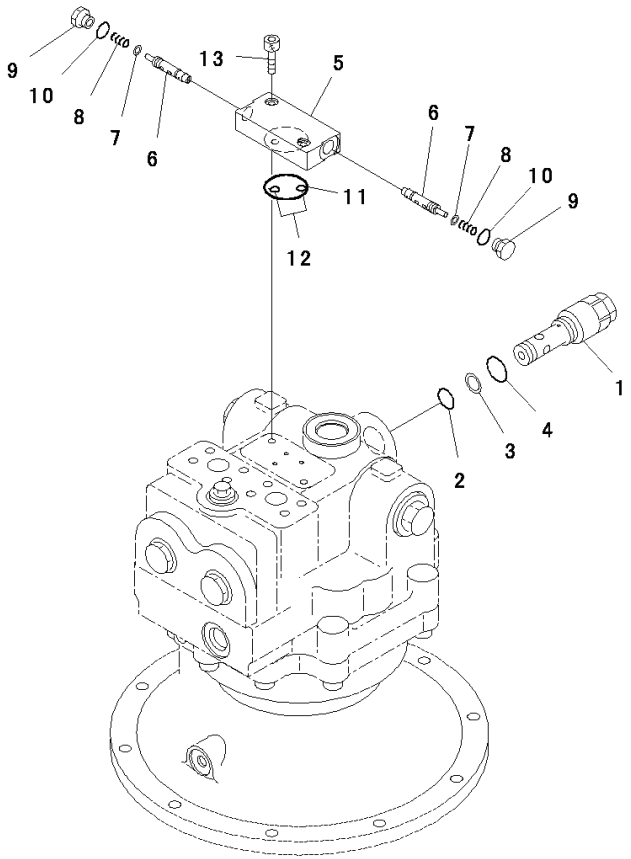

Index	Code	Part Number	Descreption	Qty	Serial Number
		706-7K-01081	Swing Motor Assembly	1	Y300001-
1		702-77-02140	• Valve Assembly, Relief	1	Y300001-
2		07000-53022	• • O-ring	1	Y300001-
3		07001-03022	• • Ring, Back-up	2	Y300001-
4		07002-53634	• • O-ring	1	Y300001-
		702-15-83000	• Valve Assembly	1	Y300001-
5	C1		• • Body	1	Y300001-
6	C1		• • Spool	2	Y300001-
7		709-70-71720	• • Seal	2	Y300001-
8		702-15-71130	• • Spring	2	Y300001-
9		702-15-71140	• • Plug	2	Y300001-
10		07002-51423	• • O-ring	2	Y300001-
11		07000-53042	• O-ring	1	Y300001-
12		07000-51009	• O-ring	2	Y300001-
13		01252-60825	• Bolt	2	Y300001-

FIG. N1210-003004 Swing Machinery, For Machine With WEBASTO Coolant Heater

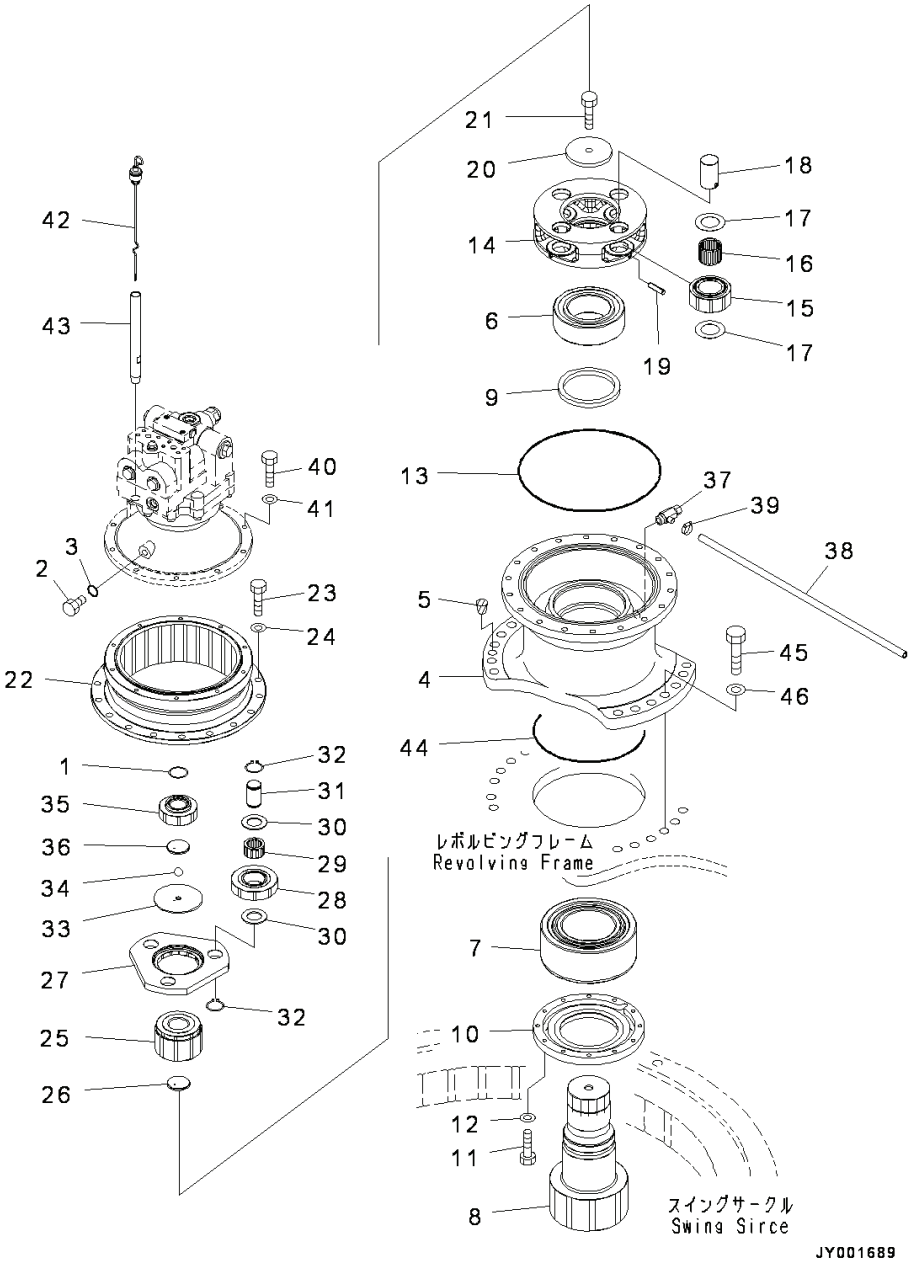

PC300-8 (FEN01263-00)

Index	Code	Part Number	Descreption	Qty	Serial Number
1		207-26-71240	Ring	1	Y300001-
2		07040-11209	Plug	1	Y300001-
3		07002-51223	O-ring	1	Y300001-
4		207-26-75110	Case	1	Y300001-
5		07049-02430	Plug	2	Y300001-
6		06000-22222	Bearing	1	Y300001-
7		06000-22324	Bearing	1	Y300001-
8		207-26-62180	Shaft	1	Y300001-
9		207-26-71710	Seal	1	Y300001-
10		207-26-75120	Cover	1	Y300001-
11		01010-81030	Bolt	12	Y300001-
12		01643-31032	Washer	12	Y300001-
13		07000-55390	O-ring	1	Y300001-
14		207-26-71581	Carrier	1	Y300001-
15		207-26-71540	Gear	4	Y300001-
16		207-26-71770	Bearing	4	Y300001-
17		20Y-27-21250	Washer, Thrust	8	Y300001-
18		20Y-26-21320	Pin	4	Y300001-
19		20Y-26-21330	Pin	4	Y300001-
20		207-26-54230	Plate	1	Y300001-
21		205-32-51211	Bolt	1	Y300001-
22		207-26-71551	Gear, Ring	1	Y300001-
23		01010-81645	Bolt	18	Y300001-
24		01643-31645	Washer	18	Y300001-
25		207-26-71530	Gear	1	Y300001-
26		207-26-71261	Plate	1	Y300001-
27		207-26-71570	Carrier	1	Y300001-
28		207-26-71520	Gear	3	Y300001-
29		22U-26-21470	Bearing	3	Y300001-
30		22U-26-21240	Washer	6	Y300001-
31		207-26-71210	Pin	3	Y300001-
32		04064-04018	Ring, Snap	6	Y300001-
33		207-26-71250	Holder	1	Y300001-
34		04260-01270	Ball	1	Y300001-
35		207-26-71510	Gear	1	Y300001-
36		207-26-71261	Plate	1	Y300001-
37		144-60-11151	Valve	1	Y300001-
38		07270-31590	Tube	1	Y300001-
39		07281-00197	Clamp	1	Y300001-
40		01010-81240	Bolt	10	Y300001-

FIG. N1210-003004 Swing Machinery, For Machine With WEBASTO Coolant Heater

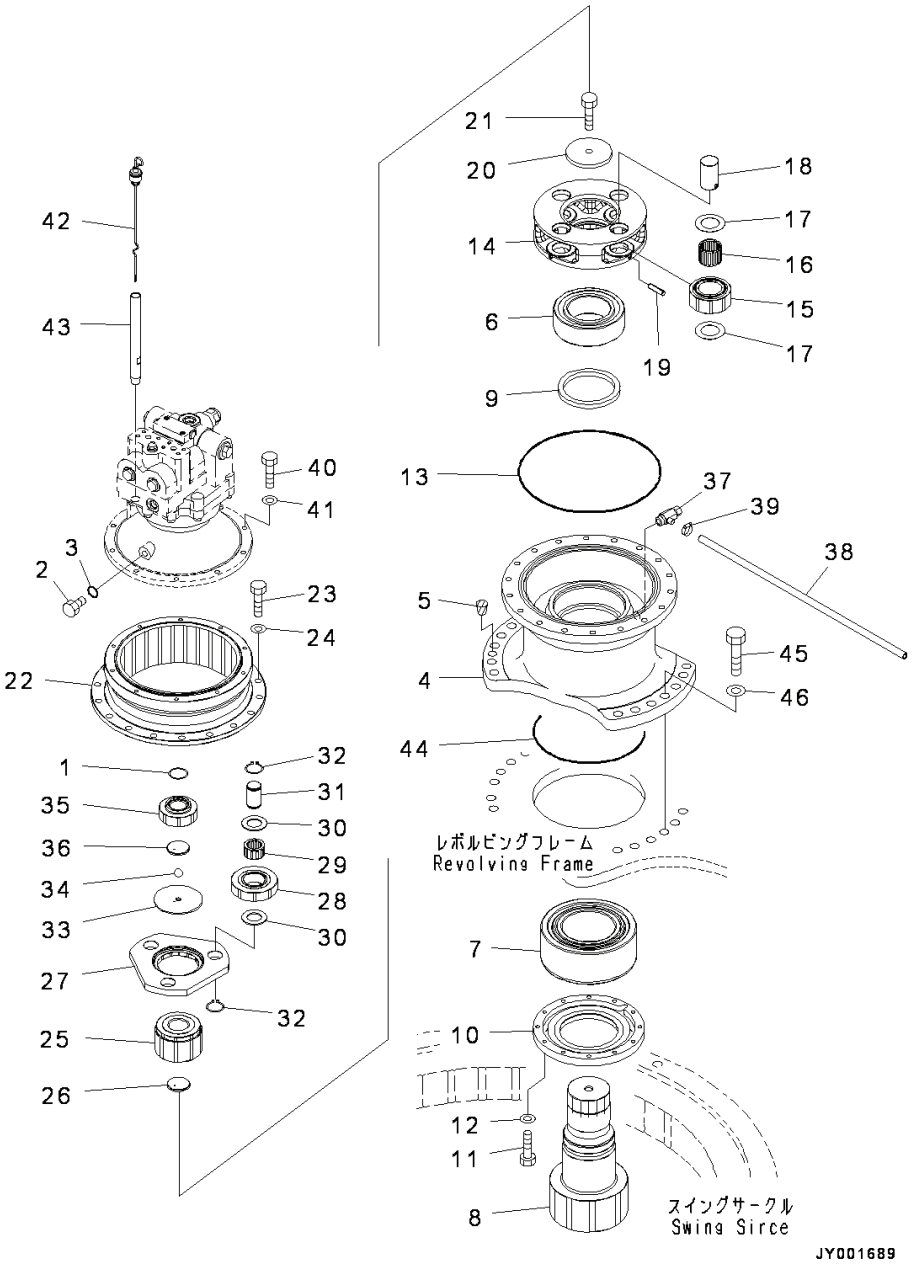

Index	Code	Part Number	Descreption	Qty	Serial Number
41		01643-31232	Washer	10	Y300001-
42		207-26-71410	Gauge	1	Y300001-
43		20Y-26-21350	Filler	1	Y300001-
44		07000-55290	O-ring	1	Y300001-
45		01010-82475	Bolt	12	Y300001-
46		01643-32460	Washer	12	Y300001-

PC300-8 (FEN01263-00)

FIG. N1220-001001 Swing Motor, Related Parts

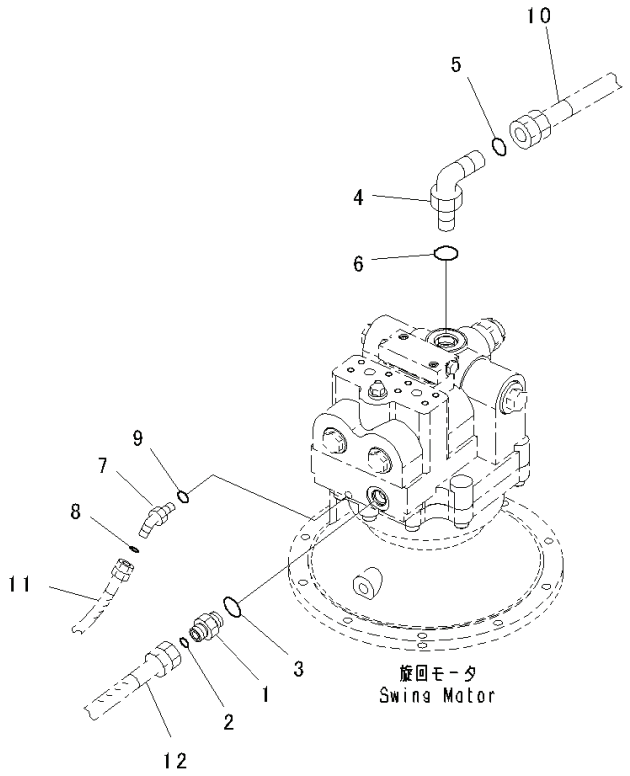

JY001700

Index	Code	Part Number	Descreption	Qty	Serial Number
1		02781-00522	Union	1	Y300001-
2		02896-11015	O-ring	1	Y300001-
3		07002-12434	O-ring	1	Y300001-
4		21W-62-42640	Elbow	1	Y300001-
5		207-62-64740	O-ring	1	Y300001-
6		07002-13334	O-ring	1	Y300001-
7		11Y-62-12510	Elbow	1	Y300001-
8		02896-11009	O-ring	1	Y300001-
9		07002-11423	O-ring	1	Y300001-
10		(207-62-74781)	Hose(Refer to Page 374)		-
		(207-62-74781)	Hose(Refer to Page 376)		-
		(207-62-74781)	Hose(Refer to Page 375)		-
11		(208-62-72131)	Hose(Refer to Page 434)		-
		(208-62-72131)	Hose(Refer to Page 438)		-
12		(02762-00509)	Hose, Face Seal Type(Refer to Page 377)		-

FIG. N1310-001001 Swivel Joint, (1/2)

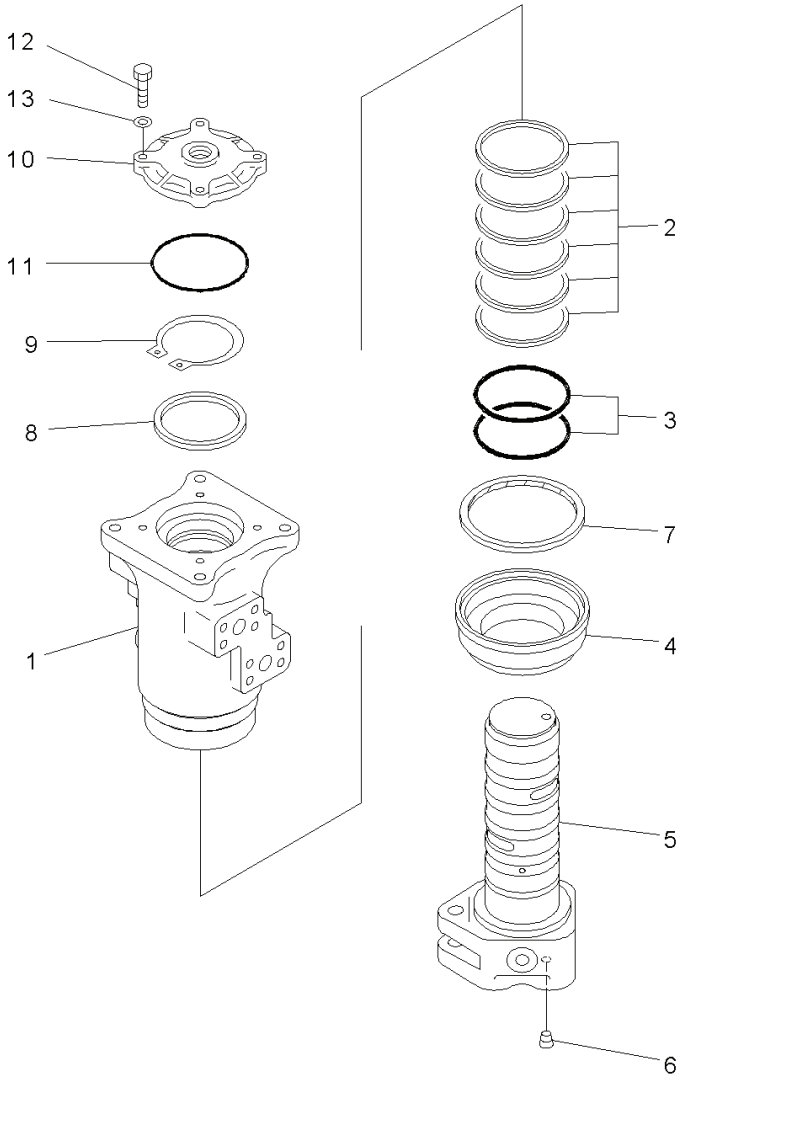

Index	Code	Part Number	Descreption	Qty	Serial Number
		703-08-33651	Swivel Joint Assembly	1	Y300001-
1		703-08-91210	• Rotor	1	Y300001-
2		703-08-95620	• Seal, Oil	6	Y300001-
3		07000-15080	• O-ring	2	Y300001-
4		703-08-93770	• Cover	1	Y300001-
5		703-08-92210	• Shaft	1	Y300001-
6		703-13-98930	• • Plug	1	Y300001-
7		703-08-95770	• Seal, Dust	1	Y300001-
8		703-08-94510	• Ring	1	Y300001-
9		04064-07525	• Ring, Snap	1	Y300001-
10		703-08-93170	• Cover	1	Y300001-
11		07000-12105	• O-ring	1	Y300001-
12		01010-80835	• Bolt	4	Y300001-
13		01643-30823	• Washer	4	Y300001-

PC300-8 (FEN01263-00)

FIG. N1310-001002 Swivel Joint, (2/2)

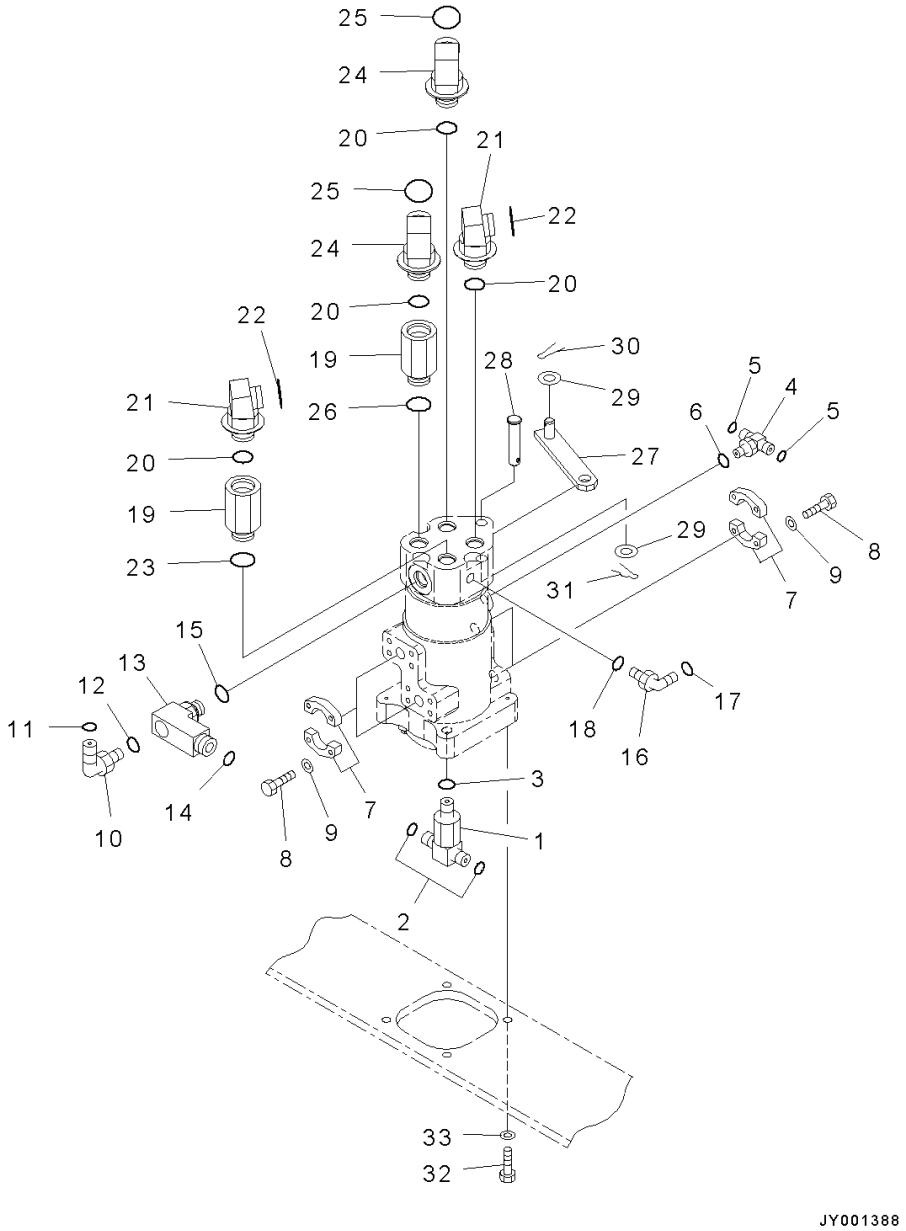

Index	Code	Part Number	Descreption	Qty	Serial Number
1		207-62-72151	Tee	1	Y300001-
2		02896-11015	O-ring	2	Y300001-
3		07002-12434	O-ring	1	Y300001-
4		21W-62-42630	Tee	1	Y300001-
5		02896-11009	O-ring	2	Y300001-
6		07002-11423	O-ring	1	Y300001-
7		07371-31049	Flange, Split	8	Y300001-
8		07372-21035	Bolt	16	Y300001-
9		01643-51032	Washer	16	Y300001-
10		02782-10522	Elbow	1	Y300001-
11		02896-11015	O-ring	1	Y300001-
12		07002-12434	O-ring	1	Y300001-
13		207-62-72171	Elbow	1	Y300001-
14		02896-11018	O-ring	1	Y300001-
15		07002-12434	O-ring	1	Y300001-
16		21W-62-42490	Elbow	1	Y300001-
17		02896-11009	O-ring	1	Y300001-
18		07002-11423	O-ring	1	Y300001-
19		203-62-63740	Joint	2	Y300001-
20		07002-63334	O-ring	2	Y300001-
21		207-62-71410	Elbow	2	Y300001-
22		11Y-62-11980	O-ring	2	Y300001-
23		07002-63334	O-ring	2	Y300001-
24		21W-62-42640	Elbow	2	Y300001-
25		11Y-62-11980	O-ring	2	Y300001-
26		07002-63334	O-ring	2	Y300001-
27		207-62-71420	Plate	1	Y300001-
28		22U-62-21870	Pin	1	Y300001-
29		01641-21626	Washer	1	Y300001-
30		04050-14025	Pin, Cotter	1	Y300001-
31		22U-62-24420	Pin	1	Y300001-
32		01010-81240	Bolt	4	Y300001-
33		01643-31232	Washer	4	Y300001-

PC300-8 (FEN01263-00)

TRAVEL SYSTEM AND ITS RELATED PARTS

FIG. P1120-001001 Travel Circuit

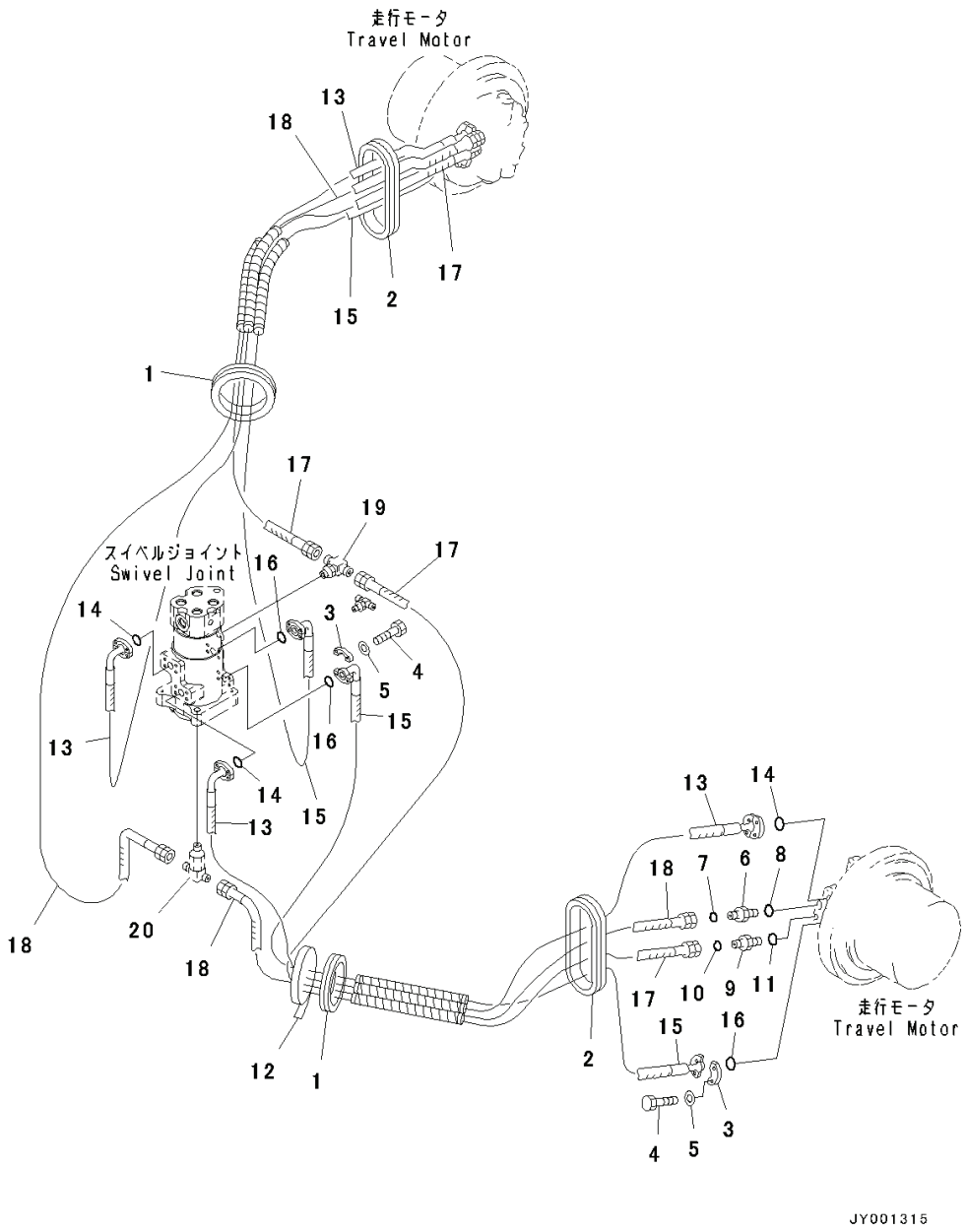

Index	Code	Part Number	Descreption	Qty	Serial Number
1		20Y-62-12121	Grommet	2	Y300001-
2		207-62-53350	Grommet	2	Y300001-
3		07371-31049	Flange, Split	8	Y300001-
4		07372-21035	Bolt	16	Y300001-
5		01643-51032	Washer	16	Y300001-
6		02781-00522	Union	2	Y300001-
7		02896-11015	O-ring	2	Y300001-
8		07002-12434	O-ring	2	Y300001-
9		11Y-62-12520	Union	2	Y300001-
10		02896-11009	O-ring	2	Y300001-
11		07002-11423	O-ring	2	Y300001-
12		08034-20536	Band	2	Y300001-
13		207-62-64850	Hose Assembly	2	Y300001-
14		07000-13032	O-ring	4	Y300001-
15		207-62-64810	Hose Assembly	2	Y300001-
16		07000-13032	O-ring	4	Y300001-
17		02762-00322	Hose	2	Y300001-
18		02762-00523	Hose	2	Y300001-
19		(21W-62-42630)	Tee(Refer to Page 837)		-
20		(207-62-72151)	Tee(Refer to Page 837)		-

PC300-8 (FEN01263-00)

FIG. P1120-002001 Travel Circuit, For Machine With WEBASTO Coolant Heater

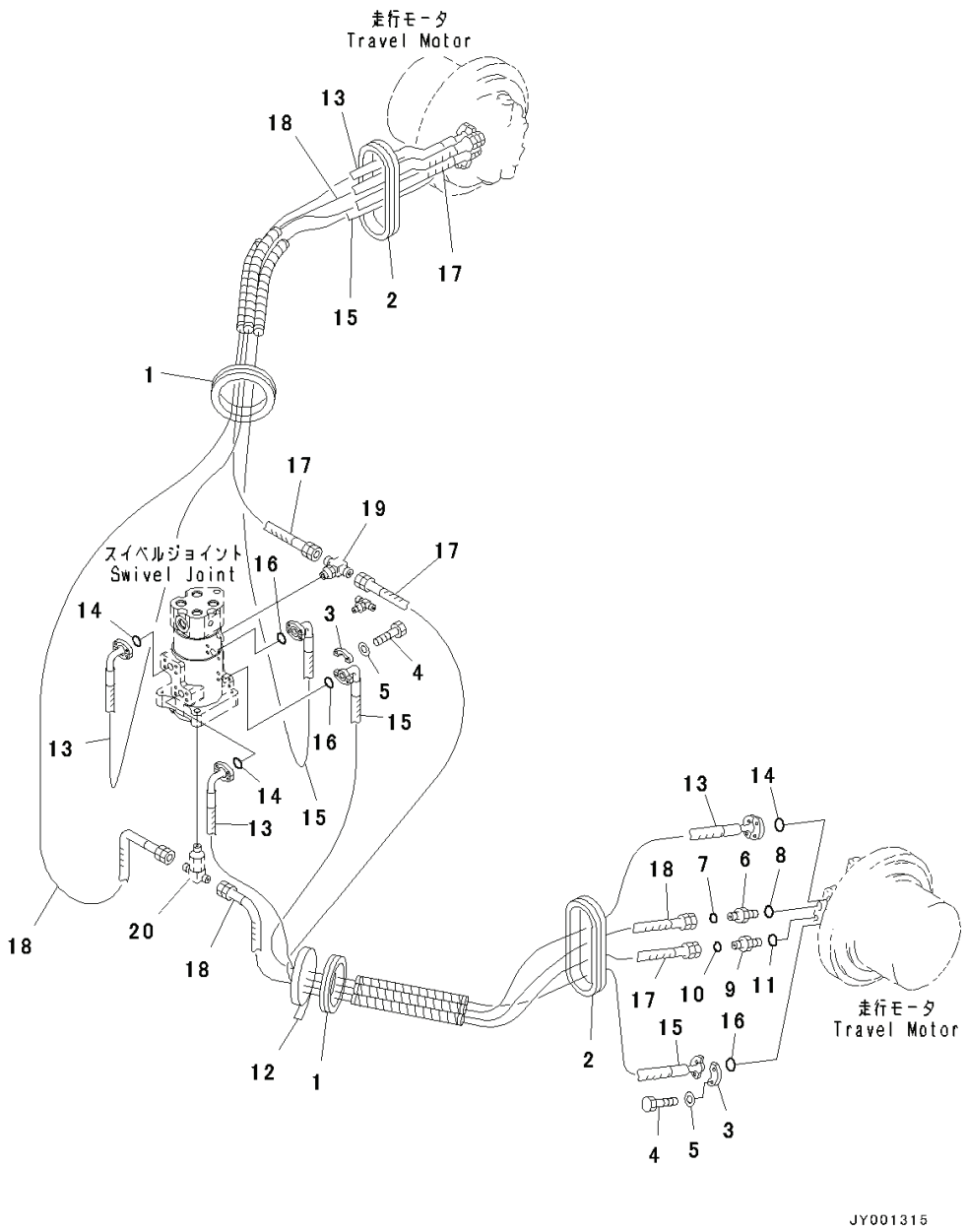

Index	Code	Part Number	Descreption	Qty	Serial Number
1		20Y-62-12121	Grommet	2	Y300001-
2		207-62-53350	Grommet	2	Y300001-
3		07371-31049	Flange, Split	8	Y300001-
4		07372-21035	Bolt	16	Y300001-
5		01643-51032	Washer	16	Y300001-
6		02781-00522	Union	2	Y300001-
7		02896-51015	O-ring	2	Y300001-
8		07002-52434	O-ring	2	Y300001-
9		11Y-62-12520	Union	2	Y300001-
10		02896-51009	O-ring	2	Y300001-
11		07002-51423	O-ring	2	Y300001-
12		08034-20536	Band	2	Y300001-
13		207-62-64850	Hose Assembly	2	Y300001-
14		07000-53032	O-ring	4	Y300001-
15		207-62-64810	Hose Assembly	2	Y300001-
16		07000-53032	O-ring	4	Y300001-
17		02762-00322	Hose	2	Y300001-
18		02762-00523	Hose	2	Y300001-
19		(21W-62-42630)	Tee(Refer to Page 837)		-
20		(207-62-72151)	Tee(Refer to Page 837)		-

PC300-8 (FEN01263-00)

FIG. P1210-001001 Travel Motor And Final Drive, (1/4)

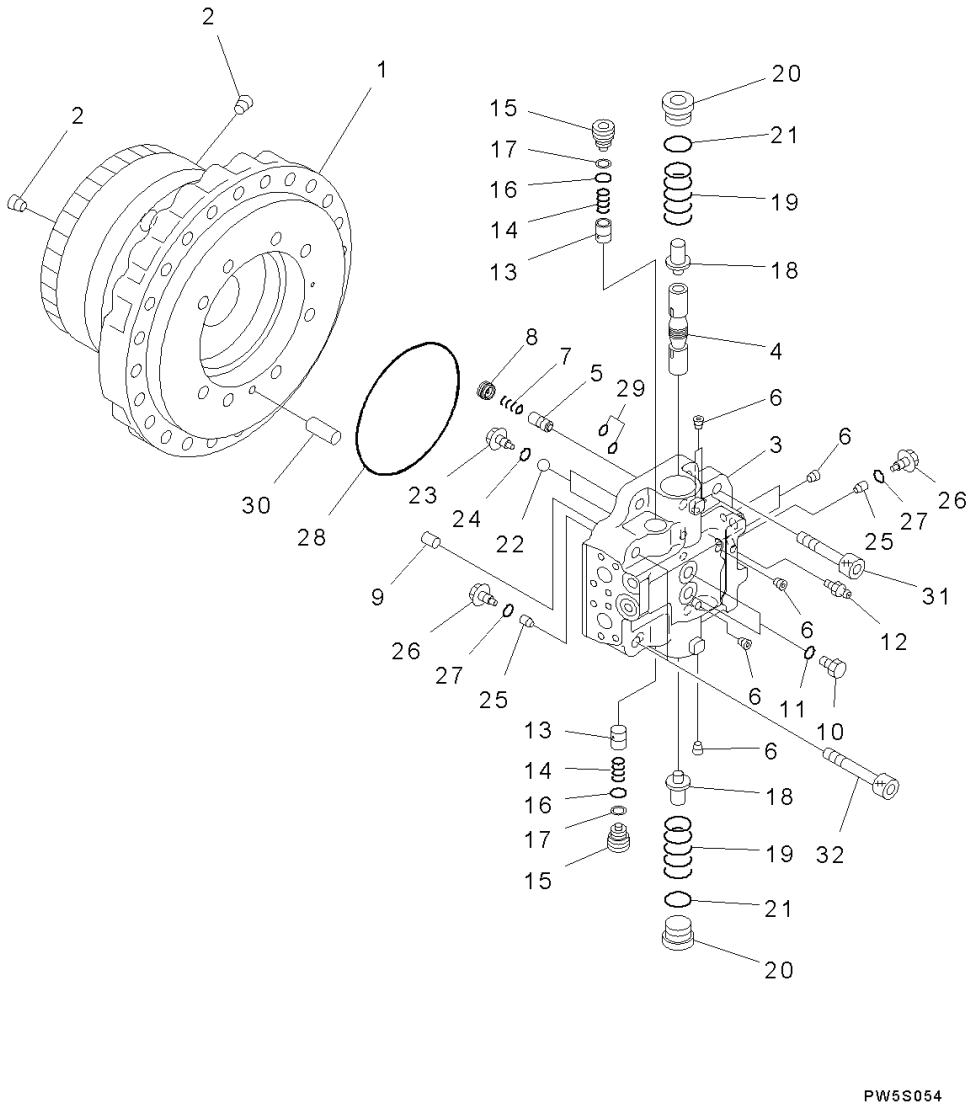

Index	Code	Part Number	Descreption	Qty	Serial Number
		207-27-00441	Final Drive Assembly .	2	Y300001-
		708-8H-00320	• Motor Assembly .	1	Y300001-
	C2	708-8H-04711	• • Case Subassembly .	1	Y300001-
1	C1		• • • Case .	1	Y300001-
2	C1		• • • Plug .	2	Y300001-
	C2	708-8H-04721	• • Cover Subassembly .	1	Y300001-
3	C1		• • • Cover .	1	Y300001-
4	C1		• • • Spool .	1	Y300001-
5	C1		• • • Spool .	1	Y300001-
6	C1		• • • Plug	7	Y300001-
7	C1		• • • Spring .	1	Y300001-
8	C1		• • • Plug	1	Y300001-
9	C2	706-75-42820	• • Pin, Dowel .	1	Y300001-
10		708-8H-11530	• • Plug .	2	Y300001-
11		07002-11423	• • O-ring	2	Y300001-
12		20B-27-11210	• • Bleeder	1	Y300001-
13		706-73-72420	• • Valve	2	Y300001-
14		706-73-72440	• • Spring	2	Y300001-
15		708-8H-36150	• • Plug .	2	Y300001-
16		07000-12018	• • O-ring	2	Y300001-
17		07001-02018	• • Ring, Back-up .	2	Y300001-
18		706-78-71160	• • Piston	2	Y300001-
19		708-8H-36121	• • Spring	2	Y300001-
20		708-8H-16141	• • Plug .	2	Y300001-
21		07002-13634	• • O-ring	2	Y300001-
22	C2	04260-00793	• • Ball .	2	Y300001-
23	C2	706-8E-14110	• • Plug .	2	Y300001-
24	C2	07002-11023	• • O-ring	2	Y300001-
25		708-8E-16180	• • Valve	2	Y300001-
26	C2	708-8E-16160	• • Plug .	2	Y300001-
27	C2	07002-11023	• • O-ring	2	Y300001-
28	C2	708-8H-31210	• • O-ring	1	Y300001-
29	C2	07000-12012	• • O-ring	2	Y300001-
30	C2	04020-01228	• • Pin, Dowel .	1	Y300001-
31	C2	01252-62055	• • Bolt .	6	Y300001-
32	C2	01252-62095	• • Bolt .	2	Y300001-

FIG. P1210-001002 Travel Motor And Final Drive, (2/4)

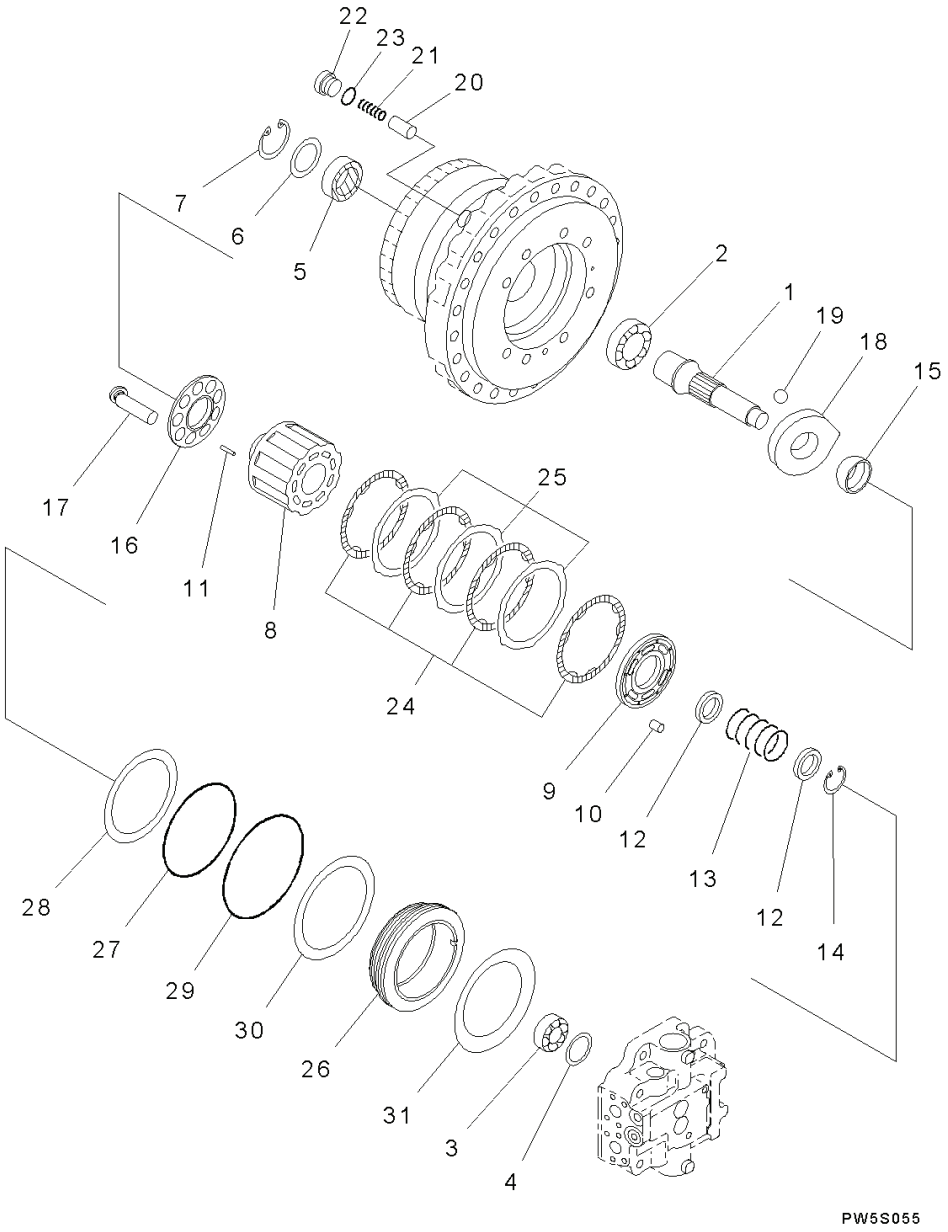

Index	Code	Part Number	Descreption	Qty	Serial Number
		207-27-00441	Final Drive Assembly .	2	Y300001-
		708-8H-00320	• Motor Assembly .	1	Y300001-
1	C2	708-8H-32120	• • Shaft .	1	Y300001-
2	C2	708-8H-32150	• • Bearing	1	Y300001-
3	C2	708-8H-32170	• • Bearing	1	Y300001-
4	C2	708-8H-05050	• • Spacer Kit .	1	Y300001-
	C1		• • • Spacer, T=1.6mm .	1	Y300001-
	C1		• • • Spacer, T=1.7mm .	1	Y300001-
	C1		• • • Spacer, T=1.8mm .	1	Y300001-
	C1		• • • Spacer, T=1.9mm .	1	Y300001-
	C1		• • • Spacer, T=2.0mm .	1	Y300001-
	C1		• • • Spacer, T=2.1mm .	1	Y300001-
	C1		• • • Spacer, T=2.2mm .	1	Y300001-
5		708-1F-12281	• • Seal, Oil .	1	Y300001-
6		708-8H-32160	• • Spacer .	1	Y300001-
7		04065-07825	• • Ring, Snap	1	Y300001-
	C2	708-8H-04810	• • Cylinder Block Assembly	1	Y300001-
8	C2	708-8H-33710	• • • Block, Cylinder .	1	Y300001-
9	C2	708-8H-33810	• • • Plate, Valve .	1	Y300001-
10	C2	708-18-13230	• • Pin .	1	Y300001-
11	C2	708-8H-33360	• • Pin .	3	Y300001-
12	C2	708-8H-33141	• • Spacer .	2	Y300001-
13	C2	708-8H-33750	• • Spring	1	Y300001-
14	C2	04065-06020	• • Ring .	1	Y300001-
15	C2	708-8H-33512	• • Retainer .	1	Y300001-
16	C2	708-8H-33340	• • Retainer .	1	Y300001-
17	C2	708-8H-33650	• • Piston Subassembly .	9	Y300001-
18	C2	708-8H-33471	• • Rocker Arm Assembly .	1	Y300001-
19	C2	04260-02857	• • Ball .	2	Y300001-
20		708-8H-34190	• • Piston	1	Y300001-
21		708-8H-34151	• • Spring	1	Y300001-
22		X17-8320160	• • Plug .	1	Y300001-
23		07002-13334	• • • O-ring .	1	Y300001-
24	C2	708-8H-35130	• • Plate .	4	Y300001-
25	C2	708-8H-35180	• • Disc .	3	Y300001-
26	C2	708-8H-35141	• • Piston, Brake, Brake .	1	Y300001-
27	C2	07000-15175	• • O-ring	1	Y300001-
28	C2	07001-05175	• • Ring, Back-up .	1	Y300001-
29	C2	07000-15195	• • O-ring	1	Y300001-
30	C2	07001-05195	• • Ring, Back-up .	1	Y300001-

PC300-8 (FEN01263-00)

FIG. P1210-001002 Travel Motor And Final Drive, (2/4)

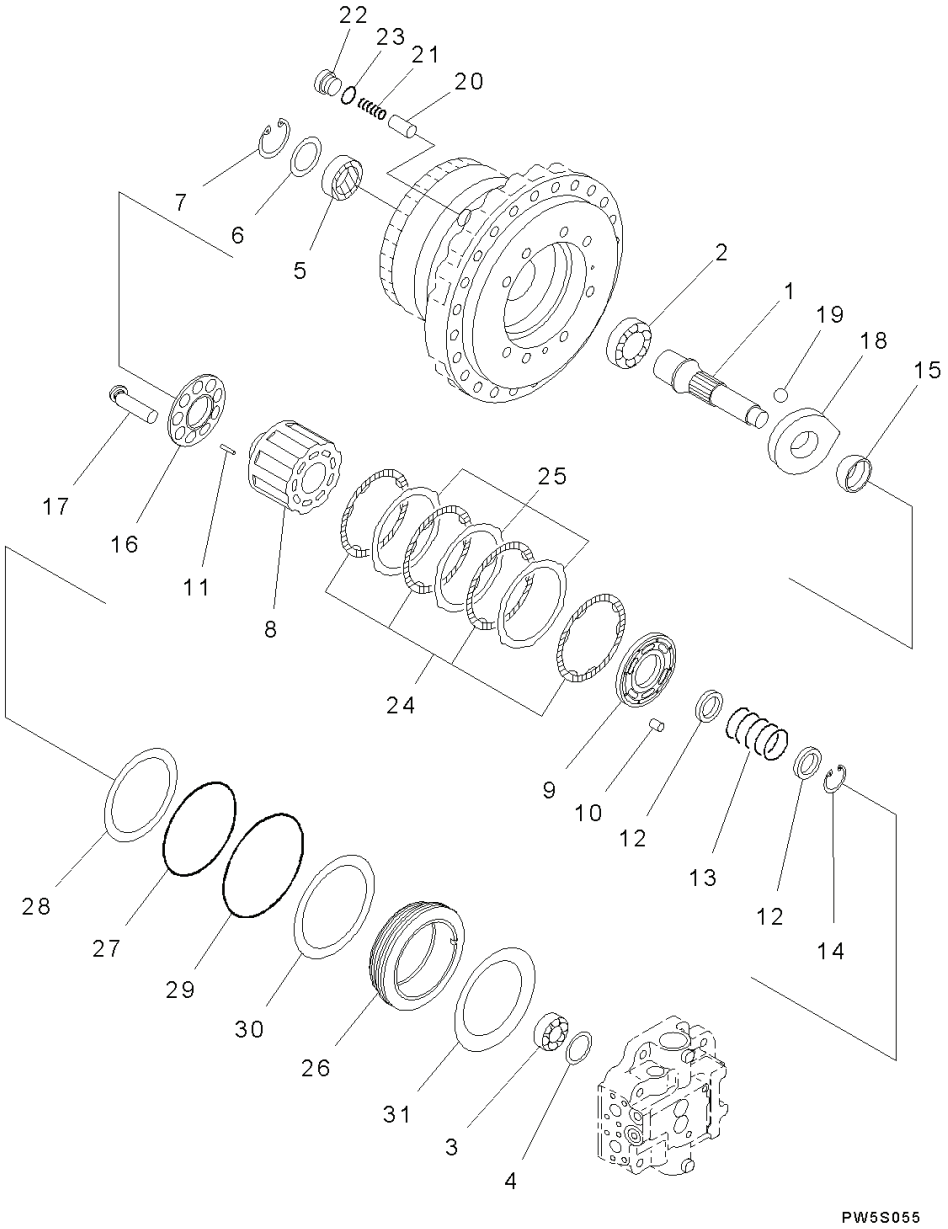

Index	Code	Part Number	Descreption	Qty	Serial Number
31	C2	708-8H-35150	• • Spring	1	Y300001-

PC300-8 (FEN01263-00)

FIG. P1210-001003 Travel Motor And Final Drive, (3/4)

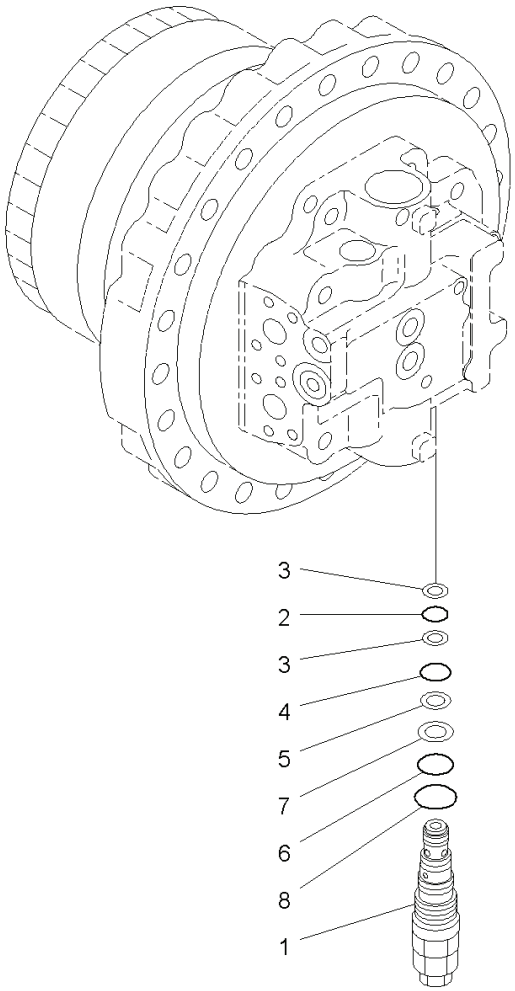

00025836

Index	Code	Part Number	Descreption	Qty	Serial Number
		207-27-00441	Final Drive Assembly	2	Y300001-
		708-8H-00320	• Motor Assembly	1	Y300001-
1		702-75-04600	• • Valve Assembly, Relief	1	Y300001-
2		07000-22018	• • • O-ring	1	Y300001-
3		07001-02018	• • • Ring, Back-up	2	Y300001-
4		07000-12021	• • • O-ring	1	Y300001-
5		07001-02021	• • • Ring	1	Y300001-
6		702-75-11520	• • • O-ring	1	Y300001-
7		702-75-11530	• • • Ring, Back-up	1	Y300001-
8		07002-13634	• • • O-ring	1	Y300001-

PC300-8 (FEN01263-00)

FIG. P1210-001004 Travel Motor And Final Drive, (4/4)

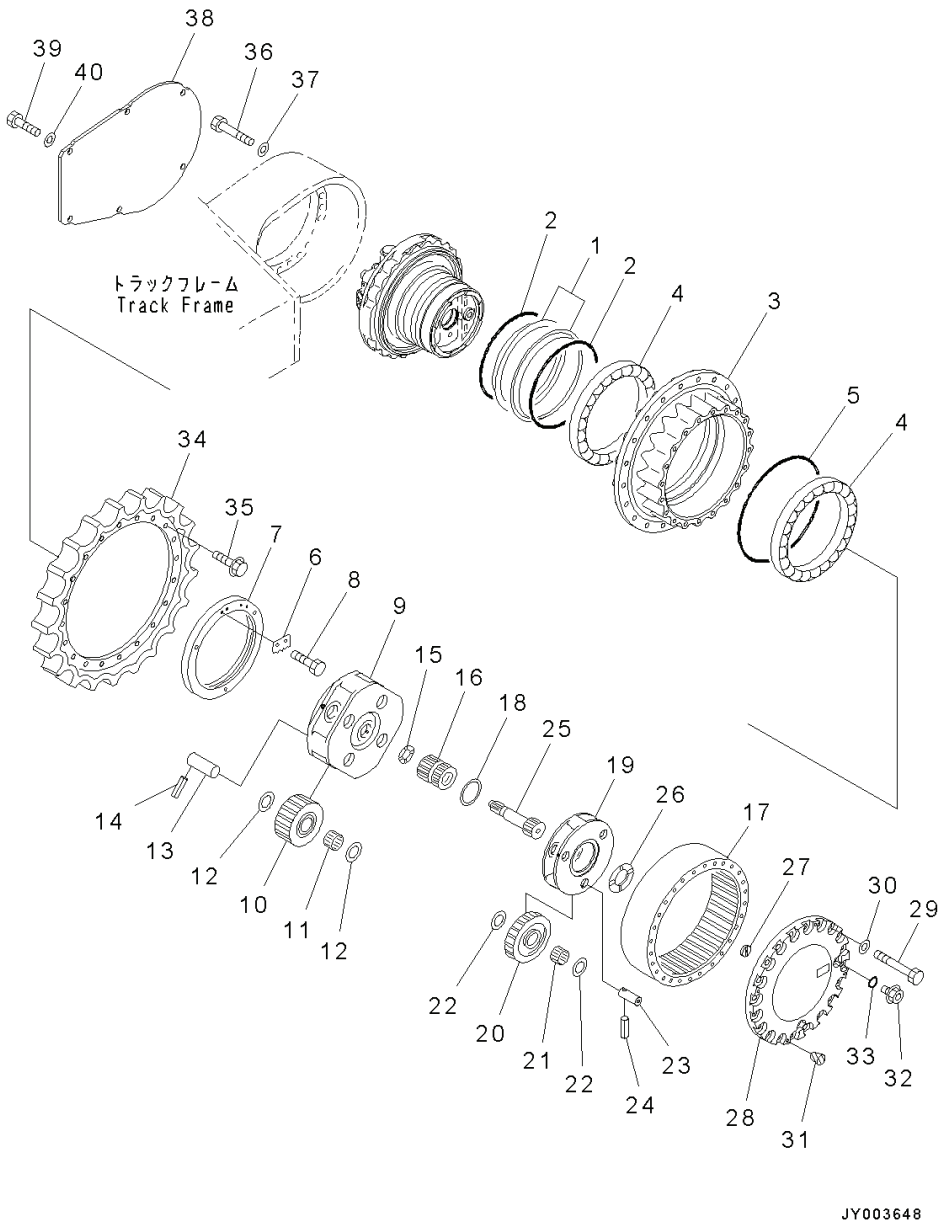

Index	Code	Part Number	Descreption	Qty	Serial Number
		207-27-00441	Final Drive Assembly	2	Y300001-
		207-27-00310	• Seal Assembly	1	Y300001-
1	C1		• • Ring	2	Y300001-
2	C1		• • O-ring	2	Y300001-
3		207-27-71311	• Hub	1	Y300001-
4		207-27-71330	• Bearing	2	Y300001-
5		207-27-52350	• O-ring	1	Y300001-
6		207-27-71370	• Lock	1	Y300001-
7		207-27-71360	• Nut, Lock	1	Y300001-
8		01010-81020	• Bolt	2	Y300001-
9		207-27-71320	• Carrier	1	Y300001-
10		207-27-71140	• Gear	4	Y300001-
11		207-27-63210	• Bearing	4	Y300001-
12		20Y-27-21250	• Washer, Thrust	8	Y300001-
13		207-27-63230	• Pin	4	Y300001-
14		20Y-26-21330	• Pin	4	Y300001-
15		20Y-27-13310	• Washer, Thrust	1	Y300001-
16		207-27-71130	• Gear	1	Y300001-
17		207-27-71152	• Gear, Ring	1	Y300001-
18		207-27-71250	• Washer	1	Y300001-
19		207-27-71161	• Carrier	1	Y300001-
20		207-27-71121	• Gear	3	Y300001-
21		207-27-61220	• Bearing	3	Y300001-
22		20Y-27-21240	• Washer, Thrust	6	Y300001-
23		207-27-61240	• Pin	3	Y300001-
24		20Y-27-21280	• Pin	3	Y300001-
25		207-27-71352	• Shaft	1	Y300001-
26		20Y-27-11250	• Spacer	1	Y300001-
27		20Y-27-22250	• Button	1	Y300001-
28		207-27-71341	• Cover	1	Y300001-
29		01011-61880	• Bolt	20	Y300001-
30		01643-31845	• Washer	20	Y300001-
31		07049-01215	• Plug	2	Y300001-
32		07044-12412	• Plug	3	Y300001-
33		07002-02434	• O-ring	3	Y300001-
34		207-27-71460	• Sprocket	1	Y300001-
35		207-27-51311	• Bolt	20	Y300001-
36		01010-82075	Bolt	42	Y300001-
37		01643-32060	Washer	42	Y300001-
38		207-30-71242	Cover	2	Y300001-

PC300-8 (FEN01263-00)

FIG. P1210-001004 Travel Motor And Final Drive, (4/4)

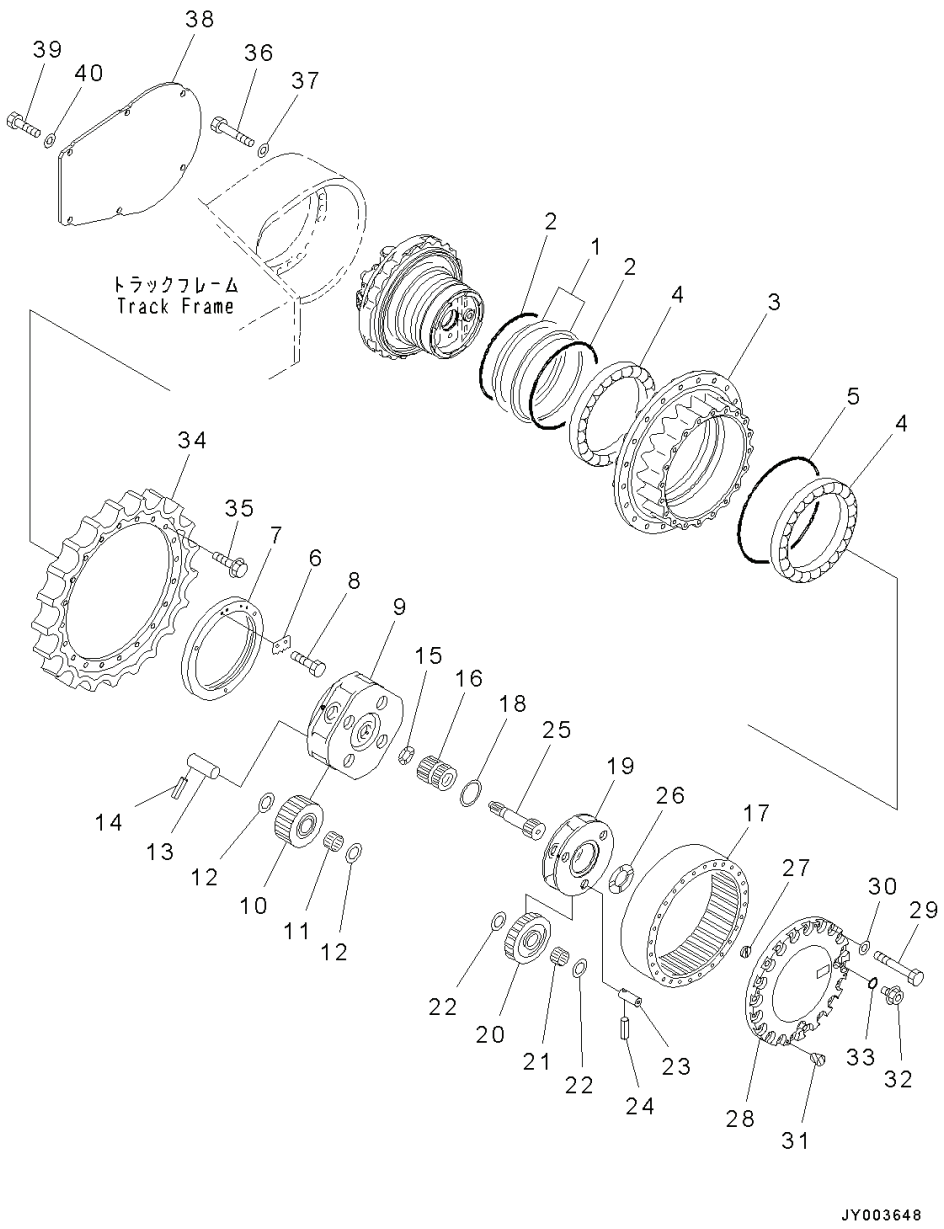

Index	Code	Part Number	Descreption	Qty	Serial Number
39		01010-81640	Bolt	12	Y300001-
40		01643-31645	Washer	12	Y300001-

PC300-8 (FEN01263-00)

FIG. P1210-002001 Travel Motor And Final Drive, Extreme Cold Area Arrangement (-50deg C), Inner Parts (1/3)

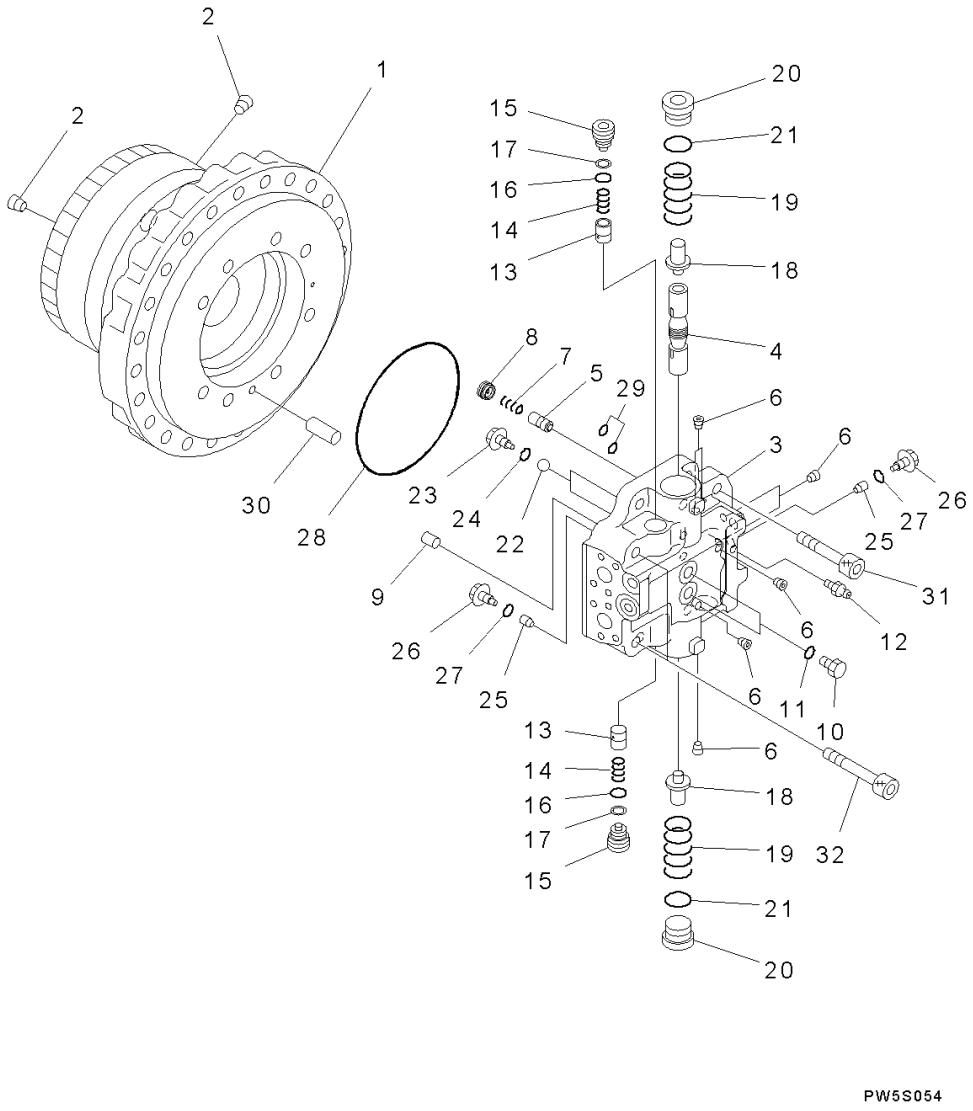

Index	Code	Part Number	Descreption	Qty	Serial Number
		207-27-00412	Final Drive Assembly	2	Y300001-
		708-8H-00320	• Motor Assembly	1	Y300001-
	C2	708-8H-04711	• • Case Subassembly	1	Y300001-
1	C1		• • • Case	1	Y300001-
2	C1		• • • Plug	2	Y300001-
	C2	708-8H-04721	• • Cover Subassembly	1	Y300001-
3	C1		• • • Cover	1	Y300001-
4	C1		• • • Spool	1	Y300001-
5	C1		• • • Spool	1	Y300001-
6	C1		• • • Plug	7	Y300001-
7	C1		• • • Spring	1	Y300001-
8	C1		• • • Plug	1	Y300001-
9	C2	706-75-42820	• • Pin, Dowel	1	Y300001-
10		708-8H-11530	• • Plug	2	Y300001-
11		07002-11423	• • O-ring	2	Y300001-
12		20B-27-11210	• • Bleeder	1	Y300001-
13		706-73-72420	• • Valve	2	Y300001-
14		706-73-72440	• • Spring	2	Y300001-
15		708-8H-36150	• • Plug	2	Y300001-
16		07000-12018	• • O-ring	2	Y300001-
17		07001-02018	• • Ring, Back-up	2	Y300001-
18		706-78-71160	• • Piston	2	Y300001-
19		708-8H-36121	• • Spring	2	Y300001-
20		708-8H-16141	• • Plug	2	Y300001-
21		07002-13634	• • O-ring	2	Y300001-
22	C2	04260-00793	• • Ball	2	Y300001-
23	C2	706-8E-14110	• • Plug	2	Y300001-
24	C2	07002-11023	• • O-ring	2	Y300001-
25		708-8E-16180	• • Valve	2	Y300001-
26	C2	708-8E-16160	• • Plug	2	Y300001-
27	C2	07002-11023	• • O-ring	2	Y300001-
28	C2	708-8H-31210	• • O-ring	1	Y300001-
29	C2	07000-12012	• • O-ring	2	Y300001-
30	C2	04020-01228	• • Pin, Dowel	1	Y300001-
31	C2	01252-62055	• • Bolt	6	Y300001-
32	C2	01252-62095	• • Bolt	2	Y300001-

FIG. P1210-002002 Travel Motor And Final Drive, Extreme Cold Area Arrangement (-50deg C), Inner Parts (2/3)

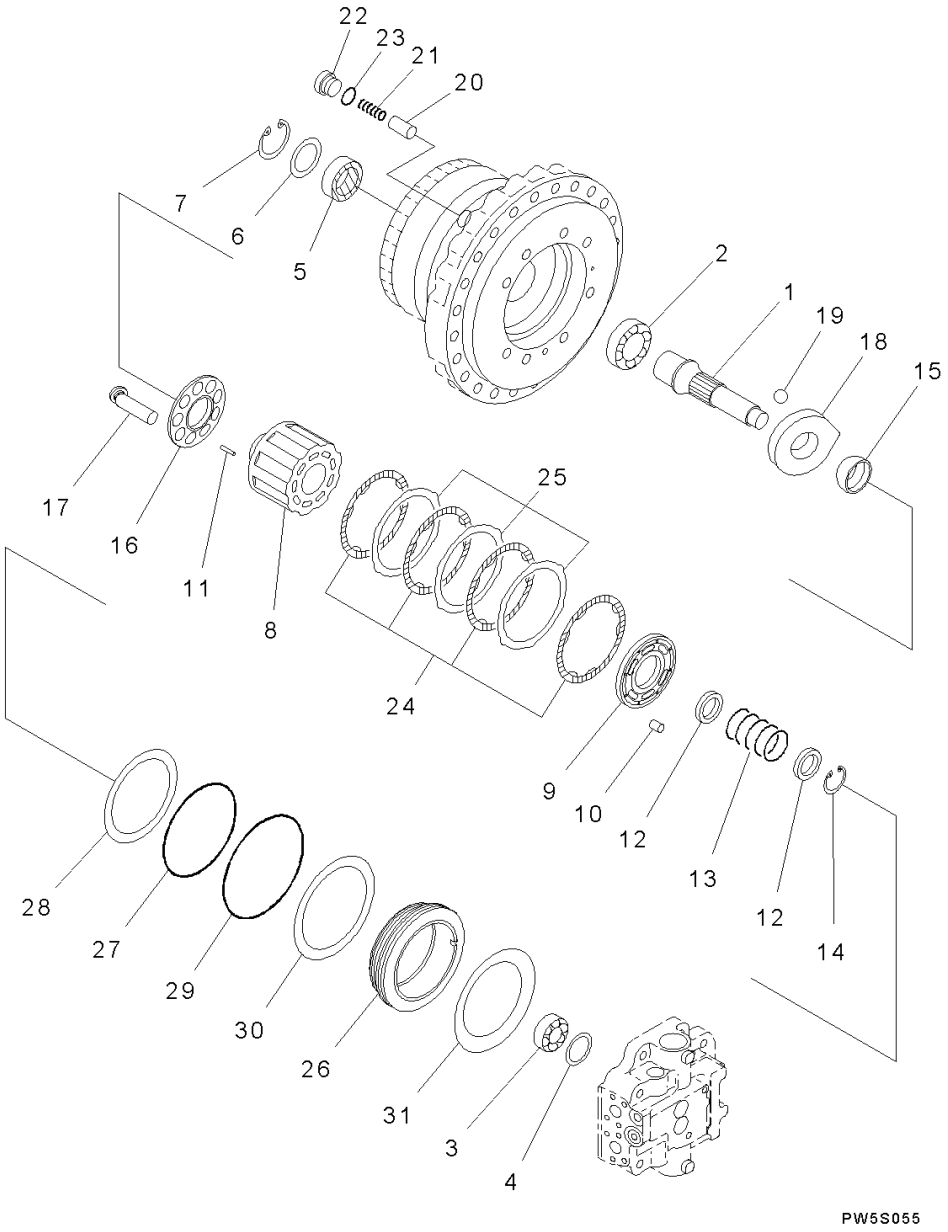

Index	Code	Part Number	Descreption	Qty	Serial Number
		207-27-00412	Final Drive Assembly	2	Y300001-
		708-8H-00320	• Motor Assembly	1	Y300001-
1	C2	708-8H-32120	• • Shaft	1	Y300001-
2	C2	708-8H-32150	• • Bearing	1	Y300001-
3	C2	708-8H-32170	• • Bearing	1	Y300001-
4	C2	708-8H-05050	• • Spacer Kit	1	Y300001-
	C1		• • • Spacer, T=1.6mm	1	Y300001-
	C1		• • • Spacer, T=1.7mm	1	Y300001-
	C1		• • • Spacer, T=1.8mm	1	Y300001-
	C1		• • • Spacer, T=1.9mm	1	Y300001-
	C1		• • • Spacer, T=2.0mm	1	Y300001-
	C1		• • • Spacer, T=2.1mm	1	Y300001-
	C1		• • • Spacer, T=2.2mm	1	Y300001-
5		708-1F-12281	• • Seal, Oil	1	Y300001-
6		708-8H-32160	• • Spacer	1	Y300001-
7		04065-07825	• • Ring, Snap	1	Y300001-
	C2	708-8H-04810	• • Cylinder Block Assembly	1	Y300001-
8	C2	708-8H-33710	• • • Block, Cylinder	1	Y300001-
9	C2	708-8H-33810	• • • Plate, Valve	1	Y300001-
10	C2	708-18-13230	• • Pin	1	Y300001-
11	C2	708-8H-33360	• • Pin	3	Y300001-
12	C2	708-8H-33141	• • Spacer	2	Y300001-
13	C2	708-8H-33750	• • Spring	1	Y300001-
14	C2	04065-06020	• • Ring	1	Y300001-
15	C2	708-8H-33512	• • Retainer	1	Y300001-
16	C2	708-8H-33340	• • Retainer	1	Y300001-
17	C2	708-8H-33650	• • Piston Subassembly	9	Y300001-
18	C2	708-8H-33471	• • Rocker Arm Assembly	1	Y300001-
19	C2	04260-02857	• • Ball	2	Y300001-
20		708-8H-34190	• • Piston	1	Y300001-
21		708-8H-34151	• • Spring	1	Y300001-
22		708-8K-14210	• • Plug	1	Y300001-
23		07002-13334	• • O-ring	1	Y300001-
24	C2	708-8H-35130	• • Plate	4	Y300001-
25	C2	708-8H-35180	• • Disc	3	Y300001-
26	C2	708-8H-35141	• • Piston, Brake, Brake	1	Y300001-
27	C2	07000-15175	• • O-ring	1	Y300001-
28	C2	07001-05175	• • Ring, Back-up	1	Y300001-
29	C2	07000-15195	• • O-ring	1	Y300001-
30	C2	07001-05195	• • Ring, Back-up	1	Y300001-

PC300-8 (FEN01263-00)

FIG. P1210-002002 Travel Motor And Final Drive, Extreme Cold Area Arrangement (-50deg C), Inner Parts (2/3)

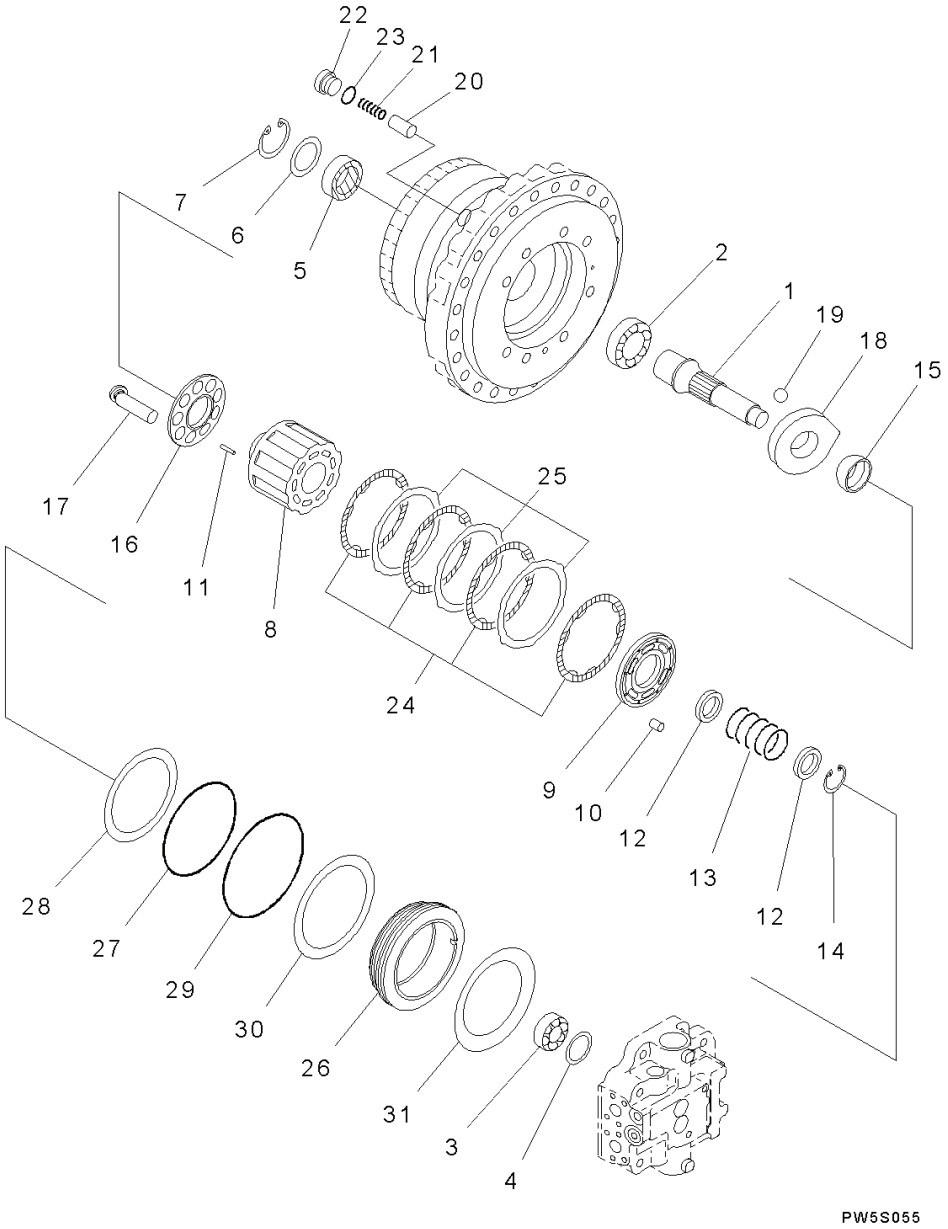

Index	Code	Part Number	Descreption	Qty	Serial Number
31	C2	708-8H-35150	• • Spring	1	Y300001-

PC300-8 (FEN01263-00)

FIG. P1210-002003 Travel Motor And Final Drive, Extreme Cold Area Arrangement (-50deg C), Inner Parts (3/3)

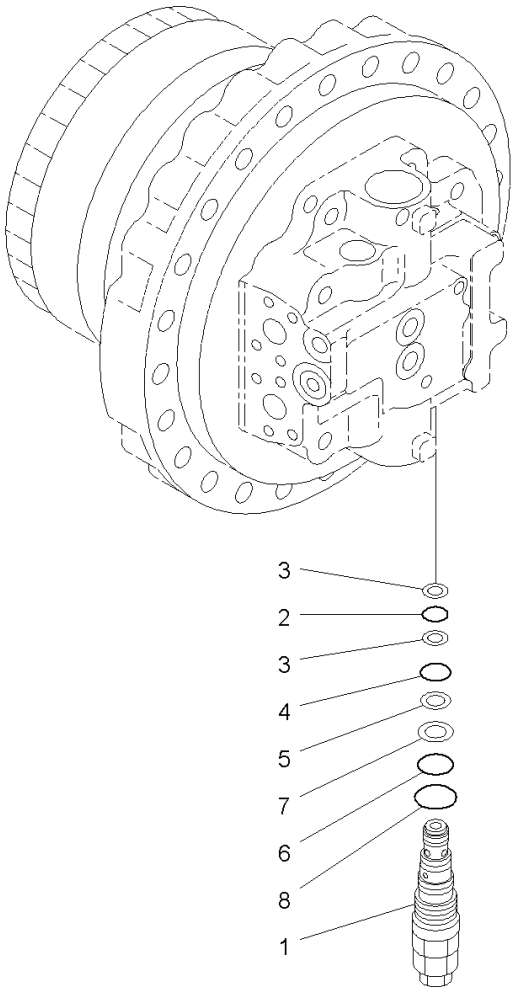

00025836

Index	Code	Part Number	Descreption	Qty	Serial Number
		207-27-00412	Final Drive Assembly	2	Y300001-
		708-8H-00320	• Motor Assembly	1	Y300001-
1		702-75-04600	• • Valve Assembly, Relief	1	Y300001-
2		07000-22018	• • • O-ring	1	Y300001-
3		07001-02018	• • • Ring, Back-up	2	Y300001-
4		07000-12021	• • • O-ring	1	Y300001-
5		07001-02021	• • • Ring	1	Y300001-
6		702-75-11520	• • • O-ring	1	Y300001-
7		702-75-11530	• • • Ring, Back-up	1	Y300001-
8		07002-13634	• • • O-ring	1	Y300001-

FIG. P1210-002004 Travel Motor And Final Drive, Extreme Cold Area Arrangement (-50deg C)

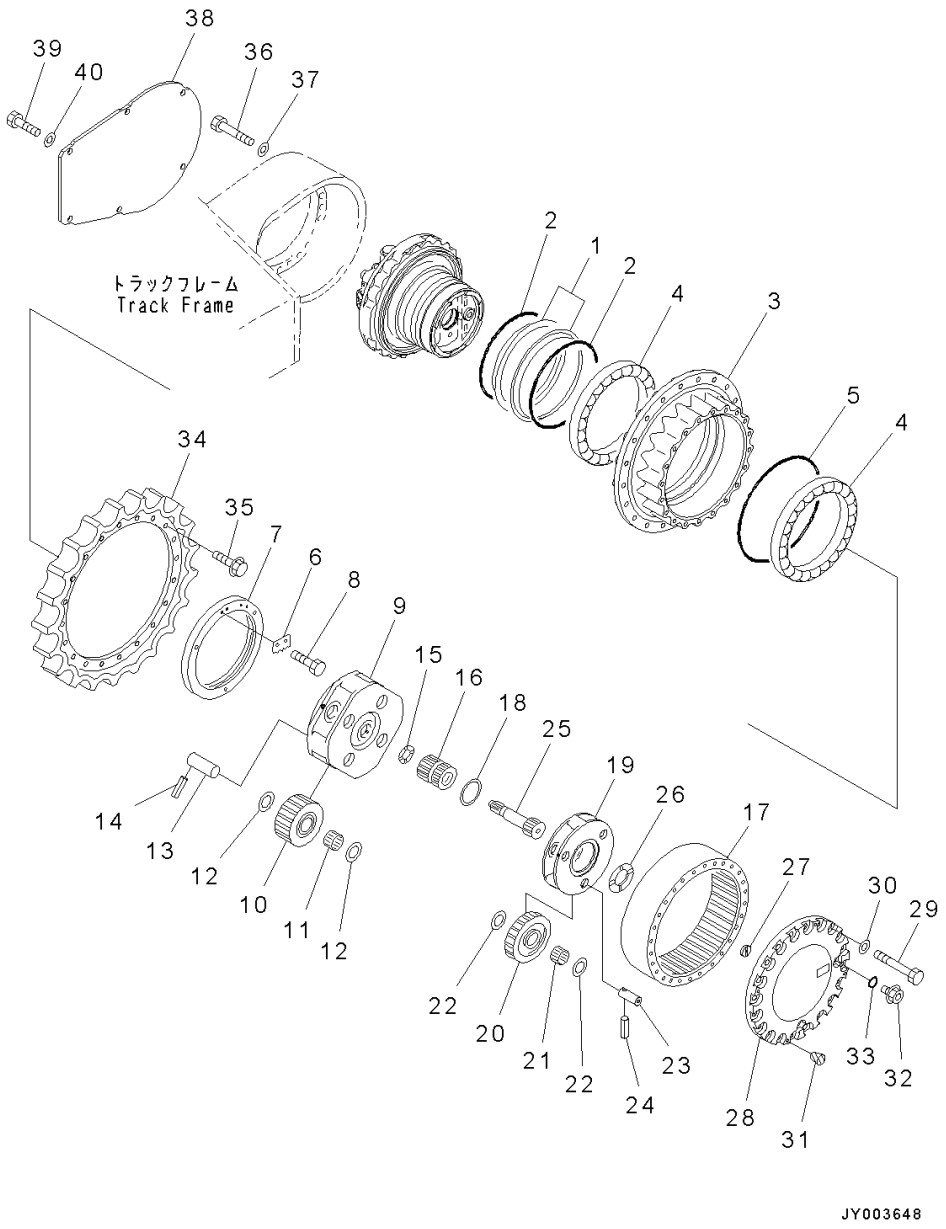

Index	Code	Part Number	Descreption	Qty	Serial Number
		207-27-00412	Final Drive Assembly	2	Y300001-
		207-27-00420	• Seal Ring Assembly	1	Y300001-
1	C1		• • Seal	2	Y300001-
2	C1		• • O-ring	2	Y300001-
3		207-27-71311	• Hub	1	Y300001-
4		207-27-71730	• Bearing	2	Y300001-
5		207-09-71110	• O-ring	1	Y300001-
6		207-27-71370	• Lock	1	Y300001-
7		207-27-71360	• Nut, Lock	1	Y300001-
8		01010-81020	• Bolt	2	Y300001-
9		207-27-71320	• Carrier	1	Y300001-
10		207-27-71140	• Gear	4	Y300001-
11		207-27-63210	• Bearing	4	Y300001-
12		20Y-27-21250	• Washer, Thrust	8	Y300001-
13		207-27-63230	• Pin	4	Y300001-
14		20Y-26-21330	• Pin	4	Y300001-
15		20Y-27-13310	• Washer, Thrust	1	Y300001-
16		207-27-71130	• Gear	1	Y300001-
17		207-27-71152	• Gear, Ring	1	Y300001-
18		207-27-71250	• Washer	1	Y300001-
19		207-27-71161	• Carrier	1	Y300001-
20		207-27-71121	• Gear	3	Y300001-
21		207-27-61220	• Bearing	3	Y300001-
22		20Y-27-21240	• Washer, Thrust	6	Y300001-
23		207-27-61240	• Pin	3	Y300001-
24		20Y-27-21280	• Pin	3	Y300001-
25		207-27-71352	• Shaft	1	Y300001-
26		20Y-27-11250	• Spacer	1	Y300001-
27		20Y-27-22250	• Button	1	Y300001-
28		207-27-71341	• Cover	1	Y300001-
29		01011-61880	• Bolt	20	Y300001-
30		01643-31845	• Washer	20	Y300001-
31		07049-01215	• Plug	2	Y300001-
32		07044-12412	• Plug	3	Y300001-
33		07002-52434	• O-ring	3	Y300001-
34		207-27-71460	• Sprocket	1	Y300001-
35		207-27-51311	• Bolt	20	Y300001-
36		01010-82075	Bolt	42	Y300001-
37		01643-32060	Washer	42	Y300001-
38		207-30-71242	Cover	2	Y300001-

PC300-8 (FEN01263-00)

FIG. P1210-002004 Travel Motor And Final Drive, Extreme Cold Area Arrangement (-50deg C)

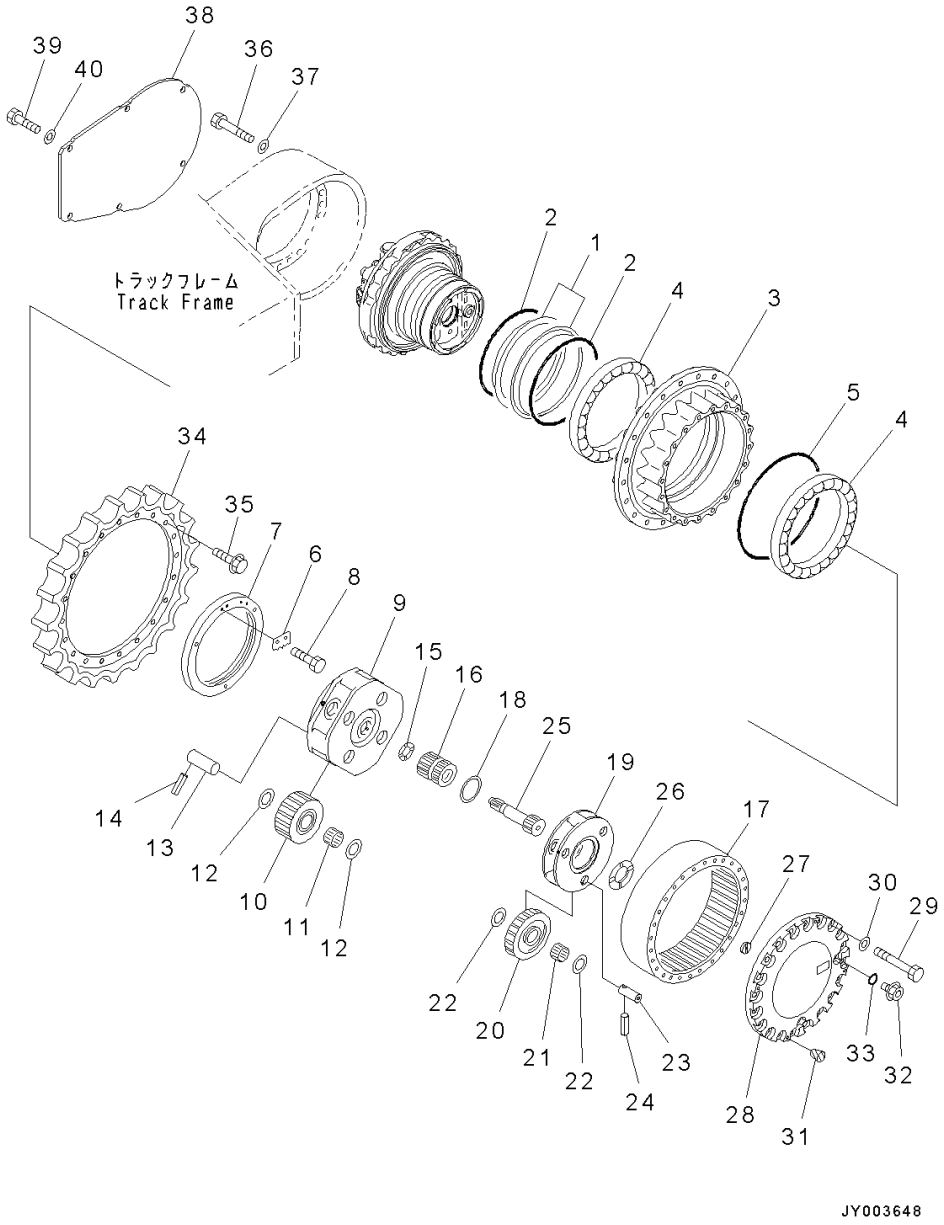

Index	Code	Part Number	Descreption	Qty	Serial Number
39		01010-81640	Bolt	12	Y300001-
40		01643-31645	Washer	12	Y300001-

PC300-8 (FEN01263-00)

UNDERCARRIAGE

FIG. R0110-001001 Front Idler And Idler Cushion, (1/2)

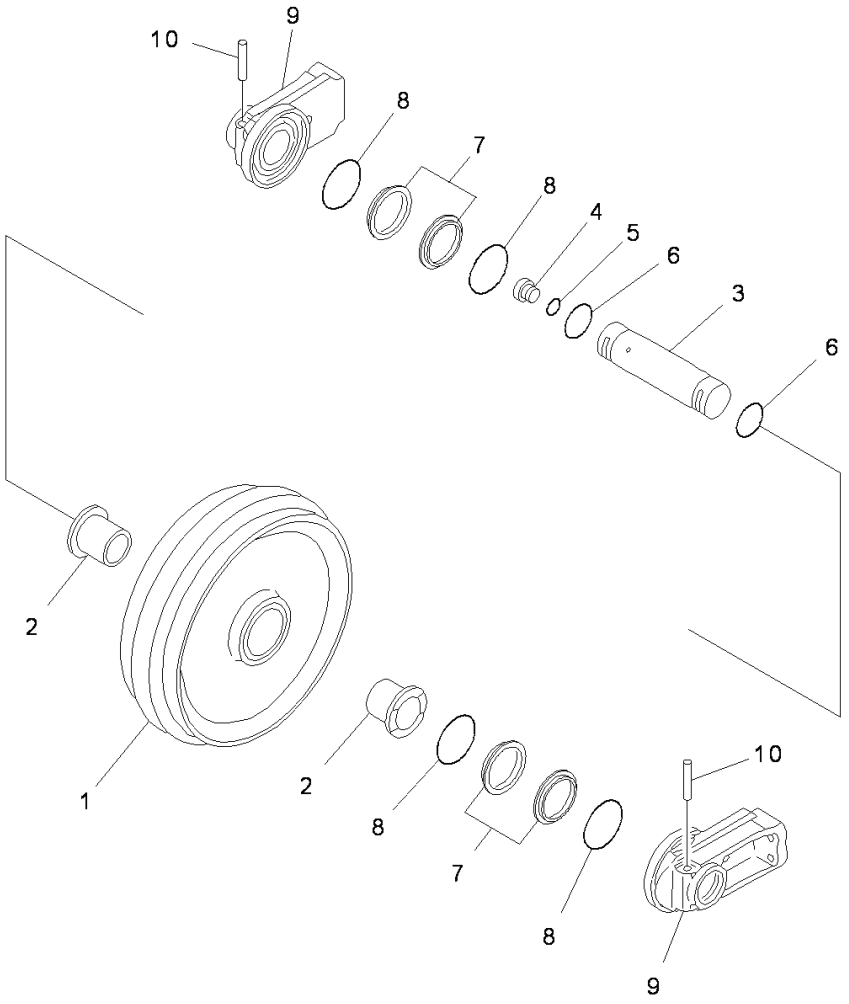

PW1C627

Index	Code	Part Number	Descreption	Qty	Serial Number
		207-30-00161	Idler Assembly	2	Y300001-
1		207-30-73210	• Idler	1	Y300001-
2		207-30-53140	• Bushing	2	Y300001-
3		207-30-53130	• Shaft	1	Y300001-
4		07040-13618	• Plug	1	Y300001-
5		07002-13634	• O-ring	1	Y300001-
6		07000-12075	• O-ring	2	Y300001-
		207-30-00101	• Floating Seal Assembly	2	Y300001-
7	C1		• • Seal	2	Y300001-
8	C1		• • O-ring	2	Y300001-
9		207-30-53151	• Support	2	Y300001-
10		207-30-53160	• Pin	2	Y300001-

PC300-8 (FEN01263-00)

FIG. R0110-001002 Front Idler And Idler Cushion, (2/2)

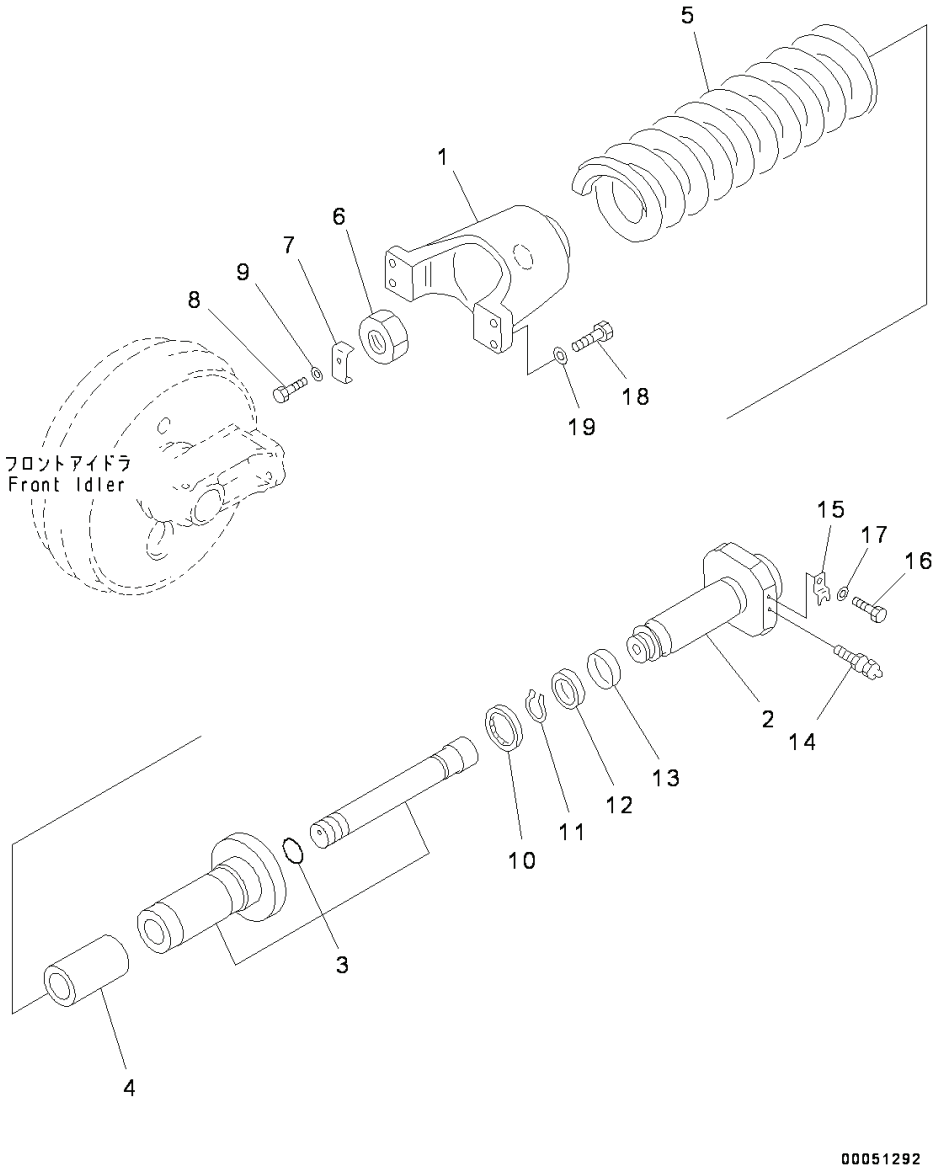

Index	Code	Part Number	Descreption	Qty	Serial Number
1		207-30-74111	Yoke	2	Y300001-
2		207-30-74120	Shaft	2	Y300001-
3		207-30-71441	Cylinder Assembly	2	Y300001-
4		207-30-71431	Pipe	2	Y300001-
5		207-30-74142	Spring	2	Y300001-
6		208-30-11760	Nut	2	Y300001-
7		207-30-34191	Lock	2	Y300001-
8		01010-81225	Bolt	2	Y300001-
9		01643-31232	Washer	2	Y300001-
10		207-30-54160	Seal	2	Y300001-
11		04064-06525	Ring	2	Y300001-
12		09370-00090	U-packing	2	Y300001-
13		07155-00925	Ring	2	Y300001-
14		07959-20001	Valve	2	Y300001-
15		205-30-72170	Plate	2	Y300001-
16		01010-81225	Bolt	2	Y300001-
17		01643-31232	Washer	2	Y300001-
18		01010-62075	Bolt	8	Y300001-
19		01643-32060	Washer	8	Y300001-

PC300-8 (FEN01263-00)

FIG. R0110-002001 Front Idler And Idler Cushion, With Rustproof Spring, (1/2)

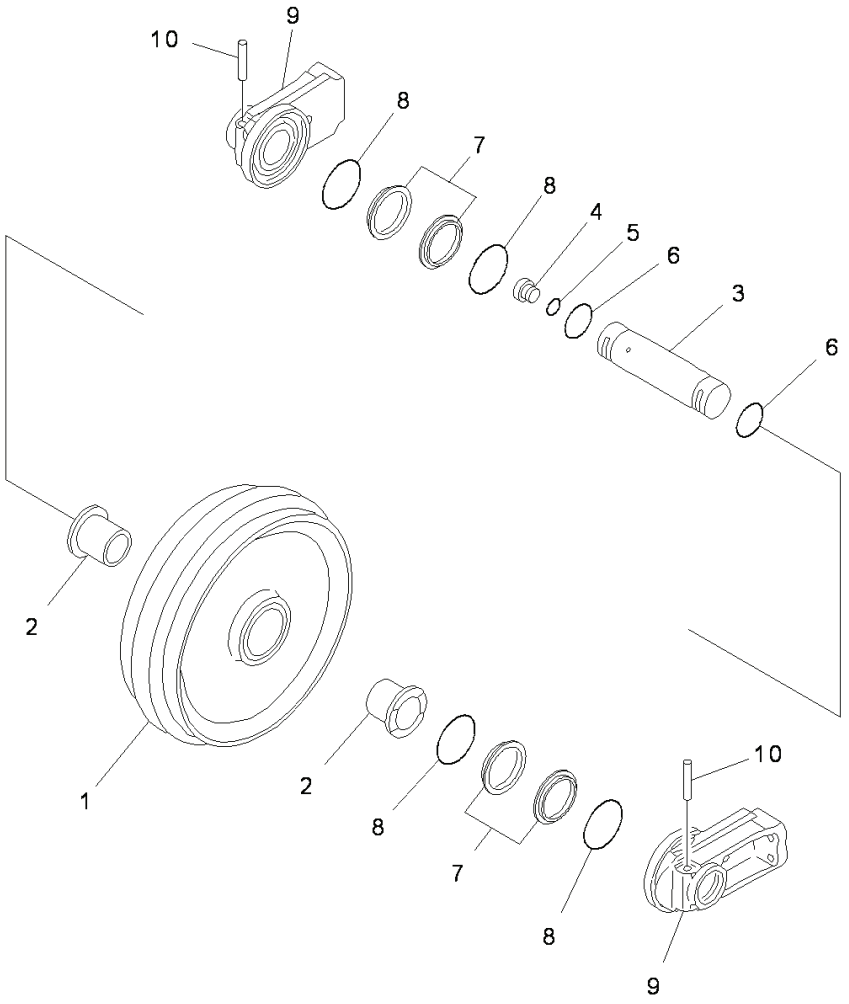

PW1C627

Index	Code	Part Number	Descreption	Qty	Serial Number
		207-30-00161	Idler Assembly	2	Y300001-
1		207-30-73210	• Idler	1	Y300001-
2		207-30-53140	• Bushing	2	Y300001-
3		207-30-53130	• Shaft	1	Y300001-
4		07040-13618	• Plug	1	Y300001-
5		07002-13634	• O-ring	1	Y300001-
6		07000-12075	• O-ring	2	Y300001-
		207-30-00101	• Floating Seal Assembly	2	Y300001-
7	C1		• • Seal	2	Y300001-
8	C1		• • O-ring	2	Y300001-
9		207-30-53151	• Support	2	Y300001-
10		207-30-53160	• Pin	2	Y300001-

PC300-8 (FEN01263-00)

FIG. R0110-002002 Front Idler And Idler Cushion, With Rustproof Spring, (2/2)

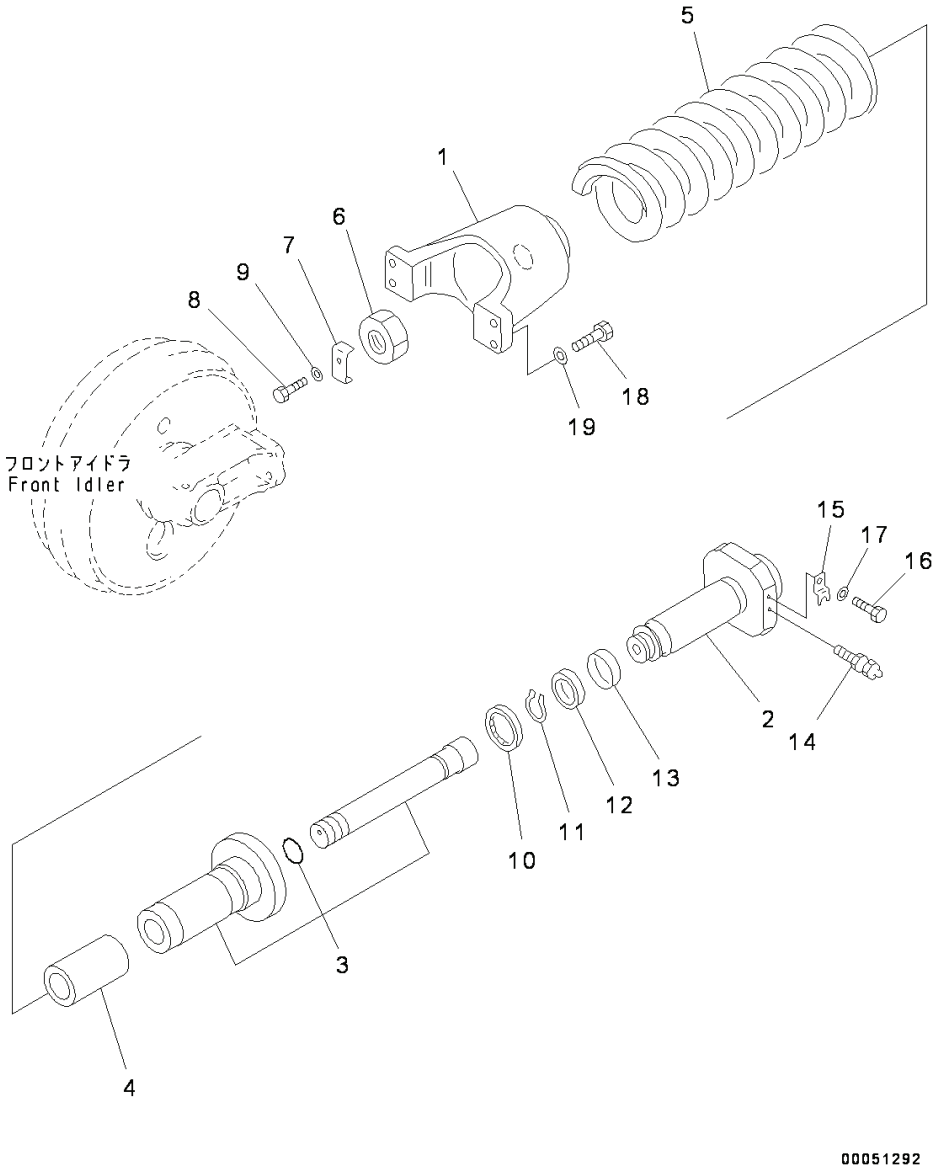

Index	Code	Part Number	Descreption	Qty	Serial Number
1		207-30-74111	Yoke	2	Y300001-
2		207-30-74120	Shaft	2	Y300001-
3		207-30-71441	Cylinder Assembly	2	Y300001-
4		207-30-71431	Pipe	2	Y300001-
5		207-30-74150	Spring	2	Y300001-
6		208-30-11760	Nut	2	Y300001-
7		207-30-34191	Lock	2	Y300001-
8		01010-81225	Bolt	2	Y300001-
9		01643-31232	Washer	2	Y300001-
10		207-30-54160	Seal	2	Y300001-
11		04064-06525	Ring	2	Y300001-
12		09370-00090	U-packing	2	Y300001-
13		07155-00925	Ring	2	Y300001-
14		07959-20001	Valve	2	Y300001-
15		205-30-72170	Plate	2	Y300001-
16		01010-81225	Bolt	2	Y300001-
17		01643-31232	Washer	2	Y300001-
18		01010-62075	Bolt	8	Y300001-
19		01643-32060	Washer	8	Y300001-

PC300-8 (FEN01263-00)

FIG. R0110-003001 Front Idler And Idler Cushion, Extreme Cold Area Arrangement (-50deg C), (1/2)

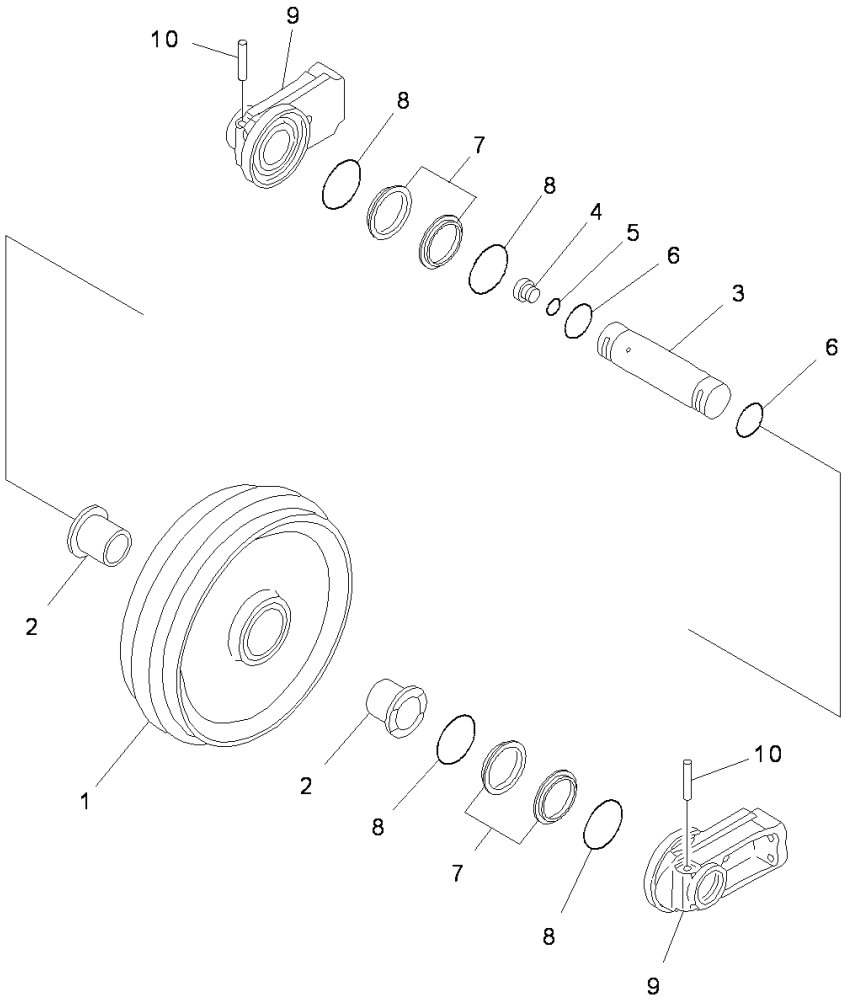

PW1C627

Index	Code	Part Number	Descreption	Qty	Serial Number
		207-30-00282	Idler Assembly	2	Y300001-
1		207-30-73210	• Idler	1	Y300001-
2		207-30-53140	• Bushing	2	Y300001-
3		207-30-53230	• Shaft	1	Y300001-
4		07040-13618	• Plug	1	Y300001-
5		07002-53634	• O-ring	1	Y300001-
6		07000-52075	• O-ring	2	Y300001-
		207-30-00250	• Floating Seal Assembly	2	Y300001-
7	C1		• • Seal	2	Y300001-
8	C1		• • O-ring	2	Y300001-
9		207-30-53151	• Support	2	Y300001-
10		207-30-53160	• Pin	2	Y300001-

PC300-8 (FEN01263-00)

FIG. R0110-003002 Front Idler And Idler Cushion, Extreme Cold Area Arrangement (-50deg C), (2/2)

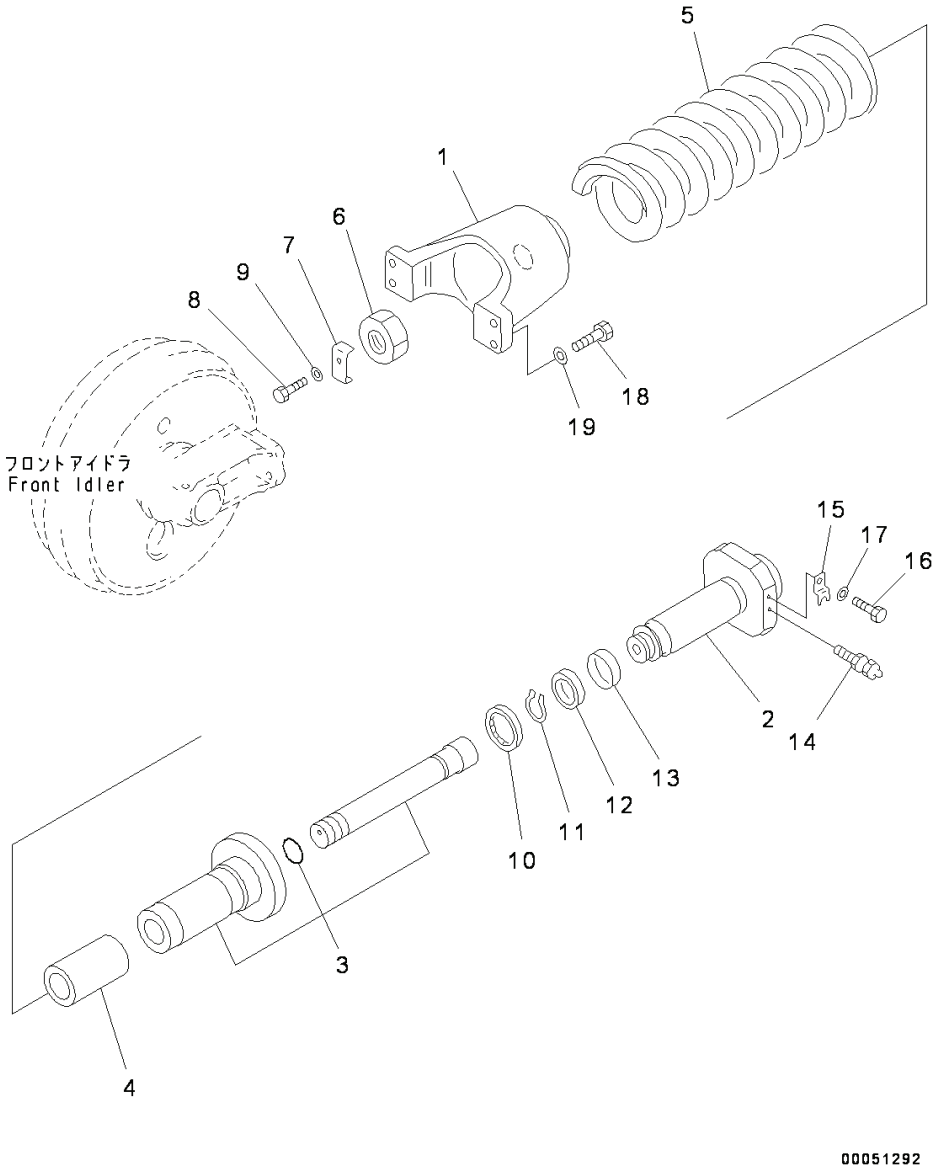

Index	Code	Part Number	Descreption	Qty	Serial Number
1		207-30-74111	Yoke	2	Y300001-
2		207-30-74120	Shaft	2	Y300001-
3		207-30-71441	Cylinder Assembly	2	Y300001-
4		207-30-71431	Pipe	2	Y300001-
5		207-30-74142	Spring	2	Y300001-
6		208-30-11760	Nut	2	Y300001-
7		207-30-34191	Lock	2	Y300001-
8		01010-81225	Bolt	2	Y300001-
9		01643-31232	Washer	2	Y300001-
10		207-30-54160	Seal	2	Y300001-
11		04064-06525	Ring	2	Y300001-
12		09370-00090	U-packing	2	Y300001-
13		07155-00925	Ring	2	Y300001-
14		07959-20001	Valve	2	Y300001-
15		205-30-72170	Plate	2	Y300001-
16		01010-81225	Bolt	2	Y300001-
17		01643-31232	Washer	2	Y300001-
18		01010-62075	Bolt	8	Y300001-
19		01643-32060	Washer	8	Y300001-

PC300-8 (FEN01263-00)

FIG. R0200-001001 Track Roller

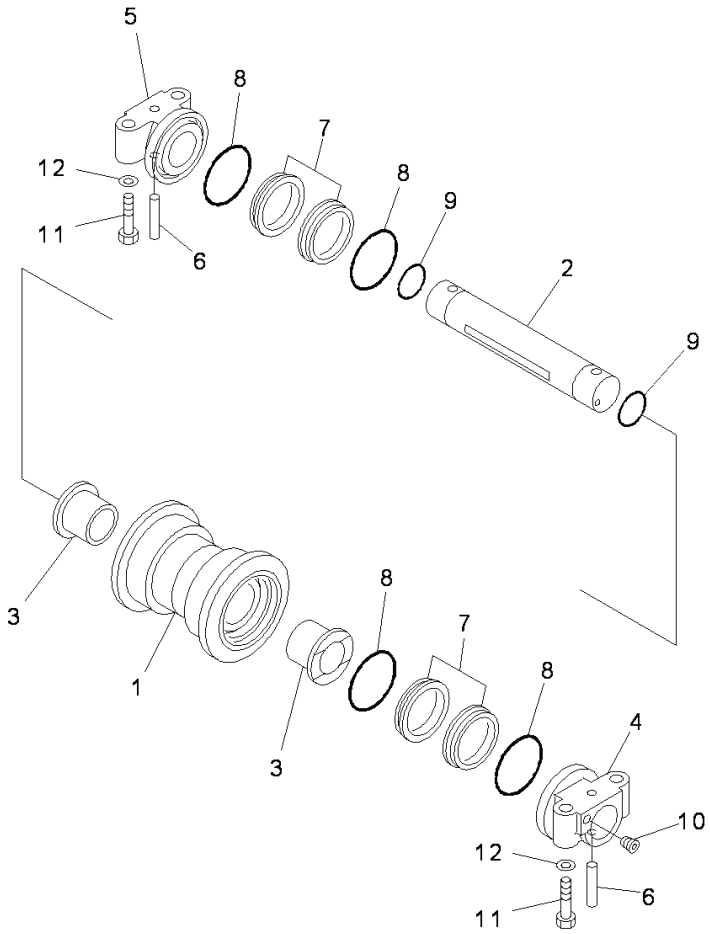

PJB1412

Index	Code	Part Number	Descreption	Qty	Serial Number
		207-30-00511	Roller, Track	14	Y300001-
1		207-30-71510	• Roller	1	Y300001-
2		207-30-56131	• Shaft	1	Y300001-
3		207-30-71540	• Bushing	2	Y300001-
4		207-30-71551	• Collar	1	Y300001-
5		207-30-71561	• Collar	1	Y300001-
6		207-30-56170	• Pin	2	Y300001-
		205-30-00052	• Floating Seal Assembly	2	Y300001-
7	C1		• • Ring	2	Y300001-
8	C1		• • O-ring	2	Y300001-
9		427-15-15910	• O-ring	2	Y300001-
10		20Y-30-16330	• Plug	1	Y300001-
11		207-30-56190	Bolt	56	Y300001-
12		01643-32060	Washer	56	Y300001-

PC300-8 (FEN01263-00)

FIG. R0200-002001 Track Roller, Extreme Cold Area Arrangement (-50deg C)

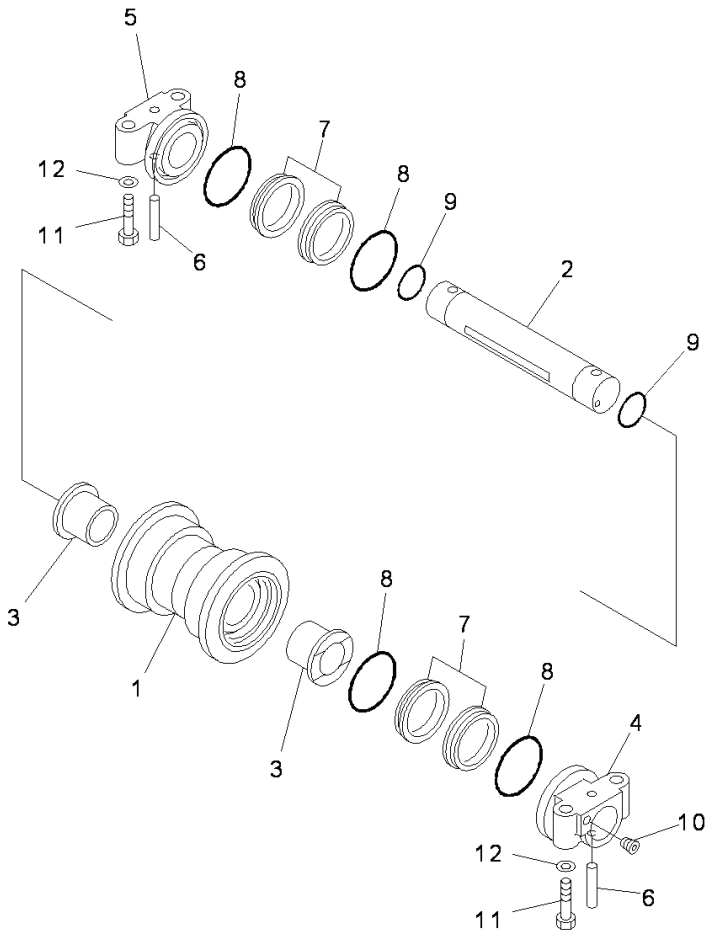

PJB1412

Index	Code	Part Number	Descreption	Qty	Serial Number
		207-30-00533	Roller Assembly, Track	14	Y300001-
1		207-30-71510	• Roller	1	Y300001-
2		207-30-56220	• Shaft	1	Y300001-
3		207-30-71540	• Bushing	2	Y300001-
4		207-30-71551	• Collar	1	Y300001-
5		207-30-71561	• Collar	1	Y300001-
6		207-30-56170	• Pin	2	Y300001-
		205-30-00160	• Seal Assembly	2	Y300001-
7	C1		• • Seal	2	Y300001-
8	C1		• • O-ring	2	Y300001-
9		427-15-15980	• O-ring	2	Y300001-
10		20Y-30-16330	• Plug	1	Y300001-
11		207-30-56190	Bolt	56	Y300001-
12		01643-32060	Washer	56	Y300001-

PC300-8 (FEN01263-00)

FIG. R0300-003001 Carrier Roller

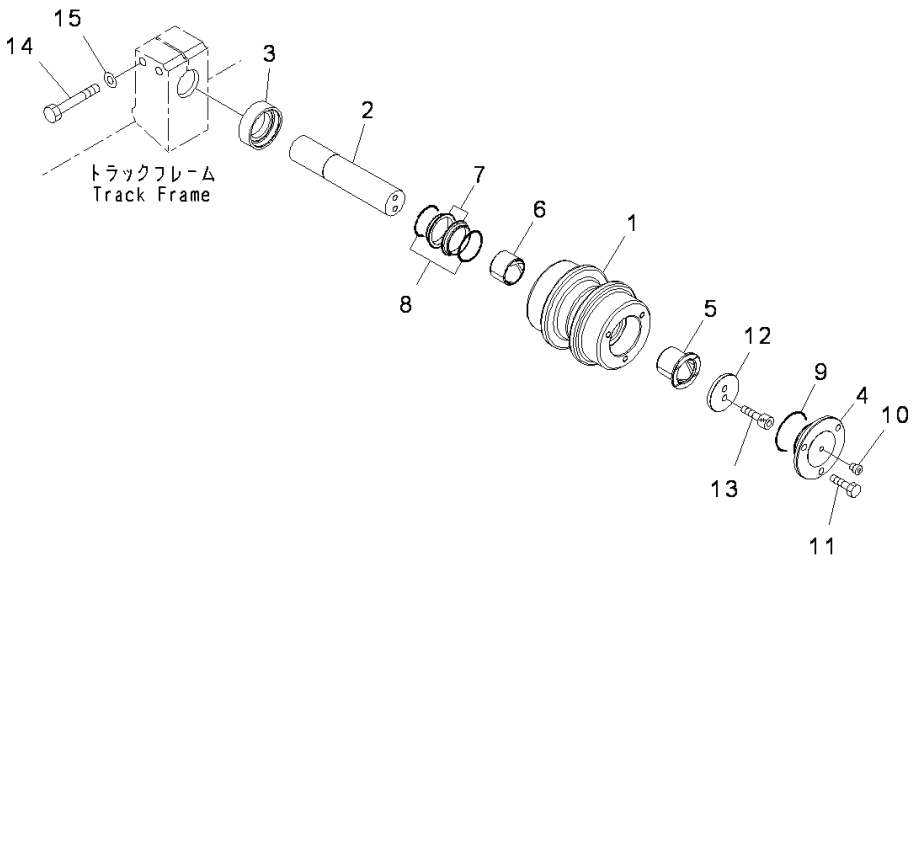

Index	Code	Part Number	Descreption	Qty	Serial Number
		207-30-00551	Carrier Assembly	4	Y300001-
1		207-30-75310	• Roller	1	Y300001-
2		207-30-75320	• Shaft	1	Y300001-
3		207-30-75330	• Ring	1	Y300001-
4		207-30-75341	• Cover	1	Y300001-
5		207-30-75360	• Bushing	1	Y300001-
6		207-30-75370	• Bushing	1	Y300001-
		140-30-00141	• Floating Seal Assembly	1	Y300001-
7	C1		• • Seal	2	Y300001-
8	C1		• • O-ring	2	Y300001-
9		07000-12080	• O-ring	1	Y300001-
10		20Y-30-16330	• Plug	1	Y300001-
11		01010-81225	• Bolt	3	Y300001-
12		207-30-75350	• Plate	1	Y300001-
13		01252-61230	• Bolt	2	Y300001-
14		01010-82095	Bolt	8	Y300001-
15		01643-32060	Washer	8	Y300001-

PC300-8 (FEN01263-00)

FIG. R0300-002001 Carrier Roller, Extreme Cold Area Arrangement (-50deg C)

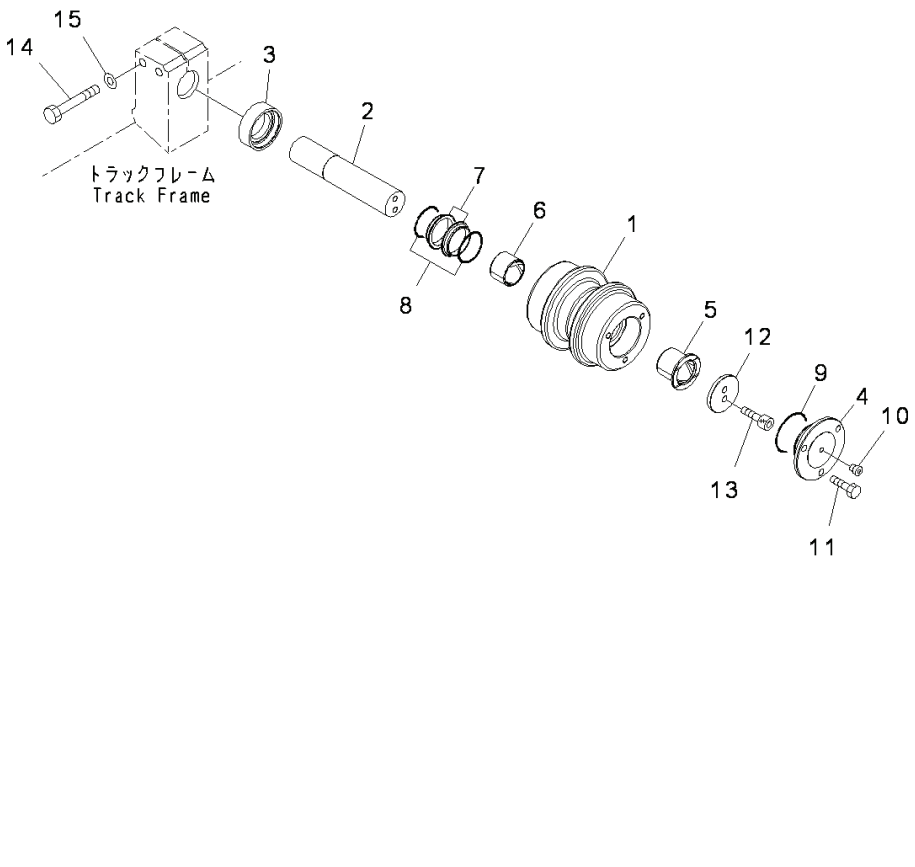

Index	Code	Part Number	Descreption	Qty	Serial Number
		207-30-00581	Roller Assembly, Carrier	4	Y300001-
1		207-30-75310	• Roller	1	Y300001-
2		207-30-75320	• Shaft	1	Y300001-
3		207-30-75330	• Ring	1	Y300001-
4		207-30-75341	• Cover	1	Y300001-
5		207-30-75360	• Bushing	1	Y300001-
6		207-30-75370	• Bushing	1	Y300001-
		207-30-00320	• Floating Seal Assembly	1	Y300001-
7	C1		• • Seal	2	Y300001-
8	C1		• • O-ring	2	Y300001-
9		07000-52080	• O-ring	1	Y300001-
10		20Y-30-16330	• Plug	1	Y300001-
11		01010-81225	• Bolt	3	Y300001-
12		207-30-75350	• Plate	1	Y300001-
13		01252-61230	• Bolt	2	Y300001-
14		01010-82095	Bolt	8	Y300001-
15		01643-32060	Washer	8	Y300001-

PC300-8 (FEN01263-00)

FIG. R0500-001001 Track Shoe Assembly, Triple Shoe Grouser, With Holed, 600mm Width

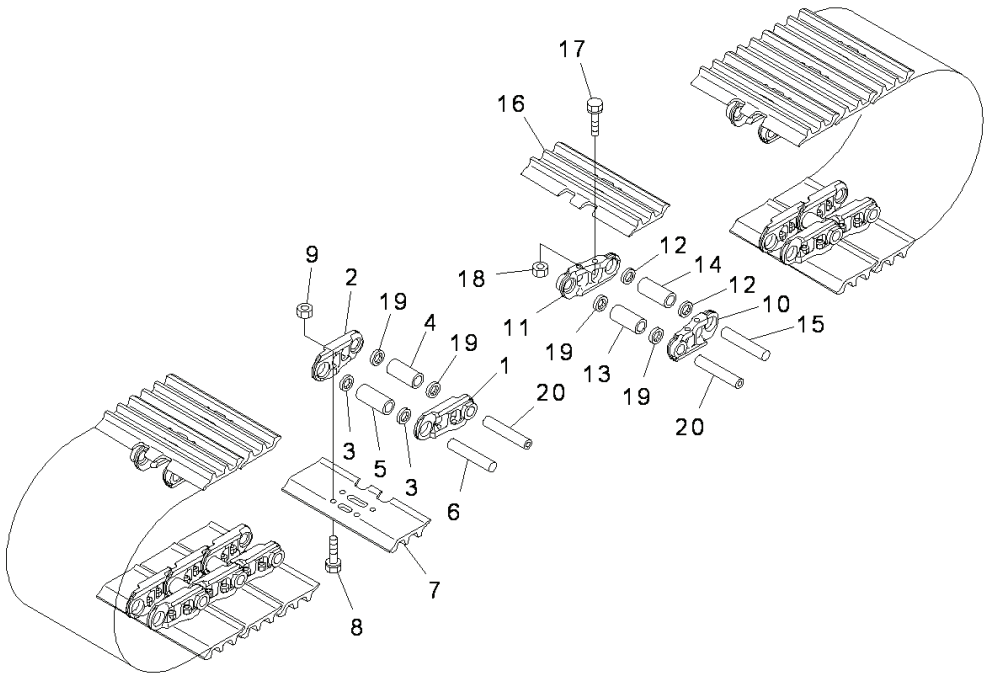

PDB6691

Index	Code	Part Number	Descreption	Qty	Serial Number
		207-32-03811	Track Shoe Assembly	1	Y300001-
1		207-32-71120	• Link	44	Y300001-
2		207-32-71130	• Link	44	Y300001-
3		144-32-11240	• Seal	84	Y300001-
4		207-32-51170	• Bushing, Master	2	Y300001-
5		207-32-51140	• Bushing, Regular	42	Y300001-
6		207-32-61150	• Pin	42	Y300001-
7		207-32-62110	• Shoe	44	Y300001-
8		207-32-71210	• Bolt, (Kit : K02)	176	Y300001-
9		154-32-71220	• Nut, (Kit : K02)	176	Y300001-
10		207-32-71120	• Link	46	Y300001-
11		207-32-71130	• Link	46	Y300001-
12		144-32-11240	• Seal	88	Y300001-
13		207-32-51170	• Bushing, Master	2	Y300001-
14		207-32-51140	• Bushing, Regular	44	Y300001-
15		207-32-61150	• Pin	44	Y300001-
16		207-32-62110	• Shoe	46	Y300001-
17		207-32-71210	• Bolt, (Kit : K02)	184	Y300001-
18		154-32-71220	• Nut, (Kit : K02)	184	Y300001-
19		207-32-61260	• Seal	8	Y300001-
20		207-32-61190	• Pin	4	Y300001-

PC300-8 (FEN01263-00)

FIG. R0500-003001 Track Shoe Assembly, Triple Shoe Grouser, With Holed, 800mm Width

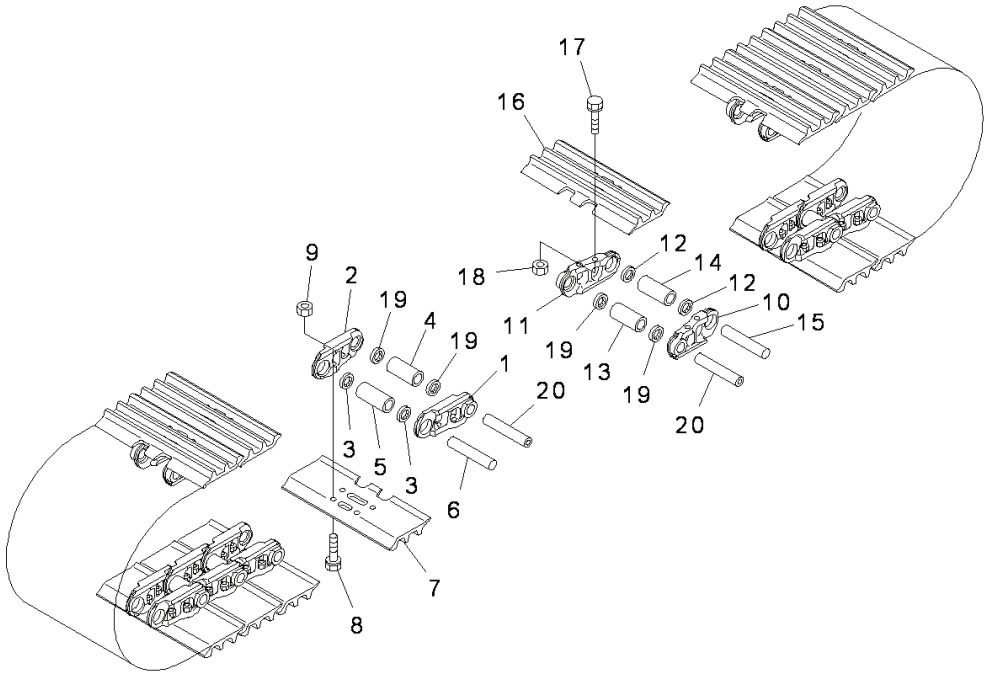

PDB6691

Index	Code	Part Number	Descreption	Qty	Serial Number
		207-32-03851	Track Shoe Assembly	1	Y300001-
1		207-32-71120	• Link	44	Y300001-
2		207-32-71130	• Link	44	Y300001-
3		144-32-11240	• Seal	84	Y300001-
4		207-32-51170	• Bushing, Master	2	Y300001-
5		207-32-51140	• Bushing, Regular	42	Y300001-
6		207-32-61150	• Pin	42	Y300001-
7		207-32-61320	• Shoe	44	Y300001-
8		207-32-71210	• Bolt, (Kit : K02)	176	Y300001-
9		154-32-71220	• Nut, (Kit : K02)	176	Y300001-
10		207-32-71120	• Link	46	Y300001-
11		207-32-71130	• Link	46	Y300001-
12		144-32-11240	• Seal	88	Y300001-
13		207-32-51170	• Bushing, Master	2	Y300001-
14		207-32-51140	• Bushing, Regular	44	Y300001-
15		207-32-61150	• Pin	44	Y300001-
16		207-32-61320	• Shoe	46	Y300001-
17		207-32-71210	• Bolt, (Kit : K02)	184	Y300001-
18		154-32-71220	• Nut, (Kit : K02)	184	Y300001-
19		207-32-61260	• Seal	8	Y300001-
20		207-32-61190	• Pin	4	Y300001-

PC300-8 (FEN01263-00)

FIG. R0500-002001 Track Shoe Assembly, Triple Shoe Grouser, With Holed, 700mm Width

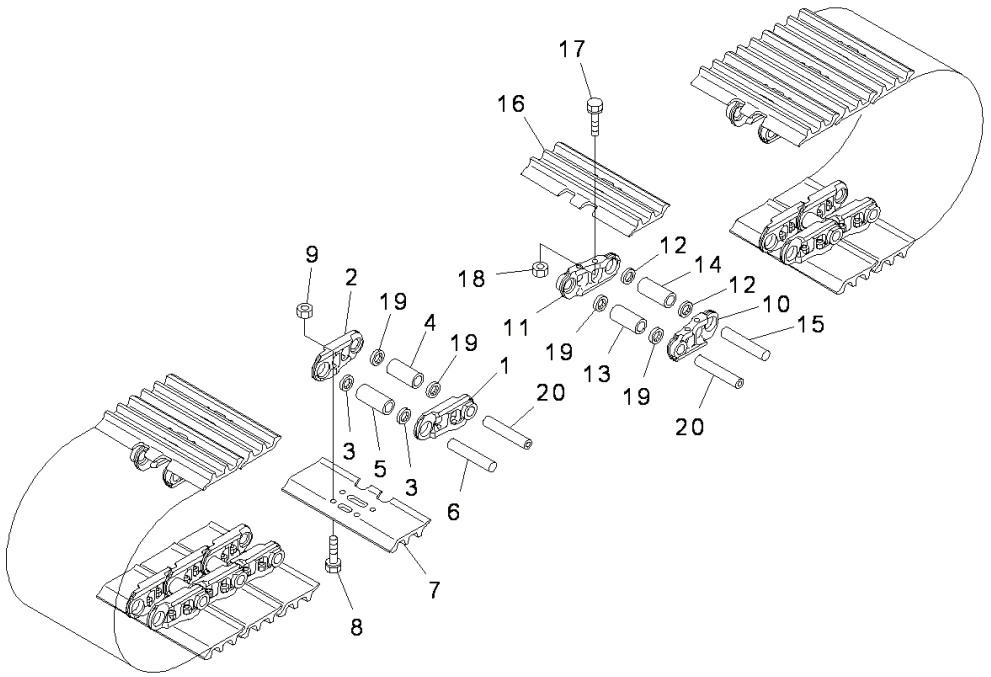

PDB6691

Index	Code	Part Number	Descreption	Qty	Serial Number
		207-32-03841	Track Shoe Assembly	1	Y300001-
1		207-32-71120	• Link	44	Y300001-
2		207-32-71130	• Link	44	Y300001-
3		144-32-11240	• Seal	84	Y300001-
4		207-32-51170	• Bushing, Master	2	Y300001-
5		207-32-51140	• Bushing, Regular	42	Y300001-
6		207-32-61150	• Pin	42	Y300001-
7		207-32-61310	• Shoe	44	Y300001-
8		207-32-71210	• Bolt, (Kit : K02)	176	Y300001-
9		154-32-71220	• Nut, (Kit : K02)	176	Y300001-
10		207-32-71120	• Link	46	Y300001-
11		207-32-71130	• Link	46	Y300001-
12		144-32-11240	• Seal	88	Y300001-
13		207-32-51170	• Bushing, Master	2	Y300001-
14		207-32-51140	• Bushing, Regular	44	Y300001-
15		207-32-61150	• Pin	44	Y300001-
16		207-32-61310	• Shoe	46	Y300001-
17		207-32-71210	• Bolt, (Kit : K02)	184	Y300001-
18		154-32-71220	• Nut, (Kit : K02)	184	Y300001-
19		207-32-61260	• Seal	8	Y300001-
20		207-32-61190	• Pin	4	Y300001-

PC300-8 (FEN01263-00)

FIG. R0501-001001 Track Link Assembly

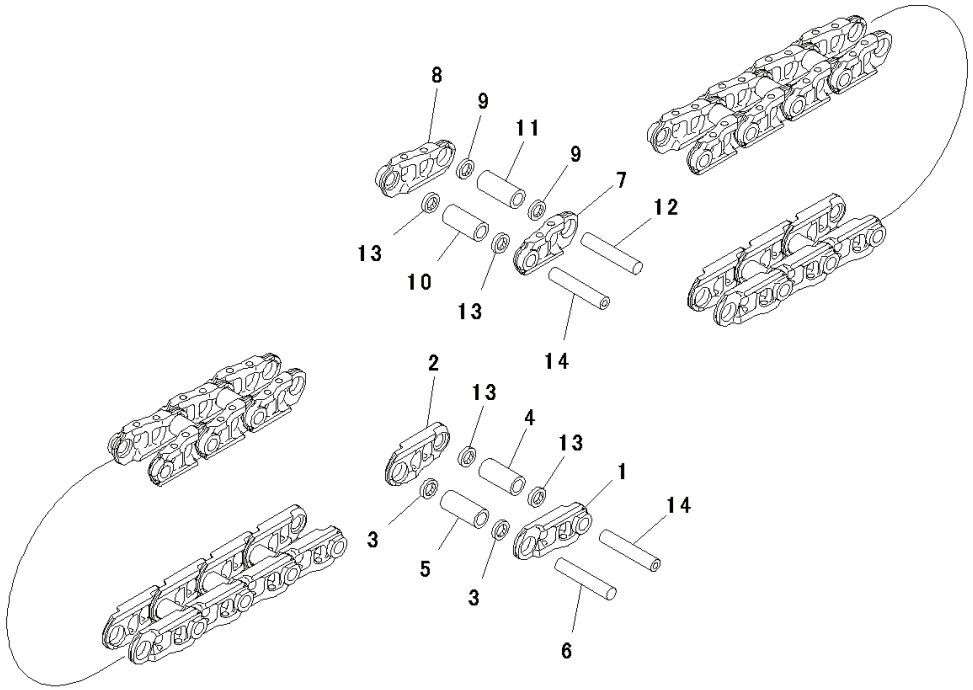

PDB6697

Index	Code	Part Number	Descreption	Qty	Serial Number
		207-32-00340	Track Link Assembly	1	Y300001-
1		207-32-71120	• Link	44	Y300001-
2		207-32-71130	• Link	44	Y300001-
3		144-32-11240	• Seal	84	Y300001-
4		207-32-51170	• Bushing, Master	2	Y300001-
5		207-32-51140	• Bushing, Regular	42	Y300001-
6		207-32-61150	• Pin	42	Y300001-
7		207-32-71120	• Link	46	Y300001-
8		207-32-71130	• Link	46	Y300001-
9		144-32-11240	• Seal	88	Y300001-
10		207-32-51170	• Bushing, Master	2	Y300001-
11		207-32-51140	• Bushing, Regular	44	Y300001-
12		207-32-61150	• Pin	44	Y300001-
13		207-32-61260	• Seal	8	Y300001-
14		207-32-61190	• Pin	4	Y300001-

PC300-8 (FEN01263-00)

FIG. R1100-002001 Track Frame, With Under Cover

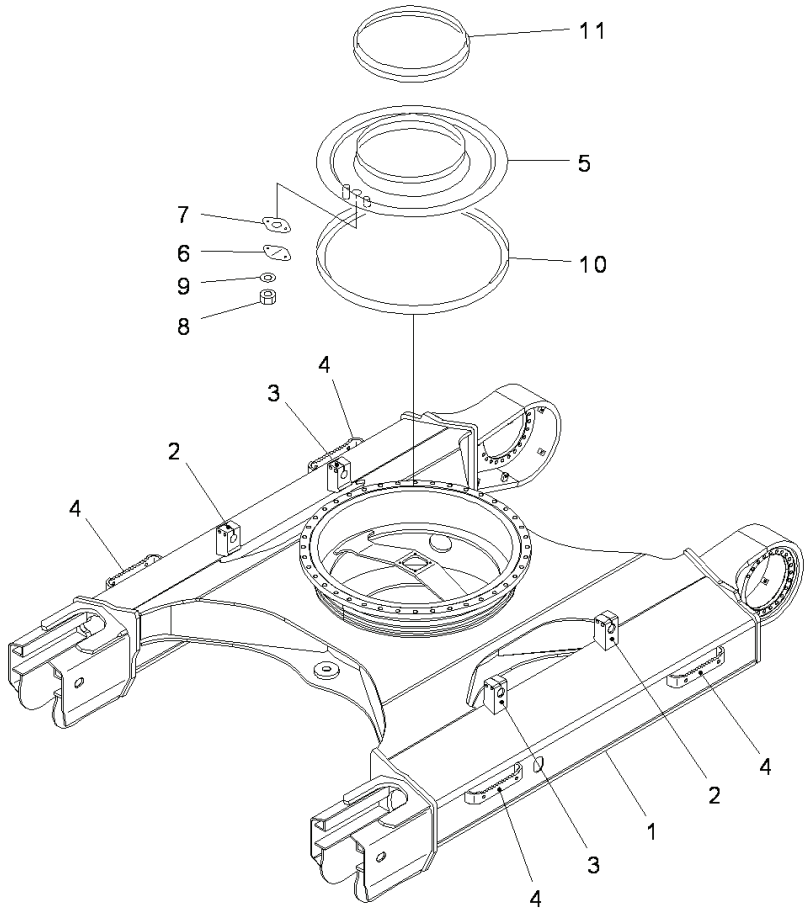

Index	Code	Part Number	Descreption	Qty	Serial Number
1		207-30-76121	Frame	1	Y300001-
2		207-30-76A11	• Bracket,Welded	2	Y300001-
3		207-30-76A21	• Bracket,Welded	2	Y300001-
4		207-30-76A81	• Plate,Welded	4	Y300001-
5		207-30-61220	Cover	1	Y300001-
6		205-30-71181	Cover	1	Y300001-
7		205-30-71191	Gasket	1	Y300001-
8		01580-11008	Nut	2	Y300001-
9		01643-31032	Washer	2	Y300001-
10		207-30-51260	Seal	1	Y300001-
11		205-30-71171	Seal	1	Y300001-

PC300-8 (FEN01263-00)

FIG. R1140-001001 Track Frame Under Cover

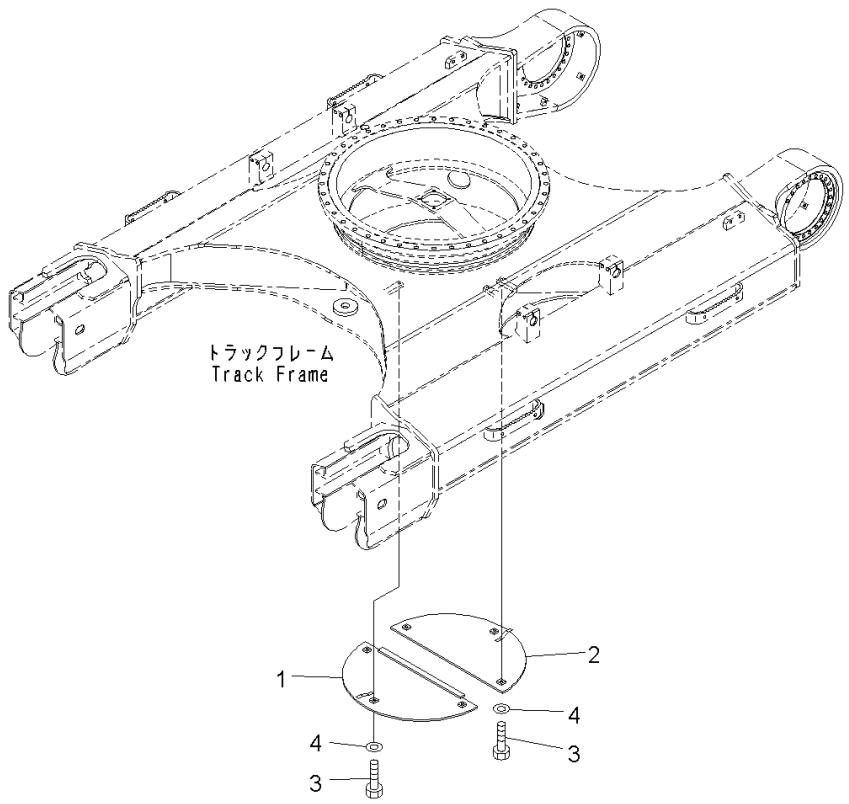

Index	Code	Part Number	Descreption	Qty	Serial Number
1		20Y-973-2220	Cover	1	Y300001-
2		20Y-973-2230	Cover	1	Y300001-
3		01010-81235	Bolt	6	Y300001-
4		01643-31232	Washer	6	Y300001-

FIG. R1200-001001 Track Roller Guard

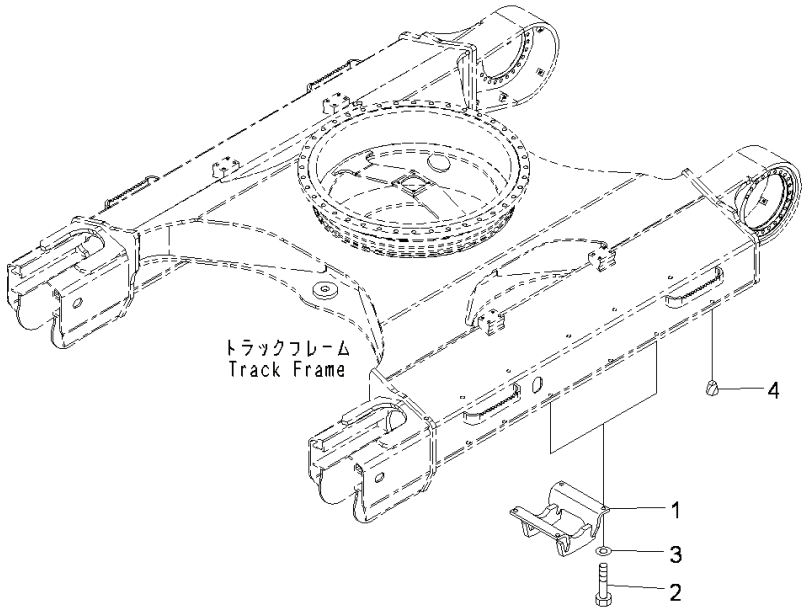

PW1C645

Index	Code	Part Number	Descreption	Qty	Serial Number
1		207-30-51191	Guard	4	Y300001-
2		01010-62455	Bolt	16	Y300001-
3		01643-32460	Washer	16	Y300001-
4		07049-02430	Plug	8	Y300001-

FIG. R1200-002001 Track Guard, Full Length

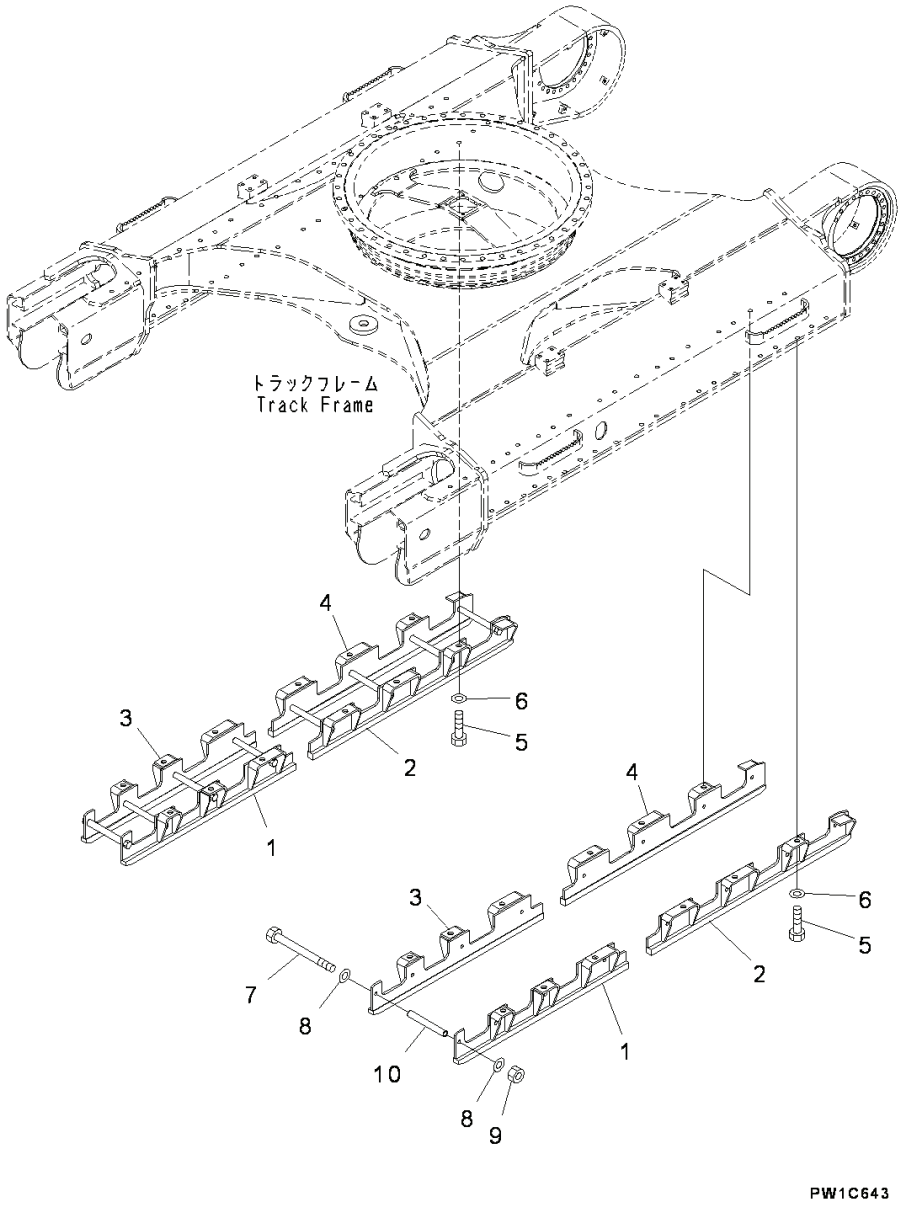

Index	Code	Part Number	Descreption	Qty	Serial Number
1		207-30-77110	Guard	2	Y300001-
2		207-30-77120	Guard	2	Y300001-
3		207-30-77130	Guard	2	Y300001-
4		207-30-77140	Guard	2	Y300001-
5		01010-62450	Bolt	24	Y300001-
6		01643-32460	Washer	24	Y300001-
7		09205-18325	Bolt	16	Y300001-
8		01643-31845	Washer	32	Y300001-
9		01580-11815	Nut	16	Y300001-
10		141-30-32181	Collar	16	Y300001-

PC300-8 (FEN01263-00)

WORK EQUIPMENT

FIG. T1110-003001 Boom, Boom and Top Pin

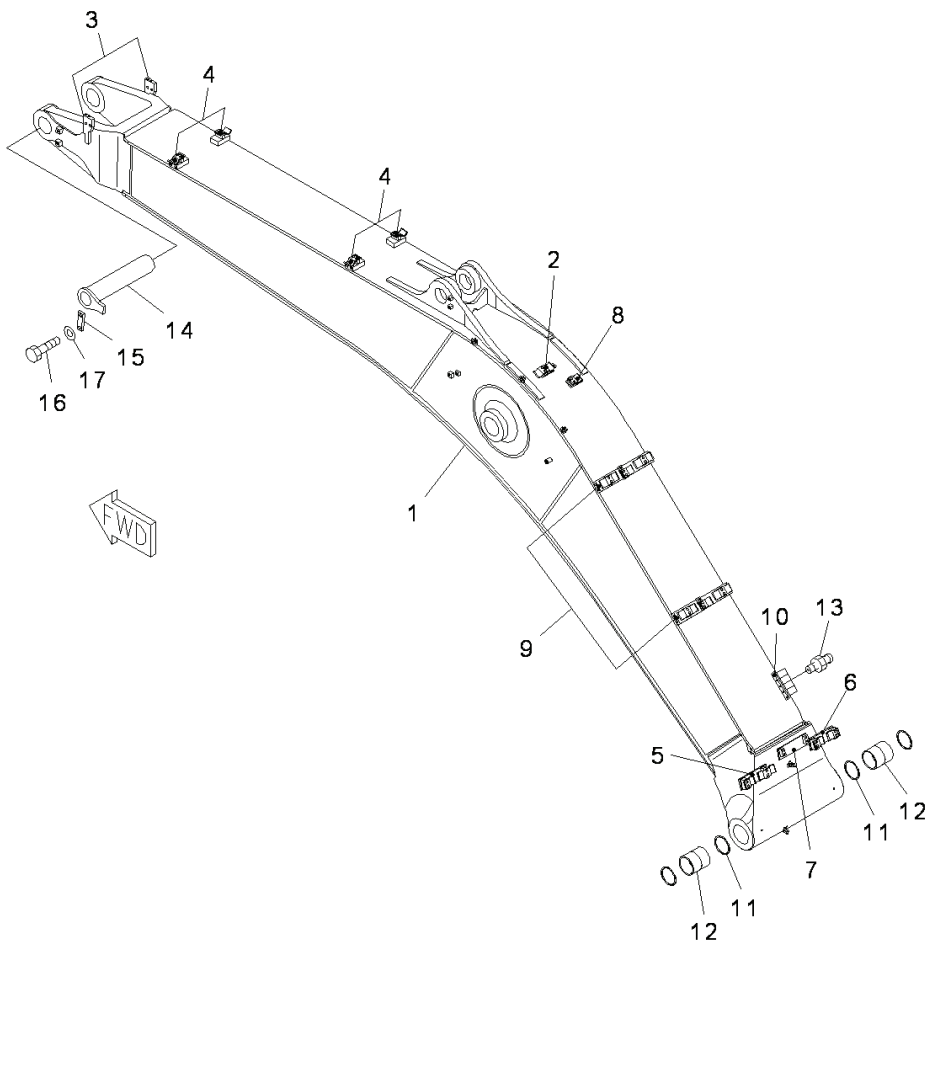

Index	Code	Part Number	Descreption	Qty	Serial Number
		Note: This list covers following specifications.			
		6.5m, 500 Hours Greasing Type			
		6.5m, 1-attachment, 500 Hours Greasing Type			
		207-70-00254	Boom Assembly .	1	Y300001-
1		207-70-71114	• Boom .	1	Y300001-
2		207-62-54750	• • Bracket,Welded	1	Y300001-
3		207-62-74221	• • Bracket,Welded	2	Y300001-
4		207-62-74230	• • Bracket,Welded	4	Y300001-
5		207-62-74240	• • Bracket,Welded	1	Y300001-
6		207-62-74251	• • Bracket,Welded	1	Y300001-
7		207-62-74281	• • Bracket,Welded	1	Y300001-
8		207-62-74340	• • Bracket,Welded	1	Y300001-
9		207-62-74371	• • Bracket,Welded	2	Y300001-
10		20Y-70-11651	• • Seat,Welded .	1	Y300001-
11		07145-00110	• Seal, Dust	2	Y300001-
12		207-70-71162	• Bushing .	2	Y300001-
13		07020-00000	• Fitting, Grease .	5	Y300001-
14		207-70-72312	Pin .	1	Y300001-
15		207-70-31230	Plate .	1	Y300001-
16		01010-81640	Bolt .	2	Y300001-
17		01643-31645	Washer .	2	Y300001-

FIG. T1110-003002 Boom, Arm Cylinder Piping

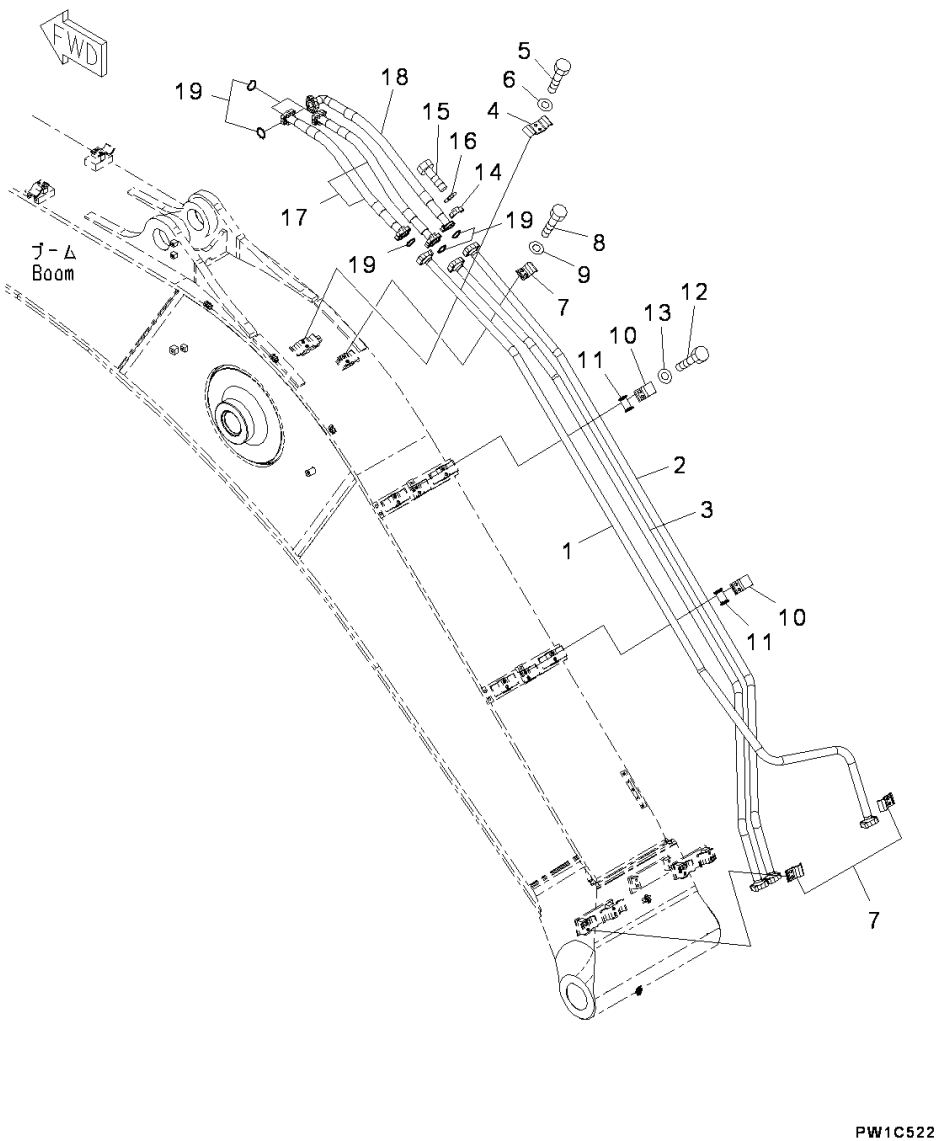

Index	Code	Part Number	Descreption	Qty	Serial Number
		Note: This list covers following specifications. 6.5m, Strengthened, 100 Hours Greasing Type 6.5m, Strengthened, 1-attachment, 100 Hours Greasing Type			
1		207-62-74160	Tube	1	Y300001-
2		207-62-74131	Tube	1	Y300001-
3		207-62-74150	Tube	1	Y300001-
4		207-62-54760	Clamp	1	Y300001-
5		01010-81235	Bolt	2	Y300001-
6		01643-31232	Washer	2	Y300001-
7		207-62-31330	Clamp	3	Y300001-
8		01010-81235	Bolt	6	Y300001-
9		01643-31232	Washer	6	Y300001-
10		207-62-52350	Clamp	2	Y300001-
11		205-62-73431	Seat	2	Y300001-
12		01010-81235	Bolt	4	Y300001-
13		01643-31232	Washer	4	Y300001-
14		07371-31049	Flange, Split	12	Y300001-
15		07372-21035	Bolt	24	Y300001-
16		01643-51032	Washer	24	Y300001-
17		07074-01008	Hose, Flange Type	2	Y300001-
18		07073-01A09	Hose, Flange Type	1	Y300001-
19		07000-13032	O-ring	6	Y300001-

FIG. T1110-003004 Boom, Bucket Cylinder Piping

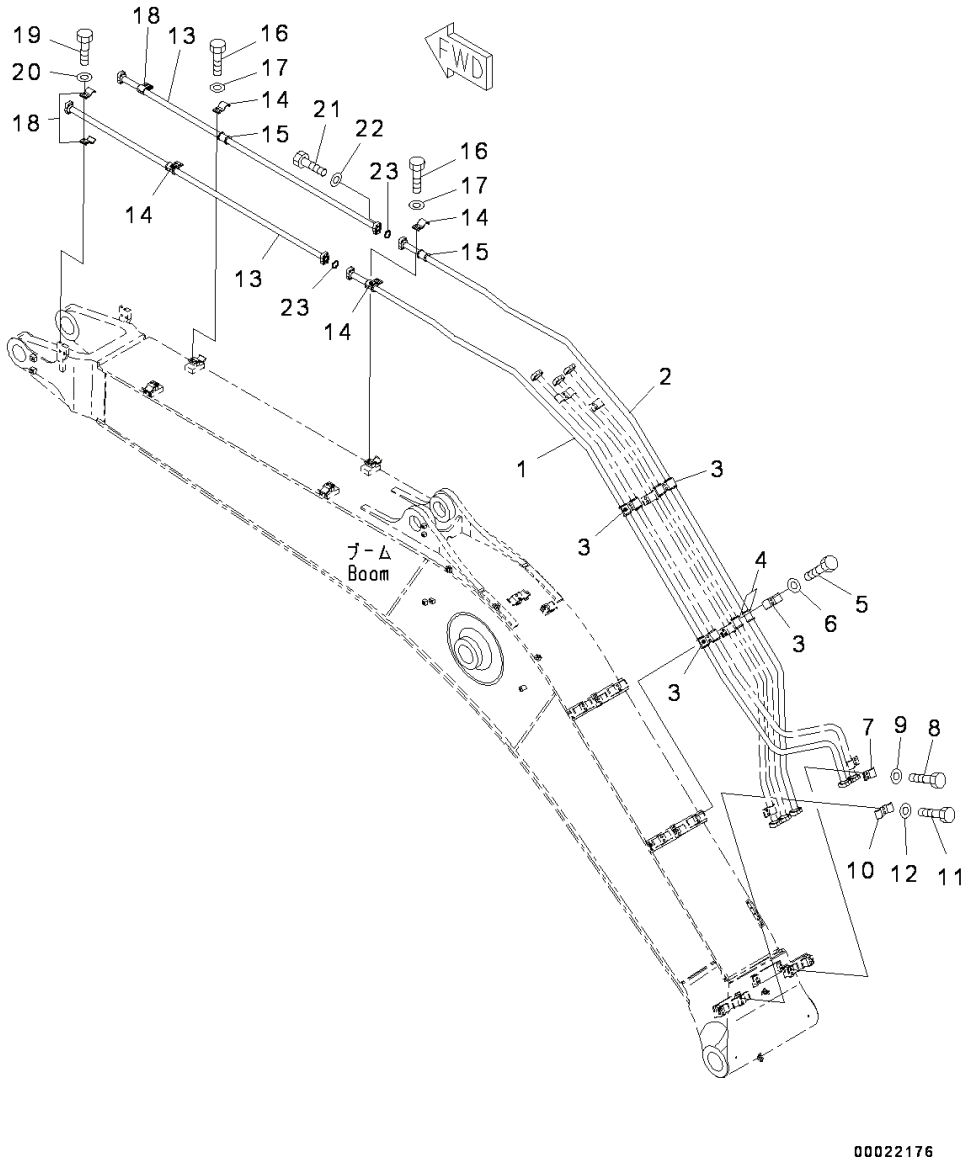

Index	Code	Part Number	Descreption	Qty	Serial Number
		Note: This list covers following specifications. 6.5m, Strengthened, 100 Hours Greasing Type 6.5m, Strengthened, 1-attachment, 100 Hours Greasing Type			
1		207-62-74111	Tube	1	Y300001-
2		207-62-74121	Tube	1	Y300001-
3		207-62-54780	Clamp	4	Y300001-
4		205-62-73431	Seat	8	Y300001-
5		01010-81235	Bolt	8	Y300001-
6		01643-31232	Washer	8	Y300001-
7		207-62-31330	Clamp	1	Y300001-
8		01010-81235	Bolt	2	Y300001-
9		01643-31232	Washer	2	Y300001-
10		207-62-54760	Clamp	1	Y300001-
11		01010-81235	Bolt	2	Y300001-
12		01643-31232	Washer	2	Y300001-
13		207-62-74140	Tube	2	Y300001-
14		207-62-52350	Clamp	4	Y300001-
15		205-62-73431	Seat	4	Y300001-
16		01010-81235	Bolt	8	Y300001-
17		01643-31232	Washer	8	Y300001-
18		207-62-31330	Clamp	4	Y300001-
19		01010-81235	Bolt	4	Y300001-
20		01643-31232	Washer	4	Y300001-
21		07372-21040	Bolt	8	Y300001-
22		01643-51032	Washer	8	Y300001-
23		07000-13035	O-ring	2	Y300001-

FIG. T1110-004003 Boom, Lubrication Piping

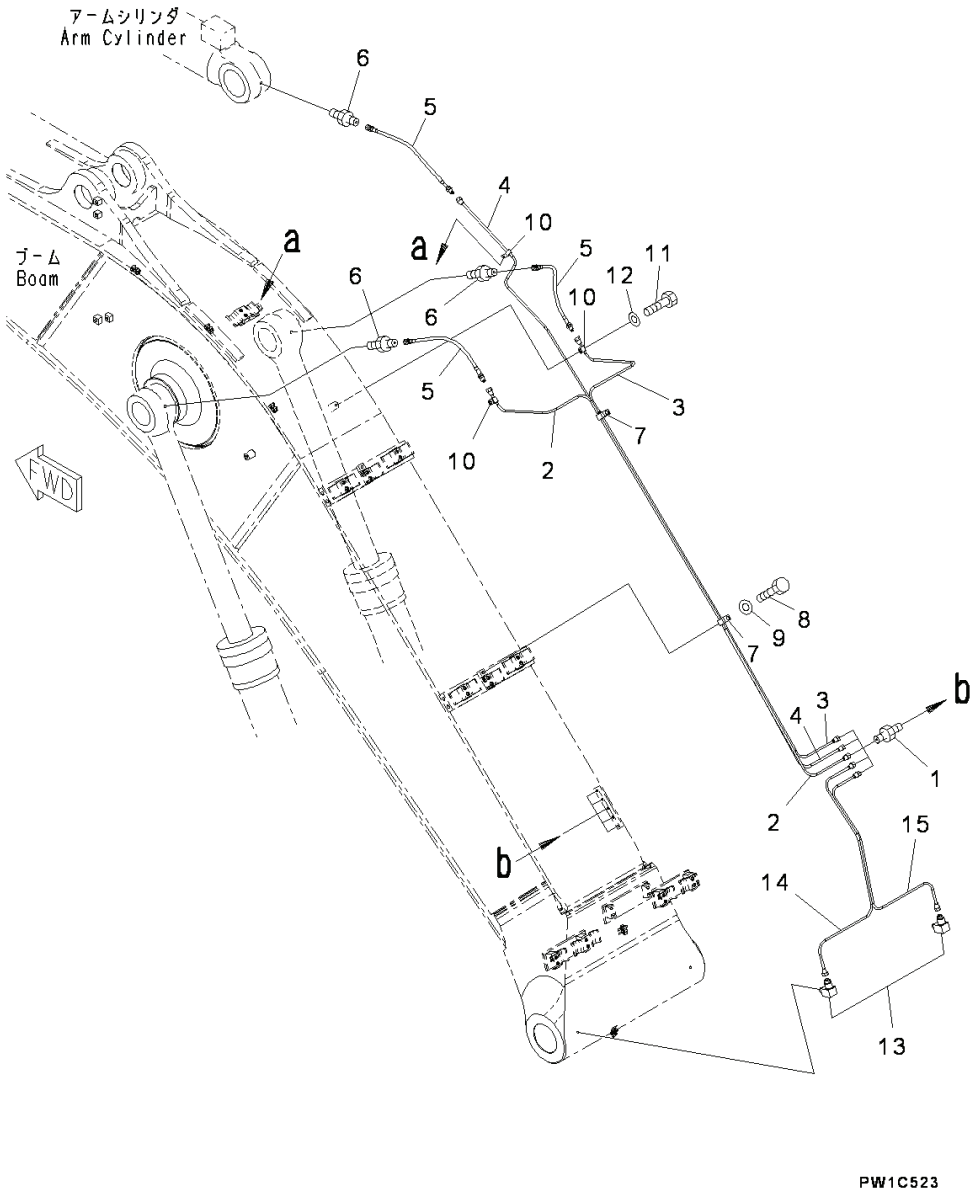

Index	Code	Part Number	Descreption	Qty	Serial Number
		Note: This list covers following specifications. 6.5m, Strengthened, 100 Hours Greasing Type 6.5m, Strengthened, 1-attachment, 100 Hours Greasing Type			
1		20Y-70-11540	Connector	5	Y300001-
2		207-70-77310	Tube	1	Y300001-
3		207-70-77320	Tube	1	Y300001-
4		207-70-77330	Tube	1	Y300001-
5		20Y-70-11520	Hose	3	Y300001-
6		205-70-51390	Nipple	3	Y300001-
7		04434-51912	Clip	2	Y300001-
8		01010-81220	Bolt	2	Y300001-
9		01643-51232	Washer	2	Y300001-
10		08036-01014	Clip	3	Y300001-
11		01010-81220	Bolt	3	Y300001-
12		01643-31232	Washer	3	Y300001-
13		20Y-25-11270	Elbow	2	Y300001-
14		207-70-77341	Tube	1	Y300001-
15		207-70-77351	Tube	1	Y300001-

FIG. T1110-005006 Additional Piping, For Machine With Webasto Coolant Heater

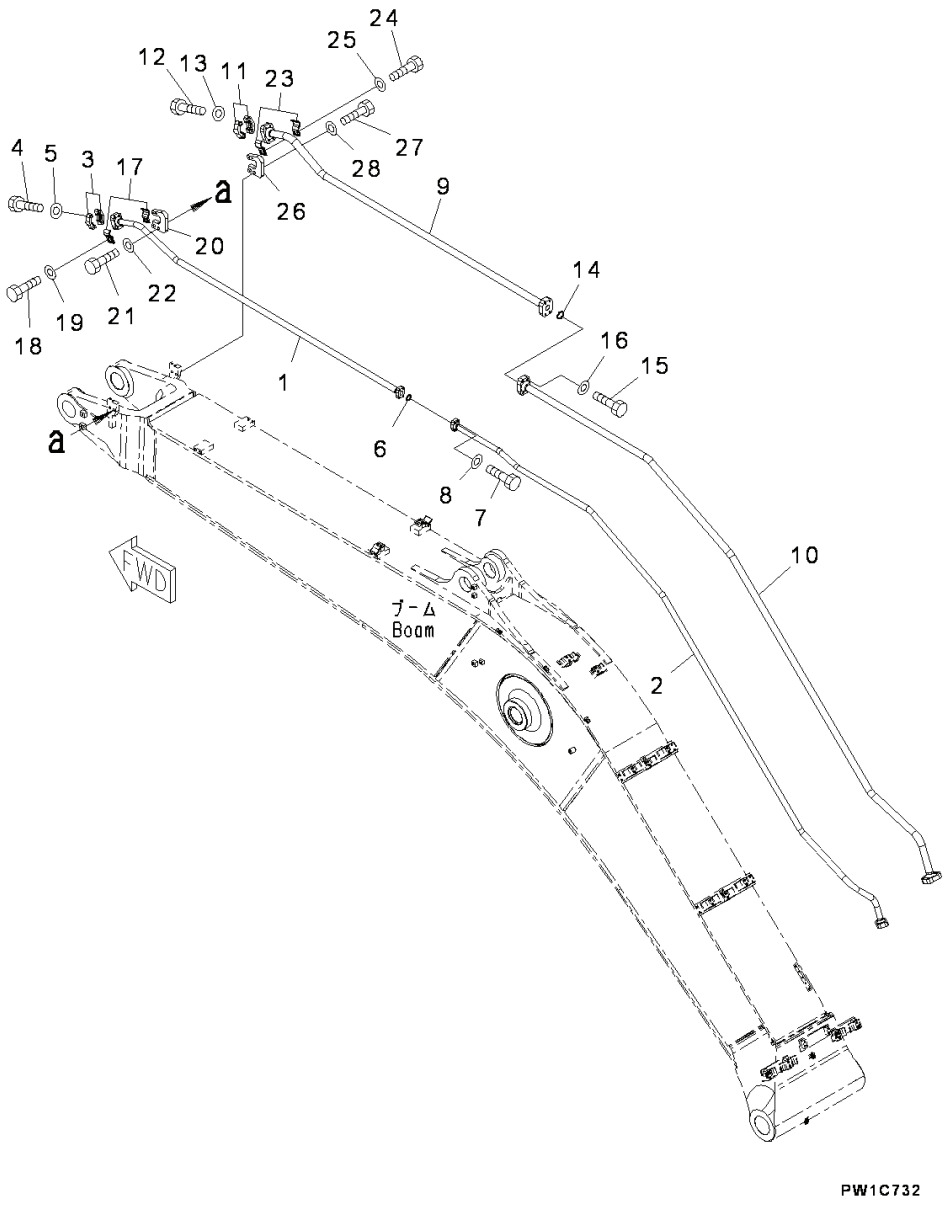

Index	Code	Part Number	Descreption	Qty	Serial Number
		Note: This list covers following specifications. 6.5m, Strengthened, 1-attachment, 100 Hours Greasing Type			
1		207-970-7110	Tube	1	Y300001-
2		207-970-7130	Tube	1	Y300001-
3		07371-51260	Flange	2	Y300001-
4		01010-81245	Bolt	4	Y300001-
5		01643-31232	Washer	4	Y300001-
6		07000-13035	O-ring	1	Y300001-
7		01010-81040	Bolt	4	Y300001-
8		01643-31032	Washer	4	Y300001-
9		207-970-7120	Tube	1	Y300001-
10		207-970-7140	Tube	1	Y300001-
11		07371-51470	Flange, Split	2	Y300001-
12		01010-81455	Bolt	4	Y300001-
13		01643-31445	Washer	4	Y300001-
14		07000-13048	O-ring	1	Y300001-
15		01010-81455	Bolt	4	Y300001-
16		01643-31445	Washer	4	Y300001-
17		208-970-7220	Clamp	2	Y300001-
18		01010-81235	Bolt	2	Y300001-
19		01643-31232	Washer	2	Y300001-
20		207-970-7151	Bracket	1	Y300001-
21		01010-81655	Bolt	2	Y300001-
22		01643-31645	Washer	2	Y300001-
23		208-970-7210	Clamp	2	Y300001-
24		01010-81235	Bolt	2	Y300001-
25		01643-31232	Washer	2	Y300001-
26		207-970-7151	Bracket	1	Y300001-
27		01010-81655	Bolt	2	Y300001-
28		01643-31645	Washer	2	Y300001-

FIG. T1110-005007 Boom, Clamp

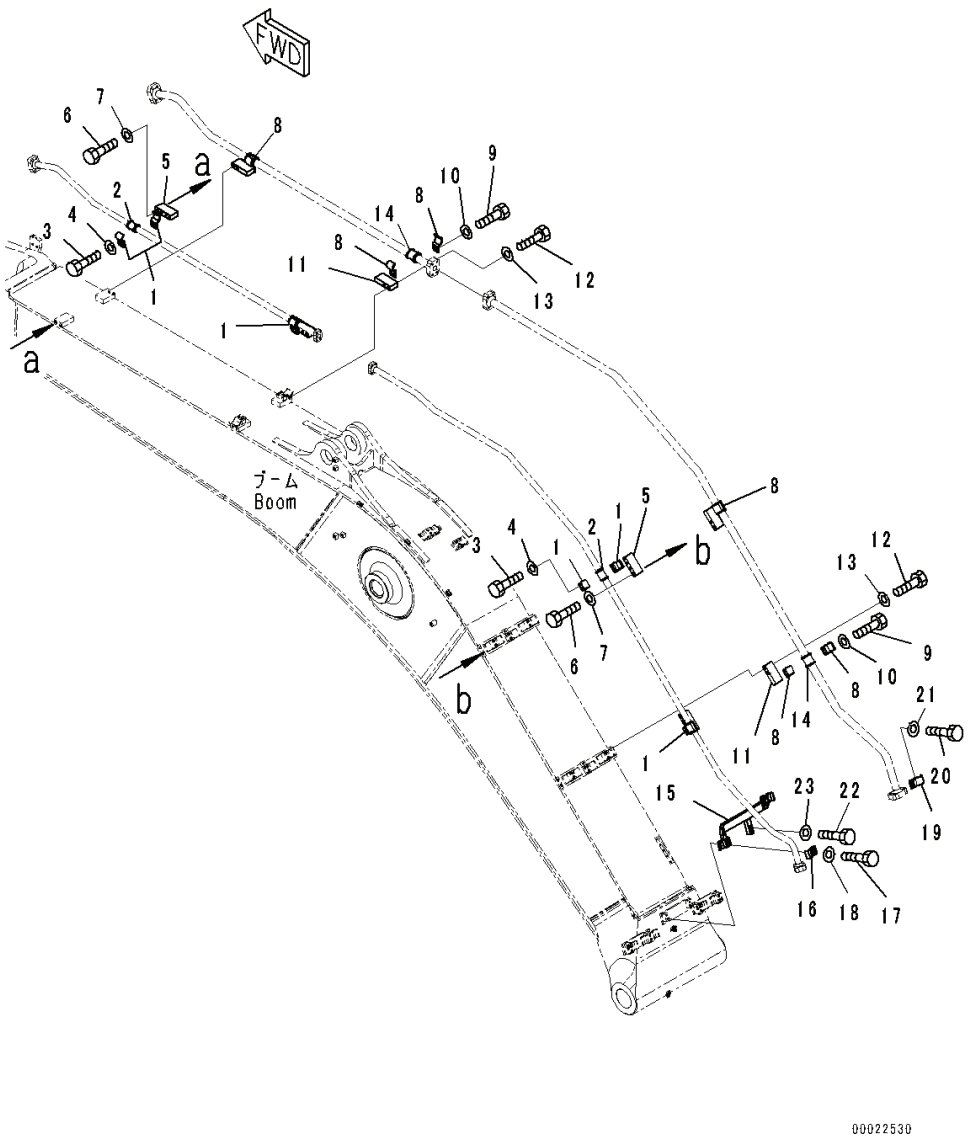

Index	Code	Part Number	Descreption	Qty	Serial Number
		Note: This list covers following specifications. 6.5m, Strengthened, 1-attachment, 100 Hours Greasing Type			
1		207-62-52350	Clamp	8	Y300001-
2		205-62-73431	Seat	4	Y300001-
3		01010-81235	Bolt	8	Y300001-
4		01643-31232	Washer	8	Y300001-
5		207-970-7171	Bracket	4	Y300001-
6		01010-81685	Bolt	8	Y300001-
7		01643-31645	Washer	8	Y300001-
8		207-970-7320	Clamp	8	Y300001-
9		01010-81235	Bolt	8	Y300001-
10		01643-31232	Washer	8	Y300001-
11		207-970-7171	Bracket	4	Y300001-
12		01010-81685	Bolt	8	Y300001-
13		01643-31645	Washer	8	Y300001-
14		207-970-7331	Seat	4	Y300001-
15		207-970-7162	Bracket	1	Y300001-
16		207-62-31330	Clamp	1	Y300001-
17		01010-81250	Bolt	2	Y300001-
18		01643-31232	Washer	2	Y300001-
19		207-970-7310	Clamp	1	Y300001-
20		01010-81235	Bolt	2	Y300001-
21		01643-31232	Washer	2	Y300001-
22		01010-81250	Bolt	2	Y300001-
23		01643-31232	Washer	2	Y300001-

PC300-8 (FEN01263-00)

FIG. T1110-007005 Boom, Cylinder Pin and Working Lamp

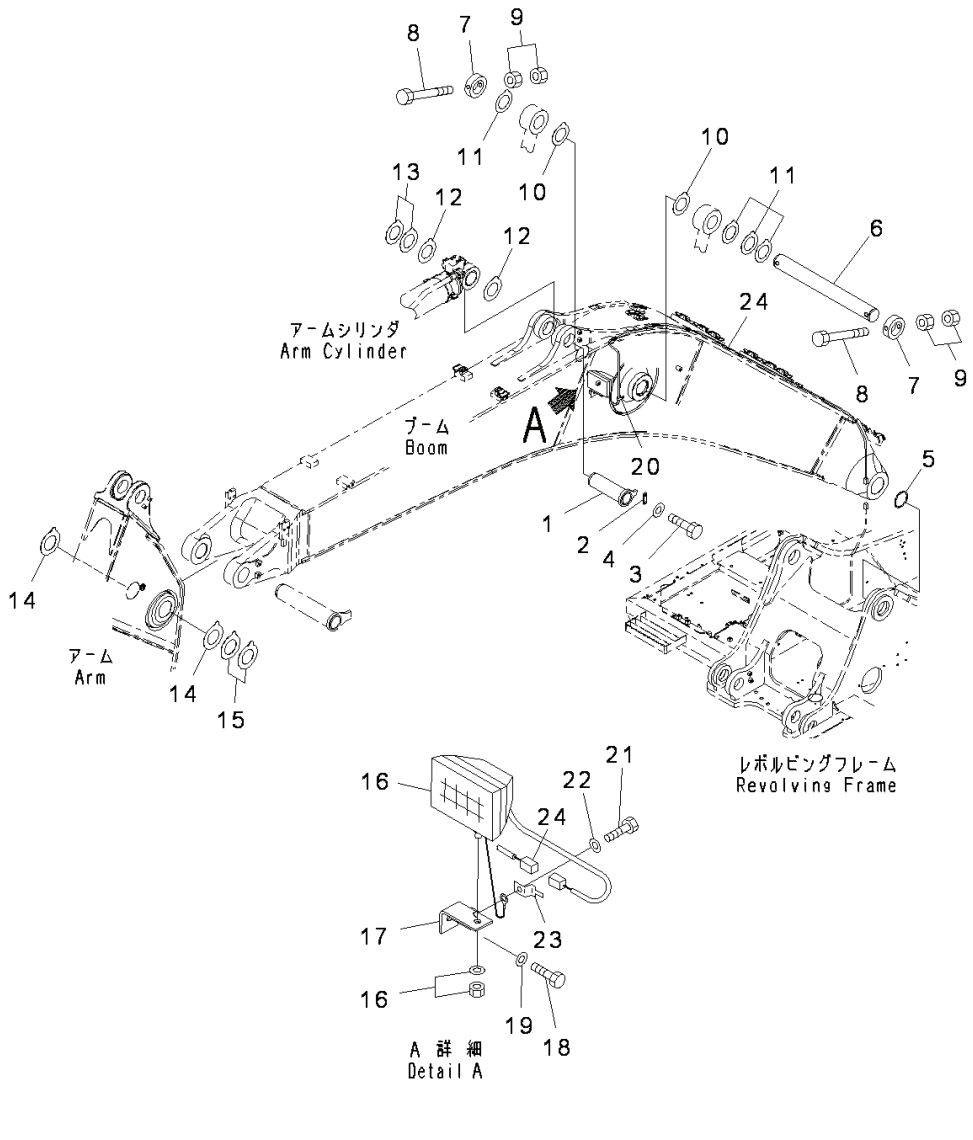

Index	Code	Part Number	Descreption	Qty	Serial Number
		Note: This list covers following specifications. 6.5m, Strengthened, 100 Hours Greasing Type 6.5m, Strengthened, 1-attachment, 100 Hours Greasing Type			
1		207-70-61192	Pin	1	Y300001-
2		205-70-66581	Plate	1	Y300001-
3		01010-81235	Bolt	2	Y300001-
4		01643-31232	Washer	2	Y300001-
5		07145-00110	Seal, Dust	2	Y300001-
6		207-70-31172	Pin	1	Y300001-
7		207-70-31242	Plate	2	Y300001-
8		207-70-13340	Bolt	2	Y300001-
9		01580-12419	Nut	4	Y300001-
10		207-70-31340	Spacer, T=0.8mm	2	Y300001-
11		207-70-51320	Spacer, T=1.5mm	5	Y300001-
12		207-70-11340	Spacer, T=0.8mm	3	Y300001-
13		207-70-11350	Spacer, T=1.5mm	2	Y300001-
14		207-70-11360	Spacer, T=1.0mm	2	Y300001-
15		207-70-11370	Spacer, T=1.5mm	2	Y300001-
16		21T-06-32810	Working Lamp Assembly, 24volt, 70watt	1	Y300001-
		421-06-23330	• Bulb, 70watt	1	Y300001-
17		20Y-06-21551	Bracket	1	Y300001-
18		01010-81430	Bolt	1	Y300001-
19		01643-31445	Washer	1	Y300001-
20		04434-51012	Clip	1	Y300001-
21		01010-81220	Bolt	2	Y300001-
22		01643-31232	Washer	2	Y300001-
23		08193-20012	Clip	1	Y300001-
24		207-06-75161	Wiring Harness	1	Y300001-

PC300-8 (FEN01263-00)

FIG. T1110-009001 Boom, 6.5m, Strengthened, 100 Hours Greasing Type, Boom and Top Pin

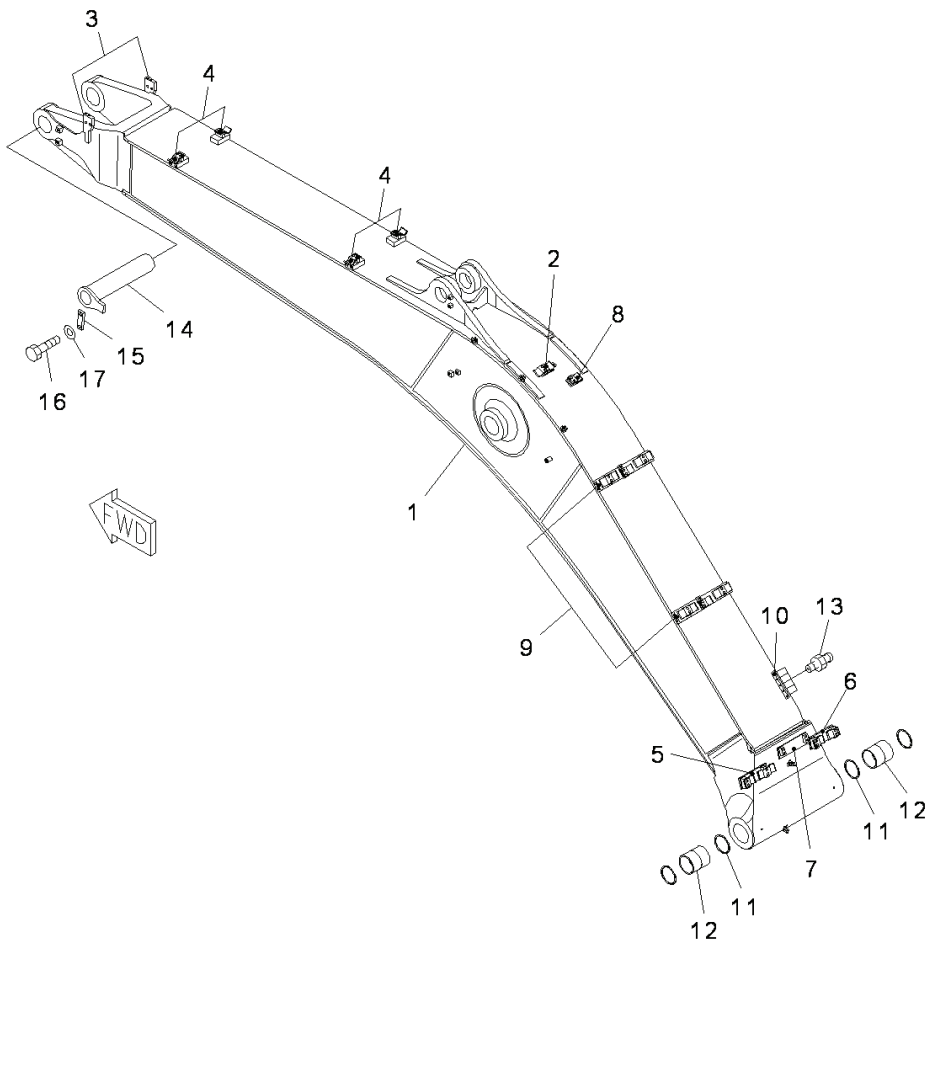

Index	Code	Part Number	Descreption	Qty	Serial Number
		207-70-00583	Boom Assembly	1	Y300001-
1		207-70-77114	• Boom .	1	Y300001-
2		207-62-54750	• • Bracket,Welded	1	Y300001-
3		207-62-74221	• • Bracket,Welded	2	Y300001-
4		207-62-74230	• • Bracket,Welded	4	Y300001-
5		207-62-74240	• • Bracket,Welded	1	Y300001-
6		207-62-74251	• • Bracket,Welded	1	Y300001-
7		207-62-74281	• • Bracket,Welded	1	Y300001-
8		207-62-74340	• • Bracket,Welded	1	Y300001-
9		207-62-74371	• • Bracket,Welded	2	Y300001-
10		20Y-70-11651	• • Seat,Welded .	1	Y300001-
11		07145-00110	• Seal, Dust	2	Y300001-
12		207-70-61610	• Bushing .	2	Y300001-
13		07020-00000	• Fitting, Grease .	5	Y300001-
14		207-70-61182	Pin .	1	Y300001-
15		207-70-31230	Plate .	1	Y300001-
16		01010-81640	Bolt .	2	Y300001-
17		01643-31645	Washer .	2	Y300001-

PC300-8 (FEN01263-00)

FIG. T1110-011001 Boom, Boom and Top Pin

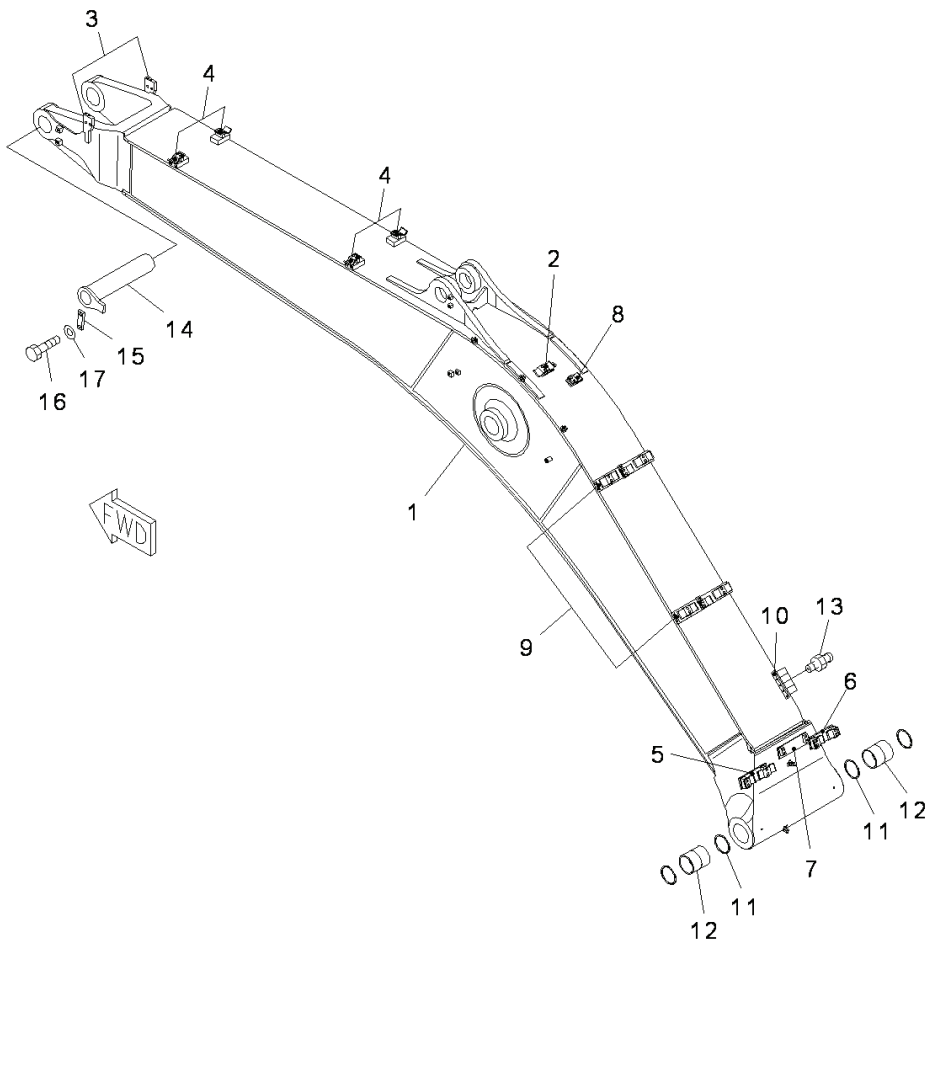

Index	Code	Part Number	Descreption	Qty	Serial Number
		Note: This list covers following specifications. 6.5m, Strengthened, 1-attachment, 100 Hours Greasing Type 6.5m, Strengthened, 100 Hours Greasing Type			
		207-70-00583	Boom Assembly .	1	Y300001-
1		207-70-77114	• Boom .	1	Y300001-
2		207-62-54750	• • Bracket,Welded	1	Y300001-
3		207-62-74221	• • Bracket,Welded	2	Y300001-
4		207-62-74230	• • Bracket,Welded	4	Y300001-
5		207-62-74240	• • Bracket,Welded	1	Y300001-
6		207-62-74251	• • Bracket,Welded	1	Y300001-
7		207-62-74281	• • Bracket,Welded	1	Y300001-
8		207-62-74340	• • Bracket,Welded	1	Y300001-
9		207-62-74371	• • Bracket,Welded	2	Y300001-
10		20Y-70-11651	• • Seat,Welded .	1	Y300001-
11		07145-00110	• Seal, Dust	2	Y300001-
12		207-70-61610	• Bushing .	2	Y300001-
13		07020-00000	• Fitting, Grease .	5	Y300001-
14		207-70-61182	Pin .	1	Y300001-
15		207-70-31230	Plate .	1	Y300001-
16		01010-81640	Bolt .	2	Y300001-
17		01643-31645	Washer .	2	Y300001-

PC300-8 (FEN01263-00)

FIG. T1110-014001 Boom, 100 Hours Greasing Type, For Machine With WEBASTO Coolant Heater, Boom and Top Pin

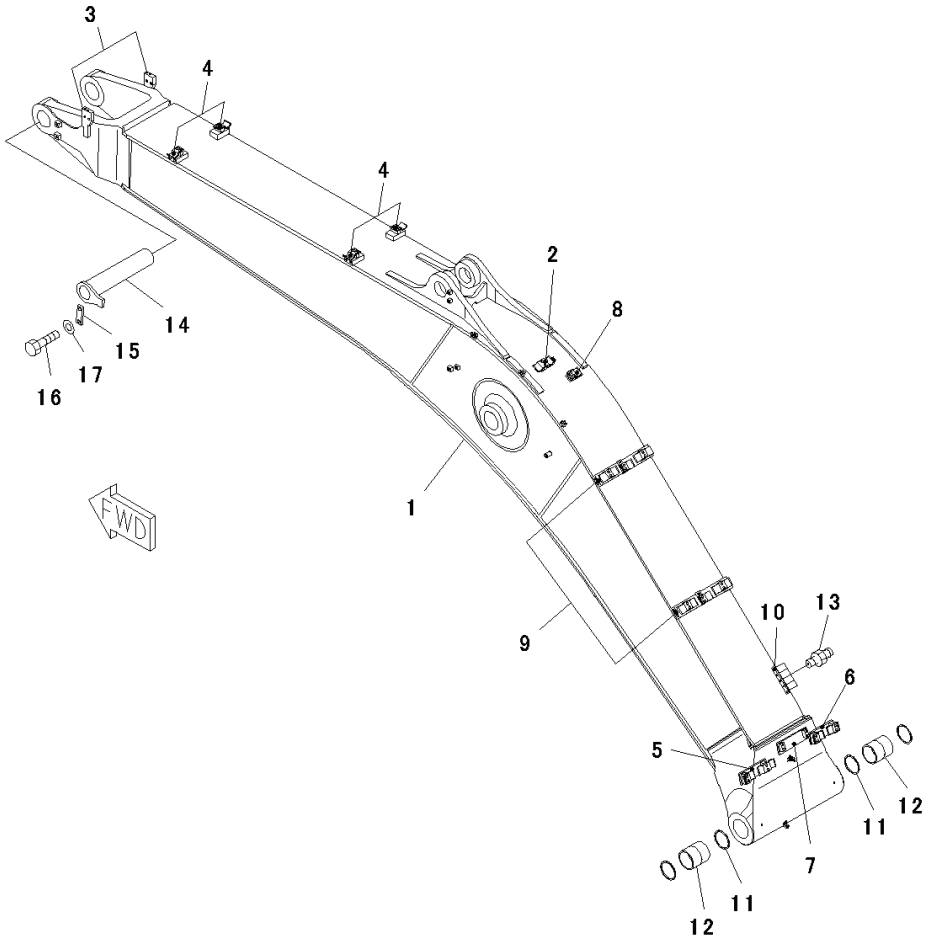

Index	Code	Part Number	Descreption	Qty	Serial Number
		Note: This list covers following specifications. 6.5m, Strengthened, 1-attachment, 100 Hours Greasing Type 6.5m, Strengthened, 100 Hours Greasing Type			
		207-70-00783	Boom Assembly	1	Y300001-
1		207-70-77114	• Boom	1	Y300001-
2		207-62-54750	• • Bracket	1	Y300001-
3		207-62-74221	• • Bracket	2	Y300001-
4		207-62-74230	• • Bracket	4	Y300001-
5		207-62-74240	• • Bracket	1	Y300001-
6		207-62-74251	• • Bracket	1	Y300001-
7		207-62-74281	• • Bracket	1	Y300001-
8		207-62-74340	• • Bracket	1	Y300001-
9		207-62-74371	• • Bracket	2	Y300001-
10		20Y-70-11651	• • Seat	1	Y300001-
11		07145-10110	• Seal, Dust	2	Y300001-
12		207-70-61610	• Bushing	2	Y300001-
13		07020-00000	• Fitting, Grease	5	Y300001-
14		207-70-61182	Pin	1	Y300001-
15		207-70-31230	Plate	1	Y300001-
16		01010-81640	Bolt	2	Y300001-
17		01643-31645	Washer	2	Y300001-

PC300-8 (FEN01263-00)

FIG. T1110-014002 Boom, 100 Hours Greasing Type, For Machine With WEBASTO Coolant Heater, Arm Cylinder Piping

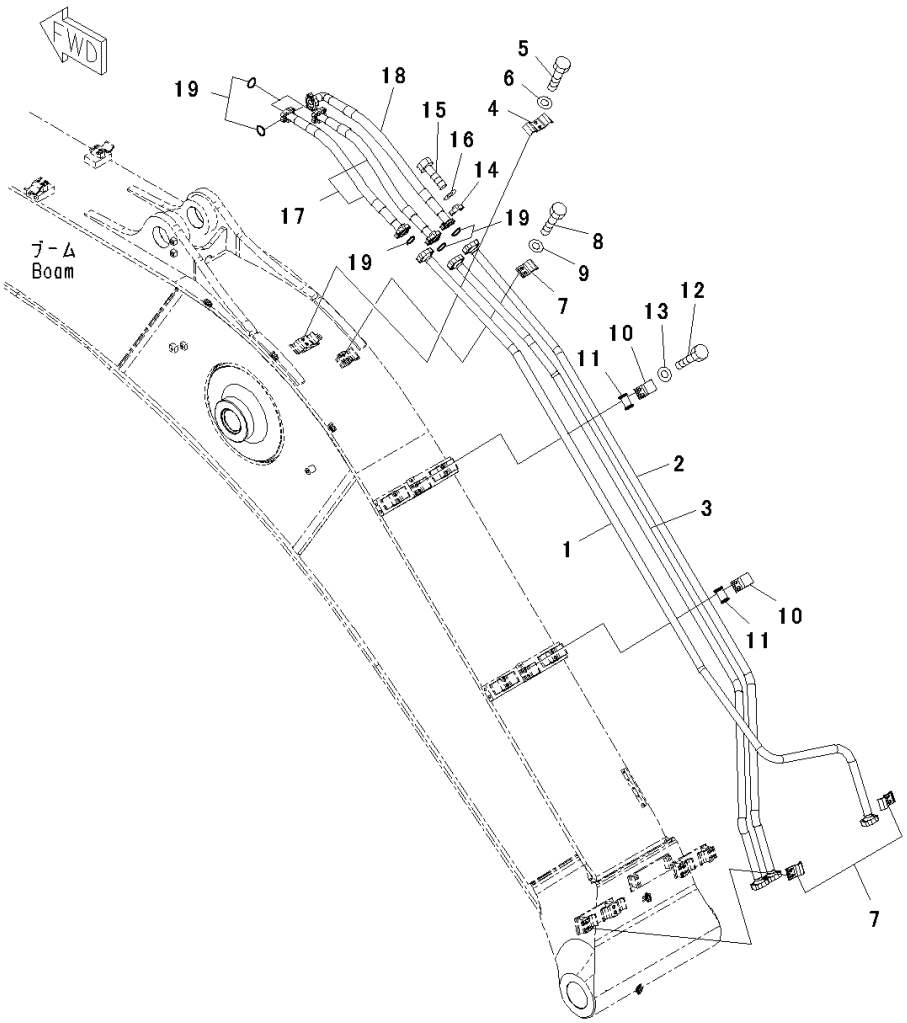

Index	Code	Part Number	Descreption	Qty	Serial Number
1		207-62-74160	Tube	1	Y300001-
2		207-62-74131	Tube	1	Y300001-
3		207-62-74150	Tube	1	Y300001-
4		207-62-54760	Clamp	1	Y300001-
5		01010-81235	Bolt	2	Y300001-
6		01643-31232	Washer	2	Y300001-
7		207-62-31330	Clamp	3	Y300001-
8		01010-81235	Bolt	6	Y300001-
9		01643-31232	Washer	6	Y300001-
10		207-62-52350	Clamp	2	Y300001-
11		208-62-73330	Seat	2	Y300001-
12		01010-81235	Bolt	4	Y300001-
13		01643-31232	Washer	4	Y300001-
14		07371-31049	Flange, Split	12	Y300001-
15		07372-21035	Bolt	24	Y300001-
16		01643-51032	Washer	24	Y300001-
17		07074-01008	Hose, Flange Type	2	Y300001-
18		07073-01A09	Hose, Flange Type	1	Y300001-
19		07000-53032	O-ring	6	Y300001-

PC300-8 (FEN01263-00)

FIG. T1110-014003 Boom, 100 Hours Greasing Type, For Machine With WEBASTO Coolant Heater, Lubrication Piping

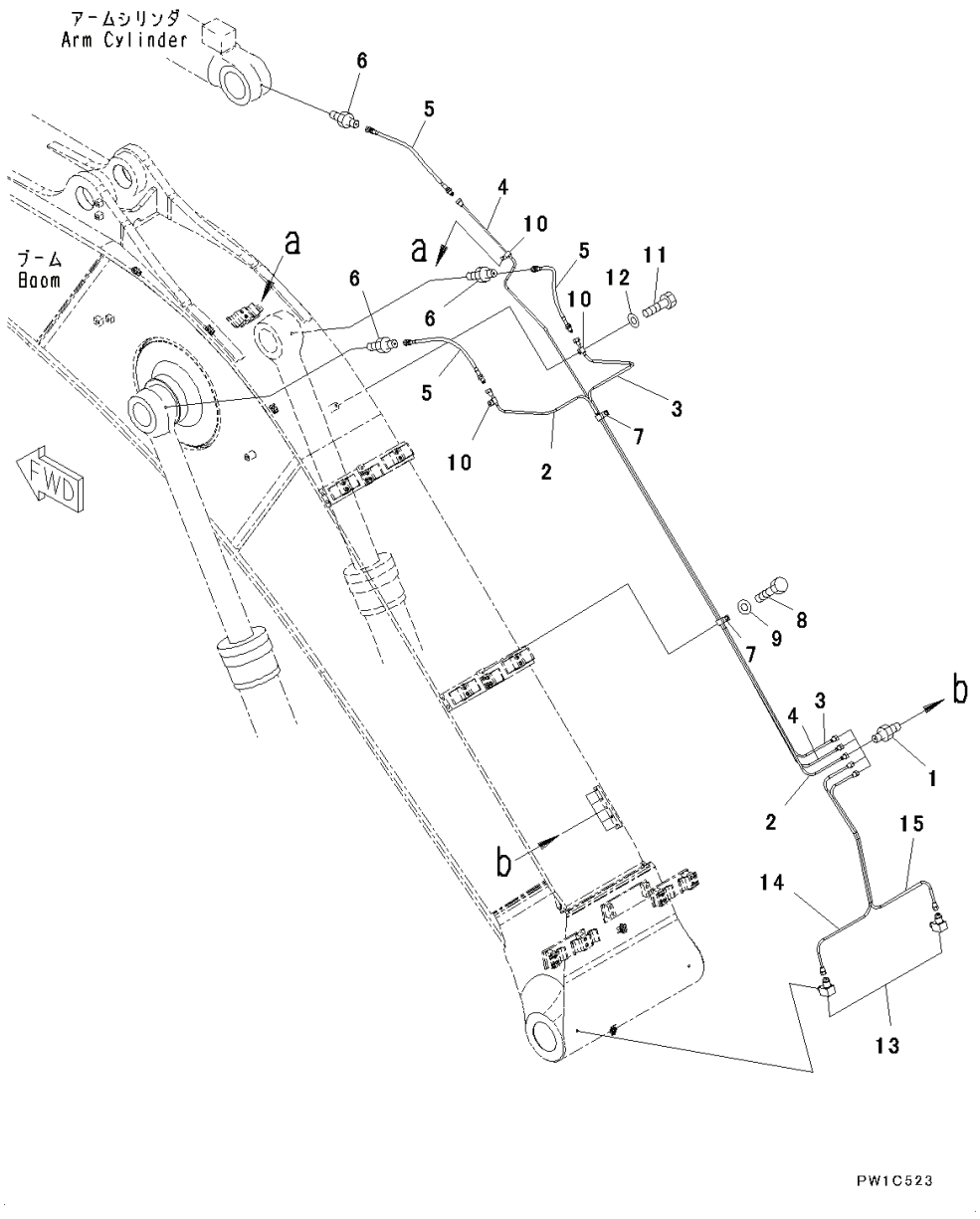

Index	Code	Part Number	Descreption	Qty	Serial Number
1		20Y-70-11540	Connector	5	Y300001-
2		207-70-77310	Tube	1	Y300001-
3		207-70-77320	Tube	1	Y300001-
4		207-70-77330	Tube	1	Y300001-
5		20Y-70-11520	Hose	3	Y300001-
6		205-70-51390	Nipple	3	Y300001-
7		04434-51912	Clip	2	Y300001-
8		01010-81220	Bolt	2	Y300001-
9		01643-51232	Washer	2	Y300001-
10		04434-50812	Clip	3	Y300001-
11		01010-81220	Bolt	3	Y300001-
12		01643-31232	Washer	3	Y300001-
13		20Y-25-11270	Elbow	2	Y300001-
14		207-70-77341	Tube	1	Y300001-
15		207-70-77351	Tube	1	Y300001-

FIG. T1110-014004 Boom, 100 Hours Greasing Type, For Machine With WEBASTO Coolant Heater, Bucket Cylinder Piping

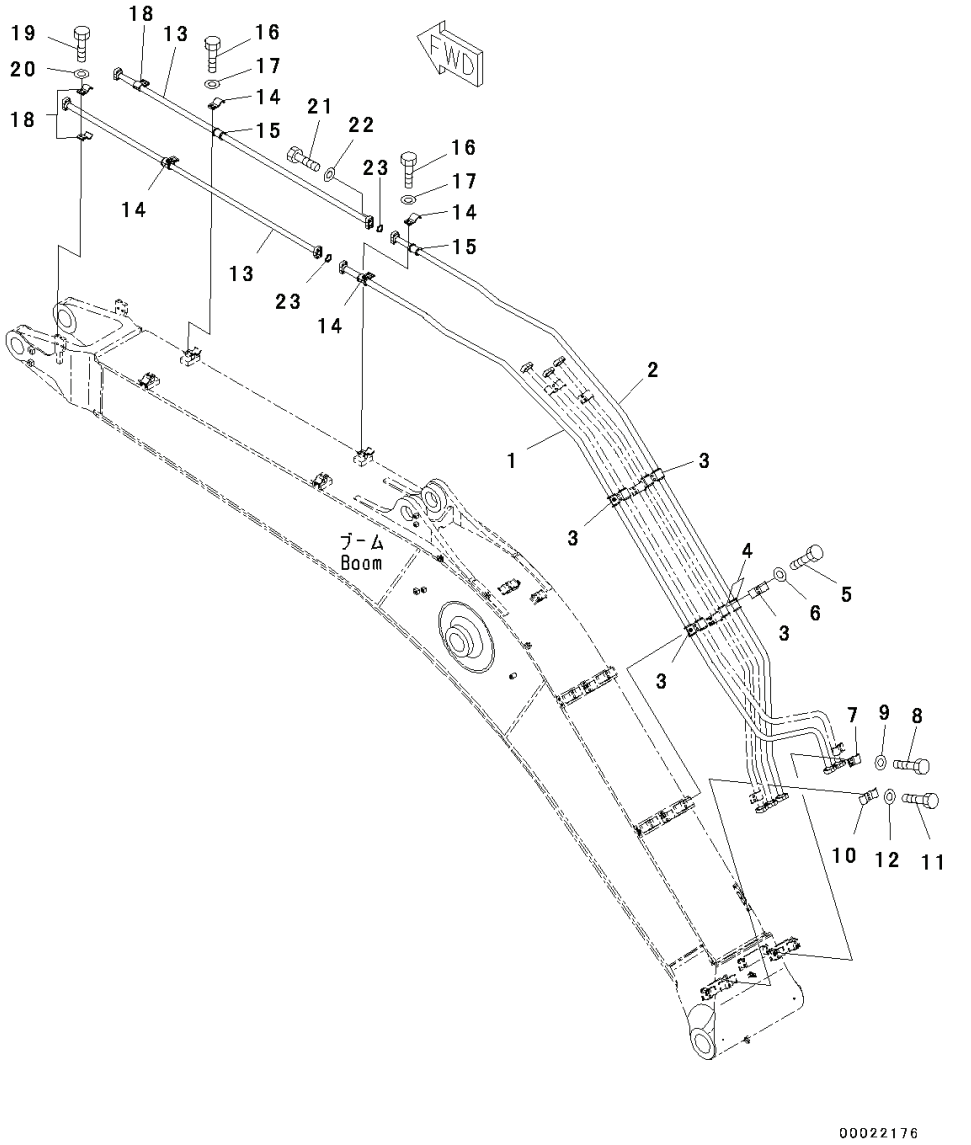

Index	Code	Part Number	Descreption	Qty	Serial Number
1		207-62-74111	Tube	1	Y300001-
2		207-62-74121	Tube	1	Y300001-
3		207-62-54780	Clamp	4	Y300001-
4		208-62-73330	Seat	8	Y300001-
5		01010-81235	Bolt	8	Y300001-
6		01643-31232	Washer	8	Y300001-
7		207-62-31330	Clamp	1	Y300001-
8		01010-81235	Bolt	2	Y300001-
9		01643-31232	Washer	2	Y300001-
10		207-62-54760	Clamp	1	Y300001-
11		01010-81235	Bolt	2	Y300001-
12		01643-31232	Washer	2	Y300001-
13		207-62-74140	Tube	2	Y300001-
14		207-62-52350	Clamp	4	Y300001-
15		208-62-73330	Seat	4	Y300001-
16		01010-81235	Bolt	8	Y300001-
17		01643-31232	Washer	8	Y300001-
18		207-62-31330	Clamp	4	Y300001-
19		01010-81235	Bolt	4	Y300001-
20		01643-31232	Washer	4	Y300001-
21		07372-21040	Bolt	8	Y300001-
22		01643-51032	Washer	8	Y300001-
23		07000-53035	O-ring	2	Y300001-

PC300-8 (FEN01263-00)

FIG. T1110-014005 Boom, 100 Hours Greasing Type, For Machine With WEBASTO Coolant Heater, Cylinder Pin and Working Lamp

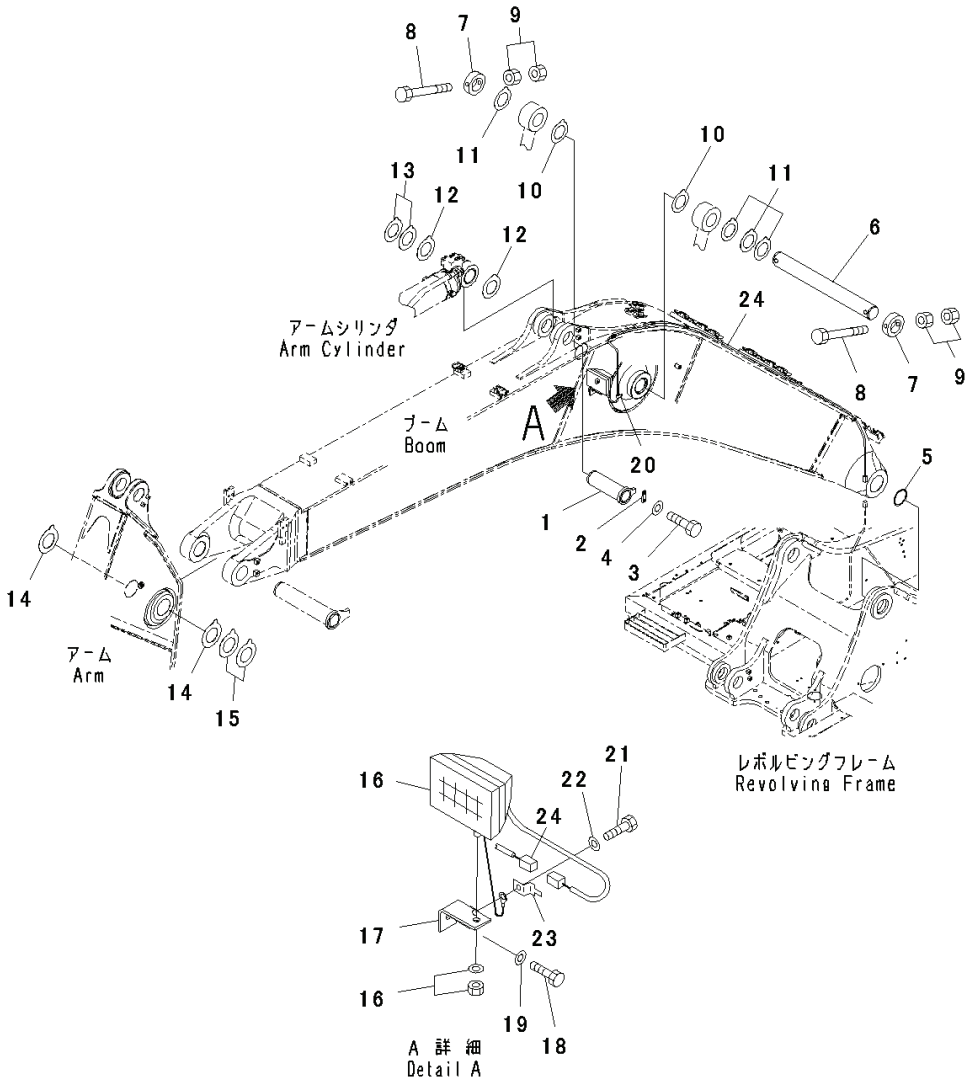

Index	Code	Part Number	Descreption	Qty	Serial Number
1		207-70-61192	Pin	1	Y300001-
2		205-70-66581	Plate	1	Y300001-
3		01010-81235	Bolt	2	Y300001-
4		01643-31232	Washer	2	Y300001-
5		07145-10110	Seal, Dust	2	Y300001-
6		207-70-31172	Pin	1	Y300001-
7		207-70-31242	Plate	2	Y300001-
8		207-70-13340	Bolt	2	Y300001-
9		01580-12419	Nut	4	Y300001-
10		207-70-31340	Spacer, T=0.8mm	2	Y300001-
11		207-70-51320	Spacer, T=1.5mm	5	Y300001-
12		207-70-11340	Spacer, T=0.8mm	3	Y300001-
13		207-70-11350	Spacer, T=1.5mm	2	Y300001-
14		207-70-11360	Spacer, T=1.0mm	2	Y300001-
15		207-70-11370	Spacer, T=1.5mm	2	Y300001-
16		21T-06-32810	Working Lamp Assembly, 24volt, 70watt	1	Y300001-
		421-06-23330	• Bulb, 70watt	1	Y300001-
17		20Y-06-21551	Bracket	1	Y300001-
18		01010-81430	Bolt	1	Y300001-
19		01643-31445	Washer	1	Y300001-
20		04434-51012	Clip	1	Y300001-
21		01010-81220	Bolt	2	Y300001-
22		01643-31232	Washer	2	Y300001-
23		08193-20012	Clip	1	Y300001-
24		207-06-75161	Wiring Harness	1	Y300001-

PC300-8 (FEN01263-00)

FIG. T1110-005006A Additional Piping, For Machine With Webasto Coolant Heater

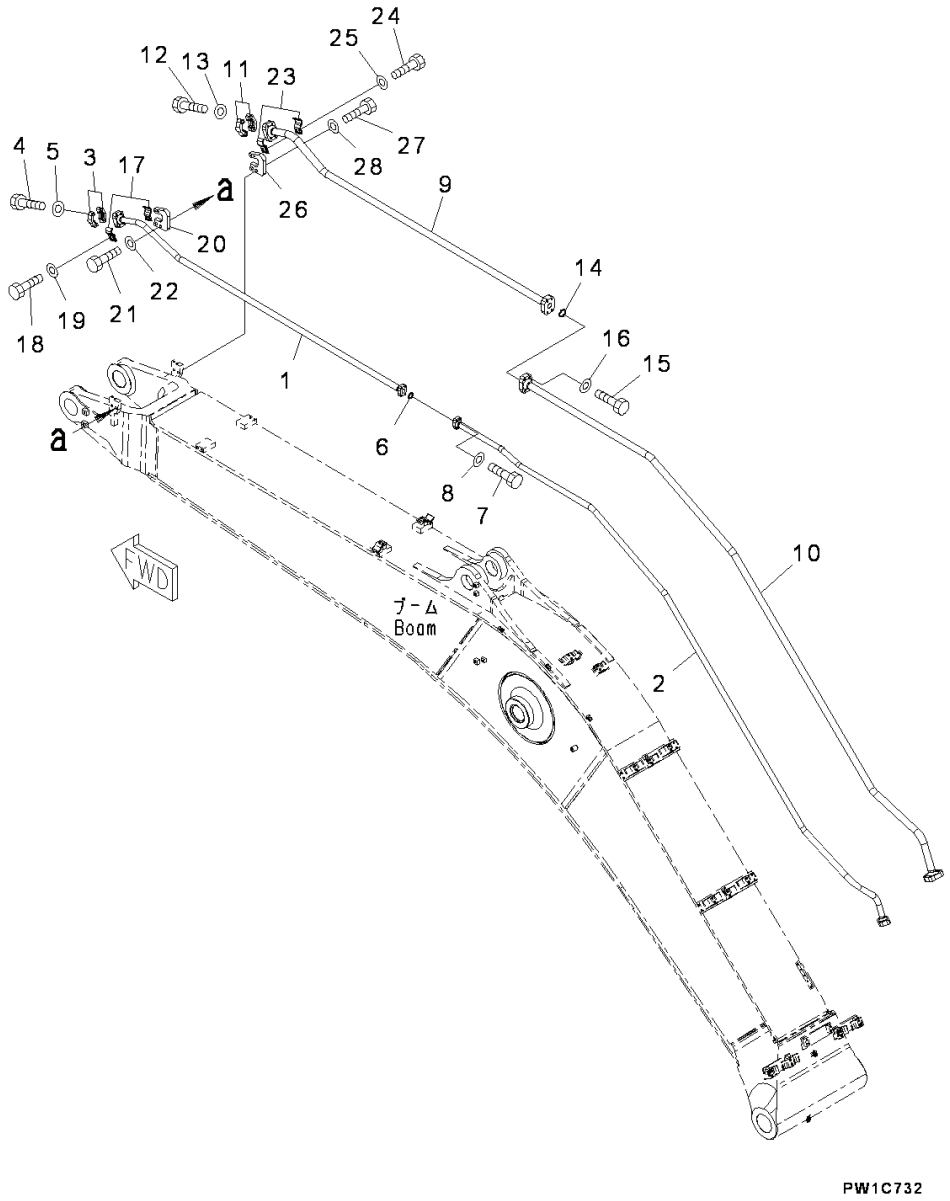

Index	Code	Part Number	Descreption	Qty	Serial Number
		Note: This list covers following specifications. 6.5m, Strengthened, 1-attachment, 100 Hours Greasing Type For Machine with WEBASTO Coolant Heater			
1		207-970-7110	Tube	1	Y300001-
2		207-970-7130	Tube	1	Y300001-
3		07371-51260	Flange	2	Y300001-
4		01010-81245	Bolt	4	Y300001-
5		01643-31232	Washer	4	Y300001-
6		07000-53035	O-ring	1	Y300001-
7		01010-81040	Bolt	4	Y300001-
8		01643-31032	Washer	4	Y300001-
9		207-970-7120	Tube	1	Y300001-
10		207-970-7140	Tube	1	Y300001-
11		07371-51470	Flange, Split	2	Y300001-
12		01010-81455	Bolt	4	Y300001-
13		01643-31445	Washer	4	Y300001-
14		07000-53048	O-ring	1	Y300001-
15		01010-81455	Bolt	4	Y300001-
16		01643-31445	Washer	4	Y300001-
17		208-970-7220	Clamp	2	Y300001-
18		01010-81235	Bolt	2	Y300001-
19		01643-31232	Washer	2	Y300001-
20		207-970-7151	Bracket	1	Y300001-
21		01010-81655	Bolt	2	Y300001-
22		01643-31645	Washer	2	Y300001-
23		208-970-7210	Clamp	2	Y300001-
24		01010-81235	Bolt	2	Y300001-
25		01643-31232	Washer	2	Y300001-
26		207-970-7151	Bracket	1	Y300001-
27		01010-81655	Bolt	2	Y300001-
28		01643-31645	Washer	2	Y300001-

PC300-8 (FEN01263-00)

FIG. T1120-003001A Boom Cylinder, 100 Hours Greasing Type, Boom Cylinder, LHS

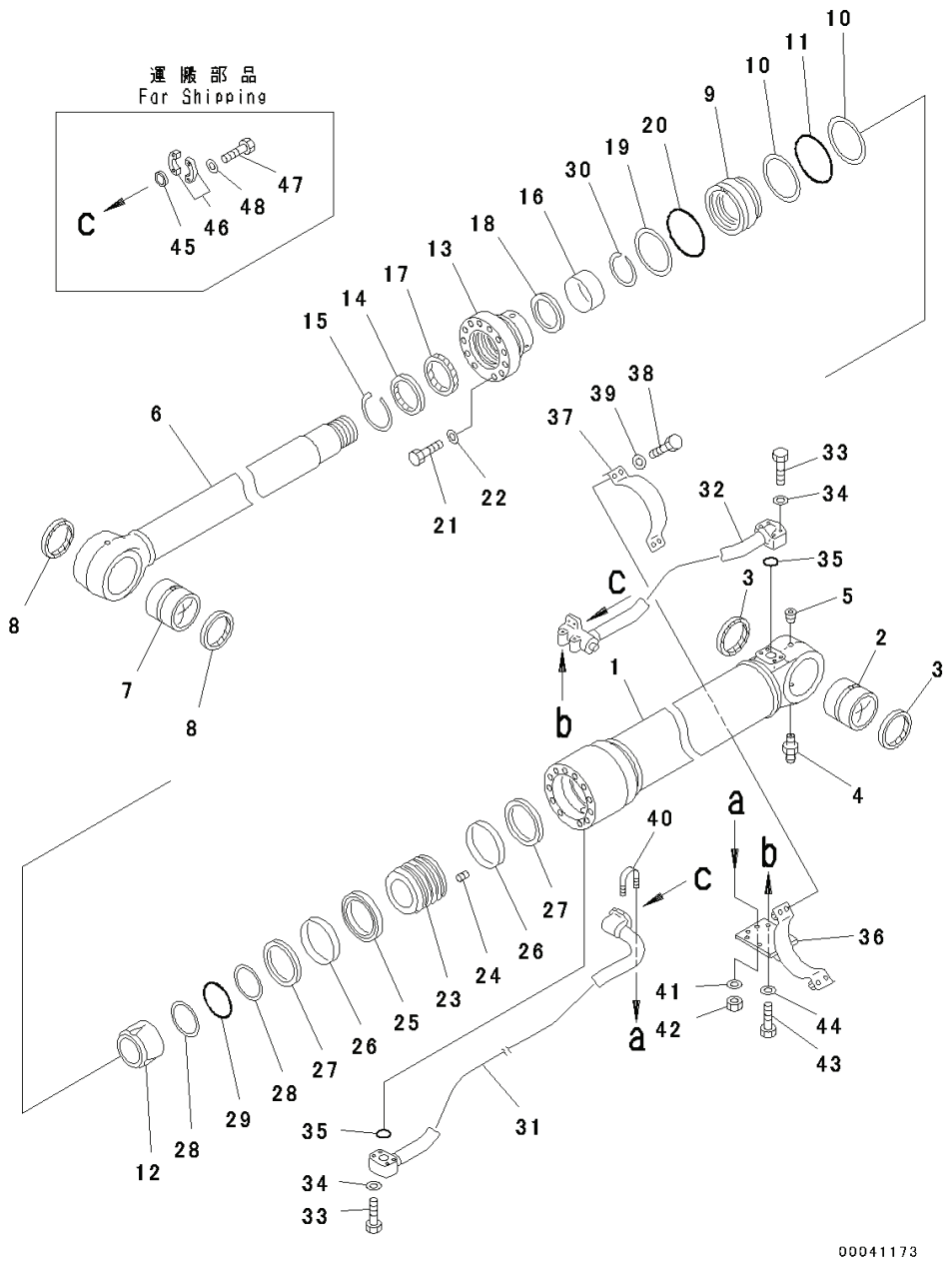

Index	Code	Part Number	Descreption	Qty	Serial Number
		707-01-XC581	Cylinder	1	Y300001-
1		707-13-14580	• Cylinder	1	Y300001-
2		707-76-90390	• Bushing	1	Y300001-
3		07145-00090	• Seal, Dust, (Kit : K04)	2	Y300001-
4		07020-00000	• Fitting, Grease	1	Y300001-
5		07043-00108	• Plug, Taper	1	Y300001-
6		707-58-10720	• Rod	1	Y300001-
7		707-76-10130	• Bushing	1	Y300001-
8		07145-00100	• Seal, Dust, (Kit : K04)	2	Y300001-
9		707-71-34800	• Collar	1	Y300001-
10		707-35-91420	• Ring, Back-up, (Kit : K04)	2	Y300001-
11		07000-15130	• O-ring, (Kit : K04)	1	Y300001-
12		707-71-61090	• Plunger	1	Y300001-
13		707-27-14890	• Head	1	Y300001-
14		176-63-56170	• Seal, Dust, (Kit : K04)	1	Y300001-
15		07179-13114	• Ring, Snap	1	Y300001-
16		707-52-90781	• Bushing	1	Y300001-
17		707-51-10030	• Packing, Rod, (Kit : K04)	1	Y300001-
18		707-51-10640	• Ring, Buffer, (Kit : K04)	1	Y300001-
19		707-35-91420	• Ring, Back-up, (Kit : K04)	1	Y300001-
20		07000-15130	• O-ring, (Kit : K04)	1	Y300001-
21		01010-81875	• Bolt	12	Y300001-
22		707-41-11840	• Washer	12	Y300001-
23		707-36-14650	• Piston	1	Y300001-
24		01310-01216	• Screw	1	Y300001-
25		707-44-14180	• Ring, Piston, (Kit : K04)	1	Y300001-
26		707-39-14110	• Ring, Wear, (Kit : K04)	2	Y300001-
27		707-44-14910	• Ring	2	Y300001-
28		07001-05090	• Ring, Back-up, (Kit : K04)	2	Y300001-
29		07000-15090	• O-ring, (Kit : K04)	1	Y300001-
30		707-75-10160	• Ring, Snap	1	Y300001-
31		707-86-11580	Tube	1	Y300001-
32		207-63-54580	Tube	1	Y300001-
33		07372-21060	Bolt	8	Y300001-
34		01643-51032	Washer	8	Y300001-
35		07000-13035	O-ring, (Kit : K04)	2	Y300001-
36		207-63-54590	Bracket	1	Y300001-
37		707-88-21370	Band	1	Y300001-
38		07372-21240	Bolt	4	Y300001-
39		01643-51232	Washer	4	Y300001-

PC300-8 (FEN01263-00)

FIG. T1120-003001A Boom Cylinder, 100 Hours Greasing Type, Boom Cylinder, LHS

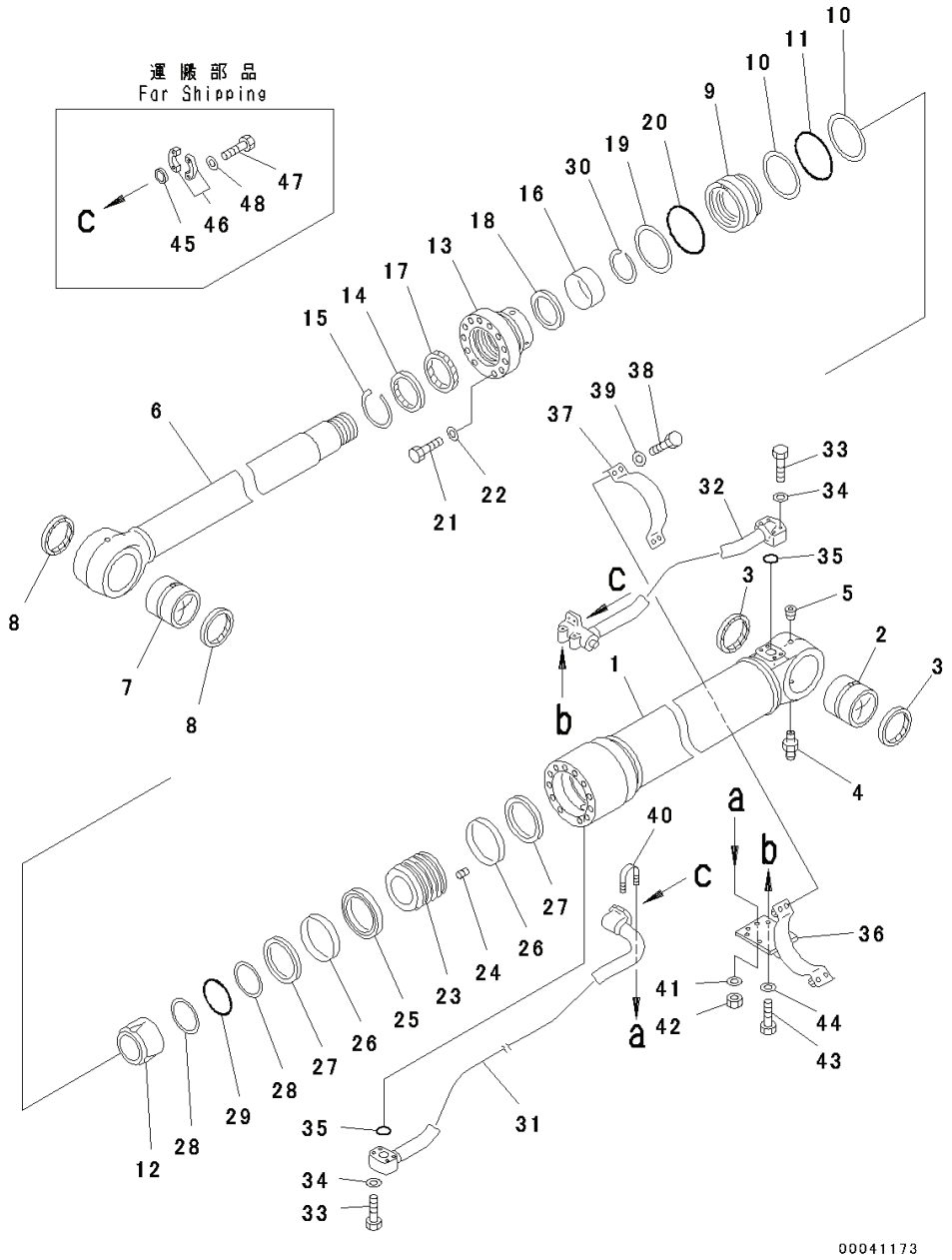

Index	Code	Part Number	Descreption	Qty	Serial Number
40		07283-33442	Clip .	1	Y300001-
41		01643-31032	Washer .	2	Y300001-
42		01597-01009	Nut .	2	Y300001-
43		01010-81025	Bolt .	2	Y300001-
44		01643-31032	Washer .	2	Y300001-
45		707-88-33040	Cap .	2	Y300001-
46		07371-31049	Flange, Split	4	Y300001-
47		07372-21035	Bolt .	8	Y300001-
48		01643-51032	Washer .	8	Y300001-

PC300-8 (FEN01263-00)

FIG. T1120-003002A Boom Cylinder, 100 Hours Greasing Type, Boom Cylinder, RHS

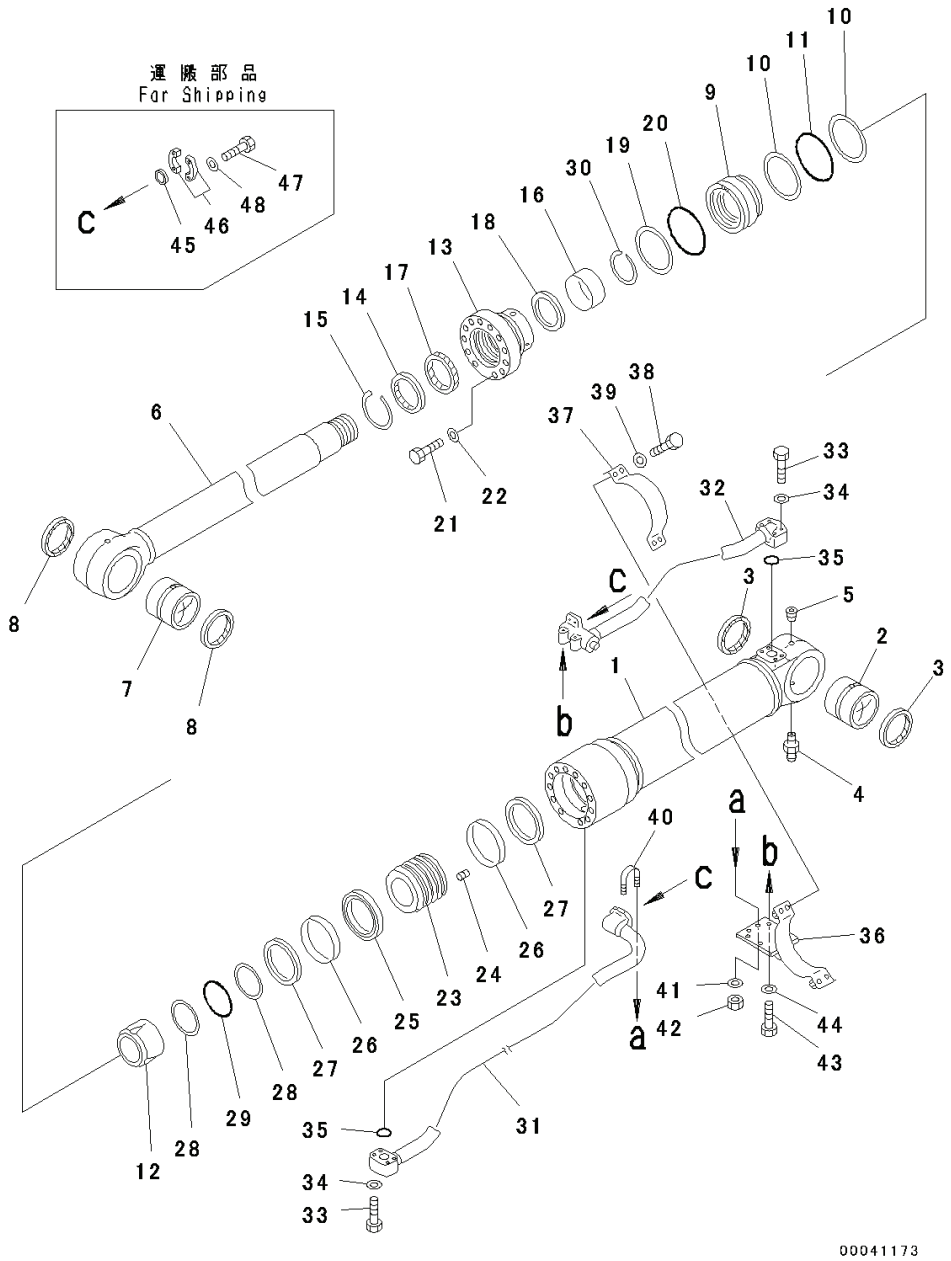

Index	Code	Part Number	Descreption	Qty	Serial Number
		707-01-XC591	Cylinder	1	Y300001-
1		707-13-14580	• Cylinder	1	Y300001-
2		707-76-90390	• Bushing	1	Y300001-
3		07145-00090	• Seal, Dust, (Kit : K04)	2	Y300001-
4		07020-00000	• Fitting, Grease	1	Y300001-
5		07043-00108	• Plug, Taper	1	Y300001-
6		707-58-10720	• Rod	1	Y300001-
7		707-76-10130	• Bushing	1	Y300001-
8		07145-00100	• Seal, Dust, (Kit : K04)	2	Y300001-
9		707-71-34800	• Collar	1	Y300001-
10		707-35-91420	• Ring, Back-up, (Kit : K04)	2	Y300001-
11		07000-15130	• O-ring, (Kit : K04)	1	Y300001-
12		707-71-61090	• Plunger	1	Y300001-
13		707-27-14890	• Head	1	Y300001-
14		176-63-56170	• Seal, Dust, (Kit : K04)	1	Y300001-
15		07179-13114	• Ring, Snap	1	Y300001-
16		707-52-90781	• Bushing	1	Y300001-
17		707-51-10030	• Packing, Rod, (Kit : K04)	1	Y300001-
18		707-51-10640	• Ring, Buffer, (Kit : K04)	1	Y300001-
19		707-35-91420	• Ring, Back-up, (Kit : K04)	1	Y300001-
20		07000-15130	• O-ring, (Kit : K04)	1	Y300001-
21		01010-81875	• Bolt	12	Y300001-
22		707-41-11840	• Washer	12	Y300001-
23		707-36-14650	• Piston	1	Y300001-
24		01310-01216	• Screw	1	Y300001-
25		707-44-14180	• Ring, Piston, (Kit : K04)	1	Y300001-
26		707-39-14110	• Ring, Wear, (Kit : K04)	2	Y300001-
27		707-44-14910	• Ring	2	Y300001-
28		07001-05090	• Ring, Back-up, (Kit : K04)	2	Y300001-
29		07000-15090	• O-ring, (Kit : K04)	1	Y300001-
30		707-75-10160	• Ring, Snap	1	Y300001-
31		707-86-11590	Tube	1	Y300001-
32		207-63-54680	Tube	1	Y300001-
33		07372-21060	Bolt	8	Y300001-
34		01643-51032	Washer	8	Y300001-
35		07000-13035	O-ring, (Kit : K04)	2	Y300001-
36		207-63-54590	Bracket	1	Y300001-
37		707-88-21370	Band	1	Y300001-
38		07372-21240	Bolt	4	Y300001-
39		01643-51232	Washer	4	Y300001-

PC300-8 (FEN01263-00)

FIG. T1120-003002A Boom Cylinder, 100 Hours Greasing Type, Boom Cylinder, RHS

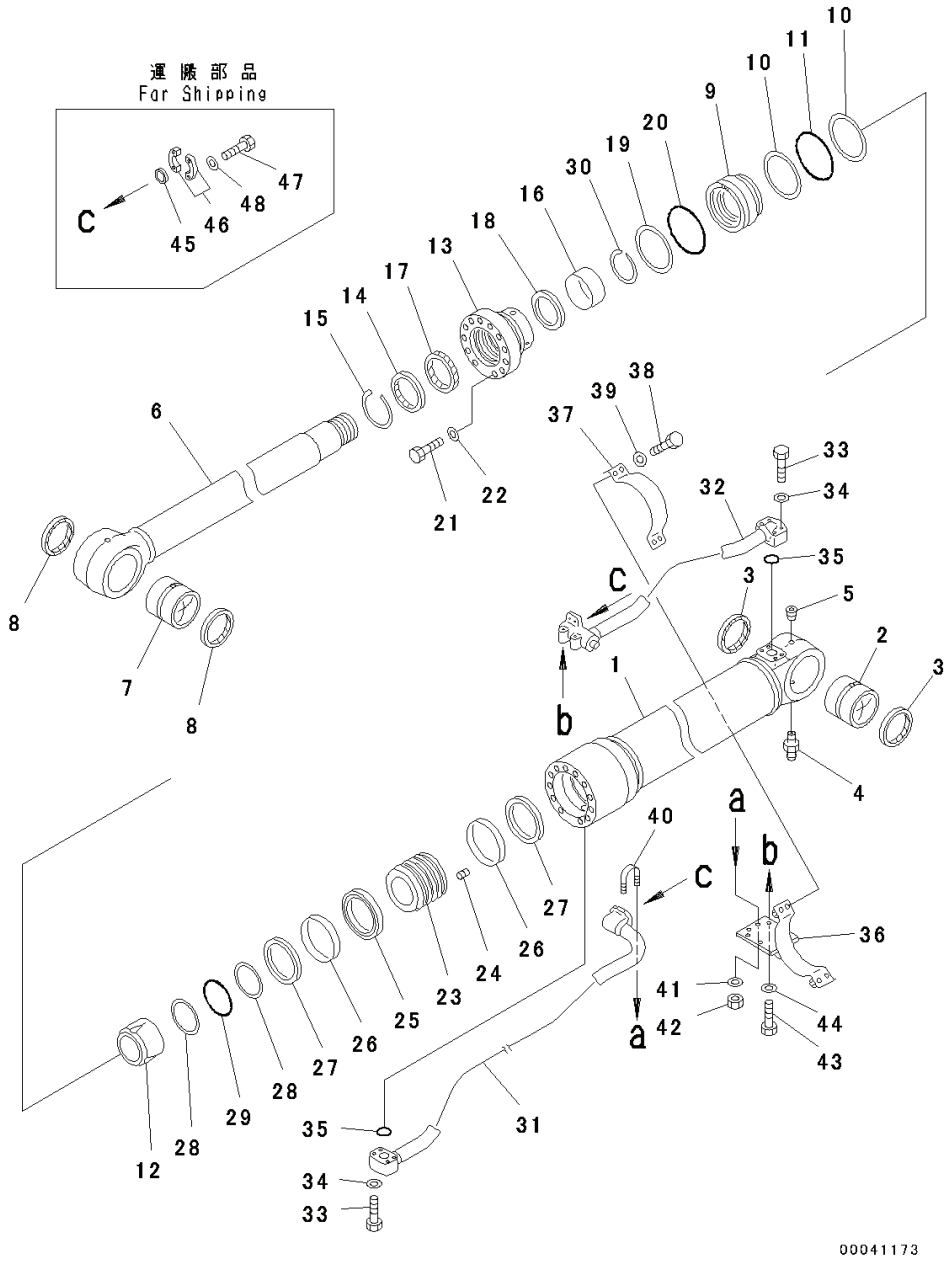

Index	Code	Part Number	Descreption	Qty	Serial Number
40		07283-33442	Clip .	1	Y300001-
41		01643-31032	Washer .	2	Y300001-
42		01597-01009	Nut .	2	Y300001-
43		01010-81025	Bolt .	2	Y300001-
44		01643-31032	Washer .	2	Y300001-
45		707-88-33040	Cap .	2	Y300001-
46		07371-31049	Flange, Split	4	Y300001-
47		07372-21035	Bolt .	8	Y300001-
48		01643-51032	Washer .	8	Y300001-

PC300-8 (FEN01263-00)

FIG. T1120-005001 Boom Cylinder, 100 Hours Greasing Type, Extreme Cold Area Arrangement (-50deg C), Boom Cylinder, LHS

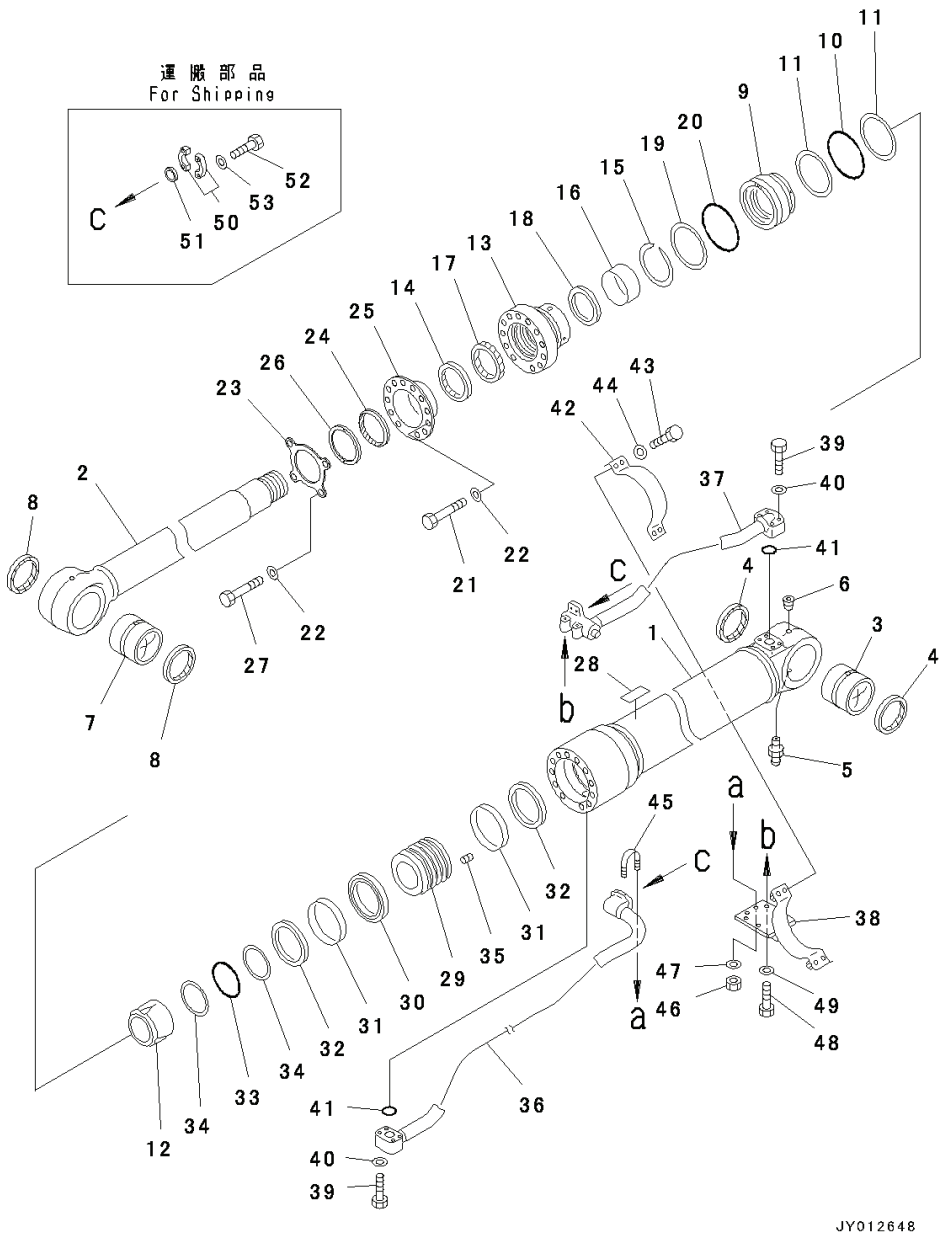

Index	Code	Part Number	Descreption	Qty	Serial Number
		707-01-XH101	Cylinder Assembly	1	Y300001-
1		707-13-14580	• Cylinder	1	Y300001-
2		721-58-10010	• Rod	1	Y300001-
3		707-76-90390	• Bushing	1	Y300001-
4		07145-10090	• Seal, Dust, (Kit : K06)	2	Y300001-
5		07020-00000	• Fitting, Grease	1	Y300001-
6		07043-00108	• Plug, Taper	1	Y300001-
7		707-76-10130	• Bushing	1	Y300001-
8		07145-10100	• Seal, Dust, (Kit : K06)	2	Y300001-
9		707-71-34800	• Collar	1	Y300001-
10		07000-55130	• O-ring, (Kit : K06)	1	Y300001-
11		707-35-91420	• Ring, Back-up, (Kit : K06)	2	Y300001-
12		707-71-61090	• Plunger	1	Y300001-
13		707-27-14890	• Head	1	Y300001-
14		176-63-56170	• Seal, Dust, (Kit : K06)	1	Y300001-
15		707-75-10160	• Ring, Snap	1	Y300001-
16		707-52-90781	• Bushing	1	Y300001-
17		707-51-10730	• Packing, Rod, (Kit : K06)	1	Y300001-
18		707-51-10640	• Ring, Buffer, (Kit : K06)	1	Y300001-
19		707-35-91420	• Ring, Back-up, (Kit : K06)	1	Y300001-
20		07000-55130	• O-ring, (Kit : K06)	1	Y300001-
21		01011-81800	• Bolt	8	Y300001-
22		707-41-11840	• Washer	12	Y300001-
23		707-88-05440	• Plate	1	Y300001-
24		707-56-10651	• Seal, Dust	1	Y300001-
25		707-88-05430	• Collar	1	Y300001-
26		707-88-36921	• Ring	1	Y300001-
27		01011-81805	• Bolt	4	Y300001-
28		700-11-31980	• Plate, Name (Limited Supply)	1	Y300001-
29		707-36-14650	• Piston	1	Y300001-
30		707-44-14180	• Ring, Piston, (Kit : K06)	1	Y300001-
31		707-39-14110	• Ring, Wear, (Kit : K06)	2	Y300001-
32		707-44-14910	• Ring	2	Y300001-
33		07000-55090	• O-ring, (Kit : K06)	1	Y300001-
34		07001-05090	• Ring, Back-up, (Kit : K06)	2	Y300001-
35		01310-01216	• Screw	1	Y300001-
36		707-86-11580	Tube	1	Y300001-
37		207-63-54580	Tube	1	Y300001-
38		207-63-54590	Bracket	1	Y300001-

PC300-8 (FEN01263-00)

FIG. T1120-005001 Boom Cylinder, 100 Hours Greasing Type, Extreme Cold Area Arrangement (-50deg C), Inner Parts, LHS

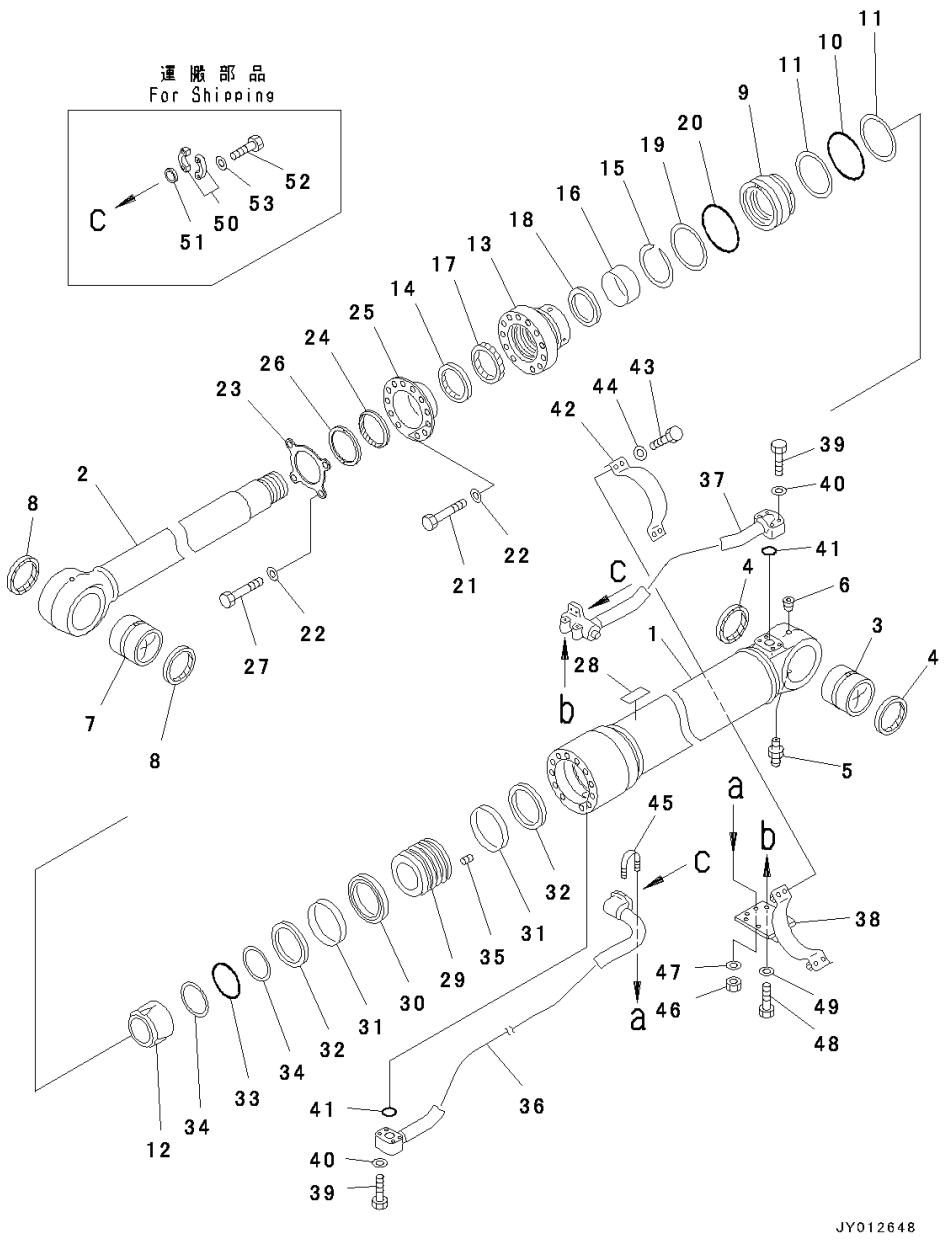

Index	Code	Part Number	Descreption	Qty	Serial Number
39		07372-21060	Bolt	8	Y300001-
40		01643-51032	Washer	8	Y300001-
41		07000-53035	O-ring, (Kit : K06)	2	Y300001-
42		707-88-21370	Band	1	Y300001-
43		07372-21240	Bolt	4	Y300001-
44		01643-51232	Washer	4	Y300001-
45		07283-33442	Clip	1	Y300001-
46		01597-01009	Nut	2	Y300001-
47		01643-31032	Washer	2	Y300001-
48		01010-81025	Bolt	2	Y300001-
49		01643-31032	Washer	2	Y300001-
50		07371-31049	Flange, Split	4	Y300001-
51		707-88-33040	Cap	2	Y300001-
52		07372-21035	Bolt	8	Y300001-
53		01643-51032	Washer	8	Y300001-

PC300-8 (FEN01263-00)

FIG. T1120-005002 Boom Cylinder, 100 Hours Greasing Type, Extreme Cold Area Arrangement (-50deg C), Boom Cylinder, RHS

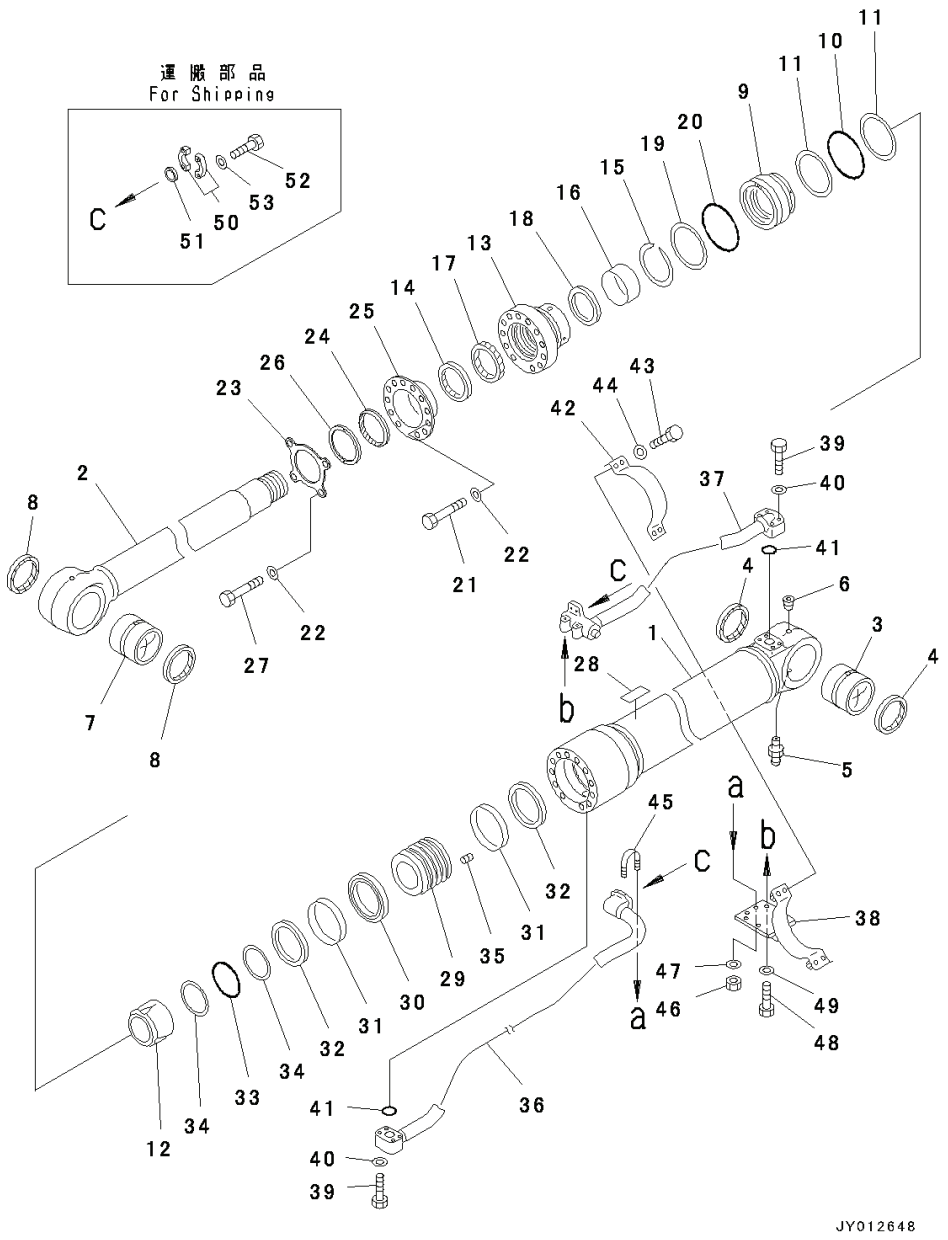

Index	Code	Part Number	Descreption	Qty	Serial Number
		707-01-XH111	Cylinder Assembly	1	Y300001-
1		707-13-14580	• Cylinder	1	Y300001-
2		721-58-10010	• Rod	1	Y300001-
3		707-76-90390	• Bushing	1	Y300001-
4		07145-10090	• Seal, Dust, (Kit : K06)	2	Y300001-
5		07020-00000	• Fitting, Grease	1	Y300001-
6		07043-00108	• Plug, Taper	1	Y300001-
7		707-76-10130	• Bushing	1	Y300001-
8		07145-10100	• Seal, Dust, (Kit : K06)	2	Y300001-
9		707-71-34800	• Collar	1	Y300001-
10		07000-55130	• O-ring, (Kit : K06)	1	Y300001-
11		707-35-91420	• Ring, Back-up, (Kit : K06)	2	Y300001-
12		707-71-61090	• Plunger	1	Y300001-
13		707-27-14890	• Head	1	Y300001-
14		176-63-56170	• Seal, Dust, (Kit : K06)	1	Y300001-
15		707-75-10160	• Ring, Snap	1	Y300001-
16		707-52-90781	• Bushing	1	Y300001-
17		707-51-10730	• Packing, Rod, (Kit : K06)	1	Y300001-
18		707-51-10640	• Ring, Buffer, (Kit : K06)	1	Y300001-
19		707-35-91420	• Ring, Back-up, (Kit : K06)	1	Y300001-
20		07000-55130	• O-ring, (Kit : K06)	1	Y300001-
21		01011-81800	• Bolt	8	Y300001-
22		707-41-11840	• Washer	12	Y300001-
23		707-88-05440	• Plate	1	Y300001-
24		707-56-10651	• Seal, Dust, (Kit : K06)	1	Y300001-
25		707-88-05430	• Collar	1	Y300001-
26		707-88-36921	• Ring	1	Y300001-
27		01011-81805	• Bolt	4	Y300001-
28		700-11-31980	• Plate, Name (Limited Supply)	1	Y300001-
29		707-36-14650	• Piston	1	Y300001-
30		707-44-14180	• Ring, Piston, (Kit : K06)	1	Y300001-
31		707-39-14110	• Ring, Wear, (Kit : K06)	2	Y300001-
32		707-44-14910	• Ring	2	Y300001-
33		07000-55090	• O-ring, (Kit : K06)	1	Y300001-
34		07001-05090	• Ring, Back-up, (Kit : K06)	2	Y300001-
35		01310-01216	• Screw	1	Y300001-
36		707-86-11590	Tube	1	Y300001-
37		207-63-54680	Tube	1	Y300001-
38		207-63-54590	Bracket	1	Y300001-

PC300-8 (FEN01263-00)

FIG. T1120-005002 Boom Cylinder, 100 Hours Greasing Type, Extreme Cold Area Arrangement (-50deg C), Boom Cylinder, RHS

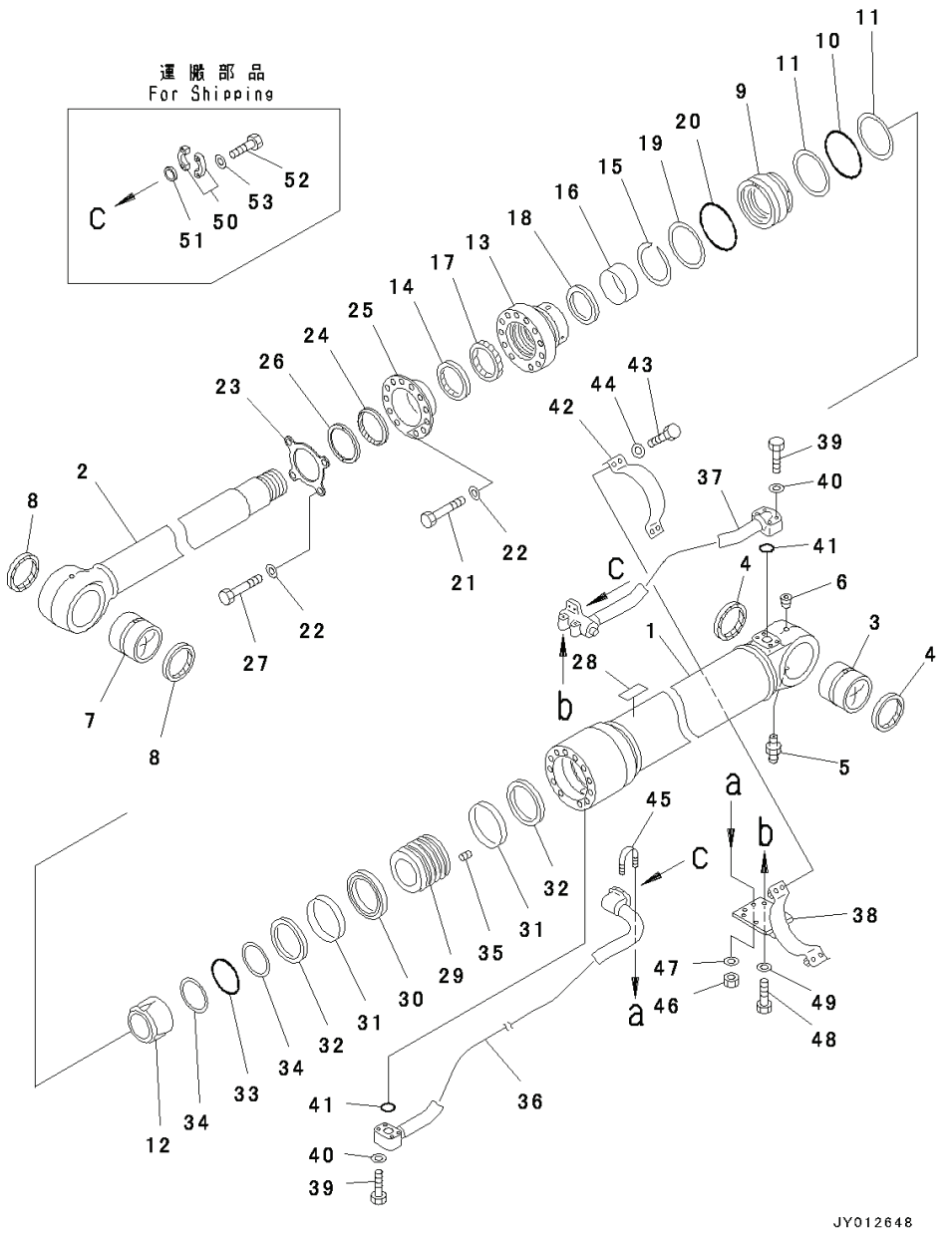

Index	Code	Part Number	Descreption	Qty	Serial Number
39		07372-21060	Bolt	8	Y300001-
40		01643-51032	Washer	8	Y300001-
41		07000-53035	O-ring, (Kit : K06)	2	Y300001-
42		707-88-21370	Band	1	Y300001-
43		07372-21240	Bolt	4	Y300001-
44		01643-51232	Washer	4	Y300001-
45		07283-33442	Clip	1	Y300001-
46		01597-01009	Nut	2	Y300001-
47		01643-31032	Washer	2	Y300001-
48		01010-81025	Bolt	2	Y300001-
49		01643-31032	Washer	2	Y300001-
50		07371-31049	Flange, Split	4	Y300001-
51		707-88-33040	Cap	2	Y300001-
52		07372-21035	Bolt	8	Y300001-
53		01643-51032	Washer	8	Y300001-

PC300-8 (FEN01263-00)

FIG. T1140-004001A Arm Cylinder, 100 Hours Greasing Type

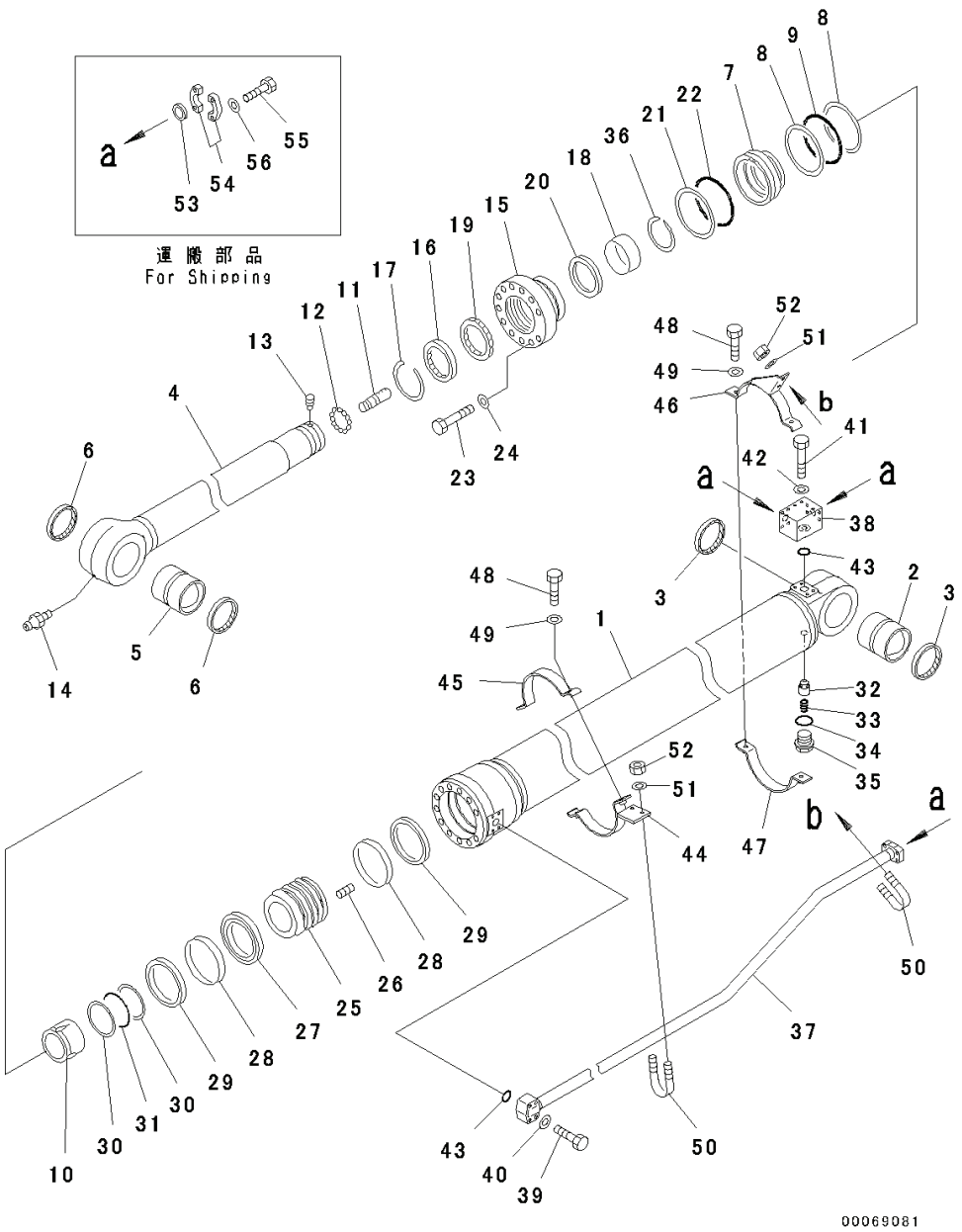

Index	Code	Part Number	Descreption	Qty	Serial Number
		707-01-XC601	Cylinder Assembly	1	Y300001-
1		707-13-16710	• Cylinder	1	Y300001-
2		707-76-10130	• Bushing	1	Y300001-
3		07145-00100	• Seal, Dust, (Kit : K08)	2	Y300001-
4		707-58-11360	• Rod	1	Y300001-
5		707-76-10130	• Bushing	1	Y300001-
6		07145-00100	• Seal, Dust, (Kit : K08)	2	Y300001-
7		707-71-32800	• Collar	1	Y300001-
8		707-35-91640	• Ring, Back-up, (Kit : K08)	2	Y300001-
9		07000-15150	• O-ring, (Kit : K08)	1	Y300001-
10		707-71-61130	• Plunger	1	Y300001-
11		707-71-70290	• Plunger	1	Y300001-
12		04260-00635	• Ball, Steel	12	Y300001-
13		707-71-91270	• Cap	1	Y300001-
14		07020-00000	• Fitting, Grease	1	Y300001-
15		707-27-16571	• Head	1	Y300001-
16		198-63-94170	• Seal, Dust, (Kit : K09)	1	Y300001-
17		07179-13126	• Ring, Snap	1	Y300001-
18		707-52-90850	• Bushing	1	Y300001-
19		707-51-11030	• Packing, Rod, Rod, (Kit : K08)	1	Y300001-
20		707-51-11640	• Ring, Buffer, Buffer, (Kit : K08)	1	Y300001-
21		707-35-91640	• Ring, Back-up, (Kit : K08)	1	Y300001-
22		07000-15150	• O-ring, (Kit : K08)	1	Y300001-
23		01010-82085	• Bolt	12	Y300001-
24		707-88-75310	• Washer	12	Y300001-
25		707-36-16580	• Piston	1	Y300001-
26		01310-01216	• Screw	1	Y300001-
27		707-44-16180	• Ring, Piston, (Kit : K08)	1	Y300001-
28		707-39-16120	• Ring, Wear, (Kit : K08)	2	Y300001-
29		707-44-16910	• Ring	2	Y300001-
30		07001-05100	• Ring, Back-up, (Kit : K08)	2	Y300001-
31		07000-15100	• O-ring, (Kit : K08)	1	Y300001-
32		707-83-13010	• Valve	1	Y300001-
33		07750-01628	• Spring	1	Y300001-
34		707-87-14070	• Plug	1	Y300001-
35		07002-12034	• O-ring, (Kit : K08)	1	Y300001-
36		707-75-11040	• Ring, Snap	1	Y300001-
37		707-86-11600	Tube	1	Y300001-
38		707-86-11610	Block	1	Y300001-
39		07372-21060	Bolt	4	Y300001-

PC300-8 (FEN01263-00)

FIG. T1140-004001A Arm Cylinder, 100 Hours Greasing Type

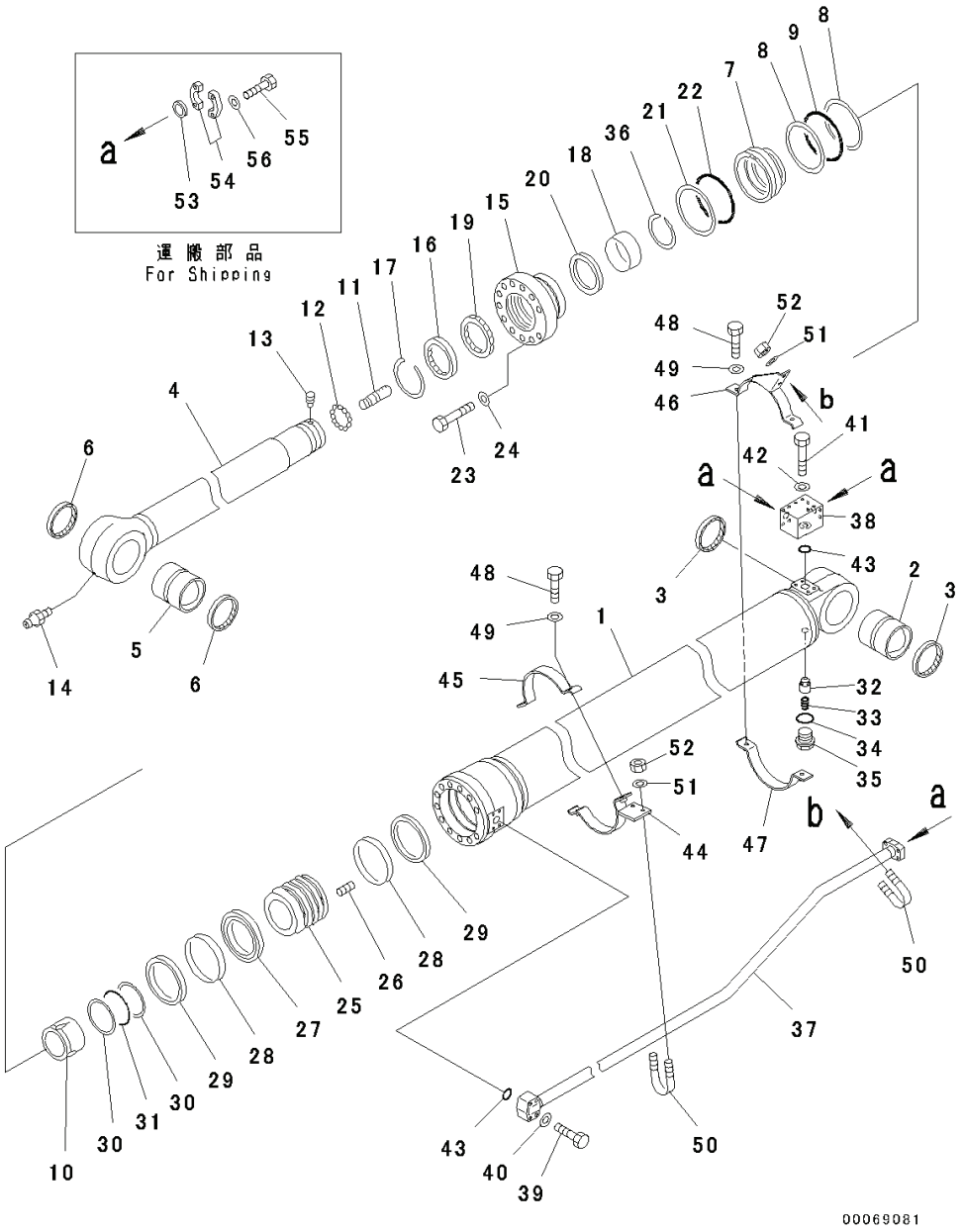

Index	Code	Part Number	Descreption	Qty	Serial Number
40		01643-51032	Washer	4	Y300001-
41		01010-81095	Bolt	4	Y300001-
42		01643-31032	Washer	4	Y300001-
43		07000-13035	O-ring, (Kit : K08)	2	Y300001-
44		707-88-22740	Bracket	1	Y300001-
45		707-88-21380	Band	1	Y300001-
46		207-63-64190	Bracket	1	Y300001-
47		707-88-21390	Band	1	Y300001-
48		01435-01235	Bolt	4	Y300001-
49		01643-51232	Washer	4	Y300001-
50		07283-33442	Clip	2	Y300001-
51		01643-31032	Washer	4	Y300001-
52		01597-01009	Nut	4	Y300001-
53		707-88-33040	Cap	3	Y300001-
54		07371-31049	Flange, Split	6	Y300001-
55		07372-21035	Bolt	12	Y300001-
56		01643-51032	Washer	12	Y300001-

PC300-8 (FEN01263-00)

FIG. T1140-005001 Arm Cylinder, 100 Hours Greasing Type, Extreme Cold Area Arrangement (-50deg C), Inner Parts

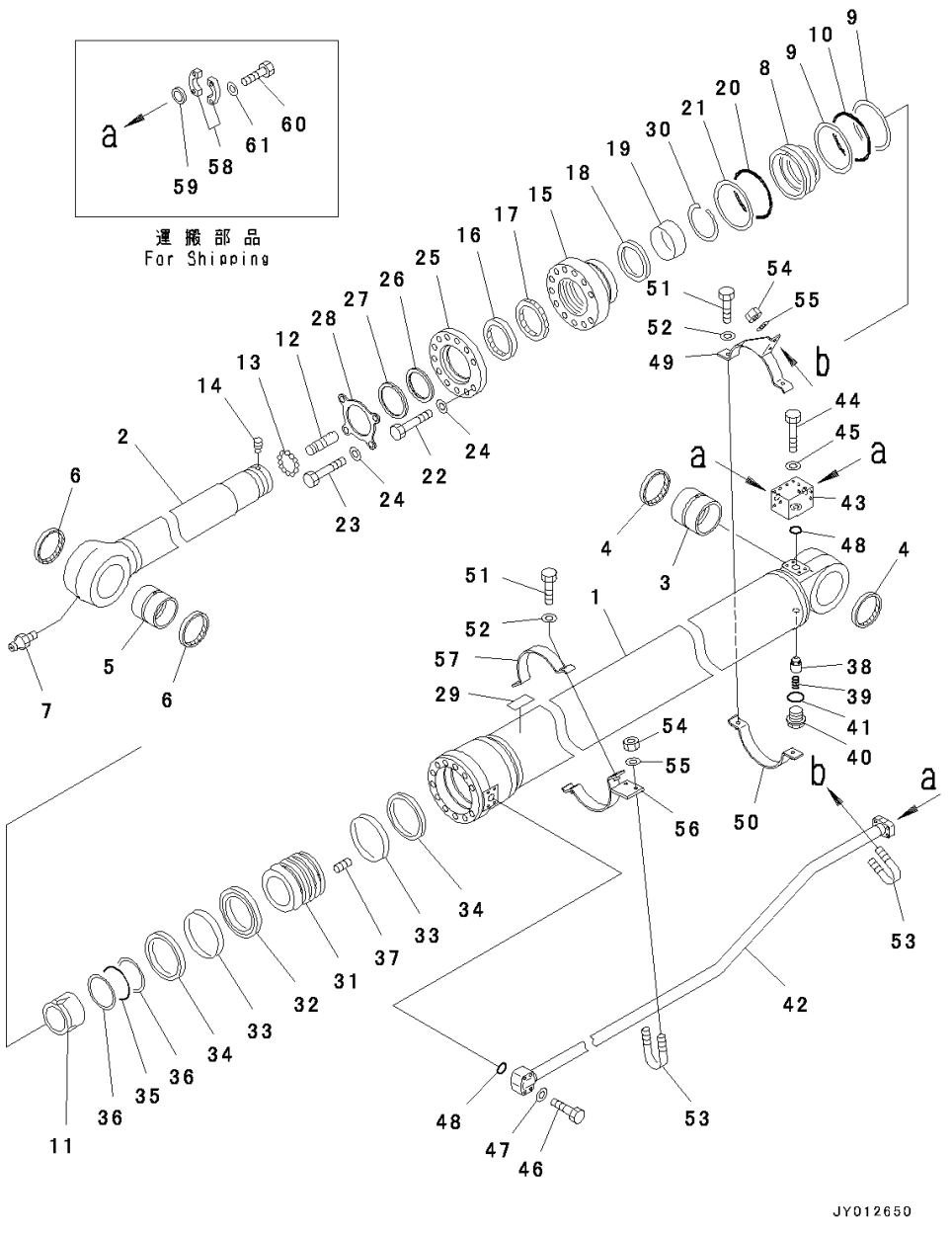

Index	Code	Part Number	Descreption	Qty	Serial Number
		707-01-XH121	Cylinder Assembly	1	Y300001-
1		707-13-16710	• Cylinder	1	Y300001-
2		707-58-11680	• Rod	1	Y300001-
3		707-76-10130	• Bushing	1	Y300001-
4		07145-10100	• Seal, Dust, (Kit : K10)	2	Y300001-
5		707-76-10130	• Bushing	1	Y300001-
6		07145-10100	• Seal, Dust, (Kit : K10)	2	Y300001-
7		07020-00000	• Fitting, Grease	1	Y300001-
8		707-71-32800	• Collar	1	Y300001-
9		707-35-91640	• Ring, Back-up, (Kit : K10)	2	Y300001-
10		07000-55150	• O-ring, (Kit : K10)	1	Y300001-
11		707-71-61130	• Plunger	1	Y300001-
12		707-71-70290	• Plunger	1	Y300001-
13		04260-00635	• Ball, Steel	12	Y300001-
14		707-71-91270	• Cap	1	Y300001-
15		707-27-16571	• Head	1	Y300001-
16		198-63-94170	• Seal, Dust, (Kit : K10)	1	Y300001-
17		707-51-11730	• Packing, Rod, (Kit : K10)	1	Y300001-
18		707-51-11640	• Ring, Buffer, (Kit : K10)	1	Y300001-
19		707-52-90850	• Bushing	1	Y300001-
20		07000-55150	• O-ring, (Kit : K10)	1	Y300001-
21		707-35-91640	• Ring, Back-up, (Kit : K10)	1	Y300001-
22		01011-82010	• Bolt	8	Y300001-
23		01011-82015	• Bolt	4	Y300001-
24		707-88-75310	• Washer	12	Y300001-
25		707-88-05210	• Collar	1	Y300001-
26		707-56-11651	• Seal, Dust, (Kit : K10)	1	Y300001-
27		707-88-36541	• Ring	1	Y300001-
28		707-88-05220	• Plate	1	Y300001-
29		700-11-31980	• Plate, Name (Limited Supply)	1	Y300001-
30		707-75-11040	• Ring, Snap	1	Y300001-
31		707-36-16580	• Piston	1	Y300001-
32		707-44-16180	• Ring, Piston, (Kit : K10)	1	Y300001-
33		707-39-16120	• Ring, Wear, (Kit : K10)	2	Y300001-
34		707-44-16910	• Ring	2	Y300001-
35		07000-55100	• O-ring, (Kit : K10)	1	Y300001-
36		07001-05100	• Ring, Back-up, (Kit : K10)	2	Y300001-
37		01310-01216	• Screw	1	Y300001-
38		707-83-13010	• Valve	1	Y300001-
39		07750-01628	• Spring	1	Y300001-

PC300-8 (FEN01263-00)

FIG. T1140-005001 Arm Cylinder, 100 Hours Greasing Type, Extreme Cold Area Arrangement (-50deg C), Inner Parts

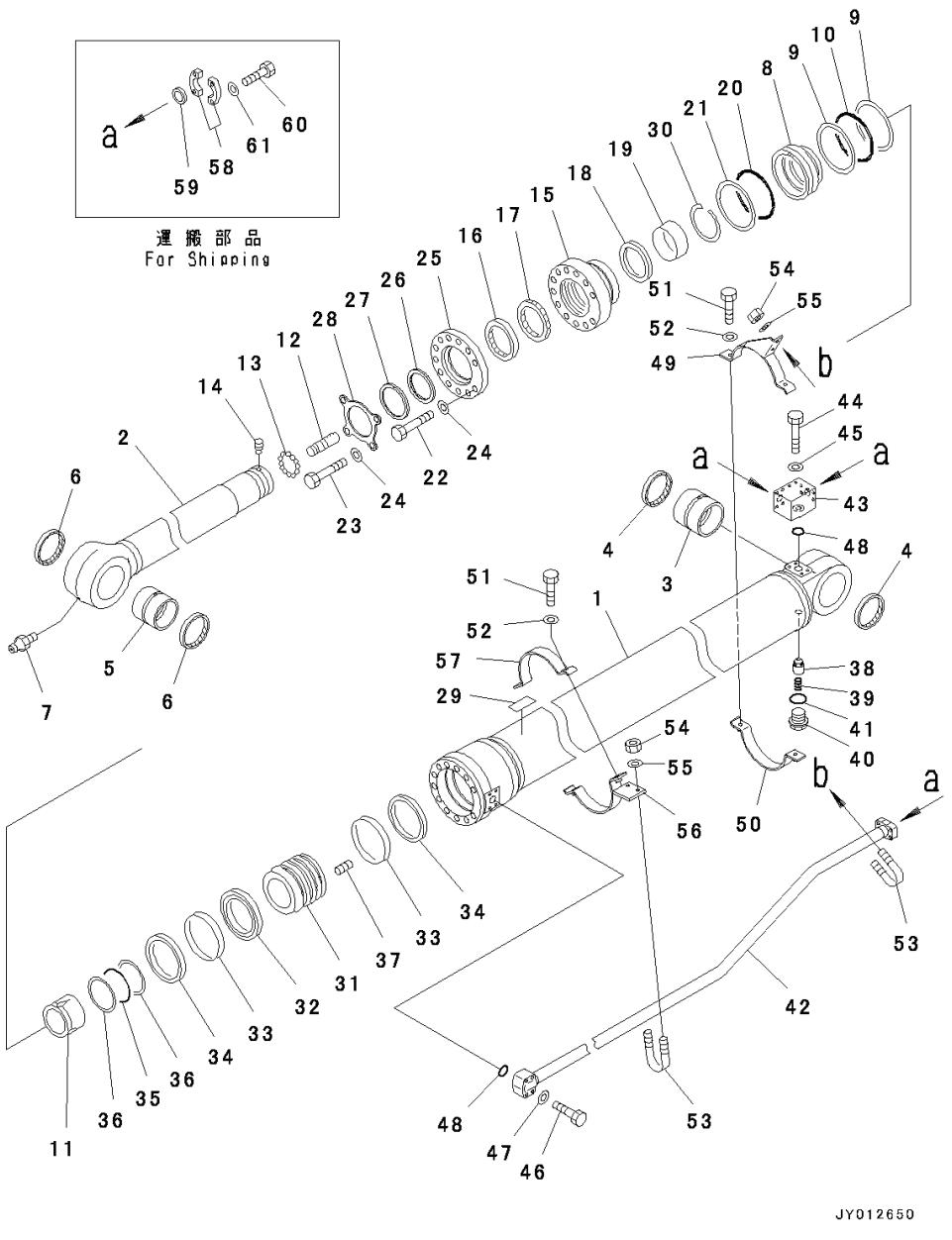

Index	Code	Part Number	Descreption	Qty	Serial Number
40		707-87-14070	• Plug	1	Y300001-
41		07002-52034	• O-ring, (Kit : K10)	1	Y300001-
42		707-86-11600	Tube	1	Y300001-
43		707-86-11610	Block	1	Y300001-
44		01010-81095	Bolt	4	Y300001-
45		01643-31032	Washer	4	Y300001-
46		07372-21060	Bolt	4	Y300001-
47		01643-51032	Washer	4	Y300001-
48		07000-53035	O-ring, (Kit : K10)	2	Y300001-
49		207-63-64190	Bracket	1	Y300001-
50		707-88-21380	Band	1	Y300001-
51		07372-21240	Bolt	4	Y300001-
52		01643-51232	Washer	4	Y300001-
53		07283-33442	Clip	2	Y300001-
54		01597-01009	Nut	4	Y300001-
55		01643-31032	Washer	4	Y300001-
56		707-88-22740	Bracket	1	Y300001-
57		707-88-21380	Band	1	Y300001-
58		07371-31049	Flange, Split	6	Y300001-
59		707-88-33040	Cap	3	Y300001-
60		07372-21035	Bolt	12	Y300001-
61		01643-51032	Washer	12	Y300001-

PC300-8 (FEN01263-00)

FIG. T1190-002001 Parts For Less Arm

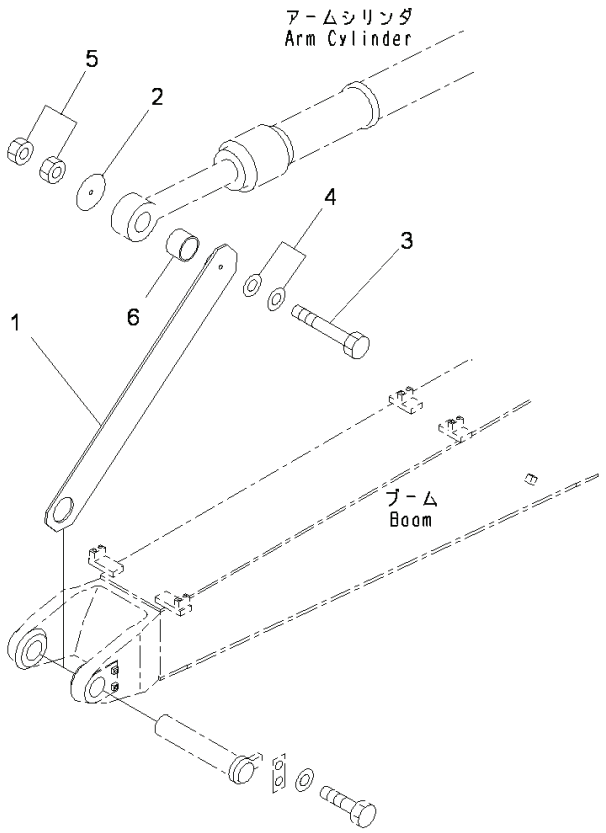

00029220

Index	Code	Part Number	Descreption	Qty	Serial Number
1		207-70-53161	Link .	1	Y300001-
2		207-70-53170	Plate .	1	Y300001-
3		01011-81260	Bolt .	1	Y300001-
4		01643-31232	Washer .	2	Y300001-
5		01580-11210	Nut .	2	Y300001-
6		207-70-53150	Collar .	3	Y300001-

FIG. T1200-001003 Arm, Bucket Link

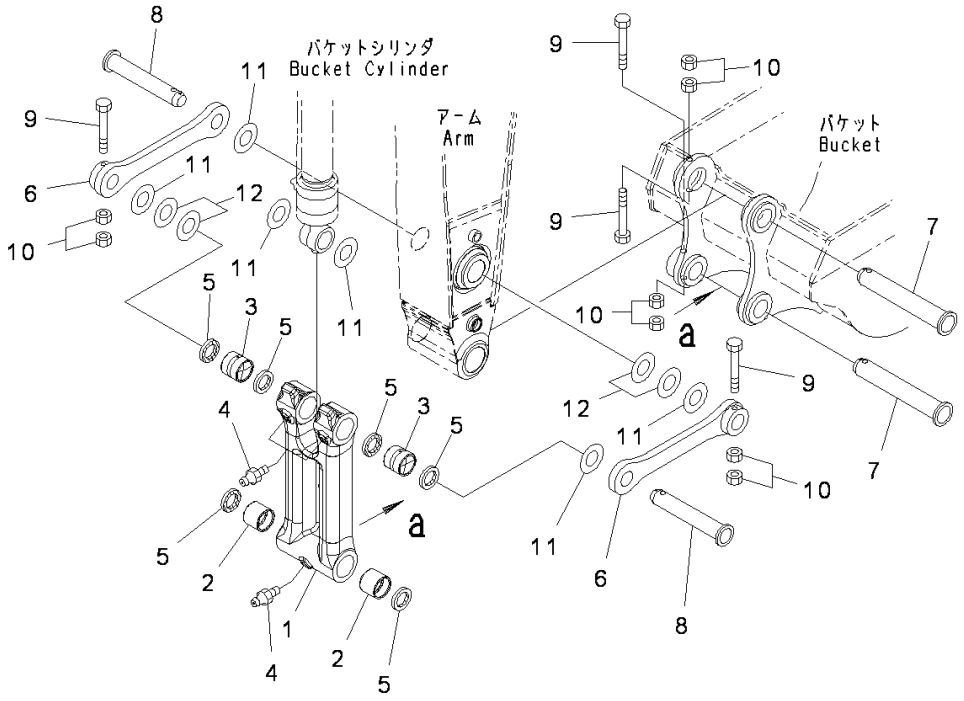

Index	Code	Part Number	Descreption	Qty	Serial Number
		Note: This list covers following specifications. 2.2m, 100 Hours Greasing Type 4.0m, 100 Hours Greasing Type 3.2m, Strengthened, 1-attachment, 100 Hours Greasing Type 2.6m, 1-attachment, 100 Hours Greasing Type 2.6m, 100 Hours Greasing Type			
		207-70-00480	Link Assembly	1	Y300001-
1	C1		• Link	1	Y300001-
2		207-70-33160	• Bushing	2	Y300001-
3		207-70-33160	• Bushing	2	Y300001-
4		07020-00000	• Fitting, Grease	3	Y300001-
5		207-70-72120	• Seal, Dust	6	Y300001-
6		207-70-33120	Link	2	Y300001-
7		207-70-73210	Pin	2	Y300001-
8		207-70-33141	Pin	2	Y300001-
9		208-70-73160	Bolt	4	Y300001-
10		01580-12419	Nut	8	Y300001-
11		207-70-24190	Spacer, T=0.8mm	8	Y300001-
12		207-70-24210	Spacer, T=1.5mm	4	Y300001-

FIG. T1200-003005 Arm, Additional Piping

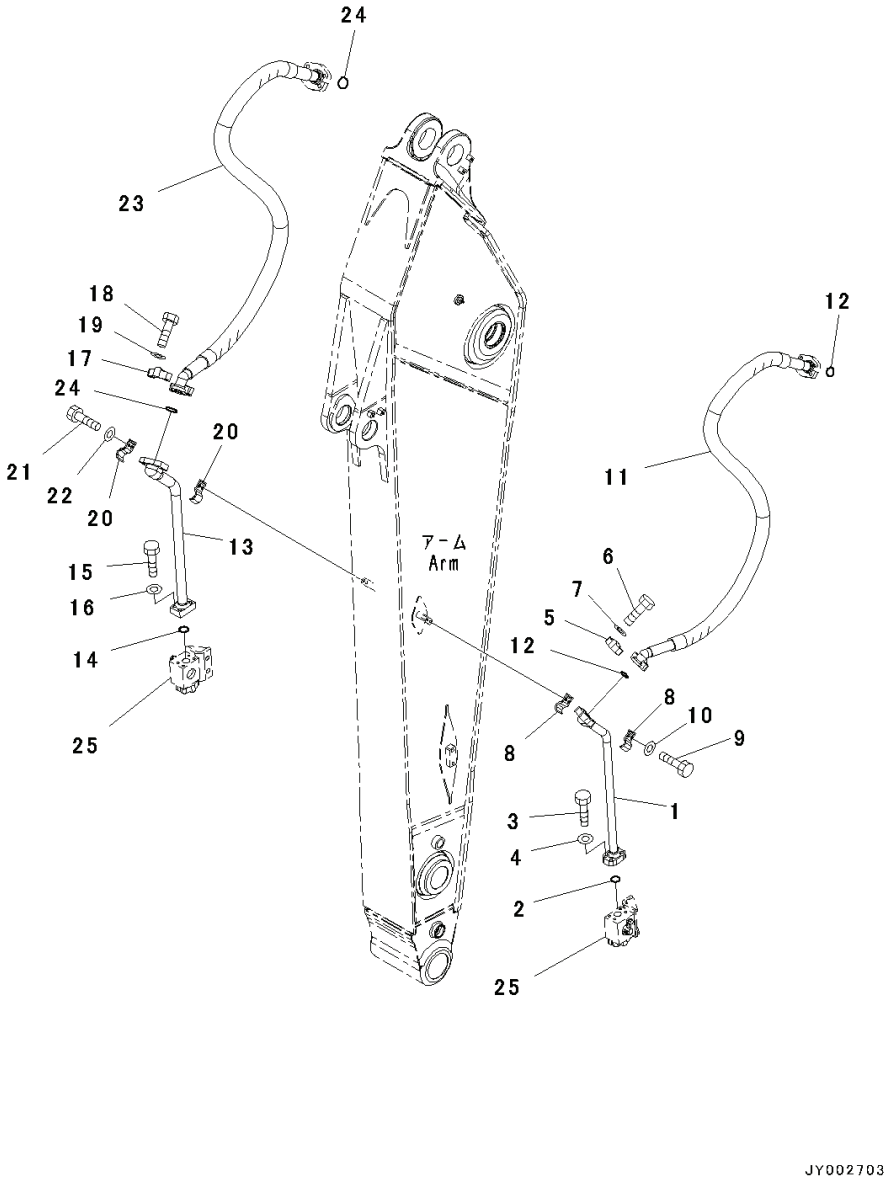

Index	Code	Part Number	Descreption	Qty	Serial Number
		Note: This list covers following specifications. 3.2m, Strengthened, 1-attachment, 100 Hours Greasing Type For Machine with WEBASTO Coolant Heater			
1		207-970-7210	Tube	1	Y300001-
2		07000-53038	O-ring	1	Y300001-
3		01010-81245	Bolt	4	Y300001-
4		01643-31232	Washer	4	Y300001-
5		07371-51260	Flange	2	Y300001-
6		01010-81245	Bolt	4	Y300001-
7		01643-31232	Washer	4	Y300001-
8		207-62-31330	Clamp	2	Y300001-
9		01010-81235	Bolt	2	Y300001-
10		01643-31232	Washer	2	Y300001-
11		07097-21222	Hose, Flange Type	1	Y300001-
12		07000-53038	O-ring	2	Y300001-
13		207-970-7221	Tube	1	Y300001-
14		07000-53038	O-ring	1	Y300001-
15		01010-81250	Bolt	4	Y300001-
16		01643-31232	Washer	4	Y300001-
17		07371-51470	Flange, Split	2	Y300001-
18		01010-81455	Bolt	4	Y300001-
19		01643-31445	Washer	4	Y300001-
20		207-970-7310	Clamp	2	Y300001-
21		01010-81235	Bolt	2	Y300001-
22		01643-31232	Washer	2	Y300001-
23		07097-21422	Hose, Flange Type	1	Y300001-
24		07000-53048	O-ring	2	Y300001-
25		(21M-970-7700)	Valve Assembly(Refer to Page 950)		-

FIG. T1200-003006 Arm, Valve, For Additional Piping

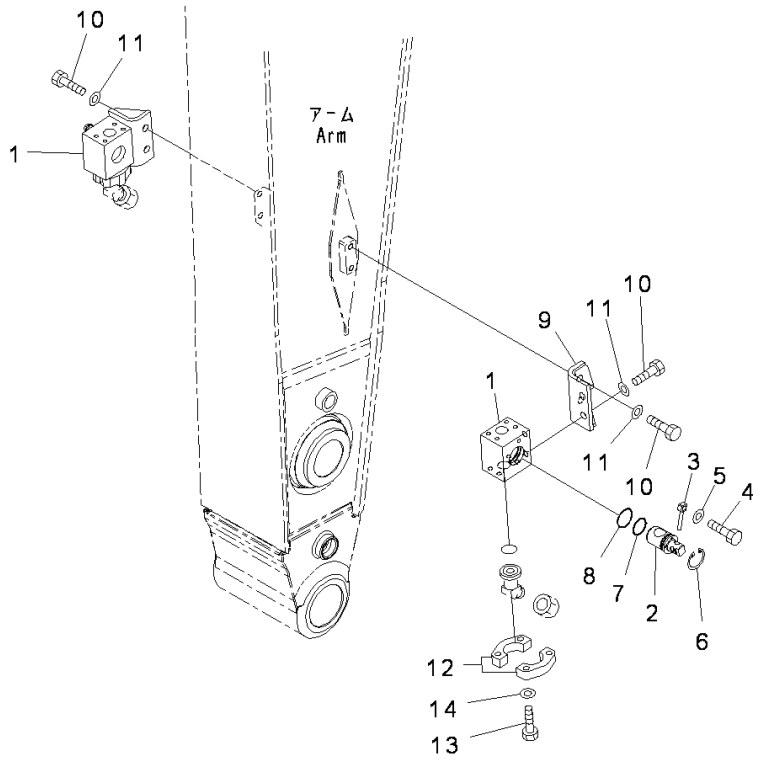

Index	Code	Part Number	Descreption	Qty	Serial Number
		Note: This list covers following specifications. 3.2m, Strengthened, 1-attachment, 100 Hours Greasing Type, For Machine with WEBASTO Coolant Heater			
		21M-970-1204	Valve Assembly	2	Y300001-
1	C1		• Block	1	Y300001-
2		21M-970-1223	• Rotor	1	Y300001-
3		202-970-2210	• Pin	1	Y300001-
4		01010-81230	• Bolt	1	Y300001-
5		01643-31232	• Washer	1	Y300001-
6		04065-05820	• Ring, Snap	1	Y300001-
7		07000-12050	• O-ring	1	Y300001-
8		07000-12055	• O-ring	1	Y300001-
9		21M-970-1173	Bracket	2	Y300001-
10		01010-81640	Bolt	8	Y300001-
11		01643-31645	Washer	8	Y300001-
12		07371-51260	Flange	4	Y300001-
13		01010-81245	Bolt	8	Y300001-
14		01643-31232	Washer	8	Y300001-

FIG. T1200-032002A Arm, Bucket Cylinder

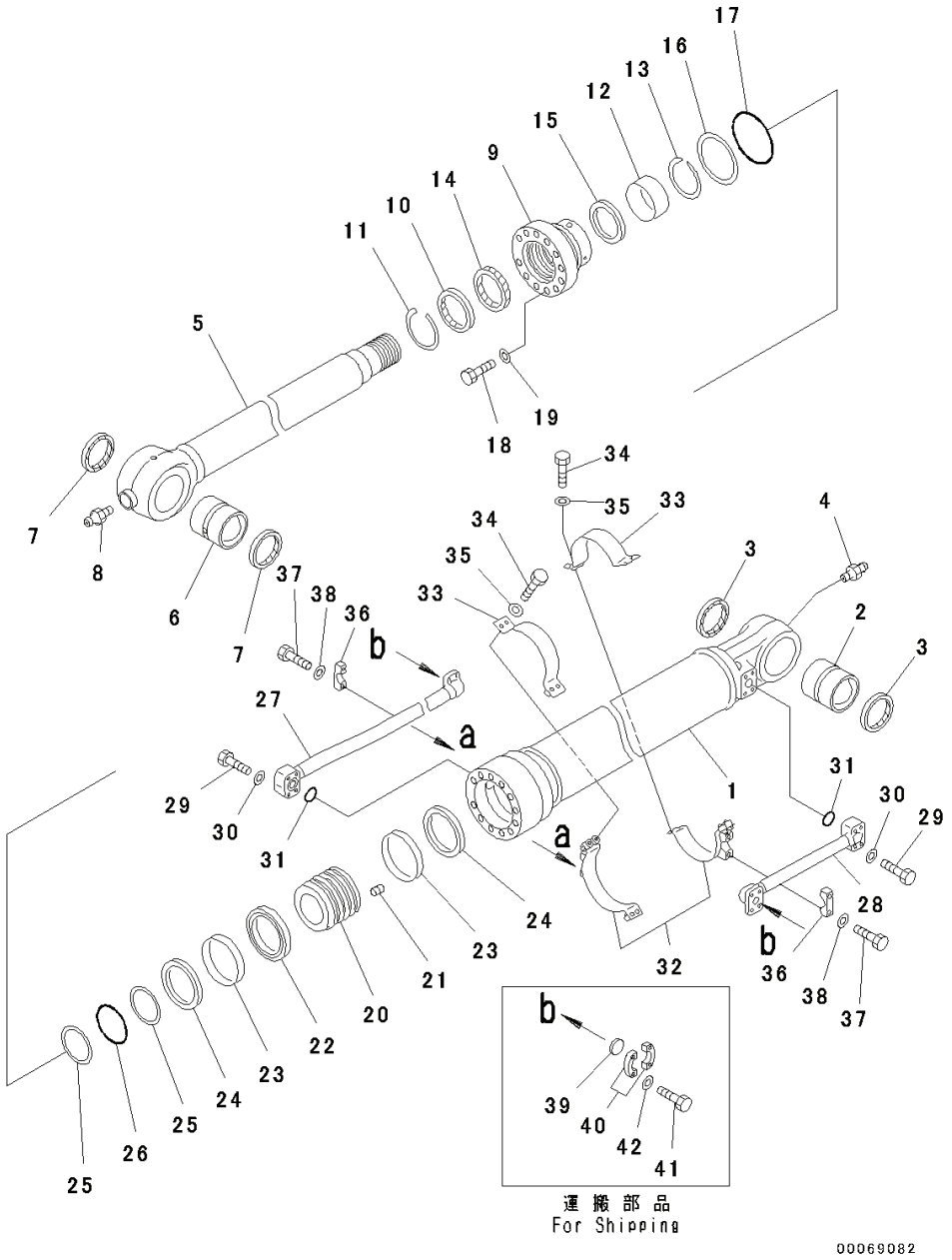

PC300-8 (FEN01263-00)

Index	Code	Part Number	Descreption	Qty	Serial Number
		Note: This list covers following specifications.			
		4.0m, 100 Hours Greasing Type			
		3.2m, Strengthened, 1-attachment, 100 Hours Greasing Type			
		3.2m, Strengthened, 100 Hours Greasing Type			
		707-01-XC612	Cylinder Assembly	1	Y300001-
1		707-13-14591	• Cylinder	1	Y300001-
2		707-76-90130	• Bushing	1	Y300001-
3		07145-00090	• Seal, Dust, (Kit : K11)	2	Y300001-
4		07020-00000	• Fitting, Grease	1	Y300001-
5		707-58-10730	• Rod	1	Y300001-
6		207-63-76170	• Bushing	1	Y300001-
7		207-70-72120	• Seal, Dust, (Kit : K11)	2	Y300001-
8		07020-00000	• Fitting, Grease	1	Y300001-
9		707-27-14690	• Head, Cylinder	1	Y300001-
10		176-63-56170	• Seal, Dust, (Kit : K11)	1	Y300001-
11		07179-13114	• Ring, Snap	1	Y300001-
12		707-52-90780	• Bushing	1	Y300001-
13		707-75-10160	• Ring, Snap	1	Y300001-
14		707-51-10030	• Packing, Rod, (Kit : K11)	1	Y300001-
15		707-51-10640	• Ring, Buffer, (Kit : K11)	1	Y300001-
16		707-35-91420	• Ring, Back-up, (Kit : K11)	1	Y300001-
17		07000-15130	• O-ring, (Kit : K11)	1	Y300001-
18		01010-81875	• Bolt	12	Y300001-
19		707-41-11840	• Washer	12	Y300001-
20		707-36-14650	• Piston	1	Y300001-
21		01310-01216	• Screw	1	Y300001-
22		707-44-14180	• Ring, Piston, (Kit : K11)	1	Y300001-
23		707-39-14110	• Ring, Wear, (Kit : K11)	2	Y300001-
24		707-44-14910	• Ring	2	Y300001-
25		07001-05090	• Ring, Back-up, (Kit : K11)	2	Y300001-
26		07000-15090	• O-ring, (Kit : K11)	1	Y300001-
27		707-86-11621	Tube	1	Y300001-

FIG. T1200-032002A Arm, Bucket Cylinder

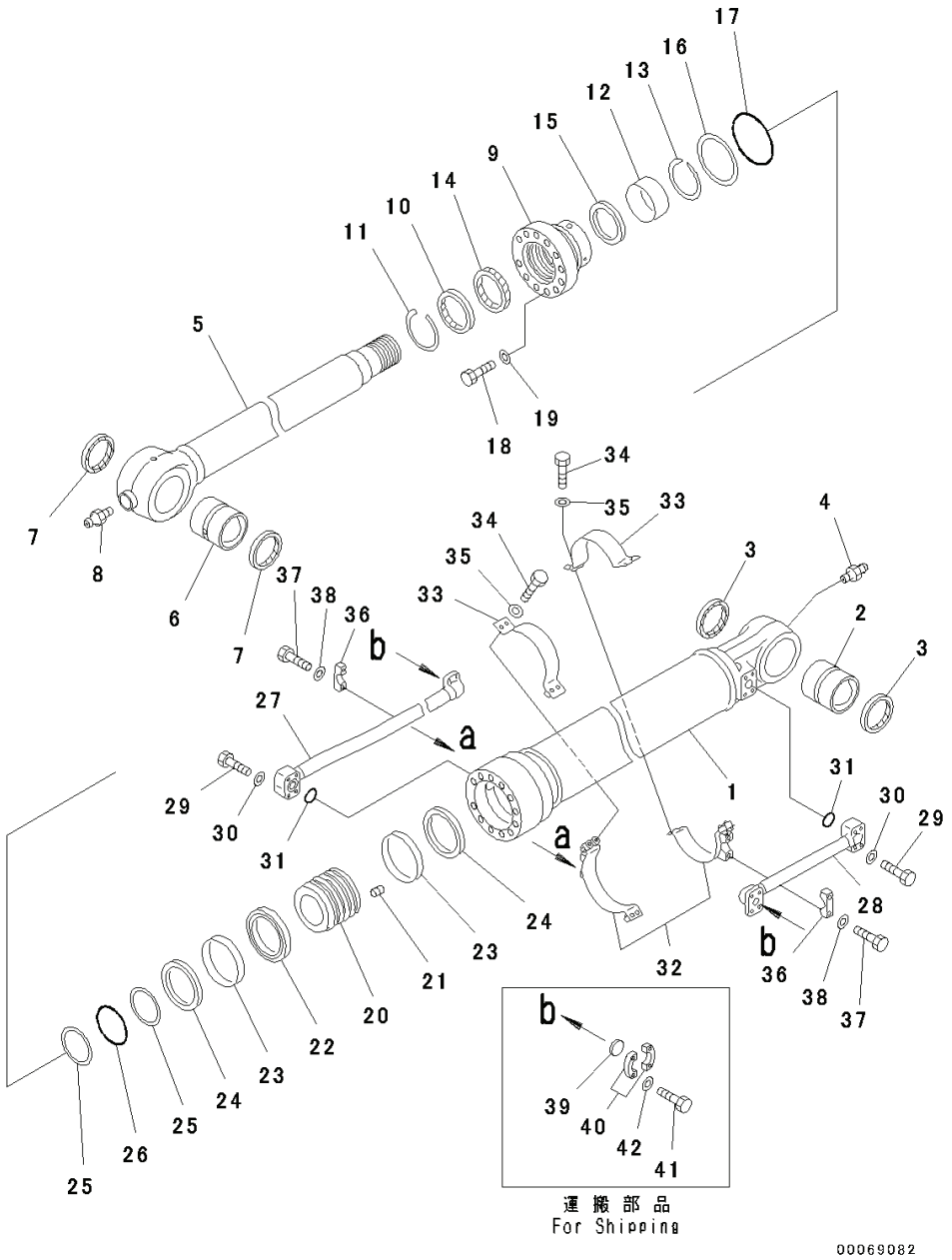

Index	Code	Part Number	Descreption	Qty	Serial Number
28		207-63-73180	Tube	1	Y300001-
29		07372-21060	Bolt	8	Y300001-
30		01643-51032	Washer	8	Y300001-
31		07000-13035	O-ring, (Kit : K11)	2	Y300001-
32		207-63-73790	Bracket	2	Y300001-
33		707-88-21410	Band	2	Y300001-
34		07372-21240	Bolt	8	Y300001-
35		01643-51232	Washer	8	Y300001-
36		707-88-10150	Clamp	2	Y300001-
37		01010-81245	Bolt	4	Y300001-
38		01643-31232	Washer	4	Y300001-
39		707-88-33040	Cap	2	Y300001-
40		07371-31049	Flange, Split	4	Y300001-
41		07372-21035	Bolt	8	Y300001-
42		01643-51032	Washer	8	Y300001-

PC300-8 (FEN01263-00)

FIG. T1200-032004 Arm, Bucket Cylinder Hose and Pin

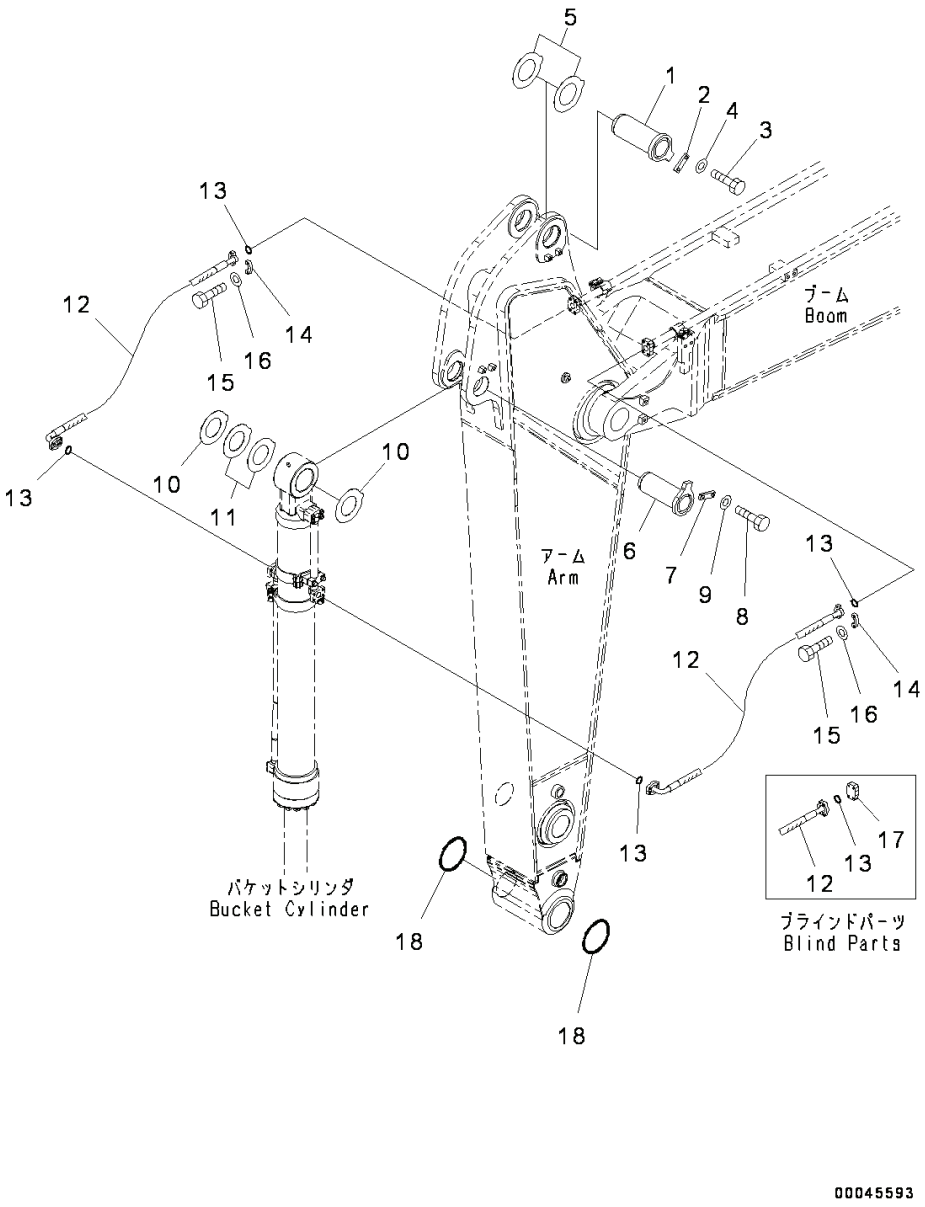

Index	Code	Part Number	Descreption	Qty	Serial Number
		Note: This list covers following specifications. 3.2m, Strengthened, 1-attachment, 100 Hours Greasing Type 3.2m, Strengthened, 100 Hours Greasing Type 2.6m, 1-attachment, 100 Hours Greasing Type 2.6m, 100 Hours Greasing Type 2.2m, 100 Hours Greasing Type			
1		208-70-61241	Pin	1	Y300001-
2		205-70-66581	Plate	1	Y300001-
3		01010-81235	Bolt	2	Y300001-
4		01643-31232	Washer	2	Y300001-
5		207-70-31340	Spacer, T=0.8mm	2	Y300001-
6		207-70-61221	Pin	1	Y300001-
7		205-70-66581	Plate	1	Y300001-
8		01010-81235	Bolt	2	Y300001-
9		01643-31232	Washer	2	Y300001-
10		207-70-24190	Spacer, T=0.8mm	3	Y300001-
11		207-70-24210	Spacer, T=1.5mm	2	Y300001-
12		207-62-74190	Hose	2	Y300001-
13		07000-13032	O-ring	4	Y300001-
14		07371-31049	Flange, Split	8	Y300001-
15		07372-21035	Bolt	16	Y300001-
16		01643-51032	Washer	16	Y300001-
17		07379-01044	Flange	2	Y300001-
18		207-70-33181	O-ring	2	Y300001-

PC300-8 (FEN01263-00)

FIG. T1200-025002A Parts For Less Arm, Bucket Cylinder

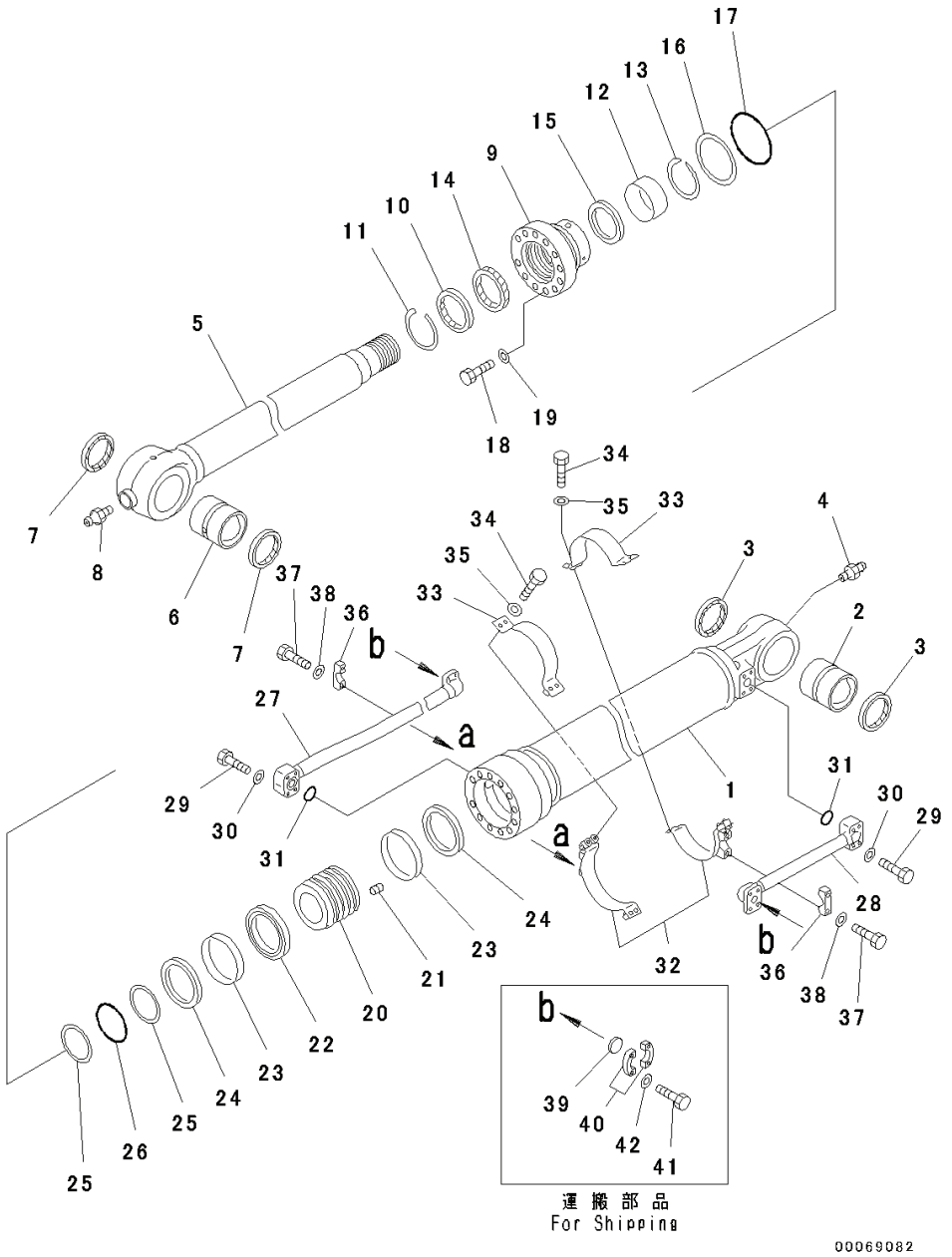

Index	Code	Part Number	Descreption	Qty	Serial Number
		Note: This list covers following specifications.			
		2.2m, 100 Hours Greasing Type			
		2.6m, 1-attachment, 100 Hours Greasing Type			
		2.6m, 100 Hours Greasing Type			
		707-01-0C622	Cylinder Assembly	1	Y300001-
1		707-13-15261	• Cylinder	1	Y300001-
2		707-76-90130	• Bushing	1	Y300001-
3		07145-00090	• Seal, Dust, (Kit : K12)	2	Y300001-
4		07020-00000	• Fitting, Grease	1	Y300001-
5		707-58-11370	• Rod	1	Y300001-
6		207-63-76170	• Bushing	1	Y300001-
7		207-70-72120	• Seal, Dust, (Kit : K12)	2	Y300001-
8		07020-00000	• Fitting, Grease	1	Y300001-
9		707-27-15650	• Head	1	Y300001-
10		198-63-94170	• Seal, Dust, (Kit : K12)	1	Y300001-
11		07179-13126	• Ring, Snap	1	Y300001-
12		707-52-90850	• Bushing	1	Y300001-
13		707-75-11040	• Ring, Snap	1	Y300001-
14		707-51-11030	• Packing, Rod, Rod, (Kit : K12)	1	Y300001-
15		707-51-11640	• Ring, Buffer, Buffer, (Kit : K12)	1	Y300001-
16		707-35-91660	• Ring, Back-up, (Kit : K12)	1	Y300001-
17		07000-15140	• O-ring, (Kit : K12)	1	Y300001-
18		01010-82085	• Bolt	12	Y300001-
19		707-88-75310	• Washer	12	Y300001-
20		707-36-15260	• Piston	1	Y300001-
21		01310-01216	• Screw	1	Y300001-
22		707-44-15180	• Ring, Piston, (Kit : K12)	1	Y300001-
23		707-39-15110	• Ring, Wear, (Kit : K12)	2	Y300001-
24		707-44-15911	• Ring	2	Y300001-
25		07001-05100	• Ring, Back-up, (Kit : K12)	2	Y300001-
26		07000-15100	• O-ring, (Kit : K12)	1	Y300001-
27		707-86-11631	Tube	1	Y300001-
28		207-63-73180	Tube	1	Y300001-
29		07372-21060	Bolt	8	Y300001-
30		01643-51032	Washer	1	Y300001-

PC300-8 (FEN01263-00)

FIG. T1200-025002A Parts For Less Arm, Bucket Cylinder

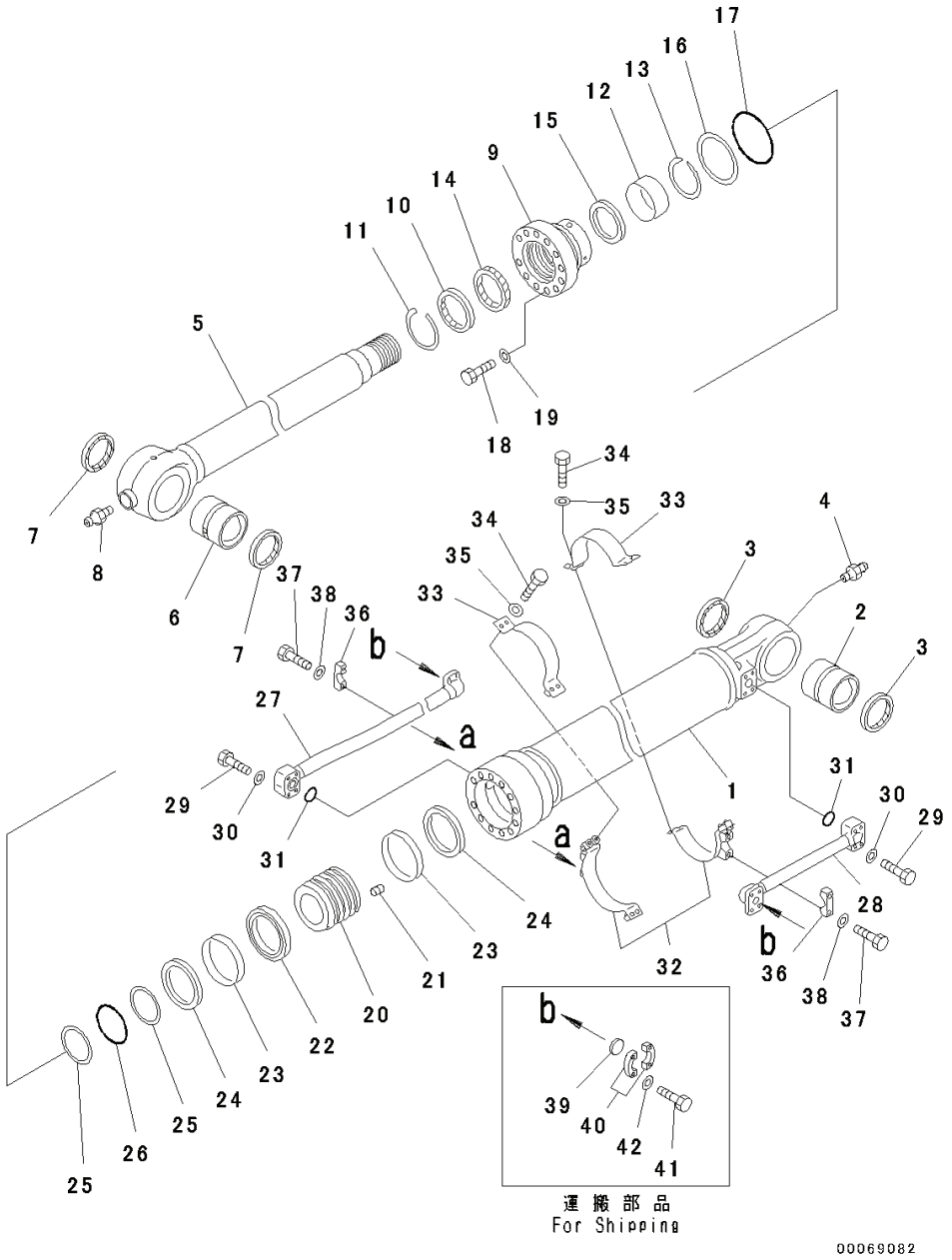

Index	Code	Part Number	Descreption	Qty	Serial Number
31		07000-13035	O-ring, (Kit : K12) .	2	Y300001-
32		707-88-22690	Bracket .	2	Y300001-
33		707-88-21420	Band	2	Y300001-
34		07372-21240	Bolt .	8	Y300001-
35		01643-51232	Washer .	1	Y300001-
36		707-88-10150	Clamp .	2	Y300001-
37		01010-81245	Bolt .	4	Y300001-
38		01643-31232	Washer .	4	Y300001-
39		707-88-33040	Cap .	2	Y300001-
40		07371-31049	Flange, Split	4	Y300001-
41		07372-21035	Bolt .	8	Y300001-
42		01643-51032	Washer .	8	Y300001-

PC300-8 (FEN01263-00)

FIG. T1200-020001 Arm, 4.0m, 100 Hours Greasing Type

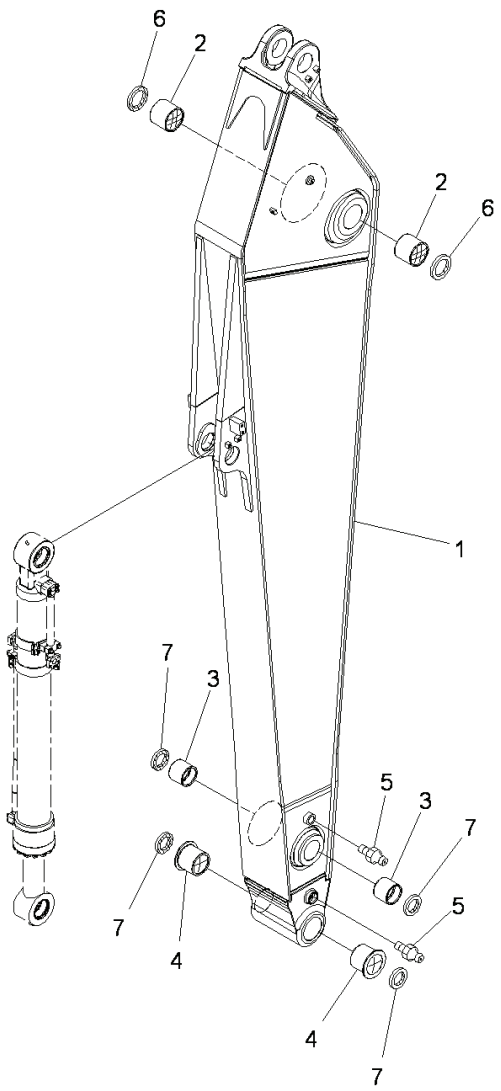

JY001202

Index	Code	Part Number	Descreption	Qty	Serial Number
		207-943-0041	Arm Assembly	1	Y300001-
1	C1		• Arm	1	Y300001-
2		207-70-61521	• Bushing	2	Y300001-
3		207-70-32150	• Bushing	2	Y300001-
4		207-70-72460	• Bushing	2	Y300001-
5		07020-00000	• Fitting, Grease	2	Y300001-
6		07145-00110	• Seal, Dust	2	Y300001-
7		207-70-72120	• Seal, Dust	4	Y300001-

PC300-8 (FEN01263-00)

FIG. T1200-020004 Arm, 4.0m, 100 Hours Greasing Type, Bucket Cylinder Hose and Pin

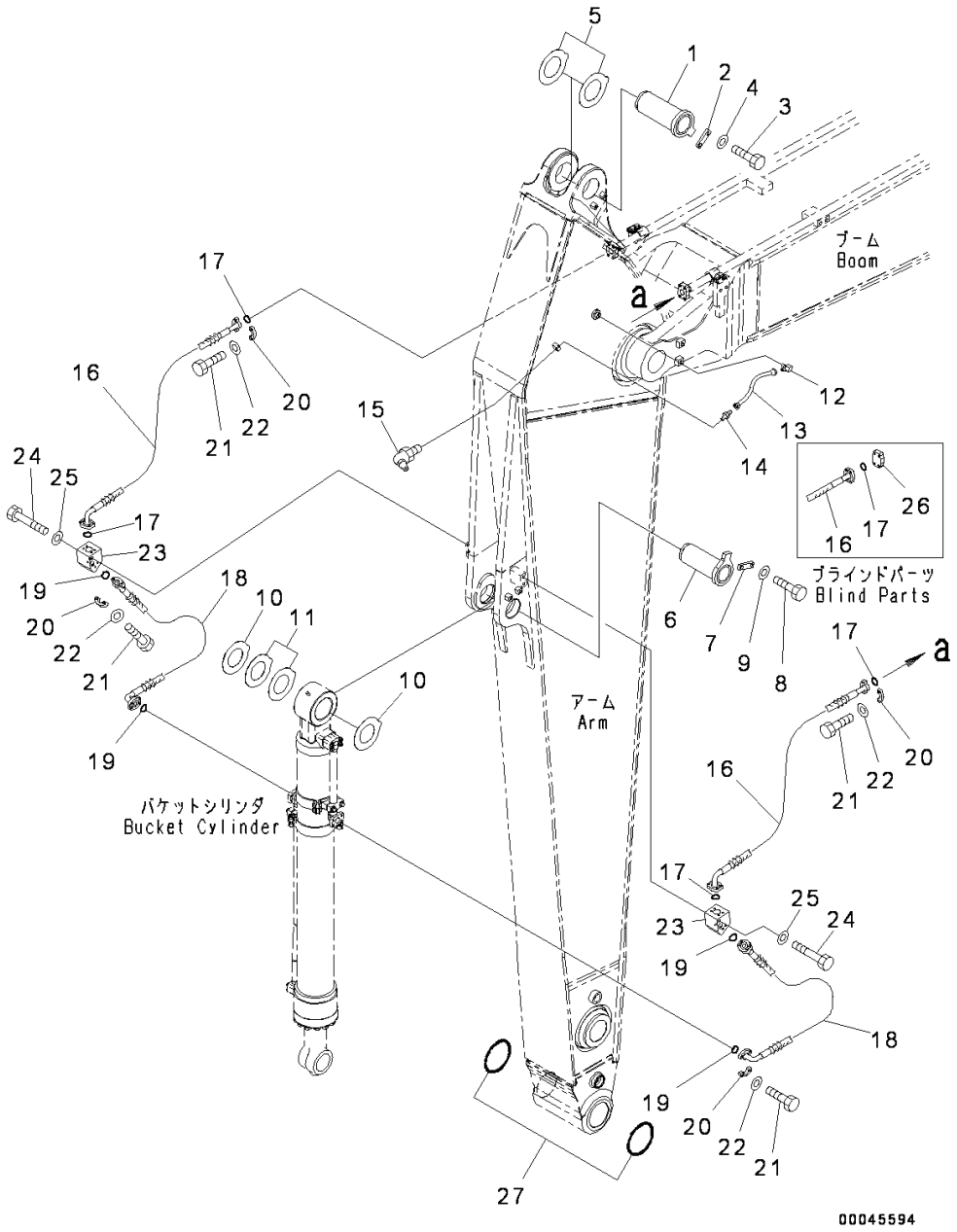

Index	Code	Part Number	Descreption	Qty	Serial Number
1		208-70-61241	Pin	1	Y300001-
2		205-70-66581	Plate	1	Y300001-
3		01010-81235	Bolt	2	Y300001-
4		01643-31232	Washer	2	Y300001-
5		207-70-31340	Spacer, T=0.8mm	2	Y300001-
6		207-70-61221	Pin	1	Y300001-
7		205-70-66581	Plate	1	Y300001-
8		01010-81235	Bolt	2	Y300001-
9		01643-31232	Washer	2	Y300001-
10		207-70-24190	Spacer, T=0.8mm	3	Y300001-
11		207-70-24210	Spacer, T=1.5mm	2	Y300001-
12		20Y-25-11270	Elbow	1	Y300001-
13		208-70-62161	Tube	1	Y300001-
14		20Y-70-11540	Connector	1	Y300001-
15		07020-00675	Fitting, Grease	1	Y300001-
16		207-62-74180	Hose	2	Y300001-
17		07000-13032	O-ring	4	Y300001-
18		207-943-5130	Hose	2	Y300001-
19		07000-13032	O-ring	4	Y300001-
20		07371-31049	Flange, Split	12	Y300001-
21		07372-21035	Bolt	24	Y300001-
22		01643-51032	Washer	24	Y300001-
23		207-943-5120	Elbow	2	Y300001-
24		01010-81290	Bolt	4	Y300001-
25		01643-31232	Washer	4	Y300001-
26		07379-01044	Flange	2	Y300001-
27		207-70-33181	O-ring	2	Y300001-

PC300-8 (FEN01263-00)

FIG. T1200-019001 Arm, 3.2m, Strengthened, 1-attachment, 100 Hours Greasing Type

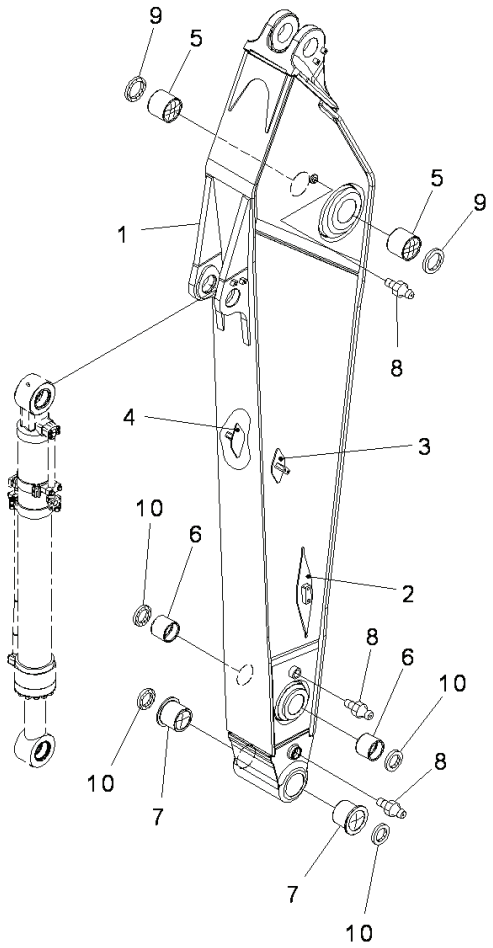

JY001225

Index	Code	Part Number	Descreption	Qty	Serial Number
		207-70-00542	Arm Assembly	1	Y300001-
1	C1		• Arm	1	Y300001-
2		208-970-7171	• • Bracket,Welded	2	Y300001-
3		207-970-7420	• • Bracket,Welded	1	Y300001-
4		207-970-7430	• • Bracket,Welded	1	Y300001-
5		207-70-61521	• Bushing .	2	Y300001-
6		207-70-32150	• Bushing .	2	Y300001-
7		207-70-72460	• Bushing .	2	Y300001-
8		07020-00000	• Fitting, Grease .	3	Y300001-
9		07145-00110	• Seal, Dust	2	Y300001-
10		207-70-72120	• Seal, Dust	4	Y300001-

PC300-8 (FEN01263-00)

FIG. T1200-017001 Arm, 3.2m, Strengthened, 100 Hours Greasing Type

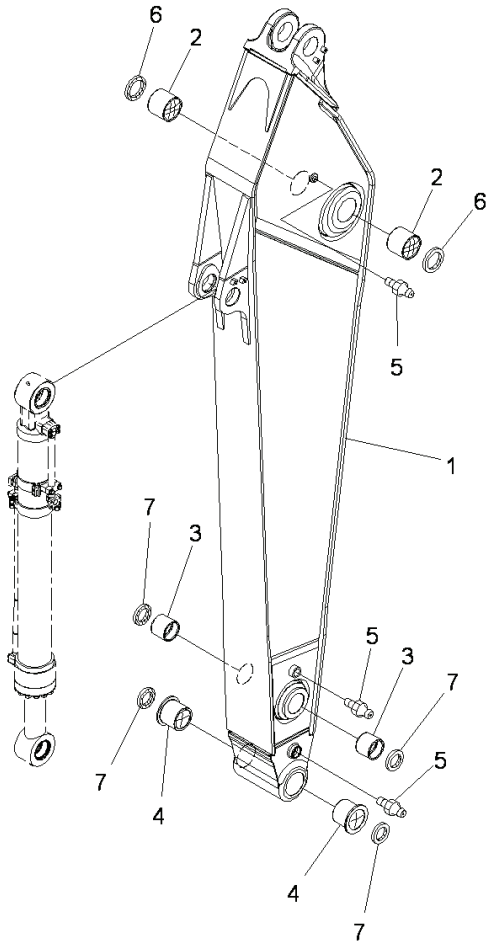

JY001506

Index	Code	Part Number	Descreption	Qty	Serial Number
		207-70-00591	Arm Assembly	1	Y300001-
1	C1		• Arm	1	Y300001-
2		207-70-61521	• Bushing	2	Y300001-
3		207-70-32150	• Bushing	2	Y300001-
4		207-70-72460	• Bushing	2	Y300001-
5		07020-00000	• Fitting, Grease	3	Y300001-
6		07145-00110	• Seal, Dust	2	Y300001-
7		207-70-72120	• Seal, Dust	4	Y300001-

FIG. T1200-014001 Arm, 2.6m, 1-attachment, 100 Hours Greasing Type

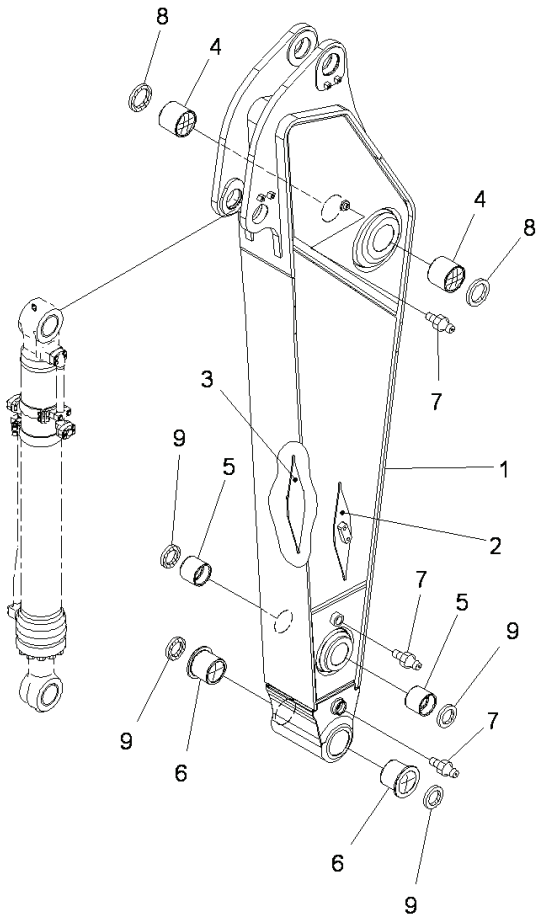

JY001516

Index	Code	Part Number	Descreption	Qty	Serial Number
1		207-970-7611	Arm	1	Y300001-
2		207-970-7620	• Bracket,Welded	1	Y300001-
3		207-970-7630	• Bracket,Welded	1	Y300001-
4		207-70-61521	Bushing	2	Y300001-
5		207-70-32150	Bushing	2	Y300001-
6		207-70-72460	Bushing	2	Y300001-
7		07020-00000	Fitting, Grease	3	Y300001-
8		07145-00110	Seal, Dust	2	Y300001-
9		207-70-72120	Seal, Dust	4	Y300001-

PC300-8 (FEN01263-00)

FIG. T1200-013001 Arm, 2.6m, 100 Hours Greasing Type

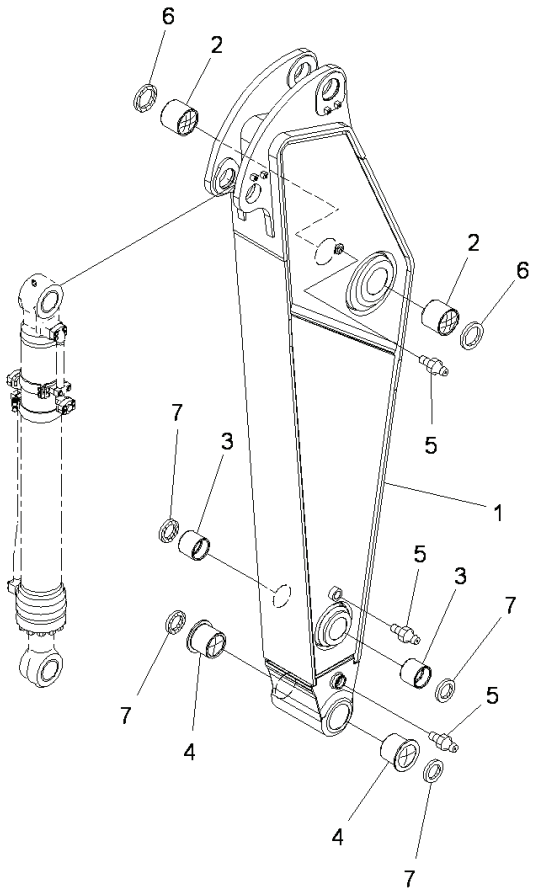

JY001206

Index	Code	Part Number	Descreption	Qty	Serial Number
1		207-944-7111	Arm	1	Y300001-
2		207-70-61521	Bushing	2	Y300001-
3		207-70-32150	Bushing	2	Y300001-
4		207-70-72460	Bushing	2	Y300001-
5		07020-00000	Fitting, Grease	3	Y300001-
6		07145-00110	Seal, Dust	2	Y300001-
7		207-70-72120	Seal, Dust	4	Y300001-

PC300-8 (FEN01263-00)

FIG. T1200-029003 Arm, Bucket Link

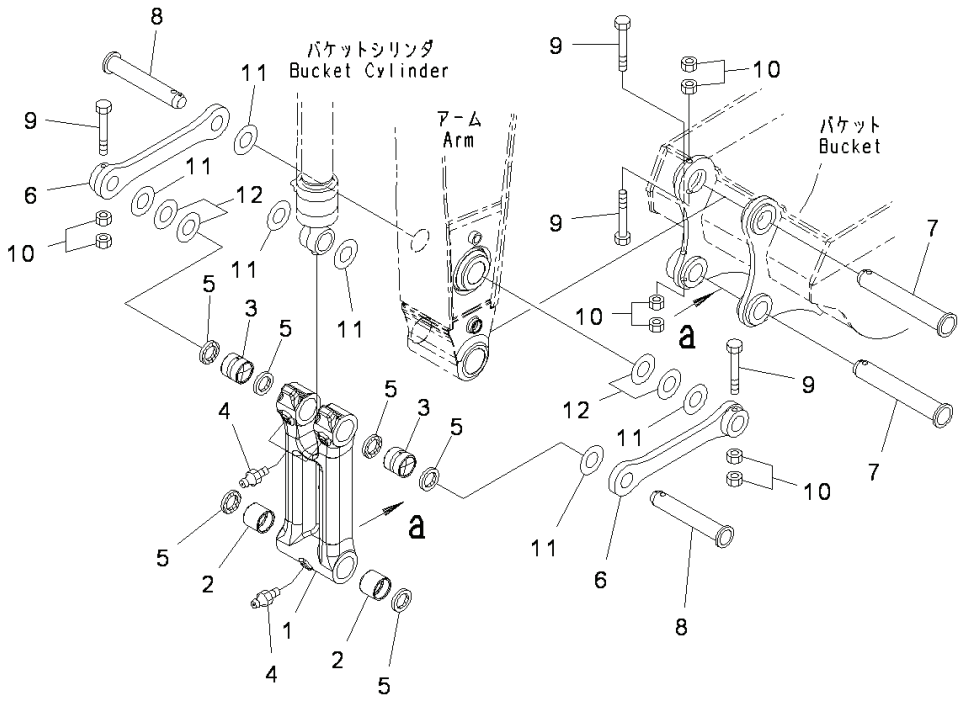

Index	Code	Part Number	Descreption	Qty	Serial Number
		Note: This list covers following specifications.			
		2.2m, 100 Hours Greasing Type			
		207-70-00480	Link Assembly	1	Y300001-
1	C1		• Link	1	Y300001-
2		207-70-33160	• Bushing	2	Y300001-
3		207-70-33160	• Bushing	2	Y300001-
4		07020-00000	• Fitting, Grease	3	Y300001-
5		207-70-72120	• Seal, Dust	6	Y300001-
6		207-70-33120	Link	2	Y300001-
7		207-70-73210	Pin	2	Y300001-
8		207-70-33141	Pin	2	Y300001-
9		208-70-73160	Bolt	4	Y300001-
10		01580-12419	Nut	8	Y300001-
11		207-70-24190	Spacer, T=0.8mm	8	Y300001-
12		207-70-24210	Spacer, T=1.5mm	4	Y300001-

FIG. T1200-027005 Arm, Additional Piping

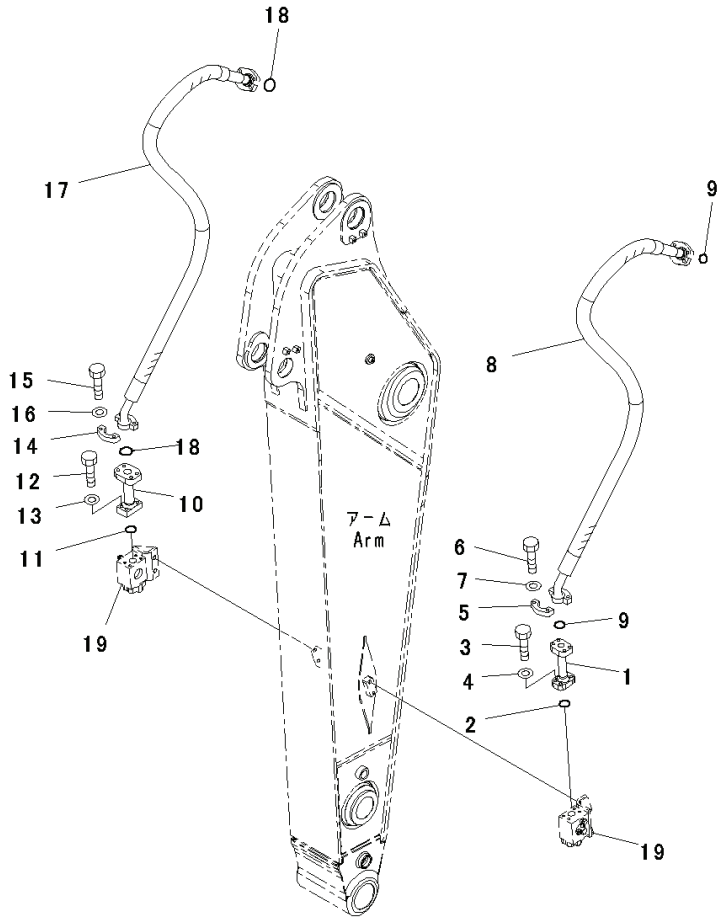

Index	Code	Part Number	Descreption	Qty	Serial Number
		Note: This list covers following specifications. 2.6m, 1-attachment, 100 Hours Greasing Type			
1		207-970-7640	Tube	1	Y300001-
2		07000-13038	O-ring	1	Y300001-
3		01010-81245	Bolt	4	Y300001-
4		01643-31232	Washer	4	Y300001-
5		07371-51260	Flange	2	Y300001-
6		01010-81245	Bolt	4	Y300001-
7		01643-31232	Washer	4	Y300001-
8		07098-21221	Hose, Flange Type	1	Y300001-
9		07000-13038	O-ring	2	Y300001-
10		207-970-7650	Tube	1	Y300001-
11		07000-13038	O-ring	1	Y300001-
12		01010-81250	Bolt	4	Y300001-
13		01643-31232	Washer	4	Y300001-
14		07371-51470	Flange, Split	2	Y300001-
15		01010-81445	Bolt	4	Y300001-
16		01643-31445	Washer	4	Y300001-
17		07098-21421	Hose, Flange Type	1	Y300001-
18		07000-13048	O-ring	2	Y300001-
19		(21M-970-1204)	Valve Assembly(Refer to Page 950)		-

FIG. T1200-012001 Arm, 2.2m, 100 Hours Greasing Type

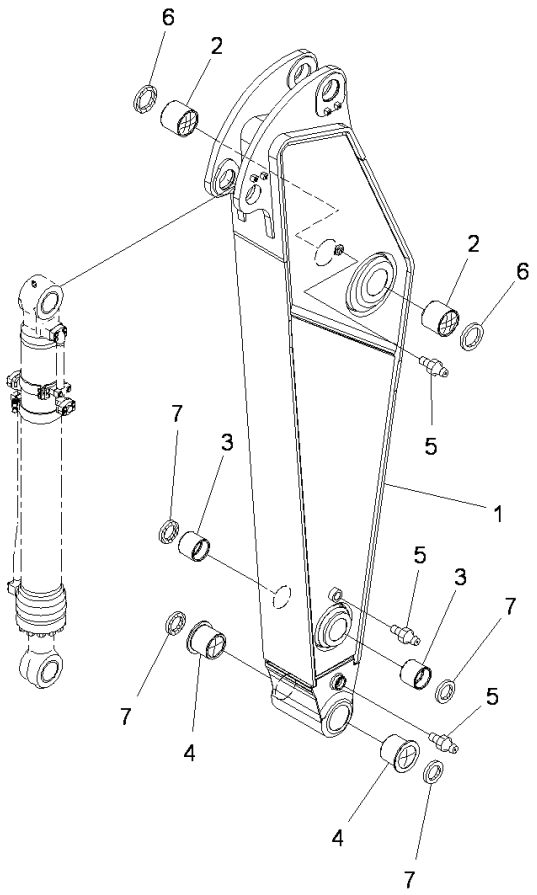

JY001206

Index	Code	Part Number	Descreption	Qty	Serial Number
1		207-944-7211	Arm	1	Y300001-
2		207-70-61521	Bushing	2	Y300001-
3		207-70-32150	Bushing	2	Y300001-
4		207-70-72460	Bushing	2	Y300001-
5		07020-00000	Fitting, Grease	3	Y300001-
6		07145-00110	Seal, Dust	2	Y300001-
7		207-70-72120	Seal, Dust	4	Y300001-

PC300-8 (FEN01263-00)

FIG. T1200-042001 Arm, 3.2m, 100 Hours Greasing Type, For Machine With WEBASTO Coolant Heater

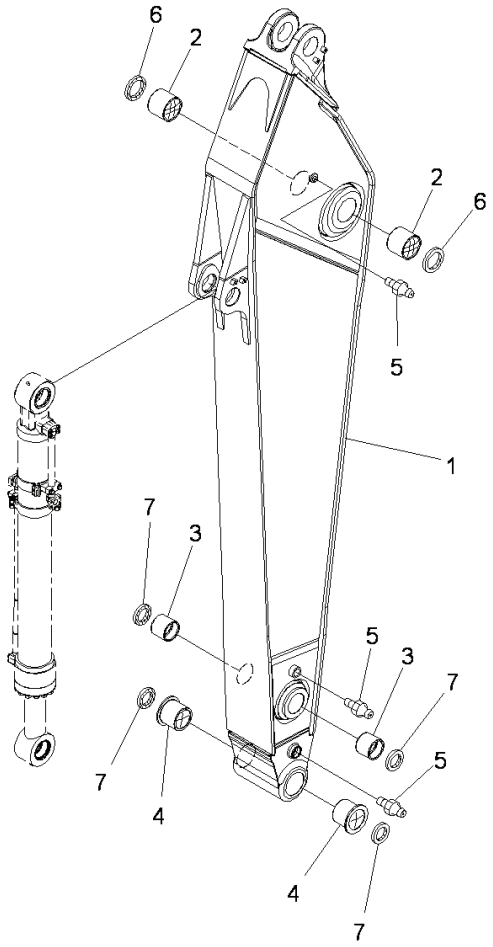

JY001506

Index	Code	Part Number	Descreption	Qty	Serial Number
		207-70-00871	Alarm Assembly	1	Y300001-
1	C1		• Arm	1	Y300001-
2		207-70-61521	• Bushing	2	Y300001-
3		207-70-32150	• Bushing	2	Y300001-
4		207-70-72460	• Bushing	2	Y300001-
5		07020-00000	• Fitting, Grease	3	Y300001-
6		07145-10110	• Seal, Dust	2	Y300001-
7		207-70-72120	• Seal, Dust	4	Y300001-

PC300-8 (FEN01263-00)

FIG. T1200-042002 Arm, 3.2m, 100 Hours Greasing Type, For Machine With WEBASTO Coolant Heater, Bucket Cylinder

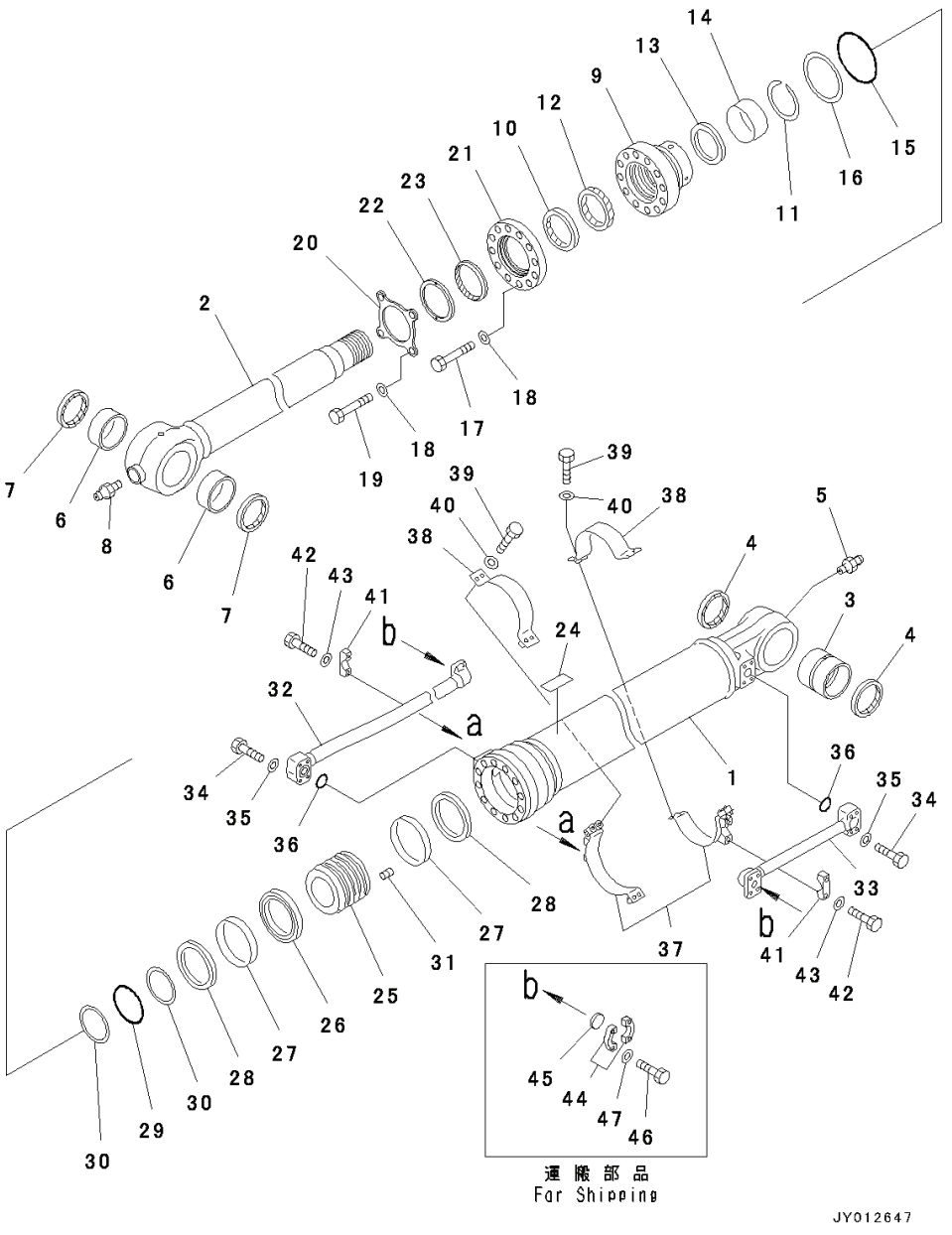

Index	Code	Part Number	Descreption	Qty	Serial Number
		707-01-XH131	Cylinder Assembly	1	Y300001-
1		707-13-14591	• Cylinder	1	Y300001-
2		721-58-10020	• Rod	1	Y300001-
3		707-76-90130	• Bushing	1	Y300001-
4		07145-10090	• Seal, Dust, (Kit : K13)	2	Y300001-
5		07020-00000	• Fitting, Grease	1	Y300001-
6		207-63-76170	• Bushing	1	Y300001-
7		207-70-72120	• Seal, Dust, (Kit : K13)	2	Y300001-
8		07020-00000	• Fitting, Grease	1	Y300001-
9		707-27-14690	• Head, Cylinder	1	Y300001-
10		176-63-56170	• Seal, Dust, (Kit : K13)	1	Y300001-
11		707-75-10160	• Ring, Snap	1	Y300001-
12		707-51-10730	• Packing, Rod, (Kit : K13)	1	Y300001-
13		707-51-10640	• Ring, Buffer, (Kit : K13)	1	Y300001-
14		707-52-90780	• Bushing	1	Y300001-
15		07000-55130	• O-ring, (Kit : K13)	1	Y300001-
16		707-35-91420	• Ring, Back-up, (Kit : K13)	1	Y300001-
17		01011-81800	• Bolt	8	Y300001-
18		707-41-11840	• Washer	12	Y300001-
19		01011-81805	• Bolt	4	Y300001-
20		707-88-05540	• Plate	1	Y300001-
21		707-88-05530	• Collar	1	Y300001-
22		707-88-36921	• Ring	1	Y300001-
23		707-56-10651	• Seal, Dust, (Kit : K13)	1	Y300001-
24		700-11-31980	• Plate, Name (Limited Supply)	1	Y300001-
25		707-36-14650	• Piston	1	Y300001-
26		707-44-14180	• Ring, Piston, (Kit : K13)	1	Y300001-
27		707-39-14110	• Ring, Wear, (Kit : K13)	2	Y300001-
28		707-44-14910	• Ring	2	Y300001-
29		07000-55090	• O-ring, (Kit : K13)	1	Y300001-
30		07001-05090	• Ring, Back-up, (Kit : K13)	2	Y300001-
31		01310-01216	• Screw	1	Y300001-
32		707-86-11621	Tube	1	Y300001-
33		207-63-73180	Tube	1	Y300001-
34		07372-21060	Bolt	8	Y300001-
35		01643-51032	Washer	8	Y300001-
36		07000-53035	O-ring, (Kit : K13)	2	Y300001-
37		207-63-73790	Bracket	2	Y300001-
38		707-88-21410	• Band	1	Y300001-

PC300-8 (FEN01263-00)

FIG. T1200-042002 Arm, 3.2m, 100 Hours Greasing Type, For Machine With WEBASTO Coolant Heater, Bucket Cylinder

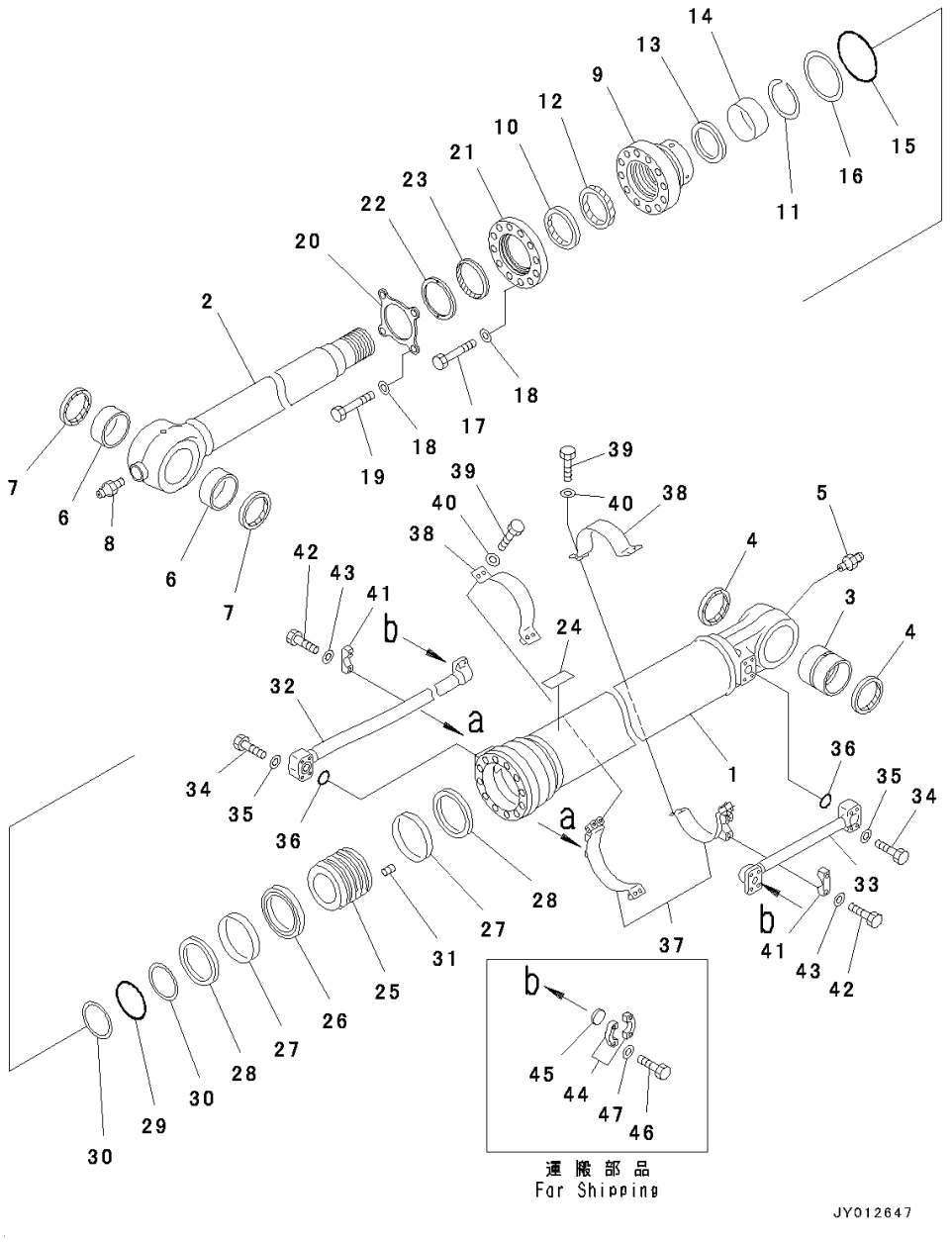

Index	Code	Part Number	Descreption	Qty	Serial Number
39		07372-21240	Bolt	8	Y300001-
40		01643-51232	Washer	8	Y300001-
41		707-88-10150	Clamp	2	Y300001-
42		01010-81245	Bolt	4	Y300001-
43		01643-31232	Washer	4	Y300001-
44		07371-31049	Flange, Split	4	Y300001-
45		707-88-33040	Cap	2	Y300001-
46		07372-21035	Bolt	8	Y300001-
47		01643-51032	Washer	8	Y300001-

PC300-8 (FEN01263-00)

FIG. T1200-042003 Arm, 3.2m, 100 Hours Greasing Type, For Machine With WEBASTO Coolant Heater, Bucket Link

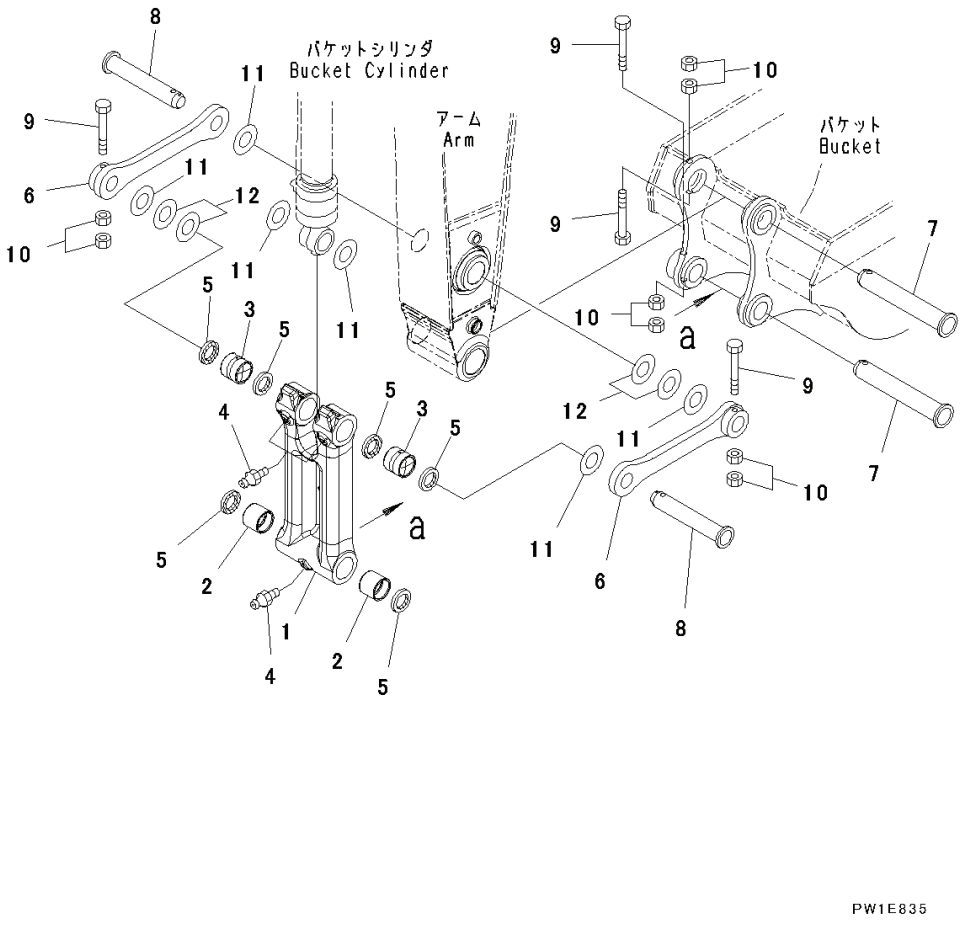

Index	Code	Part Number	Descreption	Qty	Serial Number
		207-70-00480	Link Assembly	1	Y300001-
1	C1		• Link	1	Y300001-
2		207-70-33160	• Bushing	2	Y300001-
3		207-70-33160	• Bushing	2	Y300001-
4		07020-00000	• Fitting, Grease	3	Y300001-
5		207-70-72120	• Seal, Dust	6	Y300001-
6		207-70-33120	Link	2	Y300001-
7		207-70-73210	Pin	2	Y300001-
8		207-70-33141	Pin	2	Y300001-
9		208-70-73160	Bolt	4	Y300001-
10		01580-12419	Nut	8	Y300001-
11		207-70-24190	Spacer, T=0.8mm	8	Y300001-
12		207-70-24210	Spacer, T=1.5mm	4	Y300001-

PC300-8 (FEN01263-00)

FIG. T1200-042004 Arm, 3.2m, 100 Hours Greasing Type, For Machine With WEBASTO Coolant Heater, Bucket Cylinder Hose and Pin

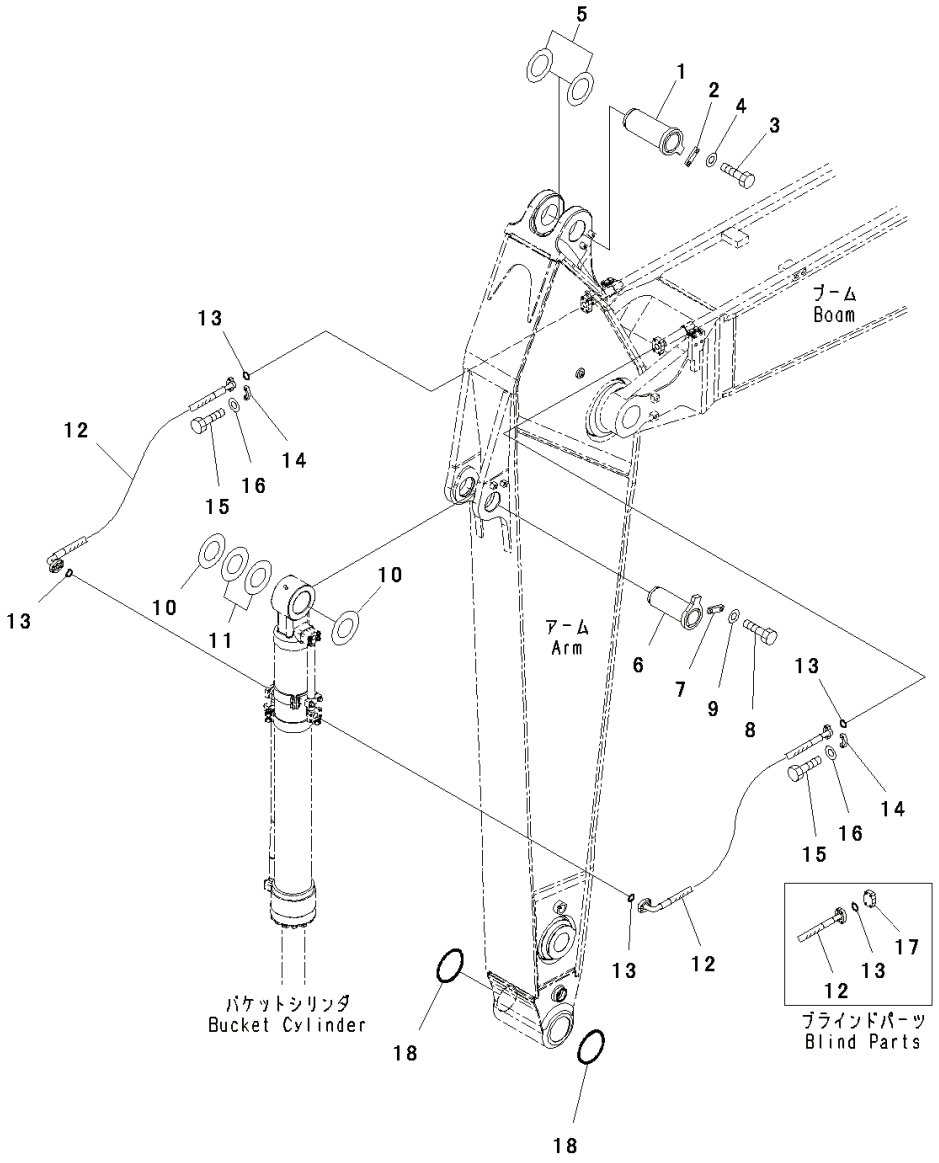

Index	Code	Part Number	Descreption	Qty	Serial Number
1		208-70-61241	Pin	1	Y300001-
2		205-70-66581	Plate	1	Y300001-
3		01010-81235	Bolt	2	Y300001-
4		01643-31232	Washer	2	Y300001-
5		207-70-31340	Spacer, T=0.8mm	2	Y300001-
6		207-70-61221	Pin	1	Y300001-
7		205-70-66581	Plate	1	Y300001-
8		01010-81235	Bolt	2	Y300001-
9		01643-31232	Washer	2	Y300001-
10		207-70-24190	Spacer, T=0.8mm	3	Y300001-
11		207-70-24210	Spacer, T=1.5mm	2	Y300001-
12		207-62-74190	Hose	2	Y300001-
13		07000-53032	O-ring	4	Y300001-
14		07371-31049	Flange, Split	8	Y300001-
15		07372-21035	Bolt	16	Y300001-
16		01643-51032	Washer	16	Y300001-
17		07379-01044	Flange	2	Y300001-
18		207-70-33181	O-ring	2	Y300001-

PC300-8 (FEN01263-00)

FIG. T1200-042001 Arm, 3.2m, 1-attachment, 100 Hours Greasing Type, For Machine With WEBASTO Coolant Heater

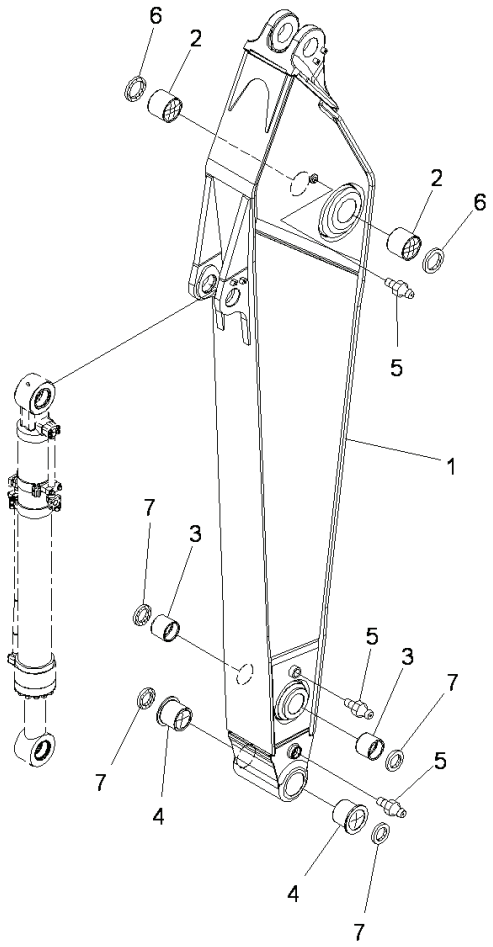

JY001506

Index	Code	Part Number	Descreption	Qty	Serial Number
		207-70-00543	Alarm Assembly	1	Y300001-
1	C1		• Arm	1	Y300001-
2		207-70-61521	• Bushing	2	Y300001-
3		207-70-32150	• Bushing	2	Y300001-
4		207-70-72460	• Bushing	2	Y300001-
5		07020-00000	• Fitting, Grease	3	Y300001-
6		07145-10110	• Seal, Dust	2	Y300001-
7		207-70-72120	• Seal, Dust	4	Y300001-

PC300-8 (FEN01263-00)

FIG. T1200-043001 Arm, 3.2m, 1-attachment, For Machine With WEBASTO Coolant Heater, 100 Hours Greasing Type, Arm

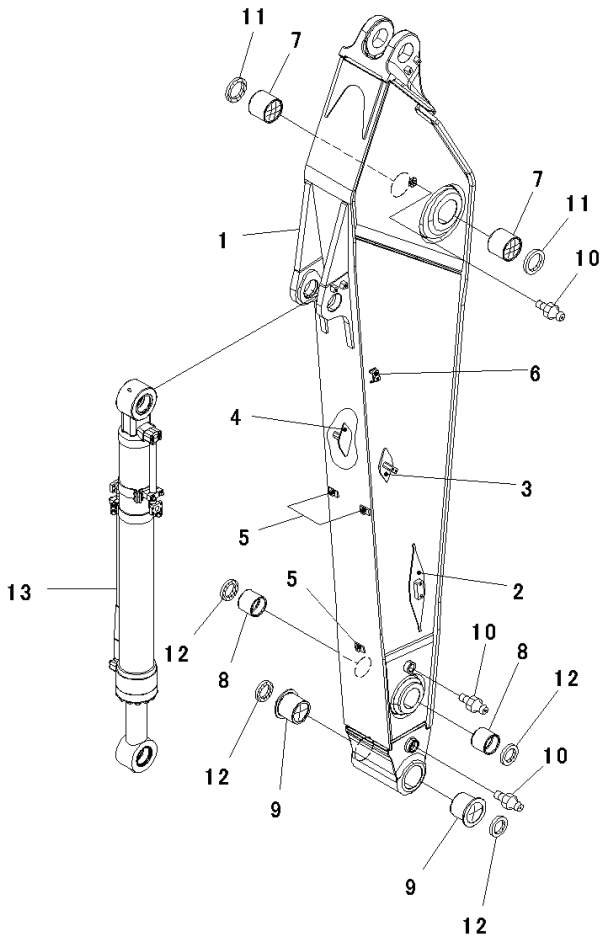

00066306

Index	Code	Part Number	Descreption	Qty	Serial Number
		207-70-00990	Arm Assembly	1	Y300001-
1	C1		• Arm	1	Y300001-
2		208-970-7171	• • Bracket, Welded	2	Y300001-
3		207-970-7420	• • Bracket, Welded	1	Y300001-
4		207-970-7430	• • Bracket, Welded	1	Y300001-
5		207-62-76360	• • Seat, Welded	3	Y300001-
6		207-62-76230	• • Bracket, Welded	2	Y300001-
7		207-70-61521	• Bushing	2	Y300001-
8		207-70-32150	• Bushing	2	Y300001-
9		207-70-72460	• Bushing	2	Y300001-
10		07020-00000	• Fitting, Grease	3	Y300001-
11		07145-00110	• Seal, Dust	2	Y300001-
12		207-70-72120	• Seal, Dust	4	Y300001-
13		(707-01-0C612)	Cylinder Assembly(Refer to Page 961)		-

FIG. T1200-043002 Arm, 3.2m, 1-attachment, For Machine With WEBASTO Coolant Heater, 100 Hours Greasing Type, Bucket Cylinder

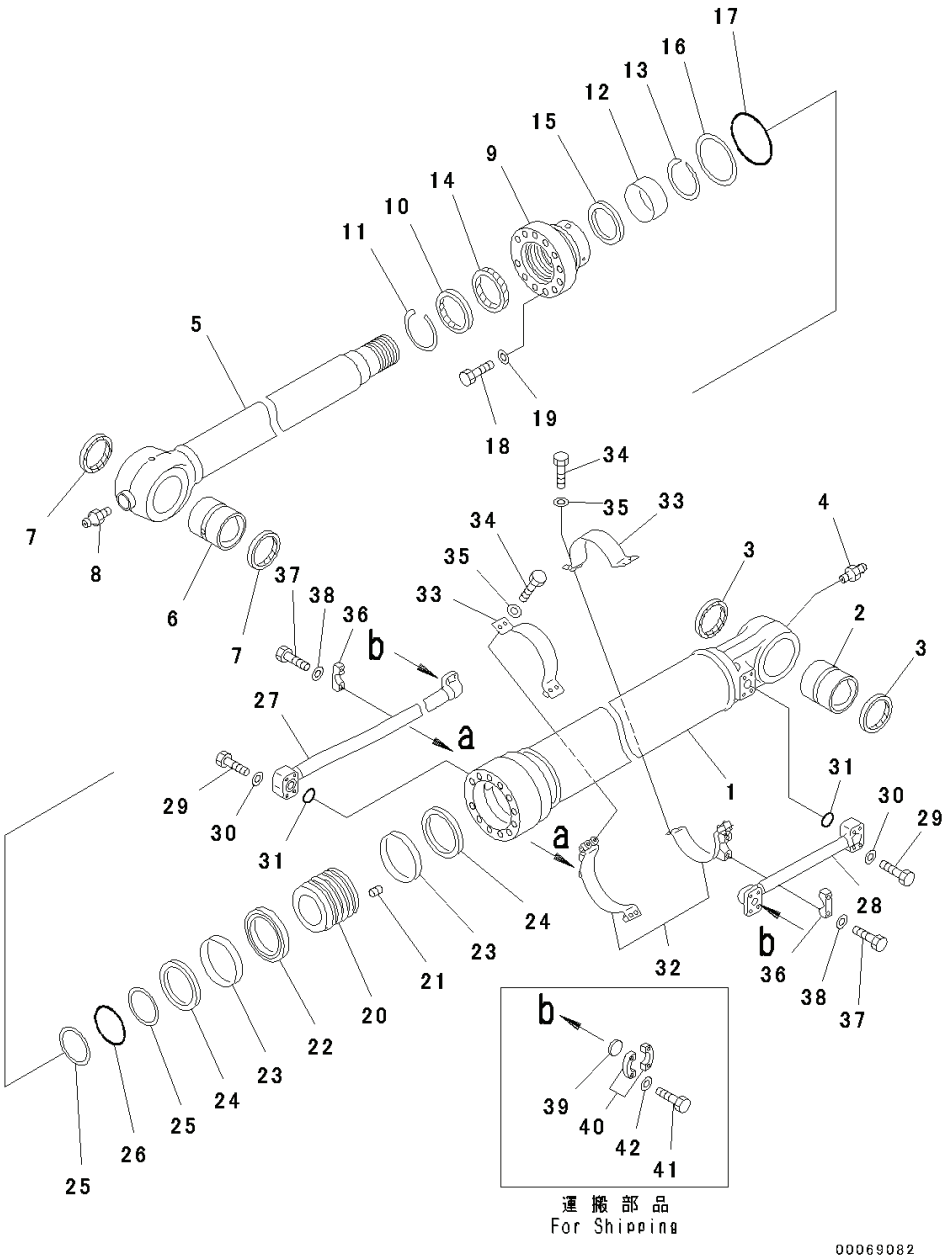

Index	Code	Part Number	Descreption	Qty	Serial Number
		707-01-0C612	Cylinder Assembly	1	Y300001-
1		707-13-14591	• Cylinder	1	Y300001-
2		707-76-90130	• Bushing	1	Y300001-
3		07145-00090	• Seal, Dust, (Kit : K11)	2	Y300001-
4		07020-00000	• Fitting, Grease	1	Y300001-
5		707-58-10730	• Rod	1	Y300001-
6		207-63-76170	• Bushing	1	Y300001-
7		207-70-72120	• Seal, Dust, (Kit : K11)	2	Y300001-
8		07020-00000	• Fitting, Grease	1	Y300001-
9		707-27-14690	• Head, Cylinder	1	Y300001-
10		176-63-56170	• Seal, Dust, (Kit : K11)	1	Y300001-
11		07179-13114	• Ring, Snap	1	Y300001-
12		707-52-90780	• Bushing	1	Y300001-
13		707-75-10160	• Ring, Snap	1	Y300001-
14		707-51-10030	• Packing, Rod, (Kit : K11)	1	Y300001-
15		707-51-10640	• Ring, Buffer, (Kit : K11)	1	Y300001-
16		707-35-91420	• Ring, Back-up, (Kit : K11)	1	Y300001-
17		07000-15130	• O-ring, (Kit : K11)	1	Y300001-
18		01010-81875	• Bolt	12	Y300001-
19		707-41-11840	• Washer	12	Y300001-
20		707-36-14650	• Piston	1	Y300001-
21		01310-01216	• Screw	1	Y300001-
22		707-44-14180	• Ring, Piston, (Kit : K11)	1	Y300001-
23		707-39-14110	• Ring, Wear, (Kit : K11)	2	Y300001-
24		707-44-14910	• Ring	2	Y300001-
25		07001-05090	• Ring, Back-up, (Kit : K11)	2	Y300001-
26		07000-15090	• O-ring, (Kit : K11)	1	Y300001-
27		707-86-11621	Tube	1	Y300001-
28		207-63-73180	Tube	1	Y300001-
29		07372-21060	Bolt	8	Y300001-
30		01643-51032	Washer	8	Y300001-
31		07000-13035	O-ring, (Kit : K11)	2	Y300001-
32		207-63-73790	Bracket	2	Y300001-
33		707-88-21410	Band	2	Y300001-
34		07372-21240	Bolt	8	Y300001-
35		01643-51232	Washer	8	Y300001-
36		707-88-10150	Clamp	2	Y300001-
37		01010-81245	Bolt	4	Y300001-
38		01643-31232	Washer	4	Y300001-

PC300-8 (FEN01263-00)

FIG. T1200-043002 Arm, 3.2m, 1-attachment, For Machine With WEBASTO Coolant Heater, 100 Hours Greasing Type, Bucket Cylinder

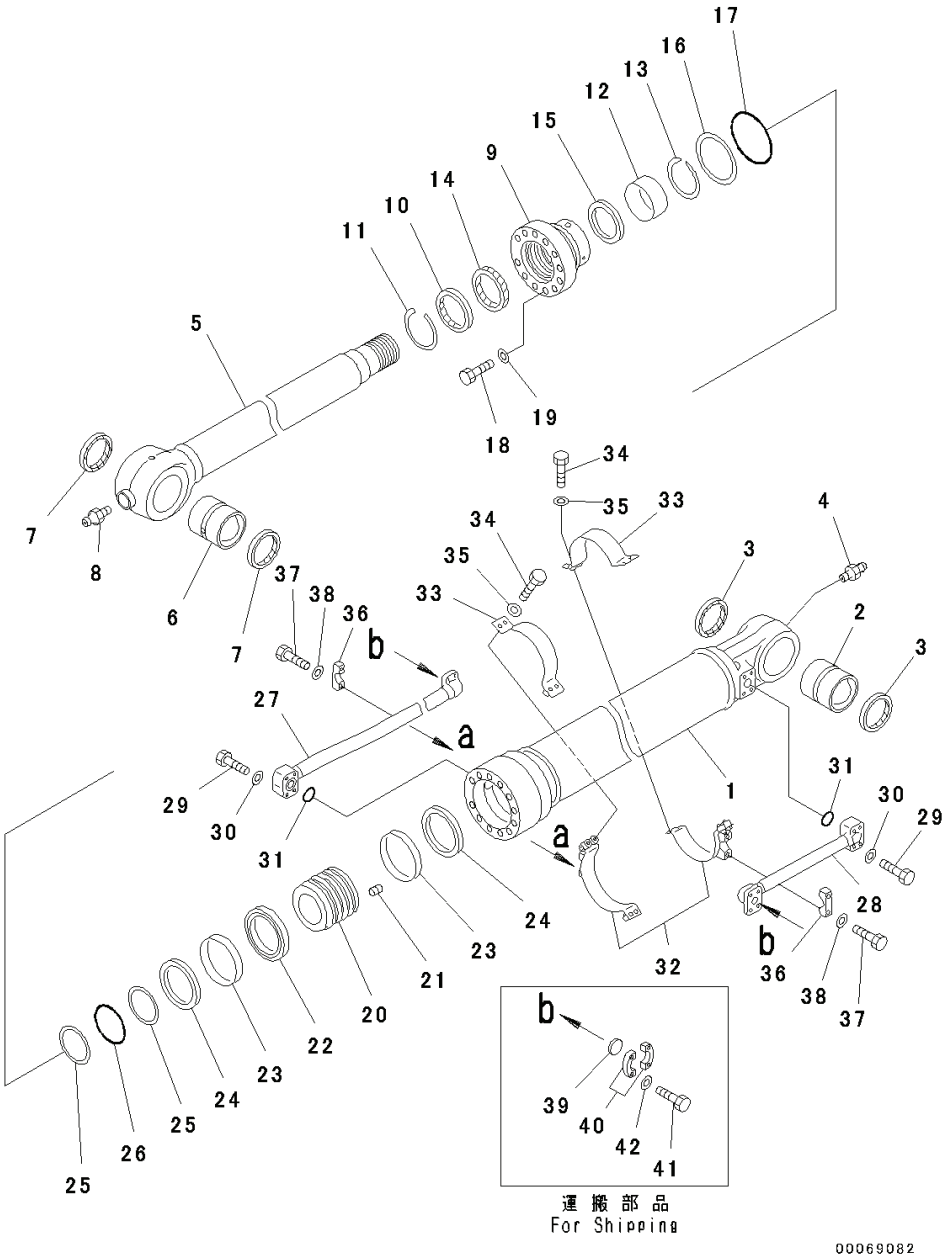

Index	Code	Part Number	Descreption	Qty	Serial Number
39		707-88-33040	Cap	2	Y300001-
40		07371-31049	Flange, Split	4	Y300001-
41		07372-21035	Bolt	8	Y300001-
42		01643-51032	Washer	8	Y300001-

PC300-8 (FEN01263-00)

FIG. T1200-043005 Arm, 3.2m, 1-attachment, For Machine With WEBASTO Coolant Heater, 100 Hours Greasing Type, Additional Piping

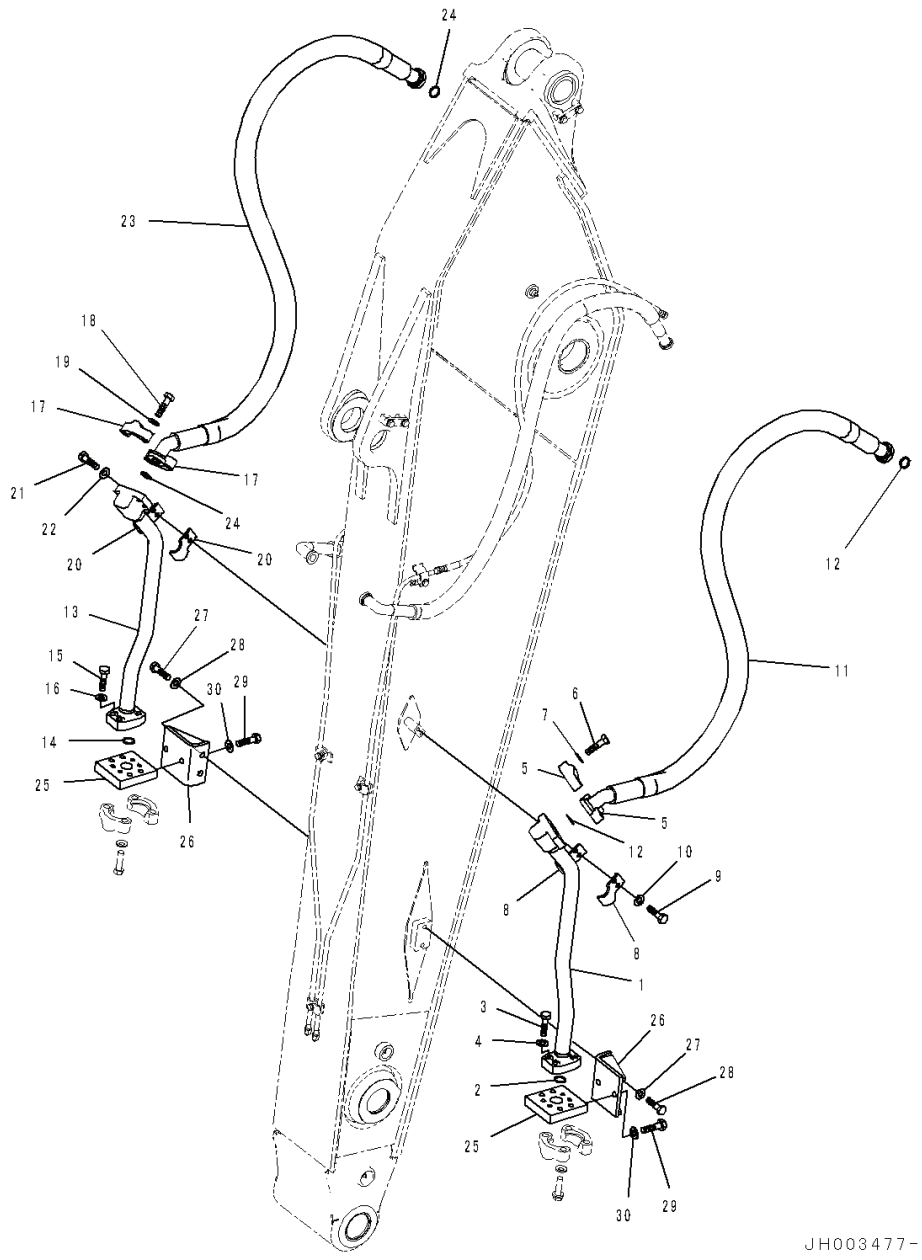

Index	Code	Part Number	Descreption	Qty	Serial Number
1		207-970-7810	Tube	1	Y300001-
2		07000-13048	O-ring	1	Y300001-
3		01010-81455	Bolt	4	Y300001-
4		01643-31445	Washer	4	Y300001-
5		07371-51470	Flange, Split	2	Y300001-
6		01010-81455	Bolt	4	Y300001-
7		01643-31445	Washer	4	Y300001-
8		207-970-7790	Clamp	2	Y300001-
9		01010-81235	Bolt	2	Y300001-
10		01643-31232	Washer	2	Y300001-
11		07097-21424	Hose, Flange Type	1	Y300001-
12		07000-13048	O-ring	2	Y300001-
13		207-970-7820	Tube	1	Y300001-
14		07000-13048	O-ring	1	Y300001-
15		01010-81455	Bolt	4	Y300001-
16		01643-31445	Washer	4	Y300001-
17		07371-51470	Flange, Split	2	Y300001-
18		01010-81455	Bolt	4	Y300001-
19		01643-31445	Washer	4	Y300001-
20		207-970-7790	Clamp	2	Y300001-
21		01010-81235	Bolt	2	Y300001-
22		01643-31232	Washer	2	Y300001-
23		07097-21422	Hose, Flange Type	1	Y300001-
24		07000-13048	O-ring	2	Y300001-
25		207-970-7830	Block	2	Y300001-
26		208-970-7460	Bracket	2	Y300001-
27		01010-81640	Bolt	4	Y300001-
28		01643-31645	Washer	4	Y300001-
29		01010-81435	Bolt	4	Y300001-
30		01643-31445	Washer	4	Y300001-

FIG. T1200-043006 Arm, 3.2m, 1-attachment, For Machine With WEBASTO Coolant Heater, 100 Hours Greasing Type, Valve, For Additional Piping

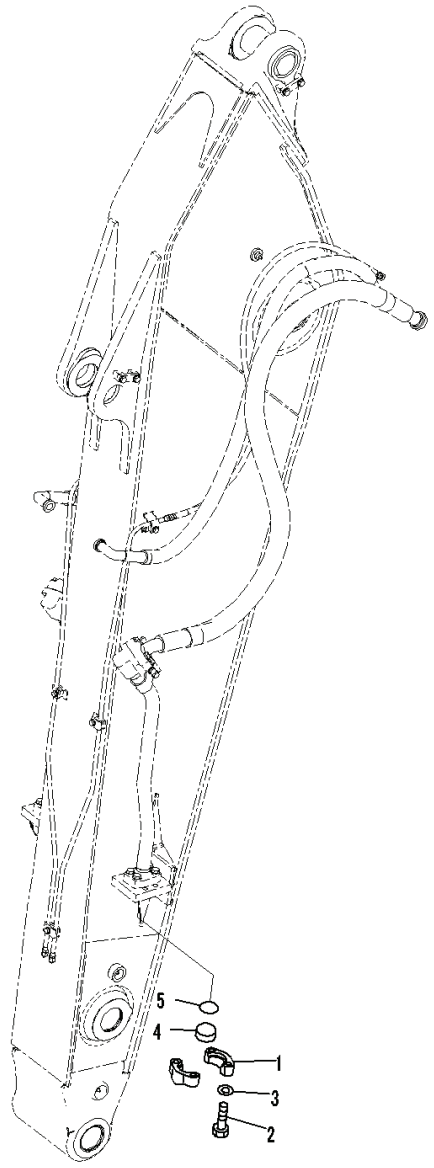

JH003478

Index	Code	Part Number	Descreption	Qty	Serial Number
1		07371-52080	Flange, Split .	4	Y300001-
2		01010-81865	Bolt .	8	Y300001-
3		01643-31845	Washer .	8	Y300001-
4		07378-12010	Head .	2	Y300001-
5		07000-12060	O-ring .	2	Y300001-

FIG. T1290-002001 Parts For Less Bucket

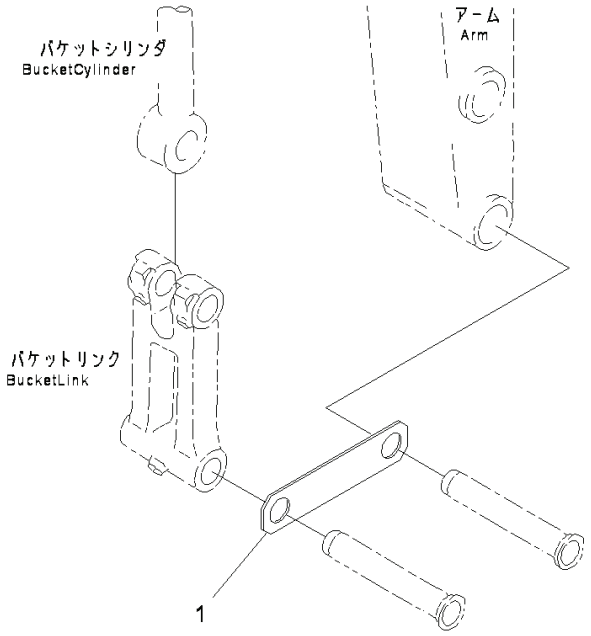

PEB3804

Index	Code	Part Number	Descreption	Qty	Serial Number
1		208-70-33220	Plate	1	Y300001-

PC300-8 (FEN01263-00)

FIG. T1510-016001 Backhoe Bucket, 1.6m3, 1515mm, Horizontal Pin Type, With Hook, With Adjusting, (1/2)

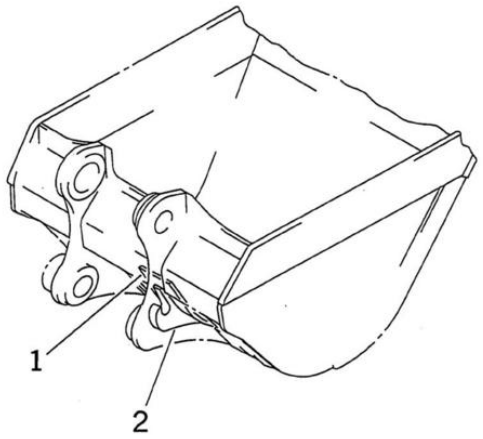

Index	Code	Part Number	Descreption	Qty	Serial Number
1		207-70-54281	Plate,Welded	1	Y300001-
2		207-70-34270	Hook,Welded	1	Y300001-

PC300-8 (FEN01263-00)

FIG. T1510-016002 Backhoe Bucket, 1.6m3, 1515mm, Horizontal Pin Type, With Hook, With Adjusting, (2/2)

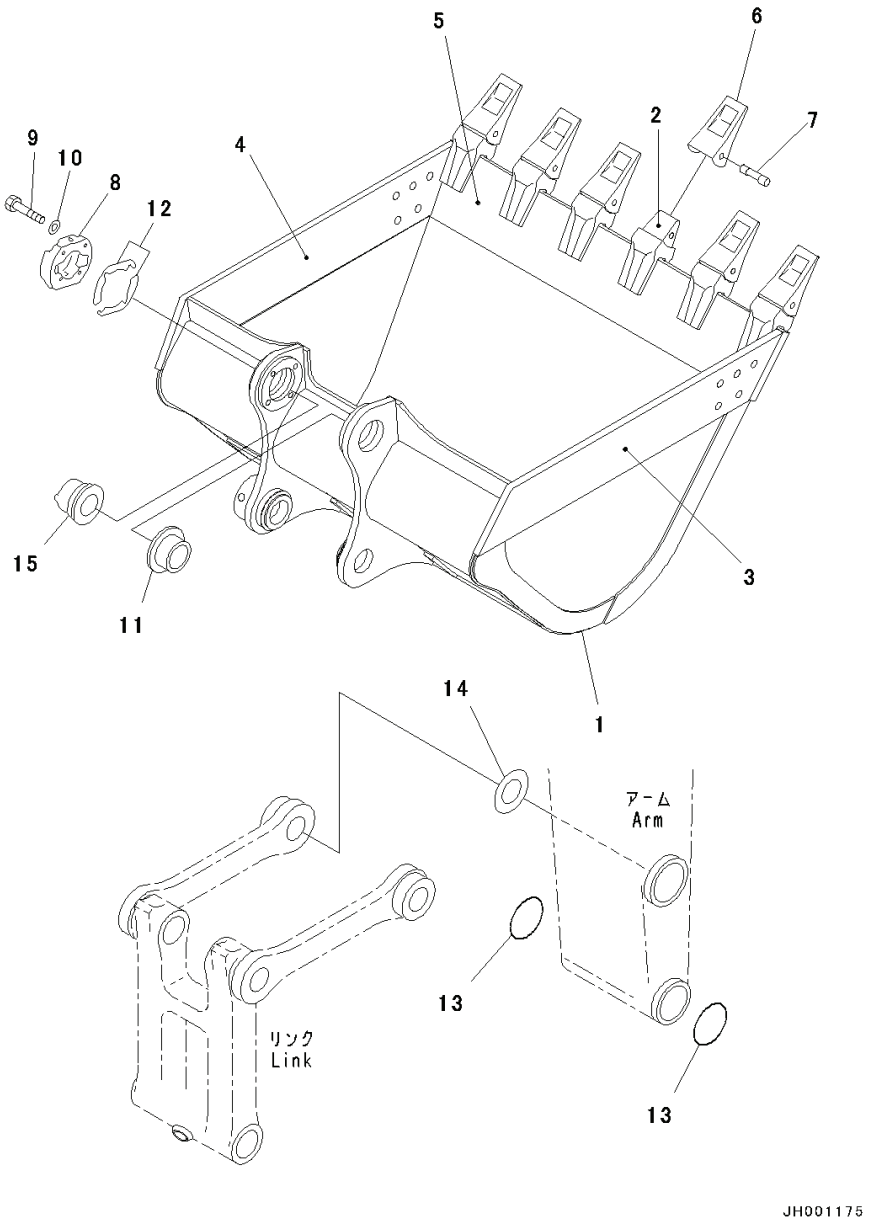

Index	Code	Part Number	Descreption	Qty	Serial Number
1		207-920-7310	Bucket	1	Y300001-
2		207-939-3120	• Adapter,Welded	6	Y300001-
3		207-70-54121	• Plate,LHS,Welded	1	Y300001-
4		207-70-54131	• Plate,RHS,Welded	1	Y300001-
5		207-920-5120	• Plate,Welded	1	Y300001-
6		207-70-14151	Tooth	6	Y300001-
7		09244-02516	Pin	6	Y300001-
8		207-70-34240	Cover	1	Y300001-
9		01010-62065	Bolt	4	Y300001-
10		01643-32060	Washer	4	Y300001-
11		207-70-72470	Bushing	1	Y300001-
12		207-70-00061	Shim Assembly	1	Y300001-
	C1		• Shim, T=1.0mm	20	Y300001-
	C1		• Shim, T=0.5mm	4	Y300001-
13		207-70-33181	O-ring	2	Y300001-
14		207-70-24190	Spacer, T=0.8mm	1	Y300001-
15		207-70-34230	Bushing	1	Y300001-

PC300-8 (FEN01263-00)

FIG. T1510-015001 Backhoe Bucket, 1.1m3, 1145mm, Horizontal Pin Type, With Hook, (1/3)

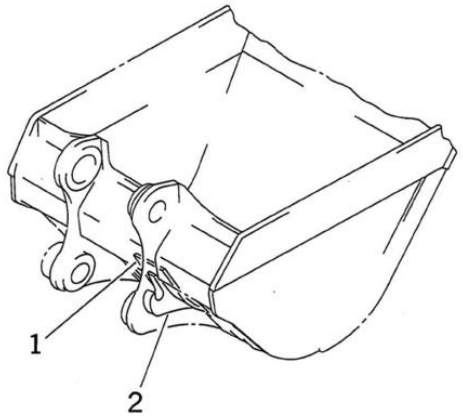

Index	Code	Part Number	Descreption	Qty	Serial Number
1		207-70-54281	Plate,Welded	1	Y300001-
2		207-70-34270	Hook,Welded	1	Y300001-

PC300-8 (FEN01263-00)

FIG. T1510-015002 Backhoe Bucket, 1.1m3, 1145mm, Horizontal Pin Type, With Hook, (2/3)

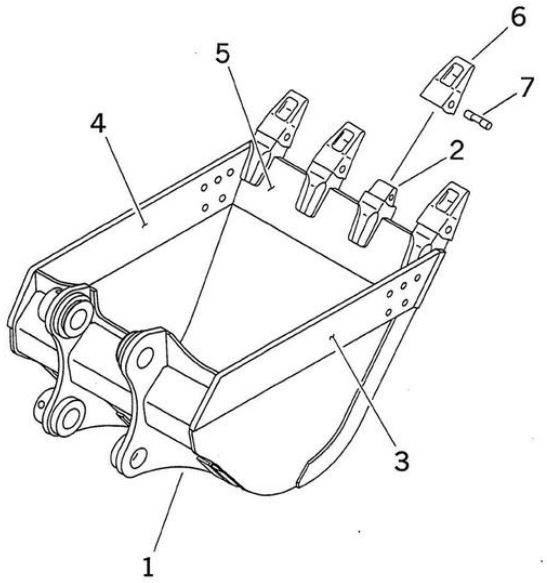

Index	Code	Part Number	Descreption	Qty	Serial Number
1		207-926-5310	Bucket	1	Y300001-
2		207-939-3120	• Adapter,Welded	4	Y300001-
3		207-70-54121	• Plate,Welded	1	Y300001-
4		207-70-54131	• Plate,Welded	1	Y300001-
5		207-926-5120	• Plate,Welded	1	Y300001-
6		207-70-14151	Tooth	4	Y300001-
7		09244-02516	Pin	4	Y300001-

PC300-8 (FEN01263-00)

FIG. T1510-015003 Backhoe Bucket, 1.1m3, 1145mm, Horizontal Pin Type, With Hook, (3/3)

Index	Code	Part Number	Descreption	Qty	Serial Number
1		207-70-33181	O-ring	2	Y300001-
2		207-70-24190	Spacer, T=0.8mm	1	Y300001-

PC300-8 (FEN01263-00)

FIG. T1510-012001 Backhoe Bucket, 1.6m3, 1515mm, Horizontal Pin Type, With Side Cutter, With Hook, With Adjusting, (1/2)

Index	Code	Part Number	Descreption	Qty	Serial Number
1		207-70-54281	Plate,Welded	1	Y300001-
2		207-70-34270	Hook,Welded	1	Y300001-

FIG. T1510-012002 Backhoe Bucket, 1.6m3, 1515mm, Horizontal Pin Type, With Side Cutter, With Hook, With Adjusting, (2/2)

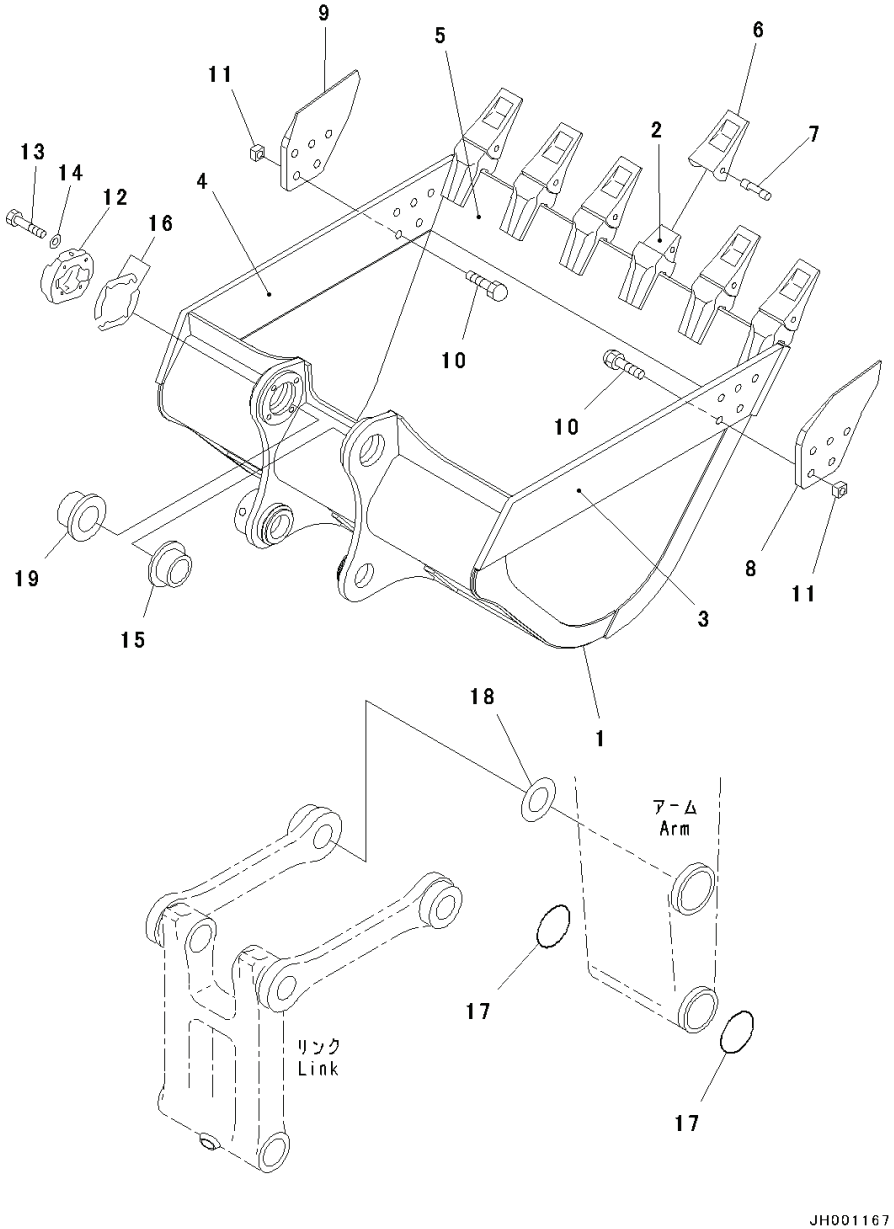

Index	Code	Part Number	Descreption	Qty	Serial Number
1		207-920-7310	Bucket	1	Y300001-
2		207-939-3120	• Adapter,Welded	6	Y300001-
3		207-70-54121	• Plate,LHS,Welded	1	Y300001-
4		207-70-54131	• Plate,RHS,Welded	1	Y300001-
5		207-920-5120	• Plate,Welded	1	Y300001-
6		207-70-14151	Tooth	6	Y300001-
7		09244-02516	Pin	6	Y300001-
8		207-70-34160	Cutter,LHS	1	Y300001-
9		207-70-34170	Cutter,RHS	1	Y300001-
10		209-32-11234	Bolt	10	Y300001-
11		195-32-11222	Nut	10	Y300001-
12		207-70-34240	Cover	1	Y300001-
13		01010-62065	Bolt	4	Y300001-
14		01643-32060	Washer	4	Y300001-
15		207-70-72470	Bushing	1	Y300001-
16		207-70-00061	Shim Assembly	1	Y300001-
	C1		• Shim, T=1.0mm	20	Y300001-
	C1		• Shim, T=0.5mm	4	Y300001-
17		207-70-33181	O-ring	2	Y300001-
18		207-70-24190	Spacer, T=0.8mm	1	Y300001-
19		207-70-34230	Bushing	1	Y300001-

PC300-8 (FEN01263-00)

FIG. T1510-010001 Backhoe Bucket, 1.1m3, 1145mm, Horizontal Pin Type, With Side Cutter, With Hook, (1/4)

Index	Code	Part Number	Descreption	Qty	Serial Number
1		207-70-54281	Plate,Welded	1	Y300001-
2		207-70-34270	Hook,Welded	1	Y300001-

FIG. T1510-010002 Backhoe Bucket, 1.1m3, 1145mm, Horizontal Pin Type, With Side Cutter, With Hook, (2/4)

Index	Code	Part Number	Descreption	Qty	Serial Number
1		207-926-5310	Bucket	1	Y300001-
2		207-939-3120	• Adapter,Welded	4	Y300001-
3		207-70-54121	• Plate,Welded	1	Y300001-
4		207-70-54131	• Plate,Welded	1	Y300001-
5		207-926-5120	• Plate,Welded	1	Y300001-
6		207-70-14151	Tooth	4	Y300001-
7		09244-02516	Pin	4	Y300001-

PC300-8 (FEN01263-00)

FIG. T1510-010003 Backhoe Bucket, 1.1m3, 1145mm, Horizontal Pin Type, With Side Cutter, With Hook, (3/4)

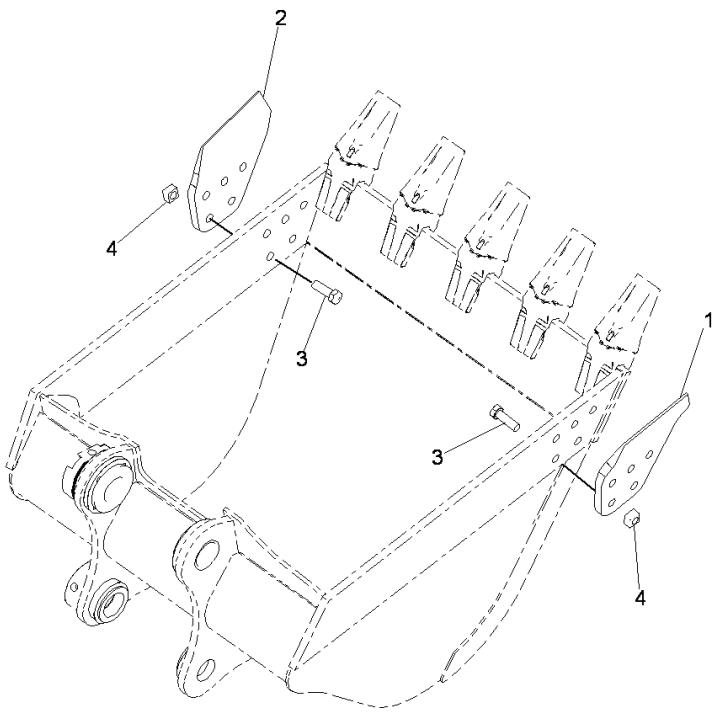

00037172

Index	Code	Part Number	Descreption	Qty	Serial Number
1		207-70-34160	Cutter,LHS	1	Y300001-
2		207-70-34170	Cutter,RHS	1	Y300001-
3		209-32-11234	Bolt, SHOE	10	Y300001-
4		195-32-11222	Nut, SHOE	10	Y300001-

FIG. T1510-010004 Backhoe Bucket, 1.1m3, 1145mm, Horizontal Pin Type, With Side Cutter, With Hook, (4/4)

Index	Code	Part Number	Descreption	Qty	Serial Number
1		207-70-33181	O-ring	2	Y300001-
2		207-70-24190	Spacer, T=0.8mm	1	Y300001-

PC300-8 (FEN01263-00)

FIG. T1510-009001 Backhoe Bucket, 1.6m3, 1515mm, Horizontal Pin Type, With Adjusting

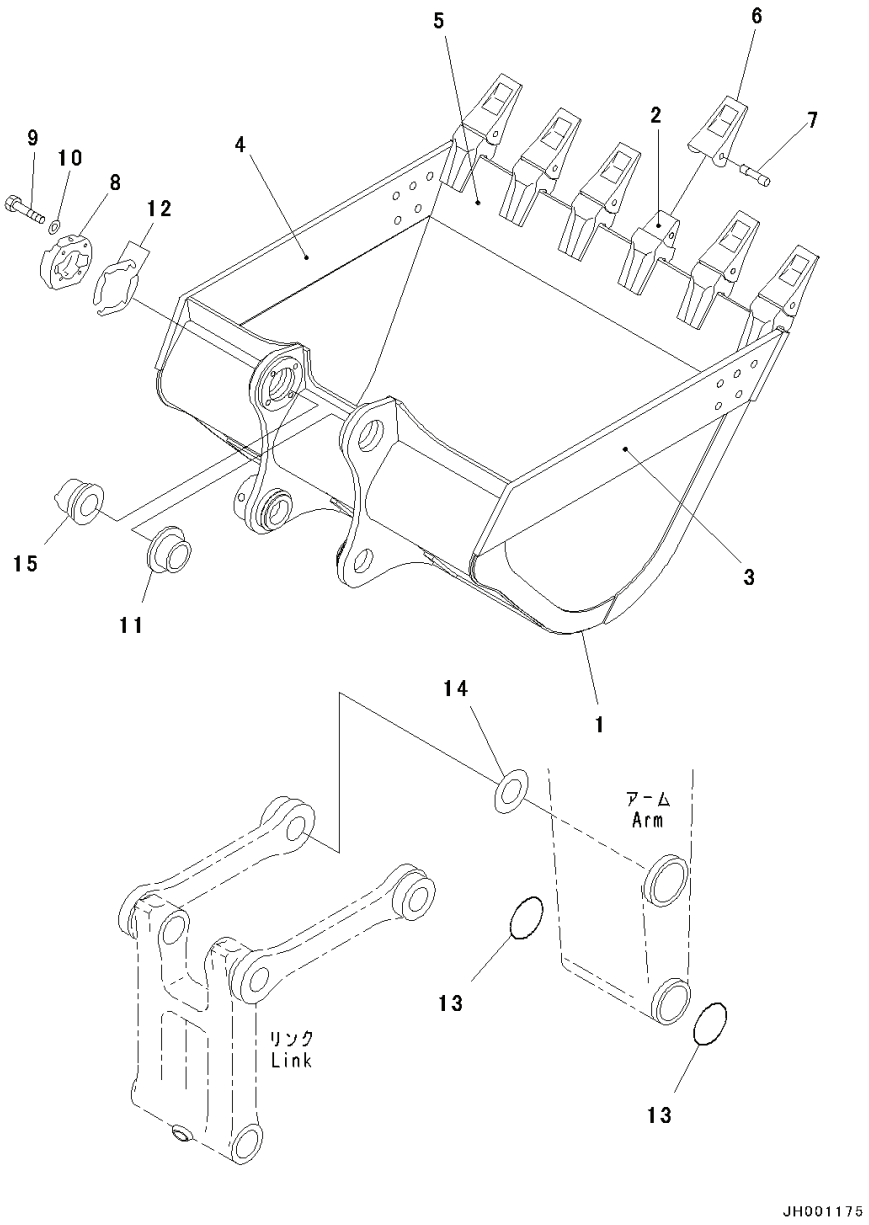

Index	Code	Part Number	Descreption	Qty	Serial Number
1		207-920-7310	Bucket	1	Y300001-
2		207-939-3120	• Adapter,Welded	6	Y300001-
3		207-70-54121	• Plate,LHS,Welded	1	Y300001-
4		207-70-54131	• Plate,RHS,Welded	1	Y300001-
5		207-920-5120	• Plate,Welded	1	Y300001-
6		207-70-14151	Tooth	6	Y300001-
7		09244-02516	Pin	6	Y300001-
8		207-70-34240	Cover	1	Y300001-
9		01010-62065	Bolt	4	Y300001-
10		01643-32060	Washer	4	Y300001-
11		207-70-72470	Bushing	1	Y300001-
12		207-70-00061	Shim Assembly	1	Y300001-
	C1		• Shim, T=1.0mm	20	Y300001-
	C1		• Shim, T=0.5mm	4	Y300001-
13		207-70-33181	O-ring	2	Y300001-
14		207-70-24190	Spacer, T=0.8mm	1	Y300001-
15		207-70-34230	Bushing	1	Y300001-

PC300-8 (FEN01263-00)

FIG. T1510-008001 Ripper Bucket, 0.9m3, 1200mm

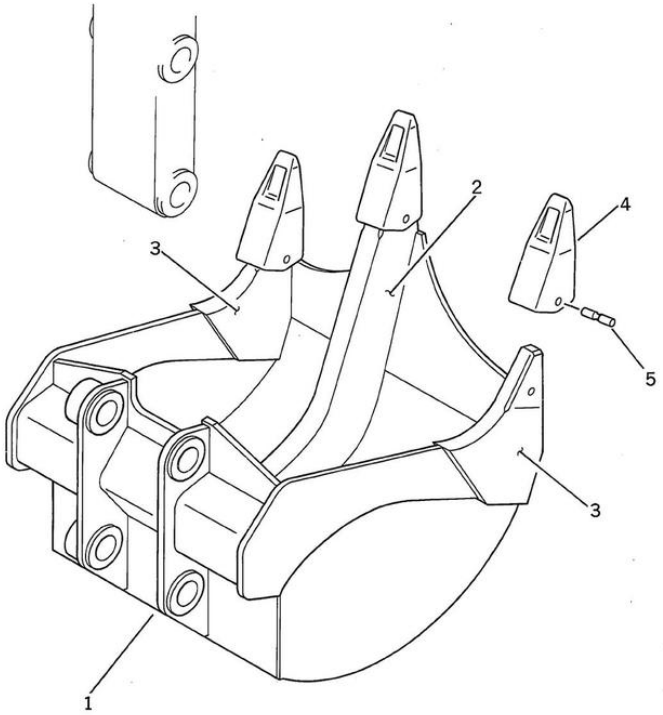

Index	Code	Part Number	Descreption	Qty	Serial Number
1		207-922-3110	Bucket	1	Y300001-
2		207-922-1120	• Shank,Welded	1	Y300001-
3		207-922-1130	• Adapter,Welded	2	Y300001-
4		195-78-21331	Point	3	Y300001-
5		09244-02508	Pin	3	Y300001-

PC300-8 (FEN01263-00)

FIG. T1510-005001 Backhoe Bucket, 1.1m3, 1145mm, Horizontal Pin Type, With Side Cutter, (1/3)

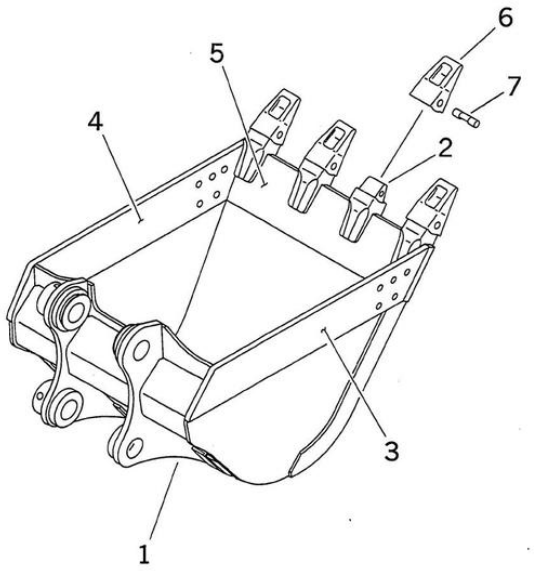

Index	Code	Part Number	Descreption	Qty	Serial Number
1		207-926-5310	Bucket	1	Y300001-
2		207-939-3120	• Adapter,Welded	4	Y300001-
3		207-70-54121	• Plate,Welded	1	Y300001-
4		207-70-54131	• Plate,Welded	1	Y300001-
5		207-926-5120	• Plate,Welded	1	Y300001-
6		207-70-14151	Tooth	4	Y300001-
7		09244-02516	Pin	4	Y300001-

PC300-8 (FEN01263-00)

FIG. T1510-005002 Backhoe Bucket, 1.1m3, 1145mm, Horizontal Pin Type, With Side Cutter, (2/3)

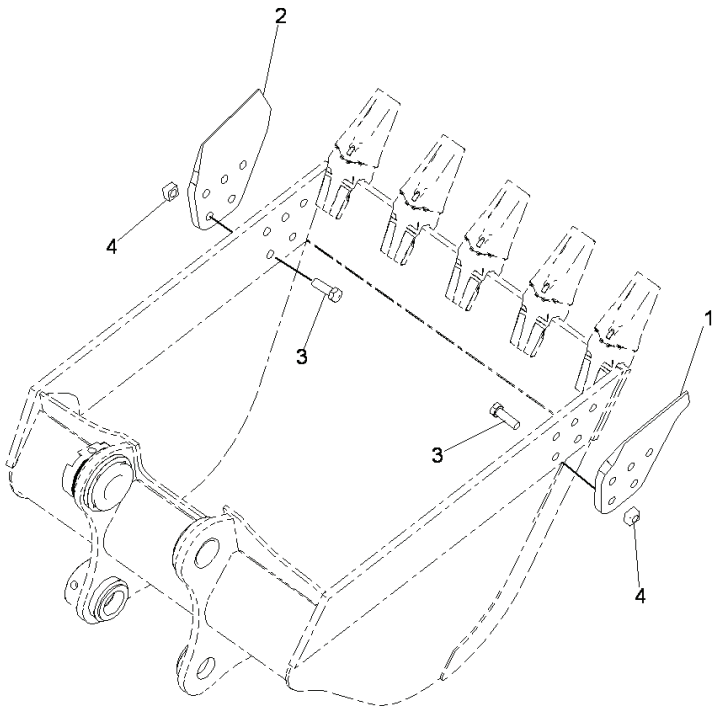

00037172

Index	Code	Part Number	Descreption	Qty	Serial Number
1		207-70-34160	Cutter,LHS	1	Y300001-
2		207-70-34170	Cutter,RHS	1	Y300001-
3		209-32-11234	Bolt, SHOE	10	Y300001-
4		195-32-11222	Nut, SHOE	10	Y300001-

PC300-8 (FEN01263-00)

FIG. T1510-005003 Backhoe Bucket, 1.1m3, 1145mm, Horizontal Pin Type, With Side Cutter, (3/3)

Index	Code	Part Number	Descreption	Qty	Serial Number
1		207-70-33181	O-ring	2	Y300001-
2		207-70-24190	Spacer, T=0.8mm	1	Y300001-

PC300-8 (FEN01263-00)

FIG. T1510-004001 Backhoe Bucket, 1.6m3, 1515mm, Horizontal Pin Type, With Side Cutter, With Adjusting

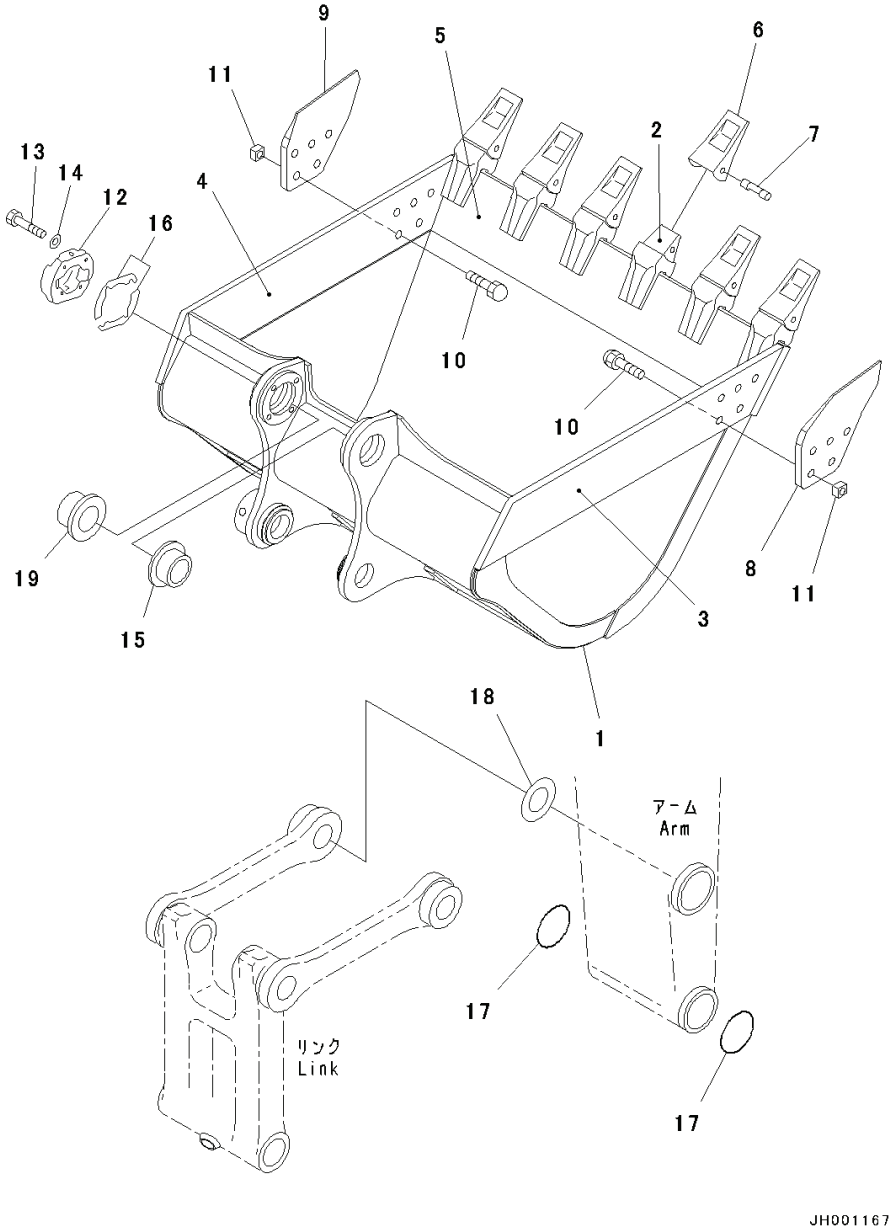

Index	Code	Part Number	Descreption	Qty	Serial Number
1		207-920-7310	Bucket	1	Y300001-
2		207-939-3120	• Adapter,Welded	6	Y300001-
3		207-70-54121	• Plate,LHS,Welded	1	Y300001-
4		207-70-54131	• Plate,RHS,Welded	1	Y300001-
5		207-920-5120	• Plate,Welded	1	Y300001-
6		207-70-14151	Tooth	6	Y300001-
7		09244-02516	Pin	6	Y300001-
8		207-70-34160	Cutter	1	Y300001-
9		207-70-34170	Cutter	1	Y300001-
10		209-32-11234	Bolt, SHOE	10	Y300001-
11		195-32-11222	Nut, SHOE	10	Y300001-
12		207-70-34240	Cover	1	Y300001-
13		01010-62065	Bolt	4	Y300001-
14		01643-32060	Washer	4	Y300001-
15		207-70-72470	Bushing	1	Y300001-
16		207-70-00061	Shim Assembly	1	Y300001-
	C1		• Shim, T=1.0mm	20	Y300001-
	C1		• Shim, T=0.5mm	4	Y300001-
17		207-70-33181	O-ring	2	Y300001-
18		207-70-24190	Spacer, T=0.8mm	1	Y300001-
19		207-70-34230	Bushing	1	Y300001-

PC300-8 (FEN01263-00)

FIG. T1510-003001 Backhoe Bucket, 1.1m3, 1145mm, Horizontal Pin Type, (1/2)

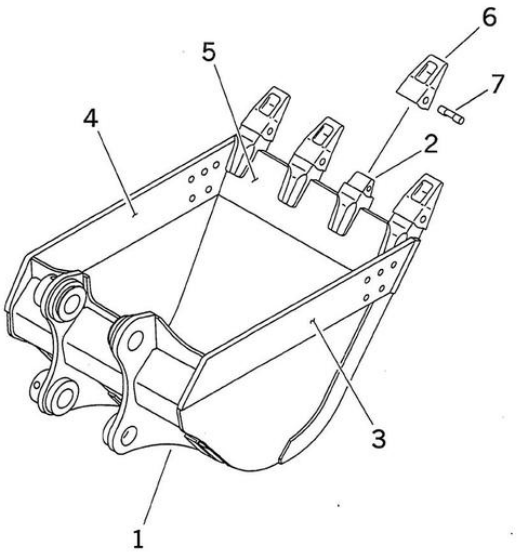

Index	Code	Part Number	Descreption	Qty	Serial Number
1		207-926-5310	Bucket	1	Y300001-
2		207-939-3120	• Adapter,Welded	4	Y300001-
3		207-70-54121	• Plate,Welded	1	Y300001-
4		207-70-54131	• Plate,Welded	1	Y300001-
5		207-926-5120	• Plate,Welded	1	Y300001-
6		207-70-14151	Tooth	4	Y300001-
7		09244-02516	Pin	4	Y300001-

PC300-8 (FEN01263-00)

FIG. T1510-003002 Backhoe Bucket, 1.1m3, 1145mm, Horizontal Pin Type, (2/2)

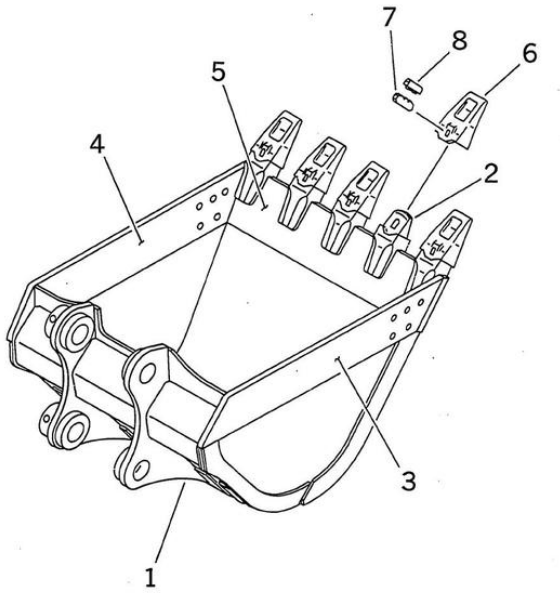

Index	Code	Part Number	Descreption	Qty	Serial Number
1		207-70-33181	O-ring	2	Y300001-
2		207-70-24190	Spacer, T=0.8mm	1	Y300001-

PC300-8 (FEN01263-00)

FIG. T1510-024001A Backhoe Bucket, 1.4m3, 1340mm, Horizontal Pin Type, Strengthened, With Side Cutter, With Adjusting

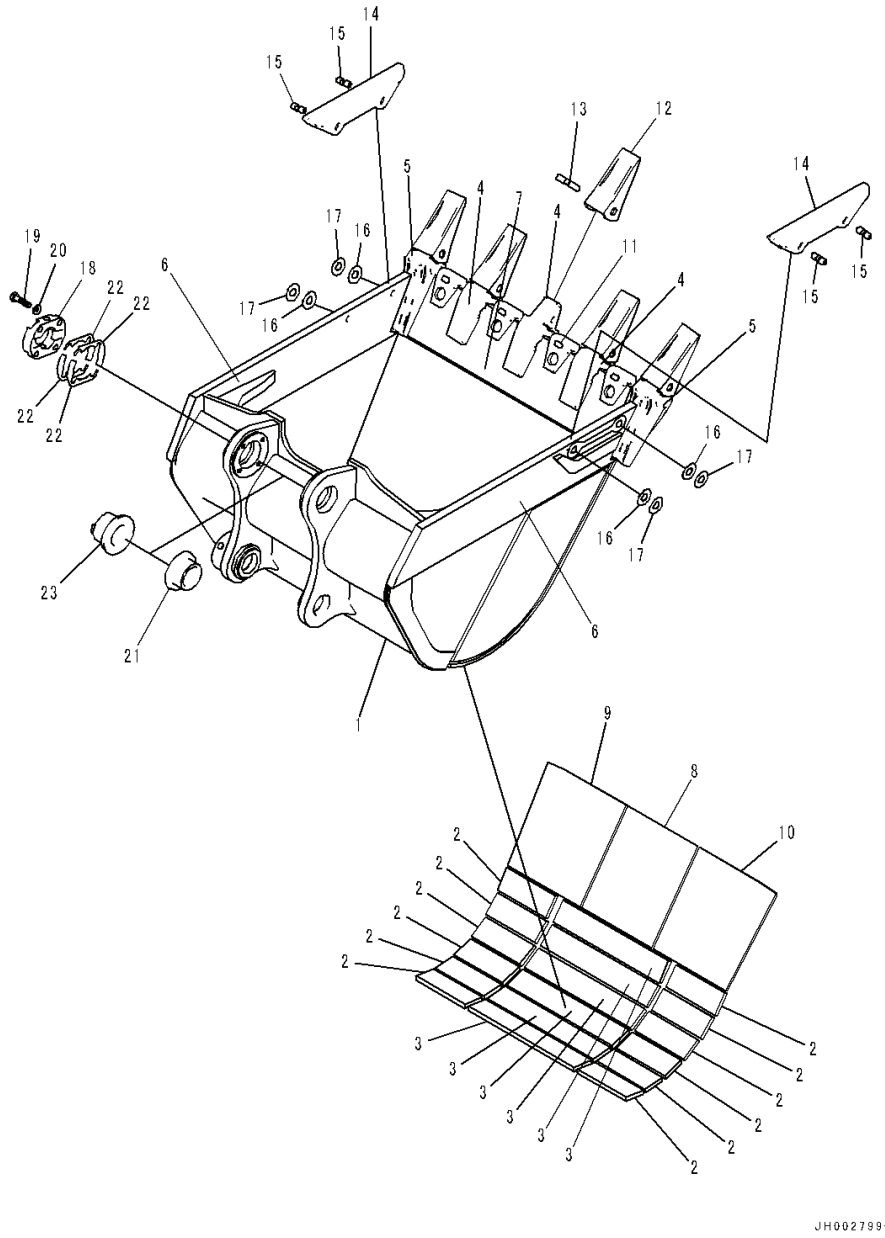

Index	Code	Part Number	Descreption	Qty	Serial Number
1		207-934-7511	Bucket .	1	Y300001-
2		207-934-6160	• Plate,Welded	12	Y300001-
3		207-934-6170	• Plate,Welded	6	Y300001-
4		207-934-7120	• Adapter,Welded .	3	Y300001-
5		207-934-7181	• Adapter,Welded .	2	Y300001-
6		207-934-7530	• Plate,Welded	2	Y300001-
7		207-934-7550	• Plate,Welded	1	Y300001-
8		207-934-7G50	• Plate,Welded	1	Y300001-
9		207-934-7G60	• Plate,Welded	1	Y300001-
10		207-934-7G70	• Plate,Welded	1	Y300001-
11		208-934-5170	• Shroud,Welded .	4	Y300001-
12		207-70-14280	Tooth	5	Y300001-
13		09244-02516	Pin .	5	Y300001-
14		208-934-7132	Guard .	2	Y300001-
15		113-78-21170	Pin .	4	Y300001-
16		209-939-7110	Shim, T=1.0mm .	8	Y300001-
17		209-939-7120	Shim, T=0.5mm .	4	Y300001-
18		207-70-34240	Cover .	1	Y300001-
19		01010-62065	Bolt .	4	Y300001-
20		01643-32060	Washer .	4	Y300001-
21		207-70-72470	Bushing .	1	Y300001-
22		207-70-00061	Shim Assembly .	1	Y300001-
	C1		• Shim, T=1.0mm .	20	Y300001-
	C1		• Shim, T=0.5mm .	4	Y300001-
23		207-70-34230	Bushing .	1	Y300001-

PC300-8 (FEN01263-00)

FIG. T1510-022001 Backhoe Bucket, 1.4m3, 1340mm, Horizontal Pin Type, Strengthened, With Side Cutter, With Hook, With Adjusting, (1/2)

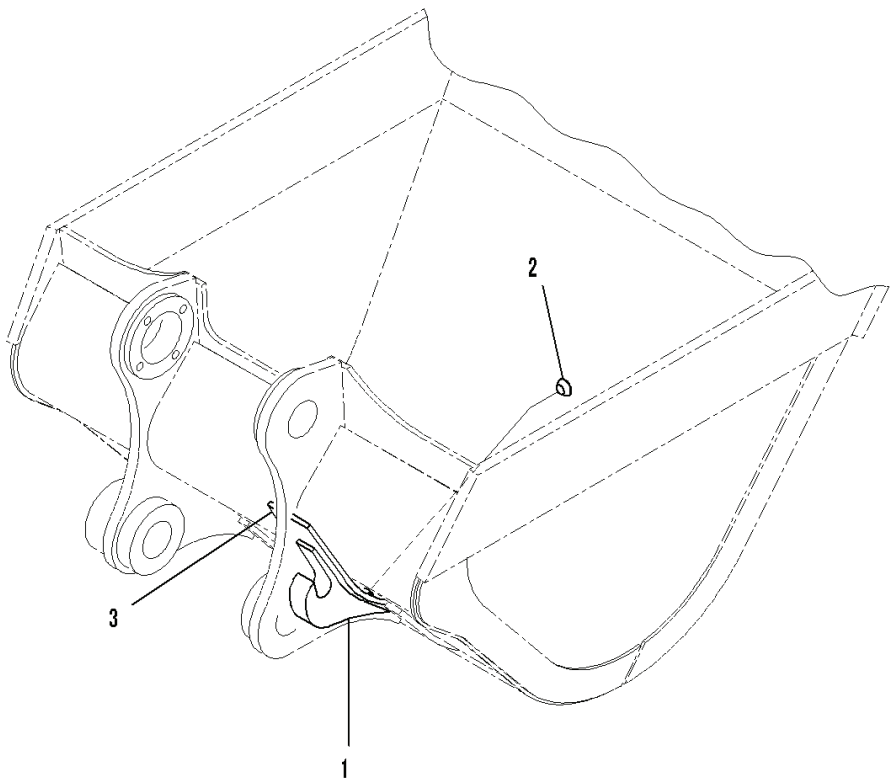

Index	Code	Part Number	Descreption	Qty	Serial Number
1		207-934-7540	Hook,Welded	1	Y300001-
2		207-934-7560	Plate,Welded	1	Y300001-
3		207-934-7580	Plate,Welded	1	Y300001-

PC300-8 (FEN01263-00)

FIG. T1510-022002A Backhoe Bucket, 1.4m3, 1340mm, Horizontal Pin Type, Strengthened, With Side Cutter, With Hook, With Adjusting, (2/2)

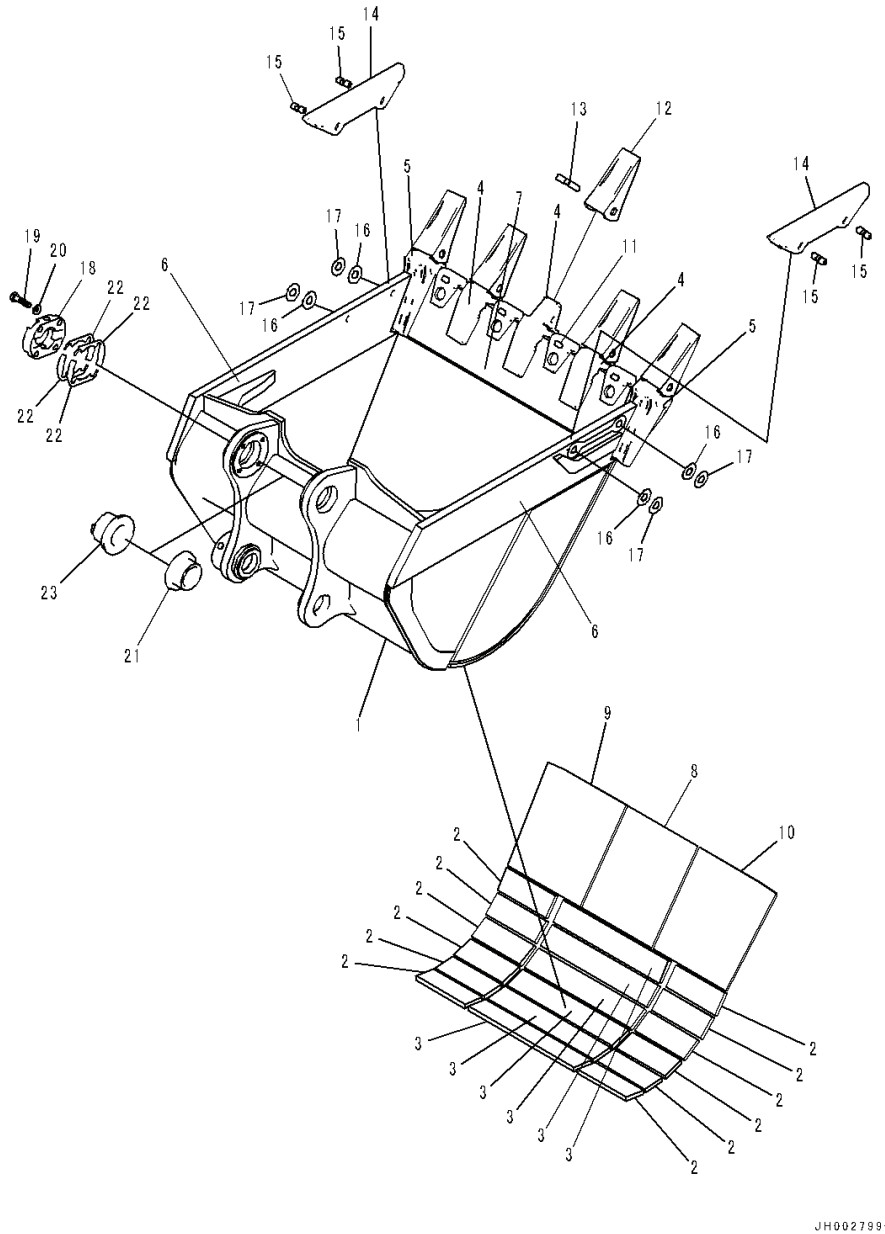

Index	Code	Part Number	Descreption	Qty	Serial Number
1		207-934-7511	Bucket .	1	Y300001-
2		207-934-6160	• Plate,Welded	12	Y300001-
3		207-934-6170	• Plate,Welded	6	Y300001-
4		207-934-7120	• Adapter,Welded .	3	Y300001-
5		207-934-7181	• Adapter,Welded .	2	Y300001-
6		207-934-7530	• Plate,Welded	2	Y300001-
7		207-934-7550	• Plate,Welded	1	Y300001-
8		207-934-7G50	• Plate,Welded	1	Y300001-
9		207-934-7G60	• Plate,Welded	1	Y300001-
10		207-934-7G70	• Plate,Welded	1	Y300001-
11		208-934-5170	• Shroud,Welded .	4	Y300001-
12		207-70-14280	Tooth	5	Y300001-
13		09244-02516	Pin .	5	Y300001-
14		208-934-7132	Guard .	2	Y300001-
15		113-78-21170	Pin .	4	Y300001-
16		209-939-7110	Shim, T=1.0mm .	8	Y300001-
17		209-939-7120	Shim, T=0.5mm .	4	Y300001-
18		207-70-34240	Cover .	1	Y300001-
19		01010-62065	Bolt .	4	Y300001-
20		01643-32060	Washer .	4	Y300001-
21		207-70-72470	Bushing .	1	Y300001-
22		207-70-00061	Shim Assembly .	1	Y300001-
	C1		• Shim, T=1.0mm .	20	Y300001-
	C1		• Shim, T=0.5mm .	4	Y300001-
23		207-70-34230	Bushing .	1	Y300001-

PC300-8 (FEN01263-00)

FIG. T1920-001001 Breaker Adapter, For Okada

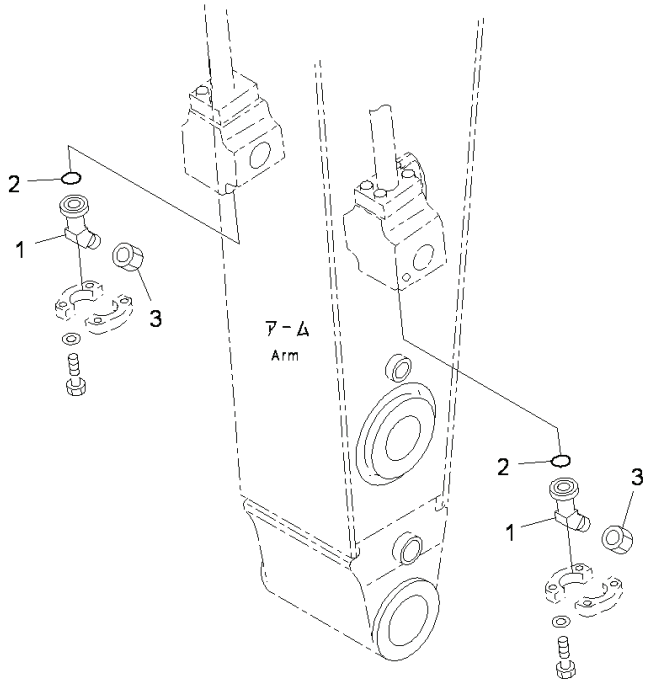

PEB6754

Index	Code	Part Number	Descreption	Qty	Serial Number
1		207-970-5510	Elbow	2	Y300001-
2		07000-13038	O-ring	2	Y300001-
3		205-970-7680	Cap	2	Y300001-

PC300-8 (FEN01263-00)

FIG. T1920-002001 Breaker Adapter, For KRUPP

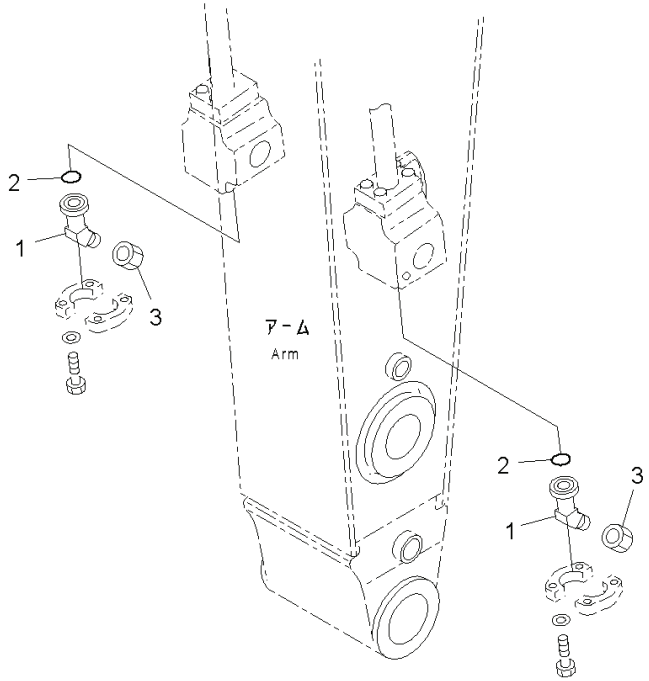

PEB6754

Index	Code	Part Number	Descreption	Qty	Serial Number
1		208-970-8460	Elbow	2	Y300001-
2		07000-13038	O-ring	2	Y300001-
3		208-970-5260	Plug	2	Y300001-

PC300-8 (FEN01263-00)

FIG. T1920-005001 Breaker Adapter, For Matsuda, For Furukawa

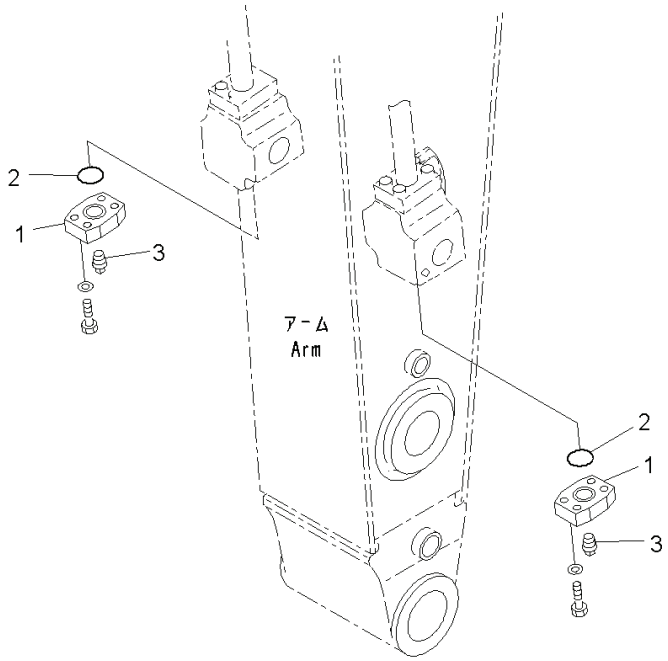

00021741

Index	Code	Part Number	Descreption	Qty	Serial Number
1		207-970-5910	Flange	2	Y300001-
2		07000-13038	O-ring	2	Y300001-
3		07042-31019	Plug, Taper	2	Y300001-

PC300-8 (FEN01263-00)

FIG. T1920-010001 Accumulator Kit, (1/2)

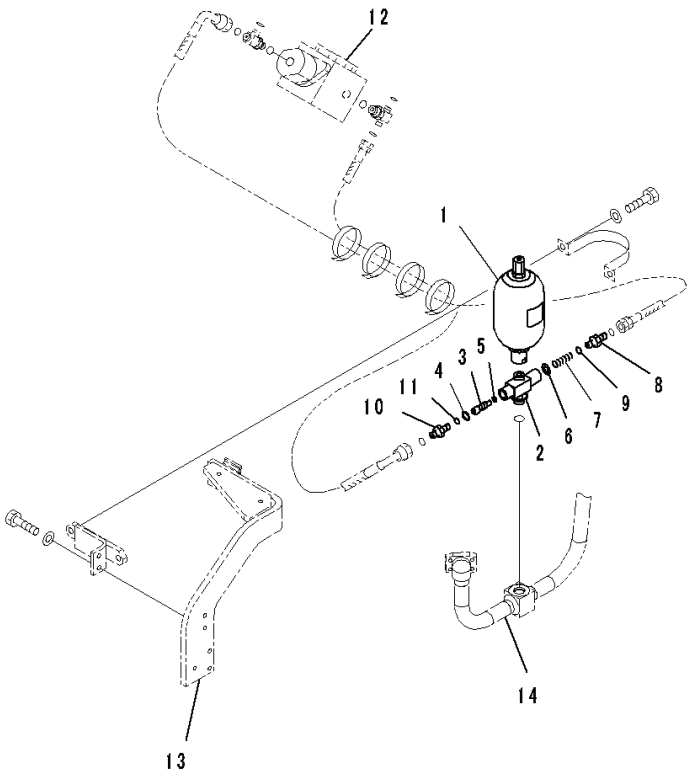

JH002803

Index	Code	Part Number	Descreption	Qty	Serial Number
1		20Y-970-6440	Accumulator Assembly	1	Y300001-
		205-970-5560	• O-ring	1	Y300001-
		20Y-62-31400	Valve	1	Y300001-
2	C1		• Body	1	Y300001-
3		20Y-62-31321	• Spool	1	Y300001-
4		22U-62-32790	• Seal	1	Y300001-
5		708-1S-15390	• Seal	1	Y300001-
6		01643-51032	• Washer	1	Y300001-
7		723-26-14240	• Spring	1	Y300001-
8		20Y-62-31331	• Nipple	1	Y300001-
9		07002-12034	• O-ring	1	Y300001-
10		02781-00313	• Union	1	Y300001-
11		07002-11823	• O-ring	1	Y300001-
12		(702-21-01920)	Valve Assembly(Refer to Page 413)		-
13		(207-62-73131)	Bracket(Refer to Page 412)		-
14		(207-62-73120)	Tube(Refer to Page 412)		-

FIG. T1920-010002 Accumulator Kit, (2/2)

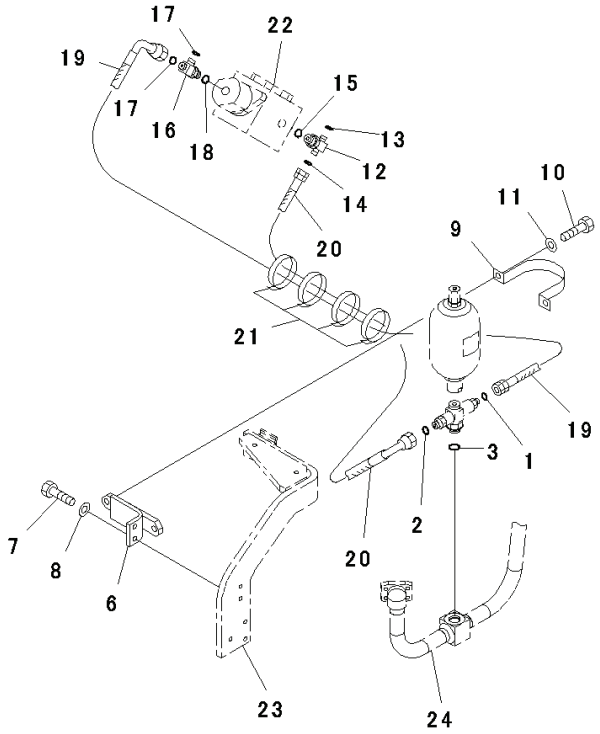

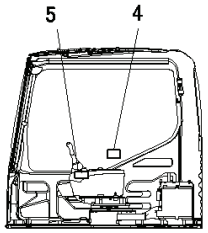

右 窓 内 側
R.H. Window Inside

JY002009

Index	Code	Part Number	Descreption	Qty	Serial Number
1		02896-11008	O-ring	1	Y300001-
2		02896-11009	O-ring	1	Y300001-
3		07002-12434	O-ring	1	Y300001-
4		20Y-00-41550	Plate	1	Y300001-
5		20Y-00-41560	Tag	1	Y300001-
6		207-62-73710	Bracket	1	Y300001-
7		01010-81235	Bolt	2	Y300001-
8		01643-31232	Washer	2	Y300001-
9		175-61-51750	Plate	1	Y300001-
10		01010-81225	Bolt	2	Y300001-
11		01643-31232	Washer	2	Y300001-
12		11Y-62-12810	Tee	1	Y300001-
13		02896-11008	O-ring	1	Y300001-
14		02896-11009	O-ring	1	Y300001-
15		07002-12034	O-ring	1	Y300001-
16		11Y-62-12330	Tee	1	Y300001-
17		02896-11008	O-ring	2	Y300001-
18		07002-11423	O-ring	1	Y300001-
19		02761-00212	Hose, Face Seal Type	1	Y300001-
20		02761-00312	Hose, Face Seal Type	1	Y300001-
21		08034-00519	Band	4	Y300001-
22		(702-21-01920)	Valve Assembly(Refer to Page 413)		-
23		(207-62-73131)	Bracket(Refer to Page 412)		-
24		(207-62-73120)	Tube(Refer to Page 412)		-

FIG. T1920-009001 Breaker Adapter, For Montaber, (1/2)

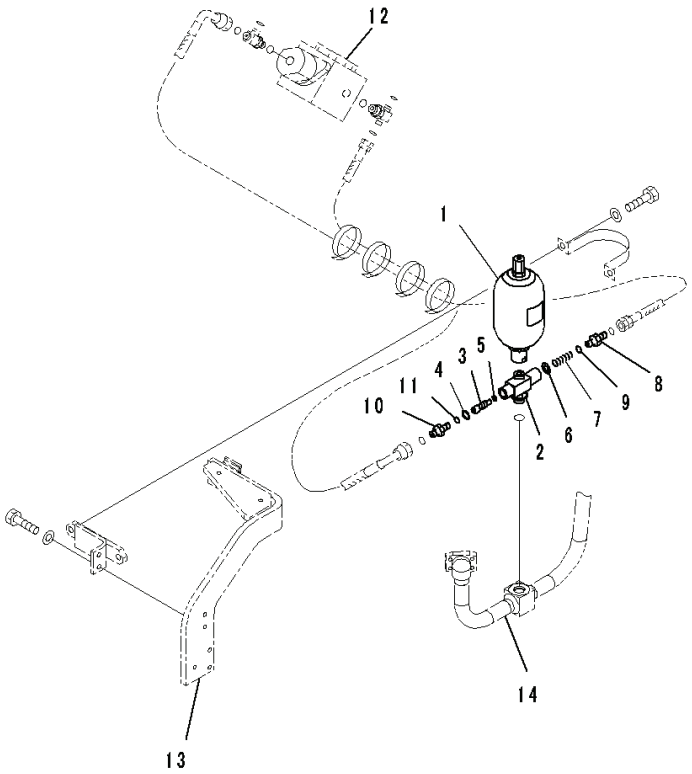

JH002803

Index	Code	Part Number	Descreption	Qty	Serial Number
1		20Y-970-6440	Accumulator Assembly	1	Y300001-
		205-970-5560	• O-ring	1	Y300001-
		20Y-62-31400	Valve	1	Y300001-
2	C1		• Body	1	Y300001-
3		20Y-62-31321	• Spool	1	Y300001-
4		22U-62-32790	• Seal	1	Y300001-
5		708-1S-15390	• Seal	1	Y300001-
6		01643-51032	• Washer	1	Y300001-
7		723-26-14240	• Spring	1	Y300001-
8		20Y-62-31331	• Nipple	1	Y300001-
9		07002-12034	• O-ring	1	Y300001-
10		02781-00313	• Union	1	Y300001-
11		07002-11823	• O-ring	1	Y300001-
12		(702-21-01920)	Valve Assembly(Refer to Page 413)		-
13		(207-62-73131)	Bracket(Refer to Page 412)		-
14		(207-62-73120)	Tube(Refer to Page 412)		-

FIG. T1920-009002 Breaker Adapter, For Montaber, (2/2)

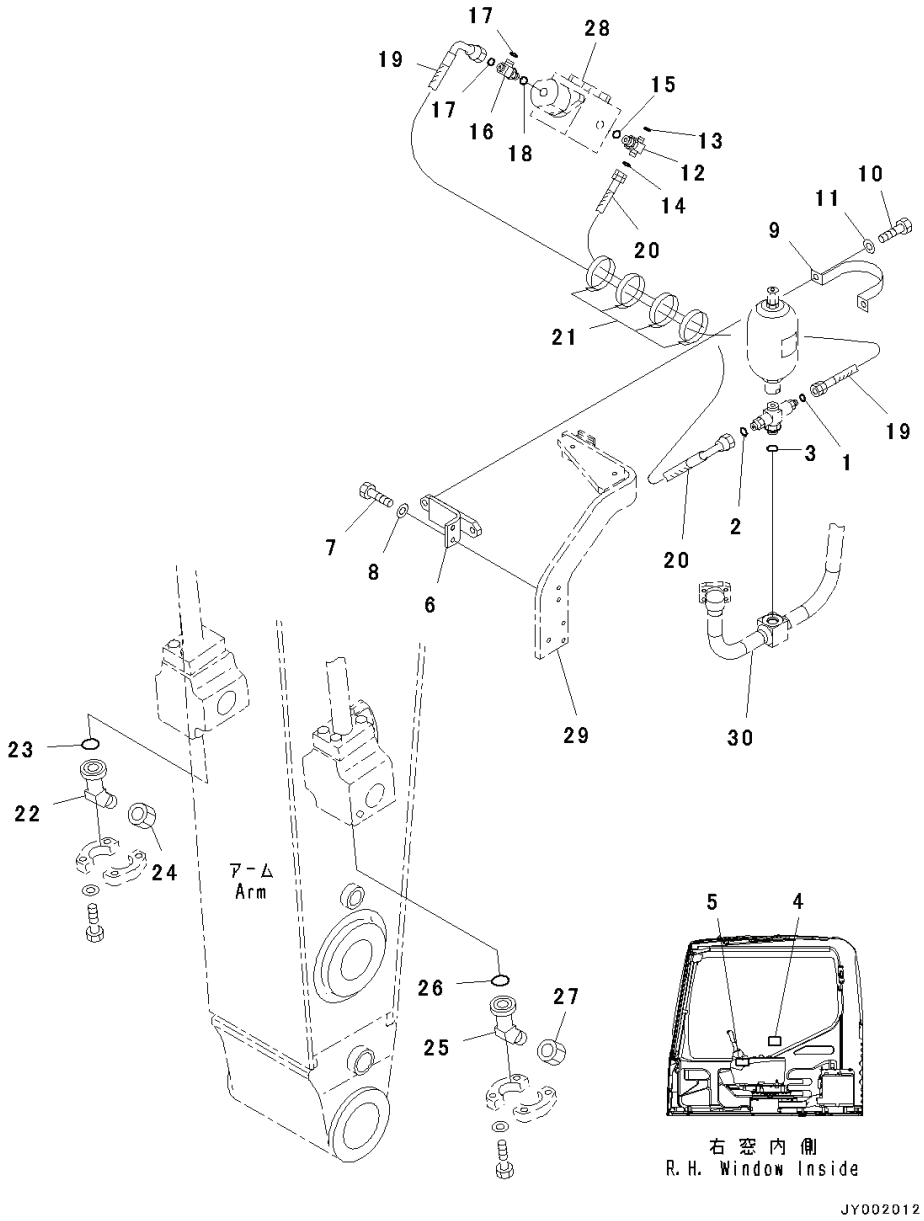

Index	Code	Part Number	Descreption	Qty	Serial Number
1		02896-11008	O-ring	1	Y300001-
2		02896-11009	O-ring	1	Y300001-
3		07002-12434	O-ring	1	Y300001-
4		20Y-00-41550	Plate	1	Y300001-
5		20Y-00-41560	Tag	1	Y300001-
6		207-62-73710	Bracket	1	Y300001-
7		01010-81235	Bolt	2	Y300001-
8		01643-31232	Washer	2	Y300001-
9		175-61-51750	Plate	1	Y300001-
10		01010-81225	Bolt	2	Y300001-
11		01643-31232	Washer	2	Y300001-
12		11Y-62-12810	Tee	1	Y300001-
13		02896-11008	O-ring	1	Y300001-
14		02896-11009	O-ring	1	Y300001-
15		07002-12034	O-ring	1	Y300001-
16		11Y-62-12330	Tee	1	Y300001-
17		02896-11008	O-ring	2	Y300001-
18		07002-11423	O-ring	1	Y300001-
19		02761-00212	Hose, Face Seal Type	1	Y300001-
20		02761-00312	Hose, Face Seal Type	1	Y300001-
21		08034-00519	Band	4	Y300001-
22		207-970-7530	Nipple	1	Y300001-
23		07000-13038	O-ring	1	Y300001-
24		207-970-7540	Plug	1	Y300001-
25		208-970-5230	Nipple	1	Y300001-
26		07000-13038	O-ring	1	Y300001-
27		208-970-5240	Plug	1	Y300001-
28		(702-21-01920)	Valve Assembly(Refer to Page 413)		-
29		(207-62-73131)	Bracket(Refer to Page 412)		-
30		(207-62-73120)	Tube(Refer to Page 412)		-

PC300-8 (FEN01263-00)

FIG. T1920-008001 Breaker Adapter, For Nippon Pneumatic, (1/2)

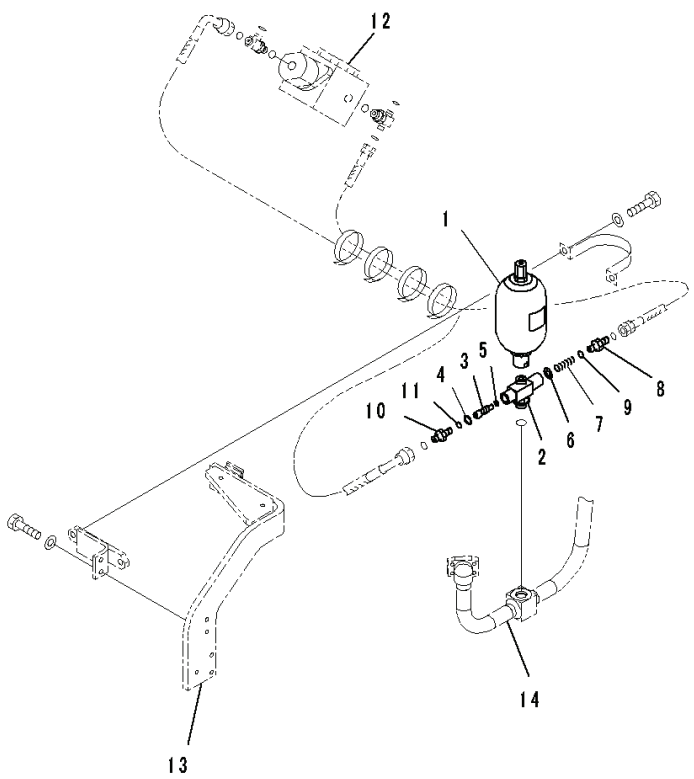

JH002803

Index	Code	Part Number	Descreption	Qty	Serial Number
1		20Y-970-6440	Accumulator Assembly	1	Y300001-
		205-970-5560	• O-ring	1	Y300001-
		20Y-62-31400	Valve	1	Y300001-
2	C1		• Body	1	Y300001-
3		20Y-62-31321	• Spool	1	Y300001-
4		22U-62-32790	• Seal	1	Y300001-
5		708-1S-15390	• Seal	1	Y300001-
6		01643-51032	• Washer	1	Y300001-
7		723-26-14240	• Spring	1	Y300001-
8		20Y-62-31331	• Nipple	1	Y300001-
9		07002-12034	• O-ring	1	Y300001-
10		02781-00313	• Union	1	Y300001-
11		07002-11823	• O-ring	1	Y300001-
12		(702-21-01920)	Valve Assembly(Refer to Page 413)		-
13		(207-62-73131)	Bracket(Refer to Page 412)		-
14		(207-62-73120)	Tube(Refer to Page 412)		-

FIG. T1920-008002 Breaker Adapter, For Nippon Pneumatic, (2/2)

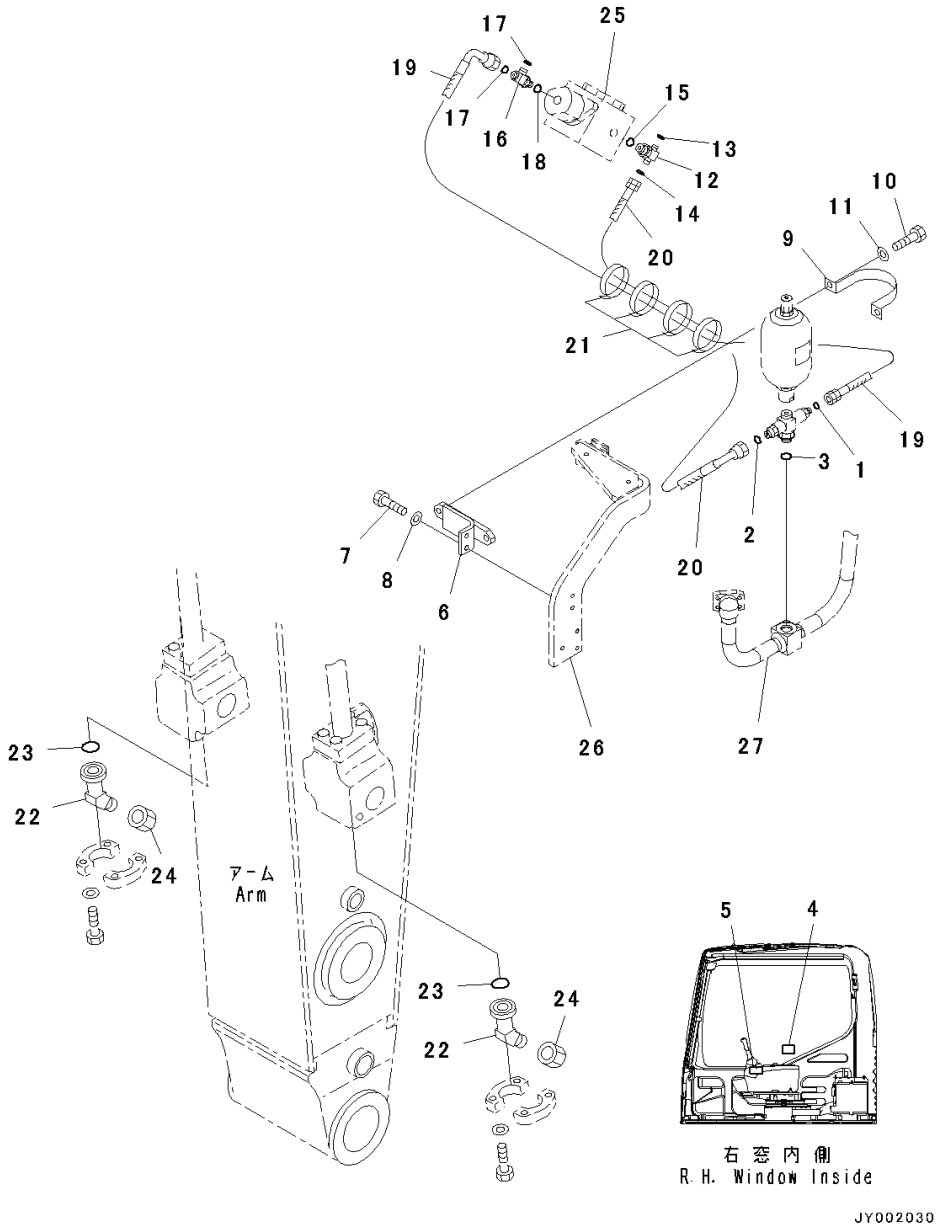

Index	Code	Part Number	Descreption	Qty	Serial Number
1		02896-11008	O-ring	1	Y300001-
2		02896-11009	O-ring	1	Y300001-
3		07002-12434	O-ring	1	Y300001-
4		20Y-00-41550	Plate	1	Y300001-
5		20Y-00-41560	Tag	1	Y300001-
6		207-62-73710	Bracket	1	Y300001-
7		01010-81235	Bolt	2	Y300001-
8		01643-31232	Washer	2	Y300001-
9		175-61-51750	Plate	1	Y300001-
10		01010-81225	Bolt	2	Y300001-
11		01643-31232	Washer	2	Y300001-
12		11Y-62-12810	Tee	1	Y300001-
13		02896-11008	O-ring	1	Y300001-
14		02896-11009	O-ring	1	Y300001-
15		07002-12034	O-ring	1	Y300001-
16		11Y-62-12330	Tee	1	Y300001-
17		02896-11008	O-ring	2	Y300001-
18		07002-11423	O-ring	1	Y300001-
19		02761-00212	Hose, Face Seal Type	1	Y300001-
20		02761-00312	Hose, Face Seal Type	1	Y300001-
21		08034-00519	Band	4	Y300001-
22		207-970-2110	Elbow	2	Y300001-
23		07000-13038	O-ring	2	Y300001-
24		205-970-5770	Cap	2	Y300001-
25		(702-21-01920)	Valve Assembly(Refer to Page 413)		-
26		(207-62-73131)	Bracket(Refer to Page 412)		-
27		(207-62-73120)	Tube(Refer to Page 412)		-

PC300-8 (FEN01263-00)

FIG. T1930-001001 Parts For Less Bucket

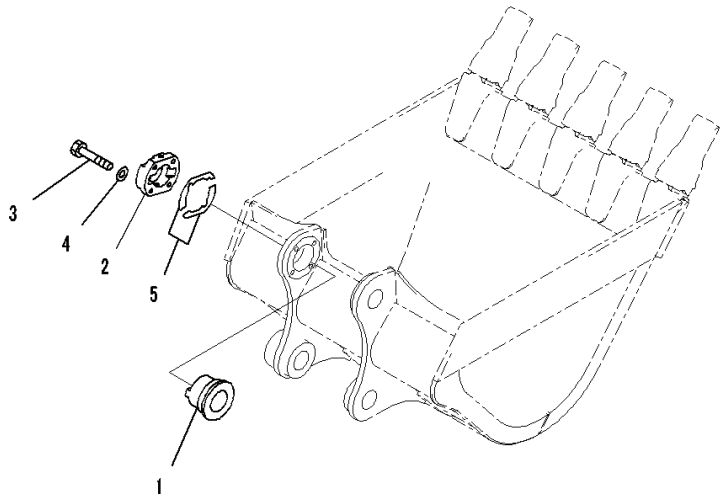

Index	Code	Part Number	Descreption	Qty	Serial Number
1		207-70-34230	Bushing	1	Y300001-
2		207-70-34240	Cover	1	Y300001-
3		01010-62065	Bolt	4	Y300001-
4		01643-32060	Washer	4	Y300001-
5		207-70-00061	Shim Assembly	1	Y300001-
	C1		• Shim, T=1.0mm	20	Y300001-
	C1		• Shim, T=0.5mm	4	Y300001-

PC300-8 (FEN01263-00)

MARKS AND PLATES

FIG. U0100-006001 Marks And Plates, Russian, Pictorial Type

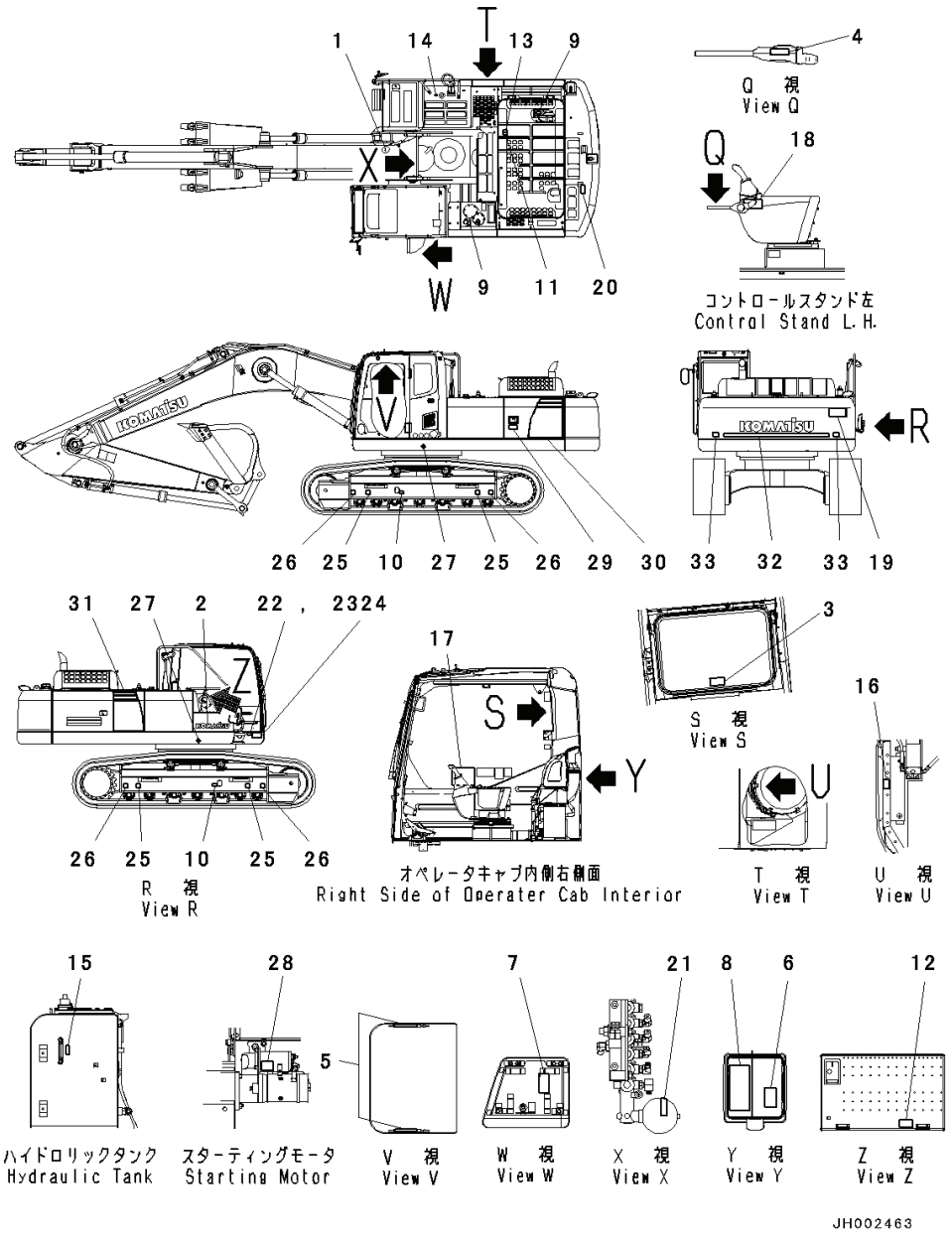

Index	Code	Part Number	Descreption	Qty	Serial Number
1		09690-M0063	Mark, Komatsu Logo	1	Y300001-
2		09690-P0630	Plate, Mark	1	Y300001-
3		09844-00050	Plate	1	Y300001-
4		09685-00002	Plate, Symbol, Lock	1	Y300001-
5		09659-A057B	Plate, Warning, Explosive Hazard	2	Y300001-
6		20Y-00-31970	Plate	1	Y300001-
7		208-00-71450	Plate	1	Y300001-
8		207-00-76490	Plate	1	Y300001-
9		09653-A0481	Plate, Warning, High Temperature	2	Y300001-
10		09657-A0881	Plate	2	Y300001-
11		09805-C0481	Plate	1	Y300001-
12		09808-A0881	Plate, Warning, Battery Cables	1	Y300001-
13		09667-A0481	Plate, Caution, Rotating Object	1	Y300001-
14		09669-0000E	Plate, Symbol, Fuel Filler	1	Y300001-
15		205-00-73360	Plate, Operating	1	Y300001-
16		20Y-00-41740	Plate	1	Y300001-
17		22U-00-21442	Plate	1	Y300001-
18		09963-A1640	Tag, Danger, Do Not Operate	1	Y300001-
19		09133-A3281	Plate	1	Y300001-
20		09805-A0881	Plate, Caution, Fender	1	Y300001-
21		09659-A057B	Plate, Warning, Explosive Hazard	1	Y300001-
22	C2	09601-30KK2	Plate, Name (Limited Supply)	1	Y300001-
23		04418-13060	Screw	4	Y300001-
24		20Y-00-31840	Plate	1	Y300001-
25		09960-00801	Decal, Lift Point Mark	4	Y300001-
26		09960-00802	Decal, Tie Down Point Mark	4	Y300001-
27		21U-98-31160	Plate, Mark, Location Of Center Of Gravity	2	Y300001-
28		09842-A0481	Plate, Caution, No Jump Start	1	Y300001-
29		20Y-00-41530	Plate, Symbol, Ecot3	1	Y300001-
30		207-00-76510	Mark	1	Y300001-
31		207-00-76520	Mark	1	Y300001-
32		207-00-71910	Plate, Mark	1	Y300001-
33		14X-98-35181	Plate, Reflector	2	Y300001-

PC300-8 (FEN01263-00)

FIG. U0110-007001 Lubrication Chart, 100 Hours Greasing Type

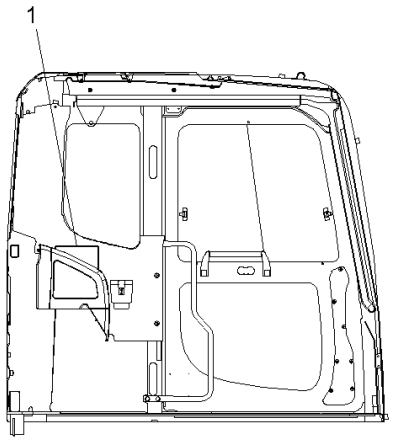

00038302

Index	Code	Part Number	Descreption	Qty	Serial Number
1		207-00-76172	Plate	1	Y300001-

PC300-8 (FEN01263-00)

FIG. U0120-011001 Caution Plates, Cab Windshield Lock Operation, Russian

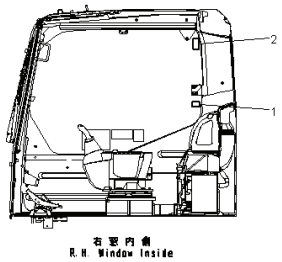

Index	Code	Part Number	Descreption	Qty	Serial Number
1		20Y-00-41730	Plate	1	Y300001-
2		09803-A0481	Plate	1	Y300001-

FIG. U0150-003001 Komatsu Logo, Boom And Counter Weight

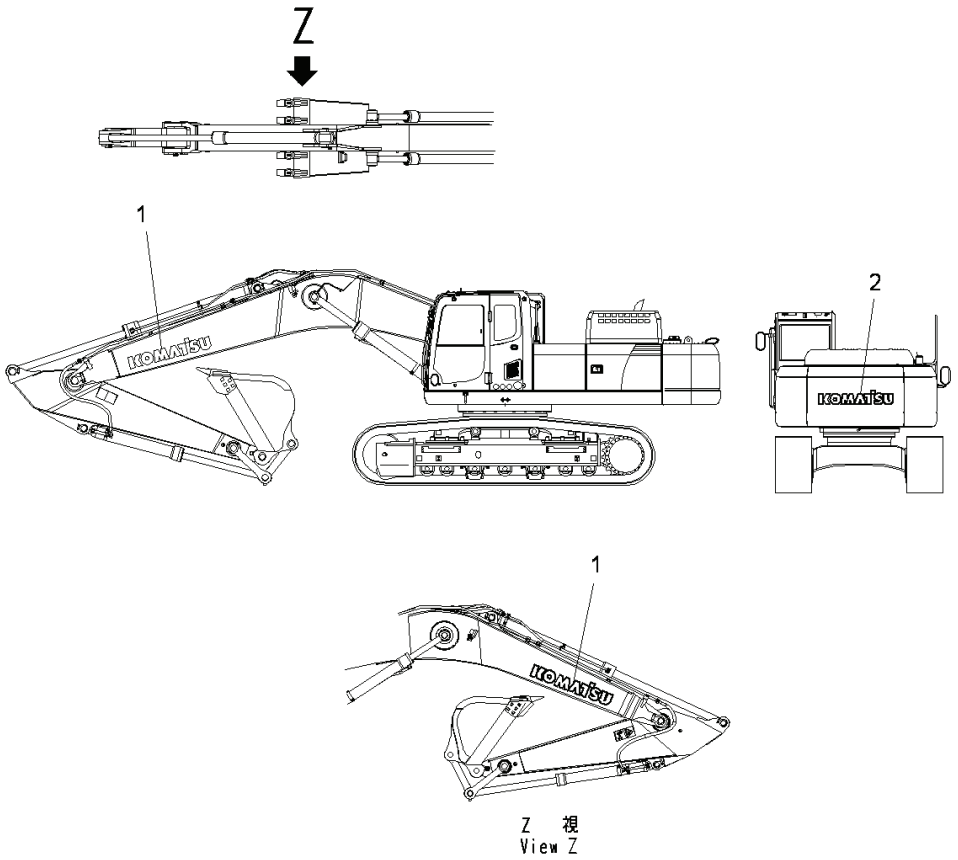

Index	Code	Part Number	Descreption	Qty	Serial Number
1		09690-P1400	Plate	2	Y300001-
2		09690-P1400	Plate	1	Y300001-

PC300-8 (FEN01263-00)

FIG. U0202-001001 Coolant Decal, Russian

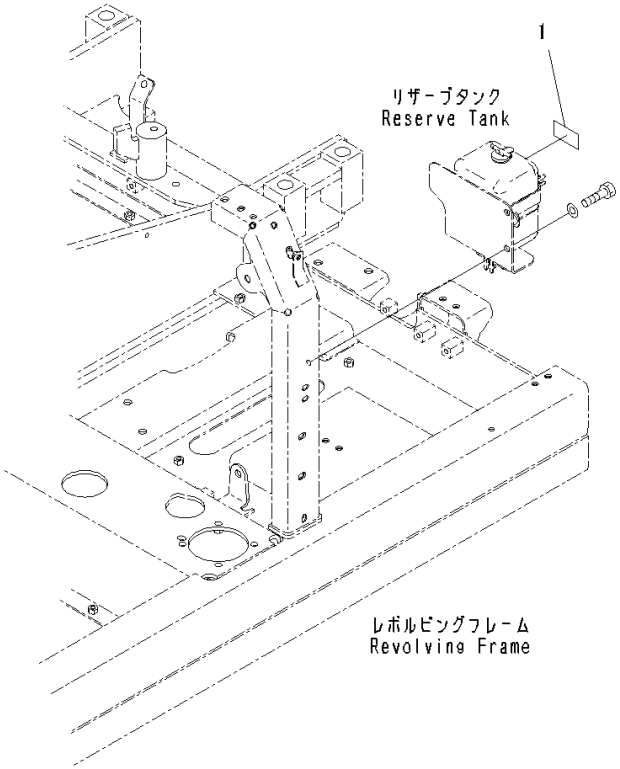

Index	Code	Part Number	Descreption	Qty	Serial Number
1		09642-14000	Plate	1	Y300001-

PC300-8 (FEN01263-00)

FIG. U0510-002001 Caution Plates, Arm

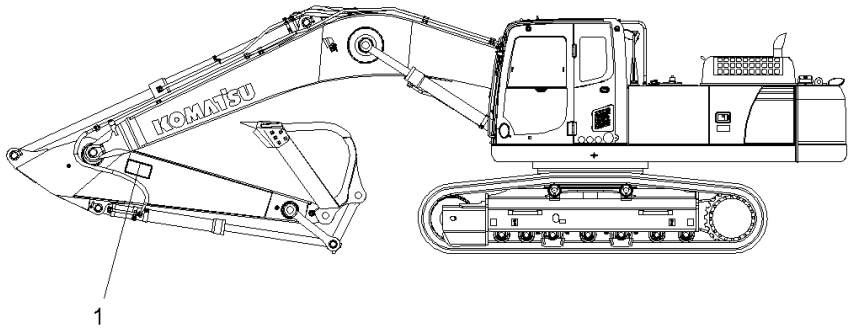

00065388

Index	Code	Part Number	Descreption	Qty	Serial Number
1		09134-A1681	Plate	2	Y300001-

FIG. U0520-017001 Caution Plates, Front Guard, Russian

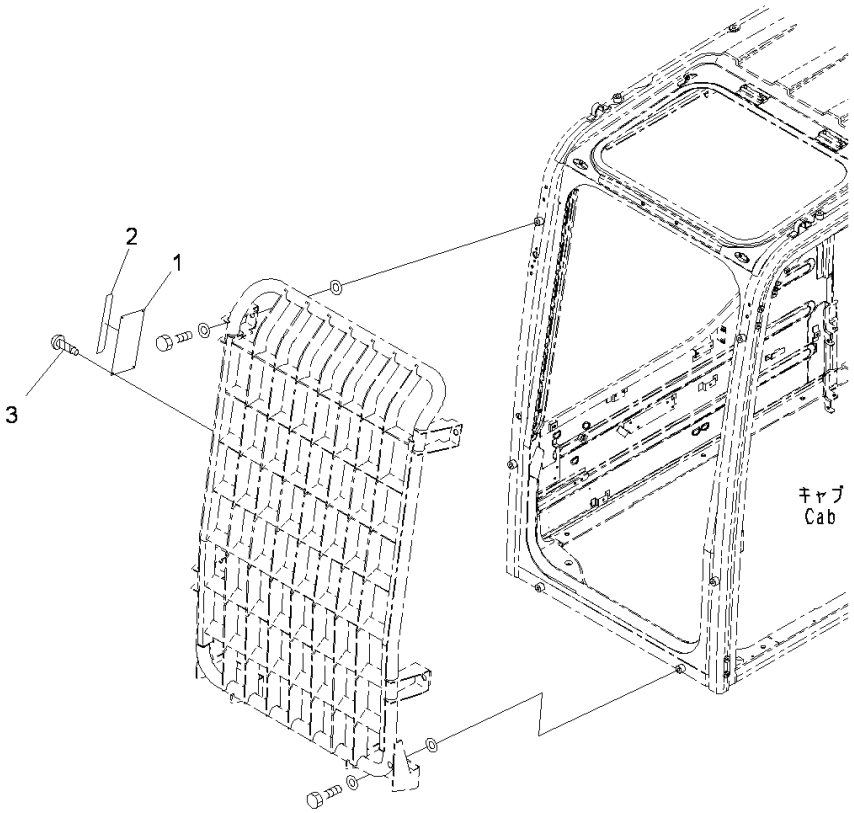

Index	Code	Part Number	Descreption	Qty	Serial Number
1	C2	09620-E2000	Plate, Name, Front Guard (Limited Supply)	1	Y300001-
2		09620-D2090	Plate	1	Y300001-
3		04418-13060	Screw	4	Y300001-

PC300-8 (FEN01263-00)

FIG. U0520-026001 Caution Plates, Top And Front Guard, Russian

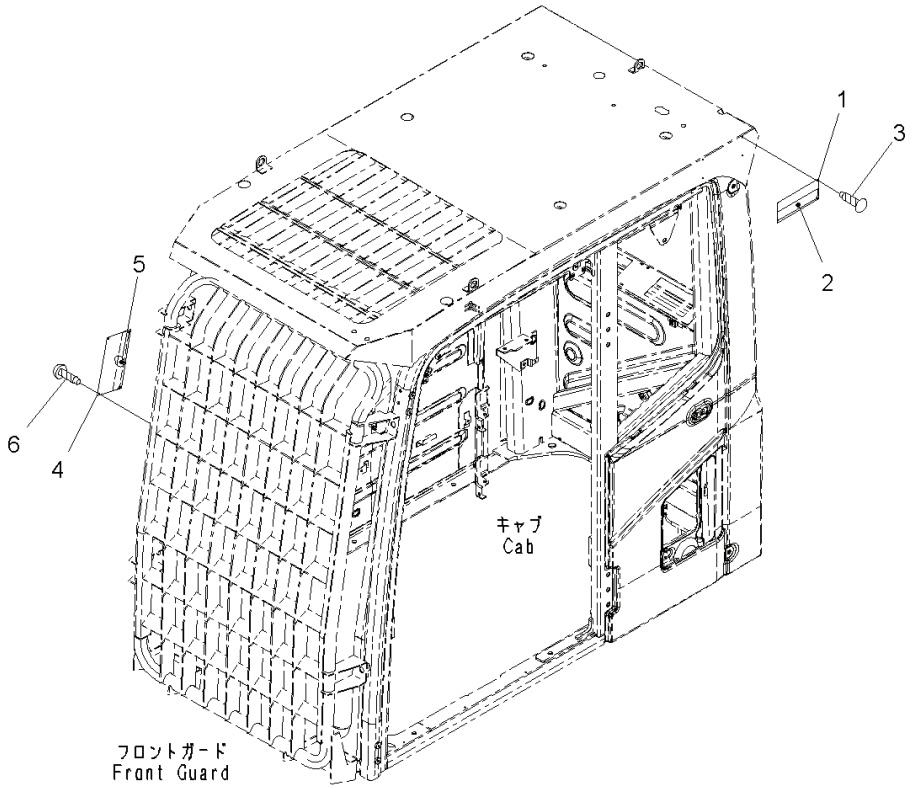

Index	Code	Part Number	Descreption	Qty	Serial Number
1	C2	09620-D2000	Plate, Name, Top Guard (Limited Supply)	1	Y300001-
2		09620-D2090	Plate	1	Y300001-
3		04418-13060	Screw	4	Y300001-
4	C2	09620-E2000	Plate, Name, Front Guard (Limited Supply)	1	Y300001-
5		09620-D2090	Plate	1	Y300001-
6		04418-13060	Screw	4	Y300001-

PC300-8 (FEN01263-00)

FIG. U0520-008001 Caution Plates, Top Guard, Russian

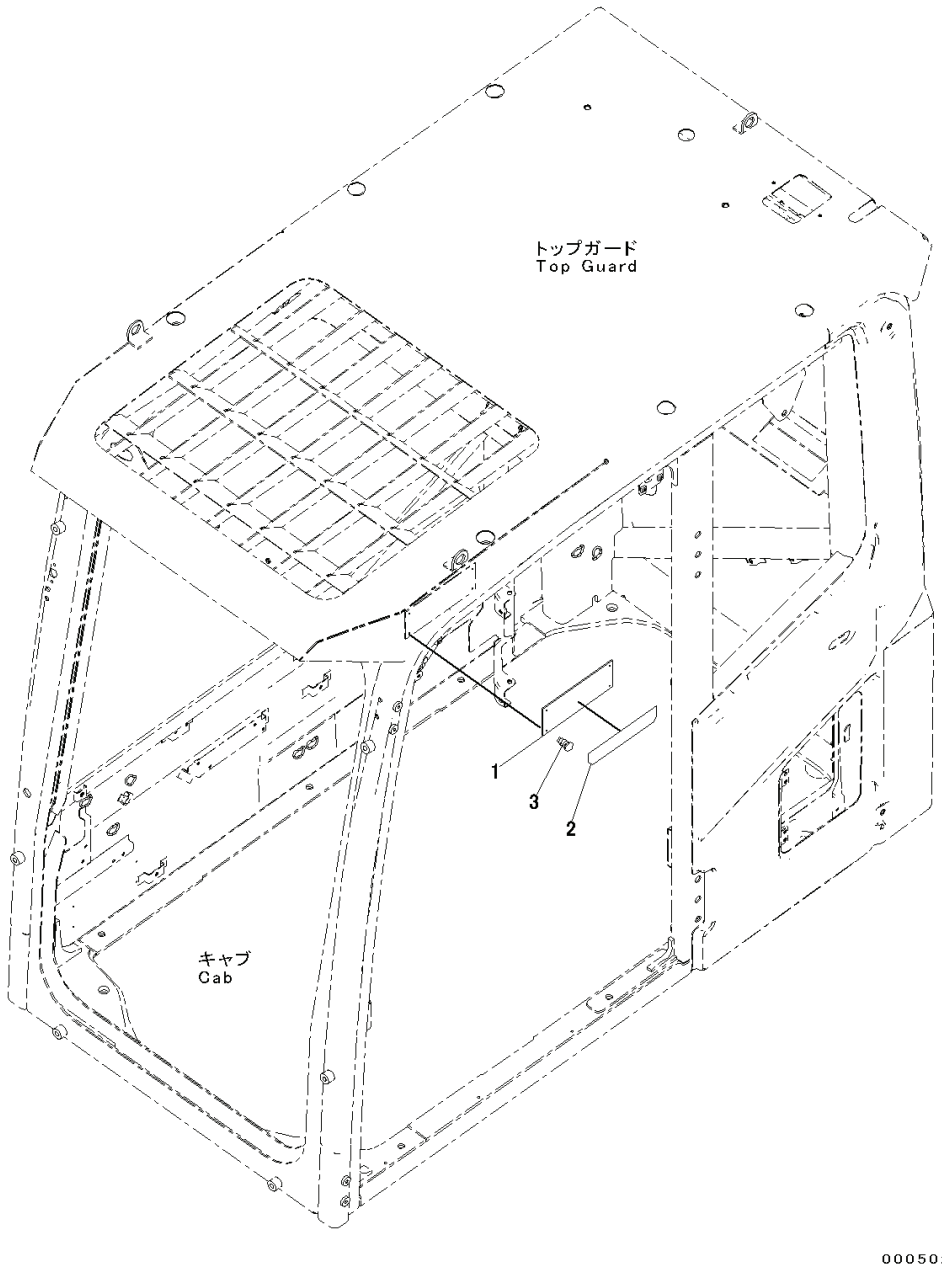

Index	Code	Part Number	Descreption	Qty	Serial Number
1	C2	09620-D2000	Plate, Name, Top Guard (Limited Supply)	1	Y300001-
2		09620-D2090	Plate	1	Y300001-
3		04418-13060	Screw	4	Y300001-

PC300-8 (FEN01263-00)

FIG. U0550-001001 Service Instruction, Air Cleaner, Double Element Type, Russian

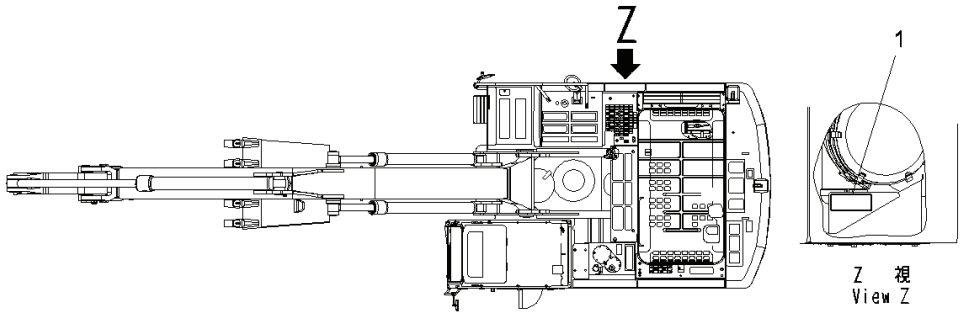

Index	Code	Part Number	Descreption	Qty	Serial Number
1		09637-40163	Plate, Instruction	1	Y300001-

PC300-8 (FEN01263-00)

FIG. U0580-004001 Caution Plates, 2-accumulator, Pictorial Type

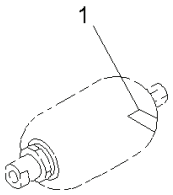

PW1B973

Index	Code	Part Number	Descreption	Qty	Serial Number
1		09659-A057B	Plate, Warning, Explosive Hazard, Safety	2	Y300001-

FIG. U0580-003001 Caution Plates, 1-accumulator, Pictorial Type

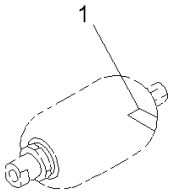

PW1B973

Index	Code	Part Number	Descreption	Qty	Serial Number
1		09659-A057B	Plate, Warning, Explosive Hazard, Safety	1	Y300001-

FIG. U0710-007001 Caution Plates, With 12volt Power Outlet, EU Safety Regulation

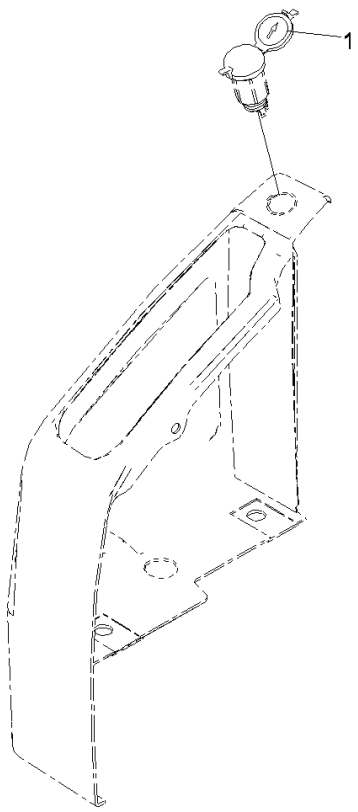

00050329

Index	Code	Part Number	Descreption	Qty	Serial Number
1		22U-00-21511	Plate, 12volt Socket	1	Y300001-

PC300-8 (FEN01263-00)

AUXILIARY PARTS AND TOOL

FIG. V0100-001001 Spare Parts

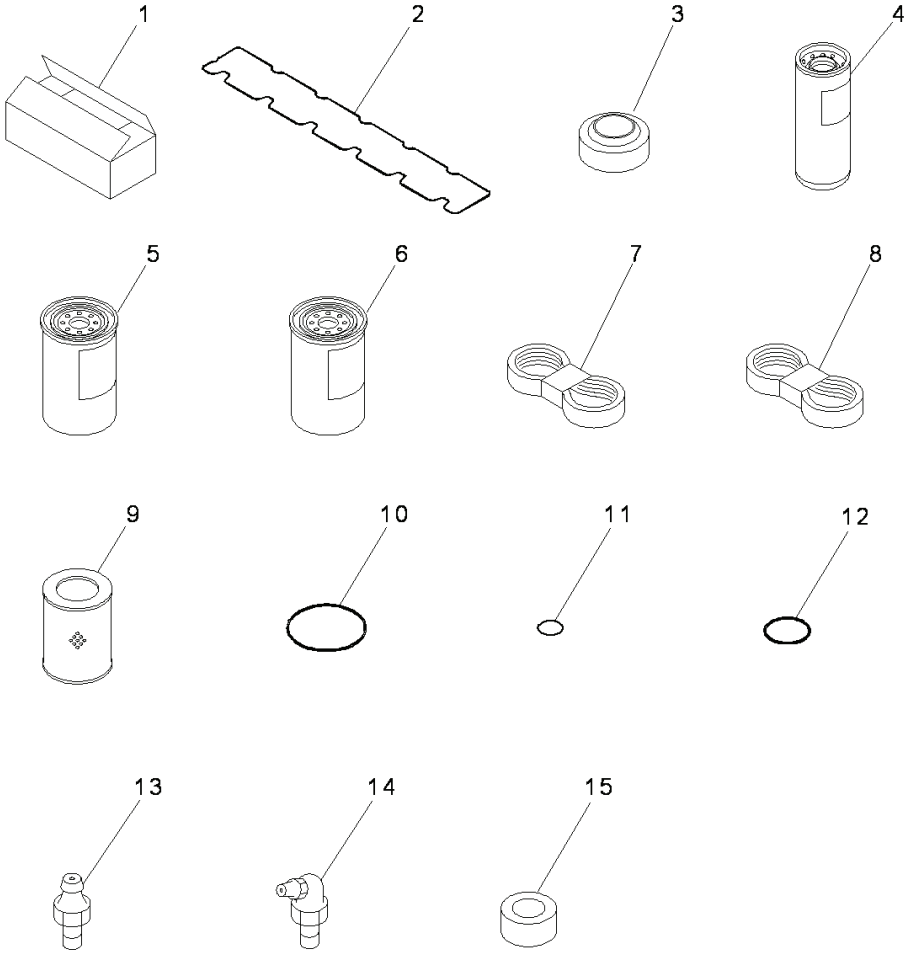

Index	Code	Part Number	Descreption	Qty	Serial Number
1		09059-00800	Box .	1	Y300001-
2		6745-11-8810	Gasket .	1	Y300001-
3		6745-11-8160	Isolator .	8	Y300001-
4		6742-01-4540	Cartridge	1	Y300001-
5		600-319-3750	Cartridge, Fuel Filter .	1	Y300001-
6		600-319-3610	Cartridge Assembly	1	Y300001-
7		6743-61-3710	Belt .	1	Y300001-
8		6743-62-3710	Belt .	1	Y300001-
9		207-60-71182	Element .	1	Y300001-
10		07000-15210	O-ring .	1	Y300001-
11		07002-11223	O-ring .	1	Y300001-
12		07002-12434	O-ring .	6	Y300001-
13		07020-00000	Fitting, Grease	4	Y300001-
14		07020-00675	Fitting, Grease	4	Y300001-
15		20Y-60-21470	Element .	1	Y300001-

PC300-8 (FEN01263-00)

FIG. V0200-001001 Cap And Overall

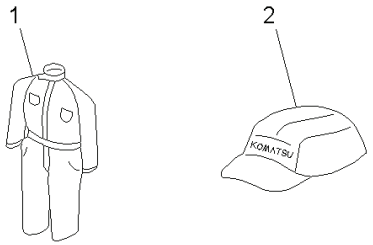

PEB0040

Index	Code	Part Number	Descreption	Qty	Serial Number
		09980-92550	Cap and Overall Kit	1	Y300001-
1		09980-10550	• Overall	1	Y300001-
2		09982-20057	• Cap	1	Y300001-

FIG. V0300-001001 General Tool Set

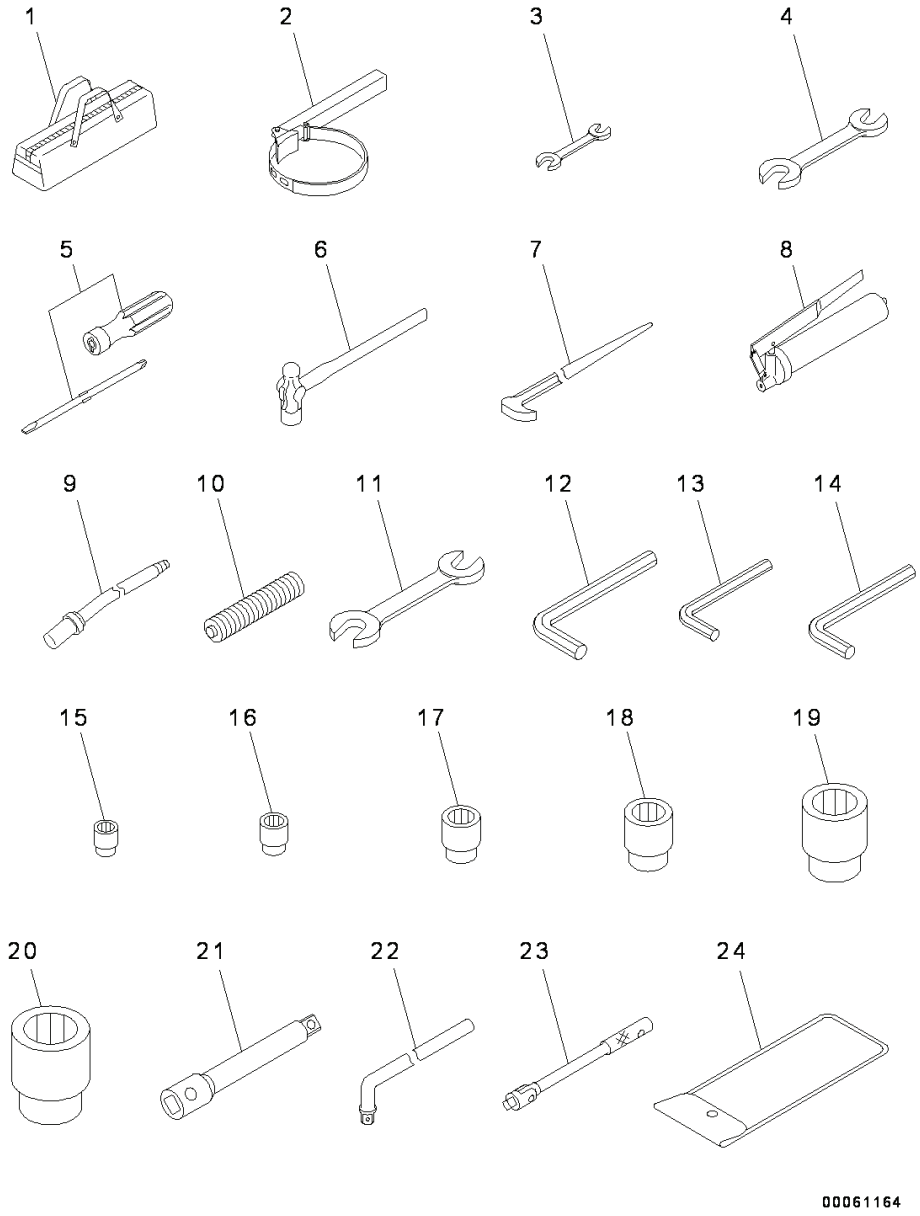

Index	Code	Part Number	Descreption	Qty	Serial Number
1		09056-04613	Bag	1	Y300001-
2		09019-28035	Wrench	1	Y300001-
3		09002-01317	Wrench, W=13X17mm, 13X17	1	Y300001-
4		09002-01922	Wrench, W=19X22mm, 19X22	1	Y300001-
5		09033-00190	Driver	1	Y300001-
6		09039-00150	Hammer	1	Y300001-
7		09055-10390	Bar	1	Y300001-
		07952-70004	Pump Assembly	1	Y300001-
8		07950-10450	• Pump Assembly	1	Y300001-
9		07951-41017	• Pump Assembly	1	Y300001-
10		07950-90403	Cartridge	1	Y300001-
11		09002-03641	Wrench, W=36X41mm, 36X41	1	Y300001-
12		09007-00836	Wrench, W=8mm, 8	1	Y300001-
13		09007-00425	Wrench, W=4mm, 4	1	Y300001-
14		09007-00528	Wrench, W=5mm, 5	1	Y300001-
		207-98-61130	Tool Kit	1	Y300001-
15		09021-01219	• Socket, W=12mm, 12	1	Y300001-
16		09021-01422	• Socket, W=14mm, 14	1	Y300001-
17		09021-01725	• Socket, W=17mm, 17	1	Y300001-
18		09021-01928	• Socket, W=19mm, 19	1	Y300001-
19		09021-02436	• Socket, W=24mm, 24	1	Y300001-
20		09021-03653	• Socket, W=36mm, 36	1	Y300001-
21		09022-00150	• Extension	1	Y300001-
22		09023-00300	• Handle	1	Y300001-
23		09024-00300	• Handle	1	Y300001-
24		20Y-98-21140	• Tool Bag	1	Y300001-

PC300-8 (FEN01263-00)

OTHER EQUIPMENT

FIG. W1111-005001 Webasto Heater, (1/3)

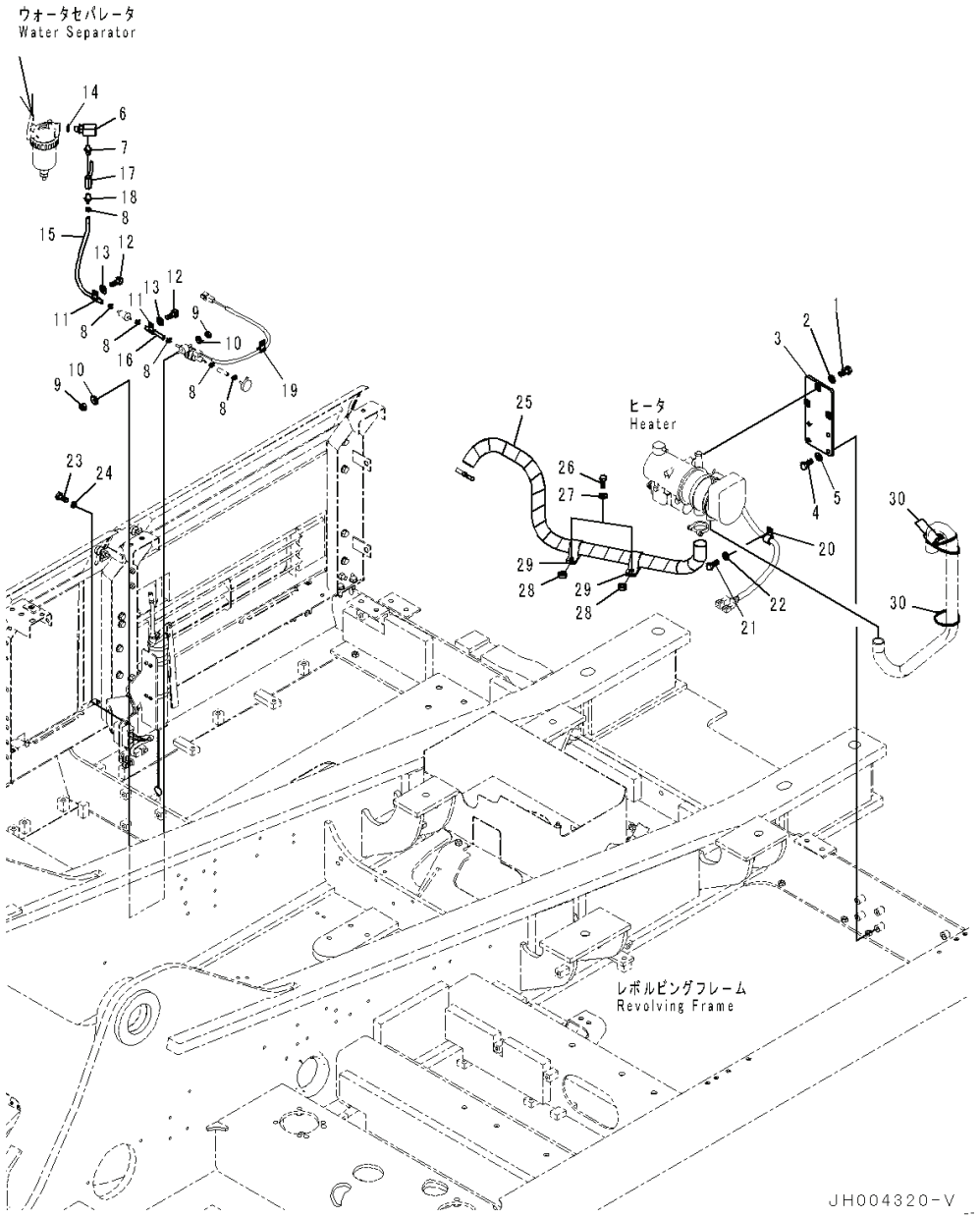

Index	Code	Part Number	Descreption	Qty	Serial Number
1		01010-80830	Bolt	3	Y300001-
2		01643-30823	Washer	3	Y300001-
3		207-977-2121	Bracket	1	Y300001-
4		01010-81025	Bolt	4	Y300001-
5		01643-31032	Washer	4	Y300001-
6		207-977-2150	Elbow	1	Y300001-
7		207-977-2450	Joint	1	Y300001-
8		07285-00095	Clip, Hose	6	Y300001-
9		01580-10806	Nut	2	Y300001-
10		01643-30823	Washer	2	Y300001-
11		04434-50808	Clip	2	Y300001-
12		01010-80816	Bolt	2	Y300001-
13		01643-30823	Washer	2	Y300001-
14		07002-11823	O-ring	1	Y300001-
15		207-977-2160	Hose Assembly	1	Y300001-
16		207-977-2170	Hose	1	Y300001-
17		07700-40240	Valve	1	Y300001-
18		134-977-2840	Nipple	1	Y300001-
19		04434-51012	Clip	1	Y300001-
20		04434-51712	Clip	1	Y300001-
21		01010-81220	Bolt	2	Y300001-
22		01643-31232	Washer	2	Y300001-
23		01010-80820	Bolt	2	Y300001-
24		01643-50823	Washer	2	Y300001-
25		14X-977-1450	Sheet	1	Y300001-
26		01010-81240	Bolt	2	Y300001-
27		01643-31232	Washer	2	Y300001-
28		198-43-15310	Collar, T=10mm	2	Y300001-
29		21T-62-76850	Clip	2	Y300001-
30		08034-20536	Band	3	Y300001-

PC300-8 (FEN01263-00)

FIG. W1111-005002 Webasto Heater, (2/3)

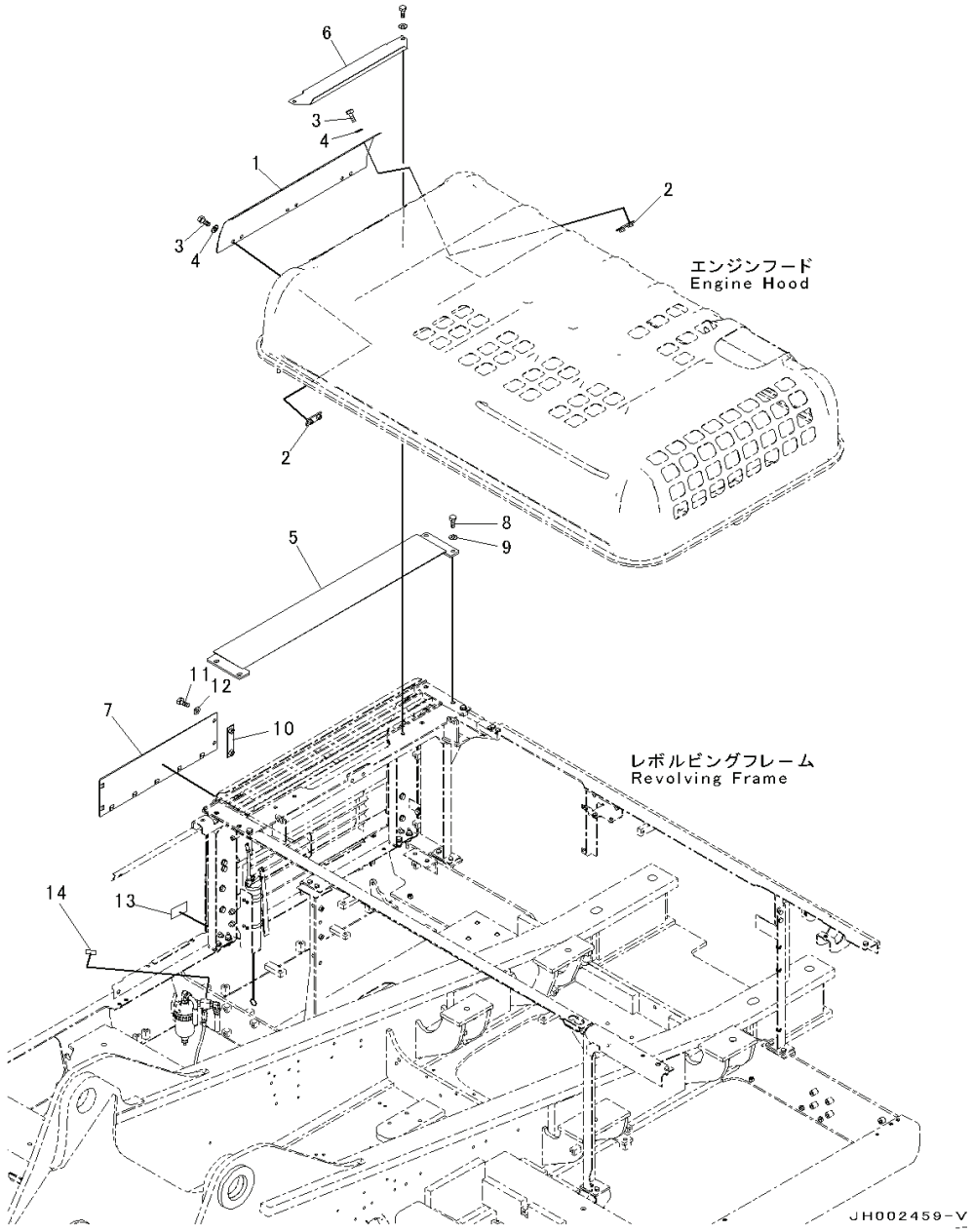

Index	Code	Part Number	Descreption	Qty	Serial Number
1		207-54-74610	Cover	1	Y300001-
2		20Y-54-74560	Plate	6	Y300001-
3		01010-D1230	Bolt	12	Y300001-
4		01643-71232	Washer	12	Y300001-
5		207-54-74620	Cover	1	Y300001-
6		207-54-74630	Cover	1	Y300001-
7		207-54-74640	Cover	1	Y300001-
8		01010-D1240	Bolt	4	Y300001-
9		01643-71232	Washer	4	Y300001-
10		207-54-78550	Plate	1	Y300001-
11		01010-D1230	Bolt	2	Y300001-
12		01643-71232	Washer	2	Y300001-
13		134-98-61650	Plate	1	Y300001-
14		134-98-61660	Plate	1	Y300001-

PC300-8 (FEN01263-00)

FIG. W1111-005003 Webasto Heater, (3/3)

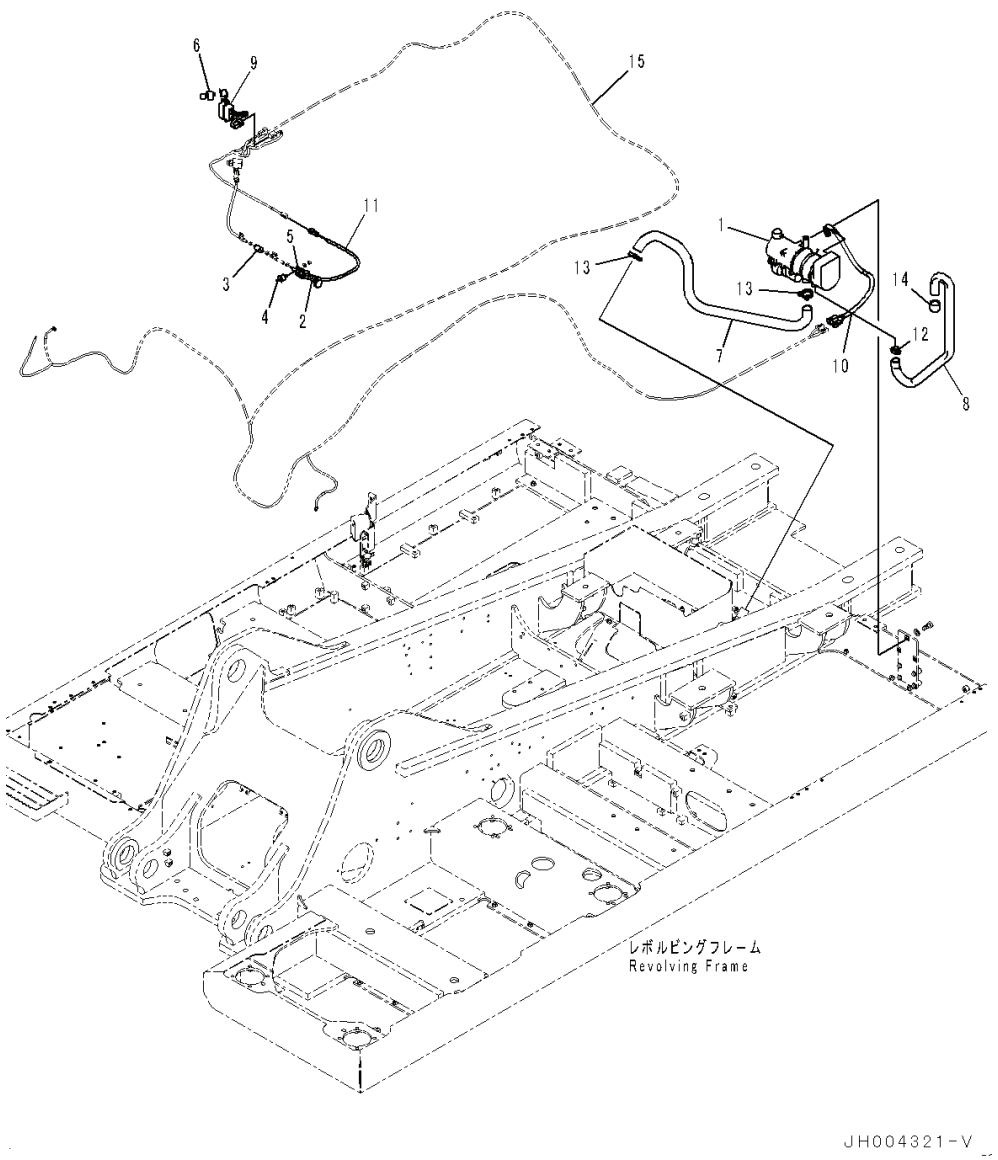

Index	Code	Part Number	Descreption	Qty	Serial Number
1		207-977-2320	Heater Assembly	1	Y300001-
2		207-977-2330	Pump Assembly	1	Y300001-
3		207-977-2340	Filter Assembly	1	Y300001-
4		207-977-2350	Cushion	1	Y300001-
5		207-977-2360	Clamp	1	Y300001-
6		207-977-2370	Switch	1	Y300001-
7		207-977-2210	Tube	1	Y300001-
8		207-977-2470	Tube	1	Y300001-
9		207-977-2251	Wiring Harness	1	Y300001-
10		207-977-2271	Wiring Harness	1	Y300001-
11		207-977-2280	Wiring Harness	1	Y300001-
12		207-977-2380	Clamp	1	Y300001-
13		207-977-2390	Clamp	2	Y300001-
14		207-977-2410	Cap	1	Y300001-
15		(207-977-2261)	Wiring Harness(Refer to Page 708)		-

PC300-8 (FEN01263-00)

FIG. W1112-002001 Webasto Heater, Related Parts, For Machine With WEBASTO Coolant Heater

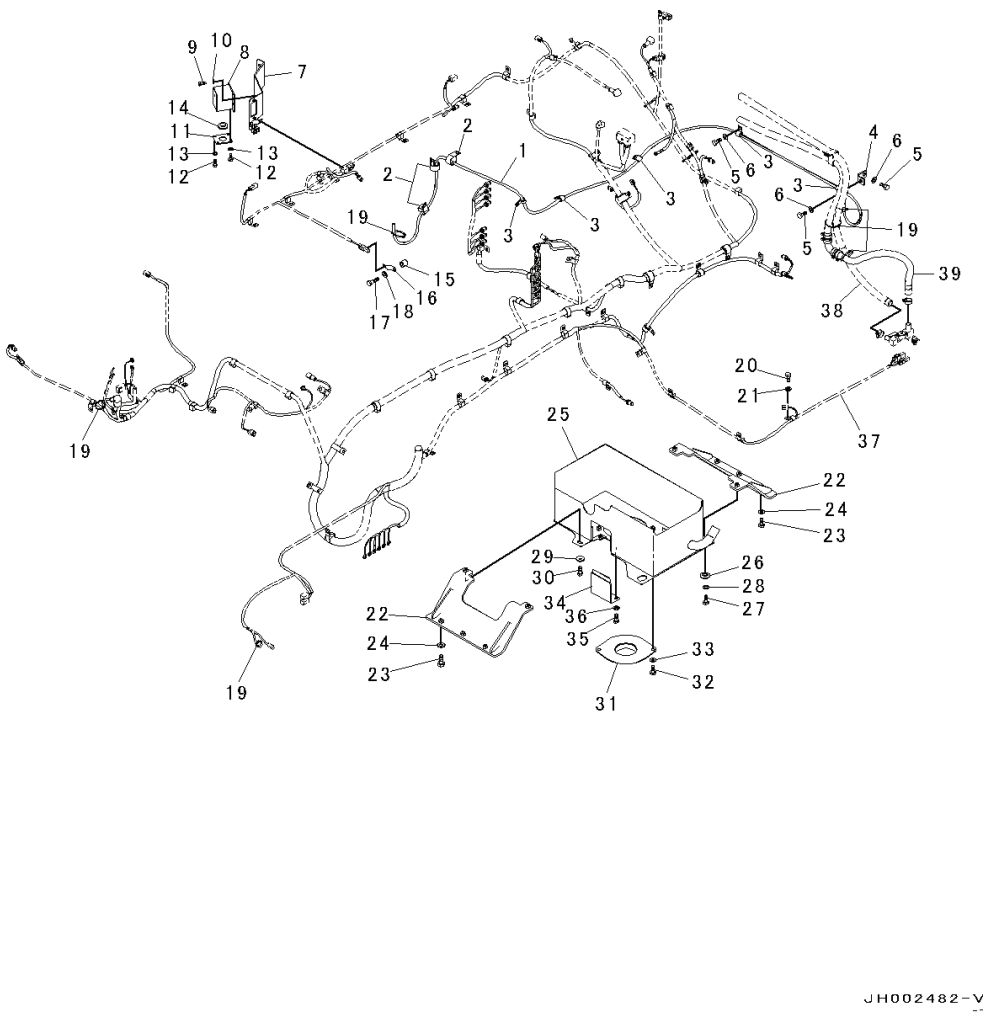

Index	Code	Part Number	Descreption	Qty	Serial Number
1		207-977-2190	Hose	1	Y300001-
2		581-04-22290	Clip	3	Y300001-
3		04434-51412	Clip	5	Y300001-
4		17M-49-15260	Bracket	1	Y300001-
5		01010-81230	Bolt	3	Y300001-
6		01643-31232	Washer	3	Y300001-
7		207-977-2440	Bracket	1	Y300001-
8		207-977-2230	Cover	1	Y300001-
9		01010-80616	Bolt	2	Y300001-
10		01643-30623	Washer	2	Y300001-
11		207-977-2240	Cover	1	Y300001-
12		01010-80616	Bolt	4	Y300001-
13		01643-30623	Washer	4	Y300001-
14		08037-02512	Grommet	1	Y300001-
15		195-33-11220	Spacer	1	Y300001-
16		08193-20012	Clip	1	Y300001-
17		01010-81250	Bolt	1	Y300001-
18		01643-31232	Washer	1	Y300001-
19		08034-20519	Band	10	Y300001-
20		01010-81220	Bolt	1	Y300001-
21		01643-31232	Washer	1	Y300001-
22		207-977-2310	Bracket	2	Y300001-
23		01010-81240	Bolt	6	Y300001-
24		01643-31232	Washer	6	Y300001-
25		207-977-2220	Cover	1	Y300001-
26		208-54-57180	Collar	2	Y300001-
27		01010-81235	Bolt	2	Y300001-
28		01643-31232	Washer	2	Y300001-
29		175-54-34170	Washer	2	Y300001-
30		01010-81230	Bolt	2	Y300001-
31		20Y-977-6360	Cover	1	Y300001-
32		01010-81225	Bolt	2	Y300001-
33		01643-31232	Washer	2	Y300001-
34		20Y-977-6730	Cover	1	Y300001-
35		01010-81020	Bolt	2	Y300001-
36		01643-31032	Washer	2	Y300001-
37		(207-977-2261)	Wiring Harness(Refer to Page 708)		-
38		(207-979-7770)	Hose Assembly(Refer to Page 480)		-
39		(207-979-7810)	Hose(Refer to Page 480)		-

FIG. W1113-001001 Fuel Self Charge Pump

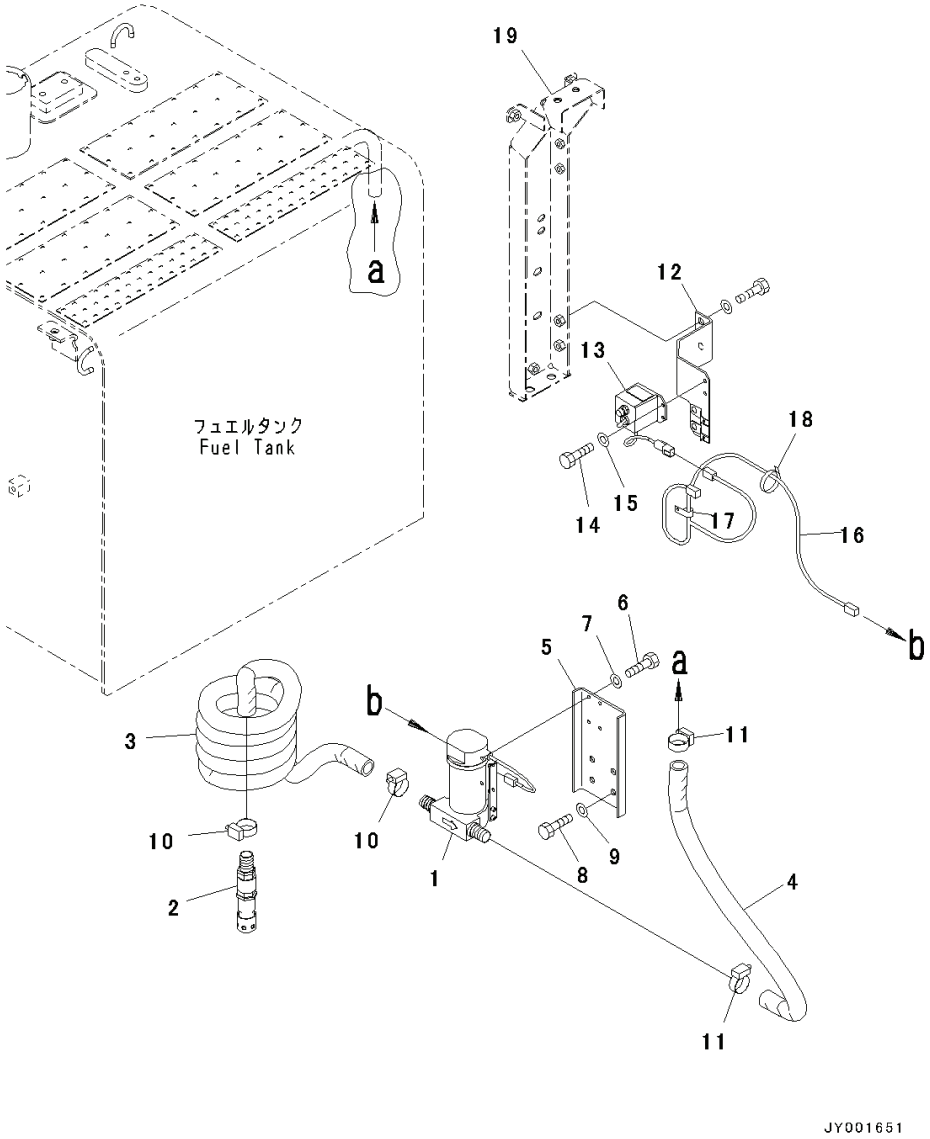

Index	Code	Part Number	Descreption	Qty	Serial Number
1		20Y-04-K2082	Pump	1	Y300001-
2		20Y-04-K2450	Valve Assembly	1	Y300001-
3		20Y-04-K2351	Hose	1	Y300001-
4		208-04-K1550	Hose	1	Y300001-
5		207-04-75180	Bracket	1	Y300001-
6		01010-80616	Bolt	4	Y300001-
7		01643-30623	Washer	4	Y300001-
8		01010-81225	Bolt	4	Y300001-
9		01643-31232	Washer	4	Y300001-
10		07289-00035	Clamp	2	Y300001-
11		07289-00035	Clamp	2	Y300001-
12		207-04-75261	Bracket	1	Y300001-
13		207-06-71540	Switch Assembly	1	Y300001-
14		01010-80616	Bolt	2	Y300001-
15		01643-30623	Washer	2	Y300001-
16		207-06-75270	Wiring Harness	1	Y300001-
17		04434-51412	Clip	1	Y300001-
18		08034-20519	Band	1	Y300001-
19		(207-54-71221)	Frame(Refer to Page 770)		-

PC300-8 (FEN01263-00)

FIG. W1113-002001 Fuel Self Charge Pump, Extremely Bad Fuel And Poor Fuel Arrangement Spec. Water+Dust

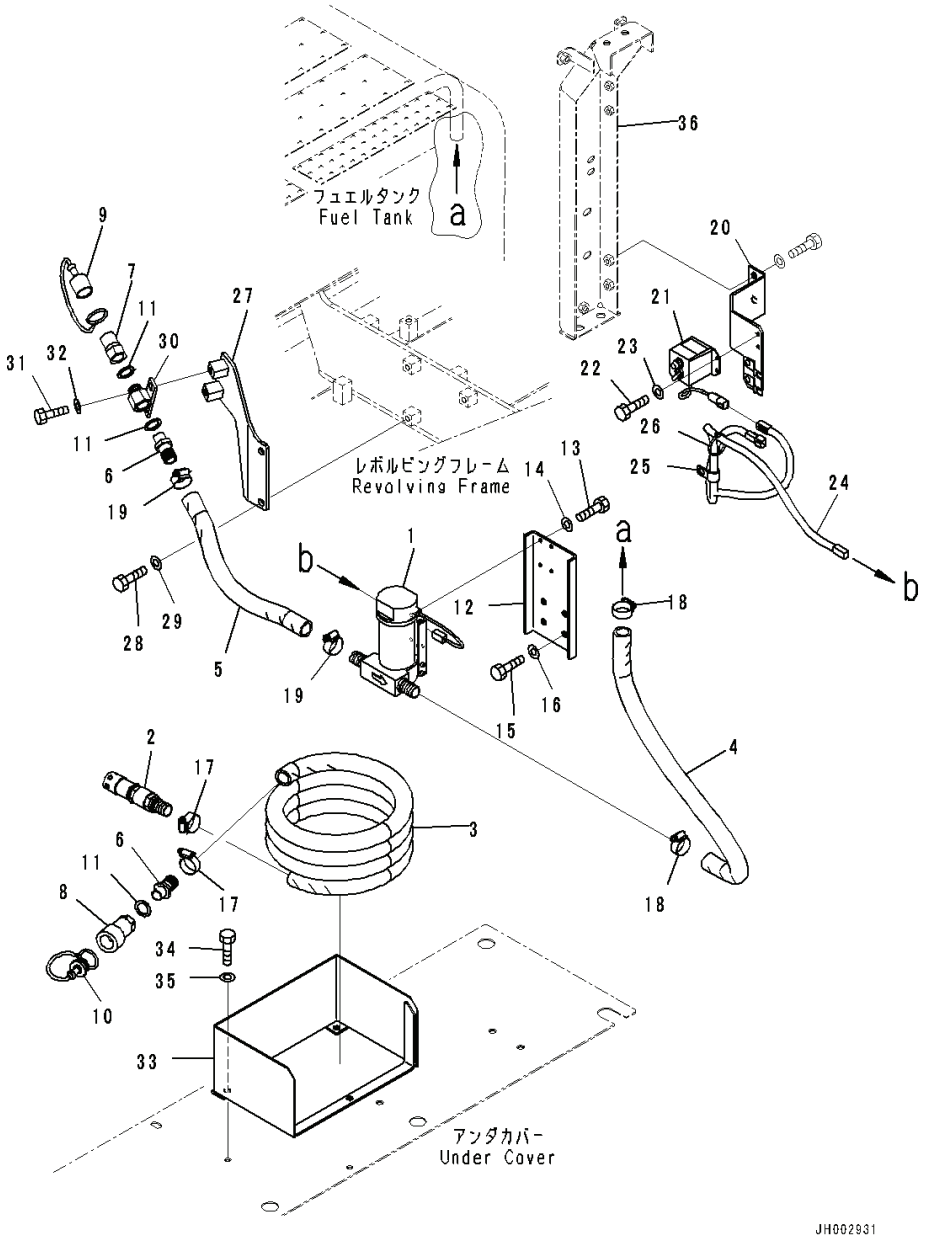

Index	Code	Part Number	Descreption	Qty	Serial Number
1		20Y-04-K2082	Pump	1	Y300001-
2		20Y-04-K2450	Valve Assembly	1	Y300001-
3		20Y-04-K2351	Hose	1	Y300001-
4		208-04-K1550	Hose	1	Y300001-
5		207-04-75430	Hose	1	Y300001-
6		22B-04-K1130	Nipple	2	Y300001-
7		22B-04-K1140	Coupling	1	Y300001-
8		22B-04-K1150	Coupling	1	Y300001-
9		22B-04-K1160	Plug	1	Y300001-
10		22B-04-K1170	Plug	1	Y300001-
11		205-04-K1370	Washer, Seal	3	Y300001-
12		207-04-75180	Bracket	1	Y300001-
13		01010-80616	Bolt	4	Y300001-
14		01643-30623	Washer	4	Y300001-
15		01010-81225	Bolt	4	Y300001-
16		01643-31232	Washer	4	Y300001-
17		07289-00035	Clamp	2	Y300001-
18		07289-00035	Clamp	2	Y300001-
19		07289-00035	Clamp	2	Y300001-
20		207-04-75261	Bracket	1	Y300001-
21		207-06-71540	Switch Assembly	1	Y300001-
22		01010-80616	Bolt	2	Y300001-
23		01643-30623	Washer	2	Y300001-
24		207-06-75270	Wiring Harness	1	Y300001-
25		04434-51412	Clip	1	Y300001-
26		08034-20519	Band	1	Y300001-
27		207-04-75420	Bracket	1	Y300001-
28		01010-81235	Bolt	2	Y300001-
29		01643-31232	Washer	2	Y300001-
30		207-04-75410	Bracket	1	Y300001-
31		01010-81225	Bolt	2	Y300001-
32		01643-31232	Washer	2	Y300001-
33		20Y-04-38170	Bracket	1	Y300001-
34		01010-81020	Bolt	3	Y300001-
35		01643-31032	Washer	3	Y300001-
36		(207-54-71221)	Frame(Refer to Page 770)		-

PC300-8 (FEN01263-00)

FIG. W1114-001001 Additional Track Frame Step

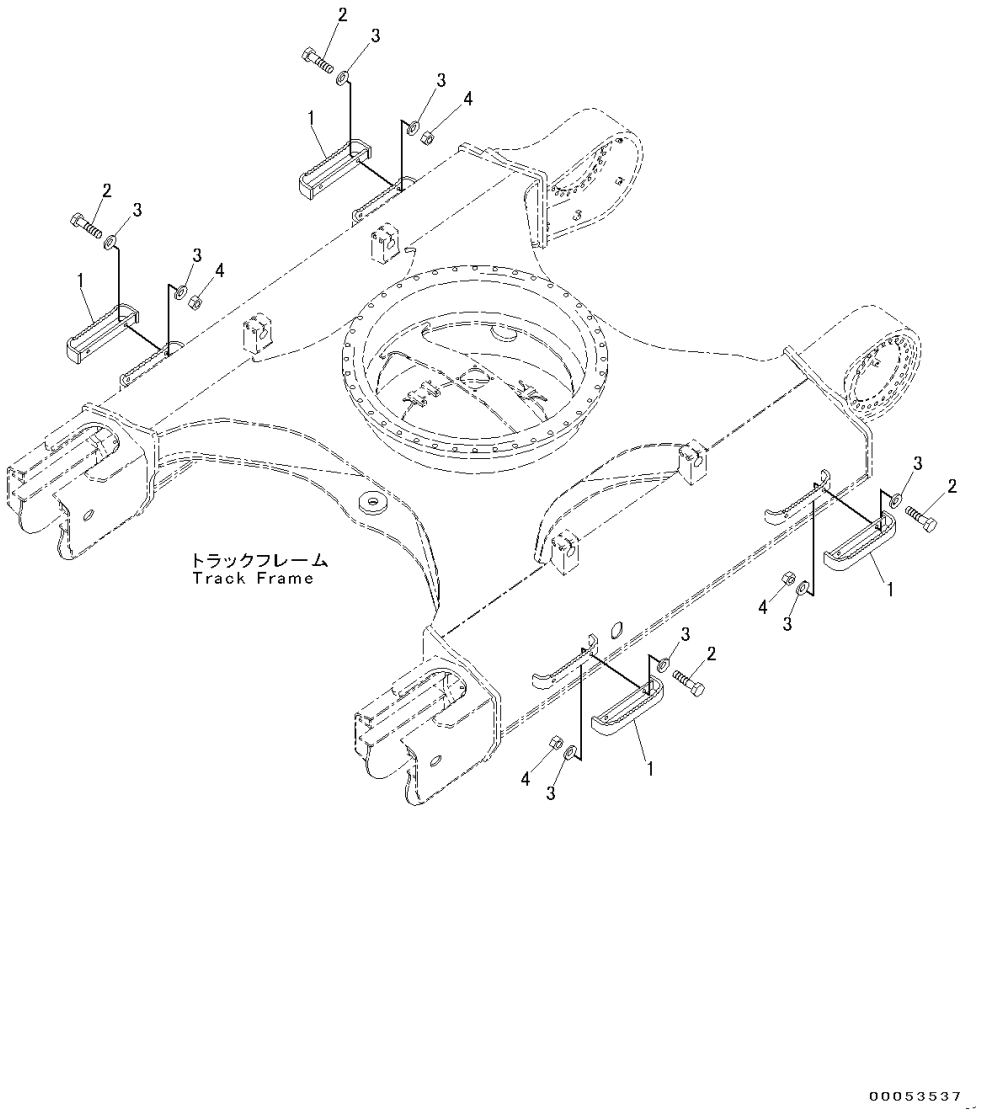

Index	Code	Part Number	Descreption	Qty	Serial Number
1		207-30-76211	Step	4	Y300001-
2		01010-81660	Bolt	8	Y300001-
3		01643-31645	Washer	16	Y300001-
4		01580-11613	Nut	8	Y300001-

PC300-8 (FEN01263-00)

FIG. W1117-001001 Grease Pump, Electric Type

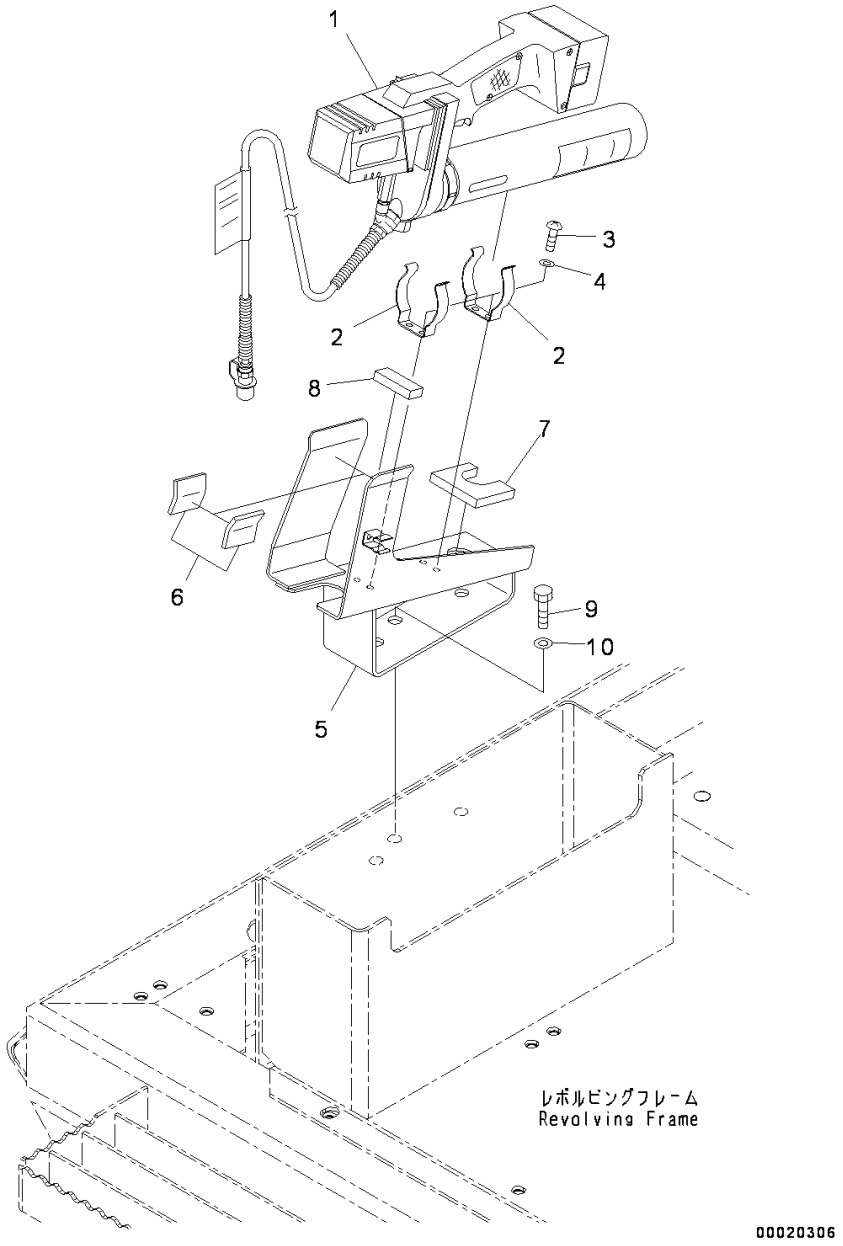

Index	Code	Part Number	Descreption	Qty	Serial Number
1		208-98-71100	Pump Assembly	1	Y300001-
2		208-54-31280	Clamp	2	Y300001-
3		01220-40612	Screw, Philips Head	4	Y300001-
4		01641-20608	Washer	4	Y300001-
5		208-98-71120	Bracket	1	Y300001-
6		207-54-52440	• Sheet	2	Y300001-
7		207-54-61830	• Sheet	1	Y300001-
8		207-54-61840	• Sheet	1	Y300001-
9		01010-81225	Bolt	3	Y300001-
10		01643-31232	Washer	3	Y300001-

PC300-8 (FEN01263-00)

FIG. W9960-001001 Engine Drain Hose

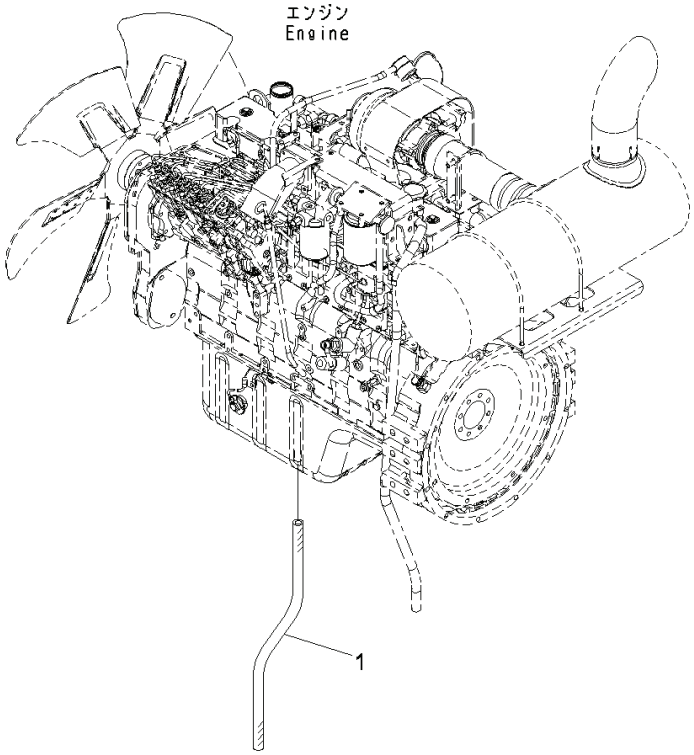

PWL5620

Index	Code	Part Number	Descreption	Qty	Serial Number
1		07286-01680	Hose	1	Y300001-

FIELD REPAIR SERVICE PARTS

FIG. KIT Service Kit Parts (1/3)

Index	Code	Part Number	Descreption	Qty	Serial Number
K01		NFEB1601	ServiceKit		Y300001-
		205-970-5560	• O-ring	1	-
	C1		• O-ring	1	-
	C1		• Ring, Back-up	1	-
K02		207-32-05060	Service Kit, Shoe Bolt and Nut		Y300001-
		154-32-71220	• Nut	30	-
		207-32-71210	• Bolt	30	-
K04		707-99-58080	Service Kit, Bucket Cylinder		Y300001-
		07000-13035	• O-ring	2	-
		07000-15090	• O-ring	1	-
		07000-15130	• O-ring	2	-
		07001-05090	• Ring, Back-up	2	-
		07145-00090	• Seal, Dust	2	-
		07145-00100	• Seal, Dust	2	-
		176-63-56170	• Seal, Dust	1	-
		707-35-91420	• Ring, Back-up	2	-
		707-39-14110	• Ring, Wear	2	-
		707-44-14180	• Ring, Piston	1	-
		707-51-10030	• Packing, Rod	1	-
		707-51-10640	• Ring, Buffer	1	-
K05		707-99-58030	Service Kit, Boom Cylinder		Y300001-
		07000-13035	• O-ring	2	-
		07000-15090	• O-ring	1	-
		07000-15130	• O-ring	1	-
		07001-05090	• Ring, Back-up	2	-
		07145-00090	• Seal, Dust	2	-
		07145-00100	• Seal, Dust	2	-
		176-63-56170	• Seal, Dust	1	-
		707-35-91420	• Ring, Back-up	1	-
		707-39-14110	• Ring, Wear	1	-
		707-44-14180	• Ring, Piston	1	-
		707-51-10030	• Packing, Rod	1	-
		707-51-10640	• Ring, Buffer	1	-
K06		707-99-59360	Service Kit, Boom Cylinder		60771-
		07000-53035	• O-ring	2	-
		07000-55090	• O-ring	1	-
		07000-55130	• O-ring	2	-
		07001-05090	• Ring, Back-up	2	-
		07145-10090	• Seal, Dust	2	-
		07145-10100	• Seal, Dust	2	-
		176-63-56170	• Seal, Dust	1	-
		707-35-91420	• Ring, Back-up	3	-
		707-39-14110	• Ring, Wear	2	-
		707-44-14180	• Ring, Piston	1	-
		707-51-10640	• Ring, Buffer	1	-
		707-51-10730	• Packing, Rod	1	-
		707-56-10651	• Seal, Dust	1	-
K07		707-99-72300	Service Kit, Arm Cylinder		Y300001-
		07000-13035	• O-ring	2	-
		07000-15100	• O-ring	1	-
		07000-15150	• O-ring	1	-
		07001-05100	• Ring, Back-up	2	-
		07002-12034	• O-ring	1	-
		07145-00100	• Seal, Dust	2	-
		198-63-94170	• Seal, Dust	1	-
		707-35-91640	• Ring, Back-up	1	-
		707-39-16120	• Ring, Wear	2	-
		707-44-16180	• Ring, Piston	1	-
		707-51-11030	• Packing, Rod	1	-
		707-51-11640	• Ring, Buffer	1	-
K08		707-99-67090	Service Kit, Boom Cylinder		Y300001-
		07000-13035	• O-ring	2	-
		07000-15100	• O-ring	1	-
		07000-15150	• O-ring	2	-
		07001-05100	• Ring, Back-up	2	-
		07002-12034	• O-ring	1	-
		07145-00100	• Seal, Dust	2	-
		198-63-94170	• Seal, Dust	1	-
		707-35-91640	• Ring, Back-up	3	-
		707-39-16120	• Ring, Wear	2	-
		707-44-16180	• Ring, Piston	1	-
		707-51-11030	• Packing, Rod	1	-
		707-51-11640	• Ring, Buffer	1	-
K09		707-99-67670	Service Kit, Blade Lift Cylinder		Y300001-
		07000-52055	• O-ring	1	-
		07000-53035	• O-ring	2	-
		07000-53038	• O-ring	2	-
		07000-53045	• O-ring	1	-
		07000-53048	• O-ring	1	-
		07000-55080	• O-ring	1	-

FIG. KIT Service Kit Parts (2/3)

Index	Code	Part Number	Descreption	Qty	Serial Number
		07000-55170	• O-ring	1	-
		07001-05080	• Ring, Back-up	2	-
		07146-05172	• Ring, Back-up	1	-
		198-63-94170	• Seal, Dust	1	-
		707-39-18820	• Ring, Wear	2	-
		707-44-18190	• Ring, Piston	1	-
		707-51-11640	• Ring, Buffer	1	-
		707-51-11730	• Packing, Rod	1	-
		707-88-36550	• Seal	1	-
K10		707-99-72280	Service Kit, Arm Cylinder		60771-
		07000-53035	• O-ring	2	-
		07000-55100	• O-ring	1	-
		07000-55150	• O-ring	2	-
		07001-05100	• Ring, Back-up	2	-
		07002-52034	• O-ring	1	-
		07145-10100	• Seal, Dust	4	-
		198-63-94170	• Seal, Dust	1	-
		707-35-91640	• Ring, Back-up	1	-
		707-39-16120	• Ring, Wear	2	-
		707-44-16180	• Ring, Piston	1	-
		707-51-11640	• Ring, Buffer	1	-
		707-51-11730	• Packing, Rod	1	-
		707-56-11651	• Seal, Dust	1	-
K11		707-99-58090	Service Kit, Bucket Cylinder		Y300001-
		07000-13035	• O-ring	2	-
		07000-15090	• O-ring	1	-
		07000-15130	• O-ring	1	-
		07001-05090	• Ring, Back-up	2	-
		07145-00090	• Seal, Dust	2	-
		176-63-56170	• Seal, Dust	1	-
		207-70-72120	• Seal, Dust	2	-
		707-35-91420	• Ring, Back-up	1	-
		707-39-14110	• Ring, Wear	2	-
		707-44-14180	• Ring, Piston	1	-
		707-51-10030	• Packing, Rod	1	-
		707-51-10640	• Ring, Buffer	1	-
K12		707-99-59610	Service Kit, Bucket Cylinder		Y300001-
		07000-13035	• O-ring	2	-
		07000-15100	• O-ring	1	-
		07000-15140	• O-ring	1	-
		07001-05100	• Ring, Back-up	2	-
		07145-00090	• Seal, Dust	2	-
		198-63-94170	• Seal, Dust	1	-
		207-70-72120	• Seal, Dust	2	-
		707-35-91660	• Ring, Back-up	1	-
		707-39-15110	• Ring, Wear	2	-
		707-44-15180	• Ring, Piston	1	-
		707-51-11030	• Packing, Rod	1	-
		707-51-11640	• Ring, Buffer	1	-
K13		707-99-59370	Service Kit, Bucket Cylinder		60771-
		07000-53035	• O-ring	2	-
		07000-55090	• O-ring	1	-
		07000-55130	• O-ring	1	-
		07001-05090	• Ring, Back-up	2	-
		07145-10090	• Seal, Dust	2	-
		176-63-56170	• Seal, Dust	1	-
		207-70-72120	• Seal, Dust	2	-
		707-35-91420	• Ring, Back-up	1	-
		707-39-14110	• Ring, Wear	2	-
		707-44-14180	• Ring, Piston	1	-
		707-51-10640	• Ring, Buffer	1	-
		707-51-10730	• Packing, Rod	1	-
		707-56-10651	• Seal, Dust	1	-
K14		707-99-59270	Service Kit, Boom Cylinder		Y300001-
		07000-13035	• O-ring	2	-
		07000-15130	• O-ring	2	-
		07000-B5090	• O-ring	1	-
		07001-05090	• Ring, Back-up	2	-
		07145-00090	• Seal, Dust	2	-
		07145-00100	• Seal, Dust	2	-
		176-63-56170	• Seal, Dust	1	-
		707-35-91420	• Ring, Back-up	3	-
		707-39-14110	• Ring, Wear	2	-
		707-44-14150	• Ring, Piston	1	-
		707-51-10030	• Packing, Rod	1	-
		707-51-10640	• Ring, Buffer	1	-
K15		707-99-72350	Service Kit, Arm Cylinder		Y300001-
		07000-13035	• O-ring	2	-
		07000-15150	• O-ring	2	-
		07000-B5100	• O-ring	1	-

PC300-8 (FEN01263-00)

FIG. KIT Service Kit Parts (3/3)

Index	Code	Part Number	Descreption	Qty	Serial Number
		07001-05100	• Ring, Back-up	2	-
		07002-12034	• O-ring	1	-
		07145-00100	• Seal, Dust	4	-
		198-63-94170	• Seal, Dust	1	-
		707-35-91640	• Ring, Back-up	3	-
		707-39-16120	• Ring, Wear	2	-
		707-44-16190	• Ring, Piston	1	-
		707-51-11030	• Packing, Rod	1	-
		707-51-11640	• Ring, Buffer	1	-
K16		707-99-59630	Service Kit, Bucket Cylinder		Y300001-
		07000-13035	• O-ring	2	-
		07000-15140	• O-ring	1	-
		07000-B5100	• O-ring	1	-
		07001-05100	• Ring, Back-up	2	-
		07145-00090	• Seal, Dust	2	-
		198-63-94170	• Seal, Dust	1	-
		207-70-72120	• Seal, Dust	2	-
		707-35-91660	• Ring, Back-up	1	-
		707-39-15110	• Ring, Wear	2	-
		707-44-15190	• Ring, Piston	1	-
		707-51-11030	• Packing, Rod	1	-
		707-51-11640	• Ring, Buffer	1	-

NUMERICAL INDEX

PartNumber	Page	Index
01010-61460	180	30
	208	30
	248	30
01010-61470	180	31
	208	31
	248	31
01010-61490	173	26
	201	26
	225	26
	241	26
01010-61655	261	7
01010-62065	584	9
	589	13
	594	9
	599	13
	602	19
	604	19
	614	3
01010-62075	508	18
	510	18
	512	18
01010-62450	524	5
01010-62455	523	2
01010-80612	144	12
	145	12
	436	23
	438	32
01010-80616	138	6
	328	3
	374	22
	380	5
	380	14
	386	9
	386	16
	410	5
	410	14
	411	14
	417	4
	436	13
	438	25
	637	9
	637	12
	638	6
	638	14
	639	13
	639	22
01010-80620	378	16
	384	16
01010-80816	155	11
	364	16
	634	12
01010-80820	345	16
	379	1
	385	1
	634	23
01010-80825	161	3
	391	2
01010-80830	374	17
	397	28
	423	35
	634	1
01010-80835	337	5
	489	12
01010-80840	397	31
	423	38
01010-80855	151	28
	364	14
01010-80875	329	8
	331	8
01010-81016	156	14
	375	2
	387	49
	387	52
	396	14
01010-81020	134	26
	135	47
	136	8
	136	15
	136	18
	136	28
	136	31
	136	34
	138	12
	138	15
	138	17
	151	36
	152	28
	153	34
	162	3
	367	1
	367	4
	369	5
	375	22
	375	25
	375	29
	375	32
	393	7
	411	4
	425	7
	448	11
	475	13
	476	13
	498	8
	504	8
	637	35
	639	34
01010-81025	155	22
	156	4
	369	3
	375	6
	396	2
	396	8
	371	3
	371	13
	443	14
	446	14
	542	43
	544	43
	546	48
	548	48
	634	4
01010-81030	134	24
	135	52
	136	10
	136	13
	136	25
	367	13
	380	2
	410	2
	443	16
	446	16
	480	11
	482	8
	486	11
01010-81035	146	14
	147	4
	330	38
	333	55
	335	55
01010-81040	172	7
	200	7
	240	7
	287	7
	375	12
	375	16
	375	20
	530	7
01010-81045	138	3
	397	2
	397	11
	423	2
	423	15
01010-81050	436	39
01010-81055	134	16
	288	12
	288	18
01010-81060		
01010-81070	288	14
	288	20
01010-81075	153	30
	291	9
01010-81080		
01010-81095	298	27
	302	28
	550	41
	552	44
01010-81220	128	18
	139	3
	152	15
	152	18
	153	37
	153	40
	155	33
	156	10
	163	5
	270	24
	277	7
	277	11
	295	18
	296	13
	300	21
	304	19
	441	7
	441	11
	441	15
	441	17
	441	28
	453	13
	529	8
	529	11
	532	21
	537	8
	537	11
	539	21
	634	21
	637	20
01010-81225	130	10
	132	10
	134	21
	135	54
	136	37
	138	10
	138	22
	138	25
	138	28
	139	21
	139	25
	139	29
	139	34
	142	16

PartNumber	Page	Index
	148	3
	148	14
	421	3
	421	13
	148	17
	148	24
	150	6
	150	16
	151	2
	151	5
	151	8
	151	11
	151	14
	151	21
	151	25
	152	2
	152	5
	152	12
	152	21
	152	25
	152	31
	153	3
	153	6
	153	14
	153	16
	153	19
	155	4
	155	15
	155	20
	155	25
	155	28
	155	31
	155	36
	155	38
	159	4

PartNumber	Page	Index
	159	10
	258	2
	290	12
	291	2
	295	23
	296	21
	300	2
	300	10
	300	16
	304	2
	304	10
	306	19
	328	5
	330	5
	330	8
	330	18
	330	24
	330	29
	330	32
	330	36
	332	5
	332	8
	332	23
	332	27
	332	35
	333	41
	333	46
	333	49
	333	53
	334	5
	334	8
	334	23
	334	27
	334	35
	335	41

PartNumber	Page	Index
	335	46
	335	49
	335	53
	427	7
	428	7
	431	32
	432	32
	435	10
	436	4
	436	7
	436	10
	436	20
	438	13
	438	18
	438	22
	438	29
	444	44
	444	47
	444	50
	447	44
	447	47
	447	50
	508	8
	508	16
	510	8
	510	16
	512	8
	512	16
	515	11
	516	11
	609	10
	611	10
	613	10
	637	32
	638	8

PartNumber	Page	Index
	639	15
	639	31
	641	9
01010-81230	128	31
	139	9
	139	14
	142	12
	142	38
	156	8
	165	27
	165	35
	279	7
	279	11
	279	15
	292	27
	299	15
	303	16
	308	4
	309	4
	310	4
	373	5
	431	19
	431	28
	431	30
	432	19
	432	28
	432	30
	435	8
	435	12
	435	16
	435	18
	435	20
	435	24
	435	27
	435	31

PartNumber	Page	Index
	435	34
	436	30
	436	36
	438	37
	439	41
	439	47
	440	5
	440	7
	440	9
	440	13
	440	18
	440	22
	440	25
	441	20
	441	23
	441	26
	441	30
	441	37
	442	42
	442	48
	443	22
	443	26
	443	28
	443	35
	443	37
	446	22
	446	26
	446	28
	446	35
	446	37
	448	14
	448	16
	448	18
	448	20
	451	7

PartNumber	Page	Index
	452	3
	455	4
	455	7
	455	11
	455	14
	455	18
	455	21
	455	26
	455	29
	455	32
	455	35
	455	37
	455	40
	457	2
	457	4
	457	7
	457	10
	458	3
	458	6
	458	11
	458	15
	458	18
	459	4
	459	7
	459	11
	459	14
	459	18
	459	21
	459	26
	459	29
	459	32
	459	35
	459	37
	459	40
	461	2

PartNumber	Page	Index
	461	5
	461	8
	462	2
	462	5
	462	10
	462	14
	462	16
	462	19
	462	25
	462	28
	462	31
	463	4
	463	7
	463	11
	463	14
	463	18
	463	21
	463	26
	463	29
	463	32
	463	35
	463	37
	463	40
	465	2
	465	4
	465	7
	465	10
	466	3
	466	6
	466	11
	466	15
	466	18
	467	4
	467	7
	467	11

PartNumber	Page	Index
	467	14
	467	18
	467	21
	467	26
	467	29
	467	32
	467	35
	467	37
	467	40
	469	2
	469	5
	469	8
	470	2
	470	5
	470	10
	470	14
	470	16
	470	19
	470	25
	470	28
	470	31
	471	4
	471	7
	471	11
	471	14
	471	18
	471	21
	471	26
	471	29
	471	32
	471	35
	471	37
	472	2
	472	4
	472	7

PartNumber	Page	Index
	472	10
	473	3
	473	6
	473	11
	473	15
	473	18
	556	4
	637	5
	637	30
01010-81235	134	11
	137	43
	137	49
	140	42
	275	20
	276	24
	279	3
	285	5
	285	13
	285	20
	311	7
	329	13
	331	13
	426	6
	426	12
	458	8
	462	7
	462	21
	466	8
	470	7
	470	21
	473	8
	473	22
	522	3
	527	5
	527	8

PartNumber	Page	Index
	527	12
	528	5
	528	8
	528	11
	528	16
	528	19
	530	18
	530	24
	531	3
	531	9
	531	20
	532	3
	536	5
	536	8
	536	12
	538	5
	538	8
	538	11
	538	16
	538	19
	539	3
	555	9
	555	21
	559	3
	559	8
	563	3
	563	8
	575	3
	575	8
	580	9
	580	21
	609	7
	611	7
	613	7
	637	27

PartNumber	Page	Index
	639	28
01010-81240	135	49
	148	32
	258	6
	271	10
	274	5
	275	3
	276	7
	285	16
	288	27
	290	9
	435	2
	449	2
	480	40
	482	35
	486	40
	490	32
	634	26
	637	23
01010-81245	148	11
	148	20
	153	24
	258	8
	285	18
	285	30
	305	16
	362	29
	408	29
	740	29
	530	4
	555	3
	555	6
	556	13
	558	37
	561	37

PartNumber	Page	Index
	569	3
	569	6
	573	42
	578	37
01010-81250	146	11
	151	33
	152	9
	152	34
	290	6
	531	17
	531	22
	555	15
	569	12
	637	17
01010-81255	433	3
	433	11
	434	3
	434	11
01010-81260	151	18
	159	6
	292	28
	300	14
	304	7
	304	14
	304	24
	305	19
	330	21
	332	38
	334	38
01010-81270	274	10
01010-81275	128	15
	128	26
	276	3
01010-81280		
	319	3

PartNumber	Page	Index
01010-81285	288	36
	300	7
	427	10
01010-81290	275	23
	276	27
	563	24
01010-81295	274	15
01010-81430		
	532	18
	539	18
01010-81435		
	580	29
01010-81440	329	4
	331	4
01010-81445	569	15
01010-81455	287	11
	287	36
	530	12
	530	15
	555	18
	580	3
	580	6
	580	15
	580	18
01010-81635	141	11
	144	19
	145	21
	166	55
	288	8
01010-81640	141	8
	142	1
	142	3
	194	2
	220	2
	257	2
	311	3
	499	39
	505	39
	526	16
	533	16
	534	16
	535	16
	556	10
	580	27
01010-81645	128	28
	194	4
	220	4
	257	4
	480	23
	482	20
	486	23
01010-81655	530	21
	530	27
01010-81660	640	2
01010-81685	531	6
	531	12
01010-81865	581	2
01010-81875	541	21
	543	21
	557	18
	578	18
01010-82075	498	36
	504	36
01010-82085	549	23
	560	18
01010-82095	515	14
	516	14
01010-82475	481	45
	487	45
01010-83080	426	9
01010-D0640	321	16
01010-D0820	321	26
	336	2
	358	17
	407	17
01010-D0825	355	3
	355	6
01010-D1025	157	2
	321	21
	351	8
	404	8
	416	8
01010-D1030	158	2
01010-D1035	421	17
01010-D1045	367	11
	371	10
01010-D1060	157	5
01010-D1220	160	4
	319	8
	321	14
01010-D1225	322	3
	405	26
01010-D1230	386	2
	433	7
	433	15
	433	18
	433	25
	434	7
	434	15
	434	18
	434	25
	635	3
	635	11
01010-D1235	433	31
	434	30
01010-D1240	433	21
	434	21
	635	8
01010-D1245	321	18
01010-D1275	321	10
01010-E1235	48	3
01011-61455	241	28
01011-61880	498	29
	504	29
01011-81015	162	5
01011-81020	272	3
01011-81040	148	26
01011-81070	273	6
	273	9
01011-81200	148	7
	285	2
	285	33
01011-81210	287	22
	292	30
01011-81260	553	3
01011-81265	274	17
01011-81800	545	21
	547	21
	362	31
	421	7
	421	10
	572	17
01011-81805	545	27
	547	27
	572	19
01011-82010	551	22
01011-82015	551	23
01011-D1245	320	3
	321	4
	321	7
01019-31400	329	6
	331	6
01023-10306	365	22
01023-10508	387	45
01023-10612	345	4
	345	6
01023-20412	349	2
01023-20416	349	8
	368	20
01023-20512	382	12
	382	16
	388	12
	388	16
	412	12
	412	16
01023-20612	319	11
	326	6
	342	10
	399	10
01023-20616	342	16
	342	18
	350	29
	399	16
	399	18
01023-20620	347	10
	403	10
	413	10
01023-60316		
01023-60320	381	26
	411	26
	417	26
01023-60410	381	
	417	10
01023-60510	381	3
	417	3
01023-60512	351	2
	404	2
	416	2
01023-60620	361	4
01023-70412	349	12
01050-31230	111	10
01220-40612	439	45
	641	3
01224-40616	443	18
	446	18
01240-00616	345	7
01240-01025	346	16
	402	16
01245-00612	353	23
01245-00616	341	16
	341	45
	343	9
	350	16
	350	22
	352	9
	353	17
	354	4
	380	12
	380	18
	380	24
	386	14
	387	22
	387	25
	400	9
	405	9
	410	12
	410	18
	410	24
	414	9
01245-00620	343	21

PartNumber	Page	Index
	382	9
	388	9
	400	21
	412	9
01245-00816	341	19
	341	26
	341	29
	352	20
	405	18
		10
	411	10
	411	3
	414	19
01245-00820	343	18
	391	5
	400	18
01245-00825	338	5
01245-01016	352	7
	352	15
	405	7
	405	14
	414	7
	414	15
01245-01025	373	8
	373	10
01252-30625	370	15
01252-41025	377	10
	383	10
01252-60530	270	18
01252-60612	370	24
01252-60635	270	4
01252-60816	179	6
	207	6
	247	6
01252-60820	169	18

PartNumber	Page	Index
	179	10
	181	9
	187	10
	189	10
	197	18
	207	10
	209	9
	215	10
	222	18
	237	18
	247	10
	249	9
01252-60825	479	13
	485	13
01252-60830		
	184	12
	212	12
	252	12
01252-60835		
	366	19
01252-60845		
	181	22
	188	5
	190	5
	209	22
	216	5
	231	5
	249	22
01252-60865		
	172	3
	200	3
	240	3
01252-61030	286	7
01252-61040		
	180	20

PartNumber	Page	Index
	208	20
	248	20
	286	6
01252-61045	185	26
	213	26
	230	26
	253	26
01252-61050	176	14
	204	14
	228	14
	244	14
01252-61065	186	6
	214	6
	254	6
01252-61075	184	13
	185	24
	212	13
	213	24
	230	24
	252	13
	253	24
	284	1
01252-61230	262	23
	266	20
	515	13
	516	13
01252-61450	477	17
	483	17
01252-61645	263	29
	264	8
	267	29
	268	8
01252-62055	494	31
	500	31
01252-62095	494	32

PartNumber	Page	Index
	500	32
01252-70516	166	41
	166	49
01252-70816	381	18
	411	18
	417	18
01252-71030	450	4
	451	4
01252-71225	287	19
01252-80616	327	2
	341	23
01252-80820	382	3
	388	3
	412	3
01252-80825	314	1
	316	1
01310-01216	541	24
	543	24
	545	35
	547	35
	549	26
	551	37
	557	21
	560	21
	572	31
	578	21
01370-00420	347	12
	403	12
	413	12
01370-00508	453	12
01370-10308	362	16
	420	15
	420	24
	408	16
01370-20308	362	19

PartNumber	Page	Index
	408	19
01370-30412	337	8
01370-30416	350	26
01370-40510	382	14
	388	14
	412	14
01370-40610	382	19
	388	19
	412	19
01434-10616	136	2
	136	5
01435-00610	359	10
	359	12
	359	14
	359	16
	359	19
	360	6
01435-00612	341	35
	350	7
	350	11
	350	18
	350	24
	356	6
	356	10
	380	20
	386	18
	407	9
	408	34
	410	20
01435-00616	342	2
	347	2
	353	2
	353	6
	353	21
	399	2

PartNumber	Page	Index
	403	2
	413	2
01435-00625	329	22
	330	15
	331	22
	332	32
	334	32
01435-00630	330	14
	332	31
	334	31
01435-00816	51	12
	361	3
01435-00820	51	6
	51	16
	353	8
	359	4
	359	6
01435-00855	51	14
01435-00860	359	2
01435-01020	48	15
	64	8
	111	9
01435-01025	48	14
01435-01030	98	2
01435-01045	98	4
01435-01075	97	13
01435-01085	97	5
01435-01095	97	4
01435-01220	344	18
	344	19
	401	18
	401	19
01435-01225	48	9
01435-01235	550	48
01435-01240	114	2

PartNumber	Page	Index
01435-40610	343	13
	350	31
	400	13
01435-40612	323	5
	324	5
	325	5
01435-40616	323	2
	324	2
	325	2
	342	14
	346	5
	357	12
	362	11
	362	22
	399	14
	402	5
	406	12
	408	11
	408	22
	415	12
01435-40620	326	9
	362	25
	392	7
	408	25
	424	7
01435-40812	341	11
	349	9
	360	2
01435-40816	382	6
	388	6
	412	6
01435-40820	358	6
	358	11
	407	11, 6
01435-40825	346	2

PartNumber	Page	Index
	351	6
	402	2
	404	6
	416	6
01436-01020	99	3
01437-00825	79	5
01580-01815	128	5
01580-02419	128	11
01580-10403	362	8
	408	8
01580-10605	155	7
	327	4
01580-10806	142	35
	263	26
	267	26
	634	9
01580-11008	341	37
	346	12
	402	12
	436	16
	438	16
	521	8
01580-11210	111	4
	553	5
01580-11613	431	4
	432	4
	640	4
01580-11815	524	9
01580-12016	426	3
01580-12419	532	9
	539	9
	554	10
	568	10
	574	10
01580-40605	382	10

PartNumber	Page	Index
	388	10
	412	10
01581-01008	51	4
01583-11408	269	12
	269	25
	372	35
01583-11811	341	32
01584-00605	119	8
01584-01008	345	13
01584-01210	114	4
01584-30806	343	3
	400	3
01584-31008	341	39
01594-01008	48	7
01597-01009	140	41
	142	10
	329	17
	331	17
	548	46
	550	52
	552	54
01597-01211	48	18
	130	14
	132	14
	542	42
	544	42
01601-20410	362	10
	408	10
01601-20513	166	42
	166	50
	387	46
01640-20408	362	9
	408	9
01640-20610	327	5
01640-20716	119	19

PartNumber	Page	Index
01640-20816	119	17
01435-00610	362	34
01435-00612	362	39
	422	35
01640-21016	373	17
01640-21123	443	13
	446	13
01641-20608	439	46
	641	4
01641-20812	79	6
01641-21626	490	29
01643-11232	317	4
01643-30623	119	13
	136	3
	136	6
	138	7
	144	13
	145	13
	155	8
	328	4
	349	1
	374	23
	380	6
	380	15
	386	10
	386	17
	410	6
	410	15
	381	5
	411	5
	417	5
	436	14
	436	24
	438	26
	438	33

PartNumber	Page	Index
	448	9
	637	10
	637	13
	638	7
	638	15
	639	14
	639	23
01643-30823	37	9
	69	3
	142	34
	151	29
	155	12
	161	4
	329	9
	331	9
	337	6
	345	17
	364	15
	374	18
	379	2
	385	2
	391	3
	397	29
	397	32
	423	36
	423	39
	489	13
	634	2
	634	10
	634	13
01643-31032	51	8
	111	16
	134	17
	134	25
	134	27

PartNumber	Page	Index
	135	48
	135	53
	136	9
	136	11
	136	14
	136	16
	136	19
	136	26
	136	29
	136	32
	136	35
	138	4
	138	13
	138	16
	138	18
	140	40
	142	9
	146	15
	147	5
	148	27
	151	37
	152	29
	153	31
	153	35
	155	23
	156	5
	156	15
	162	4
	162	6
	272	4
	273	7
	273	10
	287	8
	288	13
	288	15

PartNumber	Page	Index
	288	19
	288	21
	291	10
	298	28
	302	29
	329	18
	330	39
	331	18
	333	56
	335	56
	346	13
	367	2
	367	5
	367	14
	369	4
	369	6
	375	3
	375	4
	375	7
	375	13
	375	17
	375	21
	375	23
	375	26
	375	30
	375	33
	380	3
	387	50
	387	53
	393	8
	396	3
	396	9
	396	15
	397	3
	397	12

PartNumber	Page	Index
	402	13
	410	3
	371	4
	371	5
	371	
	423	3
	423	16
	425	8
	436	40
	443	15
	443	17
	446	15
	446	17
	448	12
	475	14
	476	14
	480	12
	482	9
	486	12
	521	9
	530	8
	542	41
	542	44
	544	41
	544	44
	546	47
	546	49
	548	47
	548	49
	550	42
	550	51
	552	45
	552	55
	634	5
	637	36

PartNumber	Page	Index
	639	35
01643-31232	48	4
	48	17
	111	2
	111	8
	128	16
	128	19
	128	27
	128	32
	130	11
	130	15
	132	11
	132	15
	134	12
	134	22
	135	50
	135	55
	137	38
	137	44
	137	50
	138	11
	138	23
	138	26
	138	29
	139	4
	139	10
	139	15
	139	22
	139	26
	139	30
	139	35
	140	43
	142	13
	142	17
	142	39

PartNumber	Page	Index
		14
	421	4
	421	5
	421	14
	146	12
	148	4
	148	8
	148	12
	148	15
	148	18
	148	21
	148	25
	148	33
	150	7
	150	10
	151	3
	151	6
	151	9
	151	12
	151	15
	151	19
	151	22
	151	26
	151	34
	152	3
	152	6
	152	10
	152	13
	152	16
	152	19
	152	22
	152	26
	152	32
	152	35
	153	4

PartNumber	Page	Index
	153	7
	153	15
	153	17
	153	20
	153	25
	153	38
	154	41
	154	42
	155	5
	155	16
	155	21
	155	26
	155	29
	155	32
	155	34
	155	37
	155	39
	156	9
	156	11
	159	5
	159	7
	159	11
	163	6
	165	28
	165	36
	258	3
	258	7
	258	9
	271	11
	274	6
	274	11
	274	16
	274	18
	275	4
	275	21

PartNumber	Page	Index
	275	24
	276	4
	276	8
	276	25
	276	28
	277	8
	277	12
	279	4
	279	8
	279	12
	279	16
	285	3
	285	6
	285	14
	285	17
	285	19
	285	21
	285	31
	285	34
	287	23
	288	28
	288	37
	290	7
	290	10
	290	13
	291	3
	292	29
	295	19
	295	24
	296	14
	296	22
	299	16
	300	3
	300	8
	300	11

PartNumber	Page	Index
	300	15
	300	17
	300	22
	303	17
	304	3
	304	8
	304	11
	304	15
	304	20
	304	25
	305	17
	305	20
	306	20
	308	5
	309	5
	310	5
	311	8
	319	4
	328	6
	329	14
	330	6
	330	9
	330	19
	330	22
	330	25
	330	30
	330	33
	330	37
	331	14
	332	6
	332	9
	332	24
	332	28
	332	36
	332	39

PartNumber	Page	Index
	333	42
	333	47
	333	50
	333	54
	334	6
	334	9
	334	24
	334	28
	334	36
	334	39
	335	42
	335	47
	335	50
	335	54
	362	30
	373	6
	408	30
	408	32
	426	7
	426	13
	427	8
	427	11
	428	8
	431	20
	431	29
	431	31
	431	33
	432	20
	432	29
	432	31
	432	33
	433	4
	433	12
	434	4
	434	12

PartNumber	Page	Index
	435	3
	435	9
	435	11
	435	17
	435	19
	435	25
	435	28
	435	32
	435	35
	436	5
	436	8
	436	11
	436	21
	436	31
	436	37
	438	14
	438	19
	438	23
	438	30
	438	38
	439	42
	439	48
	440	6
	440	8
	440	10
	440	14
	440	23
	441	16
	441	24
	441	27
	441	38
	442	43
	442	49
	443	23
	443	27

PartNumber	Page	Index
	443	36
	444	45
	444	48
	444	51
	446	23
	446	27
	446	36
	447	45
	447	48
	447	51
	448	15
	448	21
	449	3
	451	8
	452	4
	453	14
	455	5
	455	8
	455	12
	455	15
	455	22
	455	30
	455	33
	455	36
	456	41
	457	5
	457	8
	457	11
	458	7
	458	9
	458	12
	458	19
	459	5
	459	8
	459	12

PartNumber	Page	Index
	459	15
	459	22
	459	30
	459	33
	459	36
	460	41
	461	6
	461	9
	462	6
	462	8
	462	11
	462	15
	462	20
	462	22
	462	26
	462	32
	463	5
	463	8
	463	12
	463	15
	463	22
	463	30
	463	33
	463	36
	464	41
	465	5
	465	8
	465	11
	466	7
	466	9
	466	12
	466	19
	467	5
	467	8
	467	12

PartNumber	Page	Index
	467	15
	467	22
	467	30
	467	33
	467	36
	468	41
	469	6
	469	9
	470	6
	470	8
	470	11
	470	15
	470	20
	470	22
	470	26
	470	32
	471	5
	471	8
	471	12
	471	15
	471	22
	471	30
	471	33
	471	36
	472	5
	472	8
	472	11
	473	7
	473	9
	473	12
	473	19
	473	23
	481	41
	482	36
	487	41

PartNumber	Page	Index
	490	33
	508	9
	508	17
	510	9
	510	17
	512	9
	512	17
	522	4
	527	6
	527	9
	527	13
	528	6
	528	9
	528	12
	528	17
	528	20
	529	12
	530	5
	530	19
	530	25
	531	4
	531	10
	531	18
	531	21
	531	23
	532	4
	532	22
	536	6
	536	9
	536	13
	537	12
	538	6
	538	9
	538	12
	538	17

PartNumber	Page	Index
	538	20
	539	4
	539	22
	553	4
	555	4
	555	7
	555	10
	555	16
	555	22
	556	5
	556	14
	559	4
	559	9
	561	38
	563	4
	563	9
	563	25
	569	4
	569	7
	569	13
	573	43
	575	4
	575	9
	578	38
	580	10
	580	22
	609	8
	609	11
	611	8
	611	11
	613	8
	613	11
	634	22
	634	27
	637	6

PartNumber	Page	Index
	637	18
	637	21
	637	24
	637	28
	637	33
	638	9
	639	16
	639	29
	639	32
	641	10
01643-31445	173	27
	180	32
	201	27
	208	32
	225	27
	241	27
	248	32
	287	12
	287	37
	530	13
	530	16
	532	19
	539	19
	555	19
	569	16
	580	4
	580	7
	580	16
	580	19
	580	30
01643-31645	128	29
	141	9
	141	12
	142	2
	144	20

PartNumber	Page	Index
	145	22
	166	56
	194	3
	194	5
	220	3
	220	5
	257	3
	257	5
	288	9
	311	4
	431	5
	432	5
	480	24
	482	21
	486	24
	499	40
	505	40
	526	17
	530	22
	530	28
	531	7
	531	13
	533	17
	534	17
	535	17
	556	11
	580	28
	640	3
01643-31845	128	6
	498	30
	504	30
	524	8
	581	3
01643-32060	426	4
	498	37

PartNumber	Page	Index
	504	37
	508	19
	510	19
	512	19
	513	12
	514	12
	515	15
	516	15
	584	10
	589	14
	594	10
	599	14
	602	20
	604	20
	614	4
01643-32460	128	12
	481	46
	487	46
	523	3
	524	6
01643-33080	426	10
01643-50823	188	6
	190	6
	216	6
	231	6
	366	20
	634	24
01643-51032	172	8
	176	15
	180	21
	200	8
	204	15
	208	21
	228	15
	234	4

PartNumber	Page	Index
	240	8
	244	15
	248	21
	272	7
	272	14
	273	13
	273	20
	278	5
	278	10
	278	20
	279	18
	280	6
	280	12
	280	15
	280	20
	280	26
	280	29
	281	6
	281	12
	281	15
	281	20
	281	26
	281	29
	282	6
	282	12
	282	15
	282	20
	282	26
	282	29
	285	26
	286	8
	287	16
	287	27
	287	32
	292	4

PartNumber	Page	Index
	292	8
	292	15
	292	22
	293	11
	294	5
	377	11
	383	11
	490	9
	492	5
	493	5
	527	16
	528	22
	536	16
	538	22
	541	34
	542	48
	543	34
	544	48
	546	40
	546	53
	548	40
	548	53
	362	32
	550	40
	550	56
	552	47
	552	61
	558	30
	558	42
	559	16
	560	30
	561	42
	563	22
	572	35
	573	47

PartNumber	Page	Index
	575	16
	578	30
	579	42
	608	6
	610	6
	612	6
01643-51232	270	23
	288	26
	288	33
	441	22
	529	9
	537	9
	541	39
	543	39
	546	44
	548	44
	550	49
	552	52
	558	35
	561	35
	573	40
	578	35
01643-51645	261	8
01643-70623	321	17
	327	3
	341	17
	341	24
	341	46
	343	10
	343	22
	350	17
	350	23
	352	10
	353	18
	353	24

PartNumber	Page	Index
	354	5
	380	13
	380	19
	380	25
	386	15
	387	23
	387	26
	400	10
	400	22
	405	10
	410	13
	410	19
	410	25
	414	10
01643-70823	321	27
	321	29
	336	3
	338	3
	338	6
	341	20
	341	27
	341	30
	352	21
	353	15
	355	4
	355	7
	358	18
	382	4
	388	4
	391	6
	405	19
	407	18
	412	4
	414	20
01643-71032	157	3

PartNumber	Page	Index
	157	6
	158	3
	321	22
	341	40
	351	9
	352	8
	352	16
	367	12
	373	16
	404	9
	405	8
	405	15
	414	8
	414	16
	416	9
	371	8
	371	11
01643-71232	160	5
	319	9
	320	4
	321	5
	321	8
	321	11
	321	15
	321	19
	322	4
	386	3
	405	27
	433	8
	433	16
	433	19
	433	22
	433	26
	433	32
	434	8

PartNumber	Page	Index
	434	16
	434	19
	434	22
	434	26
	434	31
	635	4
	635	9
	635	12
01643-72460	475	5
	475	16
	476	5
	476	16
02030-70751	317	2
02760-00215	299	6
	303	6
02760-00227	296	15
02760-002A5	303	14
02760-002A6	299	5
	303	5
02760-00321	291	13
	295	11
02761-00212	609	19
	611	19
	613	19
02761-00312	609	20
	611	20
	613	20
02762-00322	492	17
	493	17
02762-00335	148	29
02762-00407	146	1
02762-00432	148	30
02762-00509	277	1
	488	12
02762-00523	492	18

PartNumber	Page	Index
	493	18
02763-00415	277	4
02781-0021D	397	7
	397	16
	423	7
	423	20
02781-00313	608	10
	610	10
	612	10
02781-0031D	397	4
	397	13
	423	4
	423	17
02781-00422	298	16
	302	16
02781-00522	488	1
	492	6
	493	6
02782-10315	165	9
	291	11
02782-10420	146	20
	147	7
02782-10422	165	15
02782-1042A	147	8
02782-10522	490	10
02783-10628	165	6
02789-00210	234	5
02896-11008	165	20
	192	7
	192	11
	192	13
	192	25
	193	3
	193	6
	193	9

PartNumber	Page	Index
	193	16
	421	8
	421	11
	193	19
	193	22
	193	25
	193	33
	193	36
	218	7
	218	11
	218	13
	218	25
	219	3
	219	6
	219	9
	219	16
	219	19
	219	22
	219	25
	219	33
	219	36
	233	3
	233	6
	233	9
	233	16
	233	19
	233	22
	233	25
	233	28
	233	34
	233	37
	255	7
	255	11
	255	13
	255	25

PartNumber	Page	Index
	256	3
	256	6
	256	13
	256	16
	256	19
	256	22
	256	25
	256	31
	287	2
	287	5
	295	2
	295	5
	296	2
	296	5
	296	8
	298	5
	298	7
	298	14
	302	5
	302	7
	302	14
	302	27
	368	24
	385	8
	397	8
	397	17
	371	19
	371	22
	371	
	423	8
	423	11
	423	21
	423	24
	609	1
	609	13

PartNumber	Page	Index
	609	17
	611	1
	611	13
	611	17
	613	1
	613	13
	613	17
02896-11009	85	7
	144	7
	145	7
	165	11
	192	9
	192	15
	193	28
	218	9
	218	15
	219	28
	233	29
	255	9
	255	15
	256	26
	295	8
	295	27
	298	9
	298	11
	298	23
	302	9
	302	11
	302	22
	379	8
	385	10
	397	5
	397	14
	423	5
	423	18

PartNumber	Page	Index
	488	8
	490	5
	490	17
	492	10
	609	2
	609	14
	611	2
	611	14
	613	2
	613	14
02896-11012	94	3
	144	4
	145	4
	146	23
	147	10
	165	17
	298	17
	302	17
02896-11015		3
	488	2
	490	2
	490	11
	492	7
02896-11018	165	8
	490	14
02896-51009	493	10
02896-51015	493	7
04020-01228	494	30
	500	30
04020-01434	261	5
	262	21
	266	18
04020-01842	475	6
	476	6
04022-04016	365	24

PartNumber	Page	Index
04025-00432	365	18
04050-11612	448	10
04050-13020	443	12
	446	12
		24
	421	19
	421	22
	421	24
04050-14025	490	30
04052-01253	431	24
	431	27
	432	24
	432	27
04052-10530	346	8
	402	8
04052-10833	321	28
	343	16
	400	16
04064-04018	480	32
	482	29
	486	32
04064-06525	478	8
	484	8
	508	11
	510	11
	512	11
04064-07525	489	9
04065-04718	166	46
04065-05520	262	11
	266	8
04065-05820	556	6
04065-06020	495	14
	501	14
04065-07525	478	11
	484	11

PartNumber	Page	Index
04065-07825	262	7
	495	7
	501	7
04120-21761	330	35
	333	52
	335	52
04205-10520	346	7
	402	7
04205-31230	431	23
	431	25
	432	23
	432	25
04205-31238	431	26
	432	26
04260-00635	549	12
	551	13
04260-00793	180	15
	208	15
	248	15
	494	22
	500	22
04260-01270	480	34
	482	31
	486	34
04260-02857	495	19
	501	19
04418-13060	616	23
	622	3
	623	3
	623	6
	624	3
04434-50608	329	10
	331	10
04434-50610	372	41
04434-50808	634	11

PartNumber	Page	Index
04434-50812	537	10
04434-51008	37	7
04434-51010	119	35
04434-51012	153	1
	159	3
	159	13
	277	6
	304	23
	532	20
	539	20
	634	19
04434-51212	300	20
	304	18
04434-51312	146	8
	148	2
04434-51410	375	18
	387	51
04434-51412	160	7
	637	3
	638	17
	639	25
04434-51512	300	12
	304	12
04434-51708	361	2
04434-51710	387	48
04434-51712	634	20
04434-51812	330	23
	332	40
	334	40
	427	2
	428	2
04434-51910	375	14
	375	28
04434-51912	155	1
	155	24

PartNumber	Page	Index
	300	1
	304	1
	529	7
	537	7
04434-52110	393	5
	425	5
04434-52112	146	9
	152	23
04434-52511	393	6
	425	6
04434-52512	128	17
04434-52712	153	10
04434-53212	139	2
	151	23
	151	30
	153	21
	422	41
04434-53411	361	1
	375	5
	375	10
	375	24
	396	7
04434-53412	148	5
	148	9
	148	16
	427	5
	428	5
04435-51210	371	34
04435-51512	300	5
	300	9
	300	18
	304	5
	304	9
	304	16
	427	6

PartNumber	Page	Index
	428	6
04435-51812	277	5
	295	17
	296	12
	330	31
	333	48
	335	48
04435-52112	295	29
	296	24
04530-01222	260	6
	265	7
06000-22222	480	6
	482	3
	486	6
06000-22324	480	7
	482	4
	486	7
06124-01616	381	22
	411	22
	417	22
07000-11007	134	6
	173	12
	177	4
	184	10
	201	12
	205	4
	212	10
	225	12
	229	4
	241	12
	245	4
	252	10
	366	17
07000-11008	270	16
	297	25

PartNumber	Page	Index
	301	26
	370	21
07000-11009	177	2
	180	16
	183	3
	187	11
	189	11
	205	2
	208	16
	211	3
	215	11
	229	2
	245	2
	248	16
	251	3
07000-11010	184	15
	185	17
	186	19
	212	15
	213	17
	214	19
	230	17
	252	15
	253	17
	254	19
	283	17
	301	16
	366	16
07000-12011	172	6
	180	7
	180	28
	185	15
	200	6
	208	7
	208	28

PartNumber	Page	Index
	213	15
	230	15
	240	6
	248	7
	248	28
	253	15
	283	15
	288	6
	301	4
	371	17
	371	20
	371	25
07000-12012	170	1
	186	17
	198	1
	214	17
	223	1
	238	1
	254	17
	370	22
	494	29
	500	29
07000-12014	174	2
	202	2
	226	2
	242	2
07000-12015	366	15
	368	27
	379	6
	385	6
07000-12016	174	4
	181	29
	202	4
	209	29
	226	4

PartNumber	Page	Index
	242	4
	249	29
	301	3
07000-12018	365	20
	368	22
	379	4
	385	4
	494	16
	500	16
07000-12020	176	17
	204	17
	228	17
	244	17
07000-12021	170	4
	172	5
	187	12
	189	12
	198	4
	200	5
	215	12
	420	21
	420	22
	421	34
	421	17
	421	20
	421	25
	223	4
	238	4
	240	5
	284	3
	497	4
	503	4
07000-12055	286	9
07000-12060	275	19
	275	22

PartNumber	Page	Index
	276	23
	276	26
	581	5
07000-12075	507	6
	509	6
07000-12080	515	9
07000-12105	271	2
	271	7
	489	11
07000-12125	288	7
07000-13024	168	6
	168	12
	169	3
	169	14
	178	6
	183	2
	185	12
	191	7
	191	9
	196	6
	196	12
	197	3
	197	14
	206	6
	211	2
	213	12
	217	7
	217	9
	221	6
	221	12
	222	3
	222	14
	230	12
	232	7
	232	9

PartNumber	Page	Index
	236	6
	236	12
	237	3
	237	14
	246	6
	251	2
	253	12
	283	12
07000-13028	170	5
	198	5
	223	5
	238	5
07000-13032	170	6
	181	27
	187	14
	189	14
	198	6
	209	27
	215	14
	223	6
	238	6
	249	27
	272	9
	272	11
	273	15
	273	17
	278	13
	278	15
	278	17
	280	8
	280	10
	280	22
	280	24
	281	8
	281	10

PartNumber	Page	Index
	281	22
	281	24
	282	8
	282	10
	282	22
	282	24
	284	2
	285	23
	287	29
	292	2
	292	6
	292	10
	292	12
	292	19
	293	2
	293	4
	293	6
	293	8
	294	2
	492	14
	492	16
	527	19
	559	13
	563	17
	563	19
07000-13035	184	9
	212	9
	234	2
	252	9
	272	2
	273	5
	273	8
	278	2
	278	7
	278	12

PartNumber	Page	Index
	280	3
	280	17
	281	3
	281	17
	282	3
	282	17
	287	14
	287	25
	283	81
	541	35
	543	35
	550	43
	558	31
	561	31
	578	31
	644	
	645	
	646	
07000-13036	170	8
	198	8
	223	8
	238	8
07000-13038	184	14
	212	14
	252	14
	285	28
	569	2
	569	9
	569	11
	605	2
	606	2
	607	2
	611	23
	611	26
	613	23

PartNumber	Page	Index
07000-13040	288	11
	288	17
07000-13045	135	51
	137	42
	137	46
	276	2
07000-13048	274	2
	274	4
	275	2
	276	6
	287	10
	287	18
	287	21
	287	34
	288	23
	288	30
	555	24
	569	18
	580	2
	580	12
	580	14
	580	24
07000-13050	144	11
	145	11
07000-15080	489	3
07000-15090	541	29
	543	29
	557	26
	578	26
	644	
	645	
07000-15100	549	31
	560	26
	644	
	645	

PartNumber	Page	Index
07000-15130	541	11
	541	20
	543	11
	543	20
	557	17
	578	17
	644	
	645	
07000-15140	560	17
	645	
	646	
07000-15150	549	9
	549	22
	644	
	645	
07000-15160	165	34
07000-15175	495	27
	501	27
07000-15195	165	26
	495	29
	501	29
07000-15210	630	10
07000-15290	481	44
07000-15390	480	13
	482	10
07000-22018	497	2
	503	2
07000-51009	485	12
07000-52055	644	
07000-52075	511	6
07000-52080	516	9
07000-53022	485	2
07000-53032	493	14
	493	16
	536	19

PartNumber	Page	Index
	575	13
07000-53035	538	23
	546	41
	548	41
	552	48
	572	36
	644	
	645	
07000-53038	644	
07000-53042	485	11
07000-53045	644	
07000-53048	644	
07000-55080	644	
07000-55090	545	33
	547	33
	572	29
	644	
	645	
07000-55100	551	35
	645	
07000-55130	545	10
	545	20
	547	10
	547	20
	572	15
	644	
	645	
07000-55150	551	10
	551	20
	645	
07000-55170	645	
07000-55230	484	24
07000-55290	487	44
07000-55390	486	13
07000-A5185	261	4
07000-B1008	270	20
07000-B1009	262	22
	266	19
	269	10
	269	23
07000-B2012	261	6
	263	22
	267	22
07000-B2014	261	9
07000-B2050	263	23
	264	6
	267	23
	268	6
07000-B3038	263	18
	264	2
	267	18
	268	2
07000-B5090	645	
07000-B5100	645	
	646	
07000-F3022	479	2
07001-01007	173	13
	177	5
	201	13
	205	5
	225	13
	229	5
	241	13
	245	5
07001-01008	270	21
07001-01009	177	3
	183	4
	205	3
	211	4
	229	3
07000-B5230	478	24
	479	12
07000-B3042	479	11
	530	14
	530	6
	555	2
	555	12
	555	14
	555	24
07000-52050	556	7
	556	8
	245	3
	251	4
	269	11
	269	24
07001-01010	185	18
	186	20
	213	18
	214	20
	230	18
	253	18
	254	20
	283	18
07001-02011	185	16
	213	16
	230	16
	253	16
	283	16
07001-02012	186	18
	214	18
	254	18
07001-02018	494	17
	497	3
	500	17
	503	3
07001-02020	176	18
	204	18
	228	18
	244	18
07001-02021	497	5
	503	5
07001-03022	479	3
	485	3
07001-05080	645	
07001-05090	541	28
	543	28
	545	34
	547	34
	557	25
	572	30
	578	25
	644	
	645	
07001-05100	549	30
	551	36
	560	25
	644	
	645	
	646	
07001-05175	495	28
	501	28
07001-05195	495	30
	501	30
07002-01423	305	10
07002-02434	498	33
07002-10823	147	2
	167	9
	187	4
	189	4
	195	9
	215	4
	235	9
07002-11023	173	15
	173	21
	180	27
	185	20
	201	15
	201	21
	208	27
	213	20
	225	15
	225	21
	230	20
	241	15
	241	21
	248	27
	253	20
	283	20
	285	9
	494	24
	494	27
	500	24
	500	27
07002-11223	193	4
	219	4
	233	4
	256	4
	259	6
	366	4
	480	3
	630	11
07002-11423	137	40
	137	48
	165	19
	173	11
	173	25
	176	5
	180	12
	180	19
	180	23
	180	25
	181	20
	192	16
	192	19
	192	23
	192	26
	193	7
	193	10
	193	14
	193	17
	193	20
	193	23
	193	26
	193	29
	193	31
	193	34
	193	37
	201	11
	201	25
	204	5
	208	12
	208	19
	208	23
	208	25
	209	20
	218	16
	218	19
	218	23
	218	26
	219	7

PartNumber	Page	Index
	219	10
	219	14
	219	17
	219	20
	219	23
	219	26
	219	29
	219	31
	219	34
	219	37
	225	11
	225	25
	228	5
	233	7
	233	10
	233	14
	233	17
	233	20
	233	23
	233	26
	233	30
	233	32
	233	35
	233	38
	241	11
	241	25
	244	5
	248	12
	248	19
	248	23
	248	25
	249	20
	255	16
	255	19
	255	23

PartNumber	Page	Index
	255	26
	256	7
	256	11
	256	14
	256	17
	256	20
	256	23
	256	27
	256	29
	256	32
	287	3
	295	3
	295	6
	295	9
	296	3
	296	6
	296	9
	297	29
	298	15
	298	22
	298	24
	302	15
	302	23
	305	4
	305	11
	368	25
	368	29
	379	9
	385	11
	397	6
	397	9
	397	15
	397	18
	423	6
	423	9

PartNumber	Page	Index
	423	12
	423	19
	423	22
	423	25
	488	9
	490	6
	490	18
	492	11
	494	11
	500	11
	609	18
	611	18
	613	18
07002-11623	146	19
	179	22
	207	22
	247	22
	366	14
07002-11823	146	17
	146	22
	147	9
	173	7
	185	14
	201	7
	213	14
	225	7
	230	14
	241	7
	253	14
	283	14
	608	11
	610	11
	612	11
	634	14
07002-12034	144	6

PartNumber	Page	Index
	165	10
	165	16
	186	21
	214	21
	254	21
	270	15
	291	12
		12
	298	18
	298	20
	298	26
	302	18
	302	20
	302	25
	549	35
	608	9
	609	15
	610	9
	611	15
	612	9
	613	15
	644	
	646	
07002-12434	165	5
	165	7
	173	23
	174	6
	175	4
	179	15
	179	19
	201	23
	202	6
	203	4
	207	15
	207	19

PartNumber	Page	Index
	225	23
	226	6
	227	4
	241	23
	242	6
	243	4
	247	15
	247	19
	271	6
	275	9
	276	13
	285	11
	290	4
	488	3
	490	3
	490	12
	490	15
	492	8
	609	3
	611	3
	613	3
	630	12
07002-13034	186	5
	186	14
	214	5
	214	14
	254	5
	254	14
07002-13334	165	13
	185	8
	213	8
	230	8
	253	8
	275	13
	276	17

PartNumber	Page	Index
	277	15
	283	8
	488	6
	495	23
	501	23
07002-13634	171	5
	171	9
	171	13
	171	17
	171	21
	171	25
	171	29
	178	4
	182	5
	182	9
	188	4
	190	4
	199	5
	199	9
	199	13
	199	17
	199	21
	199	25
	199	29
	206	4
	210	5
	210	9
	216	4
	224	5
	224	9
	224	13
	224	17
	224	21
	224	25
	224	29

PartNumber	Page	Index
	231	4
	239	5
	239	9
	239	13
	239	17
	239	21
	239	25
	239	29
	246	4
	250	5
	250	9
	273	4
	494	21
	497	8
	500	21
	503	8
	507	5
	509	5
07002-23634	36	5
07002-51223	486	3
07002-51423	485	10
	493	11
07002-52034	483	6
	552	41
	645	
07002-52434	493	8
	504	33
07002-53634	485	4
	511	5
07002-54234	483	15
07002-61023	260	4
	261	12
	265	9
07002-61423	270	22
07002-62434	260	8
	260	10
	265	4
	265	11
	269	13
	269	26
07002-63334	490	20
	490	23
	490	26
07005-00812	91	11
07005-01412	107	2
07005-02216	64	18
07005-03016	259	2
07020-00000	475	10
	476	10
	526	13
	533	13
	534	13
	535	13
	541	4
	543	4
	545	5
	547	5
	549	14
	551	7
	554	4
	557	4
	557	8
	560	4
	560	8
	562	5
	564	8
	565	5
	566	7
	567	5
	568	4
	570	5
	571	5
	572	5
	572	8
	574	4
	577	10
	578	4
	578	8
	630	13
07020-00675	563	15
07002-64234	477	15
07002-62034	477	6
	479	10
07002-63634	479	4
	630	14
07040-10807	147	1
07040-11007	285	8
07040-11209	259	5
	366	3
	480	2
	486	2
07040-11409	107	3
	137	41
	137	47
	297	30
07040-11612	146	18
07040-11812	146	16
07040-12412	285	10
07040-12414	260	9
	265	10
	271	5
07040-13618	507	4
	509	4
	511	4
07042-30108	482	38
07042-30211	145	19
07042-30617	482	37
07042-31019	607	3
07043-00108	541	5
	543	5
	545	6
	547	6
07044-12412	165	4
	260	7
	265	3
	498	32
	504	32
07048-01310	363	5
07049-01012	192	1
	218	1
	255	1
07049-01215	144	22
	192	2
	218	2
	255	2
	453	15
	498	31
	504	31
07049-02430	480	5
	482	2
	486	5
	523	4
07056-10045	166	45
07056-18425	144	17
07073-01A09	527	18
	536	18
07074-01008	527	17
	536	17
07094-11228	274	13
	288	34
07094-30620	128	13
07094-31228	274	8
	274	14
07095-00630	128	14
07095-01034	148	23
07095-01245	274	9
	274	12
	288	35
07095-20314	152	24
07095-20418	153	11
07095-20523	151	24
07095-20625	153	9
07097-21222	555	11
07097-21422	555	23
	580	23
07097-21424	580	11
07098-010A9	294	1
07098-21221	569	8
07098-21421	569	17
07145-00090	541	3
	543	3
	557	3
	560	3
	578	3
	644	
	645	
	646	
07145-00100	541	8
	543	8
	549	3
	549	6
	644	
	645	
	646	
07145-00110	526	11
	532	5
	533	11
	534	11
	562	6
	564	9
	565	6
	566	8
	567	6
	570	6
	577	11
07145-10090	545	4
	547	4
	572	4
	644	
	645	
07145-10100	545	8
	547	8
	551	4
	551	6
	644	
	645	
07145-10110	535	11
	539	5
	571	6
07146-05172	645	
07155-00925	508	13
	510	13
	512	13
07179-13114	541	15
	543	15
	557	11
	578	11
07179-13126	549	17
	560	11
07214-50813	475	11

PartNumber	Page	Index
	476	11
07260-09936	271	8
07260-20932	128	20
07270-00825	146	24
07270-00835	147	11
07270-01085	146	7
07270-21590	480	38
07270-31590	486	38
07270-61415	166	44
07280-04726	363	4
07281-00197	480	39
	486	39
07281-00359	47	6
	139	5
	142	25
	332	25
	334	25
07283-31079	48	16
07283-31185	130	13
	132	13
07283-33442	542	40
	544	40
	546	45
	548	45
	550	50
	552	53
07283-33450		69
07283-36155	329	16
	331	16
07283-37663	140	39
	142	8
07285-00095	634	8
07285-00100	146	25
	147	12
07285-00115	146	4

PartNumber	Page	Index
07285-00155	128	21
	166	43
07285-00220	69	2
07286-01680	642	1
07286-01960	69	1
07286-03828	363	3
07288-01007	146	2
07289-00035	638	10
	638	11
	639	17
	639	18
	639	19
07289-00070	139	7
	139	12
	142	24
07299-00080	140	45
	142	23
07299-00120	130	18
	132	18
07299-00130	130	9
	130	17
	132	8
	132	17
07371-31049	272	5
	272	12
	273	11
	273	18
	278	3
	278	8
	278	18
	280	4
	280	13
	280	18
	280	27
	281	4

PartNumber	Page	Index
	281	13
	281	18
	281	27
	282	4
	282	13
	282	18
	282	27
	285	24
	287	30
	292	13
	292	20
	293	9
	294	3
	490	7
	492	3
	493	3
	527	14
	536	14
	542	46
	544	46
	546	50
	548	50
	550	54
	552	58
	558	40
	559	14
	563	20
	573	44
	575	14
	579	40
07371-31465	288	24
	288	31
07371-51260	285	29
	530	3
	555	5

PartNumber	Page	Index
	556	12
	569	5
07371-51470	287	35
	530	11
	555	17
	569	14
	580	5
	580	17
07371-52080	581	1
07372-21035	272	6
	272	13
	273	12
	273	19
	278	4
	278	9
	278	19
	280	5
	280	14
	280	19
	280	28
	281	5
	281	14
	281	19
	281	28
	282	5
	282	14
	282	19
	282	28
	285	25
	287	31
	292	14
	292	21
	293	10
	294	4
	490	8

PartNumber	Page	Index
	492	4
	493	4
	527	15
	536	15
	542	47
	544	47
	546	52
	548	52
	550	55
	552	60
	558	41
	559	15
	561	41
	563	21
	573	46
	575	15
	579	41
07372-21040	234	3
	279	17
	280	11
	280	25
	281	11
	281	25
	282	11
	282	25
	287	15
	287	26
	292	3
	292	7
	528	21
	538	21
07372-21060	541	33
	543	33
	546	39
	548	39

PartNumber	Page	Index
	549	39
	552	46
	558	29
	560	29
	572	34
	578	29
07372-21240	288	25
	288	32
	541	38
	543	38
	546	43
	548	43
	552	51
	558	34
	561	34
	573	39
	578	34
07378-11000	292	18
07378-12010	581	4
07379-01044	559	17
	563	26
	575	17
07430-71380	169	16
	179	9
	181	8
	181	21
	187	9
	189	9
	197	16
	207	9
	209	8
	209	21
	215	9
	222	16
	237	16

PartNumber	Page	Index
	247	9
	249	8
	249	21
07700-40240	634	17
07700-50240	146	6
07700-50455	144	2
	145	2
07750-01628	549	33
	551	39
07950-10450	632	8
07950-90403	632	10
07951-41017	632	9
07952-70004	632	
07959-20001	508	14
	510	14
	512	14
08000-00000	150	2
08000-00001	150	3
08017-B0701	349	14
08020-20000	374	2
08028-43030	375	31
08028-44035	151	35
08028-44040	156	1
08028-64035	150	11
08028-CD065	374	26
08034-00519	609	21
	611	21
	613	21
08034-20414	161	6
	346	9
	347	3
	349	4
	349	15
	361	6
	387	44
	402	9
	403	3
	381	8
	411	8
	413	3
	417	8
08034-20519	153	32
	155	18
	159	14
	299	4
	303	4
	330	26
	333	43
	335	43
	361	7
	375	27
	387	35
	394	4
	394	7
	371	33
	421	33
	637	19
	638	18
	639	26
08034-20536	275	6
	276	10
	287	39
	300	4
	300	19
	304	4
	304	17
	305	18
	306	1
	306	17
	306	21
	330	27
	330	34
	333	44
	333	51
	335	44
	335	51
	377	12
	383	12
	393	9
	395	1
	396	4
	396	6
	396	10
	396	12
	396	16
	372	40
	422	40
	425	9
	492	12
	493	12
	634	30
08034-20876	357	7
	357	17
	406	7
	406	17
	415	7
	415	17
08036-00814	475	12
	476	12
08036-01014	529	10
08036-10810	158	5
08037-02512	160	2
	319	7
	342	7
	399	7
	637	14
08037-03614	455	25
	458	2
	458	14
	459	25
	462	13
	462	27
	463	25
	466	2
	466	14
	467	25
	470	13
	362	37
	470	27
	471	25
	473	2
	473	14
08037-05016	455	3
	459	3
	463	3
	467	3
	471	3
08037-11425	381	11
	411	11
	417	11
08038-00035	374	15
	374	27
08038-00519	155	10
	374	19
	374	24
08038-02027	153	39
	155	9
	155	17
	374	25
08038-10035	151	1
08038-22511	156	2
08038-42511	150	12
	156	3
08041-00500	374	3
08041-01000	362	3
	374	4
	408	3
08041-02000	362	4
	374	5
	408	4
08041-03000	362	5
	374	6
	408	5
08051-00801	349	10
08053-01510	329	11
	331	11
	372	38
08057-00810	153	33
08057-12008	161	5
08057-12010	153	26
08057-12012	151	20
	152	1
	152	4
	152	7
	152	11
	152	14
	152	20
	152	27
	152	30
	153	2
	153	5
	153	13
	153	18
	153	36
	155	3
	155	14
	155	19
	155	27
	155	30
	155	35
	156	12
08057-22008	155	6
08057-22012	151	4
	151	10
	422	38
	151	13
	151	16
08059-00413	346	10
	349	5
	402	10
08059-00515	360	7
	361	5
08086-20000	387	30
08088-30000	374	16
08116-02410	347	
	403	
	413	
08160-72400	161	1
08160-72420	161	2
08191-00770	119	37
	163	3
08192-12100	119	36
08192-14400	163	2
08192-24200	163	1
08193-20010	65	6
	119	9
	162	2
08193-20012	152	17
	153	27
	156	13

PartNumber	Page	Index
	159	15
	532	23
	539	23
	637	16
08193-21012	270	25
	304	21
	372	37
08211-00720		
08912-51600	381	6
	417	6
09002-01317	632	3
09002-01922	632	4
09002-03641	632	11
09007-00425	632	13
09007-00528	632	14
09007-00836	632	12
09019-28035	632	2
09021-01219	632	15
09021-01422	632	16
09021-01725	632	17
09021-01928	632	18
09021-02436	632	19
09021-03653	632	20
09022-00150	632	21
09023-00300	632	22
09024-00300	632	23
09033-00190	632	5
09039-00150	632	6
09055-10390	632	7
09056-04613	632	1
09059-00800	630	1
09133-A3281	616	19
09134-A1681	621	1
09205-18325	524	7
09244-02508	595	5
09244-02516	584	7
	586	7
	589	7
	591	7
	594	7
	596	7
	599	7
	600	7
	602	13
	604	13
09370-00090	508	12
	510	12
	512	12
09409-00002	317	3
09415-01008	352	14
	352	23
	414	14
	414	22
09415-02512	352	3
	387	27
	405	3
	414	3
09416-10200	343	5
	350	2
	350	4
	350	10
	400	5
09452-14503	362	15
	408	15
09479-02400	393	2
	393	4
	425	2
	425	4
09482-20000	332	11
	334	11
09483-10309	142	19
09601-30KK2	616	22
09620-D2000	422	37
	411	6
	623	1
	624	1
09620-D2090	622	2
	623	2
	623	5
	624	2
09620-E2000	622	1
	623	4
09637-40163	625	1
09642-14000	620	1
09653-A0481	616	9
09657-A0881	616	10
09659-A057B	616	5
	616	21
	626	1
09667-A0481	616	13
09669-0000E	616	14
09685-00002	616	4
09690-M0063	616	1
09690-P0630	616	2
09690-P1400	619	1
	619	2
09803-A0481	618	2
09805-A0881	616	20
09805-C0481	616	11
09808-A0881	616	12
09842-A0481	616	28
09844-00050	616	3
09920-00150	59	13
	62	13
	64	22
09960-00801	616	25
09960-00802	616	26
09963-A1640	616	18
09970-00230	352	25
	405	28
	414	24
09980-10550	631	1
09980-92550	631	
09982-20057	631	2
113-78-21170	602	15
	604	15
113-899-7950	277	10
	296	20
	306	18
11Y-01-11920	130	6
	132	5
11Y-09-11140	142	20
	142	26
	146	3
	148	31
11Y-09-11160	332	3
	334	3
11Y-62-11980	490	22
	490	25
11Y-62-12130	192	12
	193	24
	218	12
	219	24
	233	24
	255	12
	256	21
	298	10
	302	10
	385	7
11Y-62-12140	371	23
11Y-62-12160	165	18
	192	6
	193	5
	193	21
	193	32
	193	35
	218	6
	219	5
	219	21
	219	32
	219	35
	233	5
	233	21
	233	33
	233	36
	255	6
	256	5
	256	18
	256	30
	287	1
	295	1
	296	1
	298	6
	302	6
	368	23
11Y-62-12170	287	4
11Y-62-12250	192	10
	218	10
	255	10
11Y-62-12330	423	10
	423	23
	609	16
	611	16
	613	16
11Y-62-12370	295	4
	296	4
11Y-62-12510	488	7
11Y-62-12520	192	14
	218	14
	255	14
	379	7
	385	9
	492	9
	493	9
11Y-62-12810	609	12
	611	12
	613	12
11Y-62-12820	233	27
	256	24
124-01-01H1	50	2
124-A62-1920	431	14
	432	14
12954-65-H92	126	
12R-60-11230	165	30
130-43-64260	319	5
	322	2
1304869H1	72	9
1304891H1	64	20
130-76-82H1	50	1
134-03-61410	142	27
	153	12
134-977-2840	634	18
134-98-61650	635	13
134-98-61660	635	14
140-30-00141	515	
141-06-11220	330	16
	332	33
	334	33
	393	10
	425	10

PartNumber	Page	Index
141-30-32181	524	10
142-03-11160	151	17
	159	8
	300	13
	304	6
	304	13
	304	22
144-32-11240	517	3
	517	12
	518	3
	518	12
	519	3
	519	12
	520	3
	520	9
144-60-11151	480	37
	486	37
145-Z79-6270	345	20
14X-01-35570	142	22
14X-03-51621	134	14
14X-03-51640	134	13
14X-03-51770	134	15
14X-911-1330	321	20
14X-977-1450	634	25
14X-98-35181	616	33
150-952-7160	148	1
154-32-71220	517	9
	517	18
	518	9
	518	18
	519	9
	519	18
	644	
154-54-22520	443	6
	446	6
154-61-16570	51	7
	51	17
155-06-15180	330	4
	332	4
	334	4
175-40-22540	153	28
175-54-34170	150	17
	435	13
	435	21
	440	19
	440	26
	441	8
	441	12
	441	18
	441	21
	441	29
	441	31
	443	29
	443	38
	446	29
	446	38
	448	17
	448	19
	455	19
	455	27
	455	38
	457	3
	458	4
	458	16
	459	19
	459	27
	459	38
	461	3
	462	3
	462	17
	462	29
	421	23
	463	19
	463	27
	463	38
	465	3
	466	4
	466	16
	467	19
	467	27
	467	38
	469	3
	470	3
	470	17
	470	29
	471	19
	471	27
	471	38
	472	3
	473	4
	473	16
	637	29
175-61-17240	427	9
175-61-51750	290	11
	609	9
	611	9
	613	9
176-38-41350	300	6
176-63-56170	541	14
	543	14
	545	14
	547	14
	557	10
	572	10
	578	10
	644	
	645	
17A-60-11310	165	37
17A-979-3180	360	3
17M-49-15260	637	4
17M-911-3530	357	10
	406	10
	415	10
195-01-16140	330	20
	332	37
	334	37
195-01-16420	162	7
195-03-11570	144	21
	145	23
	166	57
195-03-41380	437	42
195-32-11222	589	11
	592	4
	597	4
	599	11
195-33-11220	146	10
	148	10
	151	32
	152	8
	152	33
	153	23
	375	11
	375	15
	375	19
	637	15
195-43-41530	128	30
195-71-32220	329	5
	331	5
195-78-21331	595	4
195-911-1330	338	2
195-911-1722	338	1
195-911-6531	337	1
195-911-6562	337	2
195-979-3570	148	6
195-979-7770	349	13
195-979-8580	376	2
	409	2
195-Z11-1690	345	8
195-Z11-2970	319	6
198-06-53540	155	2
198-06-53610	151	31
	153	22
198-06-53630	295	28
	296	23
198-38-12460	329	7
	331	7
198-43-15310	426	14
	634	28
198-61-44110	153	29
198-63-94170	549	16
	551	16
	560	10
	644	
	645	
	646	
19M-06-31720	374	7
201-60-11390	192	4
	218	4
	255	4
	298	2
	302	2
	305	2
	305	8
201-62-71810	290	1
202-970-2210	556	3
202-98-11340	330	11
203-04-K1140	145	18
203-43-51620	367	7
203-54-56630	448	2
203-54-62670	436	35
	438	40
	440	11
	458	5
	466	5
	473	5
203-54-63230	439	44
203-60-31100	165	2
198-Z11-2640	362	35
203-60-31160	165	3
203-60-62220	370	25
203-62-52210	308	33
	309	33
	310	31
203-62-63740	490	19
205-00-73360	616	15
205-03-62660	134	5
205-03-71230	134	3
205-03-71440	142	32
205-04-K1370	639	11
205-25-71280	475	3
	476	3
205-30-00052	513	
205-30-00160	514	
205-30-71171	521	11
205-30-71181	308	2
	309	2
	310	2
	521	6
205-30-71191	308	3
	309	3

PartNumber	Page	Index
	310	3
	521	7
205-30-72170	508	15
	510	15
	512	15
205-32-51211	480	21
	482	18
	486	21
205-54-51250	337	7
	350	25
205-54-51720	326	4
205-54-51730	326	5
205-54-51970	436	12
	438	24
205-54-53550	436	22
	438	31
205-54-68440	443	5
	446	5
205-54-75240	353	14
205-54-76410	441	25
205-62-73430	279	2
	279	6
	279	10
	279	14
205-62-73431	527	11
	528	4
	528	15
	531	2
	529	6
	537	6
205-70-66580	311	6
205-70-66581	532	2
	539	2
	559	2
	559	7

PartNumber	Page	Index
	563	2
	563	7
	575	2
	575	7
205-970-5550	290	3
205-970-5560	289	12
	608	
	610	
	612	
	644	
205-970-5770	613	24
205-970-7680	605	3
206-03-43340	139	17
	142	37
	142	40
206-06-61130	305	12
	368	31
	372	36
206-26-71270	480	16
	482	13
206-53-00150	399	
	400	
	401	
	402	
	404	
	413	
	414	
206-53-00451	339	
	340	
	342	
	343	
	344	
	345	
	346	
	347	

PartNumber	Page	Index
	348	
	349	
	350	
	351	
	352	
	416	
	420	25
	422	36
206-53-13121	426	2
206-53-14711	323	1
206-53-14721	324	1
206-53-14731	325	1
207-00-71910	616	32
207-00-76172	617	1
207-00-76220	453	9
207-00-76230	453	10
207-00-76250	443	33
	446	33
207-00-76310	443	20
	446	20
207-00-76320	443	21
	446	21
207-00-76330	453	11
207-00-76490	616	8
207-00-76510	616	30
207-00-76520	616	31
207-01-31141	259	1
207-01-31150	259	3
207-01-55181	128	4
207-01-61150	128	2
207-01-61170	128	8
207-01-68170	48	10
207-01-71310	258	1
207-01-71320	259	4
207-01-75110	128	22

PartNumber	Page	Index
207-01-75120	128	23
207-01-75130	128	24
207-01-75140	128	25
207-01-75150	128	3
207-01-75160	130	5
	132	4
207-01-75170	130	7
	132	6
207-01-75180	130	12
	132	12
207-01-75190	130	16
	132	16
207-01-75210	142	11
207-01-75220	139	37
207-01-75231	140	38
207-01-75241	142	5
207-01-75250	142	6
207-01-75270	140	46
207-01-75340	140	47
	142	7
207-03-51530	139	8
	139	13
207-03-71211	141	7
207-03-75121	134	1
207-03-75171	134	18
207-03-75181	134	19
207-03-75190	136	36
207-03-75211	137	39
207-03-75231	136	24
207-03-75241	136	27
207-03-75252	136	7
207-03-75270	136	17
207-03-75311	139	11
207-03-75330	142	18
207-03-75351	139	31

PartNumber	Page	Index
207-03-75360	139	18
207-03-75371	139	23
207-03-75381	139	27
207-03-75391	139	32
207-03-75410	139	19
207-03-75431	139	24
207-03-75441	139	28
207-03-75450	139	33
207-03-75460	139	20
207-03-75471	138	14
207-03-75511	142	15
207-03-75521	138	21
207-03-75590	437	41
207-03-75610	138	24
207-03-75620	142	31
207-03-75630	142	33
207-03-75640	139	6
207-03-76130	141	1
207-03-76140	141	2
207-03-76150	141	3
207-03-76160	141	4
207-03-76181	141	5
207-03-76190	141	6
207-03-76320	134	36
207-03-76330	134	37
207-03-76341	134	20
207-03-76350	134	23
207-03-76361	138	8
207-03-76371	136	12
207-03-76380	135	38
207-03-76390	135	39
207-03-76410	134	33
207-03-76420	135	40
207-03-76430	142	21
207-03-76440	142	14

PartNumber	Page	Index
207-03-76450	134	10
207-03-76460	138	19
207-04-71161	148	19
207-04-75111	144	1
207-04-75130	148	13
207-04-75171	145	1
207-04-75180	638	5
	639	12
207-04-75250	145	8
207-04-75261	638	12
	639	20
207-04-75310	144	8
207-04-75350	146	13
207-04-75370	147	6
207-04-75390	144	5
207-04-75410	639	30
207-04-75420	639	27
207-04-75430	639	5
207-06-11370	150	9
207-06-51330	150	15
207-06-51461	150	13
207-06-51470	150	8
207-06-61250	429	1
207-06-61280	150	1
207-06-61461	150	14
207-06-61490	376	3
	409	3
207-06-71132	328	2
207-06-71540	638	13
	639	21
207-06-75122	374	20
207-06-75140	374	14
207-06-75150	155	13
207-06-75161	532	24
	539	24

PartNumber	Page	Index
207-06-75180	159	12
207-06-75190	151	27
207-06-75270	638	16
	639	24
207-06-75310	150	4
207-06-75322	150	5
207-06-76111	152	36
	154	44
207-06-76130	387	43
207-06-76270	163	4
207-09-71110	504	5
207-25-31180	475	4
	476	4
207-25-61100	475	1
207-25-61160	475	2
207-25-61170	476	2
207-25-61700	476	1
207-25-62110	475	8
	476	8
207-25-75110	475	15
	476	15
207-26-00220	482	
207-26-54230	480	20
	482	17
	486	20
207-26-61210	480	9
	482	6
207-26-62180	480	8
	482	5
	486	8
207-26-71210	480	31
	482	28
	486	31
207-26-71240	480	1
	486	1

PartNumber	Page	Index
207-26-71250	480	33
	482	30
	486	33
207-26-71261	480	26
	480	36
	482	23
	482	33
	486	26
	486	36
207-26-71410	481	42
	487	42
207-26-71510	480	35
	482	32
	486	35
207-26-71520	480	28
	482	25
	486	28
207-26-71530	480	25
	482	22
	486	25
207-26-71540	480	15
	482	12
	486	15
207-26-71551	480	22
	482	19
	486	22
207-26-71570	480	27
	482	24
	486	27
207-26-71581	480	14
	482	11
	486	14
207-26-71610	482	34
207-26-71710	486	9
207-26-71770	486	16

PartNumber	Page	Index
207-26-75110	480	4
	482	1
	486	4
207-26-75120	480	10
	482	7
	486	10
207-27-00310	498	
207-27-00412	500	
	501	
	503	
	504	
207-27-00420	504	
207-27-00441	494	
	495	
	497	
	498	
207-27-51311	498	35
	504	35
207-27-52350	498	5
207-27-61220	498	21
	504	21
207-27-61240	498	23
	504	23
207-27-63210	498	11
	504	11
207-27-63230	498	13
	504	13
207-27-71121	498	20
	504	20
207-27-71130	498	16
	504	16
207-27-71140	498	10
	504	10
207-27-71152	498	17
	504	17

PartNumber	Page	Index
207-27-71161	498	19
	504	19
207-27-71250	498	18
	504	18
207-27-71311	498	3
	504	3
207-27-71320	498	9
207-06-76710	374	1
	504	9
207-27-71330	498	4
207-27-71341	498	28
	504	28
207-27-71352	498	25
	504	25
207-27-71360	498	7
	504	7
207-27-71370	498	6
	504	6
207-27-71460	498	34
	504	34
207-27-71730	504	4
207-30-00101	507	
	509	
207-30-00161	507	
	509	
207-30-00250	511	
207-30-00282	511	
207-30-00320	516	
207-30-00511	513	
207-30-00533	514	
207-30-00551	515	
207-30-00581	516	
207-30-34191	508	7
	510	7
	512	7

PartNumber	Page	Index
207-30-51191	523	1
207-30-51260	521	10
207-30-53130	507	3
	509	3
207-30-53140	507	2
	509	2
	511	2
207-30-53151	507	9
	509	9
	511	9
207-30-53160	507	10
	509	10
	511	10
207-30-53230	511	3
207-30-54160	508	10
	510	10
	512	10
207-30-56131	513	2
207-30-56170	513	6
	514	6
207-30-56190	513	11
	514	11
207-30-56220	514	2
207-30-61220	521	5
207-30-71242	498	38
	504	38
207-30-71431	508	4
	510	4
	512	4
207-30-71441	508	3
	510	3
	512	3
207-30-71510	513	1
	514	1
207-30-71540	513	3

PartNumber	Page	Index
	514	3
207-30-71551	513	4
	514	4
207-30-71561	513	5
	514	5
207-30-73210	507	1
	509	1
	511	1
207-30-74111	508	1
	510	1
	512	1
207-30-74120	508	2
	510	2
	512	2
207-30-74142	508	5
	512	5
207-30-74150	510	5
207-30-75310	515	1
	516	1
207-30-75320	515	2
	516	2
207-30-75330	515	3
	516	3
207-30-75341	515	4
	516	4
207-30-75350	515	12
	516	12
207-30-75360	515	5
	516	5
207-30-75370	515	6
	516	6
207-30-76121	521	1
207-30-76211	640	1
207-30-76A11	521	2
207-30-76A21	521	3

PartNumber	Page	Index
207-30-76A81	521	4
207-30-77110	524	1
207-30-77120	524	2
207-30-77130	524	3
207-30-77140	524	4
207-32-00340	520	
207-32-03811	517	
207-32-03841	519	
207-32-03851	518	
207-32-05060	644	K02
207-32-51140	517	5
	517	14
	518	5
	518	14
	519	5
	519	14
	520	5
	520	11
207-32-51170	517	4
	517	13
	518	4
	518	13
	519	4
	519	13
	520	4
	520	10
207-32-61150	517	6
	517	15
	518	6
	518	15
	519	6
	519	15
	520	6
	520	12
207-32-61190	517	20
	518	20
	519	20
	520	14
207-32-61260	517	19
	518	19
	519	19
	520	13
207-32-61310	519	7
	519	16
207-32-61320	518	7
	518	16
207-32-62110	517	7
	517	16
207-32-71120	517	1
	517	10
	518	1
	518	10
	519	1
	519	10
	520	1
	520	7
207-32-71130	517	2
	517	11
	518	2
	518	11
	519	2
	519	11
	520	2
	520	8
207-32-71210	517	8
	517	17
	518	8
	518	17
	519	8
	519	17
	644	
207-43-81240	371	15
207-46-32140	454	4
207-46-32150	454	3
207-46-32160	454	
207-46-52130	454	2
207-46-71510	308	12
	309	12
	310	12
207-46-74430	453	2
207-46-74601	453	
207-46-74611	453	1
207-46-74621	453	3
207-46-75502	308	1
207-46-75602	309	1
207-46-75900	310	1
207-46-75920	332	26
	334	26
207-46-77310	308	6
	309	6
	310	6
207-46-77321	308	7
	309	7
	310	7
207-46-77331	308	8
	309	8
	310	8
207-46-77340	142	28
	421	15
207-46-78110	308	27
	309	27
	310	26
207-46-78120	308	17
	309	17
	310	17
207-46-78130	308	22
	309	22
	310	21
207-46-78160	308	28
	309	28
207-46-78210	308	23
	309	23
	310	22
207-46-78221	308	24
	309	24
	310	23
207-46-78230	308	18
	309	18
	310	18
207-46-78291	308	25
	309	25
	310	24
207-46-78311	308	26
	309	26
	310	25
207-46-78320	308	29
	309	29
	310	27
207-46-78410	308	30
	309	30
	310	28
207-46-78421	308	16
	309	16
	310	16
207-46-78430	308	13
	309	13
	310	13
207-46-78440	308	14
	309	14
	310	14
207-46-78450	308	15
	309	15
	310	15
207-46-78480	308	19
	309	19
	310	19
207-46-78520	308	20
	309	20
207-46-78610	453	4
207-46-78620	453	5
207-46-78630	453	6
207-46-78640	453	7
207-53-14140	396	5
207-54-51440	457	9
	458	10
	461	7
	462	9
	462	24
	465	9
	466	10
	469	7
	470	9
	470	24
	472	9
	473	10
207-54-52440	641	6
207-54-61270	431	3
	432	3
207-54-61441	443	3
	446	3
207-54-61450	443	4
	446	4
207-54-61830	641	7
207-54-61840	641	8
207-54-62131	431	13
	432	13
207-54-62150	431	17
	432	17
207-54-62160	431	18
	432	18
207-54-71221	438	10
	638	19
	639	36
207-54-71241	438	11
207-54-71251	438	12
207-54-71721	435	23
207-54-72150	431	21
	432	21
207-54-72230	443	9
	446	9
207-54-72290	433	17
	434	17
207-54-72511	440	1
207-54-72552	441	13
207-54-72851	440	16
207-54-72861	440	2
207-54-72871	440	3
	441	14
207-54-72990	441	6
207-54-74610	635	1
207-54-74620	635	5
207-54-74630	635	6
207-54-74640	635	7
207-54-75220	449	1
	451	10
207-54-75710	451	5
207-54-76121	436	1
207-54-76130	436	34
207-54-76140	291	15
	436	2

PartNumber	Page	Index
207-54-76161	436	38
207-54-76190	437	43
207-54-76321	438	27
207-54-76330	438	6
207-54-76340	438	9
207-54-76350	438	39
207-54-76360	438	7
207-54-76410	435	26
207-54-76421	435	14
207-54-76451	435	1
207-54-76480	435	29
207-54-76491	435	30
207-54-76512	440	15
207-54-76521	440	20
207-54-76541	442	45
207-54-76552	442	44
207-54-76560	442	46
207-54-76570	440	21
207-54-76591	440	4
207-54-76611	441	32
207-54-76621	441	39
207-54-76630	441	33
207-54-76640	441	35
207-54-76651	441	36
207-54-76661	442	41
207-54-76690	441	40
207-54-76720	443	30
	446	30
207-54-76731	446	24
207-54-76760	444	42
	447	42
207-54-76770	444	46
	447	46
207-54-76780	443	25
	446	25

PartNumber	Page	Index
207-54-76810	442	47
207-54-76840	441	1
207-54-76850	441	9
207-54-76860	441	2
207-54-76870	441	19
207-54-76890	444	49
	447	49
207-54-76950	441	5
207-54-77172	457	1
	465	1
	472	1
207-54-77190	435	7
207-54-77220	455	31
	459	31
	463	31
	467	31
	471	31
207-54-77260	462	1
	470	1
207-54-77272	461	1
	469	1
207-54-77421	448	3
207-54-77441	448	22
207-54-77451	448	1
207-54-77560	438	34
207-54-77610	443	
	446	
207-54-77630	431	6
	432	6
207-54-77640	438	35
207-54-77690	435	5
207-54-77710	435	6
207-54-77770	441	3
207-54-77780	441	10
207-54-77840	440	17

PartNumber	Page	Index
207-54-77860	431	7
	432	7
207-54-77870	432	8
207-54-77871	431	8
207-54-77880	438	36
207-54-77930	451	6
207-54-77940	452	2
207-54-77960	452	1
207-54-77980	441	4
207-54-78110	431	1
	432	1
207-54-78121	431	15
	432	15
207-54-78130	431	9
	432	9
207-54-78170	431	10
	432	10
207-54-78180	431	11
	432	11
207-54-78190	431	12
	432	12
207-54-78220	455	9
	463	9
	471	9
207-54-78240	459	9
	467	9
207-54-78410	443	24
207-54-78431	436	32
207-54-78440	444	41
	447	41
207-54-78460	444	43
	447	43
207-54-78510	433	1
	434	1
207-54-78520	433	9

PartNumber	Page	Index
	434	9
207-54-78530	433	20
	434	20
207-54-78540	433	23
	434	23
207-54-78550	433	24
	434	24
	635	10
207-54-78560	433	27
207-54-78570	433	28
207-54-78580	433	29
	434	28
207-54-78590	434	27
207-54-78650	455	16
	463	16
	471	16
207-54-78660	459	16
	467	16
207-54-78670	435	22
207-54-78680	435	33
207-54-78690	435	4
207-54-78740	455	23
	463	23
207-54-78750	459	23
	467	23
207-54-78760	458	1
	466	1
	473	1
207-54-78770	462	12
	470	12
207-54-78781	458	13
	473	13
207-54-78810	436	17
207-54-78820	448	4
207-54-78830	438	1

PartNumber	Page	Index
207-54-78860	462	23
207-54-78870	466	13
	470	23
207-54-78890	439	43
207-54-78910	438	4
207-54-78930	438	28
207-54-78950	443	1
	446	1
207-54-78990	473	20
207-54-79611	471	23
207-60-51170	275	17
	276	21
207-60-51311	166	47
207-60-51320	166	48
207-60-61250	273	3
207-60-71182	165	21
	630	9
207-60-71311	297	
207-60-71320	301	
207-60-75110	165	1
207-60-75120	165	
207-60-75131	165	33
207-60-75160	275	15
	276	19
207-60-75910	166	51
207-60-75920	166	52
207-60-75930	166	53
207-62-31330	285	12
	292	25
	527	7
	528	7
	528	18
	531	16
	536	7
	538	7

PartNumber	Page	Index
	538	18
	555	8
207-62-52350	527	10
	528	14
	531	1
	536	10
	538	14
207-62-52430	279	5
207-62-52610	278	16
207-62-52621	278	14
207-62-53350	492	2
	493	2
207-62-54750	526	2
	533	2
	534	2
	535	2
207-62-54760	527	4
	528	10
	536	4
	538	10
207-62-54770	279	13
207-62-54780	528	3
	538	3
207-62-56190	234	1
207-62-64740	165	14
	275	8
	275	12
	276	12
	276	16
	277	14
	488	5
207-62-64810	492	15
	493	15
207-62-64850	492	13
	493	13

PartNumber	Page	Index
207-62-71141	271	1
207-62-71211	278	1
207-62-71223	278	6
207-62-71231	278	
207-62-71261	280	1
	281	1
	282	1
207-62-71280	282	2
207-62-71291	280	2
	281	2
207-62-71311	280	16
	282	16
207-62-71321	279	1
207-62-71330	279	9
207-62-71350	280	21
	281	21
	282	21
	292	11
207-62-71360	280	9
	281	9
	282	9
	292	9
207-62-71370	280	23
	281	23
	282	23
207-62-71380	272	10
207-62-71410	490	21
207-62-71420	490	27
207-62-71430	293	1
207-62-71440	293	3
207-62-71450	293	5
207-62-71460	293	7
207-62-71490	274	7
207-62-71510	299	14
	303	15

PartNumber	Page	Index
207-62-71531		
	193	18
	219	18
	233	18
	256	15
	296	7
207-62-71740	280	7
	281	7
	282	7
207-62-71750	272	8
	273	14
207-62-71791	308	32
	309	32
	310	30
207-62-71880	273	16
207-62-72110	277	13
207-62-72120		
	298	4
	302	4
207-62-72141		
	193	8
	219	8
	233	8
	298	13
	302	13
207-62-72151	490	1
	492	20
	493	20
207-62-72171	490	13
207-62-72550	306	9
207-62-72560	306	10
207-62-72590	395	4
207-62-72630	306	11
207-62-72640	306	12
207-62-72670	395	12

PartNumber	Page	Index
207-62-73112	285	1
207-62-73120	285	7
	608	14
	609	24
	610	14
	611	30
	612	14
	613	27
207-62-73131	285	4
	608	13
	609	23
	610	13
	611	29
	612	13
	613	26
207-62-73141	285	32
	288	38
	290	14
207-62-73150	287	9
207-62-73160	288	10
207-62-73170	288	16
207-62-73180	287	24
207-62-73190	287	13
207-62-73211	276	1
	288	39
207-62-73230	287	20
207-62-73240	290	8
207-62-73251	290	5
207-62-73260	287	17
207-62-73280	287	33
207-62-73290	287	28
207-62-73310	288	22
207-62-73320	288	29
207-62-73340	285	22
207-62-73350	290	2

PartNumber	Page	Index
207-62-73380	287	38
	303	13
207-62-73390	285	27
207-62-73621	285	15
207-62-73640	292	1
207-62-73650	292	5
207-62-73660	281	16
207-62-73670	292	17
207-62-73680	292	23
207-62-73690	292	24
207-62-73710	609	6
	611	6
	613	6
207-62-74111	528	1
	538	1
207-62-74121	528	2
	538	2
207-62-74131	527	2
	536	2
207-62-74140	528	13
	538	13
207-62-74150	527	3
	536	3
207-62-74160	527	1
	536	1
207-62-74170	277	2
207-62-74180	563	16
207-62-74190		
	559	12
	575	12
207-62-74221	526	3
	533	3
	534	3
	535	3
207-62-74230	526	4

PartNumber	Page	Index
	533	4
	534	4
	535	4
207-62-74240	526	5
	533	5
	534	5
	535	5
207-62-74251	526	6
	533	6
	534	6
	535	6
207-62-74281	526	7
	533	7
	534	7
	535	7
207-62-74340	526	8
	533	8
	534	8
	535	8
207-62-74371	526	9
	533	9
	534	9
	535	9
207-62-74610	194	1
	220	1
	257	1
207-62-74622	305	15
207-62-74640	271	4
207-62-74650	274	1
207-62-74660	274	3
207-62-74670	275	1
207-62-74681	275	10
	276	14
207-62-74760	277	3
207-62-74781	275	5

PartNumber	Page	Index
	276	9
	488	
	488	10
207-62-74791	276	5
207-62-74850	295	20
	296	10
207-62-74860	295	12
	296	16
207-62-74870	295	13
	296	17
207-62-74980	305	14
207-62-75120	291	1
207-62-75180	291	14
	295	26
207-62-75190	427	1
	428	1
207-62-75250	275	18
	276	22
207-62-75810	395	5
207-62-75820	395	6
	427	14
	428	11
207-62-75830	371	28
207-62-75840	371	27
207-62-75870	394	9
207-62-75880	394	10
	427	13
	428	10
207-62-75890	394	11
207-62-76230	577	6
207-62-76360	577	5
207-63-54580	541	32
	545	37
207-63-54590	541	36
	543	36

PartNumber	Page	Index
	545	38
	547	38
207-63-54680	543	32
	547	37
207-63-64190	550	46
	552	49
207-63-73180	421	27
	421	28
	558	28
	560	28
	572	33
	578	28
207-63-73790	558	32
	572	37
	578	32
207-63-76170	557	6
	560	6
	572	6
	578	6
207-70-00061	584	12
	589	16
	594	12
	599	16
	602	22
	604	22
	614	5
207-70-00253	526	
207-70-00254	526	
207-70-00480	554	
	568	
	574	
207-70-00542	564	
207-70-00583	533	
207-70-00591	565	
207-70-00783	535	

PartNumber	Page	Index
207-70-00871	571	
207-70-00990	577	
207-70-11340	532	12
	539	12
207-70-11350	532	13
	539	13
207-70-11360	532	14
	539	14
207-70-11370	532	15
	539	15
207-70-13340	532	8
	539	8
207-70-14151	584	6
	586	6
	589	6
	591	6
	594	6
	596	6
	599	6
	600	6
207-70-14280	602	12
	604	12
207-70-24190	311	9
	554	11
	559	10
	563	10
	568	11
	574	11
	575	10
	584	14
	587	2
	589	18
	593	2
	594	14
	598	2

PartNumber	Page	Index
	599	18
	601	2
207-70-24210	311	10
	554	12
	559	11
	563	11
	568	12
	574	12
	575	11
207-70-31172	154	43
	532	6
	539	6
207-70-31230	311	2
	526	15
	533	15
	534	15
	535	15
207-70-31242	532	7
	539	7
207-70-31290	311	11
207-70-31340	532	10
	539	10
	559	5
	563	5
	575	5
207-70-32150	562	3
	564	6
	565	3
	566	5
	567	3
	570	3
	571	3
	577	8
207-70-33120	554	6
	568	6

PartNumber	Page	Index
	574	6
207-70-33141	554	8
	568	8
	574	8
207-70-33160	554	2
	554	3
	568	2
	568	3
	574	2
	574	3
207-70-33181	559	18
	575	18
	584	13
	587	1
	589	17
	593	1
	594	13
	598	1
	599	17
	601	1
207-70-00543	576	
207-70-34160	589	8
	592	1
	597	1
	599	8
207-70-34170	589	9
	592	2
	597	2
	599	9
207-70-34230	584	15
	589	19
	594	15
	599	19
	602	23
	604	23

PartNumber	Page	Index
	614	1
207-70-34240	584	8
	589	12
	594	8
	599	12
	602	18
	604	18
	614	2
207-70-34270	583	2
	585	2
	588	2
	590	2
207-70-51310	311	12
207-70-51320	532	11
	539	11
207-70-53150	553	6
207-70-53160	553	
207-70-53161	553	1
207-70-53170	553	2
207-70-54121	584	3
	586	3
	589	3
	591	3
	594	3
	596	3
	599	3
	600	3
207-70-54131	584	4
	586	4
	589	4
	591	4
	594	4
	596	4
	599	4
	600	4

PartNumber	Page	Index
207-70-54281	583	1
	585	1
	588	1
	590	1
207-70-61182	533	14
	534	14
	535	14
207-70-61192	532	1
	539	1
207-70-61210	311	5
207-70-61221	559	6
	563	6
	575	6
207-70-61521	562	2
	564	5
	565	2
	566	4
	567	2
	570	2
	571	2
	577	7
207-70-61610	533	12
	534	12
	535	12
207-70-71113	526	
207-70-71114	526	1
207-70-71130	311	1
207-70-71162	526	12
207-70-72120	554	5
	557	7
	560	7
	562	7
	564	10
	565	7
	566	9

PartNumber	Page	Index
	567	7
	568	5
	570	7
	571	7
	572	7
	574	5
	577	12
	578	7
	645	
	646	
207-70-72312	526	14
207-70-72460	562	4
	564	7
	565	4
	566	6
	567	4
	570	4
	571	4
	577	9
207-70-72470	584	11
	589	15
	594	11
	599	15
	602	21
	604	21
207-70-73210	554	7
	568	7
	574	7
207-70-77113	533	
207-70-77114	533	1
	534	1
207-70-77310	529	2
	537	2
207-70-77320	529	3
	537	3
207-70-77330	529	4
	537	4
207-70-77341	529	14
	537	14
207-70-77351	529	15
	537	15
207-810-1311	392	2
	393	11
	424	2
	425	11
207-810-1321	392	4
	393	12
	424	4
	425	12
207-810-1332	392	9
	393	1
207-810-1342	392	10
	393	3
207-920-5120	584	5
	589	5
	594	5
	599	5
207-920-7310	584	1
	589	1
	594	1
	599	1
207-922-1120	595	2
207-922-1130	595	3
207-922-3110	595	1
207-926-5120	586	5
	591	5
	596	5
	600	5
207-926-5310	586	1
	591	1
	596	1
	600	1
207-934-6160	602	2
	604	2
207-934-6170	602	3
	604	3
207-934-7120	602	4
	604	4
207-934-7181	602	5
	604	5
207-934-7511	602	1
	535	1
	604	1
207-934-7530	602	6
	604	6
207-934-7540	603	1
207-934-7550	602	7
	604	7
207-934-7560	603	2
207-934-7580	603	3
207-934-7G50	602	8
	604	8
207-934-7G60	602	9
	604	9
207-934-7G70	602	10
	604	10
207-939-3120	584	2
	586	2
	589	2
	591	2
	594	2
	596	2
	599	2
	600	2
207-943-0041	562	
207-943-5120	563	23
207-943-5130	563	18
207-944-7111	567	1
207-944-7211	570	1
207-970-2110	613	22
207-970-5111	288	
207-970-511101	288	1
207-970-511102	288	2
207-970-511103	288	3
207-970-511104	288	4
207-970-5121	288	5
207-970-5510	605	1
207-970-5910	607	1
207-970-7110	530	1
207-970-7120	530	9
207-970-7130	530	2
207-970-7140	530	10
207-970-7151	530	20
	530	26
207-970-7162	531	15
207-970-7171	531	5
	531	11
207-970-7210	555	1
207-970-7221	555	13
207-970-7310	531	19
	555	20
207-970-7320	531	8
207-970-7331	531	14
207-970-7420	564	3
	577	3
207-970-7430	564	4
	577	4
207-970-7530	611	22
207-970-7540	611	24
207-970-7611	566	1
207-970-7620	566	2
207-970-7630	566	3
207-970-7640	569	1
207-970-7650	569	10
207-970-7790		
	580	8
	580	20
207-970-7810	580	1
207-970-7820	580	13
207-970-7830	580	25
207-977-2121	634	3
207-977-2150	634	6
207-977-2160	634	15
207-977-2170	634	16
207-977-2190	637	1
207-977-2210	636	7
207-977-2220	637	25
207-977-2230	637	8
207-977-2240	637	11
207-977-2251	636	9
207-977-2261	636	15
	637	37
207-977-2271	636	10
207-977-2280	636	11
207-977-2310	637	22
207-977-2320	636	1
207-977-2330	636	2
207-977-2340	636	3
207-977-2350	636	4
207-977-2360	636	5
207-977-2370	636	6
207-977-2380	636	12
207-977-2390	636	13
207-977-2410	636	14
207-977-2440	637	7
207-977-2450	634	7
207-977-2470	636	8
207-979-6180	138	27
	151	7
207-979-7381	330	28
	333	45
	335	45
207-979-7390	330	1
	332	1
	334	1
207-979-7440	329	2
	331	2
207-979-7450	329	12
	331	12
207-979-7462	330	12
	332	29
	334	29
	392	8
	424	8
207-979-7470	329	23
	331	23
207-979-7540	330	7
207-979-7560	435	15
207-979-7610	329	19
	331	19
207-979-7623	136	30
207-979-7631	136	33
207-979-7710	332	12
	334	12
207-979-7720	332	13
	334	13
207-979-7731	424	9
	425	1
207-979-7741	333	57
	335	57

PartNumber	Page	Index
	424	10
	425	3
207-979-7750	332	7
	334	7
	425	13
207-979-7760	332	14
	334	14
207-979-7770	332	15
	334	15
	637	38
207-979-7780	332	16
	334	16
207-979-7790	332	17
	334	17
207-979-7810	332	18
	334	18
	637	39
207-979-7820	332	19
	334	19
207-979-7830	332	20
207-979-7831	334	20
207-979-7840	332	21
	334	21
207-979-7850	332	22
	334	22
207-98-61130	632	
207-98-75311	451	9
208-00-71450	616	7
208-01-11161	128	9
208-01-11181	128	10
208-01-55220	128	7
208-01-72180	130	8
	132	7
208-01-72310	132	9
208-03-58310	142	36
208-03-71131	135	41
208-03-71350	137	45
208-03-71360	136	1
208-03-71370	136	4
208-03-71380	134	29
208-03-71410	139	36
208-03-71480	134	30
208-03-71490	134	31
208-03-71690	135	42
208-03-71720	136	20
208-03-71731	134	7
208-03-71741	136	21
208-03-71751	136	22
208-03-71760	136	23
208-03-71770	138	9
208-03-71780	134	32
208-03-71810	134	8
208-03-71821	134	34
208-03-71830	134	35
208-03-71840	134	9
208-03-71850	135	43
208-03-71860	135	44
208-03-71870	135	45
208-03-71890	135	46
208-03-72151	139	1
208-04-K1550	638	4
	639	4
208-06-19170	295	25
	396	1
208-30-11760	508	6
	510	6
	512	6
208-43-71420	359	8
208-43-71520	373	2
208-43-71530	373	3
208-43-71590	373	4
208-46-75110	308	21
	308	31
	309	21
	309	31
	310	20
	310	29
208-53-11330	353	9
208-53-11780	336	4
208-53-11860	342	8
	399	8
208-53-11890	358	4
	407	4
208-53-11920	356	9
208-53-11941	356	5
208-53-12120	357	15
	406	15
	415	15
208-53-12230	358	5
	407	5
208-53-12280	381	12
	411	12
	417	12
208-53-12290	362	7
	408	7
208-53-12320	362	20
	408	20
208-53-12330	362	21
	408	21
208-53-12410	362	18
	408	18
208-53-12432	357	16
	406	16
	415	16
208-53-12440	356	4
208-53-12460	355	2
208-53-12551	358	16
	407	16
208-53-12680	357	9
	406	9
	415	9
208-53-12980	350	28
208-53-12991	350	27
208-53-13270	350	6
208-53-13720	318	1
208-53-14540	346	4
	402	4
208-53-23210	426	1
208-53-23221	408	31
208-53-22810	346	14
208-53-22162	343	15
208-53-22710	343	1
208-53-22H70	343	2
208-54-31280	641	2
208-54-57180	440	24
	455	34
	459	6
	459	13
	459	20
	459	28
	459	34
	461	4
	462	4
	462	18
	462	30
	463	34
	466	17
	467	6
	467	13
	467	20
	467	28
	467	34
	469	4
	470	4
	470	18
	470	30
	471	34
	473	21
	637	26
208-54-71380	436	3
208-54-71470	448	7
208-54-71910	443	8
	446	8
208-54-71920	443	7
	446	7
208-54-73131	436	33
208-54-73351	441	34
208-54-73490	455	10
	459	10
	463	10
	467	10
	471	10
208-54-73520	455	2
	459	2
	463	2
	467	2
	471	2
208-54-73710	436	26
208-54-73720	436	27
208-54-73821	436	28
208-54-73830	436	29
208-54-74320	433	5
	434	5
208-54-74380	433	13
	434	13
208-54-78320	455	1
	463	1
	471	1
208-54-78340	459	1
	467	1
208-60-71150	165	29
208-60-71180	165	39
208-60-75120	138	20
208-62-71101	273	
208-62-71390	277	9
208-62-71410	275	14
	276	18
208-62-71540	193	2
	219	2
	233	2
	256	2
208-62-71640	299	13
208-62-71670	306	16
208-62-71810	273	1
208-62-71820	272	1
208-62-72131	299	1
	303	1
	488	
	488	11
208-62-72180	299	10
	303	10
208-62-72190	299	11
	303	11
208-62-72210	306	2
208-62-72230	306	3
208-62-72240	306	4
208-62-72290	394	5
208-62-72310	394	6
208-62-72331	394	2
	427	12

PartNumber	Page	Index
	428	9
208-62-72360	394	8
208-62-72480	371	29
208-62-72870	395	11
208-62-73330	536	11
	538	4
	538	15
208-62-73910	271	9
208-70-33220	582	1
208-70-61241	559	1
	563	1
	575	1
208-70-62161	563	13
208-70-73160	554	9
	568	9
	574	9
208-934-5170	602	11
	604	11
208-934-7132	602	14
	604	14
208-970-5230	611	25
208-970-5240	611	27
208-970-5260	606	3
208-970-7171	564	2
	577	2
208-970-7210	530	23
208-970-7220	530	17
208-970-7460	580	26
208-970-8460	606	1
208-979-7520	138	5
208-979-7530	358	12
	407	12
208-979-7540	391	1
208-979-7560	362	13
	408	13

PartNumber	Page	Index
208-979-7620	358	13
	407	13
208-979-7640	392	1
	424	1
208-979-7650	392	6
	424	6
208-98-71100	641	1
208-98-71120	641	5
209-00-41550	448	13
209-32-11234	589	10
	592	3
	597	3
	599	10
209-72-12230	353	3
	353	7
	421	29
209-939-7110	602	16
	604	16
209-939-7120	602	17
	604	17
209-98-81280	330	10
	332	10
	334	10
20B-27-11210	265	5
	494	12
	500	12
20D-62-17620	337	4
20T-54-42510	330	2
	332	2
	334	2
20T-910-8660	371	16
20U-54-25140	342	19
	399	19
20U-62-41610	146	21
20U-62-41810	275	7

PartNumber	Page	Index
	276	11
20X-54-21460	443	10
	446	10
20Y-00-31840	616	24
20Y-00-31970	616	6
20Y-00-41330	353	10
20Y-00-41530	616	29
20Y-00-41550	609	4
	611	4
	613	4
20Y-00-41560	609	5
	611	5
	613	5
20Y-00-41730	618	1
20Y-00-41740	616	16
20Y-00-42110	144	18
	145	20
	166	54
	443	34
	446	34
20Y-00-42120	443	31
	446	31
20Y-00-42140	443	32
	446	32
20Y-00-42170	453	8
20Y-03-11330	134	4
20Y-03-22110	134	2
20Y-04-11161	144	9
	145	9
20Y-04-11240	144	
	145	
20Y-04-21580	144	15
	145	15
20Y-04-31170	146	5
20Y-04-38170	639	33

PartNumber	Page	Index
20Y-04-K2082	638	1
	639	1
20Y-04-K2351	638	3
	639	3
20Y-04-K2450	638	2
	639	2
20Y-06-21551	159	2
	532	17
	539	17
20Y-06-21590	159	9
20Y-06-21710	368	30
20Y-06-23472	354	3
20Y-06-31660	374	8
20Y-06-31680	156	7
20Y-06-41121	417	7
20Y-06-41141	349	3
20Y-06-41150	359	7
20Y-06-41251	423	13
20Y-06-41542	160	6
20Y-06-41822	162	1
20Y-06-41830	381	9
	417	9
20Y-06-41990	348	
20Y-06-42110	387	39
20Y-06-42121	387	40
20Y-06-42180	349	6
20Y-06-42190	387	42
20Y-25-11270	475	9
	476	9
	529	13
	537	13
	563	12
20Y-26-21320	480	18
	482	15
	486	18

PartNumber	Page	Index
20Y-26-21330	480	19
	482	16
	486	19
	498	14
	504	14
20Y-26-21350	481	43
	487	43
20Y-27-11250	498	26
	504	26
20Y-27-13310	498	15
20Y-06-42130	387	54
20Y-06-42430	417	1
	381	1
20Y-06-41270	362	36
	421	16
	411	9
	411	1
	504	15
20Y-27-21240	498	22
	504	22
20Y-27-21250	480	17
	482	14
	486	17
	498	12
	504	12
20Y-27-21280	498	24
	504	24
20Y-27-22250	498	27
	504	27
20Y-30-16330	513	10
	514	10
	515	10
	516	10
20Y-43-21231	368	18
20Y-43-21241	368	19

PartNumber	Page	Index
20Y-43-22211	377	1
20Y-43-22221	383	1
20Y-43-22250	377	6
	383	6
20Y-43-22261	377	7
	383	7
20Y-43-22370	377	8
	383	8
20Y-43-22381	377	3
20Y-43-22390	383	3
20Y-43-22421	377	4
	383	4
20Y-43-31421	381	19
	411	19
	417	19
20Y-43-31432	381	17
	411	17
	417	17
20Y-43-31440	381	20
	411	20
	417	20
20Y-43-31450	381	21
	411	21
	417	21
20Y-43-31513	381	13
	411	13
	417	13
20Y-43-31522	381	14
	411	14
	417	14
20Y-43-31611	381	15
	411	15
	417	15
20Y-43-31621	381	16
	411	16

PartNumber	Page	Index
	417	16
20Y-43-41111	367	10
20Y-43-41121	367	3
20Y-43-41143	382	1
	412	1
20Y-43-41152	382	7
	388	7
	412	7
20Y-43-41162	382	5
	412	5
20Y-43-41173	382	2
	412	2
20Y-43-41181	382	11
	388	11
	412	11
20Y-43-41191	382	13
	388	13
	412	13
20Y-43-41230	373	1
20Y-43-41240	391	4
20Y-43-41252	373	14
20Y-43-41281	382	17
	388	17
	412	17
20Y-43-41290	323	3
	324	3
	325	3
	354	6
	380	16
	380	21
	380	26
	386	11
	386	19
	387	24
	410	16
	410	21
	410	26
20Y-43-41314	386	1
20Y-43-41323	386	7
20Y-43-41343	388	1
20Y-43-41361	367	6
20Y-43-41415	380	1
20Y-43-41423	380	9
	410	9
20Y-43-41442	380	17
	410	17
20Y-43-41461	382	18
	388	18
	412	18
20Y-43-41472	380	4
	410	4
20Y-43-41491	380	29
	410	29
20Y-43-41533	388	2
20Y-43-41591	382	15
	388	15
	412	15
20Y-43-41621	380	7
	410	7
20Y-43-41631	386	4
20Y-43-41641	380	8
	410	8
20Y-43-41651	380	10
	410	10
20Y-43-41661	380	11
	386	8
	410	11
20Y-43-41671	387	34
20Y-43-41740	387	31
20Y-43-41750	387	32
20Y-43-41760	371	2
20Y-43-41780	387	38
20Y-43-41790	387	33
20Y-43-41813	373	7
20Y-43-41823	373	9
20Y-43-41832	373	11
20Y-43-41850	388	5
20Y-43-41891	373	12
20Y-43-41970	380	28
	410	28
20Y-43-41981	380	30
	410	30
20Y-43-41991	387	28
20Y-43-42130	381	2
	417	2
20Y-43-42170	380	23
	386	13
	387	21
	410	23
20Y-43-42180	380	31
	387	29
	410	31
20Y-43-42330	386	
20Y-43-42350	386	
20Y-43-42450	380	
	410	
20Y-46-21520	475	7
	476	7
20Y-46-42320	308	9
	309	9
	310	9
20Y-46-42330	308	10
	309	10
	310	10
20Y-46-42340	308	11
	309	11
	310	11
20Y-53-00072	344	
	345	
20Y-53-00031	340	
20Y-53-00072	401	
20Y-53-11241	339	2
	398	2
20Y-53-11250	339	7
	398	7
20Y-53-11260	339	3
	398	3
20Y-53-11271	339	6
	398	6
20Y-53-11320	345	11
20Y-53-11332	344	16
	344	17
	401	16
	401	17
20Y-53-11380	352	6
20Y-43-41416	410	1
	421	2
	411	2
	405	6
	414	6
20Y-53-11390	352	4
	352	5
	405	4
	405	5
	414	4
	414	5
20Y-53-11402	344	
	401	
20Y-53-11411	344	20
	401	20
20Y-53-11421	344	21
	401	21
20Y-53-11441	345	18
20Y-53-11451	344	12
	401	12
20Y-53-11460	344	13
	401	13
20Y-53-11470	344	10
	401	10
20Y-53-11484	344	15
	401	15
20Y-53-11511	340	1
20Y-53-11520	340	2
20Y-53-11540	341	
20Y-53-11551	340	4
20Y-53-11561	341	
20Y-53-11581	341	33
20Y-53-11591	342	1
	399	1
20Y-53-11601	342	
	399	
20Y-53-11611	342	4
	399	4
20Y-53-11641	341	34
20Y-53-11661	341	28
20Y-53-11712	400	1
20Y-53-11721	343	11
	400	11
20Y-53-11741	343	6
	400	6
20Y-53-11752	350	30
20Y-53-11761	350	32
20Y-53-11771	343	17
	400	17
20Y-53-11781	343	12
	400	12
20Y-53-11790	343	7
	400	7
20Y-53-11810	402	14
20Y-53-11821	351	5
	404	5
	416	5
20Y-53-11831	351	7
	404	7
	416	7
20Y-53-11841	339	4
	398	4
20Y-53-11850	339	5
	398	5
20Y-53-11861	343	20
	400	20
20Y-53-11870	358	2
	407	2
20Y-53-11880	358	3
	407	3
20Y-53-11890	346	15
	402	15
20Y-53-11921	343	4
	400	4
20Y-53-11931	343	14
	400	14
20Y-53-11940	342	9
	399	9
20Y-53-11953	323	4
	324	4
	325	4
20Y-53-11961	351	1
	404	1
	416	1
20Y-53-11973	342	11

PartNumber	Page	Index
	399	11
20Y-53-11981	346	1
	402	1
20Y-53-11990	346	6
	402	6
20Y-53-11H71	400	2
20Y-53-12111	354	1
20Y-53-12122	353	12
20Y-53-12154	353	55
20Y-53-12161	353	20
20Y-53-12172	353	11
20Y-53-12201	345	1
20Y-53-12221	349	7
20Y-53-12232	347	9
	403	9
	413	9
20Y-53-12240	354	2
20Y-53-12260	352	11
	405	11
	414	11
20Y-53-12270	352	19
20Y-53-12280	346	3
	402	3
20Y-53-12291	353	19
20Y-53-12310	341	44
	350	15
	350	21
	353	16
	356	7
	356	11
	357	13
	362	12
	362	23
	362	26
	406	13

PartNumber	Page	Index
	408	12
	408	23
	408	26
	415	13
20Y-53-12320	352	13
	405	13
	414	13
20Y-53-12330	341	14
20Y-53-12371	362	6
	408	6
20Y-53-12381	362	14
	408	14
20Y-53-12391	362	17
	408	17
20Y-53-12412	350	1
20Y-53-12421	350	3
20Y-53-12431	350	5
20Y-53-12441	350	9
20Y-53-12463	350	14
20Y-53-12472	350	20
20Y-53-12483	353	22
20Y-53-12522	357	8
	406	8
	415	8
20Y-53-12531	341	43
20Y-53-12552	350	13
20Y-53-12564	407	1
20Y-53-12565	358	1
20Y-53-12580	352	17
	405	16
	414	17
20Y-53-12591	351	4
	404	4
	416	4
20Y-53-12611	342	15

PartNumber	Page	Index
	399	15
20Y-53-12631	342	17
	399	17
20Y-53-12661	345	14
20Y-53-12710	350	8
	350	12
20Y-53-12731	362	24
	408	24
20Y-53-12740	352	18
	405	17
	414	18
20Y-53-12751	358	9
	407	9
20Y-53-12760	358	10
	407	10
20Y-53-12771	355	5
20Y-53-12781	358	8
	407	8
20Y-53-12790	347	11
	403	11
	413	11
20Y-53-12810	353	4
20Y-53-12830	341	18
20Y-53-12840	344	3
	401	3
20Y-53-12850	344	4
	401	4
20Y-53-12860	362	28
	408	28
20Y-53-12870	344	6
	401	6
20Y-53-12880	344	7
	401	7
20Y-53-12892	342	12
	399	12

PartNumber	Page	Index
20Y-53-12940	345	12
20Y-53-12951	352	24
	405	22
	414	23
20Y-53-12960	352	1
	405	1
	414	1
20Y-53-12971	344	9
	401	9
20Y-53-12991	345	5
20Y-53-13130	426	5
20Y-53-13142	426	8
20Y-53-13151	426	11
20Y-53-13280	356	3
20Y-53-13311	357	1
	406	1
	415	1
20Y-53-13321	357	4
	406	4
	415	4
20Y-53-13331	357	2
	406	2
	415	2
20Y-53-13341	357	5
	406	5
	415	5
20Y-53-13351	357	3
	406	3
	415	3
20Y-53-13361	357	6
	406	6
	415	6
20Y-53-13371	356	1
20Y-53-13421	356	8
20Y-53-13451	357	11

PartNumber	Page	Index
	406	11
	415	11
20Y-53-13461	357	14
	406	14
	415	14
20Y-53-13480	356	2
20Y-53-13490	351	3
	404	3
	416	3
20Y-53-13617	355	
20Y-53-13631	362	
	408	
20Y-53-13880	344	14
	401	14
20Y-53-13910	344	11
	401	11
20Y-53-14121	375	1
20Y-53-14150	375	
20Y-53-14170	375	9
20Y-53-14220	371	9
20Y-53-14812	359	1
20Y-53-14820	360	1
20Y-53-14831	397	27
	423	34
20Y-53-14841	397	30
	423	37
20Y-53-14910	397	19
	423	26
20Y-53-14116	363	1
	421	9
20Y-53-14920	397	20
	423	27
20Y-53-14930	397	21
	423	28
20Y-53-14940	397	22

PartNumber	Page	Index
	423	29
20Y-53-14950	397	23
	423	30
20Y-53-14963	397	24
	423	31
20Y-53-14973	397	25
	423	32
20Y-53-14983	397	26
	423	33
20Y-53-14991	376	1
	409	1
20Y-53-15121	160	3
20Y-53-15140	405	25
20Y-53-15150	157	4
20Y-53-15210	157	1
20Y-53-15220	158	1
20Y-53-15710	326	1
20Y-53-15750	326	2
20Y-53-15780	326	7
20Y-53-15790	326	8
20Y-53-16741	327	1
20Y-53-17411	327	6
20Y-53-17811	338	4
20Y-53-18211	359	9
20Y-53-18221	408	33
20Y-53-18880	352	22
	405	20
	414	21
20Y-54-11611	341	36
	346	11
	402	11
	436	15
	438	15
20Y-54-12550	455	6
	455	13

PartNumber	Page	Index
	455	20
	455	28
	457	6
	458	17
	463	6
	463	13
	463	20
	463	28
	465	6
	471	6
	471	13
	471	20
	471	28
	472	6
	473	17
20Y-54-13322	344	8
	401	8
20Y-54-14590	341	15
	343	8
	400	8
20Y-54-19920	443	39
	446	39
20Y-54-19930	444	40
	447	40
20Y-54-25852	443	2
	446	2
20Y-54-27123	431	2
	432	2
20Y-54-27290	431	22
	432	22
20Y-54-27360	431	16
	432	16
20Y-54-27761	440	12
20Y-54-28170	436	9
	438	17

PartNumber	Page	Index
20Y-54-29232	436	25
	438	20
20Y-54-29680	448	8
20Y-54-35430	450	3
20Y-54-35451	352	12
	405	12
	414	12
20Y-54-36342	321	23
	400	15
20Y-54-39450	347	5
	403	5
	413	5
20Y-54-39460	347	6
	403	6
	413	6
20Y-54-39480	347	7
	403	7
	413	7
20Y-54-39511	349	11
20Y-54-51393	345	15
20Y-54-51420	341	42
20Y-54-51531	340	3
20Y-54-51621	341	38
20Y-54-51640	342	3
	399	3
	362	38
20Y-54-51670	341	21
20Y-54-51680	341	22
20Y-54-52211	347	1
	403	1
	413	1
20Y-54-52221	347	
	403	
	413	
20Y-54-52300	345	2

PartNumber	Page	Index
20Y-54-52350	347	4
	403	4
	413	4
20Y-54-52530	326	3
20Y-54-52621	341	12
20Y-54-52651	343	19
	343	23
	400	19
	400	23
20Y-54-52681	341	13
20Y-54-52820	345	9
20Y-54-52860	344	5
	401	5
20Y-54-53370	337	3
20Y-54-54480	158	6
20Y-54-61470	436	6
	438	21
20Y-54-61630	451	3
20Y-54-61670	455	39
	459	39
	463	39
	467	39
20Y-54-63390	438	2
20Y-54-63414	436	19
	438	3
	438	8
20Y-54-65121	396	11
20Y-54-65340	373	15
20Y-54-65540	373	18
20Y-54-65690	358	15
	407	15
20Y-54-65790	358	14
	407	14
20Y-54-71372	436	18
20Y-54-71491	438	5

PartNumber	Page	Index
20Y-54-73190	443	19
	446	19
20Y-54-74161	448	5
20Y-54-74172	448	6
20Y-54-74260	450	2
20Y-54-74270	451	2
20Y-54-74280	450	1
	451	1
20Y-54-74560	433	2
	433	6
	433	10
	433	14
	433	30
	434	2
	434	6
	434	10
	434	14
	434	29
	635	2
20Y-57-41102	313	
20Y-57-41302	315	
20Y-60-11750	305	5
20Y-60-21240	165	24
20Y-60-21320	165	31
20Y-60-21340	166	40
20Y-60-21470	165	38
	630	15
20Y-60-22201	305	
20Y-60-22210	193	11
	219	11
20Y-60-22270	192	21
	193	12
	218	21
	219	12
	233	12

PartNumber	Page	Index
	255	21
	256	9
20Y-60-22350	305	6
20Y-60-22372	273	2
20Y-60-31131	165	23
20Y-60-31140	165	22
20Y-60-31221	297	1
20Y-60-31240	297	3
20Y-60-31250	297	4
20Y-60-31271	166	
20Y-60-32120	301	2
20Y-60-32121	297	2
20Y-62-12121	492	1
	493	1
20Y-62-13450	292	26
20Y-62-15831	397	1
	397	10
	423	1
	423	14
20Y-62-15951	295	22
	427	3
	428	3
20Y-62-16630	305	1
20Y-62-18890	368	26
	379	5
	385	5
20Y-62-18910	368	21
	379	3
	385	3
20Y-62-19560	192	5
	218	5
	255	5
	298	3
	302	3
	305	3

PartNumber	Page	Index
	305	9
20Y-62-21940	298	19
	302	19
20Y-62-22160	192	17
	193	30
	218	17
	219	30
	233	31
	255	17
	256	28
	295	7
20Y-62-22271	298	1
	302	1
20Y-62-22410	305	7
20Y-62-22790	270	5
	295	14
	295	21
	296	11
	296	18
	299	2
	303	2
	306	5
	394	3
	394	12
	395	7
	395	16
20Y-62-22810	295	15
	296	19
	299	3
	299	7
	303	3
	303	7
	306	6
	395	8
	371	31

PartNumber	Page	Index
20Y-62-22820	299	8
	299	12
	303	8
	303	12
	306	13
	394	13
	395	9
	395	17
	371	32
	421	32
20Y-62-22830	270	10
	295	16
	306	7
	395	18
20Y-62-22840	306	14
	395	19
20Y-62-22850	306	8
	394	14
	395	20
20Y-62-22860	299	9
	303	9
	306	15
	395	21
20Y-62-23541	192	18
	218	18
	255	18
20Y-62-25360	371	6
20Y-62-27770	396	13
20Y-62-31321	608	3
	610	3
	612	3
20Y-62-31331	608	8
	610	8
	612	8
20Y-62-31400	608	

PartNumber	Page	Index
	610	
	612	
20Y-62-41390	368	28
20Y-62-41701	192	
	193	
	218	
	219	
	233	
	255	
	256	
20Y-62-41920	193	1
	219	1
	233	1
	256	1
20Y-62-42251	395	10
20Y-62-42271	395	13
20Y-62-42290	395	14
20Y-62-43470	371	21
20Y-62-43690	302	26
20Y-62-47630	192	24
	193	15
	218	24
	219	15
	233	15
	255	24
	256	12
20Y-62-51681	291	
20Y-62-51691	291	7
20Y-62-52160	371	18
20Y-62-52330	371	26
20Y-62-53410	395	2
20Y-62-53420	395	3
20Y-70-11520	529	5
	537	5
20Y-70-11540	529	1

PartNumber	Page	Index
	537	1
	563	14
20Y-70-11651	526	10
	533	10
	534	10
	535	10
20Y-810-1211	389	
	418	
20Y-810-1260	329	1
	331	1
20Y-954-6111	322	1
20Y-954-6122	319	1
20Y-954-6132	320	1
	321	1
20Y-954-6142	321	9
20Y-954-6151	321	12
20Y-954-6161	321	13
20Y-954-6171	321	2
20Y-954-6181	321	3
20Y-954-6192	320	2
	321	6
20Y-954-6241	319	2
20Y-954-6250	319	10
20Y-970-6440	608	1
	610	1
	612	1
20Y-970-6450	289	
	290	
20Y-973-2220	522	1
20Y-973-2230	522	2
20Y-977-6360	637	31
20Y-977-6730	637	34
20Y-979-3120	329	15
	331	15
20Y-979-3130	392	5

PartNumber	Page	Index
	424	5
20Y-979-3140	330	13
	332	30
	334	30
20Y-979-3150	329	21
	329	24
	331	21
	331	24
	392	3
	424	3
20Y-979-6161	354	7
20Y-979-6612	329	3
	331	3
20Y-979-6630	373	19
20Y-979-6650	329	20
	331	20
20Y-979-6771	360	5
20Y-98-21140	632	24
21J-06-12440	341	31
21K-54-26351	443	11
	446	11
21M-03-15260	139	16
21M-62-16350	298	12
	302	12
21M-970-1173	556	9
21M-970-7700	555	25
	556	
	569	19
21M-970-1223	556	2
21N-62-36790	395	15
21N-64-36680	295	10
21T-06-11350	328	1
21T-06-11950	330	17
	332	34
	334	34

PartNumber	Page	Index
21M-06-31170	381	7
	411	7
	421	31
	421	21
	421	6
	421	18
	421	26
21T-06-32810	156	6
	159	1
	532	16
	539	16
21T-06-33760	387	41
21T-09-11240	454	1
21T-38-12270	328	7
21T-54-16150	142	4
21T-62-76850	148	22
	634	29
21W-62-42490	192	8
	193	27
	218	8
	219	27
	255	8
	298	8
	298	21
	302	8
	302	21
	490	16
21W-62-42630	490	4
	492	19
	493	19
21W-62-42640	165	12
	275	11
	276	15
	488	4
	490	24

PartNumber	Page	Index
22B-03-12590	134	28
22B-04-K1130	639	6
22B-04-K1140	639	7
22B-04-K1150	639	8
22B-04-K1160	639	9
22B-04-K1170	639	10
22B-54-15411	340	5
22B-54-15421	341	8
22B-54-15440	340	6
22B-54-15450	341	9
22B-54-15470	340	7
22B-54-15480	341	10
22B-54-15841	342	13
	399	13
22B-54-15970	342	5
	399	5
22B-54-15980	342	6
	399	6
22B-54-16330	345	10
22B-54-16340	345	3
22B-54-16461	345	19
22B-54-17282	352	2
	405	2
	414	2
22B-54-17380	350	19
22B-54-17612	160	1
22B-54-17660	160	
22B-57-11911	317	1
22B-60-11160	165	32
22B-954-1660	321	25
22B-954-1840	321	24
22B-98-11140	336	1
22U-00-21511	628	1
22U-03-22280	141	10
22U-04-21200	144	

PartNumber	Page	Index
	145	
22U-04-21210	144	14
	145	14
22U-04-21220	144	16
	145	16
22U-04-21241	144	
	145	
22U-06-11270	374	9
22U-06-22360	381	24
	411	24
	417	24
22U-06-22380	387	36
22U-06-22460	387	37
22U-06-22490	381	23
	411	23
	417	23
22U-26-21240	480	30
	482	27
	486	30
22U-26-21320	480	29
	482	26
22U-26-21470	486	29
22U-43-21111	367	15
22U-43-21121	367	16
22U-43-21131	367	17
22U-43-21182	377	
22U-43-21192	383	
22U-43-21211	377	5
	383	5
22U-43-21350	367	
22U-43-21360	367	9
22U-43-21390	373	13
22U-00-21442	616	17
22U-06-22251	362	33
22U-43-22340	362	2

PartNumber	Page	Index
	408	2
22U-43-23251	386	5
22U-43-23260	380	27
	387	47
	410	27
	381	25
	411	25
	417	25
22U-43-23290	386	6
22U-54-24760	455	17
	455	24
	459	17
	459	24
	463	17
	463	24
	467	17
	467	24
	471	17
	471	24
22U-54-25110	369	1
22U-54-25360	353	13
22U-54-25521	369	2
22U-54-25541	371	12
22U-54-25581	363	2
22U-54-25660	371	1
22U-60-21232	165	25
22U-60-21330	298	25
	302	24
22U-62-21870	490	28
22U-62-22480	192	3
	218	3
	255	3
22U-62-24420	490	31
22U-62-31180	394	1
22U-62-32790	608	4

PartNumber	Page	Index
	610	4
	612	4
23D-950-4450	362	27
	408	27
23S-01-11140	128	1
287-06-16420	359	18
418-54-35450	358	7
	407	7
419-03-21320	142	29
421-03-22170	142	30
421-06-23330	156	
	157	
	158	
	159	
	532	
	539	
421-07-31270	360	4
421-62-35180	292	16
421-U12-3100	445	
421-U12-3120	445	1
421-U12-3130	445	2
421-U12-3140	445	3
421-U12-3150	445	4
421-U12-3160	445	5
421-U12-3170	445	6
421-U12-3180	445	7
421-U12-3190	445	8
421-U12-3210	445	9
421-U12-3220	445	10
421-U12-3230	445	11
421-U12-3240	445	12
421-U12-3250	445	13
421-U12-3260	445	14
427-15-15910	513	9
427-15-15980	514	9

PartNumber	Page	Index
437-40-26240	382	8
	388	8
	412	8
5253887	52	
560-43-15220	158	4
569-06-61960	359	17
581-04-22290	427	4
	428	4
	637	2
600-021-2060	124	1
600-184-1350	42	6
	129	6
	131	6
600-184-1610	42	5
600-184-1611	129	5
	131	5
600-184-1671	42	4
	129	2
	131	2
600-184-2810	129	
	131	
600-185-6100	42	
	129	
	131	
600-185-6110	42	2
	129	3
	131	3
600-311-3630	90	3
600-311-3640	90	4
600-311-3660	90	5
600-311-3670	90	6
600-311-3690	90	8
600-311-3722	90	7
600-311-7610	91	
	147	3

PartNumber	Page	Index
600-311-9430	91	5
600-311-9550	91	1
600-311-9760	91	9
600-311-9890	91	7
600-311-9931	91	6
600-311-9941	91	4
600-311-9950	91	8
600-311-9961	91	3
600-311-9971	91	2
600-319-3602	90	
600-319-3610	90	2
	630	6
600-411-1191	88	5
600-411-1280	377	9
	383	9
600-468-1200	121	1
600-635-7870	98	1
600-815-2170	374	21
600-861-6110	112	1
	113	
600-863-5711	115	
600-863-8112	117	
6050-71-5710	51	11
6110-23-6490	138	2
600-319-3750	630	5
	421	12
	421	1
6110-73-6231	91	10
6128-81-7420	130	1
6130-12-4581	119	10
6130-12-8610	36	2
6138-81-8660	51	13
6151-11-5280	48	11
6151-11-9970	42	7
	130	3

PartNumber	Page	Index
	132	2
6151-51-5490	148	28
6152-12-4420	140	44
6152-62-5110	43	1
	138	1
6155-71-5810	119	11
6155-71-5820	119	12
6156-81-7200	42	
6156-81-7201	129	
	131	
6156-81-7210	42	1
	129	1
	131	1
6206-11-5850	48	5
6207-51-7690	45	4
	47	11
6207-81-6980	111	3
6215-81-9510	67	18
	85	3
	88	3
6215-81-9530	62	11
6215-81-9710	67	19
	85	4
	88	4
6215-81-9730	62	12
6216-14-6820	106	1
6216-24-5730	37	6
6216-54-7320	119	34
6216-74-6180	119	32
6216-74-6190	85	26
6216-74-6220	94	2
6216-94-3450	67	16
6217-71-5770	92	2
6221-81-6810	114	1
6222-11-5940	48	6

PartNumber	Page	Index
6261-81-1900	122	18
6261-81-2901	122	
6261-81-2911	122	3
6261-81-6900	122	20
6271-81-9200	122	
6271-81-9220	122	2
	122	4
6301-11-4630	65	5
6560-81-4530	82	4
6643-11-4641	42	8
	130	4
	132	3
6691-21-6360	258	4
6731-11-8290	78	12
6731-51-6280	78	9
6731-51-6291	78	11
6731-51-8150	47	8
6731-61-2151	79	2
6731-61-3420	97	7
6731-61-3430	97	8
6731-61-4250	88	13
	89	10
6731-71-6270	37	10
6731-74-5910	85	16
	85	21
	108	3
6732-11-1720	66	2
	68	6
6732-11-1910	35	11
	58	1
	67	24
	70	2
	89	12
	107	1
6732-11-1920	35	12
	58	2
	62	10
	67	25
	70	3
6732-11-1930	79	7
6732-11-4150	88	2
	89	2
6732-11-5860	44	3
6732-21-1311	62	3
6732-21-1810	67	3
6732-21-1960	35	
	67	
	82	3
	85	
	88	
6732-21-3120	119	16
6732-21-3190	68	2
6732-21-3220	68	3
6732-21-4150	62	8
6732-21-4161	62	9
6732-21-4171	62	5
6732-21-4180	93	12
	119	2
	122	10
6732-21-4220	62	7
6732-21-4290	62	4
6732-21-5160	64	19
	103	2
6732-21-5170	64	14
6732-21-6120	67	12
6732-21-6630	38	3
6732-22-3110	85	2
	88	12
	89	9
6732-31-4120	56	1
6732-31-4130	56	2
6732-41-1260	57	4
6732-41-4520	35	19
6732-41-5430	52	5
	52	8
6732-41-6210	73	2
6732-51-5130	54	1
	58	4
6732-51-8180	47	
6732-51-8370	47	5
6732-61-3110	122	8
6732-61-3140	54	2
	65	8
	85	11
	119	15
6732-61-3170	82	6
6732-61-3260	100	2
6732-61-4120	81	8
	84	8
6732-61-6140	36	1
	119	18
6732-71-3210	37	8
	119	29
	122	6
6732-71-3220	47	10
	105	2
	119	7
	122	7
6732-71-5620	85	15
6732-71-6510	85	10
	85	14
	85	19
	85	34
	93	2
	93	7
	108	2
6732-81-8810	45	1
6732-81-8820	45	2
6732-81-8830	45	5
6732-81-8850	47	3
6732-81-8860	45	8
	47	4
6733-61-3150	52	13
6733-71-5680	64	21
6733-71-5840	64	7
6734-71-5270	81	5
6734-71-5520	122	11
6734-71-5610	65	1
6735-21-1910	67	
	89	
	119	
6735-21-1920	67	20
	89	3
	119	30
6735-21-1930	67	21
	89	4
	119	31
6735-21-4160	85	6
	85	33
6735-21-5530	35	2
	68	1
6735-21-7240	59	11
6735-51-1120	76	2
6735-61-2120	122	9
6735-61-3810	111	6
6735-71-3220	64	10
	78	8
	96	1
	111	5
6735-71-5190	37	3
6736-11-4460	67	15
6736-21-3360	68	5
6736-21-5310	37	11
	59	9
	73	3
	86	4
6736-21-5320	64	13
6736-39-1140	126	
6736-39-1150	126	5
6736-39-1160	126	6
6736-51-8710	45	7
	47	2
6736-81-6170	64	9
	65	7
	81	3
6736-81-8730	40	1
6737-51-8770	85	25
	85	29
6738-11-4370	45	6
	50	3
6738-11-4380	50	5
6738-11-4390	50	4
6738-21-5610	64	
6738-21-5620	64	15
6738-21-5630	64	16
6738-21-5640	64	17
6738-82-5810	65	4
6741-21-1130	67	7
6741-21-1140	67	6
6741-21-3320	58	3
6741-21-3330	58	5
6741-21-3530	59	7
6741-21-3540	59	6
6741-21-3810	59	4
6741-21-3820	59	3
6741-21-4110	62	6
6741-31-4100	63	
6741-31-4180	63	1
6741-39-1110	126	2
6741-39-1120	126	3
6741-39-1130	126	4
6741-39-1220	126	1
6741-51-5210	78	1
6741-51-5230	78	3
6741-61-1520	101	2
6741-61-1610	104	1
6741-61-2120	78	10
	81	1
6741-61-6110	79	16
6741-61-6130	105	3
6741-81-6510	111	7
6741-81-6520	111	1
6741-81-9220	65	2
6742-01-0310	64	4
6742-01-0530	59	10
6742-01-0540	59	2
6742-01-0550	59	
6742-01-0950	59	5
6742-01-1080	79	14
6742-01-1360	67	1
6742-01-1370	67	2
6742-01-1380	67	26
	70	1
6742-01-1420	67	4
6742-01-1460	67	17
6742-01-1470	67	13
6742-01-1480	67	22
6742-01-1520	67	11
6742-01-1890	110	2
6742-01-2441	79	15

PartNumber	Page	Index
6742-01-2492	79	3
6742-01-2500	79	4
6742-01-2630	64	3
6742-01-2920	35	1
6742-01-3320	59	12
6742-01-3620	46	1
6742-01-3770	119	5
6742-01-3780	81	7
6742-01-4080	67	23
6742-01-4220	79	10
6742-01-4340	72	10
6742-01-4490	105	1
6742-01-4540	78	6
	630	4
6742-01-4560	111	17
6742-01-5053	62	2
6742-01-5117	79	11
6742-01-5123	111	15
6742-01-5159	67	
6742-01-5160	67	5
6742-01-5199	71	
	126	
6742-01-5202	79	8
6742-01-5233	126	
6742-01-5289	110	1
6742-01-5309	72	3
6742-01-5507	81	4
6742-01-5542	59	
6742-21-8500	71	
6743-11-1610	35	20
6743-11-3230	83	5
6743-11-5230	48	2
6743-11-5750	48	13
6743-21-4190	62	1
6743-21-5540	73	5

PartNumber	Page	Index
6743-21-5610	73	6
6743-22-5110	73	4
6743-31-3101	72	
6743-31-3121	72	7
6743-31-3210	72	11
6743-51-4430	79	12
6743-51-5110	78	5
6743-51-5522	64	1
6743-51-5550	64	2
6743-51-6121	64	5
6743-51-6161	64	6
6743-51-9930	78	2
6743-51-9940	78	4
6743-51-9950	77	1
6743-51-9960	77	2
6743-61-1531	101	
6743-61-2112	79	1
6743-61-2150	79	9
6743-61-2210	79	13
6743-61-3210	97	2
6743-61-3220	97	3
6743-61-3310	97	1
6743-61-3441	111	13
6743-61-3501	97	
6743-61-3530	97	9
6743-61-3550	97	11
6743-61-3560	97	10
6743-61-3610	97	12
6743-61-3710	99	1
	630	7
6743-61-3810	98	3
6743-61-4110	99	2
6743-61-4120	100	
6743-62-3710	102	1
	630	8

PartNumber	Page	Index
6743-81-6310	114	3
6743-81-8490	51	15
6743-91-6110	60	1
6743-91-6120	61	1
6744-11-1070	35	6
6744-41-1010	57	3
6744-41-3020	52	3
6744-41-4031	35	17
6744-41-4050	35	18
6744-41-4070	35	14
6744-41-4080	35	16
6744-41-4110	35	5
6744-41-4120	35	7
6744-41-5010	52	1
6744-41-5030	52	2
6744-71-1020	82	1
6744-71-1040	82	2
6744-71-1250	82	5
6744-71-3050	85	
6744-71-3060	85	24
	85	28
6744-81-4010	122	19
6745-11-1121	35	
6745-11-1131	35	10
6745-11-1190	35	
6745-11-1811	35	21
6745-11-3102	83	1
6745-11-3110	83	2
6745-11-3150	83	3
6745-11-4110	38	1
6745-11-4120	38	2
6745-11-4140	39	2
6745-11-4150	39	3
6745-11-4161	39	4
6745-11-4180	40	2

PartNumber	Page	Index
6745-11-4190	39	1
6745-11-5110	44	1
6745-11-5120	44	6
6745-11-5170	44	4
6745-11-5310	51	10
6745-11-5710	48	12
6745-11-5720	48	1
6745-11-5730	48	8
6745-11-5740	49	1
	258	5
6745-11-5811	44	2
6745-11-7112	52	12
6745-11-7810	52	14
6745-11-8100	36	
6745-11-8110	36	11
6745-11-8120	36	10
6745-11-8150	36	9
6745-11-8160	36	3
	630	3
6745-11-8170	36	4
6745-11-8180	36	
6745-11-8190	36	6
6745-11-8220	36	
6745-11-8250	37	5
6745-11-8810	36	8
	630	2
6745-21-1190	67	
6745-21-1290	67	
6745-21-1311	53	1
6745-21-1330	53	2
6745-21-1611	67	14
6745-21-3111	59	1
6745-21-3210	59	8
6745-21-5130	64	12
6745-21-5210	64	11

PartNumber	Page	Index
6745-21-5640	73	1
6745-21-7110	37	
6745-21-7120	37	1
6745-21-7180	37	4
6745-21-7210	68	4
6745-31-1120	71	
6745-31-2010	72	
6745-31-2110	72	1
6745-31-2140	72	2
6745-41-1110	57	1
6745-41-1130	57	2
6745-41-2151	67	8
6745-41-3100	52	11
6745-41-4150	35	15
6745-41-4160	35	13
6745-41-4220	126	22
6745-41-5100	52	
6745-41-5110	52	10
6745-41-5200	52	
6745-41-5201	52	7
6745-41-5400	52	
6745-41-5401	52	4
6745-41-5430	52	6
	52	9
6745-51-1110	76	1
6745-51-5220	78	7
6745-51-8110	47	7
6745-51-8120	47	9
6745-51-8130	47	1
6745-61-3210	66	1
6745-61-4120	111	14
6745-61-4130	111	11
6745-61-4230	111	12
6745-61-6120	75	1
6745-61-6130	103	1

PartNumber	Page	Index
6745-61-8110	108	1
6745-61-8120	108	6
6745-61-8130	108	7
6745-61-8140	108	8
6745-61-8151	108	9
6745-71-1130	82	18
	85	12
	85	17
	85	22
	85	35
	88	6
	89	5
	93	4
	93	8
	108	4
	120	1
6745-71-1170	82	
6745-71-1180	82	12
6745-71-1210	81	6
6745-71-1220	82	7
6745-71-1230	82	8
6745-71-1240	82	13
6745-71-1250	82	14
6745-71-1260	82	17
6745-71-1820	93	
6745-71-1830	93	10
6745-71-1840	93	11
6745-71-1860	93	13
6745-71-3210	81	2
6745-71-4110	84	1
6745-71-4120	84	2
6745-71-4140	84	3
6745-71-4150	84	4
6745-71-4310	84	5
6745-71-4320	84	6

PartNumber	Page	Index
6745-71-4330	84	7
6745-71-5110	86	1
6745-71-5120	86	2
6745-71-5160	86	6
	120	5
6745-71-5170	94	1
6745-71-5180	85	5
6745-71-5190	85	23
6745-71-5210	86	3
6745-71-5220	86	5
6745-71-5230	120	3
6745-71-5240	120	4
6745-71-5311	93	1
6745-71-5391	93	5
6745-71-5410	93	6
6745-71-5430	93	9
6745-71-5440	85	8
6745-71-5450	85	9
6745-71-5460	85	13
6745-71-5470	85	18
6745-71-5480	85	31
6745-71-5490	85	
6745-71-5540	84	
6745-71-5550	84	11
6745-71-5580	85	27
6745-71-5610	85	1
6745-71-5620	85	32
6745-71-5860	93	3
6745-71-6110	88	
6745-71-6130	82	19
	85	30
	88	7
	89	6
	108	5
	120	2

PartNumber	Page	Index
6745-71-6150	88	10
6745-71-6170	88	8
6745-71-6180	89	7
6745-71-6230	88	14
	89	11
6745-71-6240	88	1
	89	1
6745-71-7203	90	
6745-71-7211	90	1
6745-71-9710	92	1
6745-81-4111	41	1
6745-81-4120	40	3
	41	2
6745-81-8040	45	
6745-81-8410	51	1
6745-81-8420	51	2
6745-81-8430	51	3
6745-81-8440	51	5
6745-81-8451	51	9
6745-81-8464	48	19
6745-81-9230	119	4
6745-81-9240	119	1
6745-81-9380	84	13
6745-81-9390	119	3
6745-81-9430	119	14
6745-81-9440	122	5
6745-81-9510	122	17
6745-81-9560	122	12
6745-81-9570	122	13
6745-81-9580	119	28
6745-81-9710	119	6
6745-81-9720	119	20
6745-81-9730	119	21
6745-81-9740	119	22
6745-81-9750	119	23

PartNumber	Page	Index
6745-81-9770	119	25
6745-81-9780	119	26
6745-81-9790	119	27
6745-81-9810	119	24
6754-11-1160	35	8
6754-11-3120	83	4
6754-11-5150	44	5
6754-11-8140	36	7
6754-61-4111	100	1
6754-71-1991	84	9
6754-71-5430	85	20
6754-71-5540	84	12
6754-71-6330	88	9
6754-71-9710	92	3
6754-79-6140	87	1
	89	8
6754-81-2701	122	21
6754-81-9110	122	14
6754-81-9130	122	15
6754-81-9180	122	16
6754-81-9390	119	33
6754-81-9410	122	1
700-11-31980	545	28
	547	28
	551	29
	572	24
700-22-11410	175	2
	177	8
	203	2
	205	8
	227	2
	229	8
	243	2
	245	8
	366	18

PartNumber	Page	Index
	370	19
700-80-64220	175	3
	177	7
	203	3
	205	7
	227	3
	229	7
	243	3
	245	7
700-93-11320	171	3
	171	7
	171	11
	171	15
	171	19
	171	23
	171	27
	182	3
	182	7
	188	2
	190	2
	199	3
	199	7
	199	11
	199	15
	199	19
	199	23
	199	27
	210	3
	210	7
	216	2
	224	3
	224	7
	224	11
	224	15
	224	19

PartNumber	Page	Index
	224	23
	224	27
	231	2
	239	3
	239	7
	239	11
	239	15
	239	19
	239	23
	239	27
	250	3
	250	7
700-93-11330	477	11
	483	11
701-20-61230	192	22
	193	13
	218	22
	420	19
	219	13
	233	13
	255	22
	256	10
702-15-71130	479	8
	485	8
702-15-71140	479	9
	485	9
702-15-80000	479	
702-15-83000	485	
702-16-03910	378	
	384	
702-16-04250	364	
	366	
702-16-04290	370	
	420	
702-16-51140	364	3

PartNumber	Page	Index
	378	5
	384	5
	370	3
702-16-51240	378	17
	384	17
702-16-51270	370	8
702-16-53140	364	5
	378	7
	384	7
702-16-53170	364	7
	378	10
	384	10
	370	7
702-16-53420	364	4
	378	6
	384	6
702-16-53470	378	8
	384	8
702-16-53590	378	9
	384	9
702-16-53920	169	17
	170	11
	179	21
	181	30
	197	17
	198	11
	207	21
	209	30
	222	17
	223	11
	237	17
	238	11
	247	21
	249	30
	284	4

PartNumber	Page	Index
702-16-54331	364	17
702-16-54341	364	
702-16-54351	364	
702-16-54420	364	6
702-16-54430	365	19
702-16-54550	370	4
702-16-54560	370	6
702-16-54571	370	5
702-16-54580	370	9
702-16-54590	370	10
702-16-54641	370	14
702-16-54650	370	17
702-16-54660	370	16
702-16-54670	370	
	420	
702-16-55260	270	9
702-16-55940	366	6
702-16-55950	366	7
702-16-56380	365	
702-16-56390	365	
702-16-57440	366	11
702-16-57450	366	12
702-16-71131	378	14
	384	14
702-16-71141	378	15
	384	15
702-16-71150	364	8
702-16-71160	364	9
	378	12
	384	12
	420	3
	420	8
	420	7
	420	4
	420	6

PartNumber	Page	Index
	420	5
	420	9
	420	10
	420	14
	420	17
	420	16
702-16-71280	378	13
	384	13
702-16-71361	378	18
	384	18
702-16-71441	378	19
	384	19
702-16-73610	365	21
702-16-73630	364	10
702-16-73650	365	23
702-21-01920	286	
	290	15
	608	12
	609	22
	610	12
	611	28
	612	12
	613	25
702-21-07610	370	18
702-21-11930	286	3
702-21-11940	286	4
702-21-39450	370	20
702-21-53120	180	6
	208	6
	248	6
702-21-54910	270	3
	270	8
702-21-55420	180	3
	208	3
	248	3

PartNumber	Page	Index
702-21-55440	180	5
	208	5
	248	5
702-21-55460	180	2
	208	2
	248	2
702-21-55520	180	4
	208	4
	248	4
702-21-55620	180	11
	180	24
	208	11
	208	24
	248	11
	248	24
702-21-55710	180	13
	208	13
	248	13
702-21-55720	180	14
	208	14
	248	14
702-21-55760	173	10
	201	10
	225	10
	241	10
702-21-55920	270	11
702-21-55930	270	12
702-21-55951	270	14
702-21-56600	270	
702-21-56610	270	13
702-21-57500	270	6
702-21-57600	270	1
702-75-04600	497	1
	503	1
702-75-11520	497	6

PartNumber	Page	Index
	503	6
702-75-11530	497	7
	503	7
702-77-02170	479	1
702-77-02140	485	1
703-08-33651	489	
703-08-91210	489	1
703-08-92210	489	5
703-08-93170	489	10
703-08-93770	489	4
703-08-94510	489	8
703-08-95620	489	2
703-08-95770	489	7
703-13-98930	489	6
706-73-71450	181	19
	209	19
	249	19
706-73-72420	494	13
	500	13
706-73-72440	494	14
	500	14
706-75-42820	494	9
	500	9
706-75-42830	477	4
	483	4
706-76-71190	275	16
	276	20
706-76-71390	291	8
706-77-05010	478	7
	484	7
706-77-42041	478	5
	484	5
706-77-42051	478	4
706-77-42130	478	16
	484	16

PartNumber	Page	Index
706-77-42150	484	4
706-77-42440	478	
706-77-42450	478	
706-77-42460	478	
706-77-42890	478	6
	484	6
706-77-43890	478	2
	484	2
706-77-72130	477	12
	483	12
706-77-72140	477	13
	483	13
706-77-72150	477	14
	483	14
706-77-72280	477	5
	483	5
706-77-91560	484	25
706-78-71160	494	18
	500	18
706-7K-01170	477	
	478	
	479	
702-16-71210	378	11
	384	11
706-86-90290	478	25
	420	18
	420	20
706-7K-01081	483	
	484	
	485	
706-7K-03140	477	
	478	
706-7K-03061	483	
	484	
706-7K-05010	478	

PartNumber	Page	Index
	484	
706-7K-40010	477	3
	483	3
706-7K-40040	477	16
706-7K-40030	483	16
706-7K-41120	478	15
	484	15
706-7K-41140	478	17
	484	17
706-7K-41150	477	1
	483	1
706-7K-41160	478	20
	484	20
706-7K-41210	478	12
	484	12
706-7K-41610	478	1
	484	1
706-7K-41660	484	9
706-7K-41710	478	13
	484	13
706-7K-41810	478	3
	484	3
706-7K-41920	478	10
	484	10
706-7K-71110	477	2
	483	2
706-7K-91111	478	23
	484	23
706-7K-91340	478	21
	484	21
706-7K-91350	478	22
	484	22
706-7K-91360	478	26
	484	26
706-8E-14110	494	23

PartNumber	Page	Index
	500	23
707-01-XC581	541	
	543	
707-01-XC601	549	
707-01-XC612	557	
	577	13
	578	
707-01-0C622	560	
707-01-XH101	545	
	547	
707-01-XH121	551	
707-01-XH131	572	
707-13-14580	541	1
	543	1
	545	1
	547	1
707-13-14591	557	1
	572	1
	578	1
707-13-15261	560	1
707-13-16710	549	1
	551	1
707-27-14690	557	9
	572	9
	578	9
707-27-14890	541	13
	543	13
	545	13
	547	13
707-27-15650	560	9
707-27-16571	549	15
	551	15
707-35-91420	541	10
	541	19
	543	10
	543	19
	545	11
	545	19
	547	11
	547	19
	557	16
	572	16
	578	16
	644	
	645	
707-35-91640	549	8
	549	21
	551	9
	551	21
	644	
	645	
	646	
707-35-91660	560	16
	645	
	646	
707-36-14650	541	23
	543	23
	545	29
	547	29
	557	20
	572	25
	578	20
707-36-15260	560	20
707-36-16580	549	25
	551	31
707-39-14110	541	26
	543	26
	545	31
	547	31
	557	23
706-8J-41420	478	9
706-7K-40050	479	7
707-01-XC591		
707-01-XH111	572	27
	578	23
	644	
	645	
707-39-15110	560	23
	645	
	646	
707-39-16120	549	28
	551	33
	644	
	645	
	646	
707-39-18820	645	
707-41-11840	541	22
	543	22
	545	22
	547	22
	557	19
	572	18
	578	19
707-44-14150	645	
707-44-14180	541	25
	543	25
	545	30
	547	30
	557	22
	572	26
	578	22
	644	
	645	
707-44-14910	541	27
	543	27
	545	32
	547	32
	557	24
	572	28
	578	24
707-44-15180	560	22
	645	
707-44-15190	646	
707-44-15911	560	24
707-44-16180	549	27
	551	32
	644	
	645	
707-44-16190	646	
707-44-16910	549	29
	551	34
707-44-18190	645	
707-51-10030	541	17
	543	17
	557	14
	578	14
	644	
	645	
707-51-10640	541	18
	543	18
	545	18
	547	18
	557	15
	572	13
	578	15
	644	
	645	
707-51-10730	545	17
	547	17
	572	12
	644	
	645	
707-51-11030	549	19
	560	14
	644	
	645	
	646	
707-51-11640	549	20
	551	18
	560	15
	644	
	645	
	646	
707-51-11730	551	17
	645	
707-52-90780	557	12
	572	14
	578	12
707-52-90781	541	16
	543	16
	545	16
	547	16
707-52-90850	549	18
	560	12
707-56-10651	545	24
	547	24
	572	23
	644	
	645	
707-56-11651	551	26
	645	
707-58-10720	541	6
	543	6
707-58-10730	557	5
	578	5
707-58-11360	549	4
707-58-11370	560	5
707-58-11680	551	2
707-71-32800	549	7
	551	8
707-71-34800	541	9
	543	9
	545	9
	547	9
707-71-61090	541	12
	543	12
	545	12
	547	12
707-71-61130	549	10
		10
	551	11
707-71-70290	549	11
	551	12
707-71-91270	549	13
	551	14
707-75-10160	541	30
	543	30
	545	15
	547	15
	557	13
	572	11
	578	13
707-75-11040	549	36
	551	30
	560	13
707-76-10130	541	7
	543	7
	545	7
	547	7
	549	2

PartNumber	Page	Index
	549	5
	551	3
	551	5
707-76-90130	557	2
	560	2
	572	3
	578	2
707-76-90390	541	2
	543	2
	545	3
	547	3
707-83-13010	549	32
	551	38
707-86-11580	545	36
707-86-11600	549	37
	552	42
707-86-11610	549	38
	8	
	552	43
707-86-11621	557	27
	572	32
	578	27
707-86-11631	560	27
707-87-14070	549	34
	552	40
707-88-05210	551	25
707-88-05220	551	28
707-88-05430	545	25
	547	25
707-88-05440	545	23
	547	23
707-88-05530	572	21
707-88-05540	572	20
707-88-10150	558	36
	561	36
	573	41
	578	36
707-88-21370	541	37
	543	37
	546	42
	548	42
707-88-21380	550	45
	552	50
	552	57
707-88-21390	550	47
707-88-21410	558	33
	572	38
	578	33
707-88-21420	561	33
707-88-22690	561	32
707-88-22740	550	44
	552	56
707-88-33040	544	45
	546	51
	548	51
	550	53
	552	59
	558	39
	561	39
	573	45
	579	39
707-88-36541	551	27
707-88-36550	645	
707-88-36921	545	26
	547	26
	572	22
707-88-75310	549	24
	551	24
	560	19
707-99-58030	644	K05
707-99-58080	644	K04
707-99-58090	645	K11
707-99-59270	645	K14
707-99-59360	644	K06
707-99-59370	645	K13
707-99-59610	645	K12
707-99-59630	646	K16
707-99-67090	644	K08
707-99-67670	644	K09
707-99-72280	645	K10
707-99-72300	644	K07
707-99-72350	645	K15
708-18-13230	262	10
	266	7
	478	14
	484	14
	495	10
	501	10
708-1F-12270	262	4
	266	4
708-1F-12281	495	5
	501	5
708-1L-29340	260	5
	265	6
708-1S-15390	608	5
	610	5
	612	5
708-1S-19810	185	23
	213	23
	230	23
	253	23
708-21-12541	186	15
	214	15
	254	15
708-2F-12420	268	10
708-2G-00700	258	10
	260	
	261	
	262	
	263	
	264	
	265	
	266	
	267	
	268	
	269	
	270	
708-2G-01070	260	
	261	
	262	
	263	
	264	
	265	
	266	
	267	
	268	
708-2G-03480	264	
	268	
708-2G-03580	263	
	267	
708-2G-03590	263	
	267	
708-2G-03710	269	
708-2G-03910	269	
708-2G-04240	260	
708-2G-04250	265	
708-2G-04260	262	
708-2G-04270	266	
708-2G-04290	262	
	266	
708-2G-04430	261	
708-2G-05010	262	3
	266	3
708-2G-12151	261	3
708-2G-12180	262	1
708-2G-12190	266	1
708-2G-12220	262	5
708-2G-12251	262	2
	266	2
708-2G-12340	268	9
708-2G-13131	262	12
	266	9
708-2G-13141	262	14
	266	11
708-2G-13152	262	13
	266	10
708-2G-13341	262	17
	266	14
708-2G-13370	262	18
	266	15
708-2G-13510	262	15
	266	12
708-2G-14120	263	1
	267	1
708-2G-14170	264	5
	268	5
708-2G-14190	263	25
	267	25
708-2G-14310	264	1
	268	1
708-2G-14340	263	17
	267	17
708-2G-15140	263	12
	267	12
708-2G-15151	263	15
	267	15
708-2G-15211	263	10
	267	10
708-2G-15221	263	5
	267	5
708-2G-15230	263	19
	264	3
	267	19
	268	3
708-2G-15240	263	21
	267	21
708-2G-15250	263	16
	267	16
708-2G-15260	263	20
	267	20
708-2G-15270	263	13
	267	13
708-2G-15280	263	14
	267	14
708-2G-15290	263	11
	267	11
708-2G-15310	263	24
	264	7
	267	24
	268	7
708-2G-15320	263	4
	267	4
708-2G-15330	263	28
	267	28
708-2G-15412	269	3
	269	16
708-2G-15420	269	19
708-2G-15680	270	19
708-2H-23360	262	16
	266	13

PartNumber	Page	Index
708-2L-24680	269	2
	269	15
708-2L-25480	261	10
708-2L-28540	269	4
	269	17
708-2L-35170	263	9
	267	9
708-2L-35290	263	27
	264	4
	267	27
	268	4
708-2L-35311	269	1
	269	14
708-2L-35331	269	6
708-2L-35341	269	8
	269	21
708-2L-35351	269	9
	269	22
708-2L-35360	269	5
	269	18
708-2L-35410	269	7
	269	20
708-2L-35690	263	8
	267	8
708-2L-35760	263	6
	267	6
708-2L-35770	263	7
	267	7
708-7T-16460	167	10
	187	5
	189	5
	195	10
	215	5
	235	10
708-8E-16150	260	3
	261	11
	265	8
708-8E-16160	173	14
	173	20
708-2L-23960	477	10
	180	26
	201	14
	201	20
	208	26
	225	14
	225	20
	241	14
	241	20
	248	26
	494	26
	500	26
708-8E-16180	494	25
	500	25
708-8E-16250	173	6
	201	6
	225	6
	241	6
708-8H-00320	494	
	495	
	497	
	500	
	501	
	503	
708-8H-04711	494	
	500	
708-8H-04721	494	
	500	
708-8H-04810	495	
	501	
708-8H-05050	495	4
	501	4
708-8H-11530	173	24
	176	4
	180	18
	180	22
	201	24
	204	4
	208	18
	208	22
	225	24
	228	4
	241	24
	244	4
	248	18
	248	22
	494	10
	500	10
708-8H-16141	494	20
	500	20
708-8H-31210	494	28
	500	28
708-8H-32120	495	1
	501	1
708-8H-32150	495	2
	501	2
708-8H-32160	262	6
	495	6
	501	6
708-8H-32170	495	3
	501	3
708-8H-33141	495	12
	501	12
708-8H-33340	495	16
	501	16
708-8H-33360	495	11
	501	11
708-8H-33471	495	18
	501	18
708-8H-33512	495	15
	501	15
708-8H-33650	495	17
	501	17
708-8H-33710	495	8
	501	8
708-8H-33750	495	13
	501	13
708-8H-33810	495	9
	501	9
708-8H-34151	495	21
	501	21
708-8H-34190	495	20
	501	20
708-8H-35130	495	24
	501	24
708-8H-35141	495	26
	501	26
708-8H-35150	496	31
	502	31
708-8H-35180	495	25
	501	25
708-8H-36121	494	19
	500	19
708-8H-36150	494	15
	500	15
708-8K-14210	501	22
709-10-91240	286	5
709-25-11390	176	19
	177	9
	178	2
	178	8
	204	19
	205	9
	206	2
	206	8
	228	19
	229	9
	244	19
	245	9
	246	2
	246	8
	254	24
709-70-71720	485	7
709-74-91510	183	1
	211	1
	251	1
709-74-91860	173	22
	179	14
	201	22
	207	14
	225	22
	241	22
	247	14
709-74-92810	477	7
	483	7
709-74-92821	477	9
	483	9
709-75-92220	477	8
	483	8
721-58-10010	545	2
	547	2
721-58-10020	572	2
722-12-18240	270	17
722-12-19070	170	13
	198	13
	223	13
	238	13
723-11-15110	366	13
723-11-18150	170	10
	198	10
	223	10
	238	10
723-11-18190	185	19
	213	19
	230	19
	253	19
	283	19
723-11-19130	170	2
	181	25
	187	13
	189	13
	198	2
	209	25
	215	13
	223	2
	238	2
	249	25
723-11-19960	181	18
	209	18
	249	18
	270	2
	270	7
723-26-14240	608	7
	610	7
	612	7
723-40-56350	174	3
	202	3
	226	3
	242	3
723-40-56800	174	1
	202	1

PartNumber	Page	Index
	226	1
	242	1
723-40-60101	176	16
	177	
	204	
	177	
	205	
	228	16
	229	
	244	16
	245	
723-40-61150	179	18
	207	18
	247	18
723-40-66300	191	
	217	
	232	
723-40-66601	176	
	204	
	228	
	244	
723-40-66701	176	
	204	
	228	
	244	
723-40-71201	179	
	180	
	207	
	208	
	247	
	248	
723-40-71330	179	4
	207	4
	247	4
723-40-71340	179	5

PartNumber	Page	Index
	207	5
	247	5
723-40-71350	179	8
	207	8
	247	8
723-40-71390	179	17
	207	17
	247	17
723-40-71430	180	1
	208	1
	248	1
723-40-71440	179	12
	207	12
	247	12
723-40-71800	179	
	180	
	207	
	208	
	247	
	248	
723-40-82120	185	2
	213	2
	230	2
	253	2
723-40-82130	185	3
	213	3
	230	3
	253	3
723-40-82140	185	6
	186	3
	186	9
	213	6
	214	3
	214	9
	230	6

PartNumber	Page	Index
	253	6
	254	3
	254	9
723-40-82150	185	7
	213	7
	230	7
	253	7
723-40-82210	185	4
	213	4
	230	4
	253	4
723-40-82220	173	16
	185	5
	186	11
	201	16
	213	5
	214	11
	225	16
	230	5
	241	16
	253	5
	254	11
723-40-82280	185	21
	213	21
	230	21
	253	21
723-40-82290	185	22
	213	22
	230	22
	253	22
723-40-82310	185	13
	213	13
	230	13
	253	13
723-40-82401	185	

PartNumber	Page	Index
	213	
	230	
	253	
723-40-82410	185	1
	213	1
	230	1
	253	1
723-40-82701	283	
723-40-84100	186	
	214	
	254	
723-40-84130	186	4
	186	13
	214	4
	214	13
	254	4
	254	13
723-40-84200	186	
	214	
	254	
723-40-84230	186	10
	214	10
	254	10
723-40-84420	185	9
	213	9
	230	9
	253	9
	283	9
723-40-84430	185	10
	213	10
	230	10
	253	10
	283	10
723-40-84440	185	11
	213	11

PartNumber	Page	Index
	230	11
	253	11
723-40-85100	178	7
	206	7
	246	7
723-40-87100	184	
	212	
	252	
723-40-87110	184	1
	212	1
	252	1
723-40-87140	184	2
	212	2
	252	2
723-40-87150	184	7
	212	7
	252	7
723-40-87160	184	3
	212	3
	252	3
723-40-87170	184	8
	212	8
	252	8
723-40-91200	178	1
	206	1
	246	1
	254	23
723-40-91500	177	6
	178	
	205	6
	206	
	229	6
	245	6
	246	
723-40-91600	179	20

PartNumber	Page	Index
	207	20
	247	20
723-40-92900	186	16
	214	16
	254	16
723-40-93800	175	1
	176	
	203	1
	204	
	227	1
	228	
	243	1
	244	
723-46-00742	173	
	201	
	225	
	241	
723-46-00760	173	
	201	
	225	
	241	
723-46-11910	172	1
	200	1
	240	1
723-46-14110	167	13
	181	6
	187	7
	189	7
	195	13
	209	6
	215	7
	235	13
	249	6
723-46-14131	167	15
	195	15

PartNumber	Page	Index
	235	15
723-46-14140	173	19
	201	19
	225	19
	241	19
723-46-14150	170	17
	198	17
	223	17
	238	17
723-46-14170	167	14
	195	14
	235	14
723-46-14180	181	15
	209	15
	249	15
723-46-15111	168	1
	179	7
	187	8
	189	8
	196	1
	207	7
	215	8
	221	1
	236	1
	247	7
723-46-15120	167	11
	187	6
	189	6
	195	11
	215	6
	235	11
723-46-15130	167	7
	187	3
	189	3
	195	7

PartNumber	Page	Index
	215	3
	235	7
723-46-15140	167	8
	195	8
	235	8
723-46-15190	173	18
	201	18
	225	18
	241	18
723-46-15220	201	28
	225	28
723-46-15330	181	11
	209	11
	249	11
723-46-15350	186	12
	214	12
	254	12
723-46-15370	181	4
	209	4
	249	4
723-46-15380	181	5
	209	5
	249	5
723-46-15390	181	3
	209	3
	249	3
723-46-15480	173	28
723-46-15510	172	2
	200	2
	240	2
723-46-15630	168	5
	168	11
	169	12
	196	5
	196	11

PartNumber	Page	Index
	197	12
	221	5
	221	11
	222	12
	236	5
	236	11
	237	12
723-46-15690	167	12
	195	12
	235	12
723-46-17320	169	5
	169	10
	197	5
	197	10
	222	5
	222	10
	237	5
	237	10
723-46-17330	169	6
	169	11
	197	6
	197	11
	222	6
	222	11
	237	6
	237	11
723-46-17340	169	2
	169	13
	197	2
	197	13
	222	2
	222	13
	237	2
	237	13
723-46-17350	169	19

PartNumber	Page	Index
	197	19
	222	19
	237	19
723-46-17510	170	7
	181	28
	187	15
	189	15
	198	7
	209	28
	215	15
	223	7
	238	7
	249	28
723-46-17520	170	3
	181	26
	187	16
	189	16
	198	3
	209	26
	215	16
	223	3
	238	3
	249	26
723-46-17530	170	9
	181	24
	187	17
	189	17
	198	9
	209	24
	215	17
	223	9
	238	9
	249	24
723-46-17550	173	17
	201	17

PartNumber	Page	Index
	225	17
	241	17
723-46-17570	185	25
	213	25
	230	25
	253	25
723-46-17600	173	
	201	
	225	
	241	
723-46-17610	173	8
	201	8
	225	8
	241	8
723-46-17640	173	9
	201	9
	225	9
	241	9
723-46-17650	170	16
	198	16
	223	16
	238	16
723-46-17701	177	
	205	
	229	
	245	
723-46-17711	177	1
	205	1
	229	1
	245	1
723-46-17840	181	7
	209	7
	249	7
723-46-17850	181	16
	209	16

PartNumber	Page	Index
	249	16
723-46-17860	181	17
	209	17
	249	17
723-46-18131	168	
	196	
	221	
	236	
723-46-18231	168	
	196	
	221	
	236	
723-46-18330	169	
	197	
	222	
	237	
723-46-18431	169	
	197	
	222	
	237	
723-46-18710	170	12
	198	12
	223	12
	238	12
723-46-18720	170	14
	198	14
	223	14
	238	14
723-46-18730	172	4
	200	4
	240	4
723-46-18770	186	22
	214	22
	254	22
723-46-40100	171	2

PartNumber	Page	Index
	199	2
	224	2
	239	2
723-46-40601	171	10
	182	2
	199	10
	210	2
	224	10
	239	10
	250	2
723-46-41210	171	1
	182	1
	199	1
	210	1
	224	1
	239	1
	250	1
723-46-41820	483	10
723-46-41950	171	4
	171	8
	171	12
	171	16
	171	20
	171	24
	171	28
	182	4
	182	8
	188	3
	190	3
	199	4
	199	8
	199	12
	199	16
	199	20
	199	24

PartNumber	Page	Index
	199	28
	210	4
	210	8
	216	3
	224	4
	224	8
	224	12
	224	16
	224	20
	224	24
	224	28
	231	3
	239	4
	239	8
	239	12
	239	16
	239	20
	239	24
	239	28
	250	4
	250	8
723-46-42800	171	6
	199	6
	224	6
	239	6
723-46-43100	171	14
	182	6
	199	14
	210	6
	224	14
	239	14
	250	6
723-46-43400	171	18
	199	18
	224	18

PartNumber	Page	Index
	239	18
723-46-44100	171	22
	199	22
	224	22
	239	22
723-46-45100	171	26
	199	26
	224	26
	239	26
723-46-48100	188	1
	190	1
	216	1
	231	1
723-47-26500	235	
	236	
	237	
	238	
	239	
	240	
	241	
	242	
	243	
	244	
	245	
	246	
	247	
	248	
	249	
	250	
	251	
	252	
	253	
	254	
723-48-26500	195	
	196	

PartNumber	Page	Index
	197	
	198	
	199	
	200	
	201	
	202	
	203	
	204	
	205	
	206	
	207	
	208	
	209	
	210	
	211	
	212	
	213	
	214	
	215	
	216	
	217	
	221	
	222	
	223	
	224	
	225	
	226	
	227	
	228	
	229	
	230	
	231	
	232	
723-49-26500	167	
	168	

PartNumber	Page	Index
	169	
	170	
	171	
	172	
	173	
	174	
	175	
	176	
	177	
	178	
	179	
	180	
	181	
	182	
	183	
	184	
	185	
	186	
	187	
	188	
	189	
	190	
	191	
723-60-22230	174	5
	202	5
	226	5
	242	5
723-90-61700	191	8
	217	8
	232	8
723-90-69100	178	3
	206	3
	246	3
723-90-76201	178	5
	206	5

PartNumber	Page	Index
	246	5
723-90-76501	191	6
	217	6
	232	6
7831-91-4220	65	3
7835-31-5007	353	1
7835-46-3003	359	3
7861-74-5100	359	11
	359	13
	359	15
7861-92-5810	144	10
	145	10
7861-93-1421	130	2
	132	1
7861-93-1811	194	6
	220	6
	257	6
7861-93-1840	305	13
7861-93-3320	271	3
7861-94-2000	359	5
8233-06-3350	359	20
8255-62-4591	144	3
	145	3
8A13-10-2100	405	23
8A13-10-2200	405	24
8A13-10-4300	405	21
977-2460	374	1
AS156790	315	7
AS157335	315	6
AS160122	313	9
	315	11
AS164899	313	13
	315	15
AS165989	313	19
AS166007	315	24

PartNumber	Page	Index
AS166011	313	14
	315	16
AS182831	315	21
AS186833	313	8
	315	10
AS187498	315	20
AS189761	315	23
AS192161	313	7
	315	9
AS195367	313	1
	315	1
AS195369	313	2
	315	2
AS195370	315	3
AS195372	313	4
	315	4
AS195373	313	5
	315	5
AS195374	313	6
	315	8
AS195376	313	10
	315	12
AS195377	313	11
	315	13
AS195381	313	
AS195382	315	
AS195388	313	12
AS195389	313	15
	315	17
AS195390	313	16
	315	18
AS195391	313	17
AS195392	313	18
AS195393	313	20
	315	25

PartNumber	Page	Index
AS195394	315	19
AS195395	315	14
AS195396	315	22
HM6400-0012	374	10
HM6400-0013	374	11
HM6400-0016	374	13
HM6400-0071	374	
HM6400-0072	374	
HM6400-0075	374	
HM6400-0128	374	
HM6400-0129	374	12
KD0-0020-05062	117	39
KD0-0055-05082	116	48
	117	37
KD0-0270-06402	116	43
KD0-0270-06602	118	43
KD0-0274-06202	115	17
	117	15
KD0-0275-06802	113	12
KD0-0276-08402	117	32
KD0-0280-16022	113	17
KD0-09001-4380	117	30
KD0-09001-4580	115	30
KD0-09006-0660	116	49
	118	47
KD0-09006-0670	116	50
	118	48
KD0-09011-3140	117	27
KD0-09057-0110	117	33
KD0-09057-0190	117	38
KD0-09057-0220	113	29
KD0-09170-2501	113	21
KD0-09201-0850	117	12
KD0-09201-0980	113	4
KD0-09201-1140	113	7

PartNumber	Page	Index
KD0-09271-3620	115	22
	117	21
KD0-09275-1430	116	52
	118	50
KD0-23100-0251	115	20
KD0-23100-0430	117	18
KD0-23120-0180	117	8
KD0-23200-0331	115	23
KD0-23200-0671	117	20
KD0-23303-0020	117	5
KD0-23310-1730	115	6
KD0-23310-1740	117	9
KD0-23320-0220	115	9
KD0-23500-0970	115	7
KD0-23600-0410	117	13
KD0-23600-0460	115	12
KD0-23611-0690	115	13
KD0-23611-1101	117	14
KD0-23700-0130	115	32
KD0-23710-0221	117	29
KD0-23740-0250	115	26
KD0-23740-0351	117	23
KD0-23750-0250	115	27
KD0-23750-0490	117	24
KD0-23901-0170	116	40
KD0-23904-0070	115	1
KD0-23921-0230	115	15
KD0-23927-0071	115	2
KD0-23951-0301	115	8
KD0-23951-0331	115	11
KD0-25000-8332	116	47
KD0-25000-8521	118	42
KD0-35100-0300	113	1
KD0-35120-0290	113	18
KD0-35200-0460	113	5

PartNumber	Page	Index
KD0-35300-0350	113	6
KD0-35411-0640	113	13
KD0-35421-0240	113	14
KD0-35700-0950	113	
KD0-35710-1150	113	19
KD0-35730-0700	113	20
KD0-35761-0250	113	31
KD0-35784-0210	113	27
KD0-35784-0290	113	28
KD0-35923-0130	113	23
KD0-35926-0070	113	8
KD0-35926-0090	113	10
KD0-35943-0140	113	25
KD0-35943-0150	113	22
KD0-35943-0160	113	24
KD0-35943-0170	113	26
KD0-35951-0060	113	9
KD0-47100-4651	117	19
KD0-47100-4800	115	21
KD0-47761-2671	116	45
	118	45
KD0-47761-2681	116	46
	117	25
KD0-47761-2691	115	24
	117	26
KD0-47927-1390	118	44
KD1-0240-06305	115	33
	118	41
KD1-0240-08405	115	37
KD1-0330-06012	116	42
KD1-0330-08022	115	39
	117	3
KD1-0330-16012	113	15
KD1-0335-06002	116	41
KD1-0335-08002	115	38

PartNumber	Page	Index
	117	2
KD1-0335-16002	113	16
KD1-0345-05001	118	40
KD1-0345-08001	117	4
KD1-0400-20100	115	19
KD1-0400-30100	117	17
KD1-0454-60067	115	10
KD1-0454-62007	115	31
KD1-0454-62047	115	16
KD1-0505-00601	115	28
KD1-09211-0081	117	28
KD1-09211-0980	115	14
KD1-09211-0981	118	46
KD1-09211-1120	117	22
KD1-09257-0050	116	51
	118	49
KD1-09279-0090	117	1
KD1-23111-0160	115	5
KD1-23181-0020	115	4
	117	7
KD1-23320-0290	117	11
KD1-23500-0970	117	10
KD1-23913-0040	115	25
KD1-23914-0020	115	3
	117	6
KD1-23921-0130	115	34
	117	36
KD1-23921-0140	115	35
	117	35
KD1-23941-0040	115	36
	117	34
KD1-23951-0020	115	18
KD1-23951-0051	117	16
KD1-33923-0790	113	2
KD1-33926-0730	113	11

PartNumber	Page	Index
KD1-35923-0160	113	3
KD1-47921-0790	115	29
	117	31
KD1-47927-1250	116	44
KD7-35719-0211	113	30
ND017231-0700	390	28
	418	28
ND063600-4580	390	35
	419	35
ND063800-0300	390	27
	418	27
ND077500-5650	390	36
	419	36
ND077500-5890	390	29
	418	29
ND077800-0750	390	33
	419	33
ND116140-0050	389	14
	418	14
ND116340-7350	390	38
	419	38
ND116576-3810	389	3
	418	3
ND116576-3820	389	4
	418	4
ND116576-3852	390	25
	418	25
ND116576-3862	390	26
	418	26
ND116650-6850	389	16
	418	16
ND116660-7570	389	15
	418	15
ND116662-7670	389	23
	418	23

PartNumber	Page	Index
ND116662-7681	389	24
	418	24
ND116662-8320	390	44
	419	44
ND116780-2481	389	17
	418	17
		17
ND116780-2491	389	18
	418	18
ND116780-2501	389	19
	418	19
ND116780-2510	389	20
	418	20
ND116780-3130	389	22
	418	22
ND116780-3920	390	31
	418	31
ND116781-3000	389	21
	418	21
ND146340-0560	390	34
	419	34
ND146657-8841	389	10
	418	10
ND146657-8850	389	12
	418	12
ND146657-8860	390	37
	419	37
ND146657-9811	389	11
	418	11
ND146667-0440	390	32
	419	32
ND245450-5831	389	1
	418	1
ND245450-5840	389	2
	418	2

PartNumber	Page	Index
ND246470-4311	390	42
	419	42
ND246790-2060	390	30
	418	30
ND445021-3941	389	13
	418	13
ND446010-3132	389	
	418	
ND446600-0991	389	5
	418	5
ND447500-2750	389	8
	418	8
ND93950-05003	390	43
	419	43
ND949001-1730	390	41
	419	41
ND949007-2350	347	8
	413	8
ND949008-0330	390	40
	419	40
ND949008-0460	390	39
	419	39
ND949046-3100	389	9
	418	9
ND949142-0020	389	6
	418	6
ND949142-0030	389	7
	418	7
ND979007-2350	403	8
NFEB0427-Z0	289	6
NFEB1601	644	K01
NFEB3026-A1	289	2
NFEB3401-A1	289	
NFEB4475-Z0	289	3
NFEB4477-Z0	289	7

PartNumber	Page	Index
NY01720-10600	297	28
NY05062-1170A	297	13
	301	14
NY05062-11800	297	14
	301	15
NY06277-1320A	297	16
	301	17
NY06339-10200	297	19
	301	20
NY07207-11700	297	5
	301	5
NY07207-11800	297	11
NY07493-10200	297	20
	301	21
NY07505-10200	301	11
NY07529-10200	297	6
	301	6
NY07529-10300	297	7
	301	7
NY07529-10400	297	8
	301	8
NY07529-10500	297	9
	301	9
NY07529-10600	297	10
	301	10
NY07880-10900	301	12
NY07926-10100	297	27
NY09000-11400	297	23
	301	24
NY16207-10200	297	18
	301	19
NY16207-10300	297	21
	301	22
NY80000-02100	297	24
	301	25

PartNumber	Page	Index
NY80000-02200	297	17
	301	18
NY81446-05012	297	22
	301	23
NY84110-00248	297	26
	301	27
NY86711-01010	297	15
NY89103-00090	297	12
	301	13
REU419B-418-C	348	15
RFU419B-418-A	348	1
RFU419B-418-B	348	6
RFU419B-418-C	348	7
RFU419B-418-D	348	3
RFU419B-418-E	348	4
RFU419B-418-F	348	16
X17-8320160	495	22