RUTHZIL TRATOR COMERCIAL DE PEÇAS LTDA 11 97083-6812 ROLANDO CITRANGULO

FENC0029-00

Parts Book

KOMATSU

HYDRAULIC
EXCAVATOR

PC300-8M0
PC300LC-8M0
PC350-8M0
PC350LC-8M0

SERIAL NUMBERS PC300- C90001 and up
PC350- C90415

ecot3

KOMATSU

FENC0029-00

PARTS BOOK

PC300-8M0, PC300LC-8M0

PC350-8M0, PC350LC-8M0

Serial No. PC300- C90001 and up
PC350- C90415

SAA6D114E-3F

Serial No. 26866736 and up

FOREWORD

When ordering replacement parts, specify the part number, part name, and quantity required, and also specify your machine model code, machine serial number, engine serial number and the service meter reading of which the parts are needed. This Parts Book contains not only standard replacement parts but also optional equipment, tools and field repair service parts.

To order these items, please contact your nearest Komatsu distributor.

NOTE
The illustrations, parts configuration, parts number or parts name in this publication may differ from your machine unit, and these are subject to change without notice for continuous product improvement.
Whenever concerns and questions arise regarding items in this publication and your machine unit or when you order there replacement parts, please consult your nearest Komatsu distributor for the latest information.

This Parts Book contains the information and special codes as follows:

ILLUSTRATION AND PARTS LIST

When you open this Parts Book, you will find an illustration following its figure number (FIG.) Each individual
part in the illustration is given an index number. Following the illustration, the component parts of the unit are listed in the order of the index numbers shown in the illustration. The part number, part name, quantity and applicable serial number are given for each part as a parts list.

FIGURE NUMBER (FIG.)

The figure number (FIG.) is the number which shows the figure of the page. It is not the spare part number.
The numbers are not always continuous.

PARTS LIST

Spare parts information are listed in the parts list page as follows:

Index:

This is the same as the index number in the illustration. The parts are listed in index number order.

Code:

Codes are used in this column and represent as follows:

A1 This part and the part specified in the line immediately above are interchangeable.
A2 The part specified in the line above can be used instead of this part.
A3 This part can be used instead of the part specified in the line immediately above.
A4 The part specified in the description column can be used instead of this part if it is used as a set.
B1 This shows discontinued part. The part specified in the above line is supplied instead.
B2 This shows a discontinued part. The part specified in the description column is supplied instead as a set.

C1 This part cannot be supplied as an individual part. It is supplied as an assembly.
C2 This part is supplied for authorized Komatsu distributors only. It cannot be supplied as an individual part. It is supplied as an assembly.
C3 This indicates a part supplied as semi-finished. It requires additional work before installation.

Part Number:

The number given in the part number column is the part number for the part shown. It is the identification
code used when ordering that part. It is important that there be no mistake in this code number when ordering.

Description:

This gives the name of part that has the part number listed. The mark "•" is put in front of the component part name of an assembly part and the item is entered following the assembly. If a part marked with "•" is a sub assembly, its components are marked with "••".

Example: Tank Assembly
- •Tank
- •Cap
- ••Packing

Furthermore, the following marks and abbreviations are used in this column.

Kit This indicates kit parts. For kit parts, refer to the section FIELD REPAIR SERVICE PARTS in this Parts Book.
D Diameter
L Length
L.H. Left-hand side
R.H. Right-hand side
T Thickness
W Width

Quantity (Qty):

This specifies the number of pieces used for one machine. However, if a part is included in the assembly and/or component, the quantity per such assembly and/or component is specified.
Code AR (as required) shall be used in the Quantity column if the part cannot be specified numbers requires per machine and/or component. In such case, any number of quantities may be ordered depend on the field service requirement.

Serial Numbers:

Applicable engine serial number is indicated for the engine volume. In the chassis volume, this indicates the machine serial number in which the part is used.
If the serial number is enclosed in parenthesis, it shows that it is the applicable serial number for exclusive use of the equipment of figure number (FIG.)

AVANT-PROPOS

Lorsque vous passez une commande d'une pièce de rechange, vous êtes prié de spécifier le numéro de la pièce, la désignation de la pièce et la quantité requise et d'indiquer également le code du modèle de la machine, le numéro de série de la machine, le numéro de série du moteur et la lecture du compteur de service du véhicule.

Sur le présent catalogue des pièces figurent non seulement les équipements standard, mais également les équipements et accessoires en option. Si vous désirez un équipement ou une pièce quelconque, vous êtes prié de prendre contact avec le concessionnaire Komatsu le plus proche.

Ce catalogue des pièces comprend les informations et codes spéciaux de la manière suivante:

FIGURES ET LISTES DES PIÈCES

Lorsque vous ouvrez le présent catalogue, vous pouvez rechercher les figures en fonction du numéro de figure (FIG.). Chaque pièce individuelle dans la figure est fournie d'un numéro de référence. D'après la figure, les éléments de l'unité sont énumérés dans l'ordre des numéros de référence montrés sur la figure. Le numéro de la pièce, la désignation de la pièce, la quantité et le numéro de série utilisés sont indiqués pour chaque pièce comme liste des pièces.

NUMÉRO DE FIGURE (FIG.)

Le numéro de figure (FIG.) est un numéro qui permet d'identifier une figure sur une page. Il ne représente pas le numéro de la pièce de rechange. Les numéros ne sont pas toujours séquentiels.

LISTE DES PIÈCES DE RECHANGE

Les informations des pièces de rechange sont données dans la page de la liste des pièces comme ci-après:

Numéro de référence (Index):

Les numéros de référence correspondent aux numéros de référence notés sur la figure et sont énumérés dans l'ordre des numéros de référence.

Codification (Code):

Les codes sont utilisés dans cette colonne et représentent comme ci-après:

A1 Cette pièce et la pièce qui figure sur la ligne juste au-dessus sont interchangeables.

A2 La pièce indiquée sur la ligne au-dessus peut être utilisée au lieu de cette pièce.

A3 Cette pièce peut être utilisée au lieu de la pièce indiquée sur la ligne juste au-dessus.

A4 La pièce indiquée dans la colonne de description peut être utilisée au lieu de cette pièce si elle est utilisée comme ensemble.

B1 Ceci montre la pièce dont la production est interrompue. La pièce indiquée dans la ligne au-dessus est fournie à sa place.

B2 Ceci montre la pièce dont la production est interrompue. La pièce indiquée dans la colonne de description est fournie à sa place comme ensemble.

C1 Cette pièce ne peut pas être fournie comme pièce individuelle. Elle est fournie en tant qu'ensemble.

C2 Cette pièce est fournie pour les distributeurs autorisés de Komatsu seulement. Elle ne peut pas être fournie comme pièce individuelle. Elle est fournie en tant qu'ensemble.

C3 Ceci indique une pièce fournie à l'état semi-fini. Ceci exige un travail additionnel avant l'installation.

Numéros de pièce (Part Number):

Les numéros indiqués dans cette colonne correspondent aux numéros des pièces représentées et constituent les codes à spécifier pour toute commande de pièce. Il est important de ne pas faire d'erreur avec ce code au moment de la commande.

Description (Description):

Ceci indique le nom de la pièce qui montre le numéro de la pièce énumérée. La marque "•" est placée devant le nom de la pièce du composant d'une pièce d'ensemble et l'item est introduit suivant l'ensemble. Si une pièce marquée avec "•" est un sous-ensemble, ses composants sont marqués avec "• •".
Exemple: Tank Assembly (Ensemble de réservoir)
• Tank
• Cap
• • Packing

En outre, les marques et abréviations suivantes sont utilisées dans cette colonne.

Kit Ceci indique les pièces de kit. Pour les pièces de kit, se référer à la Section FIELD REPAIR SERVICE PARTS de ce Catalogue des Pièces.
D Diamètre
L Longueur
L.H. Côté gauche
R.H. Côté droit
T Épaisseur
W Largeur

Quantité (Qty):

Ceci spécifie le nombre de pièces nécessaires pour l'équipement en question. S'il s'agit de pièces comprises dans un ensemble et/ou composant, et la quantité indiquée est le nombre de pièces nécessaires pour l'ensemble et/ou le composant en question.
Le code AR (comme requis) sera utilisé dans la colonne de Quantité si la pièce ne peut pas se présenter en nombres indiqués comme requis par machine et/ou composant. Dans ce cas, tout nombre de quantités peut être commandé selon la condition de service de champ.

Numéros de série (Serial Numbers):

Le numéro de série du moteur applicable est indiqué pour le volume du moteur. Dans le volume de la carrosserie, ceci indique le numéro de série de l'équipement sur lequel la pièce est utilisée.

Si le numéro de série est placé entre parenthèses, cela signifie qu'il s'agit d'un numéro de série destiné exclusivement à l'utilisation de l'équipement mentionné dans le numéro de figure (FIG.).

PREFAZIONE

Quando fate un ordinazione di una parte di ricambio, siete pregati di precisare il numero della parte, la designazione della parte e la quantità necessaria ed indicare anche il codice del modello della macchina, il numero di serie della macchina, il numero di serie del motore e la lettura dell'indicatore di servizio del veicolo.

Sul presente catalogo delle parti appaiono non solo le attrezzature standard, ma anche le attrezzature ed accessori in opzione. Se desiderate un'attrezzatura o una parte qualunque, siete pregati di prendere contatto con il concessionario Komatsu più vicino.

Questo catalogo delle parti comprende le informazioni ed i codici speciali nel modo seguente:

ILLUSTRAZIONI ED ELENCO DELLE PARTI

Quando aprite il presente catalogo, troverete una figura secondo il suo numero di figura (FIG.). Ogni parte individuale nella figura è fornita di un numero di riferimento. Secondo la figura, gli elementi dell'unità sono enumerati nell'ordine dei numeri di riferimento mostrati sulla figura. Il numero della parte, la designazione della parte, la quantità ed il numero di serie utilizzati sono indicati per ogni parte come elenco delle parti.

NUMERO DI FIGURA (FIG.)

Il numero di figura (FIG.) è il numero che indica la figura della pagina. Non rappresenta il numero della parte di ricambio. I numeri non sono sempre continui.

ELENCO DELLE PARTI DI RICAMBIO

Le informazioni dei pezzi di ricambio sono elencate nella pagina dell'elenco dei pezzi come segue:

Numero di riferimento (Index):

I numeri di riferimento corrispondono ai numeri di riferimento notati sulla figura e sono enumerati nell'ordine dei numeri di riferimento.

Codice (Code):

I codici sono usati in questa colonna e rappresentano come segue:

A1 Questa parte ed la parte specificata nella linea immediatamente sopra sono intercambiabili.

A2 La parte specificata nella linea sopra può essere usata anziché questa parte.

A3 Questa parte può essere usata anziché la parte specificata nella linea immediatamente sopra.

A4 La parte specificata nella colonna di descrizione può essere usata anziché questa parte se è usata come insieme.

B1 Ciò mostra la parte non più in produzione. La parte specificata nella suddetta linea è invece fornita.

B2 Ciò mostra una parte non più in produzione. La parte specificata nella colonna di descrizione è fornita invece come insieme.

C1 Questa parte non può essere fornita come pezzo individuale. È fornita come insieme.

C2 Questa parte è destinata solo ai distributori autorizzati Komatsu. Non può essere fornita come parte individuale. È fornita come insieme.

C3 Ciò indica una parte fornita come semifinito. Richiede un lavoro supplementare prima dell'installazione.

Numeri di parte (Part Number):

I numeri indicati in questa colonna corrispondono ai numeri delle parti rappresentate e costituiscono i codici da precisare per qualsiasi ordinazione di parte. È importante non fare un errore con questo codice al momento dell'ordinazione.

Descrizione (Description):

Ciò dà il nome della parte che presenta il numero di parte elencato. Il contrassegno "•" è messo davanti al nome della parte componente di una parte di gruppo e l'articolo è inserito dopo il gruppo. Se un pezzo segnato con "•" è un sotto-gruppo, i suoi componenti sono segnati con "• •".

Esempio: Tank Assembly
- • Tank
- • Cap
- • • Packing

Inoltre, i seguenti contrassegni ed abbreviazioni sono usati in questa colonna.

Kit Ciò indica le parti di kit. Per le parti di kit, riferirsi alla sezione PARTI DI RICAMBIO PER SERVIZIO DI RIPARAZIONE IN SEDE in questo Catalogo delle Parti.
D Diametro
L Lunghezza
L.H. Lato a sinistra
R.H. Lato a destra
T Spessore
W Larghezza

Quantità (Qty):

Questo precisa il numero di parti necessarie per l'attrezzatura in questione. Se si tratta di parti comprese in un insieme e/o componente, e la quantità indicata è il numero di parti necessarie per l'insieme e/o il componente in questione.
Il codice AR (come richiesto) sarà utilizzato nella colonna di Quantità se la parte non può presentarsi in numeri indicati come richiesto per macchina e/o componente. In questo caso, qualsiasi numero di quantità può essere ordinato secondo la condizione di servizio di campo.

Numeri di serie (Serial Numbers):

Il numero di serie del motore applicabile è indicato per il volume del motore. Nel volume della carrozzeria, questo indica il numero di serie dell'attrezzatura sulla quale la parte è utilizzata.

Se il numero seriale è racchiuso tra parentesi, indica che è il numero di serie applicabile per uso esclusivo dell'attrezzatura del numero di figura (FIG.)

Bei der Bestellung von Teilen bitte die Teilenummer, die Teilebezeichnung und die Menge des jeweiligen Teils sowie die Modellnummer, die Seriennummer der Maschine, die Seriennummer des Motors und den Stand des Betriebsstundenzählers angeben.

In dieser Ersatzteilliste ist nicht nur das Standardzubehör aufgeführt, sondern auch als Sonderausstattung erhältliche Teile und Einrichtungen. Bestellungen nimmt Ihr zuständiger Komatsu-Händler entgegen.

Die folgenden Informationen und Kodes sind in der Ersatzteilliste enthalten:

Bilder und Ersatzteilliste

Beim Aufschlagen des Ersatzteilkatalogs finden Sie nach der Bildnummer (BILD) geordnete Bilder. Jedes Einzelteil einer Baugruppe ist mit einer Kennzahl versehen. Ausgehend von den Bildern sind die Bauteile der Baugruppe aufgeführt, und zwar geordnet nach den in den Bildern angegebenen Kennzahlen. Jedes Einzelteil wird mit Teilenummer, Teilebezeichnung und entsprechender Seriennummer angegeben.

Bildnummer (BILD)

Mit der Bildnummer (BILD) können Bilder auf einer Seite identifiziert werden. Es handelt sich dabei nicht um die Nummer des Lieferteils. Auch sind die Bilder nicht fortlaufend nummeriert.

Ersatzteilliste

Angaben zu den Ersatzteilen sind auf der Auflistungsseite wie folgt dargestellt::

Kennzahl (Index):

Hierbei handelt es sich um die Kennzahlen aus den Bildern. Die Bauteile sind nach diesen Kennzahlen geordnet aufgeführt.

Kode (Code):

In dieser Spalte werden Kodes mit den folgenden Bedeutungen benutzt:

A1 Dieses Teil ist mit dem in der vorangegangenen Zeile aufgeführten Teil austauschbar.

A2 Das in der vorangegangen Zeile aufgeführte Teil kann anstelle dieses Teils verwendet werden.

A3 Dieses Teil kann anstelle des in der vorangegangenen Zeile aufgeführten Teils verwendet werden.

A4 Anstelle dieses Teils kann das in der Spalte „Beschreibung“ aufgeführte Teil verwendet werden, wenn das Teil zusammen mit anderen Teilen als ein Bauteilsatz verwendet wird.

B1 Dieses Teil kann nicht mehr geliefert werden. Stattdessen wird das in der vorangegangenen Zeile aufgeführte Teil geliefert.

B2 Dieses Teil kann nicht mehr geliefert werden. Stattdessen wird das in der Spalte „Beschreibung“ aufgeführte Teil als ein Bauteilsatz geliefert.

C1 Dieses Teil kann nicht als Einzelteil, sondern nur als Baugruppe geliefert werden.

C2 Dieses Teil wird nur an autorisierte Komatsu-Händler geliefert. Es kann nicht als Einzelteil, sondern nur als Baugruppe geliefert werden.

C3 Hiermit werden Teile gekennzeichnet, die in vorbearbeitetem Zustand geliefert werden und für den Einbau nachbearbeitet werden müssen.

Teilenummer (Part Number):

Die in der Spalte „Teilenummer“ aufgeführte Nummer entspricht der Teilenummer für das betreffende Teil. Diese Nummer dient zur Identifizierung des Teils bei einer Bestellung. Deshalb sollte bei der Bestellung stets auf die genaue Angabe der Teilenummer geachtet werden.

Beschreibung (Description):

Hierunter wird die Bezeichnung des Teils mit der aufgeführten Teilenummer angegeben. Jedes Baugruppen-Bauteil ist mit dem vorangestellten Symbol „·“ gekennzeichnet und wird hinter der entsprechenden Baugruppe aufgeführt. Handelt es sich bei dem mit „·“ gekennzeichneten Bauteil um eine Baugruppe, sind die Bauteile dieser Baugruppe mit „· ·“ gekennzeichnet.

Beispiel: Tank Assembly
· Tank
· Cap
· · Packing

Zusätzlich werden die folgenden Zeichen und Abkürzungen in dieser Spalte verwendet:

Kit Hiermit werden Teile gekennzeichnet, die nur als Satz erhältlich sind. Siehe dazu den Abschnitt „FIELD REPAIR SERVICE PARTS“ dieses Ersatzteilkatalogs.
D Durchmesser
L Länge
L.H. linke Seite
R.H. Rechte Seite
T Dicke
W Breite

Menge (Qty):

Hierunter wird die Anzahl der Bauteile für eine Maschine angegeben. Im Falle einer Baugruppe oder eines Aggregats wird allerdings die Anzahl der Teile pro Baugruppe angegeben.
Der Kode AR (nach Bedarf) wird in dieser Spalte dann benutzt, wenn keine genaue Angabe darüber möglich ist, wie groß der Mengenbedarf pro Maschine und/oder Baugruppe ist. In diesem Fall kann eine beliebige Menge je nach Bedarf bestellt werden.

Serial Numbers (Seriennummern):

Im Ersatzteilkatalog für den Motor versteht man hierunter die Seriennummer des Motors, in den das betreffende Teil eingebaut ist. Im Ersatzteilkatalog für die Maschine versteht man hierunter die Seriennummer der Maschine, in die das entsprechende Teil eingebaut ist.
Wenn die Seriennummer in Klammern angegeben ist, ist diese Seriennummer ausschließlich für das in der Bildnummer (BILD) angegebene Zubehör bestimmt.

INTRODUÇÃO

Ao solicitar uma peça, informe o número, nome e quantidade da peça necessária, bem como o código de modelo da máquina e seu número de série, o número do motor e a leitura do medidor de serviço.

Este catálogo de peças não somente especifica os acessórios padrões mas também as peças opcionais e aditamentos. Para pedir uma peça, entre em contato com o revendedor Komatsu mais próximo.

Este catálogo de peças contém as seguintes informações e códigos especiais:

LISTA DE PEÇAS E ILUSTRAÇÕES

Ao abrir este catálogo de peças, encontrar-se-á uma ilustração seguida do número da figura (FIG.). A cada peça individual na ilustração corresponde um número de índice. Seguindo a ilustração, as peças componentes da unidade são listadas na ordem dos números de índice nela indicados. O número, nome, quantidade e número de série aplicável da peça são aprsentados como uma lista de peças.

NÚMERO DA FIGURA (FIG.)

O número da figura (FIG.) é o número que mostra a ilustração da página. Não é um número para fornecimento de peças sobressalentes. Os números nem sempre são contínuos.ebene Zubehör bestimmt.

LISTA DE PEÇAS

As informações das peças sobressalentes são relacionadas na página com a lista de peças de acordo com o seguinte:

Índice (Index):

Este é o mesmo que o número de índice na ilustração. As peças são relacionadas na ordem dos números de índice.

Código (Code):

Códigos são utilizados nesta coluna e significam o seguinte:

A1 Esta peça e a peça especificada na linha imediatamente acima são intercambiáveis.

A2 A peça especificada na linha acima pode ser utilizada no lugar desta peça.

A3 Esta peça pode ser utilizada no lugar da peça especificada na linha imediatamente acima.

A4 A peça especificada na coluna “Descrição” pode ser utilizada no lugar desta peça se usada como um conjunto.

B1 Indica peça descontinuada. A peça especificada na linha acima é fornecida em seu lugar.

B2 Indica peça descontinuada. A peça especificada na coluna “Descrição” é fornecida em seu lugar como um conjunto.

C1 Esta peça não pode ser fornecida como peça individual. Ela é fornecida como um conjunto.

C2 Esta peça é fornecida somente para revendedores Komatsu autorizados. Não pode ser fornecida como peça individual. Ela é fornecida como um conjunto.

C3 Indica peça fornecida em condição semiacabada. Requer trabalho adicional antes da instalação.

Número da peça (Part Number):

O número indicado na coluna de números de peça corresponde ao número da peça exibida. É o código de identificação usado para o pedido da peça. É importante não enganar-se de número de código ao pedir a peça.

Descrição (Description):

Indica o nome da peça que tem o seu número de peça relacionado. O símbolo "•" é colocado na frente do nome peça do componente de uma peça de conjunto, e o item é lançado seguindo o conjunto. Se uma peça indicada com "•" é um subconjunto, os seus componentes são indicados por "• •".
Exemplo: Tank Assembly
• Tank
• Cap
• • Packing

Além disso, os seguintes símbolos e abreviações são usados nesta coluna.

Kit Indica peças de um jogo. Para peças de jogo, referir-se à seção "FIELD REPAIR SERVICE PARTS" neste catálogo de peças.

D Diâmetro
L Comprimento
L.H. Lado esquerdo
R.H. Lado direito
T Espessura
W Largura

Quantidade (Qty):

Indica o número de peças utilizadas em uma máquina. Contudo, se uma peça é incluída no conjunto e/ou componente, a quantidade por conjunto e/ou componente é especificada.
O código AR (como requerido) usar-se-á na coluna "Quantitade" caso o número de peças por máquina e/ou componente não possa ser especificado. Em tal caso, qualquer número de peças pode ser pedido dependendo dos requisitos de serviço em campo.

Números de série (Serial Numbers):

O número de série do motor aplicável é indicado para o volume do motor. No volume da carroceria, indica o número de série da máquina na qual a peça é utilizada.

Se o número de série está entre parêntesis, mostra que é o número de série aplicável para uso exclusivo do equipamento do número da figura (FIG.)

订购零件时，请注明需要零件的货号、品名、数量以及使用机器的车辆编号、发动机型号和系列号、工作时数。

此零件明细表上不仅记载了标准装备零件，还记载了选购零件、附件零件。如果您需要订货，请与最近的小松代理店联系。

为了清楚明了，零件手册中有如下规定：

图表

打开此零件清单后，可以看到附带图号（FIG.）的零件明细表图示。在图示上标有各种零件的索引号码。除图之外，还按索引号码的顺序列表表示货号、品名、数量、适用机型。

图号（FIG.）

图号表示该页图的号码。它不是补充零件用的货号。此号码不一定是连续号码。

零件表

从左栏开始按以下顺序显示零件的明细。

索引 (Index):

与图的索引号码一致，按索引号码顺序编制为表格形式。

代号 (Code):

此栏使用的代号如下所示：

A1　此行零件可与紧挨着的上一行零件互换使用。

A2　上一行的零件可取代此行零件来使用。

A3　此行零件可代替紧挨着的上一行零件使用。

A4　品名栏内的零件配套后，可取代此行零件来使用。

B1　该行零件已停止供应，用上一行的零件代替使用。

B2　该行零件已停止供应，品名栏内的零件配套后代替此行零件供应。

C1　此行零件拟成套供应，不以单一零件供应。

C2　此行零件主要面向特定的代理。不以单一零件供应，只拟成套供应。

C3　此行零件以半成品的形式供应，使用前必需再加工。

货号 (Part Number):

此栏所示的编号是图示零件的货号。它是在订货时需要标明的特定代号，是非常重要的。

品名 (Description):

表示相当于货号的零件名称。构成组装品的零件，在品名的前面有 “·” 标记，记载在组装品之后。
另外，如果标记 “·” 的零件是组装品，则该构成零件的品名前标有 “· ·” 标记。
例： TANK ASSEMBLY
· TANK
· CAP
· · PACKING

另外，说明栏可能显示以下代号。

Kit 表示修理包。关于修理包构件详情，请参考此零件清单中 “现场修理服务零件” 部分的内容。
D 直径
L 全长
L.H. 左侧
R.H. 右侧
T 厚度
W 全宽

数量 (Qty):

表示一台机器中需要使用的该零件数量。但是，如果是组装零件的构成零件时，表示其组装件的件数。
如果不能指定每个机器以及（或者）组装零件中必须的零件数量时，可以在零件数量栏中使用代码 AR。
此时，数量由现场的服务要件决定，然后进行定购。

适用机型 (Serial Numbers):

发动机篇中表示该使用零件的发动机型号，在机体篇中表示该使用零件的车辆号码。

如果适用机型位于括号中，表明该适用机型专门用于图号 (FIG.) 中所指的设备。

ПРЕДИСЛОВИЕ

При заказе запчасти укажите номер части, наименование части и нужное количество; кроме того, укажите код модели вашей машины, серийный номер машины, серийный номер двигателя и показания счетчика мото-часов.

В Каталоге приведены не только стандартные изделия, но и дополнительное оборудование и принадлежности. Для заказа запчасти пожалуйста обратитесь к ближайшему дилеру "Комацу".

Содержащаяся в Каталоге информация и специальные коды разъясняются ниже:

РИСУНОК И ПЕРЕЧЕНЬ ЧАСТЕЙ

Раскрыв Каталог, вы увидите рисунок после номера рисунка (ПОЗ). Каждой отдельной части на рисунке присвоен позиционный номер. За рисунком следует перечень составных частей устройства в порядке номеров позиций рисунка. Перечень частей указывает для каждой части ее номер, наименование, количество и применимый серийный номер.

НОМЕР РИСУНКА (ПОЗ)

Номер рисунка (ПОЗ) – это номер, который указывает рисунок на странице. Он не является номером запчасти. Последовательность номеров не обязательно непрерывна.

ПЕРЕЧЕНЬ ЧАСТЕЙ

Данные запасных частей приведены на странице перечня частей следующим образом:

Индекс (Index):

То же, что номер позиции на рисунке. Части перечислены в порядке их позиционных номеров.

Код: (Code):

В этой колонке находятся коды, обозначающие следующее:

A1 Данная часть и часть, указанная в предыдущей строке, взаимозаменяемы.

A2 Вместо данной части можно использовать часть, указанную в предыдущей строке.

A3 Данную часть можно использовать вместо части, указанной в предыдущей строке.

A4 В комплекте, вместо данной части можно использовать указанную в колонке описания.

B1 Поставки этой части прекращены. Взамен поставляется часть, указанная в предыдущей строке.

B2 Поставки этой части прекращены. Взамен комплектом поставляется часть, указанная в колонке описания.

C1 Данная часть отдельно не поставляется. Она поставляется с узлом.

C2 Данная часть поставляется лишь уполномоченным дилерам "Комацу". Отдельно не поставляется. Поставляется с узлом.

C3 Обозначает часть, поставляемую без доводки. Требует предустановочной подготовки.

Номер части (Part Number):

Приведенный в колонке номеров частей номер является номером изображенной части. Это код-идентификатор для заказа данной части. Важно, чтобы при заказе этот кодовый номер был указан без ошибок.

Описание (Description):

Здесь приводится наименование части, обозначенной номером в перечне. Значок "·" ставится перед наименованием детали компонента, причем деталь записана после узла. Если помеченная "·" часть является подсборкой узла, то ее составные части обозначаются значком "··".

Пример: Tank Assembly
·Tank
·Cap
··Packing

Далее, в этой колонке используются следующие обозначения и сокращения.

Kit	Указывает на элементы комплекта. Элементы комплекта смотри в разделе ЗАПАСНЫЕ ЧАСТИ ДЛЯ РЕМОНТА В УСЛОВИЯХ ЭКСПЛУАТАЦИИ данного Каталога.
D	Диаметр
L	Длина
L.H.	Левая сторона
R.H.	Правая сторона
T	Толщина
W	Ширина

Количество (Qty):

Указывает общее число изделий в одной машине. Если же изделие является частью узла и/или устройства, то указывается количество в таком узле и/или устройстве.
При невозможности указать количество частей на машину и/или устройство, в колонке Количество проставляется код AR (по потребности). В таком случае можно заказывать любые количества в зависимости от потребностей обслуживания на месте.

Серийные номера (Serial Numbers):

В книге по двигателю приводится соответствующий серийный номер двигателя. В книге по шасси указывает на серийный номер машины, где используется данная часть.

Серийный номер, заключенный в круглые скобки означает, что он применяется только для оборудования с номером рисунка (ПОЗ.)

. رقم القطعة (Part Number)

الرقم الوارد في عمود رقم القطعة هو رقم القطعة الخاص بالقطعة المبينة. وهو الرمز المستخدم لطلب تلك القطعة. ومن الضروري عدم ارتكاب اي خطأ في تحديد هذا الرقم عند طلب القطع.

. الوصف (Description)

يعطي اسم القطعة المدرج رقمها في القائمة. توضع العلامة "٠" امام اسم المكون لمجموعة ما ويدرج البند بعد المجموعة. اذا كانت القطعة المشار اليها بالعلامة "٠" هي نفسها عبارة عن مجموعة مكونات, فان كلا من مكوناتها يشار اليها بالعلامة "٠٠".
مثال

Tank Assembly
٠Tank
٠Cap
٠٠Packing

بالاضافة الى ذلك, العلامات والمختصرات التالية تستخدم في هذا العمود.

Kit	هذا يشير الى قطع الطقم. حول قطع الطقم, راجع قسم "قطع غيار خدمة الإصلاح الميداني" في كتاب القطع هذا.
D	قطر
L	طول
L.H.	جانب اليد اليسارى
R.H.	جانب اليد اليمنى
T	السمك
W	العرض

. الكمية (Qty)

هذا هو عدد القطع المستخدمة لآلية واحدة. اما بالنسبة لمجموعات المكونات ومجموعات القطع فانه يتم تحديد عدد القطع لكل مجموعة.
الرمز AR (حسب الطلب) سوف يستخدم في عمود الكمية اذا لم يتم تحديد عدد القطع المطلوبة لكل مانكة و/او للمجموعة. في مثل هذه الحالة, فان اي عدد من الكميات ربما يتم طلبه بشكل يعتمد على متطلبات مجال الخدمة.

. الرقم التسلسلي (Serial Numbers)

في كتاب قطع المحرك يشير هذا الرقم الى الرقم التسلسلي للمحرك الذي تستخدم فيه القطعة. قي كتاب قطع الآلية, يشير هذا الرقم الى الرقم التسلسلي للآلية التي تستخدم فيها القطع.

في حالة وضع الرقم التسلسلي بين الأقواس، فهذا يعني أن هذا هو الرقم التسلسلي الساري للاستخدام الحصري للقطعة الموضحة بالشكل.

عند طلب القطع, يرجى تحديد رقم القطعة واسم القطعة والكمية المطلوبة من القطعة, مع تحديد رقم الموديل والرقم التسلسلي وقراءة عداد الخدمة.

قائمة القطع هذه لا تقتصر على الكميات القياسية فقط بل تشمل ايضاً القطع والملحقات الاختيارية. لطلب القطع, يرجى الاتصال باقرب موزع لمنتجات كوماتسو.

كتاب القطع هذا يحتوي على المعلومات ورموز التخصيص وكما مبين ادناه:

الشكل والقائمة

عندما تفتح كتاب القطع هذا, سوف تجد رسومًا توضيحية تتضمن رقم الشكل (الشكل). كل قطعة مفردة في الرسم يعطى لها رقم فهرس. في الرسم التالي, قطع المجموعة للوحدة تم ادراجها حسب ترتيب ارقام الفهرس المبينة في الرسم.. رقم القطعة, اسم القطعة, الكمية والرقم التسلسلي المطابق يعطى لكل قطعة حسب تسلسل القطع في القائمة.

رقم الشكل (الشكل)

رقم الشكل (الشكل) هو الرقم الذي يميز شكل ما داخل الصفحة. إنه ليس رقم القطعة. وليست الأرقام متتابعة دائمًا.

قائمة القطع

معلومات قطع الغيار مثبتة في صفحة قائمة القطع وكلاتي:

. الفهرست (Index)

هذا الرقم هو نفس رقم الفهرس الوارد في الشكل التوضيحي. تدرج القطع في القائمة مرتبة تبعاً لارقام الفهرس.

. الرمز (Code)

الرموز تستخدم في هذا العمود وتوصف كلاتي:

A1 هذه القطعة والقطعة المذكورة في السطر السابق مباشرة يمكن لكل منهما ان تحل محل الاخرى.

A2 القطعة المذكورة في السطر السابق يمكن استعمالها بدلاً من هذه القطعة.

A3 هذه القطعة يمكن استعمالها بدلاً من القطعة المذكورة في السطر السابق مباشرة.

A4 القطعة المذكورة في عمود الوصف يمكن استعمالها بدلاً من هذه القطعة اذا استخدمت كطقم.

B1 هذه القطعة توقف توريدها. يتم توريد القطعة المذكورة في السطر السابق بدلاً منها.

B2 هذه القطعة توقف توريدها. يتم توريد القطعة المذكورة في عمود "الوصف" بدلاً منها كطقم.

C1 هذه القطعة لا يمكن توريدها كقطعة منفردة. يتم توريدها كمجموعة.

C2 هذه القطعة يتم تجهيزها من قبل موزعين كوماتسو المرخصين فقط. لا يمكن تجهيزها كقطعة مفردة. يتم تجهيزها كمجموعة.

C3 هذا يشير الى قطعة موردة شبه مكتملة التصنيع. تتطلب استكمال تصنيعها قبل الاستعمال.

CONTENTS

FOREWORD 2

	FIG No.	PAGE
ENGINE CYLINDER HEAD AND ITS RELATED PARTS		
Head Cover	(VC92J090)	
	AVC00-001001	36
Exhaust Connector Clamp	(XS 9258)	
	AXS00-001001	37
Cylinder Head	(X16-0A90280)	
	A1009-001001	38
Breather	(BR 9302)	
	ABR00-001001	39
Air Intake Manifold	(IM90J071)	
	AIM00-001001	40
Air Intake Connector	(IC94J069)	
	AIC00-001001	41
Air Intake Connector Mounting	(IC94J070)	
	AIC20-001001	42
Air Intake Heater	(AH 9123)	
	AAH00-001001	43
Air Cleaner, With Pre-Cleaner	(X16-0A02560)	
	B9999-001001	44
Air Cleaner	(X16-0A02160)	
	B9999-004001	45
Aftercooler	(X16-0A02180)	
	B9999-002001	46
Exhaust Manifold	(TB91206)	
	ATB30-001001	47
Turbocharger	(X16-0A90300)	
	A1539-001001	48
Turbocharger Oil Piping	(TP97218)	
	ATP00-001001	49
Exhaust Muffler	(X16-0A21010)	
	A1610-001001	50
Exhaust Muffler Drain	(X16-0A02610)	
	B9999-003001	51
Exhaust Connection	(IT 9039)	
	AIT00-001001	52
Heat Shield	(X16-0A11410)	
	A1570-001001	53
Rocker Arm Housing and Rocker Arm	(RL 9753)	
	ARL00-001001	54
Lifting Arrangement	(LA 9151)	
	ALA00-001001	55
Lifting Arrangement Bolt	(LA 9120)	
	ALA10-001001	56
Vibration Damper	(DA 9728)	
	ADA00-001001	57
ENGINE CYLINDER BLOCK AND ITS RELATED PARTS		
Camshaft	(X16-0A90490)	
	A2419-001001	60
Tappet	(BB 9080)	
	ABB00-001001	61
Front Gear Train Cover	(DF 9706)	
	ADF10-001001	62

Front Gear Cover ..... (X16-0A90450)
A2049-001001 63
Accessory Drive Pulley (For Sandy and Dusty Terrain Arrangement) ..... (PA90K645)
APA00-002001 64
Flywheel Housing ..... (X16-0A90570)
A2219-001001 65
Flywheel ..... (FW90J050)
AFW00-001001 66
Flywheel Mounting ..... (FW 9704)
AFW10-001001 67
Engine Oil Pan ..... (X16-0A90940)
A2119-002001 68
Engine Oil Level Sensor ..... (SD 9077)
ASD00-001001 69
Crank Pulley ..... (AF 9186)
AAF00-001001 70
Cylinder Block ..... (X16-0A90310)
A2019-001001 71
Cylinder Block Cover ..... (OB 9351)
AOB10-001001 72
Breather Hose ..... (X16-0A10310)
A2080-001001 73
Cabin Heater Plug ..... (HC 9046)
AHC00-001001 74
Crankshaft ..... (X16-0A90340)
A2319-001001 75
Piston and Connecting Rod ..... (X16-0A90350)
A2359-001001 76
Oil Level Gauge ..... (LG90327)
ALG00-001001 77
Water Pump Drive (Without 60Amp. Alternator) ..... (WP93J074)
AWP10-001001 78

ENGINE LUBRICATION SYSTEM

Engine Oil Pump ..... (LP 9724)
ALP00-001001 80
Engine Oil Filter ..... (X16-0A01910)
A3119-001001 81
Engine Oil Filter and Engine Oil Cooler ..... (LF 9167)
ALF00-001001 82
Engine Oil Cooler ..... (LC 9268)
ALC00-001001 83

ENGINE FUEL SYSTEM

Fuel Filter Piping ..... (FF 9581)
AFF20-001001 86
Fuel Supply Pump ..... (X16-0A90360)
Inner Parts A4019-001001 87
Mounting A4002-001002 88
Fuel Supply Pump Support ..... (FP90238)
AFP20-001001 89
Fuel Injector ..... (X16-0A90550)
A4219-001001 90
Fuel Injection Piping ..... (PP98J073)
APP50-001001 91
Fuel Piping ..... (FT 9172)
AFT00-001001 92

Fuel Filter Cartridge(Service Only) ..... (X16-0B90580)
A4119-001001 93
Fuel Filter ..... (FF90J068)
AFF10-001001 94
Fuel System Accessory ..... (FS 9907)
AFS20-001001 95
Fuel Transfer Pump ..... (FS 9746)
AFS00-001001 96
Fuel Inlet Fitting ..... (FI 9088)
AFI00-001001 97
ENGINE COOLING SYSTEM
Cooling Fan Drive Mounting (Bolt) ..... (FA 9406)
AFA20-001001 100
Cooling Fan Drive Pulley ..... (FA93J067)
AFA10-001001 101
Cooling Fan ..... (X16-0A0019B)
A5030-001001 102
Cooling Fan Belt ..... (FA 9922)
AFA30-001001 103
Cooling Fan Belt Tensioner ..... (WP 9144)
AWP20-001001104
Water Pump Mounting ..... (WP97366)
AWP00-001001105
Water Pump (#26866736-26868368) ..... (X16-0A90840)
A5019-002001 106
Water Pump (#26868369-) ..... (X16-0A90841)
A5019-003001 107
Water Outlet Connector ..... (WO 9111)
AWO00-001001108
Thermostat ..... (EC 9080)
AEC00-001001 109
Coolant Heater Plug ..... (CH 9087)
ACH00-001001 110
Coolant Inlet Connector ..... (WI 9160)
AWI10-001001 111
Plug, Torque Converter Cooling ..... (TK 9022)
ATK00-001001 112
ENGINE ELECTRICAL SYSTEM
Alternator Mounting (60Amp) ..... (EH97427)
AEH20-001001 114
Alternator (60Amp) ..... (EE 9186)
AEE00-001001 115
Starting Motor Mounting ..... (SM 9785)
ASM00-001001 117
Starting Motor (7.5KW), (#26866736-26871808) ..... (ST 9199)
Starting Motor (7.5KW), (#26866736-26871808) AST00-001001 118
Starting Motor (75KW), (#26871809-) AST00-001001 120
Starting Motor (11KW), (#26866736-26871811) ..... (ST 9259)
Starting Motor (11KW), (#26866736-26871811) AST00-002001 121
Starting Motor (11KW), (#26871812-) AST00-002001 123
Wiring Harness ..... (WR94J075)
AWR00-001001124
Electric Controller (Piping) ..... (PH 9139)
APH10-001001 125
ENGINE ACCESSORIES AND OTHERS

Engine Controller ..... (X16-0A90950)
A4719-002001 128
Engine Control Module ..... (PH90J089)
APH00-001001 129
ENGINE MARKS AND PLATES
Caution Plates ..... (X16-090367A)
A9850-001001 132
Caution Plates ..... (X16-0A30560)
A9810-001001 133
FIELD REPAIR SERVICE PARTS
Repair Service Parts ..... (X16-0A90560)
A8110-001001 136
ENGINE RELATED PARTS
Vandalism Protection Bolt for Engine Controller ..... (X87-0008520)
A9990-001001 138
Engine Related Parts ..... (X21-2239560)
Exhaust Muffler and Drain Piping A9999-001001 139
Piston Pump, Inner Parts, 1/12 ..... A9999-001002 140
Piston Pump, Inner Parts, 2/12 ..... A9999-001003 141
Piston Pump, Inner Parts, 3/12 ..... A9999-001004 142
Piston Pump, Inner Parts, 4/12 ..... A9999-001005 143
Piston Pump, Inner Parts, 5/12 ..... A9999-001006 144
Piston Pump, Inner Parts, 6/12 ..... A9999-001007 145
Piston Pump, Inner Parts, 7/12 ..... A9999-001008 146
Piston Pump, Inner Parts, 8/12 ..... A9999-001009 147
Piston Pump, Inner Parts, 9/12 ..... A9999-001010 148
Piston Pump, Inner Parts, 10/12 ..... A9999-001011 149
Piston Pump, Inner Parts, 11/12 ..... A9999-001012 150
Piston Pump, Inner Parts, 12/12 ..... A9999-001013 151
Engine Mounting ..... (X21-2235890)
B0100-001001 152
Air Cleaner, Without Pre-cleaner ..... (X21-2235040)
B0200-001001 153
Air Cleaner, With Pre-Cleaner ..... (X21-2239300)
Related Parts B0200-002001 154
Air Cleaner B0200-002002 155
COOLING SYSTEM
Cooling System (With Auto Air Conditioner) ..... (X21-2234600)
Radiator and Oil Cooler C0100-001001 158
Shroud 1/2 ..... C0100-001002 160
Aftercooler and Condenser C0100-001003 162
Radiator Piping C0100-001004 163
Shroud 2/2 ..... C0100-001005 165
Sub-tank C0100-001006 166
FUEL SYSTEM
Fuel Tank (Poor Fuel Spec, Water+Dust, Large Fuel Prefilter, With Fuel Refill Pump) ..... (X21-2235050)
D0100-001001 170
Fuel Tank (With Fuel Refill Pump) ..... (X21-2245250)
D0100-002001 171
Fuel Supply Piping (Poor Fuel Spec, Water+Dust, Large Fuel Pre-Filter) ..... (X21-2235061)
Fuel Piping D0200-001001 172
Fuel Pre-Filter D0200-001002 174
Clamp D0200-001003 175
Fuel Supply Piping (Extra Poor Fuel Spec, Water+Dust, Additional Filter) ..... (X21-2244930)
Fuel Line D0200-002001 176

Fuel Prefilter D0200-002002 177
Water Separator D0200-002003 178
Water Separator, Inner Parts D0200-002004 179
Clamp D0200-002005 180
ELECTRICAL SYSTEM
Battery ..... (X87-0004900)
E0100-001001 182
Electric Wiring Harness ..... (X21-2233550)
Starting Wiring Harness, #C90001-C90347 ..... E0200-001001 183
Wiring Harness, 1/3, #C90001-C90347 ..... E0200-001002 184
Wiring Harness, 2/3, #C90001-C90347 ..... E0200-001003 185
Wiring Harness, 3/3, #C90001-C90347 ..... E0200-001004 187
Working Lamp, #C90001-C90347 ..... E0200-001005 189
Electric Wiring Harness (With Large Fuel Filter) ..... (X21-2319290)
Starting Wiring Harness Clip, #C90348- E0200-002001 190
Wiring Harness Clip, 1/3, #C90348- E0200-002002 191
Wiring Harness Clip, 2/3, #C90348- E0200-002003 193
Wiring Harness Clip, 3/3, #C90348- E0200-002004 194
Working Lamp, #C90348- E0200-002005 196
Resistor, #C90348- E0200-002006 197
Electric Wiring Harness ..... (X21-2286090)
Starting Wiring Harness Clip E0200-003001 198
Wiring Harness Clip, 1/3 ..... E0200-003002 199
Wiring Harness Clip, 2/3 ..... E0200-003003 201
Wiring Harness Clip, 3/3 ..... E0200-003004 202
Working Lamp E0200-003005 204
Anti Vandalism Guard (for Indonesia) ..... (X87-0005690)
E0201-002001 205
Additional Working Lamp ..... (X21-1407570)
E0310-001001 206
Beacon Lamp, Beacon ..... (X21-1088762)
E0340-001001 207
Horn ..... (X21-1134660)
E0410-001001 208
Travel Alarm ..... (X21-2231480)
E0420-001001 209
Rearview Camera (Without Rearview Camera) ..... (X21-2209030)
E0450-001001 210
Rearview Camera ..... (X21-2280540)
E0450-002001 211
HYDRAULIC SYSTEM
Hydraulic Tank, #C90001-C90130 ..... (X21-2235070)
H0110-001001 214
Hydraulic Tank ..... (X21-2235071)
Tank H0110-002001 216
Breather Mounting H0110-002002 217
Control Valve ..... (X21-2231760)
7-spool, 1/22 ..... H0120-001001 218
7-spool, 2/22 ..... H0120-001002 219
7-spool, 3/22 ..... H0120-001003 220
7-spool, 4/22 ..... H0120-001004 221
7-spool, 5/22 ..... H0120-001005 222
7-spool, 6/22 ..... H0120-001006 223
7-spool, 7/22 ..... H0120-001007 224
7-spool, 8/22 ..... H0120-001008 225

7-spool, 9/22 ..... H0120-001009 226
7-spool, 10/22 ..... H0120-001010 227
7-spool, 11/22 ..... H0120-001011 228
7-spool, 12/22 ..... H0120-001012 229
7-spool, 13/22 ..... H0120-001013 230
7-spool, 14/22 ..... H0120-001014 231
7-spool, 15/22 ..... H0120-001015 232
7-spool, 16/22 ..... H0120-001016 233
7-spool, 17/22 ..... H0120-001017 234
7-spool, 18/22 ..... H0120-001018 235
7-spool, 19/22 ..... H0120-001019 236
7-spool, 20/22 ..... H0120-001020 237
7-spool, 21/22 ..... H0120-001021 238
7-spool, 22/22 ..... H0120-001022 239
Control Valve Related Parts, 1/2 ..... H0120-001023 240
Control Valve Related Parts, 2/2 ..... H0120-001024 241
Valve Bracket H0120-001025 242
Control Valve ..... (X21-2246950)
8-spool, 1/25 ..... H0120-002001 243
8-spool, 2/25 ..... H0120-002002 244
8-spool, 3/25 ..... H0120-002003 245
8-spool, 4/25 ..... H0120-002004 246
8-spool, 5/25 ..... H0120-002005 247
8-spool, 6/25 ..... H0120-002006 248
8-spool, 7/25 ..... H0120-002007 249
8-spool, 8/25 ..... H0120-002008 250
8-spool, 9/25 ..... H0120-002009 251
8-spool, 10/25 ..... H0120-002010 252
8-spool, 11/25 ..... H0120-002011 253
8-spool, 12/25 ..... H0120-002012 254
8-spool, 13/25 ..... H0120-002013 255
8-spool, 14/25 ..... H0120-002014 257
8-spool, 15/25 ..... H0120-002015 258
8-spool, 16/25 ..... H0120-002016 260
8-spool, 17/25 ..... H0120-002017 261
8-spool, 18/25 ..... H0120-002018 262
8-spool, 19/25 ..... H0120-002019 263
8-spool, 20/25 ..... H0120-002020 264
8-spool, 21/25 ..... H0120-002021 265
8-spool, 22/25 ..... H0120-002022 266
8-spool, 23/25 ..... H0120-002023 267
8-spool, 24/25 ..... H0120-002024 268
8-spool, 25/25 ..... H0120-002025 269
Control Valve Related Parts, 1/2 ..... H0120-002026 270
Control Valve Related Parts, 2/2 ..... H0120-002027 271
Valve Bracket H0120-002028 272
Blind Parts H0120-002029 273
Control Valve (With 1-additional Actuator Piping, Accumulator) ..... (X21-2246780)
H0120-003028 274
Piston Pump (Related Parts) ..... (X21-0670740)
H0210-001001 275
Suction Piping ..... (X21-1080611)
H0311-001001 276
Delivery Piping (With Inline Filter) ..... (X21-2230840)
H0312-001001 277

Oil Cooler Piping ..... (X21-2230850) H0320-001001 278
Return Piping ..... (X21-2230860) H0330-001001 279
Return Piping (1-additional Actuator Piping, Accumulator) ..... (X21-2246770) H0330-002001 280
Drain Piping ..... (X21-2230870) H0340-001001 281
Boom Piping ..... (X21-2230880)
Valve Boom Piping H1210-001001 282
Bracket and Clamp H1210-001002 283
Arm and Bucket Piping ..... (X21-2230910) H1220-001001 284
Actuator Piping (1-additional Actuator Piping, Accumulator) ..... (X21-2246800)
Main Piping, L.H. H1270-001001 286
Solenoid Valve H1270-001002 287
Main Piping, R.H. H1270-001003 288
Return Filter H1270-001004 289
Accumulator H1270-001005 290
Pilot Filter H1270-001006 291
Travel Piping ..... (X21-1163340) H1310-001001 292
Swing Piping ..... (X21-2230920) H1340-001001 293
LS Piping ..... (X21-2230930) H1810-001001 294
LS Piping (1-additional Actuator Piping, Accumulator) ..... (X21-224625A) H1810-002001 295
Solenoid Valve ..... (X21-2231500)
Inner Parts H1831-001001 296
Solenoid Valve Related Parts H1831-001002 297
Hose H1831-001003 298
Clamp H1831-001004 299
Solenoid Valve (1-additional Actuator Piping, Accumulator) ..... (X21-2245750)
1/4 ..... H1831-002001 300
2/4 ..... H1831-002002 301
3/4 ..... H1831-002003 302
4/4 ..... H1831-002004 303
Pressure Switch Block ..... (X21-2230950)
Sensor H1833-001001 304
Slow Return Valve H1833-001002 305
Bracket H1833-001003 306
Proportional Pressure Control (PPC) Valve Piping ..... (X21-2231510) H1840-001001 307

FRAME AND ITS RELATED PARTS

Revolving Frame (Poor Fuel Specification, Water+Dust, Large Fuel Prefilter) ..... (X21-2235610) J1110-001001 310
Revolving Frame (Poor Fuel Spec, Water+Dust, Large Fuel Prefilter, With Deck Guard) ..... (X21-2245120) J1110-002001 311
Revolving Frame ..... (X21-2245660) J1110-003001 312
Revolving Frame (With Deck Guard) ..... (X21-2245670) J1110-004001 313
Boom Foot Pin (100 Hours Lubrication Interval) ..... (X21-0859560) J1310-001001 314

OPERATOR'S COMPARTMENT AND CONTROL SYSTEM

Operator's Seat (Rigid Type) ..... (X21-1104251)
Operator's Seat K0110-001001 316
Bracket K0110-001002 317
Operator's Seat (Suspension Type, Hi Back, Fabric, Reclining, Tilt) ..... (X21-1992970)
K0110-002001 318
Seat Belt (50mm Width) ..... (X21-1045180)
K0160-001001 319
Seat Belt (78mm Width) ..... (X21-1145200)
K0160-002001 320
Top Guard ..... (X21-2360510)
K0220-002001 321
Front Guard, Full Guard LV2 ..... (X21-1045261)
K0230-001001 322
Front Guard, Half Guard ..... (X21-1077310)
K0230-002001 323
Floor Mat ..... (X21-1181540)
K0310-001001 324
Floor Mat (Cab Step2) ..... (X21-1993670)
K0310-002001 325
Floor Mat (1-additional Actuator Piping, Accumulator) ..... (X21-1181550)
K0310-003001 326
Floor Mat (1-additional Actuator Piping, Accumulator, Cab Step2) ..... (X21-1992771)
K0310-004001 327
Window Washer Tank ..... (X21-2233630)
K0350-001001 328
Air Conditioner Unit ..... (X21-2235080)
Inner Parts, Air Compressor K0700-001001 329
Compressor Mounting K0700-001002 330
Hose K0700-001003 331
Cab ..... (X21-2235700)
Cab Body and Window K1110-001001 332
Front Window K1110-001002 333
Front Lower Window K1110-001003 335
Roof Window K1110-001004 336
Door K1110-001005 337
Door Lock K1110-001006 338
Open Lock and Door Catch K1110-001007 339
Wiper and Room Lamp K1110-001008 340
Rubber Antenna K1110-001009 341
Speaker and Window Washer K1110-001010 342
Roof Cover and Air Intake K1110-001011 343
Pressure Valve and Grip K1110-001012 345
KOMTRAX Film Antenna K1110-001013 346
Cab In Parts, Monitor and Cover K1110-001014 347
Cab In Parts, Monitor Cover K1110-001015 348
Cab In Parts, Washer Hose Mounting K1110-001016 349
Cab In Parts, Luggage Plate and Cigarette Lighter K1110-001017 350
Cab In Parts, Air Duct K1110-001018 351
Cab In Parts, Air Duct and Fresh Air Filter K1110-001019 352
Cab In Parts, Partition and Recirculation Air Filter K1110-001020 353
Cab In Parts, Sub Plate and Relay K1110-001021 354
Cab In Parts, Air Conditioner Controller and KOMTRAX Controller K1110-001022 355
Cab In Parts, Main Wiring Harness Clamp K1110-001023 356
Cab In Parts, Rear Cover K1110-001024 357

Floor, Frame K1110-001025 359
Floor, PPC Valve for Travel K1110-001026 360
Floor, Travel Control Lever K1110-001027 361
Floor, Footrest, L.H. K1110-001028 362
Floor, Footrest, R.H. K1110-001029 363
Floor, Base K1110-001030 364
Floor, Wiring Harness K1110-001031 365
Floor, Wiring Harness Clamp and Ground K1110-001032 366
Floor, Window Washer Hose K1110-001033 367
Floor, Work Equipment Control Lever, L.H. K1110-001034 368
PPC Valve for Work Equipment, L.H. K1110-001035 369
Floor, PPC Valve Mounting for Work Equipment, L.H. K1110-001036 370
Floor, Console, L.H. K1110-001037 371
Floor, PPC Lock Lever and Radio K1110-001038 372
Floor, Armrest, L.H. K1110-001039 373
Floor, Work Equipment Control Lever, R.H. K1110-001040 374
PPC Valve for Work Equipment, R.H. K1110-001041 375
Floor, PPC Valve Mounting for Work Equipment, R.H. K1110-001042 376
Floor, Console, R.H. K1110-001043 377
Floor, Armrest, R.H. K1110-001044 379
Inner Parts, Air Conditioner Unit, 1/2 ..... K1110-001045 380
Inner Parts, Air Conditioner Motor K1110-001046 381
Inner Parts, Air Conditioner Unit, 2/2 ..... K1110-001047 382
Floor, Air Conditioner Unit K1110-001048 383
Floor, Air Conditioner Piping K1110-001049 384
Floor, PPC Piping for Travel Valve K1110-001050 385
Floor, PPC Valve Piping for Work Equipment K1110-001051 386
Floor, Piping Mounting K1110-001052 387
Floor, P, T Block K1110-001053 388
Floor, Seal K1110-001054 389
Cab ..... (X21-1994490)
Cab Body and Window K1110-002001 390
Front Window K1110-002002 391
Roof Window K1110-002004 393
KOMTRAX Film Antenna K1110-002013 394
Air Conditioner and KOMTRAX Controller K1110-002022 395
Cab (With 1-additional Acuator Piping, AM-FM Radio, KOMTRAX) ..... (X21-1994520)
Cab Body and Window K1110-003001 396
PPC Valve for Attachment K1110-003029 397
Floor, 1st Attachment Control K1110-003030 398
Floor, P, T Block K1110-003053 400
Cab (With Auto Air Conditioner, AM-FM Radio, KOMTRAX, Cab Step2) ..... (X21-2235701)
Cab Body and Window K1110-004001 401
Front Window K1110-004002 402
Front Lower Window K1110-004003 404
Roof Ventilator K1110-004004 405
Door K1110-004005 406
Door Lock K1110-004006 407
Open Lock and Door Catch K1110-004007 408
Wiper and Room Lamp K1110-004008 409
Rubber Antenna K1110-004009 410
Speaker and Window Washer K1110-004010 411
Roof Cover and Air Intake K1110-004011 412
Grip K1110-004012 414
KOMTRAX Film Antenna K1110-004013 415

KOMATSU Mark K1110-004014 416
Cab In Parts, Monitor and Cover K1110-004015 417
Cab In Parts, Monitor Cover K1110-004016 418
Cab In Parts, Washer Hose Mounting K1110-004017 419
With Auto Air Conditioner, Radio MP3, GPRS K1110-004018 420
Cab In Parts, Air Duct K1110-004019 421
Cab In Parts, Air Duct and Fresh Air Filter K1110-004020 422
Cab In Parts, Partition and Recirculation Air Filter K1110-004021 423
Cab In Parts, Sub Plate and Relay K1110-004022 424
Cab In Parts, Air Conditioner Controller and KOMTRAX Controller K1110-004023 425
Cab In Parts, Main Wiring Harness Clamp K1110-004024 426
Cab In Parts, Rear Cover K1110-004025 427
Floor, Frame K1110-004026 429
Floor, PPC Valve for Travel K1110-004027 430
Floor, Travel Control Lever K1110-004028 431
Floor, Footrest, L.H. K1110-004029 432
Floor, Footrest, R.H. K1110-004030 433
Floor, Base K1110-004031 434
Floor, Wiring Harness K1110-004032 435
Floor, Wiring Harness Clamp and Ground K1110-004033 436
Floor, Window Washer Hose K1110-004034 437
Floor, Work Equipment Control Lever, L.H. K1110-004035 438
PPC Valve for Work Equipment, L.H. K1110-004036 439
Floor, PPC Valve Mounting for Work Equipment, L.H. K1110-004037 440
Floor, Console, L.H. K1110-004038 441
Floor, PPC Lock Lever and Radio K1110-004039 442
Floor, Armrest, L.H. K1110-004040 443
Floor, Work Equipment Control Lever, R.H. K1110-004041 444
PPC Valve for Work Equipment, R.H. K1110-004042 445
Floor, PPC Valve Mounting for Work Equipment, R.H. K1110-004043 446
Floor, Console, R.H. K1110-004044 447
Floor, Armrest, R.H. K1110-004045 449
Inner Parts, Air Conditioner Unit, 1/2 ..... K1110-004046 450
Inner Parts, Air Conditioner Motor K1110-004047 451
Inner Parts, Air Conditioner Unit, 2/2 ..... K1110-004048 452
Floor, Air Conditioner Unit K1110-004049 453
Floor, Air Conditioner Piping K1110-004050 454
Floor, PPC Piping for Travel Valve K1110-004051 455
Floor, PPC Valve Piping for Work Equipment K1110-004052 456
Floor, Piping Mounting K1110-004053 457
Floor, P, T Block K1110-004054 458
Floor, Seal K1110-004055 459
Cab (With KOMTRAX, GPRS Type,Cab Step2) ..... (X21-1994491)
Cab Body and Window K1110-005001 460
Front Window K1110-005002 461
Roof Window K1110-005004 463
KOMTRAX Film Antenna K1110-005013 464
Air Conditioner and KOMTRAX Controller K1110-005022 465
Cab (With 1-aditional Actuator Piping,Cab Step2) ..... (X21-1994521)
Cab Body and Window K1110-006001 466
PPC Valve for Attachment K1110-006029 467
Floor, 1st Attachment Control K1110-006030 468
Floor, P,T Block K1110-006053 469
Cab (With Auto Air Conditioner,AM-FM Radio,KOMTRAX,Indosian,Cab Step2) ..... (X21-2319990)
K1110-007032 470

Cab (With Radio, MP3) ..... (X87-0006930)
K1110-008039 471
Cab (With GPRS, 3G) ..... (X87-0008030)
K1110-009023 472
Floor Mounting, #C90001-C90316 ..... (X21-1312121)
K1120-001001 473
Floor Mounting, Cab Step2, #C90317- ..... (X21-1996170)
K1120-002001 474
Proportional Pressure Control (PPC) Piping ..... (X21-2230970)
K1520-001001 475
Proportional Pressure Control (PPC) Piping (1-additional Actuator Piping, Accumulator) ..... (X21-2245740)
K1520-002001 476
Switch ..... (X21-0359571)
K1730-001001 477
GUARDS AND COVERS
Engine Hood, FAB Type ..... (X87-0004490)
M1110-001001 480
Machine Cab Frame ..... (X21-2232790)
M1120-001001 481
Side Cover L.H. ..... (X21-2232810)
M1130-001001 482
Side Cover R.H. (Poor Fuel Specification, Water+Dust, Large Fuel Prefilter) ..... (X21-2232830)
M1140-001001 483
Side Cover R.H. ..... (X21-2237640)
M1140-002001 485
Machine Cab Partition ..... (X21-2232850)
1/2 ..... M1150-001001 487
2/2 ..... M1150-001002 488
Machine Cab Partition (With Fuel Refill Pump) ..... (X21-2254510)
1/2 ..... M1150-002001 490
2/2 ..... M1150-002002 491
Machine Cab Cover ..... (X21-2232870)
M1210-001001 493
Machine Cab Cover, With Pre-Cleaner ..... (X21-2286480)
Cover and Duct M1210-002001 495
Pre-Cleaner, Inner Parts M1210-002002 497
Battery Case (Poor Fuel Specification, Water+Dust, Large Fuel Prefilter) ..... (X21-2237300)
M1220-001001 498
Battery Case ..... (X21-2232910)
M1220-002001 499
Handrail, #C90001-C90289 ..... (X21-063719A)
M1310-001001 500
Handrail, #C90290- ..... (X21-1172560)
M1310-002001 501
Rearview Mirror L.H. ..... (X21-2232940)
M1410-001001 502
Rearview Mirror R.H. ..... (X21-2232950)
M1420-001001 503
Rear Under View Mirror ..... (X21-2232960)
M1430-001001 504
Counterweight (6372kg) ..... (X21-2232970)
M1510-001001 505
Counterweight Mounting ..... (X21-0669000)
M1520-001001 506
Under Cover (For Large Fuel Prefilter, Provision for Fuel Refill Pump) ..... (X21-2232990)

1/3 ..... M1810-001001 507
2/3 ..... M1810-001002 509
3/3 ..... M1810-001003 510
Under Cover (Heavy Duty Type, For Large Fuel Prefilter, Provision for Fuel Refill Pump) ..... (X21-2256130)
1/3 ..... M1810-002001 511
2/3 ..... M1810-002002 513
2/3 ..... M1810-002003 514
Under Cover (Additional Filter, Provision for Fuel Refill Pump) ..... (X21-2237650)
1/3 ..... M1810-003001 515
2/3 ..... M1810-003002 517
3/3 ..... M1810-003003 518
Under Cover (Heavy Duty Type, Additional Filter, Provision For Fuel Refill Pump) ..... (X21-2239590)
1/3 ..... M1810-004001 519
2/3 ..... M1810-004002 521
3/3 ..... M1810-004003 522
SWING CIRCLE AND ITS RELATED PARTS
Swing Circle, #C90001-C90323 ..... (X21-2234860)
N1110-001001 524
Swing Circle, #C90324- ..... (X21-2234861)
N1110-002001 525
Swing Machinery and Motor (For Indonesian) ..... (X21-2239280)
Swing Motor, 1/3 ..... N1210-001001 526
Swing Motor, 2/3 ..... N1210-001002 527
Swing Motor, 3/3 ..... N1210-001003 528
Swing Machinery N1210-001004 529
Swing Machinery and Motor (With Reverse Valve) ..... (X21-2234530)
Swing Motor, 1/3 ..... N1210-002001 531
Swing Motor, 2/3 ..... N1210-002002 532
Swing Motor, 3/3 ..... N1210-002003 533
Swing Machinery N1210-002004 534
Swing Motor (Related Parts) ..... (X21-0822770)
N1220-001001 536
Swivel Joint ..... (X21-0670900)
1/2, #C90001-C90254 ..... N1310-001001 537
1/2, #C90255- N1310-001001 538
2/2 ..... N1310-001002 539
TRAVEL SYSTEM AND ITS RELATED PARTS
Travel Piping ..... (X21-2228240)
P1120-001001 542
Travel Piping LC ..... (X21-2246660)
P1120-002001 543
Travel Motor and Final Drive ..... (X21-2214440)
Travel Motor, L.H., 1/3 ..... P1210-001001 544
Travel Motor, L.H., 2/3 ..... P1210-001002 545
Travel Motor, L.H., 3/3 ..... P1210-001003 546
Carrier, L.H. P1210-001004 547
Travel Motor, R.H., 1/3 ..... P1210-001005 548
Travel Motor, R.H., 2/3 ..... P1210-001006 549
Travel Motor, R.H., 3/3 ..... P1210-001007 550
Carrier, R.H. P1210-001008 551
Cover P1210-001009 552
UNDERCARRIAGE
Front Idler and Idler Cushion (Rustproof Spring LV1) ..... (X21-223400B)
1/2 ..... R0110-001001 554
2/2 ..... R0110-001002 555

Track Roller (Single Flange) ..... (X21-2228410) R0200-001001 556
Track Roller LC ..... (X21-2246970) R0200-002001 557
Track Roller (Double Flange) ..... (X21-2373960)
1/2 ..... R0200-003001 558
2/2 ..... R0200-003002 559
Carrier Roller ,#C90001-C90061 ..... (X21-2228420) R0300-001001 560
Carrier Roller, #C90062- ..... (X21-0020293) R0300-002001 561
Track Shoe Assembly, Triple Shoe Grouser, With Holed, 600mm Width ..... (207-32-04001) R0500-001001 562
Track Shoe Assembly, Triple Shoe Grouser, With Holed, 600mm Width, Long Type ..... (207-32-03921) R0500-002001 563
Track Shoe Assembly, Triple Shoe Grouser, With Holed, 800mm Width ..... (207-32-04021) R0500-003001 564
Track Shoe Assembly, Triple Shoe Grouser, With Holed, 800mm Width, Long Type ..... (207-32-03941) R0500-004001 565
Track Frame (With Under Cover) ..... (X21-2228560) R1100-001001 566
Track Frame (With Under Cove, For LC) ..... (X21-2246610) R1100-002001 567
Track Frame Under Cover ..... (X21-0379060) R1140-001001 568
Track Roller Guard ..... (X21-0379010) R1200-001001 569
Track Roller Guard, Long Type ..... (X21-0379020) R1200-002001 570
Track Guard, Full Length ..... (X21-0818590) R1200-003001 571
Track Guard, Full Length, Long Type ..... (X21-0818630) R1200-004001 572

WORK EQUIPMENT

Boom (6500mm Heavy Duty Type, 100 Hours Lubrication Interval) ..... (X21-2120340)
Boom and Top Pin T1110-001001 574
Arm Cylinder Piping T1110-001002 575
Lubrication Piping T1110-001003 576
Bucket Cylinder Piping T1110-001004 577
Cylinder Pin and Working Lamp T1110-001005 578
Attachment Plug T1110-001006 579
Boom (6500mm Reinforced Type, Quarry, 100 Hours Lubrication Interval) ..... (X87-0004610)
Boom and Top Pin T1110-002001 580
Arm Cylinder Piping T1110-002002 581
Lubrication Piping T1110-002003 582
Bucket Cylinder Lines T1110-002004 583
Cylinder Pin and Working Lamp T1110-002005 584
Attachment Plug T1110-002006 585
Boom (6500mm,Heavy Duty Type,1-attachment,100 Hours Lubrication Interval) ..... (X21-2246730)
Boom and Top Pin T1110-003001 586
Arm Cylinder Piping T1110-003002 587
Lubrication Piping T1110-003003 588
Bucket Cylinder Piping T1110-003004 589
Cylinder Pin and Working Lamp T1110-003005 590
Additional Piping T1110-003006 591

Clamp T1110-003007 592
Boom (6000mm, SE, 100 Hours Lubrcation Interval) ..... (X21-2364701)
Boom and Top Pin T1110-004001 593
Boom and Top Pin T1110-004002 594
Lubrication Piping T1110-004003 595
Bucket Cylinder Piping T1110-004004 596
Cylinder Pin and Working Lamp T1110-004005 597
Attachment Plug T1110-004006 598
Boom (6000mm, SE, 1-Attachment, 100 Hours Lubrcation Interval) ..... (X21-2398170)
Boom and Top Pin T1110-005001 599
Boom and Top Pin T1110-005002 600
Lubrication Piping T1110-005003 601
Bucket Cylinder Piping T1110-005004 602
Cylinder Pin and Working Lamp T1110-005005 603
Additional Piping T1110-005006 604
Clamp T1110-005007 605
Boom (6000mm, SE, Reinforcement, 100 Hours Lubrcation Interval) ..... (X87-0008320)
Boom and Top Pin T1110-006001 606
Boom and Top Pin T1110-006002 607
Lubrication Piping T1110-006003 608
Bucket Cylinder Piping T1110-006004 609
Cylinder Pin and Working Lamp T1110-006005 610
Attachment Plug T1110-006006 611
Boom (6000mm,SE,Reinforcement,1-Attachment,100 Hours Lubrication) ..... (X87-0009590)
Boom and Top Pin T1110-007001 612
Boom and Top Pin T1110-007002 613
Lubrication Piping T1110-007003 614
Bucket Cylinder Piping T1110-007004 615
Cylinder Pin and Working Lamp T1110-007005 616
Additional Piping T1110-007006 617
Clamp T1110-007007 618
Boom Cylinder (100 Hours Lubrication Interval) ..... (X21-2235620)
L.H. T1120-001001 619
R.H. T1120-001002 621
Arm Cylinder (100 Hours Lubrication Interval) ..... (X21-2234460)
T1140-001001 623
Shipping Parts For Arm Less ..... (X21-0566920)
T1190-001001 625
Arm (2.2m, 100 Hours Greasing Type) ..... (X21-2245630)
Arm T1200-001001 626
Bucket Cylinder T1200-001002 627
Bucket Link T1200-001003 629
Bucket Cylinder Hose and Pin T1200-001004 630
Arm (2.6m, Strengthened, 100 Hours Greasing Type) ..... (X21-2245680)
Arm T1200-002001 631
Bucket Cylinder T1200-002002 632
Bucket Link T1200-002003 634
Bucket Cylinder Hose and Pin T1200-002004 635
Arm (2.6m, Strengthened, 1-Attachment, 100 Hours Greasing ..... (X21-2334000)
Arm and Bushing T1200-003001 636
Bucket Cylinder T1200-003002 637
Bucket Link T1200-003003 639
Bucket Cylinder Hose and Pin T1200-003004 640
Additional Piping T1200-003005 641
Valve T1200-003006 642

Arm (3.2m, Strengthened, 100 Hours Greasing Type) ..... (X21-2245591)
Arm T1200-004001 643
Bucket Cylinder T1200-004002 644
Bucket Link T1200-004003 646
Bucket Cylinder Hose and Pin T1200-004004 647
Arm (3.2m, Strengthened,1-attachment, 100 Hours Greasing Type) ..... (X21-2245611)
Arm and Bushing T1200-005001 648
Bucket Cylinder T1200-005002 649
Bucket Link T1200-005003 651
Bucket Cylinder Hose and Pin T1200-005004 652
Additional Piping T1200-005005 653
Valve for Additional Piping T1200-005006 654
Shipping Parts For Bucket Less ..... (X21-0332420)
T1290-001001 655
Bucket (1.2m3, Heavy Duty, Horizontal Pin Type, With Side Cutter) ..... (X21-0859280)
T1510-001001 656
Bucket (1.8m3 Hevy Duty, Horizontal Pin Type, With Side Cutter, Hensley) ..... (X87-0003920)
T1510-002001 657
Bucket (2.0m3, Heavy Duty, Horizontal Pin Type, With Side Cutter, Hensley) ..... (X87-0003890)
T1510-003001 658
Bucket (2.3m3 Heavy Duty, Horizontal Pin Type, With Side Cutter) ..... (X87-0001430)
T1510-004001 659
I2 Bucket,1.8m3 Reinforced,1458mm Width,Horizontal Pin Type, PAB Tooth, Side Shround ..... (X87-0007670)
T1510-006001 660
I2 Bucket,1.8m3 Reinforced,1458mm Width,Horizontal Pin Type, PAB Tooth and Side Shround ..... (X87-0007671)
T1510-007001 661
MARKS AND PLATES
Marks and Plates, PC300 ..... (X21-2239610)
U0100-001001 664
Marks and Plates, Long Type, PC300 ..... (X21-2244940)
U0100-002001 665
Marks and Plates, PC350 ..... (X87-0008750)
U0100-003001 666
Marks and Plates, Long Type, PC350 ..... (X87-0009130)
U0100-004001 667
Lubrication Chart (100 Hours Lubrication Interval) ..... (X21-2239050)
U0110-001001 668
Caution Plates (English) ..... (X21-1167230)
U0120-001001 669
Komatsu Logo ..... (X21-2249370)
U0150-001001 670
Komatsu Logo (Additional) ..... (X21-2245820)
U0150-002001 671
Komatsu Logo (For 6.0m SE Boom With Reinforcement) ..... (X87-0008740)
U0150-003001 672
Lifting Capacity Chart (English) ..... (X21-1321430)
U0200-001001 673
Machine Push-up Switch Decal, Thai ..... (X87-0007890)
U0200-002001 674
Coolant Decal (English) ..... (X21-1392170)
U0202-001001 675
KOMTRAX Plate ..... (X21-2020160)
U0205-001001 676
KOMTRAX Plate, GPRS, TC530 ..... (X87-0002190)
U0205-002001 677

KOMTRAX Plate, GPRS, 3G, TC630 ..... (X87-0002191)
U0205-003001 678
Caution Plates ..... (X21-1134080)
U0510-001001 679
FOPS Plate (English, Cab Top Guard LV2) ..... (X21-1171950)
U0520-001001 680
FOPS Plate, English, Cab front Guard LV2 ..... (X21-1171960)
U0520-002001 681
FOPS Plate, English, Cab front Guard LV2, Top Guard LV2 ..... (X21-1171970)
U0520-003001 682
Caution Plates (English) ..... (X21-2072690)
U0521-001001 683
Rivet (Plate Less) ..... (X21-2072780)
U0521-002001 684
Service Instruction ..... (X21-0560371)
U0550-001001 685
Caution Plates (1-additional Actuator Piping) ..... (X21-0568650)
U0580-001001 686
Caution Plates, Backward, Rearview Camera ..... (X21-1337580)
U0610-001001 687
AUXILIARY PARTS AND TOOL
Spare Parts (For Large Fuel Prefilter, Indonesian) ..... (X21-2239270)
V0100-001001 690
Spare Parts (For Normal Fuel Prefilter) ..... (X21-2246850)
V0100-002001 691
Cap and Overall ..... (X21-0291910)
V0200-001001 692
General Tool Set ..... (X21-0835600)
V0300-001001 693
OTHER EQUIPMENT
Fuel Refill Pump (Large Fuel Prefilter) ..... (X21-2238170)
W1113-001001 696
Fuel Refill Pump (Normal Fuel Prefilter) ..... (X21-2243490)
W1113-002001 697
Additional Track Frame Step ..... (X21-1093810)
W1114-001001 698
Vandalism Protection ..... (X21-2428230)
Cab Door Guard W1115-001001 699
Monitor Guard and Rear Cover Guard W1115-001002 700
Engine Drain Hose ..... (X21-0507990)
W9960-001001 701
FIELD REPAIR SERVICE PARTS
Service Kit Parts (1/1) ..... (Y99-0000002)
KIT-001001 704

ENGINE CYLINDER HEAD AND ITS RELATED PARTS

FIG. AVC00-001001 Head Cover

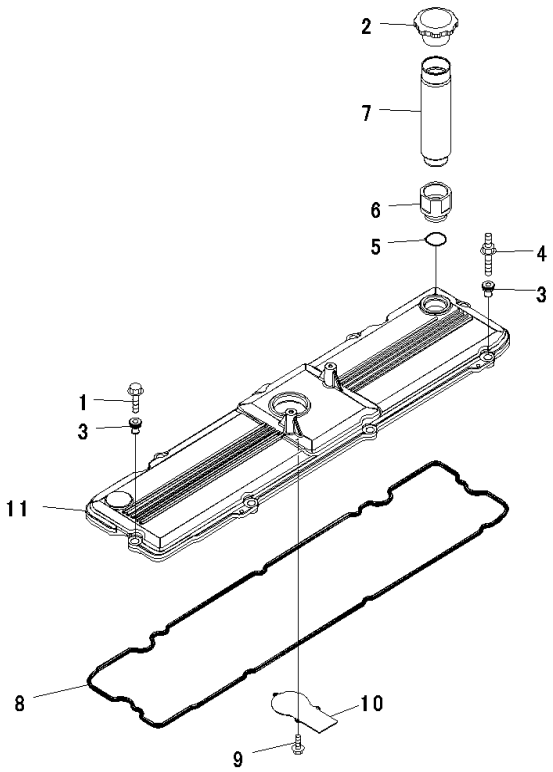

JY012022

Index	Code	Part Number	Description	Qty	Serial Number
1		01435-60835	Bolt	7	26866736-
2		6754-11-8480	Cap	1	26871967-
		6754-11-8380	Cap	1	26866736-26871966
3		6745-11-8160	Isolator	8	26866736-
4		6745-11-8170	Screw	1	26866736-
5		07002-23634	O-ring	1	26866736-
		6745-11-8100	Cover	1	26866736-
6		6745-11-8190	• Adapter	1	26866736-
7		6754-11-8140	• Filler	1	26866736-
		6745-11-8180	Cover	1	26866736-
8		6745-11-8810	• Gasket	1	26866736-
		6745-11-8220	• Cover	1	26866736-
9		6745-11-8150	• • Bolt	3	26866736-
10		6745-11-8120	• • Plate	1	26866736-
11		6745-11-8110	• • Cover	1	26866736-

FIG. AXS00-001001 Exhaust Connector Clamp

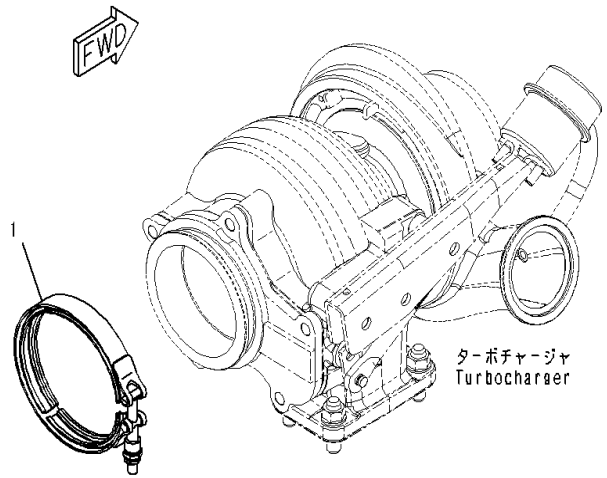

Index	Code	Part Number	Description	Qty	Serial Number
1		6742-01-3620	Clamp	1	26866736-

FIG. A1009-001001 Cylinder Head

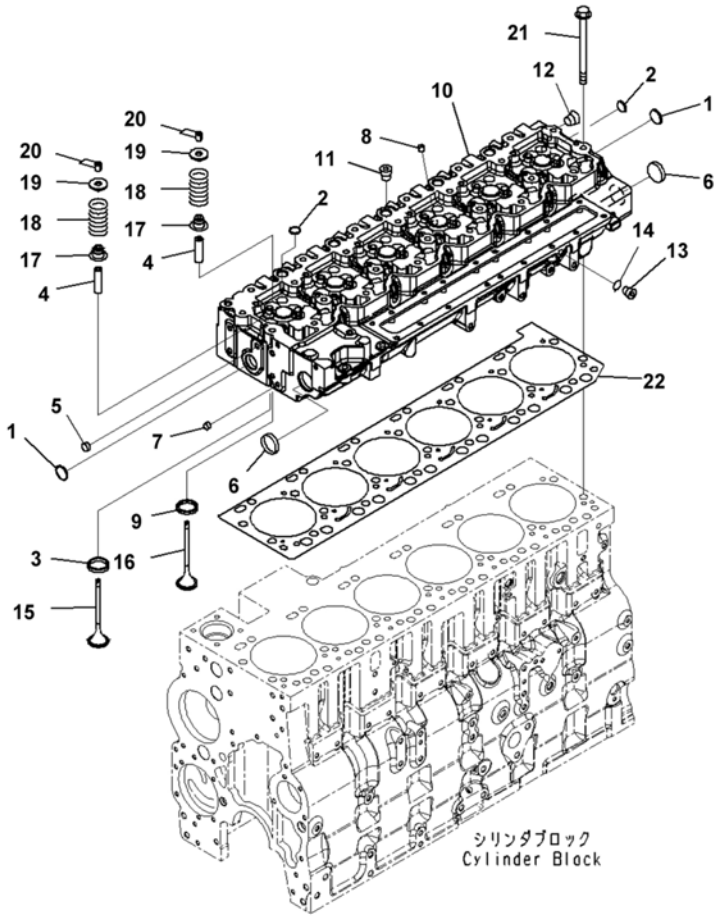

Index	Code	Part Number	Description	Qty	Serial Number
		6745-11-1190	Cylinder Head Assembly	1	26866736-
		6745-11-1123	• Head, Cylinder, Cylinder	1	26866736-
1		6742-01-2920	• • Plug	2	26866736-
2		6735-21-5531	• • Plug, Expansion	18	26866736-
3		6745-41-4210	• • Insert, Intake Valve	12	26866736-
4		6745-49-4130	• • Guide	24	26866736-
5		6744-41-4110	• • Plug	1	26866736-
6		6744-11-1070	• • Plug	2	26866736-
7		6744-41-4120	• • Plug	1	26866736-
8		6754-11-1160	• • Plug	6	26866736-
9		6745-41-4220	• • Insert, Intake Valve	12	26866736-
10	C1		• • Head	1	26870379-
	C1		• • Head, Cylinder	1	26866736-26870378
11		6732-11-1910	• Plug, Pipe	5	26866736-
12		6732-11-1920	• Plug	1	26866736-
		6732-21-1960	• Plug Assembly	1	26866736-
13		6215-81-9510	• • Plug	1	26866736-
14		6735-21-1970	• • O-ring	1	26866736-
15		6745-41-4161	Valve, Intake	12	26866736-
16		6745-41-4151	Valve, Exhaust	12	26866736-
17		6744-41-4080	Seal	24	26871609-
	A1	6746-41-4210	Seal	24	26866736-26871608
18		6745-41-4110	Spring	24	26872423-
	A3	6744-41-4033	Spring	24	26868633-26872422
		6744-41-4032	Spring	24	26868369-26868632
	A1	6744-41-4031	Spring	24	26866736-26868368
19		6744-41-4050	Retainer	24	26866736-
20		6732-41-4520	Collet	48	26866736-
21		6743-11-1610	Bolt	26	26866736-
22		6745-11-1811	Gasket	1	26866736-

FIG. ABR00-001001 Breather

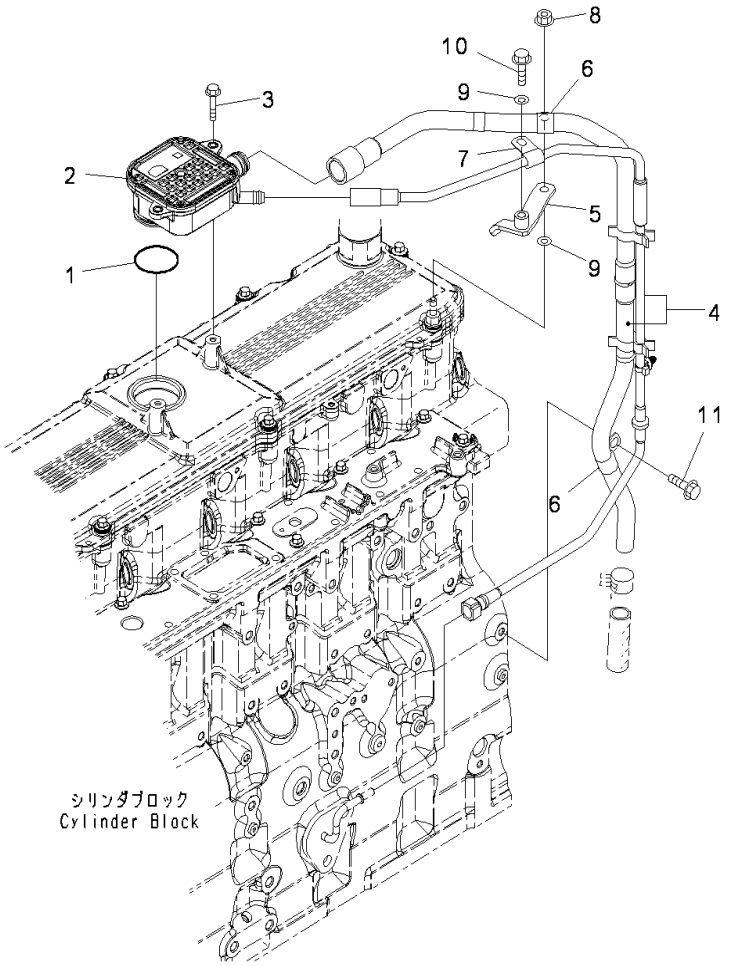

Index	Code	Part Number	Description	Qty	Serial Number
		6745-21-7110	Housing Assembly	1	26866736-
1		6745-21-7120	• O-ring	1	26866736-
2	C1		• Housing	1	26866736-
3		6735-71-5190	Bolt	2	26866736-
4		6745-21-7181	Tube	1	26866736-
5		6745-11-8250	Brace	1	26866736-
6		6216-24-5730	Clip	2	26866736-
7		04434-51008	Clip	1	26866736-
8		6732-71-3210	Nut	1	26866736-
9		01643-30823	Washer	2	26866736-
10		6731-71-6270	Screw	1	26866736-
11		01435-60816	Bolt	1	26866736-

FIG. AIM00-001001 Air Intake Manifold

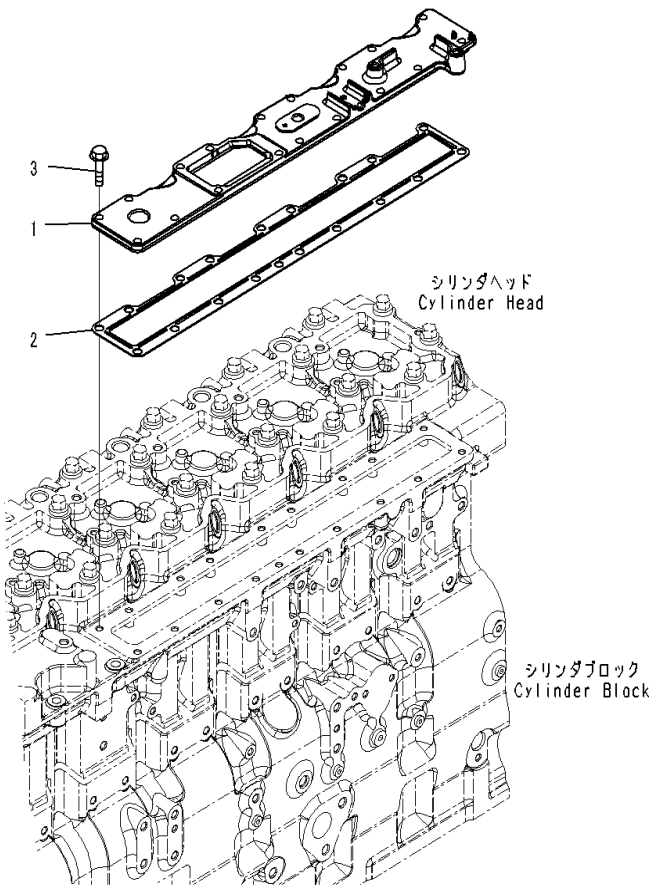

Index	Code	Part Number	Description	Qty	Serial Number
1		6745-11-4110	Cover	1	26866736-
2		6745-11-4120	Gasket	1	26866736-
3		6732-21-6630	Screw	7	26868369-
		6732-21-6630	Screw	6	26866736-26868368

FIG. AIC00-001001 Air Intake Connector

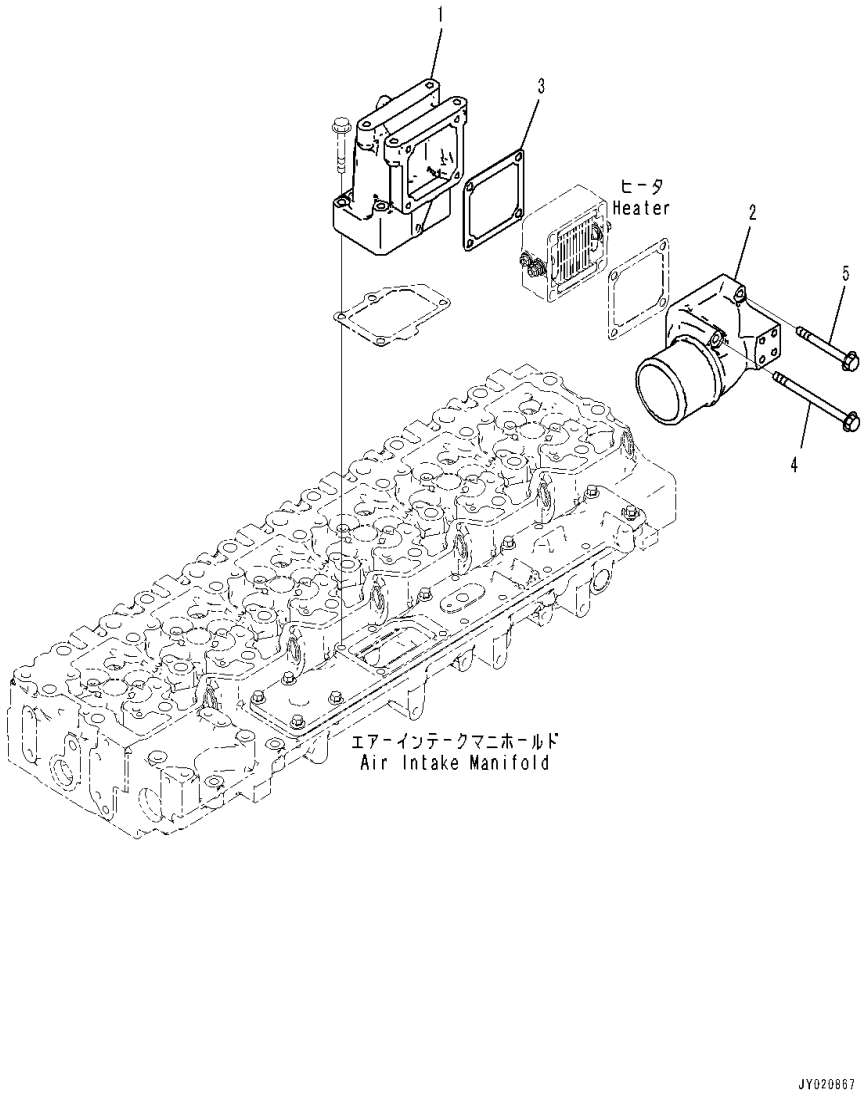

Index	Code	Part Number	Description	Qty	Serial Number
1		6745-11-4310	Connection,Air Intake	1	26866736-
2		6746-11-4230	Pipe	1	26866736-
3		6754-11-4120	Gasket	1	26866736-
4		6746-11-4240	Bolt	2	26866736-
5		01435-60890	Bolt	2	26866736-

FIG. AIC20-001001 Air Intake Connector Mounting

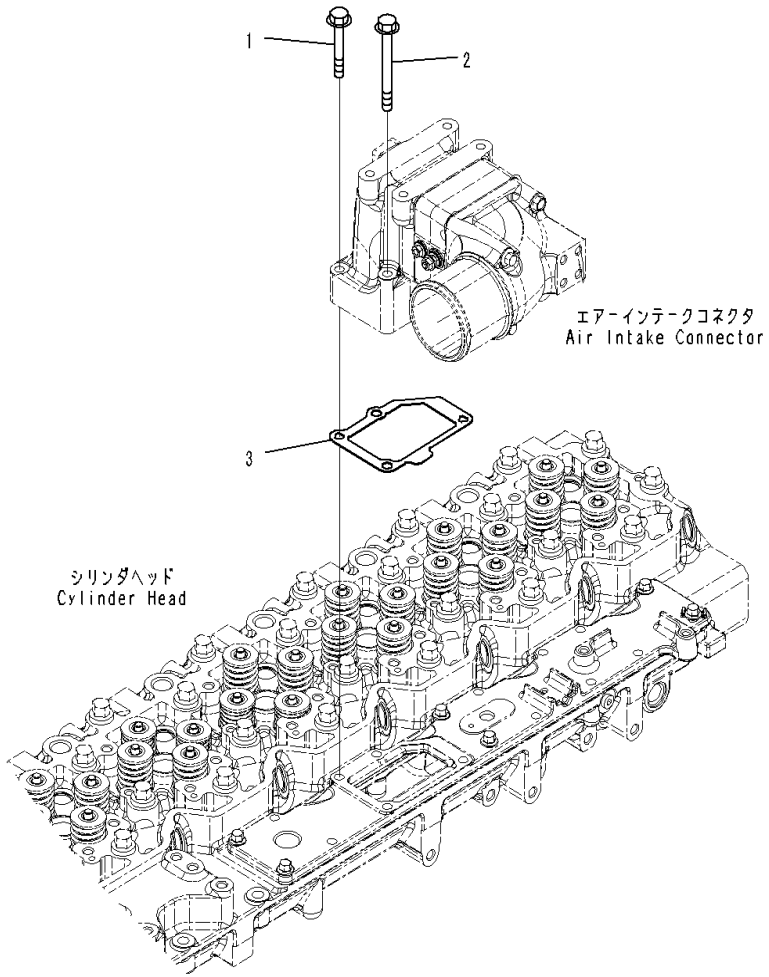

Index	Code	Part Number	Description	Qty	Serial Number
1		6736-21-3230	Bolt	2	26866736-
2		01435-60890	Bolt	2	26866736-
3		6745-81-4120	Gasket	1	26866736-

FIG. AAH00-001001 Air Intake Heater

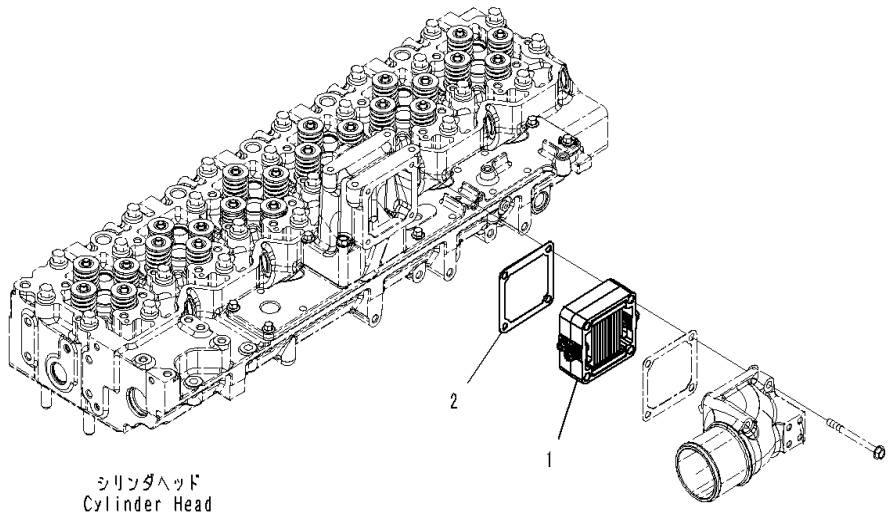

Index	Code	Part Number	Description	Qty	Serial Number
1		600-816-3120	Heater	1	26871773-
	A1	6754-81-5110	Heater	1	26866736-26871772
2		6754-11-4120	Gasket	1	26866736-

FIG. B9999-001001 Air Cleaner, With Pre-Cleaner

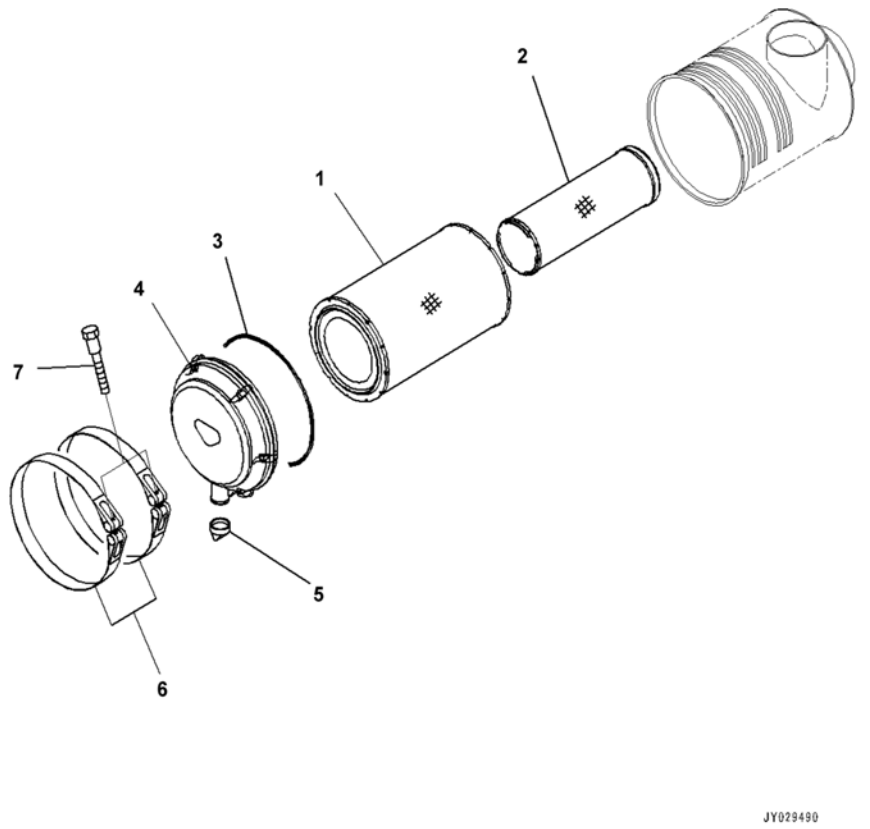

Index	Code	Part Number	Description	Qty	Serial Number
		6745-81-7320	Air Cleaner	1	26866736-
		600-185-4200	• Element Assembly	1	26866736-
1		600-185-4210	• • Element,Outer	1	26866736-
2	C1		• • Element,Inner	1	26866736-
3		600-184-1570	• • O-ring	1	26866736-
4		600-184-1510	• Cover Assembly	1	26866736-
5		600-184-1350	• Valve, Vaquator	1	26866736-
6		6151-11-4840	Band	2	26866736-
7		6643-11-4641	Bolt	2	26866736-

FIG. B9999-004001 Air Cleaner

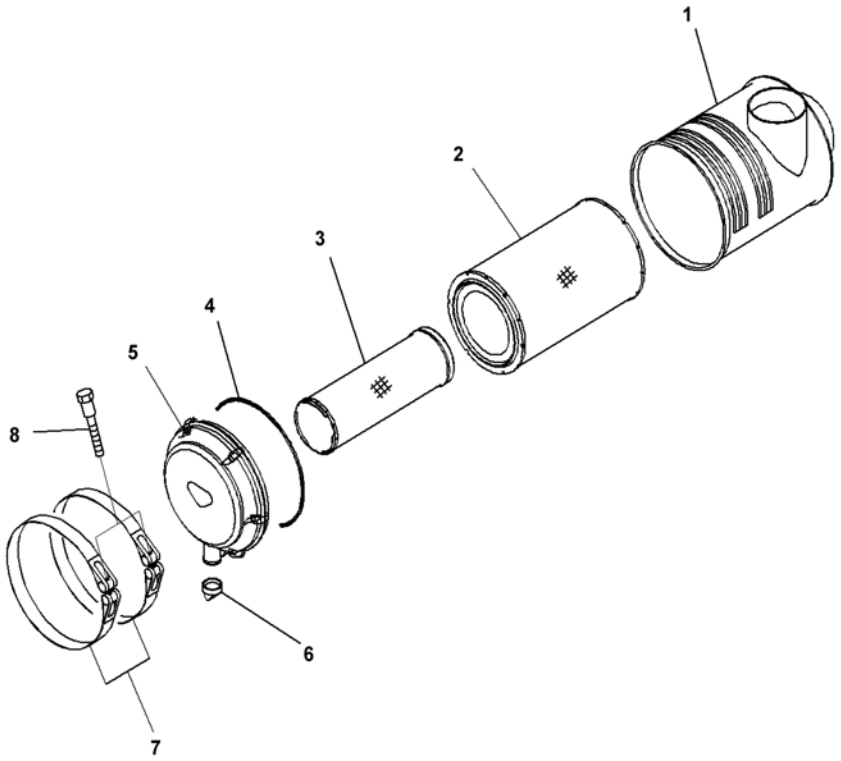

Index	Code	Part Number	Description	Qty	Serial Number
		6156-81-7202	Air Cleaner Assembly	1	26866736-
1	C1		• Body	1	26866736-
		600-185-6100	• Element Assembly	1	26866736-
2		600-185-6110	• • Element, Outer	1	26866736-
3	C1		• • Element, Inner	1	26866736-
4		600-184-1671	• • O-ring	1	26866736-
5		600-184-1611	• Cover Assembly	1	26866736-
6		600-184-1350	• Valve, Vaquator	1	26866736-
7		6151-11-9970	Band Assembly	2	26866736-
8		6643-11-4641	Bolt	2	26866736-

FIG. B9999-002001 Aftercooler

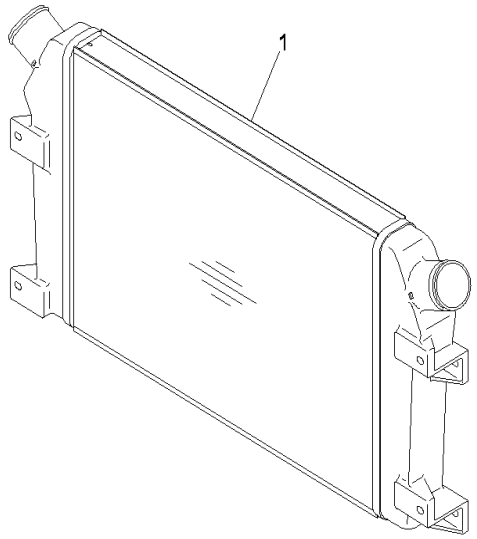

00065676

Index	Code	Part Number	Description	Qty	Serial Number
1		6152-62-5110	Aftercooler Assembly	1	26866736-

FIG. ATB30-001001 Exhaust Manifold

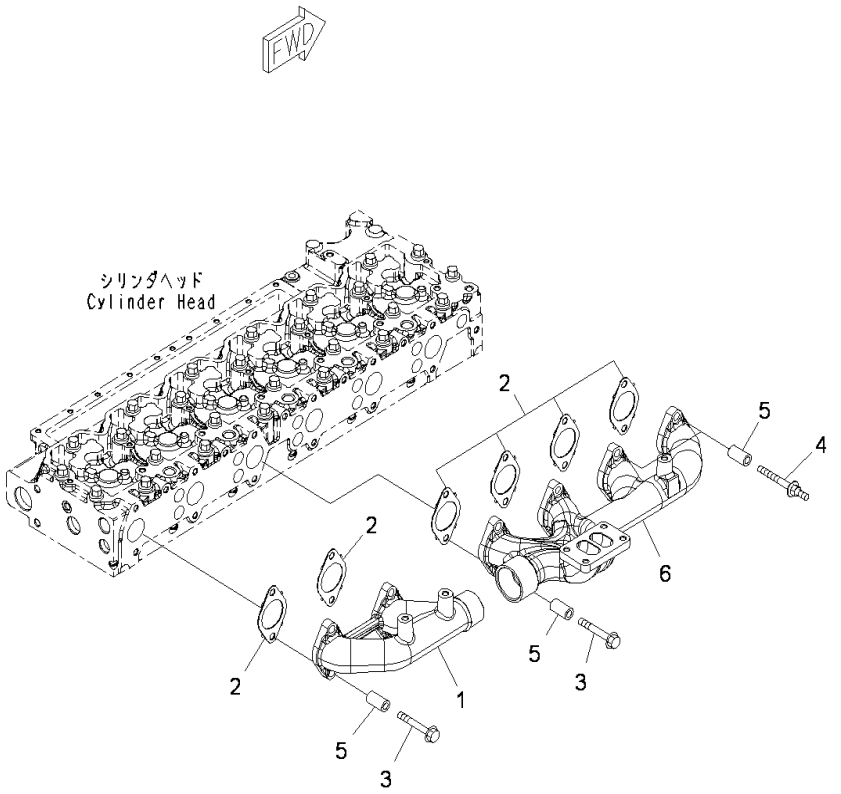

Index	Code	Part Number	Description	Qty	Serial Number
1		6745-11-5110	Manifold	1	26866736-
2		6745-11-5811	Gasket	6	26866736-
3		6732-11-5860	Bolt	8	26866736-
4		6745-11-5170	Bolt	4	26866736-
5		6754-11-5150	Spacer	12	26866736-
6		6745-11-5120	Manifold	1	26866736-

FIG. A1539-001001 Turbocharger

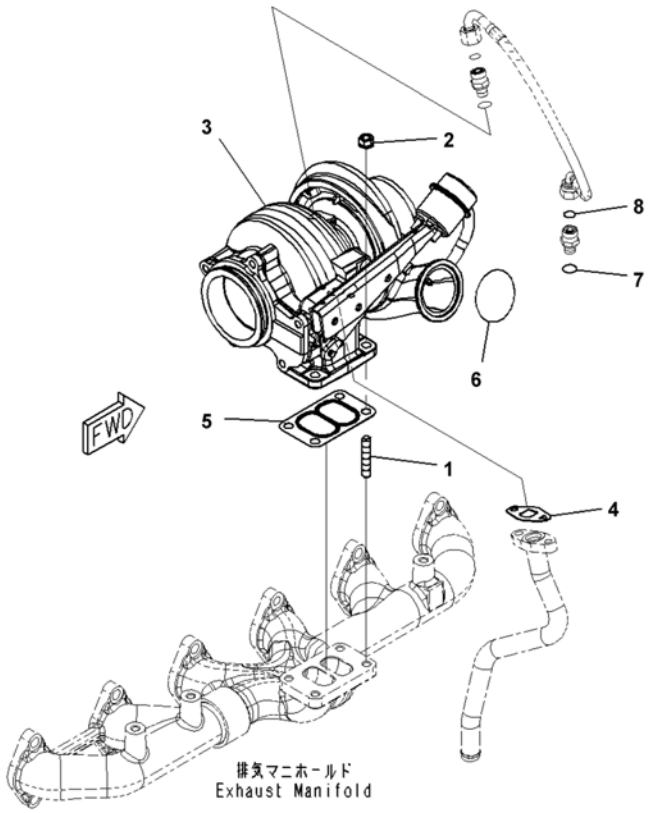

Index	Code	Part Number	Description	Qty	Serial Number
1		6732-81-8810	Stud	4	26866736-
2		6732-81-8820	Nut	4	26866736-
		6745-81-8041	Turbocharger Kit	1	26866736-
3		6745-81-8190	• Turbocharger	1	26866736-
4		6207-51-7690	• Gasket, Oil Drain	1	26866736-
5		6732-81-8830	• Gasket	1	26866736-
6		6738-11-4370	• O-ring	1	26866736-
7		6736-51-8710	• O-ring	1	26866736-
8		6732-81-8860	• O-ring	1	26866736-

FIG. ATP00-001001 Turbocharger Oil Piping

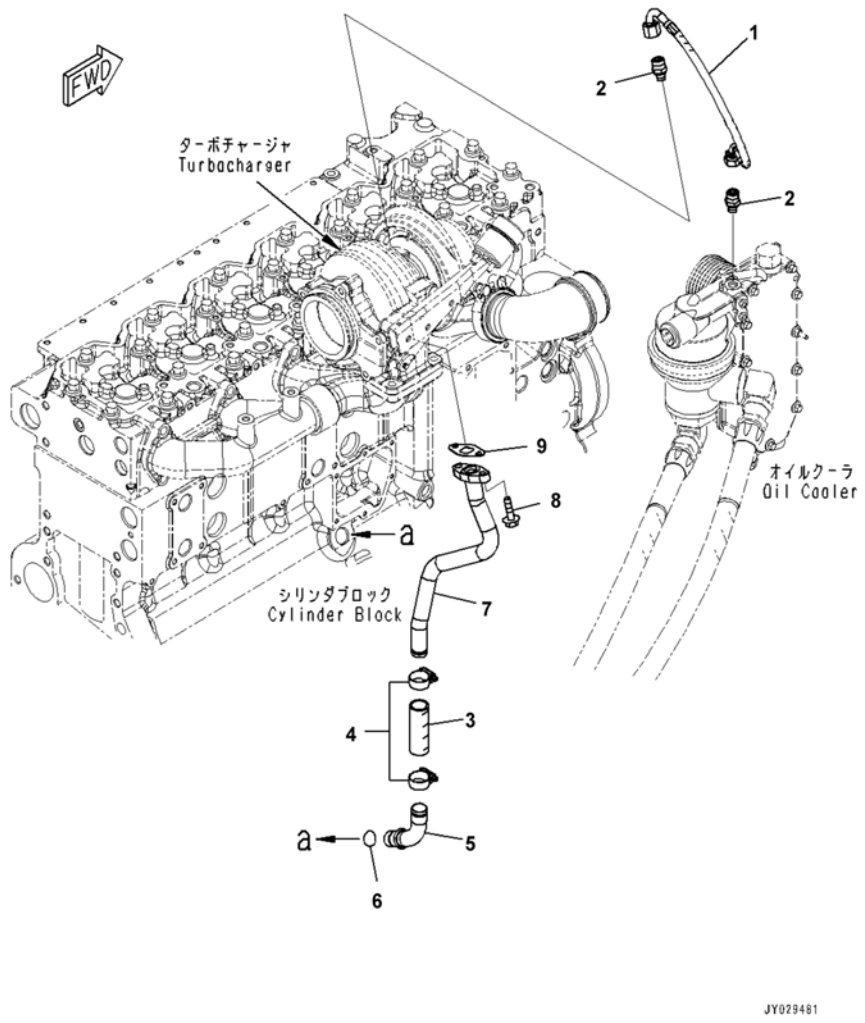

Index	Code	Part Number	Description	Qty	Serial Number
1		6745-51-8130	Hose	1	26866736-
2		6745-61-8160	Connector Assembly	2	26866736-
		6737-51-8770	• O-ring	1	26866736-
		6732-81-8860	• O-ring	1	26866736-
3		6732-51-8370	Hose	1	26866736-
4		07281-00359	Clamp, Hose	2	26866736-
5		6745-51-8110	Tube	1	26866736-
6		6731-51-8150	O-ring	1	26866736-
7		6745-51-8120	Connector	1	26866736-
8		01435-60820	Bolt	2	26866736-
9		6207-51-7690	Gasket	1	26866736-

FIG. A1610-001001 Exhaust Muffler

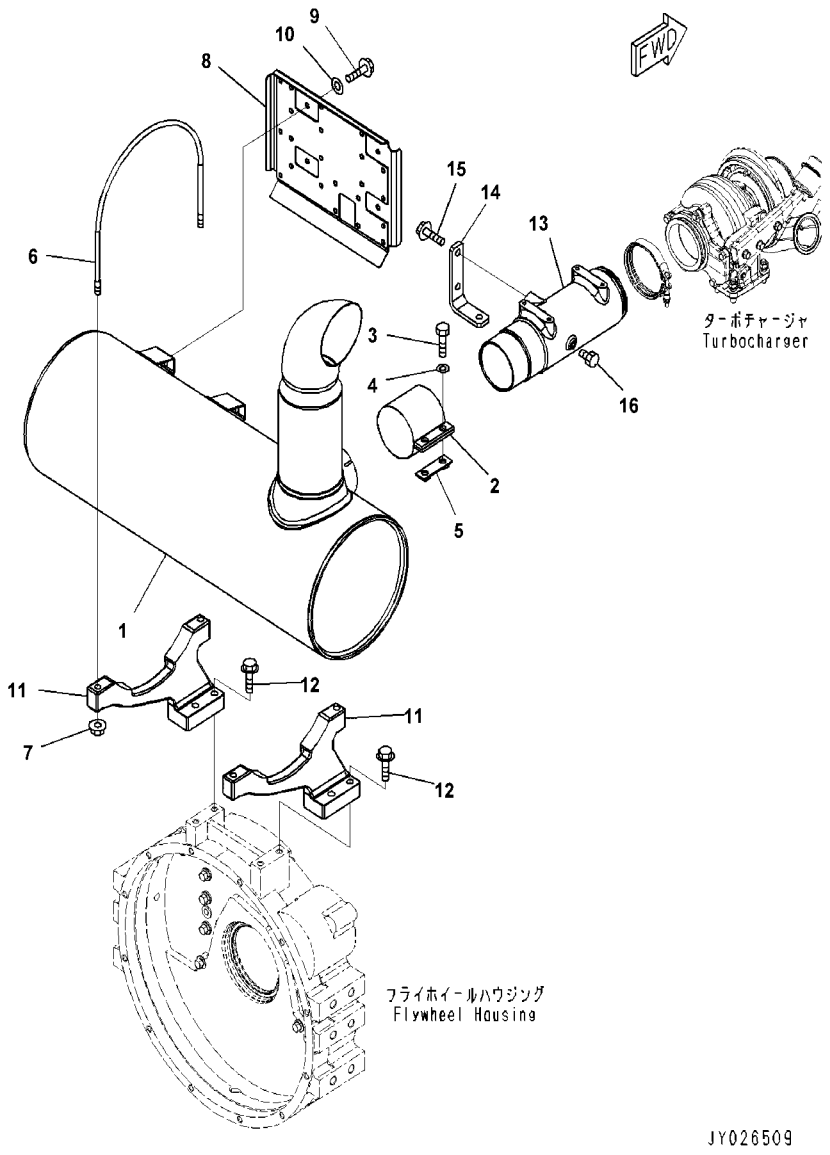

Index	Code	Part Number	Description	Qty	Serial Number
1		6745-11-6510	Muffler	1	26866736-
2		6743-11-5230	Clamp	1	26866736-
3		01010-E1235	Bolt	2	26866736-
4		01643-31232	Washer	2	26866736-
5		6208-11-5850	Plate	1	26866736-
6		6222-11-5940	U-bolt	2	26866736-
7		01594-01008	Nut	4	26866736-
8		6745-11-6240	Cover	1	26866736-
9		01435-00820	Bolt	4	26866736-
10		154-61-16570	Washer	4	26866736-
11		6745-11-6180	Bracket	2	26866736-
12		01435-01245	Bolt	4	26866736-
13		6745-11-6520	Connector	1	26866736-
14		6745-11-6261	Bracket	1	26871297-
		6745-11-6260	Bracket	1	26866736-26871296
15		01435-01025	Bolt	3	26866736-
16		6215-11-5920	Plug	1	26868369-

FIG. B9999-003001 Exhaust Muffler Drain

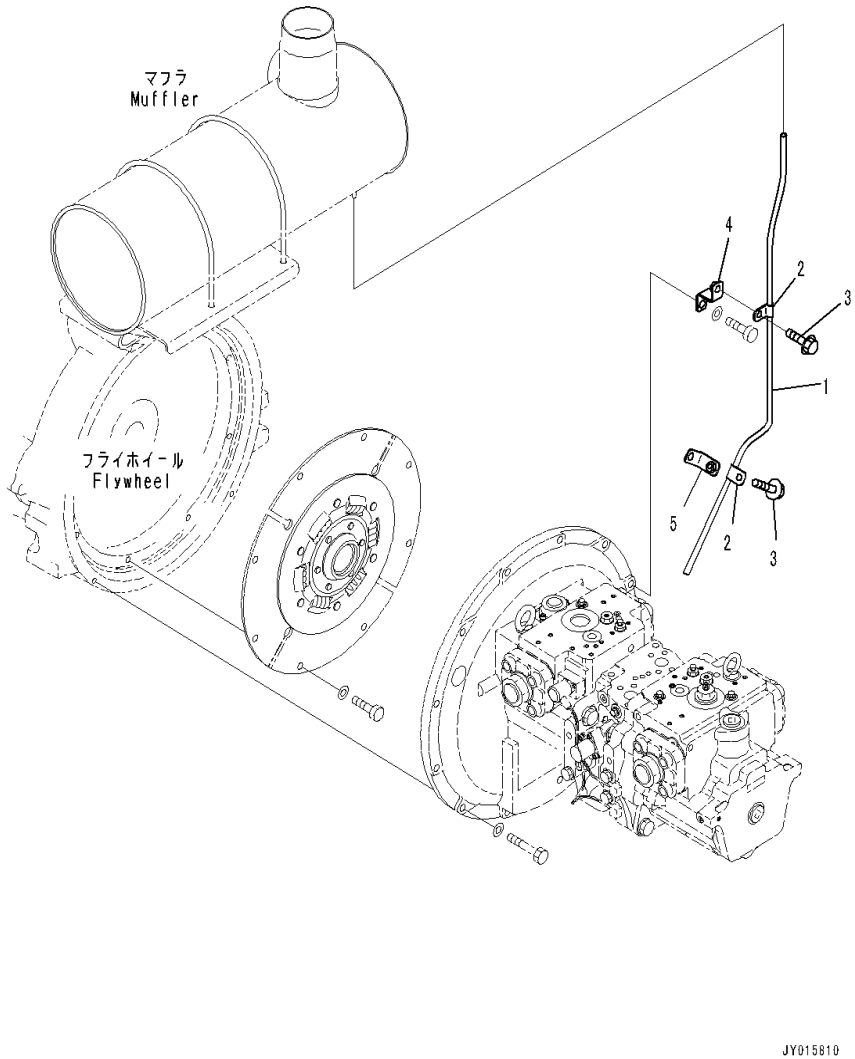

Index	Code	Part Number	Description	Qty	Serial Number
1		6745-11-6530	Tube	1	26866736-
2		6991-11-5990	Clamp	2	26866736-
3		01435-01016	Bolt	2	26866736-
4		6745-11-8260	Bracket	1	26866736-
5		6745-11-8270	Bracket	1	26866736-

FIG. AIT00-001001 Exhaust Connection

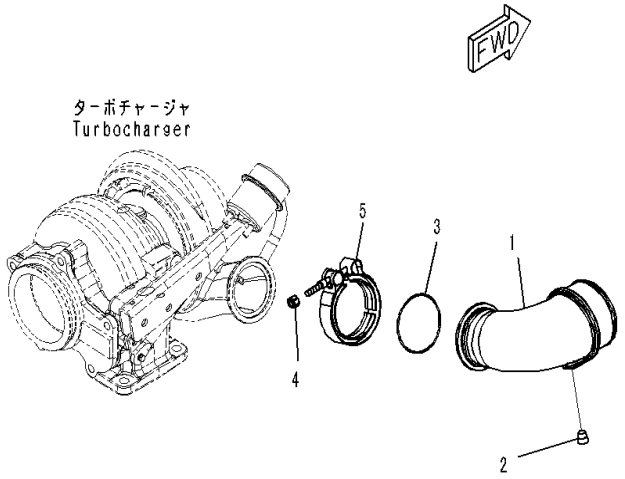

Index	Code	Part Number	Description	Qty	Serial Number
1		1307682H1	Pipe	1	26866736-
2		1240101H1	Plug	1	26866736-
3		6738-11-4370	O-ring	1	26866736-
4		6738-11-4390	Nut	1	26866736-
5		6738-11-4380	Clamp	1	26866736-

FIG. A1570-001001 Heat Shield

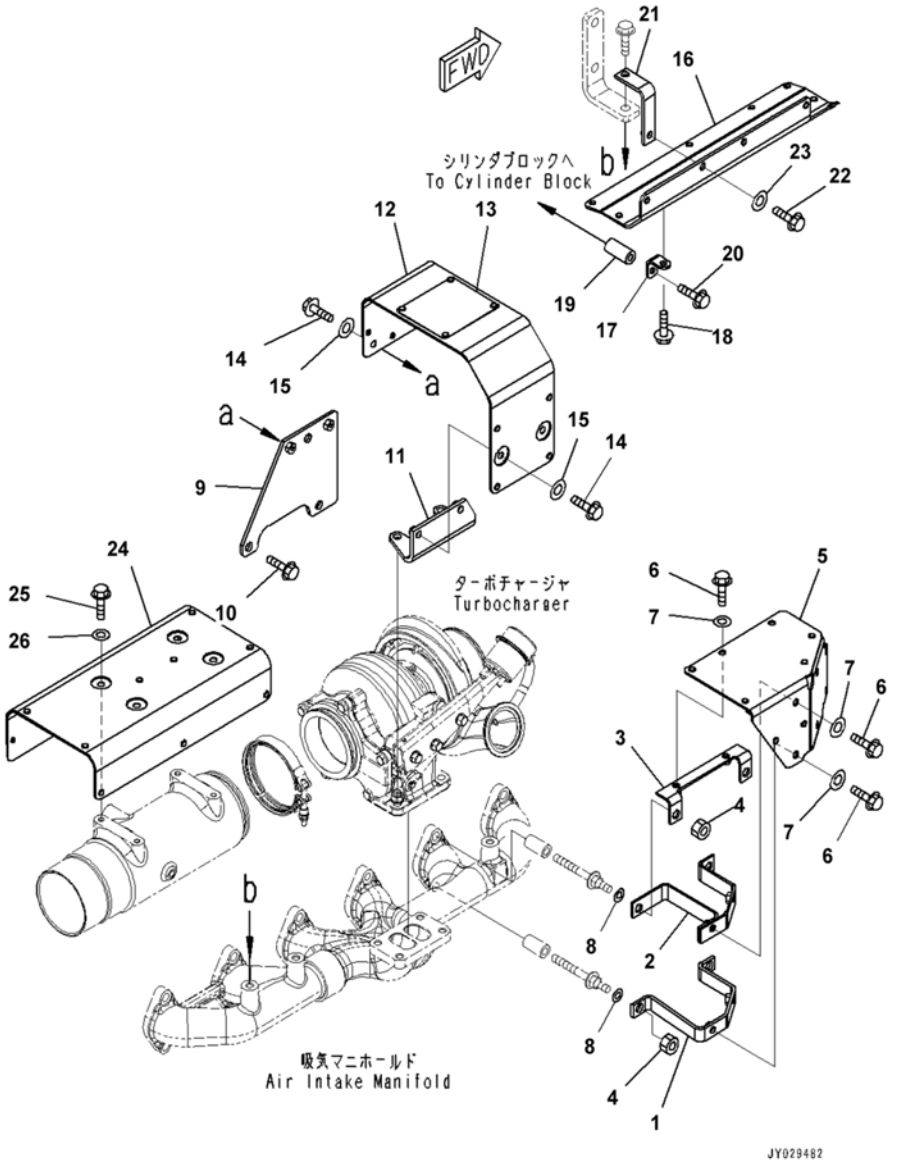

Index	Code	Part Number	Description	Qty	Serial Number
1		6745-81-8410	Bracket	1	26866736-
2		6745-81-8420	Bracket	1	26866736-
3		6745-81-8430	Bracket	1	26866736-
4		01581-01008	Nut	4	26866736-
5		6745-81-8440	Cover	1	26866736-
6		01435-00820	Bolt	6	26866736-
7		154-61-16570	Washer	6	26866736-
8		01643-31032	Washer	4	26866736-
9		6745-81-8260	Plate	1	26866736-
10		01435-01020	Bolt	2	26866736-
11		6745-81-8280	Bracket	1	26866736-
12		6745-81-8250	Cover	1	26866736-
13		09817-A1103	Plate, Warning, High Temperature	1	26866736-
14		01435-00820	Bolt	4	26866736-
15		154-61-16570	Washer	4	26866736-
16		6745-11-5310	Cover	1	26866736-
17		6050-71-5710	Bracket	2	26866736-
18		01435-00816	Bolt	2	26866736-
19		6138-81-8660	Spacer	2	26866736-
20		01435-00855	Bolt	2	26866736-
21		6743-81-8491	Bracket	1	26871297-
		6743-81-8490	Bracket	1	26866736-26871296
22		01435-00820	Bolt	1	26866736-
23		154-61-16570	Washer	1	26866736-
24		6745-81-8270	Cover	1	26866736-
25		01020-10816	Bolt	4	26872423-
	A1	01435-00814	Bolt	4	26866736-26872422
26		6745-81-8330	Washer	4	26872423-
	A1	154-61-16570	Washer	4	26866736-26872422

FIG. ARL00-001001 Rocker Arm Housing and Rocker Arm

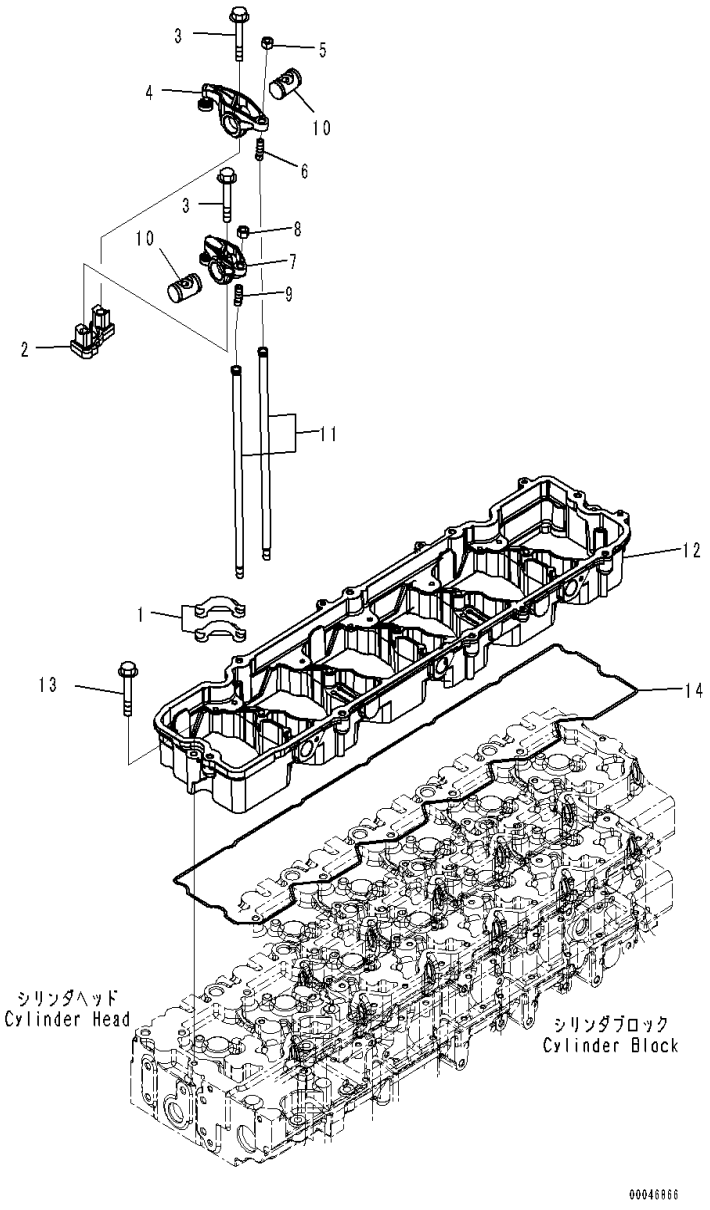

Index	Code	Part Number	Description	Qty	Serial Number
1		6744-41-5010	Crosshead	12	26866736-
2		6744-41-5030	Support	6	26866736-
3		6744-41-3020	Bolt	12	26866736-
4		6745-41-5402	Lever Assembly, Exhaust Valve	6	26869916-
		6745-41-5401	Lever Assembly , Exhaust Valve	6	26866736-26869915
5		6732-41-5430	• Nut	1	26866736-
6		6745-41-5430	• Screw	1	26866736-
7		6745-41-5202	Lever Assembly, Intake Valve	6	26869916-
		6745-41-5201	Lever Assembly, Intake Valve	6	26866736-26869915
8		6732-41-5430	• Nut	1	26866736-
9		6745-41-5430	• Screw	1	26866736-
10		6745-41-5110	Shaft	12	26866736-
11		6745-41-3100	Rod, Push	12	26866736-
12		6745-11-7112	Housing	1	26866736-
13		6733-61-3150	Bolt	7	26866736-
14		6745-11-7811	Gasket	1	26866736-

FIG. ALA00-001001 Lifting Arrangement

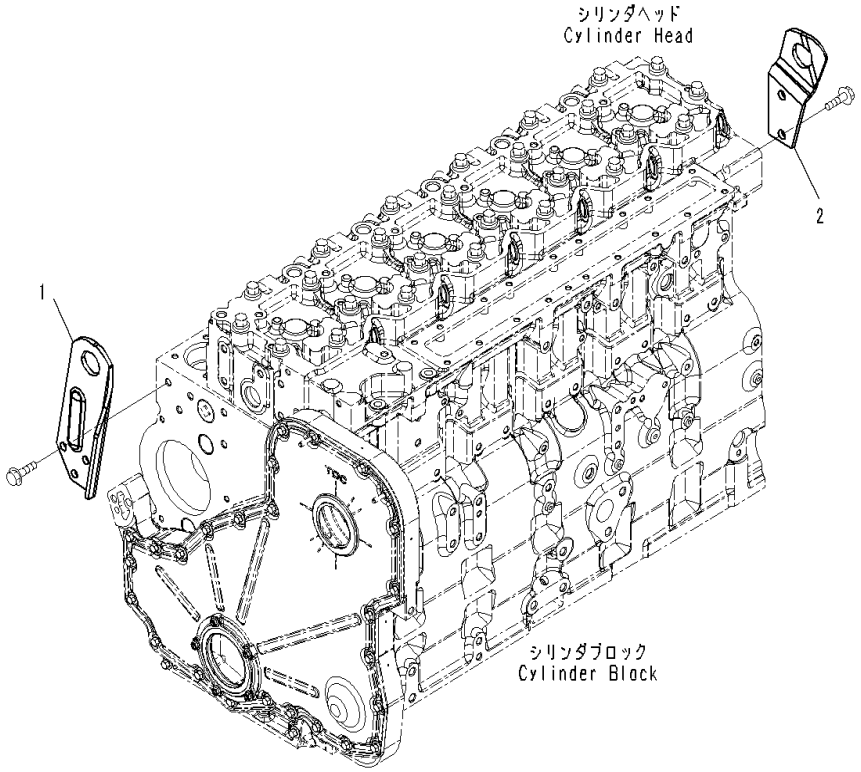

Index	Code	Part Number	Description	Qty	Serial Number
1		6745-21-1311	Bracket	1	26866736-
2		6745-21-1330	Bracket	1	26866736-

FIG. ALA10-001001 Lifting Arrangement Bolt

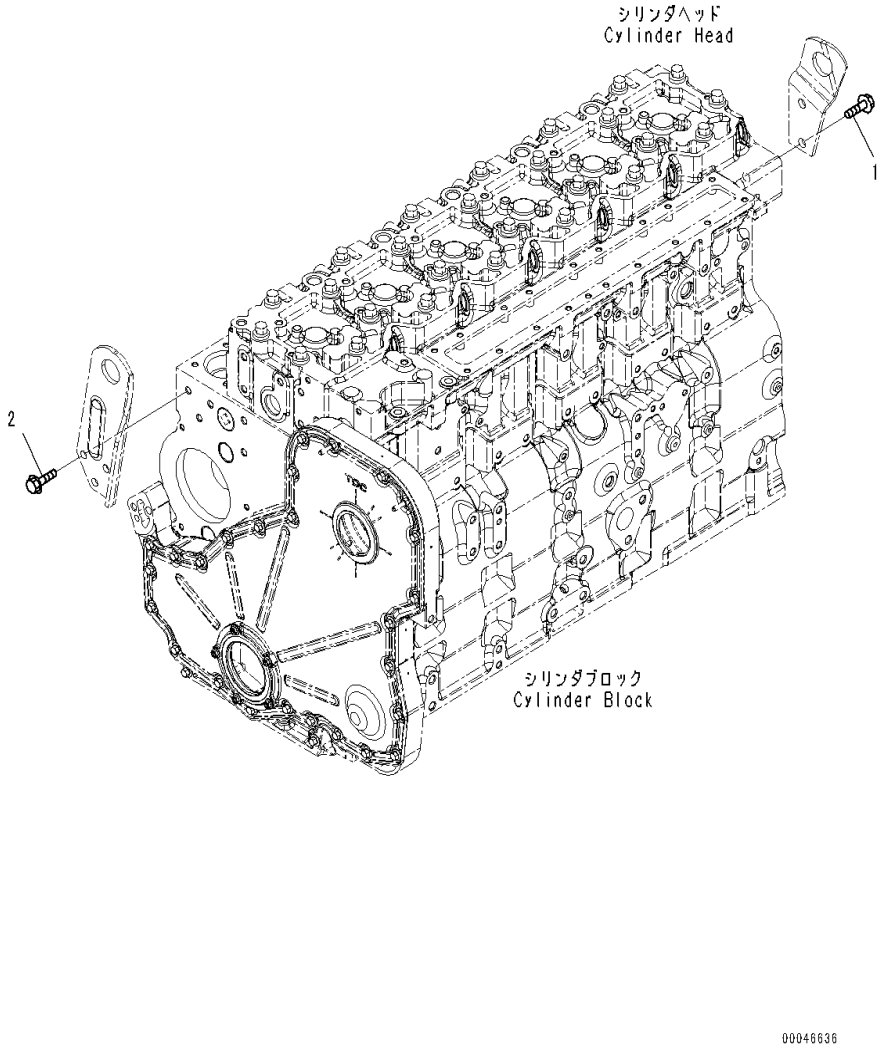

Index	Code	Part Number	Description	Qty	Serial Number
1		6732-51-5130	Bolt	2	26866736-
2		6732-61-3140	Bolt	1	26866736-

FIG. ADA00-001001 Vibration Damper

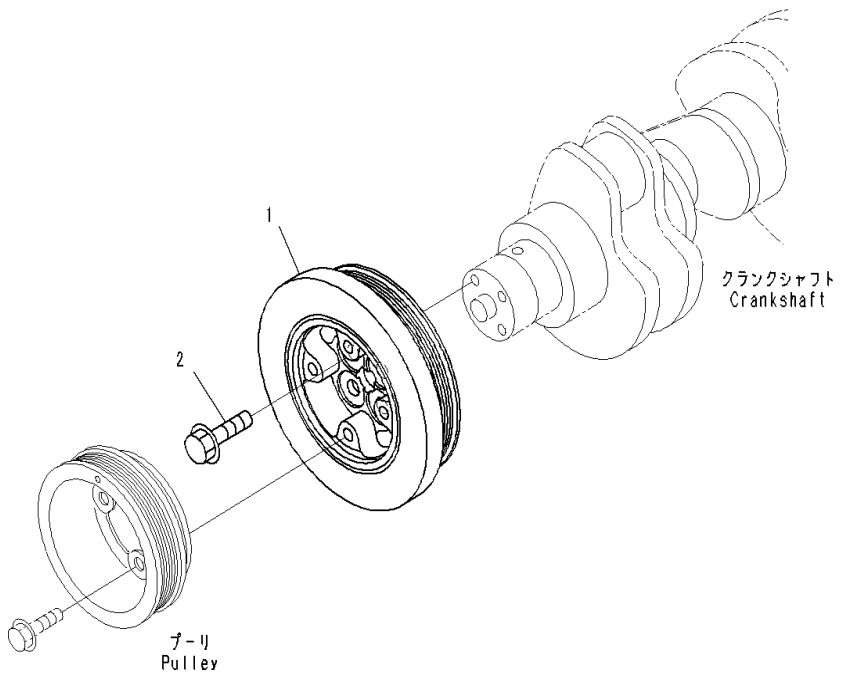

Index	Code	Part Number	Description	Qty	Serial Number
1		6742-01-5289	Damper	1	26866736-
2		6742-01-1890	Bolt	4	26866736-

ENGINE CYLINDER BLOCK AND ITS RELATED PARTS

FIG. A2419-001001 Camshaft

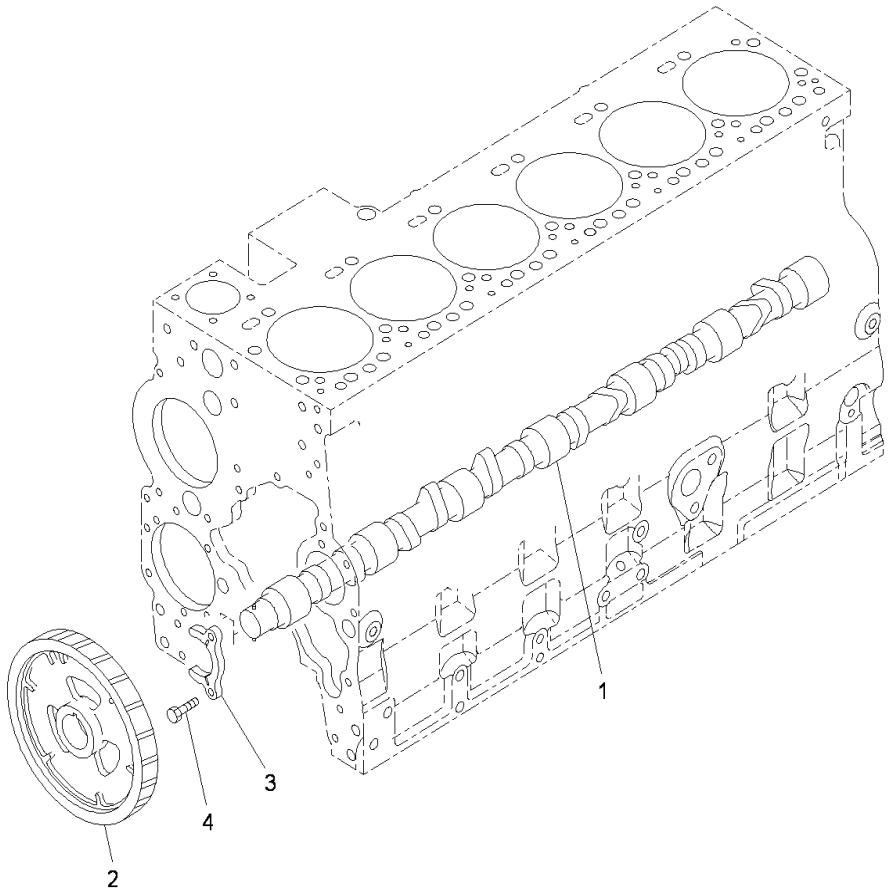

Index	Code	Part Number	Description	Qty	Serial Number
1		6745-41-1110	Camshaft Assembly	1	26866736-
2		6745-41-1131	Gear	1	26866736-
3		6744-41-1010	Support	1	26866736-
4		6732-41-1260	Bolt	2	26866736-

FIG. ABB00-001001 Tappet

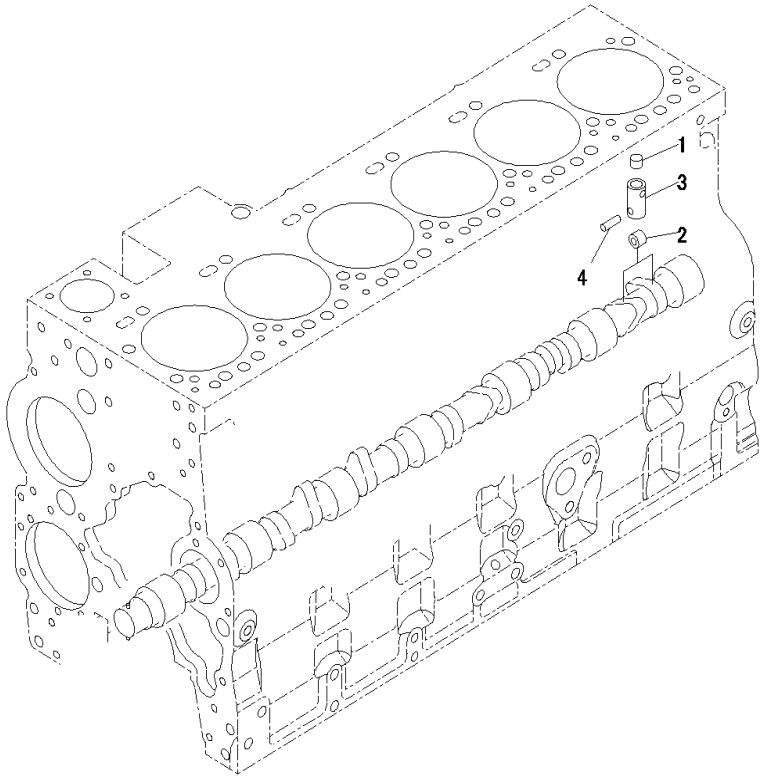

Index	Code	Part Number	Description	Qty	Serial Number
		6745-41-2100	Tappet Assembly	12	26866736-
1		6745-41-2110	• Socket	1	26866736-
2		6745-41-2120	• Roller	1	26866736-
3		6745-41-2130	• Tappet	1	26866736-
4		6745-41-2140	• Pin	1	26866736-

FIG. ADF10-001001 Front Gear Train Cover

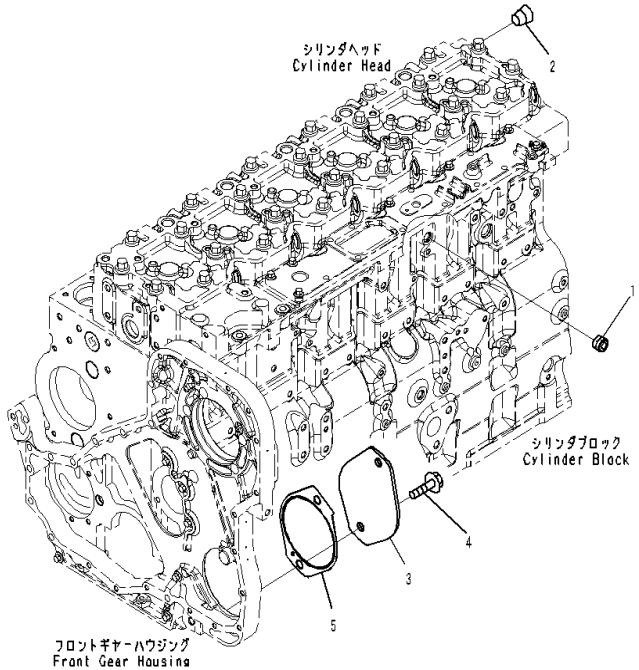

Index	Code	Part Number	Description	Qty	Serial Number
1		6732-11-1910	Plug	2	26866736-
2		6732-11-1920	Plug	1	26866736-
3		6741-21-3320	Plate	1	26866736-
4		6732-51-5130	Bolt	2	26866736-
5		6741-21-3330	Gasket	1	26866736-

FIG. A2049-001001 Front Gear Cover

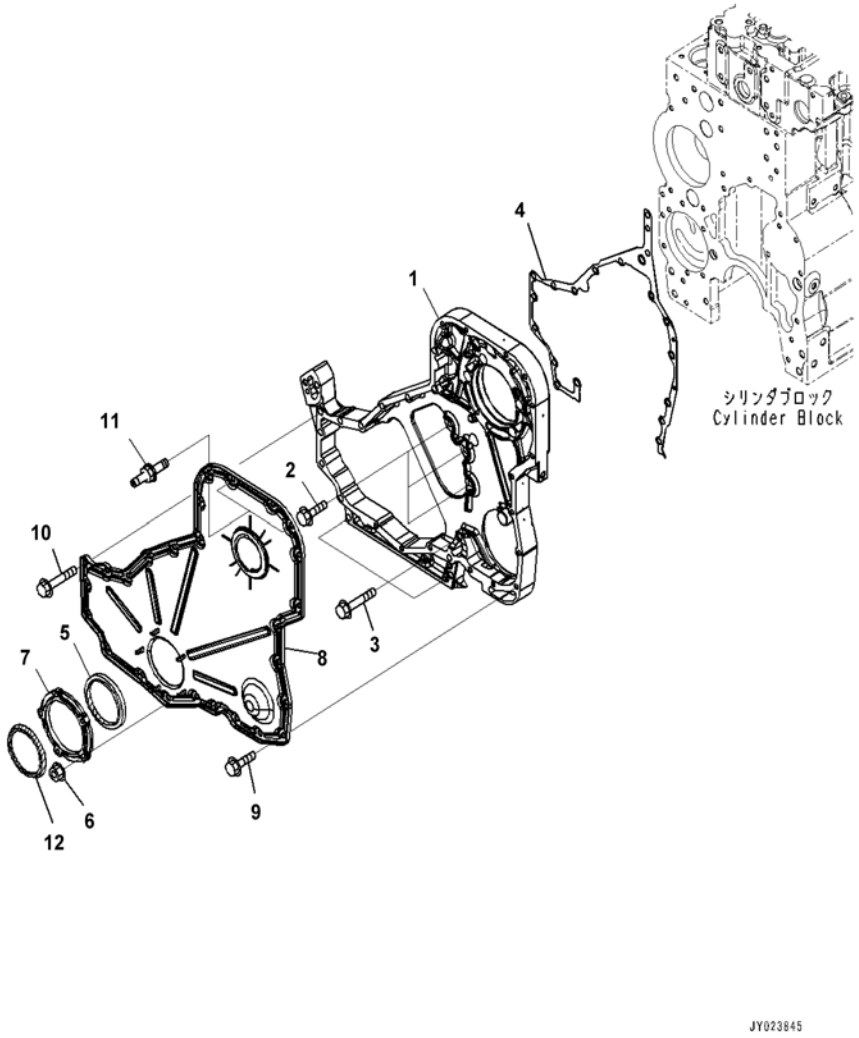

Index	Code	Part Number	Description	Qty	Serial Number
1		6745-21-3111	Housing	1	26866736-
2		6742-01-0540	Bolt	3	26866736-
3		6741-21-3820	Bolt	3	26866736-
4		6741-21-3810	Gasket	1	26866736-
		6742-01-0550	Seal Kit	1	26866736-
		6742-01-5542	• Tool, Not Shown	1	26866736-
5		6742-01-0950	• Seal	1	26866736-
6		6741-21-3541	• Nut	5	26866736-
7		6741-21-3530	Carrier	1	26866736-
8		6745-21-3210	Cover	1	26866736-
9		01435-60816	Bolt	13	26866736-
10		6742-01-0530	Bolt	11	26866736-
11		6735-21-7240	Screw	2	26866736-
12		6742-01-3320	Seal,Dust	1	26866736-

FIG. APA00-002001 Accessory Drive Pulley (For Sandy and Dusty Terrain Arrangement)

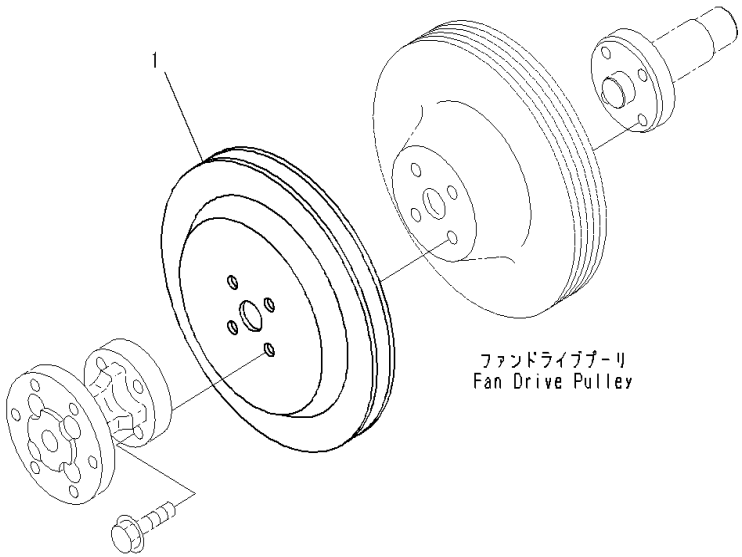

Index	Code	Part Number	Description	Qty	Serial Number
1		6743-91-6120	Pulley	1	26866736-

FIG. A2219-001001 Flywheel Housing

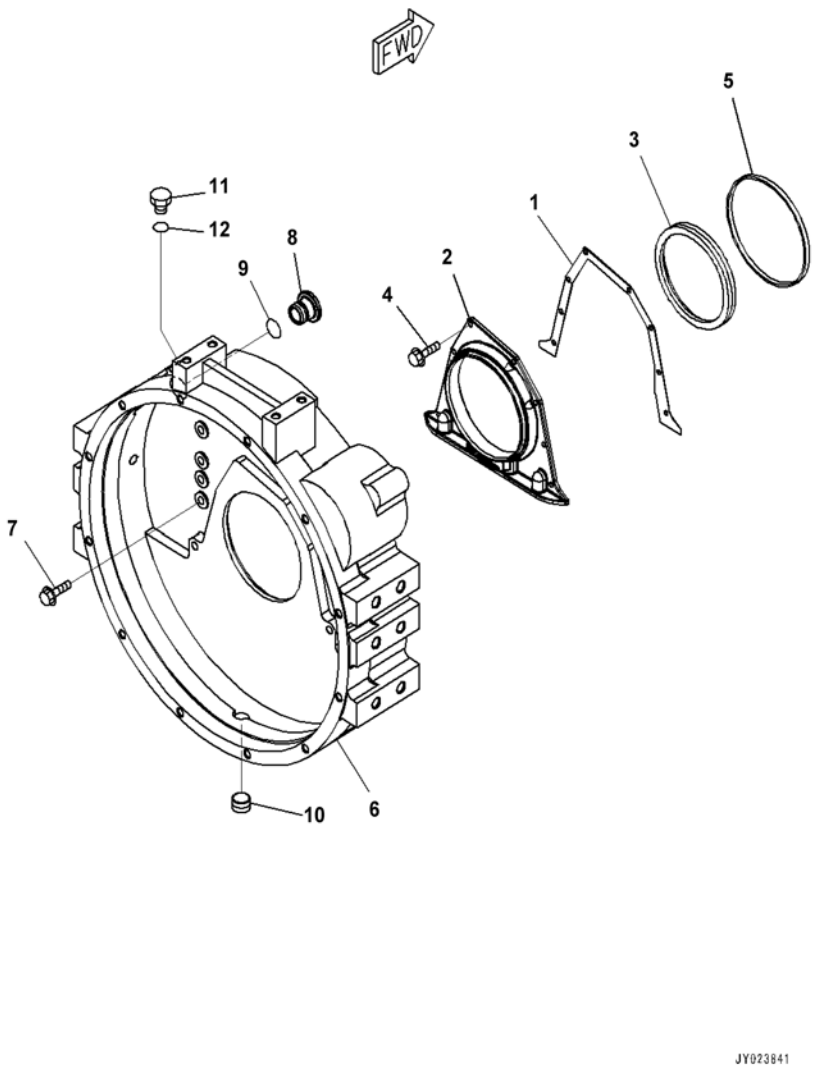

Index	Code	Part Number	Description	Qty	Serial Number
1		6743-21-4190	Gasket	1	26866736-
2		6742-01-5053	Cover	1	26866736-
3		6732-21-1311	Seal	1	26866736-
4		6732-21-4290	Bolt	8	26866736-
5		6732-21-4171	Seal Ring	1	26866736-
6		6741-21-4110	Housing, Flywheel	1	26866736-
7		6732-21-4220	Bolt	12	26866736-
8		6732-21-4150	Plug	1	26866736-
9		6732-21-4161	O-ring	1	26866736-
10		6732-11-1920	Plug	1	26866736-
11		6216-14-6820	Plug Assembly	1	26868369-
		6215-81-9530	Plug	1	26866736-26868368
		6216-14-6860	• O-ring	1	26868369-
12		6215-81-9730	O-ring	1	26866736-

FIG. AFW00-001001 Flywheel

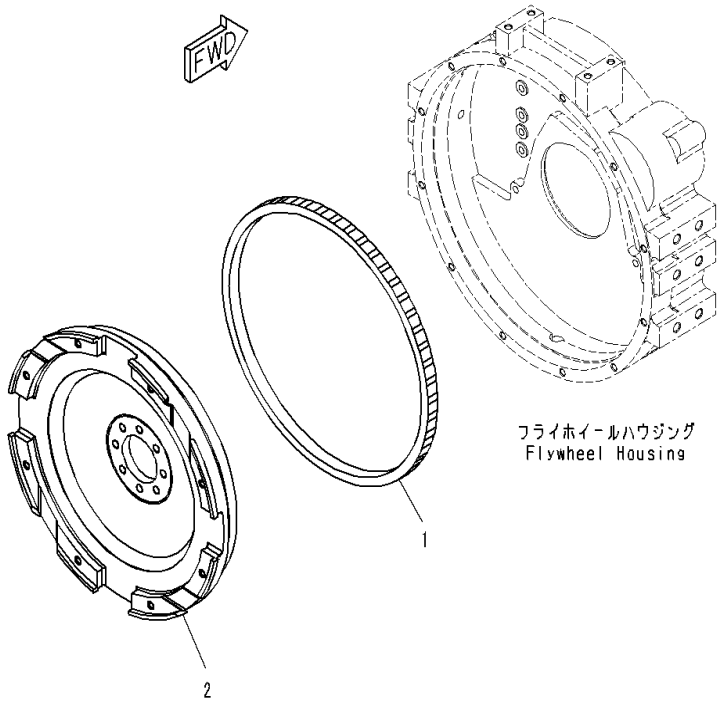

Index	Code	Part Number	Description	Qty	Serial Number
		6741-31-4100	Flywheel Assembly	1	26866736-
1		6741-31-4180	• Gear, Ring	1	26866736-
2	C1		• Flywheel	1	26866736-

FIG. AFW10-001001 Flywheel Mounting

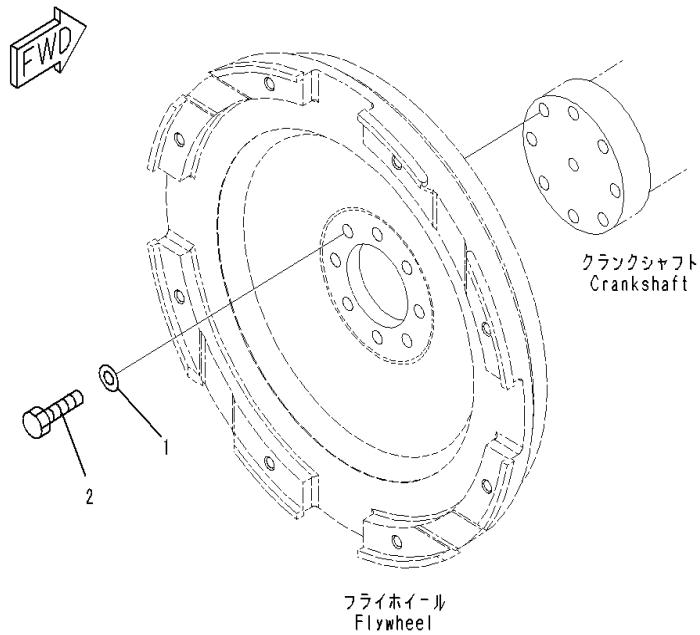

Index	Code	Part Number	Description	Qty	Serial Number
1		6732-31-4120	Washer	8	26866736-
2		6732-31-4130	Bolt	8	26866736-

FIG. A2119-002001 Engine Oil Pan

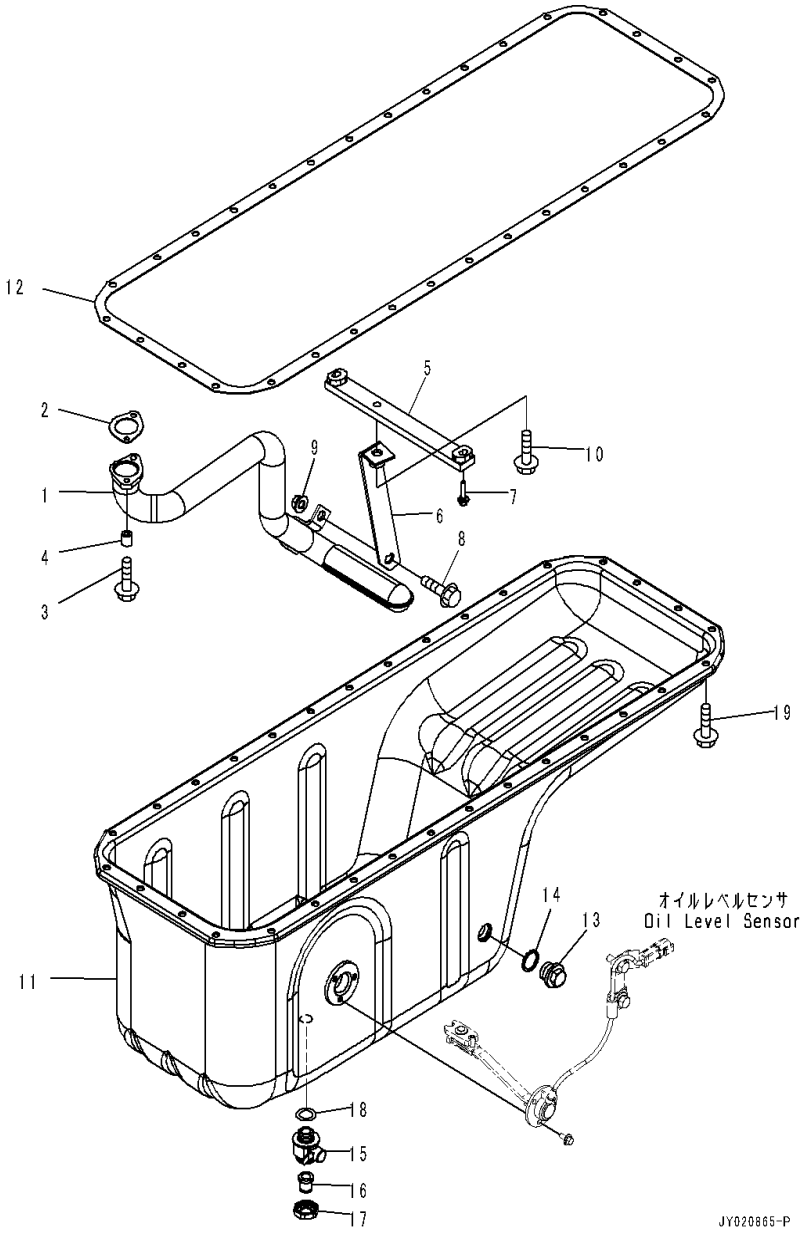

Index	Code	Part Number	Description	Qty	Serial Number
1		6743-51-5570	Tube	1	26866736-
2		6743-51-5550	Gasket	1	26866736-
3		6742-01-2630	Bolt	2	26866736-
4		6742-01-0310	Spacer	2	26866736-
5		6743-51-6121	Brace	1	26866736-
6		6743-51-6161	Brace	1	26866736-
7		6733-71-5840	Bolt	2	26866736-
8		01435-01020	Bolt	1	26866736-
9		6736-81-6170	Nut	1	26866736-
10		01435-61025	Bolt	1	26866736-
11		6745-21-5211	Pan, Oil	1	26866736-
12		6745-21-5130	Gasket	1	26866736-
13		6736-21-5320	Plug	1	26866736-
14		6732-21-5170	Gasket	1	26866736-
		6738-21-5610	Valve Assembly	1	26866736-
15		6738-21-5620	• Valve	1	26866736-
16		6738-21-5630	• Joint	1	26866736-
17		6738-21-5640	• Union	1	26866736-
18		07005-02216	Seal, Washer	1	26866736-
19		01435-60820	Bolt	32	26866736-

FIG. ASD00-001001 Engine Oil Level Sensor

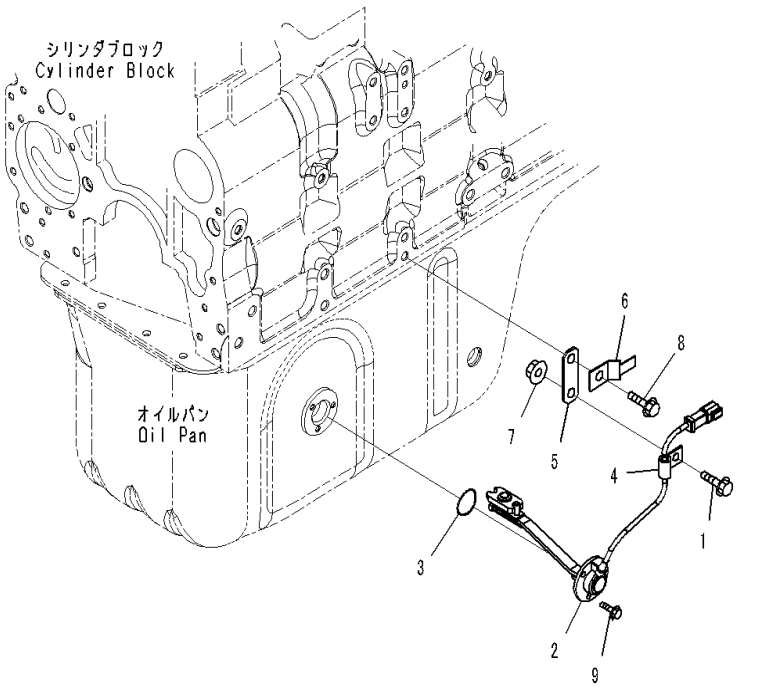

Index	Code	Part Number	Description	Qty	Serial Number
1		6734-71-5610	Bolt	1	26866736-
2		6741-81-9220	Sensor	1	26866736-
3		7831-91-4220	• O-ring	1	26866736-
4		6738-82-5810	Clip	1	26866736-
5		6301-11-4630	Plate	1	26866736-
6		08193-20010	Clip	1	26866736-
7		6736-81-6170	Nut	1	26866736-
8		6732-61-3140	Bolt	1	26866736-
9		01435-60612	Bolt	3	26866736-

FIG. AAF00-001001 Crank Pulley

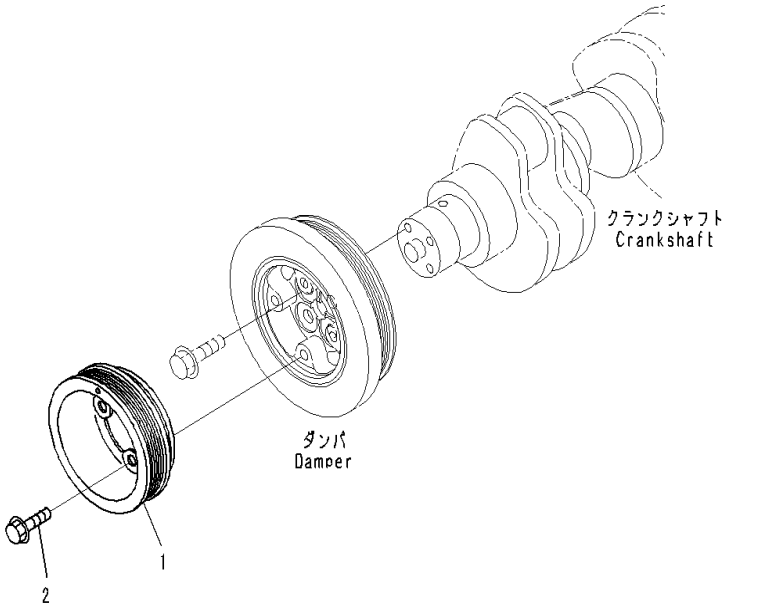

Index	Code	Part Number	Description	Qty	Serial Number
1		6745-61-3210	Pulley	1	26866736-
2		6732-11-1720	Bolt	4	26866736-

FIG. A2019-001001 Cylinder Block

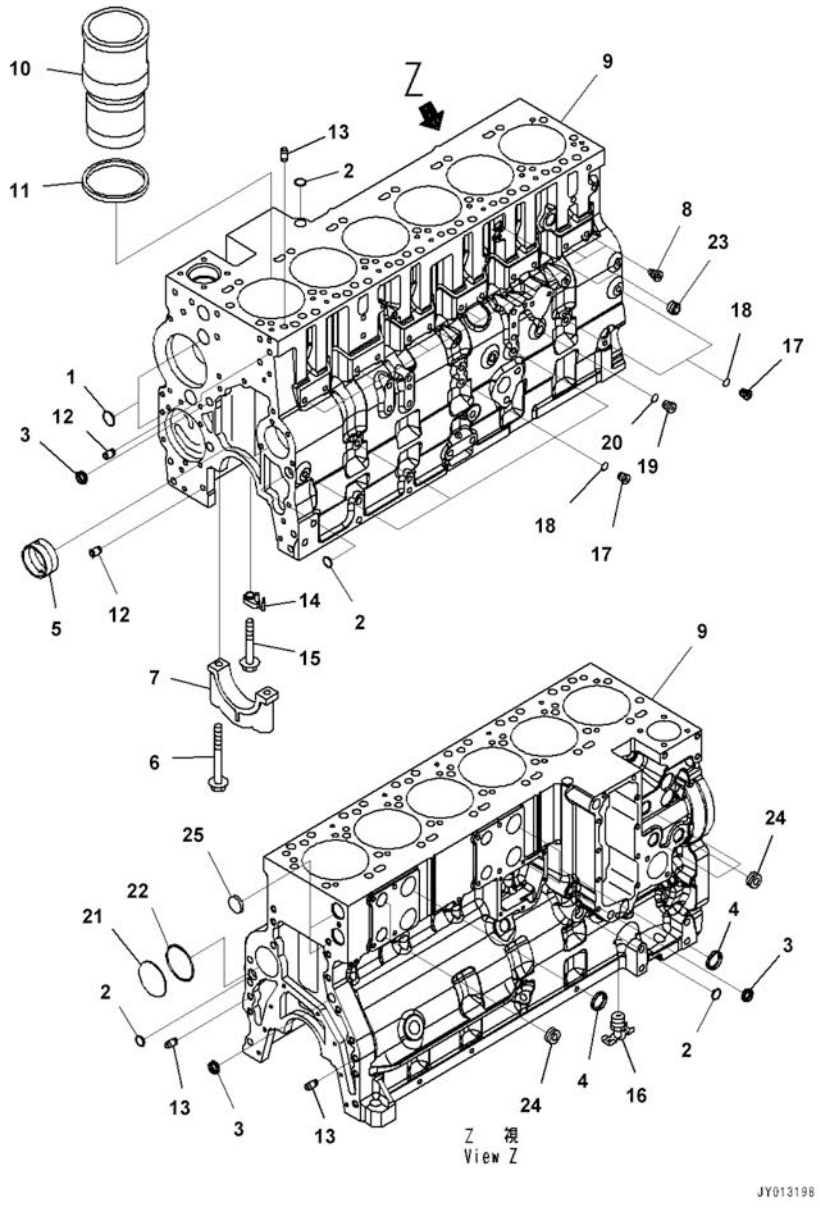

Index	Code	Part Number	Description	Qty	Serial Number
		6745-21-1190	Cylinder Block Assembly	1	26866736-
		6745-21-1107	• Block, Cylinder	1	26866736-
	B1	6745-21-1106	• Block, Cylinder	1	(26866736-26870852)
1		6742-01-1360	• • Plug	3	26866736-
2		6742-01-1370	• • Plug	4	26866736-
3		6732-21-1810	• • Plug	3	26866736-
4		6742-01-1420	• • Plug	3	26866736-
5		6746-21-1410	• • Bushing	7	26866736-
6		6741-21-1140	• • Bolt	14	26866736-
7	C3	6741-21-1131	• • Cap, main metal	7	26871466-
	C3	6741-21-1130	• • Cap, main metal	7	26866736-26871465
8		6745-41-2152	• • Guide, tappet	12	26866736-
	B1	6745-41-2151	• • Guide, tappet	12	(26866736-26870852)
9	C1		• • Cylinder Block	1	26866736-
		6742-01-5159	Liner Kit	6	26866736-
10	C1		• Liner, cylinder	1	26866736-
11		6742-01-1520	• Seal	1	26866736-
		6745-21-1290	Cylinder Block, kit	1	26866736-
12		6732-21-6120	• Pin, Dowel	2	26866736-
13		6742-01-1470	• Pin	4	26866736-
14		6745-21-1611	• Nozzle, cooling	6	26866736-
15		6736-11-4460	• Bolt	6	26866736-
16		6216-94-3450	• Cock, drain	1	26866736-
		6732-21-1960	• Plug Assembly	6	26866736-
17		6215-81-9510	• • Plug	1	26866736-
18		6735-21-1970	• • O-ring	1	26866736-
		6735-21-1910	• Plug Assembly	2	26866736-
19		6735-21-1920	• • Plug	1	26866736-
20		6735-21-1930	• • O-ring	1	26866736-
21		6742-01-1480	• Plug	1	26866736-
22		6742-01-4080	• O-ring	1	26866736-
23		6732-11-1910	• Plug	1	26866736-
24		6732-11-1920	• Plug	7	26866736-
25		6742-01-1380	• Plug	2	26866736-

FIG. AOB10-001001 Cylinder Block Cover

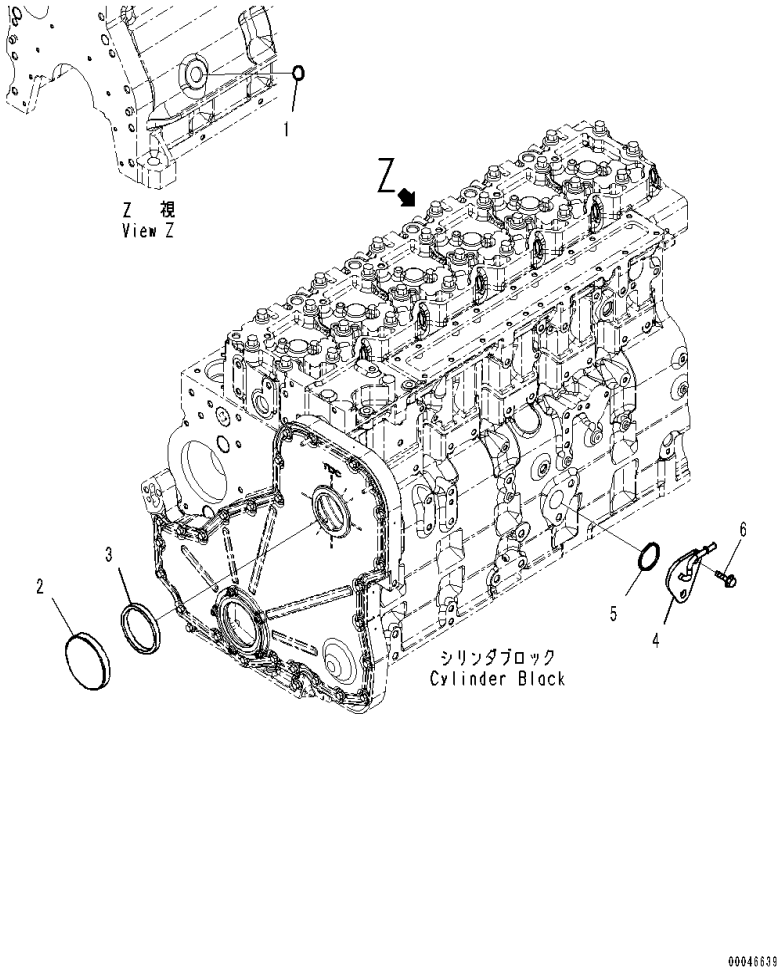

Index	Code	Part Number	Description	Qty	Serial Number
1		6735-21-5530	Plug	1	26866736-
2		6732-21-3190	Cover	1	26866736-
3		6732-21-3220	Seal Ring	1	26866736-
4		6745-21-7210	Connector	1	26866736-
5		6736-21-3360	Seal Ring	1	26866736-
6		6732-51-5130	Bolt	2	26866736-

FIG. A2080-001001 Breather Hose

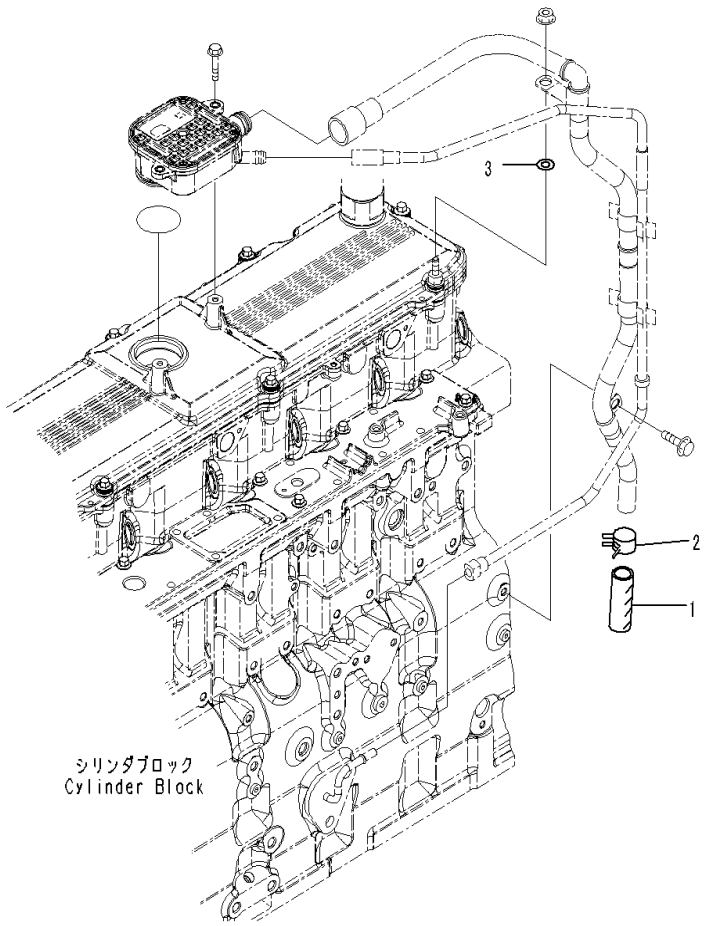

Index	Code	Part Number	Description	Qty	Serial Number
1		07286-01960	Hose	1	26866736-
2		07285-00220	Clip	1	26866736-
3		01643-30823	Washer	1	26866736-

FIG. AHC00-001001 Cabin Heater Plug

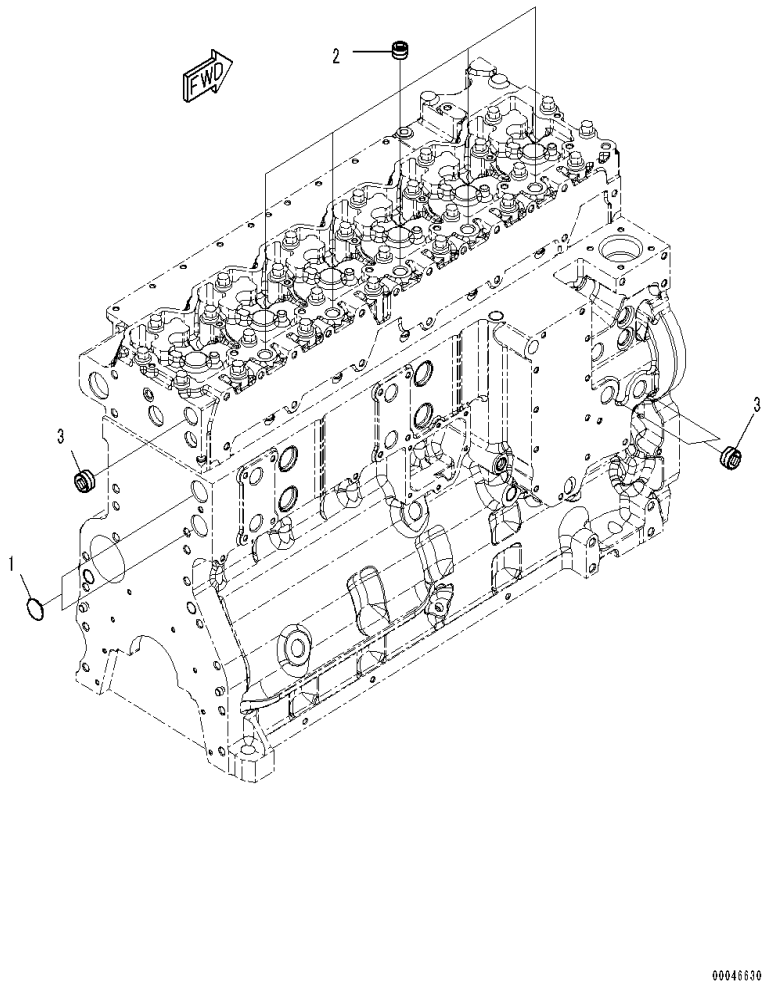

Index	Code	Part Number	Description	Qty	Serial Number
1		6742-01-1380	Plug	2	26866736-
2		6732-11-1910	Plug	5	26866736-
3		6732-11-1920	Plug	3	26866736-

FIG. A2319-001001 Crankshaft

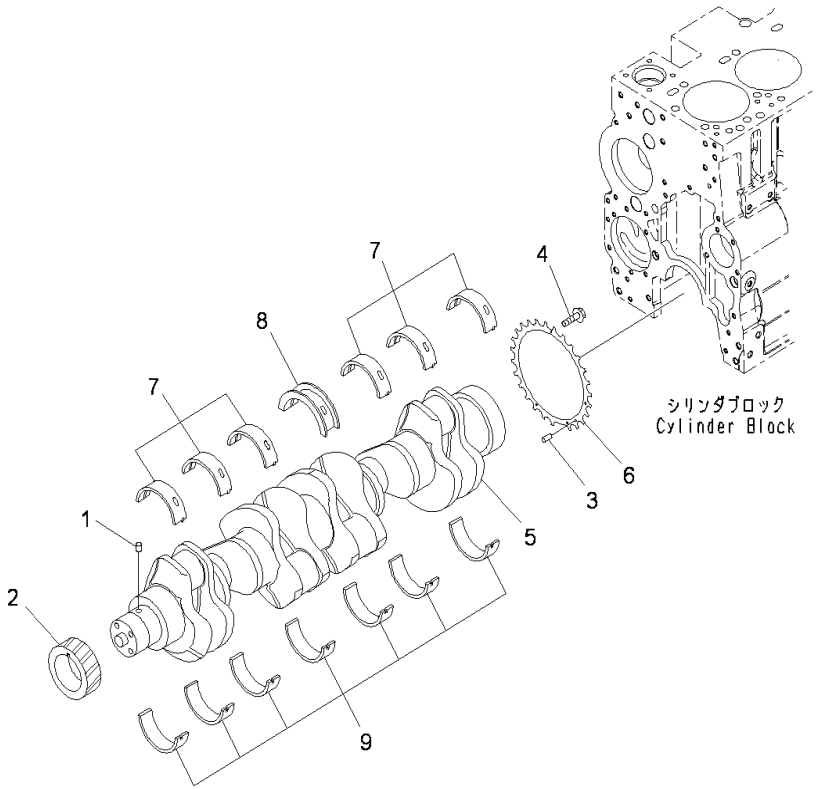

Index	Code	Part Number	Description	Qty	Serial Number
		6745-31-1120	Crankshaft	1	26866736-
1		6732-21-6150	• Pin, Dowel	1	26866736-
2		6742-01-1590	• Gear	1	26866736-
	C1		• Crankshaft Assembly	1	26866736-
3		6746-31-1210	• • Pin, Dowel	1	26869030-
	A2	6744-71-1020	• • Pin, Dowel	1	26866736-26869029
4		6745-31-1130	• • Bolt	4	26866736-
5	C1		• • Crankshaft	1	26866736-
6		6745-31-1150	• • Ring	1	26866736-
		6742-01-5199	Main Metal Assembly	1	26866736-
7	C1		• Metal,Upper	6	26866736-
8	C1		• Metal,Thrust	1	26866736-
9	C1		• Metal,Lower	7	26866736-
		6742-21-8500	Thrust Metal Assembly	1	26866736-
	C1		• Metal,Thrust	1	26866736-
	C1		• Metal,Lower	1	26866736-

FIG. A2359-001001 Piston and Connecting Rod

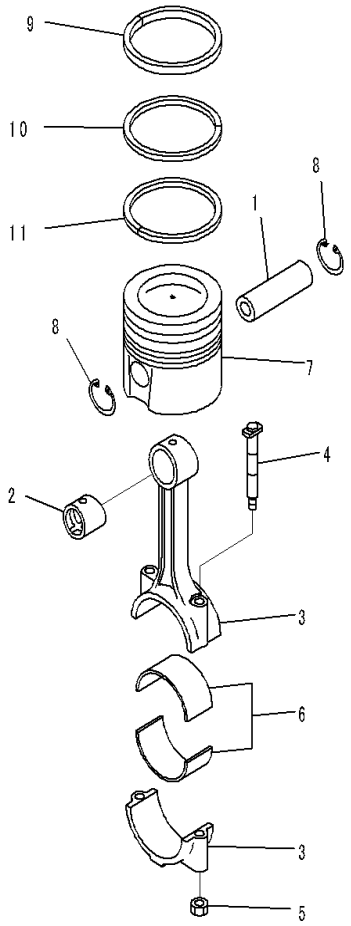

JY020880

Index	Code	Part Number	Description	Qty	Serial Number
1		6745-31-2140	Pin	6	26866736-
		6746-31-3240	Rod Assembly	6	26868690-
		6743-31-3102	Rod Assembly	6	26866736-26868689
2		6743-31-3121	• Bushing	1	26866736-
3	C1		• Rod	1	26866736-
4		1304869H1	• Bolt	2	26866736-
5		6742-01-4340	• Nut	2	26866736-
6		6743-31-3210	Bearing	12	26866736-
		6745-32-2121	Piston Kit	6	26871875-
	A2	6745-32-2120	Piston Kit	6	26866736-26871874
7		6745-31-2111	• Piston	1	26866736-
8		6742-01-5309	• Ring, Snap	2	26866736-
		6745-31-2012	• Piston Ring Assembly	1	26871875-
	A2	6745-31-2010	• Piston Ring Assembly	1	26866736-26871874
9	C1		• • Ring,Top	1	26866736-
10	C1		• • Ring,Second	1	26866736-
11	C1		• • Ring,Oil	1	26866736-

FIG. ALG00-001001 Oil Level Gauge

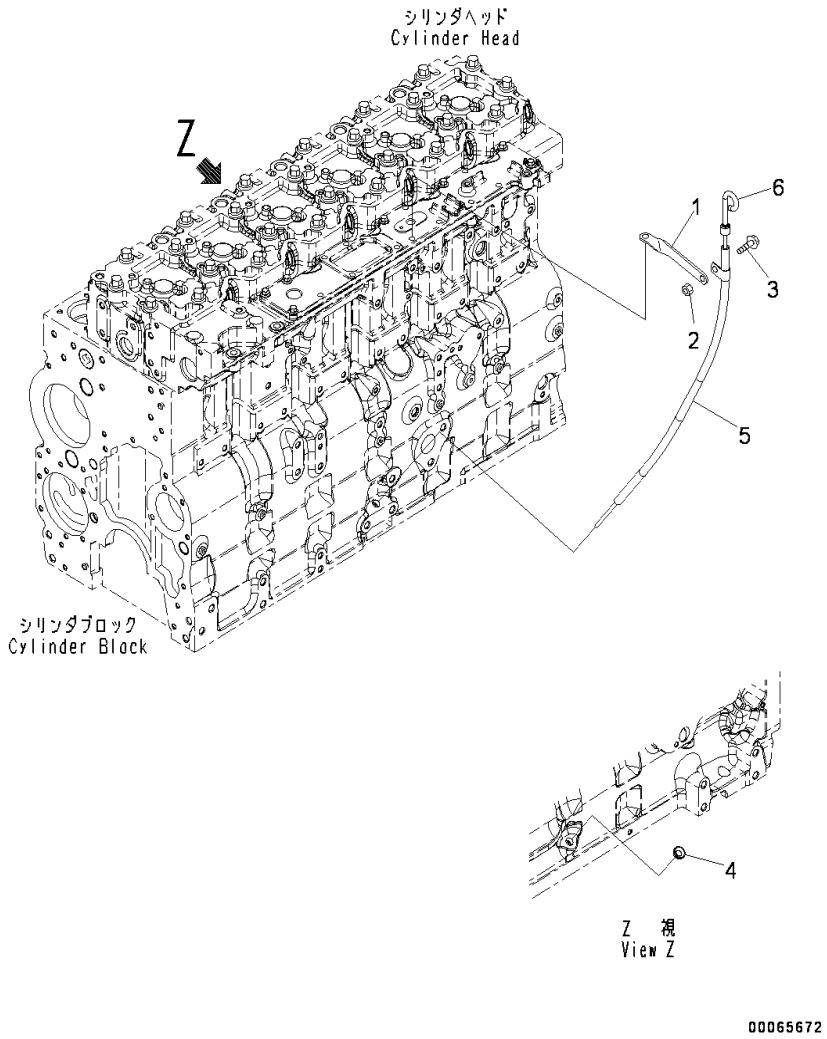

Index	Code	Part Number	Description	Qty	Serial Number
1		6745-21-5640	Brace	1	26866736-
2		6732-41-6210	Nut	1	26866736-
3		01435-60816	Bolt	1	26866736-
4		6732-21-5530	Plug	1	26866736-
5		6745-21-5670	Tube	1	26866736-
6		6745-21-5661	Dipstick	1	26870086-
	A2	6745-21-5660	Dipstick	1	26866736-26870085

FIG. AWP10-001001 Water Pump Drive (Without 60Amp. Alternator)

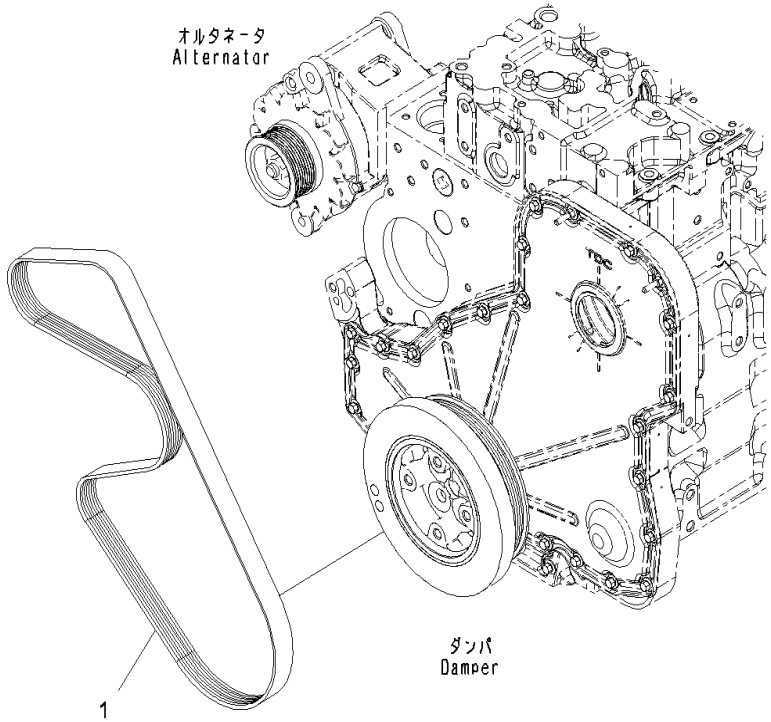

Index	Code	Part Number	Description	Qty	Serial Number
1		6732-82-3580	Belt, 1587.5mm	1	26866736-

ENGINE LUBRICATION SYSTEM

FIG. ALP00-001001 Engine Oil Pump

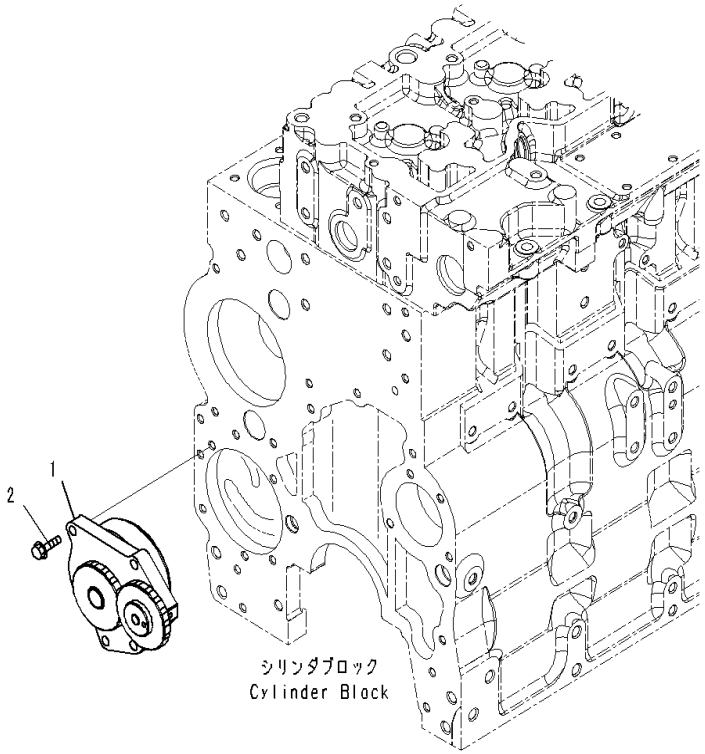

Index	Code	Part Number	Description	Qty	Serial Number
1		6745-51-1111	Pump Assembly,Oil	1	26866737-
	A1	6745-51-1110	Pump Assembly, Oil	1	26866736-26866736
2		01010-80830	Bolt	4	26866736-

FIG. A3119-001001 Engine Oil Filter

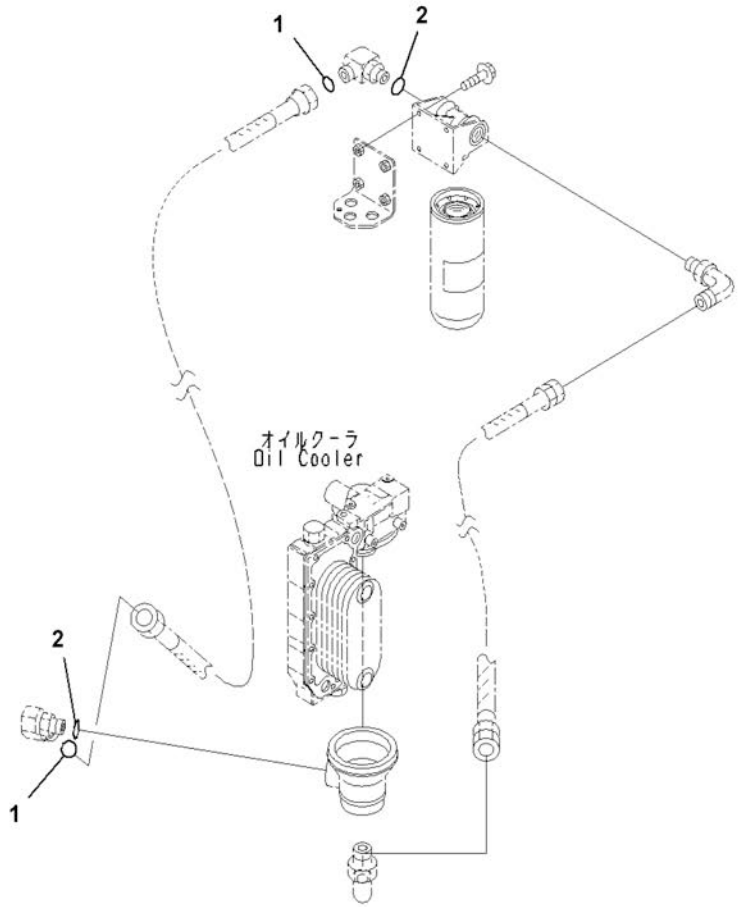

Index	Code	Part Number	Description	Qty	Serial Number
1		6743-51-9950	O-ring	2	26866736-
2		6743-51-9960	O-ring	2	26866736-

FIG. ALF00-001001 Engine Oil Filter and Engine Oil Cooler

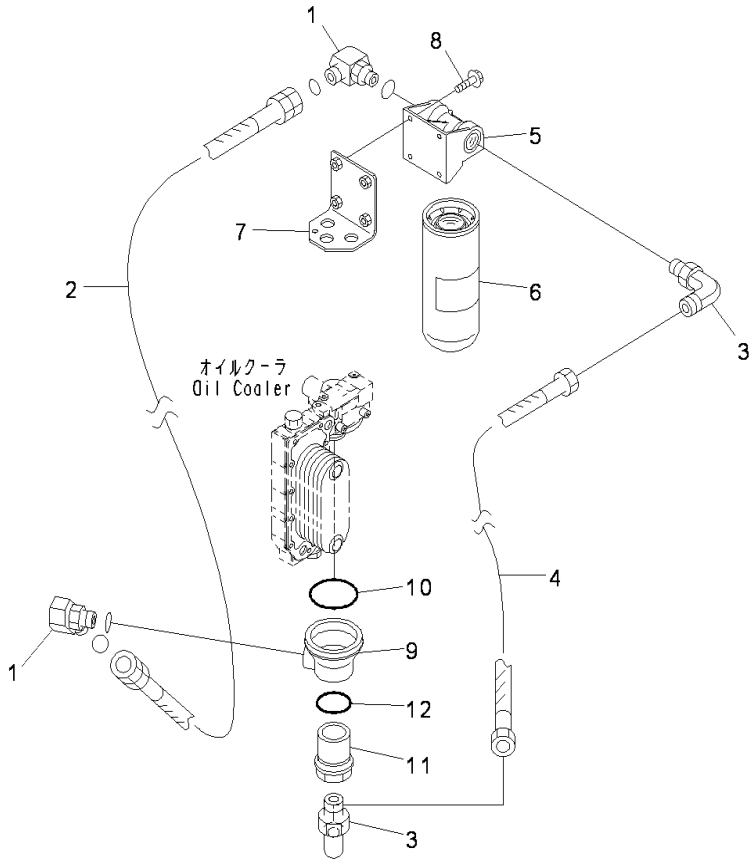

00049571

Index	Code	Part Number	Description	Qty	Serial Number
1		6741-51-5210	Elbow, With O-ring	2	26866736-
2		6743-51-9930	Hose	1	26866736-
3		6741-51-5230	Elbow	2	26866736-
4		6743-51-9940	Hose	1	26866736-
5		6743-51-5110	Head	1	26866736-
6		6742-01-4540	Cartridge	1	26866736-
7		6745-51-5220	Bracket	1	26866736-
8		01435-61025	Bolt	4	26866736-
9		6731-51-6280	Cover	1	26866736-
10		6741-61-2120	O-ring	1	26866736-
11		6731-51-6291	Adapter	1	26866736-
12		6731-11-8290	Seal	1	26866736-

FIG. ALC00-001001 Engine Oil Cooler

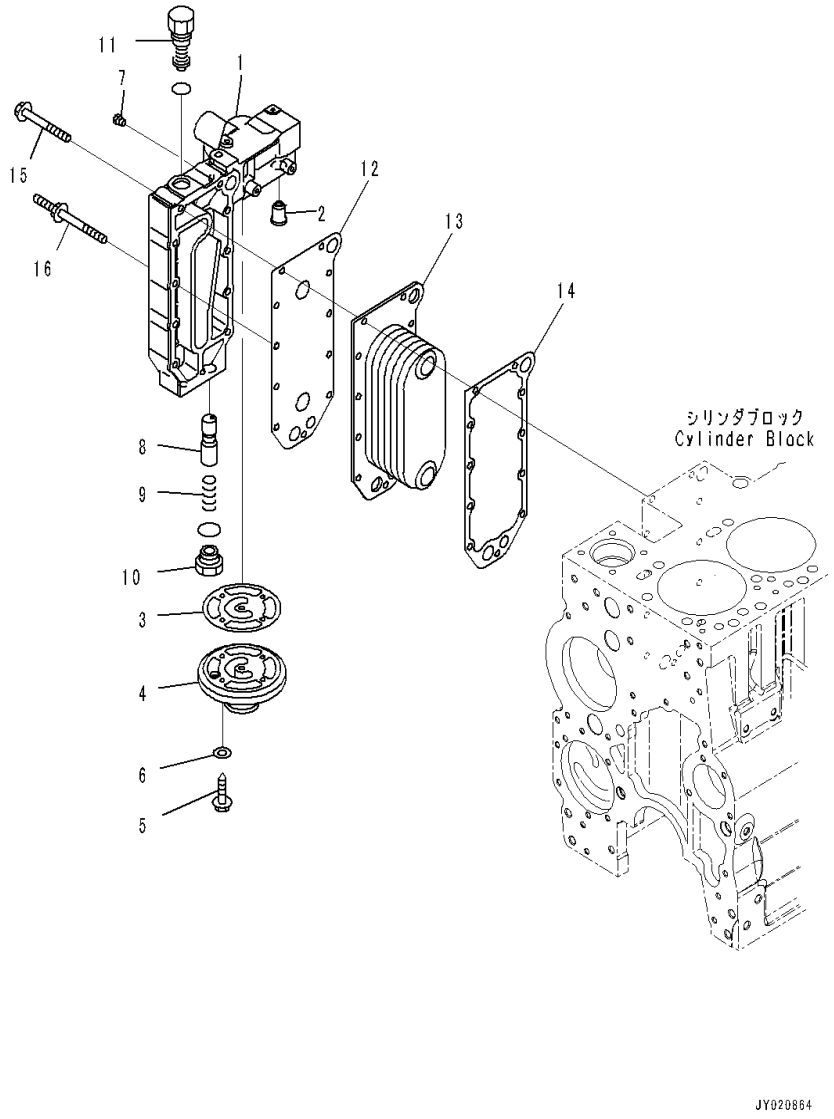

Index	Code	Part Number	Description	Qty	Serial Number
1		6743-61-2112	Cover	1	26866736-
2		6731-61-2151	Valve	1	26866736-
3		6742-01-2492	Gasket	1	26866736-
4		6742-01-2500	Head	1	26866736-
5		01437-00825	Bolt	4	26866736-
6		01641-20812	Washer	4	26866736-
7		6732-11-1930	Plug	2	26866736-
8		6742-01-5202	Plunger	1	26866736-
9		6743-61-2150	Spring	1	26866736-
10		6742-01-4220	Plug	1	26866736-
11		6742-01-5117	Valve	1	26866736-
12		6743-51-4430	Gasket	1	26866736-
13		6743-61-2210	Core	1	26866736-
14		6742-01-1080	Gasket	1	26866736-
15		6742-01-2441	Bolt	9	26866736-
16		6741-61-6110	Screw	2	26866736-

ENGINE FUEL SYSTEM

FIG. AFF20-001001 Fuel Filter Piping

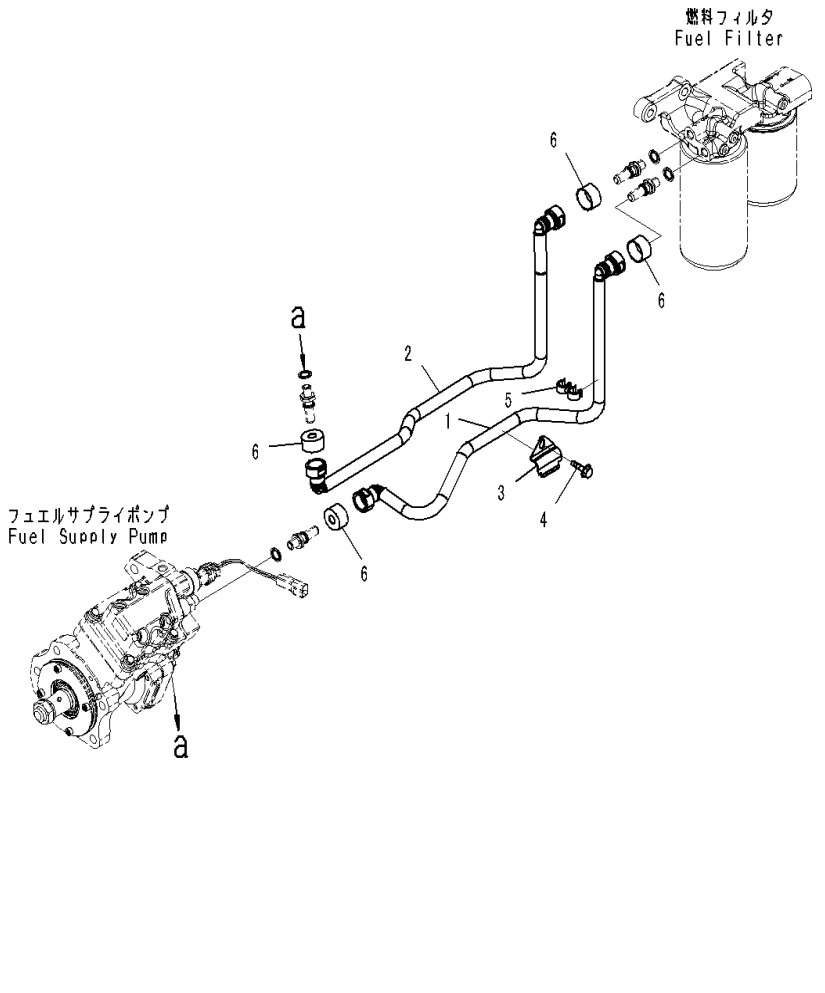

Index	Code	Part Number	Description	Qty	Serial Number
1		6745-71-5110	Tube	1	26866736-
2		6745-71-5120	Tube	1	26866736-
3		6745-71-5210	Brace	1	26866736-
4		01435-60816	Bolt	1	26866736-
5		6745-71-5220	Clamp	1	26866736-
6		6745-71-5160	Cover	4	26866736-

FIG. A4019-001001 Fuel Supply Pump (Inner Parts)

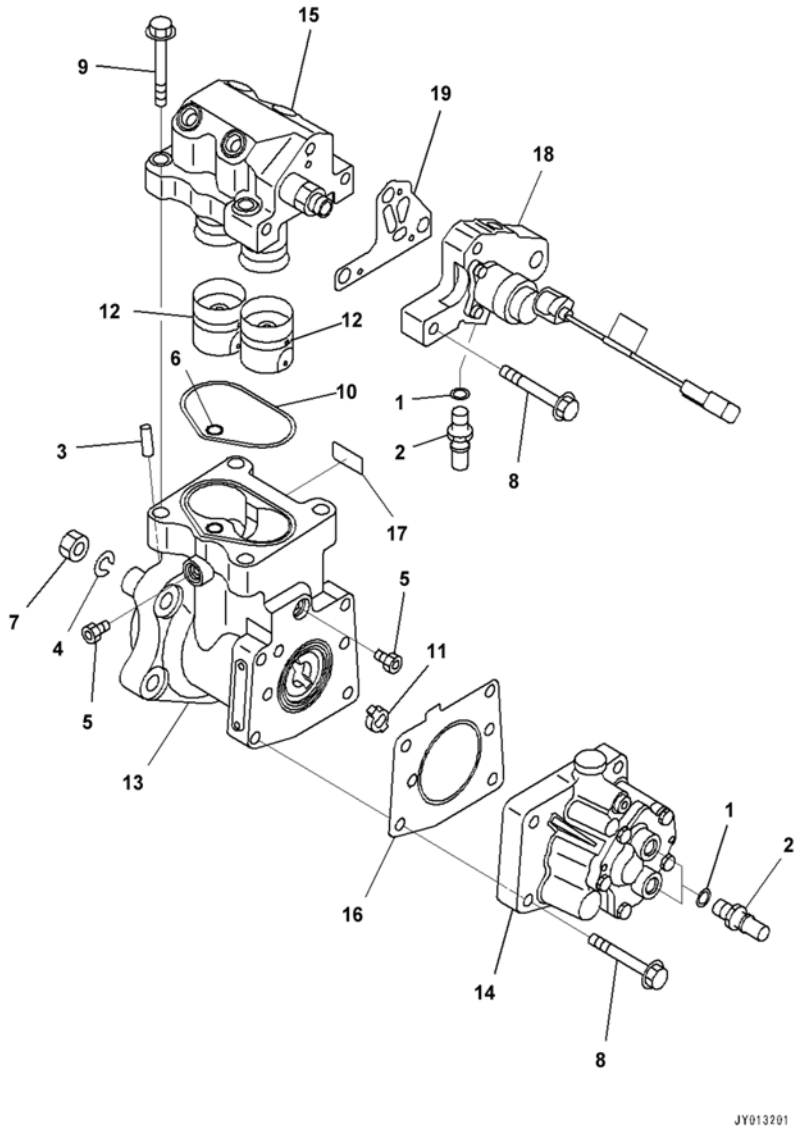

Index	Code	Part Number	Description	Qty	Serial Number
1		6745-71-1130	Seal, Washer	3	26866736-
2		6745-71-6130	Connector	3	26866736-
		6745-71-1171	Pump Assembly	1	26871922-
		6745-71-1170	Pump Assembly	1	26866736-26871921
3		6744-71-1020	• Pin, Dowel	1	26866736-
4		6744-71-1040	• Washer, Spring	1	26866736-
5		6732-21-1960	• Plug Assembly	2	26866736-
6		6560-81-4530	• O-ring	1	26866736-
7		6744-71-1250	• Nut	1	26866736-
8		6732-61-3170	• Bolt	7	26866736-
9		6745-71-1220	• Bolt	4	26866736-
10		6745-71-1230	• Seal	1	26866736-
11	C1		• Hub	1	26866736-
12	C1		• Tappet	2	26866736-
13	C1		• Body	1	26866736-
14		6745-71-1180	• Pump, Fuel	1	26866736-
15		6745-71-1240	• Head	1	26866736-
16		6745-71-1250	• Gasket	1	26866736-
17	C1		• Tag	1	26866736-
18	C1		• Adapter	1	26866736-
19		6745-71-1260	• Gasket	1	26866736-

FIG. A4002-001002 Fuel Supply Pump (Mounting)

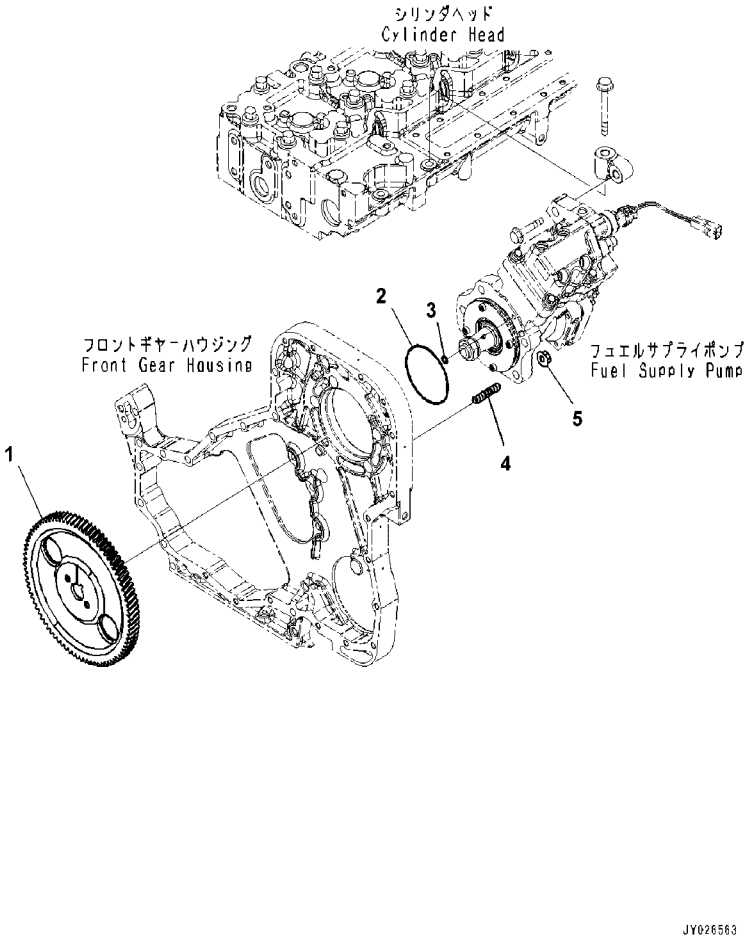

Index	Code	Part Number	Description	Qty	Serial Number
1		6745-71-3211	Gear	1	26866736-
2		6741-61-2120	O-ring	1	26866736-
3		6746-71-1230	Seal	1	26866736-
4		6742-01-5047	Stud	4	26866736-
5		6736-81-6170	Nut	4	26866736-

FIG. AFP20-001001 Fuel Supply Pump Support

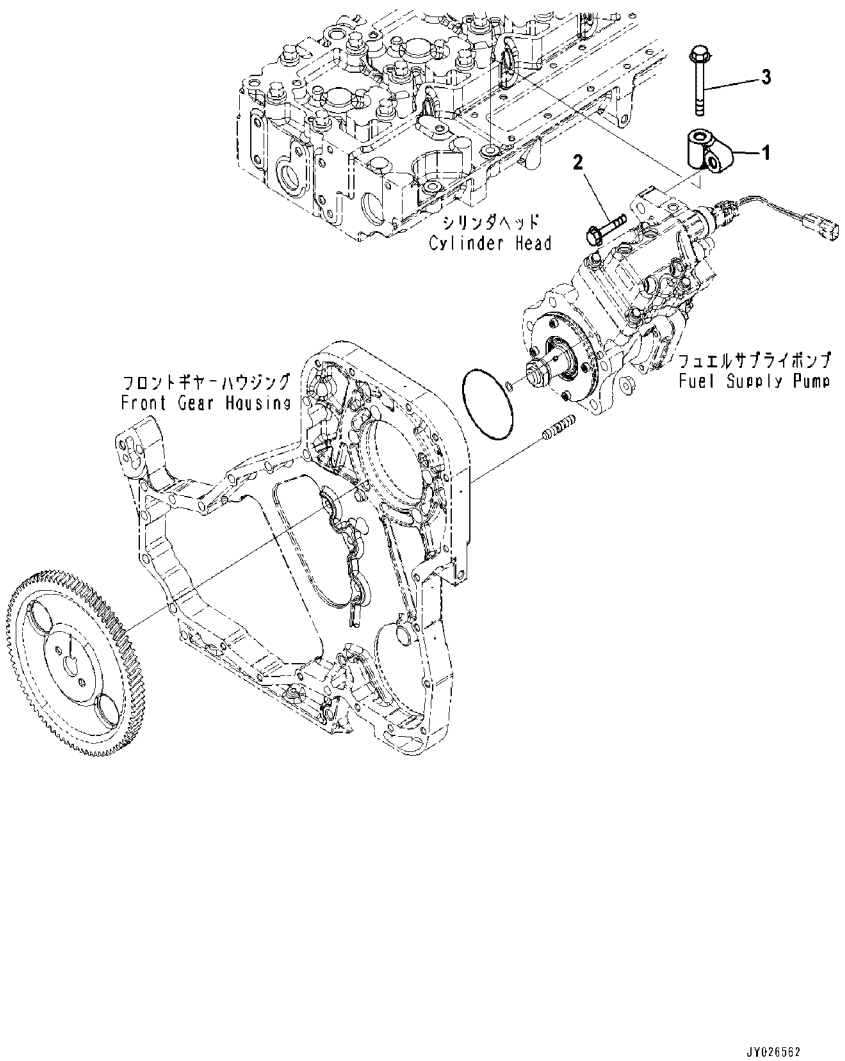

Index	Code	Part Number	Description	Qty	Serial Number
1		6745-71-1210	Support	1	26866736-
2		6742-01-3780	Bolt	1	26866736-
3		6732-61-4120	Bolt	1	26866736-

FIG. A4219-001001 Fuel Injector

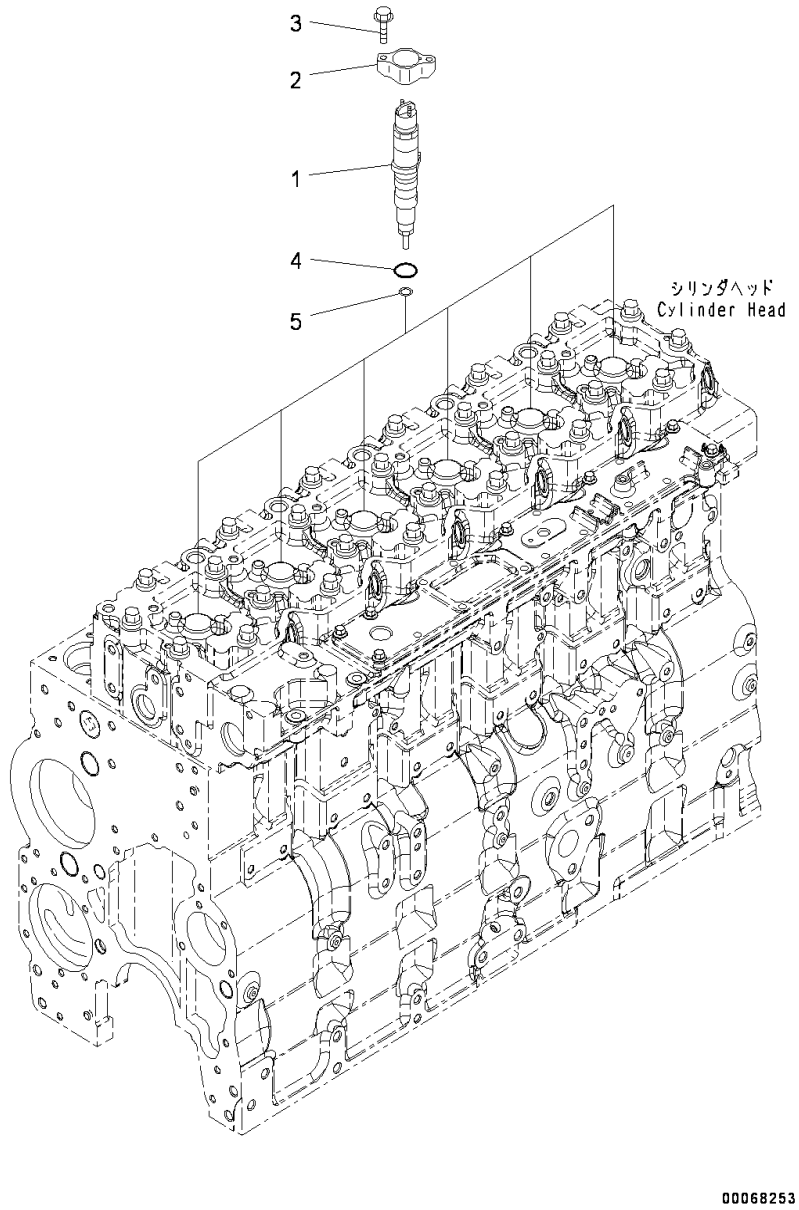

Index	Code	Part Number	Description	Qty	Serial Number
1		6745-12-3100	Injector	6	26866736-
		6754-11-3130	• Gasket	1	26866736-
		6754-11-3140	• O-ring	1	26866736-
2		6745-11-3110	Clamp	6	26866736-
3		6745-11-3150	Bolt	12	26866736-
4		6754-11-3120	O-ring	6	26866736-
5		6743-11-3230	Gasket	6	26866736-

FIG. APP50-001001 Fuel Injection Piping

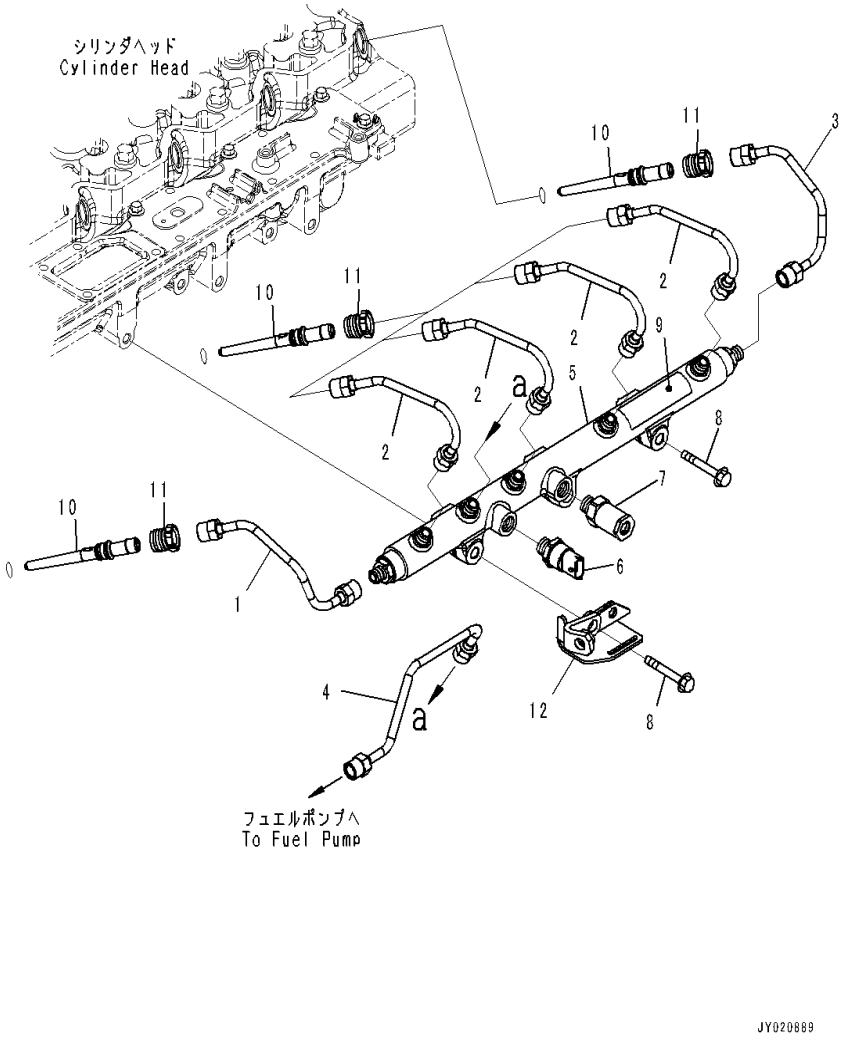

Index	Code	Part Number	Description	Qty	Serial Number
1		6745-71-4110	Tube, Fuel Supply, No.1	1	26866736-
2		6745-71-4120	Tube, Fuel Supply, No.2	4	26866736-
3		6745-71-4140	Tube, Fuel Supply, No.3	1	26866736-
4		6745-71-4150	Tube, Fuel Supply, No.4	1	26866736-
5		6745-71-4310	Manifold Assembly	1	26866736-
6		6754-72-1212	• Sensor, Pressure	1	26868369-
		6754-72-1211	• Sensor, Pressure	1	26866736-26868368
7		6745-71-4330	• Valve, Relief	1	26866736-
8		6732-61-4120	Bolt	3	26866736-
9		6754-71-1991	Decal	2	26866736-
10		6754-71-5511	Connector Assembly	6	26866736-
11		6754-71-5541	Retainer	6	26866736-
12		6745-71-5510	Brace	1	26866736-

FIG. AFT00-001001 Fuel Piping

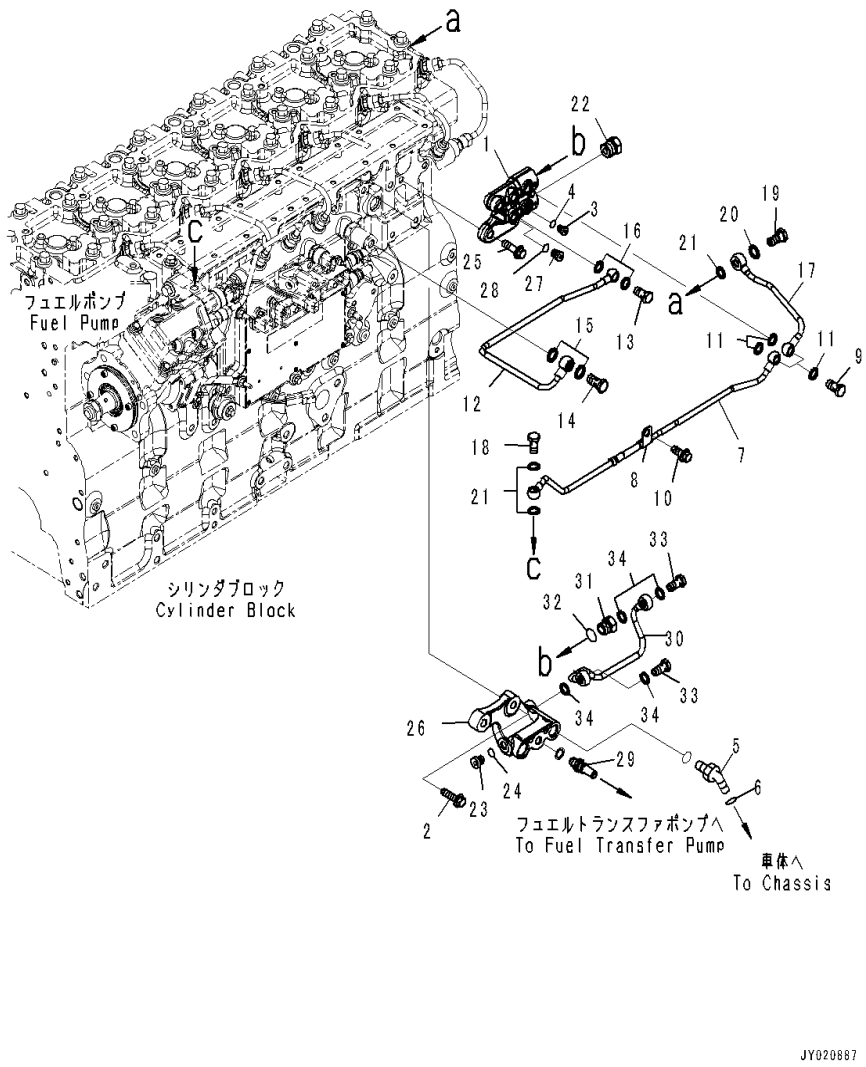

Index	Code	Part Number	Description	Qty	Serial Number
1		6745-71-5610	Connector	1	26866736-
2		6732-22-3110	Bolt	2	26866736-
		6732-21-1960	Plug Assembly	1	26866736-
3		6215-81-9510	• Plug	1	26866736-
4		6735-21-1970	• O-ring	1	26866736-
5		6745-71-5180	Elbow	1	26866736-
6		02896-11009	O-ring	1	26866736-
7		6745-71-5440	Tube	1	26866736-
8		6745-71-5450	Clip	1	26866736-
9		6732-71-6510	Bolt	2	26866736-
10		6732-61-3140	Bolt	1	26866736-
11		6745-71-1130	Washer	4	26866736-
12		6745-71-5460	Tube	1	26866736-
13		6732-71-6510	Bolt	1	26866736-
14		6732-71-5620	Connector	1	26866736-
15		6731-74-5910	Washer	2	26866736-
16		6745-71-1130	Washer	2	26866736-
17		6745-71-5470	Tube	1	26866736-
18		6732-71-6510	Bolt	1	26866736-
19		6754-71-5430	Valve, Check	1	26866736-
20		6731-74-5910	Washer	1	26866736-
21		6745-71-1130	Washer	3	26866736-
22		6745-71-5190	Plug	1	26866736-
		6744-71-3050	Plug Assembly	1	26866736-
23		6744-71-3060	• Plug, Threaded	1	26866736-
24		6737-51-8770	• O-ring	1	26866736-
25		6216-74-6190	Bolt	2	26866736-
26		6745-71-5580	Connector	1	26866736-
		6744-71-3050	Plug Assembly	1	26866736-
27		6744-71-3060	• Plug, Threaded	1	26866736-
28		6737-51-8770	• O-ring	1	26866736-
29		6745-71-6130	Connector	1	26866736-
30		6745-71-5480	Tube	1	26866736-
		6745-71-5490	Union Assembly	1	26866736-
31		6745-71-5620	• Union	1	26866736-
32		6735-21-4160	• O-ring	1	26866736-
33		6732-71-6510	Bolt	2	26866736-
34		6745-71-1130	Washer	4	26866736-

FIG. A4119-001001 Fuel Filter Cartridge(Service Only)

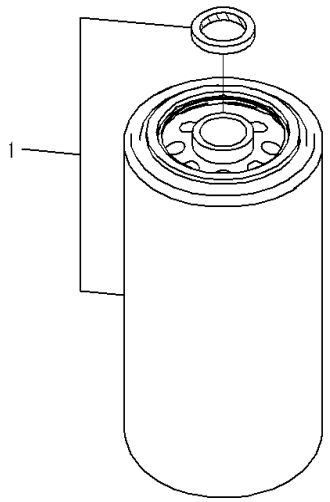

Index	Code	Part Number	Description	Qty	Serial Number
1		600-319-3750	Cartridge, Fuel Filter	1	26866736-

FIG. AFF10-001001 Fuel Filter

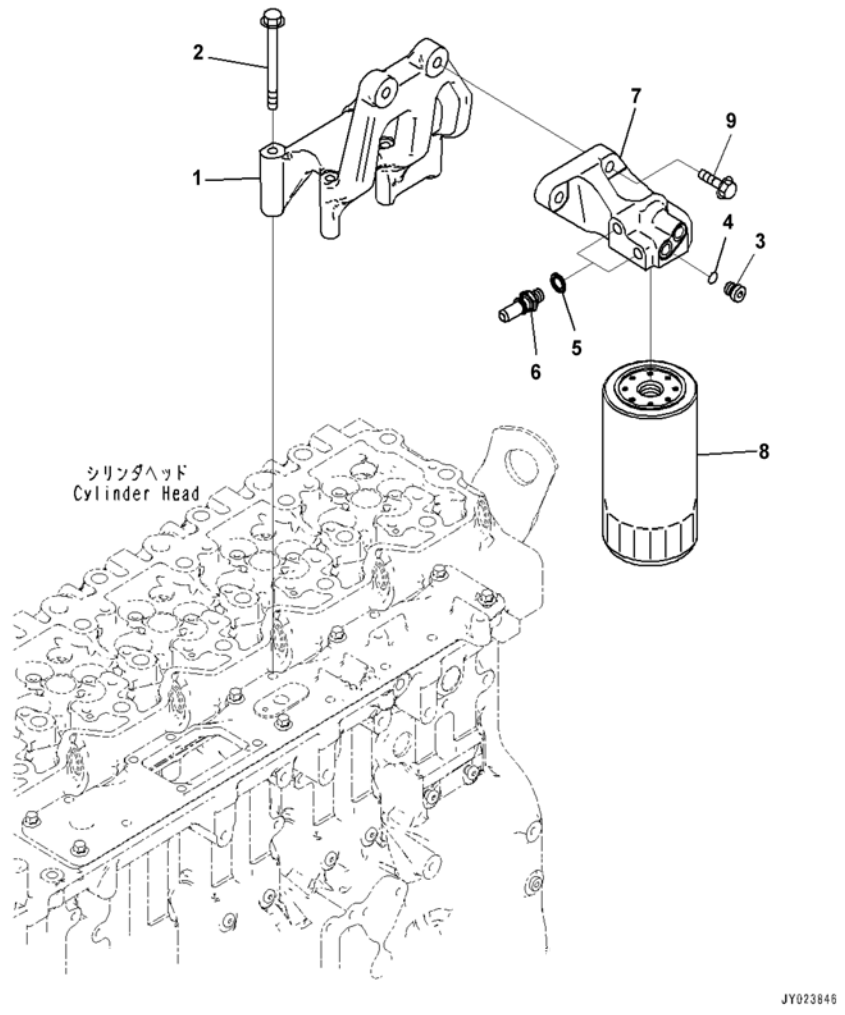

Index	Code	Part Number	Description	Qty	Serial Number
1		6745-71-6410	Support	1	26866736-
2		01435-60890	Bolt	5	26866736-
		6732-21-1960	Plug Assembly	2	26866736-
3		6215-81-9510	• Plug	1	26866736-
4		6735-21-1970	• O-ring	1	26866736-
5		6745-71-1130	Washer	2	26866736-
6		6745-71-6130	Connector	2	26866736-
7		6745-71-6190	Head	1	26866736-
8		600-319-3750	Cartridge	1	26866736-
9		6732-22-3110	Bolt	2	26866736-

FIG. AFS20-001001 Fuel System Accessory

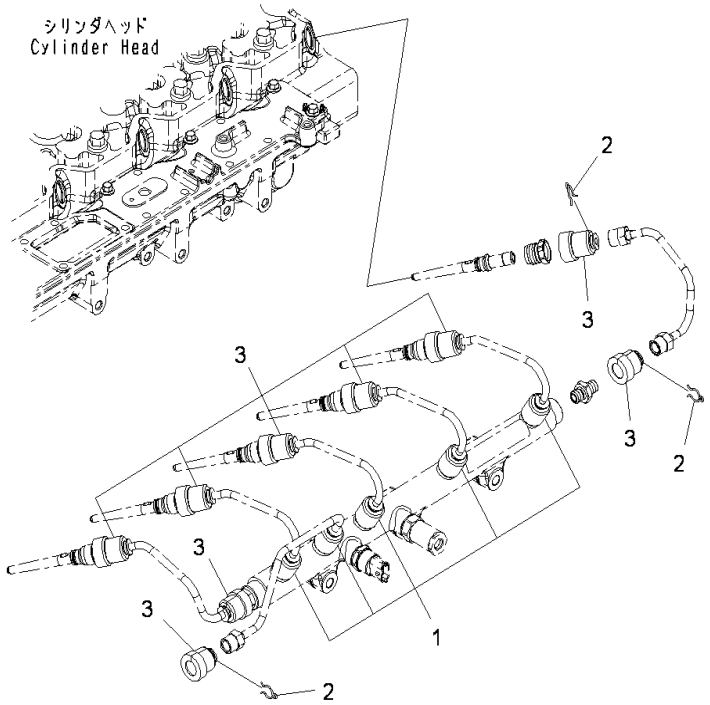

00049638

Index	Code	Part Number	Description	Qty	Serial Number
1		6745-71-9710	Cover	5	26866736-
2		6217-71-5770	Clamp	14	26866736-
3		6754-71-9710	Cover	9	26866736-

FIG. AFS00-001001 Fuel Transfer Pump

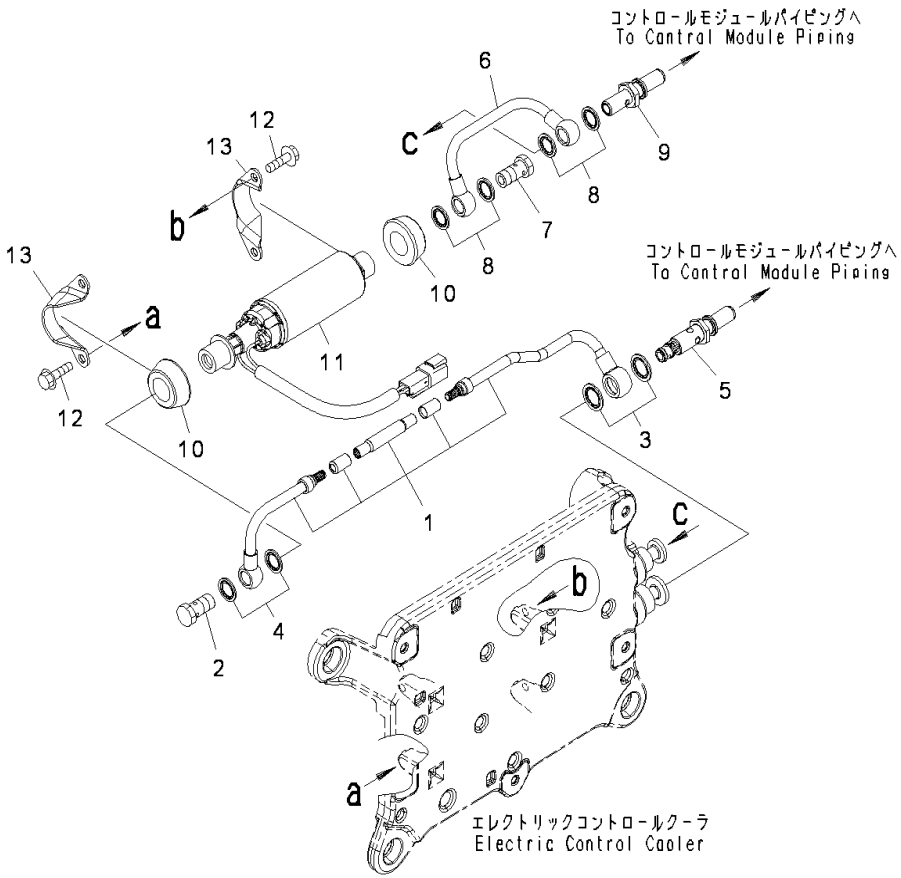

Index	Code	Part Number	Description	Qty	Serial Number
1		6745-71-5311	Tube	1	26866736-
2		6732-71-6510	Bolt	1	26866736-
3		6745-71-5860	Seal, Washer	2	26866736-
4		6745-71-1130	Washer	2	26866736-
5		6745-71-5391	Valve, Check	1	26866736-
6		6745-71-5410	Tube	1	26866736-
7		6732-71-6510	Bolt	1	26866736-
8		6745-71-1130	Washer	4	26866736-
9		6745-71-5430	Connector	1	26866736-
		6745-71-1821	Pump Assembly, Fuel	1	26866736-
10		6745-71-1830	• Isolator	2	26866736-
11		6745-71-1840	• Pump, Fuel	1	26866736-
12		6732-21-4180	Bolt	4	26866736-
13		6745-71-1860	Bracket	2	26866736-

FIG. AFI00-001001 Fuel Inlet Fitting

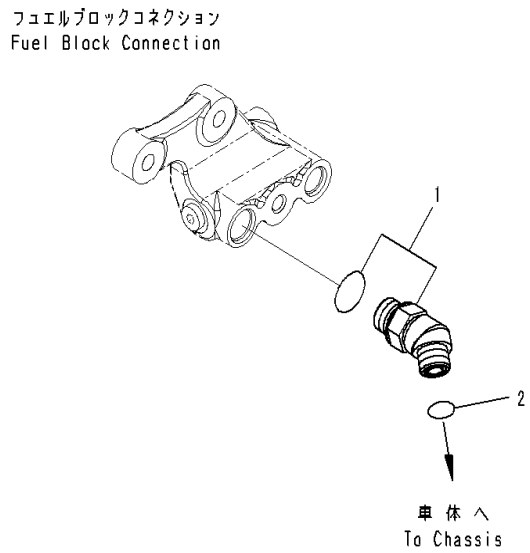

Index	Code	Part Number	Description	Qty	Serial Number
1		6745-71-5170	Elbow	1	26866736-
2		02896-11012	O-ring	1	26866736-

ENGINE COOLING SYSTEM

FIG. AFA20-001001 Cooling Fan Drive Mounting (Bolt)

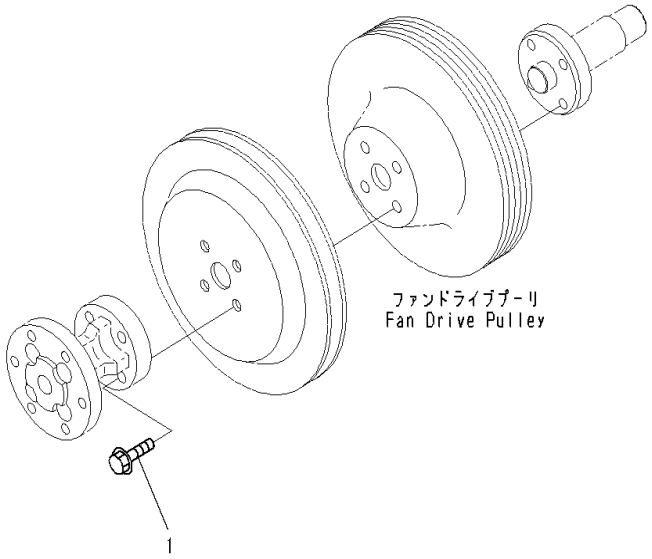

Index	Code	Part Number	Description	Qty	Serial Number
1		01435-61025	Bolt	4	26866736-

FIG. AFA10-001001 Cooling Fan Drive Pulley

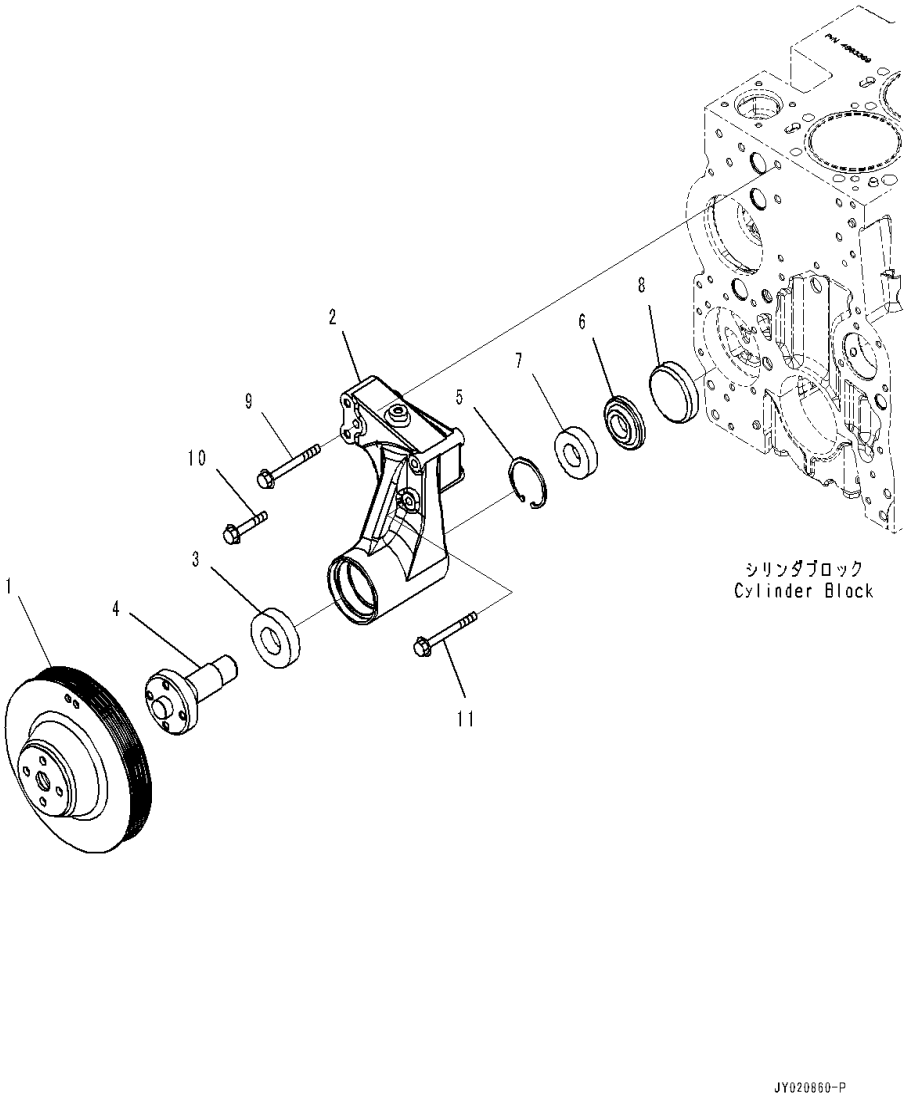

Index	Code	Part Number	Description	Qty	Serial Number
1		6743-61-3310	Pulley	1	26866736-
		6746-61-3131	Support Assembly	1	26866736-
2		6746-61-3141	• Support	1	26866736-
3		6743-61-3560	• Bearing, Ball	1	26866736-
4		6746-61-3190	• Hub	1	26866736-
5		04065-06220	• Ring, Snap	1	26866736-
6		6746-61-3180	• Retainer	1	26866736-
7		6743-61-3530	• Bearing, Ball	1	26866736-
8		07046-47520	• Plug	1	26866736-
9		01435-01090	Bolt	2	26866736-
10		01435-01050	Bolt	1	26866736-
11		01436-01000	Bolt	1	26866736-

FIG. A5030-001001 Cooling Fan

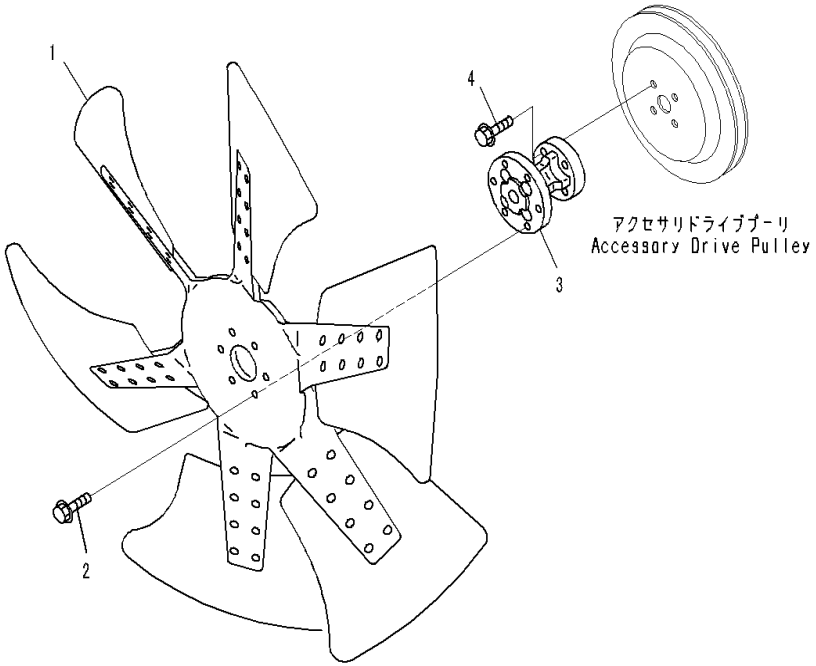

Index	Code	Part Number	Description	Qty	Serial Number
1		600-635-7870	Fan, Cooling	1	26866736-
2		01435-01030	Bolt	6	26866736-
3		6743-61-3810	Spacer	1	26866736-
4		01435-01045	Bolt	4	26866736-

FIG. AFA30-001001 Cooling Fan Belt

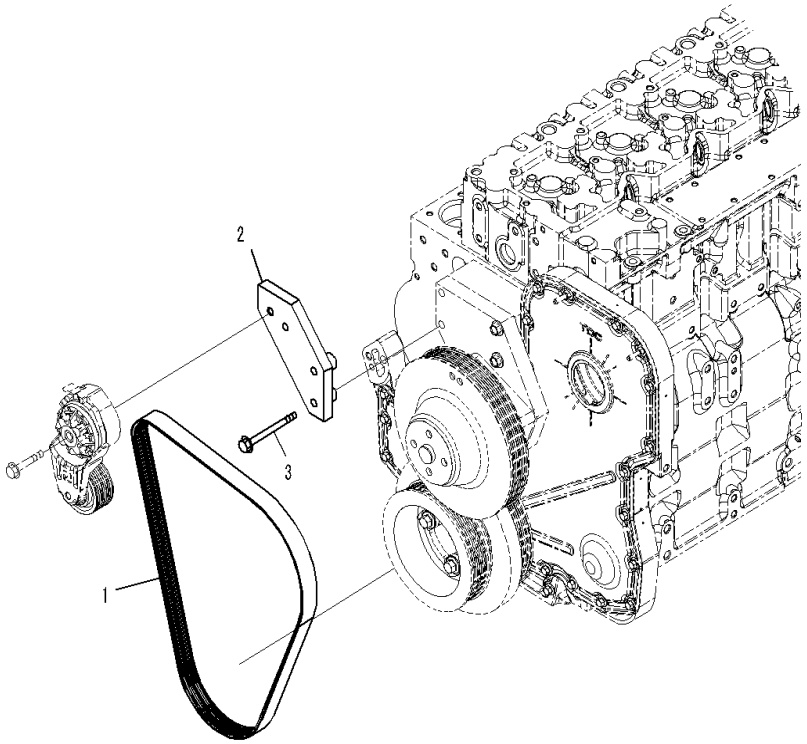

Index	Code	Part Number	Description	Qty	Serial Number
1		6743-61-3710	Belt, 1230mm	1	26866736-
2		6754-61-4111	Tensioner, Belt	1	26866736-
3		6745-61-4230	Bolt	2	26866736-

FIG. AWP20-001001 Cooling Fan Belt Tensioner

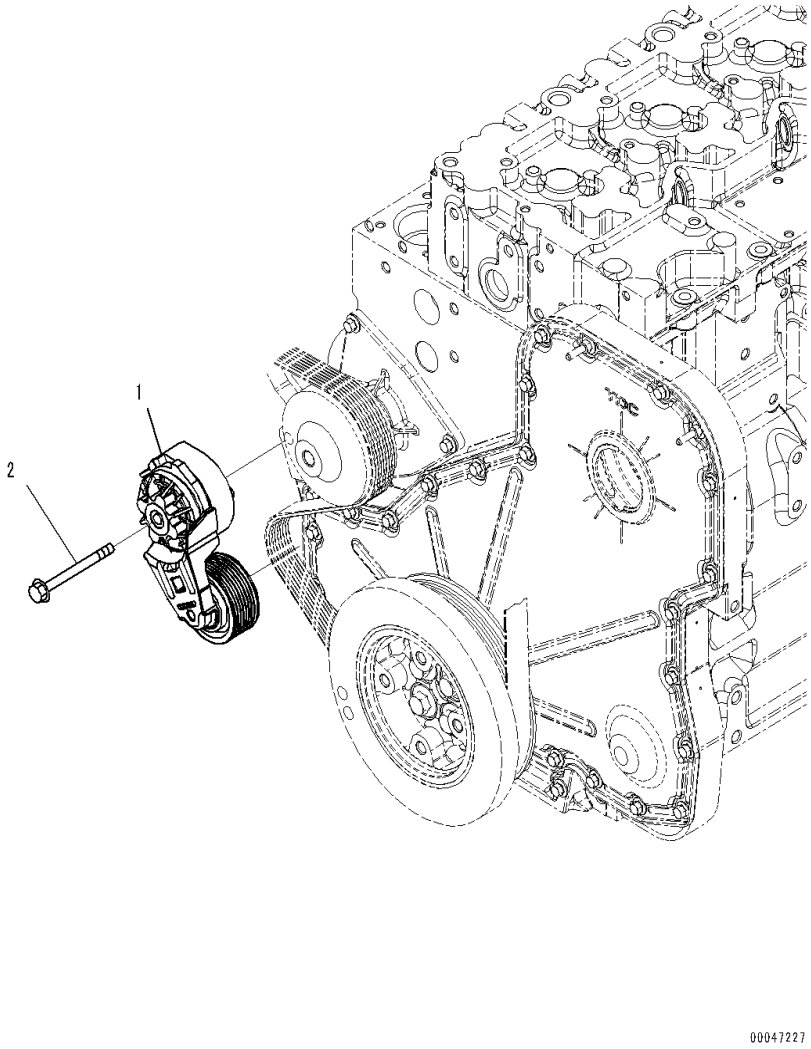

Index	Code	Part Number	Description	Qty	Serial Number
1		6754-61-4111	Tensioner, Belt	1	26866736-
2		6732-61-3260	Bolt	1	26866736-

FIG. AWP00-001001 Water Pump Mounting

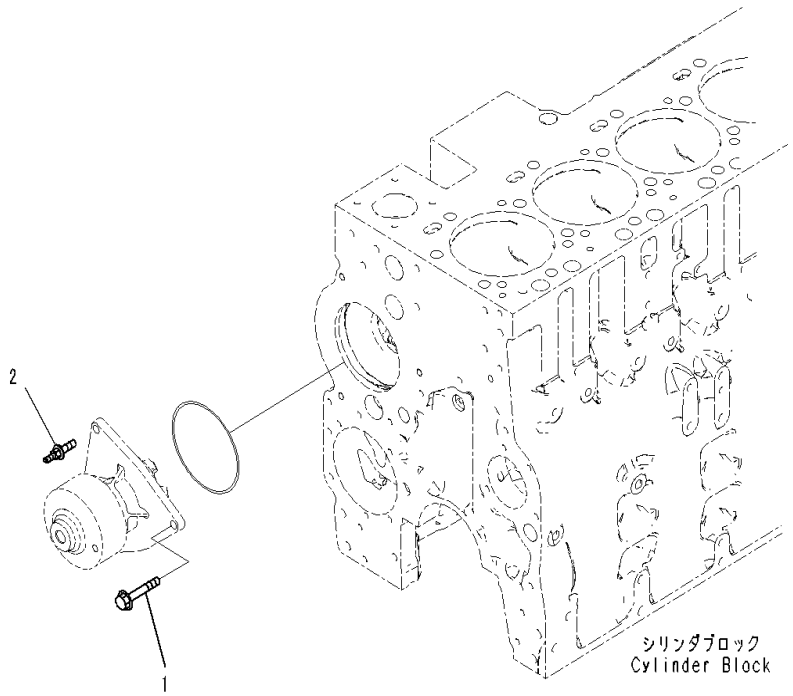

Index	Code	Part Number	Description	Qty	Serial Number
1		01435-00825	Bolt	2	26866736-
2		6742-01-5195	Screw	1	26866736-

FIG. A5019-002001 Water Pump (#26866736-26868368)

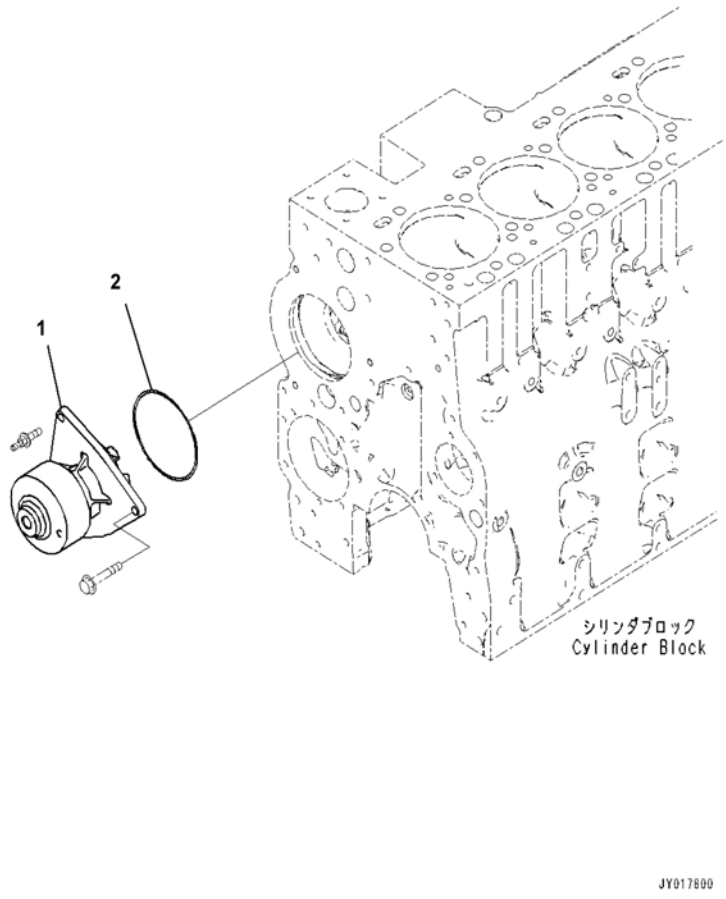

Index	Code	Part Number	Description	Qty	Serial Number
		6746-61-1200	Water Pump Assembly	1	26866736-26868368
1	C1		• Pump, Water	1	26866736-26868368
2		6741-61-1520	• Seal	1	26866736-26868368

FIG. A5019-003001 Water Pump (#26868369-)

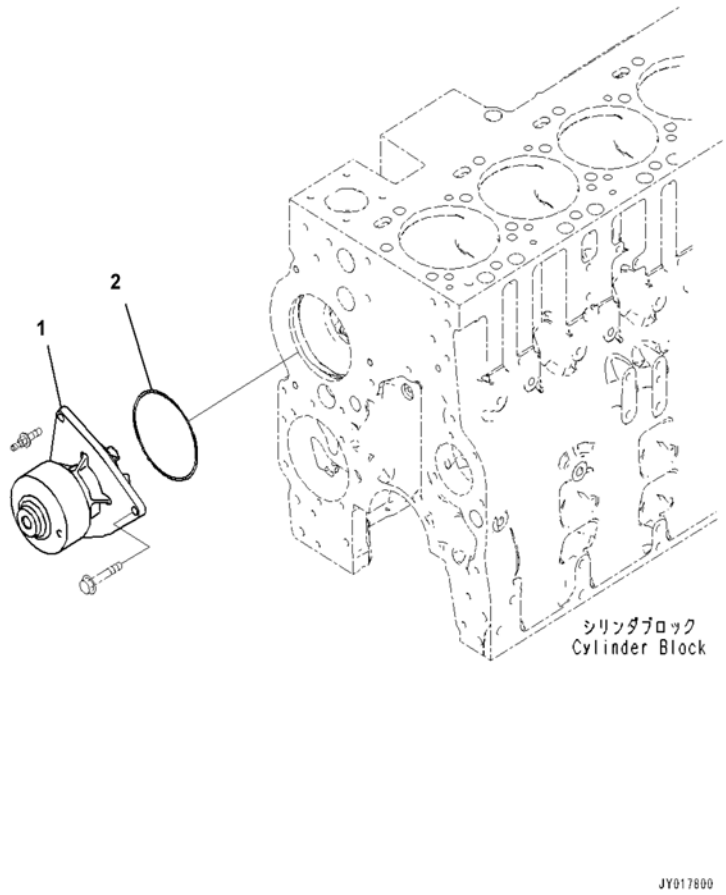

Index	Code	Part Number	Description	Qty	Serial Number
		6746-61-1201	Water Pump Assembly	1	26868369-
1	C1		• Pump, Water	1	26868369-
2		6741-61-1520	• Seal	1	26868369-

FIG. AWO00-001001 Water Outlet Connector

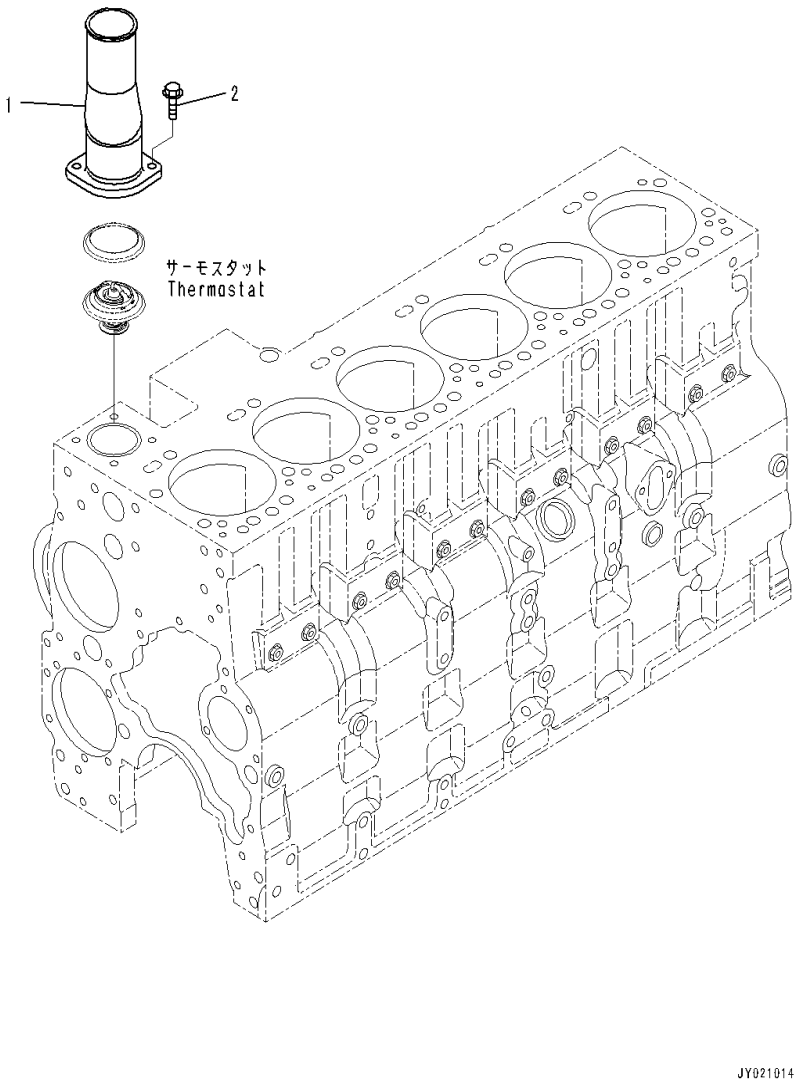

Index	Code	Part Number	Description	Qty	Serial Number
1		6745-61-6130	Connection	1	26866736-
2		01435-60825	Bolt	2	26866736-

FIG. AEC00-001001 Thermostat

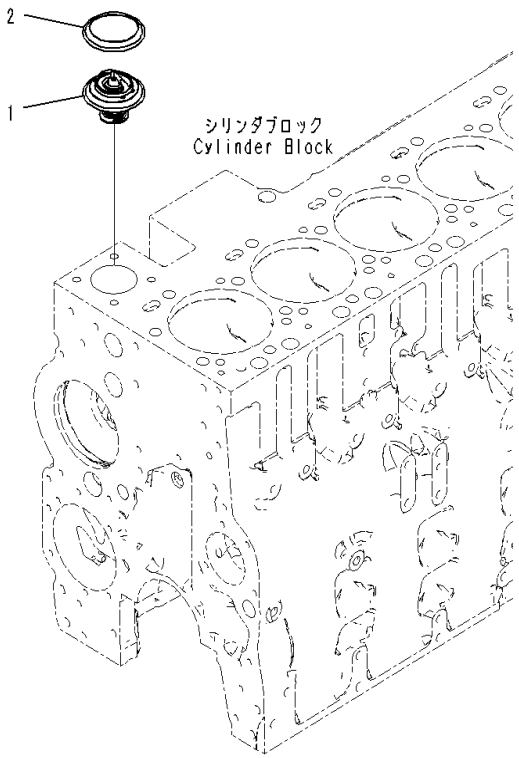

Index	Code	Part Number	Description	Qty	Serial Number
1		6746-61-6210	Thermostat	1	26866736-
2		6746-61-6230	• Seal Ring	1	26866736-

FIG. ACH00-001001 Coolant Heater Plug

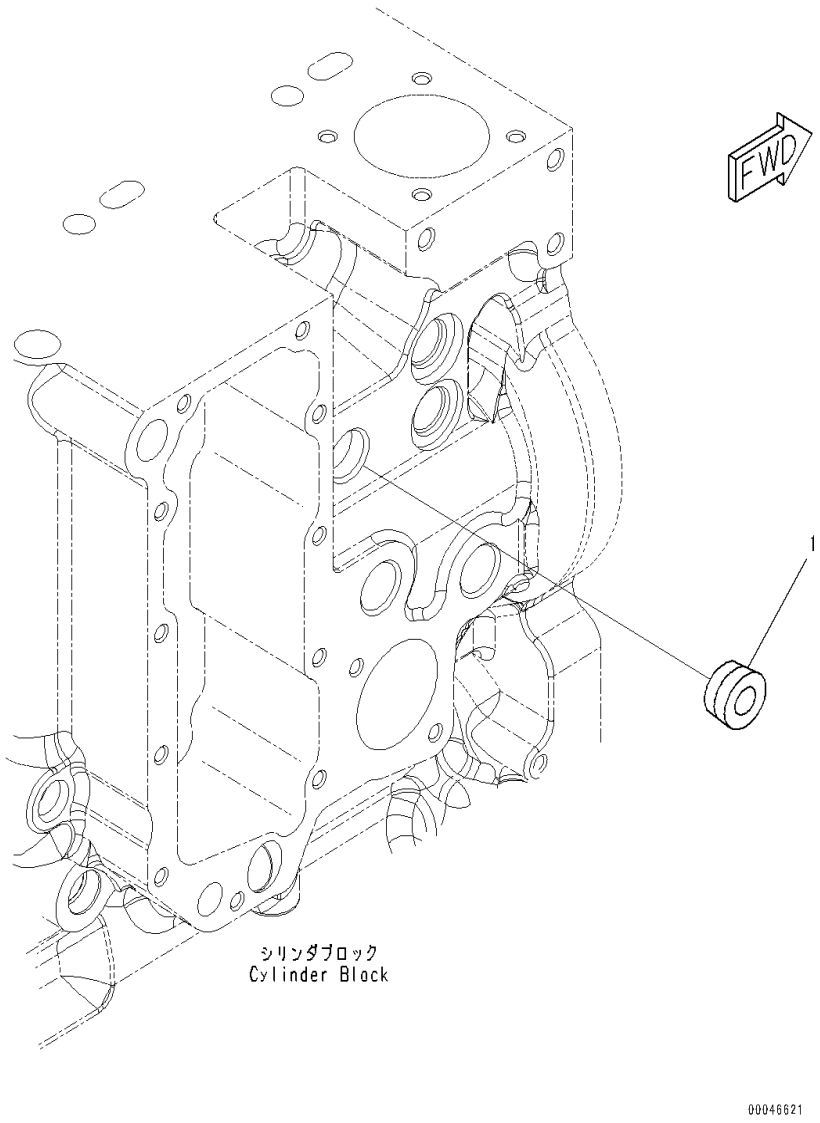

Index	Code	Part Number	Description	Qty	Serial Number
1		6732-11-1920	Plug	1	26866736-

FIG. AWI10-001001 Coolant Inlet Connector

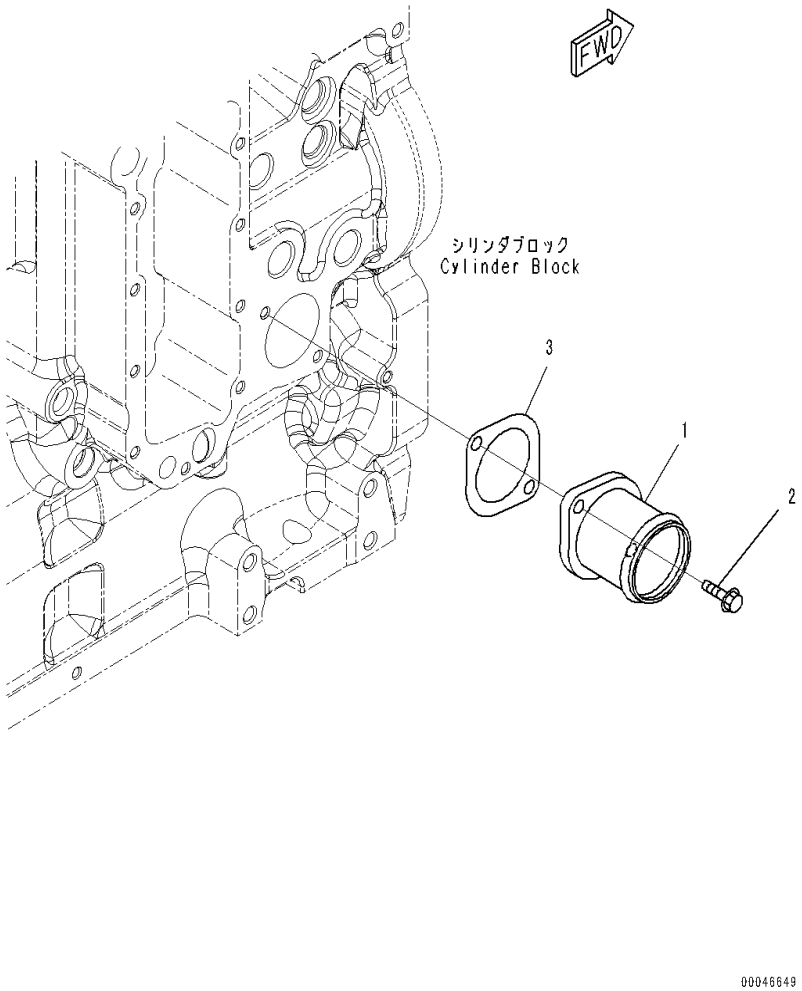

Index	Code	Part Number	Description	Qty	Serial Number
1		6742-01-4490	Connector	1	26866736-
2		01435-60820	Bolt	2	26866736-
3		6741-61-6130	Gasket	1	26866736-

FIG. ATK00-001001 Plug, Torque Converter Cooling

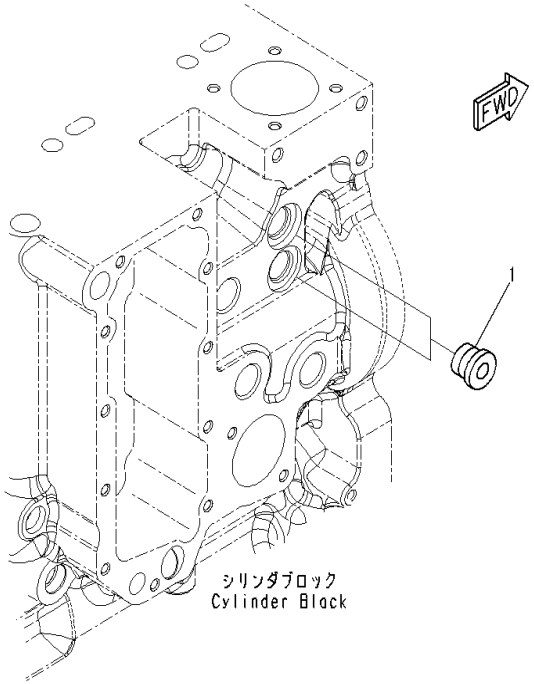

Index	Code	Part Number	Description	Qty	Serial Number
1		6216-14-6820	Plug Assembly	2	26866736-
		6216-14-6860	• O-ring	1	26866736-

ENGINE ELECTRICAL SYSTEM

FIG. AEH20-001001 Alternator Mounting (60Amp)

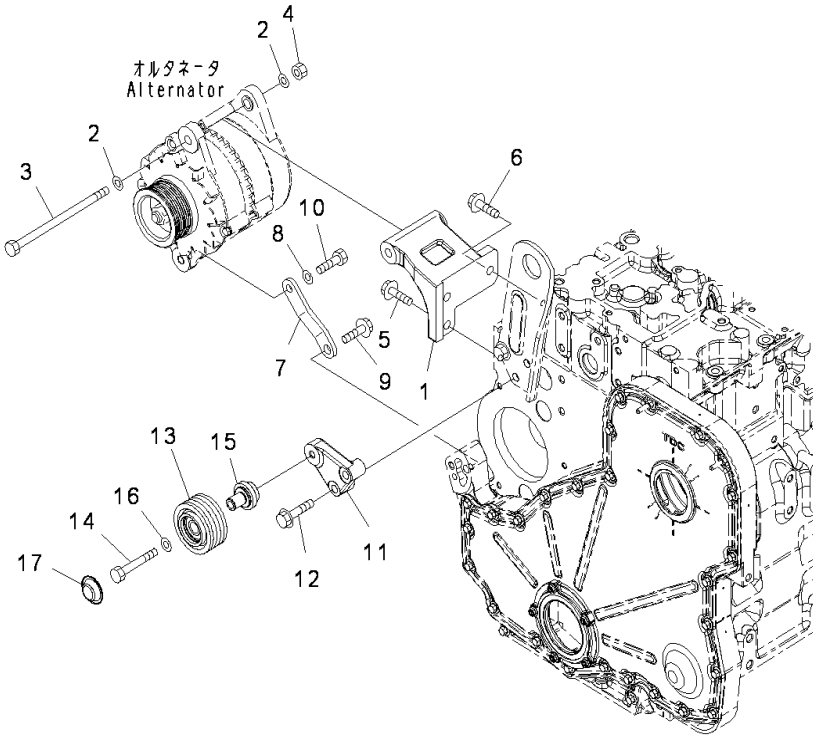

Index	Code	Part Number	Description	Qty	Serial Number
1		6741-81-6520	Bracket	1	26866736-
2		01643-31232	Washer	2	26866736-
3		6207-81-6980	Bolt	1	26866736-
4		01580-11210	Nut	1	26866736-
5		01435-61025	Bolt	1	26866736-
6		01435-61030	Bolt	2	26866736-
7		6741-81-6510	Brace	1	26866736-
8		01643-31232	Washer	1	26866736-
9		01435-01020	Bolt	1	26866736-
10		01050-31230	Bolt	1	26866736-
11		6745-61-4130	Support	1	26866736-
12		6745-61-4230	Bolt	2	26866736-
13		6743-61-3441	Pulley	1	26866736-
14		6745-61-4120	Bolt	1	26866736-
15		6742-01-5123	Shaft	1	26866736-
16		01643-31032	Washer	1	26866736-
17		6742-01-4560	Cover	1	26866736-

FIG. AEE00-001001 Alternator (60Amp)

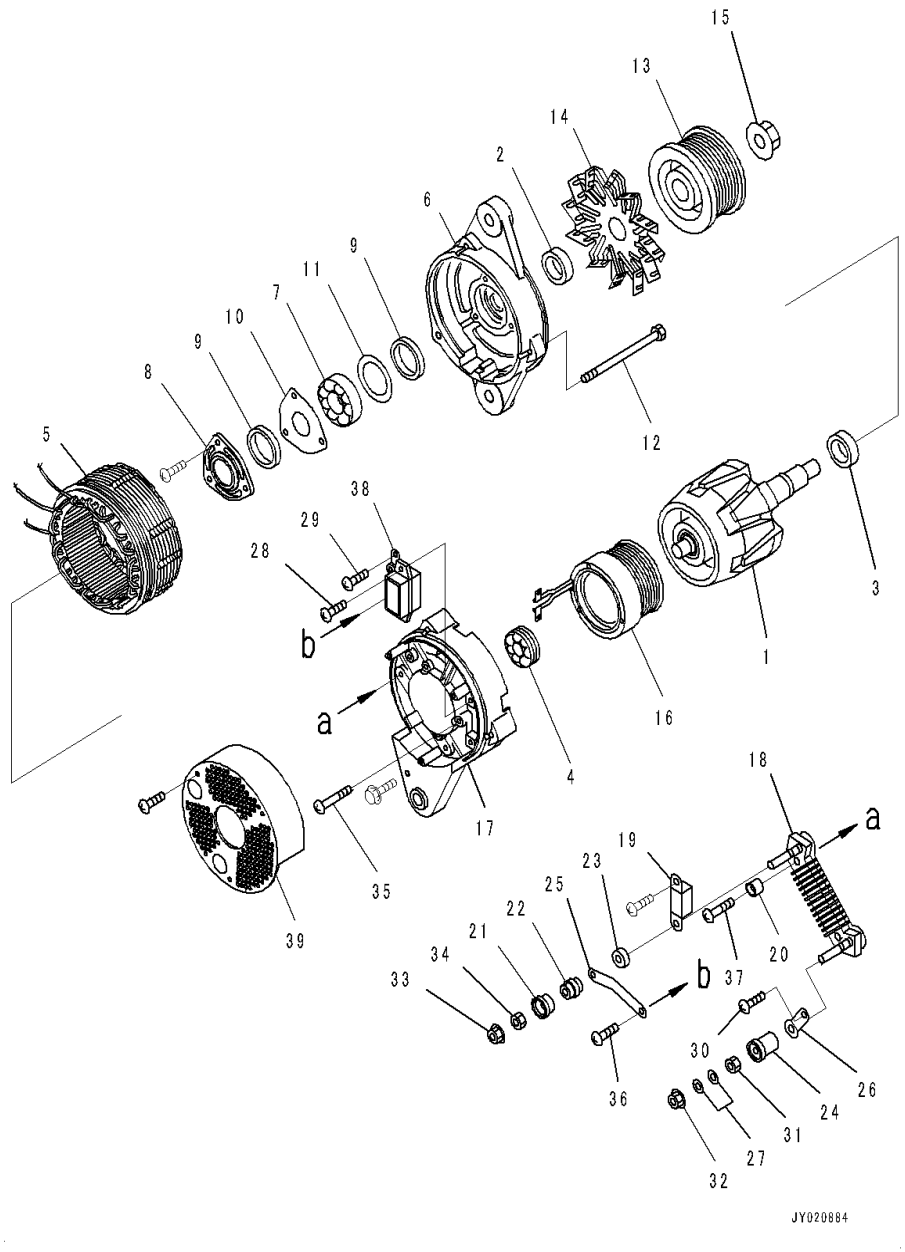

Index	Code	Part Number	Description	Qty	Serial Number
		600-861-6111	Alternator, 60Amp.	1	26866736-
1		KD0-35100-0418	• Rotor Assembly	1	26866736-
2		KD0-35943-0240	• Collar	1	26866736-
3		KD0-35923-0160	• Collar	1	26866736-
4		KD0-09201-0980	• Bearing, Ball	1	26866736-
5		KD0-35200-0528	• Stator Assembly	1	26866736-
6		KD0-35300-0450	• Bracket Assembly,Front	1	26866736-
7		KD0-09201-1450	• • Bearing	1	26866736-
8		KD0-35926-0070	• • Retainer	1	26866736-
9		KD0-35951-0060	• • Packing	2	26866736-
10		KD0-35926-0090	• • Retainer	1	26866736-
11		KD1-33926-0730	• • Retainer	1	26866736-
12		KD0-0275-06802	• Bolt	3	26866736-
13		KD0-35411-0648	• Pulley	1	26866736-
14		KD0-35421-0240	• Fan	1	26866736-
15		KD0-09006-0730	• Nut	1	26866736-
16		KD0-35120-0528	• Coil, Field	1	26866736-
		KD0-35700-1140	• Bracket Assembly	1	26866736-
17		KD0-35710-1330	• • Bracket	1	26866736-
18		KD0-35730-0700	• • Rectifier Assembly	1	26866736-
19		KD0-09170-2501	• • Condenser	1	26866736-
20		KD0-35943-0170	• • Bushing	2	26866736-
21		KD0-35943-0154	• • Bushing	1	26866736-
22		KD0-35923-0134	• • Collar	1	26866736-
23		KD0-35943-0160	• • Bushing	1	26866736-
24		KD0-35943-0140	• • Bushing	1	26866736-
25		KD0-35784-0210	• • Bar, Connect	1	26866736-
26		KD0-35784-0290	• • Bar, Plate	1	26866736-
27		KD0-09057-0220	• • Washer	2	26866736-
28		KD0-0055-05202	• • Screw	2	26866736-
29		KD0-0055-05122	• • Screw	2	26866736-
30		KD0-09011-3540	• • Screw	1	26866736-
31		KD0-35902-0010	• • Nut	1	26866736-
32		KD0-09006-0370	• • Nut	1	26866736-
33		KD0-33902-0080	• • Nut	1	26866736-
34		KD0-33902-0090	• • Nut	1	26866736-
35		KD0-0056-05302	• • Screw	3	26866736-
36		KD0-09011-3540	• • Screw	2	26866736-
37		KD0-0056-05302	• • Screw	2	26866736-
38		KD0-35719-0201	• • Regulator Assembly	1	26866736-

FIG. AEE00-001001 Alternator (60Amp)

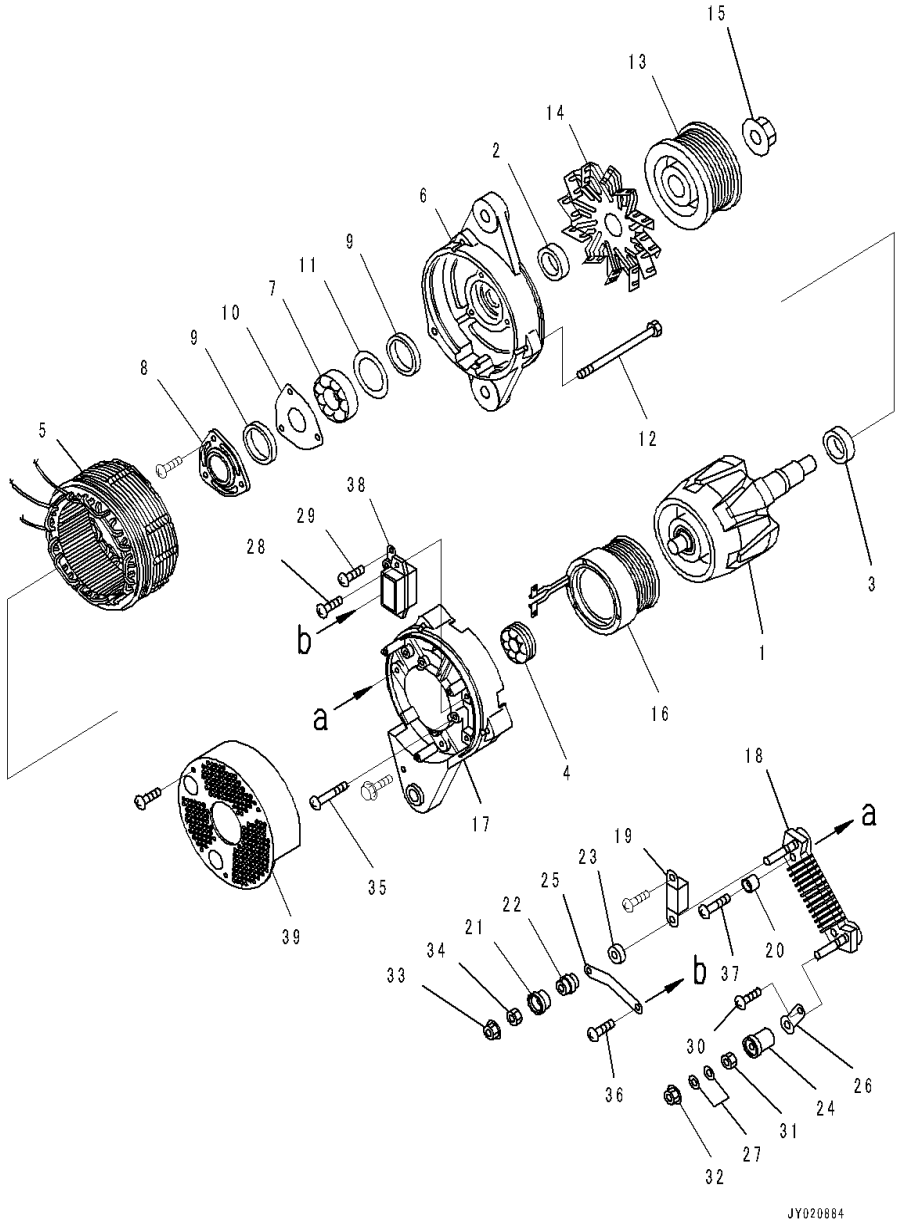

Index	Code	Part Number	Description	Qty	Serial Number
39		KD0-35761-0308	• Cover	1	26866736-

FIG. ASM00-001001 Starting Motor Mounting

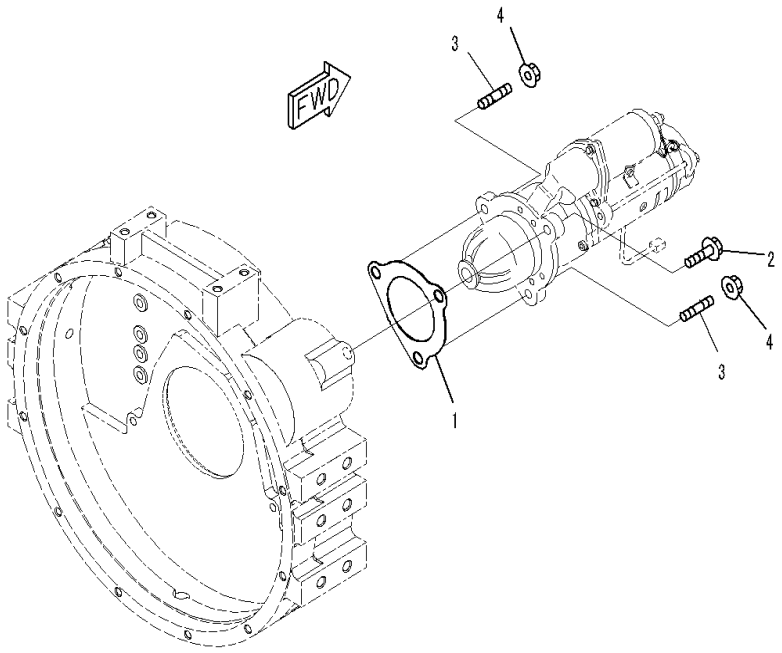

Index	Code	Part Number	Description	Qty	Serial Number
1		6221-81-6810	Gasket	1	26866736-
2		01435-01240	Bolt	1	26866736-
3		6743-81-6310	Stud	2	26866736-
4		01584-01210	Nut	2	26866736-

FIG. AST00-001001 Starting Motor (7.5KW), (#26866736-26871808)

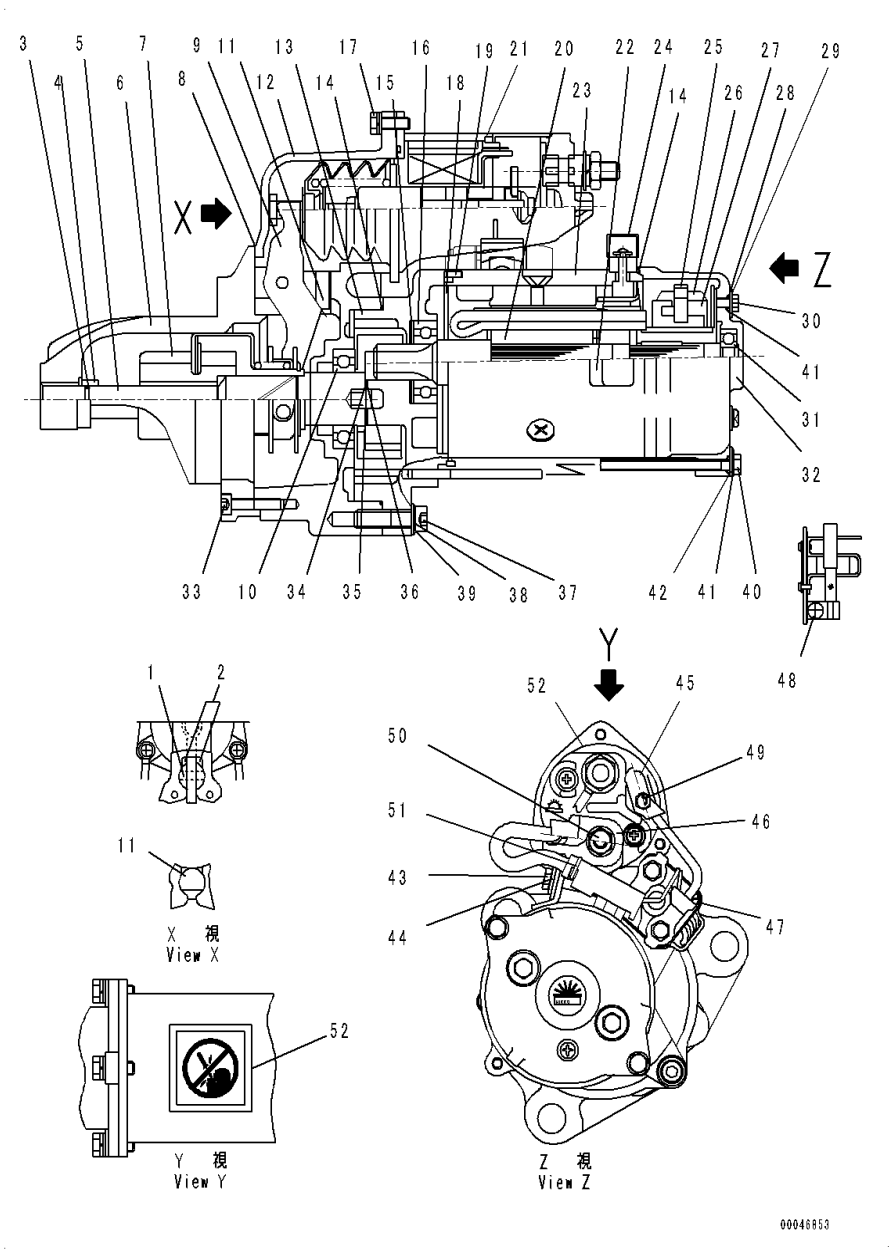

Index	Code	Part Number	Description	Qty	Serial Number
		600-863-5711	Starting Motor Assembly, 7.5Kw	1	26866736-26871808
1		KD0-23904-0070	• Pin	1	26866736-26871808
2		KD0-23927-0071	• Holder	2	26866736-26871808
3		KD1-23914-0020	• Ring	1	26866736-26871808
4		KD1-23181-0020	• Stopper	1	26866736-26871808
5		KD1-23111-0160	• Shaft	1	26866736-26871808
6		KD0-23310-1730	• Bracket,Front	1	26866736-26871808
7		KD0-23500-0970	• Clutch Assembly, Over Running	1	26866736-26871808
8		KD0-23951-0301	• Packing	1	26866736-26871808
9		KD0-23320-0220	• Lever Assembly	1	26866736-26871808
10		KD1-0454-60067	• Bearing, Ball	1	26866736-26871808
11		KD0-23951-0331	• Packing	1	26866736-26871808
12		KD0-23600-0460	• Bracket Assembly	1	26866736-26871808
13		KD0-23611-0690	• Bracket,Center	1	26866736-26871808
14		KD1-09211-0980	• O-ring	2	26866736-26871808
15		KD0-23921-0230	• Washer	1	26866736-26871808
16		KD1-0454-62047	• Bearing, Ball	1	26866736-26871808
17		KD0-0274-06202	• Bolt	3	26866736-26871808
18		KD1-23951-0020	• Packing	1	26866736-26871808
19		KD1-0400-20100	• Pin, Straight	1	26866736-26871808
20		KD0-23100-0251	• Armature Assembly	1	26866736-26871808
21		KD0-47100-4800	• Switch Assembly, Magnetic	1	26866736-26871808
22		KD0-09271-3620	• Name Plate	1	26866736-26871808
23		KD0-23200-0331	• Yoke Assembly	1	26866736-26871808
24		KD0-47761-2691	• Cover	1	26866736-26871808
25		KD1-23913-0040	• Spring, Brush	4	26866736-26871808
26		KD0-23740-0250	• Brush Assembly	4	26866736-26871808
27		KD0-23750-0250	• Holder Assembly, Brush	1	26866736-26871808
28		KD1-0505-00601	• O-ring	2	26866736-26871808
29		KD1-47921-0790	• Washer	2	26866736-26871808
30		KD0-09001-4580	• Bolt	2	26866736-26871808
31		KD1-0454-62007	• Bearing, Ball	1	26866736-26871808
32		KD0-23700-0130	• Bracket Assembly	1	26866736-26871808
33		KD1-0240-06305	• Bolt	6	26866736-26871808
34		KD1-23921-0130	• Washer	1	26866736-26871808
35		KD1-23921-0140	• Washer	1	26866736-26871808
36		KD1-23941-0040	• Washer, Insulate	1	26866736-26871808
37		KD1-0240-08405	• Bolt	3	26866736-26871808
38		KD1-0335-08002	• Washer, Spring	3	26866736-26871808
39		KD1-0330-08022	• Washer	3	26866736-26871808

FIG. AST00-001001 Starting Motor (7.5KW), (#26866736-26871808)

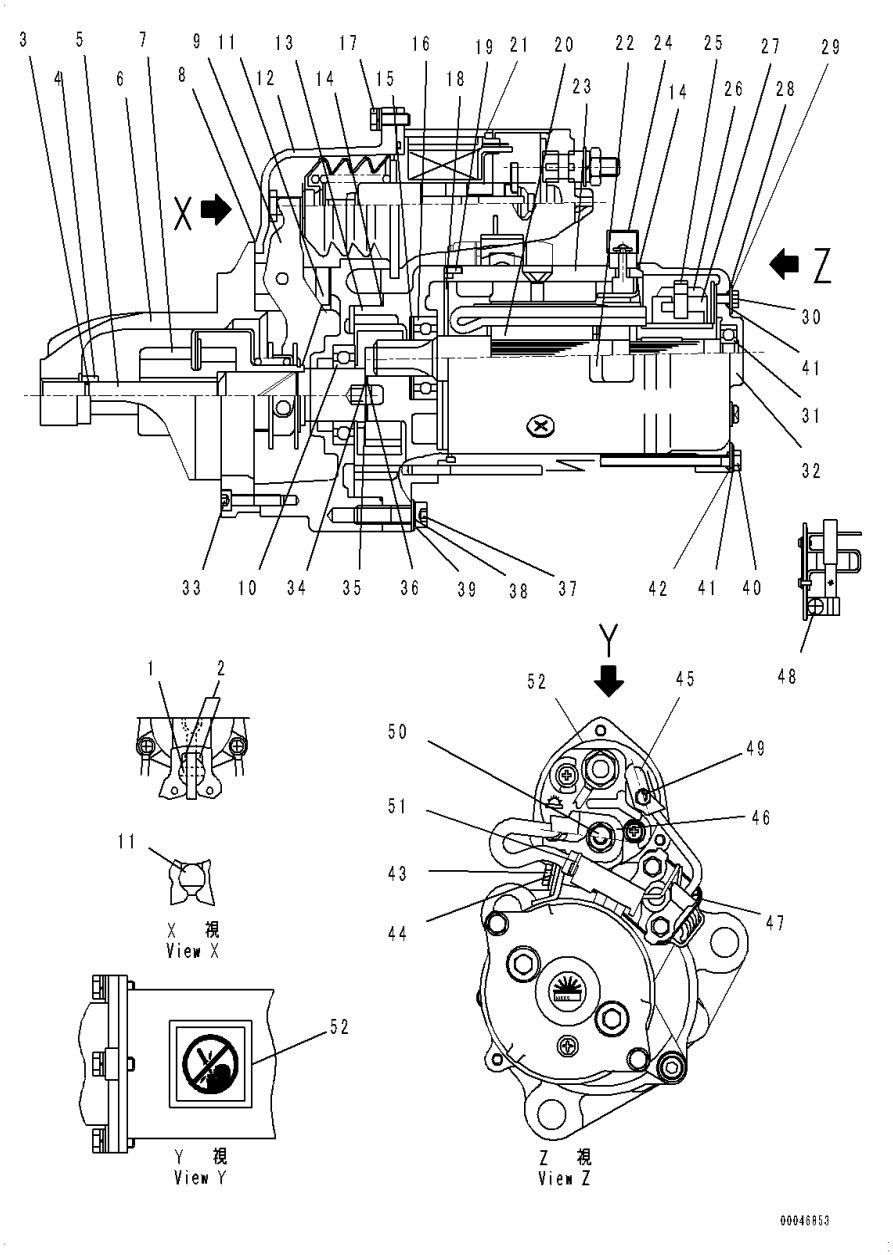

Index	Code	Part Number	Description	Qty	Serial Number
40		KD0-23901-0170	• Bolt	2	26866736-26871808
41		KD1-0335-06002	• Washer, Spring	4	26866736-26871808
42		KD1-0330-06012	• Washer, Prain	2	26866736-26871808
43		KD0-0270-06402	• Bolt	1	26866736-26871808
44		KD1-47927-1250	• Holder	1	26866736-26871808
45		KD0-47761-2671	• Cover	1	26866736-26871808
46		KD0-47761-2681	• Cover	1	26866736-26871808
47		KD0-25000-8332	• Switch Assembly	1	26866736-26871808
48		KD0-0055-05082	• Screw	4	26866736-26871808
49		KD0-09006-0660	• Nut	1	26866736-26871808
50		KD0-09006-0670	• Nut	1	26866736-26871808
51		KD1-09257-0050	• Band	1	26866736-26871808
52		KD0-09275-1430	• Plate, Caution	1	26866736-26871808

FIG. AST00-001001 Starting Motor (75KW), (#26871809-)

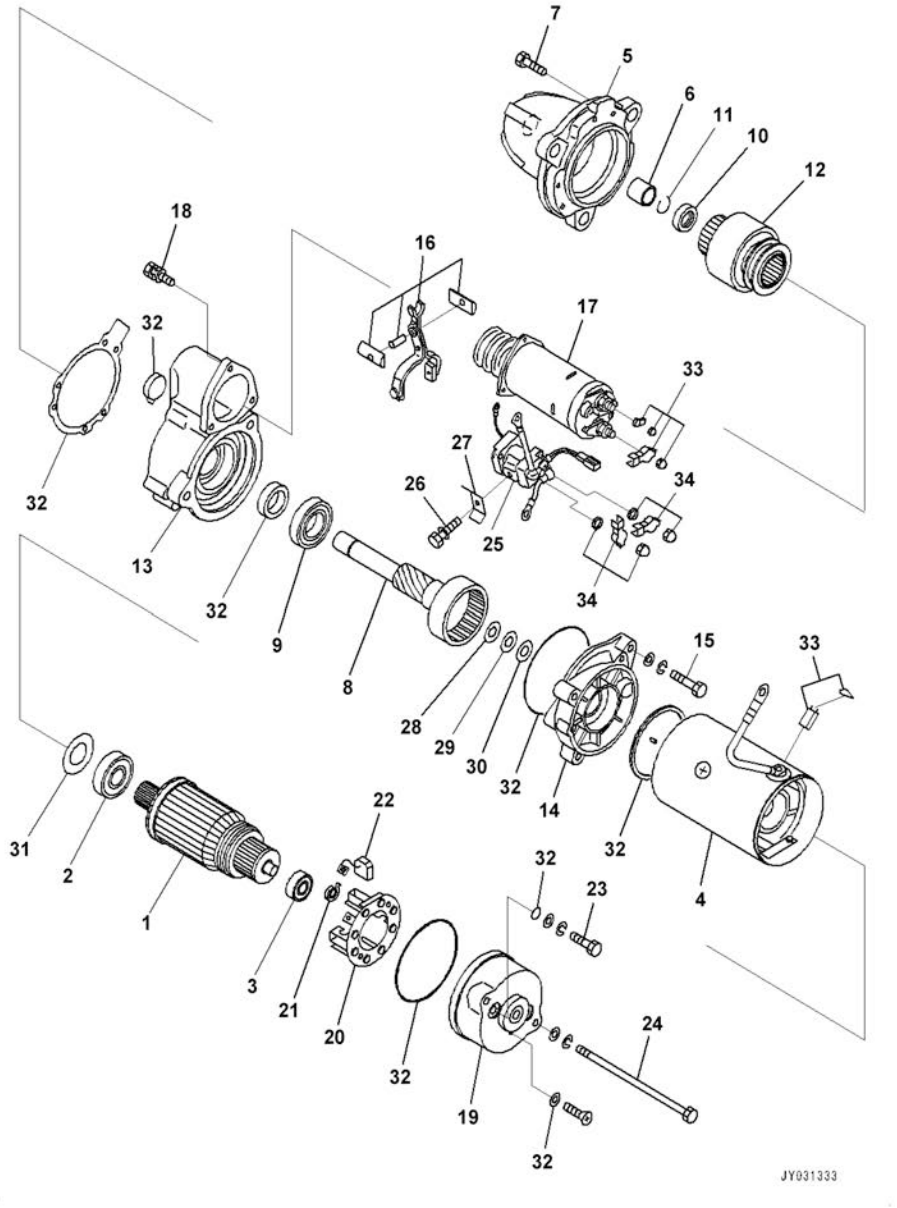

Index	Code	Part Number	Description	Qty	Serial Number
		600-863-5712	Starting Motor Assembly, 7.5Kw	1	26871809-
1		KD0-23100-0251	• Armature Assembly	1	26871809-
2		KD1-0454-62047	• • Bearing, Ball	1	26871809-
3		KD1-0454-62007	• • Bearing, Ball	1	26871809-
4		KD0-23200-0334	• Yoke Assembly	1	26871809-
5		KD0-23310-1734	• Bracket	1	26871809-
6		KD7-23351-0085	• • Metal	1	26871809-
7		KD1-0240-06305	• • Bolt	6	26871809-
8		KD7-23120-0310	• Shaft Assembly	1	26871809-
9		KD1-0454-60067	• • Bearing, Ball	1	26871809-
10		KD1-23181-0020	• • Stopper	1	26871809-
11		KD1-23914-0020	• • Ring	1	26871809-
12		KD1-23500-0974	• Clutch Assembly	1	26871809-
13		KD0-23600-0460	• Bracket Assembly	1	26871809-
14		KD0-23611-0692	• Bracket	1	26871809-
15		KD1-0240-08405	• Bolt	3	26871809-
16		KD7-23320-0060	• Shift Lever Assembly	1	26871809-
17		KD0-47100-0244	• Switch Assembly, Magnetic	1	26871809-
18		KD0-0274-06202	• Bolt	3	26871809-
		KD7-23700-0524	• Bracket Assembly	1	26871809-
19		KD0-23700-0130	• • Bracket Assembly	1	26871809-
20		KD0-23750-0124	• • Brush Assembly	1	26871809-
21		KD1-23913-0040	• • • Brush	4	26871809-
22		KD0-23740-0254	• • • Brush	4	26871809-
23		KD0-09001-4580	• • Bolt	2	26871809-
24		KD0-23901-0170	• Bolt	2	26871809-
25		KD0-25000-8333	• Switch	1	26871809-
26		KD0-0270-06402	• Bolt	1	26871809-
27		KD1-47927-1250	• Holder	1	26871809-
28		KD1-23921-0130	• Washer	1	26871809-
29		KD1-23921-0140	• Washer	1	26871809-
30		KD1-23941-0040	• Washer, Insulate	1	26871809-
31		KD0-23921-0230	• Washer	1	26871809-
32		KD7-09210-2830	• Seal Assembly	1	26871809-
33		KD7-47761-0010	• Cover Assembly	1	26871809-
34		KD7-47761-0030	• Cover Assembly	1	26871809-

FIG. AST00-002001 Starting Motor (11KW), (#26866736-26871811)

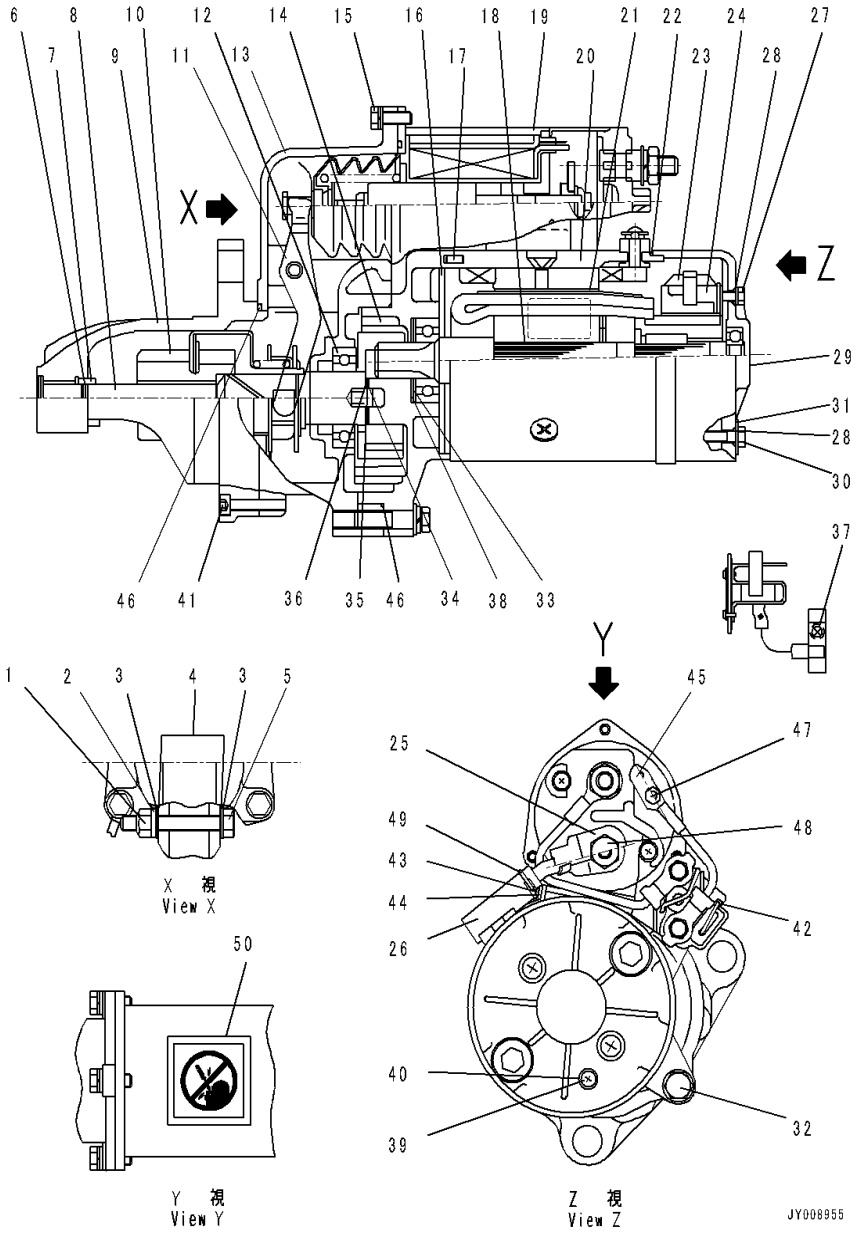

Index	Code	Part Number	Description	Qty	Serial Number
		600-863-8112	Starting Motor Assembly, 11Kw	1	26866736-26871811
1		KD1-09279-0090	• Nut	1	26866736-26871811
2		KD1-0335-08002	• Washer, Spring	4	26866736-26871811
3		KD1-0330-08022	• Washer	5	26866736-26871811
4		KD1-0345-08001	• Washer, Seal	2	26866736-26871811
5		KD0-23303-0020	• Pin	1	26866736-26871811
6		KD1-23914-0020	• Ring	1	26866736-26871811
7		KD1-23181-0020	• Stopper	1	26866736-26871811
8		KD0-23120-0180	• Shaft Assembly	1	26866736-26871811
9		KD0-23310-1740	• Bracket Assembly	1	26866736-26871811
10		KD1-23500-0970	• Clutch Assembly	1	26866736-26871811
11		KD1-23320-0290	• Lever Assembly	1	26866736-26871811
12		KD0-09201-0850	• Bearing, Ball	1	26866736-26871811
13		KD0-23600-0410	• Bracket Assembly	1	26866736-26871811
14		KD0-23611-1101	• Bracket	1	26866736-26871811
15		KD0-0274-06202	• Bolt	3	26866736-26871811
16		KD1-23951-0051	• Packing	1	26866736-26871811
17		KD1-0400-30100	• Pin	1	26866736-26871811
18		KD0-23100-0430	• Armature Assembly	1	26866736-26871811
19		KD0-47100-4651	• Switch Assembly	1	26866736-26871811
20		KD0-23200-0671	• Yoke Assembly	1	26866736-26871811
21		KD0-09271-3620	• Name Plate	1	26866736-26871811
22		KD1-09211-1120	• O-ring	1	26866736-26871811
23		KD0-23740-0351	• Brush Assembly	2	26866736-26871811
24		KD0-23750-0490	• Holder Assembly	1	26866736-26871811
25		KD0-47761-2681	• Cover	1	26866736-26871811
26		KD0-47761-2691	• Cover	1	26866736-26871811
27		KD0-09011-3140	• Screw	2	26866736-26871811
28		KD1-09211-0081	• O-ring	4	26866736-26871811
29		KD0-23710-0221	• Bracket	1	26866736-26871811
30		KD0-09001-4380	• Bolt	2	26866736-26871811
31		KD1-47921-0790	• Washer	2	26866736-26871811
32		KD0-0276-08402	• Bolt	3	26866736-26871811
33		KD0-09057-0110	• Washer	1	26866736-26871811
34		KD1-23941-0040	• Washer, Insulate	1	26866736-26871811
35		KD1-23921-0140	• Washer	1	26866736-26871811
36		KD1-23921-0130	• Washer	1	26866736-26871811
37		KD0-0055-05082	• Screw	2	26866736-26871811
38		KD0-09057-0190	• Washer	1	26866736-26871811
39		KD0-0020-05062	• Screw	1	26866736-26871811

FIG. AST00-002001 Starting Motor (11KW), (#26866736-26871811)

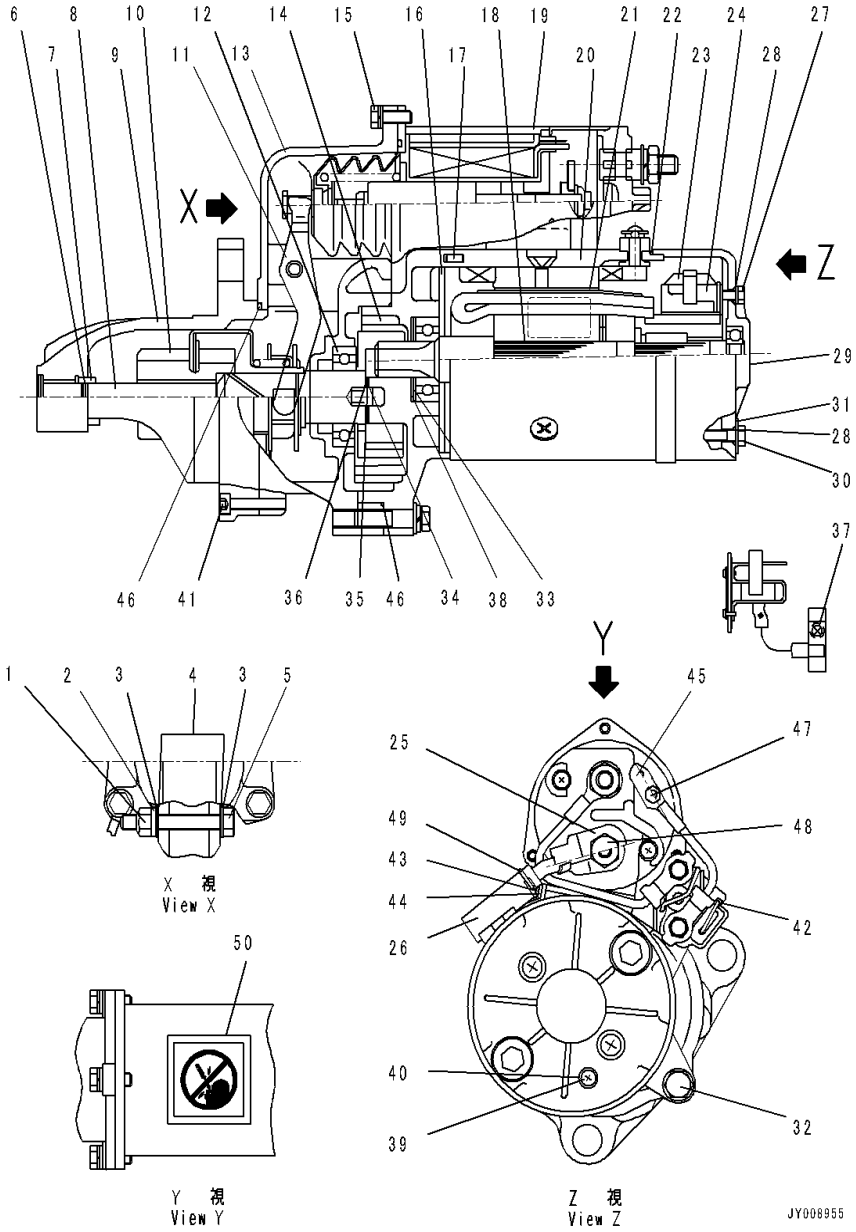

Index	Code	Part Number	Description	Qty	Serial Number
40		KD1-0345-05001	• Washer, Seal	1	26866736-26871811
41		KD1-0240-06305	• Bolt	6	26866736-26871811
42		KD0-25000-8521	• Switch Assembly	1	26866736-26871811
43		KD0-0270-06602	• Bolt	1	26866736-26871811
44		KD0-47927-1390	• Holder	1	26866736-26871811
45		KD0-47761-2671	• Cover	1	26866736-26871811
46		KD1-09211-0981	• O-ring	2	26866736-26871811
47		KD0-09006-0660	• Nut	1	26866736-26871811
48		KD0-09006-0670	• Nut	1	26866736-26871811
49		KD1-09257-0050	• Band	1	26866736-26871811
50		KD0-09275-1430	• Plate, Caution	1	26866736-26871811

FIG. AST00-002001 Starting Motor (11KW), (#26871812-)

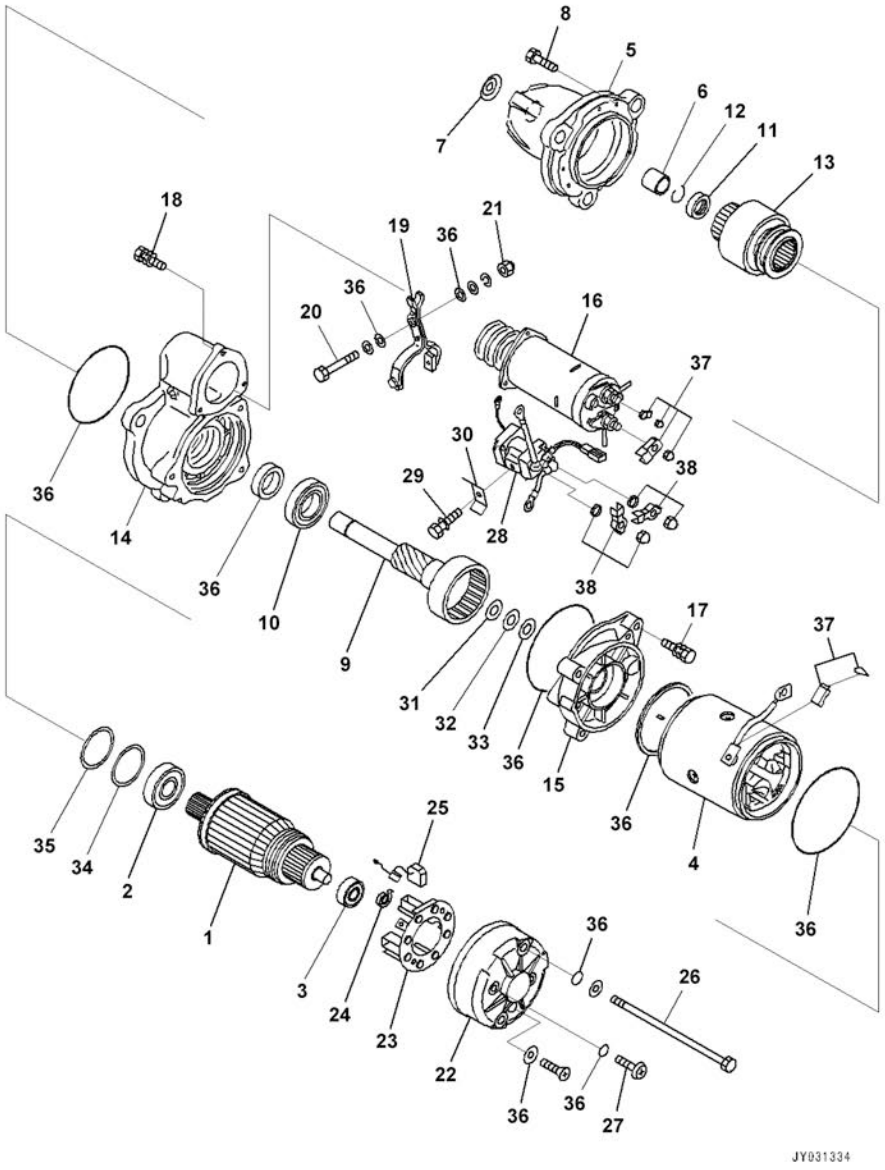

Index	Code	Part Number	Description	Qty	Serial Number
		600-863-8113	Starting Motor Assembly, 11Kw	1	26871812-
1		KD0-23100-0430	• Armature Assembly	1	26871812-
2		KD1-0456-62057	• • Bearing, Ball	1	26871812-
3		KD1-0456-62017	• • Bearing, Ball	1	26871812-
4		KD0-23200-0672	• Yoke Assembly	1	26871812-
5		KD0-23310-1744	• Bracket Assembly	1	26871812-
6		KD7-23351-0085	• • Metal	1	26871812-
7		KD1-23761-0010	• • Cover	1	26871812-
8		KD1-0240-06305	• Bolt	6	26871812-
9		KD0-23120-0180	• Shaft Assembly	1	26871812-
10		KD0-09201-0850	• Bearing, Ball	1	26871812-
11		KD1-23181-0020	• Stopper	1	26871812-
12		KD1-23914-0020	• Ring	1	26871812-
13		KD0-23500-0974	• Clutch Assembly	1	26871812-
14		KD0-23600-0410	• Bracket Assembly	1	26871812-
15		KD0-23611-1101	• Bracket	1	26871812-
16		KD7-47100-0274	• Switch Assembly, Magnetic	1	26871812-
17		KD0-0276-08402	• Bolt	3	26871812-
18		KD0-0274-06202	• Bolt	3	26871812-
19		KD0-23320-0290	• Lever Assembly	1	26871812-
20		KD0-23303-0020	• Pin	1	26871812-
21		KD1-09279-0090	• Nut	1	26871812-
22		KD0-23710-0221	• Bracket	1	26871812-
23		KD7-23750-0150	• Holder Assembly, Brush	1	26871812-
24		KD1-23913-0040	• • Brush	4	26871812-
25		KD0-23740-0354	• • Brush Assembly	4	26871812-
26		KD0-09001-4380	• Bolt	2	26871812-
27		KD0-09011-3140	• Screw	2	26871812-
28		KD0-25000-8522	• Switch	1	26871812-
29		KD0-0270-06602	• Bolt	1	26871812-
30		KD0-47927-1390	• Holder	1	26871812-
31		KD1-23921-0130	• Washer	1	26871812-
32		KD1-23921-0140	• Washer	1	26871812-
33		KD1-23941-0040	• Washer, Insulate	1	26871812-
34		KD0-09057-0110	• Washer	1	26871812-
35		KD0-09057-0190	• Washer	1	26871812-
36		KD7-09210-2910	• Seal Assembly	1	26871812-
37		KD7-47761-0010	• Cover Assembly	1	26871812-
38		KD7-47761-0030	• Cover Assembly	1	26871812-

FIG. AWR00-001001 Wiring Harness

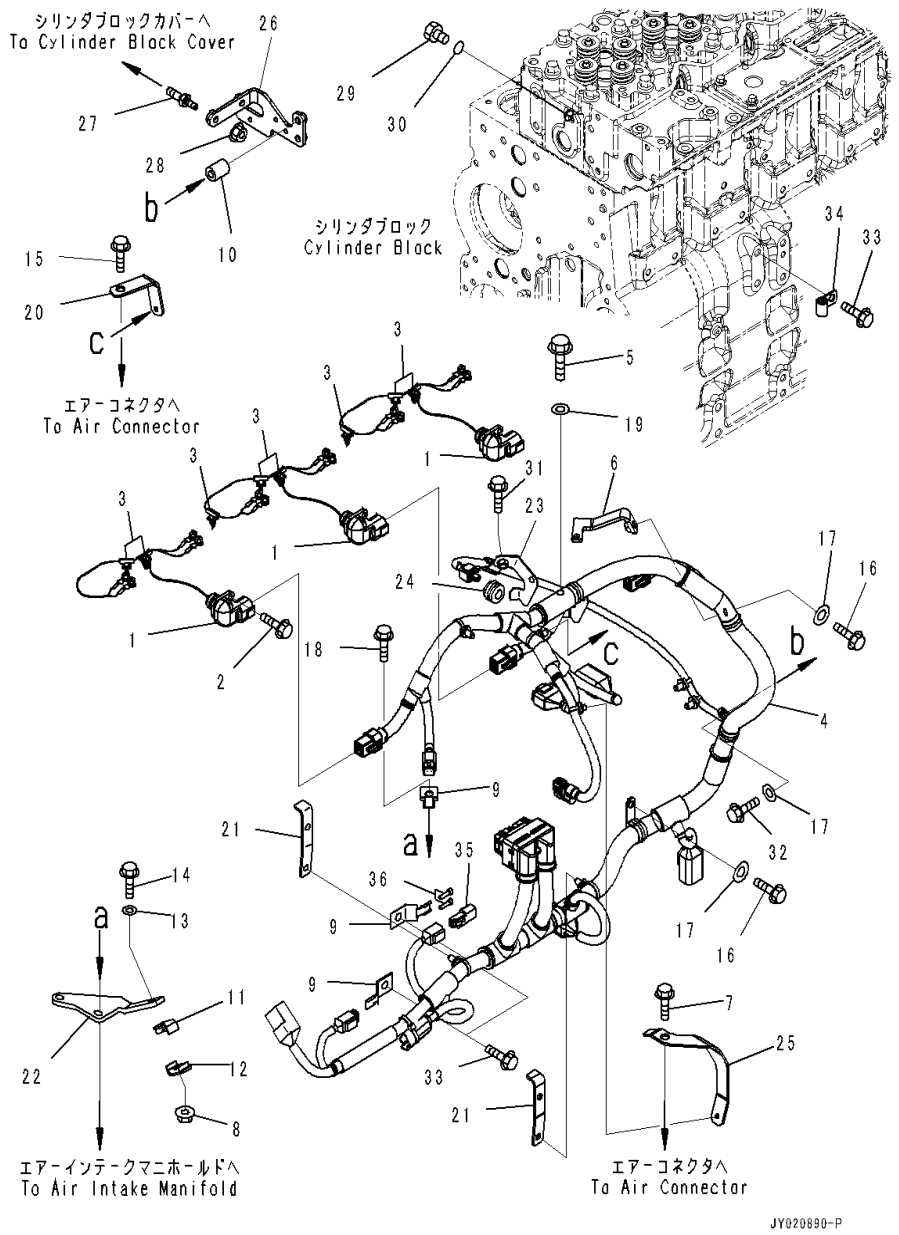

Index	Code	Part Number	Description	Qty	Serial Number
1		6745-81-9240	Wiring Harness	3	26866736-
2	C1		Bolt	3	26866736-
3		6745-81-9390	Clip	8	26866736-
4		6745-81-9230	Wiring Harness	1	26866736-
5		6742-01-3770	Bolt	1	26866736-
6		6745-81-9710	Bracket	1	26866736-
7		01435-60820	Bolt	1	26866736-
8		01584-00605	Nut	1	26866736-
9		08193-20010	Clip	3	26866736-
10		6130-12-4581	Spacer	1	26866736-
11		6155-71-5810	Clamp	1	26866736-
12		6155-71-5820	Clamp	1	26866736-
13		01643-30623	Washer	1	26866736-
14		6745-81-9430	Bolt	1	26866736-
15		6732-61-3140	Bolt	2	26866736-
16		01435-60816	Bolt	1	26866736-
17		01640-20816	Washer	3	26866736-
18		01435-60835	Bolt	2	26866736-
19		01640-20716	Washer	1	26866736-
20		6745-81-6160	Brace	1	26866736-
21		6745-81-9740	Bracket	2	26866736-
22		6745-81-9750	Brace	1	26866736-
23		6745-81-9810	Bracket	1	26866736-
24		6745-81-9771	Bushing	1	26866736-
25		6745-81-6170	Brace	1	26866736-
26		6745-81-9790	Brace	1	26866736-
27		6745-81-9580	Bolt	2	26866736-
28		6732-71-3210	Nut	2	26866736-
		6735-21-1910	Plug Assembly	1	26866736-
29		6735-21-1920	• Plug	1	26866736-
30		6735-21-1930	• O-ring	1	26866736-
31		6216-74-6180	Bolt	2	26866736-
32		6754-81-9390	Bolt	1	26866736-
33		6216-54-7320	Bolt	3	26866736-
34		04434-51010	Clip	1	26866736-
35		08192-12100	Connector Assembly	1	26866736-
36		08191-00770	Plug, Connector	2	26866736-

FIG. APH10-001001 Electric Controller (Piping)

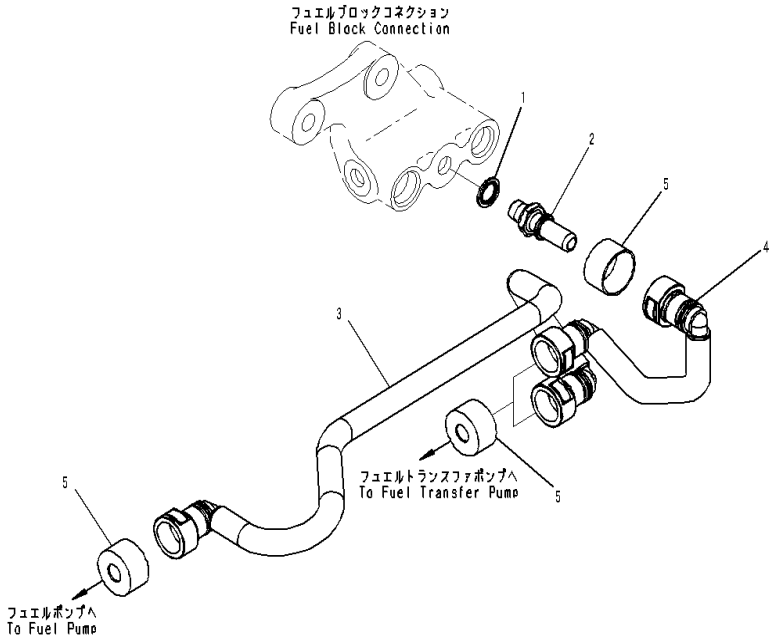

Index	Code	Part Number	Description	Qty	Serial Number
1		6745-71-1130	Washer	1	26866736-
2		6745-71-6130	Connector	1	26866736-
3		6745-71-5230	Tube	1	26866736-
4		6745-71-5240	Tube	1	26866736-
5		6745-71-5160	Cover	4	26866736-

ENGINE ACCESSORIES AND OTHERS

FIG. A4719-002001 Engine Controller

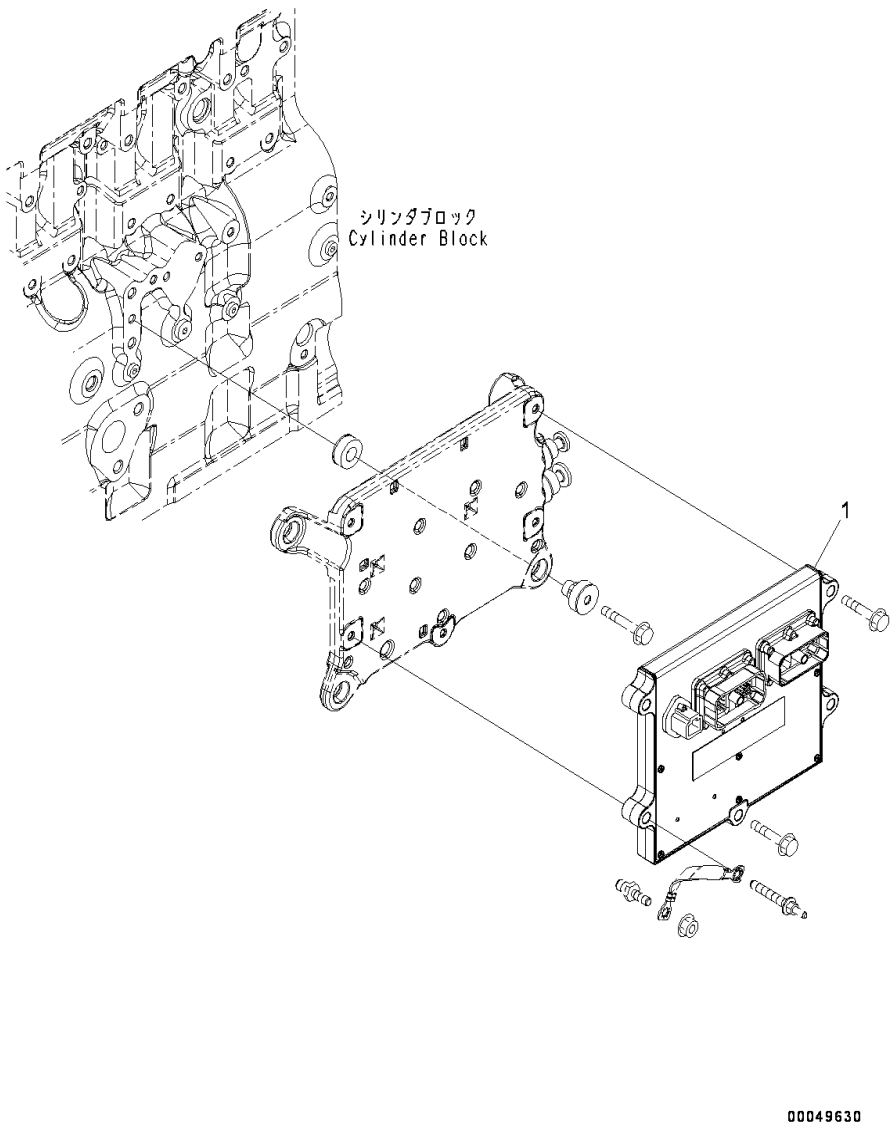

Index	Code	Part Number	Description	Qty	Serial Number
1		600-468-2100	Controller Assembly	1	26866736-

FIG. APH00-001001 Engine Control Module

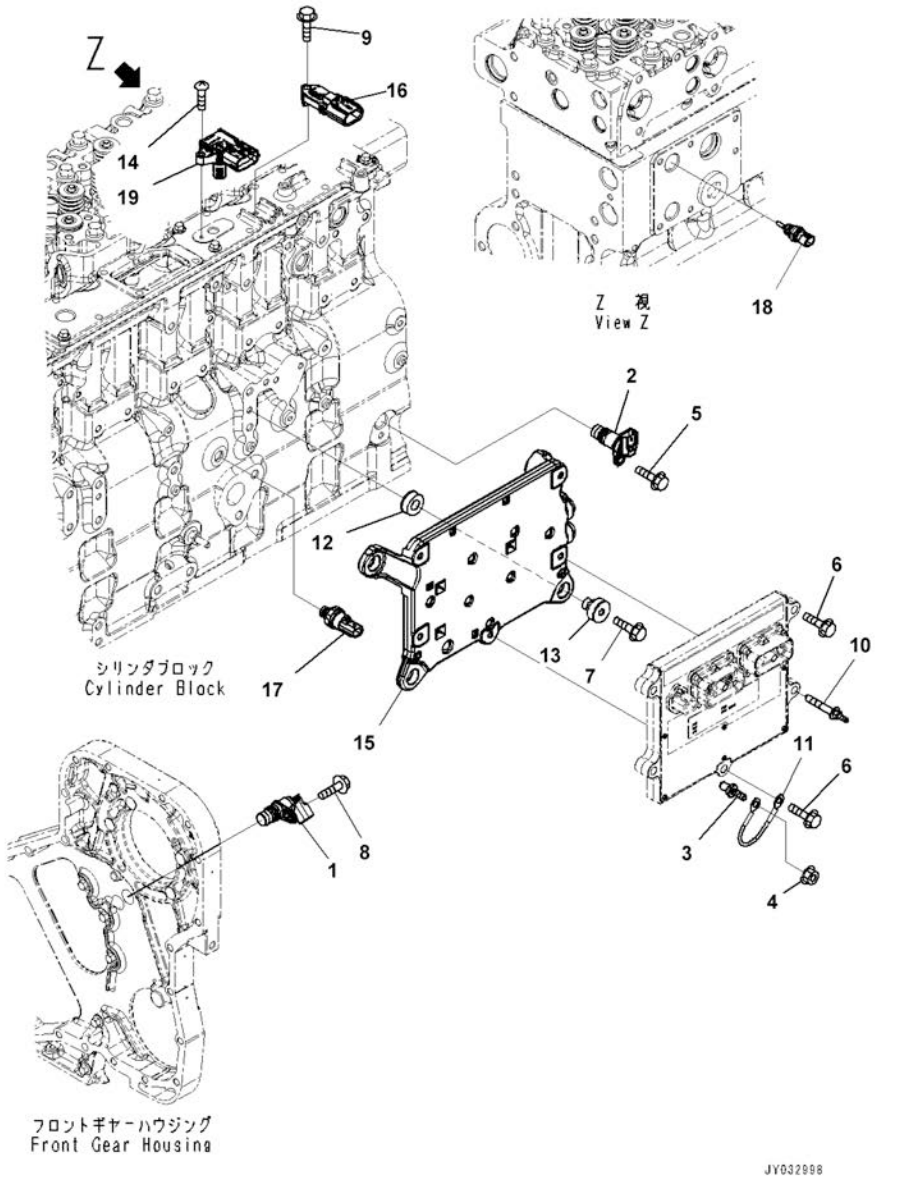

Index	Code	Part Number	Description	Qty	Serial Number
1		6271-81-9201	Sensor Assembly, Position	1	26866736-
		6271-81-9220	• O-ring	1	26866736-
2		6261-81-2902	Sensor Assembly, Speed	1	26866736-
		6271-81-9220	• O-ring	1	26866736-
3		6745-81-9440	Bolt	1	26866736-
4		6732-71-3210	Nut	1	26866736-
5		01435-60820	Bolt	1	26866736-
6		6732-61-3110	Bolt	2	26866736-
7		6735-61-2120	Bolt	4	26866736-
8		6732-21-4180	Bolt	1	26866736-
9		6734-71-5520	Bolt	1	26866736-
10		6745-81-9560	Bolt	3	26866736-
11		6271-81-4520	Wire	1	26866736-
12		6754-81-9110	Isolator, Vibration	4	26866736-
13		6754-81-9130	Isolator, Vibration	4	26866736-
14		6754-81-9180	Screw	1	26866736-
15		6746-81-9520	Cooler	1	26866736-
16		6261-81-1900	Sensor, Pressure	1	26866736-
17		6744-81-4010	Switch, Pressure	1	26866736-
18		6261-81-6901	Sensor Assembly	1	26866736-
19		6754-81-2702	Sensor, Temperature and Pressure	1	26870612-
		6754-81-2701	Sensor, Temperature	1	26866736-26870611
		6754-81-2710	• O-ring	1	26866736-

ENGINE MARKS AND PLATES

FIG. A9850-001001 Caution Plates

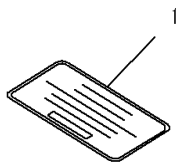

PMD1188

Index	Code	Part Number	Description	Qty	Serial Number
1		600-021-2210	Plate	1	26866736-

FIG. A9810-001001 Caution Plates

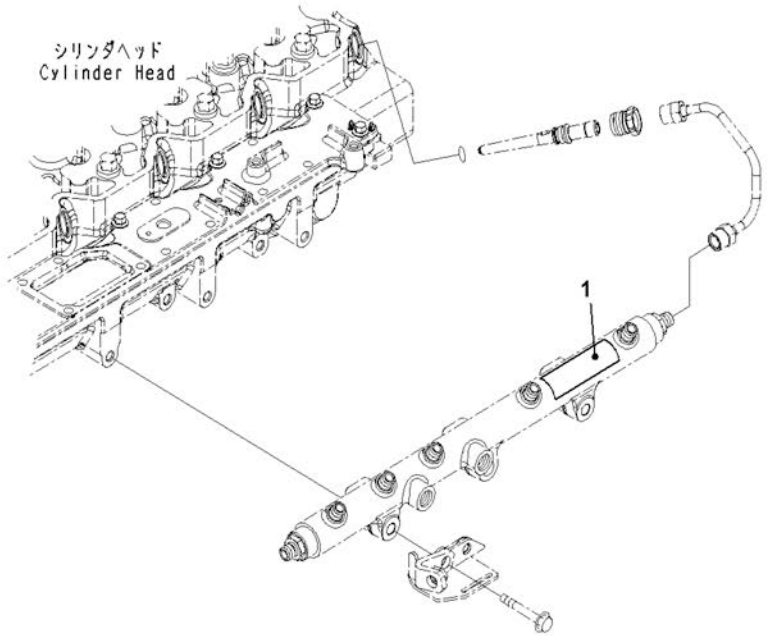

Index	Code	Part Number	Description	Qty	Serial Number
1		6745-81-2140	Plate, Chinese	1	26869053-

FIELD REPAIR SERVICE PARTS

FIG. A8110-001001 Repair Service Parts

Repair Service Parts See subsequent pages for details.

Index	Code	Part Number	Description	Qty	Serial Number
1		1295465H92	Seal Assembly	1	26866736-
2		6741-39-1220	• Tool	1	26866736-
3		6741-39-1110	• Seal	1	26866736-
4		6741-39-1120	• Sleeve	1	26866736-
5		6741-39-1130	• Shield	1	26866736-
6		6736-39-1140	Sleeve	1	26866736-
7		6736-39-1150	• Sleeve	1	26866736-
8		6736-39-1160	• Sleeve	1	26866736-
9		6742-01-5199	Main Metal Assembly	1	26866736-
10		6742-01-5233	Main Metal Assembly, Undersized, 0.25mm	1	26866736-
11		6742-01-5240	Main Metal Assembly, Undersized, 0.50mm	1	26866736-
12		6742-01-5287	Main Metal Assembly, Undersized, 0.75mm	1	26866736-
13		6742-01-5288	Main Metal Assembly, Undersized, 1.00mm	1	26866736-
14		6745-19-4210	Insert,Intake Valve,Standerd	12	26866736-
		6745-18-4210	Insert,Intake Valve,Oversize 0.25mm	12	26866736-
15		6745-19-4220	Insert,Exhaust Valve,Standerd	12	26866736-
		6745-18-4220	Insert,Exhaust Valve,Oversize 0.25mm	12	26866736-
16		6745-39-1100	Metal Assembly, Undersized, 0.25mm	6	26866736-
17		6745-39-1200	Metal Assembly	6	26866736-
18		6745-39-1300	Metal Assembly, Undersized, 0.75mm	6	26866736-
19		6745-39-1400	Metal Assembly, Undersized, 1.00mm	6	26866736-

ENGINE RELATED PARTS

FIG. A9990-001001 Vandalism Protection Bolt for Engine Controller

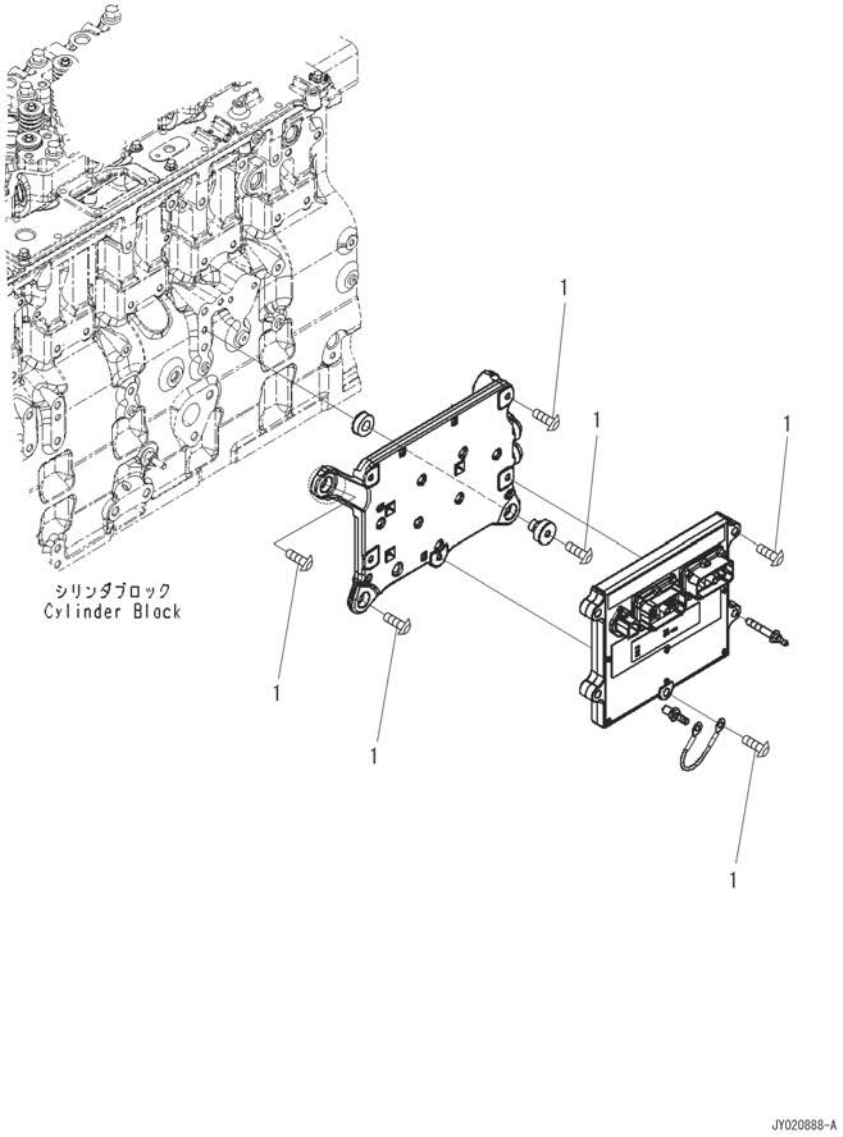

Index	Code	Part Number	Description	Qty	Serial Number
1		6754-81-9550	Screw	6	C90415-

FIG. A9999-001001 Engine Related Parts (Exhaust Muffler and Drain Piping)

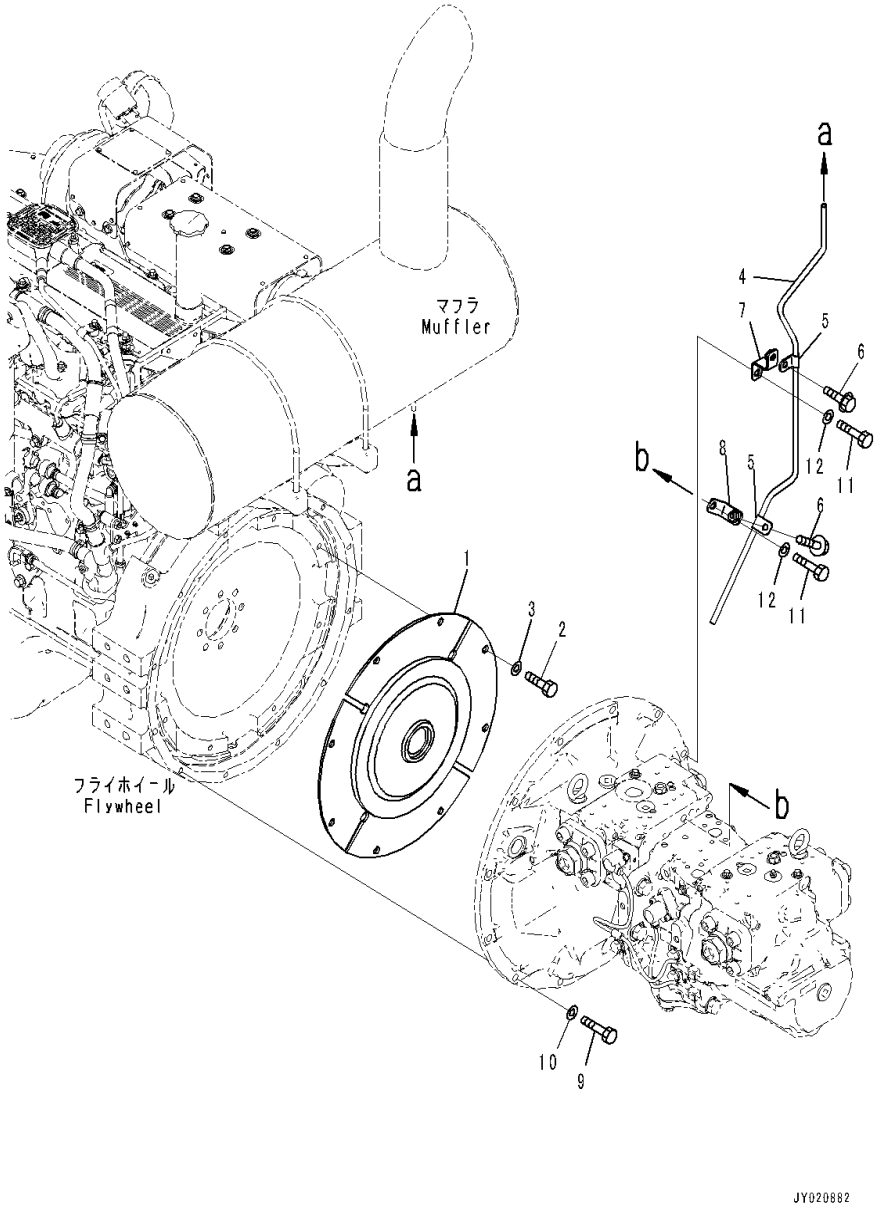

Index	Code	Part Number	Description	Qty	Serial Number
1		207-01-71310	Damper	1	C90001-
2		01010-81225	Bolt	8	C90001-
3		01643-31232	Washer	8	C90001-
4		6745-11-6530	Tube	1	C90001-
5		6991-11-5990	Clamp	2	C90001-
6		01435-01016	Bolt	2	C90001-
7		6745-11-8260	Bracket	1	C90001-
8		6745-11-8270	Bracket	1	C90001-
9		01010-81240	Bolt	10	C90001-
10		01643-31232	Washer	10	C90001-
11		01010-81245	Bolt	2	C90001-
12		01643-31232	Washer	2	C90001-

FIG. A9999-001002 Engine Related Parts (Piston Pump, Inner Parts, 1/12)

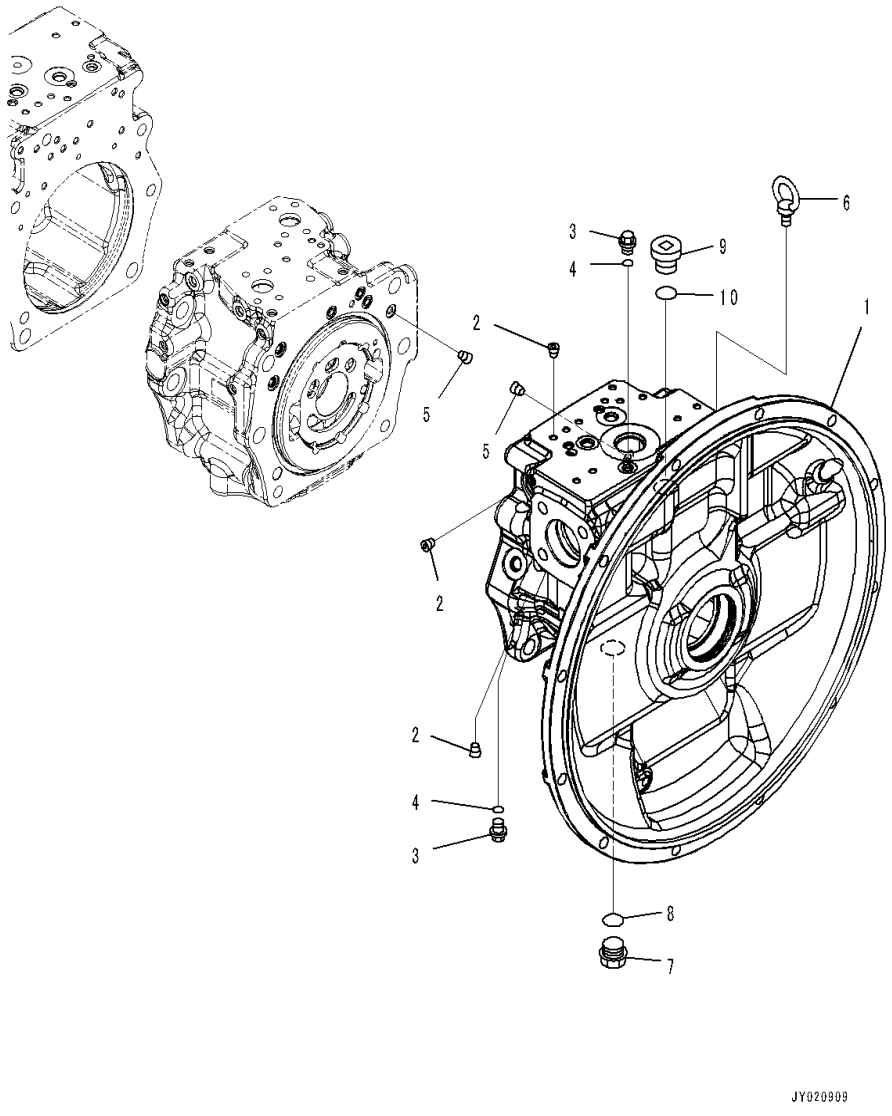

Index	Code	Part Number	Description	Qty	Serial Number
		708-2G-00181	Pump Assembly	1	C90246-
		708-2G-00180	Pump Assembly	1	C90001-C90245
	C2	708-2G-01181	• Pump Subassembly	1	C90246-
	C2	708-2G-01180	• Pump Subassembly	1	C90001-C90245
	C2	708-2G-04740	• • Case Assembly,Front	1	C90001-
1	C1		• • • Case,Front	1	C90001-
2	C1		• • • Plug	32	C90001-
3		708-8E-16150	• • Plug	2	C90001-
4		07002-61023	• • O-ring	2	C90001-
5	C2	708-1L-29340	• • Orifice	2	C90001-
6		04530-11222	• • Bolt, Eye	1	C90001-
7		07044-12412	• • Plug	1	C90001-
8		07002-62434	• • O-ring	1	C90001-
9		07040-12414	• • Plug	1	C90001-
10		07002-62434	• • O-ring	1	C90001-

FIG. A9999-001003 Engine Related Parts (Piston Pump, Inner Parts, 2/12)

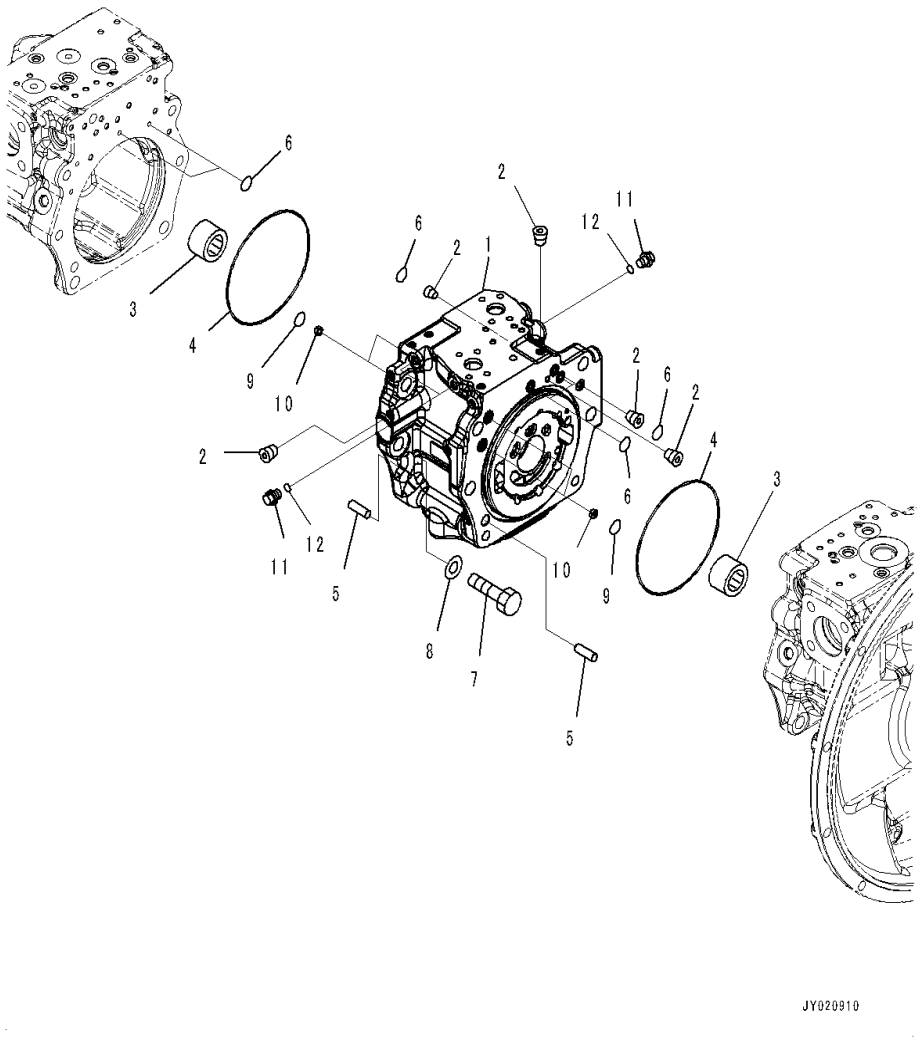

Index	Code	Part Number	Description	Qty	Serial Number
		708-2G-00181	Pump Assembly	1	C90246-
		708-2G-00180	Pump Assembly	1	C90001-C90245
	C2	708-2G-01181	• Pump Subassembly	1	C90246-
	C2	708-2G-01180	• Pump Subassembly	1	C90001-C90245
	C2	708-2G-04680	• • Cap Assembly,End	1	C90001-
1	C1		• • • Cap, End	1	C90001-
2	C1		• • • Plug	17	C90001-
3	C2	708-2G-12151	• • Bearing	2	C90001-
4	C2	07000-A5185	• • O-ring	2	C90001-
5	C2	04020-01434	• • Pin, Dowel	2	C90001-
6	C2	07000-B2012	• • O-ring	7	C90001-
7	C2	01010-61655	• • Bolt	12	C90001-
8	C2	01643-51645	• • Washer	12	C90001-
9	C2	07000-B2014	• • O-ring	4	C90001-
10	C2	708-2L-25480	• • Filter	4	C90001-
11		708-8E-16150	• • Plug	3	C90001-
12		07002-61023	• • O-ring	3	C90001-

FIG. A9999-001004 Engine Related Parts (Piston Pump, Inner Parts, 3/12)

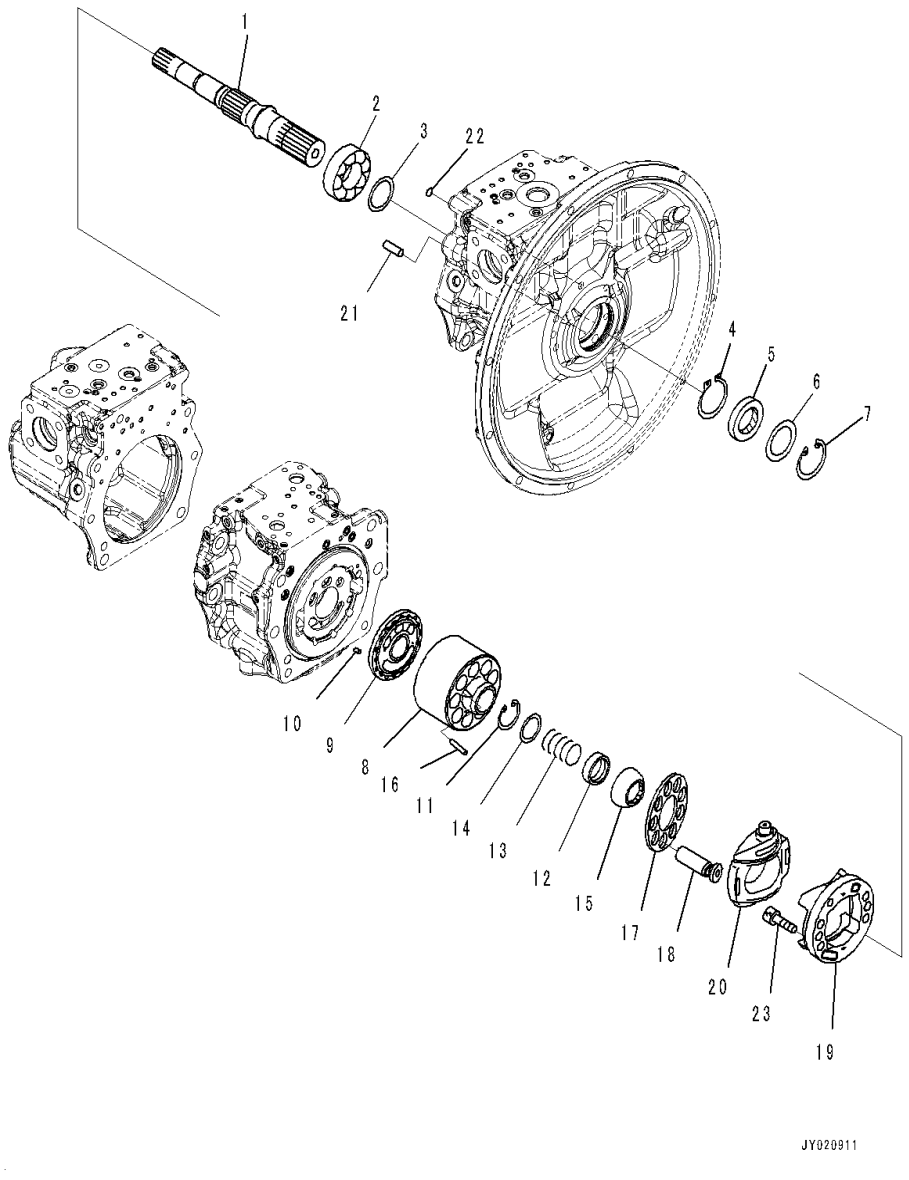

Index	Code	Part Number	Description	Qty	Serial Number
		708-2G-00181	Pump Assembly	1	C90246-
		708-2G-00180	Pump Assembly	1	C90001-C90245
	C2	708-2G-01181	• Pump Subassembly	1	C90246-
	C2	708-2G-01180	• Pump Subassembly	1	C90001-C90245
1	C2	708-2G-12640	• • Shaft	1	C90001-
2	C2	708-2G-12252	• • Bearing	1	C90001-
3	C2	708-2G-05010	• • Washer Kit	1	C90001-
	C1		• • • Washer, T=3.0mm	1	C90001-
	C1		• • • Washer, T=3.1mm	1	C90001-
	C1		• • • Washer, T=3.2mm	1	C90001-
4	C2	708-1F-12270	• • Ring, Snap	1	C90001-
5		708-2G-12230	• • Seal, Oil	1	C90001-
6		708-8H-32160	• • Spacer	1	C90001-
7		04065-07825	• • Ring, Snap	1	C90001-
	C2	708-2G-04710	• • Cylinder Block Assembly	1	C90001-
8	C1		• • • Cylinder Block	1	C90001-
9	C1		• • • Plate, Valve	1	C90001-
10	C2	708-18-13230	• • Pin	1	C90001-
11	C2	04065-05520	• • Ring, Snap	1	C90001-
12	C2	708-2G-13131	• • Seat	1	C90001-
13	C2	708-2G-13152	• • Spring	1	C90001-
14	C2	708-2G-13141	• • Seat	1	C90001-
15	C2	708-2G-13510	• • Guide, Retainer	1	C90001-
16	C2	708-2H-23360	• • Pin	3	C90001-
17	C2	708-2G-13341	• • Retainer, Shoe	1	C90001-
18	C2	708-2G-13810	• • Piston Subassembly	9	C90001-
	C2	708-2G-04670	• • Cradle Subassembly	1	C90001-
19	C1		• • • Cradle	1	C90001-
20	C1		• • • Cam, Rocker	1	C90001-
21	C2	04020-01434	• • Pin, Dowel	1	C90001-
22	C2	07000-B1009	• • O-ring	1	C90001-
23	C2	01252-61230	• • Bolt, Hexagon Socket Head	6	C90001-

FIG. A9999-001005 Engine Related Parts (Piston Pump, Inner Parts, 4/12)

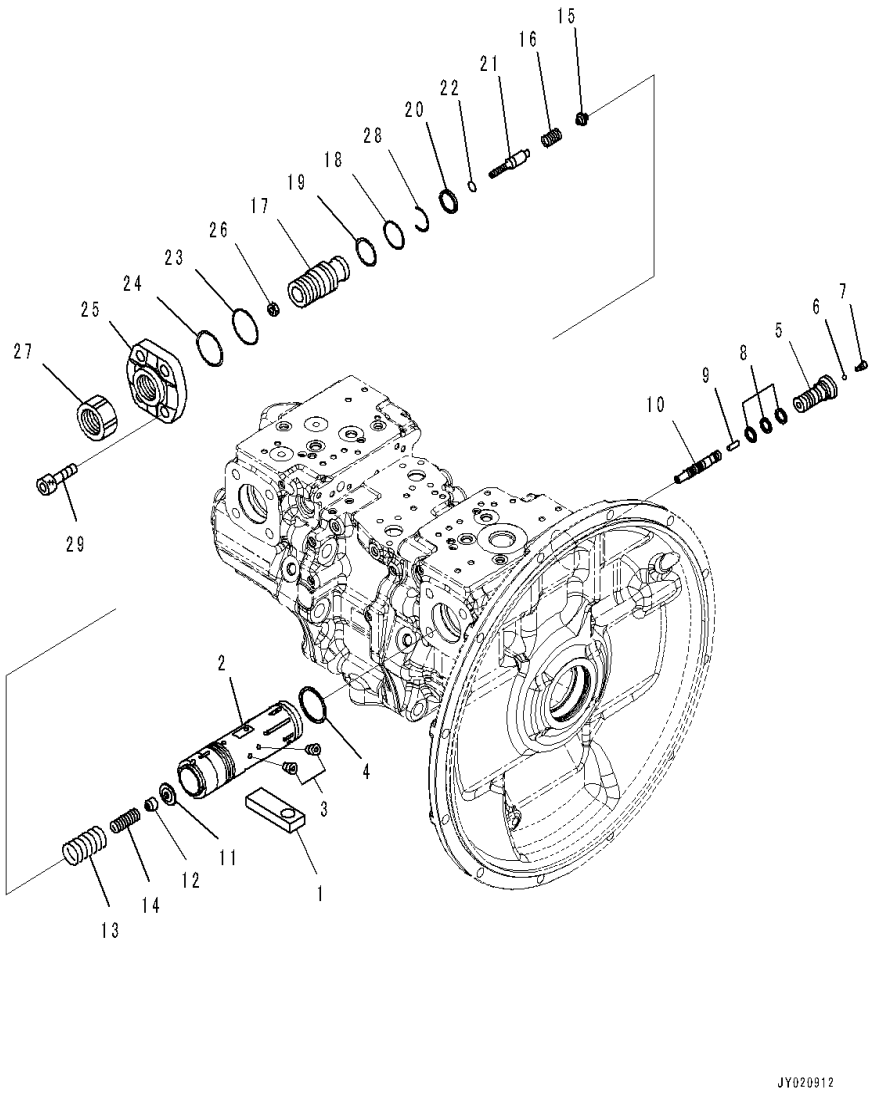

Index	Code	Part Number	Description	Qty	Serial Number
		708-2G-00181	Pump Assembly	1	C90246-
		708-2G-00180	Pump Assembly	1	C90001-C90245
	C2	708-2G-01181	• Pump Subassembly	1	C90246-
	C2	708-2G-01180	• Pump Subassembly	1	C90001-C90245
1	C2	708-2G-14120	• • Slider	1	C90001-
	C2	708-2G-03640	• • Valve Assembly	1	C90001-
	C2	708-2G-03650	• • • Piston Assembly	1	C90001-
2	C1		• • • • Piston Assembly	1	C90001-
3	C1		• • • • Plug	8	C90001-
4	C1		• • • Seal	1	C90001-
5	C1		• • • Plug	1	C90001-
6	C2	708-2L-35760	• • • Ball	1	C90001-
7	C2	708-2L-35770	• • • Plug	1	C90001-
8	C1		• • • Seal	3	C90001-
9	C2	708-2L-35170	• • • Pin	1	C90001-
10	C2	708-2G-15211	• • • Spool	1	C90001-
11	C2	708-2G-15290	• • • Retainer	1	C90001-
12	C2	708-2G-15140	• • • Seat	1	C90001-
13	C2	708-2G-15270	• • • Spring	1	C90001-
14	C2	708-2G-15280	• • • Spring	1	C90001-
15	C2	708-2G-15151	• • • Seat	1	C90001-
16	C2	708-2G-15250	• • • Spring	1	C90001-
17	C1		• • • Screw	1	C90001-
18	C2	07000-B3038	• • • O-ring	1	C90001-
19	C2	708-2G-15230	• • • Ring, Back-up	1	C90001-
20	C1		• • • Seal	1	C90001-
21	C2	708-2G-15240	• • • Plug	1	C90001-
22	C2	07000-B2012	• • • O-ring	1	C90001-
23	C2	07000-B2050	• • • O-ring	1	C90001-
24	C2	708-2G-15310	• • • Ring, Back-up	1	C90001-
25	C2	708-2G-14190	• • • Cover	1	C90001-
26	C2	01580-10806	• • • Nut	1	C90001-
27	C2	708-2L-35290	• • • Nut	1	C90001-
28	C2	708-2G-15330	• • • Ring, Wear	1	C90001-
29	C2	01252-61645	• • Bolt, Hexagon Socket Head	4	C90001-

FIG. A9999-001006 Engine Related Parts (Piston Pump, Inner Parts, 5/12)

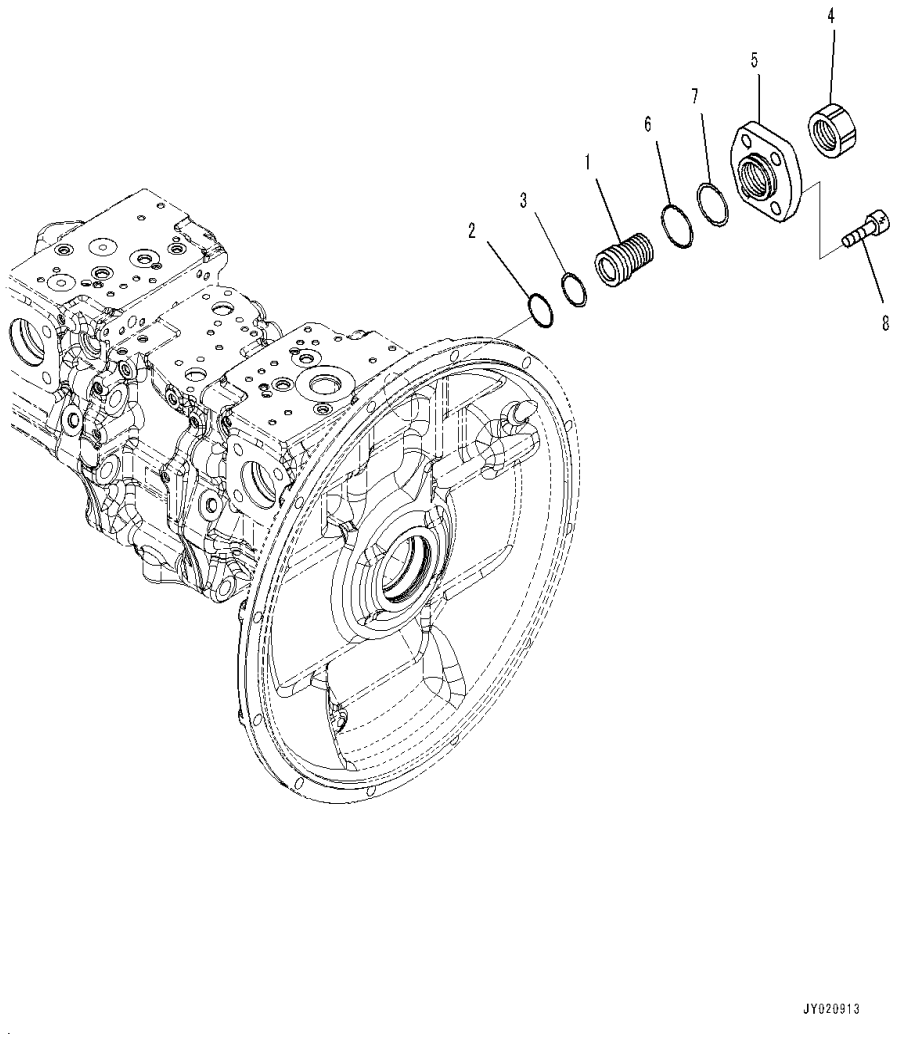

Index	Code	Part Number	Description	Qty	Serial Number
		708-2G-00181	Pump Assembly	1	C90246-
		708-2G-00180	Pump Assembly	1	C90001-C90245
	C2	708-2G-01181	• Pump Subassembly	1	C90246-
	C2	708-2G-01180	• Pump Subassembly	1	C90001-C90245
	C2	708-2G-03480	• • Cover Assembly	1	C90001-
1	C2	708-2G-14310	• • • Screw	1	C90001-
2	C2	07000-B3038	• • • O-ring	1	C90001-
3	C2	708-2G-15230	• • • Ring, Back-up	1	C90001-
4	C2	708-2L-35290	• • • Nut	1	C90001-
5	C2	708-2G-14170	• • • Cover	1	C90001-
6	C2	07000-B2050	• • • O-ring	1	C90001-
7	C2	708-2G-15310	• • • Ring, Back-up	1	C90001-
8	C2	01252-61645	• • Bolt, Hexagon Socket Head	4	C90001-

FIG. A9999-001007 Engine Related Parts (Piston Pump, Inner Parts, 6/12)

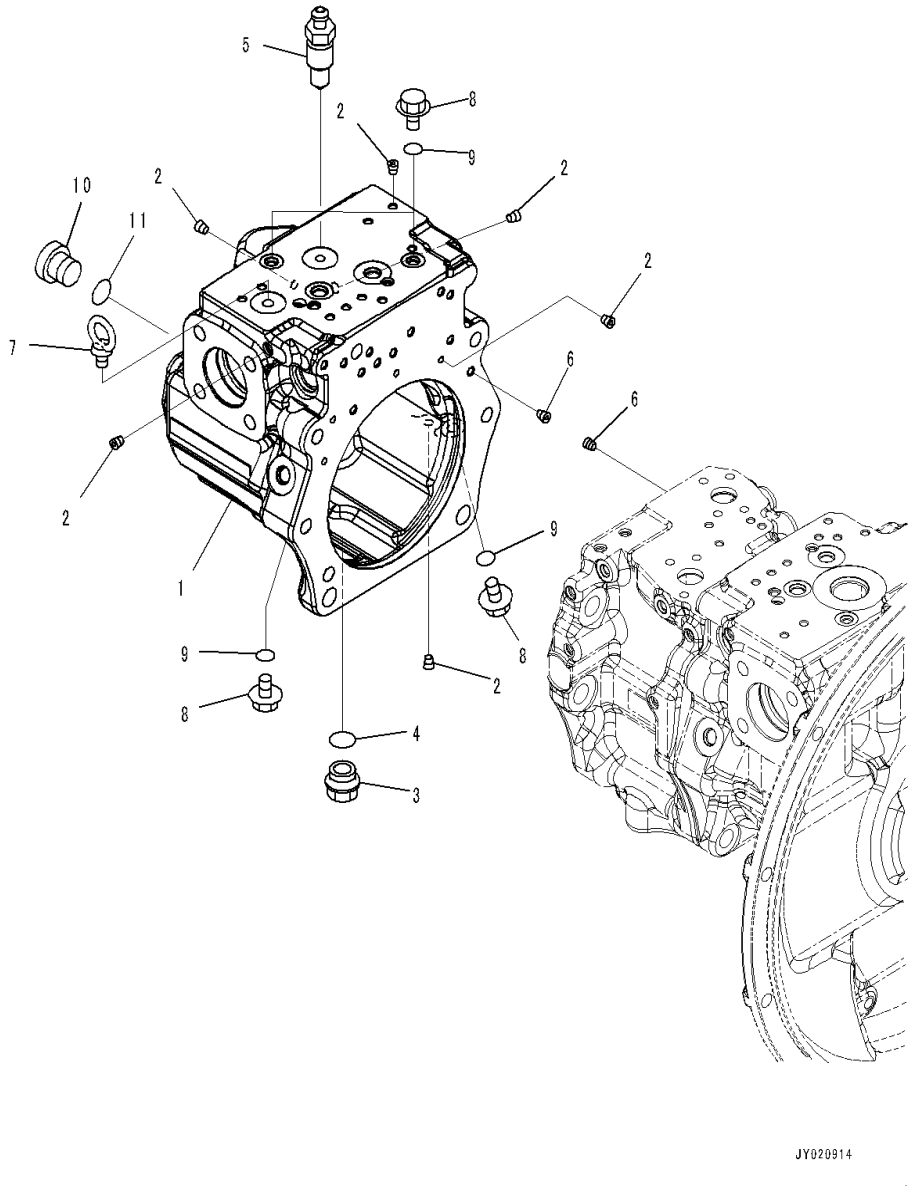

Index	Code	Part Number	Description	Qty	Serial Number
		708-2G-00181	Pump Assembly	1	C90246-
		708-2G-00180	Pump Assembly	1	C90001-C90245
	C2	708-2G-01181	• Pump Subassembly	1	C90246-
	C2	708-2G-01180	• Pump Subassembly	1	C90001-C90245
	C2	708-2G-04750	• • Case Assembly,Rear	1	C90001-
1	C1		• • • Case,Rear	1	C90001-
2	C1		• • • Plug	34	C90001-
3		07044-12412	• • Plug	1	C90001-
4		07002-62434	• • O-ring	1	C90001-
5		20B-27-11210	• • Bleeder	1	C90001-
6	C2	708-1L-29340	• • Orifice	2	C90001-
7		04530-11222	• • Bolt, Eye	1	C90001-
8		708-8E-16150	• • Plug	4	C90001-
9		07002-61023	• • O-ring	4	C90001-
10		07040-12414	• • Plug	1	C90001-
11		07002-62434	• • O-ring	1	C90001-

FIG. A9999-001008 Engine Related Parts (Piston Pump, Inner Parts, 7/12)

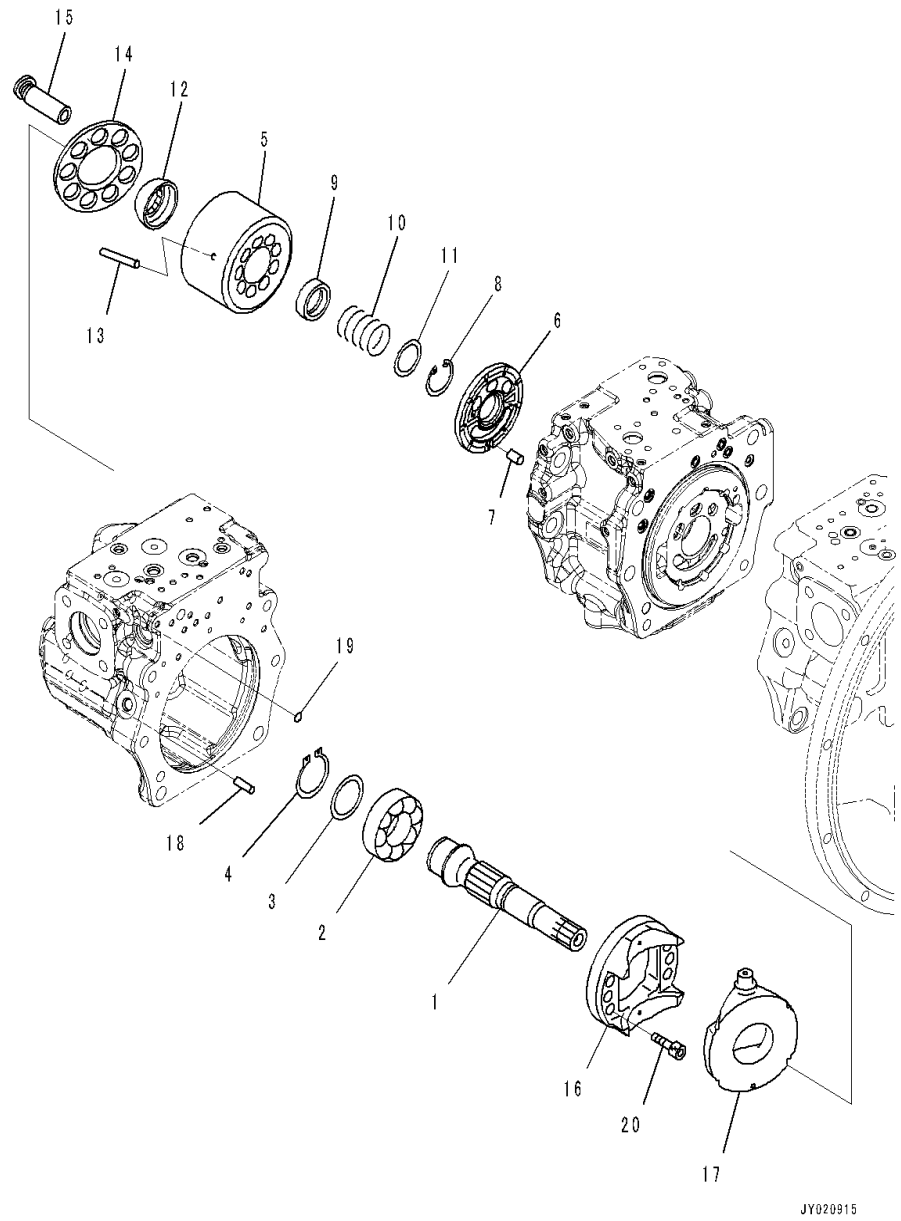

Index	Code	Part Number	Description	Qty	Serial Number
		708-2G-00181	Pump Assembly	1	C90246-
		708-2G-00180	Pump Assembly	1	C90001-C90245
	C2	708-2G-01181	• Pump Subassembly	1	C90246-
	C2	708-2G-01180	• Pump Subassembly	1	C90001-C90245
1	C2	708-2G-12720	• • Shaft	1	C90246-
	C2	708-2G-12650	• • Shaft	1	C90001-C90245
2	C2	708-2G-12252	• • Bearing	1	C90001-
3	C2	708-2G-05010	• • Washer Kit	1	C90001-
	C1		• • • Washer, T=3.0mm	1	C90001-
	C1		• • • Washer, T=3.1mm	1	C90001-
	C1		• • • Washer, T=3.2mm	1	C90001-
4	C2	708-1F-12270	• • Ring, Snap	1	C90001-
	C2	708-2G-04720	• • Block Assembly	1	C90001-
5	C1		• • • Cylinder Block	1	C90001-
6	C1		• • • Plate, Valve	1	C90001-
7	C2	708-18-13230	• • Pin	1	C90001-
8	C2	04065-05520	• • Ring, Snap	1	C90001-
9	C2	708-2G-13131	• • Seat	1	C90001-
10	C2	708-2G-13152	• • Spring	1	C90001-
11	C2	708-2G-13141	• • Seat	1	C90001-
12	C2	708-2G-13510	• • Guide, Retainer	1	C90001-
13	C2	708-2H-23360	• • Pin	3	C90001-
14	C2	708-2G-13341	• • Retainer, Shoe	1	C90001-
15	C2	708-2G-13810	• • Piston Subassembly	9	C90001-
	C2	708-2G-04670	• • Cradle Subassembly	1	C90001-
16	C1		• • • Cradle	1	C90001-
17	C1		• • • Cam, Rocker	1	C90001-
18	C2	04020-01434	• • Pin, Dowel	1	C90001-
19	C2	07000-B1009	• • O-ring	1	C90001-
20	C2	01252-61230	• • Bolt, Hexagon Socket Head	6	C90001-

FIG. A9999-001009 Engine Related Parts (Piston Pump, Inner Parts, 8/12)

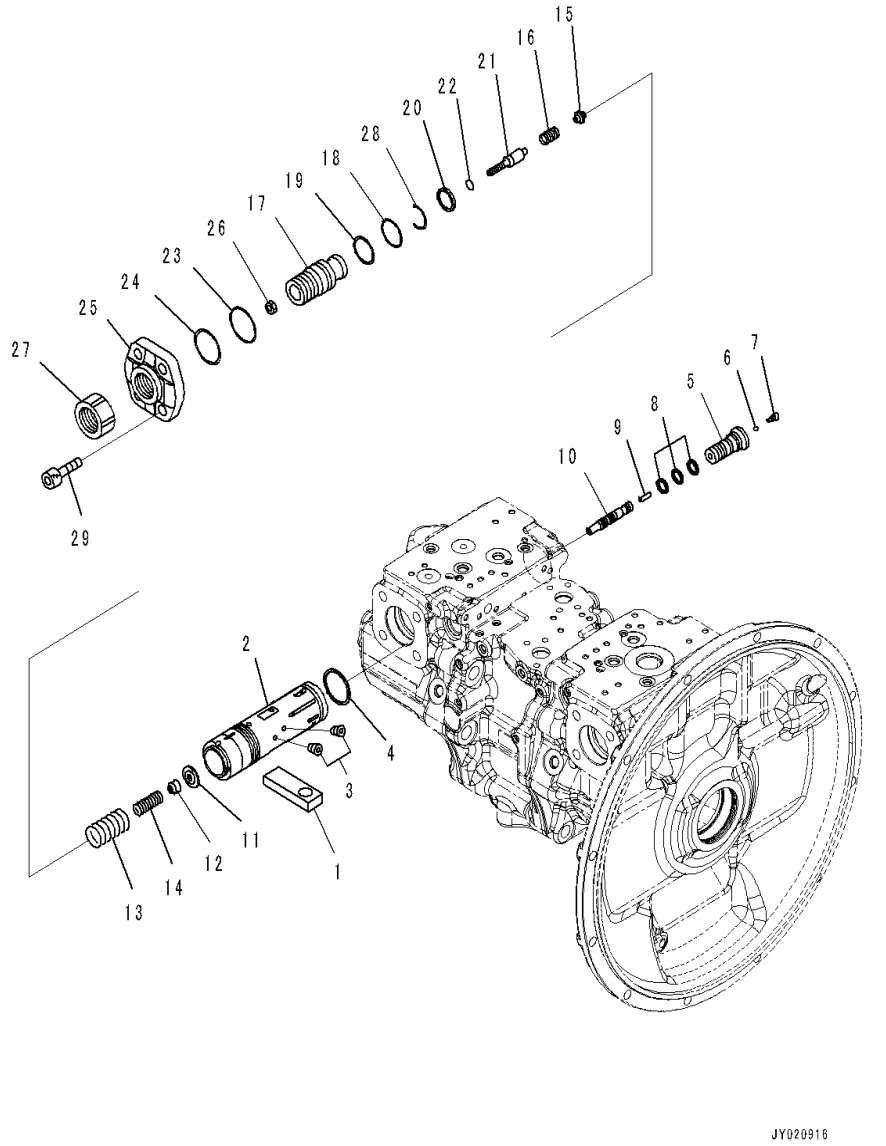

Index	Code	Part Number	Description	Qty	Serial Number
		708-2G-00181	Pump Assembly	1	C90246-
		708-2G-00180	Pump Assembly	1	C90001-C90245
	C2	708-2G-01181	• Pump Subassembly	1	C90246-
	C2	708-2G-01180	• Pump Subassembly	1	C90001-C90245
1	C2	708-2G-14120	• • Slider	1	C90001-
	C2	708-2G-03640	• • Valve Assembly	1	C90001-
	C2	708-2G-03650	• • • Piston Assembly	1	C90001-
2	C1		• • • • Piston Assembly	1	C90001-
3	C1		• • • • Plug	8	C90001-
4	C1		• • • Seal	1	C90001-
5	C1		• • • Plug	1	C90001-
6	C2	708-2L-35760	• • • Ball	1	C90001-
7	C2	708-2L-35770	• • • Plug	1	C90001-
8	C1		• • • Seal	3	C90001-
9	C2	708-2L-35170	• • • Pin	1	C90001-
10	C2	708-2G-15211	• • • Spool	1	C90001-
11	C2	708-2G-15290	• • • Retainer	1	C90001-
12	C2	708-2G-15140	• • • Seat	1	C90001-
13	C2	708-2G-15270	• • • Spring	1	C90001-
14	C2	708-2G-15280	• • • Spring	1	C90001-
15	C2	708-2G-15151	• • • Seat	1	C90001-
16	C2	708-2G-15250	• • • Spring	1	C90001-
17	C1		• • • Screw	1	C90001-
18	C2	07000-B3038	• • • O-ring	1	C90001-
19	C2	708-2G-15230	• • • Ring, Back-up	1	C90001-
20	C1		• • • Seal	1	C90001-
21	C2	708-2G-15240	• • • Plug	1	C90001-
22	C2	07000-B2012	• • • O-ring	1	C90001-
23	C2	07000-B2050	• • • O-ring	1	C90001-
24	C2	708-2G-15310	• • • Ring, Back-up	1	C90001-
25	C2	708-2G-14190	• • • Cover	1	C90001-
26	C2	01580-10806	• • • Nut	1	C90001-
27	C2	708-2L-35290	• • • Nut	1	C90001-
28	C2	708-2G-15330	• • • Ring, Wear	1	C90001-
29	C2	01252-61645	• • Bolt, Hexagon Socket Head	4	C90001-

FIG. A9999-001010 Engine Related Parts (Piston Pump, Inner Parts, 9/12)

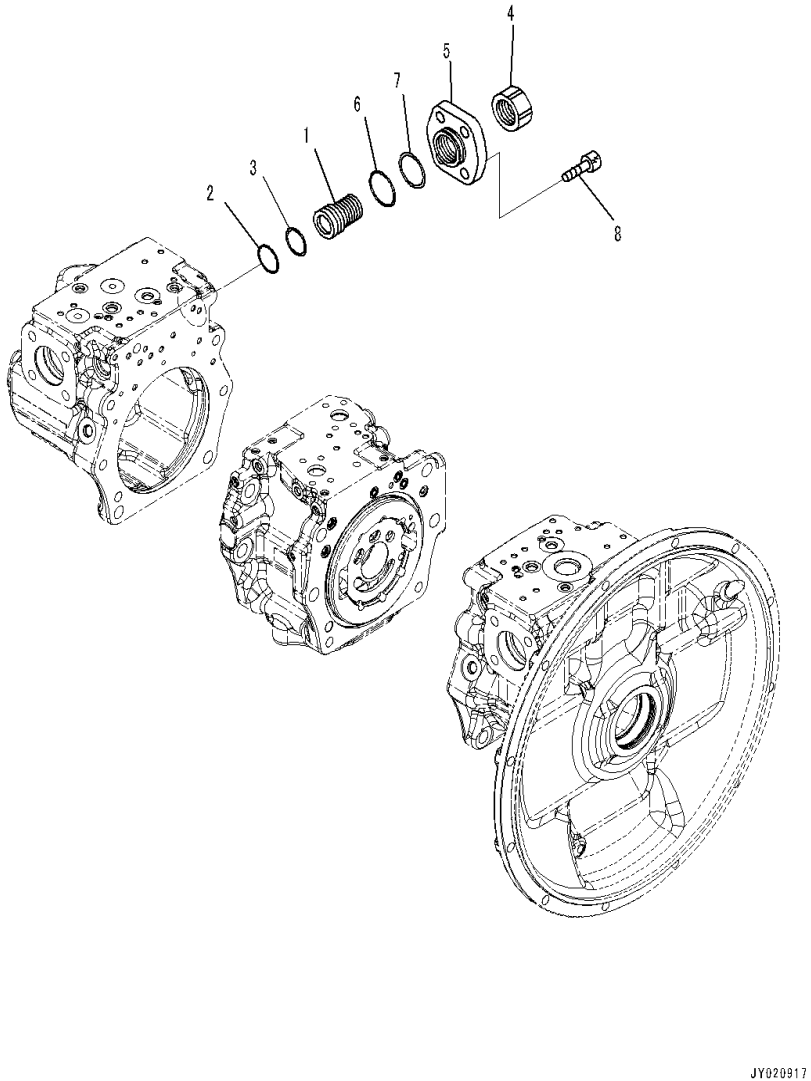

Index	Code	Part Number	Description	Qty	Serial Number
		708-2G-00181	Pump Assembly	1	C90246-
		708-2G-00180	Pump Assembly	1	C90001-C90245
	C2	708-2G-01181	• Pump Subassembly	1	C90246-
	C2	708-2G-01180	• Pump Subassembly	1	C90001-C90245
		708-2G-03480	• • Cover Assembly	1	C90001-
1	C2	708-2G-14310	• • • Screw	1	C90001-
2	C2	07000-B3038	• • • O-ring	1	C90001-
3	C2	708-2G-15230	• • • Ring, Back-up	1	C90001-
4	C2	708-2L-35290	• • • Nut	1	C90001-
5	C2	708-2G-14170	• • • Cover	1	C90001-
6	C2	07000-B2050	• • • O-ring	1	C90001-
7	C2	708-2G-15310	• • • Ring, Back-up	1	C90001-
8	C2	01252-61645	• • Bolt, Hexagon Socket Head	4	C90001-

FIG. A9999-001011 Engine Related Parts (Piston Pump, Inner Parts, 10/12)

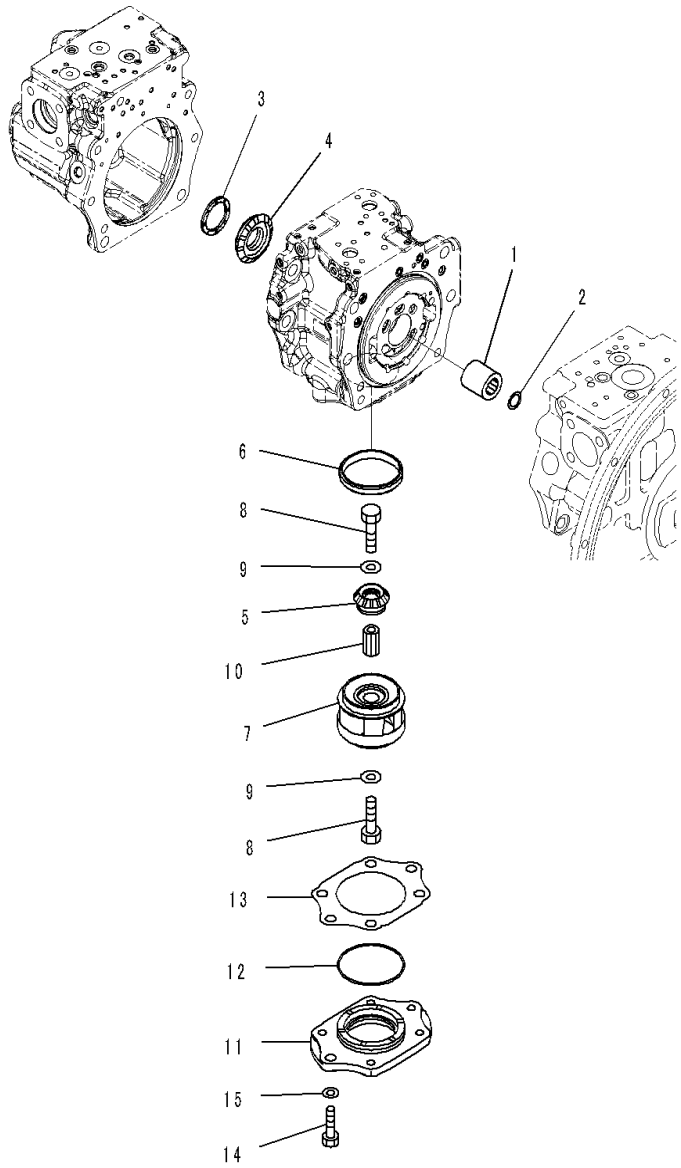

Index	Code	Part Number	Description	Qty	Serial Number
		708-2G-00181	Pump Assembly	1	C90246-
		708-2G-00180	Pump Assembly	1	C90001-C90245
	C2	708-2G-01181	• Pump Subassembly	1	C90246-
	C2	708-2G-01180	• Pump Subassembly	1	C90001-C90245
1	C2	708-2G-12340	• • Coupling	1	C90001-
2	C2	708-2F-12420	• • Ring	1	C90001-
3	C2	708-2H-21860	• • Plate	1	C90001-
	C2	708-2G-04760	• • Gear Kit	1	C90246-
	C2	708-2G-04730	• • Gear Kit	1	C90001-C90245
4	C1		• • • Gear, Bevel	1	C90246-
	C1		• • • Gear, Bevel	1	C90001-C90245
5	C1		• • • Pinion	1	C90001-
6	C2	708-2H-32320	• • Bushing	1	C90001-
7	C2	708-2H-32330	• • Impeller	1	C90001-
8	C2	01010-61220	• • Bolt	2	C90001-
9	C2	708-2H-32350	• • Washer	2	C90001-
10	C2	708-2H-32360	• • Shaft	1	C90001-
11	C2	708-2G-11910	• • Cover	1	C90001-
12	C2	07000-A2105	• • O-ring	1	C90001-
13	C2	708-2G-05020	• • Shim Kit	1	C90001-
	C1		• • • Shim, T=0.1mm	2	C90001-
	C1		• • • Shim, T=0.2mm	2	C90001-
	C1		• • • Shim, T=0.5mm	3	C90001-
14		01010-81235	• • Bolt	2	C90001-
15		01643-31232	• • Washer	2	C90001-

FIG. A9999-001012 Engine Related Parts (Piston Pump, Inner Parts, 11/12)

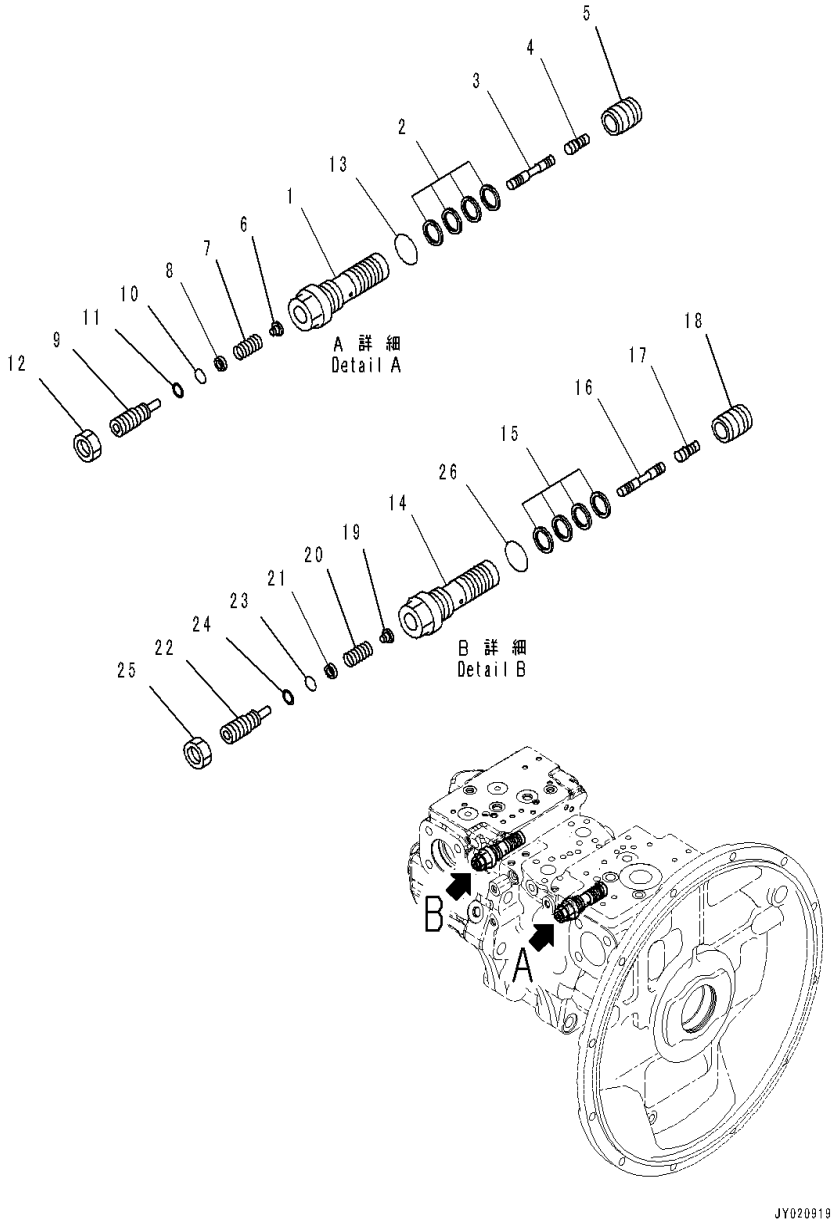

Index	Code	Part Number	Description	Qty	Serial Number
		708-2G-00181	Pump Assembly	1	C90246-
		708-2G-00180	Pump Assembly	1	C90001-C90245
		708-2G-03720	• Valve Assembly	1	C90001-
1	C1		• • Sleeve	1	C90001-
2	C1		• • Seal	4	C90001-
3	C2	708-2J-15310	• • Spool	1	C90001-
4	C2	708-2L-28540	• • Piston	1	C90001-
5	C2	708-2L-35360	• • Sleeve	1	C90001-
6	C2	708-2L-35331	• • Seat	1	C90001-
7	C2	708-2L-35410	• • Spring	1	C90001-
8	C2	708-2L-35341	• • Seat	1	C90001-
9	C2	708-2L-35351	• • Plug	1	C90001-
10	C2	07000-B1009	• • O-ring	1	C90001-
11	C2	07001-01009	• • Ring, Back-up	1	C90001-
12	C2	01583-11408	• • Nut	1	C90001-
13		07002-62434	• • O-ring	1	C90001-
		708-2G-03720	• Valve Assembly	1	C90001-
14	C1		• • Sleeve	1	C90001-
15	C1		• • Seal	4	C90001-
16	C2	708-2J-15310	• • Spool	1	C90001-
17	C2	708-2L-28540	• • Piston	1	C90001-
18	C2	708-2L-35360	• • Sleeve	1	C90001-
19	C2	708-2L-35331	• • Seat	1	C90001-
20	C2	708-2L-35410	• • Spring	1	C90001-
21	C2	708-2L-35341	• • Seat	1	C90001-
22	C2	708-2L-35351	• • Plug	1	C90001-
23	C2	07000-B1009	• • O-ring	1	C90001-
24	C2	07001-01009	• • Ring, Back-up	1	C90001-
25	C2	01583-11408	• • Nut	1	C90001-
26		07002-62434	• • O-ring	1	C90001-

FIG. A9999-001013 Engine Related Parts (Piston Pump, Inner Parts, 12/12)

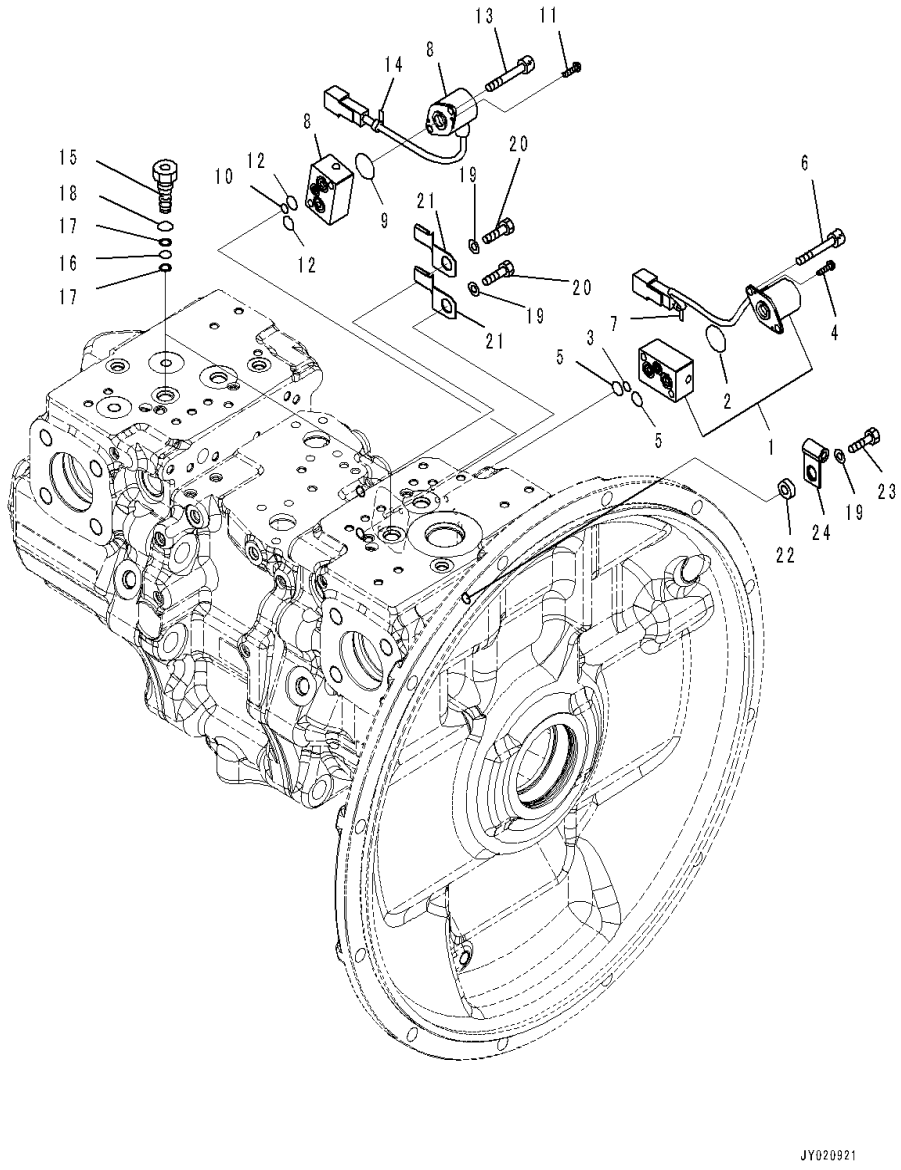

Index	Code	Part Number	Description	Qty	Serial Number
		708-2G-00181	Pump Assembly	1	C90246-
		708-2G-00180	Pump Assembly	1	C90001-C90245
1		702-21-62200	• Valve, Pilot	1	C90001-
2		720-1L-15440	• • O-ring	1	C90001-
3		720-1L-15430	• • O-ring	1	C90001-
4		702-21-54180	• • Screw	2	C90001-
5		702-16-58320	• • O-ring	2	C90001-
6		01252-60635	• Bolt, Hexagon Socket Head	2	C90001-
7		20Y-62-22790	• Band, Red	1	C90001-
8		702-21-62900	• Valve, Pilot	1	C90001-
9		720-1L-15440	• • O-ring	1	C90001-
10		720-1L-15430	• • O-ring	1	C90001-
11		702-21-54180	• • Screw	2	C90001-
12		702-16-58320	• • O-ring	2	C90001-
13		01252-60635	• Bolt, Hexagon Socket Head	2	C90001-
14		20Y-62-22830	• Band, White	1	C90001-
15	C2	708-2G-15680	• Plug	2	C90001-
16		07000-B1008	• O-ring	2	C90001-
17		07001-01008	• Ring, Back-up	4	C90001-
18		07002-61423	• O-ring	2	C90001-
19		01643-31232	• Washer	3	C90001-
20		01010-81220	• Bolt	2	C90001-
21		08193-21012	• Clip	2	C90001-
22		708-2G-19130	• Spacer	1	C90001-
23		01010-81235	• Bolt	1	C90001-
24		04434-50612	• Clip	1	C90001-

FIG. B0100-001001 Engine Mounting

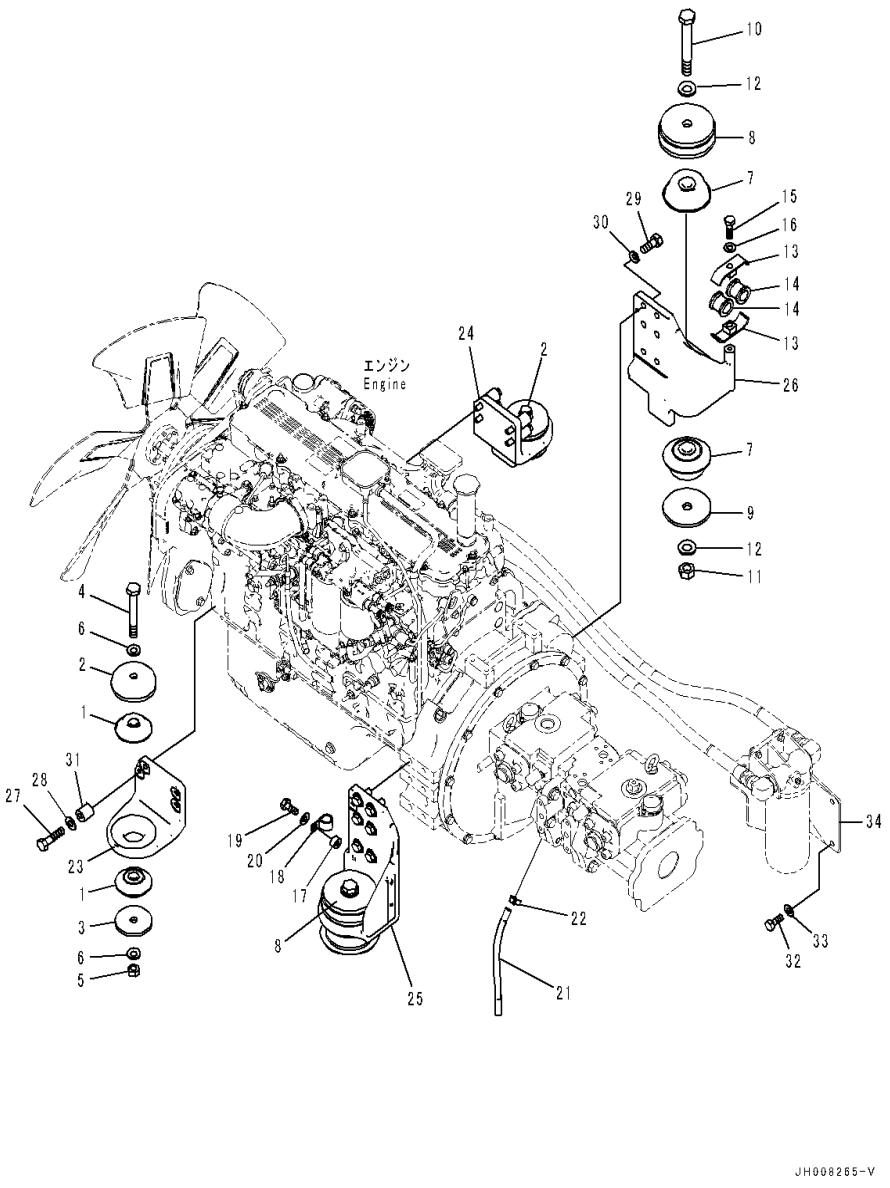

Index	Code	Part Number	Description	Qty	Serial Number
1		23S-01-11140	Cushion	4	C90001-
2		207-01-61150	Stopper	2	C90001-
3		207-01-75150	Plate	2	C90001-
4		207-01-55181	Bolt	2	C90001-
5		01580-11815	Nut	2	C90001-
6		01643-31845	Washer	4	C90001-
7		208-01-55220	Cushion	4	C90001-
8		207-01-61170	Stopper	2	C90001-
9		208-01-11161	Washer	2	C90001-
10		208-01-11181	Bolt	2	C90001-
11		01580-12419	Nut	2	C90001-
12		01643-32460	Washer	4	C90001-
13		07094-30620	Clamp	2	C90001-
14		07095-00630	Cushion	2	C90001-
15		01010-81275	Bolt	1	C90001-
16		01643-31232	Washer	1	C90001-
17		203-62-21720	Spacer	1	C90001-
18		04434-52512	Clip	1	C90001-
19		01010-81235	Bolt	1	C90001-
20		01643-31232	Washer	1	C90001-
21		07260-20932	Hose	1	C90001-
22		07285-00155	Clip	1	C90001-
23		207-01-75110	Bracket	1	C90001-
24		207-01-75120	Bracket	1	C90001-
25		207-01-75130	Bracket	1	C90001-
26		207-01-75140	Bracket	1	C90001-
27		01010-81275	Bolt	8	C90001-
28		01643-31232	Washer	8	C90001-
29		01010-81645	Bolt	12	C90001-
30		01643-31645	Washer	12	C90001-
31		195-43-41530	Collar	8	C90001-
32		01010-81230	Bolt	2	C90001-
33		01643-31232	Washer	2	C90001-
34		(207-54-76161)	Bracket		-

FIG. B0200-001001 Air Cleaner, Without Pre-cleaner

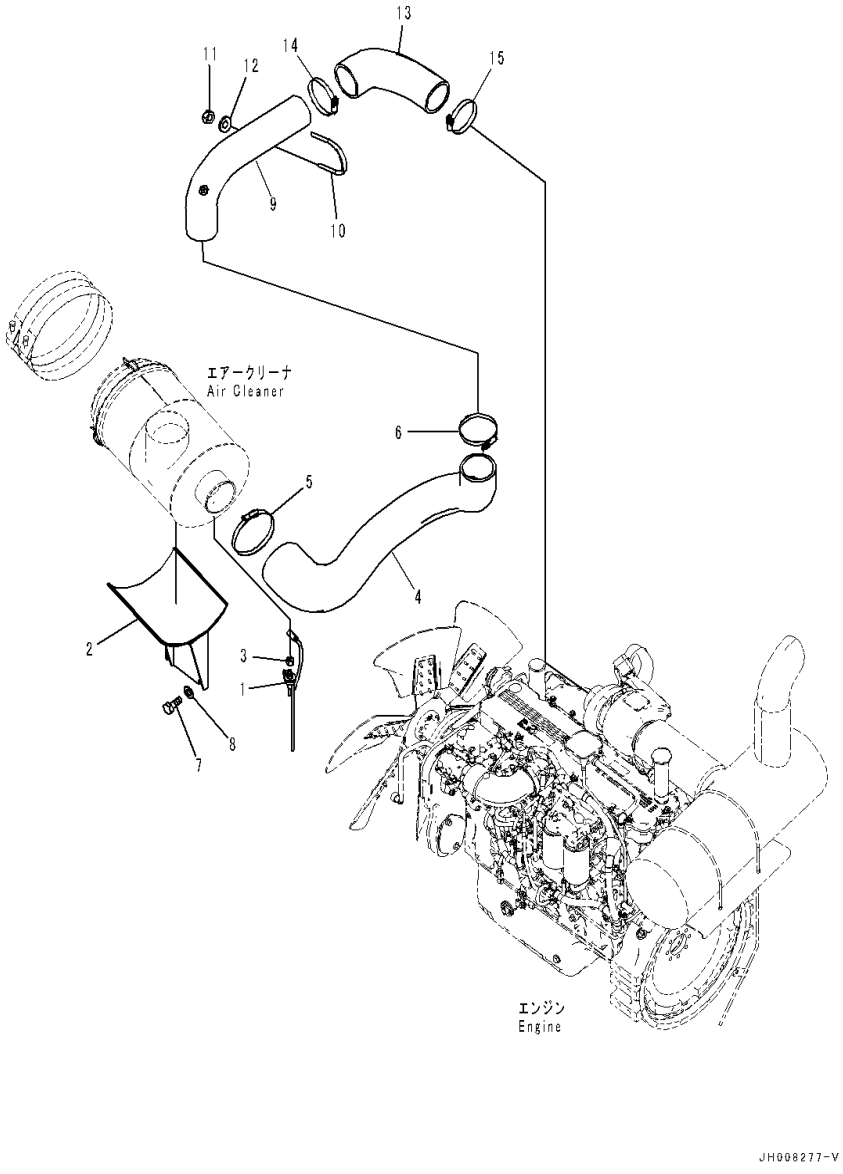

Index	Code	Part Number	Description	Qty	Serial Number
1		7861-93-1430	Sensor, Dust Indicator	1	C90001-
2		207-01-72411	Bracket	1	C90001-
3		11Y-01-11920	Joint	1	C90001-
4		207-01-72420	Hose	1	C90001-
5		07299-00145	Clamp	1	C90001-
6		07299-00130	Clamp	1	C90001-
7		01010-81225	Bolt	4	C90001-
8		01643-31232	Washer	4	C90001-
9		207-01-72381	Tube	1	C90001-
10		07283-31185	Clip	1	C90001-
11		01597-01211	Nut	2	C90001-
12		01643-31232	Washer	2	C90001-
13		207-01-72391	Hose	1	C90001-
14		07299-00130	Clamp	1	C90001-
15		07299-00120	Clamp	1	C90001-

FIG. B0200-002001 Air Cleaner, With Pre-Cleaner (Related Parts)

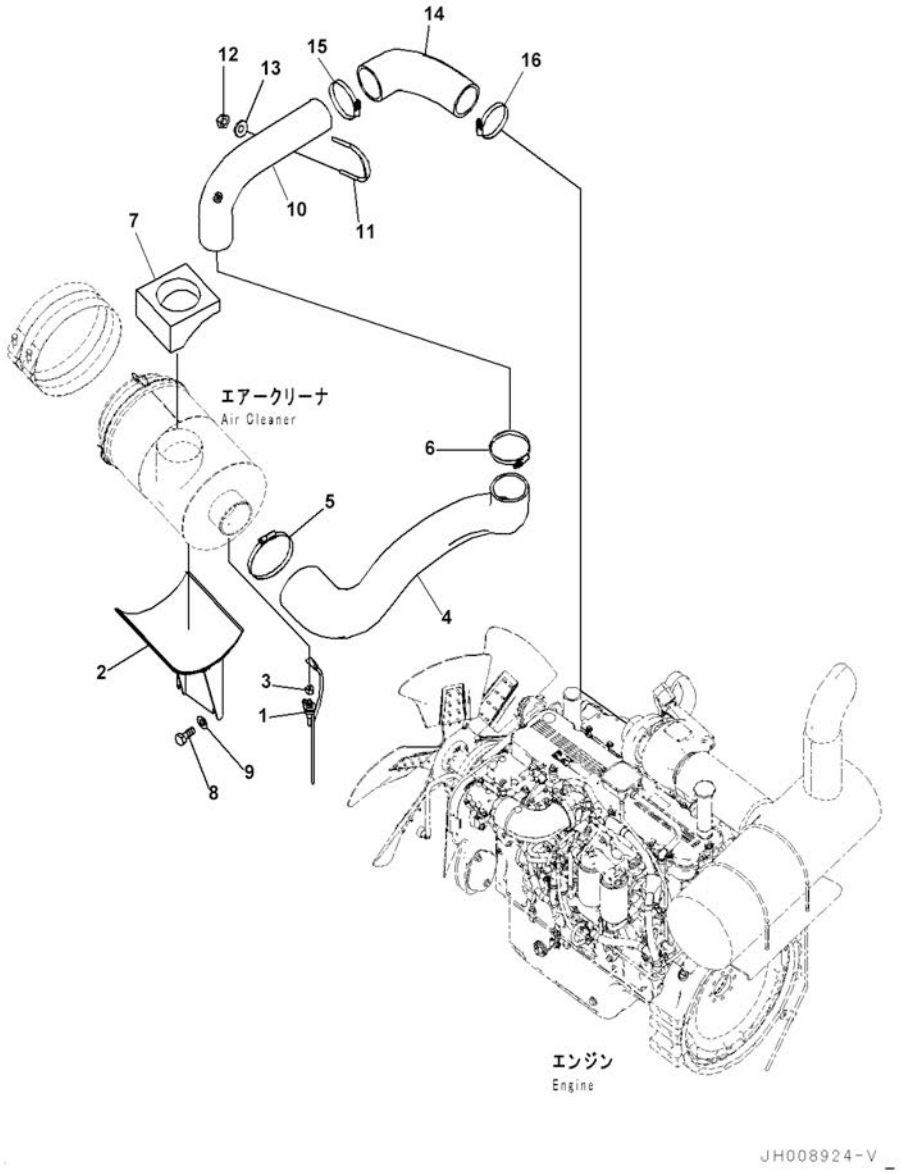

Index	Code	Part Number	Description	Qty	Serial Number
1		7861-93-1430	Sensor, Dust Indicator	1	C90001-
2		207-01-72411	Bracket	1	C90001-
3		11Y-01-11920	Joint	1	C90001-
4		207-01-72420	Hose	1	C90001-
5		07299-00145	Clamp	1	C90001-
6		07299-00130	Clamp	1	C90001-
7		207-01-41180	Seal	1	C90001-
8		01010-81225	Bolt	4	C90001-
9		01643-31232	Washer	4	C90001-
10		207-01-72381	Tube	1	C90001-
11		07283-31185	Clip	1	C90001-
12		01597-01211	Nut	2	C90001-
13		01643-31232	Washer	2	C90001-
14		207-01-72391	Hose	1	C90001-
15		07299-00130	Clamp	1	C90001-
16		07299-00120	Clamp	1	C90001-

FIG. B0200-002002 Air Cleaner, With Pre-Cleaner (Air Cleaner)

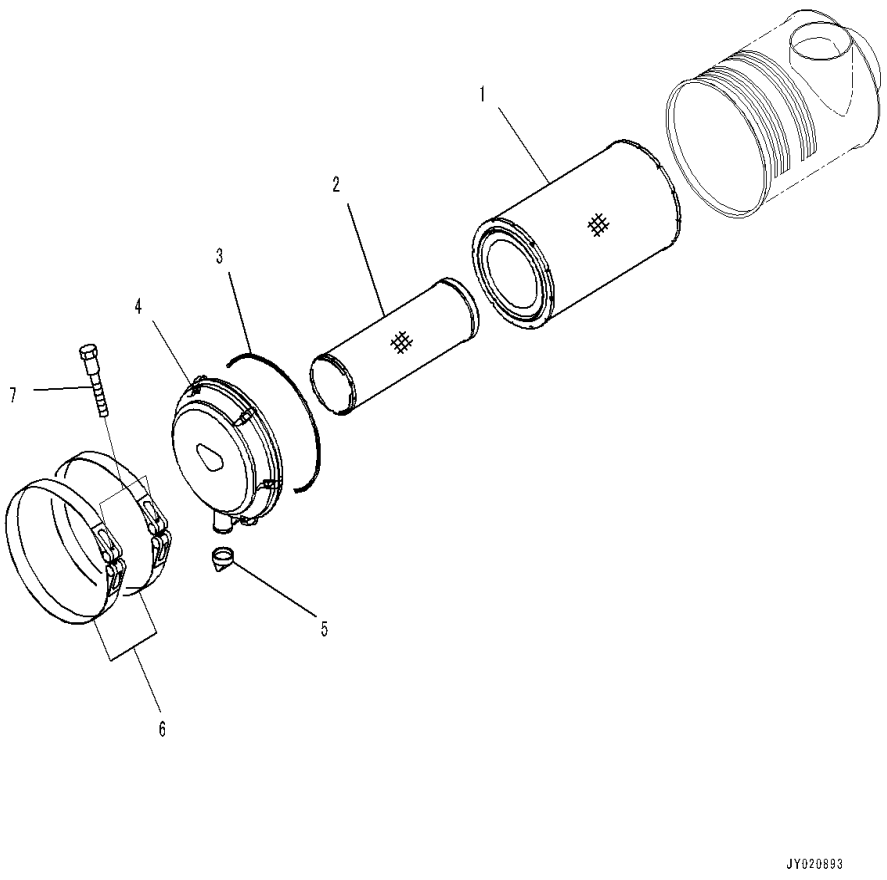

Index	Code	Part Number	Description	Qty	Serial Number
		6745-81-7320	Air Cleaner	1	C90001-
		600-185-4200	• Element Assembly	1	C90001-
1		600-185-4210	• • Element,Outer	1	C90001-
2	C1		• • Element,Inner	1	C90001-
3		600-184-1570	• • O-ring	1	C90001-
4		600-184-1510	• Cover Assembly	1	C90001-
5		600-184-1350	• Valve, Vaquator	1	C90001-
6		(6151-11-4840)	Band		-
7		(6643-11-4641)	Bolt		-

COOLING SYSTEM

FIG. C0100-001001 Cooling System (With Auto Air Conditioner) (Radiator and Oil Cooler)

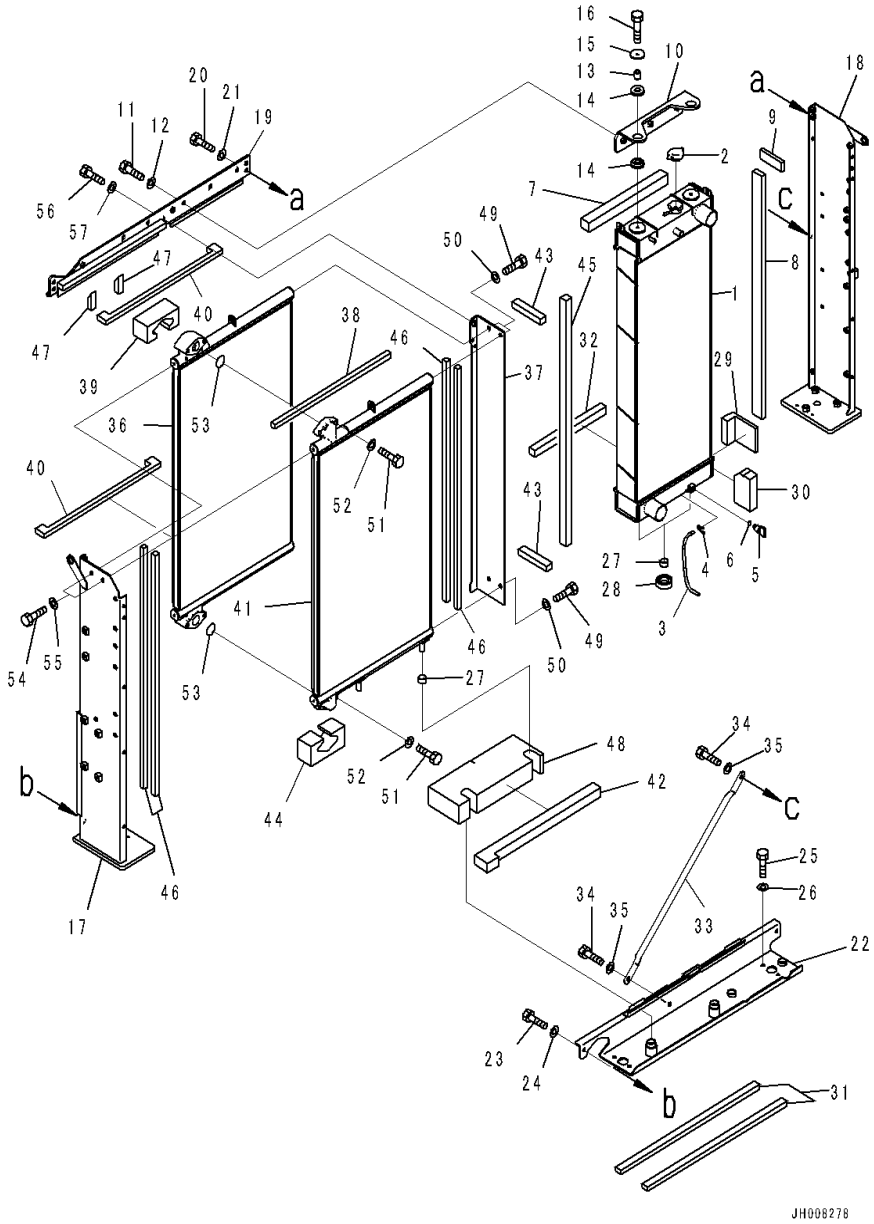

Index	Code	Part Number	Description	Qty	Serial Number
1		207-03-72321	Radiator Assembly	1	C90001-
2		20Y-03-22110	Cap	1	C90001-
3		205-03-71230	Hose	1	C90001-
4		20Y-03-11330	Clip	1	C90001-
5		205-03-62660	Plug	1	C90001-
6		07000-11007	• O-ring	1	C90001-
7		207-03-72631	Seal	1	C90001-
8		208-03-71810	Seal	1	C90001-
9		208-03-71840	Seal	1	C90001-
10		207-03-72540	Bracket	1	C90001-
11		01010-81235	Bolt	3	C90001-
12		01643-31232	Washer	3	C90001-
13		14X-03-51640	Spacer	2	C90001-
14		14X-03-51621	Cushion	4	C90001-
15		14X-03-51770	Washer	2	C90001-
16		01010-81045	Bolt	2	C90001-
17		207-03-72311	Frame	1	C90001-
18		207-03-72872	Frame	1	C90001-
19		207-03-72281	Frame	1	C90001-
20		01010-81230	Bolt	2	C90001-
21		01643-31232	Washer	2	C90001-
22		207-03-72411	Frame	1	C90001-
23		01010-81030	Bolt	2	C90001-
24		01643-31032	Washer	2	C90001-
25		01010-81020	Bolt	4	C90001-
26		01643-31032	Washer	4	C90001-
27		22B-03-12590	Cushion	4	C90001-
28		207-03-22760	Cushion	2	C90001-
29		208-03-71490	Seal	1	C90001-
30		207-03-72910	Seal	1	C90001-
31		208-03-71821	Seal	2	C90001-
32		207-03-72291	Seal	1	C90001-
33		207-03-72860	Stay	1	C90001-
34		01010-81235	Bolt	2	C90001-
35		01643-31232	Washer	2	C90001-
		207-03-72221	Oil Cooler Assembly	1	C90001-
36	C1		• Oil Cooler	1	C90001-
37		207-03-72251	• Frame	1	C90001-
38		207-03-72731	• Seal	1	C90001-
39		207-03-72340	• Seal	1	C90001-

FIG. C0100-001001 Cooling System (With Auto Air Conditioner) (Radiator and Oil Cooler)

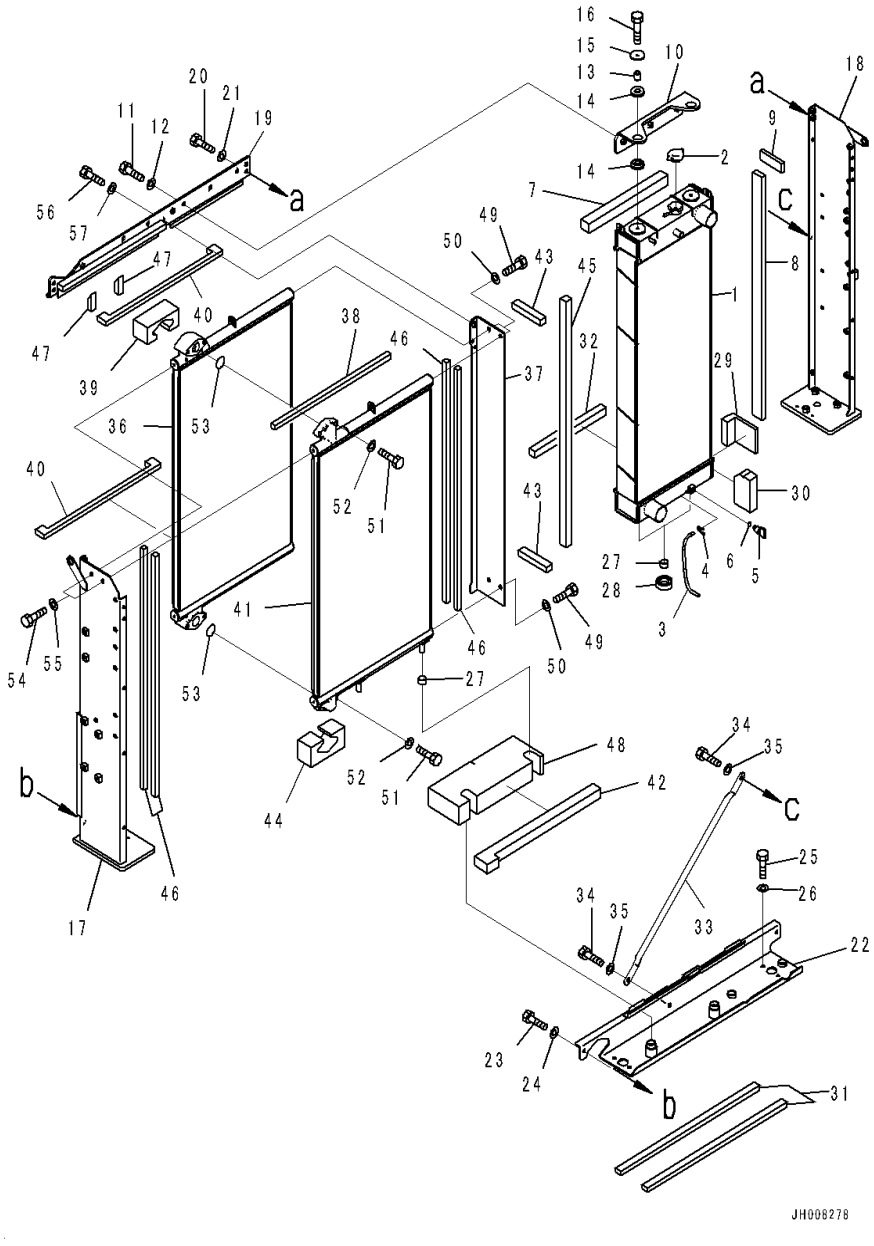

Index	Code	Part Number	Description	Qty	Serial Number
40		207-03-72721	• Seal	2	C90001-
41	C1		• Oil Cooler	1	C90001-
42		207-03-72741	• Seal	1	C90001-
43		207-03-72751	• Seal	2	C90001-
44		207-03-76380	• Seal	1	C90001-
45		208-03-71850	• Seal	1	C90001-
46		208-03-71860	• Seal	4	C90001-
47		208-03-71890	• Seal	2	C90001-
48		207-03-72421	• Seal	1	C90001-
49		01010-81020	• Bolt	4	C90001-
50		01643-31032	• Washer	4	C90001-
51		01010-81245	• Bolt	4	C90001-
52		01643-31232	• Washer	4	C90001-
53		07000-13045	• O-ring	2	C90001-
54		01010-81030	Bolt	2	C90001-
55		01643-31032	Washer	2	C90001-
56		01010-81235	Bolt	1	C90001-
57		01643-31232	Washer	1	C90001-

FIG. C0100-001002 Cooling System (With Auto Air Conditioner) (Shroud 1/2)

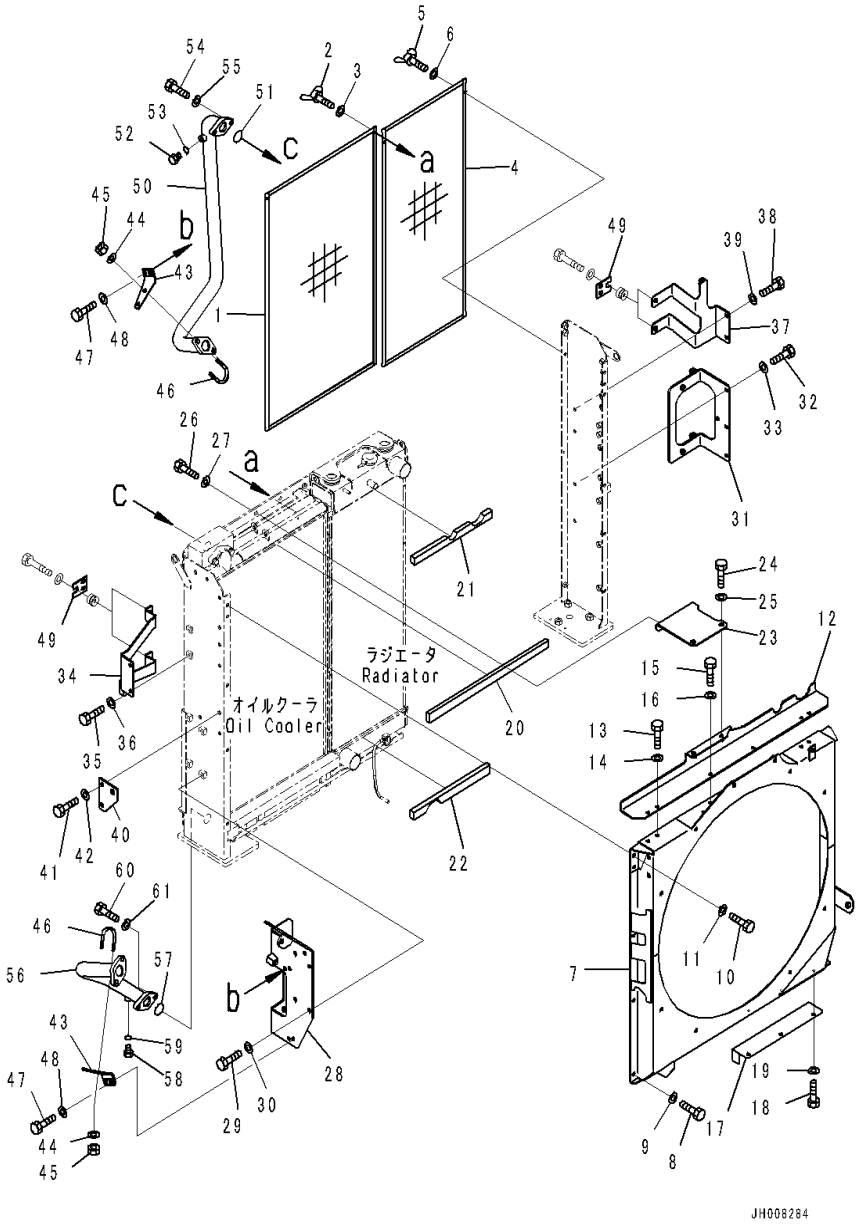

Index	Code	Part Number	Description	Qty	Serial Number
1		207-03-72261	Net	1	C90001-
2		01434-10616	Bolt, Wing	2	C90001-
3		01643-30623	Washer	2	C90001-
4		207-03-72471	Net	1	C90001-
5		01434-10616	Bolt, Wing	2	C90001-
6		01643-30623	Washer	2	C90001-
7		207-03-72121	Shroud	1	C90001-
8		01010-81020	Bolt	7	C90001-
9		01643-31032	Washer	7	C90001-
10		01010-81030	Bolt	4	C90001-
11		01643-31032	Washer	4	C90001-
12		207-03-72481	Cover	1	C90001-
13		01010-81030	Bolt	4	C90001-
14		01643-31032	Washer	4	C90001-
15		01010-81020	Bolt	2	C90001-
16		01643-31032	Washer	2	C90001-
17		207-03-72211	Cover	1	C90001-
18		01010-81020	Bolt	3	C90001-
19		01643-31032	Washer	3	C90001-
20		207-03-72641	Seal	1	C90001-
21		207-03-72491	Seal	1	C90001-
22		207-03-72781	Seal	1	C90001-
23		207-03-72880	Bracket	1	C90001-
24		01010-81225	Bolt	2	C90001-
25		01643-31232	Washer	2	C90001-
26		01010-81235	Bolt	2	C90001-
27		01643-31232	Washer	2	C90001-
28		207-03-72671	Bracket	1	C90001-
29		01010-81030	Bolt	4	C90001-
30		01643-31032	Washer	4	C90001-
31		207-03-72892	Bracket	1	C90001-
32		01010-81020	Bolt	2	C90001-
33		01643-31032	Washer	2	C90001-
34		207-979-7971	Bracket	1	C90001-
35		01010-81020	Bolt	2	C90001-
36		01643-31032	Washer	2	C90001-
37		207-979-7891	Bracket	1	C90001-
38		01010-81020	Bolt	2	C90001-
39		01643-31032	Washer	2	C90001-
40		207-03-72361	Plate	1	C90001-

FIG. C0100-001002 Cooling System (With Auto Air Conditioner) (Shroud 1/2)

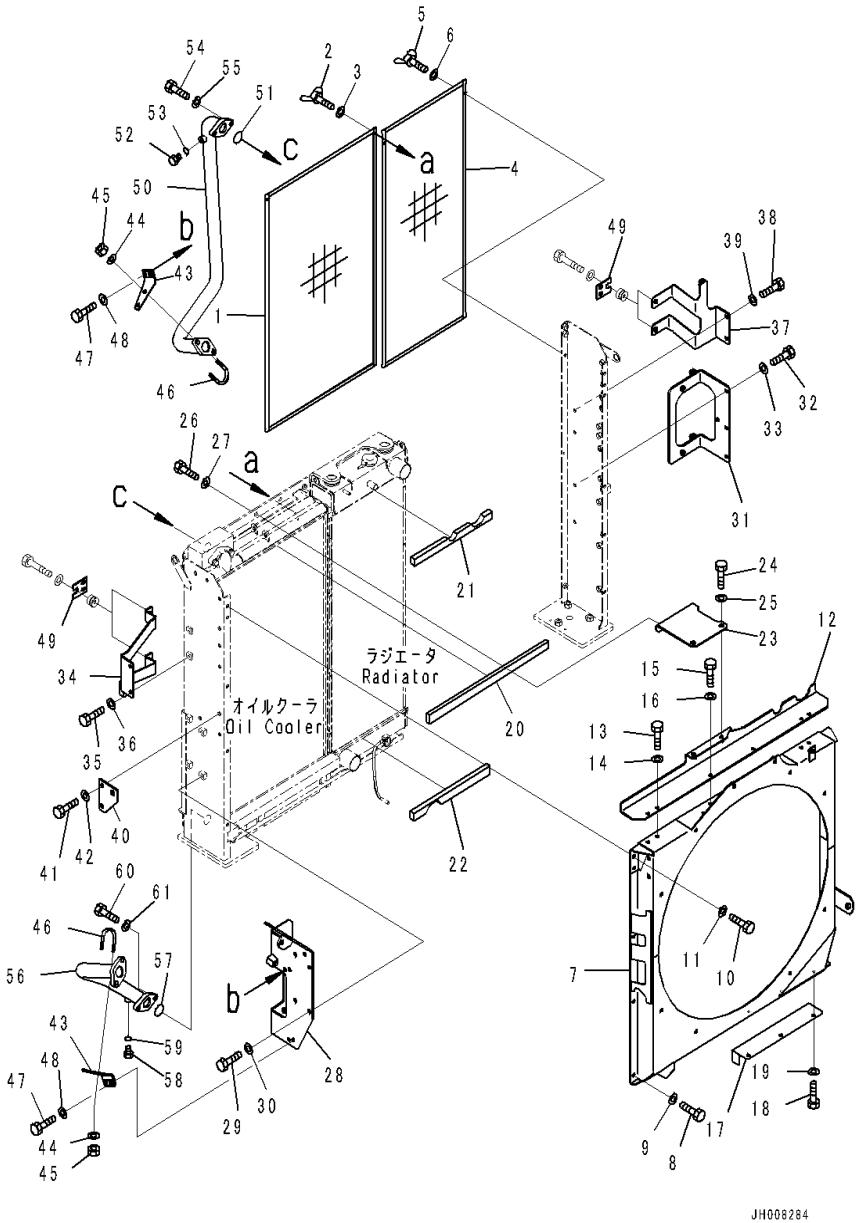

Index	Code	Part Number	Description	Qty	Serial Number
41		01010-81235	Bolt	2	C90001-
42		01643-31232	Washer	2	C90001-
43		207-03-72761	Bracket	2	C90001-
44		01643-31032	Washer	4	C90001-
45		01597-01009	Nut	4	C90001-
46		07283-34949	Clip	2	C90001-
47		01010-81030	Bolt	4	C90001-
48		01643-31032	Washer	4	C90001-
49		56D-03-31280	Plate	4	C90001-
50		207-03-72271	Tube	1	C90001-
51		07002-11423	O-ring	1	C90001-
52		07040-11409	Plug	1	C90001-
53		07000-13045	O-ring	1	C90001-
54		01010-81245	Bolt	2	C90001-
55		01643-31232	Washer	2	C90001-
56		207-03-72511	Tube	1	C90001-
57		07000-13045	O-ring	1	C90001-
58		07040-11409	Plug	1	C90001-
59		07002-11423	O-ring	1	C90001-
60		01010-81245	Bolt	2	C90001-
61		01643-31232	Washer	2	C90001-

FIG. C0100-001003 Cooling System (With Auto Air Conditioner) (Aftercooler and Condenser)

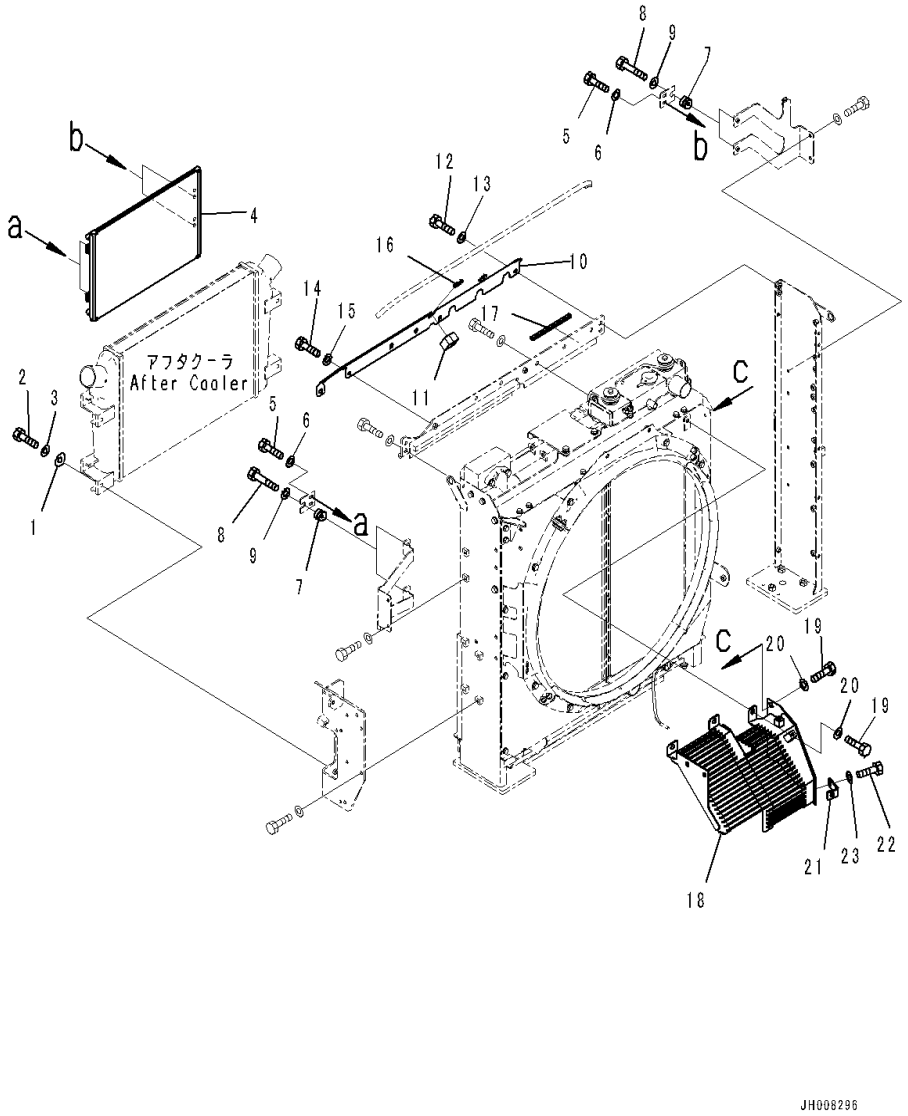

Index	Code	Part Number	Description	Qty	Serial Number
1		6110-23-6490	Spacer	4	C90001-
2		01010-81045	Bolt	4	C90001-
3		01643-31032	Washer	4	C90001-
4		208-979-7520	Condenser Assembly	1	C90001-
5		01010-80612	Bolt	8	C90001-
6		01643-30623	Washer	8	C90001-
7		20Y-810-1240	Cushion	4	C90001-
8		01010-80835	Bolt	4	C90001-
9		01643-30823	Washer	4	C90001-
10		207-03-72521	Cover	1	C90001-
11		208-03-71770	Seal	1	C90001-
12		01010-81230	Bolt	2	C90001-
13		01643-31232	Washer	2	C90001-
14		01010-81020	Bolt	2	C90001-
15		01643-31032	Washer	2	C90001-
16		207-03-76460	Seal	1	C90001-
17		208-60-75120	Trim	1	C90001-
18		207-03-72141	Guard	1	C90001-
19		01010-81225	Bolt	5	C90001-
20		01643-31232	Washer	5	C90001-
21		207-979-6180	Bracket	1	C90001-
22		01010-81225	Bolt	1	C90001-
23		01643-31232	Washer	1	C90001-

FIG. C0100-001004 Cooling System (With Auto Air Conditioner) (Radiator Piping)

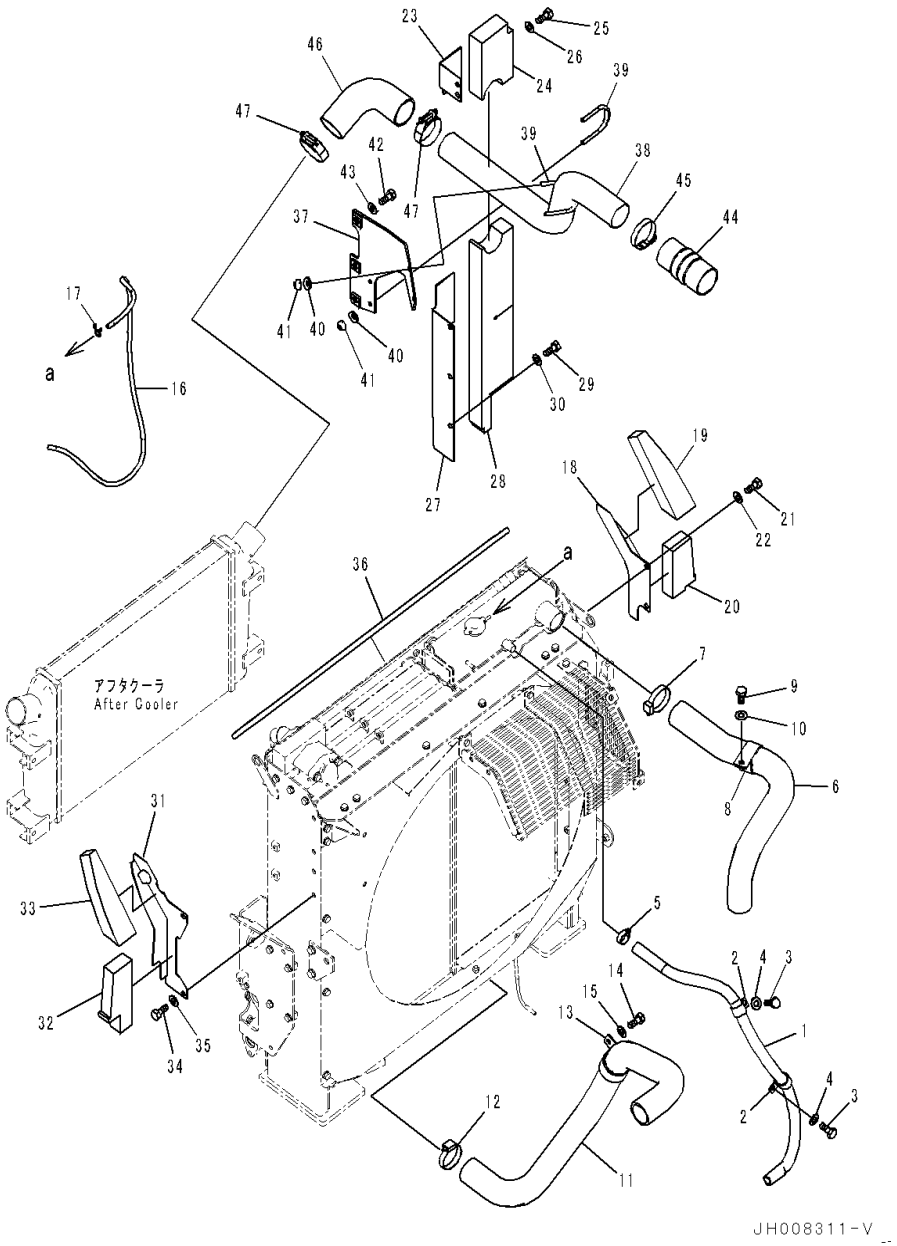

Index	Code	Part Number	Description	Qty	Serial Number
1		208-03-72151	Hose	1	C90001-
2		04434-53212	Clip	2	C90001-
3		01010-81225	Bolt	2	C90001-
4		01643-31232	Washer	2	C90001-
5		07281-00359	Clamp, Hose	1	C90001-
6		207-03-75640	Hose	1	C90001-
7		07289-00070	Clamp	1	C90001-
8		207-03-51530	Clip	1	C90001-
9		01010-81225	Bolt	1	C90001-
10		01643-31232	Washer	1	C90001-
11		207-03-72770	Hose	1	C90001-
12		07289-00070	Clamp	1	C90001-
13		207-03-51530	Clip	1	C90001-
14		01010-81230	Bolt	1	C90001-
15		01643-31232	Washer	1	C90001-
16		21M-03-15260	Hose	1	C90001-
17		206-03-43340	Clip	1	C90001-
18		207-03-72151	Cover	1	C90001-
19		207-03-72241	• Seal	1	C90001-
20		207-03-72531	• Seal	1	C90001-
21		01010-81225	Bolt	2	C90001-
22		01643-31232	Washer	2	C90001-
23		207-03-75371	Cover	1	C90001-
24		207-03-75431	• Seal	1	C90001-
25		01010-81225	Bolt	2	C90001-
26		01643-31232	Washer	2	C90001-
27		207-03-75381	Cover	1	C90001-
28		207-03-75441	• Seal	1	C90001-
29		01010-81225	Bolt	3	C90001-
30		01643-31232	Washer	3	C90001-
31		207-03-72571	Cover	1	C90001-
32		207-03-72581	• Seal	1	C90001-
33		207-03-72591	• Seal	1	C90001-
34		01010-81225	Bolt	2	C90001-
35		01643-31232	Washer	2	C90001-
36		208-03-71410	Seal	1	C90001-
37		207-01-75220	Bracket	1	C90001-
38		207-01-75231	Tube	1	C90001-
39		07283-37663	Clip	2	C90001-
40		01643-31032	Washer	4	C90001-

FIG. C0100-001004 Cooling System (With Auto Air Conditioner) (Radiator Piping)

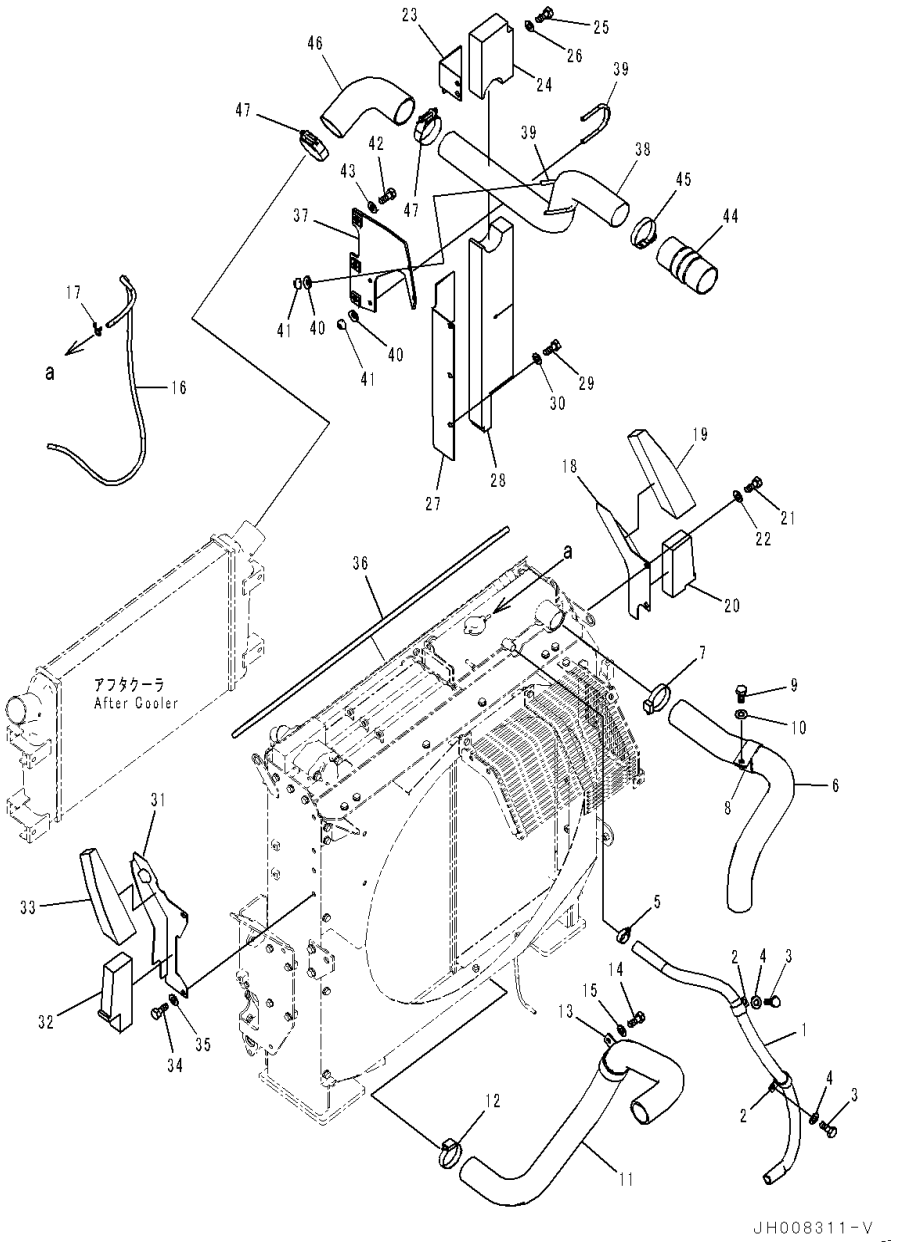

Index	Code	Part Number	Description	Qty	Serial Number
41		01597-01009	Nut	4	C90001-
42		01010-81235	Bolt	3	C90001-
43		01643-31232	Washer	3	C90001-
44		6152-12-4420	Hose	1	C90001-
45		07299-00080	Clamp	1	C90001-
46		207-01-75270	Hose	1	C90001-
47		207-01-75340	Clamp	2	C90001-

FIG. C0100-001005 Cooling System (With Auto Air Conditioner) (Shroud 2/2)

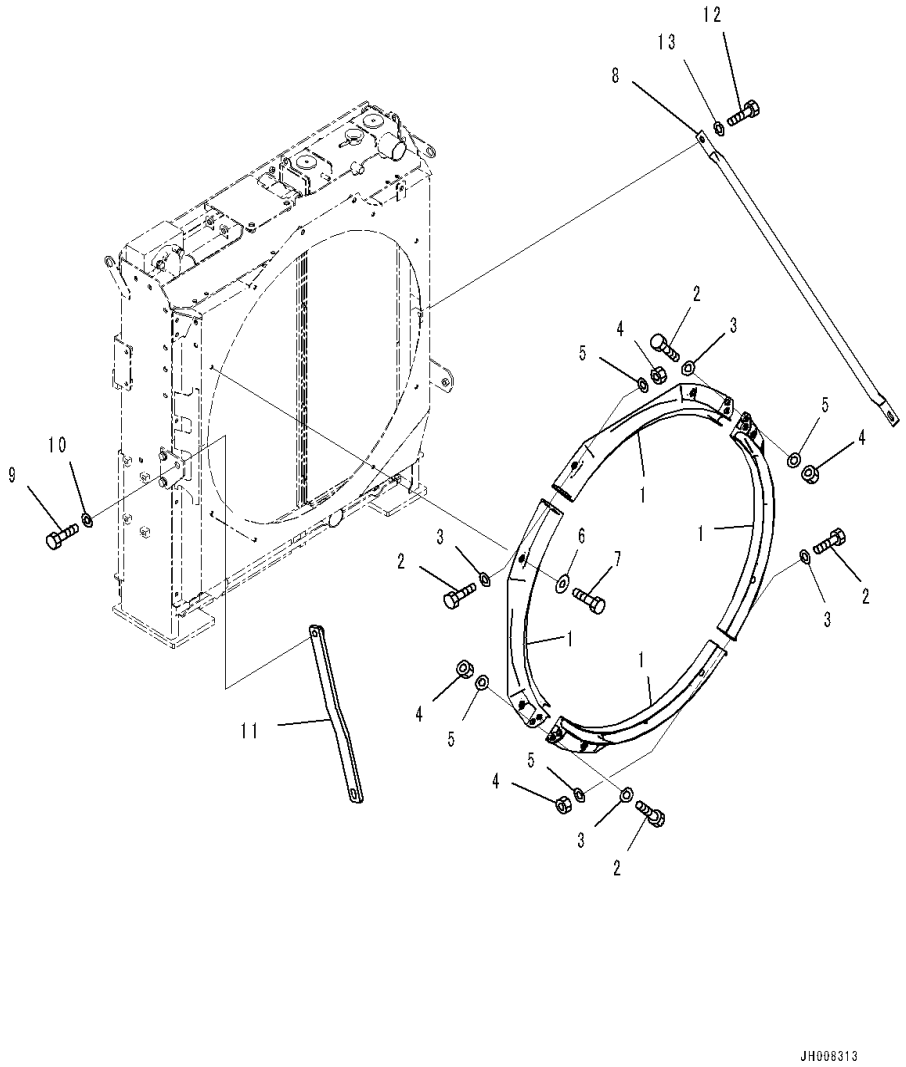

Index	Code	Part Number	Description	Qty	Serial Number
		207-03-41270	Shroud Assembly	1	C90001-
1	C1		• Shroud	4	C90001-
2		01010-81035	• Bolt	8	C90001-
3		01643-31032	• Washer	8	C90001-
4		01596-01009	• Nut, Flanged	8	C90001-
5		01643-31032	• Washer	8	C90001-
6		203-54-56970	Washer	8	C90001-
7		01010-81030	Bolt	8	C90001-
8		207-03-71211	Stay	1	C90001-
9		01010-81640	Bolt	1	C90001-
10		01643-31645	Washer	1	C90001-
11		207-03-72790	Stay	1	C90001-
12		01010-81635	Bolt	1	C90001-
13		01643-31645	Washer	1	C90001-

FIG. C0100-001006 Cooling System (With Auto Air Conditioner) (Sub-tank)

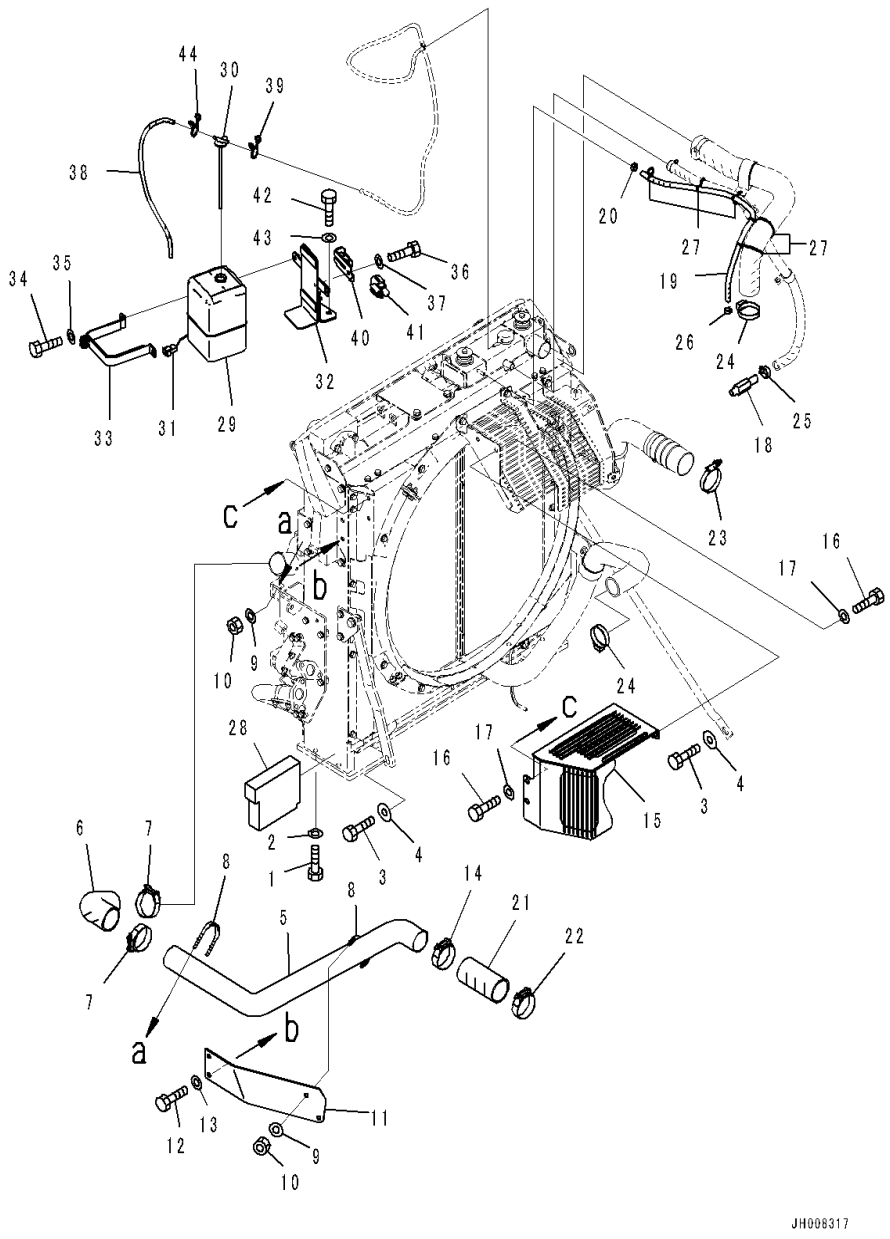

Index	Code	Part Number	Description	Qty	Serial Number
1		01010-81640	Bolt	6	C90001-
2		01643-31645	Washer	6	C90001-
3		01010-81640	Bolt	2	C90001-
4		21T-54-16150	Washer	2	C90001-
5		207-01-72361	Tube	1	C90001-
6		207-01-72372	Hose	1	C90001-
7		207-01-75340	Clamp	2	C90001-
8		07283-37663	Clip	2	C90001-
9		01643-31032	Washer	4	C90001-
10		01597-01009	Nut	4	C90001-
11		207-03-72191	Bracket	1	C90001-
12		01010-81230	Bolt	2	C90001-
13		01643-31232	Washer	2	C90001-
14		207-01-75340	Clamp	1	C90001-
15		207-03-72131	Guard	1	C90001-
16		01010-81225	Bolt	4	C90001-
17		01643-31232	Washer	4	C90001-
18		207-03-75330	Nipple	1	C90001-
19		207-03-72810	Hose Assembly	1	C90001-
20		11Y-09-11140	Clip	1	C90001-
21		207-03-72620	Hose	1	C90001-
22		207-01-75340	Clamp	1	C90001-
23		07299-00080	Clamp	1	C90001-
24		07289-00070	Clamp	2	C90001-
25		07281-00359	Clamp, Hose	1	C90001-
26		11Y-09-11140	Clip	1	C90001-
27		134-03-61410	Band	5	C90001-
28		207-03-72651	Seal	1	C90001-
29		419-03-21320	Tank, Reservoir	1	C90001-
30		421-03-22170	• Cap	1	C90001-
31		08055-00282	• Connector	1	C90001-
32		207-03-72691	Bracket	1	C90001-
33		207-03-72711	Band	1	C90001-
34		01010-81025	Bolt	2	C90001-
35		01643-31032	Washer	2	C90001-
36		01010-80612	Bolt	1	C90001-
37		01643-30623	Washer	1	C90001-
38		22U-03-27951	Hose	1	C90001-
39		206-03-43340	Clip	1	C90001-
40		20Y-979-6271	Bracket	1	C90001-

FIG. C0100-001006 Cooling System (With Auto Air Conditioner) (Sub-tank)

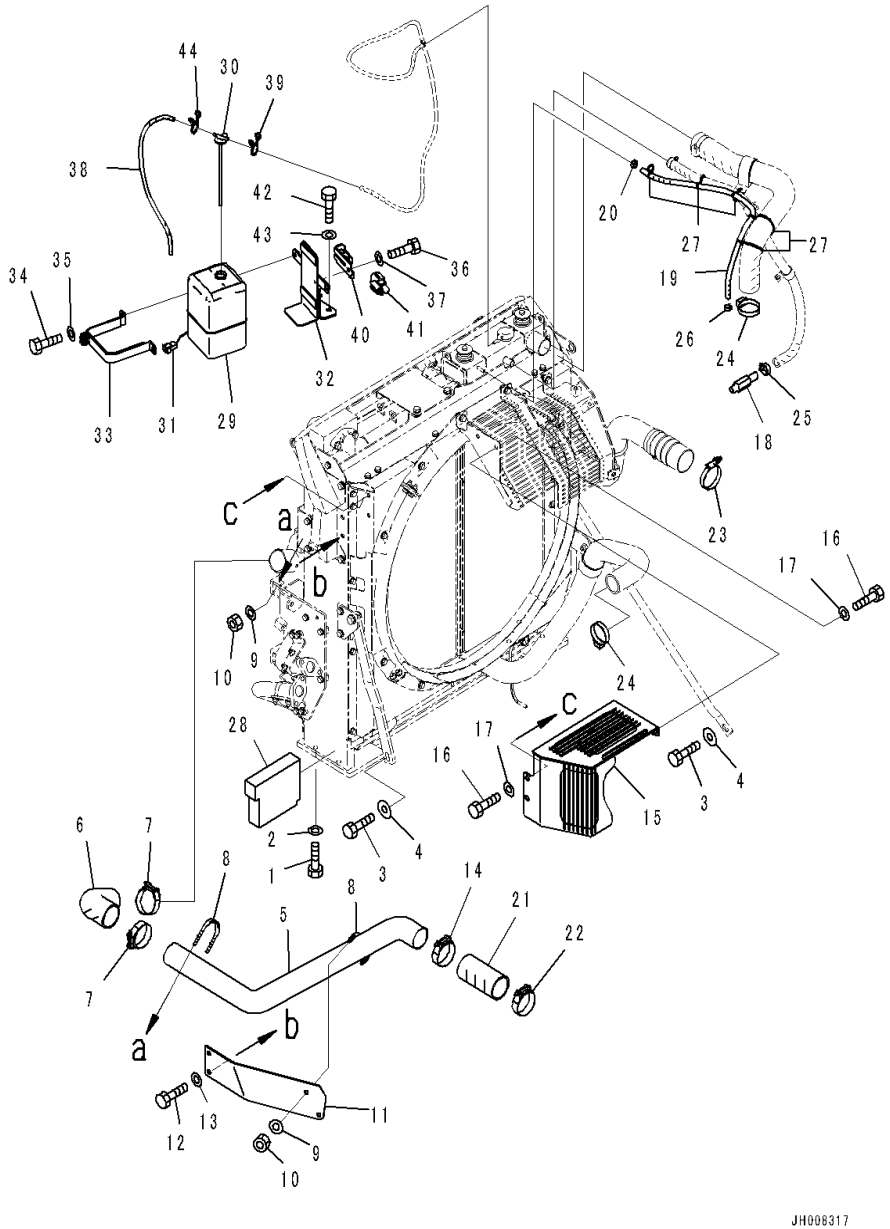

Index	Code	Part Number	Description	Qty	Serial Number
41		20Y-979-6191	Sensor	1	C90001-
42		01010-81230	Bolt	2	C90001-
43		01643-31232	Washer	2	C90001-
44		206-03-43340	Clip	1	C90001-

FUEL SYSTEM

FIG. D0100-001001 Fuel Tank (Poor Fuel Spec, Water+Dust, Large Fuel Prefilter, With Fuel Refill Pump)

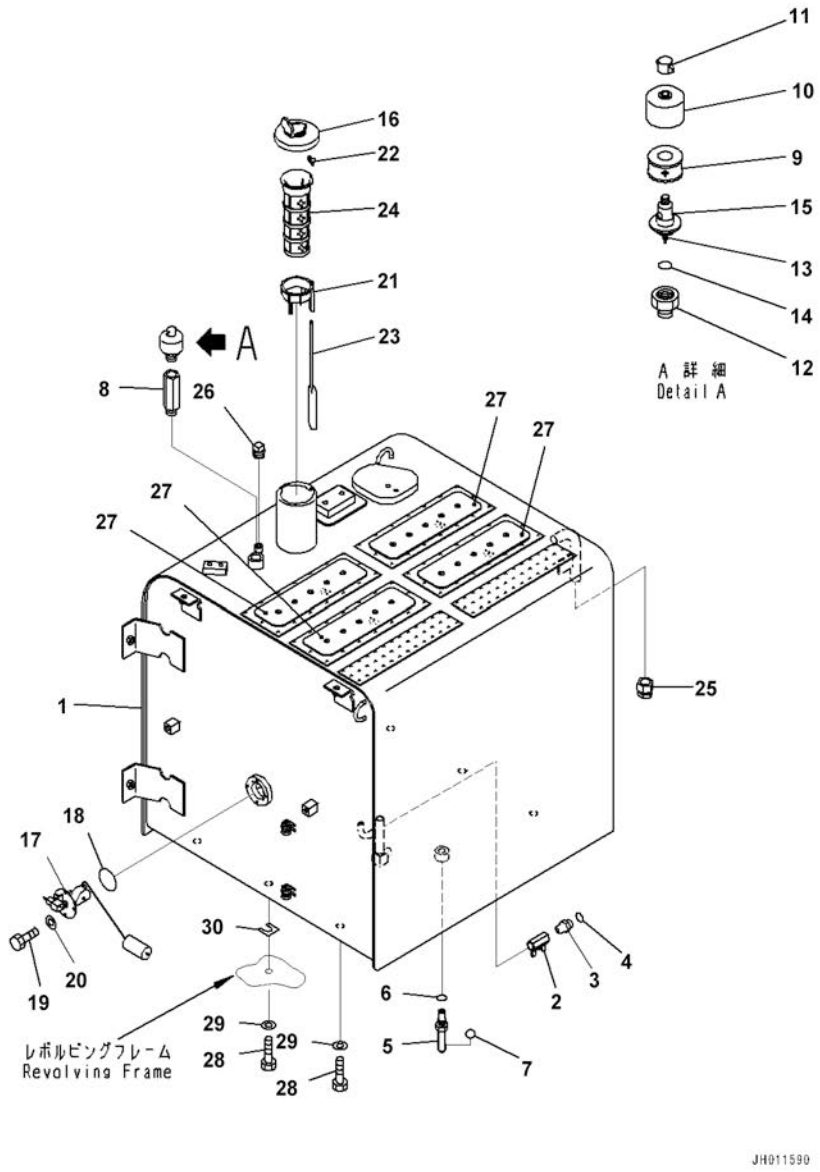

Index	Code	Part Number	Description	Qty	Serial Number
1		207-04-78131	Tank	1	C90290-
	A2	207-04-78130	Tank	1	C90001-C90289
2		07700-50455	Valve, Fuel Drain	1	C90001-
3		8255-62-4591	Connector	1	C90001-
4		02896-11012	O-ring	1	C90001-
5		207-04-75390	Elbow	1	C90001-
6		07002-12034	O-ring	1	C90001-
7		02896-11009	O-ring	1	C90001-
8		154-04-72220	Adapter	1	C90001-
		22U-60-21520	Breather	1	C90001-
9		421-60-35170	• Element	1	C90001-
10		421-60-35180	• Cover	1	C90001-
11		421-60-35190	• Nut	1	C90001-
12	C1		• Body	1	C90001-
13	C1		• Valve Assembly	1	C90001-
14	C1		• O-ring	1	C90001-
15	C1		• Case	1	C90001-
16		423-04-11362	Cap	1	C90001-
		417-04-21230	• Packing	1	C90001-
17		7861-92-5810	Sensor	1	C90001-
18		07000-13050	O-ring	1	C90001-
19		01010-80612	Bolt	4	C90001-
20		01643-30623	Washer	4	C90001-
		22U-04-21241	Strainer Assembly	1	C90001-
		22U-04-21200	• Float Assembly	1	C90001-
21		22U-04-21210	• • Guide	1	C90001-
22		20Y-04-21580	• • Cap	1	C90001-
23		22U-04-21220	• • Float	1	C90001-
24		07056-18425	• Strainer	1	C90001-
25		203-04-K1140	End	1	C90001-
26		07042-30211	Plug, Taper	1	C90001-
27		20Y-00-42110	Plate	4	C90001-
28		01010-81635	Bolt	6	C90001-
29		01643-31645	Washer	6	C90001-
30		195-03-11570	Shim, T=1.0mm	2	C90001-

FIG. D0100-002001 Fuel Tank (With Fuel Refill Pump)

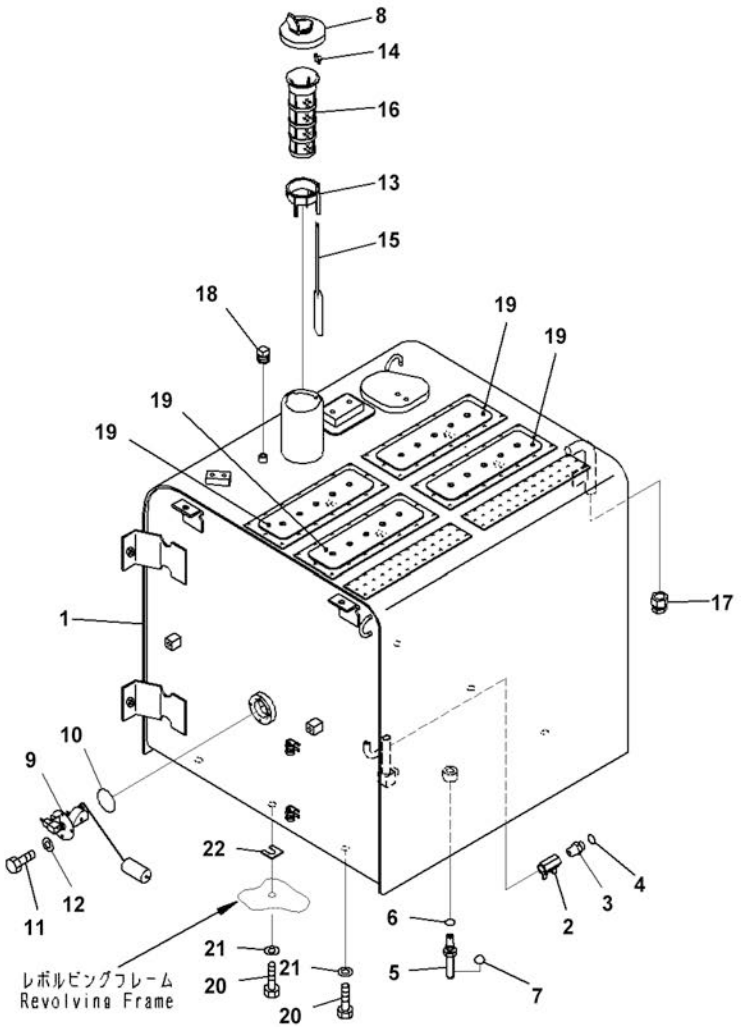

Index	Code	Part Number	Description	Qty	Serial Number
1		207-04-75172	Tank	1	C90290-
	A2	207-04-75171	Tank	1	C90001-C90289
2		07700-50455	Valve, Fuel Drain	1	C90001-
3		8255-62-4591	Connector	1	C90001-
4		02896-11012	O-ring	1	C90001-
5		02782-10317	Elbow	1	C90001-
6		07002-12034	O-ring	1	C90001-
7		02896-11009	O-ring	1	C90001-
8		20Y-04-11161	Cap	1	C90001-
9		7861-92-5810	Sensor	1	C90001-
10		07000-13050	O-ring	1	C90001-
11		01010-80612	Bolt	4	C90001-
12		01643-30623	Washer	4	C90001-
		22U-04-21241	Strainer Assembly	1	C90001-
		22U-04-21200	• Float Assembly	1	C90001-
13		22U-04-21210	• • Guide	1	C90001-
14		20Y-04-21580	• • Cap	1	C90001-
15		22U-04-21220	• • Float	1	C90001-
16		07056-18425	• Strainer	1	C90001-
17		203-04-K1140	End	1	C90001-
18		07042-30211	Plug	1	C90001-
19		20Y-00-42110	Plate	4	C90001-
20		01010-81635	Bolt	6	C90001-
21		01643-31645	Washer	6	C90001-
22		195-03-11570	Shim, T=1.0mm	2	C90001-

FIG. D0200-001001 Fuel Supply Piping (Poor Fuel Spec, Water+Dust, Large Fuel Pre-Filter) (Fuel Piping)

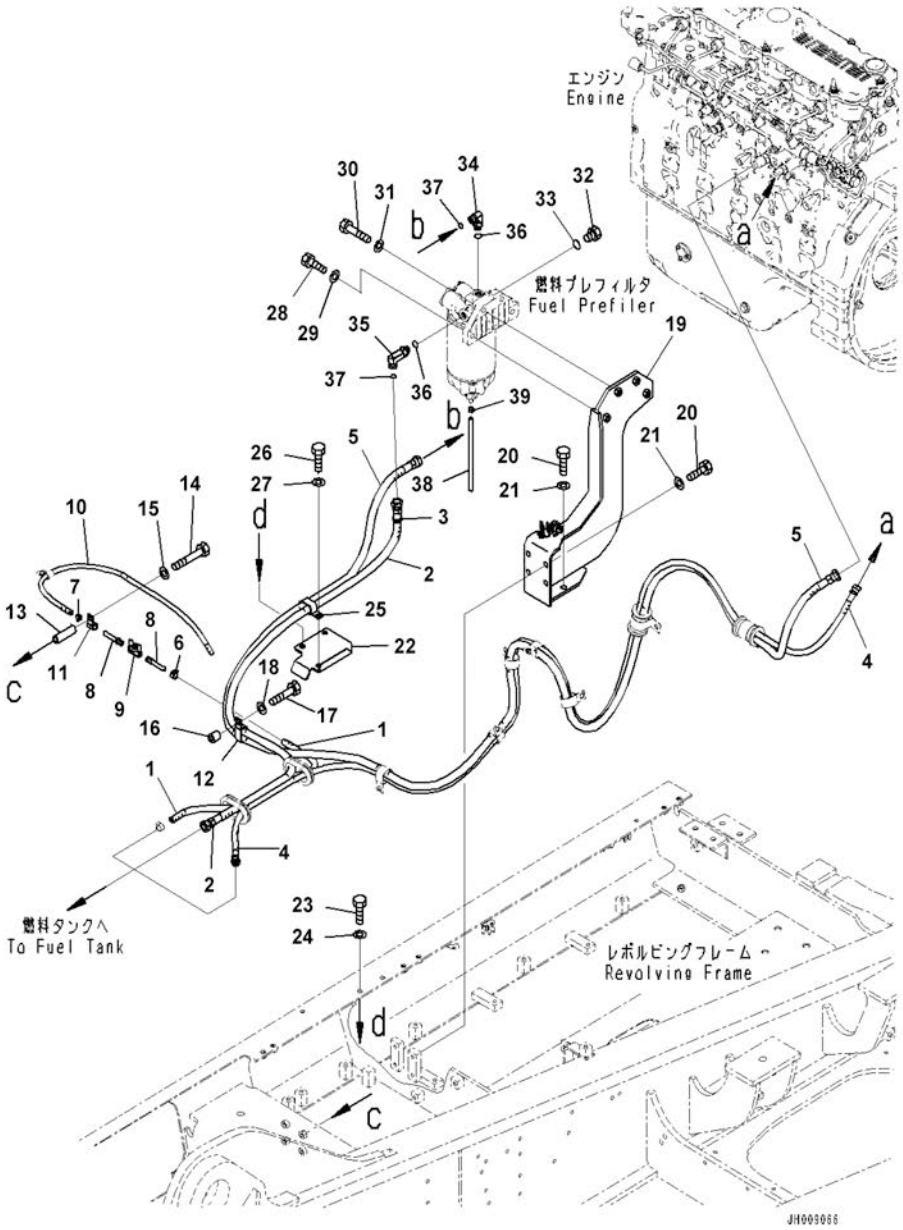

Index	Code	Part Number	Description	Qty	Serial Number
		207-04-75512	Hose Assembly	1	C90001-
1		07288-01007	• Hose	1	C90001-
2		02762-00416	• Hose, Face Seal Type	1	C90001-
3		20Y-62-22790	• Band, Red	1	C90001-
		207-04-75522	Hose Assembly	1	C90001-
4		02762-00335	• Hose	1	C90001-
5		02762-00443	• Hose, Face Seal Type	1	C90001-
6		11Y-09-11140	Clip	2	C90001-
7		07285-00115	Clip	1	C90001-
8		20Y-04-31170	Nipple	2	C90001-
9		07700-50240	Valve	1	C90001-
10		07270-01085	Tube	1	C90001-
11		04434-51312	Clip	1	C90001-
12		04435-52112	Clip	1	C90001-
13		195-979-3570	Collar	1	C90001-
14		01011-81200	Bolt	1	C90001-
15		01643-31232	Washer	1	C90001-
16		195-33-11220	Spacer	1	C90001-
17		01010-81260	Bolt	1	C90001-
18		01643-31232	Washer	1	C90001-
19		207-04-75472	Bracket	1	C90001-
20		01010-81230	Bolt	6	C90001-
21		01643-31232	Washer	6	C90001-
22		207-04-75491	Bracket	1	C90001-
23		01010-81230	Bolt	2	C90001-
24		01643-31232	Washer	2	C90001-
25		04435-52112	Clip	1	C90001-
26		01010-81230	Bolt	1	C90001-
27		01643-31232	Washer	1	C90001-
28		01010-81250	Bolt	2	C90001-
29		01643-31232	Washer	2	C90001-
30		01010-81260	Bolt	2	C90001-
31		01643-31232	Washer	2	C90001-
32		07040-11812	Plug	2	C90001-
33		07002-11823	O-ring	2	C90001-
34		02782-10420	Elbow	1	C90001-
35		20U-62-41690	Elbow	1	C90001-
36		07002-11823	O-ring	2	C90001-
37		02896-11012	O-ring	2	C90001-
38		07270-00825	Tube	1	C90001-

FIG. D0200-001001 Fuel Supply Piping (Poor Fuel Spec, Water+Dust, Large Fuel Pre-Filter) (Fuel Piping)

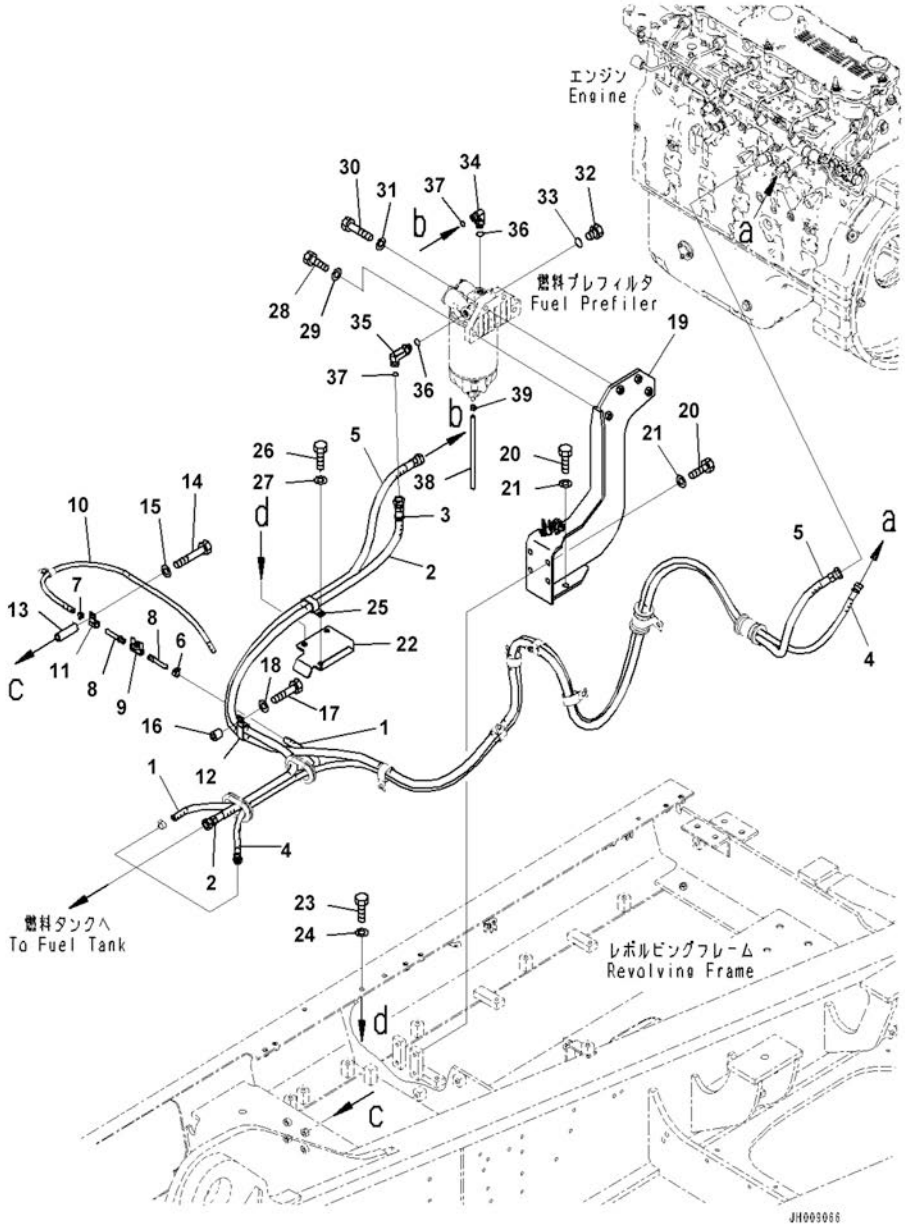

Index	Code	Part Number	Description	Qty	Serial Number
39		07285-00110	Clip	1	C90001-

FIG. D0200-001002 Fuel Supply Piping (Poor Fuel Spec, Water+Dust, Large Fuel Pre-Filter) (Fuel Pre-Filter)

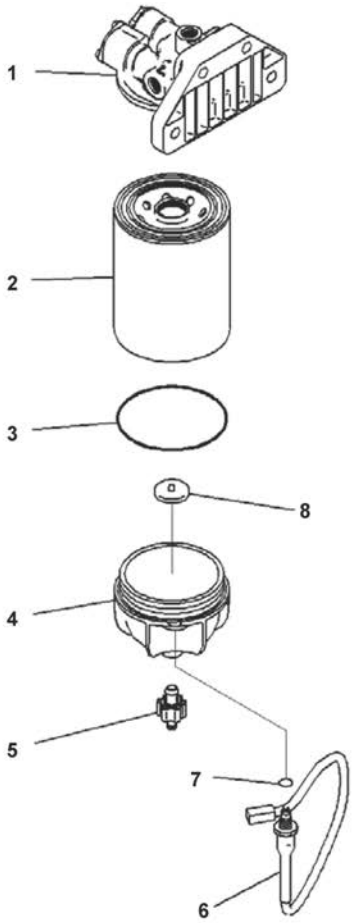

Index	Code	Part Number	Description	Qty	Serial Number
		6745-71-5902	Filter Assembly	1	C90372-
		6745-71-5900	Filter Assembly	1	C90001-C90371
1		6745-71-5910	• Head Assembly	1	C90001-
		600-311-5602	• Cartridge Assembly	1	C90372-
		600-311-5600	• Cartridge Assembly	1	C90001-C90371
2	C1		• • Cartridge	1	C90001-
3		600-311-5631	• • O-ring	1	C90372-
		600-311-5600	• • O-ring	1	C90001-C90371
4		600-311-5642	• • Bowl	1	C90372-
		600-311-5640	• • Bowl	1	C90001-C90371
5		600-311-5660	• • Valve Assembly	1	C90001-
		600-311-3760	• • Sensor	1	C90001-
6	C1		• • • Sensor	1	C90001-
7		600-311-3690	• • • O-ring	1	C90001-
8		600-311-5470	• • Float	1	C90372-

FIG. D0200-001003 Fuel Supply Piping (Poor Fuel Spec, Water+Dust, Large Fuel Pre-Filter) (Clamp)

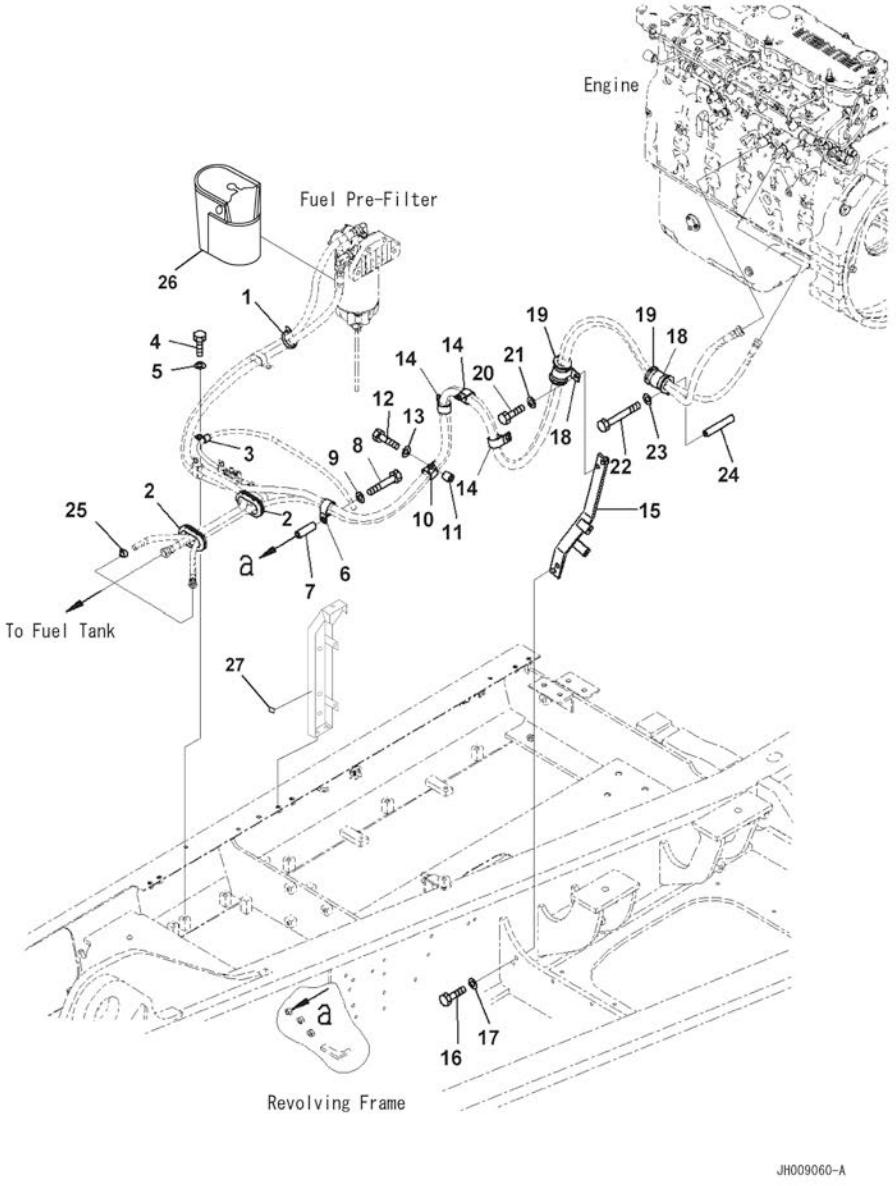

Index	Code	Part Number	Description	Qty	Serial Number
1		08034-20536	Band	1	C90001-
2		150-95-27160	Grommet	2	C90001-
3		04434-51312	Clip	1	C90001-
4		01010-81230	Bolt	1	C90001-
5		01643-31232	Washer	1	C90001-
6		04434-53412	Clip	1	C90001-
7		195-979-3570	Collar	1	C90001-
8		01011-81200	Bolt	1	C90001-
9		01643-31232	Washer	1	C90001-
10		04434-53412	Clip	1	C90001-
11		195-33-11220	Spacer	1	C90001-
12		01010-81245	Bolt	1	C90001-
13		01643-31232	Washer	1	C90001-
14		04434-53412	Clip	3	C90001-
15		207-04-77121	Bracket	1	C90001-
16		01010-81245	Bolt	2	C90001-
17		01643-31232	Washer	2	C90001-
18		21T-62-76850	Clip	2	C90001-
19		07095-01034	Cushion	2	C90001-
20		01010-81230	Bolt	1	C90001-
21		01643-31232	Washer	1	C90001-
22		01011-81040	Bolt	1	C90001-
23		01643-31032	Washer	1	C90001-
24		6151-51-5490	Spacer	1	C90001-
25		11Y-09-11140	Clip	1	C90001-
26		6754-81-5320	Cover, Fuel Pre-Filter	1	C90407-
27		20Y-00-43130	Plate	1	C90407-

FIG. D0200-002001 Fuel Supply Piping (Extra Poor Fuel Spec, Water+Dust, Additional Filter) (Fuel Line)

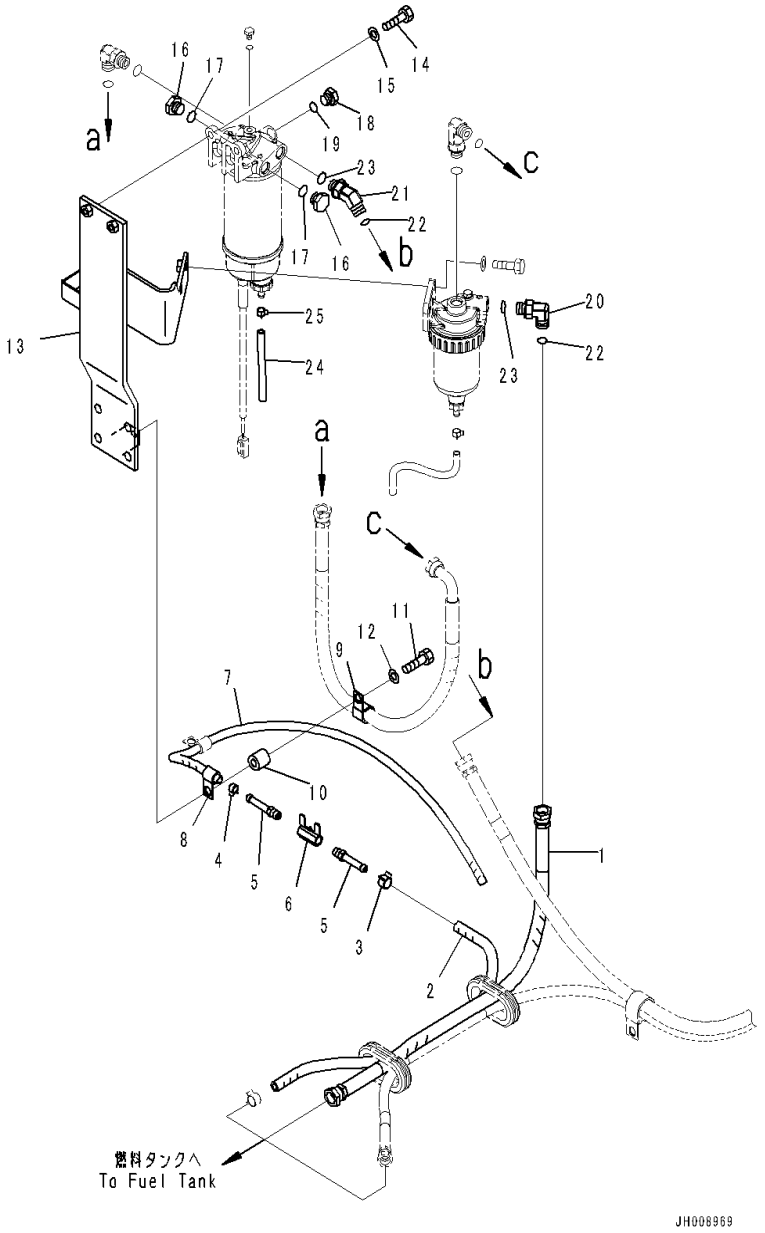

Index	Code	Part Number	Description	Qty	Serial Number
1		02762-00407	Hose, Face Seal Type	1	C90001-
2		07288-01007	Hose	1	C90001-
3		11Y-09-11140	Clip	1	C90001-
4		07285-00115	Clip	1	C90001-
5		20Y-04-31170	Nipple	2	C90001-
6		07700-50240	Valve	1	C90001-
7		07270-01085	Tube	1	C90001-
8		04434-51312	Clip	1	C90001-
9		04434-52112	Clip	1	C90001-
10		195-33-11220	Spacer	1	C90001-
11		01010-81250	Bolt	1	C90001-
12		01643-31232	Washer	1	C90001-
13		207-04-77140	Bracket	1	C90001-
14		01010-81035	Bolt	2	C90001-
15		01643-31032	Washer	2	C90001-
16		07040-11812	Plug	2	C90001-
17		07002-11823	O-ring	2	C90001-
18		07040-11612	Plug	1	C90001-
19		07002-11623	O-ring	1	C90001-
20		02782-10420	Elbow	1	C90001-
21		20U-62-41610	Elbow	1	C90001-
22		07002-11823	O-ring	2	C90001-
23		02896-11012	O-ring	2	C90001-
24		07270-00825	Tube	1	C90001-
25		07285-00100	Clip	1	C90001-

FIG. D0200-002002 Fuel Supply Piping (Extra Poor Fuel Spec, Water+Dust, Additional Filter) (Fuel Prefilter)

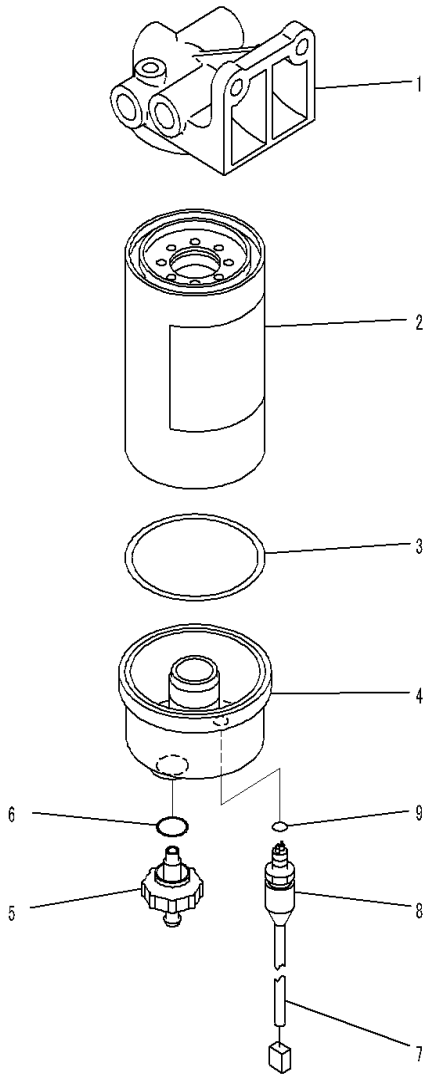

Index	Code	Part Number	Description	Qty	Serial Number
		6745-71-7203	Filter Assembly	1	C90001-
1		6745-71-7211	• Head Assembly	1	C90001-
		600-311-3602	• Cartridge Assembly	1	C90001-
		600-311-3610	• • Cartridge Assembly	1	C90001-
2	C1		• • • Cartridge	1	C90001-
3		600-311-3630	• • • Seal	1	C90001-
4		600-311-3640	• • Bowl	1	C90001-
5		600-311-3660	• • Valve Assembly	1	C90001-
6		600-311-3670	• • • Seal	1	C90001-
		600-311-3722	• • Sensor	1	C90001-
7	C1		• • •Tube	1	C90001-
8	C1		• • • Sensor	1	C90001-
9		600-311-3690	• • • O-ring	1	C90001-

FIG. D0200-002003 Fuel Supply Piping (Extra Poor Fuel Spec, Water+Dust, Additional Filter) (Water Separator)

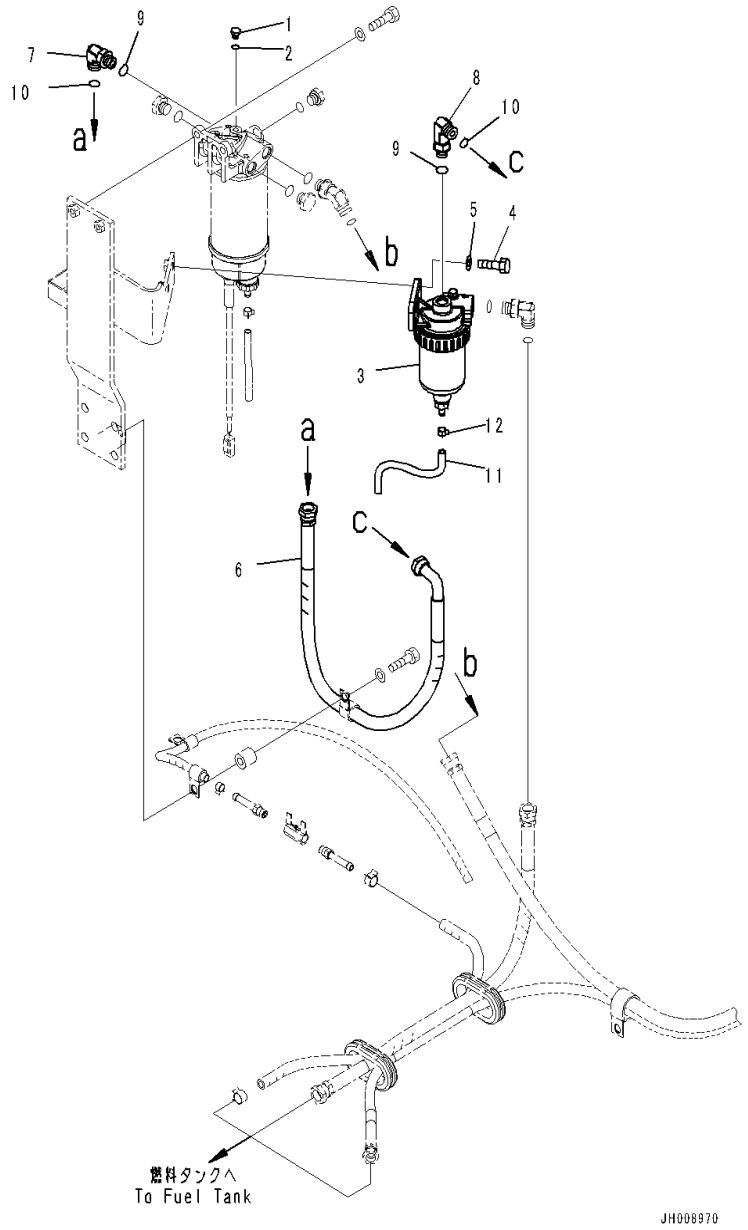

Index	Code	Part Number	Description	Qty	Serial Number
1		07040-10807	Plug	1	C90001-
2		07002-10823	O-ring	1	C90001-
3		600-311-7612	Water Separator	1	C90209-
		600-311-7611	Water Separator	1	C90001-C90208
4		01010-81035	Bolt	2	C90001-
5		01643-31032	Washer	2	C90001-
6		207-04-75370	Hose Assembly	1	C90001-
7		02782-10420	Elbow	1	C90001-
8		02782-1042A	Elbow	1	C90001-
9		07002-11823	O-ring	2	C90001-
10		02896-11012	O-ring	2	C90001-
11		07270-00835	Tube	1	C90001-
12		07285-00100	Clip	1	C90001-

FIG. D0200-002004 Fuel Supply Piping(Extra Poor Fuel Spec, Water+Dust) (Water Separator, Inner Parts)

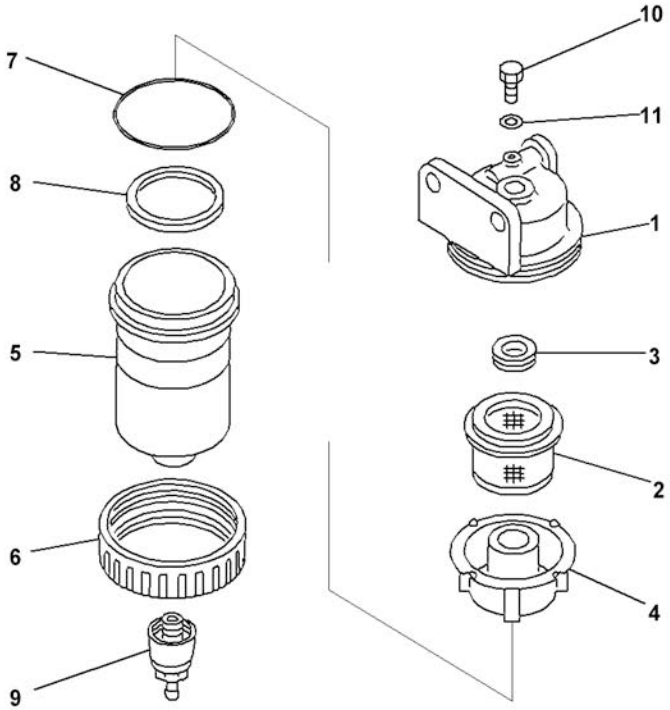

Index	Code	Part Number	Description	Qty	Serial Number
		600-311-7612	Water Separator	1	C90209-
1		600-311-9551	• Head	1	C90209-
2		600-311-9971	• Screen	1	C90209-
3		600-311-9961	• Gasket	1	C90209-
4		600-311-9941	• Baffle	1	C90209-
5		600-311-7631	• Case	1	C90209-
6		600-311-9931	• Nut	1	C90209-
7		600-311-9580	• Ring	1	C90209-
8		600-311-9950	• Ring	1	C90209-
9		600-311-9591	• Plug	1	C90209-
10		6110-73-6231	• Plug	1	C90209-
11		07005-00812	• Seal, Washer	1	C90209-

FIG. D0200-002005 Fuel Supply Piping (Extra Poor Fuel Spec, Water+Dust, Additional Filter) (Clamp)

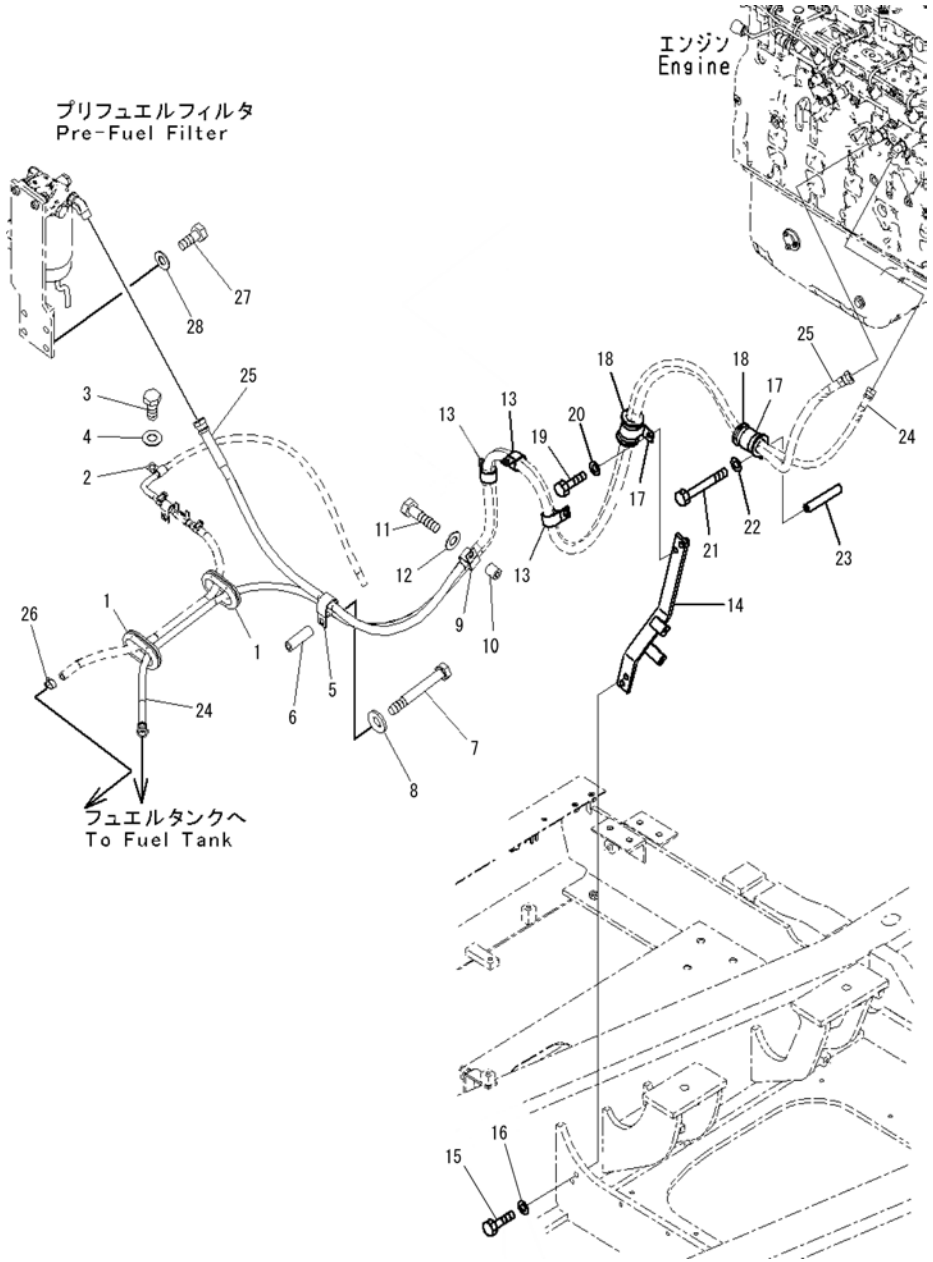

Index	Code	Part Number	Description	Qty	Serial Number
1		150-952-7160	Grommet	2	C90001-
2		04434-51312	Clip	1	C90001-
3		01010-81225	Bolt	1	C90001-
4		01643-31232	Washer	1	C90001-
5		04434-53412	Clip	1	C90001-
6		195-979-3570	Collar	1	C90001-
7		01011-81200	Bolt	1	C90001-
8		01643-31232	Washer	1	C90001-
9		04434-53412	Clip	1	C90001-
10		195-33-11220	Spacer	1	C90001-
11		01010-81245	Bolt	1	C90001-
12		01643-31232	Washer	1	C90001-
13		04434-53412	Clip	3	C90001-
14		207-04-77121	Bracket	1	C90001-
15		01010-81245	Bolt	2	C90001-
16		01643-31232	Washer	2	C90001-
17		21T-62-76850	Clip	2	C90001-
18		07095-01034	Cushion	2	C90001-
19		01010-81225	Bolt	1	C90001-
20		01643-31232	Washer	1	C90001-
21		01011-81040	Bolt	1	C90001-
22		01643-31032	Washer	1	C90001-
23		6151-51-5490	Spacer	1	C90001-
		207-04-77111	Hose Assembly	1	C90001-
24		02762-00335	• Hose	1	C90001-
25		02762-00432	• Hose, Face Seal Type	1	C90001-
26		11Y-09-11140	Clip	1	C90001-
27		01010-81240	Bolt	4	C90001-
28		01643-31232	Washer	4	C90001-

ELECTRICAL SYSTEM

FIG. E0100-001001 Battery

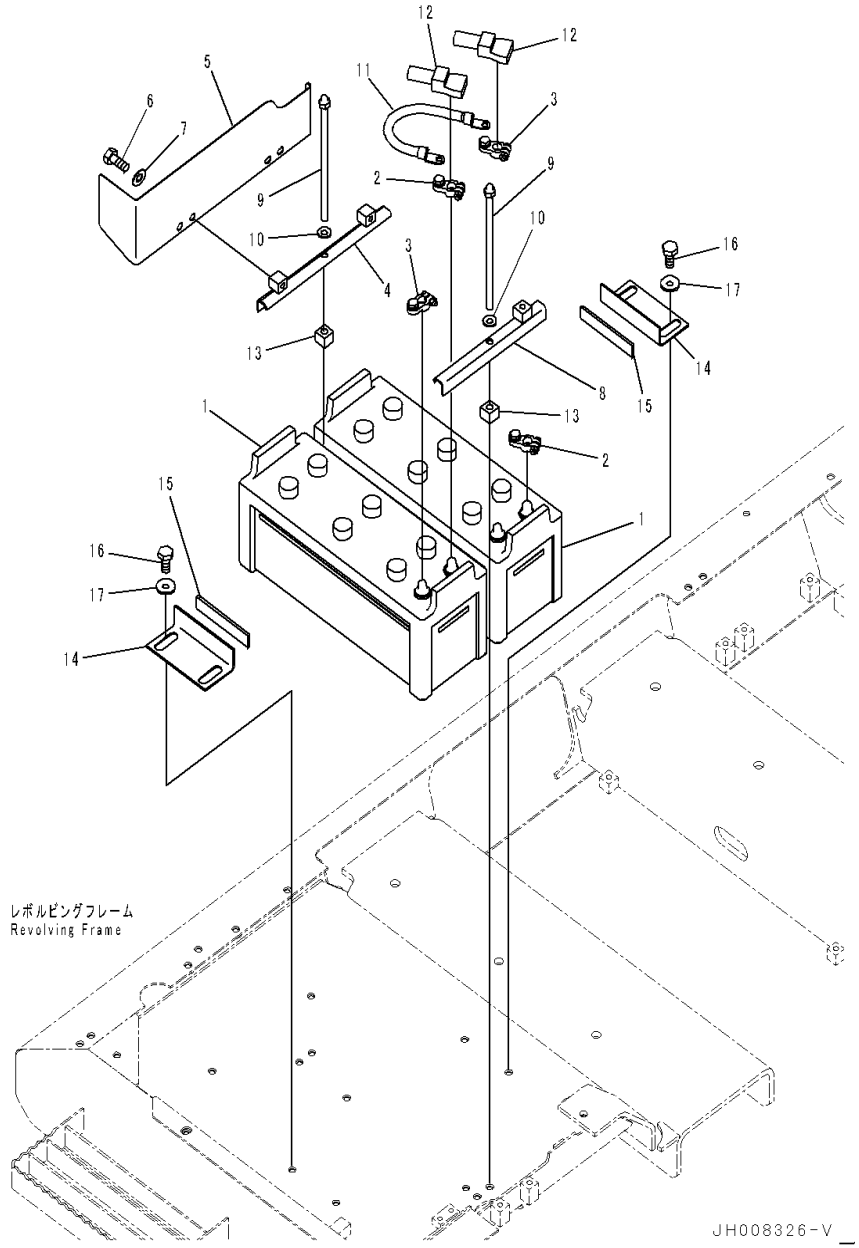

Index	Code	Part Number	Description	Qty	Serial Number
1		08000-02215	Battery, N150	2	C90001-
2		08000-00020	Terminal, (+)	2	C90001-
3		08000-00021	Terminal, (-)	2	C90001-
4		207-06-75310	Clamp	1	C90001-
5		207-06-75322	Cover	1	C90001-
6		01010-81225	Bolt	2	C90001-
7		01643-31232	Washer	2	C90001-
8		207-06-51470	Clamp	1	C90001-
9		207-06-11370	Bolt	2	C90001-
10		01643-31232	Washer	2	C90001-
11		08028-64035	Cable, Battery	1	C90001-
12		08038-42511	Cap	2	C90001-
13		207-06-51461	Block	2	C90001-
14		207-06-61461	Bracket	2	C90001-
15		207-06-51330	• Sheet	1	C90001-
16		01010-81225	Bolt	4	C90001-
17		175-54-34170	Washer	4	C90001-

FIG. E0200-001001 Electric Wiring Harness (Starting Wiring Harness, #C90001-C90347)

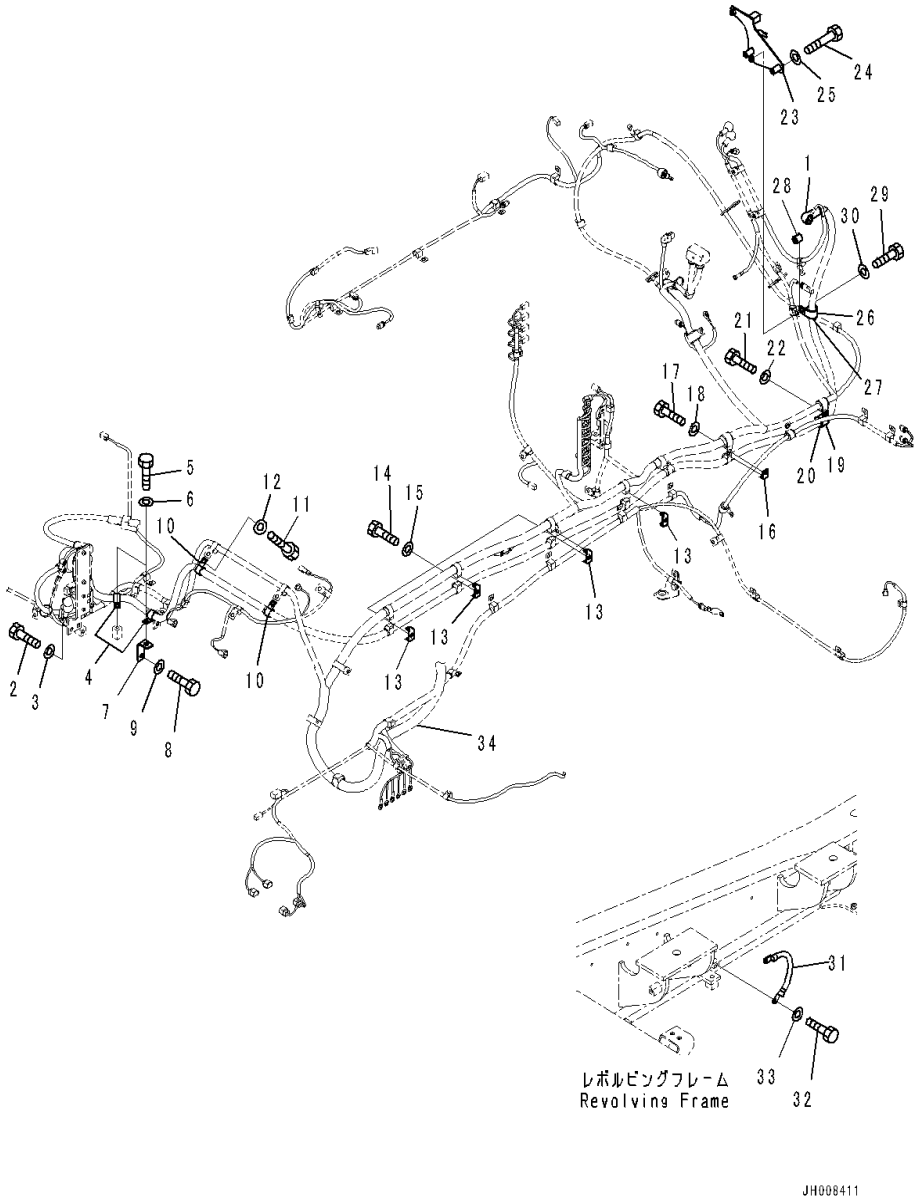

Index	Code	Part Number	Description	Qty	Serial Number
1		08038-10035	Cap	1	C90001-C90347
2		01010-81225	Bolt	2	C90001-C90347
3		01643-31232	Washer	2	C90001-C90347
4		04434-52112	Clip	2	C90001-C90347
5		01010-81225	Bolt	2	C90001-C90347
6		01643-31232	Washer	2	C90001-C90347
7		207-979-6180	Bracket	1	C90001-C90347
8		01010-81225	Bolt	1	C90001-C90347
9		01643-31232	Washer	1	C90001-C90347
10		04434-52112	Clip	2	C90001-C90347
11		01010-81220	Bolt	2	C90001-C90347
12		01643-31232	Washer	2	C90001-C90347
13		08057-22012	Clip	4	C90001-C90347
14		01010-81225	Bolt	4	C90001-C90347
15		01643-31232	Washer	4	C90001-C90347
16		08057-12012	Clip	1	C90001-C90347
17		01010-81225	Bolt	1	C90001-C90347
18		01643-31232	Washer	1	C90001-C90347
19		04434-53212	Clip	1	C90001-C90347
20		07095-20523	Cushion	1	C90001-C90347
21		01010-81225	Bolt	1	C90001-C90347
22		01643-31232	Washer	1	C90001-C90347
23		207-06-75190	Bracket	1	C90001-C90347
24		01010-80855	Bolt	2	C90001-C90347
25		01643-30823	Washer	2	C90001-C90347
26		04434-53212	Clip	1	C90001-C90347
27		198-06-53610	Cushion	1	C90001-C90347
28		195-33-11220	Spacer	1	C90001-C90347
29		01010-81250	Bolt	1	C90001-C90347
30		01643-31232	Washer	1	C90001-C90347
31		08028-44035	Cable, Ground	1	C90001-C90347
32		01010-81020	Bolt	2	C90001-C90347
33		01643-31032	Washer	2	C90001-C90347
34		(207-06-77112)	Wiring Harness		-

FIG. E0200-001002 Electric Wiring Harness (Wiring Harness, 1/3, #C90001-C90347)

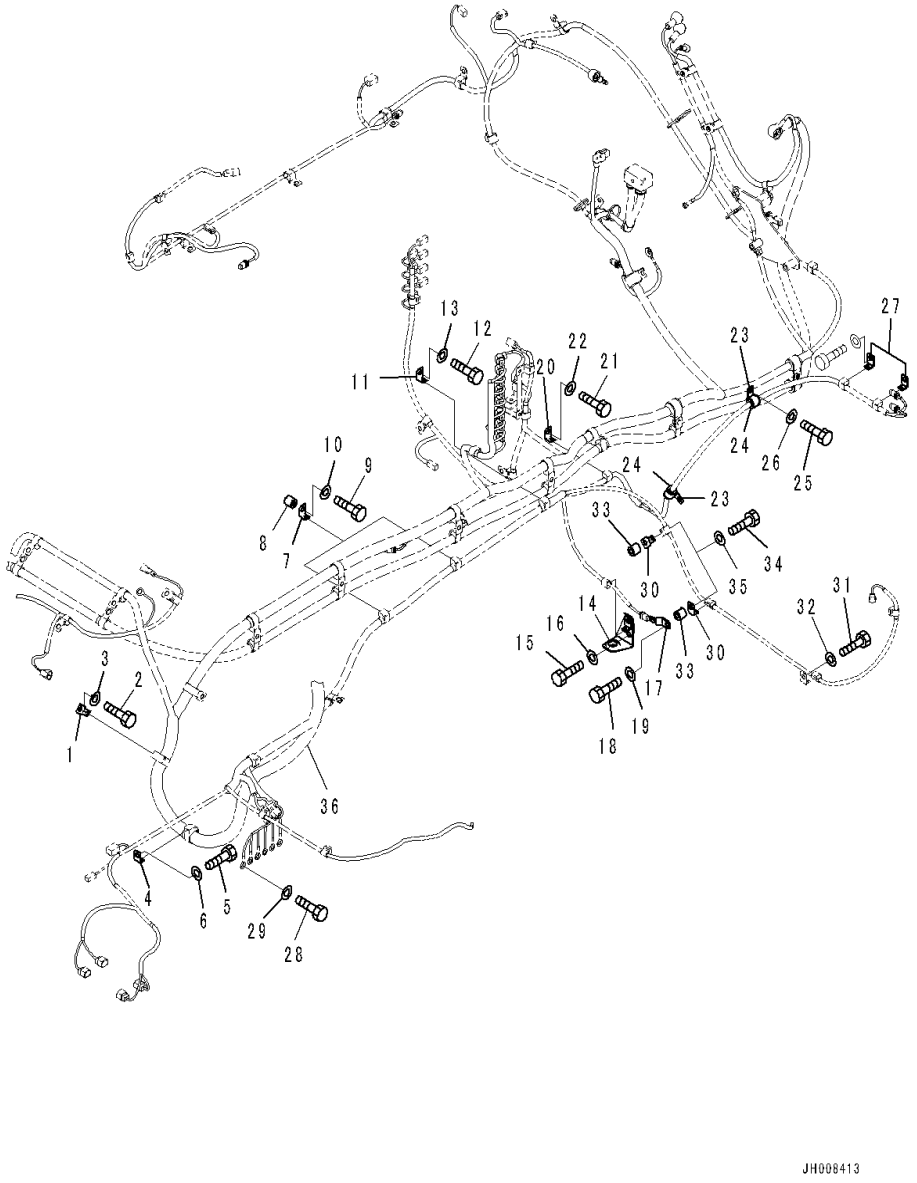

Index	Code	Part Number	Description	Qty	Serial Number
1		08057-12012	Clip	1	C90001-C90347
2		01010-81225	Bolt	1	C90001-C90347
3		01643-31232	Washer	1	C90001-C90347
4		08057-12012	Clip	1	C90001-C90347
5		01010-81225	Bolt	1	C90001-C90347
6		01643-31232	Washer	1	C90001-C90347
7		08057-12012	Clip	2	C90001-C90347
8		195-33-11220	Spacer	2	C90001-C90347
9		01010-81250	Bolt	2	C90001-C90347
10		01643-31232	Washer	2	C90001-C90347
11		08057-12012	Clip	1	C90001-C90347
12		01010-81225	Bolt	1	C90001-C90347
13		01643-31232	Washer	1	C90001-C90347
14		207-60-75180	Bracket	1	C90001-C90347
15		01010-81225	Bolt	1	C90001-C90347
16		01643-31232	Washer	1	C90001-C90347
17		08193-20012	Clip	1	C90001-C90347
18		01010-81225	Bolt	1	C90001-C90347
19		01643-31232	Washer	1	C90001-C90347
20		08057-12012	Clip	1	C90001-C90347
21		01010-81225	Bolt	1	C90001-C90347
22		01643-31232	Washer	1	C90001-C90347
23		04434-52112	Clip	2	C90001-C90347
24		07095-20314	Cushion	2	C90001-C90347
25		01010-81225	Bolt	2	C90001-C90347
26		01643-31232	Washer	2	C90001-C90347
27		08057-12012	Clip	2	C90001-C90347
28		01010-81020	Bolt	6	C90001-C90347
29		01643-31032	Washer	6	C90001-C90347
30		08057-12012	Clip	2	C90001-C90347
31		01010-81225	Bolt	1	C90001-C90347
32		01643-31232	Washer	1	C90001-C90347
33		195-33-11220	Spacer	2	C90001-C90347
34		01010-81250	Bolt	2	C90001-C90347
35		01643-31232	Washer	2	C90001-C90347
36		(207-06-77112)	Wiring Harness		-

FIG. E0200-001003 Electric Wiring Harness (Wiring Harness, 2/3, #C90001-C90347)

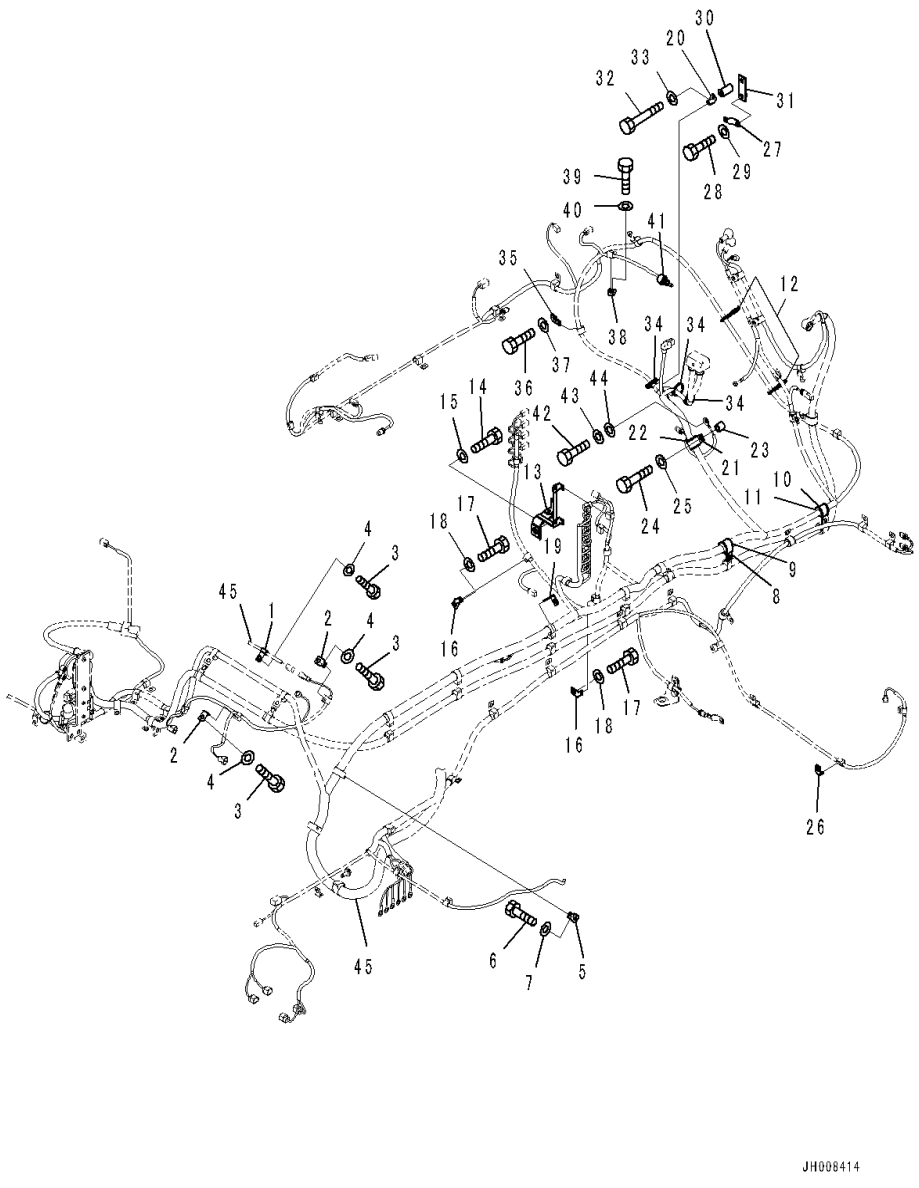

Index	Code	Part Number	Description	Qty	Serial Number
1		04434-51012	Clip	1	C90001-C90347
2		08057-12012	Clip	2	C90001-C90347
3		01010-81225	Bolt	3	C90001-C90347
4		01643-31232	Washer	3	C90001-C90347
5		08057-12012	Clip	1	C90001-C90347
6		01010-81225	Bolt	1	C90001-C90347
7		01643-31232	Washer	1	C90001-C90347
8		04434-53412	Clip	1	C90001-C90347
9		07095-20625	Cushion	1	C90001-C90347
10		04434-52712	Clip	1	C90001-C90347
11		07095-20418	Cushion	1	C90001-C90347
12		134-03-61410	Band	2	C90001-C90347
13		207-06-41220	Bracket	1	C90001-C90347
14		01010-81640	Bolt	1	C90001-C90347
15		01643-31645	Washer	1	C90001-C90347
16		08057-12012	Clip	2	C90001-C90347
17		01010-81225	Bolt	2	C90001-C90347
18		01643-31232	Washer	2	C90001-C90347
19		08057-14012	Clip	1	C90001-C90347
20		08057-14010	Clip	1	C90001-C90347
21		04434-53212	Clip	1	C90001-C90347
22		198-06-53610	Cushion	1	C90001-C90347
23		195-33-11220	Spacer	1	C90001-C90347
24		01010-81245	Bolt	1	C90001-C90347
25		01643-31232	Washer	1	C90001-C90347
26		08057-12012	Clip	1	C90001-C90347
27		08193-20012	Clip	1	C90001-C90347
28		01010-81220	Bolt	1	C90001-C90347
29		01643-31232	Washer	1	C90001-C90347
30		2A5-01-11610	Spacer	1	C90001-C90347
31		198-61-44110	Plate	1	C90001-C90347
32		01010-81055	Bolt	1	C90001-C90347
33		01643-31032	Washer	1	C90001-C90347
34		08034-20519	Band	3	C90001-C90347
35		08057-00810	Clip	1	C90001-C90347
36		01010-81020	Bolt	1	C90001-C90347
37		01643-31032	Washer	1	C90001-C90347
38		08057-12012	Clip	1	C90001-C90347
39		01010-81220	Bolt	1	C90001-C90347
40		01643-31232	Washer	1	C90001-C90347

FIG. E0200-001003 Electric Wiring Harness (Wiring Harness, 2/3, #C90001-C90347)

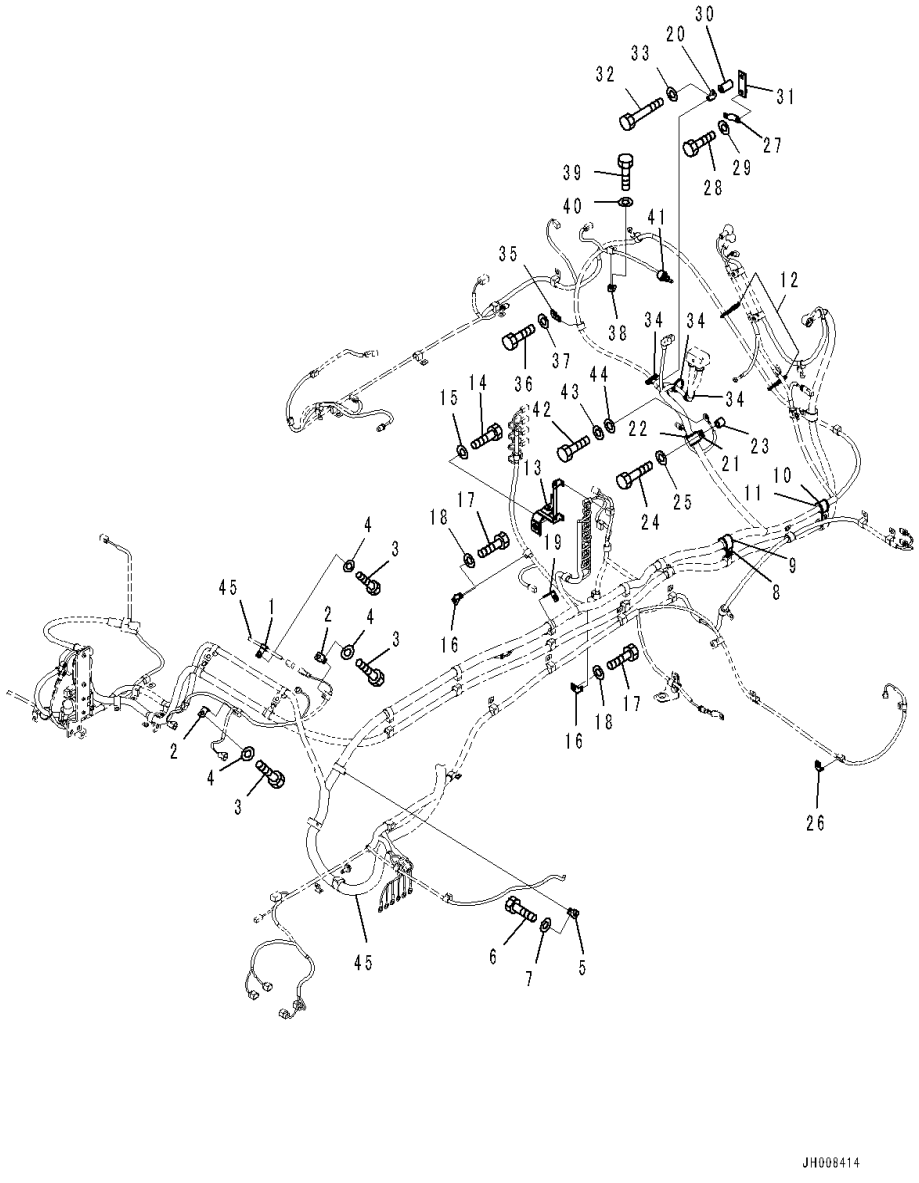

Index	Code	Part Number	Description	Qty	Serial Number
41		08038-02027	Cap, Terminal	1	C90001-C90347
42		01010-81220	Bolt	1	C90001-C90347
43		01643-31232	Washer	1	C90001-C90347
44		01643-31232	Washer	1	C90001-C90347
45		(207-06-77112)	Wiring Harness		-

FIG. E0200-001004 Electric Wiring Harness (Wiring Harness, 3/3, #C90001-C90347)

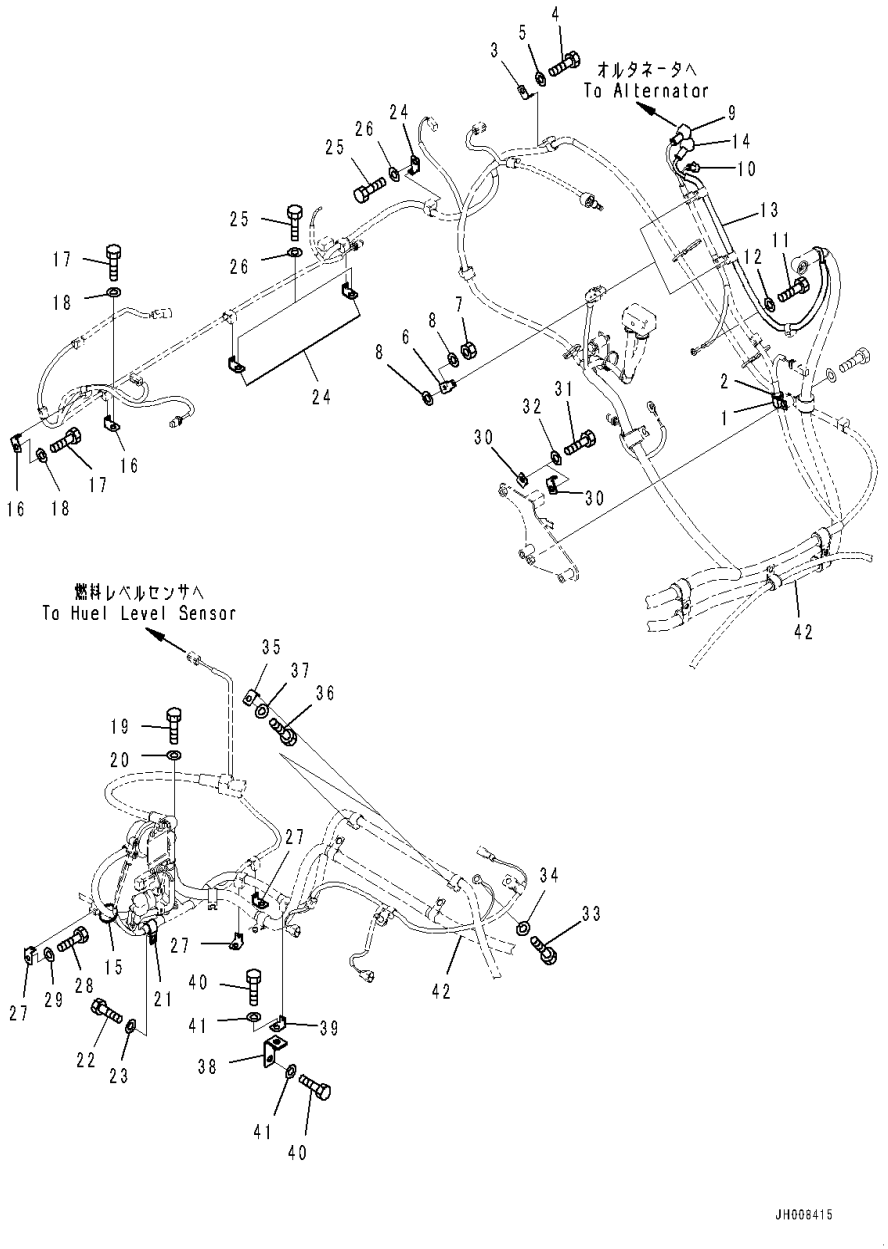

Index	Code	Part Number	Description	Qty	Serial Number
1		04434-51912	Clip	1	C90001-C90347
2		198-06-53540	Cushion	1	C90001-C90347
3		08057-12012	Clip	1	C90001-C90347
4		01010-81220	Bolt	1	C90001-C90347
5		01643-31232	Washer	1	C90001-C90347
6		08057-22008	Clip	2	C90001-C90347
7		01580-10605	Nut	2	C90001-C90347
8		01643-30623	Washer	4	C90001-C90347
9		08038-02027	Cap, Terminal	1	C90001-C90347
10		08038-00519	Cap, Terminal	1	C90001-C90347
11		01010-80816	Bolt	1	C90001-C90347
12		01643-30823	Washer	1	C90001-C90347
13		207-06-75150	Cable	1	C90001-C90347
14		08038-02027	Cap, Terminal	1	C90001-C90347
15		08034-20519	Band	1	C90001-C90347
16		08057-12012	Clip	2	C90001-C90347
17		01010-81225	Bolt	2	C90001-C90347
18		01643-31232	Washer	2	C90001-C90347
19		01010-81025	Bolt	1	C90001-C90347
20		01643-31032	Washer	1	C90001-C90347
21		04434-51912	Clip	1	C90001-C90347
22		01010-81225	Bolt	1	C90001-C90347
23		01643-31232	Washer	1	C90001-C90347
24		08057-12012	Clip	3	C90001-C90347
25		01010-81225	Bolt	3	C90001-C90347
26		01643-31232	Washer	3	C90001-C90347
27		08057-12012	Clip	3	C90001-C90347
28		01010-81225	Bolt	3	C90001-C90347
29		01643-31232	Washer	3	C90001-C90347
30		08057-12012	Clip	2	C90001-C90347
31		01010-81225	Bolt	2	C90001-C90347
32		01643-31232	Washer	2	C90001-C90347
33		01010-81225	Bolt	1	C90001-C90347
34		01643-31232	Washer	1	C90001-C90347
35		08057-12012	Clip	2	C90001-C90347
36		01010-81225	Bolt	2	C90001-C90347
37		01643-31232	Washer	2	C90001-C90347
38		207-979-6180	Bracket	1	C90001-C90347
39		08057-12012	Clip	1	C90001-C90347
40		01010-81225	Bolt	2	C90001-C90347

FIG. E0200-001004 Electric Wiring Harness (Wiring Harness, 3/3, #C90001-C90347)

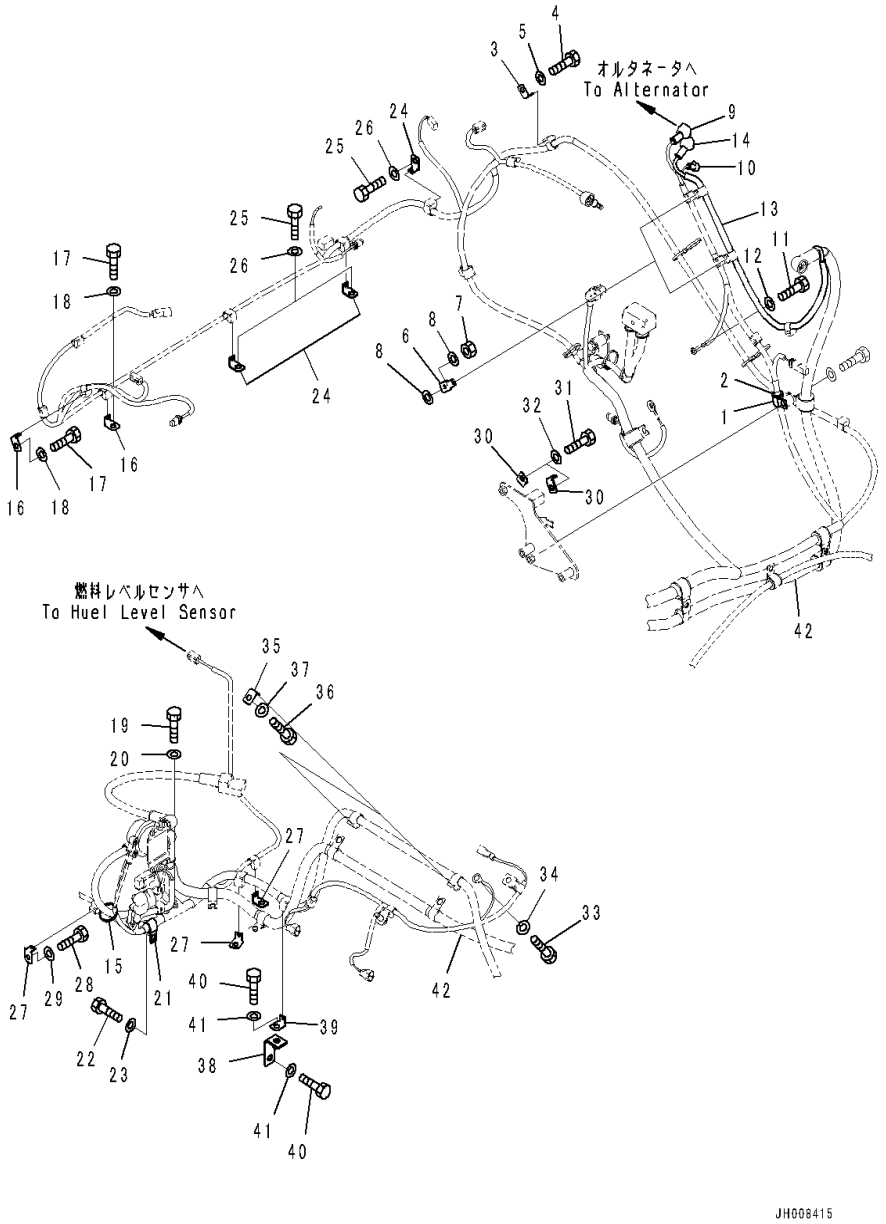

Index	Code	Part Number	Description	Qty	Serial Number
41		01643-31232	Washer	2	C90001-C90347
42		(207-06-77112)	Wiring Harness		-

FIG. E0200-001005 Electric Wiring Harness (Working Lamp, #C90001-C90347)

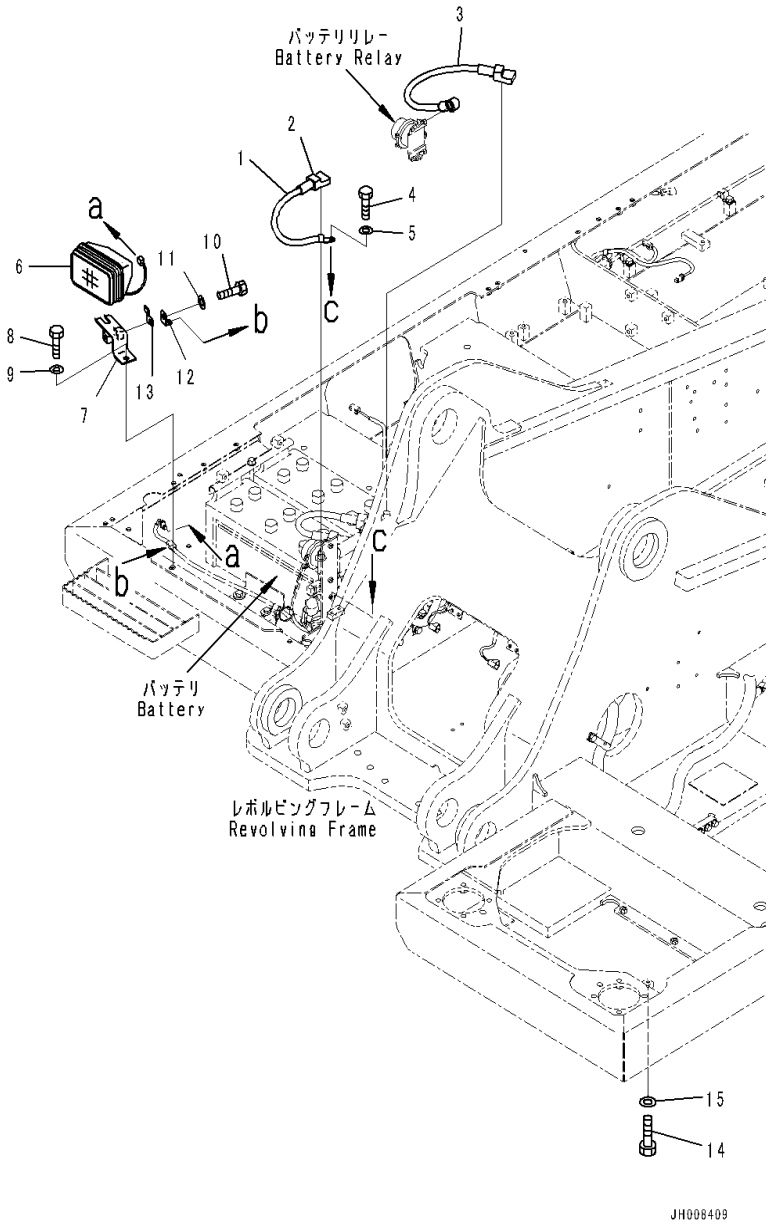

Index	Code	Part Number	Description	Qty	Serial Number
1		08028-44040	Cable, Ground	1	C90001-C90347
2		08038-22511	Cap	1	C90001-C90347
3		08038-42511	Cap	1	C90001-C90347
4		01010-81025	Bolt	1	C90001-C90347
5		01643-31032	Washer	1	C90001-C90347
6		20Y-06-43230	Working Lamp Assembly	1	C90001-C90347
		421-06-23330	• Bulb, 70watt	1	C90001-C90347
7		20Y-06-31680	Bracket	1	C90001-C90347
8		01010-81230	Bolt	1	C90001-C90347
9		01643-31232	Washer	1	C90001-C90347
10		01010-81220	Bolt	1	C90001-C90347
11		01643-31232	Washer	1	C90001-C90347
12		08057-12012	Clip	1	C90001-C90347
13		08193-20012	Clip	1	C90001-C90347
14		01010-81016	Bolt	1	C90001-C90347
15		01643-31032	Washer	1	C90001-C90347

FIG. E0200-002001 Electric Wiring Harness (With Large Fuel Filter) (Starting Wiring Harness Clip, #C90348-)

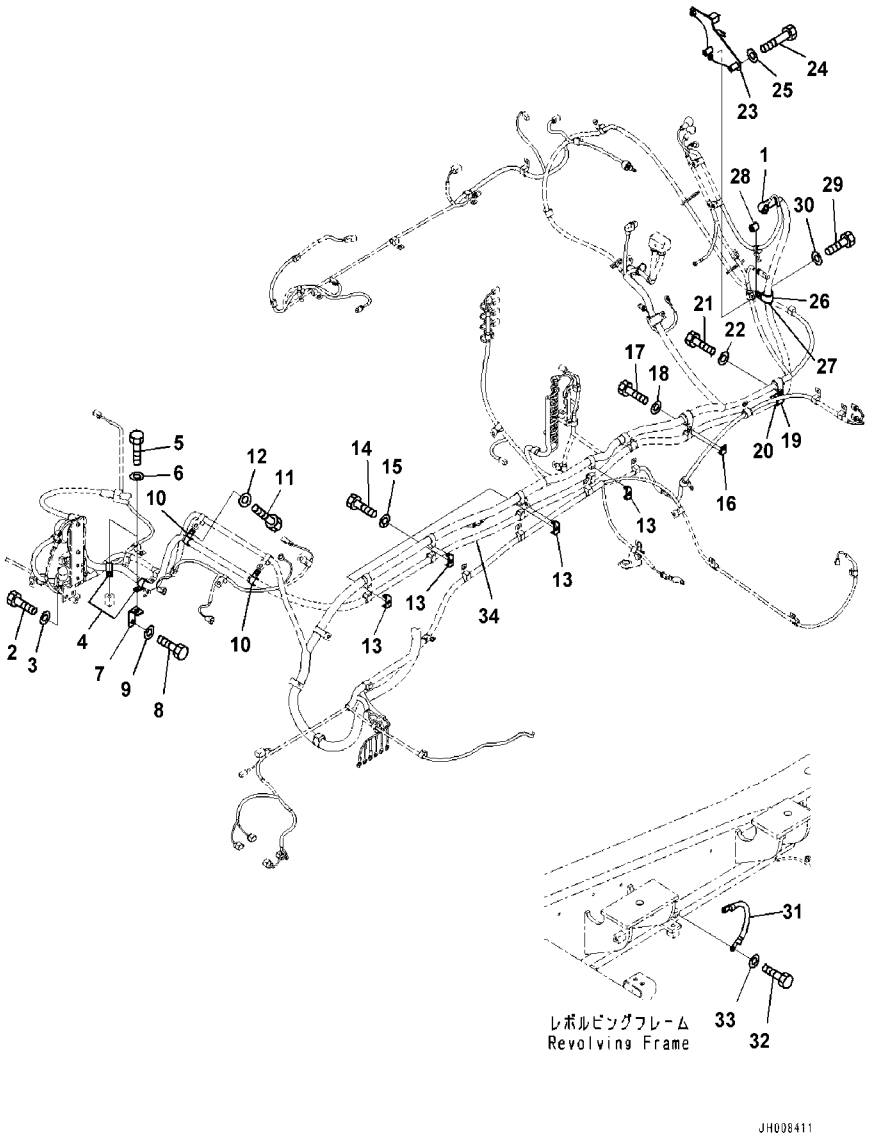

Index	Code	Part Number	Description	Qty	Serial Number
1		08038-10035	Cap	1	C90348-
2		01010-81225	Bolt	2	C90348-
3		01643-31232	Washer	2	C90348-
4		04434-52112	Clip	2	C90348-
5		01010-81225	Bolt	2	C90348-
6		01643-31232	Washer	2	C90348-
7		207-979-6180	Bracket	1	C90348-
8		01010-81225	Bolt	1	C90348-
9		01643-31232	Washer	1	C90348-
10		04434-52112	Clip	2	C90348-
11		01010-81220	Bolt	2	C90348-
12		01643-31232	Washer	2	C90348-
13		08057-22012	Clip	4	C90348-
14		01010-81225	Bolt	4	C90348-
15		01643-31232	Washer	4	C90348-
16		08057-12012	Clip	1	C90348-
17		01010-81225	Bolt	1	C90348-
18		01643-31232	Washer	1	C90348-
19		04434-53212	Clip	1	C90348-
20		07095-20523	Cushion	1	C90348-
21		01010-81225	Bolt	1	C90348-
22		01643-31232	Washer	1	C90348-
23		207-06-75190	Bracket	1	C90348-
24		01010-80855	Bolt	2	C90348-
25		01643-30823	Washer	2	C90348-
26		04434-53212	Clip	1	C90348-
27		198-06-53610	Cushion	1	C90348-
28		195-33-11220	Spacer	1	C90348-
29		01010-81250	Bolt	1	C90348-
30		01643-31232	Washer	1	C90348-
31		08028-44035	Cable,Ground	1	C90348-
32		01010-81020	Bolt	2	C90348-
33		01643-31032	Washer	2	C90348-
34		(207-06-77121)	Cable		-

FIG. E0200-002002 Electric Wiring Harness (With Large Fuel Filter) (Wiring Harness Clip, 1/3, #C90348-)

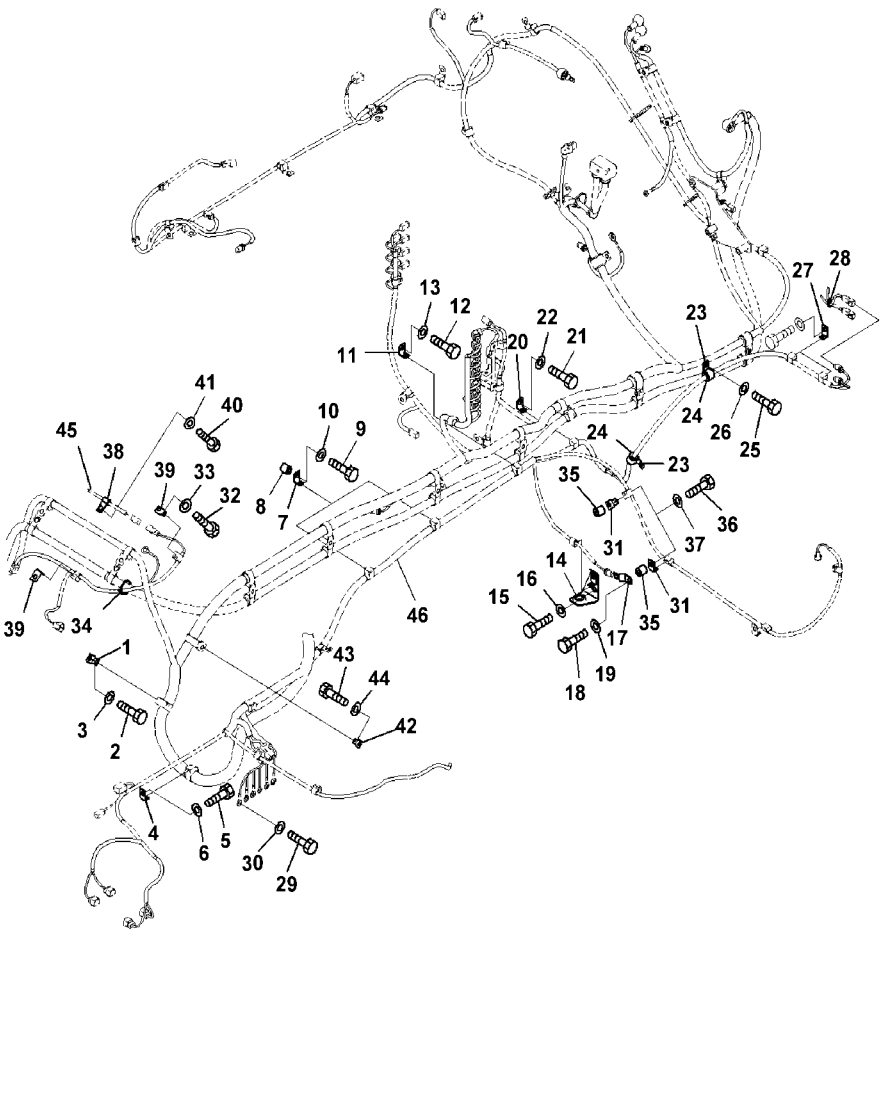

Index	Code	Part Number	Description	Qty	Serial Number
1		08057-12012	Clip	1	C90348-
2		01010-81225	Bolt	1	C90348-
3		01643-31232	Washer	1	C90348-
4		08057-12012	Clip	1	C90348-
5		01010-81225	Bolt	1	C90348-
6		01643-31232	Washer	1	C90348-
7		08057-12012	Clip	2	C90348-
8		195-33-11220	Spacer	2	C90348-
9		01010-81250	Bolt	2	C90348-
10		01643-31232	Washer	2	C90348-
11		08057-12012	Clip	1	C90348-
12		01010-81225	Bolt	1	C90348-
13		01643-31232	Washer	1	C90348-
14		207-60-75180	Bracket	1	C90348-
15		01010-81225	Bolt	1	C90348-
16		01643-31232	Washer	1	C90348-
17		08193-20012	Clip	1	C90348-
18		01010-81225	Bolt	1	C90348-
19		01643-31232	Washer	1	C90348-
20		08057-12012	Clip	1	C90348-
21		01010-81225	Bolt	1	C90348-
22		01643-31232	Washer	1	C90348-
23		04434-52112	Clip	2	C90348-
24		07095-20314	Cushion	2	C90348-
25		01010-81225	Bolt	2	C90348-
26		01643-31232	Washer	2	C90348-
27		08057-12012	Clip	2	C90348-
28		08034-20519	Band	1	C90348-
29		01010-81020	Bolt	6	C90348-
30		01643-31032	Washer	6	C90348-
31		08057-12012	Clip	2	C90348-
32		01010-81225	Bolt	2	C90348-
33		01643-31232	Washer	2	C90348-
34		08034-20519	Band	1	C90348-
35		195-33-11220	Spacer	2	C90348-
36		01010-81250	Bolt	2	C90348-
37		01643-31232	Washer	2	C90348-
38		04434-51012	Clip	1	C90348-
39		08057-12012	Clip	2	C90348-
40		01010-81225	Bolt	1	C90348-

FIG. E0200-002002 Electric Wiring Harness (With Large Fuel Filter) (Wiring Harness Clip, 1/3, #C90348-)

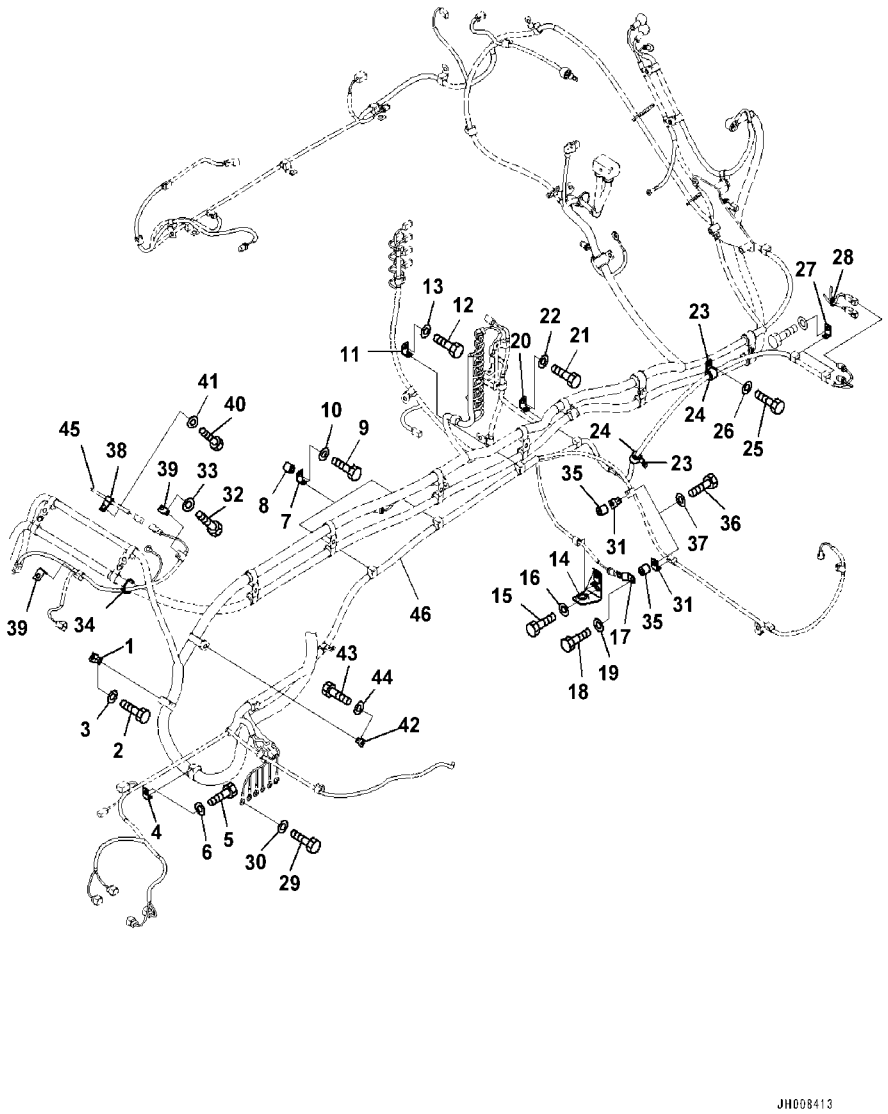

Index	Code	Part Number	Description	Qty	Serial Number
41		01643-31232	Washer	1	C90348-
42		08057-12012	Clip	1	C90348-
43		01010-81225	Bolt	1	C90348-
44		01643-31232	Washer	1	C90348-
45		(207-06-75161)	Wiring Harness		-
46		(207-06-77410)	Wiring Harness		-

FIG. E0200-002003 Electric Wiring Harness (With Large Fuel Filter) (Wiring Harness Clip, 2/3, #C90348-)

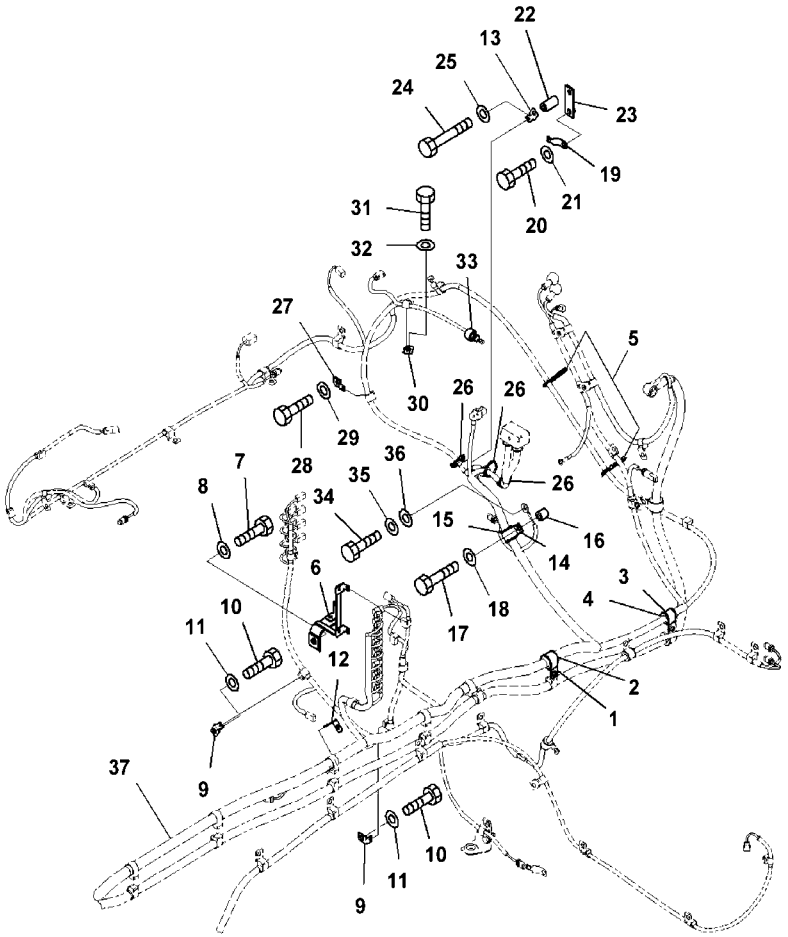

Index	Code	Part Number	Description	Qty	Serial Number
1		04434-53412	Clip	1	C90348-
2		07095-20625	Cushion	1	C90348-
3		04434-52712	Clip	1	C90348-
4		07095-20418	Cushion	1	C90348-
5		134-03-61410	Band	2	C90348-
6		207-06-41220	Bracket	1	C90348-
7		01010-81640	Bolt	1	C90348-
8		01643-31645	Washer	1	C90348-
9		08057-12012	Clip	2	C90348-
10		01010-81225	Bolt	2	C90348-
11		01643-31232	Washer	2	C90348-
12		08057-14012	Clip	1	C90348-
13		08057-14010	Clip	1	C90348-
14		04434-53212	Clip	1	C90348-
15		198-06-53610	Cushion	1	C90348-
16		195-33-11220	Spacer	1	C90348-
17		01010-81245	Bolt	1	C90348-
18		01643-31232	Washer	1	C90348-
19		08193-20012	Clip	1	C90348-
20		01010-81220	Bolt	1	C90348-
21		01643-31232	Washer	1	C90348-
22		2A5-01-11610	Spacer	1	C90348-
23		198-61-44110	Plate	1	C90348-
24		01010-81055	Bolt	1	C90348-
25		01643-31032	Washer	1	C90348-
26		08034-20519	Band	3	C90348-
27		08057-00810	Clip	1	C90348-
28		01010-81020	Bolt	1	C90348-
29		01643-31032	Washer	1	C90348-
30		08057-12012	Clip	1	C90348-
31		01010-81220	Bolt	1	C90348-
32		01643-31232	Washer	1	C90348-
33		08038-02027	Cap	1	C90348-
34		01010-81220	Bolt	1	C90348-
35		01643-31232	Washer	1	C90348-
36		01643-31232	Washer	1	C90348-
37		(207-06-77410)	Wiring Harness		-

FIG. E0200-002004 Electric Wiring Harness (With Large Fuel Filter) (Wiring Harness Clip, 3/3, #C90348-)

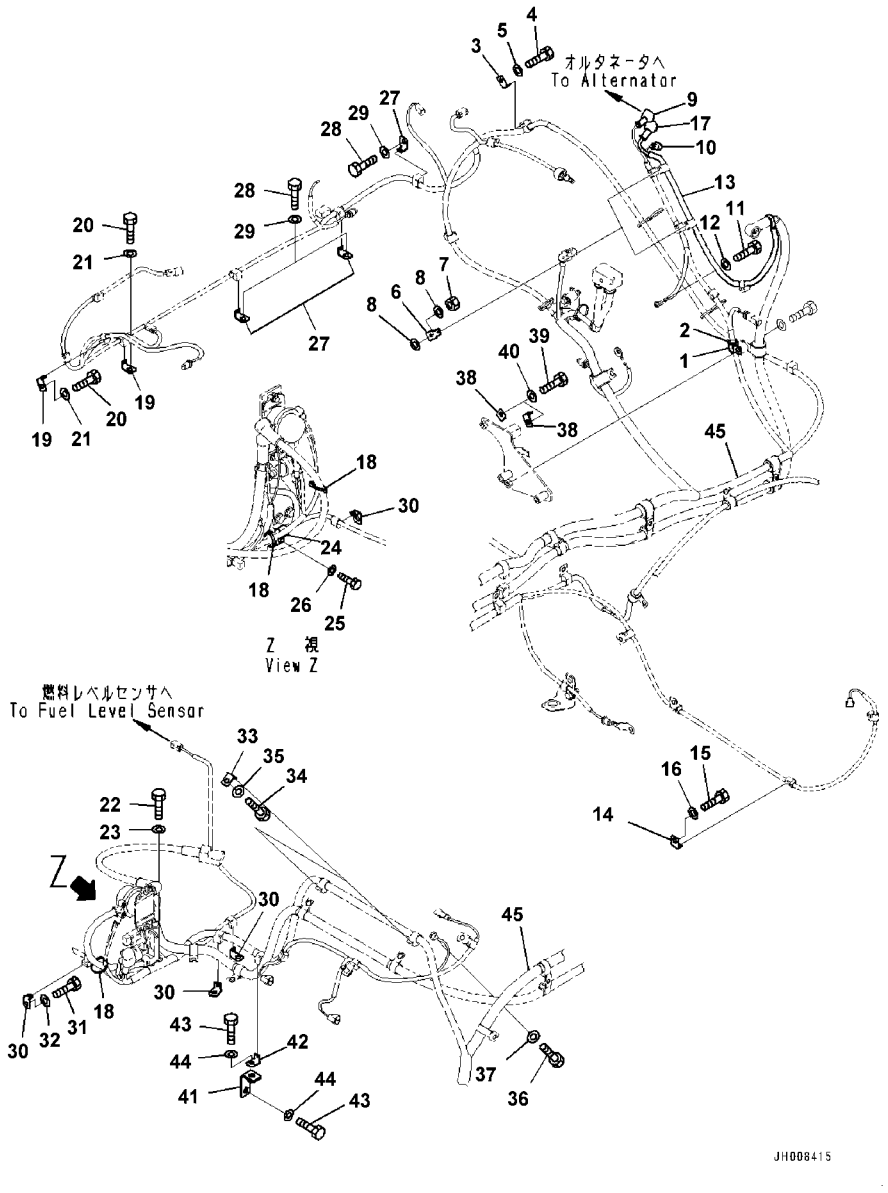

Index	Code	Part Number	Description	Qty	Serial Number
1		04434-51912	Clip	1	C90348-
2		198-06-53540	Cushion	1	C90348-
3		08057-12012	Clip	1	C90348-
4		01010-81220	Bolt	1	C90348-
5		01643-31232	Washer	1	C90348-
6		08057-22008	Clip	2	C90348-
7		01580-10605	Nut	2	C90348-
8		01643-30623	Washer	4	C90348-
9		08038-02027	Cap	1	C90348-
10		08038-00519	Cap,Terminal	1	C90348-
11		01010-80816	Bolt	1	C90348-
12		01643-30823	Washer	1	C90348-
13		207-06-75150	Cable	1	C90348-
14		08057-12012	Clip	1	C90348-
15		01010-81225	Bolt	1	C90348-
16		01643-31232	Washer	1	C90348-
17		08038-02027	Cap	1	C90348-
18		08034-20519	Band	2	C90348-
19		08057-12012	Clip	2	C90348-
20		01010-81225	Bolt	2	C90348-
21		01643-31232	Washer	2	C90348-
22		01010-81025	Bolt	1	C90348-
23		01643-31032	Washer	1	C90348-
24		04434-51912	Clip	1	C90348-
25		01010-81225	Bolt	1	C90348-
26		01643-31232	Washer	1	C90348-
27		08057-12012	Clip	3	C90348-
28		01010-81225	Bolt	3	C90348-
29		01643-31232	Washer	3	C90348-
30		08057-12012	Clip	3	C90348-
31		01010-81225	Bolt	3	C90348-
32		01643-31232	Washer	3	C90348-
33		08057-12012	Clip	2	C90348-
34		01010-81225	Bolt	2	C90348-
35		01643-31232	Washer	2	C90348-
36		01010-81225	Bolt	1	C90348-
37		01643-31232	Washer	1	C90348-
38		08057-12012	Clip	2	C90348-
39		01010-81225	Bolt	2	C90348-
40		01643-31232	Washer	2	C90348-

FIG. E0200-002004 Electric Wiring Harness (With Large Fuel Filter) (Wiring Harness Clip, 3/3, #C90348-)

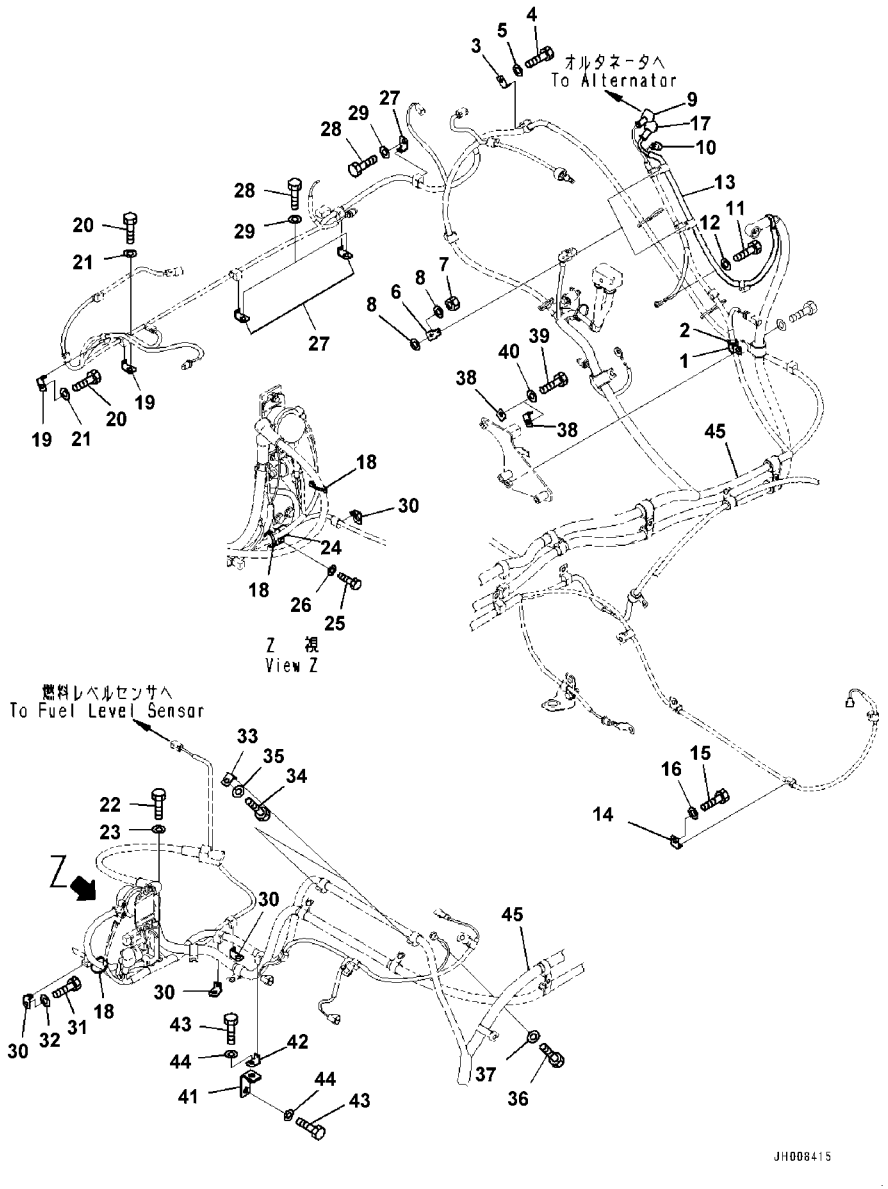

Index	Code	Part Number	Description	Qty	Serial Number
41		207-979-6180	Bracket	1	C90348-
42		08057-12012	Clip	1	C90348-
43		01010-81225	Bolt	2	C90348-
44		01643-31232	Washer	2	C90348-
45		(207-06-77410)	Wiring Harness		-

FIG. E0200-002005 Electric Wiring Harness (With Large Fuel Filter) (Working Lamp, #C90348-)

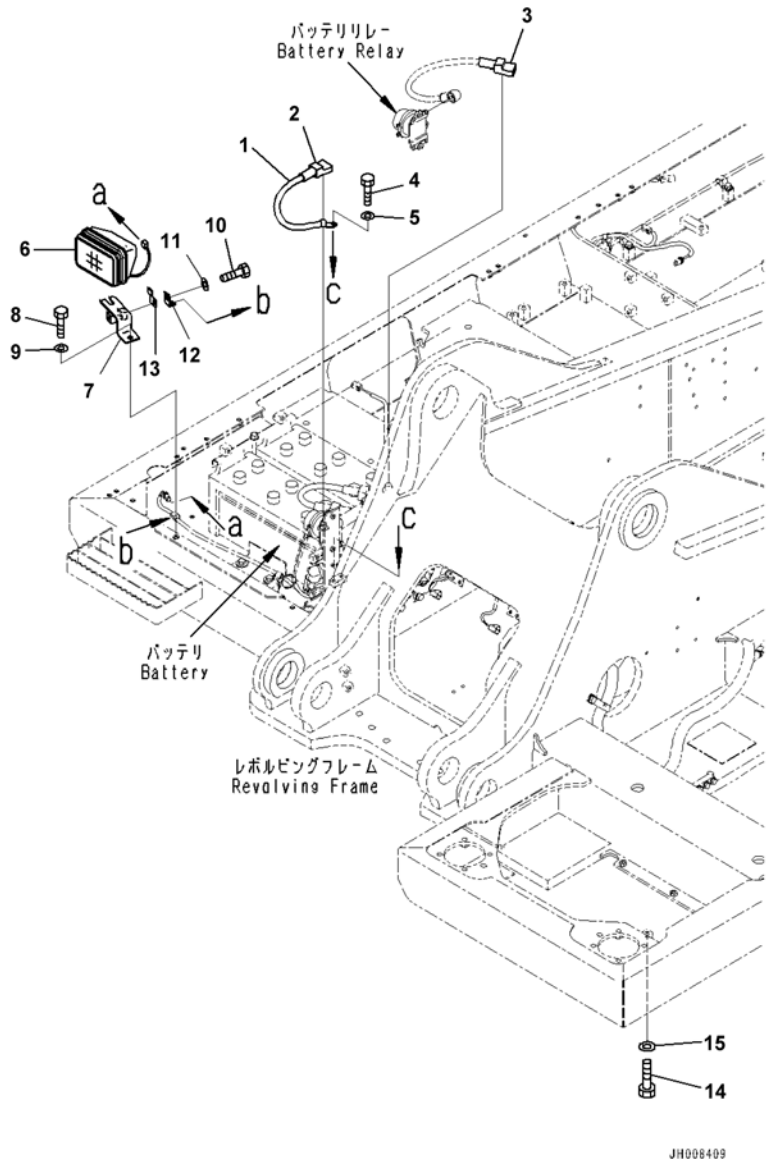

Index	Code	Part Number	Description	Qty	Serial Number
1		08028-44040	Cable,Ground	1	C90348-
2		08038-22511	Cap	1	C90348-
3		08038-42511	Cap	1	C90348-
4		01010-81025	Bolt	1	C90348-
5		01643-31032	Washer	1	C90348-
6		20Y-06-43230	Working Lamp Assembly	1	C90348-
		421-06-23330	• Bulb,70watt	1	C90348-
7		20Y-06-31680	Bracket	1	C90348-
8		01010-81230	Bolt	1	C90348-
9		01643-31232	Washer	1	C90348-
10		01010-81220	Bolt	1	C90348-
11		01643-31232	Washer	1	C90348-
12		08057-12012	Clip	1	C90348-
13		08193-20012	Clip	1	C90348-
14		01010-81016	Bolt	1	C90348-
15		01643-31032	Washer	1	C90348-

FIG. E0200-002006 Electric Wiring Harness (With Large Fuel Filter) (Resistor, #C90348-)

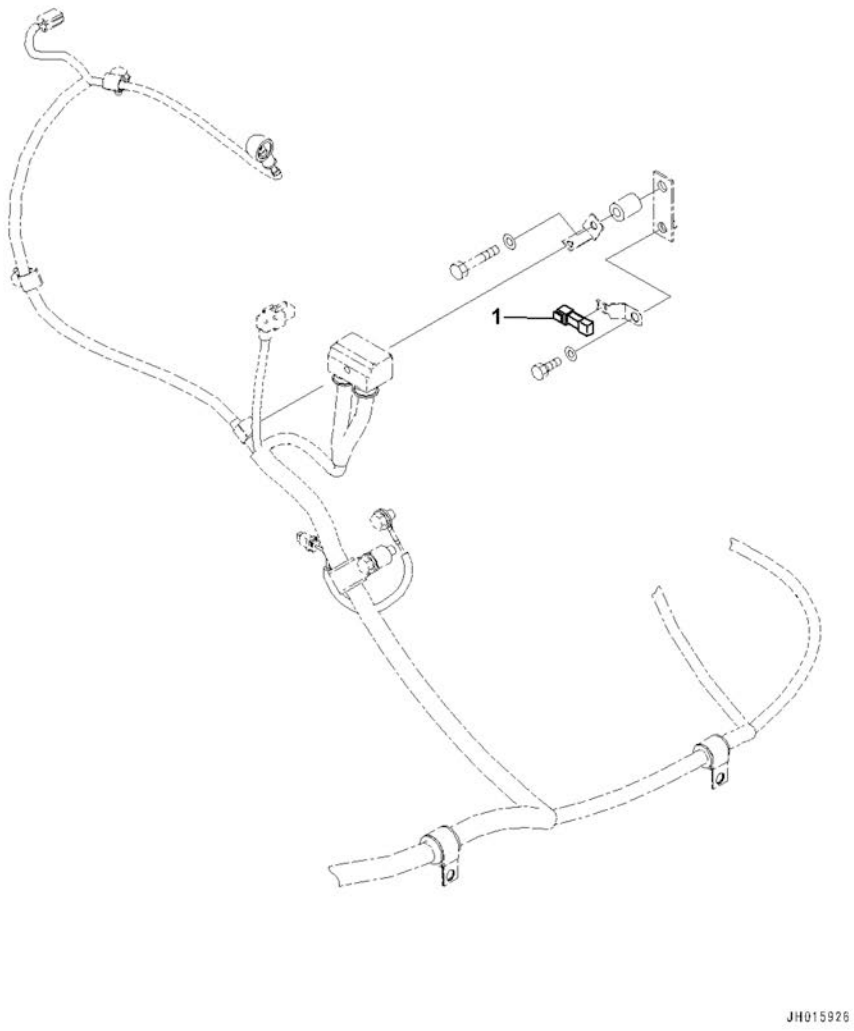

Index	Code	Part Number	Description	Qty	Serial Number
1		20Y-06-43280	Resistor	1	C90348-

FIG. E0200-003001 Electric Wiring Harness (Starting Wiring Harness Clip)

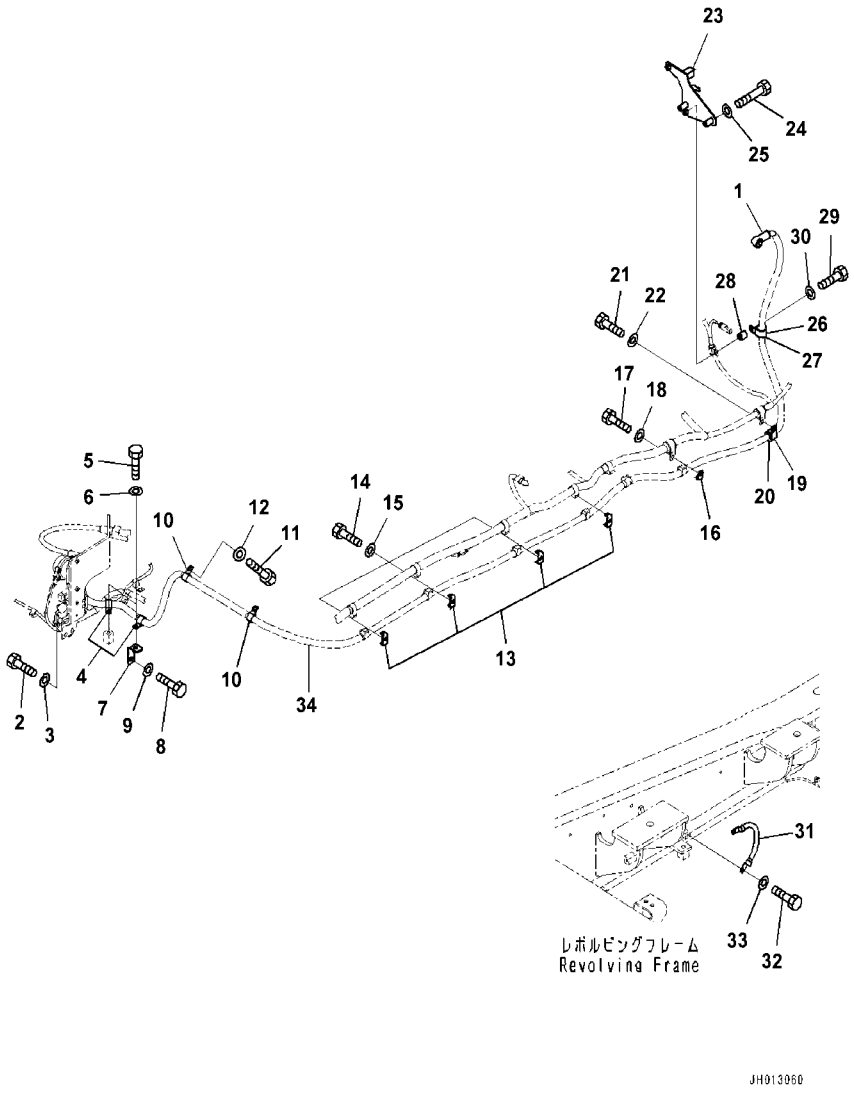

Index	Code	Part Number	Description	Qty	Serial Number
1		08038-10035	Cap	1	C90001-
2		01010-81225	Bolt	2	C90001-
3		01643-31232	Washer	2	C90001-
4		04434-52112	Clip	2	C90001-
5		01010-81225	Bolt	2	C90001-
6		01643-31232	Washer	2	C90001-
7		207-979-6180	Bracket	1	C90001-
8		01010-81225	Bolt	1	C90001-
9		01643-31232	Washer	1	C90001-
10		04434-52112	Clip	2	C90001-
11		01010-81220	Bolt	2	C90001-
12		01643-31232	Washer	2	C90001-
13		08057-22012	Clip	4	C90001-
14		01010-81225	Bolt	4	C90001-
15		01643-31232	Washer	4	C90001-
16		08057-12012	Clip	1	C90001-
17		01010-81225	Bolt	1	C90001-
18		01643-31232	Washer	1	C90001-
19		04434-53212	Clip	1	C90001-
20		07095-20523	Cushion	1	C90001-
21		01010-81225	Bolt	1	C90001-
22		01643-31232	Washer	1	C90001-
23		207-06-75190	Bracket	1	C90001-
24		01010-80855	Bolt	2	C90001-
25		01643-30823	Washer	2	C90001-
26		04434-53212	Clip	1	C90001-
27		198-06-53610	Cushion	1	C90001-
28		195-33-11220	Spacer	1	C90001-
29		01010-81250	Bolt	1	C90001-
30		01643-31232	Washer	1	C90001-
31		08028-44035	Cable,Ground	1	C90001-
32		01010-81020	Bolt	2	C90001-
33		01643-31032	Washer	2	C90001-
34		(207-06-77121)	Cable		-

FIG. E0200-003002 Electric Wiring Harness (Wiring Harness Clip, 1/3)

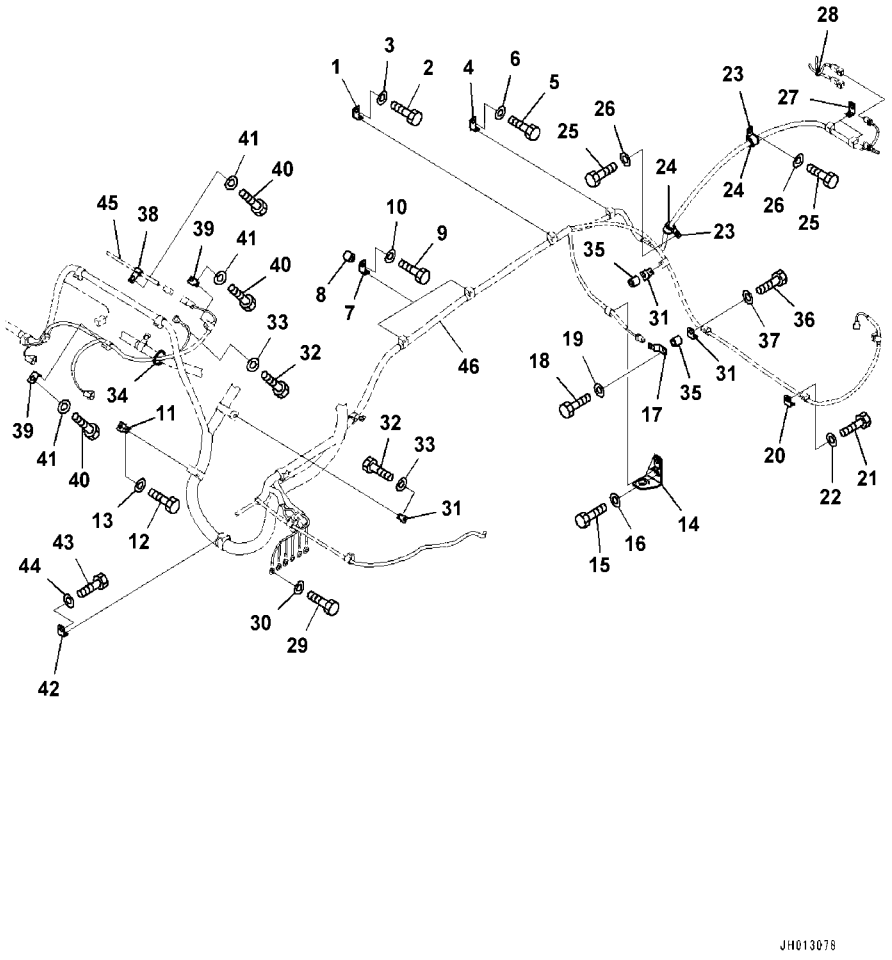

Index	Code	Part Number	Description	Qty	Serial Number
1		08057-12012	Clip	1	C90001-
2		01010-81225	Bolt	1	C90001-
3		01643-31232	Washer	1	C90001-
4		08057-12012	Clip	1	C90001-
5		01010-81225	Bolt	1	C90001-
6		01643-31232	Washer	1	C90001-
7		08057-12012	Clip	2	C90001-
8		195-33-11220	Spacer	2	C90001-
9		01010-81250	Bolt	2	C90001-
10		01643-31232	Washer	2	C90001-
11		08057-12012	Clip	1	C90001-
12		01010-81225	Bolt	1	C90001-
13		01643-31232	Washer	1	C90001-
14		207-60-75180	Bracket	1	C90001-
15		01010-81225	Bolt	1	C90001-
16		01643-31232	Washer	1	C90001-
17		08193-20012	Clip	1	C90001-
18		01010-81225	Bolt	1	C90001-
19		01643-31232	Washer	1	C90001-
20		08057-12012	Clip	1	C90001-
21		01010-81225	Bolt	1	C90001-
22		01643-31232	Washer	1	C90001-
23		04434-52112	Clip	2	C90001-
24		07095-20314	Cushion	2	C90001-
25		01010-81225	Bolt	2	C90001-
26		01643-31232	Washer	2	C90001-
27		08057-12012	Clip	2	C90001-
28		08034-20519	Band	1	C90001-
29		01010-81020	Bolt	6	C90001-
30		01643-31032	Washer	6	C90001-
31		08057-12012	Clip	3	C90001-
32		01010-81225	Bolt	2	C90001-
33		01643-31232	Washer	2	C90001-
34		08034-20519	Band	1	C90001-
35		195-33-11220	Spacer	2	C90001-
36		01010-81250	Bolt	2	C90001-
37		01643-31232	Washer	2	C90001-
38		04434-51012	Clip	1	C90001-
39		08057-12012	Clip	2	C90001-
40		01010-81225	Bolt	3	C90001-

FIG. E0200-003002 Electric Wiring Harness (Wiring Harness Clip, 1/3)

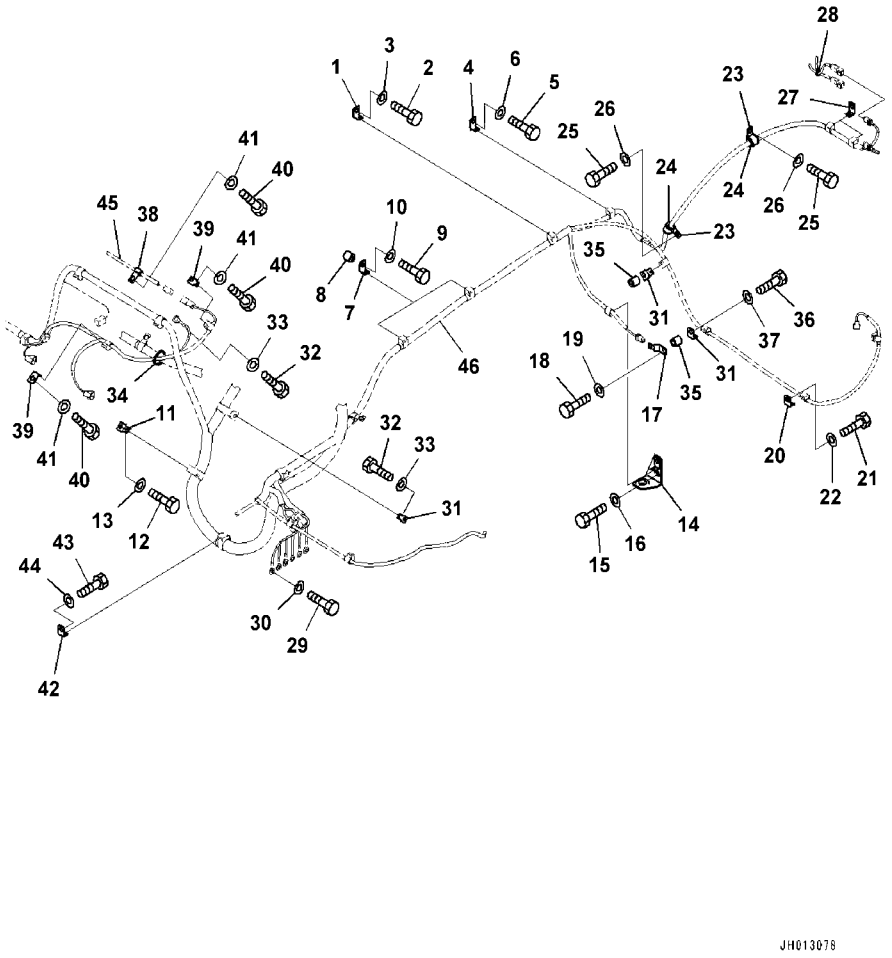

Index	Code	Part Number	Description	Qty	Serial Number
41		01643-31232	Washer	3	C90001-
42		08057-12012	Clip	1	C90001-
43		01010-81225	Bolt	1	C90001-
44		01643-31232	Washer	1	C90001-
45		(207-06-75161)	Wiring Harness		-
46		(207-06-77221)	Wiring Harness		-
		(207-06-77112)	Wiring Harness		-

FIG. E0200-003003 Electric Wiring Harness (Wiring Harness Clip, 2/3)

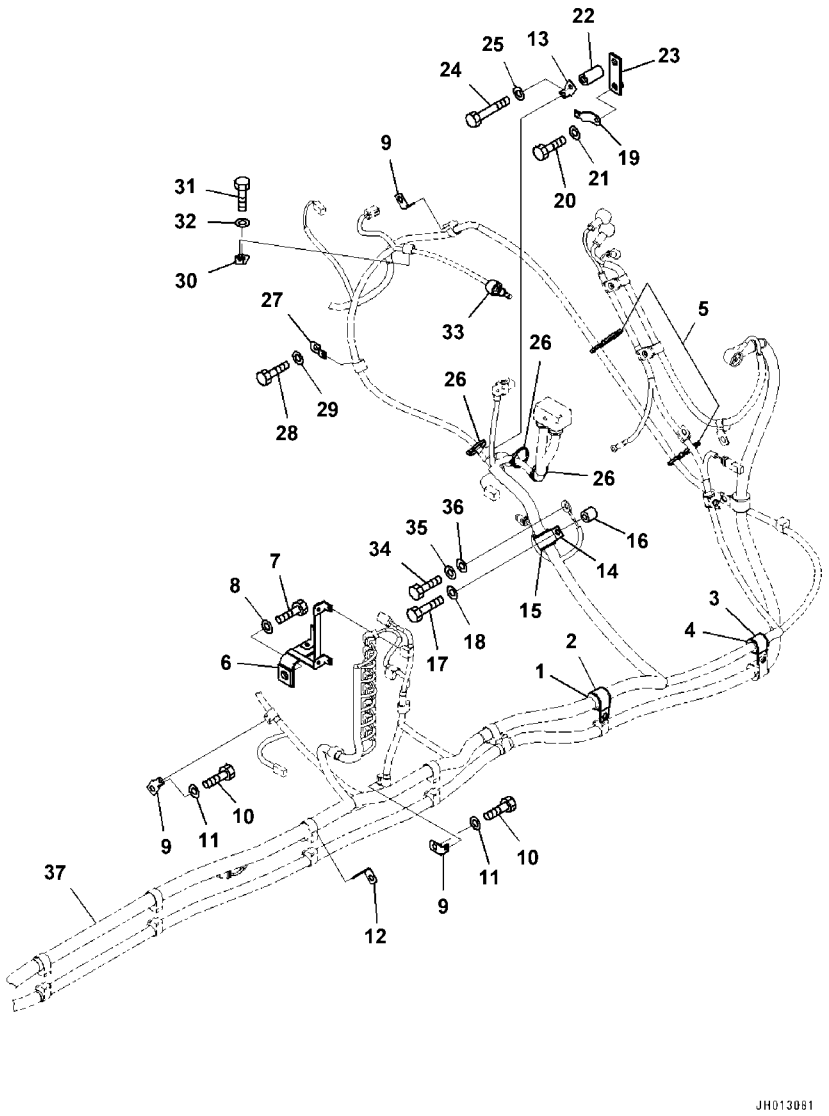

Index	Code	Part Number	Description	Qty	Serial Number
1		04434-53412	Clip	1	C90001-
2		07095-20625	Cushion	1	C90001-
3		04434-52712	Clip	1	C90001-
4		07095-20418	Cushion	1	C90001-
5		134-03-61410	Band	2	C90001-
6		207-06-41220	Bracket	1	C90001-
7		01010-81640	Bolt	1	C90001-
8		01643-31645	Washer	1	C90001-
9		08057-12012	Clip	3	C90001-
10		01010-81225	Bolt	2	C90001-
11		01643-31232	Washer	2	C90001-
12		08057-14012	Clip	1	C90001-
13		08057-14010	Clip	1	C90001-
14		04434-53212	Clip	1	C90001-
15		198-06-53610	Cushion	1	C90001-
16		195-33-11220	Spacer	1	C90001-
17		01010-81245	Bolt	1	C90001-
18		01643-31232	Washer	1	C90001-
19		08193-20012	Clip	1	C90001-
20		01010-81220	Bolt	1	C90001-
21		01643-31232	Washer	1	C90001-
22		2A5-01-11610	Spacer	1	C90001-
23		198-61-44110	Plate	1	C90001-
24		01010-81055	Bolt	1	C90001-
25		01643-31032	Washer	1	C90001-
26		08034-20519	Band	3	C90001-
27		08057-00810	Clip	1	C90001-
28		01010-81020	Bolt	1	C90001-
29		01643-31032	Washer	1	C90001-
30		08057-12012	Clip	1	C90001-
31		01010-81220	Bolt	1	C90001-
32		01643-31232	Washer	1	C90001-
33		08038-02027	Cap	1	C90001-
34		01010-81220	Bolt	1	C90001-
35		01643-31232	Washer	1	C90001-
36		01643-31232	Washer	1	C90001-
37		(207-06-77221)	Wiring Harness		-
		(207-06-77112)	Wiring Harness		-

FIG. E0200-003004 Electric Wiring Harness (Wiring Harness Clip, 3/3)

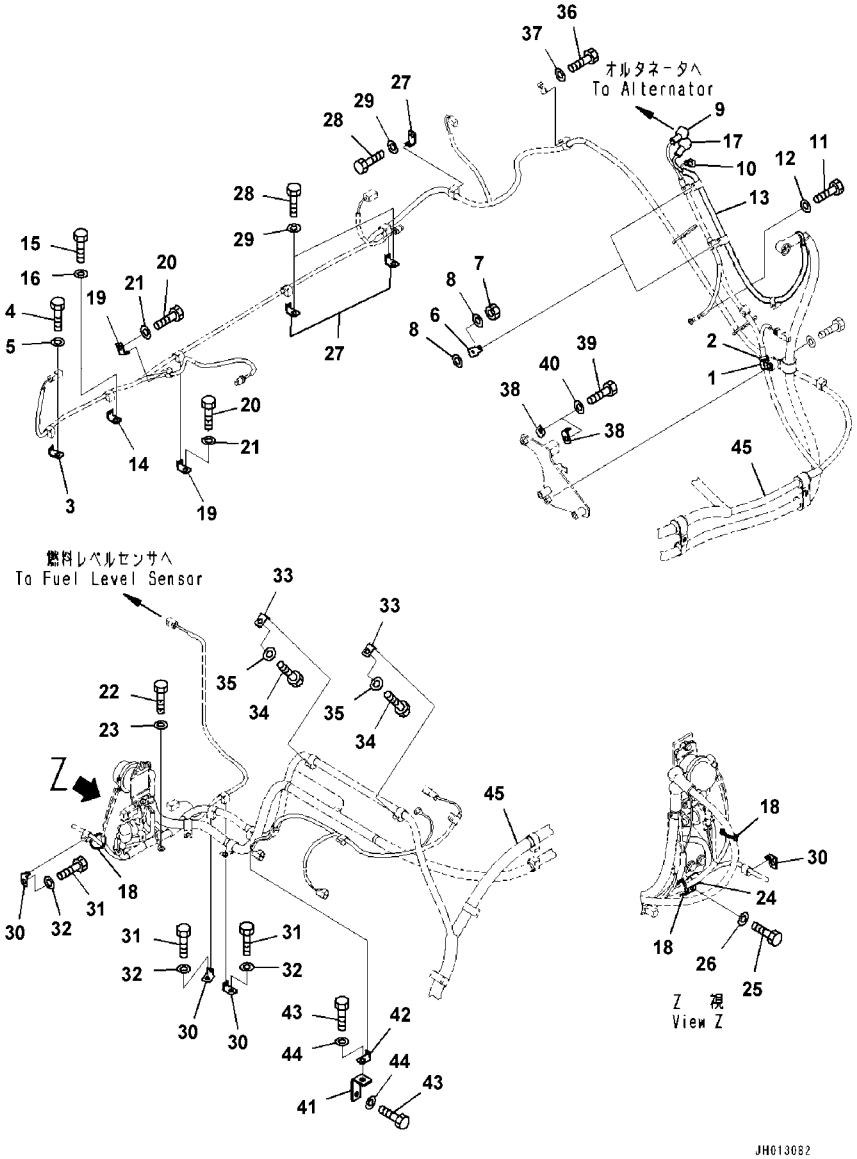

Index	Code	Part Number	Description	Qty	Serial Number
1		04434-51912	Clip	1	C90001-
2		198-06-53540	Cushion	1	C90001-
3		08057-12012	Clip	1	C90001-
4		01010-81220	Bolt	1	C90001-
5		01643-31232	Washer	1	C90001-
6		08057-22008	Clip	2	C90001-
7		01580-10605	Nut	2	C90001-
8		01643-30623	Washer	4	C90001-
9		08038-02027	Cap	1	C90001-
10		08038-00519	Cap,Terminal	1	C90001-
11		01010-80816	Bolt	1	C90001-
12		01643-30823	Washer	1	C90001-
13		207-06-75150	Cable	1	C90001-
14		08057-12012	Clip	1	C90001-
15		01010-81225	Bolt	1	C90001-
16		01643-31232	Washer	1	C90001-
17		08038-02027	Cap	1	C90001-
18		08034-20519	Band	2	C90001-
19		08057-12012	Clip	2	C90001-
20		01010-81225	Bolt	2	C90001-
21		01643-31232	Washer	2	C90001-
22		01010-81025	Bolt	1	C90001-
23		01643-31032	Washer	1	C90001-
24		04434-51912	Clip	1	C90001-
25		01010-81225	Bolt	1	C90001-
26		01643-31232	Washer	1	C90001-
27		08057-12012	Clip	3	C90001-
28		01010-81225	Bolt	3	C90001-
29		01643-31232	Washer	3	C90001-
30		08057-12012	Clip	3	C90001-
31		01010-81225	Bolt	3	C90001-
32		01643-31232	Washer	3	C90001-
33		08057-12012	Clip	2	C90001-
34		01010-81225	Bolt	2	C90001-
35		01643-31232	Washer	2	C90001-
36		01010-81225	Bolt	1	C90001-
37		01643-31232	Washer	1	C90001-
38		08057-12012	Clip	2	C90001-
39		01010-81225	Bolt	2	C90001-
40		01643-31232	Washer	2	C90001-

FIG. E0200-003004 Electric Wiring Harness (Wiring Harness Clip, 3/3)

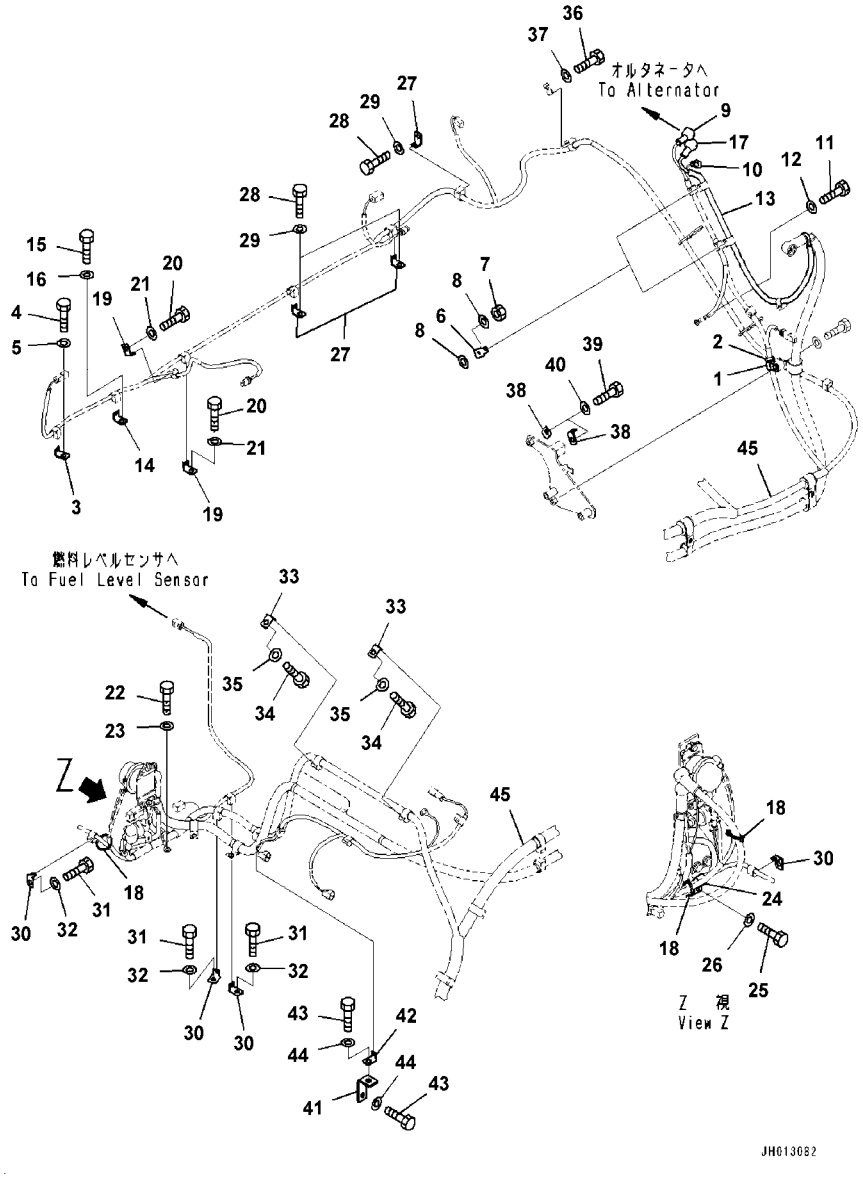

Index	Code	Part Number	Description	Qty	Serial Number
41		207-979-6180	Bracket	1	C90001-
42		08057-12012	Clip	1	C90001-
43		01010-81225	Bolt	2	C90001-
44		01643-31232	Washer	2	C90001-
45		(207-06-77221)	Wiring Harness		-
		(207-06-77112)	Wiring Harness		-

FIG. E0200-003005 Electric Wiring Harness (Working Lamp)

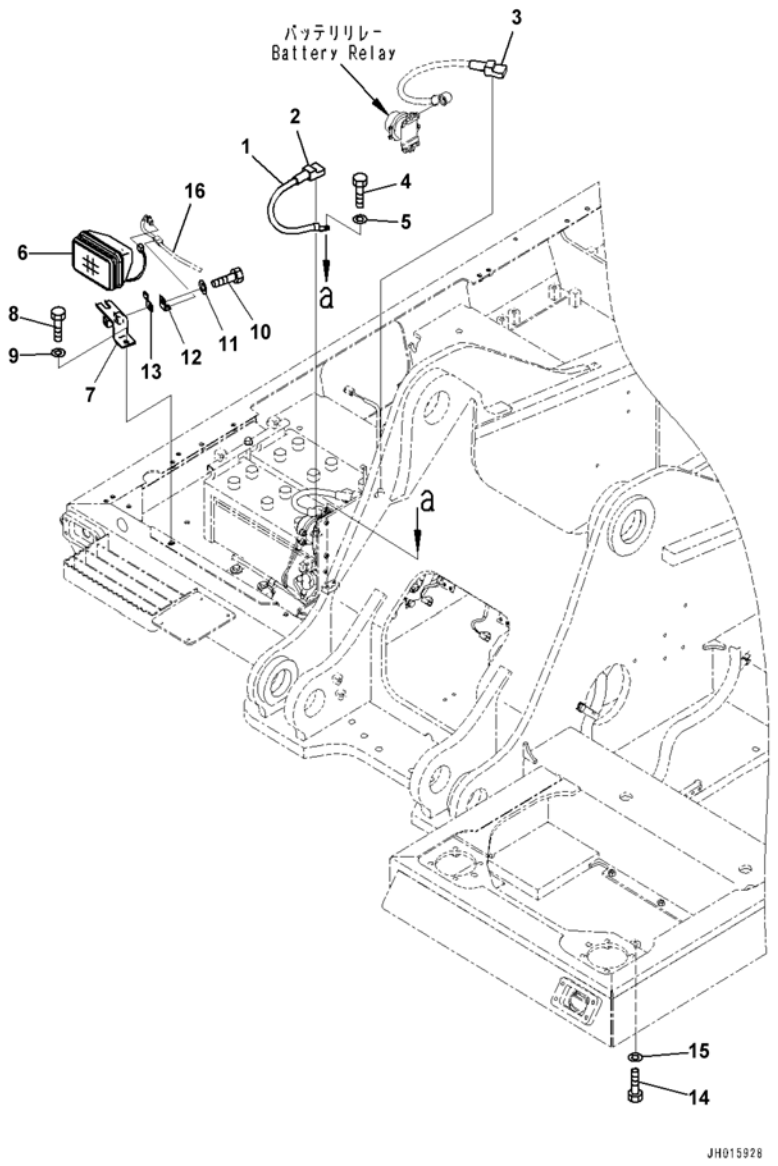

Index	Code	Part Number	Description	Qty	Serial Number
1		08028-44040	Cable,Ground	1	C90001-
2		08038-22511	Cap	1	C90001-
3		08038-42511	Cap	1	C90001-
4		01010-81025	Bolt	1	C90001-
5		01643-31032	Washer	1	C90001-
6		20Y-06-43230	Working Lamp Assembly	1	C90001-
		421-06-23330	• Bulb,70watt	1	C90001-
7		20Y-06-31680	Bracket	1	C90001-
8		01010-81230	Bolt	1	C90001-
9		01643-31232	Washer	1	C90001-
10		01010-81220	Bolt	1	C90001-
11		01643-31232	Washer	1	C90001-
12		08057-12012	Clip	1	C90001-
13		08193-20012	Clip	1	C90001-
14		01010-81016	Bolt	1	C90001-
15		01643-31032	Washer	1	C90001-
16		(207-06-77221)	Wiring Harness		-
		(207-06-77112)	Wiring Harness		-

FIG. E0201-002001 Anti Vandalism Guard (for Indonesia)

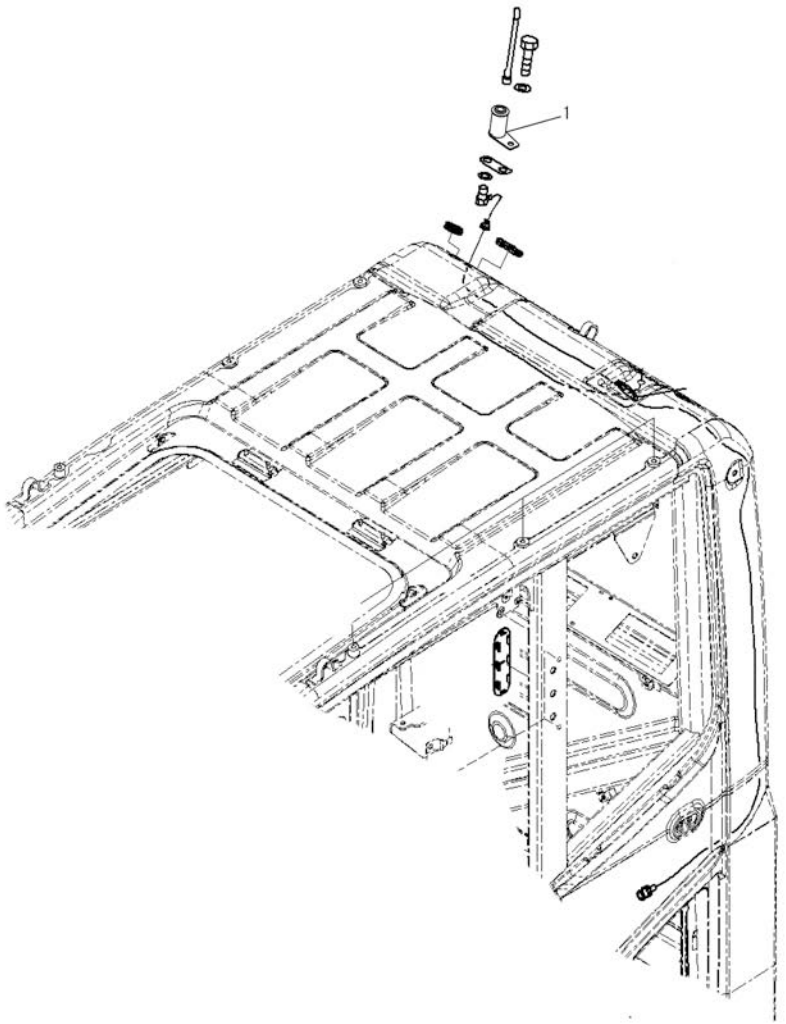

Index	Code	Part Number	Description	Qty	Serial Number
1		20Y-53-J1530	Guard	1	C90001-

FIG. E0310-001001 Additional Working Lamp

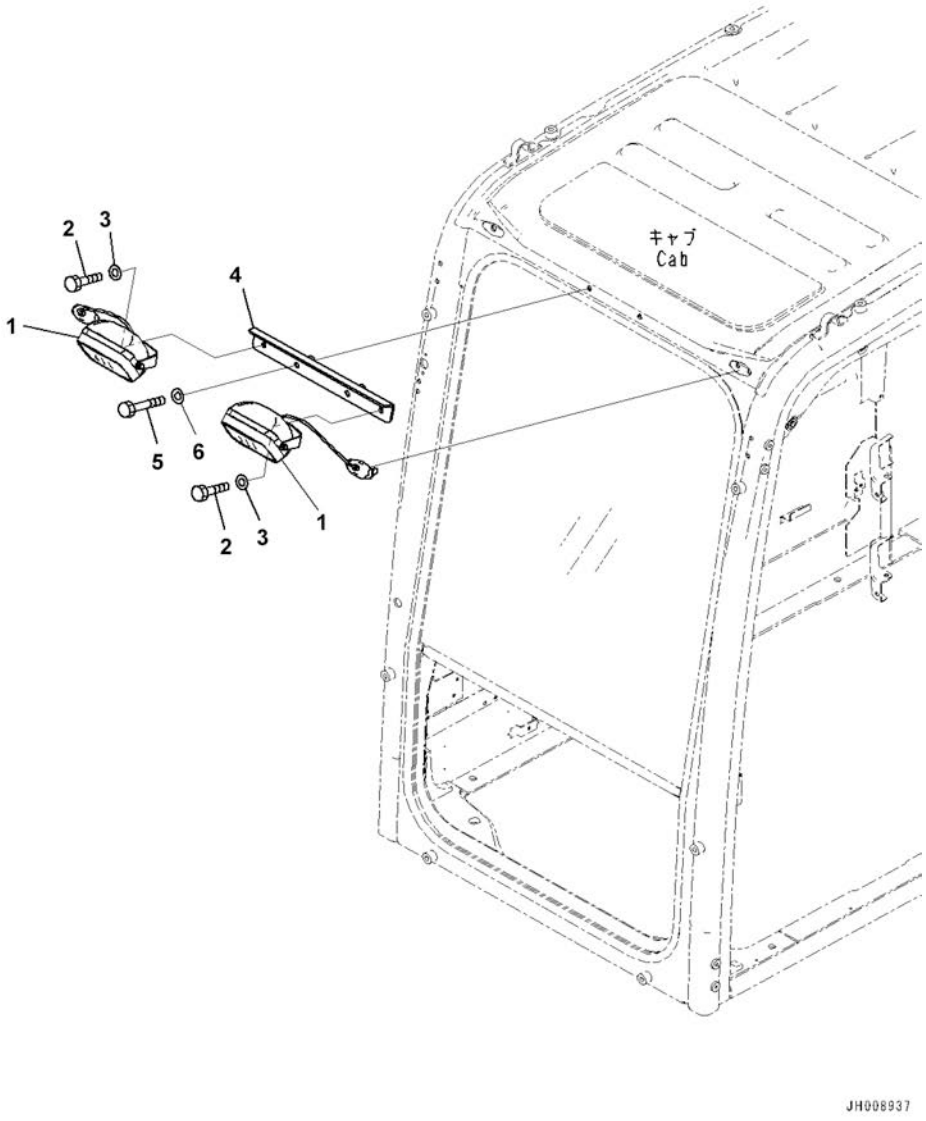

Index	Code	Part Number	Description	Qty	Serial Number
1		2A5-06-12431	Lamp Assembly, Working	2	C90415-
	A2	2A5-06-12430	Lamp Assembly, Working	2	C90001-C90414
		421-06-23330	• Bulb, 70watt	1	C90001-
2		01010-D1025	Bolt	2	C90001-
3		01643-71032	Washer	2	C90001-
4		20Y-53-15281	Bracket	1	C90001-
5		01010-D1065	Bolt	2	C90001-
6		01643-71032	Washer	2	C90001-

FIG. E0340-001001 Beacon Lamp, Beacon

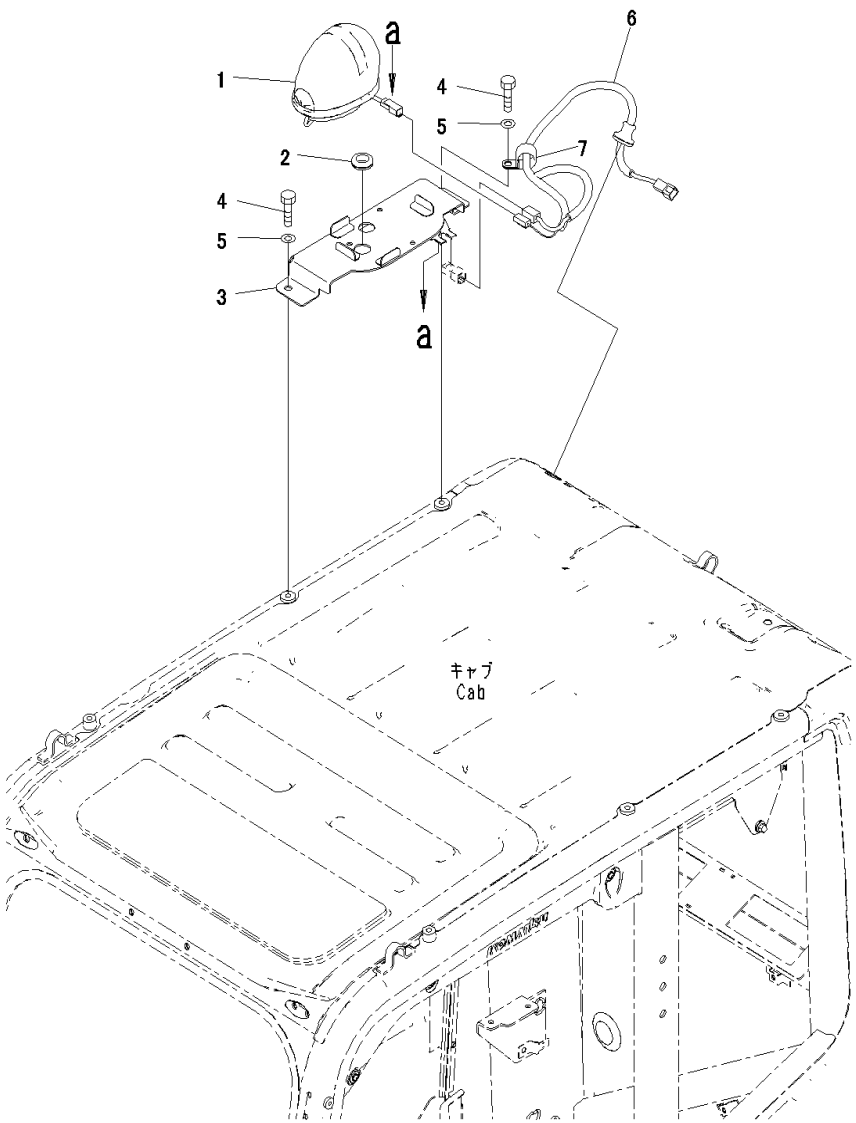

Index	Code	Part Number	Description	Qty	Serial Number
1		22B-54-17612	Lamp Assembly, Working	1	C90001-
		22B-54-17660	• Bulb	1	C90001-
2		08037-02512	Grommet	1	C90001-
3		20Y-53-15121	Bracket	1	C90001-
4		01010-D1220	Bolt	2	C90001-
5		01643-71232	Washer	2	C90001-
6		20Y-06-41543	Wire Harness	1	C90001-
7		04434-51012	Clip	1	C90001-

FIG. E0410-001001 Horn

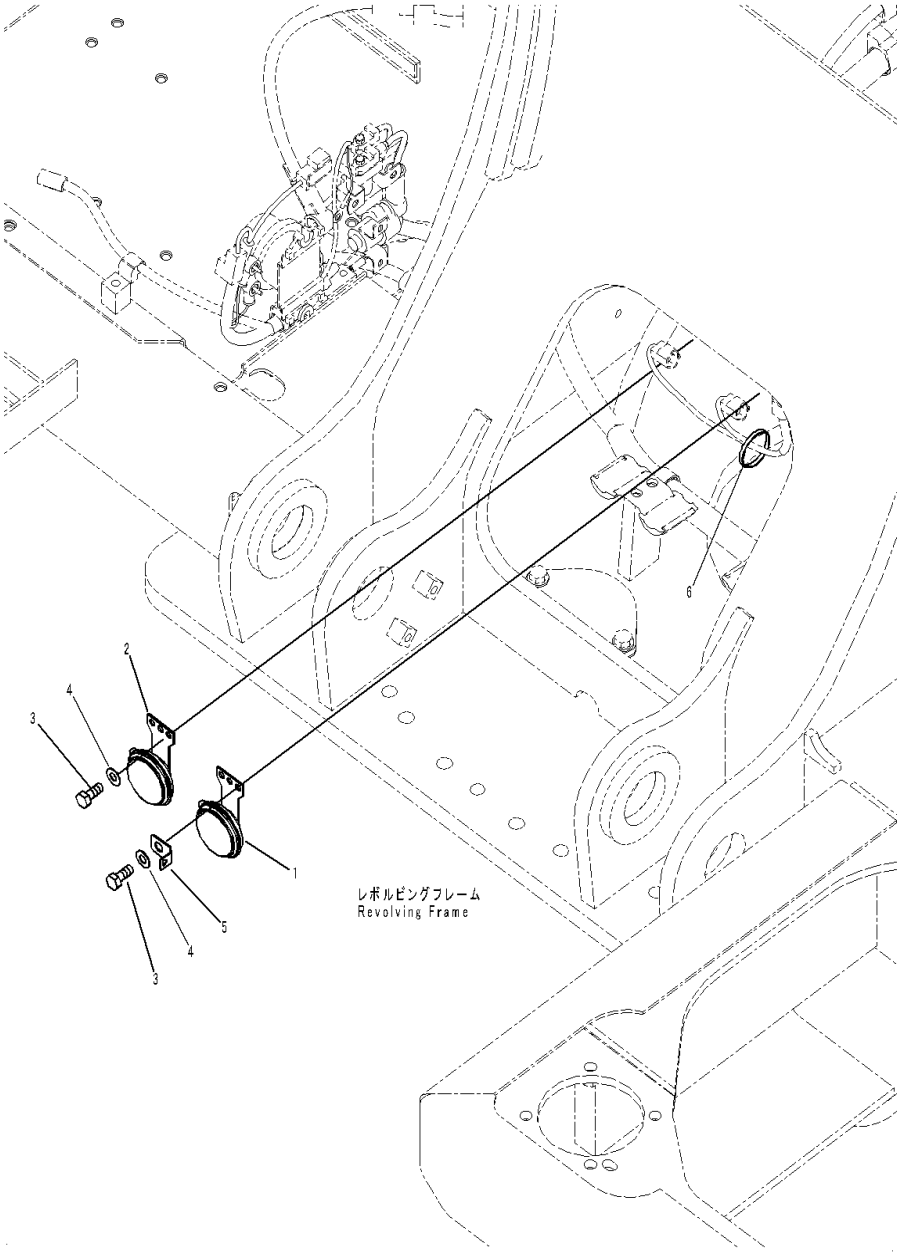

Index	Code	Part Number	Description	Qty	Serial Number
1		08160-72400	Horn	1	C90001-
2		08160-72420	Horn	1	C90001-
3		01010-80825	Bolt	4	C90001-
4		01643-30823	Washer	4	C90001-
5		08057-12008	Clip	1	C90001-
6		08034-20414	Band	1	C90001-

FIG. E0420-001001 Travel Alarm

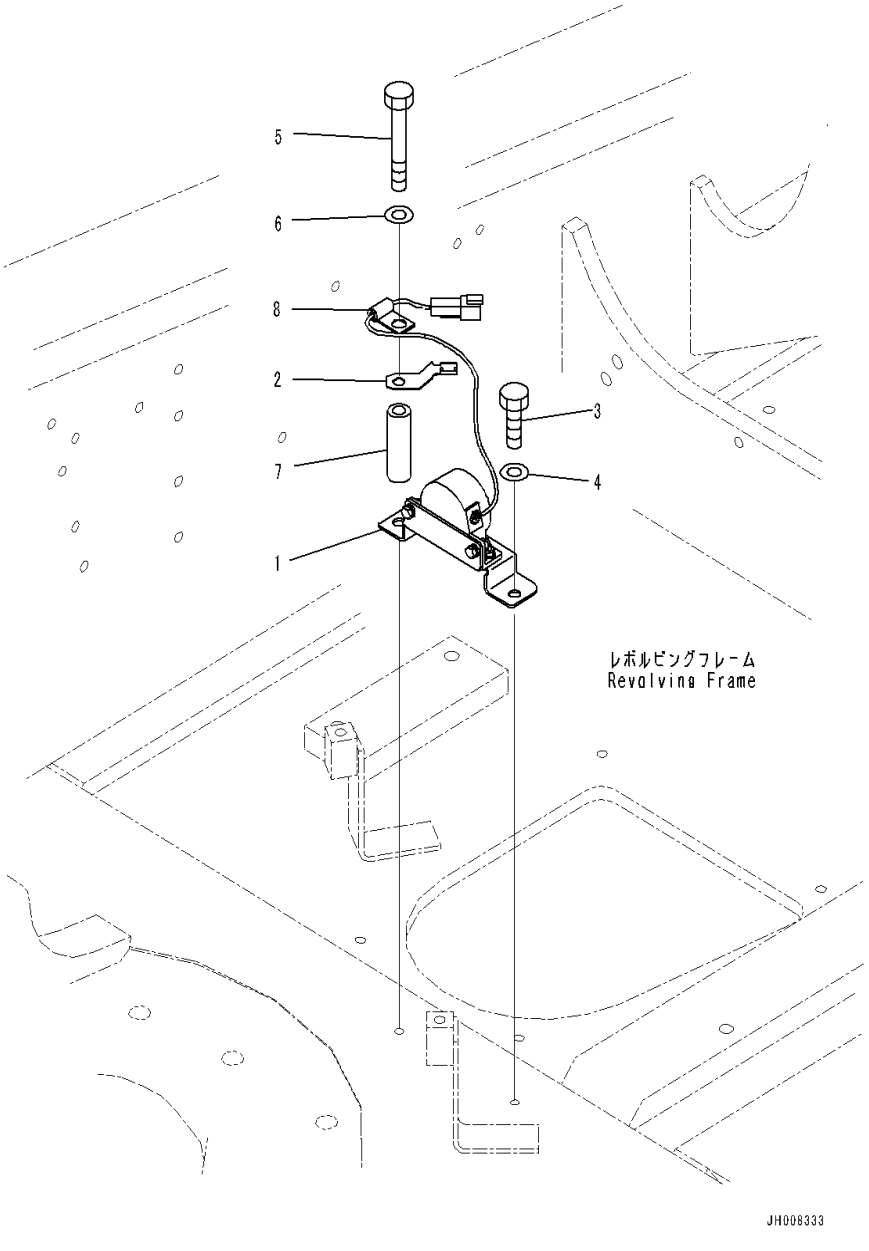

Index	Code	Part Number	Description	Qty	Serial Number
1		20Y-06-41822	Back-up Alarm	1	C90001-
2		08193-20010	Clip	1	C90001-
3		01010-81020	Bolt	1	C90001-
4		01643-31032	Washer	1	C90001-
5		01010-81075	Bolt	1	C90001-
6		01643-31032	Washer	1	C90001-
7		195-979-5190	Collar	1	C90001-
8		04434-50610	Clip	1	C90001-

FIG. E0450-001001 Rearview Camera (Without Rearview Camera)

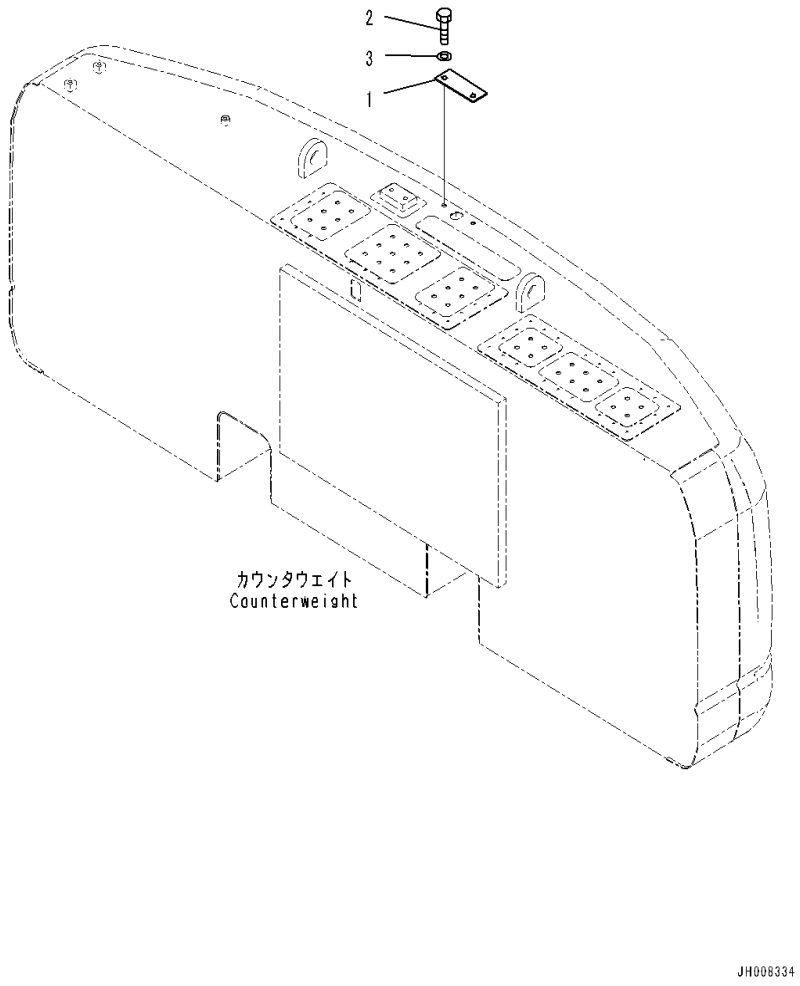

Index	Code	Part Number	Description	Qty	Serial Number
1		207-06-76270	Plate	1	C90001-
2		01010-81220	Bolt	2	C90001-
3		01643-31232	Washer	2	C90001-

FIG. E0450-002001 Rearview Camera

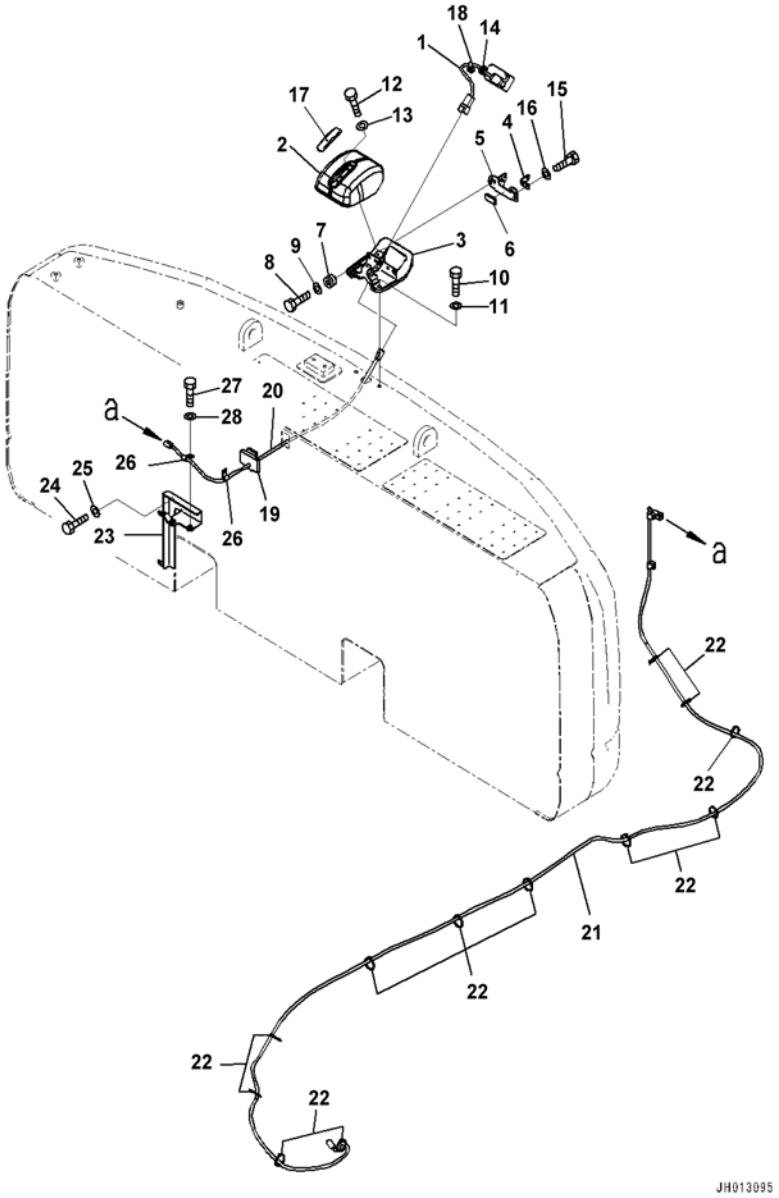

Index	Code	Part Number	Description	Qty	Serial Number
1		7835-33-2001	Camera	1	C90001-
2		207-06-76420	Cover	1	C90001-
3		20Y-06-71210	Cover	1	C90001-
4		22U-06-31440	Bracket	1	C90001-
5		22U-06-31430	Bracket	1	C90001-
6		207-06-76460	• Sheet	1	C90001-
7		20Y-810-1240	Cushion	2	C90001-
8		01010-80835	Bolt	2	C90001-
9		01643-30823	Washer	2	C90001-
10		01010-81230	Bolt	2	C90001-
11		01643-31232	Washer	2	C90001-
12		01010-80616	Bolt	2	C90001-
13		01643-30623	Washer	2	C90001-
14		175-06-81610	Grommet	1	C90001-
15		01010-80616	Bolt	5	C90001-
16		01643-30623	Washer	5	C90001-
17		207-06-76451	Cover	1	C90001-
18		08059-00310	Clamp	1	C90001-
19		207-06-76490	Sheet	1	C90001-
20		20Y-06-42610	Cable	1	C90001-
21		207-06-77130	Cable	1	C90001-
22		08034-20536	Band	12	C90001-
23		207-54-78680	Bracket	1	C90001-
24		01010-81230	Bolt	2	C90001-
25		01643-31232	Washer	2	C90001-
26		04434-51012	Clip	2	C90001-
27		01010-81230	Bolt	2	C90001-
28		01643-31232	Washer	2	C90001-

HYDRAULIC SYSTEM

FIG. H0110-001001 Hydraulic Tank, #C90001-C90130

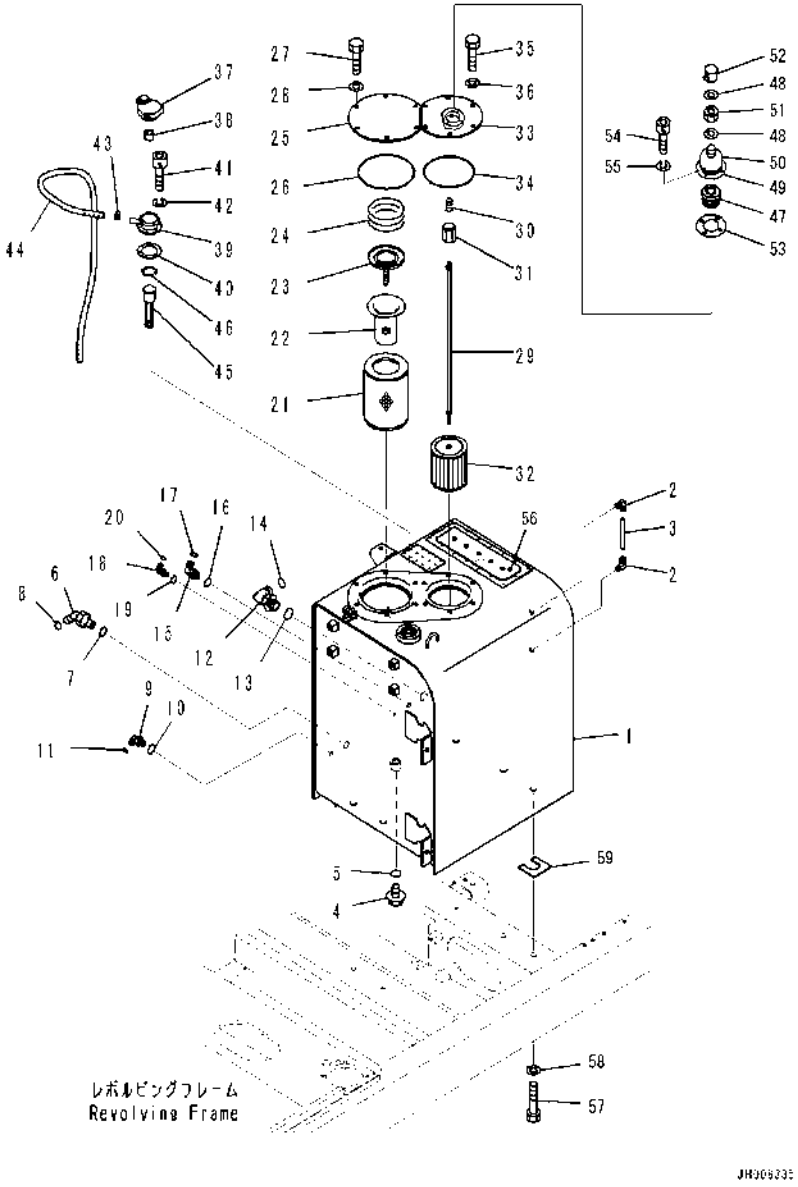

Index	Code	Part Number	Description	Qty	Serial Number
1		207-60-77111	Tank	1	C90001-C90130
2		203-60-31100	Elbow Assembly	2	C90001-C90130
3		203-60-31160	Tube	1	C90001-C90130
4		07044-12412	Plug	1	C90001-C90130
5		07002-12434	O-ring	1	C90001-C90130
6		02783-10628	Elbow	1	C90001-C90130
7		07002-12434	O-ring	1	C90001-C90130
8		02896-11018	O-ring	1	C90001-C90130
9		02782-10315	Elbow	1	C90001-C90130
10		07002-12034	O-ring	1	C90001-C90130
11		02896-11009	O-ring	1	C90001-C90130
12		21W-62-42640	Elbow	1	C90001-C90130
13		07002-13334	O-ring	1	C90001-C90130
14		207-62-64740	O-ring	1	C90001-C90130
15		02782-10422	Elbow	1	C90001-C90130
16		07002-12034	O-ring	1	C90001-C90130
17		02896-11012	O-ring	1	C90001-C90130
18		02782-10311	Elbow	1	C90001-C90130
19		07002-11423	O-ring	1	C90001-C90130
20		02896-11009	O-ring	1	C90001-C90130
21		207-60-71183	Element	1	C90001-C90130
22		20Y-60-31140	Strainer	1	C90001-C90130
23		20Y-60-31450	Valve Assembly	1	C90001-C90130
24		20Y-60-21240	Spring	1	C90001-C90130
25		207-60-77131	Cover	1	C90001-C90130
26		07000-15195	O-ring	1	C90001-C90130
27		01010-81225	Bolt	6	C90001-C90130
28		01643-31232	Washer	6	C90001-C90130
		207-60-75120	Strainer Assembly	1	C90001-C90130
29		208-60-71150	• Rod Assembly	1	C90001-C90130
30		12R-60-11230	• • Spring	1	C90001-C90130
31		20Y-60-21320	• • Holder	1	C90001-C90130
32		22B-60-11160	• Strainer	1	C90001-C90130
33		207-60-77150	Cover	1	C90001-C90130
34		07000-15160	O-ring	1	C90001-C90130
35		01010-81225	Bolt	6	C90001-C90130
36		01643-31232	Washer	6	C90001-C90130
37		17A-60-11310	Cap Assembly	1	C90001-C90130
38		20Y-60-21470	• Element	1	C90001-C90130
39		208-60-71181	Filler Neck	1	C90001-C90130

FIG. H0110-001001 Hydraulic Tank, #C90001-C90130

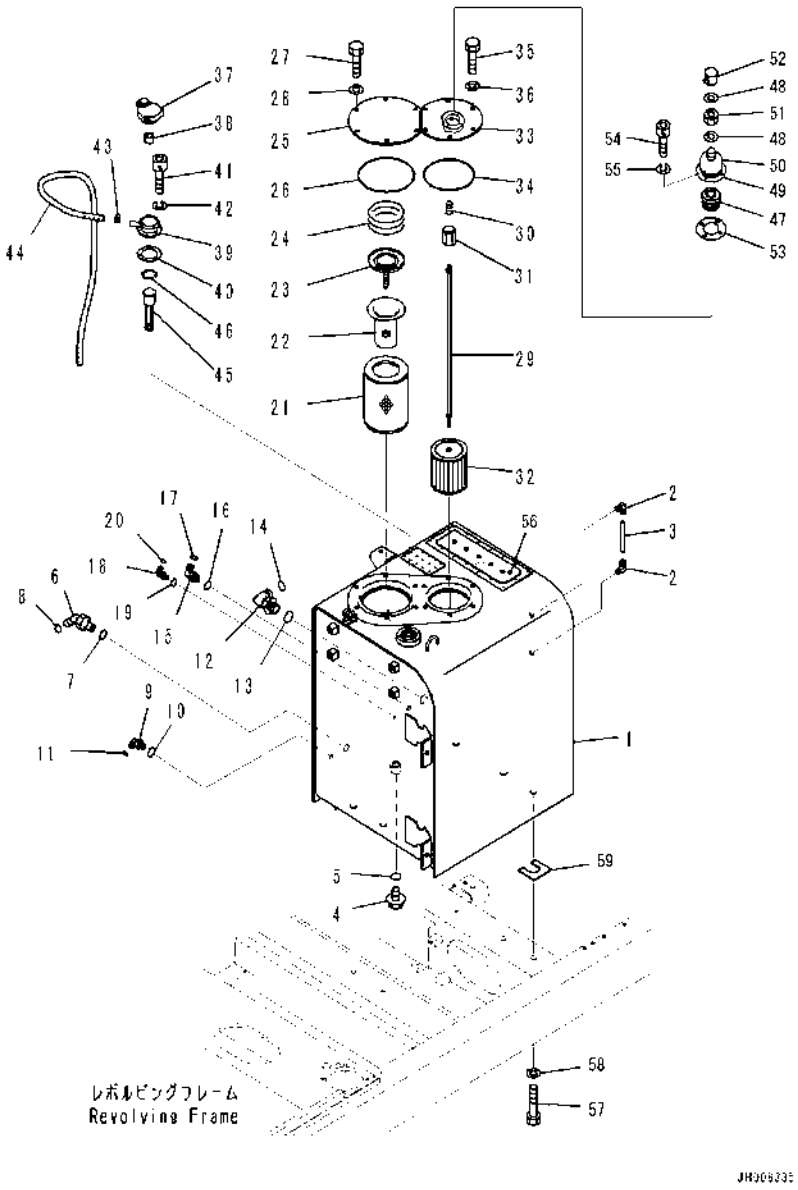

Index	Code	Part Number	Description	Qty	Serial Number
40		20Y-60-21340	Gasket	1	C90001-C90130
41		01252-A0516	Bolt, Hexagon Socket Head	6	C90001-C90130
42		01601-20513	Washer	6	C90001-C90130
43		07285-00200	Clip, Hose	1	C90001-C90130
44		07261-21415	Hose	1	C90001-C90130
45		07056-10045	Strainer	1	C90001-C90130
46		04065-04718	Ring, Snap	1	C90001-C90130
		20Y-60-31271	Breather	1	C90001-C90130
47		207-60-51311	• Element	1	C90001-C90130
48		207-60-51320	• Seal	2	C90001-C90130
49	C1		• Body	1	C90001-C90130
50	C1		• Cover	1	C90001-C90130
51	C1		• Nut	1	C90001-C90130
52	C1		• Nut	1	C90001-C90130
53	C1		• Packing	1	C90001-C90130
54		01252-70516	Screw	4	C90001-C90130
55		01601-20513	Washer	4	C90001-C90130
56		20Y-00-42110	Plate	1	C90001-C90130
57		01010-81635	Bolt	6	C90001-C90130
58		01643-31645	Washer	6	C90001-C90130
59		195-03-11570	Shim, T=1.0mm	2	C90001-C90130

FIG. H0110-002001 Hydraulic Tank (Tank)

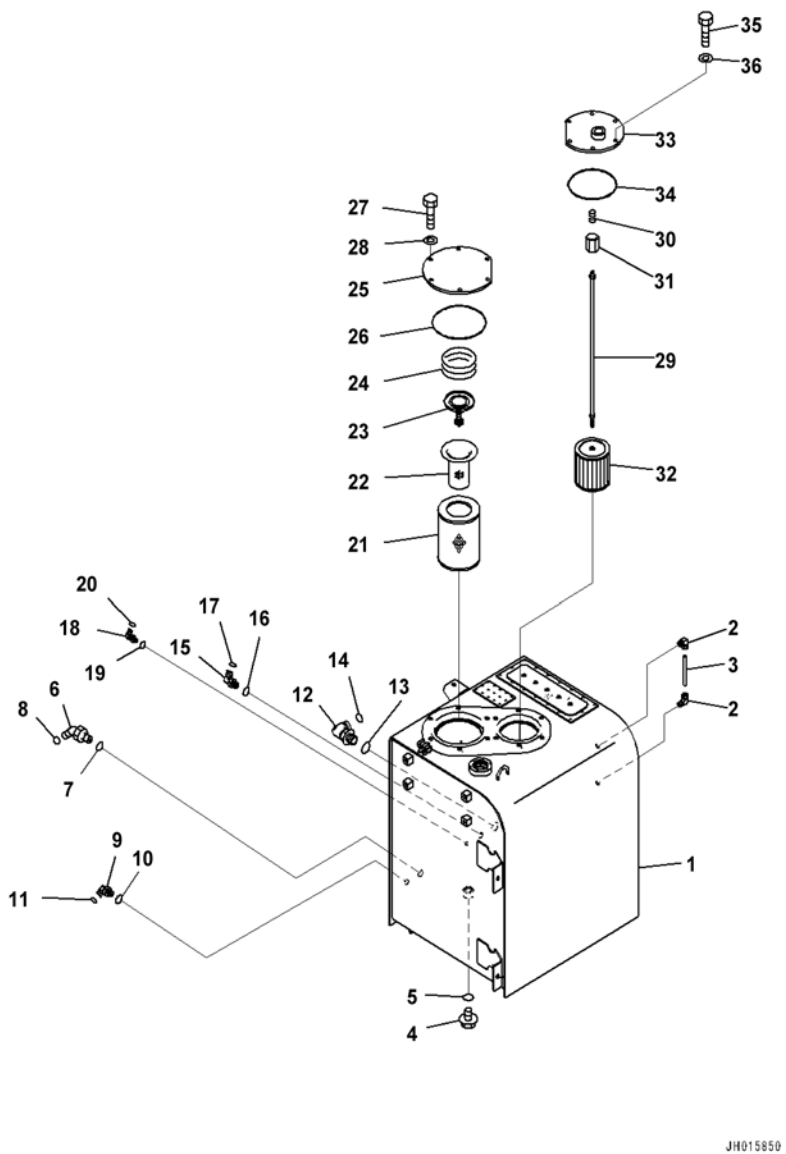

Index	Code	Part Number	Description	Qty	Serial Number
1		207-60-77111	Tank	1	C90131-
2		203-60-31100	Elbow Assembly	2	C90131-
3		203-60-31160	Tube	1	C90131-
4		07044-12412	Plug	1	C90131-
5		07002-12434	O-ring	1	C90131-
6		02783-10628	Elbow	1	C90131-
7		07002-12434	O-ring	1	C90131-
8		02896-11018	O-ring	1	C90131-
9		02782-10315	Elbow	1	C90131-
10		07002-12034	O-ring	1	C90131-
11		02896-11009	O-ring	1	C90131-
12		21W-62-42640	Elbow	1	C90131-
13		07002-13334	O-ring	1	C90131-
14		207-62-64740	O-ring	1	C90131-
15		02782-10422	Elbow	1	C90131-
16		07002-12034	O-ring	1	C90131-
17		02896-11012	O-ring	1	C90131-
18		02782-10311	Elbow	1	C90131-
19		07002-11423	O-ring	1	C90131-
20		02896-11009	O-ring	1	C90131-
21		207-60-71183	Element,Hydraulic Oil Filter	1	C90131-
22		20Y-60-31140	Strainer	1	C90131-
23		20Y-60-31450	Valve Assembly	1	C90131-
24		20Y-60-21240	Spring	1	C90131-
25		207-60-77131	Cover	1	C90131-
26		07000-15195	O-ring	1	C90131-
27		01010-81225	Bolt	6	C90131-
28		01643-31232	Washer	6	C90131-
		207-60-75120	Strainer Assembly	1	C90131-
29		208-60-71150	• Rod Assembly	1	C90131-
30		12R-60-11230	• • Spring	1	C90131-
31		20Y-60-21320	• • Holder	1	C90131-
32		22B-60-11160	• Strainer	1	C90131-
33		207-60-77141	Cover	1	C90131-
34		07000-15160	O-ring	1	C90131-
35		01010-81225	Bolt	6	C90131-
36		01643-31232	Washer	6	C90131-

FIG. H0110-002002 Hydraulic Tank (Breather Mounting)

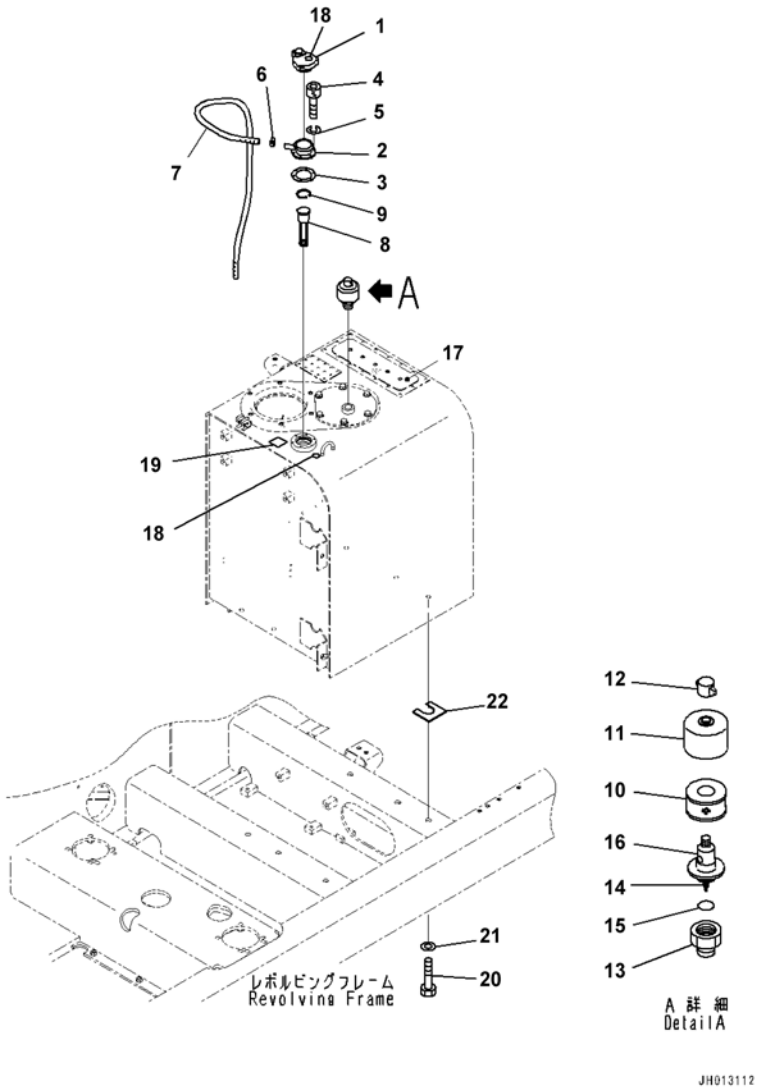

Index	Code	Part Number	Description	Qty	Serial Number
1		207-60-21220	Cap Assembly	1	C90131-
2		20Y-60-42210	Filler Neck	1	C90131-
3		20Y-60-21340	Gasket	1	C90131-
4		01252-A0516	Bolt,Hexagon Socket Head	6	C90131-
5		01601-20513	Washer	6	C90131-
6		07285-00200	Clip,Hose	1	C90131-
7		07261-21415	Hose	1	C90131-
8		07056-10045	Strainer	1	C90131-
9		04065-04718	Ring,Snap	1	C90131-
		198-60-55510	Breather	1	C90131-
10		421-60-35170	• Element	1	C90131-
11		421-60-35180	• Cover	1	C90131-
12		421-60-35190	• Nut	1	C90131-
13	C1		• Body	1	C90131-
14	C1		• Valve Assembly	1	C90131-
15	C1		• O-ring	1	C90131-
16	C1		• Case	1	C90131-
17		20Y-00-42110	Plate	1	C90131-
18		203-00-17210	Mark,Triangle	2	C90131-
19		203-00-17220	Mark,Key	1	C90131-
20		01010-81635	Bolt	6	C90131-
21		01643-31645	Washer	6	C90131-
22		195-03-11570	Shim,T=1.0mm	2	C90131-

FIG. H0120-001001 Control Valve (7-spool, 1/22)

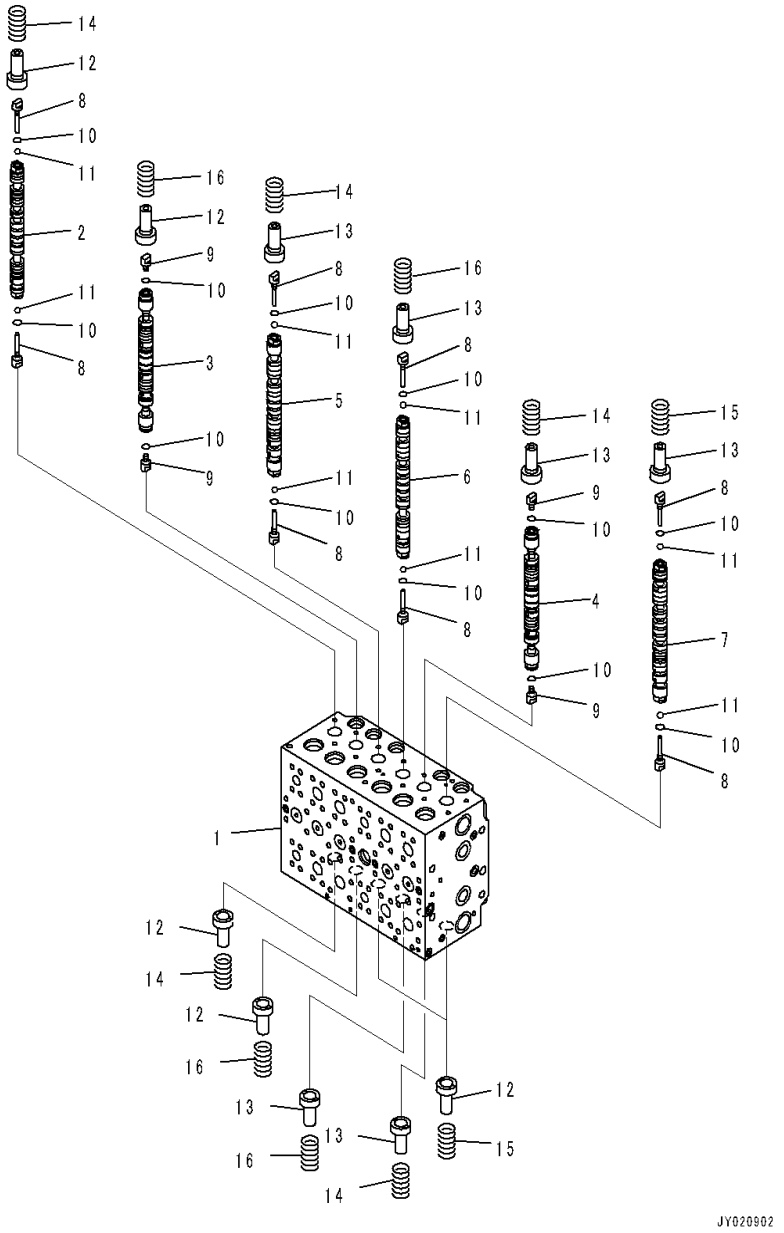

Index	Code	Part Number	Description	Qty	Serial Number
		723-47-25602	Valve, Control	1	C90415-
	A2	723-47-25601	Valve, Control	1	C90208-C90414
	A2	723-47-25600	Valve, Control	1	C90001-C90207
	C1		• Body Subassembly	1	C90208-
	C1		• Body Subassembly	1	C90001-C90207
1	C1		• • Block, Valve	1	C90001-
2	C1		• • Spool	1	C90001-
3	C1		• • Spool	1	C90001-
4	C1		• • Spool	1	C90001-
5	C1		• • Spool	1	C90001-
6	C1		• • Spool	1	C90001-
7	C1		• • Spool	1	C90001-
8		723-46-15130	• • Plug	8	C90001-
9		723-46-15140	• • Plug	4	C90001-
10		07002-10823	• • O-ring	12	C90001-
11		708-7T-16460	• • Ball	8	C90001-
12		723-46-15120	• • Retainer	6	C90001-
13		723-46-15690	• • Retainer	6	C90001-
14		723-46-14110	• • Spring	5	C90001-
15		723-46-14170	• • Spring	3	C90001-
16		723-46-14131	• • Spring	4	C90001-

FIG. H0120-001002 Control Valve (7-spool, 2/22)

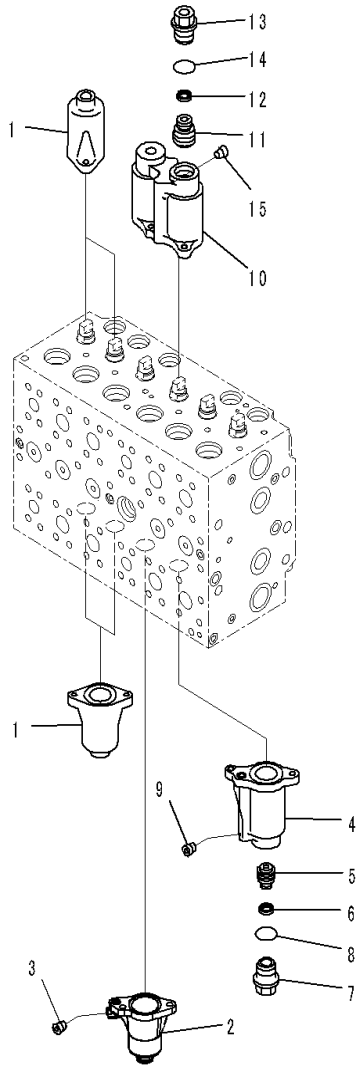

Index	Code	Part Number	Description	Qty	Serial Number
		723-47-25602	Valve, Control	1	C90415-
	A2	723-47-25601	Valve, Control	1	C90208- C90414
	A2	723-47-25600	Valve, Control	1	C90001-C90207
	C1		• Body Subassembly	1	C90208-
	C1		• Body Subassembly	1	C90001-C90207
1		723-46-15111	• • Case	4	C90001-
		723-46-19140	• • Case Subassembly	1	C90001-
2	C1		• • • Case	1	C90001-
3	C1		• • • Plug	1	C90001-
		723-46-19800	• • Case Subassembly	1	C90001-
4	C1		• • • Case	1	C90001-
5	C1		• • • Piston	1	C90001-
6	C1		• • • Seal	1	C90001-
7		723-46-15630	• • • Plug	1	C90001-
8		07000-13024	• • • O-ring	1	C90001-
9	C1		• • • Plug	1	C90001-
		723-46-18380	• • Case Subassembly	1	C90001-
10	C1		• • • Case	1	C90001-
11	C1		• • • Piston	1	C90001-
12	C1		• • • Seal	1	C90001-
13		723-46-15630	• • • Plug	1	C90001-
14		07000-13024	• • • O-ring	1	C90001-
15	C1		• • • Plug	1	C90001-

FIG. H0120-001003 Control Valve (7-spool, 3/22)

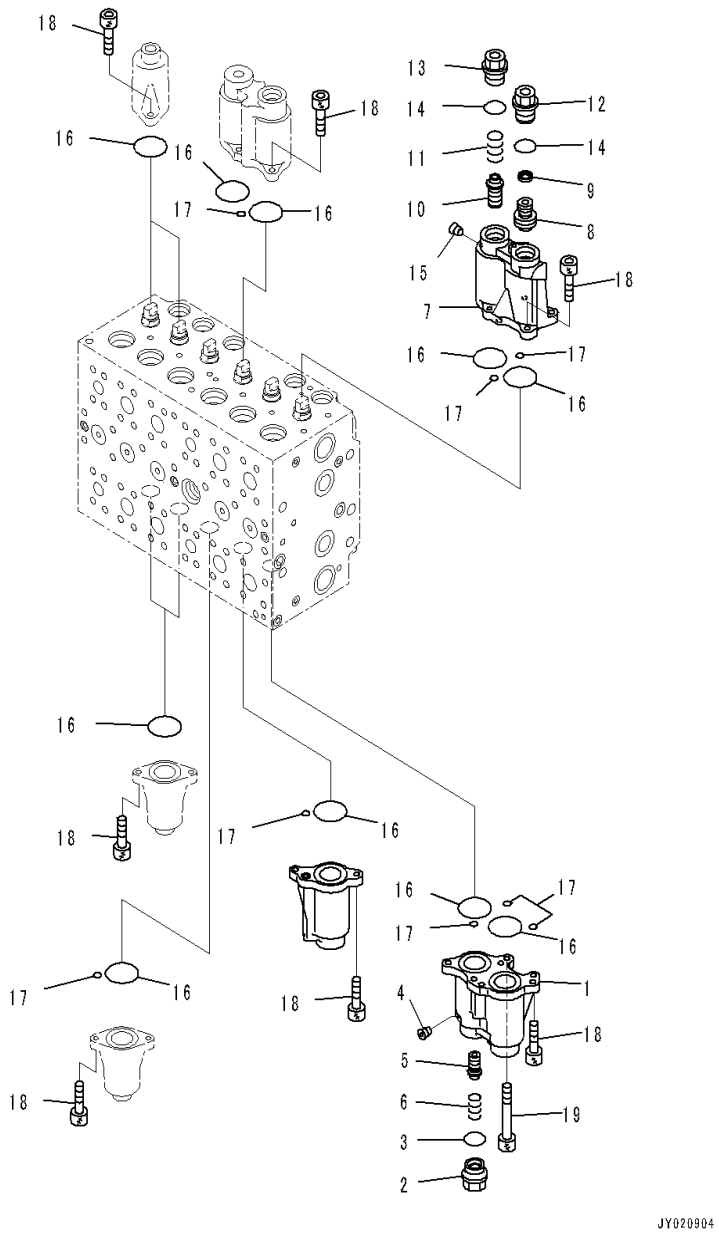

Index	Code	Part Number	Description	Qty	Serial Number
		723-47-25602	Valve, Control	1	C90415-
	A2	723-47-25601	Valve, Control	1	C90208-C90414
	A2	723-47-25600	Valve, Control	1	C90001-C90207
	C1		• Body Subassembly	1	C90208-
	C1		• Body Subassembly	1	C90001-C90207
		723-46-18450	• • Case Subassembly	1	C90001-
1	C1		• • • Case	1	C90001-
2		723-46-17340	• • • Plug	1	C90001-
3		07000-13024	• • • O-ring	1	C90001-
4	C1		• • • Plug	1	C90001-
5		723-46-17320	• • • Spool	1	C90001-
6		723-46-17330	• • • Spring	1	C90001-
		723-46-18460	• • Case Subassembly	1	C90001-
7	C1		• • • Case	1	C90001-
8	C1		• • • Piston	1	C90001-
9	C1		• • • Seal	1	C90001-
10		723-46-17320	• • • Spool	1	C90001-
11		723-46-17330	• • • Spring	1	C90001-
12		723-46-15630	• • • Plug	1	C90001-
13		723-46-17340	• • • Plug	1	C90001-
14		07000-13024	• • • O-ring	2	C90001-
15	C1		• • • Plug	2	C90001-
16		07430-71380	• • O-ring	12	C90001-
17		07000-11010	• • O-ring	8	C90001-
18		01252-60820	• • Bolt, Hexagon Socket Head	23	C90001-
19		723-46-17350	• • Bolt, Hexagon Socket Head	1	C90001-

FIG. H0120-001004 Control Valve (7-spool, 4/22)

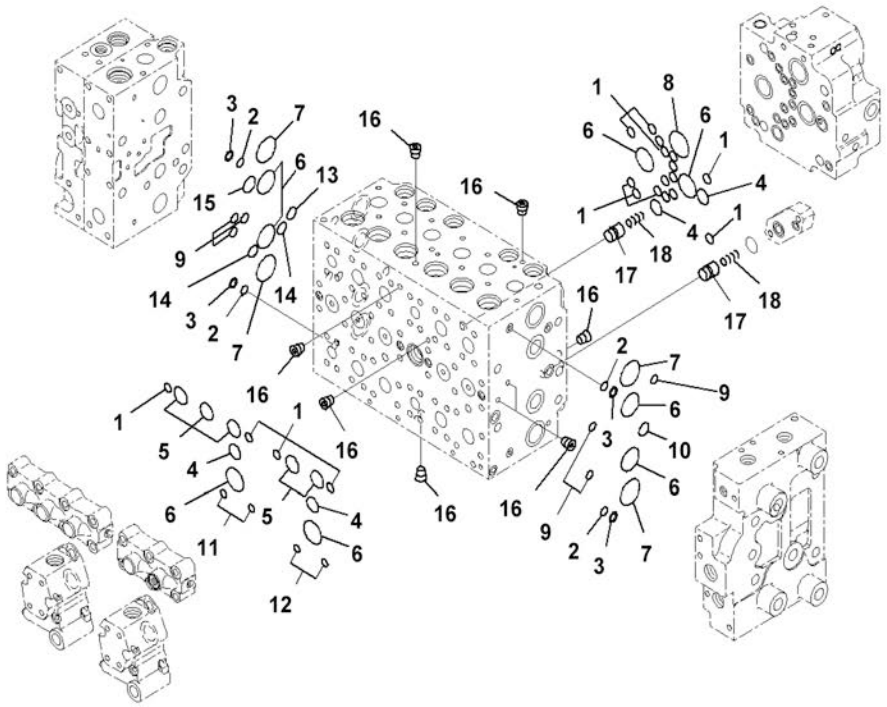

Index	Code	Part Number	Description	Qty	Serial Number
		723-47-25602	Valve, Control	1	C90415-
	A2	723-47-25601	Valve, Control	1	C90208-C90414
	A2	723-47-25600	Valve, Control	1	C90001-C90207
	C1		• Body Subassembly	1	C90208-
	C1		• Body Subassembly	1	C90001-C90207
1		07000-12012	• • O-ring	19	C90001-
2		723-11-19130	• • O-ring	4	C90001-
3		723-46-17520	• • Ring, Back-up	4	C90001-
4		07000-12021	• • O-ring	4	C90001-
5		07000-13028	• • O-ring	5	C90001-
6		07000-13032	• • O-ring	8	C90001-
7		723-46-17510	• • O-ring	4	C90001-
8		07000-13036	• • O-ring	1	C90001-
9		723-46-17530	• • O-ring	12	C90001-
10		723-11-18150	• • O-ring	3	C90001-
11		702-16-53920	• • O-ring	2	C90208-
12		07000-11010	• • O-ring	2	C90208-
13		723-46-18710	• • O-ring	1	C90001-
14		722-12-19070	• • O-ring	2	C90001-
15		723-46-18720	• • O-ring	1	C90001-
16	C1		• • Plug	14	C90001-
17		723-46-17650	• • Valve	2	C90001-
18		723-46-14150	• • Spring	2	C90001-

FIG. H0120-001005 Control Valve (7-spool, 5/22)

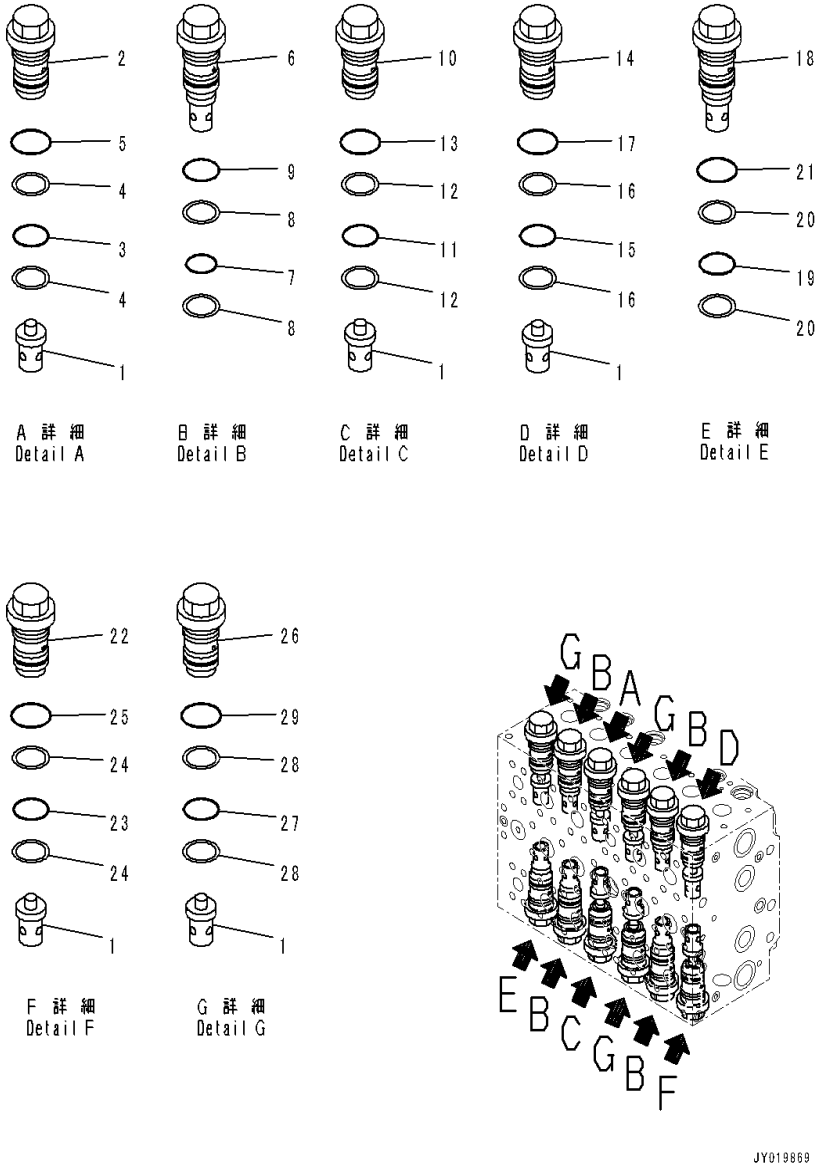

Index	Code	Part Number	Description	Qty	Serial Number
		723-47-25602	Valve, Control	1	C90415-
	A2	723-47-25601	Valve, Control	1	C90208-C90414
	A2	723-47-25600	Valve, Control	1	C90001-C90207
	C1		• Body Subassembly	1	C90208-
	C1		• Body Subassembly	1	C90001-C90207
1		723-46-41210	• • Valve	7	C90001-
2		723-46-40100	• • Valve Assembly	1	C90001-
3		700-93-11320	• • • O-ring	1	C90001-
4		723-46-41950	• • • Ring, Back-up	2	C90001-
5		07002-13634	• • • O-ring	1	C90001-
6		723-46-42800	• • Valve Assembly	4	C90001-
7		700-93-11320	• • • O-ring	1	C90001-
8		723-46-41950	• • • Ring, Back-up	2	C90001-
9		07002-13634	• • • O-ring	1	C90001-
10		723-46-40601	• • Valve Assembly	1	C90001-
11		700-93-11320	• • • O-ring	1	C90001-
12		723-46-41950	• • • Ring, Back-up	2	C90001-
13		07002-13634	• • • O-ring	1	C90001-
14		723-46-43100	• • Valve Assembly	1	C90001-
15		700-93-11320	• • • O-ring	1	C90001-
16		723-46-41950	• • • Ring, Back-up	2	C90001-
17		07002-13634	• • • O-ring	1	C90001-
18		723-46-43600	• • Valve Assembly	1	C90001-
19		700-93-11320	• • • O-ring	1	C90001-
20		723-46-41950	• • • Ring, Back-up	2	C90001-
21		07002-13634	• • • O-ring	1	C90001-
22		723-46-44100	• • Valve Assembly	1	C90001-
23		700-93-11320	• • • O-ring	1	C90001-
24		723-46-41950	• • • Ring, Back-up	2	C90001-
25		07002-13634	• • • O-ring	1	C90001-
26		723-46-45100	• • Valve Assembly	3	C90001-
27		700-93-11320	• • • O-ring	1	C90001-
28		723-46-41950	• • • Ring, Back-up	2	C90001-
29		07002-13634	• • • O-ring	1	C90001-

FIG. H0120-001006 Control Valve (7-spool, 6/22)

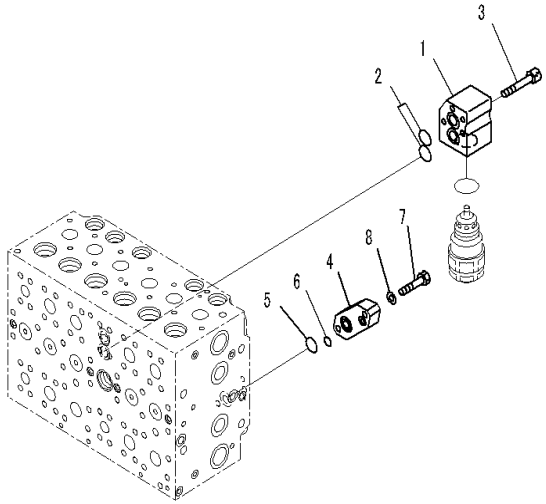

JY019870

Index	Code	Part Number	Description	Qty	Serial Number
		723-47-25602	Valve, Control	1	C90415-
	A2	723-47-25601	Valve, Control	1	C90208-C90414
	A2	723-47-25600	Valve, Control	1	C90001-C90207
	C1		• Body Subassembly	1	C90208-
	C1		• Body Subassembly	1	C90001-C90207
1		723-46-11910	• • Block	1	C90001-
2		723-46-15510	• • O-ring	2	C90001-
3		01252-60865	• • Bolt, Hexagon Socket Head	4	C90001-
4		723-46-18730	• • Plate	1	C90001-
5		07000-12021	• • O-ring	1	C90001-
6		07000-12011	• • O-ring	1	C90001-
7		01010-61040	• • Bolt	2	C90001-
8		01643-51032	• • Washer	2	C90001-

FIG. H0120-001007 Control Valve (7-spool, 7/22)

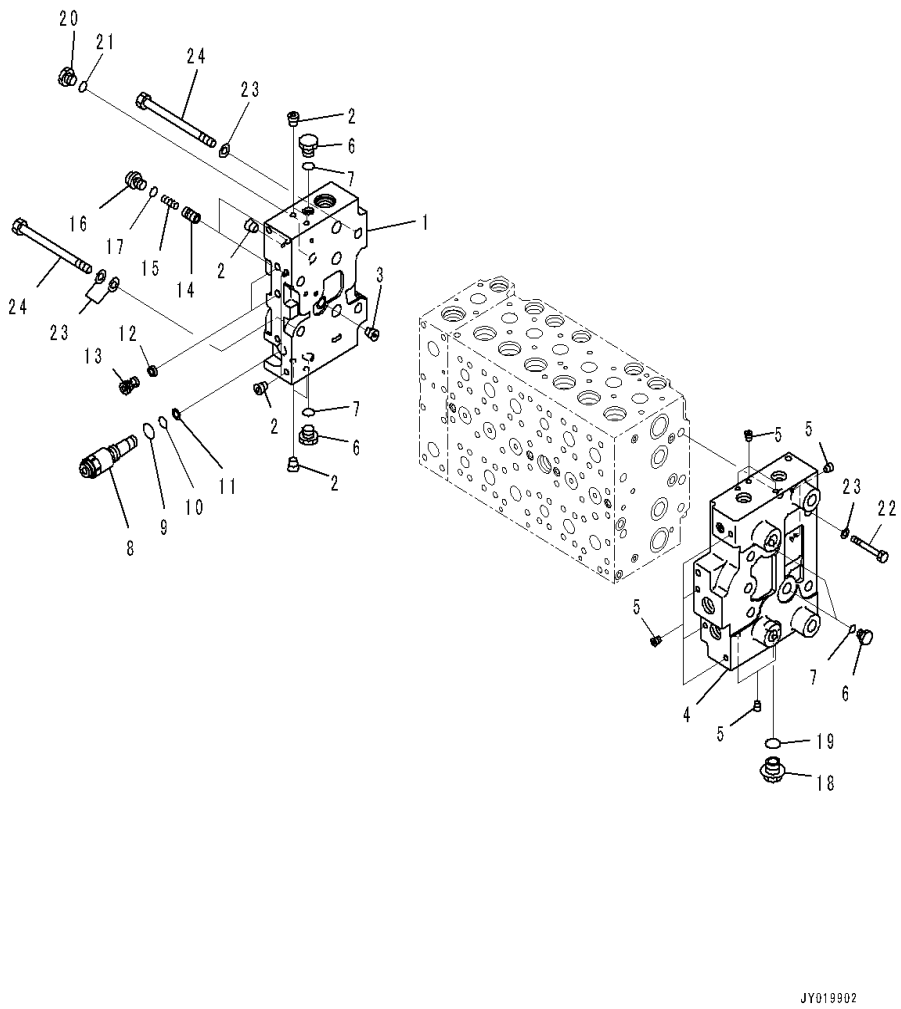

Index	Code	Part Number	Description	Qty	Serial Number
		723-47-25602	Valve, Control	1	C90415-
	A2	723-47-25601	Valve, Control	1	C90208-C90414
	A2	723-47-25600	Valve, Control	1	C90001-C90207
		723-46-00660	• Cover Assembly	1	C90001-
1	C1		• • Cover	1	C90001-
2	C1		• • Plug	7	C90001-
3	C1		• • Plug	1	C90001-
		723-46-00990	• Cover Assembly	1	C90001-
4	C1		• • Cover	1	C90001-
5	C1		• • Plug	10	C90001-
6		708-8E-16250	• Plug	4	C90001-
7		07002-11823	• O-ring	4	C90001-
8		723-46-17600	• Plug Assembly	1	C90001-
9		07002-11423	• • O-ring	1	C90001-
10		07000-11007	• • O-ring	1	C90001-
11		07001-01007	• • Ring, Back-up	1	C90001-
12		723-40-82220	• Filter	2	C90001-
13		723-46-17550	• Plug	2	C90001-
14		723-46-15190	• Valve	2	C90001-
15		723-46-14140	• Spring	2	C90001-
16		708-8E-16160	• Plug	2	C90001-
17		07002-11023	• O-ring	2	C90001-
18		709-74-91860	• Plug	1	C90001-
19		07002-12434	• O-ring	1	C90001-
20		708-8H-11530	• Plug	1	C90001-
21		07002-11423	• O-ring	1	C90001-
22		01010-61490	• Bolt	4	C90001-
23		01643-31445	• Washer	10	C90001-
24		01011-61455	• Bolt	4	C90001-

FIG. H0120-001008 Control Valve (7-spool, 8/22)

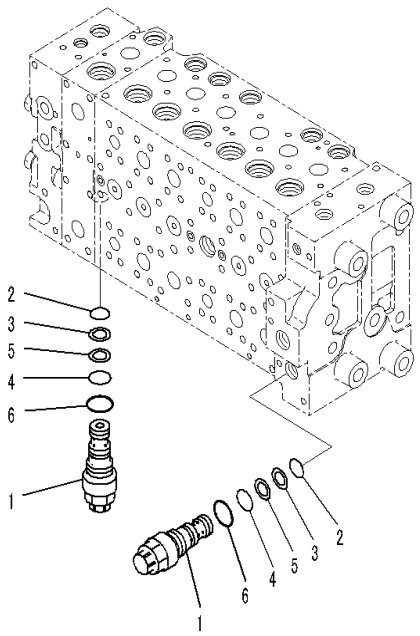

JY019878

Index	Code	Part Number	Description	Qty	Serial Number
		723-47-25602	Valve, Control	1	C90415-
	A2	723-47-25601	Valve, Control	1	C90208-C90414
	A2	723-47-25600	Valve, Control	1	C90001-C90207
1		723-40-56800	• Valve Assembly, Unloader	2	C90001-
2		07000-12014	• • O-ring	1	C90001-
3		723-40-56350	• • Ring, Back-up	1	C90001-
4		07000-12016	• • O-ring	1	C90001-
5		723-60-22230	• • Ring, Back-up	1	C90001-
6		07002-12434	• • O-ring	1	C90001-

FIG. H0120-001009 Control Valve (7-spool, 9/22)

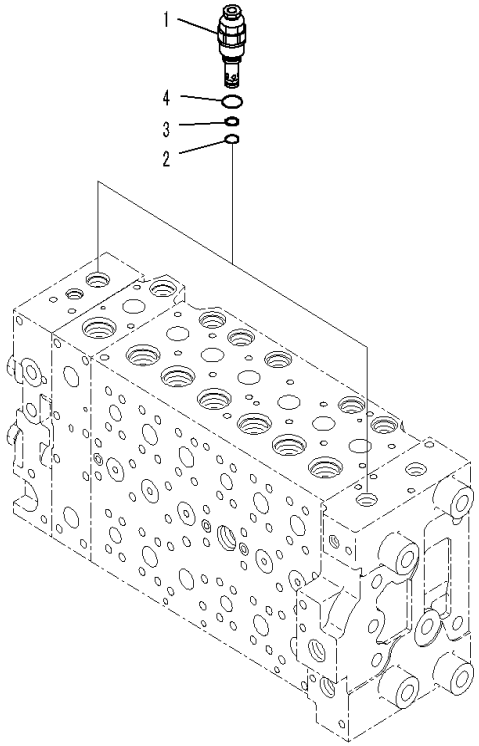

Index	Code	Part Number	Description	Qty	Serial Number
		723-47-25602	Valve, Control	1	C90415-
	A2	723-47-25601	Valve, Control	1	C90208-C90414
	A2	723-47-25600	Valve, Control	1	C90001-C90207
1		723-40-93801	• Valve, Relief	2	C90001-
2		700-22-11410	• • O-ring	1	C90001-
3		700-80-64220	• • Ring, Back-up	1	C90001-
4		07002-12434	• • O-ring	1	C90001-

FIG. H0120-001010 Control Valve (7-spool, 10/22)

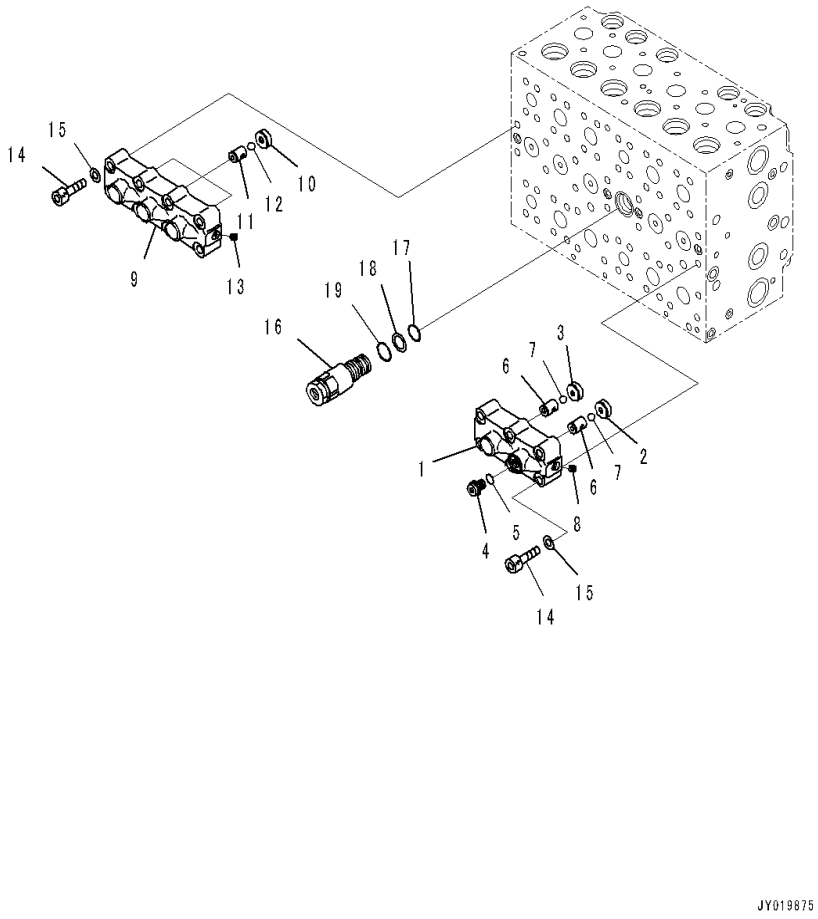

Index	Code	Part Number	Description	Qty	Serial Number
		723-47-25601	Valve, Control	1	C90208-
	A2	723-47-25600	Valve, Control	1	C90001-C90207
		723-40-66701	• Valve Assembly	1	C90001-
1	C1		• • Case	1	C90001-
2	C1		• • Seat	1	C90001-
3	C1		• • Seat	1	C90001-
4		708-8H-11530	• • Plug	1	C90001-
5		07002-11423	• • O-ring	1	C90001-
6	C1		• • Seat	2	C90001-
7	C1		• • Ball	2	C90001-
8	C1		• • Plug	1	C90001-
		723-40-66601	• Valve Assembly	1	C90001-
9	C1		• • Case	1	C90001-
10	C1		• • Seat	3	C90001-
11	C1		• • Seat	3	C90001-
12	C1		• • Ball	3	C90001-
13	C1		• • Plug	1	C90001-
14		01252-61050	• Bolt, Hexagon Socket Head	14	C90001-
15		01643-51032	• Washer	14	C90001-
16		723-40-60101	• Valve Assembly	1	C90001-
17		07000-12020	• • O-ring	1	C90001-
18		07001-02020	• • Ring, Back-up	1	C90001-
19		709-25-11390	• • O-ring	1	C90001-

FIG. H0120-001011 Control Valve (7-spool, 11/22)

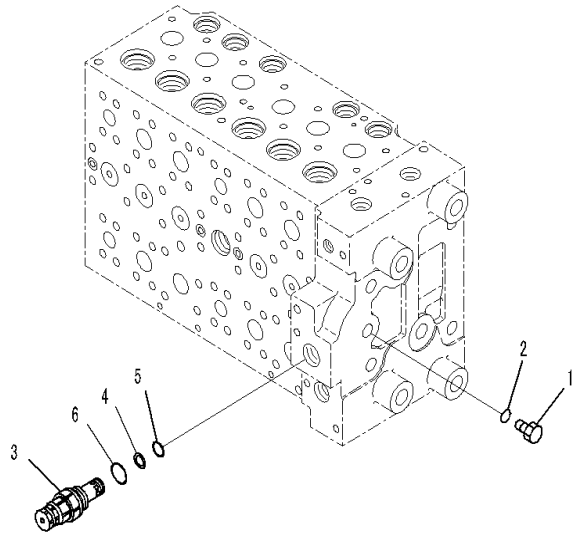

JY020905

Index	Code	Part Number	Description	Qty	Serial Number
		723-47-25602	Valve, Control	1	C90415-
	A2	723-47-25601	Valve, Control	1	C90208-C90414
	A2	723-47-25600	Valve, Control	1	C90001-C90207
1		702-21-55620	• Plug	1	C90001-
2		07002-11423	• O-ring	1	C90001-
3		723-40-91500	• Valve Assembly, Relief	1	C90001-
4		700-80-64220	• • Ring, Back-up	1	C90001-
5		700-22-11410	• • O-ring	1	C90001-
6		709-25-11390	• • O-ring	1	C90001-

FIG. H0120-001012 Control Valve (7-spool, 12/22)

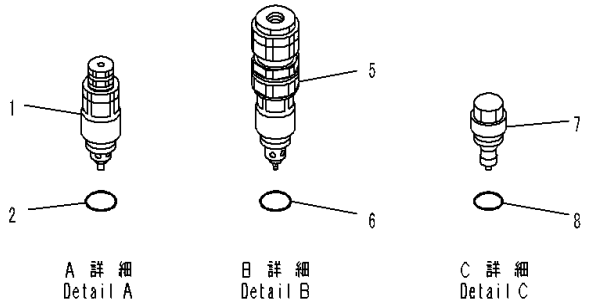

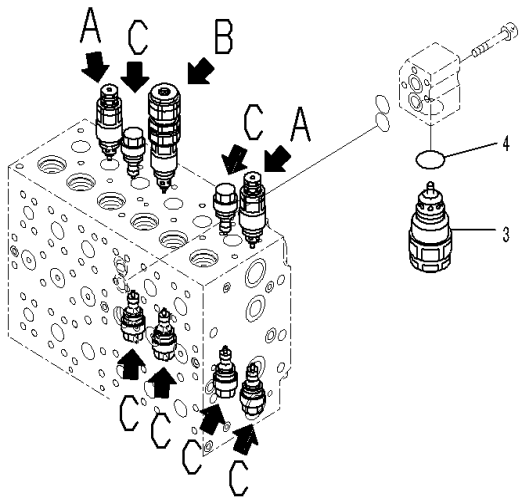

Index	Code	Part Number	Description	Qty	Serial Number
		723-47-25602	Valve, Control	1	C90415-
	A2	723-47-25601	Valve, Control	1	C90208-C90414
	A2	723-47-25600	Valve, Control	1	C90001-C90207
1		723-40-91200	• Valve Assembly, Suction and Relief	2	C90001-
2		709-25-11390	• • O-ring	1	C90001-
3		723-90-69100	• Valve Assembly, Suction and Relief	1	C90001-
4		07002-13634	• • O-ring	1	C90001-
5		723-90-76201	• Valve Assembly, Suction and Relief	1	C90001-
6		07000-13024	• • O-ring	1	C90001-
7		723-40-85100	• Valve Assembly, Suction	6	C90001-
8		709-25-11390	• • O-ring	1	C90001-

FIG. H0120-001013 Control Valve (7-spool, 13/22)

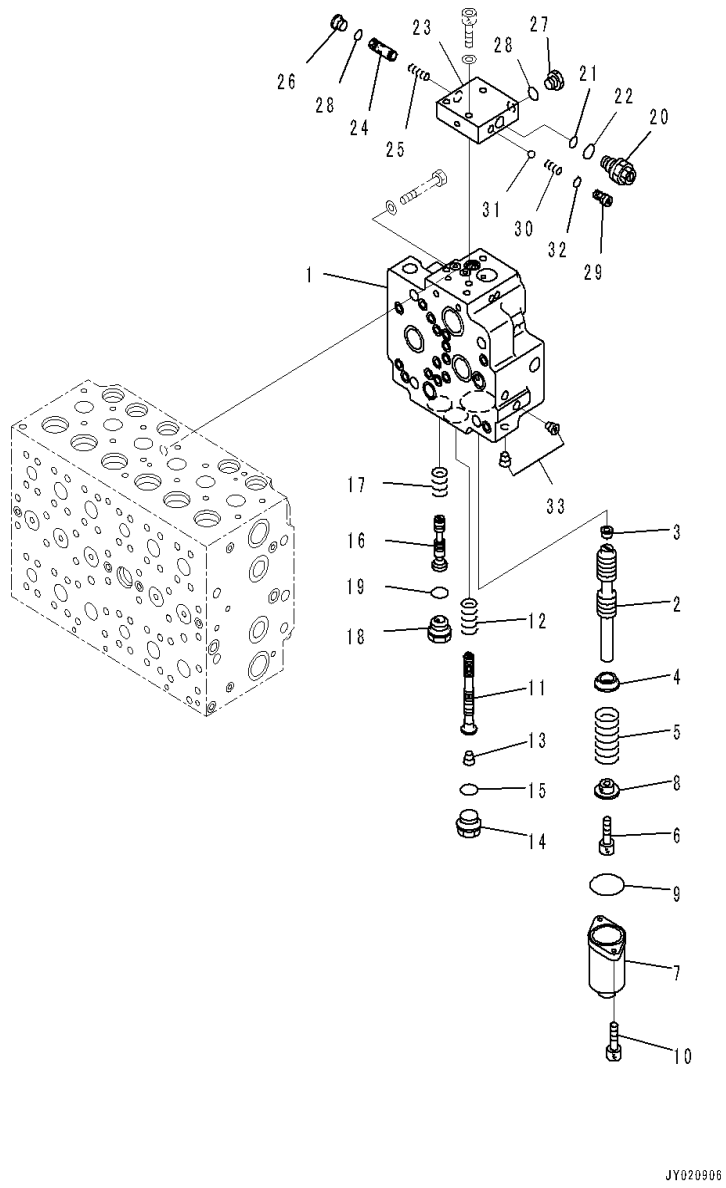

Index	Code	Part Number	Description	Qty	Serial Number
		723-47-25602	Valve, Control	1	C90415-
	A2	723-47-25601	Valve, Control	1	C90208-C90414
	A2	723-47-25600	Valve, Control	1	C90001-C90207
		723-40-71201	• Valve Assembly	1	C90001-
1	C1		• • Body, Valve	1	C90001-
2	C1		• • Spool	1	C90001-
3	C1		• • Plug	1	C90001-
4		723-40-71330	• • Retainer	1	C90001-
5		723-40-71340	• • Spring	1	C90001-
6		01252-60816	• • Bolt, Hexagon Socket Head	1	C90001-
7		723-46-15111	• • Case	1	C90001-
8		723-40-71350	• • Retainer	1	C90001-
9		07430-71380	• • O-ring	1	C90001-
10		01252-60820	• • Bolt, Hexagon Socket Head	2	C90001-
11	C1		• • Spool	1	C90001-
12		723-40-71440	• • Spring	1	C90001-
13	C1		• • Plug	1	C90001-
14		709-74-91860	• • Plug	1	C90001-
15		07002-12434	• • O-ring	1	C90001-
16	C1		• • Spool	1	C90001-
17		723-40-71390	• • Spring	1	C90001-
18		723-40-61150	• • Plug	1	C90001-
19		07002-12434	• • O-ring	1	C90001-
		723-40-71800	• • Valve Assembly	1	C90001-
20		723-40-91600	• • • Valve, Relief	1	C90001-
21		702-16-53920	• • • • O-ring	1	C90001-
22		07002-11623	• • • • O-ring	1	C90001-
23	C1		• • • Block	1	C90001-
24	C1		• • • Spool	1	C90001-
25	C1		• • • Spring	1	C90001-
26		702-21-55620	• • • Plug	1	C90001-
27		708-8H-11530	• • • Plug	1	C90001-
28		07002-11423	• • • O-ring	2	C90001-
29		702-21-55710	• • • Seat	1	C90001-
30		702-21-55720	• • • Spring	1	C90001-
31		04260-00793	• • • Ball	1	C90001-
32		07000-11009	• • • O-ring	1	C90001-
33	C1		• • • Plug	2	C90001-

FIG. H0120-001014 Control Valve (7-spool, 14/22)

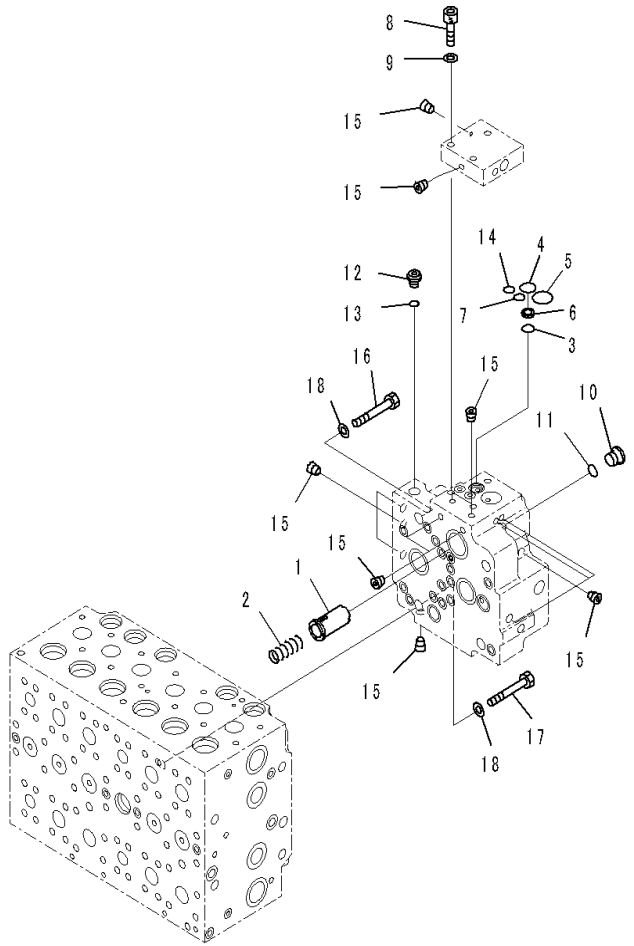

Index	Code	Part Number	Description	Qty	Serial Number
		723-47-25602	Valve, Control	1	C90415-
	A2	723-47-25601	Valve, Control	1	C90208-C90414
	A2	723-47-25600	Valve, Control	1	C90001-C90207
		723-40-71201	• Valve Assembly	1	C90001-
1		723-40-71430	• • Valve	1	C90001-
2		702-21-55460	• • Spring	1	C90001-
3		702-21-55420	• • O-ring	1	C90001-
4		702-21-55520	• • O-ring	1	C90001-
5		702-21-55440	• • O-ring	1	C90001-
6		702-21-53140	• • Filter	1	C90001-
7		07000-12011	• • O-ring	1	C90001-
8		01252-61040	• • Bolt, Hexagon Socket Head	3	C90001-
9		01643-51032	• • Washer	3	C90001-
10		702-21-55620	• • Plug	1	C90001-
11		07002-11423	• • O-ring	1	C90001-
12		708-8E-16160	• • Plug	1	C90001-
13		07002-11023	• • O-ring	1	C90001-
14		07000-12011	• • O-ring	1	C90001-
15	C1		• • Plug	17	C90001-
16		01010-61460	• Bolt	1	C90001-
17		01010-61470	• Bolt	3	C90001-
18		01643-31445	• Washer	4	C90001-

FIG. H0120-001015 Control Valve (7-spool, 15/22)

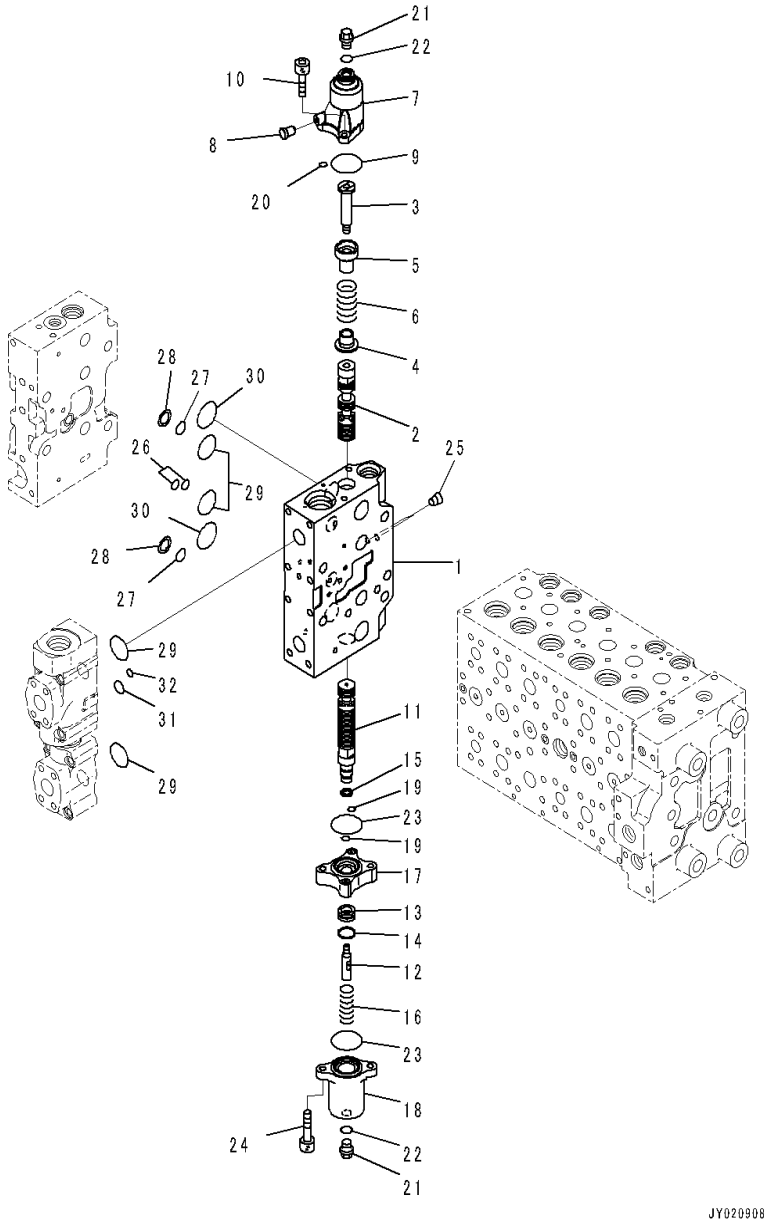

Index	Code	Part Number	Description	Qty	Serial Number
		723-47-25602	Valve, Control	1	C90415-
	A2	723-47-25601	Valve, Control	1	C90208-C90414
	A2	723-47-25600	Valve, Control	1	C90001-C90207
	C1		• Body Subassembly	1	C90415-
	C1		• Body Subassembly	1	C90001-C90414
1	C1		• • Block, Valve	1	C90001-
2	C1		• • Spool	1	C90001-
3		723-46-15390	• • Plug	1	C90001-
4		723-46-15370	• • Retainer	1	C90001-
5		723-46-15380	• • Retainer	1	C90001-
6		723-46-14110	• • Spring	1	C90001-
		723-46-19900	• • Case Subassembly	1	C90001-
7	C1		• • • Case	1	C90001-
8	C1		• • • Plug	1	C90001-
9		07430-71380	• • O-ring	1	C90001-
10		01252-60820	• • Bolt, Hexagon Socket Head	2	C90001-
11	C1		• • Spool	1	C90001-
12		723-46-15330	• • Bolt	1	C90001-
13	C1		• • Piston	1	C90001-
14	C1		• • Seal	1	C90001-
15	C1		• • Seal	1	C90001-
16		723-46-14180	• • Spring	1	C90001-
17		723-46-17850	• • Case	1	C90001-
18		723-46-17860	• • Case	1	C90001-
19		723-11-19960	• • O-ring	2	C90001-
20		07000-11010	• • O-ring	1	C90001-
21		706-73-71450	• • Plug	2	C90001-
22		07002-11423	• • O-ring	2	C90001-
23		07430-71380	• • O-ring	2	C90001-
24		01252-60845	• • Bolt, Hexagon Socket Head	2	C90001-
25	C1		• • Plug	2	C90001-
26		723-46-17530	• • O-ring	2	C90001-
27		723-11-19130	• • O-ring	2	C90001-
28		723-46-17520	• • Ring, Back-up	2	C90001-
29		07000-13032	• • O-ring	4	C90001-
30		723-46-17510	• • O-ring	2	C90001-
31		07000-12016	• • O-ring	1	C90001-
32		702-16-53920	• • O-ring	1	C90001-

FIG. H0120-001016 Control Valve (7-spool, 16/22)

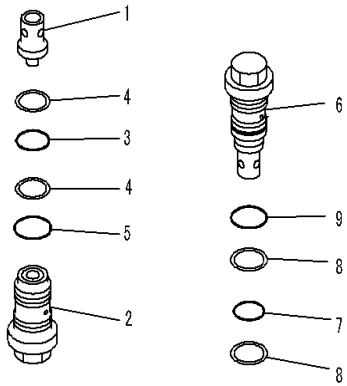

A 詳 細
Detail A

B 詳 細
Detail B

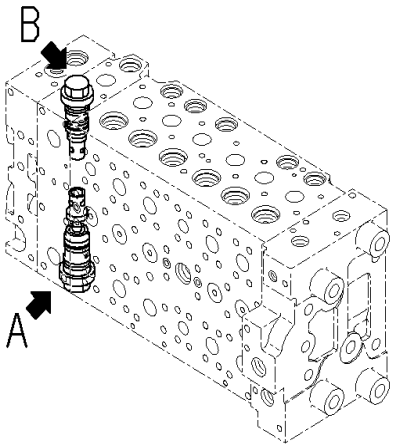

JY019907

Index	Code	Part Number	Description	Qty	Serial Number
		723-47-25602	Valve, Control	1	C90415-
	A2	723-47-25601	Valve, Control	1	C90208-C90414
	A2	723-47-25600	Valve, Control	1	C90001-C90207
	C1		• Body Subassembly	1	C90415-
	C1		• Body Subassembly	1	C90001-C90414
1		723-46-41210	• • Valve	1	C90001-
2		723-46-40601	• • Valve Assembly	1	C90001-
3		700-93-11320	• • • O-ring	1	C90001-
4		723-46-41950	• • • Ring, Back-up	2	C90001-
5		07002-13634	• • • O-ring	1	C90001-
6		723-46-44600	• • Valve Assembly	1	C90415-
		723-46-43700	• • Valve Assembly	1	C90001-C90414
7		700-93-11320	• • • O-ring	1	C90001-
8		723-46-41950	• • • Ring, Back-up	2	C90001-
9		07002-13634	• • • O-ring	1	C90001-

FIG. H0120-001017 Control Valve (7-spool, 17/22)

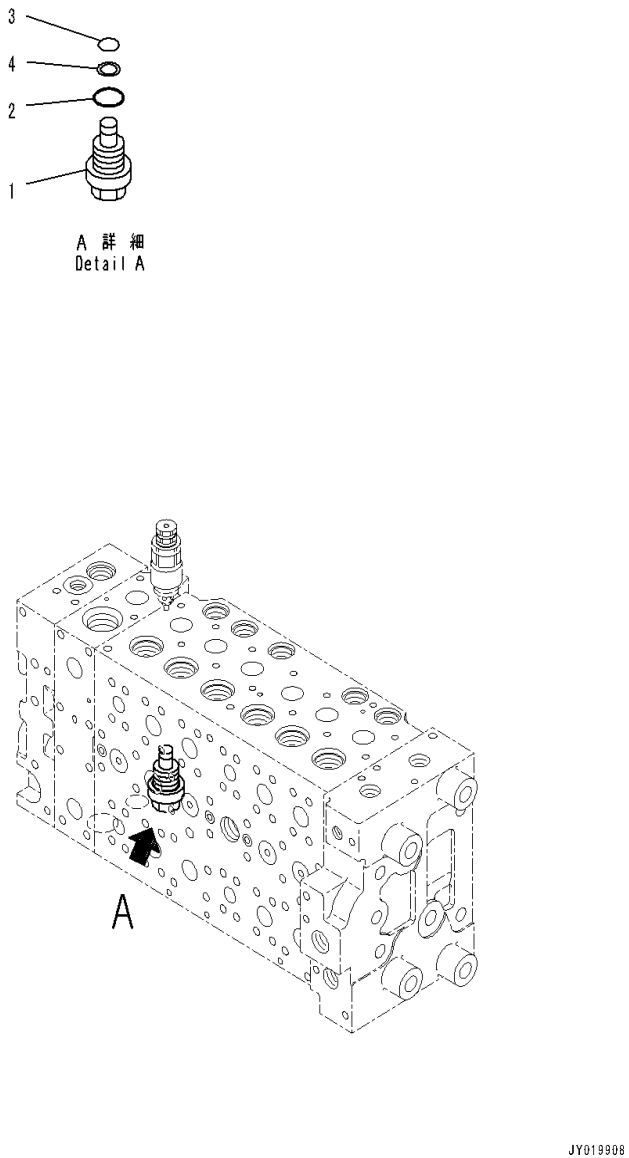

Index	Code	Part Number	Description	Qty	Serial Number
		723-47-25602	Valve, Control	1	C90415-
	A2	723-47-25601	Valve, Control	1	C90208-C90414
	A2	723-47-25600	Valve, Control	1	C90001-C90207
	C1		• Body Subassembly	1	C90415-
	C1		• Body Subassembly	1	C90001-C90414
1		709-74-91510	• • Plug	1	C90001-
2		07000-13024	• • O-ring	1	C90001-
3		07000-11009	• • O-ring	1	C90001-
4		07001-01009	• • Ring, Back-up	1	C90001-

FIG. H0120-001018 Control Valve (7-spool, 18/22)

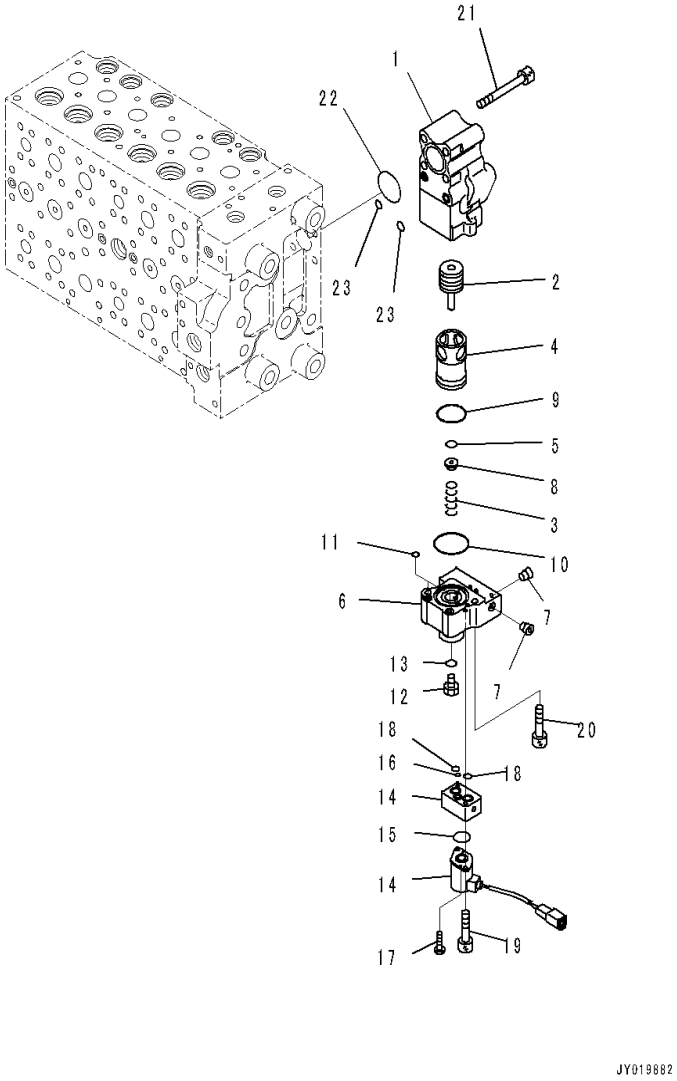

Index	Code	Part Number	Description	Qty	Serial Number
		723-47-25602	Valve, Control	1	C90415-
	A2	723-47-25601	Valve, Control	1	C90208-C90414
	A2	723-47-25600	Valve, Control	1	C90001-C90207
		723-40-87800	• Valve Assembly	1	C90001-
1	C1		• • Body	1	C90001-
2	C1		• • Spool	1	C90001-
3		723-40-87650	• • Spring	1	C90001-
4	C1		• • Sleeve	1	C90001-
5	C1		• • Seal	1	C90001-
6	C1		• • Case	1	C90001-
7	C1		• • Plug	4	C90001-
8		723-40-87670	• • Retainer	1	C90001-
9		723-40-87170	• • O-ring	1	C90001-
10		07000-13035	• • O-ring	1	C90001-
11		07000-11008	• • O-ring	2	C90001-
12		07040-11007	• • Plug	1	C90001-
13		07002-11023	• • O-ring	1	C90001-
14		702-21-60900	• • Valve, Pilot	1	C90001-
15		700-80-61260	• • • O-ring	1	C90001-
16		723-11-19960	• • • O-ring	1	C90001-
17		702-21-54180	• • • Screw	2	C90001-
18		702-21-54910	• • • O-ring	2	C90001-
19		01252-60635	• • Bolt, Hexagon Socket Head	2	C90001-
20		01252-60845	• • Bolt, Hexagon Socket Head	2	C90001-
21		01252-61075	• Bolt, Hexagon Socket Head	4	C90001-
22		07000-13038	• O-ring	1	C90001-
23		07000-11010	• O-ring	2	C90001-

FIG. H0120-001019 Control Valve (7-spool, 19/22)

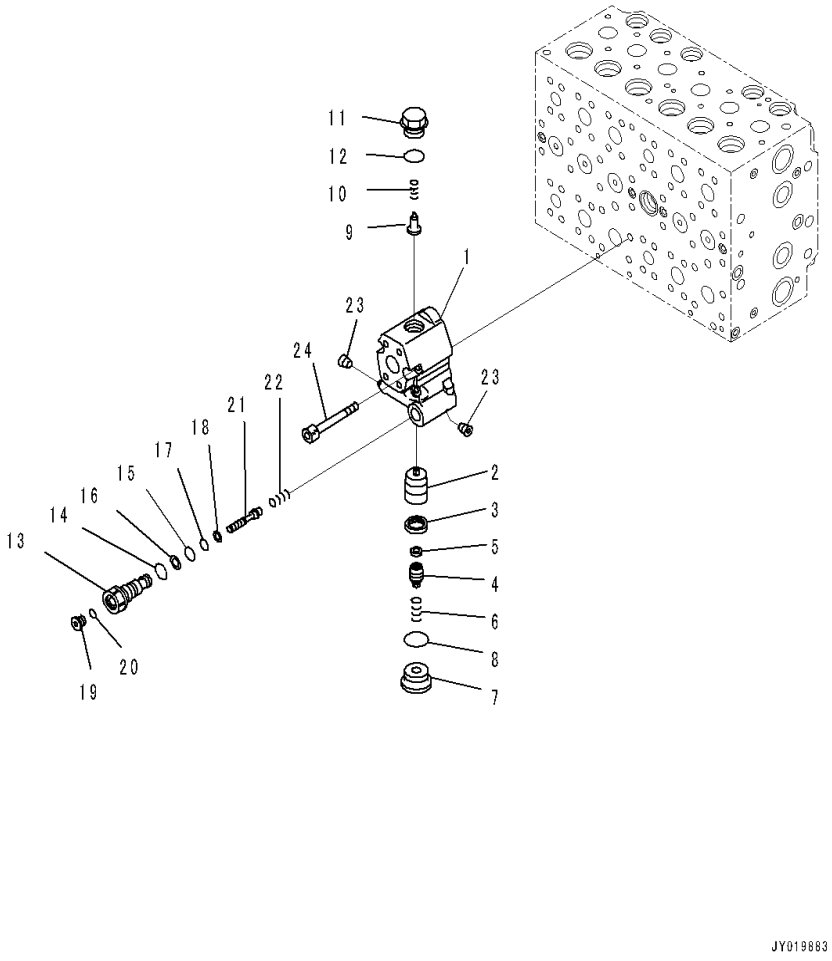

Index	Code	Part Number	Description	Qty	Serial Number
		723-47-25602	Valve, Control	1	C90415-
	A2	723-47-25601	Valve, Control	1	C90208-C90414
	A2	723-47-25600	Valve, Control	1	C90001-C90207
		723-40-82401	• Valve Assembly	1	C90001-
1	C1		• • Body	1	C90001-
2	C1		• • Valve	1	C90001-
3	C1		• • Seal	1	C90001-
4	C1		• • Plug	1	C90001-
5	C1		• • Filter	1	C90001-
6	C1		• • Spring	1	C90001-
7		723-40-82150	• • Plug	1	C90001-
8		07002-13334	• • O-ring	1	C90001-
9		723-40-84420	• • Valve, Check	1	C90001-
10		723-40-84430	• • Spring	1	C90001-
11		723-40-84440	• • Plug	1	C90001-
12		07000-13024	• • O-ring	1	C90001-
13	C1		• • Plug	1	C90001-
14		07002-11823	• • O-ring	1	C90001-
15		07000-12011	• • O-ring	1	C90001-
16		07001-02011	• • Ring, Back-up	1	C90001-
17		07000-11010	• • O-ring	1	C90001-
18		07001-01010	• • Ring, Back-up	1	C90001-
19		723-11-18190	• • Plug	1	C90001-
20		07002-11023	• • O-ring	1	C90001-
21	C1		• • Piston	1	C90001-
22	C1		• • Spring	1	C90001-
23	C1		• • Plug	2	C90001-
24		01252-61075	• Bolt, Hexagon Socket Head	4	C90001-

FIG. H0120-001020 Control Valve (7-spool, 20/22)

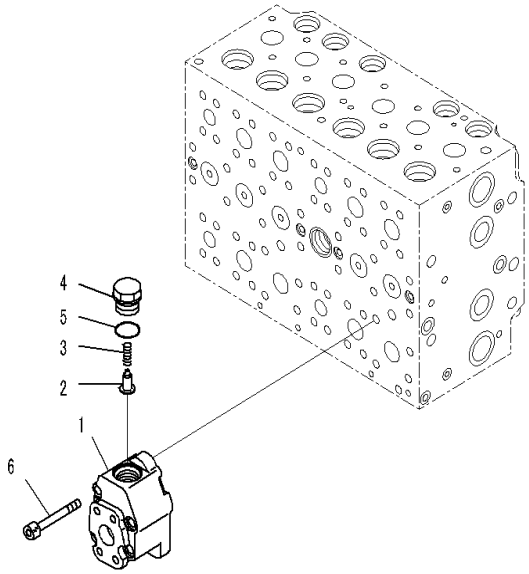

JY019884

Index	Code	Part Number	Description	Qty	Serial Number
		723-47-25602	Valve, Control	1	C90415-
	A2	723-47-25601	Valve, Control	1	C90208-C90414
	A2	723-47-25600	Valve, Control	1	C90001-C90207
		723-40-84700	• Valve Assembly	1	C90208-
		723-40-84601	• Valve Assembly	1	C90001-C90207
1		723-40-84461	• • Block	1	C90208-
		723-40-84410	• • Block	1	C90001-C90207
2		723-40-84420	• • Valve, Check	1	C90001-
3		723-40-84430	• • Spring	1	C90001-
4		723-40-84440	• • Plug	1	C90001-
5		07000-13024	• • O-ring	1	C90001-
6		01252-61070	• Bolt, Hexagon Socket Head	4	C90001-

FIG. H0120-001021 Control Valve (7-spool, 21/22)

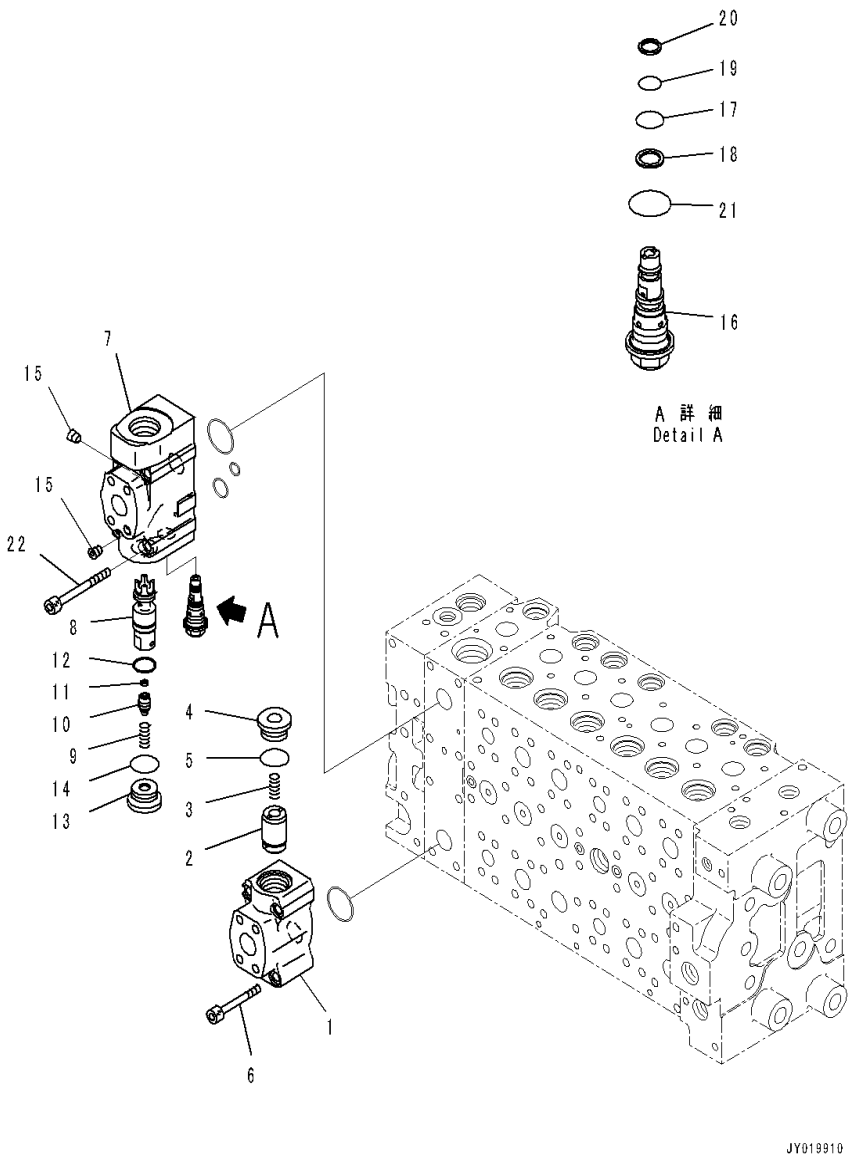

Index	Code	Part Number	Description	Qty	Serial Number
		723-47-25602	Valve, Control	1	C90415-
	A2	723-47-25601	Valve, Control	1	C90208-C90414
	A2	723-47-25600	Valve, Control	1	C90001-C90207
		723-40-84100	• Valve Assembly	1	C90001-
1	C1		• • Body	1	C90001-
2	C1		• • Valve	1	C90001-
3		723-40-82140	• • Spring	1	C90001-
4		723-40-84130	• • Plug	1	C90001-
5		07002-13034	• • O-ring	1	C90001-
6		01252-61065	• Bolt	4	C90001-
		723-40-84200	• Valve Assembly	1	C90001-
7	C1		• • Body	1	C90001-
8	C1		• • Valve	1	C90001-
9		723-40-82140	• • Spring	1	C90001-
10		723-40-84230	• • Plug	1	C90001-
11		723-40-82220	• • Filter	1	C90001-
12		723-46-15350	• • Seal	1	C90001-
13		723-40-84130	• • Plug	1	C90001-
14		07002-13034	• • O-ring	1	C90001-
15	C1		• • Plug	2	C90001-
16		723-40-92900	• • Valve Assembly	1	C90001-
17		07000-12012	• • • O-ring	1	C90001-
18		07001-02012	• • • Ring, Back-up	1	C90001-
19		07000-11010	• • • O-ring	1	C90001-
20		07001-01010	• • • Ring, Back-up	1	C90001-
21		07002-12034	• • • O-ring	1	C90001-
22		723-46-18770	• Bolt	4	C90001-

FIG. H0120-001022 Control Valve (7-spool, 22/22)

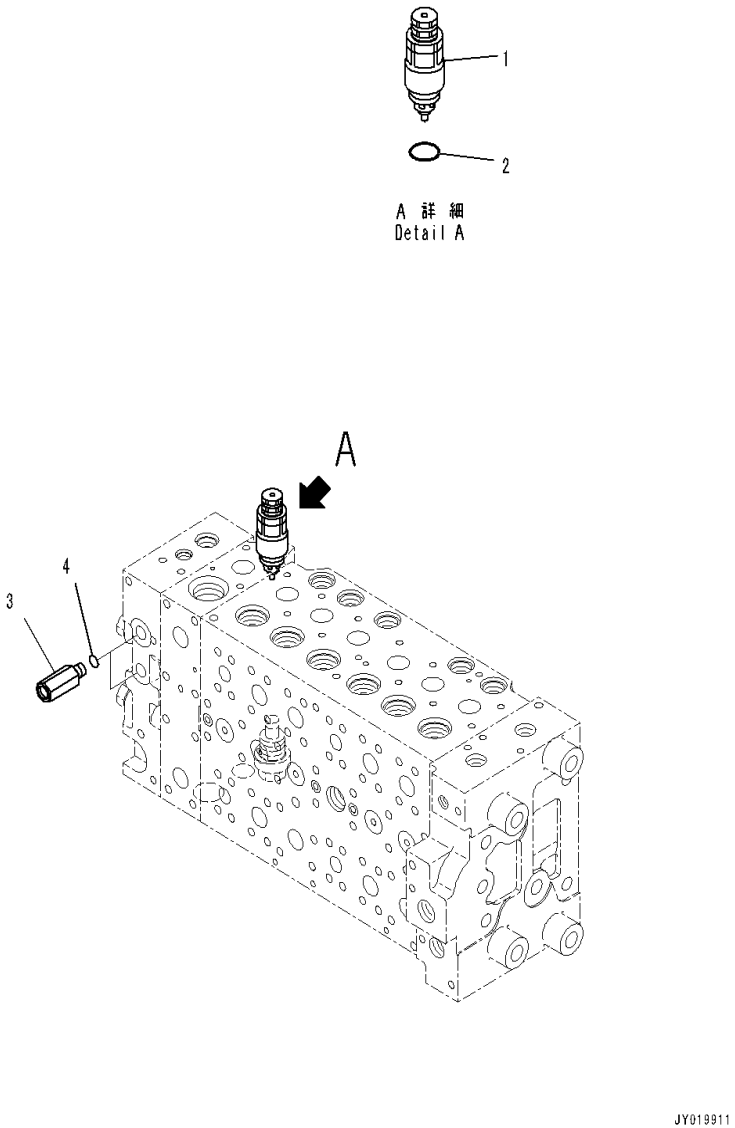

Index	Code	Part Number	Description	Qty	Serial Number
		723-47-25602	Valve, Control	1	C90415-
	A2	723-47-25601	Valve, Control	1	C90208-C90414
	A2	723-47-25600	Valve, Control	1	C90001-C90207
1		723-40-91200	• Valve Assembly, Suction and Relief	1	C90001-
2		709-25-11390	• • O-ring	1	C90001-
3		723-46-17720	• Valve Assembly	2	C90001-
4		07002-11423	• • O-ring	1	C90001-

FIG. H0120-001023 Control Valve (Control Valve Related Parts, 1/2)

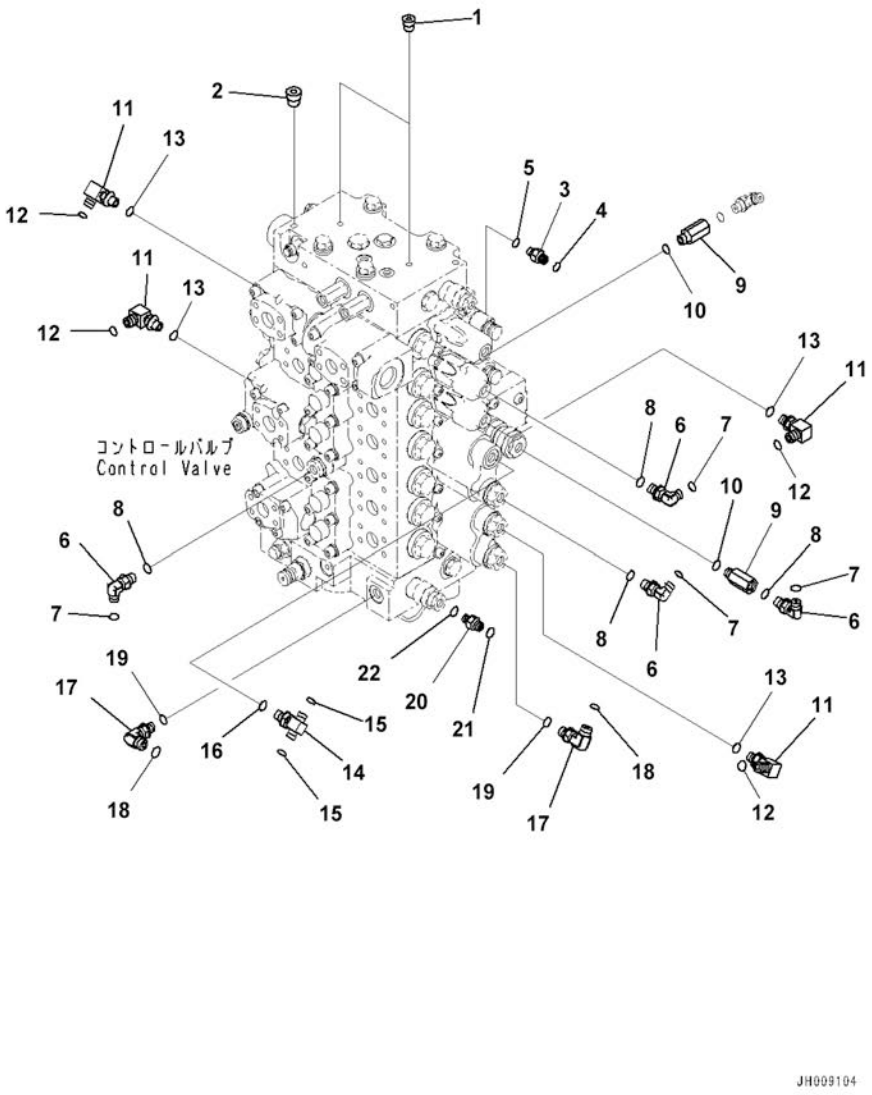

Index	Code	Part Number	Description	Qty	Serial Number
1		07049-01012	Plug	2	C90001-
2		07049-01215	Plug	1	C90001-
3		208-62-71540	Nipple	1	C90001-
4		02896-11008	O-ring	1	C90001-
5		07002-11223	O-ring	1	C90001-
6		11Y-62-12160	Elbow	4	C90001-
7		02896-11008	O-ring	4	C90001-
8		07002-11423	O-ring	4	C90001-
9		20Y-62-22160	Adapter	2	C90001-
10		07002-11423	O-ring	2	C90001-
11		20Y-62-45620	Elbow	4	C90001-
12		02896-11008	O-ring	4	C90001-
13		07002-11423	O-ring	4	C90001-
14		11Y-62-12250	Tee	1	C90001-
15		02896-11008	O-ring	2	C90001-
16		07002-11423	O-ring	1	C90001-
17		21W-62-42490	Elbow	2	C90001-
18		02896-11009	O-ring	2	C90001-
19		07002-11423	O-ring	2	C90001-
20		208-62-71540	Nipple	1	C90001-
21		02896-11008	O-ring	1	C90001-
22		07002-11223	O-ring	1	C90001-

FIG. H0120-001024 Control Valve (Control Valve Related Parts, 2/2)

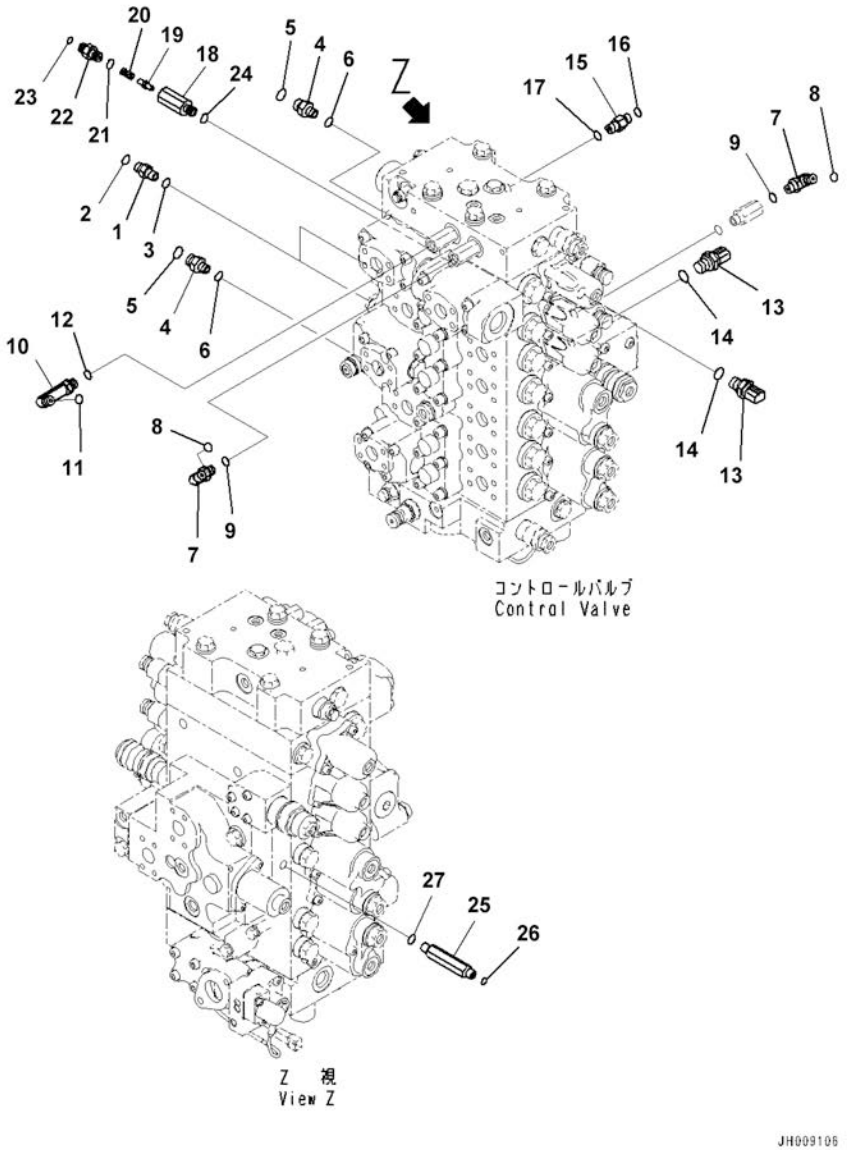

Index	Code	Part Number	Description	Qty	Serial Number
1		02781-0021D	Union	2	C90001-
2		02896-11008	O-ring	2	C90001-
3		07002-11423	O-ring	2	C90001-
4		11Y-62-12520	Union	2	C90001-
5		02896-11009	O-ring	2	C90001-
6		07002-11423	O-ring	2	C90001-
7		02782-10210	Elbow	2	C90001-
8		02896-11008	O-ring	2	C90001-
9		07002-11423	O-ring	2	C90001-
10		02782-10212	Elbow	1	C90001-
11		02896-11008	O-ring	1	C90001-
12		07002-11423	O-ring	1	C90001-
13		7861-93-1812	Sensor, Pressure	2	C90001-
14		07002-61823	• O-ring	1	C90001-
15		22L-62-22590	Nipple	1	C90001-
16		02896-11008	O-ring	1	C90001-
17		07002-11423	O-ring	1	C90001-
		20Y-62-41701	Valve Assembly	1	C90001-
18	C1		• Body	1	C90001-
19		20Y-60-22270	• Poppet	1	C90001-
20		701-20-61230	• Spring	1	C90001-
21		07002-11423	• O-ring	1	C90001-
22		20Y-62-47630	• Nipple	1	C90001-
23		02896-11008	O-ring	1	C90001-
24		07002-11423	O-ring	1	C90001-
25		207-62-71531	Union	1	C90001-
26		02896-11008	O-ring	1	C90001-
27		07002-11423	O-ring	1	C90001-

FIG. H0120-001025 Control Valve (Valve Bracket)

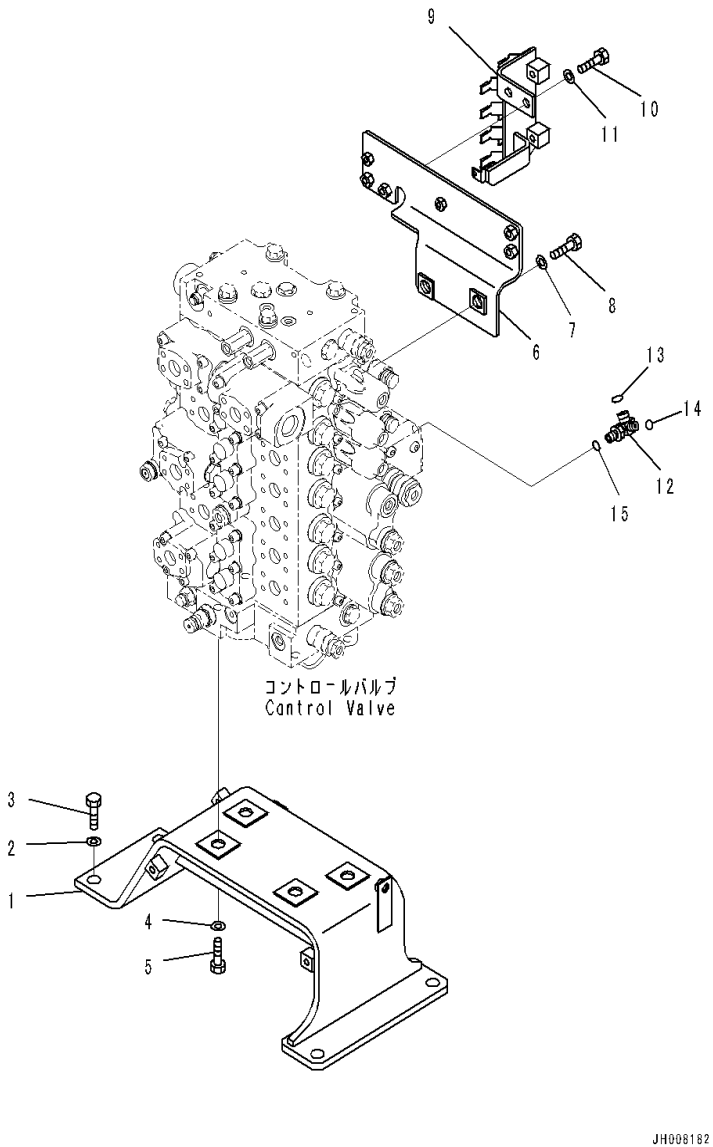

Index	Code	Part Number	Description	Qty	Serial Number
1		207-62-77310	Bracket	1	C90001-
2		421-70-11280	Washer	4	C90001-
3		01010-81640	Bolt	4	C90001-
4		01643-31645	Washer	4	C90001-
5		01010-81645	Bolt	4	C90001-
6		207-62-41121	Bracket	1	C90001-
7		01643-31645	Washer	2	C90001-
8		01010-81640	Bolt	2	C90001-
9		207-62-77110	Bracket	1	C90001-
10		01010-81235	Bolt	2	C90001-
11		01643-31232	Washer	2	C90001-
12		20Y-62-87510	Tee	1	C90001-
13		02896-11008	O-ring	1	C90001-
14		02896-11009	O-ring	1	C90001-
15		07002-11423	O-ring	1	C90001-

FIG. H0120-002001 Control Valve (8-spool, 1/25)

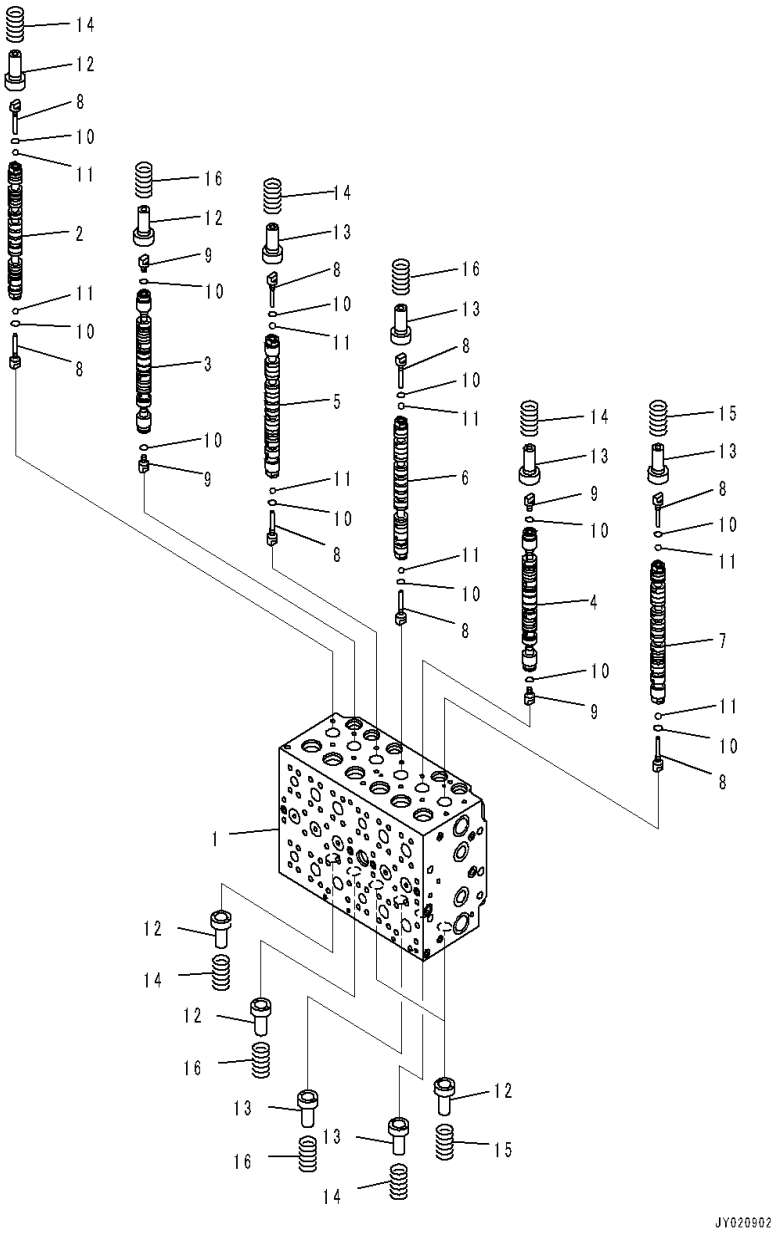

Index	Code	Part Number	Description	Qty	Serial Number
		Note: This list covers following specifications.			
		With 1-service Valve			
		With 1-additional Actuator Piping, Accumulator			
		723-48-25602	Valve, Control	1	C90373-
	A2	723-48-25601	Valve, Control	1	C90293-C90372
	A2	723-48-25600	Valve, Control	1	C90001-C90292
	C1		• Body Subassembly	1	C90293-
	C1		• Body Subassembly	1	C90001-C90292
1	C1		• • Block, Valve	1	C90001-
2	C1		• • Spool	1	C90001-
3	C1		• • Spool	1	C90001-
4	C1		• • Spool	1	C90001-
5	C1		• • Spool	1	C90001-
6	C1		• • Spool	1	C90001-
7	C1		• • Spool	1	C90001-
8		723-46-15130	• • Plug	8	C90001-
9		723-46-15140	• • Plug	4	C90001-
10		07002-10823	• • O-ring	12	C90001-
11		708-7T-16460	• • Ball	8	C90001-
12		723-46-15120	• • Retainer	6	C90001-
13		723-46-15690	• • Retainer	6	C90001-
14		723-46-14110	• • Spring	5	C90001-
15		723-46-14170	• • Spring	3	C90001-
16		723-46-14131	• • Spring	4	C90001-

FIG. H0120-002002 Control Valve (8-spool, 2/25)

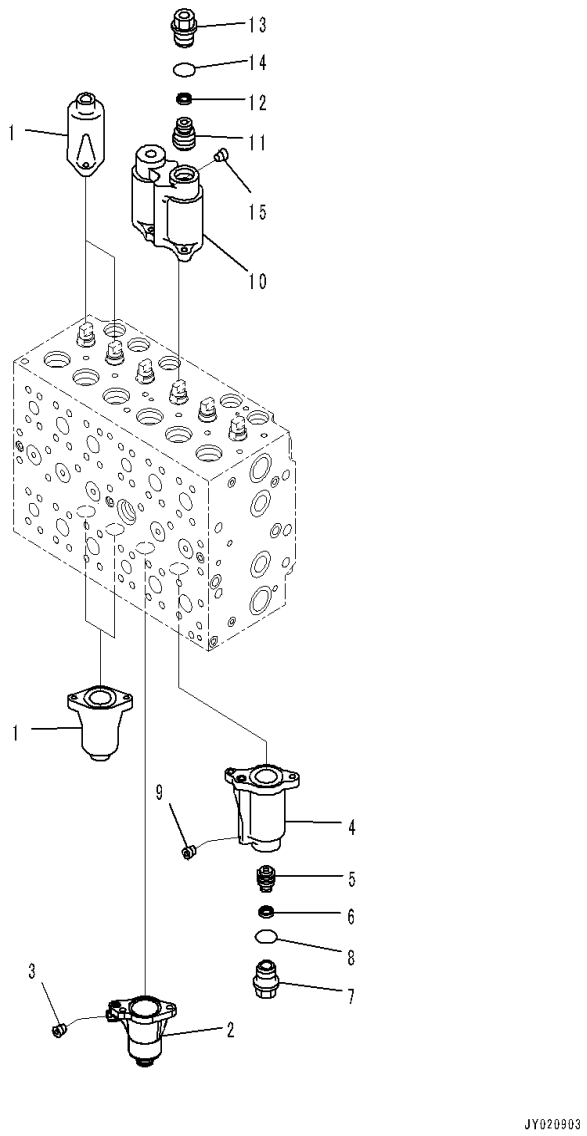

Index	Code	Part Number	Description	Qty	Serial Number
		Note: This list covers following specifications.			
		With 1-service Valve			
		With 1-additional Actuator Piping, Accumulator			
		723-48-25602	Valve, Control	1	C90373-
	A2	723-48-25601	Valve, Control	1	C90293-C90372
	A2	723-48-25600	Valve, Control	1	C90001-C90292
	C1		• Body Subassembly	1	C90293-
	C1		• Body Subassembly	1	C90001-C90292
1		723-46-15111	• • Case	4	C90001-
		723-46-19140	• • Case Subassembly	1	C90001-
2	C1		• • • Case	1	C90001-
3	C1		• • • Plug	1	C90001-
		723-46-19800	• • Case Subassembly	1	C90001-
4	C1		• • • Case	1	C90001-
5	C1		• • • Piston	1	C90001-
6	C1		• • • Seal	1	C90001-
7		723-46-15630	• • • Plug	1	C90001-
8		07000-13024	• • • O-ring	1	C90001-
9	C1		• • • Plug	1	C90001-
		723-46-18380	• • Case Subassembly	1	C90001-
10	C1		• • • Case	1	C90001-
11	C1		• • • Piston	1	C90001-
12	C1		• • • Seal	1	C90001-
13		723-46-15630	• • • Plug	1	C90001-
14		07000-13024	• • • O-ring	1	C90001-
15	C1		• • • Plug	1	C90001-

FIG. H0120-002003 Control Valve (8-spool, 3/25)

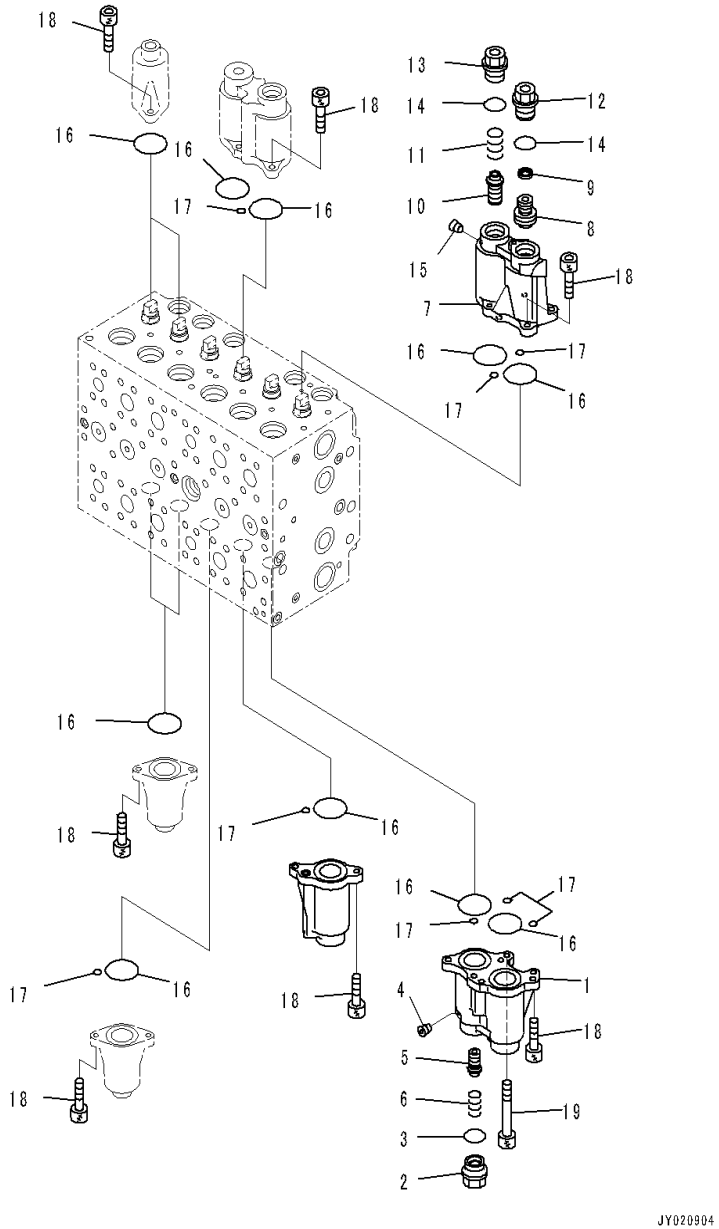

Index	Code	Part Number	Description	Qty	Serial Number
		Note: This list covers following specifications.			
		With 1-service Valve			
		With 1-additional Actuator Piping, Accumulator			
		723-48-25602	Valve, Control	1	C90373-
	A2	723-48-25601	Valve, Control	1	C90293-C90372
	A2	723-48-25600	Valve, Control	1	C90001-C90292
	C1		• Body Subassembly	1	C90293-
	C1		• Body Subassembly	1	C90001-C90292
		723-46-18450	• • Case Subassembly	1	C90001-
1	C1		• • • Case	1	C90001-
2		723-46-17340	• • • Plug	1	C90001-
3		07000-13024	• • • O-ring	1	C90001-
4	C1		• • • Plug	1	C90001-
5		723-46-17320	• • • Spool	1	C90001-
6		723-46-17330	• • • Spring	1	C90001-
		723-46-18460	• • Case Subassembly	1	C90001-
7	C1		• • • Case	1	C90001-
8	C1		• • • Piston	1	C90001-
9	C1		• • • Seal	1	C90001-
10		723-46-17320	• • • Spool	1	C90001-
11		723-46-17330	• • • Spring	1	C90001-
12		723-46-15630	• • • Plug	1	C90001-
13		723-46-17340	• • • Plug	1	C90001-
14		07000-13024	• • • O-ring	2	C90001-
15	C1		• • • Plug	2	C90001-
16		07430-71380	• • O-ring	12	C90001-
17		07000-11010	• • O-ring	8	C90001-
18		01252-60820	• • Bolt, Hexagon Socket Head	23	C90001-
19		723-46-17350	• • Bolt, Hexagon Socket Head	1	C90001-

FIG. H0120-002004 Control Valve (8-spool, 4/25)

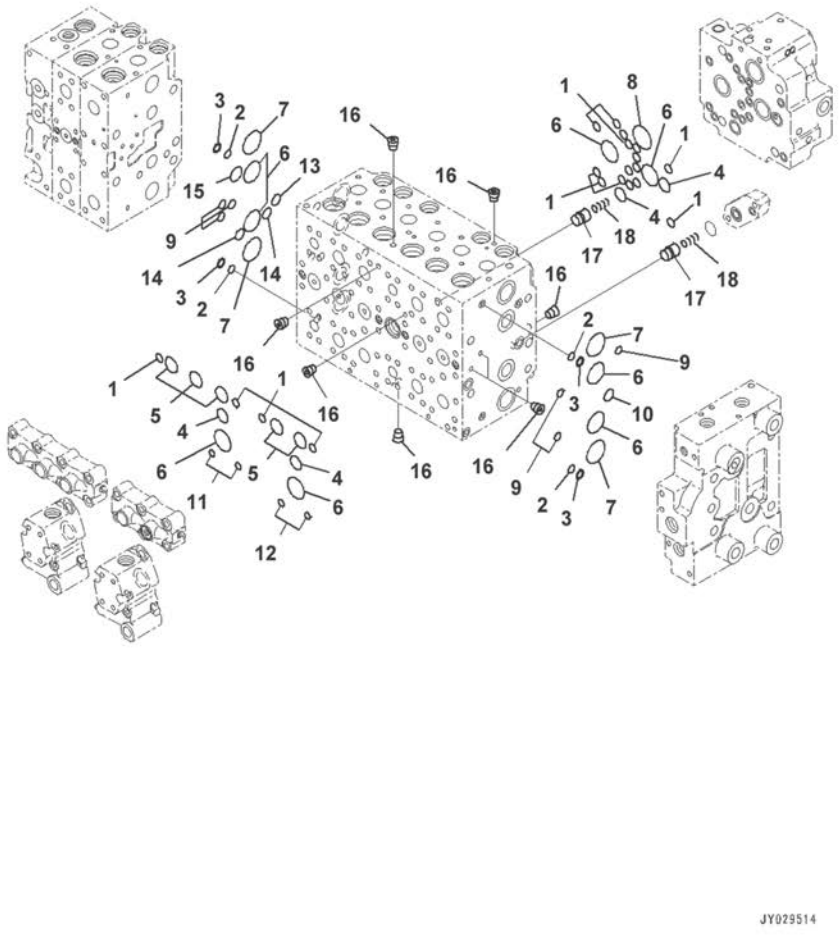

Index	Code	Part Number	Description	Qty	Serial Number
		Note: This list covers following specifications.			
		With 1-service Valve			
		With 1-additional Actuator Piping, Accumulator			
		723-48-25602	Valve, Control	1	C90373-
	A2	723-48-25601	Valve, Control	1	C90293-C90372
	A2	723-48-25600	Valve, Control	1	C90001-C90292
	C1		• Body Subassembly	1	C90293-
	C1		• Body Subassembly	1	C90001-C90292
1		07000-12012	• • O-ring	19	C90001-
2		723-11-19130	• • O-ring	4	C90001-
3		723-46-17520	• • Ring, Back-up	4	C90001-
4		07000-12021	• • O-ring	4	C90001-
5		07000-13028	• • O-ring	5	C90001-
6		07000-13032	• • O-ring	8	C90001-
7		723-46-17510	• • O-ring	4	C90001-
8		07000-13036	• • O-ring	1	C90001-
9		723-46-17530	• • O-ring	12	C90001-
10		723-11-18150	• • O-ring	3	C90001-
11		702-16-53920	• • O-ring	2	C90001-
12		07000-11010	• • O-ring	2	C90001-
13		723-46-18710	• • O-ring	1	C90001-
14		722-12-19070	• • O-ring	2	C90001-
15		723-46-18720	• • O-ring	1	C90001-
16	C1		• • Plug	14	C90001-
17		723-46-17650	• • Valve	2	C90001-
18		723-46-14150	• • Spring	2	C90001-

FIG. H0120-002005 Control Valve (8-spool, 5/25)

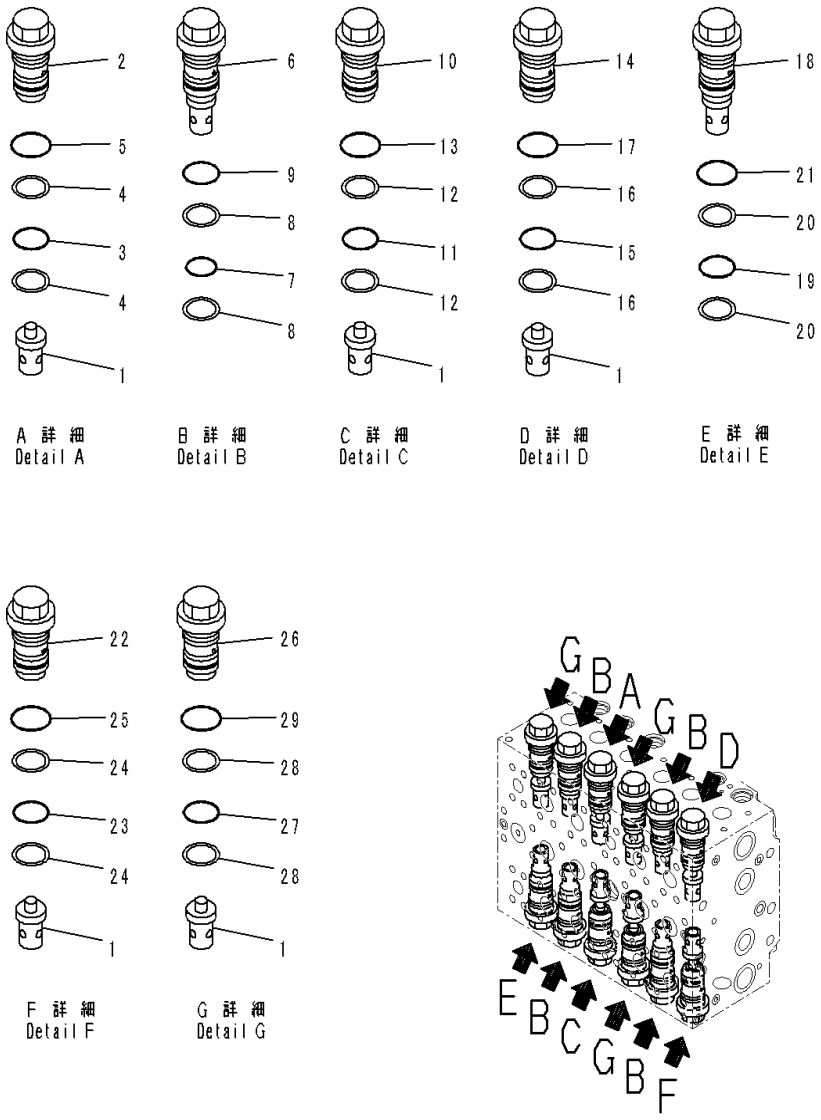

Index	Code	Part Number	Description	Qty	Serial Number
		Note: This list covers following specifications.			
		With 1-service Valve			
		With 1-additional Actuator Piping, Accumulator			
		723-48-25602	Valve, Control	1	C90373-
	A2	723-48-25601	Valve, Control	1	C90293-C90372
	A2	723-48-25600	Valve, Control	1	C90001-C90292
	C1		• Body Subassembly	1	C90293-
	C1		• Body Subassembly	1	C90001-C90292
1		723-46-41210	• • Valve	7	C90001-
2		723-46-40100	• • Valve Assembly	1	C90001-
3		700-93-11320	• • • O-ring	1	C90001-
4		723-46-41950	• • • Ring, Back-up	2	C90001-
5		07002-13634	• • • O-ring	1	C90001-
6		723-46-42800	• • Valve Assembly	4	C90001-
7		700-93-11320	• • • O-ring	1	C90001-
8		723-46-41950	• • • Ring, Back-up	2	C90001-
9		07002-13634	• • • O-ring	1	C90001-
10		723-46-40601	• • Valve Assembly	1	C90001-
11		700-93-11320	• • • O-ring	1	C90001-
12		723-46-41950	• • • Ring, Back-up	2	C90001-
13		07002-13634	• • • O-ring	1	C90001-
14		723-46-43100	• • Valve Assembly	1	C90001-
15		700-93-11320	• • • O-ring	1	C90001-
16		723-46-41950	• • • Ring, Back-up	2	C90001-
17		07002-13634	• • • O-ring	1	C90001-
18		723-46-43600	• • Valve Assembly	1	C90001-
19		700-93-11320	• • • O-ring	1	C90001-
20		723-46-41950	• • • Ring, Back-up	2	C90001-
21		07002-13634	• • • O-ring	1	C90001-
22		723-46-44100	• • Valve Assembly	1	C90001-
23		700-93-11320	• • • O-ring	1	C90001-
24		723-46-41950	• • • Ring, Back-up	2	C90001-
25		07002-13634	• • • O-ring	1	C90001-
26		723-46-45100	• • Valve Assembly	3	C90001-
27		700-93-11320	• • • O-ring	1	C90001-
28		723-46-41950	• • • Ring, Back-up	2	C90001-
29		07002-13634	• • • O-ring	1	C90001-

FIG. H0120-002006 Control Valve (8-spool, 6/25)

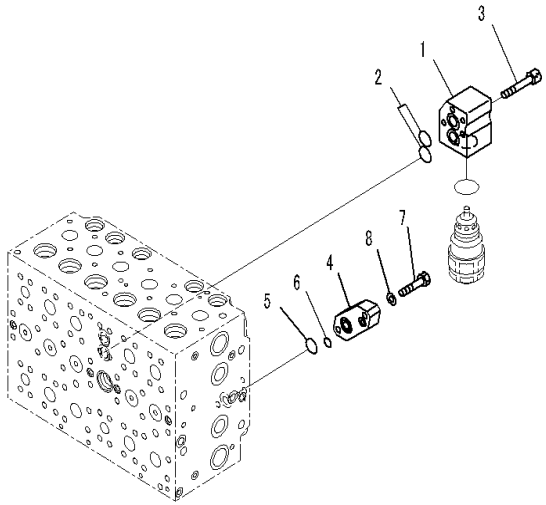

JY019870

Index	Code	Part Number	Description	Qty	Serial Number
		Note: This list covers following specifications.			
		With 1-service Valve			
		With 1-additional Actuator Piping, Accumulator			
		723-48-25602	Valve, Control	1	C90373-
	A2	723-48-25601	Valve, Control	1	C90293-C90372
	A2	723-48-25600	Valve, Control	1	C90001-C90292
	C1		• Body Subassembly	1	C90293-
	C1		• Body Subassembly	1	C90001-C90292
1		723-46-11910	• • Block	1	C90001-
2		723-46-15510	• • O-ring	2	C90001-
3		01252-60865	• • Bolt, Hexagon Socket Head	4	C90001-
4		723-46-18730	• • Plate	1	C90001-
5		07000-12021	• • O-ring	1	C90001-
6		07000-12011	• • O-ring	1	C90001-
7		01010-61040	• • Bolt	2	C90001-
8		01643-51032	• • Washer	2	C90001-

FIG. H0120-002007 Control Valve (8-spool, 7/25)

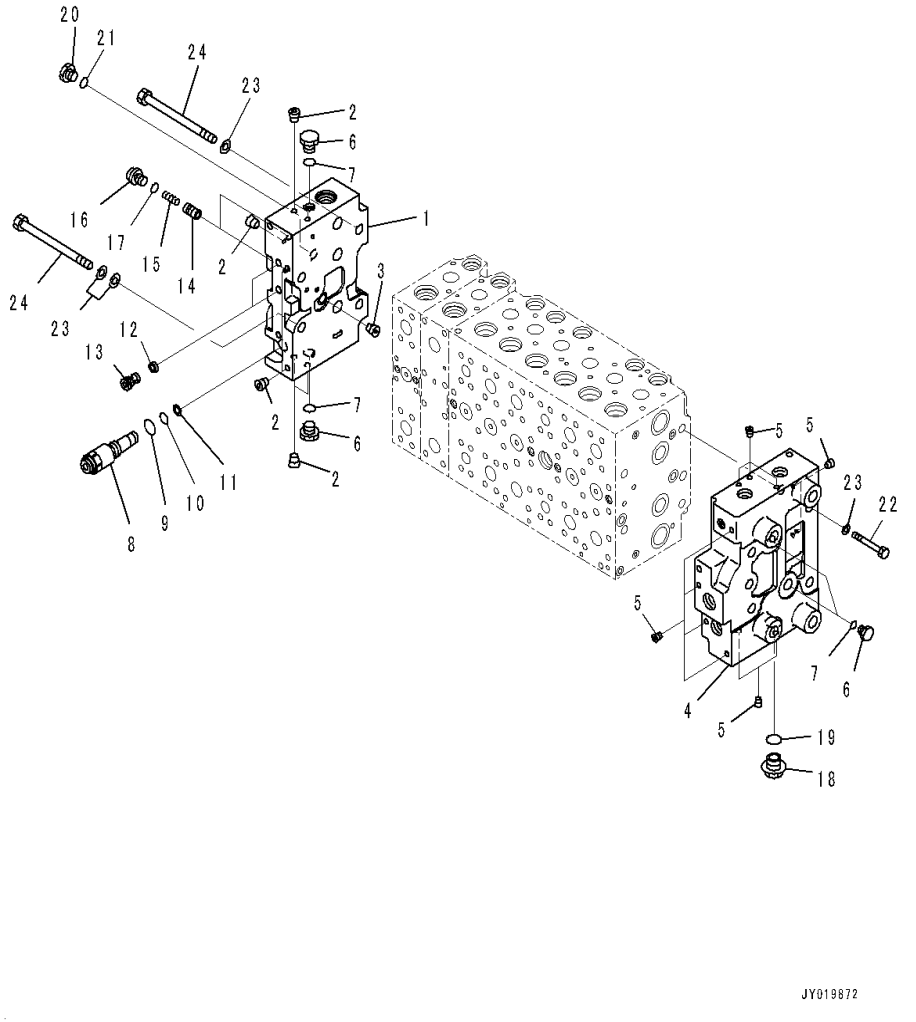

Index	Code	Part Number	Description	Qty	Serial Number
		Note: This list covers following specifications.			
		With 1-service Valve			
		With 1-additional Actuator Piping, Accumulator			
		723-48-25602	Valve, Control	1	C90373-
	A2	723-48-25601	Valve, Control	1	C90293-C90372
	A2	723-48-25600	Valve, Control	1	C90001-C90292
		723-46-00660	• Cover Assembly	1	C90001-
1	C1		• • Cover	1	C90001-
2	C1		• • Plug	7	C90001-
3	C1		• • Plug	1	C90001-
		723-46-00990	• Cover Assembly	1	C90001-
4	C1		• • Cover	1	C90001-
5	C1		• • Plug	10	C90001-
6		708-8E-16250	• Plug	4	C90001-
7		07002-11823	• O-ring	4	C90001-
8		723-46-17600	• Plug Assembly	1	C90001-
9		07002-11423	• • O-ring	1	C90001-
10		07000-11007	• • O-ring	1	C90001-
11		07001-01007	• • Ring, Back-up	1	C90001-
12		723-40-82220	• Filter	2	C90001-
13		723-46-17550	• Plug	2	C90001-
14		723-46-15190	• Valve	2	C90001-
15		723-46-14140	• Spring	2	C90001-
16		708-8E-16160	• Plug	2	C90001-
17		07002-11023	• O-ring	2	C90001-
18		709-74-91860	• Plug	1	C90001-
19		07002-12434	• O-ring	1	C90001-
20		708-8H-11530	• Plug	1	C90001-
21		07002-11423	• O-ring	1	C90001-
22		01010-61490	• Bolt	4	C90001-
23		01643-31445	• Washer, Flat	10	C90001-
24		723-46-15220	• Bolt	4	C90001-

FIG. H0120-002008 Control Valve (8-spool, 8/25)

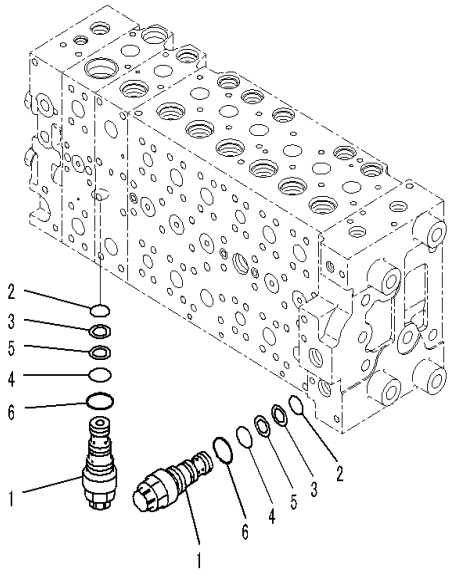

JY019873

Index	Code	Part Number	Description	Qty	Serial Number
		Note: This list covers following specifications.			
		With 1-service Valve			
		With 1-additional Actuator Piping, Accumulator			
		723-48-25602	Valve, Control	1	C90373-
	A2	723-48-25601	Valve, Control	1	C90293-C90372
	A2	723-48-25600	Valve, Control	1	C90001-C90292
1		723-40-56800	• Valve Assembly, Unloader	2	C90001-
2		07000-12014	• • O-ring	1	C90001-
3		723-40-56350	• • Ring, Back-up	1	C90001-
4		07000-12016	• • O-ring	1	C90001-
5		723-60-22230	• • Ring, Back-up	1	C90001-
6		07002-12434	• • O-ring	1	C90001-

FIG. H0120-002009 Control Valve (8-spool, 9/25)

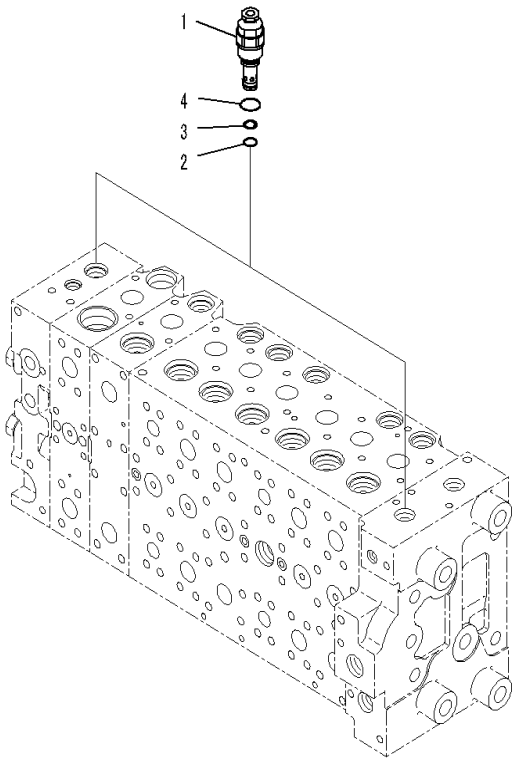

Index	Code	Part Number	Description	Qty	Serial Number
		Note: This list covers following specifications.			
		With 1-service Valve			
		With 1-additional Actuator Piping, Accumulator			
		723-48-25602	Valve, Control	1	C90373-
	A2	723-48-25601	Valve, Control	1	C90293-C90372
	A2	723-48-25600	Valve, Control	1	C90001-C90292
1		723-40-93801	• Valve, Relief	2	C90001-
2		700-22-11410	• • O-ring	1	C90001-
3		700-80-64220	• • Ring, Back-up	1	C90001-
4		07002-12434	• • O-ring	1	C90001-

FIG. H0120-002010 Control Valve (8-spool, 10/25)

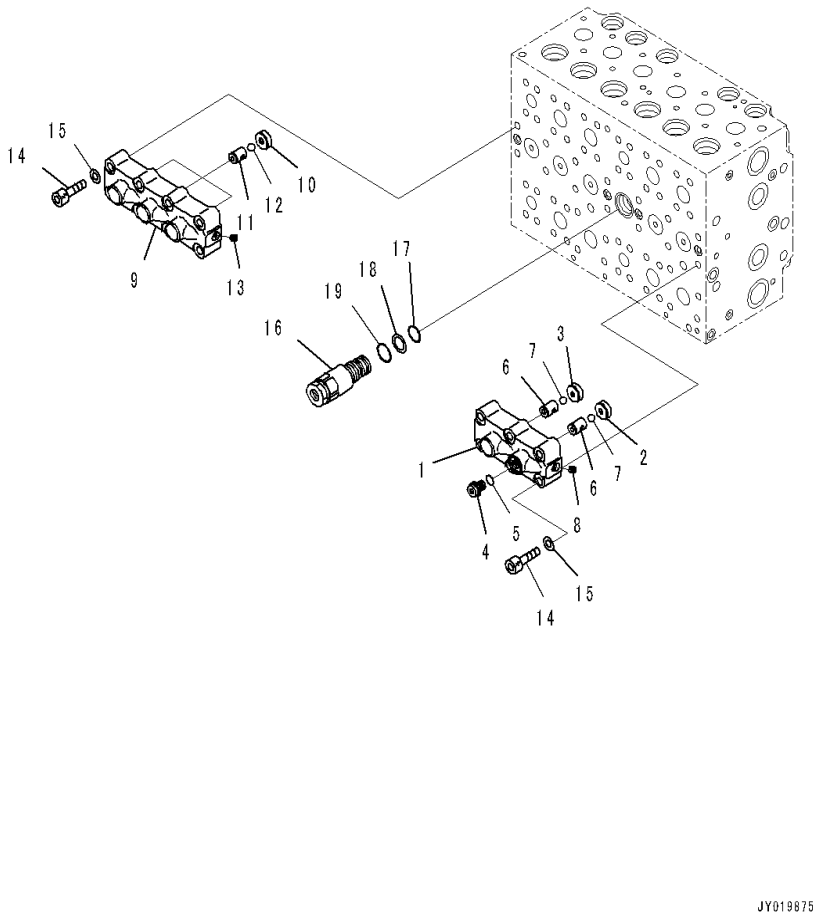

Index	Code	Part Number	Description	Qty	Serial Number
		Note: This list covers following specifications.			
		With 1-service Valve			
		With 1-additional Actuator Piping, Accumulator			
		723-48-25602	Valve, Control	1	C90373-
	A2	723-48-25601	Valve, Control	1	C90293-C90372
	A2	723-48-25600	Valve, Control	1	C90001-C90292
		723-40-66701	• Valve Assembly	1	C90001-
1	C1		• • Case	1	C90001-
2	C1		• • Seat	1	C90001-
3	C1		• • Seat	1	C90001-
4		708-8H-11530	• • Plug	1	C90001-
5		07002-11423	• • O-ring	1	C90001-
6	C1		• • Seat	2	C90001-
7	C1		• • Ball	2	C90001-
8	C1		• • Plug	1	C90001-
		723-40-66601	• Valve Assembly	1	C90001-
9	C1		• • Case	1	C90001-
10	C1		• • Seat	3	C90001-
11	C1		• • Seat	3	C90001-
12	C1		• • Ball	3	C90001-
13	C1		• • Plug	1	C90001-
14		01252-61050	• Bolt, Hexagon Socket Head	14	C90001-
15		01643-51032	• Washer	14	C90001-
16		723-40-60101	• Valve Assembly	1	C90001-
17		07000-12020	• • O-ring	1	C90001-
18		07001-02020	• • Ring, Back-up	1	C90001-
19		709-25-11390	• • O-ring	1	C90001-

FIG. H0120-002011 Control Valve (8-spool, 11/25)

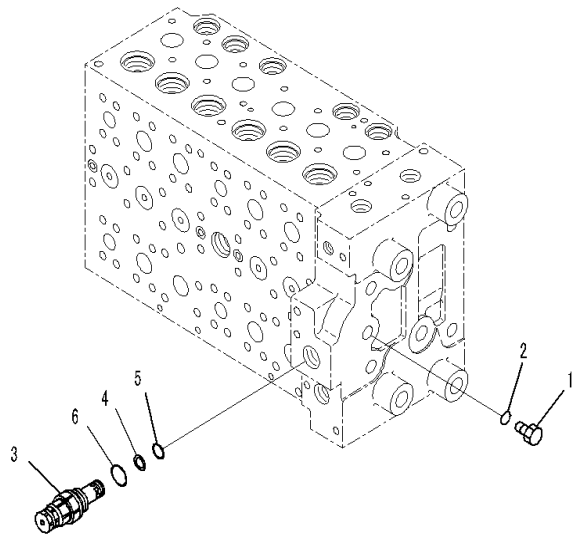

JY020905

Index	Code	Part Number	Description	Qty	Serial Number
		Note: This list covers following specifications.			
		With 1-service Valve			
		With 1-additional Actuator Piping, Accumulator			
		723-48-25602	Valve, Control	1	C90373-
	A2	723-48-25601	Valve, Control	1	C90293-C90372
	A2	723-48-25600	Valve, Control	1	C90001-C90292
1		702-21-55620	• Plug	1	C90001-
2		07002-11423	• O-ring	1	C90001-
3		723-40-91500	• Valve Assembly, Relief	1	C90001-
4		700-80-64220	• • Ring, Back-up	1	C90001-
5		700-22-11410	• • O-ring	1	C90001-
6		709-25-11390	• • O-ring	1	C90001-

FIG. H0120-002012 Control Valve (8-spool, 12/25)

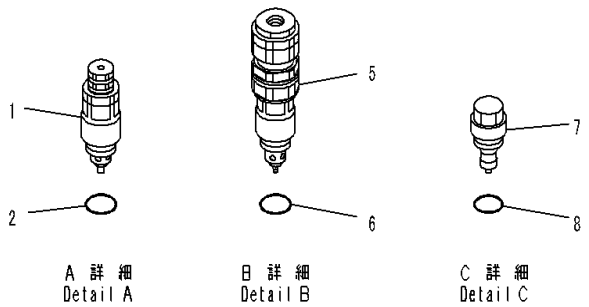

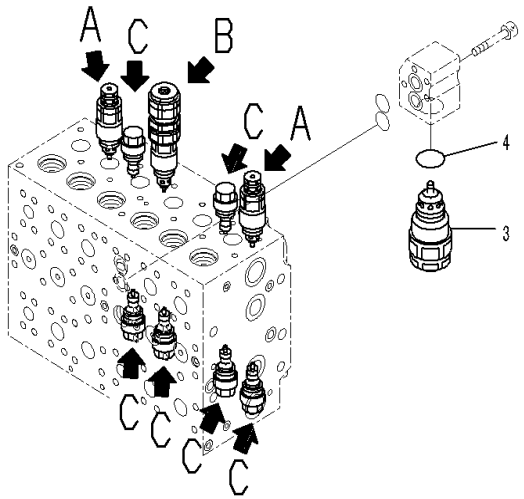

Index	Code	Part Number	Description	Qty	Serial Number
		Note: This list covers following specifications.			
		With 1-service Valve			
		With 1-additional Actuator Piping, Accumulator			
		723-48-25602	Valve, Control	1	C90373-
	A2	723-48-25601	Valve, Control	1	C90293-C90372
	A2	723-48-25600	Valve, Control	1	C90001-C90292
1		723-40-91200	• Valve Assembly, Suction and Relief	2	C90001-
2		709-25-11390	• • O-ring	1	C90001-
3		723-90-69100	• Valve Assembly, Suction and Relief	1	C90001-
4		07002-13634	• • O-ring	1	C90001-
5		723-90-76201	• Valve Assembly, Suction and Relief	1	C90001-
6		07000-13024	• • O-ring	1	C90001-
7		723-40-85100	• Valve Assembly, Suction	6	C90001-
8		709-25-11390	• • O-ring	1	C90001-

FIG. H0120-002013 Control Valve (8-spool, 13/25)

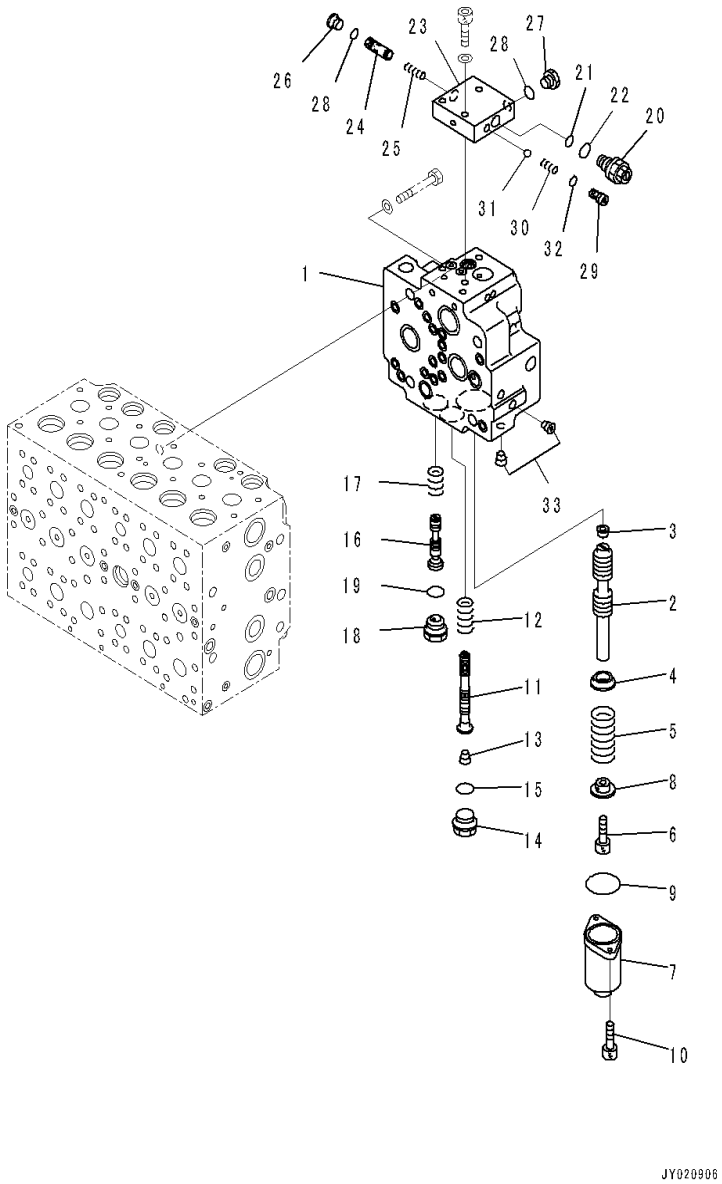

Index	Code	Part Number	Description	Qty	Serial Number
		Note: This list covers following specifications.			
		With 1-service Valve			
		With 1-additional Actuator Piping, Accumulator			
		723-48-25602	Valve, Control	1	C90373-
	A2	723-48-25601	Valve, Control	1	C90293-C90372
	A2	723-48-25600	Valve, Control	1	C90001-C90292
		723-40-71201	• Valve Assembly	1	C90001-
1	C1		• • Body, Valve	1	C90001-
2	C1		• • Spool	1	C90001-
3	C1		• • Plug	1	C90001-
4		723-40-71330	• • Retainer	1	C90001-
5		723-40-71340	• • Spring	1	C90001-
6		01252-60816	• • Bolt, Hexagon Socket Head	1	C90001-
7		723-46-15111	• • Case	1	C90001-
8		723-40-71350	• • Retainer	1	C90001-
9		07430-71380	• • O-ring	1	C90001-
10		01252-60820	• • Bolt, Hexagon Socket Head	2	C90001-
11	C1		• • Spool	1	C90001-
12		723-40-71440	• • Spring	1	C90001-
13	C1		• • Plug	1	C90001-
14		709-74-91860	• • Plug	1	C90001-
15		07002-12434	• • O-ring	1	C90001-
16	C1		• • Spool	1	C90001-
17		723-40-71390	• • Spring	1	C90001-
18		723-40-61150	• • Plug	1	C90001-
19		07002-12434	• • O-ring	1	C90001-
		723-40-71800	• • Valve Assembly	1	C90001-
20		723-40-91600	• • • Valve, Relief	1	C90001-
21		702-16-53920	• • • • O-ring	1	C90001-
22		07002-11623	• • • • O-ring	1	C90001-
23	C1		• • • Block	1	C90001-
24	C1		• • • Spool	1	C90001-
25	C1		• • • Spring	1	C90001-
26		702-21-55620	• • • Plug	1	C90001-
27		708-8H-11530	• • • Plug	1	C90001-
28		07002-11423	• • • O-ring	2	C90001-
29		702-21-55710	• • • Seat	1	C90001-
30		702-21-55720	• • • Spring	1	C90001-
31		04260-00793	• • • Ball	1	C90001-
32		07000-11009	• • • O-ring	1	C90001-

FIG. H0120-002013 Control Valve (8-spool, 13/25)

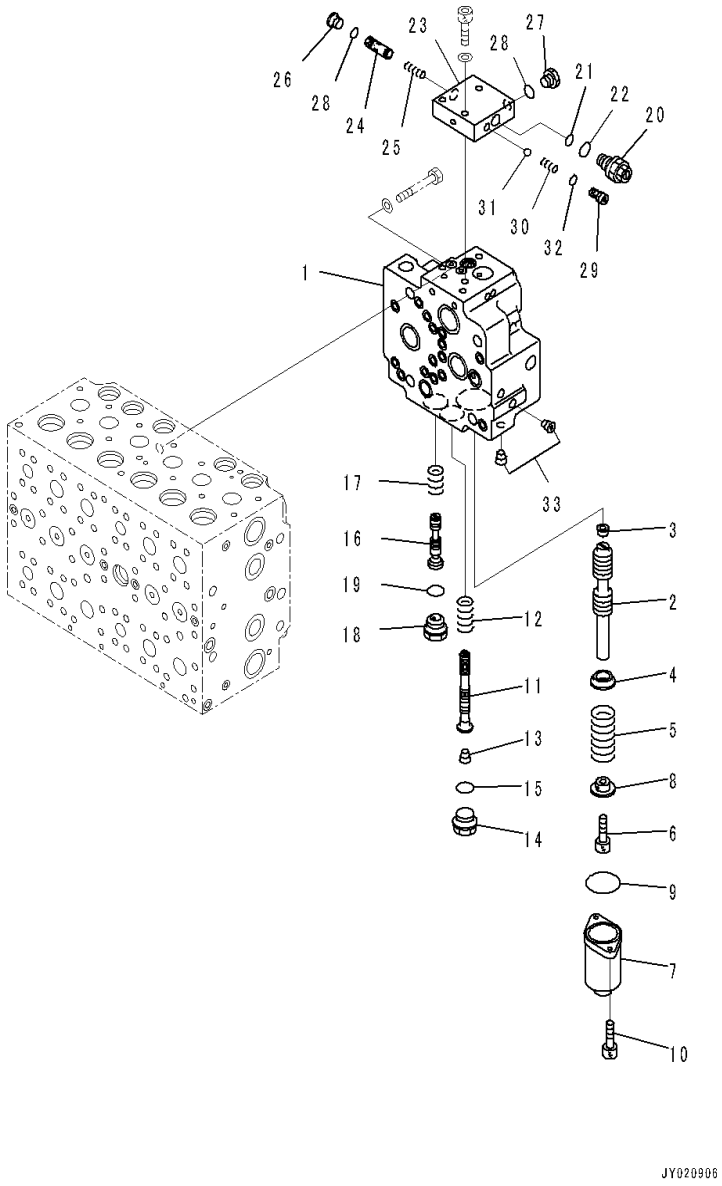

Index	Code	Part Number	Description	Qty	Serial Number
33	C1		• • • Plug	2	C90001-

FIG. H0120-002014 Control Valve (8-spool, 14/25)

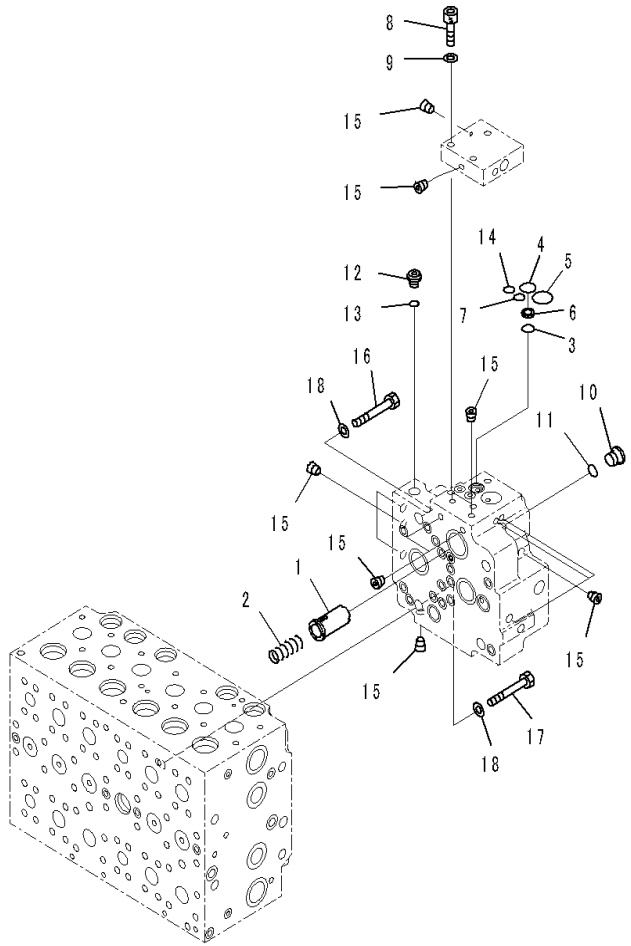

Index	Code	Part Number	Description	Qty	Serial Number
		Note: This list covers following specifications.			
		With 1-service Valve			
		With 1-additional Actuator Piping, Accumulator			
		723-48-25602	Valve, Control	1	C90373-
	A2	723-48-25601	Valve, Control	1	C90293-C90372
	A2	723-48-25600	Valve, Control	1	C90001-C90292
		723-40-71201	• Valve Assembly	1	C90001-
1		723-40-71430	• • Valve	1	C90001-
2		702-21-55460	• • Spring	1	C90001-
3		702-21-55420	• • O-ring	1	C90001-
4		702-21-55520	• • O-ring	1	C90001-
5		702-21-55440	• • O-ring	1	C90001-
6		702-21-53140	• • Filter	1	C90001-
7		07000-12011	• • O-ring	1	C90001-
8		01252-61040	• • Bolt, Hexagon Socket Head	3	C90001-
9		01643-51032	• • Washer	3	C90001-
10		702-21-55620	• • Plug	1	C90001-
11		07002-11423	• • O-ring	1	C90001-
12		708-8E-16160	• • Plug	1	C90001-
13		07002-11023	• • O-ring	1	C90001-
14		07000-12011	• • O-ring	1	C90001-
15	C1		• • Plug	17	C90001-
16		01010-61460	• Bolt	1	C90001-
17		01010-61470	• Bolt	3	C90001-
18		01643-31445	• Washer, Flat	4	C90001-

FIG. H0120-002015 Control Valve (8-spool, 15/25)

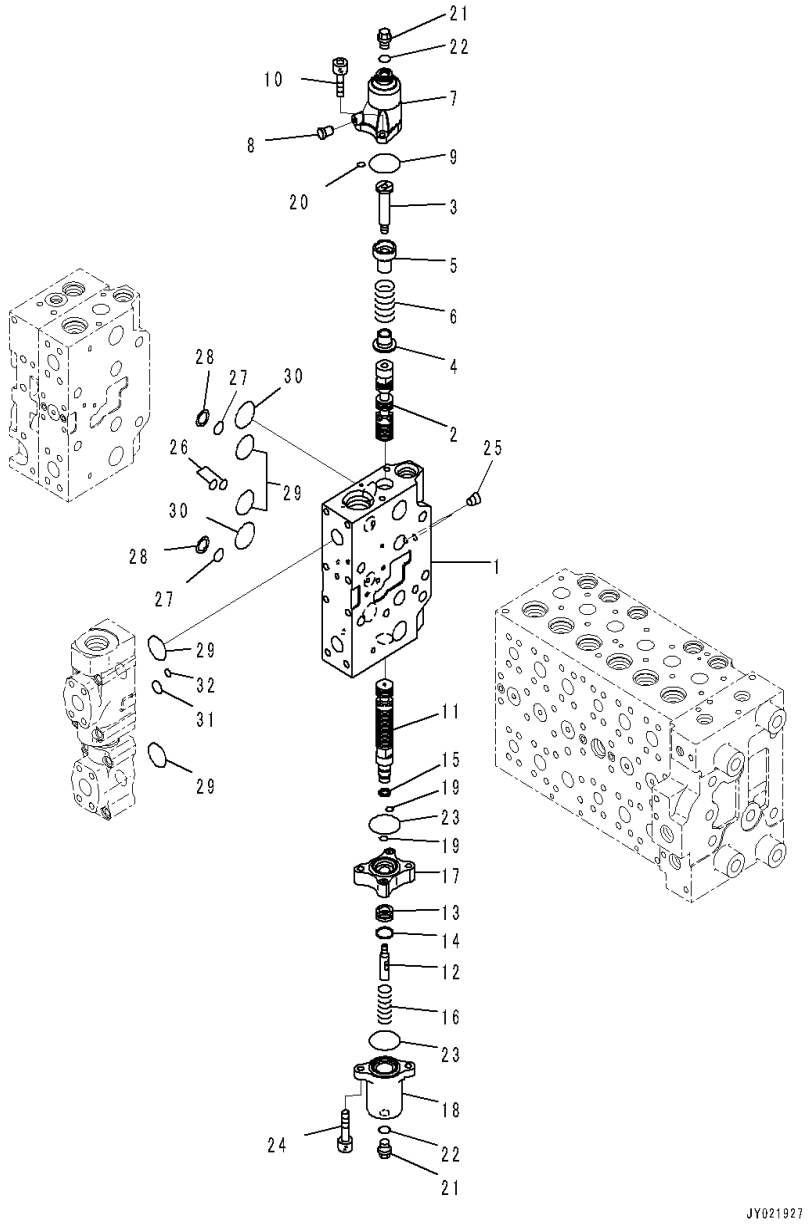

Index	Code	Part Number	Description	Qty	Serial Number
		Note: This list covers following specifications.			
		With 1-service Valve			
		With 1-additional Actuator Piping, Accumulator			
		723-48-25602	Valve, Control	1	C90373-
	A2	723-48-25601	Valve, Control	1	C90293-C90372
	A2	723-48-25600	Valve, Control	1	C90001-C90292
	C1		• Body Subassembly	1	C90293-
	C1		• Body Subassembly	1	C90001-C90292
1	C1		• • Block, Valve	1	C90001-
2	C1		• • Spool	1	C90001-
3		723-46-15390	• • Plug	1	C90001-
4		723-46-15370	• • Retainer	1	C90001-
5		723-46-15380	• • Retainer	1	C90001-
6		723-46-14110	• • Spring	1	C90001-
		723-46-19900	• • Case Subassembly	1	C90001-
7	C1		• • • Case	1	C90001-
8	C1		• • • Plug	1	C90001-
9		07430-71380	• • O-ring	1	C90001-
10		01252-60820	• • Bolt, Hexagon Socket Head	2	C90001-
11	C1		• • Spool	1	C90001-
12		723-46-15330	• • Bolt	1	C90001-
13	C1		• • Piston	1	C90001-
14	C1		• • Seal	1	C90001-
15	C1		• • Seal	1	C90001-
16		723-46-14180	• • Spring	1	C90001-
17		723-46-17850	• • Case	1	C90001-
18		723-46-17860	• • Case	1	C90001-
19		723-11-19960	• • O-ring	2	C90001-
20		07000-11010	• • O-ring	1	C90001-
21		706-73-71450	• • Plug	2	C90001-
22		07002-11423	• • O-ring	2	C90001-
23		07430-71380	• • O-ring	2	C90001-
24		01252-60845	• • Bolt, Hexagon Socket Head	2	C90001-
25	C1		• • Plug	2	C90001-
26		723-46-17530	• • O-ring	2	C90001-
27		723-11-19130	• • O-ring	2	C90001-
28		723-46-17520	• • Ring, Back-up	2	C90001-
29		07000-13032	• • O-ring	4	C90001-
30		723-46-17510	• • O-ring	2	C90001-
31		07000-12016	• • O-ring	1	C90001-

FIG. H0120-002015 Control Valve (8-spool, 15/25)

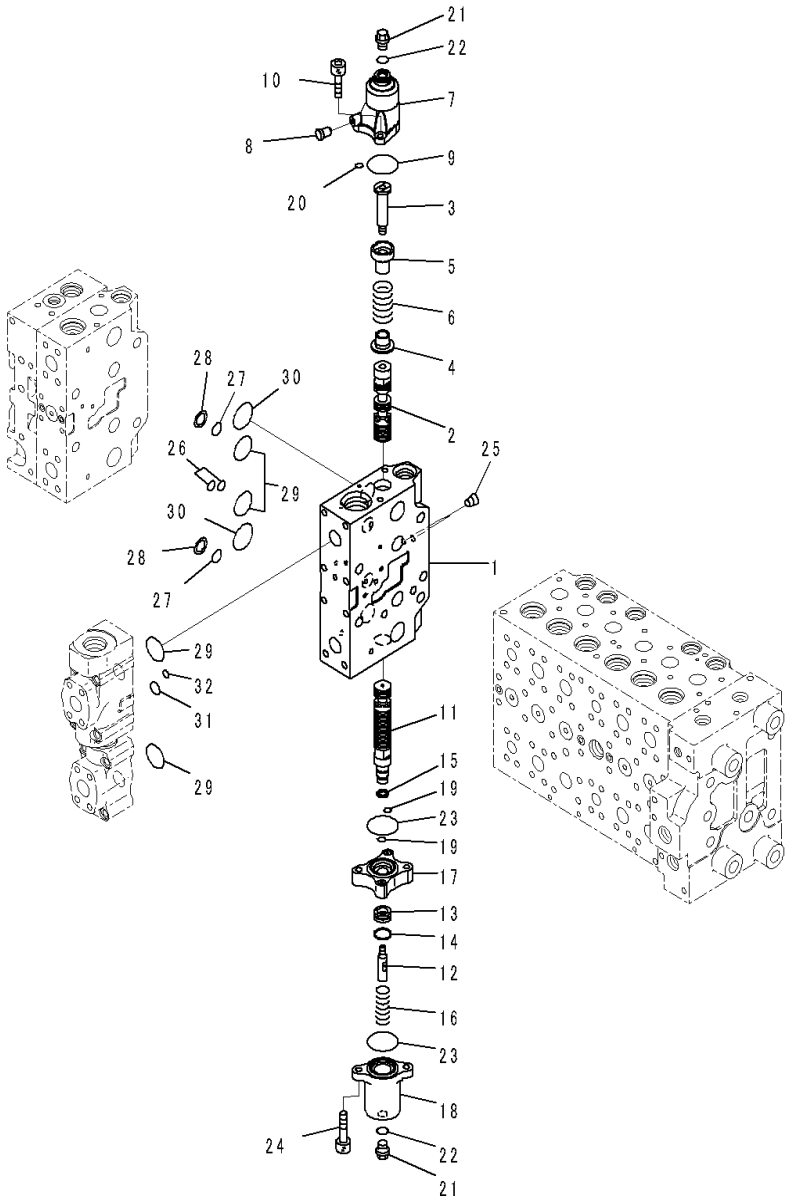

Index	Code	Part Number	Description	Qty	Serial Number
32		702-16-53920	• • O-ring	1	C90001-

FIG. H0120-002016 Control Valve (8-spool, 16/25)

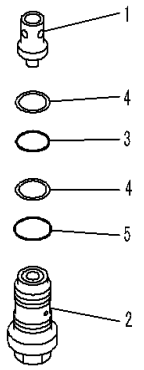

A 詳 細
Detail A

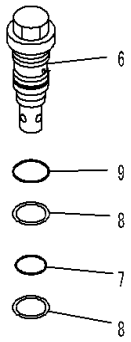

B 詳 細
Detail B

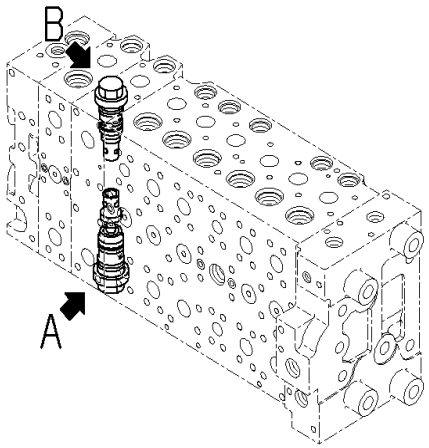

JY019880

Index	Code	Part Number	Description	Qty	Serial Number
		Note: This list covers following specifications.			
		With 1-service Valve			
		With 1-additional Actuator Piping, Accumulator			
		723-48-25602	Valve, Control	1	C90373-
	A2	723-48-25601	Valve, Control	1	C90293-C90372
	A2	723-48-25600	Valve, Control	1	C90001-C90292
	C1		• Body Subassembly	1	C90293-
	C1		• Body Subassembly	1	C90001-C90292
1		723-46-41210	• • Valve	1	C90001-
2		723-46-40601	• • Valve Assembly	1	C90001-
3		700-93-11320	• • • O-ring	1	C90001-
4		723-46-41950	• • • Ring, Back-up	2	C90001-
5		07002-13634	• • • O-ring	1	C90001-
6		723-46-43700	• • Valve Assembly	1	C90001-
7		700-93-11320	• • • O-ring	1	C90001-
8		723-46-41950	• • • Ring, Back-up	2	C90001-
9		07002-13634	• • • O-ring	1	C90001-

FIG. H0120-002017 Control Valve (8-spool, 17/25)

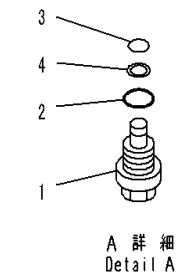

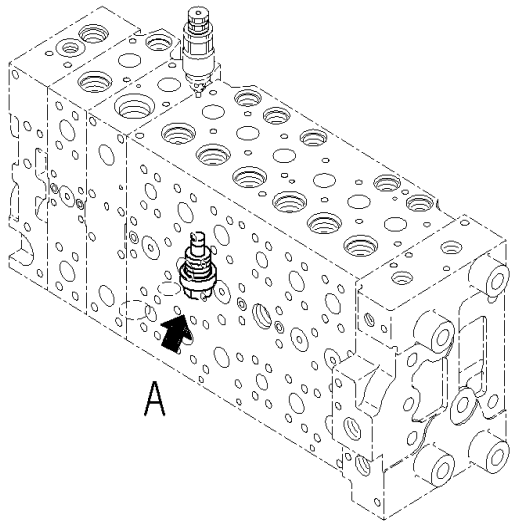

JY019881

Index	Code	Part Number	Description	Qty	Serial Number
		Note: This list covers following specifications.			
		With 1-service Valve			
		With 1-additional Actuator Piping, Accumulator			
		723-48-25602	Valve, Control	1	C90373-
	A2	723-48-25601	Valve, Control	1	C90293-C90372
	A2	723-48-25600	Valve, Control	1	C90001-C90292
	C1		• Body Subassembly	1	C90293-
	C1		• Body Subassembly	1	C90001-C90292
1		709-74-91510	• • Plug	1	C90001-
2		07000-13024	• • O-ring	1	C90001-
3		07000-11009	• • O-ring	1	C90001-
4		07001-01009	• • Ring, Back-up	1	C90001-

FIG. H0120-002018 Control Valve (8-spool, 18/25)

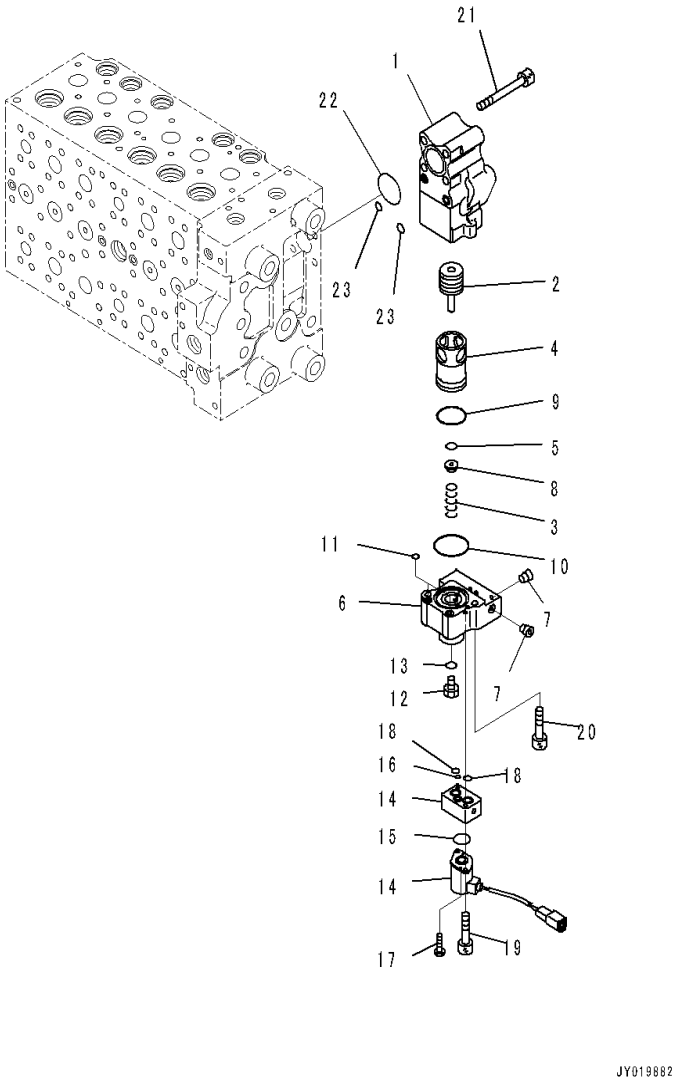

Index	Code	Part Number	Description	Qty	Serial Number
		Note: This list covers following specifications.			
		With 1-service Valve			
		With 1-additional Actuator Piping, Accumulator			
		723-48-25602	Valve, Control	1	C90373-
	A2	723-48-25601	Valve, Control	1	C90293-C90372
	A2	723-48-25600	Valve, Control	1	C90001-C90292
		723-40-87800	• Valve Assembly	1	C90001-
1	C1		• • Body	1	C90001-
2	C1		• • Spool	1	C90001-
3		723-40-87650	• • Spring	1	C90001-
4	C1		• • Sleeve	1	C90001-
5	C1		• • Seal	1	C90001-
6	C1		• • Case	1	C90001-
7	C1		• • Plug	4	C90001-
8		723-40-87670	• • Retainer	1	C90001-
9		723-40-87170	• • O-ring	1	C90001-
10		07000-13035	• • O-ring	1	C90001-
11		07000-11008	• • O-ring	2	C90001-
12		07040-11007	• • Plug	1	C90001-
13		07002-11023	• • O-ring	1	C90001-
14		702-21-60900	• • Valve, Pilot	1	C90001-
15		700-80-61260	• • • O-ring	1	C90001-
16		723-11-19960	• • • O-ring	1	C90001-
17		702-21-54180	• • • Screw	2	C90001-
18		702-21-54910	• • • O-ring	2	C90001-
19		01252-60635	• • Bolt, Hexagon Socket Head	2	C90001-
20		01252-60845	• • Bolt, Hexagon Socket Head	2	C90001-
21		01252-61075	• Bolt, Hexagon Socket Head	4	C90001-
22		07000-13038	• O-ring	1	C90001-
23		07000-11010	• O-ring	2	C90001-

FIG. H0120-002019 Control Valve (8-spool, 19/25)

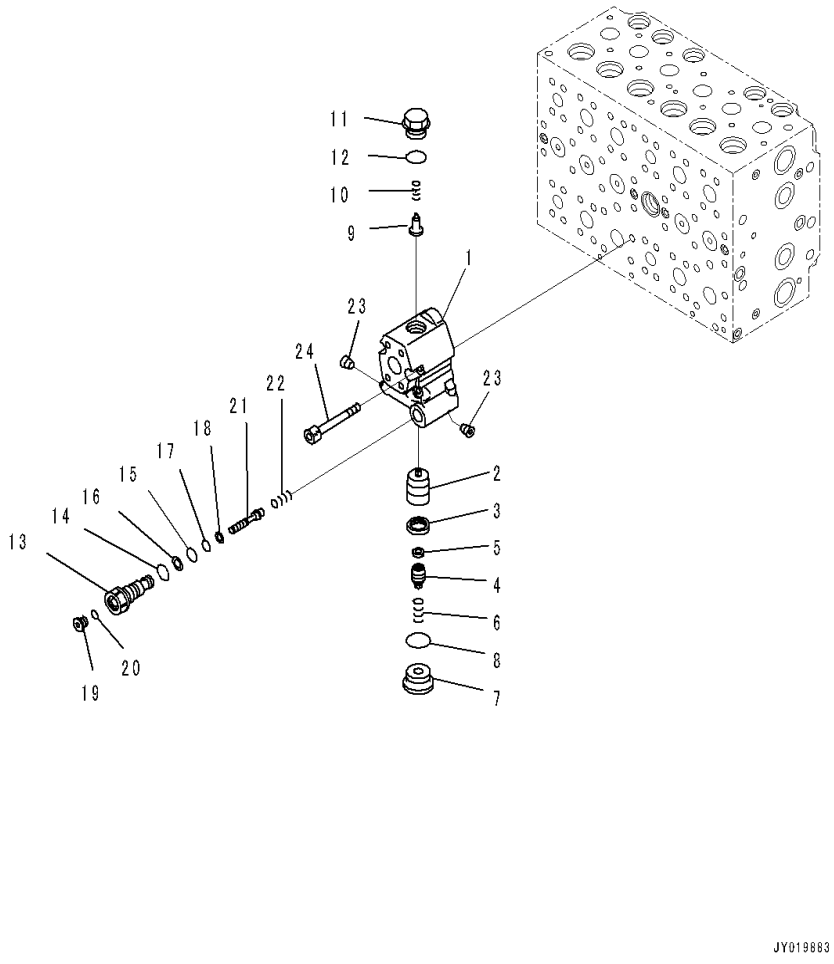

Index	Code	Part Number	Description	Qty	Serial Number
		Note: This list covers following specifications.			
		With 1-service Valve			
		With 1-additional Actuator Piping, Accumulator			
		723-48-25602	Valve, Control	1	C90373-
	A2	723-48-25601	Valve, Control	1	C90293-C90372
	A2	723-48-25600	Valve, Control	1	C90001-C90292
		723-40-82401	• Valve Assembly	1	C90001-
1	C1		• • Body	1	C90001-
2	C1		• • Valve	1	C90001-
3	C1		• • Seal	1	C90001-
4		723-40-82210	• • Plug	1	C90001-
5		723-40-82220	• • Filter	1	C90001-
6		723-40-82140	• • Spring	1	C90001-
7		723-40-82150	• • Plug	1	C90001-
8		07002-13334	• • O-ring	1	C90001-
9		723-40-84420	• • Valve, Check	1	C90001-
10		723-40-84430	• • Spring	1	C90001-
11		723-40-84440	• • Plug	1	C90001-
12		07000-13024	• • O-ring	1	C90001-
13	C1		• • Plug	1	C90001-
14		07002-11823	• • O-ring	1	C90001-
15		07000-12011	• • O-ring	1	C90001-
16		07001-02011	• • Ring, Back-up	1	C90001-
17		07000-11010	• • O-ring	1	C90001-
18		07001-01010	• • Ring, Back-up	1	C90001-
19		723-11-18190	• • Plug	1	C90001-
20		07002-11023	• • O-ring	1	C90001-
21	C1		• • Piston	1	C90001-
22		723-40-82290	• • Spring	1	C90001-
23	C1		• • Plug	2	C90001-
24		01252-61075	• Bolt, Hexagon Socket Head	4	C90001-

FIG. H0120-002020 Control Valve (8-spool, 20/25)

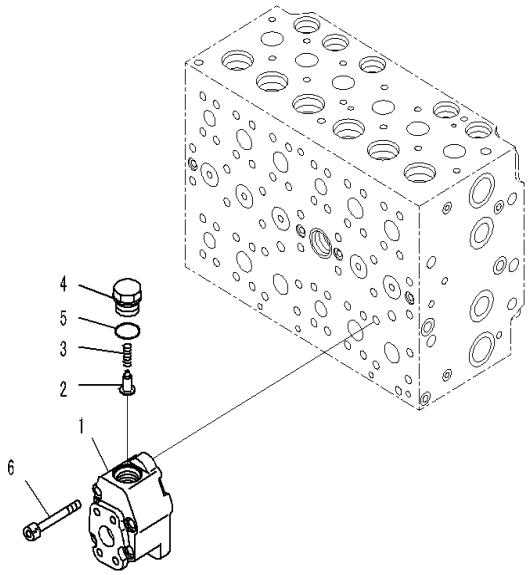

JY019884

Index	Code	Part Number	Description	Qty	Serial Number
		Note: This list covers following specifications.			
		With 1-service Valve			
		With 1-additional Actuator Piping, Accumulator			
		723-48-25602	Valve, Control	1	C90373-
	A2	723-48-25601	Valve, Control	1	C90293-C90372
	A2	723-48-25600	Valve, Control	1	C90001-C90292
		723-40-84700	• Valve Assembly	1	C90293-
		723-40-84601	• Valve Assembly	1	C90001-C90292
1		723-40-84461	• • Block	1	C90373-
		723-40-84410	• • Block	1	C90001-C90372
2		723-40-84420	• • Valve, Check	1	C90001-
3		723-40-84430	• • Spring	1	C90001-
4		723-40-84440	• • Plug	1	C90001-
5		07000-13024	• • O-ring	1	C90001-
6		01252-61070	• Bolt, Hexagon Socket Head	4	C90001-

FIG. H0120-002021 Control Valve (8-spool, 21/25)

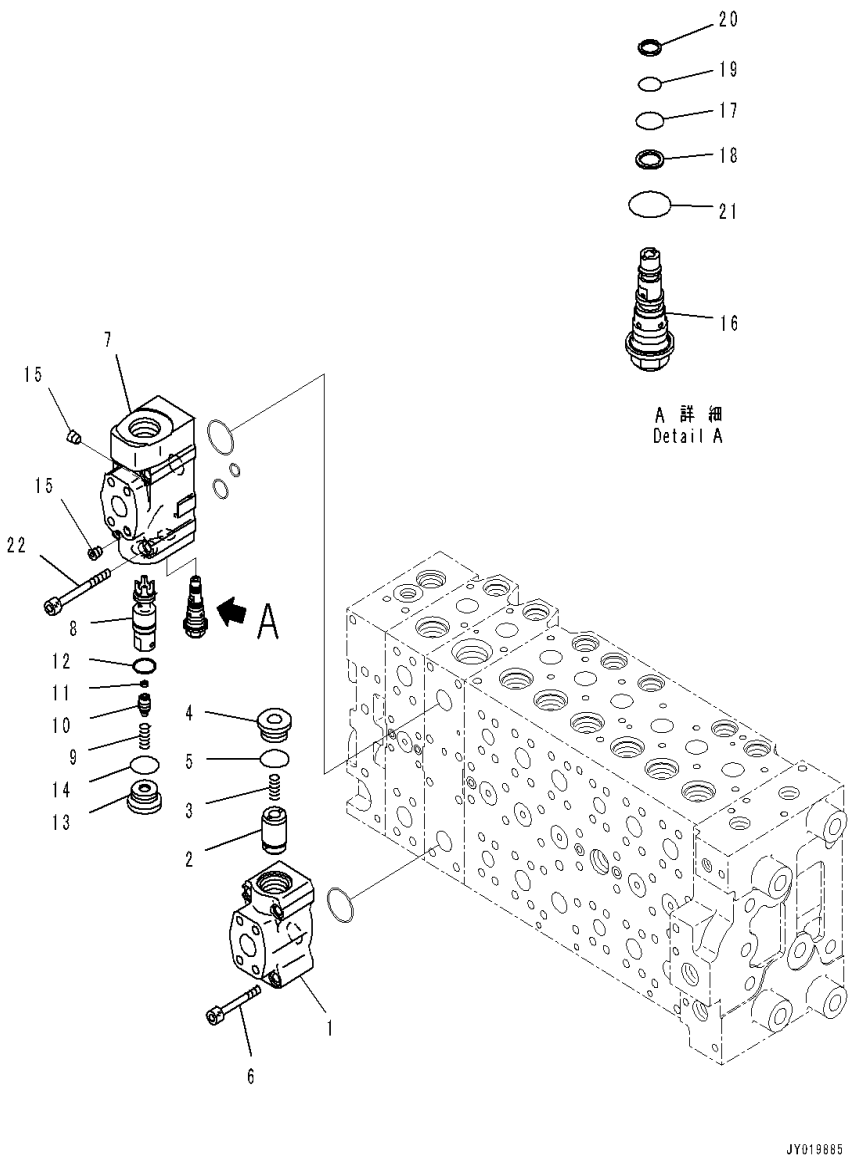

Index	Code	Part Number	Description	Qty	Serial Number
		Note: This list covers following specifications.			
		With 1-service Valve			
		With 1-additional Actuator Piping, Accumulator			
		723-48-25602	Valve, Control	1	C90373-
	A2	723-48-25601	Valve, Control	1	C90293-C90372
	A2	723-48-25600	Valve, Control	1	C90001-C90292
		723-40-84100	• Valve Assembly	1	C90001-
1	C1		• • Body	1	C90001-
2	C1		• • Valve	1	C90001-
3		723-40-82140	• • Spring	1	C90001-
4		723-40-84130	• • Plug	1	C90001-
5		07002-13034	• • O-ring	1	C90001-
6		01252-61065	• Bolt	4	C90001-
		723-40-84200	• Valve Assembly	1	C90001-
7	C1		• • Body	1	C90001-
8	C1		• • Valve	1	C90001-
9		723-40-82140	• • Spring	1	C90001-
10		723-40-84230	• • Plug	1	C90001-
11		723-40-82220	• • Filter	1	C90001-
12	C1		• • Seal	1	C90001-
13		723-40-84130	• • Plug	1	C90001-
14		07002-13034	• • O-ring	1	C90001-
15	C1		• • Plug	2	C90001-
16		723-40-92900	• • Valve Assembly	1	C90001-
17		07000-12012	• • • O-ring	1	C90001-
18		07001-02012	• • • Ring, Back-up	1	C90001-
19		07000-11010	• • • O-ring	1	C90001-
20		07001-01010	• • • Ring, Back-up	1	C90001-
21		07002-12034	• • • O-ring	1	C90001-
22		723-46-18770	• Bolt	4	C90001-

FIG. H0120-002022 Control Valve (8-spool, 22/25)

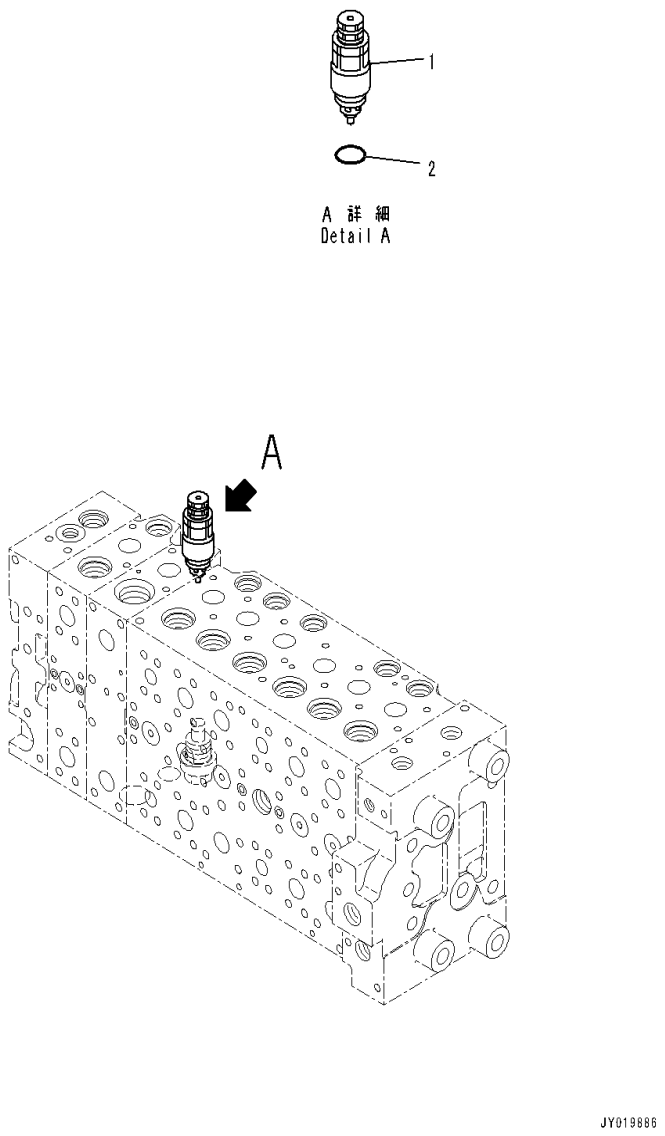

Index	Code	Part Number	Description	Qty	Serial Number
		Note: This list covers following specifications.			
		With 1-service Valve			
		With 1-additional Actuator Piping, Accumulator			
		723-48-25602	Valve, Control	1	C90373-
	A2	723-48-25601	Valve, Control	1	C90293-C90372
	A2	723-48-25600	Valve, Control	1	C90001-C90292
1		723-40-91200	• Valve Assembly, Suction and Relief	1	C90001-
2		709-25-11390	• • O-ring	1	C90001-

FIG. H0120-002023 Control Valve (8-spool, 23/25)

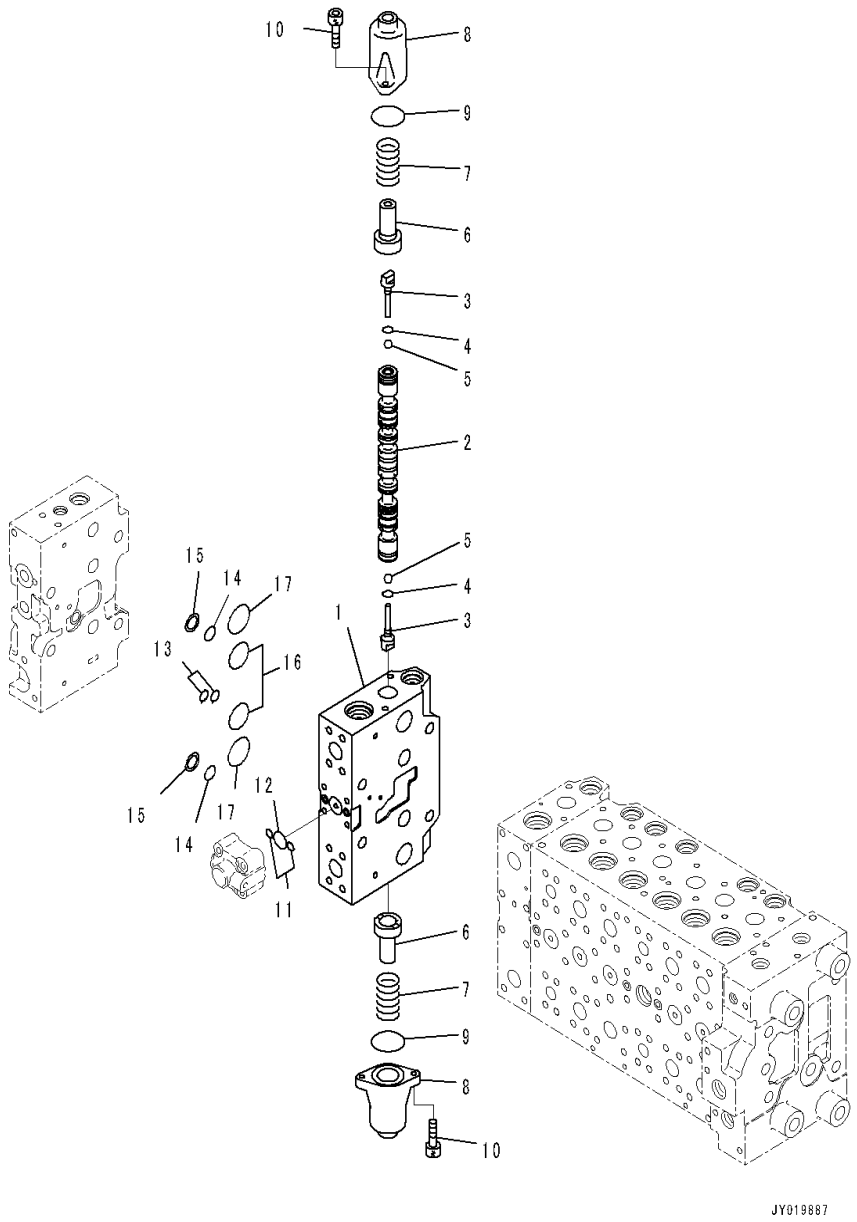

Index	Code	Part Number	Description	Qty	Serial Number
		Note: This list covers following specifications.			
		With 1-service Valve			
		With 1-additional Actuator Piping, Accumulator			
		723-48-25602	Valve, Control	1	C90373-
	A2	723-48-25601	Valve, Control	1	C90293-C90372
	A2	723-48-25600	Valve, Control	1	C90001-C90292
	C1		• Body Subassembly	1	C90293-
	C1		• Body Subassembly	1	C90001-C90292
1	C1		• • Block, Valve	1	C90001-
2	C1		• • Spool	1	C90001-
3		723-46-15130	• • Plug	2	C90001-
4		07002-10823	• • O-ring	2	C90001-
5		708-7T-16460	• • Ball	2	C90001-
6		723-46-15120	• • Retainer	2	C90001-
7		723-46-14110	• • Spring	2	C90001-
8		723-46-15111	• • Case	2	C90001-
9		07430-71380	• • O-ring	2	C90001-
10		01252-60820	• • Bolt, Hexagon Socket Head	4	C90001-
11		07000-11009	• • O-ring	2	C90001-
12		07000-12021	• • O-ring	1	C90001-
13		723-46-17530	• • O-ring	2	C90001-
14		723-11-19130	• • O-ring	2	C90001-
15		723-46-17520	• • Ring, Back-up	2	C90001-
16		07000-13032	• • O-ring	2	C90001-
17		723-46-17510	• • O-ring	2	C90001-

FIG. H0120-002024 Control Valve (8-spool, 24/25)

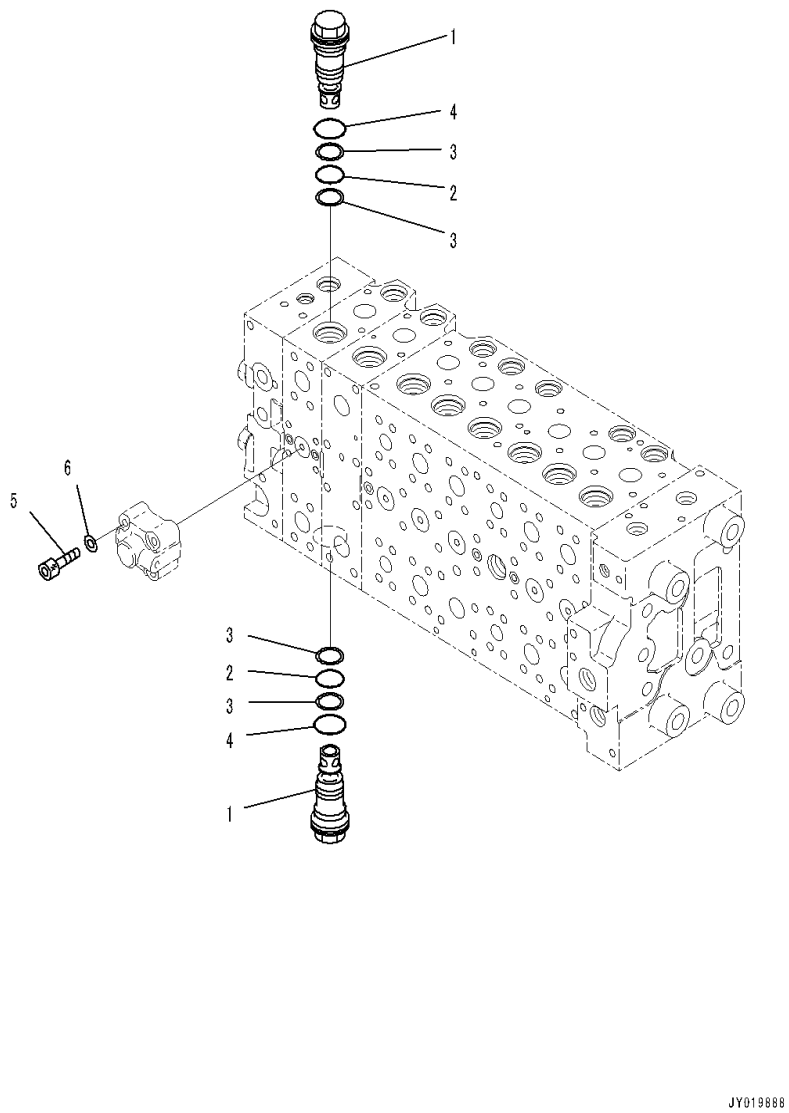

Index	Code	Part Number	Description	Qty	Serial Number
		Note: This list covers following specifications.			
		With 1-service Valve			
		With 1-additional Actuator Piping, Accumulator			
		723-48-25602	Valve, Control	1	C90373-
	A2	723-48-25601	Valve, Control	1	C90293-C90372
	A2	723-48-25600	Valve, Control	1	C90001-C90292
	C1		• Body Subassembly	1	C90293-
	C1		• Body Subassembly	1	C90001-C90292
1		723-46-45700	• • Valve Assembly	2	C90001-
2		700-93-11320	• • • O-ring	1	C90001-
3		723-46-41950	• • • Ring, Back-up	2	C90001-
4		07002-13634	• • • O-ring	1	C90001-
5		01252-60845	• • Bolt, Hexagon Socket Head	4	C90001-
6		01643-50823	• • Washer	4	C90001-

FIG. H0120-002025 Control Valve (8-spool, 25/25)

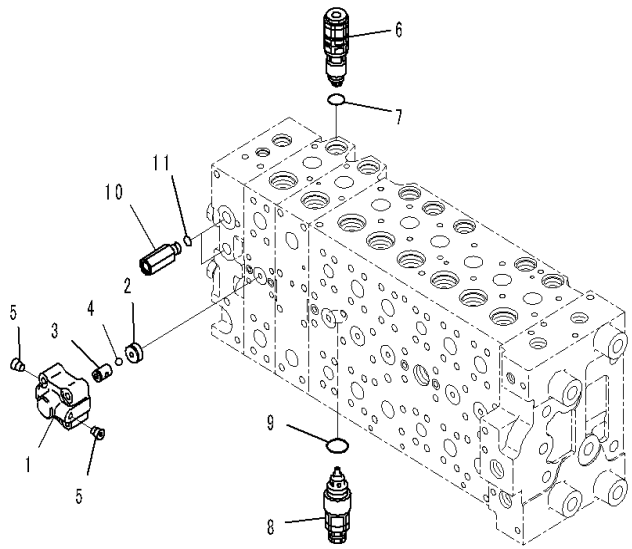

Index	Code	Part Number	Description	Qty	Serial Number
		Note: This list covers following specifications.			
		With 1-service Valve			
		With 1-additional Actuator Piping, Accumulator			
		723-48-25602	Valve, Control	1	C90373-
	A2	723-48-25601	Valve, Control	1	C90293-C90372
	A2	723-48-25600	Valve, Control	1	C90001-C90292
		723-40-66300	• Valve Assembly	1	C90001-
1	C1		• • Case	1	C90001-
2	C1		• • Seat	1	C90001-
3	C1		• • Seat	1	C90001-
4	C1		• • Ball	1	C90001-
5	C1		• • Plug	2	C90001-
6		723-90-76300	• Valve Assembly, Suction and Relief	1	C90373-
		723-90-76501	• Valve Assembly, Suction and Relief	1	C90001-C90372
7		07000-13024	• • O-ring	1	C90001-
8		723-40-91300	• Valve Assembly, Suction and Relief	1	C90373-
		723-90-61700	• Valve Assembly, Suction and Relief	1	C90001-C90372
9		709-25-11390	• • O-ring	1	C90373-
		07000-13024	• • O-ring	1	C90001-C90372
10		723-46-17720	• Valve Assembly	2	C90001-
11		07002-11423	• • O-ring	1	C90001-

FIG. H0120-002026 Control Valve (Control Valve Related Parts, 1/2)

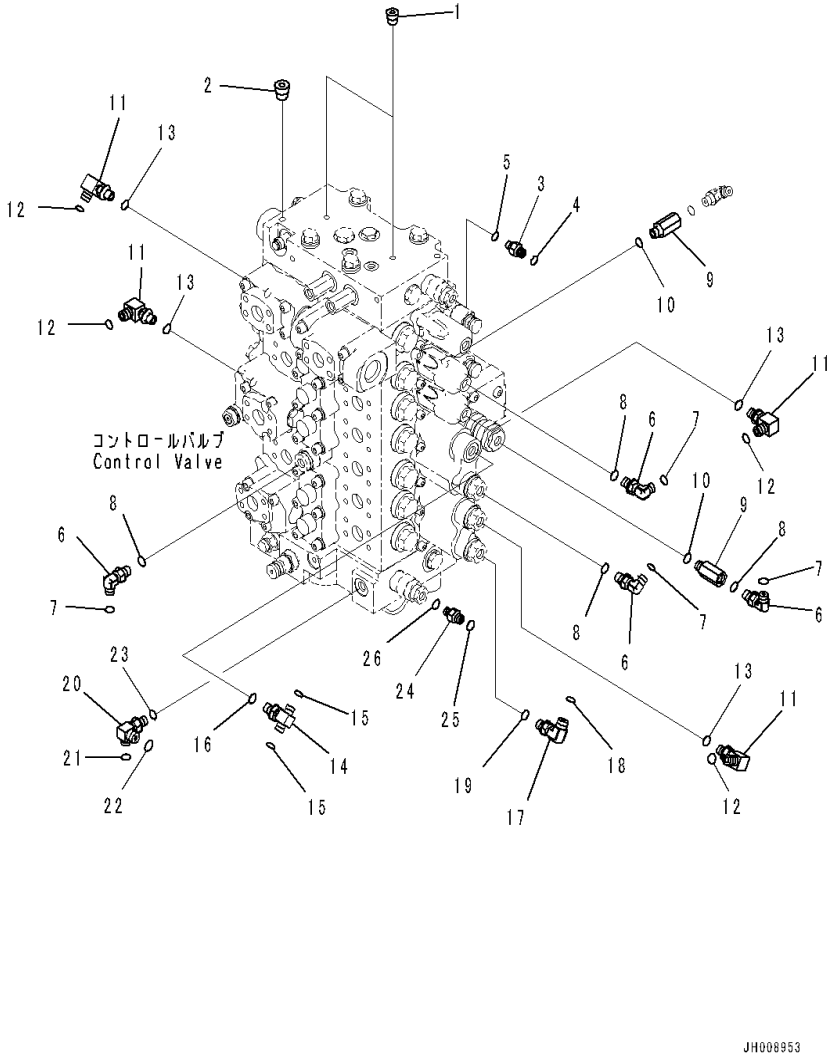

Index	Code	Part Number	Description	Qty	Serial Number
		Note: This list covers following specifications.			
		With 1-service Valve			
		With 1-additional Actuator Piping, Accumulator			
1		07049-01012	Plug	2	C90001-
2		07049-01215	Plug	1	C90001-
3		208-62-71540	Nipple	1	C90001-
4		02896-11008	O-ring	1	C90001-
5		07002-11223	O-ring	1	C90001-
6		11Y-62-12160	Elbow	4	C90001-
7		02896-11008	O-ring	4	C90001-
8		07002-11423	O-ring	4	C90001-
9		20Y-62-22160	Adapter	2	C90001-
10		07002-11423	O-ring	2	C90001-
11		20Y-62-45620	Elbow	4	C90001-
12		02896-11008	O-ring	4	C90001-
13		07002-11423	O-ring	4	C90001-
14		11Y-62-12250	Tee	1	C90001-
15		02896-11008	O-ring	2	C90001-
16		07002-11423	O-ring	1	C90001-
17		21W-62-42490	Elbow	1	C90001-
18		02896-11009	O-ring	1	C90001-
19		07002-11423	O-ring	1	C90001-
20		20Y-62-45710	Tee	1	C90001-
21		02896-11008	O-ring	1	C90001-
22		02896-11009	O-ring	1	C90001-
23		07002-11423	O-ring	1	C90001-
24		208-62-71540	Nipple	1	C90001-
25		02896-11008	O-ring	1	C90001-
26		07002-11223	O-ring	1	C90001-

FIG. H0120-002027 Control Valve (Control Valve Related Parts, 2/2)

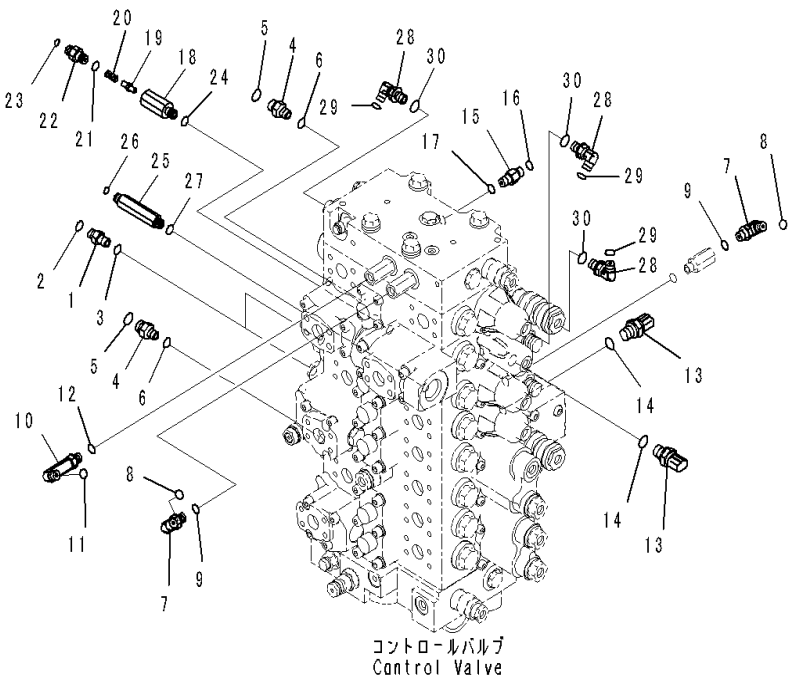

Index	Code	Part Number	Description	Qty	Serial Number
		Note: This list covers following specifications.			
		With 1-service Valve			
		With 1-additional Actuator Piping, Accumulator			
1		02781-0021D	Union	2	C90001-
2		02896-11008	O-ring	2	C90001-
3		07002-11423	O-ring	2	C90001-
4		11Y-62-12520	Union	2	C90001-
5		02896-11009	O-ring	2	C90001-
6		07002-11423	O-ring	2	C90001-
7		02782-10210	Elbow	2	C90001-
8		02896-11008	O-ring	2	C90001-
9		07002-11423	O-ring	2	C90001-
10		02782-10212	Elbow	1	C90001-
11		02896-11008	O-ring	1	C90001-
12		07002-11423	O-ring	1	C90001-
13		7861-93-1812	Sensor, Pressure	2	C90001-
14		07002-61823	• O-ring	1	C90001-
15		22L-62-22590	Nipple	1	C90001-
16		02896-11008	O-ring	1	C90001-
17		07002-11423	O-ring	1	C90001-
		20Y-62-41701	Valve Assembly	1	C90001-
18	C1		• Body	1	C90001-
19		20Y-60-22270	• Poppet	1	C90001-
20		701-20-61230	• Spring	1	C90001-
21		07002-11423	• O-ring	1	C90001-
22		20Y-62-47630	• Nipple	1	C90001-
23		02896-11008	O-ring	1	C90001-
24		07002-11423	O-ring	1	C90001-
25		207-62-71531	Union	1	C90001-
26		02896-11008	O-ring	1	C90001-
27		07002-11423	O-ring	1	C90001-
28		11Y-62-12160	Elbow	3	C90001-
29		02896-11008	O-ring	3	C90001-
30		07002-11423	O-ring	3	C90001-

FIG. H0120-002028 Control Valve (1-Service Valve) (Valve Bracket)

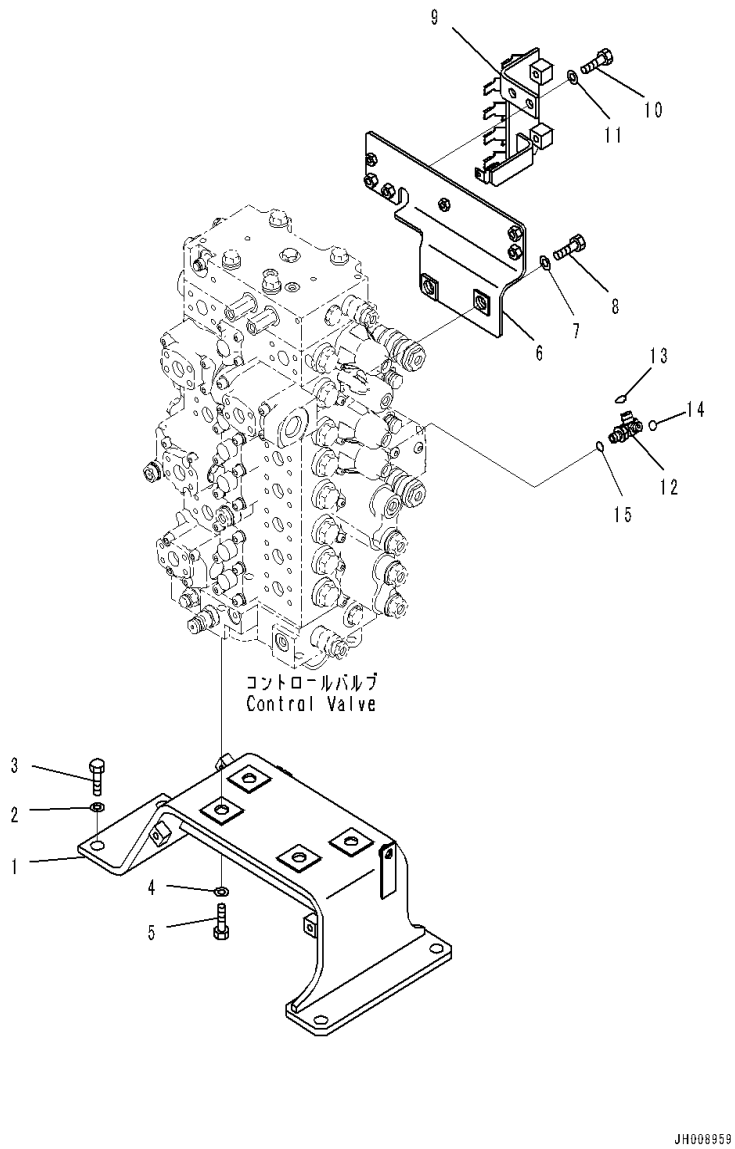

Index	Code	Part Number	Description	Qty	Serial Number
1		207-62-77310	Bracket	1	C90001-
2		421-70-11280	Washer	4	C90001-
3		01010-81640	Bolt	4	C90001-
4		01643-31645	Washer	4	C90001-
5		01010-81645	Bolt	4	C90001-
6		207-62-41121	Bracket	1	C90001-
7		01643-31645	Washer	2	C90001-
8		01010-81640	Bolt	2	C90001-
9		207-62-77110	Bracket	1	C90001-
10		01010-81235	Bolt	2	C90001-
11		01643-31232	Washer	2	C90001-
12		20Y-62-87510	Tee	1	C90001-
13		02896-11008	O-ring	1	C90001-
14		02896-11009	O-ring	1	C90001-
15		07002-11423	O-ring	1	C90001-

FIG. H0120-002029 Control Valve (1-Service Valve) (Blind Parts)

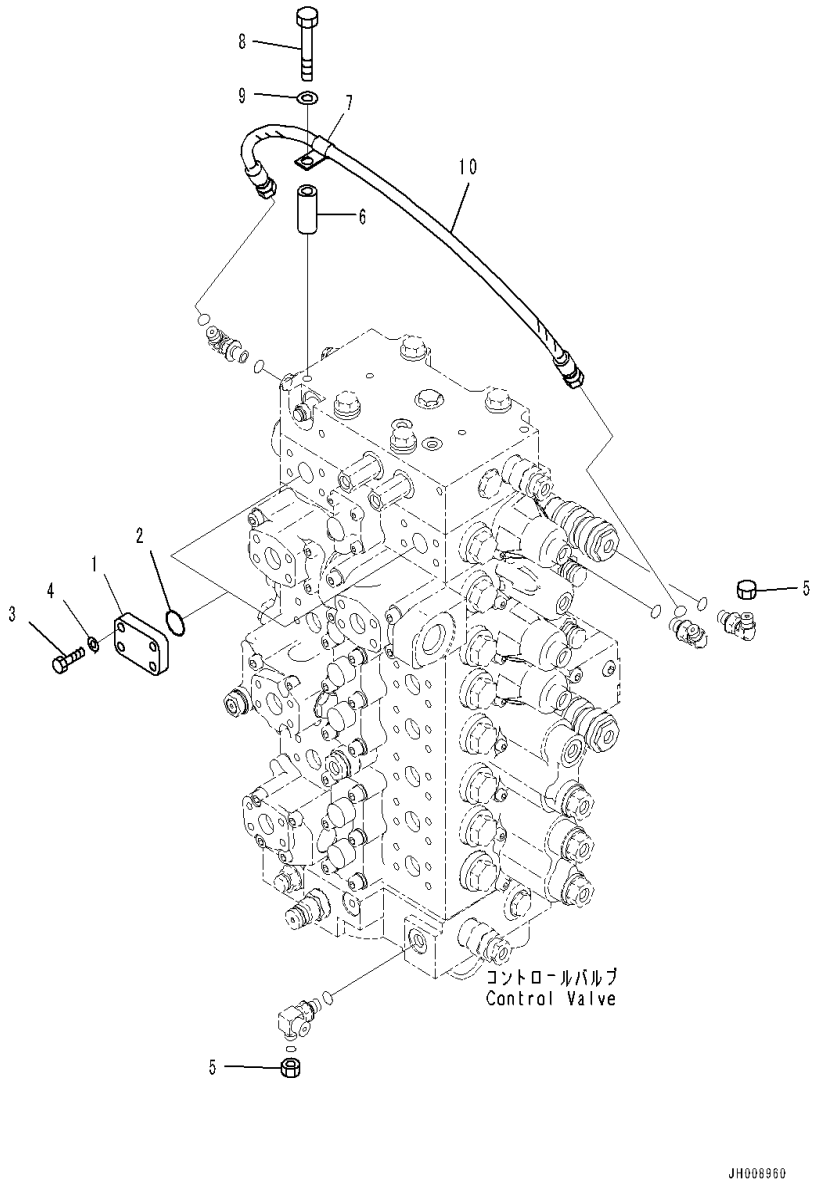

Index	Code	Part Number	Description	Qty	Serial Number
1		207-62-56190	Flange	2	C90001-
2		07000-13035	O-ring	2	C90001-
3		07372-21040	Bolt	8	C90001-
4		01643-51032	Washer	8	C90001-
5		02789-00210	Plug	2	C90001-
6		14X-54-26640	Collar	1	C90001-
7		04434-51012	Clip	1	C90001-
8		01010-81275	Bolt	1	C90001-
9		01643-31232	Washer	1	C90001-
10		02774-00207	Hose	1	C90001-

FIG. H0120-003028 Control Valve (With 1-additional Actuator Piping, Accumulator) (Valve Bracket)

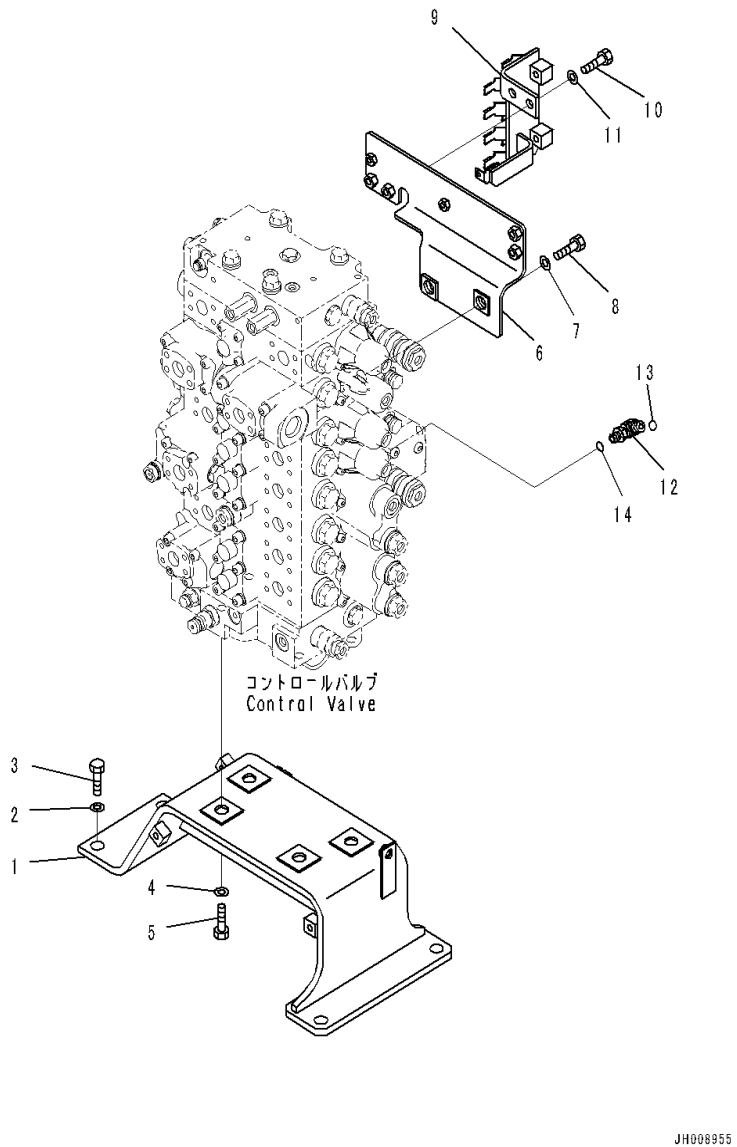

Index	Code	Part Number	Description	Qty	Serial Number
1		207-62-77310	Bracket	1	C90001-
2		421-70-11280	Washer	4	C90001-
3		01010-81640	Bolt	4	C90001-
4		01643-31645	Washer	4	C90001-
5		01010-81645	Bolt	4	C90001-
6		207-62-41121	Bracket	1	C90001-
7		01643-31645	Washer	2	C90001-
8		01010-81640	Bolt	2	C90001-
9		207-62-77110	Bracket	1	C90001-
10		01010-81235	Bolt	2	C90001-
11		01643-31232	Washer	2	C90001-
12		21W-62-42490	Elbow	1	C90001-
13		02896-11009	O-ring	1	C90001-
14		07002-11423	O-ring	1	C90001-

FIG. H0210-001001 Piston Pump (Related Parts)

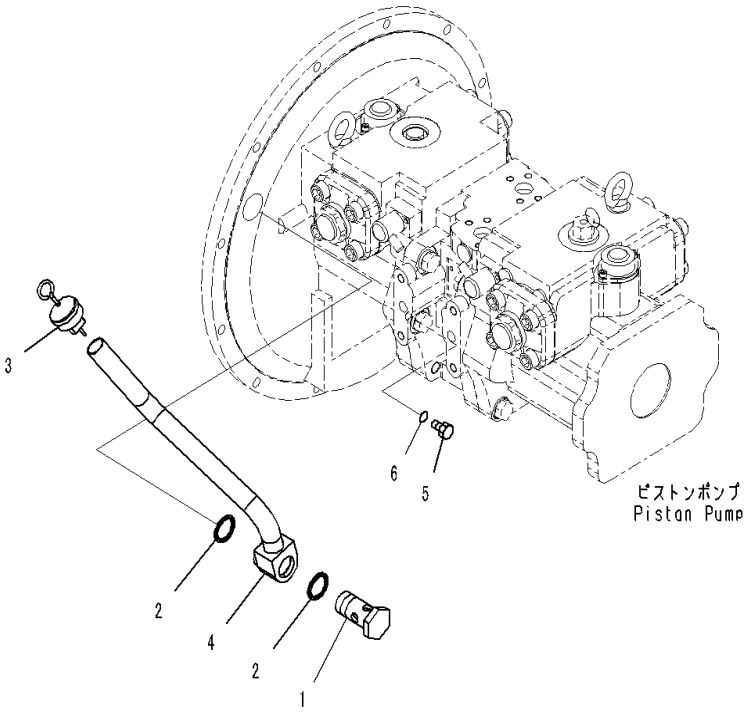

Index	Code	Part Number	Description	Qty	Serial Number
1		207-01-31141	Joint	1	C90001-
2		07005-03016	Seal, Washer	2	C90001-
3		207-01-31150	Gauge	1	C90001-
4		207-01-71320	Tube	1	C90001-
5		07040-11209	Plug	1	C90001-
6		07002-11223	O-ring	1	C90001-

FIG. H0311-001001 Suction Piping

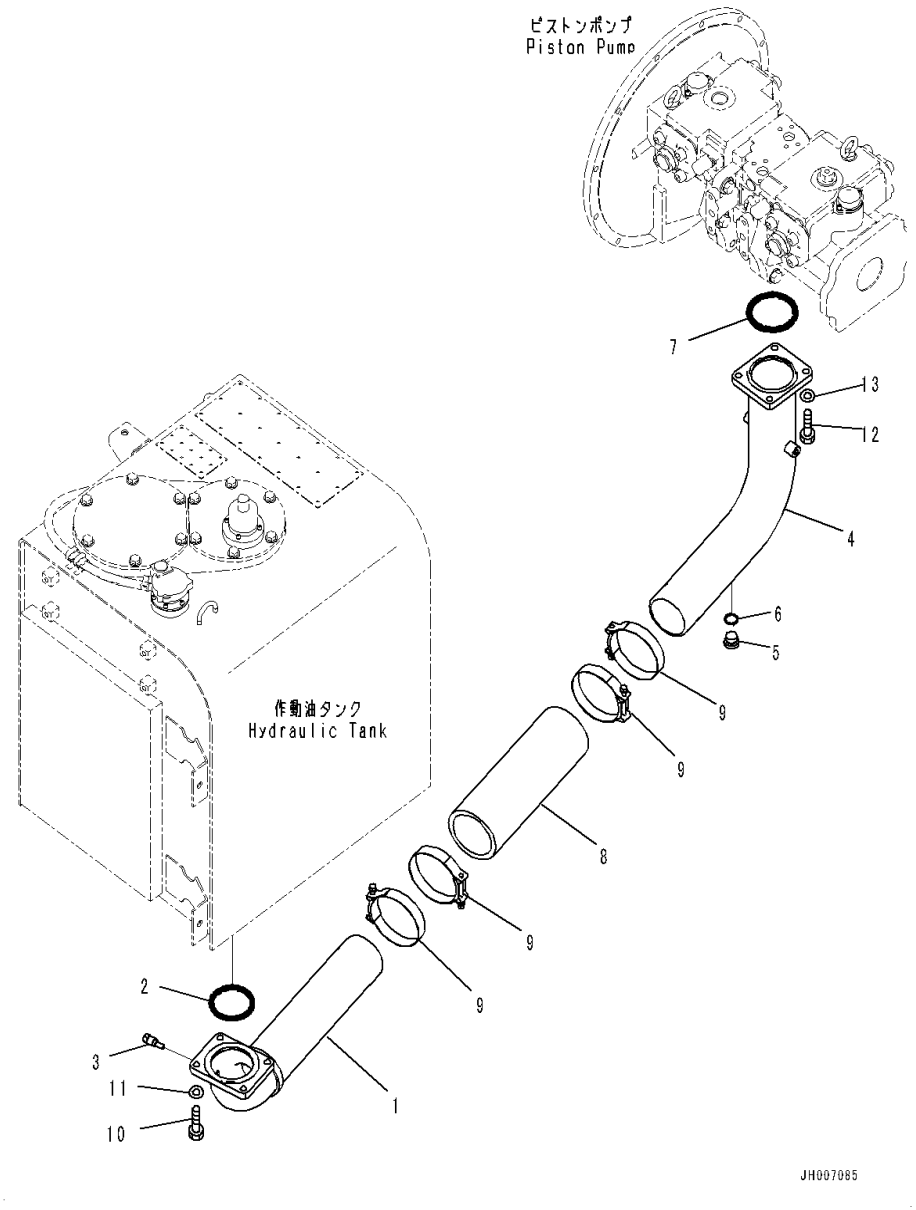

Index	Code	Part Number	Description	Qty	Serial Number
1		207-62-74460	Tube	1	C90001-
2		07000-12105	O-ring	1	C90001-
3		7861-93-3320	Sensor, Temperature	1	C90001-
4		207-62-74450	Tube	1	C90001-
5		07040-12414	Plug	1	C90001-
6		07002-12434	O-ring	1	C90001-
7		07000-12105	O-ring	1	C90001-
8		07260-09936	Hose	1	C90001-
9		208-62-73910	Clamp	4	C90001-
10		01010-81240	Bolt	4	C90001-
11		01643-31232	Washer	4	C90001-
12		01010-81255	Bolt	4	C90001-
13		01643-31232	Washer	4	C90001-

FIG. H0312-001001 Delivery Piping (With Inline Filter)

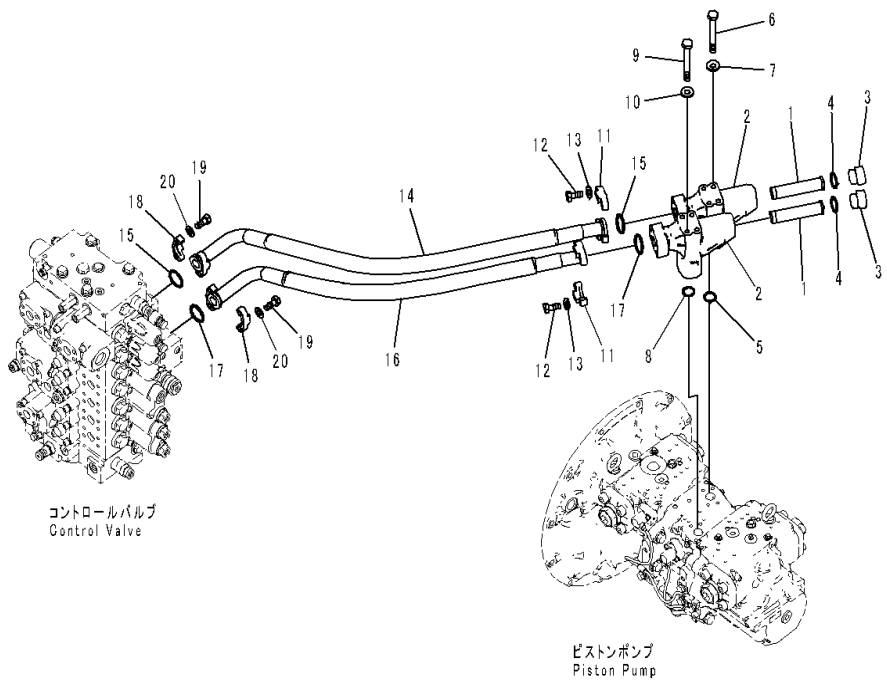

Index	Code	Part Number	Description	Qty	Serial Number
		207-62-77231	Filter Assembly	2	C90001-
1		207-60-61250	• Strainer	1	C90001-
2		207-62-77241	• Case	1	C90001-
3		20Y-60-22372	• Plug	1	C90001-
4		07002-13634	• O-ring	1	C90001-
5		07000-13035	O-ring	1	C90001-
6		01011-81070	Bolt	4	C90001-
7		01643-31032	Washer	4	C90001-
8		07000-13035	O-ring	1	C90001-
9		01011-81070	Bolt	4	C90001-
10		01643-31032	Washer	4	C90001-
11		07371-31049	Flange, Split	4	C90001-
12		07372-21035	Bolt	8	C90001-
13		01643-51032	Washer	8	C90001-
14		207-62-71750	Hose	1	C90001-
15		07000-13032	O-ring	2	C90001-
16		207-62-71880	Hose	1	C90001-
17		07000-13032	O-ring	2	C90001-
18		07371-31049	Flange, Split	4	C90001-
19		07372-21035	Bolt	8	C90001-
20		01643-51032	Washer	8	C90001-

FIG. H0320-001001 Oil Cooler Piping

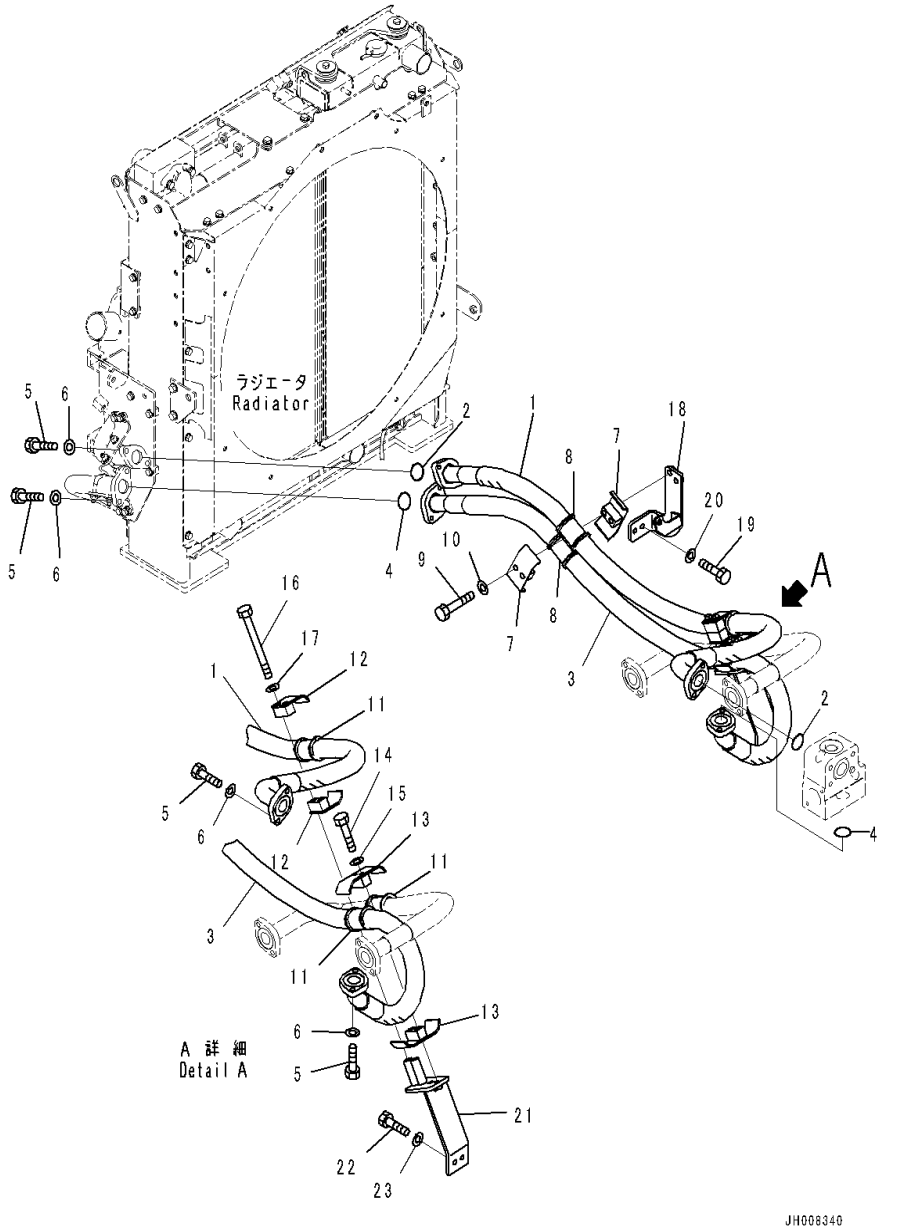

Index	Code	Part Number	Description	Qty	Serial Number
1		207-62-77160	Hose	1	C90001-
2		07000-13048	O-ring	2	C90001-
3		207-62-77171	Hose	1	C90001-
4		07000-13048	O-ring	2	C90001-
5		01010-81240	Bolt	8	C90001-
6		01643-31232	Washer	8	C90001-
7		07094-31228	Clip	2	C90001-
8		07095-01245	Cushion	2	C90001-
9		01010-81295	Bolt	2	C90001-
10		01643-31232	Washer	2	C90001-
11		07095-01245	Cushion	3	C90001-
12		07094-11228	Clamp	2	C90001-
13		07094-31228	Clip	2	C90001-
14		01010-81295	Bolt	2	C90001-
15		01643-31232	Washer	2	C90001-
16		01011-81265	Bolt	2	C90001-
17		01643-31232	Washer	2	C90001-
18		207-62-77151	Bracket	1	C90001-
19		01010-81230	Bolt	2	C90001-
20		01643-31232	Washer	2	C90001-
21		207-62-41481	Bracket	1	C90001-
22		01010-81230	Bolt	2	C90001-
23		01643-31232	Washer	2	C90001-

FIG. H0330-001001 Return Piping

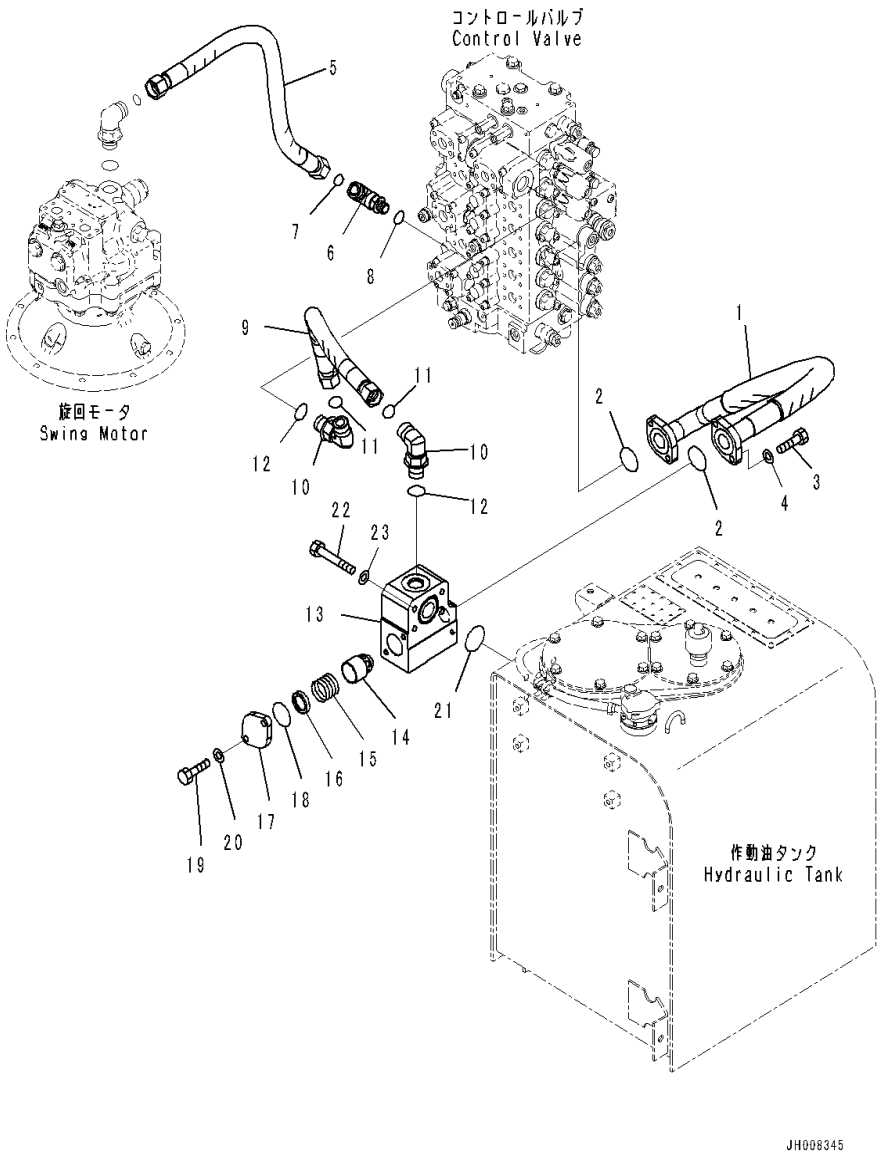

Index	Code	Part Number	Description	Qty	Serial Number
1		207-62-74670	Hose	1	C90001-
2		07000-13048	O-ring	2	C90001-
3		01010-81240	Bolt	4	C90001-
4		01643-31232	Washer	4	C90001-
5		207-62-77140	Hose Assembly	1	C90001-
6		195-03-66490	Elbow	1	C90001-
7		207-62-64740	O-ring	1	C90001-
8		07002-12434	O-ring	1	C90001-
9		207-62-74681	Hose	1	C90001-
10		21W-62-42640	Elbow	2	C90001-
11		207-62-64740	O-ring	2	C90001-
12		07002-13334	O-ring	2	C90001-
13		208-62-71410	Block	1	C90001-
14		207-60-75160	Valve	1	C90001-
15		706-76-71190	Spring	1	C90001-
16		207-60-51170	Spacer	1	C90001-
17		207-62-75250	Flange	1	C90001-
18		07000-12060	O-ring	1	C90001-
19		01010-81235	Bolt	2	C90001-
20		01643-31232	Washer	2	C90001-
21		07000-12060	O-ring	1	C90001-
22		01010-81290	Bolt	4	C90001-
23		01643-31232	Washer	4	C90001-

FIG. H0330-002001 Return Piping (1-additional Actuator Piping, Accumulator)

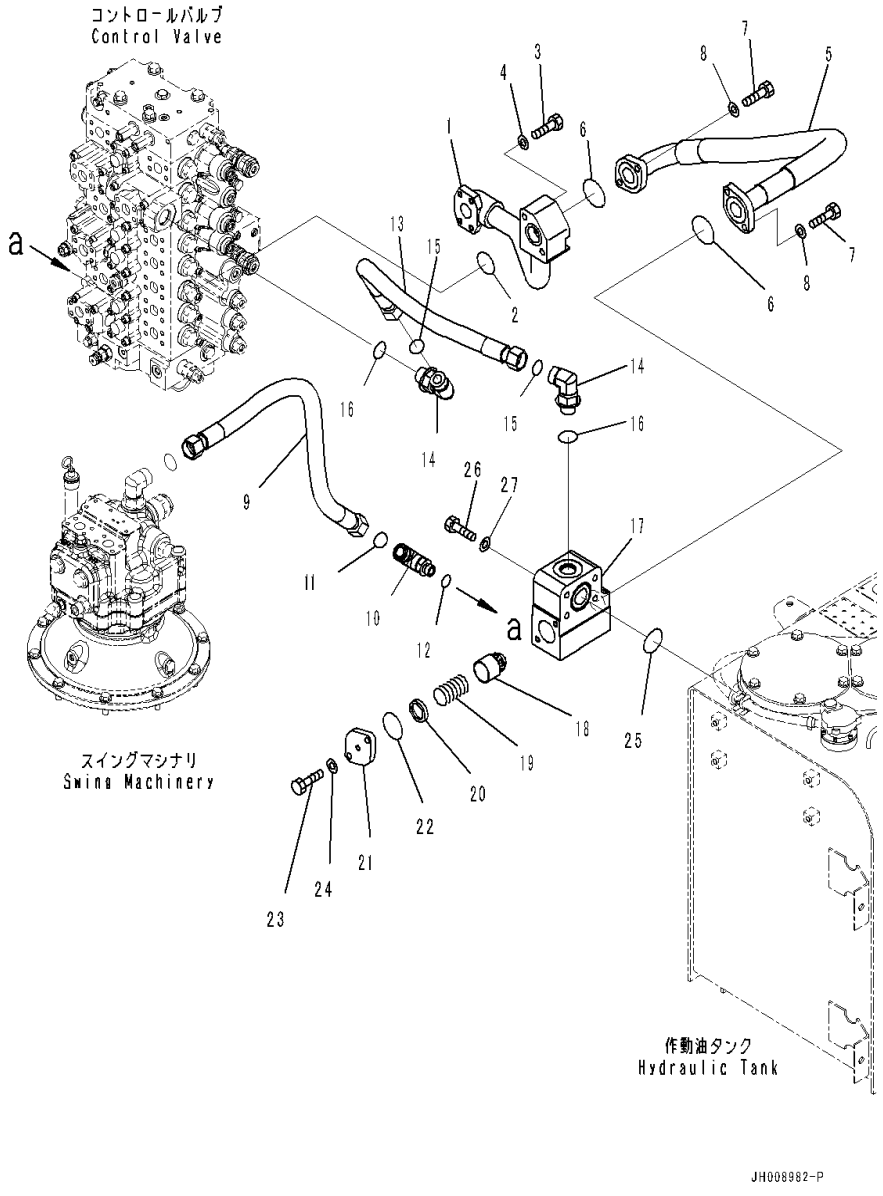

Index	Code	Part Number	Description	Qty	Serial Number
1		207-62-42481	Tube	1	C90001-
2		07000-13045	O-ring	1	C90001-
3		01010-81280	Bolt	2	C90001-
4		01643-31232	Washer	2	C90001-
5		207-62-74791	Hose	1	C90001-
6		07000-13048	O-ring	2	C90001-
7		01010-81240	Bolt	4	C90001-
8		01643-31232	Washer	4	C90001-
9		207-62-77140	Hose Assembly	1	C90001-
10		195-03-66490	Elbow	1	C90001-
11		207-62-64740	O-ring	1	C90001-
12		07002-12434	O-ring	1	C90001-
13		207-62-74681	Hose	1	C90001-
14		21W-62-42640	Elbow	2	C90001-
15		207-62-64740	O-ring	2	C90001-
16		07002-13334	O-ring	2	C90001-
17		208-62-71410	Block	1	C90001-
18		207-60-75160	Valve	1	C90001-
19		706-76-71190	Spring	1	C90001-
20		207-60-51170	Spacer	1	C90001-
21		207-62-75250	Flange	1	C90001-
22		07000-12060	O-ring	1	C90001-
23		01010-81235	Bolt	2	C90001-
24		01643-31232	Washer	2	C90001-
25		07000-12060	O-ring	1	C90001-
26		01010-81290	Bolt	4	C90001-
27		01643-31232	Washer	4	C90001-

FIG. H0340-001001 Drain Piping

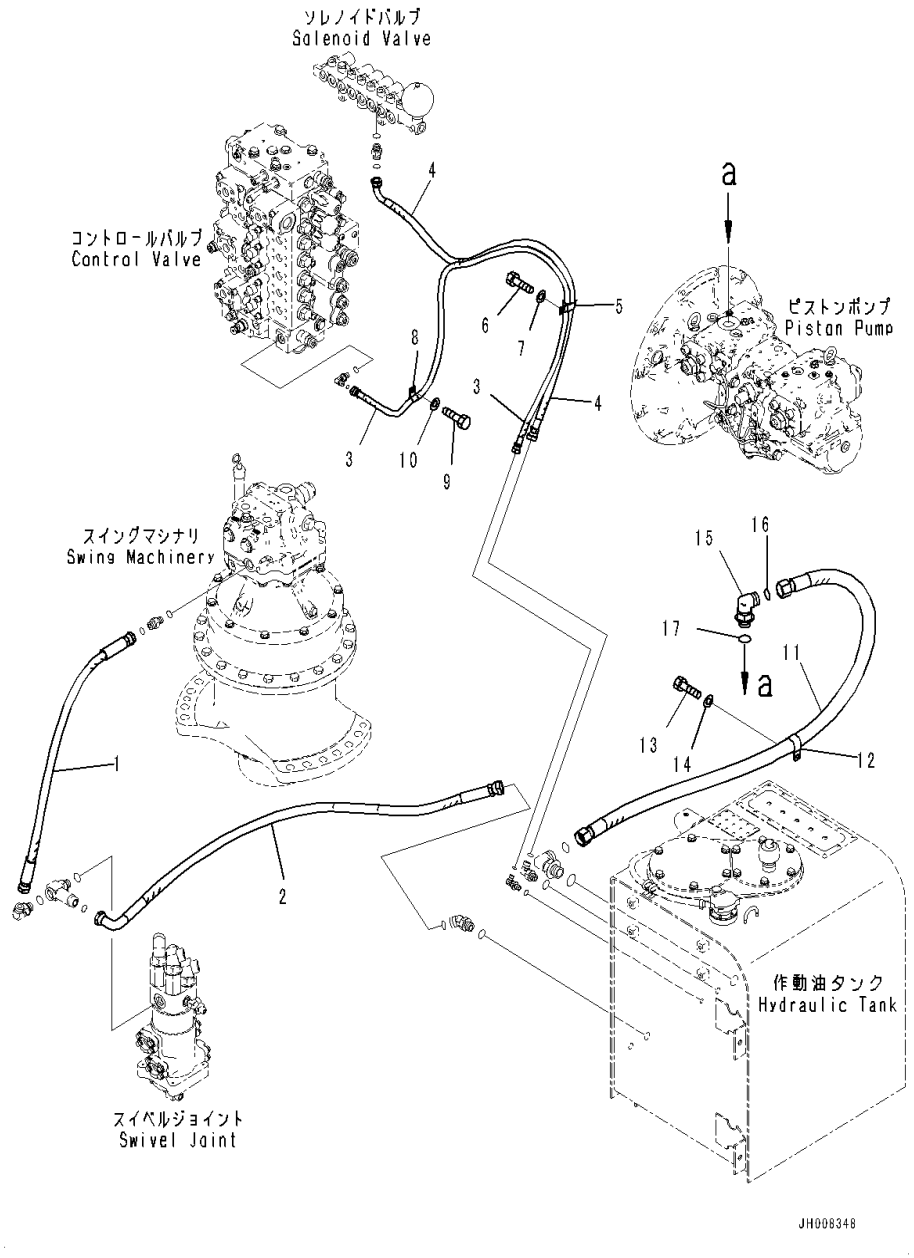

Index	Code	Part Number	Description	Qty	Serial Number
1		02774-00509	Hose	1	C90001-
2		207-62-77450	Hose	1	C90001-
3		02774-00319	Hose	1	C90001-
4		02775-00414	Hose	1	C90001-
5		04435-51812	Clip	1	C90001-
6		01010-81220	Bolt	1	C90001-
7		01643-31232	Washer	1	C90001-
8		04434-51512	Clip	1	C90001-
9		01010-81220	Bolt	1	C90001-
10		01643-31232	Washer	1	C90001-
11		207-62-77360	Hose	1	C90001-
12		113-899-7950	Clip	1	C90001-
13		01010-81220	Bolt	1	C90001-
14		01643-31232	Washer	1	C90001-
15		21W-62-42640	Elbow	1	C90001-
16		207-62-64740	O-ring	1	C90001-
17		07002-13334	O-ring	1	C90001-

FIG. H1210-001001 Boom Piping (Valve Boom Piping)

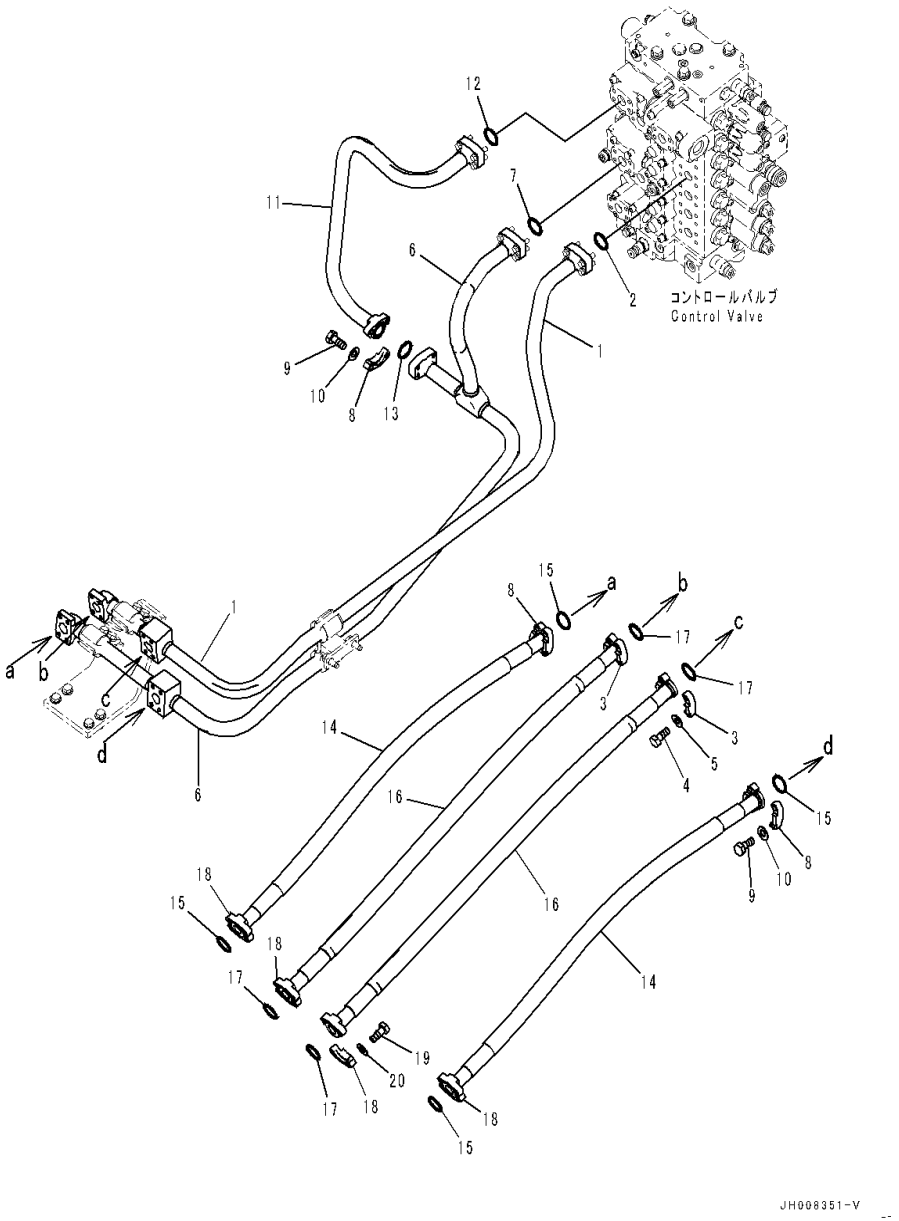

Index	Code	Part Number	Description	Qty	Serial Number
1		207-62-71211	Tube	1	C90001-
2		07000-13035	O-ring	1	C90001-
3		07371-31049	Flange, Split	4	C90001-
4		07372-21035	Bolt	8	C90001-
5		01643-51032	Washer	8	C90001-
6		207-62-71223	Tube	1	C90001-
7		07000-13035	O-ring	1	C90001-
8		07371-31049	Flange, Split	6	C90001-
9		07372-21035	Bolt	12	C90001-
10		01643-51032	Washer	12	C90001-
11		207-62-71231	Tube	1	C90001-
12		07000-13035	O-ring	1	C90001-
13		07000-13032	O-ring	1	C90001-
14		207-62-52621	Hose	2	C90001-
15		07000-13032	O-ring	4	C90001-
16		207-62-52610	Hose	2	C90001-
17		07000-13032	O-ring	4	C90001-
18		07371-31049	Flange, Split	8	C90001-
19		07372-21035	Bolt	16	C90001-
20		01643-51032	Washer	16	C90001-

FIG. H1210-001002 Boom Piping (Bracket and Clamp)

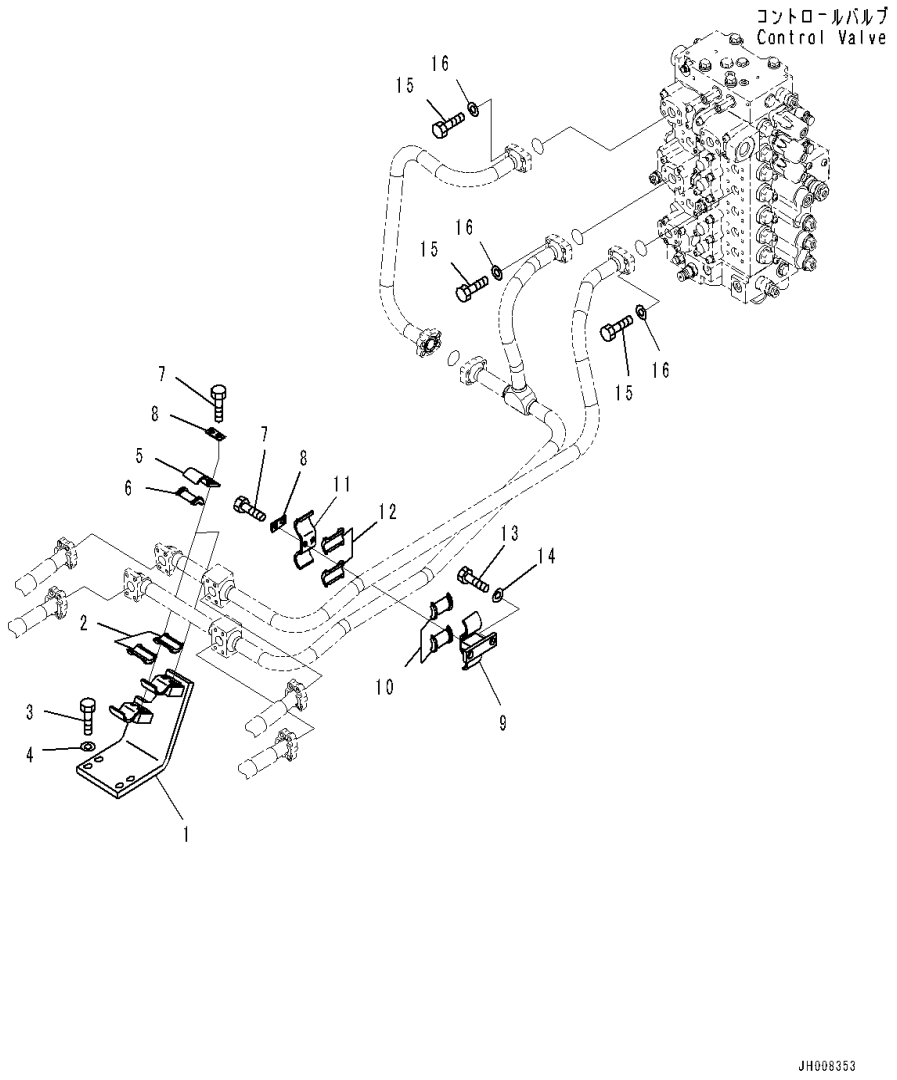

Index	Code	Part Number	Description	Qty	Serial Number
1		207-62-71321	Bracket	1	C90001-
2		205-62-73430	• Seat	2	C90001-
3		01010-81235	Bolt	4	C90001-
4		01643-31232	Washer	4	C90001-
5		207-62-52430	Clamp	2	C90001-
6		205-62-73430	• Seat	1	C90001-
7		01010-81230	Bolt	6	C90001-
8		20Y-62-13450	Plate	3	C90001-
9		207-62-71330	Clamp	1	C90001-
10		205-62-73430	• Seat	2	C90001-
11		207-62-54770	Clamp	1	C90001-
12		205-62-73430	• Seat	2	C90001-
13		01010-81230	Bolt	2	C90001-
14		01643-31232	Washer	2	C90001-
15		07372-21040	Bolt	12	C90001-
16		01643-51032	Washer	12	C90001-

FIG. H1220-001001 Arm and Bucket Piping

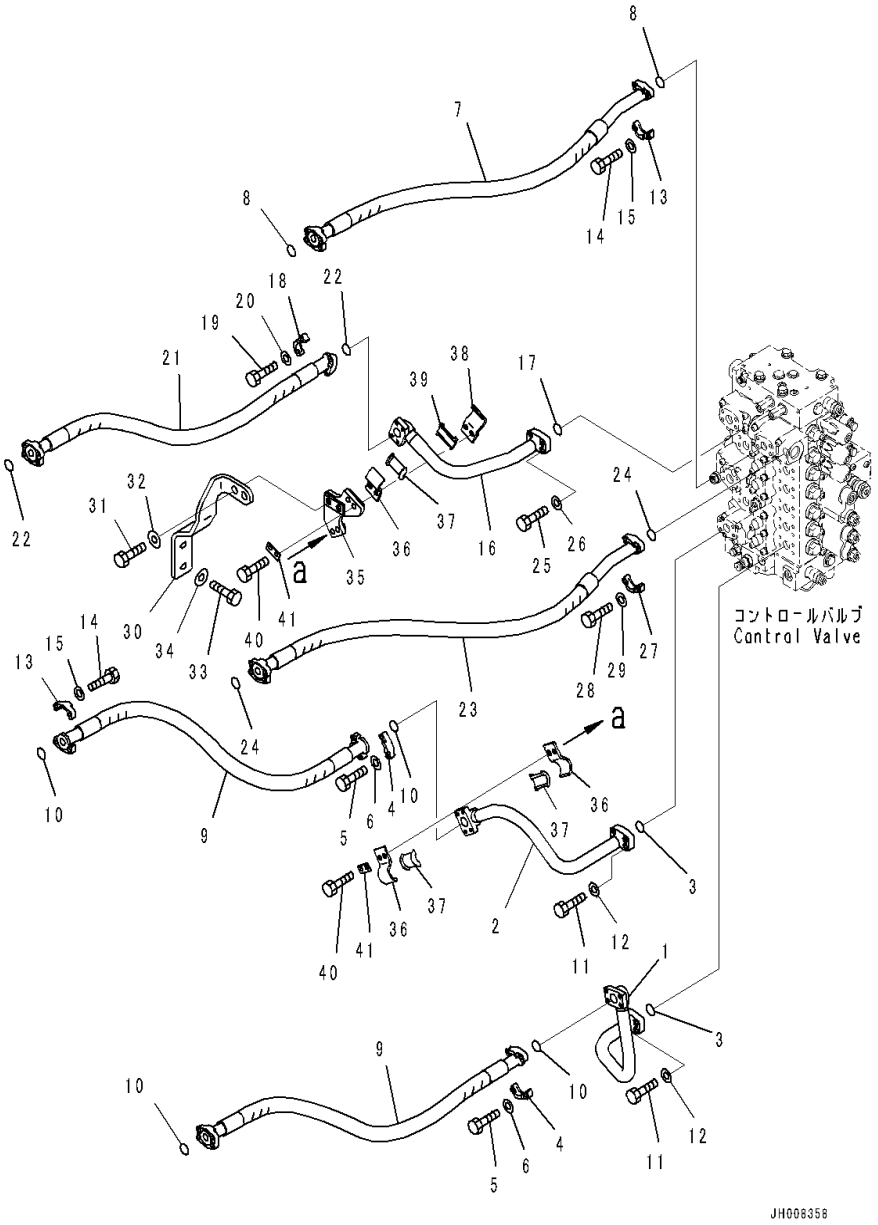

Index	Code	Part Number	Description	Qty	Serial Number
1		207-62-71261	Tube	1	C90001-
2		207-62-77261	Tube	1	C90001-
3		07000-13035	O-ring	2	C90001-
4		07371-31049	Flange, Split	4	C90001-
5		07372-21035	Bolt	8	C90001-
6		01643-51032	Washer	8	C90001-
7		207-62-71740	Hose Assembly	1	C90001-
8		07000-13032	O-ring	2	C90001-
9		207-62-71360	Hose Assembly	2	C90001-
10		07000-13032	O-ring	4	C90001-
11		07372-21040	Bolt	8	C90001-
12		01643-51032	Washer	8	C90001-
13		07371-31049	Flange, Split	12	C90001-
14		07372-21035	Bolt	24	C90001-
15		01643-51032	Washer	24	C90001-
16		207-62-71311	Tube	1	C90001-
17		07000-13035	O-ring	1	C90001-
18		07371-31049	Flange, Split	2	C90001-
19		07372-21035	Bolt	4	C90001-
20		01643-51032	Washer	4	C90001-
21		207-62-71350	Hose	1	C90001-
22		07000-13032	O-ring	2	C90001-
23		207-62-71370	Hose Assembly	1	C90001-
24		07000-13032	O-ring	2	C90001-
25		07372-21040	Bolt	4	C90001-
26		01643-51032	Washer	4	C90001-
27		07371-31049	Flange, Split	2	C90001-
28		07372-21035	Bolt	4	C90001-
29		01643-51032	Washer	4	C90001-
30		207-62-77281	Bracket	1	C90001-
31		01010-81250	Bolt	2	C90001-
32		175-54-34170	Washer	2	C90001-
33		01010-81240	Bolt	2	C90001-
34		175-54-34170	Washer	2	C90001-
35		207-62-77271	Bracket	1	C90001-
36		207-62-52430	Clamp	3	C90001-
37		205-62-73430	• Seat	1	C90001-
38		207-62-77340	Clamp	1	C90001-
39		205-62-73430	• Seat	1	C90001-
40		01010-81250	Bolt	4	C90001-

FIG. H1220-001001 Arm and Bucket Piping

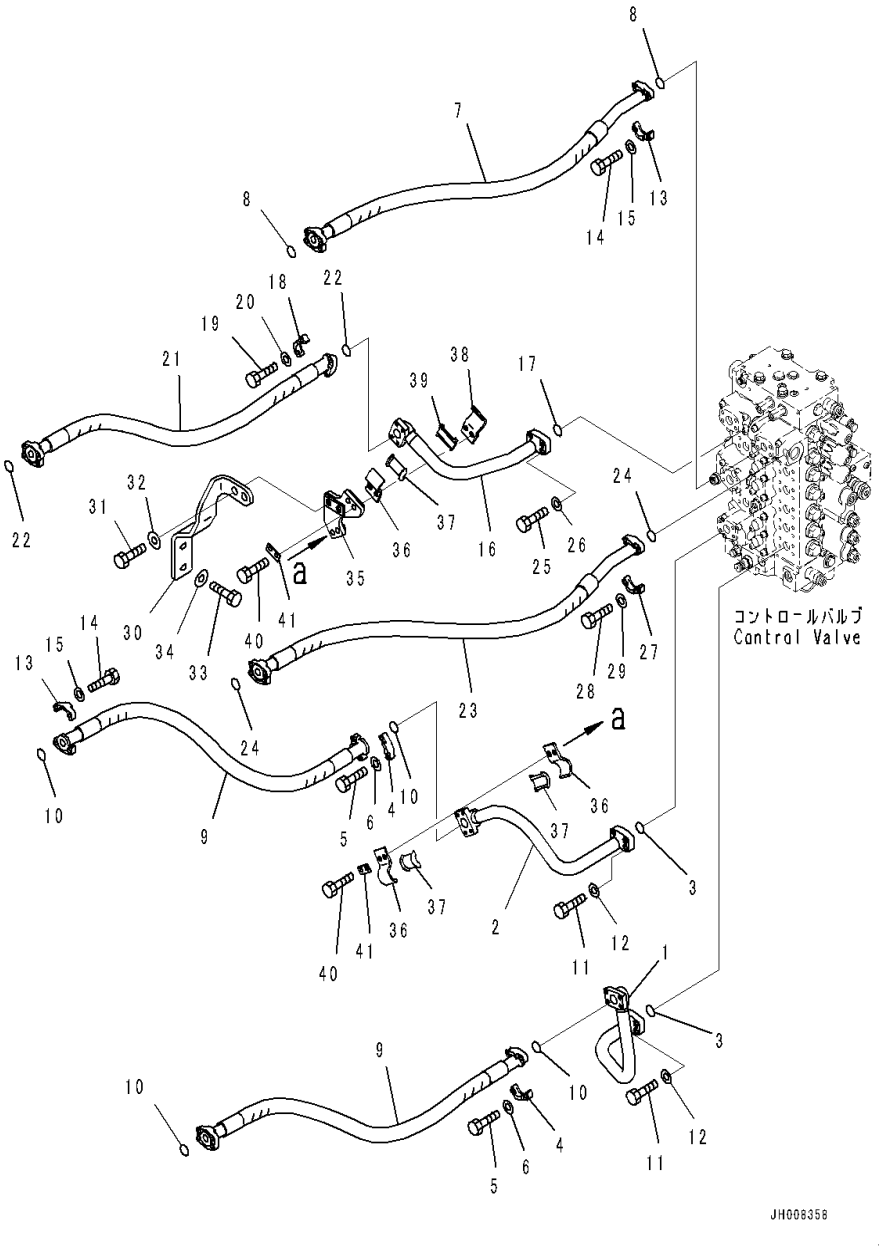

Index	Code	Part Number	Description	Qty	Serial Number
41		20Y-62-13450	Plate	2	C90001-

FIG. H1270-001001 Actuator Piping (1-additional Actuator Piping, Accumulator) (Main Piping, L.H.)

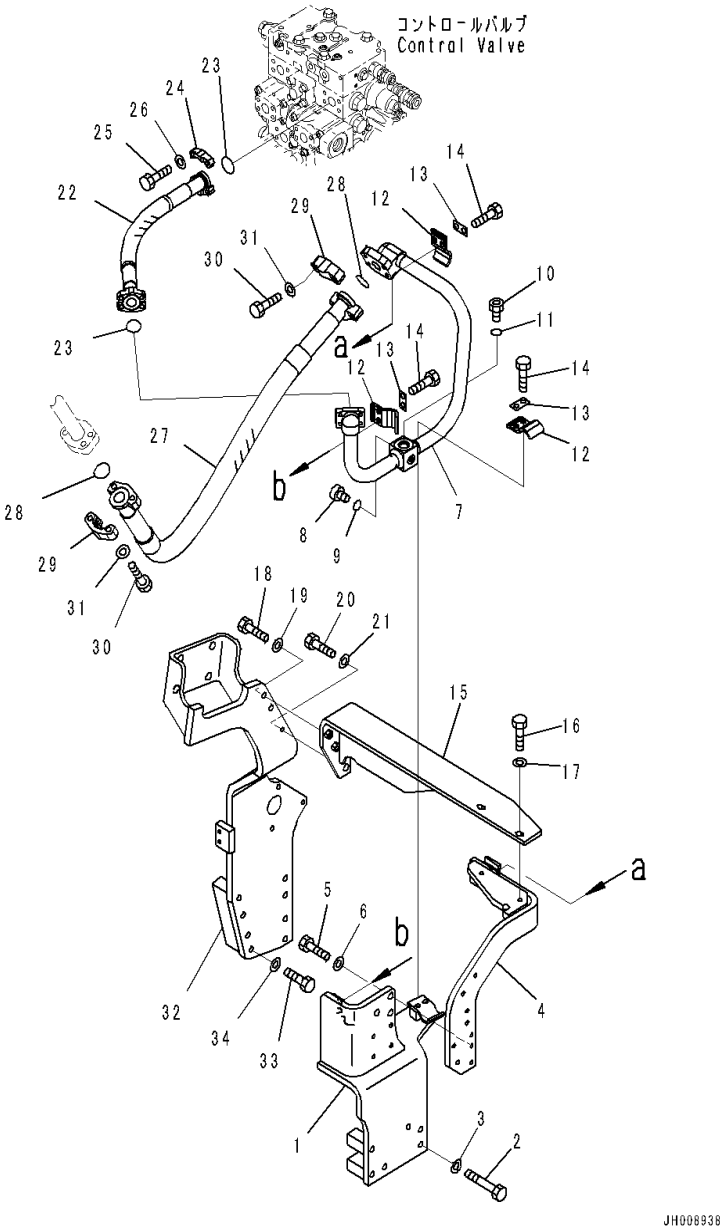

Index	Code	Part Number	Description	Qty	Serial Number
1		207-62-77250	Bracket	1	C90001-
2		01011-81200	Bolt	6	C90001-
3		01643-31232	Washer	6	C90001-
4		207-62-42520	Bracket	1	C90001-
5		01010-81235	Bolt	3	C90001-
6		01643-31232	Washer	3	C90001-
7		207-62-42490	Tube	1	C90001-
8		07040-11007	Plug	1	C90001-
9		07002-11023	O-ring	1	C90001-
10		07040-12412	Plug	1	C90001-
11		07002-12434	O-ring	1	C90001-
12		207-62-31330	Clamp	3	C90001-
13		20Y-62-13450	Plate	3	C90001-
14		01010-81235	Bolt	6	C90001-
15		207-62-73621	Bracket	1	C90001-
16		01010-81240	Bolt	2	C90001-
17		01643-31232	Washer	2	C90001-
18		01010-81245	Bolt	2	C90001-
19		01643-31232	Washer	2	C90001-
20		01010-81235	Bolt	1	C90001-
21		01643-31232	Washer	1	C90001-
22		207-62-73340	Hose	1	C90001-
23		07000-13032	O-ring	2	C90001-
24		07371-31049	Flange, Split	4	C90001-
25		07372-21035	Bolt	8	C90001-
26		01643-51032	Washer	8	C90001-
27		207-62-73390	Hose	1	C90001-
28		07000-13038	O-ring	2	C90001-
29		07371-51260	Flange, Split	4	C90001-
30		01010-81245	Bolt	8	C90001-
31		01643-31232	Washer	8	C90001-
32		207-62-73141	Bracket	1	C90001-
33		01011-81200	Bolt	8	C90001-
34		01643-31232	Washer	8	C90001-

FIG. H1270-001002 Actuator Piping (1-additional Actuator Piping, Accumulator) (Solenoid Valve)

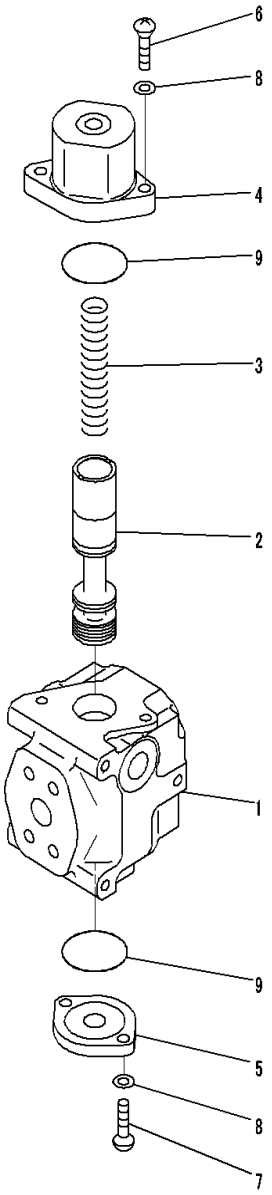

Index	Code	Part Number	Description	Qty	Serial Number
		702-21-01920	Valve Assembly	1	C90001-
1	C1		• Block	1	C90001-
2	C1		• Spool	1	C90001-
3		702-21-11930	• Spring	1	C90001-
4		702-21-11940	• Case	1	C90001-
5		709-10-91240	• Flange	1	C90001-
6		01252-61040	• Bolt, Hexagon Socket Head	2	C90001-
7		01252-61030	• Bolt, Hexagon Socket Head	2	C90001-
8		01643-51032	• Washer	4	C90001-
9		07000-12055	• O-ring	2	C90001-

FIG. H1270-001003 Actuator Piping (1-additional Actuator Piping, Accumulator) (Main Piping, R.H.)

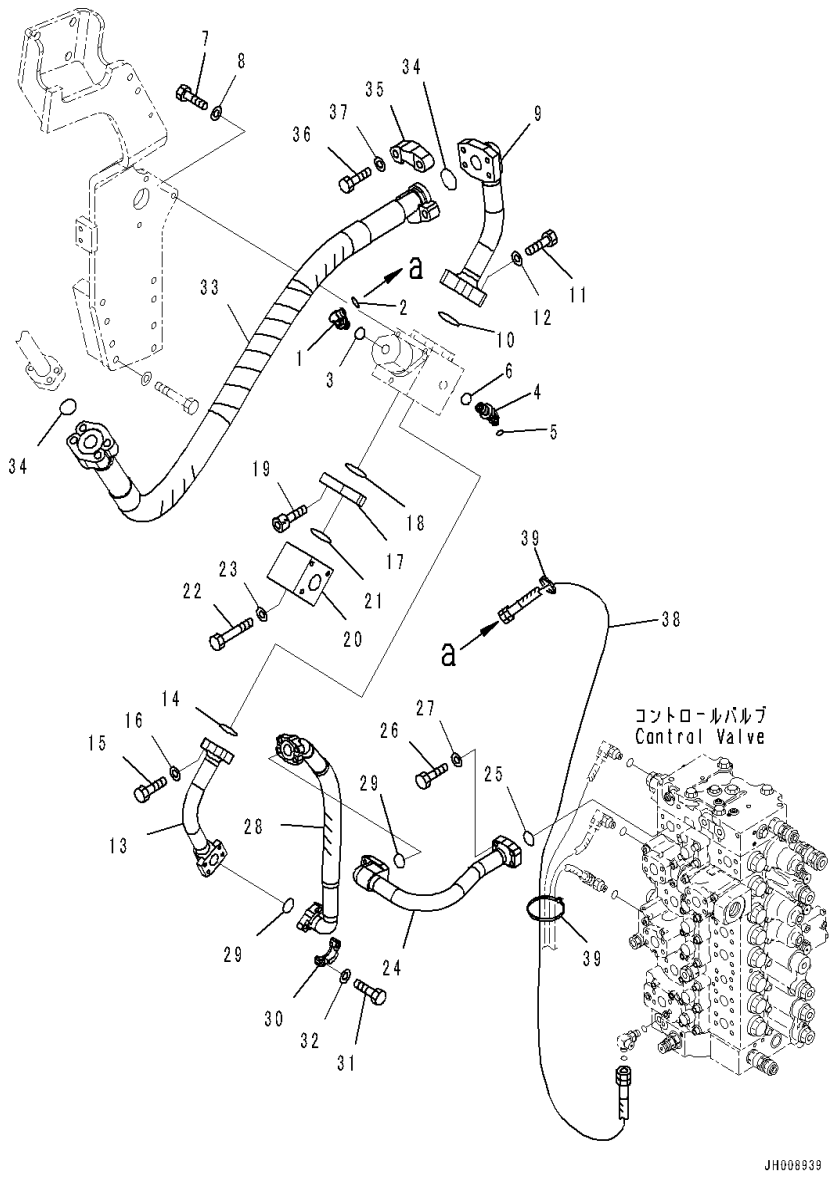

Index	Code	Part Number	Description	Qty	Serial Number
1		11Y-62-12160	Elbow	1	C90001-
2		02896-11008	O-ring	1	C90001-
3		07002-11423	O-ring	1	C90001-
4		11Y-62-12170	Elbow	1	C90001-
5		02896-11008	O-ring	1	C90001-
6		07002-12034	O-ring	1	C90001-
7		01010-81040	Bolt	3	C90001-
8		01643-31032	Washer	3	C90001-
9		207-62-73150	Tube	1	C90001-
10		07000-13048	O-ring	1	C90001-
11		01010-81455	Bolt	4	C90001-
12		01643-31445	Washer, Flat	4	C90001-
13		207-62-73190	Tube	1	C90001-
14		07000-13035	O-ring	1	C90001-
15		07372-21040	Bolt	4	C90001-
16		01643-51032	Washer	4	C90001-
17		207-62-73260	Plate	1	C90001-
18		07000-13048	O-ring	1	C90001-
19		01252-71225	Bolt	2	C90001-
20		207-62-73230	Block	1	C90001-
21		07000-13048	O-ring	1	C90001-
22		01011-81210	Bolt	2	C90001-
23		01643-31232	Washer	2	C90001-
24		207-62-73180	Tube	1	C90001-
25		07000-13035	O-ring	1	C90001-
26		07372-21040	Bolt	4	C90001-
27		01643-51032	Washer	4	C90001-
28		207-62-73290	Hose	1	C90001-
29		07000-13032	O-ring	2	C90001-
30		07371-31049	Flange, Split	4	C90001-
31		07372-21035	Bolt	8	C90001-
32		01643-51032	Washer	8	C90001-
33		207-62-73280	Hose	1	C90001-
34		07000-13048	O-ring	2	C90001-
35		07371-51470	Flange, Split	4	C90001-
36		01010-81455	Bolt	8	C90001-
37		01643-31445	Washer, Flat	8	C90001-
38		207-62-42210	Hose Assembly	1	C90001-
39		08034-20536	Band	2	C90001-

FIG. H1270-001004 Actuator Piping (1-additional Actuator Piping, Accumulator) (Return Filter)

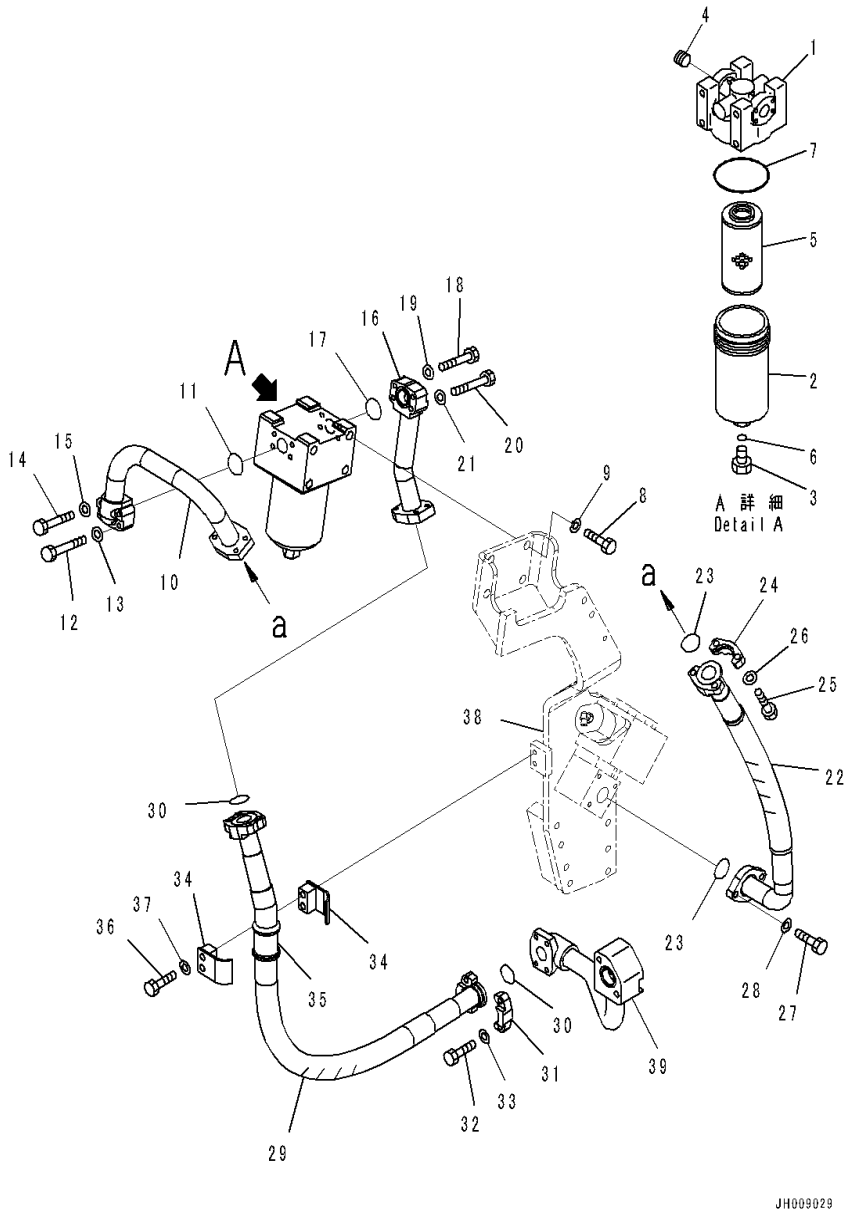

Index	Code	Part Number	Description	Qty	Serial Number
		207-970-5111	Filter	1	C90001-
1		207-970-511101	• Cover	1	C90001-
2		207-970-511102	• Case	1	C90001-
3		207-970-511103	• Bolt	1	C90001-
4		207-970-511104	• Valve	1	C90001-
5		207-970-5121	• Element	1	C90001-
6		07000-12011	• O-ring	1	C90001-
7		07000-12125	• O-ring	1	C90001-
8		01010-81635	Bolt	4	C90001-
9		01643-31645	Washer	4	C90001-
10		207-62-73160	Tube	1	C90001-
11		07000-13040	O-ring	1	C90001-
12		01010-81055	Bolt	2	C90001-
13		01643-31032	Washer	2	C90001-
14		01010-81070	Bolt	2	C90001-
15		01643-31032	Washer	2	C90001-
16		207-62-73170	Tube	1	C90001-
17		07000-13040	O-ring	1	C90001-
18		01010-81055	Bolt	2	C90001-
19		01643-31032	Washer	2	C90001-
20		01010-81070	Bolt	2	C90001-
21		01643-31032	Washer	2	C90001-
22		207-62-73310	Hose	1	C90001-
23		07000-13048	O-ring	2	C90001-
24		07371-31465	Flange	2	C90001-
25		07372-21240	Bolt	4	C90001-
26		01643-51232	Washer	4	C90001-
27		01010-81240	Bolt	2	C90001-
28		01643-31232	Washer	2	C90001-
29		207-62-73320	Hose	1	C90001-
30		07000-13048	O-ring	2	C90001-
31		07371-31465	Flange	4	C90001-
32		07372-21240	Bolt	8	C90001-
33		01643-51232	Washer	8	C90001-
34		07094-11228	Clamp	2	C90001-
35		07095-01245	Cushion	1	C90001-
36		01010-81285	Bolt	2	C90001-
37		01643-31232	Washer	2	C90001-
38		(207-62-73141)	Bracket		-
39		(207-62-42481)	Tube		-

FIG. H1270-001005 Actuator Piping (1-additional Actuator Piping, Accumulator) (Accumulator)

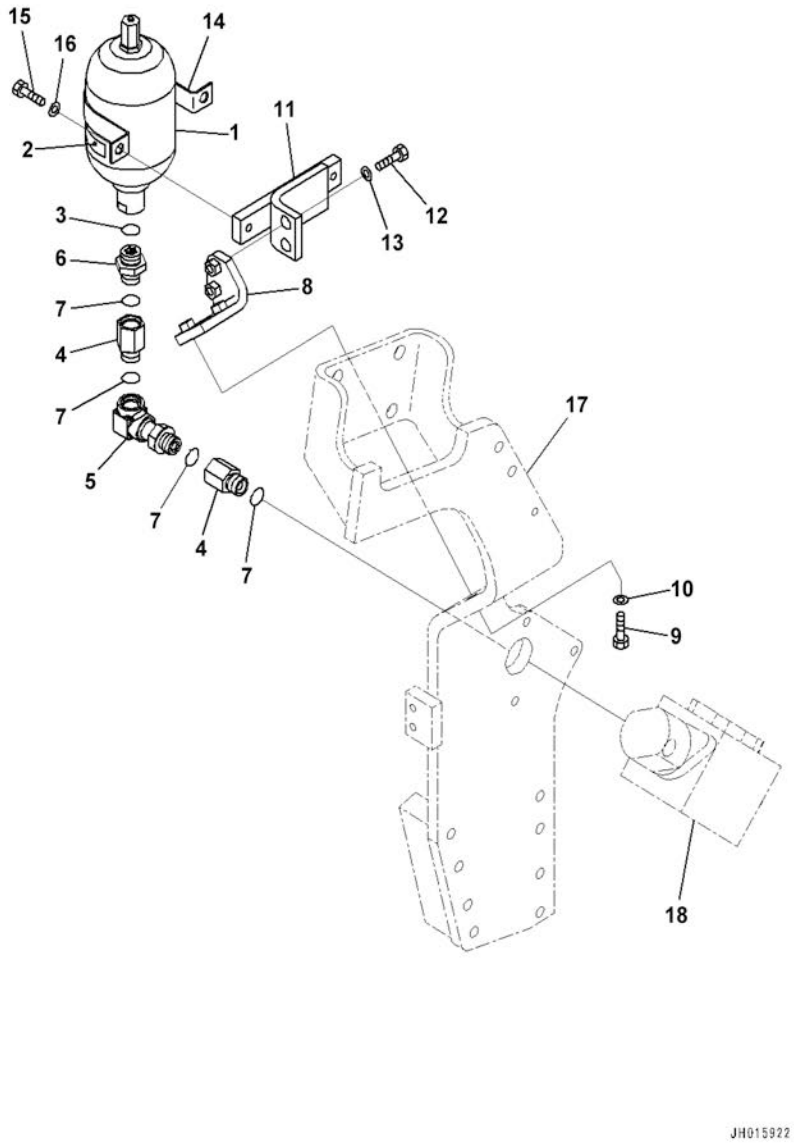

Index	Code	Part Number	Description	Qty	Serial Number
1		20Y-970-6451	Accumulator Assembly	1	C90001-
2		09659-A057B	• Plate, Warning, Explosion Hazard	1	C90001-
3		205-970-5560	• O-ring	1	C90001-
4		201-62-71810	Joint	2	C90001-
5		207-62-73350	Elbow	1	C90001-
6		205-970-5550	Nipple	1	C90001-
7		07002-12434	O-ring	4	C90001-
8		207-62-73251	Bracket	1	C90001-
9		01010-81250	Bolt	2	C90001-
10		01643-31232	Washer	2	C90001-
11		207-62-73240	Bracket	1	C90001-
12		01010-81240	Bolt	2	C90001-
13		01643-31232	Washer	2	C90001-
14		175-61-51750	Plate	1	C90001-
15		01010-81225	Bolt	2	C90001-
16		01643-31232	Washer	2	C90001-
17		(207-62-73141)	Bracket		-
18		(702-21-01920)	Valve Assembly		-

FIG. H1270-001006 Actuator Piping (1-additional Actuator Piping, Accumulator) (Pilot Filter)

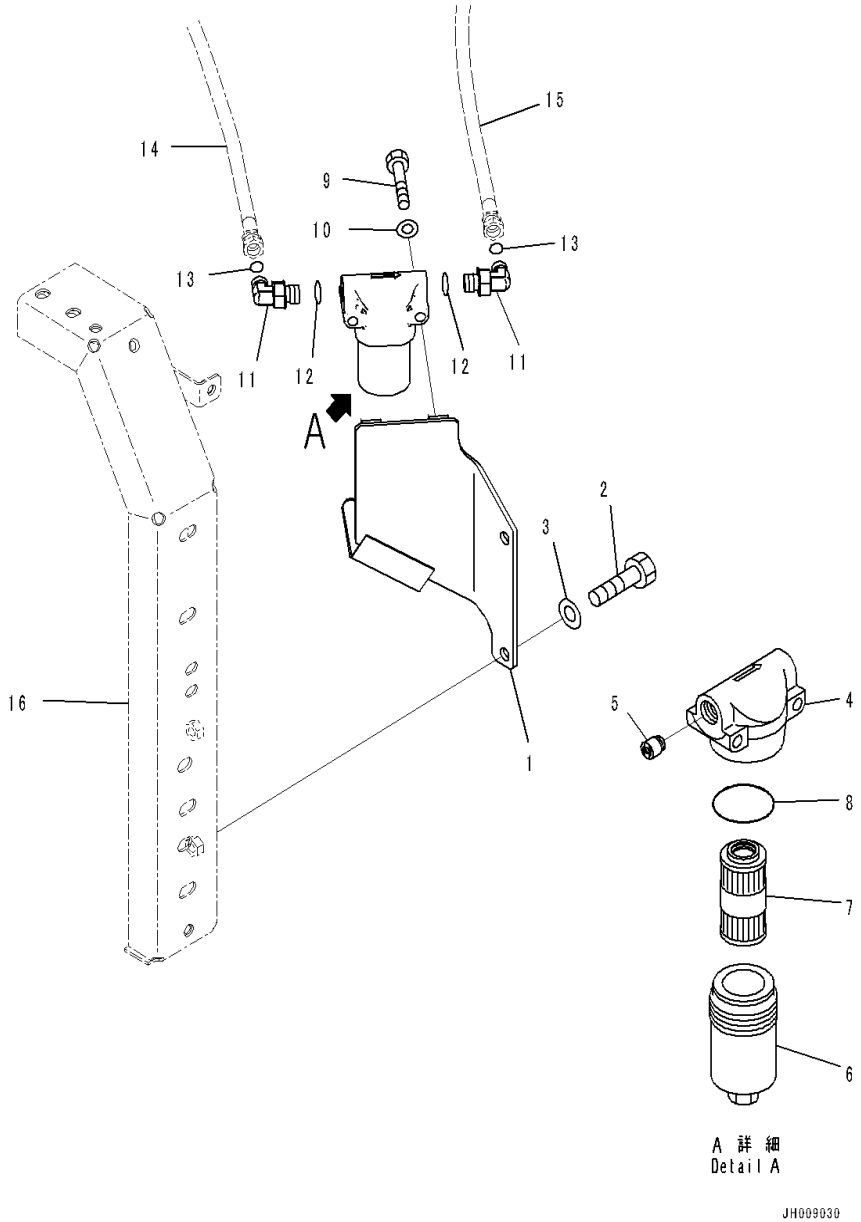

Index	Code	Part Number	Description	Qty	Serial Number
1		207-62-75120	Bracket	1	C90001-
2		01010-81225	Bolt	2	C90001-
3		01643-31232	Washer	2	C90001-
		20Y-62-51681	Filter Assembly	1	C90001-
4	C1		• Head	1	C90001-
5	C1		• Valve Assembly	1	C90001-
6	C1		• Case	1	C90001-
7		20Y-62-51691	• Element	1	C90001-
8		706-76-71390	• O-ring	1	C90001-
9		01010-81075	Bolt	2	C90001-
10		01643-31032	Washer	2	C90001-
11		02782-10315	Elbow	2	C90001-
12		07002-12034	O-ring	2	C90001-
13		02896-11009	O-ring	2	C90001-
14		(207-62-77460)	Hose		-
15		(207-62-75180)	Hose		-
16		(207-54-76140)	Frame		-

FIG. H1310-001001 Travel Piping

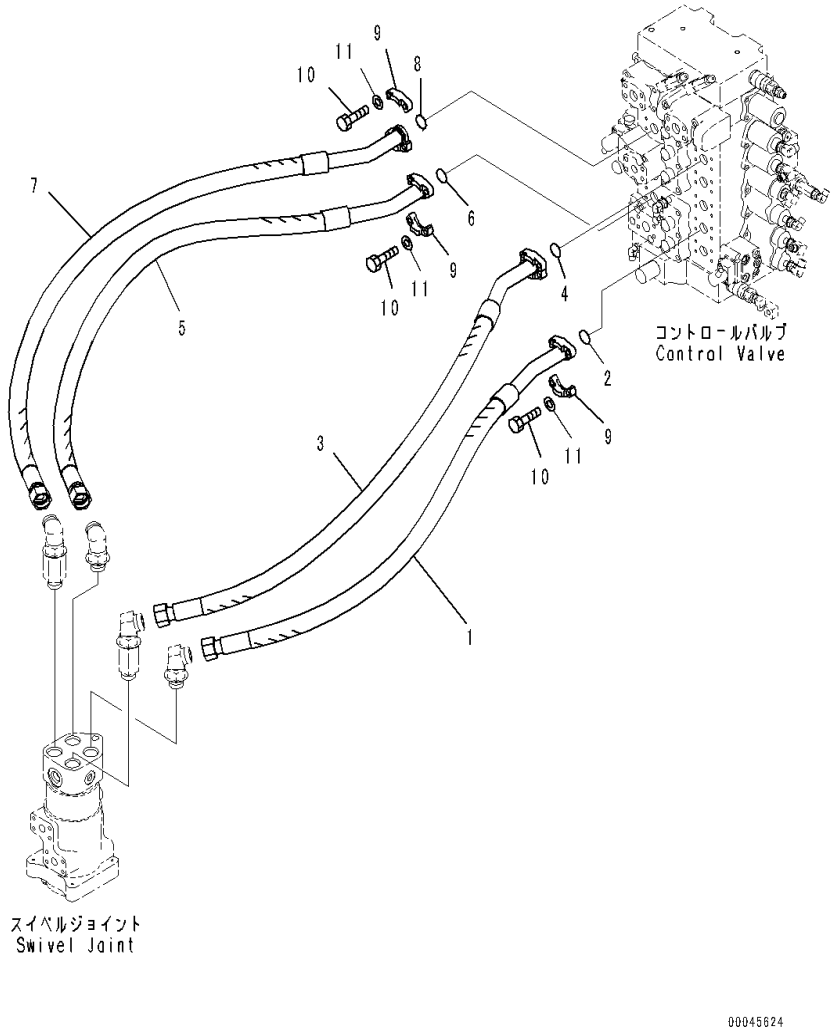

Index	Code	Part Number	Description	Qty	Serial Number
1		207-62-71430	Hose Assembly	1	C90001-
2		07000-13032	O-ring	1	C90001-
3		207-62-71440	Hose Assembly	1	C90001-
4		07000-13032	O-ring	1	C90001-
5		207-62-71450	Hose Assembly	1	C90001-
6		07000-13032	O-ring	1	C90001-
7		207-62-71460	Hose Assembly	1	C90001-
8		07000-13032	O-ring	1	C90001-
9		07371-31049	Flange, Split	8	C90001-
10		07372-21035	Bolt	16	C90001-
11		01643-51032	Washer	16	C90001-

FIG. H1340-001001 Swing Piping

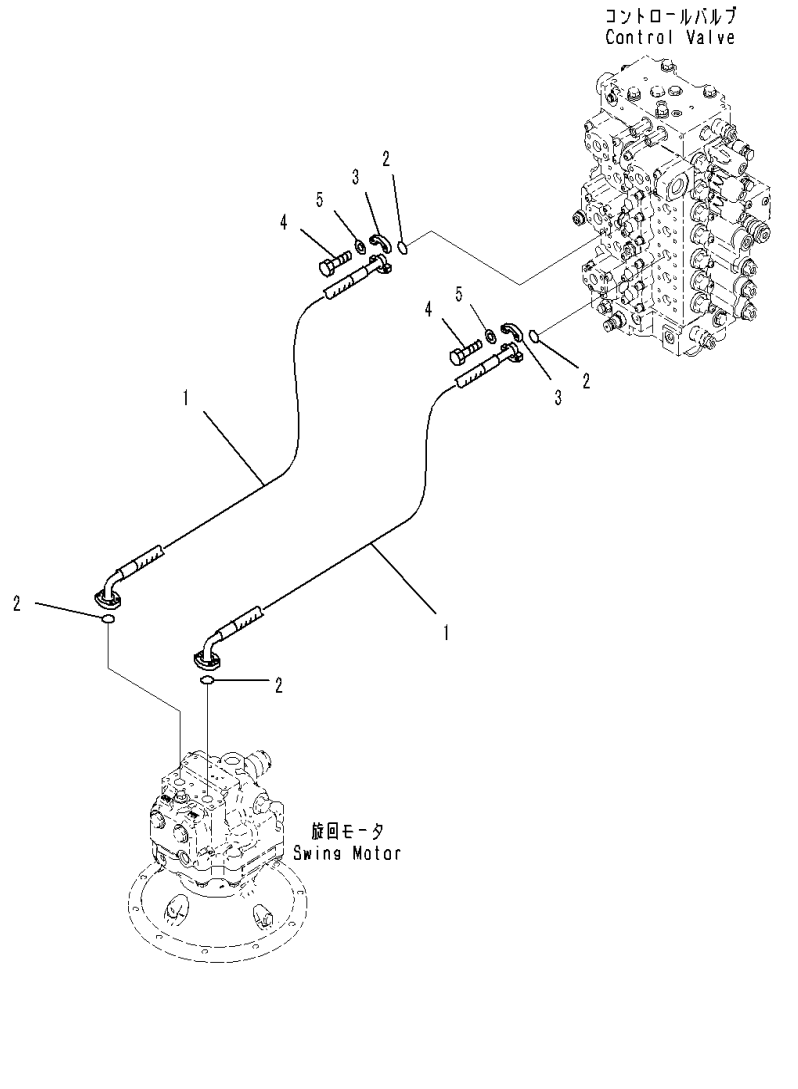

Index	Code	Part Number	Description	Qty	Serial Number
1		07098-01009	Hose, Flange Type	2	C90001-
2		07000-13032	O-ring	4	C90001-
3		07371-31049	Flange, Split	8	C90001-
4		07372-21035	Bolt	16	C90001-
5		01643-51032	Washer	16	C90001-

FIG. H1810-001001 LS Piping

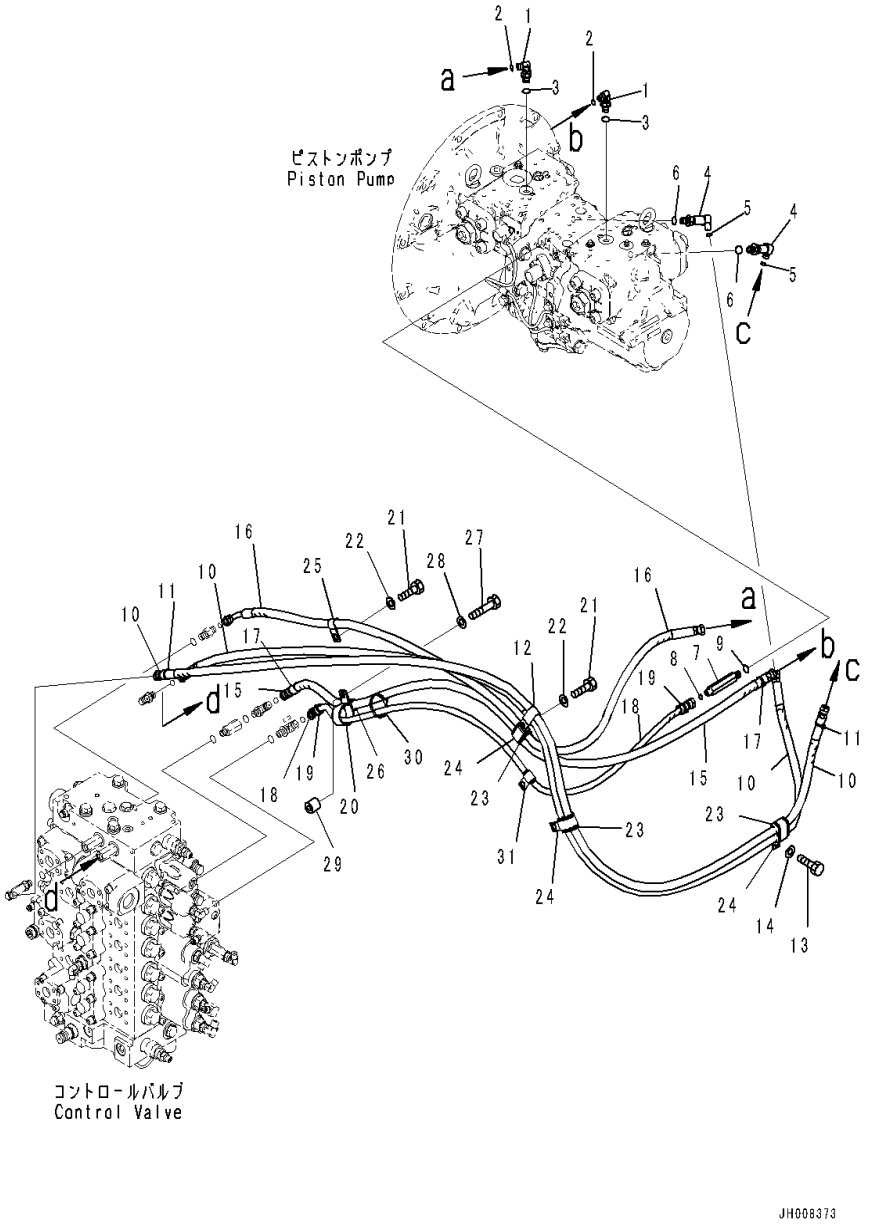

Index	Code	Part Number	Description	Qty	Serial Number
1		11Y-62-12160	Elbow	2	C90001-
2		02896-11008	O-ring	2	C90001-
3		07002-11423	O-ring	2	C90001-
4		11Y-62-12370	Elbow	2	C90001-
5		02896-11008	O-ring	2	C90001-
6		07002-11423	O-ring	2	C90001-
7		207-62-71531	Union	1	C90001-
8		02896-11008	O-ring	1	C90001-
9		07002-11423	O-ring	1	C90001-
10		207-62-74851	Hose	2	C90001-
11		20Y-62-22790	Band, Red	2	C90001-
12		04435-51812	Clip	1	C90001-
13		01010-81220	Bolt	1	C90001-
14		01643-31232	Washer	1	C90001-
15		207-62-42561	Hose	1	C90001-
16		207-62-42571	Hose	1	C90001-
17		20Y-62-22790	Band, Red	2	C90001-
18		207-62-41651	Hose	1	C90001-
19		20Y-62-22810	• Band, Yellow	2	C90001-
20		208-06-19170	Clip	1	C90001-
21		01010-81225	Bolt	4	C90001-
22		01643-31232	Washer	4	C90001-
23		198-06-53630	Cushion	3	C90001-
24		04435-52112	Clip	3	C90001-
25		04434-51612	Clip	1	C90001-
26		04434-51812	Clip	1	C90001-
27		01010-81250	Bolt	1	C90001-
28		01643-31232	Washer	1	C90001-
29		195-33-11220	Spacer	1	C90001-
30		08034-20536	Band	1	C90001-
31		04434-51312	Clip	1	C90001-

FIG. H1810-002001 LS Piping (1-additional Actuator Piping, Accumulator)

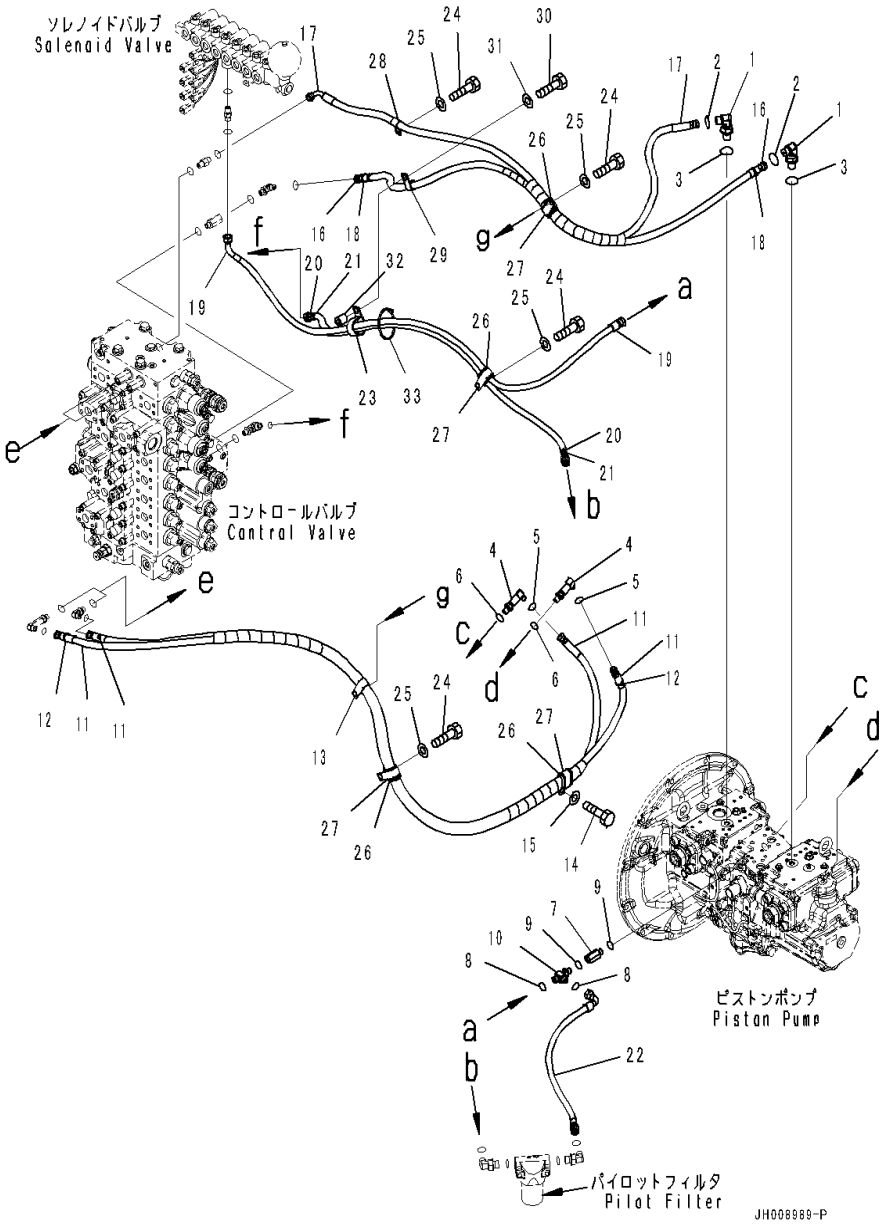

Index	Code	Part Number	Description	Qty	Serial Number
1		11Y-62-12160	Elbow	2	C90001-
2		02896-11008	O-ring	2	C90001-
3		07002-11423	O-ring	2	C90001-
4		11Y-62-12370	Elbow	2	C90001-
5		02896-11008	O-ring	2	C90001-
6		07002-11423	O-ring	2	C90001-
7		20Y-62-22160	Adapter	1	C90001-
8		02896-11009	O-ring	2	C90001-
9		07002-11423	O-ring	2	C90001-
10		21N-64-36680	Tee	1	C90001-
11		207-62-74743	Hose Assembly	1	C90001-
12		20Y-62-22790	• Band, Red	2	C90001-
13		04435-51812	Clip	1	C90001-
14		01010-81220	Bolt	1	C90001-
15		01643-31232	Washer	1	C90001-
16		207-62-42560	Hose	1	C90001-
17		207-62-42570	Hose	1	C90001-
18		20Y-62-22790	Band, Red	2	C90001-
19		207-62-77470	Hose	1	C90001-
20		207-62-77460	Hose	1	C90001-
21		20Y-62-22810	• Band, Yellow	2	C90001-
22		02775-003A5	Hose	1	C90001-
23		20Y-62-15951	Clip	1	C90001-
24		01010-81225	Bolt	4	C90001-
25		01643-31232	Washer	4	C90001-
26		198-06-53630	Cushion	4	C90001-
27		04435-52112	Clip	4	C90001-
28		04434-51612	Clip	1	C90001-
29		04434-51812	Clip	1	C90001-
30		01010-81250	Bolt	1	C90001-
31		01643-31232	Washer	1	C90001-
32		195-33-11220	Spacer	1	C90001-
33		08034-20536	Band	1	C90001-

FIG. H1831-001001 Solenoid Valve (Inner Parts)

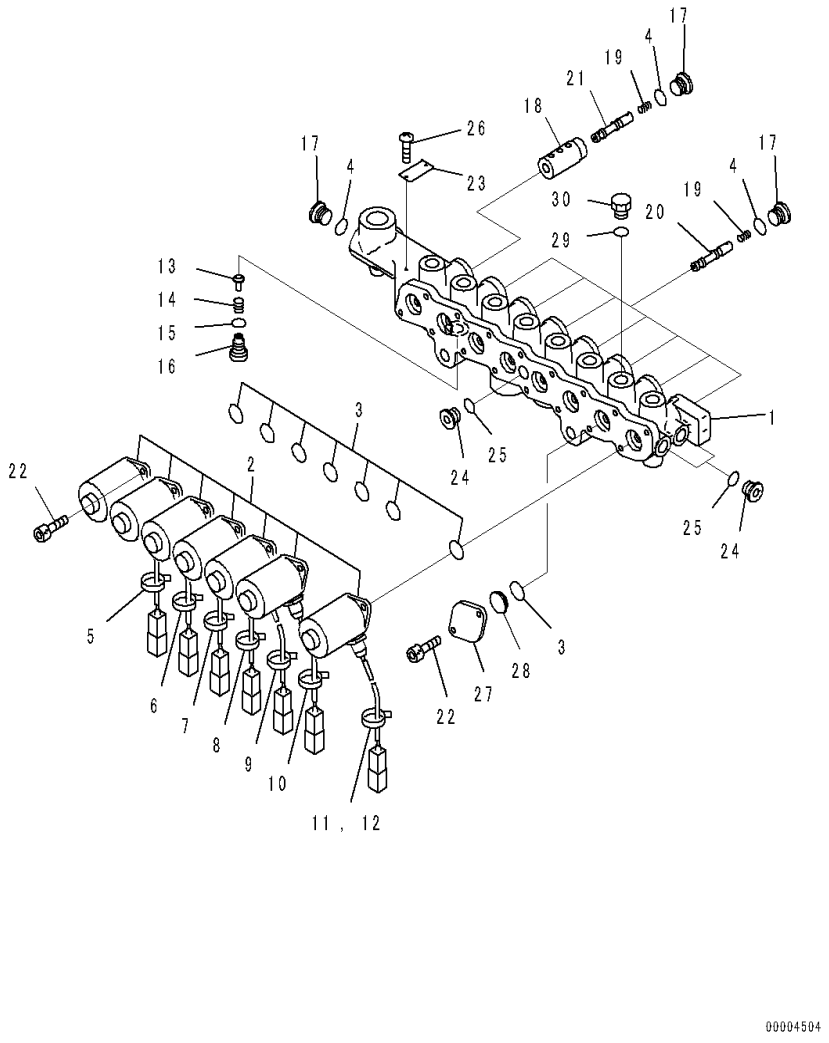

Index	Code	Part Number	Description	Qty	Serial Number
		207-60-71311	Valve Assembly	1	C90001-
1	C1		• Block	1	C90001-
2		20Y-60-32121	• Solenoid Assembly	7	C90001-
3		07000-12016	• O-ring	8	C90001-
4		07000-12011	• O-ring	9	C90001-
5		NY07207-11700	• Tube	1	C90001-
6		NY07529-10200	• Tube	1	C90001-
7		NY07529-10300	• Tube	1	C90001-
8		NY07529-10400	• Tube	1	C90001-
9		NY07529-10500	• Tube	1	C90001-
10		NY07529-10600	• Tube	1	C90001-
11		NY07207-11800	• Tube	1	C90001-
12		NY89103-00090	• Band	7	C90001-
13		NY05062-1170A	• Plunger	1	C90001-
14		NY05062-11800	• Spring	1	C90001-
15		07000-11010	• O-ring	1	C90001-
16		NY06277-1320A	• Plug	1	C90001-
17		NY80000-02200	• Plug	9	C90001-
18		NY16207-10200	• Sleeve	1	C90001-
19		NY06339-10200	• Spring	8	C90001-
20		NY07493-10200	• Spool	7	C90001-
21		NY16207-10300	• Spool	1	C90001-
22		NY81446-05012	• Bolt	16	C90001-
23		NY09000-11400	• Plate	1	C90001-
24		NY80000-02100	• Plug	3	C90001-
25		07000-11008	• O-ring	3	C90001-
26		NY84110-00248	• Screw	2	C90001-
27		NY07926-10100	• Plate	1	C90001-
28		NY01720-10600	• Stopper	1	C90001-
29		07002-11423	• O-ring	1	C90001-
30		07040-11409	• Plug	1	C90001-

FIG. H1831-001002 Solenoid Valve (Solenoid Valve Related Parts)

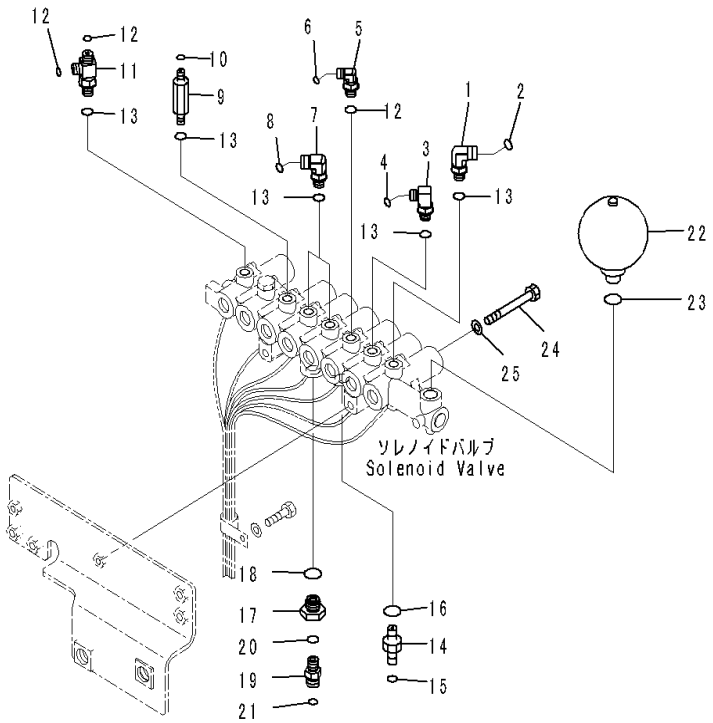

Index	Code	Part Number	Description	Qty	Serial Number
1		02782-10311	Elbow	1	C90001-
2		02896-11009	O-ring	1	C90001-
3		207-62-72120	Elbow	1	C90001-
4		02896-11008	O-ring	1	C90001-
5		11Y-62-12160	Elbow	1	C90001-
6		02896-11008	O-ring	1	C90001-
7		21W-62-42490	Elbow	2	C90001-
8		02896-11009	O-ring	2	C90001-
9		11Y-62-12230	Union	1	C90001-
10		02896-11008	O-ring	1	C90001-
11		11Y-62-12330	Tee	1	C90001-
12		02896-11008	O-ring	2	C90001-
13		07002-11423	O-ring	7	C90001-
14		02781-00422	Union	1	C90001-
15		02896-11012	O-ring	1	C90001-
16		07002-12034	O-ring	1	C90001-
17		20Y-62-21940	Joint	1	C90001-
18		07002-12034	O-ring	1	C90001-
19		02781-0031D	Nipple	1	C90001-
20		07002-11423	O-ring	1	C90001-
21		02896-11009	O-ring	1	C90001-
22		22U-60-21331	Accumulator	1	C90001-
23		07002-12034	O-ring	1	C90001-
24		01010-81090	Bolt	2	C90001-
25		01643-31032	Washer	2	C90001-

FIG. H1831-001003 Solenoid Valve (Hose)

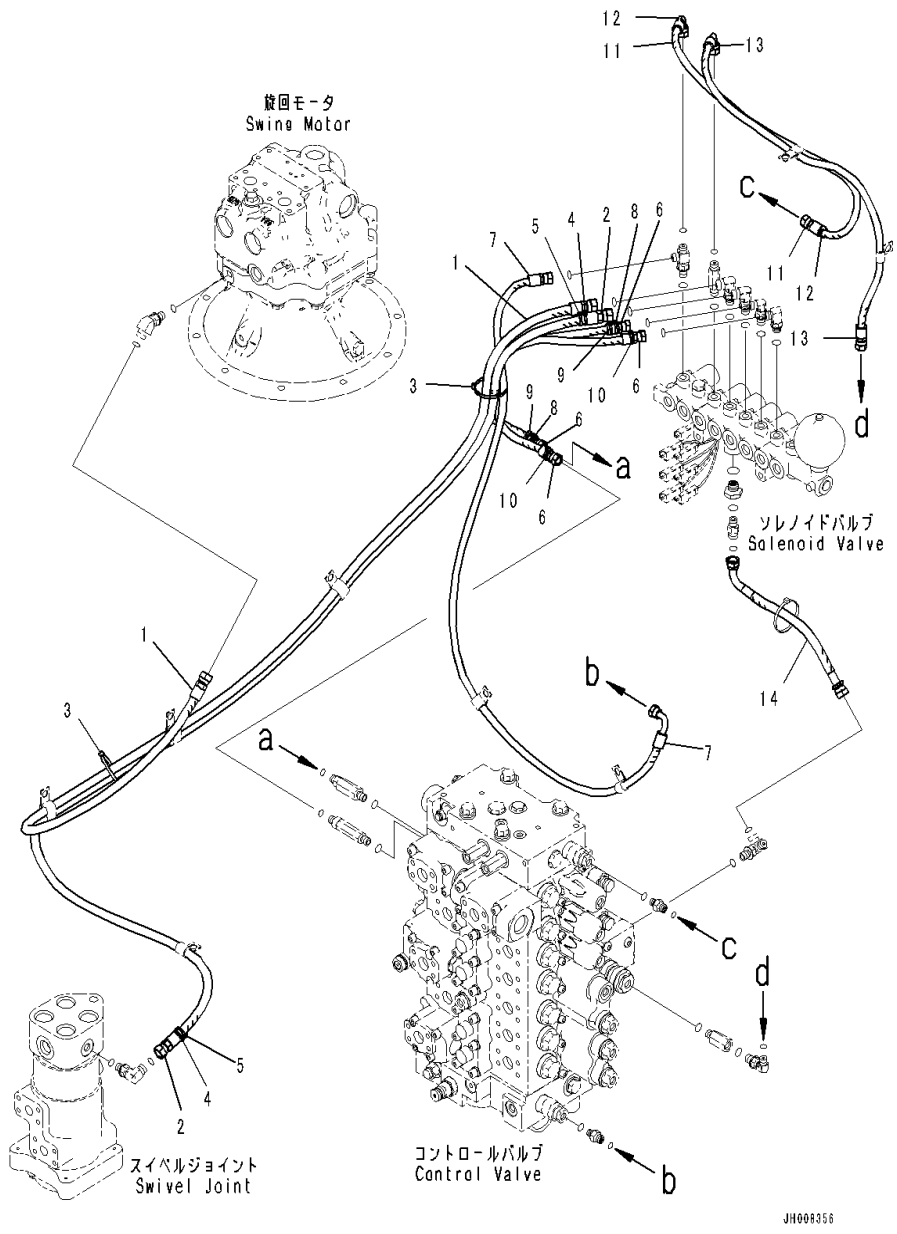

Index	Code	Part Number	Description	Qty	Serial Number
1		02774-00325	Hose	1	C90001-
2		02774-00326	Hose	1	C90001-
3		08034-20519	Band	2	C90001-
4		20Y-62-22790	Band, Red	2	C90001-
5		20Y-62-22810	Band, Yellow	2	C90001-
6		02760-002A6	Hose, Face Seal Type	2	C90001-
7		02763-00216	Hose, Face Seal Type	1	C90001-
8		20Y-62-22810	Band, Yellow	2	C90001-
9		20Y-62-22820	Band, Blue	2	C90001-
10		20Y-62-22860	Band, Brown	2	C90001-
11		02775-00208	Hose	1	C90001-
12		20Y-62-22820	Band, Blue	2	C90001-
13		02775-002A9	Hose	1	C90001-
14		02763-003A3	Hose, Face Seal Type	1	C90001-

FIG. H1831-001004 Solenoid Valve (Clamp)

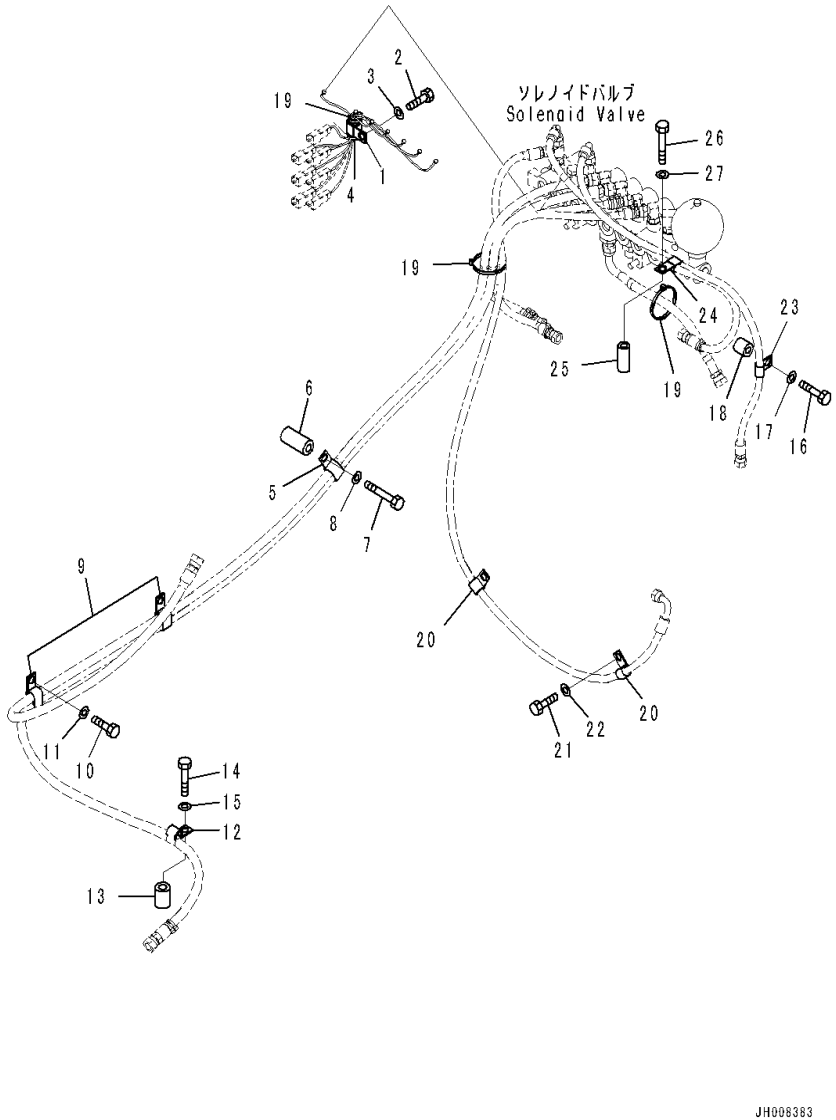

Index	Code	Part Number	Description	Qty	Serial Number
1		04434-51912	Clip	1	C90001-
2		01010-81225	Bolt	1	C90001-
3		01643-31232	Washer	1	C90001-
4		08034-20536	Band	2	C90001-
5		04435-51512	Clip	1	C90001-
6		176-38-41350	Spacer	1	C90001-
7		01010-81285	Bolt	1	C90001-
8		01643-31232	Washer	1	C90001-
9		04435-51512	Clip	2	C90001-
10		01010-81225	Bolt	2	C90001-
11		01643-31232	Washer	2	C90001-
12		04434-51412	Clip	1	C90001-
13		142-03-11160	Spacer	1	C90001-
14		01010-81260	Bolt	1	C90001-
15		01643-31232	Washer	1	C90001-
16		01010-81255	Bolt	1	C90001-
17		01643-31232	Washer	1	C90001-
18		195-33-11220	Spacer	1	C90001-
19		08034-20536	Band	3	C90001-
20		04434-51312	Clip	2	C90001-
21		01010-81225	Bolt	2	C90001-
22		01643-31232	Washer	2	C90001-
23		04434-51012	Clip	1	C90001-
24		04435-51212	Clip	1	C90001-
25		14X-54-26640	Collar	1	C90001-
26		01010-81275	Bolt	1	C90001-
27		01643-31232	Washer	1	C90001-

FIG. H1831-002001 Solenoid Valve (1-additional Actuator Piping, Accumulator) (1/4)

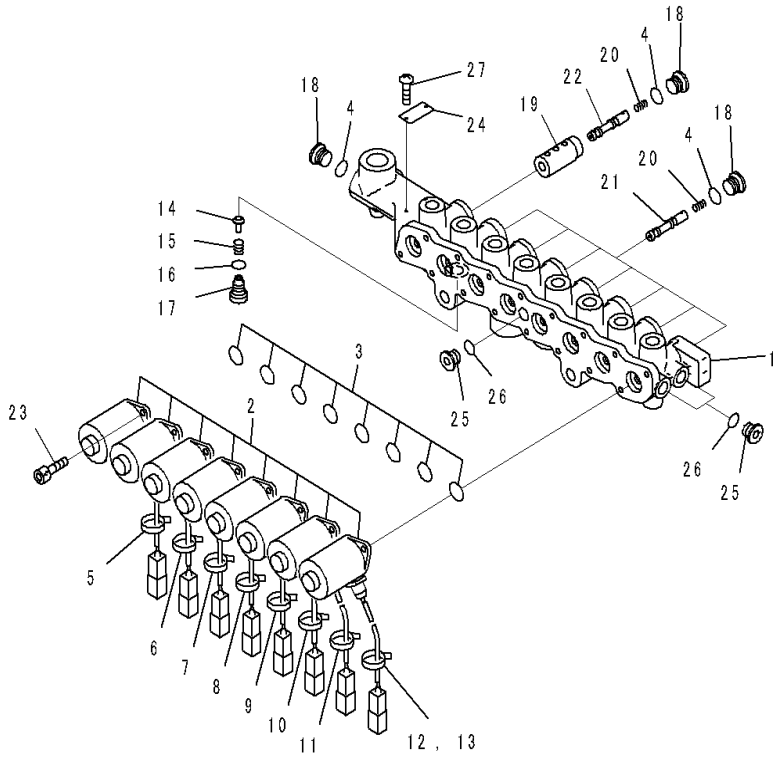

Index	Code	Part Number	Description	Qty	Serial Number
		207-60-71320	Valve Assembly	1	C90001-
1	C1		• Block	1	C90001-
2		20Y-60-32121	• Solenoid Assembly	8	C90001-
3		07000-12016	• O-ring	8	C90001-
4		07000-12011	• O-ring	9	C90001-
5		NY07207-11700	• Tube	1	C90001-
6		NY07529-10200	• Tube	1	C90001-
7		NY07529-10300	• Tube	1	C90001-
8		NY07529-10400	• Tube	1	C90001-
9		NY07529-10500	• Tube	1	C90001-
10		NY07529-10600	• Tube	1	C90001-
11		NY07505-10200	• Tube	1	C90001-
12		NY07880-10900	• Tube	1	C90001-
13		NY89103-00090	• Band	8	C90001-
14		NY05062-1170A	• Plunger	1	C90001-
15		NY05062-11800	• Spring	1	C90001-
16		07000-11010	• O-ring	1	C90001-
17		NY06277-1320A	• Plug	1	C90001-
18		NY80000-02200	• Plug	9	C90001-
19		NY16207-10200	• Sleeve	1	C90001-
20		NY06339-10200	• Spring	8	C90001-
21		NY07493-10200	• Spool	7	C90001-
22		NY16207-10300	• Spool	1	C90001-
23		NY81446-05012	• Bolt	16	C90001-
24		NY09000-11400	• Plate	1	C90001-
25		NY80000-02100	• Plug	3	C90001-
26		NY86711-01008	• O-ring	3	C90001-
27		NY84110-00248	• Screw	2	C90001-

FIG. H1831-002002 Solenoid Valve (1-additional Actuator Piping, Accumulator) (2/4)

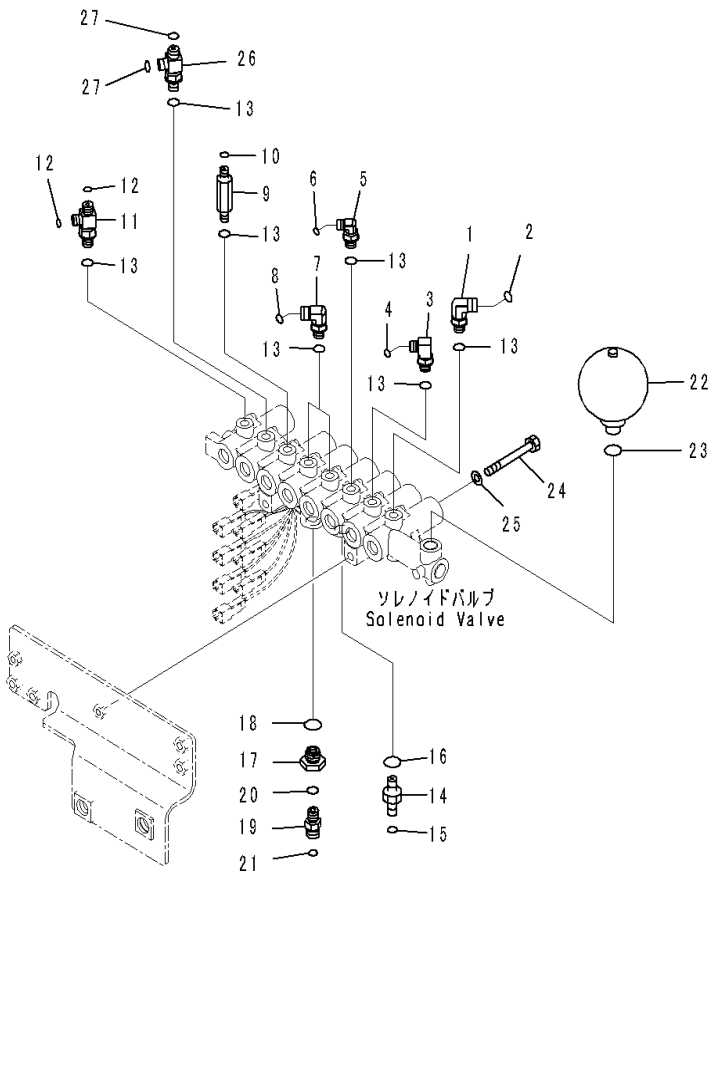

Index	Code	Part Number	Description	Qty	Serial Number
1		02782-10311	Elbow	1	C90001-
2		02896-11009	O-ring	1	C90001-
3		207-62-72120	Elbow	1	C90001-
4		02896-11008	O-ring	1	C90001-
5		11Y-62-12160	Elbow	1	C90001-
6		02896-11008	O-ring	1	C90001-
7		21W-62-42490	Elbow	2	C90001-
8		02896-11009	O-ring	2	C90001-
9		11Y-62-12230	Union	1	C90001-
10		02896-11008	O-ring	1	C90001-
11		11Y-62-12330	Tee	1	C90001-
12		02896-11008	O-ring	2	C90001-
13		07002-11423	O-ring	8	C90001-
14		02781-00422	Union	1	C90001-
15		02896-11012	O-ring	1	C90001-
16		07002-12034	O-ring	1	C90001-
17		20Y-62-21940	Joint	1	C90001-
18		07002-12034	O-ring	1	C90001-
19		02781-0031D	Nipple	1	C90001-
20		07002-11423	O-ring	1	C90001-
21		02896-11009	O-ring	1	C90001-
22		22U-60-21331	Accumulator	1	C90001-
23		07002-12034	O-ring	1	C90001-
24		01010-81090	Bolt	2	C90001-
25		01643-31032	Washer	2	C90001-
26		20Y-62-41960	Tee	1	C90001-
27		02896-11008	O-ring	2	C90001-

FIG. H1831-002003 Solenoid Valve (1-additional Actuator Piping, Accumulator) (3/4)

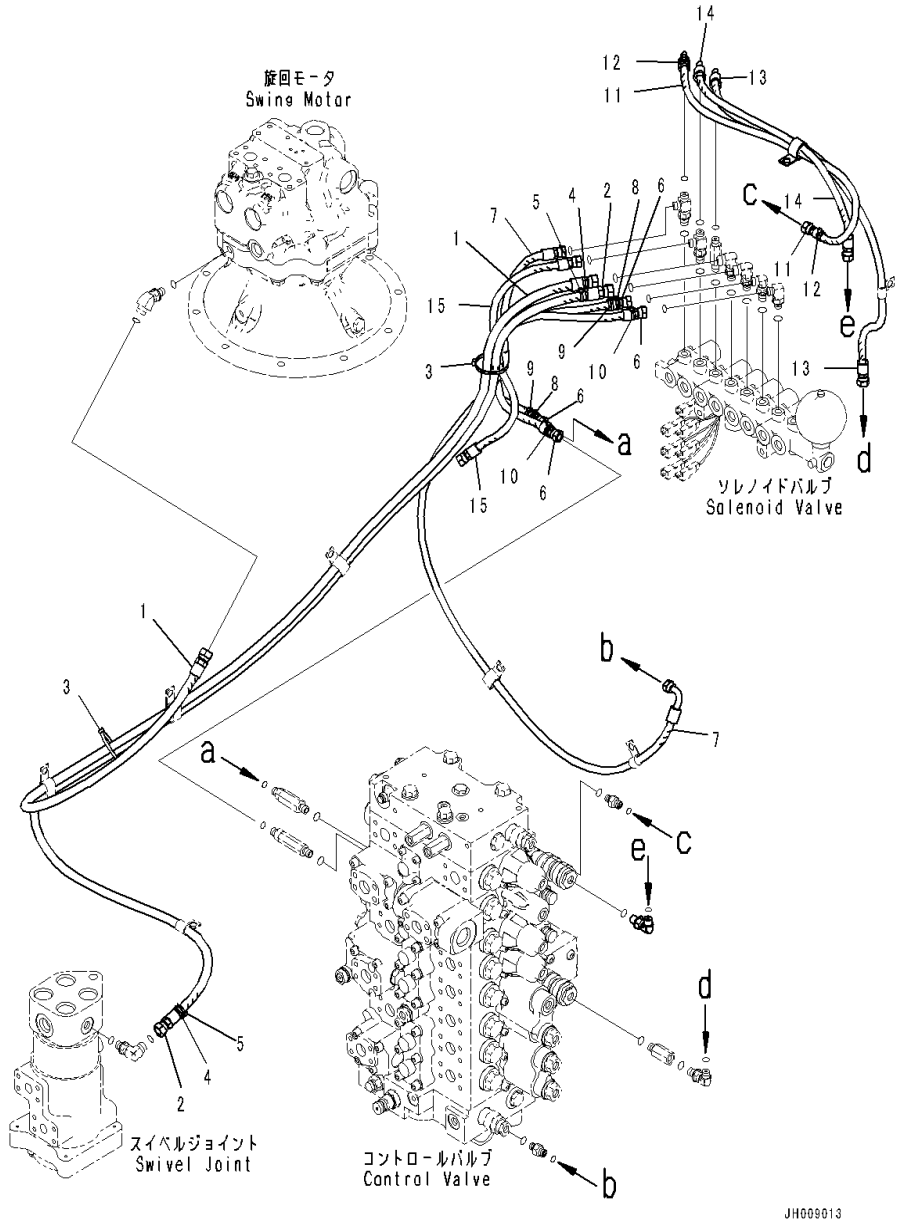

Index	Code	Part Number	Description	Qty	Serial Number
1		02774-00325	Hose	1	C90001-
2		02774-00326	Hose	1	C90001-
3		08034-20519	Band	2	C90001-
4		20Y-62-22790	Band, Red	2	C90001-
5		20Y-62-22810	Band, Yellow	2	C90001-
6		02760-002A6	Hose, Face Seal Type	2	C90001-
7		02763-00216	Hose, Face Seal Type	1	C90001-
8		20Y-62-22810	Band, Yellow	2	C90001-
9		20Y-62-22820	Band, Blue	2	C90001-
10		20Y-62-22860	Band, Brown	2	C90001-
11		02775-00208	Hose	1	C90001-
12		20Y-62-22820	Band, Blue	2	C90001-
13		02775-002A9	Hose	1	C90001-
14		02775-002A6	Hose	1	C90001-
15		02774-002A5	Hose	1	C90001-

FIG. H1831-002004 Solenoid Valve (1-additional Actuator Piping, Accumulator) (4/4)

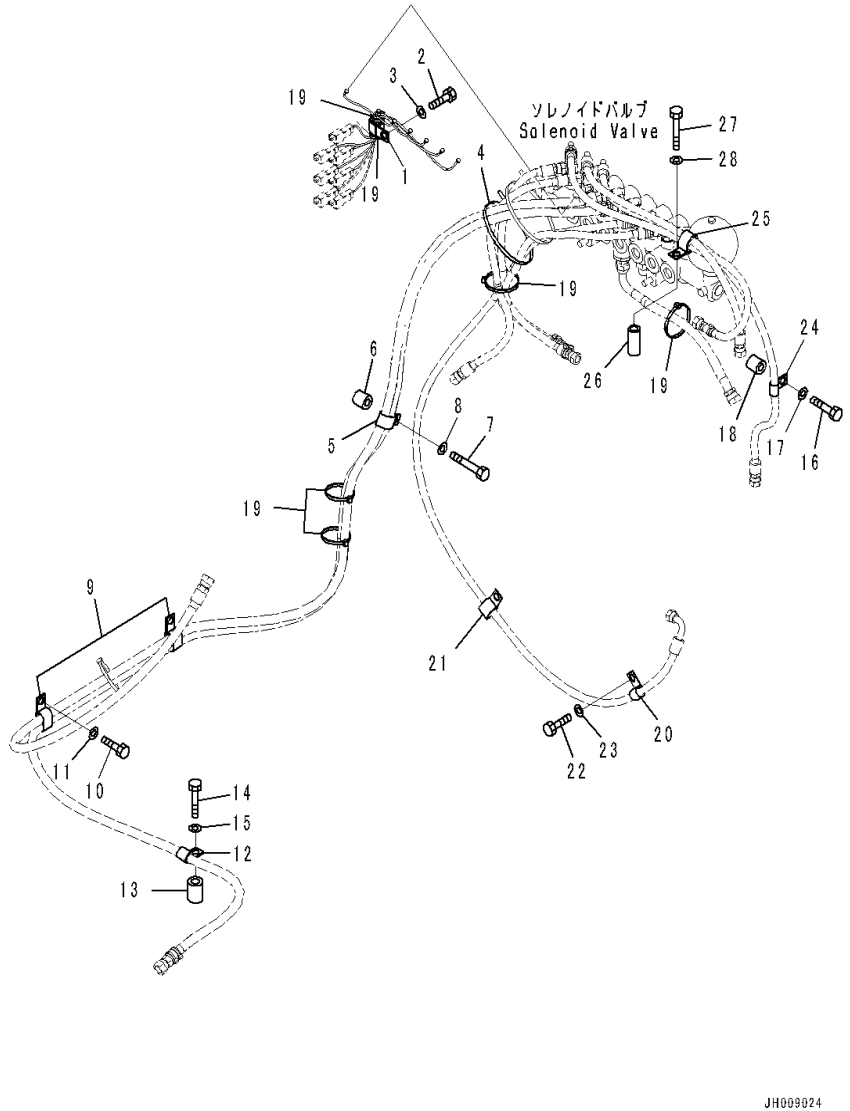

Index	Code	Part Number	Description	Qty	Serial Number
1		04434-52112	Clip	1	C90001-
2		01010-81225	Bolt	1	C90001-
3		01643-31232	Washer	1	C90001-
4		08034-20536	Band	1	C90001-
5		04435-51512	Clip	1	C90001-
6		195-33-11220	Spacer	1	C90001-
7		01010-81250	Bolt	1	C90001-
8		01643-31232	Washer	1	C90001-
9		04435-51512	Clip	2	C90001-
10		01010-81225	Bolt	2	C90001-
11		01643-31232	Washer	2	C90001-
12		04434-51412	Clip	1	C90001-
13		142-03-11160	Spacer	1	C90001-
14		01010-81260	Bolt	1	C90001-
15		01643-31232	Washer	1	C90001-
16		01010-81255	Bolt	1	C90001-
17		01643-31232	Washer	1	C90001-
18		195-33-11220	Spacer	1	C90001-
19		08034-20536	Band	6	C90001-
20		04434-51312	Clip	1	C90001-
21		04435-51312	Clip	1	C90001-
22		01010-81225	Bolt	2	C90001-
23		01643-31232	Washer	2	C90001-
24		04434-51012	Clip	1	C90001-
25		04434-52312	Clip	1	C90001-
26		14X-54-26640	Collar	1	C90001-
27		01010-81275	Bolt	1	C90001-
28		01643-31232	Washer	1	C90001-

FIG. H1833-001001 Pressure Switch Block (Sensor)

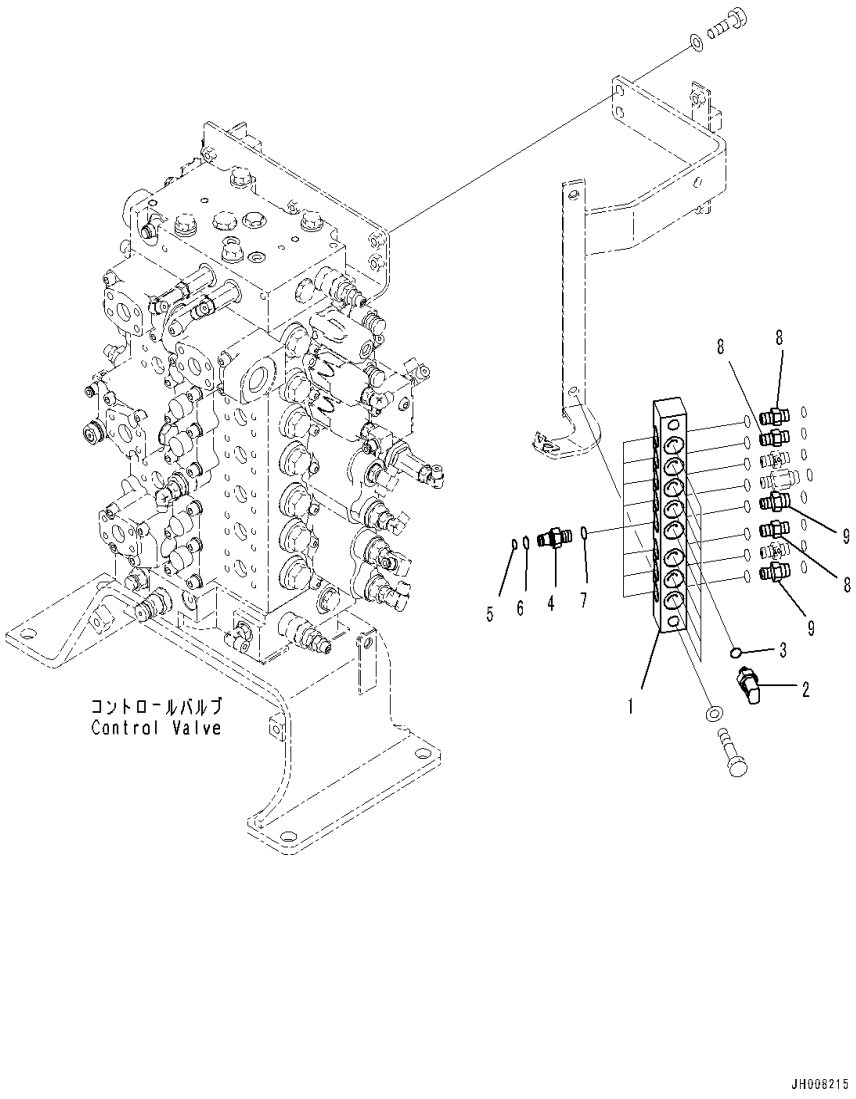

Index	Code	Part Number	Description	Qty	Serial Number
1		2A5-62-12771	Block	1	C90001-
2		7861-93-1840	Sensor, Pressure	8	C90001-
3		07000-12011	• O-ring	1	C90001-
4		20Y-62-16630	Nipple	8	C90001-
5		201-60-11390	• O-ring	1	C90001-
6		20Y-62-19560	• O-ring	1	C90001-
7		07002-11423	O-ring	8	C90001-
8		11Y-62-12130	Nipple	3	C90001-
9		11Y-62-12520	Union	2	C90001-

FIG. H1833-001002 Pressure Switch Block (Slow Return Valve)

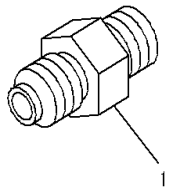

JY018287

Index	Code	Part Number	Description	Qty	Serial Number
1		702-16-08210	Valve Assembly	2	C90001-

FIG. H1833-001003 Pressure Switch Block (Bracket)

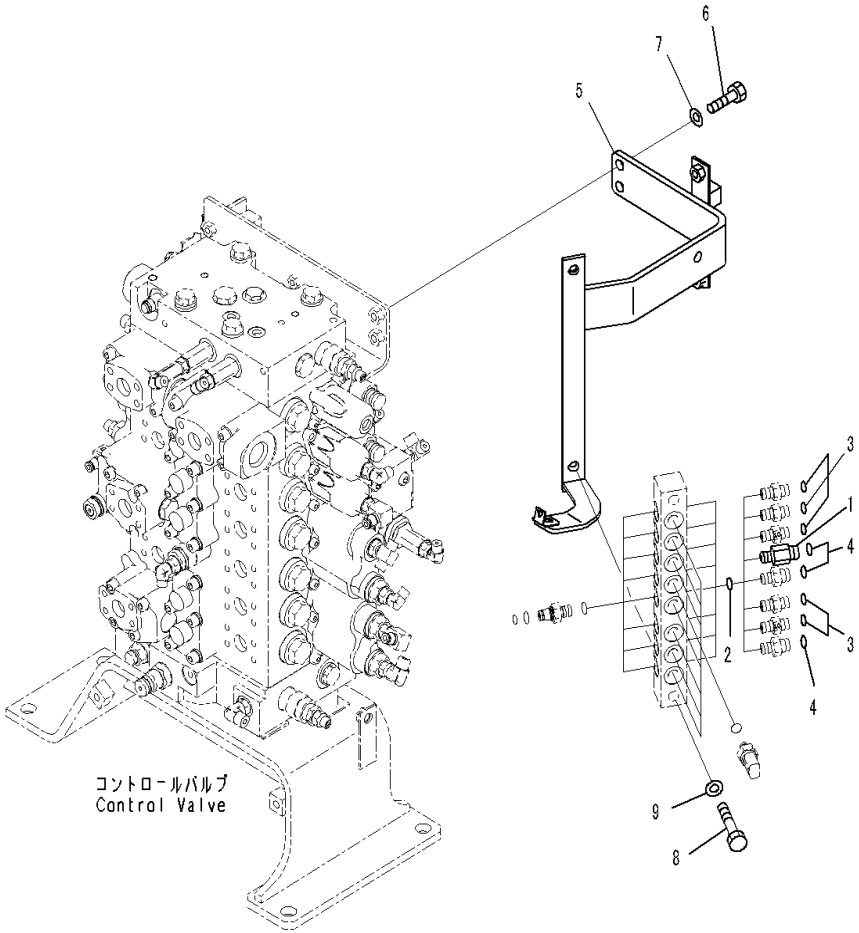

Index	Code	Part Number	Description	Qty	Serial Number
1		20U-62-41730	Union	1	C90001-
2		07002-11423	O-ring	8	C90001-
3		02896-11008	O-ring	5	C90001-
4		02896-11009	O-ring	3	C90001-
5		207-62-77211	Bracket	1	C90001-
6		01010-81235	Bolt	2	C90001-
7		01643-31232	Washer	2	C90001-
8		01010-81265	Bolt	2	C90001-
9		01643-31232	Washer	2	C90001-

FIG. H1840-001001 Proportional Pressure Control (PPC) Valve Piping

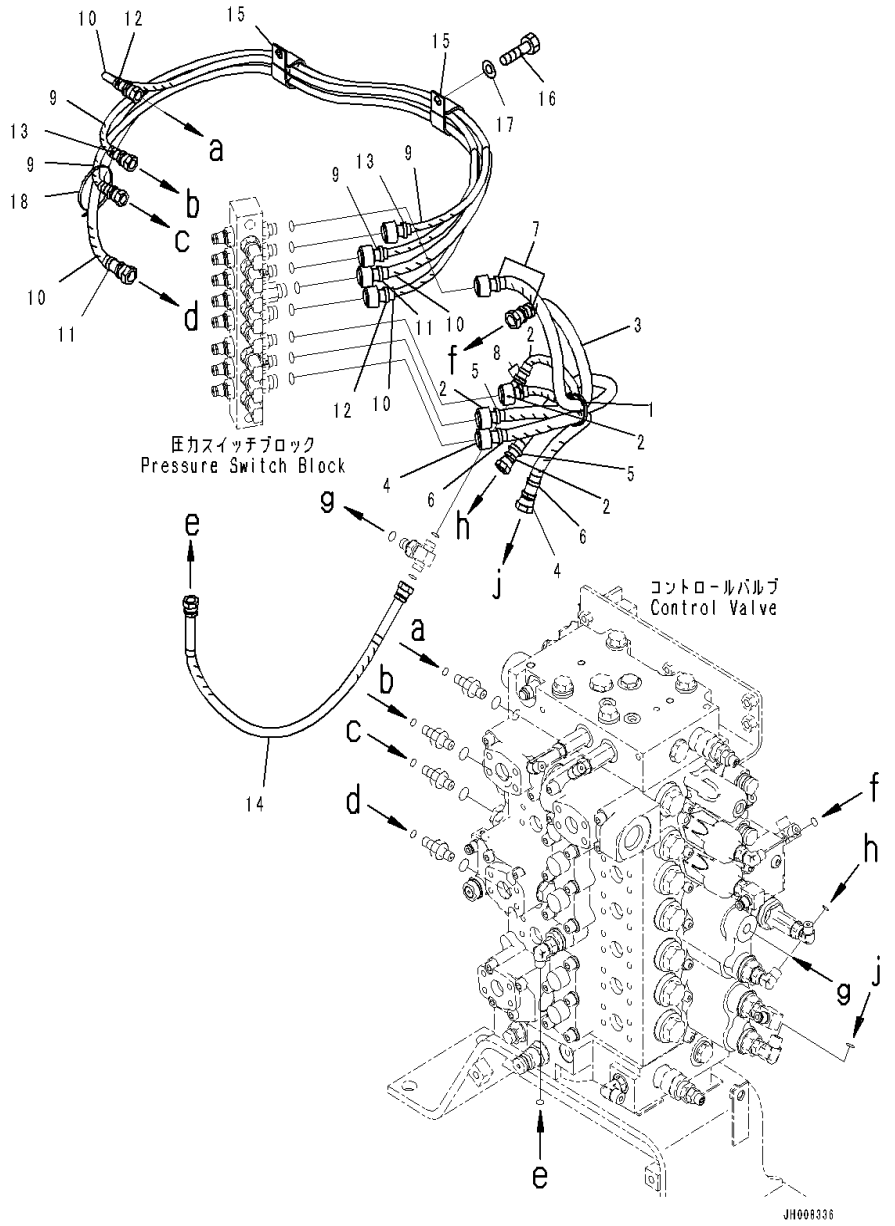

Index	Code	Part Number	Description	Qty	Serial Number
1		08034-20536	Band	1	C90001-
2		02774-00204	Hose	2	C90001-
3		02774-00206	Hose, Face Seal Type	1	C90001-
4		02774-003A6	Hose	1	C90001-
5		20Y-62-22790	Band, Red	2	C90001-
6		20Y-62-22810	Band, Yellow	2	C90001-
7		20Y-62-22830	Band, White	2	C90001-
8		20Y-62-22850	Band, Green	2	C90001-
9		02775-00214	Hose	2	C90001-
10		02775-00314	Hose	2	C90001-
11		20Y-62-22820	Band, Blue	2	C90001-
12		20Y-62-22840	Band, Black	2	C90001-
13		20Y-62-22860	Band, Brown	2	C90001-
14		02774-002A5	Hose	1	C90001-
15		113-899-7950	Clip	2	C90001-
16		01010-81225	Bolt	2	C90001-
17		01643-31232	Washer	2	C90001-
18		08034-20536	Band	1	C90001-

FRAME AND ITS RELATED PARTS

FIG. J1110-001001 Revolving Frame (Poor Fuel Specification, Water+Dust, Large Fuel Prefilter)

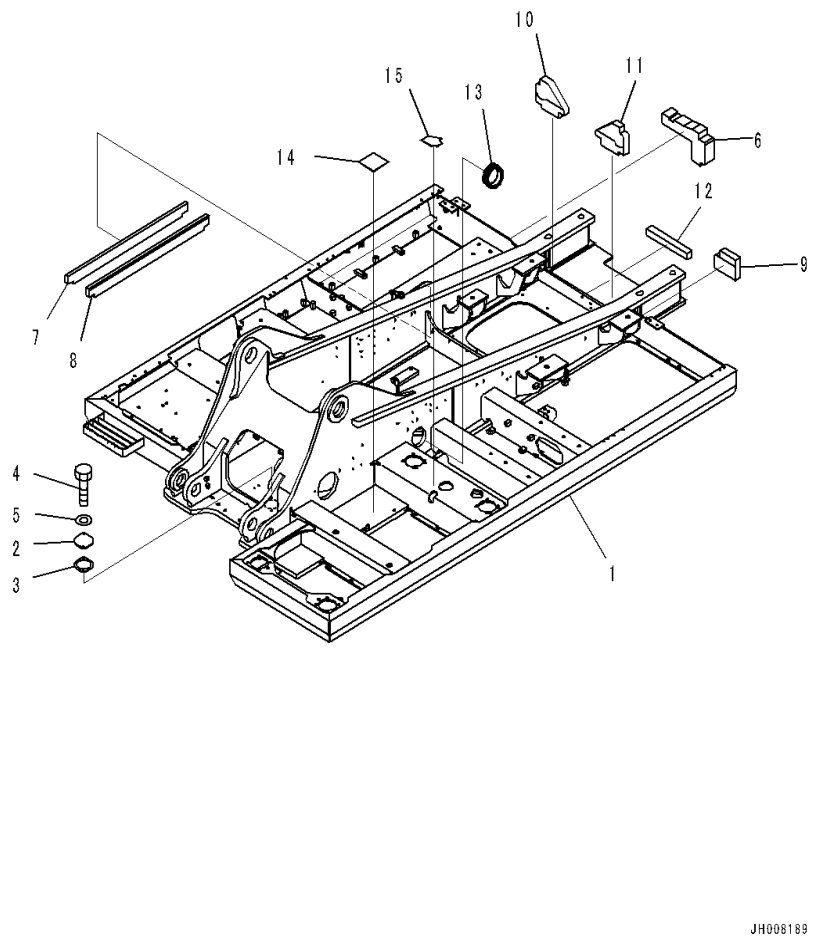

Index	Code	Part Number	Description	Qty	Serial Number
1		207-46-72300	Frame	1	C90001-
2		205-30-71181	Cover	1	C90001-
3		205-30-71191	Gasket	1	C90001-
4		01010-81230	Bolt	2	C90001-
5		01643-31232	Washer	2	C90001-
6		207-46-72520	Sheet	1	C90001-
7		207-46-77321	Sheet	1	C90001-
8		207-46-77331	Sheet	1	C90001-
9		207-46-72560	Sheet	1	C90001-
10		207-46-72530	Sheet	1	C90001-
11		207-46-72540	Sheet	1	C90001-
12		207-46-72550	Sheet	1	C90001-
13		207-62-71791	Grommet	1	C90001-
14		203-62-52210	Rubber	1	C90001-
15		207-46-72570	Sheet	1	C90001-

FIG. J1110-002001 Revolving Frame (Poor Fuel Spec, Water+Dust, Large Fuel Prefilter, With Deck Guard)

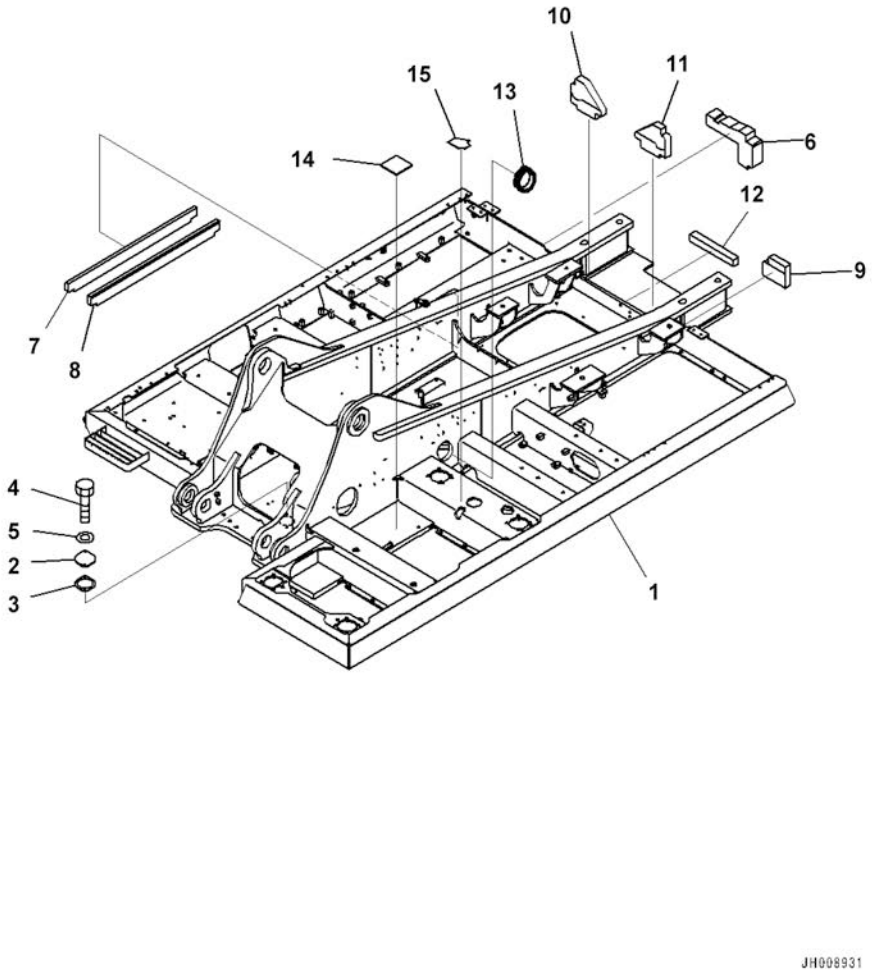

Index	Code	Part Number	Description	Qty	Serial Number
1		207-46-72400	Frame	1	C90001-
2		205-30-71181	Cover	1	C90001-
3		205-30-71191	Gasket	1	C90001-
4		01010-81230	Bolt	2	C90001-
5		01643-31232	Washer	2	C90001-
6		207-46-72520	Sheet	1	C90001-
7		207-46-77321	Sheet	1	C90001-
8		207-46-77331	Sheet	1	C90001-
9		207-46-72560	Sheet	1	C90001-
10		207-46-72530	Sheet	1	C90001-
11		207-46-72540	Sheet	1	C90001-
12		207-46-72550	Sheet	1	C90001-
13		207-62-71791	Grommet	1	C90001-
14		203-62-52210	Rubber	1	C90001-
15		207-46-72570	Sheet	1	C90001-

FIG. J1110-003001 Revolving Frame

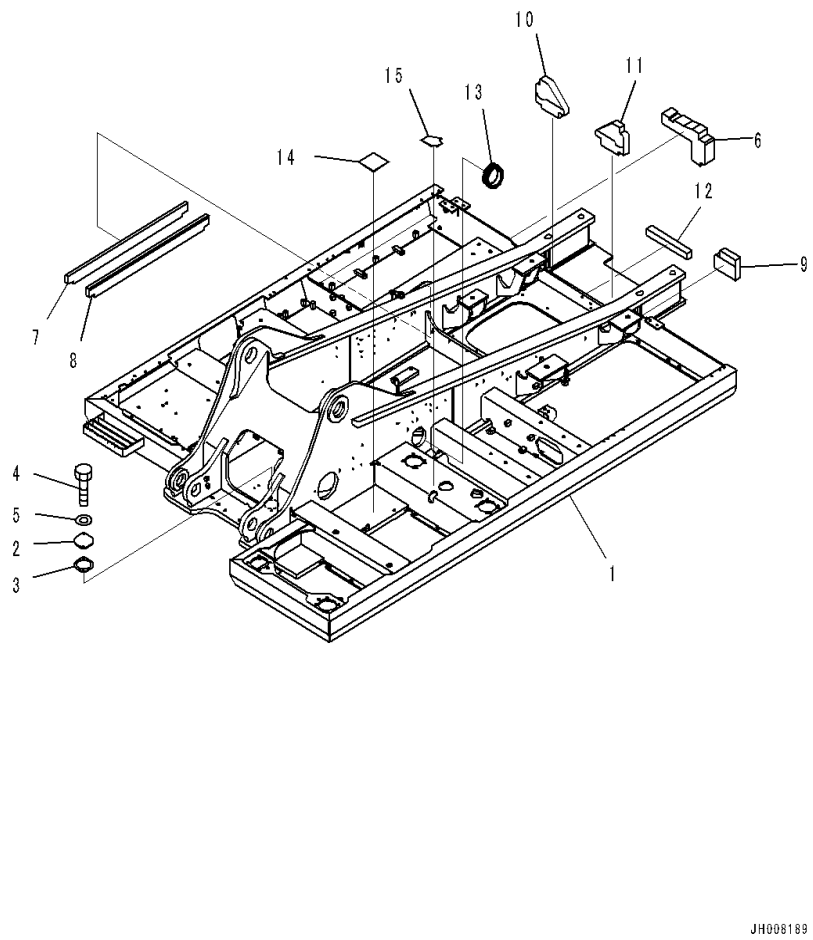

Index	Code	Part Number	Description	Qty	Serial Number
1		207-46-72700	Frame	1	C90001-
2		205-30-71181	Cover	1	C90001-
3		205-30-71191	Gasket	1	C90001-
4		01010-81230	Bolt	2	C90001-
5		01643-31232	Washer	2	C90001-
6		207-46-72520	Sheet	1	C90001-
7		207-46-77321	Sheet	1	C90001-
8		207-46-77331	Sheet	1	C90001-
9		207-46-72560	Sheet	1	C90001-
10		207-46-72530	Sheet	1	C90001-
11		207-46-72540	Sheet	1	C90001-
12		207-46-72550	Sheet	1	C90001-
13		207-62-71791	Grommet	1	C90001-
14		203-62-52210	Rubber	1	C90001-
15		207-46-72570	Sheet	1	C90001-

FIG. J1110-004001 Revolving Frame (With Deck Guard)

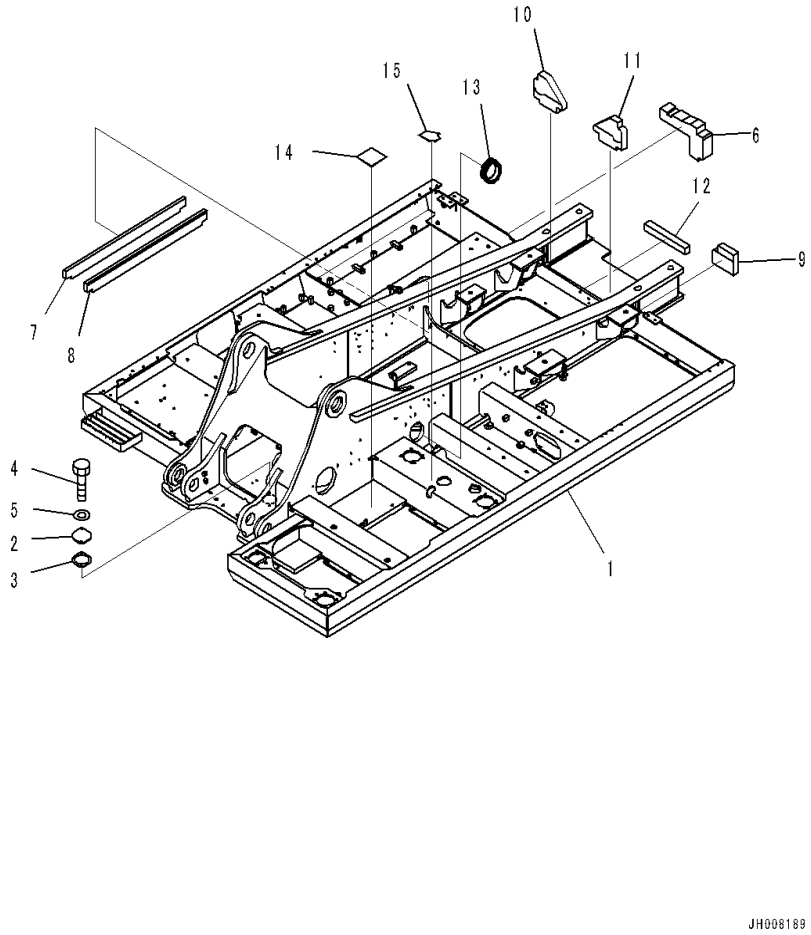

Index	Code	Part Number	Description	Qty	Serial Number
1		207-46-72601	Frame	1	C90001-
2		205-30-71181	Cover	1	C90001-
3		205-30-71191	Gasket	1	C90001-
4		01010-81230	Bolt	2	C90001-
5		01643-31232	Washer	2	C90001-
6		207-46-72520	Sheet	1	C90001-
7		207-46-77321	Sheet	1	C90001-
8		207-46-77331	Sheet	1	C90001-
9		207-46-72560	Sheet	1	C90001-
10		207-46-72530	Sheet	1	C90001-
11		207-46-72540	Sheet	1	C90001-
12		207-46-72550	Sheet	1	C90001-
13		207-62-71791	Grommet	1	C90001-
14		203-62-52210	Rubber	1	C90001-
15		207-46-72570	Sheet	1	C90001-

FIG. J1310-001001 Boom Foot Pin (100 Hours Lubrication Interval)

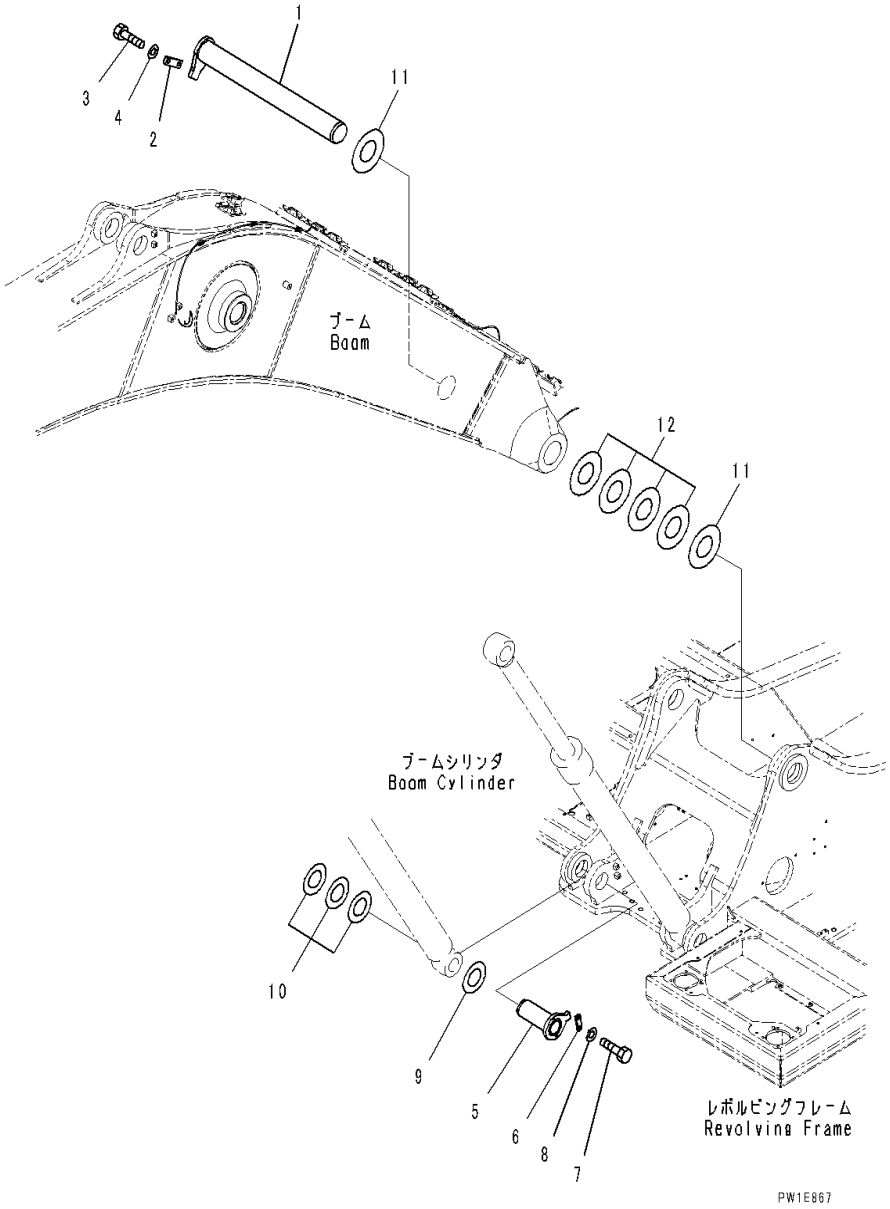

Index	Code	Part Number	Description	Qty	Serial Number
1		207-70-71130	Pin	1	C90001-
2		207-70-31230	Plate	1	C90001-
3		01010-81640	Bolt	2	C90001-
4		01643-31645	Washer	2	C90001-
5		207-70-61210	Pin	2	C90001-
6		205-70-66580	Plate	2	C90001-
7		01010-81235	Bolt	4	C90001-
8		01643-31232	Washer	4	C90001-
9		207-70-24190	Spacer, T=0.8mm	2	C90001-
10		207-70-24210	Spacer, T=1.5mm	6	C90001-
11		207-70-31290	Spacer, T=0.8mm	2	C90001-
12		207-70-51310	Spacer, T=1.5mm	4	C90001-

OPERATOR’S COMPARTMENT AND CONTROL SYSTEM

FIG. K0110-001001 Operator's Seat (Rigid Type) (Operator's Seat)

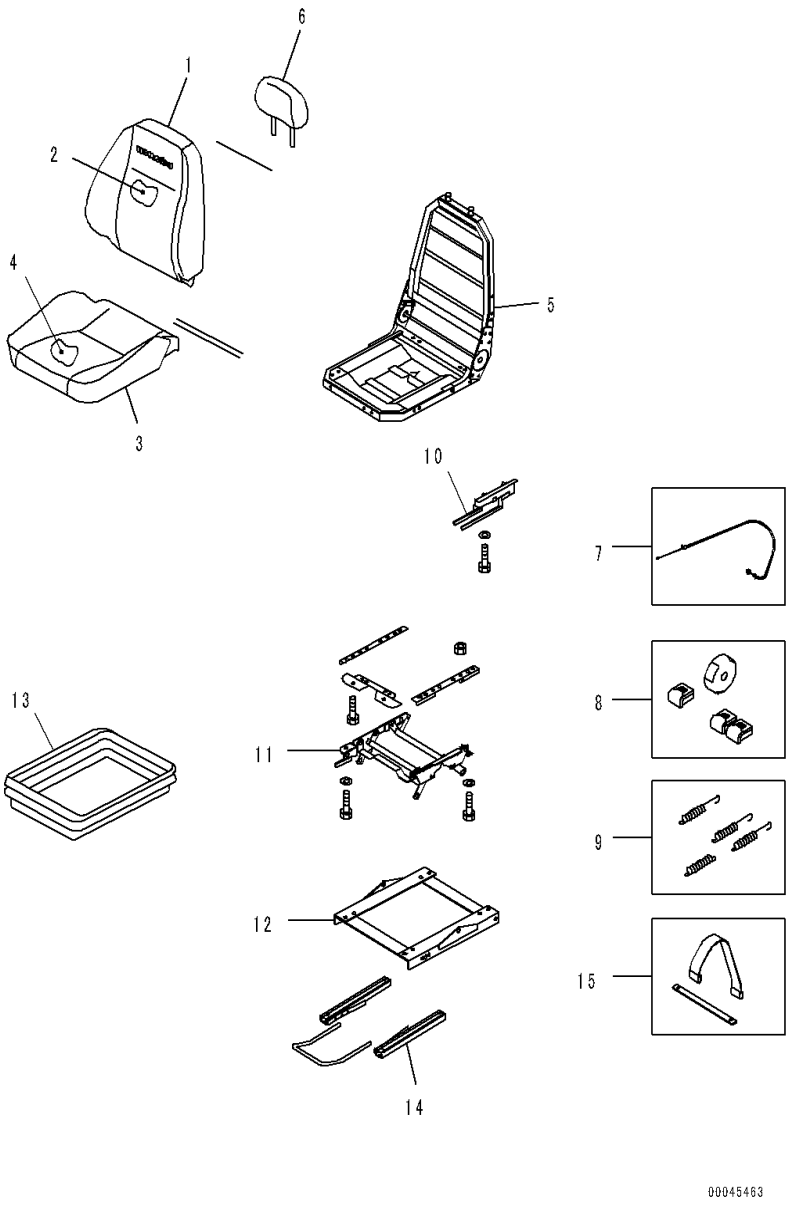

Index	Code	Part Number	Description	Qty	Serial Number
		20Y-57-41204	Operator's Seat Assembly	1	C90001-
		AS195365	• Upper Assembly	1	C90001-
1		AS195367	• • Back Seat Cover Kit	1	C90001-
2		AS195369	• • Back Seat Foam Kit	1	C90001-
3		AS195370	• • Seat Cover Kit	1	C90001-
4		AS195372	• • Seat Foam Kit	1	C90001-
5		AS195373	• • Frame Kit	1	C90001-
6		AS195374	• • Headrest Kit	1	C90001-
7		AS192161	• Cable Kit	1	C90001-
8		AS186833	• Handle Kit	1	C90001-
9		AS160122	• Spring Kit	1	C90001-
10		AS195376	• Latch Kit	1	C90001-
11		AS200024	• Riser Kit	1	C90001-
12		AS195378	• Pliers Kit	1	C90001-
13		AS195379	• Cover Kit	1	C90001-
14		AS195380	• Adjuster Kit	1	C90001-
15		AS184718	• Belt Kit	1	C90001-

FIG. K0110-001002 Operator's Seat (Rigid Type) (Bracket)

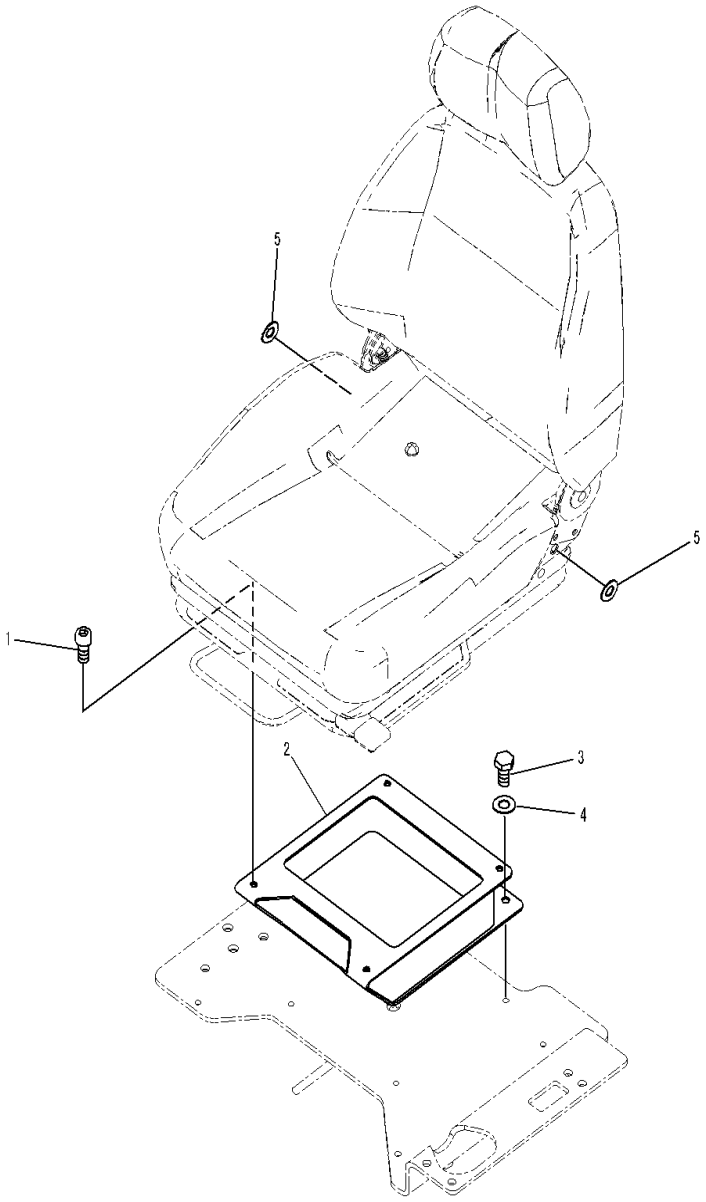

Index	Code	Part Number	Description	Qty	Serial Number
1		01252-80825	Bolt	4	C90001-
2		20Y-57-41211	Bracket	1	C90001-
3		01010-D0825	Bolt	4	C90001-
4		01643-70823	Washer	4	C90001-
5		01643-11232	Washer	2	C90001-

FIG. K0110-002001 Operator's Seat (Suspension Type, Hi Back, Fabric, Reclining, Tilt)

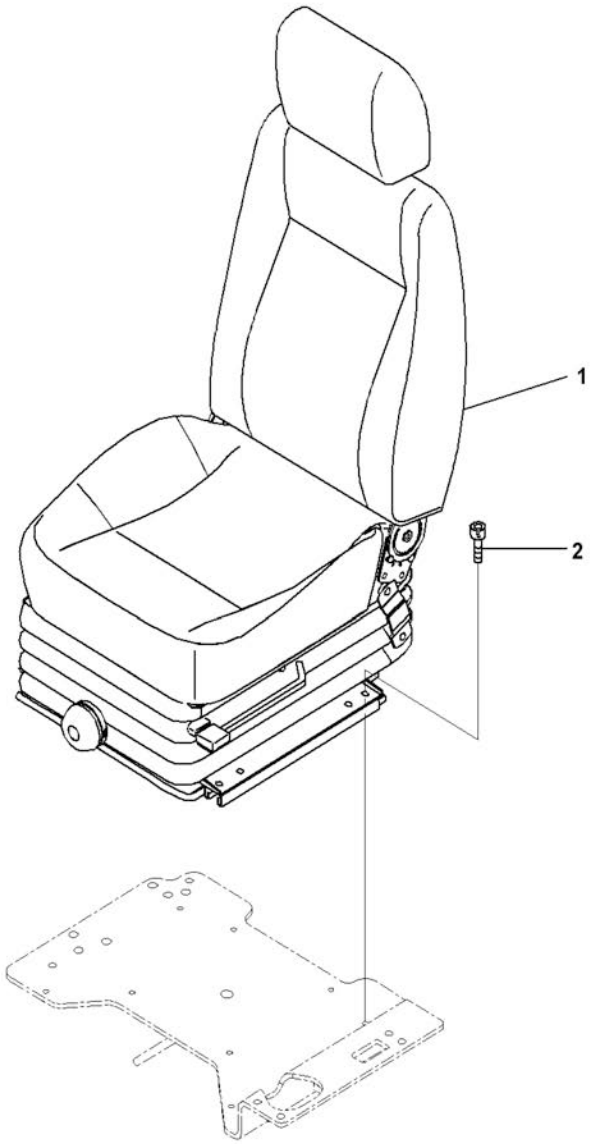

Index	Code	Part Number	Description	Qty	Serial Number
1		20Y-57-42100	Seat Assembly	1	C90001-
2		01252-8082	Bolt	4	C90001-

FIG. K0160-001001 Seat Belt (50mm Width)

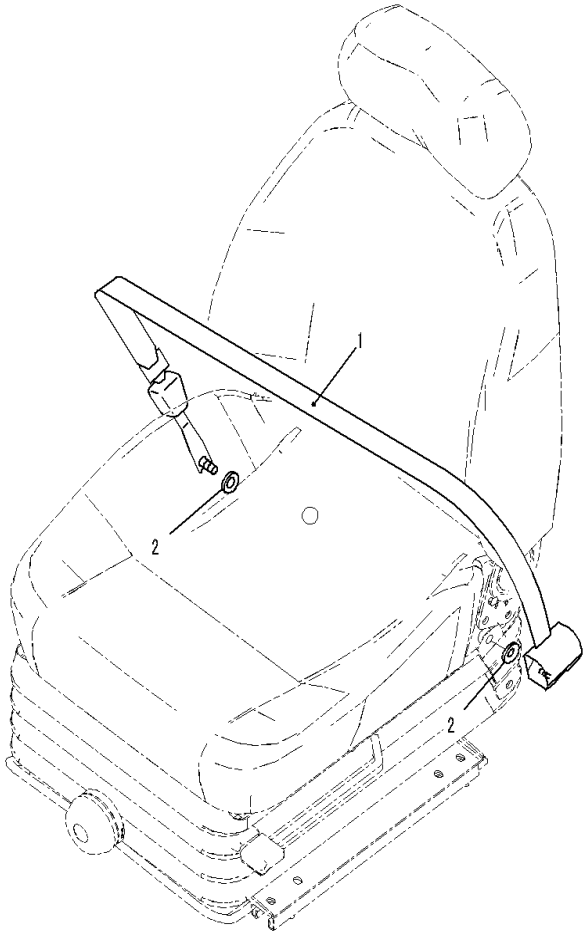

Index	Code	Part Number	Description	Qty	Serial Number
1		20Y-57-41910	Belt Kit	1	C90001-
2		01643-11232	Washer	2	C90001-

FIG. K0160-002001 Seat Belt (78mm Width)

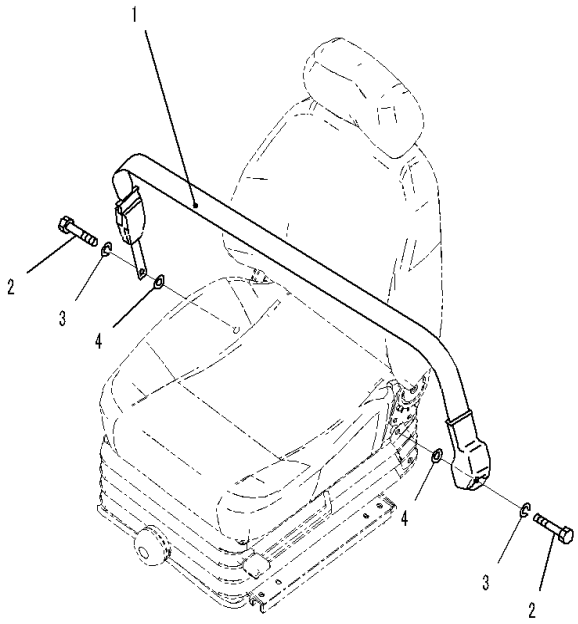

00045683

Index	Code	Part Number	Description	Qty	Serial Number
1		22B-57-11911	Belt	1	C90001-
2		02030-70751	• Bolt	2	C90001-
3		09409-00002	• Washer, Spring	2	C90001-
4		01643-11232	Washer	2	C90001-

FIG. K0220-002001 Top Guard

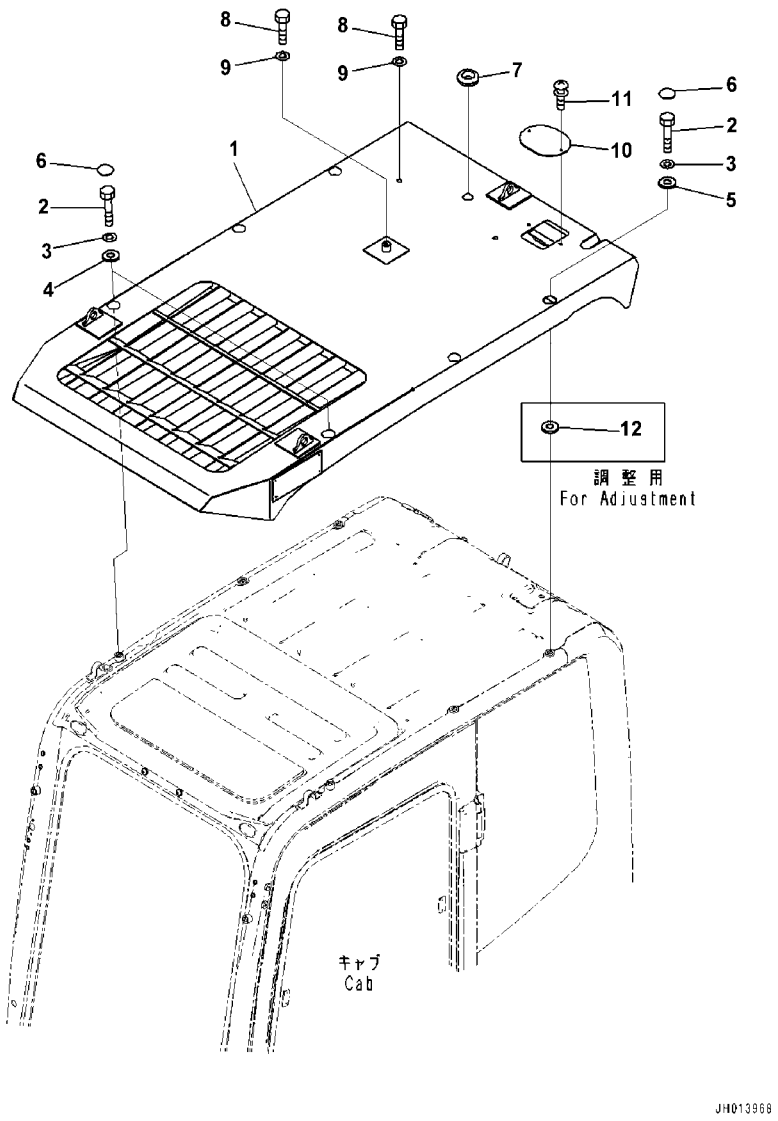

Index	Code	Part Number	Description	Qty	Serial Number
1		20Y-954-6380	Guard	1	C90001-
2		01010-81280	Bolt	6	C90001-
3		01643-31232	Washer	6	C90001-
4		2A5-954-1130	Collar	2	C90001-
5		17A-54-42370	Washer	4	C90001-
6		195-Z11-2970	Cap	6	C90001-
7		08037-02512	Grommet	1	C90001-
8		01010-D1220	Bolt	3	C90001-
9		01643-71232	Washer	3	C90001-
10		20Y-954-6250	Plate	1	C90001-
11		01023-20612	Screw	2	C90001-
12		2A5-954-1130	Collar	4	C90001-

FIG. K0230-001001 Front Guard, Full Guard LV2

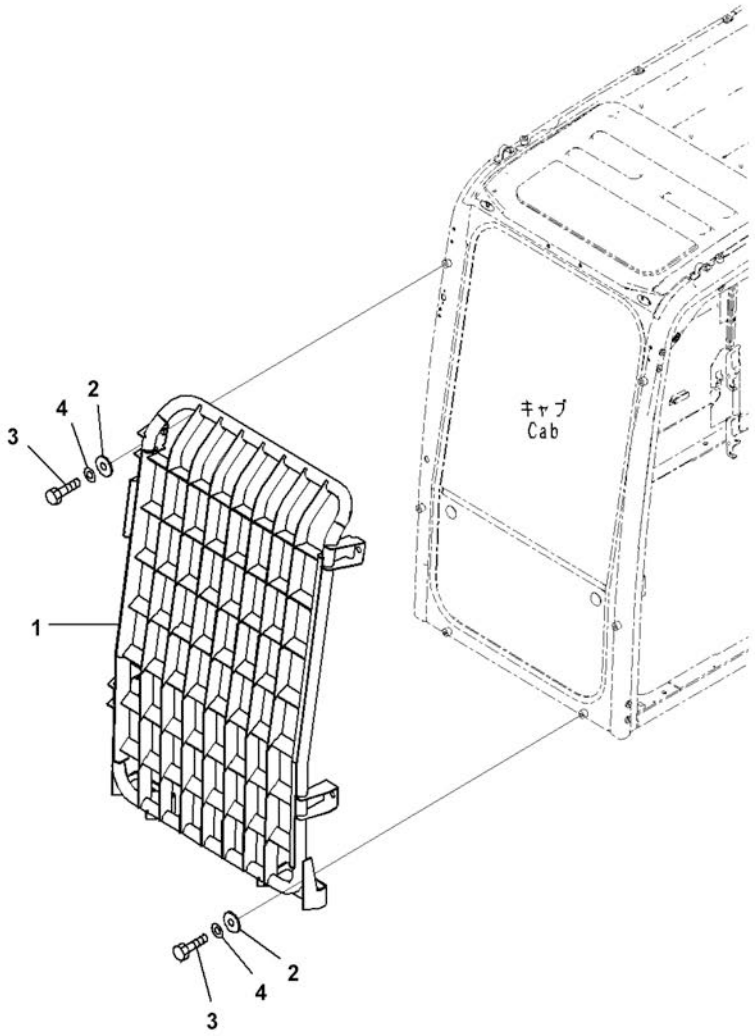

Index	Code	Part Number	Description	Qty	Serial Number
1		20Y-954-6111	Guard	1	C90001-
2		130-43-64260	Collar	6	C90001-
3		01010-D1225	Bolt	6	C90001-
4		01643-71232	Washer	6	C90001-

FIG. K0230-002001 Front Guard, Half Guard

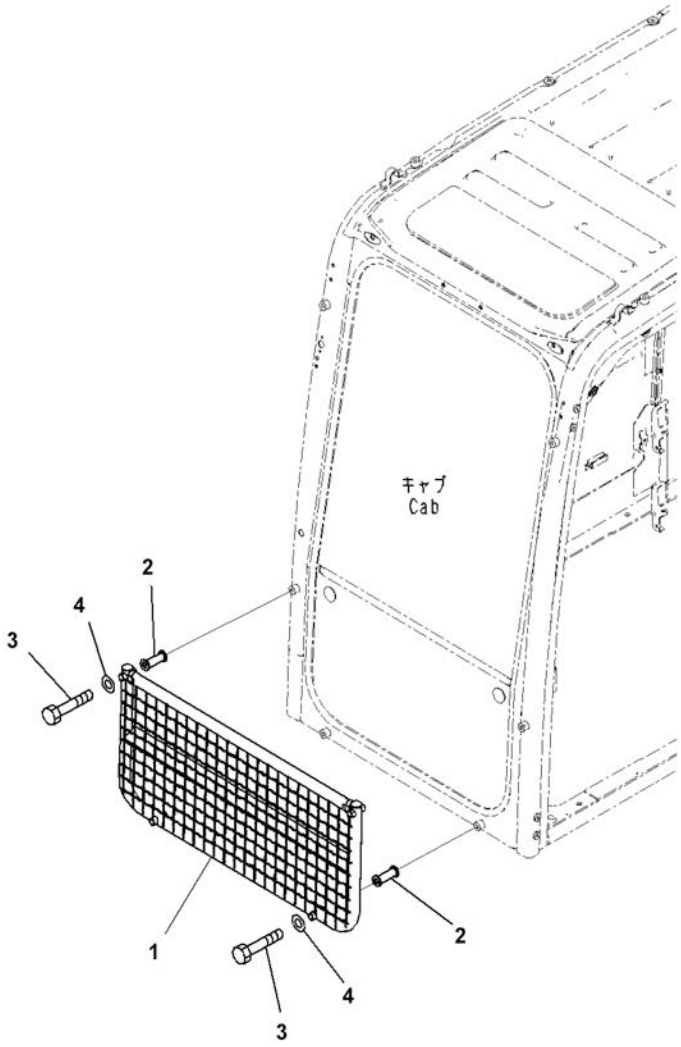

Index	Code	Part Number	Description	Qty	Serial Number
1		20Y-954-6132	Guard	1	C90001-
2		20Y-954-6192	Spacer	4	C90001-
3		01011-D1245	Bolt	4	C90001-
4		01643-71232	Washer	4	C90001-

FIG. K0310-001001 Floor Mat

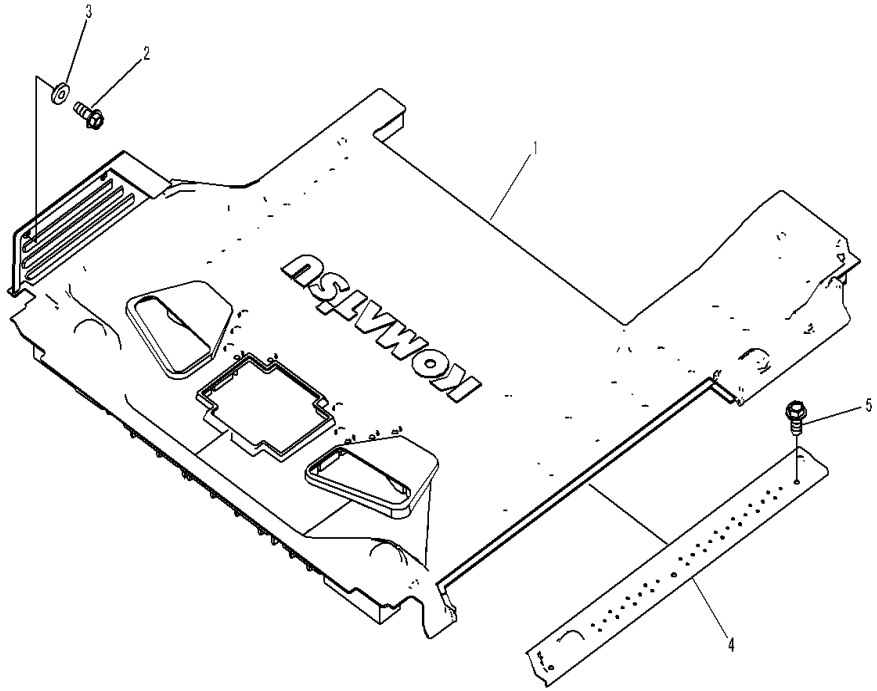

Index	Code	Part Number	Description	Qty	Serial Number
1		206-53-14711	Floor Mat	1	C90001-C90316
2		01435-40616	Bolt	2	C90001-C90316
3		20Y-43-41290	Collar	2	C90001-C90316
4		20Y-53-11953	Cover	1	C90001-C90316
5		01435-40612	Bolt	3	C90001-C90316

FIG. K0310-002001 Floor Mat (Cab Step2)

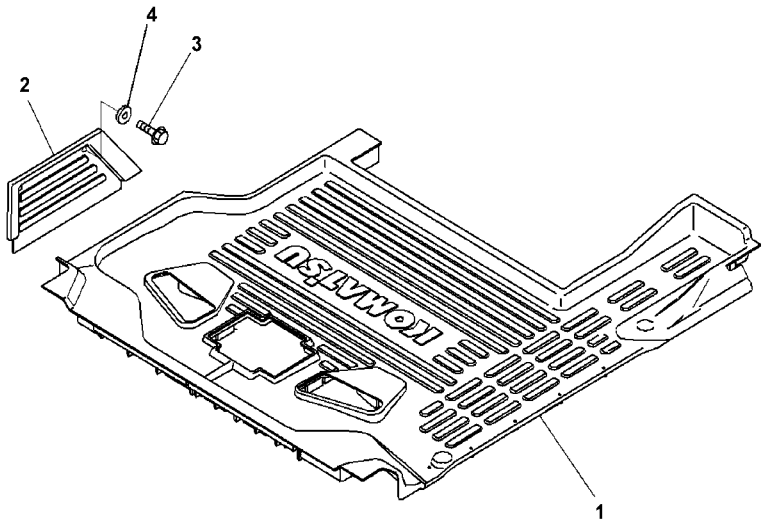

Index	Code	Part Number	Description	Qty	Serial Number
1		20Y-43-15751	Mat	1	C90317-
2		2A5-43-11261	Mat	1	C90317-
3		01435-40616	Bolt	2	C90317-
4		20Y-43-41290	Collar	2	C90317-

FIG. K0310-003001 Floor Mat (1-additional Actuator Piping, Accumulator)

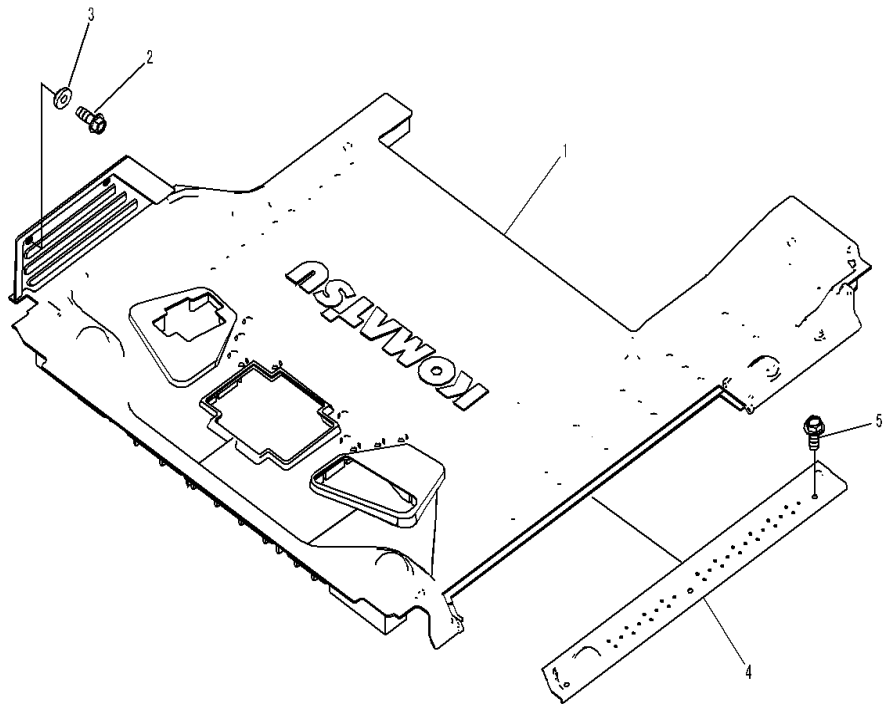

Index	Code	Part Number	Description	Qty	Serial Number
1		206-53-14721	Mat	1	C90001-C90316
2		01435-40616	Bolt	2	C90001-C90316
3		20Y-43-41290	Collar	2	C90001-C90316
4		20Y-53-11953	Cover	1	C90001-C90316
5		01435-40612	Bolt	3	C90001-C90316

FIG. K0310-004001 Floor Mat (1-additional Actuator Piping, Accumulator, Cab Step2)

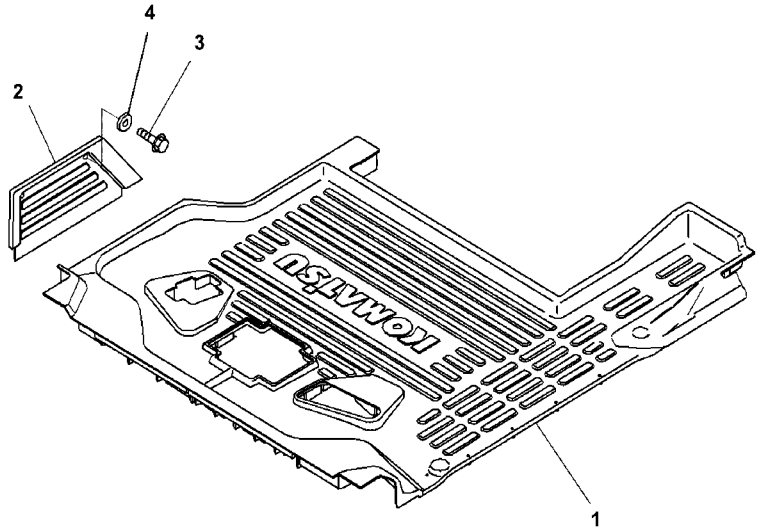

Index	Code	Part Number	Description	Qty	Serial Number
1		20Y-43-15761	Mat	1	C90317-
2		2A5-43-11261	Mat	1	C90317-
3		01435-40616	Bolt	2	C90317-
4		20Y-43-41290	Collar	2	C90317-

FIG. K0350-001001 Window Washer Tank

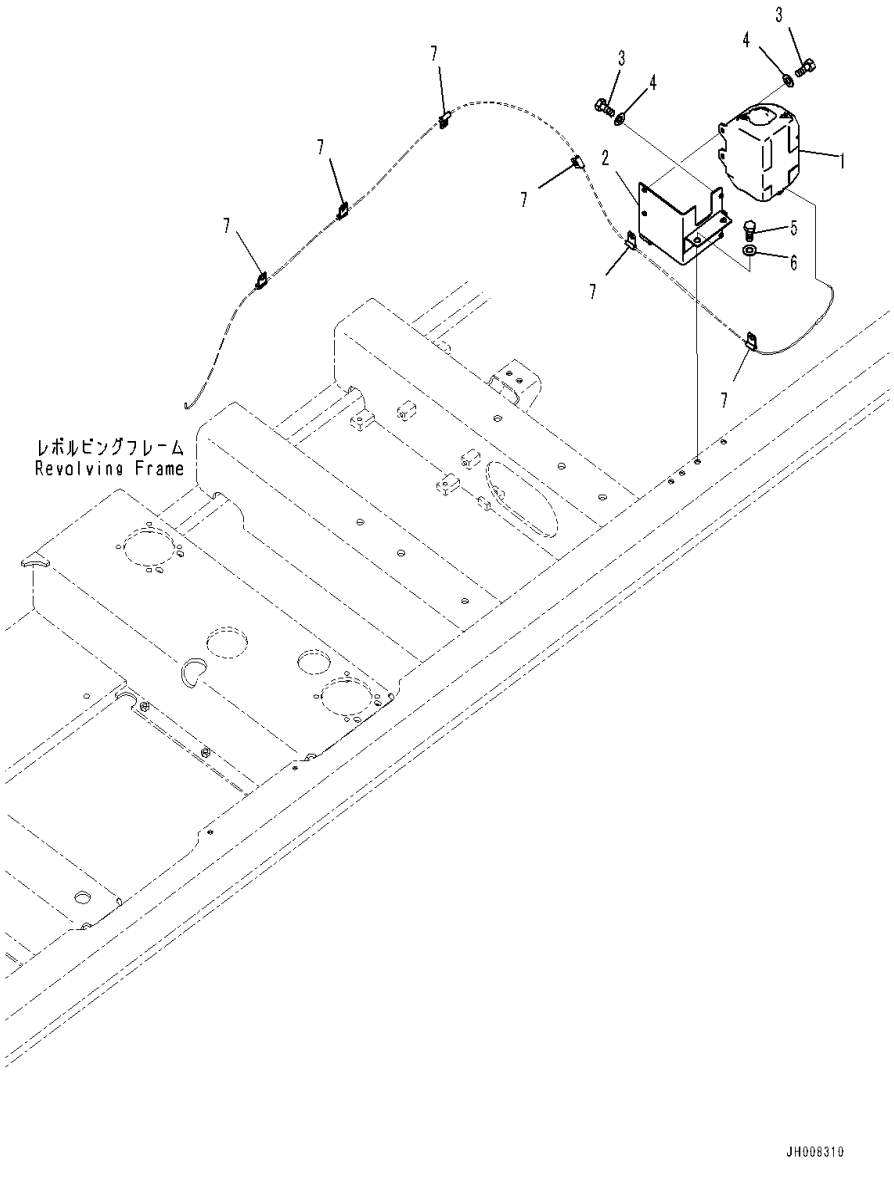

Index	Code	Part Number	Description	Qty	Serial Number
1		21T-06-11351	Tank Assembly	1	C90001-
2		207-06-41311	Bracket	1	C90001-
3		01010-80616	Bolt	3	C90001-
4		209-72-12230	Washer	3	C90001-
5		01010-81225	Bolt	2	C90001-
6		01643-31232	Washer	2	C90001-
7		21T-38-12270	Clip	6	C90001-

FIG. K0700-001001 Air Conditioner Unit (Inner Parts, Air Compressor)

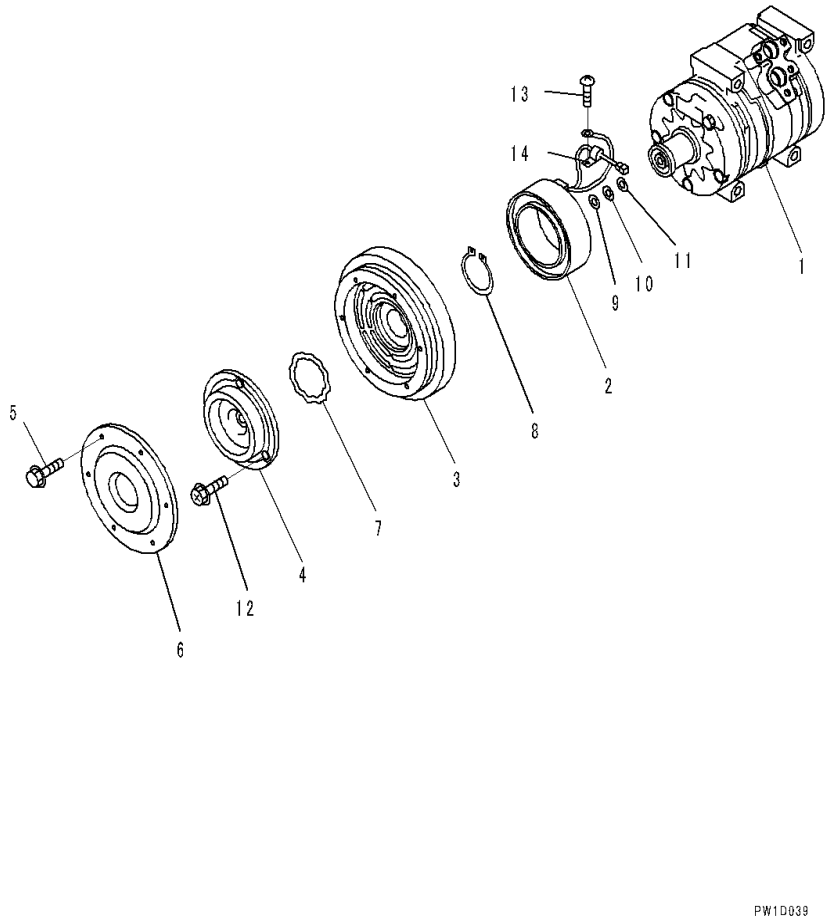

Index	Code	Part Number	Description	Qty	Serial Number
		20Y-810-1260	Compressor Assembly	1	C90001-
1		ND447220-4051	• Compressor Assembly	1	C90001-
		ND247300-0510	• Clutch Assembly, Magnetic	1	C90001-
2		ND047310-7240	• • Stator	1	C90001-
3	C1		• • Rotor	1	C90001-
4		ND047410-1570	• • Hub	1	C90001-
		ND047410-1580	• • Hub	1	C90001-
5		ND949047-2950	• • Bolt and Washer	6	C90001-
6		ND047372-0660	• • Dust Cover	1	C90001-
		ND949070-1360	• Ring, Snap	1	C90001-
7		ND949070-0640	• Ring, Snap	1	C90001-
8		ND949070-1390	• Ring Assembly	1	C90001-
9		ND949013-7480	• Washer, T=0.1mm	1	C90001-
10		ND949013-7500	• Washer, T=0.3mm	1	C90001-
11		ND949013-7510	• Washer, T=0.5mm	1	C90001-
12		ND949048-0430	• Bolt	1	C90001-
13		ND91310-05081	• Screw	1	C90001-
14		ND146691-4470	• Clamp	1	C90001-

FIG. K0700-001002 Air Conditioner Unit (Compressor Mounting)

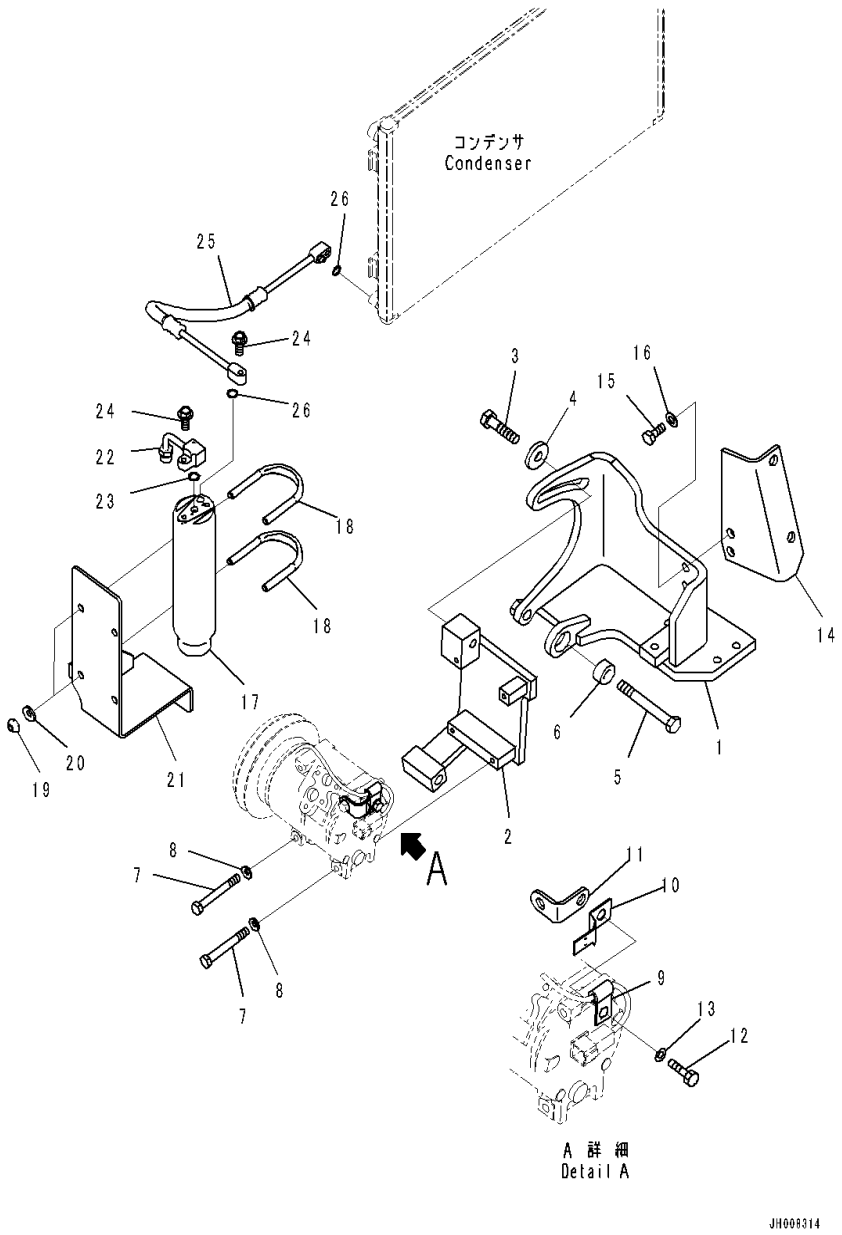

Index	Code	Part Number	Description	Qty	Serial Number
1		207-979-7880	Bracket	1	C90001-
2		20Y-979-6612	Bracket	1	C90001-
3		01010-81440	Bolt	1	C90001-
4		195-71-32220	Washer	1	C90001-
5		01019-31400	Bolt	1	C90001-
6		198-38-12460	Spacer	1	C90001-
7		01010-80875	Bolt	4	C90001-
8		01643-30823	Washer	4	C90001-
9		04434-50608	Clip	1	C90001-
10		08053-01510	Clip	1	C90001-
11		6110-23-5331	Bracket	1	C90001-
12		01010-80816	Bolt	1	C90001-
13		01643-30823	Washer	1	C90001-
14		207-979-7871	Bracket	1	C90001-
15		01010-81235	Bolt	2	C90001-
16		01643-31232	Washer	2	C90001-
17		20Y-979-3120	Tank, Receiver	1	C90001-
18		07283-36155	Clip	2	C90001-
19		01597-01009	Nut	4	C90001-
20		01643-31032	Washer	4	C90001-
21		207-979-7991	Bracket	1	C90001-
22		20Y-979-6650	Tube	1	C90001-
23		20Y-979-3150	• O-ring	1	C90001-
24		01435-00625	Bolt	2	C90001-
25		207-979-7961	Hose	1	C90001-
26		20Y-979-3150	• O-ring	2	C90001-

FIG. K0700-001003 Air Conditioner Unit (Hose)

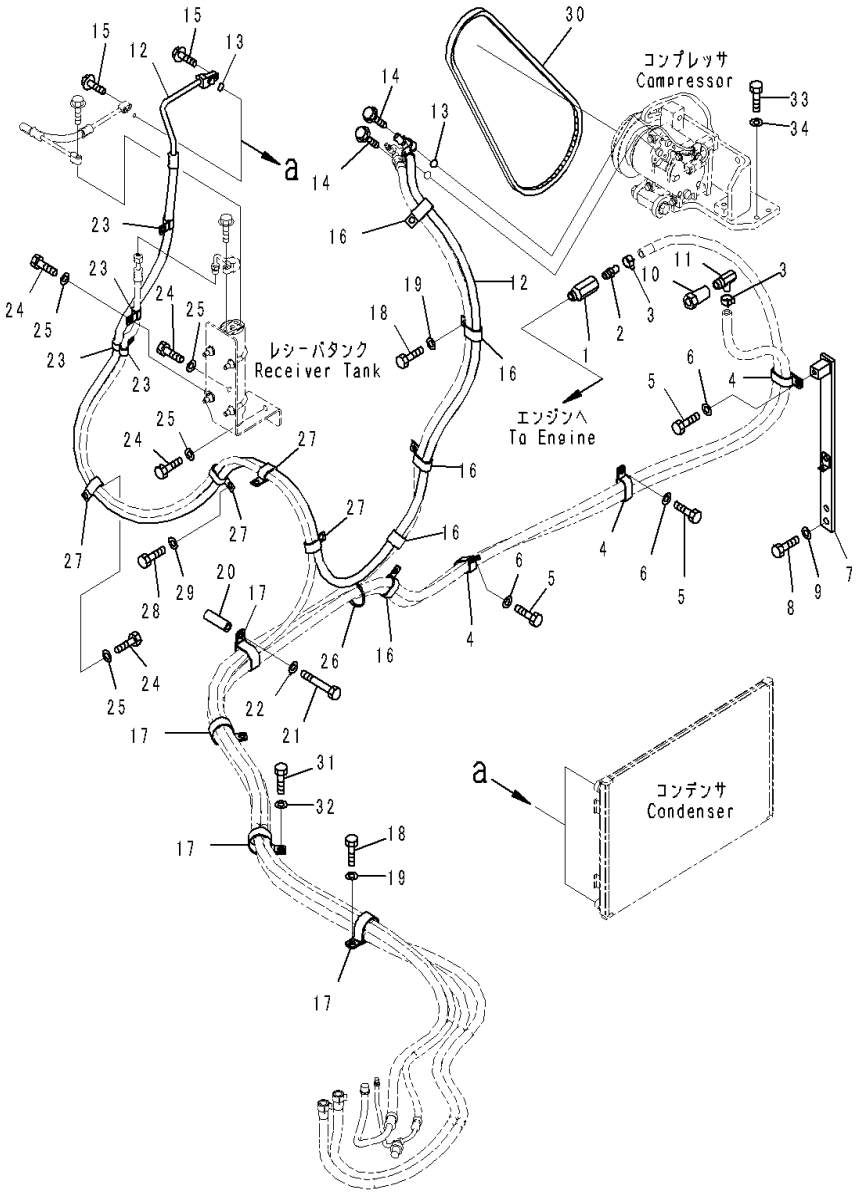

Index	Code	Part Number	Description	Qty	Serial Number
1		207-979-7390	Nipple	1	C90001-
2		20T-54-42510	Nipple	1	C90001-
3		11Y-09-11160	Clip	2	C90001-
4		155-06-15180	Clamp	3	C90001-
5		01010-81225	Bolt	3	C90001-
6		01643-31232	Washer	3	C90001-
7		207-979-7540	Bracket	1	C90001-
8		01010-81230	Bolt	2	C90001-
9		01643-31232	Washer	2	C90001-
10		209-98-81280	Nipple	1	C90001-
11		202-98-11340	Joint	1	C90001-
12		207-979-7951	Hose	1	C90001-
13		20Y-979-3140	• O-ring	2	C90001-
14		01435-00630	Bolt	2	C90001-
15		01435-00625	Bolt	2	C90001-
16		141-06-11220	Clip	5	C90001-
17		21T-06-11950	Clip	4	C90001-
18		01010-81225	Bolt	6	C90001-
19		01643-31232	Washer	6	C90001-
20		195-979-3570	Collar	1	C90001-
21		01010-81295	Bolt	1	C90001-
22		01643-31232	Washer	1	C90001-
23		04434-51812	Clip	4	C90001-
24		01010-81225	Bolt	6	C90001-
25		01643-31232	Washer	6	C90001-
26		08034-20536	Band	1	C90001-
27		04435-51812	Clip	4	C90001-
28		01010-81225	Bolt	3	C90001-
29		01643-31232	Washer	3	C90001-
30		04120-21761	V-belt	1	C90001-
31		01010-81225	Bolt	2	C90001-
32		01643-31232	Washer	2	C90001-
33		01010-81035	Bolt	4	C90001-
34		01643-31032	Washer	4	C90001-

FIG. K1110-001001 Cab (Auto Air Conditioner, AM-FM Radio Asia, KOMTRAX, Indonesian) (Cab Body and Window)

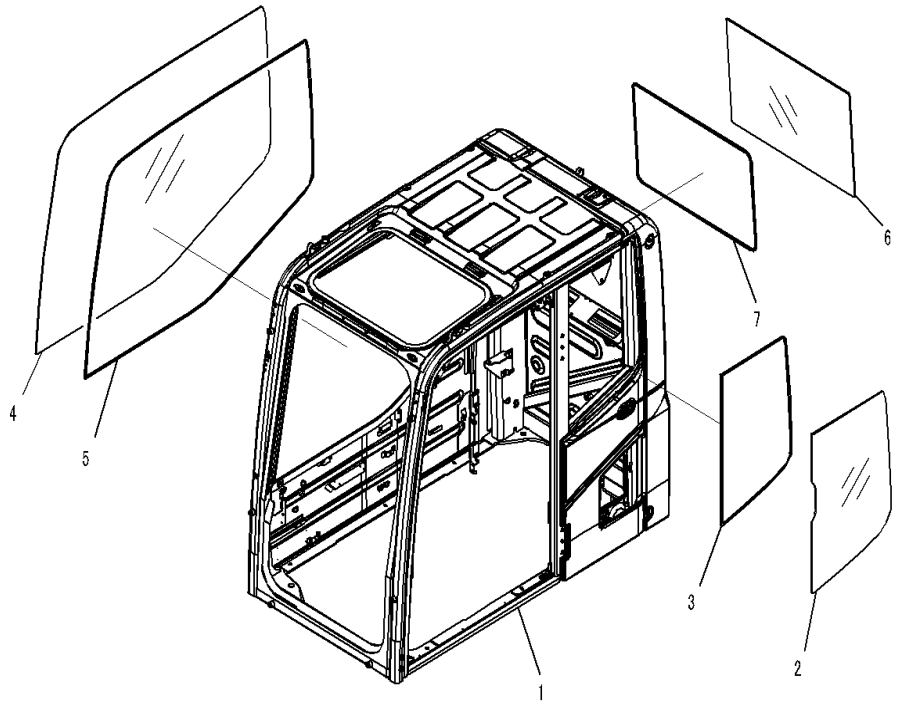

Index	Code	Part Number	Description	Qty	Serial Number
		207-53-00560	Cab Assembly	1	C90001-C90316
1	C1		• Cab	1	C90001-C90316
2		20Y-53-11241	• Glass	1	C90001-C90316
3		20Y-53-11260	• Seal	1	C90001-C90316
4		20Y-53-11841	• Glass	1	C90001-C90316
5		20Y-53-11850	• Seal	1	C90001-C90316
6		20Y-53-11271	• Glass	1	C90001-C90316
7		20Y-53-11250	• Seal	1	C90001-C90316

FIG. K1110-001002 Cab (Front Window)

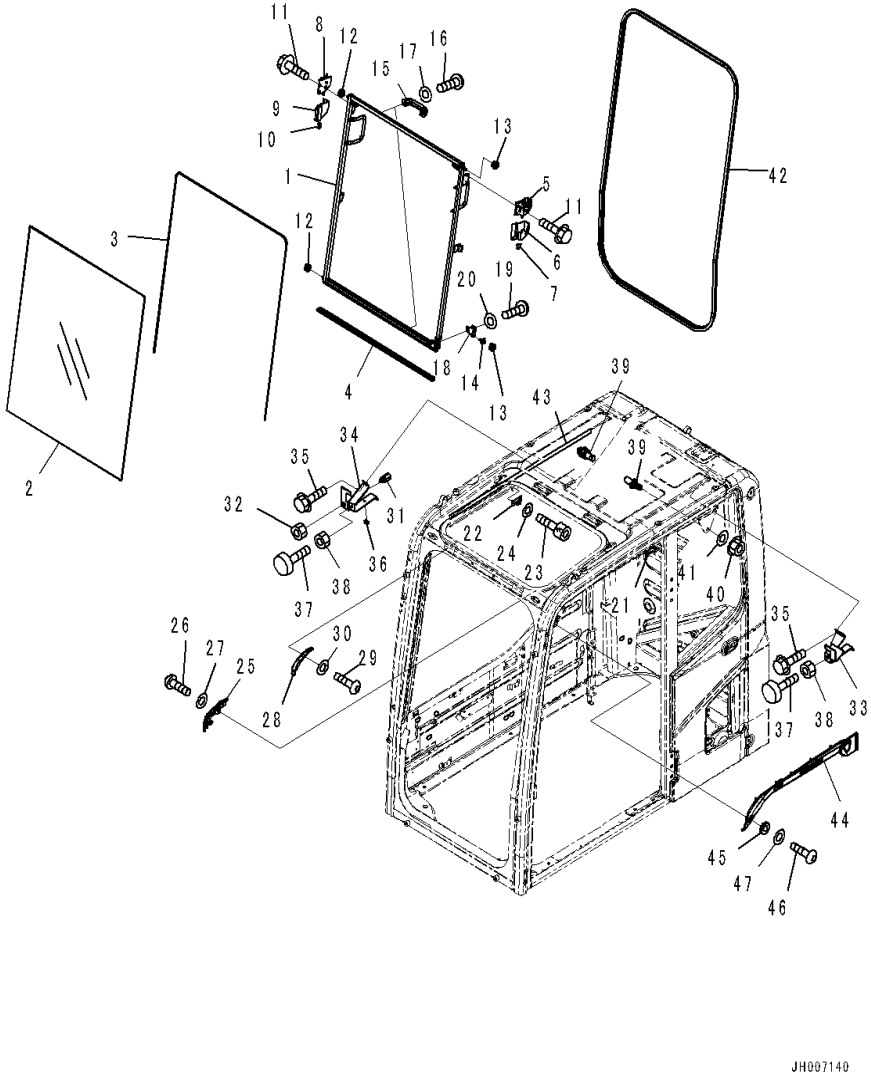

Index	Code	Part Number	Description	Qty	Serial Number
		Note: This list covers following specifications.			
		(*1)Auto Air Conditioner,AM-FM Radio,KOMTRAX,Indonesian			
		(*3)1-additional Acuator Piping, AM-FM Radio, KOMTRAX			
		207-53-00560	Cab Assembly(*1)	1	C90001-C90316
		207-53-00580	Cab Assembly(*3)	1	C90001-C90316
		20Y-53-00380	• Window Assembly	1	C90001-C90316
1		2A5-53-12491	• • Frame	1	C90001-C90316
2		20Y-53-11520	• • Glass	1	C90001-C90316
3		20Y-54-51531	• • Seal	1	C90001-C90316
4		20Y-53-11551	• • Seal	1	C90001-C90316
5		22B-54-15411	• • Lock Assembly	1	C90001-C90316
6		22B-54-15440	• • Case	1	C90001-C90316
7		22B-54-15470	• • Knob	1	C90001-C90316
8		22B-54-15421	• • Lock Assembly	1	C90001-C90316
9		22B-54-15450	• • Case	1	C90001-C90316
10		22B-54-15480	• • Knob	1	C90001-C90316
11		01435-40812	• • Bolt	4	C90001-C90316
12		20Y-54-52621	• • Roller	2	C90001-C90316
13		20Y-54-52681	• • Roller	2	C90001-C90316
14		20Y-53-12330	• • Pin	1	C90001-C90316
15		20Y-54-14590	• • Handle	2	C90001-C90316
16		01245-00616	• • Screw	4	C90001-C90316
17		01643-70623	• • Washer	4	C90001-C90316
18		20Y-53-12830	• • Bracket	1	C90001-C90316
19		01245-00816	• • Screw	2	C90001-C90316
20		01643-70823	• • Washer	2	C90001-C90316
21		20Y-54-51670	• Stopper	1	C90001-C90316
22		20Y-54-51680	• Stopper	1	C90001-C90316
23		01252-80616	• Bolt	4	C90001-C90316
24		01643-70623	• Washer	4	C90001-C90316
25		20Y-53-11561	• Block Assembly	1	C90001-C90316
26		01245-00816	• Screw	2	C90001-C90316
27		01643-70823	• Washer	2	C90001-C90316
28		20Y-53-11661	• Bracket	1	C90001-C90316
29		01245-00816	• Screw	2	C90001-C90316
30		01643-70823	• Washer	2	C90001-C90316
31		21J-06-12440	• Switch	1	C90001-C90316
32		01583-11811	• Nut	1	C90001-C90316
33		20Y-53-11581	• Bracket	1	C90001-C90316
34		2A5-53-12850	• Bracket	1	C90001-C90316

FIG. K1110-001002 Cab (Front Window)

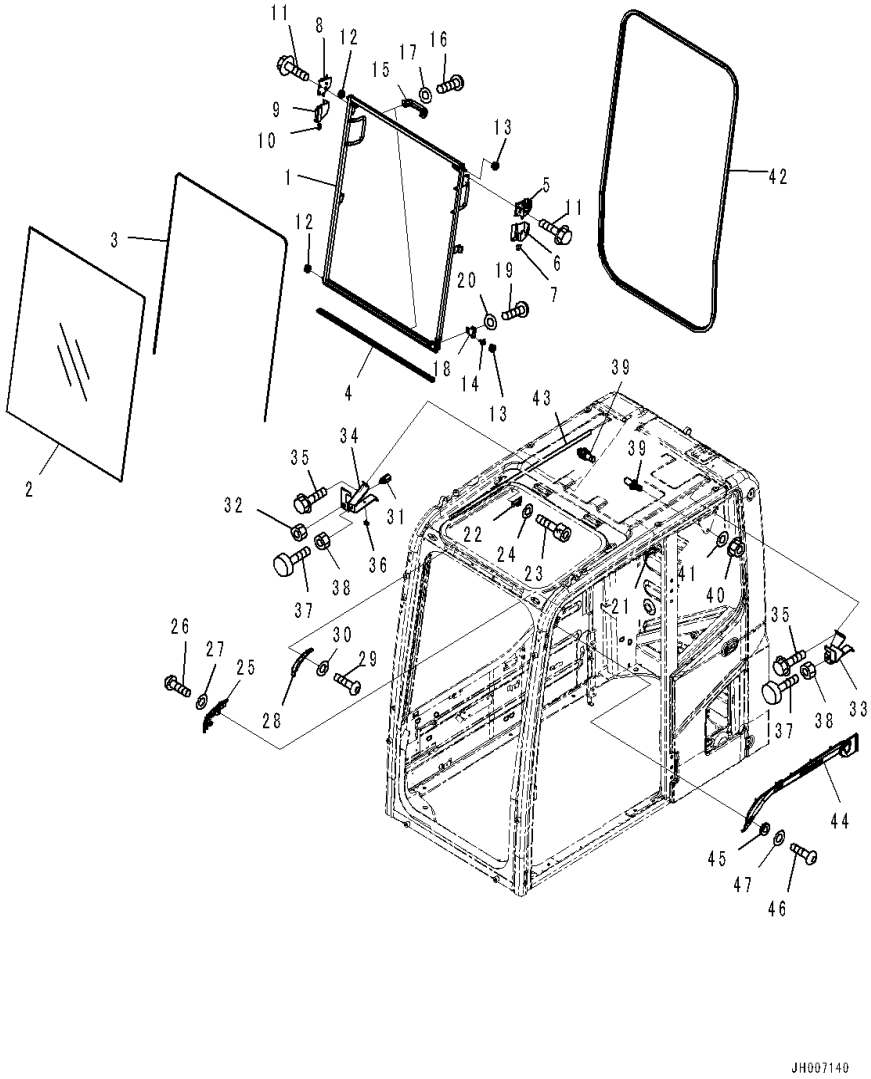

Index	Code	Part Number	Description	Qty	Serial Number
35		01435-00612	• Bolt	4	C90001-C90316
36		08059-00515	• Clip	1	C90001-C90316
37		20Y-54-11611	• Stopper	2	C90001-C90316
38		01580-11008	• Nut	2	C90001-C90316
39		20Y-54-51621	• Striker	2	C90001-C90316
40		01584-31008	• Nut	2	C90001-C90316
41		01643-71032	• Washer	2	C90001-C90316
42		20Y-53-11540	• Seal	1	C90001-C90316
43		20Y-54-51420	• Seal	1	C90001-C90316
44		20Y-53-12531	• Cover	1	C90001-C90316
45		20Y-53-12310	• Collar	3	C90001-C90316
46		01245-00616	• Screw	3	C90001-C90316
47		01643-70623	• Washer	3	C90001-C90316

FIG. K1110-001003 Cab (Front Lower Window)

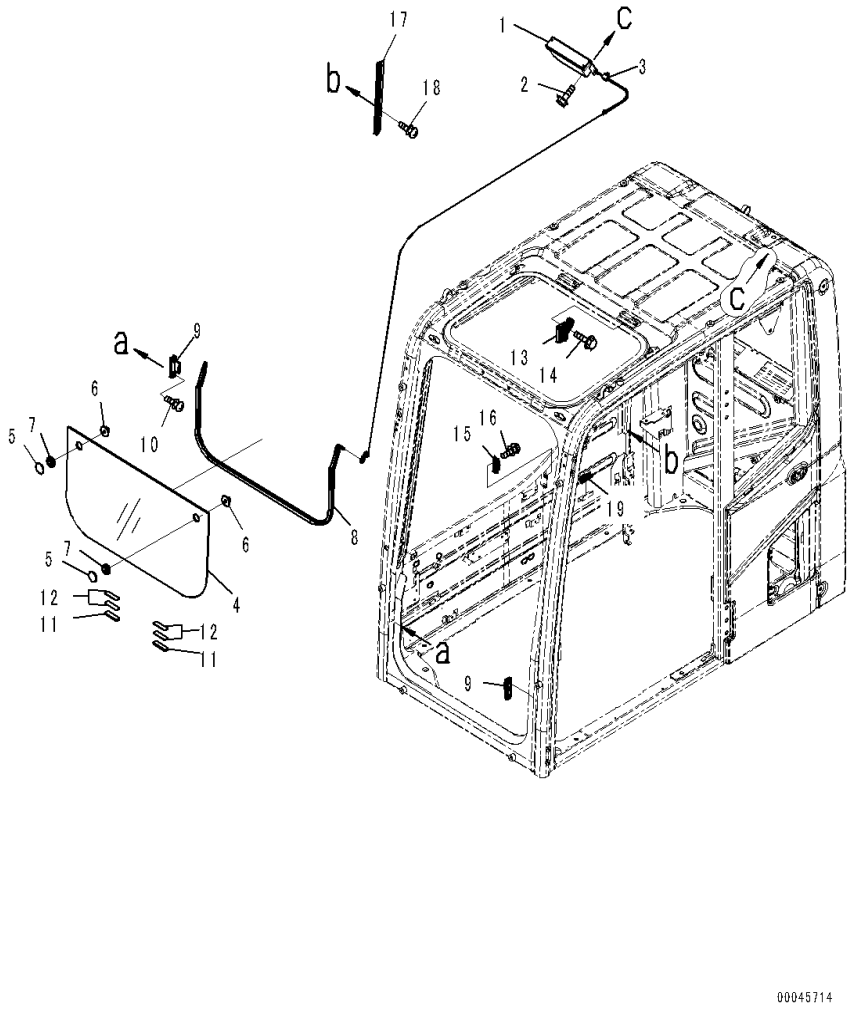

Index	Code	Part Number	Description	Qty	Serial Number
		Note: This list covers following specifications.			
		(*1)Auto Air Conditioner,AM-FM Radio,KOMTRAX,Indonesian			
		(*2)Auto Air Conditioner, AM-FM Radio Asia, GPRS			
		(*3)1-additional Acuator Piping, AM-FM Radio, KOMTRAX			
		207-53-00560	Cab Assembly(*1)	1	C90001-C90316
		207-53-00570	Cab Assembly(*2)	1	C90001-C90316
		207-53-00580	Cab Assembly(*3)	1	C90001-C90316
1		20Y-53-11591	• Spring Assembly	1	C90001-C90316
2		01435-00616	• Bolt	2	C90001-C90316
3		20Y-54-51640	• Holder	1	C90001-C90316
		20Y-53-11601	• Glass Assembly	1	C90001-C90316
4		20Y-53-11611	• • Glass	1	C90001-C90316
5		22B-54-15970	• • Retainer	2	C90001-C90316
6		22B-54-15980	• • Knob	2	C90001-C90316
7		08037-02512	• • Grommet	2	C90001-C90316
8		208-53-11860	• Trim	1	C90001-C90316
9		20Y-53-11940	• Seat	2	C90001-C90316
10		01023-20612	• Screw	4	C90001-C90316
11		20Y-53-11973	• Stopper	2	C90001-C90316
12		20Y-53-12892	• Rubber	4	C90001-C90316
13		22B-54-15841	• Lock Assembly	1	C90001-C90316
14		01435-40616	• Bolt	2	C90001-C90316
15		20Y-53-12611	• Seat	1	C90001-C90316
16		01023-20616	• Screw	2	C90001-C90316
17		20Y-53-12631	• Rail	1	C90001-C90316
18		01023-20616	• Screw	2	C90001-C90316
19		20U-54-25140	• Stopper	1	C90001-C90316

FIG. K1110-001004 Cab (Roof Window)

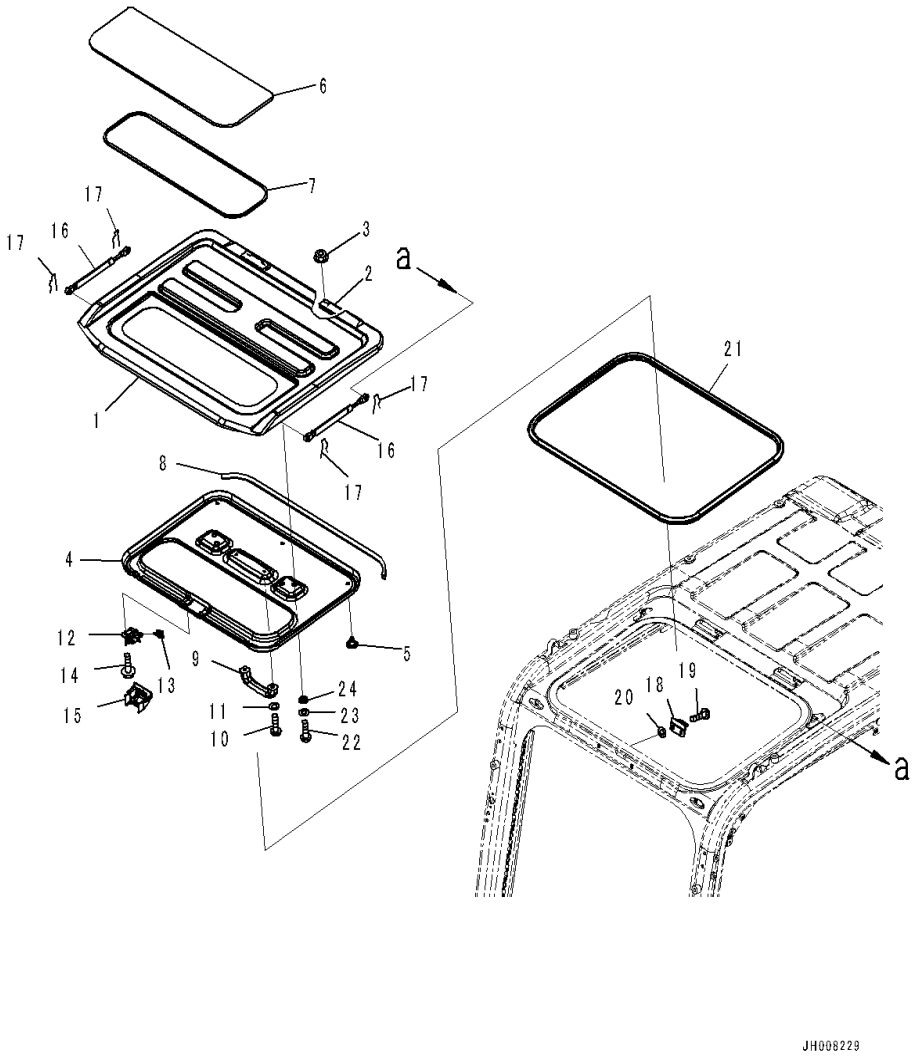

Index	Code	Part Number	Description	Qty	Serial Number
		Note: This list covers following specifications.			
		(*1)Auto Air Conditioner,AM-FM Radio,KOMTRAX,Indonesian			
		(*3)1-additional Acuator Piping, AM-FM Radio, KOMTRAX			
		207-53-00560	Cab Assembly(*1)	1	C90001-C90316
		207-53-00580	Cab Assembly(*3)	1	C90001-C90316
1		208-53-22710	• Roof	1	C90001-C90316
2		208-53-22H70	• • Hinge,Welded	2	C90001-C90316
3		01584-30806	• Nut	4	C90001-C90316
4		20Y-53-11921	• Cover	1	C90001-C90316
5		09416-10200	• Rivet	5	C90001-C90316
6		20Y-53-11741	• Plate	1	C90001-C90316
7		20Y-53-11790	• Seal	1	C90001-C90316
8		2A5-53-11471	• Seal	1	C90001-C90316
9		20Y-54-14590	• Handle	1	C90001-C90316
10		01245-00616	• Screw	2	C90001-C90316
11		01643-70623	• Washer	2	C90001-C90316
12		20Y-53-11721	• Lock	1	C90001-C90316
13		20Y-53-11781	• Knob	1	C90001-C90316
14		01435-40610	• Bolt	3	C90001-C90316
15		20Y-53-11931	• Cover	1	C90001-C90316
16		208-53-22162	• Gas Spring	2	C90001-C90316
17		04052-10833	• Pin, Snap	4	C90001-C90316
18		20Y-53-11771	• Striker	1	C90001-C90316
19		01245-00820	• Screw	2	C90001-C90316
20		20Y-54-52651	• Spacer	2	C90001-C90316
21		20Y-53-11861	• Seal	1	C90001-C90316
22		01245-00620	• Screw	4	C90001-C90316
23		01643-70623	• Washer	4	C90001-C90316
24		20Y-54-52651	• Spacer	4	C90001-C90316

FIG. K1110-001005 Cab (Door)

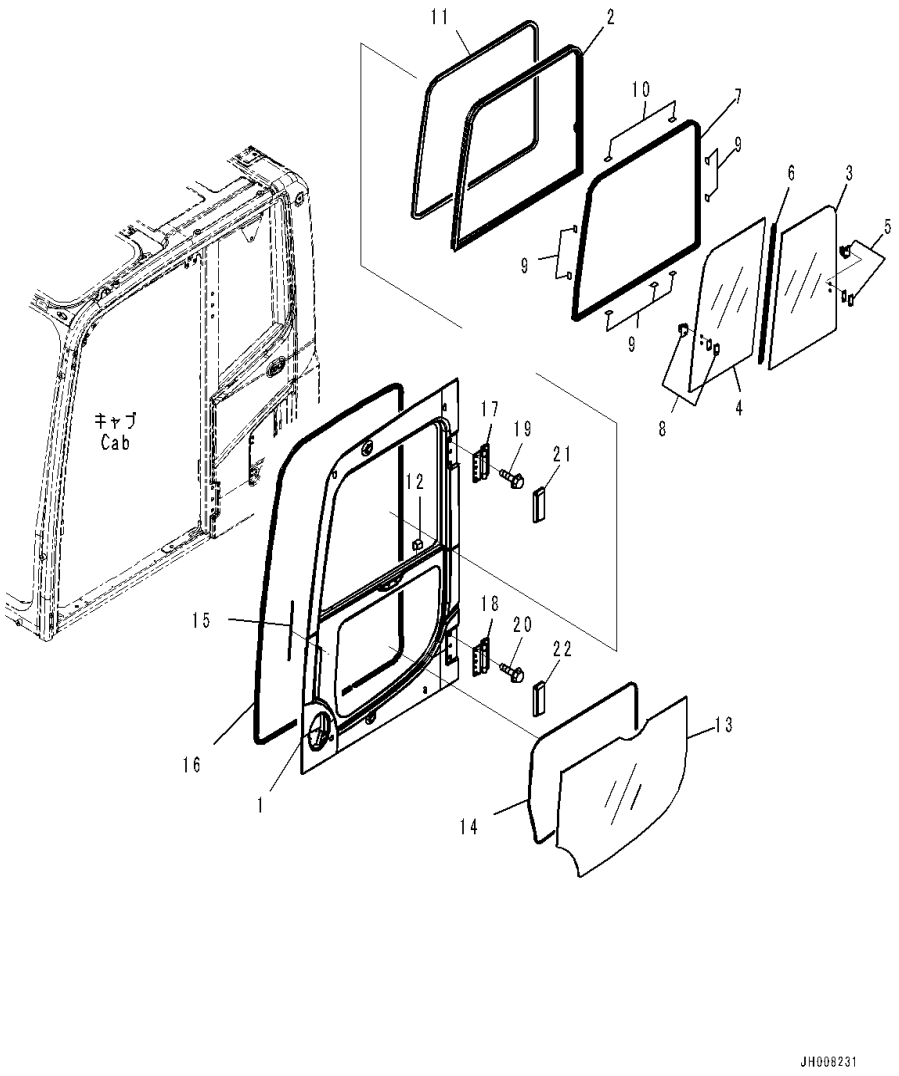

Index	Code	Part Number	Description	Qty	Serial Number
		Note: This list covers following specifications.			
		(*1)Auto Air Conditioner,AM-FM Radio,KOMTRAX,Indonesian			
		(*2)Auto Air Conditioner, AM-FM Radio Asia, GPRS			
		(*3)1-additional Acuator Piping, AM-FM Radio, KOMTRAX			
		207-53-00560	Cab Assembly(*1)	1	C90001-C90316
		207-53-00570	Cab Assembly(*2)	1	C90001-C90316
		207-53-00580	Cab Assembly(*3)	1	C90001-C90316
		20Y-53-00940	• Door Assembly	1	C90001-C90316
1	C1		• • Door	1	C90001-C90316
		20Y-53-11402	• • Sash Assembly	1	C90001-C90316
2	C1		• • • Sash	1	C90001-C90316
3		20Y-53-12840	• • • Glass	1	C90001-C90316
4		20Y-53-12850	• • • Glass	1	C90001-C90316
5		20Y-54-52860	• • • Lock Assembly	1	C90001-C90316
6		20Y-53-12870	• • • Seal	1	C90001-C90316
7		20Y-53-12880	• • • Seal	1	C90001-C90316
8		20Y-54-13322	• • • Lock Assembly	1	C90001-C90316
9		20Y-53-12971	• • Seat	7	C90001-C90316
10		20Y-54-13180	• • Seat	2	C90001-C90316
11		20Y-53-11470	• • Trim	1	C90001-C90316
12		20Y-53-13910	• • Cover	1	C90001-C90316
13		20Y-53-11451	• • Glass	1	C90001-C90316
14		20Y-53-11460	• • Seal	1	C90001-C90316
15		20Y-53-13880	• • Seal	1	C90001-C90316
16		20Y-53-11485	• • Weather Strip	1	C90001-C90316
17		20Y-53-11332	• • Hinge	1	C90001-C90316
18		20Y-53-11332	• • Hinge	1	C90001-C90316
19		01435-01220	• • Bolt	6	C90001-C90316
20		01435-01220	• • Bolt	6	C90001-C90316
21		20Y-53-11411	• • Cover	1	C90001-C90316
22		20Y-53-11421	• • Cover	1	C90001-C90316

FIG. K1110-001006 Cab (Door Lock)

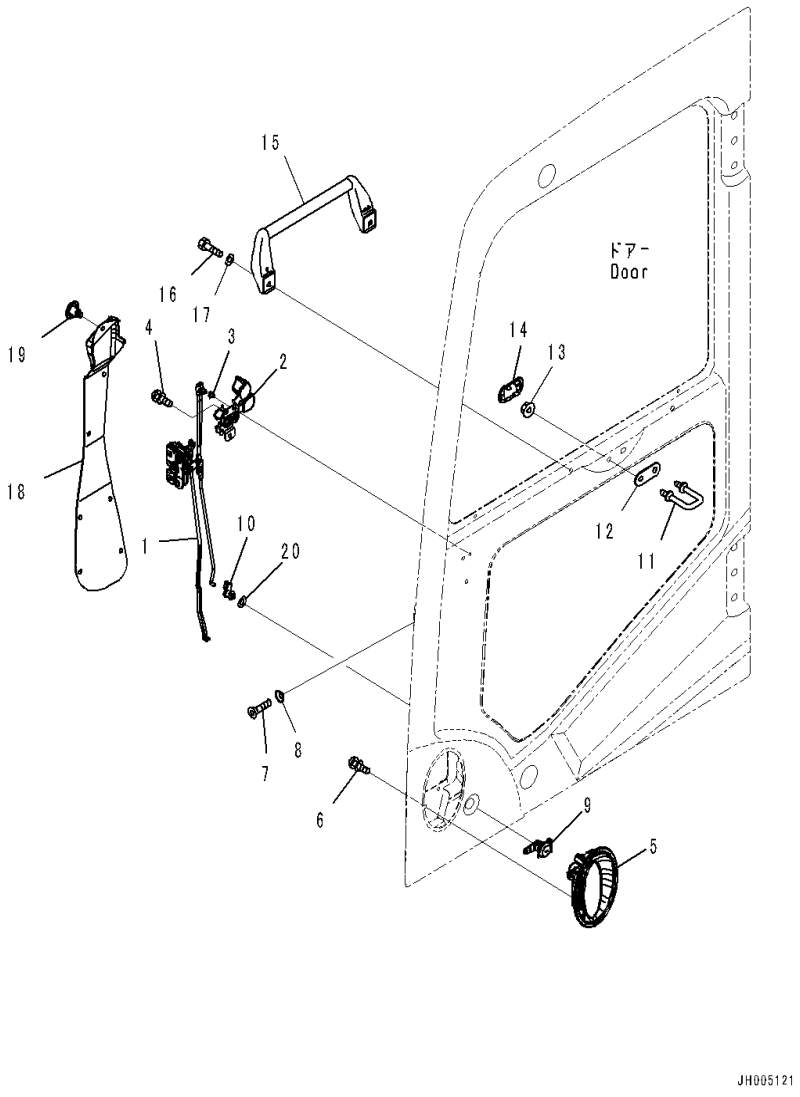

Index	Code	Part Number	Description	Qty	Serial Number
		Note: This list covers following specifications.			
		(*1)Auto Air Conditioner,AM-FM Radio,KOMTRAX,Indonesian			
		(*2)Auto Air Conditioner, AM-FM Radio Asia, GPRS			
		(*3)1-additional Acuator Piping, AM-FM Radio, KOMTRAX			
		207-53-00560	Cab Assembly(*1)	1	C90001-C90316
		207-53-00570	Cab Assembly(*2)	1	C90001-C90316
		207-53-00580	Cab Assembly(*3)	1	C90001-C90316
		20Y-53-00940	• Door Assembly	1	C90001-C90316
1		20Y-53-12201	• • Latch Assembly	1	C90001-C90316
2		20Y-54-52300	• • Handle Assembly	1	C90001-C90316
3		22B-54-16340	• • • Snap	1	C90001-C90316
4		01023-10612	• • Screw	3	C90001-C90316
5		20Y-53-12991	• • Handle	1	C90001-C90316
6		01023-10612	• • Screw	3	C90001-C90316
7		01240-00616	• • Screw	3	C90001-C90316
8		195-Z11-1690	• • Washer	3	C90001-C90316
9		2A5-53-12710	• • Lock Assembly	1	C90001-C90316
10		22B-54-16330	• • Snap	1	C90001-C90316
11		20Y-53-11320	• • Striker	1	C90001-C90316
12		20Y-53-12940	• • Plate	1	C90001-C90316
13		01584-01008	• • Nut	2	C90001-C90316
14		20Y-53-12661	• • Cover	1	C90001-C90316
15		2A5-53-13130	• • Grip	1	C90001-C90316
16		01010-80820	• • Bolt	2	C90001-C90316
17		01643-30823	• • Washer	2	C90001-C90316
18		20Y-53-11441	• • Cover	1	C90001-C90316
19		22B-54-16461	• • Rivet	7	C90001-C90316
20		145-Z79-6270	• • Washer	1	C90001-C90316

FIG. K1110-001007 Cab (Open Lock and Door Catch)

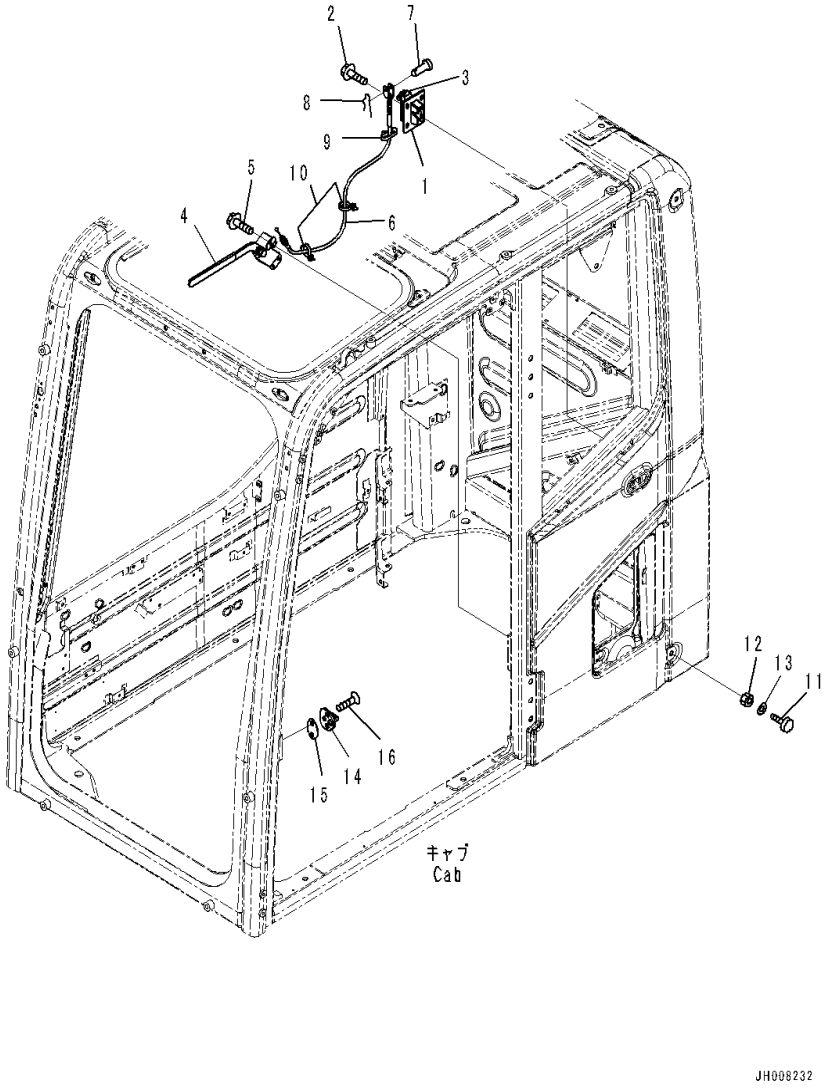

Index	Code	Part Number	Description	Qty	Serial Number
		Note: This list covers following specifications.			
		(*1)Auto Air Conditioner,AM-FM Radio,KOMTRAX,Indonesian			
		(*2)Auto Air Conditioner, AM-FM Radio Asia, GPRS			
		(*3)1-additional Acuator Piping, AM-FM Radio, KOMTRAX			
		207-53-00560	Cab Assembly(*1)	1	C90001-C90316
		207-53-00570	Cab Assembly(*2)	1	C90001-C90316
		207-53-00580	Cab Assembly(*3)	1	C90001-C90316
1		20Y-53-11981	• Lock	1	C90001-C90316
2		01435-00820	• Bolt	4	C90001-C90316
3		20Y-53-12280	• Cover	1	C90001-C90316
4		208-53-14540	• Lever Assembly	1	C90001-C90316
5		01435-40616	• Bolt	3	C90001-C90316
6		20Y-53-11990	• Cable	1	C90001-C90316
7		04205-10520	• Pin	1	C90001-C90316
8		04052-10530	• Pin	1	C90001-C90316
9		08034-20519	• Band	1	C90001-C90316
10		08059-00413	• Clip	2	C90001-C90316
11		20Y-54-11611	• Stopper	2	C90001-C90316
12		01580-11008	• Nut	2	C90001-C90316
13		01643-31032	• Washer	2	C90001-C90316
14		208-53-22810	• Striker	1	C90001-C90316
15		20Y-53-11890	• Plate	1	C90001-C90316
16		01240-01025	• Screw	2	C90001-C90316

FIG. K1110-001008 Cab (Wiper and Room Lamp)

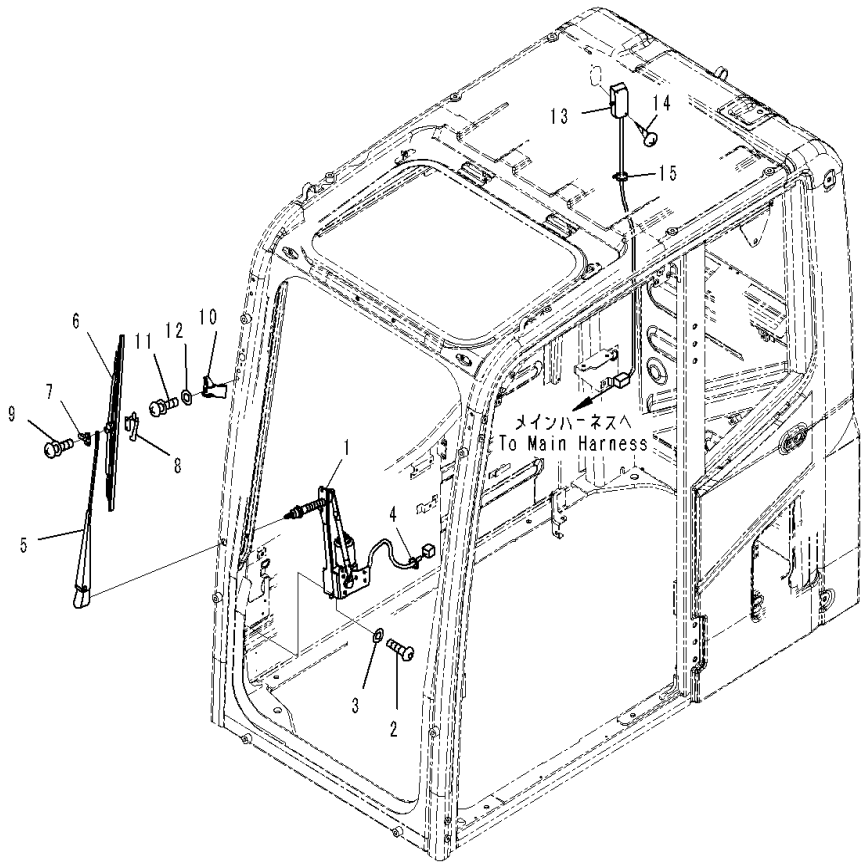

Index	Code	Part Number	Description	Qty	Serial Number
		Note: This list covers following specifications.			
		(*1)Auto Air Conditioner,AM-FM Radio,KOMTRAX,Indonesian			
		(*2)Auto Air Conditioner, AM-FM Radio Asia, GPRS			
		(*3)1-additional Acuator Piping, AM-FM Radio, KOMTRAX			
		207-53-00560	Cab Assembly(*1)	1	C90001-C90316
		207-53-00570	Cab Assembly(*2)	1	C90001-C90316
		207-53-00580	Cab Assembly(*3)	1	C90001-C90316
1		2A5-53-12721	• Motor Assembly	1	C90001-C90316
2		01245-00616	• Screw	6	C90001-C90316
3		01643-70623	• Washer	6	C90001-C90316
4		08034-20519	• Band	1	C90001-C90316
		20Y-54-52221	• Wiper Assembly	1	C90001-C90316
5		20Y-54-52350	• • Arm	1	C90001-C90316
6		20Y-54-39450	• • Wiper Blade	1	C90001-C90316
7		20Y-54-39460	• • Slider	1	C90001-C90316
8		20Y-54-39480	• • Plate	1	C90001-C90316
9		ND949007-2350	• • Screw and Washer	2	C90001-C90316
10		20Y-53-12233	• Stopper	1	C90001-C90316
11		01245-00625	• Screw	2	C90001-C90316
12		01643-70623	• Washer	2	C90001-C90316
13		2A5-53-12870	• Lamp Assembly	1	C90001-C90316
		08116-02410	• • Bulb, 10watt	1	C90001-C90316
14		01370-00420	• Screw	2	C90001-C90316
15		08034-20519	• Band	1	C90001-C90316

FIG. K1110-001009 Cab (Rubber Antenna)

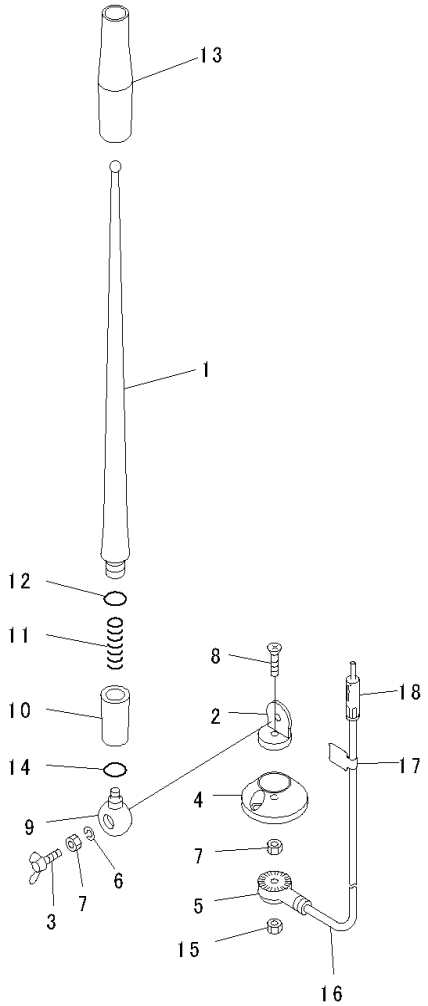

JH002177

Index	Code	Part Number	Description	Qty	Serial Number
		Note: This list covers following specifications.			
		(*1)Auto Air Conditioner,AM-FM Radio,KOMTRAX,Indonesian			
		(*2)Auto Air Conditioner, AM-FM Radio Asia, GPRS			
		(*3)1-additional Acuator Piping, AM-FM Radio, KOMTRAX			
		207-53-00560	Cab Assembly(*1)	1	C90001-C90316
		207-53-00570	Cab Assembly(*2)	1	C90001-C90316
		207-53-00580	Cab Assembly(*3)	1	C90001-C90316
		20Y-06-41990	• Antenna	1	C90001-C90316
1		RFU419B-418-A	• • Rod	1	C90001-C90316
2	C1		• • Holder	1	C90001-C90316
3		RFU419B-418-D	• • Bolt, Wing	1	C90001-C90316
4		RFU419B-418-E	• • Base	1	C90001-C90316
5	C1		• • Holder	1	C90001-C90316
6		RFU419B-418-B	• • Washer, Spring	1	C90001-C90316
7		RFU419B-418-C	• • Nut	2	C90001-C90316
8	C1		• • Screw	1	C90001-C90316
9	C1		• • Holder	1	C90001-C90316
10	C1		• • Holder Assembly	1	C90001-C90316
11	C1		• • Spring	1	C90001-C90316
12	C1		• • O-ring	1	C90001-C90316
13	C1		• • Tube	1	C90001-C90316
14	C1		• • O-ring	1	C90001-C90316
15		REU419B-418-C	• • Nut	1	C90001-C90316
16		RFU419B-418-F	• • Cable	1	C90001-C90316
17	C1		• • Plate	1	C90001-C90316
18	C1		• • Plug	1	C90001-C90316

FIG. K1110-001010 Cab (Speaker and Window Washer)

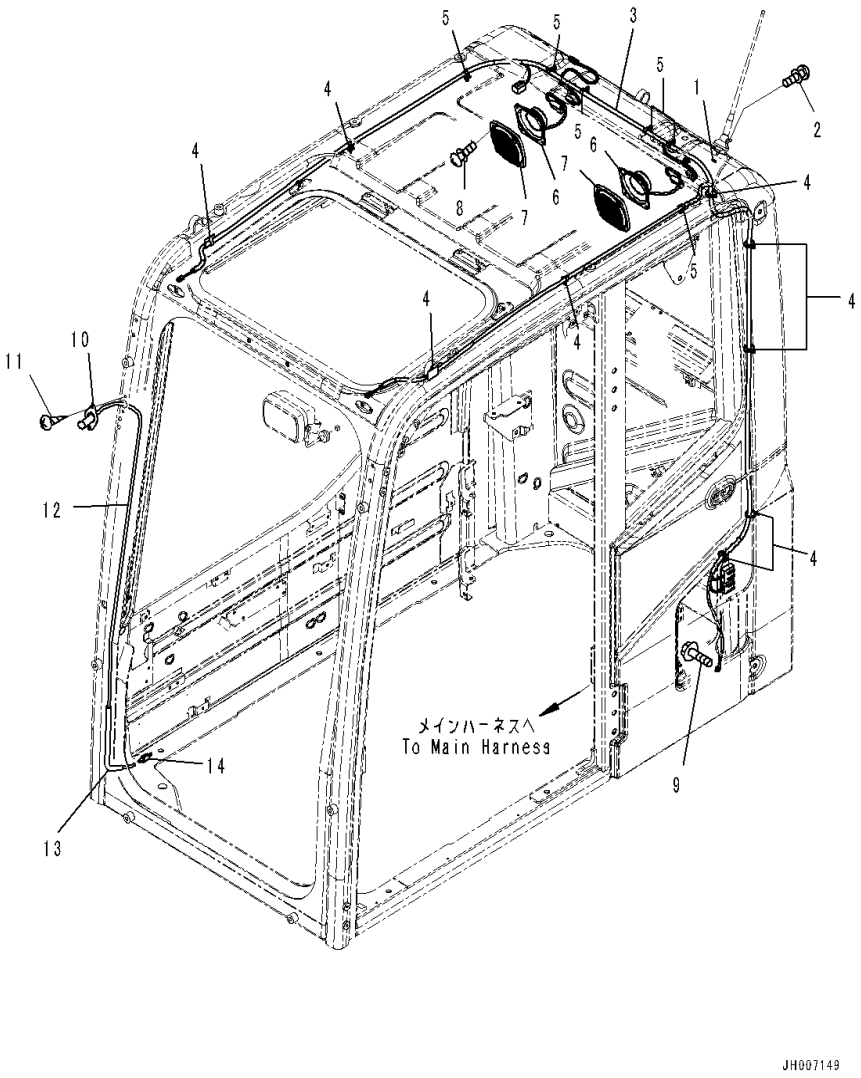

Index	Code	Part Number	Description	Qty	Serial Number
		Note: This list covers following specifications.			
		(*1)Auto Air Conditioner,AM-FM Radio,KOMTRAX,Indonesian			
		(*2)Auto Air Conditioner, AM-FM Radio Asia, GPRS			
		(*3)1-additional Acuator Piping, AM-FM Radio, KOMTRAX			
		207-53-00560	Cab Assembly(*1)	1	C90001-C90316
		207-53-00570	Cab Assembly(*2)	1	C90001-C90316
		207-53-00580	Cab Assembly(*3)	1	C90001-C90316
1		01643-30623	• Washer	1	C90001-C90316
2		01023-20412	• Screw	2	C90001-C90316
3		2A5-06-12350	• Wiring Harness	1	C90001-C90316
4		08034-20519	• Band	9	C90001-C90316
5		08059-00515	• Clip	6	C90001-C90316
6		20Y-06-42180	• Speaker	2	C90001-C90316
7		20Y-53-12221	• Cover	2	C90001-C90316
8		01023-20416	• Screw	8	C90001-C90316
9		01435-40812	• Bolt	1	C90001-C90316
10		20Y-54-39511	• Nozzle	1	C90001-C90316
11		01023-70412	• Screw	2	C90001-C90316
12		2A5-53-12920	• Hose	1	C90001-C90316
13		08017-A0702	• Conduit	1	C90001-C90316
14		(17A-Z11-4610)	Valve		-

FIG. K1110-001011 Cab (Roof Cover and Air Intake)

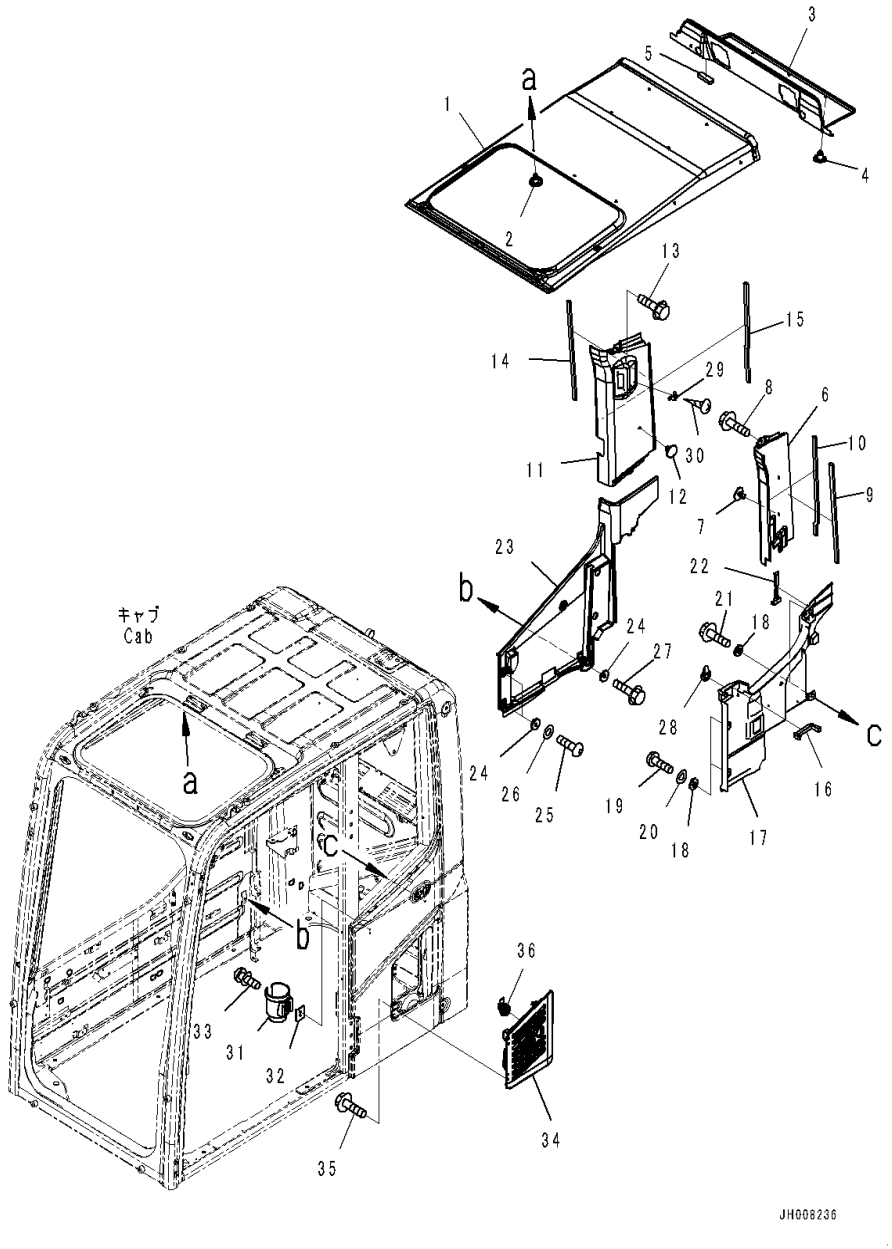

Index	Code	Part Number	Description	Qty	Serial Number
		Note: This list covers following specifications.			
		(*1)Auto Air Conditioner,AM-FM Radio,KOMTRAX,Indonesian			
		(*2)Auto Air Conditioner, AM-FM Radio Asia, GPRS			
		(*3)1-additional Acuator Piping, AM-FM Radio, KOMTRAX			
		207-53-00560	Cab Assembly(*1)	1	C90001-C90316
		207-53-00570	Cab Assembly(*2)	1	C90001-C90316
		207-53-00580	Cab Assembly(*3)	1	C90001-C90316
1		2A5-53-12561	• Cover	1	C90001-C90316
2		09416-10200	• Rivet	15	C90001-C90316
3		20Y-53-12421	• Cover	1	C90001-C90316
4		09416-10200	• Rivet	3	C90001-C90316
5		20Y-53-13870	• Seal	1	C90001-C90316
6		20Y-53-12431	• Cover	1	C90001-C90316
7		208-53-13270	• Rivet	2	C90001-C90316
8		01435-00612	• Bolt	1	C90001-C90316
9		20Y-53-12710	• Seal	1	C90001-C90316
10		20Y-53-15870	• Seal Assembly	1	C90001-C90316
11		20Y-53-12442	• Cover	1	C90001-C90316
12		09416-10200	• Rivet	1	C90001-C90316
13		01435-00612	• Bolt	1	C90001-C90316
14		20Y-53-12710	• Seal	1	C90001-C90316
15		20Y-53-15870	• Seal Assembly	1	C90001-C90316
16		20Y-53-12552	• Seal	1	C90001-C90316
17		2A5-53-11291	• Cover	1	C90001-C90316
18		20Y-53-12310	• Collar	4	C90001-C90316
19		01245-00616	• Screw	2	C90001-C90316
20		01643-70623	• Washer	2	C90001-C90316
21		01435-00612	• Bolt	1	C90001-C90316
22		22B-54-17380	• Hammer	1	C90001-C90316
23		20Y-53-12472	• Cover	1	C90001-C90316
24		20Y-53-12310	• Collar	5	C90001-C90316
25		01245-00616	• Screw	3	C90001-C90316
26		01643-70623	• Washer	3	C90001-C90316
27		01435-00612	• Bolt	2	C90001-C90316
28		09415-00706	• Cap	1	C90001-C90316
29		205-54-51250	• Hanger	1	C90001-C90316
30		01370-30416	• Screw	2	C90001-C90316
31		208-53-12991	• Holder	1	C90001-C90316
32		208-53-12980	• Plate	1	C90001-C90316
33		01023-20616	• Screw	2	C90001-C90316

FIG. K1110-001011 Cab (Roof Cover and Air Intake)

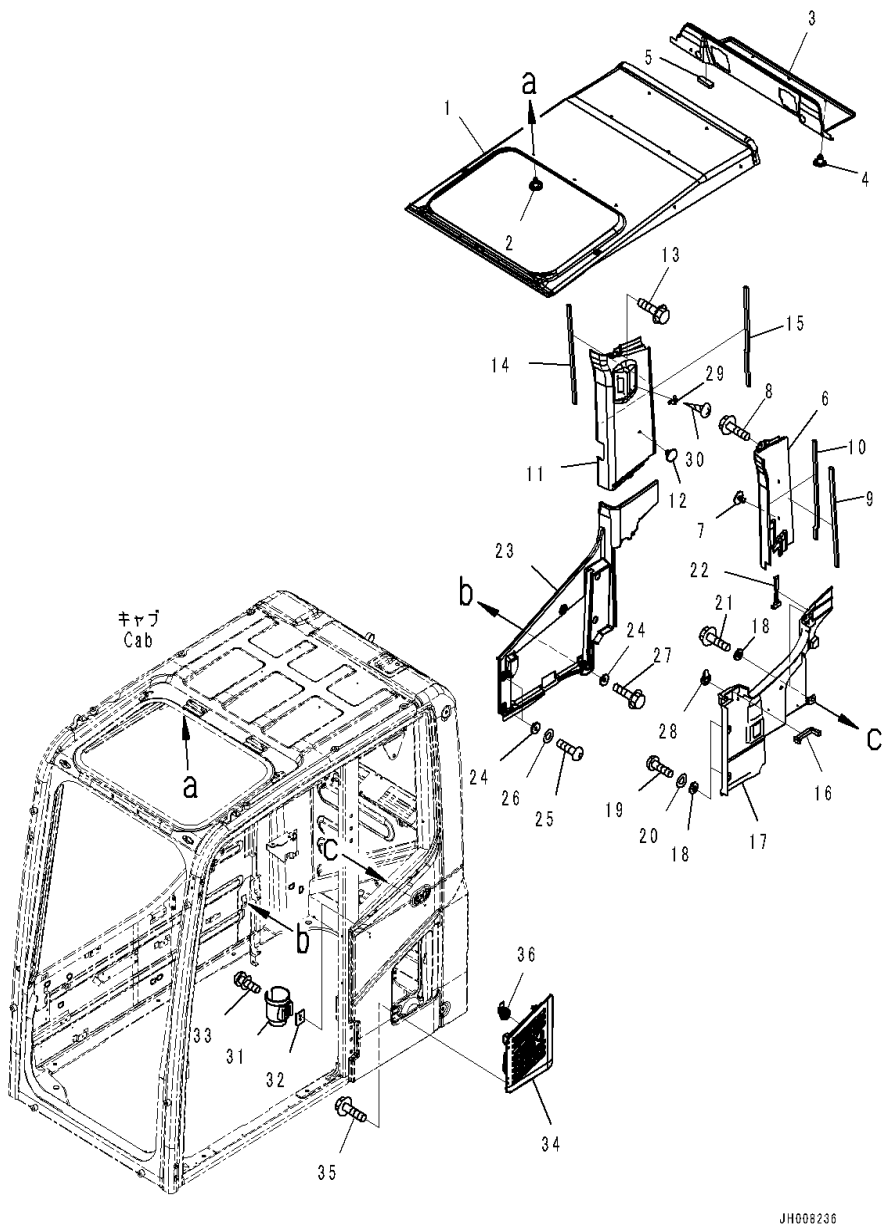

Index	Code	Part Number	Description	Qty	Serial Number
34		20Y-53-13960	• Cover	1	C90001-C90316
35		01435-40610	• Bolt	4	C90001-C90316
36		20Y-53-11761	• Lock Assembly	1	C90001-C90316

FIG. K1110-001012 Cab (Pressure Valve and Grip)

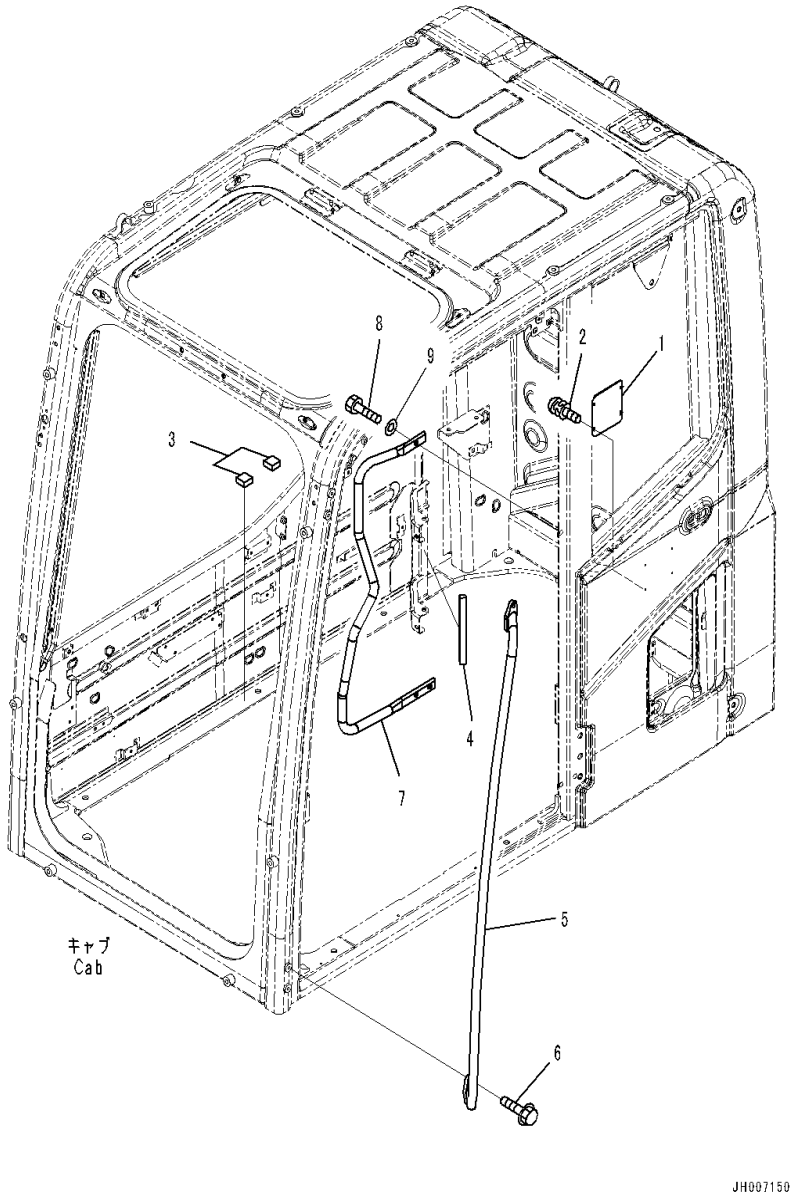

Index	Code	Part Number	Description	Qty	Serial Number
		Note: This list covers following specifications.			
		(*1)Auto Air Conditioner,AM-FM Radio,KOMTRAX,Indonesian			
		(*2)Auto Air Conditioner, AM-FM Radio Asia, GPRS			
		(*3)1-additional Acuator Piping, AM-FM Radio, KOMTRAX			
		207-53-00560	Cab Assembly(*1)	1	C90001-C90316
		207-53-00570	Cab Assembly(*2)	1	C90001-C90316
		207-53-00580	Cab Assembly(*3)	1	C90001-C90316
1		20Y-53-13930	• Plate	1	C90001-C90316
2		01023-60512	• Screw	4	C90001-C90316
3		20Y-53-13490	• Rubber	2	C90001-C90316
4		2A5-53-11870	• Seal	1	C90001-C90316
5		20Y-53-11821	• Grip	1	C90001-C90316
6		01435-40825	• Bolt	4	C90001-C90316
7		2A5-53-13140	• Grip	1	C90001-C90316
8		01010-D1025	• Bolt	3	C90001-C90316
9		01643-71032	• Washer	3	C90001-C90316

FIG. K1110-001013 Cab (KOMTRAX Film Antenna)

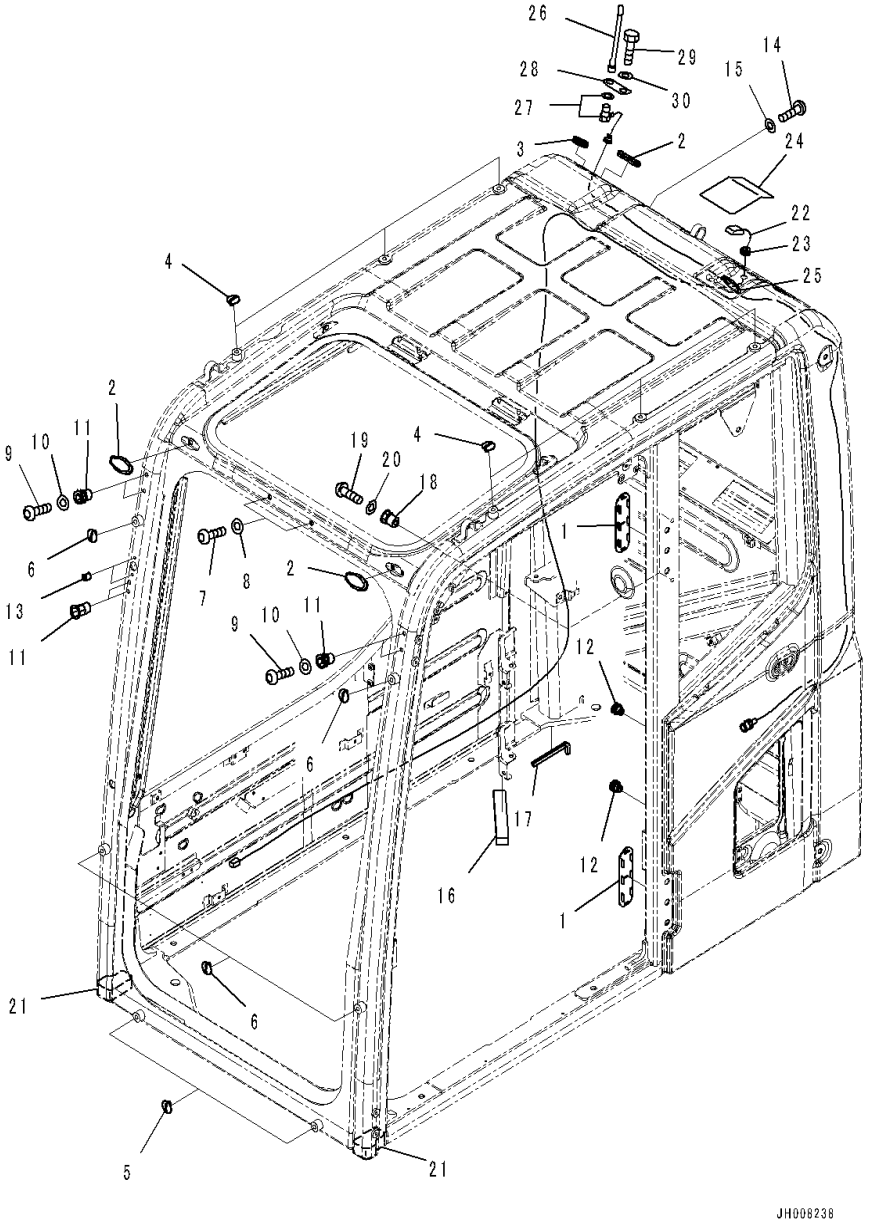

Index	Code	Part Number	Description	Qty	Serial Number
		Note: This list covers following specifications.			
		(*1)Auto Air Conditioner,AM-FM Radio,KOMTRAX,Indonesian			
		(*3)1-additional Acuator Piping, AM-FM Radio, KOMTRAX			
		207-53-00560	Cab Assembly(*1)	1	C90001-C90316
		207-53-00580	Cab Assembly(*3)	1	C90001-C90316
1		20Y-53-12960	• Cover	2	C90001-C90316
2		22B-54-17282	• Cap	3	C90001-C90316
3		09415-02512	• Cap	1	C90001-C90316
4		20Y-53-11390	• Cap	6	C90001-C90316
5		20Y-53-11390	• Cap	2	C90001-C90316
6		20Y-53-11380	• Cap	4	C90001-C90316
7		01245-01016	• Screw	2	C90001-C90316
8		01643-71032	• Washer	2	C90001-C90316
9		01245-00616	• Screw	4	C90001-C90316
10		01643-70623	• Washer	4	C90001-C90316
11		20Y-53-12260	• Nut	6	C90001-C90316
12		20Y-54-35451	• Nut	2	C90001-C90316
13		20Y-53-12320	• Nut	2	C90001-C90316
14		01245-01016	• Screw	1	C90001-C90316
15		01643-71032	• Washer	1	C90001-C90316
16		20Y-53-12580	• Seal	1	C90001-C90316
17		20Y-53-12740	• Trim	1	C90001-C90316
18		20Y-53-12270	• Nut	2	C90001-C90316
19		01245-00816	• Screw	2	C90001-C90316
20		01643-70823	• Washer	2	C90001-C90316
21		20Y-53-18880	• Seal	2	C90001-C90316
22		8A13-10-1320	• Antenna	1	C90001-C90316
23		08037-10610	• • Grommet	1	C90001-C90316
24		20Y-53-12951	• Cover, GPS	1	C90001-C90316
25		2A5-53-12130	• Grommet	1	C90001-C90316
26		8A13-10-2100	• Antenna	1	C90001-C90316
27		8A13-10-2200	• Cable	1	C90001-C90316
28		20Y-53-15140	• Plate	1	C90001-C90316
29		01010-D1225	• Bolt	1	C90001-C90316
30		01643-71232	• Washer	1	C90001-C90316

FIG. K1110-001014 Cab (Cab In Parts, Monitor and Cover)

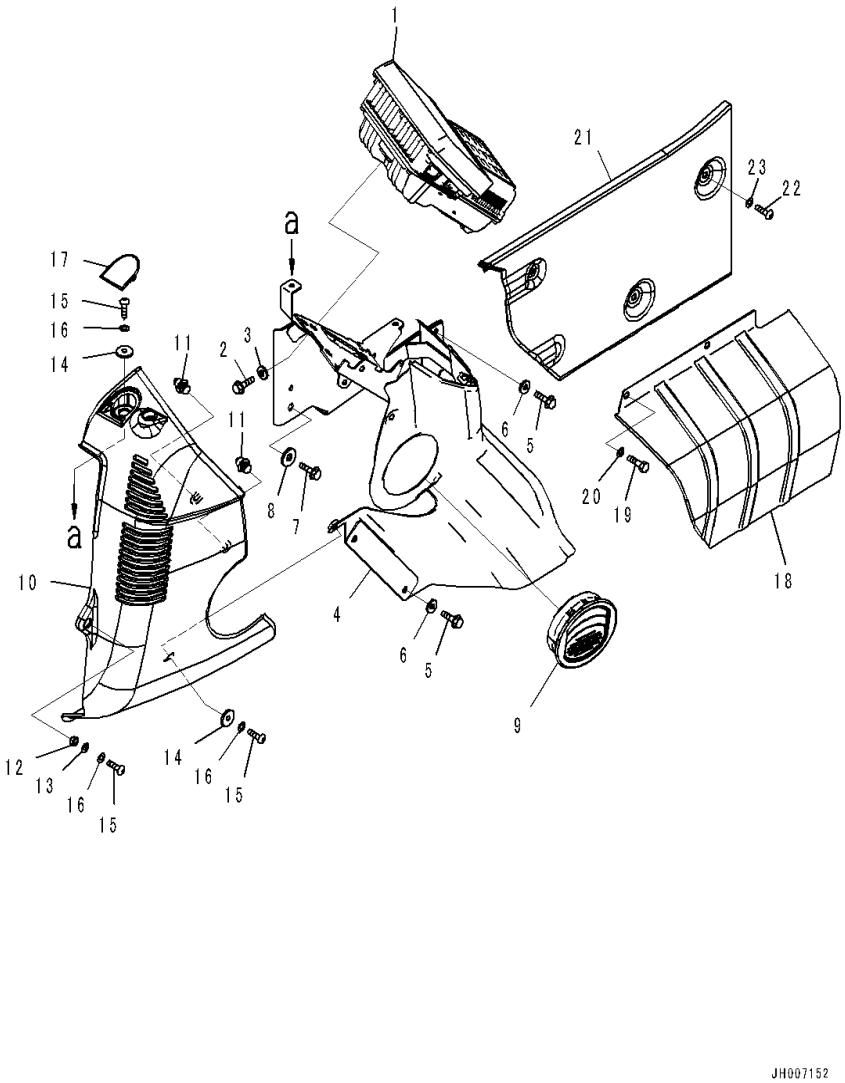

Index	Code	Part Number	Description	Qty	Serial Number
		Note: This list covers following specifications.			
		Auto Air Conditioner,AM-FM Radio,KOMTRAX,Indonesian			
		Auto Air Conditioner, AM-FM Radio Asia, GPRS			
		1-additional Acuator Piping, AM-FM Radio, KOMTRAX			
1		7835-34-1002	Monitor	1	C90001-C90316
2		01435-00616	Bolt	4	C90001-C90316
3		209-72-12230	Washer	4	C90001-C90316
4		2A5-53-11532	Cover	1	C90001-C90316
5		01435-00616	Bolt	4	C90001-C90316
6		209-72-12230	Washer	4	C90001-C90316
7		01435-00820	Bolt	1	C90001-C90316
8		208-53-11330	Washer	1	C90001-C90316
9		20Y-53-12172	Grille	1	C90001-C90316
10		20Y-53-12122	Cover	1	C90001-C90316
11		22U-54-25360	• Clip	2	C90001-C90316
12		205-54-75240	Collar	1	C90001-C90316
13		01643-70823	Washer	1	C90001-C90316
14		20Y-53-12310	Collar	2	C90001-C90316
15		01245-00616	Screw	3	C90001-C90316
16		01643-70623	Washer	3	C90001-C90316
17		20Y-53-12291	Cap	1	C90001-C90316
18		20Y-53-12161	Cover	1	C90001-C90316
19		01010-80616	Bolt	2	C90001-C90316
20		01643-30623	Washer	2	C90001-C90316
21		20Y-53-12483	Cover	1	C90001-C90316
22		01245-00616	Screw	3	C90001-C90316
23		01643-70623	Washer	3	C90001-C90316

FIG. K1110-001015 Cab (Cab In Parts, Monitor Cover)

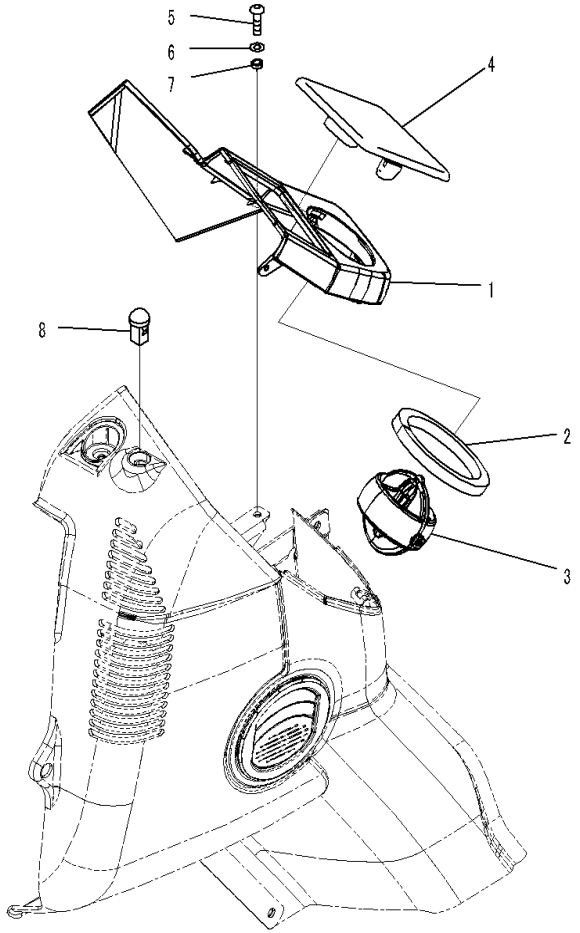

モニタカバー
Monitor Cover

JH005133

Index	Code	Part Number	Description	Qty	Serial Number
		Note: This list covers following specifications.			
		Auto Air Conditioner,AM-FM Radio,KOMTRAX,Indonesian			
		Auto Air Conditioner, AM-FM Radio Asia, GPRS			
		1-additional Acuator Piping, AM-FM Radio, KOMTRAX			
		2A5-53-12651	Cover Assembly	1	C90001-C90316
1	C1		• Cover	1	C90001-C90316
2		2A5-53-12140	• Seal	1	C90001-C90316
3		20Y-53-12240	Louver	1	C90001-C90316
4		20Y-53-14230	Cap	1	C90001-C90316
5		01245-00616	Screw	1	C90001-C90316
6		01643-70623	Washer	1	C90001-C90316
7		20Y-43-41290	Collar	1	C90001-C90316
8		20Y-979-6161	Sensor, Insolation,Auto Air Conditioner ..	1	C90001-C90316

FIG. K1110-001016 Cab (Cab In Parts, Washer Hose Mounting)

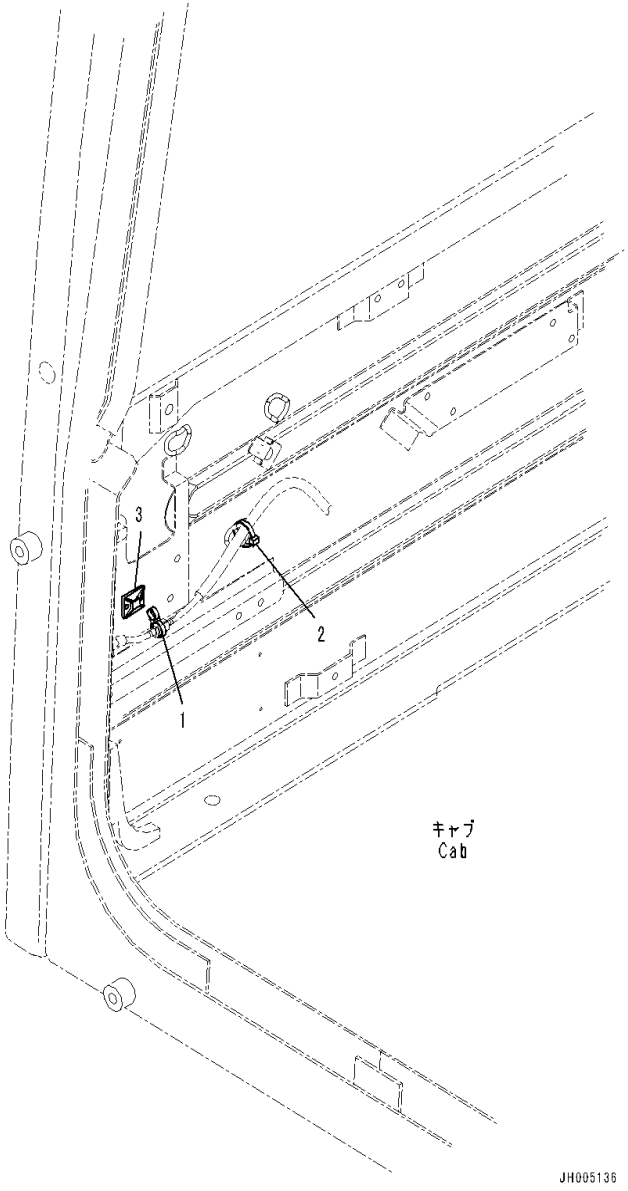

Index	Code	Part Number	Description	Qty	Serial Number
		Note: This list covers following specifications.			
		Auto Air Conditioner,AM-FM Radio,KOMTRAX,Indonesian			
		Auto Air Conditioner, AM-FM Radio Asia, GPRS			
		1-additional Acuator Piping, AM-FM Radio, KOMTRAX			
1		08034-40521	Band	1	C90001-C90316
2		08034-20519	Band	1	C90001-C90316
3		20U-54-46520	Hook, Sticker Type	1	C90001-C90316

FIG. K1110-001017 Cab (Cab In Parts, Luggage Plate and Cigarette Lighter)

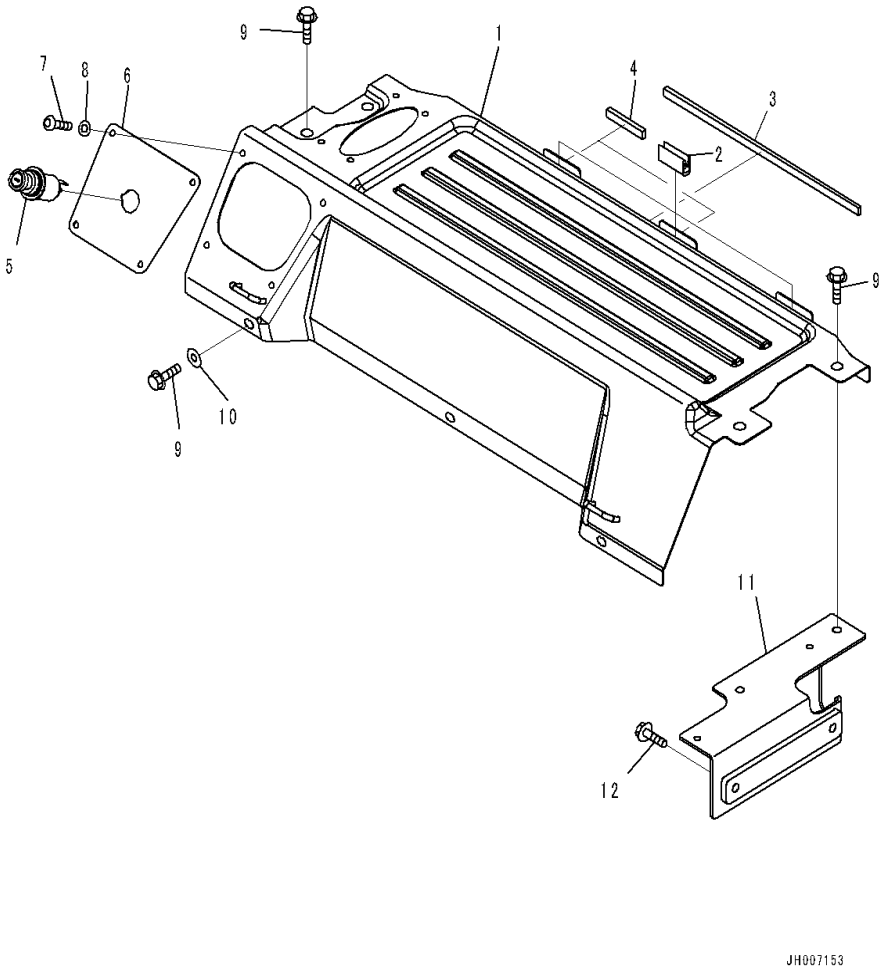

Index	Code	Part Number	Description	Qty	Serial Number
		Note: This list covers following specifications.			
		Auto Air Conditioner,AM-FM Radio,KOMTRAX,Indonesian			
		Auto Air Conditioner, AM-FM Radio Asia, GPRS			
		1-additional Acuator Piping, AM-FM Radio, KOMTRAX			
		20Y-53-13618	Cover Assembly	1	C90001-C90316
1	C1		• Cover	1	C90001-C90316
2		208-53-12460	• Seat	3	C90001-C90316
3		205-53-31181	• Sheet	1	C90001-C90316
4		205-53-31190	• Sheet	2	C90001-C90316
5		20Y-06-23472	Cigarette Lighter	1	C90001-C90316
6		20Y-53-13680	Plate	1	C90001-C90316
7		01245-00616	Screw	4	C90001-C90316
8		01643-70623	Washer	4	C90001-C90316
9		01435-80825	Bolt	7	C90001-C90316
10		418-54-35450	Washer	3	C90001-C90316
11		20Y-53-12771	Plate	1	C90001-C90316
12		01435-80825	Bolt	2	C90001-C90316

FIG. K1110-001018 Cab (Cab In Parts, Air Duct)

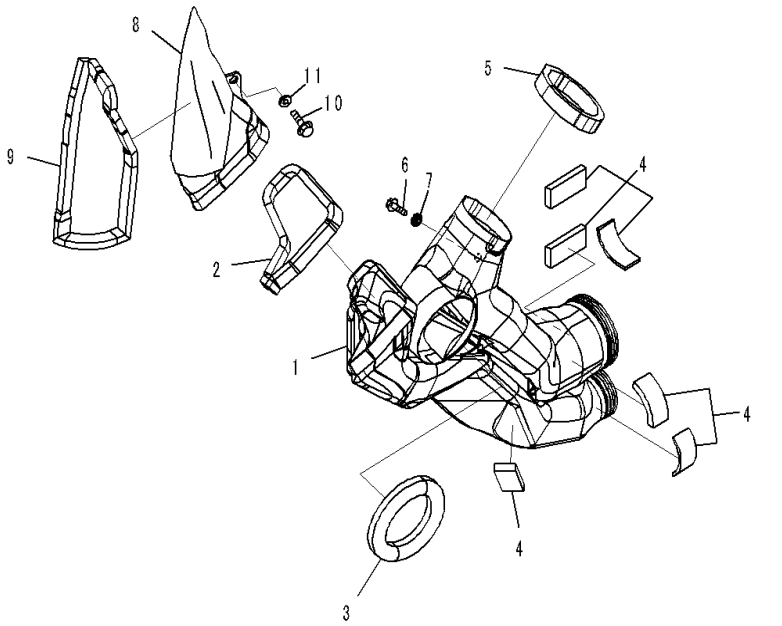

Index	Code	Part Number	Description	Qty	Serial Number
		Note: This list covers following specifications.			
		Auto Air Conditioner,AM-FM Radio,KOMTRAX,Indonesian			
		Auto Air Conditioner, AM-FM Radio Asia, GPRS			
		1-additional Acuator Piping, AM-FM Radio, KOMTRAX			
1		20Y-53-13371	Duct	1	C90001-C90316
2		20Y-53-13480	Seal	1	C90001-C90316
3		20Y-53-13280	Seal	1	C90001-C90316
4		208-53-12440	Seal	6	C90001-C90316
5		208-53-11941	Seal	1	C90001-C90316
6		01435-00612	Bolt	1	C90001-C90316
7		20Y-53-12310	Collar	1	C90001-C90316
8		20Y-53-13421	Duct	1	C90001-C90316
9		208-53-11920	Seal	1	C90001-C90316
10		01435-00612	Bolt	1	C90001-C90316
11		20Y-53-12310	Collar	1	C90001-C90316

FIG. K1110-001019 Cab (Cab In Parts, Air Duct and Fresh Air Filter)

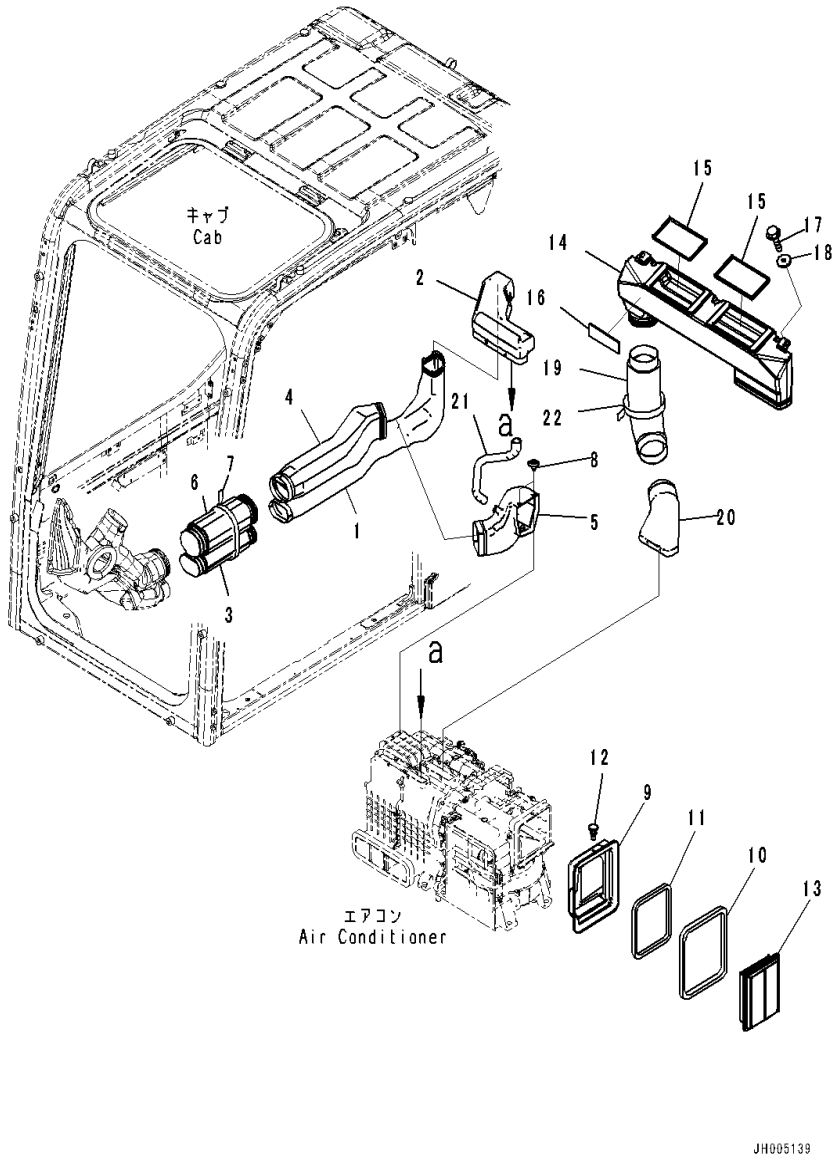

Index	Code	Part Number	Description	Qty	Serial Number
		Note: This list covers following specifications.			
		Auto Air Conditioner,AM-FM Radio,KOMTRAX,Indonesian			
		Auto Air Conditioner, AM-FM Radio Asia, GPRS			
		1-additional Acuator Piping, AM-FM Radio, KOMTRAX			
1		2A5-979-1211	Duct	1	C90001-C90316
2		2A5-979-1221	Duct	1	C90001-C90316
3		20Y-53-13351	Duct	1	C90001-C90316
4		2A5-979-1231	Duct	1	C90001-C90316
5		2A5-979-1241	Duct	1	C90001-C90316
6		20Y-53-13361	Duct	1	C90001-C90316
7		08034-20876	Band	1	C90001-C90316
8		22B-54-16461	Rivet	2	C90001-C90316
9		2A5-979-1252	Duct	1	C90001-C90316
10		2A5-979-1660	• Seal	1	C90001-C90316
11		2A5-979-1670	• Seal	1	C90001-C90316
12		208-53-12680	Clip	1	C90001-C90316
13		17M-911-3530	Element	1	C90001-C90316
14		20Y-53-13451	Duct	1	C90001-C90316
15		2A5-979-1580	Seal	2	C90001-C90316
16		2A5-979-1590	Seal	1	C90001-C90316
17		01435-80616	Bolt	2	C90001-C90316
18		20Y-53-12310	Collar	2	C90001-C90316
19		208-53-12220	Duct	1	C90001-C90316
20		2A5-979-1261	Duct	1	C90001-C90316
21		2A5-979-1271	Hose	1	C90001-C90316
22		08034-20876	Band	1	C90001-C90316

FIG. K1110-001020 Cab (Cab In Parts, Partition and Recirculation Air Filter)

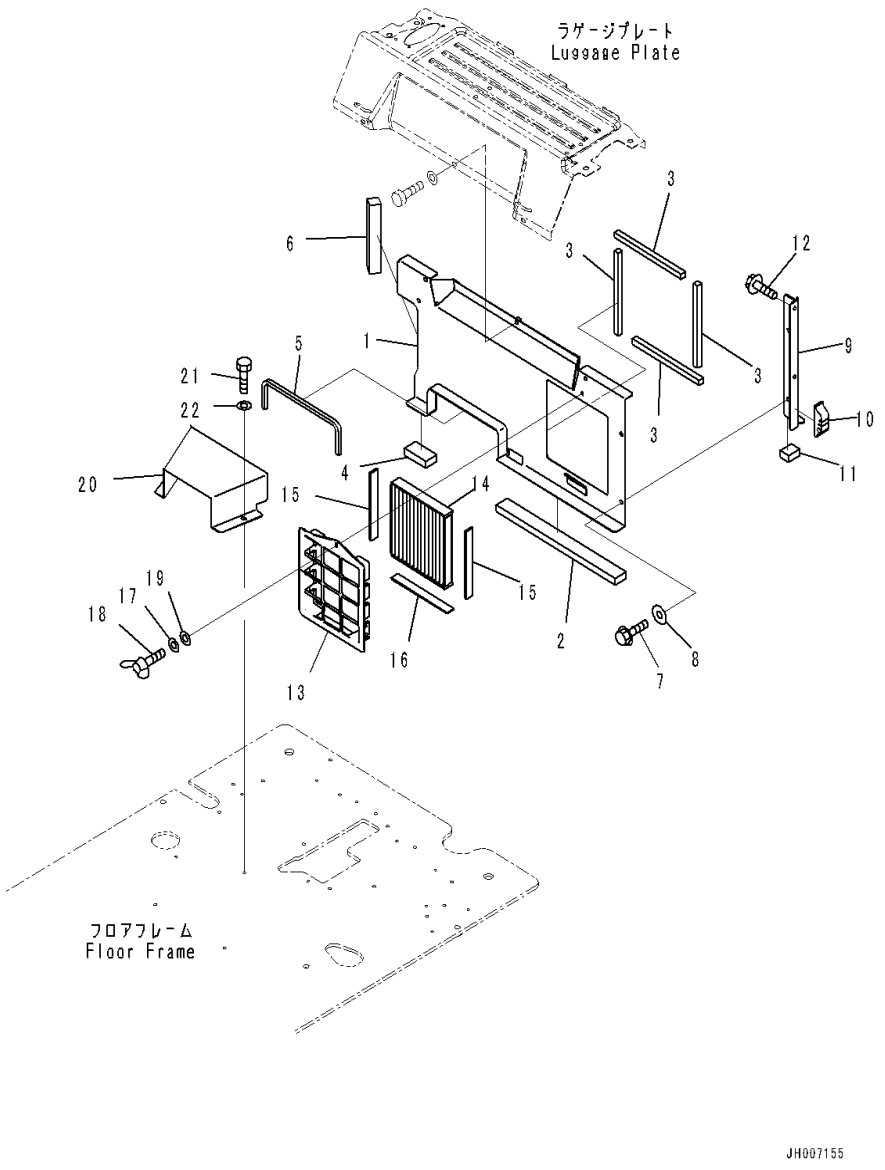

Index	Code	Part Number	Description	Qty	Serial Number
		Note: This list covers following specifications.			
		Auto Air Conditioner,AM-FM Radio,KOMTRAX,Indonesian			
		Auto Air Conditioner, AM-FM Radio Asia, GPRS			
		1-additional Acuator Piping, AM-FM Radio, KOMTRAX			
		2A5-53-11741	Bracket Assembly	1	C90001-C90316
1	C1		• Bracket	1	C90001-C90316
2		2A5-53-11760	• Seal	1	C90001-C90316
3		2A5-53-11770	• Seal	4	C90001-C90316
4		2A5-53-11780	• Seal	2	C90001-C90316
5		2A5-53-11790	• Seal	1	C90001-C90316
6		2A5-53-11860	• Seal	1	C90001-C90316
7		01435-80820	Bolt	3	C90001-C90316
8		418-54-35450	Washer	3	C90001-C90316
9		20Y-53-12781	Plate	1	C90001-C90316
10		20Y-53-12751	Seal	1	C90001-C90316
11		20Y-53-12760	Seal	1	C90001-C90316
12		01435-80820	Bolt	2	C90001-C90316
13		2A5-979-1181	Holder	1	C90001-C90316
		2A5-979-1551	Filter Assembly	1	C90001-C90316
14		2A5-979-1191	• Filter	1	C90001-C90316
15		2A5-979-1541	• Seal Assembly	2	C90001-C90316
16		2A5-979-1611	• Seal Assembly	1	C90001-C90316
17		20Y-54-65690	Washer	1	C90001-C90316
18		20Y-54-65790	Bolt	1	C90001-C90316
19		01640-20610	Washer	1	C90001-C90316
20		20Y-53-13921	Duct	1	C90001-C90316
21		01010-D0820	Bolt	2	C90001-C90316
22		01643-70823	Washer	2	C90001-C90316

FIG. K1110-001021 Cab (Cab In Parts, Sub Plate and Relay)

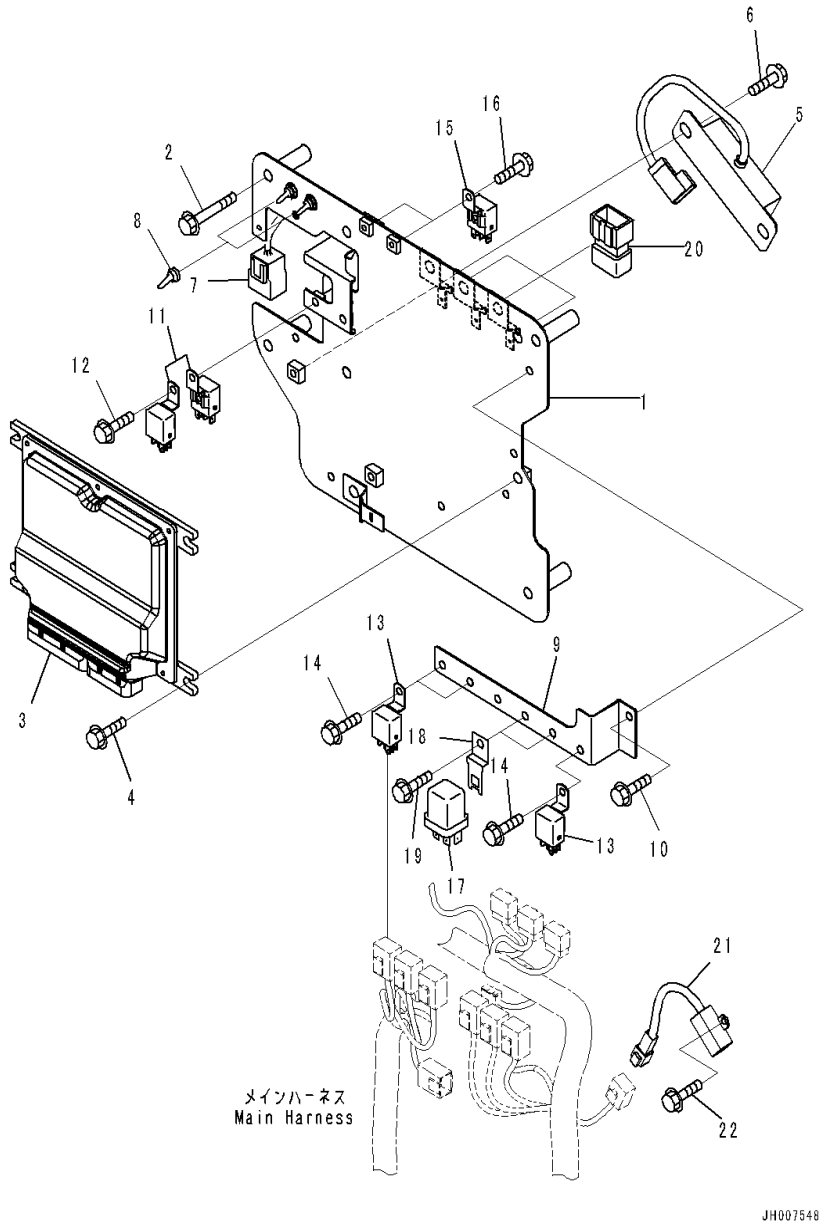

Index	Code	Part Number	Description	Qty	Serial Number
		Note: This list covers following specifications.			
		Auto Air Conditioner,AM-FM Radio,KOMTRAX,Indonesian			
		Auto Air Conditioner, AM-FM Radio Asia, GPRS			
		1-additional Acuator Piping, AM-FM Radio, KOMTRAX			
1		20Y-53-14812	Bracket	1	C90001-C90316
2		01435-00860	Bolt	4	C90001-C90316
3		7835-45-5000	Controller	1	C90001-C90316
4		01435-00820	Bolt	4	C90001-C90316
5		7861-94-2000	Resistor	1	C90001-C90316
6		01435-00820	Bolt	2	C90001-C90316
7		20Y-06-41150	Wiring Harness	1	C90001-C90316
8		208-43-71420	Cap	2	C90001-C90316
9		20Y-53-18211	Bracket	1	C90001-C90316
10		01435-00610	Bolt	1	C90001-C90316
11		7861-74-5100	Relay	2	C90001-C90316
12		01435-00610	Bolt	1	C90001-C90316
13		7861-74-5100	Relay	3	C90001-C90316
14		01435-00610	Bolt	3	C90001-C90316
15		7861-74-5100	Relay	2	C90001-C90316
16		01435-00610	Bolt	2	C90001-C90316
17		569-06-61960	Relay	2	C90001-C90316
18		287-06-16420	Bracket	2	C90001-C90316
19		01435-00610	Bolt	2	C90001-C90316
20		8233-06-3350	Diode	3	C90001-C90316
21		21T-06-35620	Resistor	1	C90001-C90316
22		01435-00610	Bolt	2	C90001-C90316

FIG. K1110-001022 Cab (Cab In Parts, Air Conditioner Controller and KOMTRAX Controller)

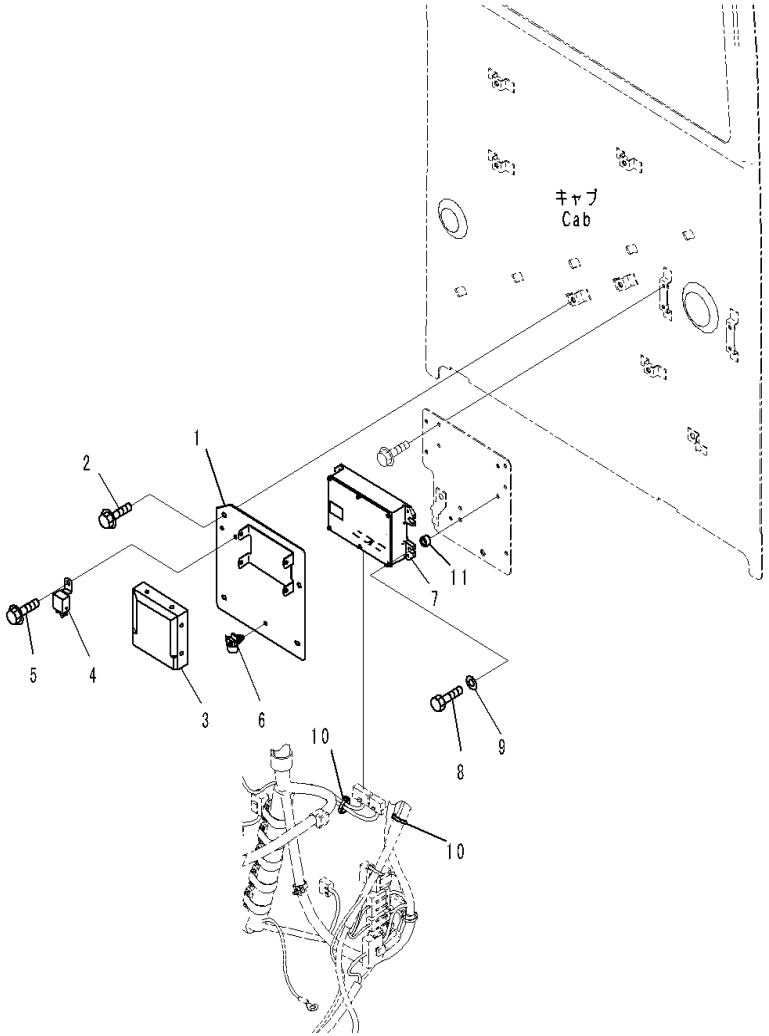

Index	Code	Part Number	Description	Qty	Serial Number
		Note: This list covers following specifications.			
		Auto Air Conditioner,AM-FM Radio,KOMTRAX,Indonesian			
		1-additional Acuator Piping, AM-FM Radio, KOMTRAX			
1		20Y-53-14821	Plate	1	C90001-C90316
2		01435-40812	Bolt	2	C90001-C90316
3		2A5-979-1122	Controller, Air Conditioner	1	C90001-C90316
4		7861-74-5100	Relay	1	C90001-C90316
5		01435-00610	Bolt	1	C90001-C90316
6		08059-00515	Clip	1	C90001-C90316
7		7826-25-3005	Controller, KOMTRAX	1	C90001-C90316
8		01010-80630	Bolt	4	C90001-C90316
9		01643-30623	Washer	4	C90001-C90316
10		08034-20519	Band	2	C90001-C90316
11		20Y-53-14340	Collar	4	C90001-C90316

FIG. K1110-001023 Cab (Cab In Parts, Main Wiring Harness Clamp)

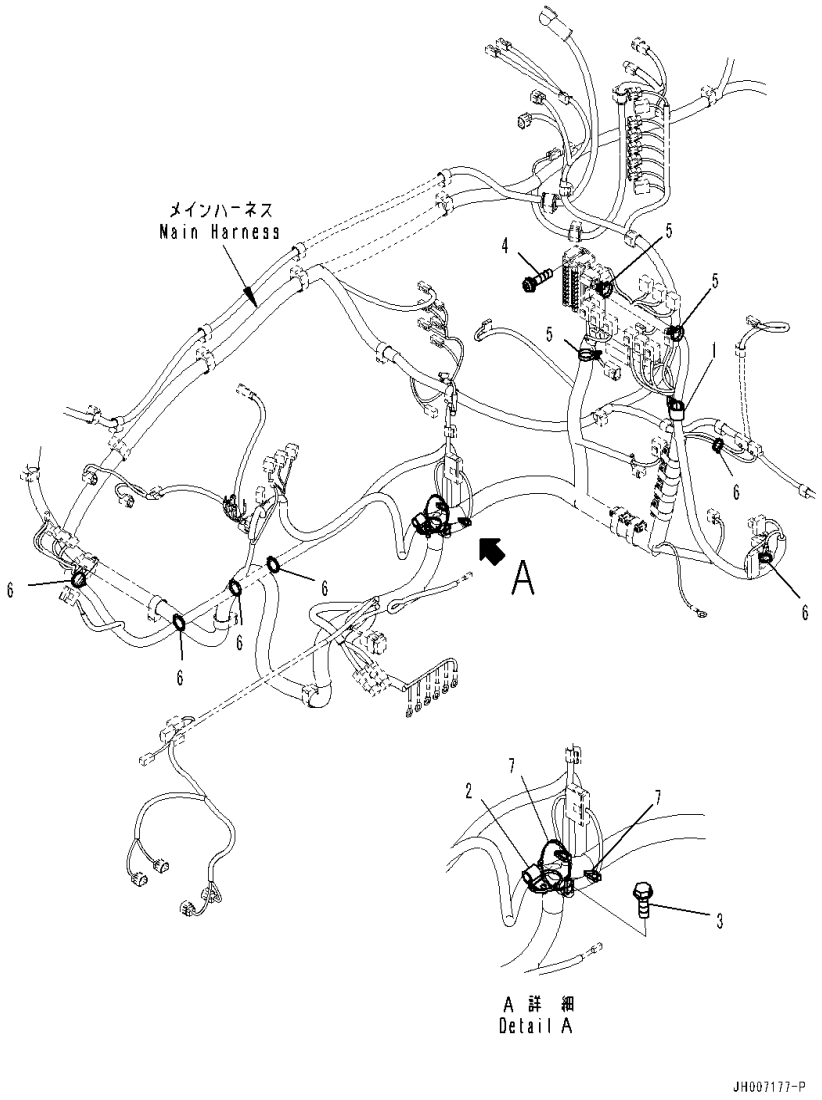

Index	Code	Part Number	Description	Qty	Serial Number
		Note: This list covers following specifications.			
		Auto Air Conditioner,AM-FM Radio,KOMTRAX,Indonesian			
		Auto Air Conditioner, AM-FM Radio Asia, GPRS			
		1-additional Acuator Piping, AM-FM Radio, KOMTRAX			
1		04434-52511	Clip	1	C90001-C90316
2		04434-51708	Clip	1	C90001-C90316
3		01435-00816	Bolt	1	C90001-C90316
4		01023-60620	Screw	2	C90001-C90316
5		08059-00515	Clip	3	C90001-C90316
6		08034-20519	Band	6	C90001-C90316
7		08034-20519	Band	5	C90001-C90316

FIG. K1110-001024 Cab (Cab In Parts, Rear Cover)

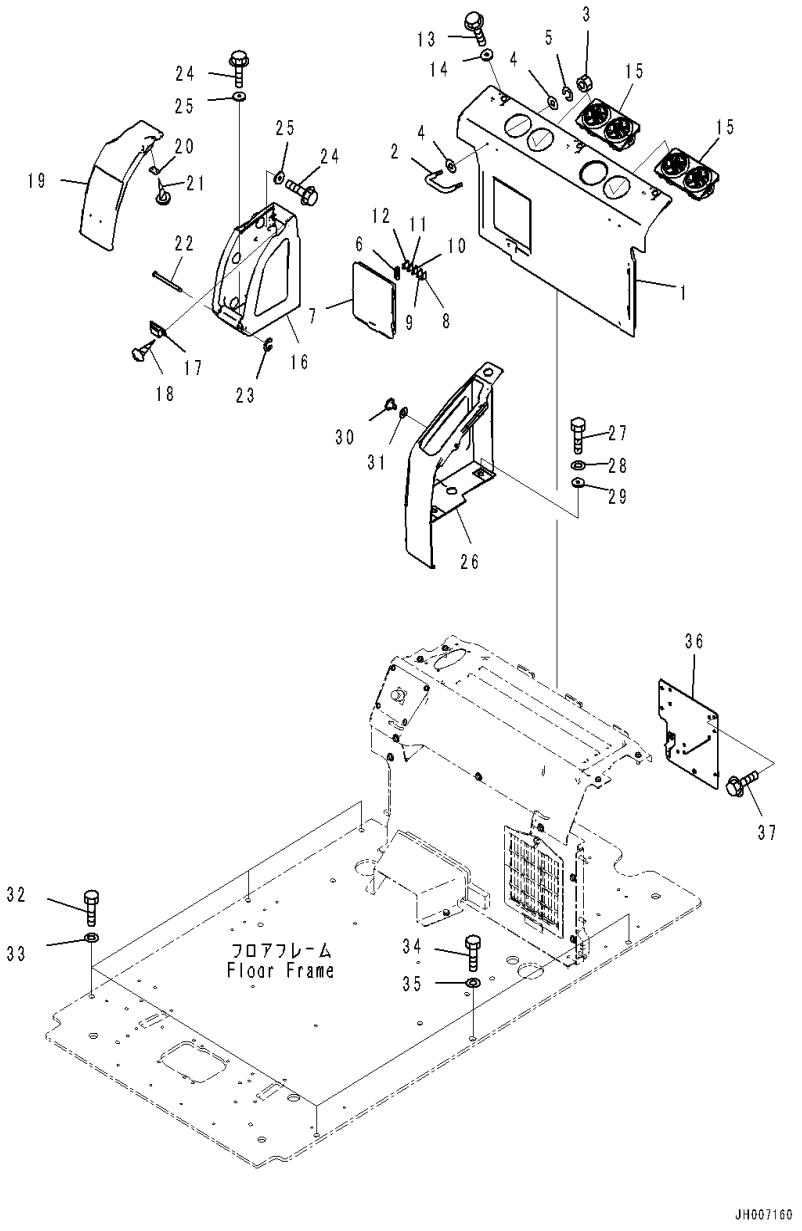

Index	Code	Part Number	Description	Qty	Serial Number
		Note: This list covers following specifications.			
		Auto Air Conditioner,AM-FM Radio,KOMTRAX,Indonesian			
		Auto Air Conditioner, AM-FM Radio Asia, GPRS			
		1-additional Acuator Piping, AM-FM Radio, KOMTRAX			
1		20Y-53-12371	Cover	1	C90001-C90316
2		208-53-12290	• Hook	2	C90001-C90316
3		01580-10403	• Nut	4	C90001-C90316
4		01640-20408	• Washer	8	C90001-C90316
5		01601-20410	• Washer	4	C90001-C90316
		2A5-53-11731	Cover Assembly	1	C90001-C90316
6		22U-43-22340	• Puller	1	C90001-C90316
7	C1		• Cover	1	C90001-C90316
8		08041-00500	• Fuse, 5Amp.	1	C90001-C90316
9		08041-01000	• Fuse, 10Amp.	1	C90001-C90316
10		08041-02000	• Fuse, 20Amp.	1	C90001-C90316
11		08041-02500	• Fuse, 25Amp.	1	C90001-C90316
12		08041-03000	• Fuse, 30Amp.	1	C90001-C90316
13		01435-80616	Bolt	3	C90001-C90316
14		20Y-53-12310	Collar	3	C90001-C90316
15		208-979-7560	Grille	2	C90001-C90316
16		20Y-53-12381	Cover	1	C90001-C90316
17		09452-14503	Catcher	1	C90001-C90316
18		01370-10308	Screw	2	C90001-C90316
19		20Y-53-12391	Cover	1	C90001-C90316
20		208-53-12410	Plate	1	C90001-C90316
21		01370-20308	Screw	2	C90001-C90316
22		208-53-12320	Pin	1	C90001-C90316
23		208-53-12330	Ring	1	C90001-C90316
24		01435-80616	Bolt	5	C90001-C90316
25		20Y-53-12310	Collar	5	C90001-C90316
26		20Y-53-12731	Cover	1	C90001-C90316
27		01010-D0620	Bolt	2	C90001-C90316
28		01643-70623	Washer	2	C90001-C90316
29		20Y-53-12310	Collar	2	C90001-C90316
30		23D-950-4450	Button	1	C90001-C90316
31		20Y-53-12860	Spacer	1	C90001-C90316
32		01010-81245	Bolt	5	C90001-C90316
33		01643-31232	Washer	5	C90001-C90316
34		01010-81655	Bolt	1	C90001-C90316
35		01643-31645	Washer	1	C90001-C90316

FIG. K1110-001024 Cab (Cab In Parts, Rear Cover)

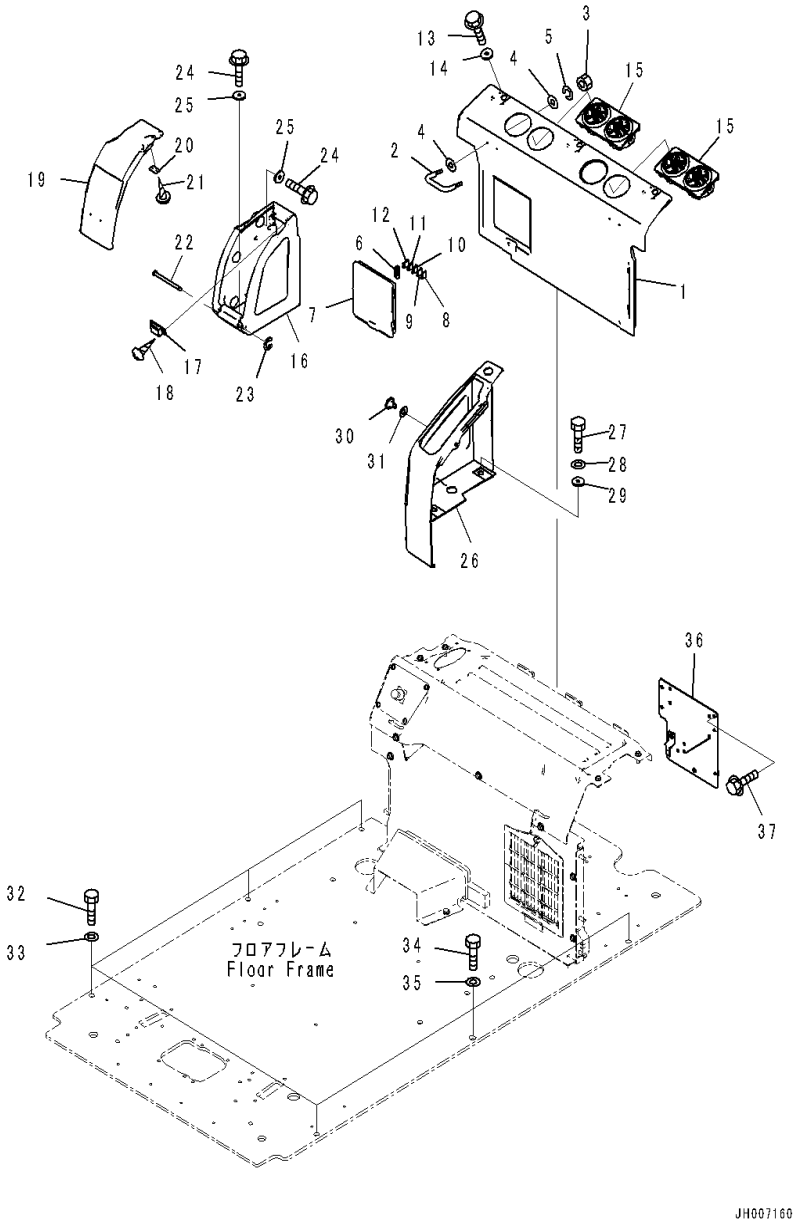

Index	Code	Part Number	Description	Qty	Serial Number
36		20Y-53-18221	Bracket	1	C90001-C90316
37		01435-00612	Bolt	4	C90001-C90316

FIG. K1110-001025 Cab (Floor, Frame)

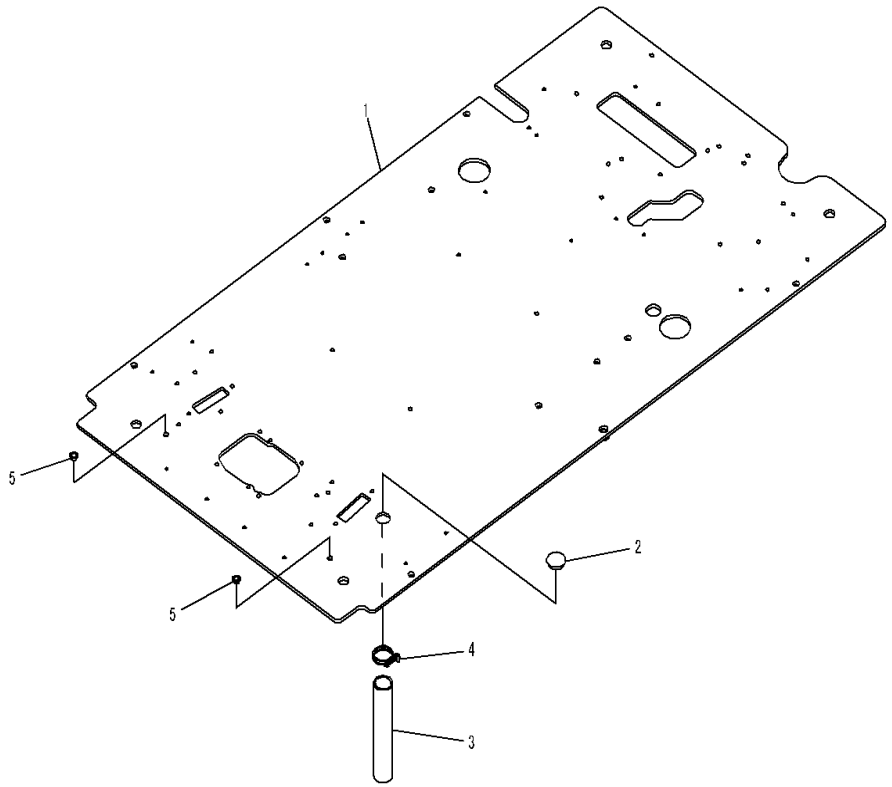

JH007161-V

Index	Code	Part Number	Description	Qty	Serial Number
		Note: This list covers following specifications.			
		Auto Air Conditioner,AM-FM Radio,KOMTRAX,Indonesian			
		Auto Air Conditioner, AM-FM Radio Asia, GPRS			
		1-additional Acuator Piping, AM-FM Radio, KOMTRAX			
1		207-43-21211	Frame	1	C90001-C90316
2		22U-54-25581	Grommet	2	C90001-C90316
3		07286-03828	Hose	1	C90001-C90316
4		07280-04726	Clamp	1	C90001-C90316
5		07048-01310	Plug	2	C90001-C90316

FIG. K1110-001026 Cab (Floor, PPC Valve for Travel)

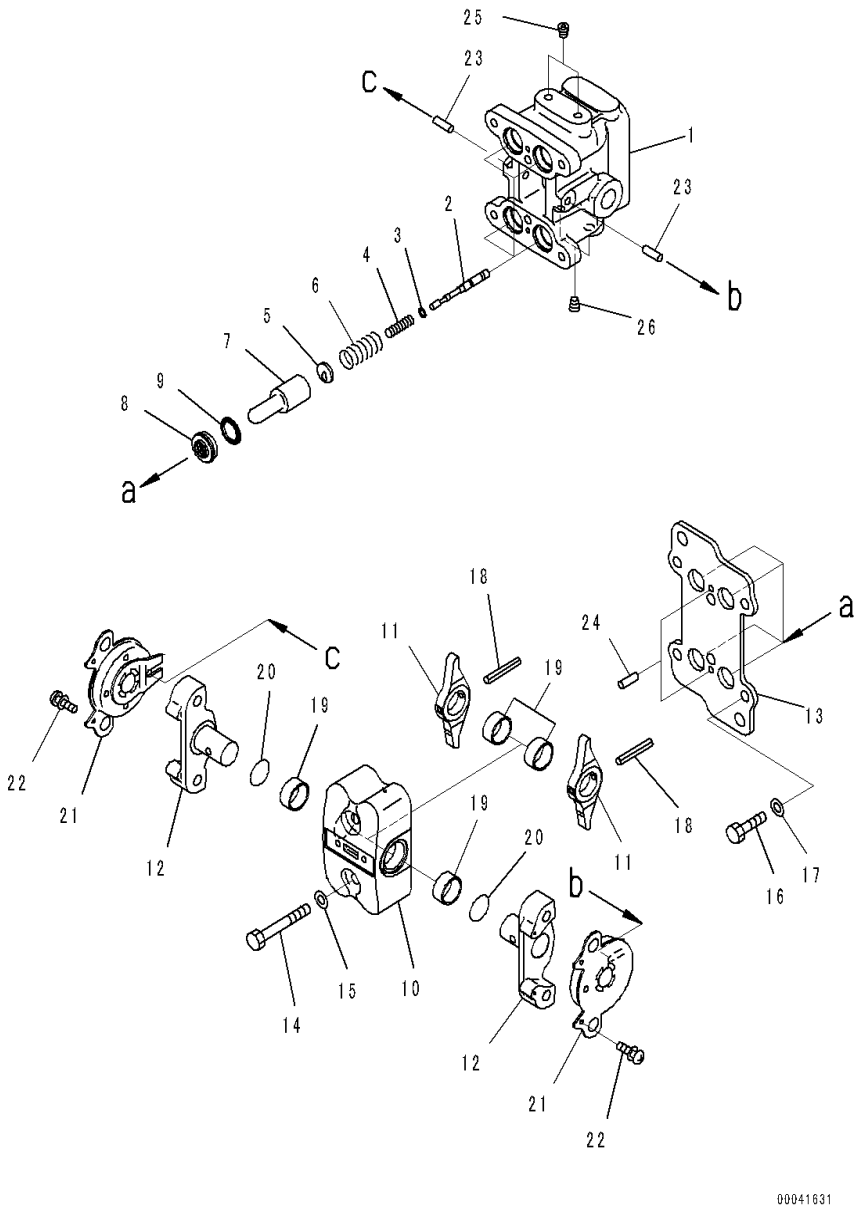

Index	Code	Part Number	Description	Qty	Serial Number
		Note: This list covers following specifications.			
		Auto Air Conditioner,AM-FM Radio,KOMTRAX,Indonesian			
		Auto Air Conditioner, AM-FM Radio Asia, GPRS			
		1-additional Acuator Piping, AM-FM Radio, KOMTRAX			
		702-16-04260	Valve, Pilot	1	C90001-C90316
1	C1		• Valve Body	1	C90001-C90316
2	C1		• Valve	4	C90001-C90316
3		702-16-51140	• Shim, T=0.30mm	4	C90001-C90316
4		702-16-53420	• Spring	4	C90001-C90316
5		702-16-53140	• Retainer	4	C90001-C90316
6		702-16-54420	• Spring	4	C90001-C90316
7		702-16-53170	• Piston	4	C90001-C90316
8		702-16-71150	• Seal	4	C90001-C90316
9		702-16-71160	• Seat	4	C90001-C90316
10	C1		• Case	1	C90001-C90316
11	C1		• Lever	2	C90001-C90316
12	C1		• Shaft	2	C90001-C90316
13		702-16-73640	• Plate	1	C90001-C90316
14		01010-80855	• Bolt	2	C90001-C90316
15		01643-30823	• Washer	2	C90001-C90316
16		01010-80816	• Bolt	4	C90001-C90316
17		702-16-54331	• Washer	4	C90001-C90316
		702-16-54341	• Washer, T=1.30mm	4	C90001-C90316
		702-16-54351	• Washer, T=1.00mm	4	C90001-C90316
		702-16-56380	• Washer, T=1.90mm	4	C90001-C90316
		702-16-56390	• Washer, T=2.20mm	4	C90001-C90316
18	C1		• Pin, Spring	2	C90001-C90316
19	C1		• Bushing	4	C90001-C90316
20	C1		• O-ring	2	C90001-C90316
21		702-16-73610	• Damper Assembly	2	C90001-C90316
22		01023-10306	• Screw	4	C90001-C90316
23	C1		• Pin	2	C90001-C90316
24		04022-04016	• Pin, Dowel	2	C90001-C90316
25	C1		• Plug	2	C90001-C90316
26	C1		• Plug	2	C90001-C90316

FIG. K1110-001027 Cab (Floor, Travel Control Lever)

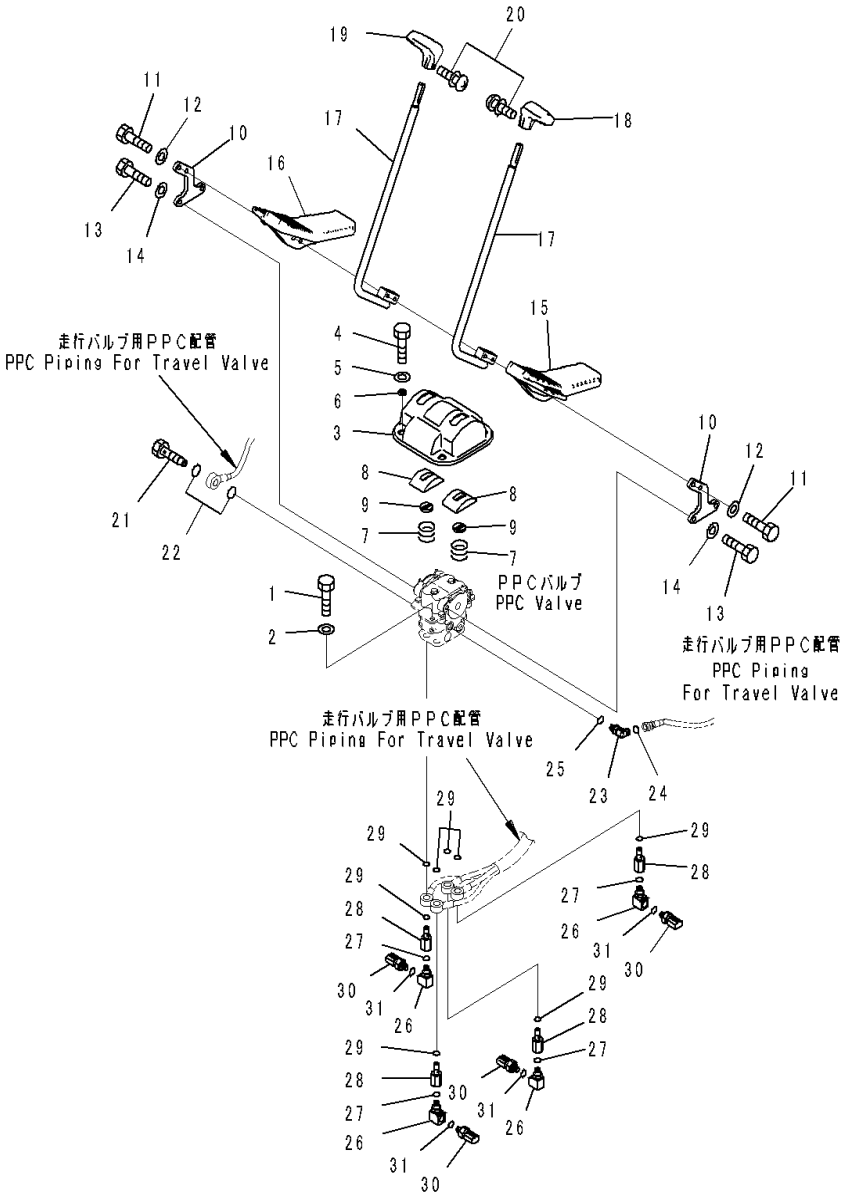

Index	Code	Part Number	Description	Qty	Serial Number
		Note: This list covers following specifications.			
		Auto Air Conditioner,AM-FM Radio,KOMTRAX,Indonesian			
		Auto Air Conditioner, AM-FM Radio Asia, GPRS			
		1-additional Acuator Piping, AM-FM Radio, KOMTRAX			
1		01010-81020	Bolt	2	C90001-C90316
2		01643-31032	Washer	2	C90001-C90316
3		20Y-43-41121	Cover	1	C90001-C90316
4		01010-81020	Bolt	4	C90001-C90316
5		01643-31032	Washer	4	C90001-C90316
6		20Y-43-41361	Collar	4	C90001-C90316
7		203-43-51620	Spring	2	C90001-C90316
		22U-43-21350	Cover Assembly	2	C90001-C90316
8	C1		• Cover	1	C90001-C90316
9		22U-43-21360	• Seal	1	C90001-C90316
10		20Y-43-41111	Lever	2	C90001-C90316
11		01010-D1045	Bolt	4	C90001-C90316
12		01643-71032	Washer	4	C90001-C90316
13		01010-81030	Bolt	4	C90001-C90316
14		01643-31032	Washer	4	C90001-C90316
15		22U-43-21111	Pedal	1	C90001-C90316
16		22U-43-21121	Pedal	1	C90001-C90316
17		22U-43-21131	Lever	2	C90001-C90316
18		20Y-43-21231	Knob	1	C90001-C90316
19		20Y-43-21241	Knob	1	C90001-C90316
20		01023-20416	Screw	2	C90001-C90316
21		20Y-62-18910	Plug	1	C90001-C90316
22		07000-12018	O-ring	2	C90001-C90316
23		11Y-62-12160	Elbow	1	C90001-C90316
24		02896-11008	O-ring	1	C90001-C90316
25		07002-11423	O-ring	1	C90001-C90316
26		22U-62-33521	Elbow	4	C90001-C90316
27		07002-11223	O-ring	4	C90001-C90316
28		22U-62-33531	Joint	4	C90001-C90316
29		07000-12015	O-ring	8	C90001-C90316
30		7861-93-1840	Sensor, Pressure	4	C90001-C90316
31		07000-12011	• O-ring	1	C90001-C90316

FIG. K1110-001028 Cab (Floor, Footrest, L.H.)

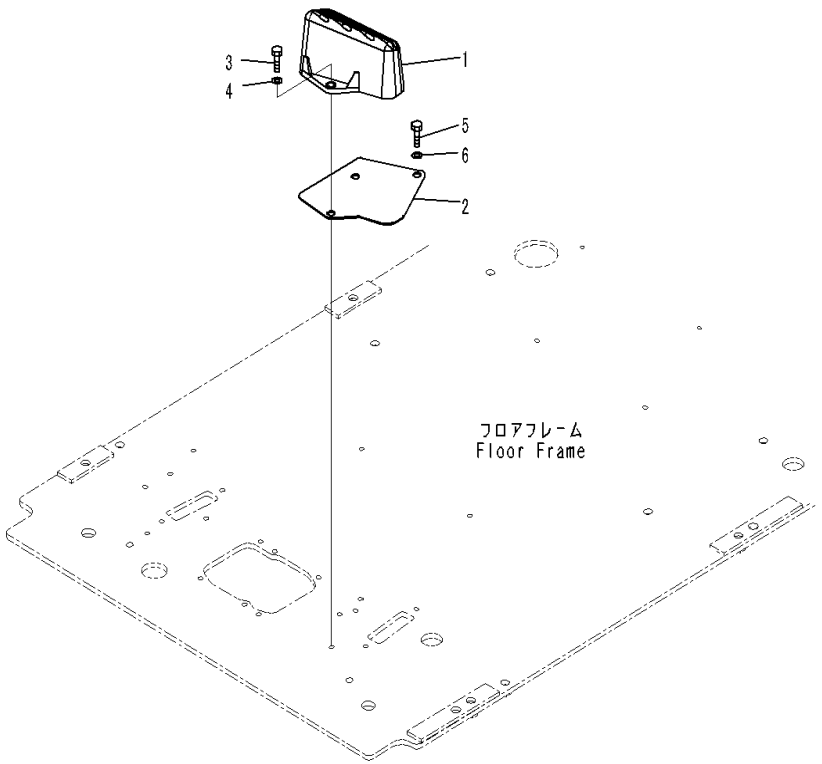

Index	Code	Part Number	Description	Qty	Serial Number
		Note: This list covers following specifications.			
		Auto Air Conditioner,AM-FM Radio,KOMTRAX,Indonesian			
		Auto Air Conditioner, AM-FM Radio Asia, GPRS			
		1-additional Acuator Piping, AM-FM Radio, KOMTRAX			
1		22U-54-25110	Footrest	1	C90001-C90316
2		22U-54-25521	Plate	1	C90001-C90316
3		01010-81025	Bolt	2	C90001-C90316
4		01643-31032	Washer	2	C90001-C90316
5		01010-81020	Bolt	1	C90001-C90316
6		01643-31032	Washer	1	C90001-C90316

FIG. K1110-001029 Cab (Floor, Footrest, R.H.)

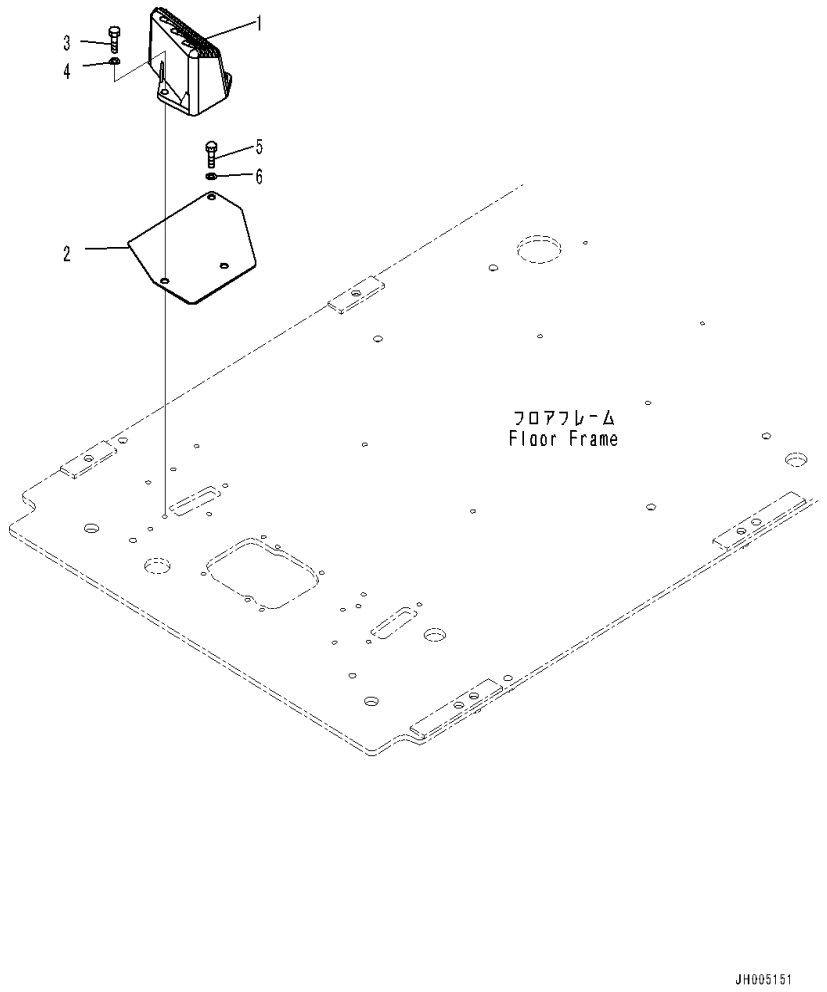

Index	Code	Part Number	Description	Qty	Serial Number
		Note: This list covers following specifications.			
		Auto Air Conditioner,AM-FM Radio,KOMTRAX,Indonesian			
		Auto Air Conditioner, AM-FM Radio Asia, GPRS			
1		22U-54-25120	Footrest	1	C90001-C90316
2		22U-54-25531	Plate	1	C90001-C90316
3		01010-81025	Bolt	2	C90001-C90316
4		01643-31032	Washer	2	C90001-C90316
5		01010-81020	Bolt	1	C90001-C90316
6		01643-31032	Washer	1	C90001-C90316

FIG. K1110-001030 Cab (Floor, Base)

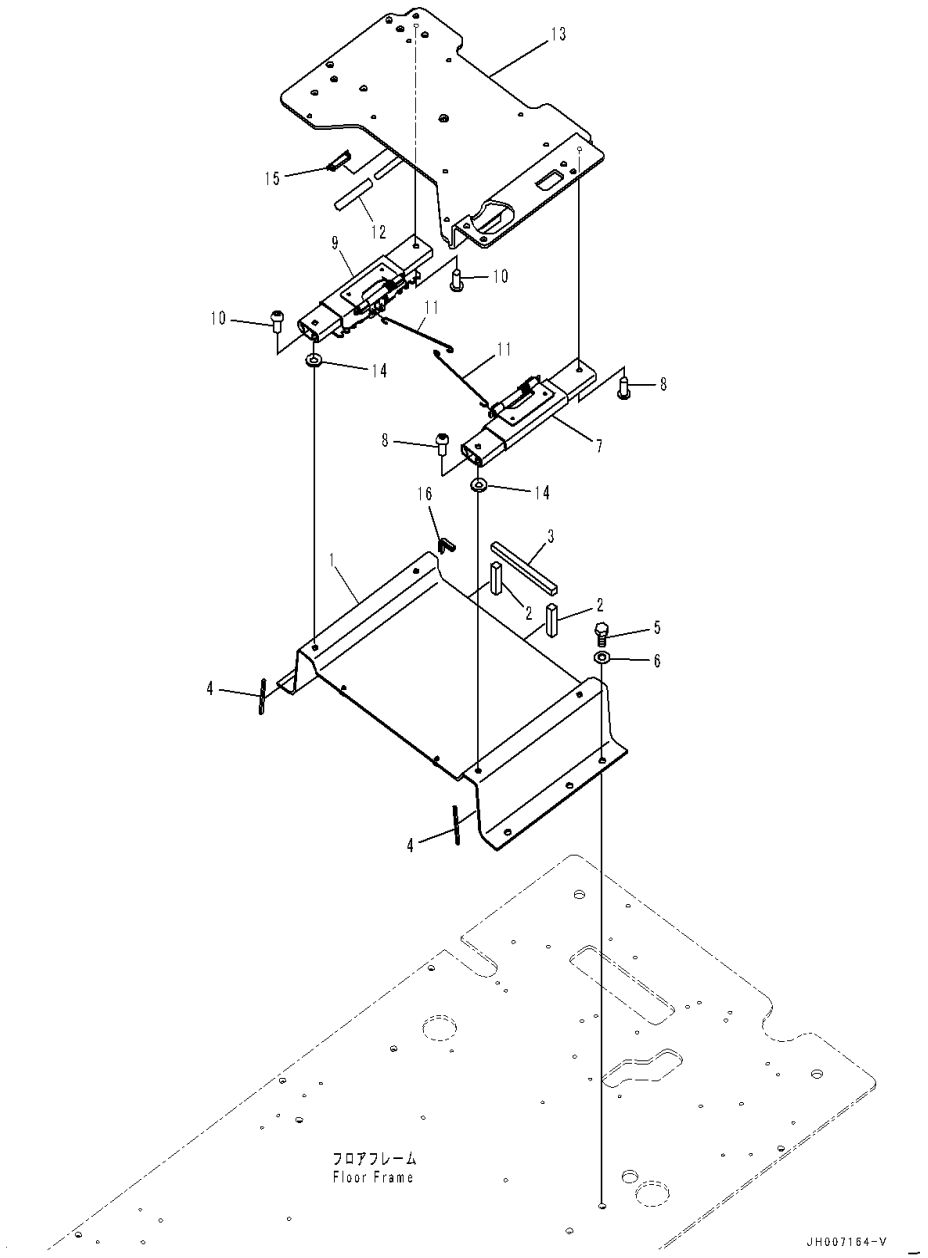

Index	Code	Part Number	Description	Qty	Serial Number
		Note: This list covers following specifications.			
		Auto Air Conditioner,AM-FM Radio,KOMTRAX,Indonesian			
		Auto Air Conditioner, AM-FM Radio Asia, GPRS			
		1-additional Acuator Piping, AM-FM Radio, KOMTRAX			
1		207-43-21120	Frame	1	C90001-C90316
2		208-43-71520	• Seal	2	C90001-C90316
3		208-43-71530	• Seal	1	C90001-C90316
4		208-43-71590	• Seal	2	C90001-C90316
5		01010-81230	Bolt	5	C90001-C90316
6		01643-31232	Washer	5	C90001-C90316
7		2A5-43-12353	Adjuster	1	C90001-C90316
8		01245-01025	Screw	4	C90001-C90316
9		2A5-43-12363	Adjuster	1	C90001-C90316
10		01245-01025	Screw	4	C90001-C90316
11		20Y-43-41833	Wire	2	C90001-C90316
12		22U-43-21390	Cap	1	C90001-C90316
13		20Y-43-41253	Frame	1	C90001-C90316
14		2A5-43-12480	Washer	4	C90001-C90316
15		20Y-979-6630	Catcher	1	C90001-C90316
16		12Y-979-1850	Trim	1	C90001-C90316

FIG. K1110-001031 Cab (Floor, Wiring Harness)

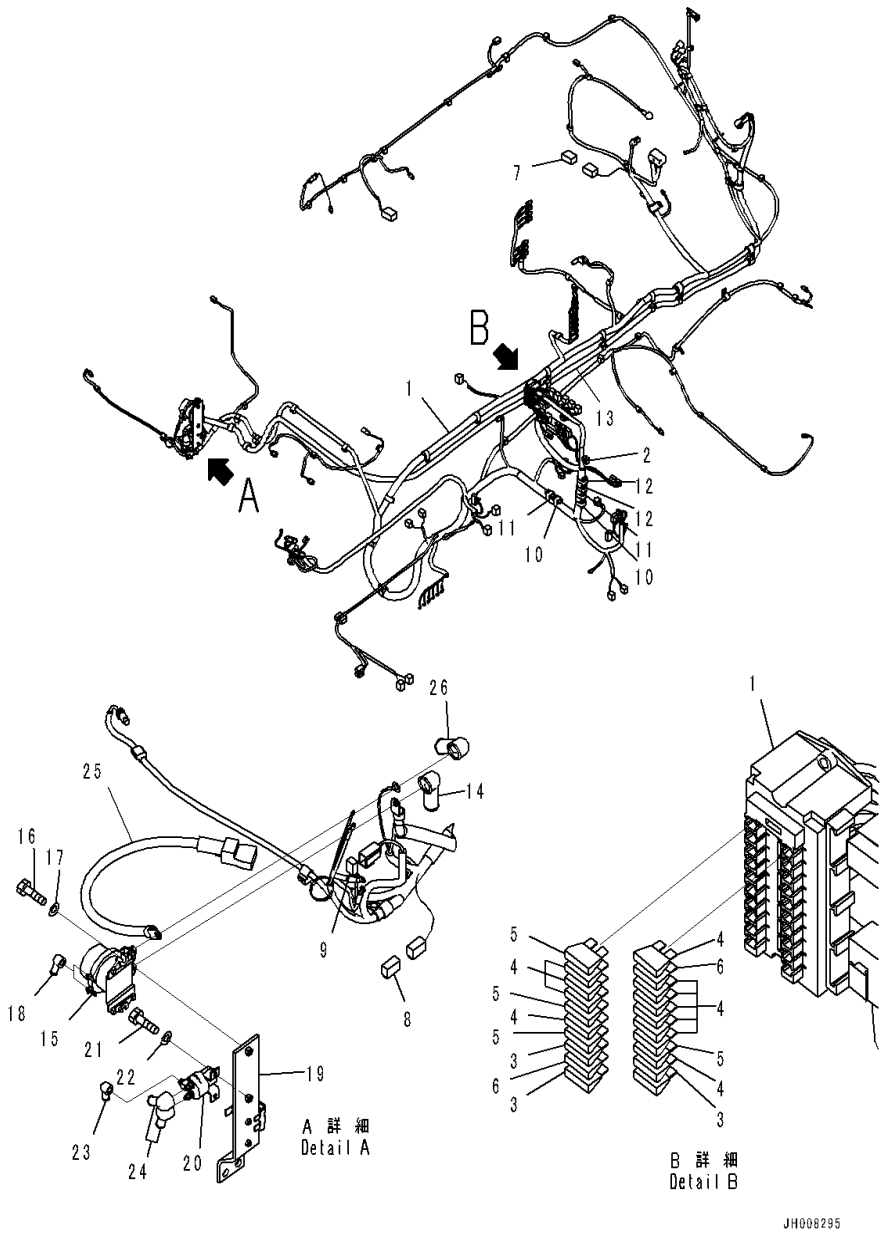

Index	Code	Part Number	Description	Qty	Serial Number
		Note: This list covers following specifications.			
		Auto Air Conditioner,AM-FM Radio,KOMTRAX,Indonesian			
		Auto Air Conditioner, AM-FM Radio Asia, GPRS			
		1-additional Acuator Piping, AM-FM Radio, KOMTRAX			
1		207-06-77112	Wiring Harness	1	C90001-C90316
2		08020-20000	• Diode	2	C90001-C90316
3		08041-00500	• Fuse, 5Amp.	3	C90001-C90316
4		08041-01000	• Fuse, 10Amp.	11	C90001-C90316
5		08041-02000	• Fuse, 20Amp.	4	C90001-C90316
6		08041-03000	• Fuse, 30Amp. ..	2	C90001-C90316
7		19M-06-31720	• Resistor	1	C90001-C90316
8		20Y-06-31660	• Fusible Link, 30Amp.	1	C90001-C90316
9		22U-06-11270	• Fusible Link, 65Amp.	1	C90001-C90316
10		HM6400-0012	• F-Connector, Black	2	C90001-C90316
		HM6409-0071	• M-Connector, Black	2	C90001-C90316
11		HM6400-0013	• F-Connector, Green	2	C90001-C90316
		HM6409-0072	• M-Connector, Green ...	2	C90001-C90316
12		HM6440-0129	• F-Connector, Pink	2	C90001-C90316
		HM6440-0128	• M-Connector, Pink	2	C90001-C90316
13		207-06-77121	Cable	1	C90001-C90316
14		08038-00035	Cap, Terminal	1	C90001-C90316
15		08088-30000	Switch, Battery Relay	1	C90001-C90316
16		01010-80830	Bolt	2	C90001-C90316
17		01643-30823	Washer	2	C90001-C90316
18		08038-00519	Cap, Terminal	2	C90001-C90316
19		207-06-75122	Bracket	1	C90001-C90316
20		600-815-2170	Switch, Heater	1	C90001-C90316
21		01010-80616	Bolt	2	C90001-C90316
22		01643-30623	Washer	2	C90001-C90316
23		08038-00519	Cap, Terminal	1	C90001-C90316
24		08038-02027	Cap, Terminal	2	C90001-C90316
25		08028-CD065	Cable, Ground	1	C90001-C90316
26		08038-00035	Cap, Terminal	1	C90001-C90316

FIG. K1110-001032 Cab (Floor, Wiring Harness Clamp and Ground)

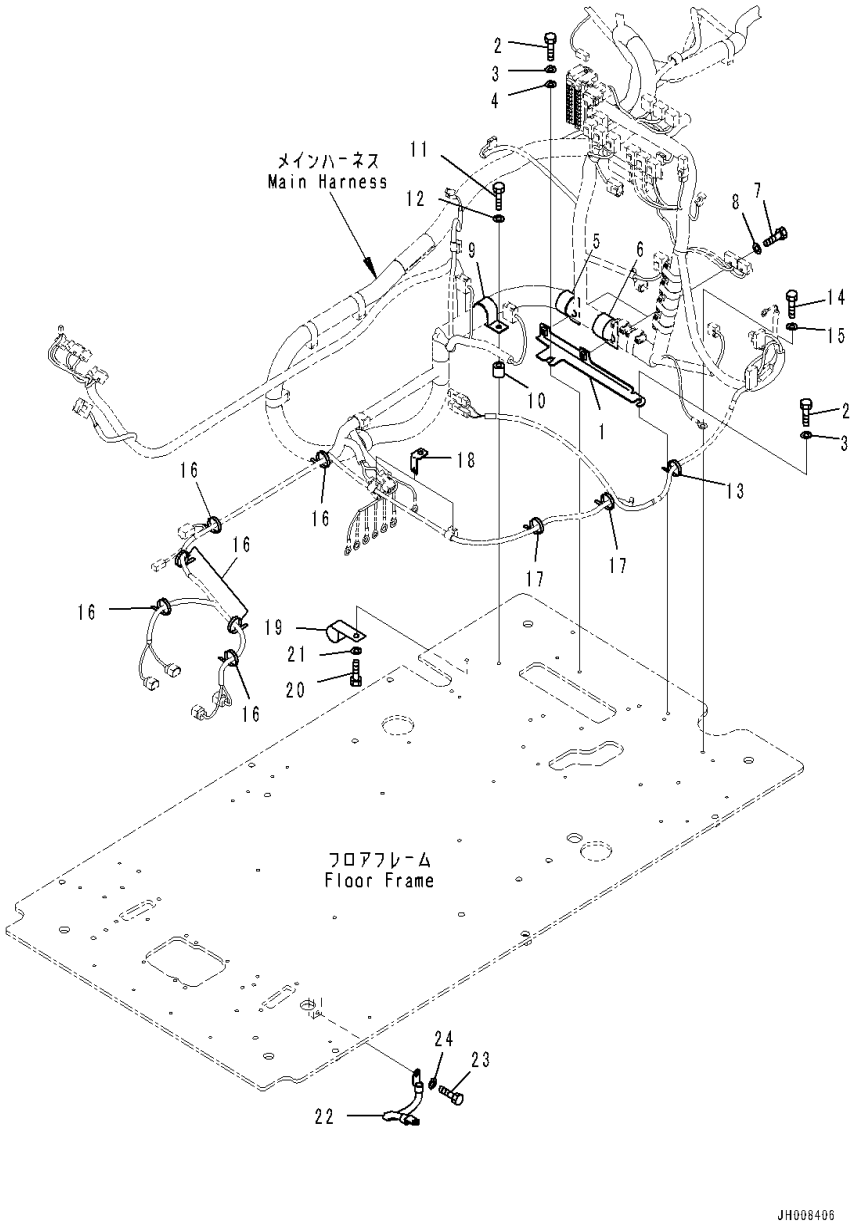

Index	Code	Part Number	Description	Qty	Serial Number
		Note: This list covers following specifications.			
		Auto Air Conditioner,AM-FM Radio,KOMTRAX,Indonesian			
		Auto Air Conditioner, AM-FM Radio Asia, GPRS			
		1-additional Acuator Piping, AM-FM Radio, KOMTRAX			
1		2A5-43-11732	Bracket	1	C90001-C90316
2		01010-81016	Bolt	2	C90001-C90316
3		01643-31032	Washer	2	C90001-C90316
4		01643-31032	Washer	1	C90001-C90316
5		176-911-1690	Clamp	1	C90001-C90316
6		208-06-19170	Clip	1	C90001-C90316
7		01010-81020	Bolt	2	C90001-C90316
8		01643-31032	Washer	2	C90001-C90316
9		176-911-1690	Clamp	1	C90001-C90316
10		195-33-11220	Spacer	1	C90001-C90316
11		01010-81040	Bolt	1	C90001-C90316
12		01643-31032	Washer	1	C90001-C90316
13		08059-00413	Clip	1	C90001-C90316
14		01010-81020	Bolt	1	C90001-C90316
15		01643-31032	Washer	1	C90001-C90316
16		08034-20519	Band	6	C90001-C90316
17		08034-20519	Band	2	C90001-C90316
18		08057-14010	Clip	2	C90001-C90316
19		04434-51910	Clip	1	C90001-C90316
20		01010-81020	Bolt	1	C90001-C90316
21		01643-31032	Washer	1	C90001-C90316
22		08028-43030	Cable, Ground	1	C90001-C90316
23		01010-81020	Bolt	1	C90001-C90316
24		01643-31032	Washer	1	C90001-C90316

FIG. K1110-001033 Cab (Floor, Window Washer Hose)

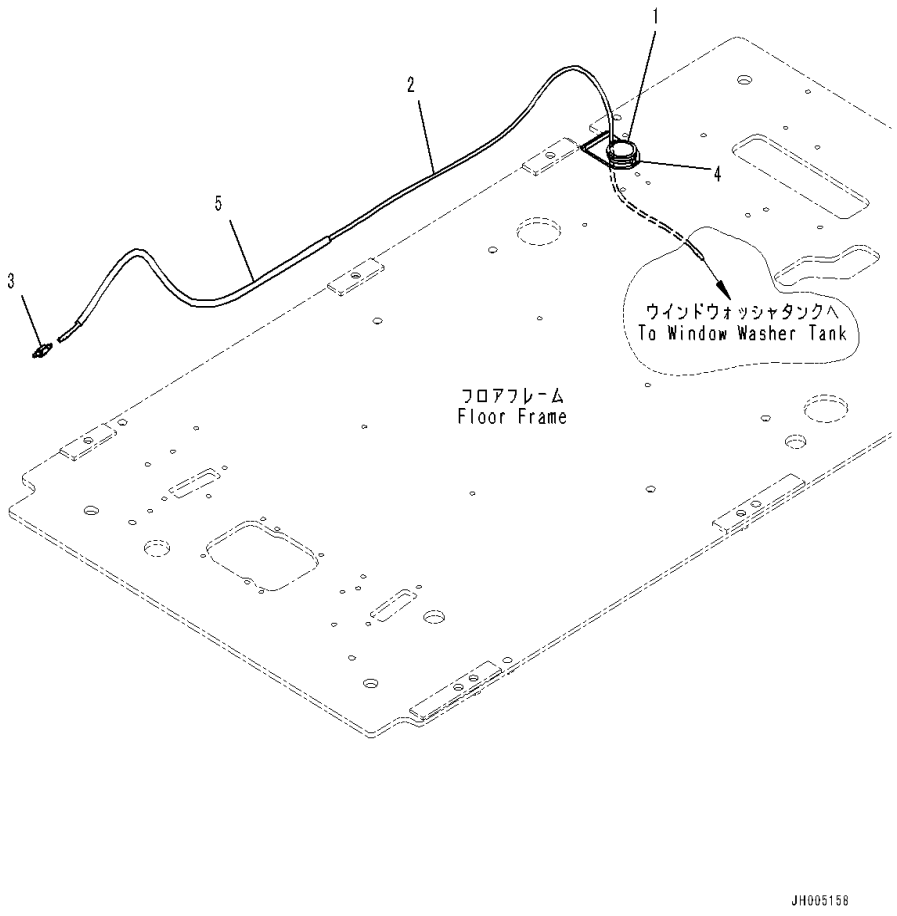

Index	Code	Part Number	Description	Qty	Serial Number
		Note: This list covers following specifications.			
		Auto Air Conditioner,AM-FM Radio,KOMTRAX,Indonesian			
		Auto Air Conditioner, AM-FM Radio Asia, GPRS			
		1-additional Acuator Piping, AM-FM Radio, KOMTRAX			
1		2A5-43-11420	Grommet	1	C90001-C90316
2		207-43-11370	Hose	1	C90001-C90316
3		17A-Z11-4610	Valve	1	C90001-C90316
4		08034-20536	Band	1	C90001-C90316
5		08017-A0707	Conduit	1	C90001-C90316

FIG. K1110-001034 Cab (Floor, Work Equipment Control Lever, L.H.)

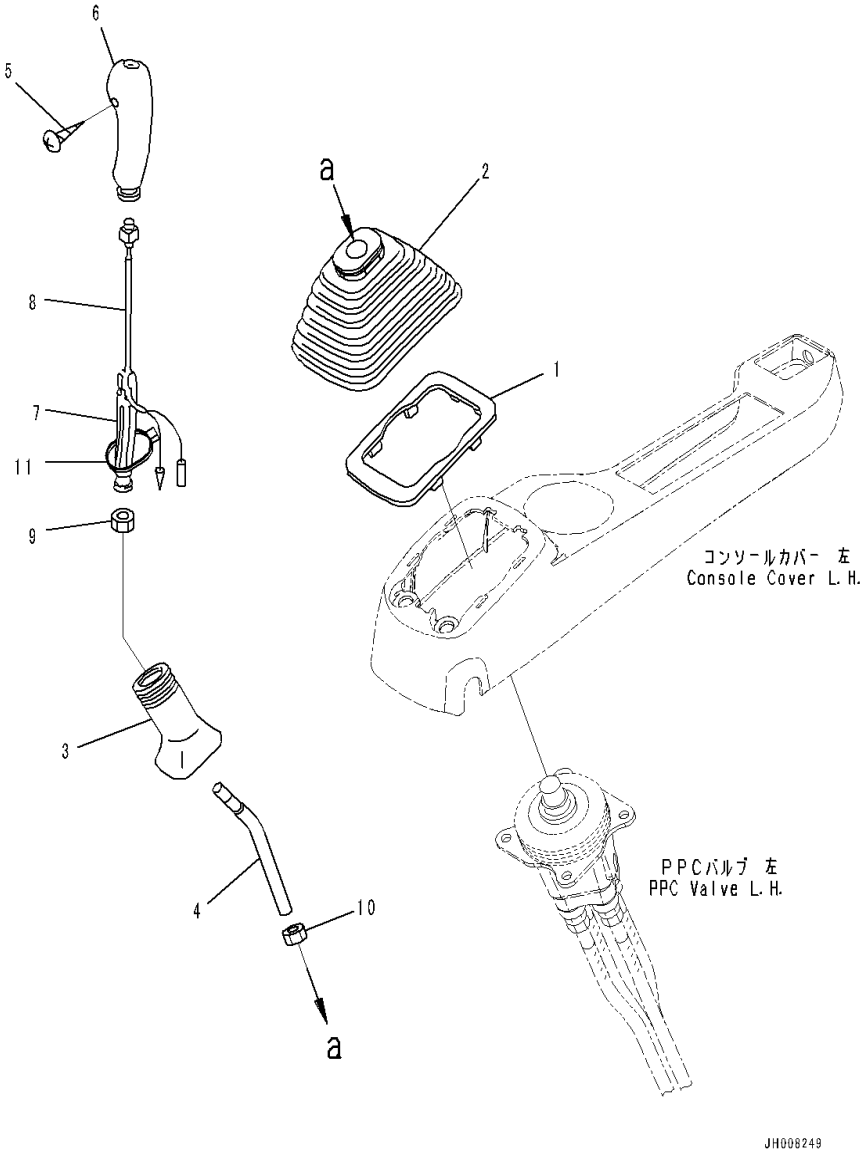

Index	Code	Part Number	Description	Qty	Serial Number
		Note: This list covers following specifications.			
		Auto Air Conditioner,AM-FM Radio,KOMTRAX,Indonesian			
		Auto Air Conditioner, AM-FM Radio Asia, GPRS			
		1-additional Acuator Piping, AM-FM Radio, KOMTRAX			
1		20Y-43-22250	Plate	1	C90001-C90316
2		20Y-43-22261	Boot	1	C90001-C90316
3		20Y-43-22370	Boot	1	C90001-C90316
4		20Y-43-11471	Lever	1	C90001-C90316
		22U-43-21182	Knob	1	C90001-C90316
5	C1		• Screw	1	C90001-C90316
6		20Y-43-22381	• Knob	1	C90001-C90316
7		20Y-43-22421	• Insert	1	C90001-C90316
8		22U-43-21211	• Switch	1	C90001-C90316
9		600-411-1280	Nut	1	C90001-C90316
10		01582-11411	Nut	1	C90001-C90316
11		08034-20536	Band	1	C90001-C90316

FIG. K1110-001035 Cab (PPC Valve for Work Equipment, L.H.)

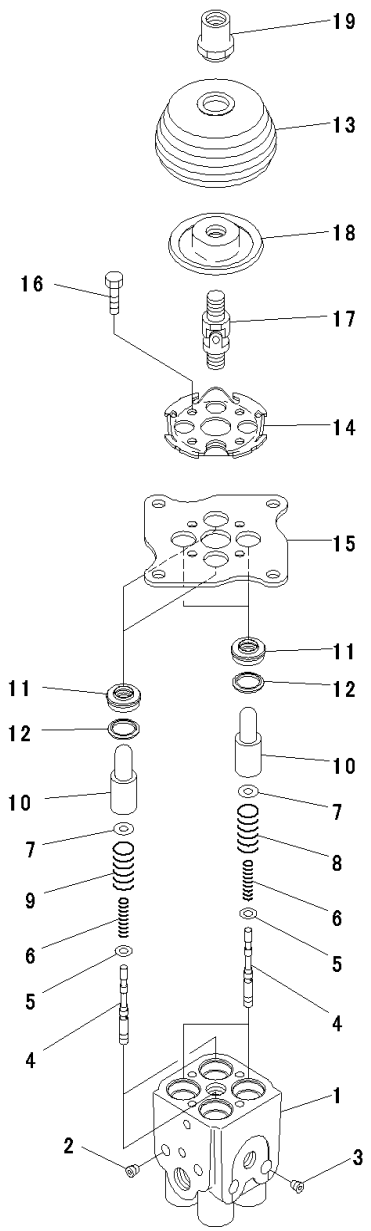

PW5X112

Index	Code	Part Number	Description	Qty	Serial Number
		Note: This list covers following specifications.			
		Auto Air Conditioner,AM-FM Radio,KOMTRAX,Indonesian			
		Auto Air Conditioner, AM-FM Radio Asia, GPRS			
		1-additional Acuator Piping, AM-FM Radio, KOMTRAX			
		702-16-03910	Valve Assembly, Pilot	1	C90001-C90316
1	C1		• Body	1	C90001-C90316
2	C1		• Plug	2	C90001-C90316
3	C1		• Plug	2	C90001-C90316
4	C1		• Valve	4	C90001-C90316
5		702-16-51140	• Shim, T=0.30mm	4	C90001-C90316
6		702-16-53420	• Spring	4	C90001-C90316
7		702-16-53140	• Retainer	4	C90001-C90316
8		702-16-53470	• Spring	2	C90001-C90316
9		702-16-53590	• Spring	2	C90001-C90316
10		702-16-53170	• Piston	4	C90001-C90316
11		702-16-71210	• Seal	4	C90001-C90316
12		702-16-71160	• Seat	4	C90001-C90316
13		702-16-71280	• Boot	1	C90001-C90316
14		702-16-71131	• Plate	1	C90001-C90316
15		702-16-71141	• Plate	1	C90001-C90316
16		01010-80620	• Bolt	4	C90001-C90316
17		702-16-51240	• Joint, Universal	1	C90001-C90316
18		702-16-71361	• Disc	1	C90001-C90316
19		702-16-71441	• Nut	1	C90001-C90316

FIG. K1110-001036 Cab (Floor, PPC Valve Mounting for Work Equipment, L.H.)

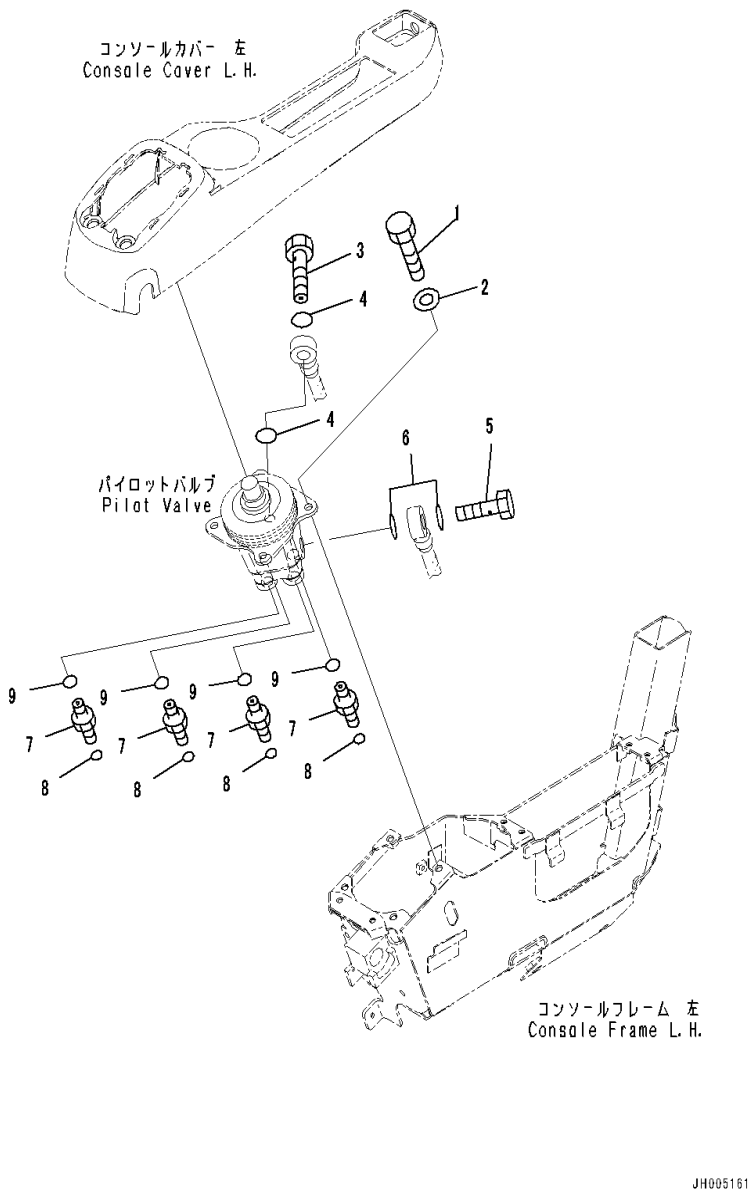

Index	Code	Part Number	Description	Qty	Serial Number
		Note: This list covers following specifications.			
		Auto Air Conditioner,AM-FM Radio,KOMTRAX,Indonesian			
		Auto Air Conditioner, AM-FM Radio Asia, GPRS			
		1-additional Acuator Piping, AM-FM Radio, KOMTRAX			
1		01010-80820	Bolt	4	C90001-C90316
2		01643-30823	Washer	4	C90001-C90316
3		20Y-62-18910	Plug	1	C90001-C90316
4		07000-12018	O-ring	2	C90001-C90316
5		20Y-62-18890	Bolt, Joint	1	C90001-C90316
6		07000-12015	O-ring	2	C90001-C90316
7		11Y-62-12520	Union	4	C90001-C90316
8		02896-11009	O-ring	4	C90001-C90316
9		07002-11423	O-ring	4	C90001-C90316

FIG. K1110-001037 Cab (Floor, Console, L.H.)

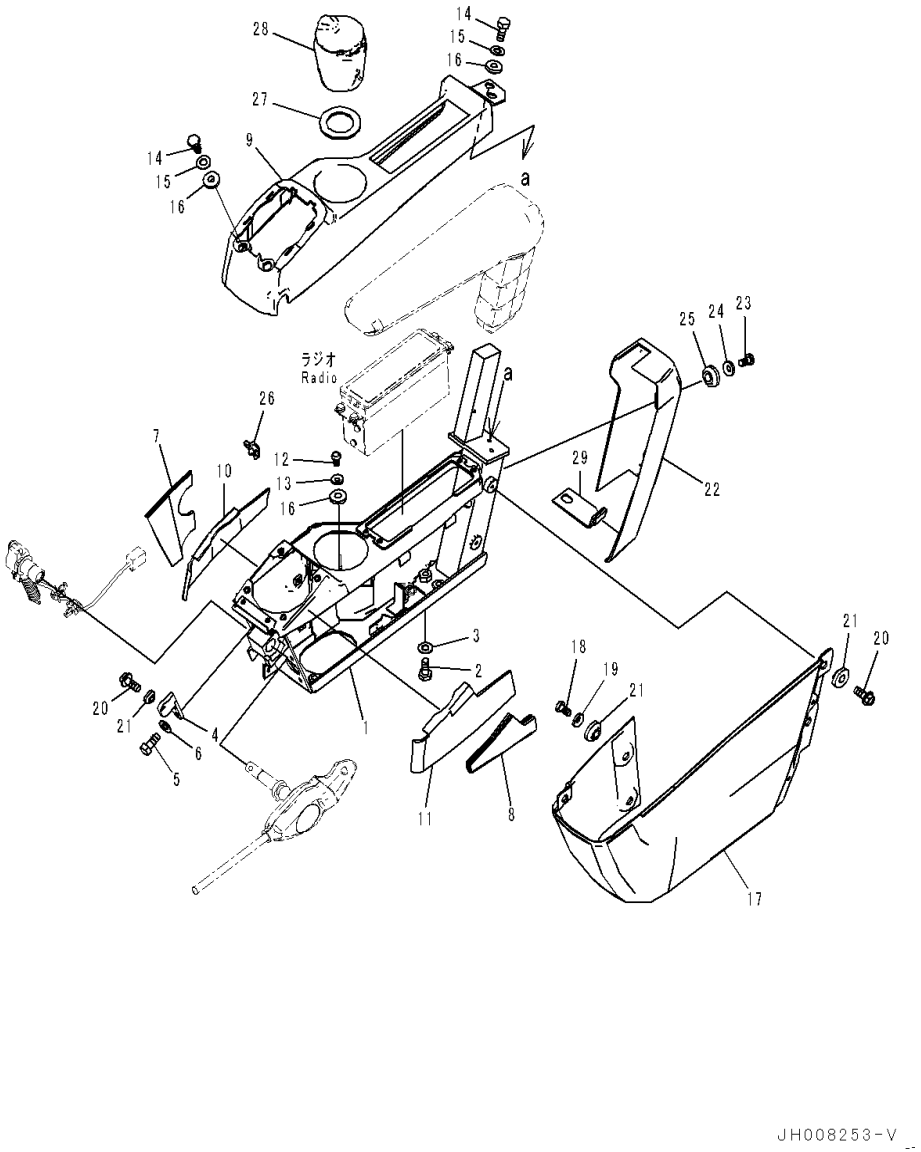

Index	Code	Part Number	Description	Qty	Serial Number
		Note: This list covers following specifications.			
		Auto Air Conditioner,AM-FM Radio,KOMTRAX,Indonesian			
		Auto Air Conditioner, AM-FM Radio Asia, GPRS			
		1-additional Acuator Piping, AM-FM Radio, KOMTRAX			
1		20Y-43-41416	Frame	1	C90001-C90316
2		01010-81030	Bolt	4	C90001-C90316
3		01643-31032	Washer	4	C90001-C90316
4		20Y-43-41472	Bracket	1	C90001-C90316
5		01010-80616	Bolt	2	C90001-C90316
6		01643-30623	Washer	2	C90001-C90316
7		20Y-43-41621	Sheet	1	C90001-C90316
8		20Y-43-41641	Sheet	1	C90001-C90316
9		20Y-43-41424	Cover	1	C90001-C90316
10		20Y-43-41651	Sheet	1	C90001-C90316
11		20Y-43-41661	Sheet	1	C90001-C90316
12		01245-00616	Screw	1	C90001-C90316
13		01643-70623	Washer	1	C90001-C90316
14		01010-80616	Bolt	4	C90001-C90316
15		01643-30623	Washer	4	C90001-C90316
16		20Y-43-41290	Collar	5	C90001-C90316
17		20Y-43-41442	Cover	1	C90001-C90316
18		01245-00616	Screw	2	C90001-C90316
19		01643-70623	Washer	2	C90001-C90316
20		01435-00612	Bolt	3	C90001-C90316
21		20Y-43-41290	Collar	5	C90001-C90316
22		20Y-43-42450	Cover	1	C90001-C90316
23		01245-00616	Screw	2	C90001-C90316
24		01643-70623	Washer	2	C90001-C90316
25		20Y-43-41290	Collar	2	C90001-C90316
26		22U-43-23260	Clip	1	C90001-C90316
27		20Y-43-41970	Sheet	1	C90001-C90316
28		20Y-43-41491	Ashtray	1	C90001-C90316
29		20Y-43-41981	Bracket	1	C90001-C90316

FIG. K1110-001038 Cab (Floor, PPC Lock Lever and Radio)

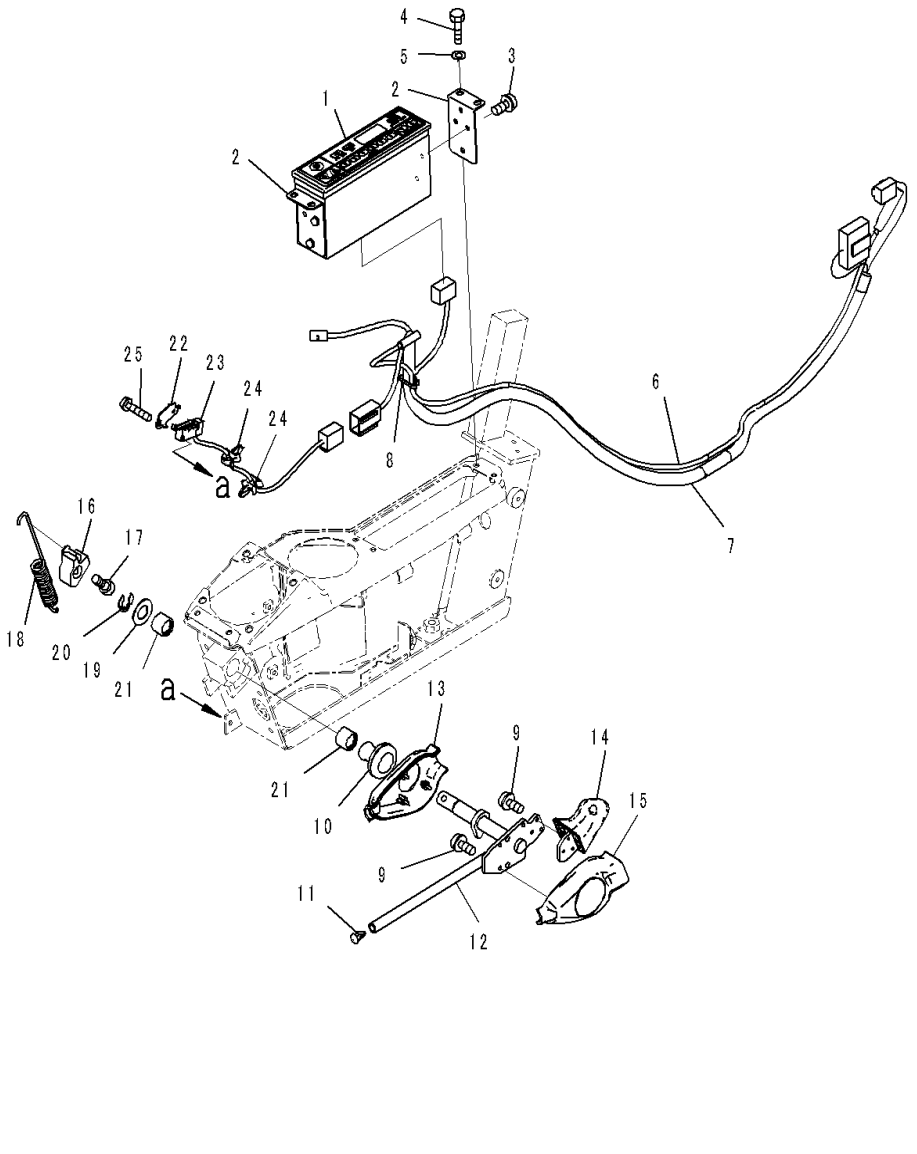

Index	Code	Part Number	Description	Qty	Serial Number
		Note: This list covers following specifications.			
		Auto Air Conditioner,AM-FM Radio,KOMTRAX,Indonesian			
		Auto Air Conditioner, AM-FM Radio Asia, GPRS			
		1-additional Acuator Piping, AM-FM Radio, KOMTRAX			
1		2A5-06-11932	Radio	1	C90001-C90316
2		20Y-43-42130	Plate	2	C90001-C90316
3		01023-60510	Screw	6	C90001-C90316
4		01010-80616	Bolt	4	C90001-C90316
5		01643-30623	Washer	4	C90001-C90316
6		08912-51600	Cord	1	C90001-C90316
7		20Y-06-16910	Wiring Harness	1	C90001-C90316
8		08034-20414	Band	1	C90001-C90316
9		01023-60410	Screw	6	C90001-C90316
10		08037-11425	Grommet	1	C90001-C90316
11		208-53-12280	Cap	1	C90001-C90316
12		20Y-43-31513	Lever	1	C90001-C90316
13		20Y-43-31522	Cover	1	C90001-C90316
14		20Y-43-31611	Knob	1	C90001-C90316
15		20Y-43-31621	Cover	1	C90001-C90316
16		20Y-43-31432	Cam	1	C90001-C90316
17		01252-70816	Bolt	1	C90001-C90316
18		20Y-43-31421	Spring	1	C90001-C90316
19		20Y-43-31440	Ring	1	C90001-C90316
20		20Y-43-31450	Plate	1	C90001-C90316
21		06124-01616	Bearing	2	C90001-C90316
22		22U-06-22490	Plate	1	C90001-C90316
23		22U-06-22360	Switch Assembly	1	C90001-C90316
24		22U-43-23260	Clip	2	C90001-C90316
25		01023-60320	Screw	2	C90001-C90316

FIG. K1110-001039 Cab (Floor, Armrest, L.H.)

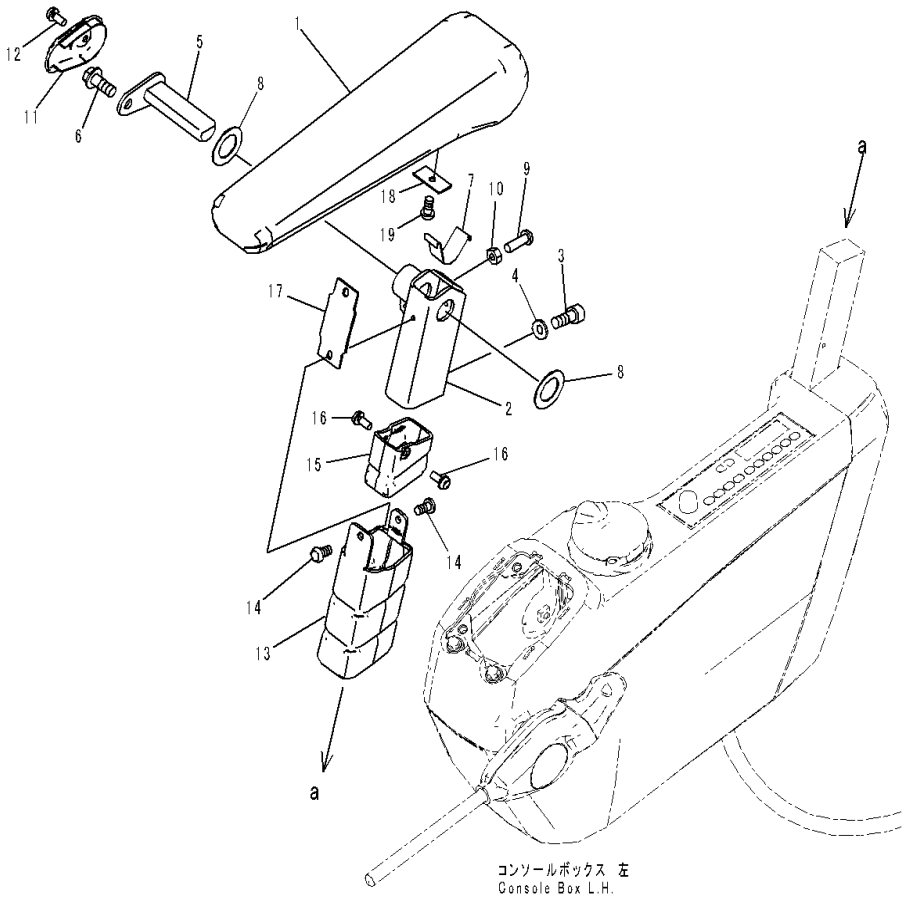

Index	Code	Part Number	Description	Qty	Serial Number
		Note: This list covers following specifications.			
		Auto Air Conditioner,AM-FM Radio,KOMTRAX,Indonesian			
		Auto Air Conditioner, AM-FM Radio Asia, GPRS			
		1-additional Acuator Piping, AM-FM Radio, KOMTRAX			
1		20Y-43-41143	Armrest	1	C90001-C90316
2		20Y-43-41173	Bracket	1	C90001-C90316
3		01252-80820	Bolt	2	C90001-C90316
4		01643-70823	Washer	2	C90001-C90316
5		20Y-43-41162	Pin	1	C90001-C90316
6		01435-40816	Bolt	1	C90001-C90316
7		20Y-43-41152	Spring	1	C90001-C90316
8		437-40-26240	Washer	2	C90001-C90316
9		01245-00620	Screw	1	C90001-C90316
10		01580-40605	Nut	1	C90001-C90316
11		20Y-43-41181	Cap	1	C90001-C90316
12		01023-20512	Screw	1	C90001-C90316
13		20Y-43-41191	Cover	1	C90001-C90316
14		01370-40510	Screw	2	C90001-C90316
15		20Y-43-41591	Cover	1	C90001-C90316
16		01023-20512	Screw	2	C90001-C90316
17		20Y-43-41281	Rubber	1	C90001-C90316
18		20Y-43-41461	Plate	1	C90001-C90316
19		01370-40610	Screw	1	C90001-C90316

FIG. K1110-001040 Cab (Floor, Work Equipment Control Lever, R.H.)

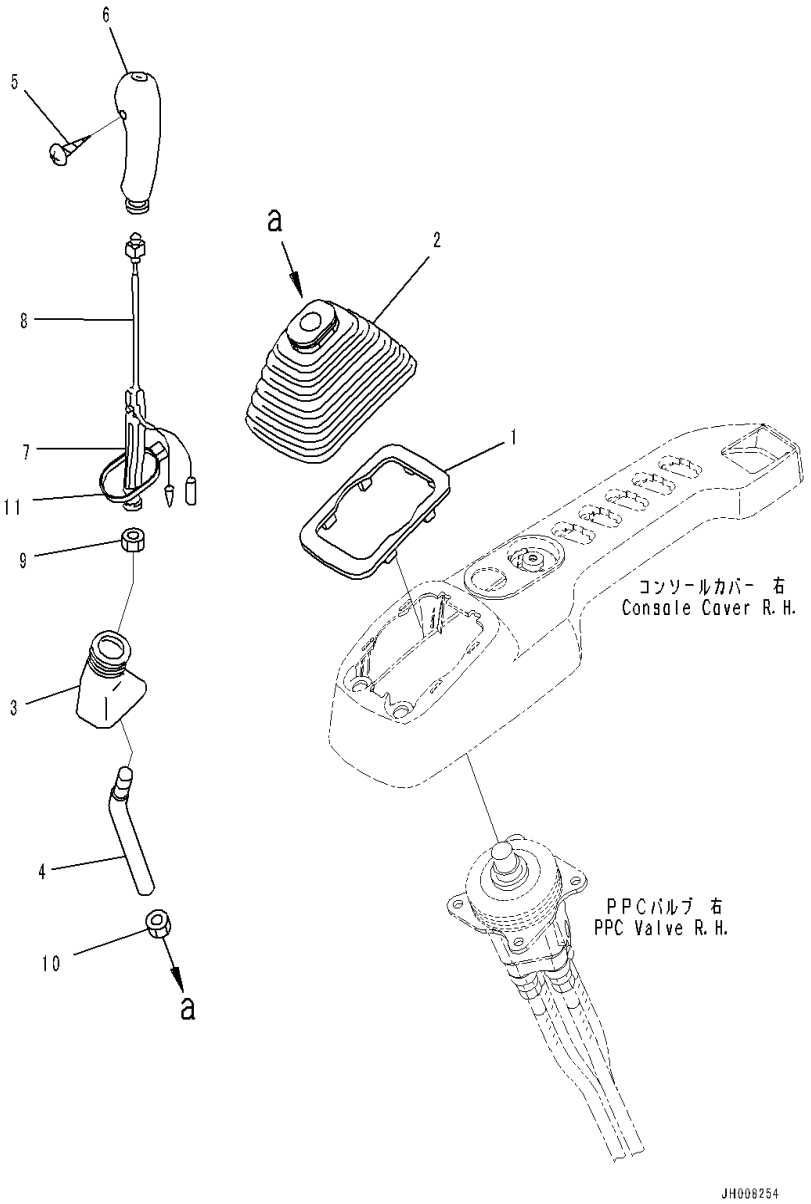

Index	Code	Part Number	Description	Qty	Serial Number
		Note: This list covers following specifications.			
		Auto Air Conditioner,AM-FM Radio,KOMTRAX,Indonesian			
		Auto Air Conditioner, AM-FM Radio Asia, GPRS			
		1-additional Acuator Piping, AM-FM Radio, KOMTRAX			
1		20Y-43-22250	Plate	1	C90001-C90316
2		20Y-43-22261	Boot	1	C90001-C90316
3		20Y-43-22370	Boot	1	C90001-C90316
4		20Y-43-11471	Lever	1	C90001-C90316
		22U-43-21192	Knob	1	C90001-C90316
5	C1		• Screw	1	C90001-C90316
6		20Y-43-22390	• Knob	1	C90001-C90316
7		20Y-43-22421	• Insert	1	C90001-C90316
8		22U-43-21211	• Switch	1	C90001-C90316
9		600-411-1280	Nut	1	C90001-C90316
10		01582-11411	Nut	1	C90001-C90316
11		08034-20536	Band	1	C90001-C90316

FIG. K1110-001041 Cab (PPC Valve for Work Equipment, R.H.)

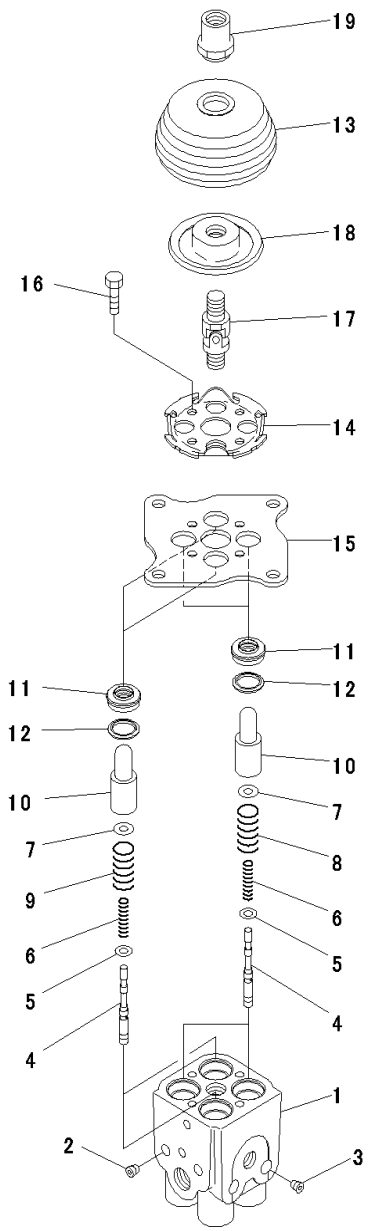

PW5X112

Index	Code	Part Number	Description	Qty	Serial Number
		Note: This list covers following specifications.			
		Auto Air Conditioner,AM-FM Radio,KOMTRAX,Indonesian			
		Auto Air Conditioner, AM-FM Radio Asia, GPRS			
		1-additional Acuator Piping, AM-FM Radio, KOMTRAX			
		702-16-03910	Valve Assembly, Pilot	1	C90001-C90316
1	C1		• Body	1	C90001-C90316
2	C1		• Plug	2	C90001-C90316
3	C1		• Plug	2	C90001-C90316
4	C1		• Valve	4	C90001-C90316
5		702-16-51140	• Shim, T=0.30mm	4	C90001-C90316
6		702-16-53420	• Spring	4	C90001-C90316
7		702-16-53140	• Retainer	4	C90001-C90316
8		702-16-53470	• Spring	2	C90001-C90316
9		702-16-53590	• Spring	2	C90001-C90316
10		702-16-53170	• Piston	4	C90001-C90316
11		702-16-71210	• Seal	4	C90001-C90316
12		702-16-71160	• Seat	4	C90001-C90316
13		702-16-71280	• Boot	1	C90001-C90316
14		702-16-71131	• Plate	1	C90001-C90316
15		702-16-71141	• Plate	1	C90001-C90316
16		01010-80620	• Bolt	4	C90001-C90316
17		702-16-51240	• Joint, Universal	1	C90001-C90316
18		702-16-71361	• Disc	1	C90001-C90316
19		702-16-71441	• Nut	1	C90001-C90316

FIG. K1110-001042 Cab (Floor, PPC Valve Mounting for Work Equipment, R.H.)

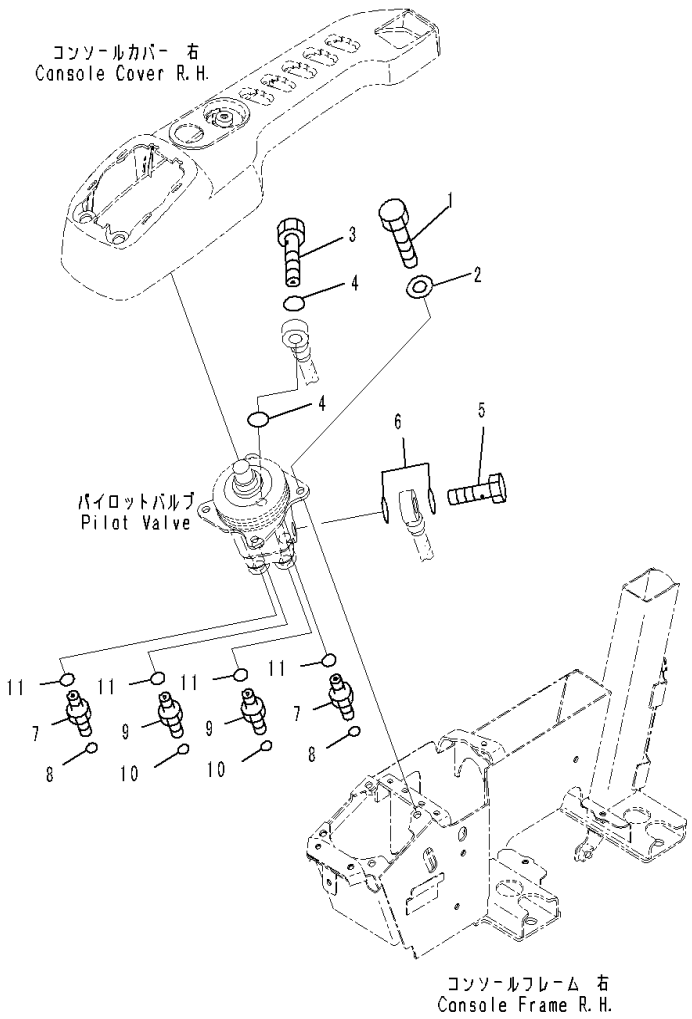

Index	Code	Part Number	Description	Qty	Serial Number
		Note: This list covers following specifications.			
		Auto Air Conditioner,AM-FM Radio,KOMTRAX,Indonesian			
		Auto Air Conditioner, AM-FM Radio Asia, GPRS			
		1-additional Acuator Piping, AM-FM Radio, KOMTRAX			
1		01010-80820	Bolt	4	C90001-C90316
2		01643-30823	Washer	4	C90001-C90316
3		20Y-62-18910	Plug	1	C90001-C90316
4		07000-12018	O-ring	2	C90001-C90316
5		20Y-62-18890	Bolt, Joint	1	C90001-C90316
6		07000-12015	O-ring	2	C90001-C90316
7		11Y-62-12130	Nipple	2	C90001-C90316
8		02896-11008	O-ring	2	C90001-C90316
9		11Y-62-12520	Union	2	C90001-C90316
10		02896-11009	O-ring	2	C90001-C90316
11		07002-11423	O-ring	4	C90001-C90316

FIG. K1110-001043 Cab (Floor, Console, R.H.)

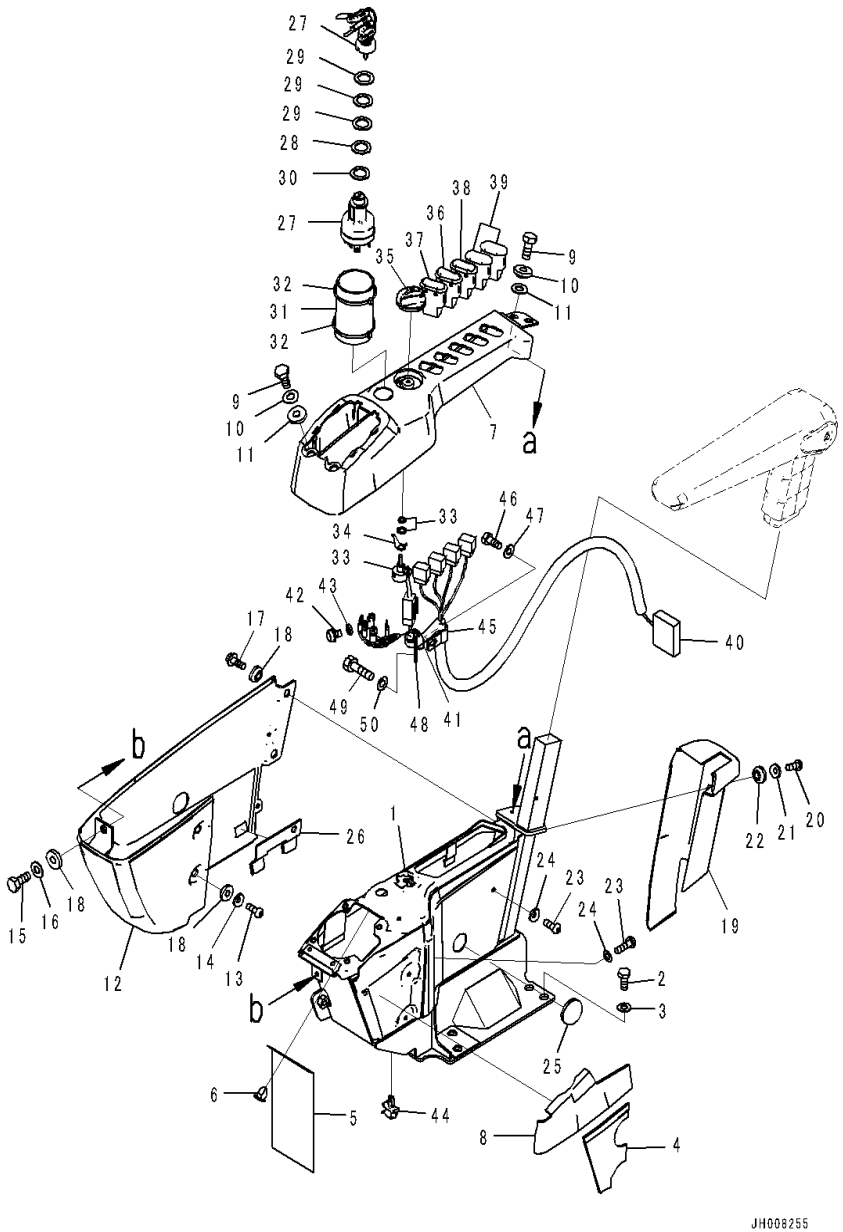

Index	Code	Part Number	Description	Qty	Serial Number
		Note: This list covers following specifications.			
		Auto Air Conditioner,AM-FM Radio,KOMTRAX,Indonesian			
		Auto Air Conditioner, AM-FM Radio Asia, GPRS			
		1-additional Acuator Piping, AM-FM Radio, KOMTRAX			
1		20Y-43-41314	Frame	1	C90001-C90316
2		01010-D1230	Bolt	4	C90001-C90316
3		01643-71232	Washer	4	C90001-C90316
4		20Y-43-41631	Sheet	1	C90001-C90316
5		22U-43-23251	Sheet	1	C90001-C90316
6		22U-43-23290	Clip	2	C90001-C90316
7		20Y-43-41324	Cover	1	C90001-C90316
8		20Y-43-41661	Sheet	1	C90001-C90316
9		01010-80616	Bolt	4	C90001-C90316
10		01643-30623	Washer	4	C90001-C90316
11		20Y-43-41290	Collar	4	C90001-C90316
12		20Y-43-42330	Cover	1	C90001-C90316
13		01245-00616	Screw	2	C90001-C90316
14		01643-70623	Washer	2	C90001-C90316
15		01010-80616	Bolt	1	C90001-C90316
16		01643-30623	Washer	1	C90001-C90316
17		01435-00612	Bolt	2	C90001-C90316
18		20Y-43-41290	Collar	5	C90001-C90316
19		20Y-43-42350	Cover	1	C90001-C90316
20		01245-00616	Screw	2	C90001-C90316
21		01643-70623	Washer	2	C90001-C90316
22		20Y-43-41290	Collar	2	C90001-C90316
23		01245-00616	Screw	3	C90001-C90316
24		01643-70623	Washer	3	C90001-C90316
25		09415-02512	Cap	1	C90001-C90316
26		20Y-43-41991	Bracket	1	C90001-C90316
27		08086-20000	Switch, Starting	1	C90001-C90316
28		20Y-43-41740	Plate	1	C90001-C90316
29		20Y-43-41750	Washer	3	C90001-C90316
30		20Y-43-41790	Washer	1	C90001-C90316
31		20Y-43-41671	Sheet	1	C90001-C90316
32		08034-20519	Band	2	C90001-C90316
33		22U-06-22380	Potentiometer	1	C90001-C90316
34		22U-06-22460	Spring	1	C90001-C90316
35		20Y-43-41781	Knob	1	C90001-C90316
36		20Y-06-42110	Switch, Lock	1	C90001-C90316

FIG. K1110-001043 Cab (Floor, Console, R.H.)

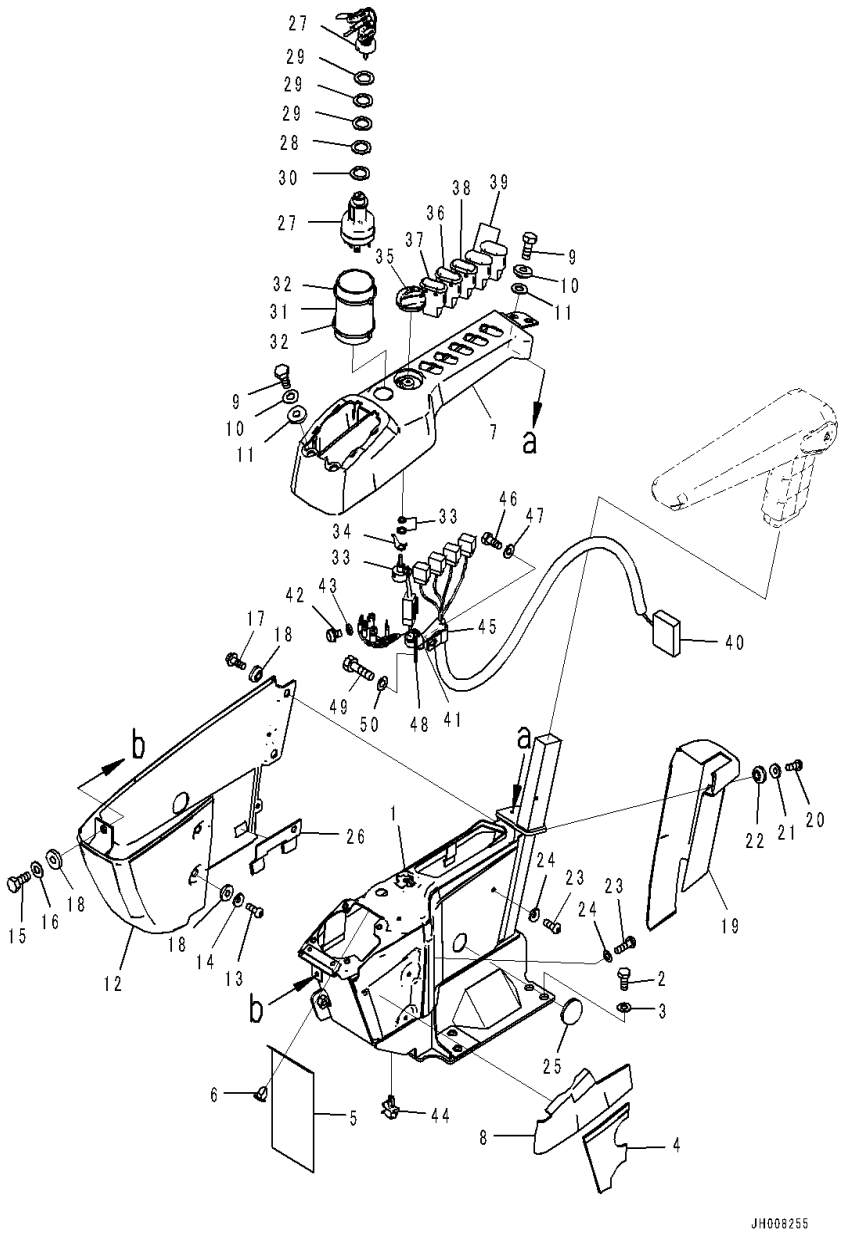

Index	Code	Part Number	Description	Qty	Serial Number
37		20Y-06-42121	Switch, Lamp	1	C90001-C90316
38		21T-06-33760	Switch, Machine Push Up	1	C90001-C90316
39		20Y-06-42190	Cover	2	C90001-C90316
40		207-06-76131	Wiring Harness	1	C90001-C90316
41		08034-20414	Band	1	C90001-C90316
42		01023-10508	Screw	5	C90001-C90316
43		01601-20513	Washer	5	C90001-C90316
44		22U-43-23260	Clip	1	C90001-C90316
45		04434-51710	Clip	1	C90001-C90316
46		01010-81016	Bolt	1	C90001-C90316
47		01643-31032	Washer	1	C90001-C90316
48		04434-51410	Clip	1	C90001-C90316
49		01010-81016	Bolt	1	C90001-C90316
50		01643-31032	Washer	1	C90001-C90316

FIG. K1110-001044 Cab (Floor, Armrest, R.H.)

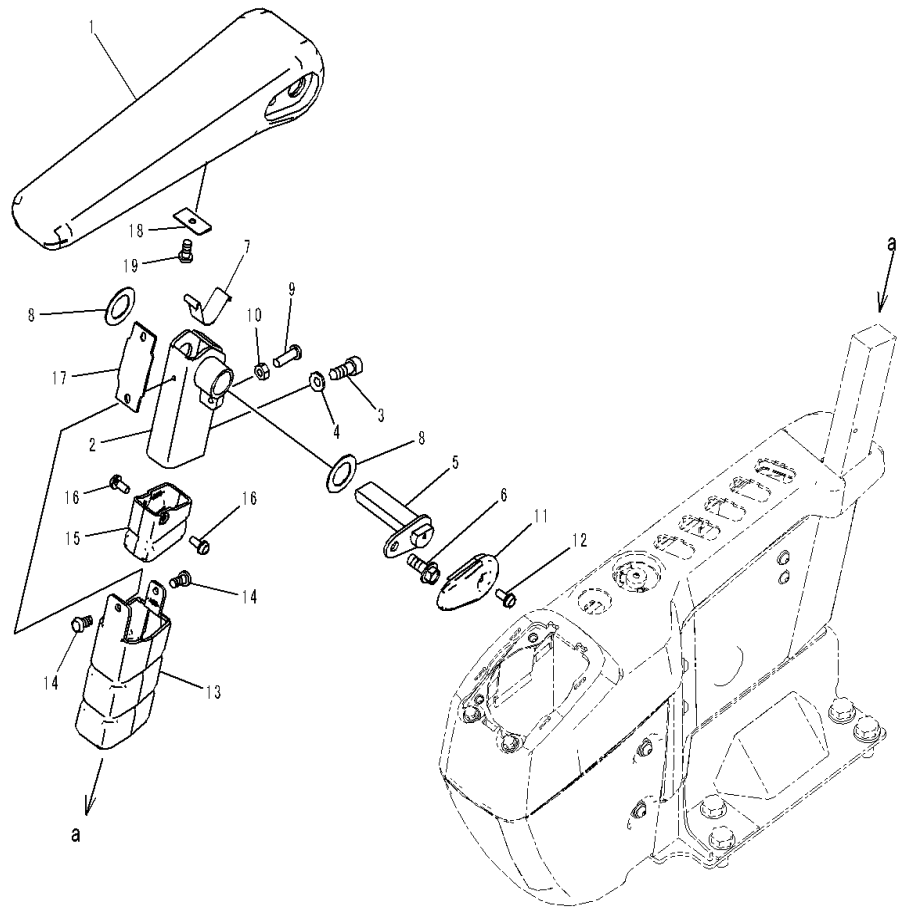

Index	Code	Part Number	Description	Qty	Serial Number
		Note: This list covers following specifications.			
		Auto Air Conditioner,AM-FM Radio,KOMTRAX,Indonesian			
		Auto Air Conditioner, AM-FM Radio Asia, GPRS			
		1-additional Acuator Piping, AM-FM Radio, KOMTRAX			
1		20Y-43-41343	Armrest	1	C90001-C90316
2		20Y-43-41533	Bracket	1	C90001-C90316
3		01252-80820	Bolt	2	C90001-C90316
4		01643-70823	Washer	2	C90001-C90316
5		20Y-43-41850	Pin	1	C90001-C90316
6		01435-40816	Bolt	1	C90001-C90316
7		20Y-43-41152	Spring	1	C90001-C90316
8		437-40-26240	Washer	2	C90001-C90316
9		01245-00620	Screw	1	C90001-C90316
10		01580-40605	Nut	1	C90001-C90316
11		20Y-43-41181	Cap	1	C90001-C90316
12		01023-20512	Screw	1	C90001-C90316
13		20Y-43-41191	Cover	1	C90001-C90316
14		01370-40510	Screw	2	C90001-C90316
15		20Y-43-41591	Cover	1	C90001-C90316
16		01023-20512	Screw	2	C90001-C90316
17		20Y-43-41281	Rubber	1	C90001-C90316
18		20Y-43-41461	Plate	1	C90001-C90316
19		01370-40610	Screw	1	C90001-C90316

FIG. K1110-001045 Cab (Inner Parts, Air Conditioner Unit, 1/2)

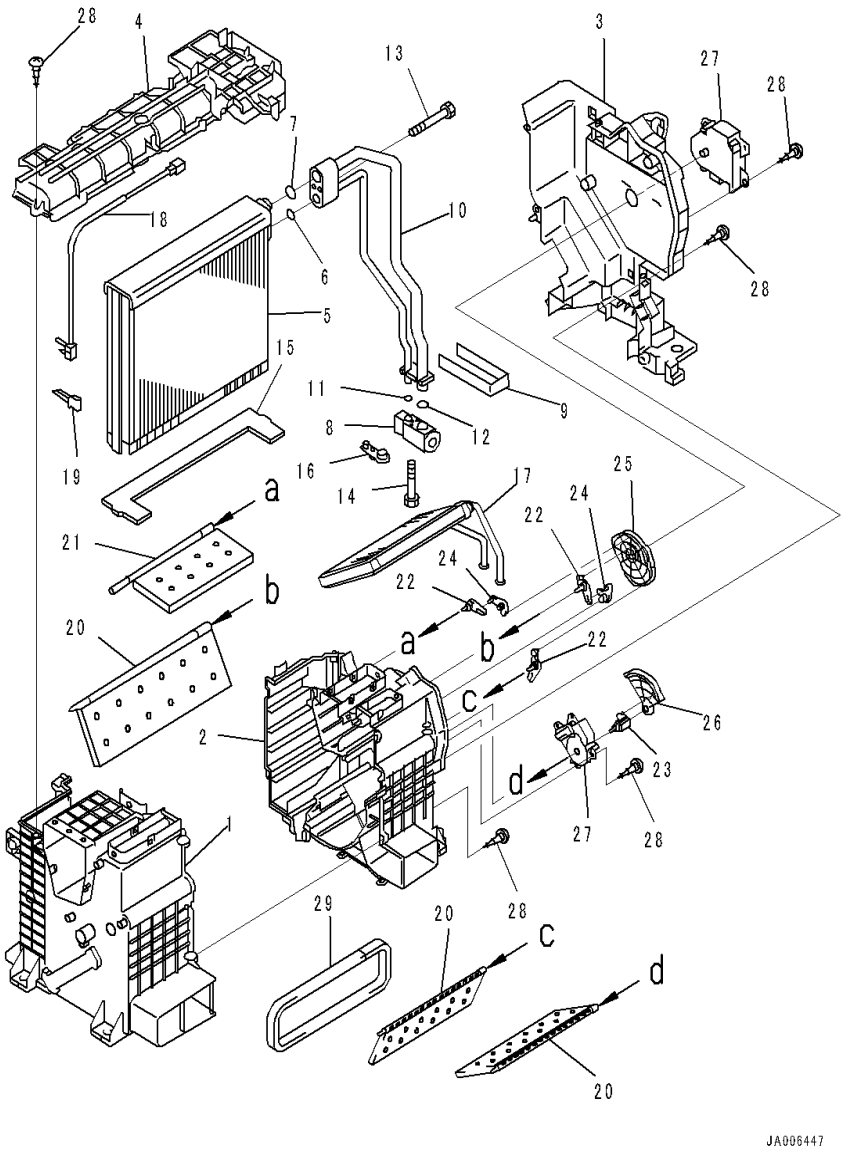

Index	Code	Part Number	Description	Qty	Serial Number
		Note: This list covers following specifications.			
		Auto Air Conditioner,AM-FM Radio,KOMTRAX,Indonesian			
		Auto Air Conditioner, AM-FM Radio Asia, GPRS			
		1-additional Acuator Piping, AM-FM Radio, KOMTRAX			
		2A5-979-1112	Air Conditioner	1	C90001-C90316
		ND443120-1961	• Cooling Unit Assembly	1	C90001-C90316
1		ND245450-8520	• • Case	1	C90001-C90316
2		ND245450-8530	• • Case	1	C90001-C90316
3		ND245450-8540	• • Case	1	C90001-C90316
4		ND116577-0970	• • Plate	1	C90001-C90316
		ND446010-5360	• • Evaporator	1	C90001-C90316
5		ND447610-0630	• • • Evaporator Assembly	1	C90001-C90316
6		ND949142-0020	• • • O-ring	1	C90001-C90316
7		ND949142-0030	• • • O-ring	1	C90001-C90316
8		ND447500-3750	• • • Valve	1	C90001-C90316
9		ND146636-7450	• • • Packing	1	C90001-C90316
10		ND446260-2160	• • • Tube	1	C90001-C90316
11		ND949142-0020	• • • O-ring	1	C90001-C90316
12		ND949142-0030	• • • O-ring	1	C90001-C90316
13		ND949046-3610	• • • Bolt	2	C90001-C90316
14		ND949046-3100	• • • Bolt	2	C90001-C90316
15		ND146636-7460	• • • Packing	1	C90001-C90316
16		ND445021-3941	• • • Plug	1	C90001-C90316
17		ND116420-7450	• • Core Subassembly	1	C90001-C90316
18		ND100775-8400	• • Thermistor Assembly	1	C90001-C90316
19		ND246790-2060	• • Clamp	1	C90001-C90316
20		ND116740-4980	• • Door Assembly	3	C90001-C90316
21		ND116740-4990	• • Door Assembly	1	C90001-C90316
22		ND116782-6690	• • Lever	3	C90001-C90316
23		ND116782-6700	• • Lever	1	C90001-C90316
24		ND116780-5651	• • Lever Subassembly	2	C90001-C90316
25		ND116577-0981	• • Plate	1	C90001-C90316
26		ND116577-0990	• • Plate	1	C90001-C90316
27		ND063800-0300	• • Servo Motor Assembly	2	C90001-C90316
28		ND949001-1730	• • Screw, Tapping	23	C90001-C90316
29		ND146636-7560	• • Packing	1	C90001-C90316

FIG. K1110-001046 Cab (Inner Parts, Air Conditioner Motor)

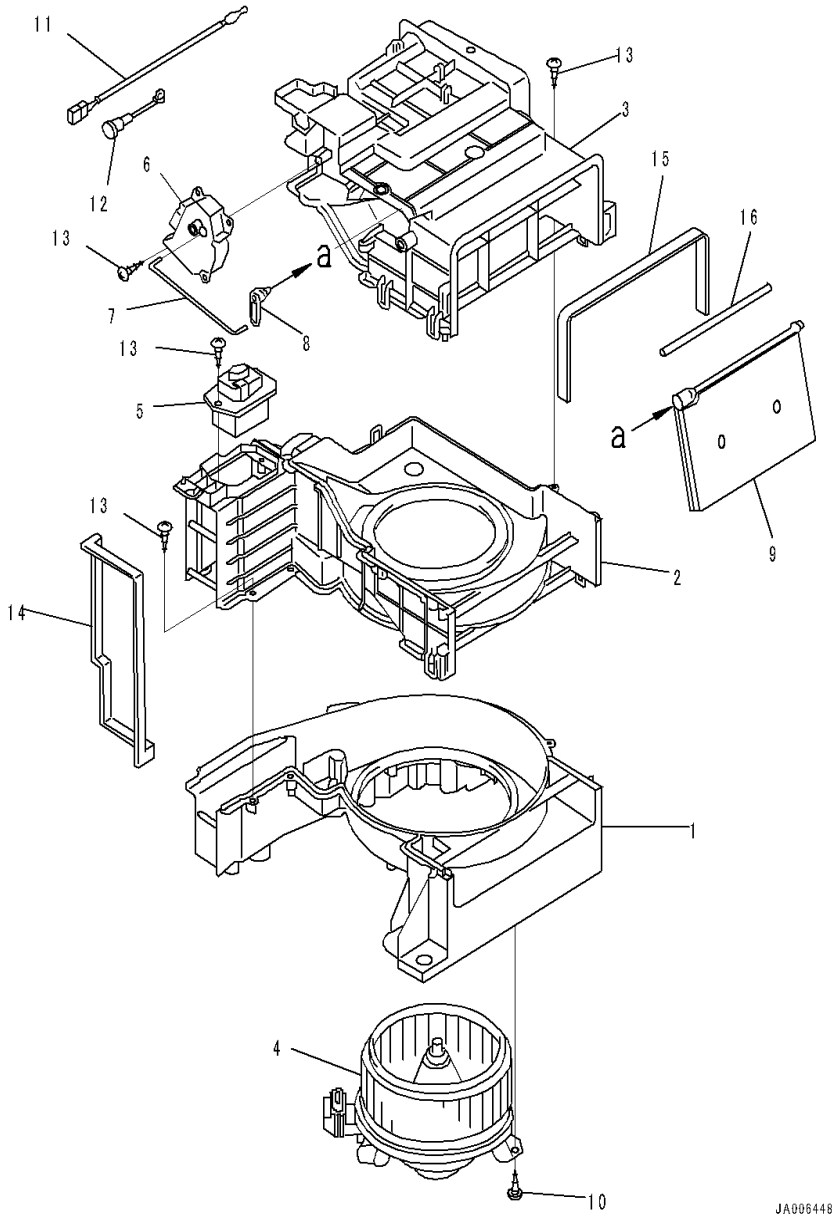

Index	Code	Part Number	Description	Qty	Serial Number
		Note: This list covers following specifications.			
		Auto Air Conditioner,AM-FM Radio,KOMTRAX,Indonesian			
		Auto Air Conditioner, AM-FM Radio Asia, GPRS			
		1-additional Acuator Piping, AM-FM Radio, KOMTRAX			
		2A5-979-1112	Air Conditioner	1	C90001-C90316
		ND117300-2600	• Motor Assembly	1	C90001-C90316
1		ND116242-7000	• • Case	1	C90001-C90316
2		ND116242-7010	• • Case	1	C90001-C90316
3		ND017321-4600	• • Case	1	C90001-C90316
4		ND116360-0030	• • Motor Assembly	1	C90001-C90316
5		ND077800-1040	• • Transistor	1	C90001-C90316
6		ND063600-4580	• • Servo Motor Assembly	1	C90001-C90316
7		ND116662-8530	• • Shaft	1	C90001-C90316
8		ND116782-6720	• • Lever	1	C90001-C90316
9		ND116740-5000	• • Door Assembly	1	C90001-C90316
10		ND949008-0330	• • Screw, Tapping	3	C90001-C90316
11		ND077500-5650	• • Thermistor Assembly	1	C90001-C90316
12		ND017661-3560	• • Bracket	1	C90001-C90316
13		ND949001-1730	• • Screw, Tapping	11	C90001-C90316
14		ND146636-7530	• • Packing	1	C90001-C90316
15		ND146636-7540	• • Packing	1	C90001-C90316
16		ND146636-7550	• • Packing	1	C90001-C90316

FIG. K1110-001047 Cab (Inner Parts, Air Conditioner Unit, 2/2)

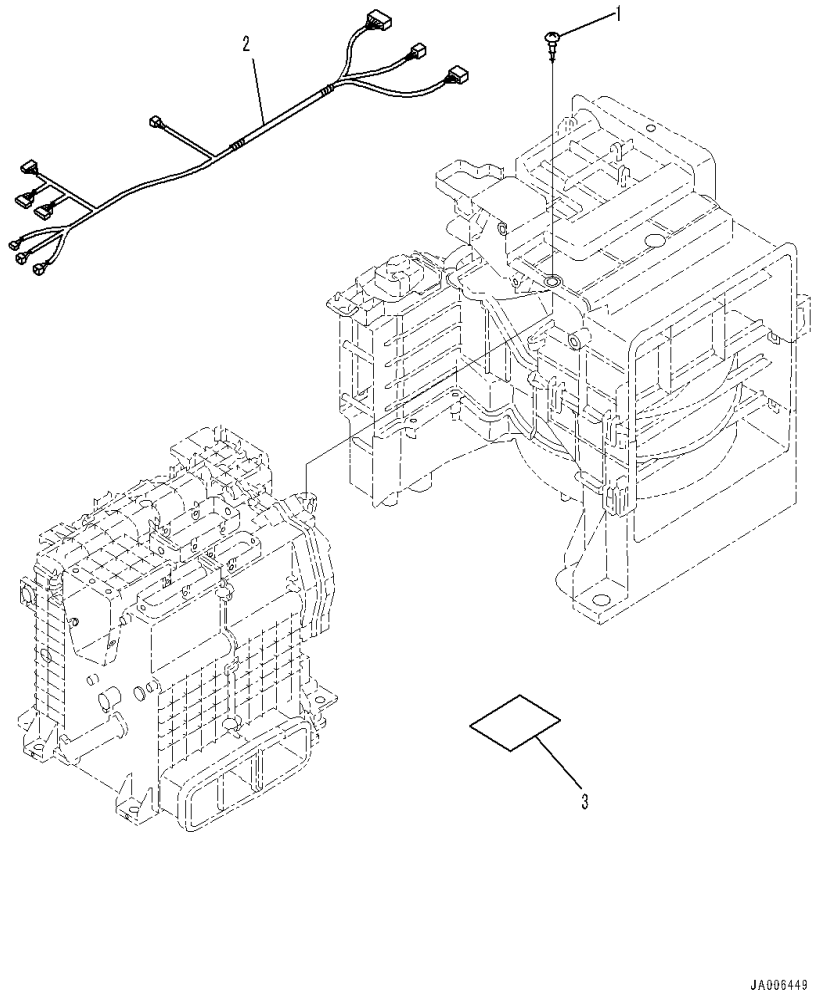

Index	Code	Part Number	Description	Qty	Serial Number
		Note: This list covers following specifications.			
		Auto Air Conditioner,AM-FM Radio,KOMTRAX,Indonesian			
		Auto Air Conditioner, AM-FM Radio Asia, GPRS			
		1-additional Acuator Piping, AM-FM Radio, KOMTRAX			
		2A5-979-1112	Air Conditioner	1	C90001-C90316
1		ND949008-0330	• Screw, Tapping	2	C90001-C90316
2		ND246470-8152	• Wiring Harness Assembly	1	C90001-C90316
3		ND113104-2260	• Plate, Name	1	C90001-C90316

FIG. K1110-001048 Cab (Floor, Air Conditioner Unit)

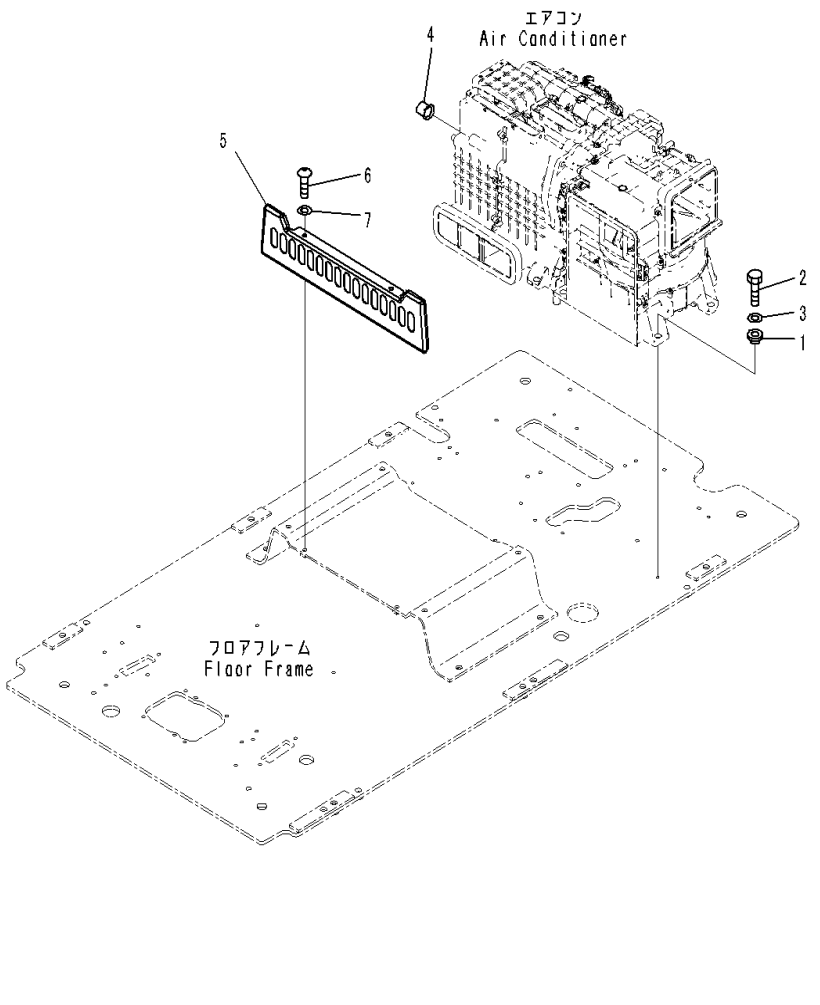

Index	Code	Part Number	Description	Qty	Serial Number
		Note: This list covers following specifications.			
		Auto Air Conditioner,AM-FM Radio,KOMTRAX,Indonesian			
		Auto Air Conditioner, AM-FM Radio Asia, GPRS			
		1-additional Acuator Piping, AM-FM Radio, KOMTRAX			
1		208-979-7540	Collar	6	C90001-C90316
2		01010-80825	Bolt	6	C90001-C90316
3		01643-30823	Washer	6	C90001-C90316
4		17A-979-3131	Cap	1	C90001-C90316
5		20Y-43-41240	Cover	1	C90001-C90316
6		01245-00820	Screw	2	C90001-C90316
7		01643-70823	Washer	2	C90001-C90316

FIG. K1110-001049 Cab (Floor, Air Conditioner Piping)

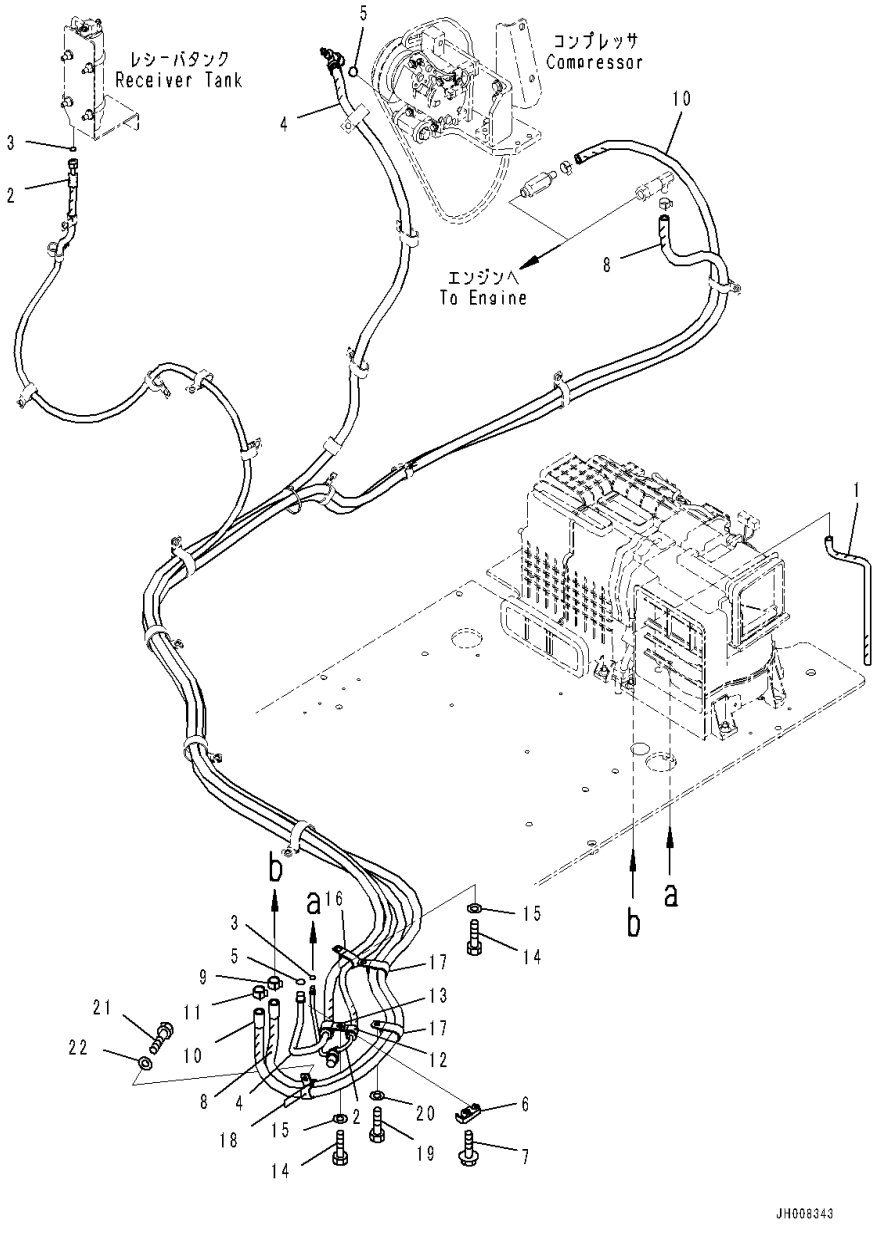

Index	Code	Part Number	Description	Qty	Serial Number
		Note: This list covers following specifications.			
		Auto Air Conditioner,AM-FM Radio,KOMTRAX,Indonesian			
		Auto Air Conditioner, AM-FM Radio Asia, GPRS			
		1-additional Acuator Piping, AM-FM Radio, KOMTRAX			
1		2A5-979-1131	Hose	1	C90001-C90316
2		207-979-7911	Hose	1	C90001-C90316
3		20Y-979-3150	• O-ring	2	C90001-C90316
4		207-979-7922	Hose	1	C90001-C90316
5		20Y-979-3130	O-ring	2	C90001-C90316
6		208-979-7650	Connector	1	C90001-C90316
7		01435-40620	Bolt	1	C90001-C90316
8		207-979-7940	Hose Assembly	1	C90001-C90316
9		09479-02400	Clip	1	C90001-C90316
10		207-979-7930	Hose Assembly	1	C90001-C90316
11		09479-02400	Clip	1	C90001-C90316
12		04434-51910	Clip	1	C90001-C90316
13		04434-52511	Clip	1	C90001-C90316
14		01010-81020	Bolt	2	C90001-C90316
15		01643-31032	Washer	2	C90001-C90316
16		20Y-810-1170	Clip	1	C90001-C90316
17		141-06-11220	Clip	2	C90001-C90316
18		04434-52110	Clip	2	C90001-C90316
19		01010-81020	Bolt	2	C90001-C90316
20		01643-31032	Washer	2	C90001-C90316
21		01010-81025	Bolt	1	C90001-C90316
22		01643-31032	Washer	1	C90001-C90316

FIG. K1110-001050 Cab (Floor, PPC Piping for Travel Valve)

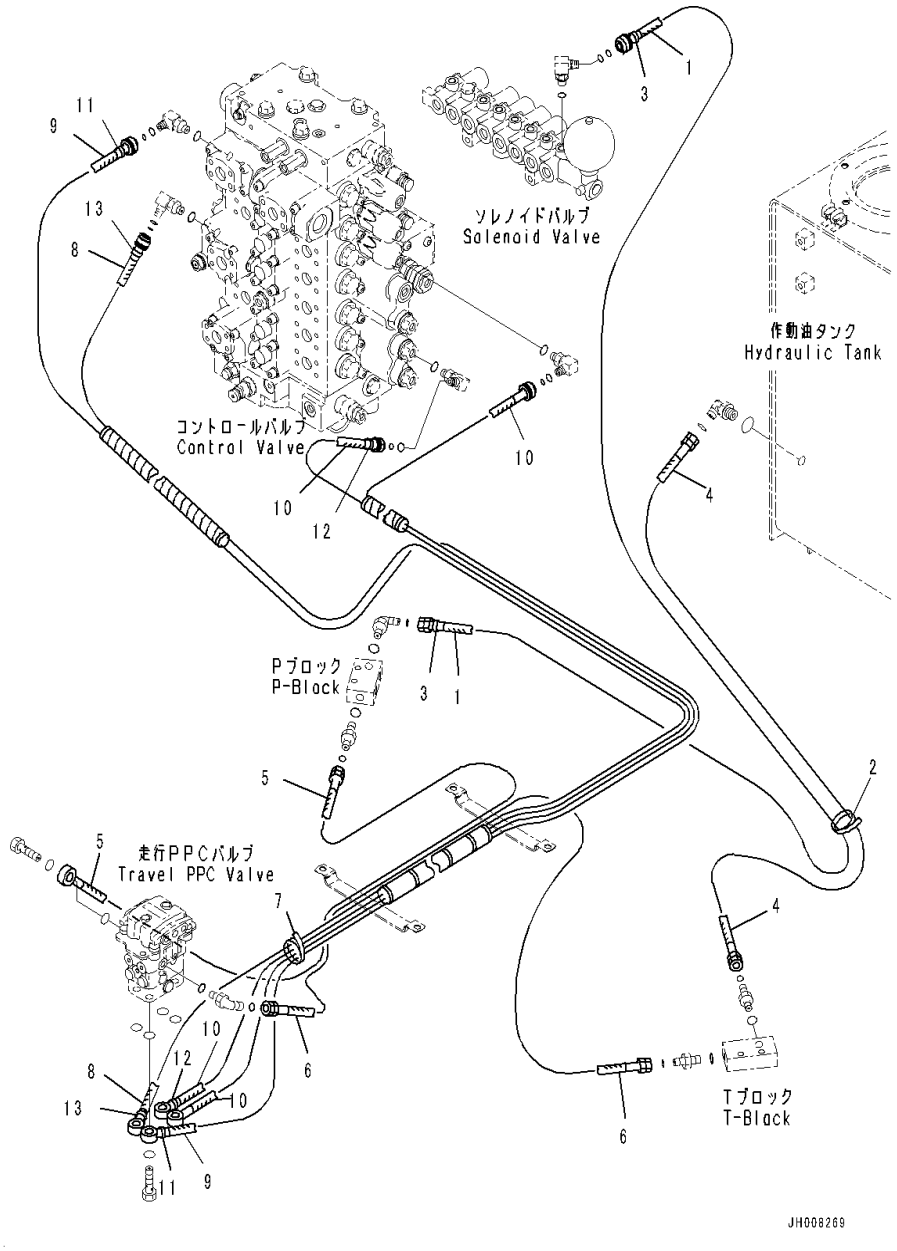

Index	Code	Part Number	Description	Qty	Serial Number
		Note: This list covers following specifications.			
		Auto Air Conditioner,AM-FM Radio,KOMTRAX,Indonesian			
		Auto Air Conditioner, AM-FM Radio Asia, GPRS			
		1-additional Acuator Piping, AM-FM Radio, KOMTRAX			
1		02760-00327	Hose, Face Seal Type	1	C90001-C90316
2		08034-20519	Band	1	C90001-C90316
3		20Y-62-22790	Band, Red	2	C90001-C90316
4		207-62-42680	Hose	1	C90001-C90316
5		20Y-62-44630	Hose	1	C90001-C90316
6		02760-002A9	Hose	1	C90001-C90316
7		08034-20536	Band	1	C90001-C90316
8		207-62-42980	Hose	1	C90001-C90316
9		207-62-76420	Hose	1	C90001-C90316
10		207-62-76570	Hose	2	C90001-C90316
11		20Y-62-22790	Band, Red	2	C90001-C90316
12		20Y-62-22820	Band, Blue	2	C90001-C90316
13		20Y-62-22850	Band, Green	2	C90001-C90316

FIG. K1110-001051 Cab (Floor, PPC Valve Piping for Work Equipment)

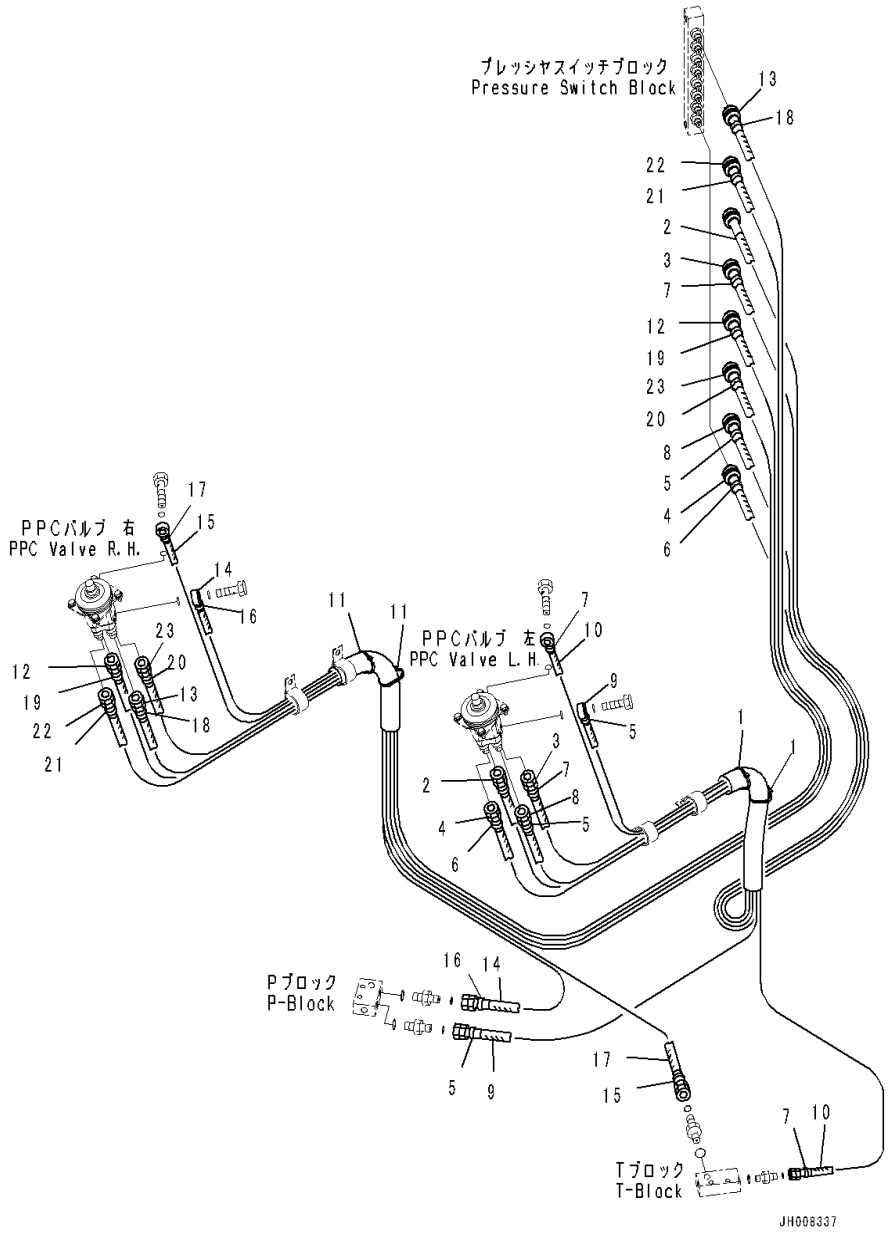

Index	Code	Part Number	Description	Qty	Serial Number
		Note: This list covers following specifications.			
		Auto Air Conditioner,AM-FM Radio,KOMTRAX,Indonesian			
		Auto Air Conditioner, AM-FM Radio Asia, GPRS			
		1-additional Acuator Piping, AM-FM Radio, KOMTRAX			
		207-62-21961	Hose Assembly	1	C90001-C90316
1		08034-20536	• Band	2	C90001-C90316
2		207-62-72680	• Hose	1	C90001-C90316
3		207-62-75820	• Hose	1	C90001-C90316
4		207-62-72740	• Hose	1	C90001-C90316
5		20Y-62-22790	• Band, Red	4	C90001-C90316
6		20Y-62-22810	• Band, Yellow	2	C90001-C90316
7		20Y-62-22820	• Band, Blue	4	C90001-C90316
8		20Y-62-42550	• Hose	1	C90001-C90316
9		20Y-62-53410	• Hose	1	C90001-C90316
10		207-62-22220	• Hose	1	C90001-C90316
		207-62-21110	Hose Assembly	1	C90001-C90316
11		08034-20536	• Band	2	C90001-C90316
12		208-62-42320	• Hose	1	C90001-C90316
13		208-62-72470	• Hose	1	C90001-C90316
14		208-62-72860	• Hose	1	C90001-C90316
15		208-62-72870	• Hose	1	C90001-C90316
16		20Y-62-22790	• Band, Red	2	C90001-C90316
17		20Y-62-22820	• Band, Blue	2	C90001-C90316
18		20Y-62-22830	• Band, White	2	C90001-C90316
19		20Y-62-22840	• Band, Black	2	C90001-C90316
20		20Y-62-22850	• Band, Green	2	C90001-C90316
21		20Y-62-22860	• Band, Brown	2	C90001-C90316
22		20Y-62-52280	• Hose	1	C90001-C90316
23		22B-62-18620	• Hose	1	C90001-C90316

FIG. K1110-001052 Cab (Floor, Piping Mounting)

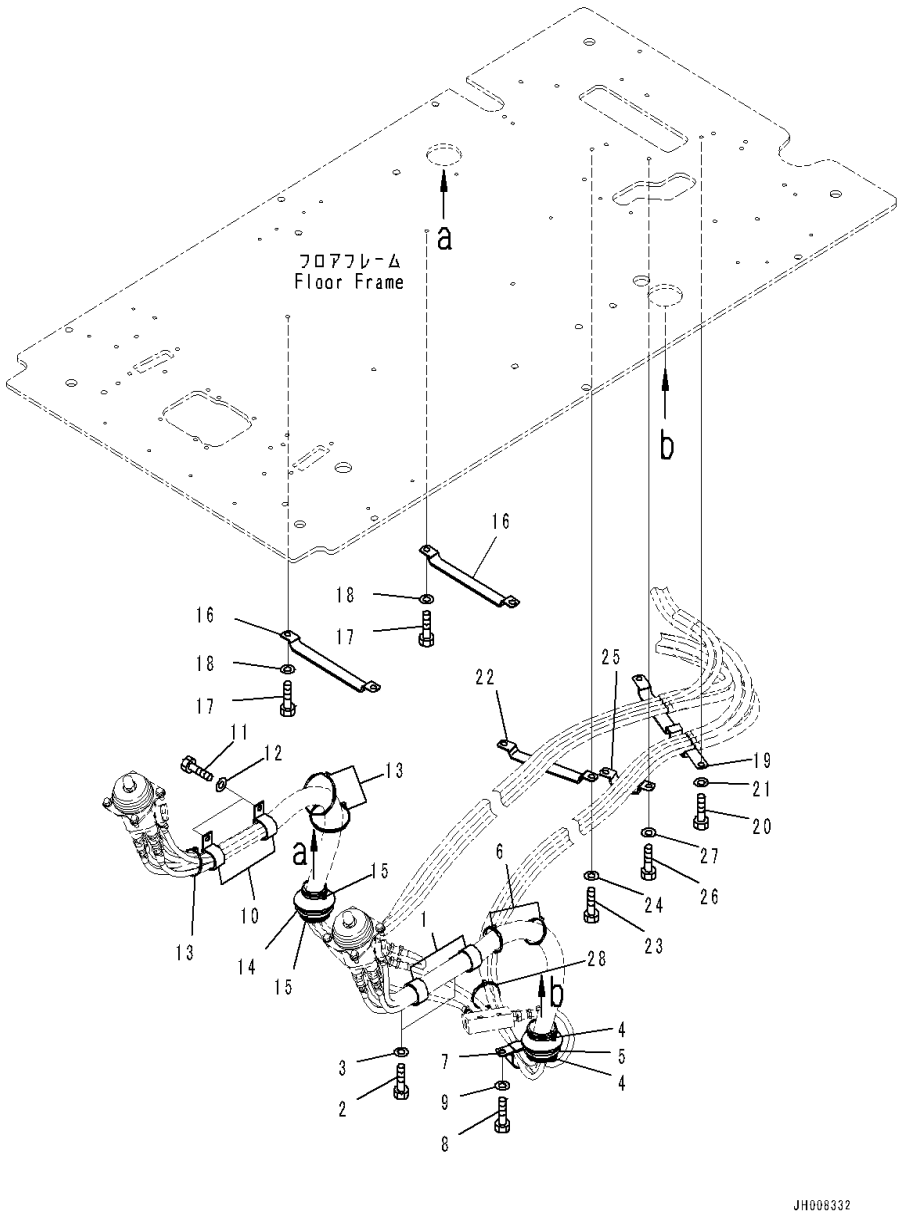

Index	Code	Part Number	Description	Qty	Serial Number
		Note: This list covers following specifications.			
		Auto Air Conditioner,AM-FM Radio,KOMTRAX,Indonesian			
		Auto Air Conditioner, AM-FM Radio Asia, GPRS			
		1-additional Acuator Piping, AM-FM Radio, KOMTRAX			
1		208-06-19170	Clip	2	C90001-C90316
2		01010-81025	Bolt	2	C90001-C90316
3		01643-31032	Washer	2	C90001-C90316
4		08034-20536	Band	2	C90001-C90316
5		208-43-41111	Grommet	1	C90001-C90316
6		08034-20536	Band	2	C90001-C90316
7		208-06-19170	Clip	1	C90001-C90316
8		01010-81020	Bolt	1	C90001-C90316
9		01643-31032	Washer	1	C90001-C90316
10		04434-53411	Clip	2	C90001-C90316
11		01010-81020	Bolt	2	C90001-C90316
12		01643-31032	Washer	2	C90001-C90316
13		08034-20536	Band	3	C90001-C90316
14		208-43-41111	Grommet	1	C90001-C90316
15		08034-20536	Band	2	C90001-C90316
16		20Y-62-27770	Clamp	2	C90001-C90316
17		01010-81016	Bolt	4	C90001-C90316
18		01643-31032	Washer	4	C90001-C90316
19		2A5-62-13811	Clamp	1	C90001-C90316
20		01010-81016	Bolt	2	C90001-C90316
21		01643-31032	Washer	2	C90001-C90316
22		2A5-62-13820	Clamp	1	C90001-C90316
23		01010-81016	Bolt	2	C90001-C90316
24		01643-31032	Washer	2	C90001-C90316
25		2A5-62-13831	Clamp	1	C90001-C90316
26		01010-81016	Bolt	2	C90001-C90316
27		01643-31032	Washer	2	C90001-C90316
28		08034-20536	Band	1	C90001-C90316

FIG. K1110-001053 Cab (Floor, P, T Block)

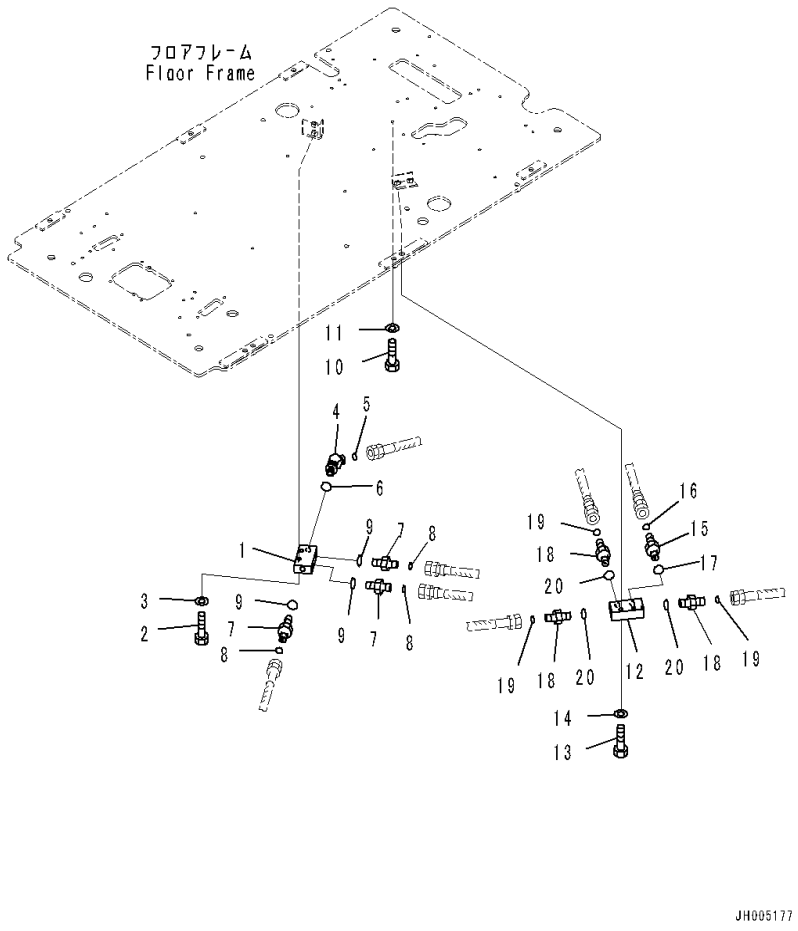

Index	Code	Part Number	Description	Qty	Serial Number
		Note: This list covers following specifications.			
		Auto Air Conditioner,AM-FM Radio,KOMTRAX,Indonesian			
		Auto Air Conditioner, AM-FM Radio Asia, GPRS			
1		20Y-62-15831	Block	1	C90001-C90316
2		01010-81045	Bolt	2	C90001-C90316
3		01643-31032	Washer	2	C90001-C90316
4		11Y-62-12510	Elbow	1	C90001-C90316
5		02896-11009	O-ring	1	C90001-C90316
6		07002-11423	O-ring	1	C90001-C90316
7		02781-0021D	Union	3	C90001-C90316
8		02896-11008	O-ring	3	C90001-C90316
9		07002-11423	O-ring	3	C90001-C90316
10		01010-81016	Bolt	1	C90001-C90316
11		01643-31032	Washer	1	C90001-C90316
12		20Y-62-15831	Block	1	C90001-C90316
13		01010-81045	Bolt	2	C90001-C90316
14		01643-31032	Washer	2	C90001-C90316
15		02781-0031D	Nipple	1	C90001-C90316
16		02896-11009	O-ring	1	C90001-C90316
17		07002-11423	O-ring	1	C90001-C90316
18		02781-0021D	Union	3	C90001-C90316
19		02896-11008	O-ring	3	C90001-C90316
20		07002-11423	O-ring	3	C90001-C90316

FIG. K1110-001054 Cab (Floor, Seal)

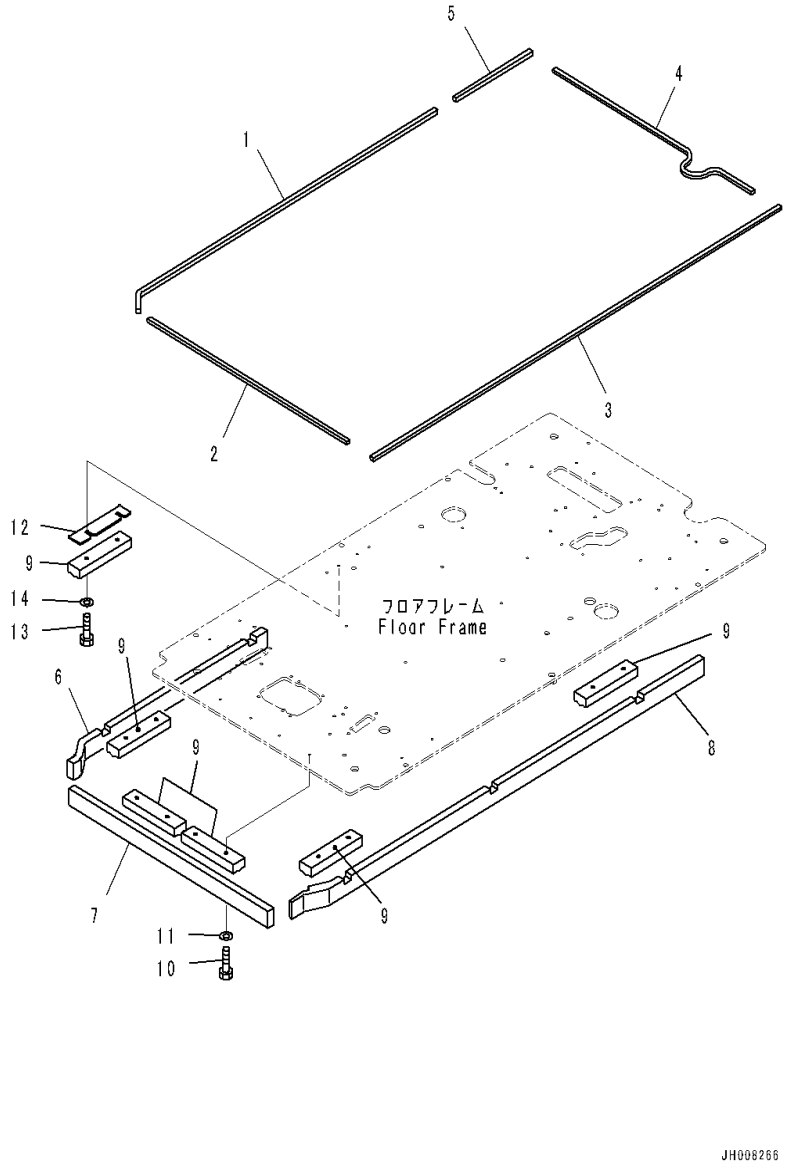

Index	Code	Part Number	Description	Qty	Serial Number
		Note: This list covers following specifications.			
		Auto Air Conditioner,AM-FM Radio,KOMTRAX,Indonesian			
		Auto Air Conditioner, AM-FM Radio Asia, GPRS			
		1-additional Acuator Piping, AM-FM Radio, KOMTRAX			
1		20Y-53-14910	Seal	1	C90001-C90316
2		20Y-53-14920	Seal	1	C90001-C90316
3		20Y-53-14930	Seal	1	C90001-C90316
4		20Y-53-14940	Seal	1	C90001-C90316
5		20Y-53-14950	Seal	1	C90001-C90316
6		20Y-53-14963	Sheet	1	C90001-C90316
7		20Y-53-14973	Sheet	1	C90001-C90316
8		20Y-53-14984	Sheet	1	C90001-C90316
9		20Y-53-14831	Sheet	6	C90001-C90316
10		01010-80830	Bolt	10	C90001-C90316
11		01643-30823	Washer	10	C90001-C90316
12		20Y-53-14841	Plate	1	C90001-C90316
13		01010-80840	Bolt	2	C90001-C90316
14		01643-30823	Washer	2	C90001-C90316

FIG. K1110-002001 Cab (Cab Body and Window)

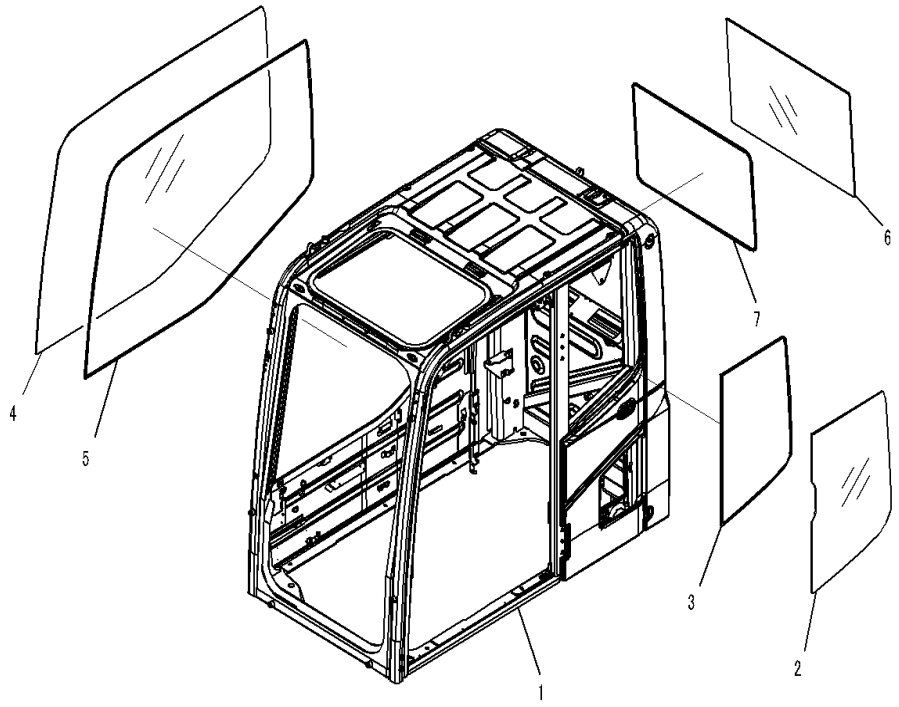

Index	Code	Part Number	Description	Qty	Serial Number
		Note: This list covers following specifications.			
		Auto Air Conditioner, AM-FM Radio Asia, GPRS			
		With 1-additional Acuator Piping, AM-FM Radio, GPRS			
		207-53-00570	Cab Assembly	1	C90001-C90316
1	C1		• Cab	1	C90001-C90316
2		20Y-53-11241	• Glass	1	C90001-C90316
3		20Y-53-11260	• Seal	1	C90001-C90316
4		20Y-53-11841	• Glass	1	C90001-C90316
5		20Y-53-11850	• Seal	1	C90001-C90316
6		20Y-53-11271	• Glass	1	C90001-C90316
7		20Y-53-11250	• Seal	1	C90001-C90316

FIG. K1110-002002 Cab (Front Window)

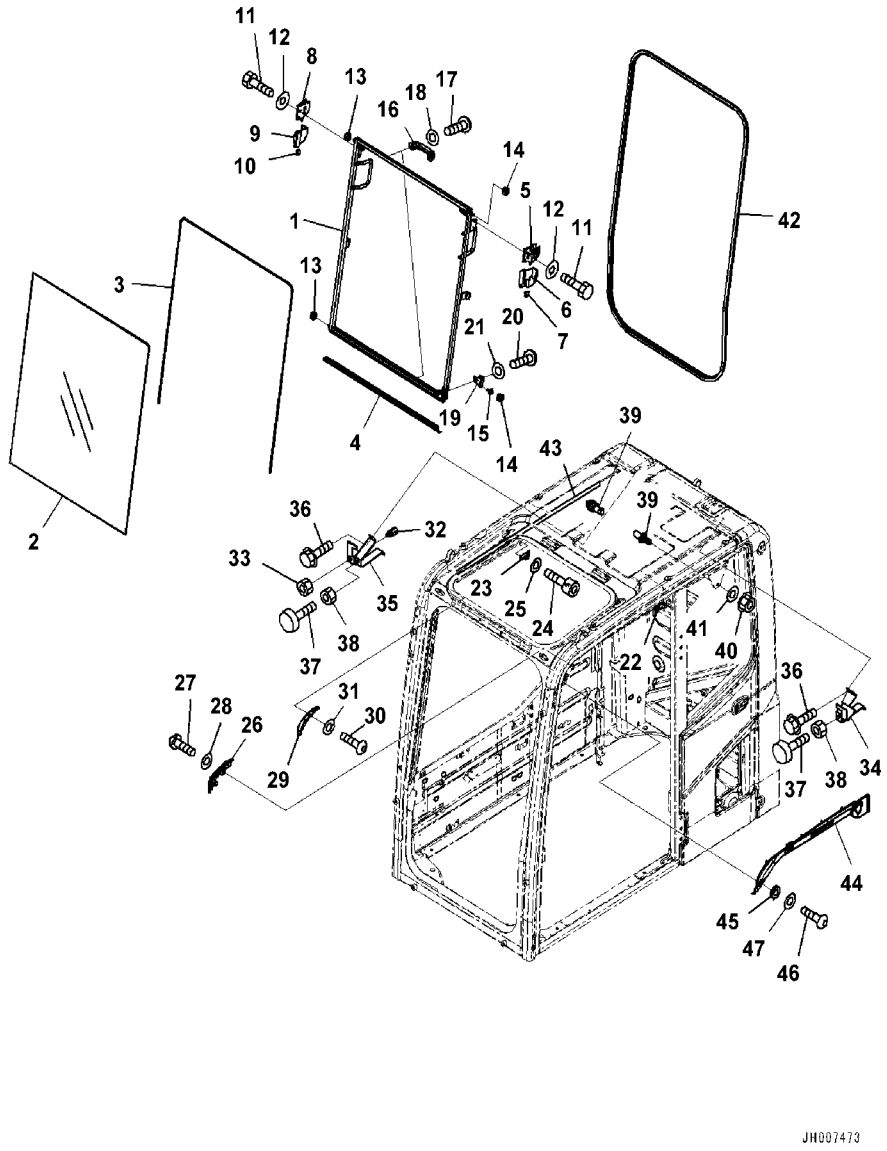

Index	Code	Part Number	Description	Qty	Serial Number
		Note: This list covers following specifications.			
		Auto Air Conditioner, AM-FM Radio Asia, GPRS			
		With 1-additional Acuator Piping, AM-FM Radio, GPRS			
		207-53-00570	Cab Assembly	1	C90001-C90316
		20Y-53-00880	• Window Assembly	1	C90001-C90316
1		2A5-53-12491	• • Frame	1	C90001-C90316
2		20Y-53-11520	• • Glass	1	C90001-C90316
3		20Y-54-51531	• • Seal	1	C90001-C90316
4		20Y-53-11551	• • Seal	1	C90001-C90316
5		22B-54-15411	• • Lock Assembly	1	C90001-C90316
6		22B-54-15440	• • Case	1	C90001-C90316
7		22B-54-15470	• • Knob	1	C90001-C90316
8		22B-54-15421	• • Lock Assembly	1	C90001-C90316
9		22B-54-15450	• • Case	1	C90001-C90316
10		22B-54-15480	• • Knob	1	C90001-C90316
11		01010-D0816	• • Bolt	4	C90001-C90316
12		418-54-35450	• • Washer	4	C90001-C90316
13		20Y-54-52621	• • Roller	2	C90001-C90316
14		20Y-54-52681	• • Roller	2	C90001-C90316
15		20Y-53-12330	• • Pin	1	C90001-C90316
16		20Y-54-14590	• • Handle	2	C90001-C90316
17		01245-00616	• • Screw	4	C90001-C90316
18		01643-70623	• • Washer	4	C90001-C90316
19		20Y-53-12830	• • Bracket	1	C90001-C90316
20		01245-00816	• • Screw	2	C90001-C90316
21		01643-70823	• • Washer	2	C90001-C90316
22		20Y-54-51670	• Stopper	1	C90001-C90316
23		20Y-54-51680	• Stopper	1	C90001-C90316
24		01252-80616	• Bolt	4	C90001-C90316
25		01643-70623	• Washer	4	C90001-C90316
26		20Y-53-11571	• Block Assembly	1	C90001-C90316
27		01245-00816	• Screw	2	C90001-C90316
28		01643-70823	• Washer	2	C90001-C90316
29		20Y-53-11661	• Bracket	1	C90001-C90316
30		01245-00816	• Screw	2	C90001-C90316
31		01643-70823	• Washer	2	C90001-C90316
32		21J-06-12440	• Switch	1	C90001-C90316
33		01583-11811	• Nut	1	C90001-C90316
34		20Y-53-11581	• Bracket	1	C90001-C90316
35		20Y-53-11641	• Bracket	1	C90001-C90316

FIG. K1110-002002 Cab (Front Window)

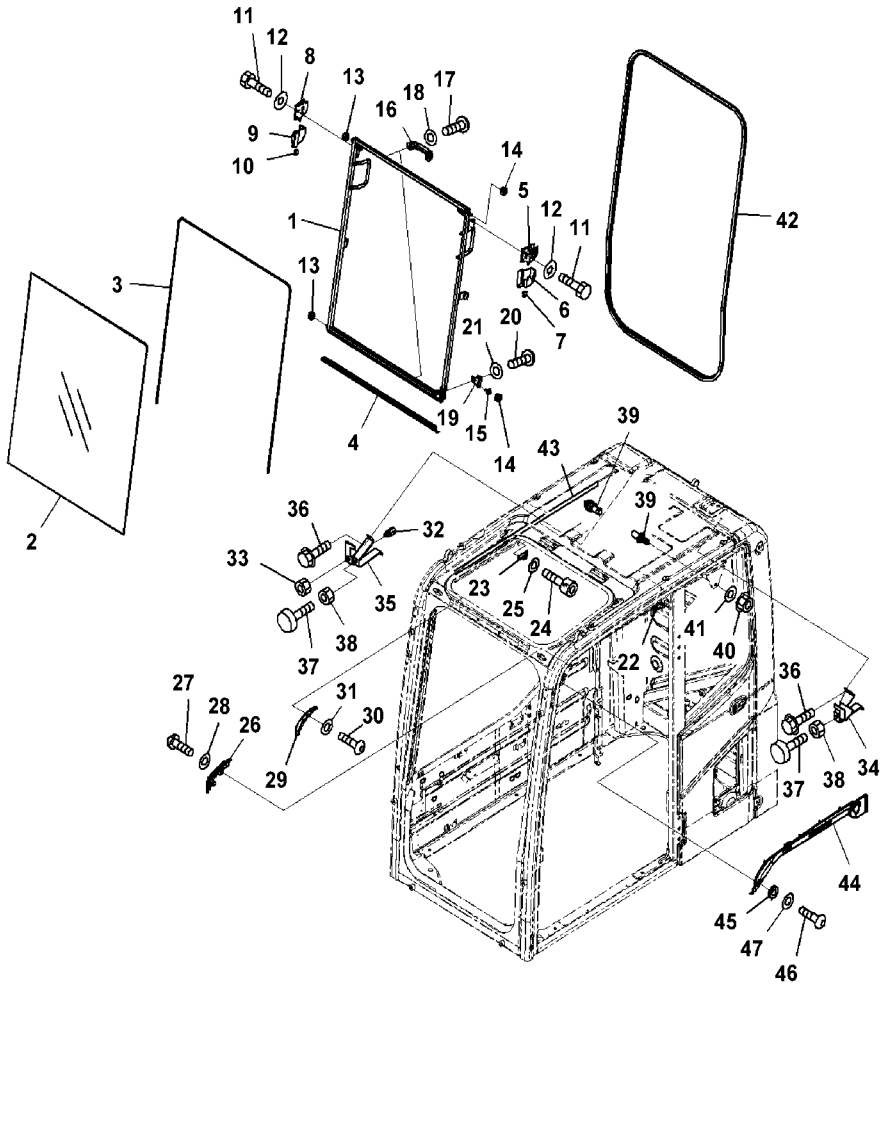

Index	Code	Part Number	Description	Qty	Serial Number
36		01435-00612	• Bolt	4	C90001-C90316
37		20Y-54-11611	• Stopper	2	C90001-C90316
38		01580-11008	• Nut	2	C90001-C90316
39		20Y-54-51621	• Striker	2	C90001-C90316
40		01584-31008	• Nut	2	C90001-C90316
41		01643-71032	• Washer	2	C90001-C90316
42		20Y-53-11540	• Seal	1	C90001-C90316
43		20Y-54-51420	• Seal	1	C90001-C90316
44		20Y-53-12531	• Cover	1	C90001-C90316
45		20Y-53-12310	• Collar	3	C90001-C90316
46		01245-00616	• Screw	3	C90001-C90316
47		01643-70623	• Washer	3	C90001-C90316

FIG. K1110-002004 Cab (Roof Window)

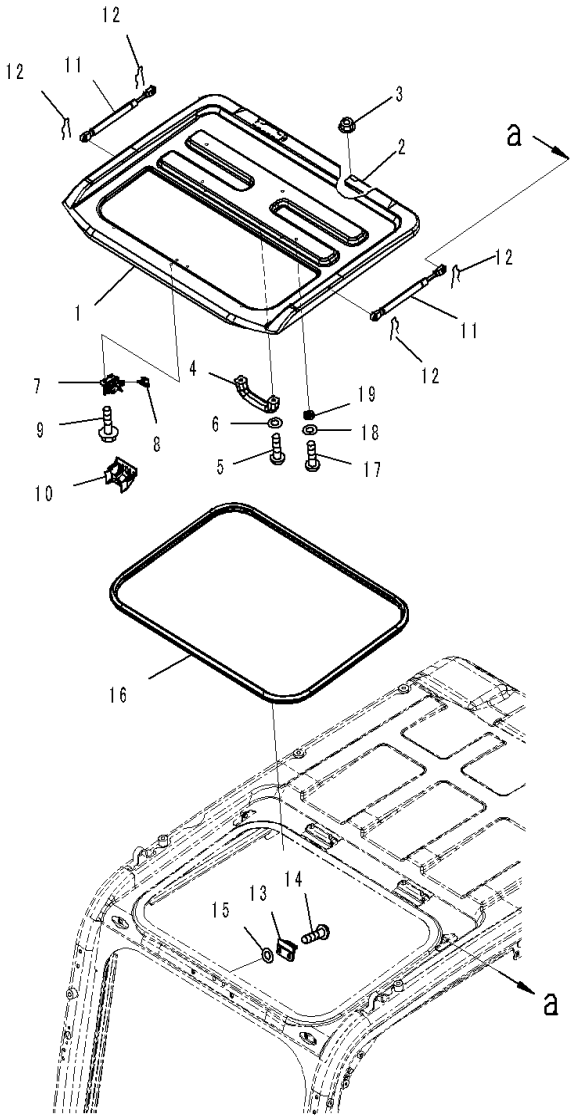

Index	Code	Part Number	Description	Qty	Serial Number
		Note: This list covers following specifications.			
		Auto Air Conditioner, AM-FM Radio Asia, GPRS			
		With 1-additional Acuator Piping, AM-FM Radio, GPRS			
		207-53-00570	Cab Assembly	1	C90001-C90316
1		208-53-26810	• Roof	1	C90001-C90316
2		208-53-22H70	• • Hinge,Welded	2	C90001-C90316
3		01584-30806	• Nut	4	C90001-C90316
4		20Y-54-14590	• Handle	1	C90001-C90316
5		01245-00616	• Screw	2	C90001-C90316
6		01643-70623	• Washer	2	C90001-C90316
7		20Y-53-11721	• Lock	1	C90001-C90316
8		20Y-53-11781	• Knob	1	C90001-C90316
9		01435-40610	• Bolt	3	C90001-C90316
10		20Y-53-11931	• Cover	1	C90001-C90316
11		208-53-22162	• Gas Spring	2	C90001-C90316
12		04052-10833	• Pin, Snap	4	C90001-C90316
13		20Y-53-11771	• Striker	1	C90001-C90316
14		01245-00820	• Screw	2	C90001-C90316
15		20Y-54-52651	• Spacer	2	C90001-C90316
16		20Y-53-11861	• Seal	1	C90001-C90316
17		01245-00620	• Screw	4	C90001-C90316
18		01643-70623	• Washer	4	C90001-C90316
19		20Y-54-52651	• Spacer	4	C90001-C90316

FIG. K1110-002013 Cab (KOMTRAX Film Antenna)

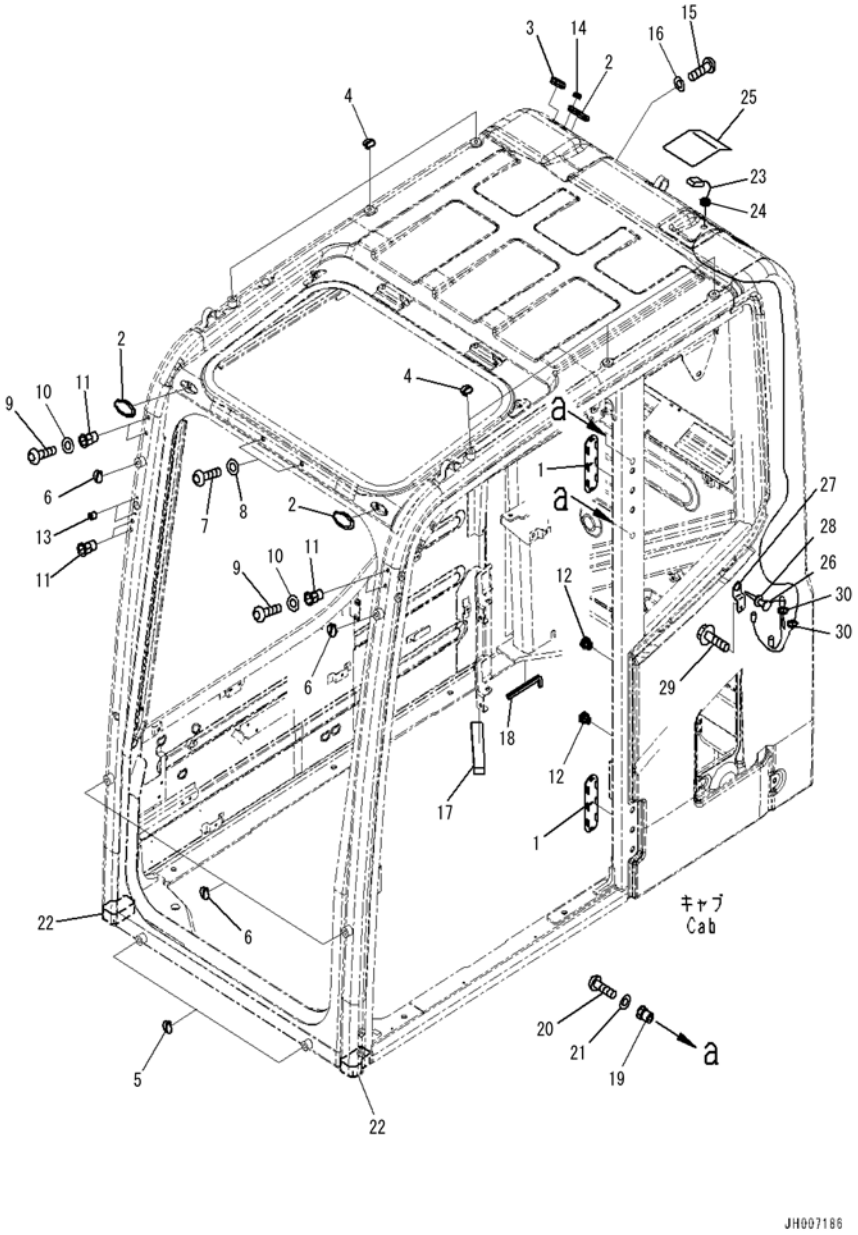

Index	Code	Part Number	Description	Qty	Serial Number
		Note: This list covers following specifications.			
		Auto Air Conditioner, AM-FM Radio Asia, GPRS			
		With 1-additional Acuator Piping, AM-FM Radio, GPRS			
		207-53-00570	Cab Assembly	1	C90001-C90316
1		20Y-53-12960	• Cover	2	C90001-C90316
2		22B-54-17282	• Cap	3	C90001-C90316
3		09415-02512	• Cap	1	C90001-C90316
4		20Y-53-11390	• Cap	6	C90001-C90316
5		20Y-53-11390	• Cap	2	C90001-C90316
6		20Y-53-11380	• Cap	4	C90001-C90316
7		01245-01016	• Screw	2	C90001-C90316
8		01643-71032	• Washer	2	C90001-C90316
9		01245-00616	• Screw	4	C90001-C90316
10		01643-70623	• Washer	4	C90001-C90316
11		20Y-53-12260	• Nut	6	C90001-C90316
12		20Y-54-35451	• Nut	2	C90001-C90316
13		20Y-53-12320	• Nut	2	C90001-C90316
14		09415-01008	Cap	1	C90001-C90316
15		01245-01016	• Screw	1	C90001-C90316
16		01643-71032	• Washer	1	C90001-C90316
17		20Y-53-12580	• Seal	1	C90001-C90316
18		20Y-53-12740	• Trim	1	C90001-C90316
19		20Y-53-12270	• Nut	2	C90001-C90316
20		01245-00816	• Screw	2	C90001-C90316
21		01643-70823	• Washer	2	C90001-C90316
22		20Y-53-18880	• Seal	2	C90001-C90316
23		8A13-10-1320	• Antenna	1	C90001-C90316
24		08037-10610	• • Grommet	1	C90001-C90316
25		20Y-53-12951	• Cover, GPS	1	C90001-C90316
26		8A13-10-3110	• Antenna	1	C90001-C90316
27		20Y-53-14311	• Plate	1	C90001-C90316
28		08037-01610	• Grommet	1	C90001-C90316
29		01435-00616	• Bolt	1	C90001-C90316
30		08034-20414	• Washer	1	C90001-C90316

FIG. K1110-002022 Cab (Air Conditioner and KOMTRAX Controller)

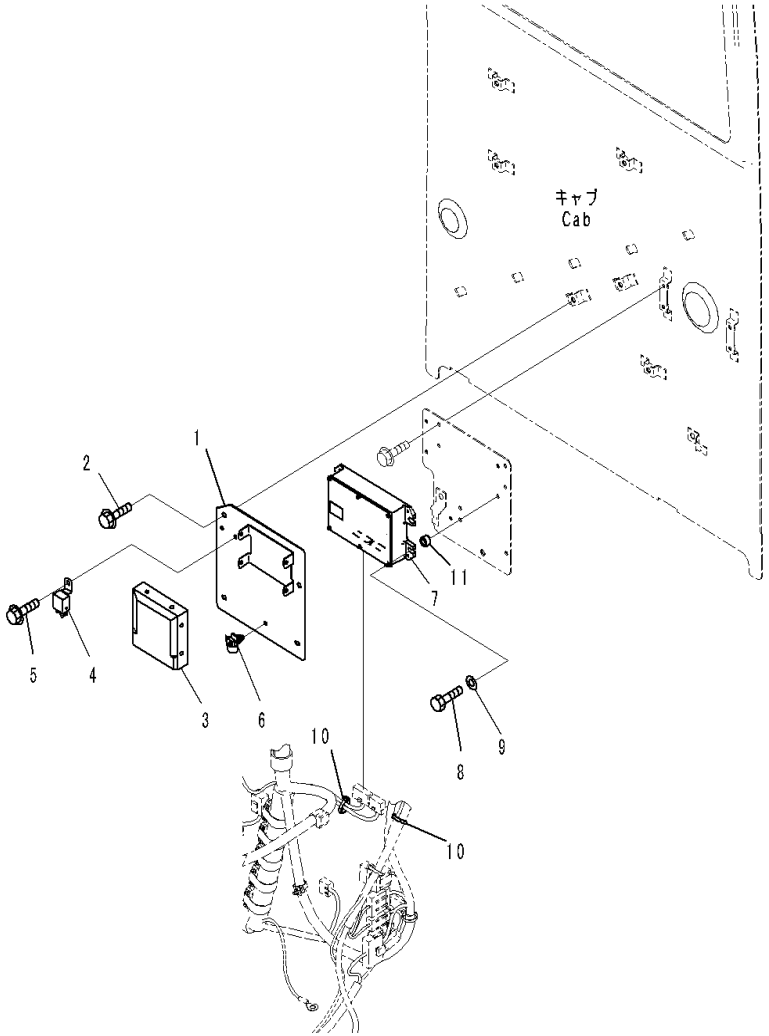

Index	Code	Part Number	Description	Qty	Serial Number
		Note: This list covers following specifications.			
		Auto Air Conditioner, AM-FM Radio Asia, GPRS			
		With 1-additional Acuator Piping, AM-FM Radio, GPRS			
1		20Y-53-14821	Plate	1	C90001-C90316
2		01435-40812	Bolt	2	C90001-C90316
3		2A5-979-1122	Controller, Air Conditioner	1	C90001-C90316
4		7861-74-5100	Relay	1	C90001-C90316
5		01435-00610	Bolt	1	C90001-C90316
6		08059-00515	Clip	1	C90001-C90316
7		7826-25-5100	Controller, KOMTRAX	1	C90001-C90316
8		01010-80630	Bolt	4	C90001-C90316
9		01643-30623	Washer	4	C90001-C90316
10		08034-20519	Band	2	C90001-C90316
11		20Y-53-14340	Collar	4	C90001-C90316

FIG. K1110-003001 Cab (With 1-additional Acuator Piping, AM-FM Radio, KOMTRAX) (Cab Body and Window)

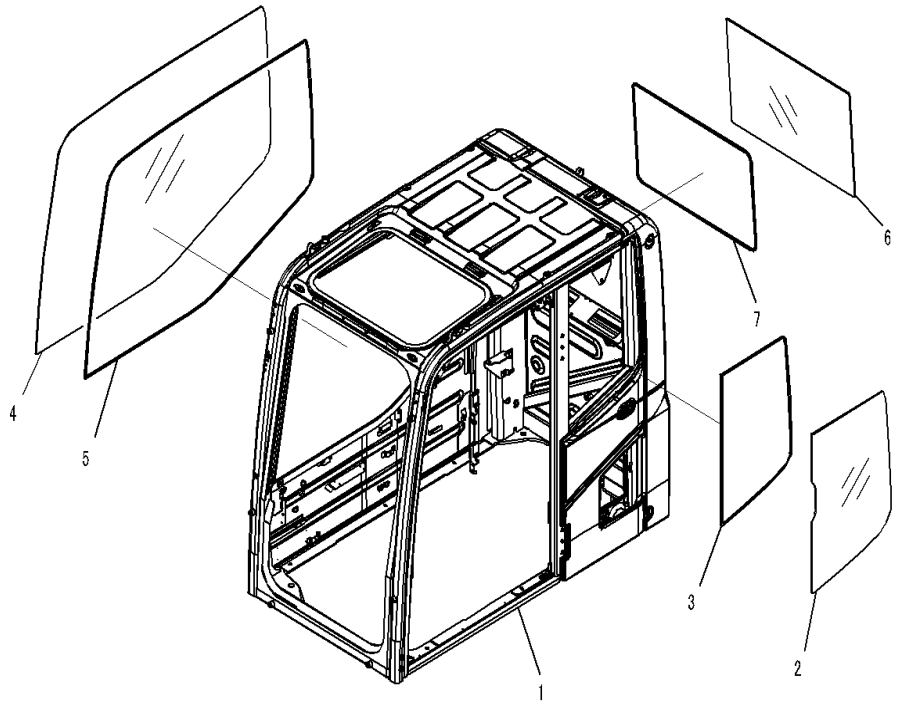

Index	Code	Part Number	Description	Qty	Serial Number
		207-53-00580	Cab Assembly	1	C90001-C90316
1	C1		• Cab	1	C90001-C90316
2		20Y-53-11241	• Glass	1	C90001-C90316
3		20Y-53-11260	• Seal	1	C90001-C90316
4		20Y-53-11841	• Glass	1	C90001-C90316
5		20Y-53-11850	• Seal	1	C90001-C90316
6		20Y-53-11271	• Glass	1	C90001-C90316
7		20Y-53-11250	• Seal	1	C90001-C90316

FIG. K1110-003029 Cab (PPC Valve for Attachment)

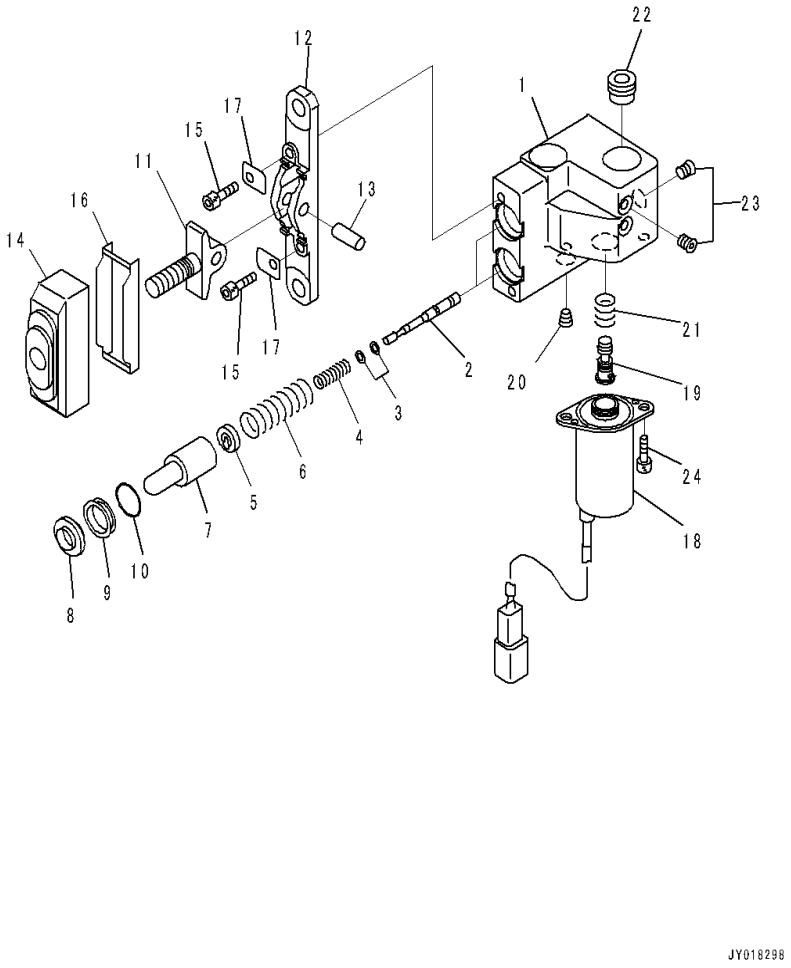

Index	Code	Part Number	Description	Qty	Serial Number
		Note: This list covers following specifications.			
		With 1-additional Acuator Piping, AM-FM Radio, KOMTRAX			
		With 1-additional Acuator Piping, AM-FM Radio, GPRS			
		702-16-05260	Valve, Pilot	1	C90001-C90316
1	C1		• Body, Valve	1	C90001-C90316
2	C1		• Valve	2	C90001-C90316
3		702-16-51140	• Shim, T=0.30mm	2	C90001-C90316
		702-16-54670	• Shim, T=0.20mm	4	C90001-C90316
4		702-16-54550	• Spring	2	C90001-C90316
5		702-16-54571	• Retainer	2	C90001-C90316
6		702-16-54560	• Spring	2	C90001-C90316
7		702-16-53170	• Piston	2	C90001-C90316
8		702-16-51270	• Seal	2	C90001-C90316
9		702-16-54580	• Collar	2	C90001-C90316
10		702-16-54590	• O-ring	2	C90001-C90316
11	C1		• Lever	1	C90001-C90316
12	C1		• Plate	1	C90001-C90316
13	C1		• Shaft	1	C90001-C90316
14		702-16-54641	• Boot	1	C90001-C90316
15		01252-60625	• Bolt, Hexagon Socket Head	2	C90001-C90316
16		702-16-54660	• Plate	1	C90001-C90316
17		702-16-54650	• Plate	2	C90001-C90316
18		702-21-53780	• Solenoid Assembly	1	C90001-C90316
19	C1		• Spool	1	C90001-C90316
20	C1		• Plug	1	C90001-C90316
21		702-21-53311	• Spring	1	C90001-C90316
		702-21-53340	• Spring	1	C90001-C90316
		702-21-53350	• Spring	1	C90001-C90316
22		702-16-56490	• Filter	1	C90001-C90316
23	C1		• Plug	2	C90001-C90316
24		01252-60620	• Bolt, Hexagon Socket Head	2	C90001-C90316

FIG. K1110-003030 Cab (Floor, 1st Attachment Control)

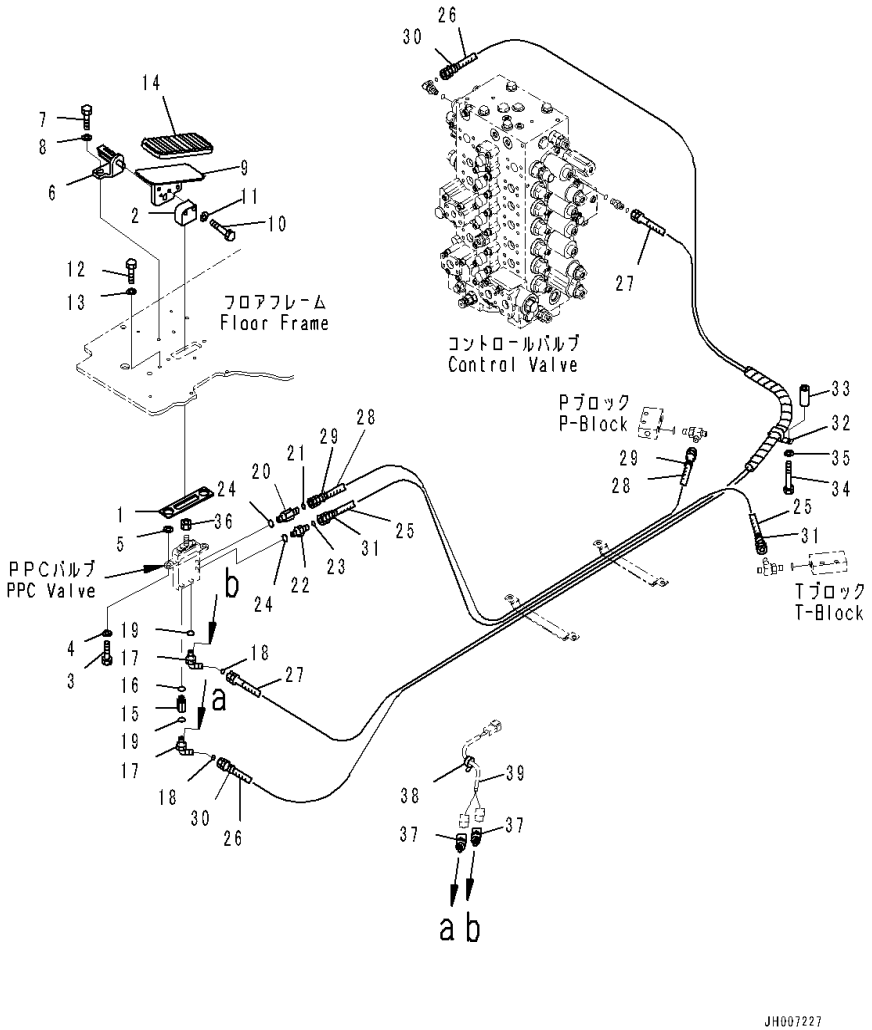

Index	Code	Part Number	Description	Qty	Serial Number
		Note: This list covers following specifications.			
		With 1-additional Acuator Piping, AM-FM Radio, KOMTRAX			
		With 1-additional Acuator Piping, AM-FM Radio, GPRS			
1		22U-54-25660	Seal	1	C90001-C90316
2		20Y-43-41760	Seat	1	C90001-C90316
3		01010-81025	Bolt	2	C90001-C90316
4		01643-31032	Washer	2	C90001-C90316
5		01643-31032	Washer	2	C90001-C90316
6		2A5-62-12350	Bracket	1	C90001-C90316
7		01010-81025	Bolt	2	C90001-C90316
8		01643-31032	Washer	2	C90001-C90316
9		20Y-53-14220	Pedal	1	C90001-C90316
10		01010-D1045	Bolt	2	C90001-C90316
11		01643-71032	Washer	2	C90001-C90316
12		01010-81020	Bolt	3	C90001-C90316
13		01643-31032	Washer	3	C90001-C90316
14		207-43-81240	Cap	1	C90001-C90316
15		20T-910-8660	Nipple	1	C90001-C90316
16		07000-12011	O-ring	1	C90001-C90316
17		20Y-62-52160	Elbow	2	C90001-C90316
18		02896-11008	O-ring	2	C90001-C90316
19		07000-12011	O-ring	2	C90001-C90316
20		20Y-62-43470	Nipple	1	C90001-C90316
21		02896-11008	O-ring	1	C90001-C90316
22		11Y-62-12140	Nipple	1	C90001-C90316
23		02896-11008	O-ring	1	C90001-C90316
24		07000-12011	O-ring	2	C90001-C90316
25		20Y-62-52330	Hose	1	C90001-C90316
26		20Y-62-52340	Hose	1	C90001-C90316
27		20Y-62-52350	Hose	1	C90001-C90316
28		208-62-72480	Hose	1	C90001-C90316
29		20Y-62-22790	Band, Red	2	C90001-C90316
30		20Y-62-22810	Band, Yellow	2	C90001-C90316
31		20Y-62-22820	Band, Blue	2	C90001-C90316
32		04435-51210	Clip	1	C90001-C90316
33		175-40-22540	Spacer	1	C90001-C90316
34		01010-81070	Bolt	1	C90001-C90316
35		01643-31032	Washer	1	C90001-C90316
36		01583-11408	Nut	1	C90001-C90316
37		206-06-61130	Switch, Pressure	2	C90001-C90316

FIG. K1110-003030 Cab (Floor, 1st Attachment Control)

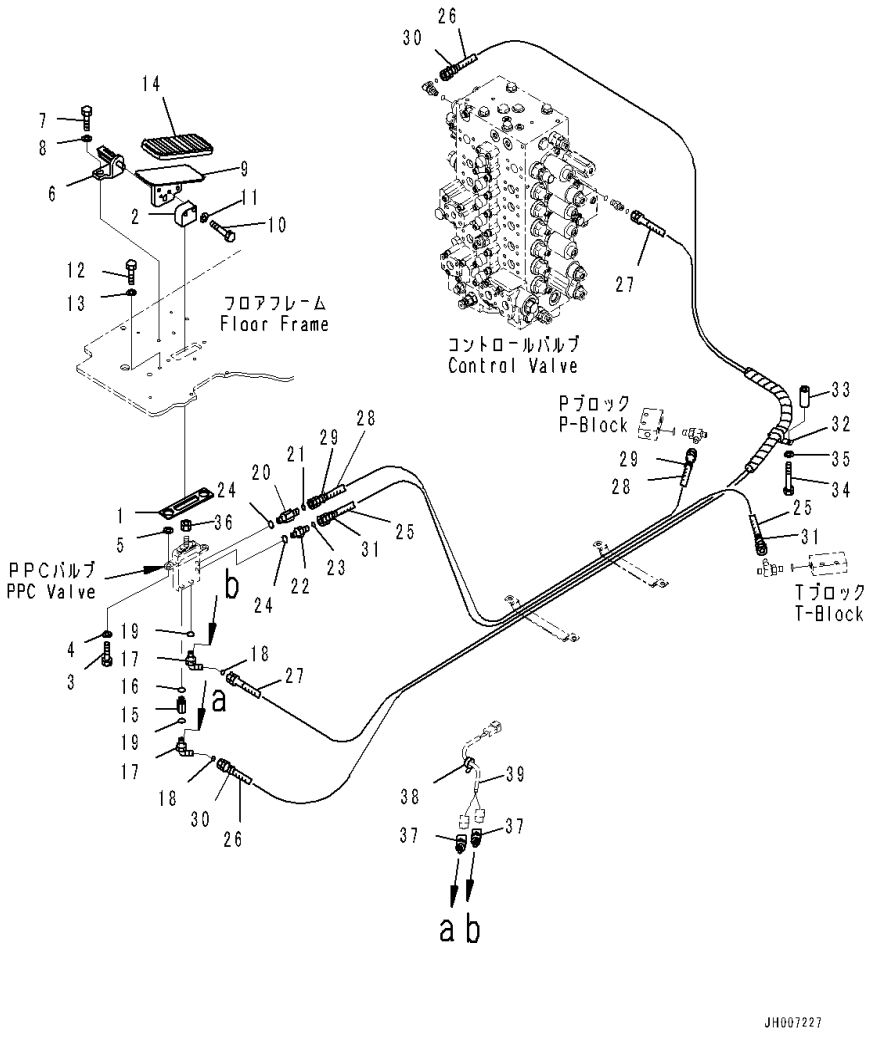

Index	Code	Part Number	Description	Qty	Serial Number
38		08034-20519	Band	1	C90001-C90316
39		(20Y-06-41251)	Wiring Harness		-

FIG. K1110-003053 Cab (Floor, P, T Block)

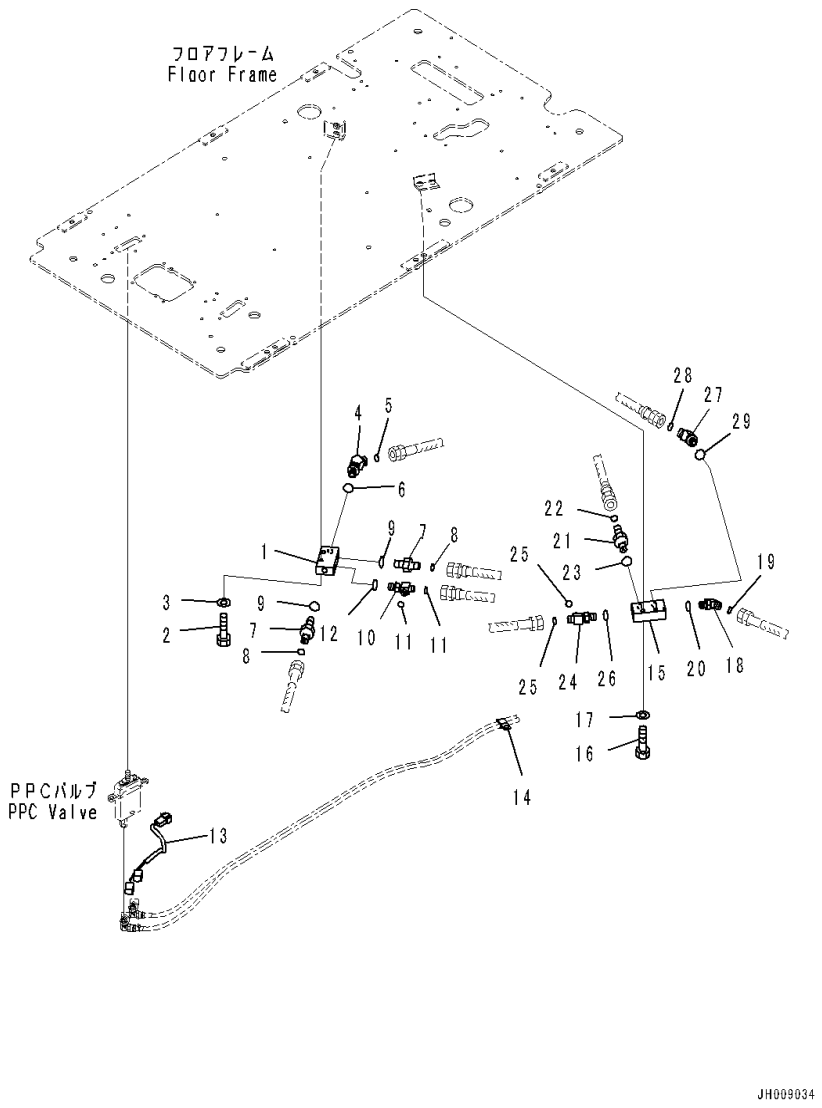

Index	Code	Part Number	Description	Qty	Serial Number
		Note: This list covers following specifications.			
		With 1-additional Acuator Piping, AM-FM Radio, KOMTRAX			
		With 1-additional Acuator Piping, AM-FM Radio, GPRS			
1		20Y-62-15831	Block	1	C90001-C90316
2		01010-81045	Bolt	2	C90001-C90316
3		01643-31032	Washer	2	C90001-C90316
4		11Y-62-12510	Elbow	1	C90001-C90316
5		02896-11009	O-ring	1	C90001-C90316
6		07002-11423	O-ring	1	C90001-C90316
7		02781-0021D	Union	2	C90001-C90316
8		02896-11008	O-ring	2	C90001-C90316
9		07002-11423	O-ring	2	C90001-C90316
10		11Y-62-12330	Tee	1	C90001-C90316
11		02896-11008	O-ring	2	C90001-C90316
12		07002-11423	O-ring	1	C90001-C90316
13		20Y-06-41251	Wiring Harness	1	C90001-C90316
14		04435-51210	Clip	1	C90001-C90316
15		20Y-62-15831	Block	1	C90001-C90316
16		01010-81045	Bolt	2	C90001-C90316
17		01643-31032	Washer	2	C90001-C90316
18		02783-10210	Elbow	1	C90001-C90316
19		02896-11008	O-ring	1	C90001-C90316
20		07002-11423	O-ring	1	C90001-C90316
21		02781-0021D	Union	1	C90001-C90316
22		02896-11008	O-ring	1	C90001-C90316
23		07002-11423	O-ring	1	C90001-C90316
24		11Y-62-12330	Tee	1	C90001-C90316
25		02896-11008	O-ring	2	C90001-C90316
26		07002-11423	O-ring	1	C90001-C90316
27		11Y-62-12510	Elbow	1	C90001-C90316
28		02896-11009	O-ring	1	C90001-C90316
29		07002-11423	O-ring	1	C90001-C90316

FIG. K1110-004001 Cab (With Auto Air Conditioner, AM-FM Radio, KOMTRAX, Cab Step2) (Cab Body and Window)

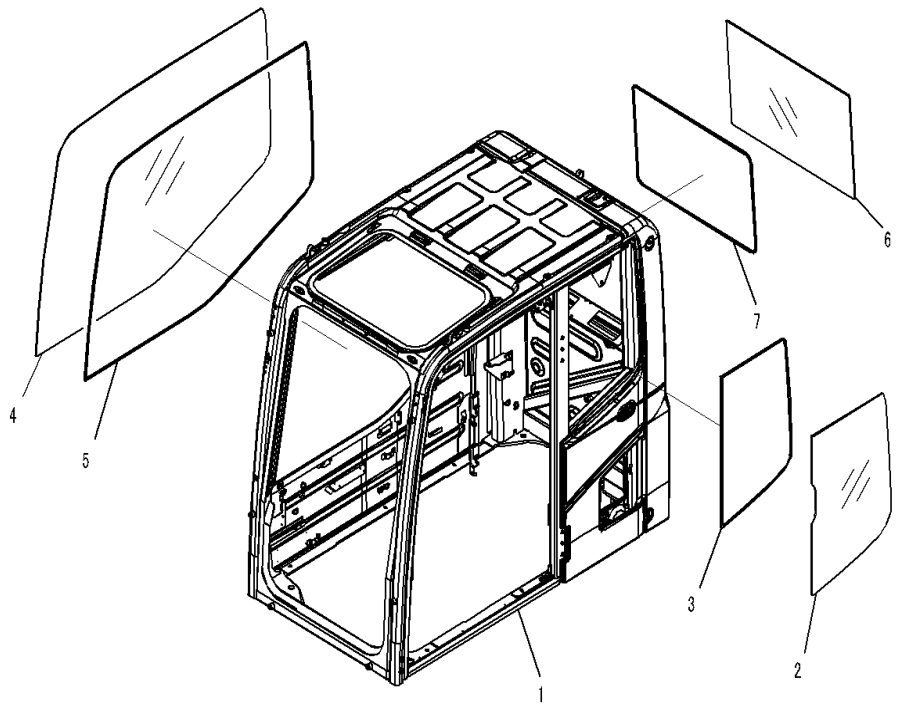

Index	Code	Part Number	Description	Qty	Serial Number
		207-53-00651	Cab Assembly	1	C90317-
1	C1		• Cab	1	C90317-
2		20Y-53-11241	• Glass	1	C90317-
3		20Y-53-11260	• Seal	1	C90317-
4		20Y-53-11841	• Glass	1	C90317-
5		20Y-53-11850	• Seal	1	C90317-
6		20Y-53-11271	• Glass	1	C90317-
7		20Y-53-11250	• Seal	1	C90317-

FIG. K1110-004002 Cab (Front Window)

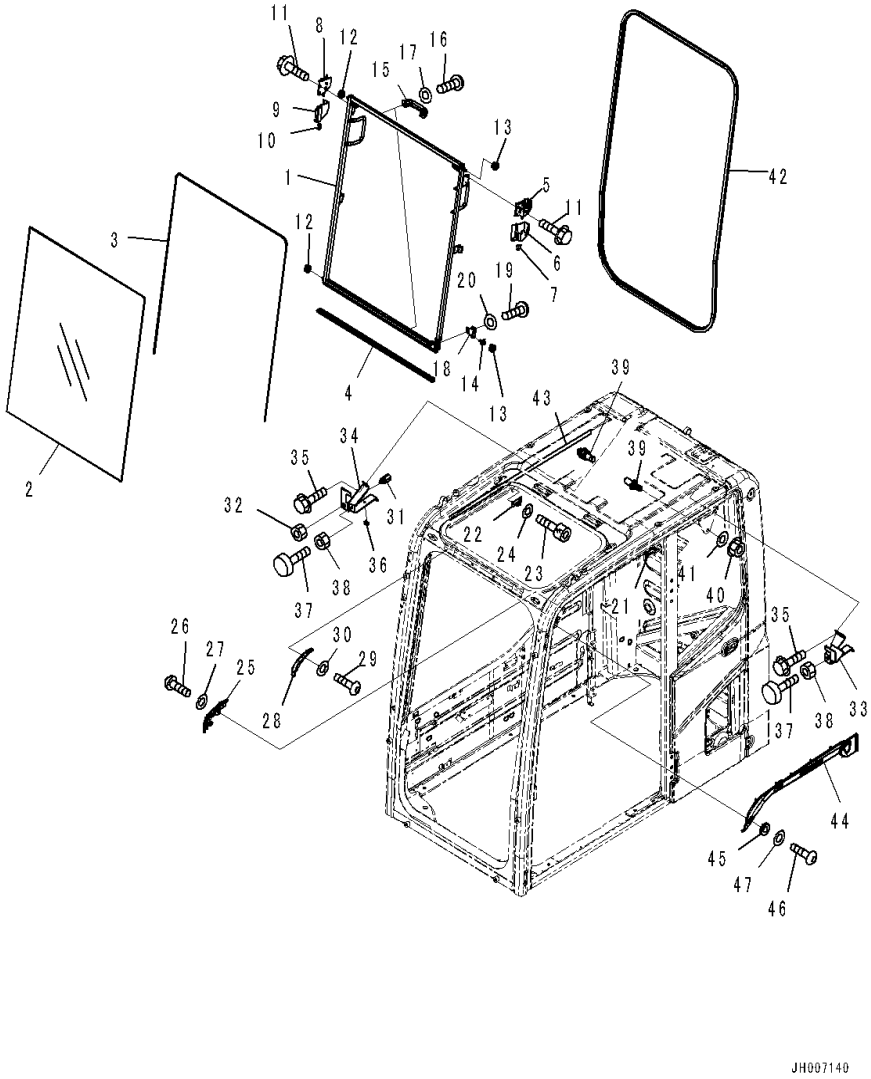

Index	Code	Part Number	Description	Qty	Serial Number
		Note: This list covers following specifications.			
		(*4)Auto Air Conditioner,AM-FM Radio,KOMTRAX,Cab Step2			
		(*6)With 1-aditional Actuator Piping,Cab Step2			
		207-53-00651	Cab Assembly(*4)	1	C90317-
		207-53-00671	Cab Assembly(*6)	1	C90317-
		20Y-53-00380	• Window Assembly	1	C90317-
1		2A5-53-12491	• • Frame	1	C90317-
2		20Y-53-11520	• • Glass	1	C90317-
3		20Y-54-51531	• • Seal	1	C90317-
4		20Y-53-11551	• • Seal	1	C90317-
5		22B-54-15411	• • Lock Assembly	1	C90317-
6		22B-54-15440	• • Case	1	C90317-
7		22B-54-15470	• • Knob	1	C90317-
8		22B-54-15421	• • Lock Assembly	1	C90317-
9		22B-54-15450	• • Case	1	C90317-
10		22B-54-15480	• • Knob	1	C90317-
11		01435-40812	• • Bolt	4	C90317-
12		20Y-54-52621	• • Roller	2	C90317-
13		20Y-54-52681	• • Roller	2	C90317-
14		20Y-53-12330	• • Pin	1	C90317-
15		20Y-54-14590	• • Handle	2	C90317-
16		01245-00616	• • Screw	4	C90317-
17		01643-70623	• • Washer	4	C90317-
18		20Y-53-12830	• • Bracket	1	C90317-
19		01245-00816	• • Screw	2	C90317-
20		01643-70823	• • Washer	2	C90317-
21		20Y-54-51670	• Stopper	1	C90317-
22		20Y-54-51680	• Stopper	1	C90317-
23		01252-80616	• Bolt	4	C90001-
24		01643-70623	• Washer	4	C90317-
25		20Y-53-11561	• Block Assembly	1	C90317-
26		01245-00816	• Screw	2	C90317-
27		01643-70823	• Washer	2	C90317-
28		20Y-53-11661	• Bracket	1	C90317-
29		01245-00816	• Screw	2	C90317-
30		01643-70823	• Washer	2	C90317-
31		21J-06-12440	• Switch	1	C90317-
32		01583-11811	• Nut	1	C90317-
33		20Y-53-11581	• Bracket	1	C90317-
34		2A5-53-12850	• Bracket	1	C90317-

FIG. K1110-004002 Cab (Front Window)

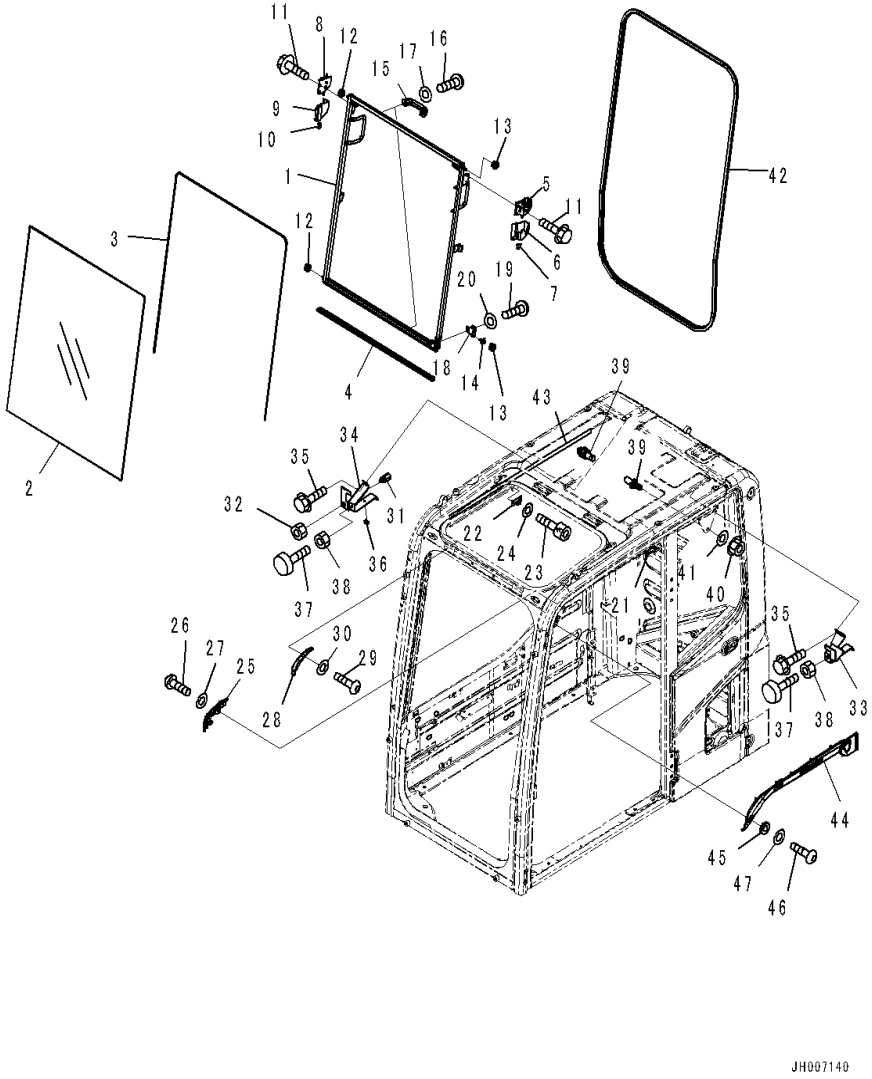

Index	Code	Part Number	Description	Qty	Serial Number
35		01435-00612	• Bolt	4	C90317-
36		08059-00515	• Clip	1	C90317-
37		20Y-54-11611	• Stopper	2	C90317-
38		01580-11008	• Nut	2	C90317-
39		20Y-54-51621	• Striker	2	C90317-
40		01584-31008	• Nut	2	C90317-
41		01643-71032	• Washer	2	C90317-
42		20Y-53-11540	• Seal	1	C90317-
43		20Y-54-51420	• Seal	1	C90317-
44		20Y-53-12531	• Cover	1	C90317-
45		20Y-53-12310	• Collar	3	C90317-
46		01245-00616	• Screw	3	C90317-
47		01643-70623	• Washer	3	C90317-

FIG. K1110-004003 Cab (Front Lower Window)

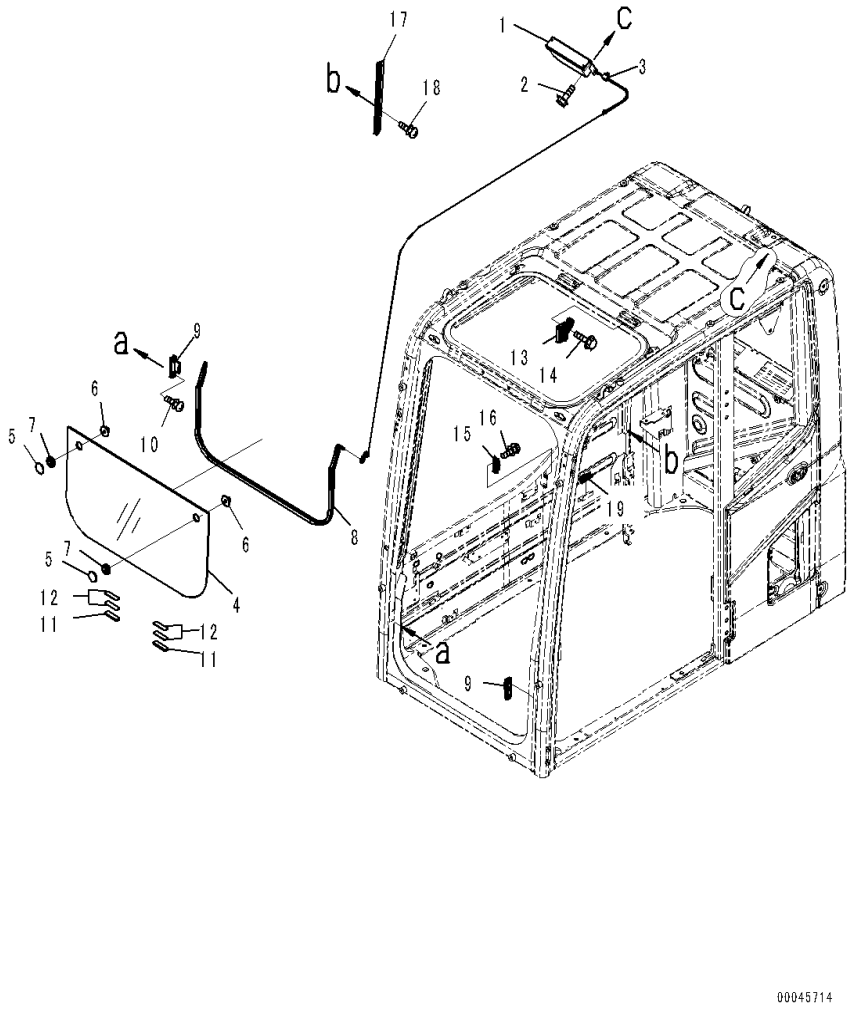

Index	Code	Part Number	Description	Qty	Serial Number
		Note: This list covers following specifications.			
		(*4)Auto Air Conditioner,AM-FM Radio,KOMTRAX,Cab Step2			
		(*5)Cab with KOMTRAX,GPRS Type,Cab Step2			
		(*6)With 1-aditional Actuator Piping,Cab Step2			
		207-53-00651	Cab Assembly(*4)	1	C90317-
		207-53-00661	Cab Assembly(*5)	1	C90317-
		207-53-00671	Cab Assembly(*6)	1	C90317-
1		20Y-53-11591	• Spring Assembly	1	C90317-
2		01435-00616	• Bolt	2	C90317-
3		20Y-54-51640	• Holder	1	C90317-
		20Y-53-11601	• Glass Assembly	1	C90317-
4		20Y-53-11611	• • Glass	1	C90317-
5		22B-54-15970	• • Retainer	2	C90317-
6		22B-54-15980	• • Knob	2	C90317-
7		08037-02512	• • Grommet	2	C90317-
8		2A5-53-12160	• Trim	1	C90317-
9		20Y-53-11940	• Seat	2	C90317-
10		01023-20612	• Screw	4	C90317-
11		2A5-53-11981	• Stopper	2	C90317-
12		20Y-53-12892	• Rubber	4	C90317-
13		22B-54-15841	• Lock Assembly	1	C90317-
14		01435-40616	• Bolt	2	C90317-
15		20Y-53-12611	• Seat	1	C90317-
16		01023-20616	• Screw	2	C90317-
17		20Y-53-12631	• Rail	1	C90317-
18		01023-20616	• Screw	2	C90317-
19		20U-54-25140	• Stopper	1	C90317-

FIG. K1110-004004 Cab (Roof Ventilator)

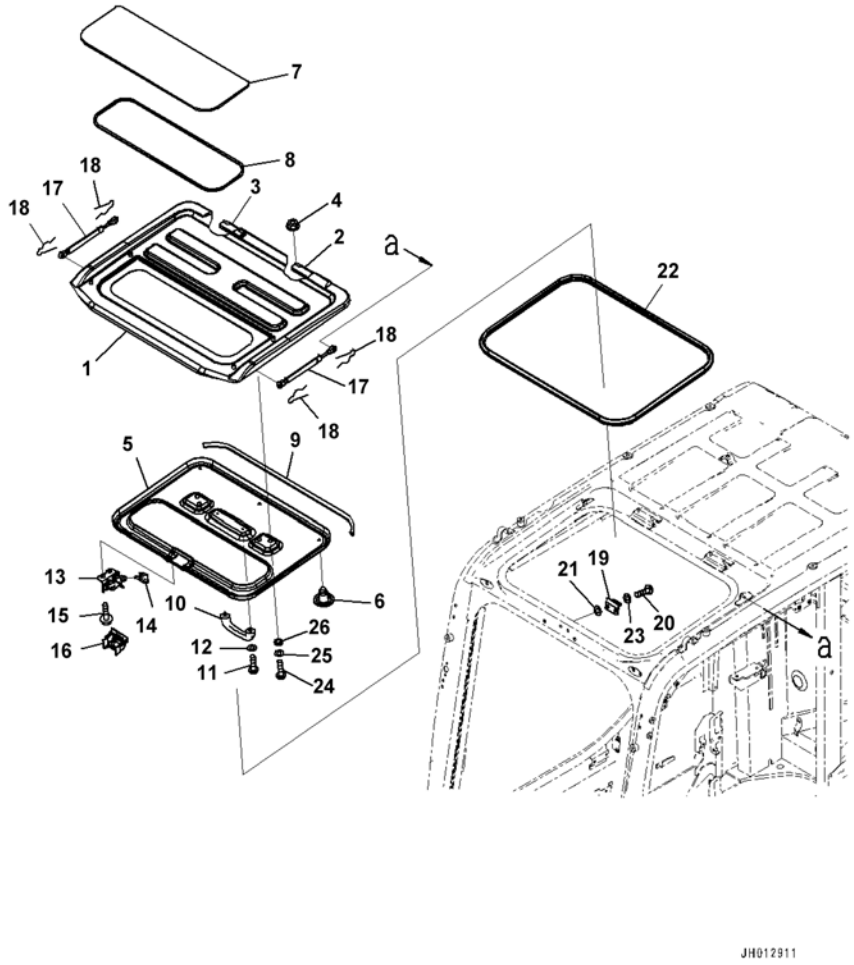

Index	Code	Part Number	Description	Qty	Serial Number
		Note: This list covers following specifications.			
		(*4)Auto Air Conditioner,AM-FM Radio,KOMTRAX,Cab Step2			
		(*6)With 1-aditional Actuator Piping,Cab Step2			
		207-53-00651	Cab Assembly(4*)	1	C90317-
		207-53-00671	Cab Assembly(6*)	1	C90317-
1		2A5-53-12412	• Roof	1	C90317-
2		2A5-53-11K11	• • Hinge, Welded	1	C90317-
3		2A5-53-11K21	• • Hinge, Welded	1	C90317-
4		01584-30806	• Nut	4	C90317-
5		20Y-53-11921	• Cover	1	C90317-
6		09416-10200	• Rivet	5	C90317-
7		20Y-53-11741	• Plate	1	C90317-
8		20Y-53-11790	• Seal	1	C90317-
9		2A5-53-11471	• Seal	1	C90317-
10		20Y-54-14590	• Handle	1	C90317-
11		01245-00616	• Screw	2	C90317-
12		01643-70623	• Washer	2	C90317-
13		2A5-53-12970	• Lock Assembly	1	C90317-
14		20Y-53-11781	• Knob	1	C90317-
15		01435-40610	• Bolt	3	C90317-
16		20Y-53-11931	• Cover	1	C90317-
17		22B-54-38541	• Spring, Gas	2	C90317-
18		2A5-53-12530	• Pin, Snap	4	C90317-
19		20Y-53-11771	• Striker	1	C90317-
20		01245-00820	• Screw	2	C90317-
21		20Y-54-52651	• Spacer	2	C90317-
22		20Y-53-11861	• Seal	1	C90317-
23		01643-70823	• Washer	2	C90317-
24		01245-00620	• Screw	4	C90317-
25		01643-70623	• Washer	4	C90317-
26		20Y-54-52651	• Spacer	4	C90317-

FIG. K1110-004005 Cab (Door)

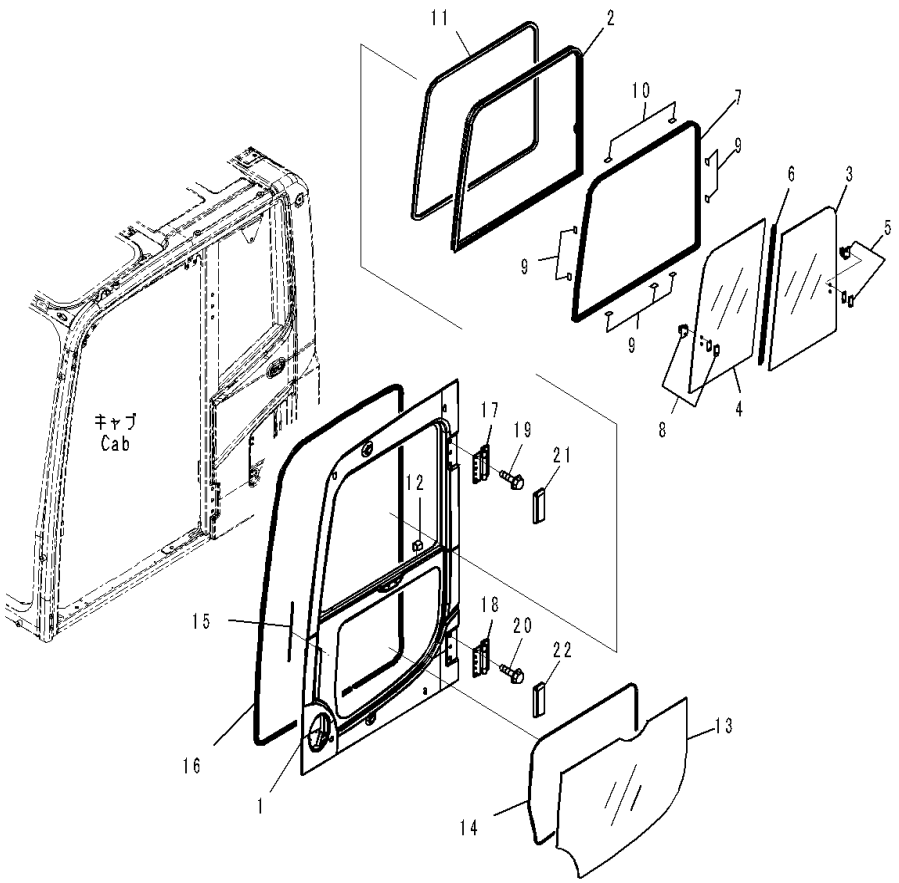

Index	Code	Part Number	Description	Qty	Serial Number
		Note: This list covers following specifications.			
		(*4)Auto Air Conditioner,AM-FM Radio,KOMTRAX,Cab Step2			
		(*5)Cab with KOMTRAX,GPRS Type,Cab Step2			
		(*6)With 1-aditional Actuator Piping,Cab Step2			
		207-53-00651	Cab Assembly(*4)	1	C90317-
		207-53-00661	Cab Assembly(*5)	1	C90317-
		207-53-00671	Cab Assembly(*6)	1	C90317-
		20Y-53-00940	• Door Assembly	1	C90317-
1	C1		• • Door	1	C90317-
		20Y-53-11402	• • Sash Assembly	1	C90317-
2	C1		• • • Sash	1	C90317-
3		20Y-53-12840	• • • Glass	1	C90317-
4		20Y-53-12850	• • • Glass	1	C90317-
5		20Y-54-52860	• • • Lock Assembly	1	C90317-
6		20Y-53-12870	• • • Seal	1	C90317-
7		20Y-53-12880	• • • Seal	1	C90317-
8		20Y-54-13322	• • • Lock Assembly	1	C90317-
9		20Y-53-12971	• • Seat	7	C90317-
10		20Y-54-13180	• • Seat	2	C90317-
11		20Y-53-11470	• • Trim	1	C90317-
12		20Y-53-13910	• • Cover	1	C90317-
13		20Y-53-11451	• • Glass	1	C90317-
14		20Y-53-11460	• • Seal	1	C90317-
15		20Y-53-13880	• • Seal	1	C90317-
16		20Y-53-11485	• • Weather Strip	1	C90317-
17		20Y-53-11332	• • Hinge	1	C90317-
18		20Y-53-11332	• • Hinge	1	C90317-
19		01435-01220	• • Bolt	6	C90317-
20		01435-01220	• • Bolt	6	C90317-
21		20Y-53-11411	• • Cover	1	C90317-
22		20Y-53-11421	• • Cover	1	C90317-

FIG. K1110-004006 Cab (Door Lock)

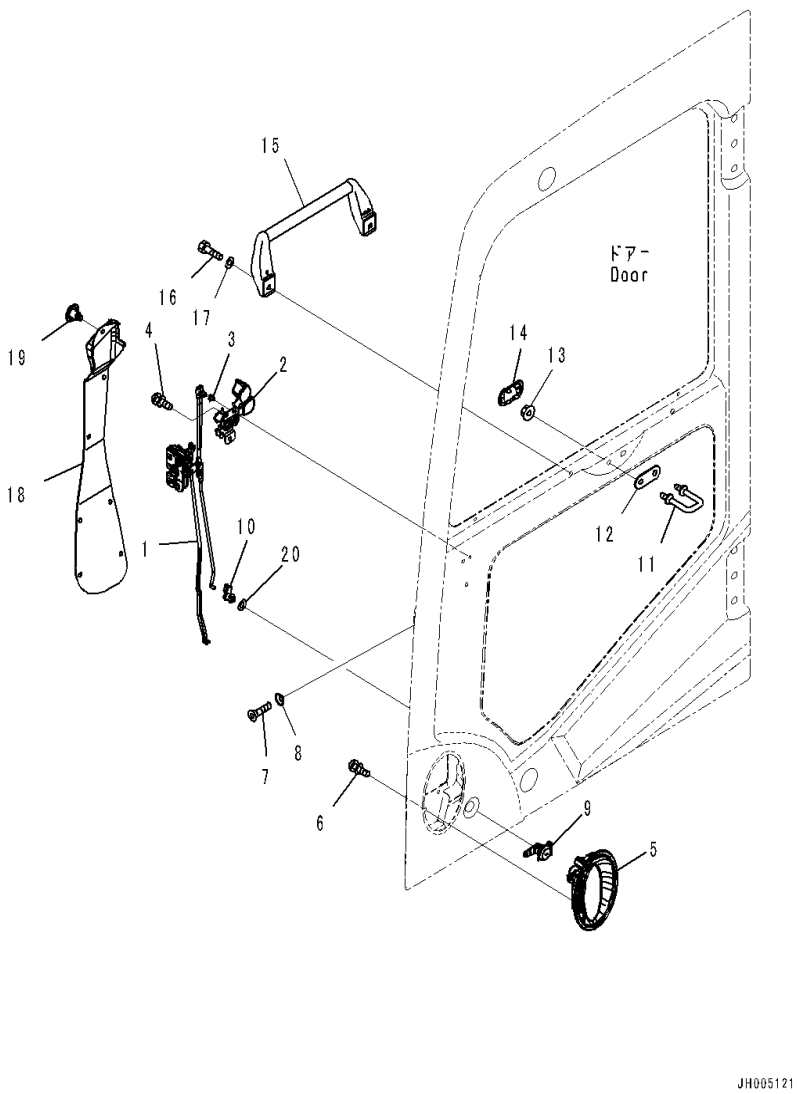

Index	Code	Part Number	Description	Qty	Serial Number
		Note: This list covers following specifications.			
		(*4)Auto Air Conditioner,AM-FM Radio,KOMTRAX,Cab Step2			
		(*5)Cab with KOMTRAX,GPRS Type,Cab Step2			
		(*6)With 1-aditional Actuator Piping,Cab Step2			
		207-53-00651	Cab Assembly(*4)	1	C90317-
		207-53-00661	Cab Assembly(*5)	1	C90317-
		207-53-00671	Cab Assembly(*6)	1	C90317-
		20Y-53-00940	• Door Assembly	1	C90317-
1		20Y-53-12201	• • Latch Assembly	1	C90317-
2		20Y-54-52300	• • Handle Assembly	1	C90317-
3		22B-54-16340	• • • Snap	1	C90317-
4		01023-10612	• • Screw	3	C90317-
5		20Y-53-12991	• • Handle	1	C90317-
6		01023-10612	• • Screw	3	C90317-
7		01240-00616	• • Screw	3	C90317-
8		195-Z11-1690	• • Washer	3	C90317-
9		2A5-53-12710	• • Lock Assembly	1	C90317--
10		22B-54-16330	• • Snap	1	C90317-
11		20Y-53-11320	• • Striker	1	C90317-
12		20Y-53-12940	• • Plate	1	C90317-
13		01584-01008	• • Nut	2	C90317-
14		20Y-53-12661	• • Cover	1	C90317-
15		2A5-53-13130	• • Grip	1	C90317-
16		01010-80820	• • Bolt	2	C90317-
17		01643-30823	• • Washer	2	C90317-
18		20Y-53-11441	• • Cover	1	C90317-
19		22B-54-16461	• • Rivet	7	C90317-
20		145-Z79-6270	• • Washer	1	C90317-

FIG. K1110-004007 Cab (Open Lock and Door Catch)

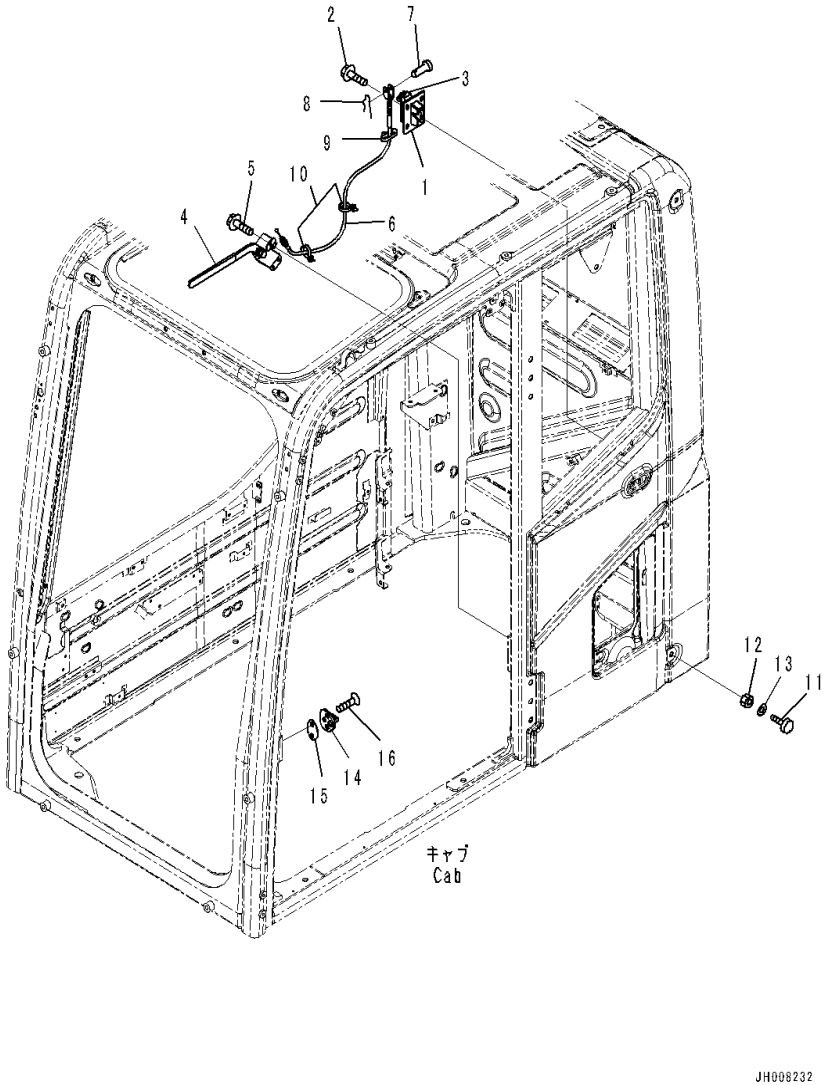

Index	Code	Part Number	Description	Qty	Serial Number
		Note: This list covers following specifications.			
		(*4)Auto Air Conditioner,AM-FM Radio,KOMTRAX,Cab Step2			
		(*5)Cab with KOMTRAX,GPRS Type,Cab Step2			
		(*6)With 1-aditional Actuator Piping,Cab Step2			
		207-53-00651	Cab Assembly(*4)	1	C90317-
		207-53-00661	Cab Assembly(*5)	1	C90317-
		207-53-00671	Cab Assembly(*6)	1	C90317-
1		20Y-53-11981	• Lock	1	C90317-
2		01435-00820	• Bolt	4	C90317-
3		20Y-53-12280	• Cover	1	C90317-
4		208-53-14540	• Lever Assembly	1	C90317-
5		01435-40616	• Bolt	3	C90317-
6		20Y-53-11990	• Cable	1	C90317-
7		04205-10520	• Pin	1	C90317-
8		04052-10530	• Pin	1	C90317-
9		08034-20519	• Band	1	C90317-
10		08059-00413	• Clip	2	C90317-
11		20Y-54-11611	• Stopper	2	C90317-
12		01580-11008	• Nut	2	C90317-
13		01643-31032	• Washer	2	C90317-
14		208-53-22810	• Striker	1	C90317-
15		20Y-53-11890	• Plate	1	C90317-
16		01240-01025	• Screw	2	C90317-

FIG. K1110-004008 Cab (Wiper and Room Lamp)

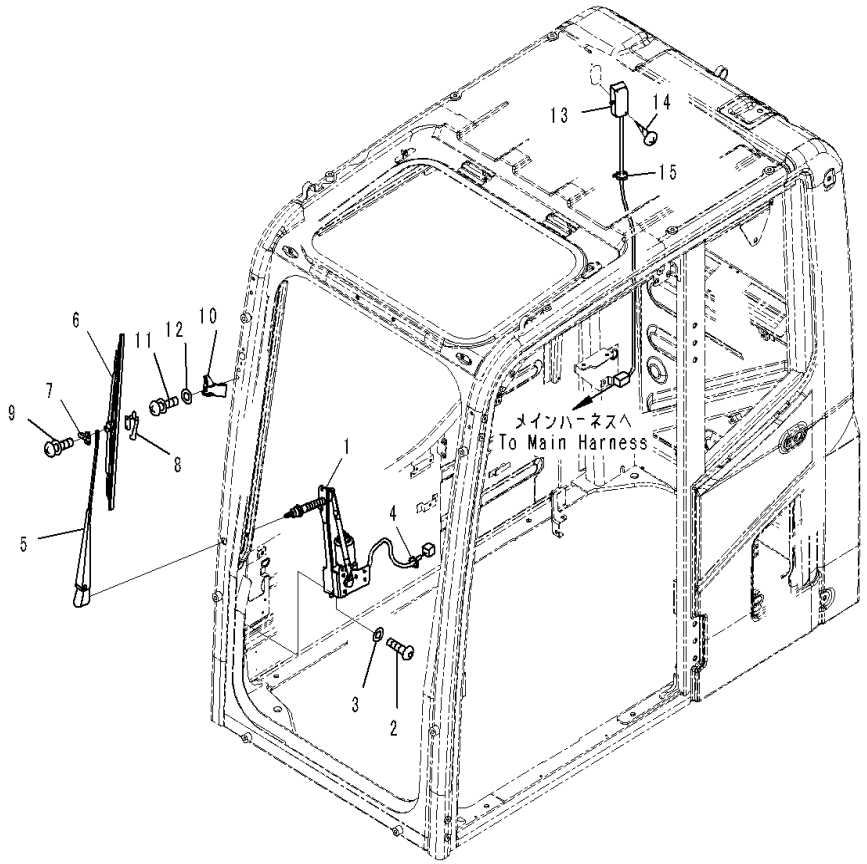

Index	Code	Part Number	Description	Qty	Serial Number
		Note: This list covers following specifications.			
		(*4)Auto Air Conditioner,AM-FM Radio,KOMTRAX,Cab Step2			
		(*5)Cab with KOMTRAX,GPRS Type,Cab Step2			
		(*6)With 1-aditional Actuator Piping,Cab Step2			
		207-53-00651	Cab Assembly(*4)	1	C90317-
		207-53-00661	Cab Assembly(*5)	1	C90317-
		207-53-00671	Cab Assembly(*6)	1	C90317-
1		2A5-53-12721	• Motor Assembly	1	C90317-
2		01245-00616	• Screw	6	C90317-
3		01643-70623	• Washer	6	C90317-
4		08034-20519	• Band	1	C90317-
		20Y-54-52221	• Wiper Assembly	1	C90317-
5		20Y-54-52350	• • Arm	1	C90317-
6		20Y-54-39450	• • Wiper Blade	1	C90317-
7		20Y-54-39460	• • Slider	1	C90317-
8		20Y-54-39480	• • Plate	1	C90317-
9		ND949007-2350	• • Screw and Washer	2	C90317-
10		20Y-53-12233	• Stopper	1	C90317-
11		01245-00625	• Screw	2	C90317-
12		01643-70623	• Washer	2	C90317-
13		2A5-53-13540	• Lamp Assembly	1	C90317-
		08116-02410	• • Bulb, 10watt	1	C90317-
14		01370-00420	• Screw	2	C90317-
15		08034-20519	• Band	1	C90317-

FIG. K1110-004009 Cab (Rubber Antenna)

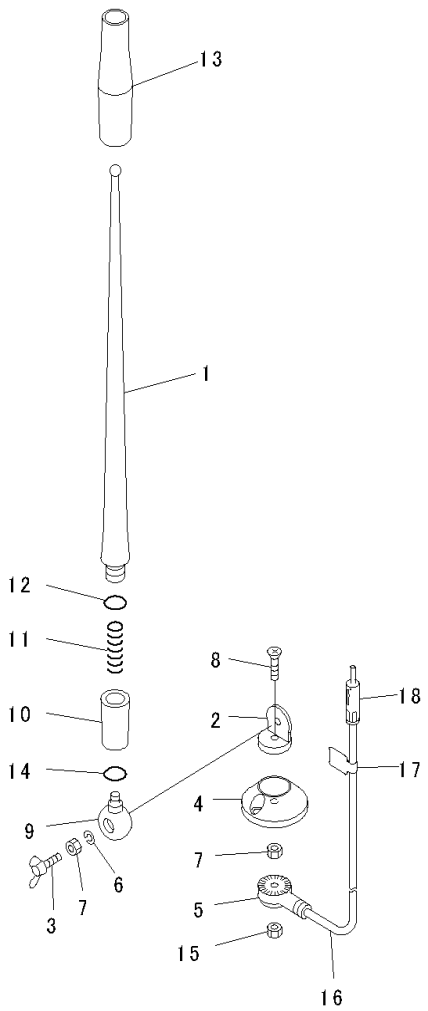

Index	Code	Part Number	Description	Qty	Serial Number
		Note: This list covers following specifications.			
			(*4)Auto Air Conditioner,AM-FM Radio,KOMTRAX,Cab Step2		
			(*5)Cab with KOMTRAX,GPRS Type,Cab Step2		
			(*6)With 1-aditional Actuator Piping,Cab Step2		
		207-53-00651	Cab Assembly(*4)	1	C90317-
		207-53-00661	Cab Assembly(*5)	1	C90317-
		207-53-00671	Cab Assembly(*6)	1	C90317-
		20Y-06-41990	• Antenna	1	C90317-
1		RFU419B-418-A	• • Rod	1	C90317-
2	C1		• • Holder	1	C90317-
3		RFU419B-418-D	• • Bolt, Wing	1	C90317-
4		RFU419B-418-E	• • Base	1	C90317-
5	C1		• • Holder	1	C90317-
6		RFU419B-418-B	• • Washer, Spring	1	C90317-
7		RFU419B-418-C	• • Nut	2	C90317-
8	C1		• • Screw	1	C90317-
9	C1		• • Holder	1	C90317-
10	C1		• • Holder Assembly	1	C90317-
11	C1		• • Spring	1	C90317-
12	C1		• • O-ring	1	C90317-
13	C1		• • Tube	1	C90317-
14	C1		• • O-ring	1	C90317-
15		REU419B-418-C	• • Nut	1	C90317-
16		RFU419B-418-F	• • Cable	1	C90317-
17	C1		• • Plate	1	C90317-
18	C1		• • Plug	1	C90317-

FIG. K1110-004010 Cab (Speaker and Window Washer)

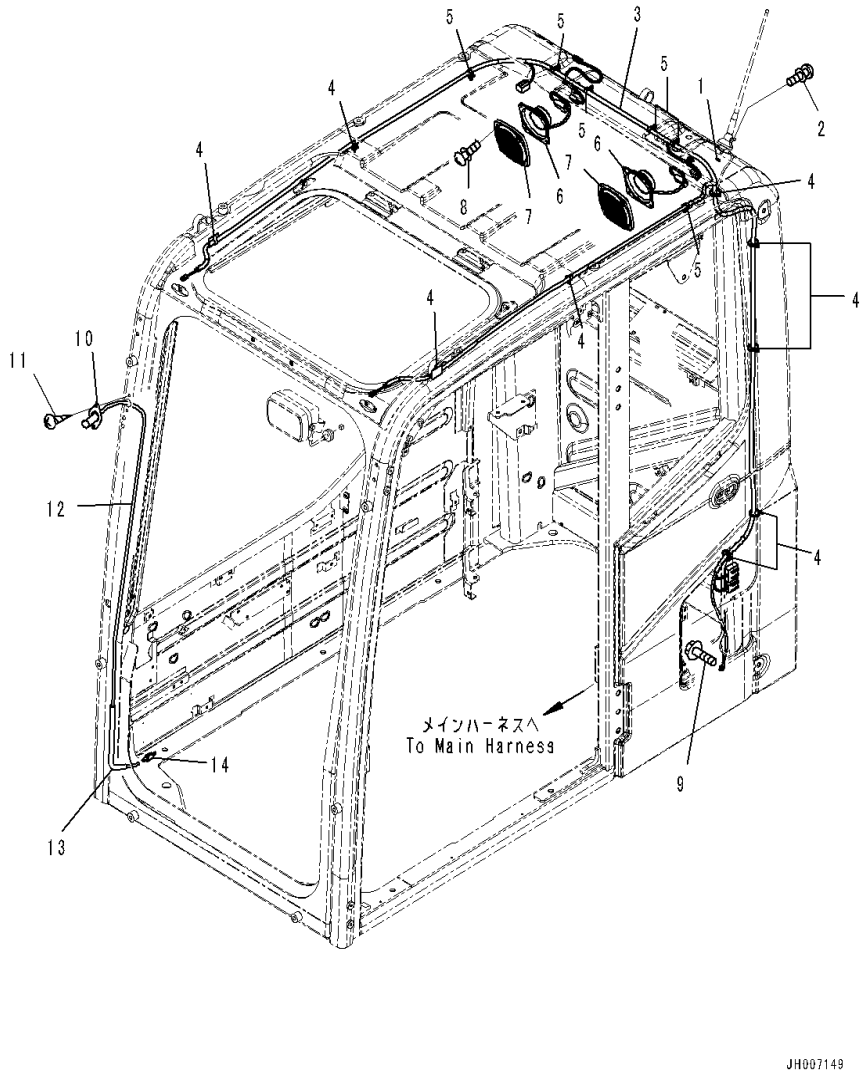

Index	Code	Part Number	Description	Qty	Serial Number
		Note: This list covers following specifications.			
		(*4)Auto Air Conditioner,AM-FM Radio,KOMTRAX,Cab Step2			
		(*5)Cab with KOMTRAX,GPRS Type,Cab Step2			
		(*6)With 1-aditional Actuator Piping,Cab Step2			
		207-53-00651	Cab Assembly(*4)	1	C90317-
		207-53-00661	Cab Assembly(*5)	1	C90317-
		207-53-00671	Cab Assembly(*6)	1	C90317-
1		01643-30623	• Washer	1	C90317-
2		01023-20412	• Screw	2	C90317-
3		2A5-06-12351	• Wiring Harness	1	C90317-
4		08034-20519	• Band	9	C90317-
5		08059-00515	• Clip	6	C90317-
6		20Y-06-42180	• Speaker	2	C90317-
7		20Y-53-12221	• Cover	2	C90317-
8		01023-20416	• Screw	8	C90317-
9		01435-40812	• Bolt	1	C90317-
10		20Y-54-39511	• Nozzle	1	C90317-
11		01023-70412	• Screw	2	C90317-
12		2A5-53-12920	• Hose	1	C90317-
13		08017-A0702	• Conduit	1	C90317-
14		(17A-Z11-4610)	Valve		-

FIG. K1110-004011 Cab (Roof Cover and Air Intake)

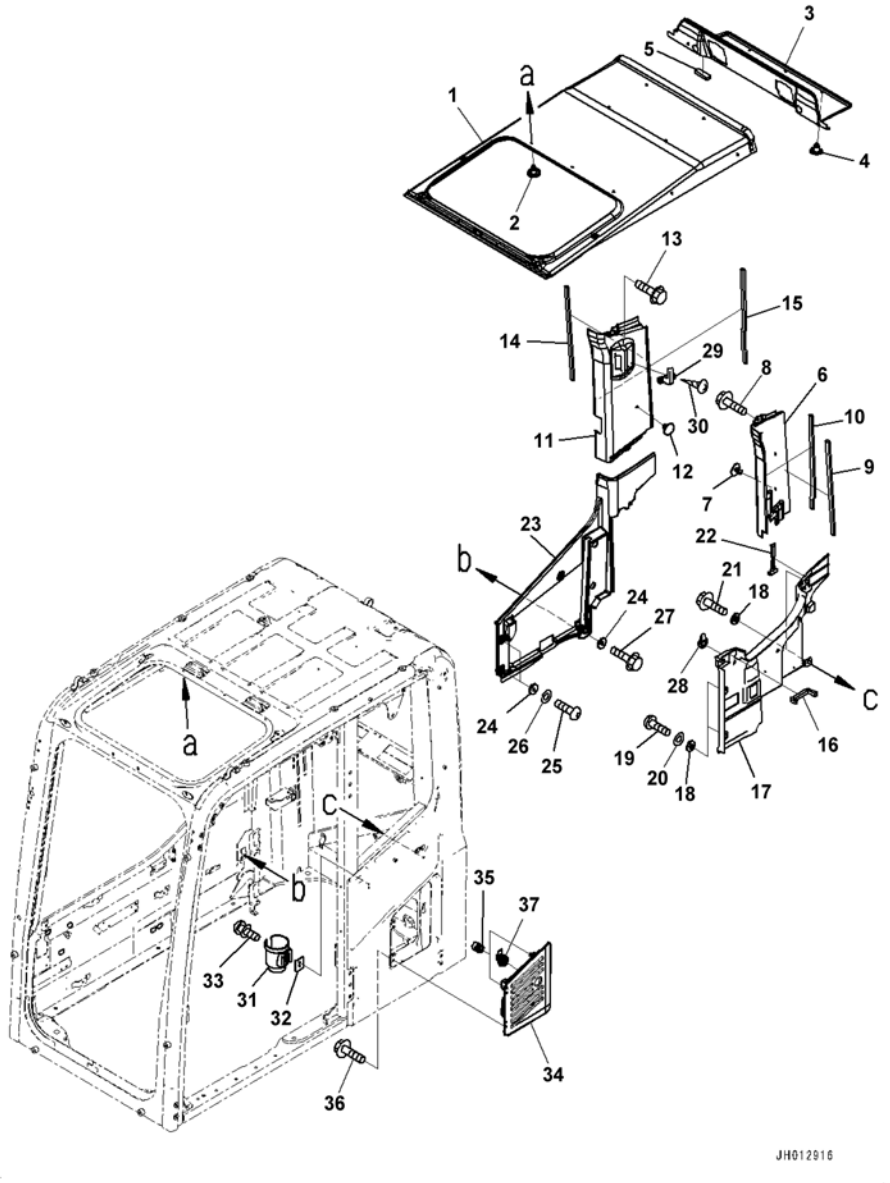

Index	Code	Part Number	Description	Qty	Serial Number
		Note: This list covers following specifications.			
		(*4)Auto Air Conditioner,AM-FM Radio,KOMTRAX,Cab Step2			
		(*5)Cab with KOMTRAX,GPRS Type,Cab Step2			
		(*6)With 1-aditional Actuator Piping,Cab Step2			
		207-53-00651	Cab Assembly(*4)	1	C90317-
		207-53-00661	Cab Assembly(*5)	1	C90317-
		207-53-00671	Cab Assembly(*6)	1	C90317-
1		2A5-53-12561	• Cover	1	C90317-
2		09416-10200	• Rivet	15	C90317-
3		20Y-53-12421	• Cover	1	C90317-
4		09416-10200	• Rivet	3	C90317-
5		20Y-53-13870	• Seal	1	C90317-
6		20Y-53-12431	• Cover	1	C90317-
7		208-53-13270	• Rivet	2	C90317-
8		01435-00612	• Bolt	1	C90317-
9		20Y-53-12710	• Seal	1	C90317-
10		20Y-53-15870	• Seal Assembly	1	C90317-
11		20Y-53-12442	• Cover	1	C90317-
12		09416-10200	• Rivet	1	C90317-
13		01435-00612	• Bolt	1	C90317-
14		20Y-53-12710	• Seal	1	C90317-
15		20Y-53-15870	• Seal Assembly	1	C90317-
16		20Y-53-12552	• Seal	1	C90317-
17		2A5-53-11291	• Cover	1	C90317-
18		20Y-53-12310	• Collar	4	C90317-
19		01245-00616	• Screw	2	C90317-
20		01643-70623	• Washer	2	C90317-
21		01435-00612	• Bolt	1	C90317-
22		22B-54-17380	• Hammer	1	C90317-
23		20Y-53-12472	• Cover	1	C90317-
24		20Y-53-12310	• Collar	5	C90317-
25		01245-00616	• Screw	3	C90317-
26		01643-70623	• Washer	3	C90317-
27		01435-00612	• Bolt	2	C90317-
28		09415-00706	• Cap	1	C90317-
29		205-54-51250	• Hanger	1	C90317-
30		01370-30416	• Screw	2	C90317-
31		208-53-12991	• Holder	1	C90317-
32		208-53-12980	• Plate	1	C90317-
33		01023-20616	• Screw	2	C90317-

FIG. K1110-004011 Cab (Roof Cover and Air Intake)

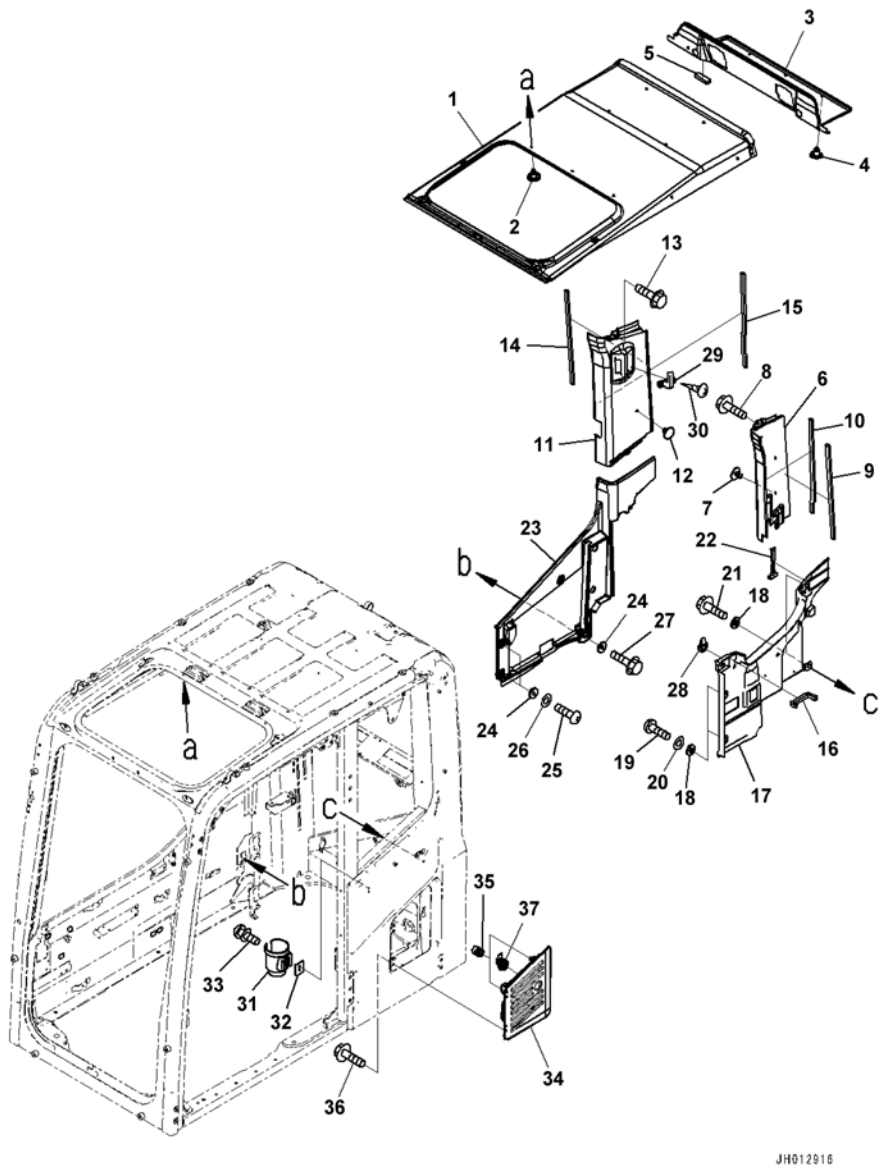

Index	Code	Part Number	Description	Qty	Serial Number
34		20Y-53-15470	• Cover	1	C90317-
35		20Y-54-52791	• Stopper	2	C90317-
36		01435-40610	• Bolt	4	C90317-
37		20Y-53-11761	• Lock Assembly	1	C90317-

FIG. K1110-004012 Cab (Grip)

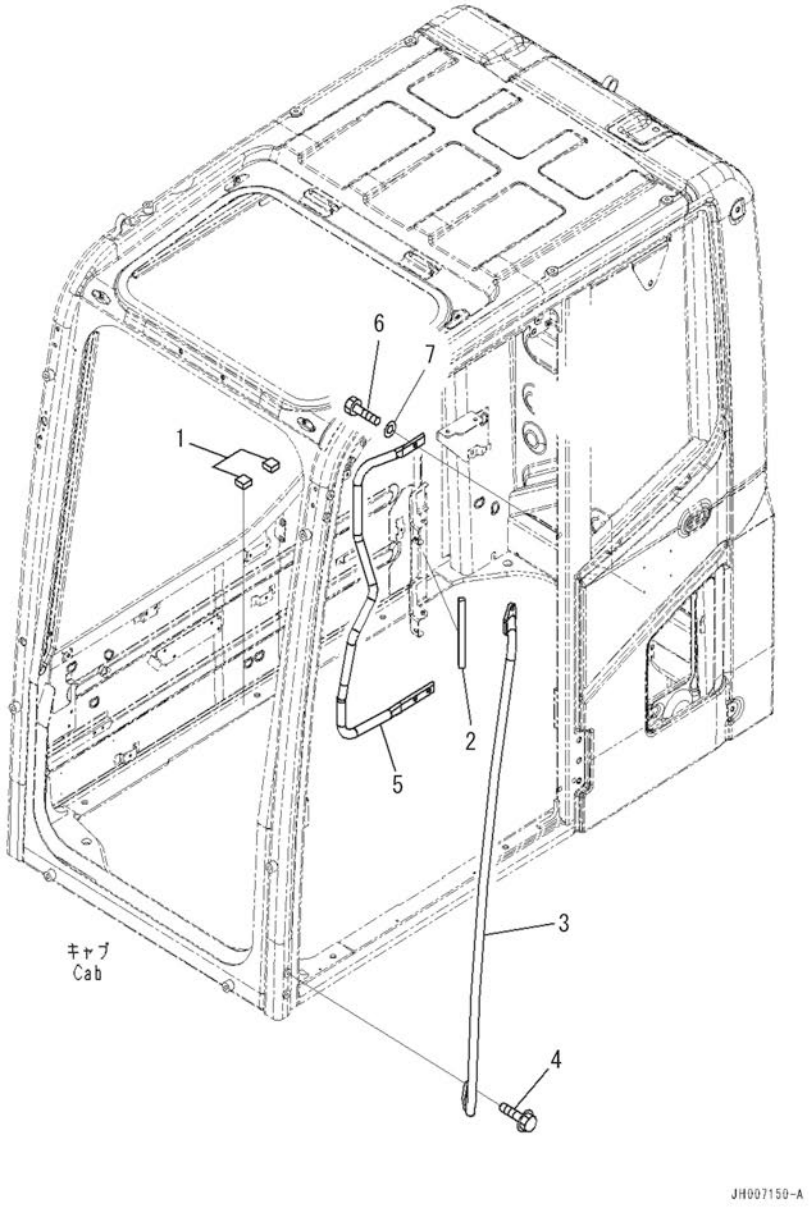

Index	Code	Part Number	Description	Qty	Serial Number
		Note: This list covers following specifications.			
		(*4)Auto Air Conditioner,AM-FM Radio,KOMTRAX,Cab Step2			
		(*5)Cab with KOMTRAX,GPRS Type,Cab Step2			
		(*6)With 1-aditional Actuator Piping,Cab Step2			
		207-53-00651	Cab Assembly(*4)	1	C90317-
		207-53-00661	Cab Assembly(*5)	1	C90317-
		207-53-00671	Cab Assembly(*6)	1	C90317-
1		20Y-53-13490	• Rubber	2	C90317-
2		2A5-53-11870	• Seal	1	C90317-
3		20Y-53-11821	• Grip	1	C90317-
4		01435-40825	• Bolt	4	C90317-
5		2A5-53-13140	• Grip	1	C90317-
6		01010-D1030	• Bolt	3	C90317-
7		01643-71032	• Washer	3	C90317-

FIG. K1110-004013 Cab (KOMTRAX Film Antenna)

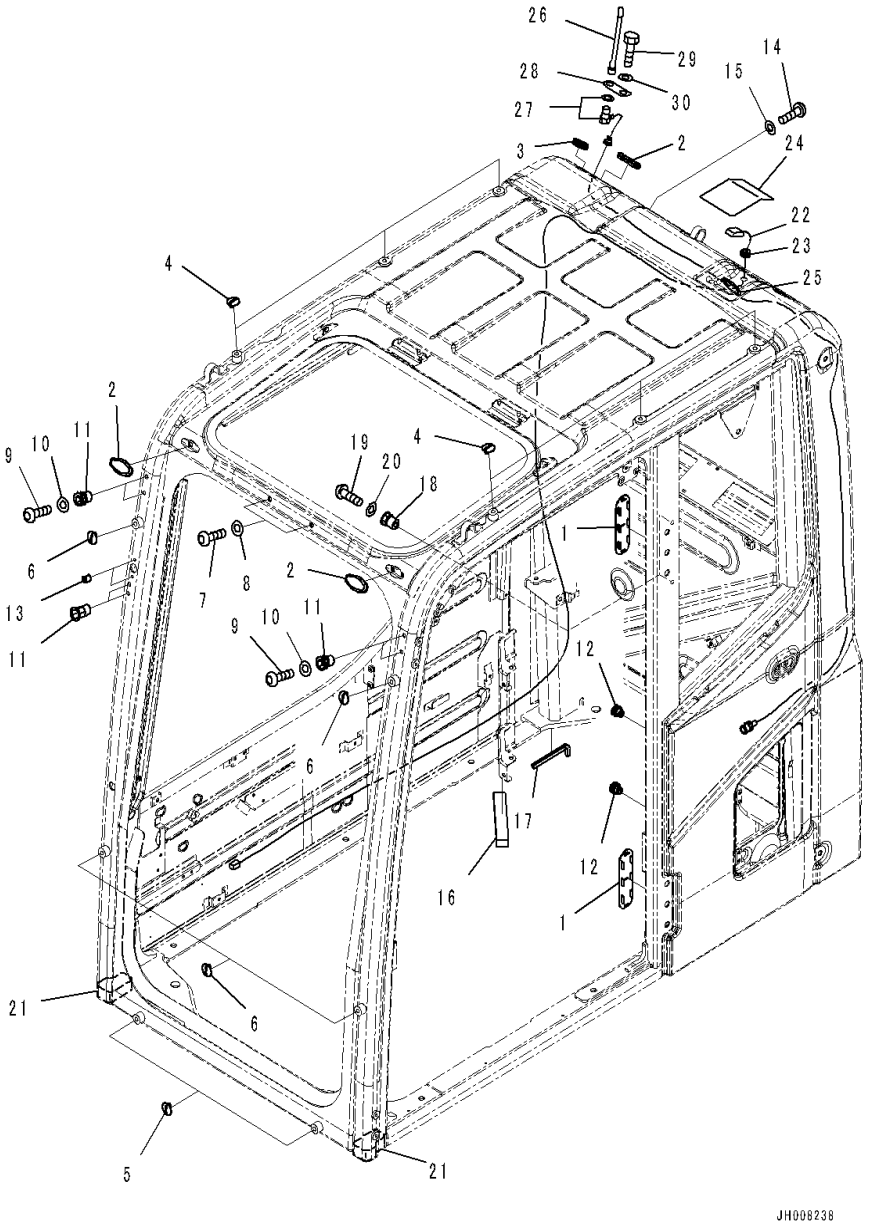

Index	Code	Part Number	Description	Qty	Serial Number
		Note: This list covers following specifications.			
		(*4)Auto Air Conditioner,AM-FM Radio,KOMTRAX,Cab Step2			
		(*6)With 1-aditional Actuator Piping,Cab Step2			
		207-53-00651	Cab Assembly(*4)	1	C90317-
		207-53-00671	Cab Assembly(*6)	1	C90317-
1		20Y-53-12960	• Cover	2	C90317-
2		22B-54-17282	• Cap	3	C90317-
3		09415-02512	• Cap	1	C90317-
4		20Y-53-11390	• Cap	6	C90317-
5		20Y-53-11390	• Cap	2	C90317-
6		20Y-53-11380	• Cap	4	C90317-
7		01245-01016	• Screw	2	C90317-
8		01643-71032	• Washer	2	C90317-
9		01245-00616	• Screw	4	C90317-
10		01643-70623	• Washer	4	C90317-
11		20Y-53-12260	• Nut	6	C90317-
12		20Y-54-35451	• Nut	2	C90317-
13		20Y-53-12320	• Nut	2	C90317-
14		01245-01016	• Screw	1	C90317-
15		01643-71032	• Washer	1	C90317-
16		20Y-53-12580	• Seal	1	C90317-
17		2A5-53-13381	• Trim	1	C90317-
18		20Y-53-12270	• Nut	2	C90317-
19		01245-00816	• Screw	2	C90317-
20		01643-70823	• Washer	2	C90317-
21		2A5-53-11361	• Seal	2	C90317-
22		8A13-10-1320	• Antenna	1	C90317-
23		08037-10610	• • Grommet	1	C90317-
24		20Y-53-12951	• Cover, GPS	1	C90317-
25		2A5-53-12130	• Grommet	1	C90317-
26		8A13-10-2100	• Antenna	1	C90317-
27		8A13-10-2200	• Cable	1	C90317-
28		20Y-53-15140	• Plate	1	C90317-
29		01010-D1225	• Bolt	1	C90317-
30		01643-71232	• Washer	1	C90317-

FIG. K1110-004014 Cab (KOMATSU Mark)

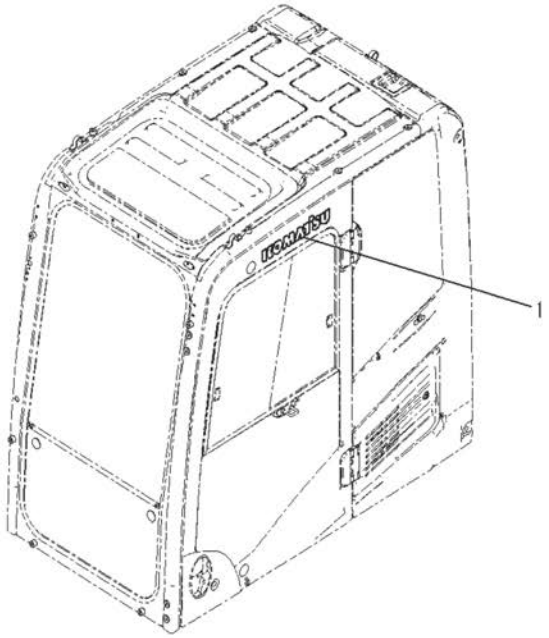

JH010894

Index	Code	Part Number	Description	Qty	Serial Number
		Note: This list covers following specifications.			
		(*4)Auto Air Conditioner,AM-FM Radio,KOMTRAX,Cab Step2			
		(*5)Cab with KOMTRAX,GPRS Type,Cab Step2			
		(*6)With 1-aditional Actuator Piping,Cab Step2			
		207-53-00651	Cab Assembly(*4)	1	C90317-
		207-53-00661	Cab Assembly(*5)	1	C90317-
		207-53-00671	Cab Assembly(*6)	1	C90317-
1		09693-00400	• Emblem, KOMATSU	1	C90317-

FIG. K1110-004015 Cab (Cab In Parts, Monitor and Cover)

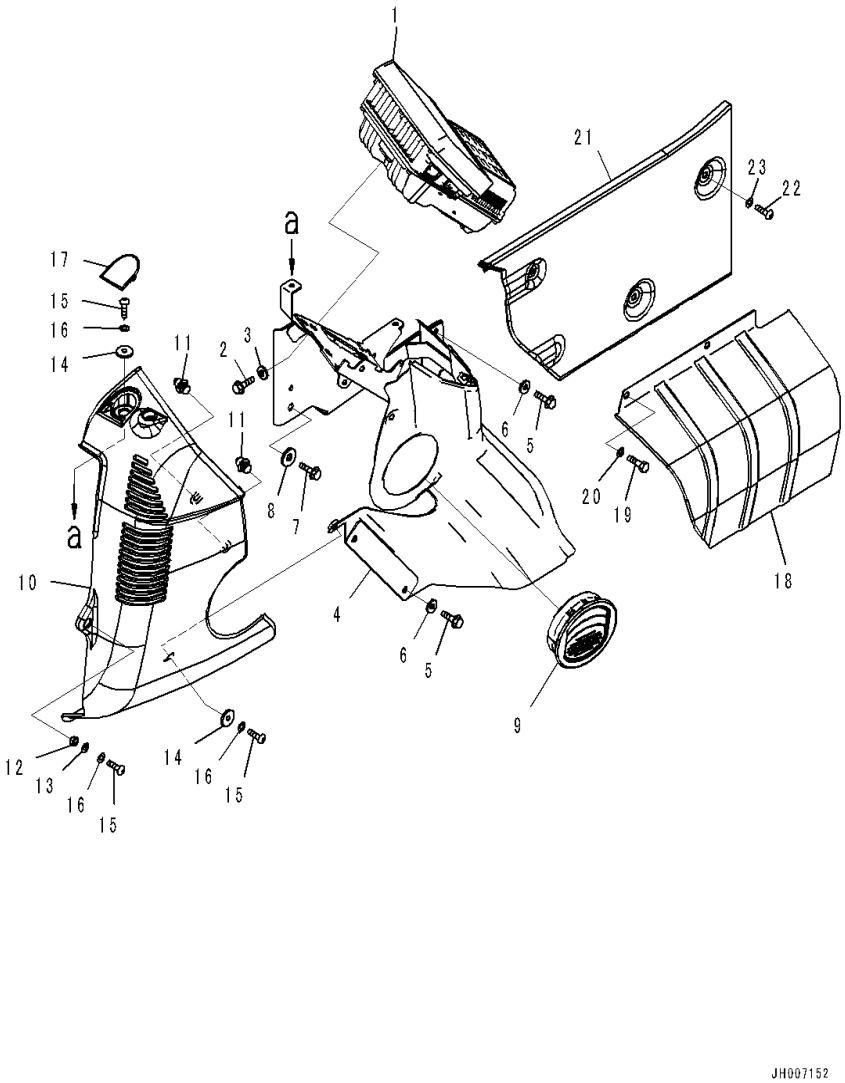

Index	Code	Part Number	Description	Qty	Serial Number
		Note: This list covers following specifications.			
		Auto Air Conditioner,AM-FM Radio,KOMTRAX,Cab Step2			
		Cab with KOMTRAX,GPRS Type,Cab Step2			
		With 1-aditional Actuator Piping,Cab Step2			
		7835-34-1004	Monitor	1	C90317-
1		7835-34-1003	Monitor	1	C90317-#
2		01435-00616	Bolt	4	C90317-
3		209-72-12230	Washer	4	C90317-
4		2A5-53-11532	Cover	1	C90317-
5		01435-00616	Bolt	4	C90317-
6		209-72-12230	Washer	4	C90317-
7		01435-00820	Bolt	1	C90317-
8		208-53-11330	Washer	1	C90317-
9		20Y-53-12172	Grille	1	C90317-
10		20Y-53-12122	Cover	1	C90317-
11		22U-54-25360	• Clip	2	C90317-
12		205-54-75240	Collar	1	C90317-
13		01643-70823	Washer	1	C90317-
14		20Y-53-12310	Collar	2	C90317-
15		01245-00616	Screw	3	C90317-
16		01643-70623	Washer	3	C90317-
17		20Y-53-12291	Cap	1	C90317-
18		20Y-53-12161	Cover	1	C90317-
19		01010-80616	Bolt	2	C90317-
20		01643-30623	Washer	2	C90317-
21		20Y-53-12483	Cover	1	C90317-
22		01245-00616	Screw	3	C90317-
23		01643-70623	Washer	3	C90317-

FIG. K1110-004016 Cab (Cab In Parts, Monitor Cover)

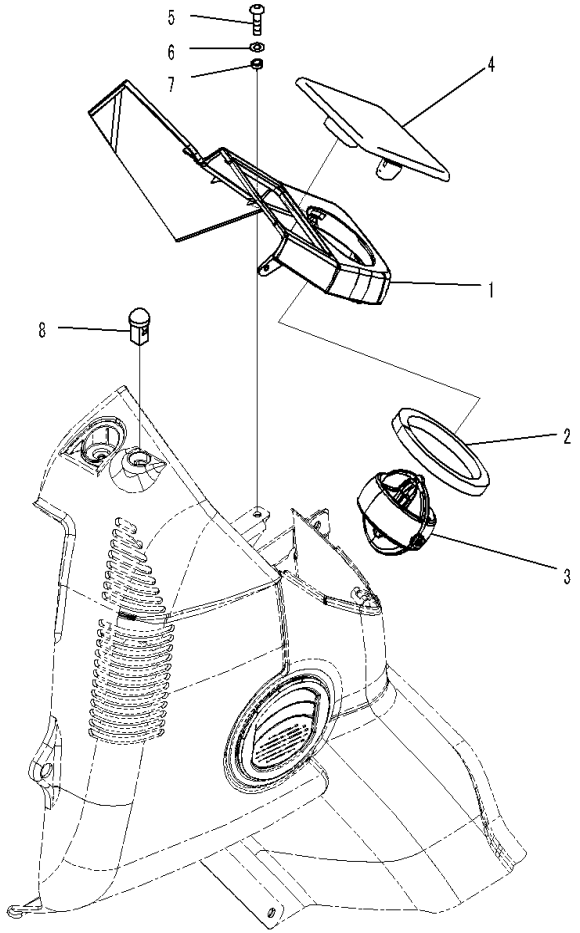

モニタカバー
Monitor Cover

JH005133

Index	Code	Part Number	Description	Qty	Serial Number
		Note: This list covers following specifications.			
		Auto Air Conditioner,AM-FM Radio,KOMTRAX,Cab Step2			
		Cab with KOMTRAX,GPRS Type,Cab Step2			
		With 1-aditional Actuator Piping,Cab Step2			
		2A5-53-12651	Cover Assembly	1	C90317-
1	C1		• Cover	1	C90317-
2		2A5-53-12140	• Seal	1	C90317-
3		20Y-53-12240	Louver	1	C90317-
4		20Y-53-14230	Cap	1	C90317-
5		01245-00616	Screw	1	C90317-
6		01643-70623	Washer	1	C90317-
7		20Y-43-41290	Collar	1	C90317-
8		20Y-979-6161	Sensor, Insolation,Auto Air Conditioner ..	1	C90317-

FIG. K1110-004017 Cab (Cab In Parts, Washer Hose Mounting)

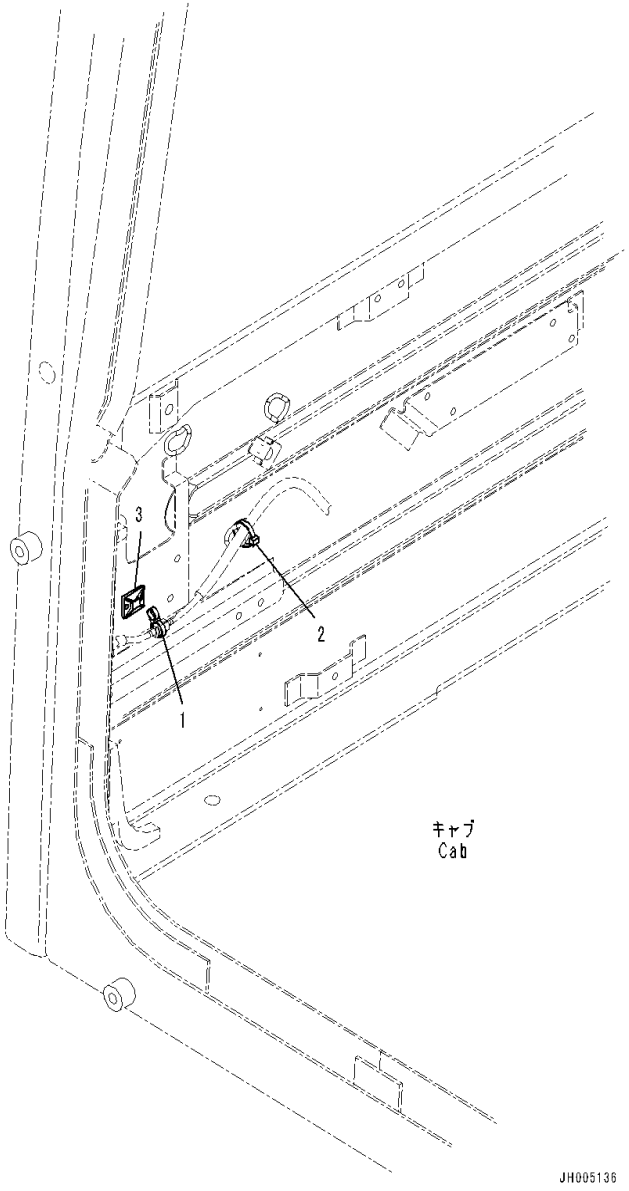

Index	Code	Part Number	Description	Qty	Serial Number
		Note: This list covers following specifications.			
		Auto Air Conditioner,AM-FM Radio,KOMTRAX,Cab Step2			
		Cab with KOMTRAX,GPRS Type,Cab Step2			
		With 1-aditional Actuator Piping,Cab Step2			
1		08034-40521	Band	1	C90317-
2		08034-20519	Band	1	C90317-
3		20U-54-46520	Hook, Sticker Type	1	C90317-

FIG. K1110-004018 Cab (With Auto Air Conditioner, Radio MP3, GPRS)

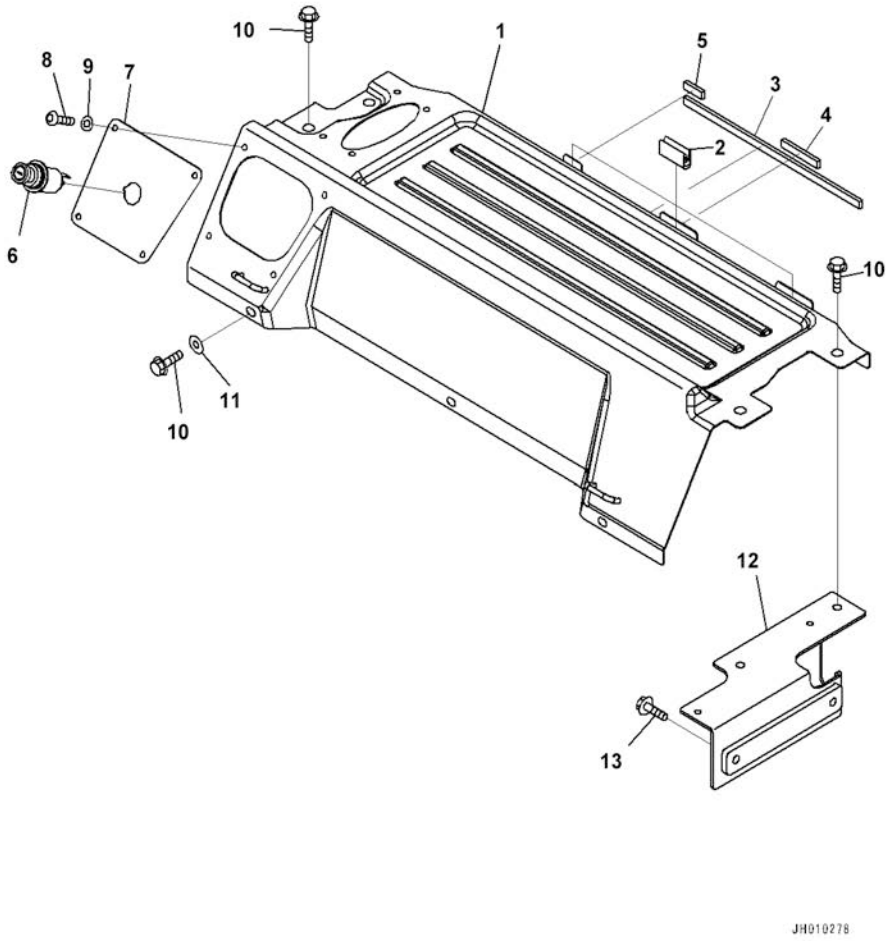

Index	Code	Part Number	Description	Qty	Serial Number
		Note: This list covers following specifications.			
		Auto Air Conditioner,AM-FM Radio,KOMTRAX,Cab Step2			
		Cab with KOMTRAX,GPRS Type,Cab Step2			
		With 1-aditional Actuator Piping,Cab Step2			
		20Y-53-13619	Cover Assembly	1	C90317-
1	C1		• Cover	1	C90317-
2		208-53-12460	• Seat	3	C90317-
3		205-53-31182	• Sheet	1	C90317-
4		205-53-31190	• Sheet	2	C90317-
5		20Y-53-16180	• Sheet	1	C90317-
6		20Y-06-23472	Cigarette Lighter	1	C90317-
7		20Y-53-13680	Plate	1	C90317-
8		01245-00616	Screw	4	C90317-
9		01643-70623	Washer	4	C90317-
10		01435-80825	Bolt	7	C90317-
11		418-54-35450	Washer	3	C90317-
12		20Y-53-12771	Plate	1	C90317-
13		01435-80825	Bolt	2	C90317-

FIG. K1110-004019 Cab (Cab In Parts, Air Duct)

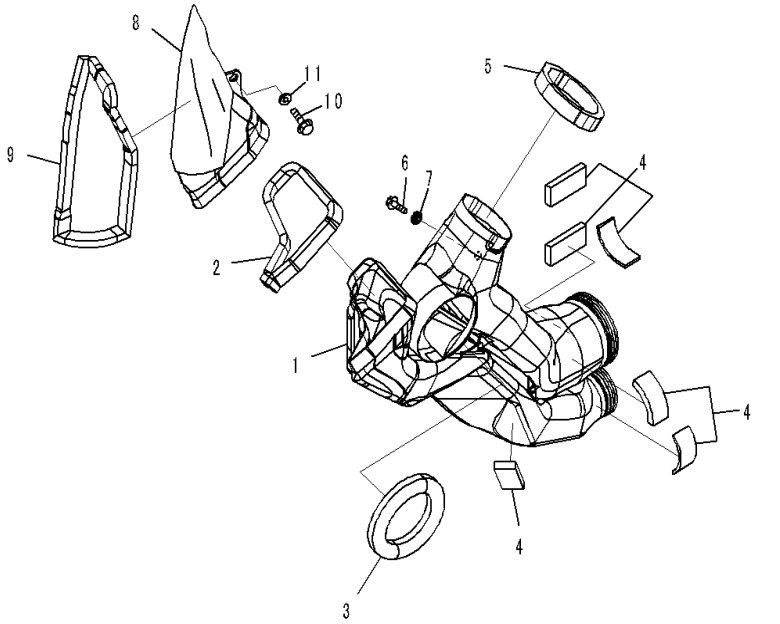

Index	Code	Part Number	Description	Qty	Serial Number
		Note: This list covers following specifications.			
		Auto Air Conditioner,AM-FM Radio,KOMTRAX,Cab Step2			
		Cab with KOMTRAX,GPRS Type,Cab Step2			
		With 1-aditional Actuator Piping,Cab Step2			
1		20Y-53-13371	Duct	1	C90317-
2		20Y-53-13480	Seal	1	C90317-
3		20Y-53-13280	Seal	1	C90317-
4		208-53-12440	Seal	6	C90317-
5		208-53-11941	Seal	1	C90317-
6		01435-00612	Bolt	1	C90317-
7		20Y-53-12310	Collar	1	C90317-
8		20Y-53-13421	Duct	1	C90317-
9		208-53-11920	Seal	1	C90317-
10		01435-00612	Bolt	1	C90317-
11		20Y-53-12310	Collar	1	C90317-

FIG. K1110-004020 Cab (Cab In Parts, Air Duct and Fresh Air Filter)

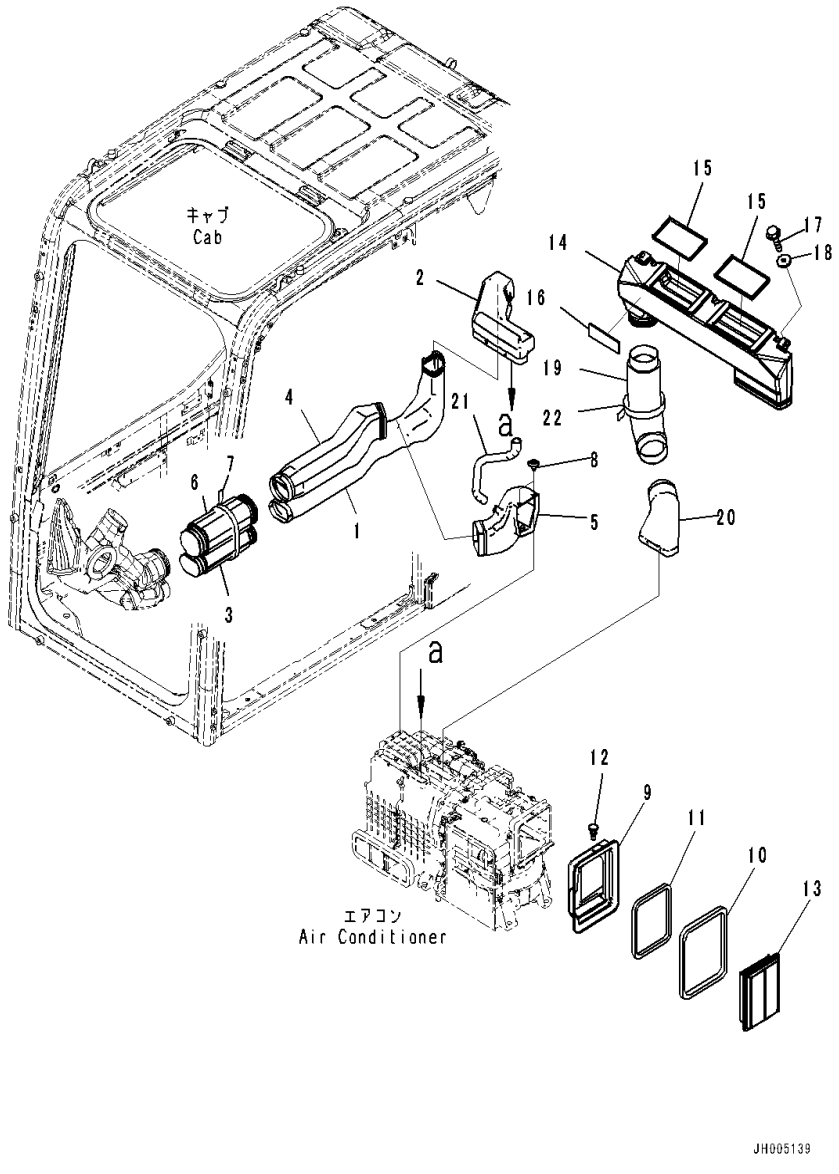

Index	Code	Part Number	Description	Qty	Serial Number
		Note: This list covers following specifications.			
		Auto Air Conditioner,AM-FM Radio,KOMTRAX,Cab Step2			
		Cab with KOMTRAX,GPRS Type,Cab Step2			
		With 1-aditional Actuator Piping,Cab Step2			
1		2A5-979-1211	Duct	1	C90317-
2		2A5-979-1221	Duct	1	C90317-
3		20Y-53-13351	Duct	1	C90317-
4		2A5-979-1231	Duct	1	C90317-
5		2A5-979-1241	Duct	1	C90317-
6		20Y-53-13361	Duct	1	C90317-
7		08034-20876	Band	1	C90317-
8		22B-54-16461	Rivet	2	C90317-
9		2A5-979-1252	Duct	1	C90317-
10		2A5-979-1660	• Seal	1	C90317-
11		2A5-979-1670	• Seal	1	C90317-
12		208-53-12680	Clip	1	C90317-
13		17M-911-3530	Element	1	C90317-
14		20Y-53-13451	Duct	1	C90317-
15		2A5-979-1580	Seal	2	C90317-
16		2A5-979-1590	Seal	1	C90317-
17		01435-80616	Bolt	2	C90317-
18		20Y-53-12310	Collar	2	C90317-
19		208-53-12220	Duct	1	C90317-
20		2A5-979-1261	Duct	1	C90317-
21		2A5-979-1271	Hose	1	C90317-
22		08034-20876	Band	1	C90317-

FIG. K1110-004021 Cab (Cab In Parts, Partition and Recirculation Air Filter)

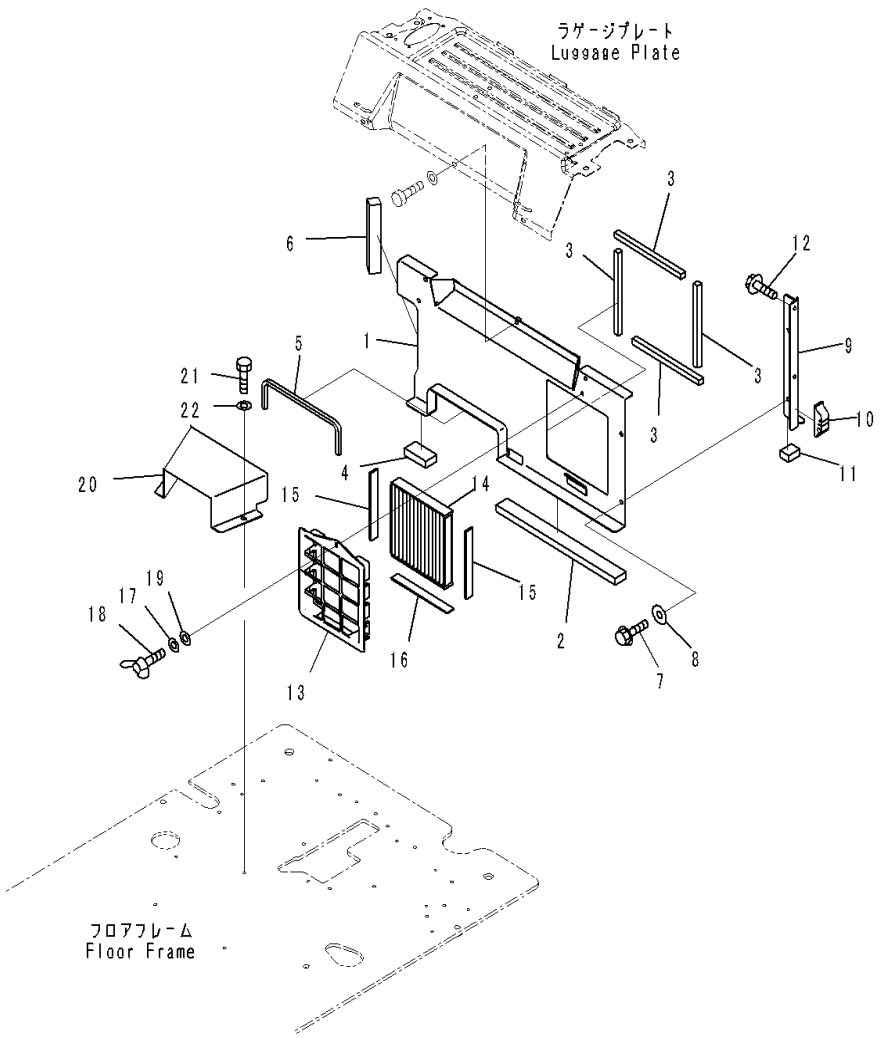

Index	Code	Part Number	Description	Qty	Serial Number
		Note: This list covers following specifications.			
		Auto Air Conditioner,AM-FM Radio,KOMTRAX,Cab Step2			
		Cab with KOMTRAX,GPRS Type,Cab Step2			
		With 1-aditional Actuator Piping,Cab Step2			
		2A5-53-11741	Bracket Assembly	1	C90317-
1	C1		• Bracket	1	C90317-
2		2A5-53-11760	• Seal	1	C90317-
3		2A5-53-11770	• Seal	4	C90317-
4		2A5-53-11780	• Seal	2	C90317-
5		2A5-53-11790	• Seal	1	C90317-
6		2A5-53-11860	• Seal	1	C90317-
7		01435-80820	Bolt	3	C90317-
8		418-54-35450	Washer	3	C90317-
9		20Y-53-12781	Plate	1	C90317-
10		20Y-53-12751	Seal	1	C90317-
11		20Y-53-12760	Seal	1	C90317-
12		01435-80820	Bolt	2	C90317-
13		2A5-979-1181	Holder	1	C90317-
		2A5-979-1551	Filter Assembly	1	C90317-
14		2A5-979-1191	• Filter	1	C90317-
15		2A5-979-1541	• Seal Assembly	2	C90317-
16		2A5-979-1611	• Seal Assembly	1	C90317-
17		20Y-54-65690	Washer	1	C90317-
18		20Y-54-65790	Bolt	1	C90317-
19		01640-20610	Washer	1	C90317-
20		20Y-53-13922	Duct	1	C90317-
21		01010-D0820	Bolt	2	C90317-
22		01643-70823	Washer	2	C90317-

FIG. K1110-004022 Cab (Cab In Parts, Sub Plate and Relay)

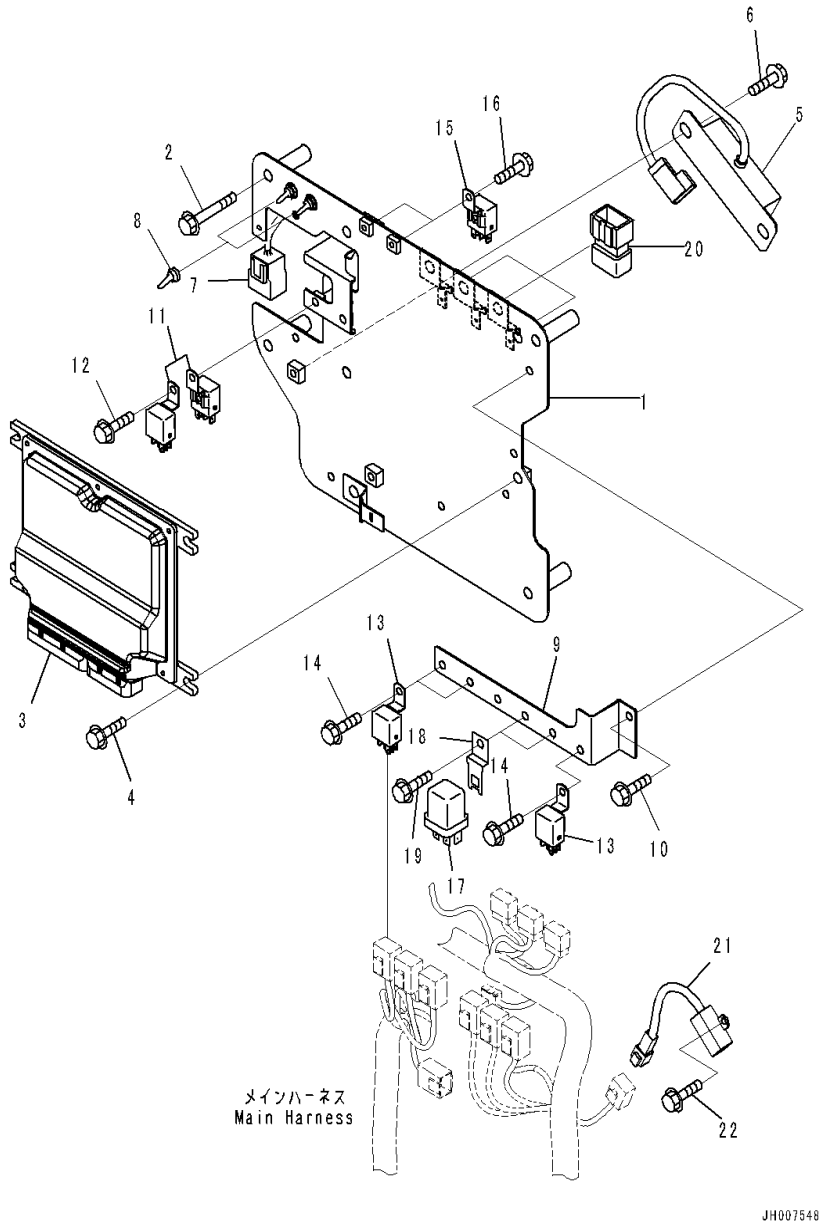

Index	Code	Part Number	Description	Qty	Serial Number
		Note: This list covers following specifications.			
		Auto Air Conditioner,AM-FM Radio,KOMTRAX,Cab Step2			
		Cab with KOMTRAX,GPRS Type,Cab Step2			
		With 1-aditional Actuator Piping,Cab Step2			
1		20Y-53-14812	Bracket	1	C90317-
2		01435-00860	Bolt	4	C90317-
3		7835-45-5002	Controller, Pump	1	C90317-
4		01435-00820	Bolt	4	C90317-
5		7861-94-2000	Resistor	1	C90317-
6		01435-00820	Bolt	2	C90317-
7		20Y-06-41150	Wiring Harness	1	C90317-
8		208-43-71420	Cap	2	C90317-
9		20Y-53-18211	Bracket	1	C90317-
10		01435-00610	Bolt	1	C90317-
11		7861-74-5100	Relay	2	C90317-
12		01435-00610	Bolt	1	C90317-
13		7861-74-5100	Relay	3	C90317-
14		01435-00610	Bolt	3	C90317-
15		7861-74-5100	Relay	2	C90317-
16		01435-00610	Bolt	2	C90317-
17		569-06-61960	Relay	2	C90317-
18		287-06-16420	Bracket	2	C90317-
19		01435-00610	Bolt	2	C90317-
20		8233-06-3350	Diode	3	C90317-
21		21T-06-35620	Resistor	1	C90317-
22		01435-00610	Bolt	2	C90317-

FIG. K1110-004023 Cab (Cab In Parts, Air Conditioner Controller and KOMTRAX Controller)

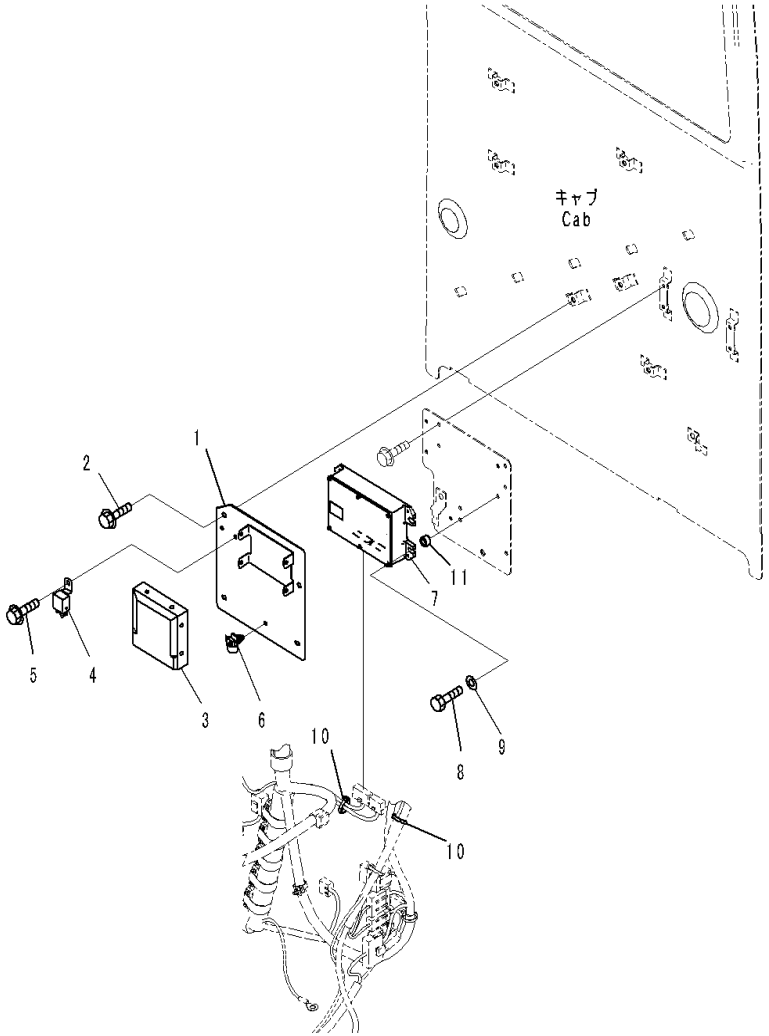

Index	Code	Part Number	Description	Qty	Serial Number
		Note: This list covers following specifications.			
		Auto Air Conditioner,AM-FM Radio,KOMTRAX,Cab Step2			
		With 1-aditional Actuator Piping,Cab Step2			
1		20Y-53-14821	Plate	1	C90317-
2		01435-40812	Bolt	2	C90317-
3		2A5-979-1122	Controller, Air Conditioner	1	C90317-
4		7861-74-5100	Relay	1	C90317-
5		01435-00610	Bolt	1	C90317-
6		08059-00515	Clip	1	C90317-
7		7826-25-3010	Controller, KOMTRAX, TC330	1	C90317-#
8		01010-80630	Bolt	4	C90317-
9		01643-30623	Washer	4	C90317-
10		08034-20519	Band	2	C90317-
11		20Y-53-14340	Collar	4	C90317-

FIG. K1110-004024 Cab (Cab In Parts, Main Wiring Harness Clamp)

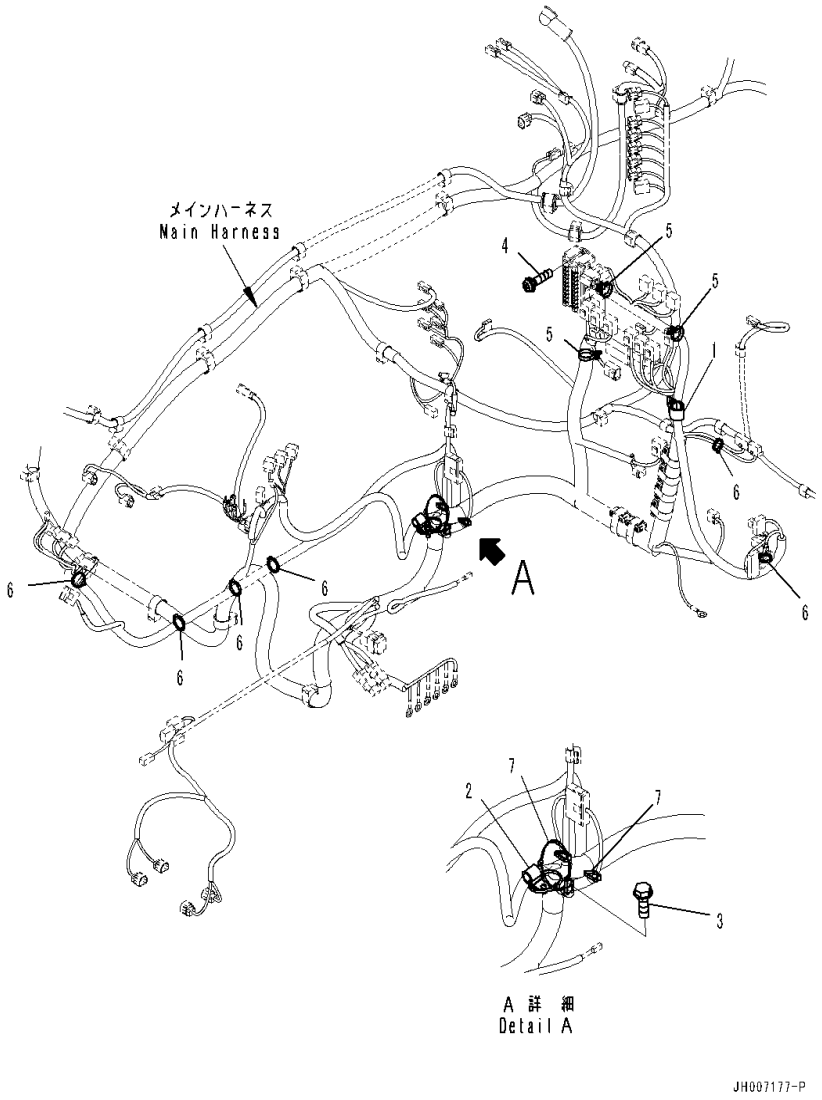

Index	Code	Part Number	Description	Qty	Serial Number
		Note: This list covers following specifications.			
		Auto Air Conditioner,AM-FM Radio,KOMTRAX,Cab Step2			
		Cab with KOMTRAX,GPRS Type,Cab Step2			
		With 1-aditional Actuator Piping,Cab Step2			
1		04434-52511	Clip	1	C90317-
2		04434-51708	Clip	1	C90317-
3		01435-00816	Bolt	1	C90317-
4		01023-60620	Screw	2	C90317-
5		08059-00515	Clip	3	C90317-
6		08034-20519	Band	6	C90317-
7		08034-20519	Band	5	C90317-

FIG. K1110-004025 Cab (Cab In Parts, Rear Cover)

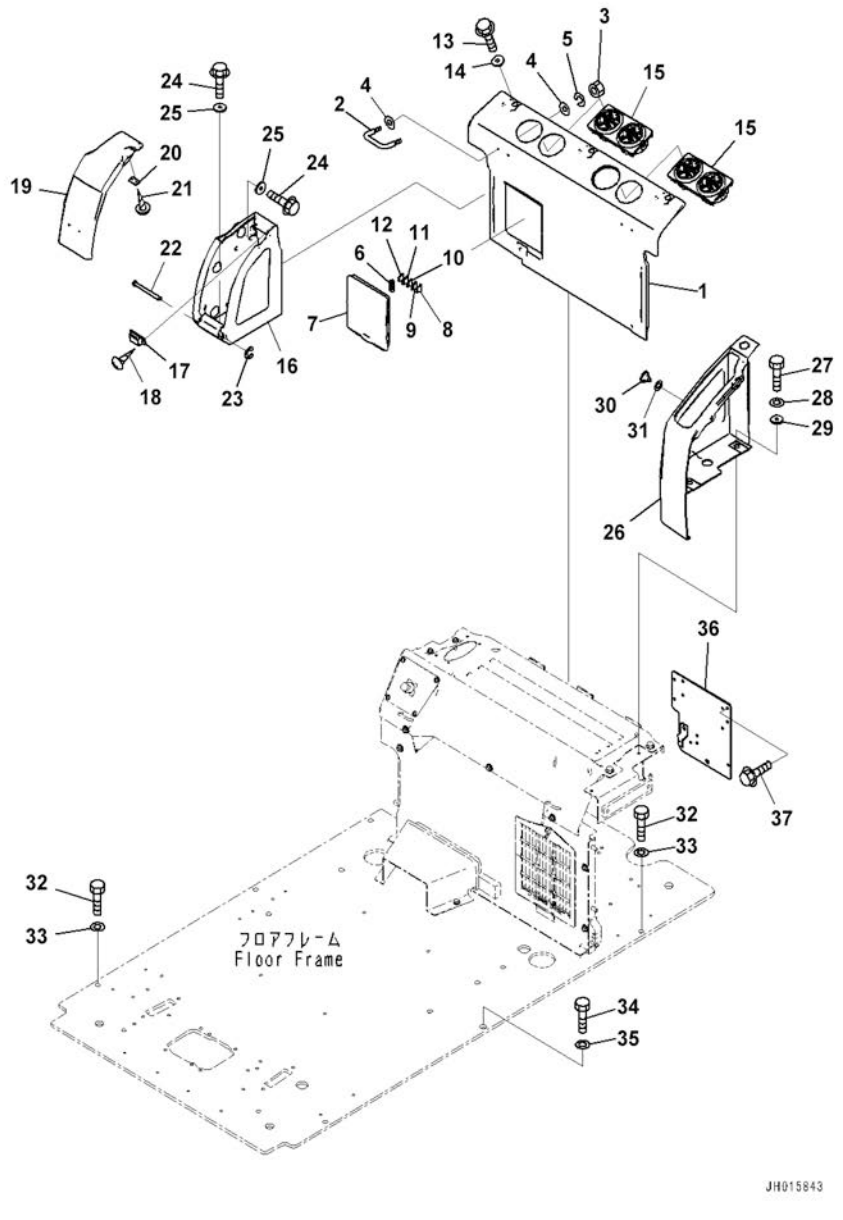

Index	Code	Part Number	Description	Qty	Serial Number
		Note: This list covers following specifications.			
		Auto Air Conditioner,AM-FM Radio,KOMTRAX,Cab Step2			
		Cab with KOMTRAX,GPRS Type,Cab Step2			
		With 1-aditional Actuator Piping,Cab Step2			
1		20Y-53-12371	Cover	1	C90317-
2		208-53-12290	• Hook	2	C90317-
3		01580-10403	• Nut	4	C90317-
4		01640-20408	• Washer	8	C90317-
5		01601-20410	• Washer	4	C90317-
		2A5-53-11731	Cover Assembly	1	C90317-
6		22U-43-22340	• Puller	1	C90317-
7	C1		• Cover	1	C90317-
8		08041-00500	• Fuse, 5Amp.	1	C90317-
9		08041-01000	• Fuse, 10Amp.	1	C90317-
10		08041-02000	• Fuse, 20Amp.	1	C90317-
11		08041-02500	• Fuse, 25Amp.	1	C90317-
12		08041-03000	• Fuse, 30Amp.	1	C90317-
13		01435-80616	Bolt	3	C90317-
14		20Y-53-12310	Collar	3	C90317-
15		208-979-7560	Grille	2	C90317-
16		20Y-53-12381	Cover	1	C90317-
17		09452-14503	Catcher	1	C90317-
18		01370-10308	Screw	2	C90317-
19		20Y-53-12391	Cover	1	C90317-
20		208-53-12410	Plate	1	C90317-
21		01370-20308	Screw	2	C90317-
22		208-53-12320	Pin	1	C90317-
23		208-53-12330	Ring	1	C90317-
24		01435-80616	Bolt	5	C90317-
25		20Y-53-12310	Collar	5	C90317-
26		20Y-53-12731	Cover	1	C90317-
27		01010-D0620	Bolt	2	C90317-
28		01643-70623	Washer	2	C90317-
29		20Y-53-12310	Collar	2	C90317-
30		23D-950-4450	Button	1	C90317-
31		20Y-53-12860	Spacer	1	C90317-
32		01010-81240	Bolt	5	C90317-
33		01643-31232	Washer	5	C90317-
34		01010-81250	Bolt	2	C90317-
35		01643-31232	Washer	2	C90317-

FIG. K1110-004025 Cab (Cab In Parts, Rear Cover)

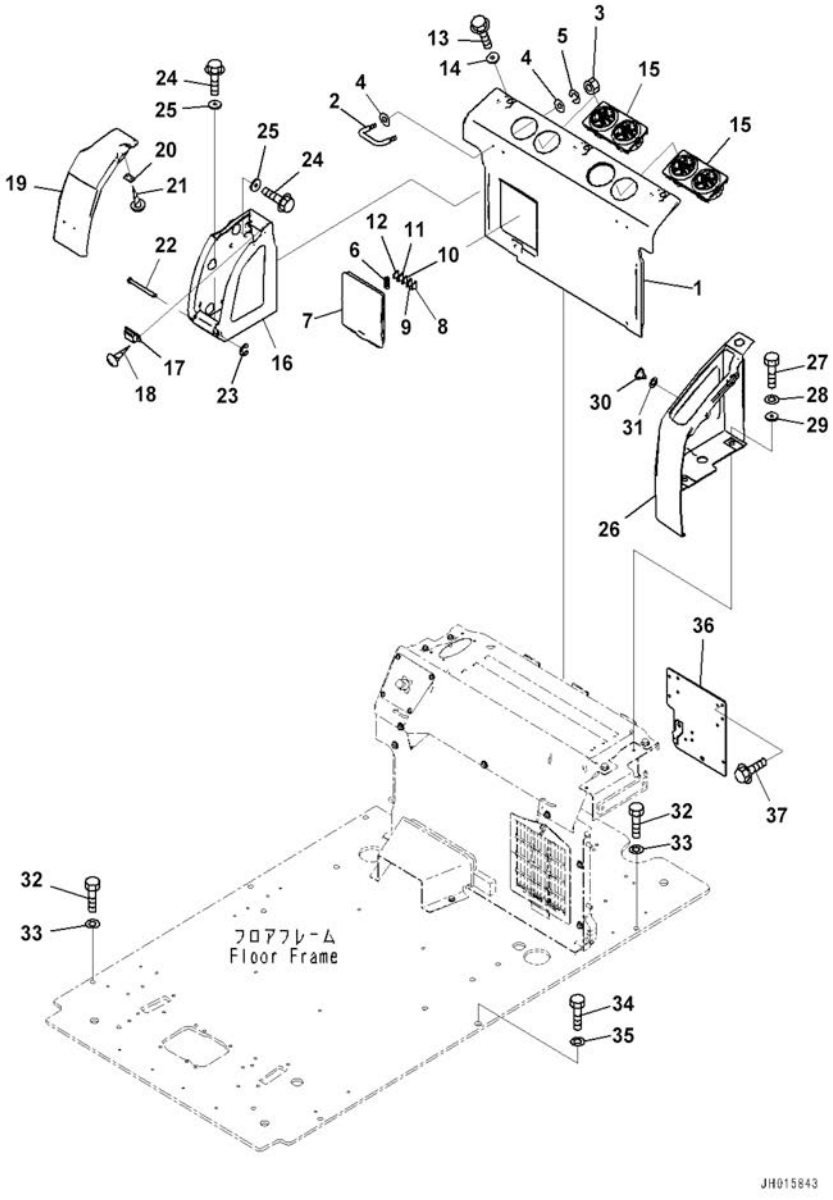

Index	Code	Part Number	Description	Qty	Serial Number
36		20Y-53-18221	Bracket	1	C90317-
37		01435-00612	Bolt	4	C90317-

FIG. K1110-004026 Cab (Floor, Frame)

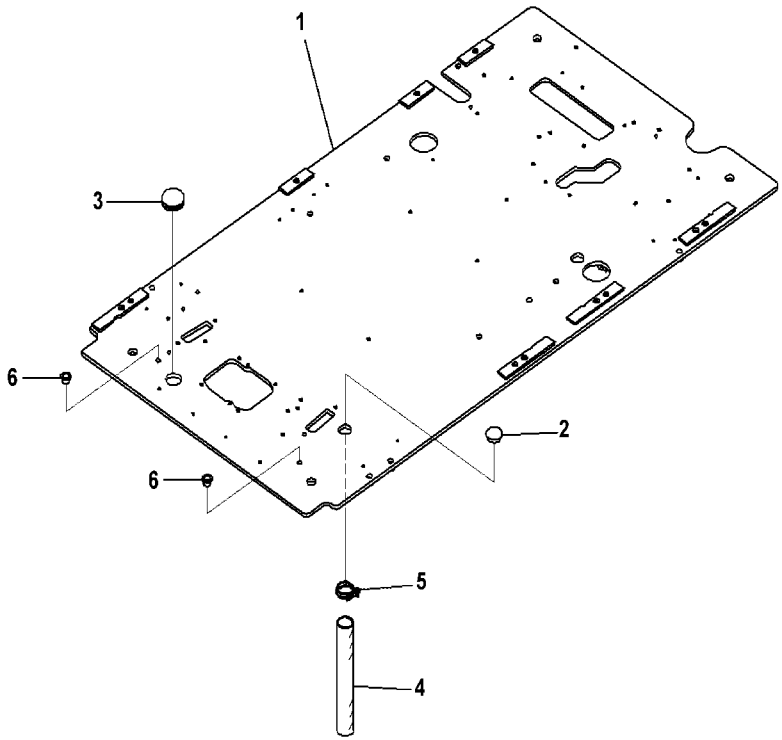

Index	Code	Part Number	Description	Qty	Serial Number
		Note: This list covers following specifications.			
		Auto Air Conditioner,AM-FM Radio,KOMTRAX,Cab Step2			
		Cab with KOMTRAX,GPRS Type,Cab Step2			
		With 1-aditional Actuator Piping,Cab Step2			
1		207-43-21220	Frame	1	C90317-
2		22U-54-25581	Grommet	2	C90317-
3		09415-03620	Cap	1	C90317-
4		07286-03828	Hose	1	C90317-
5		07280-04726	Clamp	1	C90317-
6		07048-01310	Plug	2	C90317-

FIG. K1110-004027 Cab (Floor, PPC Valve for Travel)

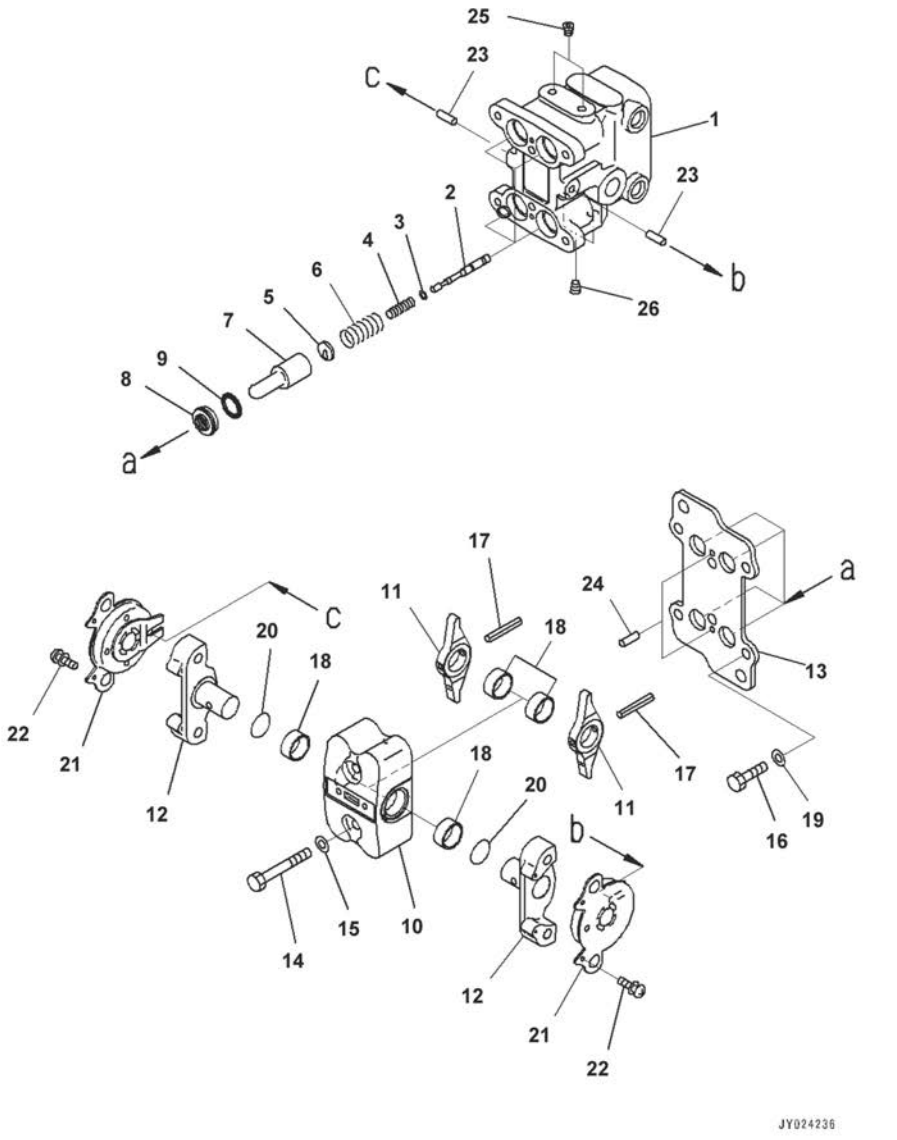

Index	Code	Part Number	Description	Qty	Serial Number
		Note: This list covers following specifications.			
		Auto Air Conditioner,AM-FM Radio,KOMTRAX,Cab Step2			
		Cab with KOMTRAX,GPRS Type,Cab Step2			
		With 1-aditional Actuator Piping,Cab Step2			
		702-22-01010	Valve, Pilot	1	C90317-
1	C1		• Valve Body	1	C90317-
2	C1		• Valve	4	C90317-
3		702-16-51140	• Shim, T=0.30mm	4	C90317-
4		702-16-53420	• Spring	4	C90317-
5		702-16-53140	• Retainer	4	C90317-
6		702-16-54420	• Spring	4	C90317-
7		702-16-53170	• Piston	4	C90317-
8		702-16-71150	• Seal	4	C90317-
9		702-16-71160	• Seat	4	C90317-
10	C1		• Case	1	C90317-
11	C1		• Lever	2	C90317-
12	C1		• Shaft	2	C90317-
13		702-16-73640	• Plate	1	C90317-
14		01010-80855	• Bolt	2	C90317-
15		01643-30823	• Washer	2	C90317-
16		01010-80820	• Bolt	4	C90317-
17	C1		• Pin, Spring	2	C90317-
18	C1		• Bushing	4	C90317-
19		702-16-54331	• Washer, T=1.60mm	4	C90317-
		702-16-54341	• Washer, T=1.30mm	4	C90317-
		702-16-54351	• Washer, T=1.00mm	4	C90317-
		702-16-56380	• Washer, T=1.90mm	4	C90317-
		702-16-56390	• Washer, T=2.20mm	4	C90317-
20	C1		• O-ring	2	C90317-
21		702-16-73610	• Damper Assembly	2	C90317-
22		01023-10306	• Screw	4	C90317-
23	C1		• Pin	2	C90317-
24		04022-04016	• Pin, Dowel	2	C90317-
25	C1		• Plug	2	C90317-
26	C1		• Plug	2	C90317-

FIG. K1110-004028 Cab (Floor, Travel Control Lever)

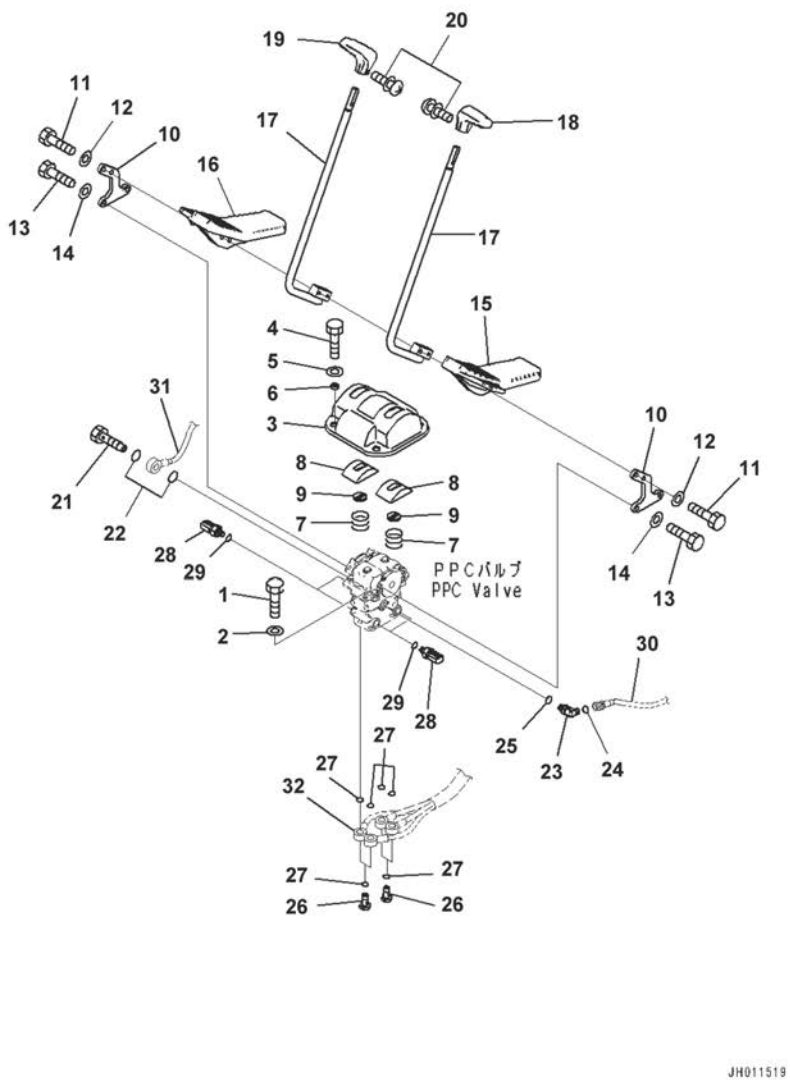

Index	Code	Part Number	Description	Qty	Serial Number
		Note: This list covers following specifications.			
		Auto Air Conditioner,AM-FM Radio,KOMTRAX,Cab Step2			
		Cab with KOMTRAX,GPRS Type,Cab Step2			
		With 1-aditional Actuator Piping,Cab Step2			
1		01010-81020	Bolt	2	C90317-
2		01643-31032	Washer	2	C90317-
3		20Y-43-41121	Cover	1	C90317-
4		01010-81020	Bolt	4	C90317-
5		01643-31032	Washer	4	C90317-
6		20Y-43-41361	Collar	4	C90317-
7		203-43-51620	Spring	2	C90317-
		22U-43-21350	Cover Assembly	2	C90317-
8	C1		• Cover	1	C90317-
9		22U-43-21360	• Seal	1	C90317-
10		20Y-43-41111	Lever	2	C90317-
11		01010-D1045	Bolt	4	C90317-
12		01643-71032	Washer	4	C90317-
13		01010-81030	Bolt	4	C90317-
14		01643-31032	Washer	4	C90317-
15		22U-43-21111	Pedal	1	C90317-
16		22U-43-21121	Pedal	1	C90317-
17		22U-43-21131	Lever	2	C90317-
18		20Y-43-21231	Knob	1	C90317-
19		20Y-43-21241	Knob	1	C90317-
20		01023-20416	Screw	2	C90317-
21		20Y-62-18910	Plug	1	C90317-
22		07000-12018	O-ring	2	C90317-
23		11Y-62-12160	Elbow	1	C90317-
24		02896-11008	O-ring	1	C90317-
25		07002-11423	O-ring	1	C90317-
26		20Y-62-18890	Elbow Bolt	4	C90317-
27		07000-12015	O-ring	8	C90317-
28		7861-93-1840	Sensor, Pressure	4	C90317-
29		07000-12011	• O-ring	1	C90317-

FIG. K1110-004029 Cab (Floor, Footrest, L.H.)

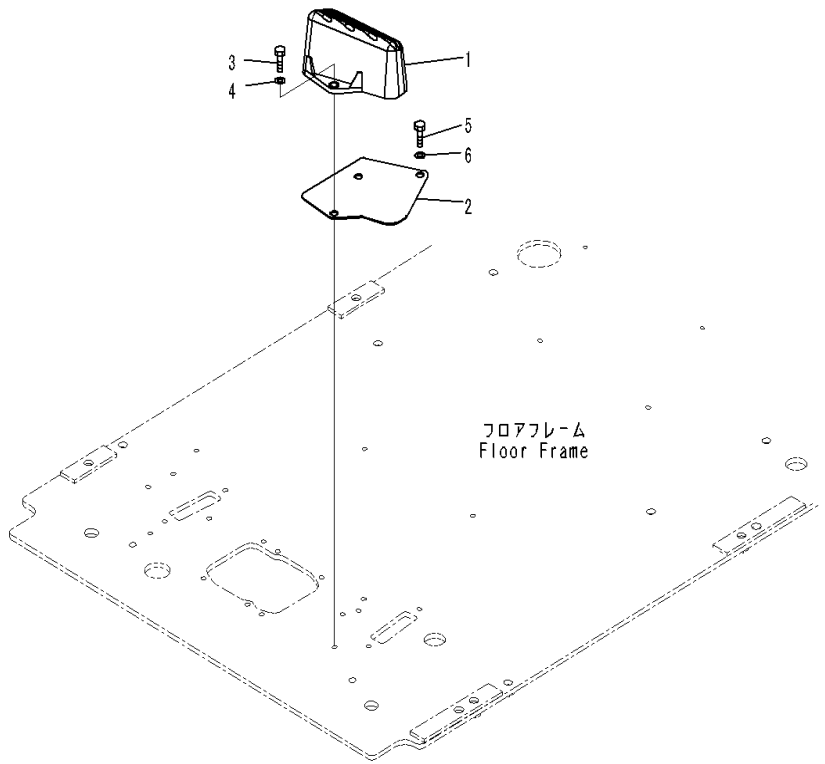

Index	Code	Part Number	Description	Qty	Serial Number
		Note: This list covers following specifications.			
		Auto Air Conditioner,AM-FM Radio,KOMTRAX,Cab Step2			
		Cab with KOMTRAX,GPRS Type,Cab Step2			
		With 1-aditional Actuator Piping,Cab Step2			
1		22U-54-25110	Footrest	1	C90317-
2		22U-54-25521	Plate	1	C90317-
3		01010-81025	Bolt	2	C90317-
4		01643-31032	Washer	2	C90317-
5		01010-81020	Bolt	1	C90317-
6		01643-31032	Washer	1	C90317-

FIG. K1110-004030 Cab (Floor, Footrest, R.H.)

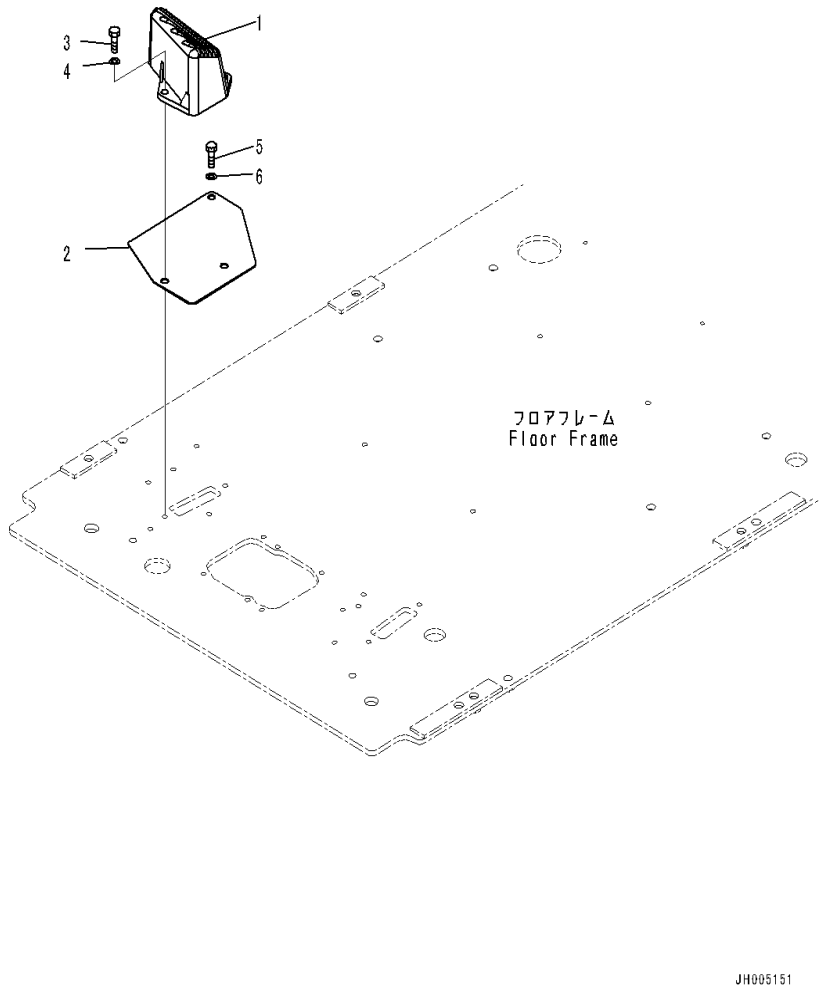

Index	Code	Part Number	Description	Qty	Serial Number
		Note: This list covers following specifications.			
		Auto Air Conditioner,AM-FM Radio,KOMTRAX,Cab Step2			
		Auto Air Conditioner, AM-FM Radio Asia, GPRS			
1		22U-54-25120	Footrest	1	C90317-
2		22U-54-25531	Plate	1	C90317-
3		01010-81025	Bolt	2	C90317-
4		01643-31032	Washer	2	C90317-
5		01010-81020	Bolt	1	C90317-
6		01643-31032	Washer	1	C90317-

FIG. K1110-004031 Cab (Floor, Base)

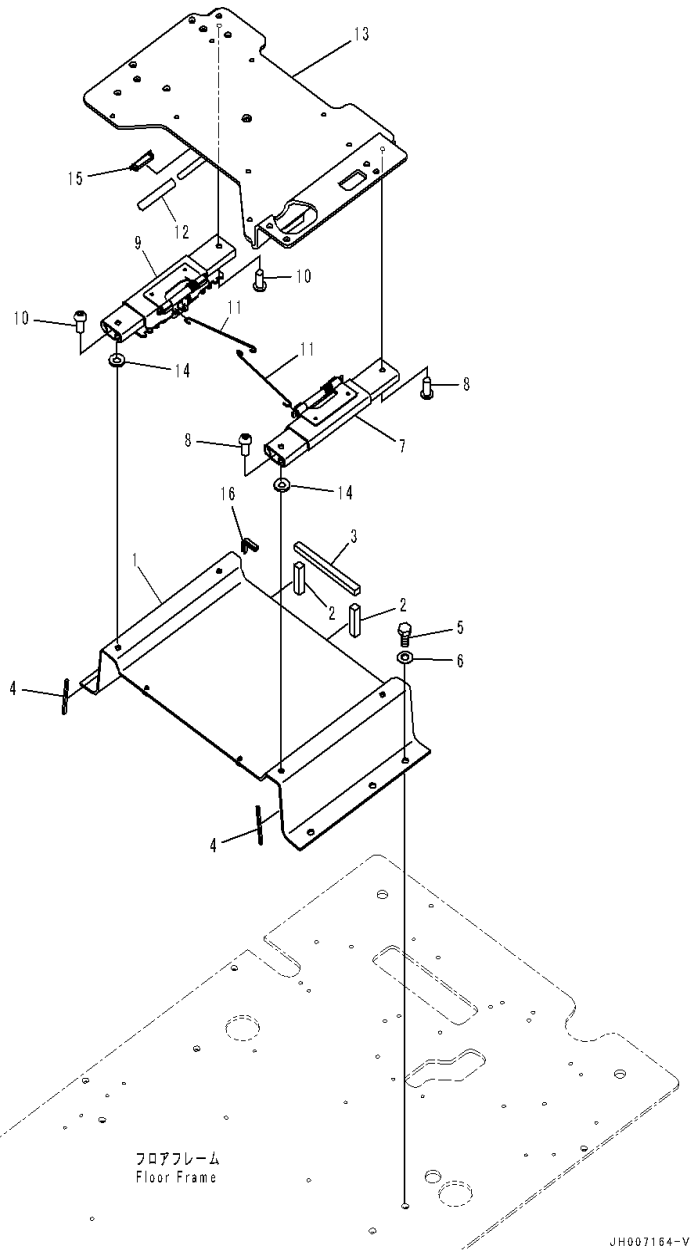

Index	Code	Part Number	Description	Qty	Serial Number
		Note: This list covers following specifications.			
		Auto Air Conditioner,AM-FM Radio,KOMTRAX,Cab Step2			
		Cab with KOMTRAX,GPRS Type,Cab Step2			
		With 1-aditional Actuator Piping,Cab Step2			
1		207-43-21120	Frame	1	C90317-
2		208-43-71520	• Seal	2	C90317-
3		208-43-71530	• Seal	1	C90317-
4		208-43-71590	• Seal	2	C90317-
5		01010-81230	Bolt	5	C90317-
6		01643-31232	Washer	5	C90317-
7		2A5-43-12353	Adjuster	1	C90317-
8		01245-01025	Screw	4	C90317-
9		2A5-43-12363	Adjuster	1	C90317-
10		01245-01025	Screw	4	C90317-
11		20Y-43-41833	Wire	2	C90317-
12		22U-43-21390	Cap	1	C90317-
13		20Y-43-41253	Frame	1	C90317-
14		2A5-43-12480	Washer	4	C90317-
15		20Y-979-6630	Catcher	1	C90317-
16		12Y-979-1850	Trim	1	C90317-

FIG. K1110-004032 Cab (Floor, Wiring Harness)

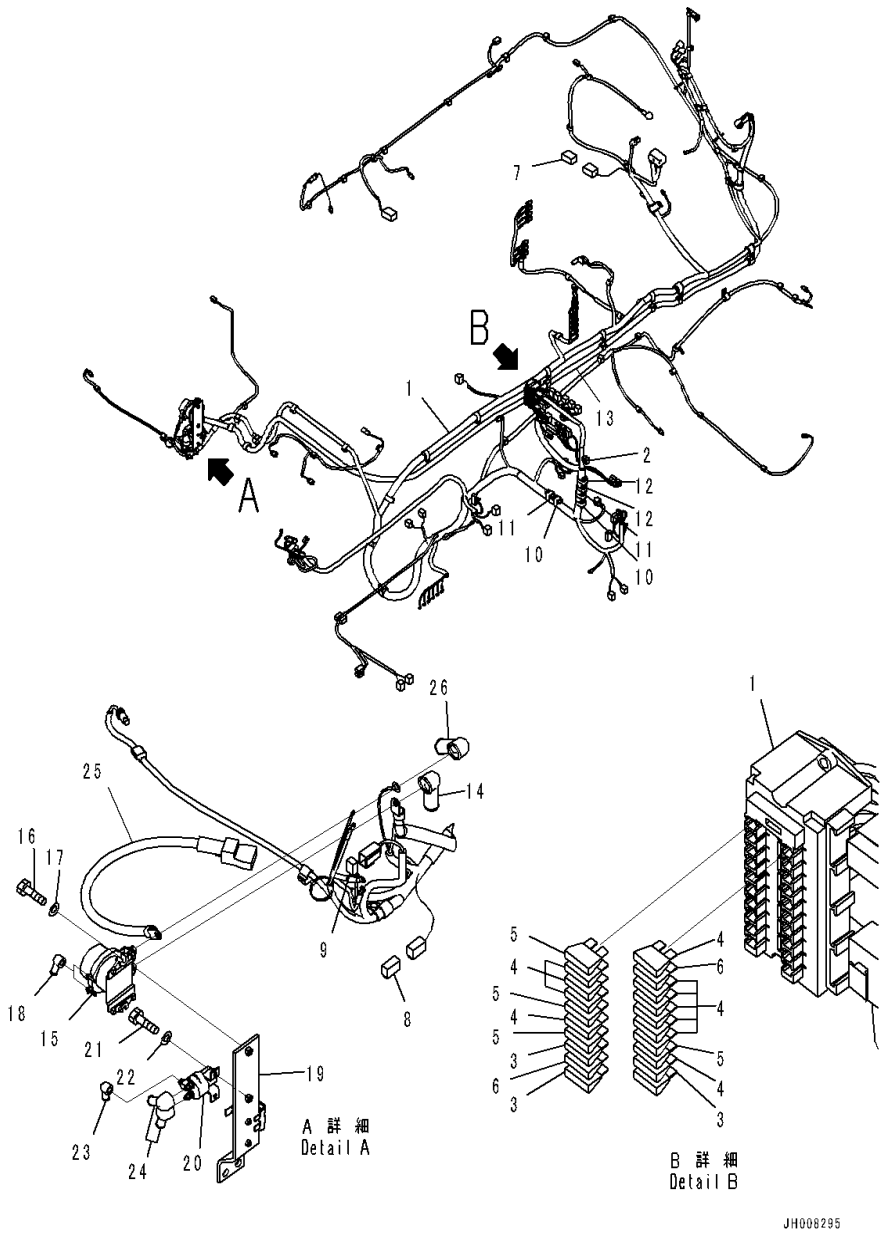

Index	Code	Part Number	Description	Qty	Serial Number
		Note: This list covers following specifications.			
		Auto Air Conditioner,AM-FM Radio,KOMTRAX,Cab Step2			
		Cab with KOMTRAX,GPRS Type,Cab Step2			
		With 1-aditional Actuator Piping,Cab Step2			
1		207-06-77221	Wiring Harness	1	C90317-
2		08020-20000	• Diode	2	C90317-
3		08041-00500	• Fuse, 5Amp.	3	C90317-
4		08041-01000	• Fuse, 10Amp.	11	C90317-
5		08041-02000	• Fuse, 20Amp.	4	C90317-
6		08041-03000	• Fuse, 30Amp. ..	2	C90317-
7		19M-06-31720	• Resistor	1	C90317-
8		20Y-06-31660	• Fusible Link, 30Amp.	1	C90317-
9		22U-06-11270	• Fusible Link, 65Amp.	1	C90317-
10		HM6400-0012	• F-Connector, Black	2	C90317-
		HM6409-0071	• M-Connector, Black	2	C90317-
11		HM6400-0013	• F-Connector, Green	2	C90317-
		HM6409-0072	• M-Connector, Green ...	2	C90317-
12		HM6440-0129	• F-Connector, Pink	2	C90317-
		HM6440-0128	• M-Connector, Pink	2	C90317-
13		207-06-77121	Cable	1	C90317-
14		08038-00035	Cap, Terminal	1	C90317-
15		08088-30000	Switch, Battery Relay	1	C90317-
16		01010-80830	Bolt	2	C90317-
17		01643-30823	Washer	2	C90317-
18		08038-00519	Cap, Terminal	2	C90317-
19		207-06-75122	Bracket	1	C90317-
20		600-815-2170	Switch, Heater	1	C90317-
21		01010-80616	Bolt	2	C90317-
22		01643-30623	Washer	2	C90317-
23		08038-00519	Cap, Terminal	1	C90317-
24		08038-02027	Cap, Terminal	2	C90317-
25		08028-CD065	Cable, Ground	1	C90317-
26		08038-00035	Cap, Terminal	1	C90317-

FIG. K1110-004033 Cab (Floor, Wiring Harness Clamp and Ground)

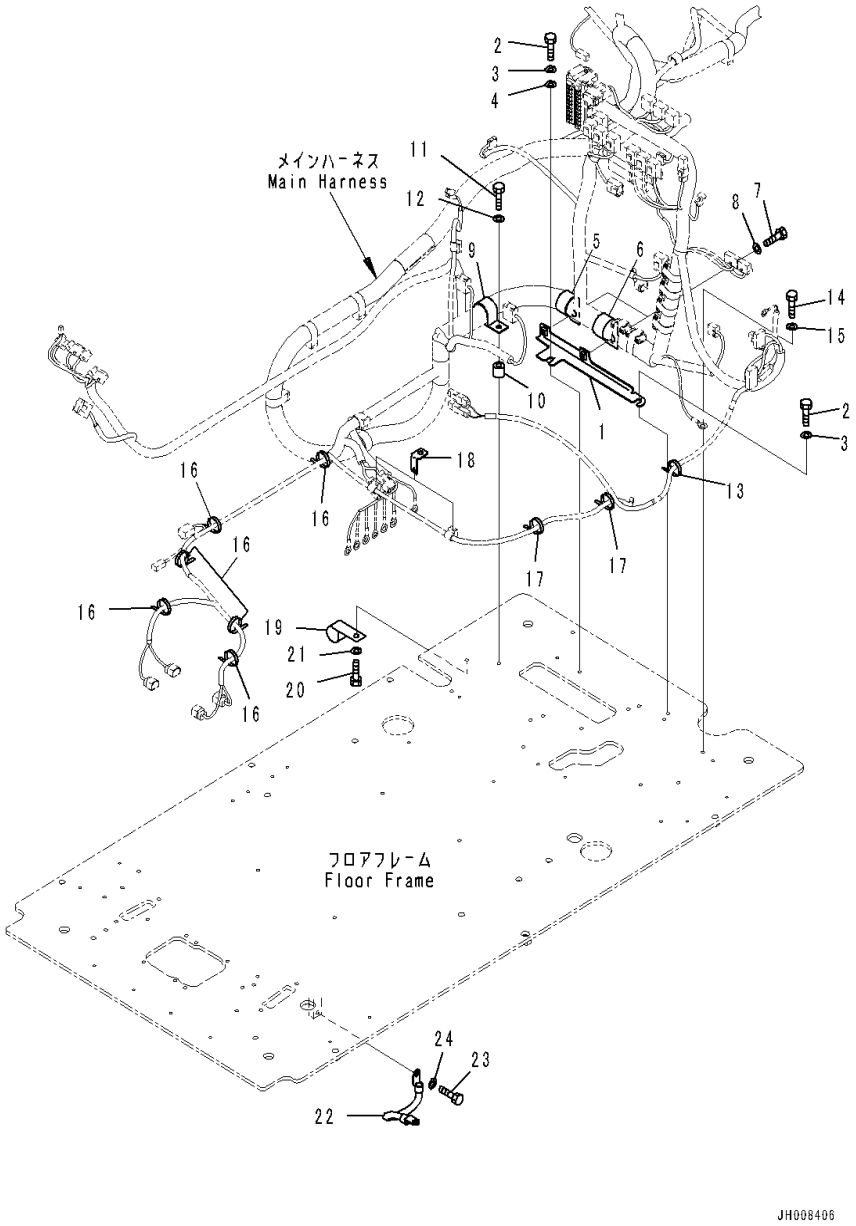

Index	Code	Part Number	Description	Qty	Serial Number
		Note: This list covers following specifications.			
		Auto Air Conditioner,AM-FM Radio,KOMTRAX,Cab Step2			
		Cab with KOMTRAX,GPRS Type,Cab Step2			
		With 1-aditional Actuator Piping,Cab Step2			
1		2A5-43-11732	Bracket	1	C90317-
2		01010-81016	Bolt	2	C90317-
3		01643-31032	Washer	2	C90317-
4		01643-31032	Washer	1	C90317-
5		176-911-1690	Clamp	1	C90317-
6		208-06-19170	Clip	1	C90317-
7		01010-81020	Bolt	2	C90317-
8		01643-31032	Washer	2	C90317-
9		176-911-1690	Clamp	1	C90317-
10		195-33-11220	Spacer	1	C90317-
11		01010-81040	Bolt	1	C90317-
12		01643-31032	Washer	1	C90317-
13		08059-00413	Clip	1	C90317-
14		01010-81020	Bolt	1	C90317-
15		01643-31032	Washer	1	C90317-
16		08034-20519	Band	6	C90317-
17		08034-20519	Band	2	C90317-
18		08057-14010	Clip	2	C90317-
19		04434-51910	Clip	1	C90317-
20		01010-81020	Bolt	1	C90317-
21		01643-31032	Washer	1	C90317-
22		08028-43030	Cable, Ground	1	C90317-
23		01010-81020	Bolt	1	C90317-
24		01643-31032	Washer	1	C90317-

FIG. K1110-004034 Cab (Floor, Window Washer Hose)

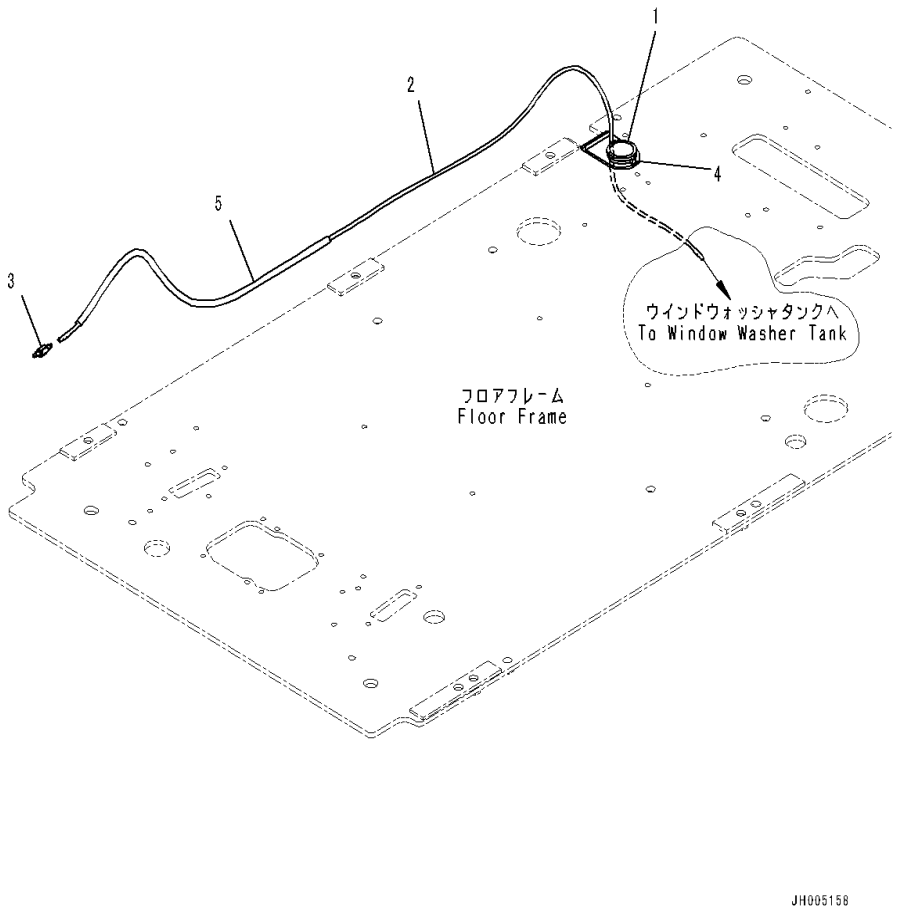

Index	Code	Part Number	Description	Qty	Serial Number
		Note: This list covers following specifications.			
		Auto Air Conditioner,AM-FM Radio,KOMTRAX,Cab Step2			
		Cab with KOMTRAX,GPRS Type,Cab Step2			
		With 1-aditional Actuator Piping,Cab Step2			
1		2A5-43-11420	Grommet	1	C90317-
2		207-43-11370	Hose	1	C90317-
3		17A-Z11-4610	Valve	1	C90317-
4		08034-20536	Band	1	C90317-
5		08017-A0707	Conduit	1	C90317-

FIG. K1110-004035 Cab (Floor, Work Equipment Control Lever, L.H.)

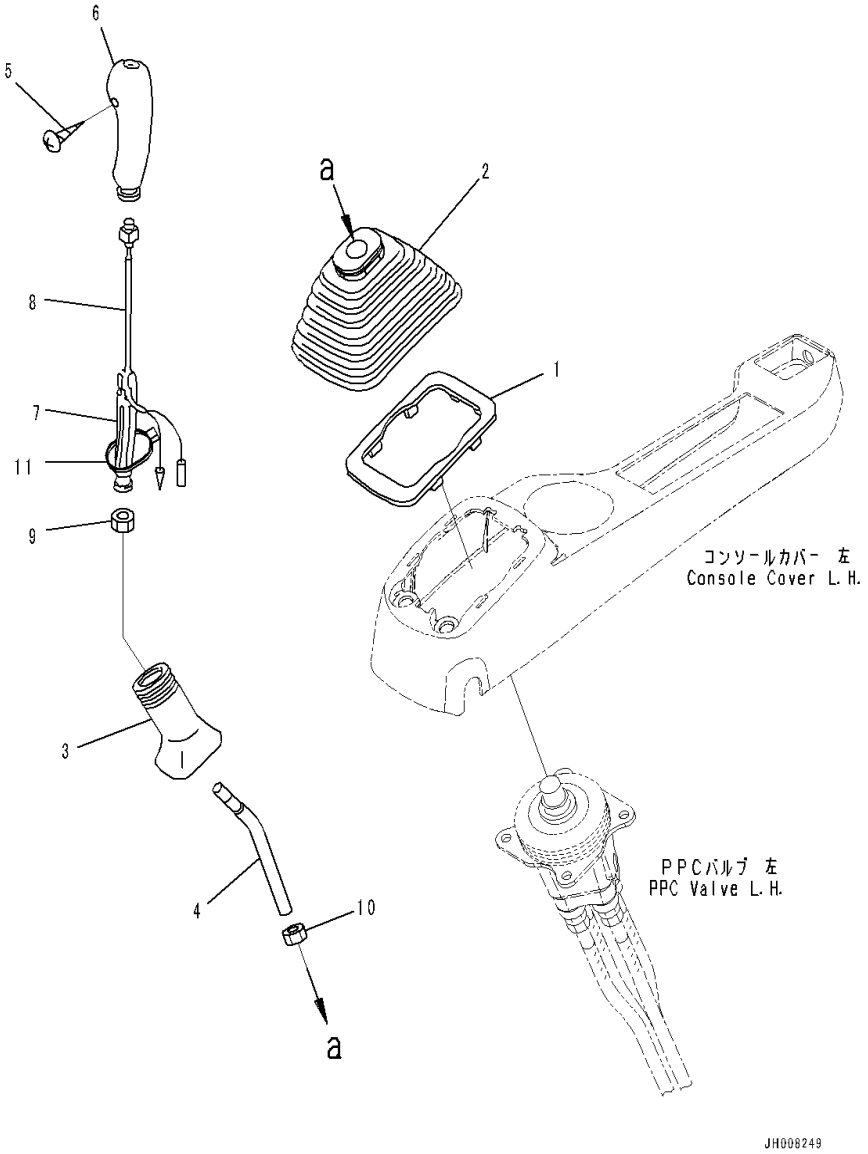

Index	Code	Part Number	Description	Qty	Serial Number
		Note: This list covers following specifications.			
		Auto Air Conditioner,AM-FM Radio,KOMTRAX,Cab Step2			
		Cab with KOMTRAX,GPRS Type,Cab Step2			
		With 1-aditional Actuator Piping,Cab Step2			
1		20Y-43-22250	Plate	1	C90317-
2		20Y-43-22261	Boot	1	C90317-
3		20Y-43-22370	Boot	1	C90317-
4		20Y-43-11471	Lever	1	C90317-
		22U-43-21182	Knob	1	C90317-
5	C1		• Screw	1	C90317-
6		20Y-43-22381	• Knob	1	C90317-
7		20Y-43-22421	• Insert	1	C90317-
8		22U-43-21211	• Switch	1	C90317-
9		600-411-1280	Nut	1	C90317-
10		01582-11411	Nut	1	C90317-
11		08034-20536	Band	1	C90317-

FIG. K1110-004036 Cab (PPC Valve for Work Equipment, L.H.)

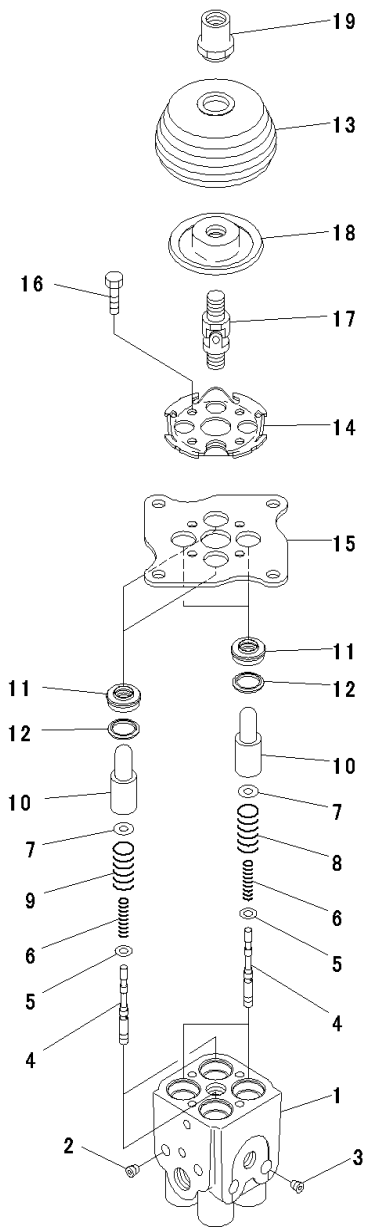

PW5X112

Index	Code	Part Number	Description	Qty	Serial Number
		Note: This list covers following specifications.			
		Auto Air Conditioner,AM-FM Radio,KOMTRAX,Cab Step2			
		Cab with KOMTRAX,GPRS Type,Cab Step2			
		With 1-aditional Actuator Piping,Cab Step2			
		702-16-03910	Valve Assembly, Pilot	1	C90317-
1	C1		• Body	1	C90317-
2	C1		• Plug	2	C90317-
3	C1		• Plug	2	C90317-
4	C1		• Valve	4	C90317-
5		702-16-51140	• Shim, T=0.30mm	4	C90317-
6		702-16-53420	• Spring	4	C90317-
7		702-16-53140	• Retainer	4	C90317-
8		702-16-53470	• Spring	2	C90317-
9		702-16-53590	• Spring	2	C90317-
10		702-16-53170	• Piston	4	C90317-
11		702-16-71210	• Seal	4	C90317-
12		702-16-71160	• Seat	4	C90317-
13		702-16-71280	• Boot	1	C90317-
14		702-16-71131	• Plate	1	C90317-
15		702-16-71141	• Plate	1	C90317-
16		01010-80620	• Bolt	4	C90317-
17		702-16-51240	• Joint, Universal	1	C90317-
18		702-16-71361	• Disc	1	C90317-
19		702-16-71441	• Nut	1	C90317-

FIG. K1110-004037 Cab (Floor, PPC Valve Mounting for Work Equipment, L.H.)

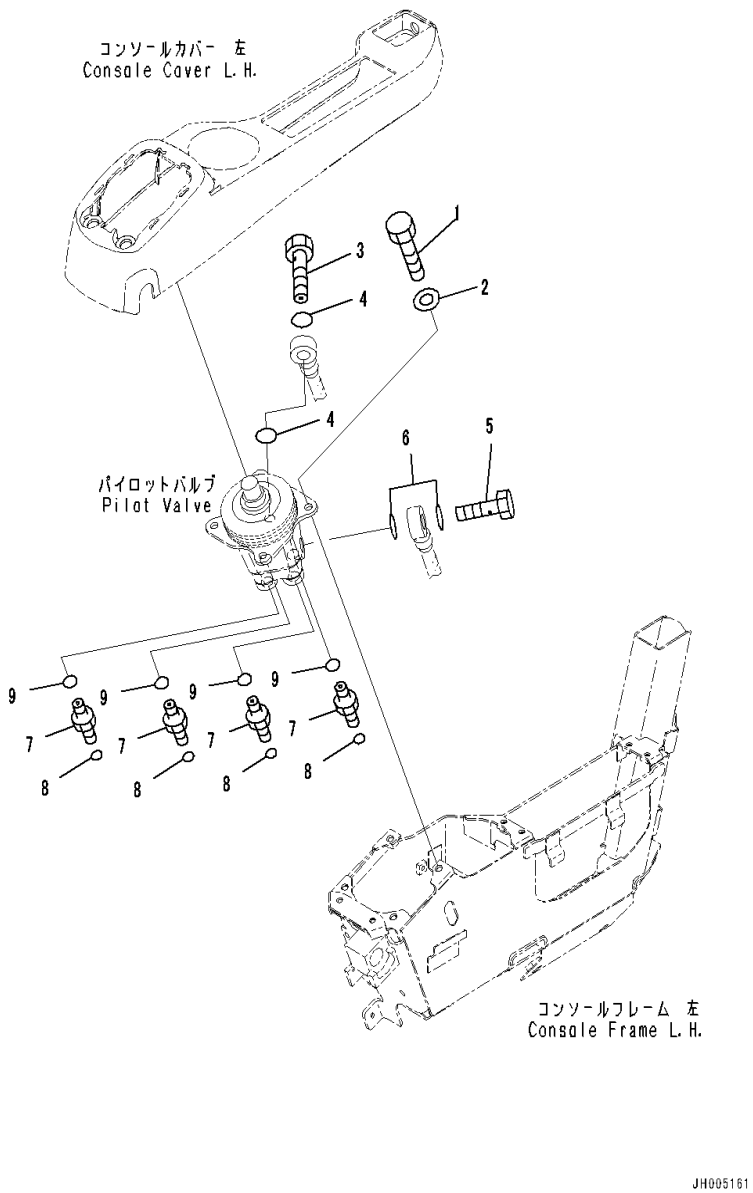

Index	Code	Part Number	Description	Qty	Serial Number
		Note: This list covers following specifications.			
		Auto Air Conditioner,AM-FM Radio,KOMTRAX,Cab Step2			
		Cab with KOMTRAX,GPRS Type,Cab Step2			
		With 1-aditional Actuator Piping,Cab Step2			
1		01010-80820	Bolt	4	C90317-
2		01643-30823	Washer	4	C90317-
3		20Y-62-18910	Plug	1	C90317-
4		07000-12018	O-ring	2	C90317-
5		20Y-62-18890	Bolt, Joint	1	C90317-
6		07000-12015	O-ring	2	C90317-
7		11Y-62-12520	Union	4	C90317-
8		02896-11009	O-ring	4	C90317-
9		07002-11423	O-ring	4	C90317-

FIG. K1110-004038 Cab (Floor, Console, L.H.)

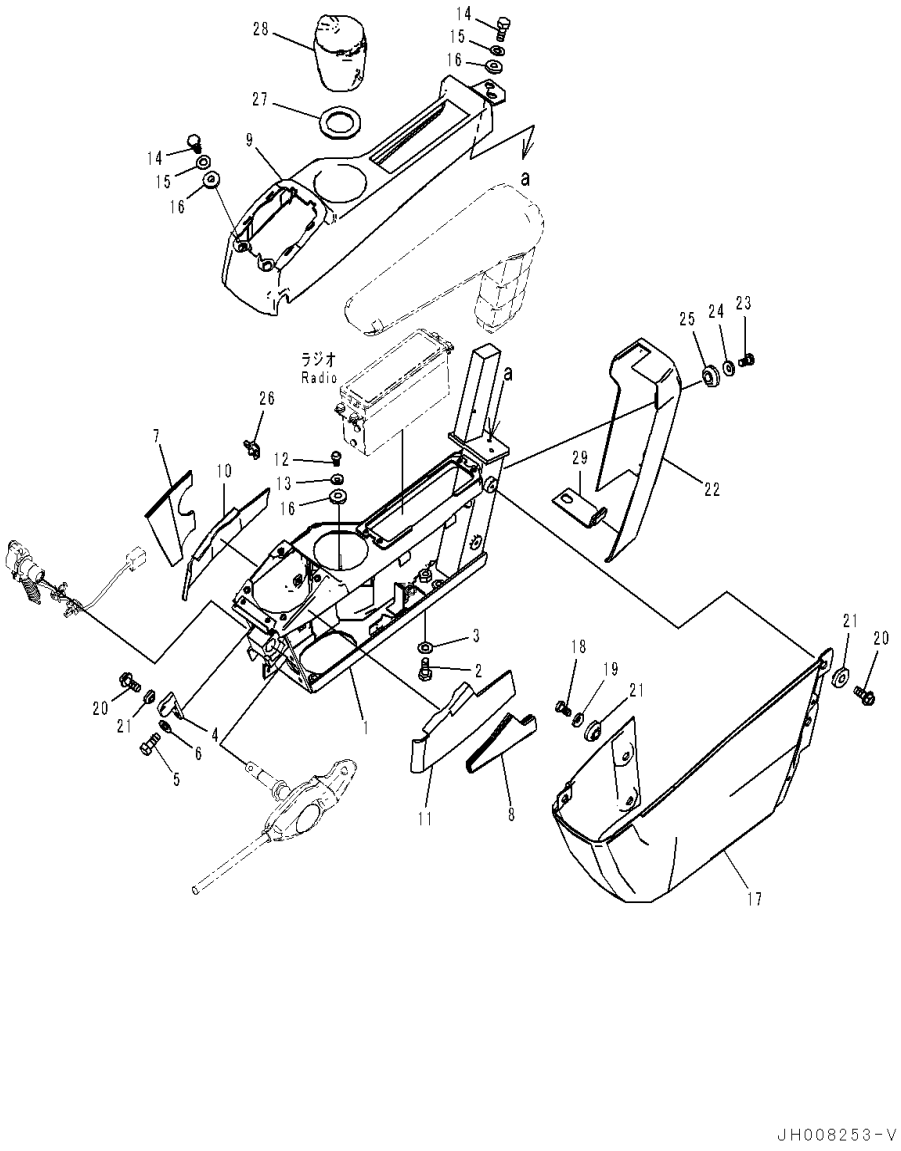

Index	Code	Part Number	Description	Qty	Serial Number
		Note: This list covers following specifications.			
		Auto Air Conditioner,AM-FM Radio,KOMTRAX,Cab Step2			
		Cab with KOMTRAX,GPRS Type,Cab Step2			
		With 1-aditional Actuator Piping,Cab Step2			
1		20Y-43-41416	Frame	1	C90317-
2		01010-81030	Bolt	4	C90317-
3		01643-31032	Washer	4	C90317-
4		20Y-43-41472	Bracket	1	C90317-
5		01010-80616	Bolt	2	C90317-
6		01643-30623	Washer	2	C90317-
7		20Y-43-41621	Sheet	1	C90317-
8		20Y-43-41641	Sheet	1	C90317-
9		20Y-43-41424	Cover	1	C90317-
10		20Y-43-41651	Sheet	1	C90317-
11		20Y-43-41661	Sheet	1	C90317-
12		01245-00616	Screw	1	C90317-
13		01643-70623	Washer	1	C90317-
14		01010-80616	Bolt	4	C90317-
15		01643-30623	Washer	4	C90317-
16		20Y-43-41290	Collar	5	C90317-
17		20Y-43-41442	Cover	1	C90317-
18		01245-00616	Screw	2	C90317-
19		01643-70623	Washer	2	C90317-
20		01435-00612	Bolt	3	C90317-
21		20Y-43-41290	Collar	5	C90317-
22		20Y-43-42450	Cover	1	C90317-
23		01245-00616	Screw	2	C90317-
24		01643-70623	Washer	2	C90317-
25		20Y-43-41290	Collar	2	C90317-
26		22U-43-23260	Clip	1	C90317-
27		20Y-43-41970	Sheet	1	C90317-
28		20Y-43-41491	Ashtray	1	C90317-
29		20Y-43-41981	Bracket	1	C90317-

FIG. K1110-004039 Cab (Floor, PPC Lock Lever and Radio)

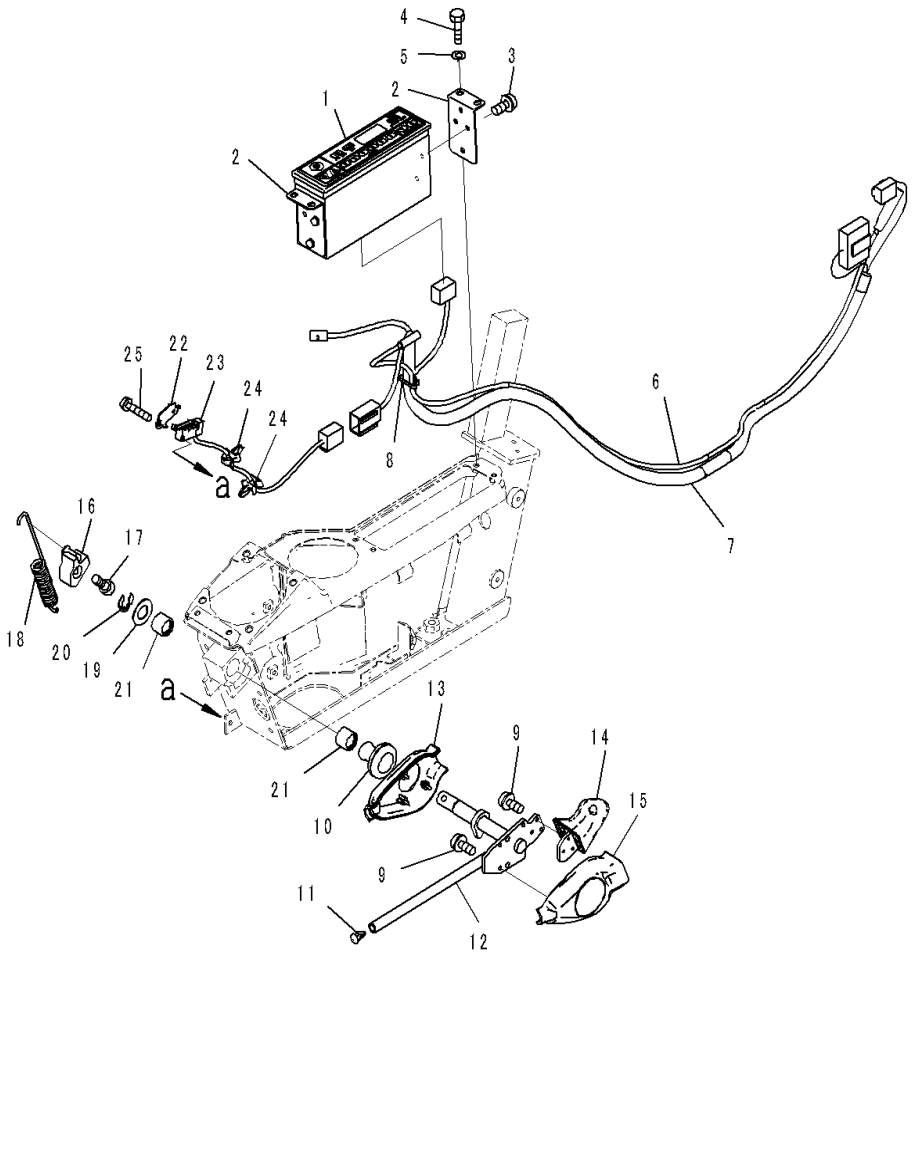

Index	Code	Part Number	Description	Qty	Serial Number
		Note: This list covers following specifications.			
		Auto Air Conditioner,AM-FM Radio,KOMTRAX,Cab Step2			
		Cab with KOMTRAX,GPRS Type,Cab Step2			
		With 1-aditional Actuator Piping,Cab Step2			
1		2A5-06-11932	Radio	1	C90317-
2		20Y-43-42130	Plate	2	C90317-
3		01023-60510	Screw	6	C90317-
4		01010-80616	Bolt	4	C90317-
5		01643-30623	Washer	4	C90317-
6		566-07-12151	Cable	1	C90317-
7		20Y-06-16910	Wiring Harness	1	C90317-
8		08034-20414	Band	1	C90317-
9		01023-60410	Screw	6	C90317-
10		08037-11425	Grommet	1	C90317-
11		208-53-12280	Cap	1	C90317-
12		20Y-43-31513	Lever	1	C90317-
13		20Y-43-31522	Cover	1	C90317-
14		20Y-43-31611	Knob	1	C90317-
15		20Y-43-31621	Cover	1	C90317-
16		20Y-43-31432	Cam	1	C90317-
17		01252-70816	Bolt	1	C90317-
18		20Y-43-31421	Spring	1	C90317-
19		20Y-43-31440	Ring	1	C90317-
20		20Y-43-31450	Plate	1	C90317-
21		06124-01616	Bearing	2	C90317-
22		22U-06-22490	Plate	1	C90317-
23		22U-06-22360	Switch Assembly	1	C90317-
24		22U-43-23260	Clip	2	C90317-
25		01023-60320	Screw	2	C90317-

FIG. K1110-004040 Cab (Floor, Armrest, L.H.)

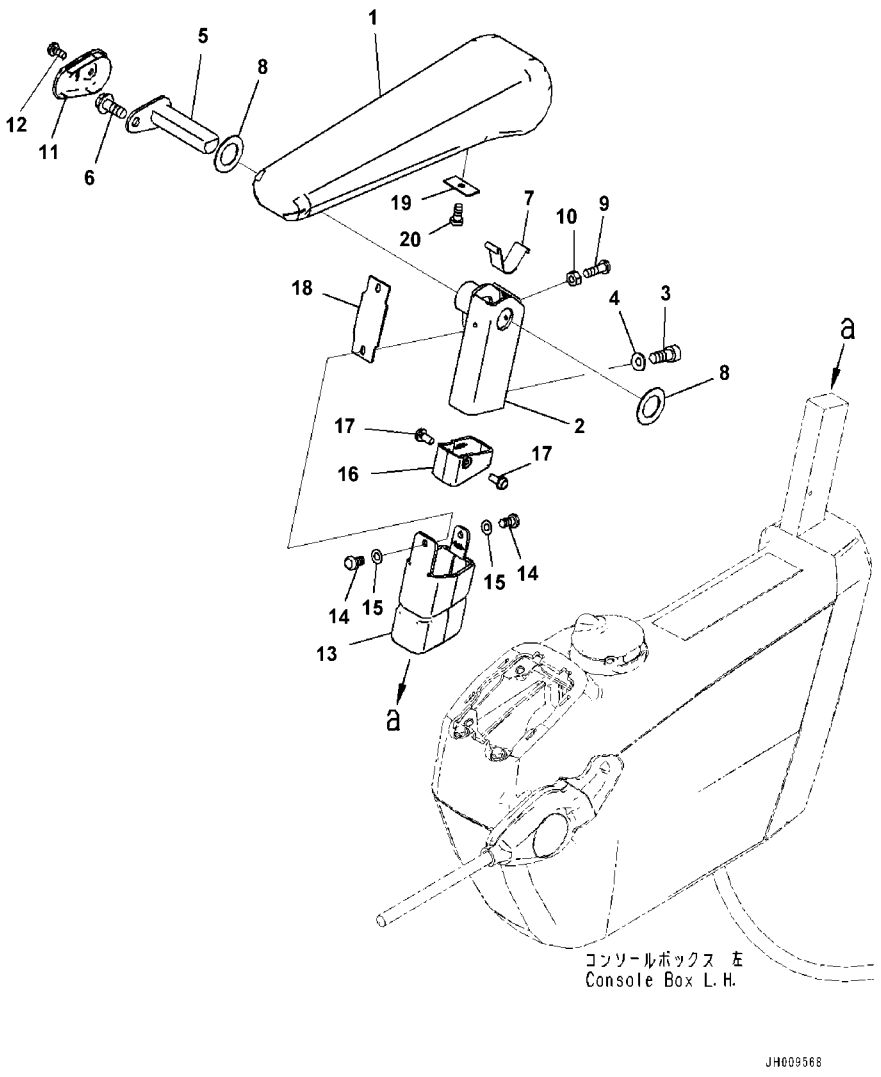

Index	Code	Part Number	Description	Qty	Serial Number
		Note: This list covers following specifications.			
		Auto Air Conditioner,AM-FM Radio,KOMTRAX,Cab Step2			
		Cab with KOMTRAX,GPRS Type,Cab Step2			
		With 1-aditional Actuator Piping,Cab Step2			
1		20Y-43-41143	Armrest	1	C90317-
2		20Y-43-41173	Bracket	1	C90317-
3		01252-80820	Bolt	2	C90317-
4		01643-70823	Washer	2	C90317-
5		20Y-43-41162	Pin	1	C90317-
6		01435-40816	Bolt	1	C90317-
7		20Y-43-41152	Spring	1	C90317-
8		437-40-26240	Washer	2	C90317-
9		01245-00620	Screw	1	C90317-
10		01580-40605	Nut	1	C90317-
11		20Y-43-41181	Cap	1	C90317-
12		01023-20512	Screw	1	C90317-
13		20Y-43-41191	Cover	1	C90317-
14		20Y-53-15890	Screw	2	C90317-
15		01640-50508	Washer	2	C90317-
16		20Y-43-41591	Cover	1	C90317-
17		01023-20512	Screw	2	C90317-
18		20Y-43-41281	Rubber	1	C90317-
19		20Y-43-41461	Plate	1	C90317-
20		01370-40610	Screw	1	C90317-

FIG. K1110-004041 Cab (Floor, Work Equipment Control Lever, R.H.)

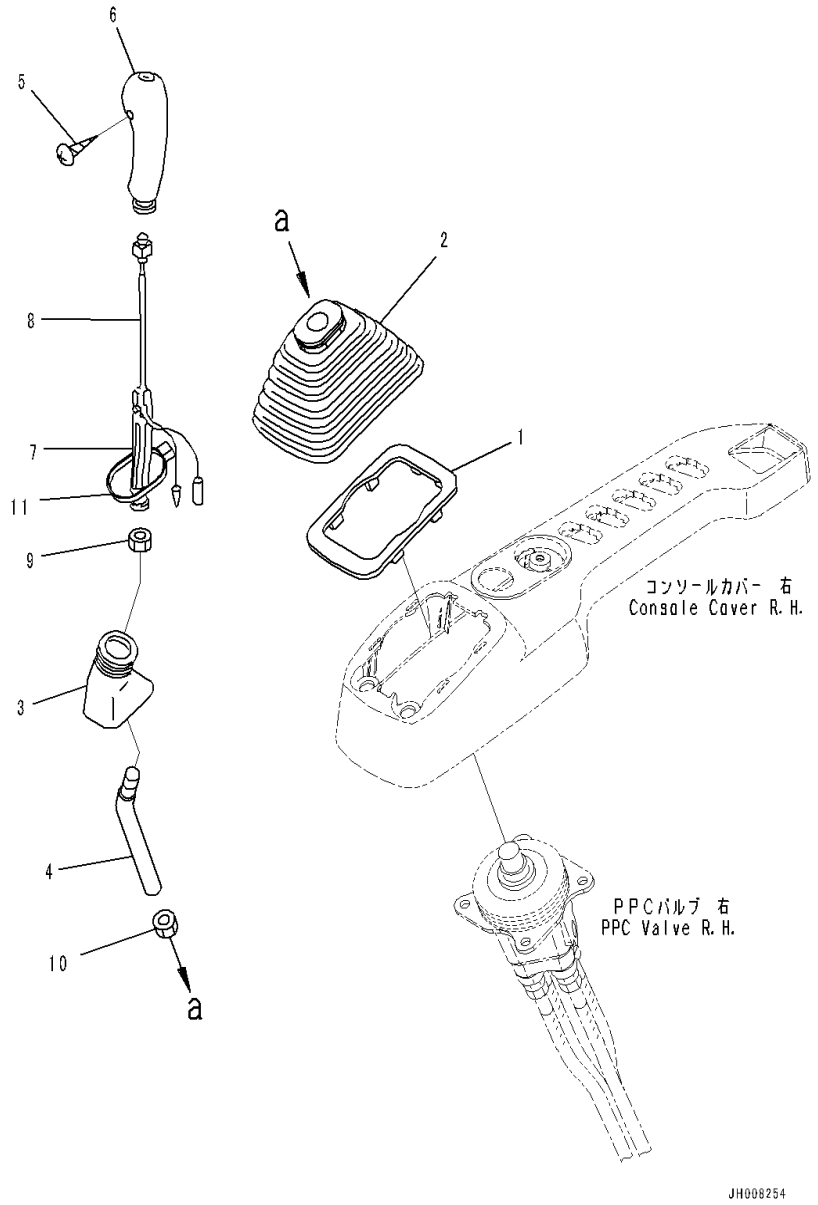

Index	Code	Part Number	Description	Qty	Serial Number
		Note: This list covers following specifications.			
		Auto Air Conditioner,AM-FM Radio,KOMTRAX,Cab Step2			
		Cab with KOMTRAX,GPRS Type,Cab Step2			
		With 1-aditional Actuator Piping,Cab Step2			
1		20Y-43-22250	Plate	1	C90317-
2		20Y-43-22261	Boot	1	C90317-
3		20Y-43-22370	Boot	1	C90317-
4		20Y-43-11471	Lever	1	C90317-
		22U-43-21192	Knob	1	C90317-
5	C1		• Screw	1	C90317-
6		20Y-43-22390	• Knob	1	C90317-
7		20Y-43-22421	• Insert	1	C90317-
8		22U-43-21211	• Switch	1	C90317-
9		600-411-1280	Nut	1	C90317-
10		01582-11411	Nut	1	C90317-
11		08034-20536	Band	1	C90317-

FIG. K1110-004042 Cab (PPC Valve for Work Equipment, R.H.)

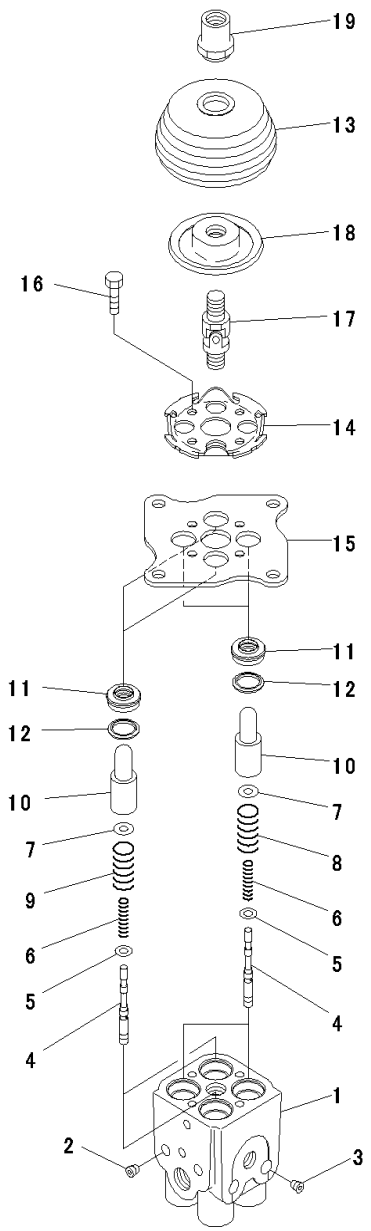

PW5X112

Index	Code	Part Number	Description	Qty	Serial Number
		Note: This list covers following specifications.			
		Auto Air Conditioner,AM-FM Radio,KOMTRAX,Cab Step2			
		Cab with KOMTRAX,GPRS Type,Cab Step2			
		With 1-aditional Actuator Piping,Cab Step2			
		702-16-03910	Valve Assembly, Pilot	1	C90317-
1	C1		• Body	1	C90317-
2	C1		• Plug	2	C90317-
3	C1		• Plug	2	C90317-
4	C1		• Valve	4	C90317-
5		702-16-51140	• Shim, T=0.30mm	4	C90317-
6		702-16-53420	• Spring	4	C90317-
7		702-16-53140	• Retainer	4	C90317-
8		702-16-53470	• Spring	2	C90317-
9		702-16-53590	• Spring	2	C90317-
10		702-16-53170	• Piston	4	C90317-
11		702-16-71210	• Seal	4	C90317-
12		702-16-71160	• Seat	4	C90317-
13		702-16-71280	• Boot	1	C90317-
14		702-16-71131	• Plate	1	C90317-
15		702-16-71141	• Plate	1	C90317-
16		01010-80620	• Bolt	4	C90317-
17		702-16-51240	• Joint, Universal	1	C90317-
18		702-16-71361	• Disc	1	C90317-
19		702-16-71441	• Nut	1	C90317-

FIG. K1110-004043 Cab (Floor, PPC Valve Mounting for Work Equipment, R.H.)

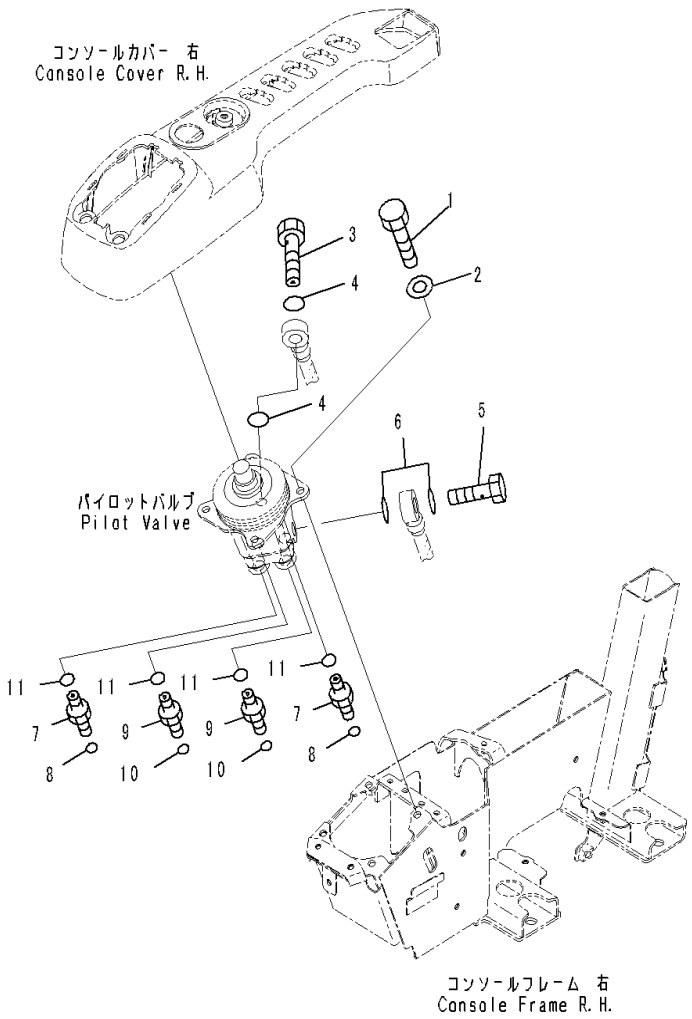

Index	Code	Part Number	Description	Qty	Serial Number
		Note: This list covers following specifications.			
		Auto Air Conditioner,AM-FM Radio,KOMTRAX,Cab Step2			
		Cab with KOMTRAX,GPRS Type,Cab Step2			
		With 1-aditional Actuator Piping,Cab Step2			
1		01010-80820	Bolt	4	C90317-
2		01643-30823	Washer	4	C90317-
3		20Y-62-18910	Plug	1	C90317-
4		07000-12018	O-ring	2	C90317-
5		20Y-62-18890	Bolt, Joint	1	C90317-
6		07000-12015	O-ring	2	C90317-
7		11Y-62-12130	Nipple	2	C90317-
8		02896-11008	O-ring	2	C90317-
9		11Y-62-12520	Union	2	C90317-
10		02896-11009	O-ring	2	C90317-
11		07002-11423	O-ring	4	C90317-

FIG. K1110-004044 Cab (Floor, Console, R.H.)

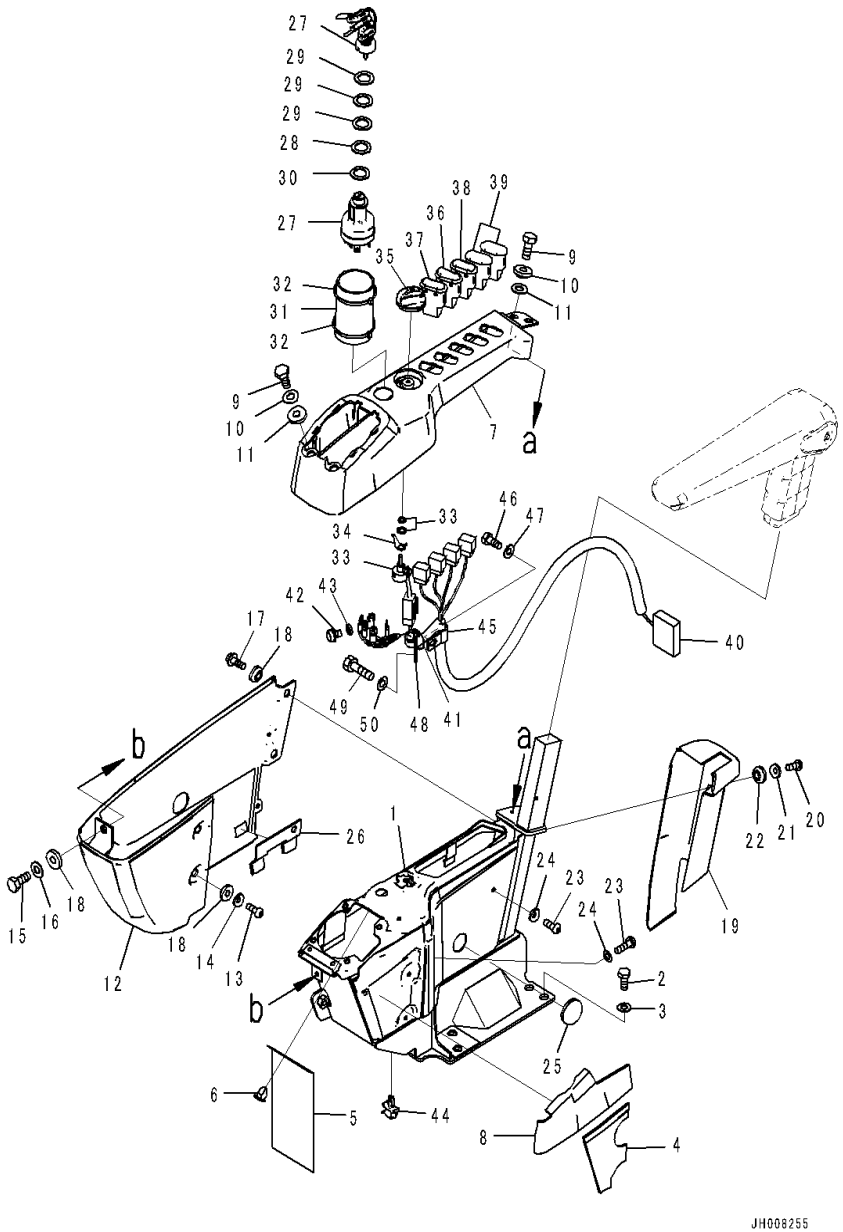

Index	Code	Part Number	Description	Qty	Serial Number
		Note: This list covers following specifications.			
		Auto Air Conditioner,AM-FM Radio,KOMTRAX,Cab Step2			
		Cab with KOMTRAX,GPRS Type,Cab Step2			
		With 1-aditional Actuator Piping,Cab Step2			
1		20Y-43-41314	Frame	1	C90317-
2		01010-D1230	Bolt	4	C90317-
3		01643-71232	Washer	4	C90317-
4		20Y-43-41631	Sheet	1	C90317-
5		22U-43-23251	Sheet	1	C90317-
6		22U-43-23290	Clip	2	C90317-
7		20Y-43-41324	Cover	1	C90317-
8		20Y-43-41661	Sheet	1	C90317-
9		01010-80616	Bolt	4	C90317-
10		01643-30623	Washer	4	C90317-
11		20Y-43-41290	Collar	4	C90317-
12		20Y-43-42330	Cover	1	C90317-
13		01245-00616	Screw	2	C90317-
14		01643-70623	Washer	2	C90317-
15		01010-80616	Bolt	1	C90317-
16		01643-30623	Washer	1	C90317-
17		01435-00612	Bolt	2	C90317-
18		20Y-43-41290	Collar	5	C90317-
19		20Y-43-42350	Cover	1	C90317-
20		01245-00616	Screw	2	C90317-
21		01643-70623	Washer	2	C90317-
22		20Y-43-41290	Collar	2	C90317-
23		01245-00616	Screw	3	C90317-
24		01643-70623	Washer	3	C90317-
25		09415-02512	Cap	1	C90317-
26		20Y-43-41991	Bracket	1	C90317-
27		08086-50000	Switch, Starting	1	C90317-
28		20Y-43-41740	Plate	1	C90317-
29		20Y-43-41750	Washer	3	C90317-
30		20Y-43-41790	Washer	1	C90317-
31		20Y-43-41671	Sheet	1	C90317-
32		08034-20519	Band	2	C90317-
33		22U-06-22380	Potentiometer	1	C90317-
34		22U-06-22460	Spring	1	C90317-
35		20Y-43-41781	Knob	1	C90317-
36		20Y-06-42110	Switch, Lock	1	C90317-

FIG. K1110-004044 Cab (Floor, Console, R.H.)

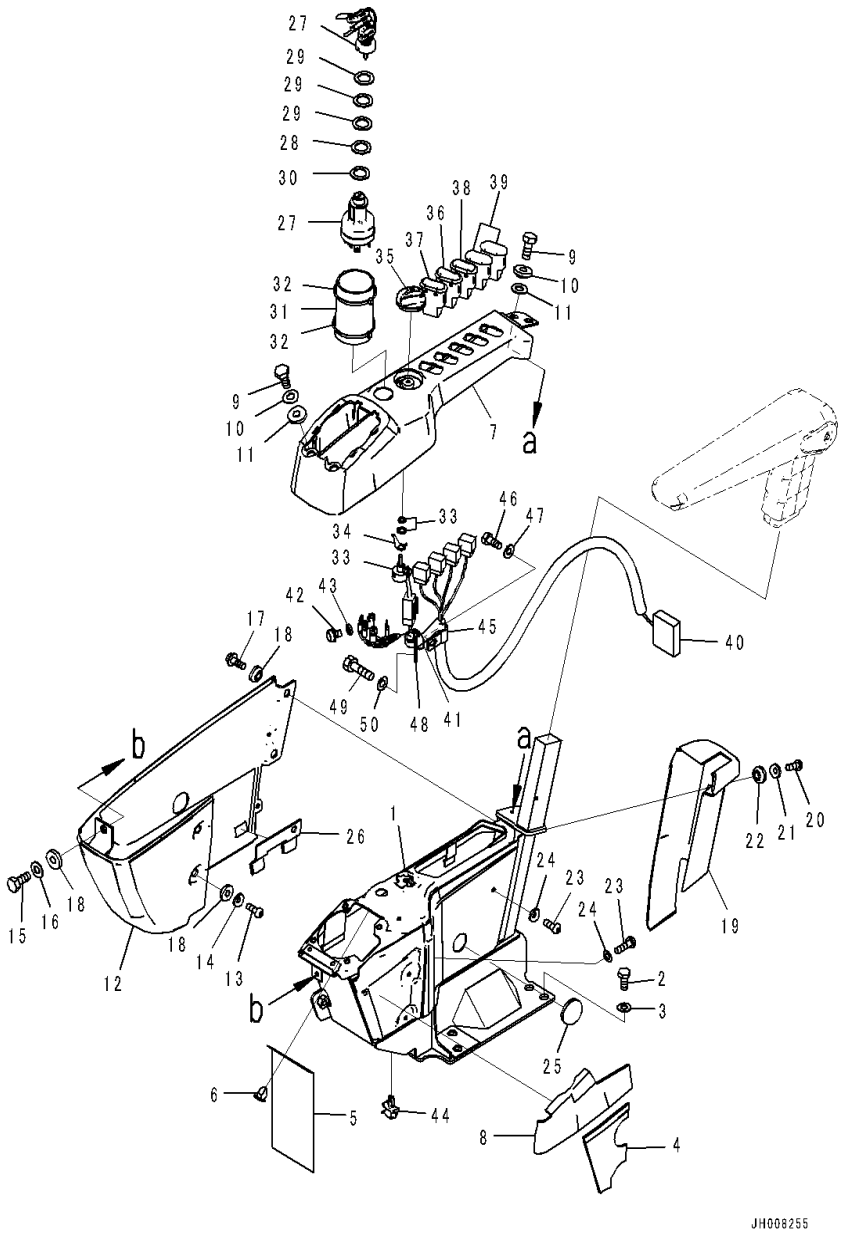

Index	Code	Part Number	Description	Qty	Serial Number
37		20Y-06-42450	Switch, Lamp	1	C90317-
38		21T-06-33760	Switch, Machine Push Up	1	C90317-
39		20Y-06-42190	Cover	2	C90317-
40		207-06-76131	Wiring Harness	1	C90317-
41		08034-20414	Band	1	C90317-
42		01023-10508	Screw	5	C90317-
43		01601-20513	Washer	5	C90317-
44		22U-43-23260	Clip	1	C90317-
45		04434-51710	Clip	1	C90317-
46		01010-81016	Bolt	1	C90317-
47		01643-31032	Washer	1	C90317-
48		04434-51410	Clip	1	C90317-
49		01010-81016	Bolt	1	C90317-
50		01643-31032	Washer	1	C90317-

FIG. K1110-004045 Cab (Floor, Armrest, R.H.)

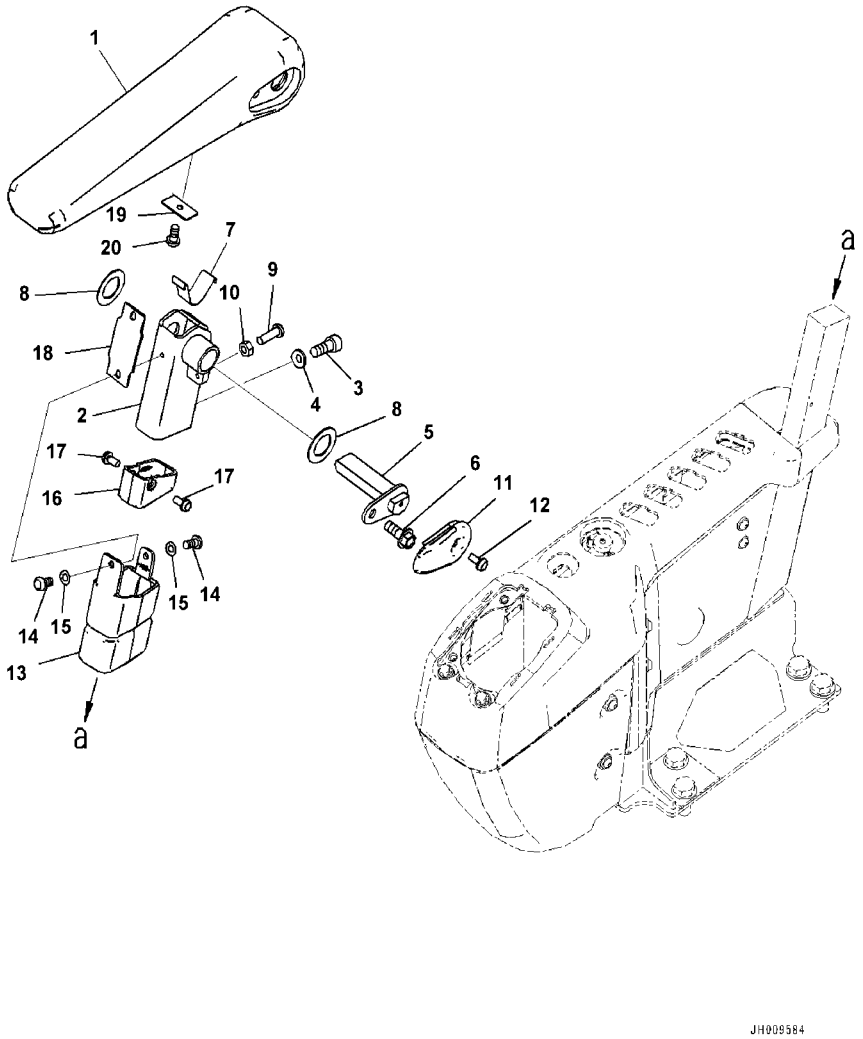

Index	Code	Part Number	Description	Qty	Serial Number
		Note: This list covers following specifications.			
		Auto Air Conditioner,AM-FM Radio,KOMTRAX,Cab Step2			
		Cab with KOMTRAX,GPRS Type,Cab Step2			
		With 1-aditional Actuator Piping,Cab Step2			
1		20Y-43-41343	Armrest	1	C90317-
2		20Y-43-41533	Bracket	1	C90317-
3		01252-80820	Bolt	2	C90317-
4		01643-70823	Washer	2	C90317-
5		20Y-43-41850	Pin	1	C90317-
6		01435-40816	Bolt	1	C90317-
7		20Y-43-41152	Spring	1	C90317-
8		437-40-26240	Washer	2	C90317-
9		01245-00620	Screw	1	C90317-
10		01580-40605	Nut	1	C90317-
11		20Y-43-41181	Cap	1	C90317-
12		01023-20512	Screw	1	C90317-
13		20Y-43-41191	Cover	1	C90317-
14		20Y-53-15890	Screw	2	C90317-
15		01640-50508	Washer	2	C90317-
16		20Y-43-41591	Cover	1	C90317-
17		01023-20512	Screw	2	C90317-
18		20Y-43-41281	Rubber	1	C90317-
19		20Y-43-41461	Plate	1	C90317-
20		01370-40610	Screw	1	C90317-

FIG. K1110-004046 Cab (Inner Parts, Air Conditioner Unit, 1/2)

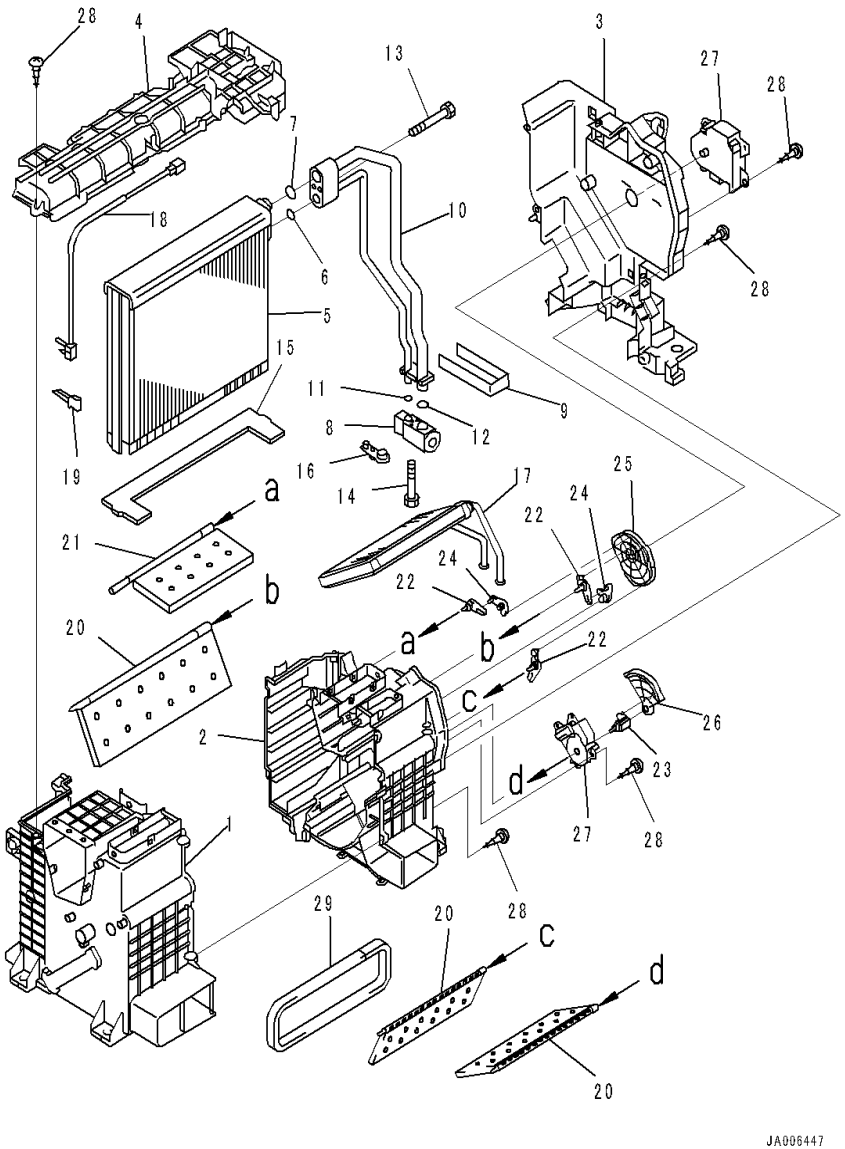

Index	Code	Part Number	Description	Qty	Serial Number
		Note: This list covers following specifications.			
		Auto Air Conditioner,AM-FM Radio,KOMTRAX,Cab Step2			
		Cab with KOMTRAX,GPRS Type,Cab Step2			
		With 1-aditional Actuator Piping,Cab Step2			
		2A5-979-1113	Air Conditioner	1	C90317-
		ND443120-1961	• Cooling Unit Assembly	1	C90317-
1		ND245450-8520	• • Case	1	C90317-
2		ND245450-8530	• • Case	1	C90317-
3		ND245450-8540	• • Case	1	C90317-
4		ND116577-0970	• • Plate	1	C90317-
		ND446010-5360	• • Evaporator	1	C90317-
5		ND447610-0630	• • • Evaporator Assembly	1	C90317-
6		ND949142-0020	• • • O-ring	1	C90317-
7		ND949142-0030	• • • O-ring	1	C90317-
8		ND447500-4010	• • • Valve	1	C90317-
9		ND146636-7450	• • • Packing	1	C90317-
10		ND446260-2160	• • • Tube	1	C90317-
11		ND949142-0020	• • • O-ring	1	C90317-
12		ND949142-0030	• • • O-ring	1	C90317-
13		ND949046-3610	• • • Bolt	2	C90317-
14		ND949046-3100	• • • Bolt	2	C90317-
15		ND146636-7460	• • • Packing	1	C90317-
16		ND445021-3091	• • • Plug	1	C90317-
17		ND116420-7450	• • Core Subassembly	1	C90317-
18		ND100775-8400	• • Thermistor Assembly	1	C90317-
19		ND246790-2060	• • Clamp	1	C90317-
20		ND116740-4980	• • Door Assembly	3	C90317-
21		ND116740-4990	• • Door Assembly	1	C90317-
22		ND116782-6690	• • Lever	3	C90317-
23		ND116782-6700	• • Lever	1	C90317-
24		ND116780-5651	• • Lever Subassembly	2	C90317-
25		ND116577-0981	• • Plate	1	C90317-
26		ND116577-0990	• • Plate	1	C90317-
27		ND063800-0300	• • Servo Motor Assembly	2	C90317-
28		ND949001-1730	• • Screw, Tapping	23	C90317-
29		ND146636-7560	• • Packing	1	C90317-

FIG. K1110-004047 Cab (Inner Parts, Air Conditioner Motor)

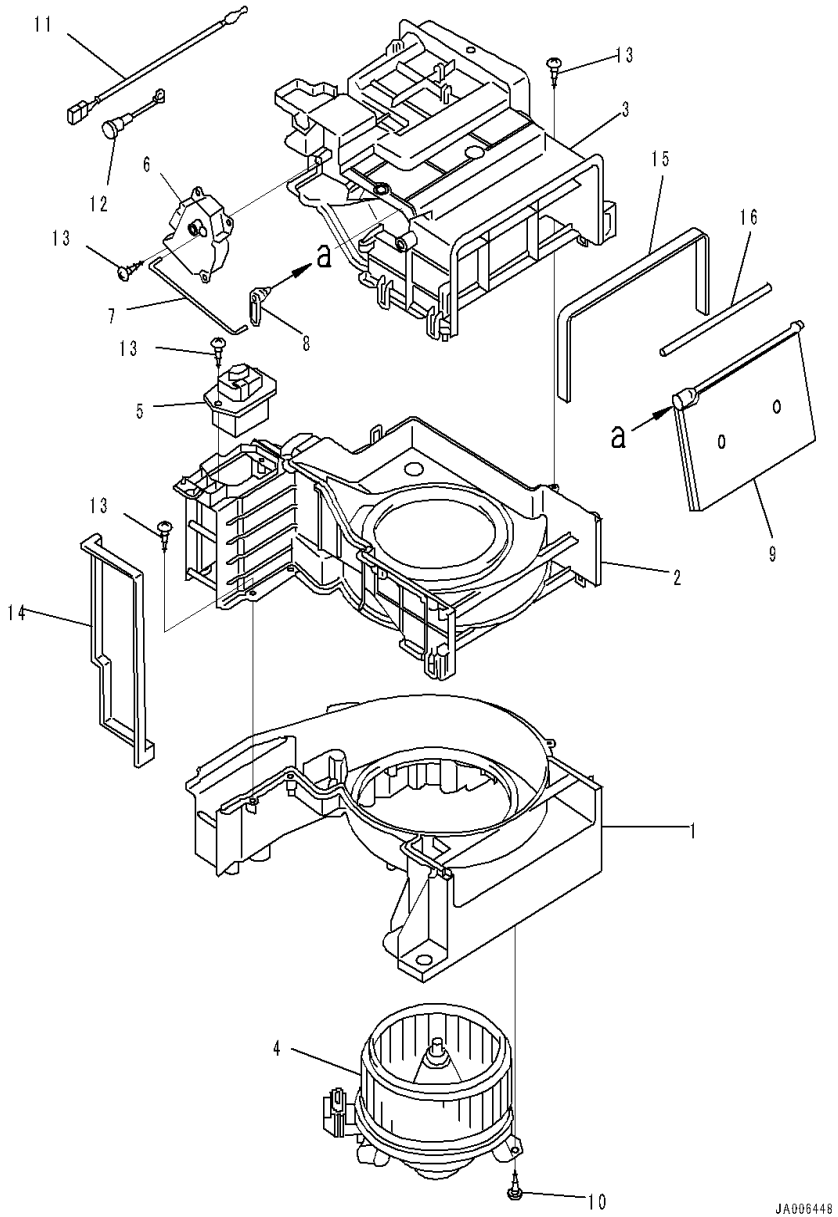

Index	Code	Part Number	Description	Qty	Serial Number
		Note: This list covers following specifications.			
		Auto Air Conditioner,AM-FM Radio,KOMTRAX,Cab Step2			
		Cab with KOMTRAX,GPRS Type,Cab Step2			
		With 1-aditional Actuator Piping,Cab Step2			
		2A5-979-1113	Air Conditioner	1	C90317-
		ND117300-2601	• Motor Assembly	1	C90317--
1		ND116242-7000	• • Case	1	C90317-
2		ND116242-7010	• • Case	1	C90317-
3		ND017321-4600	• • Case	1	C90317-
4		ND116360-0030	• • Motor Assembly	1	C90317-
5		ND077800-1130	• • Transistor	1	C90317-
6		ND063600-4580	• • Servo Motor Assembly	1	C90317-
7		ND116662-8530	• • Shaft	1	C90317-
8		ND116782-6720	• • Lever	1	C90317-
9		ND116740-5000	• • Door Assembly	1	C90317-
10		ND949008-0330	• • Screw, Tapping	3	C90317-
11		ND077500-5650	• • Thermistor Assembly	1	C90317-
12		ND017661-3560	• • Bracket	1	C90317-
13		ND949001-1730	• • Screw, Tapping	11	C90317-
14		ND146636-7530	• • Packing	1	C90317-
15		ND146636-7540	• • Packing	1	C90317-
16		ND146636-7550	• • Packing	1	C90317-

FIG. K1110-004048 Cab (Inner Parts, Air Conditioner Unit, 2/2)

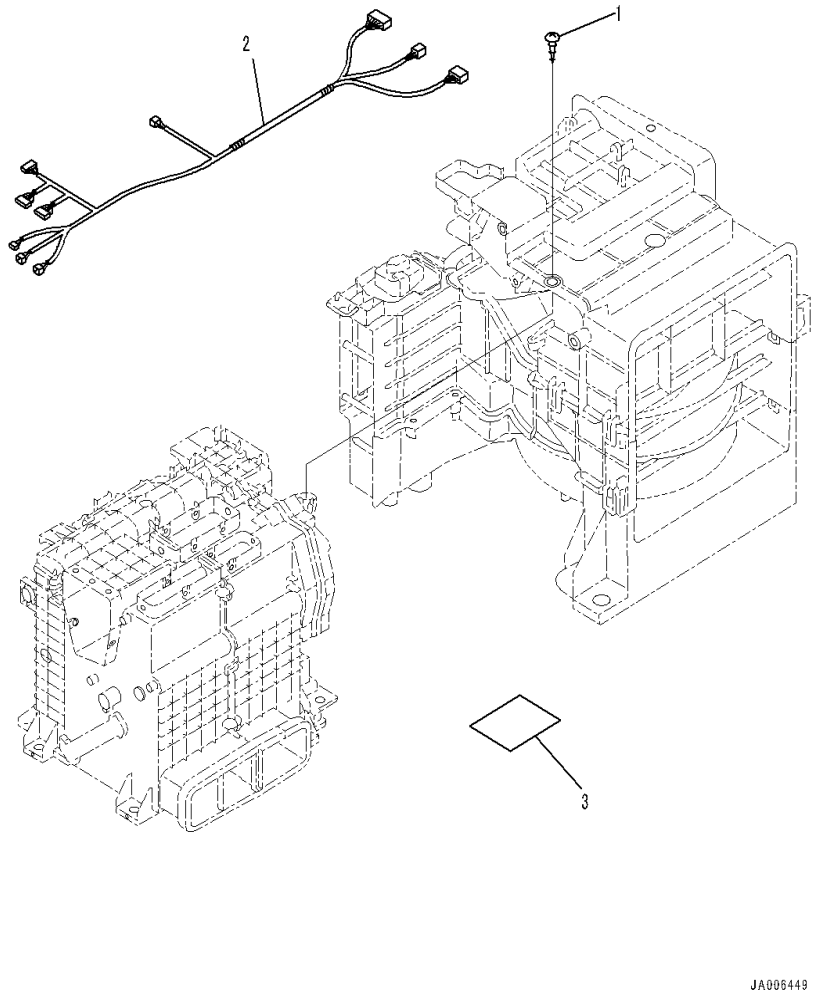

Index	Code	Part Number	Description	Qty	Serial Number
		Note: This list covers following specifications.			
		Auto Air Conditioner,AM-FM Radio,KOMTRAX,Cab Step2			
		Cab with KOMTRAX,GPRS Type,Cab Step2			
		With 1-aditional Actuator Piping,Cab Step2			
		2A5-979-1113	Air Conditioner	1	C90317-
1		ND949008-0330	• Screw, Tapping	2	C90317-
2		ND246470-8154	• Wiring Harness Assembly	1	C90317-
3		ND113104-2260	• Plate, Name	1	C90317-

FIG. K1110-004049 Cab (Floor, Air Conditioner Unit)

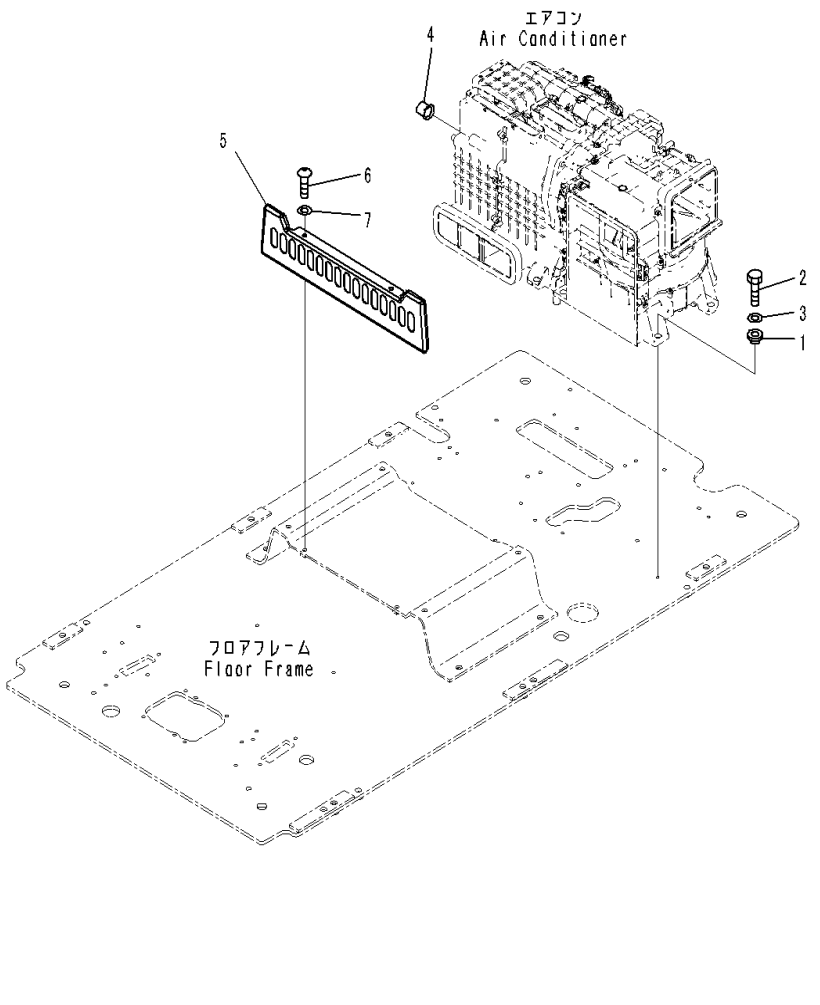

Index	Code	Part Number	Description	Qty	Serial Number
		Note: This list covers following specifications.			
		Auto Air Conditioner,AM-FM Radio,KOMTRAX,Cab Step2			
		Cab with KOMTRAX,GPRS Type,Cab Step2			
		With 1-aditional Actuator Piping,Cab Step2			
1		208-979-7540	Collar	6	C90317-
2		01010-80825	Bolt	6	C90317-
3		01643-30823	Washer	6	C90317-
4		17A-979-3131	Cap	1	C90317-
5		20Y-43-41240	Cover	1	C90317-
6		01245-00820	Screw	2	C90317-
7		01643-70823	Washer	2	C90317-

FIG. K1110-004050 Cab (Floor, Air Conditioner Piping)

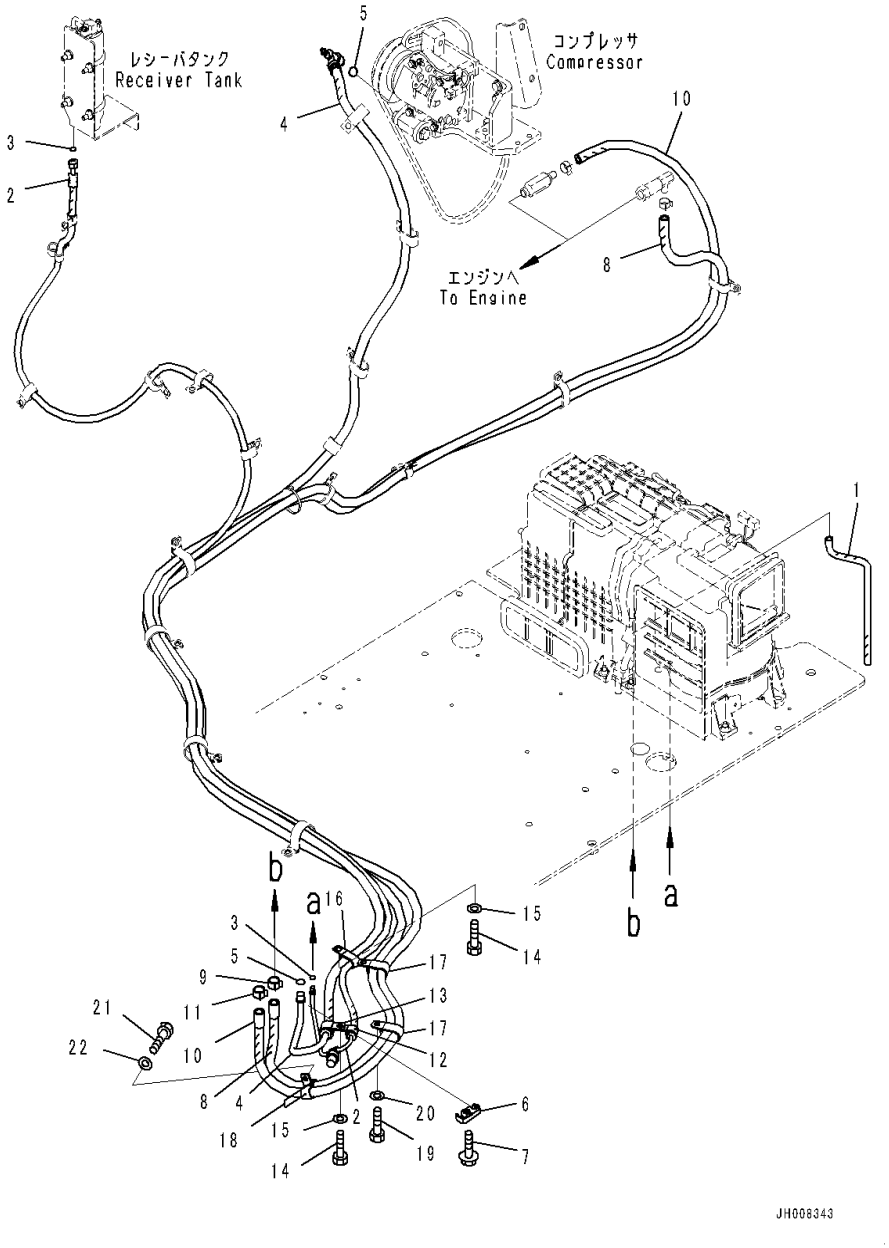

Index	Code	Part Number	Description	Qty	Serial Number
		Note: This list covers following specifications.			
		Auto Air Conditioner,AM-FM Radio,KOMTRAX,Cab Step2			
		Cab with KOMTRAX,GPRS Type,Cab Step2			
		With 1-aditional Actuator Piping,Cab Step2			
1		2A5-979-1131	Hose	1	C90317-
2		207-979-7912	Hose	1	C90317-
3		20Y-979-3150	• O-ring	2	C90317-
4		207-979-7922	Hose	1	C90317-
5		20Y-979-3130	• O-ring	2	C90317-
6		208-979-7650	Connector	1	C90317-
7		01435-40620	Bolt	1	C90317-
8		207-979-7940	Hose Assembly	1	C90317-
9		09479-12400	Clip	1	C90317-
10		207-979-7930	Hose Assembly	1	C90317-
11		09479-12400	Clip	1	C90317-
12		04434-51910	Clip	1	C90317-
13		04434-52511	Clip	1	C90317-
14		01010-81020	Bolt	2	C90317-
15		01643-31032	Washer	2	C90317-
16		20Y-810-1170	Clip	1	C90317-
17		141-06-11220	Clip	2	C90317-
18		04434-52110	Clip	2	C90317-
19		01010-81020	Bolt	2	C90317-
20		01643-31032	Washer	2	C90317-
21		01010-81025	Bolt	1	C90317-
22		01643-31032	Washer	1	C90317-

FIG. K1110-004051 Cab (Floor, PPC Piping for Travel Valve)

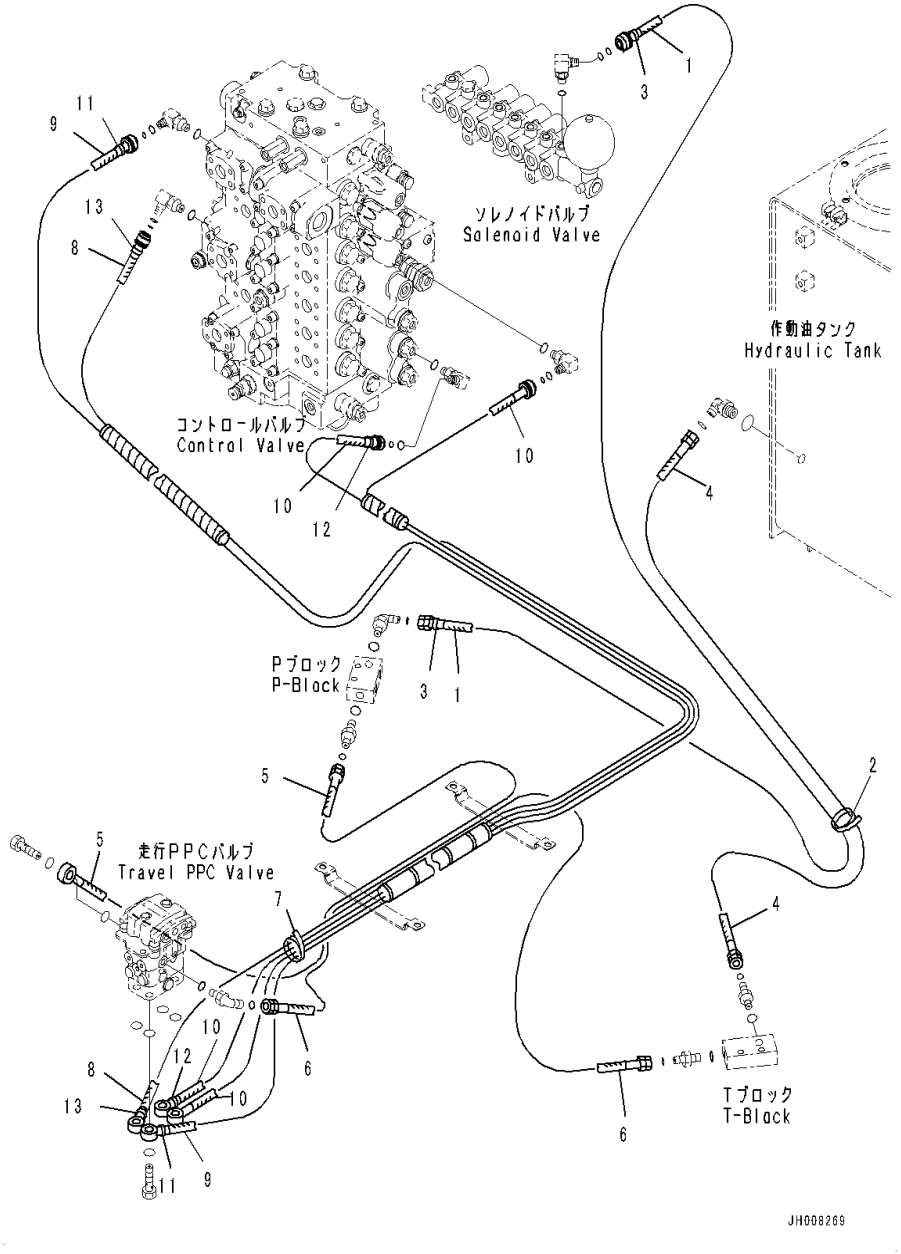

Index	Code	Part Number	Description	Qty	Serial Number
		Note: This list covers following specifications.			
		Auto Air Conditioner,AM-FM Radio,KOMTRAX,Cab Step2			
		Cab with KOMTRAX,GPRS Type,Cab Step2			
		With 1-aditional Actuator Piping,Cab Step2			
		207-62-42610	Hose, Assembly.....	1	C90317-
1		02760-00327	• Hose, Face Seal Type	1	C90317-
2		08034-20519	• Band	1	C90317-
3		20Y-62-22790	• Band, Red	2	C90317-
4		207-62-42680	• Hose	1	C90317-
5		20Y-62-44630	Hose	1	C90317-
6		02760-002A9	Hose	1	C90317-
		207-62-42691	Hose, Assembly.....	1	C90317-
7		08034-20536	• Band	1	C90317-
8		207-62-42980	• Hose	1	C90317-
9		207-62-76420	• Hose	1	C90317-
10		207-62-76570	• Hose	2	C90317-
11		20Y-62-22790	• Band, Red	2	C90317-
12		20Y-62-22820	• Band, Blue	2	C90317-
13		20Y-62-22850	• Band, Green	2	C90317-

FIG. K1110-004052 Cab (Floor, PPC Valve Piping for Work Equipment)

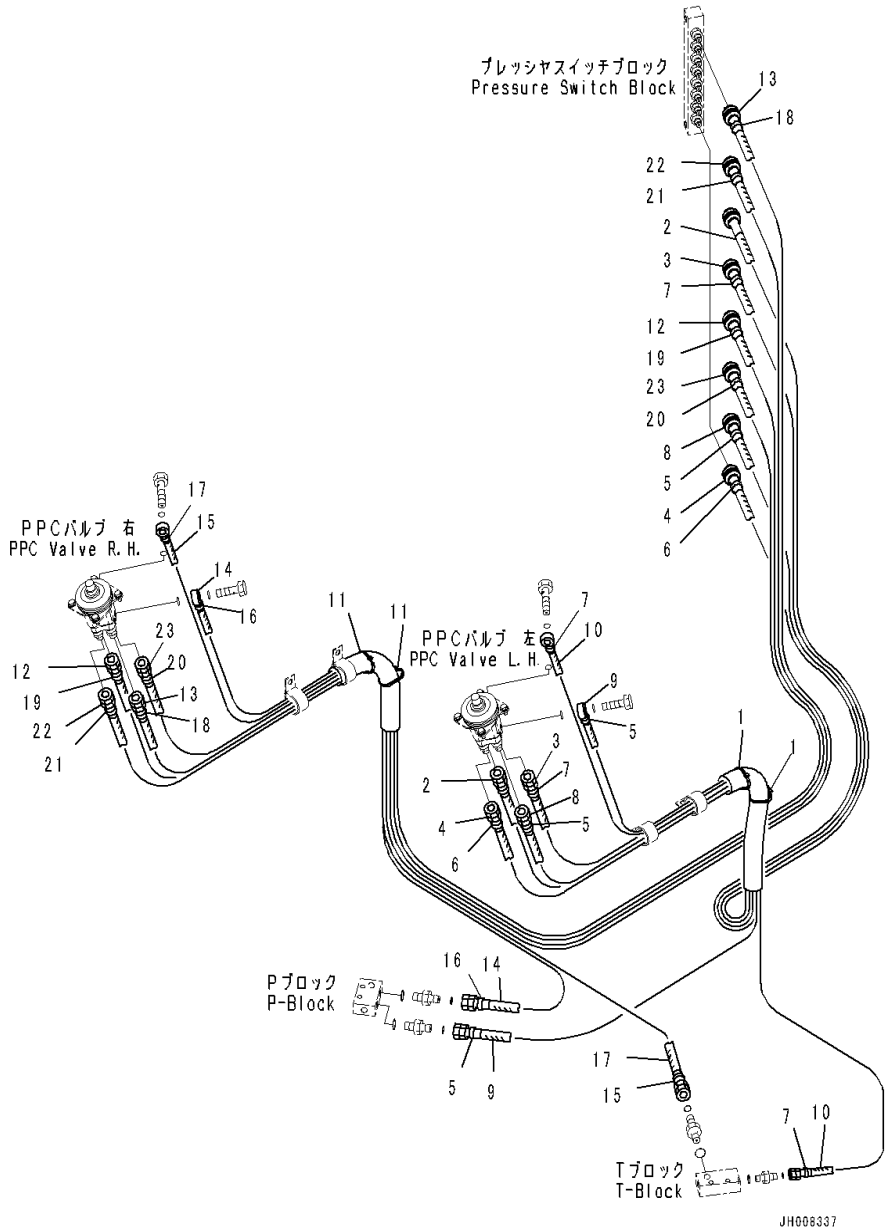

Index	Code	Part Number	Description	Qty	Serial Number
		Note: This list covers following specifications.			
		Auto Air Conditioner,AM-FM Radio,KOMTRAX,Cab Step2			
		Cab with KOMTRAX,GPRS Type,Cab Step2			
		With 1-aditional Actuator Piping,Cab Step2			
		207-62-21961	Hose Assembly	1	C90317-
1		08034-20536	• Band	2	C90317-
2		207-62-72680	• Hose	1	C90317-
3		207-62-75820	• Hose	1	C90317-
4		207-62-72740	• Hose	1	C90317-
5		20Y-62-22790	• Band, Red	4	C90317-
6		20Y-62-22810	• Band, Yellow	2	C90317-
7		20Y-62-22820	• Band, Blue	4	C90317-
8		20Y-62-42550	• Hose	1	C90317-
9		20Y-62-53410	• Hose	1	C90317-
10		207-62-22220	• Hose	1	C90317-
		207-62-21110	Hose Assembly	1	C90317-
11		08034-20536	• Band	2	C90317-
12		208-62-42320	• Hose	1	C90317-
13		208-62-72470	• Hose	1	C90317-
14		208-62-72860	• Hose	1	C90317-
15		208-62-72870	• Hose	1	C90317-
16		20Y-62-22790	• Band, Red	2	C90317-
17		20Y-62-22820	• Band, Blue	2	C90317-
18		20Y-62-22830	• Band, White	2	C90317-
19		20Y-62-22840	• Band, Black	2	C90317-
20		20Y-62-22850	• Band, Green	2	C90001-
21		20Y-62-22860	• Band, Brown	2	C90317-
22		20Y-62-52280	• Hose	1	C90317-
23		22B-62-18620	• Hose	1	C90317-

FIG. K1110-004053 Cab (Floor, Piping Mounting)

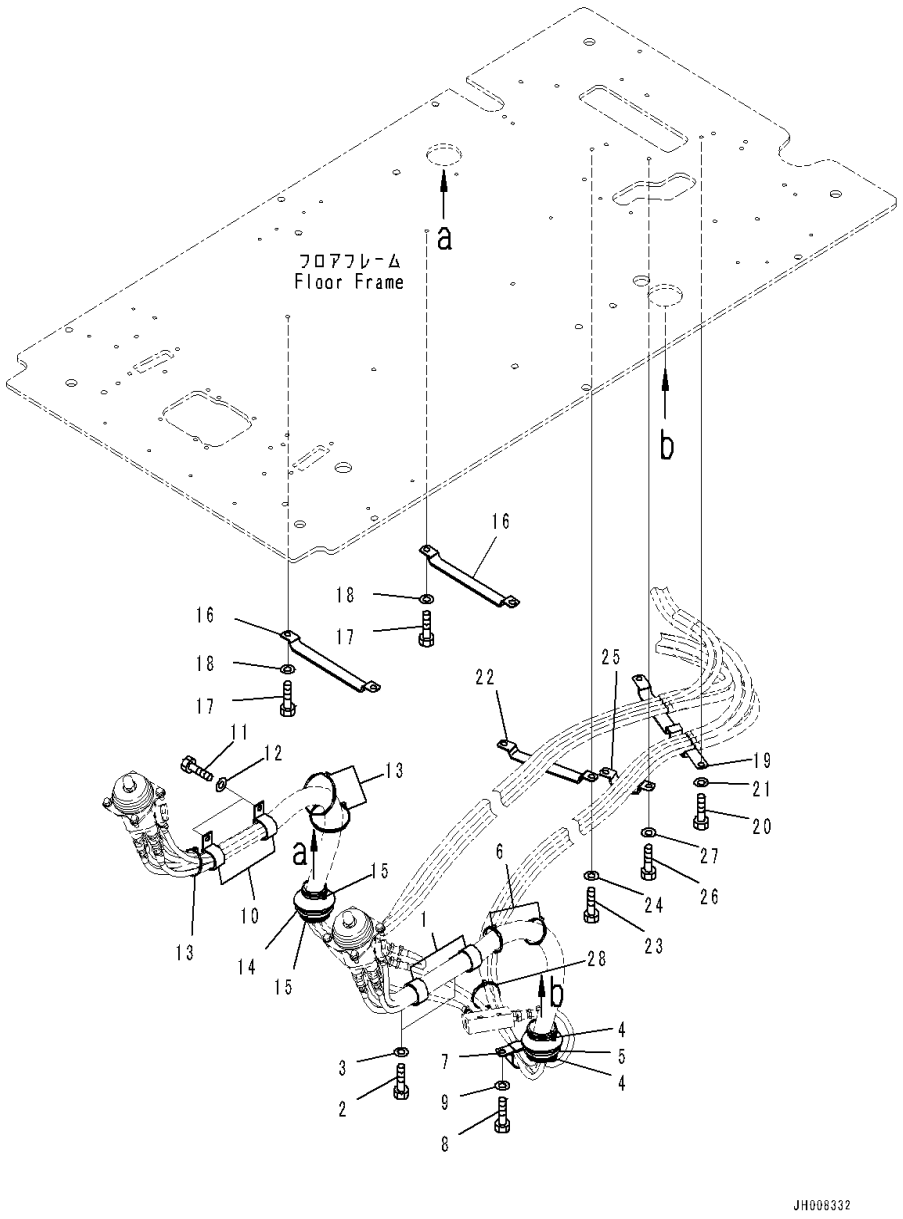

Index	Code	Part Number	Description	Qty	Serial Number
		Note: This list covers following specifications.			
		Auto Air Conditioner,AM-FM Radio,KOMTRAX,Cab Step2			
		Cab with KOMTRAX,GPRS Type,Cab Step2			
		With 1-aditional Actuator Piping,Cab Step2			
1		208-06-19170	Clip	2	C90317-
2		01010-81025	Bolt	2	C90317-
3		01643-31032	Washer	2	C90317-
4		08034-20536	Band	2	C90317-
5		208-43-41111	Grommet	1	C90317-
6		08034-20536	Band	2	C90317-
7		208-06-19170	Clip	1	C90317-
8		01010-81020	Bolt	1	C90317-
9		01643-31032	Washer	1	C90317-
10		04434-53411	Clip	2	C90317-
11		01010-81025	Bolt	2	C90317-
12		01643-31032	Washer	2	C90317-
13		08034-20536	Band	3	C90317-
14		208-43-41111	Grommet	1	C90317-
15		08034-20536	Band	2	C90317-
16		20Y-62-27770	Clamp	2	C90317-
17		01010-81016	Bolt	4	C90317-
18		01643-31032	Washer	4	C90317-
19		2A5-62-13811	Clamp	1	C90317-
20		01010-81016	Bolt	2	C90317-
21		01643-31032	Washer	2	C90317-
22		2A5-62-13820	Clamp	1	C90317-
23		01010-81016	Bolt	2	C90317-
24		01643-31032	Washer	2	C90317-
25		2A5-62-13831	Clamp	1	C90317-
26		01010-81016	Bolt	2	C90317-
27		01643-31032	Washer	2	C90317-
28		08034-20536	Band	1	C90317-

FIG. K1110-004054 Cab (Floor, P, T Block)

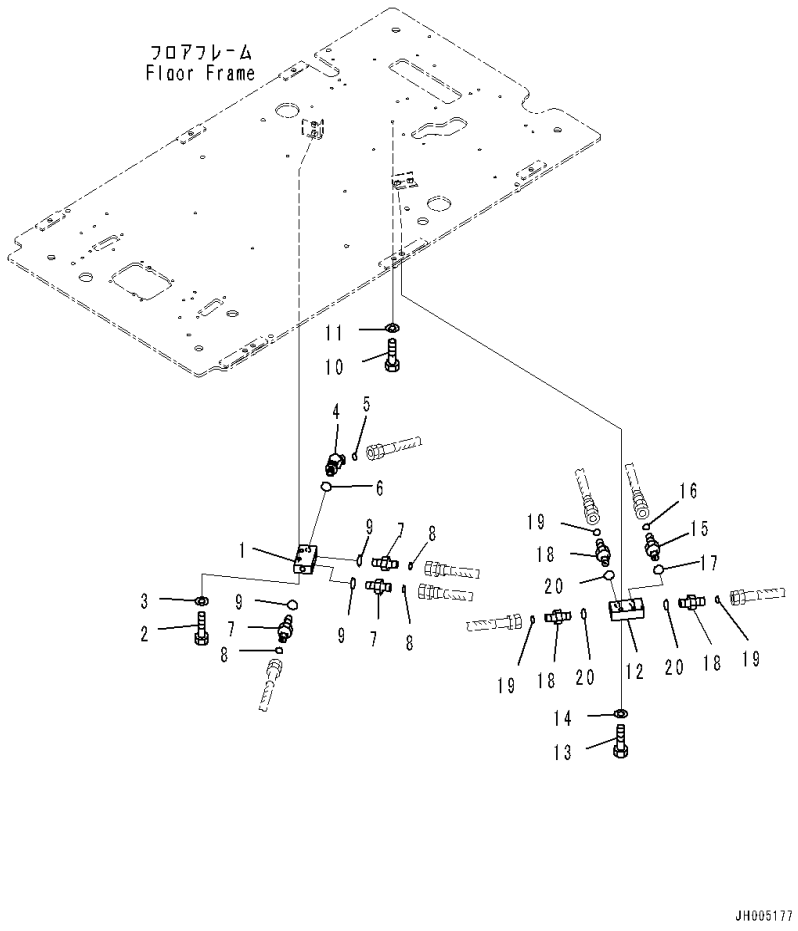

Index	Code	Part Number	Description	Qty	Serial Number
		Note: This list covers following specifications.			
		Auto Air Conditioner,AM-FM Radio,KOMTRAX,Cab Step2			
		Cab with KOMTRAX,GPRS Type,Cab Step2			
1		20Y-62-15831	Block	1	C90317-
2		01010-81045	Bolt	2	C90317-
3		01643-31032	Washer	2	C90317-
4		11Y-62-12510	Elbow	1	C90317-
5		02896-11009	O-ring	1	C90317-
6		07002-11423	O-ring	1	C90317-
7		02781-0021D	Union	3	C90317-
8		02896-11008	O-ring	3	C90317-
9		07002-11423	O-ring	3	C90317-
10		01010-81016	Bolt	1	C90317-
11		01643-31032	Washer	1	C90317-
12		20Y-62-15831	Block	1	C90317-
13		01010-81045	Bolt	2	C90317-
14		01643-31032	Washer	2	C90317-
15		02781-0031D	Nipple	1	C90317-
16		02896-11009	O-ring	1	C90317-
17		07002-11423	O-ring	1	C90317-
18		02781-0021D	Union	3	C90317-
19		02896-11008	O-ring	3	C90317-
20		07002-11423	O-ring	3	C90317-

FIG. K1110-004055 Cab (Floor, Seal)

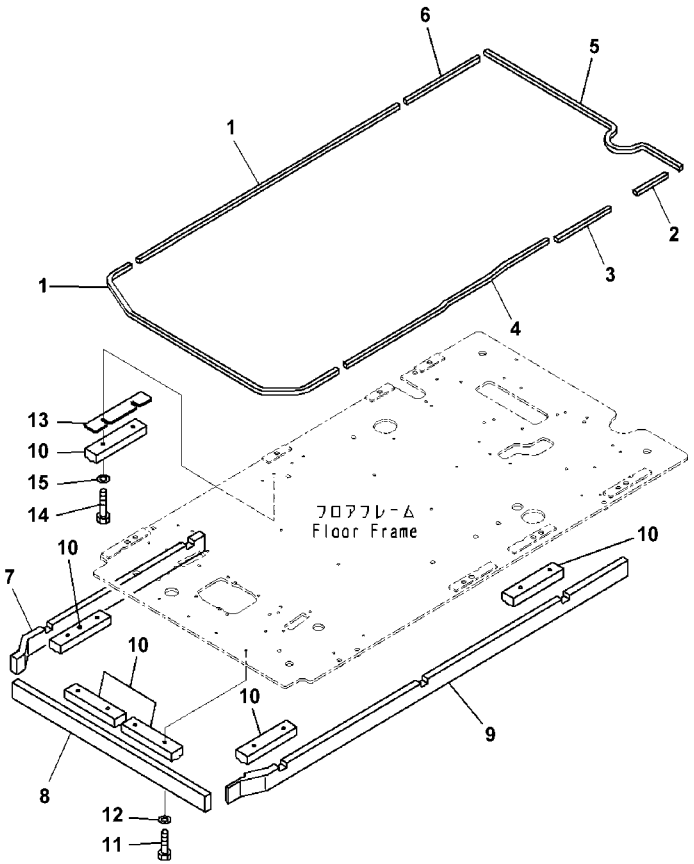

Index	Code	Part Number	Description	Qty	Serial Number
		Note: This list covers following specifications.			
		Auto Air Conditioner,AM-FM Radio,KOMTRAX,Cab Step2			
		Cab with KOMTRAX,GPRS Type,Cab Step2			
		With 1-aditional Actuator Piping,Cab Step2			
1		2A5-43-12131	Seal	2	C90317-
2		20Y-43-15650	Seal	1	C90317-
3		20Y-43-15640	Seal	1	C90317-
4		20Y-43-15630	Seal	1	C90317-
5		20Y-53-14940	Seal	1	C90317-
6		20Y-53-14950	Seal	1	C90317-
7		20Y-43-15720	Sheet	1	C90317-
8		20Y-43-15730	Sheet	1	C90317-
9		20Y-43-15741	Sheet	1	C90317-
10		20Y-43-15790	Sheet	6	C90317-
11		01010-80830	Bolt	10	C90317-
12		01643-30823	Washer	10	C90317-
13		20Y-53-14841	Plate	1	C90317-
14		01010-80840	Bolt	2	C90317-
15		01643-30823	Washer	2	C90317-

FIG. K1110-005001 Cab (With KOMTRAX, GPRS Type,Cab Step2) (Cab Body and Window)

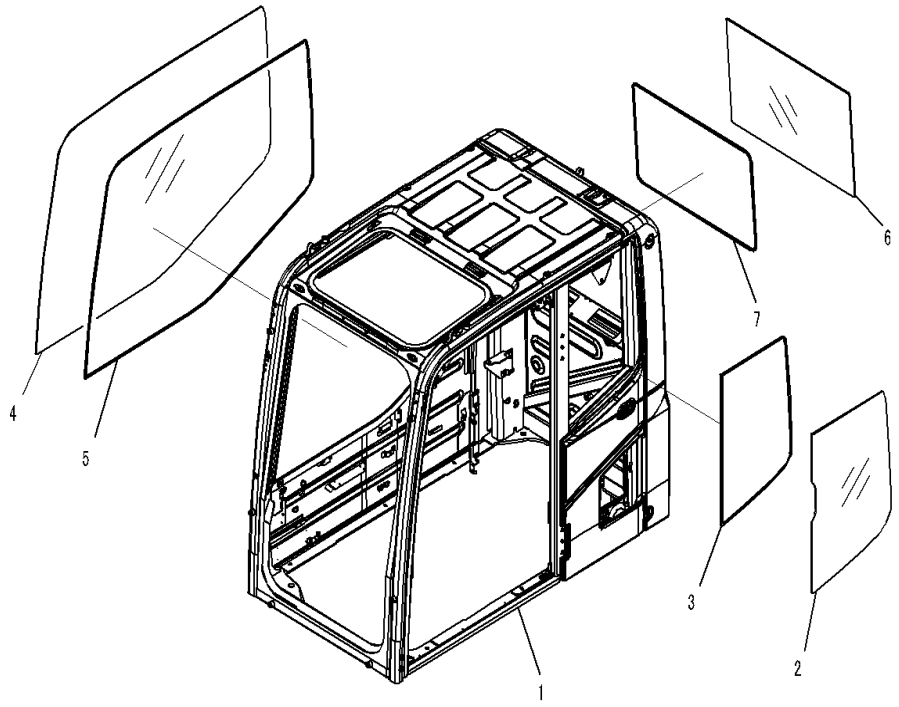

Index	Code	Part Number	Description	Qty	Serial Number
		207-53-00661	Cab Assembly	1	C90317-
1	C1		• Cab	1	C90317-
2		20Y-53-11241	• Glass	1	C90317-
3		20Y-53-11260	• Seal	1	C90317-
4		20Y-53-11841	• Glass	1	C90317-
5		20Y-53-11850	• Seal	1	C90317-
6		20Y-53-11271	• Glass	1	C90317-
7		20Y-53-11250	• Seal	1	C90317-

FIG. K1110-005002 Cab (With KOMTRAX, GPRS Type,Cab Step2) (Front Window)

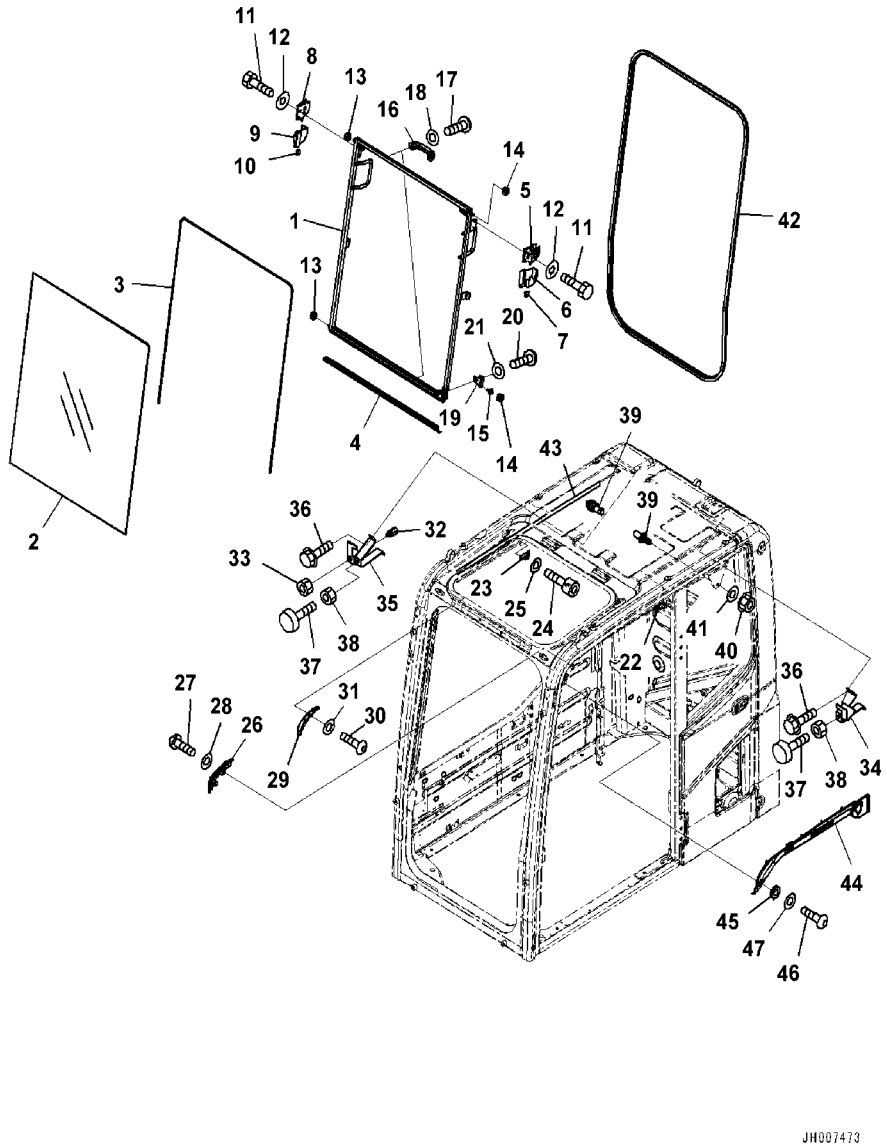

Index	Code	Part Number	Description	Qty	Serial Number
		207-53-00661	Cab Assembly	1	C90317-
		20Y-53-00880	• Window Assembly	1	C90317-
1		2A5-53-12491	• • Frame	1	C90317-
2		20Y-53-11520	• • Glass	1	C90317-
3		20Y-54-51531	• • Seal	1	C90317-
4		20Y-53-11551	• • Seal	1	C90317-
5		22B-54-15411	• • Lock Assembly	1	C90317-
6		22B-54-15440	• • Case	1	C90317-
7		22B-54-15470	• • Knob	1	C90317-
8		22B-54-15421	• • Lock Assembly	1	C90317-
9		22B-54-15450	• • Case	1	C90317-
10		22B-54-15480	• • Knob	1	C90317-
11		01010-D0816	• • Bolt	4	C90317-
12		418-54-35450	• • Washer	4	C90317-
13		20Y-54-52621	• • Roller	2	C90317-
14		20Y-54-52681	• • Roller	2	C90317-
15		20Y-53-12330	• • Pin	1	C90317-
16		20Y-54-14590	• • Handle	2	C90317-
17		01245-00616	• • Screw	4	C90317-
18		01643-70623	• • Washer	4	C90317-
19		20Y-53-12830	• • Bracket	1	C90317-
20		01245-00816	• • Screw	2	C90317-
21		01643-70823	• • Washer	2	C90317-
22		20Y-54-51670	• Stopper	1	C90317-
23		20Y-54-51680	• Stopper	1	C90317-
24		01252-80616	• Bolt	4	C90317-
25		01643-70623	• Washer	4	C90317-
26		20Y-53-11571	• Block Assembly	1	C90317-
27		01245-00816	• Screw	2	C90317-
28		01643-70823	• Washer	2	C90317-
29		20Y-53-11661	• Bracket	1	C90317-
30		01245-00816	• Screw	2	C90317-
31		01643-70823	• Washer	2	C90317-
32		21J-06-12440	• Switch	1	C90317-
33		01583-11811	• Nut	1	C90317-
34		20Y-53-11581	• Bracket	1	C90317-
35		20Y-53-11641	• Bracket	1	C90317-
36		01435-00612	• Bolt	4	C90317-
37		20Y-54-11611	• Stopper	2	C90317-
38		01580-11008	• Nut	2	C90317-

FIG. K1110-005002 Cab (With KOMTRAX, GPRS Type,Cab Step2) (Front Window)

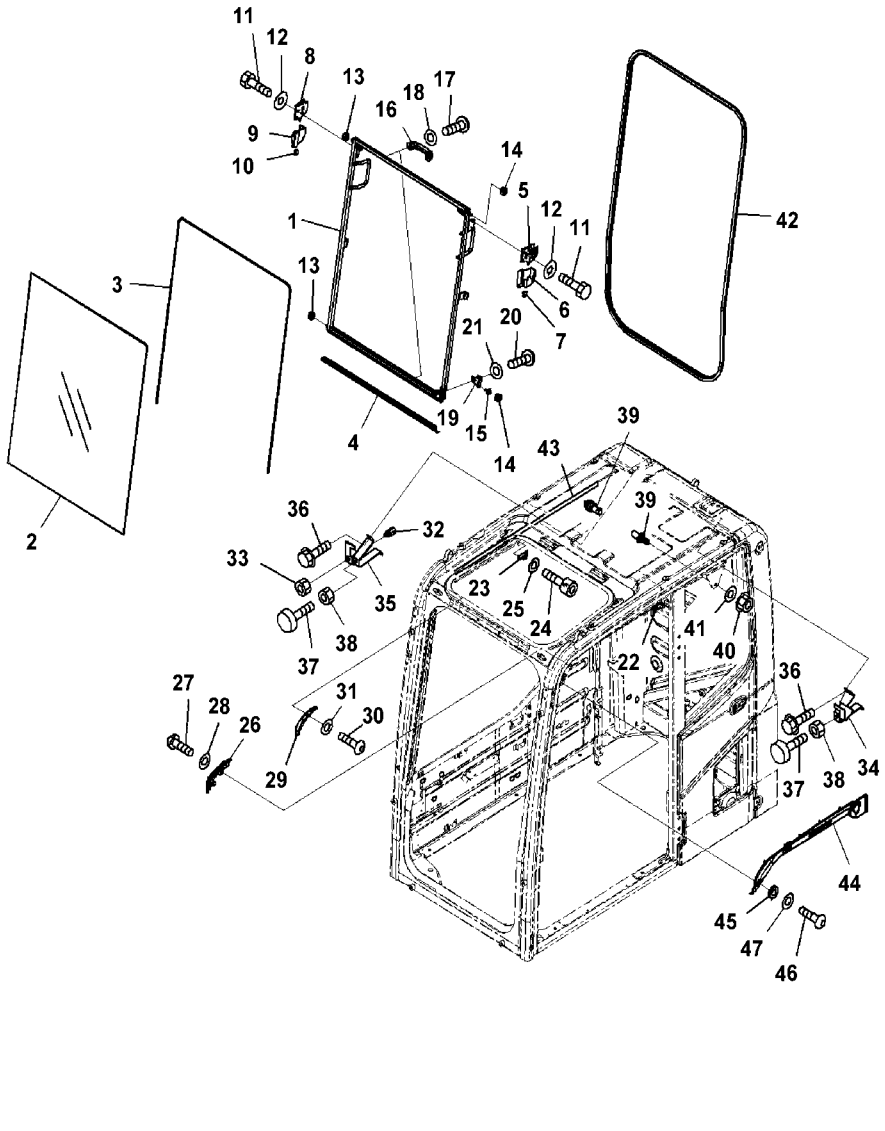

Index	Code	Part Number	Description	Qty	Serial Number
39		20Y-54-51621	• Striker	2	C90317-
40		01584-31008	• Nut	2	C90317-
41		01643-71032	• Washer	2	C90317-
42		20Y-53-11540	• Seal	1	C90317-
43		20Y-54-51420	• Seal	1	C90317-
44		20Y-53-12531	• Cover	1	C90317-
45		20Y-53-12310	• Collar	3	C90317-
46		01245-00616	• Screw	3	C90317-
47		01643-70623	• Washer	3	C90317-

FIG. K1110-005004 Cab (With KOMTRAX, GPRS Type,Cab Step2) (Roof Window)

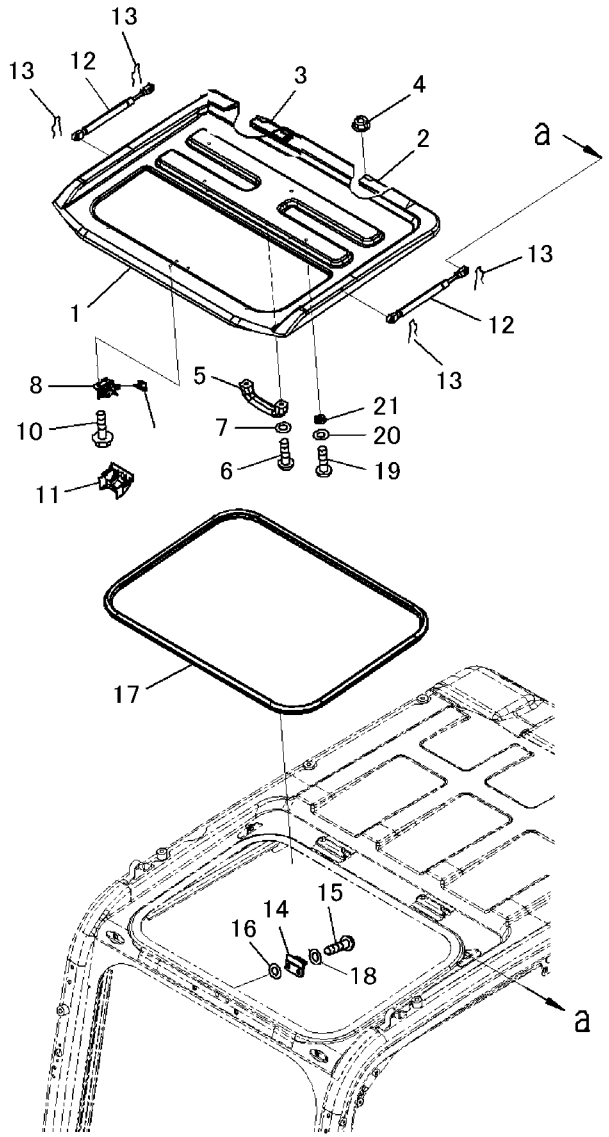

Index	Code	Part Number	Description	Qty	Serial Number
		207-53-00661	Cab Assembly	1	C90317-
1		20Y-53-15881	• Roof	1	C90317-
2		2A5-53-11K11	• • Hinge	1	C90317-
3		2A5-53-11K21	• • Hinge	1	C90317-
4		01584-30806	• Nut	4	C90317-
5		20Y-54-14590	• Handle	1	C90317-
6		01245-00616	• Screw	2	C90317-
7		01643-70623	• Washer	2	C90317-
8		2A5-53-12970	• Lock	1	C90317-
9		20Y-53-11781	• Knob	1	C90317-
10		01435-40610	• Bolt	3	C90317-
11		20Y-53-11931	• Cover	1	C90317-
12		22B-54-38541	• Gas Spring	2	C90317-
13		2A5-53-12530	• Pin, Snap	4	C90317-
14		20Y-53-11771	• Striker	1	C90317-
15		01245-00820	• Screw	2	C90317-
16		20Y-54-52651	• Spacer	2	C90317-
17		20Y-53-11861	• Seal	1	C90317-
18		01643-70823	• Washer	2	C90317-
19		01245-00620	• Screw	4	C90317-
20		01643-70623	• Washer	4	C90317-
21		20Y-54-52651	• Spacer	4	C90317-

FIG. K1110-005013 Cab (With KOMTRAX, GPRS Type,Cab Step2) (KOMTRAX Film Antenna)

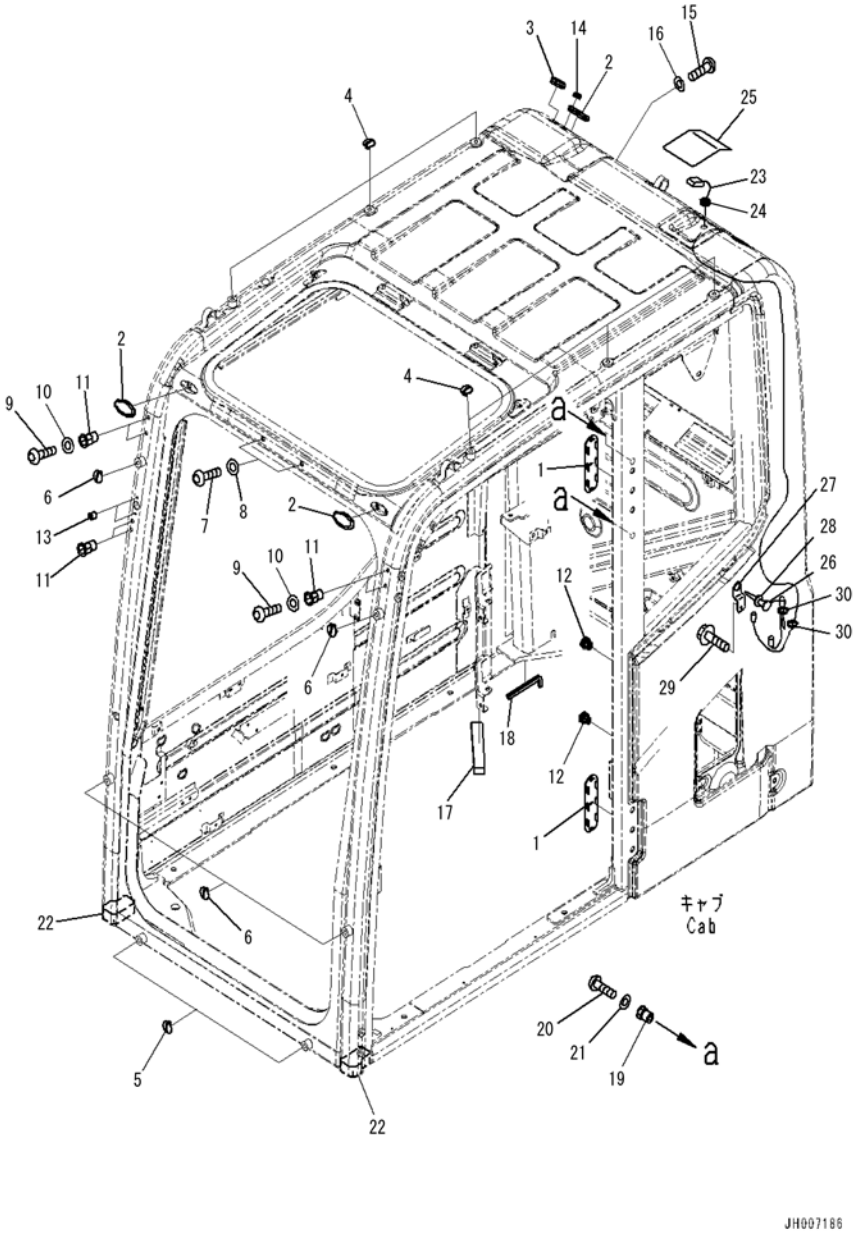

Index	Code	Part Number	Description	Qty	Serial Number
		207-53-00661	Cab Assembly	1	C90317-
1		20Y-53-12960	• Cover	2	C90317-
2		22B-54-17282	• Cap	3	C90317-
3		09415-02512	• Cap	1	C90317-
4		20Y-53-11390	• Cap	6	C90317-
5		20Y-53-11390	• Cap	2	C90317-
6		20Y-53-11380	• Cap	4	C90317-
7		01245-01016	• Screw	2	C90317-
8		01643-71032	• Washer	2	C90317-
9		01245-00616	• Screw	4	C90317-
10		01643-70623	• Washer	4	C90317-
11		20Y-53-12260	• Nut	6	C90317-
12		20Y-54-35451	• Nut	2	C90317-
13		20Y-53-12320	• Nut	2	C90317-
14		09415-01008	Cap	1	C90317-
15		01245-01016	• Screw	1	C90317-
16		01643-71032	• Washer	1	C90317-
17		20Y-53-12580	• Seal	1	C90317-
18		20Y-53-12740	• Trim	1	C90317-
19		20Y-53-12270	• Nut	2	C90317-
20		01245-00816	• Screw	2	C90317-
21		01643-70823	• Washer	2	C90317-
22		2A5-53-11361	• Seal	2	C90317-
23		8A13-10-1320	• Antenna	1	C90317-
24		08037-10610	• • Grommet	1	C90317-
25		20Y-53-12951	• Cover, GPS	1	C90317-
26		8A13-10-3110	• Antenna	1	C90317-
27		20Y-53-14311	• Plate	1	C90317-
28		08037-01610	• Grommet	1	C90317-
29		01435-00616	• Bolt	1	C90317-
30		08034-20414	• Washer	1	C90317-

FIG. K1110-005022 Cab (With KOMTRAX, GPRS Type,Cab Step2) (Air Conditioner and KOMTRAX Controller)

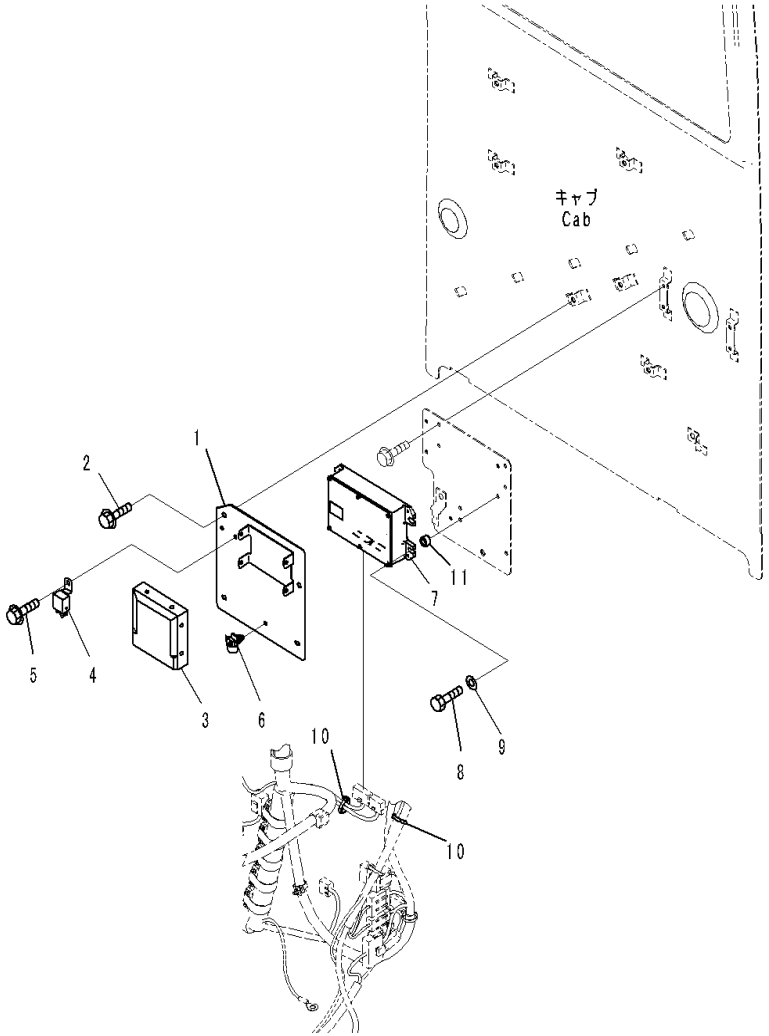

Index	Code	Part Number	Description	Qty	Serial Number
1		20Y-53-14821	Plate	1	C90317-
2		01435-40812	Bolt	2	C90317-
3		2A5-979-1122	Controller, Air Conditioner	1	C90317-
4		7861-74-5100	Relay	1	C90317-
5		01435-00610	Bolt	1	C90317-
6		08059-00515	Clip	1	C90317-
7		7826-25-5102	Controller, KOMTRAX, TC530	1	C90317-
8		01010-80630	Bolt	4	C90317-
9		01643-30623	Washer	4	C90317-
10		08034-20519	Band	2	C90317-
11		20Y-53-14340	Collar	4	C90317-

FIG. K1110-006001 Cab (With 1-aditional Actuator Piping,Cab Step2) (Cab Body and Window)

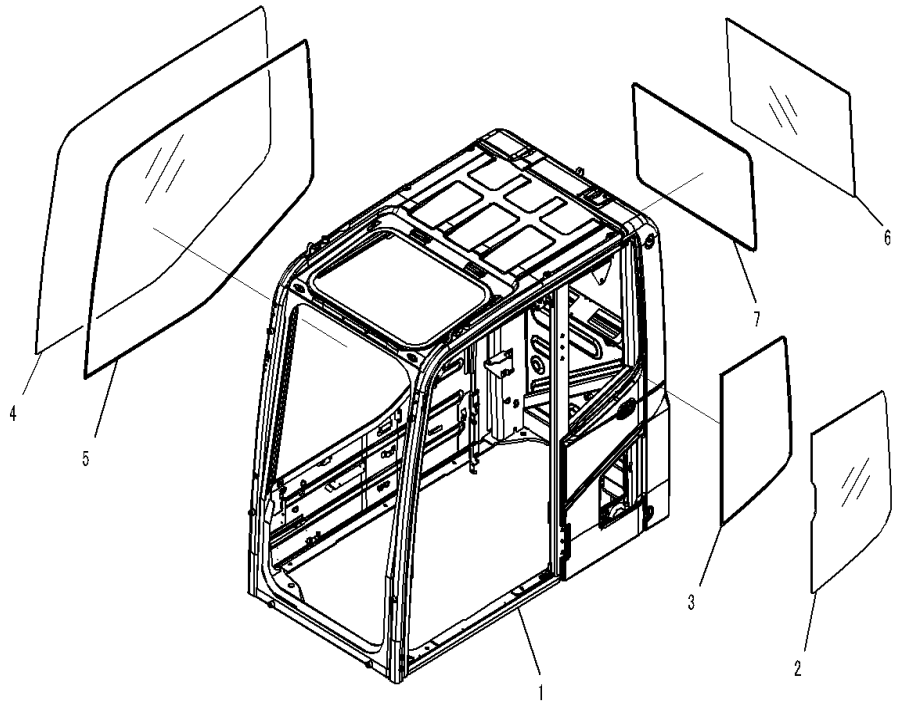

Index	Code	Part Number	Description	Qty	Serial Number
		207-53-00671	Cab Assembly	1	C90317-
1	C1		• Cab	1	C90317-
2		20Y-53-11241	• Glass	1	C90317-
3		20Y-53-11260	• Seal	1	C90317-
4		20Y-53-11841	• Glass	1	C90317-
5		20Y-53-11850	• Seal	1	C90317-
6		20Y-53-11271	• Glass	1	C90317-
7		20Y-53-11250	• Seal	1	C90317-

FIG. K1110-006029 Cab (With 1-aditional Actuator Piping,Cab Step2) (PPC Valve for Attachment)

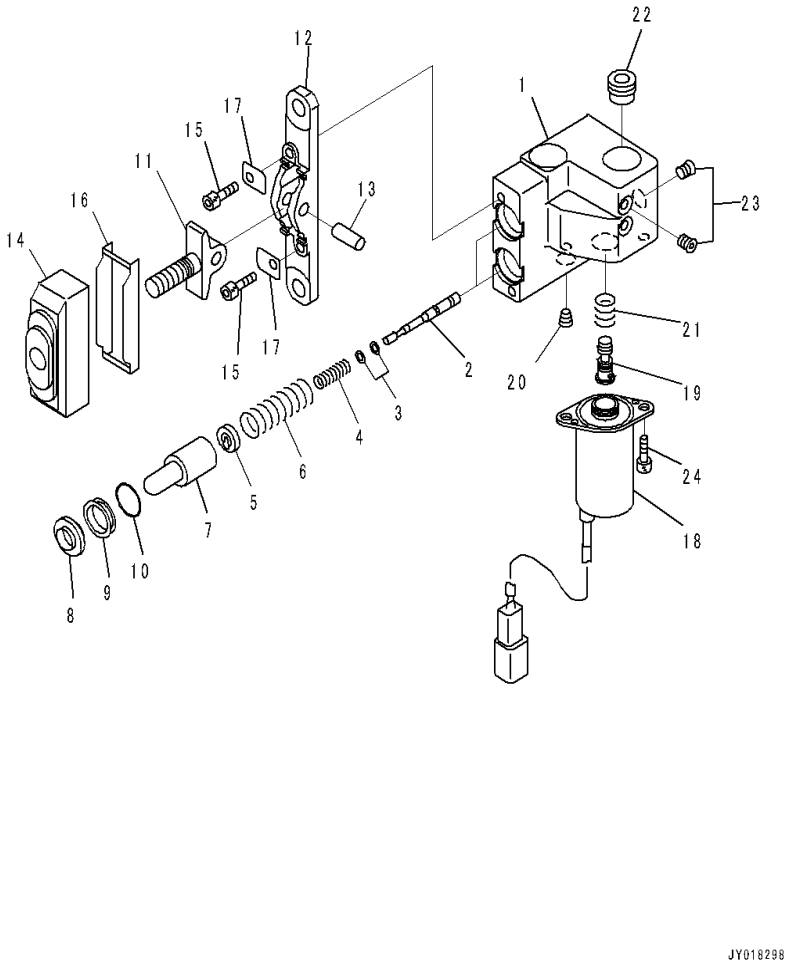

Index	Code	Part Number	Description	Qty	Serial Number
		702-16-05260	Valve, Pilot	1	C90317-
1	C1		• Body, Valve	1	C90317-
2	C1		• Valve	2	C90317-
3		702-16-51140	• Shim, T=0.30mm	2	C90317-
		702-16-54670	• Shim, T=0.20mm	4	C90317-
4		702-16-54550	• Spring	2	C90317-
5		702-16-54571	• Retainer	2	C90317-
6		702-16-54560	• Spring	2	C90317-
7		702-16-53170	• Piston	2	C90317-
8		702-16-51270	• Seal	2	C90317-
9		702-16-54580	• Collar	2	C90317-
10		702-16-54590	• O-ring	2	C90317-
11	C1		• Lever	1	C90317-
12	C1		• Plate	1	C90317-
13	C1		• Shaft	1	C90317-
14		702-16-54641	• Boot	1	C90317-
15		01252-60625	• Bolt, Hexagon Socket Head	2	C90317-
16		702-16-54660	• Plate	1	C90317-
17		702-16-54650	• Plate	2	C90317-
18		702-21-53780	• Solenoid Assembly	1	C90317-
19	C1		• Spool	1	C90317-
20	C1		• Plug	1	C90317-
21		702-21-53311	• Spring	1	C90317-
		702-21-53340	• Spring	1	C90317-
		702-21-53350	• Spring	1	C90317-
22		702-16-56490	• Filter	1	C90317-
23	C1		• Plug	2	C90317-
24		01252-60620	• Bolt, Hexagon Socket Head	2	C90317-

FIG. K1110-006030 Cab (With 1-aditional Actuator Piping,Cab Step2) (Floor, 1st Attachment Control)

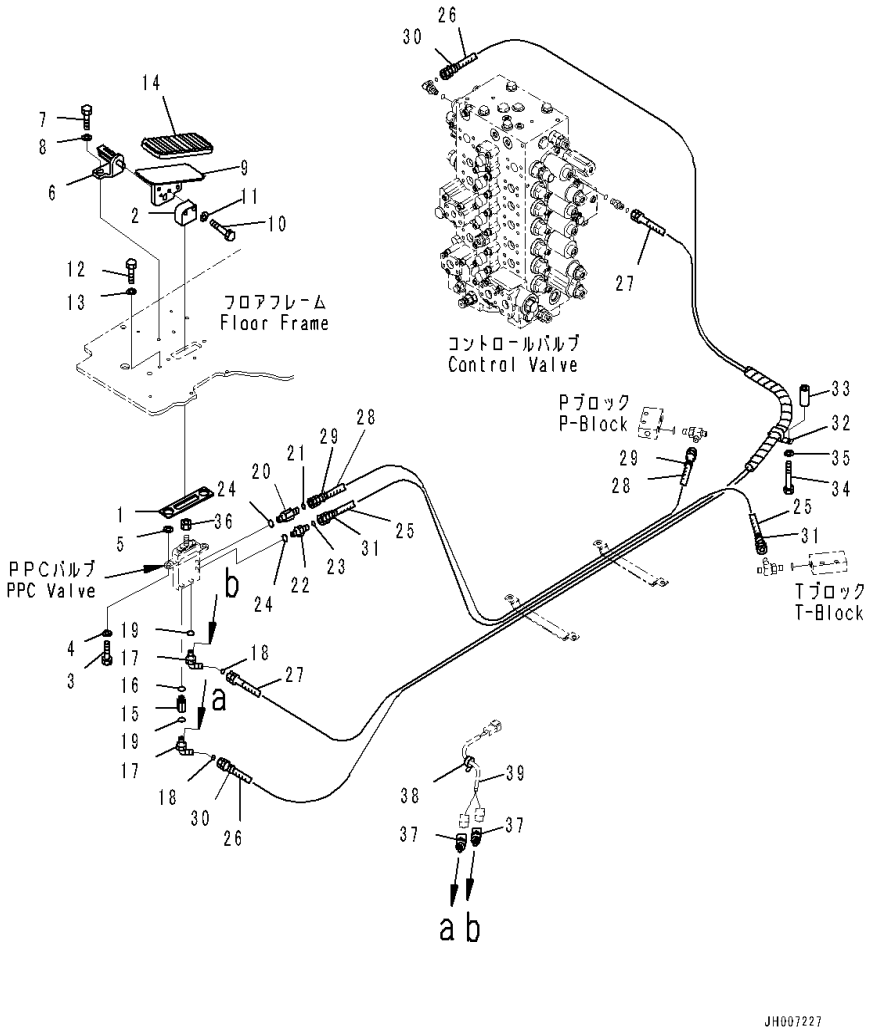

Index	Code	Part Number	Description	Qty	Serial Number
1		22U-54-25660	Seal	1	C90317-
2		20Y-43-41760	Seat	1	C90317-
3		01010-81025	Bolt	2	C90317-
4		01643-31032	Washer	2	C90317-
5		01643-31032	Washer	2	C90317-
6		2A5-62-12350	Bracket	1	C90317-
7		01010-81025	Bolt	2	C90317-
8		01643-31032	Washer	2	C90317-
9		20Y-53-14220	Pedal	1	C90317-
10		01010-D1045	Bolt	2	C90317-
11		01643-71032	Washer	2	C90317-
12		01010-81020	Bolt	3	C90317-
13		01643-31032	Washer	3	C90317-
14		207-43-81240	Cap	1	C90317-
15		20T-910-8660	Nipple	1	C90317-
16		07000-12011	O-ring	1	C90317-
17		20Y-62-52160	Elbow	2	C90317-
18		02896-11008	O-ring	2	C90317-
19		07000-12011	O-ring	2	C90317-
20		20Y-62-43470	Nipple	1	C90317-
21		02896-11008	O-ring	1	C90317-
22		11Y-62-12140	Nipple	1	C90317-
23		02896-11008	O-ring	1	C90317-
24		07000-12011	O-ring	2	C90317-
		207-62-21981	Hose Assembly	1	C90317-
25		02740-00209	• Hose ,900mm	1	C90317-
26		02740-00238	• Hose ,3800mm	1	C90317-
27		02740-00233	• Hose ,3300mm	1	C90317-
28		208-62-72480	• Hose	1	C90317-
29		20Y-62-22790	• Band, Red	2	C90317-
30		20Y-62-22810	• Band, Yellow	2	C90317-
31		20Y-62-22820	• Band, Blue	2	C90317-
32		04435-51210	Clip	1	C90317-
33		175-40-22540	Spacer	1	C90317-
34		01010-81070	Bolt	1	C90317-
35		01643-31032	Washer	1	C90317-
36		01583-11408	Nut	1	C90317-
37		206-06-61130	Switch, Pressure	2	C90317-
38		08034-20519	Band	1	C90317-
39		(20Y-06-41251)	Wiring Harness		-

FIG. K1110-006053 Cab (With 1-aditional Actuator Piping,Cab Step2) (Floor, P,T Block)

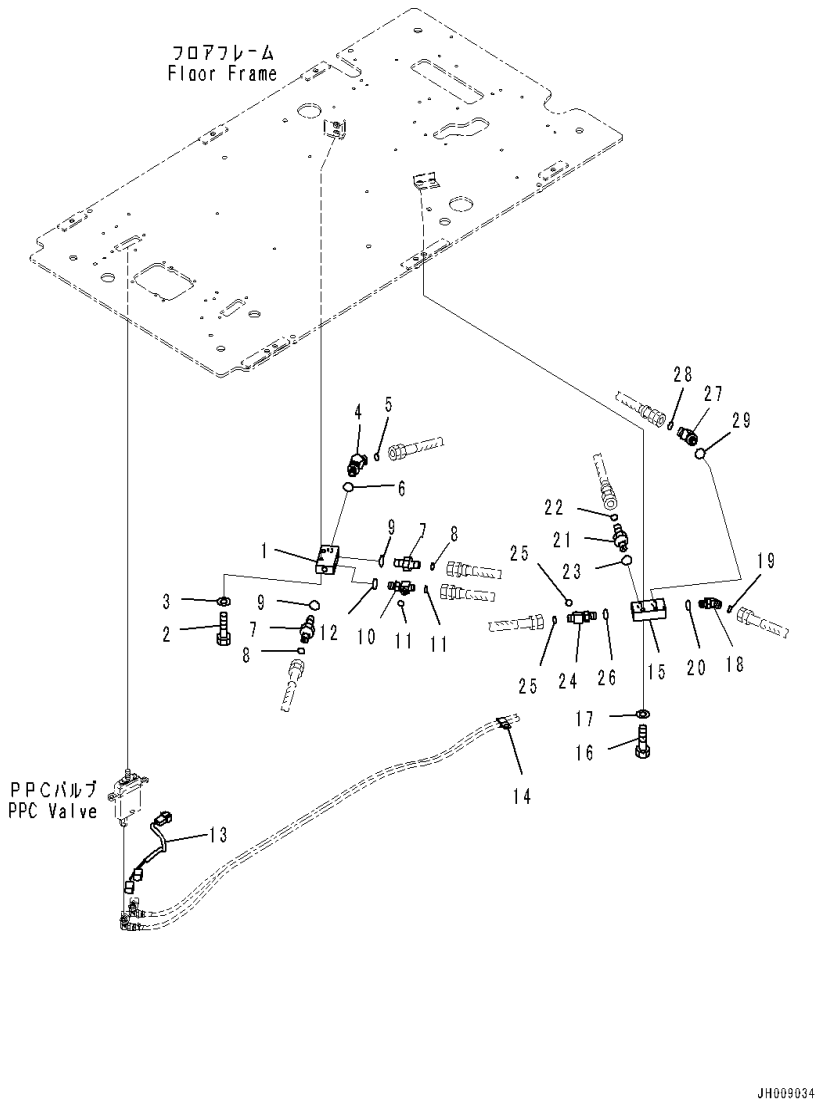

Index	Code	Part Number	Description	Qty	Serial Number
1		20Y-62-15831	Block	1	C90317-
2		01010-81045	Bolt	2	C90317-
3		01643-31032	Washer	2	C90317-
4		11Y-62-12510	Elbow	1	C90317-
5		02896-11009	O-ring	1	C90317-
6		07002-11423	O-ring	1	C90317-
7		02781-0021D	Union	2	C90317-
8		02896-11008	O-ring	2	C90317-
9		07002-11423	O-ring	2	C90317-
10		11Y-62-12330	Tee	1	C90317-
11		02896-11008	O-ring	2	C90317-
12		07002-11423	O-ring	1	C90317-
13		20Y-06-41251	Wiring Harness	1	C90317-
14		04435-51210	Clip	1	C90317-
15		20Y-62-15831	Block	1	C90317-
16		01010-81045	Bolt	2	C90317-
17		01643-31032	Washer	2	C90317-
18		02783-10210	Elbow	1	C90317-
19		02896-11008	O-ring	1	C90317-
20		07002-11423	O-ring	1	C90317-
21		02781-0021D	Union	1	C90317-
22		02896-11008	O-ring	1	C90317-
23		07002-11423	O-ring	1	C90317-
24		11Y-62-12330	Tee	1	C90317-
25		02896-11008	O-ring	2	C90317-
26		07002-11423	O-ring	1	C90317-
27		11Y-62-12510	Elbow	1	C90317-
28		02896-11009	O-ring	1	C90317-
29		07002-11423	O-ring	1	C90317-

FIG. K1110-007032 Cab (With Auto Air Conditioner,AM-FM Radio,KOMTRAX,Indosian,Cab Step2) (Floor,Wiring Harness)

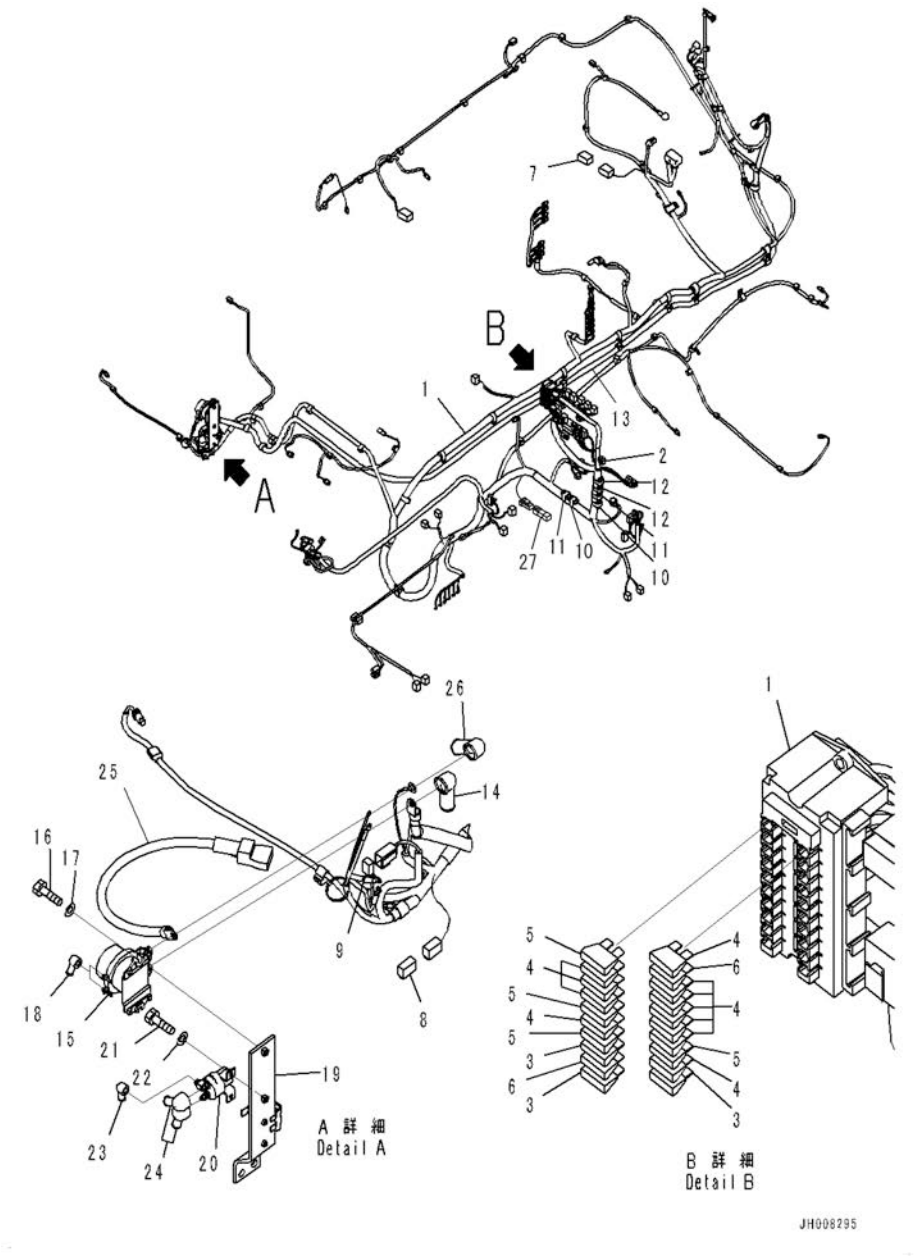

Index	Code	Part Number	Description	Qty	Serial Number
1		207-06-77410	Wiring Harness	1	C90348-
2		08020-20000	• Diode	2	C90348-
3		08041-00500	• Fuse, 5Amp.	3	C90348-
4		08041-01000	• Fuse, 10Amp.	11	C90348-
5		08041-02000	• Fuse, 20Amp.	4	C90348-
6		08041-03000	• Fuse, 30Amp.	2	C90348-
7		19M-06-31720	• Resistor	1	C90348-
8		20Y-06-31660	• Fusible Link,	1	C90348-
9		22U-06-11270	• Fusible Link,	1	C90348-
10		HM6400-0012	• F-Connector Black	2	C90348-
		HM6409-0071	• M-Connector, Black	2	C90348-
11		HM6400-0013	• F-Connector, Green	2	C90348-
		HM6409-0072	• M-Connector, Green	2	C90348-
12		HM6440-0129	• F-Connector, Pink	2	C90348-
		HM6440-0128	• M-Connector, Pink	2	C90348-
13		207-06-77121	Cable	1	C90348-
14		08038-00035	Cap, Terminal	1	C90348-
15		08088-30000	Switch, Battery Relay	1	C90348-
16		01010-80830	Bolt	2	C90348-
17		01643-30823	Washer	2	C90348-
18		08038-00519	Cap, Terminal	2	C90348-
19		207-06-75122	Bracket	1	C90348-
20		600-815-2170	Switch, Heater	1	C90348-
21		01010-80616	Bolt	2	C90348-
22		01643-30623	Washer	2	C90348-
23		08038-00519	Cap, Terminal	1	C90348-
24		08038-02027	Cap, Terminal	2	C90348-
25		08028-CD065	Cable, Ground	1	C90348-
26		08038-00035	Cap, Terminal	1	C90348-
27		20Y-06-43270	Resistor	1	C90348-

FIG. K1110-008039 Cab (With Radio, MP3) (Floor, PPC Lock Lever and Radio)

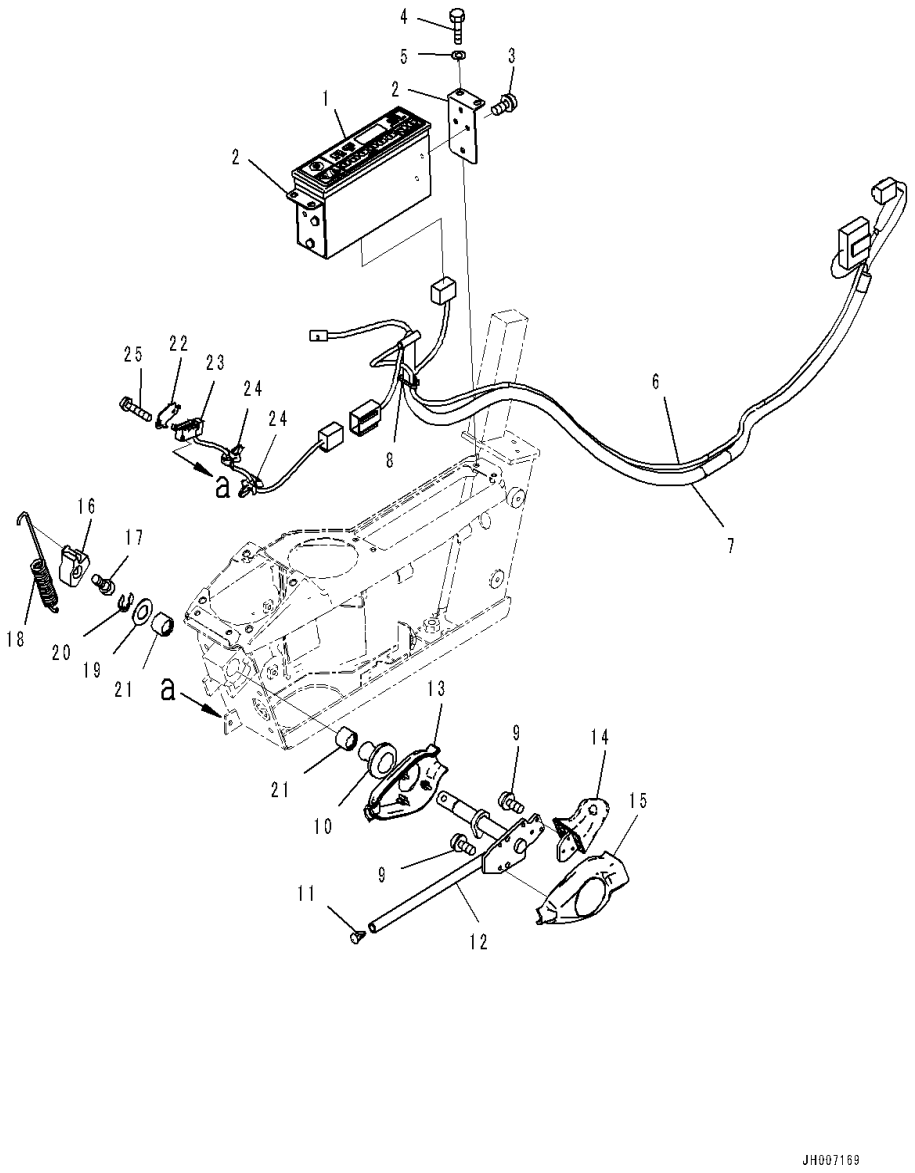

Index	Code	Part Number	Description	Qty	Serial Number
		Note: This list covers following specifications.			
		Auto Air Conditioner,AM-FM Radio,KOMTRAX,Cab Step2			
		Cab with KOMTRAX,GPRS Type,Cab Step2			
		With 1-aditional Actuator Piping,Cab Step2			
1		20Y-06-C1512	Radio	1	C90001-
2		20Y-43-C1211	Plate	2	C90001-
3		01023-60510	Screw	6	C90001-
4		01010-80616	Bolt	4	C90001-
5		01643-30623	Washer	4	C90001-
6		566-07-12151	Cable	1	C90001-
7		20Y-06-16910	Wiring Harness	1	C90001-
8		08034-20414	Band	1	C90001-
9		01023-60410	Screw	6	C90001-
10		08037-11425	Grommet	1	C90001-
11		208-53-12280	Cap	1	C90001-
12		20Y-43-31513	Lever	1	C90001-
13		20Y-43-31522	Cover	1	C90001-
14		20Y-43-31611	Knob	1	C90001-
15		20Y-43-31621	Cover	1	C90001-
16		20Y-43-31432	Cam	1	C90001-
17		01252-70816	Bolt	1	C90001-
18		20Y-43-31421	Spring	1	C90001-
19		20Y-43-31440	Ring	1	C90001-
20		20Y-43-31450	Plate	1	C90001-
21		06124-01616	Bearing	2	C90001-
22		22U-06-22490	Plate	1	C90001-
23		22U-06-22360	Switch Assembly	1	C90001-
24		22U-43-23260	Clip	2	C90001-
25		01023-60320	Screw	2	C90001-

FIG. K1110-009023 Cab (With GPRS, 3G) (Cab In Parts, Air Conditioner and KOMTRAX Controller)

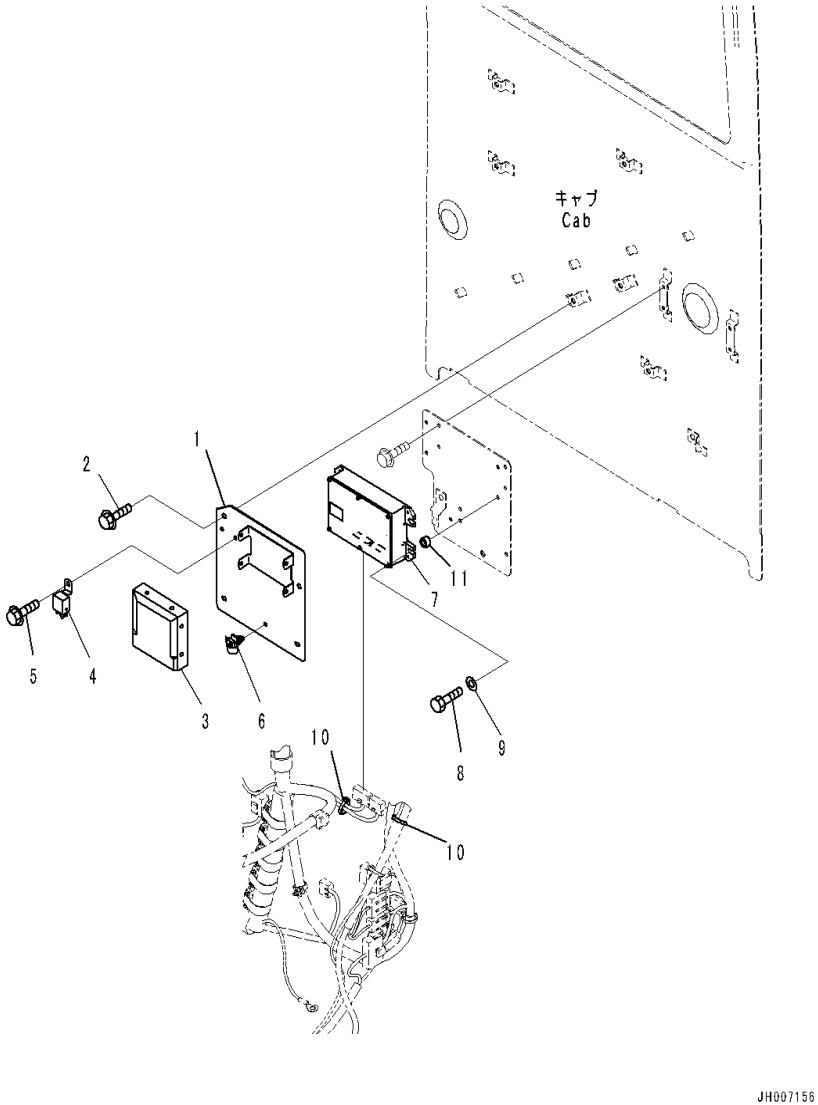

Index	Code	Part Number	Description	Qty	Serial Number
1		20Y-53-14821	Plate	1	C90415-
2		01435-40812	Bolt	2	C90415-
3		2A5-979-1122	Controller, Air Conditioner	1	C90415-
4		7861-74-5100	Relay	1	C90415-
5		01435-00610	Bolt	1	C90415-
6		08059-00515	Clip	1	C90415-
7		7826-25-6002	Controller, GPRS, TC630	1	C90415-
8		01010-80630	Bolt	4	C90415-
9		01643-30623	Washer	4	C90415-
10		08034-20519	Band	2	C90415-
11		20Y-53-14340	Collar	4	C90415-

FIG. K1120-001001 Floor Mounting, #C90001-C90316

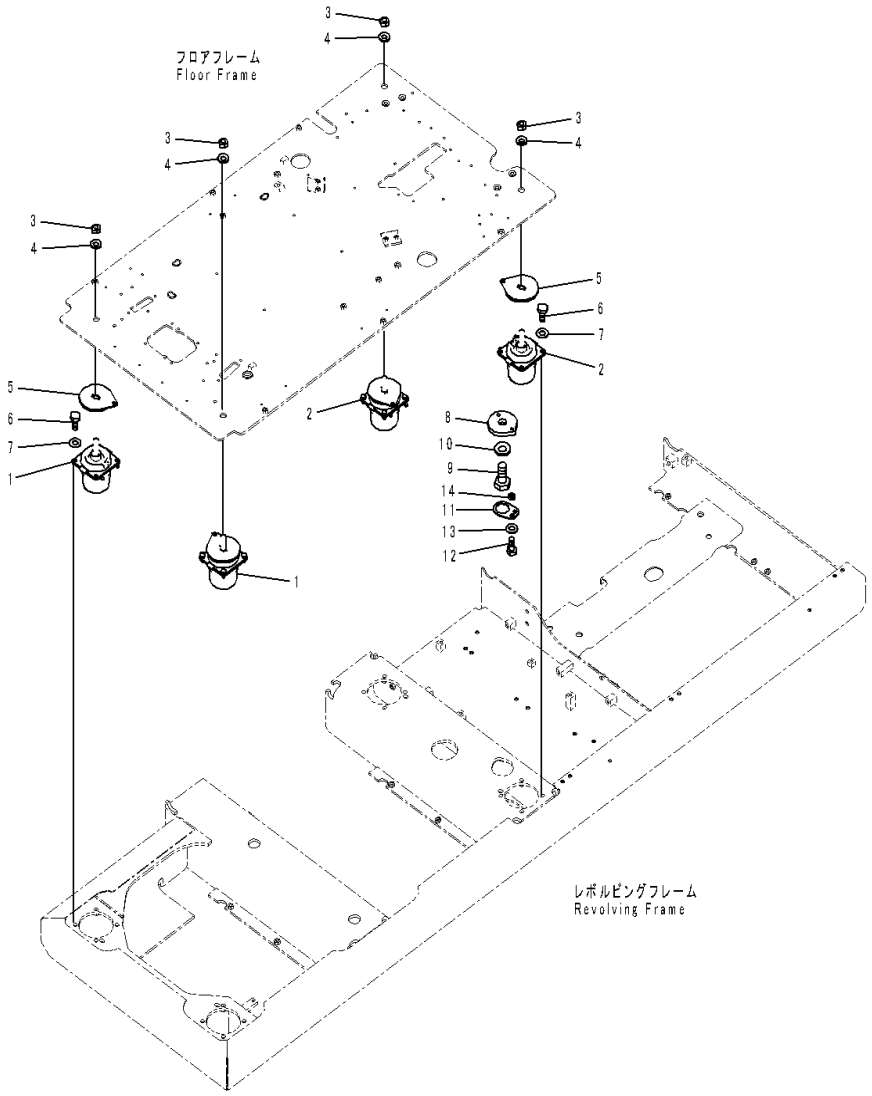

Index	Code	Part Number	Description	Qty	Serial Number
1		208-53-23210	Cushion	2	C90001-C90316
2		206-53-13121	Cushion	2	C90001-C90316
3		01580-12016	Nut	4	C90001-C90316
4		01643-32060	Washer	4	C90001-C90316
5		20Y-53-13130	Spacer	4	C90001-C90316
6		01010-81235	Bolt	16	C90001-C90316
7		01643-31232	Washer	16	C90001-C90316
8		20Y-53-13142	Plate	1	C90001-C90316
9		01011-83080	Bolt	1	C90001-C90316
10		01643-33080	Washer	1	C90001-C90316
11		20Y-53-13151	Lock	1	C90001-C90316
12		01010-81235	Bolt	1	C90001-C90316
13		01643-31232	Washer	1	C90001-C90316
14		198-43-15310	Collar	1	C90001-C90316

FIG. K1120-002001 Floor Mounting, Cab Step2, #C90317-

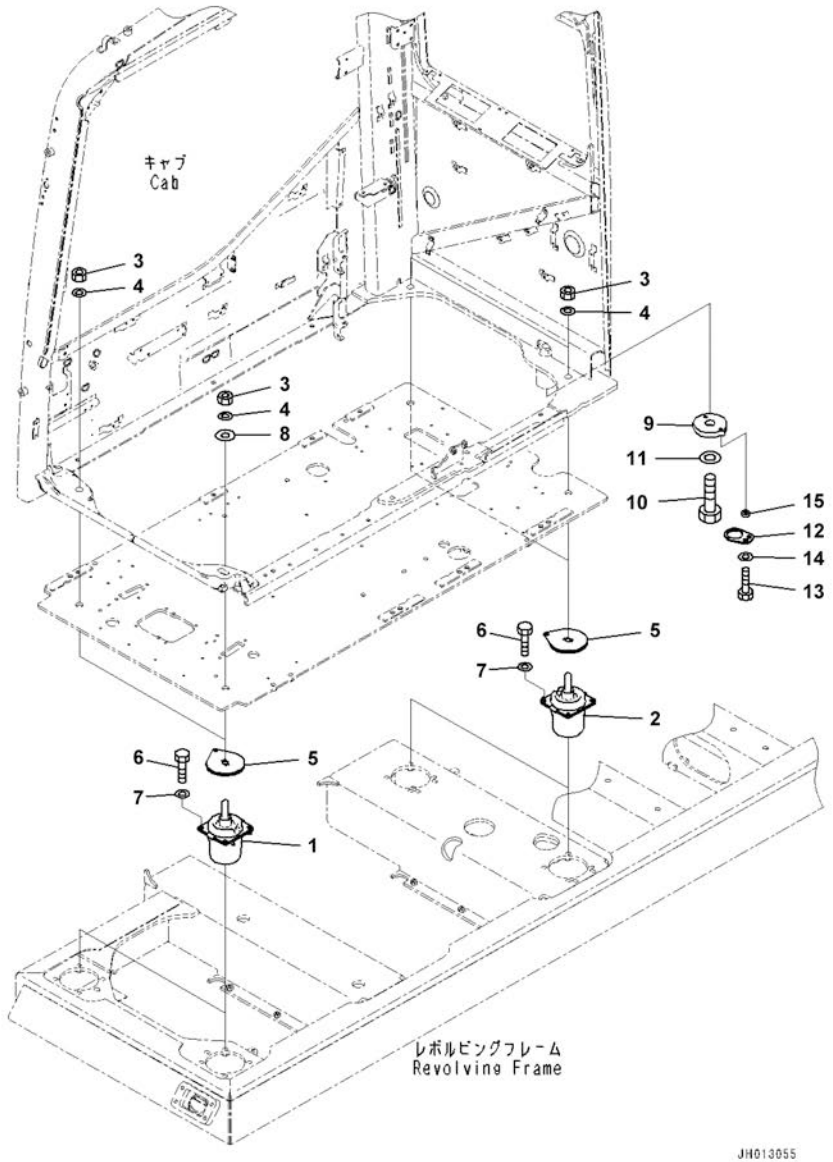

Index	Code	Part Number	Description	Qty	Serial Number
1		208-53-23210	Cushion	2	C90317-
2		206-53-13121	Cushion	2	C90317-
3		01580-12016	Nut	4	C90317-
4		01643-32060	Washer	4	C90317-
5		20Y-53-13130	Spacer	4	C90317-
6		01010-81235	Bolt	16	C90317-
7		01643-31232	Washer	16	C90317-
8		2A5-53-11941	Plate	1	C90317-
9		20Y-53-13142	Plate	1	C90317-
10		01011-83080	Bolt	1	C90317-
11		01643-33080	Washer	1	C90317-
12		20Y-53-13151	Lock	1	C90317-
13		01010-81235	Bolt	1	C90317-
14		01643-31232	Washer	1	C90317-
15		198-43-15310	Collar	1	C90317-

FIG. K1520-001001 Proportional Pressure Control (PPC) Piping

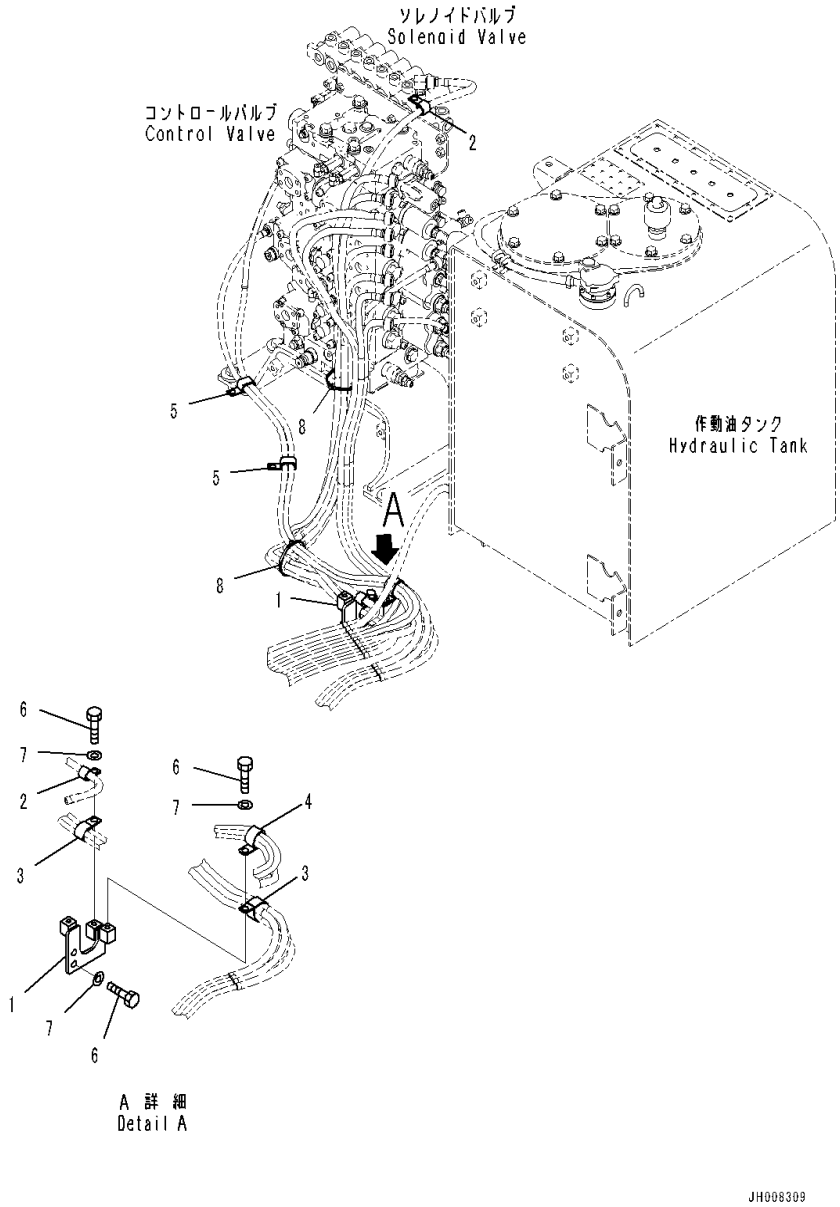

Index	Code	Part Number	Description	Qty	Serial Number
1		207-62-22210	Bracket	1	C90001-
2		04434-51812	Clip	2	C90001-
3		20Y-62-15951	Clip	2	C90001-
4		04434-52712	Clip	1	C90001-
5		04435-51512	Clip	2	C90001-
6		01010-81230	Bolt	4	C90001-
7		01643-31232	Washer	4	C90001-
8		08034-20536	Band	2	C90001-

FIG. K1520-002001 Proportional Pressure Control (PPC) Piping (1-additional Actuator Piping, Accumulator)

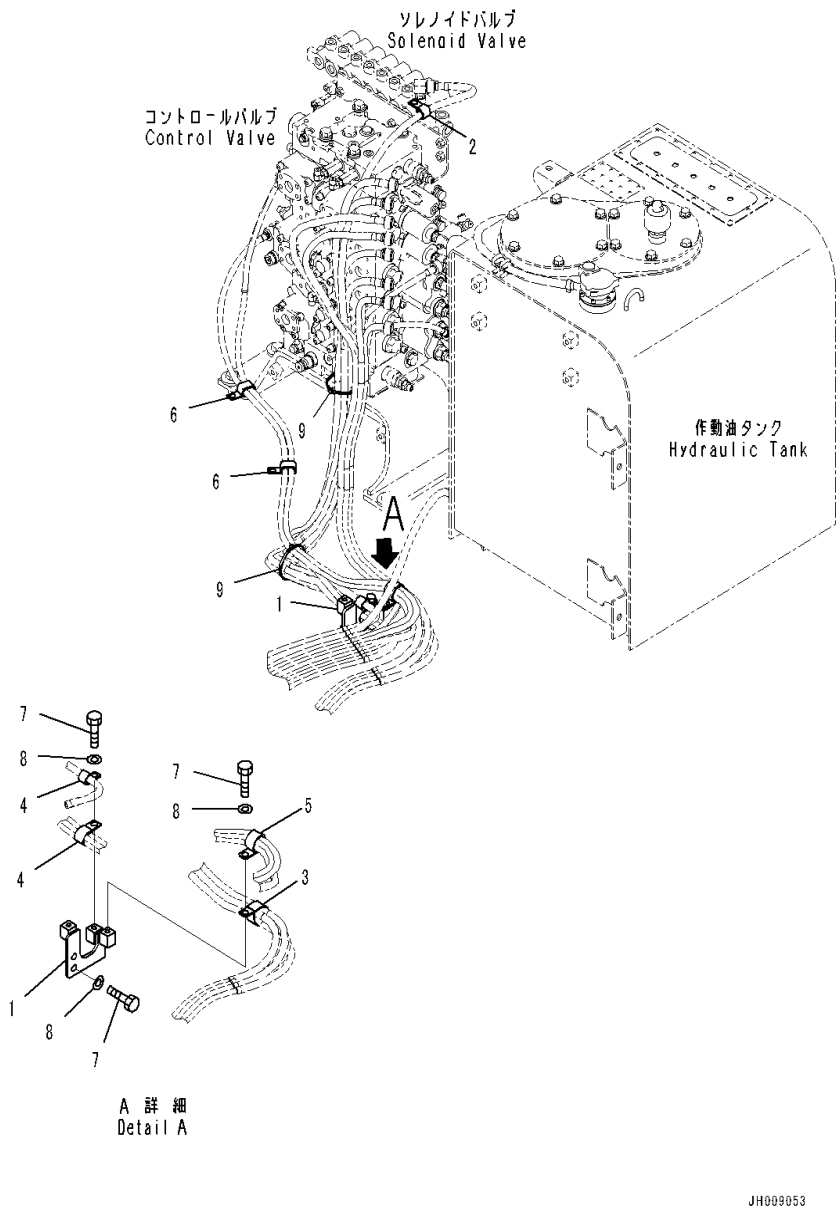

Index	Code	Part Number	Description	Qty	Serial Number
1		207-62-22210	Bracket	1	C90001-
2		04434-51812	Clip	1	C90001-
3		20Y-62-15951	Clip	1	C90001-
4		581-04-22290	Clip	2	C90001-
5		04434-52712	Clip	1	C90001-
6		142-06-13540	Clip	2	C90001-
7		01010-81230	Bolt	4	C90001-
8		01643-31232	Washer	4	C90001-
9		08034-20536	Band	2	C90001-

FIG. K1730-001001 Switch

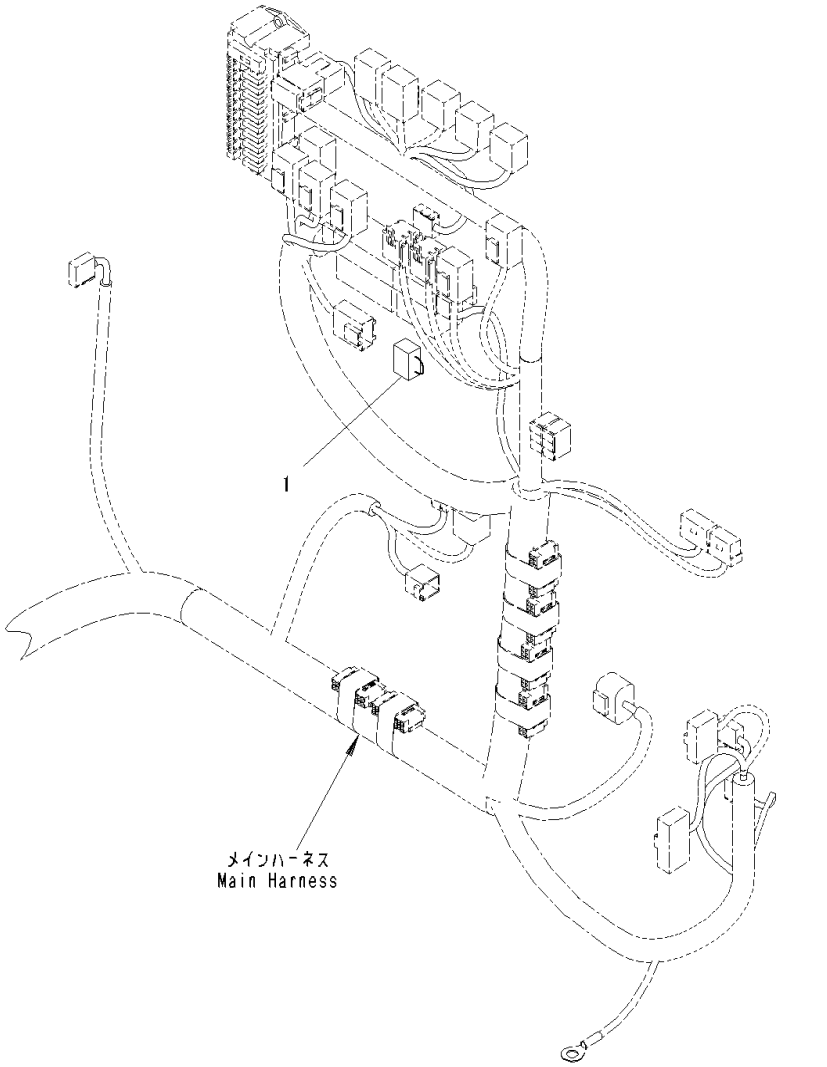

Index	Code	Part Number	Description	Qty	Serial Number
1		207-06-61250	Switch	1	C90001-

GUARDS AND COVERS

FIG. M1110-001001 Engine Hood, FAB Type

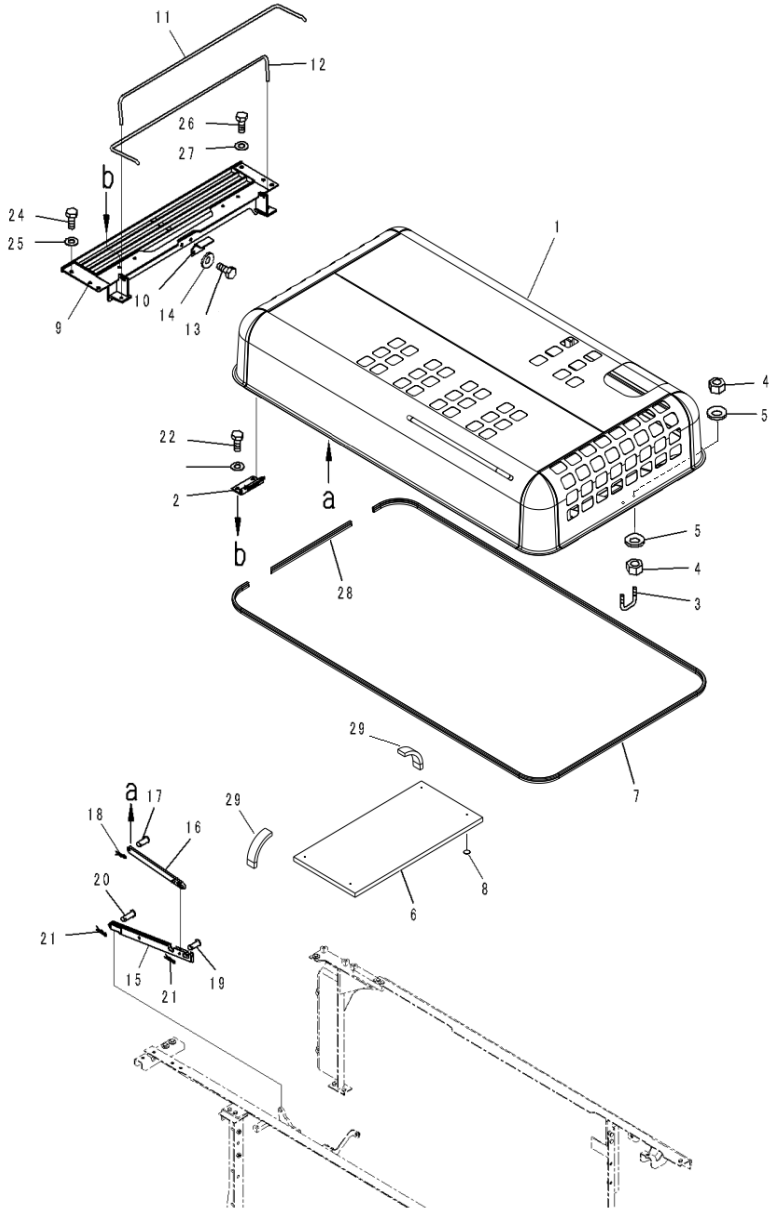

Index	Code	Part Number	Description	Qty	Serial Number
1		207-54-C2100	Hood	1	C90001-
2		20Y-54-D1450	• Hinge	2	C90001-
3		207-54-61270	U-bolt	1	C90001-
4		01580-11613	Nut	4	C90001-
5		01643-31645	Washer	4	C90001-
6		207-54-C1150	Sheet	1	C90001-
7		207-54-C1210	Seal	1	C90001-
8		124-A62-1920	Cap	8	C90001-
9		207-54-78121	Frame	1	C90001-
10		20Y-54-27360	Bracket	1	C90001-
11		207-54-62150	Spring	1	C90001-
12		207-54-62160	Spring	1	C90001-
13		01010-81230	Bolt	2	C90001-
14		01643-31232	Washer	2	C90001-
15		207-54-72150	Stay	1	C90001-
16		20Y-54-27290	Stay	1	C90001-
17		04205-31230	Pin	1	C90001-
18		04052-01253	Pin	1	C90001-
19		04205-31230	Pin	1	C90001-
20		04205-31238	Pin	1	C90001-
21		04052-01253	Pin	2	C90001-
22		01010-81230	Bolt	4	C90001-
23		01643-31232	Washer	4	C90001-
24		01010-81230	Bolt	3	C90001-
25		01643-31232	Washer	3	C90001-
26		01010-81225	Bolt	3	C90001-
27		01643-31232	Washer	3	C90001-
28		207-54-C1220	Seal	1	C90001-
29		207-54-C1190	Seal	2	C90001-

FIG. M1120-001001 Machine Cab Frame

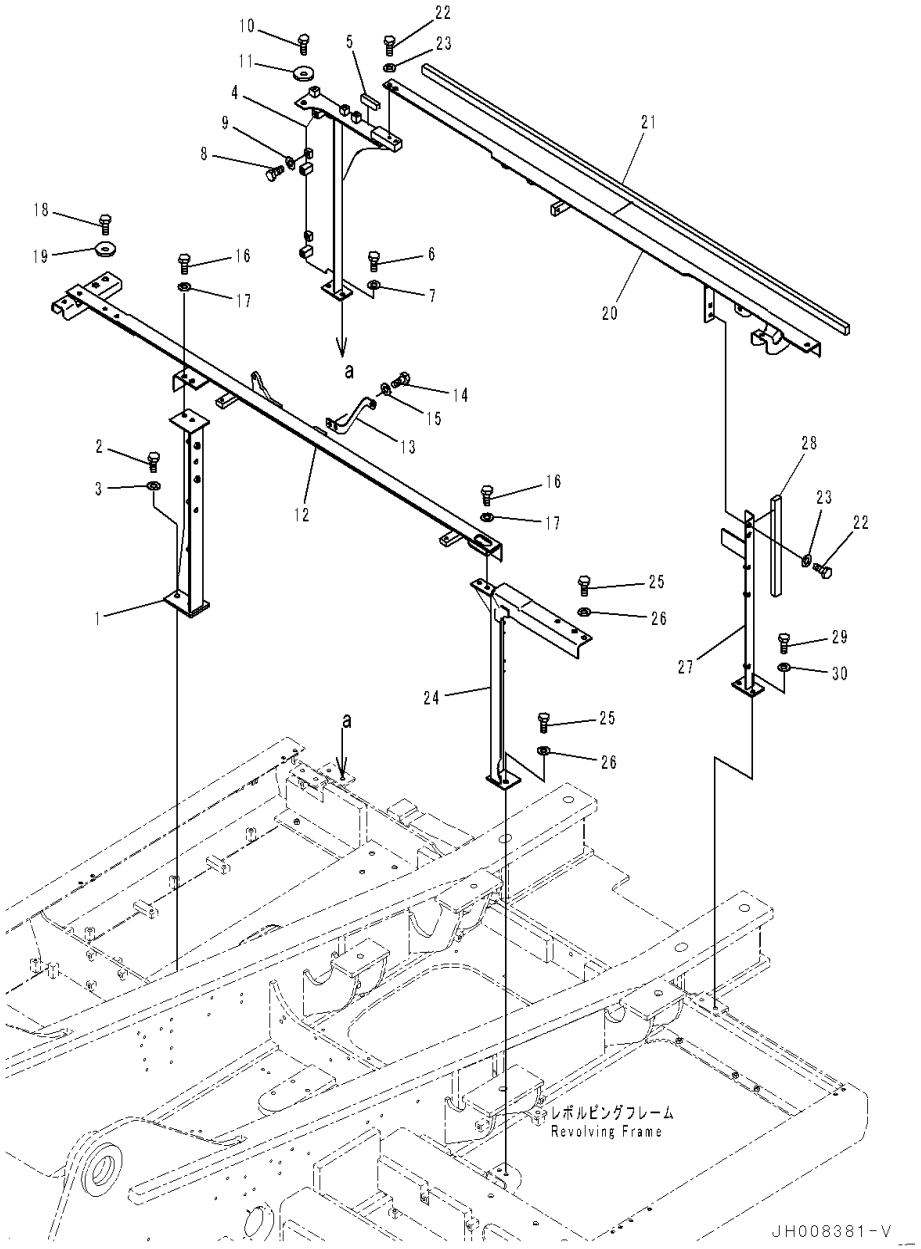

Index	Code	Part Number	Description	Qty	Serial Number
1		207-54-73630	Frame	1	C90001-
2		01010-81240	Bolt	2	C90001-
3		01643-31232	Washer	2	C90001-
4		207-54-73620	Frame	1	C90001-
5		207-54-77190	• Sheet	1	C90001-
6		01010-81230	Bolt	2	C90001-
7		01643-31232	Washer	2	C90001-
8		01010-81225	Bolt	2	C90001-
9		01643-31232	Washer	2	C90001-
10		01010-81230	Bolt	1	C90001-
11		175-54-34170	Washer	1	C90001-
12		207-54-76421	Frame	1	C90001-
13		207-979-7560	Bracket	1	C90001-
14		01010-81230	Bolt	2	C90001-
15		01643-31232	Washer	2	C90001-
16		01010-81230	Bolt	4	C90001-
17		01643-31232	Washer	4	C90001-
18		01010-81230	Bolt	2	C90001-
19		175-54-34170	Washer	2	C90001-
20		207-54-78670	Frame	1	C90001-
21		207-54-71721	• Sheet	1	C90001-
22		01010-81230	Bolt	5	C90001-
23		01643-31232	Washer	5	C90001-
24		207-54-73611	Frame	1	C90001-
25		01010-81230	Bolt	3	C90001-
26		01643-31232	Washer	3	C90001-
27		207-54-76480	Frame	1	C90001-
28		207-54-76491	• Sheet	1	C90001-
29		01010-81230	Bolt	2	C90001-
30		01643-31232	Washer	2	C90001-

FIG. M1130-001001 Side Cover L.H.

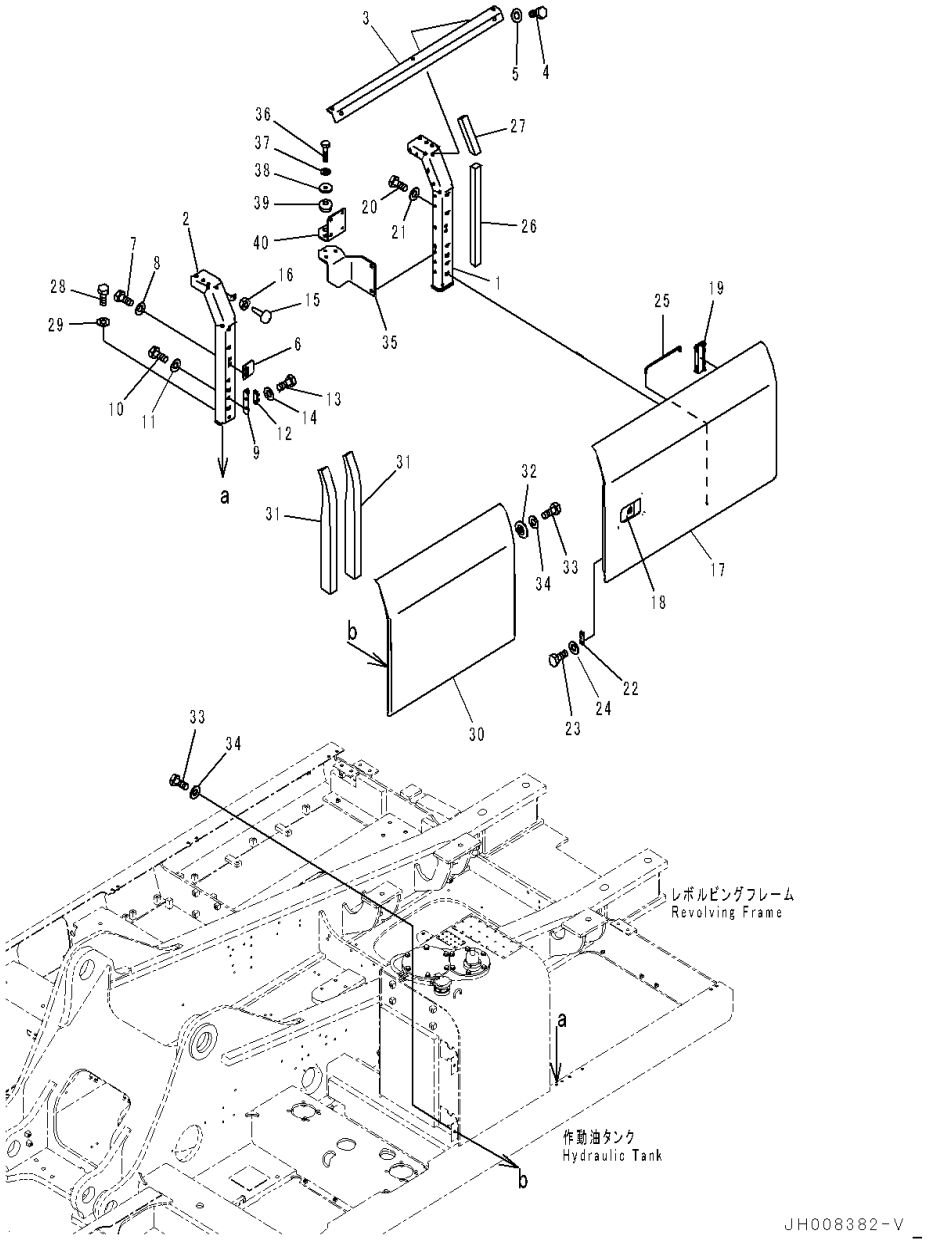

Index	Code	Part Number	Description	Qty	Serial Number
1		207-54-73341	Frame	1	C90001-
2		207-54-76140	Frame	1	C90001-
3		208-54-71380	Frame	1	C90001-
4		01010-81225	Bolt	2	C90001-
5		01643-31232	Washer	2	C90001-
6		20Y-54-61470	Plate	1	C90001-
7		01010-81225	Bolt	2	C90001-
8		01643-31232	Washer	2	C90001-
9		20Y-54-28170	Bracket	1	C90001-
10		01010-81225	Bolt	2	C90001-
11		01643-31232	Washer	2	C90001-
12		205-54-51971	Dovetail	1	C90001-
13		01010-80616	Bolt	2	C90001-
14		01643-30623	Washer	2	C90001-
15		20Y-54-11611	Stopper	1	C90001-
16		01580-11008	Nut	1	C90001-
17		207-54-78810	Cover	1	C90001-
18		20Y-54-71372	• Lock,Welded	1	C90001-
19		20Y-54-63414	• Hinge,Welded	2	C90001-
20		01010-81225	Bolt	4	C90001-
21		01643-31232	Washer	4	C90001-
22		205-54-53550	Dovetail	1	C90001-
23		01010-80612	Bolt	2	C90001-
24		01643-30623	Washer	2	C90001-
25		20Y-54-29232	Bar	1	C90001-
26		208-54-73710	Sheet	1	C90001-
27		208-54-73720	Sheet	1	C90001-
28		01010-81230	Bolt	4	C90001-
29		01643-31232	Washer	4	C90001-
30		207-54-73320	Cover	1	C90001-
31		208-54-73131	• Sheet	2	C90001-
32		203-54-62670	Collar	1	C90001-
33		01010-81230	Bolt	4	C90001-
34		01643-31232	Washer	4	C90001-
35		207-54-76161	Bracket	1	C90001-
36		01010-81050	Bolt	3	C90001-
37		01643-31032	Washer	3	C90001-
38		207-03-75590	Plate	3	C90001-
39		195-03-41380	Cushion	3	C90001-
40		207-54-76190	Sheet	1	C90001-

FIG. M1140-001001 Side Cover R.H. (Poor Fuel Specification, Water+Dust, Large Fuel Prefilter)

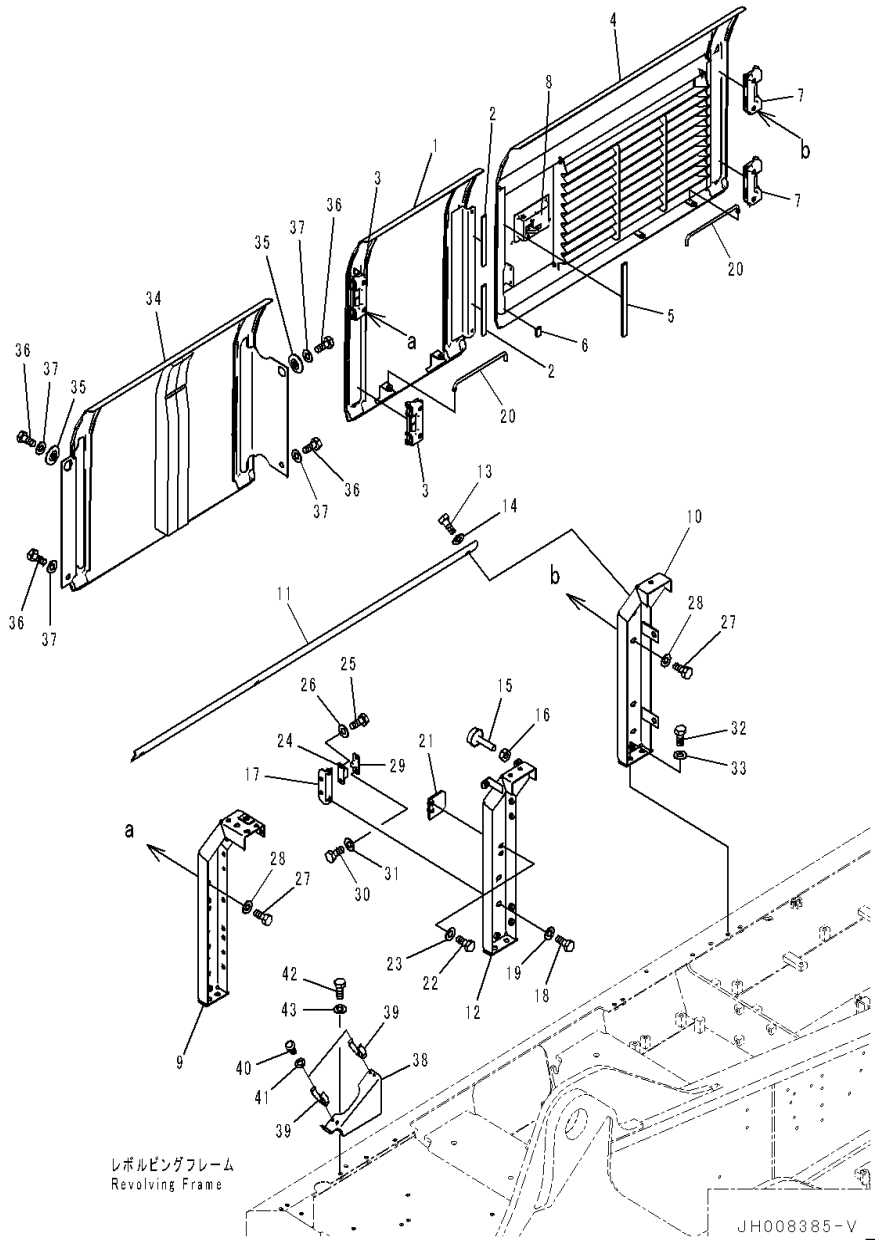

Index	Code	Part Number	Description	Qty	Serial Number
1		207-54-78830	Cover	1	C90001-
2		20Y-54-63390	• Sheet	2	C90001-
3		20Y-54-63414	• Hinge,Welded	2	C90001-
4		207-54-75720	Cover	1	C90001-
5		207-54-76330	• Sheet	1	C90001-
6		207-54-76360	• Sheet	1	C90001-
7		20Y-54-63414	• Hinge	2	C90001-
8		20Y-54-71491	• Lock	1	C90001-
9		207-54-76340	Frame	1	C90001-
10		207-54-71221	Frame	1	C90001-
11		207-54-71241	Plate	1	C90001-
12		207-54-73430	Frame	1	C90001-
13		01010-81225	Bolt	3	C90001-
14		01643-31232	Washer	3	C90001-
15		20Y-54-11611	Stopper	2	C90001-
16		01580-11008	Nut	2	C90001-
17		20Y-54-28170	Bracket	1	C90001-
18		01010-81225	Bolt	2	C90001-
19		01643-31232	Washer	2	C90001-
20		20Y-54-29232	Bar	2	C90001-
21		20Y-54-61470	Plate	1	C90001-
22		01010-81225	Bolt	2	C90001-
23		01643-31232	Washer	2	C90001-
24		205-54-51971	Dovetail	1	C90001-
25		01010-80616	Bolt	2	C90001-
26		01643-30623	Washer	2	C90001-
27		01010-81225	Bolt	8	C90001-
28		01643-31232	Washer	8	C90001-
29		205-54-53550	Dovetail	1	C90001-
30		01010-80612	Bolt	2	C90001-
31		01643-30623	Washer	2	C90001-
32		01010-81230	Bolt	6	C90001-
33		01643-31232	Washer	6	C90001-
34		207-54-76350	Cover	1	C90001-
35		203-54-62670	Collar	2	C90001-
36		01010-81230	Bolt	4	C90001-
37		01643-31232	Washer	4	C90001-
38		208-54-41441	Bracket	1	C90001-
39		203-54-63230	Clamp	2	C90001-
40		01220-40612	Screw, Philips Head	4	C90001-

FIG. M1140-001001 Side Cover R.H. (Poor Fuel Specification, Water+Dust, Large Fuel Prefilter)

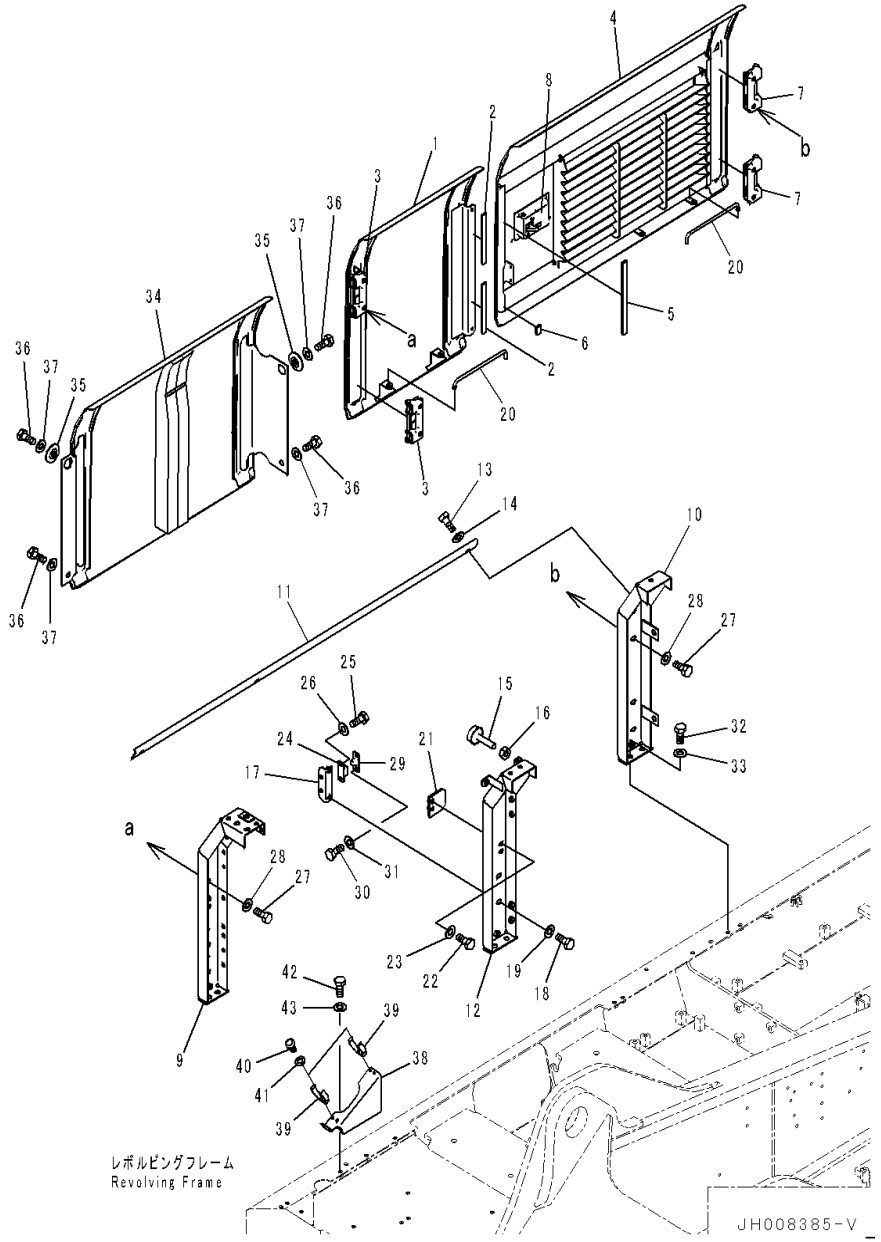

Index	Code	Part Number	Description	Qty	Serial Number
41		01641-20608	Washer	4	C90001-
42		01010-81230	Bolt	2	C90001-
43		01643-31232	Washer	2	C90001-

FIG. M1140-002001 Side Cover R.H.

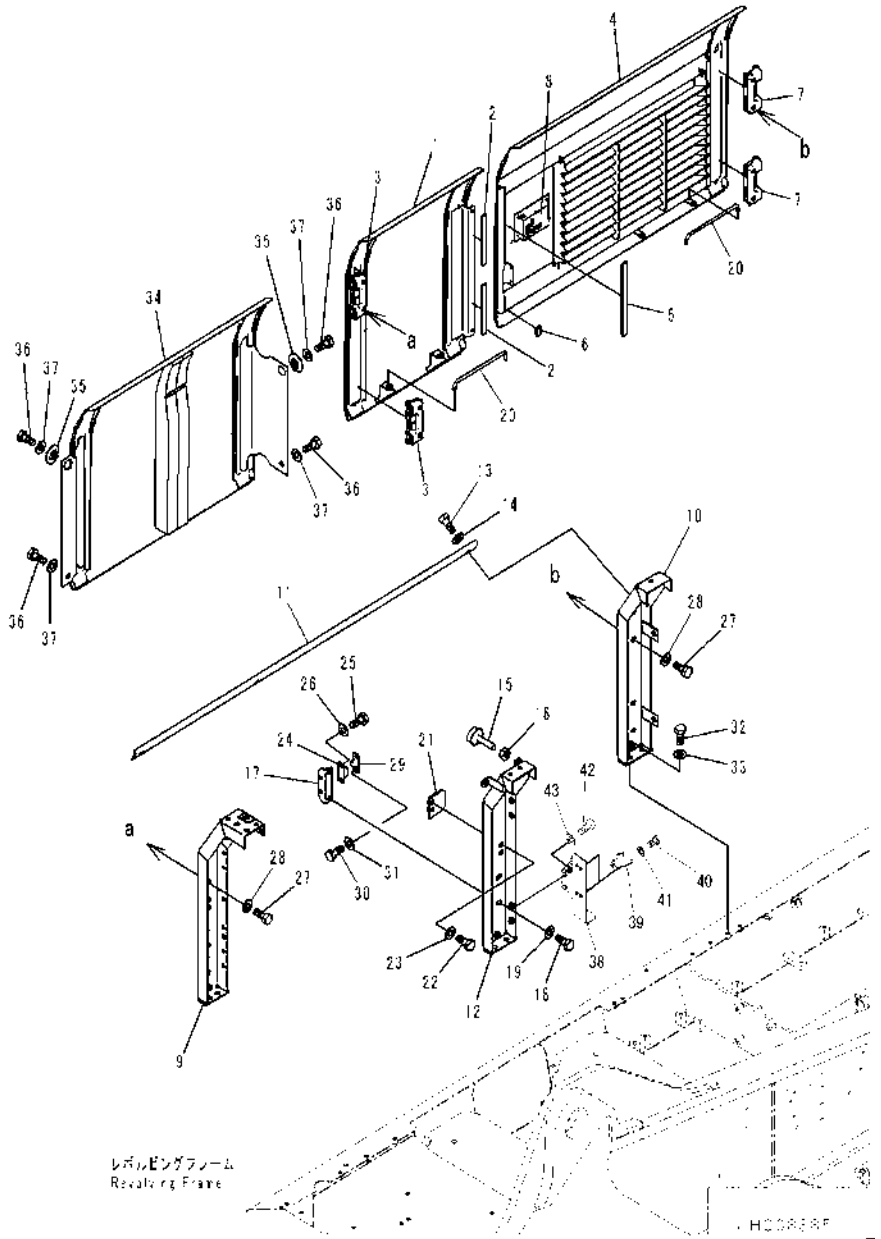

Index	Code	Part Number	Description	Qty	Serial Number
1		207-54-78830	Cover	1	C90001-
2		20Y-54-63390	• Sheet	2	C90001-
3		20Y-54-63414	• Hinge,Welded	2	C90001-
4		207-54-75720	Cover	1	C90001-
5		207-54-76330	• Sheet	1	C90001-
6		207-54-76360	• Sheet	1	C90001-
7		20Y-54-63414	• Hinge	2	C90001-
8		20Y-54-71491	• Lock	1	C90001-
9		207-54-76340	Frame	1	C90001-
10		207-54-71221	Frame	1	C90001-
11		207-54-71241	Plate	1	C90001-
12		207-54-73430	Frame	1	C90001-
13		01010-81225	Bolt	3	C90001-
14		01643-31232	Washer	3	C90001-
15		20Y-54-11611	Stopper	2	C90001-
16		01580-11008	Nut	2	C90001-
17		20Y-54-28170	Bracket	1	C90001-
18		01010-81225	Bolt	2	C90001-
19		01643-31232	Washer	2	C90001-
20		20Y-54-29232	Bar	2	C90001-
21		20Y-54-61470	Plate	1	C90001-
22		01010-81225	Bolt	2	C90001-
23		01643-31232	Washer	2	C90001-
24		205-54-51971	Dovetail	1	C90001-
25		01010-80616	Bolt	2	C90001-
26		01643-30623	Washer	2	C90001-
27		01010-81225	Bolt	8	C90001-
28		01643-31232	Washer	8	C90001-
29		205-54-53550	Dovetail	1	C90001-
30		01010-80612	Bolt	2	C90001-
31		01643-30623	Washer	2	C90001-
32		01010-81230	Bolt	6	C90001-
33		01643-31232	Washer	6	C90001-
34		207-54-76350	Cover	1	C90001-
35		203-54-62670	Collar	2	C90001-
36		01010-81230	Bolt	4	C90001-
37		01643-31232	Washer	4	C90001-
38		207-54-78890	Bracket	1	C90001-
39		203-54-63230	Clamp	2	C90001-
40		01220-40612	Screw, Philips Head	4	C90001-

FIG. M1140-002001 Side Cover R.H.

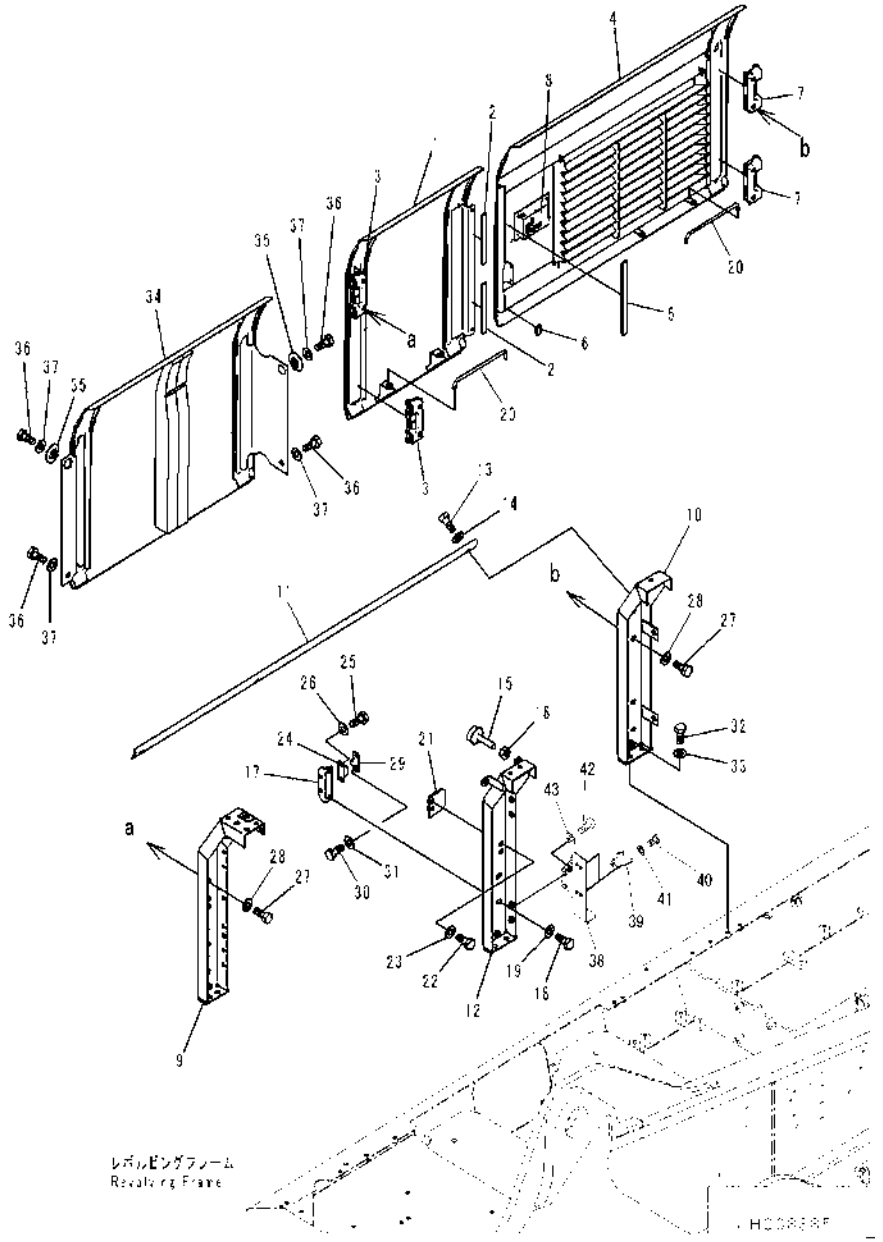

Index	Code	Part Number	Description	Qty	Serial Number
41		01641-20608	Washer	4	C90001-
42		01010-81230	Bolt	2	C90001-
43		01643-31232	Washer	2	C90001-

FIG. M1150-001001 Machine Cab Partition (1/2)

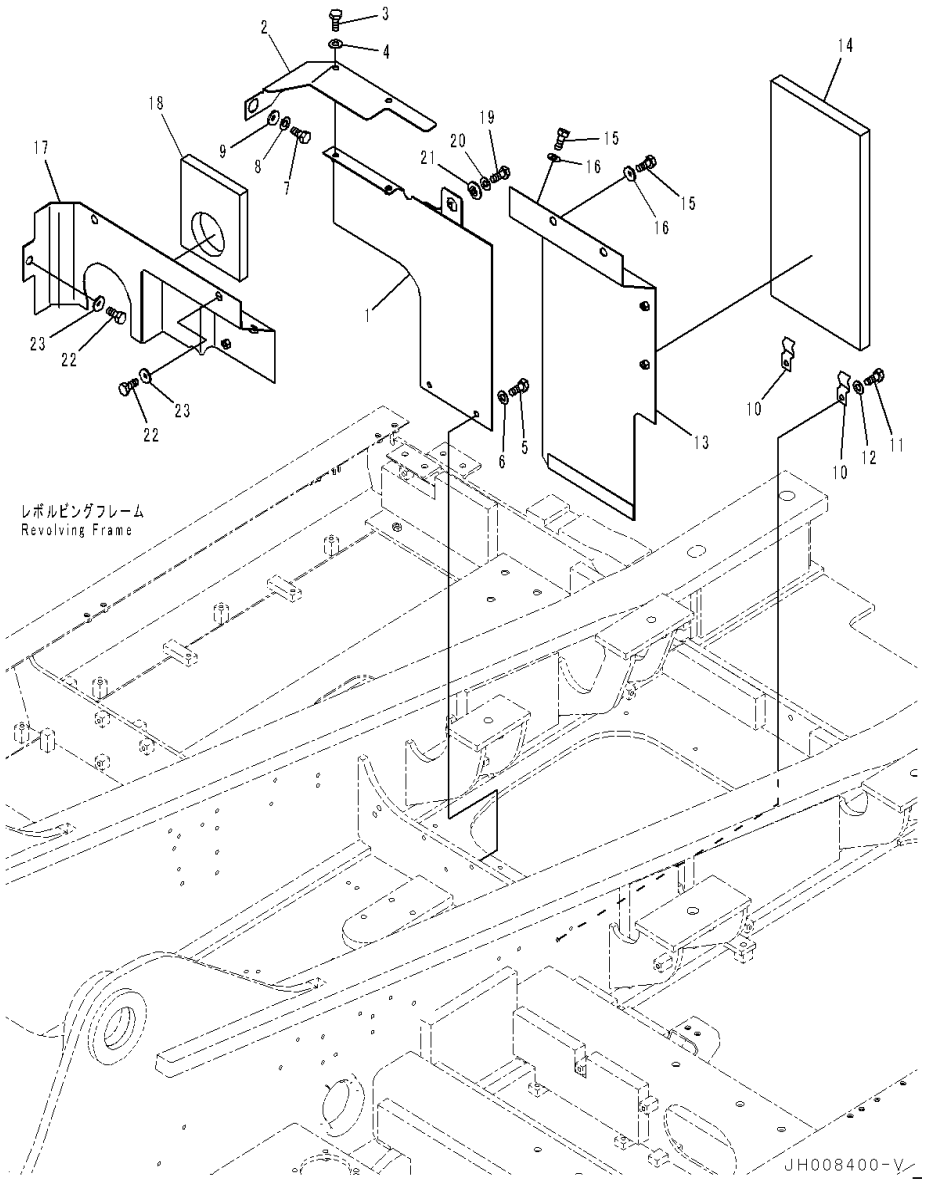

Index	Code	Part Number	Description	Qty	Serial Number
1		207-54-73780	Cover	1	C90001-
2		207-54-73790	Cover	1	C90001-
3		01010-81230	Bolt	2	C90001-
4		01643-31232	Washer	2	C90001-
5		01010-81230	Bolt	2	C90001-
6		01643-31232	Washer	2	C90001-
7		01010-81230	Bolt	1	C90001-
8		01643-31232	Washer	1	C90001-
9		208-54-57180	Collar	1	C90001-
10		20Y-54-27761	Catcher	2	C90001-
11		01010-81230	Bolt	2	C90001-
12		01643-31232	Washer	2	C90001-
13		207-54-73751	Cover	1	C90001-
14		207-54-72851	• Sheet	1	C90001-
15		01010-81230	Bolt	3	C90001-
16		175-54-34170	Washer	3	C90001-
17		207-54-73761	Cover	1	C90001-
18		207-54-74321	• Sheet	1	C90001-
19		01010-81230	Bolt	1	C90001-
20		01643-31232	Washer	1	C90001-
21		208-54-57180	Collar	1	C90001-
22		01010-81230	Bolt	3	C90001-
23		175-54-34170	Washer	3	C90001-

FIG. M1150-001002 Machine Cab Partition (2/2)

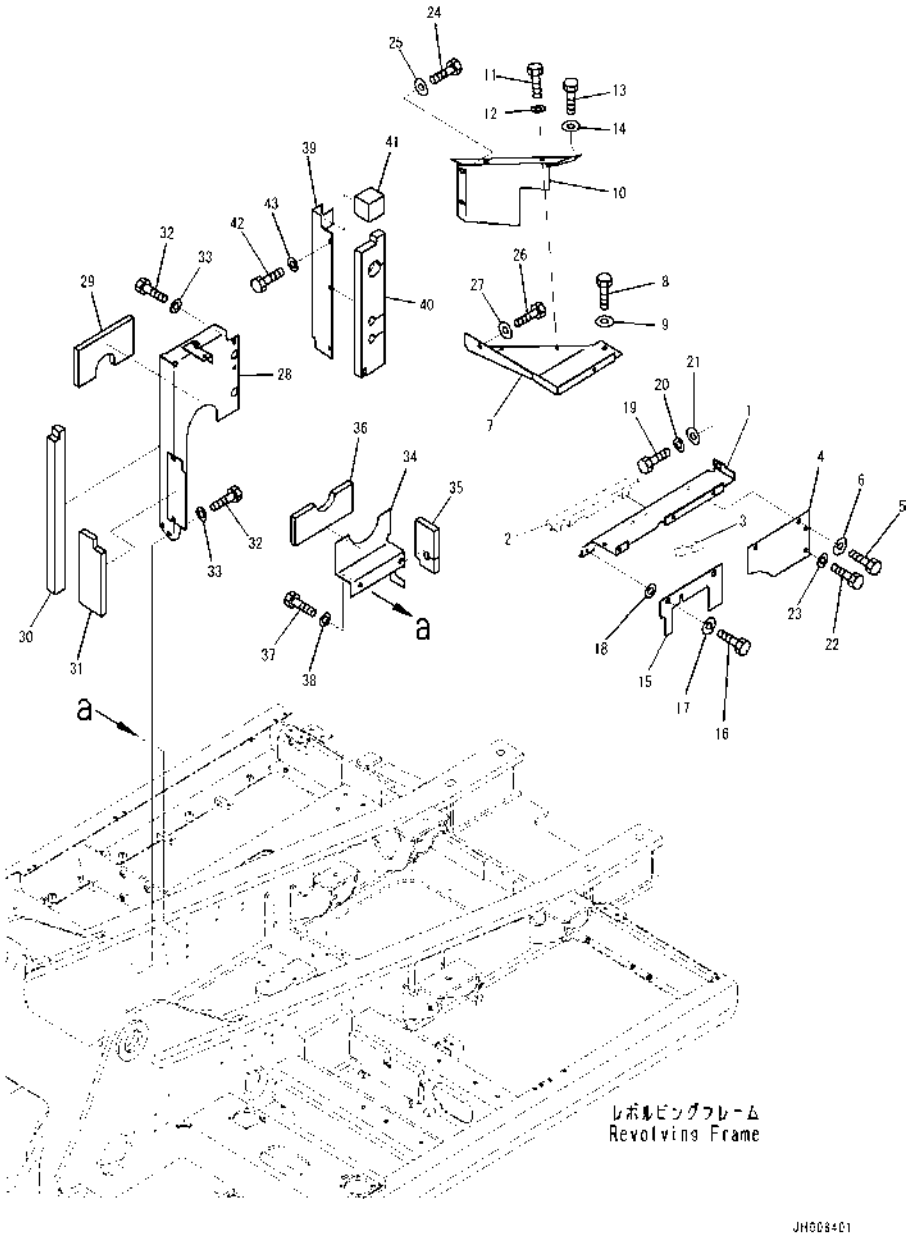

Index	Code	Part Number	Description	Qty	Serial Number
1		207-54-73721	Cover	1	C90001-
2		207-54-73990	• Sheet	1	C90001-
3		207-54-77980	• Sheet	1	C90001-
4		207-54-74330	Cover	1	C90001-
5		01010-81220	Bolt	2	C90001-
6		175-54-34170	Washer	2	C90001-
7		207-54-73730	Cover	1	C90001-
8		01010-81220	Bolt	1	C90001-
9		175-54-34170	Washer	1	C90001-
10		207-54-73741	Cover	1	C90001-
11		01010-81220	Bolt	2	C90001-
12		01643-31232	Washer	2	C90001-
13		01010-81220	Bolt	1	C90001-
14		175-54-34170	Washer	1	C90001-
15		207-54-76870	Sheet	1	C90001-
16		01010-81230	Bolt	2	C90001-
17		175-54-34170	Washer	2	C90001-
18		01643-51232	Washer	2	C90001-
19		01010-81230	Bolt	1	C90001-
20		01643-31232	Washer	1	C90001-
21		205-54-76410	Collar	1	C90001-
22		01010-81230	Bolt	2	C90001-
23		01643-31232	Washer	2	C90001-
24		01010-81220	Bolt	2	C90001-
25		175-54-34170	Washer	2	C90001-
26		01010-81230	Bolt	1	C90001-
27		175-54-34170	Washer	1	C90001-
28		207-54-74311	Cover	1	C90001-
29		207-54-74380	• Sheet	1	C90001-
30		208-54-73351	• Sheet	1	C90001-
31		207-54-76640	• Sheet	1	C90001-
32		01010-81230	Bolt	4	C90001-
33		01643-31232	Washer	4	C90001-
34		207-54-74550	Cover	1	C90001-
35		207-54-74570	• Sheet	1	C90001-
36		207-54-76690	•Sheet	1	C90001-
37		01010-81230	Bolt	2	C90001-
38		01643-31232	Washer	2	C90001-
39		207-54-74341	Cover	1	C90001-
40		207-54-74351	• Sheet	1	C90001-

FIG. M1150-001002 Machine Cab Partition (2/2)

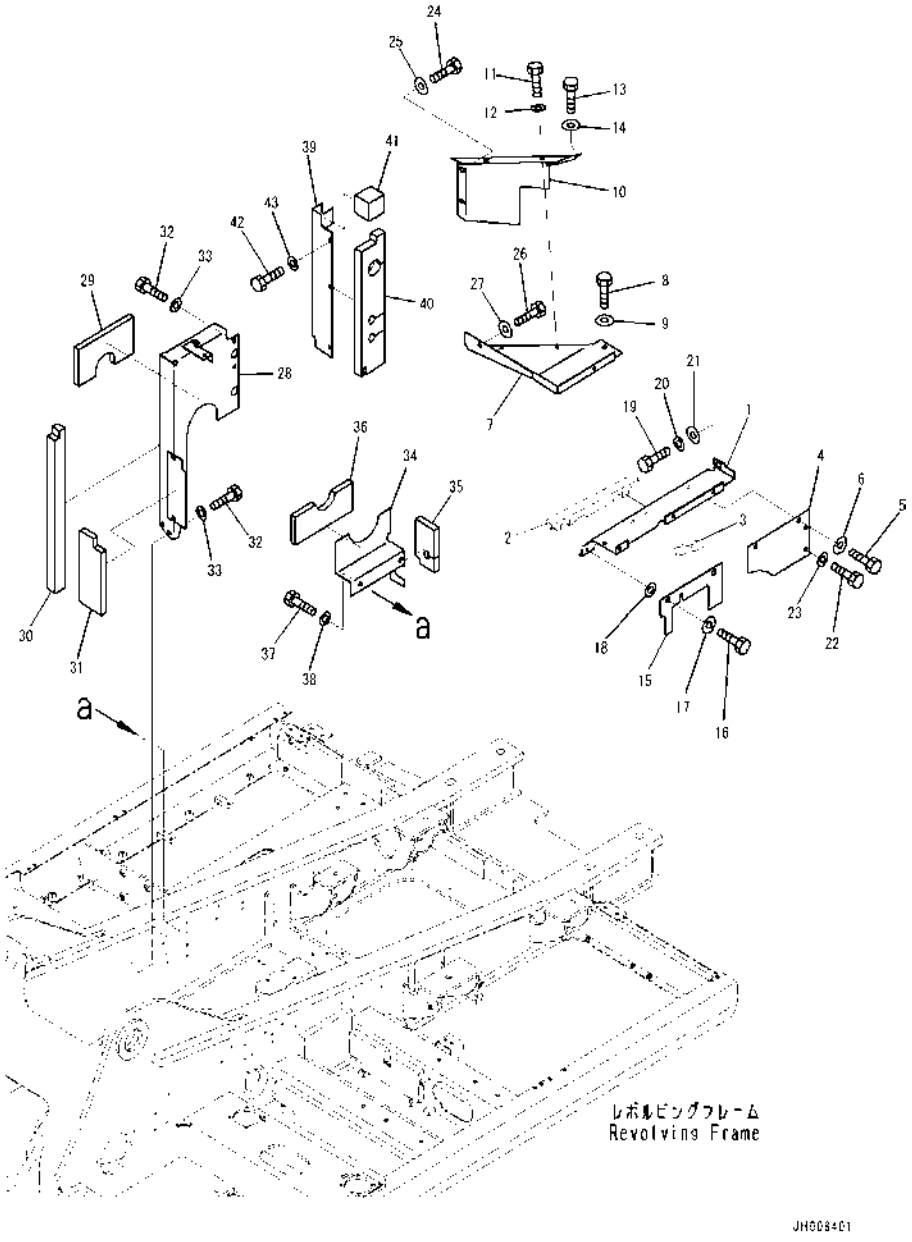

Index	Code	Part Number	Description	Qty	Serial Number
41		207-54-74360	• Sheet	1	C90001-
42		01010-81230	Bolt	3	C90001-
43		01643-31232	Washer	3	C90001-

FIG. M1150-002001 Machine Cab Partition (With Fuel Refill Pump) (1/2)

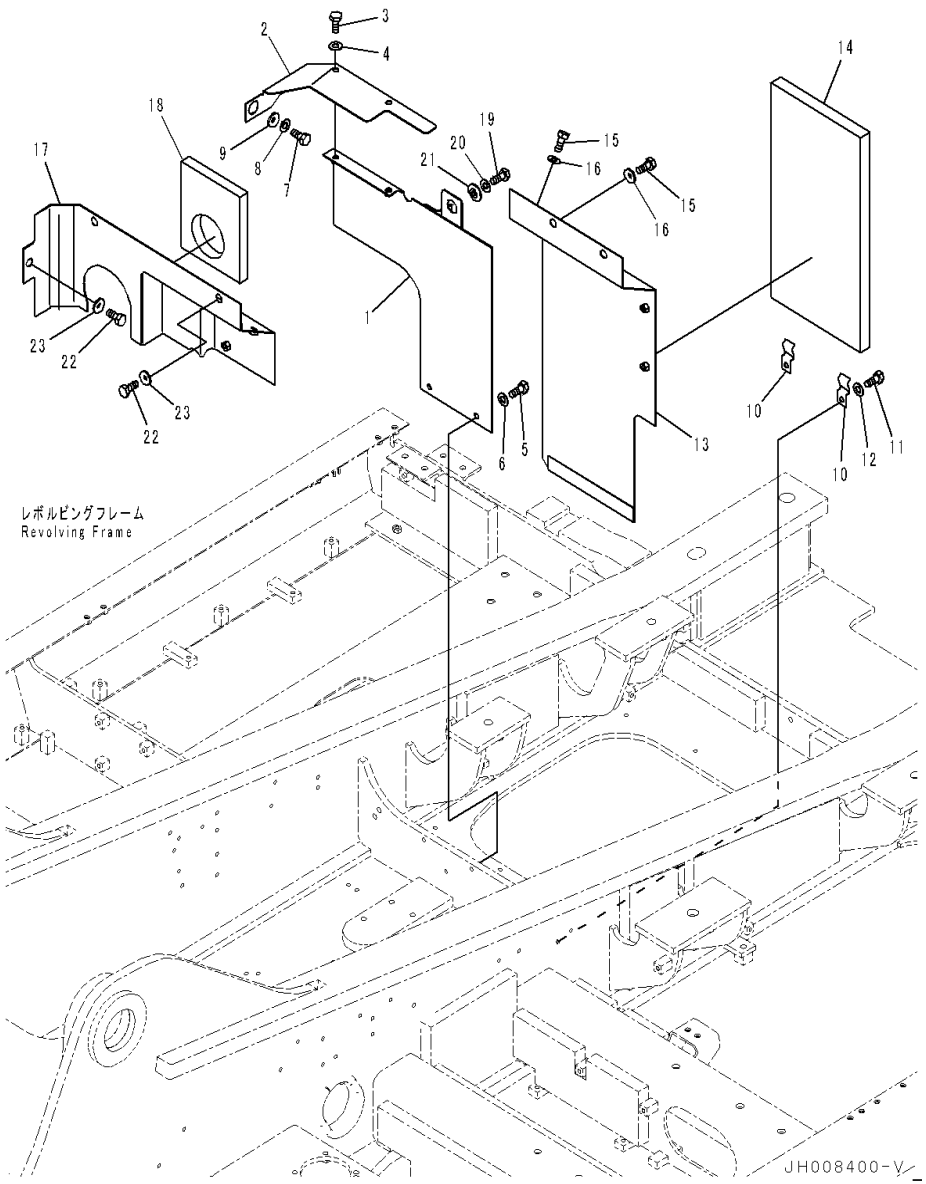

Index	Code	Part Number	Description	Qty	Serial Number
1		207-54-73780	Cover	1	C90001-
2		207-54-73790	Cover	1	C90001-
3		01010-81230	Bolt	2	C90001-
4		01643-31232	Washer	2	C90001-
5		01010-81230	Bolt	2	C90001-
6		01643-31232	Washer	2	C90001-
7		01010-81230	Bolt	1	C90001-
8		01643-31232	Washer	1	C90001-
9		208-54-57180	Collar	1	C90001-
10		20Y-54-27761	Catcher	2	C90001-
11		01010-81230	Bolt	2	C90001-
12		01643-31232	Washer	2	C90001-
13		207-54-73751	Cover	1	C90001-
14		207-54-72851	• Sheet	1	C90001-
15		01010-81230	Bolt	3	C90001-
16		175-54-34170	Washer	3	C90001-
17		207-54-73761	Cover	1	C90001-
18		207-54-74321	• Sheet	1	C90001-
19		01010-81230	Bolt	1	C90001-
20		01643-31232	Washer	1	C90001-
21		208-54-57180	Collar	1	C90001-
22		01010-81230	Bolt	3	C90001-
23		175-54-34170	Washer	3	C90001-

FIG. M1150-002002 Machine Cab Partition (With Fuel Refill Pump) (2/2)

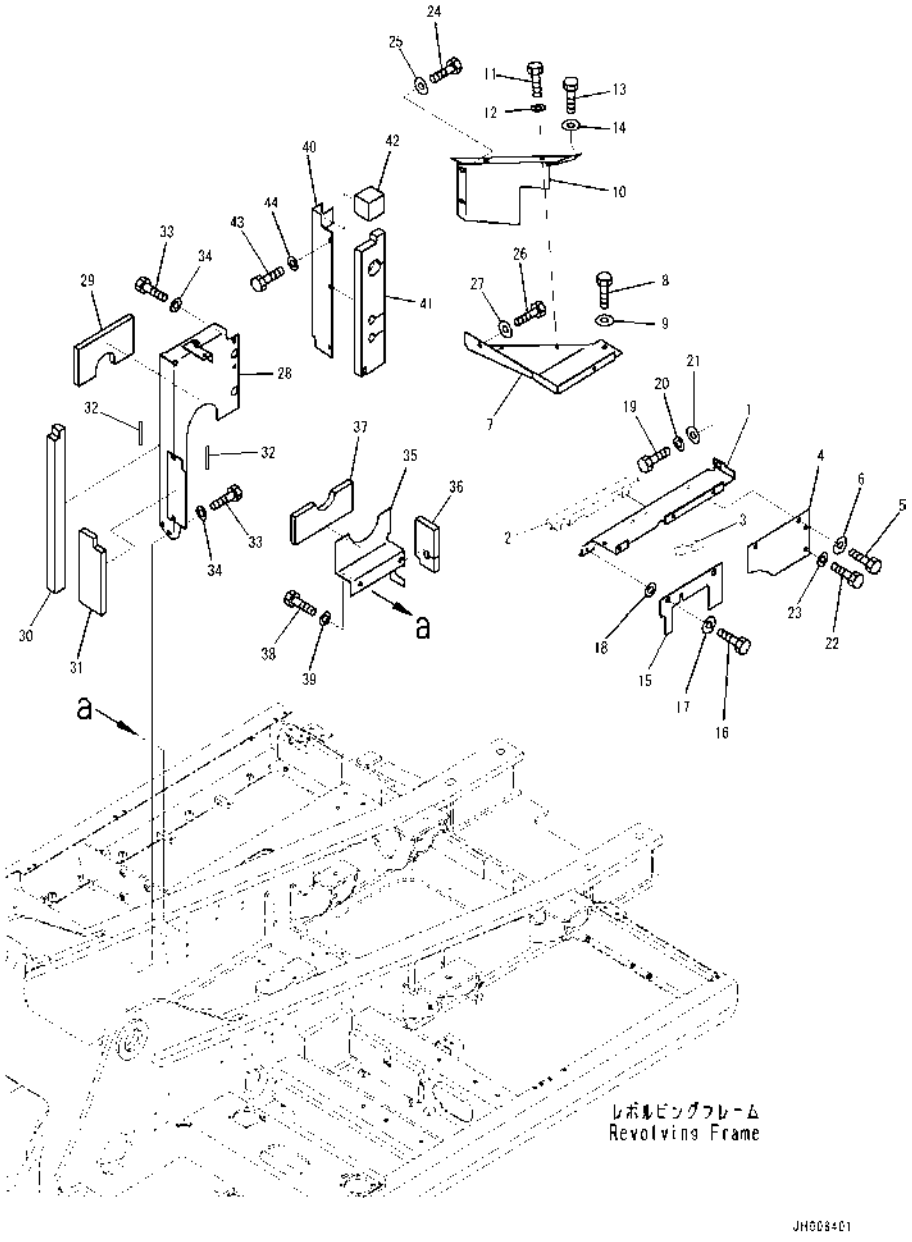

Index	Code	Part Number	Description	Qty	Serial Number
1		207-54-73721	Cover	1	C90001-
2		207-54-73990	• Sheet	1	C90001-
3		207-54-77980	• Sheet	1	C90001-
4		207-54-74330	Cover	1	C90001-
5		01010-81220	Bolt	2	C90001-
6		175-54-34170	Washer	2	C90001-
7		207-54-73730	Cover	1	C90001-
8		01010-81220	Bolt	1	C90001-
9		175-54-34170	Washer	1	C90001-
10		207-54-73741	Cover	1	C90001-
11		01010-81220	Bolt	2	C90001-
12		01643-31232	Washer	2	C90001-
13		01010-81220	Bolt	1	C90001-
14		175-54-34170	Washer	1	C90001-
15		207-54-76870	Sheet	1	C90001-
16		01010-81230	Bolt	2	C90001-
17		175-54-34170	Washer	2	C90001-
18		01643-51232	Washer	2	C90001-
19		01010-81230	Bolt	1	C90001-
20		01643-31232	Washer	1	C90001-
21		205-54-76410	Collar	1	C90001-
22		01010-81230	Bolt	2	C90001-
23		01643-31232	Washer	2	C90001-
24		01010-81220	Bolt	2	C90001-
25		175-54-34170	Washer	2	C90001-
26		01010-81230	Bolt	1	C90001-
27		175-54-34170	Washer	1	C90001-
28		207-54-74280	Cover	1	C90001-
29		207-54-74380	• Sheet	1	C90001-
30		208-54-73351	• Sheet	1	C90001-
31		207-54-76640	• Sheet	1	C90001-
32		20Y-53-14170	• Trim	2	C90001-
33		01010-81230	Bolt	4	C90001-
34		01643-31232	Washer	4	C90001-
35		207-54-74550	Cover	1	C90001-
36		207-54-74570	• Sheet	1	C90001-
37		207-54-76690	• Sheet	1	C90001-
38		01010-81230	Bolt	2	C90001-
39		01643-31232	Washer	2	C90001-
40		207-54-74341	Cover	1	C90001-

FIG. M1150-002002 Machine Cab Partition (With Fuel Refill Pump) (2/2)

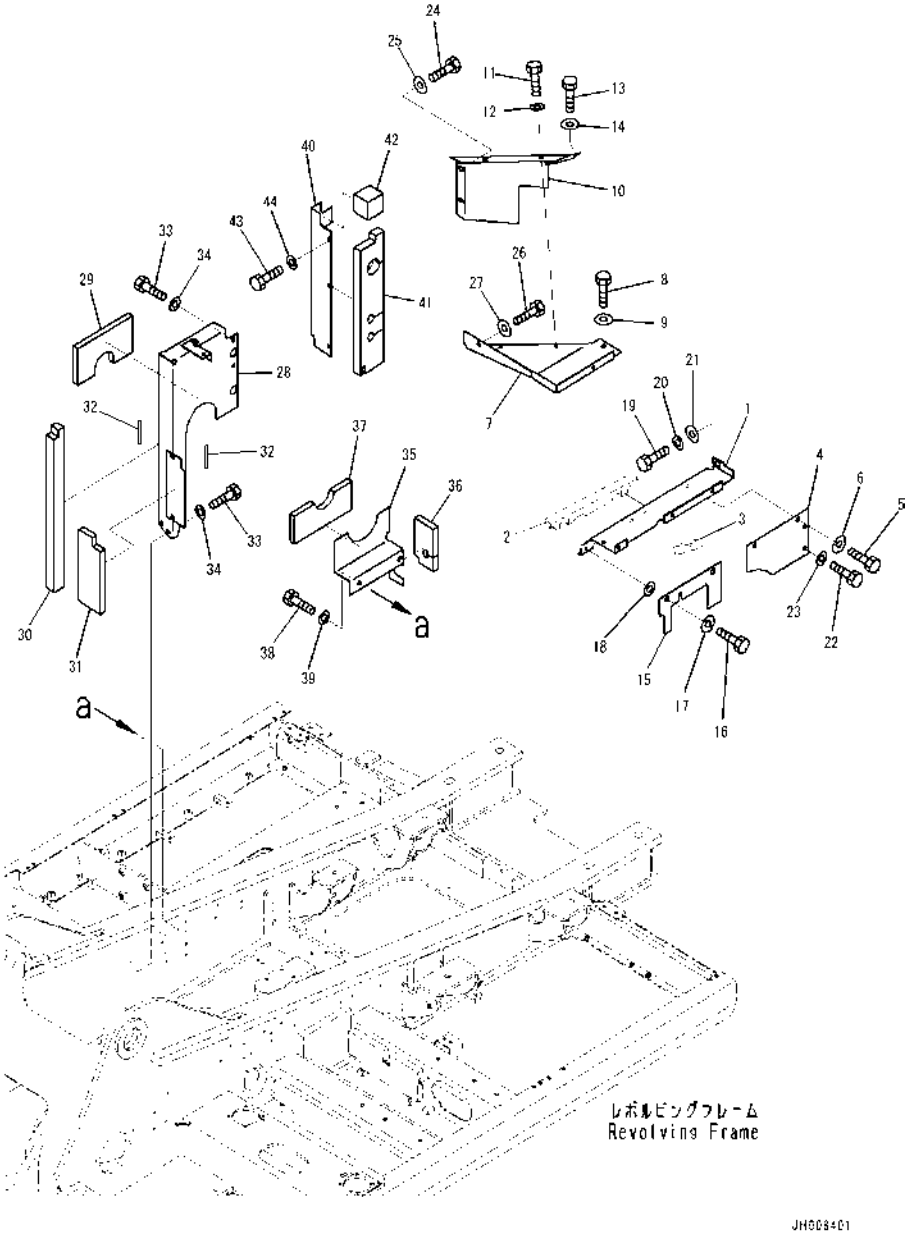

Index	Code	Part Number	Description	Qty	Serial Number
41		207-54-74351	• Sheet	1	C90001-
42		207-54-74360	• Sheet	1	C90001-
43		01010-81230	Bolt	3	C90001-
44		01643-31232	Washer	3	C90001-

FIG. M1210-001001 Machine Cab Cover

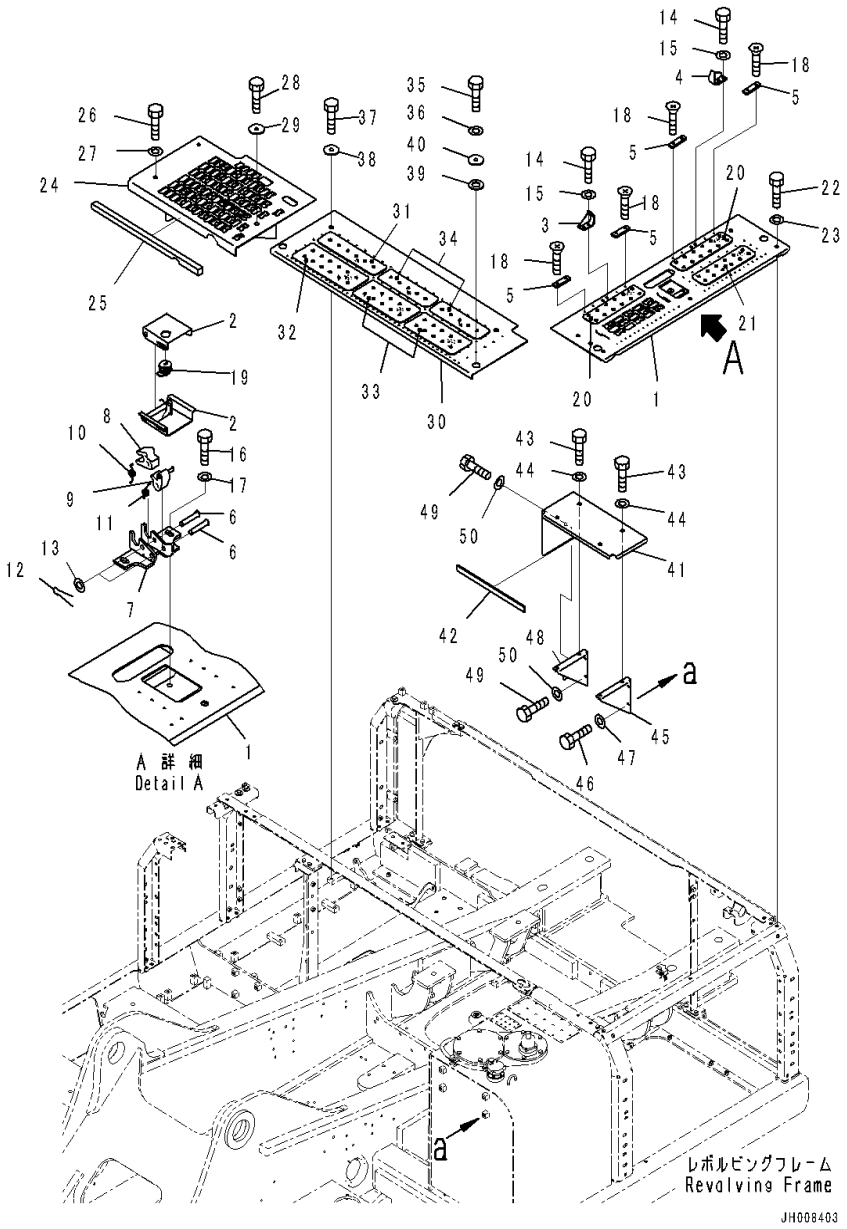

Index	Code	Part Number	Description	Qty	Serial Number
1		207-54-75830	Cover	1	C90001-
2		20Y-54-25852	• Lock,Welded	1	C90001-
3		207-54-61441	Bracket,L.H.	1	C90001-
4		207-54-61450	Bracket,R.H.	1	C90001-
5		205-54-68440	Plate	4	C90001-
		208-54-71900	Lock Assembly	1	C90001-
6		154-54-22520	• Pin	2	C90001-
7		208-54-71920	• Bracket	1	C90001-
8		208-54-71910	• Lever	1	C90001-
9		207-54-72230	• Lever	1	C90001-
10		20X-54-21460	• Spring	1	C90001-
11		21K-54-26351	• Spring	1	C90001-
12		04050-13020	• Pin, Cotter	2	C90001-
13		01640-21123	• Washer, Flat	2	C90001-
14		01010-81025	Bolt	4	C90001-
15		01643-31032	Washer	4	C90001-
16		01010-81030	Bolt	2	C90001-
17		01643-31032	Washer	2	C90001-
18		01224-40616	Screw	8	C90001-
19		20Y-54-73190	Lock Assembly	1	C90001-
20		207-00-76310	Plate	2	C90001-
21		207-00-76320	Plate	1	C90001-
22		01010-81230	Bolt	10	C90001-
23		01643-31232	Washer	10	C90001-
24		207-54-76731	Cover	1	C90001-
25		207-54-76780	• Sheet	1	C90001-
26		01010-81230	Bolt	2	C90001-
27		01643-31232	Washer	2	C90001-
28		01010-81230	Bolt	1	C90001-
29		175-54-34170	Washer	1	C90001-
30		207-54-76720	Cover	1	C90001-
31		20Y-00-42120	Plate	1	C90001-
32		20Y-00-42140	Plate	1	C90001-
33		207-00-76250	Plate	2	C90001-
34		20Y-00-42110	Plate	2	C90001-
35		01010-81230	Bolt	2	C90001-
36		01643-31232	Washer	2	C90001-
37		01010-81230	Bolt	2	C90001-
38		175-54-34170	Washer	2	C90001-
39		20Y-54-19920	Plate	2	C90001-

FIG. M1210-001001 Machine Cab Cover

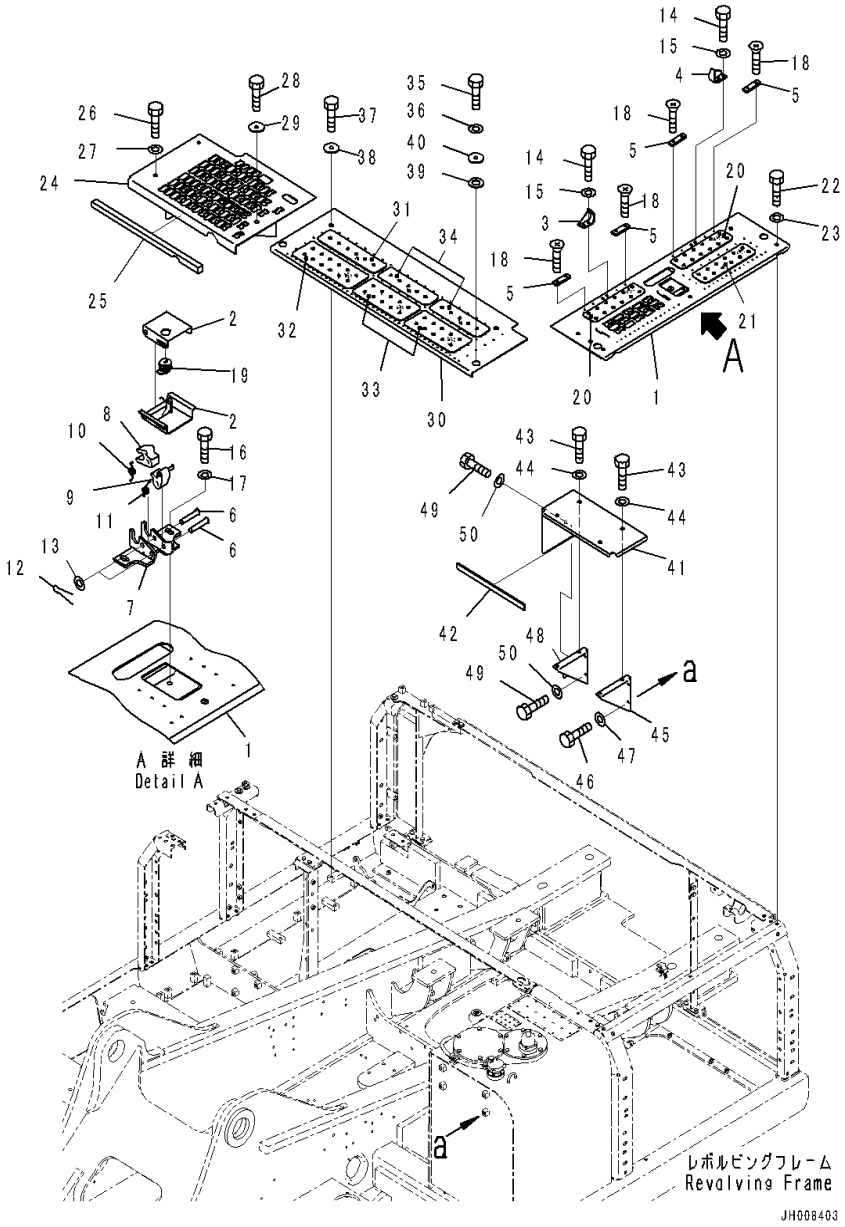

Index	Code	Part Number	Description	Qty	Serial Number
40		20Y-54-19930	Collar	2	C90001-
41		207-54-74430	Cover Assembly	1	C90001-
42		207-54-78460	• Sheet	1	C90001-
43		01010-81225	Bolt	4	C90001-
44		01643-31232	Washer	4	C90001-
45		207-54-76770	Bracket	1	C90001-
46		01010-81225	Bolt	2	C90001-
47		01643-31232	Washer	2	C90001-
48		207-54-76890	Bracket	1	C90001-
49		01010-81225	Bolt	3	C90001-
50		01643-31232	Washer	3	C90001-

FIG. M1210-002001 Machine Cab Cover, With Pre-Cleaner (Cover and Duct)

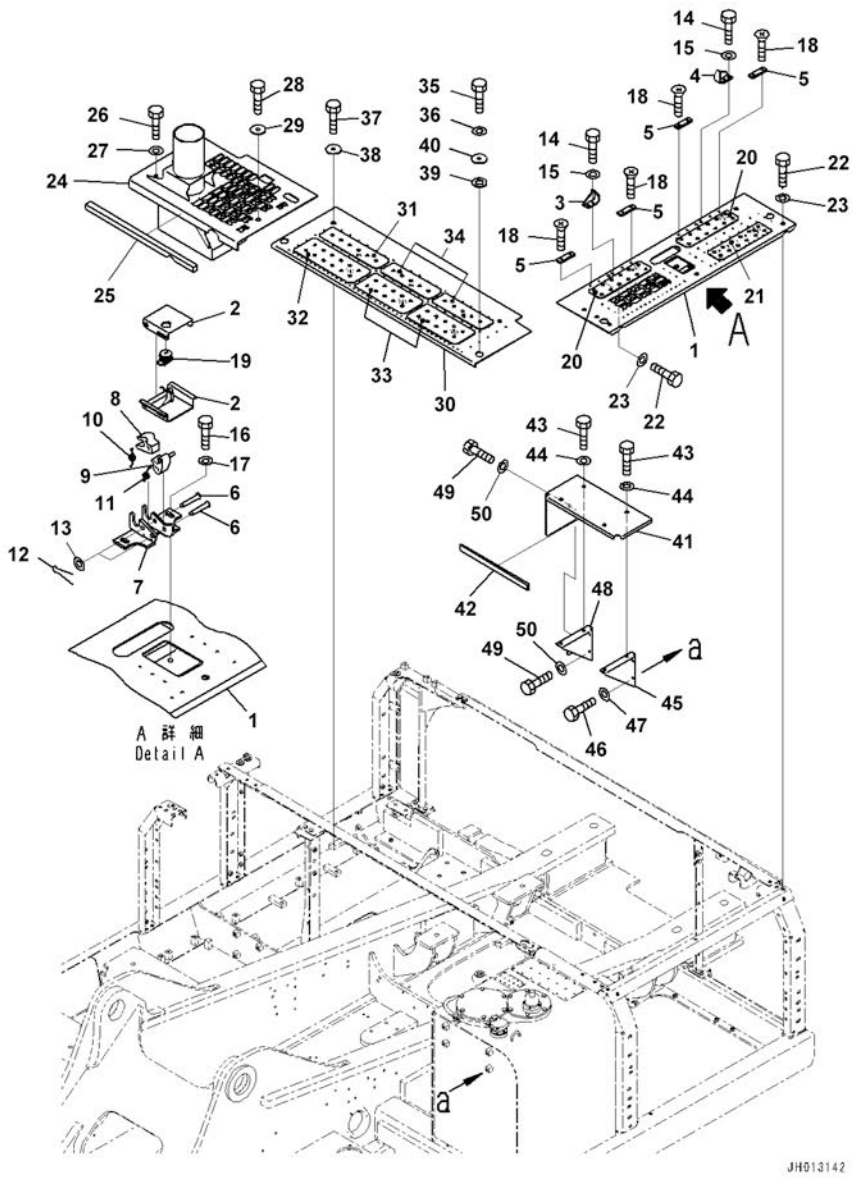

Index	Code	Part Number	Description	Qty	Serial Number
1		207-54-75830	Cover	1	C90001-
2		20Y-54-25852	• Lock,Welded	1	C90001-
3		207-54-61441	Bracket,L.H.	1	C90001-
4		207-54-61450	Bracket,R.H.	1	C90001-
5		205-54-68440	Plate	4	C90001-
		208-54-71900	Lock Assembly	1	C90001-
6		154-54-22520	• Pin	2	C90001-
7		208-54-71920	• Bracket	1	C90001-
8		208-54-71910	• Lever	1	C90001-
9		207-54-72230	• Lever	1	C90001-
10		20X-54-21460	• Spring	1	C90001-
11		21K-54-26351	• Spring	1	C90001-
12		04050-13020	• Pin, Cotter	2	C90001-
13		01640-21123	• Washer, Flat	2	C90001-
14		01010-81025	Bolt	4	C90001-
15		01643-31032	Washer	4	C90001-
16		01010-81030	Bolt	2	C90001-
17		01643-31032	Washer	2	C90001-
18		01224-40616	Screw	8	C90001-
19		20Y-54-73190	Lock Assembly	1	C90001-
20		207-00-76310	Plate	2	C90001-
21		207-00-76320	Plate	1	C90001-
22		01010-81230	Bolt	10	C90001-
23		01643-31232	Washer	10	C90001-
24		207-54-74911	Cover	1	C90001-
25		207-54-76780	• Sheet	1	C90001-
26		01010-81230	Bolt	2	C90001-
27		01643-31232	Washer	2	C90001-
28		01010-81230	Bolt	1	C90001-
29		175-54-34170	Washer	1	C90001-
30		207-54-76720	Cover	1	C90001-
31		20Y-00-42120	Plate	1	C90001-
32		20Y-00-42140	Plate	1	C90001-
33		207-00-76250	Plate	2	C90001-
34		20Y-00-42110	Plate	2	C90001-
35		01010-81230	Bolt	2	C90001-
36		01643-31232	Washer	2	C90001-
37		01010-81230	Bolt	2	C90001-
38		175-54-34170	Washer	2	C90001-
39		20Y-54-19920	Plate	2	C90001-

FIG. M1210-002001 Machine Cab Cover, With Pre-Cleaner (Cover and Duct)

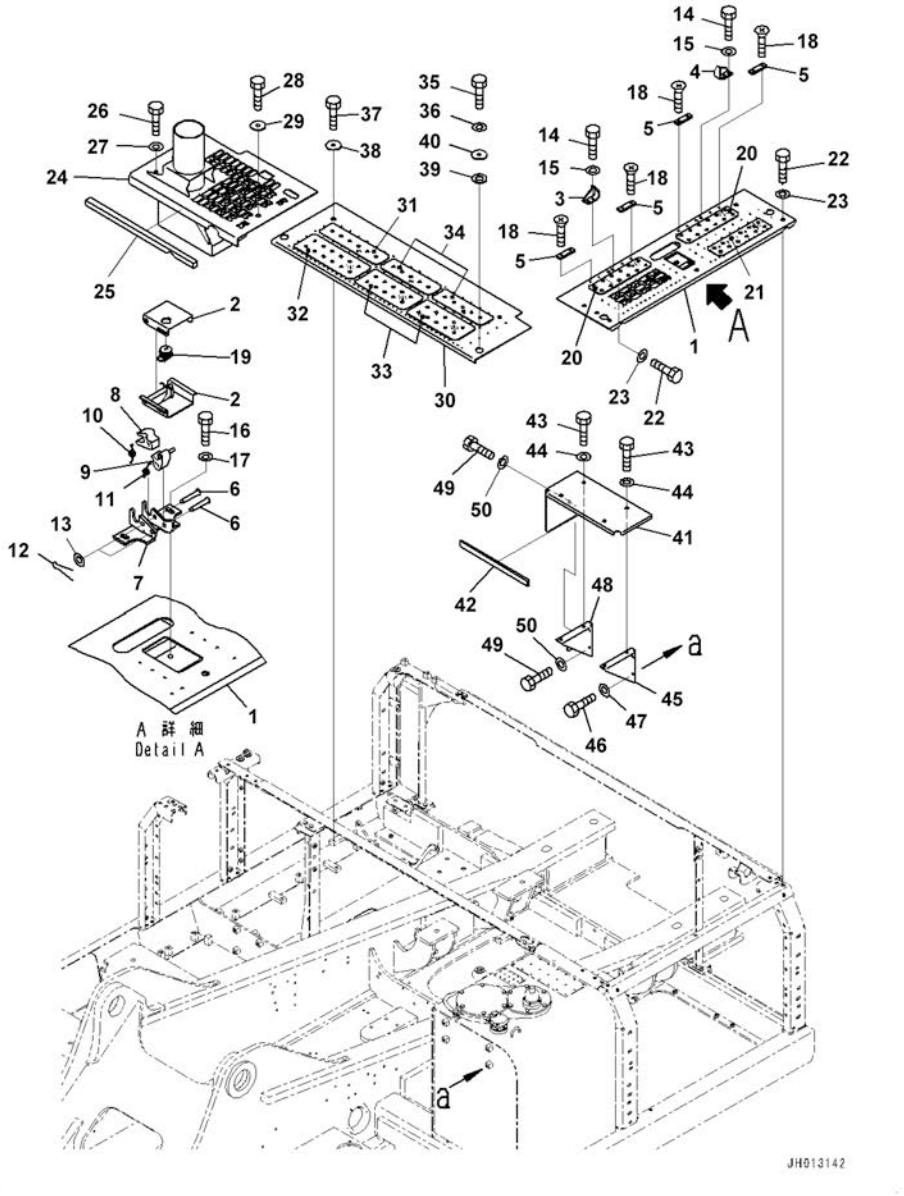

Index	Code	Part Number	Description	Qty	Serial Number
40		20Y-54-19930	Collar	2	C90001-
41		207-54-74430	Cover Assembly	1	C90001-
42		207-54-78460	• Sheet	1	C90001-
43		01010-81225	Bolt	4	C90001-
44		01643-31232	Washer	4	C90001-
45		207-54-76770	Bracket	1	C90001-
46		01010-81225	Bolt	2	C90001-
47		01643-31232	Washer	2	C90001-
48		207-54-76890	Bracket	1	C90001-
49		01010-81225	Bolt	3	C90001-
50		01643-31232	Washer	3	C90001-

FIG. M1210-002002 Machine Cab Cover, With Pre-Cleaner (Pre-Cleaner, Inner Parts)

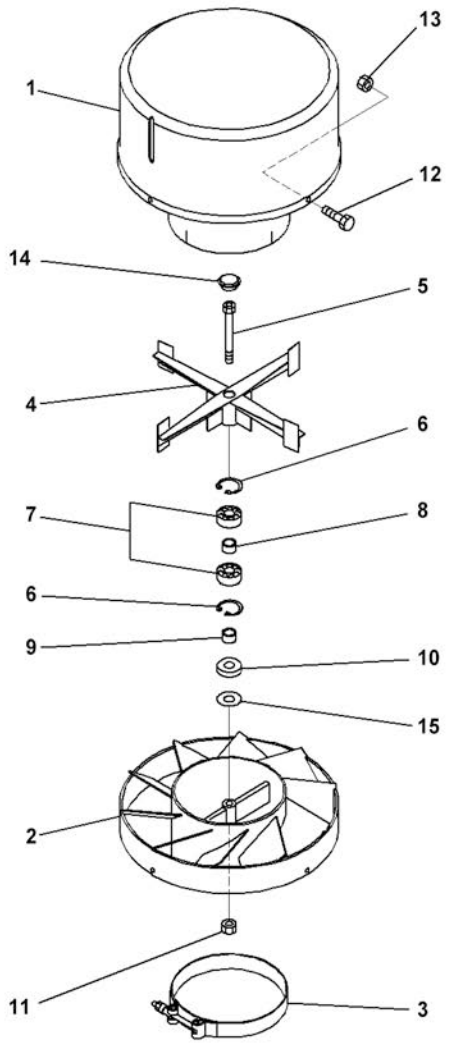

Index	Code	Part Number	Description	Qty	Serial Number
		421-U12-3102	Pre-Cleaner	1	C90001-
1	C1		• Hood, Precleaner	1	C90001-
2		421-U12-3330	• Body	1	C90001-
3		421-U12-3140	• Clamp	1	C90001-
4		421-U12-3151	• Rotor	1	C90001-
5		421-U12-3160	• Bolt	1	C90001-
6		421-U12-3170	• Ring, Snap	2	C90001-
7		421-U12-3181	• Bearing, Ball	2	C90001-
8		421-U12-3190	• Bushing	2	C90001-
9		418-U12-3410	• Bushing	1	C90001-
10		418-U12-3420	• Shield	1	C90001-
11		421-U12-3230	• Nut	1	C90001-
12		421-U12-3240	• Bolt	4	C90001-
13		421-U12-3250	• Nut	4	C90001-
14		421-U12-3261	• Plug, Plastic	1	C90001-
15		418-U12-3470	• Washer, Flat	1	C90001-

FIG. M1220-001001 Battery Case (Poor Fuel Specification, Water+Dust, Large Fuel Prefilter)

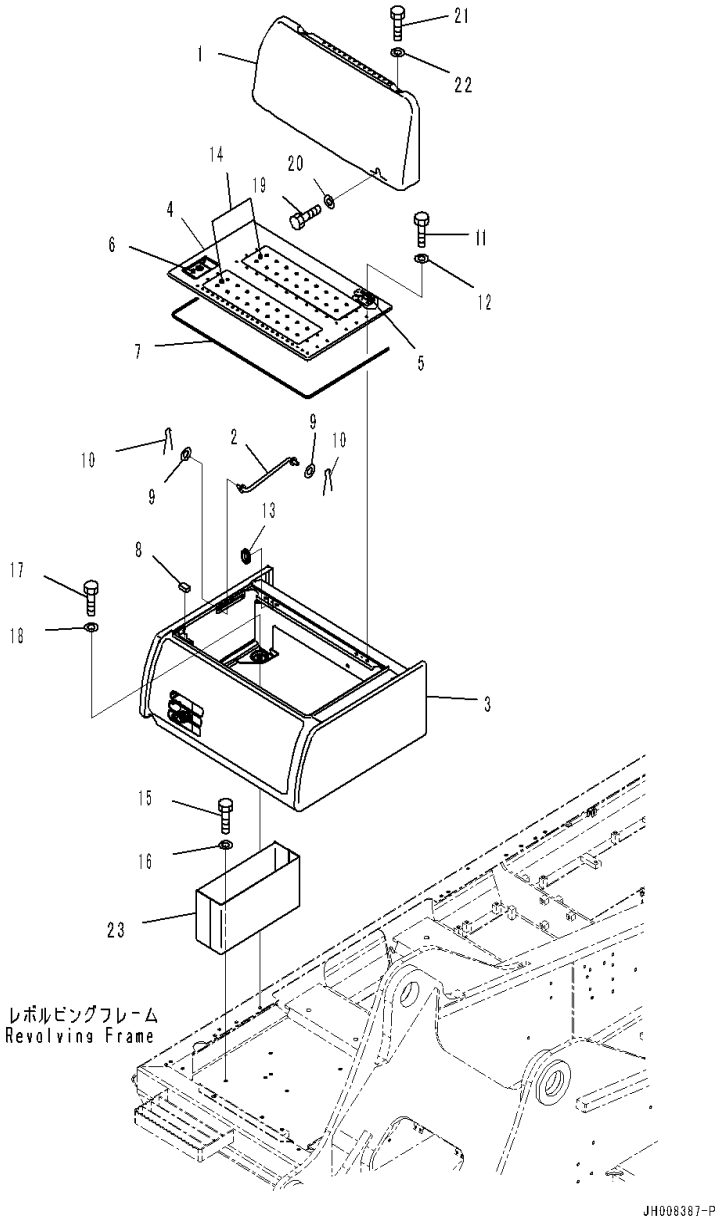

Index	Code	Part Number	Description	Qty	Serial Number
1		207-54-77451	Cover	1	C90001-
2		203-54-56630	Rod	1	C90001-
3		207-54-79830	Cover	1	C90001-
4		207-54-78820	Cover	1	C90001-
5		20Y-54-74161	• Hinge,Welded	2	C90001-
6		20Y-54-74172	• Lock,Welded	1	C90001-
7		208-54-71470	Seal	1	C90001-
8		20Y-54-29680	Sheet	1	C90001-
9		01643-30623	Washer	2	C90001-
10		04050-11612	Pin, Cotter	2	C90001-
11		01010-81020	Bolt	4	C90001-
12		01643-31032	Washer	4	C90001-
13		120-06-24110	Grommet	1	C90001-
14		209-00-41550	Plate	2	C90001-
15		01010-81230	Bolt	2	C90001-
16		01643-31232	Washer	2	C90001-
17		01010-81230	Bolt	4	C90001-
18		175-54-34170	Washer	4	C90001-
19		01010-81230	Bolt	2	C90001-
20		175-54-34170	Washer	2	C90001-
21		01010-81230	Bolt	2	C90001-
22		01643-31232	Washer	2	C90001-
23		207-54-77441	Box, Tool	1	C90001-

FIG. M1220-002001 Battery Case

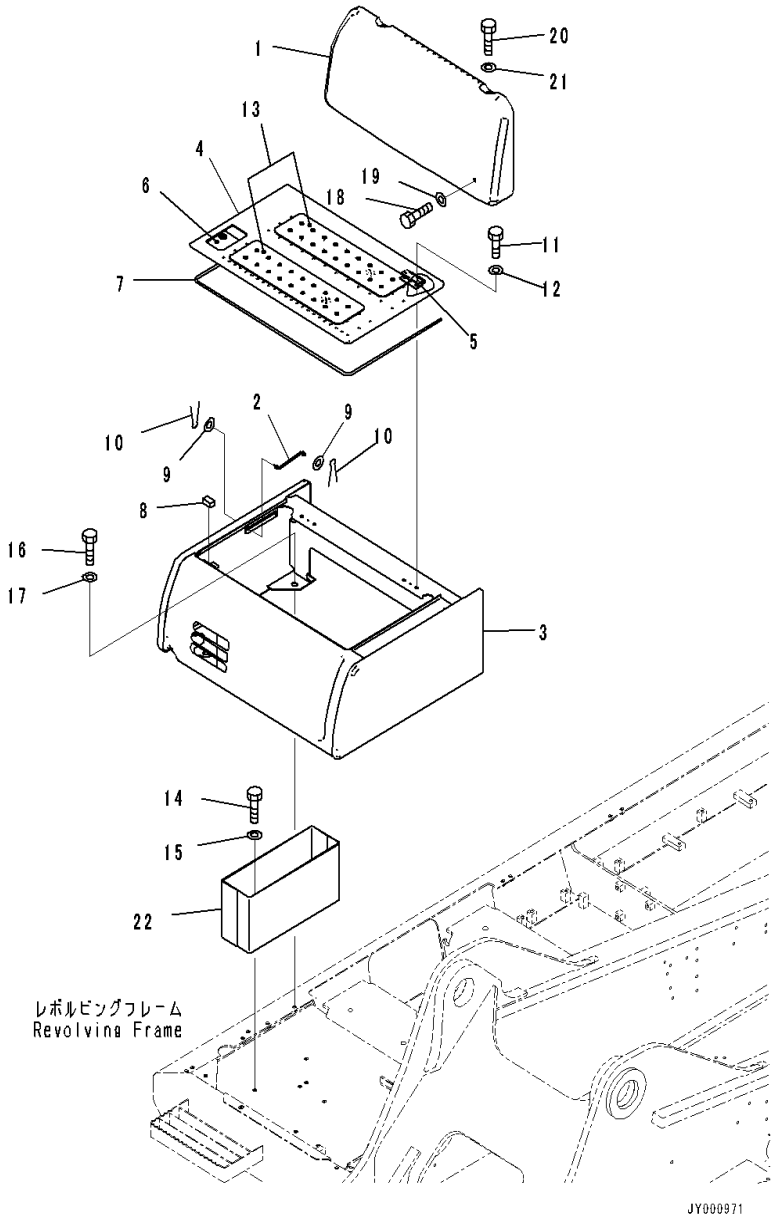

Index	Code	Part Number	Description	Qty	Serial Number
1		207-54-77451	Cover	1	C90001-
2		203-54-56630	Rod	1	C90001-
3		207-54-79810	Cover	1	C90001-
4		207-54-78820	Cover	1	C90001-
5		20Y-54-74161	• Hinge	2	C90001-
6		20Y-54-74172	• Lock	1	C90001-
7		208-54-71470	Seal	1	C90001-
8		20Y-54-29680	Sheet	1	C90001-
9		01643-30623	Washer	2	C90001-
10		04050-11612	Pin, Cotter	2	C90001-
11		01010-81020	Bolt	4	C90001-
12		01643-31032	Washer	4	C90001-
13		209-00-41550	Plate	2	C90001-
14		01010-81230	Bolt	2	C90001-
15		01643-31232	Washer	2	C90001-
16		01010-81230	Bolt	4	C90001-
17		175-54-34170	Washer	4	C90001-
18		01010-81230	Bolt	2	C90001-
19		175-54-34170	Washer	2	C90001-
20		01010-81230	Bolt	2	C90001-
21		01643-31232	Washer	2	C90001-
22		207-54-77441	Box, Tool	1	C90001-

FIG. M1310-001001 Handrail, #C90001-C90289

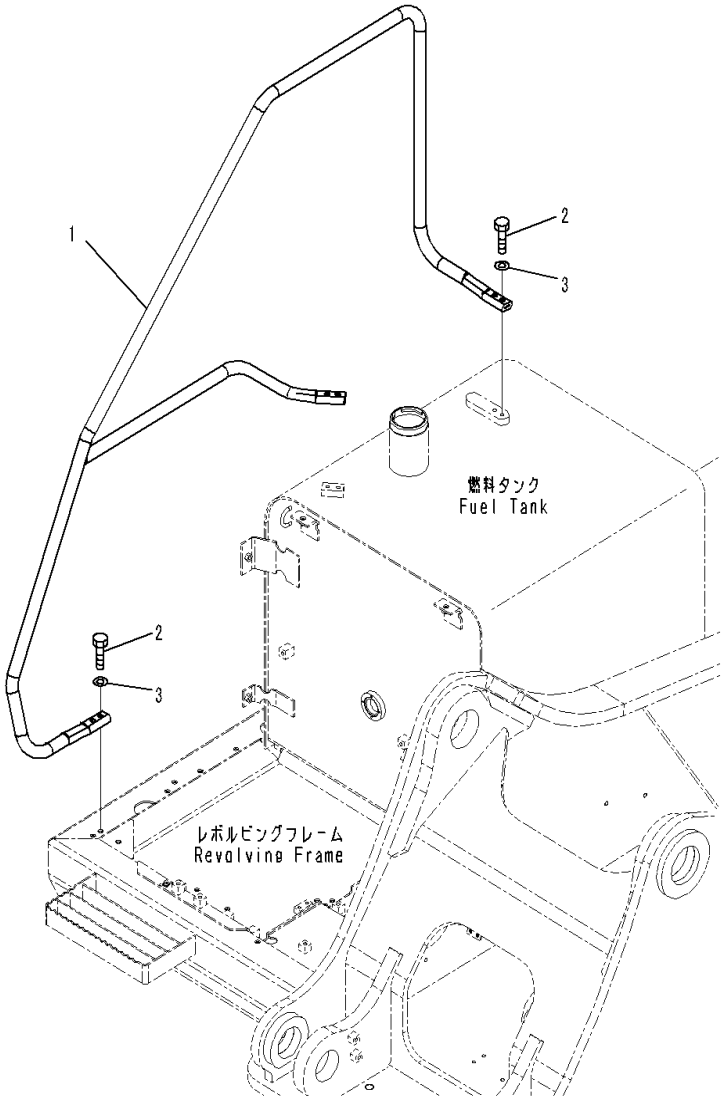

Index	Code	Part Number	Description	Qty	Serial Number
1		207-54-75220	Handrail	1	C90001-C90289
2		01010-81240	Bolt	6	C90001-C90289
3		01643-31232	Washer	6	C90001-C90289

FIG. M1310-002001 Handrail, #C90290-

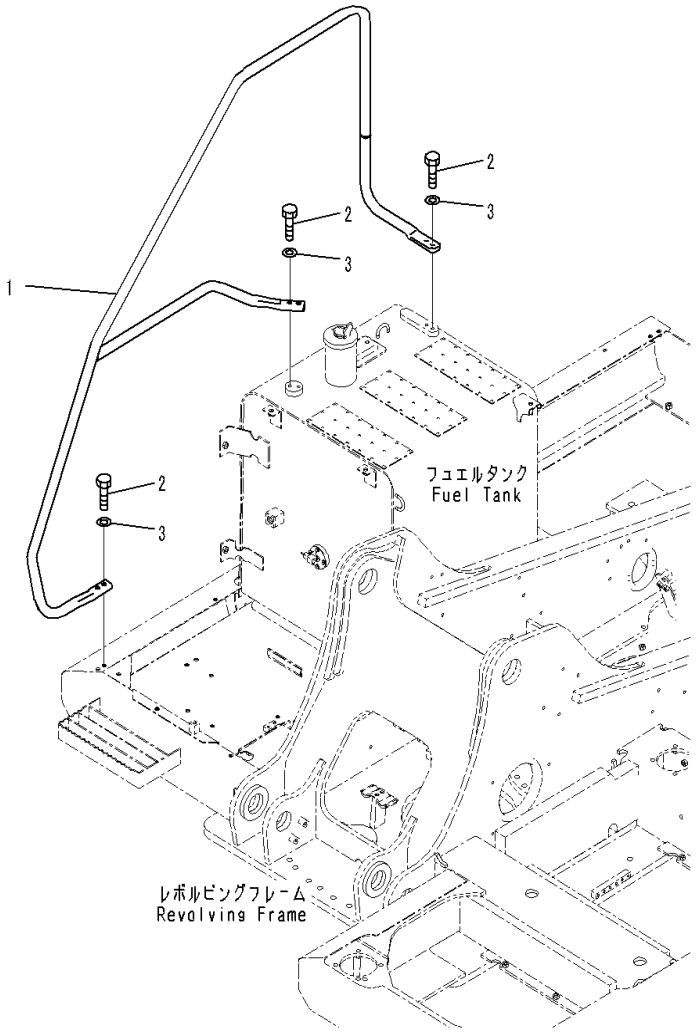

Index	Code	Part Number	Description	Qty	Serial Number
1		205-54-32320	Handrail	1	C90290-
2		01010-81240	Bolt	6	C90290-
3		01643-31232	Washer	6	C90290-

FIG. M1410-001001 Rearview Mirror L.H.

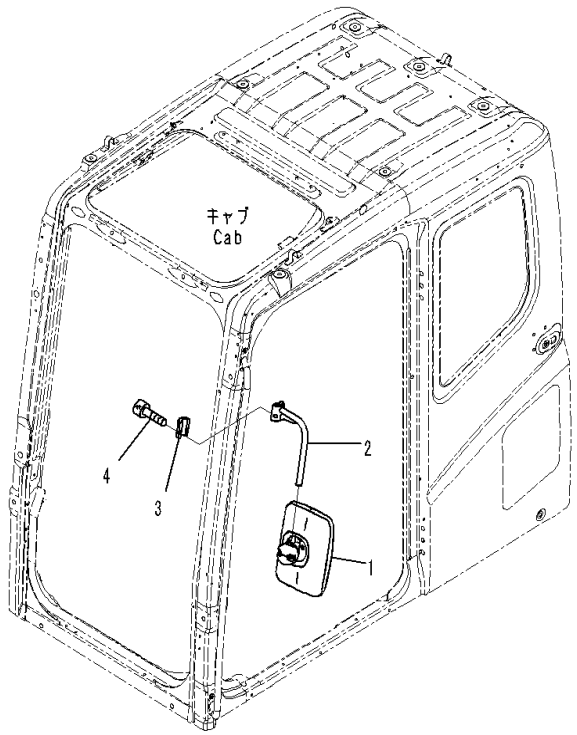

JH004133

Index	Code	Part Number	Description	Qty	Serial Number
1		2A5-54-13420	Mirror, Rearview	1	C90001-
2		20Y-54-74260	Support	1	C90001-
3		20Y-54-35430	Clamp	1	C90001-
4		01252-A1030	Bolt, Hexagon Socket Head	2	C90001-

FIG. M1420-001001 Rearview Mirror R.H.

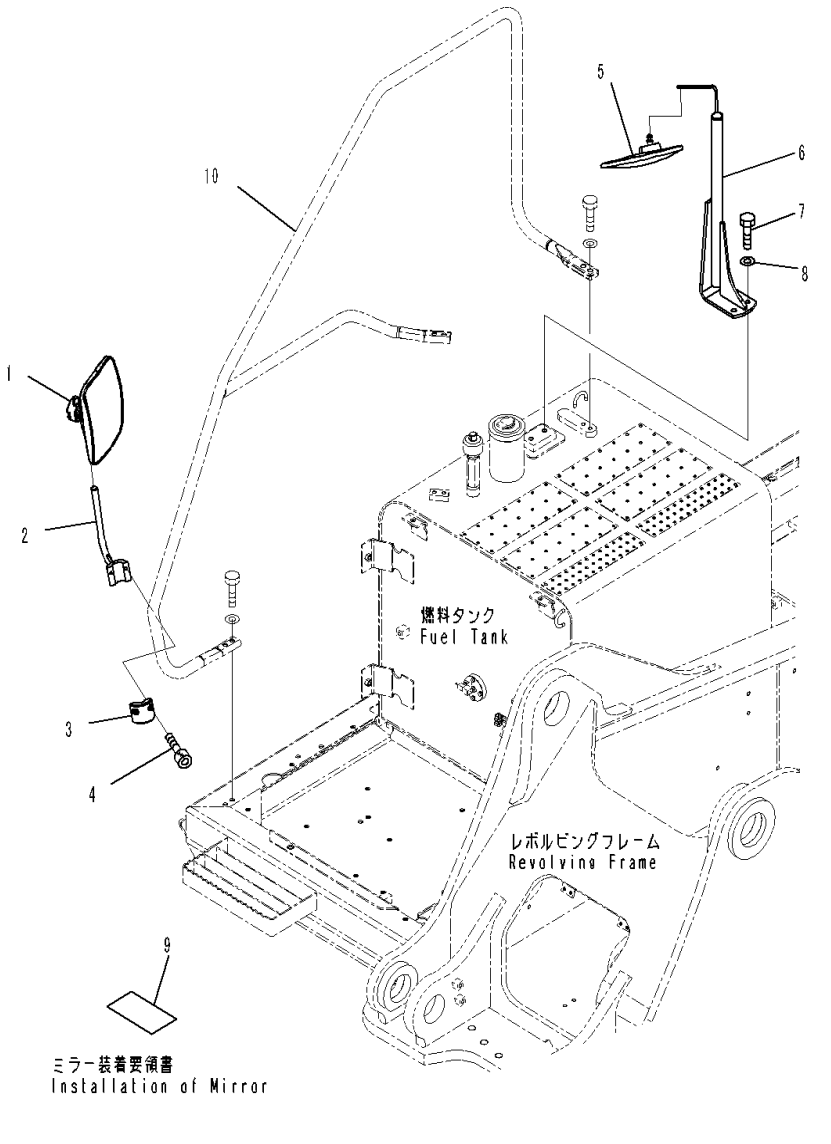

Index	Code	Part Number	Description	Qty	Serial Number
1		2A5-54-13420	Mirror, Rearview	1	C90001-
2		20Y-54-74270	Support	1	C90001-
3		20Y-54-61630	Clamp	1	C90001-
4		01252-A1030	Bolt, Hexagon Socket Head	2	C90001-
5		207-54-75710	Mirror	1	C90001-
6		207-54-79731	Bracket	1	C90001-
7		01010-81230	Bolt	2	C90001-
8		01643-31232	Washer	2	C90001-
9		207-98-73110	Plate	1	C90001-
10		(207-54-75220)	Handrail		-

FIG. M1430-001001 Rear Under View Mirror

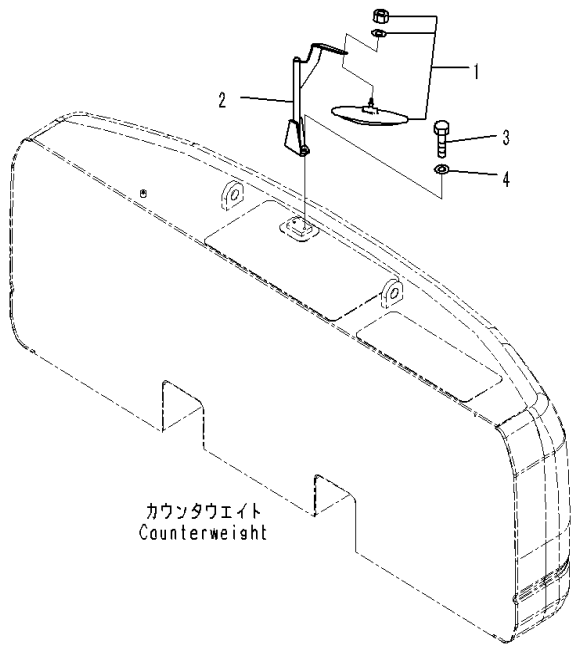

Index	Code	Part Number	Description	Qty	Serial Number
1		207-54-79711	Mirror, Rearview	1	C90001-
2		207-54-79720	Bracket	1	C90001-
3		01010-81230	Bolt	2	C90001-
4		01643-31232	Washer	2	C90001-

FIG. M1510-001001 Counterweight (6372kg)

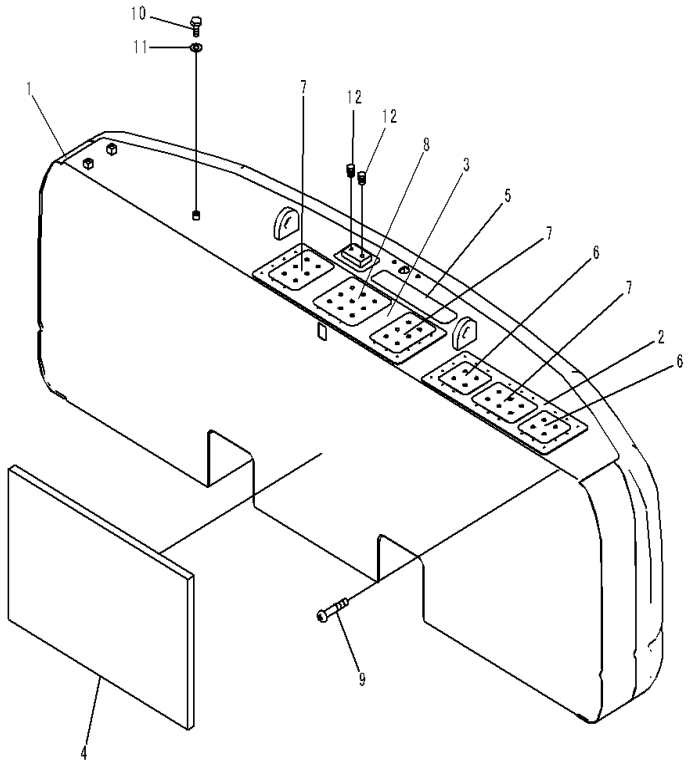

Index	Code	Part Number	Description	Qty	Serial Number
		207-46-73400	Weight	1	C90001-
1		207-46-73410	• Weight	1	C90001-
2		207-46-74430	• • Plate	1	C90001-
3		207-46-74621	• • Plate	1	C90001-
4		207-46-78630	• Sheet	1	C90001-
5		20Y-00-42170	Plate	1	C90001-
6		207-00-76220	Plate	2	C90001-
7		207-00-76230	Plate	3	C90001-
8		207-00-76330	Plate	1	C90001-
9		01370-00508	Screw	1	C90001-
10		01010-81220	Bolt	1	C90001-
11		01643-31232	Washer	1	C90001-
12		07049-01215	Plug	4	C90001-

FIG. M1520-001001 Counterweight Mounting

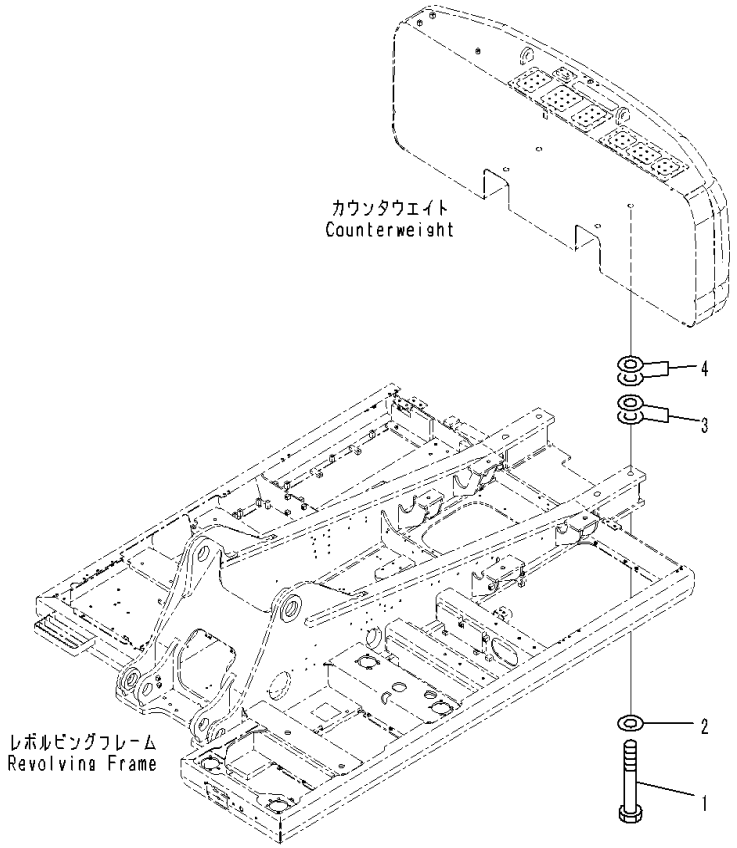

Index	Code	Part Number	Description	Qty	Serial Number
1		21T-09-11240	Bolt	4	C90001-
2		207-46-52130	Washer	4	C90001-
3		207-46-32150	Shim, T=1.0mm	4	C90001-
4		207-46-32140	Shim, T=0.5mm	4	C90001-
		207-46-32160	Shim, T=2.0mm	4	C90001-

FIG. M1810-001001 Under Cover (For Large Fuel Prefilter, Provision for Fuel Refill Pump) (1/3)

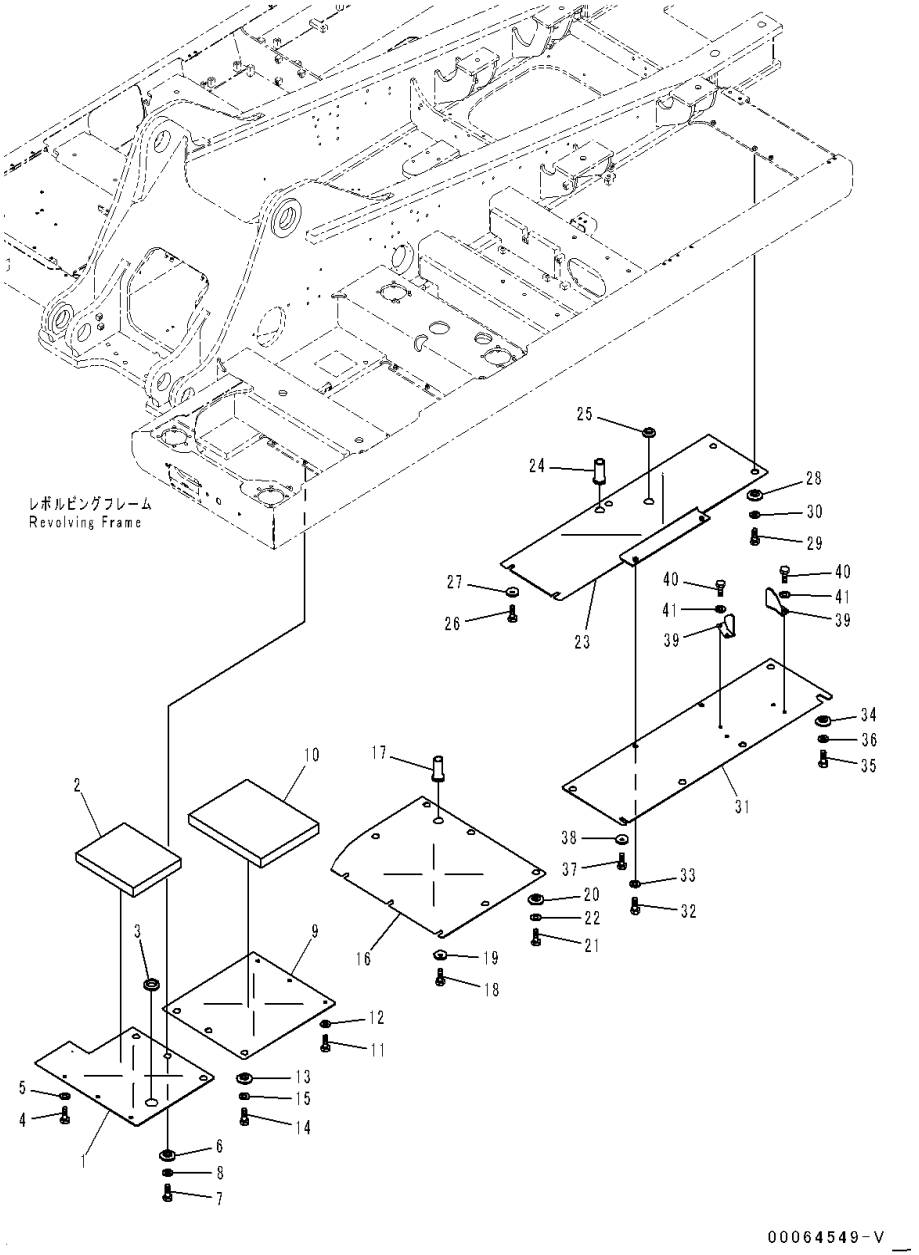

Index	Code	Part Number	Description	Qty	Serial Number
1		208-54-78320	Cover	1	C90001-
2		208-54-73520	Sheet	1	C90001-
3		08037-05016	Grommet	1	C90001-
4		01010-81230	Bolt	3	C90001-
5		01643-31232	Washer	3	C90001-
6		20Y-54-12550	Collar	3	C90001-
7		01010-81230	Bolt	3	C90001-
8		01643-31232	Washer	3	C90001-
9		207-54-78220	Cover	1	C90001-
10		208-54-73490	Sheet	1	C90001-
11		01010-81230	Bolt	3	C90001-
12		01643-31232	Washer	3	C90001-
13		20Y-54-12550	Collar	3	C90001-
14		01010-81230	Bolt	3	C90001-
15		01643-31232	Washer	3	C90001-
16		207-54-78650	Cover	1	C90001-
17		22U-54-24760	Grommet	1	C90001-
18		01010-81230	Bolt	3	C90001-
19		175-54-34170	Washer	3	C90001-
20		20Y-54-12550	Collar	5	C90001-
21		01010-81230	Bolt	5	C90001-
22		01643-31232	Washer	5	C90001-
23		207-54-78740	Cover	1	C90001-
24		22U-54-24760	Grommet	1	C90001-
25		08037-03614	Grommet	1	C90001-
26		01010-81230	Bolt	2	C90001-
27		175-54-34170	Washer	2	C90001-
28		20Y-54-12550	Collar	3	C90001-
29		01010-81230	Bolt	3	C90001-
30		01643-31232	Washer	3	C90001-
31		207-54-77220	Cover	1	C90001-
32		01010-81230	Bolt	2	C90001-
33		01643-31232	Washer	2	C90001-
34		208-54-57180	Collar	5	C90001-
35		01010-81230	Bolt	5	C90001-
36		01643-31232	Washer	5	C90001-
37		01010-81230	Bolt	1	C90001-
38		175-54-34170	Washer	1	C90001-
39		20Y-54-61670	Bracket	2	C90001-
40		01010-81230	Bolt	4	C90001-

FIG. M1810-001001 Under Cover (For Large Fuel Prefilter, Provision for Fuel Refill Pump) (1/3)

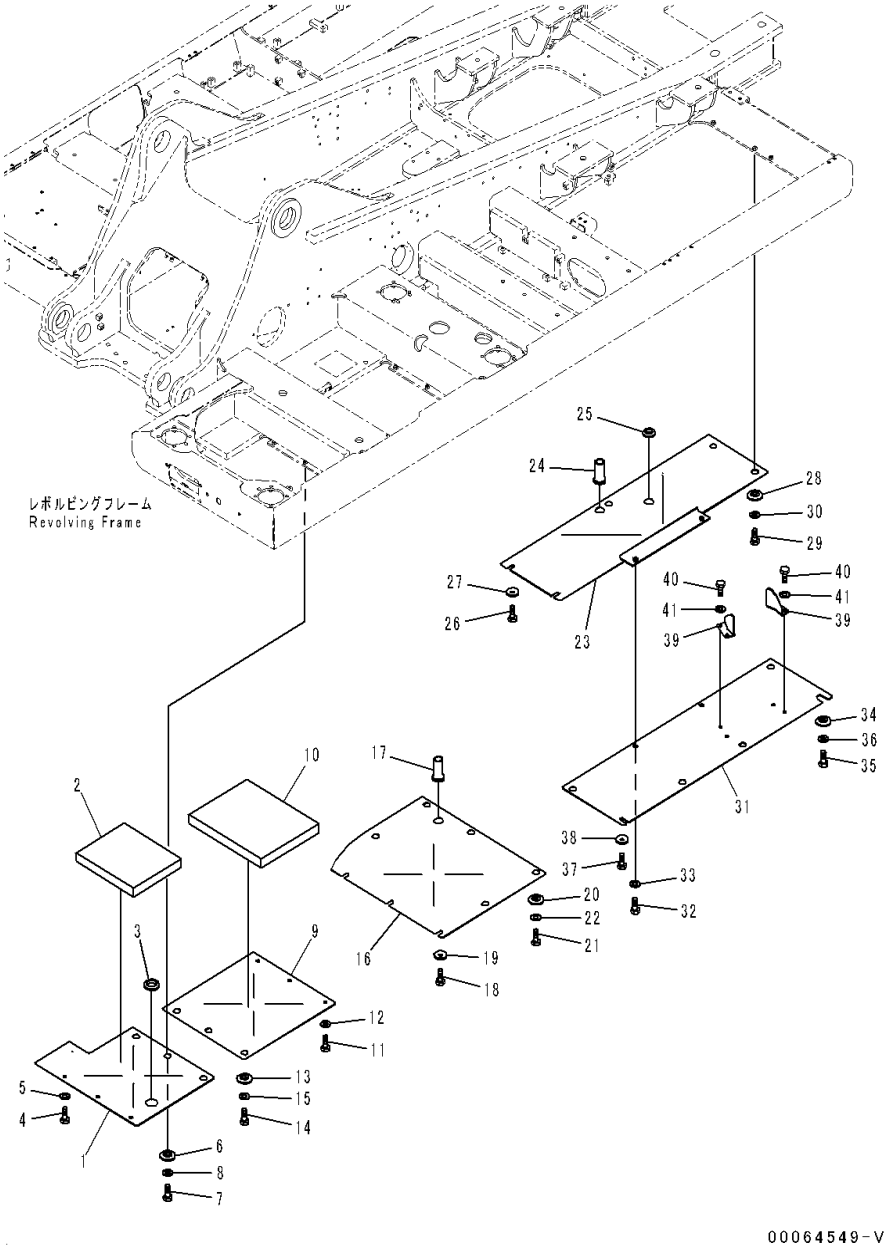

Index	Code	Part Number	Description	Qty	Serial Number
41		01643-31232	Washer	4	C90001-

FIG. M1810-001002 Under Cover (For Large Fuel Prefilter, Provision for Fuel Refill Pump) (2/3)

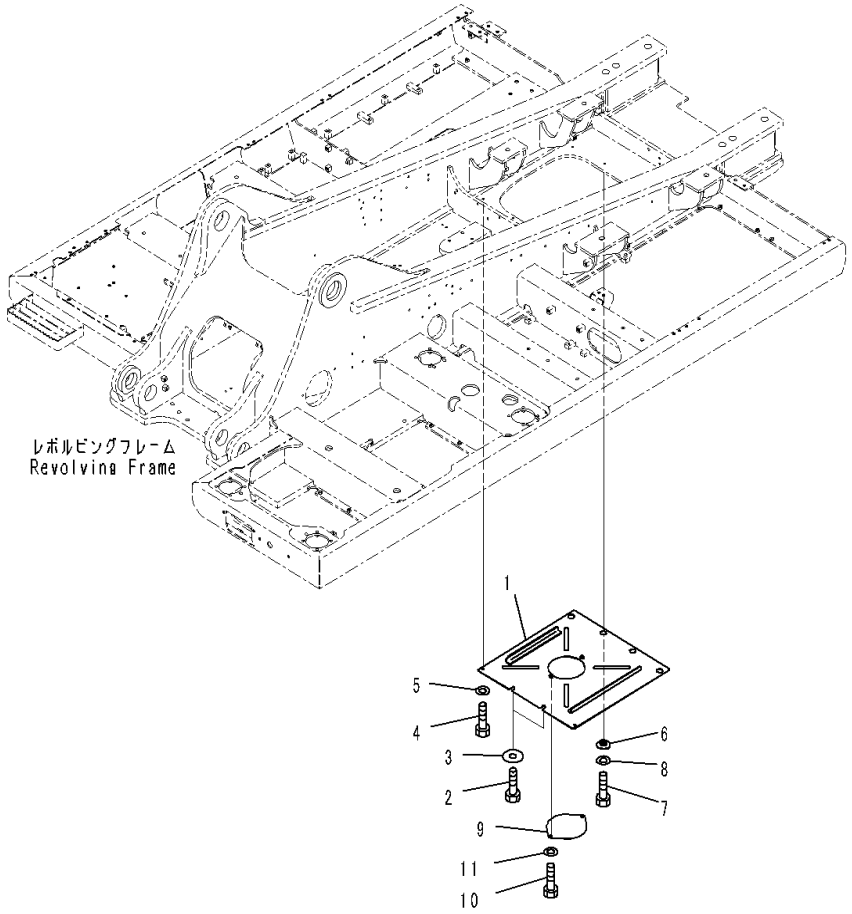

Index	Code	Part Number	Description	Qty	Serial Number
1		207-54-77172	Cover	1	C90001-
2		01010-81230	Bolt	2	C90001-
3		175-54-34170	Washer	2	C90001-
4		01010-81230	Bolt	2	C90001-
5		01643-31232	Washer	2	C90001-
6		20Y-54-12550	Collar	4	C90001-
7		01010-81230	Bolt	4	C90001-
8		01643-31232	Washer	4	C90001-
9		207-54-51440	Plate	1	C90001-
10		01010-81230	Bolt	2	C90001-
11		01643-31232	Washer	2	C90001-

FIG. M1810-001003 Under Cover (For Large Fuel Prefilter, Provision for Fuel Refill Pump) (3/3)

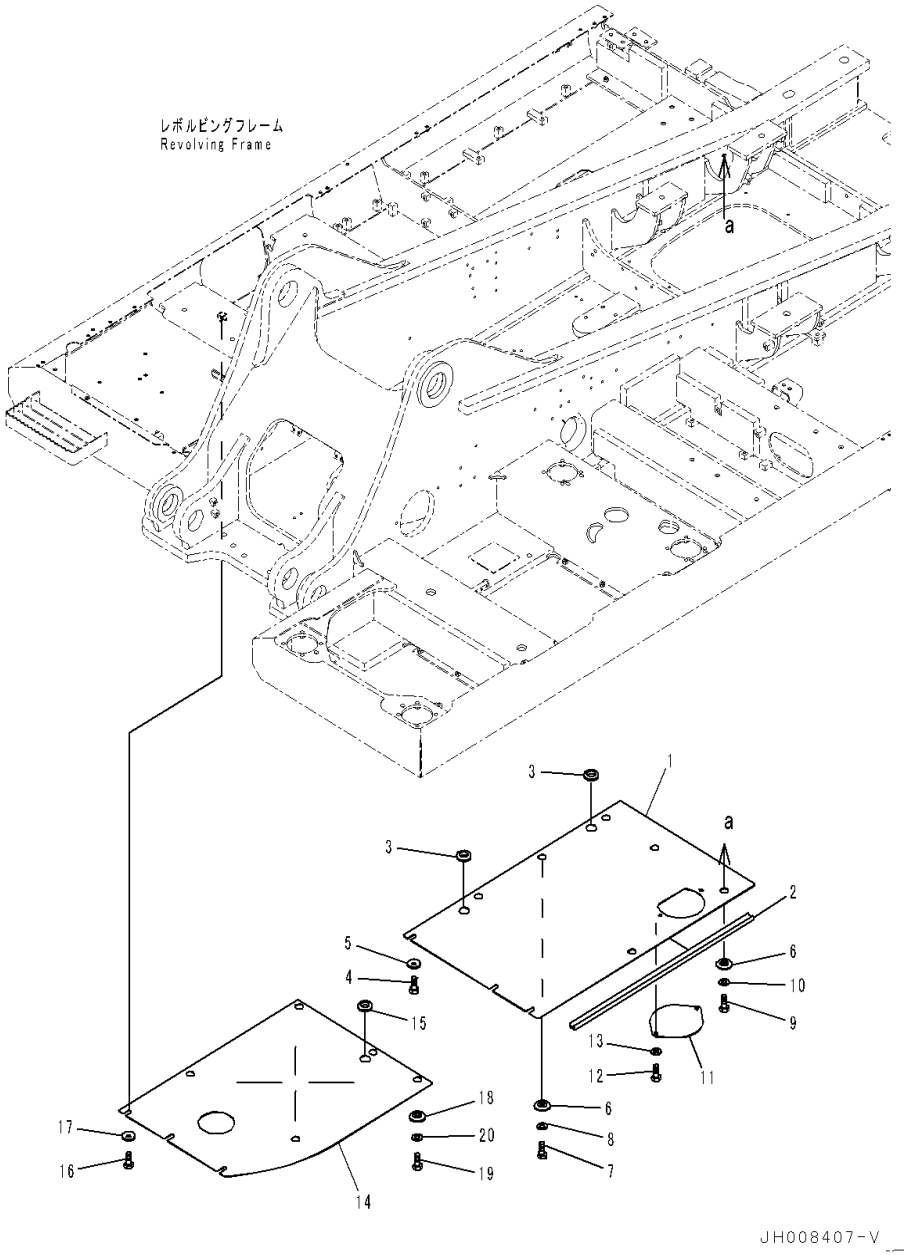

Index	Code	Part Number	Description	Qty	Serial Number
1		207-54-75940	Cover	1	C90001-
2		207-54-74950	• Seal	1	C90001-
3		08037-03614	Grommet	2	C90001-
4		01010-81230	Bolt	3	C90001-
5		175-54-34170	Washer	3	C90001-
6		203-54-62670	Collar	6	C90001-
7		01010-81230	Bolt	3	C90001-
8		01643-31232	Washer	3	C90001-
9		01010-81235	Bolt	3	C90001-
10		01643-31232	Washer	3	C90001-
11		207-54-51440	Plate	1	C90001-
12		01010-81230	Bolt	2	C90001-
13		01643-31232	Washer	2	C90001-
14		207-54-75971	Cover	1	C90001-
15		08037-03614	Grommet	1	C90001-
16		01010-81230	Bolt	3	C90001-
17		175-54-34170	Washer	3	C90001-
18		208-54-57180	Collar	5	C90001-
19		01010-81230	Bolt	5	C90001-
20		01643-31232	Washer	5	C90001-

FIG. M1810-002001 Under Cover (Heavy Duty Type, For Large Fuel Prefilter, Provision for Fuel Refill Pump) (1/3)

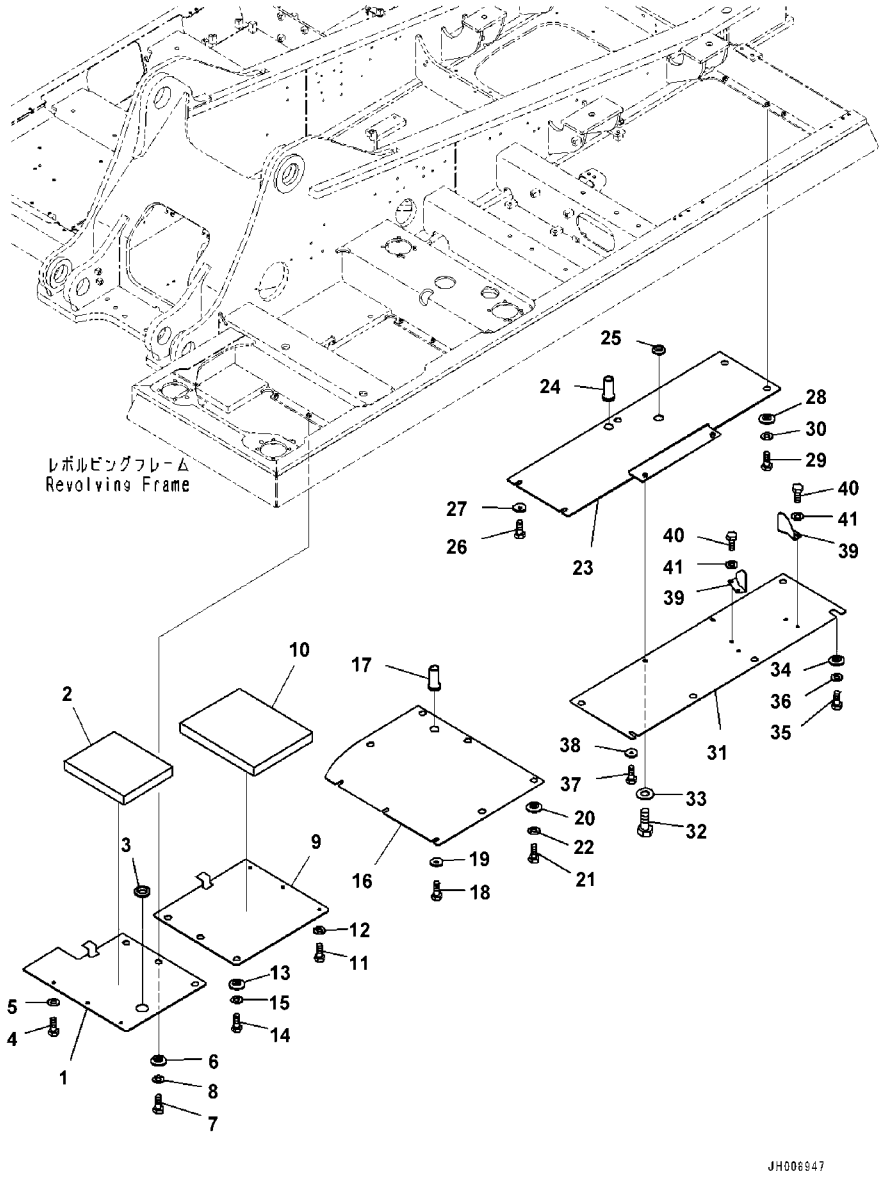

Index	Code	Part Number	Description	Qty	Serial Number
1		208-54-78340	Cover	1	C90001-
2		208-54-73520	Sheet	1	C90001-
3		08037-05016	Grommet	1	C90001-
4		01010-81230	Bolt	3	C90001-
5		01643-31232	Washer	3	C90001-
6		208-54-57180	Collar	3	C90001-
7		01010-81230	Bolt	3	C90001-
8		01643-31232	Washer	3	C90001-
9		207-54-78240	Cover	1	C90001-
10		208-54-73490	Sheet	1	C90001-
11		01010-81230	Bolt	3	C90001-
12		01643-31232	Washer	3	C90001-
13		208-54-57180	Collar	3	C90001-
14		01010-81230	Bolt	3	C90001-
15		01643-31232	Washer	3	C90001-
16		207-54-78660	Cover	1	C90001-
17		22U-54-24760	Grommet	1	C90001-
18		01010-81230	Bolt	3	C90001-
19		175-54-34170	Washer	3	C90001-
20		208-54-57180	Collar	5	C90001-
21		01010-81230	Bolt	5	C90001-
22		01643-31232	Washer	5	C90001-
23		207-54-78750	Cover	1	C90001-
24		22U-54-24760	Grommet	1	C90001-
25		08037-03614	Grommet	1	C90001-
26		01010-81230	Bolt	2	C90001-
27		175-54-34170	Washer	2	C90001-
28		208-54-57180	Collar	3	C90001-
29		01010-81230	Bolt	3	C90001-
30		01643-31232	Washer	3	C90001-
31		207-54-77220	Cover	1	C90001-
32		01010-81230	Bolt	2	C90001-
33		01643-31232	Washer	2	C90001-
34		208-54-57180	Collar	5	C90001-
35		01010-81230	Bolt	5	C90001-
36		01643-31232	Washer	5	C90001-
37		01010-81230	Bolt	1	C90001-
38		175-54-34170	Washer	1	C90001-
39		20Y-54-61670	Bracket	2	C90001-
40		01010-81230	Bolt	4	C90001-

FIG. M1810-002001 Under Cover (Heavy Duty Type, For Large Fuel Prefilter, Provision for Fuel Refill Pump) (1/3)

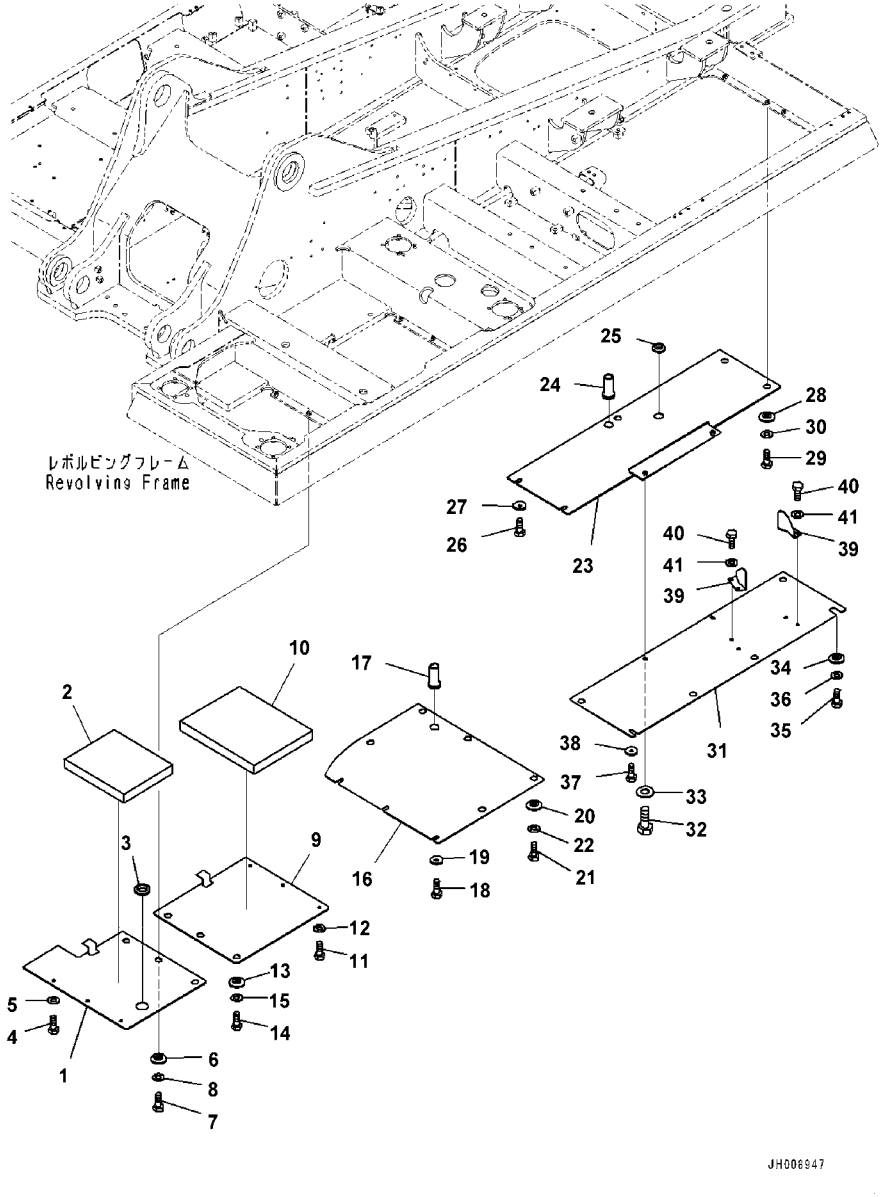

Index	Code	Part Number	Description	Qty	Serial Number
41		01643-31232	Washer	4	C90001-

FIG. M1810-002002 Under Cover (Heavy Duty Type, For Large Fuel Prefilter, Provision for Fuel Refill Pump) (2/3)

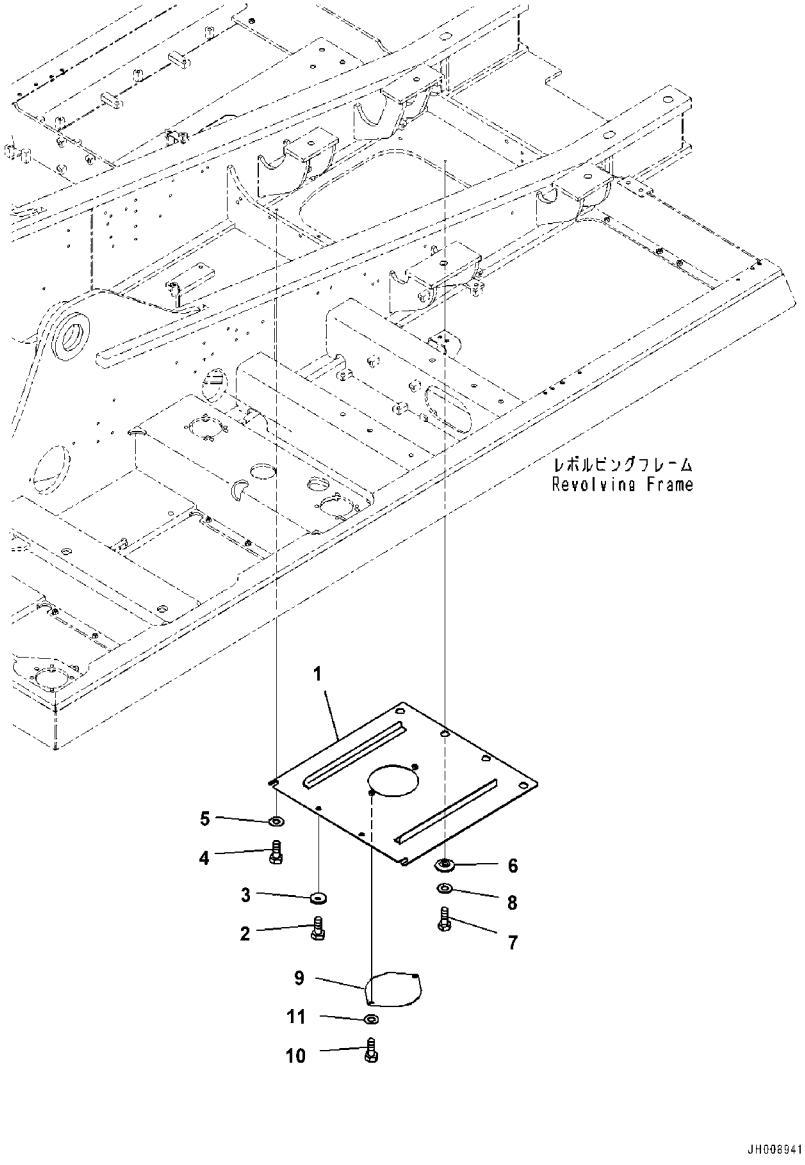

Index	Code	Part Number	Description	Qty	Serial Number
1		207-54-77272	Cover	1	C90001-
2		01010-81230	Bolt	2	C90001-
3		175-54-34170	Washer	2	C90001-
4		01010-81230	Bolt	2	C90001-
5		01643-31232	Washer	2	C90001-
6		208-54-57180	Collar	4	C90001-
7		01010-81230	Bolt	4	C90001-
8		01643-31232	Washer	4	C90001-
9		207-54-51440	Plate	1	C90001-
10		01010-81230	Bolt	2	C90001-
11		01643-31232	Washer	2	C90001-

FIG. M1810-002003 Under Cover (Heavy Duty Type, For Large Fuel Prefilter, Provision for Fuel Refill Pump) (2/3)

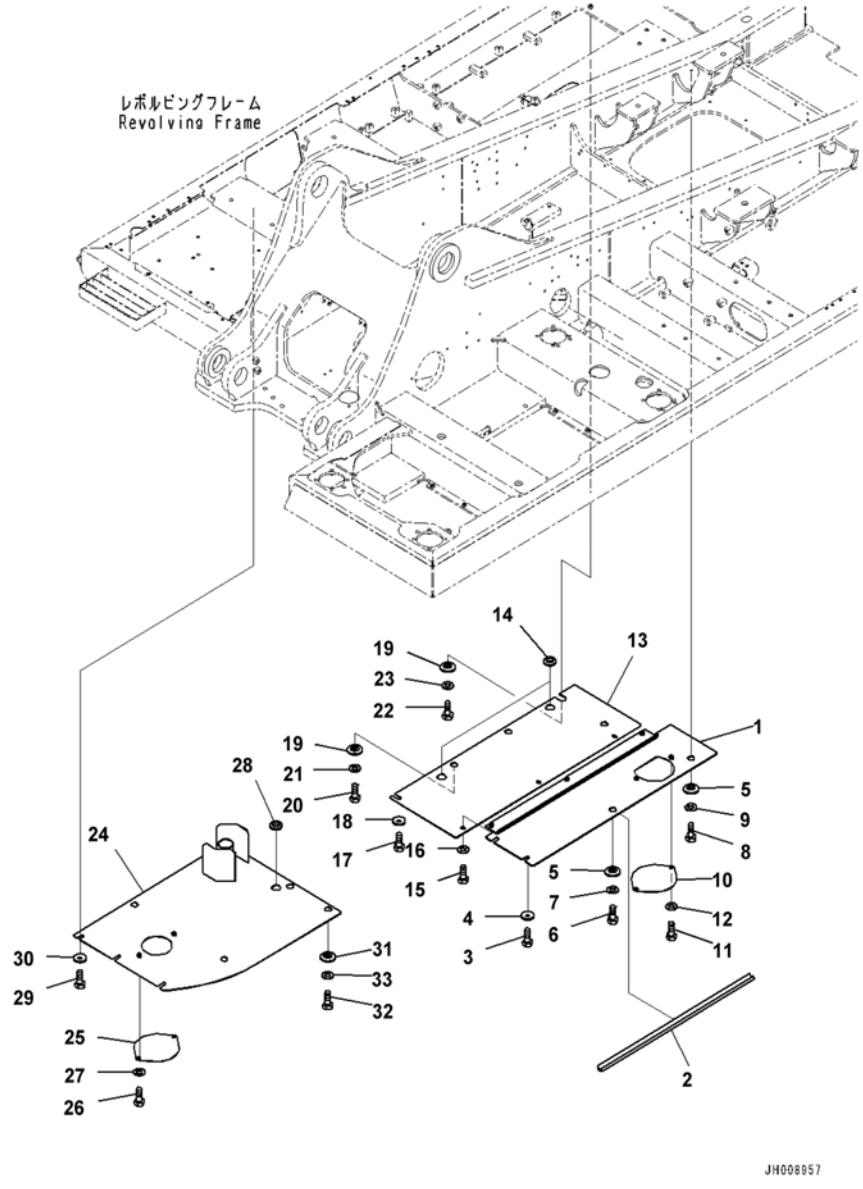

Index	Code	Part Number	Description	Qty	Serial Number
1		207-54-74940	Cover	1	C90001-
2		207-54-74950	• Seal	1	C90001-
3		01010-81230	Bolt	2	C90001-
4		175-54-34170	Washer	2	C90001-
5		208-54-57180	Collar	2	C90001-
6		01010-81230	Bolt	1	C90001-
7		01643-31232	Washer	1	C90001-
8		01010-81235	Bolt	1	C90001-
9		01643-31232	Washer	1	C90001-
10		207-54-51440	Plate	1	C90001-
11		01010-81230	Bolt	2	C90001-
12		01643-31232	Washer	2	C90001-
13		207-54-75960	Cover	1	C90001-
14		08037-03614	Grommet	2	C90001-
15		01010-81230	Bolt	3	C90001-
16		01643-31232	Washer	3	C90001-
17		01010-81230	Bolt	1	C90001-
18		175-54-34170	Washer	1	C90001-
19		208-54-57180	Collar	4	C90001-
20		01010-81230	Bolt	2	C90001-
21		01643-31232	Washer	2	C90001-
22		01010-81235	Bolt	2	C90001-
23		01643-31232	Washer	2	C90001-
24		207-54-75971	Cover	1	C90001-
25		207-54-51440	Plate	1	C90001-
26		01010-81230	Bolt	2	C90001-
27		01643-31232	Washer	2	C90001-
28		08037-03614	Grommet	1	C90001-
29		01010-81230	Bolt	3	C90001-
30		175-54-34170	Washer	3	C90001-
31		208-54-57180	Collar	5	C90001-
32		01010-81230	Bolt	5	C90001-
33		01643-31232	Washer	5	C90001-

FIG. M1810-003001 Under Cover (Additional Filter, Provision for Fuel Refill Pump) (1/3)

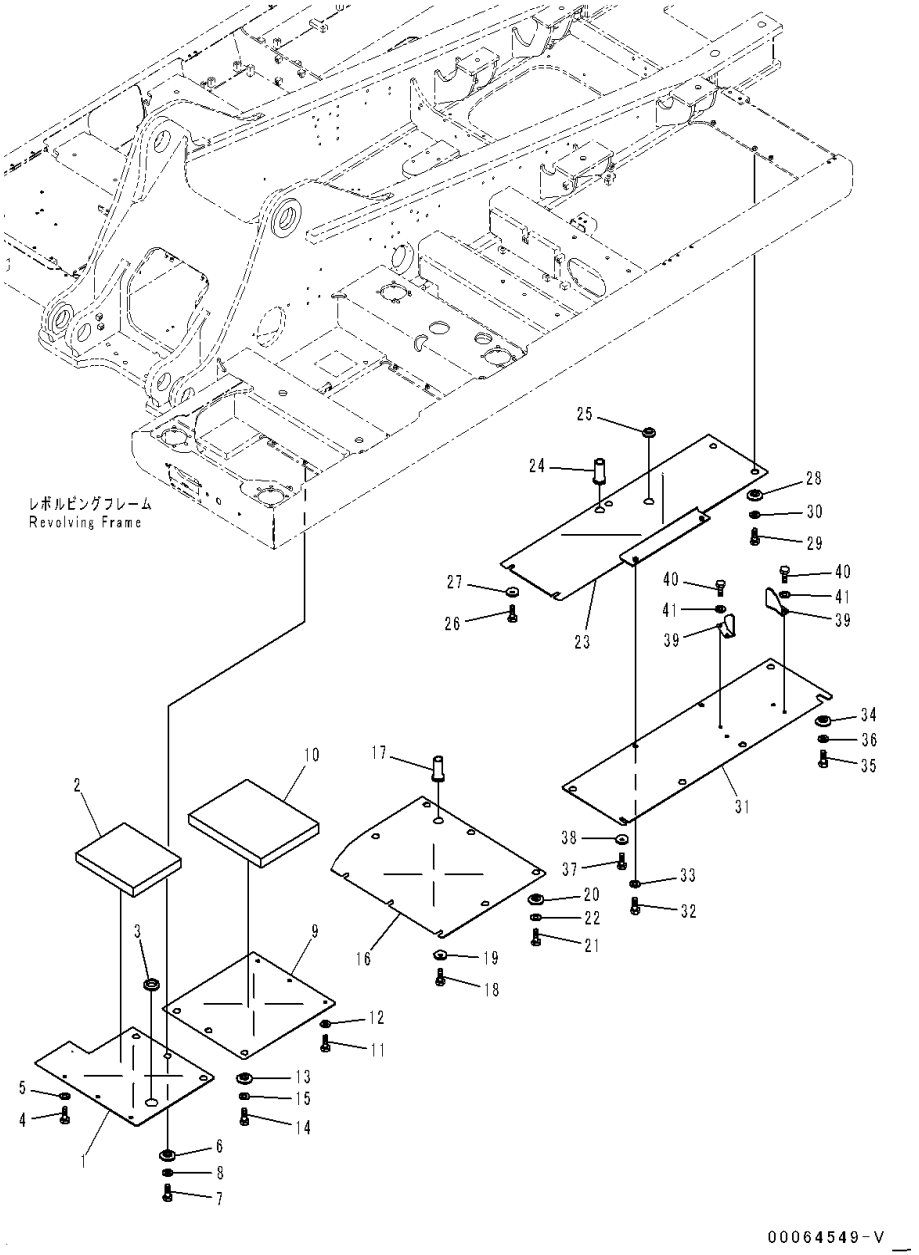

Index	Code	Part Number	Description	Qty	Serial Number
1		208-54-78320	Cover	1	C90001-
2		208-54-73520	Sheet	1	C90001-
3		08037-05016	Grommet	1	C90001-
4		01010-81230	Bolt	3	C90001-
5		01643-31232	Washer	3	C90001-
6		20Y-54-12550	Collar	3	C90001-
7		01010-81230	Bolt	3	C90001-
8		01643-31232	Washer	3	C90001-
9		207-54-78220	Cover	1	C90001-
10		208-54-73490	Sheet	1	C90001-
11		01010-81230	Bolt	3	C90001-
12		01643-31232	Washer	3	C90001-
13		20Y-54-12550	Collar	3	C90001-
14		01010-81230	Bolt	3	C90001-
15		01643-31232	Washer	3	C90001-
16		207-54-78650	Cover	1	C90001-
17		22U-54-24760	Grommet	1	C90001-
18		01010-81230	Bolt	3	C90001-
19		175-54-34170	Washer	3	C90001-
20		20Y-54-12550	Collar	5	C90001-
21		01010-81230	Bolt	5	C90001-
22		01643-31232	Washer	5	C90001-
23		207-54-78740	Cover	1	C90001-
24		22U-54-24760	Grommet	1	C90001-
25		08037-03614	Grommet	1	C90001-
26		01010-81230	Bolt	2	C90001-
27		175-54-34170	Washer	2	C90001-
28		20Y-54-12550	Collar	3	C90001-
29		01010-81230	Bolt	3	C90001-
30		01643-31232	Washer	3	C90001-
31		207-54-77120	Cover	1	C90001-
32		01010-81230	Bolt	2	C90001-
33		01643-31232	Washer	2	C90001-
34		208-54-57180	Collar	5	C90001-
35		01010-81230	Bolt	5	C90001-
36		01643-31232	Washer	5	C90001-
37		01010-81230	Bolt	1	C90001-
38		175-54-34170	Washer	1	C90001-
39		20Y-54-61670	Bracket	2	C90001-
40		01010-81230	Bolt	4	C90001-

FIG. M1810-003001 Under Cover (Additional Filter, Provision for Fuel Refill Pump) (1/3)

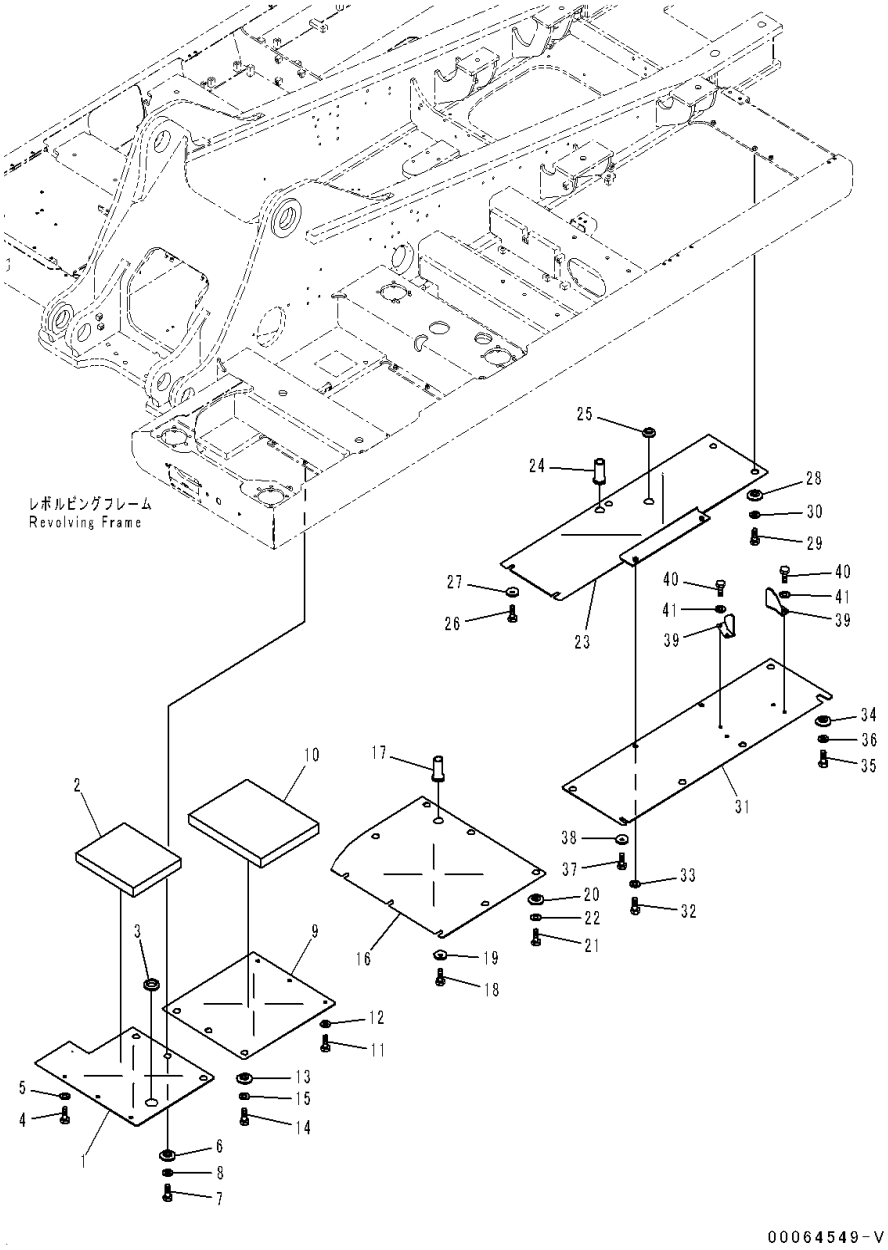

Index	Code	Part Number	Description	Qty	Serial Number
41		01643-31232	Washer	4	C90001-

FIG. M1810-003002 Under Cover (Additional Filter, Provision for Fuel Refill Pump) (2/3)

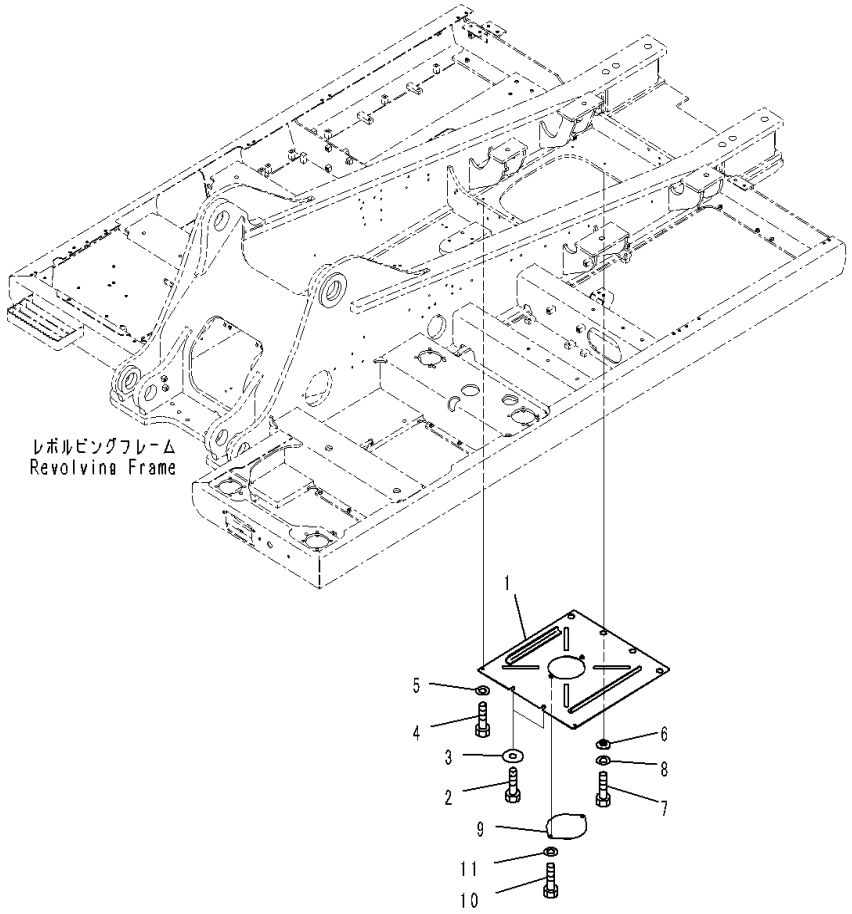

Index	Code	Part Number	Description	Qty	Serial Number
1		207-54-77172	Cover	1	C90001-
2		01010-81230	Bolt	2	C90001-
3		175-54-34170	Washer	2	C90001-
4		01010-81230	Bolt	2	C90001-
5		01643-31232	Washer	2	C90001-
6		20Y-54-12550	Collar	4	C90001-
7		01010-81230	Bolt	4	C90001-
8		01643-31232	Washer	4	C90001-
9		207-54-51440	Plate	1	C90001-
10		01010-81230	Bolt	2	C90001-
11		01643-31232	Washer	2	C90001-

FIG. M1810-003003 Under Cover (Additional Filter, Provision for Fuel Refill Pump) (3/3)

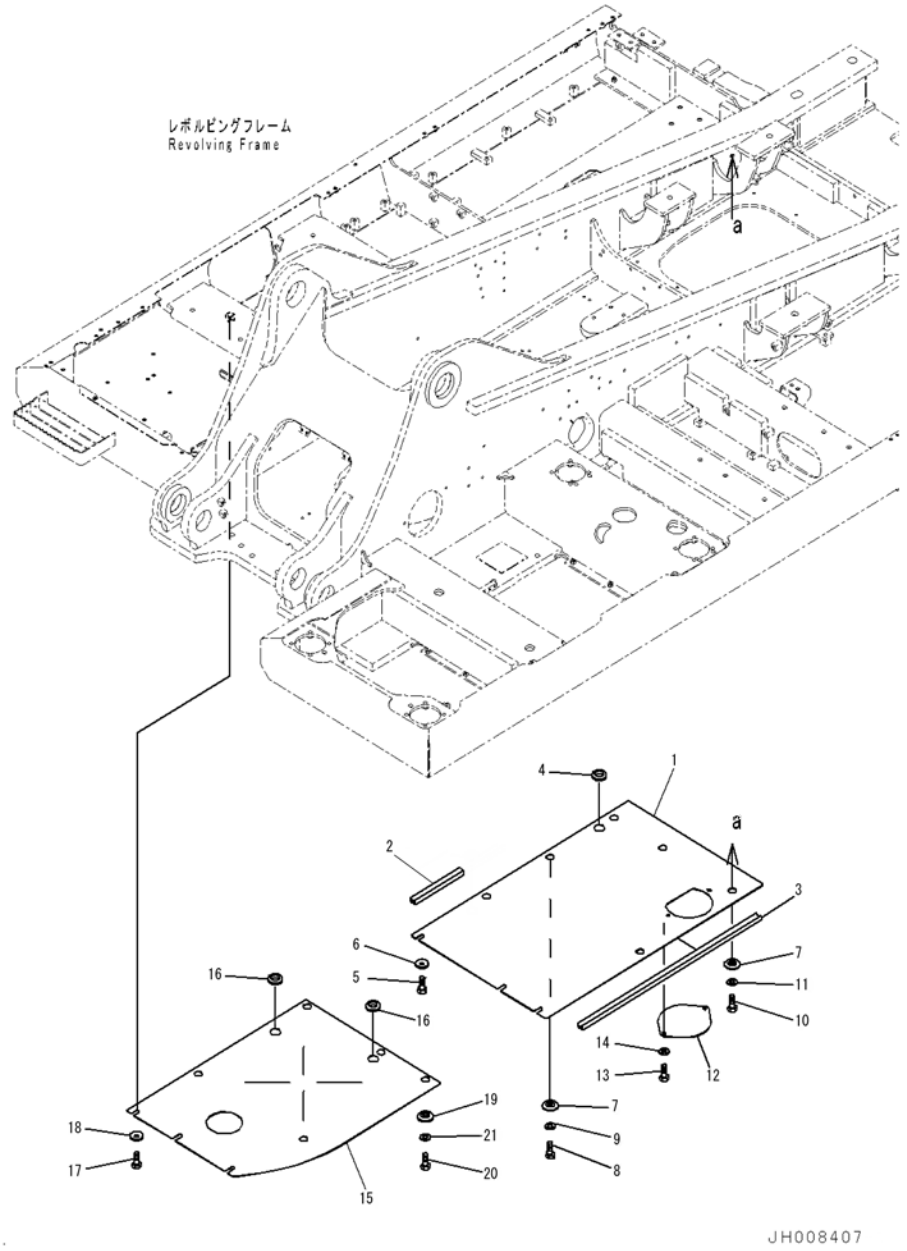

Index	Code	Part Number	Description	Qty	Serial Number
1		207-54-73980	Cover	1	C90001-
2		207-54-73960	• Seal	1	C90001-
3		207-54-74950	• Seal	1	C90001-
4		08037-03614	Grommet	1	C90001-
5		01010-81230	Bolt	3	C90001-
6		175-54-34170	Washer	3	C90001-
7		203-54-62670	Collar	6	C90001-
8		01010-81230	Bolt	3	C90001-
9		01643-31232	Washer	3	C90001-
10		01010-81235	Bolt	3	C90001-
11		01643-31232	Washer	3	C90001-
12		207-54-51440	Plate	1	C90001-
13		01010-81230	Bolt	2	C90001-
14		01643-31232	Washer	2	C90001-
15		207-54-78781	Cover	1	C90001-
16		08037-03614	Grommet	2	C90001-
17		01010-81230	Bolt	3	C90001-
18		175-54-34170	Washer	3	C90001-
19		20Y-54-12550	Collar	5	C90001-
20		01010-81230	Bolt	5	C90001-
21		01643-31232	Washer	5	C90001-

FIG. M1810-004001 Under Cover (Heavy Duty Type, Additional Filter, Provision For Fuel Refill Pump) (1/3)

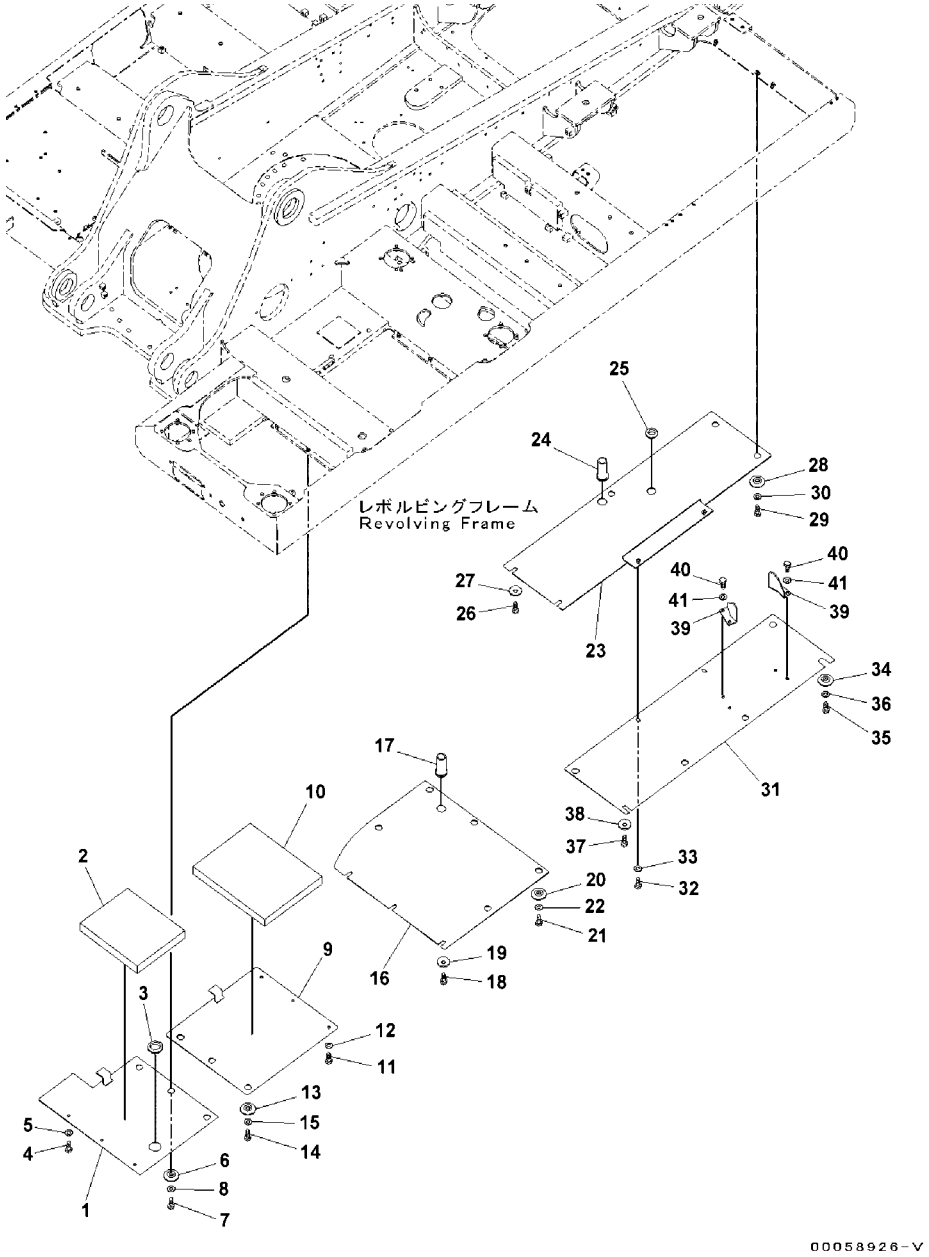

Index	Code	Part Number	Description	Qty	Serial Number
1		208-54-78340	Cover	1	C90001-
2		208-54-73520	Sheet	1	C90001-
3		08037-05016	Grommet	1	C90001-
4		01010-81230	Bolt	3	C90001-
5		01643-31232	Washer	3	C90001-
6		208-54-57180	Collar	3	C90001-
7		01010-81230	Bolt	3	C90001-
8		01643-31232	Washer	3	C90001-
9		207-54-78240	Cover	1	C90001-
10		208-54-73490	Sheet	1	C90001-
11		01010-81230	Bolt	3	C90001-
12		01643-31232	Washer	3	C90001-
13		208-54-57180	Collar	3	C90001-
14		01010-81230	Bolt	3	C90001-
15		01643-31232	Washer	3	C90001-
16		207-54-78660	Cover	1	C90001-
17		22U-54-24760	Grommet	1	C90001-
18		01010-81230	Bolt	3	C90001-
19		175-54-34170	Washer	3	C90001-
20		208-54-57180	Collar	5	C90001-
21		01010-81230	Bolt	5	C90001-
22		01643-31232	Washer	5	C90001-
23		207-54-78750	Cover	1	C90001-
24		22U-54-24760	Grommet	1	C90001-
25		08037-03614	Grommet	1	C90001-
26		01010-81230	Bolt	2	C90001-
27		175-54-34170	Washer	2	C90001-
28		208-54-57180	Collar	3	C90001-
29		01010-81230	Bolt	3	C90001-
30		01643-31232	Washer	3	C90001-
31		207-54-77120	Cover	1	C90001-
32		01010-81230	Bolt	2	C90001-
33		01643-31232	Washer	2	C90001-
34		208-54-57180	Collar	5	C90001-
35		01010-81230	Bolt	5	C90001-
36		01643-31232	Washer	5	C90001-
37		01010-81230	Bolt	1	C90001-
38		175-54-34170	Washer	1	C90001-
39		20Y-54-61670	Bracket	2	C90001-
40		01010-81230	Bolt	4	C90001-

FIG. M1810-004001 Under Cover (Heavy Duty Type, Additional Filter, Provision For Fuel Refill Pump) (1/3)

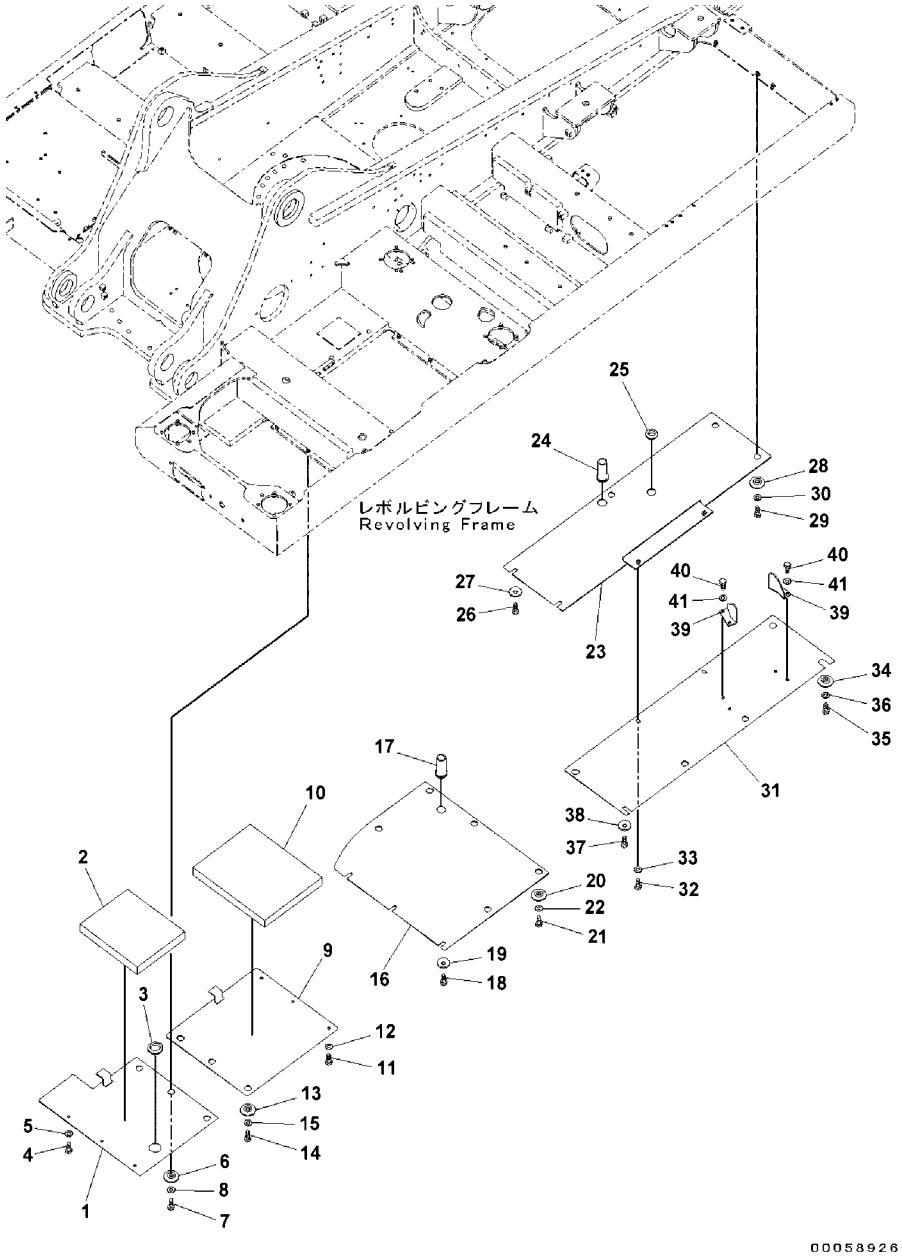

Index	Code	Part Number	Description	Qty	Serial Number
41		01643-31232	Washer	4	C90001-

FIG. M1810-004002 Under Cover (Heavy Duty Type, Additional Filter, Provision For Fuel Refill Pump) (2/3)

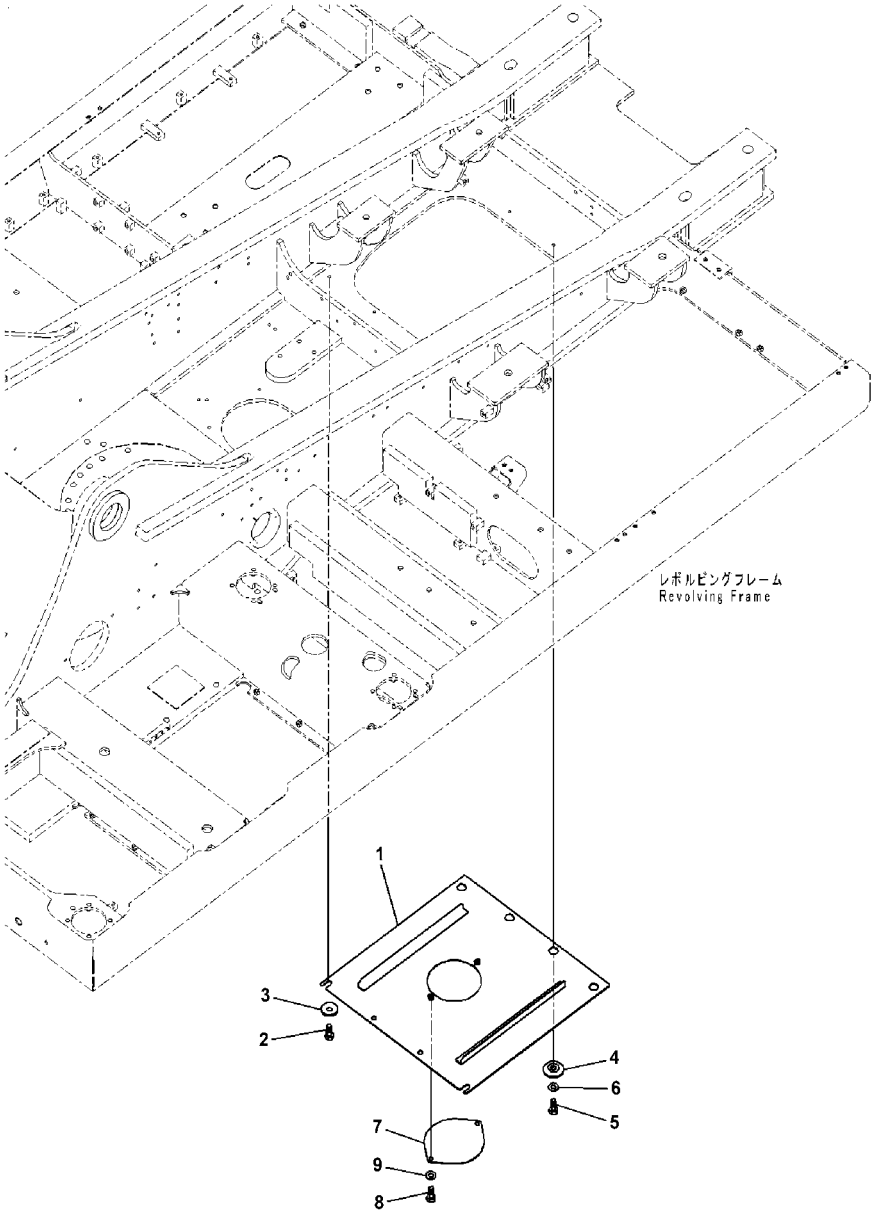

Index	Code	Part Number	Description	Qty	Serial Number
1		207-54-77272	Cover	1	C90001-
2		01010-81230	Bolt	2	C90001-
3		175-54-34170	Washer	2	C90001-
4		208-54-57180	Collar	4	C90001-
5		01010-81230	Bolt	4	C90001-
6		01643-31232	Washer	4	C90001-
7		207-54-51440	Plate	1	C90001-
8		01010-81230	Bolt	2	C90001-
9		01643-31232	Washer	2	C90001-

FIG. M1810-004003 Under Cover (Heavy Duty Type, Additional Filter, Provision For Fuel Refill Pump) (3/3)

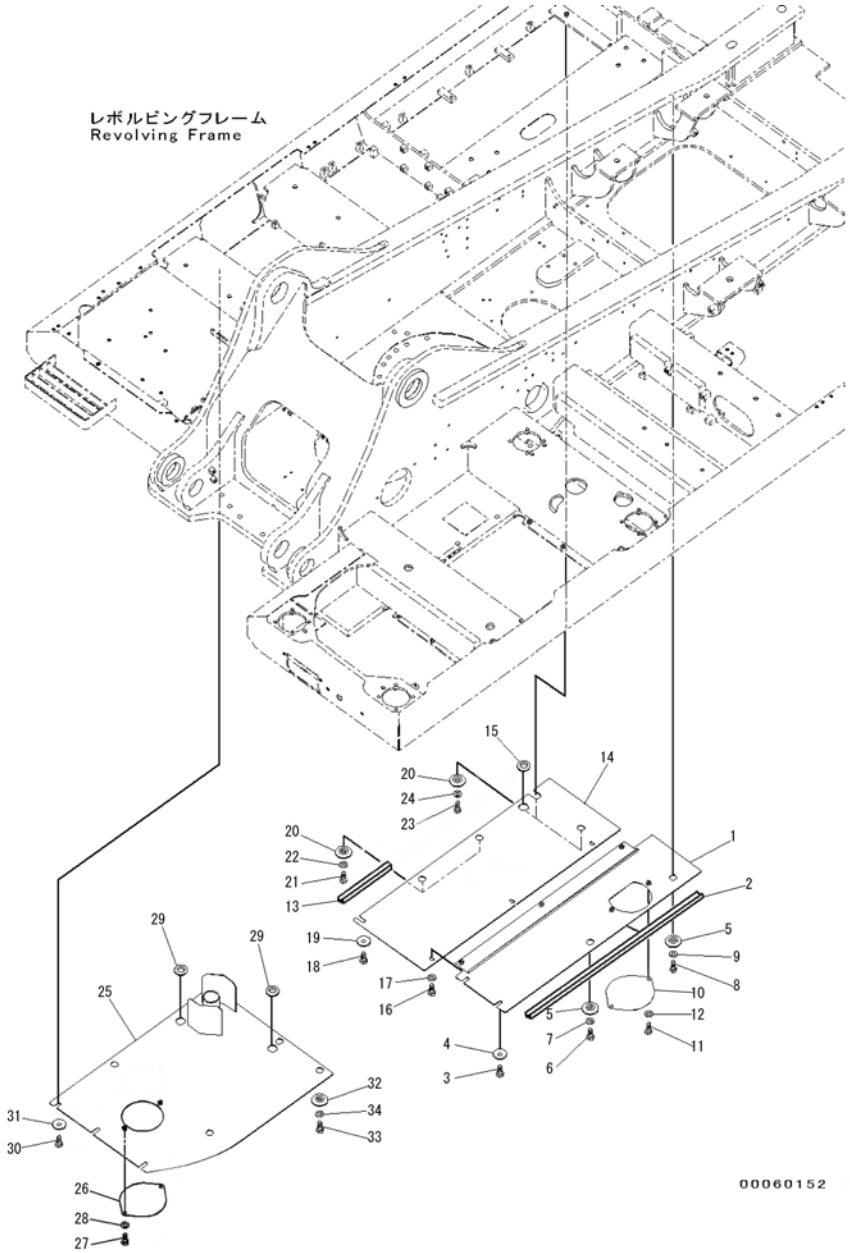

Index	Code	Part Number	Description	Qty	Serial Number
1		207-54-74940	Cover	1	C90001-
2		207-54-74950	• Seal	1	C90001-
3		01010-81230	Bolt	2	C90001-
4		175-54-34170	Washer	2	C90001-
5		208-54-57180	Collar	2	C90001-
6		01010-81230	Bolt	1	C90001-
7		01643-31232	Washer	1	C90001-
8		01010-81235	Bolt	1	C90001-
9		01643-31232	Washer	1	C90001-
10		207-54-51440	Plate	1	C90001-
11		01010-81230	Bolt	2	C90001-
12		01643-31232	Washer	2	C90001-
		207-54-73950	Cover Assembly	1	C90001-
13		207-54-73960	• Seal	1	C90001-
14		207-54-78770	• Cover	1	C90001-
15		08037-03614	Grommet	1	C90001-
16		01010-81230	Bolt	3	C90001-
17		01643-31232	Washer	3	C90001-
18		01010-81230	Bolt	1	C90001-
19		175-54-34170	Washer	1	C90001-
20		208-54-57180	Collar	4	C90001-
21		01010-81230	Bolt	2	C90001-
22		01643-31232	Washer	2	C90001-
23		01010-81235	Bolt	2	C90001-
24		01643-31232	Washer	2	C90001-
25		207-54-78860	Cover	1	C90001-
26		207-54-51440	Plate	1	C90001-
27		01010-81230	Bolt	2	C90001-
28		01643-31232	Washer	2	C90001-
29		08037-03614	Grommet	2	C90001-
30		01010-81230	Bolt	3	C90001-
31		175-54-34170	Washer	3	C90001-
32		208-54-57180	Collar	5	C90001-
33		01010-81230	Bolt	5	C90001-
34		01643-31232	Washer	5	C90001-

SWING CIRCLE AND ITS RELATED PARTS

FIG. N1110-001001 Swing Circle, #C90001-C90323

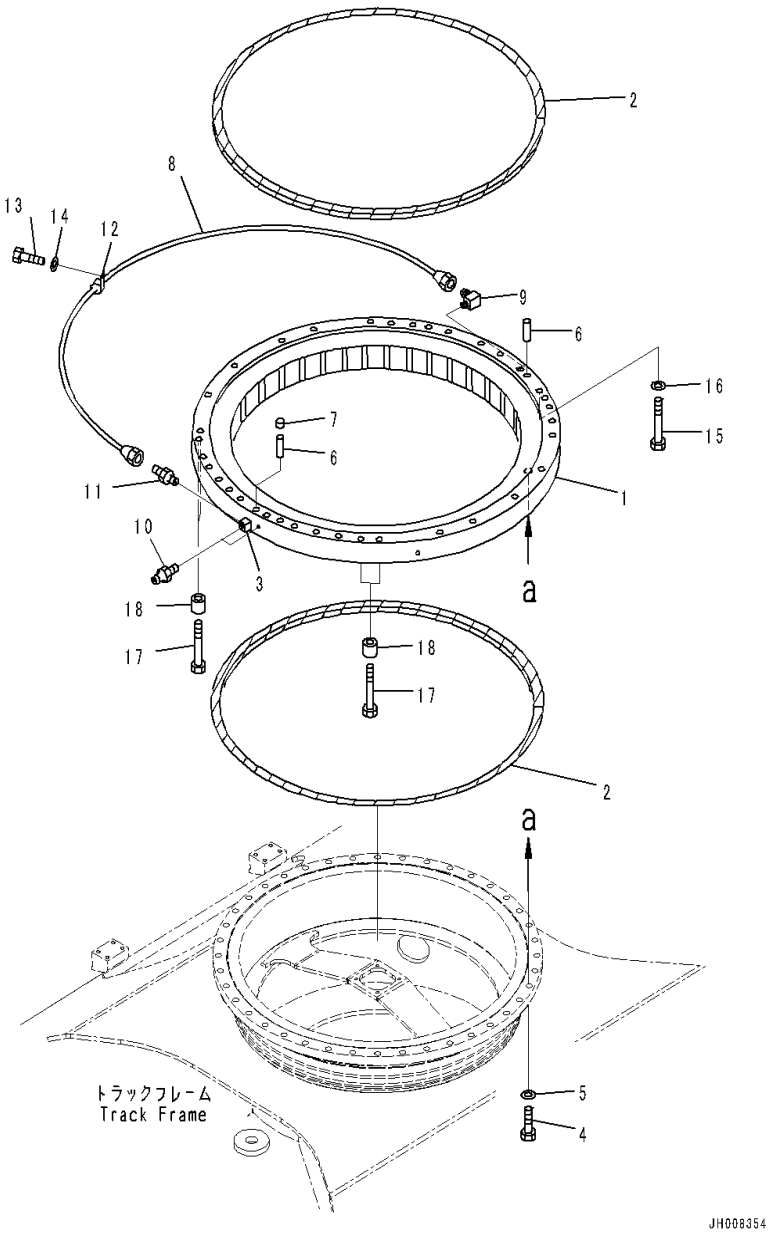

Index	Code	Part Number	Description	Qty	Serial Number
1		207-25-61100	Swing Circle Assembly	1	C90001-C90323
2		207-25-61160	• Seal	2	C90001-C90323
3		205-25-71280	• Nipple	1	C90001-C90323
4		21N-04-41410	Bolt	40	C90001-C90323
5		01643-72460	Washer	40	C90001-C90323
6		04020-01842	Pin, Dowel	2	C90001-C90323
7		20Y-46-21520	Cap	1	C90001-C90323
8		207-25-62110	Tube	1	C90001-C90323
9		20Y-25-11270	Elbow	1	C90001-C90323
10		07020-00000	Fitting, Grease	2	C90001-C90323
11		07214-50813	Connector	1	C90001-C90323
12		08036-00814	Clip	1	C90001-C90323
13		01010-81020	Bolt	1	C90001-C90323
14		01643-31032	Washer	1	C90001-C90323
15		207-25-75110	Bolt	31	C90001-C90323
16		01643-72460	Washer	31	C90001-C90323
17		207-25-75120	Bolt	4	C90001-C90323
18		207-25-25131	Collar	4	C90001-C90323

FIG. N1110-002001 Swing Circle, #C90324-

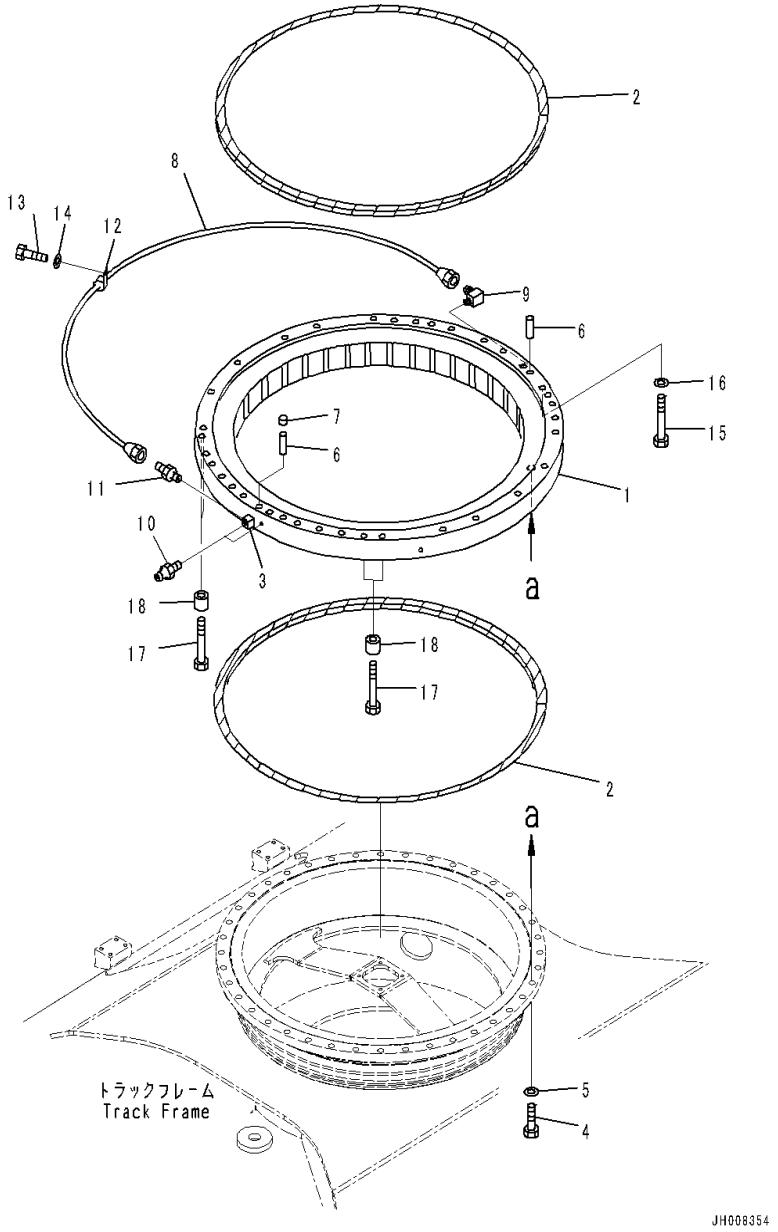

Index	Code	Part Number	Description	Qty	Serial Number
1		207-25-00120	Swing Circle Assembly	1	C90324-
2		207-25-61160	• Seal	2	C90324-
3		205-25-71280	• Nipple	1	C90324-
4		21N-04-41410	Bolt	40	C90324-
5		01643-72460	Washer	40	C90324-
6		04020-01842	Pin, Dowel	2	C90324-
7		20Y-46-21520	Cap	1	C90324-
8		207-25-62110	Tube	1	C90324-
9		20Y-25-11270	Elbow	1	C90324-
10		07020-00000	Fitting, Grease	2	C90324-
11		07214-50813	Connector	1	C90324-
12		08036-00814	Clip	1	C90324-
13		01010-81020	Bolt	1	C90324-
14		01643-31032	Washer	1	C90324-
15		207-25-75110	Bolt	31	C90324-
16		01643-72460	Washer	31	C90324-
17		207-25-75120	Bolt	4	C90324-
18		207-25-25131	Collar	4	C90324-

FIG. N1210-001001 Swing Machinery and Motor (For Indonesian) (Swing Motor, 1/3)

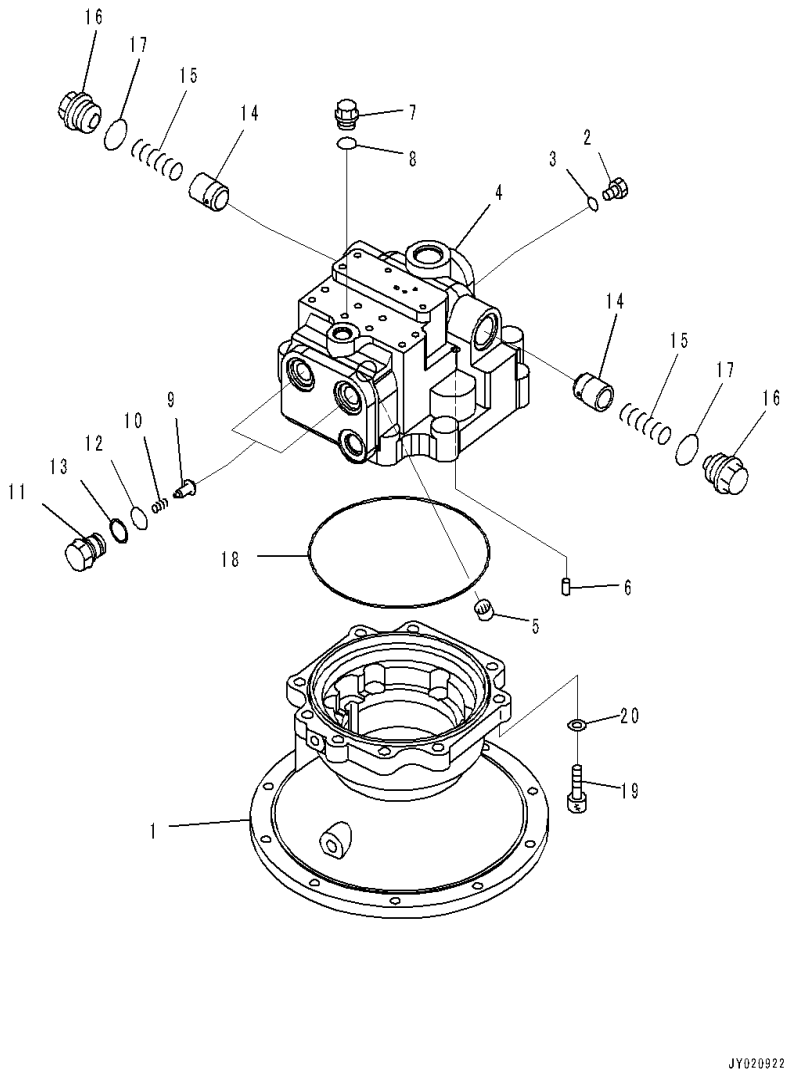

Index	Code	Part Number	Description	Qty	Serial Number
		706-7H-01050	Motor Assembly	1	C90001-
		706-7H-03010	• Motor Subassembly	1	C90001-
1	C2	706-7H-12210	•• Case	1	C90001-
2		07040-11409	•• Plug	2	C90001-
3		07002-61423	•• O-ring	2	C90001-
4	C2	706-7H-12220	•• Housing	1	C90001-
5	C2	706-7H-11560	•• Bushing	1	C90001-
6	C2	706-75-42830	•• Pin, Dowel	1	C90001-
7		706-77-72280	•• Plug	1	C90001-
8		07002-62034	•• O-ring	1	C90001-
9		709-74-92810	•• Valve	2	C90001-
10		709-75-92220	•• Spring	2	C90001-
11		709-74-92821	•• Plug	2	C90001-
12		708-2L-23960	•• O-ring	2	C90001-
13		700-93-11330	•• Ring, Back-up	2	C90001-
14		708-8K-16150	•• Valve	2	C90001-
15		708-8K-16160	•• Spring	2	C90001-
16		708-8K-16170	•• Plug	2	C90001-
17		07002-63634	•• O-ring	2	C90001-
18	C2	706-7K-40040	•• O-ring	1	C90001-
19	C2	01010-61460	•• Bolt	8	C90001-
20	C2	01643-31445	•• Washer	8	C90001-

FIG. N1210-001002 Swing Machinery and Motor (For Indonesian) (Swing Motor, 2/3)

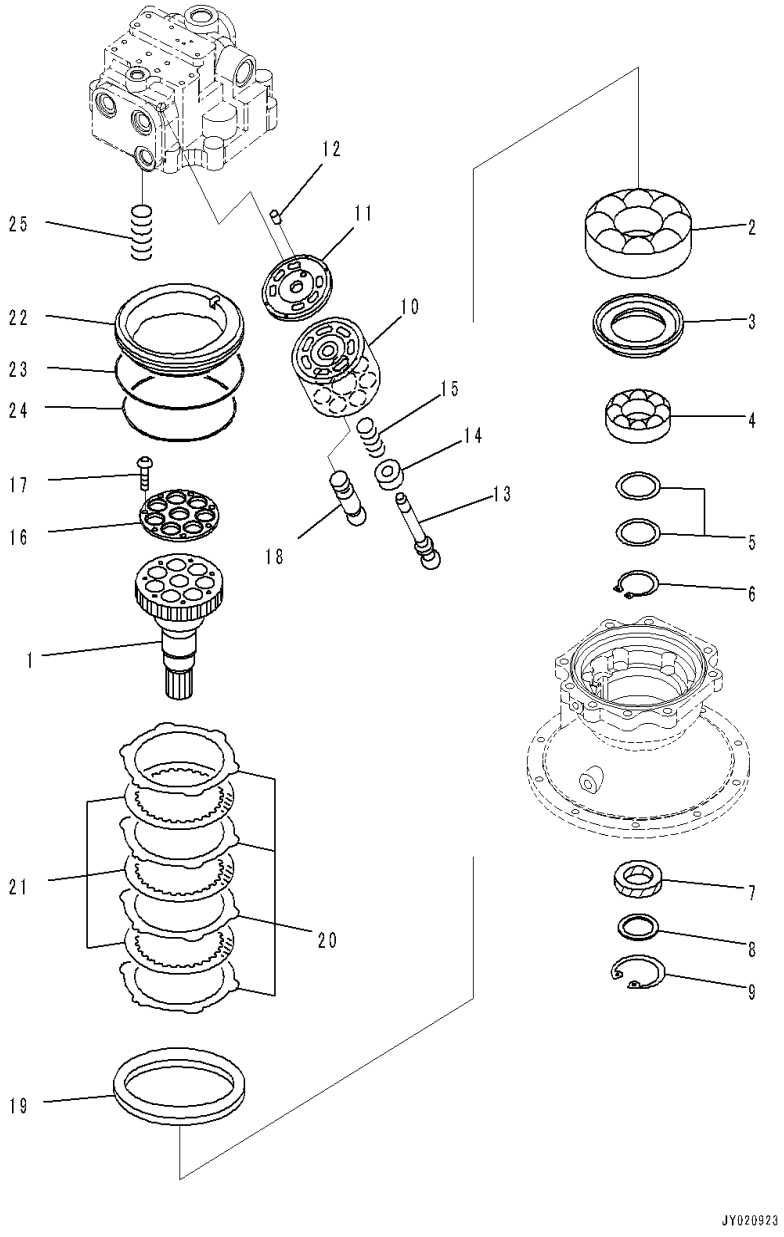

Index	Code	Part Number	Description	Qty	Serial Number
		706-7H-01050	Motor Assembly	1	C90001-
		706-7H-03010	• Motor Subassembly	1	C90001-
1	C2	706-7H-11440	•• Shaft	1	C90001-
2	C2	706-8J-41010	•• Bearing	1	C90001-
3	C2	706-7H-11450	•• Spacer	1	C90001-
4	C2	706-77-42890	•• Bearing	1	C90001-
5	C2	706-77-05010	•• Spacer Kit	1	C90001-
	C1		••• Spacer, T=2.3mm	2	C90001-
	C1		••• Spacer, T=2.5mm	2	C90001-
	C1		••• Spacer, T=2.7mm	2	C90001-
6	C2	04064-06525	•• Ring, Snap, for Shaft Side	1	C90001-
7		706-8J-41420	•• Seal, Oil	1	C90001-
8		706-7K-41920	•• Spacer	1	C90001-
9		04065-07525	•• Ring, Snap, for Hole Side	1	C90001-
10	C2	706-7H-11460	•• Block, Cylinder	1	C90001-
11	C2	706-7H-11550	•• Plate, Valve	1	C90001-
12	C2	708-18-13230	•• Pin	1	C90001-
13	C2	706-7H-11530	•• Shaft	1	C90001-
14	C2	706-7H-11540	•• Ring	1	C90001-
15	C2	706-7H-11520	•• Spring	1	C90001-
	C2	706-7H-11570	•• Retainer Kit	1	C90001-
16	C1		••• Retainer	1	C90001-
17	C1		••• Screw	7	C90001-
18	C2	706-7H-11510	•• Piston Subassembly	7	C90001-
19	C2	706-7H-13610	•• Plate	1	C90001-
20	C2	706-7H-13560	•• Plate	4	C90001-
21	C2	706-7H-13570	•• Disc	3	C90001-
22	C2	706-7H-13580	•• Piston, Brake	1	C90001-
23	C2	07000-B5230	•• O-ring	1	C90001-
24	C2	07000-B5200	•• O-ring	1	C90001-
25	C2	706-7H-13590	•• Spring	4	C90001-

FIG. N1210-001003 Swing Machinery and Motor (For Indonesian) (Swing Motor, 3/3)

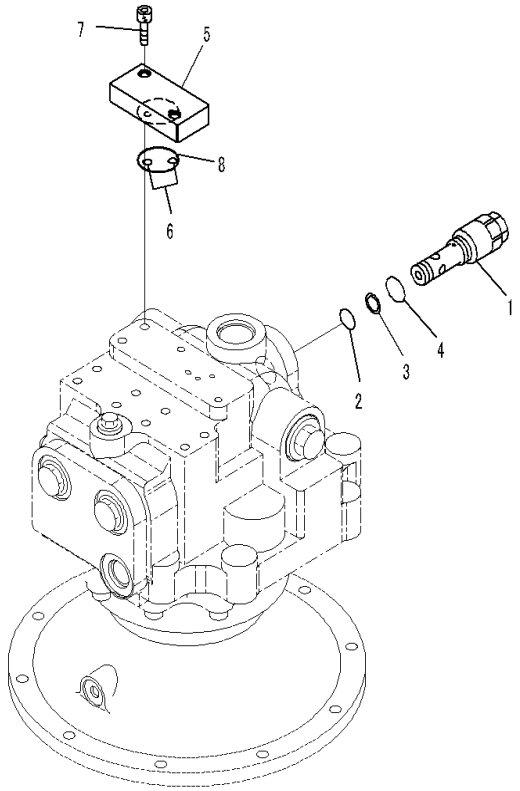

Index	Code	Part Number	Description	Qty	Serial Number
		706-7H-01050	Motor Assembly	1	C90001-
1		702-77-02170	• Valve, Relief	1	C90001-
2		07000-F3022	• • O-ring	1	C90001-
3		07001-03022	• • Ring, Back-up	2	C90001-
4		07002-63634	• • O-ring	1	C90001-
5		706-7G-71290	• Plate	1	C90001-
6		07000-B1009	• O-ring	2	C90001-
7		01252-60825	• Bolt, Hexagon Socket Head	2	C90001-
8		07000-B3042	• O-ring	1	C90001-

FIG. N1210-001004 Swing Machinery and Motor (For Indonesian) (Swing Machinery)

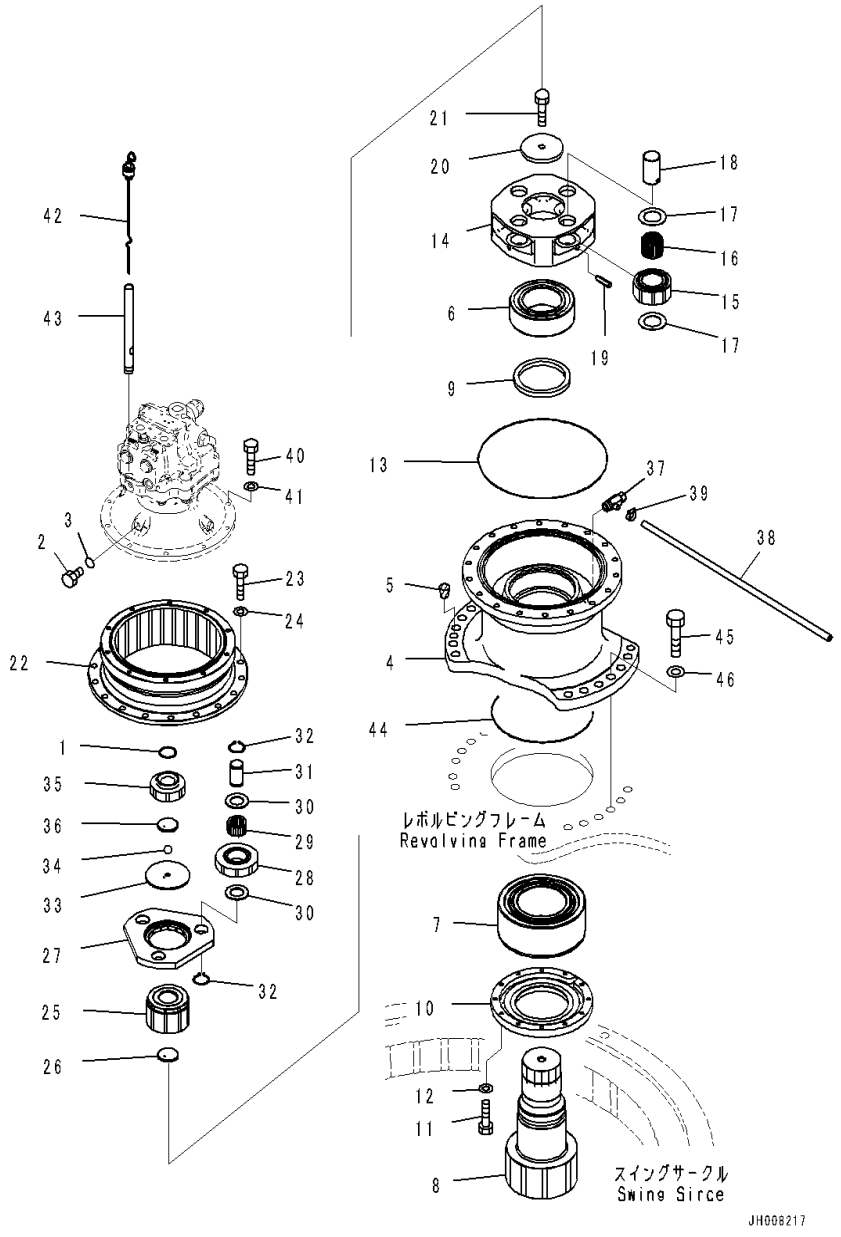

Index	Code	Part Number	Description	Qty	Serial Number
1		207-26-71240	Ring	1	C90001-
2		07040-11209	Plug	1	C90001-
3		07002-11223	O-ring	1	C90001-
4		207-26-75130	Case	1	C90001-
5		07049-02430	Plug	2	C90001-
6		06000-22222	Bearing	1	C90001-
7		207-26-73150	Bearing	1	C90001-
8		207-26-62180	Shaft	1	C90001-
9		207-26-61210	Seal	1	C90001-
10		207-26-75140	Cover	1	C90001-
11		01010-81030	Bolt	12	C90001-
12		01643-31032	Washer	12	C90001-
13		07000-15390	O-ring	1	C90001-
14		207-26-73130	Carrier	1	C90001-
15		207-26-73120	Gear	4	C90001-
16		20Y-27-41250	Bearing	4	C90001-
17		20Y-27-41270	Washer, Thrust	8	C90001-
18		20Y-26-21320	Pin	4	C90001-
19		20Y-26-21330	Pin	4	C90001-
20		207-26-54230	Plate	1	C90001-
21		205-32-51211	Bolt	1	C90001-
22		207-26-71551	Gear, Ring	1	C90001-
23		01010-81645	Bolt	18	C90001-
24		01643-31645	Washer	18	C90001-
25		207-26-73110	Gear	1	C90001-
26		208-26-71241	Plate	1	C90001-
27		208-26-71170	Carrier	1	C90001-
28		207-26-71521	Gear	3	C90001-
29		22U-26-21320	Bearing	3	C90001-
30		22U-26-21240	Washer	6	C90001-
31		207-26-71210	Pin	3	C90001-
32		04064-04018	Ring, Snap	6	C90001-
33		208-26-71210	Holder	1	C90001-
34		04260-01270	Ball	1	C90001-
35		207-26-71511	Gear	1	C90001-
36		207-26-71261	Plate	1	C90001-
37		144-60-11151	Valve	1	C90001-
38		07270-21590	Tube	1	C90001-
39		07281-00197	Clamp	1	C90001-
40		01010-81240	Bolt	10	C90001-

FIG. N1210-001004 Swing Machinery and Motor (For Indonesian) (Swing Machinery)

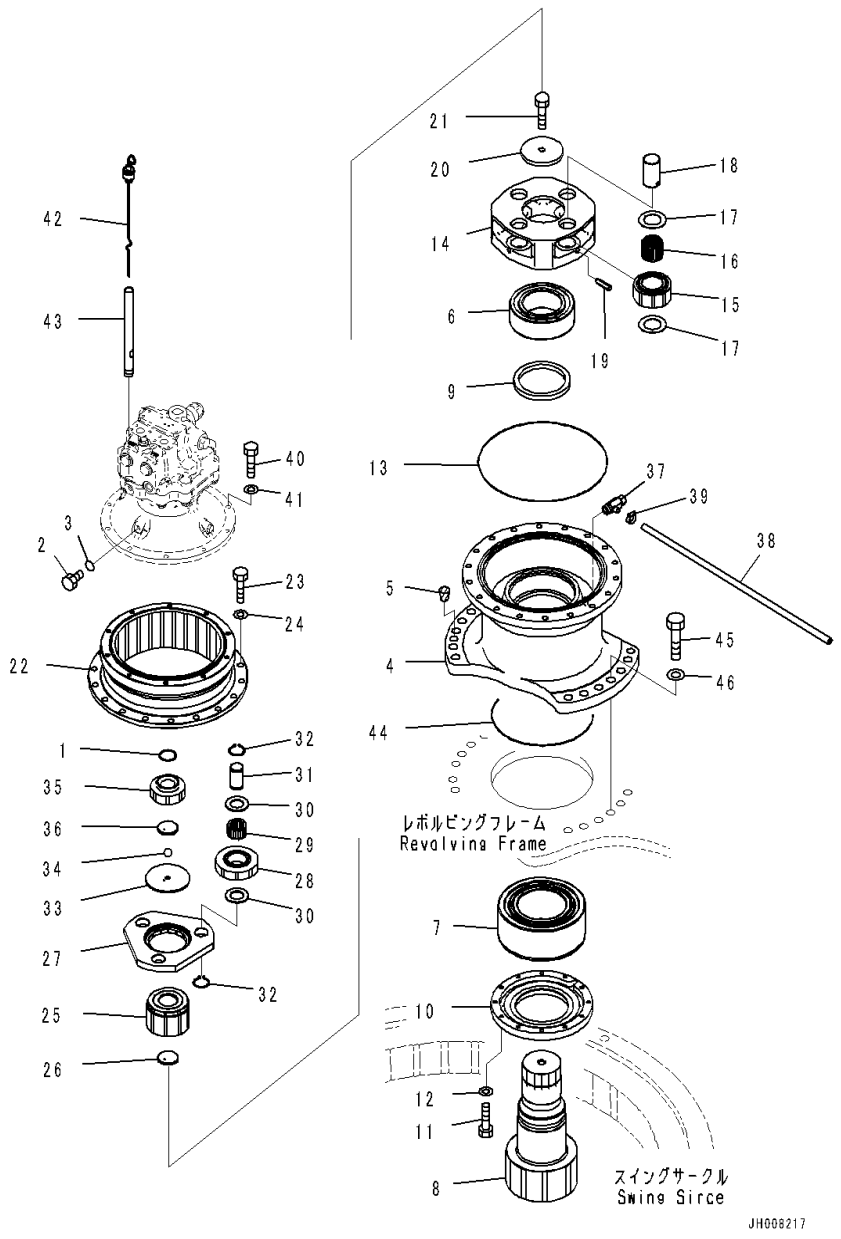

Index	Code	Part Number	Description	Qty	Serial Number
41		01643-31232	Washer	10	C90001-
42		207-26-71410	Gauge	1	C90001-
43		20Y-26-21350	Filler	1	C90001-
44		07000-15290	O-ring	1	C90001-
45		01010-82475	Bolt	12	C90001-
46		01643-32460	Washer	12	C90001-

FIG. N1210-002001 Swing Machinery and Motor (With Reverse Valve) (Swing Motor, 1/3)

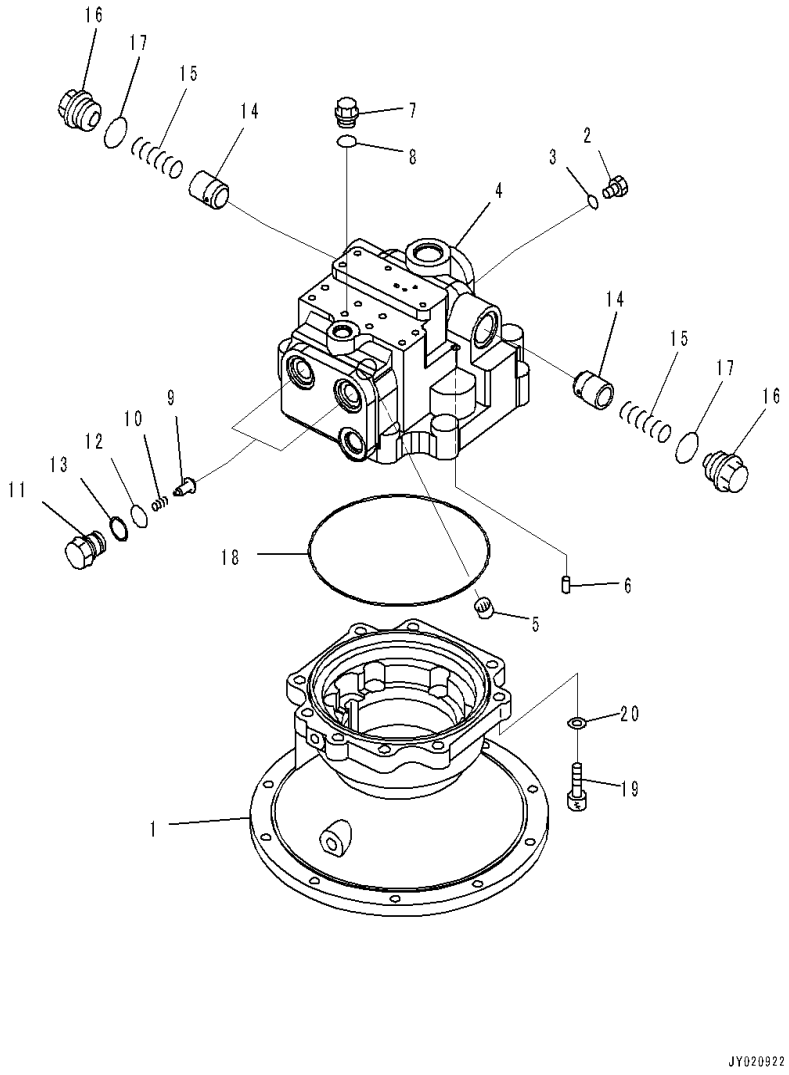

Index	Code	Part Number	Description	Qty	Serial Number
		706-7H-01040	Motor Assembly	1	C90001-
		706-7H-03010	• Motor Subassembly	1	C90001-
1	C2	706-7H-12210	• • Case	1	C90001-
2		07040-11409	• • Plug	2	C90001-
3		07002-61423	• • O-ring	2	C90001-
4	C2	706-7H-12220	• • Housing	1	C90001-
5	C2	706-7H-11560	• • Bushing	1	C90001-
6	C2	706-75-42830	• • Pin, Dowel	1	C90001-
7		706-77-72280	• • Plug	1	C90001-
8		07002-62034	• • O-ring	1	C90001-
9		709-74-92810	• • Valve	2	C90001-
10		709-75-92220	• • Spring	2	C90001-
11		709-74-92821	• • Plug	2	C90001-
12		708-2L-23960	• • O-ring	2	C90001-
13		700-93-11330	• • Ring, Back-up	2	C90001-
14		708-8K-16150	• • Valve	2	C90001-
15		708-8K-16160	• • Spring	2	C90001-
16		708-8K-16170	• • Plug	2	C90001-
17		07002-63634	• • O-ring	2	C90001-
18	C2	706-7K-40040	• • O-ring	1	C90001-
19	C2	01010-61460	• • Bolt	8	C90001-
20	C2	01643-31445	• • Washer, Flat	8	C90001-

FIG. N1210-002002 Swing Machinery and Motor (With Reverse Valve) (Swing Motor, 2/3)

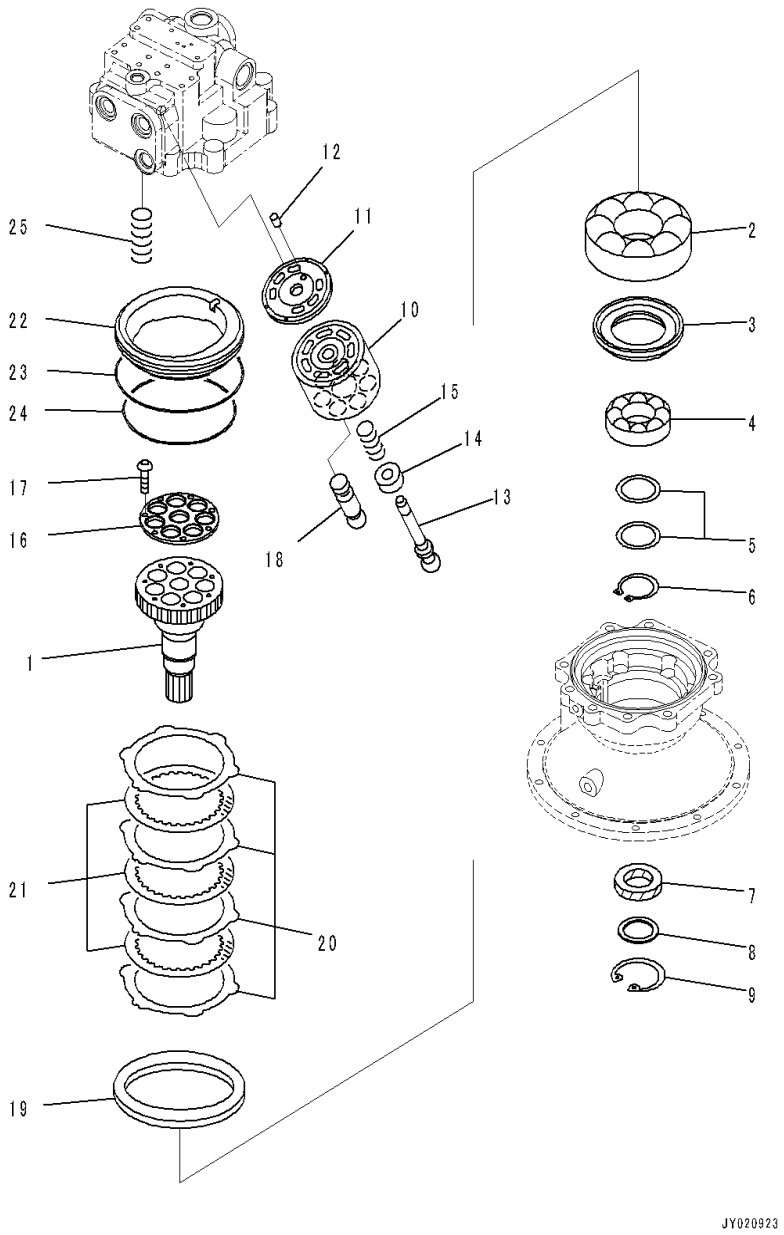

Index	Code	Part Number	Description	Qty	Serial Number
		706-7H-01040	Motor Assembly	1	C90001-
		706-7H-03010	• Motor Subassembly	1	C90001-
1	C2	706-7H-11440	• • Shaft	1	C90001-
2	C2	706-8J-41010	• • Bearing	1	C90001-
3	C2	706-7H-11450	• • Spacer	1	C90001-
4	C2	706-77-42890	• • Bearing	1	C90001-
5	C2	706-77-05010	• • Spacer Kit	1	C90001-
	C1		• • • Spacer, T=2.3mm	2	C90001-
	C1		• • • Spacer, T=2.5mm	2	C90001-
	C1		• • • Spacer, T=2.7mm	2	C90001-
6	C2	04064-06525	• • Ring, Snap, for Shaft Side	1	C90001-
7		706-8J-41420	• • Seal, Oil	1	C90001-
8		706-7K-41920	• • Spacer	1	C90001-
9		04065-07525	• • Ring, Snap, for Hole Side	1	C90001-
10	C2	706-7H-11460	• • Block, Cylinder	1	C90001-
11	C2	706-7H-11550	• • Plate, Valve	1	C90001-
12	C2	708-18-13230	• • Pin	1	C90001-
13	C2	706-7H-11530	• • Shaft	1	C90001-
14	C2	706-7H-11540	• • Ring	1	C90001-
15	C2	706-7H-11520	• • Spring	1	C90001-
	C2	706-7H-11570	• • Retainer Kit	1	C90001-
16	C1		• • • Retainer	1	C90001-
17	C1		• • • Screw	7	C90001-
18	C2	706-7H-11510	• • Piston Subassembly	7	C90001-
19	C2	706-7H-13610	• • Plate	1	C90001-
20	C2	706-7H-13560	• • Plate	4	C90001-
21	C2	706-7H-13570	• • Disc	3	C90001-
22	C2	706-7H-13580	• • Piston, Brake	1	C90001-
23	C2	07000-B5230	• • O-ring	1	C90001-
24	C2	07000-B5200	• • O-ring	1	C90001-
25	C2	706-7H-13590	• • Spring	4	C90001-

FIG. N1210-002003 Swing Machinery and Motor (With Reverse Valve) (Swing Motor, 3/3)

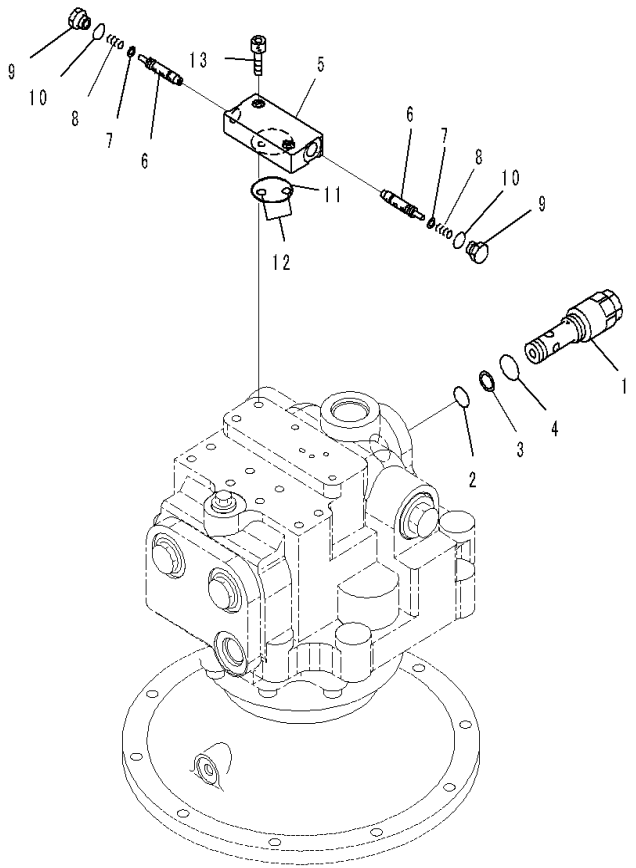

Index	Code	Part Number	Description	Qty	Serial Number
		706-7H-01040	Motor Assembly	1	C90001-
1		702-77-02170	• Valve, Relief	1	C90001-
2		07000-F3022	• • O-ring	1	C90001-
3		07001-03022	• • Ring, Back-up	2	C90001-
4		07002-63634	• • O-ring	1	C90001-
		702-15-80000	• Valve Assembly	1	C90001-
5	C1		• • Body	1	C90001-
6	C1		• • Spool	2	C90001-
7	C1		• • Seal	2	C90001-
8		702-15-71130	• • Spring	2	C90001-
9		702-15-71140	• • Plug	2	C90001-
10		07002-61423	• • O-ring	2	C90001-
11		07000-B3042	• O-ring	1	C90001-
12		07000-B1009	• O-ring	2	C90001-
13		01252-60825	• Bolt, Hexagon Socket Head	2	C90001-

FIG. N1210-002004 Swing Machinery and Motor (With Reverse Valve) (Swing Machinery)

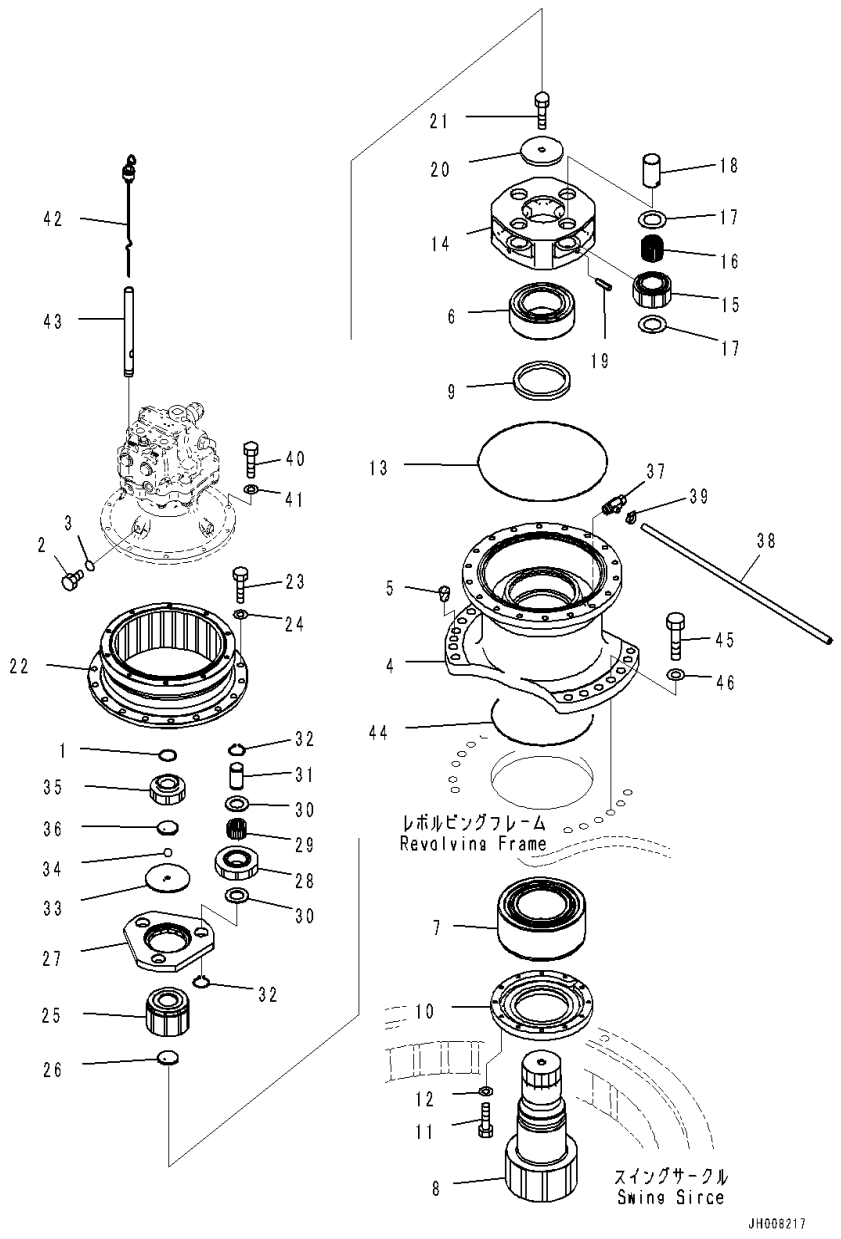

Index	Code	Part Number	Description	Qty	Serial Number
1		207-26-71240	Ring	1	C90001-
2		07040-11209	Plug	1	C90001-
3		07002-11223	O-ring	1	C90001-
4		207-26-75130	Case	1	C90001-
5		07049-02430	Plug	2	C90001-
6		06000-22222	Bearing	1	C90001-
7		207-26-73150	Bearing	1	C90001-
8		207-26-62180	Shaft	1	C90001-
9		207-26-61210	Seal	1	C90001-
10		207-26-75140	Cover	1	C90001-
11		01010-81030	Bolt	12	C90001-
12		01643-31032	Washer	12	C90001-
13		07000-15390	O-ring	1	C90001-
14		207-26-73130	Carrier	1	C90001-
15		207-26-73120	Gear	4	C90001-
16		20Y-27-41250	Bearing	4	C90001-
17		20Y-27-41270	Washer, Thrust	8	C90001-
18		20Y-26-21320	Pin	4	C90001-
19		20Y-26-21330	Pin	4	C90001-
20		207-26-54230	Plate	1	C90001-
21		205-32-51211	Bolt	1	C90001-
22		207-26-71551	Gear, Ring	1	C90001-
23		01010-81645	Bolt	18	C90001-
24		01643-31645	Washer	18	C90001-
25		207-26-73110	Gear	1	C90001-
26		208-26-71241	Plate	1	C90001-
27		208-26-71170	Carrier	1	C90001-
28		207-26-71521	Gear	3	C90001-
29		22U-26-21320	Bearing	3	C90001-
30		22U-26-21240	Washer	6	C90001-
31		207-26-71210	Pin	3	C90001-
32		04064-04018	Ring, Snap	6	C90001-
33		208-26-71210	Holder	1	C90001-
34		04260-01270	Ball	1	C90001-
35		207-26-71511	Gear	1	C90001-
36		207-26-71261	Plate	1	C90001-
37		144-60-11151	Valve	1	C90001-
38		07270-21590	Tube	1	C90001-
39		07281-00197	Clamp	1	C90001-
40		01010-81240	Bolt	10	C90001-

FIG. N1210-002004 Swing Machinery and Motor (With Reverse Valve) (Swing Machinery)

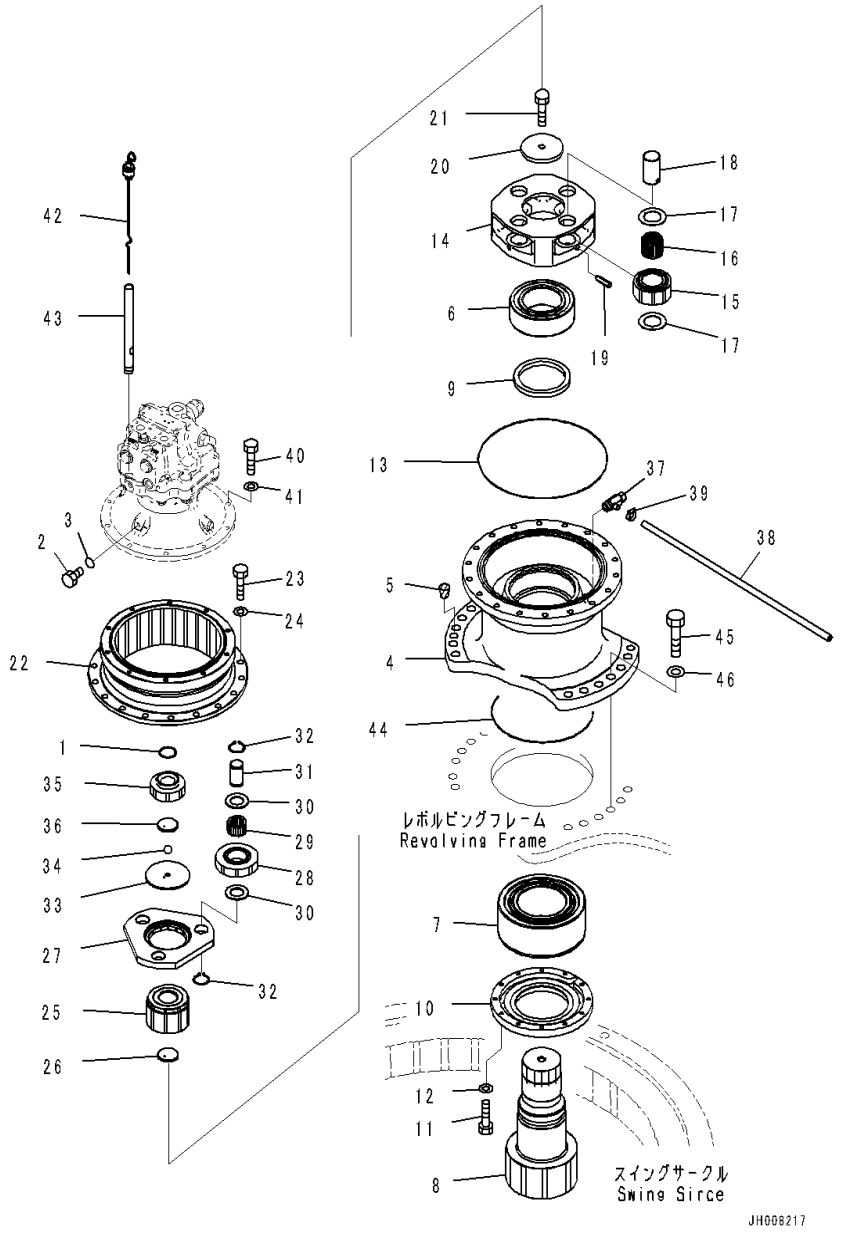

Index	Code	Part Number	Description	Qty	Serial Number
41		01643-31232	Washer	10	C90001-
42		207-26-71410	Gauge	1	C90001-
43		20Y-26-21350	Filler	1	C90001-
44		07000-15290	O-ring	1	C90001-
45		01010-82475	Bolt	12	C90001-
46		01643-32460	Washer	12	C90001-

FIG. N1220-001001 Swing Motor (Related Parts)

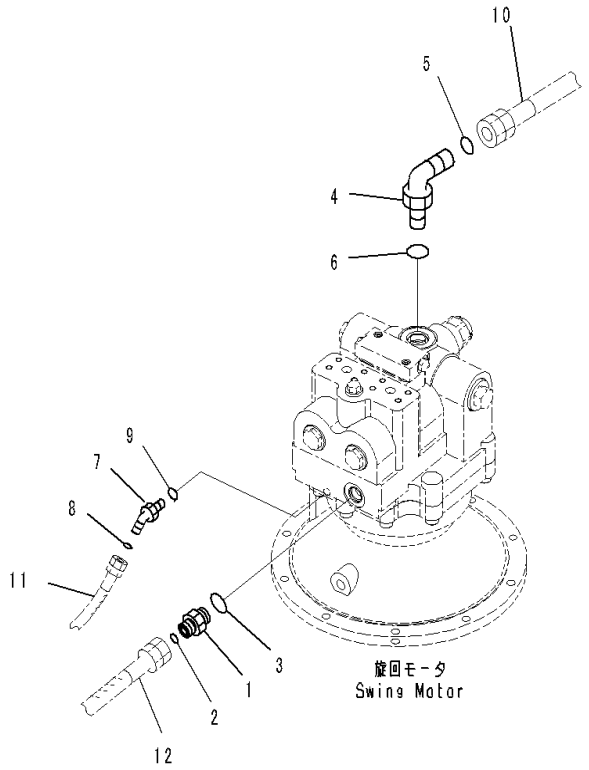

Index	Code	Part Number	Description	Qty	Serial Number
1		02781-00522	Union	1	C90001-
2		02896-11015	O-ring	1	C90001-
3		07002-12434	O-ring	1	C90001-
4		21W-62-42640	Elbow	1	C90001-
5		207-62-64740	O-ring	1	C90001-
6		07002-13334	O-ring	1	C90001-
7		11Y-62-12510	Elbow	1	C90001-
8		02896-11009	O-ring	1	C90001-
9		07002-11423	O-ring	1	C90001-
10		(207-62-77140)	Hose Assembly		-
11		(02774-00325)	Hose		-
12		(02774-00509)	Hose		-

FIG. N1310-001001 Swivel Joint (1/2, #C90001-C90254)

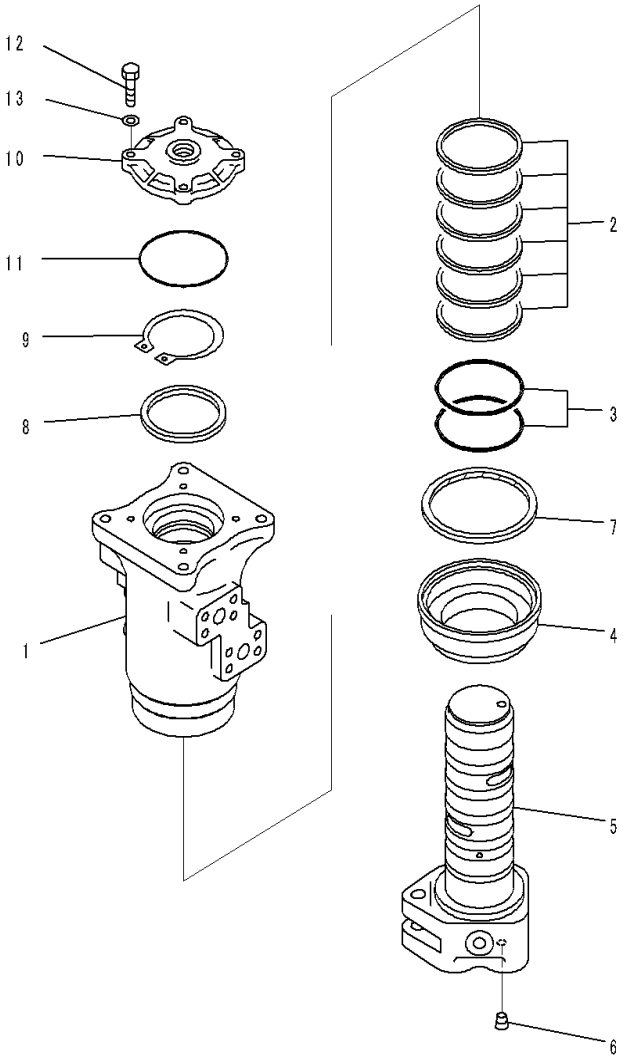

Index	Code	Part Number	Description	Qty	Serial Number
		703-08-33651	Swivel Joint Assembly	1	C90001-C90254
1		703-08-91210	• Rotor	1	C90001-C90254
2		703-08-95620	• Seal, Oil	6	C90001-C90254
3		07000-15080	• O-ring	2	C90001-C90254
4		703-08-93770	• Cover	1	C90001-C90254
5		703-08-92210	• Shaft	1	C90001-C90254
6		703-13-98930	•• Plug	1	C90001-C90254
7		703-08-95770	• Seal, Dust	1	C90001-C90254
8		703-08-94510	• Ring	1	C90001-C90254
9		04064-07525	• Ring, Snap, for Shaft Side	1	C90001-C90254
10		703-08-93170	• Cover	1	C90001-C90254
11		07000-12105	• O-ring	1	C90001-C90254
12		01010-80835	• Bolt	4	C90001-C90254
13		01643-30823	• Washer	4	C90001-C90254

FIG. N1310-001001 Swivel Joint (1/2, #C90255-)

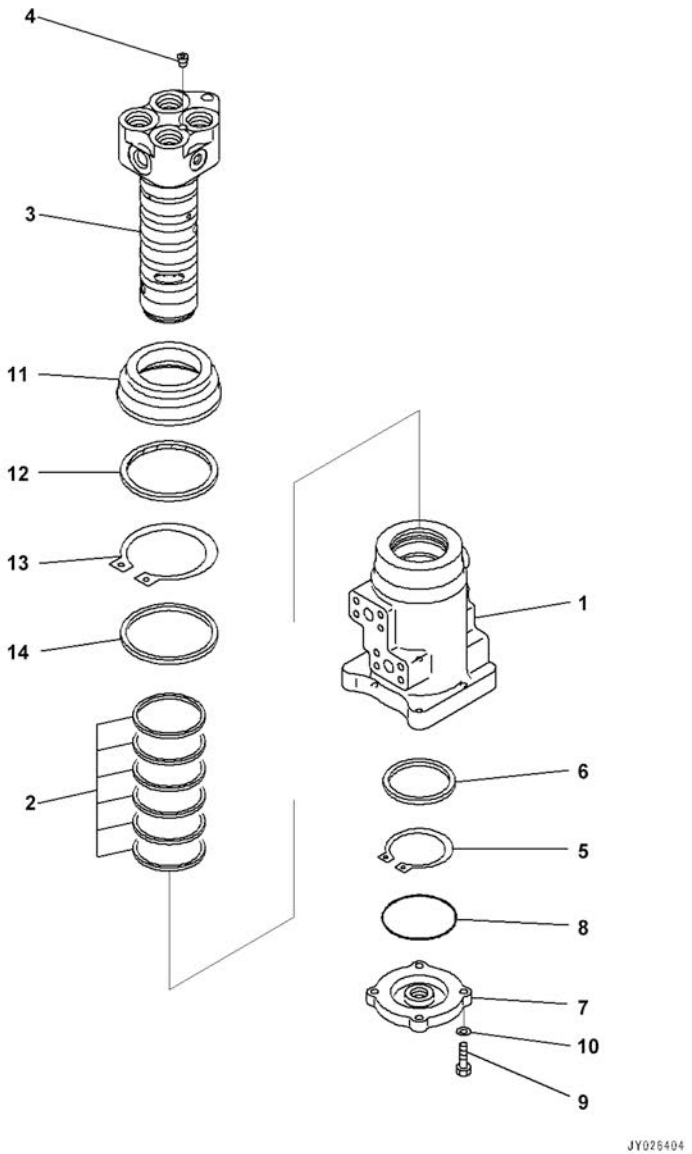

Index	Code	Part Number	Description	Qty	Serial Number
		703-08-33652	Swivel Joint Assembly	1	C90255-
1		703-08-91212	• Rotor	1	C90255-
2		703-08-95620	• Seal, Oil	6	C90255-
3		703-08-92211	• Shaft	1	C90255-
4		703-13-98930	• • Plug	1	C90255-
5		04064-07525	• Ring, Snap, for Shaft Side	1	C90255-
6		703-08-94510	• Ring	1	C90255-
7		703-08-93170	• Cover	1	C90255-
8		07000-B2105	• O-ring	1	C90255-
9		01010-80835	• Bolt	4	C90255-
10		01643-30823	• Washer	4	C90255-
11		703-08-93771	• Cover	1	C90255-
12		703-08-95770	• Seal, Dust	1	C90255-
13		04065-01054	• Ring, Snap	1	C90255-
14		703-08-96120	• Seal, Oil	1	C90255-

FIG. N1310-001002 Swivel Joint (2/2)

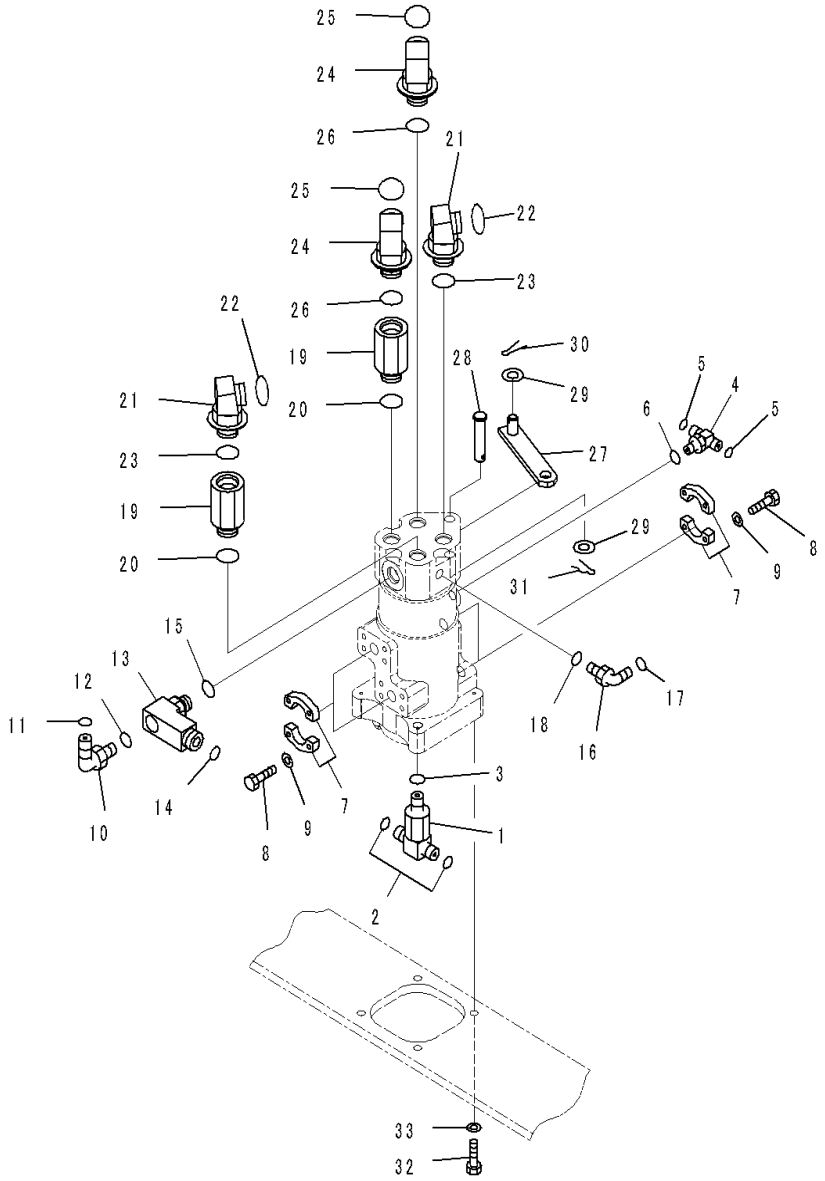

Index	Code	Part Number	Description	Qty	Serial Number
1		207-62-72151	Tee	1	C90001-
2		02896-11015	O-ring	2	C90001-
3		07002-12434	O-ring	1	C90001-
4		21W-62-42630	Tee	1	C90001-
5		02896-11009	O-ring	2	C90001-
6		07002-11423	O-ring	1	C90001-
7		07371-31049	Flange, Split	8	C90001-
8		07372-21035	Bolt	16	C90001-
9		01643-51032	Washer	16	C90001-
10		02782-10522	Elbow	1	C90001-
11		02896-11015	O-ring	1	C90001-
12		07002-12434	O-ring	1	C90001-
13		207-62-72171	Elbow	1	C90001-
14		02896-11018	O-ring	1	C90001-
15		07002-12434	O-ring	1	C90001-
16		21W-62-42490	Elbow	1	C90001-
17		02896-11009	O-ring	1	C90001-
18		07002-11423	O-ring	1	C90001-
19		203-62-63740	Joint	2	C90001-
20		07002-63334	O-ring	2	C90001-
21		207-62-71410	Elbow	2	C90001-
22		11Y-62-11980	O-ring	2	C90001-
23		07002-63334	O-ring	2	C90001-
24		21W-62-42640	Elbow	2	C90001-
25		11Y-62-11980	O-ring	2	C90001-
26		07002-63334	O-ring	2	C90001-
27		207-62-71420	Plate	1	C90001-
28		22U-62-21870	Pin	1	C90001-
29		01641-21626	Washer	1	C90001-
30		04050-14025	Pin, Cotter	1	C90001-
31		22U-62-24420	Pin	1	C90001-
32		01010-81240	Bolt	4	C90001-
33		01643-31232	Washer	4	C90001-

TRAVEL SYSTEM AND ITS RELATED PARTS

FIG. P1120-001001 Travel Piping

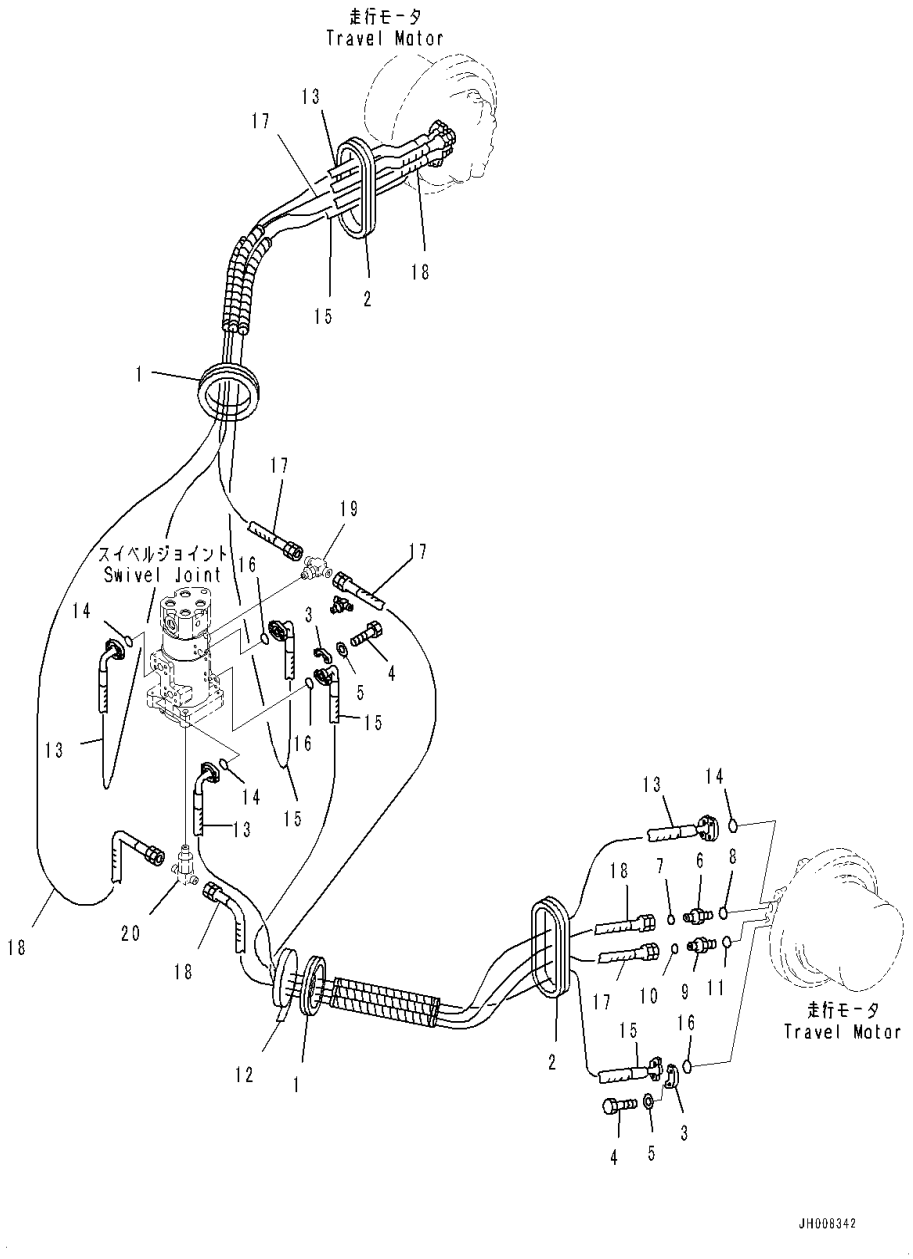

Index	Code	Part Number	Description	Qty	Serial Number
1		207-62-77390	Grommet	2	C90001-
2		207-62-43130	Grommet	2	C90001-
3		07371-31049	Flange, Split	8	C90001-
4		07372-21035	Bolt	16	C90001-
5		01643-51032	Washer	16	C90001-
6		02781-00522	Union	2	C90001-
7		02896-11015	O-ring	2	C90001-
8		07002-12434	O-ring	2	C90001-
9		11Y-62-12520	Union	2	C90001-
10		02896-11009	O-ring	2	C90001-
11		07002-11423	O-ring	2	C90001-
12		08034-20536	Band	2	C90001-
13		207-62-64850	Hose Assembly	2	C90001-
14		07000-13032	O-ring	4	C90001-
15		207-62-64810	Hose Assembly	2	C90001-
16		07000-13032	O-ring	4	C90001-
17		02762-00322	Hose	2	C90001-
18		02762-00523	Hose	2	C90001-
19		(21W-62-42630)	Tee		-
20		(207-62-72151)	Tee		-

FIG. P1120-002001 Travel Piping LC

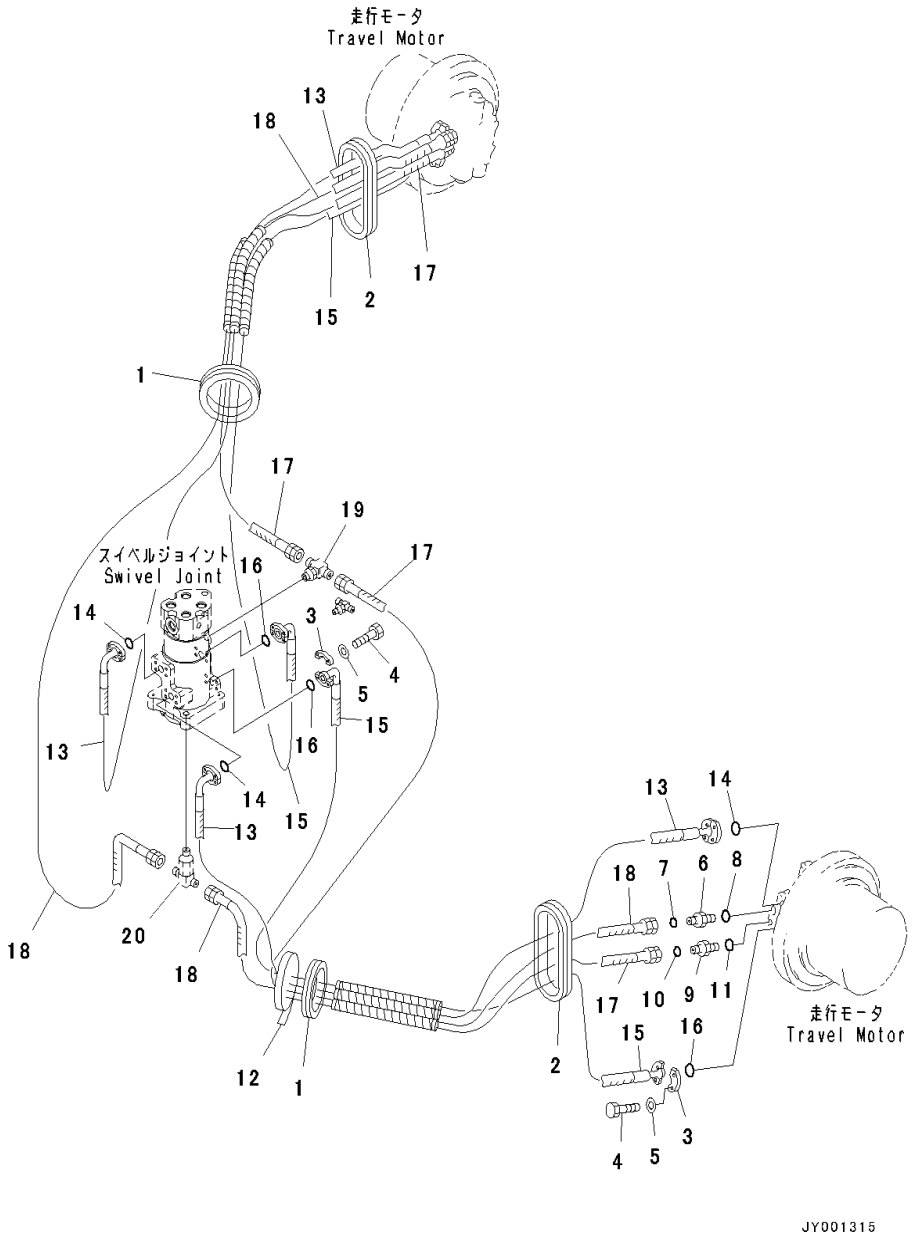

Index	Code	Part Number	Description	Qty	Serial Number
1		20Y-62-12121	Grommet	2	C90001-
2		207-62-43130	Grommet	2	C90001-
3		07371-31049	Flange, Split	8	C90001-
4		07372-21035	Bolt	16	C90001-
5		01643-51032	Washer	16	C90001-
6		02781-00522	Union	2	C90001-
7		02896-11015	O-ring	2	C90001-
8		07002-12434	O-ring	2	C90001-
9		11Y-62-12520	Union	2	C90001-
10		02896-11009	O-ring	2	C90001-
11		07002-11423	O-ring	2	C90001-
12		08034-20536	Band	2	C90001-
13		207-62-64860	Hose Assembly	2	C90001-
14		07000-13032	O-ring	4	C90001-
15		207-62-64820	Hose Assembly	2	C90001-
16		07000-13032	O-ring	4	C90001-
17		02774-00325	Hose	2	C90001-
18		02774-00525	Hose	2	C90001-
19		(21W-62-42630)	Tee		-
20		(207-62-72151)	Tee		-

FIG. P1210-001001 Travel Motor and Final Drive (Travel Motor, L.H., 1/3)

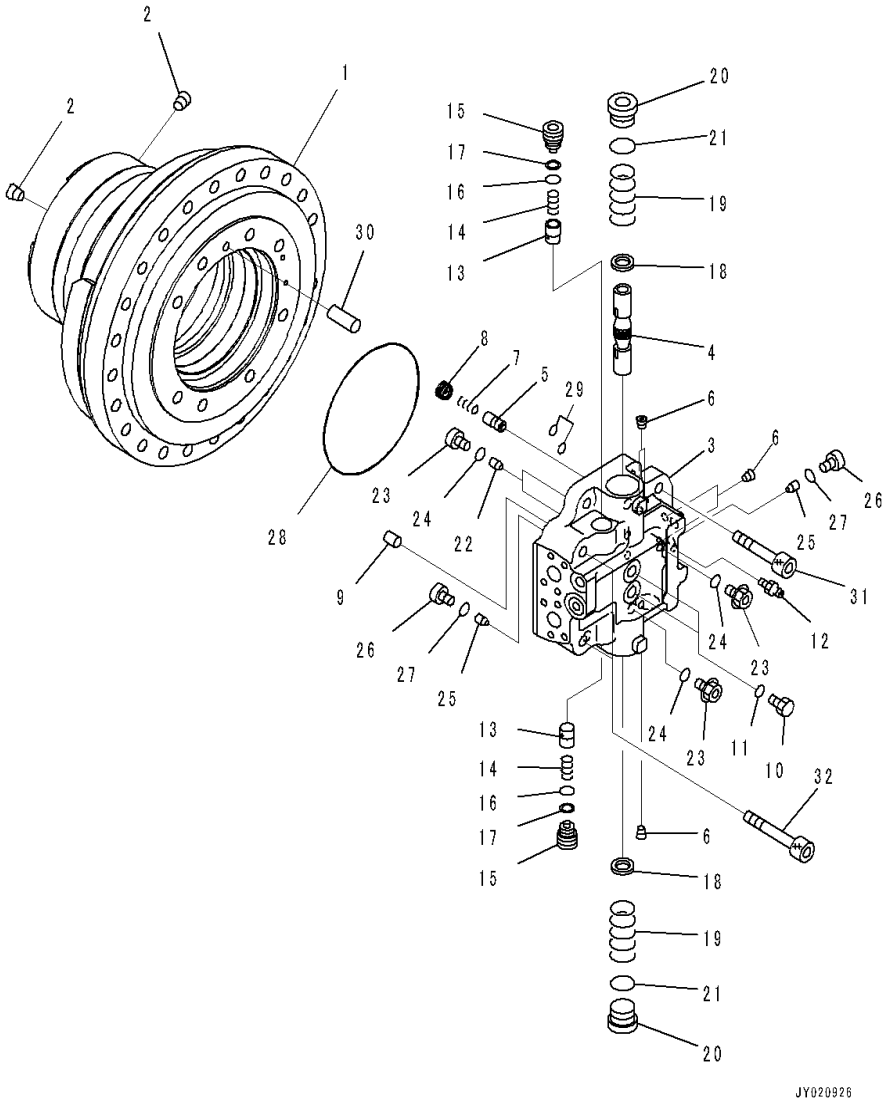

Index	Code	Part Number	Description	Qty	Serial Number
		207-27-00580	Final Drive Assembly	1	C90001-
		708-8H-00440	• Motor Assembly	1	C90001-
	C2	708-8H-04880	• • Case Subassembly	1	C90001-
1	C1		• • • Case, Motor	1	C90001-
2	C1		• • • Plug	2	C90001-
	C2	708-8H-04850	• • Cover Subassembly	1	C90001-
3	C1		• • • Cover, End	1	C90001-
4	C1		• • • Spool	1	C90001-
5	C1		• • • Spool	1	C90001-
6	C1		• • • Plug	5	C90001-
7	C1		• • • Spring	1	C90001-
8	C1		• • • Plug	1	C90001-
9	C2	706-75-42820	• • Pin, Dowel	1	C90001-
10		702-21-55620	• • Plug	2	C90001-
11		07002-11423	• • O-ring	2	C90001-
12		20B-27-11210	• • Bleeder	1	C90001-
13		706-73-72420	• • Valve	2	C90001-
14		706-73-72440	• • Spring	2	C90001-
15		708-8H-36150	• • Plug	2	C90001-
16		07000-12018	• • O-ring	2	C90001-
17		708-8H-36160	• • Ring, Back-up	2	C90001-
18		708-8F-36120	• • Ring	2	C90001-
19		708-8H-36121	• • Spring	2	C90001-
20		708-8H-16141	• • Plug	2	C90001-
21		07002-13634	• • O-ring	2	C90001-
22		708-3D-15110	• • Valve	2	C90001-
23		708-8E-16160	• • Plug	4	C90001-
24		07002-11023	• • O-ring	4	C90001-
25		706-8J-71181	• • Valve	2	C90001-
26		706-8J-71190	• • Plug	2	C90001-
27		07002-11223	• • O-ring	2	C90001-
28	C2	708-8H-31210	• • O-ring	1	C90001-
29	C2	07000-12012	• • O-ring	2	C90001-
30	C2	04020-01228	• • Pin, Dowel	1	C90001-
31	C2	01252-62055	• • Bolt	6	C90001-
32	C2	01252-62095	• • Bolt	2	C90001-

FIG. P1210-001002 Travel Motor and Final Drive (Travel Motor, L.H., 2/3)

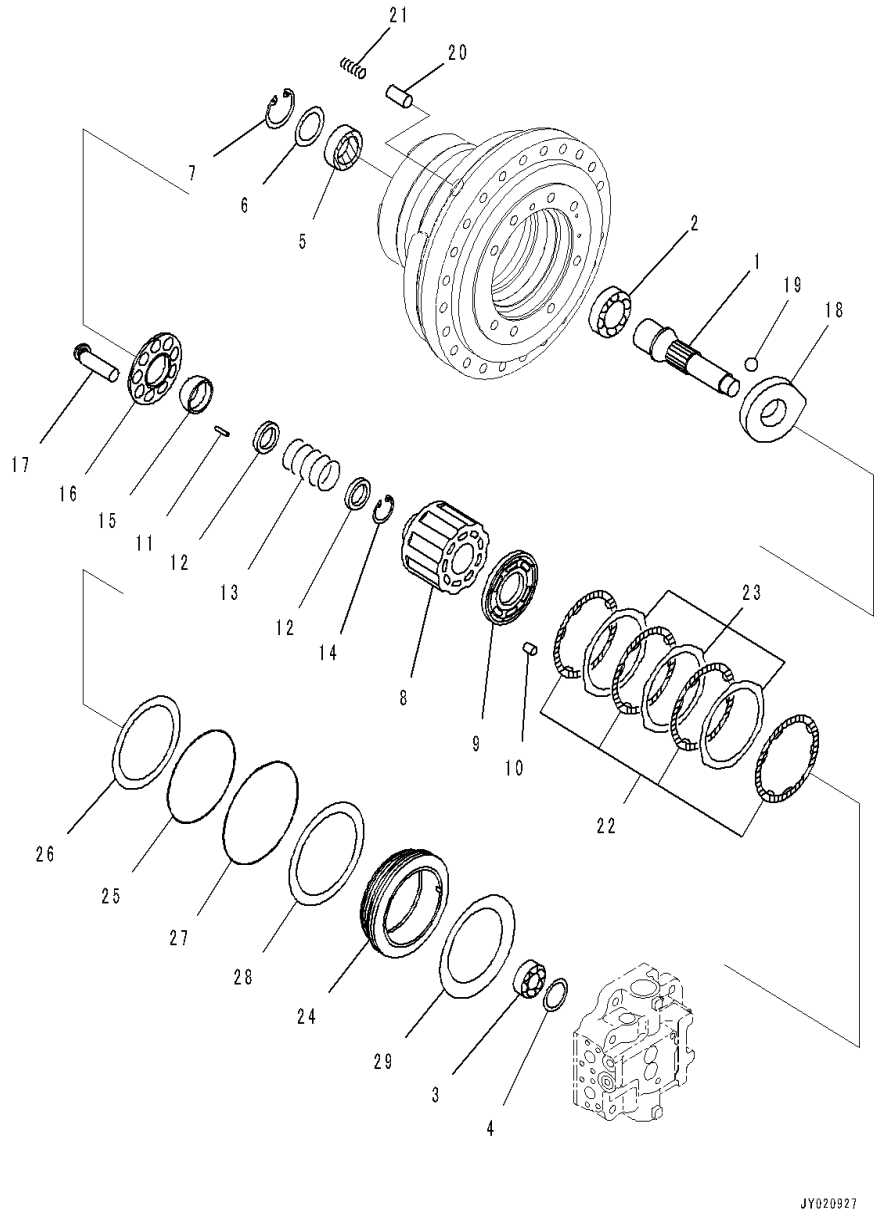

Index	Code	Part Number	Description	Qty	Serial Number
		207-27-00580	Final Drive Assembly	1	C90001-
		708-8H-00440	• Motor Assembly	1	C90001-
1	C2	708-8H-32180	• • Shaft	1	C90001-
2	C2	708-8H-32150	• • Bearing	1	C90001-
3	C2	708-8H-32170	• • Bearing	1	C90001-
4	C2	708-8H-05050	• • Spacer Kit	1	C90001-
	C1		• • • Spacer, T=1.6mm	1	C90001-
	C1		• • • Spacer, T=1.7mm	1	C90001-
	C1		• • • Spacer, T=1.8mm	1	C90001-
	C1		• • • Spacer, T=1.9mm	1	C90001-
	C1		• • • Spacer, T=2.0mm	1	C90001-
	C1		• • • Spacer, T=2.1mm	1	C90001-
	C1		• • • Spacer, T=2.2mm	1	C90001-
5		708-1F-12281	• • Seal, Oil	1	C90001-
6		708-8H-32160	• • Spacer	1	C90001-
7		04065-07825	• • Ring, Snap	1	C90001-
	C2	708-8H-04860	• • Cylinder Block Assembly	1	C90001-
8	C1		• • • Block, Cylinder	1	C90001-
9	C1		• • • Plate, Valve	1	C90001-
10	C2	708-18-13230	• • Pin	1	C90001-
11	C2	708-8H-33360	• • Pin	3	C90001-
12	C2	708-8H-33141	• • Spacer	2	C90001-
13	C2	708-8H-33750	• • Spring	1	C90001-
14	C2	04065-06020	• • Ring, Snap	1	C90001-
15	C2	708-8H-33512	• • Guide, Retainer	1	C90001-
16	C2	708-8H-33340	• • Retainer, Shoe	1	C90001-
17	C2	708-8H-33650	• • Piston Subassembly	9	C90001-
18	C2	708-8H-33940	• • Cam, Rocker	1	C90001-
19	C2	04260-02857	• • Ball, Retainer	2	C90001-
20		708-8H-34320	• • Piston	1	C90001-
21		708-8H-34330	• • Spring	1	C90001-
22	C2	708-8H-35130	• • Plate	4	C90001-
23	C2	708-8H-35180	• • Disc	3	C90001-
24	C2	708-8H-35141	• • Piston, Brake	1	C90001-
25	C2	07000-15175	• • O-ring	1	C90001-
26	C2	07001-05175	• • Ring, Back-up	1	C90001-
27	C2	07000-15195	• • O-ring	1	C90001-
28	C2	07001-05195	• • Ring, Back-up	1	C90001-
29	C2	708-8H-35150	• • Spring	1	C90001-

FIG. P1210-001003 Travel Motor and Final Drive (Travel Motor, L.H., 3/3)

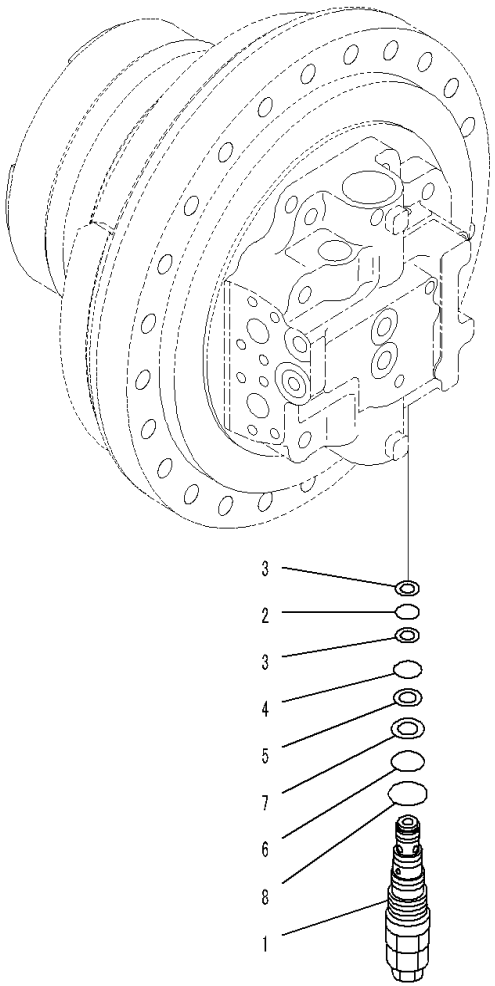

JY020928

Index	Code	Part Number	Description	Qty	Serial Number
		207-27-00580	Final Drive Assembly	1	C90001-
		708-8H-00440	• Motor Assembly	1	C90001-
1		702-75-04601	• • Valve Assembly, Relief	1	C90001-
2		07000-22018	• • • O-ring	1	C90001-
3		702-75-11830	• • • Ring, Back-up	2	C90001-
4		07000-12021	• • • O-ring	1	C90001-
5		702-75-11840	• • • Ring, Back-up	1	C90001-
6		702-75-11520	• • • O-ring	1	C90001-
7		702-75-11850	• • • Ring, Back-up	1	C90001-
8		07002-13634	• • • O-ring	1	C90001-

FIG. P1210-001004 Travel Motor and Final Drive (Carrier, L.H.)

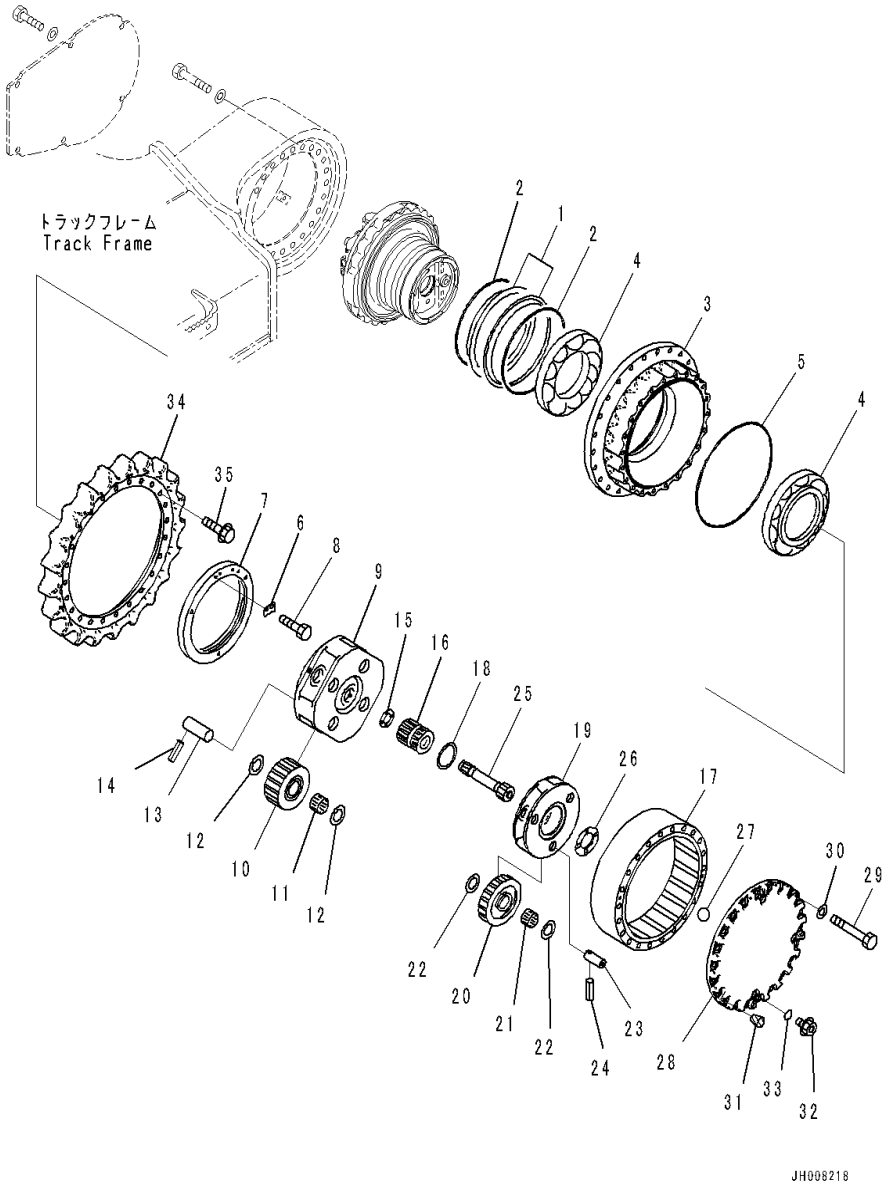

Index	Code	Part Number	Description	Qty	Serial Number
		207-27-00580	Final Drive Assembly	1	C90001-
		207-27-00510	• Floating Seal Assembly	1	C90001-
1	C1		• • Seal	2	C90001-
2	C1		• • O-ring	2	C90001-
3		207-27-72290	• Hub	1	C90001-
4		207-27-72220	• Bearing	2	C90001-
5		207-27-52350	• O-ring	1	C90001-
6		207-27-72260	• Lock	1	C90001-
7		207-27-72250	• Nut, Lock	1	C90001-
8		01010-81020	• Bolt	2	C90001-
9		207-27-72170	• Carrier	1	C90001-
10		207-27-72140	• Gear	4	C90001-
11		207-27-72210	• Bearing	4	C90001-
12		21M-27-11260	• Washer, Thrust	8	C90001-
13		208-27-71250	• Pin	4	C90001-
14		20Y-27-21290	• Pin	4	C90001-
15		20Y-27-13310	• Washer, Thrust	1	C90001-
16		207-27-72130	• Gear	1	C90001-
17		207-27-72150	• Gear, Ring	1	C90001-
18		207-27-72240	• Washer, Thrust	1	C90001-
19		207-27-72160	• Carrier	1	C90001-
20		207-27-72120	• Gear	3	C90001-
21		22U-26-21320	• Bearing	3	C90001-
22		206-26-71520	• Washer, Thrust	6	C90001-
23		207-27-72230	• Pin	3	C90001-
24		20Y-27-21280	• Pin	3	C90001-
25		207-27-72110	• Shaft	1	C90001-
26		20Y-27-11250	• Spacer	1	C90001-
27		04260-01905	• Ball	1	C90001-
28		207-27-72180	• Cover	1	C90001-
29		01011-61890	• Bolt	22	C90001-
30		01643-31845	• Washer	22	C90001-
31		07049-01215	• Plug	2	C90001-
32		07044-12412	• Plug	3	C90001-
33		07002-02434	• O-ring	3	C90001-
34		207-27-72270	• Sprocket	1	C90001-
35		207-27-51311	• Bolt	24	C90001-

FIG. P1210-001005 Travel Motor and Final Drive (Travel Motor, R.H., 1/3)

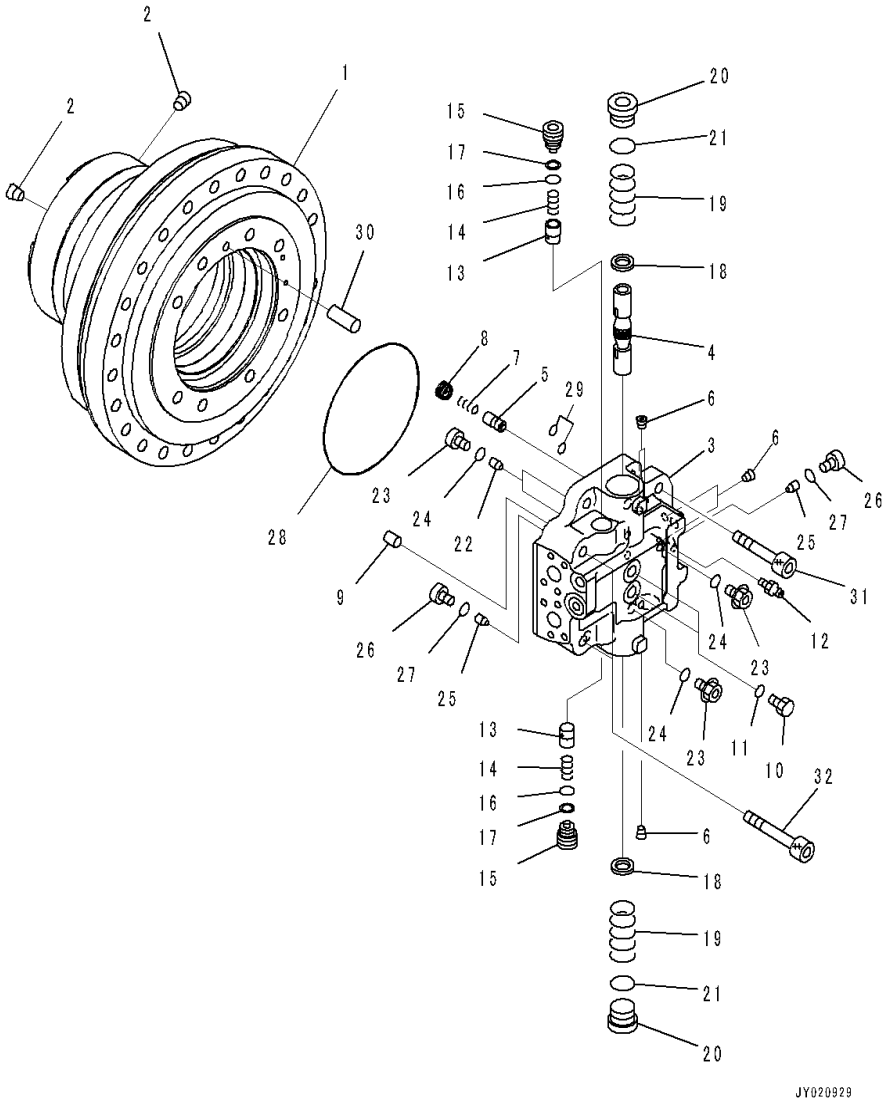

Index	Code	Part Number	Description	Qty	Serial Number
		207-27-00590	Final Drive Assembly	1	C90001-
		708-8H-00430	• Motor Assembly	1	C90001-
		708-8H-04870	• • Case Subassembly	1	C90001-
1		708-8H-31360	• • • Case, Motor	1	C90001-
2	C1		• • • Plug	2	C90001-
	C2	708-8H-04850	• • Cover Subassembly	1	C90001-
3	C1		• • • Cover, End	1	C90001-
4	C1		• • • Spool	1	C90001-
5	C1		• • • Spool	1	C90001-
6	C1		• • • Plug	5	C90001-
7	C1		• • • Spring	1	C90001-
8	C1		• • • Plug	1	C90001-
9	C2	706-75-42820	• • Pin, Dowel	1	C90001-
10		702-21-55620	• • Plug	2	C90001-
11		07002-11423	• • O-ring	2	C90001-
12		20B-27-11210	• • Bleeder	1	C90001-
13		706-73-72420	• • Valve	2	C90001-
14		706-73-72440	• • Spring	2	C90001-
15		708-8H-36150	• • Plug	2	C90001-
16		07000-12018	• • O-ring	2	C90001-
17		708-8H-36160	• • Ring, Back-up	2	C90001-
18		708-8F-36120	• • Ring	2	C90001-
19		708-8H-36121	• • Spring	2	C90001-
20		708-8H-16141	• • Plug	2	C90001-
21		07002-13634	• • O-ring	2	C90001-
22		708-3D-15110	• • Valve	2	C90001-
23		708-8E-16160	• • Plug	4	C90001-
24		07002-11023	• • O-ring	4	C90001-
25		706-8J-71181	• • Valve	2	C90001-
26		706-8J-71190	• • Plug	2	C90001-
27		07002-11223	• • O-ring	2	C90001-
28	C2	708-8H-31210	• • O-ring	1	C90001-
29	C2	07000-12012	• • O-ring	2	C90001-
30	C2	04020-01228	• • Pin, Dowel	1	C90001-
31	C2	01252-62055	• • Bolt	6	C90001-
32	C2	01252-62095	• • Bolt	2	C90001-

FIG. P1210-001006 Travel Motor and Final Drive (Travel Motor, R.H., 2/3)

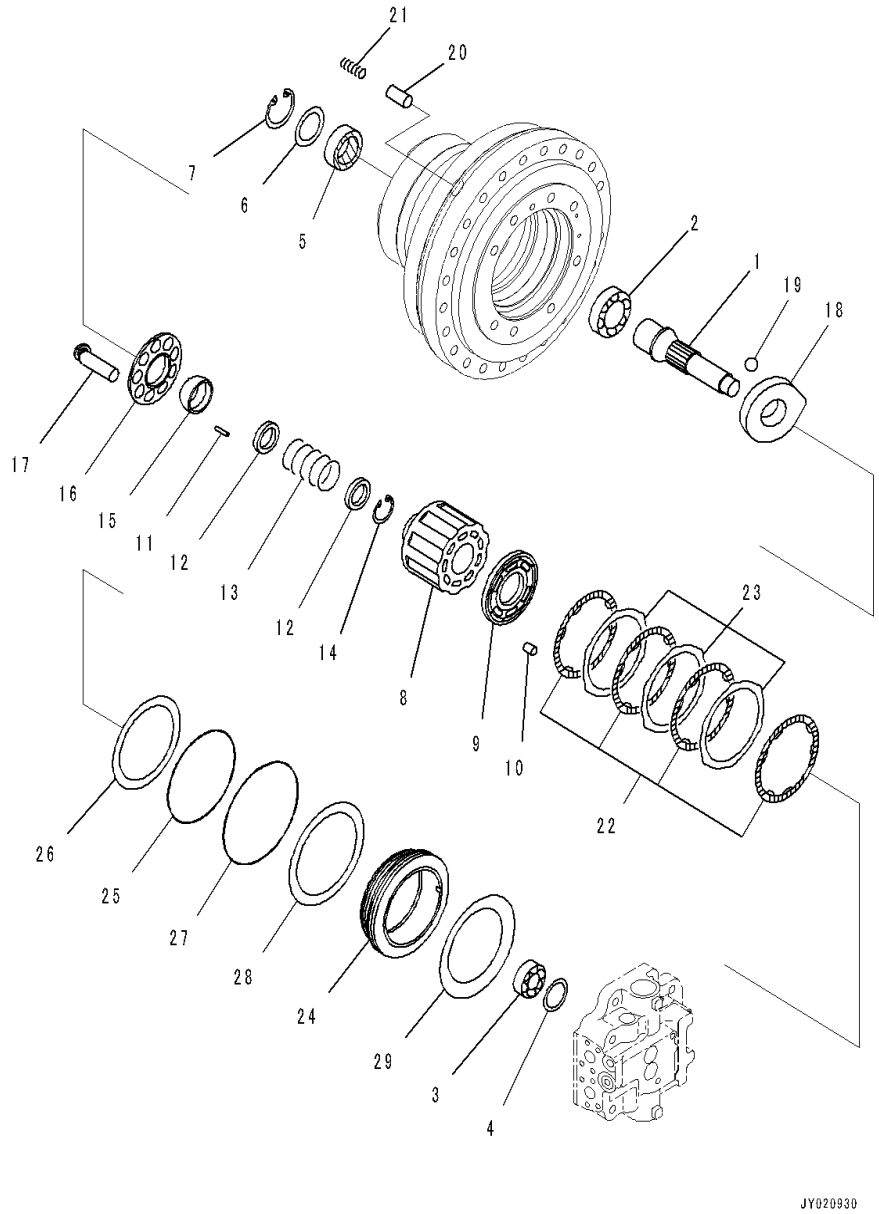

Index	Code	Part Number	Description	Qty	Serial Number
		207-27-00590	Final Drive Assembly	1	C90001-
		708-8H-00430	• Motor Assembly	1	C90001-
1	C2	708-8H-32180	• • Shaft	1	C90001-
2	C2	708-8H-32150	• • Bearing	1	C90001-
3	C2	708-8H-32170	• • Bearing	1	C90001-
4	C2	708-8H-05050	• • Spacer Kit	1	C90001-
	C1		• • • Spacer, T=1.6mm	1	C90001-
	C1		• • • Spacer, T=1.7mm	1	C90001-
	C1		• • • Spacer, T=1.8mm	1	C90001-
	C1		• • • Spacer, T=1.9mm	1	C90001-
	C1		• • • Spacer, T=2.0mm	1	C90001-
	C1		• • • Spacer, T=2.1mm	1	C90001-
	C1		• • • Spacer, T=2.2mm	1	C90001-
5		708-1F-12281	• • Seal, Oil	1	C90001-
6		708-8H-32160	• • Spacer	1	C90001-
7		04065-07825	• • Ring, Snap	1	C90001-
	C2	708-8H-04860	• • Cylinder Block Assembly	1	C90001-
8	C1		• • • Block, Cylinder	1	C90001-
9	C1		• • • Plate, Valve	1	C90001-
10	C2	708-18-13230	• • Pin	1	C90001-
11	C2	708-8H-33360	• • Pin	3	C90001-
12	C2	708-8H-33141	• • Spacer	2	C90001-
13	C2	708-8H-33750	• • Spring	1	C90001-
14	C2	04065-06020	• • Ring, Snap	1	C90001-
15	C2	708-8H-33512	• • Guide, Retainer	1	C90001-
16	C2	708-8H-33340	• • Retainer, Shoe	1	C90001-
17	C2	708-8H-33650	• • Piston Subassembly	9	C90001-
18	C2	708-8H-33940	• • Cam, Rocker	1	C90001-
19	C2	04260-02857	• • Ball, Retainer	2	C90001-
20		708-8H-34320	• • Piston	1	C90001-
21		708-8H-34330	• • Spring	1	C90001-
22	C2	708-8H-35130	• • Plate	4	C90001-
23	C2	708-8H-35180	• • Disc	3	C90001-
24	C2	708-8H-35141	• • Piston, Brake	1	C90001-
25	C2	07000-15175	• • O-ring	1	C90001-
26	C2	07001-05175	• • Ring, Back-up	1	C90001-
27	C2	07000-15195	• • O-ring	1	C90001-
28	C2	07001-05195	• • Ring, Back-up	1	C90001-
29	C2	708-8H-35150	• • Spring	1	C90001-

FIG. P1210-001007 Travel Motor and Final Drive (Travel Motor, R.H., 3/3)

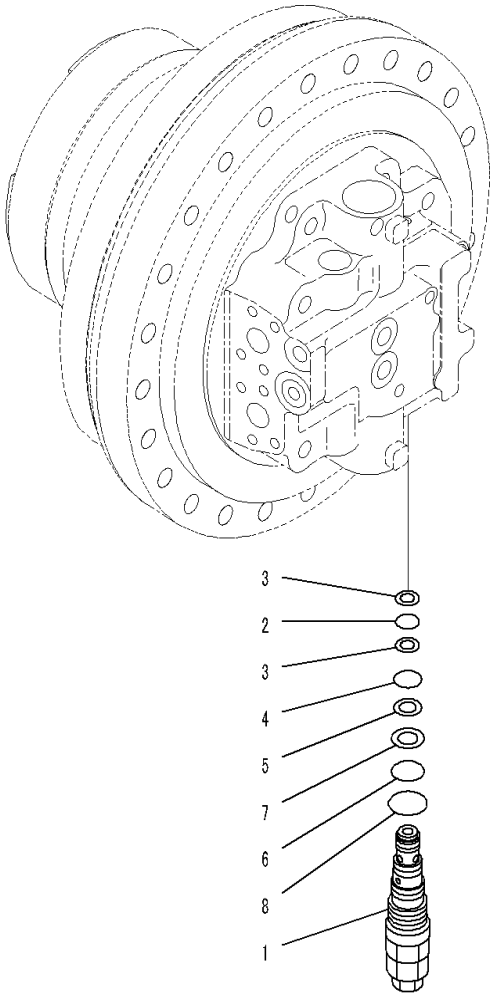

JY020931

Index	Code	Part Number	Description	Qty	Serial Number
		207-27-00590	Final Drive Assembly	1	C90001-
		708-8H-00430	• Motor Assembly	1	C90001-
1		702-75-04601	• • Valve Assembly, Relief	1	C90001-
2		07000-22018	• • • O-ring	1	C90001-
3		702-75-11830	• • • Ring, Back-up	2	C90001-
4		07000-12021	• • • O-ring	1	C90001-
5		702-75-11840	• • • Ring, Back-up	1	C90001-
6		702-75-11520	• • • O-ring	1	C90001-
7		702-75-11850	• • • Ring, Back-up	1	C90001-
8		07002-13634	• • • O-ring	1	C90001-

FIG. P1210-001008 Travel Motor and Final Drive (Carrier, R.H.)

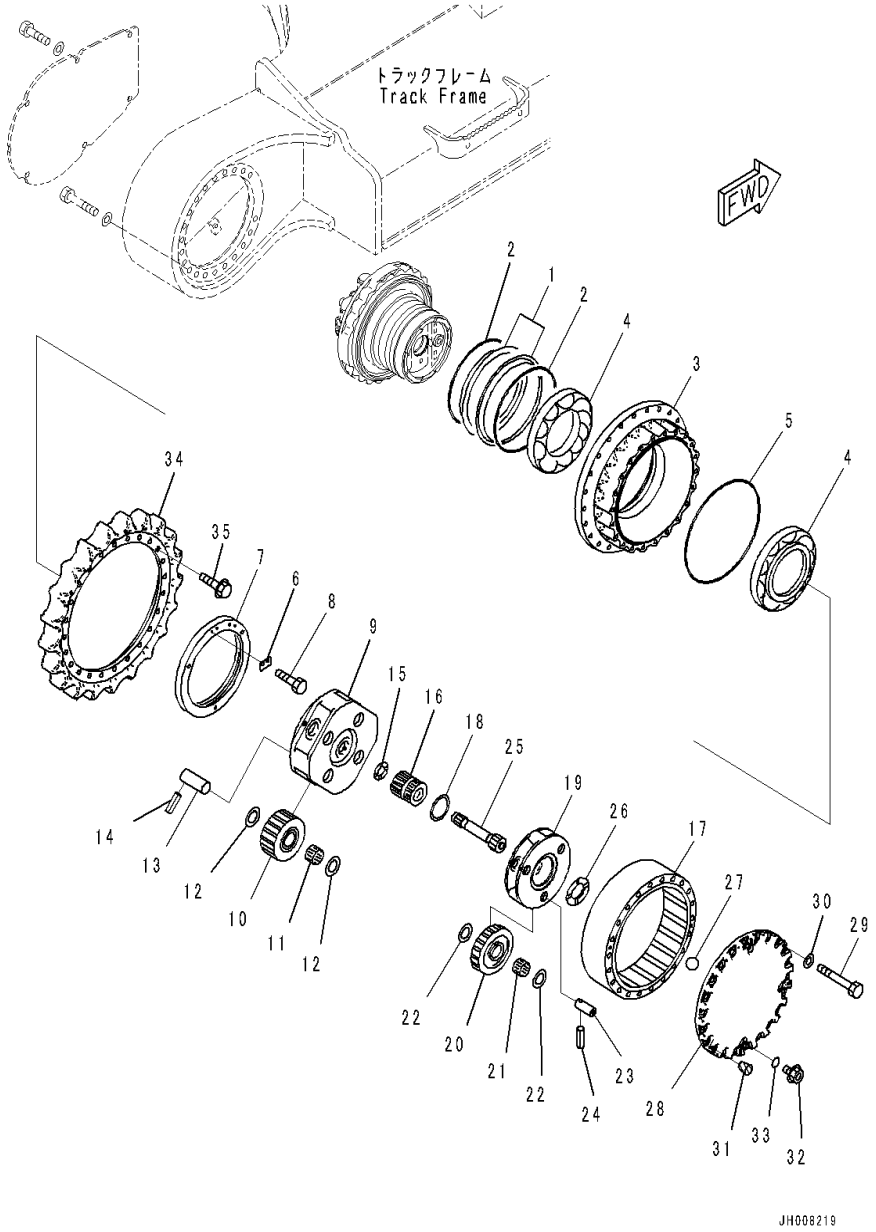

Index	Code	Part Number	Description	Qty	Serial Number
		207-27-00590	Final Drive Assembly	1	C90001-
		207-27-00510	• Floating Seal Assembly	1	C90001-
1	C1		• • Seal	2	C90001-
2	C1		• • O-ring	2	C90001-
3		207-27-72290	• Hub	1	C90001-
4		207-27-72220	• Bearing	2	C90001-
5		207-27-52350	• O-ring	1	C90001-
6		207-27-72260	• Lock	1	C90001-
7		207-27-72250	• Nut, Lock	1	C90001-
8		01010-81020	• Bolt	2	C90001-
9		207-27-72170	• Carrier	1	C90001-
10		207-27-72140	• Gear	4	C90001-
11		207-27-72210	• Bearing	4	C90001-
12		21M-27-11260	• Washer, Thrust	8	C90001-
13		208-27-71250	• Pin	4	C90001-
14		20Y-27-21290	• Pin	4	C90001-
15		20Y-27-13310	• Washer, Thrust	1	C90001-
16		207-27-72130	• Gear	1	C90001-
17		207-27-72150	• Gear, Ring	1	C90001-
18		207-27-72240	• Washer, Thrust	1	C90001-
19		207-27-72160	• Carrier	1	C90001-
20		207-27-72120	• Gear	3	C90001-
21		22U-26-21320	• Bearing	3	C90001-
22		206-26-71520	• Washer, Thrust	6	C90001-
23		207-27-72230	• Pin	3	C90001-
24		20Y-27-21280	• Pin	3	C90001-
25		207-27-72110	• Shaft	1	C90001-
26		20Y-27-11250	• Spacer	1	C90001-
27		04260-01905	• Ball	1	C90001-
28		207-27-72180	• Cover	1	C90001-
29		01011-61890	• Bolt	22	C90001-
30		01643-31845	• Washer	22	C90001-
31		07049-01215	• Plug	2	C90001-
32		07044-12412	• Plug	3	C90001-
33		07002-02434	• O-ring	3	C90001-
34		207-27-72270	• Sprocket	1	C90001-
35		207-27-51311	• Bolt	24	C90001-

FIG. P1210-001009 Travel Motor and Final Drive (Cover)

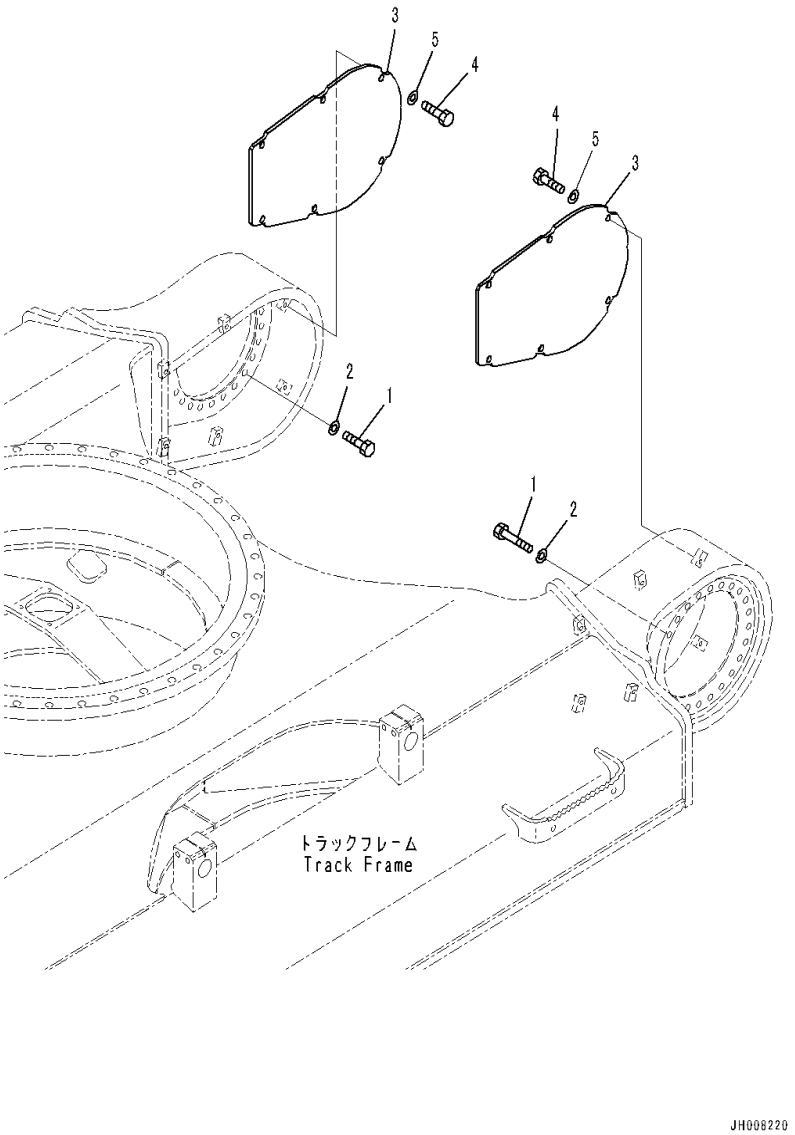

Index	Code	Part Number	Description	Qty	Serial Number
1		01010-82075	Bolt	42	C90001-
2		01643-32060	Washer	42	C90001-
3		207-30-41390	Cover	2	C90001-
4		01010-81640	Bolt	12	C90001-
5		01643-31645	Washer	12	C90001-

UNDERCARRIAGE

FIG. R0110-001001 Front Idler and Idler Cushion (Rustproof Spring LV1) (1/2)

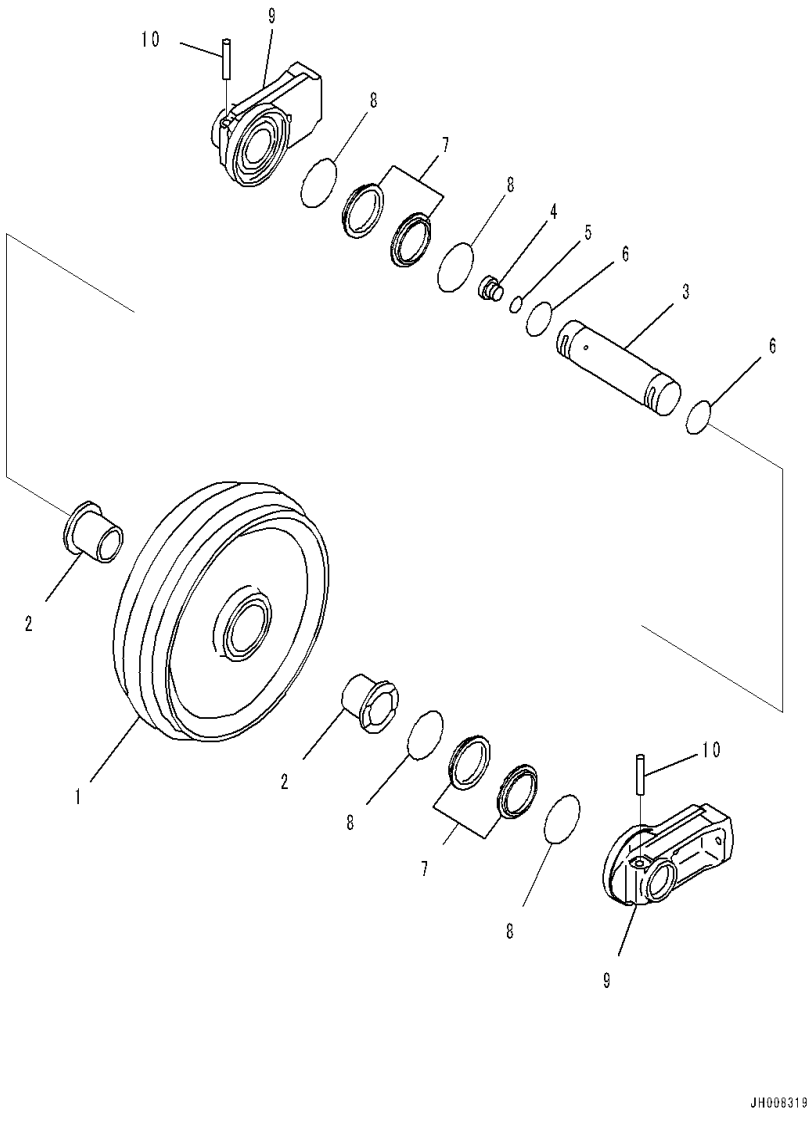

Index	Code	Part Number	Description	Qty	Serial Number
		207-30-00692	Idler Assembly	2	C90415-
	A1	207-30-00690	Idler Assembly	2	C90001-C90414
1		207-30-48110	• Idler	1	C90415-
		207-30-73210	• Idler	1	C90001-C90414
2		207-30-53140	• Bushing	2	C90001-
3		207-30-53130	• Shaft	1	C90001-
4		07040-13618	• Plug	1	C90001-
5		07002-13634	• O-ring	1	C90001-
6		07000-12075	• O-ring	2	C90001-
		207-30-01220	• Floating Seal Assembly	2	C90415-
		207-30-00101	• Floating Seal Assembly	2	C90001-C90414
7	C1		• • Seal	2	C90415-
	C1		• • Seal	2	C90001-C90414
8	C1		• • O-ring	2	C90415-
	C1		• • O-ring	2	C90001-C90414
9		207-30-48450	• Support	2	C90415-
		207-30-48350	• Support	2	C90001-C90414
10		207-30-53160	• Pin	2	C90001-

FIG. R0110-001002 Front Idler and Idler Cushion (Rustproof Spring LV1) (2/2)

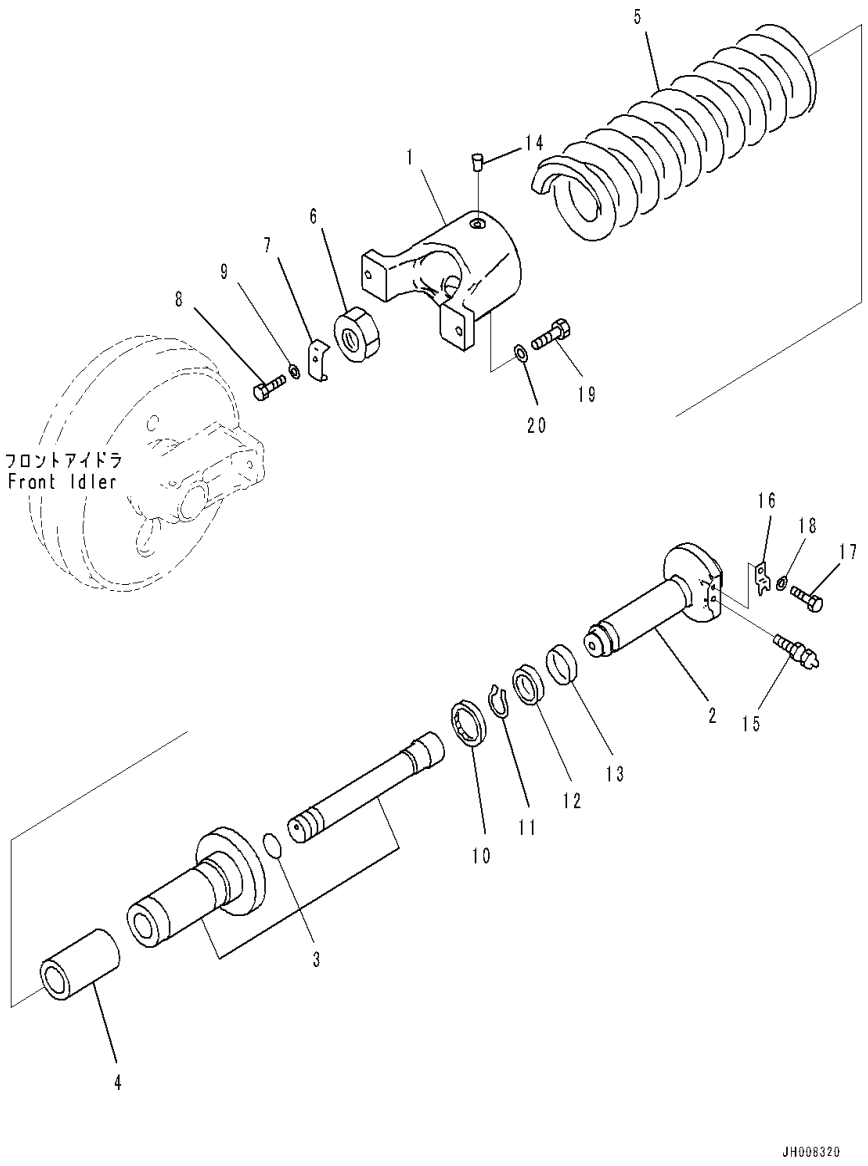

Index	Code	Part Number	Description	Qty	Serial Number
		207-30-00990	Cushion Assembly	2	C90001-
1		207-30-73311	• Yoke	1	C90001-
2		207-30-73421	• Shaft	1	C90001-
3		207-30-71441	• Cylinder Assembly	1	C90001-
4		207-30-71431	• Pipe	1	C90001-
5		207-30-74160	• Spring	1	C90001-
6		208-30-11760	• Nut	1	C90001-
7		207-30-34191	• Lock	1	C90001-
8		01010-81225	• Bolt	1	C90001-
9		01643-31232	• Washer	1	C90001-
10		207-30-54160	• Seal	1	C90001-
11		04064-06525	• Ring, Snap, for Shaft Side	1	C90001-
12		09370-00090	• U-packing	1	C90001-
13		07155-00925	• Ring, Wear	1	C90001-
14		207-30-73450	• Plug	1	C90001-
15		07959-20001	Valve	2	C90001-
16		205-30-72170	Plate	2	C90001-
17		01010-81225	Bolt	2	C90001-
18		01643-31232	Washer	2	C90001-
19		01010-62075	Bolt	4	C90001-
20		01643-32060	Washer	4	C90001-

FIG. R0200-001001 Track Roller (Single Flange)

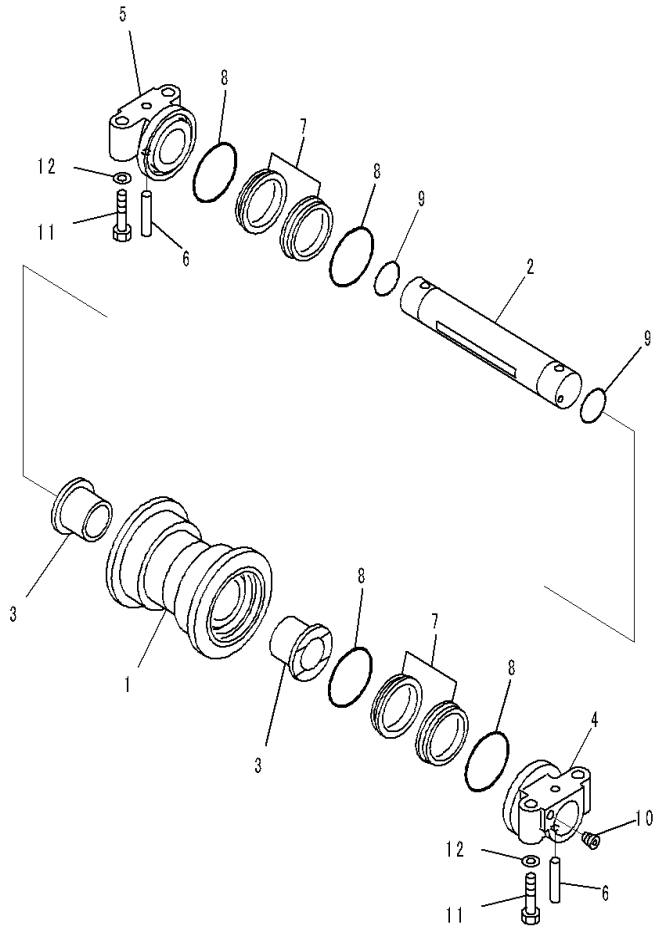

Index	Code	Part Number	Description	Qty	Serial Number
		207-30-00660	Track Roller Assembly	14	C90001-
1		207-30-71510	• Roller	1	C90001-
2		207-30-21670	• Shaft	1	C90001-
3		207-30-71540	• Bushing	2	C90001-
4		207-30-21650	• Collar	1	C90001-
5		207-30-21660	• Collar	1	C90001-
6		207-30-56170	• Pin	2	C90001-
		205-30-00052	• Floating Seal Assembly	2	C90001-
7	C1		• • Ring	2	C90001-
8	C1		• • O-ring	2	C90001-
9		427-15-15910	• O-ring	2	C90001-
10		20Y-30-16330	• Plug	1	C90001-
11		207-30-56190	Bolt	56	C90001-
12		01643-32060	Washer	56	C90001-

FIG. R0200-002001 Track Roller LC

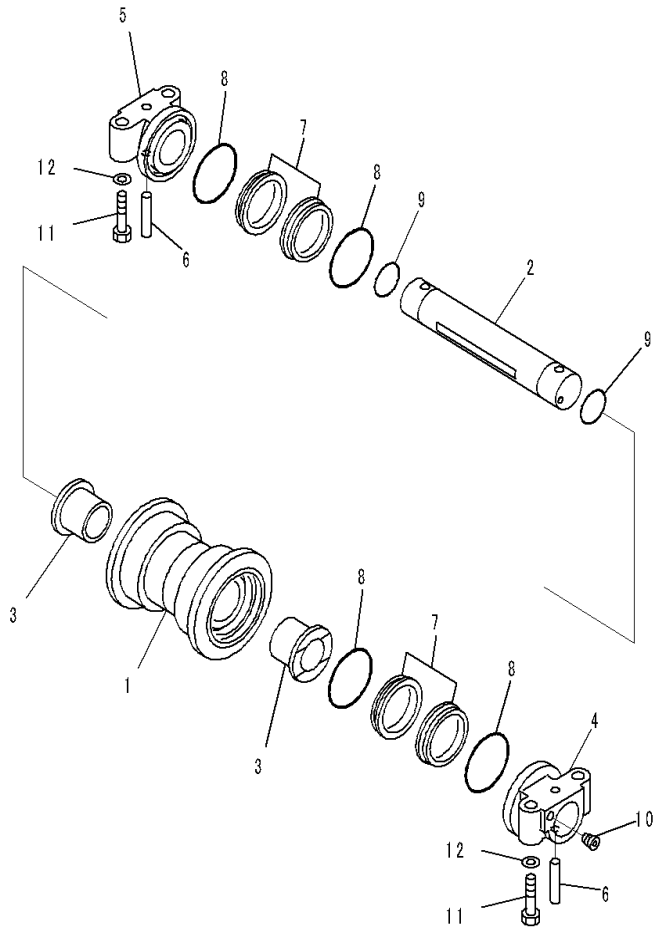

Index	Code	Part Number	Description	Qty	Serial Number
		207-30-00660	Track Roller Assembly	16	C90001-
1		207-30-71510	• Roller	1	C90001-
2		207-30-21670	• Shaft	1	C90001-
3		207-30-71540	• Bushing	2	C90001-
4		207-30-21650	• Collar	1	C90001-
5		207-30-21660	• Collar	1	C90001-
6		207-30-56170	• Pin	2	C90001-
		205-30-00052	• Floating Seal Assembly	2	C90001-
7	C1		• • Ring	2	C90001-
8	C1		• • O-ring	2	C90001-
9		427-15-15910	• O-ring	2	C90001-
10		20Y-30-16330	• Plug	1	C90001-
11		207-30-56190	Bolt	64	C90001-
12		01643-32060	Washer	64	C90001-

FIG. R0200-003001 Track Roller (Double Flange) (1/2)

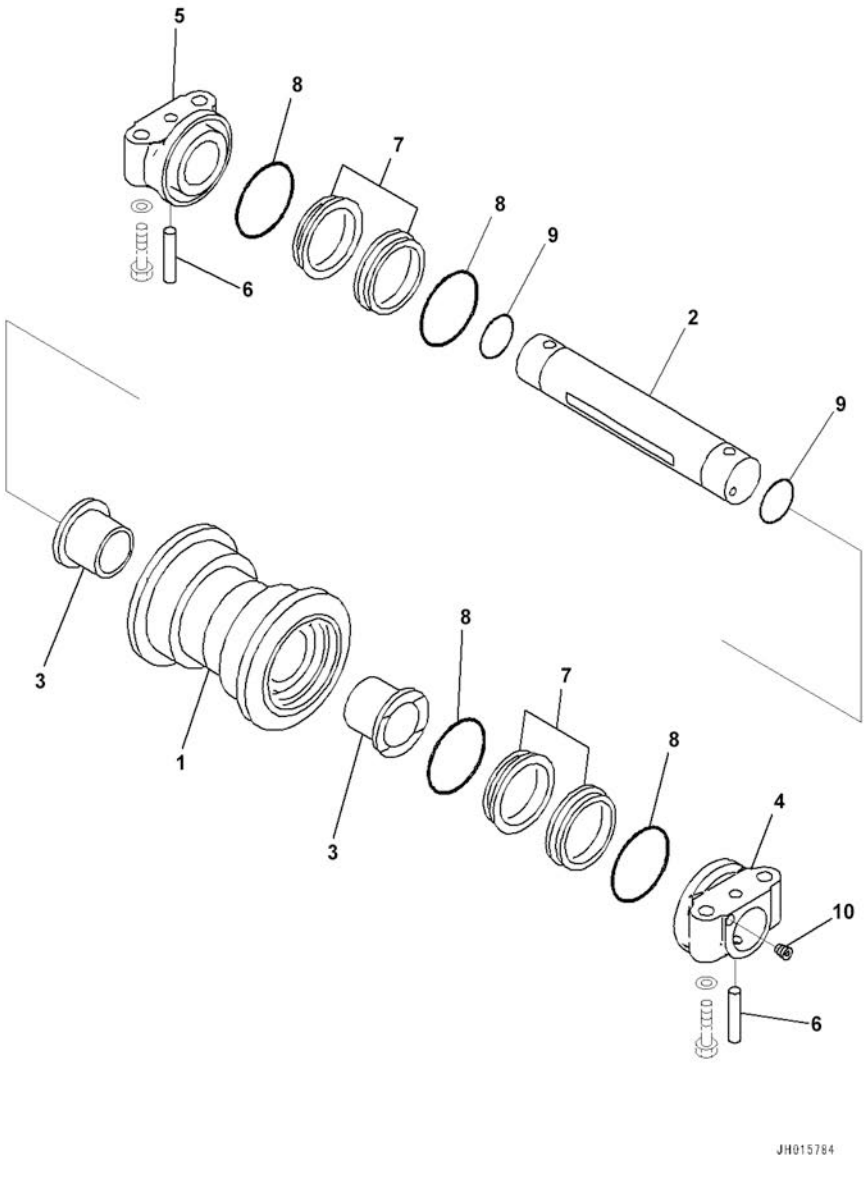

Index	Code	Part Number	Description	Qty	Serial Number
		207-30-00650	Track Roller Assembly, Single Flange ...	8	C90001-
1		207-30-21510	• Roller	1	C90001-
2		207-30-21670	• Shaft	1	C90001-
3		207-30-71540	• Bushing	2	C90001-
4		207-30-21750	• Collar	1	C90001-
5		207-30-21760	• Collar	1	C90001-
6		207-30-56170	• Pin	2	C90001-
		205-30-00052	• Floating Seal Assembly	2	C90001-
7	C1		• • Seal	2	C90001-
8	C1		• • O-ring	2	C90001-
9		427-15-15910	• O-ring	2	C90001-
10		20Y-30-16330	• Plug	1	C90001-

FIG. R0200-003002 Track Roller (Double Flange) (2/2)

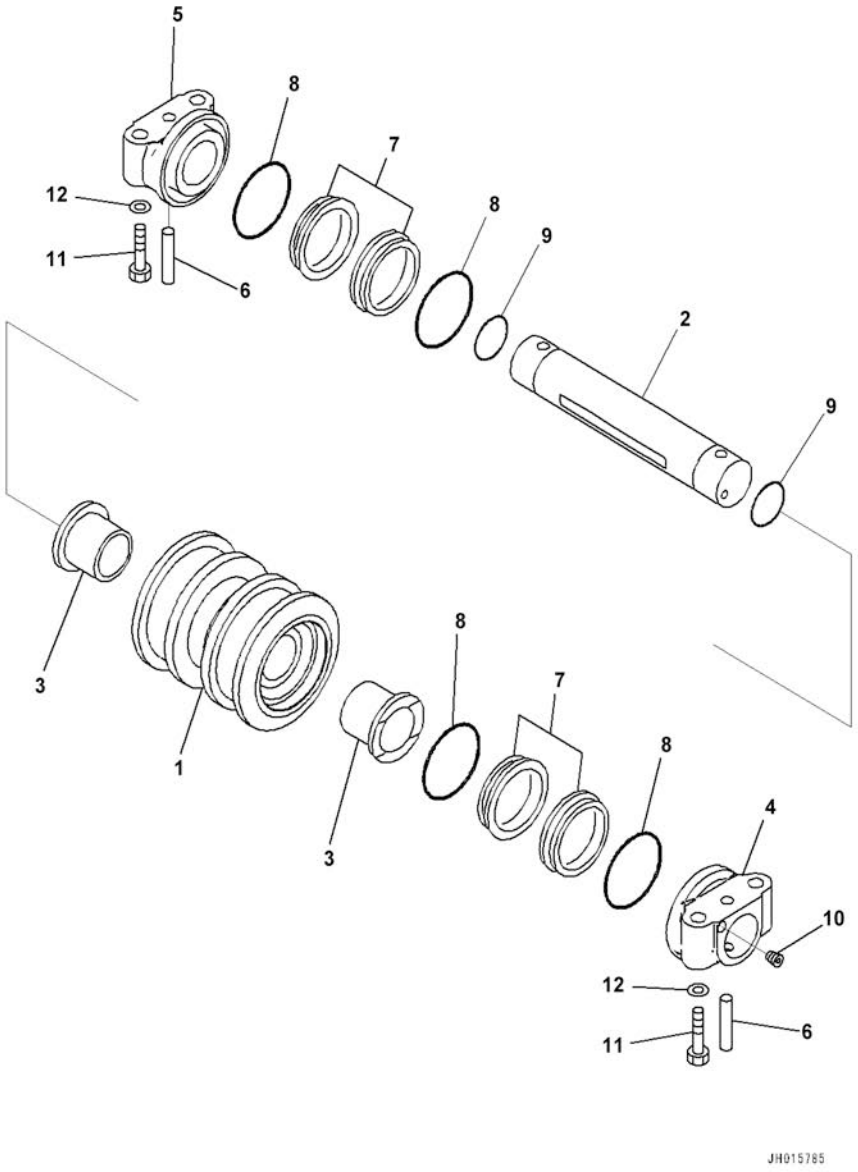

Index	Code	Part Number	Description	Qty	Serial Number
		207-30-01160	Track Roller Assembly, Double Flange ..	6	C90001-
1		207-30-21520	• Roller	1	C90001-
2		207-30-21670	• Shaft	1	C90001-
3		207-30-71540	• Bushing	2	C90001-
4		207-30-21750	• Collar	1	C90001-
5		207-30-21760	• Collar	1	C90001-
6		207-30-56170	• Pin	2	C90001-
		205-30-00052	• Floating Seal Assembly	2	C90001-
7	C1		• • Seal	2	C90001-
8	C1		• • O-ring	2	C90001-
9		427-15-15910	• O-ring	2	C90001-
10		20Y-30-16330	• Plug	1	C90001-
11		207-30-56190	Bolt..... .	56	C90001-
12		01643-32060	Washer.....	56	C90001-

FIG. R0300-001001 Carrier Roller ,#C90001-C90061

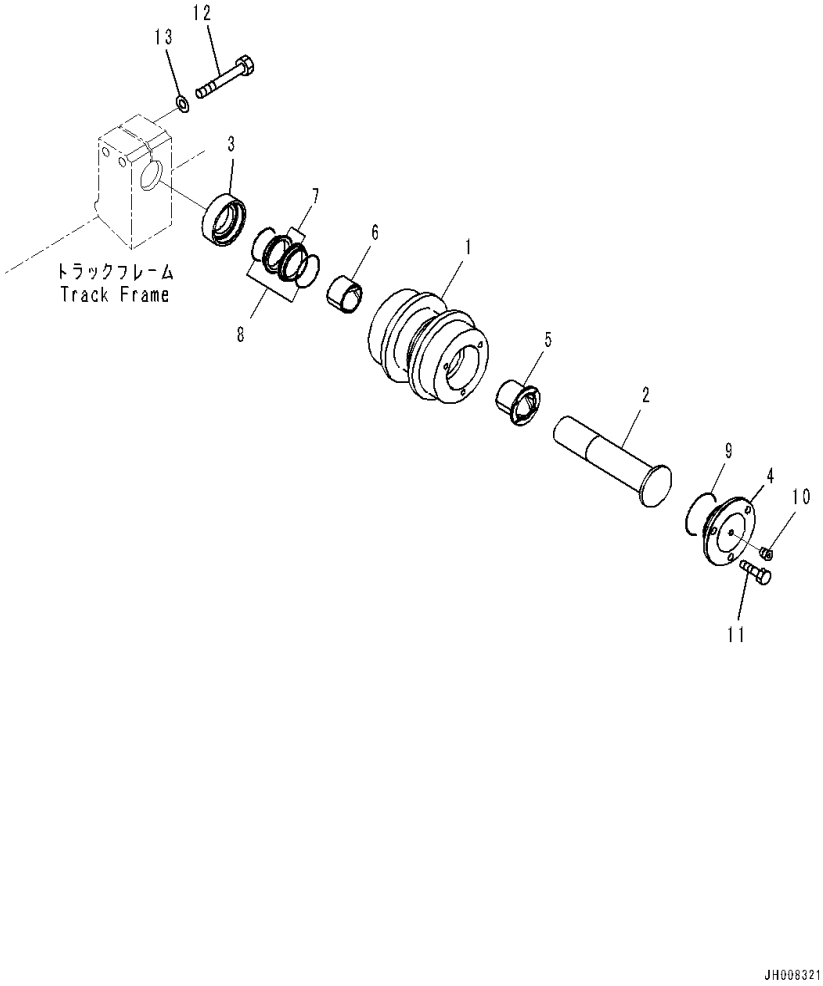

Index	Code	Part Number	Description	Qty	Serial Number
		207-30-00620	Carrier Roller Assembly	4	C90001-C90061
1		207-30-21610	• Roller	1	C90001-C90061
2		207-30-21620	• Shaft	1	C90001-C90061
3		207-30-75330	• Ring	1	C90001-C90061
4		207-30-21640	• Cover	1	C90001-C90061
5		207-30-75360	• Bushing	1	C90001-C90061
6		207-30-75370	• Bushing	1	C90001-C90061
		140-30-00141	• Floating Seal Assembly	1	C90001-C90061
7	C1		• • Seal	2	C90001-C90061
8	C1		• • O-ring	2	C90001-C90061
9		07000-12080	• O-ring	1	C90001-C90061
10		20Y-30-16330	• Plug	1	C90001-C90061
11		01010-81225	• Bolt	3	C90001-C90061
12		01010-82095	Bolt	8	C90001-C90061
13		01643-32060	Washer	8	C90001-C90061

FIG. R0300-002001 Carrier Roller, #C90062-

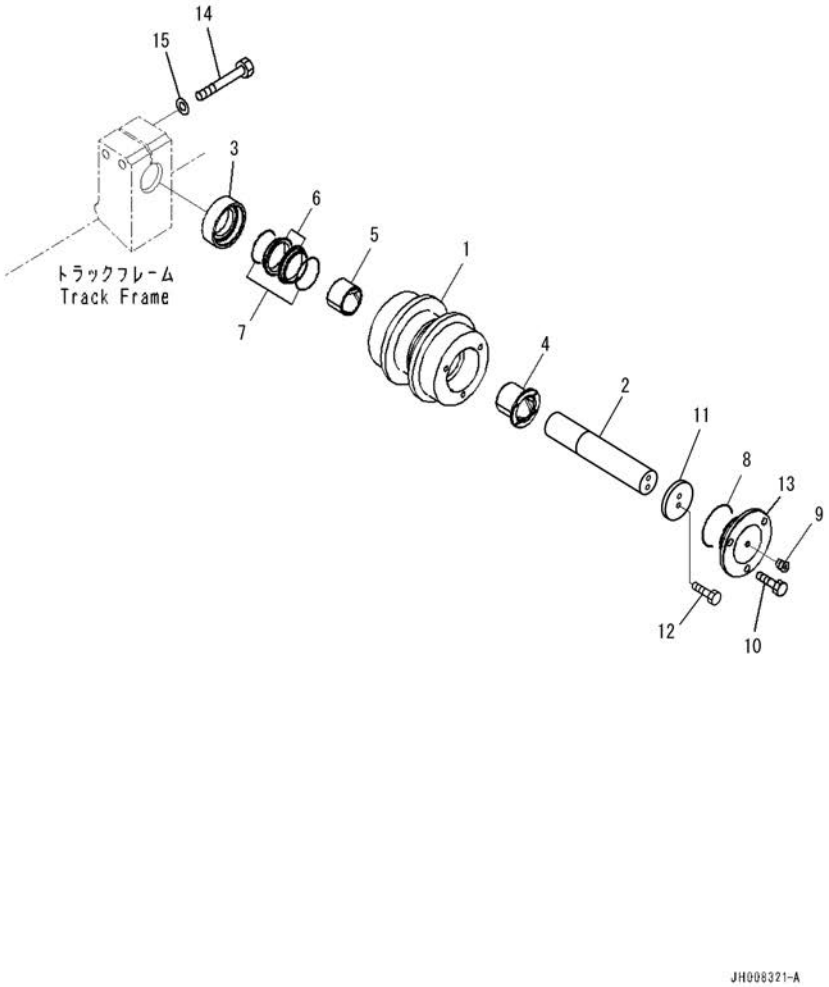

Index	Code	Part Number	Description	Qty	Serial Number
		207-30-00551	Carrier Roller Assembly	4	C90062-
1		207-30-75310	• Roller	1	C90062-
2		207-30-75320	• Shaft	1	C90062-
3		207-30-75330	• Ring	1	C90062-
4		207-30-75360	• Bushing	1	C90062-
5		207-30-75370	• Bushing	1	C90062-
		140-30-00141	• Floating Seal Assembly	1	C90062-
6	C1		• • Seal	2	C90062-
7	C1		• • O-ring	2	C90062-
8		07000-12080	• O-ring	1	C90062-
9		20Y-30-16330	• Plug	1	C90062-
10		01010-81225	• Bolt	3	C90062-
11		207-30-75350	• Plate	1	C90062-
12		01252-61230	• Bolt	2	C90062-
13		207-30-75341	• Cover	1	C90062-
14		01010-82095	Bolt	8	C90062-
15		01643-32060	Washer	8	C90062-

FIG. R0500-001001 Track Shoe Assembly, Triple Shoe Grouser, With Holed, 600mm Width

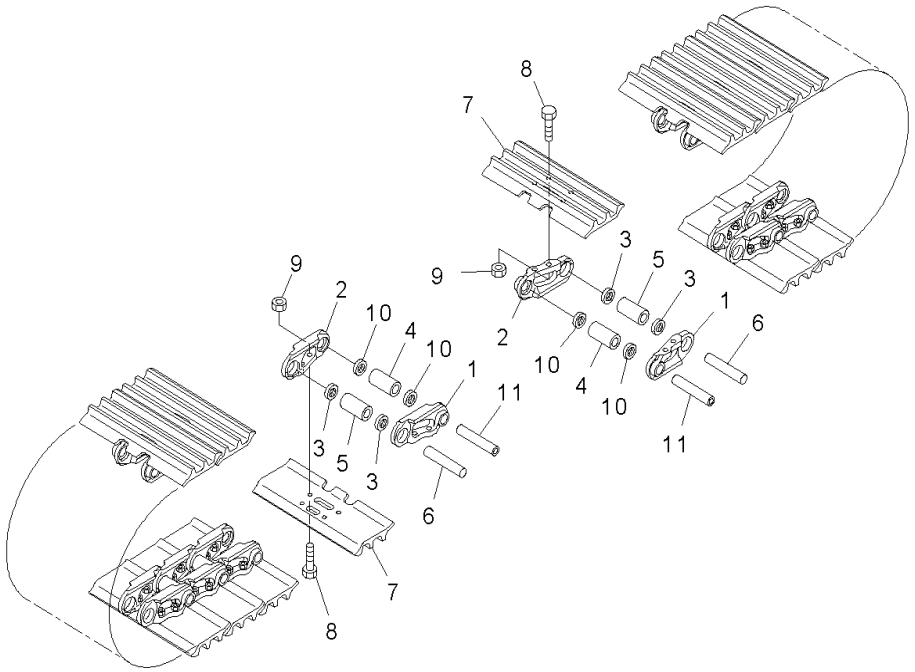

Index	Code	Part Number	Description	Qty	Serial Number
		207-32-04041	Track Shoe Assembly, W=600mm	2	C90001-
		207-32-00390	• Track Shoe Assembly	1	C90001-
1		207-32-71120	• • Link	45	C90001-
2		207-32-71130	• • Link	45	C90001-
3		144-32-11240	• • Seal	88	C90001-
4		207-32-51170	• • Bushing, Master	1	C90001-
5		207-32-51140	• • Bushing, Regular	44	C90001-
6		207-32-61150	• • Pin	44	C90001-
7		207-32-61110	• Shoe	45	C90001-
8		207-32-71210	• Bolt, (Kit : K02)	180	C90001-
9		154-32-71220	• Nut, (Kit : K02)	180	C90001-
10		207-32-61260	Seal	4	C90001-
11		207-32-61190	Pin	2	C90001-

FIG. R0500-002001 Track Shoe Assembly, Triple Shoe Grouser, With Holed, 600mm Width, Long Type

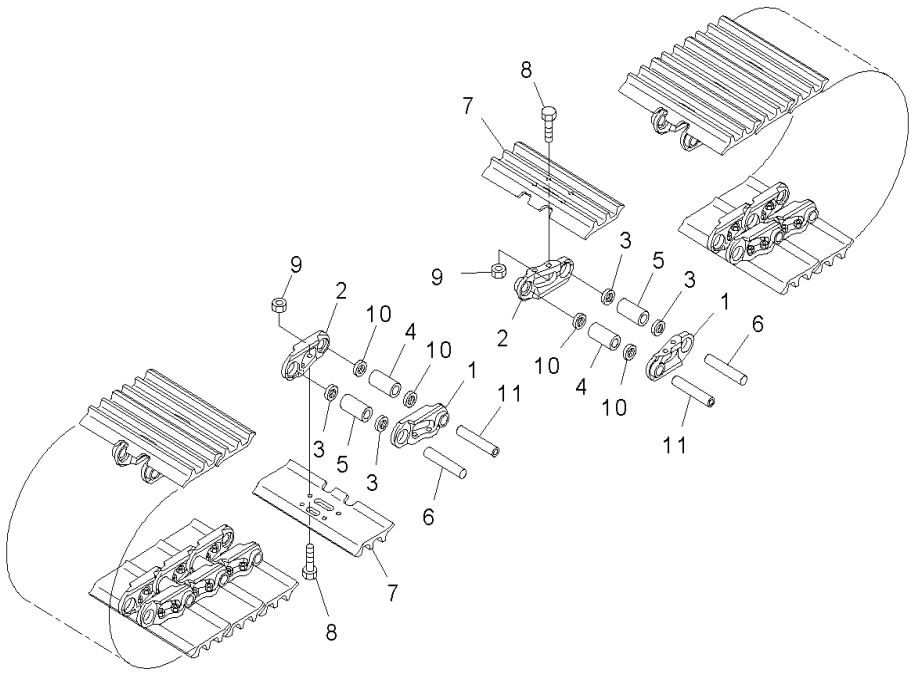

Index	Code	Part Number	Description	Qty	Serial Number
		207-32-03961	Track Shoe Assembly, W=600mm	2	C90001-
		207-32-00370	• Track Shoe Assembly	1	C90001-
1		207-32-71120	• • Link	48	C90001-
2		207-32-71130	• • Link	48	C90001-
3		144-32-11240	• • Seal	94	C90001-
4		207-32-51170	• • Bushing, Master	1	C90001-
5		207-32-51140	• • Bushing, Regular	47	C90001-
6		207-32-61150	• • Pin	47	C90001-
7		207-32-61110	• Shoe	48	C90001-
8		207-32-71210	• Bolt, (Kit : K02)	192	C90001-
9		154-32-71220	• Nut, (Kit : K02)	192	C90001-
10		207-32-61260	Seal	4	C90001-
11		207-32-61190	Pin	2	C90001-

FIG. R0500-003001 Track Shoe Assembly, Triple Shoe Grouser, With Holed, 800mm Width

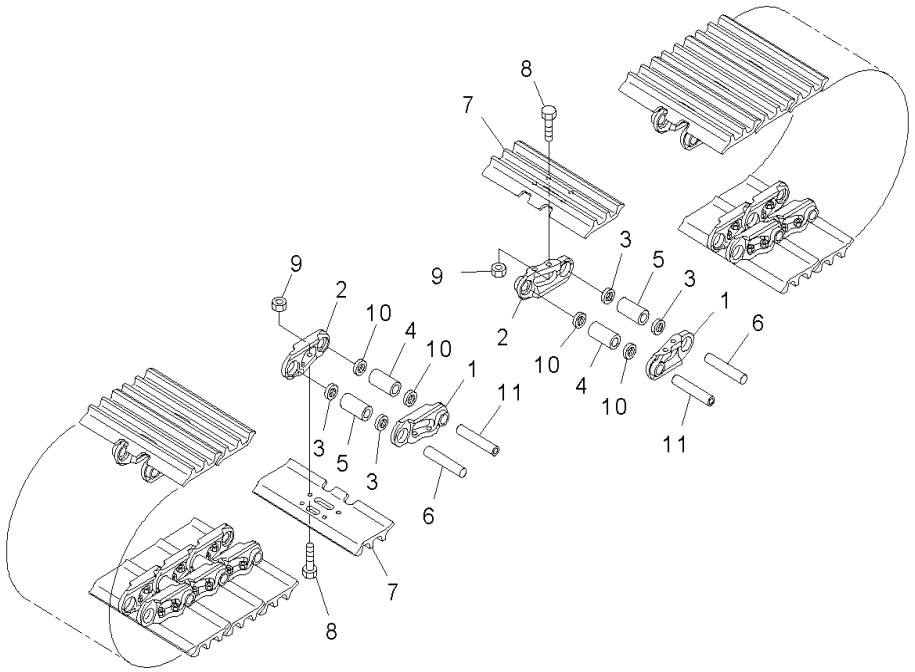

Index	Code	Part Number	Description	Qty	Serial Number
		207-32-04061	Track Shoe Assembly, W=800mm	2	C90001-
		207-32-00390	• Track Shoe Assembly	1	C90001-
1		207-32-71120	• • Link	45	C90001-
2		207-32-71130	• • Link	45	C90001-
3		144-32-11240	• • Seal	88	C90001-
4		207-32-51170	• • Bushing, Master	1	C90001-
5		207-32-51140	• • Bushing, Regular	44	C90001-
6		207-32-61150	• • Pin	44	C90001-
7		207-32-61320	• Shoe	45	C90001-
8		207-32-71210	• Bolt	180	C90001-
9		154-32-71220	• Nut	180	C90001-
10		207-32-61260	Seal	4	C90001-
11		207-32-61190	Pin	2	C90001-

FIG. R0500-004001 Track Shoe Assembly, Triple Shoe Grouser, With Holed, 800mm Width, Long Type

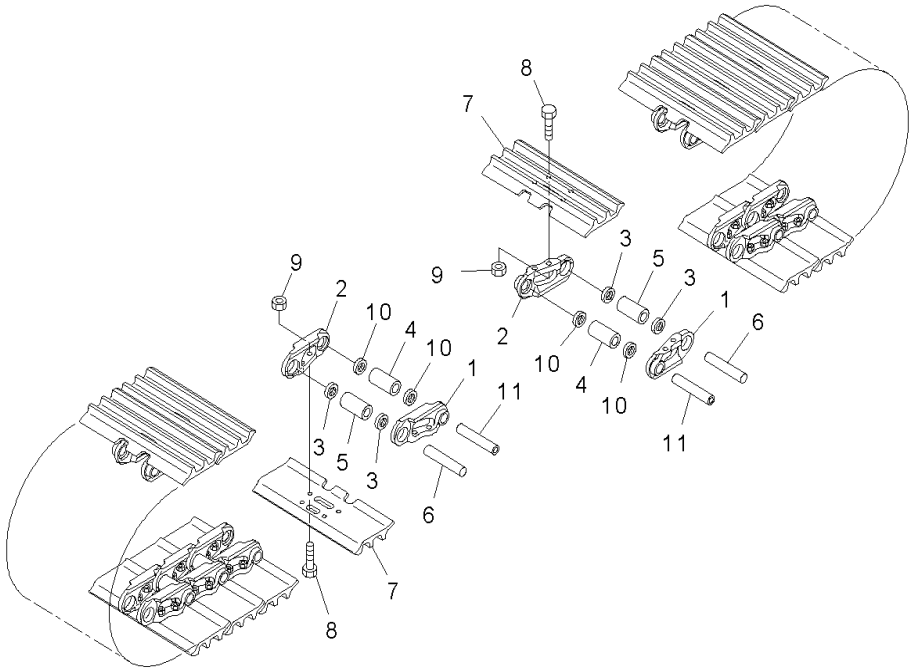

Index	Code	Part Number	Description	Qty	Serial Number
		207-32-03981	Track Shoe Assembly, W=800mm	2	C90001-
		207-32-00370	• Track Shoe Assembly	1	C90001-
1		207-32-71120	• • Link	48	C90001-
2		207-32-71130	• • Link	48	C90001-
3		144-32-11240	• • Seal	94	C90001-
4		207-32-51170	• • Bushing, Master	1	C90001-
5		207-32-51140	• • Bushing, Regular	47	C90001-
6		207-32-61150	• • Pin	47	C90001-
7		207-32-61320	• Shoe	48	C90001-
8		207-32-71210	• Bolt	192	C90001-
9		154-32-71220	• Nut	192	C90001-
10		207-32-61260	Seal	4	C90001-
11		207-32-61190	Pin	2	C90001-

FIG. R1100-001001 Track Frame (With Under Cover)

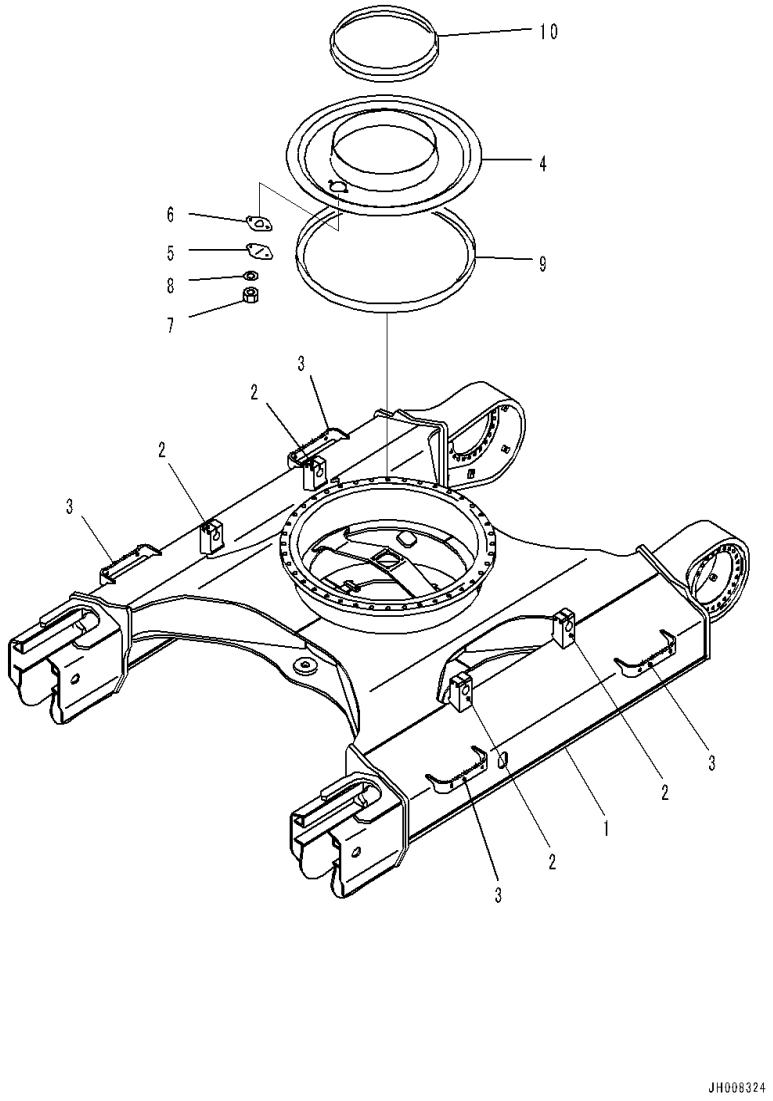

Index	Code	Part Number	Description	Qty	Serial Number
1		207-30-71811	Frame	1	C90001-
2		207-30-76A21	• Bracket,Welded	4	C90001-
3		207-30-76B80	• Plate,Welded	4	C90001-
4		207-30-61220	Cover	1	C90001-
5		205-30-71181	Cover	1	C90001-
6		205-30-71191	Gasket	1	C90001-
7		01580-11008	Nut	2	C90001-
8		01643-31032	Washer	2	C90001-
9		207-30-51260	Seal	1	C90001-
10		205-30-71171	Seal	1	C90001-

FIG. R1100-002001 Track Frame (With Under Cove, For LC)

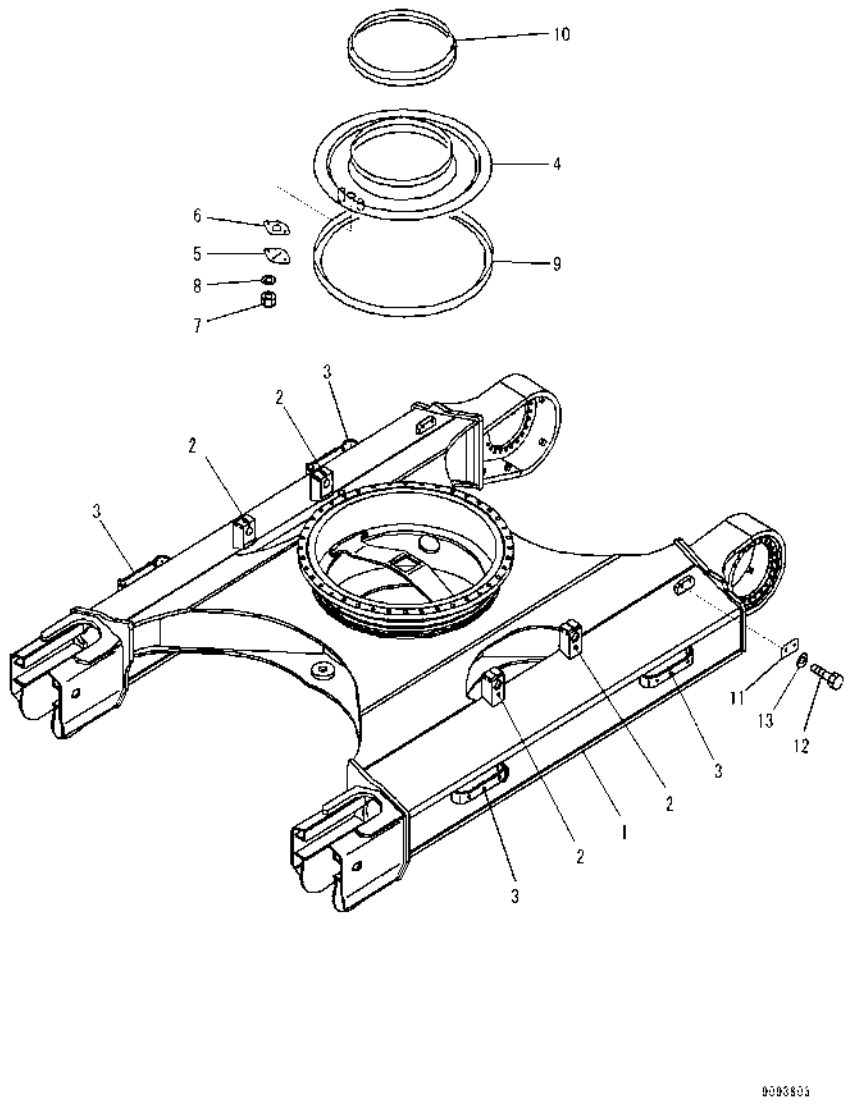

Index	Code	Part Number	Description	Qty	Serial Number
1		207-30-71920	Frame	1	C90001-
2		207-30-76A21	• Bracket,Welded	4	C90001-
3		207-30-76B80	• Plate,Welded	4	C90001-
4		207-30-61220	Cover	1	C90001-
5		205-30-71181	Cover	1	C90001-
6		205-30-71191	Gasket	1	C90001-
7		01580-11008	Nut	2	C90001-
8		01643-31032	Washer	2	C90001-
9		207-30-51260	Seal	1	C90001-
10		205-30-71171	Seal	1	C90001-
11		208-30-72120	Plate	2	C90001-
12		01010-62070	Bolt	4	C90001-
13		01643-32060	Washer	4	C90001-

FIG. R1140-001001 Track Frame Under Cover

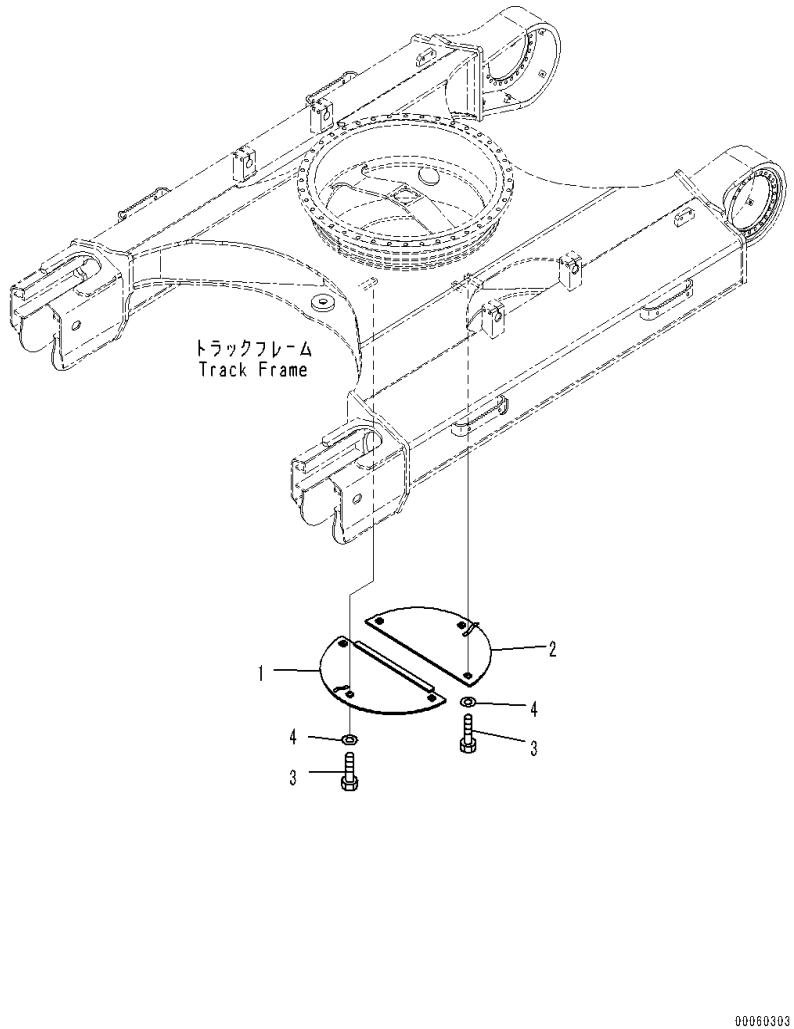

Index	Code	Part Number	Description	Qty	Serial Number
1		20Y-973-2220	Cover	1	C90001-
2		20Y-973-2230	Cover	1	C90001-
3		01010-81235	Bolt	6	C90001-
4		01643-31232	Washer	6	C90001-

FIG. R1200-001001 Track Roller Guard

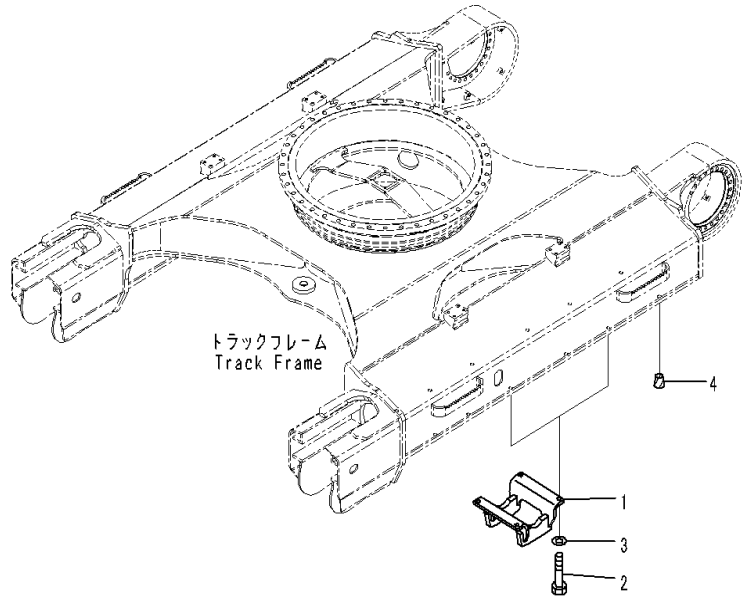

Index	Code	Part Number	Description	Qty	Serial Number
1		207-30-51191	Guard	4	C90001-
2		01010-62455	Bolt	16	C90001-
3		01643-32460	Washer	16	C90001-
4		07049-02430	Plug	8	C90001-

FIG. R1200-002001 Track Roller Guard, Long Type

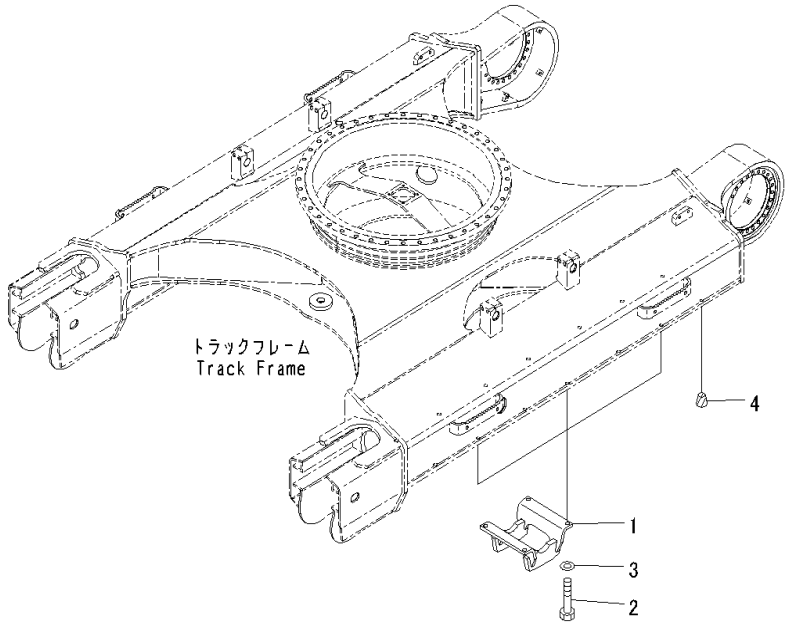

Index	Code	Part Number	Description	Qty	Serial Number
1		207-30-51191	Guard	6	C90001-
2		01010-62455	Bolt	24	C90001-
3		01643-32460	Washer	24	C90001-
4		07049-02430	Plug	4	C90001-

FIG. R1200-003001 Track Guard, Full Length

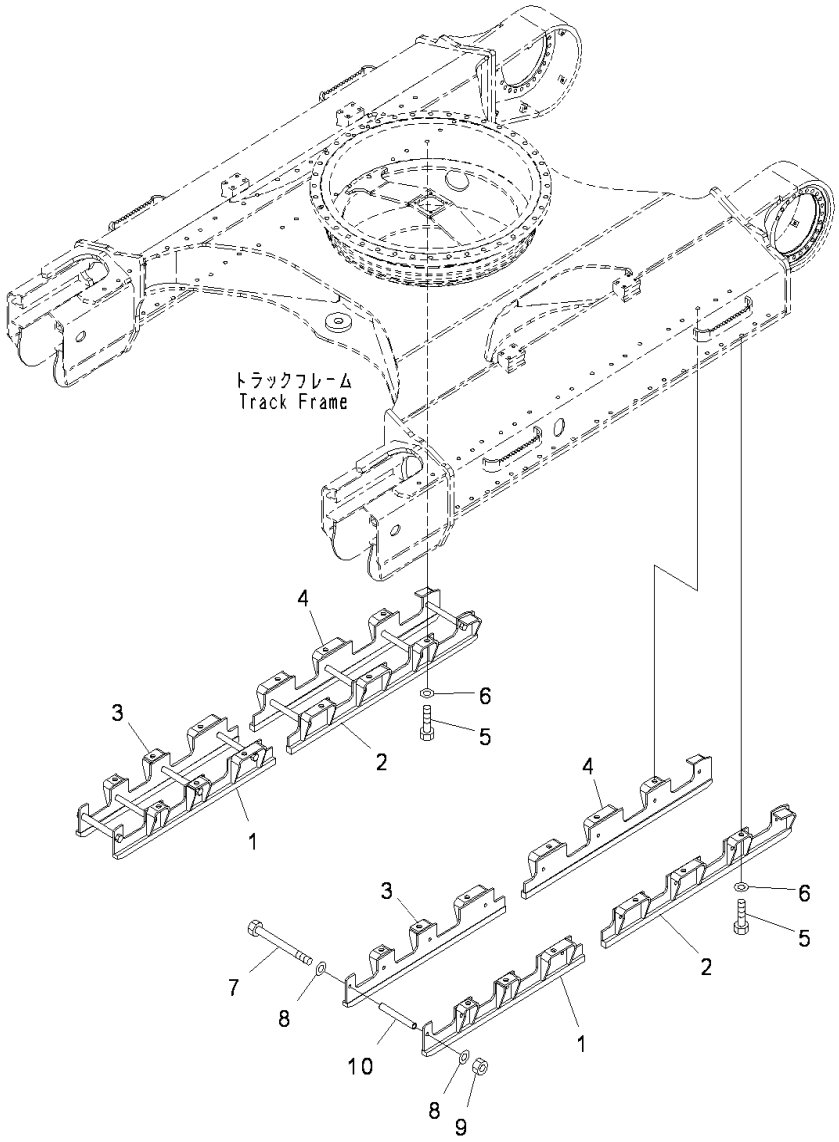

Index	Code	Part Number	Description	Qty	Serial Number
1		207-30-77110	Guard	2	C90001-
2		207-30-77120	Guard	2	C90001-
3		207-30-77130	Guard	2	C90001-
4		207-30-77140	Guard	2	C90001-
5		01010-62450	Bolt	24	C90001-
6		01643-32460	Washer	24	C90001-
7		09205-18325	Bolt	16	C90001-
8		01643-31845	Washer	32	C90001-
9		01580-11815	Nut	16	C90001-
10		141-30-32181	Collar	16	C90001-

FIG. R1200-004001 Track Guard, Full Length, Long Type

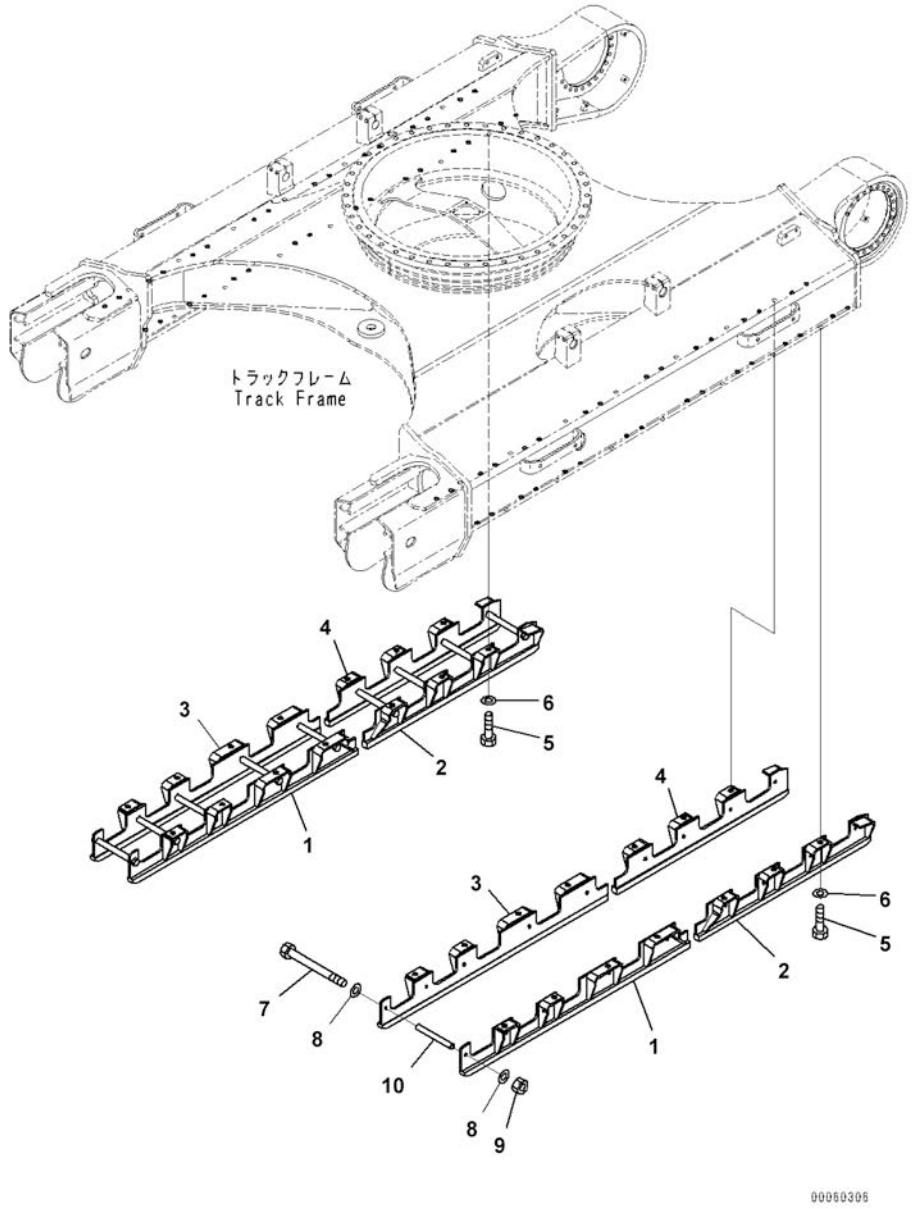

Index	Code	Part Number	Description	Qty	Serial Number
1		207-30-77210	Guard	2	C90001-
2		207-30-77220	Guard	2	C90001-
3		207-30-77230	Guard	2	C90001-
4		207-30-77240	Guard	2	C90001-
5		01010-62450	Bolt	28	C90001-
6		01643-32460	Washer	28	C90001-
7		09205-18325	Bolt	18	C90001-
8		01643-31845	Washer	36	C90001-
9		01580-11815	Nut	18	C90001-
10		141-30-32181	Collar	18	C90001-

WORK EQUIPMENT

FIG. T1110-001001 Boom (6500mm Heavy Duty Type, 100 Hours Lubrication Interval) (Boom and Top Pin)

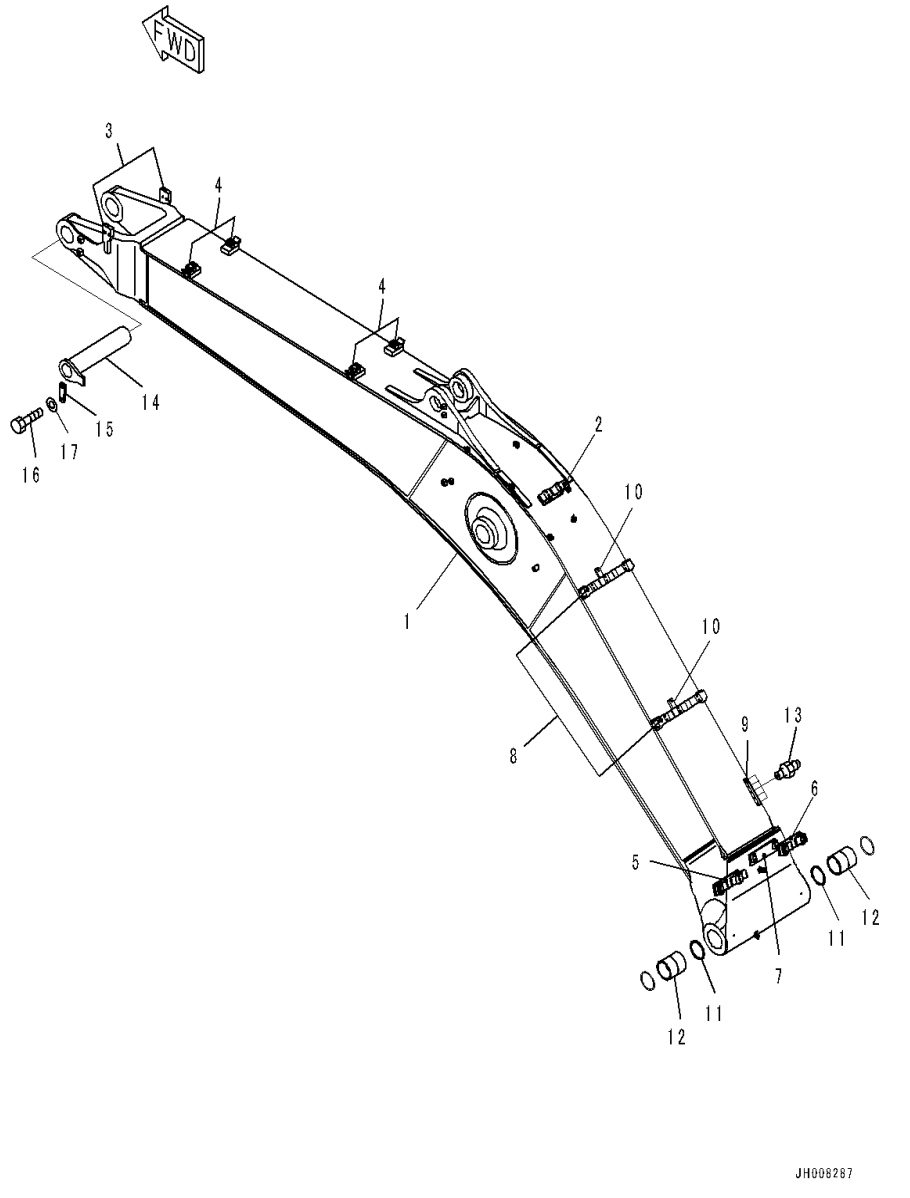

Index	Code	Part Number	Description	Qty	Serial Number
		207-70-01340	Boom Assembly	1	C90001-
1	C1		• Boom	1	C90001-
2		207-62-42830	• • Bracket	1	C90001-
3		207-62-74221	• • Bracket,Welded	2	C90001-
4		207-62-74230	• • Bracket,Welded	4	C90001-
5		207-62-74240	• • Bracket,Welded	1	C90001-
6		207-62-74251	• • Bracket,Welded	1	C90001-
7		207-62-74281	• • Bracket,Welded	1	C90001-
8		207-70-77651	• • Bracket,Welded	2	C90001-
9		2A5-70-11130	• • Plate,Welded	1	C90001-
10		01573-12306	• • Seat, Welded	2	C90001-
11		07145-00110	• Seal, Dust	2	C90001-
12		207-70-61610	• Bushing	2	C90001-
13		07020-00000	• Fitting, Grease	5	C90001-
14		207-70-61182	Pin	1	C90001-
15		207-70-31230	Plate	1	C90001-
16		01010-81640	Bolt	2	C90001-
17		01643-31645	Washer	2	C90001-

FIG. T1110-001002 Boom (6500mm Heavy Duty Type, 100 Hours Lubrication Interval) (Arm Cylinder Piping)

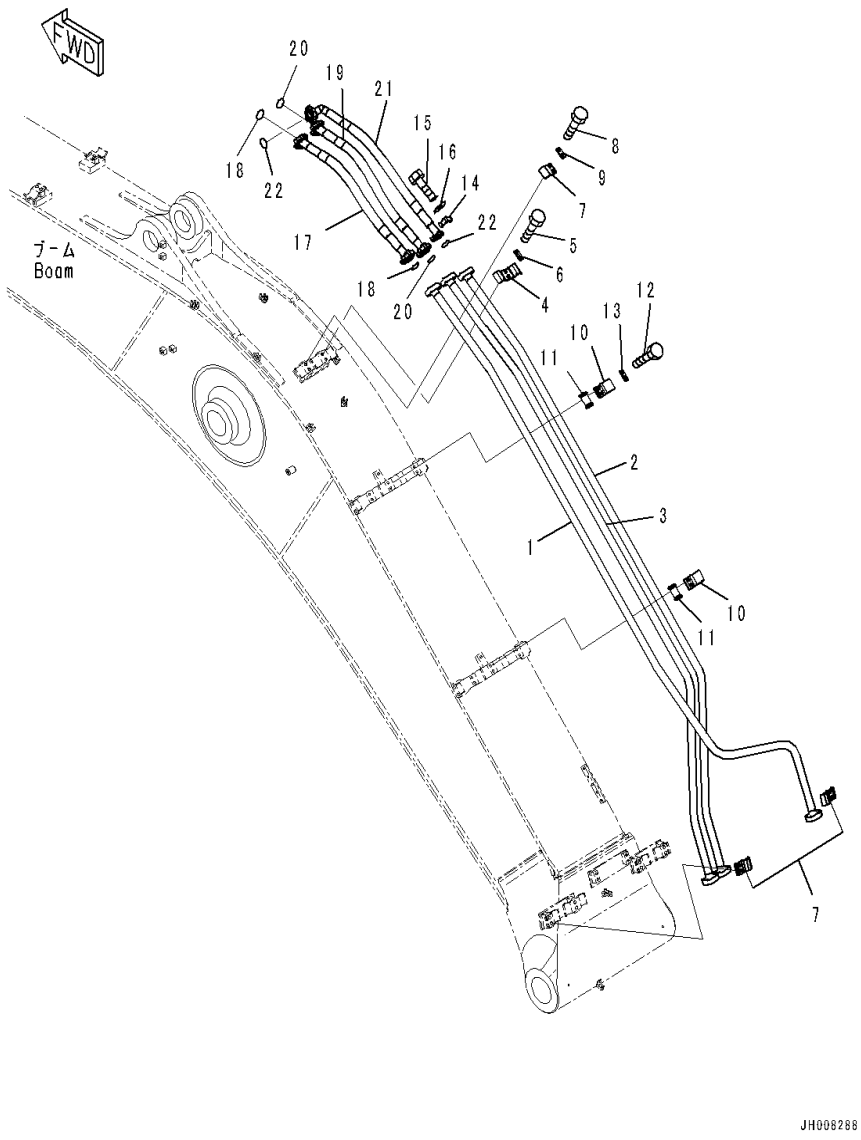

Index	Code	Part Number	Description	Qty	Serial Number
1		207-62-44161	Tube	1	C90001-
2		207-62-74132	Tube	1	C90001-
3		207-62-74151	Tube	1	C90001-
4		207-62-54760	Clamp	1	C90001-
5		01010-81235	Bolt	2	C90001-
6		20Y-62-13450	Plate	1	C90001-
7		207-62-31330	Clamp	3	C90001-
8		01010-81235	Bolt	6	C90001-
9		20Y-62-13450	Plate	3	C90001-
10		207-62-52350	Clamp	2	C90001-
11		205-62-73431	Seat	2	C90001-
12		01010-81235	Bolt	4	C90001-
13		20Y-62-13450	Plate	2	C90001-
14		07371-31049	Flange, Split	12	C90001-
15		07372-21035	Bolt	24	C90001-
16		01643-51032	Washer	24	C90001-
17		07085-010A9	Hose, Flange Type	1	C90001-
18		07000-13032	O-ring	2	C90001-
19		07085-010A9	Hose, Flange Type	1	C90001-
20		07000-13032	O-ring	2	C90001-
21		207-62-76810	Hose	1	C90001-
22		07000-13032	O-ring	2	C90001-

FIG. T1110-001003 Boom (6500mm Heavy Duty Type, 100 Hours Lubrication Interval) (Lubrication Piping)

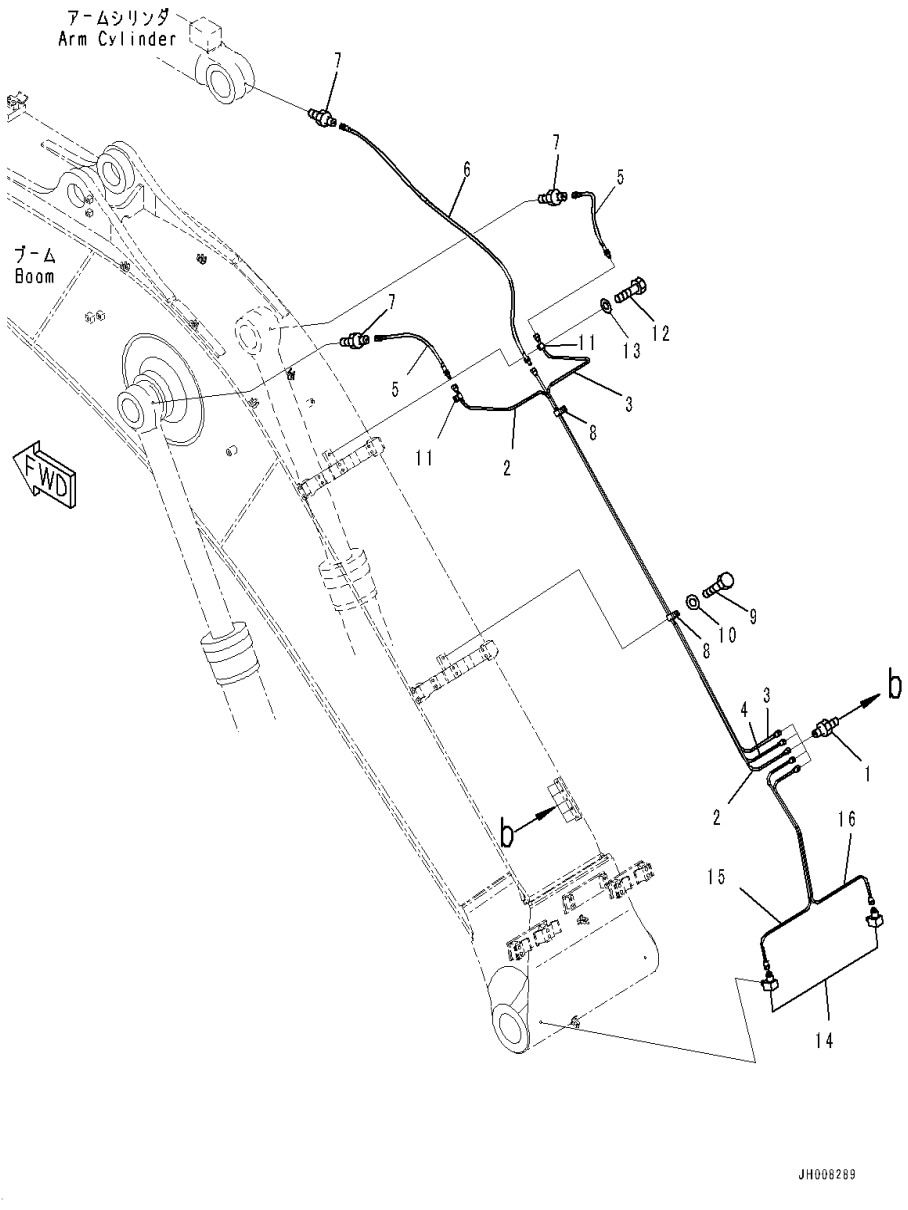

Index	Code	Part Number	Description	Qty	Serial Number
1		20Y-70-11540	Connector	5	C90001-
2		207-70-77310	Tube	1	C90001-
3		207-70-77320	Tube	1	C90001-
4		207-70-77810	Tube	1	C90001-
5		20Y-70-11520	Hose	2	C90001-
6		207-70-77820	Hose	1	C90001-
7		205-70-51390	Nipple	3	C90001-
8		04434-51912	Clip	2	C90001-
9		01010-81220	Bolt	2	C90001-
10		01643-31232	Washer	2	C90001-
11		04434-50812	Clip	2	C90001-
12		01010-81220	Bolt	2	C90001-
13		01643-31232	Washer	2	C90001-
14		20Y-25-11270	Elbow	2	C90001-
15		207-70-77341	Tube	1	C90001-
16		207-70-77351	Tube	1	C90001-

FIG. T1110-001004 Boom (6500mm Heavy Duty Type, 100 Hours Lubrication Interval) (Bucket Cylinder Piping)

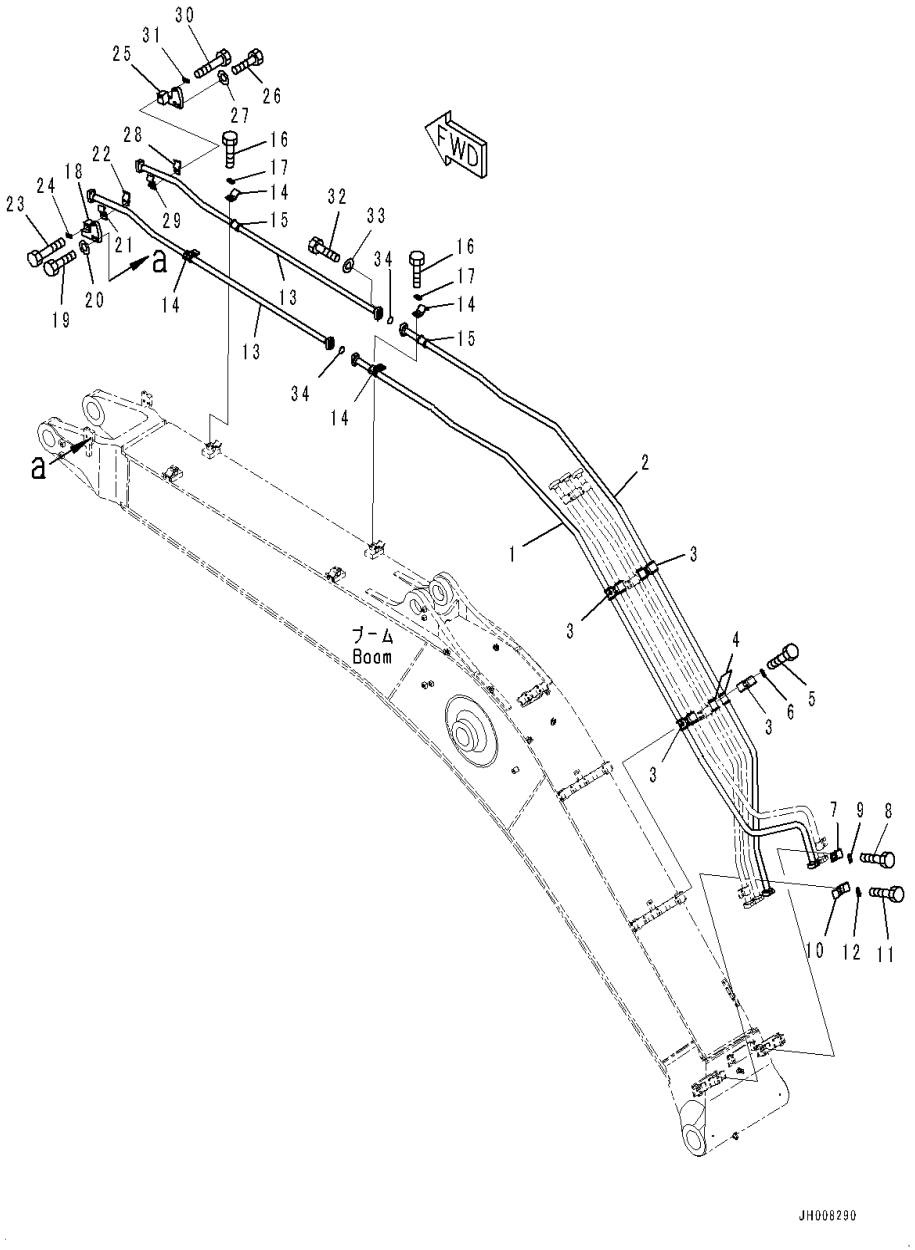

Index	Code	Part Number	Description	Qty	Serial Number
1		207-62-74111	Tube	1	C90001-
2		207-62-74121	Tube	1	C90001-
3		207-62-54780	Clamp	4	C90001-
4		205-62-73431	Seat	8	C90001-
5		01010-81235	Bolt	8	C90001-
6		20Y-62-13450	Plate	4	C90001-
7		207-62-31330	Clamp	1	C90001-
8		01010-81235	Bolt	2	C90001-
9		20Y-62-13450	Plate	1	C90001-
10		207-62-54760	Clamp	1	C90001-
11		01010-81235	Bolt	2	C90001-
12		20Y-62-13450	Plate	1	C90001-
13		207-62-74141	Tube	2	C90001-
14		207-62-52350	Clamp	4	C90001-
15		205-62-73431	Seat	4	C90001-
16		01010-81235	Bolt	8	C90001-
17		20Y-62-13450	Plate	4	C90001-
18		207-62-74390	Bracket	1	C90001-
19		01010-81655	Bolt	2	C90001-
20		01643-31645	Washer	2	C90001-
21		208-970-7220	Clamp	1	C90001-
22		208-62-76910	Clamp	1	C90001-
23		01010-81280	Bolt	2	C90001-
24		20Y-62-13450	Plate	1	C90001-
25		207-62-74490	Bracket	1	C90001-
26		01010-81655	Bolt	2	C90001-
27		01643-31645	Washer	2	C90001-
28		208-970-7220	Clamp	1	C90001-
29		208-62-76910	Clamp	1	C90001-
30		01010-81280	Bolt	2	C90001-
31		20Y-62-13450	Plate	1	C90001-
32		07372-21040	Bolt	8	C90001-
33		01643-51032	Washer	8	C90001-
34		07000-13035	O-ring	2	C90001-

FIG. T1110-001005 Boom(6500mm Heavy Duty Type,100 Hours Lubrication Interval) (Cylinder Pin and Working Lamp)

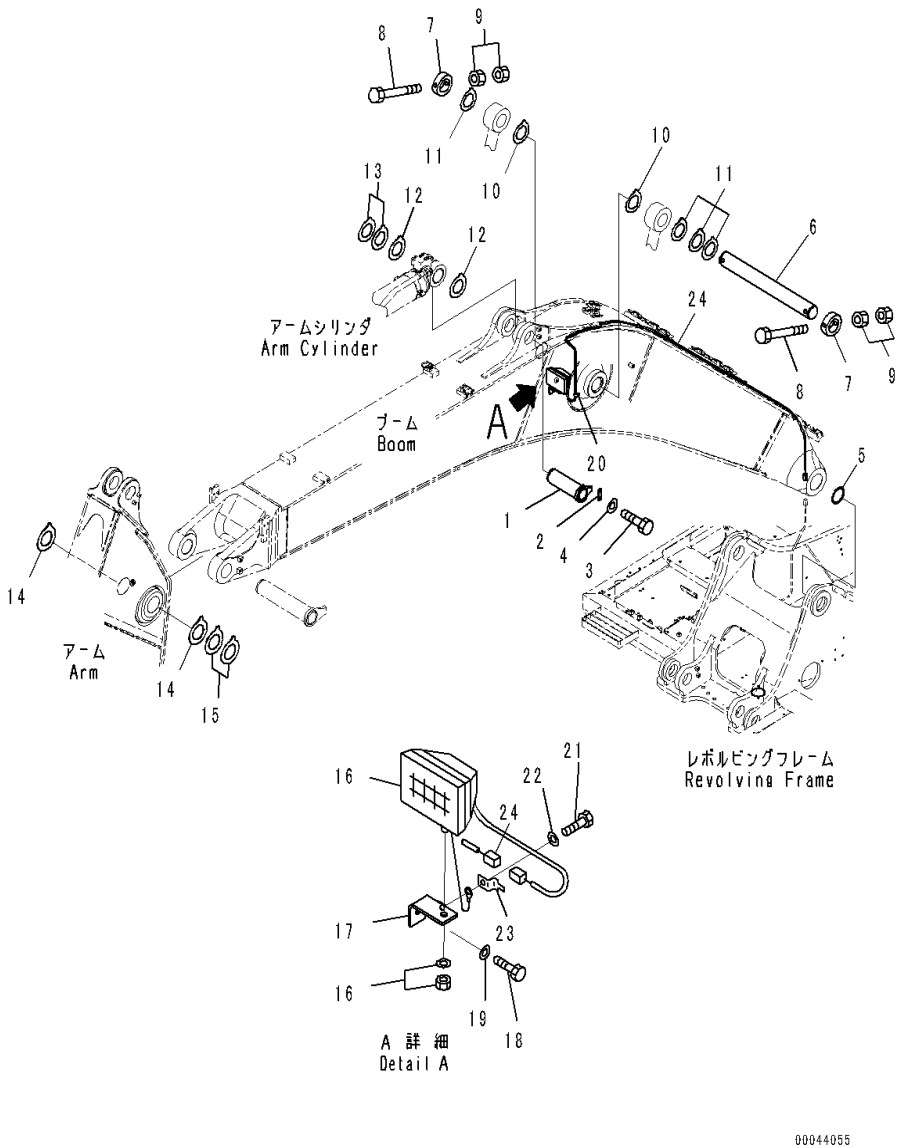

Index	Code	Part Number	Description	Qty	Serial Number
1		207-70-61192	Pin	1	C90001-
2		205-70-66581	Plate	1	C90001-
3		01010-81235	Bolt	2	C90001-
4		01643-31232	Washer	2	C90001-
5		07145-00110	Seal, Dust	2	C90001-
6		207-70-31172	Pin	1	C90001-
7		207-70-31242	Plate	2	C90001-
8		207-70-13340	Bolt	2	C90001-
9		01580-12419	Nut	4	C90001-
10		207-70-31340	Spacer, T=0.8mm	2	C90001-
11		207-70-51320	Spacer, T=1.5mm	5	C90001-
12		207-70-11340	Spacer, T=0.8mm	3	C90001-
13		207-70-11350	Spacer, T=1.5mm	2	C90001-
14		207-70-11360	Spacer, T=1.0mm	2	C90001-
15		207-70-11370	Spacer, T=1.5mm	2	C90001-
16		20Y-06-43230	Working Lamp Assembly	1	C90001-
		421-06-23330	• Bulb, 70watt	1	C90001-
17		20Y-06-21551	Bracket	1	C90001-
18		01010-81430	Bolt	1	C90001-
19		01643-31445	Washer	1	C90001-
20		04434-51012	Clip	1	C90001-
21		01010-81220	Bolt	2	C90001-
22		01643-31232	Washer	2	C90001-
23		08193-20012	Clip	1	C90001-
24		207-06-75161	Wiring Harness	1	C90001-

FIG. T1110-001006 Boom (6500mm Heavy Duty Type, 100 Hours Lubrication Interval) (Attachment Plug)

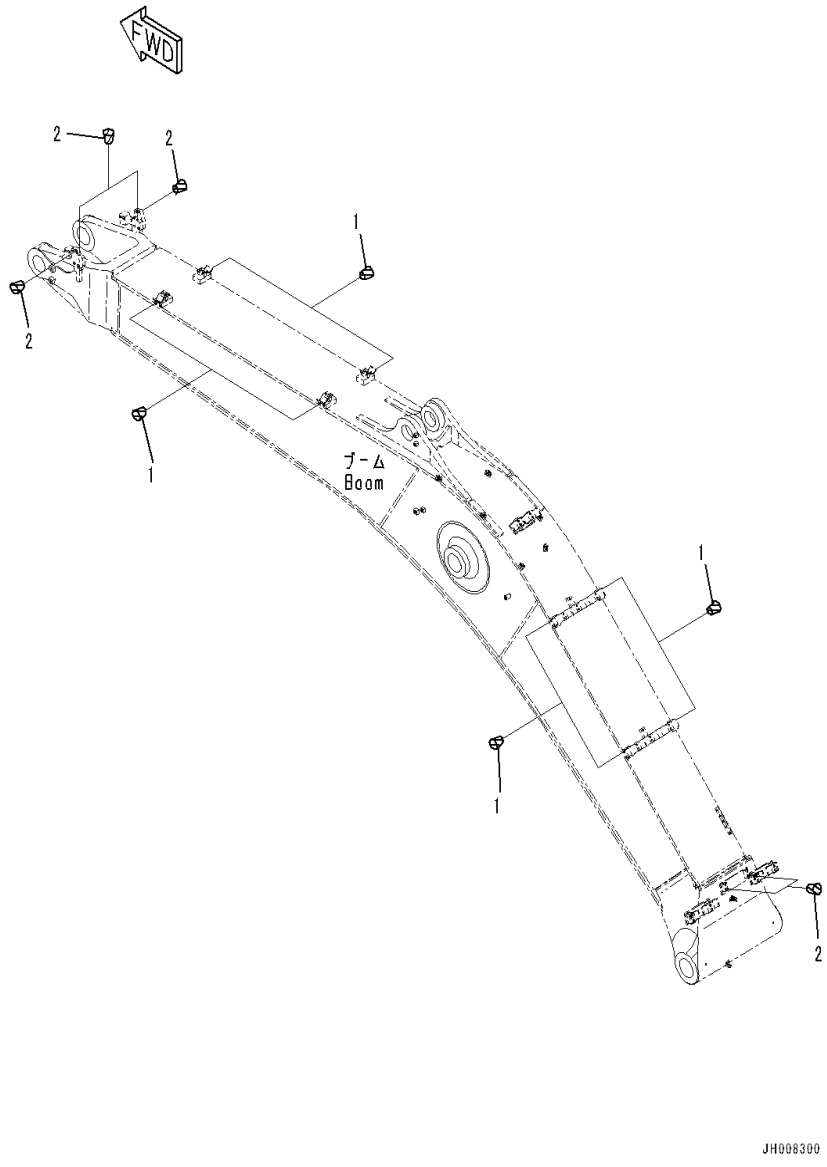

Index	Code	Part Number	Description	Qty	Serial Number
1		07049-01620	Plug	16	C90001-
2		07049-01215	Plug	12	C90001-

FIG. T1110-002001 Boom (6500mm Reinforced Type, Quarry, 100 Hours Lubrication Interval) (Boom and Top Pin)

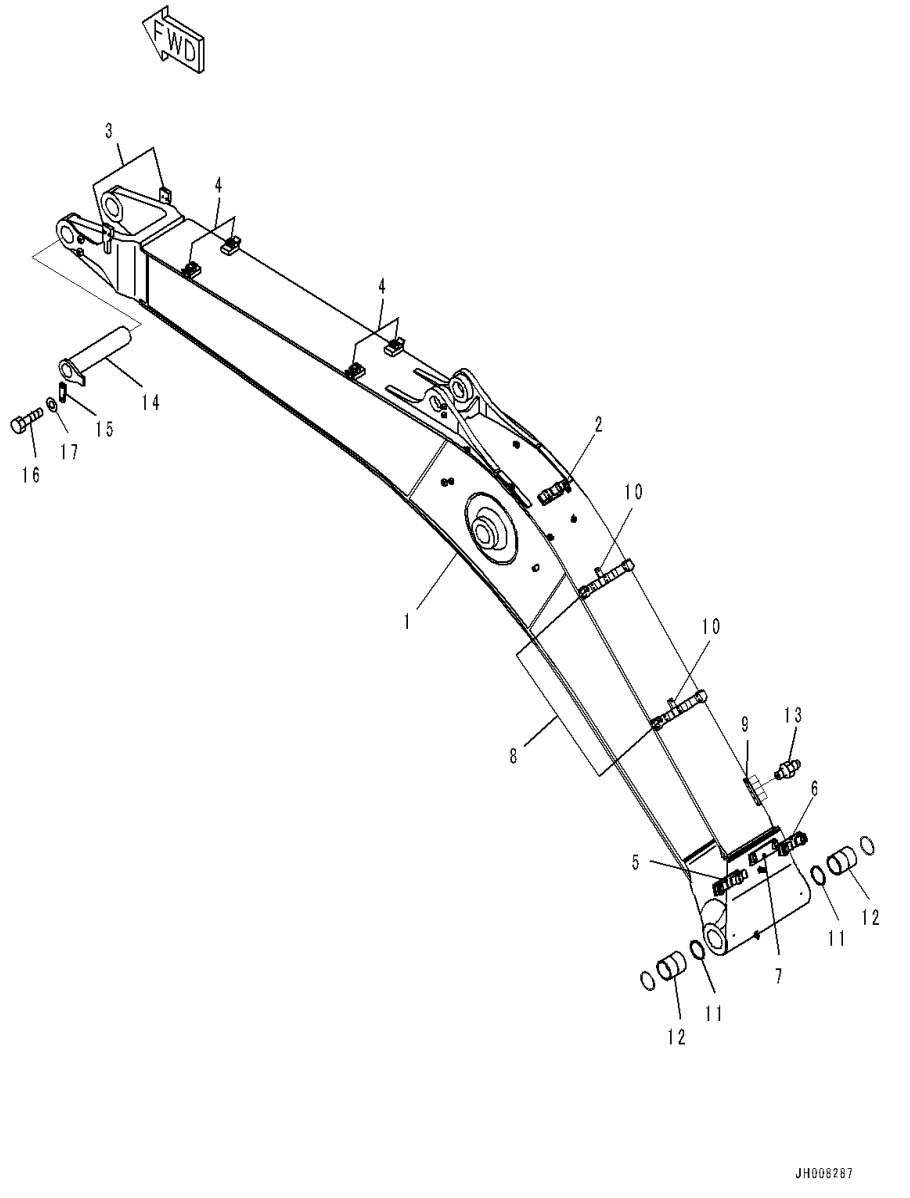

Index	Code	Part Number	Description	Qty	Serial Number
		207-70-C2030	Boom Assembly	1	C90001-
1	C1		• Boom	1	C90001-
2		207-62-42830	• • Bracket	1	C90001-
3		207-62-74221	• • Bracket,Welded	2	C90001-
4		207-62-74230	• • Bracket,Welded	4	C90001-
5		207-62-74240	• • Bracket,Welded	1	C90001-
6		207-62-74251	• • Bracket,Welded	1	C90001-
7		207-62-74281	• • Bracket,Welded	1	C90001-
8		207-70-77651	• • Bracket,Welded	2	C90001-
9		2A5-70-11130	• • Plate,Welded	1	C90001-
10		01573-12306	• • Seat, Welded	2	C90001-
11		07145-00110	Seal, Dust	2	C90001-
12		207-70-61610	Bushing	2	C90001-
13		07020-00000	Fitting, Grease	5	C90001-
14		207-70-61182	Pin	1	C90001-
15		207-70-31230	Plate	1	C90001-
16		01010-81640	Bolt	2	C90001-
17		01643-31645	Washer	2	C90001-

FIG. T1110-002002 Boom (6500mm Reinforced Type, Quarry, 100 Hours Lubrication Interval) (Arm Cylinder Piping)

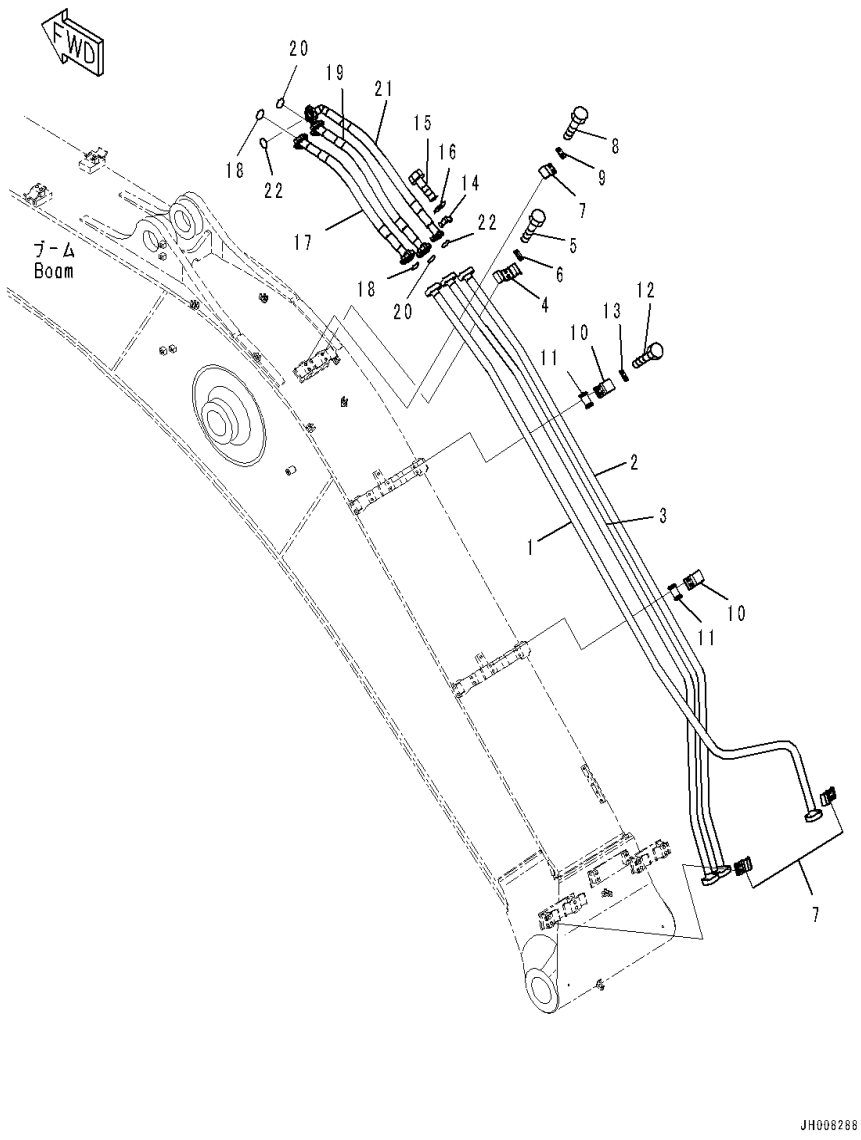

Index	Code	Part Number	Description	Qty	Serial Number
1		207-62-44161	Tube	1	C90001-
2		207-62-74132	Tube	1	C90001-
3		207-62-74151	Tube	1	C90001-
4		207-62-54760	Clamp	1	C90001-
5		01010-81235	Bolt	2	C90001-
6		20Y-62-13450	Plate	1	C90001-
7		207-62-31330	Clamp	3	C90001-
8		01010-81235	Bolt	6	C90001-
9		20Y-62-13450	Plate	3	C90001-
10		207-62-52350	Clamp	2	C90001-
11		205-62-73431	Seat	2	C90001-
12		01010-81235	Bolt	4	C90001-
13		20Y-62-13450	Plate	2	C90001-
14		07371-31049	Flange, Split	12	C90001-
15		07372-21035	Bolt	24	C90001-
16		01643-51032	Washer	24	C90001-
17		07085-010A9	Hose, Flange Type	1	C90001-
18		07000-13032	O-ring	2	C90001-
19		07085-010A9	Hose, Flange Type	1	C90001-
20		07000-13032	O-ring	2	C90001-
21		207-62-76810	Hose	1	C90001-
22		07000-13032	O-ring	2	C90001-

FIG. T1110-002003 Boom (6500mm Reinforced Type, Quarry, 100 Hours Lubrication Interval) (Lubrication Piping)

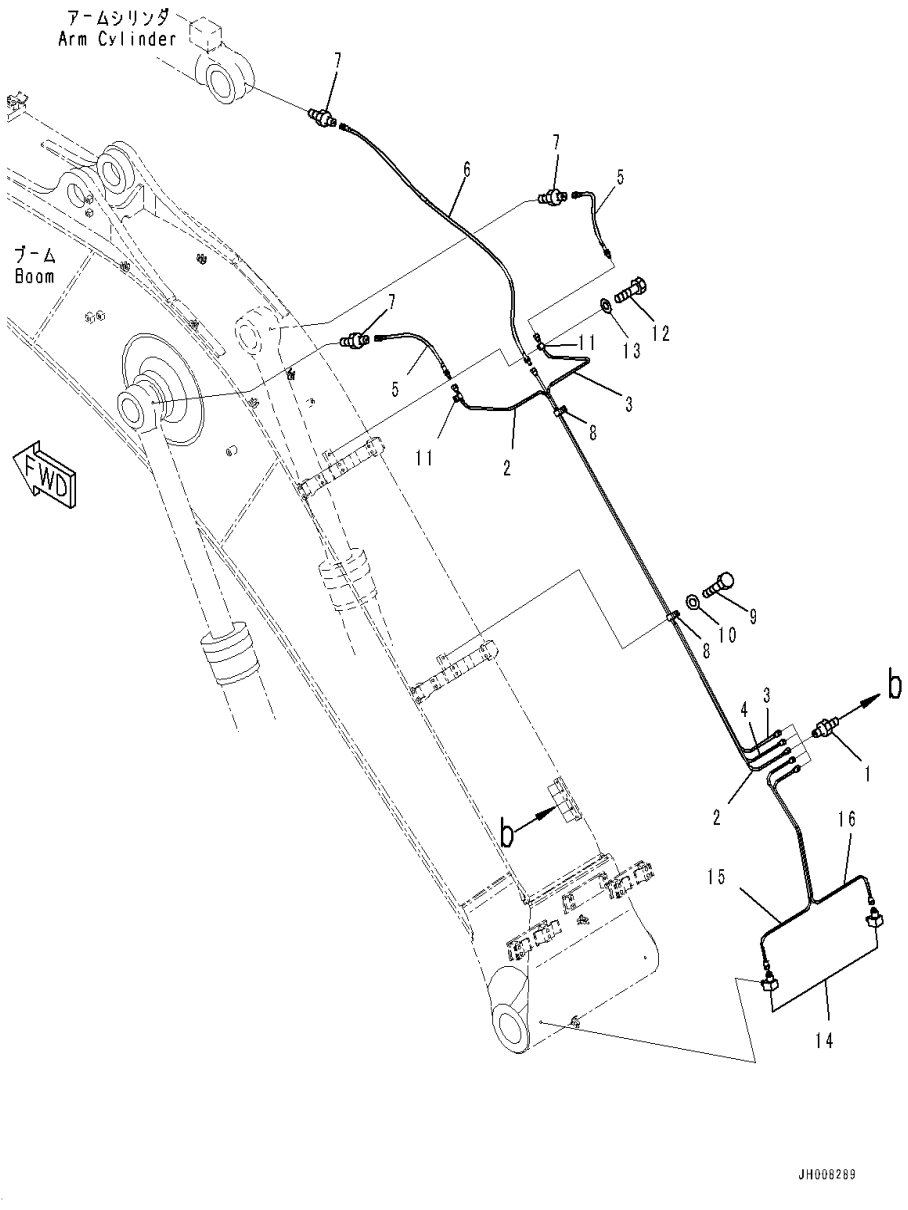

Index	Code	Part Number	Description	Qty	Serial Number
1		20Y-70-11540	Connector	5	C90001-
2		207-70-77310	Tube	1	C90001-
3		207-70-77320	Tube	1	C90001-
4		207-70-77810	Tube	1	C90001-
5		20Y-70-11520	Hose	2	C90001-
6		207-70-77820	Hose	1	C90001-
7		205-70-51390	Nipple	3	C90001-
8		04434-51912	Clip	2	C90001-
9		01010-81220	Bolt	2	C90001-
10		01643-31232	Washer	2	C90001-
11		04434-50812	Clip	2	C90001-
12		01010-81220	Bolt	2	C90001-
13		01643-31232	Washer	2	C90001-
14		20Y-25-11270	Elbow	2	C90001-
15		207-70-77341	Tube	1	C90001-
16		207-70-77351	Tube	1	C90001-

FIG. T1110-002004 Boom (6500mm Reinforced Type, Quarry, 100 Hours Lubrication Interval) (Bucket Cylinder Lines)

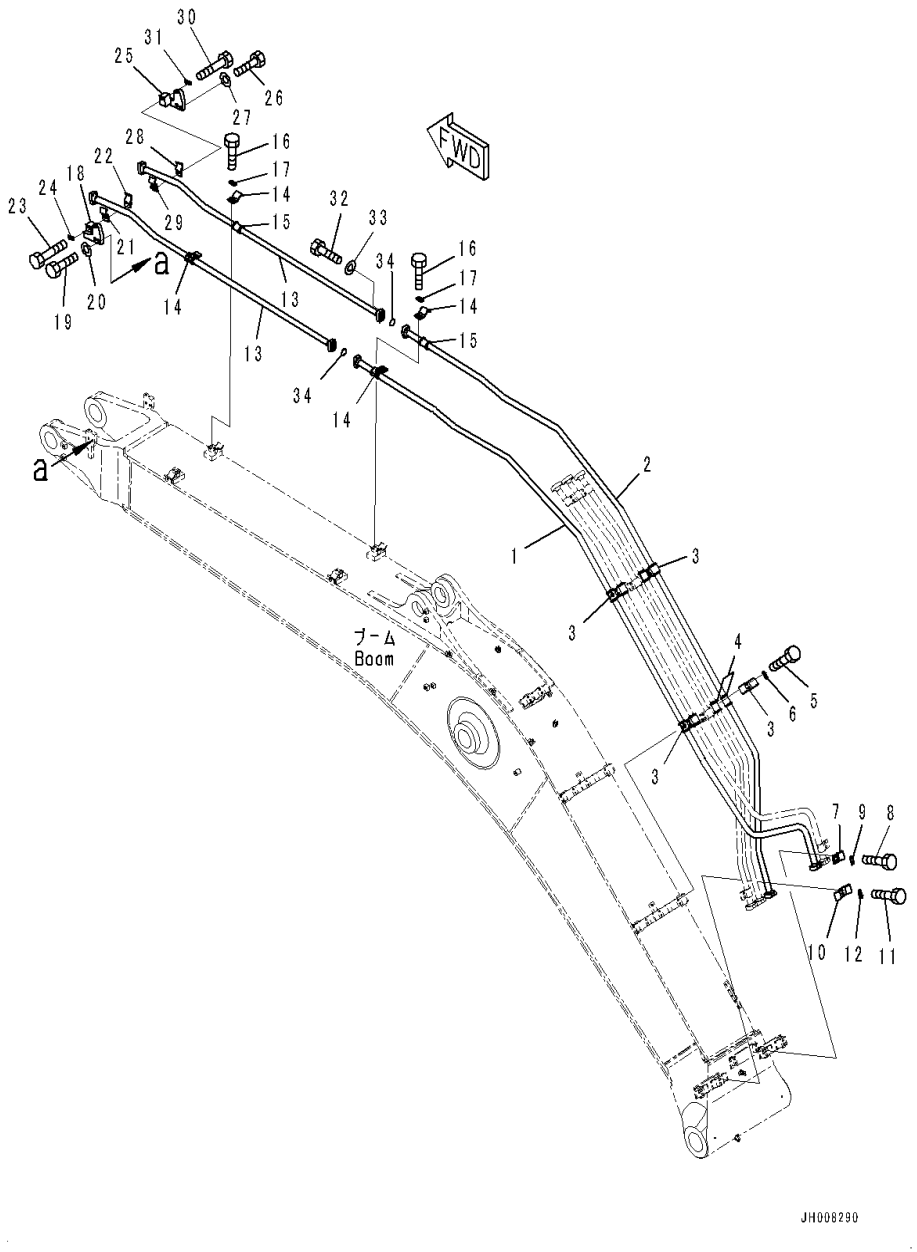

Index	Code	Part Number	Description	Qty	Serial Number
1		207-62-74111	Tube	1	C90001-
2		207-62-74121	Tube	1	C90001-
3		207-62-54780	Clamp	4	C90001-
4		205-62-73431	Seat	8	C90001-
5		01010-81235	Bolt	8	C90001-
6		20Y-62-13450	Plate	4	C90001-
7		207-62-31330	Clamp	1	C90001-
8		01010-81235	Bolt	2	C90001-
9		20Y-62-13450	Plate	1	C90001-
10		207-62-54760	Clamp	1	C90001-
11		01010-81235	Bolt	2	C90001-
12		20Y-62-13450	Plate	1	C90001-
13		207-62-74141	Tube	2	C90001-
14		207-62-52350	Clamp	4	C90001-
15		205-62-73431	Seat	4	C90001-
16		01010-81235	Bolt	8	C90001-
17		20Y-62-13450	Plate	4	C90001-
18		207-62-74390	Bracket	1	C90001-
19		01010-81655	Bolt	2	C90001-
20		01643-31645	Washer	2	C90001-
21		208-970-7220	Clamp	1	C90001-
22		208-62-76910	Clamp	1	C90001-
23		01010-81280	Bolt	2	C90001-
24		20Y-62-13450	Plate	1	C90001-
25		207-62-74490	Bracket	1	C90001-
26		01010-81655	Bolt	2	C90001-
27		01643-31645	Washer	2	C90001-
28		208-970-7220	Clamp	1	C90001-
29		208-62-76910	Clamp	1	C90001-
30		01010-81280	Bolt	2	C90001-
31		20Y-62-13450	Plate	1	C90001-
32		07372-21040	Bolt	8	C90001-
33		01643-51032	Washer	8	C90001-
34		07000-13035	O-ring	2	C90001-

FIG. T1110-002005 Boom (6500mm Reinforced Type, Quarry, 100 Hours Lubrication) (Cylinder Pin and Working Lamp)

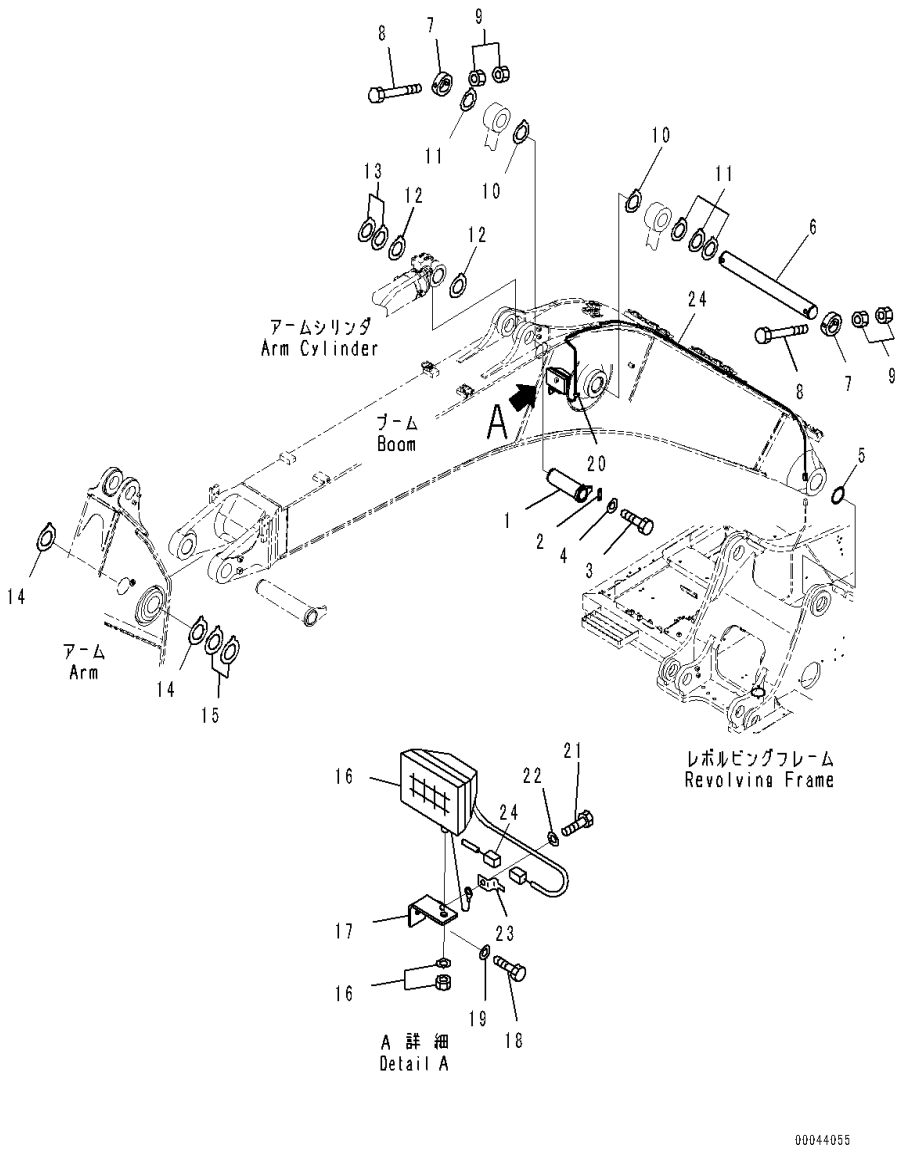

Index	Code	Part Number	Description	Qty	Serial Number
1		207-70-61192	Pin	1	C90001-
2		205-70-66581	Plate	1	C90001-
3		01010-81235	Bolt	2	C90001-
4		01643-31232	Washer	2	C90001-
5		07145-00110	Seal, Dust	2	C90001-
6		207-70-31172	Pin	1	C90001-
7		207-70-31242	Plate	2	C90001-
8		207-70-13340	Bolt	2	C90001-
9		01580-12419	Nut	4	C90001-
10		207-70-31340	Spacer, T=0.8mm	2	C90001-
11		207-70-51320	Spacer, T=1.5mm	5	C90001-
12		207-70-11340	Spacer, T=0.8mm	3	C90001-
13		207-70-11350	Spacer, T=1.5mm	2	C90001-
14		207-70-11360	Spacer, T=1.0mm	2	C90001-
15		207-70-11370	Spacer, T=1.5mm	2	C90001-
16		20Y-06-43230	Working Lamp Assembly	1	C90001-
		421-06-23330	• Bulb, 70watt	1	C90001-
17		20Y-06-21551	Bracket	1	C90001-
18		01010-81430	Bolt	1	C90001-
19		01643-31445	Washer	1	C90001-
20		04434-51012	Clip	1	C90001-
21		01010-81220	Bolt	2	C90001-
22		01643-31232	Washer	2	C90001-
23		08193-20012	Clip	1	C90001-
24		207-06-75161	Wiring Harness	1	C90001-

FIG. T1110-002006 Boom (6500mm Reinforced Type, Quarry, 100 Hours Lubrication Interval) (Attachment Plug)

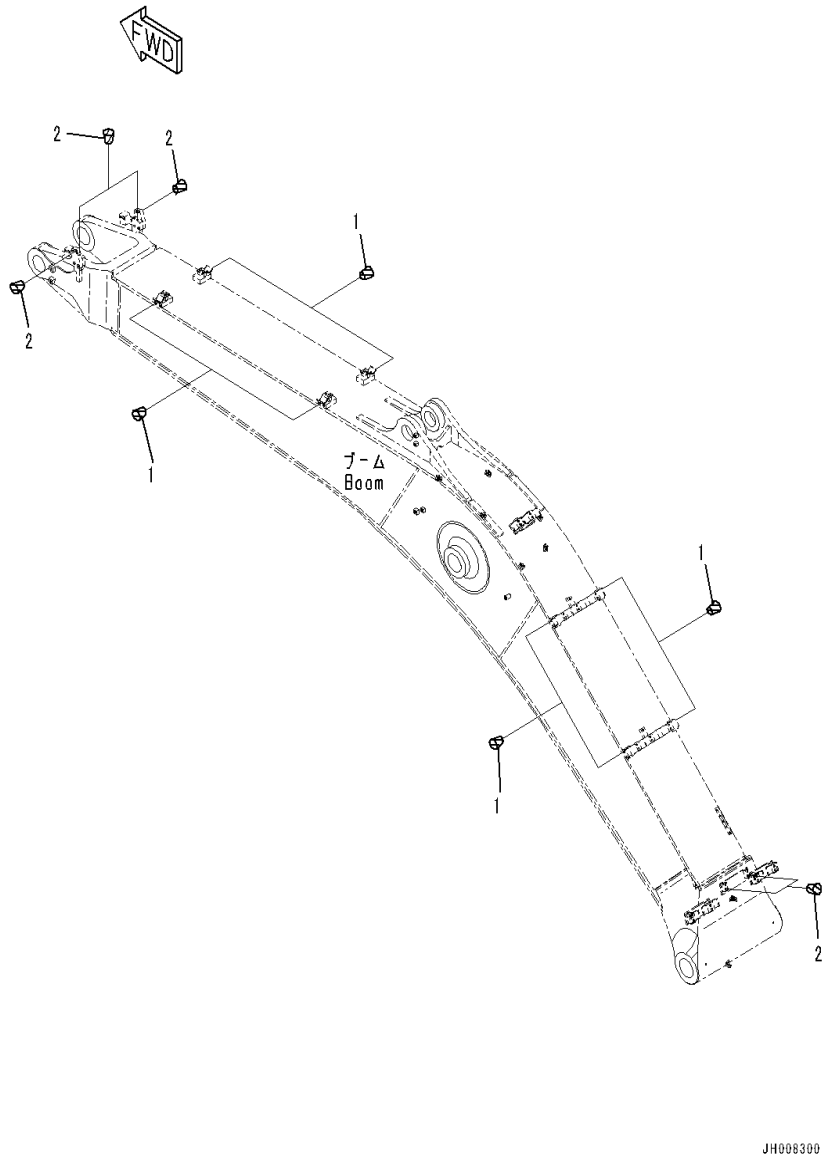

Index	Code	Part Number	Description	Qty	Serial Number
1		07049-01620	Plug	16	C90001-
2		07049-01215	Plug	12	C90001-

FIG. T1110-003001 Boom (6500mm,Heavy Duty Type,1-attachment,100 Hours Lubrication Interval) (Boom and Top Pin)

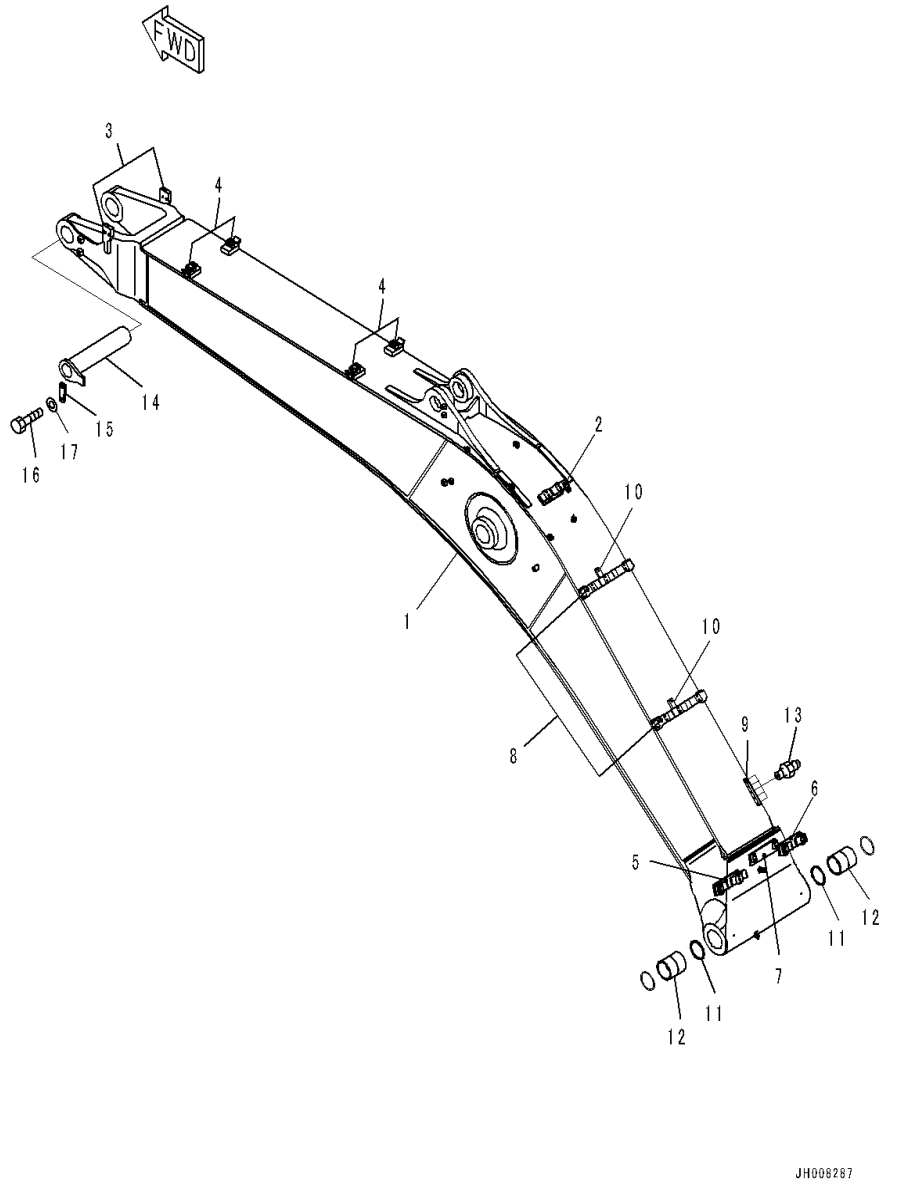

Index	Code	Part Number	Description	Qty	Serial Number
		207-70-01340	Boom Assembly	1	C90001-
1	C1		• Boom	1	C90001-
2		207-62-42830	• • Bracket	1	C90001-
3		207-62-74221	• • Bracket,Welded	2	C90001-
4		207-62-74230	• • Bracket,Welded	4	C90001-
5		207-62-74240	• • Bracket,Welded	1	C90001-
6		207-62-74251	• • Bracket,Welded	1	C90001-
7		207-62-74281	• • Bracket,Welded	1	C90001-
8		207-70-77651	• • Bracket,Welded	2	C90001-
9		2A5-70-11130	• • Plate,Welded	1	C90001-
10		01573-12306	• • Seat, Welded	2	C90001-
11		07145-00110	• Seal, Dust	2	C90001-
12		207-70-61610	• Bushing	2	C90001-
13		07020-00000	• Fitting, Grease	5	C90001-
14		207-70-61182	Pin	1	C90001-
15		207-70-31230	Plate	1	C90001-
16		01010-81640	Bolt	2	C90001-
17		01643-31645	Washer	2	C90001-

FIG. T1110-003002 Boom (6500mm,Heavy Duty Type,1-attachment,100 Hours) (Arm Cylinder Piping)

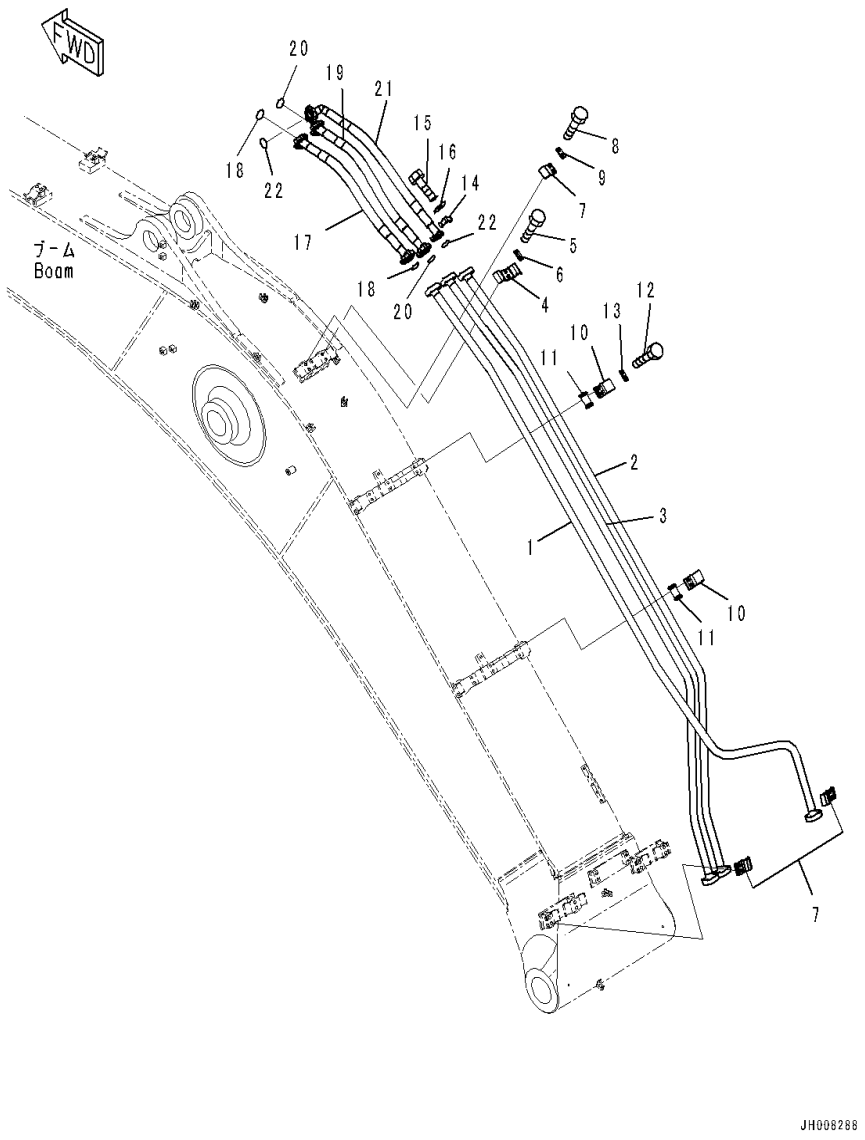

Index	Code	Part Number	Description	Qty	Serial Number
1		207-62-44161	Tube	1	C90001-
2		207-62-74132	Tube	1	C90001-
3		207-62-74151	Tube	1	C90001-
4		207-62-54760	Clamp	1	C90001-
5		01010-81235	Bolt	2	C90001-
6		20Y-62-13450	Plate	1	C90001-
7		207-62-31330	Clamp	3	C90001-
8		01010-81235	Bolt	6	C90001-
9		20Y-62-13450	Plate	3	C90001-
10		207-62-52350	Clamp	2	C90001-
11		205-62-73431	Seat	2	C90001-
12		01010-81235	Bolt	4	C90001-
13		20Y-62-13450	Plate	2	C90001-
14		07371-31049	Flange, Split	12	C90001-
15		07372-21035	Bolt	24	C90001-
16		01643-51032	Washer	24	C90001-
17		07085-010A9	Hose, Flange Type	1	C90001-
18		07000-13032	O-ring	2	C90001-
19		07085-010A9	Hose, Flange Type	1	C90001-
20		07000-13032	O-ring	2	C90001-
21		207-62-76810	Hose	1	C90001-
22		07000-13032	O-ring	2	C90001-

FIG. T1110-003003 Boom (6500mm,Heavy Duty Type,1-attachment,100 Hours) (Lubrication Piping)

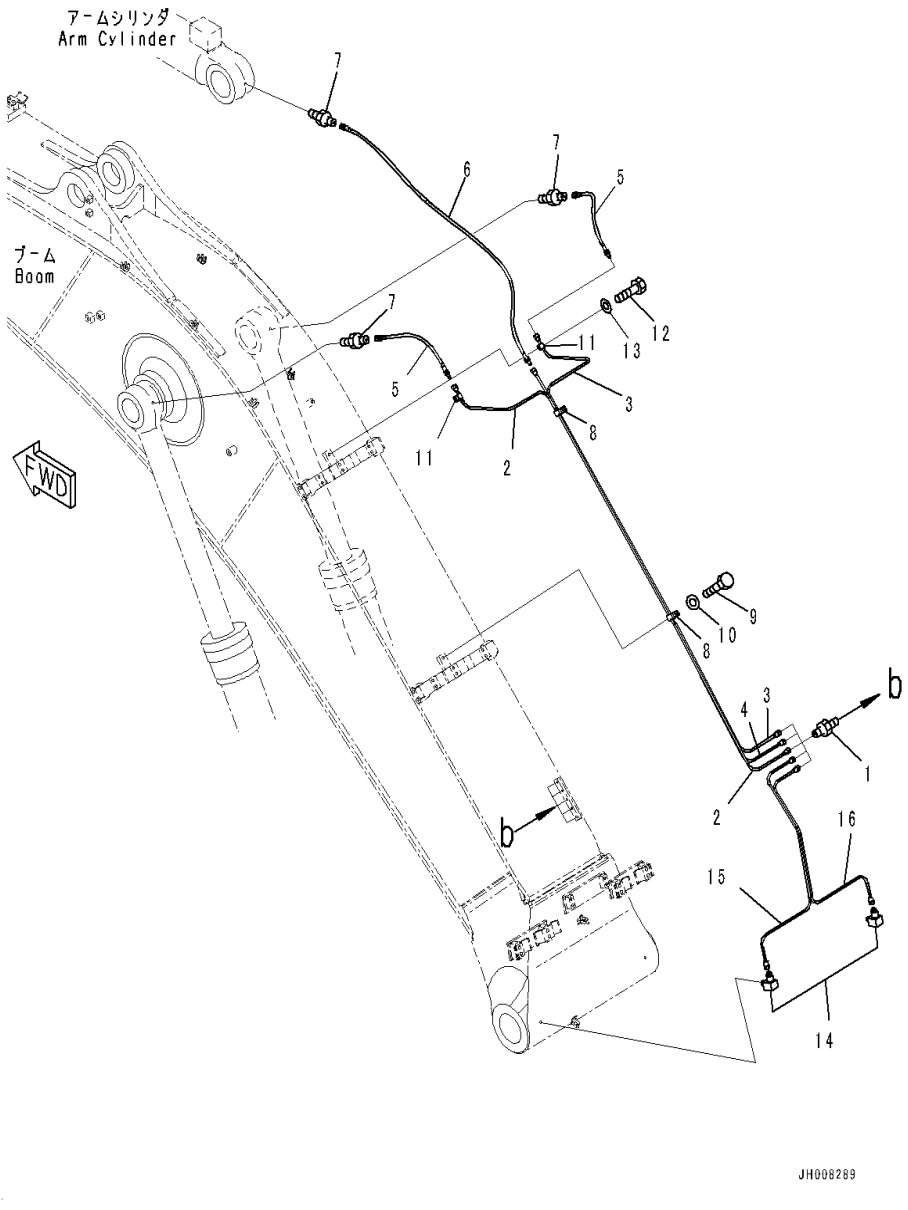

Index	Code	Part Number	Description	Qty	Serial Number
1		20Y-70-11540	Connector	5	C90001-
2		207-70-77310	Tube	1	C90001-
3		207-70-77320	Tube	1	C90001-
4		207-70-77810	Tube	1	C90001-
5		20Y-70-11520	Hose	2	C90001-
6		207-70-77820	Hose	1	C90001-
7		205-70-51390	Nipple	3	C90001-
8		04434-51912	Clip	2	C90001-
9		01010-81220	Bolt	2	C90001-
10		01643-31232	Washer	2	C90001-
11		04434-50812	Clip	2	C90001-
12		01010-81220	Bolt	2	C90001-
13		01643-31232	Washer	2	C90001-
14		20Y-25-11270	Elbow	2	C90001-
15		207-70-77341	Tube	1	C90001-
16		207-70-77351	Tube	1	C90001-

FIG. T1110-003004 Boom (6500mm,Heavy Duty Type,1-attachment,100 Hours) (Bucket Cylinder Piping)

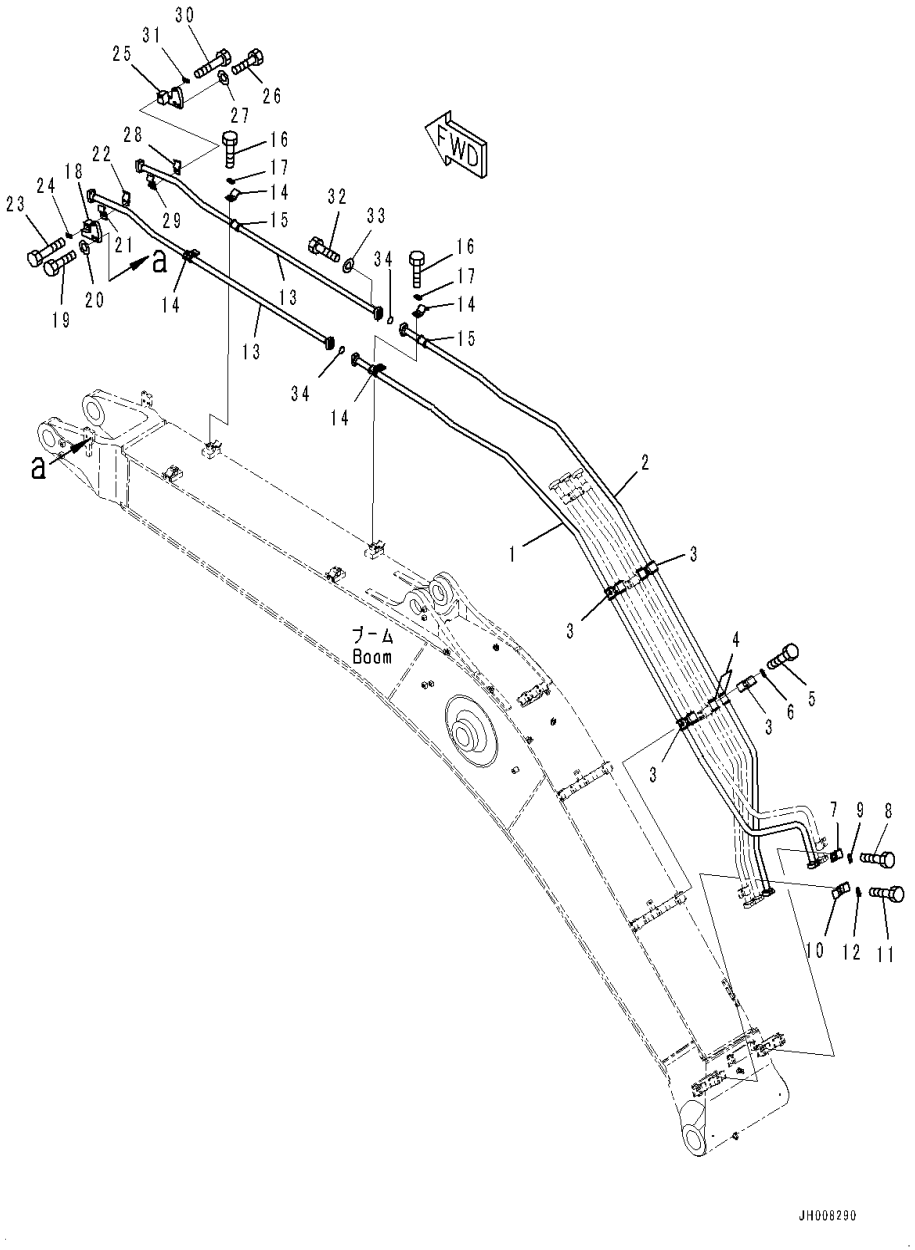

Index	Code	Part Number	Description	Qty	Serial Number
1		207-62-74111	Tube	1	C90001-
2		207-62-74121	Tube	1	C90001-
3		207-62-54780	Clamp	4	C90001-
4		205-62-73431	Seat	8	C90001-
5		01010-81235	Bolt	8	C90001-
6		20Y-62-13450	Plate	4	C90001-
7		207-62-31330	Clamp	1	C90001-
8		01010-81235	Bolt	2	C90001-
9		20Y-62-13450	Plate	1	C90001-
10		207-62-54760	Clamp	1	C90001-
11		01010-81235	Bolt	2	C90001-
12		20Y-62-13450	Plate	1	C90001-
13		207-62-74141	Tube	2	C90001-
14		207-62-52350	Clamp	4	C90001-
15		205-62-73431	Seat	4	C90001-
16		01010-81235	Bolt	8	C90001-
17		20Y-62-13450	Plate	4	C90001-
18		207-62-74390	Bracket	1	C90001-
19		01010-81655	Bolt	2	C90001-
20		01643-31645	Washer	2	C90001-
21		208-970-7220	Clamp	1	C90001-
22		208-62-76910	Clamp	1	C90001-
23		01010-81280	Bolt	2	C90001-
24		20Y-62-13450	Plate	1	C90001-
25		207-62-74490	Bracket	1	C90001-
26		01010-81655	Bolt	2	C90001-
27		01643-31645	Washer	2	C90001-
28		208-970-7220	Clamp	1	C90001-
29		208-62-76910	Clamp	1	C90001-
30		01010-81280	Bolt	2	C90001-
31		20Y-62-13450	Plate	1	C90001-
32		07372-21040	Bolt	8	C90001-
33		01643-51032	Washer	8	C90001-
34		07000-13035	O-ring	2	C90001-

FIG. T1110-003005 Boom (6500mm,Heavy Duty Type,1-attachment,100 Hours) (Cylinder Pin and Working Lamp)

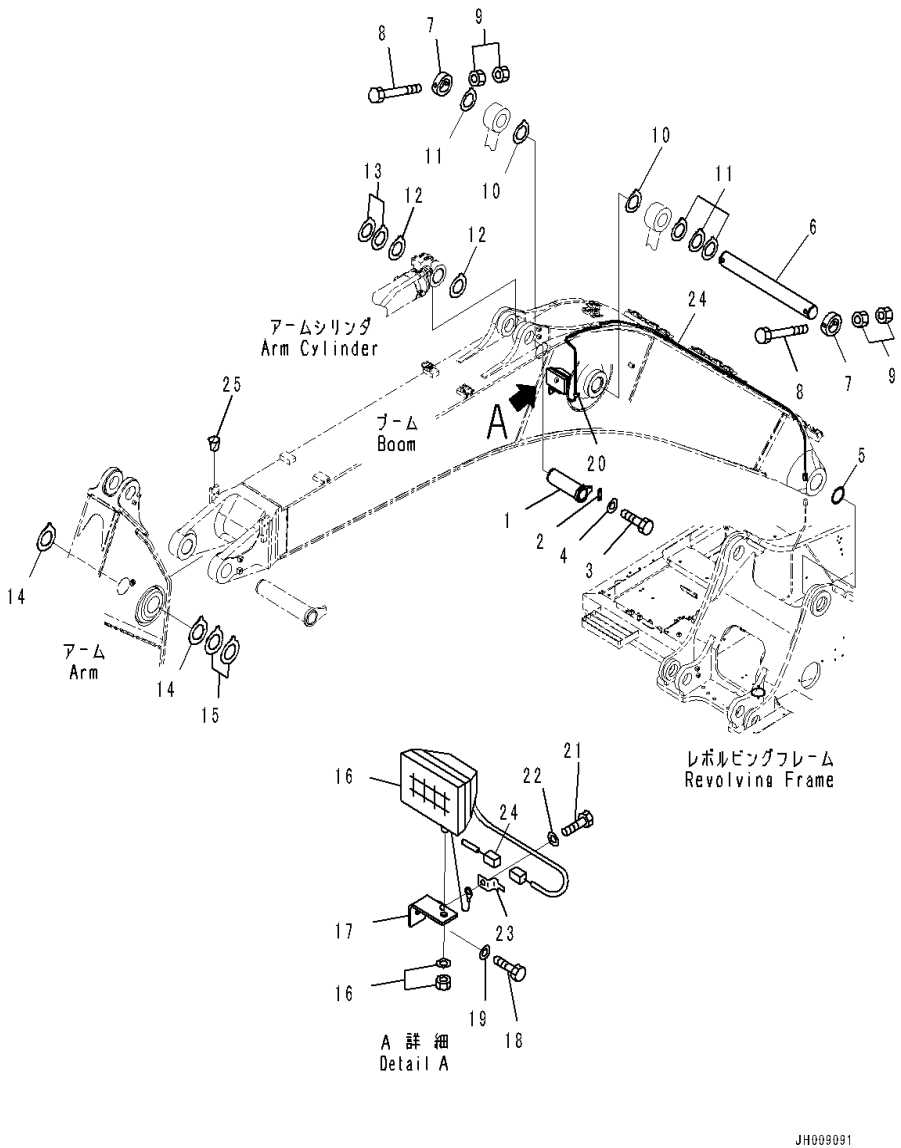

Index	Code	Part Number	Description	Qty	Serial Number
1		207-70-61192	Pin	1	C90001-
2		205-70-66581	Plate	1	C90001-
3		01010-81235	Bolt	2	C90001-
4		01643-31232	Washer	2	C90001-
5		07145-00110	Seal, Dust	2	C90001-
6		207-70-31172	Pin	1	C90001-
7		207-70-31242	Plate	2	C90001-
8		207-70-13340	Bolt	2	C90001-
9		01580-12419	Nut	4	C90001-
10		207-70-31340	Spacer, T=0.8mm	2	C90001-
11		207-70-51320	Spacer, T=1.5mm	5	C90001-
12		207-70-11340	Spacer, T=0.8mm	3	C90001-
13		207-70-11350	Spacer, T=1.5mm	2	C90001-
14		207-70-11360	Spacer, T=1.0mm	2	C90001-
15		207-70-11370	Spacer, T=1.5mm	2	C90001-
16		20Y-06-43230	Working Lamp Assembly	1	C90001-
		421-06-23330	• Bulb, 70watt	1	C90001-
17		20Y-06-21551	Bracket	1	C90001-
18		01010-81430	Bolt	1	C90001-
19		01643-31445	Washer	1	C90001-
20		04434-51012	Clip	1	C90001-
21		01010-81220	Bolt	2	C90001-
22		01643-31232	Washer	2	C90001-
23		08193-20012	Clip	1	C90001-
24		207-06-75161	Wiring Harness	1	C90001-
25		07049-01215	Plug	4	C90001-

FIG. T1110-003006 Boom (6500mm,Heavy Duty Type,1-attachment,100 Hours Lubrication Interval) (Additional Piping)

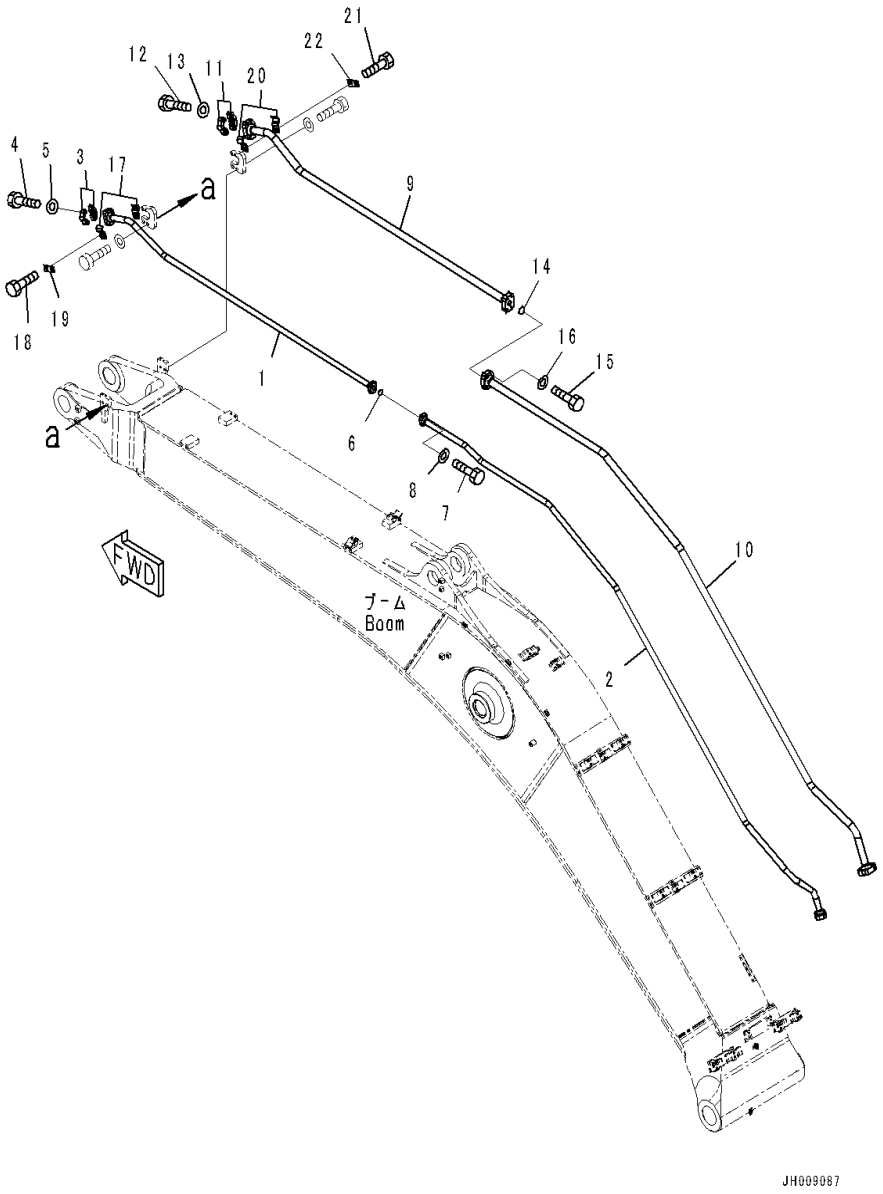

Index	Code	Part Number	Description	Qty	Serial Number
1		207-970-7110	Tube	1	C90001-
2		207-970-7130	Tube	1	C90001-
3		07371-51260	Flange, Split	2	C90001-
4		01010-81245	Bolt	4	C90001-
5		01643-31232	Washer	4	C90001-
6		07000-13035	O-ring	1	C90001-
7		07372-21040	Bolt	4	C90001-
8		01643-51032	Washer	4	C90001-
9		207-970-7120	Tube	1	C90001-
10		207-970-7140	Tube	1	C90001-
11		07371-51470	Flange, Split	2	C90001-
12		01010-81455	Bolt	4	C90001-
13		01643-31445	Washer	4	C90001-
14		07000-13048	O-ring	1	C90001-
15		01010-81455	Bolt	4	C90001-
16		01643-31445	Washer	4	C90001-
17		208-970-7220	Clamp	2	C90001-
18		01010-81235	Bolt	2	C90001-
19		20Y-62-13450	Plate	1	C90001-
20		208-970-7210	Clamp	2	C90001-
21		01010-81235	Bolt	2	C90001-
22		20Y-62-13450	Plate	1	C90001-

FIG. T1110-003007 Boom (6500mm,Heavy Duty Type,1-attachment,100 Hours Lubrication Interval (Clamp)

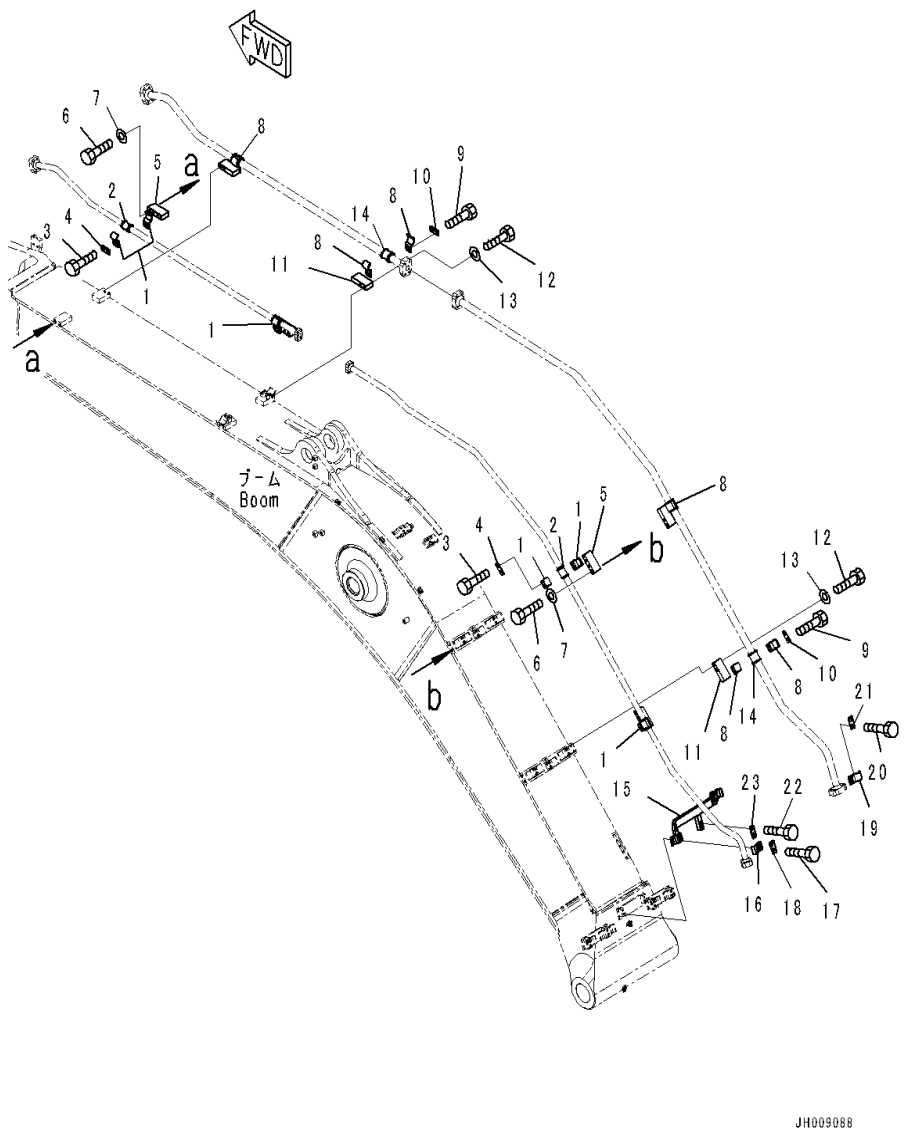

Index	Code	Part Number	Description	Qty	Serial Number
1		207-62-52350	Clamp	8	C90001-
2		205-62-73431	Seat	4	C90001-
3		01010-81235	Bolt	8	C90001-
4		20Y-62-13450	Plate	4	C90001-
5		207-970-7171	Bracket	4	C90001-
6		01010-81685	Bolt	8	C90001-
7		01643-31645	Washer	8	C90001-
8		207-970-7320	Clamp	8	C90001-
9		01010-81235	Bolt	8	C90001-
10		20Y-62-13450	Plate	4	C90001-
11		207-970-7171	Bracket	4	C90001-
12		01010-81685	Bolt	8	C90001-
13		01643-31645	Washer	8	C90001-
14		207-970-7331	Seat	4	C90001-
15		207-970-7162	Bracket	1	C90001-
16		207-62-31330	Clamp	1	C90001-
17		01010-81250	Bolt	2	C90001-
18		20Y-62-13450	Plate	1	C90001-
19		207-970-7310	Clamp	1	C90001-
20		01010-81235	Bolt	2	C90001-
21		20Y-62-13450	Plate	1	C90001-
22		01010-81250	Bolt	2	C90001-
23		20Y-62-13450	Plate	1	C90001-

FIG. T1110-004001 Boom (6000mm, SE, 100 Hours Lubrcation Interval) (Boom and Top Pin)

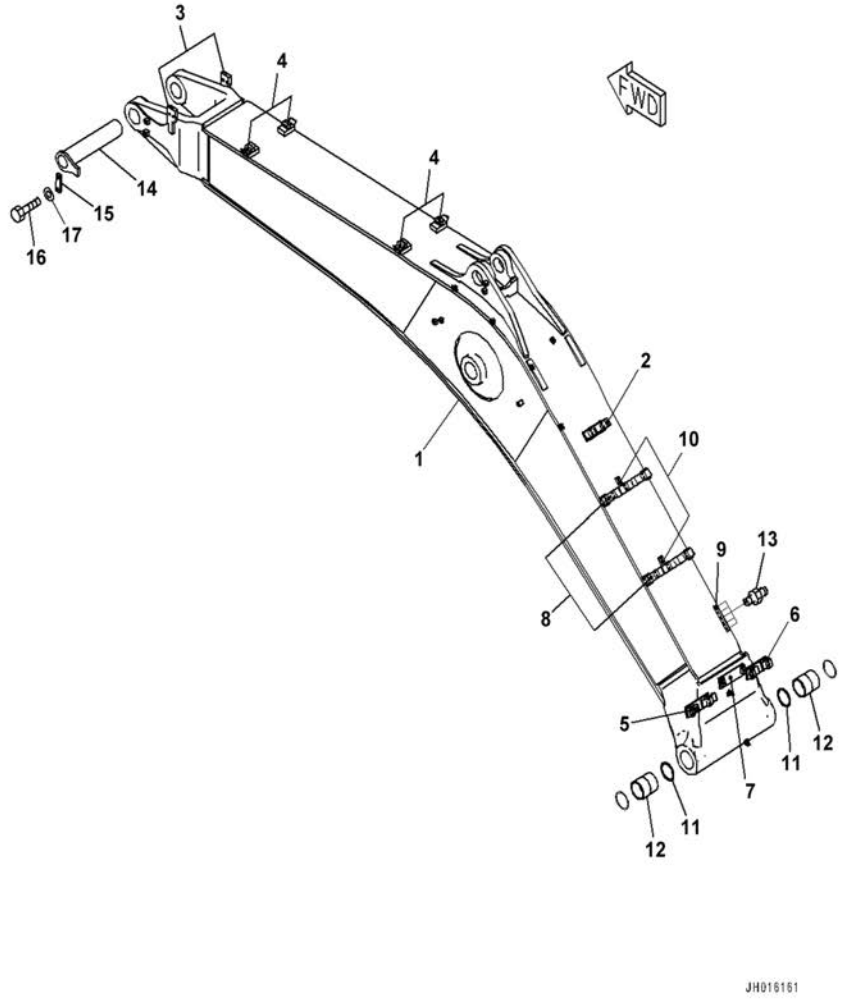

Index	Code	Part Number	Description	Qty	Serial Number
		207-70-01521	Boom Assembly	1	C90001-
1	C1	207-70-78110	• Boom	1	C90001-
2		207-62-78180	• • Bracket,Welded	1	C90001-
3		207-62-74221	• • Bracket,Welded	2	C90001-
4		207-62-74230	• • Bracket,Welded	4	C90001-
5		207-62-74240	• • Bracket,Welded	1	C90001-
6		207-62-74251	• • Bracket,Welded	1	C90001-
7		207-62-74281	• • Bracket,Welded	1	C90001-
8		207-70-77651	• • Bracket,Welded	2	C90001-
9		2A5-70-11130	• • Plate,Welded	1	C90001-
10		01573-12306	• • Seat,Welded	2	C90001-
11		07145-00110	• Seal,Dust	2	C90001-
12		207-70-61610	• Bushing	2	C90001-
13		07020-00000	• Fitting,Grease	5	C90001-
14		207-70-61182	Pin	1	C90001-
15		207-70-31230	Plate	1	C90001-
16		01010-81640	Bolt	2	C90001-
17		01643-31645	Washer	2	C90001-

FIG. T1110-004002 Boom (6000mm, SE, 100 Hours Lubrcation Interval) (Boom and Top Pin)

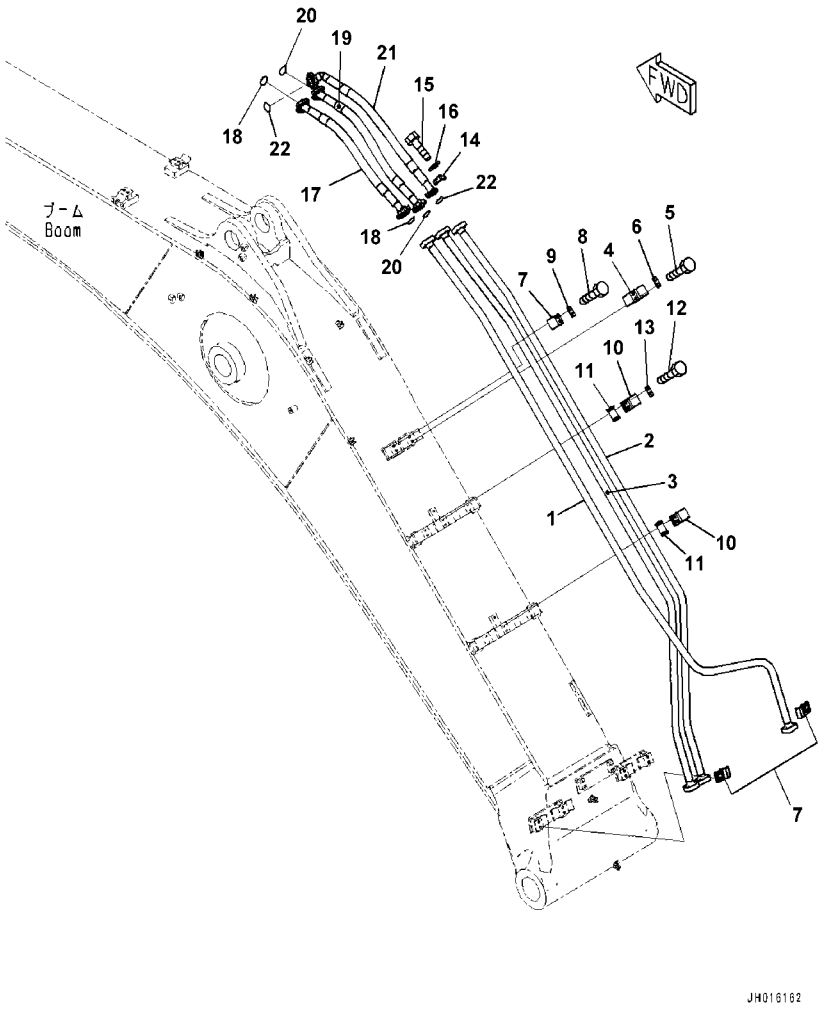

Index	Code	Part Number	Description	Qty	Serial Number
1		207-62-78110	Tube	1	C90001-
2		207-62-78120	Tube	1	C90001-
3		207-62-78130	Tube	1	C90001-
4		207-62-54760	Clamp	1	C90001-
5		01010-81235	Bolt	2	C90001-
6		20Y-62-13450	Plate	1	C90001-
7		207-62-31330	Clamp	3	C90001-
8		01010-81235	Bolt	6	C90001-
9		20Y-62-13450	Plate	3	C90001-
10		207-62-52350	Clamp	2	C90001-
11		205-62-73431	Seat	2	C90001-
12		01010-81235	Bolt	4	C90001-
13		20Y-62-13450	Plate	2	C90001-
14		07371-31049	Flange,Split	12	C90001-
15		07372-21035	Bolt	24	C90001-
16		01643-51032	Washer	24	C90001-
17		07085-01014	Hose,Flange Type	1	C90001-
18		07000-13032	O-ring	2	C90001-
19		07085-01014	Hose,Flange Type	1	C90001-
20		07000-13032	O-ring	2	C90001-
21		207-62-78260	Hose	1	C90001-
22		07000-13032	O-ring	2	C90001-

FIG. T1110-004003 Boom (6000mm, SE, 100 Hours Lubrcation Interval) (Lubrication Piping)

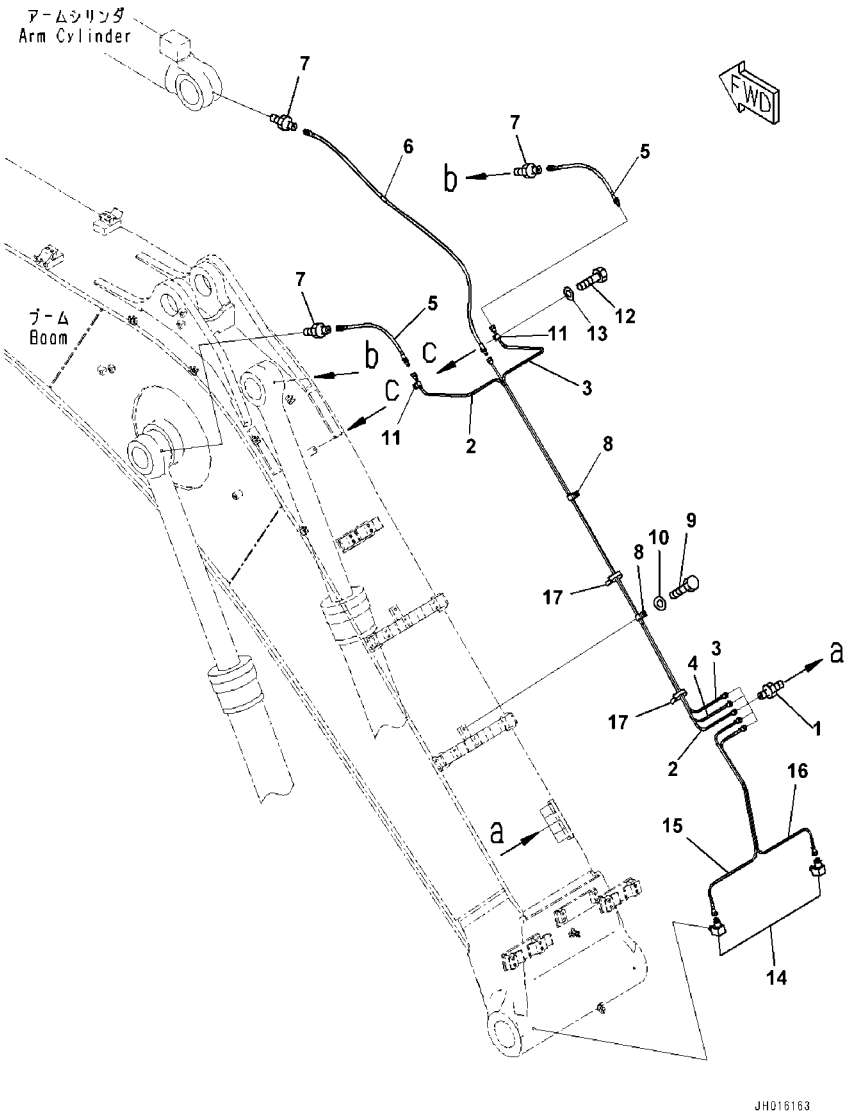

Index	Code	Part Number	Description	Qty	Serial Number
1		20Y-70-11540	Connector	5	C90001-
2		207-70-78220	Tube	1	C90001-
3		207-70-78230	Tube	1	C90001-
4		207-70-78210	Tube	1	C90001-
5		20Y-70-11520	Hose	2	C90001-
6		207-70-78260	Hose	1	C90001-
7		205-70-51390	Nipple	3	C90001-
8		04434-51912	Clip	2	C90001-
9		01010-81220	Bolt	2	C90001-
10		01643-31232	Washer	2	C90001-
11		04434-50812	Clip	2	C90001-
12		01010-81220	Bolt	2	C90001-
13		01643-31232	Washer	2	C90001-
14		20Y-25-11270	Elbow	2	C90001-
15		207-70-77341	Tube	1	C90001-
16		207-70-77351	Tube	1	C90001-
17		08034-20519	Band	2	C90001-

FIG. T1110-004004 Boom (6000mm, SE, 100 Hours Lubrcation Interval) (Bucket Cylinder Piping)

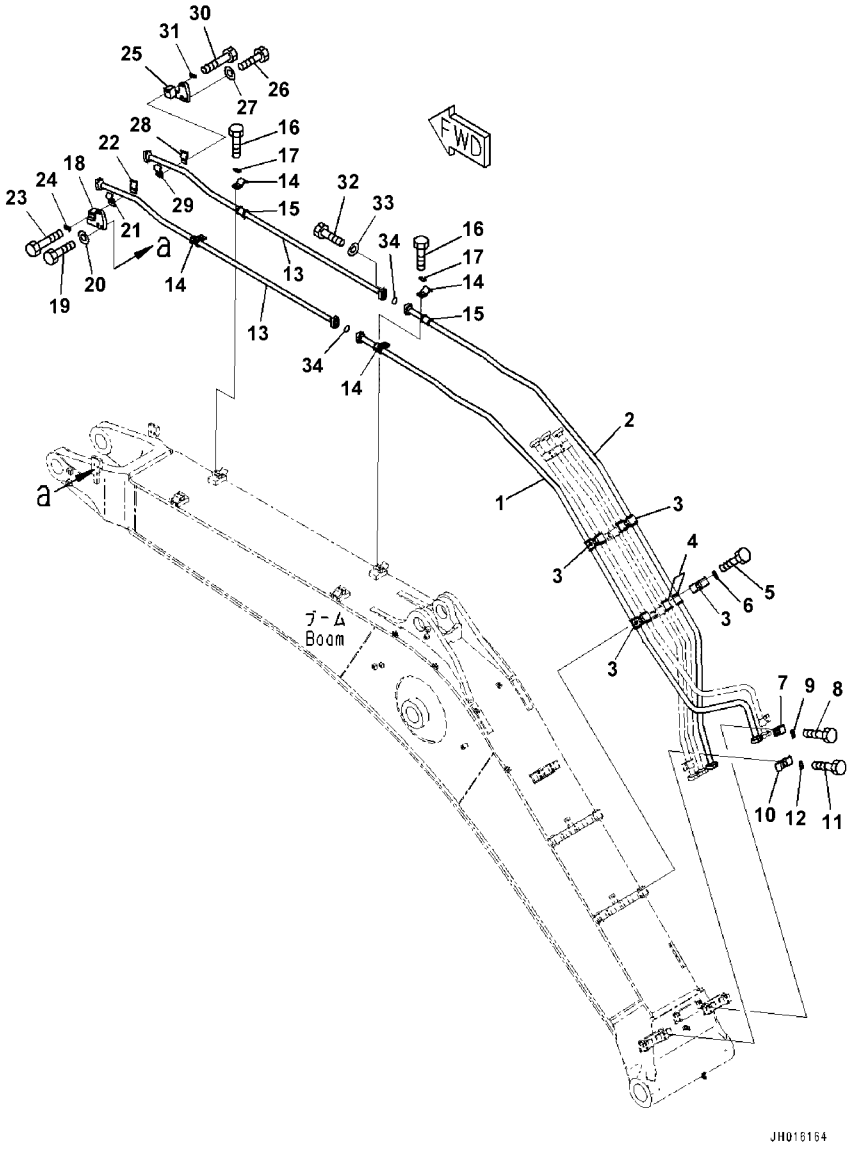

Index	Code	Part Number	Description	Qty	Serial Number
1		207-62-78140	Tube	1	C90001-
2		207-62-78150	Tube	1	C90001-
3		207-62-54780	Clamp	4	C90001-
4		205-62-73431	Seat	8	C90001-
5		01010-81235	Bolt	8	C90001-
6		20Y-62-13450	Plate	4	C90001-
7		207-62-31330	Clamp	1	C90001-
8		01010-81235	Bolt	2	C90001-
9		20Y-62-13450	Plate	1	C90001-
10		207-62-54760	Clamp	1	C90001-
11		01010-81235	Bolt	2	C90001-
12		20Y-62-13450	Plate	1	C90001-
13		207-62-74141	Tube	2	C90001-
14		207-62-52350	Clamp	4	C90001-
15		205-62-73431	Seat	4	C90001-
16		01010-81235	Bolt	8	C90001-
17		20Y-62-13450	Plate	4	C90001-
18		207-62-74390	Bracket	1	C90001-
19		01010-81655	Bolt	2	C90001-
20		01643-31645	Washer	2	C90001-
21		208-970-7220	Clamp	1	C90001-
22		208-62-76910	Clamp	1	C90001-
23		01010-81280	Bolt	2	C90001-
24		20Y-62-13450	Plate	1	C90001-
25		207-62-74490	Bracket	1	C90001-
26		01010-81655	Bolt	2	C90001-
27		01643-31645	Washer	2	C90001-
28		208-970-7220	Clamp	1	C90001-
29		208-62-76910	Clamp	1	C90001-
30		01010-81280	Bolt	2	C90001-
31		20Y-62-13450	Plate	1	C90001-
32		07372-21040	Bolt	8	C90001-
33		01643-51032	Washer	8	C90001-
34		07000-13035	O-ring	2	C90001-

FIG. T1110-004005 Boom (6000mm, SE, 100 Hours Lubrcation Interval) (Cylinder Pin and Working Lamp)

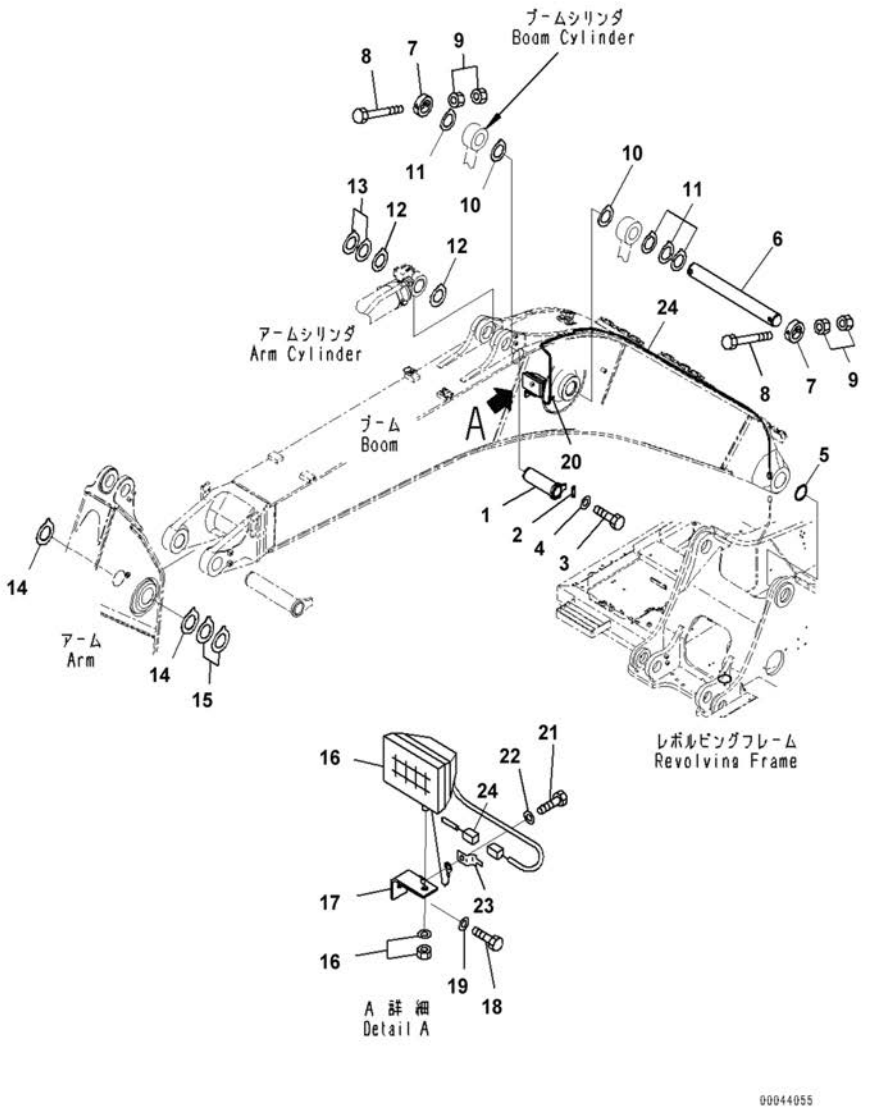

Index	Code	Part Number	Description	Qty	Serial Number
1		207-70-61192	Pin	1	C90001-
2		205-70-66581	Plate	1	C90001-
3		01010-81235	Bolt	2	C90001-
4		01643-31232	Washer	2	C90001-
5		07145-00110	Seal,Dust	2	C90001-
6		207-70-31172	Pin	1	C90001-
7		207-70-31242	Plate	2	C90001-
8		207-70-13340	Bolt	2	C90001-
9		01580-12419	Nut	4	C90001-
10		207-70-31340	Spacer,T=0.8mm	2	C90001-
11		207-70-51320	Spacer,T=1.5mm	5	C90001-
12		207-70-11340	Spacer,T=0.8mm	3	C90001-
13		207-70-11350	Spacer,T=1.5mm	2	C90001-
14		207-70-11360	Spacer,T=1.0mm	2	C90001-
15		207-70-11370	Spacer,T=1.5mm	2	C90001-
16		20Y-06-43230	Working Lamp Assembly	1	C90001-
		421-06-23330	• Bulb,70watt	1	C90001-
17		20Y-06-21551	Bracket	1	C90001-
18		01010-81430	Bolt	1	C90001-
19		01643-31445	Washer,Flat	1	C90001-
20		04434-51012	Clip	1	C90001-
21		01010-81220	Bolt	2	C90001-
22		01643-31232	Washer	2	C90001-
23		08193-20012	Clip	1	C90001-
24		207-06-75161	Wiring Harness	1	C90001-

FIG. T1110-004006 Boom (6000mm, SE, 100 Hours Lubrcation Interval) (Attachment Plug)

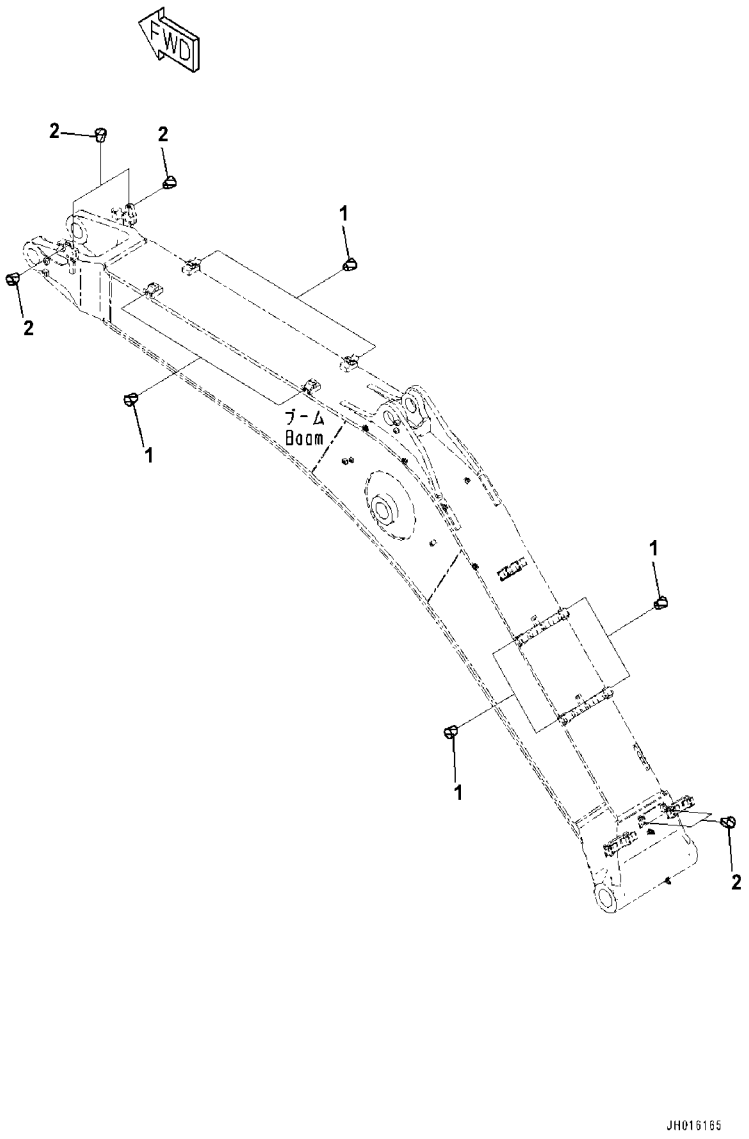

Index	Code	Part Number	Description	Qty	Serial Number
1		07049-01620	Plug	16	C90001-
2		07049-01215	Plug	12	C90001-

FIG. T1110-005001 Boom (6000mm, SE, 1-Attachment, 100 Hours Lubrcation Interval) (Boom and Top Pin)

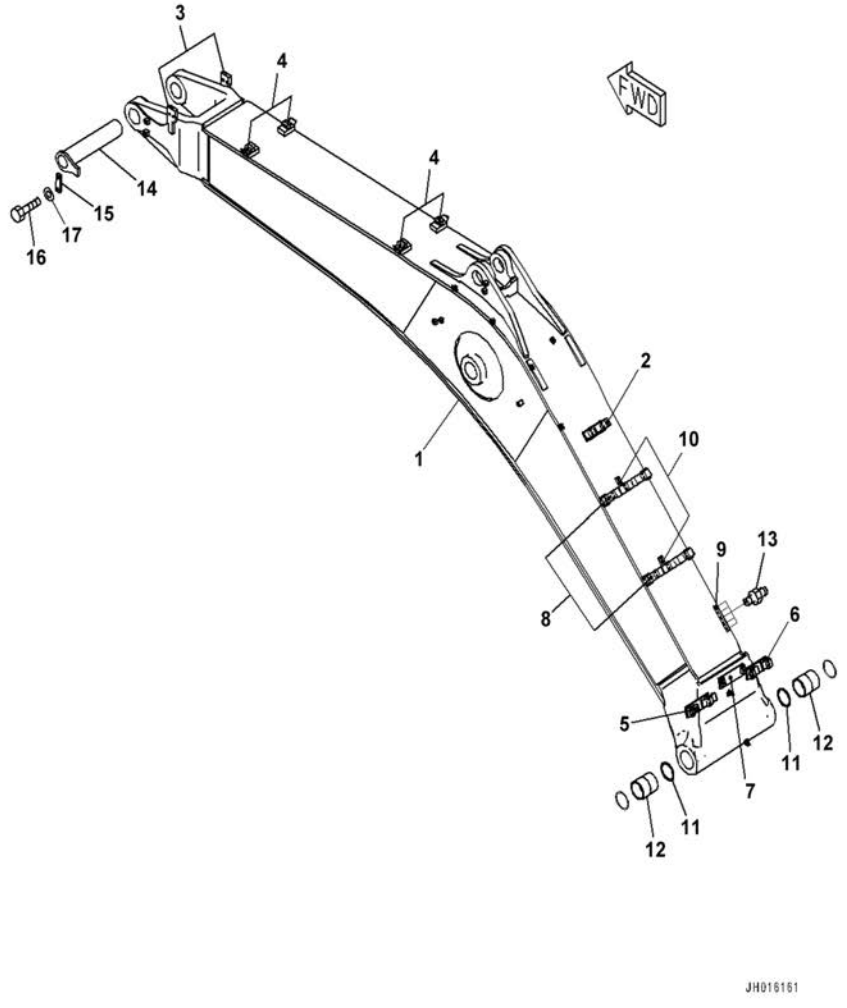

Index	Code	Part Number	Description	Qty	Serial Number
		207-70-01521	Boom Assembly	1	C90001-
1	C1		• Boom	1	C90001-
2		207-62-78180	• • Bracket,Welded	1	C90001-
3		207-62-74221	• • Bracket,Welded	2	C90001-
4		207-62-74230	• • Bracket,Welded	4	C90001-
5		207-62-74240	• • Bracket,Welded	1	C90001-
6		207-62-74251	• • Bracket,Welded	1	C90001-
7		207-62-74281	• • Bracket,Welded	1	C90001-
8		207-70-77651	• • Bracket,Welded	2	C90001-
9		2A5-70-11130	• • Plate,Welded	1	C90001-
10		01573-12306	• • Seat,Welded	2	C90001-
11		07145-00110	• Seal,Dust	2	C90001-
12		207-70-61610	• Bushing	2	C90001-
13		07020-00000	• Fitting,Grease	5	C90001-
14		207-70-61182	Pin	1	C90001-
15		207-70-31230	Plate	1	C90001-
16		01010-81640	Bolt	2	C90001-
17		01643-31645	Washer	2	C90001-

FIG. T1110-005002 Boom (6000mm, SE, 1-Attachment, 100 Hours Lubrcation Interval) (Boom and Top Pin)

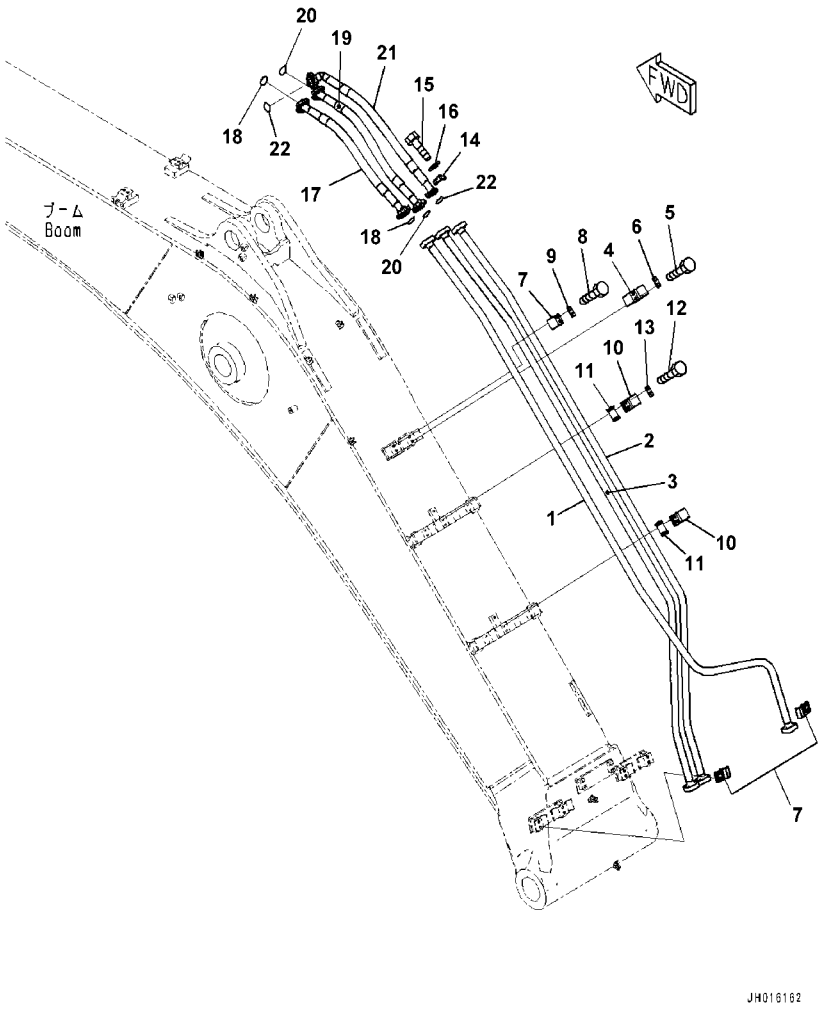

Index	Code	Part Number	Description	Qty	Serial Number
1		207-62-78110	Tube	1	C90001-
2		207-62-78120	Tube	1	C90001-
3		207-62-78130	Tube	1	C90001-
4		207-62-54760	Clamp	1	C90001-
5		01010-81235	Bolt	2	C90001-
6		20Y-62-13450	Plate	1	C90001-
7		207-62-31330	Clamp	3	C90001-
8		01010-81235	Bolt	6	C90001-
9		20Y-62-13450	Plate	3	C90001-
10		207-62-52350	Clamp	2	C90001-
11		205-62-73431	Seat	2	C90001-
12		01010-81235	Bolt	4	C90001-
13		20Y-62-13450	Plate	2	C90001-
14		07371-31049	Flange,Split	12	C90001-
15		07372-21035	Bolt	24	C90001-
16		01643-51032	Washer	24	C90001-
17		07085-01014	Hose,Flange Type	1	C90001-
18		07000-13032	O-ring	2	C90001-
19		07085-01014	Hose,Flange Type	1	C90001-
20		07000-13032	O-ring	2	C90001-
21		207-62-78260	Hose	1	C90001-
22		07000-13032	O-ring	2	C90001-

FIG. T1110-005003 Boom (6000mm, SE, 1-Attachment, 100 Hours Lubrcation Interval) (Lubrication Piping)

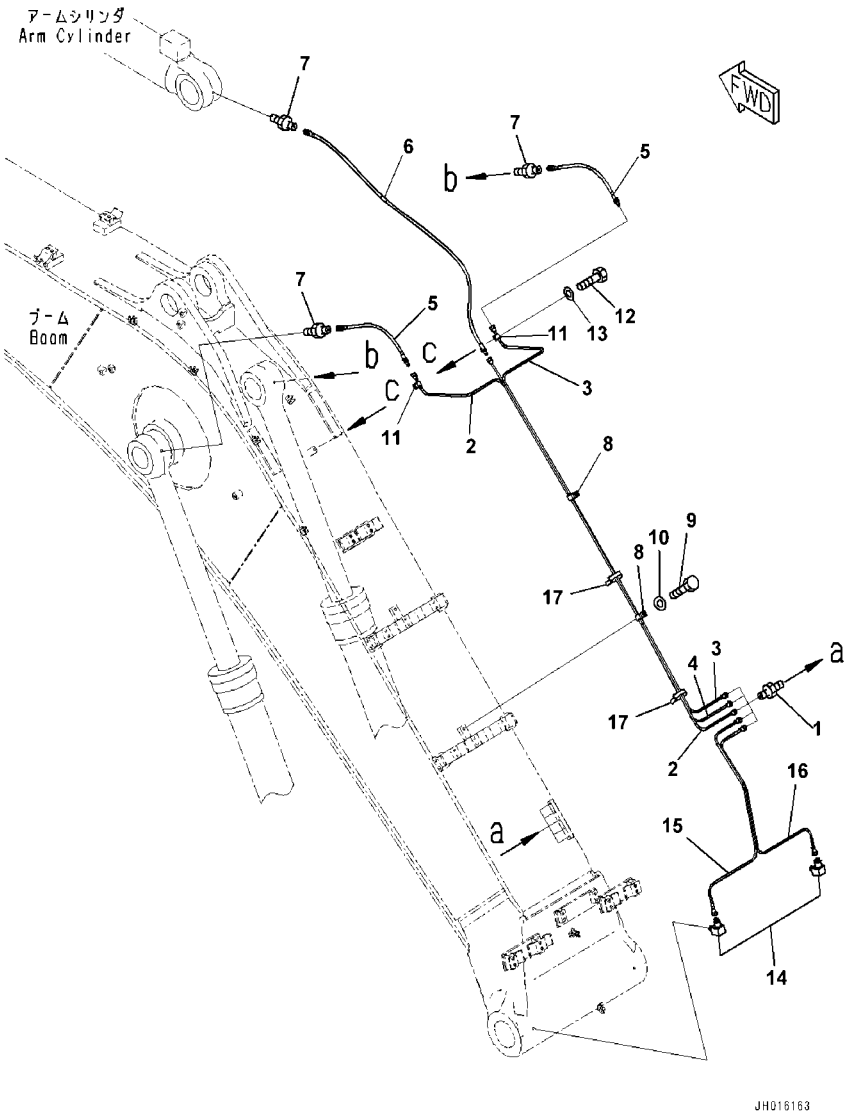

Index	Code	Part Number	Description	Qty	Serial Number
1		20Y-70-11540	Connector	5	C90001-
2		207-70-78220	Tube	1	C90001-
3		207-70-78230	Tube	1	C90001-
4		207-70-78210	Tube	1	C90001-
5		20Y-70-11520	Hose	2	C90001-
6		207-70-78260	Hose	1	C90001-
7		205-70-51390	Nipple	3	C90001-
8		04434-51912	Clip	2	C90001-
9		01010-81220	Bolt	2	C90001-
10		01643-31232	Washer	2	C90001-
11		04434-50812	Clip	2	C90001-
12		01010-81220	Bolt	2	C90001-
13		01643-31232	Washer	2	C90001-
14		20Y-25-11270	Elbow	2	C90001-
15		207-70-77341	Tube	1	C90001-
16		207-70-77351	Tube	1	C90001-
17		08034-20519	Band	2	C90001-

FIG. T1110-005004 Boom (6000mm, SE, 1-Attachment, 100 Hours Lubrcation Interval) (Bucket Cylinder Piping)

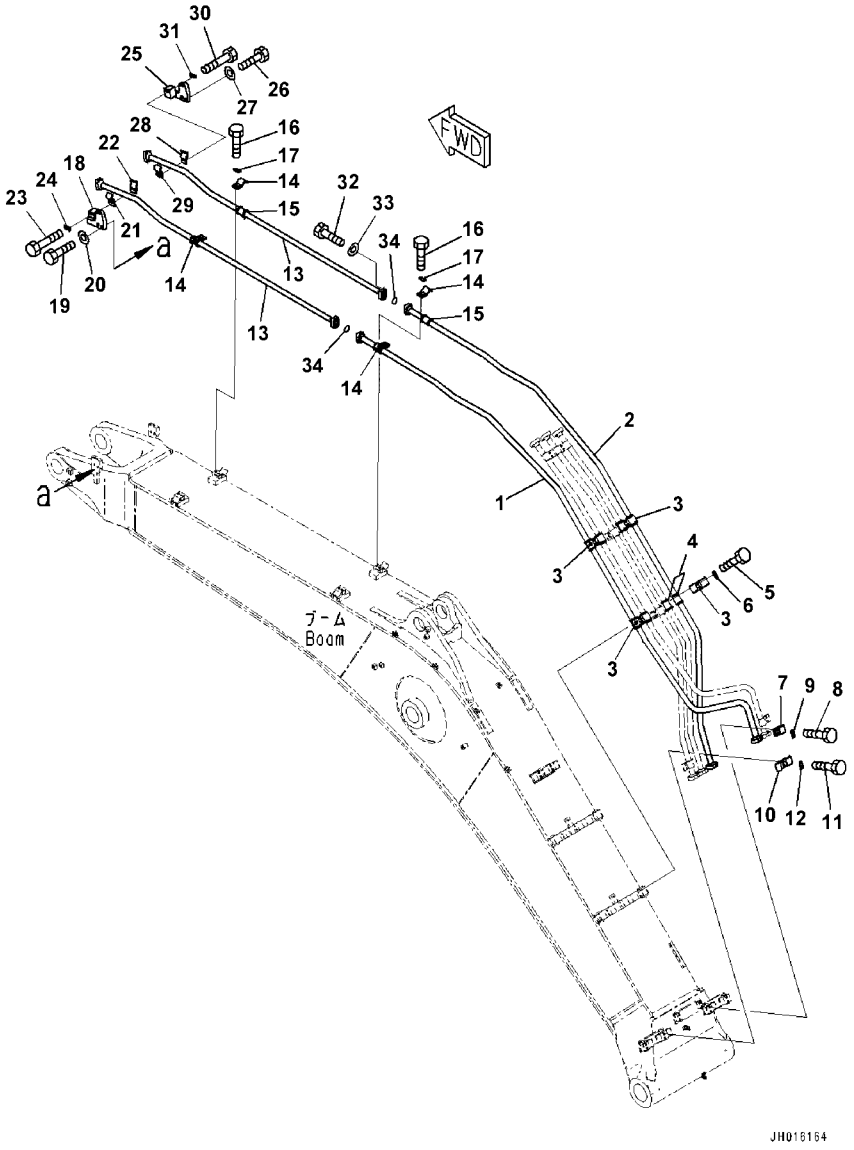

Index	Code	Part Number	Description	Qty	Serial Number
1		207-62-78140	Tube	1	C90001-
2		207-62-78150	Tube	1	C90001-
3		207-62-54780	Clamp	4	C90001-
4		205-62-73431	Seat	8	C90001-
5		01010-81235	Bolt	8	C90001-
6		20Y-62-13450	Plate	4	C90001-
7		207-62-31330	Clamp	1	C90001-
8		01010-81235	Bolt	2	C90001-
9		20Y-62-13450	Plate	1	C90001-
10		207-62-54760	Clamp	1	C90001-
11		01010-81235	Bolt	2	C90001-
12		20Y-62-13450	Plate	1	C90001-
13		207-62-74141	Tube	2	C90001-
14		207-62-52350	Clamp	4	C90001-
15		205-62-73431	Seat	4	C90001-
16		01010-81235	Bolt	8	C90001-
17		20Y-62-13450	Plate	4	C90001-
18		207-62-74390	Bracket	1	C90001-
19		01010-81655	Bolt	2	C90001-
20		01643-31645	Washer	2	C90001-
21		208-970-7220	Clamp	1	C90001-
22		208-62-76910	Clamp	1	C90001-
23		01010-81280	Bolt	2	C90001-
24		20Y-62-13450	Plate	1	C90001-
25		207-62-74490	Bracket	1	C90001-
26		01010-81655	Bolt	2	C90001-
27		01643-31645	Washer	2	C90001-
28		208-970-7220	Clamp	1	C90001-
29		208-62-76910	Clamp	1	C90001-
30		01010-81280	Bolt	2	C90001-
31		20Y-62-13450	Plate	1	C90001-
32		07372-21040	Bolt	8	C90001-
33		01643-51032	Washer	8	C90001-
34		07000-13035	O-ring	2	C90001-

FIG. T1110-005005 Boom (6000mm, SE, 1-Attachment,100 Hours Lubrcation Interval) (Cylinder Pin and Working Lamp)

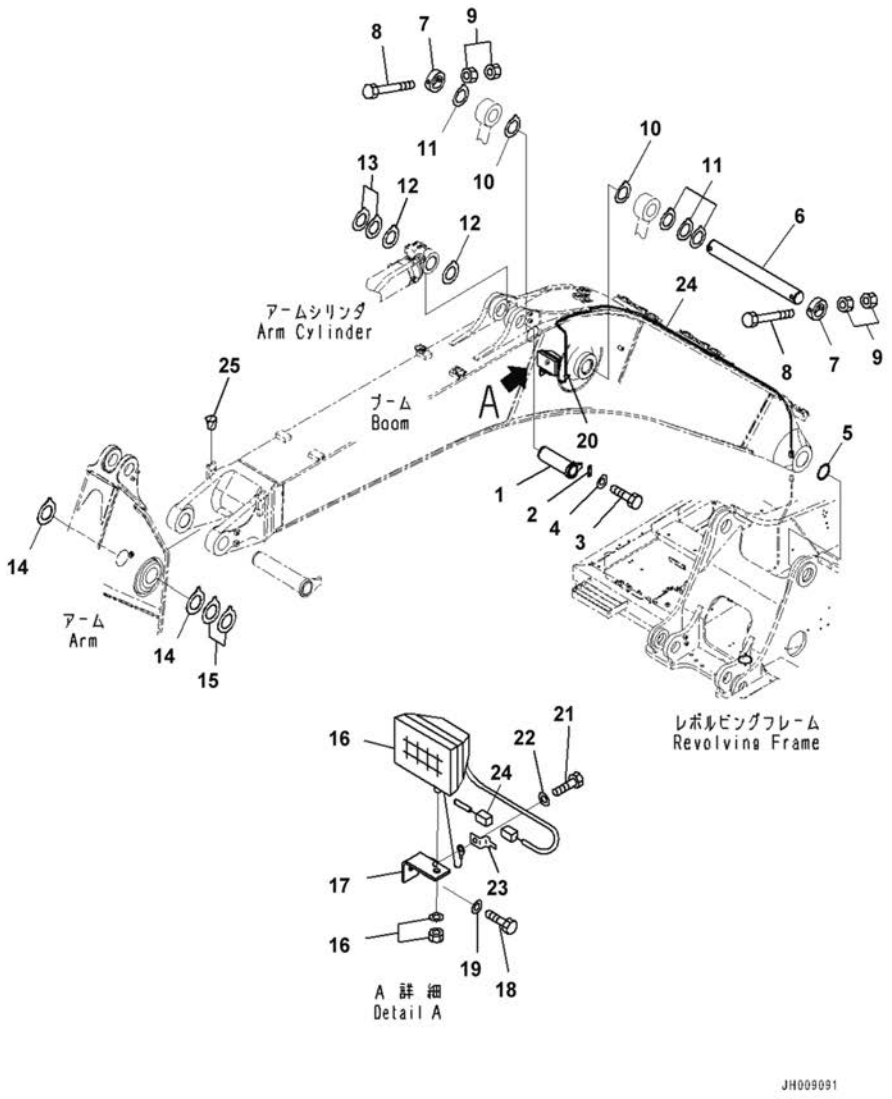

Index	Code	Part Number	Description	Qty	Serial Number
1		207-70-61192	Pin	1	C90001-
2		205-70-66581	Plate	1	C90001-
3		01010-81235	Bolt	2	C90001-
4		01643-31232	Washer	2	C90001-
5		07145-00110	Seal,Dust	2	C90001-
6		207-70-31172	Pin	1	C90001-
7		207-70-31242	Plate	2	C90001-
8		207-70-13340	Bolt	2	C90001-
9		01580-12419	Nut	4	C90001-
10		207-70-31340	Spacer,T=0.8mm	2	C90001-
11		207-70-51320	Spacer,T=1.5mm	5	C90001-
12		207-70-11340	Spacer,T=0.8mm	3	C90001-
13		207-70-11350	Spacer,T=1.5mm	2	C90001-
14		207-70-11360	Spacer,T=1.0mm	2	C90001-
15		207-70-11370	Spacer,T=1.5mm	2	C90001-
16		20Y-06-43230	Working Lamp Assembly	1	C90001-
		421-06-23330	• Bulb,70watt	1	C90001-
17		20Y-06-21551	Bracket	1	C90001-
18		01010-81430	Bolt	1	C90001-
19		01643-31445	Washer,Flat	1	C90001-
20		04434-51012	Clip	1	C90001-
21		01010-81220	Bolt	2	C90001-
22		01643-31232	Washer	2	C90001-
23		08193-20012	Clip	1	C90001-
24		207-06-75161	Wiring Harness	1	C90001-
25		07049-01215	Plug	4	C90001-

FIG. T1110-005006 Boom (6000mm, SE, 1-Attachment, 100 Hours Lubrcation Interval) (Additional Piping)

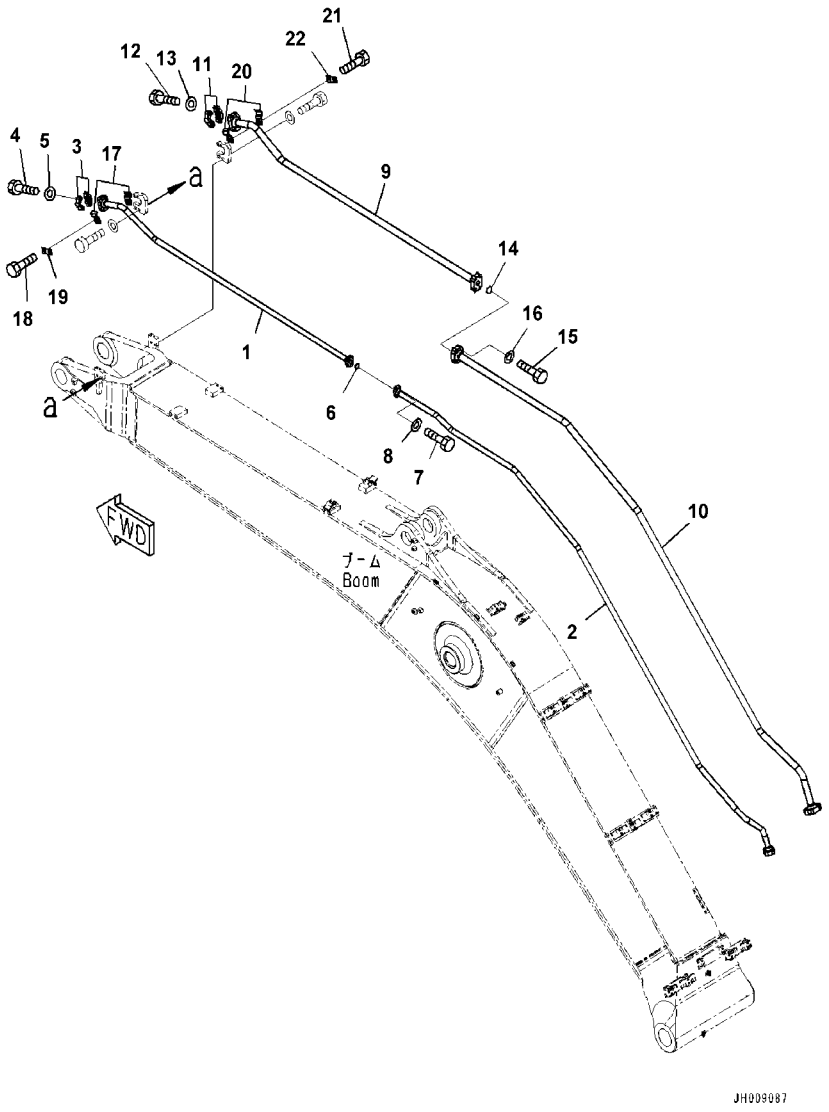

Index	Code	Part Number	Description	Qty	Serial Number
1		207-970-7110	Tube	1	C90001-
2		207-970-2260	Tube	1	C90001-
3		07371-51260	Flange,Split	2	C90001-
4		01010-81245	Bolt	4	C90001-
5		01643-31232	Washer	4	C90001-
6		07000-13035	O-ring	1	C90001-
7		07372-21040	Bolt	4	C90001-
8		01643-51032	Washer	4	C90001-
9		207-970-7120	Tube	1	C90001-
10		207-970-2250	Tube	1	C90001-
11		07371-51470	Flange,Split	2	C90001-
12		01010-81455	Bolt	4	C90001-
13		01643-31445	Washer,Flat	4	C90001-
14		07000-13048	O-ring	1	C90001-
15		01010-81455	Bolt	4	C90001-
16		01643-31445	Washer,Flat	4	C90001-
17		208-970-7220	Clamp	2	C90001-
18		01010-81235	Bolt	2	C90001-
19		20Y-62-13450	Plate	1	C90001-
20		208-970-7210	Clamp	2	C90001-
21		01010-81235	Bolt	2	C90001-
22		20Y-62-13450	Plate	1	C90001-

FIG. T1110-005007 Boom (6000mm, SE, 1-Attachment, 100 Hours Lubrcation Interval) (Clamp)

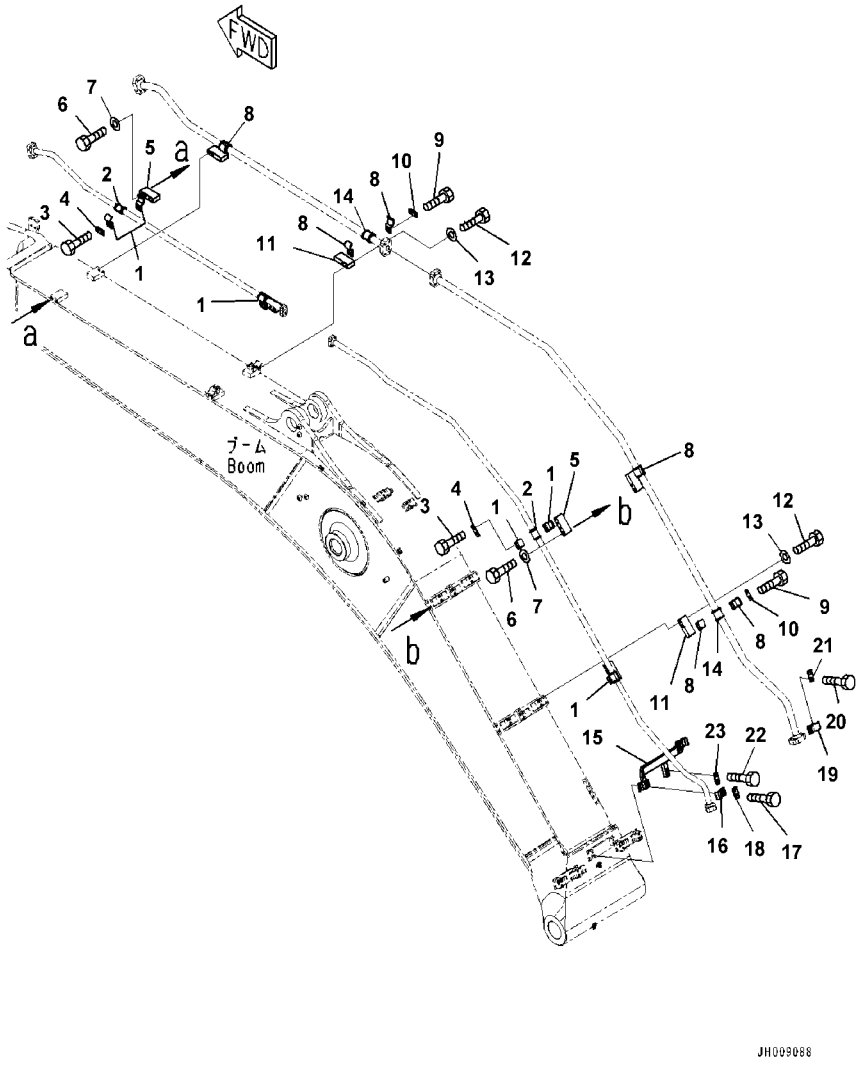

Index	Code	Part Number	Description	Qty	Serial Number
1		207-62-52350	Clamp	8	C90001-
2		205-62-73431	Seat	4	C90001-
3		01010-81235	Bolt	8	C90001-
4		20Y-62-13450	Plate	4	C90001-
5		207-970-7171	Bracket	4	C90001-
6		01010-81685	Bolt	8	C90001-
7		01643-31645	Washer	8	C90001-
8		207-970-7320	Clamp	8	C90001-
9		01010-81235	Bolt	8	C90001-
10		20Y-62-13450	Plate	4	C90001-
11		207-970-7171	Bracket	4	C90001-
12		01010-81685	Bolt	8	C90001-
13		01643-31645	Washer	8	C90001-
14		207-970-7331	Seat	4	C90001-
15		207-970-7162	Bracket	1	C90001-
16		207-62-31330	Clamp	1	C90001-
17		01010-81250	Bolt	2	C90001-
18		20Y-62-13450	Plate	1	C90001-
19		207-970-7310	Clamp	1	C90001-
20		01010-81235	Bolt	2	C90001-
21		20Y-62-13450	Plate	1	C90001-
22		01010-81250	Bolt	2	C90001-
23		20Y-62-13450	Plate	1	C90001-

FIG. T1110-006001 Boom (6000mm, SE, Reinforcement, 100 Hours Lubrcation Interval) (Boom and Top Pin)

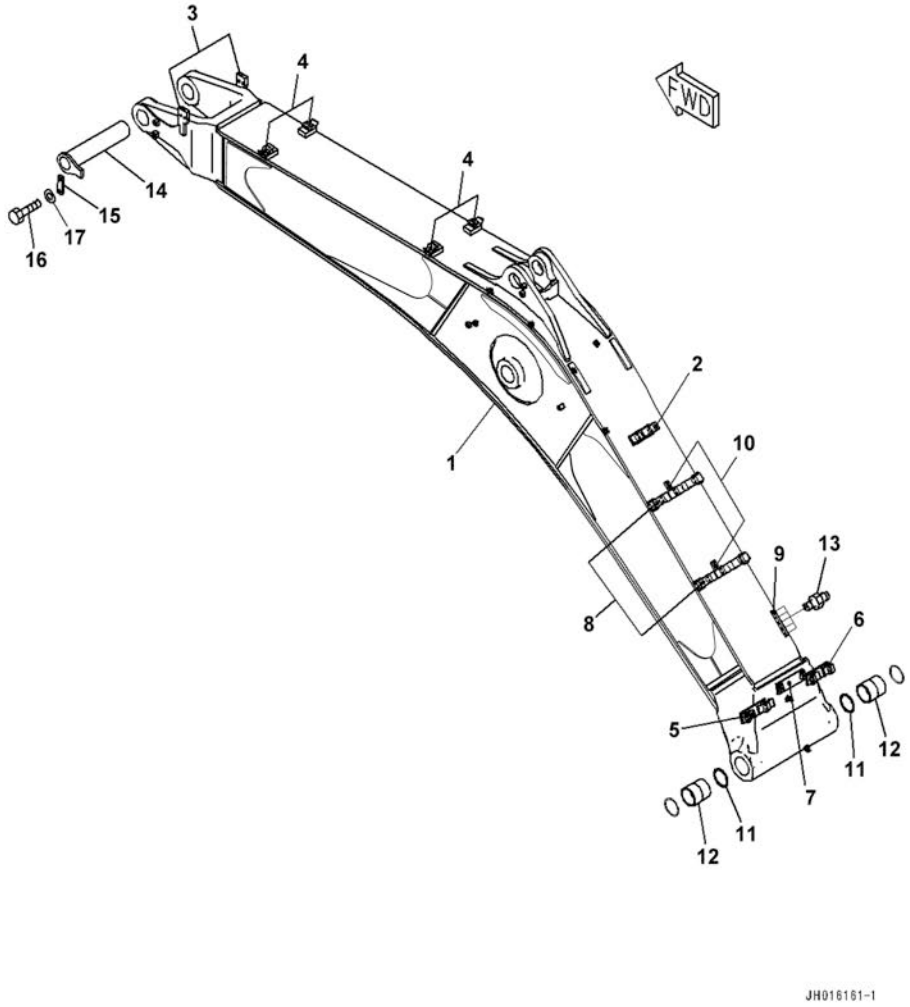

Index	Code	Part Number	Description	Qty	Serial Number
		207-70-C2200	Boom	1	C90001-
1	C1	207-70-78110	• Boom	1	C90001-
2		207-62-78180	• • Bracket,Welded	1	C90001-
3		207-62-74221	• • Bracket,Welded	2	C90001-
4		207-62-74230	• • Bracket,Welded	4	C90001-
5		207-62-74240	• • Bracket,Welded	1	C90001-
6		207-62-74251	• • Bracket,Welded	1	C90001-
7		207-62-74281	• • Bracket,Welded	1	C90001-
8		207-70-77651	• • Bracket,Welded	2	C90001-
9		2A5-70-11130	• • Plate,Welded	1	C90001-
10		01573-12306	• • Seat,Welded	2	C90001-
11		07145-00110	Seal,Dust	2	C90001-
12		207-70-61610	Bushing	2	C90001-
13		07020-00000	Fitting,Grease	5	C90001-
14		207-70-61182	Pin	1	C90001-
15		207-70-31230	Plate	1	C90001-
16		01010-81640	Bolt	2	C90001-
17		01643-31645	Washer	2	C90001-

FIG. T1110-006002 Boom (6000mm, SE, Reinforcement, 100 Hours Lubrcation Interval) (Boom and Top Pin)

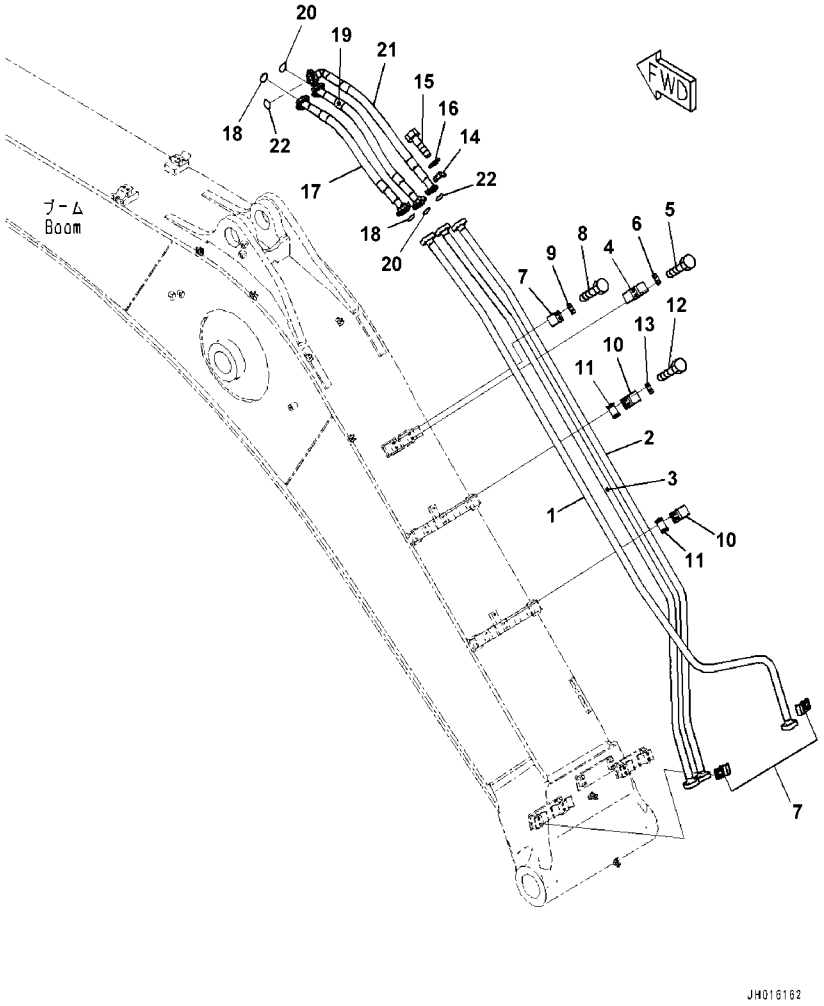

Index	Code	Part Number	Description	Qty	Serial Number
1		207-62-78110	Tube	1	C90001-
2		207-62-78120	Tube	1	C90001-
3		207-62-78130	Tube	1	C90001-
4		207-62-54760	Clamp	1	C90001-
5		01010-81235	Bolt	2	C90001-
6		20Y-62-13450	Plate	1	C90001-
7		207-62-31330	Clamp	3	C90001-
8		01010-81235	Bolt	6	C90001-
9		20Y-62-13450	Plate	3	C90001-
10		207-62-52350	Clamp	2	C90001-
11		205-62-73431	Seat	2	C90001-
12		01010-81235	Bolt	4	C90001-
13		20Y-62-13450	Plate	2	C90001-
14		07371-31049	Flange,Split	12	C90001-
15		07372-21035	Bolt	24	C90001-
16		01643-51032	Washer	24	C90001-
17		07085-01014	Hose,Flange Type	1	C90001-
18		07000-13032	O-ring	2	C90001-
19		07085-01014	Hose,Flange Type	1	C90001-
20		07000-13032	O-ring	2	C90001-
21		207-62-78260	Hose	1	C90001-
22		07000-13032	O-ring	2	C90001-

FIG. T1110-006003 Boom (6000mm, SE, Reinforcement, 100 Hours Lubrcation Interval) (Lubrication Piping)

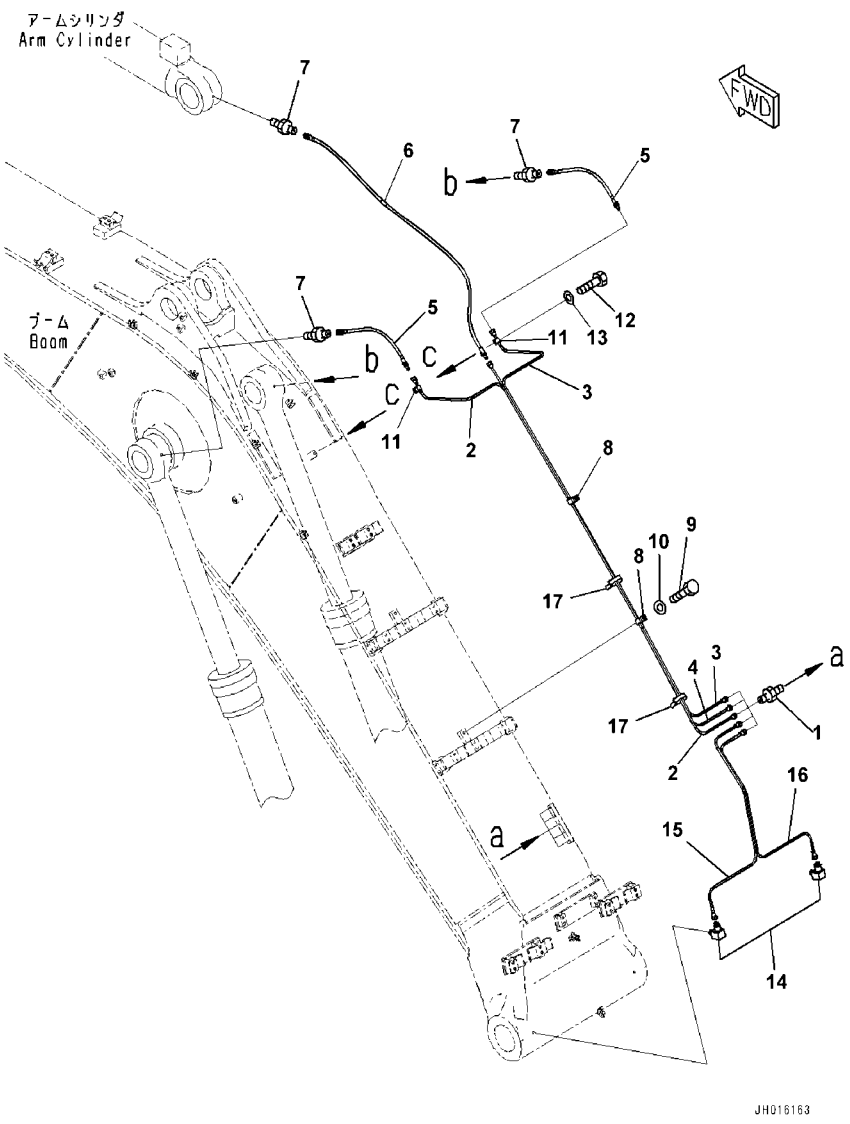

Index	Code	Part Number	Description	Qty	Serial Number
1		20Y-70-11540	Connector	5	C90001-
2		207-70-78220	Tube	1	C90001-
3		207-70-78230	Tube	1	C90001-
4		207-70-78210	Tube	1	C90001-
5		20Y-70-11520	Hose	2	C90001-
6		207-70-78260	Hose	1	C90001-
7		205-70-51390	Nipple	3	C90001-
8		04434-51912	Clip	2	C90001-
9		01010-81220	Bolt	2	C90001-
10		01643-31232	Washer	2	C90001-
11		04434-50812	Clip	2	C90001-
12		01010-81220	Bolt	2	C90001-
13		01643-31232	Washer	2	C90001-
14		20Y-25-11270	Elbow	2	C90001-
15		207-70-77341	Tube	1	C90001-
16		207-70-77351	Tube	1	C90001-
17		08034-20519	Band	2	C90001-

FIG. T1110-006004 Boom (6000mm, SE, Reinforcement, 100 Hours Lubrcation Interval) (Bucket Cylinder Piping)

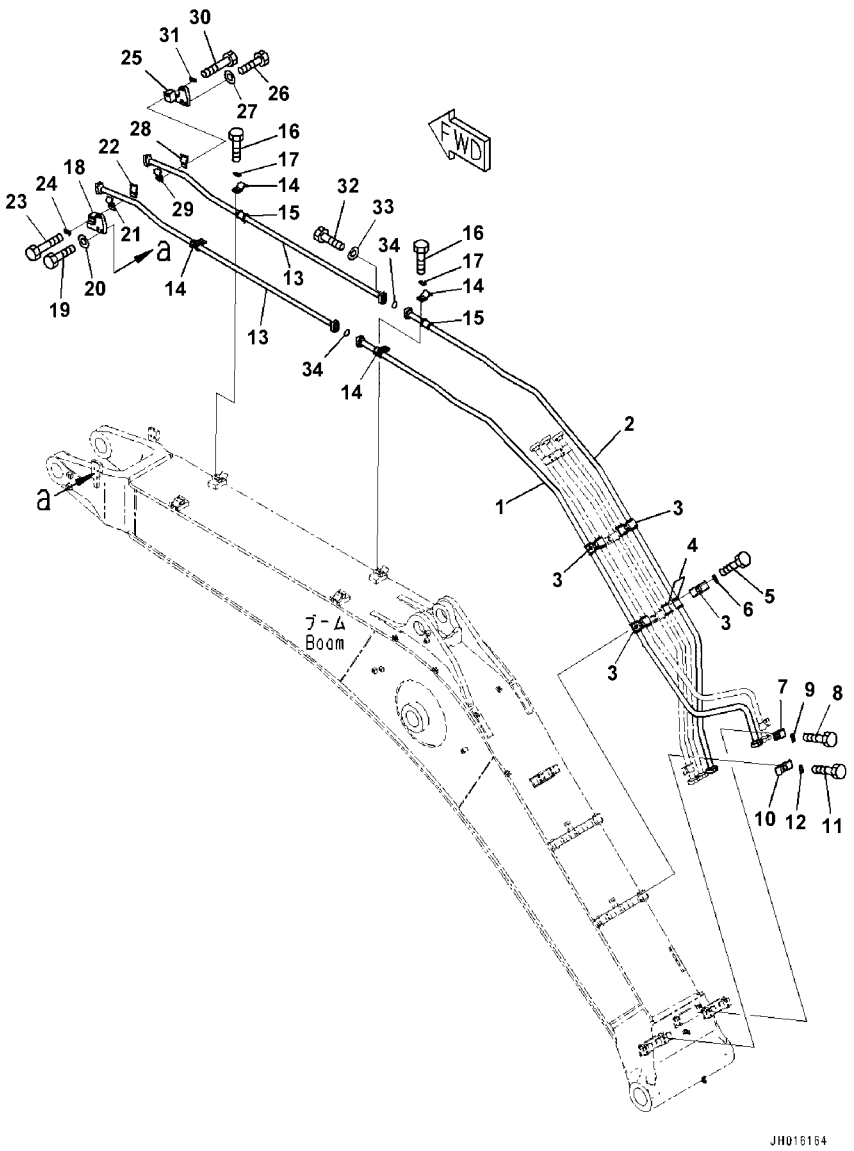

Index	Code	Part Number	Description	Qty	Serial Number
1		207-62-78140	Tube	1	C90001-
2		207-62-78150	Tube	1	C90001-
3		207-62-54780	Clamp	4	C90001-
4		205-62-73431	Seat	8	C90001-
5		01010-81235	Bolt	8	C90001-
6		20Y-62-13450	Plate	4	C90001-
7		207-62-31330	Clamp	1	C90001-
8		01010-81235	Bolt	2	C90001-
9		20Y-62-13450	Plate	1	C90001-
10		207-62-54760	Clamp	1	C90001-
11		01010-81235	Bolt	2	C90001-
12		20Y-62-13450	Plate	1	C90001-
13		207-62-74141	Tube	2	C90001-
14		207-62-52350	Clamp	4	C90001-
15		205-62-73431	Seat	4	C90001-
16		01010-81235	Bolt	8	C90001-
17		20Y-62-13450	Plate	4	C90001-
18		207-62-74390	Bracket	1	C90001-
19		01010-81655	Bolt	2	C90001-
20		01643-31645	Washer	2	C90001-
21		208-970-7220	Clamp	1	C90001-
22		208-62-76910	Clamp	1	C90001-
23		01010-81280	Bolt	2	C90001-
24		20Y-62-13450	Plate	1	C90001-
25		207-62-74490	Bracket	1	C90001-
26		01010-81655	Bolt	2	C90001-
27		01643-31645	Washer	2	C90001-
28		208-970-7220	Clamp	1	C90001-
29		208-62-76910	Clamp	1	C90001-
30		01010-81280	Bolt	2	C90001-
31		20Y-62-13450	Plate	1	C90001-
32		07372-21040	Bolt	8	C90001-
33		01643-51032	Washer	8	C90001-
34		07000-13035	O-ring	2	C90001-

FIG. T1110-006005 Boom (6000mm, SE,Reinforcement,100 Hours Lubrcation Interval) (Cylinder Pin and Working Lamp)

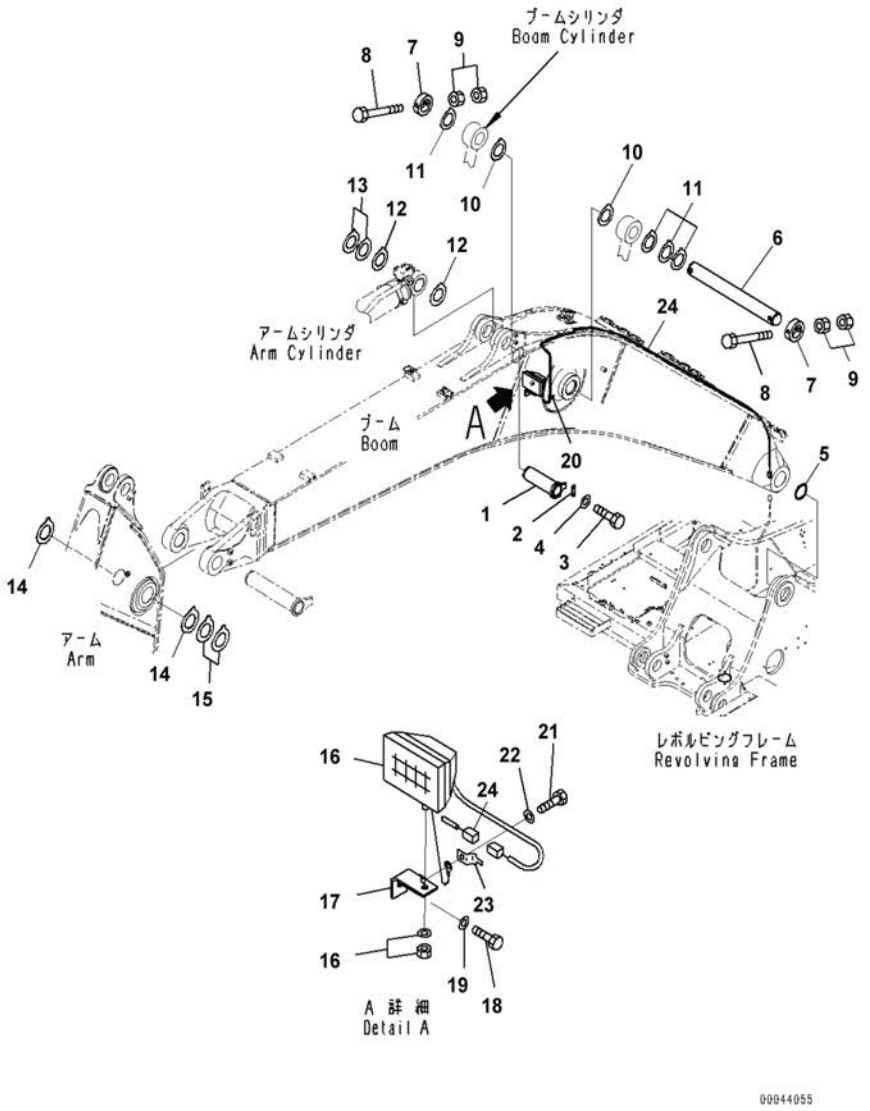

Index	Code	Part Number	Description	Qty	Serial Number
1		207-70-61192	Pin	1	C90001-
2		205-70-66581	Plate	1	C90001-
3		01010-81235	Bolt	2	C90001-
4		01643-31232	Washer	2	C90001-
5		07145-00110	Seal,Dust	2	C90001-
6		207-70-31172	Pin	1	C90001-
7		207-70-31242	Plate	2	C90001-
8		207-70-13340	Bolt	2	C90001-
9		01580-12419	Nut	4	C90001-
10		207-70-31340	Spacer,T=0.8mm	2	C90001-
11		207-70-51320	Spacer,T=1.5mm	5	C90001-
12		207-70-11340	Spacer,T=0.8mm	3	C90001-
13		207-70-11350	Spacer,T=1.5mm	2	C90001-
14		207-70-11360	Spacer,T=1.0mm	2	C90001-
15		207-70-11370	Spacer,T=1.5mm	2	C90001-
16		20Y-06-43230	Working Lamp Assembly	1	C90001-
		421-06-23330	• Bulb,70watt	1	C90001-
17		20Y-06-21551	Bracket	1	C90001-
18		01010-81430	Bolt	1	C90001-
19		01643-31445	Washer,Flat	1	C90001-
20		04434-51012	Clip	1	C90001-
21		01010-81220	Bolt	2	C90001-
22		01643-31232	Washer	2	C90001-
23		08193-20012	Clip	1	C90001-
24		207-06-75161	Wiring Harness	1	C90001-

FIG. T1110-006006 Boom (6000mm, SE,Reinforcement,100 Hours Lubrcation Interval) (Attachment Plug)

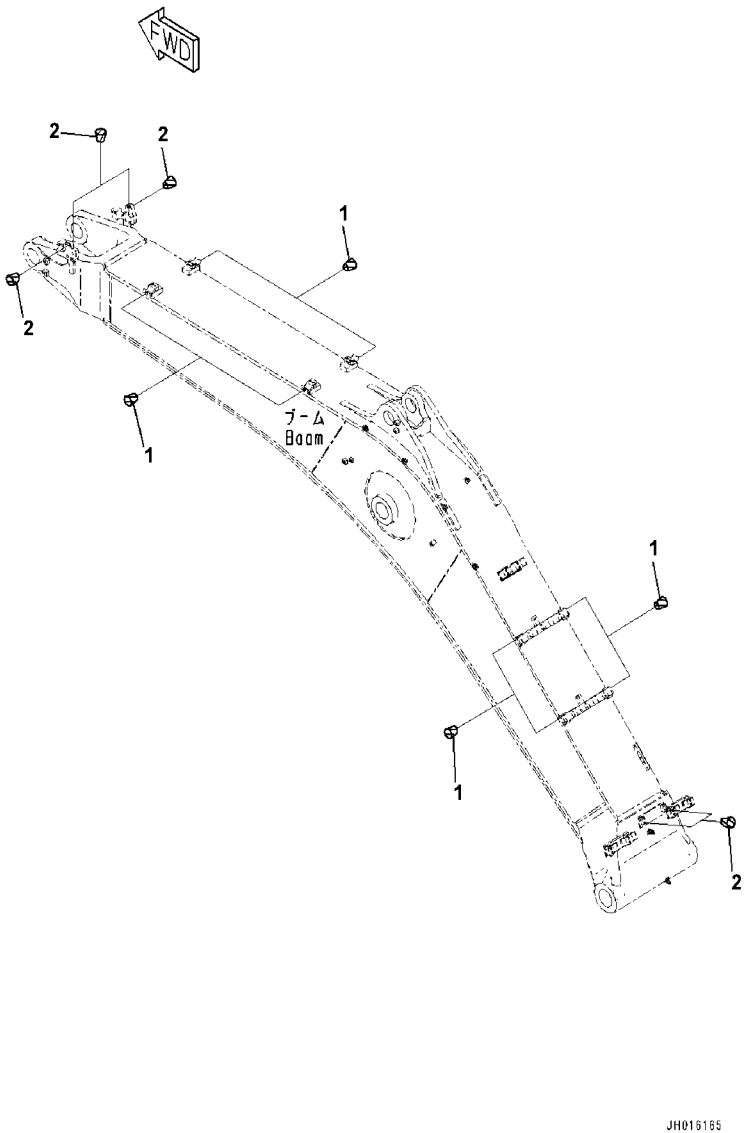

Index	Code	Part Number	Description	Qty	Serial Number
1		07049-01620	Plug	16	C90001-
2		07049-01215	Plug	12	C90001-

FIG. T1110-007001 Boom (6000mm,SE,Reinforcement,1-Attachment,100 Hours Lubrication) (Boom and Top Pin)

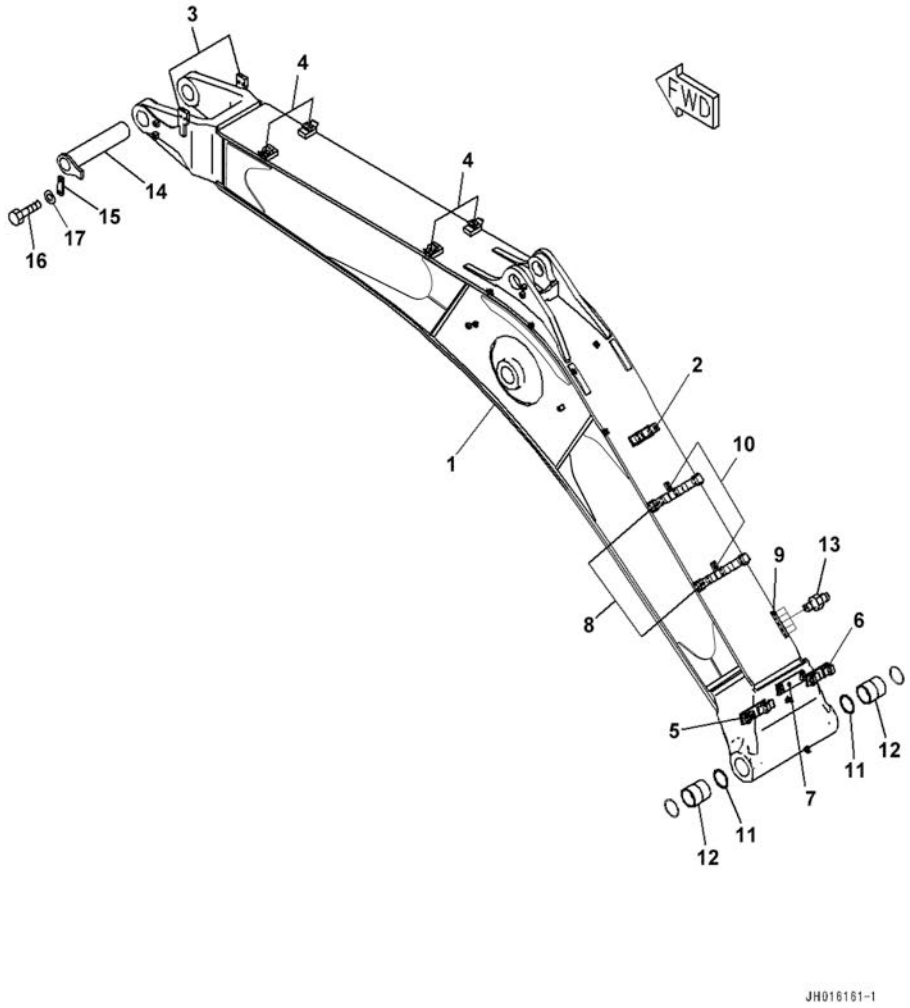

Index	Code	Part Number	Description	Qty	Serial Number
		207-70-C2200	Boom	1	C90001-
1	C1	207-70-78110	• Boom	1	C90001-
2		207-62-78180	• • Bracket,Welded	1	C90001-
3		207-62-74221	• • Bracket,Welded	2	C90001-
4		207-62-74230	• • Bracket,Welded	4	C90001-
5		207-62-74240	• • Bracket,Welded	1	C90001-
6		207-62-74251	• • Bracket,Welded	1	C90001-
7		207-62-74281	• • Bracket,Welded	1	C90001-
8		207-70-77651	• • Bracket,Welded	2	C90001-
9		2A5-70-11130	• • Plate,Welded	1	C90001-
10		01573-12306	• • Seat,Welded	2	C90001-
11		07145-00110	Seal,Dust	2	C90001-
12		207-70-61610	Bushing	2	C90001-
13		07020-00000	Fitting,Grease	5	C90001-
14		207-70-61182	Pin	1	C90001-
15		207-70-31230	Plate	1	C90001-
16		01010-81640	Bolt	2	C90001-
17		01643-31645	Washer	2	C90001-

FIG. T1110-007002 Boom (6000mm,SE,Reinforcement,1-Attachment,100 Hours Lubrication) (Boom and Top Pin)

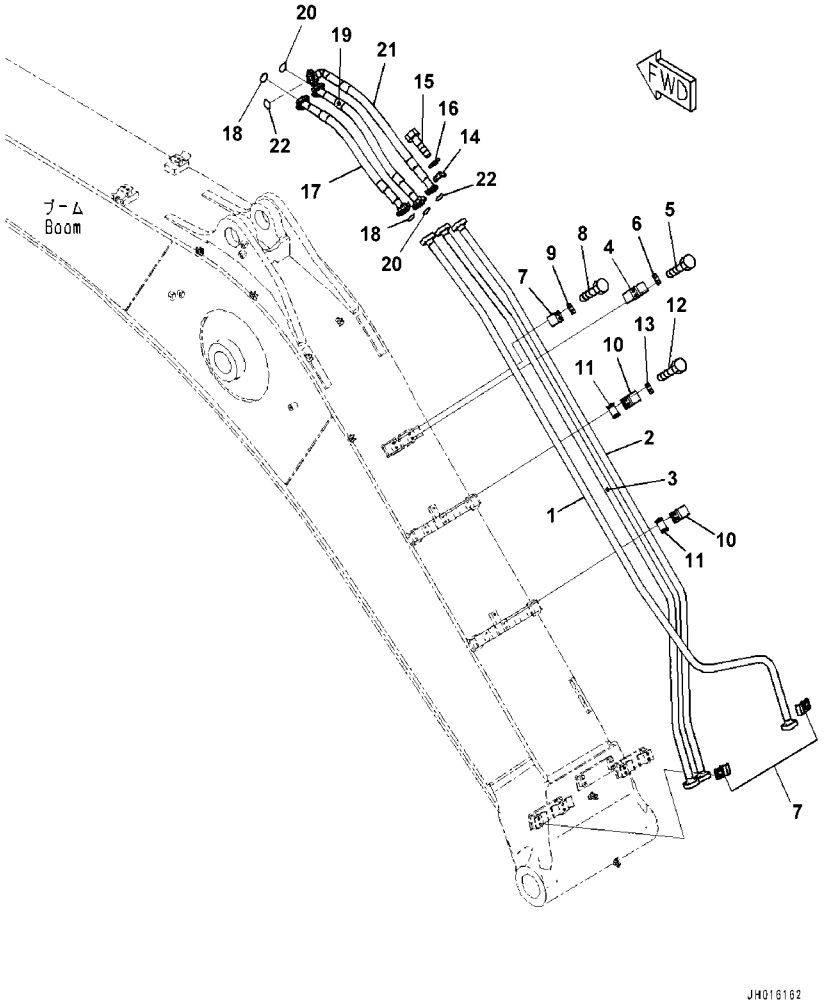

Index	Code	Part Number	Description	Qty	Serial Number
1		207-62-78110	Tube	1	C90001-
2		207-62-78120	Tube	1	C90001-
3		207-62-78130	Tube	1	C90001-
4		207-62-54760	Clamp	1	C90001-
5		01010-81235	Bolt	2	C90001-
6		20Y-62-13450	Plate	1	C90001-
7		207-62-31330	Clamp	3	C90001-
8		01010-81235	Bolt	6	C90001-
9		20Y-62-13450	Plate	3	C90001-
10		207-62-52350	Clamp	2	C90001-
11		205-62-73431	Seat	2	C90001-
12		01010-81235	Bolt	4	C90001-
13		20Y-62-13450	Plate	2	C90001-
14		07371-31049	Flange,Split	12	C90001-
15		07372-21035	Bolt	24	C90001-
16		01643-51032	Washer	24	C90001-
17		07085-01014	Hose,Flange Type	1	C90001-
18		07000-13032	O-ring	2	C90001-
19		07085-01014	Hose,Flange Type	1	C90001-
20		07000-13032	O-ring	2	C90001-
21		207-62-78260	Hose	1	C90001-
22		07000-13032	O-ring	2	C90001-

FIG. T1110-007003 Boom (6000mm,SE,Reinforcement,1-Attachment,100 Hours Lubrication) (Lubrication Piping)

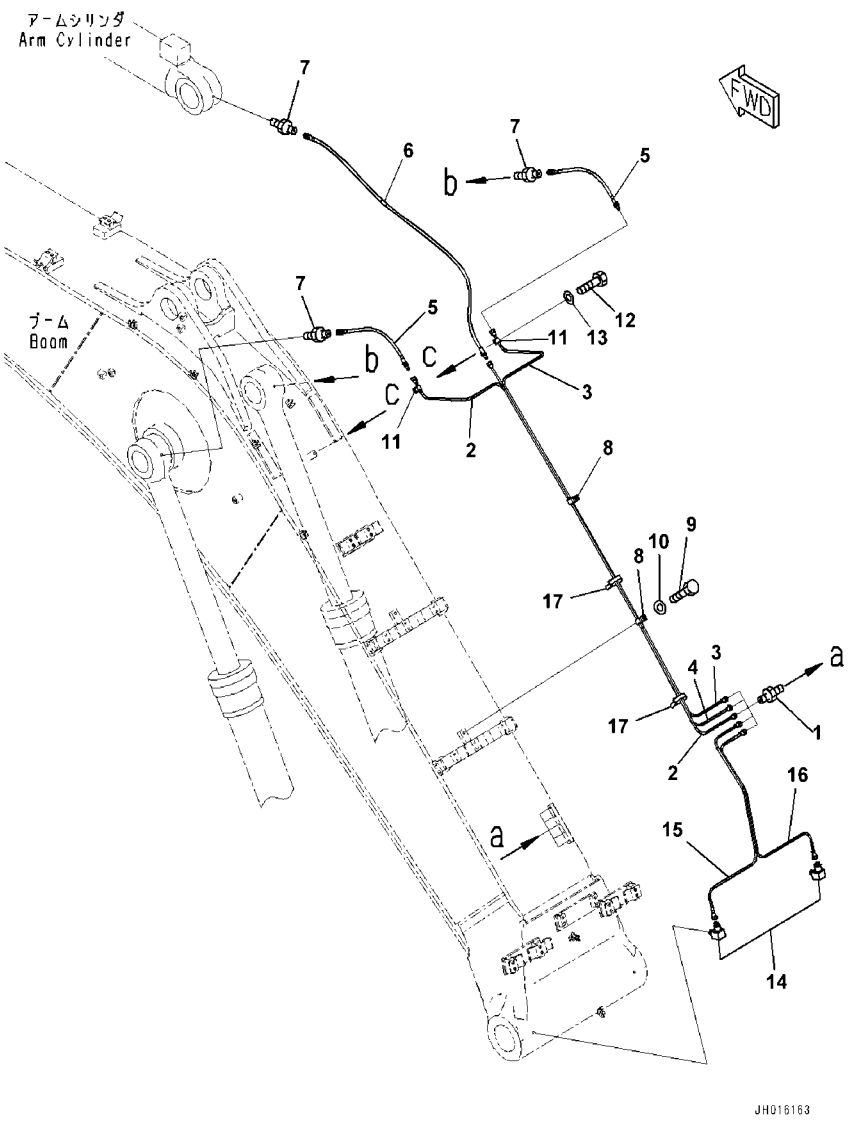

Index	Code	Part Number	Description	Qty	Serial Number
1		20Y-70-11540	Connector	5	C90001-
2		207-70-78220	Tube	1	C90001-
3		207-70-78230	Tube	1	C90001-
4		207-70-78210	Tube	1	C90001-
5		20Y-70-11520	Hose	2	C90001-
6		207-70-78260	Hose	1	C90001-
7		205-70-51390	Nipple	3	C90001-
8		04434-51912	Clip	2	C90001-
9		01010-81220	Bolt	2	C90001-
10		01643-31232	Washer	2	C90001-
11		04434-50812	Clip	2	C90001-
12		01010-81220	Bolt	2	C90001-
13		01643-31232	Washer	2	C90001-
14		20Y-25-11270	Elbow	2	C90001-
15		207-70-77341	Tube	1	C90001-
16		207-70-77351	Tube	1	C90001-
17		08034-20519	Band	2	C90001-

FIG. T1110-007004 Boom (6000mm,SE,Reinforcement,1-Attachment,100 Hours Lubrication) (Bucket Cylinder Piping)

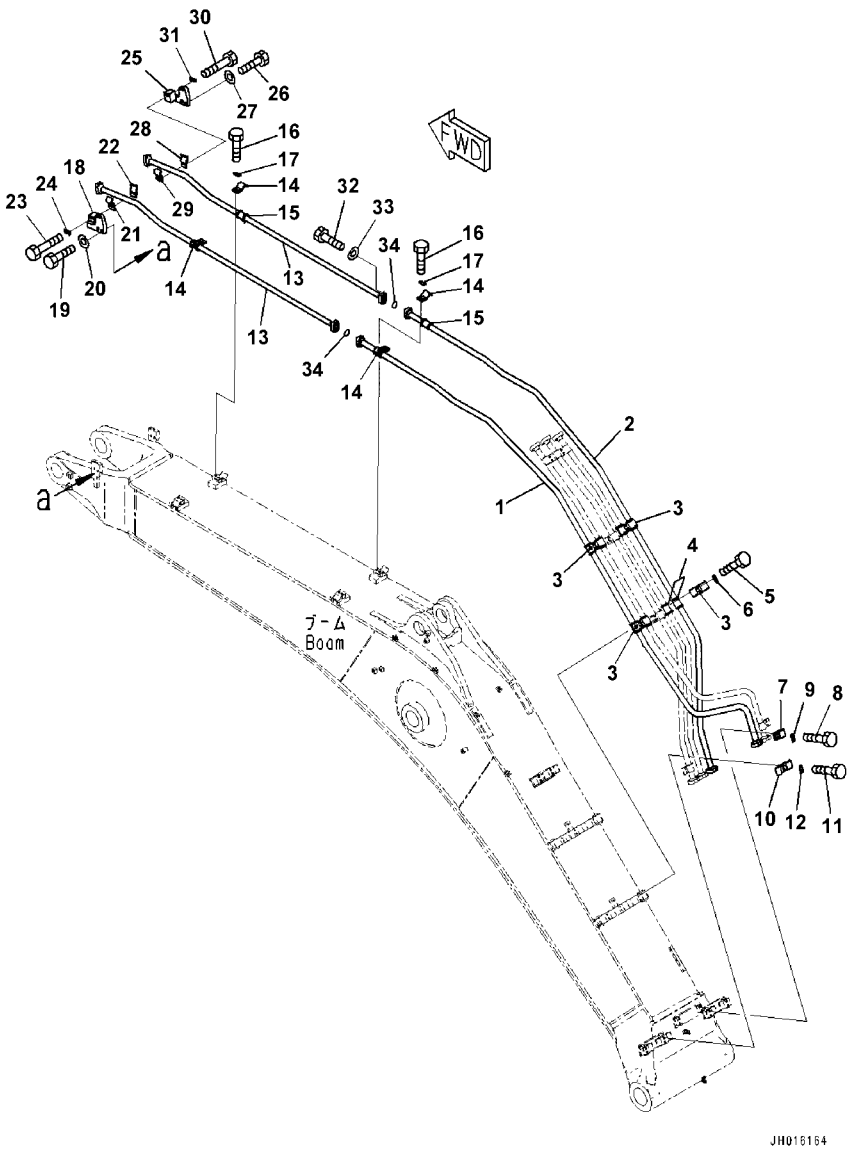

Index	Code	Part Number	Description	Qty	Serial Number
1		207-62-78140	Tube	1	C90001-
2		207-62-78150	Tube	1	C90001-
3		207-62-54780	Clamp	4	C90001-
4		205-62-73431	Seat	8	C90001-
5		01010-81235	Bolt	8	C90001-
6		20Y-62-13450	Plate	4	C90001-
7		207-62-31330	Clamp	1	C90001-
8		01010-81235	Bolt	2	C90001-
9		20Y-62-13450	Plate	1	C90001-
10		207-62-54760	Clamp	1	C90001-
11		01010-81235	Bolt	2	C90001-
12		20Y-62-13450	Plate	1	C90001-
13		207-62-74141	Tube	2	C90001-
14		207-62-52350	Clamp	4	C90001-
15		205-62-73431	Seat	4	C90001-
16		01010-81235	Bolt	8	C90001-
17		20Y-62-13450	Plate	4	C90001-
18		207-62-74390	Bracket	1	C90001-
19		01010-81655	Bolt	2	C90001-
20		01643-31645	Washer	2	C90001-
21		208-970-7220	Clamp	1	C90001-
22		208-62-76910	Clamp	1	C90001-
23		01010-81280	Bolt	2	C90001-
24		20Y-62-13450	Plate	1	C90001-
25		207-62-74490	Bracket	1	C90001-
26		01010-81655	Bolt	2	C90001-
27		01643-31645	Washer	2	C90001-
28		208-970-7220	Clamp	1	C90001-
29		208-62-76910	Clamp	1	C90001-
30		01010-81280	Bolt	2	C90001-
31		20Y-62-13450	Plate	1	C90001-
32		07372-21040	Bolt	8	C90001-
33		01643-51032	Washer	8	C90001-
34		07000-13035	O-ring	2	C90001-

FIG. T1110-007005 Boom (6000mm,SE,Reinforcement,1-Attachment,100 Hours) (Cylinder Pin and Working Lamp)

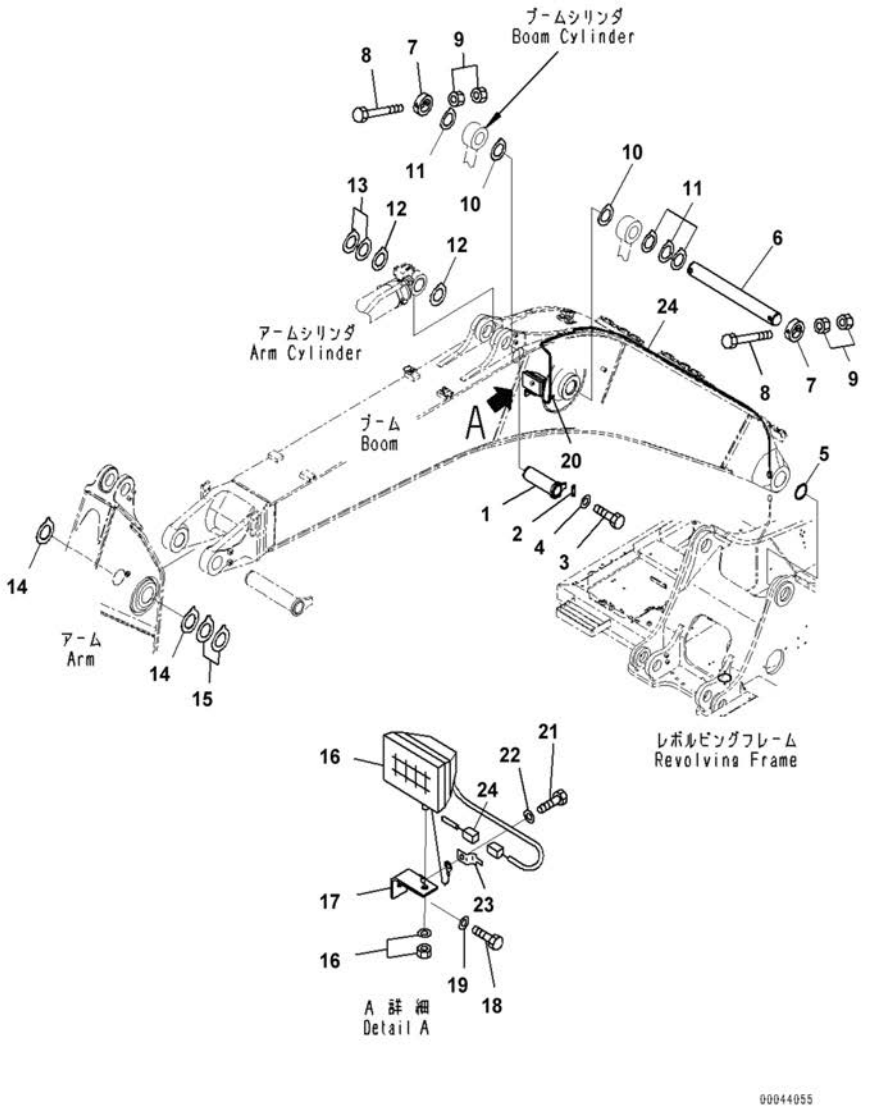

Index	Code	Part Number	Description	Qty	Serial Number
1		207-70-61192	Pin	1	C90001-
2		205-70-66581	Plate	1	C90001-
3		01010-81235	Bolt	2	C90001-
4		01643-31232	Washer	2	C90001-
5		07145-00110	Seal,Dust	2	C90001-
6		207-70-31172	Pin	1	C90001-
7		207-70-31242	Plate	2	C90001-
8		207-70-13340	Bolt	2	C90001-
9		01580-12419	Nut	4	C90001-
10		207-70-31340	Spacer,T=0.8mm	2	C90001-
11		207-70-51320	Spacer,T=1.5mm	5	C90001-
12		207-70-11340	Spacer,T=0.8mm	3	C90001-
13		207-70-11350	Spacer,T=1.5mm	2	C90001-
14		207-70-11360	Spacer,T=1.0mm	2	C90001-
15		207-70-11370	Spacer,T=1.5mm	2	C90001-
16		20Y-06-43230	Working Lamp Assembly	1	C90001-
		421-06-23330	• Bulb,70watt	1	C90001-
17		20Y-06-21551	Bracket	1	C90001-
18		01010-81430	Bolt	1	C90001-
19		01643-31445	Washer,Flat	1	C90001-
20		04434-51012	Clip	1	C90001-
21		01010-81220	Bolt	2	C90001-
22		01643-31232	Washer	2	C90001-
23		08193-20012	Clip	1	C90001-
24		207-06-75161	Wiring Harness	1	C90001-

FIG. T1110-007006 Boom (6000mm,SE,Reinforcement,1-Attachment,100 Hours Lubrication) (Additional Piping)

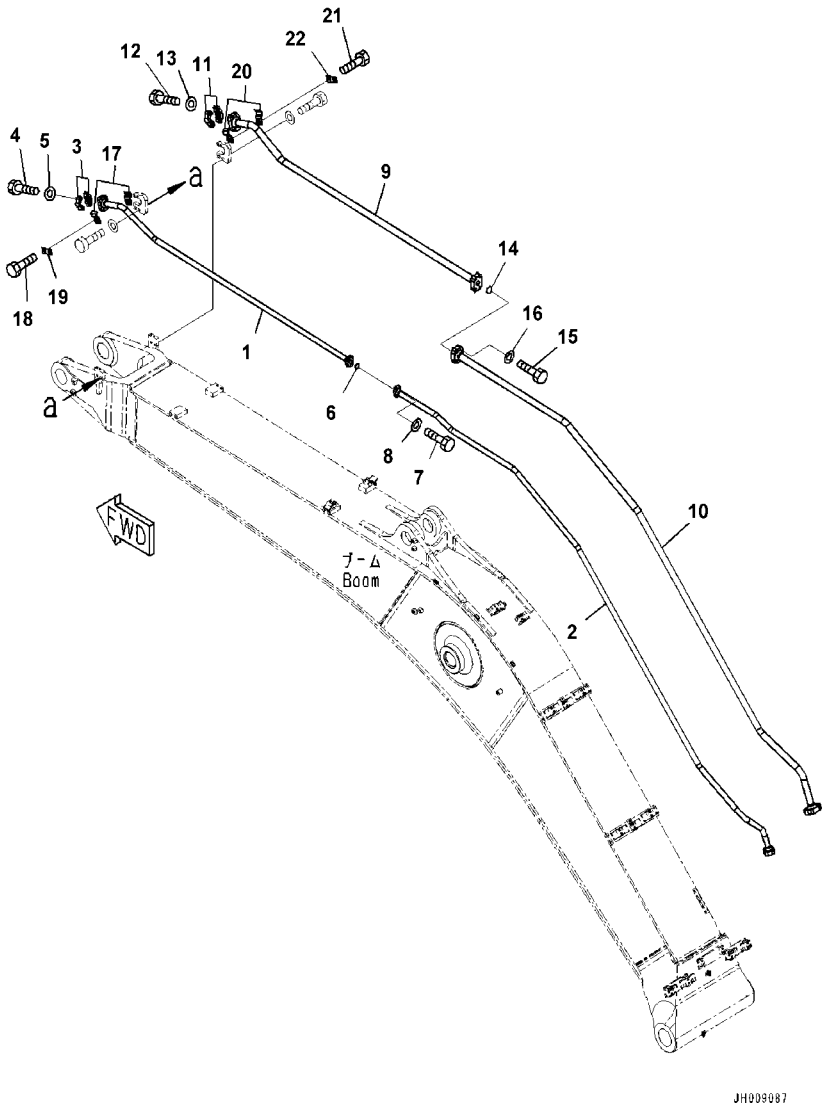

Index	Code	Part Number	Description	Qty	Serial Number
1		207-970-7110	Tube	1	C90001-
2		207-970-2260	Tube	1	C90001-
3		07371-51260	Flange,Split	2	C90001-
4		01010-81245	Bolt	4	C90001-
5		01643-31232	Washer	4	C90001-
6		07000-13035	O-ring	1	C90001-
7		07372-21040	Bolt	4	C90001-
8		01643-51032	Washer	4	C90001-
9		207-970-7120	Tube	1	C90001-
10		207-970-2250	Tube	1	C90001-
11		07371-51470	Flange,Split	2	C90001-
12		01010-81455	Bolt	4	C90001-
13		01643-31445	Washer,Flat	4	C90001-
14		07000-13048	O-ring	1	C90001-
15		01010-81455	Bolt	4	C90001-
16		01643-31445	Washer,Flat	4	C90001-
17		208-970-7220	Clamp	2	C90001-
18		01010-81235	Bolt	2	C90001-
19		20Y-62-13450	Plate	1	C90001-
20		208-970-7210	Clamp	2	C90001-
21		01010-81235	Bolt	2	C90001-
22		20Y-62-13450	Plate	1	C90001-

FIG. T1110-007007 Boom (6000mm,SE,Reinforcement,1-Attachment,100 Hours Lubrication) (Clamp)

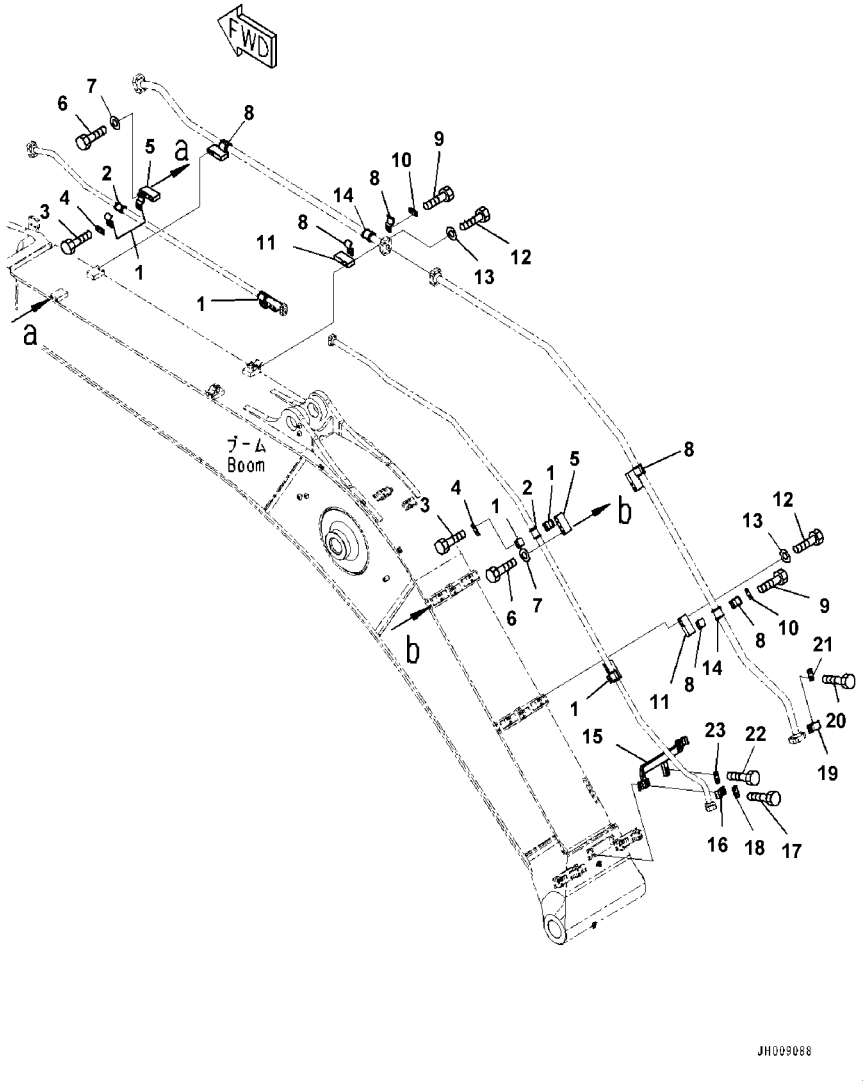

Index	Code	Part Number	Description	Qty	Serial Number
1		207-62-52350	Clamp	8	C90001-
2		205-62-73431	Seat	4	C90001-
3		01010-81235	Bolt	8	C90001-
4		20Y-62-13450	Plate	4	C90001-
5		207-970-7171	Bracket	4	C90001-
6		01010-81685	Bolt	8	C90001-
7		01643-31645	Washer	8	C90001-
8		207-970-7320	Clamp	8	C90001-
9		01010-81235	Bolt	8	C90001-
10		20Y-62-13450	Plate	4	C90001-
11		207-970-7171	Bracket	4	C90001-
12		01010-81685	Bolt	8	C90001-
13		01643-31645	Washer	8	C90001-
14		207-970-7331	Seat	4	C90001-
15		207-970-7162	Bracket	1	C90001-
16		207-62-31330	Clamp	1	C90001-
17		01010-81250	Bolt	2	C90001-
18		20Y-62-13450	Plate	1	C90001-
19		207-970-7310	Clamp	1	C90001-
20		01010-81235	Bolt	2	C90001-
21		20Y-62-13450	Plate	1	C90001-
22		01010-81250	Bolt	2	C90001-
23		20Y-62-13450	Plate	1	C90001-

FIG. T1120-001001 Boom Cylinder (100 Hours Lubrication Interval) (L.H.)

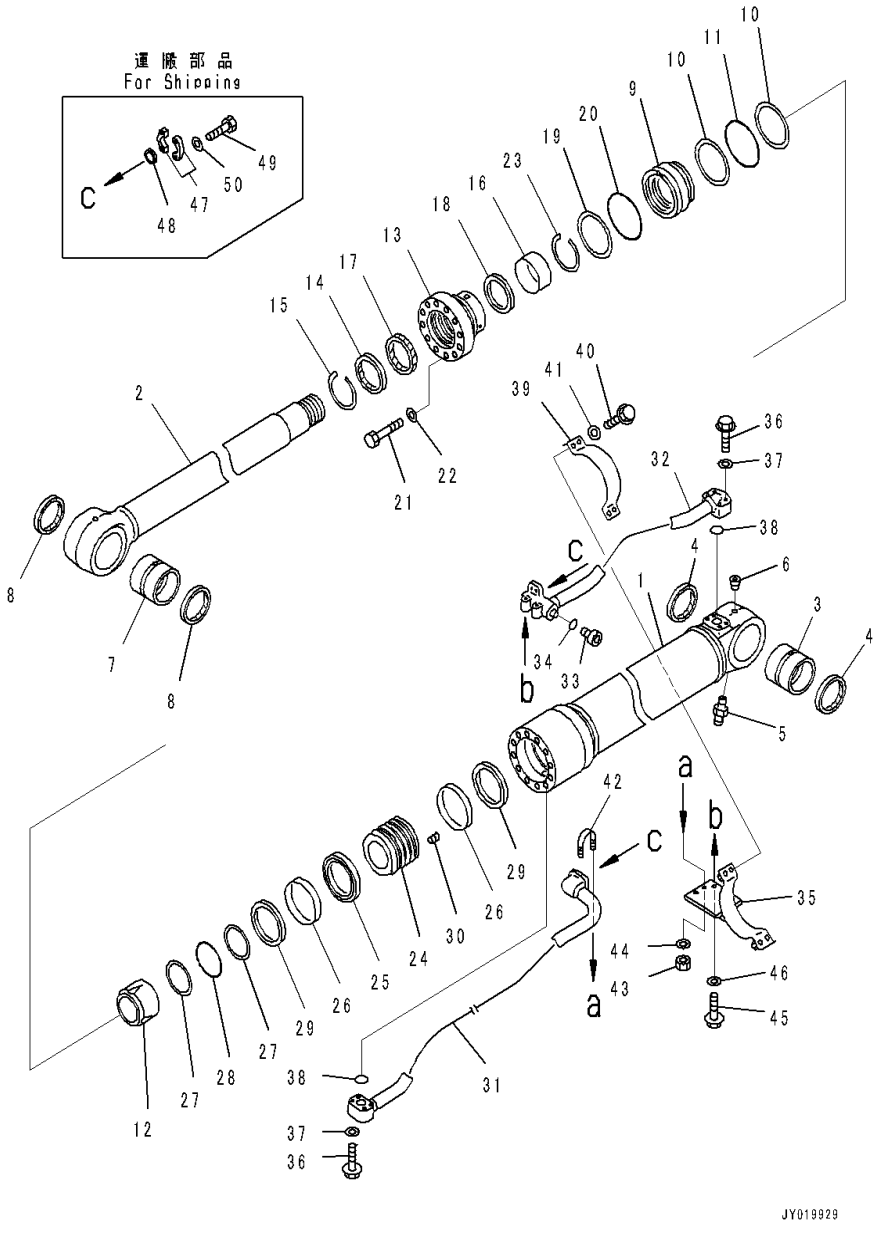

Index	Code	Part Number	Description	Qty	Serial Number
		(707-F1-X2480)	Cylinder Group	1	C90001-
		**********	**********		
		707-E1-02480	Cylinder Assembly	1	C90001-
1		721-13-14050	• Cylinder	1	C90001-
2		721-58-10400	• Rod, Piston	1	C90001-
3		707-76-90390	• Bushing	1	C90001-
4		07145-00090	• Seal, Dust, (Kit : K12)	2	C90001-
5		07020-00000	• Fitting, Grease	1	C90001-
6		07043-00108	• Plug, Taper	1	C90001-
7		707-76-10130	• Bushing	1	C90001-
8		07145-00100	• Seal, Dust, (Kit : K12)	2	C90001-
9		707-71-35220	• Collar	1	C90001-
10		707-35-31310	• Ring, Back-up, (Kit : K12)	2	C90001-
11		07000-B5130	• O-ring, (Kit : K12)	1	C90001-
12		707-71-71060	• Plunger	1	C90001-
13		707-27-14690	• Head, Cylinder	1	C90001-
14		707-56-10740	• Seal, Dust, (Kit : K12)	1	C90001-
15		07179-13114	• Ring, Snap	1	C90001-
16		707-52-90781	• Bushing	1	C90001-
17		707-51-10860	• Packing, Rod, (Kit : K12)	1	C90001-
18		707-51-10650	• Ring, Buffer, (Kit : K12)	1	C90001-
19		707-35-31310	• Ring, Back-up, (Kit : K12)	1	C90001-
20		07000-B5130	• O-ring, (Kit : K12)	1	C90001-
21		01010-81875	• Bolt	12	C90001-
22		707-41-11840	• Washer	12	C90001-
23		707-75-10160	• Ring, Snap	1	C90001-
24		707-36-14650	• Piston	1	C90001-
25		707-44-14150	• Ring, Piston, (Kit : K12)	1	C90001-
26		707-39-14110	• Ring, Wear, (Kit : K12)	2	C90001-
27		707-35-30900	• Ring, Back-up, (Kit : K12)	2	C90001-
28		07000-B5090	• O-ring, (Kit : K12)	1	C90001-
29		707-44-14910	• Ring	2	C90001-
30		01310-01216	• Screw	1	C90001-
31		707-86-00810	Tube	1	C90001-
32		707-86-00860	Tube	1	C90001-
33		707-87-14700	Plug	1	C90001-
34		07002-63034	O-ring, (Kit : K12)	1	C90001-
35		207-63-54590	Bracket	1	C90001-
36		07372-21060	Bolt	8	C90001-
37		01643-51032	Washer	8	C90001-

FIG. T1120-001001 Boom Cylinder (100 Hours Lubrication Interval) (L.H.)

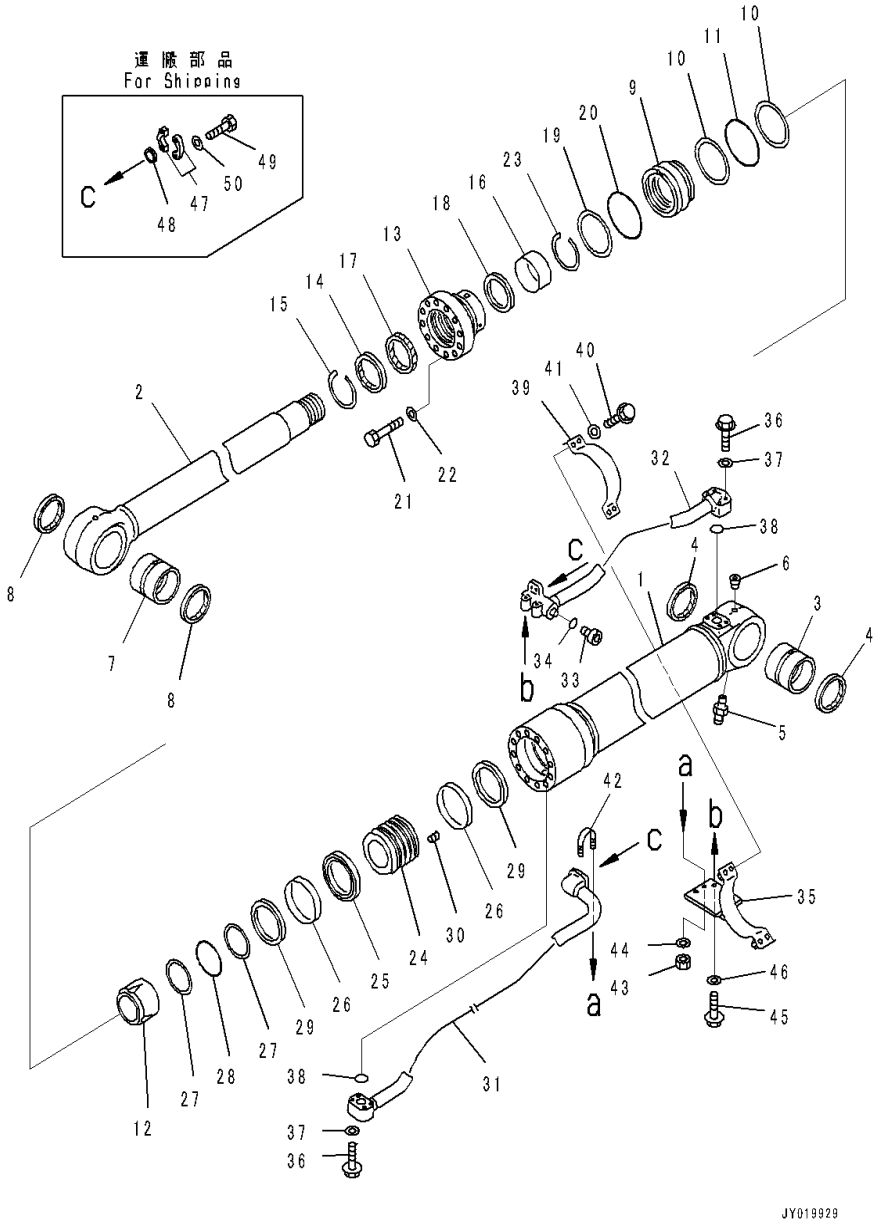

Index	Code	Part Number	Description	Qty	Serial Number
38		07000-B3035	O-ring, (Kit : K12)	2	C90001-
39		707-88-21370	Band	1	C90001-
40		07372-21240	Bolt	4	C90001-
41		01643-51232	Washer	4	C90001-
42		07283-33442	Clip, Pipe	1	C90001-
43		01597-01009	Nut	2	C90001-
44		01643-31032	Washer	2	C90001-
45		01010-81025	Bolt	2	C90001-
46		01643-31032	Washer	2	C90001-
47		07371-31049	Flange, Split	4	C90001-
48		707-88-33040	Cap	2	C90001-
49		07372-21035	Bolt	8	C90001-
50		01643-51032	Washer	8	C90001-

FIG. T1120-001002 Boom Cylinder (100 Hours Lubrication Interval) (R.H.)

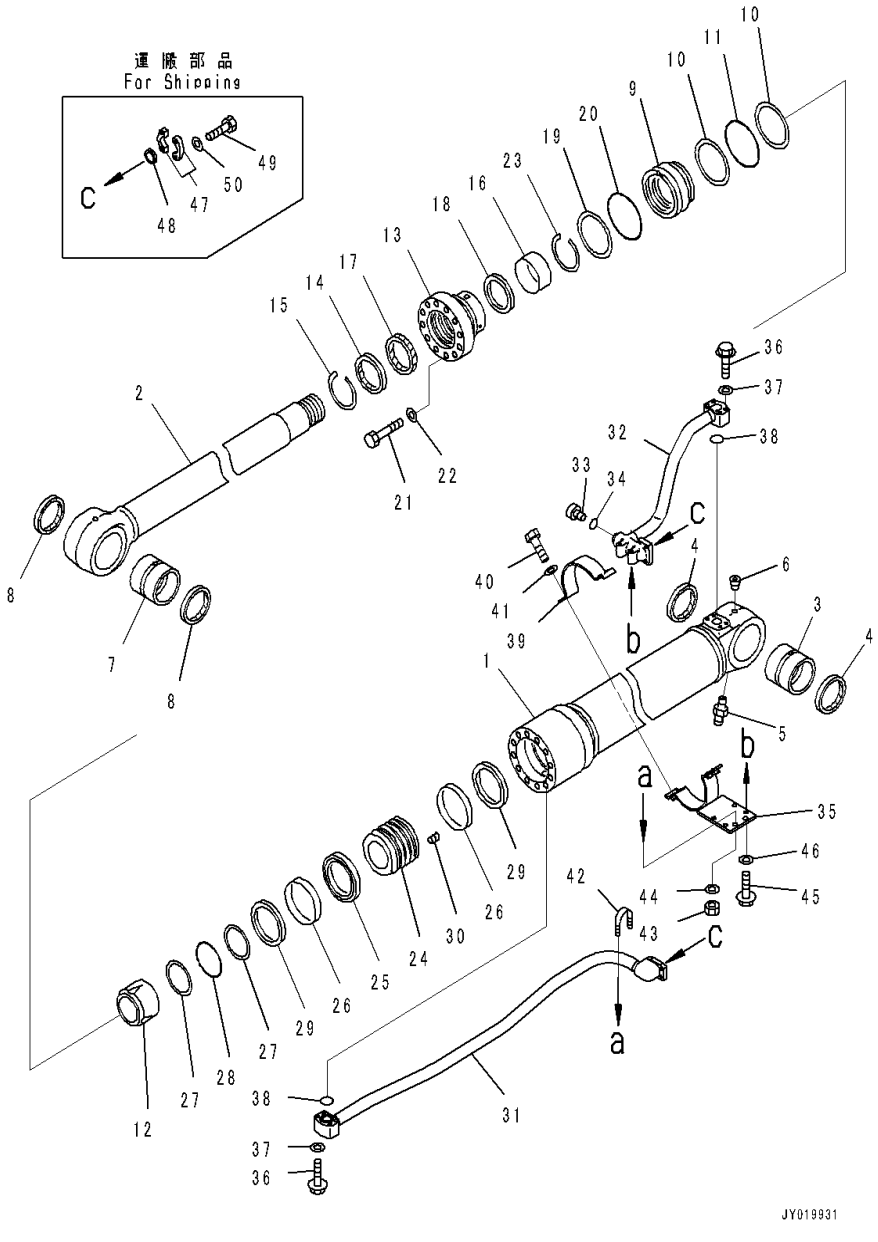

Index	Code	Part Number	Description	Qty	Serial Number
		(707-F1-X2490)	Cylinder Group	1	C90001-
		**********	**********		
		707-E1-02480	Cylinder Assembly	1	C90001-
1		721-13-14050	• Cylinder	1	C90001-
2		721-58-10400	• Rod, Piston	1	C90001-
3		707-76-90390	• Bushing	1	C90001-
4		07145-00090	• Seal, Dust, (Kit : K12)	2	C90001-
5		07020-00000	• Fitting, Grease	1	C90001-
6		07043-00108	• Plug, Taper	1	C90001-
7		707-76-10130	• Bushing	1	C90001-
8		07145-00100	• Seal, Dust, (Kit : K12)	2	C90001-
9		707-71-35220	• Collar	1	C90001-
10		707-35-31310	• Ring, Back-up, (Kit : K12)	2	C90001-
11		07000-B5130	• O-ring, (Kit : K12)	1	C90001-
12		707-71-71060	• Plunger	1	C90001-
13		707-27-14690	• Head, Cylinder	1	C90001-
14		707-56-10740	• Seal, Dust, (Kit : K12)	1	C90001-
15		07179-13114	• Ring, Snap	1	C90001-
16		707-52-90781	• Bushing	1	C90001-
17		707-51-10860	• Packing, Rod, (Kit : K12)	1	C90001-
18		707-51-10650	• Ring, Buffer, (Kit : K12)	1	C90001-
19		707-35-31310	• Ring, Back-up, (Kit : K12)	1	C90001-
20		07000-B5130	• O-ring, (Kit : K12)	1	C90001-
21		01010-81875	• Bolt	12	C90001-
22		707-41-11840	• Washer	12	C90001-
23		707-75-10160	• Ring, Snap	1	C90001-
24		707-36-14650	• Piston	1	C90001-
25		707-44-14150	• Ring, Piston, (Kit : K12)	1	C90001-
26		707-39-14110	• Ring, Wear, (Kit : K12)	2	C90001-
27		707-35-30900	• Ring, Back-up, (Kit : K12)	2	C90001-
28		07000-B5090	• O-ring, (Kit : K12)	1	C90001-
29		707-44-14910	• Ring	2	C90001-
30		01310-01216	• Screw	1	C90001-
31		707-86-00820	• Tube	1	C90001-
32		707-86-00870	• Tube	1	C90001-
33		707-87-14700	• Plug	1	C90001-
34		07002-63034	• O-ring, (Kit : K12)	1	C90001-
35		207-63-54590	• Bracket	1	C90001-
36		07372-21060	• Bolt	8	C90001-
37		01643-51032	• Washer	8	C90001-

FIG. T1120-001002 Boom Cylinder (100 Hours Lubrication Interval) (R.H.)

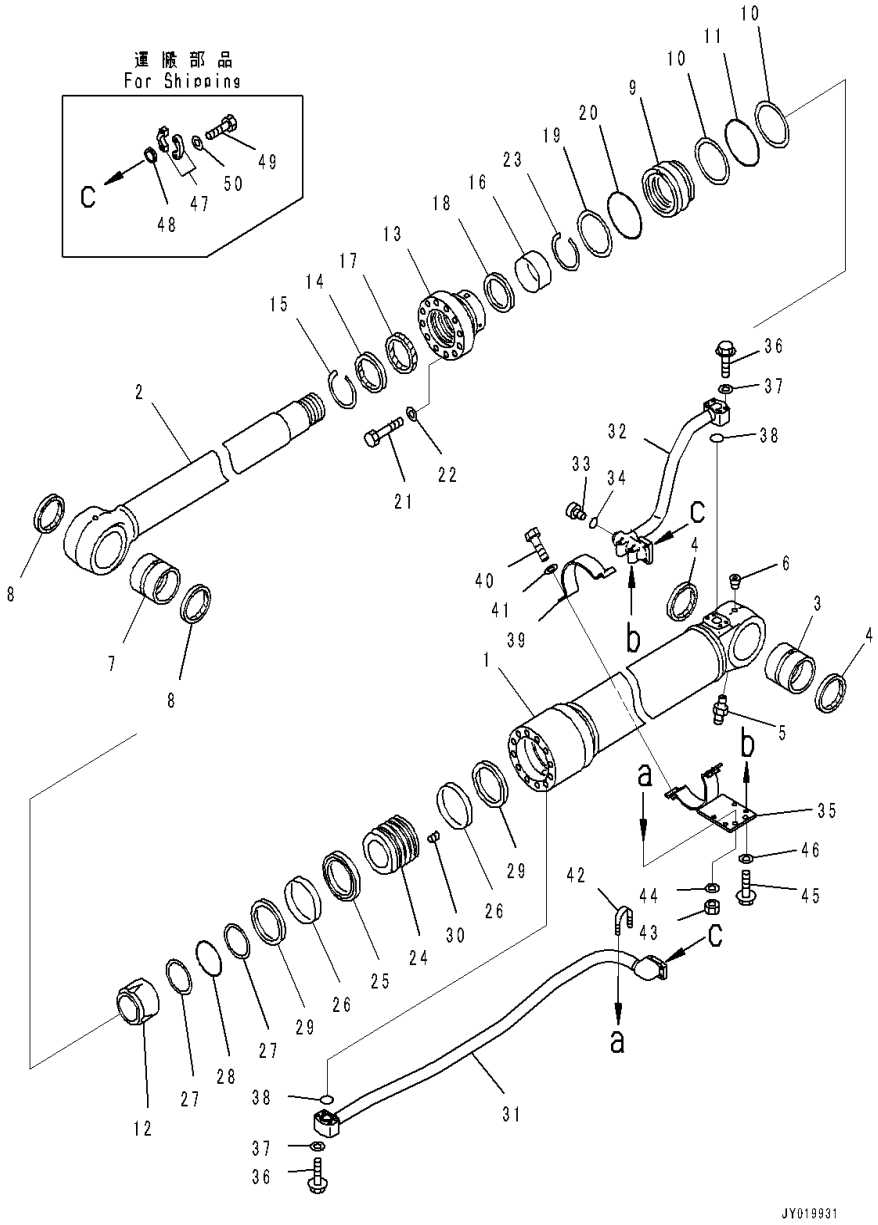

Index	Code	Part Number	Description	Qty	Serial Number
38		07000-B3035	• O-ring, (Kit : K12)	2	C90001-
39		707-88-21370	• Band	1	C90001-
40		07372-21240	• Bolt	4	C90001-
41		01643-51232	• Washer	4	C90001-
42		07283-33442	• Clip, Pipe	1	C90001-
43		01597-01009	• Nut	2	C90001-
44		01643-31032	• Washer	2	C90001-
45		01010-81025	• Bolt	2	C90001-
46		01643-31032	• Washer	2	C90001-
47		07371-31049	• Flange, Split	4	C90001-
48		707-88-33040	• Cap	2	C90001-
49		07372-21035	• Bolt	8	C90001-
50		01643-51032	• Washer	8	C90001-

FIG. T1140-001001 Arm Cylinder (100 Hours Lubrication Interval)

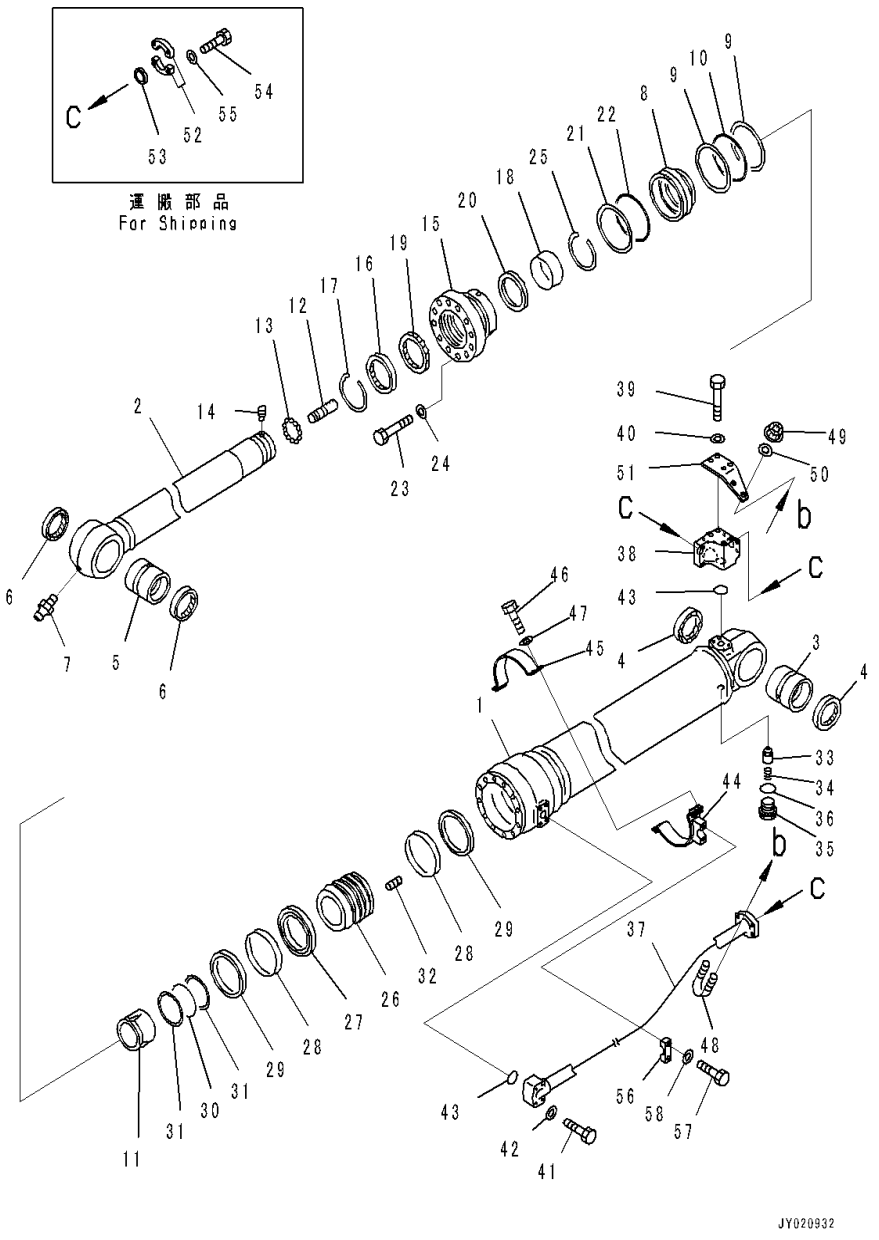

Index	Code	Part Number	Description	Qty	Serial Number
		(707-F1-X2180)	Cylinder Group	1	C90001-
		**********	**********		
		707-E1-02180	Cylinder Assembly	1	C90001-
1		721-13-16431	Cylinder	1	C90001-
2		721-58-11090	Rod, Piston	1	C90001-
3		707-76-10130	Bushing	1	C90001-
4		07145-00100	Seal, Dust, (Kit : K17)	2	C90001-
5		707-76-10130	Bushing	1	C90001-
6		07145-00100	Seal, Dust, (Kit : K17)	2	C90001-
7		07020-00000	Fitting, Grease	1	C90001-
8		707-71-35270	Collar	1	C90001-
9		707-35-31510	Ring, Back-up, (Kit : K17)	2	C90001-
10		07000-B5150	O-ring, (Kit : K17)	1	C90001-
11		707-71-61160	Plunger	1	C90001-
12		707-71-80280	Plunger	1	C90001-
13		04260-00635	Ball, Steel	12	C90001-
14		707-71-91270	Cap	1	C90001-
15		721-27-16080	Head, Cylinder	1	C90001-
16		707-56-11740	Seal, Dust, (Kit : K17)	1	C90001-
17		07179-13126	Ring, Snap	1	C90001-
18		707-52-90851	Bushing	1	C90001-
19		707-51-11860	Packing, Rod, (Kit : K17)	1	C90001-
20		707-51-11650	Ring, Buffer, (Kit : K17)	1	C90001-
21		707-35-31510	Ring, Back-up, (Kit : K17)	1	C90001-
22		07000-B5150	O-ring, (Kit : K17)	1	C90001-
23		01010-82085	Bolt	12	C90001-
24		707-88-75310	Washer	12	C90001-
25		707-75-11040	Ring, Snap	1	C90001-
26		707-36-16580	Piston	1	C90001-
27		707-44-16150	Ring, Piston, (Kit : K17)	1	C90001-
28		707-39-16120	Ring, Wear, (Kit : K17)	2	C90001-
29		707-44-16910	Ring	2	C90001-
30		07000-B5100	O-ring, (Kit : K17)	1	C90001-
31		707-35-31000	Ring, Back-up, (Kit : K17)	2	C90001-
32		01310-01216	Screw	1	C90001-
33		707-83-13010	Valve	1	C90001-
34		07750-01628	Spring	1	C90001-
35		707-87-14070	Plug	1	C90001-
36		07002-12034	O-ring, (Kit : K17)	1	C90001-
37		707-86-00830	Tube	1	C90001-

FIG. T1140-001001 Arm Cylinder (100 Hours Lubrication Interval)

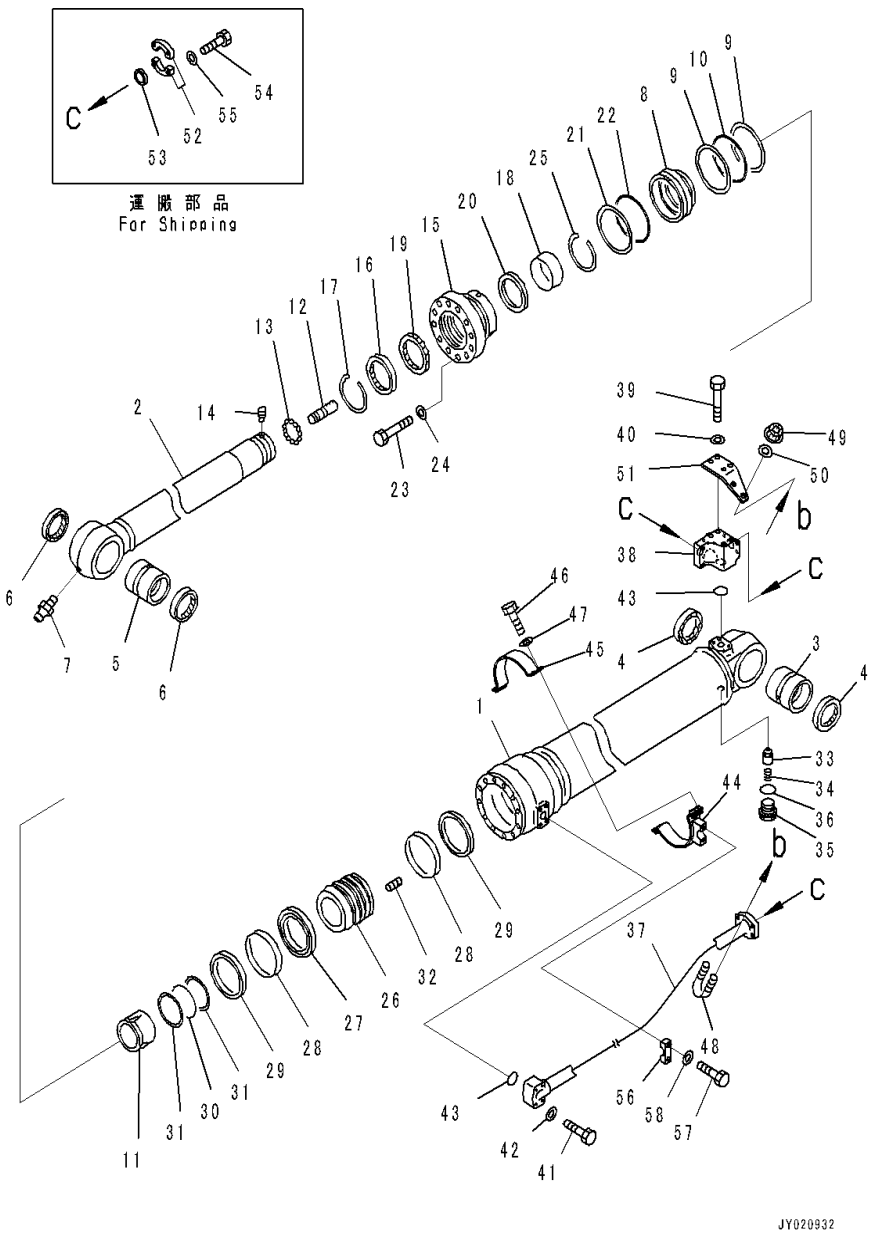

Index	Code	Part Number	Description	Qty	Serial Number
38		707-87-14960	Elbow	1	C90001-
39		01011-81005	Bolt	4	C90001-
40		01643-51032	Washer	4	C90001-
41		07372-21060	Bolt	4	C90001-
42		01643-51032	Washer	4	C90001-
43		07000-B3035	O-ring, (Kit : K17)	2	C90001-
44		707-88-51190	Bracket	1	C90001-
45		707-88-21850	Band	1	C90001-
46		07372-21240	Bolt	4	C90001-
47		01643-51232	Washer	4	C90001-
48		07283-33442	Clip, Pipe	1	C90001-
49		01597-01009	Nut	2	C90001-
50		01643-31032	Washer	2	C90001-
51		707-88-02960	Plate	1	C90001-
52		07371-31049	Flange, Split	6	C90001-
53		707-88-33040	Cap	3	C90001-
54		07372-21035	Bolt	12	C90001-
55		01643-51032	Washer	12	C90001-
56		707-88-10150	Clamp	1	C90001-
57		01010-81245	Bolt	2	C90001-
58		01643-31232	Washer	2	C90001-

FIG. T1190-001001 Shipping Parts For Arm Less

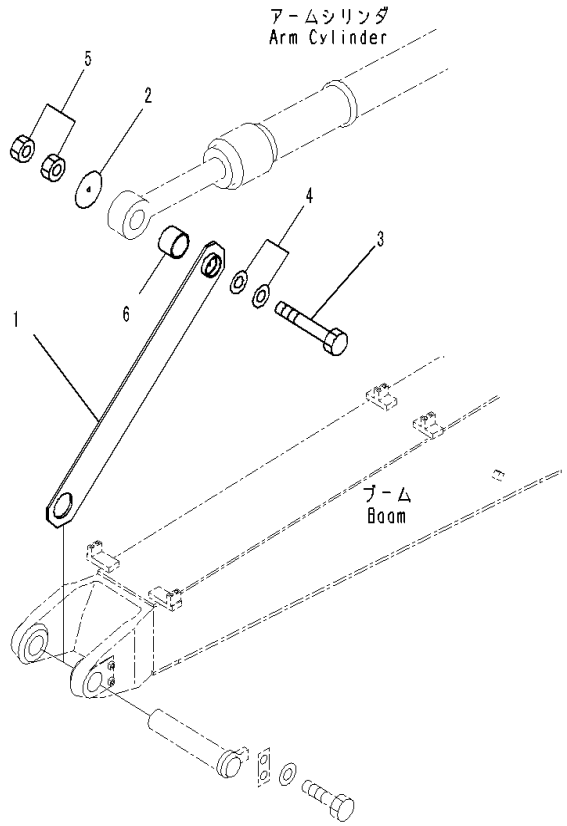

Index	Code	Part Number	Description	Qty	Serial Number
		207-70-53160	Link	1	C90001-
1		207-70-53161	Link	1	C90001-
2		207-70-53170	Plate	1	C90001-
3		01011-81260	Bolt	1	C90001-
4		01643-31232	Washer	2	C90001-
5		01580-11210	Nut	2	C90001-
6		207-70-53150	Collar	3	C90001-

FIG. T1200-001001 Arm (2.2m, 100 Hours Greasing Type) (Arm)

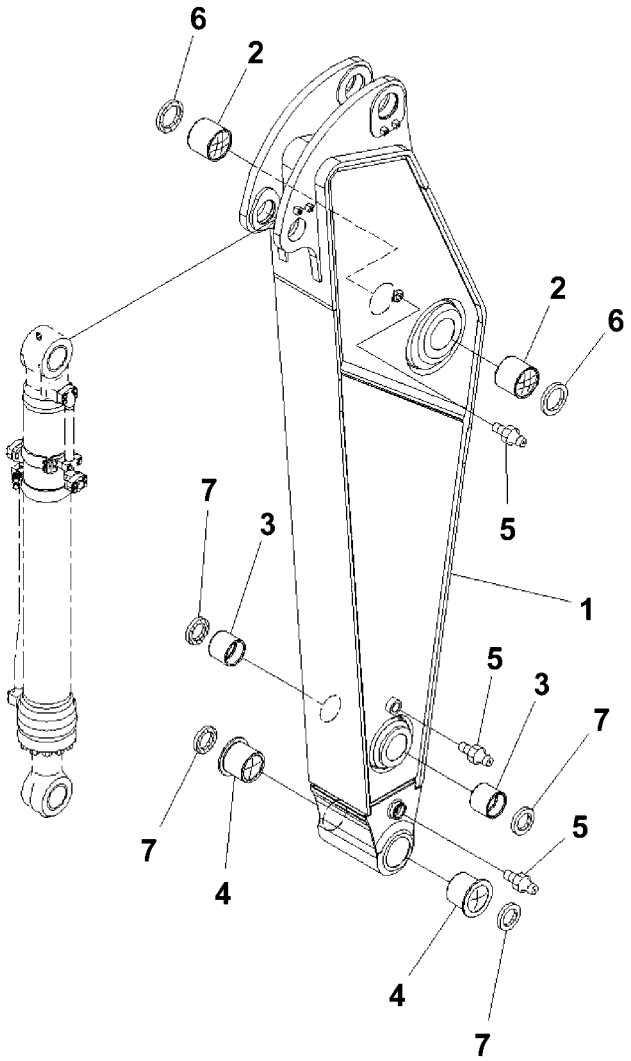

JY001206

Index	Code	Part Number	Description	Qty	Serial Number
1		207-944-7211	Arm	1	C90001-
2		207-70-61521	Bushing	2	C90001-
3		207-70-32150	Bushing	2	C90001-
4		207-70-72460	Bushing	2	C90001-
5		07020-00000	Fitting, Grease	3	C90001-
6		07145-00110	Seal, Dust	2	C90001-
7		207-70-72120	Seal, Dust	4	C90001-

FIG. T1200-001002 Arm (2.2m, 100 Hours Greasing Type) (Bucket Cylinder)

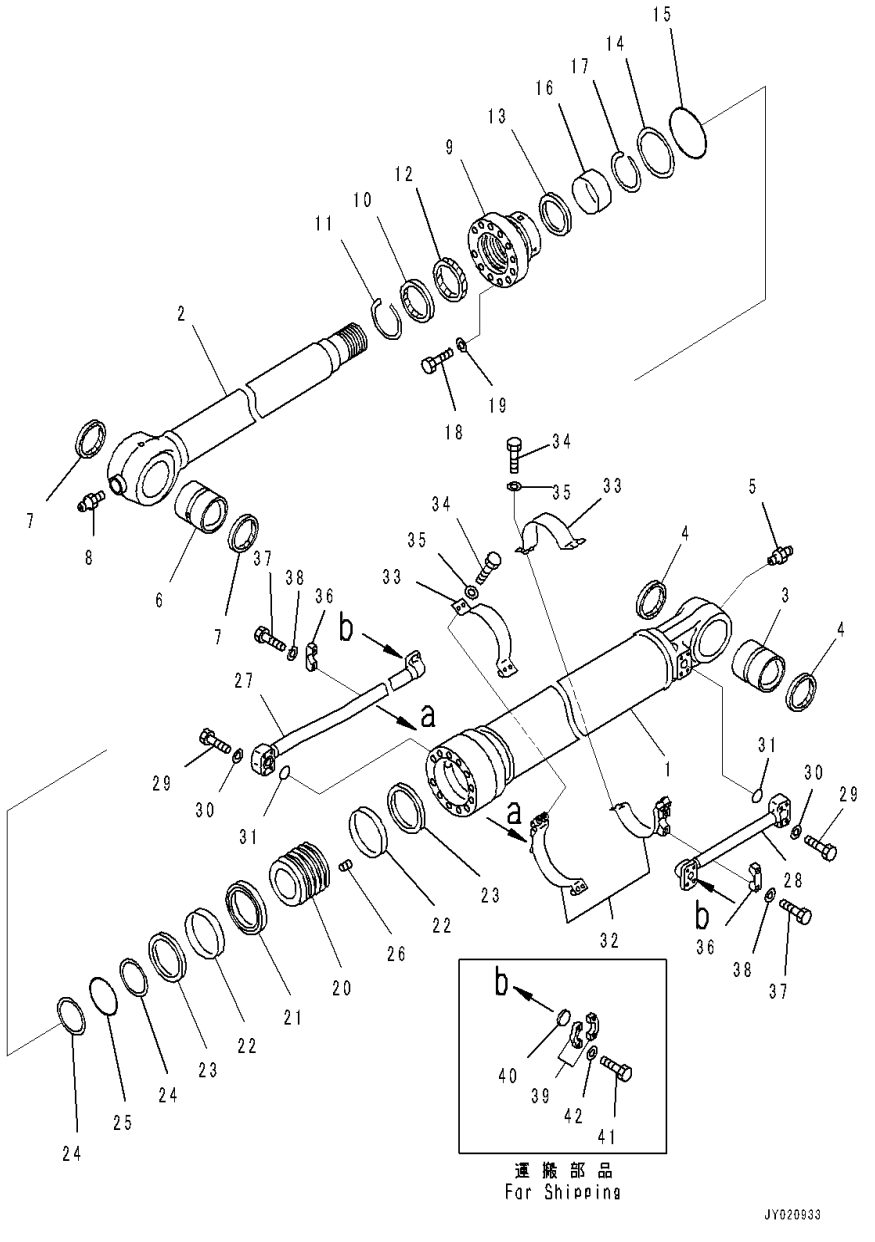

Index	Code	Part Number	Description	Qty	Serial Number
		(707-F1-X2470)	Cylinder Group	1	C90001-
		**********	**********		
		707-E1-02470	Cylinder Assembly	1	C90001-
1		707-13-15570	• Cylinder	1	C90001-
2		707-58-11850	• Rod, Piston	1	C90001-
3		707-76-90130	• Bushing	1	C90001-
4		07145-00090	• Seal, Dust, (Kit : K23)	2	C90001-
5		07020-00000	• Fitting, Grease	1	C90001-
6		207-63-76170	• Bushing	1	C90001-
7		207-70-72120	• Seal, Dust, (Kit : K23)	2	C90001-
8		07020-00000	• Fitting, Grease	1	C90001-
9		707-27-15620	• Head, Cylinder	1	C90001-
10		707-56-11740	• Seal, Dust, (Kit : K23)	1	C90001-
11		07179-13126	• Ring, Snap	1	C90001-
12		707-51-11860	• Packing, Rod, (Kit : K23)	1	C90001-
13		707-51-11650	• Ring, Buffer, (Kit : K23)	1	C90001-
14		707-35-31410	• Ring, Back-up, (Kit : K23)	1	C90001-
15		07000-B5140	• O-ring, (Kit : K23)	1	C90001-
16		707-52-90851	• Bushing	1	C90001-
17		707-75-11040	• Ring, Snap	1	C90001-
18		01010-82085	• Bolt	12	C90001-
19		707-88-75310	• Washer	12	C90001-
20		707-36-15260	• Piston	1	C90001-
21		707-44-15150	• Ring, Piston, (Kit : K23)	1	C90001-
22		707-39-15110	• Ring, Wear, (Kit : K23)	2	C90001-
23		707-44-15911	• Ring	2	C90001-
24		707-35-31000	• Ring, Back-up, (Kit : K23)	2	C90001-
25		07000-B5100	• O-ring, (Kit : K23)	1	C90001-
26		01310-01216	• Screw	1	C90001-
27		707-86-00920	Tube	1	C90001-
28		207-63-73181	Tube	1	C90001-
29		07372-21060	Bolt	8	C90001-
30		01643-51032	Washer	8	C90001-
31		07000-B3035	O-ring, (Kit : K23)	2	C90001-
32		707-88-22692	Bracket	2	C90001-
33		707-88-21420	Band	2	C90001-
34		07372-21240	Bolt	8	C90001-
35		01643-51232	Washer	8	C90001-
36		707-88-10150	Clamp	2	C90001-
37		01010-81245	Bolt	4	C90001-

FIG. T1200-001002 Arm (2.2m, 100 Hours Greasing Type) (Bucket Cylinder)

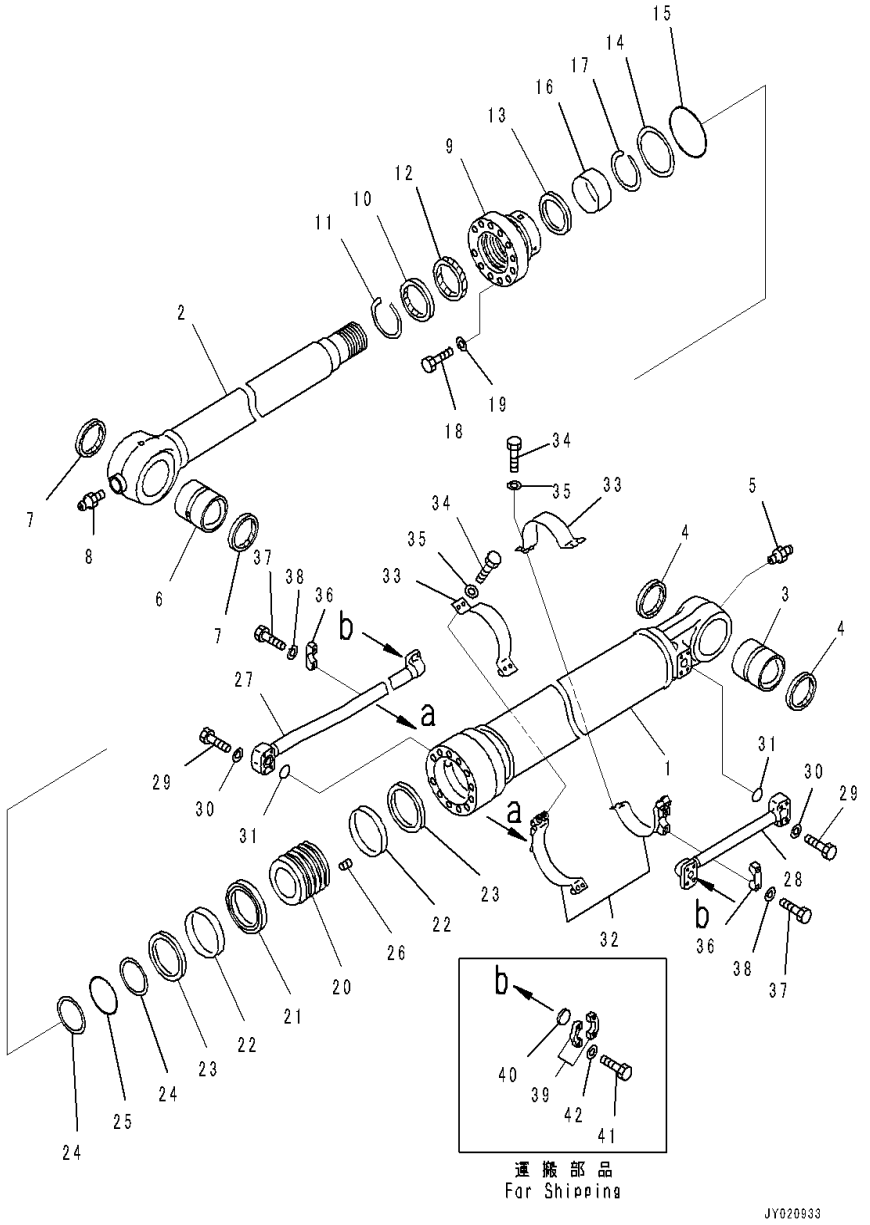

Index	Code	Part Number	Description	Qty	Serial Number
38		01643-31232	Washer	4	C90001-
39		07371-31049	Flange, Split	4	C90001-
40		707-88-33040	Cap	2	C90001-
41		07372-21035	Bolt	8	C90001-
42		01643-51032	Washer	8	C90001-

FIG. T1200-001003 Arm (2.2m, 100 Hours Greasing Type) (Bucket Link)

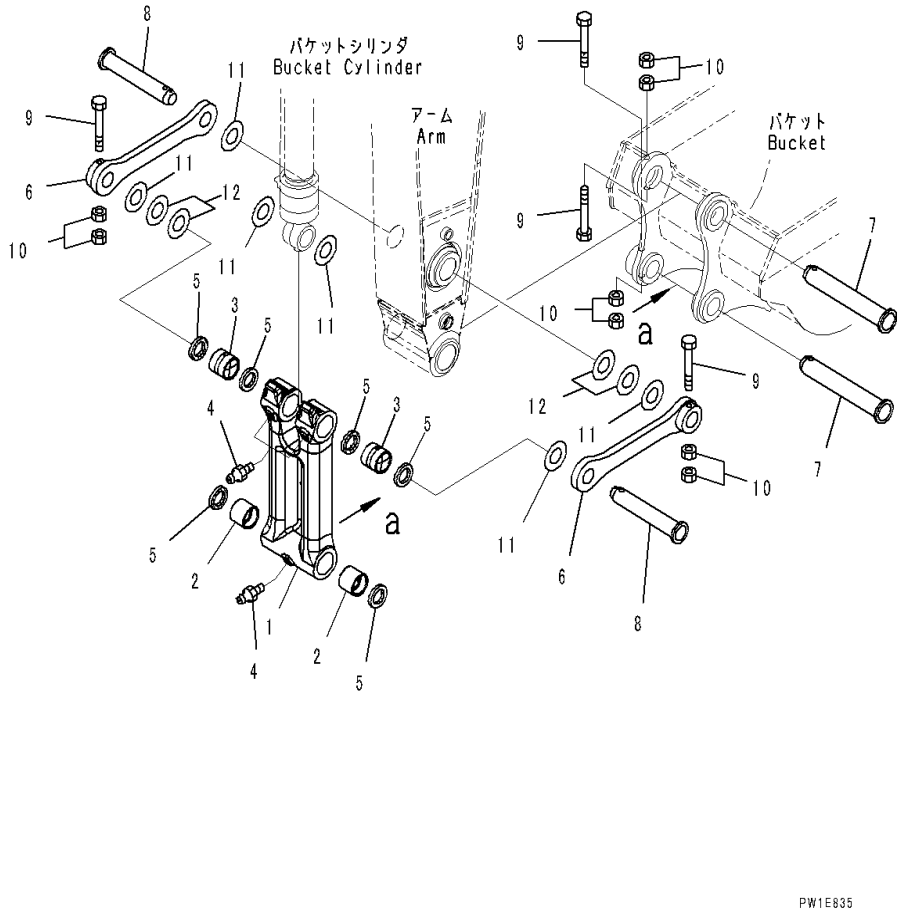

Index	Code	Part Number	Description	Qty	Serial Number
		207-70-00480	Link Assembly	1	C90001-
1	C1		• Link	1	C90001-
2		207-70-33160	• Bushing	2	C90001-
3		207-70-33160	• Bushing	2	C90001-
4		07020-00000	• Fitting, Grease	3	C90001-
5		207-70-72120	• Seal, Dust	6	C90001-
6		207-70-33120	Link	2	C90001-
7		207-70-73210	Pin	2	C90001-
8		207-70-33141	Pin	2	C90001-
9		208-70-73160	Bolt	4	C90001-
10		01580-12419	Nut	8	C90001-
11		207-70-24190	Spacer, T=0.8mm	8	C90001-
12		207-70-24210	Spacer, T=1.5mm	4	C90001-

FIG. T1200-001004 Arm (2.2m, 100 Hours Greasing Type) (Bucket Cylinder Hose and Pin)

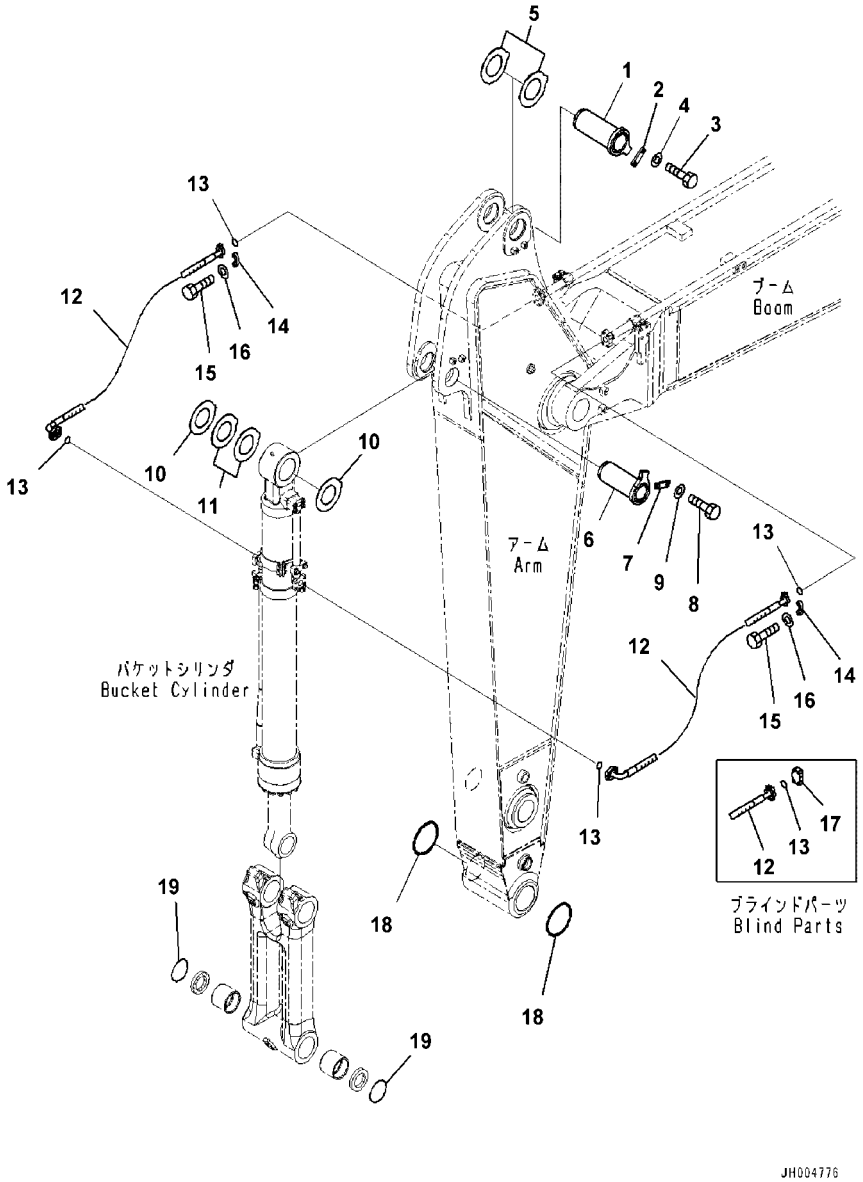

Index	Code	Part Number	Description	Qty	Serial Number
1		208-70-61241	Pin	1	C90001-
2		205-70-66581	Plate	1	C90001-
3		01010-81235	Bolt	2	C90001-
4		01643-31232	Washer	2	C90001-
5		207-70-31340	Spacer, T=0.8mm	2	C90001-
6		207-70-61221	Pin	1	C90001-
7		205-70-66581	Plate	1	C90001-
8		01010-81235	Bolt	2	C90001-
9		01643-31232	Washer	2	C90001-
10		207-70-24190	Spacer, T=0.8mm	3	C90001-
11		207-70-24210	Spacer, T=1.5mm	2	C90001-
12		207-62-76830	Hose	2	C90001-
13		07000-13032	O-ring	4	C90001-
14		07371-31049	Flange, Split	8	C90001-
15		07372-21035	Bolt	16	C90001-
16		01643-51032	Washer	16	C90001-
17		07379-01044	Flange	2	C90001-
18		207-70-33181	O-ring	2	C90001-
19		205-70-73280	O-ring	2	C90001-

FIG. T1200-002001 Arm (2.6m, Strengthened, 100 Hours Greasing Type) (Arm)

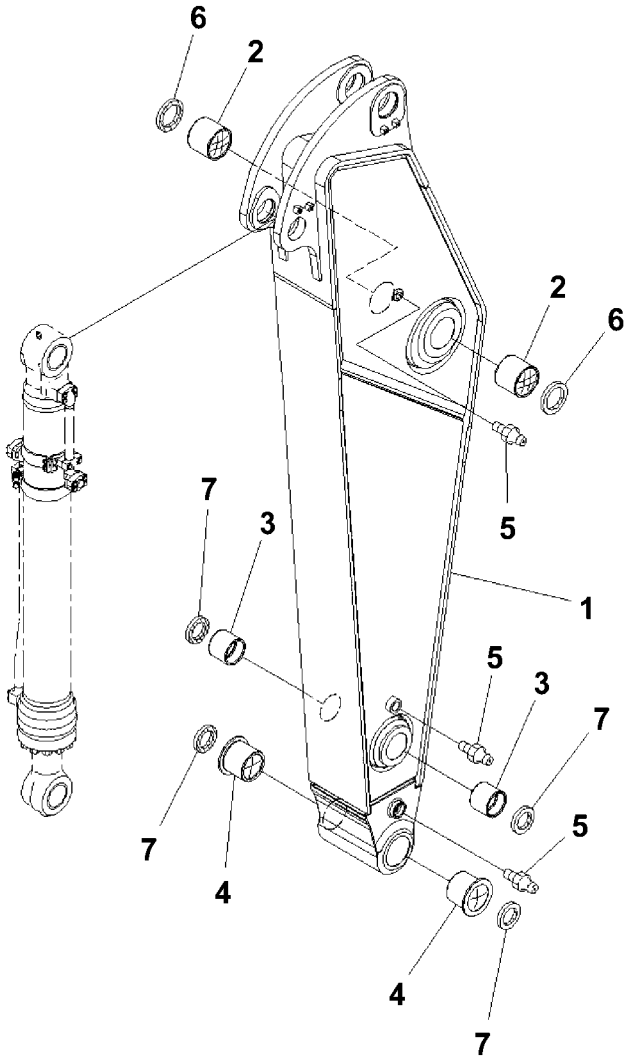

JY001206

Index	Code	Part Number	Description	Qty	Serial Number
1		207-944-7510	Arm	1	C90001-
2		207-70-61521	Bushing	2	C90001-
3		207-70-32150	Bushing	2	C90001-
4		207-70-72460	Bushing	2	C90001-
5		07020-00000	Fitting, Grease	3	C90001-
6		07145-00110	Seal, Dust	2	C90001-
7		207-70-72120	Seal, Dust	4	C90001-

FIG. T1200-002002 Arm (2.6m, Strengthened, 100 Hours Greasing Type) (Bucket Cylinder)

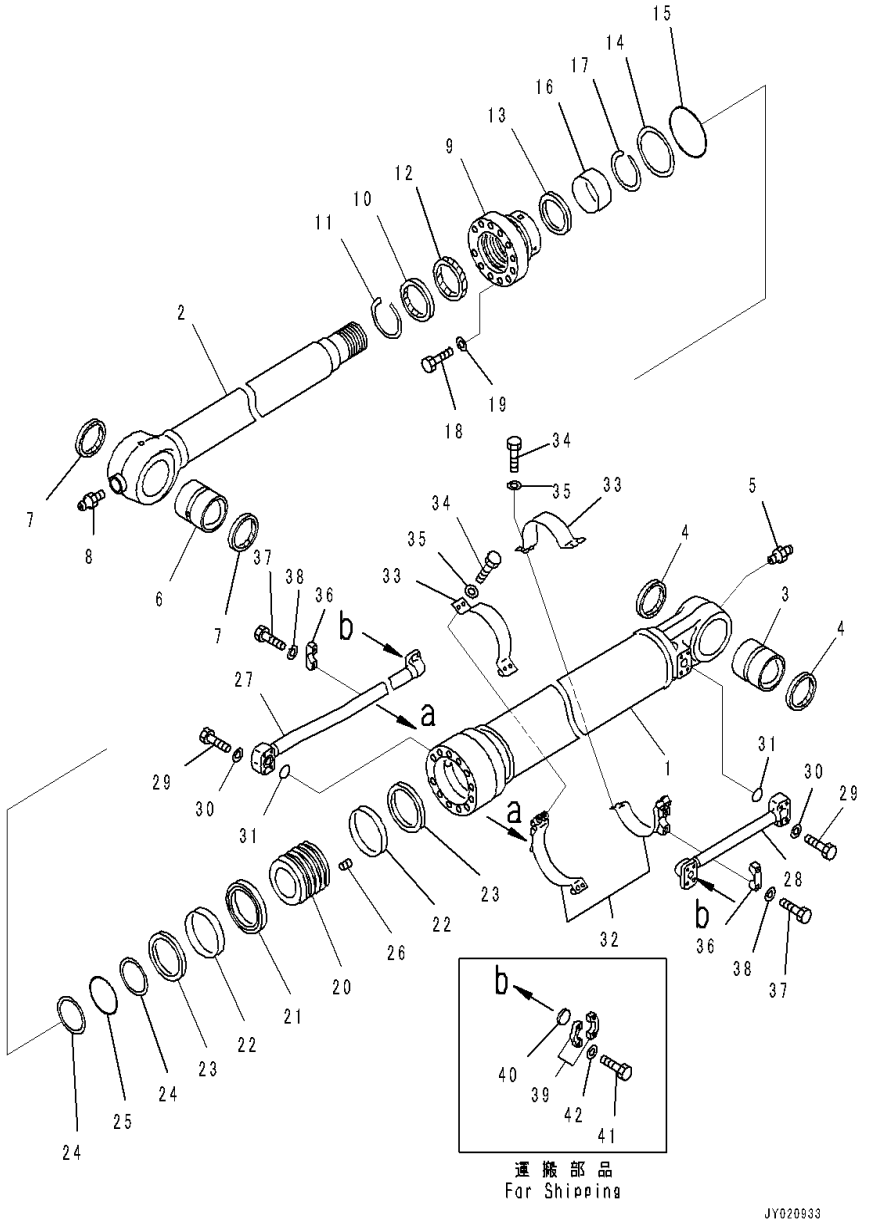

Index	Code	Part Number	Description	Qty	Serial Number
		(707-F1-X2470)	Cylinder Group	1	C90001-
		**********	**********		
		707-E1-02470	Cylinder Assembly	1	C90001-
1		707-13-15570	• Cylinder	1	C90001-
2		707-58-11850	• Rod, Piston	1	C90001-
3		707-76-90130	• Bushing	1	C90001-
4		07145-00090	• Seal, Dust, (Kit : K23)	2	C90001-
5		07020-00000	• Fitting, Grease	1	C90001-
6		207-63-76170	• Bushing	1	C90001-
7		207-70-72120	• Seal, Dust, (Kit : K23)	2	C90001-
8		07020-00000	• Fitting, Grease	1	C90001-
9		707-27-15620	• Head, Cylinder	1	C90001-
10		707-56-11740	• Seal, Dust, (Kit : K23)	1	C90001-
11		07179-13126	• Ring, Snap	1	C90001-
12		707-51-11860	• Packing, Rod, (Kit : K23)	1	C90001-
13		707-51-11650	• Ring, Buffer, (Kit : K23)	1	C90001-
14		707-35-31410	• Ring, Back-up, (Kit : K23)	1	C90001-
15		07000-B5140	• O-ring, (Kit : K23)	1	C90001-
16		707-52-90851	• Bushing	1	C90001-
17		707-75-11040	• Ring, Snap	1	C90001-
18		01010-82085	• Bolt	12	C90001-
19		707-88-75310	• Washer	12	C90001-
20		707-36-15260	• Piston	1	C90001-
21		707-44-15150	• Ring, Piston, (Kit : K23)	1	C90001-
22		707-39-15110	• Ring, Wear, (Kit : K23)	2	C90001-
23		707-44-15911	• Ring	2	C90001-
24		707-35-31000	• Ring, Back-up, (Kit : K23)	2	C90001-
25		07000-B5100	• O-ring, (Kit : K23)	1	C90001-
26		01310-01216	• Screw	1	C90001-
27		707-86-00920	Tube	1	C90001-
28		207-63-73181	Tube	1	C90001-
29		07372-21060	Bolt	8	C90001-
30		01643-51032	Washer	8	C90001-
31		07000-B3035	O-ring, (Kit : K23)	2	C90001-
32		707-88-22692	Bracket	2	C90001-
33		707-88-21420	Band	2	C90001-
34		07372-21240	Bolt	8	C90001-
35		01643-51232	Washer	8	C90001-
36		707-88-10150	Clamp	2	C90001-
37		01010-81245	Bolt	4	C90001-

FIG. T1200-002002 Arm (2.6m, Strengthened, 100 Hours Greasing Type) (Bucket Cylinder)

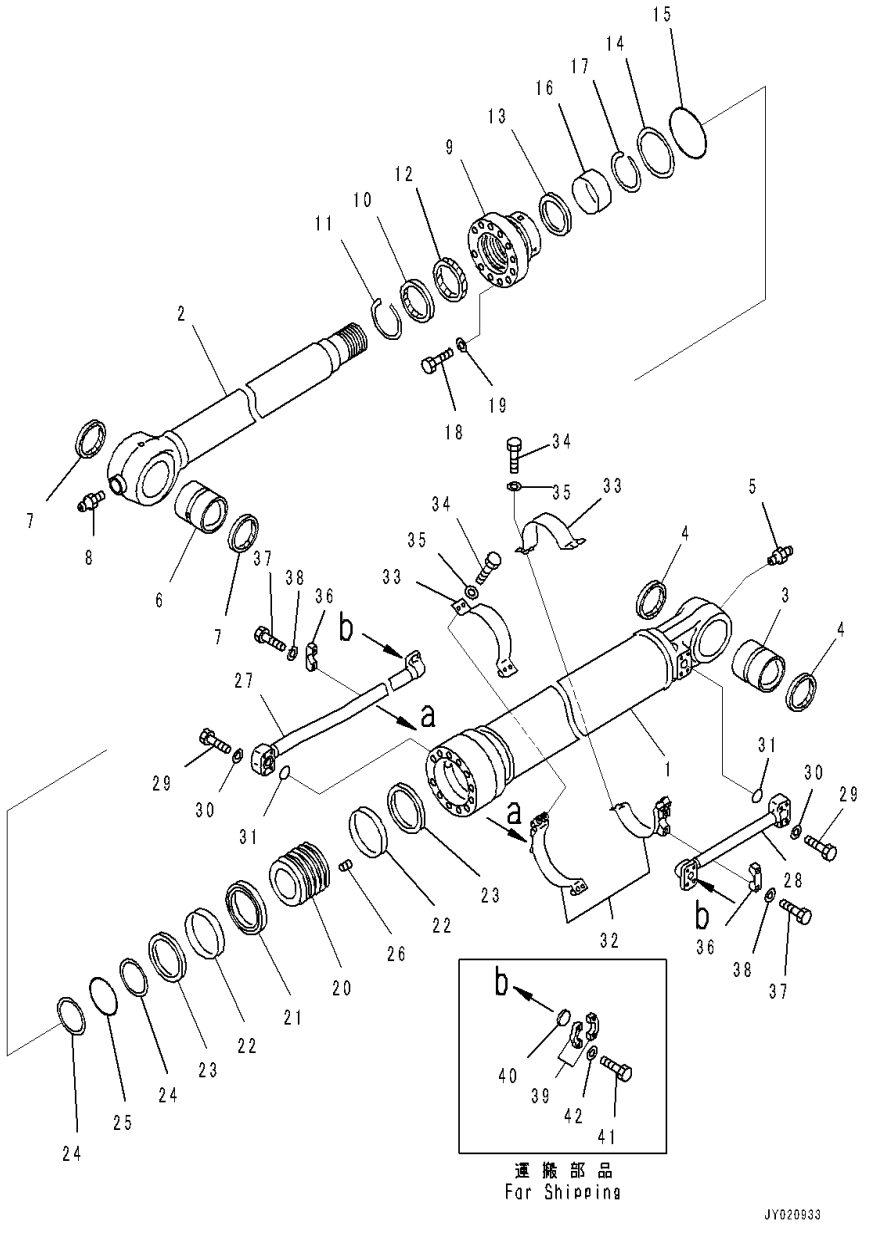

Index	Code	Part Number	Description	Qty	Serial Number
38		01643-31232	Washer	4	C90001-
39		07371-31049	Flange, Split	4	C90001-
40		707-88-33040	Cap	2	C90001-
41		07372-21035	Bolt	8	C90001-
42		01643-51032	Washer	8	C90001-

FIG. T1200-002003 Arm (2.6m, Strengthened, 100 Hours Greasing Type) (Bucket Link)

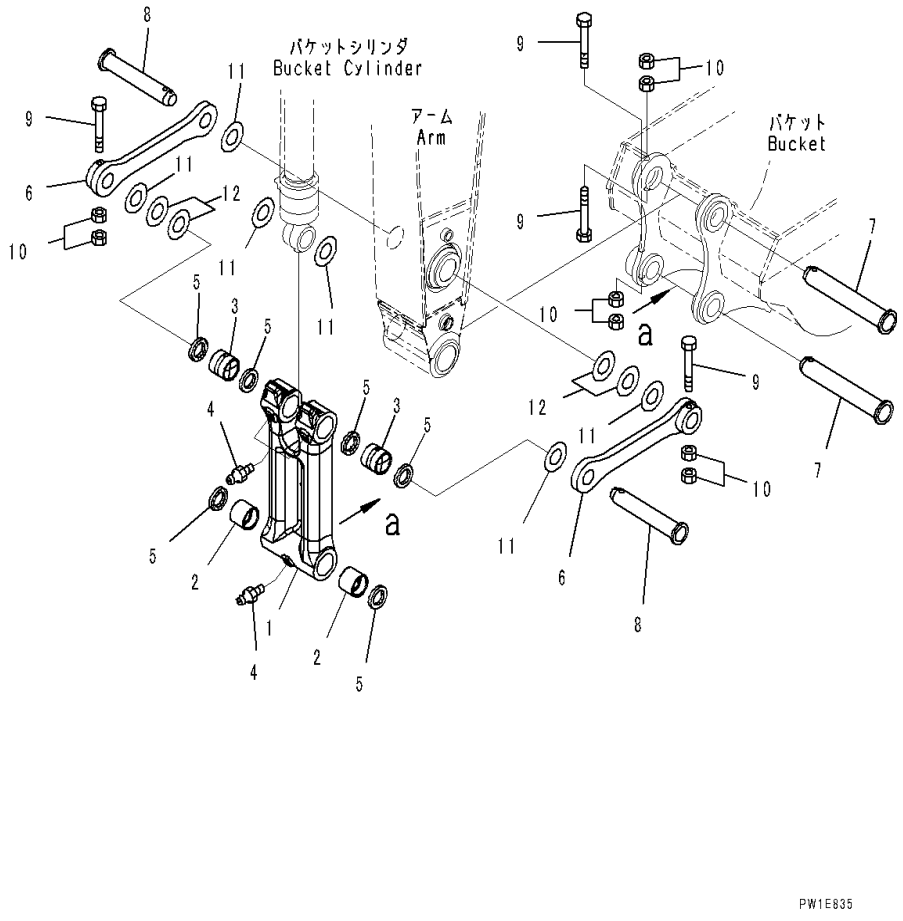

Index	Code	Part Number	Description	Qty	Serial Number
		207-70-00480	Link Assembly	1	C90001-
1	C1		• Link	1	C90001-
2		207-70-33160	• Bushing	2	C90001-
3		207-70-33160	• Bushing	2	C90001-
4		07020-00000	• Fitting, Grease	3	C90001-
5		207-70-72120	• Seal, Dust	6	C90001-
6		207-70-33120	Link	2	C90001-
7		207-70-73210	Pin	2	C90001-
8		207-70-33141	Pin	2	C90001-
9		208-70-73160	Bolt	4	C90001-
10		01580-12419	Nut	8	C90001-
11		207-70-24190	Spacer, T=0.8mm	8	C90001-
12		207-70-24210	Spacer, T=1.5mm	4	C90001-

FIG. T1200-002004 Arm (2.6m, Strengthened, 100 Hours Greasing Type) (Bucket Cylinder Hose and Pin)

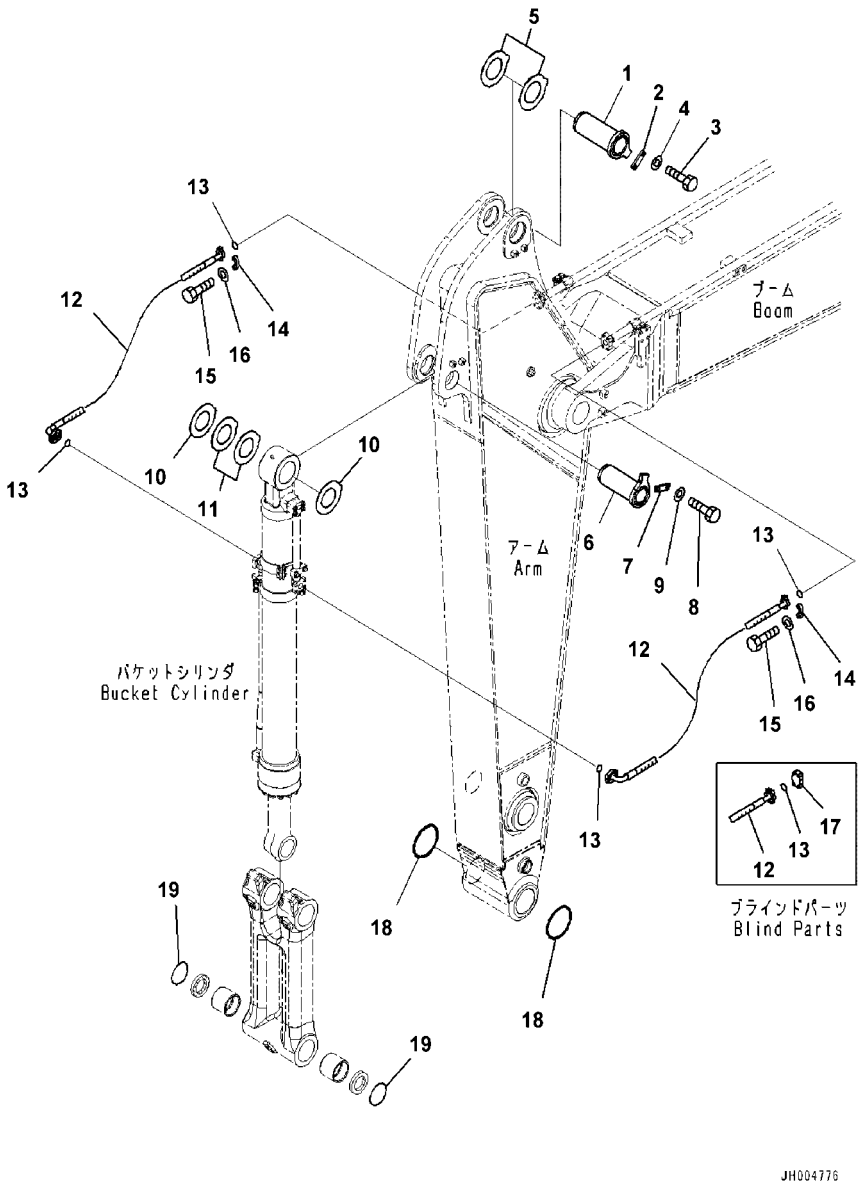

Index	Code	Part Number	Description	Qty	Serial Number
1		208-70-61241	Pin	1	C90001-
2		205-70-66581	Plate	1	C90001-
3		01010-81235	Bolt	2	C90001-
4		01643-31232	Washer	2	C90001-
5		207-70-31340	Spacer, T=0.8mm	2	C90001-
6		207-70-61221	Pin	1	C90001-
7		205-70-66581	Plate	1	C90001-
8		01010-81235	Bolt	2	C90001-
9		01643-31232	Washer	2	C90001-
10		207-70-24190	Spacer, T=0.8mm	3	C90001-
11		207-70-24210	Spacer, T=1.5mm	2	C90001-
12		207-62-76830	Hose	2	C90001-
13		07000-13032	O-ring	4	C90001-
14		07371-31049	Flange, Split	8	C90001-
15		07372-21035	Bolt	16	C90001-
16		01643-51032	Washer	16	C90001-
17		07379-01044	Flange	2	C90001-
18		207-70-33181	O-ring	2	C90001-
19		205-70-73280	O-ring	2	C90001-

FIG. T1200-003001 Arm (2.6m, Strengthened, 1-Attachment, 100 Hours Greasing (Arm and Bushing)

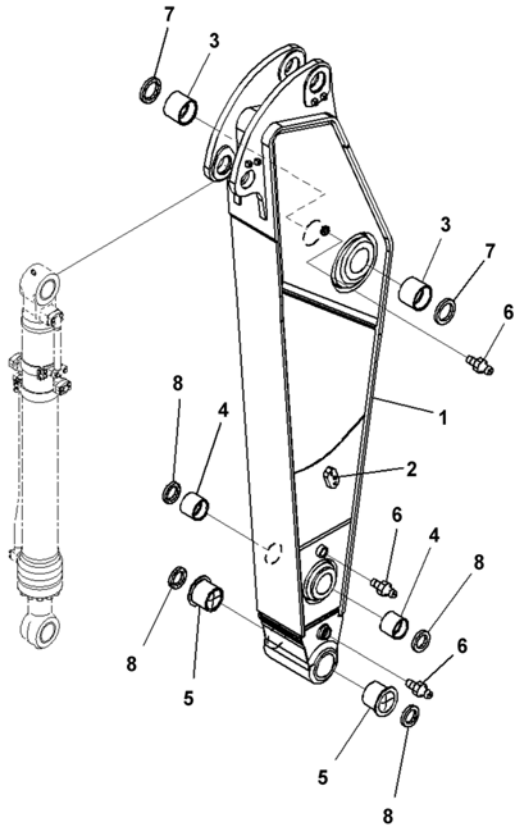

Index	Code	Part Number	Description	Qty	Serial Number
		207-944-7551	Arm	1	C90001-
1	C1		• Arm	1	C90001-
2		207-944-7H80	• Seat, Welded	2	C90001-
3		207-70-61521	Bushing	2	C90001-
4		207-70-32150	Bushing	2	C90001-
5		207-70-72460	Bushing	2	C90001-
6		07020-00000	Fitting, Grease	3	C90001-
7		07145-00110	Seal, Dust	2	C90001-
8		207-70-72120	Seal, Dust	4	C90001-

FIG. T1200-003002 Arm (2.6m, Strengthened, 1-Attachment, 100 Hours Greasing Type) (Bucket Cylinder)

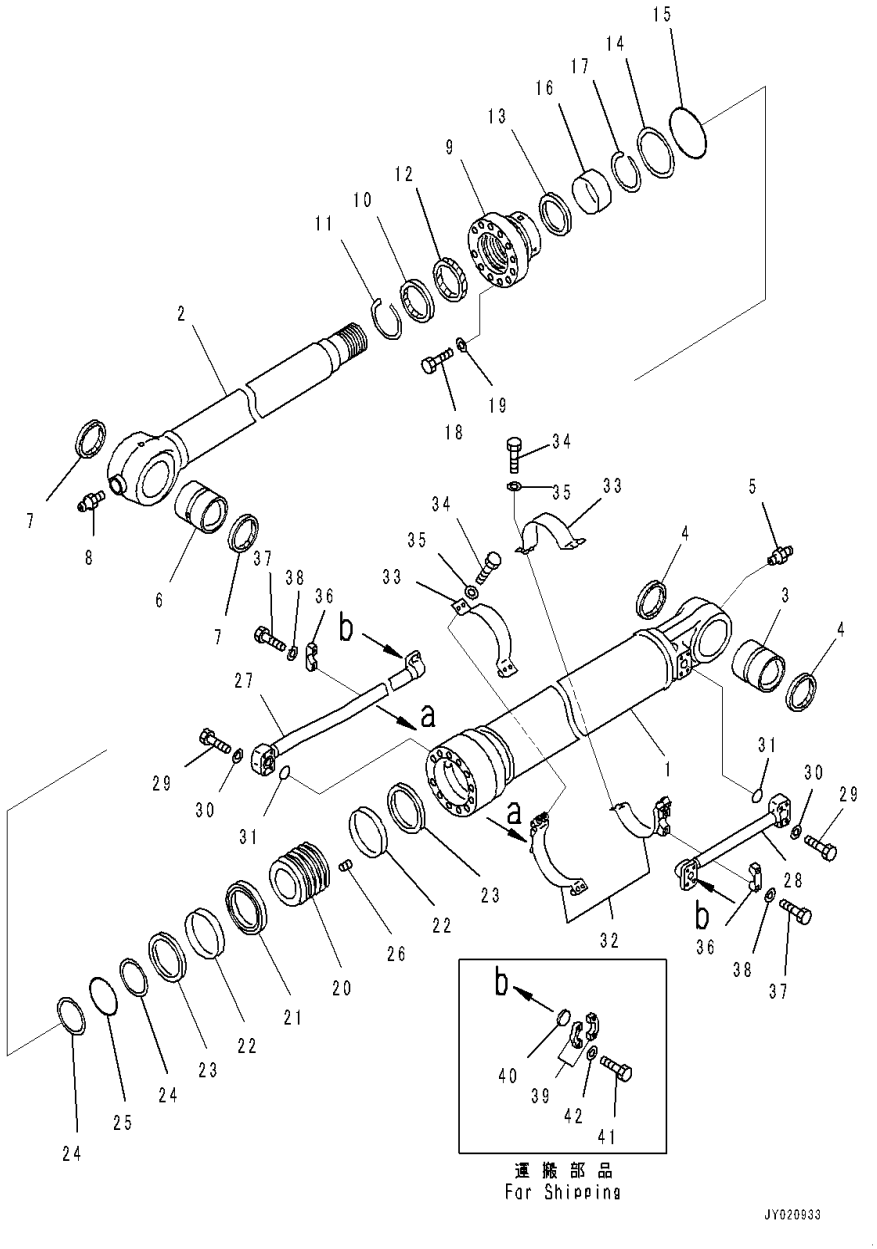

Index	Code	Part Number	Description	Qty	Serial Number
		(707-F1-X2470)	Cylinder Group	1	C90001-
		**********	**********		
		707-E1-02470	Cylinder Assembly	1	C90001-
1		707-13-15570	• Cylinder	1	C90001-
2		707-58-11850	• Rod, Piston	1	C90001-
3		707-76-90130	• Bushing	1	C90001-
4		07145-00090	• Seal, Dust, (Kit : K23)	2	C90001-
5		07020-00000	• Fitting, Grease	1	C90001-
6		207-63-76170	• Bushing	1	C90001-
7		207-70-72120	• Seal, Dust, (Kit : K23)	2	C90001-
8		07020-00000	• Fitting, Grease	1	C90001-
9		707-27-15620	• Head, Cylinder	1	C90001-
10		707-56-11740	• Seal, Dust, (Kit : K23)	1	C90001-
11		07179-13126	• Ring, Snap	1	C90001-
12		707-51-11860	• Packing, Rod, (Kit : K23)	1	C90001-
13		707-51-11650	• Ring, Buffer, (Kit : K23)	1	C90001-
14		707-35-31410	• Ring, Back-up, (Kit : K23)	1	C90001-
15		07000-B5140	• O-ring, (Kit : K23)	1	C90001-
16		707-52-90851	• Bushing	1	C90001-
17		707-75-11040	• Ring, Snap	1	C90001-
18		01010-82085	• Bolt	12	C90001-
19		707-88-75310	• Washer	12	C90001-
20		707-36-15260	• Piston	1	C90001-
21		707-44-15150	• Ring, Piston, (Kit : K23)	1	C90001-
22		707-39-15110	• Ring, Wear, (Kit : K23)	2	C90001-
23		707-44-15911	• Ring	2	C90001-
24		707-35-31000	• Ring, Back-up, (Kit : K23)	2	C90001-
25		07000-B5100	• O-ring, (Kit : K23)	1	C90001-
26		01310-01216	• Screw	1	C90001-
27		707-86-00920	Tube	1	C90001-
28		207-63-73181	Tube	1	C90001-
29		07372-21060	Bolt	8	C90001-
30		01643-51032	Washer	8	C90001-
31		07000-B3035	O-ring, (Kit : K23)	2	C90001-
32		707-88-22692	Bracket	2	C90001-
33		707-88-21420	Band	2	C90001-
34		07372-21240	Bolt	8	C90001-
35		01643-51232	Washer	8	C90001-
36		707-88-10150	Clamp	2	C90001-
37		01010-81245	Bolt	4	C90001-

FIG. T1200-003002 Arm (2.6m, Strengthened, 1-Attachment, 100 Hours Greasing Type) (Bucket Cylinder)

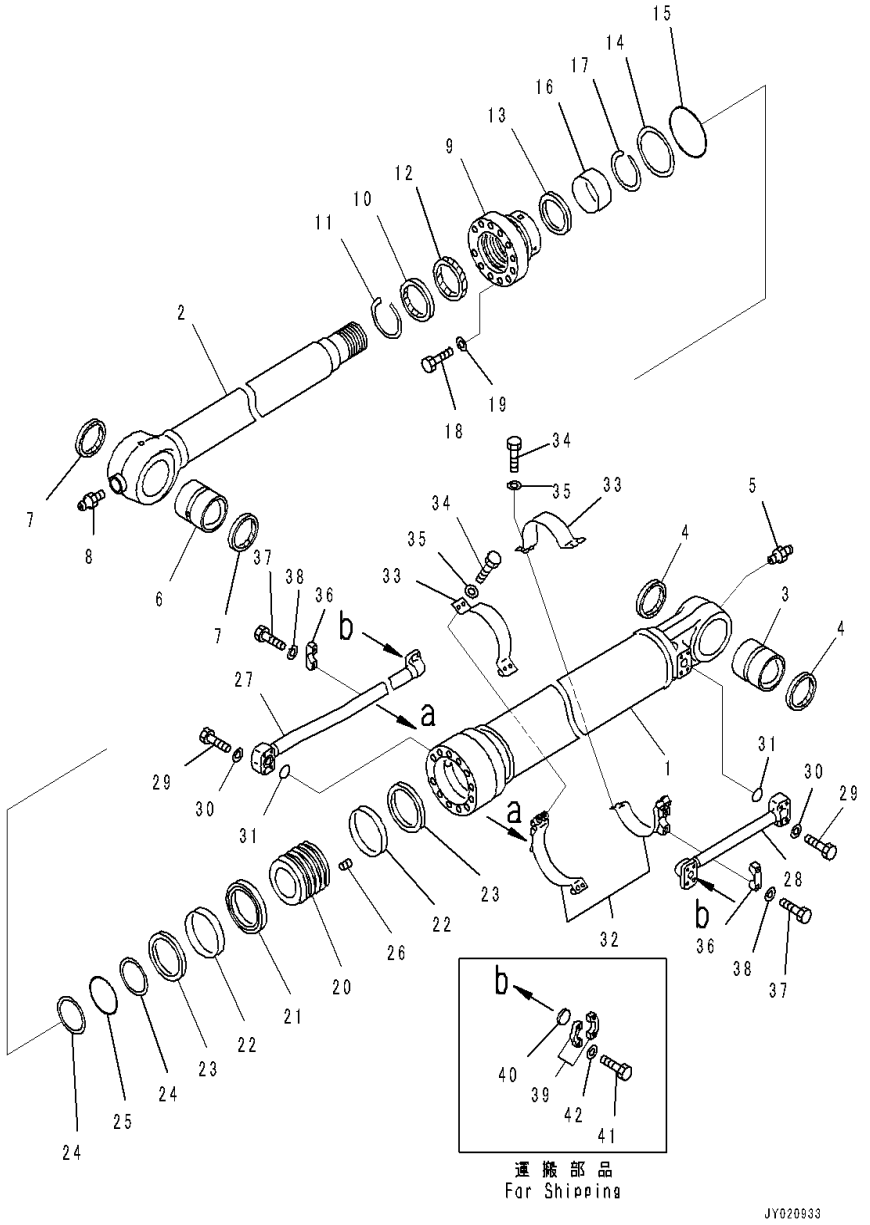

Index	Code	Part Number	Description	Qty	Serial Number
38		01643-31232	Washer	4	C90001-
39		07371-31049	Flange, Split	4	C90001-
40		707-88-33040	Cap	2	C90001-
41		07372-21035	Bolt	8	C90001-
42		01643-51032	Washer	8	C90001-

FIG. T1200-003003 Arm (2.6m, Strengthened, 1-Attachment, 100 Hours Greasing Type) (Bucket Link)

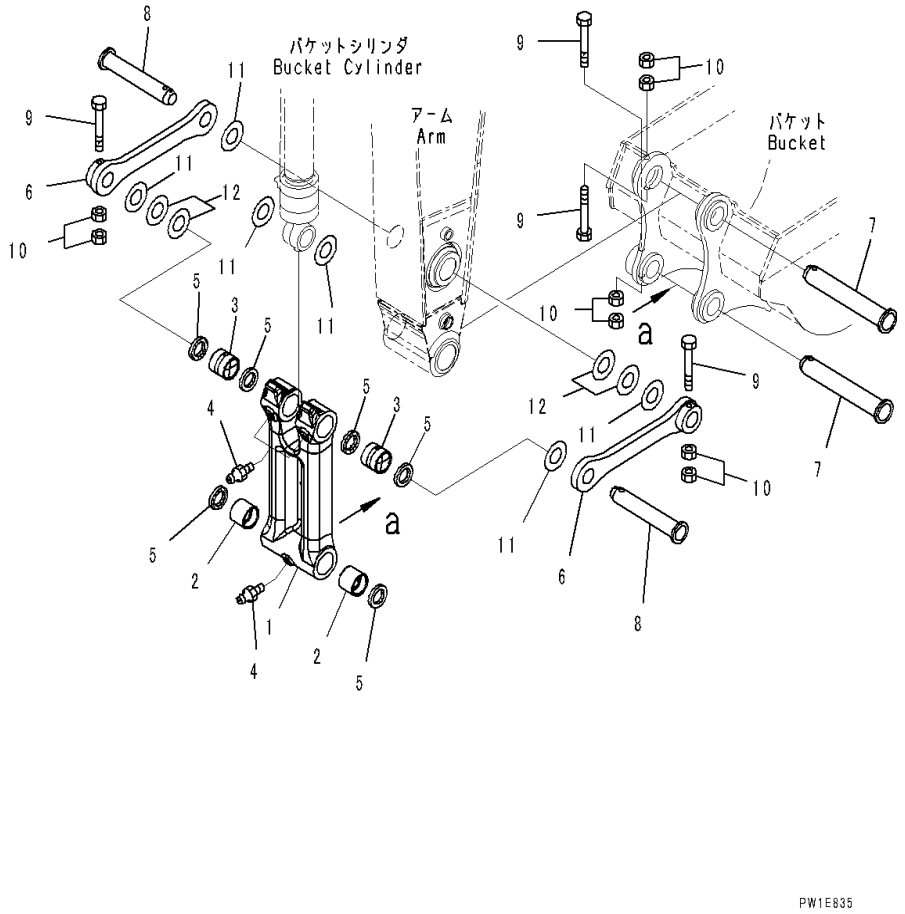

Index	Code	Part Number	Description	Qty	Serial Number
		207-70-00480	Link Assembly	1	C90001-
1	C1		• Link	1	C90001-
2		207-70-33160	• Bushing	2	C90001-
3		207-70-33160	• Bushing	2	C90001-
4		07020-00000	• Fitting, Grease	3	C90001-
5		207-70-72120	• Seal, Dust	6	C90001-
6		207-70-33120	Link	2	C90001-
7		207-70-73210	Pin	2	C90001-
8		207-70-33141	Pin	2	C90001-
9		208-70-73160	Bolt	4	C90001-
10		01580-12419	Nut	8	C90001-
11		207-70-24190	Spacer, T=0.8mm	8	C90001-
12		207-70-24210	Spacer, T=1.5mm	4	C90001-

FIG. T1200-003004 Arm (2.6m, Strengthened, 1-Attachment, 100 Hours Greasing) (Bucket Cylinder Hose and Pin)

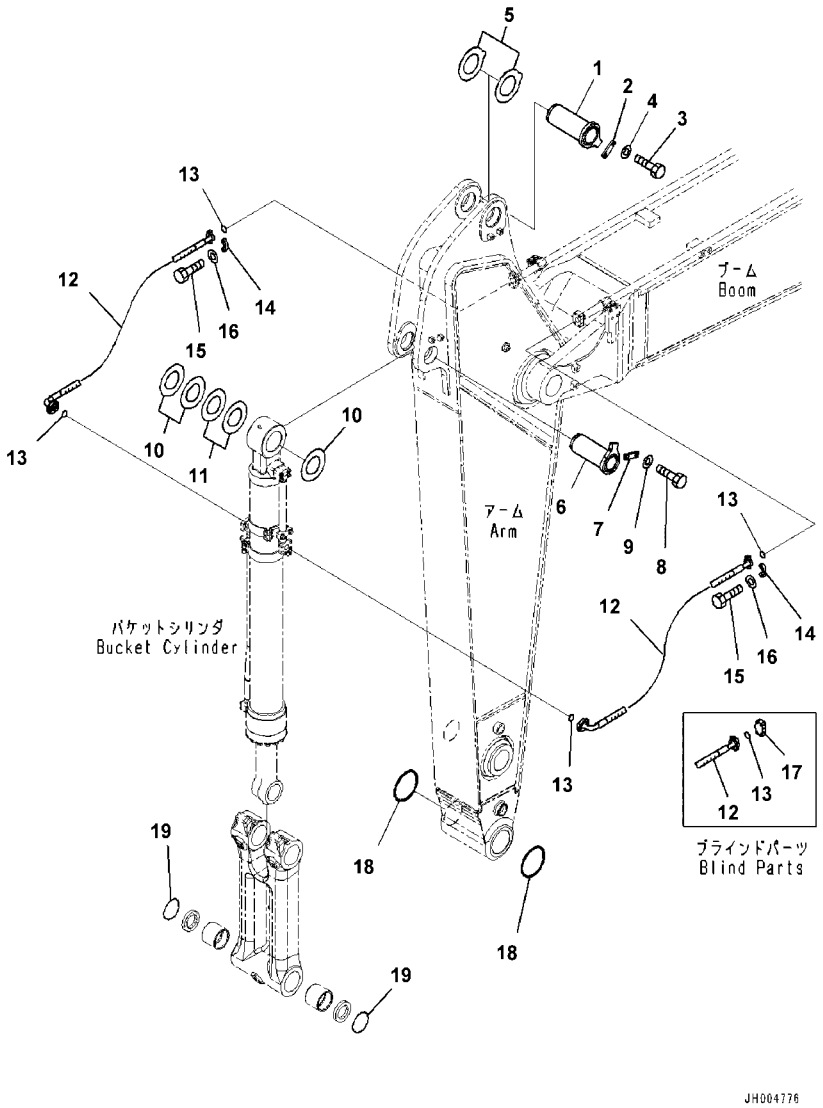

Index	Code	Part Number	Description	Qty	Serial Number
1		208-70-61241	Pin	1	C90001-
2		205-70-66581	Plate	1	C90001-
3		01010-81235	Bolt	2	C90001-
4		01643-31232	Washer	2	C90001-
5		207-70-31340	Spacer, T=0.8mm	2	C90001-
6		207-70-61221	Pin	1	C90001-
7		205-70-66581	Plate	1	C90001-
8		01010-81235	Bolt	2	C90001-
9		01643-31232	Washer	2	C90001-
10		207-70-24190	Spacer, T=0.8mm	3	C90001-
11		207-70-24210	Spacer, T=1.5mm	2	C90001-
12		207-62-76830	Hose	2	C90001-
13		07000-13032	O-ring	4	C90001-
14		07371-31049	Flange, Split	8	C90001-
15		07372-21035	Bolt	16	C90001-
16		01643-51032	Washer	16	C90001-
17		07379-01044	Flange	2	C90001-
18		207-70-33181	O-ring	2	C90001-
19		205-70-73280	O-ring	2	C90001-

FIG. T1200-003005 Arm (2.6m, Strengthened, 1-Attachment, 100 Hours Greasing Type) (Additional Piping)

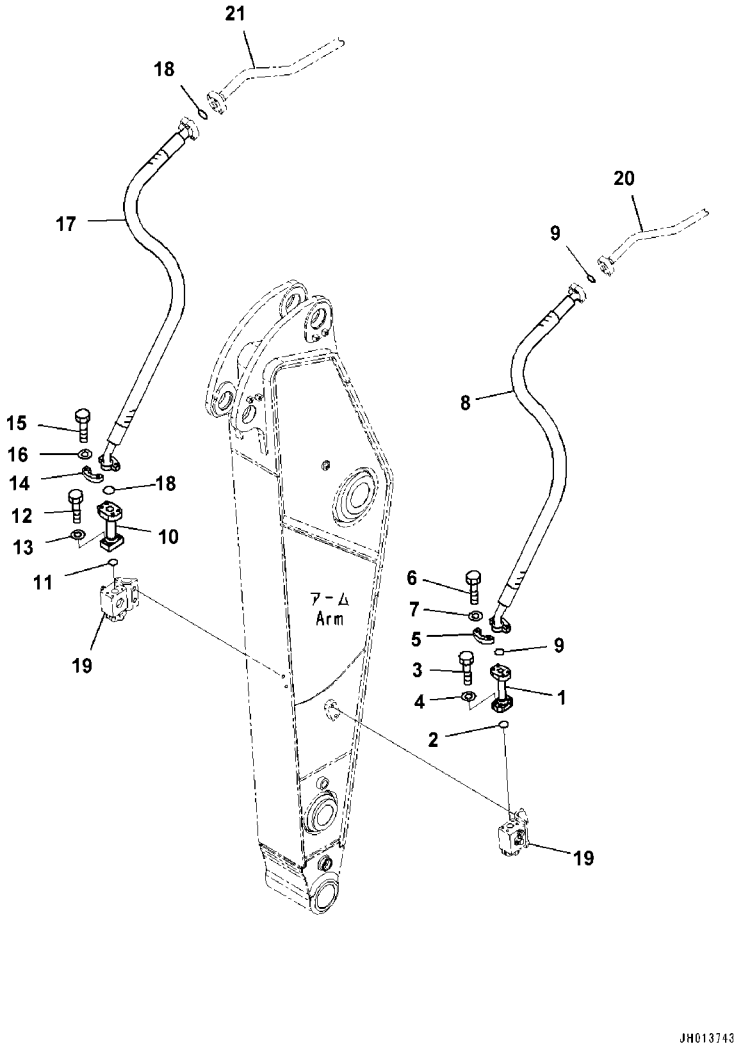

Index	Code	Part Number	Description	Qty	Serial Number
1		207-970-7640	Tube	1	C90001-
2		07000-13038	O-ring	1	C90001-
3		01010-81245	Bolt	4	C90001-
4		01643-31232	Washer	4	C90001-
5		07371-51260	Flange, Split	2	C90001-
6		01010-81245	Bolt	4	C90001-
7		01643-31232	Washer	4	C90001-
8		07098-21221	Hose, Flange Type	1	C90001-
9		07000-13038	O-ring	2	C90001-
10		207-970-7650	Tube	1	C90001-
11		07000-13038	O-ring	1	C90001-
12		01010-81250	Bolt	4	C90001-
13		01643-31232	Washer	4	C90001-
14		07371-51470	Flange, Split	2	C90001-
15		01010-81445	Bolt	4	C90001-
16		01643-31445	Washer, Flat	4	C90001-
17		07098-21421	Hose, Flange Type	1	C90001-
18		07000-13048	O-ring	2	C90001-
19		(21M-970-1204)	Valve Assembly		
20		(207-970-7110)	Tube		
21		(207-970-7120)	Tube		

FIG. T1200-003006 Arm (2.6m, Strengthened, 1-Attachment, 100 Hours Greasing Type) (Valve)

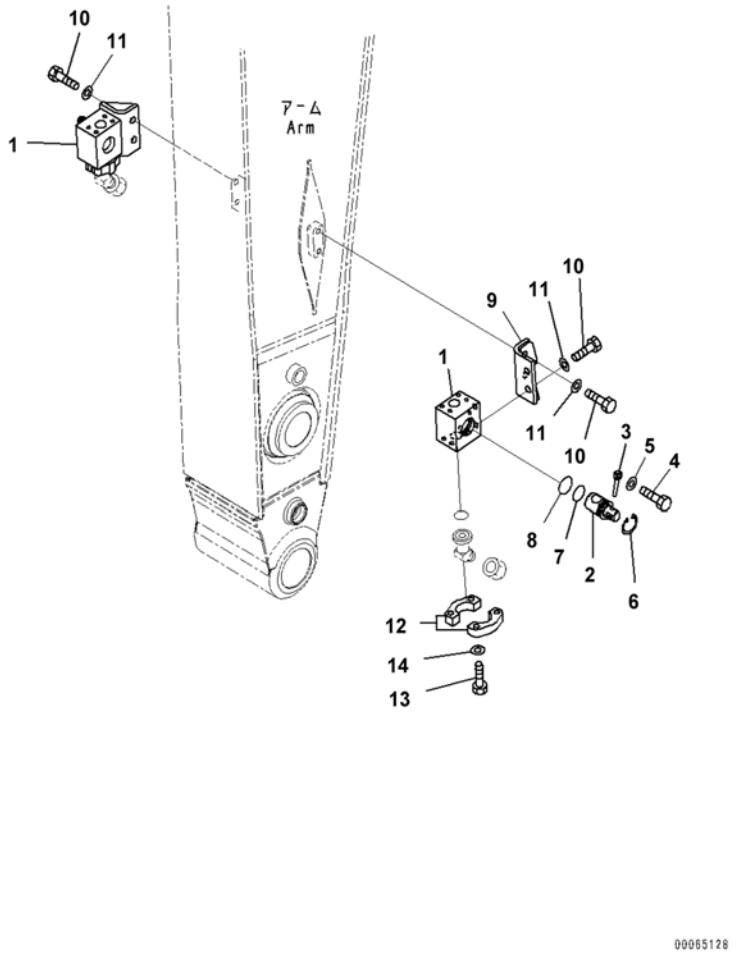

Index	Code	Part Number	Description	Qty	Serial Number
		21M-970-1204	Valve Assembly	2	C90001-
1	C1		• Block	1	C90001-
2		21M-970-1223	• Rotor	1	C90001-
3		202-970-2210	• Pin	1	C90001-
4		01010-81230	• Bolt	1	C90001-
5		01643-31232	• Washer	1	C90001-
6		04065-05820	• Ring, Snap	1	C90001-
7		07000-12050	• O-ring	1	C90001-
8		07000-12055	• O-ring	1	C90001-
9		21M-970-1173	Bracket	2	C90001-
10		01010-81640	Bolt	8	C90001-
11		01643-31645	Washer	8	C90001-
12		07371-51260	Flange, Split	4	C90001-
13		01010-81245	Bolt	8	C90001-
14		01643-31232	Washer	8	C90001-

FIG. T1200-004001 Arm (3.2m, Strengthened, 100 Hours Greasing Type) (Arm)

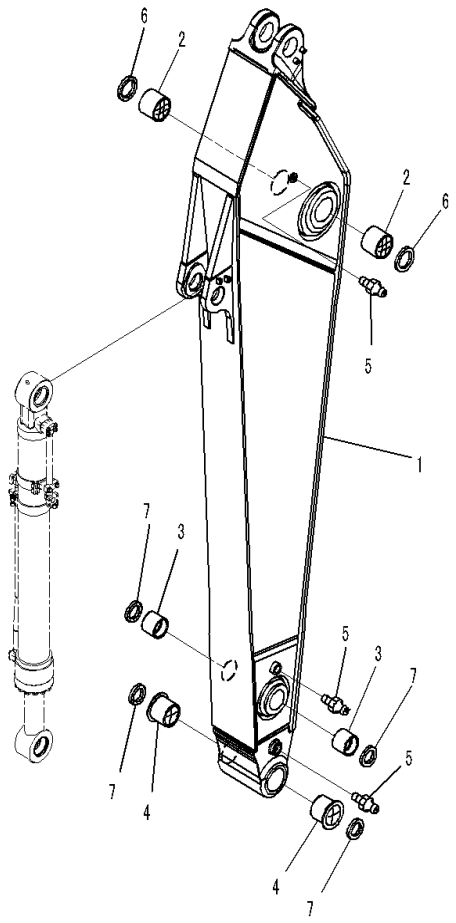

JH008943

Index	Code	Part Number	Description	Qty	Serial Number
		207-70-00591	Arm Assembly	1	C90001-
1	C1		• Arm	1	C90001-
2		207-70-61521	• Bushing	2	C90001-
3		207-70-32150	• Bushing	2	C90001-
4		207-70-72460	• Bushing	2	C90001-
5		07020-00000	• Fitting, Grease	3	C90001-
6		07145-00110	• Seal, Dust	2	C90001-
7		207-70-72120	• Seal, Dust	4	C90001-

FIG. T1200-004002 Arm (3.2m, Strengthened, 100 Hours Greasing Type) (Bucket Cylinder)

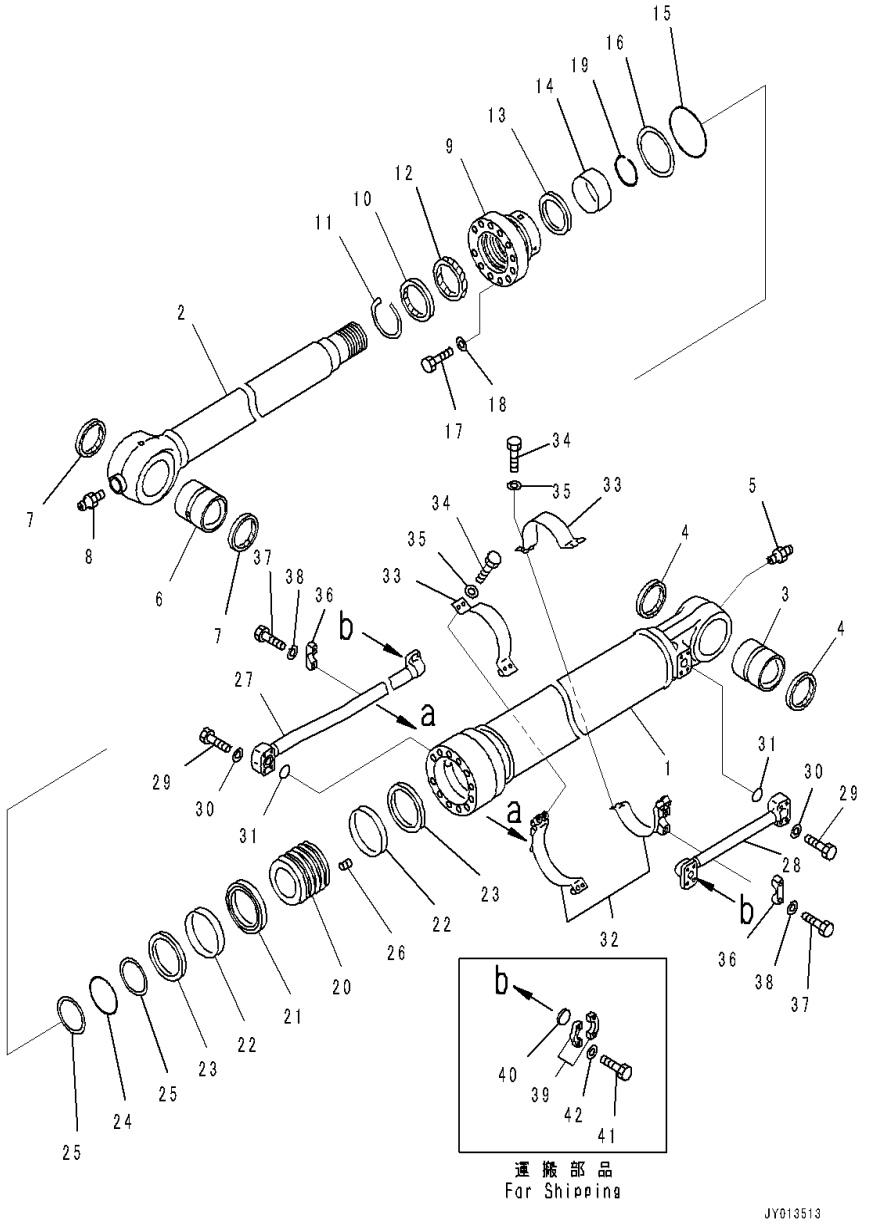

Index	Code	Part Number	Description	Qty	Serial Number
		(707-F1-X2190)	Cylinder Group	1	C90001-
		**********	**********		
		707-E1-02190	Cylinder Assembly	1	C90001-
1		721-13-14060	• Cylinder	1	C90001-
2		721-58-10410	• Rod	1	C90001-
3		707-76-90130	• Bushing	1	C90001-
4		07145-00090	• Seal, Dust, (Kit : K24)	2	C90001-
5		07020-00000	• Fitting, Grease	1	C90001-
6		207-63-76170	• Bushing	1	C90001-
7		207-70-72120	• Seal, Dust, (Kit : K24)	2	C90001-
8		07020-00000	• Fitting, Grease	1	C90001-
9		707-27-14690	• Head, Cylinder	1	C90001-
10		707-56-10740	• Seal, Dust, (Kit : K24)	1	C90001-
11		07179-13114	• Ring, Snap	1	C90001-
12		707-51-10860	• Packing, Rod, (Kit : K24)	1	C90001-
13		707-51-10650	• Ring, Buffer, (Kit : K24)	1	C90001-
14		707-52-90781	• Bushing	1	C90001-
15		07000-B5130	• O-ring, (Kit : K24)	1	C90001-
16		707-35-31310	• Ring, Back-up, (Kit : K24)	1	C90001-
17		01010-81875	• Bolt	12	C90001-
18		707-41-11840	• Washer	12	C90001-
19		707-75-10160	• Ring, Snap	1	C90001-
20		707-36-14650	• Piston	1	C90001-
21		707-44-14150	• Ring, Piston, (Kit : K24)	1	C90001-
22		707-39-14110	• Ring, Wear, (Kit : K24)	2	C90001-
23		707-44-14910	• Ring	2	C90001-
24		07000-B5090	• O-ring, (Kit : K24)	1	C90001-
25		707-35-30900	• Ring, Back-up, (Kit : K24)	2	C90001-
26		01310-01216	• Screw	1	C90001-
27		707-86-16330	Tube	1	C90001-
28		207-63-73181	Tube	1	C90001-
29		07372-21060	Bolt	8	C90001-
30		01643-51032	Washer	8	C90001-
31		07000-B3035	O-ring, (Kit : K24)	2	C90001-
32		707-88-51380	Bracket	2	C90001-
33		707-88-21410	Band	2	C90001-
34		07372-21240	Bolt	8	C90001-
35		01643-51232	Washer	8	C90001-
36		707-88-10150	Clamp	2	C90001-
37		01010-81245	Bolt	4	C90001-

FIG. T1200-004002 Arm (3.2m, Strengthened, 100 Hours Greasing Type) (Bucket Cylinder)

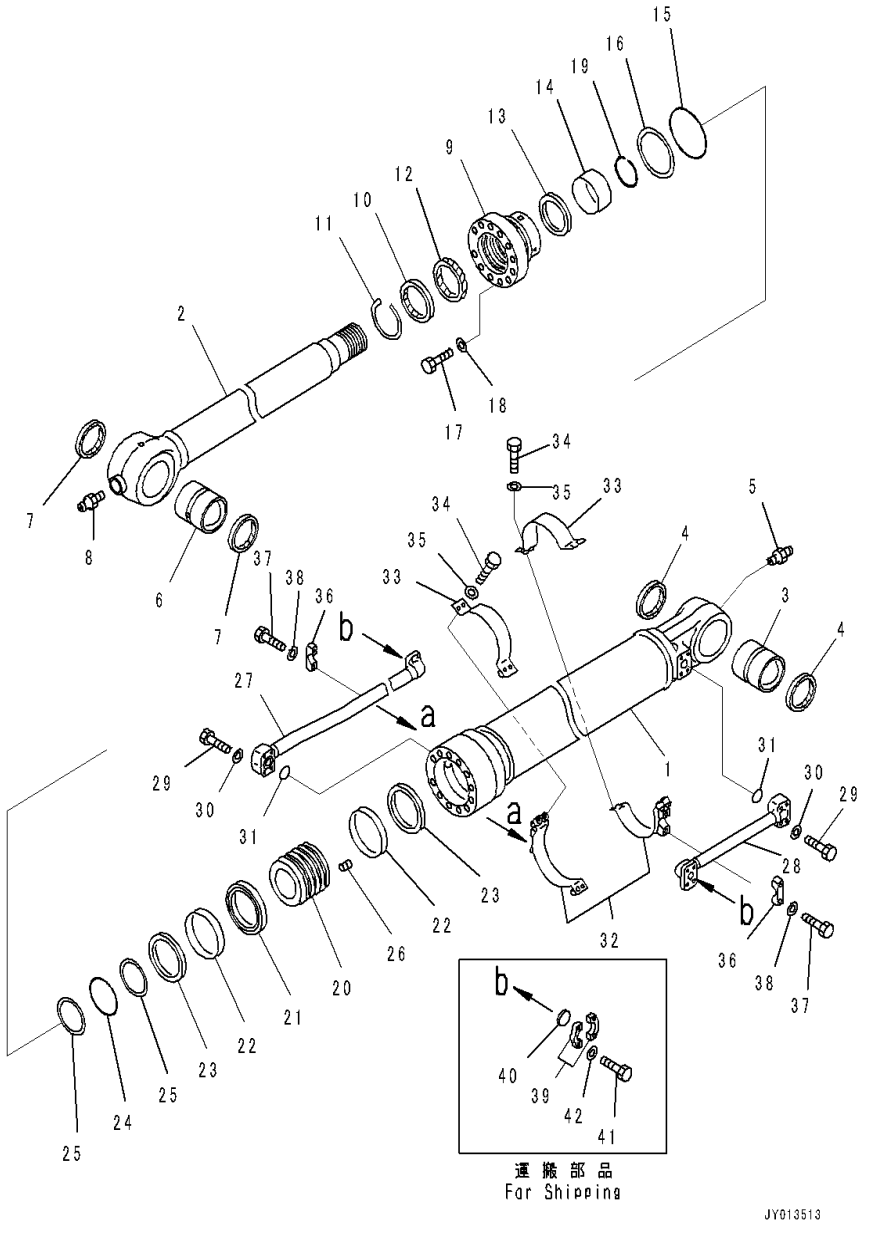

Index	Code	Part Number	Description	Qty	Serial Number
38		01643-31232	Washer	4	C90001-
39		07371-31049	Flange, Split	4	C90001-
40		707-88-33040	Cap	2	C90001-
41		07372-21035	Bolt	8	C90001-
42		01643-51032	Washer	8	C90001-

FIG. T1200-004003 Arm (3.2m, Strengthened, 100 Hours Greasing Type) (Bucket Link)

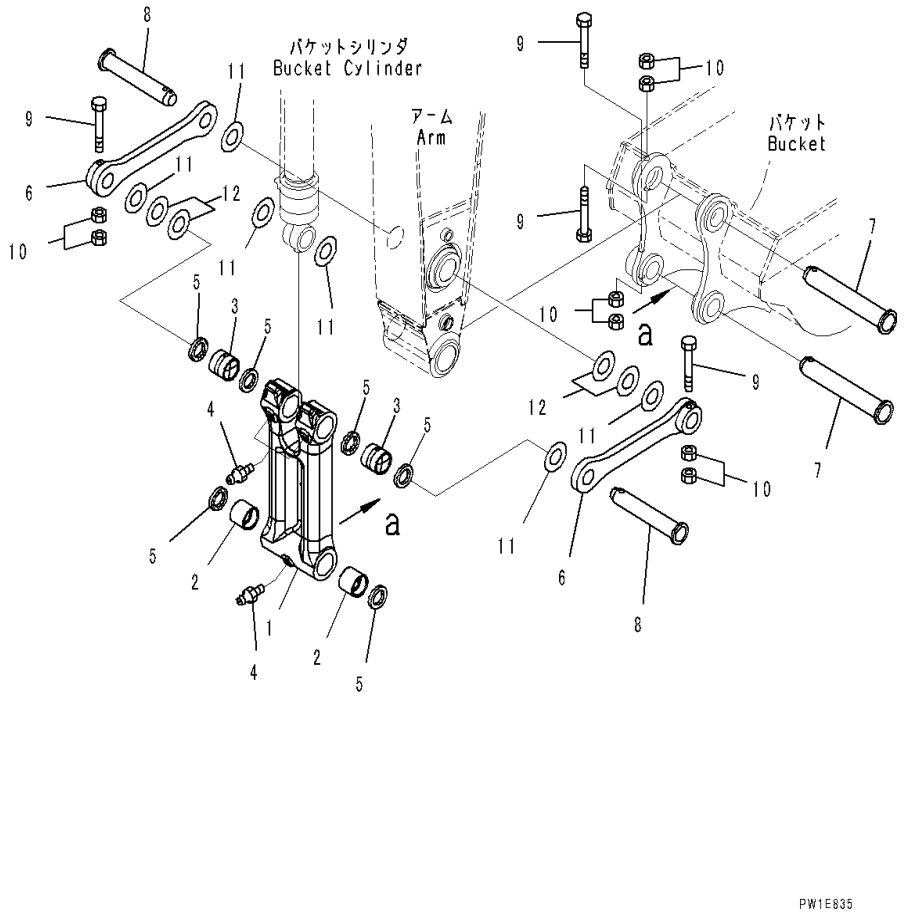

Index	Code	Part Number	Description	Qty	Serial Number
		207-70-00480	Link Assembly	1	C90001-
1	C1		• Link	1	C90001-
2		207-70-33160	• Bushing	2	C90001-
3		207-70-33160	• Bushing	2	C90001-
4		07020-00000	• Fitting, Grease	3	C90001-
5		207-70-72120	• Seal, Dust	6	C90001-
6		207-70-33120	Link	2	C90001-
7		207-70-73210	Pin	2	C90001-
8		207-70-33141	Pin	2	C90001-
9		208-70-73160	Bolt	4	C90001-
10		01580-12419	Nut	8	C90001-
11		207-70-24190	Spacer, T=0.8mm	8	C90001-
12		207-70-24210	Spacer, T=1.5mm	4	C90001-

FIG. T1200-004004 Arm (3.2m, Strengthened, 100 Hours Greasing Type) (Bucket Cylinder Hose and Pin)

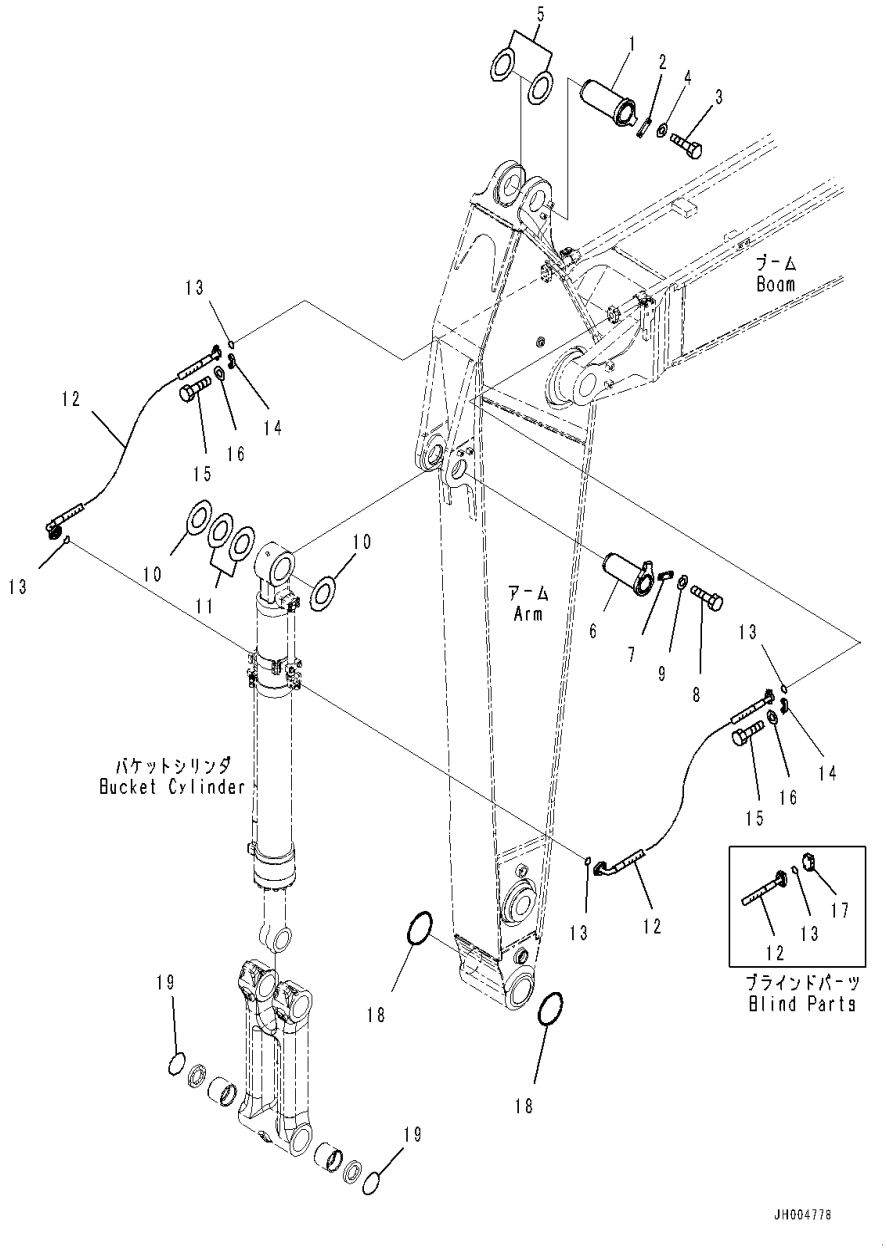

Index	Code	Part Number	Description	Qty	Serial Number
1		208-70-61241	Pin	1	C90001-
2		205-70-66581	Plate	1	C90001-
3		01010-81235	Bolt	2	C90001-
4		01643-31232	Washer	2	C90001-
5		207-70-31340	Spacer, T=0.8mm	2	C90001-
6		207-70-61221	Pin	1	C90001-
7		205-70-66581	Plate	1	C90001-
8		01010-81235	Bolt	2	C90001-
9		01643-31232	Washer	2	C90001-
10		207-70-24190	Spacer, T=0.8mm	3	C90001-
11		207-70-24210	Spacer, T=1.5mm	2	C90001-
12		207-62-76830	Hose	2	C90001-
13		07000-13032	O-ring	4	C90001-
14		07371-31049	Flange, Split	8	C90001-
15		07372-21035	Bolt	16	C90001-
16		01643-51032	Washer	16	C90001-
17		07379-01044	Flange	2	C90001-
18		207-70-33181	O-ring	2	C90001-
19		205-70-73280	O-ring	2	C90001-

FIG. T1200-005001 Arm (3.2m, Strengthened,1-attachment, 100 Hours Greasing Type) (Arm and Bushing)

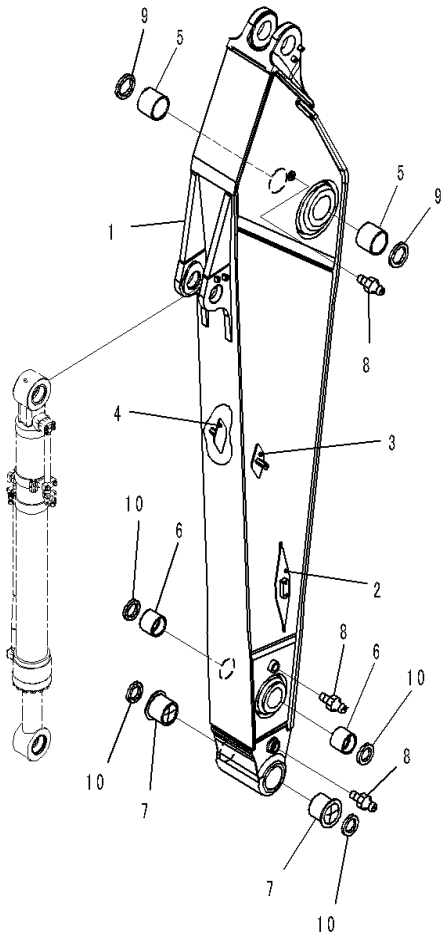

Index	Code	Part Number	Description	Qty	Serial Number
		207-70-00542	Arm Assembly	1	C90001-
1	C1		• Arm	1	C90001-
2		208-970-7171	••Bracket, Welded	2	C90001-
3		207-970-7420	••Bracket, Welded	1	C90001-
4		207-970-7430	••Bracket, Welded	1	C90001-
5		207-70-61521	• Bushing	2	C90001-
6		207-70-32150	• Bushing	2	C90001-
7		207-70-72460	• Bushing	2	C90001-
8		07020-00000	• Fitting, Grease	3	C90001-
9		07145-00110	• Seal, Dust	2	C90001-
10		207-70-72120	• Seal, Dust	4	C90001-

FIG. T1200-005002 Arm (3.2m, Strengthened,1-attachment, 100 Hours Greasing Type) (Bucket Cylinder)

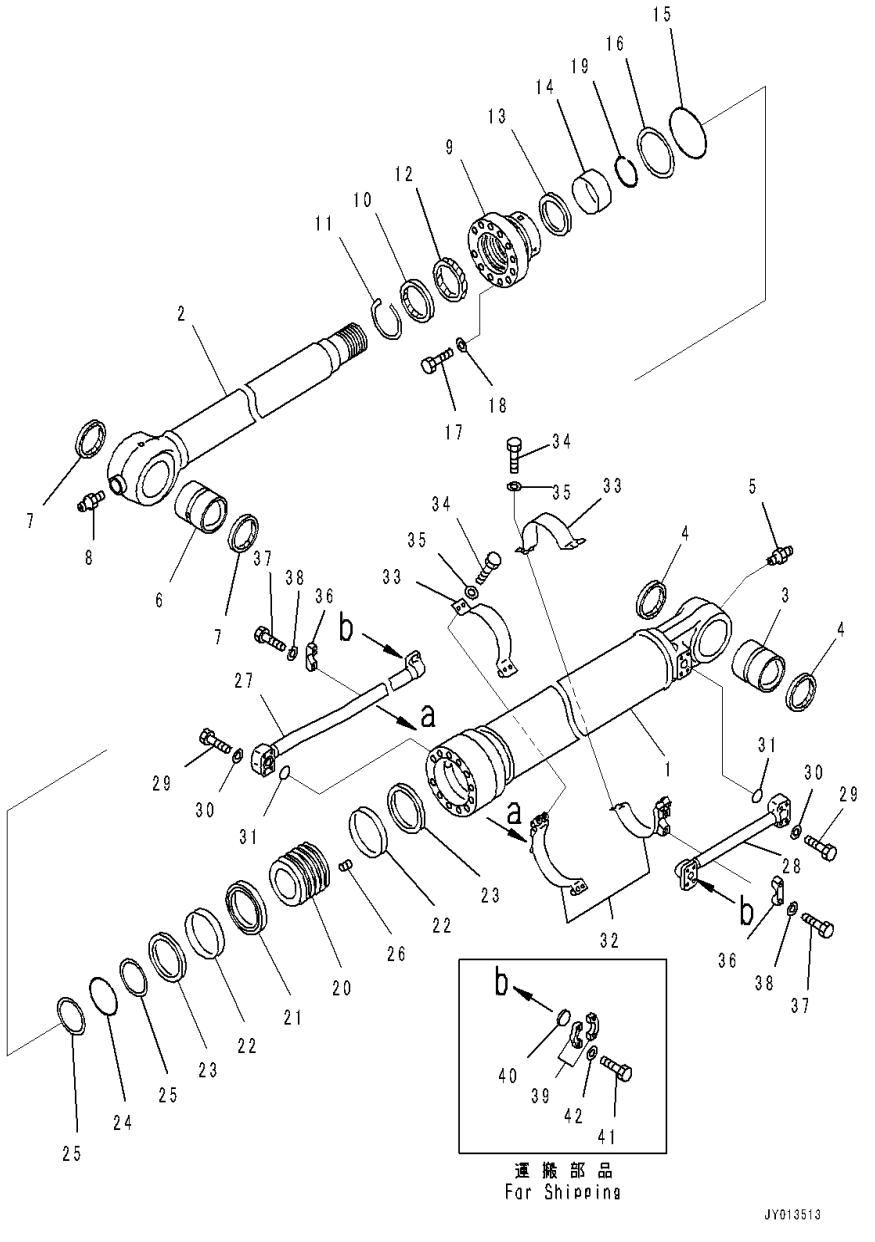

Index	Code	Part Number	Description	Qty	Serial Number
		(707-F1-X2190)	Cylinder Group	1	C90001-
		**********	**********		
		707-E1-02190	Cylinder Assembly	1	C90001-
1		721-13-14060	• Cylinder	1	C90001-
2		721-58-10410	• Rod	1	C90001-
3		707-76-90130	• Bushing	1	C90001-
4		07145-00090	• Seal, Dust, (Kit : K24)	2	C90001-
5		07020-00000	• Fitting, Grease	1	C90001-
6		207-63-76170	• Bushing	1	C90001-
7		207-70-72120	• Seal, Dust, (Kit : K24)	2	C90001-
8		07020-00000	• Fitting, Grease	1	C90001-
9		707-27-14690	• Head, Cylinder	1	C90001-
10		707-56-10740	• Seal, Dust, (Kit : K24)	1	C90001-
11		07179-13114	• Ring, Snap	1	C90001-
12		707-51-10860	• Packing, Rod, (Kit : K24)	1	C90001-
13		707-51-10650	• Ring, Buffer, (Kit : K24)	1	C90001-
14		707-52-90781	• Bushing	1	C90001-
15		07000-B5130	• O-ring, (Kit : K24)	1	C90001-
16		707-35-31310	• Ring, Back-up, (Kit : K24)	1	C90001-
17		01010-81875	• Bolt	12	C90001-
18		707-41-11840	• Washer	12	C90001-
19		707-75-10160	• Ring, Snap	1	C90001-
20		707-36-14650	• Piston	1	C90001-
21		707-44-14150	• Ring, Piston, (Kit : K24)	1	C90001-
22		707-39-14110	• Ring, Wear, (Kit : K24)	2	C90001-
23		707-44-14910	• Ring	2	C90001-
24		07000-B5090	• O-ring, (Kit : K24)	1	C90001-
25		707-35-30900	• Ring, Back-up, (Kit : K24)	2	C90001-
26		01310-01216	• Screw	1	C90001-
27		707-86-16330	Tube	1	C90001-
28		207-63-73181	Tube	1	C90001-
29		07372-21060	Bolt	8	C90001-
30		01643-51032	Washer	8	C90001-
31		07000-B3035	O-ring, (Kit : K24)	2	C90001-
32		707-88-51380	Bracket	2	C90001-
33		707-88-21410	Band	2	C90001-
34		07372-21240	Bolt	8	C90001-
35		01643-51232	Washer	8	C90001-
36		707-88-10150	Clamp	2	C90001-
37		01010-81245	Bolt	4	C90001-

FIG. T1200-005002 Arm (3.2m, Strengthened,1-attachment, 100 Hours Greasing Type) (Bucket Cylinder)

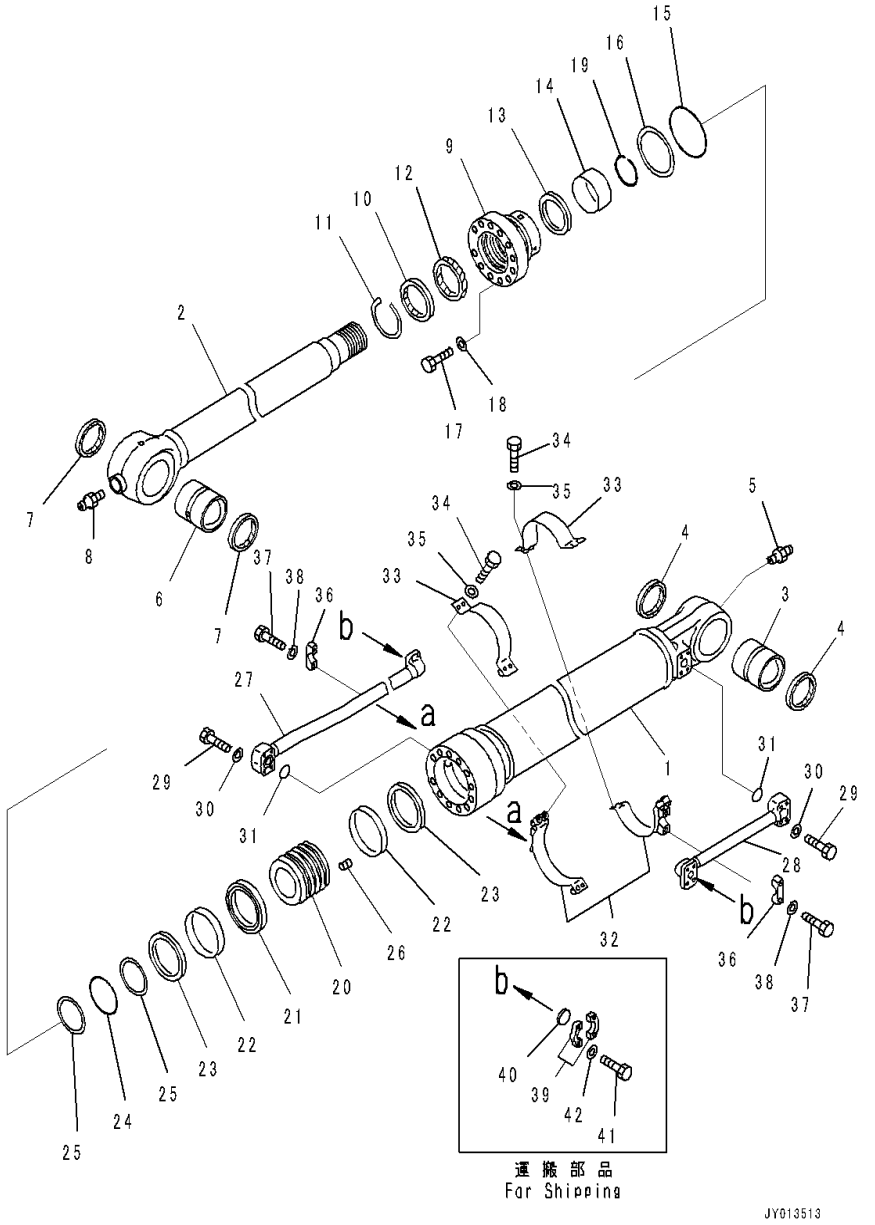

Index	Code	Part Number	Description	Qty	Serial Number
38		01643-31232	Washer	4	C90001-
39		07371-31049	Flange, Split	4	C90001-
40		707-88-33040	Cap	2	C90001-
41		07372-21035	Bolt	8	C90001-
42		01643-51032	Washer	8	C90001-

FIG. T1200-005003 Arm (3.2m, Strengthened,1-attachment, 100 Hours Greasing Type) (Bucket Link)

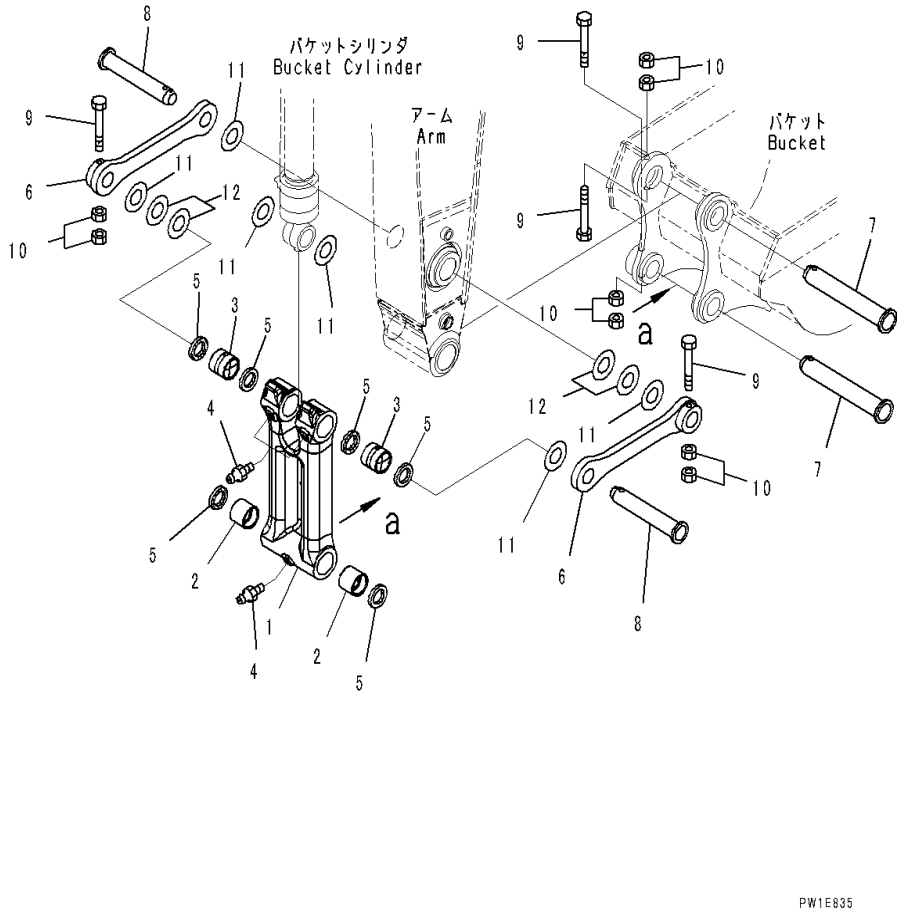

Index	Code	Part Number	Description	Qty	Serial Number
		207-70-00480	Link Assembly	1	C90001-
1	C1		• Link	1	C90001-
2		207-70-33160	• Bushing	2	C90001-
3		207-70-33160	• Bushing	2	C90001-
4		07020-00000	• Fitting, Grease	3	C90001-
5		207-70-72120	• Seal, Dust	6	C90001-
6		207-70-33120	Link	2	C90001-
7		207-70-73210	Pin	2	C90001-
8		207-70-33141	Pin	2	C90001-
9		208-70-73160	Bolt	4	C90001-
10		01580-12419	Nut	8	C90001-
11		207-70-24190	Spacer, T=0.8mm	8	C90001-
12		207-70-24210	Spacer, T=1.5mm	4	C90001-

FIG. T1200-005004 Arm (3.2m, Strengthened,1-attachment, 100 Hours Greasing Type) (Bucket Cylinder Hose and Pin)

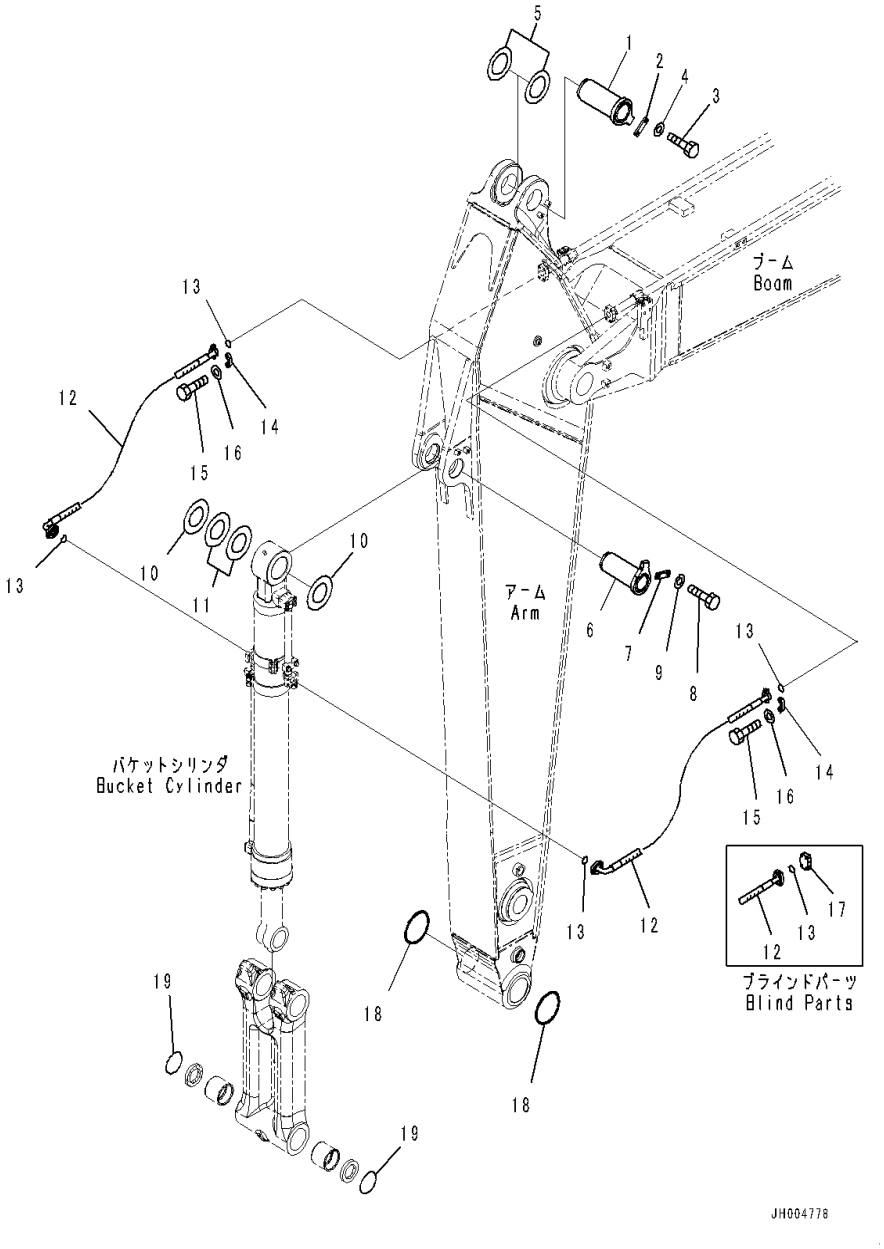

Index	Code	Part Number	Description	Qty	Serial Number
1		208-70-61241	Pin	1	C90001-
2		205-70-66581	Plate	1	C90001-
3		01010-81235	Bolt	2	C90001-
4		01643-31232	Washer	2	C90001-
5		207-70-31340	Spacer, T=0.8mm	2	C90001-
6		207-70-61221	Pin	1	C90001-
7		205-70-66581	Plate	1	C90001-
8		01010-81235	Bolt	2	C90001-
9		01643-31232	Washer	2	C90001-
10		207-70-24190	Spacer, T=0.8mm	3	C90001-
11		207-70-24210	Spacer, T=1.5mm	2	C90001-
12		207-62-76830	Hose	2	C90001-
13		07000-13032	O-ring	4	C90001-
14		07371-31049	Flange, Split	8	C90001-
15		07372-21035	Bolt	16	C90001-
16		01643-51032	Washer	16	C90001-
17		07379-01044	Flange	2	C90001-
18		207-70-33181	O-ring	2	C90001-
19		205-70-73280	O-ring	2	C90001-

FIG. T1200-005005 Arm (3.2m, Strengthened,1-attachment, 100 Hours Greasing Type) (Additional Piping)

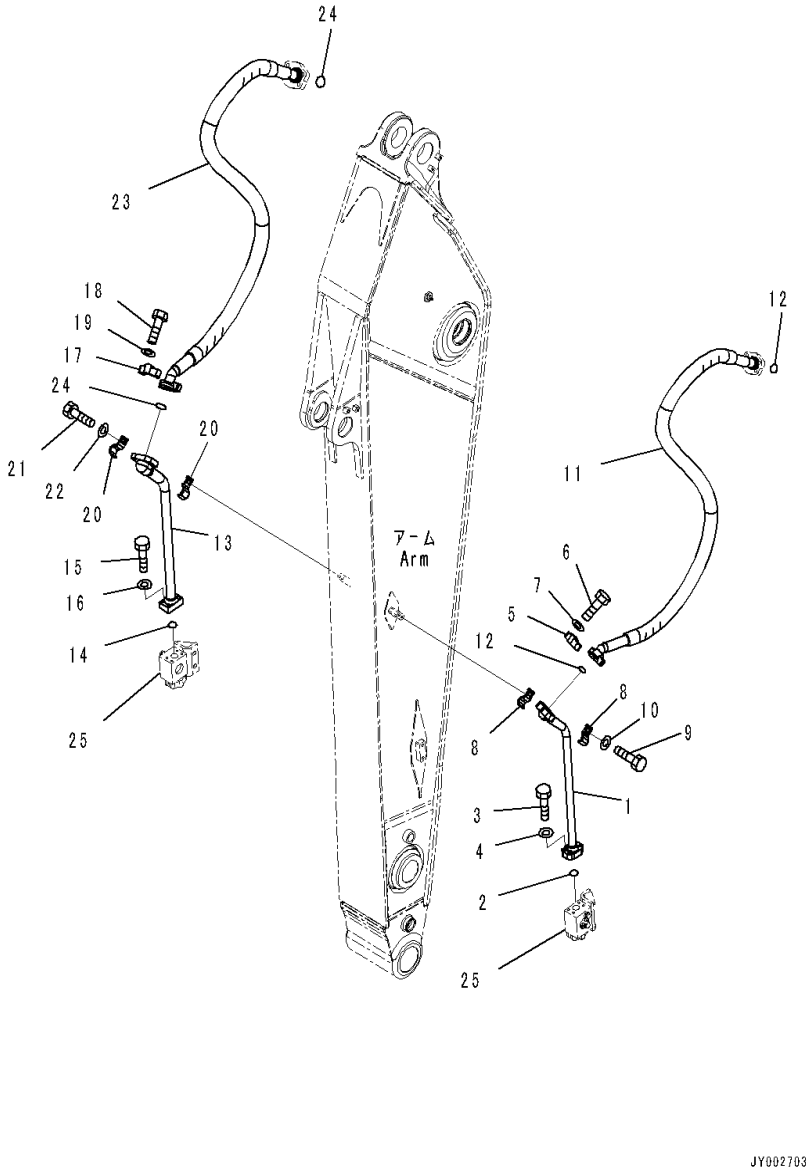

Index	Code	Part Number	Description	Qty	Serial Number
1		207-970-7210	Tube	1	C90001-
2		07000-13038	O-ring	1	C90001-
3		01010-81245	Bolt	4	C90001-
4		01643-31232	Washer	4	C90001-
5		07371-51260	Flange, Split	2	C90001-
6		01010-81245	Bolt	4	C90001-
7		01643-31232	Washer	4	C90001-
8		207-62-31330	Clamp	2	C90001-
9		01010-81235	Bolt	2	C90001-
10		01643-31232	Washer	2	C90001-
11		07097-21222	Hose, Flange Type	1	C90001-
12		07000-13038	O-ring	2	C90001-
13		207-970-7221	Tube	1	C90001-
14		07000-13038	O-ring	1	C90001-
15		01010-81250	Bolt	4	C90001-
16		01643-31232	Washer	4	C90001-
17		07371-51470	Flange, Split	2	C90001-
18		01010-81455	Bolt	4	C90001-
19		01643-31445	Washer	4	C90001-
20		207-970-7310	Clamp	2	C90001-
21		01010-81235	Bolt	2	C90001-
22		01643-31232	Washer	2	C90001-
23		07097-21422	Hose, Flange Type	1	C90001-
24		07000-13048	O-ring	2	C90001-
25		(21M-970-1204)	Valve Assembly		-

FIG. T1200-005006 Arm (3.2m, Strengthened,1-attachment, 100 Hours Greasing Type) (Valve for Additional Piping)

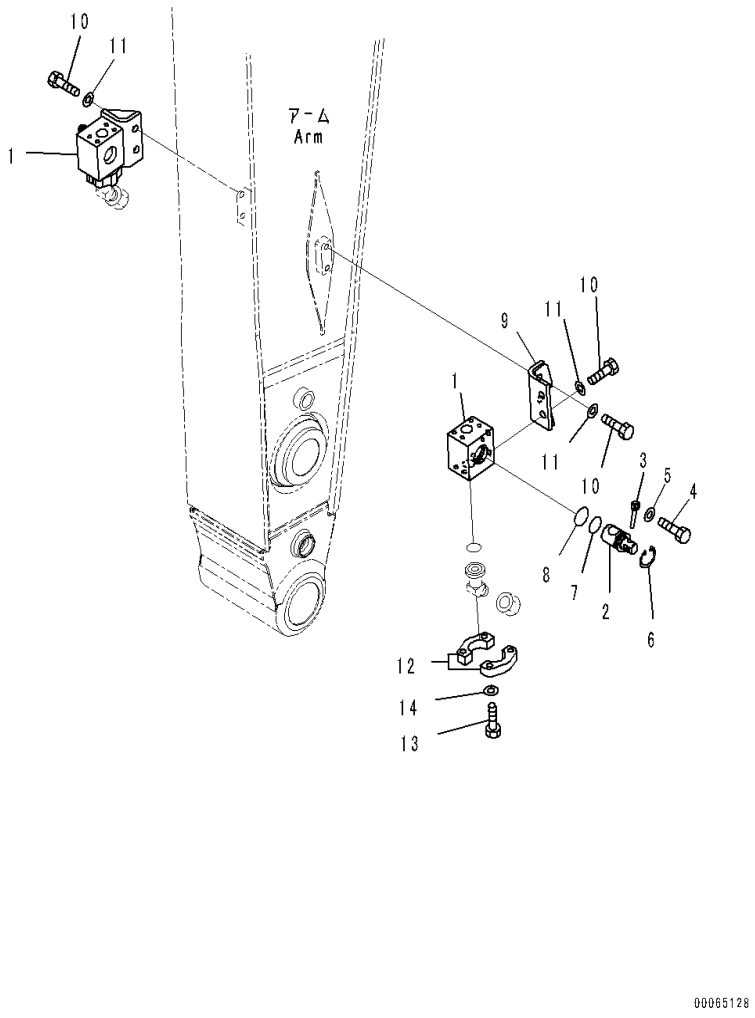

Index	Code	Part Number	Description	Qty	Serial Number
		21M-970-1204	Valve Assembly	2	C90001-
1	C1		• Block	1	C90001-
2		21M-970-1223	• Rotor	1	C90001-
3		202-970-2210	• Pin	1	C90001-
4		01010-81230	• Bolt	1	C90001-
5		01643-31232	• Washer	1	C90001-
6		04065-05820	• Ring, Snap	1	C90001-
7		07000-12050	• O-ring	1	C90001-
8		07000-12055	• O-ring	1	C90001-
9		21M-970-1173	Bracket	2	C90001-
10		01010-81640	Bolt	8	C90001-
11		01643-31645	Washer	8	C90001-
12		07371-51260	Flange	4	C90001-
13		01010-81245	Bolt	8	C90001-
14		01643-31232	Washer	8	C90001-

FIG. T1290-001001 Shipping Parts For Bucket Less

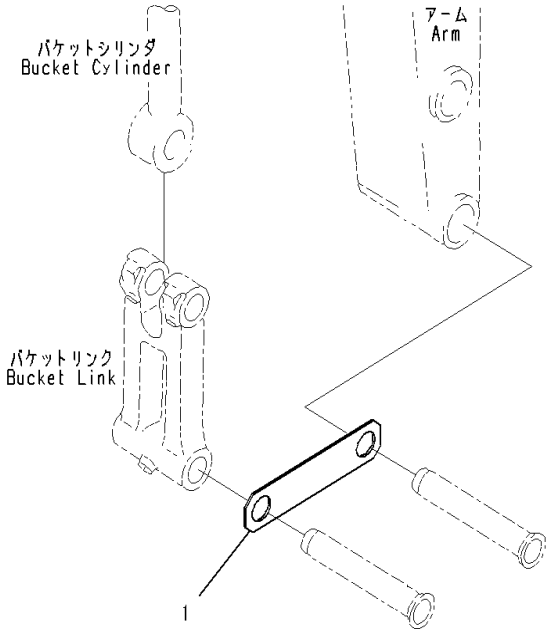

Index	Code	Part Number	Description	Qty	Serial Number
1		208-70-33220	Plate	1	C90001-

FIG. T1510-001001 Bucket (1.2m3, Heavy Duty, Horizontal Pin Type, With Side Cutter)

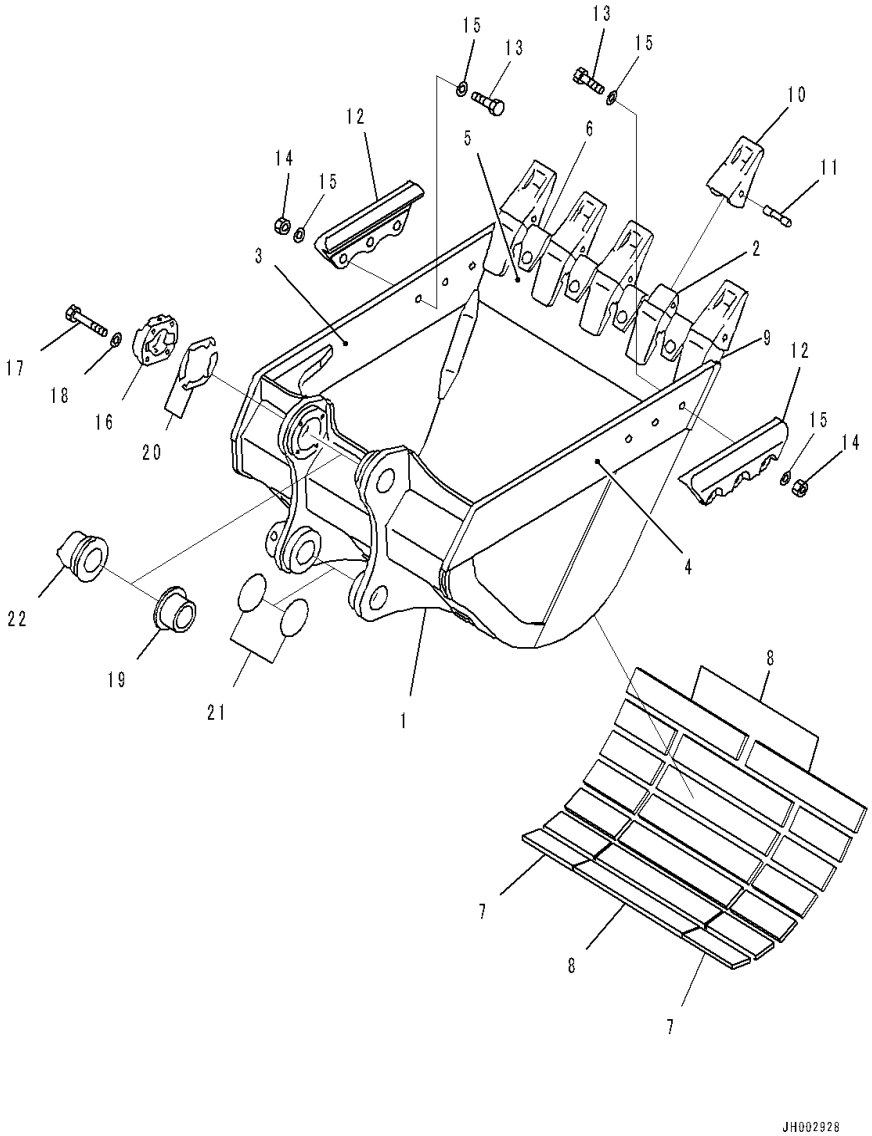

Index	Code	Part Number	Description	Qty	Serial Number
1		207-934-7111	Bucket	1	C90001-
2		207-934-7120	• Adapter	3	C90001-
3		207-934-7131	• Plate	1	C90001-
4		207-934-7140	• Plate	1	C90001-
5		207-934-7150	• Plate	1	C90001-
6		208-934-5170	• Shroud	4	C90001-
7		207-934-6160	• Plate	12	C90001-
8		207-934-6170	• Plate	8	C90001-
9		207-934-7181	• Adapter	2	C90001-
10		207-70-14280	Tooth	5	C90001-
11		09244-02516	Pin	5	C90001-
12		209-70-54610	Shroud	2	C90001-
13		01011-83000	Bolt	6	C90001-
14		01580-13024	Nut	6	C90001-
15		01643-33080	Washer	12	C90001-
16		207-70-34240	Cover	1	C90001-
17		01010-62065	Bolt	4	C90001-
18		01643-32060	Washer	4	C90001-
19		207-70-72470	Bushing	1	C90001-
20		207-70-00061	Shim Assembly	1	C90001-
		207-70-34250	• Shim, T=1.0mm	20	C90001-
		207-70-34260	• Shim, T=0.5mm	4	C90001-
21		205-70-73280	O-ring	2	C90001-
22		207-70-34230	Bushing	1	C90001-

FIG. T1510-002001 Bucket (1.8m3 Hevy Duty, Horizontal Pin Type, With Side Cutter, Hensley)

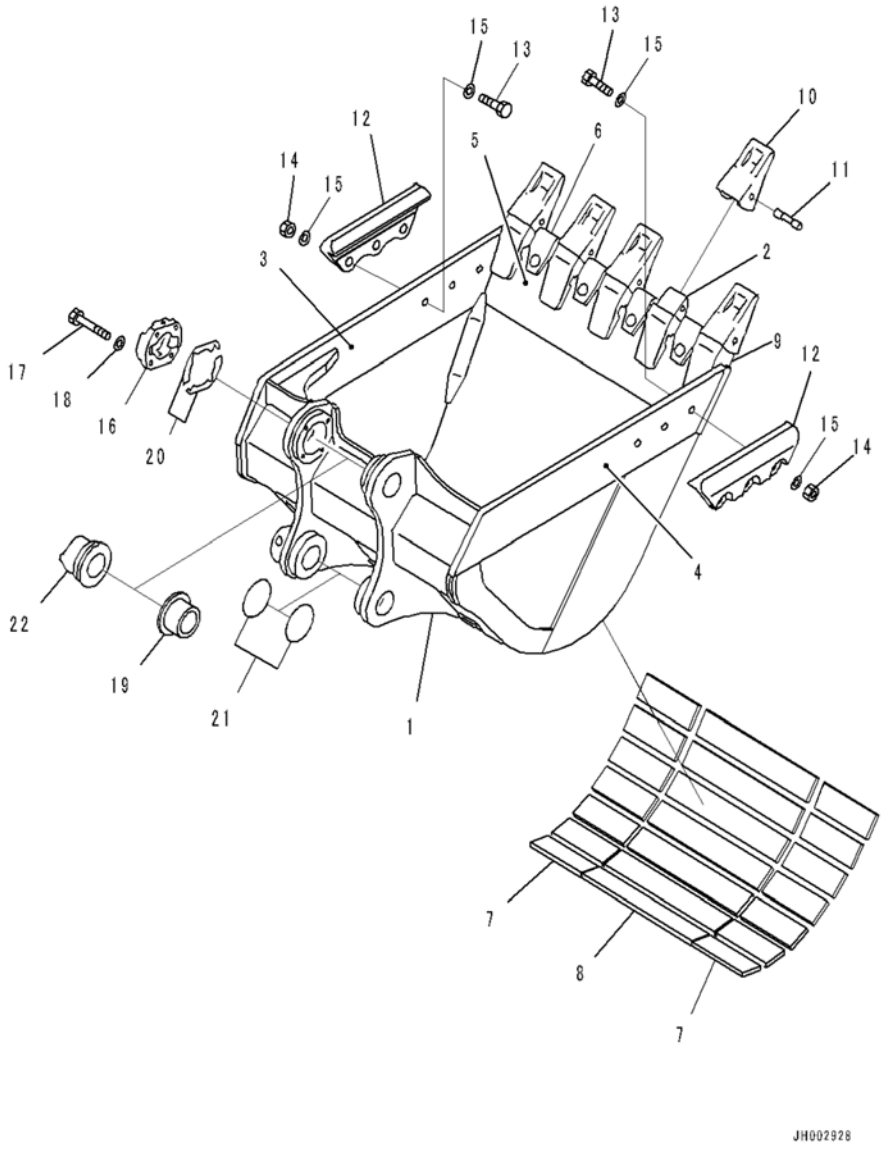

Index	Code	Part Number	Description	Qty	Serial Number
1		207-934-C210	Bucket	1	C90001-
2		207-934-7120	• Adapter	3	C90001-
3		207-934-CA80	• Plate (R.H.)	1	C90001-
4		207-934-CA70	• Plate (L.H.)	1	C90001-
5		207-934-7150	• Plate	1	C90001-
6		208-934-5170	• Shroud	4	C90001-
7		208-934-6160	• Plate	14	C90001-
8		207-934-CB60	• Plate	7	C90001-
9		207-934-7181	• Adapter	2	C90001-
10		775-934-6130	Tooth	5	C90001-
11		09244-02516	Pin	5	C90001-
12		209-70-54610	Shroud	2	C90001-
13		01011-83000	Bolt	6	C90001-
14		01580-13024	Nut	6	C90001-
15		01643-33080	Washer	12	C90001-
16		207-70-34240	Cover	1	C90001-
17		01010-62065	Bolt	4	C90001-
18		01643-32060	Washer	4	C90001-
19		207-70-72470	Bushing	1	C90001-
20		207-70-00061	Shim Assembly	1	C90001-
		207-70-34250	• Shim, T=1.0mm	20	C90001-
		207-70-34260	• Shim, T=0.5mm	4	C90001-
21		205-70-73280	O-ring	2	C90001-
22		207-70-34230	Bushing	1	C90001-

FIG. T1510-003001 Bucket (2.0m3, Heavy Duty, Horizontal Pin Type, With Side Cutter, Hensley)

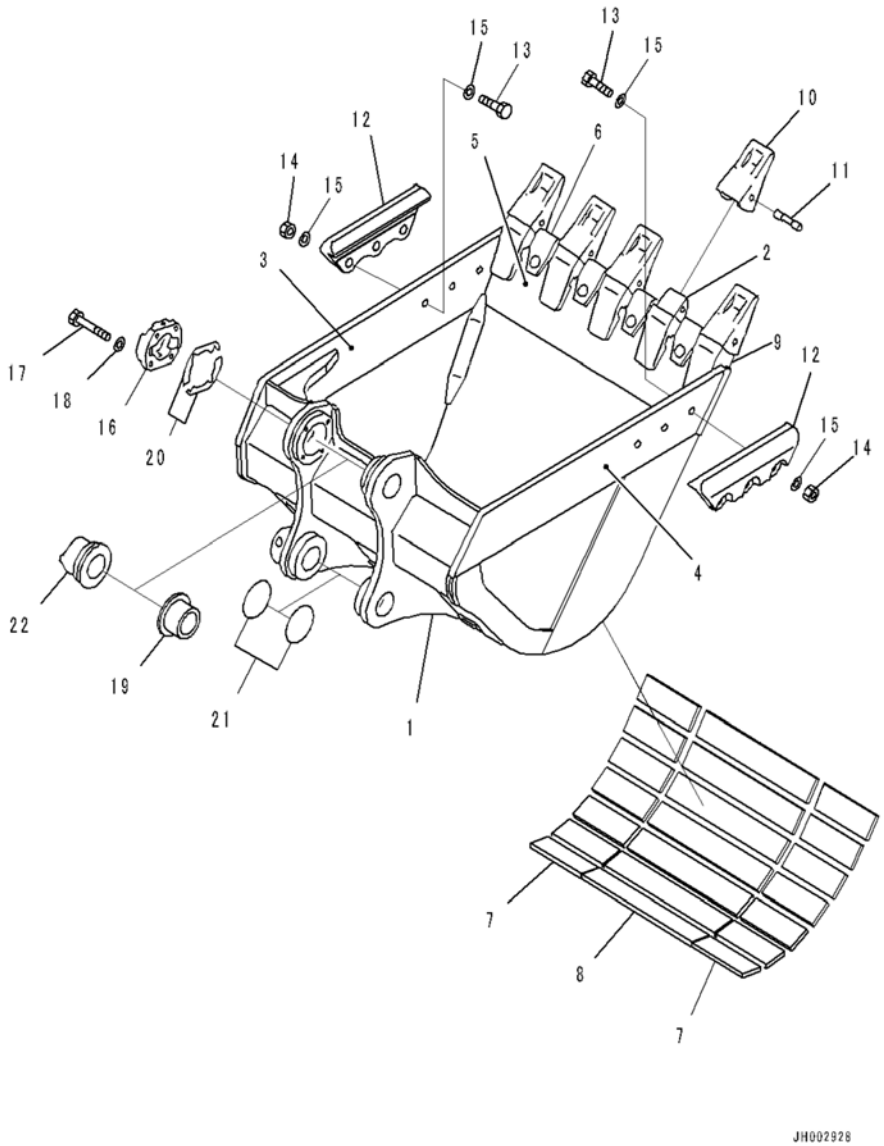

Index	Code	Part Number	Description	Qty	Serial Number
1		207-934-C110	Bucket	1	C90001-
2		207-934-7120	• Adapter	3	C90001-
3		207-934-CA80	• Plate (R.H.)	1	C90001-
4		207-934-CA70	• Plate (L.H.)	1	C90001-
5		207-934-CA60	• Plate	1	C90001-
6		208-934-5170	• Shroud	4	C90001-
7		208-934-6160	• Plate	14	C90001-
8		207-934-CA50	• Plate	7	C90001-
9		207-934-7181	• Adapter	2	C90001-
10		775-934-6130	Tooth	5	C90001-
11		09244-02516	Pin	5	C90001-
12		209-70-54610	Shroud	2	C90001-
13		01011-83000	Bolt	6	C90001-
14		01580-13024	Nut	6	C90001-
15		01643-33080	Washer	12	C90001-
16		207-70-34240	Cover	1	C90001-
17		01010-62065	Bolt	4	C90001-
18		01643-32060	Washer	4	C90001-
19		207-70-72470	Bushing	1	C90001-
20		207-70-00061	Shim Assembly	1	C90001-
		207-70-34250	• Shim, T=1.0mm	20	C90001-
		207-70-34260	• Shim, T=0.5mm	4	C90001-
21		205-70-73280	O-ring	2	C90001-
22		207-70-34230	Bushing	1	C90001-

FIG. T1510-004001 Bucket (2.3m3 Heavy Duty, Horizontal Pin Type, With Side Cutter)

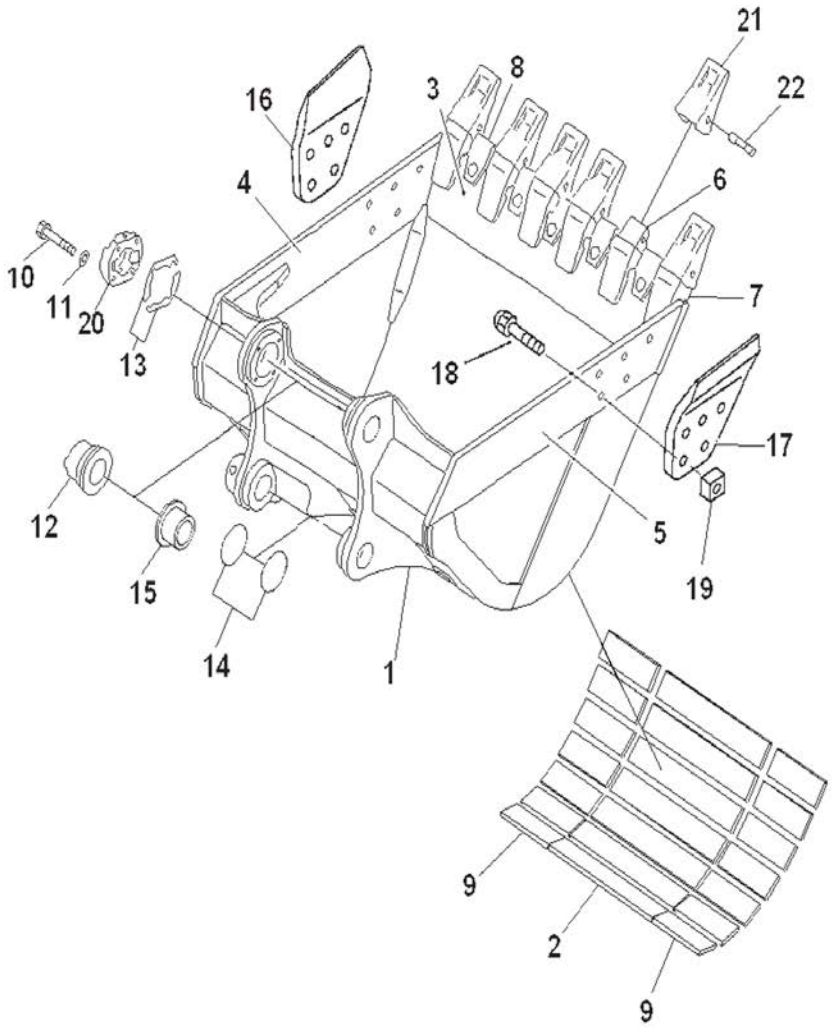

Index	Code	Part Number	Description	Qty	Serial Number
1		207-934-C310	Bucket	1	C90001-
2		207-934-7630	• Plate	7	C90001-
3		207-934-7640	• Plate	1	C90001-
4		207-934-7650	• Plate (L.H.)	1	C90001-
5		207-934-7660	• Plate (R.H.)	1	C90001-
6		207-934-7120	• Adapter	4	C90001-
7		207-934-7181	• Adapter	2	C90001-
8		208-934-5170	• Shroud	5	C90001-
9		208-934-6160	• Plate	14	C90001-
10		01010-62065	Bolt	4	C90001-
11		01643-32060	Washer	4	C90001-
12		207-70-72470	Bushing	1	C90001-
13		207-70-00061	Shim Assembly	1	C90001-
		207-70-34250	• Shim, T=1.0mm	20	C90001-
		207-70-34260	• Shim, T=0.5mm	4	C90001-
14		205-70-73280	O-ring	2	C90001-
15		207-70-34230	Bushing	1	C90001-
16		207-70-34160	Cutter (L.H.)	1	C90001-
17		207-70-34170	Cutter (R.H.)	1	C90001-
18		21N-32-11211	Bolt	10	C90001-
19		195-32-41220	Nut	10	C90001-
20		207-70-34240	Cover	1	C90001-
21		207-70-14280	Tooth	6	C90001-
22		09244-02516	Pin	6	C90001-

FIG. T1510-006001 Bucket,1.8m3 Reinforced,1458mm Width,Horizontal Pin Type, PAB Tooth, Side Shround

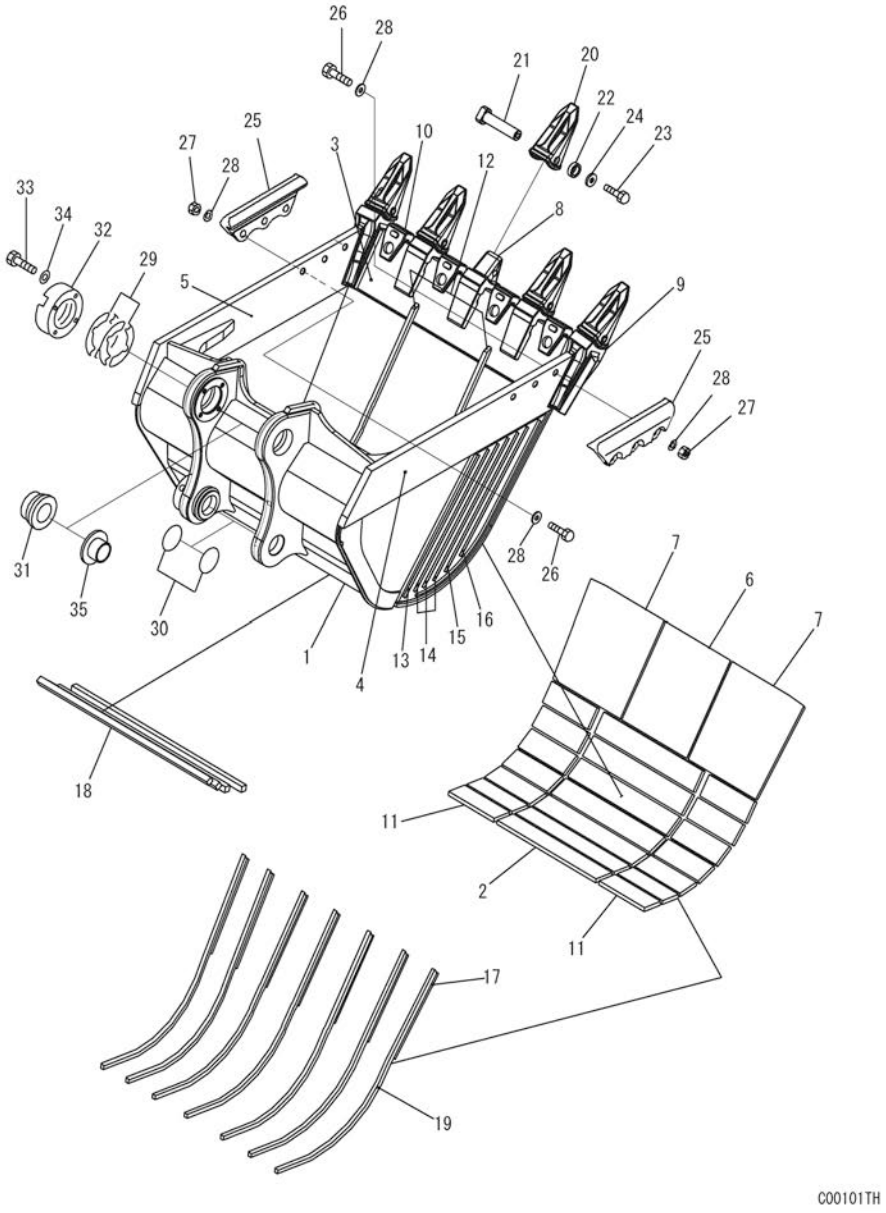

Index	Code	Part Number	Description	Qty	Serial Number
1		207-934-C221	Bucket Assembly	1	C90415-
	C1		• Bucket	1	C90415-
2		207-934-CB60	• • Plate, Welded	7	C90415-
3		207-934-7150	• • Plate, Welded	1	C90415-
4		207-934-CA70	• • Plate(L.H), Welded	1	C90415-
5		207-934-CA80	• • Plate(R.H), Welded	1	C90415-
6		207-934-CA90	• • Plate, Welded	1	C90415-
7		207-934-CB80	• • Plate, Welded	2	C90415-
8		207-934-7120	• • Adapter, Welded	3	C90415-
9		207-934-7181	• • Adapter, Welded	2	C90415-
10		208-934-5170	• • Shroud, Welded	4	C90415-
11		208-934-6160	• • Plate, Welded	14	C90415-
12		207-934-CE10	• Rod, Welded	2	C90415-
13		207-934-CE30	• Bar, Welded	2	C90415-
14		207-934-CE40	• Bar, Welded	6	C90415-
15		207-934-CE50	• Bar, Welded	2	C90415-
16		207-934-CE60	• Bar, Welded	2	C90415-
17		207-934-C2A0	• Rod, Welded	7	C90415-
18		207-934-C2C0	• Rod, Welded	4	C90415-
19		207-934-C2E0	• Plate, Welded	7	C90415-
20		775-934-678D	Tooth, PAB	5	C90415-
		775-934-7760	Pin Assembly,PAB	5	C90415-
21		775-934-7622	• Pin	5	C90415-
22		775-934-6762	• Bushing	5	C90415-
23		01010-81240	• Bolt	5	C90415-
24		22B-46-24380	• Washer	5	C90415-
25		209-70-54610	Shroud	2	C90415-
26		01011-83000	Bolt	6	C90415-
27		01580-13024	Nut	6	C90415-
28		01643-33080	Washer	12	C90415-
29		207-70-00061	Shim Assembly	1	C90415-
	C1		• Shim, T=1.0mm	20	C90415-
	C1		• Shim, T=0.5mm	4	C90415-
30		205-70-73280	O-ring	2	C90415-
31		207-70-34230	Bushing	1	C90415-
32		207-70-34240	Cover	1	C90415-
33		01010-62065	Bolt	4	C90415-
34		01643-32060	Washer	4	C90415-
35		207-70-72470	Bushing	1	C90415-

FIG. T1510-007001 Bucket,1.8m3 Reinforced,1458mm Width,Horizontal Pin Type, PAB Tooth and Side Shround

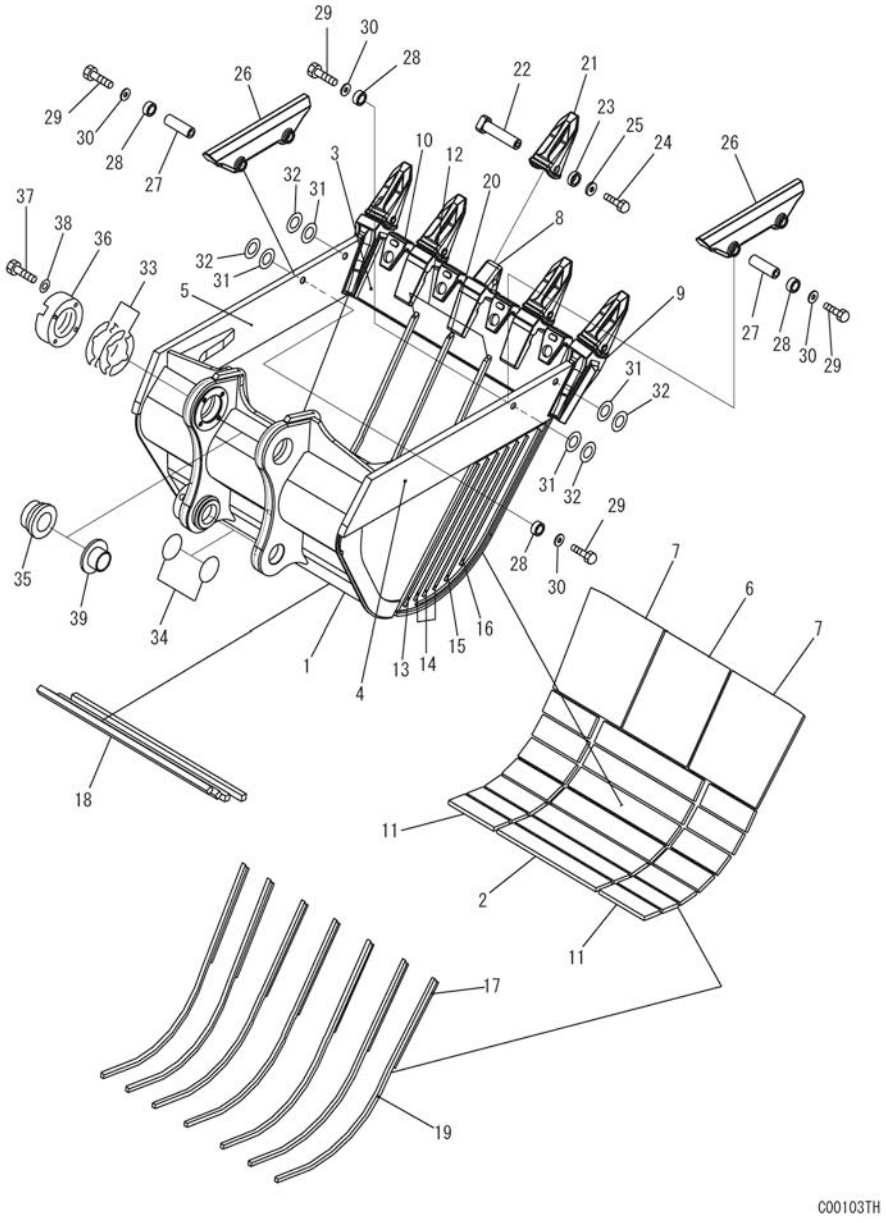

Index	Code	Part Number	Description	Qty	Serial Number
1		207-934-C222	Bucket Assembly	1	C90415-
	C1		• Bucket	1	C90415-
2		207-934-CB60	• • Plate, Welded	7	C90415-
3		207-934-7150	• • Plate, Welded	1	C90415-
4		207-934-CA71	• • Plate(L.H), Welded	1	C90415-
5		207-934-CA81	• • Plate(R.H), Welded	1	C90415-
6		207-934-CA90	• • Plate, Welded	1	C90415-
7		207-934-CB80	• • Plate, Welded	2	C90415-
8		207-934-7120	• • Adapter, Welded	3	C90415-
9		207-934-7181	• • Adapter, Welded	2	C90415-
10		208-934-5170	• • Shroud, Welded	4	C90415-
11		208-934-6160	• • Plate, Welded	14	C90415-
12		207-934-CE10	• Rod, Welded	2	C90415-
13		207-934-CE30	• Bar, Welded	2	C90415-
14		207-934-CE40	• Bar, Welded	6	C90415-
15		207-934-CE50	• Bar, Welded	2	C90415-
16		207-934-CE60	• Bar, Welded	2	C90415-
17		207-934-C2A0	• Rod, Welded	7	C90415-
18		207-934-C2C0	• Rod, Welded	4	C90415-
19		207-934-C2E0	• Plate, Welded	7	C90415-
20		207-934-C2G0	• Rod, Welded	1	C90415-
21		775-934-678D	Tooth, PAB	5	C90415-
		775-934-7760	Pin Assembly,PAB	5	C90415-
22		775-934-7622	• Pin	5	C90415-
23		775-934-6762	• Bushing	5	C90415-
24		01010-81240	• Bolt	5	C90415-
25		22B-46-24380	• Washer	5	C90415-
26		775-934-7610	Guard, PAB	2	C90415-
		775-934-7910	Pin Assembly,PAB	4	C90415-
27		775-934-6982	• Pin	4	C90415-
28		775-934-6B92	• Bushing	8	C90415-
29		01010-81240	• Bolt	8	C90415-
30		124-54-26540	• Washer	8	C90415-
		775-934-7020	Shim Assy	2	C90415-
31		209-939-7110	• Shim, T=1.0mm	8	C90415-
32		209-939-7120	• Shim, T=0.5mm	4	C90415-
33		207-70-00061	Shim Assembly	1	C90415-
	C1		• Shim, T=1.0mm	20	C90415-
	C1		• Shim, T=0.5mm	4	C90415-
34		205-70-73280	O-Ring	2	C90415-

FIG. T1510-007001 Bucket,1.8m3 Reinforced,1458mm Width,Horizontal Pin Type, PAB Tooth and Side Shround

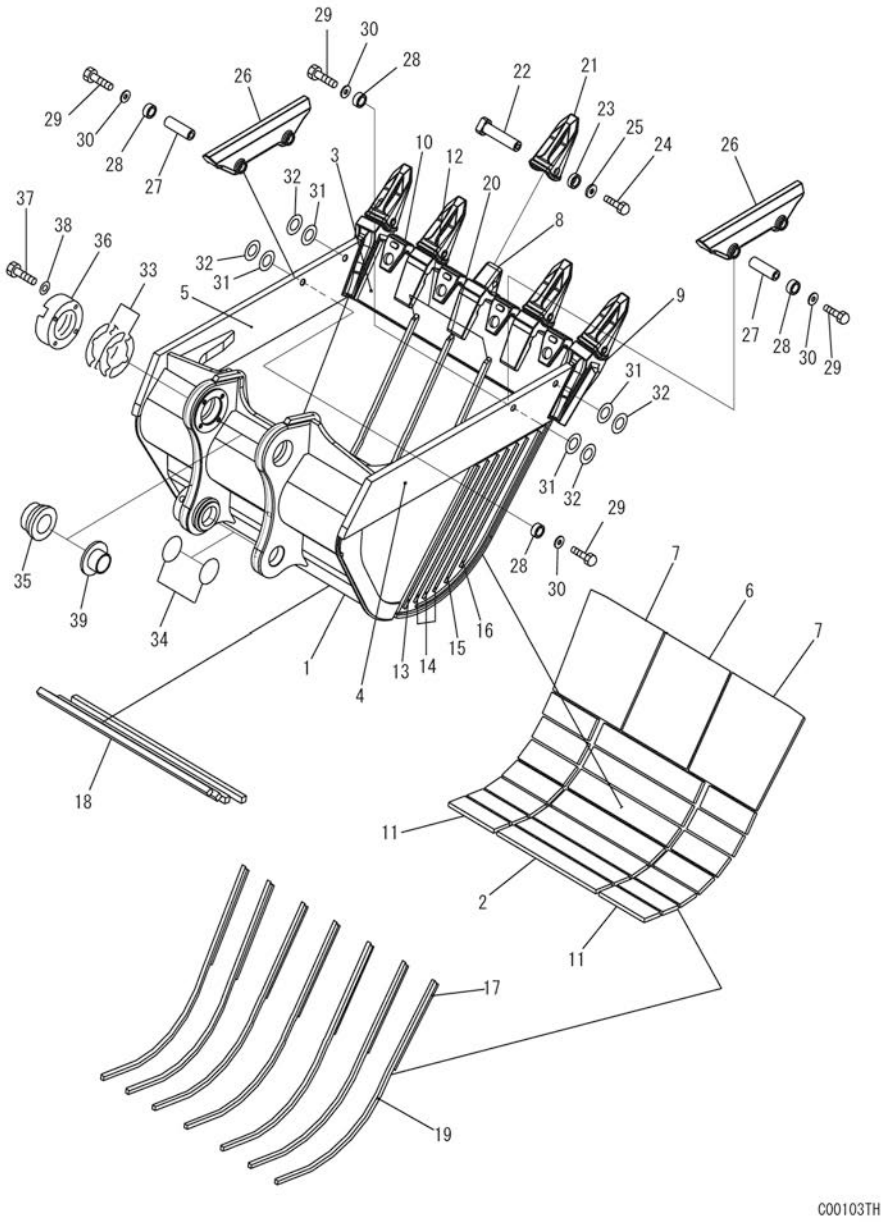

Index	Code	Part Number	Description	Qty	Serial Number
35		207-70-34230	Bushing	1	C90415-
36		207-70-34240	Cover	1	C90415-
37		01010-62065	Bolt	4	C90415-
38		01643-32060	Washer	4	C90415-
39		207-70-72470	Bushing	1	C90415-

MARKS AND PLATES

FIG. U0100-001001 Marks and Plates, PC300

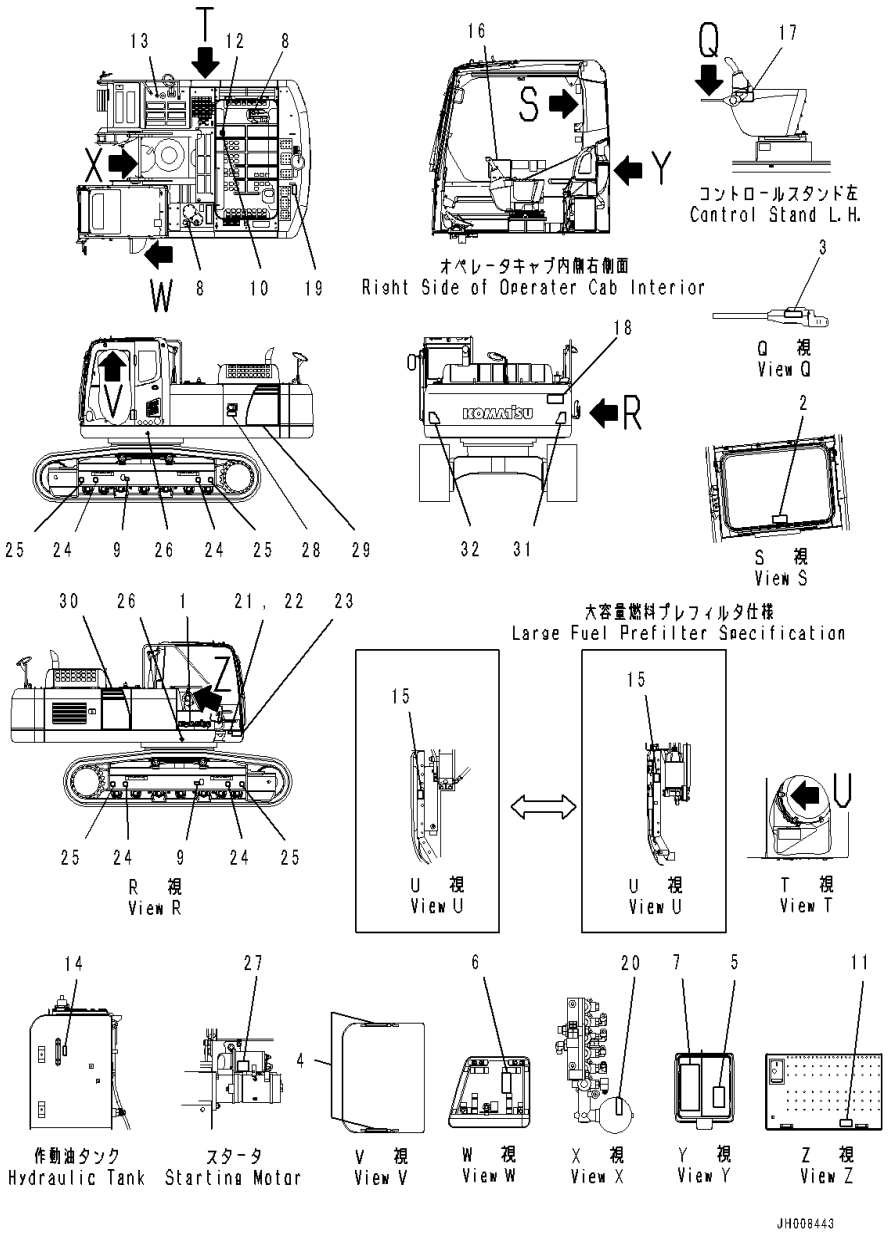

Index	Code	Part Number	Description	Qty	Serial Number
1		09690-P0630	Plate, Komatsu Logo	1	C90001-
2		09844-00050	Plate, Emergency Exit	1	C90001-
3		09685-00002	Plate, Symbol, Lock/Unlock	1	C90001-
4		09659-A057B	Plate, Warning, Explosion Hazard	2	C90001-
5		20Y-00-31330	Plate, Operating	1	C90001-
6		208-00-71260	Plate	1	C90001-
7		207-00-76760	Plate	1	C90001-
8		09653-A0481	Plate, Warning, High Temperature	2	C90001-
9		09657-A0881	Plate, Warning, Track Adjustment	2	C90001-
10		09805-C0481	Plate, Caution, Do not Get On	1	C90001-
11		09808-A0881	Plate, Warning, Battery Cables	1	C90001-
12		09667-A0481	Plate, Caution, Rotating Object	1	C90001-
13		09669-0000E	Plate, Symbol, Fuel Filler	1	C90001-
14		205-00-73360	Plate, Operating	1	C90001-
15		20Y-00-41340	Plate, Pre Filter Caution	1	C90001-
16		22U-00-21440	Plate	1	C90001-
17		09963-03001	Tag, Danger, Do Not Operate	1	C90001-
18		09133-A3281	Plate, Danger, Keep Off Swing Area	1	C90001-
19		09805-A0881	Plate, Caution, Do not Approach	1	C90001-
20		09659-A057B	Plate, Warning, Explosion Hazard	1	C90001-
21	C2	09601-120E2	Plate, Name (Limited Supply)	1	C90001-
22		04418-13060	Screw	4	C90001-
23		20Y-00-31840	Plate	1	C90001-
24		09960-00801	Mark, Lift Point	4	C90001-
25		09960-00802	Mark, Tie Down Point	4	C90001-
26		21U-98-31160	Plate, Mark, Location Of Center Of Gravity	2	C90001-
27		09842-A0481	Plate, Caution, No Jump Start	1	C90001-
28		20Y-00-41530	Plate, Symbol, Ecot3	1	C90001-
29		207-00-76510	Mark	1	C90001-
30		207-00-76520	Mark	1	C90001-
31		2A5-00-11410	Plate, Reflector	1	C90001-
32		2A5-00-11420	Plate, Reflector	1	C90001-

FIG. U0100-002001 Marks and Plates, Long Type, PC300LC

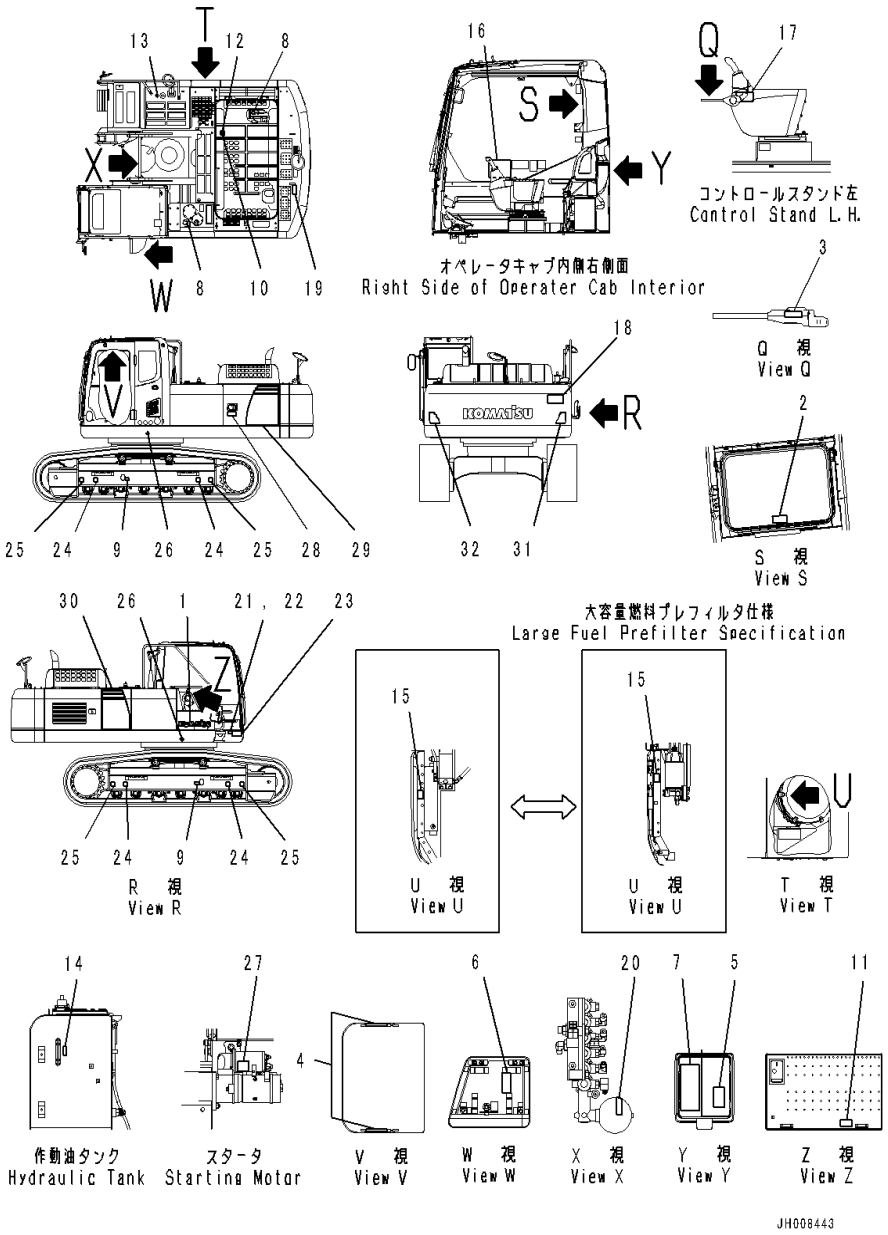

Index	Code	Part Number	Description	Qty	Serial Number
1		09690-P0630	Plate, Komatsu Logo	1	C90001-
2		09844-00050	Plate, Emergency Exit	1	C90001-
3		09685-00002	Plate, Symbol, Lock/Unlock	1	C90001-
4		09659-A057B	Plate, Warning, Explosion Hazard	2	C90001-
5		20Y-00-31330	Plate, Operating	1	C90001-
6		208-00-71260	Plate	1	C90001-
7		207-00-76760	Plate	1	C90001-
8		09653-A0481	Plate, Warning, High Temperature	2	C90001-
9		09657-A0881	Plate, Warning, Track Adjustment	2	C90001-
10		09805-C0481	Plate, Caution, Do not Get On	1	C90001-
11		09808-A0881	Plate, Warning, Battery Cables	1	C90001-
12		09667-A0481	Plate, Caution, Rotating Object	1	C90001-
13		09669-0000E	Plate, Symbol, Fuel Filler	1	C90001-
14		205-00-73360	Plate, Operating	1	C90001-
15		20Y-00-41340	Plate, Pre Filter Caution	1	C90001-
16		22U-00-21440	Plate	1	C90001-
17		09963-03001	Tag, Danger, Do Not Operate	1	C90001-
18		09133-A3281	Plate, Danger, Keep Off Swing Area	1	C90001-
19		09805-A0881	Plate, Caution, Do not Approach	1	C90001-
20		09659-A057B	Plate, Warning, Explosion Hazard	1	C90001-
21	C2	09601-120E2	Plate, Name (Limited Supply)	1	C90001-
22		04418-13060	Screw	4	C90001-
23		20Y-00-31840	Plate	1	C90001-
24		09960-00801	Mark, Lift Point	4	C90001-
25		09960-00802	Mark, Tie Down Point	4	C90001-
26		21U-98-31160	Plate, Mark, Location Of Center Of Gravity	2	C90001-
27		09842-A0481	Plate, Caution, No Jump Start	1	C90001-
28		20Y-00-41530	Plate, Symbol, Ecot3	1	C90001-
29		207-00-76530	Mark	1	C90001-
30		207-00-76540	Mark	1	C90001-
31		2A5-00-11410	Plate, Reflector	1	C90001-
32		2A5-00-11420	Plate, Reflector	1	C90001-

FIG. U0100-003001 Marks and Plates, PC350

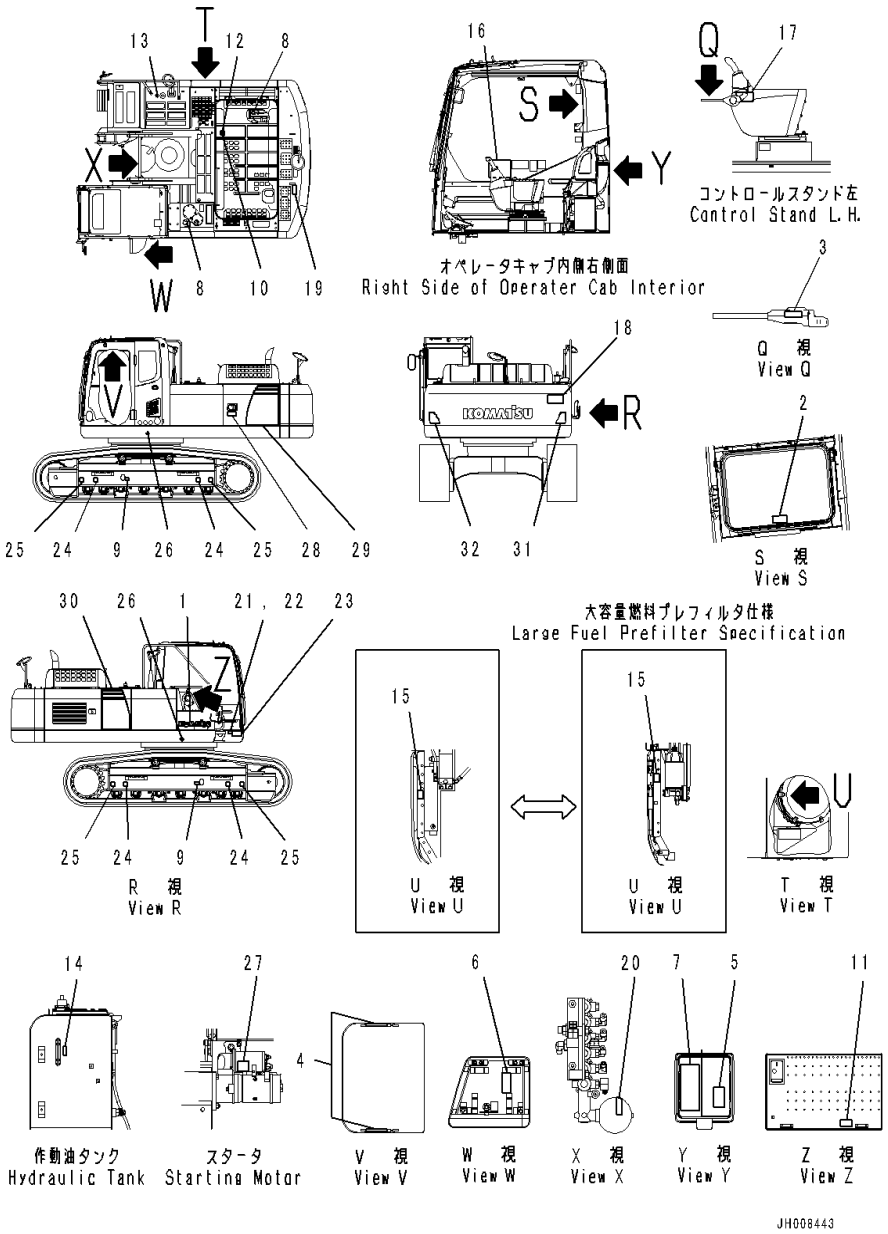

Index	Code	Part Number	Description	Qty	Serial Number
1		09690-P0630	Plate, Komatsu Logo	1	C90415-
2		09844-00050	Plate, Emergency Exit	1	C90415-
3		09685-00002	Plate, Symbol, Lock/Unlock	1	C90415-
4		09659-A057B	Plate, Warning, Explosion Hazard	2	C90415-
5		20Y-00-31330	Plate, Operating	1	C90415-
6		208-00-71260	Plate	1	C90415-
7		207-00-76760	Plate	1	C90415-
8		09653-A0481	Plate, Warning, High Temperature	2	C90415-
9		09657-A0881	Plate, Warning, Track Adjustment	2	C90415-
10		09805-C0481	Plate, Caution, Do not Get On	1	C90415-
11		09808-A0881	Plate, Warning, Battery Cables	1	C90415-
12		09667-A0481	Plate, Caution, Rotating Object	1	C90415-
13		09669-0000E	Plate, Symbol, Fuel Filler	1	C90415-
14		205-00-73360	Plate, Operating	1	C90415-
15		20Y-00-41340	Plate, Pre Filter Caution	1	C90415-
16		22U-00-21440	Plate	1	C90415-
17		09963-03001	Tag, Danger, Do Not Operate	1	C90415-
18		09133-A3281	Plate, Danger, Keep Off Swing Area	1	C90415-
19		09805-A0881	Plate, Caution, Do not Approach	1	C90415-
20		09659-A057B	Plate, Warning, Explosion Hazard	1	C90415-
21	C2	09601-120E2	Plate, Name (Limited Supply)	1	C90415-
22		04418-13060	Screw	4	C90415-
23		20Y-00-31840	Plate	1	C90415-
24		09960-00801	Mark, Lift Point	4	C90415-
25		09960-00802	Mark, Tie Down Point	4	C90415-
26		21U-98-31160	Plate, Mark, Location Of Center Of Gravity	2	C90415-
27		09842-A0481	Plate, Caution, No Jump Start	1	C90415-
28		20Y-00-41530	Plate, Symbol, Ecot3	1	C90415-
29		207-00-76550	Mark	1	C90415-
30		207-00-76560	Mark	1	C90415-
31		2A5-00-11410	Plate, Reflector	1	C90415-
32		2A5-00-11420	Plate, Reflector	1	C90415-

FIG. U0100-004001 Marks and Plates, Long Type, PC350LC

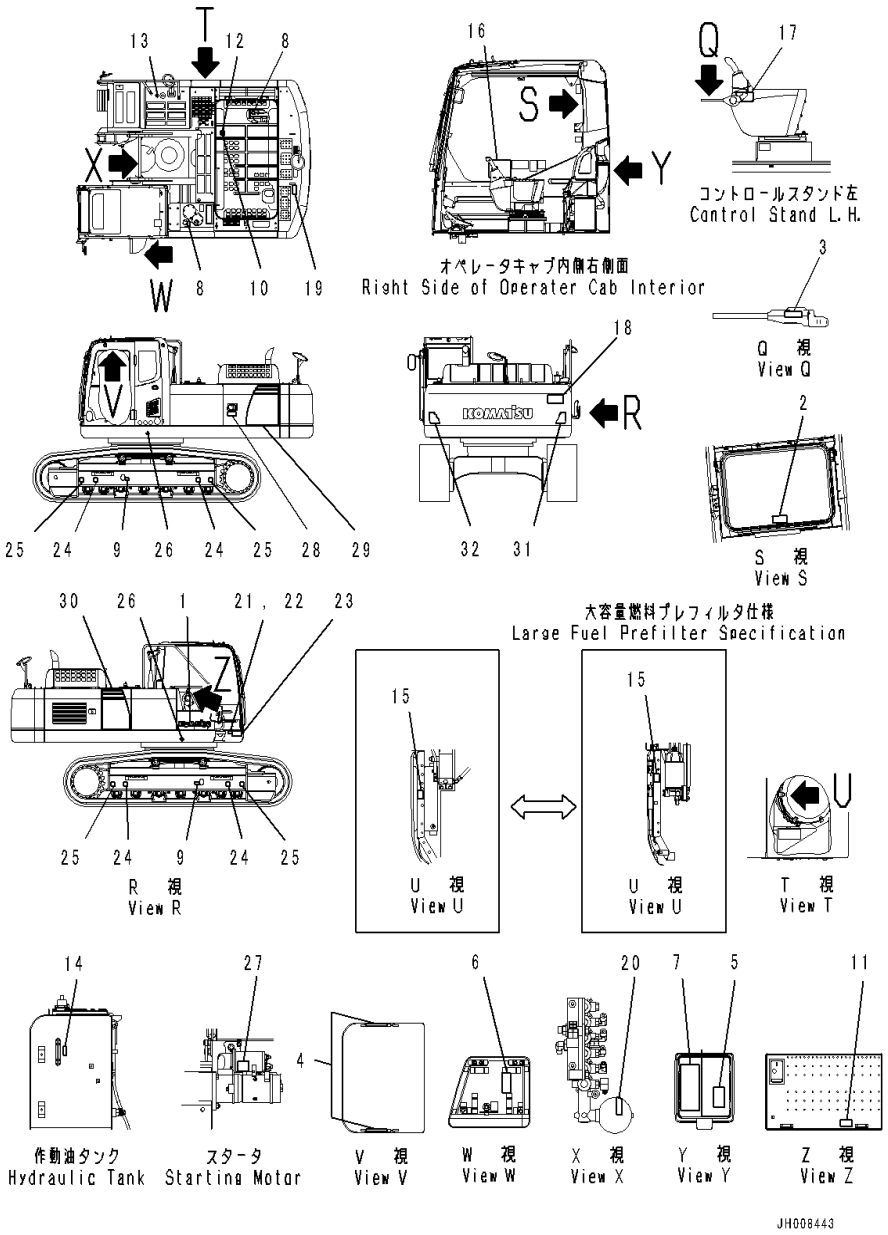

Index	Code	Part Number	Description	Qty	Serial Number
1		09690-P0630	Plate, Komatsu Logo	1	C90415-
2		09844-00050	Plate, Emergency Exit	1	C90415-
3		09685-00002	Plate, Symbol, Lock/Unlock	1	C90415-
4		09659-A057B	Plate, Warning, Explosion Hazard	2	C90415-
5		20Y-00-31330	Plate, Operating	1	C90415-
6		208-00-71260	Plate	1	C90415-
7		207-00-76760	Plate	1	C90415-
8		09653-A0481	Plate, Warning, High Temperature	2	C90415-
9		09657-A0881	Plate, Warning, Track Adjustment	2	C90415-
10		09805-C0481	Plate, Caution, Do not Get On	1	C90415-
11		09808-A0881	Plate, Warning, Battery Cables	1	C90415-
12		09667-A0481	Plate, Caution, Rotating Object	1	C90415-
13		09669-0000E	Plate, Symbol, Fuel Filler	1	C90415-
14		205-00-73360	Plate, Operating	1	C90415-
15		20Y-00-41340	Plate, Pre Filter Caution	1	C90415-
16		22U-00-21440	Plate	1	C90415-
17		09963-03001	Tag, Danger, Do Not Operate	1	C90415-
18		09133-A3281	Plate, Danger, Keep Off Swing Area	1	C90415-
19		09805-A0881	Plate, Caution, Do not Approach	1	C90415-
20		09659-A057B	Plate, Warning, Explosion Hazard	1	C90415-
21	C2	09601-120E2	Plate, Name (Limited Supply)	1	C90415-
22		04418-13060	Screw	4	C90415-
23		20Y-00-31840	Plate	1	C90415-
24		09960-00801	Mark, Lift Point	4	C90415-
25		09960-00802	Mark, Tie Down Point	4	C90415-
26		21U-98-31160	Plate, Mark, Location Of Center Of Gravity	2	C90415-
27		09842-A0481	Plate, Caution, No Jump Start	1	C90415-
28		20Y-00-41530	Plate, Symbol, Ecot3	1	C90415-
29		207-00-76570	Mark	1	C90415-
30		207-00-76580	Mark	1	C90415-
31		2A5-00-11410	Plate, Reflector	1	C90415-
32		2A5-00-11420	Plate, Reflector	1	C90415-

FIG. U0110-001001 Lubrication Chart (100 Hours Lubrication Interval)

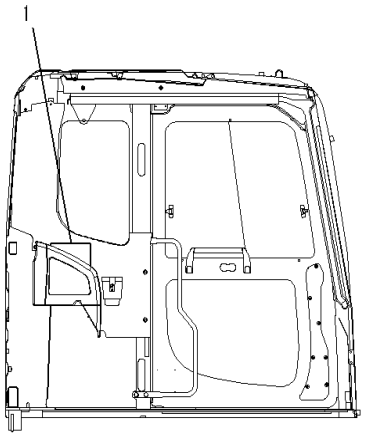

左ドアー内側
L.H. Door Inside

00038302

Index	Code	Part Number	Description	Qty	Serial Number
1		207-00-76130	Plate	1	C90001-

FIG. U0120-001001 Caution Plates (English)

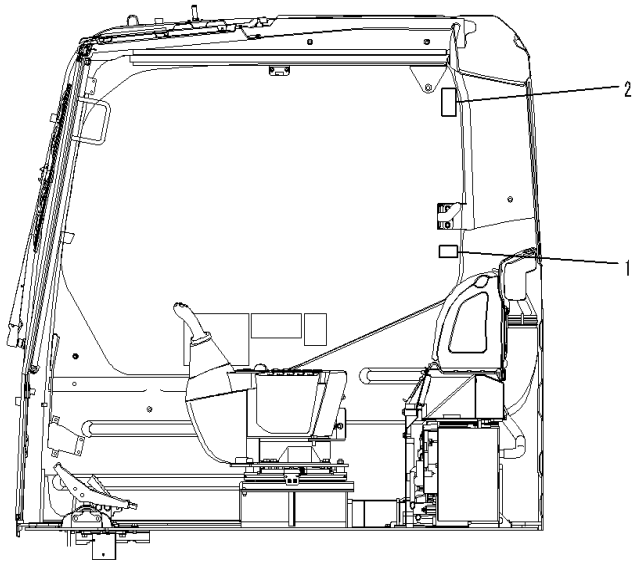

右窓内側
R. H. Window Inside

00045815

Index	Code	Part Number	Description	Qty	Serial Number
1		20Y-00-41460	Plate	1	C90001-
2		09803-A0481	Plate, Warning, Window Lock	1	C90001-

FIG. U0150-001001 Komatsu Logo

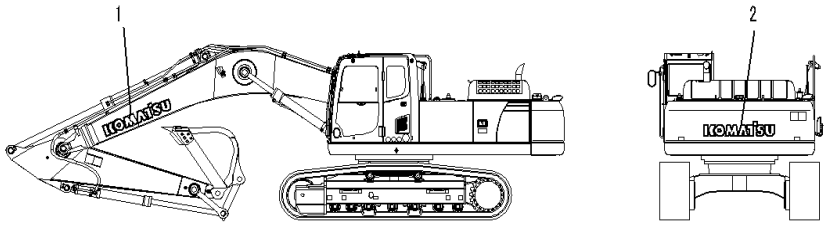

Index	Code	Part Number	Description	Qty	Serial Number
1		09690-P1800	Plate, Komatsu Logo	1	C90001-
2		09690-P1800	Plate, Komatsu Logo	1	C90001-

FIG. U0150-002001 Komatsu Logo (Additional)

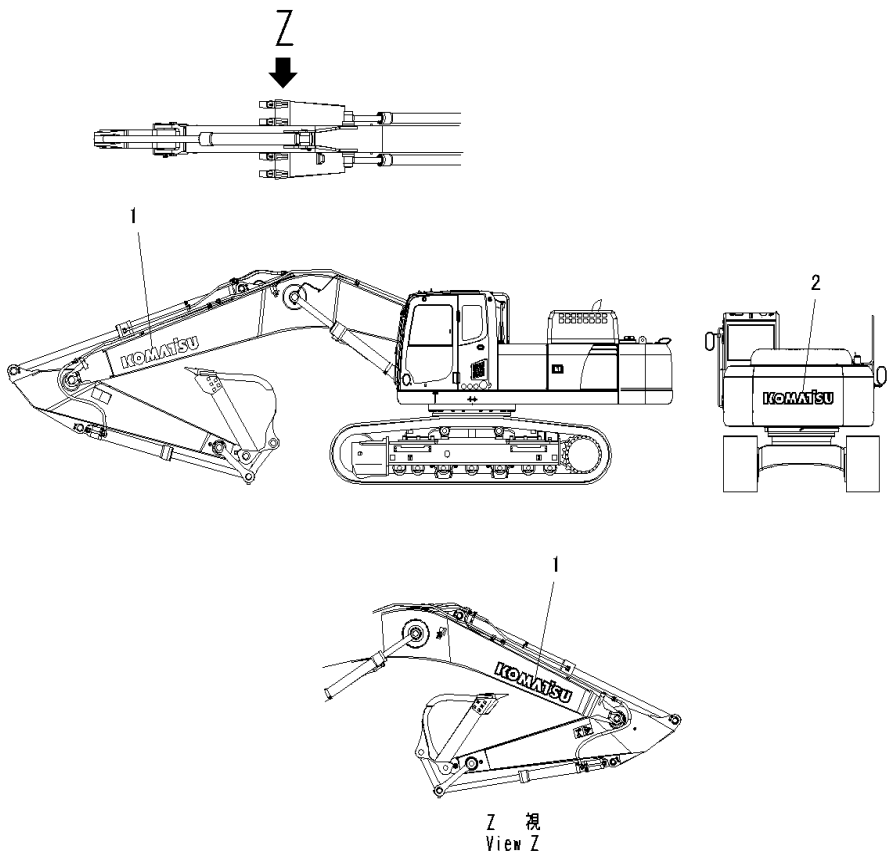

Index	Code	Part Number	Description	Qty	Serial Number
1		09690-P1800	Plate, Komatsu Logo	2	C90001-
2		09690-P1800	Plate, Komatsu Logo	1	C90001-

FIG. U0150-003001 Komatsu Logo (For 6.0m SE Boom With Reinforcement)

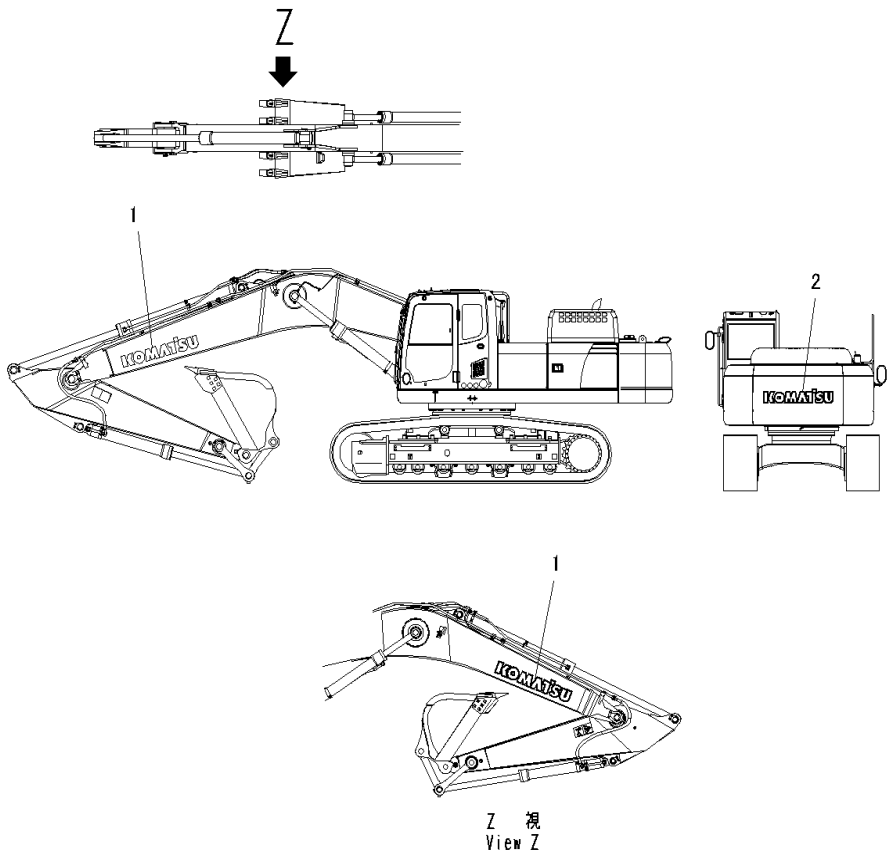

Index	Code	Part Number	Description	Qty	Serial Number
1		09690-P1600	Plate, Komatsu Logo	2	C90415-
2		09690-P1800	Mark, Plate.....	1	C90415-

FIG. U0200-001001 Lifting Capacity Chart (English)

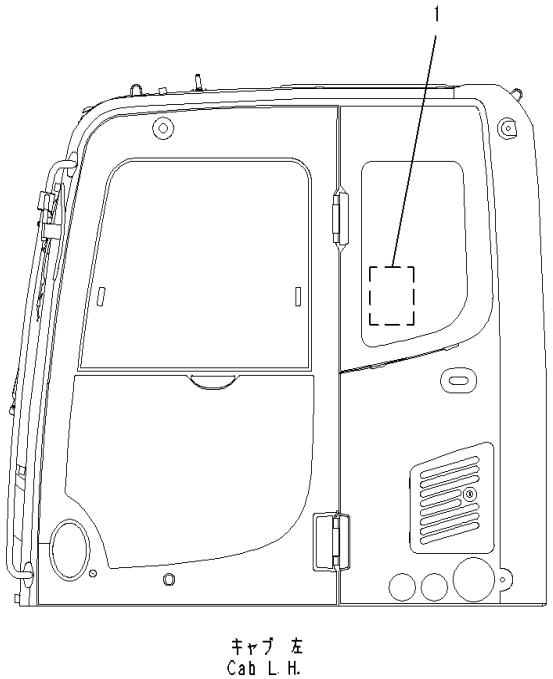

Index	Code	Part Number	Description	Qty	Serial Number
1		207-00-76811	Plate	1	C90001-

FIG. U0200-002001 Machine Push-up Switch Decal, Thai

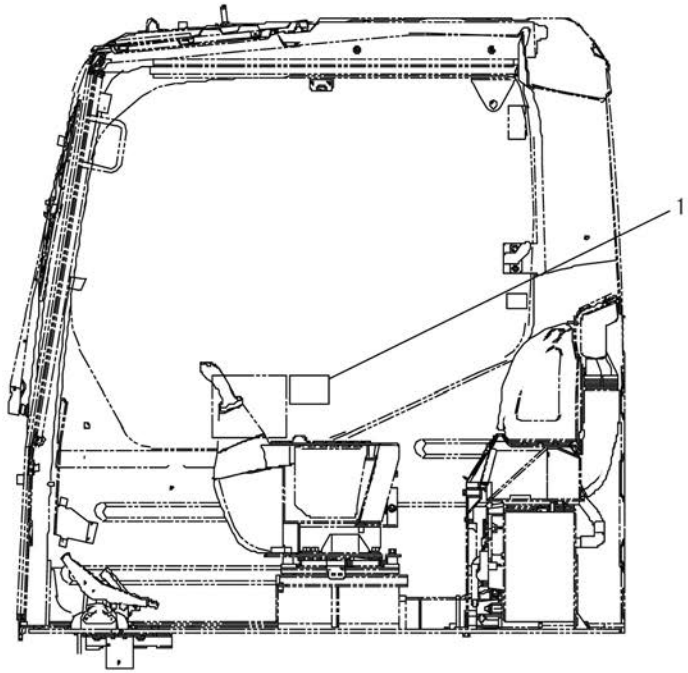

R.H. Window Inside

Index	Code	Part Number	Description	Qty	Serial Number
1		207-00-C1010	Plate	1	C90001-

FIG. U0202-001001 Coolant Decal (English)

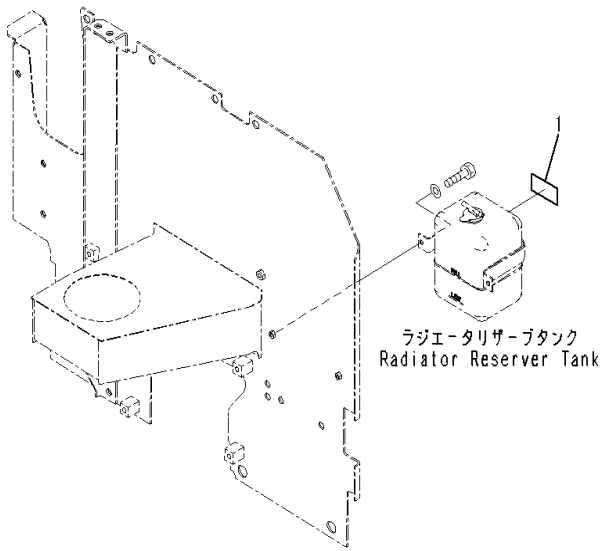

Index	Code	Part Number	Description	Qty	Serial Number
1		09642-13000	Plate, Service Instruction, Engine ..... Coolant AF-NAC	1	C90001-

FIG. U0205-001001 KOMTRAX Plate

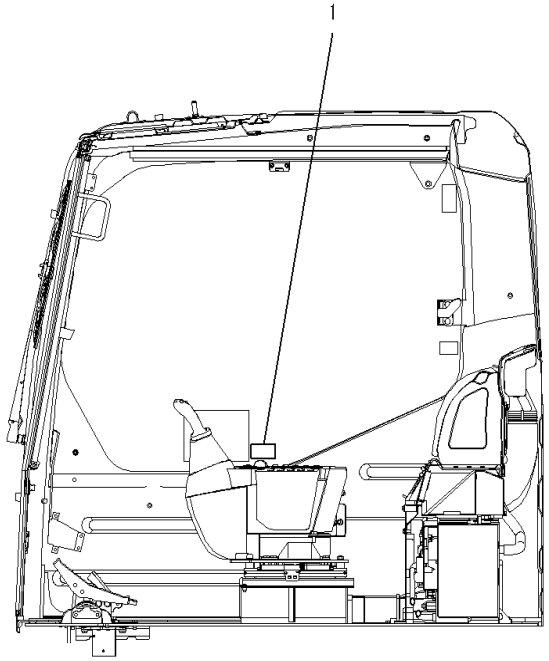

Index	Code	Part Number	Description	Qty	Serial Number
1		09845-00480	Plate, Caution, Blast Site	1	C90001-

FIG. U0205-002001 KOMTRAX Plate, GPRS, TC530

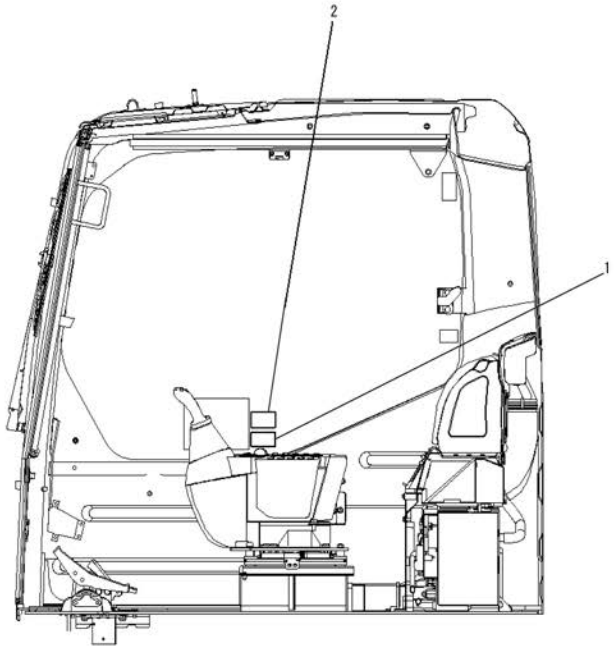

Index	Code	Part Number	Description	Qty	Serial Number
1		09845-00480	Plate, Caution, Blast Site	1	C90001-
2		20Y-00-C1130	Plate	1	C90001-

FIG. U0205-003001 KOMTRAX Plate, GPRS, 3G, TC630

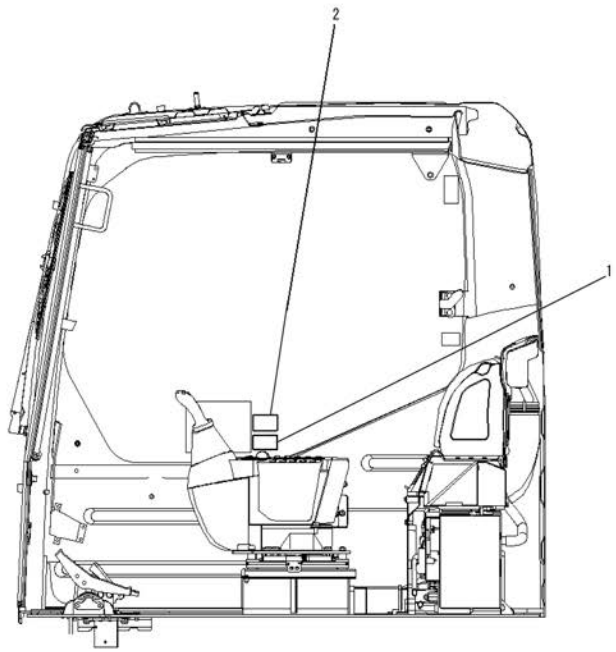

Index	Code	Part Number	Description	Qty	Serial Number
1		09845-00480	Plate, Caution, Blast Site	1	C90001-
2		20Y-00-C1131	Plate	1	C90001-

FIG. U0510-001001 Caution Plates

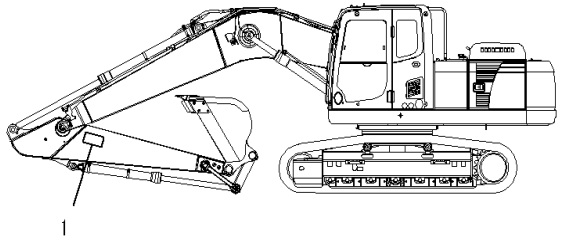

00045822

Index	Code	Part Number	Description	Qty	Serial Number
1		09134-A1681	Plate, Danger, Keep Off Working Area ...	2	C90001-

FIG. U0520-001001 FOPS Plate (English, Cab Top Guard LV2)

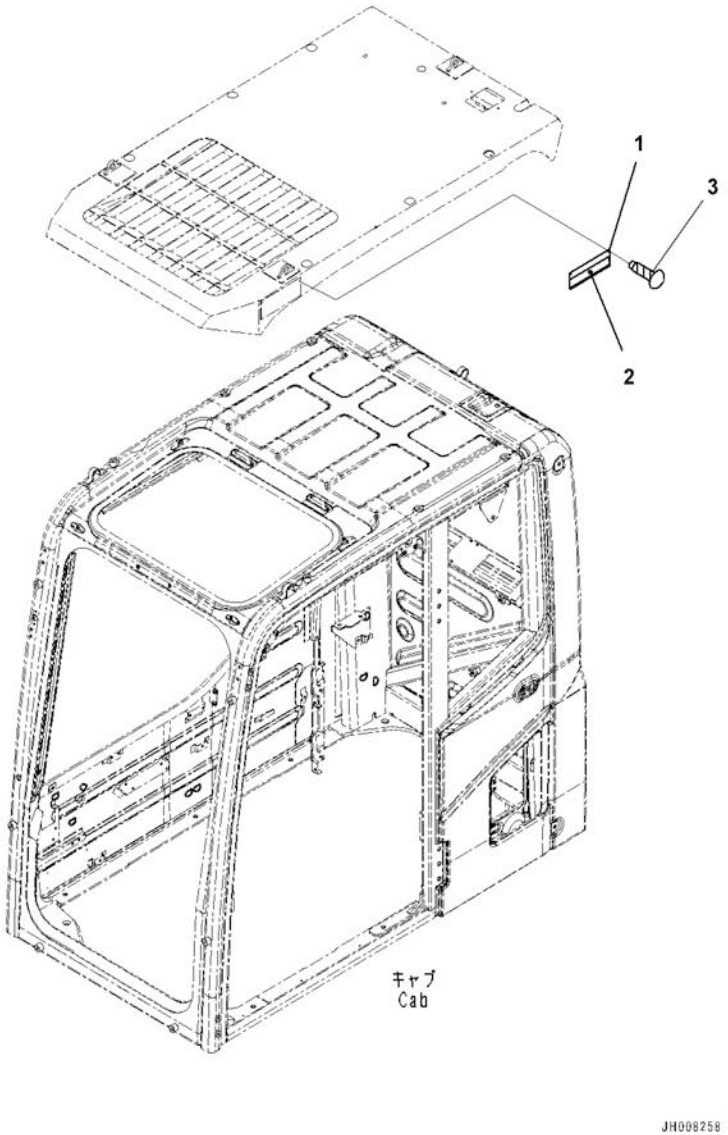

Index	Code	Part Number	Description	Qty	Serial Number
1	C2	(09620-D2001)	Plate, Name, Top Guard(Limited Supply)	1	C90001-
2		09620-D2171	Plate, Warning, Top and Front Guard	1	C90001-
3		04418-13060	Screw	4	C90001-

FIG. U0520-002001 FOPS Plate, English, Cab front Guard LV2

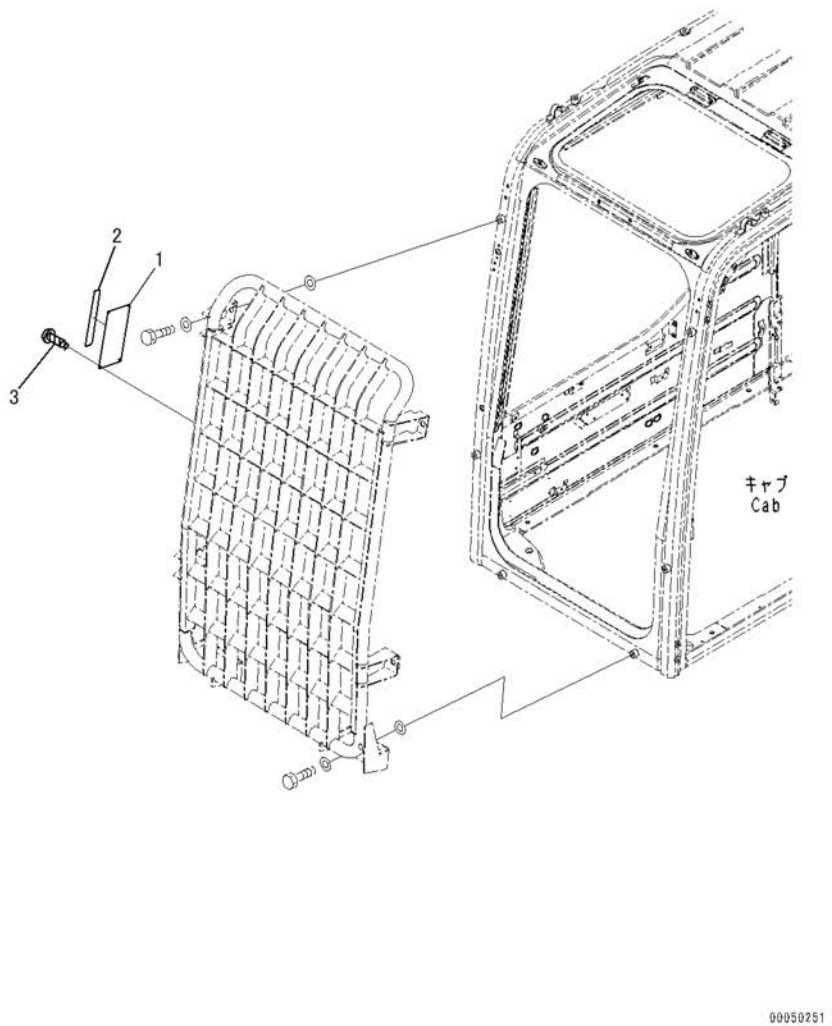

Index	Code	Part Number	Description	Qty	Serial Number
1	C2	(09620-E2001)	Plate, Name, Front Guard ..... (Limited Supply)	1	C90001-
2		09620-D2171	Plate, Warning, Top and Front Guard	1	C90001-
3		04418-13060	Screw	4	C90001-

FIG. U0520-003001 FOPS Plate, English, Cab front Guard LV2, Top Guard LV2

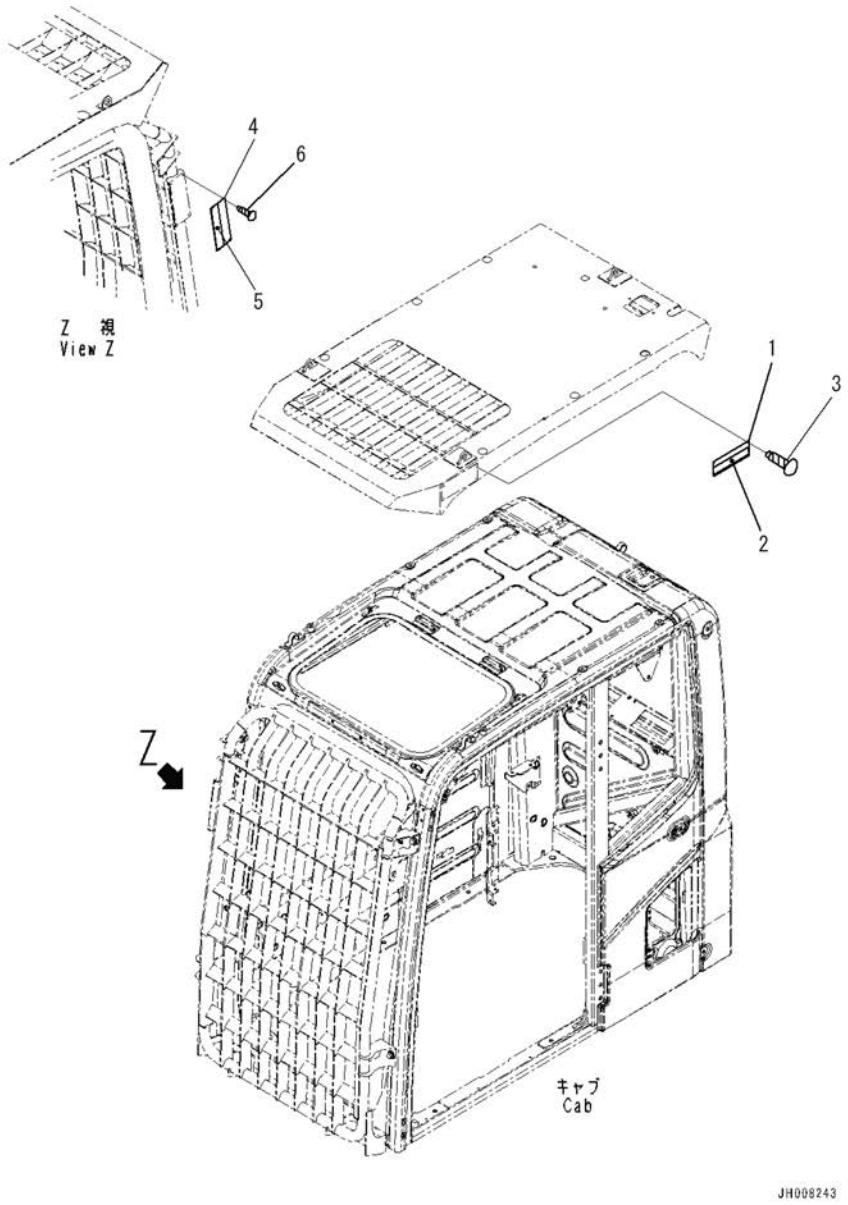

Index	Code	Part Number	Description	Qty	Serial Number
1	C2	(09620-D2001)	Plate, Name, Top Guard	1	C90001-
			(Limited Supply)		
2		09620-D2171	Plate, Warning, Top and Front Guard	1	C90001-
3		04418-13060	Screw.....	4	C90001-
4	C2	(09620-E2001)	Plate, Name, Front Guard	1	C90001-
			(Limited Supply)		
5		09620-D2171	Plate, Warning, Top and Front Guard	1	C90001-
6		04418-13060	Screw.....	4	C90001-

FIG. U0521-001001 Caution Plates (English)

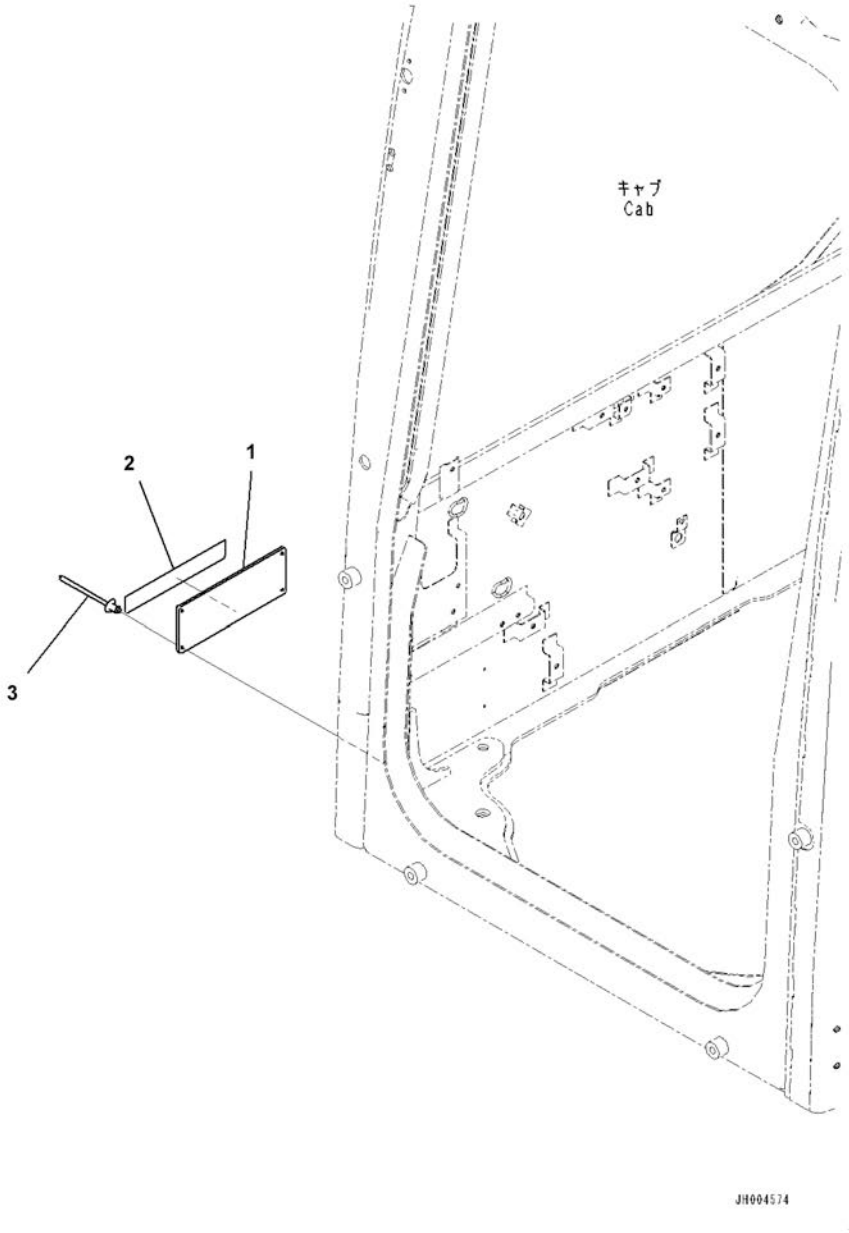

Index	Code	Part Number	Description	Qty	Serial Number
1	C2	(09620-T2001)	Plate, Name, ROPS(Limited Supply)	1	C90001-
2		09620-B2171	Plate, Warninf, ROPS	1	C90001-
3		205-00-72430	Rivet	4	C90001-

FIG. U0521-002001 Rivet (Plate Less)

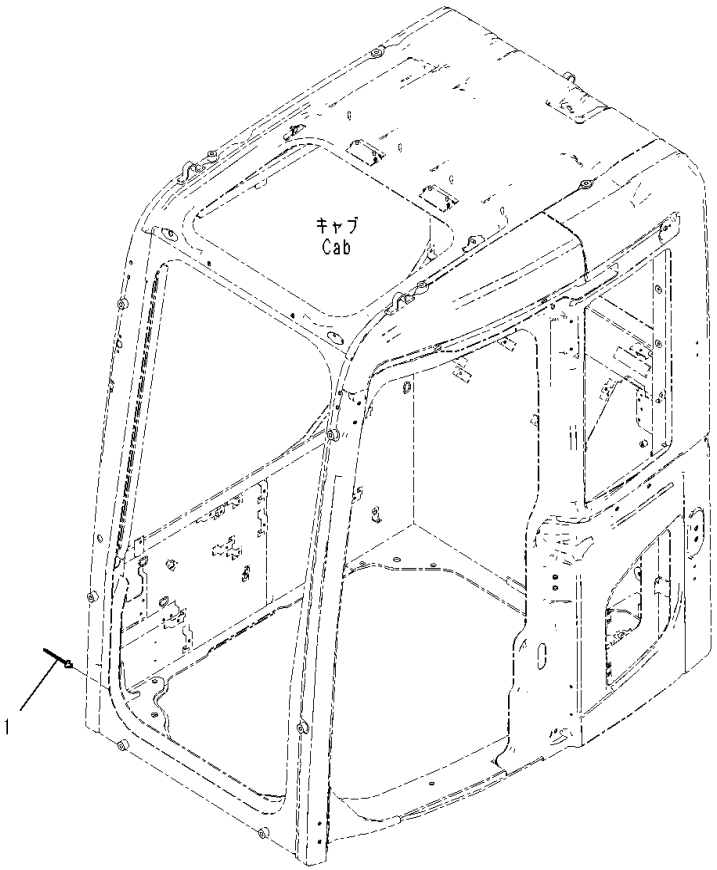

Index	Code	Part Number	Description	Qty	Serial Number
1		205-00-72430	Rivet	4	C90001-

FIG. U0550-001001 Service Instruction

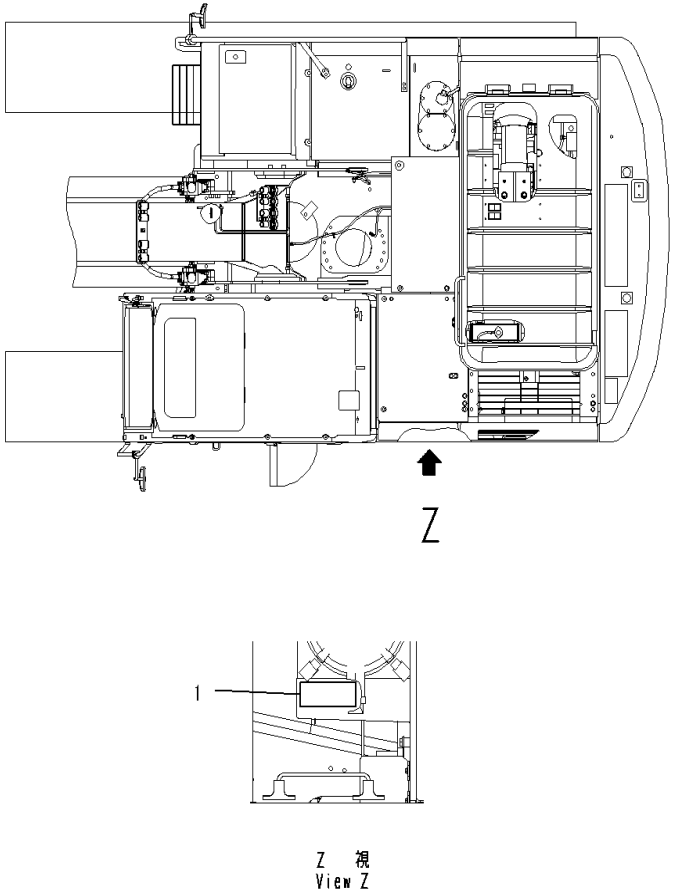

Index	Code	Part Number	Description	Qty	Serial Number
1		09637-30163	Plate, Service Instruction, Air Cleaner	1	C90001-

FIG. U0580-001001 Caution Plates (1-additional Actuator Piping)

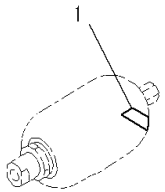

PW1B973

Index	Code	Part Number	Description	Qty	Serial Number
1		09659-A057B	Plate, Warning, Explosion Hazard	1	C90001-

FIG. U0610-001001 Caution Plates, Backward, Rearview Camera

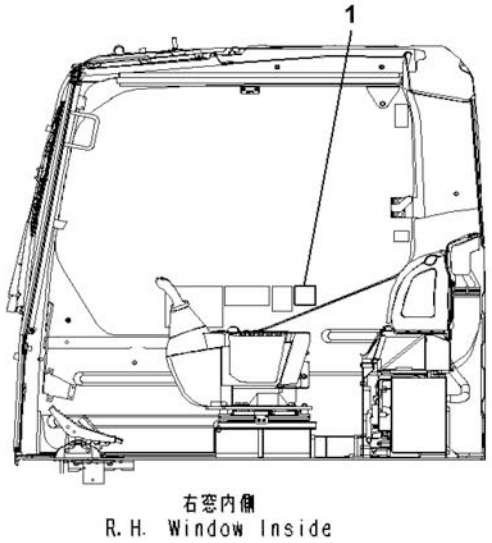

Index	Code	Part Number	Description	Qty	Serial Number
1		09833-A0881	Plate, Warning, Swinging and Traveling in Reverse	1	C90001-

AUXILIARY PARTS AND TOOL

FIG. V0100-001001 Spare Parts (For Large Fuel Prefilter, Indonesian)

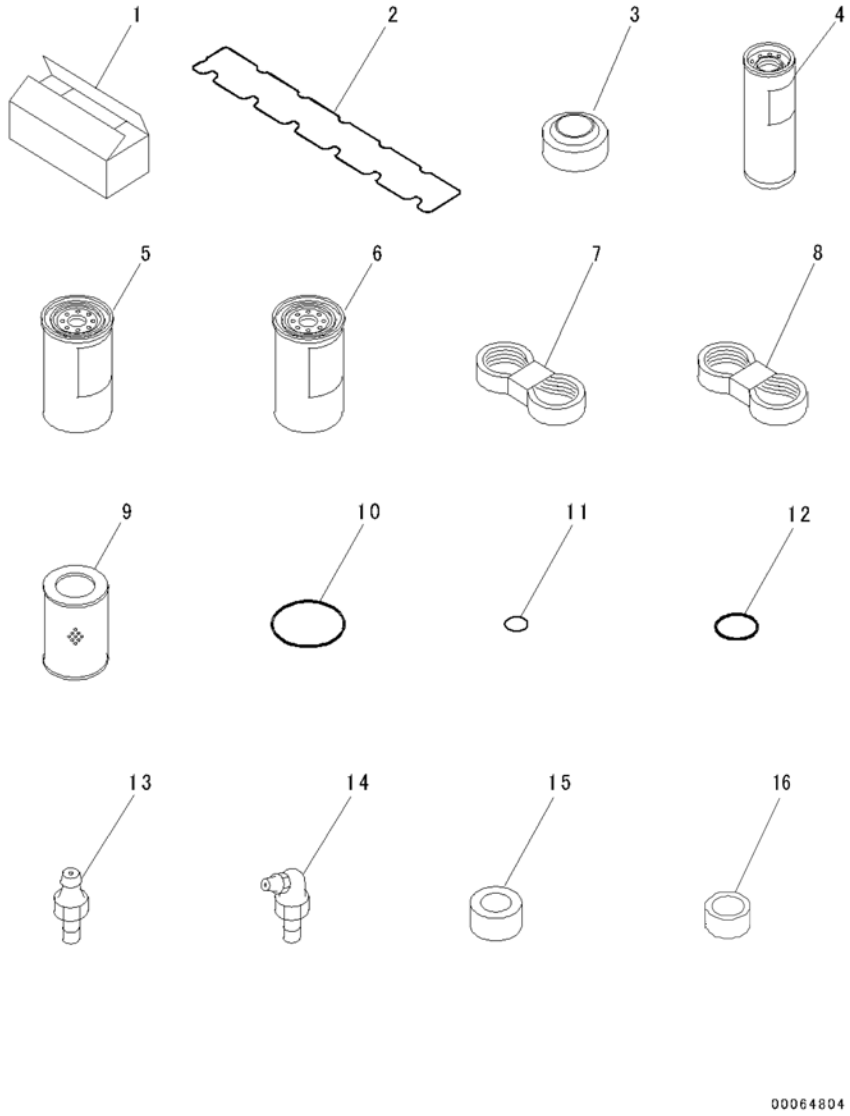

Index	Code	Part Number	Description	Qty	Serial Number
1		207-98-C1000	Box, Wooden	1	C90001-
2		6745-11-8810	Gasket	1	C90001-
3		6745-11-8160	Isolator	8	C90001-
4		6742-01-4540	Cartridge, Oil Filter	1	C90001-
5		600-319-3750	Cartridge, Fuel Filter	1	C90001-
6		600-319-5611	Cartridge Assembly, Prefilter-Large	1	C90002-
	A2	600-319-5610	Cartridge Assembly, Prefilter-Large	1	C90001-C90001
7		6743-61-3710	Belt	1	C90001-
8		6732-82-3580	Belt	1	C90001-
9		207-60-71183	Element	1	C90001-
10		07000-15210	O-ring	1	C90001-
11		07002-11223	O-ring	1	C90001-
12		07002-12434	O-ring	6	C90001-
13		07020-00000	Fitting, Grease	4	C90001-
14		07020-00675	Fitting, Grease	4	C90001-
15		421-60-35170	Element	1	C90001-
16		20Y-60-21470	Element	1	C90001-

FIG. V0100-002001 Spare Parts (For Normal Fuel Prefilter)

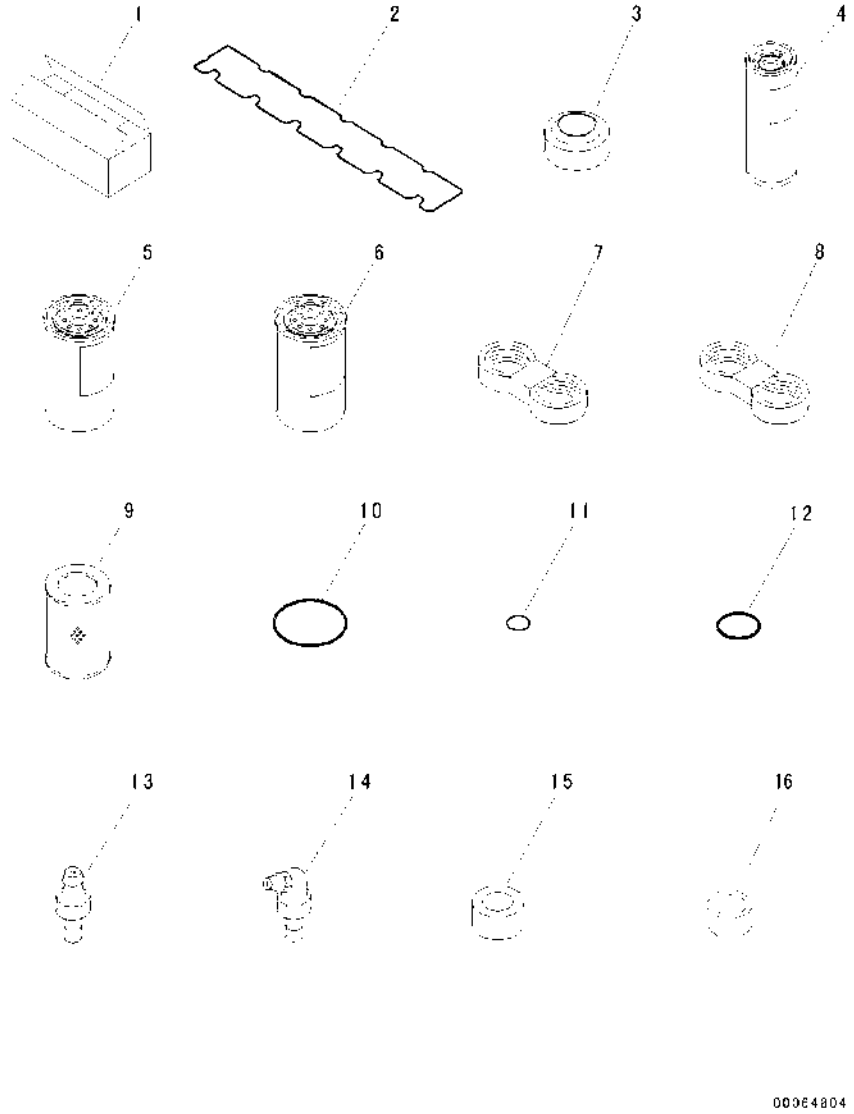

Index	Code	Part Number	Description	Qty	Serial Number
1		207-98-C1000	Box, Wooden	1	C90001-
2		6745-11-8810	Gasket	1	C90001-
3		6745-11-8160	Isolator	8	C90001-
4		6742-01-4540	Cartridge, Oil Filter	1	C90001-
5		600-319-3750	Cartridge, Fuel Filter	1	C90001-
6		600-319-3610	Cartridge, Prefilter-Normal	1	C90001-
7		6743-61-3710	Belt	1	C90001-
8		6732-82-3580	Belt	1	C90001-
9		207-60-71183	Element	1	C90001-
10		07000-15210	O-ring	1	C90001-
11		07002-11223	O-ring	1	C90001-
12		07002-12434	O-ring	6	C90001-
13		07020-00000	Fitting, Grease	4	C90001-
14		07020-00675	Fitting, Grease	4	C90001-
15		421-60-35170	Element	1	C90001-
16		20Y-60-21470	Element	1	C90001-

FIG. V0200-001001 Cap and Overall

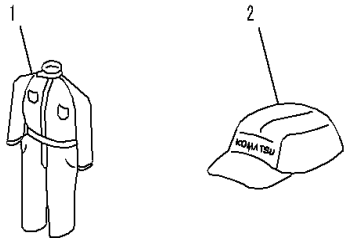

PEB0040

Index	Code	Part Number	Description	Qty	Serial Number
		09980-92550	Cap and Overall Kit	1	C90001-
1		09980-10550	• Overall	1	C90001-
2		09982-20057	• Cap	1	C90001-

FIG. V0300-001001 General Tool Set

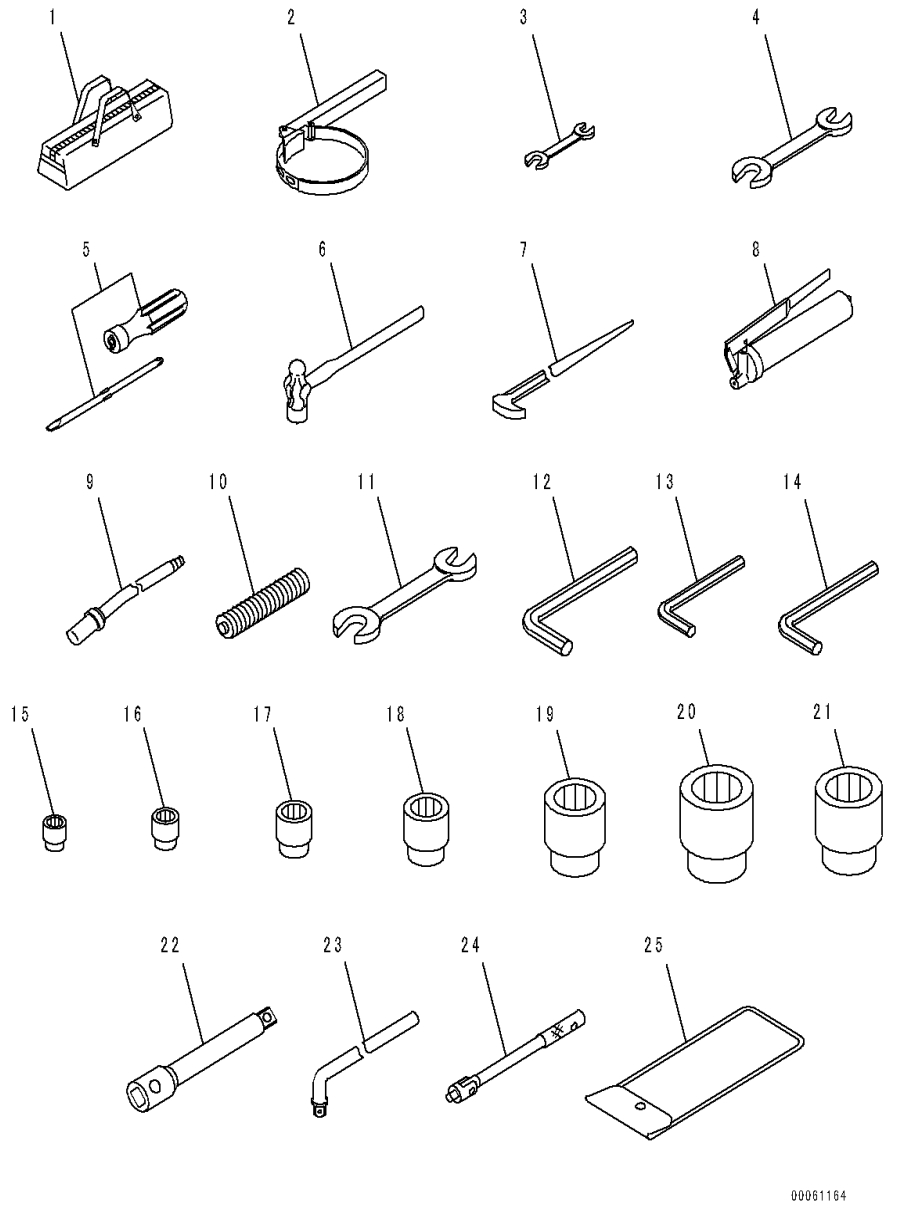

Index	Code	Part Number	Description	Qty	Serial Number
1		09056-04613	Bag	1	C90001-
2		09019-28036	Wrench	1	C90001-
		09019-28035	Wrench	1	C90001-
3		09002-01317	Wrench, W=13X17mm	1	C90001-
4		09002-01922	Wrench, W=19X22mm	1	C90001-
5		09033-00190	Driver	1	C90001-
6		09039-00150	Hammer	1	C90001-
7		09055-10390	Bar	1	C90001-
		07952-70004	Pump Assembly	1	C90001-
8		07950-10450	• Pump	1	C90001-
9		07951-41017	• Nozzle	1	C90001-
10		07950-90403	Cartridge, Grease	1	C90001-
11		09002-03641	Wrench, W=36X41mm	1	C90001-
12		09007-00836	Wrench, W=8mm	1	C90001-
13		09007-00425	Wrench, W=4mm	1	C90001-
14		09007-00528	Wrench, W=5mm	1	C90001-
		207-98-61130	Tool Kit	1	C90001-
15		09021-01219	• Socket, W=12mm	1	C90001-
16		09021-01422	• Socket, W=14mm	1	C90001-
17		09021-01725	• Socket, W=17mm	1	C90001-
18		09021-01928	• Socket, W=19mm	1	C90001-
19		09021-02436	• Socket, W=24mm	1	C90001-
20		09021-03653	• Socket, W=36mm	1	C90001-
21		09021-03044	• Socket, W=30mm	1	C90001-
22		09022-00150	• Extension	1	C90001-
23		09023-00300	• Handle	1	C90001-
24		09024-00300	• Handle	1	C90001-
25		20Y-98-21140	• Tool Bag	1	C90001-

OTHER EQUIPMENT

FIG. W1113-001001 Fuel Refill Pump (Large Fuel Prefilter)

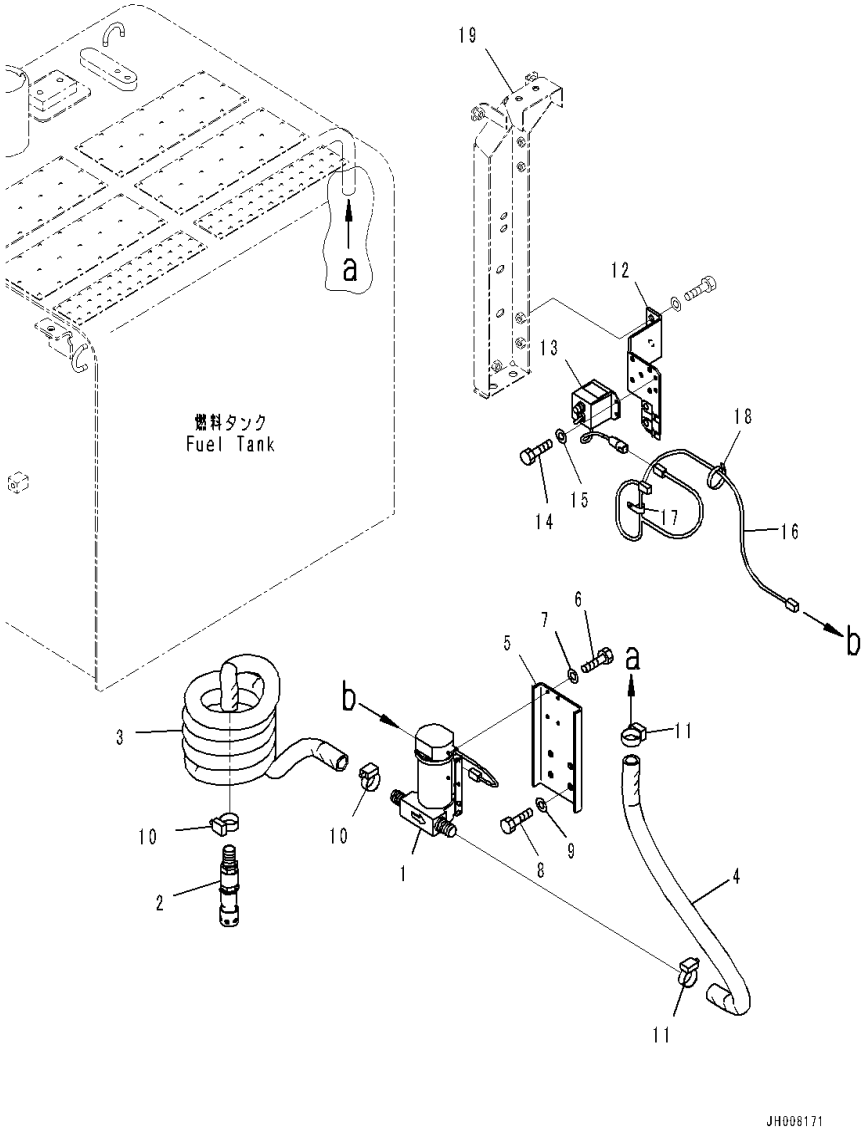

Index	Code	Part Number	Description	Qty	Serial Number
1		207-04-C1010	Pump	1	C90001-
2		20Y-04-K2450	Valve Assembly	1	C90001-
3		20Y-04-K2351	Hose	1	C90001-
4		208-04-K1550	Hose	1	C90001-
5		207-04-75540	Bracket	1	C90001-
6		01010-80616	Bolt	4	C90001-
7		01643-30623	Washer	4	C90001-
8		01010-81225	Bolt	4	C90001-
9		01643-31232	Washer	4	C90001-
10		07289-00035	Clamp	2	C90001-
11		07289-00035	Clamp	2	C90001-
12		207-04-75262	Bracket	1	C90001-
13		207-06-71541	Switch Assembly	1	C90001-
14		01010-80616	Bolt	2	C90001-
15		01643-30623	Washer	2	C90001-
16		207-06-75270	Wiring Harness	1	C90001-
17		04434-51412	Clip	1	C90001-
18		08034-20519	Band	1	C90001-
19		(207-54-71221)	Frame		-

FIG. W1113-002001 Fuel Refill Pump (Normal Fuel Prefilter)

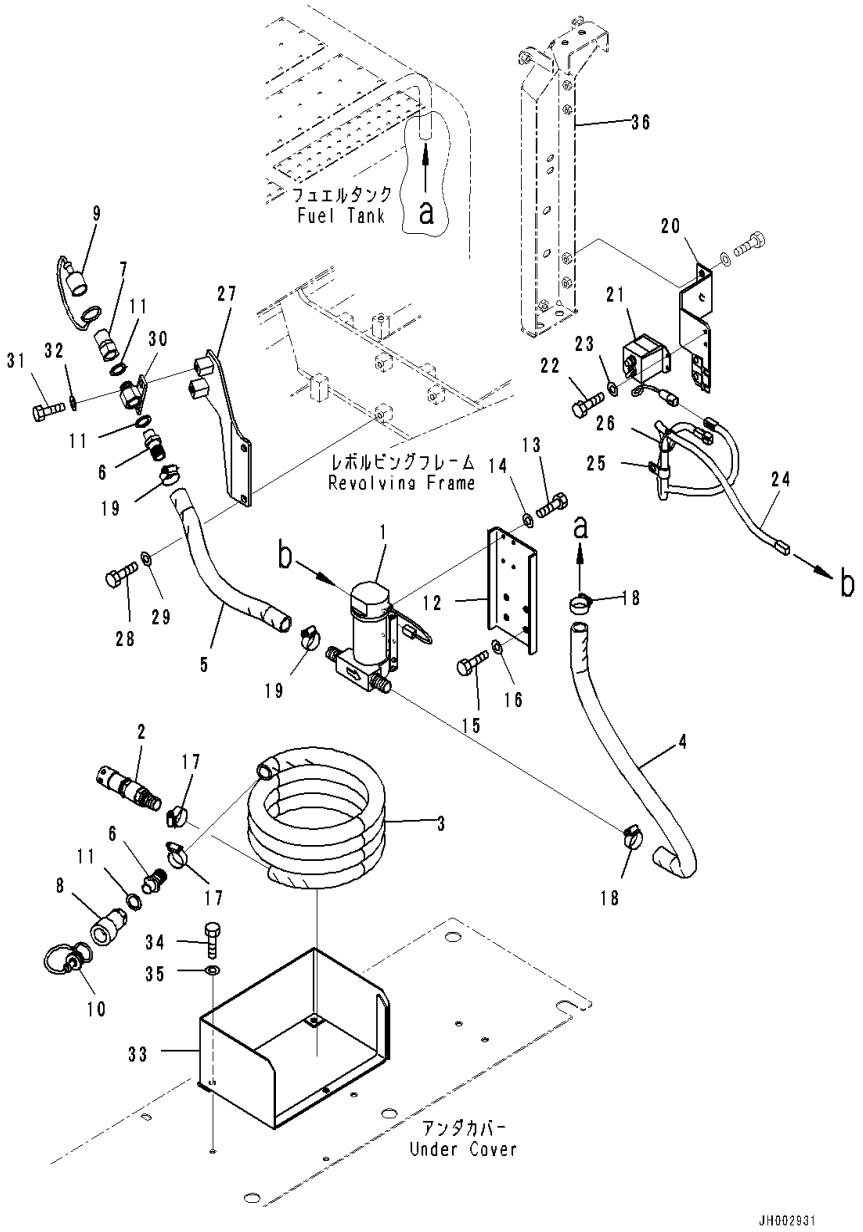

Index	Code	Part Number	Description	Qty	Serial Number
1		207-04-C1010	Pump	1	C90001-
2		20Y-04-K2450	Valve Assembly	1	C90001-
3		20Y-04-K2351	Hose	1	C90001-
4		208-04-K1550	Hose	1	C90001-
5		207-04-75430	Hose	1	C90001-
6		22B-04-K1130	Nipple	2	C90001-
7		22B-04-K1140	Coupling	1	C90001-
8		22B-04-K1150	Coupling	1	C90001-
9		22B-04-K1160	Plug	1	C90001-
10		22B-04-K1170	Plug	1	C90001-
11		205-04-K1370	Washer, Seal	3	C90001-
12		207-04-75540	Bracket	1	C90001-
13		01010-80616	Bolt	4	C90001-
14		01643-30623	Washer	4	C90001-
15		01010-81225	Bolt	4	C90001-
16		01643-31232	Washer	4	C90001-
17		07289-00035	Clamp	2	C90001-
18		07289-00035	Clamp	2	C90001-
19		07289-00035	Clamp	2	C90001-
20		207-04-75262	Bracket	1	C90001-
21		207-06-71541	Switch Assembly	1	C90001-
22		01010-80616	Bolt	2	C90001-
23		01643-30623	Washer	2	C90001-
24		207-06-75270	Wiring Harness	1	C90001-
25		04434-51412	Clip	1	C90001-
26		08034-20519	Band	1	C90001-
27		207-04-75420	Bracket	1	C90001-
28		01010-81235	Bolt	2	C90001-
29		01643-31232	Washer	2	C90001-
30		207-04-75410	Bracket	1	C90001-
31		01010-81225	Bolt	2	C90001-
32		01643-31232	Washer	2	C90001-
33		20Y-04-38170	Bracket	1	C90001-
34		01010-81020	Bolt	3	C90001-
35		01643-31032	Washer	3	C90001-
36		(207-54-71221)	Frame		-

FIG. W1114-001001 Additional Track Frame Step

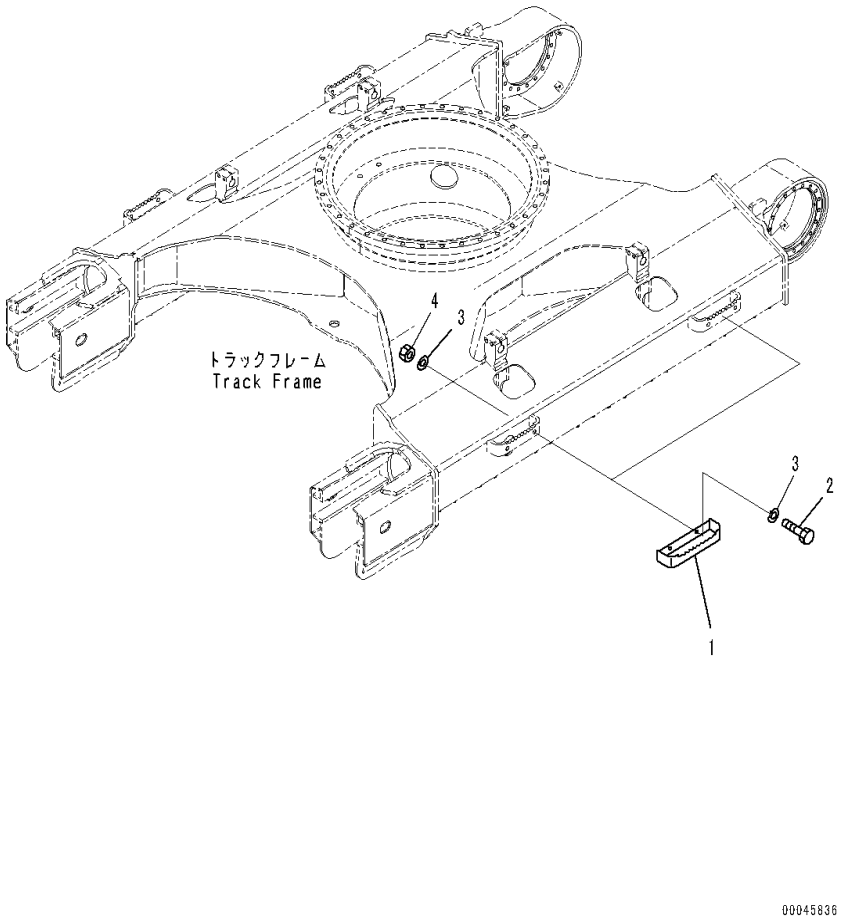

Index	Code	Part Number	Description	Qty	Serial Number
1		207-30-76211	Step	4	C90001-
2		01010-81660	Bolt	8	C90001-
3		01643-31645	Washer	16	C90001-
4		01580-11613	Nut	8	C90001-

FIG. W1115-001001 Vandalism Protection (Cab Door Guard)

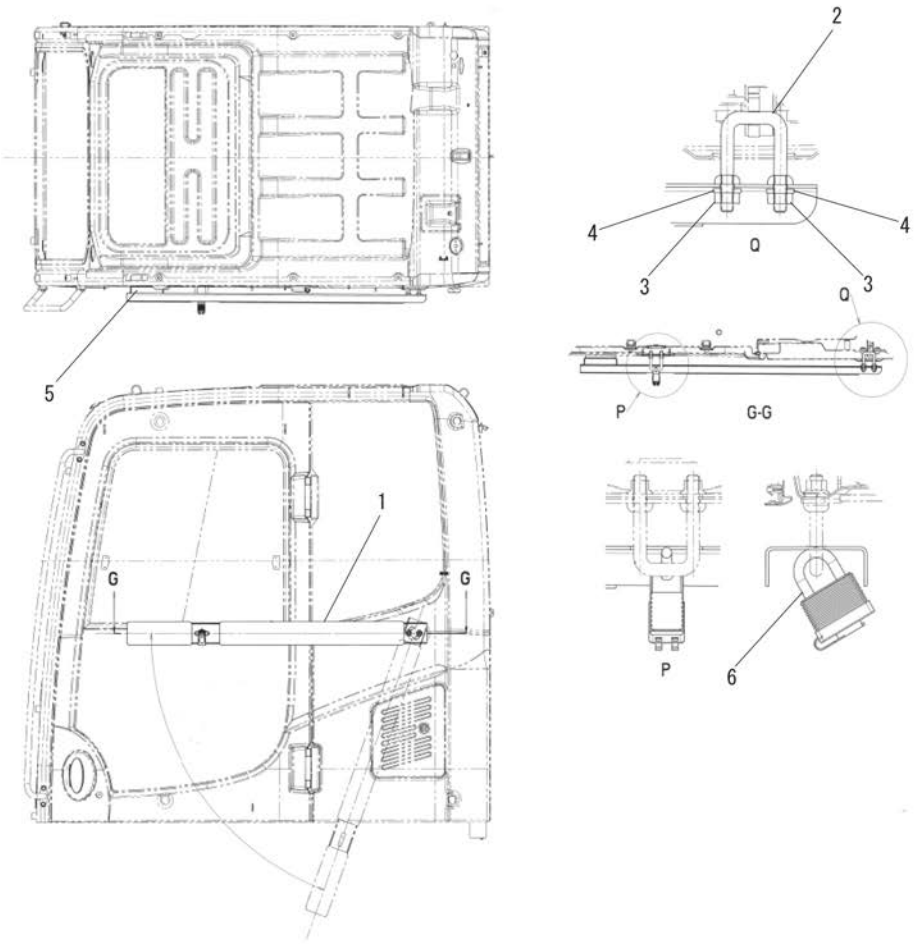

Index	Code	Part Number	Description	Qty	Serial Number
		20Y-53-21340	Frame Assembly	1	C90001-
1		20Y-53-21211	• Frame Assembly	1	C90001-
2		20Y-53-11320	• • Striker	1	C90001-
3		01580-01008	• • Nut	2	C90001-
4		01643-31032	• • Washer	2	C90001-
5		20Y-53-21251	• Sheet	1	C90001-
6		17A-04-41440	Lock	1	C90001-

FIG. W1115-001002 Vandalism Protection (Monitor Guard and Rear Cover Guard)

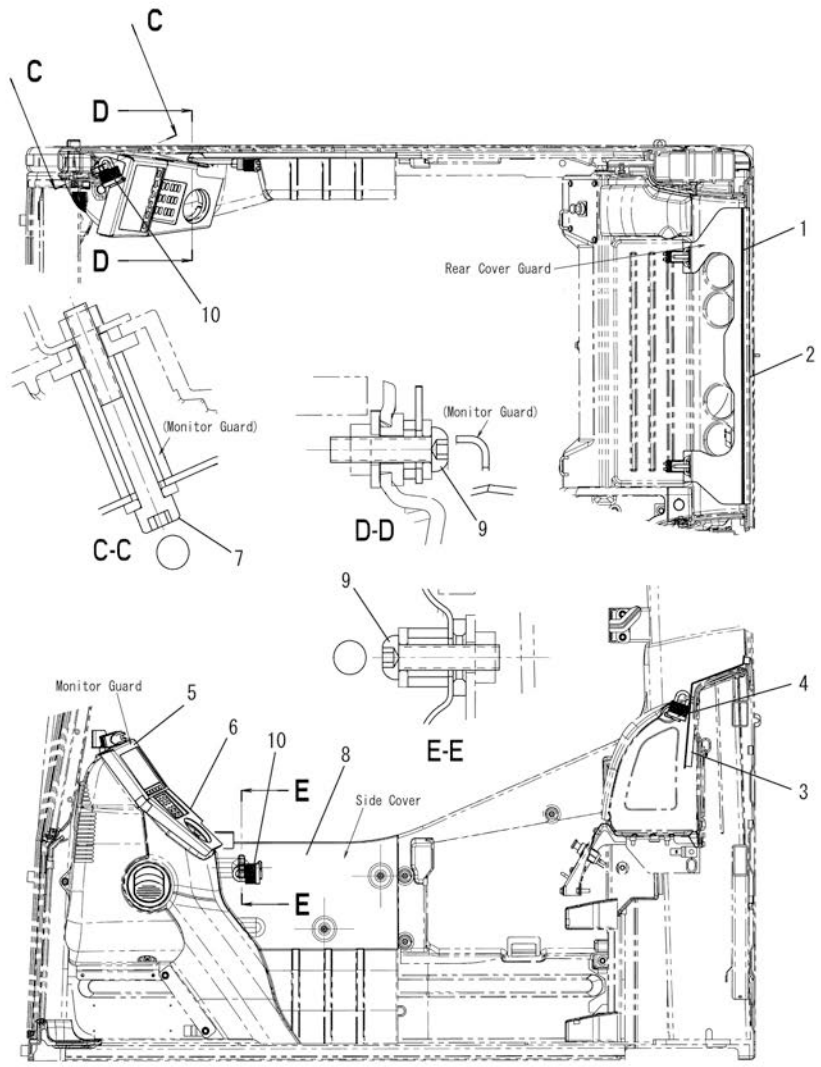

Index	Code	Part Number	Description	Qty	Serial Number
		20Y-53-21261	Cover Assembly	1	C90001-
1		20Y-53-21271	• Plate	1	C90001-
2		20Y-53-21280	• Sheet	1	C90001-
3		20Y-53-21350	• Sheet	2	C90001-
4		17A-04-41440	Lock	2	C90001-
		20Y-53-21371	Guard Assembly	1	C90001-
5		20Y-53-21292	• Guard	1	C90001-
6		20Y-53-21361	• Seal	1	C90001-
7		01252-80650	Bolt	1	C90001-
8		20Y-53-21321	Cover	1	C90001-
9		01245-00625	Screw	2	C90001-
10		17A-04-41440	Lock	2	C90001-

FIG. W9960-001001 Engine Drain Hose

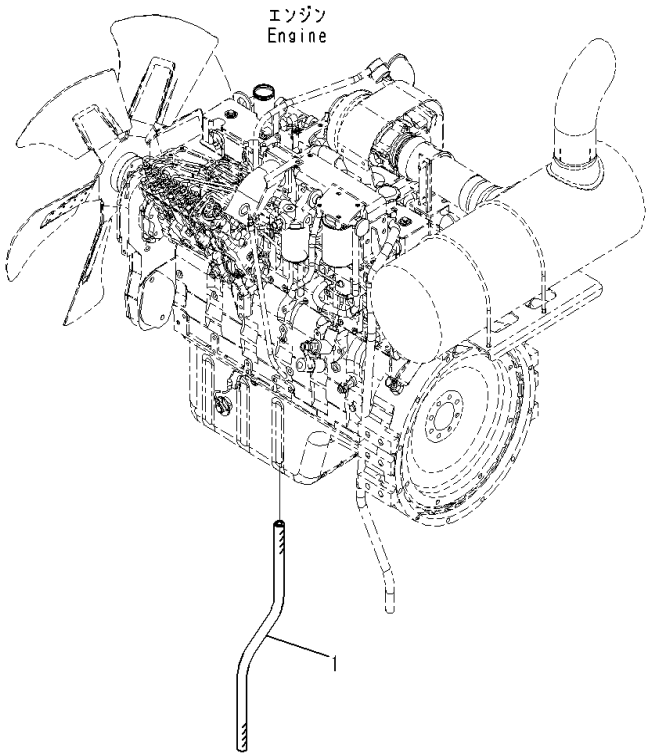

Index	Code	Part Number	Description	Qty	Serial Number
1		07286-01680	Hose	1	C90001-

FIELD REPAIR SERVICE PARTS

FIG. KIT-001001 Service Kit Parts (1/1)



Index	Code	Part Number	Description	Qty	Serial Number
1	K01	NFEB1601	Service Kit	1	C90001-
		205-970-5560	• O-ring	1	-
	C1		• O-ring	1	-
	C1		• O-ring	1	-
2	K02	207-32-05060	Service Kit, Shoe Bolt and Nut	1	C90001-
		154-32-71220	• Nut	30	-
		207-32-71210	• Bolt	30	-
3	K11	707-99-59142	Seal Kit, Hydraulic Cylinder, Boom	1	C90001-
		07000-13035	• O-ring	2	-
		07000-B5090	• O-ring	1	-
		07000-B5130	• O-ring	2	-
		07002-63034	• O-ring	1	-
		07145-00090	• Seal, Dust	2	-
		07145-00100	• Seal, Dust	2	-
		707-35-30900	• Ring, Back-up	2	-
		707-35-31310	• Ring, Back-up	3	-
		707-39-14110	• Ring, Wear	2	-
		707-44-14150	• Ring, Piston	1	-
		707-51-10650	• Ring, Buffer	1	-
		707-51-10860	• Packing, Rod	1	-
		707-56-10740	• Seal, Dust	1	-
4	K12	721-98-00510	Seal Kit, Hydraulic Cylinder, Boom	1	C90001-
		07000-B3035	• O-ring	2	-
		07000-B5090	• O-ring	1	-
		07000-B5130	• O-ring	2	-
		07002-63034	• O-ring	1	-
		07145-00090	• Seal, Dust	2	-
		07145-00100	• Seal, Dust	2	-
		707-35-30900	• Ring, Back-up	2	-
		707-35-31310	• Ring, Back-up	3	-
		707-39-14110	• Ring, Wear	2	-
		707-44-14150	• Ring, Piston	1	-
		707-51-10650	• Ring, Buffer	1	-
		707-51-10860	• Packing, Rod	1	-
		707-56-10740	• Seal, Dust	1	-
5	K16	707-99-72080	Seal Kit, Hydraulic Cylinder, Arm	1	C90001-
		07000-13035	• O-ring	2	-
		07000-B5100	• O-ring	1	-
		07000-B5150	• O-ring	2	-
		07002-12034	• O-ring	1	-

FIG. KIT-001001 Service Kit Parts (1/1)

Service Kit Parts

See subsequent pages for details.

Index	Code	Part Number	Description	Qty	Serial Number
		07145-00100	• Seal, Dust	4	-
		707-35-31000	• Ring, Back-up	2	-
		707-35-31510	• Ring, Back-up	3	-
		707-39-16120	• Ring, Wear	2	-
		707-44-16150	• Ring, Piston	1	-
		707-51-11650	• Ring, Buffer	1	-
		707-51-11860	• Packing, Rod	1	-
		707-56-11740	• Seal, Dust	1	-
6	K17	721-98-00520	Seal Kit, Hydraulic Cylinder, Arm	1	C90001-
		07000-B3035	• O-ring	2	-
		07000-B5100	• O-ring	1	-
		07000-B5150	• O-ring	2	-
		07002-12034	• O-ring	1	-
		07145-00100	• Seal, Dust	4	-
		707-35-31000	• Ring, Back-up	2	-
		707-35-31510	• Ring, Back-up	3	-
		707-39-16120	• Ring, Wear	2	-
		707-44-16150	• Ring, Piston	1	-
		707-51-11650	• Ring, Buffer	1	-
		707-51-11860	• Packing, Rod	1	-
		707-56-11740	• Seal, Dust	1	-
7	K21	707-99-59550	Seal Kit, Hydraulic Cylinder, Bucket	1	C90001-
		07000-13035	• O-ring	2	-
		07000-B5100	• O-ring	1	-
		07000-B5140	• O-ring	1	-
		07145-00090	• Seal, Dust	2	-
		207-70-72120	• Seal, Dust	2	-
		707-35-31000	• Ring, Back-up	2	-
		707-35-31410	• Ring, Back-up	1	-
		707-39-15110	• Ring, Wear	2	-
		707-44-15150	• Ring, Piston	1	-
		707-51-11650	• Ring, Buffer	1	-
		707-51-11860	• Packing, Rod	1	-
		707-56-11740	• Seal, Dust	1	-
8	K22	707-99-59150	Seal Kit, Hydraulic Cylinder, Bucket	1	C90001-
		07000-13035	• O-ring	2	-
		07000-B5090	• O-ring	1	-
		07000-B5130	• O-ring	1	-
		07145-00090	• Seal, Dust	2	-
		207-70-72120	• Seal, Dust	2	-

FIG. KIT-001001 Service Kit Parts (1/1)

Service Kit Parts

See subsequent pages for details.

Index	Code	Part Number	Description	Qty	Serial Number
		707-35-30900	• Ring, Back-up	2	-
		707-35-31310	• Ring, Back-up	1	-
		707-39-14110	• Ring, Wear	2	-
		707-44-14150	• Ring, Piston	1	-
		707-51-10650	• Ring, Buffer	1	-
		707-51-10860	• Packing, Rod	1	-
		707-56-10740	• Seal, Dust	1	-
9	K23	721-98-01080	Seal Kit, Hydraulic Cylinder, Bucket	1	C90001-
		07000-B3035	• O-ring	2	-
		07000-B5100	• O-ring	1	-
		07000-B5140	• O-ring	1	-
		07145-00090	• Seal, Dust	2	-
		207-70-72120	• Seal, Dust	2	-
		707-35-31000	• Ring, Back-up	2	-
		707-35-31410	• Ring, Back-up	1	-
		707-39-15110	• Ring, Wear	2	-
		707-44-15150	• Ring, Piston	1	-
		707-51-11650	• Ring, Buffer	1	-
		707-51-11860	• Packing, Rod	1	-
		707-56-11740	• Seal, Dust	1	-
10	K24	721-98-00610	Seal Kit, Hydraulic Cylinder, Bucket	1	C90001-
		07000-B3035	• O-ring	2	-
		07000-B5090	• O-ring	1	-
		07000-B5130	• O-ring	1	-
		07145-00090	• Seal, Dust	2	-
		207-70-72120	• Seal, Dust	2	-
		707-35-30900	• Ring, Back-up	2	-
		707-35-31310	• Ring, Back-up	1	-
		707-39-14110	• Ring, Wear	2	-
		707-44-14150	• Ring, Piston	1	-
		707-51-10650	• Ring, Buffer	1	-
		707-51-10860	• Packing, Rod	1	-
		707-56-10740	• Seal, Dust	1	-

NUMERICAL INDEX

PartNumber	Page	Index
01010-61040	223	7
	248	7
01010-61220	149	8
01010-61460	231	16
	257	16
	526	19
	531	19
01010-61470	231	17
	257	17
01010-61490	224	22
	249	22
01010-61655	141	7
01010-62065	656	17
	657	17
	658	17
	659	10
	661	33
	662	37
01010-62070	567	12
01010-62075	555	19
01010-62450	571	5
	572	5
01010-62455	569	2
	570	2
01010-80612	162	5
	166	36
	170	19
	171	11
	482	23
	483	30
	485	30
01010-80616	211	12
	211	15
	328	3
	347	19
	365	21
	371	5
	371	14
	372	4
	377	9
	377	15
	417	19
	435	21
	441	5
	441	14
	442	4
	447	9
	447	15
	470	21
	471	4
	482	13
	483	25
	485	25
	696	6
	696	14
	697	13
	697	22
01010-80620	369	16
	375	16
	439	16
	445	16
01010-80630	355	8
	395	8
	425	8
	465	8
	472	8
01010-80816	187	11
	194	11
	202	11
	330	12
	360	16
01010-80820	338	16
	370	1
	376	1
	407	16
	430	16
	440	1
	446	1
01010-80825	208	3
	383	2
	453	2
01010-80830	80	2
	365	16
	389	10
	435	16
	459	11
	470	16
01010-80835	162	8
	211	8
	537	12
	538	9
01010-80840	389	13
	459	14
01010-80855	183	24
	190	24
	198	24
	360	14
	430	14
01010-80875	330	7
01010-81016	189	14
	196	14
	204	14
	366	2
	378	46
	378	49
	387	17
	387	20
	387	23
	387	26
	388	10
	436	2
	448	46
	448	49
	457	17
	457	20
	457	23
	457	26
	458	10
01010-81020	158	25
	159	49
	160	8
	160	15
	160	18
	160	32
	160	35
	160	38
	162	14
	183	32
	184	28
	185	36
	190	32
	191	29
	193	28
	198	32
	199	29
	201	28
	209	3
	361	1
	361	4
	362	5
	363	5
	366	7
	366	14
	366	20
	366	23
	384	14
	384	19
	387	8
	387	11
	398	12
	431	1
	431	4
	432	5
	433	5
	436	7
	436	14
	436	20
	436	23
	454	14
	454	19
	457	8
	468	12
	498	11
	499	11
	524	13
	525	13
	547	8
	551	8
	697	34
01010-81025	166	34
	187	19
	189	4
	194	22
	196	4
	202	22
	204	4
	362	3
	363	3
	384	21
	387	2
	398	3
	398	7
	432	3
	433	3
	454	21
	457	2
	457	11
	468	3
	468	7
	493	14
	495	14
	620	45
	622	45
01010-81030	158	23
	159	54
	160	10
	160	13
	160	29
	161	47
	165	7
	361	13
	371	2
	431	13
	441	2
	493	16
	495	16
	529	11
	534	11
01010-81035	165	2
	176	14
	178	4
	331	33
01010-81040	288	7
	366	11
	436	11
01010-81045	158	16
	162	2
	388	2
	388	13
	400	2
	400	16
	458	2
	458	13
	469	2
	469	16

PartNumber	Page	Index
01010-81050	482	36
01010-81055	185	32
	193	24
	201	24
	289	12
	289	18
01010-81070	289	14
	289	20
	398	34
	468	34
01010-81075	209	5
	291	9
01010-81090	297	24
	301	24
01010-81220	151	20
	183	11
	185	28
	185	39
	186	42
	187	4
	189	10
	190	11
	193	20
	193	31
	193	34
	194	4
	196	10
	198	11
	201	20
	201	31
	201	34
	202	4
	204	10
	210	2
	281	6
	281	9
	281	13
	294	13
	295	14
	488	5
	488	8
	488	11
	488	13
	488	24
	491	5
	491	8
	491	11
	491	13
	491	24
	505	10
	576	9
	576	12
	578	21
	582	9
	582	12
	584	21
	588	9
	588	12
	590	21
	595	9
	595	12
	597	21
	601	9
	601	12
	603	21
	608	9
	608	12
	610	21
	614	9
	614	12
	616	21
01010-81225	139	2
	153	7
	154	8
	160	24
	162	19
	162	22
	163	3
	163	9
	163	21
	163	25
	163	29
	163	34
	166	16
	180	3
	180	19
	182	6
	182	16
	183	2
	183	5
	183	8
	183	14
	183	17
	183	21
	184	2
	184	5
	184	12
	184	15
	184	18
	184	21
	184	25
	184	31
	185	3
	185	6
	185	17
	187	17
	187	22
	187	25
	187	28
	187	31
	187	33
	187	36
	187	40
	190	2
	190	5
	190	8
	190	14
	190	17
	190	21
	191	2
	191	5
	191	12
	191	15
	191	18
	191	21
	191	25
	191	32
	191	40
	192	43
	193	10
	194	15
	194	20
	194	25
	194	28
	194	31
	194	34
	194	36
	194	39
	195	43
	198	2
	198	5
	198	8
	198	14
	198	17
	198	21
	199	2
	199	5
	199	12
	199	15
	199	18
	199	21
	199	25
	199	32
	199	40
	200	43
	201	10
	202	15
	202	20
	202	25
	202	28
	202	31
	202	34
	202	36
	202	39
	203	43
	214	27
	214	35
	216	27
	216	35
	290	15
	291	2
	294	21
	295	24
	299	2
	299	10
	299	21
	303	2
	303	10
	303	22
	307	16
	328	5
	331	5
	331	18
	331	24
	331	28
	331	31
	480	26
	481	8
	482	4
	482	7
	482	10
	482	20
	483	13
	483	18
	483	22
	483	27
	485	13
	485	18
	485	22
	485	27
	494	43
	494	46
	494	49
	496	43
	496	46
	496	49
	555	8
	555	17
	560	11
	561	10
	696	8
	697	15
	697	31
01010-81230	152	32
	158	20
	162	12
	163	14
	166	12
	167	42
	172	20
	172	23
	172	26
	175	4
	175	20
	189	8

PartNumber	Page	Index
	196	8
	204	8
	211	10
	211	24
	211	27
	278	19
	278	22
	283	7
	283	13
	310	4
	311	4
	312	4
	313	4
	331	8
	364	5
	434	5
	475	6
	476	7
	480	13
	480	22
	480	24
	481	6
	481	10
	481	14
	481	16
	481	18
	481	22
	481	25
	481	29
	482	28
	482	33
	483	32
	483	36
	484	42
	485	32
	485	36
	486	42
	487	3
	487	5
	487	7
	487	11
	487	15
	487	19
	487	22
	488	16
	488	19
	488	22
	488	26
	488	32
	488	37
	488	42
	490	3
	490	5
	490	7
	490	11
	490	15
	490	19
	490	22
	491	16
	491	19
	491	22
	491	26
	491	33
	491	38
	491	43
	493	22
	493	26
	493	28
	493	35
	493	37
	495	22
	495	26
	495	28
	495	35
	495	37

PartNumber	Page	Index
	498	15
	498	17
	498	19
	498	21
	499	14
	499	16
	499	18
	499	20
	503	7
	504	3
	507	4
	507	7
	507	11
	507	14
	507	18
	507	21
	507	26
	507	29
	507	32
	507	35
	507	37
	507	40
	509	2
	509	4
	509	7
	509	10
	510	4
	510	7
	510	12
	510	16
	510	19
	511	4
	511	7
	511	11
	511	14
	511	18
	511	21
	511	26
	511	29
	511	32
	511	35
	511	37
	511	40
	513	2
	513	4
	513	7
	513	10
	514	3
	514	6
	514	11
	514	15
	514	17
	514	20
	514	26
	514	29
	514	32
	515	4
	515	7
	515	11
	515	14
	515	18
	515	21
	515	26
	515	29
	515	32
	515	35
	515	37
	515	40
	517	2
	517	4
	517	7
	517	10
	518	5
	518	8
	518	13

PartNumber	Page	Index
	518	17
	518	20
	519	4
	519	7
	519	11
	519	14
	519	18
	519	21
	519	26
	519	29
	519	32
	519	35
	519	37
	519	40
	521	2
	521	5
	521	8
	522	3
	522	6
	522	11
	522	16
	522	18
	522	21
	522	27
	522	30
	522	33
	642	4
	654	4
01010-81235	149	14
	151	23
	152	19
	158	11
	158	34
	159	56
	160	26
	161	41
	164	42
	242	10
	272	10
	274	10
	279	19
	280	23
	283	3
	286	5
	286	14
	286	20
	306	6
	314	7
	330	15
	473	6
	473	12
	474	6
	474	13
	510	9
	514	8
	514	22
	518	10
	522	8
	522	23
	568	3
	575	5
	575	8
	575	12
	577	5
	577	8
	577	11
	577	16
	578	3
	581	5
	581	8
	581	12
	583	5
	583	8
	583	11
	583	16

PartNumber	Page	Index
	584	3
	587	5
	587	8
	587	12
	589	5
	589	8
	589	11
	589	16
	590	3
	591	18
	591	21
	592	3
	592	9
	592	20
	594	5
	594	8
	594	12
	596	5
	596	8
	596	11
	596	16
	597	3
	600	5
	600	8
	600	12
	602	5
	602	8
	602	11
	602	16
	603	3
	604	18
	604	21
	605	3
	605	9
	605	20
	607	5
	607	8
	607	12
	609	5
	609	8
	609	11
	609	16
	610	3
	613	5
	613	8
	613	12
	615	5
	615	8
	615	11
	615	16
	616	3
	617	18
	617	21
	618	3
	618	9
	618	20
	630	3
	630	8
	635	3
	635	8
	640	3
	640	8
	647	3
	647	8
	652	3
	652	8
	653	9
	653	21
	697	28
01010-81240	139	9
	180	27
	276	10
	278	5
	279	3
	280	7
	284	33
	286	16
	289	27
	290	12
	427	32
	481	2
	500	2
	501	2
	529	40
	534	40
	539	32
	660	23
	661	24
	661	29
01010-81245	139	11
	159	51
	161	54
	161	60
	175	12
	175	16
	180	11
	180	15
	185	24
	193	17
	201	17
	286	18
	286	30
	357	32
	591	4
	604	4
	617	4
	624	57
	627	37
	632	37
	637	37
	641	3
	641	6
	642	13
	644	37
	649	37
	653	3
	653	6
	654	13
01010-81250	172	28
	176	11
	183	29
	184	9
	184	34
	190	29
	191	9
	191	36
	198	29
	199	9
	199	36
	284	31
	284	40
	290	9
	294	27
	295	30
	303	7
	427	34
	592	17
	592	22
	605	17
	605	22
	618	17
	618	22
	641	12
	653	15
01010-81255	276	12
	299	16
	303	16
01010-81260	172	17
	172	30
	299	14
	303	14
01010-81265	306	8
01010-81275	152	15
	152	27
	273	8
	299	26
	303	27
01010-81280	280	3
	321	2
	577	23
	577	30
	583	23
	583	30
	589	23
	589	30
	596	23
	596	30
	602	23
	602	30
	609	23
	609	30
	615	23
	615	30
01010-81285	289	36
	299	7
01010-81290	279	22
	280	26
01010-81295	278	9
	278	14
	331	21
01010-81430	578	18
	584	18
	590	18
	597	18
	603	18
	610	18
	616	18
01010-81440	330	3
01010-81445	641	15
01010-81455	288	11
	288	36
	591	12
	591	15
	604	12
	604	15
	617	12
	617	15
	653	18
01010-81635	165	12
	170	28
	171	20
	215	57
	217	20
	289	8
01010-81640	165	9
	166	1
	166	3
	185	14
	193	7
	201	7
	242	3
	242	8
	272	3
	272	8
	274	3
	274	8
	314	3
	552	4
	574	16
	580	16
	586	16
	593	16
	599	16
	606	16
	612	16

PartNumber	Page	Index
	642	10
	654	10
01010-81645	152	29
	242	5
	272	5
	274	5
	529	23
	534	23
01010-81655	357	34
	577	19
	577	26
	583	19
	583	26
	589	19
	589	26
	596	19
	596	26
	602	19
	602	26
	609	19
	609	26
	615	19
	615	26
01010-81660	698	2
01010-81685	592	6
	592	12
	605	6
	605	12
	618	6
	618	12
01010-81875	619	21
	621	21
	644	17
	649	17
01010-82075	552	1
01010-82085	623	23
	627	18
	632	18
	637	18
01010-82095	560	12
	561	14
01010-82475	530	45
	535	45
01010-D0620	357	27
	427	27
01010-D0816	391	11
	461	11
01010-D0820	353	21
	423	21
01010-D0825	317	3
01010-D1025	206	2
	345	8
01010-D1030	414	6
01010-D1045	361	11
	398	10
	431	11
	468	10
01010-D1065	206	5
01010-D1220	207	4
	321	8
01010-D1225	322	3
	346	29
	415	29
01010-D1230	377	2
	447	2
01010-E1235	50	3
01011-61455	224	24
01011-61890	547	29
	551	29
01011-81005	623	39
01011-81040	175	22
	180	21
01011-81070	277	6
	277	9
01011-81200	172	14
	175	8
	180	7
	286	2
	286	33
01011-81210	288	22
01011-81260	625	3
01011-81265	278	16
01011-83000	656	13
	657	13
	658	13
	660	26
01011-83080	473	9
	474	10
01011-D1245	323	3
01019-31400	330	5
01020-10816	53	25
01023-10306	360	22
	430	22
01023-10508	378	42
	448	42
01023-10612	338	4
	338	6
	407	4
	407	6
01023-20412	342	2
	411	2
01023-20416	342	8
	361	20
	411	8
	431	20
01023-20512	373	12
	373	16
	379	12
	379	16
	443	12
	443	17
	449	12
	449	17
01023-20612	321	11
	335	10
	404	10
01023-20616	335	16
	335	18
	343	33
	404	16
	404	18
	412	33
01023-60320	372	25
	442	25
	471	25
01023-60410	372	9
	442	9
	471	9
01023-60510	372	3
	442	3
	471	3
01023-60512	345	2
01023-60620	356	4
	426	4
01023-70412	342	11
	411	11
01050-31230	114	10
01220-40612	483	40
	485	40
01224-40616	493	18
	495	18
01240-00616	338	7
	407	7
01240-01025	339	16
	408	16
01245-00616	333	16
	334	46
	336	10
	340	2
	343	19
	343	25
	346	9
	347	15
	347	22
	348	5
	350	7
	371	12
	371	18
	371	23
	377	13
	377	20
	377	23
	391	17
	392	46
	393	5
	394	9
	402	16
	403	46
	405	11
	409	2
	412	19
	412	25
	415	9
	417	15
	417	22
	418	5
	420	8
	441	12
	441	18
	441	23
	447	13
	447	20
	447	23
	461	17
	462	46
	463	6
	464	9
01245-00620	336	22
	373	9
	379	9
	393	17
	405	24
	443	9
	449	9
	463	19
01245-00625	340	11
	409	11
	700	9
01245-00816	333	19
	333	26
	333	29
	346	19
	391	20
	391	27
	391	30
	394	20
	402	19
	402	26
	402	29
	415	19
	461	20
	461	27
	461	30
	464	20
01245-00820	336	19
	383	6
	393	14
	405	20
	453	6
	463	15
01245-01016	346	7
	346	14
	394	7
	394	15
	415	7

PartNumber	Page	Index
	415	14
	464	7
	464	15
01245-01025	364	8
	364	10
	434	8
	434	10
01252-60620	397	24
	467	24
01252-60625	397	15
	467	15
01252-60635	151	6
	151	13
	235	19
	262	19
01252-60816	230	6
	255	6
01252-60820	220	18
	230	10
	232	10
	245	18
	255	10
	258	10
	267	10
01252-60825	528	7
	533	13
01252-60845	232	24
	235	20
	258	24
	262	20
	268	5
01252-60865	223	3
	248	3
01252-61030	287	7
01252-61040	231	8
	257	8
	287	6
01252-61050	227	14
	252	14
01252-61065	238	6
	265	6
01252-61070	237	6
	264	6
01252-61075	235	21
	236	24
	262	21
	263	24
01252-61230	142	23
	146	20
	561	12
01252-61645	143	29
	144	8
	147	29
	148	8
01252-62055	544	31
	548	31
01252-62095	544	32
	548	32
01252-70516	215	54
01252-70816	372	17
	442	17
	471	17
01252-71225	288	19
01252-80616	333	23
	391	24
	402	23
	461	24
01252-80650	700	7
01252-8082	318	2
01252-80820	373	3
	379	3
	443	3
	449	3
01252-80825	317	1
01252-A0516	215	41

PartNumber	Page	Index
	217	4
01252-A1030	502	4
	503	4
01310-01216	619	30
	621	30
	623	32
	627	26
	632	26
	637	26
	644	26
	649	26
01370-00420	340	14
	409	14
01370-00508	505	9
01370-10308	357	18
	427	18
01370-20308	357	21
	427	21
01370-30416	343	30
	412	30
01370-40510	373	14
	379	14
01370-40610	373	19
	379	19
	443	20
	449	20
01434-10616	160	2
	160	5
01435-00610	354	10
	354	12
	354	14
	354	16
	354	19
	354	22
	355	5
	395	5
	424	10
	424	12
	424	14
	424	16
	424	19
	424	22
	425	5
	465	5
	472	5
01435-00612	333	35
	343	8
	343	13
	343	21
	343	27
	351	6
	351	10
	357	37
	371	20
	377	17
	391	36
	402	35
	412	8
	412	13
	412	21
	412	27
	421	6
	421	10
	427	37
	441	20
	447	17
	461	36
01435-00616	335	2
	347	2
	347	5
	394	29
	404	2
	417	2
	417	5
	464	29

PartNumber	Page	Index
01435-00625	330	24
	331	15
01435-00630	331	14
01435-00814	53	
01435-00816	53	18
	356	3
	426	3
01435-00820	50	9
	53	6
	53	14
	53	22
	339	2
	347	7
	354	4
	354	6
	408	2
	417	7
	424	4
	424	6
01435-00825	105	1
01435-00855	53	20
01435-00860	354	2
	424	2
01435-01016	51	3
	139	6
01435-01020	53	10
	68	8
	114	9
01435-01025	50	15
01435-01030	102	2
01435-01045	102	4
01435-01050	101	10
01435-01090	101	9
01435-01220	337	19
	337	20
	406	19
	406	20
01435-01240	117	2
01435-01245	50	12
01435-40610	336	14
	343	35
	393	9
	405	15
	412	36
	463	10
01435-40612	324	5
	326	5
01435-40616	324	2
	325	3
	326	2
	327	3
	335	14
	339	5
	404	14
	408	5
01435-40620	384	7
	454	7
01435-40812	333	11
	342	9
	355	2
	395	2
	402	11
	411	9
	425	2
	465	2
	472	2
01435-40816	373	6
	379	6
	443	6
	449	6
01435-40825	345	6
	414	4
01435-60612	69	9
01435-60816	39	11
	63	9

PartNumber	Page	Index
	77	3
	86	4
	124	16
01435-60820	49	8
	68	19
	111	2
	124	7
	129	5
01435-60825	108	2
01435-60835	36	1
	124	18
01435-60890	41	5
	42	2
	94	2
01435-61025	68	10
	82	8
	100	1
	114	5
01435-61030	114	6
01435-80616	352	17
	357	13
	357	24
	422	17
	427	13
	427	24
01435-80820	353	7
	353	12
	423	7
	423	12
01435-80825	350	9
	350	12
	420	10
	420	13
01436-01000	101	11
01437-00825	83	5
01573-12306	574	10
	580	10
	586	10
	593	10
	599	10
	606	10
	612	10
01580-01008	699	3
01580-10403	357	3
	427	3
01580-10605	187	7
	194	7
	202	7
01580-10806	143	26
	147	26
01580-11008	333	38
	339	12
	391	38
	402	38
	408	12
	461	38
	482	16
	483	16
	485	16
	566	7
	567	7
01580-11210	114	4
	625	5
01580-11613	480	4
	698	4
01580-11815	152	5
	571	9
	572	9
01580-12016	473	3
	474	3
01580-12419	152	11
	578	9
	584	9
	590	9
	597	9

PartNumber	Page	Index
	603	9
	610	9
	616	9
	629	10
	634	10
	639	10
	646	10
	651	10
01580-13024	656	14
	657	14
	658	14
	660	27
01580-40605	373	10
	379	10
	443	10
	449	10
01581-01008	53	4
01582-11411	368	10
	374	10
	438	10
	444	10
01583-11408	150	12
	150	25
	398	36
	468	36
01583-11811	333	32
	391	33
	402	32
	461	33
01584-00605	124	8
01584-01008	338	13
	407	13
01584-01210	117	4
01584-30806	336	3
	393	3
	405	4
	463	4
01584-31008	334	40
	392	40
	403	40
	462	40
01594-01008	50	7
01596-01009	165	4
01597-01009	161	45
	164	41
	166	10
	330	19
	620	43
	622	43
	624	49
01597-01211	153	11
	154	12
01601-20410	357	5
	427	5
01601-20513	215	42
	215	55
	217	5
	378	43
	448	43
01640-20408	357	4
	427	4
01640-20610	353	19
	423	19
01640-20716	124	19
01640-20816	124	17
01640-21123	493	13
	495	13
01640-50508	443	15
	449	15
01641-20608	484	41
	486	41
01641-20812	83	6
01641-21626	539	29
01643-11232	317	5
	319	2

PartNumber	Page	Index
	320	4
01643-30623	124	13
	160	3
	160	6
	162	6
	166	37
	170	20
	171	12
	187	8
	194	8
	202	8
	211	13
	211	16
	342	1
	347	20
	355	9
	365	22
	371	6
	371	15
	372	5
	377	10
	377	16
	395	9
	411	1
	417	20
	425	9
	435	22
	441	6
	441	15
	442	5
	447	10
	447	16
	465	9
	470	22
	471	5
	472	9
	482	14
	482	24
	483	26
	483	31
	485	26
	485	31
	498	9
	499	9
	696	7
	696	15
	697	14
	697	23
01643-30823	39	9
	73	3
	162	9
	183	25
	187	12
	190	25
	194	12
	198	25
	202	12
	208	4
	211	9
	330	8
	330	13
	338	17
	360	15
	365	17
	370	2
	376	2
	383	3
	389	11
	389	14
	407	17
	430	15
	435	17
	440	2
	446	2
	453	3

PartNumber	Page	Index
	459	12
	459	15
	470	17
	537	13
	538	10
01643-31032	53	8
	114	16
	158	24
	158	26
	159	50
	159	55
	160	9
	160	11
	160	14
	160	16
	160	19
	160	30
	160	33
	160	36
	160	39
	161	44
	161	48
	162	3
	162	15
	163	40
	165	3
	165	5
	166	9
	166	35
	175	23
	176	15
	178	5
	180	22
	183	33
	184	29
	185	33
	185	37
	187	20
	189	5
	189	15
	190	33
	191	30
	193	25
	193	29
	194	23
	196	5
	196	15
	198	33
	199	30
	201	25
	201	29
	202	23
	204	5
	204	15
	209	4
	209	6
	277	7
	277	10
	288	8
	289	13
	289	15
	289	19
	289	21
	291	10
	297	25
	301	25
	330	20
	331	34
	339	13
	361	2
	361	5
	361	14
	362	4
	362	6
	363	4
	363	6
	366	3
	366	4
	366	8
	366	12
	366	15
	366	21
	366	24
	371	3
	378	47
	378	50
	384	15
	384	20
	384	22
	387	3
	387	9
	387	12
	387	18
	387	21
	387	24
	387	27
	388	3
	388	11
	388	14
	398	4
	398	5
	398	8
	398	13
	398	35
	400	3
	400	17
	408	13
	431	2
	431	5
	431	14
	432	4
	432	6
	433	4
	433	6
	436	3
	436	4
	436	8
	436	12
	436	15
	436	21
	436	24
	441	3
	448	47
	448	50
	454	15
	454	20
	454	22
	457	3
	457	9
	457	12
	457	18
	457	21
	457	24
	457	27
	458	3
	458	11
	458	14
	468	4
	468	5
	468	8
	468	13
	468	35
	469	3
	469	17
	482	37
	493	15
	493	17
	495	15
	495	17
	498	12
	499	12
	524	14
	525	14
	529	12
	534	12
	566	8
	567	8
	620	44
	620	46
	622	44
	622	46
	624	50
	697	35
	699	4
01643-31232	50	4
	114	2
	114	8
	139	3
	139	10
	139	12
	149	15
	151	19
	152	16
	152	20
	152	28
	152	33
	153	8
	153	12
	154	9
	154	13
	158	12
	158	21
	158	35
	159	52
	159	57
	160	25
	160	27
	161	42
	161	55
	161	61
	162	13
	162	20
	162	23
	163	4
	163	10
	163	15
	163	22
	163	26
	163	30
	163	35
	164	43
	166	13
	166	17
	167	43
	172	15
	172	18
	172	21
	172	24
	172	27
	172	29
	172	31
	175	5
	175	9
	175	13
	175	17
	175	21
	176	12
	180	4
	180	8
	180	12
	180	16
	180	20
	180	28
	182	7
	182	10

PartNumber	Page	Index
	183	3
	183	6
	183	9
	183	12
	183	15
	183	18
	183	22
	183	30
	184	3
	184	6
	184	10
	184	13
	184	16
	184	19
	184	22
	184	26
	184	32
	184	35
	185	4
	185	7
	185	18
	185	25
	185	29
	185	40
	186	43
	186	44
	187	5
	187	18
	187	23
	187	26
	187	29
	187	32
	187	34
	187	37
	188	41
	189	9
	189	11
	190	3
	190	6
	190	9
	190	12
	190	15
	190	18
	190	22
	190	30
	191	3
	191	6
	191	10
	191	13
	191	16
	191	19
	191	22
	191	26
	191	33
	191	37
	192	41
	192	44
	193	11
	193	18
	193	21
	193	32
	193	35
	193	36
	194	5
	194	16
	194	21
	194	26
	194	29
	194	32
	194	35
	194	37
	194	40
	195	44
	196	9
	196	11

PartNumber	Page	Index
	198	3
	198	6
	198	9
	198	12
	198	15
	198	18
	198	22
	198	30
	199	3
	199	6
	199	10
	199	13
	199	16
	199	19
	199	22
	199	26
	199	33
	199	37
	200	41
	200	44
	201	11
	201	18
	201	21
	201	32
	201	35
	201	36
	202	5
	202	16
	202	21
	202	26
	202	29
	202	32
	202	35
	202	37
	202	40
	203	44
	204	9
	204	11
	210	3
	211	11
	211	25
	211	28
	214	28
	214	36
	216	28
	216	36
	242	11
	272	11
	273	9
	274	11
	276	11
	276	13
	278	6
	278	10
	278	15
	278	17
	278	20
	278	23
	279	4
	279	20
	279	23
	280	4
	280	8
	280	24
	280	27
	281	7
	281	10
	281	14
	283	4
	283	14
	286	3
	286	6
	286	17
	286	19
	286	21

PartNumber	Page	Index
	286	31
	286	34
	288	23
	289	28
	289	37
	290	10
	290	13
	290	16
	291	3
	294	14
	294	22
	294	28
	295	15
	295	25
	295	31
	299	3
	299	8
	299	11
	299	15
	299	17
	299	22
	299	27
	303	3
	303	8
	303	11
	303	15
	303	17
	303	23
	303	28
	306	7
	306	9
	307	17
	310	5
	311	5
	312	5
	313	5
	314	8
	321	3
	328	6
	330	16
	331	6
	331	9
	331	19
	331	22
	331	25
	331	29
	331	32
	357	33
	364	6
	427	33
	427	35
	434	6
	473	7
	473	13
	474	7
	474	14
	475	7
	476	8
	480	14
	480	23
	480	25
	480	27
	481	3
	481	7
	481	9
	481	15
	481	17
	481	23
	481	26
	481	30
	482	5
	482	8
	482	11
	482	21
	482	29

PartNumber	Page	Index
	482	34
	483	14
	483	19
	483	23
	483	28
	483	33
	483	37
	484	43
	485	14
	485	19
	485	23
	485	28
	485	33
	485	37
	486	43
	487	4
	487	6
	487	8
	487	12
	487	20
	488	12
	488	20
	488	23
	488	33
	488	38
	489	43
	490	4
	490	6
	490	8
	490	12
	490	20
	491	12
	491	20
	491	23
	491	34
	491	39
	492	44
	493	23
	493	27
	493	36
	494	44
	494	47
	494	50
	495	23
	495	27
	495	36
	496	44
	496	47
	496	50
	498	16
	498	22
	499	15
	499	21
	500	3
	501	3
	503	8
	504	4
	505	11
	507	5
	507	8
	507	12
	507	15
	507	22
	507	30
	507	33
	507	36
	508	41
	509	5
	509	8
	509	11
	510	8
	510	10
	510	13
	510	20
	511	5

PartNumber	Page	Index
	511	8
	511	12
	511	15
	511	22
	511	30
	511	33
	511	36
	512	41
	513	5
	513	8
	513	11
	514	7
	514	9
	514	12
	514	16
	514	21
	514	23
	514	27
	514	33
	515	5
	515	8
	515	12
	515	15
	515	22
	515	30
	515	33
	515	36
	516	41
	517	5
	517	8
	517	11
	518	9
	518	11
	518	14
	518	21
	519	5
	519	8
	519	12
	519	15
	519	22
	519	30
	519	33
	519	36
	520	41
	521	6
	521	9
	522	7
	522	9
	522	12
	522	17
	522	22
	522	24
	522	28
	522	34
	530	41
	535	41
	539	33
	555	9
	555	18
	568	4
	576	10
	576	13
	578	4
	578	22
	582	10
	582	13
	584	4
	584	22
	588	10
	588	13
	590	4
	590	22
	591	5
	595	10
	595	13

PartNumber	Page	Index
	597	4
	597	22
	601	10
	601	13
	603	4
	603	22
	604	5
	608	10
	608	13
	610	4
	610	22
	614	10
	614	13
	616	4
	616	22
	617	5
	624	58
	625	4
	627	38
	630	4
	630	9
	632	38
	635	4
	635	9
	637	38
	640	4
	640	9
	641	4
	641	7
	641	13
	642	5
	642	14
	644	38
	647	4
	647	9
	649	38
	652	4
	652	9
	653	4
	653	7
	653	10
	653	16
	653	22
	654	5
	654	14
	696	9
	697	16
	697	29
	697	32
01643-31445	224	23
	231	18
	249	23
	257	18
	288	12
	288	37
	526	20
	531	20
	578	19
	584	19
	590	19
	591	13
	591	16
	597	19
	603	19
	604	13
	604	16
	610	19
	616	19
	617	13
	617	16
	641	16
	653	19
01643-31645	152	30
	165	10
	165	13

PartNumber	Page	Index
	166	2
	170	29
	171	21
	185	15
	193	8
	201	8
	215	58
	217	21
	242	4
	242	7
	272	4
	272	7
	274	4
	274	7
	289	9
	314	4
	357	35
	480	5
	529	24
	534	24
	552	5
	574	17
	577	20
	577	27
	580	17
	583	20
	583	27
	586	17
	589	20
	589	27
	592	7
	592	13
	593	17
	596	20
	596	27
	599	17
	602	20
	602	27
	605	7
	605	13
	606	17
	609	20
	609	27
	612	17
	615	20
	615	27
	618	7
	618	13
	642	11
	654	11
	698	3
01643-31845	152	6
	547	30
	551	30
	571	8
	572	8
01643-32060	473	4
	474	4
	552	2
	555	20
	556	12
	557	12
	559	12
	560	13
	561	15
	567	13
	656	18
	657	18
	658	18
	659	11
	661	34
	662	38
01643-32460	152	12
	530	46
	535	46

PartNumber	Page	Index
	569	3
	570	3
	571	6
	572	6
01643-33080	473	10
	474	11
	656	15
	657	15
	658	15
	660	28
01643-50823	268	6
01643-51032	223	8
	227	15
	231	9
	248	8
	252	15
	257	9
	273	4
	277	13
	277	20
	282	5
	282	10
	282	20
	283	16
	284	6
	284	12
	284	15
	284	20
	284	26
	284	29
	286	26
	287	8
	288	16
	288	27
	288	32
	292	11
	293	5
	539	9
	542	5
	543	5
	575	16
	577	33
	581	16
	583	33
	587	16
	589	33
	591	8
	594	16
	596	33
	600	16
	602	33
	604	8
	607	16
	609	33
	613	16
	615	33
	617	8
	619	37
	620	50
	621	37
	622	50
	624	40
	624	42
	624	55
	627	30
	628	42
	630	16
	632	30
	633	42
	635	16
	637	30
	638	42
	640	16
	644	30
	645	42

PartNumber	Page	Index
	647	16
	649	30
	650	42
	652	16
01643-51232	289	26
	289	33
	488	18
	491	18
	620	41
	622	41
	624	47
	627	35
	632	35
	637	35
	644	35
	649	35
01643-51645	141	8
01643-70623	333	17
	333	24
	334	47
	336	11
	336	23
	340	3
	340	12
	343	20
	343	26
	346	10
	347	16
	347	23
	348	6
	350	8
	357	28
	371	13
	371	19
	371	24
	377	14
	377	21
	377	24
	391	18
	391	25
	392	47
	393	6
	393	18
	394	10
	402	17
	402	24
	403	47
	405	12
	405	25
	409	3
	409	12
	412	20
	412	26
	415	10
	417	16
	417	23
	418	6
	420	9
	427	28
	441	13
	441	19
	441	24
	447	14
	447	21
	447	24
	461	18
	461	25
	462	47
	463	7
	463	20
	464	10
01643-70823	317	4
	333	20
	333	27
	333	30

PartNumber	Page	Index
	346	20
	347	13
	353	22
	373	4
	379	4
	383	7
	391	21
	391	28
	391	31
	394	21
	402	20
	402	27
	402	30
	405	23
	415	20
	417	13
	423	22
	443	4
	449	4
	453	7
	461	21
	461	28
	461	31
	463	18
	464	21
01643-71032	206	3
	206	6
	334	41
	345	9
	346	8
	346	15
	361	12
	392	41
	394	8
	394	16
	398	11
	403	41
	414	7
	415	8
	415	15
	431	12
	462	41
	464	8
	464	16
	468	11
01643-71232	207	5
	321	9
	322	4
	323	4
	346	30
	377	3
	415	30
	447	3
01643-72460	524	5
	524	16
	525	5
	525	16
02030-70751	320	2
02740-00209	468	25
02740-00233	468	27
02740-00238	468	26
02760-002A6	298	6
	302	6
02760-002A9	385	6
	455	6
02760-00327	385	1
	455	1
02762-00322	542	17
02762-00335	172	4
	180	24
02762-00407	176	1
02762-00416	172	2
02762-00432	180	25
02762-00443	172	5
02762-00523	542	18
02763-00216	298	7
	302	7
02763-003A3	298	14
02774-00204	307	2
02774-00206	307	3
02774-00207	273	10
02774-002A5	302	15
	307	14
02774-00319	281	3
02774-00325	298	1
	302	1
	536	11
	543	17
02774-00326	298	2
	302	2
02774-003A6	307	4
02774-00509	281	1
	536	12
02774-00525	543	18
02775-00208	298	11
	302	11
02775-00214	307	9
02775-002A6	302	14
02775-002A9	298	13
	302	13
02775-00314	307	10
02775-003A5	295	22
02775-00414	281	4
02781-0021D	241	1
	271	1
	388	7
	388	18
	400	7
	400	21
	458	7
	458	18
	469	7
	469	21
02781-0031D	297	19
	301	19
	388	15
	458	15
02781-00422	297	14
	301	14
02781-00522	536	1
	542	6
	543	6
02782-10210	241	7
	271	7
02782-10212	241	10
	271	10
02782-10311	214	18
	216	18
	297	1
	301	1
02782-10315	214	9
	216	9
	291	11
02782-10317	171	5
02782-10420	172	34
	176	20
	178	7
02782-10422	214	15
	216	15
02782-1042A	178	8
02782-10522	539	10
02783-10210	400	18
	469	18
02783-10628	214	6
	216	6
02789-00210	273	5
02896-11008	240	4
	240	7
	240	12
	240	15
	240	21
	241	2
	241	8
	241	11
	241	16
	241	23
	241	26
	242	13
	270	4
	270	7
	270	12
	270	15
	270	21
	270	25
	271	2
	271	8
	271	11
	271	16
	271	23
	271	26
	271	29
	272	13
	288	2
	288	5
	294	2
	294	5
	294	8
	295	2
	295	5
	297	4
	297	6
	297	10
	297	12
	301	4
	301	6
	301	10
	301	12
	301	27
	306	3
	361	24
	376	8
	388	8
	388	19
	398	18
	398	21
	398	23
	400	8
	400	11
	400	19
	400	22
	400	25
	431	24
	446	8
	458	8
	458	19
	468	18
	468	21
	468	23
	469	8
	469	11
	469	19
	469	22
	469	25
02896-11009	92	6
	170	7
	171	7
	214	11
	214	20
	216	11
	216	20
	240	18
	241	5
	242	14
	270	18
	270	22

PartNumber	Page	Index
	271	5
	272	14
	274	13
	291	13
	295	8
	297	2
	297	8
	297	21
	301	2
	301	8
	301	21
	306	4
	370	8
	376	10
	388	5
	388	16
	400	5
	400	28
	440	8
	446	10
	458	5
	458	16
	469	5
	469	28
	536	8
	539	5
	539	17
	542	10
	543	10
02896-11012	97	2
	170	4
	171	4
	172	37
	176	23
	178	10
	214	17
	216	17
	297	15
	301	15
02896-11015	536	2
	539	2
	539	11
	542	7
	543	7
02896-11018	214	8
	216	8
	539	14
04020-01228	544	30
	548	30
04020-01434	141	5
	142	21
	146	18
04020-01842	524	6
	525	6
04022-04016	360	24
	430	24
04050-11612	498	10
	499	10
04050-13020	493	12
	495	12
04050-14025	539	30
04052-01253	480	18
	480	21
04052-10530	339	8
	408	8
04052-10833	336	17
	393	12
04064-04018	529	32
	534	32
04064-06525	527	6
	532	6
	555	11
04064-07525	537	9
	538	5
04065-01054	538	13

PartNumber	Page	Index
04065-04718	215	46
	217	9
04065-05520	142	11
	146	8
04065-05820	642	6
	654	6
04065-06020	545	14
	549	14
04065-06220	101	5
04065-07525	527	9
	532	9
04065-07825	142	7
	545	7
	549	7
04120-21761	331	30
04205-10520	339	7
	408	7
04205-31230	480	17
	480	19
04205-31238	480	20
04260-00635	623	13
04260-00793	230	31
	255	31
04260-01270	529	34
	534	34
04260-01905	547	27
	551	27
04260-02857	545	19
	549	19
04418-13060	664	22
	665	22
	666	22
	667	22
	680	3
	681	3
	682	3
	682	6
04434-50608	330	9
04434-50610	209	8
04434-50612	151	24
04434-50812	576	11
	582	11
	588	11
	595	11
	601	11
	608	11
	614	11
04434-51008	39	7
04434-51010	124	34
04434-51012	185	1
	191	38
	199	38
	207	7
	211	26
	273	7
	299	23
	303	24
	578	20
	584	20
	590	20
	597	20
	603	20
	610	20
	616	20
04434-51312	172	11
	175	3
	176	8
	180	2
	294	31
	299	20
	303	20
04434-51410	378	48
	448	48
04434-51412	299	12
	303	12

PartNumber	Page	Index
	696	17
	697	25
04434-51512	281	8
04434-51612	294	25
	295	28
04434-51708	356	2
	426	2
04434-51710	378	45
	448	45
04434-51812	294	26
	295	29
	331	23
	475	2
	476	2
04434-51910	366	19
	384	12
	436	19
	454	12
04434-51912	187	1
	187	21
	194	1
	194	24
	202	1
	202	24
	299	1
	576	8
	582	8
	588	8
	595	8
	601	8
	608	8
	614	8
04434-52110	384	18
	454	18
04434-52112	176	9
	183	4
	183	10
	184	23
	190	4
	190	10
	191	23
	198	4
	198	10
	199	23
	303	1
04434-52312	303	25
04434-52511	356	1
	384	13
	426	1
	454	13
04434-52512	152	18
04434-52712	185	10
	193	3
	201	3
	475	4
	476	5
04434-53212	163	2
	183	19
	183	26
	185	21
	190	19
	190	26
	193	14
	198	19
	198	26
	201	14
04434-53411	387	10
	457	10
04434-53412	175	6
	175	10
	175	14
	180	5
	180	9
	180	13
	185	8

PartNumber	Page	Index
	193	1
	201	1
04435-51210	398	32
	400	14
	468	32
	469	14
04435-51212	299	24
04435-51312	303	21
04435-51512	299	5
	299	9
	303	5
	303	9
	475	5
04435-51812	281	5
	294	12
	295	13
	331	27
04435-52112	172	12
	172	25
	294	24
	295	27
04530-11222	140	6
	145	7
06000-22222	529	6
	534	6
06124-01616	372	21
	442	21
	471	21
07000-11007	158	6
	224	10
	249	10
07000-11008	235	11
	262	11
	296	25
07000-11009	230	32
	234	3
	255	32
	261	3
	267	11
07000-11010	220	17
	221	12
	232	20
	235	23
	236	17
	238	19
	245	17
	246	12
	258	20
	262	23
	263	17
	265	19
	296	15
	300	16
07000-12011	223	6
	231	7
	231	14
	236	15
	248	6
	257	7
	257	14
	263	15
	289	6
	296	4
	300	4
	304	3
	361	31
	398	16
	398	19
	398	24
	431	29
	468	16
	468	19
	468	24
07000-12012	221	1
	238	17
	246	1
	265	17
	544	29
	548	29
07000-12014	225	2
	250	2
07000-12015	361	29
	370	6
	376	6
	431	27
	440	6
	446	6
07000-12016	225	4
	232	31
	250	4
	258	31
	296	3
	300	3
07000-12018	361	22
	370	4
	376	4
	431	22
	440	4
	446	4
	544	16
	548	16
07000-12020	227	17
	252	17
07000-12021	221	4
	223	5
	246	4
	248	5
	267	12
	546	4
	550	4
07000-12050	642	7
	654	7
07000-12055	287	9
	642	8
	654	8
07000-12060	279	18
	279	21
	280	22
	280	25
07000-12075	554	6
07000-12080	560	9
	561	8
07000-12105	276	2
	276	7
	537	11
07000-12125	289	7
07000-13024	219	8
	219	14
	220	3
	220	14
	229	6
	234	2
	236	12
	237	5
	244	8
	244	14
	245	3
	245	14
	254	6
	261	2
	263	12
	264	5
	269	
	269	7
07000-13028	221	5
	246	5
07000-13032	221	6
	232	29
	246	6
	258	29
	267	16
	277	15
	277	17
	282	13
	282	15
	282	17
	284	8
	284	10
	284	22
	284	24
	286	23
	288	29
	292	2
	292	4
	292	6
	292	8
	293	2
	542	14
	542	16
	543	14
	543	16
	575	18
	575	20
	575	22
	581	18
	581	20
	581	22
	587	18
	587	20
	587	22
	594	18
	594	20
	594	22
	600	18
	600	20
	600	22
	607	18
	607	20
	607	22
	613	18
	613	20
	613	22
	630	13
	635	13
	640	13
	647	13
	652	13
07000-13035	235	10
	262	10
	273	2
	277	5
	277	8
	282	2
	282	7
	282	12
	284	3
	284	17
	288	14
	288	25
	577	34
	583	34
	589	34
	591	6
	596	34
	602	34
	604	6
	609	34
	615	34
	617	6
	704	
	704	
	705	
	705	
07000-13036	221	8
	246	8

PartNumber	Page	Index
07000-13038	235	22
	262	22
	286	28
	641	2
	641	9
	641	11
	653	2
	653	12
	653	14
07000-13040	289	11
	289	17
07000-13045	159	53
	161	53
	161	57
	280	2
07000-13048	278	2
	278	4
	279	2
	280	6
	288	10
	288	18
	288	21
	288	34
	289	23
	289	30
	591	14
	604	14
	617	14
	641	18
	653	24
07000-13050	170	18
	171	10
07000-15080	537	3
07000-15160	214	34
	216	34
07000-15175	545	25
	549	25
07000-15195	214	26
	216	26
	545	27
	549	27
07000-15210	690	10
	691	10
07000-15290	530	44
	535	44
07000-15390	529	13
	534	13
07000-22018	546	2
	550	2
07000-A2105	149	12
07000-A5185	141	4
07000-B1008	151	16
07000-B1009	142	22
	146	19
	150	10
	150	23
	528	6
	533	12
07000-B2012	141	6
	143	22
	147	22
07000-B2014	141	9
07000-B2050	143	23
	144	6
	147	23
	148	6
07000-B2105	538	8
07000-B3035	619	38
	621	38
	624	43
	627	31
	632	31
	637	31
	644	31
	649	31
	704	
	705	
	706	
	706	
07000-B3038	143	18
	144	2
	147	18
	148	2
07000-B3042	528	8
	533	11
07000-B5090	619	28
	621	28
	644	24
	649	24
	704	
	704	
	705	
	706	
07000-B5100	623	30
	627	25
	632	25
	637	25
	704	
	705	
	705	
	706	
07000-B5130	619	11
	619	20
	621	11
	621	20
	644	15
	649	15
	704	
	704	
	705	
	706	
07000-B5140	627	15
	632	15
	637	15
	705	
	706	
07000-B5150	623	10
	623	22
	704	
	705	
07000-B5200	527	24
	532	24
07000-B5230	527	23
	532	23
07000-F3022	528	2
	533	2
07001-01007	224	11
	249	11
07001-01008	151	17
07001-01009	150	11
	150	24
	234	4
	261	4
07001-01010	236	18
	238	20
	263	18
	265	20
07001-02011	236	16
	263	16
07001-02012	238	18
	265	18
07001-02020	227	18
	252	18
07001-03022	528	3
	533	3
07001-05175	545	26
	549	26
07001-05195	545	28
	549	28
07002-02434	547	33
	551	33
07002-10823	178	2
	218	10
	243	10
	267	4
07002-11023	224	17
	231	13
	235	13
	236	20
	249	17
	257	13
	262	13
	263	20
	286	9
	544	24
	548	24
07002-11223	240	5
	240	22
	270	5
	270	26
	275	6
	361	27
	529	3
	534	3
	544	27
	548	27
	690	11
	691	11
07002-11423	161	51
	161	59
	214	19
	216	19
	224	9
	224	21
	227	5
	228	2
	230	28
	231	11
	232	22
	239	4
	240	8
	240	10
	240	13
	240	16
	240	19
	241	3
	241	6
	241	9
	241	12
	241	17
	241	21
	241	24
	241	27
	242	15
	249	9
	249	21
	252	5
	253	2
	255	28
	257	11
	258	22
	269	11
	270	8
	270	10
	270	13
	270	16
	270	19
	270	23
	271	3
	271	6
	271	9
	271	12
	271	17
	271	21
	271	24

PartNumber	Page	Index
	271	27
	271	30
	272	15
	274	14
	288	3
	294	3
	294	6
	294	9
	295	3
	295	6
	295	9
	296	29
	297	13
	297	20
	301	13
	301	20
	304	7
	306	2
	361	25
	370	9
	376	11
	388	6
	388	9
	388	17
	388	20
	400	6
	400	9
	400	12
	400	20
	400	23
	400	26
	400	29
	431	25
	440	9
	446	11
	458	6
	458	9
	458	17
	458	20
	469	6
	469	9
	469	12
	469	20
	469	23
	469	26
	469	29
	536	9
	539	6
	539	18
	542	11
	543	11
	544	11
	548	11
07002-11623	176	19
	230	22
	255	22
07002-11823	172	33
	172	36
	176	17
	176	22
	178	9
	224	7
	236	14
	249	7
	263	14
07002-12034	170	6
	171	6
	214	10
	214	16
	216	10
	216	16
	238	21
	265	21
	288	6
	291	12
	297	16
	297	18
	297	23
	301	16
	301	18
	301	23
	623	36
	704	
	705	
07002-12434	214	5
	214	7
	216	5
	216	7
	224	19
	225	6
	226	4
	230	15
	230	19
	249	19
	250	6
	251	4
	255	15
	255	19
	276	6
	279	8
	280	12
	286	11
	290	7
	536	3
	539	3
	539	12
	539	15
	542	8
	543	8
	690	12
	691	12
07002-13034	238	5
	238	14
	265	5
	265	14
07002-13334	214	13
	216	13
	236	8
	263	8
	279	12
	280	16
	281	17
	536	6
07002-13634	222	5
	222	9
	222	13
	222	17
	222	21
	222	25
	222	29
	229	4
	233	5
	233	9
	247	5
	247	9
	247	13
	247	17
	247	21
	247	25
	247	29
	254	4
	260	5
	260	9
	268	4
	277	4
	544	21
	546	8
	548	21
	550	8
	554	5
07002-23634	36	5
07002-61023	140	4
	141	12
	145	9
07002-61423	151	18
	526	3
	531	3
	533	10
07002-61823	241	14
	271	14
07002-62034	526	8
	531	8
07002-62434	140	8
	140	10
	145	4
	145	11
	150	13
	150	26
07002-63034	619	34
	621	34
	704	
	704	
07002-63334	539	20
	539	23
	539	26
07002-63634	526	17
	528	4
	531	17
	533	4
07005-00812	179	11
07005-02216	68	18
07005-03016	275	2
07020-00000	524	10
	525	10
	574	13
	580	13
	586	13
	593	13
	599	13
	606	13
	612	13
	619	5
	621	5
	623	7
	626	5
	627	5
	627	8
	629	4
	631	5
	632	5
	632	8
	634	4
	636	6
	637	5
	637	8
	639	4
	643	5
	644	5
	644	8
	646	4
	648	8
	649	5
	649	8
	651	4
	690	13
	691	13
07020-00675	690	14
	691	14
07040-10807	178	1
07040-11007	235	12
	262	12
	286	8
07040-11209	275	5
	529	2
	534	2

PartNumber	Page	Index
07040-11409	161	52
	161	58
	296	30
	526	2
	531	2
07040-11612	176	18
07040-11812	172	32
	176	16
07040-12412	286	10
07040-12414	140	9
	145	10
	276	5
07040-13618	554	4
07042-30211	170	26
	171	18
07043-00108	619	6
	621	6
07044-12412	140	7
	145	3
	214	4
	216	4
	547	32
	551	32
07046-47520	101	8
07048-01310	359	5
	429	6
07049-01012	240	1
	270	1
07049-01215	240	2
	270	2
	505	12
	547	31
	551	31
	579	2
	585	2
	590	25
	598	2
	603	25
	611	2
07049-01620	579	1
	585	1
	598	1
	611	1
07049-02430	529	5
	534	5
	569	4
	570	4
07056-10045	215	45
	217	8
07056-18425	170	24
	171	16
07085-01014	594	17
	594	19
	600	17
	600	19
	607	17
	607	19
	613	17
	613	19
07085-010A9	575	17
	575	19
	581	17
	581	19
	587	17
	587	19
07094-11228	278	12
	289	34
07094-30620	152	13
07094-31228	278	7
	278	13
07095-00630	152	14
07095-01034	175	19
	180	18
07095-01245	278	8
	278	11
	289	35
07095-20314	184	24
	191	24
	199	24
07095-20418	185	11
	193	4
	201	4
07095-20523	183	20
	190	20
	198	20
07095-20625	185	9
	193	2
	201	2
07097-21222	653	11
07097-21422	653	23
07098-01009	293	1
07098-21221	641	8
07098-21421	641	17
07145-00090	619	4
	621	4
	627	4
	632	4
	637	4
	644	4
	649	4
	704	
	704	
	705	
	705	
	706	
	706	
07145-00100	619	8
	621	8
	623	4
	623	6
	704	
	704	
	705	
	705	
07145-00110	574	11
	578	5
	580	11
	584	5
	586	11
	590	5
	593	11
	597	5
	599	11
	603	5
	606	11
	610	5
	612	11
	616	5
	626	6
	631	6
	636	7
	643	6
	648	9
07155-00925	555	13
07179-13114	619	15
	621	15
	644	11
	649	11
07179-13126	623	17
	627	11
	632	11
	637	11
07214-50813	524	11
	525	11
07260-09936	276	8
07260-20932	152	21
07261-21415	215	44
	217	7
07270-00825	172	38
	176	24
07270-00835	178	11
07270-01085	172	10
	176	7
07270-21590	529	38
	534	38
07280-04726	359	4
	429	5
07281-00197	529	39
	534	39
07281-00359	49	4
	163	5
	166	25
07283-31185	153	10
	154	11
07283-33442	620	42
	622	42
	624	48
07283-34949	161	46
07283-36155	330	18
07283-37663	163	39
	166	8
07285-00100	176	25
	178	12
07285-00110	172	39
07285-00115	172	7
	176	4
07285-00155	152	22
07285-00200	215	43
	217	6
07285-00220	73	2
07286-01680	701	1
07286-01960	73	1
07286-03828	359	3
	429	4
07288-01007	172	1
	176	2
07289-00035	696	10
	696	11
	697	17
	697	18
	697	19
07289-00070	163	7
	163	12
	166	24
07299-00080	164	45
	166	23
07299-00120	153	15
	154	16
07299-00130	153	6
	153	14
	154	6
	154	15
07299-00145	153	5
	154	5
07371-31049	277	11
	277	18
	282	3
	282	8
	282	18
	284	4
	284	13
	284	18
	284	27
	286	24
	288	30
	292	9
	293	3
	539	7
	542	3
	543	3
	575	14
	581	14
	587	14
	594	14
	600	14

PartNumber	Page	Index
	607	14
	613	14
	620	47
	622	47
	624	52
	627	39
	630	14
	632	39
	635	14
	637	39
	640	14
	644	39
	647	14
	649	39
	652	14
07371-31465	289	24
	289	31
07371-51260	286	29
	591	3
	604	3
	617	3
	641	5
	642	12
	653	5
	654	12
07371-51470	288	35
	591	11
	604	11
	617	11
	641	14
	653	17
07372-21035	277	12
	277	19
	282	4
	282	9
	282	19
	284	5
	284	14
	284	19
	284	28
	286	25
	288	31
	292	10
	293	4
	539	8
	542	4
	543	4
	575	15
	581	15
	587	15
	594	15
	600	15
	607	15
	613	15
	620	49
	622	49
	624	54
	628	41
	630	15
	633	41
	635	15
	638	41
	640	15
	645	41
	647	15
	650	41
	652	15
07372-21040	273	3
	283	15
	284	11
	284	25
	288	15
	288	26
	577	32
	583	32

PartNumber	Page	Index
	589	32
	591	7
	596	32
	602	32
	604	7
	609	32
	615	32
	617	7
07372-21060	619	36
	621	36
	624	41
	627	29
	632	29
	637	29
	644	29
	649	29
07372-21240	289	25
	289	32
	620	40
	622	40
	624	46
	627	34
	632	34
	637	34
	644	34
	649	34
07379-01044	630	17
	635	17
	640	17
	647	17
	652	17
07430-71380	220	16
	230	9
	232	9
	232	23
	245	16
	255	9
	258	9
	258	23
	267	9
07700-50240	172	9
	176	6
07700-50455	170	2
	171	2
07750-01628	623	34
07950-10450	693	8
07950-90403	693	10
07951-41017	693	9
07952-70004	693	
07959-20001	555	15
08000-00020	182	2
08000-00021	182	3
08000-02215	182	1
08017-A0702	342	13
	411	13
08017-A0707	367	5
	437	5
08020-20000	365	2
	435	2
	470	2
08028-43030	366	22
	436	22
08028-44035	183	31
	190	31
	198	31
08028-44040	189	1
	196	1
	204	1
08028-64035	182	11
08028-CD065	365	25
	435	25
	470	25
08034-20414	208	6
	372	8
	378	41

PartNumber	Page	Index
	394	30
	442	8
	448	41
	464	30
	471	8
08034-20519	185	34
	187	15
	191	28
	191	34
	193	26
	194	18
	199	28
	199	34
	201	26
	202	18
	298	3
	302	3
	339	9
	340	4
	340	15
	342	4
	349	2
	355	10
	356	6
	356	7
	366	16
	366	17
	377	32
	385	2
	395	10
	399	38
	408	9
	409	4
	409	15
	411	4
	419	2
	425	10
	426	6
	426	7
	436	16
	436	17
	447	32
	455	2
	465	10
	469	38
	472	10
	595	17
	601	17
	608	17
	614	17
	696	18
	697	26
08034-20536	175	1
	211	22
	288	39
	294	30
	295	33
	299	4
	299	19
	303	4
	303	19
	307	1
	307	18
	331	26
	367	4
	368	11
	374	11
	385	7
	386	1
	386	11
	387	4
	387	6
	387	13
	387	15
	387	28

PartNumber	Page	Index
	437	4
	438	11
	444	11
	455	7
	456	1
	456	11
	457	4
	457	6
	457	13
	457	15
	457	28
	475	8
	476	9
	542	12
	543	12
08034-20876	352	7
	352	22
	422	7
	422	22
08034-40521	349	1
	419	1
08036-00814	524	12
	525	12
08037-01610	394	28
	464	28
08037-02512	207	2
	321	7
	335	7
	404	7
08037-03614	507	25
	510	3
	510	15
	511	25
	514	14
	514	28
	515	25
	518	4
	518	16
	519	25
	522	15
	522	29
08037-05016	507	3
	511	3
	515	3
	519	3
08037-10610	346	23
	394	24
	415	23
	464	24
08037-11425	372	10
	442	10
	471	10
08038-00035	365	14
	365	26
	435	14
	435	26
	470	14
	470	26
08038-00519	187	10
	194	10
	202	10
	365	18
	365	23
	435	18
	435	23
	470	18
	470	23
08038-02027	186	41
	187	9
	187	14
	193	33
	194	9
	194	17
	201	33
	202	9
	202	17
	365	24
	435	24
	470	24
08038-10035	183	1
	190	1
	198	1
08038-22511	189	2
	196	2
	204	2
08038-42511	182	12
	189	3
	196	3
	204	3
08041-00500	357	8
	365	3
	427	8
	435	3
	470	3
08041-01000	357	9
	365	4
	427	9
	435	4
	470	4
08041-02000	357	10
	365	5
	427	10
	435	5
	470	5
08041-02500	357	11
	427	11
08041-03000	357	12
	365	6
	427	12
	435	6
	470	6
08053-01510	330	10
08055-00282	166	31
08057-00810	185	35
	193	27
	201	27
08057-12008	208	5
08057-12012	183	16
	184	1
	184	4
	184	7
	184	11
	184	20
	184	27
	184	30
	185	2
	185	5
	185	16
	185	26
	185	38
	187	3
	187	16
	187	24
	187	27
	187	30
	187	35
	187	39
	189	12
	190	16
	191	1
	191	4
	191	7
	191	11
	191	20
	191	27
	191	31
	191	39
	192	42
	193	9
	193	30
	194	3
	194	14
	194	19
	194	27
	194	30
	194	33
	194	38
	195	42
	196	12
	198	16
	199	1
	199	4
	199	7
	199	11
	199	20
	199	27
	199	31
	199	39
	200	42
	201	9
	201	30
	202	3
	202	14
	202	19
	202	27
	202	30
	202	33
	202	38
	203	42
	204	12
08057-14010	185	20
	193	13
	201	13
	366	18
	436	18
08057-14012	185	19
	193	12
	201	12
08057-22008	187	6
	194	6
	202	6
08057-22012	183	13
	190	13
	198	13
08059-00310	211	18
08059-00413	339	10
	366	13
	408	10
	436	13
08059-00515	333	36
	342	5
	355	6
	356	5
	395	6
	402	36
	411	5
	425	6
	426	5
	465	6
	472	6
08086-20000	377	27
08086-50000	447	27
08088-30000	365	15
	435	15
	470	15
08116-02410	340	
	409	
08160-72400	208	1
08160-72420	208	2
08191-00770	124	36
08192-12100	124	35
08193-20010	69	6
	124	9
	209	2
08193-20012	184	17

PartNumber	Page	Index
	185	27
	189	13
	191	17
	193	19
	196	13
	199	17
	201	19
	204	13
	578	23
	584	23
	590	23
	597	23
	603	23
	610	23
	616	23
08193-21012	151	21
08912-51600	372	6
09002-01317	693	3
09002-01922	693	4
09002-03641	693	11
09007-00425	693	13
09007-00528	693	14
09007-00836	693	12
09019-28035	693	
09019-28036	693	2
09021-01219	693	15
09021-01422	693	16
09021-01725	693	17
09021-01928	693	18
09021-02436	693	19
09021-03044	693	21
09021-03653	693	20
09022-00150	693	22
09023-00300	693	23
09024-00300	693	24
09033-00190	693	5
09039-00150	693	6
09055-10390	693	7
09056-04613	693	1
09133-A3281	664	18
	665	18
	666	18
	667	18
09134-A1681	679	1
09205-18325	571	7
	572	7
09244-02516	656	11
	657	11
	658	11
	659	22
09370-00090	555	12
09409-00002	320	3
09415-00706	343	28
	412	28
09415-01008	394	14
	464	14
09415-02512	346	3
	377	25
	394	3
	415	3
	447	25
	464	3
09415-03620	429	3
09416-10200	336	5
	343	2
	343	4
	343	12
	405	6
	412	2
	412	4
	412	12
09452-14503	357	17
	427	17
09479-02400	384	9
	384	11
09479-12400	454	9
	454	11
09601-120E2	664	21
	665	21
	666	21
	667	21
09620-B2171	683	2
09620-D2001	680	1
	682	1
09620-D2171	680	2
	681	2
	682	2
	682	5
09620-E2001	681	1
	682	4
09620-T2001	683	1
09637-30163	685	1
09642-13000	675	1
09653-A0481	664	8
	665	8
	666	8
	667	8
09657-A0881	664	9
	665	9
	666	9
	667	9
09659-A057B	290	2
	664	4
	664	20
	665	4
	665	20
	666	4
	666	20
	667	4
	667	20
	686	1
09667-A0481	664	12
	665	12
	666	12
	667	12
09669-0000E	664	13
	665	13
	666	13
	667	13
09685-00002	664	3
	665	3
	666	3
	667	3
09690-P0630	664	1
	665	1
	666	1
	667	1
09690-P1600	672	1
09690-P1800	670	1
	670	2
	671	1
	671	2
	672	2
09693-00400	416	1
09803-A0481	669	2
09805-A0881	664	19
	665	19
	666	19
	667	19
09805-C0481	664	10
	665	10
	666	10
	667	10
09808-A0881	664	11
	665	11
	666	11
	667	11
09817-A1103	53	13
09833-A0881	687	1
09842-A0481	664	27
	665	27
	666	27
	667	27
09844-00050	664	2
	665	2
	666	2
	667	2
09845-00480	676	1
	677	1
	678	1
09960-00801	664	24
	665	24
	666	24
	667	24
09960-00802	664	25
	665	25
	666	25
	667	25
09963-03001	664	17
	665	17
	666	17
	667	17
09980-10550	692	1
09980-92550	692	
09982-20057	692	2
113-899-7950	281	12
	307	15
11Y-01-11920	153	3
	154	3
11Y-09-11140	166	20
	166	26
	172	6
	175	25
	176	3
	180	26
11Y-09-11160	331	3
11Y-62-11980	539	22
	539	25
11Y-62-12130	304	8
	376	7
	446	7
11Y-62-12140	398	22
	468	22
11Y-62-12160	240	6
	270	6
	271	28
	288	1
	294	1
	295	1
	297	5
	301	5
	361	23
	431	23
11Y-62-12170	288	4
11Y-62-12230	297	9
	301	9
11Y-62-12250	240	14
	270	14
11Y-62-12330	297	11
	301	11
	400	10
	400	24
	469	10
	469	24
11Y-62-12370	294	4
	295	4
11Y-62-12510	388	4
	400	4
	400	27
	458	4
	469	4
	469	27
	536	7
11Y-62-12520	241	4
	271	4

PartNumber	Page	Index
	304	9
	370	7
	376	9
	440	7
	446	9
	542	9
	543	9
120-06-24110	498	13
124-54-26540	661	30
124-A62-1920	480	8
1240101H1	52	2
1295465H92	136	1
12R-60-11230	214	30
	216	30
12Y-979-1850	364	16
	434	16
130-43-64260	322	2
1304869H1	76	4
1307682H1	52	1
134-03-61410	166	27
	185	12
	193	5
	201	5
140-30-00141	560	
	561	
141-06-11220	331	16
	384	17
	454	17
141-30-32181	571	10
	572	10
142-03-11160	299	13
	303	13
142-06-13540	476	6
144-32-11240	562	3
	563	3
	564	3
	565	3
144-60-11151	529	37
	534	37
145-Z79-6270	338	20
	407	20
14X-03-51621	158	14
14X-03-51640	158	13
14X-03-51770	158	15
14X-54-26640	273	6
	299	25
	303	26
150-95-27160	175	2
150-952-7160	180	1
154-04-72220	170	8
154-32-71220	562	9
	563	9
	564	9
	565	9
	704	
154-54-22520	493	6
	495	6
154-61-16570	50	10
	53	
	53	7
	53	15
	53	23
155-06-15180	331	4
175-06-81610	211	14
175-40-22540	398	33
	468	33
175-54-34170	182	17
	284	32
	284	34
	481	11
	481	19
	487	16
	487	23
	488	6
	488	9

PartNumber	Page	Index
	488	14
	488	17
	488	25
	488	27
	490	16
	490	23
	491	6
	491	9
	491	14
	491	17
	491	25
	491	27
	493	29
	493	38
	495	29
	495	38
	498	18
	498	20
	499	17
	499	19
	507	19
	507	27
	507	38
	509	3
	510	5
	510	17
	511	19
	511	27
	511	38
	513	3
	514	4
	514	18
	514	30
	515	19
	515	27
	515	38
	517	3
	518	6
	518	18
	519	19
	519	27
	519	38
	521	3
	522	4
	522	19
	522	31
175-61-51750	290	14
176-38-41350	299	6
176-911-1690	366	5
	366	9
	436	5
	436	9
17A-04-41440	699	6
	700	4
	700	10
17A-54-42370	321	5
17A-60-11310	214	37
17A-979-3131	383	4
	453	4
17A-Z11-4610	342	14
	367	3
	411	14
	437	3
17M-911-3530	352	13
	422	13
195-03-11570	170	30
	171	22
	215	59
	217	22
195-03-41380	482	39
195-03-66490	279	6
	280	10
195-32-41220	659	19
195-33-11220	172	16
	175	11

PartNumber	Page	Index
	176	10
	180	10
	183	28
	184	8
	184	33
	185	23
	190	28
	191	8
	191	35
	193	16
	198	28
	199	8
	199	35
	201	16
	294	29
	295	32
	299	18
	303	6
	303	18
	366	10
	436	10
195-43-41530	152	31
195-71-32220	330	4
195-979-3570	172	13
	175	7
	180	6
	331	20
195-979-5190	209	7
195-Z11-1690	338	8
	407	8
195-Z11-2970	321	6
198-06-53540	187	2
	194	2
	202	2
198-06-53610	183	27
	185	22
	190	27
	193	15
	198	27
	201	15
198-06-53630	294	23
	295	26
198-38-12460	330	6
198-43-15310	473	14
	474	15
198-60-55510	217	
198-61-44110	185	31
	193	23
	201	23
19M-06-31720	365	7
	435	7
	470	7
201-60-11390	304	5
201-62-71810	290	4
202-970-2210	642	3
	654	3
202-98-11340	331	11
203-00-17210	217	18
203-00-17220	217	19
203-04-K1140	170	25
	171	17
203-43-51620	361	7
	431	7
203-54-56630	498	2
	499	2
203-54-56970	165	6
203-54-62670	482	32
	483	35
	485	35
	510	6
	518	7
203-54-63230	483	39
	485	39
203-60-31100	214	2
	216	2

PartNumber	Page	Index
203-60-31160	214	3
	216	3
203-62-21720	152	17
203-62-52210	310	14
	311	14
	312	14
	313	14
203-62-63740	539	19
205-00-72430	683	3
	684	1
205-00-73360	664	14
	665	14
	666	14
	667	14
205-03-62660	158	5
205-03-71230	158	3
205-04-K1370	697	11
205-25-71280	524	3
	525	3
205-30-00052	556	
	557	
	558	
	559	
205-30-71171	566	10
	567	10
205-30-71181	310	2
	311	2
	312	2
	313	2
	566	5
	567	5
205-30-71191	310	3
	311	3
	312	3
	313	3
	566	6
	567	6
205-30-72170	555	16
205-32-51211	529	21
	534	21
205-53-31181	350	3
205-53-31182	420	3
205-53-31190	350	4
	420	4
205-54-32320	501	1
205-54-51250	343	29
	412	29
205-54-51971	482	12
	483	24
	485	24
205-54-53550	482	22
	483	29
	485	29
205-54-68440	493	5
	495	5
205-54-75240	347	12
	417	12
205-54-76410	488	21
	491	21
205-62-73430	283	2
	283	6
	283	10
	283	12
	284	37
	284	39
205-62-73431	575	11
	577	4
	577	15
	581	11
	583	4
	583	15
	587	11
	589	4
	589	15
	592	2
	594	11
	596	4
	596	15
	600	11
	602	4
	602	15
	605	2
	607	11
	609	4
	609	15
	613	11
	615	4
	615	15
	618	2
205-70-51390	576	7
	582	7
	588	7
	595	7
	601	7
	608	7
	614	7
205-70-66580	314	6
205-70-66581	578	2
	584	2
	590	2
	597	2
	603	2
	610	2
	616	2
	630	2
	630	7
	635	2
	635	7
	640	2
	640	7
	647	2
	647	7
	652	2
	652	7
205-70-73280	630	19
	635	19
	640	19
	647	19
	652	19
	656	21
	657	21
	658	21
	659	14
	660	30
	661	34
205-970-5550	290	6
205-970-5560	290	3
	704	
206-03-43340	163	17
	166	39
	167	44
206-06-61130	399	37
	469	37
206-26-71520	547	22
	551	22
206-53-13121	473	2
	474	2
206-53-14711	324	1
206-53-14721	326	1
207-00-76130	668	1
207-00-76220	505	6
207-00-76230	505	7
207-00-76250	493	33
	495	33
207-00-76310	493	20
	495	20
207-00-76320	493	21
	495	21
207-00-76330	505	8
207-00-76510	664	29
207-00-76520	664	30
207-00-76530	665	29
207-00-76540	665	30
207-00-76550	666	29
207-00-76560	666	30
207-00-76570	667	29
207-00-76580	667	30
207-00-76760	664	7
	665	7
	666	7
	667	7
207-00-76811	673	1
207-00-C1010	674	1
207-01-31141	275	1
207-01-31150	275	3
207-01-41180	154	7
207-01-55181	152	4
207-01-61150	152	2
207-01-61170	152	8
207-01-71310	139	1
207-01-71320	275	4
207-01-72361	166	5
207-01-72372	166	6
207-01-72381	153	9
	154	10
207-01-72391	153	13
	154	14
207-01-72411	153	2
	154	2
207-01-72420	153	4
	154	4
207-01-75110	152	23
207-01-75120	152	24
207-01-75130	152	25
207-01-75140	152	26
207-01-75150	152	3
207-01-75220	163	37
207-01-75231	163	38
207-01-75270	164	46
207-01-75340	164	47
	166	7
	166	14
	166	22
207-03-22760	158	28
207-03-41270	165	
207-03-51530	163	8
	163	13
207-03-71211	165	8
207-03-72121	160	7
207-03-72131	166	15
207-03-72141	162	18
207-03-72151	163	18
207-03-72191	166	11
207-03-72211	160	17
207-03-72221	158	
207-03-72241	163	19
207-03-72251	158	37
207-03-72261	160	1
207-03-72271	161	50
207-03-72281	158	19
207-03-72291	158	32
207-03-72311	158	17
207-03-72321	158	1
207-03-72340	158	39
207-03-72361	160	40
207-03-72411	158	22
207-03-72421	159	48
207-03-72471	160	4
207-03-72481	160	12
207-03-72491	160	21
207-03-72511	161	56
207-03-72521	162	10
207-03-72531	163	20
207-03-72540	158	10
207-03-72571	163	31

PartNumber	Page	Index
207-03-72581	163	32
207-03-72591	163	33
207-03-72620	166	21
207-03-72631	158	7
207-03-72641	160	20
207-03-72651	166	28
207-03-72671	160	28
207-03-72691	166	32
207-03-72711	166	33
207-03-72721	159	40
207-03-72731	158	38
207-03-72741	159	42
207-03-72751	159	43
207-03-72761	161	43
207-03-72770	163	11
207-03-72781	160	22
207-03-72790	165	11
207-03-72810	166	19
207-03-72860	158	33
207-03-72872	158	18
207-03-72880	160	23
207-03-72892	160	31
207-03-72910	158	30
207-03-75330	166	18
207-03-75371	163	23
207-03-75381	163	27
207-03-75431	163	24
207-03-75441	163	28
207-03-75590	482	38
207-03-75640	163	6
207-03-76380	159	44
207-03-76460	162	16
207-04-75171	171	
207-04-75172	171	1
207-04-75262	696	12
	697	20
207-04-75370	178	6
207-04-75390	170	5
207-04-75410	697	30
207-04-75420	697	27
207-04-75430	697	5
207-04-75472	172	19
207-04-75491	172	22
207-04-75512	172	
207-04-75522	172	
207-04-75540	696	5
	697	12
207-04-77111	180	
207-04-77121	175	15
	180	14
207-04-77140	176	13
207-04-78130	170	
207-04-78131	170	1
207-04-C1010	696	1
	697	1
207-06-11370	182	9
207-06-41220	185	13
	193	6
	201	6
207-06-41311	328	2
207-06-51330	182	15
207-06-51461	182	13
207-06-51470	182	8
207-06-61250	477	1
207-06-61461	182	14
207-06-71541	696	13
	697	21
207-06-75122	365	19
	435	19
	470	19
207-06-75150	187	13
	194	13
	202	13
207-06-75161	192	45
	200	45

PartNumber	Page	Index
	578	24
	584	24
	590	24
	597	24
	603	24
	610	24
	616	24
207-06-75190	183	23
	190	23
	198	23
207-06-75270	696	16
	697	24
207-06-75310	182	4
207-06-75322	182	5
207-06-76131	377	40
	447	40
207-06-76270	210	1
207-06-76420	211	2
207-06-76451	211	17
207-06-76460	211	6
207-06-76490	211	19
207-06-77112	183	34
	184	36
	186	45
	188	42
	200	
	201	
	203	
	204	
	365	1
207-06-77121	190	34
	198	34
	365	13
	435	13
	470	13
207-06-77130	211	21
207-06-77221	200	46
	201	37
	203	45
	204	16
	435	1
207-06-77410	192	46
	193	37
	195	45
	470	1
207-25-00120	525	1
207-25-25131	524	18
	525	18
207-25-61100	524	1
207-25-61160	524	2
	525	2
207-25-62110	524	8
	525	8
207-25-75110	524	15
	525	15
207-25-75120	524	17
	525	17
207-26-54230	529	20
	534	20
207-26-61210	529	9
	534	9
207-26-62180	529	8
	534	8
207-26-71210	529	31
	534	31
207-26-71240	529	1
	534	1
207-26-71261	529	36
	534	36
207-26-71410	530	42
	535	42
207-26-71511	529	35
	534	35
207-26-71521	529	28
	534	28

PartNumber	Page	Index
207-26-71551	529	22
	534	22
207-26-73110	529	25
	534	25
207-26-73120	529	15
	534	15
207-26-73130	529	14
	534	14
207-26-73150	529	7
	534	7
207-26-75130	529	4
	534	4
207-26-75140	529	10
	534	10
207-27-00510	547	
	551	
207-27-00580	544	
	545	
	546	
	547	
207-27-00590	548	
	549	
	550	
	551	
207-27-51311	547	35
	551	35
207-27-52350	547	5
	551	5
207-27-72110	547	25
	551	25
207-27-72120	547	20
	551	20
207-27-72130	547	16
	551	16
207-27-72140	547	10
	551	10
207-27-72150	547	17
	551	17
207-27-72160	547	19
	551	19
207-27-72170	547	9
	551	9
207-27-72180	547	28
	551	28
207-27-72210	547	11
	551	11
207-27-72220	547	4
	551	4
207-27-72230	547	23
	551	23
207-27-72240	547	18
	551	18
207-27-72250	547	7
	551	7
207-27-72260	547	6
	551	6
207-27-72270	547	34
	551	34
207-27-72290	547	3
	551	3
207-30-00101	554	
207-30-00551	561	
207-30-00620	560	
207-30-00650	558	
207-30-00660	556	
	557	
207-30-00690	554	
207-30-00692	554	
207-30-00990	555	
207-30-01160	559	
207-30-01220	554	
207-30-21510	558	1
207-30-21520	559	1
207-30-21610	560	1
207-30-21620	560	2

PartNumber	Page	Index
207-30-21640	560	4
207-30-21650	556	4
	557	4
207-30-21660	556	5
	557	5
207-30-21670	556	2
	557	2
	558	2
	559	2
207-30-21750	558	4
	559	4
207-30-21760	558	5
	559	5
207-30-34191	555	7
207-30-41390	552	3
207-30-48110	554	1
207-30-48350	554	
207-30-48450	554	9
207-30-51191	569	1
	570	1
207-30-51260	566	9
	567	9
207-30-53130	554	3
207-30-53140	554	2
207-30-53160	554	10
207-30-54160	555	10
207-30-56170	556	6
	557	6
	558	6
	559	6
207-30-56190	556	11
	557	11
	559	11
207-30-61220	566	4
	567	4
207-30-71431	555	4
207-30-71441	555	3
207-30-71510	556	1
	557	1
207-30-71540	556	3
	557	3
	558	3
	559	3
207-30-71811	566	1
207-30-71920	567	1
207-30-73210	554	
207-30-73311	555	1
207-30-73421	555	2
207-30-73450	555	14
207-30-74160	555	5
207-30-75310	561	1
207-30-75320	561	2
207-30-75330	560	3
	561	3
207-30-75341	561	13
207-30-75350	561	11
207-30-75360	560	5
	561	4
207-30-75370	560	6
	561	5
207-30-76211	698	1
207-30-76A21	566	2
	567	2
207-30-76B80	566	3
	567	3
207-30-77110	571	1
207-30-77120	571	2
207-30-77130	571	3
207-30-77140	571	4
207-30-77210	572	1
207-30-77220	572	2
207-30-77230	572	3
207-30-77240	572	4
207-32-00370	563	
	565	

PartNumber	Page	Index
207-32-00390	562	
	564	
207-32-03961	563	
207-32-03981	565	
207-32-04041	562	
207-32-04061	564	
207-32-05060	704	2
207-32-51140	562	5
	563	5
	564	5
	565	5
207-32-51170	562	4
	563	4
	564	4
	565	4
207-32-61110	562	7
	563	7
207-32-61150	562	6
	563	6
	564	6
	565	6
207-32-61190	562	11
	563	11
	564	11
	565	11
207-32-61260	562	10
	563	10
	564	10
	565	10
207-32-61320	564	7
	565	7
207-32-71120	562	1
	563	1
	564	1
	565	1
207-32-71130	562	2
	563	2
	564	2
	565	2
207-32-71210	562	8
	563	8
	564	8
	565	8
	704	
207-43-11370	367	2
	437	2
207-43-21120	364	1
	434	1
207-43-21211	359	1
207-43-21220	429	1
207-43-81240	398	14
	468	14
207-46-32140	506	4
207-46-32150	506	3
207-46-32160	506	
207-46-52130	506	2
207-46-72300	310	1
207-46-72400	311	1
207-46-72520	310	6
	311	6
	312	6
	313	6
207-46-72530	310	10
	311	10
	312	10
	313	10
207-46-72540	310	11
	311	11
	312	11
	313	11
207-46-72550	310	12
	311	12
	312	12
	313	12
207-46-72560	310	9

PartNumber	Page	Index
	311	9
	312	9
	313	9
207-46-72570	310	15
	311	15
	312	15
	313	15
207-46-72601	313	1
207-46-72700	312	1
207-46-73400	505	
207-46-73410	505	1
207-46-74430	505	2
207-46-74621	505	3
207-46-77321	310	7
	311	7
	312	7
	313	7
207-46-77331	310	8
	311	8
	312	8
	313	8
207-46-78630	505	4
207-53-00560	332	
	333	
	335	
	336	
	337	
	338	
	339	
	340	
	341	
	342	
	343	
	345	
	346	
207-53-00570	335	
	337	
	338	
	339	
	340	
	341	
	342	
	343	
	345	
	390	
	391	
	393	
	394	
207-53-00580	333	
	335	
	336	
	337	
	338	
	339	
	340	
	341	
	342	
	343	
	345	
	346	
	396	
207-53-00651	401	
	402	
	404	
	405	
	406	
	407	
	408	
	409	
	410	
	411	
	412	
	414	
	415	
	416	

PartNumber	Page	Index
207-53-00661	404	
	406	
	407	
	408	
	409	
	410	
	411	
	412	
	414	
	416	
	460	
	461	
	463	
	464	
207-53-00671	402	
	404	
	405	
	406	
	407	
	408	
	409	
	410	
	411	
	412	
	414	
	415	
	416	
	466	
207-54-51440	509	9
	510	11
	513	9
	514	10
	514	25
	517	9
	518	12
	521	7
	522	10
	522	26
207-54-61270	480	3
207-54-61441	493	3
	495	3
207-54-61450	493	4
	495	4
207-54-62150	480	11
207-54-62160	480	12
207-54-71221	483	10
	485	10
	696	19
	697	36
207-54-71241	483	11
	485	11
207-54-71721	481	21
207-54-72150	480	15
207-54-72230	493	9
	495	9
207-54-72851	487	14
	490	14
207-54-73320	482	30
207-54-73341	482	1
207-54-73430	483	12
	485	12
207-54-73611	481	24
207-54-73620	481	4
207-54-73630	481	1
207-54-73721	488	1
	491	1
207-54-73730	488	7
	491	7
207-54-73741	488	10
	491	10
207-54-73751	487	13
	490	13
207-54-73761	487	17
	490	17
207-54-73780	487	1

PartNumber	Page	Index
	490	1
207-54-73790	487	2
	490	2
207-54-73950	522	
207-54-73960	518	2
	522	13
207-54-73980	518	1
207-54-73990	488	2
	491	2
207-54-74280	491	28
207-54-74311	488	28
207-54-74321	487	18
	490	18
207-54-74330	488	4
	491	4
207-54-74341	488	39
	491	40
207-54-74351	488	40
	491	41
207-54-74360	488	41
	491	42
207-54-74380	488	29
	491	29
207-54-74430	494	41
	496	41
207-54-74550	488	34
	491	35
207-54-74570	488	35
	491	36
207-54-74911	495	24
207-54-74940	514	1
	522	1
207-54-74950	510	2
	514	2
	518	3
	522	2
207-54-75220	500	1
	503	10
207-54-75710	503	5
207-54-75720	483	4
	485	4
207-54-75830	493	1
	495	1
207-54-75940	510	1
207-54-75960	514	13
207-54-75971	510	14
	514	24
207-54-76140	291	16
	482	2
207-54-76161	152	34
	482	35
207-54-76190	482	40
207-54-76330	483	5
	485	5
207-54-76340	483	9
	485	9
207-54-76350	483	34
	485	34
207-54-76360	483	6
	485	6
207-54-76421	481	12
207-54-76480	481	27
207-54-76491	481	28
207-54-76640	488	31
	491	31
207-54-76690	488	36
	491	37
207-54-76720	493	30
	495	30
207-54-76731	493	24
207-54-76770	494	45
	496	45
207-54-76780	493	25
	495	25
207-54-76870	488	15

PartNumber	Page	Index
	491	15
207-54-76890	494	48
	496	48
207-54-77120	515	31
	519	31
207-54-77172	509	1
	517	1
207-54-77190	481	5
207-54-77220	507	31
	511	31
207-54-77272	513	1
	521	1
207-54-77441	498	23
	499	22
207-54-77451	498	1
	499	1
207-54-77980	488	3
	491	3
207-54-78121	480	9
207-54-78220	507	9
	515	9
207-54-78240	511	9
	519	9
207-54-78460	494	42
	496	42
207-54-78650	507	16
	515	16
207-54-78660	511	16
	519	16
207-54-78670	481	20
207-54-78680	211	23
207-54-78740	507	23
	515	23
207-54-78750	511	23
	519	23
207-54-78770	522	14
207-54-78781	518	15
207-54-78810	482	17
207-54-78820	498	4
	499	4
207-54-78830	483	1
	485	1
207-54-78860	522	25
207-54-78890	485	38
207-54-79711	504	1
207-54-79720	504	2
207-54-79731	503	6
207-54-79810	499	3
207-54-79830	498	3
207-54-C1150	480	6
207-54-C1190	480	29
207-54-C1210	480	7
207-54-C1220	480	28
207-54-C2100	480	1
207-60-21220	217	1
207-60-51170	279	16
	280	20
207-60-51311	215	47
207-60-51320	215	48
207-60-61250	277	1
207-60-71183	214	21
	216	21
	690	9
	691	9
207-60-71311	296	
207-60-71320	300	
207-60-75120	214	
	216	
207-60-75160	279	14
	280	18
207-60-75180	184	14
	191	14
	199	14
207-60-77111	214	1
	216	1

PartNumber	Page	Index
207-60-77131	214	25
	216	25
207-60-77141	216	33
207-60-77150	214	33
207-62-21110	386	
	456	
207-62-21961	386	
	456	
207-62-21981	468	
207-62-22210	475	1
	476	1
207-62-22220	386	10
	456	10
207-62-31330	286	12
	575	7
	577	7
	581	7
	583	7
	587	7
	589	7
	592	16
	594	7
	596	7
	600	7
	602	7
	605	16
	607	7
	609	7
	613	7
	615	7
	618	16
	653	8
207-62-41121	242	6
	272	6
	274	6
207-62-41481	278	21
207-62-41651	294	18
207-62-42210	288	38
207-62-42481	280	1
	289	39
207-62-42490	286	7
207-62-42520	286	4
207-62-42560	295	16
207-62-42561	294	15
207-62-42570	295	17
207-62-42571	294	16
207-62-42610	455	
207-62-42680	385	4
	455	4
207-62-42691	455	
207-62-42830	574	2
	580	2
	586	2
207-62-42980	385	8
	455	8
207-62-43130	542	2
	543	2
207-62-44161	575	1
	581	1
	587	1
207-62-52350	575	10
	577	14
	581	10
	583	14
	587	10
	589	14
	592	1
	594	10
	596	14
	600	10
	602	14
	605	1
	607	10
	609	14
	613	10
	615	14
	618	1
207-62-52430	283	5
	284	36
207-62-52610	282	16
207-62-52621	282	14
207-62-54760	575	4
	577	10
	581	4
	583	10
	587	4
	589	10
	594	4
	596	10
	600	4
	602	10
	607	4
	609	10
	613	4
	615	10
207-62-54770	283	11
207-62-54780	577	3
	583	3
	589	3
	596	3
	602	3
	609	3
	615	3
207-62-56190	273	1
207-62-64740	214	14
	216	14
	279	7
	279	11
	280	11
	280	15
	281	16
	536	5
207-62-64810	542	15
207-62-64820	543	15
207-62-64850	542	13
207-62-64860	543	13
207-62-71211	282	1
207-62-71223	282	6
207-62-71231	282	11
207-62-71261	284	1
207-62-71311	284	16
207-62-71321	283	1
207-62-71330	283	9
207-62-71350	284	21
207-62-71360	284	9
207-62-71370	284	23
207-62-71410	539	21
207-62-71420	539	27
207-62-71430	292	1
207-62-71440	292	3
207-62-71450	292	5
207-62-71460	292	7
207-62-71531	241	25
	271	25
	294	7
207-62-71740	284	7
207-62-71750	277	14
207-62-71791	310	13
	311	13
	312	13
	313	13
207-62-71880	277	16
207-62-72120	297	3
	301	3
207-62-72151	539	1
	542	20
	543	20
207-62-72171	539	13
207-62-72680	386	2
	456	2
207-62-72740	386	4
	456	4
207-62-73141	286	32
	289	38
	290	17
207-62-73150	288	9
207-62-73160	289	10
207-62-73170	289	16
207-62-73180	288	24
207-62-73190	288	13
207-62-73230	288	20
207-62-73240	290	11
207-62-73251	290	8
207-62-73260	288	17
207-62-73280	288	33
207-62-73290	288	28
207-62-73310	289	22
207-62-73320	289	29
207-62-73340	286	22
207-62-73350	290	5
207-62-73390	286	27
207-62-73621	286	15
207-62-74111	577	1
	583	1
	589	1
207-62-74121	577	2
	583	2
	589	2
207-62-74132	575	2
	581	2
	587	2
207-62-74141	577	13
	583	13
	589	13
	596	13
	602	13
	609	13
	615	13
207-62-74151	575	3
	581	3
	587	3
207-62-74221	574	3
	580	3
	586	3
	593	3
	599	3
	606	3
	612	3
207-62-74230	574	4
	580	4
	586	4
	593	4
	599	4
	606	4
	612	4
207-62-74240	574	5
	580	5
	586	5
	593	5
	599	5
	606	5
	612	5
207-62-74251	574	6
	580	6
	586	6
	593	6
	599	6
	606	6
	612	6
207-62-74281	574	7
	580	7
	586	7
	593	7
	599	7
	606	7

PartNumber	Page	Index
	612	7
207-62-74390	577	18
	583	18
	589	18
	596	18
	602	18
	609	18
	615	18
207-62-74450	276	4
207-62-74460	276	1
207-62-74490	577	25
	583	25
	589	25
	596	25
	602	25
	609	25
	615	25
207-62-74670	279	1
207-62-74681	279	9
	280	13
207-62-74743	295	11
207-62-74791	280	5
207-62-74851	294	10
207-62-75120	291	1
207-62-75180	291	15
207-62-75250	279	17
	280	21
207-62-75820	386	3
	456	3
207-62-76420	385	9
	455	9
207-62-76570	385	10
	455	10
207-62-76810	575	21
	581	21
	587	21
207-62-76830	630	12
	635	12
	640	12
	647	12
	652	12
207-62-77110	242	9
	272	9
	274	9
207-62-77140	279	5
	280	9
	536	10
207-62-77151	278	18
207-62-77160	278	1
207-62-77171	278	3
207-62-77211	306	5
207-62-77231	277	
207-62-77241	277	2
207-62-77250	286	1
207-62-77261	284	2
207-62-77271	284	35
207-62-77281	284	30
207-62-77310	242	1
	272	1
	274	1
207-62-77340	284	38
207-62-77360	281	11
207-62-77390	542	1
207-62-77450	281	2
207-62-77460	291	14
	295	20
207-62-77470	295	19
207-62-78110	594	1
	600	1
	607	1
	613	1
207-62-78120	594	2
	600	2
	607	2
	613	2

PartNumber	Page	Index
207-62-78130	594	3
	600	3
	607	3
	613	3
207-62-78140	596	1
	602	1
	609	1
	615	1
207-62-78150	596	2
	602	2
	609	2
	615	2
207-62-78180	593	2
	599	2
	606	2
	612	2
207-62-78260	594	21
	600	21
	607	21
	613	21
207-63-54590	619	35
	621	35
207-63-73181	627	28
	632	28
	637	28
	644	28
	649	28
207-63-76170	627	6
	632	6
	637	6
	644	6
	649	6
207-70-00061	656	20
	657	20
	658	20
	659	13
	660	29
	661	33
207-70-00480	629	
	634	
	639	
	646	
	651	
207-70-00542	648	
207-70-00591	643	
207-70-01340	574	
	586	
207-70-01521	593	
	599	
207-70-11340	578	12
	584	12
	590	12
	597	12
	603	12
	610	12
	616	12
207-70-11350	578	13
	584	13
	590	13
	597	13
	603	13
	610	13
	616	13
207-70-11360	578	14
	584	14
	590	14
	597	14
	603	14
	610	14
	616	14
207-70-11370	578	15
	584	15
	590	15
	597	15
	603	15

PartNumber	Page	Index
	610	15
	616	15
207-70-13340	578	8
	584	8
	590	8
	597	8
	603	8
	610	8
	616	8
207-70-14280	656	10
	659	21
207-70-24190	314	9
	629	11
	630	10
	634	11
	635	10
	639	11
	640	10
	646	11
	647	10
	651	11
	652	10
207-70-24210	314	10
	629	12
	630	11
	634	12
	635	11
	639	12
	640	11
	646	12
	647	11
	651	12
	652	11
207-70-31172	578	6
	584	6
	590	6
	597	6
	603	6
	610	6
	616	6
207-70-31230	314	2
	574	15
	580	15
	586	15
	593	15
	599	15
	606	15
	612	15
207-70-31242	578	7
	584	7
	590	7
	597	7
	603	7
	610	7
	616	7
207-70-31290	314	11
207-70-31340	578	10
	584	10
	590	10
	597	10
	603	10
	610	10
	616	10
	630	5
	635	5
	640	5
	647	5
	652	5
207-70-32150	626	3
	631	3
	636	4
	643	3
	648	6
207-70-33120	629	6
	634	6

PartNumber	Page	Index
	639	6
	646	6
	651	6
207-70-33141	629	8
	634	8
	639	8
	646	8
	651	8
207-70-33160	629	2
	629	3
	634	2
	634	3
	639	2
	639	3
	646	2
	646	3
	651	2
	651	3
207-70-33181	630	18
	635	18
	640	18
	647	18
	652	18
207-70-34160	659	16
207-70-34170	659	17
207-70-34230	656	22
	657	22
	658	22
	659	15
	661	31
	662	35
207-70-34240	656	16
	657	16
	658	16
	659	20
	661	32
	662	36
207-70-34250	656	
	657	
	658	
	659	
207-70-34260	656	
	657	
	658	
	659	
207-70-51310	314	12
207-70-51320	578	11
	584	11
	590	11
	597	11
	603	11
	610	11
	616	11
207-70-53150	625	6
207-70-53160	625	
207-70-53161	625	1
207-70-53170	625	2
207-70-61182	574	14
	580	14
	586	14
	593	14
	599	14
	606	14
	612	14
207-70-61192	578	1
	584	1
	590	1
	597	1
	603	1
	610	1
	616	1
207-70-61210	314	5
207-70-61221	630	6
	635	6
	640	6

PartNumber	Page	Index
	647	6
	652	6
207-70-61521	626	2
	631	2
	636	3
	643	2
	648	5
207-70-61610	574	12
	580	12
	586	12
	593	12
	599	12
	606	12
	612	12
207-70-71130	314	1
207-70-72120	626	7
	627	7
	629	5
	631	7
	632	7
	634	5
	636	8
	637	7
	639	5
	643	7
	644	7
	646	5
	648	10
	649	7
	651	5
	705	
	706	
	706	
	706	
207-70-72460	626	4
	631	4
	636	5
	643	4
	648	7
207-70-72470	656	19
	657	19
	658	19
	659	12
	661	35
	662	39
207-70-73210	629	7
	634	7
	639	7
	646	7
	651	7
207-70-77310	576	2
	582	2
	588	2
207-70-77320	576	3
	582	3
	588	3
207-70-77341	576	15
	582	15
	588	15
	595	15
	601	15
	608	15
	614	15
207-70-77351	576	16
	582	16
	588	16
	595	16
	601	16
	608	16
	614	16
207-70-77651	574	8
	580	8
	586	8
	593	8
	599	8

PartNumber	Page	Index
	606	8
	612	8
207-70-77810	576	4
	582	4
	588	4
207-70-77820	576	6
	582	6
	588	6
207-70-78110	593	1
	606	1
	612	1
207-70-78210	595	4
	601	4
	608	4
	614	4
207-70-78220	595	2
	601	2
	608	2
	614	2
207-70-78230	595	3
	601	3
	608	3
	614	3
207-70-78260	595	6
	601	6
	608	6
	614	6
207-70-C2030	580	
207-70-C2200	606	
	612	
207-934-6160	656	7
207-934-6170	656	8
207-934-7111	656	1
207-934-7120	656	2
	657	2
	658	2
	659	6
	660	8
	661	8
207-934-7131	656	3
207-934-7140	656	4
207-934-7150	656	5
	657	5
	660	3
	661	3
207-934-7181	656	9
	657	9
	658	9
	659	7
	660	9
	661	9
207-934-7630	659	2
207-934-7640	659	3
207-934-7650	659	4
207-934-7660	659	5
207-934-C110	658	1
207-934-C210	657	1
207-934-C221	660	1
207-934-C222	661	1
207-934-C2A0	660	17
	661	17
207-934-C2C0	660	18
	661	18
207-934-C2E0	660	19
	661	19
207-934-C2G0	661	20
207-934-C310	659	1
207-934-CA50	658	8
207-934-CA60	658	5
207-934-CA70	657	4
	658	4
	660	4
207-934-CA71	661	4
207-934-CA80	657	3
	658	3

PartNumber	Page	Index
	660	5
207-934-CA81	661	5
207-934-CA90	660	6
	661	6
207-934-CB60	657	8
	660	2
	661	2
207-934-CB80	660	7
	661	7
207-934-CE10	660	12
	661	12
207-934-CE30	660	13
	661	13
207-934-CE40	660	14
	661	14
207-934-CE50	660	15
	661	15
207-934-CE60	660	16
	661	16
207-944-7211	626	1
207-944-7510	631	1
207-944-7551	636	
207-944-7H80	636	2
207-970-2250	604	10
	617	10
207-970-2260	604	2
	617	2
207-970-5111	289	
207-970-511101	289	1
207-970-511102	289	2
207-970-511103	289	3
207-970-511104	289	4
207-970-5121	289	5
207-970-7110	591	1
	604	1
	617	1
	641	20
207-970-7120	591	9
	604	9
	617	9
	641	21
207-970-7130	591	2
207-970-7140	591	10
207-970-7162	592	15
	605	15
	618	15
207-970-7171	592	5
	592	11
	605	5
	605	11
	618	5
	618	11
207-970-7210	653	1
207-970-7221	653	13
207-970-7310	592	19
	605	19
	618	19
	653	20
207-970-7320	592	8
	605	8
	618	8
207-970-7331	592	14
	605	14
	618	14
207-970-7420	648	3
207-970-7430	648	4
207-970-7640	641	1
207-970-7650	641	10
207-979-6180	162	21
	183	7
	187	38
	190	7
	195	41
	198	7
	203	41

PartNumber	Page	Index
207-979-7390	331	1
207-979-7540	331	7
207-979-7560	481	13
207-979-7871	330	14
207-979-7880	330	1
207-979-7891	160	37
207-979-7911	384	2
207-979-7912	454	2
207-979-7922	384	4
	454	4
207-979-7930	384	10
	454	10
207-979-7940	384	8
	454	8
207-979-7951	331	12
207-979-7961	330	25
207-979-7971	160	34
207-979-7991	330	21
207-98-61130	693	
207-98-73110	503	9
207-98-C1000	690	1
	691	1
208-00-71260	664	6
	665	6
	666	6
	667	6
208-01-11161	152	9
208-01-11181	152	10
208-01-55220	152	7
208-03-71410	163	36
208-03-71490	158	29
208-03-71770	162	11
208-03-71810	158	8
208-03-71821	158	31
208-03-71840	158	9
208-03-71850	159	45
208-03-71860	159	46
208-03-71890	159	47
208-03-72151	163	1
208-04-K1550	696	4
	697	4
208-06-19170	294	20
	366	6
	387	1
	387	7
	436	6
	457	1
	457	7
208-26-71170	529	27
	534	27
208-26-71210	529	33
	534	33
208-26-71241	529	26
	534	26
208-27-71250	547	13
	551	13
208-30-11760	555	6
208-30-72120	567	11
208-43-41111	387	5
	387	14
	457	5
	457	14
208-43-71420	354	8
	424	8
208-43-71520	364	2
	434	2
208-43-71530	364	3
	434	3
208-43-71590	364	4
	434	4
208-53-11330	347	8
	417	8
208-53-11860	335	8
208-53-11920	351	9
	421	9

PartNumber	Page	Index
208-53-11941	351	5
	421	5
208-53-12220	352	19
	422	19
208-53-12280	372	11
	442	11
	471	11
208-53-12290	357	2
	427	2
208-53-12320	357	22
	427	22
208-53-12330	357	23
	427	23
208-53-12410	357	20
	427	20
208-53-12440	351	4
	421	4
208-53-12460	350	2
	420	2
208-53-12680	352	12
	422	12
208-53-12980	343	32
	412	32
208-53-12991	343	31
	412	31
208-53-13270	343	7
	412	7
208-53-14540	339	4
	408	4
208-53-22162	336	16
	393	11
208-53-22710	336	1
208-53-22810	339	14
	408	14
208-53-22H70	336	2
	393	2
208-53-23210	473	1
	474	1
208-53-26810	393	1
208-54-41441	483	38
208-54-57180	487	9
	487	21
	490	9
	490	21
	507	34
	510	18
	511	6
	511	13
	511	20
	511	28
	511	34
	513	6
	514	5
	514	19
	514	31
	515	34
	519	6
	519	13
	519	20
	519	28
	519	34
	521	4
	522	5
	522	20
	522	32
208-54-71380	482	3
208-54-71470	498	7
	499	7
208-54-71900	493	
	495	
208-54-71910	493	8
	495	8
208-54-71920	493	7
	495	7
208-54-73131	482	31

PartNumber	Page	Index
208-54-73351	488	30
	491	30
208-54-73490	507	10
	511	10
	515	10
	519	10
208-54-73520	507	2
	511	2
	515	2
	519	2
208-54-73710	482	26
208-54-73720	482	27
208-54-78320	507	1
	515	1
208-54-78340	511	1
	519	1
208-60-71150	214	29
	216	29
208-60-71181	214	39
208-60-75120	162	17
208-62-42320	386	12
	456	12
208-62-71410	279	13
	280	17
208-62-71540	240	3
	240	20
	270	3
	270	24
208-62-72470	386	13
	456	13
208-62-72480	398	28
	468	28
208-62-72860	386	14
	456	14
208-62-72870	386	15
	456	15
208-62-73910	276	9
208-62-76910	577	22
	577	29
	583	22
	583	29
	589	22
	589	29
	596	22
	596	29
	602	22
	602	29
	609	22
	609	29
	615	22
	615	29
208-70-33220	655	1
208-70-61241	630	1
	635	1
	640	1
	647	1
	652	1
208-70-73160	629	9
	634	9
	639	9
	646	9
	651	9
208-934-5170	656	6
	657	6
	658	6
	659	8
	660	10
	661	10
208-934-6160	657	7
	658	7
	659	9
	660	11
	661	11
208-970-7171	648	2
208-970-7210	591	20
	604	20
	617	20
208-970-7220	577	21
	577	28
	583	21
	583	28
	589	21
	589	28
	591	17
	596	21
	596	28
	602	21
	602	28
	604	17
	609	21
	609	28
	615	21
	615	28
	617	17
208-979-7520	162	4
208-979-7540	383	1
	453	1
208-979-7560	357	15
	427	15
208-979-7650	384	6
	454	6
209-00-41550	498	14
	499	13
209-70-54610	656	12
	657	12
	658	12
	660	25
209-72-12230	328	4
	347	3
	347	6
	417	3
	417	6
209-939-7110	661	31
209-939-7120	661	32
209-98-81280	331	10
20B-27-11210	145	5
	544	12
	548	12
20T-54-42510	331	2
20T-910-8660	398	15
	468	15
20U-54-25140	335	19
	404	19
20U-54-46520	349	3
	419	3
20U-62-41610	176	21
20U-62-41690	172	35
20U-62-41730	306	1
20X-54-21460	493	10
	495	10
20Y-00-31330	664	5
	665	5
	666	5
	667	5
20Y-00-31840	664	23
	665	23
	666	23
	667	23
20Y-00-41340	664	15
	665	15
	666	15
	667	15
20Y-00-41460	669	1
20Y-00-41530	664	28
	665	28
	666	28
	667	28
20Y-00-42110	170	27
	171	19
	215	56
	217	17
	493	34
	495	34
20Y-00-42120	493	31
	495	31
20Y-00-42140	493	32
	495	32
20Y-00-42170	505	5
20Y-00-43130	175	27
20Y-00-C1130	677	2
20Y-00-C1131	678	2
20Y-03-11330	158	4
20Y-03-22110	158	2
20Y-04-11161	171	8
20Y-04-21580	170	22
	171	14
20Y-04-31170	172	8
	176	5
20Y-04-38170	697	33
20Y-04-K2351	696	3
	697	3
20Y-04-K2450	696	2
	697	2
20Y-06-16910	372	7
	442	7
	471	7
20Y-06-21551	578	17
	584	17
	590	17
	597	17
	603	17
	610	17
	616	17
20Y-06-23472	350	5
	420	6
20Y-06-31660	365	8
	435	8
	470	8
20Y-06-31680	189	7
	196	7
	204	7
20Y-06-41150	354	7
	424	7
20Y-06-41251	399	39
	400	13
	469	13
	469	39
20Y-06-41543	207	6
20Y-06-41822	209	1
20Y-06-41990	341	
	410	
20Y-06-42110	377	36
	447	36
20Y-06-42121	377	37
20Y-06-42180	342	6
	411	6
20Y-06-42190	377	39
	447	39
20Y-06-42450	447	37
20Y-06-42610	211	20
20Y-06-43230	189	6
	196	6
	204	6
	578	16
	584	16
	590	16
	597	16
	603	16
	610	16
	616	16
20Y-06-43270	470	27
20Y-06-43280	197	1
20Y-06-71210	211	3
20Y-06-C1512	471	1
20Y-25-11270	524	9

PartNumber	Page	Index
	525	9
	576	14
	582	14
	588	14
	595	14
	601	14
	608	14
	614	14
20Y-26-21320	529	18
	534	18
20Y-26-21330	529	19
	534	19
20Y-26-21350	530	43
	535	43
20Y-27-11250	547	26
	551	26
20Y-27-13310	547	15
	551	15
20Y-27-21280	547	24
	551	24
20Y-27-21290	547	14
	551	14
20Y-27-41250	529	16
	534	16
20Y-27-41270	529	17
	534	17
20Y-30-16330	556	10
	557	10
	558	10
	559	10
	560	10
	561	9
20Y-43-11471	368	4
	374	4
	438	4
	444	4
20Y-43-15630	459	4
20Y-43-15640	459	3
20Y-43-15650	459	2
20Y-43-15720	459	7
20Y-43-15730	459	8
20Y-43-15741	459	9
20Y-43-15751	325	1
20Y-43-15761	327	1
20Y-43-15790	459	10
20Y-43-21231	361	18
	431	18
20Y-43-21241	361	19
	431	19
20Y-43-22250	368	1
	374	1
	438	1
	444	1
20Y-43-22261	368	2
	374	2
	438	2
	444	2
20Y-43-22370	368	3
	374	3
	438	3
	444	3
20Y-43-22381	368	6
	438	6
20Y-43-22390	374	6
	444	6
20Y-43-22421	368	7
	374	7
	438	7
	444	7
20Y-43-31421	372	18
	442	18
	471	18
20Y-43-31432	372	16
	442	16
	471	16
20Y-43-31440	372	19
	442	19
	471	19
20Y-43-31450	372	20
	442	20
	471	20
20Y-43-31513	372	12
	442	12
	471	12
20Y-43-31522	372	13
	442	13
	471	13
20Y-43-31611	372	14
	442	14
	471	14
20Y-43-31621	372	15
	442	15
	471	15
20Y-43-41111	361	10
	431	10
20Y-43-41121	361	3
	431	3
20Y-43-41143	373	1
	443	1
20Y-43-41152	373	7
	379	7
	443	7
	449	7
20Y-43-41162	373	5
	443	5
20Y-43-41173	373	2
	443	2
20Y-43-41181	373	11
	379	11
	443	11
	449	11
20Y-43-41191	373	13
	379	13
	443	13
	449	13
20Y-43-41240	383	5
	453	5
20Y-43-41253	364	13
	434	13
20Y-43-41281	373	17
	379	17
	443	18
	449	18
20Y-43-41290	324	3
	325	4
	326	3
	327	4
	348	7
	371	16
	371	21
	371	25
	377	11
	377	18
	377	22
	418	7
	441	16
	441	21
	441	25
	447	11
	447	18
	447	22
20Y-43-41314	377	1
	447	1
20Y-43-41324	377	7
	447	7
20Y-43-41343	379	1
	449	1
20Y-43-41361	361	6
	431	6
20Y-43-41416	371	1
	441	1
20Y-43-41424	371	9
	441	9
20Y-43-41442	371	17
	441	17
20Y-43-41461	373	18
	379	18
	443	19
	449	19
20Y-43-41472	371	4
	441	4
20Y-43-41491	371	28
	441	28
20Y-43-41533	379	2
	449	2
20Y-43-41591	373	15
	379	15
	443	16
	449	16
20Y-43-41621	371	7
	441	7
20Y-43-41631	377	4
	447	4
20Y-43-41641	371	8
	441	8
20Y-43-41651	371	10
	441	10
20Y-43-41661	371	11
	377	8
	441	11
	447	8
20Y-43-41671	377	31
	447	31
20Y-43-41740	377	28
	447	28
20Y-43-41750	377	29
	447	29
20Y-43-41760	398	2
	468	2
20Y-43-41781	377	35
	447	35
20Y-43-41790	377	30
	447	30
20Y-43-41833	364	11
	434	11
20Y-43-41850	379	5
	449	5
20Y-43-41970	371	27
	441	27
20Y-43-41981	371	29
	441	29
20Y-43-41991	377	26
	447	26
20Y-43-42130	372	2
	442	2
20Y-43-42330	377	12
	447	12
20Y-43-42350	377	19
	447	19
20Y-43-42450	371	22
	441	22
20Y-43-C1211	471	2
20Y-46-21520	524	7
	525	7
20Y-53-00380	333	
	402	
20Y-53-00880	391	
	461	
20Y-53-00940	337	
	338	
	406	
	407	
20Y-53-11241	332	2
	390	2
	396	2

PartNumber	Page	Index
	401	2
	460	2
	466	2
20Y-53-11250	332	7
	390	7
	396	7
	401	7
	460	7
	466	7
20Y-53-11260	332	3
	390	3
	396	3
	401	3
	460	3
	466	3
20Y-53-11271	332	6
	390	6
	396	6
	401	6
	460	6
	466	6
20Y-53-11320	338	11
	407	11
	699	2
20Y-53-11332	337	17
	337	18
	406	17
	406	18
20Y-53-11380	346	6
	394	6
	415	6
	464	6
20Y-53-11390	346	4
	346	5
	394	4
	394	5
	415	4
	415	5
	464	4
	464	5
20Y-53-11402	337	
	406	
20Y-53-11411	337	21
	406	21
20Y-53-11421	337	22
	406	22
20Y-53-11441	338	18
	407	18
20Y-53-11451	337	13
	406	13
20Y-53-11460	337	14
	406	14
20Y-53-11470	337	11
	406	11
20Y-53-11485	337	16
	406	16
20Y-53-11520	333	2
	391	2
	402	2
	461	2
20Y-53-11540	334	42
	392	42
	403	42
	462	42
20Y-53-11551	333	4
	391	4
	402	4
	461	4
20Y-53-11561	333	25
	402	25
20Y-53-11571	391	26
	461	26
20Y-53-11581	333	33
	391	34
	402	33
	461	34
20Y-53-11591	335	1
	404	1
20Y-53-11601	335	
	404	
20Y-53-11611	335	4
	404	4
20Y-53-11641	391	35
	461	35
20Y-53-11661	333	28
	391	29
	402	28
	461	29
20Y-53-11721	336	12
	393	7
20Y-53-11741	336	6
	405	7
20Y-53-11761	343	36
	412	37
20Y-53-11771	336	18
	393	13
	405	19
	463	14
20Y-53-11781	336	13
	393	8
	405	14
	463	9
20Y-53-11790	336	7
	405	8
20Y-53-11821	345	5
	414	3
20Y-53-11841	332	4
	390	4
	396	4
	401	4
	460	4
	466	4
20Y-53-11850	332	5
	390	5
	396	5
	401	5
	460	5
	466	5
20Y-53-11861	336	21
	393	16
	405	22
	463	17
20Y-53-11890	339	15
	408	15
20Y-53-11921	336	4
	405	5
20Y-53-11931	336	15
	393	10
	405	16
	463	11
20Y-53-11940	335	9
	404	9
20Y-53-11953	324	4
	326	4
20Y-53-11973	335	11
20Y-53-11981	339	1
	408	1
20Y-53-11990	339	6
	408	6
20Y-53-12122	347	10
	417	10
20Y-53-12161	347	18
	417	18
20Y-53-12172	347	9
	417	9
20Y-53-12201	338	1
	407	1
20Y-53-12221	342	7
	411	7
20Y-53-12233	340	10
	409	10
20Y-53-12240	348	3
	418	3
20Y-53-12260	346	11
	394	11
	415	11
	464	11
20Y-53-12270	346	18
	394	19
	415	18
	464	19
20Y-53-12280	339	3
	408	3
20Y-53-12291	347	17
	417	17
20Y-53-12310	334	45
	343	18
	343	24
	347	14
	351	7
	351	11
	352	18
	357	14
	357	25
	357	29
	392	45
	403	45
	412	18
	412	24
	417	14
	421	7
	421	11
	422	18
	427	14
	427	25
	427	29
	462	45
20Y-53-12320	346	13
	394	13
	415	13
	464	13
20Y-53-12330	333	14
	391	15
	402	14
	461	15
20Y-53-12371	357	1
	427	1
20Y-53-12381	357	16
	427	16
20Y-53-12391	357	19
	427	19
20Y-53-12421	343	3
	412	3
20Y-53-12431	343	6
	412	6
20Y-53-12442	343	11
	412	11
20Y-53-12472	343	23
	412	23
20Y-53-12483	347	21
	417	21
20Y-53-12531	334	44
	392	44
	403	44
	462	44
20Y-53-12552	343	16
	412	16
20Y-53-12580	346	16
	394	17
	415	16
	464	17
20Y-53-12611	335	15
	404	15
20Y-53-12631	335	17
	404	17

PartNumber	Page	Index
20Y-53-12661	338	14
	407	14
20Y-53-12710	343	9
	343	14
	412	9
	412	14
20Y-53-12731	357	26
	427	26
20Y-53-12740	346	17
	394	18
	464	18
20Y-53-12751	353	10
	423	10
20Y-53-12760	353	11
	423	11
20Y-53-12771	350	11
	420	12
20Y-53-12781	353	9
	423	9
20Y-53-12830	333	18
	391	19
	402	18
	461	19
20Y-53-12840	337	3
	406	3
20Y-53-12850	337	4
	406	4
20Y-53-12860	357	31
	427	31
20Y-53-12870	337	6
	406	6
20Y-53-12880	337	7
	406	7
20Y-53-12892	335	12
	404	12
20Y-53-12940	338	12
	407	12
20Y-53-12951	346	24
	394	25
	415	24
	464	25
20Y-53-12960	346	1
	394	1
	415	1
	464	1
20Y-53-12971	337	9
	406	9
20Y-53-12991	338	5
	407	5
20Y-53-13130	473	5
	474	5
20Y-53-13142	473	8
	474	9
20Y-53-13151	473	11
	474	12
20Y-53-13280	351	3
	421	3
20Y-53-13351	352	3
	422	3
20Y-53-13361	352	6
	422	6
20Y-53-13371	351	1
	421	1
20Y-53-13421	351	8
	421	8
20Y-53-13451	352	14
	422	14
20Y-53-13480	351	2
	421	2
20Y-53-13490	345	3
	414	1
20Y-53-13618	350	
20Y-53-13619	420	
20Y-53-13680	350	6
	420	7

PartNumber	Page	Index
20Y-53-13870	343	5
	412	5
20Y-53-13880	337	15
	406	15
20Y-53-13910	337	12
	406	12
20Y-53-13921	353	20
20Y-53-13922	423	20
20Y-53-13930	345	1
20Y-53-13960	343	34
20Y-53-14170	491	32
20Y-53-14220	398	9
	468	9
20Y-53-14230	348	4
	418	4
20Y-53-14311	394	27
	464	27
20Y-53-14340	355	11
	395	11
	425	11
	465	11
	472	11
20Y-53-14812	354	1
	424	1
20Y-53-14821	355	1
	395	1
	425	1
	465	1
	472	1
20Y-53-14831	389	9
20Y-53-14841	389	12
	459	13
20Y-53-14910	389	1
20Y-53-14920	389	2
20Y-53-14930	389	3
20Y-53-14940	389	4
	459	5
20Y-53-14950	389	5
	459	6
20Y-53-14963	389	6
20Y-53-14973	389	7
20Y-53-14984	389	8
20Y-53-15121	207	3
20Y-53-15140	346	28
	415	28
20Y-53-15281	206	4
20Y-53-15470	412	34
20Y-53-15870	343	10
	343	15
	412	10
	412	15
20Y-53-15881	463	1
20Y-53-15890	443	14
	449	14
20Y-53-16180	420	5
20Y-53-18211	354	9
	424	9
20Y-53-18221	357	36
	427	36
20Y-53-18880	346	21
	394	22
20Y-53-21211	699	1
20Y-53-21251	699	5
20Y-53-21261	700	
20Y-53-21271	700	1
20Y-53-21280	700	2
20Y-53-21292	700	5
20Y-53-21321	700	8
20Y-53-21340	699	
20Y-53-21350	700	3
20Y-53-21361	700	6
20Y-53-21371	700	
20Y-53-J1530	205	1
20Y-54-11611	333	37
	339	11

PartNumber	Page	Index
	391	37
	402	37
	408	11
	461	37
	482	15
	483	15
	485	15
20Y-54-12550	507	6
	507	13
	507	20
	507	28
	509	6
	515	6
	515	13
	515	20
	515	28
	517	6
	518	19
20Y-54-13180	337	10
	406	10
20Y-54-13322	337	8
	406	8
20Y-54-14590	333	15
	336	9
	391	16
	393	4
	402	15
	405	10
	461	16
	463	5
20Y-54-19920	493	39
	495	39
20Y-54-19930	494	40
	496	40
20Y-54-25852	493	2
	495	2
20Y-54-27290	480	16
20Y-54-27360	480	10
20Y-54-27761	487	10
	490	10
20Y-54-28170	482	9
	483	17
	485	17
20Y-54-29232	482	25
	483	20
	485	20
20Y-54-29680	498	8
	499	8
20Y-54-35430	502	3
20Y-54-35451	346	12
	394	12
	415	12
	464	12
20Y-54-39450	340	6
	409	6
20Y-54-39460	340	7
	409	7
20Y-54-39480	340	8
	409	8
20Y-54-39511	342	10
	411	10
20Y-54-51420	334	43
	392	43
	403	43
	462	43
20Y-54-51531	333	3
	391	3
	402	3
	461	3
20Y-54-51621	334	39
	392	39
	403	39
	462	39
20Y-54-51640	335	3
	404	3

PartNumber	Page	Index
20Y-54-51670	333	21
	391	22
	402	21
	461	22
20Y-54-51680	333	22
	391	23
	402	22
	461	23
20Y-54-52221	340	
	409	
20Y-54-52300	338	2
	407	2
20Y-54-52350	340	5
	409	5
20Y-54-52621	333	12
	391	13
	402	12
	461	13
20Y-54-52651	336	20
	336	24
	393	15
	393	19
	405	21
	405	26
	463	16
	463	21
20Y-54-52681	333	13
	391	14
	402	13
	461	14
20Y-54-52791	412	35
20Y-54-52860	337	5
	406	5
20Y-54-61470	482	6
	483	21
	485	21
20Y-54-61630	503	3
20Y-54-61670	507	39
	511	39
	515	39
	519	39
20Y-54-63390	483	2
	485	2
20Y-54-63414	482	19
	483	3
	483	7
	485	3
	485	7
20Y-54-65690	353	17
	423	17
20Y-54-65790	353	18
	423	18
20Y-54-71372	482	18
20Y-54-71491	483	8
	485	8
20Y-54-73190	493	19
	495	19
20Y-54-74161	498	5
	499	5
20Y-54-74172	498	6
	499	6
20Y-54-74260	502	2
20Y-54-74270	503	2
20Y-54-D1450	480	2
20Y-57-41204	316	
20Y-57-41211	317	2
20Y-57-41910	319	1
20Y-57-42100	318	1
20Y-60-21240	214	24
	216	24
20Y-60-21320	214	31
	216	31
20Y-60-21340	215	40
	217	3
20Y-60-21470	214	38
	690	16
	691	16
20Y-60-22270	241	19
	271	19
20Y-60-22372	277	3
20Y-60-31140	214	22
	216	22
20Y-60-31271	215	
20Y-60-31450	214	23
	216	23
20Y-60-32121	296	2
	300	2
20Y-60-42210	217	2
20Y-62-12121	543	1
20Y-62-13450	283	8
	285	41
	286	13
	575	6
	575	9
	575	13
	577	6
	577	9
	577	12
	577	17
	577	24
	577	31
	581	6
	581	9
	581	13
	583	6
	583	9
	583	12
	583	17
	583	24
	583	31
	587	6
	587	9
	587	13
	589	6
	589	9
	589	12
	589	17
	589	24
	589	31
	591	19
	591	22
	592	4
	592	10
	592	18
	592	21
	592	23
	594	6
	594	9
	594	13
	596	6
	596	9
	596	12
	596	17
	596	24
	596	31
	600	6
	600	9
	600	13
	602	6
	602	9
	602	12
	602	17
	602	24
	602	31
	604	19
	604	22
	605	4
	605	10
	605	18
	605	21
	605	23
	607	6
	607	9
	607	13
	609	6
	609	9
	609	12
	609	17
	609	24
	609	31
	613	6
	613	9
	613	13
	615	6
	615	9
	615	12
	615	17
	615	24
	615	31
	617	19
	617	22
	618	4
	618	10
	618	18
	618	21
	618	23
20Y-62-15831	388	1
	388	12
	400	1
	400	15
	458	1
	458	12
	469	1
	469	15
20Y-62-15951	295	23
	475	3
	476	3
20Y-62-16630	304	4
20Y-62-18890	370	5
	376	5
	431	26
	440	5
	446	5
20Y-62-18910	361	21
	370	3
	376	3
	431	21
	440	3
	446	3
20Y-62-19560	304	6
20Y-62-21940	297	17
	301	17
20Y-62-22160	240	9
	270	9
	295	7
20Y-62-22790	151	7
	172	3
	294	11
	294	17
	295	12
	295	18
	298	4
	302	4
	307	5
	385	3
	385	11
	386	5
	386	16
	398	29
	455	3
	455	11
	456	5
	456	16
	468	29
20Y-62-22810	294	19

PartNumber	Page	Index
	295	21
	298	5
	298	8
	302	5
	302	8
	307	6
	386	6
	398	30
	456	6
	468	30
20Y-62-22820	298	9
	298	12
	302	9
	302	12
	307	11
	385	12
	386	7
	386	17
	398	31
	455	12
	456	7
	456	17
	468	31
20Y-62-22830	151	14
	307	7
	386	18
	456	18
20Y-62-22840	307	12
	386	19
	456	19
20Y-62-22850	307	8
	385	13
	386	20
	455	13
	456	20
20Y-62-22860	298	10
	302	10
	307	13
	386	21
	456	21
20Y-62-27770	387	16
	457	16
20Y-62-41701	241	
	271	
20Y-62-41960	301	26
20Y-62-42550	386	8
	456	8
20Y-62-43470	398	20
	468	20
20Y-62-44630	385	5
	455	5
20Y-62-45620	240	11
	270	11
20Y-62-45710	270	20
20Y-62-47630	241	22
	271	22
20Y-62-51681	291	
20Y-62-51691	291	7
20Y-62-52160	398	17
	468	17
20Y-62-52280	386	22
	456	22
20Y-62-52330	398	25
20Y-62-52340	398	26
20Y-62-52350	398	27
20Y-62-53410	386	9
	456	9
20Y-62-87510	242	12
	272	12
20Y-70-11520	576	5
	582	5
	588	5
	595	5
	601	5
	608	5
	614	5
20Y-70-11540	576	1
	582	1
	588	1
	595	1
	601	1
	608	1
	614	1
20Y-810-1170	384	16
	454	16
20Y-810-1240	162	7
	211	7
20Y-810-1260	329	
20Y-954-6111	322	1
20Y-954-6132	323	1
20Y-954-6192	323	2
20Y-954-6250	321	10
20Y-954-6380	321	1
20Y-970-6451	290	1
20Y-973-2220	568	1
20Y-973-2230	568	2
20Y-979-3120	330	17
20Y-979-3130	384	5
	454	5
20Y-979-3140	331	13
20Y-979-3150	330	23
	330	26
	384	3
	454	3
20Y-979-6161	348	8
	418	8
20Y-979-6191	167	41
20Y-979-6271	166	40
20Y-979-6612	330	2
20Y-979-6630	364	15
	434	15
20Y-979-6650	330	22
20Y-98-21140	693	25
21J-06-12440	333	31
	391	32
	402	31
	461	32
21K-54-26351	493	11
	495	11
21M-03-15260	163	16
21M-27-11260	547	12
	551	12
21M-970-1173	642	9
	654	9
21M-970-1204	641	19
	642	
	653	25
	654	
21M-970-1223	642	2
	654	2
21N-04-41410	524	4
	525	4
21N-32-11211	659	18
21N-64-36680	295	10
21T-06-11351	328	1
21T-06-11950	331	17
21T-06-33760	377	38
	447	38
21T-06-35620	354	21
	424	21
21T-09-11240	506	1
21T-38-12270	328	7
21T-54-16150	166	4
21T-62-76850	175	18
	180	17
21U-98-31160	664	26
	665	26
	666	26
	667	26
21W-62-42490	240	17
	270	17
	274	12
	297	7
	301	7
	539	16
21W-62-42630	539	4
	542	19
	543	19
21W-62-42640	214	12
	216	12
	279	10
	280	14
	281	15
	536	4
	539	24
22B-03-12590	158	27
22B-04-K1130	697	6
22B-04-K1140	697	7
22B-04-K1150	697	8
22B-04-K1160	697	9
22B-04-K1170	697	10
22B-46-24380	660	24
	661	25
22B-54-15411	333	5
	391	5
	402	5
	461	5
22B-54-15421	333	8
	391	8
	402	8
	461	8
22B-54-15440	333	6
	391	6
	402	6
	461	6
22B-54-15450	333	9
	391	9
	402	9
	461	9
22B-54-15470	333	7
	391	7
	402	7
	461	7
22B-54-15480	333	10
	391	10
	402	10
	461	10
22B-54-15841	335	13
	404	13
22B-54-15970	335	5
	404	5
22B-54-15980	335	6
	404	6
22B-54-16330	338	10
	407	10
22B-54-16340	338	3
	407	3
22B-54-16461	338	19
	352	8
	407	19
	422	8
22B-54-17282	346	2
	394	2
	415	2
	464	2
22B-54-17380	343	22
	412	22
22B-54-17612	207	1
22B-54-17660	207	
22B-54-38541	405	17
	463	12
22B-57-11911	320	1
22B-60-11160	214	32
	216	32
22B-62-18620	386	23

PartNumber	Page	Index
	456	23
22L-62-22590	241	15
	271	15
22U-00-21440	664	16
	665	16
	666	16
	667	16
22U-03-27951	166	38
22U-04-21200	170	
	171	
22U-04-21210	170	21
	171	13
22U-04-21220	170	23
	171	15
22U-04-21241	170	
	171	
22U-06-11270	365	9
	435	9
	470	9
22U-06-22360	372	23
	442	23
	471	23
22U-06-22380	377	33
	447	33
22U-06-22460	377	34
	447	34
22U-06-22490	372	22
	442	22
	471	22
22U-06-31430	211	5
22U-06-31440	211	4
22U-26-21240	529	30
	534	30
22U-26-21320	529	29
	534	29
	547	21
	551	21
22U-43-21111	361	15
	431	15
22U-43-21121	361	16
	431	16
22U-43-21131	361	17
	431	17
22U-43-21182	368	
	438	
22U-43-21192	374	
	444	
22U-43-21211	368	8
	374	8
	438	8
	444	8
22U-43-21350	361	
	431	
22U-43-21360	361	9
	431	9
22U-43-21390	364	12
	434	12
22U-43-22340	357	6
	427	6
22U-43-23251	377	5
	447	5
22U-43-23260	371	26
	372	24
	378	44
	441	26
	442	24
	448	44
	471	24
22U-43-23290	377	6
	447	6
22U-54-24760	507	17
	507	24
	511	17
	511	24
	515	17

PartNumber	Page	Index
	515	24
	519	17
	519	24
22U-54-25110	362	1
	432	1
22U-54-25120	363	1
	433	1
22U-54-25360	347	11
	417	11
22U-54-25521	362	2
	432	2
22U-54-25531	363	2
	433	2
22U-54-25581	359	2
	429	2
22U-54-25660	398	1
	468	1
22U-60-21331	297	22
	301	22
22U-60-21520	170	
22U-62-21870	539	28
22U-62-24420	539	31
22U-62-33521	361	26
22U-62-33531	361	28
23D-950-4450	357	30
	427	30
23S-01-11140	152	1
287-06-16420	354	18
	424	18
2A5-00-11410	664	31
	665	31
	666	31
	667	31
2A5-00-11420	664	32
	665	32
	666	32
	667	32
2A5-01-11610	185	30
	193	22
	201	22
2A5-06-11932	372	1
	442	1
2A5-06-12350	342	3
2A5-06-12351	411	3
2A5-06-12430	206	
2A5-06-12431	206	1
2A5-43-11261	325	2
	327	2
2A5-43-11420	367	1
	437	1
2A5-43-11732	366	1
	436	1
2A5-43-12131	459	1
2A5-43-12353	364	7
	434	7
2A5-43-12363	364	9
	434	9
2A5-43-12480	364	14
	434	14
2A5-53-11291	343	17
	412	17
2A5-53-11361	415	21
	464	22
2A5-53-11471	336	8
	405	9
2A5-53-11532	347	4
	417	4
2A5-53-11731	357	
	427	
2A5-53-11741	353	
	423	
2A5-53-11760	353	2
	423	2
2A5-53-11770	353	3
	423	3

PartNumber	Page	Index
2A5-53-11780	353	4
	423	4
2A5-53-11790	353	5
	423	5
2A5-53-11860	353	6
	423	6
2A5-53-11870	345	4
	414	2
2A5-53-11941	474	8
2A5-53-11981	404	11
2A5-53-11K11	405	2
	463	2
2A5-53-11K21	405	3
	463	3
2A5-53-12130	346	25
	415	25
2A5-53-12140	348	2
	418	2
2A5-53-12160	404	8
2A5-53-12412	405	1
2A5-53-12491	333	1
	391	1
	402	1
	461	1
2A5-53-12530	405	18
	463	13
2A5-53-12561	343	1
	412	1
2A5-53-12651	348	
	418	
2A5-53-12710	338	9
	407	9
2A5-53-12721	340	1
	409	1
2A5-53-12850	333	34
	402	34
2A5-53-12870	340	13
2A5-53-12920	342	12
	411	12
2A5-53-12970	405	13
	463	8
2A5-53-13130	338	15
	407	15
2A5-53-13140	345	7
	414	5
2A5-53-13381	415	17
2A5-53-13540	409	13
2A5-54-13420	502	1
	503	1
2A5-62-12350	398	6
	468	6
2A5-62-12771	304	1
2A5-62-13811	387	19
	457	19
2A5-62-13820	387	22
	457	22
2A5-62-13831	387	25
	457	25
2A5-70-11130	574	9
	580	9
	586	9
	593	9
	599	9
	606	9
	612	9
2A5-954-1130	321	4
	321	12
2A5-979-1112	380	
	381	
	382	
2A5-979-1113	450	
	451	
	452	
2A5-979-1122	355	3
	395	3

PartNumber	Page	Index
	425	3
	465	3
	472	3
2A5-979-1131	384	1
	454	1
2A5-979-1181	353	13
	423	13
2A5-979-1191	353	14
	423	14
2A5-979-1211	352	1
	422	1
2A5-979-1221	352	2
	422	2
2A5-979-1231	352	4
	422	4
2A5-979-1241	352	5
	422	5
2A5-979-1252	352	9
	422	9
2A5-979-1261	352	20
	422	20
2A5-979-1271	352	21
	422	21
2A5-979-1541	353	15
	423	15
2A5-979-1551	353	
	423	
2A5-979-1580	352	15
	422	15
2A5-979-1590	352	16
	422	16
2A5-979-1611	353	16
	423	16
2A5-979-1660	352	10
	422	10
2A5-979-1670	352	11
	422	11
417-04-21230	170	
418-54-35450	350	10
	353	8
	391	12
	420	11
	423	8
	461	12
418-U12-3410	497	9
418-U12-3420	497	10
418-U12-3470	497	15
419-03-21320	166	29
421-03-22170	166	30
421-06-23330	189	
	196	
	204	
	206	
	578	
	584	
	590	
	597	
	603	
	610	
	616	
421-60-35170	170	9
	217	10
	690	15
	691	15
421-60-35180	170	10
	217	11
421-60-35190	170	11
	217	12
421-70-11280	242	2
	272	2
	274	2
421-U12-3102	497	
421-U12-3140	497	3
421-U12-3151	497	4
421-U12-3160	497	5
421-U12-3170	497	6
421-U12-3181	497	7
421-U12-3190	497	8
421-U12-3230	497	11
421-U12-3240	497	12
421-U12-3250	497	13
421-U12-3261	497	14
421-U12-3330	497	2
423-04-11362	170	16
427-15-15910	556	9
	557	9
	558	9
	559	9
437-40-26240	373	8
	379	8
	443	8
	449	8
566-07-12151	442	6
	471	6
569-06-61960	354	17
	424	17
56D-03-31280	161	49
581-04-22290	476	4
600-021-2210	132	1
600-184-1350	44	5
	45	6
	155	5
600-184-1510	44	4
	155	4
600-184-1570	44	3
	155	3
600-184-1611	45	5
600-184-1671	45	4
600-185-4200	44	
	155	
600-185-4210	44	1
	155	1
600-185-6100	45	
600-185-6110	45	2
600-311-3602	177	
600-311-3610	177	
600-311-3630	177	3
600-311-3640	177	4
600-311-3660	177	5
600-311-3670	177	6
600-311-3690	174	7
	177	9
600-311-3722	177	
600-311-3760	174	
600-311-5470	174	8
600-311-5600	174	
	174	
600-311-5602	174	
600-311-5631	174	3
600-311-5640	174	
600-311-5642	174	4
600-311-5660	174	5
600-311-7611	178	
600-311-7612	178	3
	179	
600-311-7631	179	5
600-311-9551	179	1
600-311-9580	179	7
600-311-9591	179	9
600-311-9931	179	6
600-311-9941	179	4
600-311-9950	179	8
600-311-9961	179	3
600-311-9971	179	2
600-319-3610	691	6
600-319-3750	93	1
	94	8
	690	5
	691	5
600-319-5610	690	
600-319-5611	690	6
600-411-1280	368	9
	374	9
	438	9
	444	9
600-468-2100	128	1
600-635-7870	102	1
600-815-2170	365	20
	435	20
	470	20
600-816-3120	43	1
600-861-6111	115	
600-863-5711	118	
600-863-5712	120	
600-863-8112	121	
600-863-8113	123	
6050-71-5710	53	17
6110-23-5331	330	11
6110-23-6490	162	1
6110-73-6231	179	10
6130-12-4581	124	10
6138-81-8660	53	19
6151-11-4840	44	6
	155	6
6151-11-9970	45	7
6151-51-5490	175	24
	180	23
6152-12-4420	164	44
6152-62-5110	46	1
6155-71-5810	124	11
6155-71-5820	124	12
6156-81-7202	45	
6207-51-7690	48	4
	49	9
6207-81-6980	114	3
6208-11-5850	50	5
6215-11-5920	50	16
6215-81-9510	38	13
	71	17
	92	3
	94	3
6215-81-9530	65	
6215-81-9730	65	12
6216-14-6820	65	11
	112	1
6216-14-6860	65	
	112	
6216-24-5730	39	6
6216-54-7320	124	33
6216-74-6180	124	31
6216-74-6190	92	25
6216-94-3450	71	16
6217-71-5770	95	2
6221-81-6810	117	1
6222-11-5940	50	6
6261-81-1900	129	16
6261-81-2902	129	2
6261-81-6901	129	18
6271-81-4520	129	11
6271-81-9201	129	1
6271-81-9220	129	
	129	
6301-11-4630	69	5
6560-81-4530	87	6
6643-11-4641	44	7
	45	8
	155	7
6731-11-8290	82	12
6731-51-6280	82	9
6731-51-6291	82	11
6731-51-8150	49	6
6731-61-2151	83	2
6731-71-6270	39	10
6731-74-5910	92	15
	92	20

PartNumber	Page	Index
6732-11-1720	70	2
6732-11-1910	38	11
	62	1
	71	23
	74	2
6732-11-1920	38	12
	62	2
	65	10
	71	24
	74	3
	110	1
6732-11-1930	83	7
6732-11-5860	47	3
6732-21-1311	65	3
6732-21-1810	71	3
6732-21-1960	38	
	71	
	87	5
	92	
	94	
6732-21-3190	72	2
6732-21-3220	72	3
6732-21-4150	65	8
6732-21-4161	65	9
6732-21-4171	65	5
6732-21-4180	96	12
	129	8
6732-21-4220	65	7
6732-21-4290	65	4
6732-21-5170	68	14
6732-21-5530	77	4
6732-21-6120	71	12
6732-21-6150	75	1
6732-21-6630	40	
	40	3
6732-22-3110	92	2
	94	9
6732-31-4120	67	1
6732-31-4130	67	2
6732-41-1260	60	4
6732-41-4520	38	20
6732-41-5430	54	5
	54	8
6732-41-6210	77	2
6732-51-5130	56	1
	62	4
	72	6
6732-51-8370	49	3
6732-61-3110	129	6
6732-61-3140	56	2
	69	8
	92	10
	124	15
6732-61-3170	87	8
6732-61-3260	104	2
6732-61-4120	89	3
	91	8
6732-71-3210	39	8
	124	28
	129	4
6732-71-5620	92	14
6732-71-6510	92	9
	92	13
	92	18
	92	33
	96	2
	96	7
6732-81-8810	48	1
6732-81-8820	48	2
6732-81-8830	48	5
6732-81-8860	48	8
	49	
6732-82-3580	78	1
	690	8
	691	8

PartNumber	Page	Index
6733-61-3150	54	13
6733-71-5840	68	7
6734-71-5520	129	9
6734-71-5610	69	1
6735-21-1910	71	
	124	
6735-21-1920	71	19
	124	29
6735-21-1930	71	20
	124	30
6735-21-1970	38	14
	71	18
	92	4
	94	4
6735-21-4160	92	32
6735-21-5530	72	1
6735-21-5531	38	2
6735-21-7240	63	11
6735-61-2120	129	7
6735-71-5190	39	3
6736-11-4460	71	15
6736-21-3230	42	1
6736-21-3360	72	5
6736-21-5320	68	13
6736-39-1140	136	6
6736-39-1150	136	7
6736-39-1160	136	8
6736-51-8710	48	7
6736-81-6170	68	9
	69	7
	88	5
6737-51-8770	49	
	92	24
	92	28
6738-11-4370	48	6
	52	3
6738-11-4380	52	5
6738-11-4390	52	4
6738-21-5610	68	
6738-21-5620	68	15
6738-21-5630	68	16
6738-21-5640	68	17
6738-82-5810	69	4
6741-21-1130	71	
6741-21-1131	71	7
6741-21-1140	71	6
6741-21-3320	62	3
6741-21-3330	62	5
6741-21-3530	63	7
6741-21-3541	63	6
6741-21-3810	63	4
6741-21-3820	63	3
6741-21-4110	65	6
6741-31-4100	66	
6741-31-4180	66	1
6741-39-1110	136	3
6741-39-1120	136	4
6741-39-1130	136	5
6741-39-1220	136	2
6741-51-5210	82	1
6741-51-5230	82	3
6741-61-1520	106	2
	107	2
6741-61-2120	82	10
	88	2
6741-61-6110	83	16
6741-61-6130	111	3
6741-81-6510	114	7
6741-81-6520	114	1
6741-81-9220	69	2
6742-01-0310	68	4
6742-01-0530	63	10
6742-01-0540	63	2
6742-01-0550	63	
6742-01-0950	63	5

PartNumber	Page	Index
6742-01-1080	83	14
6742-01-1360	71	1
6742-01-1370	71	2
6742-01-1380	71	25
	74	1
6742-01-1420	71	4
6742-01-1470	71	13
6742-01-1480	71	21
6742-01-1520	71	11
6742-01-1590	75	2
6742-01-1890	57	2
6742-01-2441	83	15
6742-01-2492	83	3
6742-01-2500	83	4
6742-01-2630	68	3
6742-01-2920	38	1
6742-01-3320	63	12
6742-01-3620	37	1
6742-01-3770	124	5
6742-01-3780	89	2
6742-01-4080	71	22
6742-01-4220	83	10
6742-01-4340	76	5
6742-01-4490	111	1
6742-01-4540	82	6
	690	4
	691	4
6742-01-4560	114	17
6742-01-5047	88	4
6742-01-5053	65	2
6742-01-5117	83	11
6742-01-5123	114	15
6742-01-5159	71	
6742-01-5195	105	2
6742-01-5199	75	
	136	9
6742-01-5202	83	8
6742-01-5233	136	10
6742-01-5240	136	11
6742-01-5287	136	12
6742-01-5288	136	13
6742-01-5289	57	1
6742-01-5309	76	8
6742-01-5542	63	
6742-21-8500	75	
6743-11-1610	38	21
6743-11-3230	90	5
6743-11-5230	50	2
6743-21-4190	65	1
6743-31-3102	76	
6743-31-3121	76	2
6743-31-3210	76	6
6743-51-4430	83	12
6743-51-5110	82	5
6743-51-5550	68	2
6743-51-5570	68	1
6743-51-6121	68	5
6743-51-6161	68	6
6743-51-9930	82	2
6743-51-9940	82	4
6743-51-9950	81	1
6743-51-9960	81	2
6743-61-2112	83	1
6743-61-2150	83	9
6743-61-2210	83	13
6743-61-3310	101	1
6743-61-3441	114	13
6743-61-3530	101	7
6743-61-3560	101	3
6743-61-3710	103	1
	690	7
	691	7
6743-61-3810	102	3
6743-81-6310	117	3
6743-81-8490	53	

PartNumber	Page	Index
6743-81-8491	53	21
6743-91-6120	64	1
6744-11-1070	38	6
6744-41-1010	60	3
6744-41-3020	54	3
6744-41-4031	38	
6744-41-4032	38	
6744-41-4033	38	
6744-41-4050	38	19
6744-41-4080	38	17
6744-41-4110	38	5
6744-41-4120	38	7
6744-41-5010	54	1
6744-41-5030	54	2
6744-71-1020	75	
	87	3
6744-71-1040	87	4
6744-71-1250	87	7
6744-71-3050	92	
	92	
6744-71-3060	92	23
	92	27
6744-81-4010	129	17
6745-11-1123	38	
6745-11-1190	38	
6745-11-1811	38	22
6745-11-3110	90	2
6745-11-3150	90	3
6745-11-4110	40	1
6745-11-4120	40	2
6745-11-4310	41	1
6745-11-5110	47	1
6745-11-5120	47	6
6745-11-5170	47	4
6745-11-5310	53	16
6745-11-5811	47	2
6745-11-6180	50	11
6745-11-6240	50	8
6745-11-6260	50	
6745-11-6261	50	14
6745-11-6510	50	1
6745-11-6520	50	13
6745-11-6530	51	1
	139	4
6745-11-7112	54	12
6745-11-7811	54	14
6745-11-8100	36	
6745-11-8110	36	11
6745-11-8120	36	10
6745-11-8150	36	9
6745-11-8160	36	3
	690	3
	691	3
6745-11-8170	36	4
6745-11-8180	36	
6745-11-8190	36	6
6745-11-8220	36	
6745-11-8250	39	5
6745-11-8260	51	4
	139	7
6745-11-8270	51	5
	139	8
6745-11-8810	36	8
	690	2
	691	2
6745-12-3100	90	1
6745-18-4210	136	
6745-18-4220	136	
6745-19-4210	136	14
6745-19-4220	136	15
6745-21-1106	71	
6745-21-1107	71	
6745-21-1190	71	
6745-21-1290	71	
6745-21-1311	55	1
6745-21-1330	55	2
6745-21-1611	71	14
6745-21-3111	63	1
6745-21-3210	63	8
6745-21-5130	68	12
6745-21-5211	68	11
6745-21-5640	77	1
6745-21-5660	77	
6745-21-5661	77	6
6745-21-5670	77	5
6745-21-7110	39	
6745-21-7120	39	1
6745-21-7181	39	4
6745-21-7210	72	4
6745-31-1120	75	
6745-31-1130	75	4
6745-31-1150	75	6
6745-31-2010	76	
6745-31-2012	76	
6745-31-2111	76	7
6745-31-2140	76	1
6745-32-2120	76	
6745-32-2121	76	
6745-39-1100	136	16
6745-39-1200	136	17
6745-39-1300	136	18
6745-39-1400	136	19
6745-41-1110	60	1
6745-41-1131	60	2
6745-41-2100	61	
6745-41-2110	61	1
6745-41-2120	61	2
6745-41-2130	61	3
6745-41-2140	61	4
6745-41-2151	71	
6745-41-2152	71	8
6745-41-3100	54	11
6745-41-4110	38	18
6745-41-4151	38	16
6745-41-4161	38	15
6745-41-4210	38	3
6745-41-4220	38	9
6745-41-5110	54	10
6745-41-5201	54	
6745-41-5202	54	7
6745-41-5401	54	
6745-41-5402	54	4
6745-41-5430	54	6
	54	9
6745-49-4130	38	4
6745-51-1110	80	
6745-51-1111	80	1
6745-51-5220	82	7
6745-51-8110	49	5
6745-51-8120	49	7
6745-51-8130	49	1
6745-61-3210	70	1
6745-61-4120	114	14
6745-61-4130	114	11
6745-61-4230	103	3
	114	12
6745-61-6130	108	1
6745-61-8160	49	2
6745-71-1130	87	1
	92	11
	92	16
	92	21
	92	34
	94	5
	96	4
	96	8
	125	1
6745-71-1170	87	
6745-71-1171	87	
6745-71-1180	87	14
6745-71-1210	89	1
6745-71-1220	87	9
6745-71-1230	87	10
6745-71-1240	87	15
6745-71-1250	87	16
6745-71-1260	87	19
6745-71-1821	96	
6745-71-1830	96	10
6745-71-1840	96	11
6745-71-1860	96	13
6745-71-3211	88	1
6745-71-4110	91	1
6745-71-4120	91	2
6745-71-4140	91	3
6745-71-4150	91	4
6745-71-4310	91	5
6745-71-4330	91	7
6745-71-5110	86	1
6745-71-5120	86	2
6745-71-5160	86	6
	125	5
6745-71-5170	97	1
6745-71-5180	92	5
6745-71-5190	92	22
6745-71-5210	86	3
6745-71-5220	86	5
6745-71-5230	125	3
6745-71-5240	125	4
6745-71-5311	96	1
6745-71-5391	96	5
6745-71-5410	96	6
6745-71-5430	96	9
6745-71-5440	92	7
6745-71-5450	92	8
6745-71-5460	92	12
6745-71-5470	92	17
6745-71-5480	92	30
6745-71-5490	92	
6745-71-5510	91	12
6745-71-5580	92	26
6745-71-5610	92	1
6745-71-5620	92	31
6745-71-5860	96	3
6745-71-5900	174	
6745-71-5902	174	
6745-71-5910	174	1
6745-71-6130	87	2
	92	29
	94	6
	125	2
6745-71-6190	94	7
6745-71-6410	94	1
6745-71-7203	177	
6745-71-7211	177	1
6745-71-9710	95	1
6745-81-2140	133	1
6745-81-4120	42	3
6745-81-6160	124	20
6745-81-6170	124	25
6745-81-7320	44	
	155	
6745-81-8041	48	
6745-81-8190	48	3
6745-81-8250	53	12
6745-81-8260	53	9
6745-81-8270	53	24
6745-81-8280	53	11
6745-81-8330	53	26
6745-81-8410	53	1
6745-81-8420	53	2
6745-81-8430	53	3
6745-81-8440	53	5
6745-81-9230	124	4
6745-81-9240	124	1
6745-81-9390	124	3

PartNumber	Page	Index
6745-81-9430	124	14
6745-81-9440	129	3
6745-81-9560	129	10
6745-81-9580	124	27
6745-81-9710	124	6
6745-81-9740	124	21
6745-81-9750	124	22
6745-81-9771	124	24
6745-81-9790	124	26
6745-81-9810	124	23
6746-11-4230	41	2
6746-11-4240	41	4
6746-21-1410	71	5
6746-31-1210	75	3
6746-31-3240	76	
6746-41-4210	38	
6746-61-1200	106	
6746-61-1201	107	
6746-61-3131	101	
6746-61-3141	101	2
6746-61-3180	101	6
6746-61-3190	101	4
6746-61-6210	109	1
6746-61-6230	109	2
6746-71-1230	88	3
6746-81-9520	129	15
6754-11-1160	38	8
6754-11-3120	90	4
6754-11-3130	90	
6754-11-3140	90	
6754-11-4120	41	3
	43	2
6754-11-5150	47	5
6754-11-8140	36	7
6754-11-8380	36	
6754-11-8480	36	2
6754-61-4111	103	2
	104	1
6754-71-1991	91	9
6754-71-5430	92	19
6754-71-5511	91	10
6754-71-5541	91	11
6754-71-9710	95	3
6754-72-1211	91	
6754-72-1212	91	6
6754-81-2701	129	
6754-81-2702	129	19
6754-81-2710	129	
6754-81-5110	43	
6754-81-5320	175	26
6754-81-9110	129	12
6754-81-9130	129	13
6754-81-9180	129	14
6754-81-9390	124	32
6754-81-9550	138	1
6991-11-5990	51	2
	139	5
700-22-11410	226	2
	228	5
	251	2
	253	5
700-80-61260	235	15
	262	15
700-80-64220	226	3
	228	4
	251	3
	253	4
700-93-11320	222	3
	222	7
	222	11
	222	15
	222	19
	222	23
	222	27
	233	3
	233	7
	247	3
	247	7
	247	11
	247	15
	247	19
	247	23
	247	27
	260	3
	260	7
	268	2
700-93-11330	526	13
	531	13
701-20-61230	241	20
	271	20
702-15-71130	533	8
702-15-71140	533	9
702-15-80000	533	
702-16-03910	369	
	375	
	439	
	445	
702-16-04260	360	
702-16-05260	397	
	467	
702-16-08210	305	1
702-16-51140	360	3
	369	5
	375	5
	397	3
	430	3
	439	5
	445	5
	467	3
702-16-51240	369	17
	375	17
	439	17
	445	17
702-16-51270	397	8
	467	8
702-16-53140	360	5
	369	7
	375	7
	430	5
	439	7
	445	7
702-16-53170	360	7
	369	10
	375	10
	397	7
	430	7
	439	10
	445	10
	467	7
702-16-53420	360	4
	369	6
	375	6
	430	4
	439	6
	445	6
702-16-53470	369	8
	375	8
	439	8
	445	8
702-16-53590	369	9
	375	9
	439	9
	445	9
702-16-53920	221	11
	230	21
	232	32
	246	11
	255	21
	258	32
702-16-54331	360	17
	430	19
702-16-54341	360	
	430	
702-16-54351	360	
	430	
702-16-54420	360	6
	430	6
702-16-54550	397	4
	467	4
702-16-54560	397	6
	467	6
702-16-54571	397	5
	467	5
702-16-54580	397	9
	467	9
702-16-54590	397	10
	467	10
702-16-54641	397	14
	467	14
702-16-54650	397	17
	467	17
702-16-54660	397	16
	467	16
702-16-54670	397	
	467	
702-16-56380	360	
	430	
702-16-56390	360	
	430	
702-16-56490	397	22
	467	22
702-16-58320	151	5
	151	12
702-16-71131	369	14
	375	14
	439	14
	445	14
702-16-71141	369	15
	375	15
	439	15
	445	15
702-16-71150	360	8
	430	8
702-16-71160	360	9
	369	12
	375	12
	430	9
	439	12
	445	12
702-16-71210	369	11
	375	11
	439	11
	445	11
702-16-71280	369	13
	375	13
	439	13
	445	13
702-16-71361	369	18
	375	18
	439	18
	445	18
702-16-71441	369	19
	375	19
	439	19
	445	19
702-16-73610	360	21
	430	21
702-16-73640	360	13
	430	13
702-21-01920	287	
	290	18
702-21-11930	287	3
702-21-11940	287	4
702-21-53140	231	6
	257	6

PartNumber	Page	Index
702-21-53311	397	21
	467	21
702-21-53340	397	
	467	
702-21-53350	397	
	467	
702-21-53780	397	18
	467	18
702-21-54180	151	4
	151	11
	235	17
	262	17
702-21-54910	235	18
	262	18
702-21-55420	231	3
	257	3
702-21-55440	231	5
	257	5
702-21-55460	231	2
	257	2
702-21-55520	231	4
	257	4
702-21-55620	228	1
	230	26
	231	10
	253	1
	255	26
	257	10
	544	10
	548	10
702-21-55710	230	29
	255	29
702-21-55720	230	30
	255	30
702-21-60900	235	14
	262	14
702-21-62200	151	1
702-21-62900	151	8
702-22-01010	430	
702-75-04601	546	1
	550	1
702-75-11520	546	6
	550	6
702-75-11830	546	3
	550	3
702-75-11840	546	5
	550	5
702-75-11850	546	7
	550	7
702-77-02170	528	1
	533	1
703-08-33651	537	
703-08-33652	538	
703-08-91210	537	1
703-08-91212	538	1
703-08-92210	537	5
703-08-92211	538	3
703-08-93170	537	10
	538	7
703-08-93770	537	4
703-08-93771	538	11
703-08-94510	537	8
	538	6
703-08-95620	537	2
	538	2
703-08-95770	537	7
	538	12
703-08-96120	538	14
703-13-98930	537	6
	538	4
706-73-71450	232	21
	258	21
706-73-72420	544	13
	548	13
706-73-72440	544	14
	548	14
706-75-42820	544	9
	548	9
706-75-42830	526	6
	531	6
706-76-71190	279	15
	280	19
706-76-71390	291	8
706-77-05010	527	5
	532	5
706-77-42890	527	4
	532	4
706-77-72280	526	7
	531	7
706-7G-71290	528	5
706-7H-01040	531	
	532	
	533	
706-7H-01050	526	
	527	
	528	
706-7H-03010	526	
	527	
	531	
	532	
706-7H-11440	527	1
	532	1
706-7H-11450	527	3
	532	3
706-7H-11460	527	10
	532	10
706-7H-11510	527	18
	532	18
706-7H-11520	527	15
	532	15
706-7H-11530	527	13
	532	13
706-7H-11540	527	14
	532	14
706-7H-11550	527	11
	532	11
706-7H-11560	526	5
	531	5
706-7H-11570	527	
	532	
706-7H-12210	526	1
	531	1
706-7H-12220	526	4
	531	4
706-7H-13560	527	20
	532	20
706-7H-13570	527	21
	532	21
706-7H-13580	527	22
	532	22
706-7H-13590	527	25
	532	25
706-7H-13610	527	19
	532	19
706-7K-40040	526	18
	531	18
706-7K-41920	527	8
	532	8
706-8J-41010	527	2
	532	2
706-8J-41420	527	7
	532	7
706-8J-71181	544	25
	548	25
706-8J-71190	544	26
	548	26
707-13-15570	627	1
	632	1
	637	1
707-27-14690	619	13
	621	13
	644	9
	649	9
707-27-15620	627	9
	632	9
	637	9
707-35-30900	619	27
	621	27
	644	25
	649	25
	704	
	704	
	706	
	706	
707-35-31000	623	31
	627	24
	632	24
	637	24
	705	
	705	
	705	
	706	
707-35-31310	619	10
	619	19
	621	10
	621	19
	644	16
	649	16
	704	
	704	
	706	
	706	
707-35-31410	627	14
	632	14
	637	14
	705	
	706	
707-35-31510	623	9
	623	21
	705	
	705	
707-36-14650	619	24
	621	24
	644	20
	649	20
707-36-15260	627	20
	632	20
	637	20
707-36-16580	623	26
707-39-14110	619	26
	621	26
	644	22
	649	22
	704	
	704	
	706	
	706	
707-39-15110	627	22
	632	22
	637	22
	705	
	706	
707-39-16120	623	28
	705	
	705	
707-41-11840	619	22
	621	22
	644	18
	649	18
707-44-14150	619	25
	621	25
	644	21
	649	21
	704	
	704	

PartNumber	Page	Index
	706	
	706	
707-44-14910	619	29
	621	29
	644	23
	649	23
707-44-15150	627	21
	632	21
	637	21
	705	
	706	
707-44-15911	627	23
	632	23
	637	23
707-44-16150	623	27
	705	
	705	
707-44-16910	623	29
707-51-10650	619	18
	621	18
	644	13
	649	13
	704	
	704	
	706	
	706	
707-51-10860	619	17
	621	17
	644	12
	649	12
	704	
	704	
	706	
	706	
707-51-11650	623	20
	627	13
	632	13
	637	13
	705	
	705	
	705	
	706	
707-51-11860	623	19
	627	12
	632	12
	637	12
	705	
	705	
	705	
	706	
707-52-90781	619	16
	621	16
	644	14
	649	14
707-52-90851	623	18
	627	16
	632	16
	637	16
707-56-10740	619	14
	621	14
	644	10
	649	10
	704	
	704	
	706	
	706	
707-56-11740	623	16
	627	10
	632	10
	637	10
	705	
	705	
	705	
	706	
707-58-11850	627	2

PartNumber	Page	Index
	632	2
	637	2
707-71-35220	619	9
	621	9
707-71-35270	623	8
707-71-61160	623	11
707-71-71060	619	12
	621	12
707-71-80280	623	12
707-71-91270	623	14
707-75-10160	619	23
	621	23
	644	19
	649	19
707-75-11040	623	25
	627	17
	632	17
	637	17
707-76-10130	619	7
	621	7
	623	3
	623	5
707-76-90130	627	3
	632	3
	637	3
	644	3
	649	3
707-76-90390	619	3
	621	3
707-83-13010	623	33
707-86-00810	619	31
707-86-00820	621	31
707-86-00830	623	37
707-86-00860	619	32
707-86-00870	621	32
707-86-00920	627	27
	632	27
	637	27
707-86-16330	644	27
	649	27
707-87-14070	623	35
707-87-14700	619	33
	621	33
707-87-14960	623	38
707-88-02960	624	51
707-88-10150	624	56
	627	36
	632	36
	637	36
	644	36
	649	36
707-88-21370	619	39
	621	39
707-88-21410	644	33
	649	33
707-88-21420	627	33
	632	33
	637	33
707-88-21850	624	45
707-88-22692	627	32
	632	32
	637	32
707-88-33040	620	48
	622	48
	624	53
	628	40
	633	40
	638	40
	645	40
	650	40
707-88-51190	624	44
707-88-51380	644	32
	649	32
707-88-75310	623	24
	627	19

PartNumber	Page	Index
	632	19
	637	19
707-99-59142	704	3
707-99-59150	705	8
707-99-59550	705	7
707-99-72080	704	5
707-E1-02180	623	
707-E1-02190	644	
	649	
707-E1-02470	627	
	632	
	637	
707-E1-02480	619	
	621	
707-F1-X2180	623	
707-F1-X2190	644	
	649	
707-F1-X2470	627	
	632	
	637	
707-F1-X2480	619	
707-F1-X2490	621	
708-18-13230	142	10
	146	7
	527	12
	532	12
	545	10
	549	10
708-1F-12270	142	4
	146	4
708-1F-12281	545	5
	549	5
708-1L-29340	140	5
	145	6
708-2F-12420	149	2
708-2G-00180	140	
	141	
	142	
	143	
	144	
	145	
	146	
	147	
	148	
	149	
	150	
	151	
708-2G-00181	140	
	141	
	142	
	143	
	144	
	145	
	146	
	147	
	148	
	149	
	150	
	151	
708-2G-01180	140	
	141	
	142	
	143	
	144	
	145	
	146	
	147	
	148	
	149	
708-2G-01181	140	
	141	
	142	
	143	
	144	
	145	

PartNumber	Page	Index
	146	
	147	
	148	
	149	
708-2G-03480	144	
	148	
708-2G-03640	143	
	147	
708-2G-03650	143	
	147	
708-2G-03720	150	
	150	
708-2G-04670	142	
	146	
708-2G-04680	141	
708-2G-04710	142	
708-2G-04720	146	
708-2G-04730	149	
708-2G-04740	140	
708-2G-04750	145	
708-2G-04760	149	
708-2G-05010	142	3
	146	3
708-2G-05020	149	13
708-2G-11910	149	11
708-2G-12151	141	3
708-2G-12230	142	5
708-2G-12252	142	2
	146	2
708-2G-12340	149	1
708-2G-12640	142	1
708-2G-12650	146	
708-2G-12720	146	1
708-2G-13131	142	12
	146	9
708-2G-13141	142	14
	146	11
708-2G-13152	142	13
	146	10
708-2G-13341	142	17
	146	14
708-2G-13510	142	15
	146	12
708-2G-13810	142	18
	146	15
708-2G-14120	143	1
	147	1
708-2G-14170	144	5
	148	5
708-2G-14190	143	25
	147	25
708-2G-14310	144	1
	148	1
708-2G-15140	143	12
	147	12
708-2G-15151	143	15
	147	15
708-2G-15211	143	10
	147	10
708-2G-15230	143	19
	144	3
	147	19
	148	3
708-2G-15240	143	21
	147	21
708-2G-15250	143	16
	147	16
708-2G-15270	143	13
	147	13
708-2G-15280	143	14
	147	14
708-2G-15290	143	11
	147	11
708-2G-15310	143	24
	144	7
	147	24
	148	7
708-2G-15330	143	28
	147	28
708-2G-15680	151	15
708-2G-19130	151	22
708-2H-21860	149	3
708-2H-23360	142	16
	146	13
708-2H-32320	149	6
708-2H-32330	149	7
708-2H-32350	149	9
708-2H-32360	149	10
708-2J-15310	150	3
	150	16
708-2L-23960	526	12
	531	12
708-2L-25480	141	10
708-2L-28540	150	4
	150	17
708-2L-35170	143	9
	147	9
708-2L-35290	143	27
	144	4
	147	27
	148	4
708-2L-35331	150	6
	150	19
708-2L-35341	150	8
	150	21
708-2L-35351	150	9
	150	22
708-2L-35360	150	5
	150	18
708-2L-35410	150	7
	150	20
708-2L-35760	143	6
	147	6
708-2L-35770	143	7
	147	7
708-3D-15110	544	22
	548	22
708-7T-16460	218	11
	243	11
	267	5
708-8E-16150	140	3
	141	11
	145	8
708-8E-16160	224	16
	231	12
	249	16
	257	12
	544	23
	548	23
708-8E-16250	224	6
	249	6
708-8F-36120	544	18
	548	18
708-8H-00430	548	
	549	
	550	
708-8H-00440	544	
	545	
	546	
708-8H-04850	544	
	548	
708-8H-04860	545	
	549	
708-8H-04870	548	
708-8H-04880	544	
708-8H-05050	545	4
	549	4
708-8H-11530	224	20
	227	4
	230	27
	249	20
	252	4
	255	27
708-8H-16141	544	20
	548	20
708-8H-31210	544	28
	548	28
708-8H-31360	548	1
708-8H-32150	545	2
	549	2
708-8H-32160	142	6
	545	6
	549	6
708-8H-32170	545	3
	549	3
708-8H-32180	545	1
	549	1
708-8H-33141	545	12
	549	12
708-8H-33340	545	16
	549	16
708-8H-33360	545	11
	549	11
708-8H-33512	545	15
	549	15
708-8H-33650	545	17
	549	17
708-8H-33750	545	13
	549	13
708-8H-33940	545	18
	549	18
708-8H-34320	545	20
	549	20
708-8H-34330	545	21
	549	21
708-8H-35130	545	22
	549	22
708-8H-35141	545	24
	549	24
708-8H-35150	545	29
	549	29
708-8H-35180	545	23
	549	23
708-8H-36121	544	19
	548	19
708-8H-36150	544	15
	548	15
708-8H-36160	544	17
	548	17
708-8K-16150	526	14
	531	14
708-8K-16160	526	15
	531	15
708-8K-16170	526	16
	531	16
709-10-91240	287	5
709-25-11390	227	19
	228	6
	229	2
	229	8
	239	2
	252	19
	253	6
	254	2
	254	8
	266	2
	269	9
709-74-91510	234	1
	261	1
709-74-91860	224	18
	230	14
	249	18
	255	14
709-74-92810	526	9
	531	9

PartNumber	Page	Index
709-74-92821	526	11
	531	11
709-75-92220	526	10
	531	10
720-1L-15430	151	3
	151	10
720-1L-15440	151	2
	151	9
721-13-14050	619	1
	621	1
721-13-14060	644	1
	649	1
721-13-16431	623	1
721-27-16080	623	15
721-58-10400	619	2
	621	2
721-58-10410	644	2
	649	2
721-58-11090	623	2
721-98-00510	704	4
721-98-00520	705	6
721-98-00610	706	10
721-98-01080	706	9
722-12-19070	221	14
	246	14
723-11-18150	221	10
	246	10
723-11-18190	236	19
	263	19
723-11-19130	221	2
	232	27
	246	2
	258	27
	267	14
723-11-19960	232	19
	235	16
	258	19
	262	16
723-40-56350	225	3
	250	3
723-40-56800	225	1
	250	1
723-40-60101	227	16
	252	16
723-40-61150	230	18
	255	18
723-40-66300	269	
723-40-66601	227	
	252	
723-40-66701	227	
	252	
723-40-71201	230	
	231	
	255	
	257	
723-40-71330	230	4
	255	4
723-40-71340	230	5
	255	5
723-40-71350	230	8
	255	8
723-40-71390	230	17
	255	17
723-40-71430	231	1
	257	1
723-40-71440	230	12
	255	12
723-40-71800	230	
	255	
723-40-82140	238	3
	238	9
	263	6
	265	3
	265	9
723-40-82150	236	7
	263	7
723-40-82210	263	4
723-40-82220	224	12
	238	11
	249	12
	263	5
	265	11
723-40-82290	263	22
723-40-82401	236	
	263	
723-40-84100	238	
	265	
723-40-84130	238	4
	238	13
	265	4
	265	13
723-40-84200	238	
	265	
723-40-84230	238	10
	265	10
723-40-84410	237	
	264	
723-40-84420	236	9
	237	2
	263	9
	264	2
723-40-84430	236	10
	237	3
	263	10
	264	3
723-40-84440	236	11
	237	4
	263	11
	264	4
723-40-84461	237	1
	264	1
723-40-84601	237	
	264	
723-40-84700	237	
	264	
723-40-85100	229	7
	254	7
723-40-87170	235	9
	262	9
723-40-87650	235	3
	262	3
723-40-87670	235	8
	262	8
723-40-87800	235	
	262	
723-40-91200	229	1
	239	1
	254	1
	266	1
723-40-91300	269	8
723-40-91500	228	3
	253	3
723-40-91600	230	20
	255	20
723-40-92900	238	16
	265	16
723-40-93801	226	1
	251	1
723-46-00660	224	
	249	
723-46-00990	224	
	249	
723-46-11910	223	1
	248	1
723-46-14110	218	14
	232	6
	243	14
	258	6
	267	7
723-46-14131	218	16
	243	16
723-46-14140	224	15
	249	15
723-46-14150	221	18
	246	18
723-46-14170	218	15
	243	15
723-46-14180	232	16
	258	16
723-46-15111	219	1
	230	7
	244	1
	255	7
	267	8
723-46-15120	218	12
	243	12
	267	6
723-46-15130	218	8
	243	8
	267	3
723-46-15140	218	9
	243	9
723-46-15190	224	14
	249	14
723-46-15220	249	24
723-46-15330	232	12
	258	12
723-46-15350	238	12
723-46-15370	232	4
	258	4
723-46-15380	232	5
	258	5
723-46-15390	232	3
	258	3
723-46-15510	223	2
	248	2
723-46-15630	219	7
	219	13
	220	12
	244	7
	244	13
	245	12
723-46-15690	218	13
	243	13
723-46-17320	220	5
	220	10
	245	5
	245	10
723-46-17330	220	6
	220	11
	245	6
	245	11
723-46-17340	220	2
	220	13
	245	2
	245	13
723-46-17350	220	19
	245	19
723-46-17510	221	7
	232	30
	246	7
	258	30
	267	17
723-46-17520	221	3
	232	28
	246	3
	258	28
	267	15
723-46-17530	221	9
	232	26
	246	9
	258	26
	267	13
723-46-17550	224	13
	249	13

PartNumber	Page	Index
723-46-17600	224	8
	249	8
723-46-17650	221	17
	246	17
723-46-17720	239	3
	269	10
723-46-17850	232	17
	258	17
723-46-17860	232	18
	258	18
723-46-18380	219	
	244	
723-46-18450	220	
	245	
723-46-18460	220	
	245	
723-46-18710	221	13
	246	13
723-46-18720	221	15
	246	15
723-46-18730	223	4
	248	4
723-46-18770	238	22
	265	22
723-46-19140	219	
	244	
723-46-19800	219	
	244	
723-46-19900	232	
	258	
723-46-40100	222	2
	247	2
723-46-40601	222	10
	233	2
	247	10
	260	2
723-46-41210	222	1
	233	1
	247	1
	260	1
723-46-41950	222	4
	222	8
	222	12
	222	16
	222	20
	222	24
	222	28
	233	4
	233	8
	247	4
	247	8
	247	12
	247	16
	247	20
	247	24
	247	28
	260	4
	260	8
	268	3
723-46-42800	222	6
	247	6
723-46-43100	222	14
	247	14
723-46-43600	222	18
	247	18
723-46-43700	233	
	260	6
723-46-44100	222	22
	247	22
723-46-44600	233	6
723-46-45100	222	26
	247	26
723-46-45700	268	1
723-47-25600	218	
	219	
	220	
	221	
	222	
	223	
	224	
	225	
	226	
	227	
	228	
	229	
	230	
	231	
	232	
	233	
	234	
	235	
	236	
	237	
	238	
	239	
723-47-25601	218	
	219	
	220	
	221	
	222	
	223	
	224	
	225	
	226	
	227	
	228	
	229	
	230	
	231	
	232	
	233	
	234	
	235	
	236	
	237	
	238	
	239	
723-47-25602	218	
	219	
	220	
	221	
	222	
	223	
	224	
	225	
	226	
	228	
	229	
	230	
	231	
	232	
	233	
	234	
	235	
	236	
	237	
	238	
	239	
723-48-25600	243	
	244	
	245	
	246	
	247	
	248	
	249	
	250	
	251	
	252	
	253	
	254	
	255	
	257	
	258	
	260	
	261	
	262	
	263	
	264	
	265	
	266	
	267	
	268	
	269	
723-48-25601	243	
	244	
	245	
	246	
	247	
	248	
	249	
	250	
	251	
	252	
	253	
	254	
	255	
	257	
	258	
	260	
	261	
	262	
	263	
	264	
	265	
	266	
	267	
	268	
	269	
723-48-25602	243	
	244	
	245	
	246	
	247	
	248	
	249	
	250	
	251	
	252	
	253	
	254	
	255	
	257	
	258	
	260	
	261	
	262	
	263	
	264	
	265	
	266	
	267	
	268	
	269	
723-60-22230	225	5
	250	5
723-90-61700	269	
723-90-69100	229	3
	254	3
723-90-76201	229	5
	254	5
723-90-76300	269	6
723-90-76501	269	
775-934-6130	657	10
	658	10
775-934-6762	660	22

PartNumber	Page	Index
	661	23
775-934-678D	660	20
	661	21
775-934-6982	661	27
775-934-6B92	661	28
775-934-7020	661	
775-934-7610	661	26
775-934-7622	660	21
	661	22
775-934-7760	660	
	661	
775-934-7910	661	
7826-25-3005	355	7
7826-25-3010	425	7
7826-25-5100	395	7
7826-25-5102	465	7
7826-25-6002	472	7
7831-91-4220	69	3
7835-33-2001	211	1
7835-34-1002	347	1
7835-34-1003	417	1
7835-34-1004	417	
7835-45-5000	354	3
7835-45-5002	424	3
7861-74-5100	354	11
	354	13
	354	15
	355	4
	395	4
	424	11
	424	13
	424	15
	425	4
	465	4
	472	4
7861-92-5810	170	17
	171	9
7861-93-1430	153	1
	154	1
7861-93-1812	241	13
	271	13
7861-93-1840	304	2
	361	30
	431	28
7861-93-3320	276	3
7861-94-2000	354	5
	424	5
8233-06-3350	354	20
	424	20
8255-62-4591	170	3
	171	3
8A13-10-1320	346	22
	394	23
	415	22
	464	23
8A13-10-2100	346	26
	415	26
8A13-10-2200	346	27
	415	27
8A13-10-3110	394	26
	464	26
AS160122	316	9
AS184718	316	15
AS186833	316	8
AS192161	316	7
AS195365	316	
AS195367	316	1
AS195369	316	2
AS195370	316	3
AS195372	316	4
AS195373	316	5
AS195374	316	6
AS195376	316	10
AS195378	316	12
AS195379	316	13

PartNumber	Page	Index
AS195380	316	14
AS200024	316	11
HM6400-0012	365	10
	435	10
	470	10
HM6400-0013	365	11
	435	11
	470	11
HM6409-0071	365	
	435	
	470	
HM6409-0072	365	
	435	
	470	
HM6440-0128	365	
	435	
	470	
HM6440-0129	365	12
	435	12
	470	12
KD0-0020-05062	121	39
KD0-0055-05082	119	48
	121	37
KD0-0055-05122	115	29
KD0-0055-05202	115	28
KD0-0056-05302	115	35
	115	37
KD0-0270-06402	119	43
	120	26
KD0-0270-06602	122	43
	123	29
KD0-0274-06202	118	17
	120	18
	121	15
	123	18
KD0-0275-06802	115	12
KD0-0276-08402	121	32
	123	17
KD0-09001-4380	121	30
	123	26
KD0-09001-4580	118	30
	120	23
KD0-09006-0370	115	32
KD0-09006-0660	119	49
	122	47
KD0-09006-0670	119	50
	122	48
KD0-09006-0730	115	15
KD0-09011-3140	121	27
	123	27
KD0-09011-3540	115	30
	115	36
KD0-09057-0110	121	33
	123	34
KD0-09057-0190	121	38
	123	35
KD0-09057-0220	115	27
KD0-09170-2501	115	19
KD0-09201-0850	121	12
	123	10
KD0-09201-0980	115	4
KD0-09201-1450	115	7
KD0-09271-3620	118	22
	121	21
KD0-09275-1430	119	52
	122	50
KD0-23100-0251	118	20
	120	1
KD0-23100-0430	121	18
	123	1
KD0-23120-0180	121	8
	123	9
KD0-23200-0331	118	23
KD0-23200-0334	120	4
KD0-23200-0671	121	20

PartNumber	Page	Index
KD0-23200-0672	123	4
KD0-23303-0020	121	5
	123	20
KD0-23310-1730	118	6
KD0-23310-1734	120	5
KD0-23310-1740	121	9
KD0-23310-1744	123	5
KD0-23320-0220	118	9
KD0-23320-0290	123	19
KD0-23500-0970	118	7
KD0-23500-0974	123	13
KD0-23600-0410	121	13
	123	14
KD0-23600-0460	118	12
	120	13
KD0-23611-0690	118	13
KD0-23611-0692	120	14
KD0-23611-1101	121	14
	123	15
KD0-23700-0130	118	32
	120	19
KD0-23710-0221	121	29
	123	22
KD0-23740-0250	118	26
KD0-23740-0254	120	22
KD0-23740-0351	121	23
KD0-23740-0354	123	25
KD0-23750-0124	120	20
KD0-23750-0250	118	27
KD0-23750-0490	121	24
KD0-23901-0170	118	40
	120	24
KD0-23904-0070	118	1
KD0-23921-0230	118	15
	120	31
KD0-23927-0071	118	2
KD0-23951-0301	118	8
KD0-23951-0331	118	11
KD0-25000-8332	119	47
KD0-25000-8333	120	25
KD0-25000-8521	122	42
KD0-25000-8522	123	28
KD0-33902-0080	115	33
KD0-33902-0090	115	34
KD0-35100-0418	115	1
KD0-35120-0528	115	16
KD0-35200-0528	115	5
KD0-35300-0450	115	6
KD0-35411-0648	115	13
KD0-35421-0240	115	14
KD0-35700-1140	115	
KD0-35710-1330	115	17
KD0-35719-0201	115	38
KD0-35730-0700	115	18
KD0-35761-0308	116	39
KD0-35784-0210	115	25
KD0-35784-0290	115	26
KD0-35902-0010	115	31
KD0-35923-0134	115	22
KD0-35923-0160	115	3
KD0-35926-0070	115	8
KD0-35926-0090	115	10
KD0-35943-0140	115	24
KD0-35943-0154	115	21
KD0-35943-0160	115	23
KD0-35943-0170	115	20
KD0-35943-0240	115	2
KD0-35951-0060	115	9
KD0-47100-0244	120	17
KD0-47100-4651	121	19
KD0-47100-4800	118	21
KD0-47761-2671	119	45
	122	45
KD0-47761-2681	119	46
	121	25

PartNumber	Page	Index
KD0-47761-2691	118	24
	121	26
KD0-47927-1390	122	44
	123	30
KD1-0240-06305	118	33
	120	7
	122	41
	123	8
KD1-0240-08405	118	37
	120	15
KD1-0330-06012	119	42
KD1-0330-08022	118	39
	121	3
KD1-0335-06002	119	41
KD1-0335-08002	118	38
	121	2
KD1-0345-05001	121	40
KD1-0345-08001	121	4
KD1-0400-20100	118	19
KD1-0400-30100	121	17
KD1-0454-60067	118	10
	120	9
KD1-0454-62007	118	31
	120	3
KD1-0454-62047	118	16
	120	2
KD1-0456-62017	123	3
KD1-0456-62057	123	2
KD1-0505-00601	118	28
KD1-09211-0081	121	28
KD1-09211-0980	118	14
KD1-09211-0981	122	46
KD1-09211-1120	121	22
KD1-09257-0050	119	51
	122	49
KD1-09279-0090	121	1
	123	21
KD1-23111-0160	118	5
KD1-23181-0020	118	4
	120	10
	121	7
	123	11
KD1-23320-0290	121	11
KD1-23500-0970	121	10
KD1-23500-0974	120	12
KD1-23761-0010	123	7
KD1-23913-0040	118	25
	120	21
	123	24
KD1-23914-0020	118	3
	120	11
	121	6
	123	12
KD1-23921-0130	118	34
	120	28
	121	36
	123	31
KD1-23921-0140	118	35
	120	29
	121	35
	123	32
KD1-23941-0040	118	36
	120	30
	121	34
	123	33
KD1-23951-0020	118	18
KD1-23951-0051	121	16
KD1-33926-0730	115	11
KD1-47921-0790	118	29
	121	31
KD1-47927-1250	119	44
	120	27
KD7-09210-2830	120	32
KD7-09210-2910	123	36
KD7-23120-0310	120	8
KD7-23320-0060	120	16
KD7-23351-0085	120	6
	123	6
KD7-23700-0524	120	
KD7-23750-0150	123	23
KD7-47100-0274	123	16
KD7-47761-0010	120	33
	123	37
KD7-47761-0030	120	34
	123	38
ND017321-4600	381	3
	451	3
ND017661-3560	381	12
	451	12
ND047310-7240	329	2
ND047372-0660	329	6
ND047410-1570	329	4
ND047410-1580	329	
ND063600-4580	381	6
	451	6
ND063800-0300	380	27
	450	27
ND077500-5650	381	11
	451	11
ND077800-1040	381	5
ND077800-1130	451	5
ND100775-8400	380	18
	450	18
ND113104-2260	382	3
	452	3
ND116242-7000	381	1
	451	1
ND116242-7010	381	2
	451	2
ND116360-0030	381	4
	451	4
ND116420-7450	380	17
	450	17
ND116577-0970	380	4
	450	4
ND116577-0981	380	25
	450	25
ND116577-0990	380	26
	450	26
ND116662-8530	381	7
	451	7
ND116740-4980	380	20
	450	20
ND116740-4990	380	21
	450	21
ND116740-5000	381	9
	451	9
ND116780-5651	380	24
	450	24
ND116782-6690	380	22
	450	22
ND116782-6700	380	23
	450	23
ND116782-6720	381	8
	451	8
ND117300-2600	381	
ND117300-2601	451	
ND146636-7450	380	9
	450	9
ND146636-7460	380	15
	450	15
ND146636-7530	381	14
	451	14
ND146636-7540	381	15
	451	15
ND146636-7550	381	16
	451	16
ND146636-7560	380	29
	450	29
ND146691-4470	329	14
ND245450-8520	380	1
	450	1
ND245450-8530	380	2
	450	2
ND245450-8540	380	3
	450	3
ND246470-8152	382	2
ND246470-8154	452	2
ND246790-2060	380	19
	450	19
ND247300-0510	329	
ND443120-1961	380	
	450	
ND445021-3091	450	16
ND445021-3941	380	16
ND446010-5360	380	
	450	
ND446260-2160	380	10
	450	10
ND447220-4051	329	1
ND447500-3750	380	8
ND447500-4010	450	8
ND447610-0630	380	5
	450	5
ND91310-05081	329	13
ND949001-1730	380	28
	381	13
	450	28
	451	13
ND949007-2350	340	9
	409	9
ND949008-0330	381	10
	382	1
	451	10
	452	1
ND949013-7480	329	9
ND949013-7500	329	10
ND949013-7510	329	11
ND949046-3100	380	14
	450	14
ND949046-3610	380	13
	450	13
ND949047-2950	329	5
ND949048-0430	329	12
ND949070-0640	329	7
ND949070-1360	329	
ND949070-1390	329	8
ND949142-0020	380	6
	380	11
	450	6
	450	11
ND949142-0030	380	7
	380	12
	450	7
	450	12
NFEB1601	704	1
NY01720-10600	296	28
NY05062-1170A	296	13
	300	14
NY05062-11800	296	14
	300	15
NY06277-1320A	296	16
	300	17
NY06339-10200	296	19
	300	20
NY07207-11700	296	5
	300	5
NY07207-11800	296	11
NY07493-10200	296	20
	300	21
NY07505-10200	300	11
NY07529-10200	296	6
	300	6
NY07529-10300	296	7
	300	7

PartNumber	Page	Index
NY07529-10400	296	8
	300	8
NY07529-10500	296	9
	300	9
NY07529-10600	296	10
	300	10
NY07880-10900	300	12
NY07926-10100	296	27
NY09000-11400	296	23
	300	24
NY16207-10200	296	18
	300	19
NY16207-10300	296	21
	300	22
NY80000-02100	296	24
	300	25
NY80000-02200	296	17
	300	18
NY81446-05012	296	22
	300	23
NY84110-00248	296	26
	300	27
NY86711-01008	300	26
NY89103-00090	296	12
	300	13
REU419B-418-C	341	15
	410	15
RFU419B-418-A	341	1
	410	1
RFU419B-418-B	341	6
	410	6
RFU419B-418-C	341	7
	410	7
RFU419B-418-D	341	3
	410	3
RFU419B-418-E	341	4
	410	4
RFU419B-418-F	341	16
	410	16

PC300-8M0, PC300LC-8M0, PC350-8M0, PC350LC-8M0 Hydraulic Excavator (Track Type)

Form No. FENC0029-00

©2016 KOMATSU
All Rights Reserved
Printed in Thailand 10-16