RUTHZIL TRATOR COMERCIAL DE PEÇAS LTDA 11 97083-6812 ROLANDO CITRANGULO

KEPB075306

PARTS BOOK

KOMATSU

PC350LC-8
Serial No. B10001 and up

SAA6D114E-3D
Serial No. 26852735 and up

When ordering a spare part, specify the part number, part name, and quantity required, and also specify your machine model code, machine serial number, engine serial number and the service meter reading.

This Parts Book describes not only standard items but also optional equipment and attachments. To order a part, please contact your nearest Komatsu distributor.

This Parts Book contains the information and special codes as follows:

ILLUSTRATION AND PARTS LIST

When you open this Parts Book, you will find an illustration following its figure number (FIG.) Each individual part in the illustration is given an index number. Following the illustration, the component parts of the unit are listed in the order of the index numbers shown in the illustration. The part number, part name, quantity and applicable serial number are given for each part as a parts list.

FIGURE NUMBER (FIG.)

The figure number (FIG.) is the number which shows the figure of the page. It is not the spare part number. The numbers are not always continuous.

PARTS LIST

Spare parts information are listed in the parts list page as follows:

Index:

This is the same as the index number in the illustration. The parts are listed in index number order.

Code:

Codes are used in this column and represent as follows:

A1 This part and the part specified in the line immediately above are interchangeable.

A2 The part specified in the line above can be used instead of this part.

A3 This part can be used instead of the part specified in the line immediately above.

A4 The part specified in the description column can be used instead of this part if it is used as a set.

B1 This shows discontinued part. The part specified in the above line is supplied instead.

B2 This shows a discontinued part. The part specified in the description column is supplied instead as a set.

C1 This part cannot be supplied as an individual part. It is supplied as an assembly.

C2 This part is supplied for authorized Komatsu distributors only. It cannot be supplied as an individual part. It is supplied as an assembly.

C3 This indicates a part supplied as semi-finished. It requires additional work before installation.

Part Number:

The number given in the part number column is the part number for the part shown. It is the identification code used when ordering that part. It is important that there be no mistake in this code number when ordering.

Description:

This gives the name of part that has the part number listed. The mark "•" is put in front of the component part name of an assembly part and the item is entered following the assembly. If a part marked with "•" is a sub assembly, its components are marked with "••".

Example: Tank Assembly
- •Tank
- •Cap
- ••Packing

Furthermore, the following marks and abbreviations are used in this column.

Kit	This indicates kit parts. For kit parts, refer to the section FIELD REPAIR SERVICE PARTS in this Parts Book.
D	Diameter
L	Length
LHS	Left-hand side
RHS	Right-hand side
T	Thickness
W	Width

Quantity (Qty):

This specifies the number of pieces used for one machine. However, if a part is included in the assembly and/or component, the quantity per such assembly and/or component is specified.
Code AR (as required) shall be used in the Quantity column if the part cannot be specified numbers requires per machine and/or component. In such case, any number of quantities may be ordered depend on the field service requirement.

Serial Numbers:

Applicable engine serial number is indicated for the engine volume. In the chassis volume, this indicates the machine serial number in which the part is used.

If the serial number is enclosed in parenthesis, it shows that it is the applicable serial number for exclusive use of the equipment of figure number (FIG.)

AVANT-PROPOS

Lorsque vous passez une commande d'une pièce de rechange, vous êtes prié de spécifier le numéro de la pièce, la désignation de la pièce et la quantité requise et d'indiquer également le code du modèle de la machine, le numéro de série de la machine, le numéro de série du moteur et la lecture du compteur de service du véhicule.

Sur le présent catalogue des pièces figurent non seulement les équipements standard, mais également les équipements et accessoires en option. Si vous désirez un équipement ou une pièce quelconque, vous êtes prié de prendre contact avec le concessionnaire Komatsu le plus proche.

Ce catalogue des pièces comprend les informations et codes spéciaux de la manière suivante:

FIGURES ET LISTES DES PIÈCES

Lorsque vous ouvrez le présent catalogue, vous pouvez rechercher les figures en fonction du numéro de figure (FIG.). Chaque pièce individuelle dans la figure est fournie d'un numéro de référence. D'après la figure, les éléments de l'unité sont énumérés dans l'ordre des numéros de référence montrés sur la figure. Le numéro de la pièce, la désignation de la pièce, la quantité et le numéro de série utilisés sont indiqués pour chaque pièce comme liste des pièces.

NUMÉRO DE FIGURE (FIG.)

Le numéro de figure (FIG.) est un numéro qui permet d'identifier une figure sur une page. Il ne représente pas le numéro de la pièce de rechange. Les numéros ne sont pas toujours séquentiels.

LISTE DES PIÈCES DE RECHANGE

Les informations des pièces de rechange sont données dans la page de la liste des pièces comme ci-après:

Numéro de référence (Index):

Les numéros de référence correspondent aux numéros de référence notés sur la figure et sont énumérés dans l'ordre des numéros de référence.

Codification (Code):

Les codes sont utilisés dans cette colonne et représentent comme ci-après:

A1 Cette pièce et la pièce qui figure sur la ligne juste au-dessus sont interchangeables.

A2 La pièce indiquée sur la ligne au-dessus peut être utilisée au lieu de cette pièce.

A3 Cette pièce peut être utilisée au lieu de la pièce indiquée sur la ligne juste au-dessus.

A4 La pièce indiquée dans la colonne de description peut être utilisée au lieu de cette pièce si elle est utilisée comme ensemble.

B1 Ceci montre la pièce dont la production est interrompue. La pièce indiquée dans la ligne au-dessus est fournie à sa place.

B2 Ceci montre la pièce dont la production est interrompue. La pièce indiquée dans la colonne de description est fournie à sa place comme ensemble.

C1 Cette pièce ne peut pas être fournie comme pièce individuelle. Elle est fournie en tant qu'ensemble.

C2 Cette pièce est fournie pour les distributeurs autorisés de Komatsu seulement. Elle ne peut pas être fournie comme pièce individuelle. Elle est fournie en tant qu'ensemble.

C3 Ceci indique une pièce fournie à l'état semi-fini. Ceci exige un travail additionnel avant l'installation.

Numéros de pièce (Part Number):

Les numéros indiqués dans cette colonne correspondent aux numéros des pièces représentées et constituent les codes à spécifier pour toute commande de pièce. Il est important de ne pas faire d'erreur avec ce code au moment de la commande.

Description (Description):

Ceci indique le nom de la pièce qui montre le numéro de la pièce énumérée. La marque "•" est placée devant le nom de la pièce du composant d'une pièce d'ensemble et l'item est introduit suivant l'ensemble. Si une pièce marquée avec "•" est un sous-ensemble, ses composants sont marqués avec "• •".
Exemple: Tank Assembly (Ensemble de réservoir)
• Tank
• Cap
• • Packing

En outre, les marques et abréviations suivantes sont utilisées dans cette colonne.

Kit Ceci indique les pièces de kit. Pour les pièces de kit, se référer à la Section FIELD REPAIR SERVICE PARTS de ce Catalogue des Pièces.
D Diamètre
L Longueur
LHS Côté gauche
RHS Côté droit
T Épaisseur
W Largeur

Quantité (Qty):

Ceci spécifie le nombre de pièces nécessaires pour l'équipement en question. S'il s'agit de pièces comprises dans un ensemble et/ou composant, et la quantité indiquée est le nombre de pièces nécessaires pour l'ensemble et/ou le composant en question.
Le code AR (comme requis) sera utilisé dans la colonne de Quantité si la pièce ne peut pas se présenter en nombres indiqués comme requis par machine et/ou composant. Dans ce cas, tout nombre de quantités peut être commandé selon la condition de service de champ.

Numéros de série (Serial Numbers):

Le numéro de série du moteur applicable est indiqué pour le volume du moteur. Dans le volume de la carrosserie, ceci indique le numéro de série de l'équipement sur lequel la pièce est utilisée.

Si le numéro de série est placé entre parenthèses, cela signifie qu'il s'agit d'un numéro de série destiné exclusivement à l'utilisation de l'équipement mentionné dans le numéro de figure (FIG.).

Quando fate un ordinazione di una parte di ricambio, siete pregati di precisare il numero della parte, la designazione della parte e la quantità necessaria ed indicare anche il codice del modello della macchina, il numero di serie della macchina, il numero di serie del motore e la lettura dell'indicatore di servizio del veicolo.

Sul presente catalogo delle parti appaiono non solo le attrezzature standard, ma anche le attrezzature ed accessori in opzione. Se desiderate un'attrezzatura o una parte qualunque, siete pregati di prendere contatto con il concessionario Komatsu più vicino.

Questo catalogo delle parti comprende le informazioni ed i codici speciali nel modo seguente:

ILLUSTRAZIONI ED ELENCO DELLE PARTI

Quando aprite il presente catalogo, troverete una figura secondo il suo numero di figura (FIG.). Ogni parte individuale nella figura è fornita di un numero di riferimento. Secondo la figura, gli elementi dell'unità sono enumerati nell'ordine dei numeri di riferimento mostrati sulla figura. Il numero della parte, la designazione della parte, la quantità ed il numero di serie utilizzati sono indicati per ogni parte come elenco delle parti.

NUMERO DI FIGURA (FIG.)

Il numero di figura (FIG.) è il numero che indica la figura della pagina. Non rappresenta il numero della parte di ricambio. I numeri non sono sempre continui.

ELENCO DELLE PARTI DI RICAMBIO

Le informazioni dei pezzi di ricambio sono elencate nella pagina dell'elenco dei pezzi come segue:

Numero di riferimento (Index):

I numeri di riferimento corrispondono ai numeri di riferimento notati sulla figura e sono enumerati nell'ordine dei numeri di riferimento.

Codice (Code):

I codici sono usati in questa colonna e rappresentano come segue:

A1 Questa parte ed la parte specificata nella linea immediatamente sopra sono intercambiabili.

A2 La parte specificata nella linea sopra può essere usata anziché questa parte.

A3 Questa parte può essere usata anziché la parte specificata nella linea immediatamente sopra.

A4 La parte specificata nella colonna di descrizione può essere usata anziché questa parte se è usata come insieme.

B1 Ciò mostra la parte non più in produzione. La parte specificata nella suddetta linea è invece fornita.

B2 Ciò mostra una parte non più in produzione. La parte specificata nella colonna di descrizione è fornita invece come insieme.

C1 Questa parte non può essere fornita come pezzo individuale. È fornita come insieme.

C2 Questa parte è destinata solo ai distributori autorizzati Komatsu. Non può essere fornita come parte individuale. È fornita come insieme.

C3 Ciò indica una parte fornita come semifinito. Richiede un lavoro supplementare prima dell'installazione.

Numeri di parte (Part Number):

I numeri indicati in questa colonna corrispondono ai numeri delle parti rappresentate e costituiscono i codici da precisare per qualsiasi ordinazione di parte. È importante non fare un errore con questo codice al momento dell'ordinazione.

Descrizione (Description):

Ciò dà il nome della parte che presenta il numero di parte elencato. Il contrassegno "•" è messo davanti al nome della parte componente di una parte di gruppo e l'articolo è inserito dopo il gruppo. Se un pezzo segnato con "•" è un sotto-gruppo, i suoi componenti sono segnati con "• •".

Esempio: Tank Assembly
- • Tank
- • Cap
- • • Packing

Inoltre, i seguenti contrassegni ed abbreviazioni sono usati in questa colonna.

Kit Ciò indica le parti di kit. Per le parti di kit, riferirsi alla sezione PARTI DI RICAMBIO PER SERVIZIO DI RIPARAZIONE IN SEDE in questo Catalogo delle Parti.
D Diametro
L Lunghezza
LHS Lato a sinistra
RHS Lato a destra
T Spessore
W Larghezza

Quantità (Qty):

Questo precisa il numero di parti necessarie per l'attrezzatura in questione. Se si tratta di parti comprese in un insieme e/o componente, e la quantità indicata è il numero di parti necessarie per l'insieme e/o il componente in questione.
Il codice AR (come richiesto) sarà utilizzato nella colonna di Quantità se la parte non può presentarsi in numeri indicati come richiesto per macchina e/o componente. In questo caso, qualsiasi numero di quantità può essere ordinato secondo la condizione di servizio di campo.

Numeri di serie (Serial Numbers):

Il numero di serie del motore applicabile è indicato per il volume del motore. Nel volume della carrozzeria, questo indica il numero di serie dell'attrezzatura sulla quale la parte è utilizzata.

Se il numero seriale è racchiuso tra parentesi, indica che è il numero di serie applicabile per uso esclusivo dell'attrezzatura del numero di figura (FIG.)

Bei der Bestellung von Teilen bitte die Teilenummer, die Teilebezeichnung und die Menge des jeweiligen Teils sowie die Modellnummer, die Seriennummer der Maschine, die Seriennummer des Motors und den Stand des Betriebsstundenzählers angeben.

In dieser Ersatzteilliste ist nicht nur das Standardzubehör aufgeführt, sondern auch als Sonderausstattung erhältliche Teile und Einrichtungen. Bestellungen nimmt Ihr zuständiger Komatsu-Händler entgegen.

Die folgenden Informationen und Kodes sind in der Ersatzteilliste enthalten:

Bilder und Ersatzteilliste

Beim Aufschlagen des Ersatzteilkatalogs finden Sie nach der Bildnummer (BILD) geordnete Bilder. Jedes Einzelteil einer Baugruppe ist mit einer Kennzahl versehen. Ausgehend von den Bildern sind die Bauteile der Baugruppe aufgeführt, und zwar geordnet nach den in den Bildern angegebenen Kennzahlen. Jedes Einzelteil wird mit Teilenummer, Teilebezeichnung und entsprechender Seriennummer angegeben.

Bildnummer (BILD)

Mit der Bildnummer (BILD) können Bilder auf einer Seite identifiziert werden. Es handelt sich dabei nicht um die Nummer des Lieferteils. Auch sind die Bilder nicht fortlaufend nummeriert.

Ersatzteilliste

Angaben zu den Ersatzteilen sind auf der Auflistungsseite wie folgt dargestellt::

Kennzahl (Index):

Hierbei handelt es sich um die Kennzahlen aus den Bildern. Die Bauteile sind nach diesen Kennzahlen geordnet aufgeführt.

Kode (Code):

In dieser Spalte werden Kodes mit den folgenden Bedeutungen benutzt:

A1 Dieses Teil ist mit dem in der vorangegangenen Zeile aufgeführten Teil austauschbar.

A2 Das in der vorangegangen Zeile aufgeführte Teil kann anstelle dieses Teils verwendet werden.

A3 Dieses Teil kann anstelle des in der vorangegangenen Zeile aufgeführten Teils verwendet werden.

A4 Anstelle dieses Teils kann das in der Spalte „Beschreibung“ aufgeführte Teil verwendet werden, wenn das Teil zusammen mit anderen Teilen als ein Bauteilsatz verwendet wird.

B1 Dieses Teil kann nicht mehr geliefert werden. Stattdessen wird das in der vorangegangenen Zeile aufgeführte Teil geliefert.

B2 Dieses Teil kann nicht mehr geliefert werden. Stattdessen wird das in der Spalte „Beschreibung“ aufgeführte Teil als ein Bauteilsatz geliefert.

C1 Dieses Teil kann nicht als Einzelteil, sondern nur als Baugruppe geliefert werden.

C2 Dieses Teil wird nur an autorisierte Komatsu-Händler geliefert. Es kann nicht als Einzelteil, sondern nur als Baugruppe geliefert werden.

C3 Hiermit werden Teile gekennzeichnet, die in vorbearbeitetem Zustand geliefert werden und für den Einbau nachbearbeitet werden müssen.

Teilenummer (Part Number):

Die in der Spalte „Teilenummer“ aufgeführte Nummer entspricht der Teilenummer für das betreffende Teil. Diese Nummer dient zur Identifizierung des Teils bei einer Bestellung. Deshalb sollte bei der Bestellung stets auf die genaue Angabe der Teilenummer geachtet werden.

Beschreibung (Description):

Hierunter wird die Bezeichnung des Teils mit der aufgeführten Teilenummer angegeben. Jedes Baugruppen-Bauteil ist mit dem vorangestellten Symbol „•“ gekennzeichnet und wird hinter der entsprechenden Baugruppe aufgeführt. Handelt es sich bei dem mit „•“ gekennzeichneten Bauteil um eine Baugruppe, sind die Bauteile dieser Baugruppe mit „• •“ gekennzeichnet.
Beispiel: Tank Assembly
• Tank
• Cap
• • Packing

Zusätzlich werden die folgenden Zeichen und Abkürzungen in dieser Spalte verwendet:

Kit Hiermit werden Teile gekennzeichnet, die nur als Satz erhältlich sind. Siehe dazu den Abschnitt „FIELD REPAIR SERVICE PARTS“ dieses Ersatzteilkatalogs.
D Durchmesser
L Länge
LHS linke Seite
RHS Rechte Seite
T Dicke
W Breite

Menge (Qty):

Hierunter wird die Anzahl der Bauteile für eine Maschine angegeben. Im Falle einer Baugruppe oder eines Aggregats wird allerdings die Anzahl der Teile pro Baugruppe angegeben.
Der Kode AR (nach Bedarf) wird in dieser Spalte dann benutzt, wenn keine genaue Angabe darüber möglich ist, wie groß der Mengenbedarf pro Maschine und/oder Baugruppe ist. In diesem Fall kann eine beliebige Menge je nach Bedarf bestellt werden.

Serial Numbers (Seriennummern):

Im Ersatzteilkatalog für den Motor versteht man hierunter die Seriennummer des Motors, in den das betreffende Teil eingebaut ist. Im Ersatzteilkatalog für die Maschine versteht man hierunter die Seriennummer der Maschine, in die das entsprechende Teil eingebaut ist.
Wenn die Seriennummer in Klammern angegeben ist, ist diese Seriennummer ausschließlich für das in der Bildnummer (BILD) angegebene Zubehör bestimmt.

Ao solicitar uma peça, informe o número, nome e quantidade da peça necessária, bem como o código de modelo da máquina e seu número de série, o número do motor e a leitura do medidor de serviço.

Este catálogo de peças não somente especifica os acessórios padrões mas também as peças opcionais e aditamentos. Para pedir uma peça, entre em contato com o revendedor Komatsu mais próximo.

Este catálogo de peças contém as seguintes informações e códigos especiais:

LISTA DE PEÇAS E ILUSTRAÇÕES

Ao abrir este catálogo de peças, encontrar-se-á uma ilustração seguida do número da figura (FIG.). A cada peça individual na ilustração corresponde um número de índice. Seguindo a ilustração, as peças componentes da unidade são listadas na ordem dos números de índice nela indicados. O número, nome, quantidade e número de série aplicável da peça são aprsentados como uma lista de peças.

NÚMERO DA FIGURA (FIG.)

O número da figura (FIG.) é o número que mostra a ilustração da página. Não é um número para fornecimento de peças sobressalentes. Os números nem sempre são contínuos.ebene Zubehör bestimmt.

LISTA DE PEÇAS

As informações das peças sobressalentes são relacionadas na página com a lista de peças de acordo com o seguinte:

Índice (Index):

Este é o mesmo que o número de índice na ilustração. As peças são relacionadas na ordem dos números de índice.

Código (Code):

Códigos são utilizados nesta coluna e significam o seguinte:

A1 Esta peça e a peça especificada na linha imediatamente acima são intercambiáveis.

A2 A peça especificada na linha acima pode ser utilizada no lugar desta peça.

A3 Esta peça pode ser utilizada no lugar da peça especificada na linha imediatamente acima.

A4 A peça especificada na coluna “Descrição” pode ser utilizada no lugar desta peça se usada como um conjunto.

B1 Indica peça descontinuada. A peça especificada na linha acima é fornecida em seu lugar.

B2 Indica peça descontinuada. A peça especificada na coluna “Descrição” é fornecida em seu lugar como um conjunto.

C1 Esta peça não pode ser fornecida como peça individual. Ela é fornecida como um conjunto.

C2 Esta peça é fornecida somente para revendedores Komatsu autorizados. Não pode ser fornecida como peça individual. Ela é fornecida como um conjunto.

C3 Indica peça fornecida em condição semiacabada. Requer trabalho adicional antes da instalação.

Número da peça (Part Number):

O número indicado na coluna de números de peça corresponde ao número da peça exibida. É o código de identificação usado para o pedido da peça. É importante não enganar-se de número de código ao pedir a peça.

Descrição (Description):

Indica o nome da peça que tem o seu número de peça relacionado. O símbolo "•" é colocado na frente do nome peça do componente de uma peça de conjunto, e o item é lançado seguindo o conjunto. Se uma peça indicada com "•" é um subconjunto, os seus componentes são indicados por "• •".
Exemplo: Tank Assembly
• Tank
• Cap
• • Packing

Além disso, os seguintes símbolos e abreviações são usados nesta coluna.

Kit Indica peças de um jogo. Para peças de jogo, referir-se à seção "FIELD REPAIR SERVICE PARTS" neste catálogo de peças.

D Diâmetro
L Comprimento
LHS Lado esquerdo
RHS Lado direito
T Espessura
W Largura

Quantidade (Qty):

Indica o número de peças utilizadas em uma máquina. Contudo, se uma peça é incluída no conjunto e/ou componente, a quantidade por conjunto e/ou componente é especificada.
O código AR (como requerido) usar-se-á na coluna "Quantitade" caso o número de peças por máquina e/ou componente não possa ser especificado. Em tal caso, qualquer número de peças pode ser pedido dependendo dos requisitos de serviço em campo.

Números de série (Serial Numbers):

O número de série do motor aplicável é indicado para o volume do motor. No volume da carroceria, indica o número de série da máquina na qual a peça é utilizada.

Se o número de série está entre parêntesis, mostra que é o número de série aplicável para uso exclusivo do equipamento do número da figura (FIG.)

订购零件时，请注明需要零件的货号、品名、数量以及使用机器的车辆编号、发动机型号和系列号、工作时数。

此零件明细表上不仅记载了标准装备零件，还记载了选购零件、附件零件。如果您需要订货，请与最近的小松代理店联系。

为了清楚明了，零件手册中有如下规定：

图表

打开此零件清单后，可以看到附带图号（FIG.）的零件明细表图示。在图示上标有各种零件的索引号码。除图之外，还按索引号码的顺序列表表示货号、品名、数量、适用机型。

图号（FIG.）

图号表示该页图的号码。它不是补充零件用的货号。此号码不一定是连续号码。

零件表

从左栏开始按以下顺序显示零件的明细。

索引 (Index):

与图的索引号码一致，按索引号码顺序编制为表格形式。

代号 (Code):

此栏使用的代号如下所示：

A1　此行零件可与紧挨着的上一行零件互换使用。

A2　上一行的零件可取代此行零件来使用。

A3　此行零件可代替紧挨着的上一行零件使用。

A4　品名栏内的零件配套后，可取代此行零件来使用。

B1　该行零件已停止供应，用上一行的零件代替使用。

B2　该行零件已停止供应，品名栏内的零件配套后代替此行零件供应。

C1　此行零件拟成套供应，不以单一零件供应。

C2　此行零件主要面向特定的代理。不以单一零件供应，只拟成套供应。

C3　此行零件以半成品的形式供应，使用前必需再加工。

货号 (Part Number):

此栏所示的编号是图示零件的货号。它是在订货时需要标明的特定代号，是非常重要的。

品名 (Description):
表示相当于货号的零件名称。构成组装品的零件，在品名的前面有 “·” 标记，记载在组装品之后。
另外，如果标记 “·” 的零件是组装品，则该构成零件的品名前标有 “· ·” 标记。
例： TANK ASSEMBLY
· TANK
· CAP
· · PACKING

另外，说明栏可能显示以下代号。

Kit 表示修理包。关于修理包构件详情，请参考此零件清单中 “现场修理服务零件” 部分的内容。
D 直径
L 全长
LHS 左侧
RHS 右侧
T 厚度
W 全宽

数量 (Qty):

表示一台机器中需要使用的该零件数量。但是，如果是组装零件的构成零件时，表示其组装件的件数。
如果不能指定每个机器以及（或者）组装零件中必须的零件数量时，可以在零件数量栏中使用代码 AR。
此时，数量由现场的服务要件决定，然后进行定购。

适用机型 (Serial Numbers):

发动机篇中表示该使用零件的发动机型号，在机体篇中表示该使用零件的车辆号码。

如果适用机型位于括号中，表明该适用机型专门用于图号 (FIG.) 中所指的设备。

ПРЕДИСЛОВИЕ

При заказе запчасти укажите номер части, наименование части и нужное количество; кроме того, укажите код модели вашей машины, серийный номер машины, серийный номер двигателя и показания счетчика мото-часов.

В Каталоге приведены не только стандартные изделия, но и дополнительное оборудование и принадлежности. Для заказа запчасти пожалуйста обратитесь к ближайшему дилеру "Комацу".

Содержащаяся в Каталоге информация и специальные коды разъясняются ниже:

РИСУНОК И ПЕРЕЧЕНЬ ЧАСТЕЙ

Раскрыв Каталог, вы увидите рисунок после номера рисунка (ПОЗ). Каждой отдельной части на рисунке присвоен позиционный номер. За рисунком следует перечень составных частей устройства в порядке номеров позиций рисунка. Перечень частей указывает для каждой части ее номер, наименование, количество и применимый серийный номер.

НОМЕР РИСУНКА (ПОЗ)

Номер рисунка (ПОЗ) – это номер, который указывает рисунок на странице. Он не является номером запчасти. Последовательность номеров не обязательно непрерывна.

ПЕРЕЧЕНЬ ЧАСТЕЙ

Данные запасных частей приведены на странице перечня частей следующим образом:

Индекс (Index):

То же, что номер позиции на рисунке. Части перечислены в порядке их позиционных номеров.

Код: (Code):

В этой колонке находятся коды, обозначающие следующее:

A1 Данная часть и часть, указанная в предыдущей строке, взаимозаменяемы.

A2 Вместо данной части можно использовать часть, указанную в предыдущей строке.

A3 Данную часть можно использовать вместо части, указанной в предыдущей строке.

A4 В комплекте, вместо данной части можно использовать указанную в колонке описания.

B1 Поставки этой части прекращены. Взамен поставляется часть, указанная в предыдущей строке.

B2 Поставки этой части прекращены. Взамен комплектом поставляется часть, указанная в колонке описания.

C1 Данная часть отдельно не поставляется. Она поставляется с узлом.

C2 Данная часть поставляется лишь уполномоченным дилерам "Комацу". Отдельно не поставляется. Поставляется с узлом.

C3 Обозначает часть, поставляемую без доводки. Требует предустановочной подготовки.

Номер части (Part Number):

Приведенный в колонке номеров частей номер является номером изображенной части. Это код-идентификатор для заказа данной части. Важно, чтобы при заказе этот кодовый номер был указан без ошибок.

Описание (Description):

Здесь приводится наименование части, обозначенной номером в перечне. Значок "·" ставится перед наименованием детали компонента, причем деталь записана после узла. Если помеченная "·" часть является подсборкой узла, то ее составные части обозначаются значком "··".

Пример: Tank Assembly
·Tank
·Cap
··Packing

Далее, в этой колонке используются следующие обозначения и сокращения.

Kit	Указывает на элементы комплекта. Элементы комплекта смотри в разделе ЗАПАСНЫЕ ЧАСТИ ДЛЯ РЕМОНТА В УСЛОВИЯХ ЭКСПЛУАТАЦИИ данного Каталога.
D	Диаметр
L	Длина
LHS	Левая сторона
RHS	Правая сторона
T	Толщина
W	Ширина

Количество (Qty):

Указывает общее число изделий в одной машине. Если же изделие является частью узла и/или устройства, то указывается количество в таком узле и/или устройстве.
При невозможности указать количество частей на машину и/или устройство, в колонке Количество проставляется код AR (по потребности). В таком случае можно заказывать любые количества в зависимости от потребностей обслуживания на месте.

Серийные номера (Serial Numbers):

В книге по двигателю приводится соответствующий серийный номер двигателя. В книге по шасси указывает на серийный номер машины, где используется данная часть.

Серийный номер, заключенный в круглые скобки означает, что он применяется только для оборудования с номером рисунка (ПОЗ.)

. رقم القطعة (Part Number)

الرقم الوارد في عمود رقم القطعة هو رقم القطعة الخاص بالقطعة المبينة. وهو الرمز المستخدم لطلب تلك القطعة. ومن الضروري عدم ارتكاب اي خطأ في تحديد هذا الرقم عند طلب القطع.

. الوصف (Description)

يعطي اسم القطعة المدرج رقمها في القائمة. توضع العلامة "٠" امام اسم المكون لمجموعة ما ويدرج البند بعد المجموعة. اذا كانت القطعة المشار اليها بالعلامة "٠" هي نفسها عبارة عن مجموعة مكونات, فان كلا من مكوناتها يشار اليها بالعلامة "٠٠".
مثال

Tank Assembly
٠Tank
٠Cap
٠٠Packing

بالاضافة الى ذلك, العلامات والمختصرات التالية تستخدم في هذا العمود.

Kit هذا يشير الى قطع الطقم. حول قطع الطقم, راجع قسم "قطع غيار خدمة الإصلاح الميداني" في كتاب القطع هذا.
D قطر
L طول
LHS جانب اليد اليسارى
RHS جانب اليد اليمنى
T السمك
W العرض

. الكمية (Qty)

هذا هو عدد القطع المستخدمة لآلية واحدة. اما بالنسبة لمجموعات المكونات ومجموعات القطع فانه يتم تحديد عدد القطع لكل مجموعة.
الرمز AR (حسب الطلب) سوف يستخدم في عمود الكمية اذا لم يتم تحديد عدد القطع المطلوبة لكل مانكة و/او للمجموعة. في مثل هذه الحالة, فان اي عدد من الكميات ربما يتم طلبه بشكل يعتمد على متطلبات مجال الخدمة.

. الرقم التسلسلي (Serial Numbers)

في كتاب قطع المحرك يشير هذا الرقم الى الرقم التسلسلي للمحرك الذي تستخدم فيه القطعة. قي كتاب قطع الآلية, يشير هذا الرقم الى الرقم التسلسلي للآلية التي تستخدم فيها القطع.

في حالة وضع الرقم التسلسلي بين الأقواس، فهذا يعني أن هذا هو الرقم التسلسلي الساري للاستخدام الحصري للقطعة الموضحة بالشكل.

عند طلب القطع, يرجى تحديد رقم القطعة واسم القطعة والكمية المطلوبة من القطعة, مع تحديد رقم الموديل والرقم التسلسلي وقراءة عداد الخدمة.

قائمة القطع هذه لا تقتصر على الكميات القياسية فقط بل تشمل ايضاً القطع والملحقات الاختيارية. لطلب القطع, يرجى الاتصال باقرب موزع لمنتجات كوماتسو.

كتاب القطع هذا يحتوي على المعلومات ورموز التخصيص وكما مبين ادناه:

الشكل والقائمة

عندما تفتح كتاب القطع هذا, سوف تجد رسومًا توضيحية تتضمن رقم الشكل (الشكل). كل قطعة مفردة في الرسم يعطى لها رقم فهرس. في الرسم التالي, قطع المجموعة للوحدة تم ادراجها حسب ترتيب ارقام الفهرس المبينة في الرسم.. رقم القطعة, اسم القطعة, الكمية والرقم التسلسلي المطابق يعطى لكل قطعة حسب تسلسل القطع في القائمة.

رقم الشكل (الشكل)

رقم الشكل (الشكل) هو الرقم الذي يميز شكل ما داخل الصفحة. إنه ليس رقم القطعة. وليست الأرقام متتابعة دائمًا.

قائمة القطع

معلومات قطع الغيار مثبتة في صفحة قائمة القطع وكلاتي:

. الفهرست (Index)

هذا الرقم هو نفس رقم الفهرس الوارد في الشكل التوضيحي. تدرج القطع في القائمة مرتبة تبعاً لارقام الفهرس.

. الرمز (Code)

الرموز تستخدم في هذا العمود وتوصف كلاتي:

A1 هذه القطعة والقطعة المذكورة في السطر السابق مباشرة يمكن لكل منهما ان تحل محل الاخرى.

A2 القطعة المذكورة في السطر السابق يمكن استعمالها بدلاً من هذه القطعة.

A3 هذه القطعة يمكن استعمالها بدلاً من القطعة المذكورة في السطر السابق مباشرة.

A4 القطعة المذكورة في عمود الوصف يمكن استعمالها بدلاً من هذه القطعة اذا استخدمت كطقم.

B1 هذه القطعة توقف توريدها. يتم توريد القطعة المذكورة في السطر السابق بدلاً منها.

B2 هذه القطعة توقف توريدها. يتم توريد القطعة المذكورة في عمود "الوصف" بدلاً منها كطقم.

C1 هذه القطعة لا يمكن توريدها كقطعة منفردة. يتم توريدها كمجموعة.

C2 هذه القطعة يتم تجهيزها من قبل موزعين كوماتسو المرخصين فقط. لا يمكن تجهيزها كقطعة مفردة. يتم تجهيزها كمجموعة.

C3 هذا يشير الى قطعة موردة شبه مكتملة التصنيع. تتطلب استكمال تصنيعها قبل الاستعمال.

CONTENTS

CONTENTS

	FIG. NO	PAGE
ENGINE		
Cylinder Head	A1009-001001	A001001
Cylinder Head Cover	AVC00-001001	A002001
Cylinder Head Fitting Parts	ARP00-001001	A003001
Air Intake Manifold	AIM00-001001	A004001
Air Intake Connector	AIC00-001001	A005001
Air Intake Connector Mounts	AIC20-001001	A006001
Air Intake Heater	AAH00-001001	A007001
Exhaust Manifold	ATB30-001001	A008001
Turbocharger	A1539-001001	A009001
Turbocharger Exhaust Gas Connector	AXS00-001001	A010001
Turbocharger Oil Piping	ATP00-001001	A011001
Exhaust Connection	AIT00-001001	A012001
Heat Shield	A1570-001001	A013001
Rocker Arm Housing And Rocker Arm	ARL00-001001	A014001
Engine Lifting Eye	ALA00-001001	A015001
Engine Lifting Eye Mounts	ALA10-001001	A016001
Camshaft	A2419-001001	B001001
Front Gear Train Cover	ADF10-001001	B002001
Front Cover	A2049-001001	B003001
Accessory Drive Pulley	APA00-001001	B004001
Flywheel Housing	A2219-001001	B005001
Flywheel	AFW00-001001	B006001
Flywheel Mounts	AFW10-001001	B007001
Engine Oil Pan	A2119-001001	B008001
Engine Oil Level Sensor	ASD00-001001	B009001
Crank Pulley	AAF00-002001	B010001
Cylinder Block	A2019-001001	B011001
Cylinder Block Cover	AOB10-001001	B012001
Breather	ABR00-002001	B013001
Cabin Heater Plug	AHC00-001001	B014001
Crankshaft	A2319-001001	B015001
Damper Flange	ADA00-001001	B016001
Piston and Connecting Rod	A2359-001001	B017001
Oil Level Gauge	ALG00-002001	B018001
Engine Oil Pump	ALP00-001001	C001001
Engine Oil Filter, Related Parts	A3119-001001	C002001
Engine Oil Filter And Engine Oil Cooler, Piping	ALF00-001001	C003001
Engine Oil Cooler	ALC00-001001	C004001
Fuel Injection Pump	A4019-001001	D001001
Fuel Supply Pump Support	AFP20-001001	D002001
Fuel Injector	A4219-001001	D003001
Fuel Injection Piping	APP50-001001	D004001
Fuel Piping	AFT00-001001	D005001
Fuel Filter Plumbing, Piping	AFF20-001001	D006001
Fuel Filter	AFF10-001001	D007001
Fuel System Accessory	AFS20-001001	D008001
Fuel Transfer Pump	AFS00-001001	D009001
Fuel Inlet Fitting	AFI00-001001	D010001
Cooling Fan Drive Bolt	AFA20-001001	E001001
Cooling Fan Drive Pulley	AFA10-001001	E002001
Cooling Fan	A5030-001001	E003001
Cooling Fan Belt	AFA30-001001	E004001
Cooling Fan Belt Tensioner	AWP20-001001	E005001
Water Pump, Drive Belt	AWP10-001001	E006001
Water Pump	A5019-001001	E007001
Thermostat	AEC00-001001	E008001
Coolant Inlet Connector	AWI10-001001	E009001
Coolant Outlet Connector	AWO00-001001	E010001
Corrosion Piping	AWF00-001001	E011001
Plug, Torque Converter Cooling	ATK00-001001	E012001
Plug, For Corrosion Resistor	AWF00-002001	E013001
Alternator Mount Parts	AEH20-001001	F001001
Electric Wiring	AWR00-002001	F002001

	FIG. NO	PAGE
Electric Controller Piping	APH10-001001	F003001
Electric Controller Mounts, North America EPA 3RD Regulations,		
EU Exhaust Emissions 3RD Regulations	APH00-001001	F004001
Electric Controller	A4719-001001	F005001
Repair Service Parts	A8110-001001	Y001001

ENGINE RELATED PARTS

Heat Shield	A1570-001001	B000011
Exhaust Muffler And Mount Bracket	A1610-001001	B000021
Breather Hose	A2080-001001	B000031
Cooling Fan	A5030-001001	B000041
Alternator, 60Amp. (1/2)	A6010-001001	B000051
Alternator, 60Amp. (2/2) (#B10001~B10273)	A6010-001002	B000052
Alternator, 60Amp. (2/2) (#B10274~)	A6010-001004	B000054
Starting Motor Mounts	A6250-001001	B000061
Starting Motor, 11KW	A6250-002001	B000071
Main Piston Pump Inner Parts (1/11) (#B10001-B10230)	A9999-002001	B001001
Main Piston Pump Inner Parts (2/11) (#B10001-B10230)	A9999-002002	B001002
Main Piston Pump Inner Parts (3/11) (#B10001-B10230)	A9999-002003	B001003
Main Piston Pump Inner Parts (4/11) (#B10001-B10230)	A9999-002004	B001004
Main Piston Pump Inner Parts (5/11) (#B10001-B10230)	A9999-002005	B001005
Main Piston Pump Inner Parts (6/11) (#B10001-B10230)	A9999-002006	B001006
Main Piston Pump Inner Parts (7/11) (#B10001-B10230)	A9999-002007	B001007
Main Piston Pump Inner Parts (8/11) (#B10001-B10230)	A9999-002008	B001008
Main Piston Pump Inner Parts (9/11) (#B10001-B10230)	A9999-002009	B001009
Main Piston Pump Inner Parts (10/11) (#B10001-B10230)	A9999-002010	B001010
Main Piston Pump Inner Parts (11/11) (#B10001-B10230)	A9999-002011	B001011
Main Piston Pump Inner Parts (1/12) (#B10231-B10328)	A9999-002012	B001012
Main Piston Pump Inner Parts (2/12) (#B10231-B10326)	A9999-002013	B001013
Main Piston Pump Inner Parts (3/12) (#B10231-B10326)	A9999-002014	B001014
Main Piston Pump Inner Parts (4/12) (#B10231-B10326)	A9999-002015	B001015
Main Piston Pump Inner Parts (5/12) (#B10231-B10326)	A9999-002016	B001016
Main Piston Pump Inner Parts (6/12) (#B10231-B10326)	A9999-002017	B001017
Main Piston Pump Inner Parts (7/12) (#B10231-B10326)	A9999-002018	B001018
Main Piston Pump Inner Parts (8/12) (#B10231-B10326)	A9999-002019	B001019
Main Piston Pump Inner Parts (9/12) (#B10231-B10326)	A9999-002020	B001020
Main Piston Pump Inner Parts (10/12) (#B10231-B10326)	A9999-002021	B001021
Main Piston Pump Inner Parts (11/12) (#B10231-B10326)	A9999-002022	B001022
Main Piston Pump Inner Parts (12/12) (#B10231-B10326)	A9999-002023	B001023
Main Piston Pump Inner Parts (1/12) (#B10327-)	A9999-003012	B001032
Main Piston Pump Inner Parts (2/12) (#B10327-)	A9999-003013	B001033
Main Piston Pump Inner Parts (3/12) (#B10327-)	A9999-003014	B001034
Main Piston Pump Inner Parts (4/12) (#B10327-)	A9999-003015	B001035
Main Piston Pump Inner Parts (5/12) (#B10327-)	A9999-003016	B001036
Main Piston Pump Inner Parts (6/12) (#B10327-)	A9999-003017	B001037
Main Piston Pump Inner Parts (7/12) (#B10327-)	A9999-003018	B001038
Main Piston Pump Inner Parts (8/12) (#B10327-)	A9999-003019	B001039
Main Piston Pump Inner Parts (9/12) (#B10327-)	A9999-003020	B001040
Main Piston Pump Inner Parts (10/12) (#B10327-)	A9999-003021	B001041
Main Piston Pump Inner Parts (11/12) (#B10327-)	A9999-003022	B001042
Main Piston Pump Inner Parts (12/12) (#B10327-)	A9999-003023	B001043
Damper (#B10001-B10177)	A9999-003001	B002001
Damper (#B10178-)	A9999-003001A	B002002
Engine Mounts	B0100-001001	B003001
Air Cleaner (1/2)	B0200-002001	B004001
Air Cleaner (2/2)	B0200-002002	B004002

COOLING SYSTEM

Cooling System Radiator And Oil Cooler (#B10001-B10031)	C0100-001001	C001001
Cooling System Radiator And Oil Cooler (#B10032-)	C0100-001002	C001002
Cooling System Shroud	C0100-001003	C001003
Cooling System After Cooler And Condenser	C0100-001004	C001004
Cooling System Radiator Piping	C0100-001005	C001005
Cooling System Stay And Sound Sheet	C0100-001006	C001006
Cooling System Air Cooler Piping And Sub Tank	C0100-001007	C001007

FUEL TANK AND RELATED PARTS

Fuel Tank (#B10001-B10386)	D0100-001001	D001001

	FIG. NO	PAGE
Fuel Tank (#B10387-)	D0100-001001A	D001001A
Fuel Supply Piping Fuel Line	D0200-002001	D002001
Pre Filter	D0200-002002	D002002
Fuel Supply Piping Pre Filter Bracket	D0200-002003	D002003
ELECTRICAL SYSTEM		
Battery, With Large Capacity Battery	E0100-002001	E001001
Battery, (150 Ah)	E0100-002002	E001002
Electric Wiring Starting Harness	E0200-001001	E002001
Electric Wiring Main Harness (1/3)	E0200-001002	E002002
Electric Wiring Main Harness (2/3)	E0200-001003	E002003
Electric Wiring Main Harness (3/3)	E0200-001004	E002004
Electric Wiring Working Light	E0200-001005	E002005
Additional Working Light	E0310-005001	E003001
Additional Working Light, Full, RHS	E0310-004001	E004001
Additional Rear Working Light (#B10027-)	E0320-001001	E005001
Horn	E0410-001001	E006001
Travel Alarm	E0420-001001	E007001
Rear View Camera, 1-camera	E0450-001001	E008001
Rear View Camera Less	E0450-001002	E009001
HYDRAULIC SYSTEM		
Hydraulic Oil Tank	H0110-002001	H001001
Main Control Valve, 1-actuator Inner Parts (1/24)	H0120-005001	H002001
Main Control Valve, 1-actuator Inner Parts (2/24)	H0120-005002	H002002
Main Control Valve, 1-actuator Inner Parts (3/24)	H0120-005003	H002003
Main Control Valve, 1-actuator Inner Parts (4/24)	H0120-005004	H002004
Main Control Valve, 1-actuator Inner Parts (5/24) (#B10001-B10401)	H0120-005005	H002005
Main Control Valve, 1-actuator Inner Parts (5/24) (#B10402-)	H0120-005005A	H002005A
Main Control Valve, 1-actuator Inner Parts (6/24)	H0120-005006	H002006
Main Control Valve, 1-actuator Inner Parts (7/24)	H0120-005007	H002007
Main Control Valve, 1-actuator Inner Parts (8/24)	H0120-005008	H002008
Main Control Valve, 1-actuator Inner Parts (9/24)	H0120-005009	H002009
Main Control Valve, 1-actuator Inner Parts (10/24)	H0120-005010	H002010
Main Control Valve, 1-actuator Inner Parts (11/24)	H0120-005011	H002011
Main Control Valve, 1-actuator Inner Parts (12/24)	H0120-005012	H002012
Main Control Valve, 1-actuator Inner Parts (13/24)	H0120-005013	H002013
Main Control Valve, 1-actuator Inner Parts (14/24)	H0120-005014	H002014
Main Control Valve, 1-actuator Inner Parts (15/24)	H0120-005015	H002015
Main Control Valve, 1-actuator Inner Parts (16/24)	H0120-005016	H002016
Main Control Valve, 1-actuator Inner Parts (17/24)	H0120-005017	H002017
Main Control Valve, 1-actuator Inner Parts (18/24)	H0120-005018	H002018
Main Control Valve, 1-actuator Inner Parts (19/24)	H0120-005019	H002019
Main Control Valve, 1-actuator Inner Parts (20/24)	H0120-005020	H002020
Main Control Valve, 1-actuator Inner Parts (21/24)	H0120-005021	H002021
Main Control Valve, 1-actuator Inner Parts (22/24)	H0120-005022	H002022
Main Control Valve, 1-actuator Inner Parts (23/24)	H0120-005023	H002023
Main Control Valve, 1-actuator Inner Parts (24/24)	H0120-005024	H002024
Main Control Valve, 1-actuator Control Valve Related Parts (1/2)	H0120-005025	H002025
Main Control Valve, 1-actuator Control Valve Related Parts (2/2)	H0120-005026	H002026
Main Control Valve, 1-actuator Valve Bracket	H0120-005027	H002027
Main Control Valve, 1-actuator, Piping Less, Inner Parts (1/24) (#B10172-)	H0120-004001	H003001
Main Control Valve, 1-actuator, Piping Less, Inner Parts (2/24) (#B10172-)	H0120-004002	H003002
Main Control Valve, 1-actuator, Piping Less, Inner Parts (3/24) (#B10172-)	H0120-004003	H003003
Main Control Valve, 1-actuator, Piping Less, Inner Parts (4/24) (#B10172-)	H0120-004004	H003004
Main Control Valve, 1-actuator, Piping Less, Inner Parts (5/24) (#B10172-B10401)	H0120-004005	H003005
Main Control Valve, 1-actuator, Piping Less, Inner Parts (5/24) (#B10402-)	H0120-004005A	H003005A
Main Control Valve, 1-actuator, Piping Less, Inner Parts (6/24) (#B10172-)	H0120-004006	H003006
Main Control Valve, 1-actuator, Piping Less, Inner Parts (7/24) (#B10172-)	H0120-004007	H003007
Main Control Valve, 1-actuator, Piping Less, Inner Parts (8/24) (#B10172-)	H0120-004008	H003008
Main Control Valve, 1-actuator, Piping Less, Inner Parts (9/24) (#B10172-)	H0120-004009	H003009
Main Control Valve, 1-actuator, Piping Less, Inner Parts (10/24) (#B10172-)	H0120-004010	H003010
Main Control Valve, 1-actuator, Piping Less, Inner Parts (11/24) (#B10172-)	H0120-004011	H003011
Main Control Valve, 1-actuator, Piping Less, Inner Parts (12/24) (#B10172-)	H0120-004012	H003012
Main Control Valve, 1-actuator, Piping Less, Inner Parts (13/24) (#B10172-)	H0120-004013	H003013
Main Control Valve, 1-actuator, Piping Less, Inner Parts (14/24) (#B10172-)	H0120-004014	H003014
Main Control Valve, 1-actuator, Piping Less, Inner Parts (15/24) (#B10172-)	H0120-004015	H003015
Main Control Valve, 1-actuator, Piping Less, Inner Parts (16/24) (#B10172-)	H0120-004016	H003016

	FIG. NO	PAGE
Main Control Valve, 1-actuator, Piping Less, Inner Parts (17/24) (#B10172-)	H0120-004017	H003017
Main Control Valve, 1-actuator, Piping Less, Inner Parts (18/24) (#B10172-)	H0120-004018	H003018
Main Control Valve, 1-actuator, Piping Less, Inner Parts (19/24) (#B10172-)	H0120-004019	H003019
Main Control Valve, 1-actuator, Piping Less, Inner Parts (20/24) (#B10172-)	H0120-004020	H003020
Main Control Valve, 1-actuator, Piping Less, Inner Parts (21/24) (#B10172-)	H0120-004021	H003021
Main Control Valve, 1-actuator, Piping Less, Inner Parts (22/24) (#B10172-)	H0120-004022	H003022
Main Control Valve, 1-actuator, Piping Less, Inner Parts (23/24) (#B10172-)	H0120-004023	H003023
Main Control Valve, 1-actuator, Piping Less, Inner Parts (24/24) (#B10172-)	H0120-004024	H003024
Main Control Valve, 1-actuator, Piping Less, Control Valve Related Parts (1/2) (#B10172-)	H0120-004025	H003025
Main Control Valve, 1-actuator, Piping Less, Control Valve Related Parts (2/2) (#B10172-)	H0120-004026	H003026
Main Control Valve, 1-actuator, Piping Less, Valve Bracket (#B10172-)	H0120-004027	H003027
Main Control Valve, 1-actuator, Piping Less, Blind Parts (#B10172-)	H0120-004028	H003028
Control Valve, Without 1-additional Actuator Piping, 7-spool, Inner Parts (1/22)	H0120-004101	H004001
Control Valve, Without 1-additional Actuator Piping, 7-spool, Inner Parts (2/22)	H0120-004102	H004002
Control Valve, Without 1-additional Actuator Piping, 7-spool, Inner Parts (3/22)	H0120-004103	H004003
Control Valve, Without 1-additional Actuator Piping, 7-spool, Inner Parts (4/22)	H0120-004104	H004004
Control Valve, Without 1-additional Actuator Piping, 7-spool, Inner Parts (5/22)	H0120-004105	H004005
Control Valve, Without 1-additional Actuator Piping, 7-spool, Inner Parts (6/22)	H0120-004106	H004006
Control Valve, Without 1-additional Actuator Piping, 7-spool, Inner Parts (7/22)	H0120-004107	H004007
Control Valve, Without 1-additional Actuator Piping, 7-spool, Inner Parts (8/22)	H0120-004108	H004008
Control Valve, Without 1-additional Actuator Piping, 7-spool, Inner Parts (9/22)	H0120-004109	H004009
Control Valve, Without 1-additional Actuator Piping, 7-spool, Inner Parts (10/22)	H0120-004110	H004010
Control Valve, Without 1-additional Actuator Piping, 7-spool, Inner Parts (11/22)	H0120-004111	H004011
Control Valve, Without 1-additional Actuator Piping, 7-spool, Inner Parts (12/22)	H0120-004112	H004012
Control Valve, Without 1-additional Actuator Piping, 7-spool, Inner Parts (13/22)	H0120-004113	H004013
Control Valve, Without 1-additional Actuator Piping, 7-spool, Inner Parts (14/22)	H0120-004114	H004014
Control Valve, Without 1-additional Actuator Piping, 7-spool, Inner Parts (15/22)	H0120-004115	H004015
Control Valve, Without 1-additional Actuator Piping, 7-spool, Inner Parts (16/22)	H0120-004116	H004016
Control Valve, Without 1-additional Actuator Piping, 7-spool, Inner Parts (17/22)	H0120-004117	H004017
Control Valve, Without 1-additional Actuator Piping, 7-spool, Inner Parts (18/22)	H0120-004118	H004018
Control Valve, Without 1-additional Actuator Piping, 7-spool, Inner Parts (19/22)	H0120-004119	H004019
Control Valve, Without 1-additional Actuator Piping, 7-spool, Inner Parts (20/22)	H0120-004120	H004020
Control Valve, Without 1-additional Actuator Piping, 7-spool, Inner Parts (21/22)	H0120-004121	H004021
Control Valve, Without 1-additional Actuator Piping, 7-spool, Inner Parts (22/22)	H0120-004122	H004022
Control Valve, Without 1-additional Actuator Piping, Control Valve Related Parts (1/2)	H0120-004123	H004023
Control Valve, Without 1-additional Actuator Piping, Control Valve Related Parts (2/2)	H0120-004124	H004024
Control Valve, Without 1-additional Actuator Piping, Valve Bracket	H0120-004125	H004025
Main Piston Pump, Related Parts	H0210-001001	H005001
Suction Piping (#B10001-B10230)	H0311-001001	H006001
Suction Piping (#B10231-)	H0311-001002	H006002
Delivery Piping, With In-line Filter (#B10001-B10265)	H0312-002001	H007001
Delivery Piping, With In-line Filter (#B10266-)	H0312-002010	H007002
Oil Cooler Piping	H0320-001001	H008001
Return Piping (#B10172-)	H0330-001001	H009001
Return Piping, For Additional Piping	H0330-002001	H010001
Drain Piping	H0340-001001	H011001
Boom Piping, Valve Boom Lines	H1210-001001	H012001
Boom Piping, Bracket and Clamp	H1210-001002	H012002
Arm And Bucket Piping, For Machine With Arm Holding Valve	H1220-003001	H013001
Arm And Bucket Piping, For Machine With Arm Holding Valve (2/2)	H1220-003002	H013002
Actuator Piping, Main Line, LHS	H1270-003001	H014001
Actuator Piping, Solenoid Valve	H1270-003002	H014002
Actuator Piping, Main Line, RHS	H1270-003003	H014003
Actuator Piping, Return Filter	H1270-003004	H014004
Actuator Piping, Accumulator	H1270-003005	H014005
Actuator Piping, Accumulator, LHS	H1270-003006	H014006
Actuator Piping, Pilot Filter	H1270-003007	H014007
Travel Piping	H1310-001001	H015001
Swing Piping	H1340-001001	H016001
LS Piping, For Additional Actuator Piping	H1810-001001	H017001
LS Piping (#B10172-)	H1810-002001	H018001
Solenoid Valve Piping, Solenoid Valve (1/2) (#B10172-)	H1831-001001	H019001
Solenoid Valve Piping, Solenoid Valve (2/2) (#B10172-)	H1831-001002	H019002
Solenoid Valve Piping, Hose And Bracket (#B10172-)	H1831-001003	H019003
Solenoid Valve Piping, Clamp (#B10172-)	H1831-001004	H019004
Solenoid Valve Piping, For Additional Actuator Piping, Solenoid Valve	H1831-002001	H020001
Solenoid Valve Piping, For Additional Actuator Piping	H1831-002002	H020002
Solenoid Valve Piping, For Additional Actuator Piping, Hose And Bracket	H1831-002003	H020003

	FIG. NO	PAGE
Solenoid Valve Piping, For Additional Actuator Piping, Clamp	H1831-002004	H020004
Pressure Switch Block	H1833-001001	H021001
Proportional Pressure Control (PPC) Valve Piping	H1840-001001	H022001
MAIN/REVOLVING FRAME AND RELATED PARTS		
Revolving Frame, With Deck Guard	J1110-001001	J001001
Boom Foot Pin, 100 Hours Greasing Type	J1310-002001	J002001
OPERATOR'S COMPARTMENT AND CONTROL SYSTEM		
Operator's Seat, Suspension Type (1/2)	K0110-001001	K001001
Operator's Seat, Suspension Type (2/2)	K0110-001002	K001002
Seat Belt, 78mm Width	K0160-002001	K002001
Front Guard, Half	K0230-002001	K003001
Floor Mat (#B10172-)	K0310-001001	K004001
Floor Mat, 1-actuator	K0310-002001	K005001
Windshield Washer Tank	K0350-001001	K006001
Air Conditioner Unit Compressor	K0700-001001	K007001
Air Conditioner Unit Hose	K0700-001002	K007002
Cab, EOPS Cabin Front Fix, 1-actuator, With AM-FM Radio, With Master Key, For KOMTRAX, Cab And Window	K1110-024001	K008001
Cab, EOPS Cabin Front Fix, 1-actuator, With AM-FM Radio, With Master Key, For KOMTRAX, Front Window	K1110-024002	K008002
Cab, EOPS Cabin Front Fix, 1-actuator, With AM-FM Radio, With Master Key, For KOMTRAX, Roof Window	K1110-024003	K008003
Cab, EOPS Cabin Front Fix, 1-actuator, With AM-FM Radio, With Master Key, For KOMTRAX, Door	K1110-024004	K008004
Cab, EOPS Cabin Front Fix, 1-actuator, With AM-FM Radio, With Master Key, For KOMTRAX, Door Lock	K1110-024005	K008005
Cab, EOPS Cabin Front Fix, 1-actuator, With AM-FM Radio, With Master Key, For KOMTRAX, Open Lock and Door Catch	K1110-024006	K008006
Cab, EOPS Cabin Front Fix, 1-actuator, With AM-FM Radio, With Master Key, For KOMTRAX, Wiper and Room Lamp	K1110-024007	K008007
Cab, EOPS Cabin Front Fix, 1-actuator, With AM-FM Radio, With Master Key, For KOMTRAX, Rubber Antenna	K1110-024008	K008008
Cab, EOPS Cabin Front Fix, 1-actuator, With AM-FM Radio, With Master Key, For KOMTRAX, Speaker and Window Washer	K1110-024009	K008009
Cab, EOPS Cabin Front Fix, 1-actuator, With AM-FM Radio, With Master Key, For KOMTRAX, Roof Cover and Air Intake	K1110-024010	K008010
Cab, EOPS Cabin Front Fix, 1-actuator, With AM-FM Radio, With Master Key, For KOMTRAX, Pressure Valve and Grip	K1110-024011	K008011
Cab, EOPS Cabin Front Fix, 1-actuator, With AM-FM Radio, With Master Key, For KOMTRAX KOMTRAX, Film Antenna and ORBCOM Type	K1110-024012	K008012
Cab, EOPS Cabin Front Fix, 1-actuator, With AM-FM Radio, With Master Key, For KOMTRAX, Cab In Parts, Monitor And Cover	K1110-024013	K008013
Cab, EOPS Cabin Front Fix, 1-actuator, With AM-FM Radio, With Master Key, For KOMTRAX, Cab In Parts, Monitor Cover (#B10001-B101	K1110-024014	K008014
Cab, EOPS Cabin Front Fix, 1-actuator, With AM-FM Radio, With Master Key, For KOMTRAX, Cab In Parts, Monitor Cover (#B10121-)	K1110-024015	K008014A
Cab, EOPS Cabin Front Fix, 1-actuator, With AM-FM Radio, With Master Key, For KOMTRAX, Cab In Parts, Luggage Plate (#B10001-B101	K1110-024016	K008015
Cab, EOPS Cabin Front Fix, 1-actuator, With AM-FM Radio, With Master Key, For KOMTRAX, Cab In Parts, Luggage Plate (#B10121-)	K1110-024017	K008015A
Cab, EOPS Cabin Front Fix, 1-actuator, With AM-FM Radio, With Master Key, For KOMTRAX, Cab In Parts, Monitor Duct	K1110-024018	K008016
Cab, EOPS Cabin Front Fix, 1-actuator, With AM-FM Radio, With Master Key, For KOMTRAX, Cab In Parts, Air Duct, With Air Conditio	K1110-024019	K008017
Cab, EOPS Cabin Front Fix, 1-actuator, With AM-FM Radio, With Master Key, For KOMTRAX, Cab In Parts, Partition And Filter, With	K1110-024020	K008018
Cab, EOPS Cabin Front Fix, 1-actuator, With AM-FM Radio, With Master Key, For KOMTRAX, Cab In Parts, Sub Plate And Relay	K1110-024021	K008019
Cab, EOPS Cabin Front Fix, 1-actuator, With AM-FM Radio, With Master Key, For KOMTRAX, Cab In Parts, Air Conditioner And	K1110-024022	K008020
Cab, EOPS Cabin Front Fix, 1-actuator, With AM-FM Radio, With Master Key, For KOMTRAX, Cab In Parts, Main Harness Clamp	K1110-024023	K008021
Cab, EOPS Cabin Front Fix, 1-actuator, With AM-FM Radio, With Master Key, For KOMTRAX, Cab In Parts, Rear Cover	K1110-024024	K008022
Cab, EOPS Cabin Front Fix, 1-actuator, With AM-FM Radio, With Master Key, For KOMTRAX, Floor, Frame	K1110-024025	K008023

	FIG. NO	PAGE
Cab, EOPS Cabin Front Fix, 1-actuator, With AM-FM Radio, With Master Key, For KOMTRAX, Floor, P.P.C. Valve, For Travel (1/2)	K1110-024026	K008024
Cab, EOPS Cabin Front Fix, 1-actuator, With AM-FM Radio, With Master Key, For KOMTRAX, Floor, P.P.C. Valve, For Travel (2/2)	K1110-024027	K008025
Cab, EOPS Cabin Front Fix, 1-actuator, With AM-FM Radio, With Master Key, For KOMTRAX, Floor, Travel Control	K1110-024028	K008026
Cab, EOPS Cabin Front Fix, 1-actuator, With AM-FM Radio, With Master Key, For KOMTRAX, Floor, Foot Rest, LHS	K1110-024029	K008027
Cab, EOPS Cabin Front Fix, 1-actuator, With AM-FM Radio, With Master Key, For KOMTRAX, Floor, P.P.C. Valve, For 1st. Attachment	K1110-024030	K008028
Cab, EOPS Cabin Front Fix, 1-actuator, With AM-FM Radio, With Master Key, For KOMTRAX, Floor, 1st. Attachment Control	K1110-024031	K008029
Cab, EOPS Cabin Front Fix, 1-actuator, With AM-FM Radio, With Master Key, For KOMTRAX, Floor, Base (B10001-B10171)	K1110-024032	K008030
Cab, EOPS Cabin Front Fix, 1-actuator, With AM-FM Radio, With Master Key, For KOMTRAX, Floor, Base (#B10172-)	K1110-024033	K008030A
Cab, EOPS Cabin Front Fix, 1-actuator, With AM-FM Radio, With Master Key, For KOMTRAX, Floor, Harness	K1110-024034	K008031
Cab, EOPS Cabin Front Fix, 1-actuator, With AM-FM Radio, With Master Key, For KOMTRAX, Floor, Harness Clamp And Earth	K1110-024035	K008032
Cab, EOPS Cabin Front Fix, 1-actuator, With AM-FM Radio, With Master Key, For KOMTRAX, Floor, Window Washer Hose	K1110-024036	K008033
Cab, EOPS Cabin Front Fix, 1-actuator, With AM-FM Radio, With Master Key, For KOMTRAX, Floor, Lever, LHS	K1110-024037	K008034
Cab, EOPS Cabin Front Fix, 1-actuator, With AM-FM Radio, With Master Key, For KOMTRAX, Floor, P.P.C. Valve, For Work Equipment,	K1110-024038	K008035
Cab, EOPS Cabin Front Fix, 1-actuator, With AM-FM Radio, With Master Key, For KOMTRAX, Floor, Valve, LHS	K1110-024039	K008036
Cab, EOPS Cabin Front Fix, 1-actuator, With AM-FM Radio, With Master Key, For KOMTRAX, Floor, Console, LHS	K1110-024040	K008037
Cab, EOPS Cabin Front Fix, 1-actuator, With AM-FM Radio, With Master Key, For KOMTRAX, Floor, P.P.C. Lock Lever And Radio	K1110-024041	K008038
Cab, EOPS Cabin Front Fix, 1-actuator, With AM-FM Radio, With Master Key, For KOMTRAX, Floor, Arm Rest, LHS	K1110-024042	K008039
Cab, EOPS Cabin Front Fix, 1-actuator, With AM-FM Radio, With Master Key, For KOMTRAX, Floor, Lever, RHS	K1110-024043	K008040
Cab, EOPS Cabin Front Fix, 1-actuator, With AM-FM Radio, With Master Key, For KOMTRAX, Floor, P.P.C. Valve, For Work Equipment,	K1110-024044	K008041
Cab, EOPS Cabin Front Fix, 1-actuator, With AM-FM Radio, With Master Key, For KOMTRAX, Floor, Valve, RHS	K1110-024045	K008042
Cab, EOPS Cabin Front Fix, 1-actuator, With AM-FM Radio, With Master Key, For KOMTRAX, Floor, Console, RHS	K1110-024046	K008043
Cab, EOPS Cabin Front Fix, 1-actuator, With AM-FM Radio, With Master Key, For KOMTRAX, Floor, Arm Rest, RHS	K1110-024047	K008044
Cab, EOPS Cabin Front Fix, 1-actuator, With AM-FM Radio, With Master Key, For KOMTRAX, Air Conditioner Unit	K1110-024048	K008045
Cab, EOPS Cabin Front Fix, 1-actuator, With AM-FM Radio, With Master Key, For KOMTRAX, Floor, Air Conditioner Unit	K1110-024049	K008046
Cab, EOPS Cabin Front Fix, 1-actuator, With AM-FM Radio, With Master Key, For KOMTRAX, Floor, Air Conditioner Hose	K1110-024050	K008047
Cab, EOPS Cabin Front Fix, 1-actuator, With AM-FM Radio, With Master Key, For KOMTRAX, Floor, Heater Hose	K1110-024051	K008048
Cab, EOPS Cabin Front Fix, 1-actuator, With AM-FM Radio, With Master Key, For KOMTRAX, Floor, P.P.C. Piping For Travel Valve	K1110-024052	K008049
Cab, EOPS Cabin Front Fix, 1-actuator, With AM-FM Radio, With Master Key, For KOMTRAX, Floor, P.P.C. Piping For Pilot Valve	K1110-024053	K008050
Cab, EOPS Cabin Front Fix, 1-actuator, With AM-FM Radio, With Master Key, For KOMTRAX, Floor, P.P.C. Hose Clamp	K1110-024054	K008051
Cab, EOPS Cabin Front Fix, 1-actuator, With AM-FM Radio, With Master Key, For KOMTRAX, Floor, P, T Block And Seal	K1110-024055	K008052
Cab, EOPS Cabin Front Fix, 1-actuator, With AM-FM Radio, With Master Key, For KOMTRAX, Floor, Rear Camera Cable	K1110-024056	K008053
Cab, EOPS Cabin Front Fix, With AM-FM Radio, With Master Key, For KOMTRAX, Cab And Window (#B10172-)	K1110-039001	K009001
Cab, EOPS Cabin Front Fix, With AM-FM Radio, With Master Key, For KOMTRAX, Front Window (#B10172-)	K1110-039002	K009002
Cab, EOPS Cabin Front Fix, With AM-FM Radio, With Master Key, For KOMTRAX, Roof Window (#B10172-)	K1110-039003	K009003

	FIG. NO	PAGE
Cab, EOPS Cabin Front Fix, With AM-FM Radio, With Master Key, For KOMTRAX, Door (#B10172-)	K1110-039004	K009004
Cab, EOPS Cabin Front Fix, With AM-FM Radio, With Master Key, For KOMTRAX, Door Lock (#B10172-)	K1110-039005	K009005
Cab, EOPS Cabin Front Fix, With AM-FM Radio, With Master Key, For KOMTRAX, Open Lock and Door Catch (#B10172-)	K1110-039006	K009006
Cab, EOPS Cabin Front Fix, With AM-FM Radio, With Master Key, For KOMTRAX, Wiper and Room Lamp (#B10172-)	K1110-039007	K009007
Cab, EOPS Cabin Front Fix, With AM-FM Radio, With Master Key, For KOMTRAX, Rubber Antenna (#B10172-)	K1110-039008	K009008
Cab, EOPS Cabin Front Fix, With AM-FM Radio, With Master Key, For KOMTRAX, Speaker and Window Washer (#B10172-)	K1110-039009	K009009
Cab, EOPS Cabin Front Fix, With AM-FM Radio, With Master Key, For KOMTRAX, Roof Cover and Air Intake (#B10172-)	K1110-039010	K009010
Cab, EOPS Cabin Front Fix, With AM-FM Radio, With Master Key, For KOMTRAX, Pressure Valve and Grip (#B10172-)	K1110-039011	K009011
Cab, EOPS Cabin Front Fix, With AM-FM Radio, With Master Key, For KOMTRAX KOMTRAX, Film Antenna and ORBCOM Type (#B10172-)	K1110-039012	K009012
Cab, EOPS Cabin Front Fix, With AM-FM Radio, With Master Key, For KOMTRAX, Cab In Parts, Monitor And Cover (#B10172-)	K1110-039013	K009013
Cab, EOPS Cabin Front Fix, With AM-FM Radio, With Master Key, For KOMTRAX, Cab In Parts, Monitor Cover (#B10172-)	K1110-039014	K009014
Cab, EOPS Cabin Front Fix, With AM-FM Radio, With Master Key, For KOMTRAX, Cab In Parts, Luggage Plate (#B10172-)	K1110-039015	K009015
Cab, EOPS Cabin Front Fix, With AM-FM Radio, With Master Key, For KOMTRAX, Cab In Parts, Monitor Duct (#B10172-)	K1110-039016	K009016
Cab, EOPS Cabin Front Fix, With AM-FM Radio, With Master Key, For KOMTRAX, Cab In Parts, Air Duct, With Air Condition (#B10172-)	K1110-039017	K009017
Cab, EOPS Cabin Front Fix, With AM-FM Radio, With Master Key, For KOMTRAX, Cab In Parts, Partition And Filter, With Air Conditio	K1110-039018	K009018
Cab, EOPS Cabin Front Fix, With AM-FM Radio, With Master Key, For KOMTRAX Cab In Parts, Sub Plate And Relay (#B10172-)	K1110-039019	K009019
Cab, EOPS Cabin Front Fix, With AM-FM Radio, With Master Key, For KOMTRAX, Cab In Parts, Air Conditioner And KOMTRAX Controller	K1110-039020	K009020
Cab, EOPS Cabin Front Fix, With AM-FM Radio, With Master Key, For KOMTRAX, Cab In Parts, Main Harness Clamp (#B10172-)	K1110-039021	K009021
Cab, EOPS Cabin Front Fix, With AM-FM Radio, With Master Key, For KOMTRAX, Cab In Parts, Rear Cover (#B10172-)	K1110-039022	K009022
Cab, EOPS Cabin Front Fix, With AM-FM Radio, With Master Key, For KOMTRAX, Floor, Frame (#B10172-)	K1110-039023	K009023
Cab, EOPS Cabin Front Fix, With AM-FM Radio, With Master Key, For KOMTRAX, Floor, P.P.C. Valve, For Travel (1/2) (#B10172-)	K1110-039024	K009024
Cab, EOPS Cabin Front Fix, With AM-FM Radio, With Master Key, For KOMTRAX, Floor, P.P.C. Valve, For Travel (2/2) (#B10172-)	K1110-039025	K009025
Cab, EOPS Cabin Front Fix, With AM-FM Radio, With Master Key, For KOMTRAX, Floor, Travel Control (#B10172-)	K1110-039026	K009026
Cab, EOPS Cabin Front Fix, With AM-FM Radio, With Master Key, For KOMTRAX, Floor, Foot Rest, LHS (#B10172-)	K1110-039027	K009027
Cab, EOPS Cabin Front Fix, With AM-FM Radio, With Master Key, For KOMTRAX, Floor, Foot Rest, RHS (#B10172-)	K1110-039028	K009028
Cab, EOPS Cabin Front Fix, With AM-FM Radio, With Master Key, For KOMTRAX, Floor, Base (#B10172-)	K1110-039029	K009029
Cab, EOPS Cabin Front Fix, With AM-FM Radio, With Master Key, For KOMTRAX, Floor, Harness (#B10172-)	K1110-039030	K009030
Cab, EOPS Cabin Front Fix, With AM-FM Radio, With Master Key, For KOMTRAX Floor, Harness Clamp And Earth (#B10172-)	K1110-039031	K009031
Cab, EOPS Cabin Front Fix, With AM-FM Radio, With Master Key, For KOMTRAX, Floor, Window Washer Hose (#B10172-)	K1110-039032	K009032
Cab, EOPS Cabin Front Fix, With AM-FM Radio, With Master Key, For KOMTRAX, Floor, Lever, LHS (#B10172-)	K1110-039033	K009033
Cab, EOPS Cabin Front Fix, With AM-FM Radio, With Master Key, For KOMTRAX, Floor, P.P.C. Valve, For Work Equipment, LHS (#B10172-)	K1110-039034	K009034
Cab, EOPS Cabin Front Fix, With AM-FM Radio, With Master Key, For KOMTRAX, Floor, Valve, LHS (#B10172-)	K1110-039035	K009035
Cab, EOPS Cabin Front Fix, With AM-FM Radio, With Master Key, For KOMTRAX Floor, Console, LHS (#B10172-)	K1110-039036	K009036
Cab, EOPS Cabin Front Fix, With AM-FM Radio, With Master Key, For KOMTRAX, Floor, P.P.C. Lock Lever And Radio (#B10172-)	K1110-039037	K009037

	FIG. NO	PAGE
Cab, EOPS Cabin Front Fix, With AM-FM Radio, With Master Key, For KOMTRAX, Floor, Arm Rest, LHS (#B10172-)	K1110-039038	K009038
Cab, EOPS Cabin Front Fix, With AM-FM Radio, With Master Key, For KOMTRAX, Floor, Lever, RHS (#B10172-)	K1110-039039	K009039
Cab, EOPS Cabin Front Fix, With AM-FM Radio, With Master Key, For KOMTRAX, Floor, P.P.C. Valve, For Work Equipment, RHS (#B10172	K1110-039040	K009040
Cab, EOPS Cabin Front Fix, With AM-FM Radio, With Master Key, For KOMTRAX, Floor, Valve, RHS (#B10172-)	K1110-039041	K009041
Cab, EOPS Cabin Front Fix, With AM-FM Radio, With Master Key, For KOMTRAX, Floor, Console, RHS (#B10172-)	K1110-039042	K009042
Cab, EOPS Cabin Front Fix, With AM-FM Radio, With Master Key, For KOMTRAX, Floor, Arm Rest, RHS (#B10172-)	K1110-039043	K009043
Cab, EOPS Cabin Front Fix, With AM-FM Radio, With Master Key, For KOMTRAX, Air Conditioner Unit (#B10172-)	K1110-039044	K009044
Cab, EOPS Cabin Front Fix, With AM-FM Radio, With Master Key, For KOMTRAX, Floor, Air Conditioner Unit (#B10172-)	K1110-039045	K009045
Cab, EOPS Cabin Front Fix, With AM-FM Radio, With Master Key, For KOMTRAX, Floor, Air Conditioner Hose (#B10172-)	K1110-039046	K009046
Cab, EOPS Cabin Front Fix, With AM-FM Radio, With Master Key, For KOMTRAX, Floor, Heater Hose (#B10172-)	K1110-039047	K009047
Cab, EOPS Cabin Front Fix, With AM-FM Radio, With Master Key, For KOMTRAX, Floor, P.P.C. Piping For Travel Valve (#B10172-)	K1110-039048	K009048
Cab, EOPS Cabin Front Fix, With AM-FM Radio, With Master Key, For KOMTRAX, Floor, P.P.C. Piping For Pilot Valve (#B10172-)	K1110-039049	K009049
Cab, EOPS Cabin Front Fix, With AM-FM Radio, With Master Key, For KOMTRAX, Floor, P.P.C. Hose Clamp (#B10172-)	K1110-039050	K009050
Cab, EOPS Cabin Front Fix, With AM-FM Radio, With Master Key, For KOMTRAX, Floor, P, T Block And Seal (#B10172-)	K1110-039051	K009051
Cab, EOPS Cabin Front Fix, With AM-FM Radio, With Master Key, For KOMTRAX, Floor, Rear Camera Cable (#B10172-)	K1110-039052	K009052
Floor Mounts	K1120-001001	K010001
Proportional Pressure Control (PPC) Piping (#B10172-)	K1520-001001	K011001
Proportional Pressure Control (PPC) Piping, For Additional Actuator Piping	K1520-002001	K012001
Mode Selection Connectors	K1730-001001	K013001

	FIG. NO	PAGE
GUARD		
Hood	M1110-001001	M001001
Machine Cab Frame	M1120-001001	M002001
Side Cover, LHS	M1130-001001	M003001
Side Cover, RHS	M1140-001001	M004001
Machine Cab Partition (1/2)	M1150-002001	M005001
Machine Cab Partition (2/2)	M1150-002002	M005002
Machine Cab Cover	M1210-002001	M006001
Battery Case	M1220-001001	M007001
Handrail	M1310-002001	M008001
Rear View Mirror, LHS	M1410-001001	M009001
Rearview Mirror, RHS	M1420-001001	M010001
Rearview Mirror, Mounted On Counterweight	M1430-001001	M011001
Counterweight, 6371kg	M1510-001001	M012001
Counterweight Mounts	M1520-001001	M013001
Under Cover, Reinforced Type (1/3)	M1810-004001	M014001
Under Cover, Reinforced Type (2/3)	M1810-004002	M014002
Under Cover, Reinforced Type (3/3)	M1810-004003	M014003
SWING CIRCLE AND ITS RELATED PARTS		
Swing Circle	N1110-001001	N001001
Swing Machinery Inner Parts (1/3)	N1210-001001	N002001
Swing Machinery Inner Parts (2/3)	N1210-001002	N002002
Swing Machinery Inner Parts (3/3)	N1210-001003	N002003
Swing Machinery	N1210-001004	N002004
Swing Motor, Related Parts	N1220-001001	N003001
Swivel Joint, Inner Parts (#B10001-B10348)	N1310-001001	N004001
Swivel Joint, Inner Parts (#B10349-)	N1310-001001A	N004002
Swivel Joint	N1310-001002	N004003
TRAVEL SYSTEM AND ITS RELATED PARTS		
Travel Circuit	P1120-001001	P001001
Travel Motor And Final Drive, L.H. (1/4) (#B10001-B10313)	P1210-002001	P002001

	FIG. NO	PAGE
Travel Motor And Final Drive, L.H. (2/4) (#B10001-B10313)	P1210-002002	P002002
Travel Motor And Final Drive, L.H. (3/4) (B10001-B10313)	P1210-002003	P002003
Travel Motor And Final Drive, L.H. (4/4) (#B10001-B10313)	P1210-002004	P002004
Travel Motor And Final Drive, L.H. (1/4) (#B10314-)	P1210-002005	P002005
Travel Motor And Final Drive, R.H. (2/4) (#B10314-)	P1210-002006	P002006
Travel Motor And Final Drive, L.H. (3/4) (B10314-)	P1210-002007	P002007
Travel Motor And Final Drive, L.H. (4/4)	P1210-002008	P002008
Travel Motor And Final Drive, R.H. (1/4) (#B10314-)	P1210-002009	P002009
Travel Motor And Final Drive, R.H. (2/4) (#B10314-)	P1210-002010	P002010
Travel Motor And Final Drive, R.H. (3/4) (B10314-)	P1210-002011	P002011
Travel Motor And Final Drive, R.H. (4/4)	P1210-002012	P002012
UNDER CARRIAGE		
Front Idler And Idler Cushion (1/2) (#B10001-B10400)	R0110-001001	R001001
Front Idler And Idler Cushion (1/2) (#B10401-)	R0110-001001A	R001001A
Front Idler And Idler Cushion (2/2) (#B10001-B10400)	R0110-001002	R001002
Front Idler And Idler Cushion (2/2) (#B10401-)	R0110-001002A	R001002A
Track Roller, Single Flanged (#B10001-B10387) (1/2)	R0200-002001	R002001
Track Roller, Double Flanged (#B10001-B10264) (2/2)	R0200-002002	R002002
Track Roller, Single Flanged (#B10388-)	R0200-002011	R002011
Carrier Roller (#B10001-B10397)	R0300-003001	R003001
Carrier Roller (#B10398-)	R0300-003011	R003011
Track Shoe Assembly, Triple Shoe Grouser, With Holed, 600mm Width (#B10001-B10262)	R0500-001001	R004001
Track Shoe Assembly, Triple Shoe Grouser, With Holed, 600mm Width (#B10263-)	R0500-001002	R004002
Track Frame, With Under Cover	R1100-002001	R005001
Track Frame Under Cover	R1140-001001	R006001
Center Frame	R1140-001002	R006002
Track Roller Guard, Full Length	R1200-002001	R007001
WORK EQUIPMENT		
Boom, 6.5m, Strengthened, 1-attachment, 100 Hours Greasing Type, Boom And Top Pin	T1110-005001	T001001
Boom, 6.5m, Strengthened, 1-attachment, 100 Hours Greasing Type, Arm Cylinder Lines	T1110-005002	T001002
Boom, 6.5m, Strengthened, 1-attachment, 100 Hours Greasing Type, Lubricating Line	T1110-005003	T001003
Boom, 6.5m, Strengthened, 1-attachment, 100 Hours Greasing Type, Bucket Cylinder Line	T1110-005004	T001004
Boom, 6.5m, Strengthened, 1-attachment, 100 Hours Greasing Type, Cylinder Pin And Working Lamp	T1110-005005	T001005
Boom, 6.5m, Strengthened, 1-attachment, 100 Hours Greasing Type, Additional Piping	T1110-005006	T001006
Boom, 6.5m, Strengthened, 1-attachment, 100 Hours Greasing Type, Clamp	T1110-005007	T001007
Boom, 6.5m, Strengthened, 100 Hours Greasing Type, Boom And Top Pin (#B10172-)	T1110-004001	T002001
Boom, 6.5m, Strengthened, 100 Hours Greasing Type, Arm Cylinder Lines (#B10172-)	T1110-004002	T002002
Boom, 6.5m, Strengthened, 100 Hours Greasing Type, Lubricating Line (#B10172-)	T1110-004003	T002003
Boom, 6.5m, Strengthened, 100 Hours Greasing Type, Bucket Cylinder Line (#B10172-)	T1110-004004	T002004
Boom, 6.5m, Strengthened, 100 Hours Greasing Type, Cylinder Pin And Working Lamp (#B10172-)	T1110-004005	T002005
Boom Cylinder, 100 Hours Greasing Type Boom Cylinder, LHS	T1120-003001	T003001
Boom Cylinder, 100 Hours Greasing Type Boom Cylinder, RHS	T1120-003002	T003002
Arm Cylinder, 100 Hours Greasing Type (#B10001-.)	T1140-003001	T004001
Arm Cylinder, 100 Hours Greasing Type (#.-)	T1140-004001	T004011
Arm, 2.6m, Strengthened, 1-attachment, 100 Hours Greasing Type	T1200-010001	T005001
Arm, 2.6m, Strengthened, 1-attachment, 100 Hours Greasing Type Cylinder	T1200-010002	T005002
Arm, 2.6m, Strengthened, 1-attachment, 100 Hours Greasing Type, Bucket Link	T1200-010003	T005003
Arm, 2.6m, Strengthened, 1-attachment, 100 Hours Greasing Type, Bucket Cylinder Hose and Pin	T1200-010004	T005004
Arm, 2.6m, Strengthened, 1-attachment, 100 Hours Greasing Type, Additional Piping	T1200-010005	T005005
Arm, 2.6m, Strengthened, 1-attachment, 100 Hours Greasing Type, Valve	T1200-010006	T005006
Arm, 2.6m, Strengthened, 100 Hours Greasing Type (#B10172-)	T1200-011001	T006001
Arm, 2.6m, Strengthened, 100 Hours Greasing Type, Bucket Cylinder	T1200-011002	T006002
Arm, 2.6m, Strengthened, 100 Hours Greasing Type, Bucket Link (#B10172-)	T1200-011003	T006003
Arm, 2.6m, Strengthened, 100 Hours Greasing Type, Bucket Cylinder Hose and Pin (#B10172-)	T1200-011004	T006004
Arm, 3.2m, Strengthened, 1-attachment, 100 Hours Greasing Type	T1200-008001	T007001
Arm, 3.2m, Strengthened, 1-attachment, 100 Hours Greasing Type, Bucket Cylinder	T1200-008002	T007002
Arm, 3.2m, Strengthened, 1-attachment, 100 Hours Greasing Type, Bucket Link	T1200-008003	T007003
Arm, 3.2m, Strengthened, 1-attachment, 100 Hours Greasing Type, Bucket Cylinder Hose and Pin	T1200-008004	T007004
Arm, 3.2m, Strengthened, 1-attachment, 100 Hours Greasing Type, Additional Piping	T1200-008005	T007005

	FIG. NO	PAGE
Arm, 3.2m, Strengthened, 1-attachment, 100 Hours Greasing Type, Valve,		
For Additional Piping	T1200-008006	T007006
Arm, 3.2m, Strengthened, 100 Hours Greasing Type (#B10172-)	T1200-007001	T008001
Arm, 3.2m, Strengthened, 100 Hours Greasing Type, Bucket Cylinder (#B10172-)	T1200-007002	T008002
Arm, 3.2m, Strengthened, 100 Hours Greasing Type Bucket Link (#B10172-)	T1200-007003	T008003
Arm, 3.2m, Strengthened, 100 Hours Greasing Type,		
Bucket Cylinder Hose and Pin (#B10172-)	T1200-007004	T008004
Parts For Less Bucket	T1290-002001	T009001
Bucket, 2.23 M3 HP (With Hook)	T1510-000001	T010001
Bucket, 2.23 M3 HPS (With Hook)	T1510-000002	T010002
Bucket, 2.23 M3 HPX (With Hook)	T1510-000003	T010003
Bucket (Hook)	T1510-000004	T010004
Breaker Adapter, For Okada	T1920-001001	T011001

MARKS AND PLATES

Marks And Plates, Portuguese, Lettering Type	U0100-005001	U001001
Marks And Plates, Spanish, Lettering Type	U0100-006001	U002001
Lubrication Chart, 100 Hours Greasing Type	U0110-003001	U003001
Caution Plate, Cab Windshield Lock Operation	U0120-010001	U004001
Komatsu Logo	U0150-001001	U005001
Komatsu Logo, Boom And Counter Weight	U0150-003001	U006001
Coolant Decal, Coolant Decal, Portuguese	U0202-003001	U007001
Coolant Decal, Coolant Decal, Spanish	U0202-004001	U008001
Caution Plate (#B10113-)	U0205-001001	U009001
Caution Plate, Arm	U0510-002001	U010001
Caution Plates, Portuguese	U0521-002001	U011001
Caution Plates, Spanish-English	U0521-007001	U012001
Rivet, Plate Less	U0521-010001	U013001
Service Instruction, Air Cleaner, Double Element Type, Portuguese	U0550-001001	U014001
Service Instruction, Air Cleaner, Double Element Type, Spanish	U0550-002001	U015001
Caution Plate, 1-accumulator, Portuguese	U0580-005001	U016001
Caution Plate, 1-accumulator, Spanish	U0580-007001	U017001
Caution Plate, Swing or Back-up Warning	U0610-002001	U018001
Caution Plate, With 12volt Power Outlet, Except Japan	U0710-001001	U019001
Caution Plate, With 12volt Power Outlet, Spanish	U0710-002001	U020001

MISCELLANEOUS

Blind Parts (Body) (1 Actuator)	W1200-001001	W001001

NUMERICAL INDEX

Numerical Index	No Figure Nº	INDEX

ENGINE

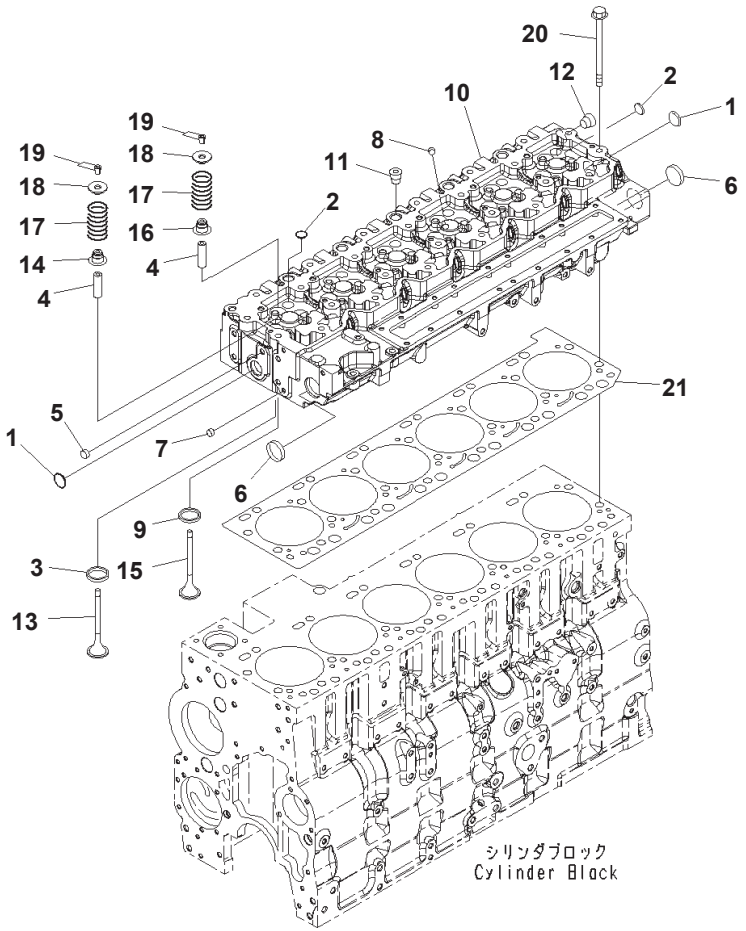

Cylinder Head

Index	Code	Part Number	Description	Qty	Serial No.
		6745-11-1190	Head Assembly, Cylinder	1	26852077-
		6745-11-1121	・ Head Assembly, Cylinder	1	26854438-
1		6742-01-2920	・・ Plug	2	26852077-
2		6735-21-5530	・・ Plug	18	26852077-
3	C1		・・ Insert, Intake valve	12	26852077-
4	C1		・・ Guide	24	26852906-
5		6744-41-4110	・・ Plug	1	26852077-
6		6744-11-1070	・・ Plug	2	26852077-
7		6744-41-4120	・・ Plug	1	26852077-
8		6754-11-1160	・・ Plug	6	26854438-
9	C1		・・ Insert, Exhaust Valve	12	26852077-
10		6745-11-1131	・・ Head, Cylinder	1	26854438-
11		6732-11-1910	・ Plug	5	26852077-
12		6732-11-1920	・ Plug	1	26852077-
		6732-21-1960	・ Plug Assembly, (Not Shown)	1	26854438-
13		6745-41-4160	Valve, Intake	12	26852077-
14		6744-41-4070	Seal, Intake	12	26852077-
15		6745-41-4150	Valve, Exhaust	12	26852077-
16		6744-41-4080	Seal, Exhaust	12	26852077-
17		6744-41-4031	Spring	24	26852077-
18		6744-41-4050	Retainer	24	26852077-
19		6732-41-4520	Collet	48	26852077-
20		6743-11-1610	Bolt	26	26852077-
21		6745-11-1811	Gasket	1	26856495-

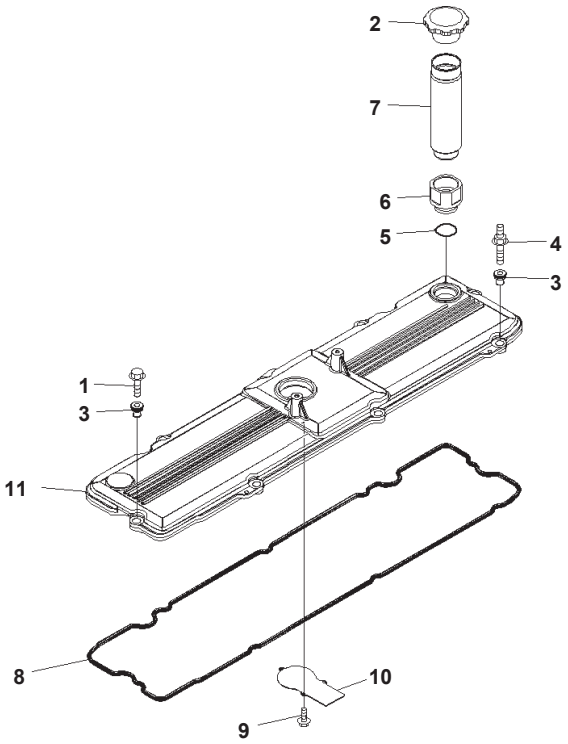

JY012022

Cylinder Head Cover

Index	Part Number	Description	Qty	Serial No.
1	6732-61-6140	Bolt	7	26852077-
2	6130-12-8610	Cap	1	26852077-
3	6745-11-8160	Isolator	8	26852077-
4	6745-11-8170	Screw	1	26852077-
5	07002-23634	O-ring	1	26852077-
	6745-11-8100	Cover	1	26852077-
6	6745-11-8190	・ Adapter	1	26852077-
7	6754-11-8140	・ Filler	1	26852077-
	6745-11-8180	Cover	1	26852077-
8	6745-11-8810	・ Gasket	1	26852077-
	6745-11-8220	・ Cover	1	26852077-
9	6745-11-8150	・・ Bolt	3	26852077-
10	6745-11-8120	・・ Plate	1	26852077-
11	6745-11-8110	・・ Cover	1	26852077-

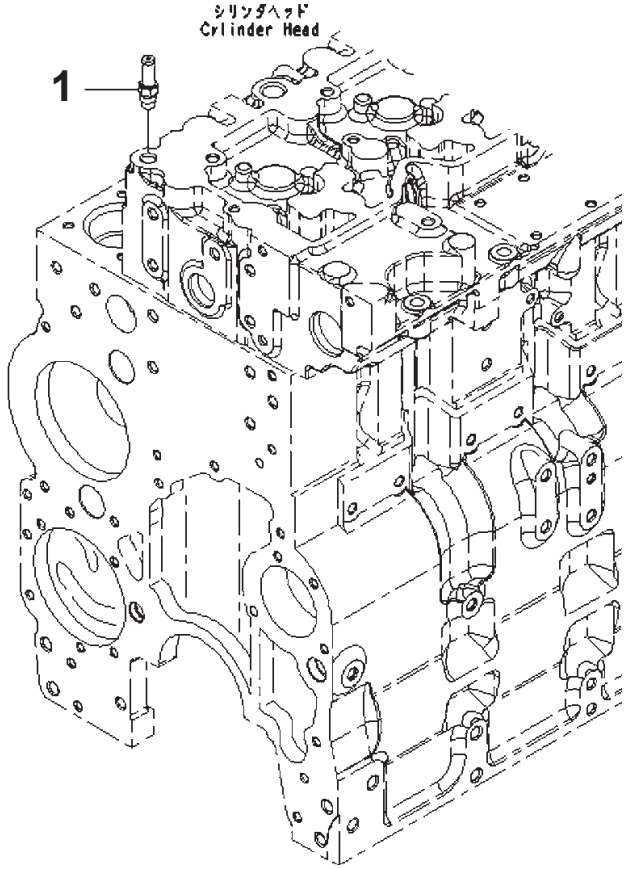

Cylinder Head Fitting Parts

Index	Part Number	Description	Qty	Serial No.
1	6745-61-6120	Fitting	1	26852077-

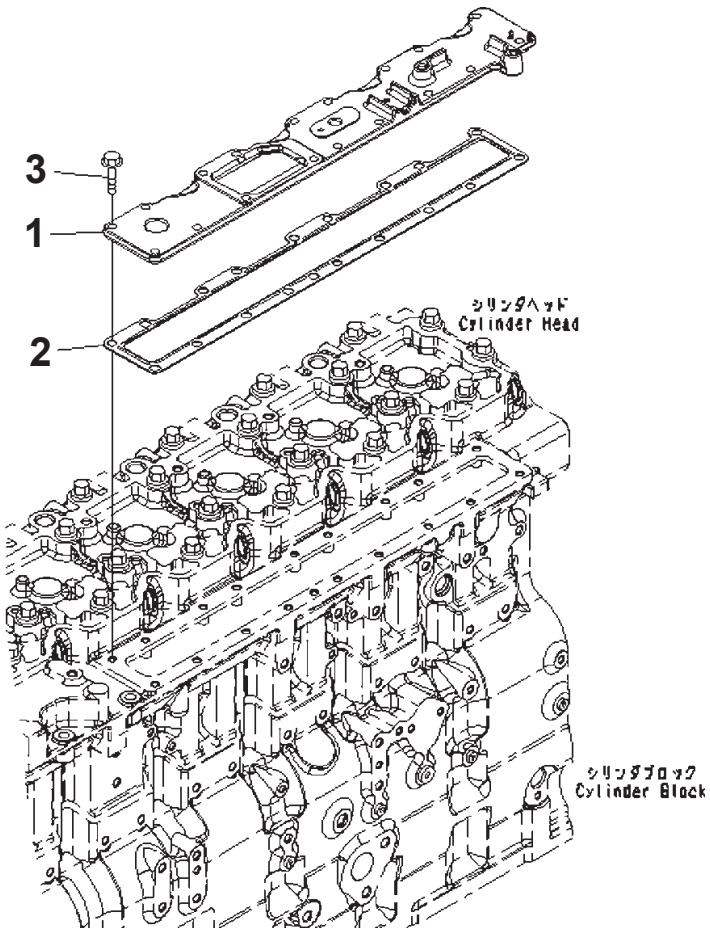

Air Intake Manifold

Index	Part Number	Description	Qty	Serial No.
1	6745-11-4110	Cover	1	26852077-
2	6745-11-4120	Gasket	1	26852077-
3	6732-21-6630	Bolt	9	26852077-

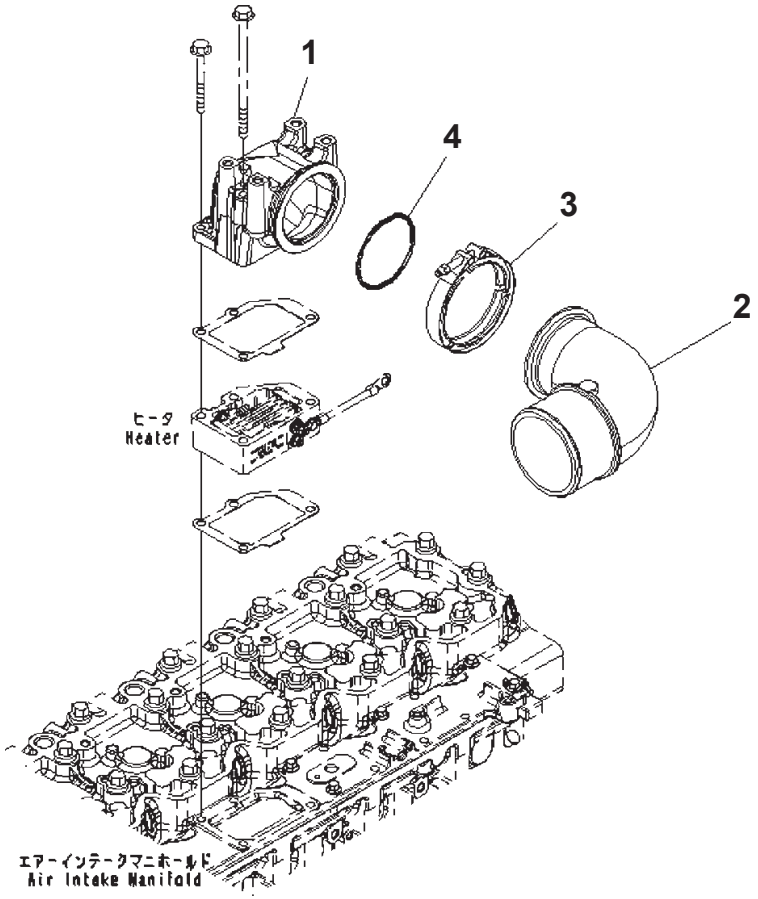

Air Intake Connector

Index	Part Number	Description	Qty	Serial No.
1	6745-11-4190	Connector	1	26852077-
2	6745-11-4140	Connector	1	26852077-
3	6745-11-4150	Clamp	1	26852077-
4	6745-11-4161	O-ring	1	26856687-

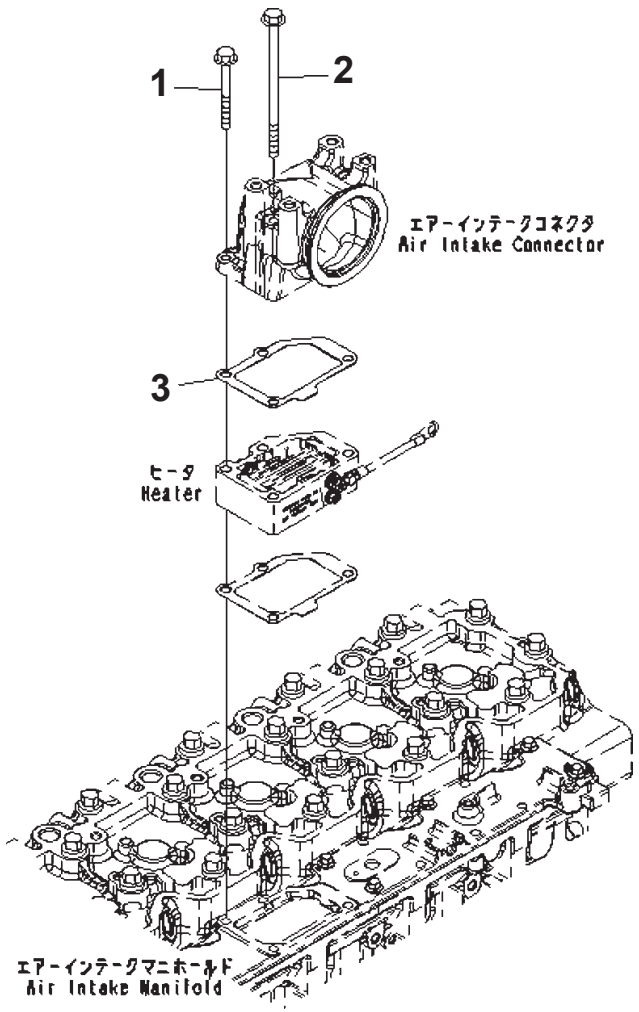

Air Intake Connector Mounts

Index	Part Number	Description	Qty	Serial No.
1	6736-81-8730	Bolt	2	26852077-
2	6745-11-4180	Bolt	2	26852077-
3	6745-81-4120	Gasket	1	26852077-

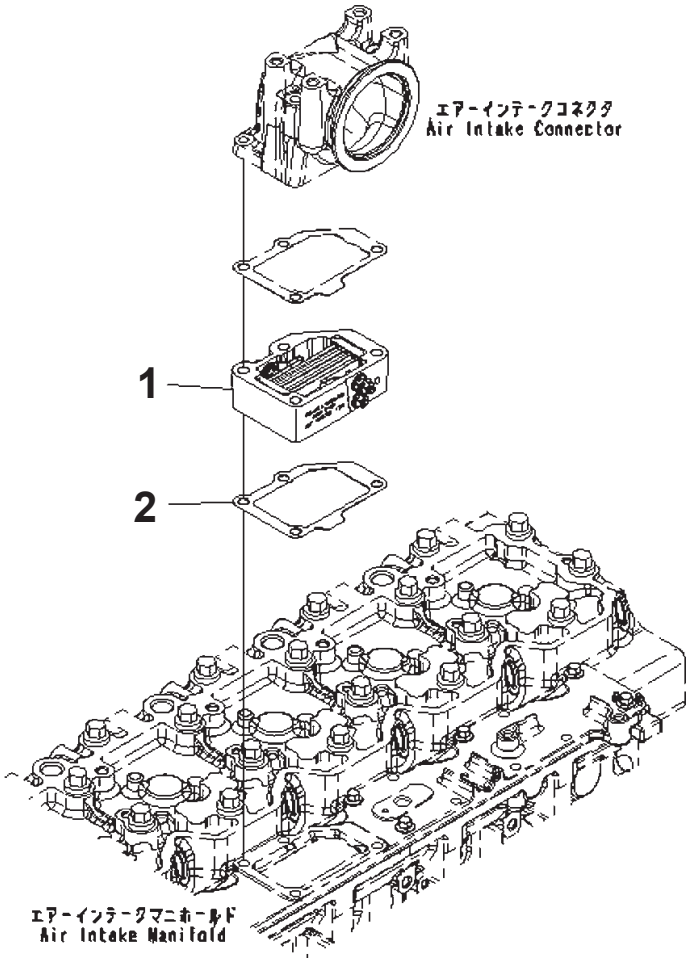

Air Intake Heater

Index	Part Number	Description	Qty	Serial No.
1	6745-81-4111	Heater	1	26853733-
2	6745-81-4120	Gasket	1	26852077-

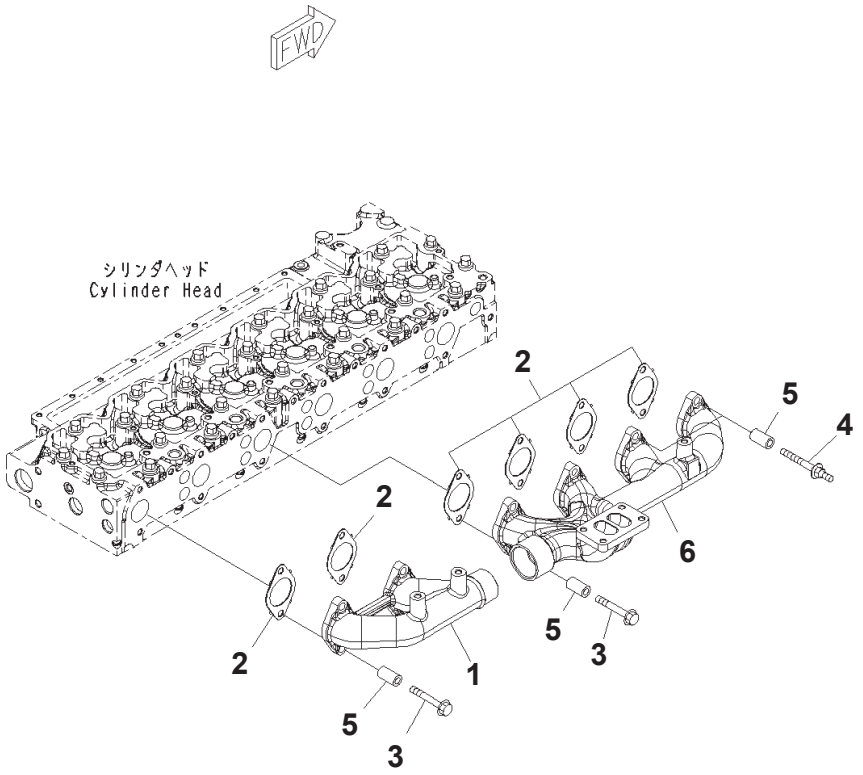

Exhaust Manifold

Index	Part Number	Description	Qty	Serial No.
1	6745-11-5110	Manifold	1	26852077-
2	6745-11-5590	Gasket	6	73010808-
	6745-11-5810	Gasket	6	(73010808-73071821)
	6745-11-5810	Gasket	6	(36141185-36278761)
3	6732-11-5860	Bolt	8	26852077-
4	6745-11-5170	Bolt	4	26852077-
5	6754-11-5150	Spacer	12	26852077-
6	6745-11-5120	Manifold	1	26852077-

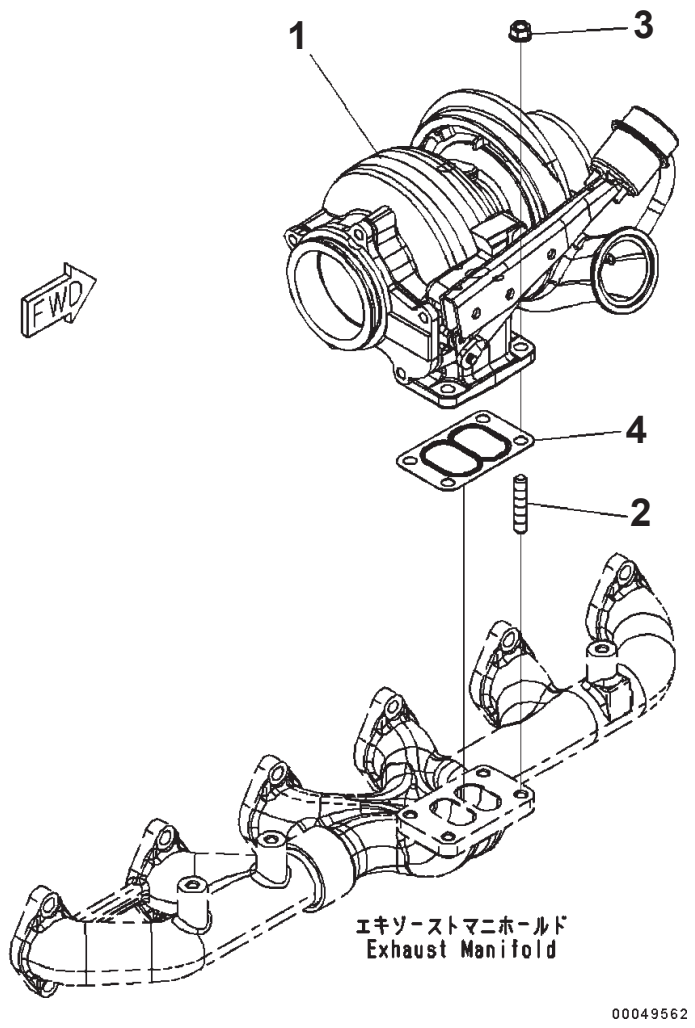

Index	Part Number	Description	Qty	Serial No.
	6745-81-8110	Turbocharger	1	26852077-
1	6745-81-8120	・ Turbocharger	1	26852077-
2	6732-81-8810	Stud	4	26852077-
3	6732-81-8820	Nut	4	26852077-
4	6732-81-8830	Gasket	1	26852077-

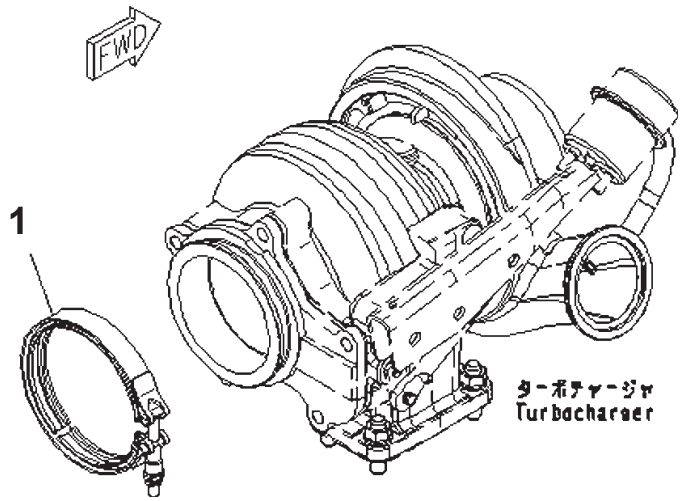

Turbocharger Exhaust Gas Connector

Index	Part Number	Description	Qty	Serial No.
1	6742-01-3620	Clamp	1	26852077-

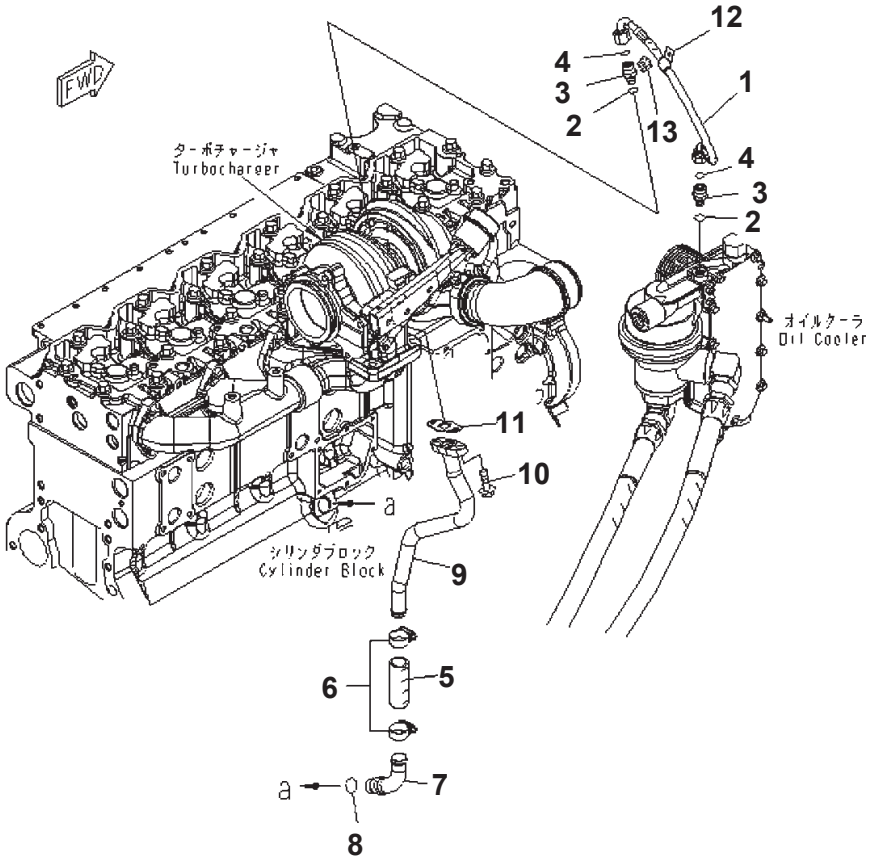

Turbocharger Oil Piping

Index	Code	Part Number	Description	Qty	Serial No.
1		6745-51-8130	Hose	1	26852077-
		6745-61-8160	Connector Assembly	2	26852077-
2		6737-51-8770	・ O-ring	1	26852077-
3	C1		・ Connector	1	26852077-
4		6732-81-8860	・ O-ring	1	26852077-
5		6736-21-6110	Hose	1	26852077-
6		6734-71-5170	Clamp, Hose	2	26852077-
7		6745-51-8110	Tube	1	26852077-
8		6731-51-8150	O-ring	1	26852077-
9		6745-51-8120	Connector	1	26852077-
10		6732-71-3220	Bolt	2	26852077-
11		6735-51-8180	Gasket	1	26852077-
12		6745-51-8140	Clip	1	26852077-
13		6216-71-7210	Nut	1	26852077-

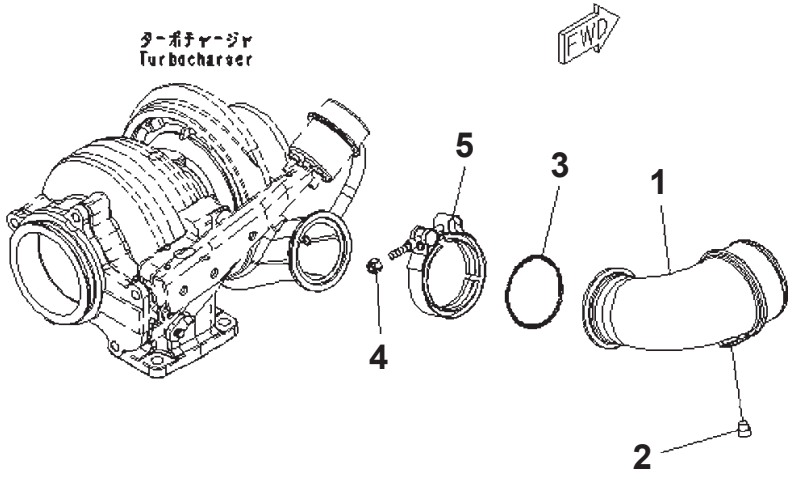

Exhaust Connection

Index	Part Number	Description	Qty	Serial No.
1	130-76-82H1	Pipe	1	26852077-
2	124-01-01H1	Plug	1	26852077-
3	6738-11-4370	O-ring	1	26852077-
4	6738-11-4390	Nut	1	26852077-
5	6738-11-4380	Clamp	1	26852077-

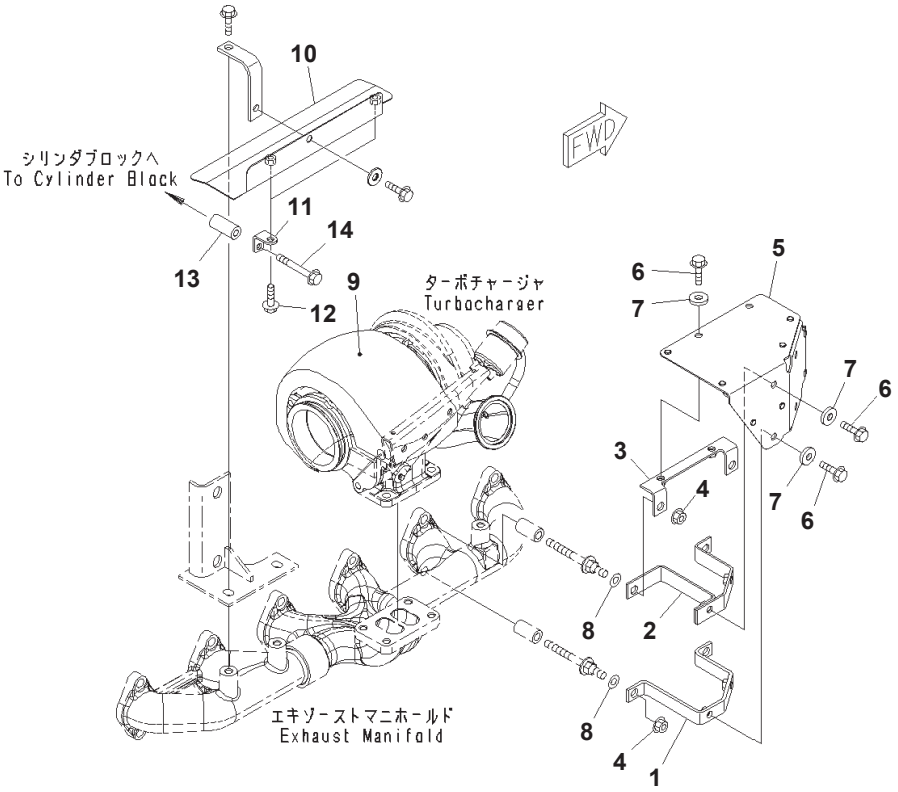

Heat Shield

Index	Part Number	Description	Qty	Serial No.
1	6745-81-8410	Bracket	1	26852077-
2	6745-81-8420	Bracket	1	26852077-
3	6745-81-8430	Bracket	1	26852077-
4	6736-81-6170	Nut	4	26852077-
5	6745-81-8440	Cover	1	26852077-
6	01435-00820	Bolt	6	26852077-
7	154-61-16570	Washer	6	26852077-
8	01643-31032	Washer	4	26852077-
9	6745-81-8451	Cover	1	26852077-
10	6745-11-5310	Cover	1	26852077-
11	6745-11-5320	Bracket	2	26852077-
12	01435-00816	Bolt	2	26852077-
13	6138-81-8660	Spacer	2	26852077-
14	01435-00855	Bolt	2	26852077-

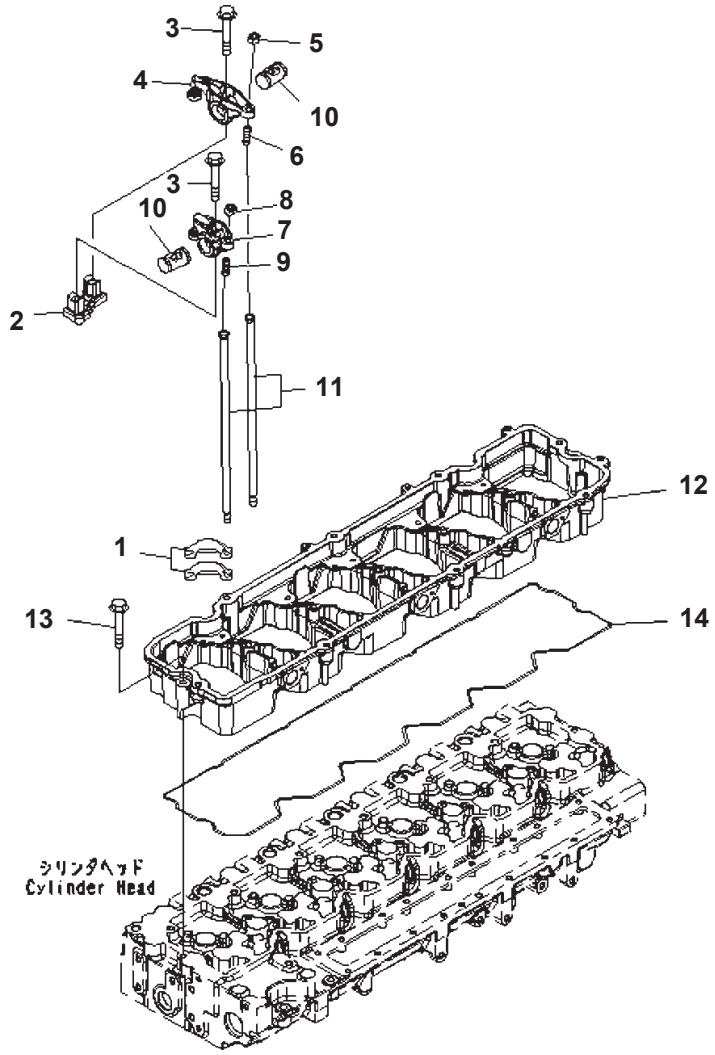

Index	Part Number	Description	Qty	Serial No.
1	6744-41-5010	Crosshead	12	26852077-
	6745-41-5100	Lever Assembly	6	26852077-
2	6744-41-5030	・ Support	1	26852077-
3	6744-41-3020	・ Bolt	2	26852077-
4	6745-41-5400	・ Lever Assembly	1	26852077-
5	6732-41-5430	・・ Nut	1	26852077-
6	6745-41-5430	・・ Screw	1	26852077-
7	6745-41-5200	・ Lever Assembly	1	26852077-
8	6732-41-5430	・・ Nut	1	26852077-
9	6745-41-5430	・・ Screw	1	26852077-
10	6745-41-5110	・ Shaft	2	26852077-
11	6745-41-3100	Rod, Push	12	26852077-
12	6745-11-7112	Housing	1	26857001-
13	6733-61-3150	Bolt	7	26852077-
14	6745-11-7810	Gasket	1	26852077-

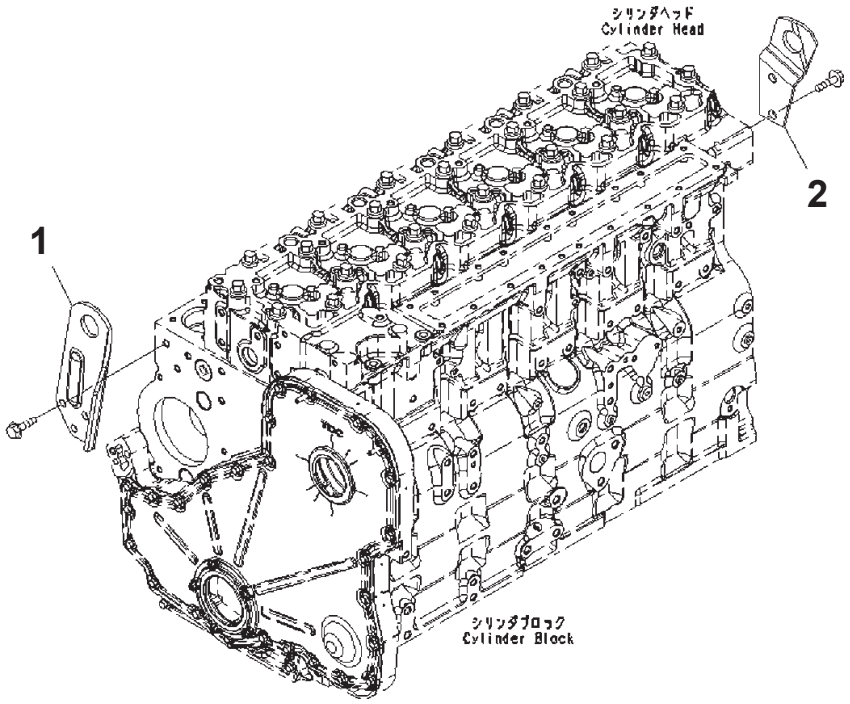

Index	Part Number	Description	Qty	Serial No.
1	6745-21-1311	Bracket	1	26856064-
2	6745-21-1330	Bracket	1	26852077-

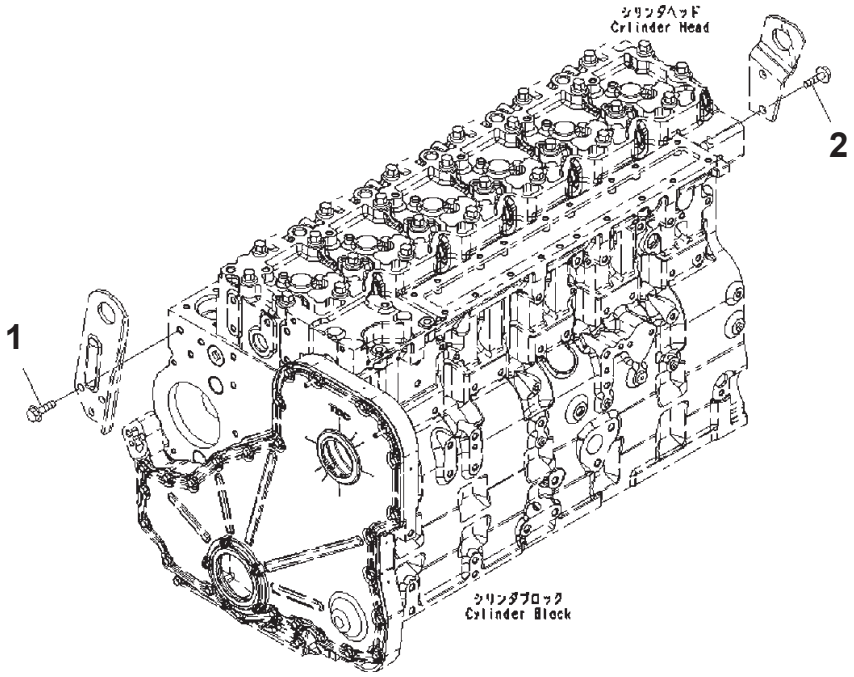

Engine Lifting Eye Mounts

Index	Part Number	Description	Qty	Serial No.
1	6754-11-4130	Bolt	2	26852077-
2	6732-61-3140	Bolt	1	26852077-

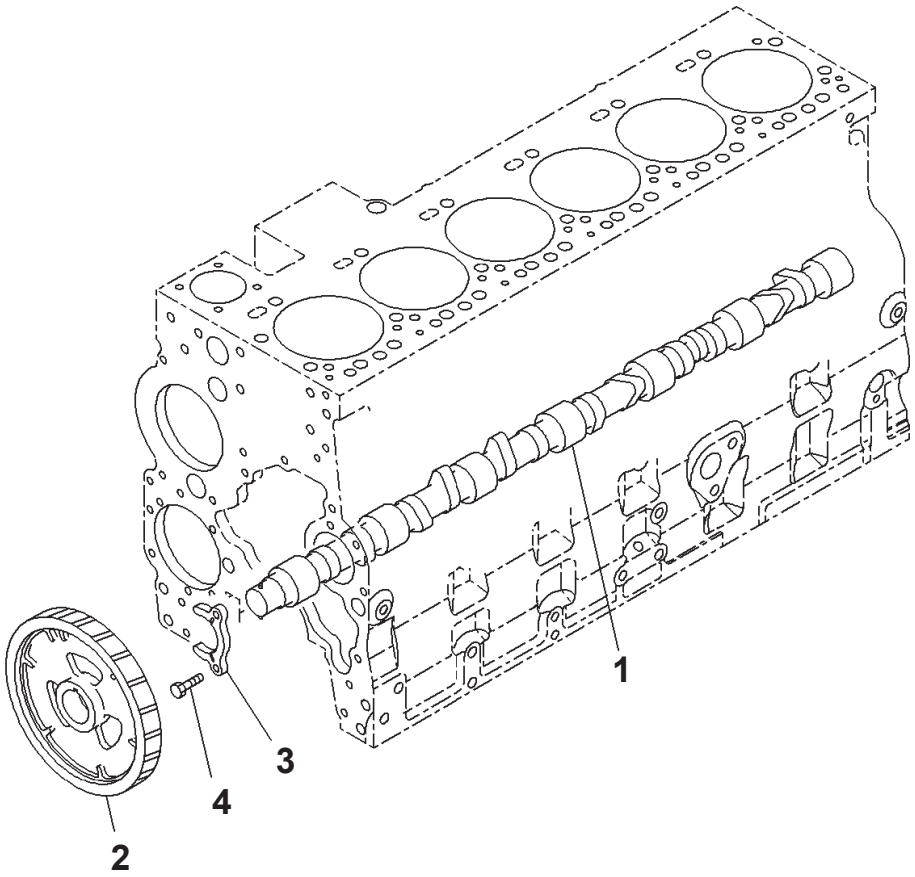

Camshaft

Index	Part Number	Description	Qty	Serial No.
1	6745-41-1110	Camshaft Assembly	1	26852077-
2	6745-41-1130	Gear	1	26852077-
3	6744-41-1010	Support	1	26852077-
4	6732-41-1260	Bolt	2	26852077-

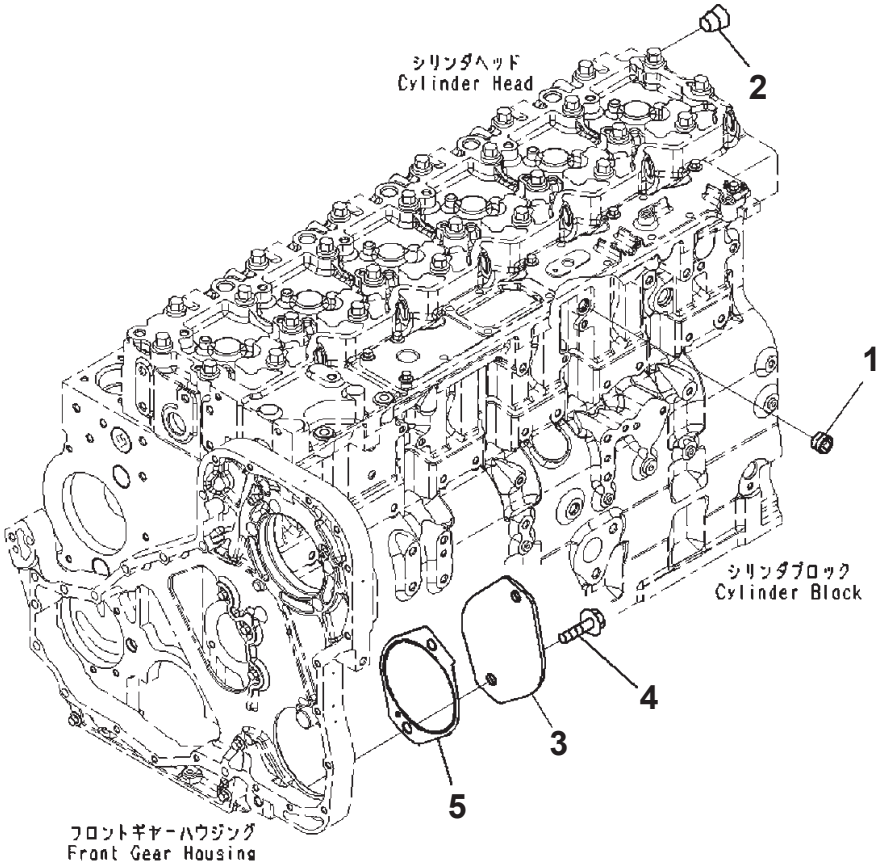

Index	Part Number	Description	Qty	Serial No.
1	6745-11-1910	Plug	2	26852077-
2	6745-21-4110	Plug	1	26852077-
3	6741-21-3320	Plate	1	26852077-
4	6732-51-5130	Bolt	2	26852077-
5	6741-21-3330	Gasket	1	26852077-

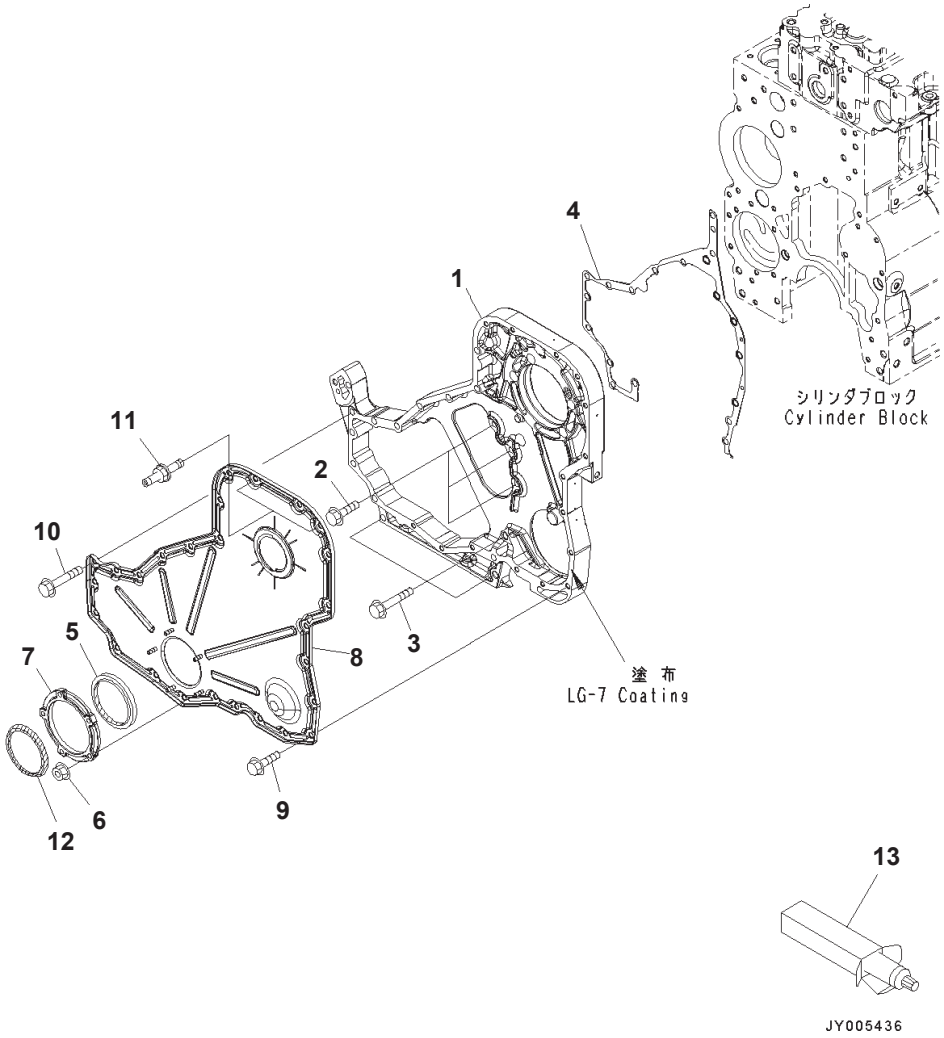

Front Cover

Index	Part Number	Description	Qty	Serial No.
1	6745-21-3111	Housing	1	26852077-
2	6742-01-0540	Bolt	3	26852077-
3	6741-21-3820	Bolt	3	26852077-
4	6741-21-3810	Gasket	1	26852077-
	6742-02-1110	Seal Kit	1	26852077-
5	6742-01-0950	・ Seal	1	26852077-
6	6741-21-3541	・ Nut	5	26852077-
7	6741-21-3530	Carrier	1	26852077-
8	6745-21-3210	Cover	1	26852077-
9	6736-21-5310	Bolt	13	26852077-
10	6742-01-0530	Bolt	11	26852077-
11	6735-21-7240	Screw	2	26852077-
12	6742-01-3320	Seal, Dust	1	26852077-
13	09920-00150	Liquid gasket, LG-7, 150g	AR	26852077-

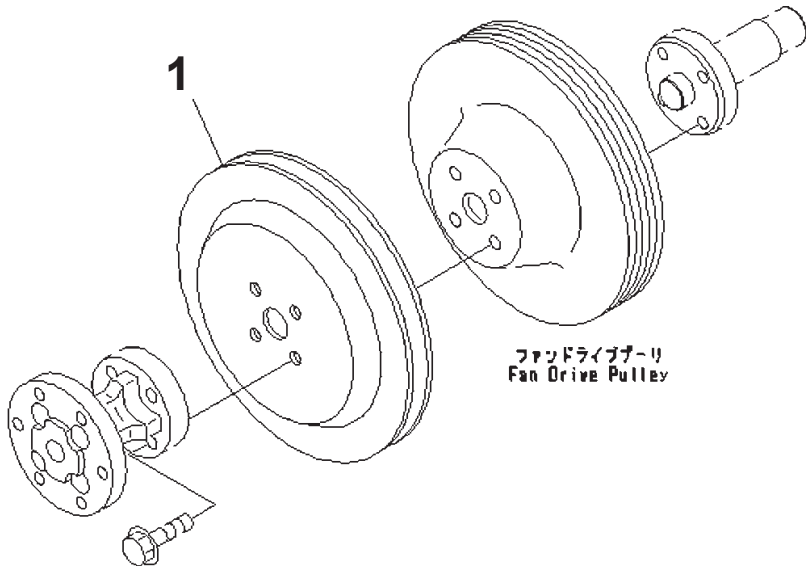

Accessory Drive Pulley

Index	Part Number	Description	Qty	Serial No.
1	6743-91-6110	Pulley	1	26852077-

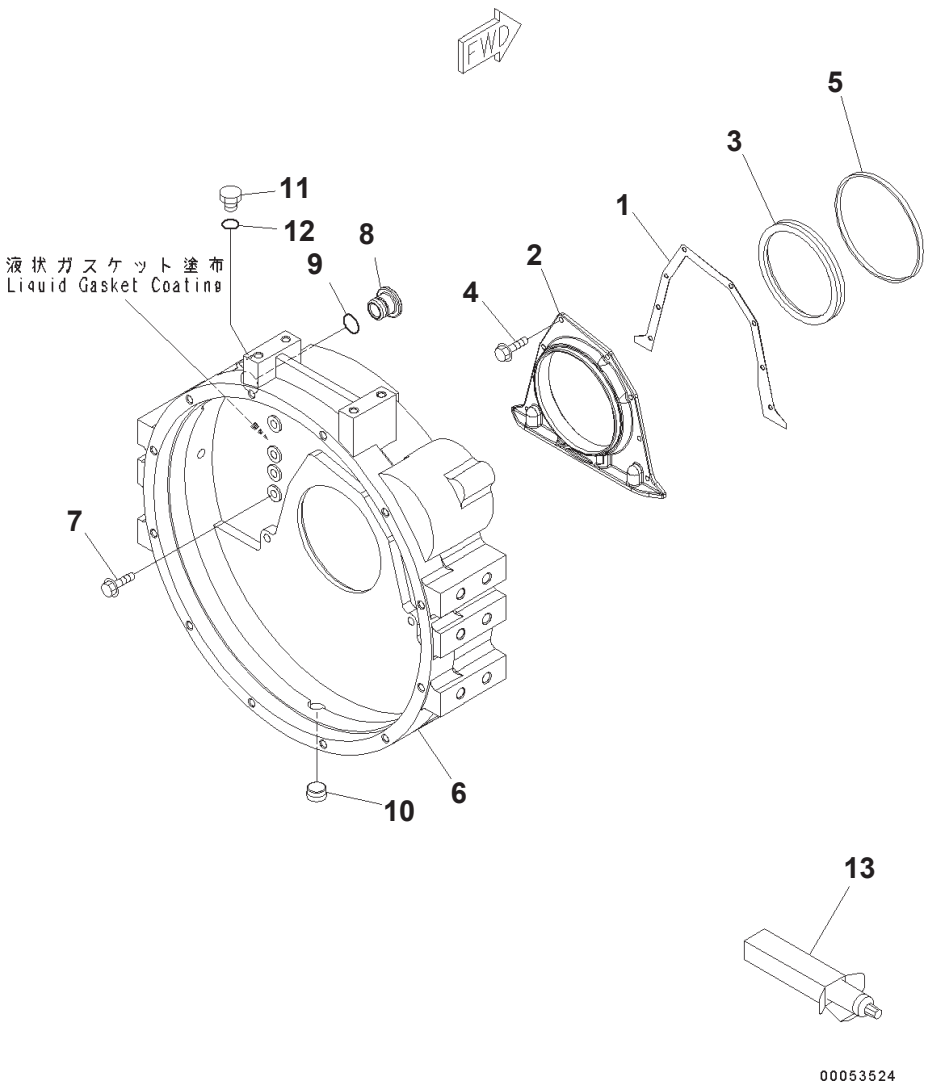

Flywheel Housing

Index	Part Number	Description	Qty	Serial No.
1	6742-01-5503	Gasket	1	26852077-
2	6742-01-5053	Cover	1	26852077-
3	6732-21-1311	Seal, Oil	1	26852077-
4	6738-22-4110	Bolt	8	26852077-
5	6732-21-4171	Seal Ring	1	26852077-
6	6741-21-4110	Housing, Flywheel	1	26852077-
7	6732-21-4220	Bolt	12	26852077-
8	6732-21-4150	Plug	1	26852077-
9	6732-21-4161	O-ring	1	26852077-
10	6745-21-4110	Plug	1	26852077-
11	6215-81-9530	Plug	1	26852077-
12	6215-81-9730	O-ring	1	26852077-
13	09920-00150	Liquid gasket, LG-7, 150g	AR	26852077-

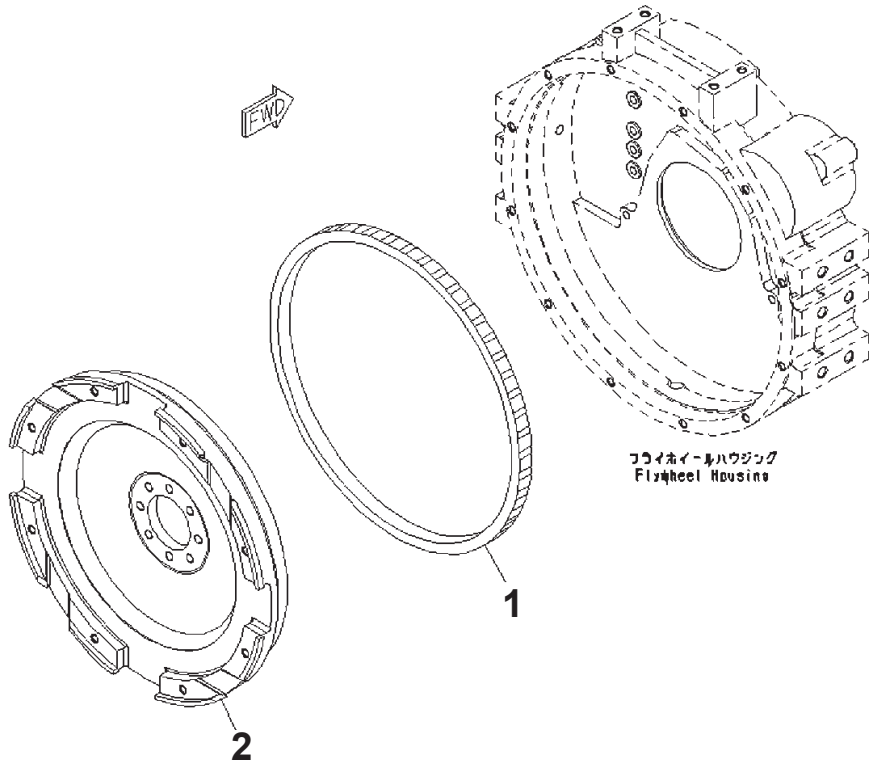

Flywheel

Index	Code	Part Number	Description	Qty	Serial No.
		6741-31-4100	Flywheel Assembly	1	26852077-
1		6741-31-4180	・ Gear, Ring	1	26852077-
2	C1		・ Flywheel	1	26852077-

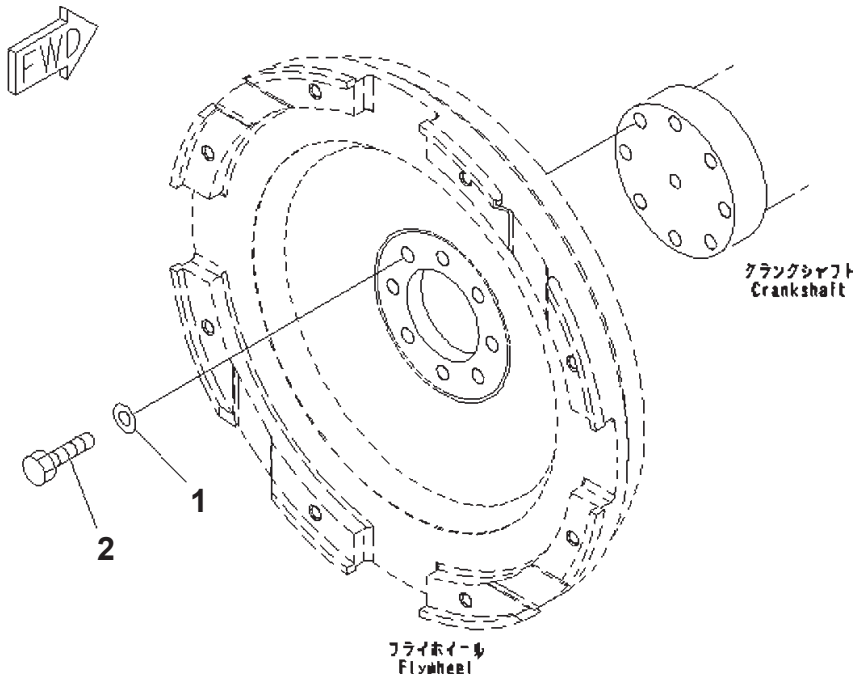

Flywheel Mounts

Index	Part Number	Description	Qty	Serial No.
1	6732-31-4120	Washer	8	26852077-
2	6732-31-4130	Bolt	8	26852077-

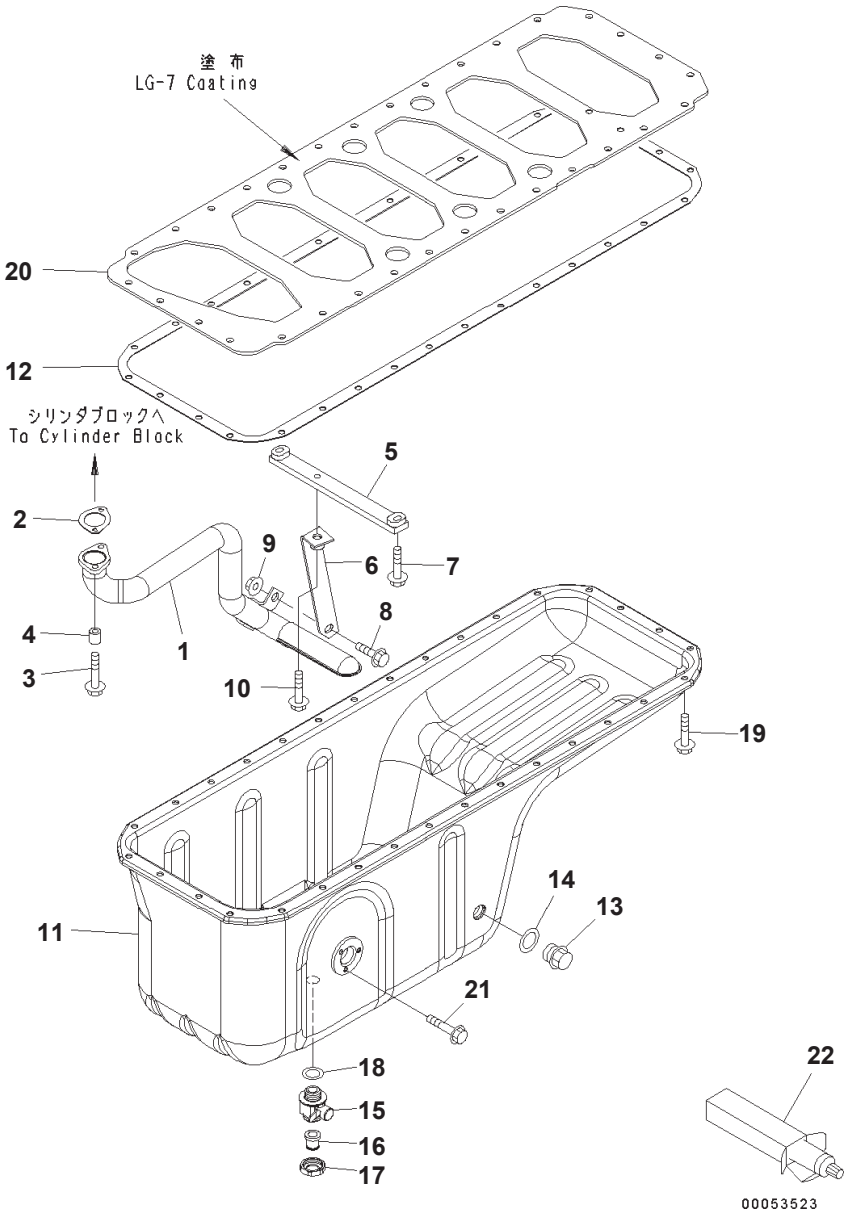

Engine Oil Pan

Index	Part Number	Description	Qty	Serial No.
1	6743-51-5521	Connector	1	26856445-
2	6743-51-5550	Gasket	1	26852077-
3	6742-01-2630	Bolt	2	26852077-
4	6742-01-0310	Spacer	2	26852077-
5	6743-51-6121	Brace	1	26852077-
6	6743-51-6161	Brace	1	26852077-
7	6733-71-5840	Bolt	2	26852077-
8	01435-01020	Bolt	1	26852077-
9	6736-81-6170	Nut	1	26852077-
10	6735-71-3220	Bolt	1	26852077-
11	6745-21-5210	Pan	1	26852077-
12	6742-01-5308	Gasket	1	26852077-
13	6736-21-5320	Plug	1	26852077-
14	6732-21-5170	Gasket	1	26852077-
	6738-21-5610	Valve Assembly	1	26852077-
15	6738-21-5620	・ Valve	1	26852077-
16	6738-21-5630	・ Joint	1	26852077-
17	6738-21-5640	・ Union	1	26852077-
18	07005-02216	Seal, Washer	1	26852077-
19	6732-21-5160	Bolt	32	26852077-
20	1304891H1	Plate	1	26852077-
21	6733-71-5680	Bolt	3	26852077-
22	09920-00150	Liquid gasket, LG-7, 150g	AR	26852077-

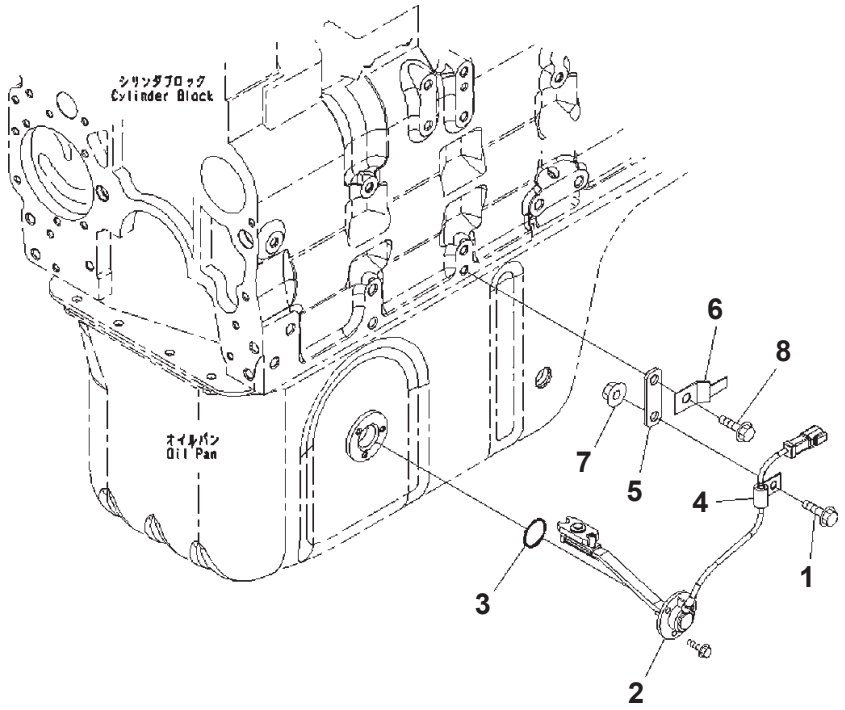

Index	Part Number	Description	Qty	Serial No.
1	6734-71-5610	Bolt	1	26852077-
2	6741-81-9220	Sensor, Level	1	26852077-
3	7831-91-4220	・ O-ring	1	26852077-
4	6738-82-5810	Clip	1	26852077-
5	6738-22-5110	Plate	1	26852077-
6	08193-20010	Bracket	1	26852077-
7	6736-81-6170	Nut	1	26852077-
8	6732-61-3140	Bolt	1	26852077-

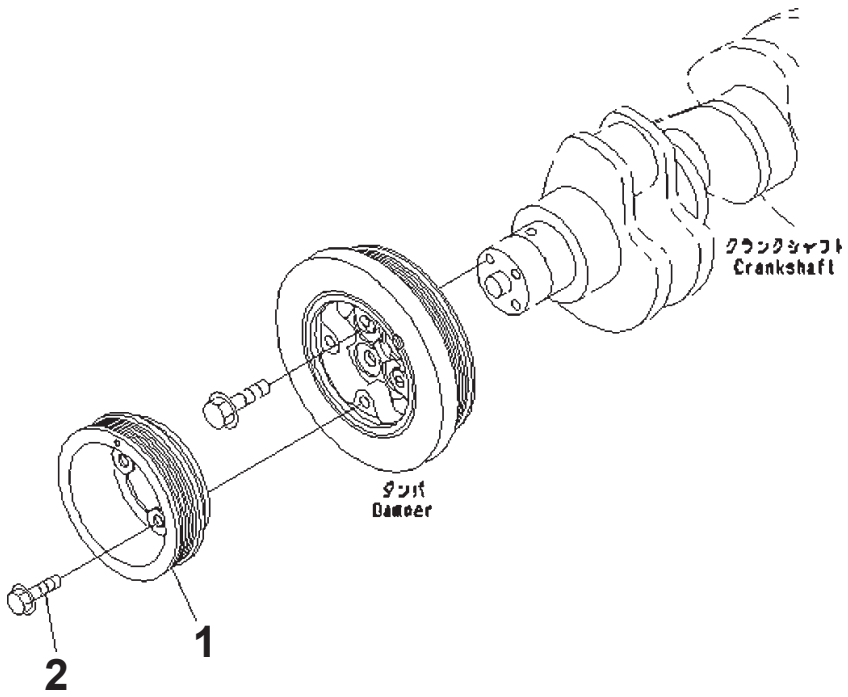

Crank Pulley

Index	Part Number	Description	Qty	Serial No.
1	6742-01-0520	Pulley	1	26852077-
2	6732-11-1720	Bolt	4	26852077-

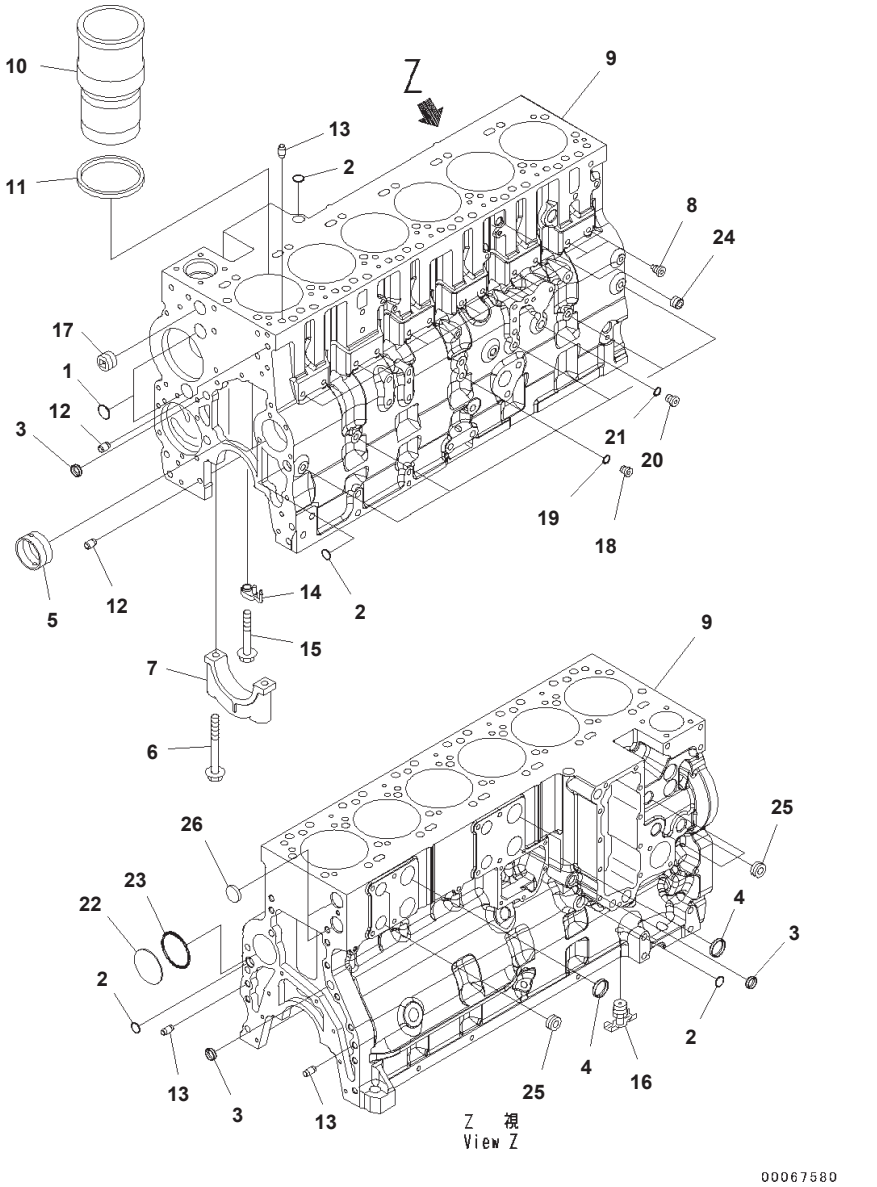

Cylinder Block

Index	Code	Part Number	Description	Qty	Serial No.
		6745-21-1190	Cylinder Block, Kit	1	26852077-
	C1		・ Block Assembly	1	26852918-
1		6742-01-1360	・・ Plug	3	26852077-
2		6742-01-1370	・・ Plug	4	26852077-
3		6732-21-1810	・・ Plug	3	26852077-
4		6742-01-1420	・・ Plug	3	26852918-
5		6742-01-5160	・・ Bushing	7	26852077-
6		6741-21-1140	・・ Bolt	14	26852077-
7	C3	6741-21-1130	・・ Cap, Main Metal	7	26852077-
8		6745-41-2151	・・ Guide, Tappet	12	26852360-
9	C1		・・ Block, Cylinder	1	26852918-
		6742-01-5159	Liner Kit	6	26852077-
10	C1		・ Liner, Cylinder	1	26852077-
11		6742-01-1520	・ Seal	1	26852077-
		6745-21-1290	Cylinder Block, Kit	1	26852077-
12		6732-21-6120	・ Pin, Dowel	2	26852077-
13		6742-01-1470	・ Pin	4	26852077-
14		6745-21-1611	・ Nozzle, Cooling	6	26852077-
15		6736-11-4460	・ Bolt	6	26852077-
16		6216-94-3450	・ Cock, Drain	1	26852077-
17		6742-01-1460	・ Plug	1	26852077-
		6732-21-1960	・ Plug Assembly	6	26852077-
18		6215-81-9510	・・ Plug	1	26852077-
19		6215-81-9710	・・ O-ring	1	26852077-
		6735-21-1910	・ Plug Assembly	2	26852077-
20		6735-21-1920	・・ Plug	1	26852077-
21		6735-21-1930	・・ O-ring	1	26852077-
22		6742-01-1480	・ Plug	1	26852077-
23		6742-01-4080	・ O-ring	1	26852077-
24		6732-11-1910	・ Plug	1	26852077-
25		6732-11-1920	・ Plug	7	26852077-
26		6742-01-1380	・ Plug	2	26852077-

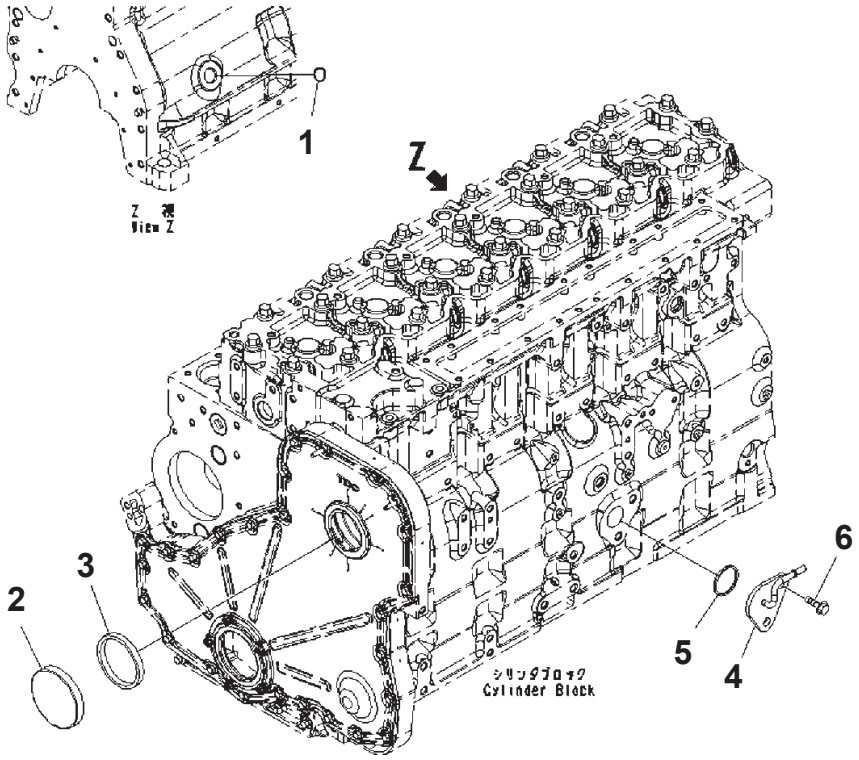

Cylinder Block Cover

Index	Part Number	Description	Qty	Serial No.
1	6735-21-5530	Plug	1	26852077-
2	6732-21-3190	Cover	1	26852077-
3	6732-21-3220	Seal Ring	1	26852077-
4	6745-21-7210	Connector	1	26852077-
5	6736-21-3360	Seal Ring	1	26852077-
6	6732-11-1720	Bolt	2	26852077-

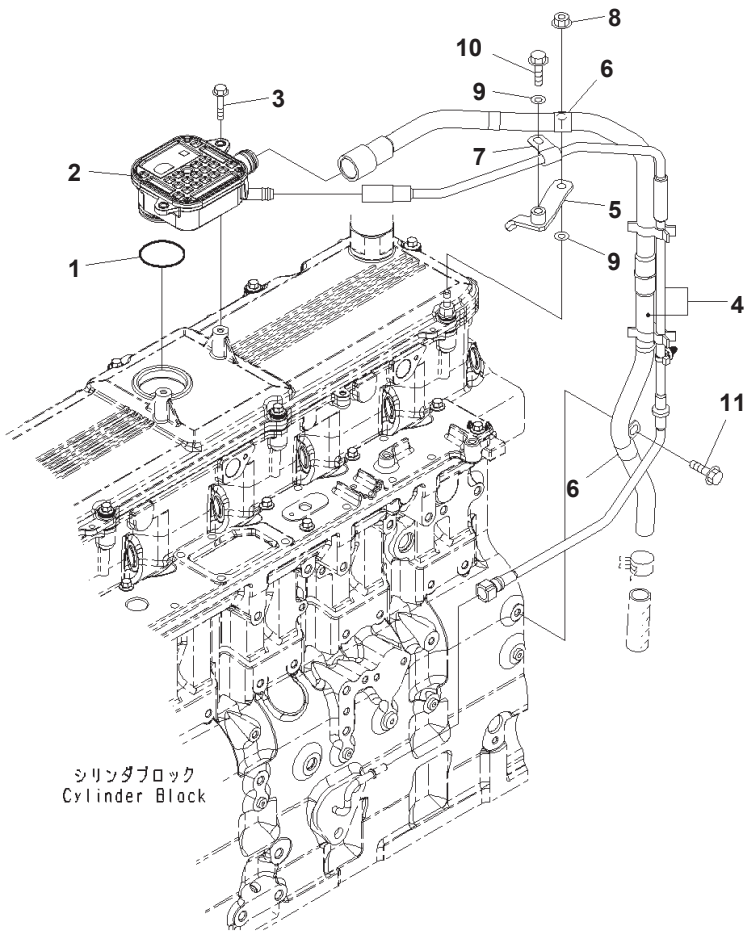

Index	Code	Part Number	Description	Qty	Serial No.
		6745-21-7110	Housing Assembly	1	26852077-
1		6745-21-7120	・ O-ring	1	26852077-
2	C1		・ Housing	1	26852077-
3		6735-71-5190	Bolt	2	26852077-
4		6745-21-7180	Tube	1	26852077-
5		6745-11-8250	Brace	1	26852077-
6		6216-24-5730	Clip	2	26852077-
7		04434-51008	Clip	1	26852077-
8		6732-71-3210	Nut	1	26852077-
9		01643-30823	Washer	2	26852077-
10		6731-71-6270	Bolt	1	26852077-
11		6736-21-5310	Bolt	1	26852077-

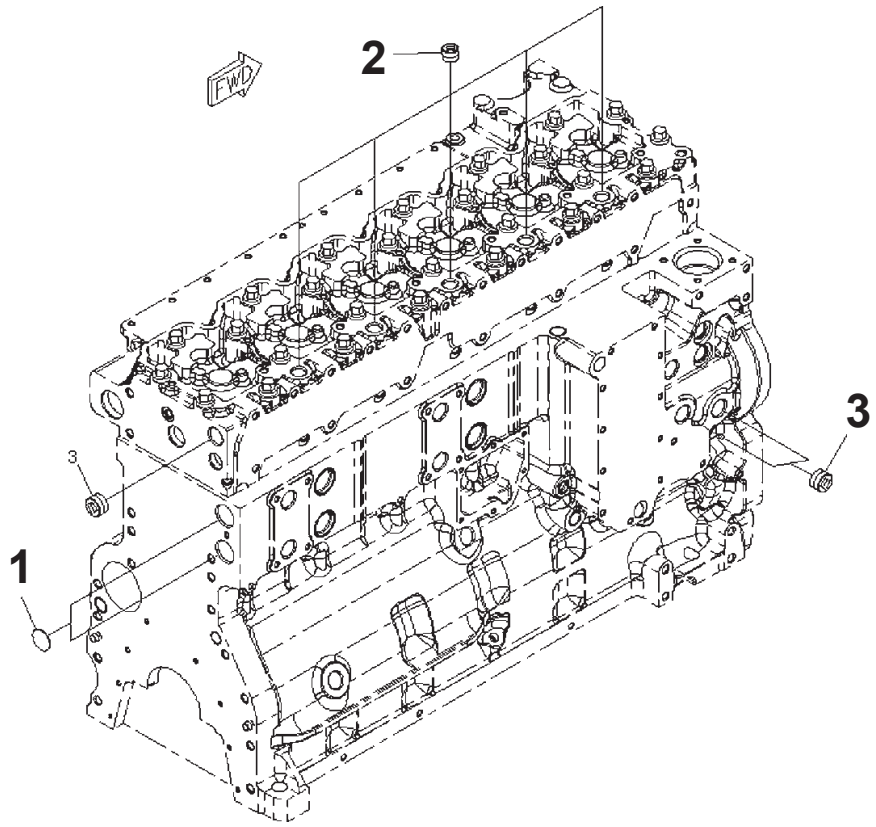

Cabin Heater Plug

Index	Part Number	Description	Qty	Serial No.
1	6742-01-1380	Plug	2	26852077-
2	6732-11-1910	Plug	5	26852077-
3	6732-11-1920	Plug	3	26852077-

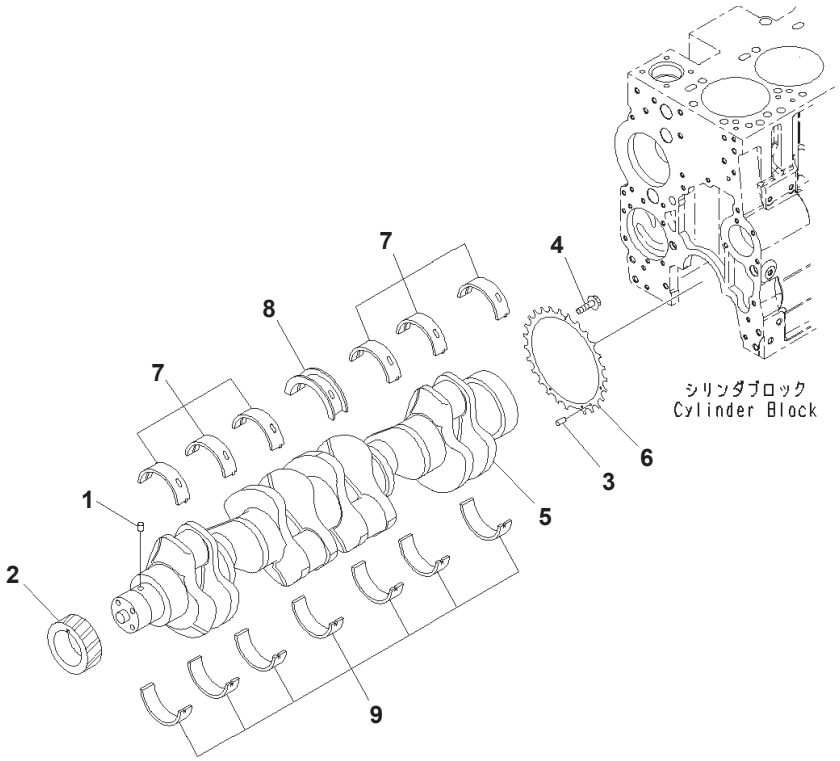

Crankshaft

Index	Code	Part Number	Description	Qty	Serial No.
		6745-31-1120	Crankshaft	1	26852077-
1	C1		・ Pin, Dowel	1	26852077-
2	C1		・ Gear	1	26852077-
	C1		・ Crankshaft Assembly	1	26852077-
3	C1		・・ Pin, Dowel	1	26852077-
4	C1		・・ Bolt	4	26852077-
5	C1		・・ Crankshaft	1	26852077-
6	C1		・・ Ring	1	26852077-
		6742-01-5199	Main Metal Assembly	1	26852077-
7	C1		・ Metal	6	26852077-
8	C1		・ Metal	1	26852077-
9	C1		・ Metal	7	26852077-
		6742-21-8500	Thrust Metal Assembly	1	26852077-
9	C1		・ Metal	1	26852077-
	C1		・ Metal	1	26852077-

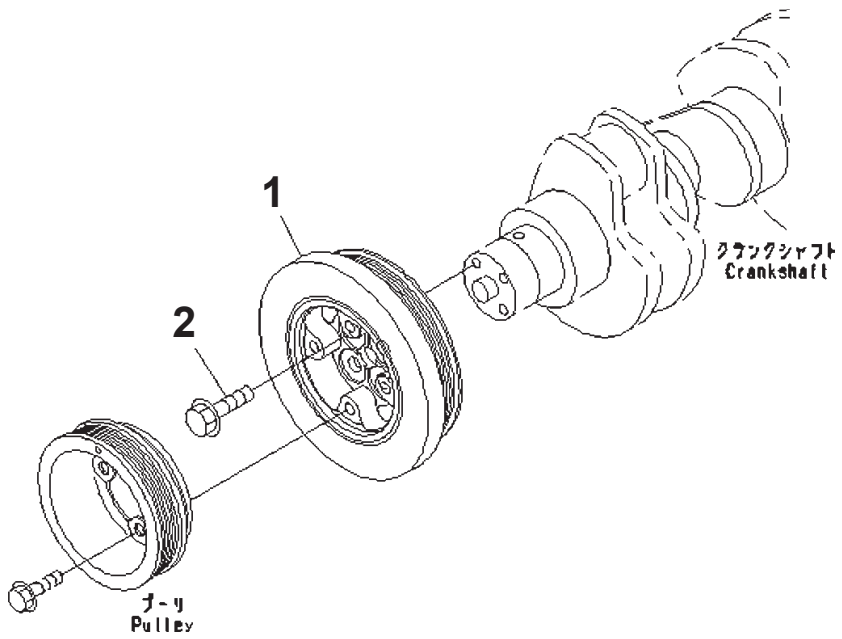

Damper Flange

Index	Part Number	Description	Qty	Serial No.
1	6742-01-5289	Damper	1	26852077-
2	6742-01-1890	Bolt	4	26852077-

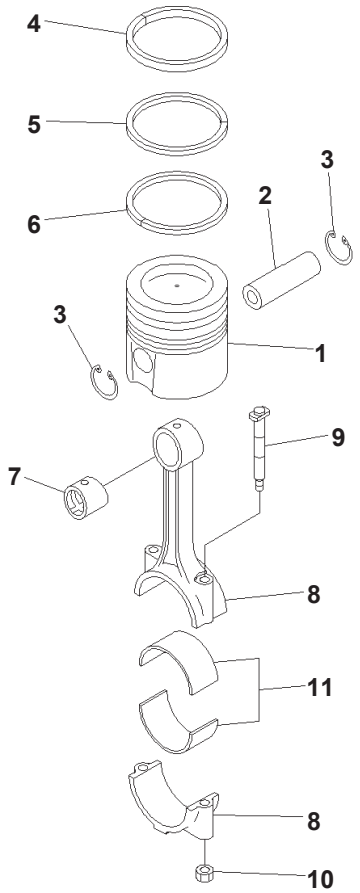

00049566

Piston and Connecting Rod

Index	Code	Part Number	Description	Qty	Serial No.
1		6745-31-2110	Piston	6	26852077-
2		6745-31-2140	Pin	6	26852077-
3		6742-01-5309	Ring, Snap	12	26852077-
		6745-31-2010	Piston Ring Assembly	6	26852077-
4	C1		· Ring, Top	1	26852077-
5	C1		· Ring, Second	1	26852077-
6	C1		· Ring, Oil	1	26852077-
		6743-31-3101	Rod Assembly	6	26856799-
7		6743-31-3121	· Bushing	1	26856799-
8	C1		· Rod	1	26852077-
9		1304869H1	· Bolt	2	26852077-
10		6742-01-4340	· Nut	2	26852077-
11		6743-31-3210	Metal	12	26852077-

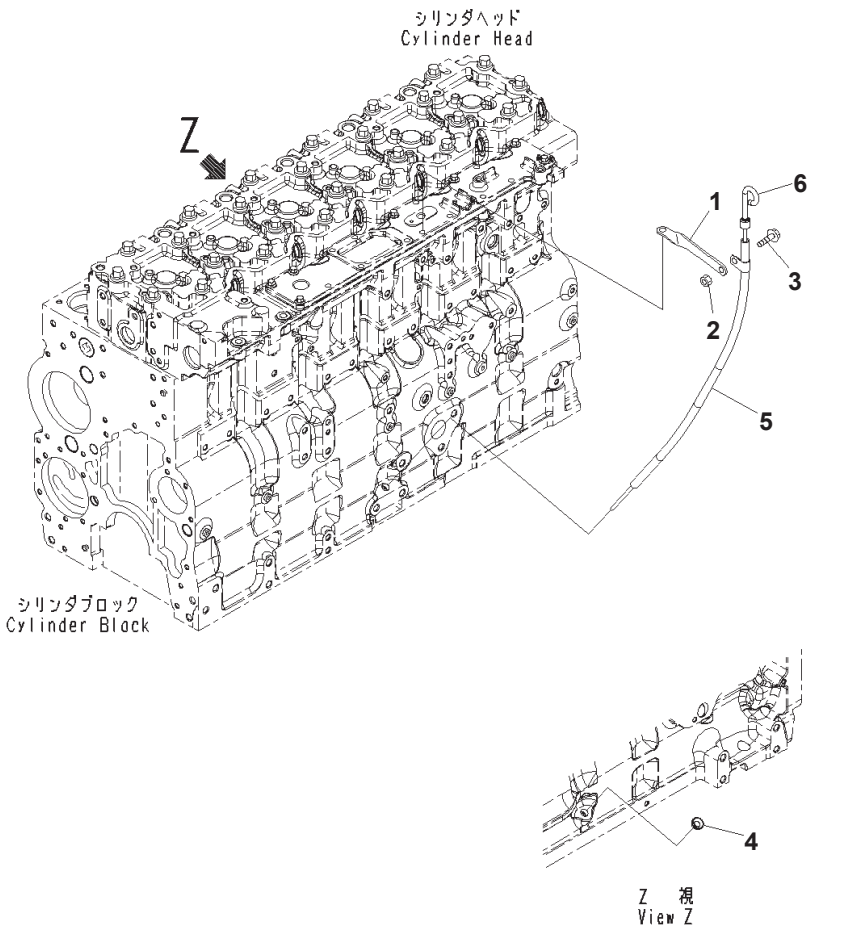

Index	Part Number	Description	Qty	Serial No.
1	6745-21-5640	Brace	1	26852077-
2	6732-41-6210	Nut	1	26852077-
3	6736-21-5310	Bolt	1	26852077-
4	6743-22-5110	Plug	1	26852077-
5	6743-21-5540	Tube, OIL LEVEL	1	26852077-
6	6743-21-5610	Gauge	1	26852077-

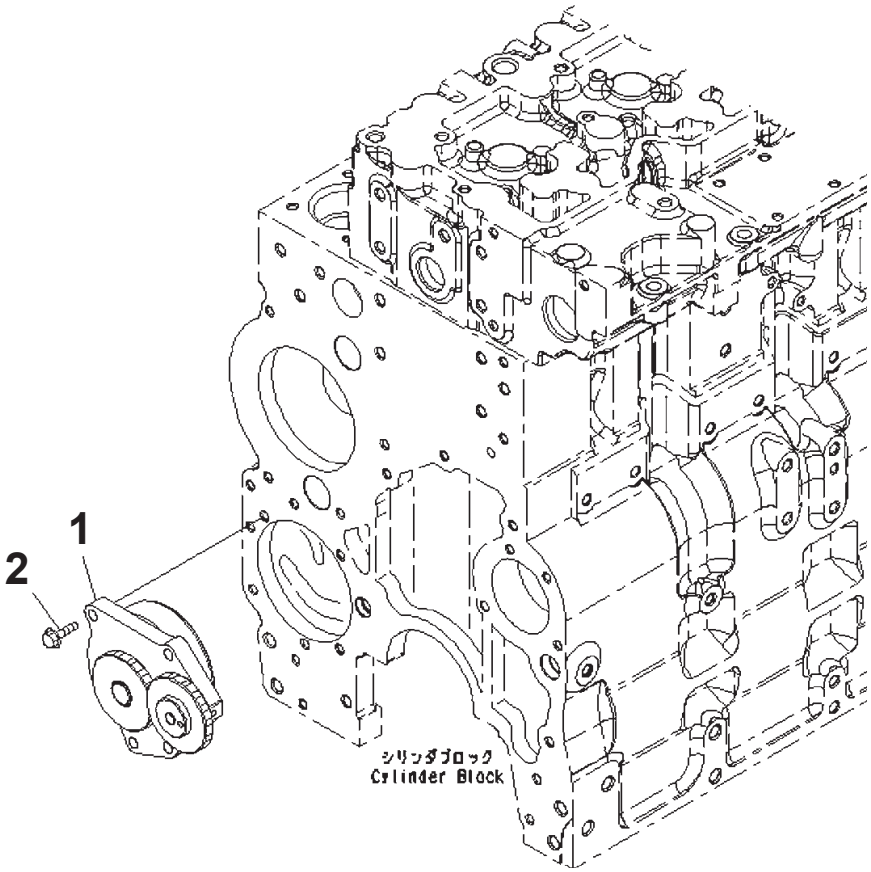

Index	Part Number	Description	Qty	Serial No.
1	6745-51-1110	Pump Assembly, OIL	1	26852077-
2	6735-51-1120	Bolt	4	26852077-

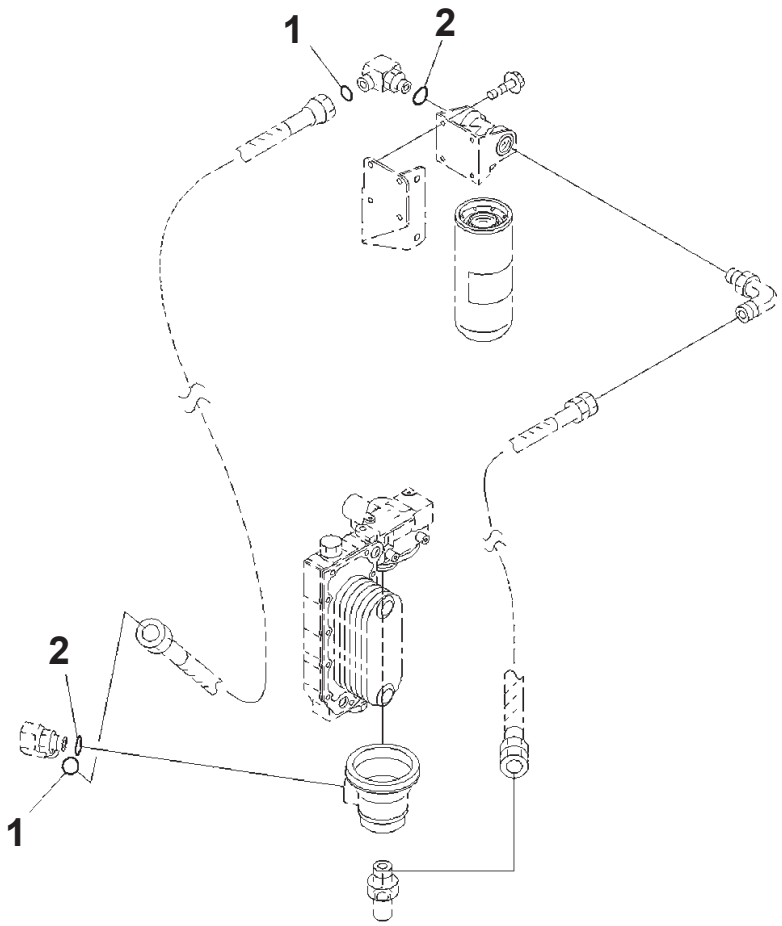

Index	Part Number	Description	Qty	Serial No.
1	6743-51-9950	O-ring	2	26852077-
2	6743-51-9960	O-ring	2	26852077-

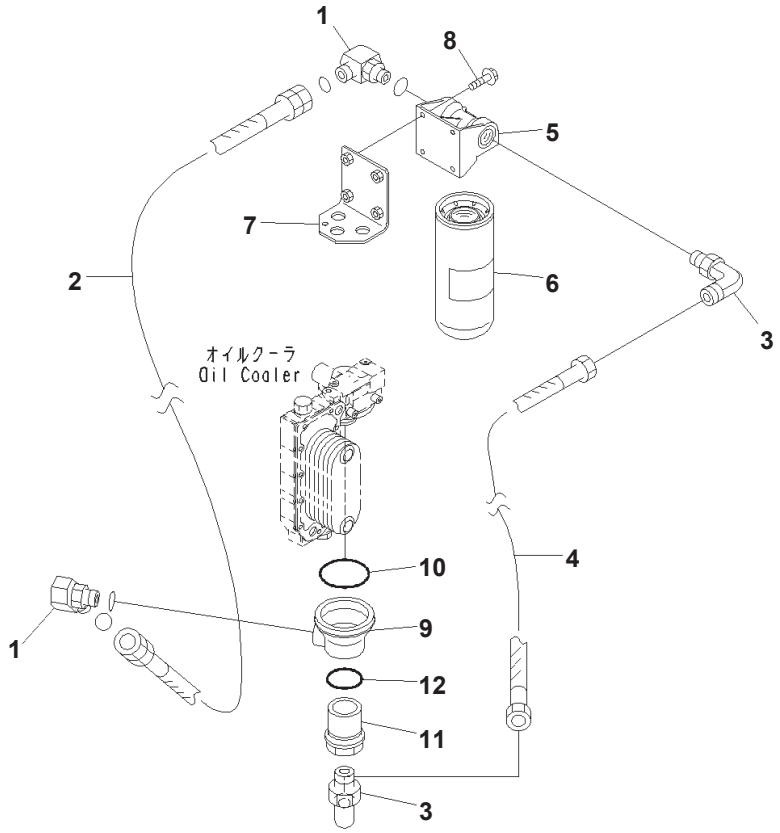

Engine Oil Filter And Engine Oil Cooler, Piping

Index	Part Number	Description	Qty	Serial No.
1	6741-51-5210	Elbow	2	26852077-
2	6743-51-9930	Hose	1	26852077-
3	6741-51-5230	Elbow	2	26852077-
4	6743-51-9940	Hose	1	26852077-
5	6743-51-5110	Head	1	26852077-
6	6742-01-4540	Cartridge	1	26852077-
7	6745-51-5220	Bracket	1	26852077-
8	6735-71-3220	Bolt	4	26852077-
9	6731-51-6280	Filter	1	26852077-
10	6741-61-2120	O-ring	1	26852077-
11	6731-51-6290	Filter	1	26852077-
12	6731-11-8290	Seal	1	26852077-

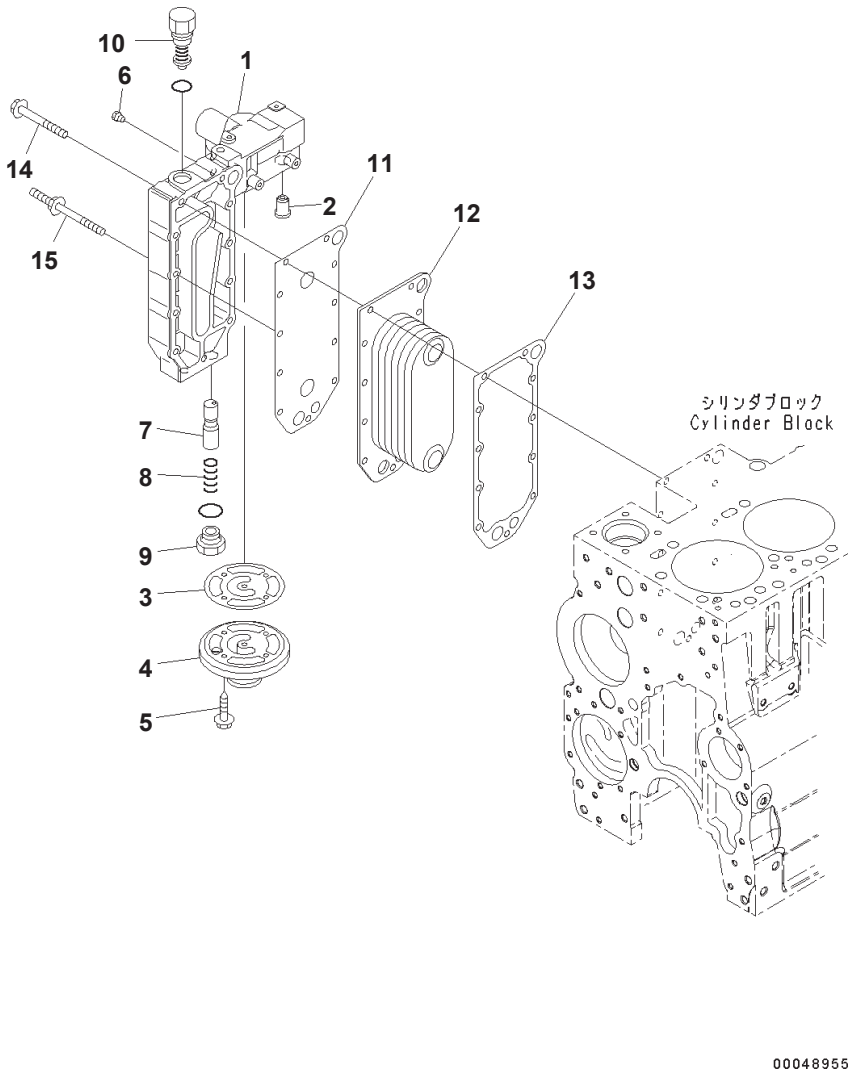

Index	Part Number	Description	Qty	Serial No.
1	6743-61-2111	Cover	1	26855044-
2	6731-61-2151	Valve	1	26852077-
3	6742-01-2491	Gasket	1	26852077-
4	6742-01-2500	Head	1	26852077-
5	6732-21-6610	Bolt	4	26852077-
6	6732-11-1930	Plug	2	26852077-
7	6742-01-5202	Plunger	1	26852077-
8	6743-61-2150	Spring	1	26852077-
9	6742-01-4220	Plug	1	26852077-
10	6742-01-5117	Valve	1	26852077-
11	6743-51-4430	Gasket	1	26852077-
12	6743-61-2210	Core	1	26852077-
13	6742-01-1080	Gasket	1	26852077-
14	6742-01-2441	Bolt	9	26852077-
15	6741-61-6110	Screw	2	26852077-

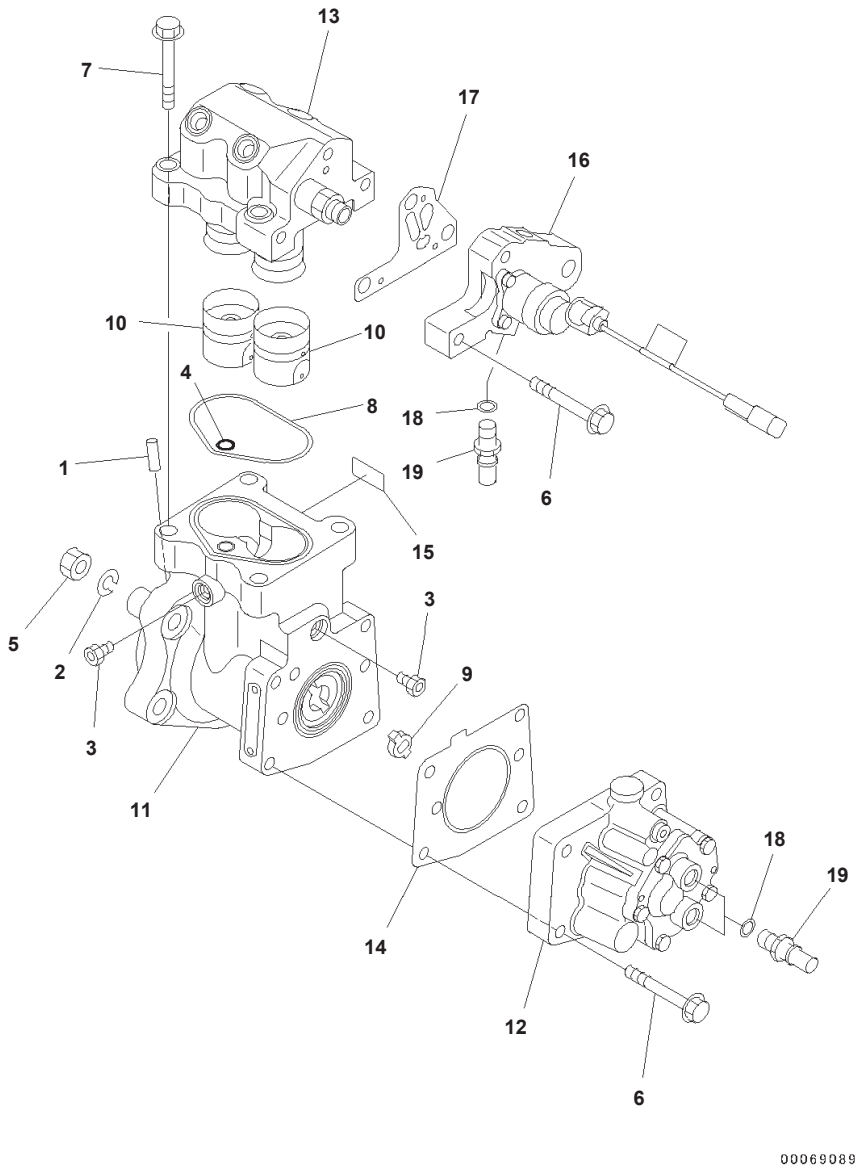

Index	Code	Part Number	Description	Qty	Serial No.
		6745-71-1170	Pump Assembly	1	26852077-
1		6744-71-1020	· Pin, Dowel	1	26852077-
2		6744-71-1040	· Washer, Spring	1	26852077-
3		6732-21-1960	· Plug Assembly	2	26852077-
4		6560-81-4530	· O-ring	1	26852077-
5		6744-71-1250	· Nut	1	26852077-
6		6732-61-3170	· Bolt	7	26852077-
7		6745-71-1220	· Bolt	4	26852077-
8		6745-71-1230	· Seal	1	26852077-
9	C1		· Hub	1	26852077-
10	C1		· Tappet	2	26852077-
11	C1		· Body	1	26852077-
12		6745-71-1180	· Pump, Fuel	1	26852077-
13		6745-71-1240	· Head	1	26852077-
14		6745-71-1250	· Gasket	1	26852077-
15	C1		· Tag	1	26852077-
16	C1		· Adapter	1	26852077-
17		6745-71-1260	· Gasket	1	26852077-
18		6745-71-1130	Washer	3	26852077-
19		6745-71-6130	Connector	3	26852077-

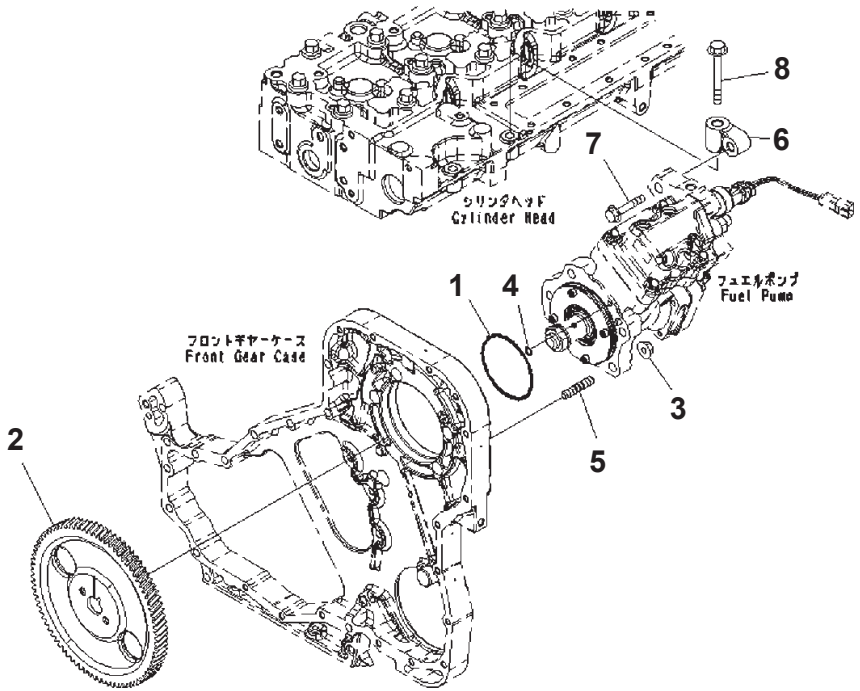

Index	Part Number	Description	Qty	Serial No.
1	6741-61-2120	O-ring	1	26852077-
2	6745-71-3210	Gear	1	26852077-
3	6736-81-6170	Nut	4	26852077-
4	6742-01-5507	Seal	1	26852077-
5	6734-71-5270	Stud	4	26852077-
6	6745-71-1210	Support	1	26852077-
7	6742-01-3780	Bolt	1	26852077-
8	6732-61-4120	Bolt	1	26852077-

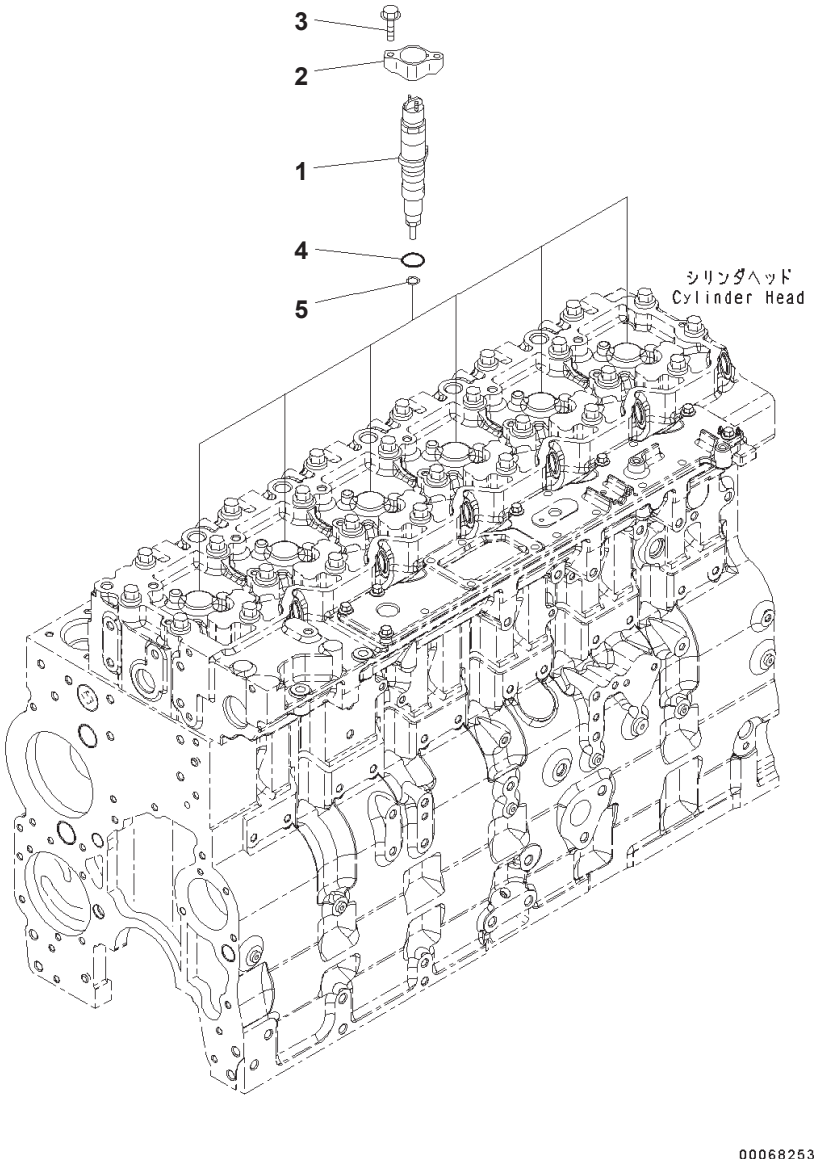

Index	Part Number	Description	Qty	Serial No.
1	6745-11-3102	Injector	6	26852174-
2	6745-11-3110	Clamp	6	26852077-
3	6745-11-3150	Bolt	12	26852077-
4	6754-11-3120	O-ring	1	26852077-
5	6743-11-3230	Gasket	1	26852077-

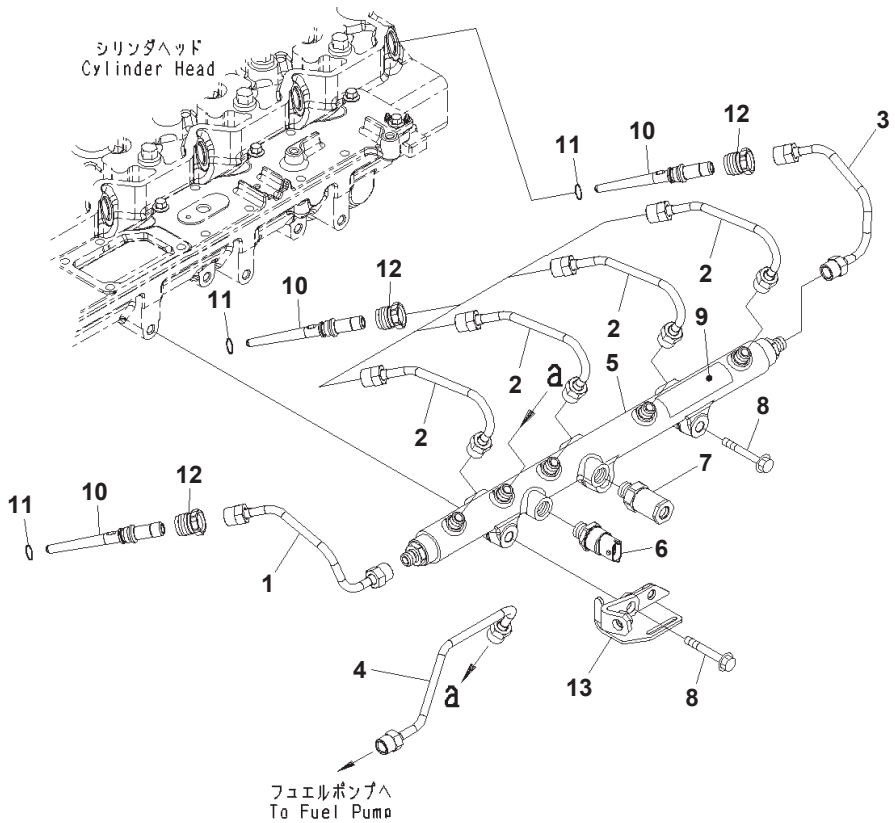

Fuel Injection Piping

Index	Code	Part Number	Description	Qty	Serial No.
1		6745-71-4110	Tube	1	26852077-
2		6745-71-4120	Tube	4	26852077-
3		6745-71-4140	Tube	1	26852077-
4		6745-71-4150	Tube	1	26852077-
5		6745-71-4310	Manifold Assembly	1	26852077-
6		6745-71-4320	・ Sensor, Pressure	1	26852077-
7		6745-71-4330	・ Valve, Relief	1	26852077-
8		6732-61-4120	Bolt	3	26852077-
9		6754-71-1991	Decal	2	26852077-
		6745-71-5540	Connector Assembly	6	26852077-
10	C1		・ Connector	1	26852077-
11		6745-71-5550	・ O-ring	1	26852077-
12		6754-71-5540	Retainer	6	26852077-
13		6745-81-9380	Brace	1	26852780-

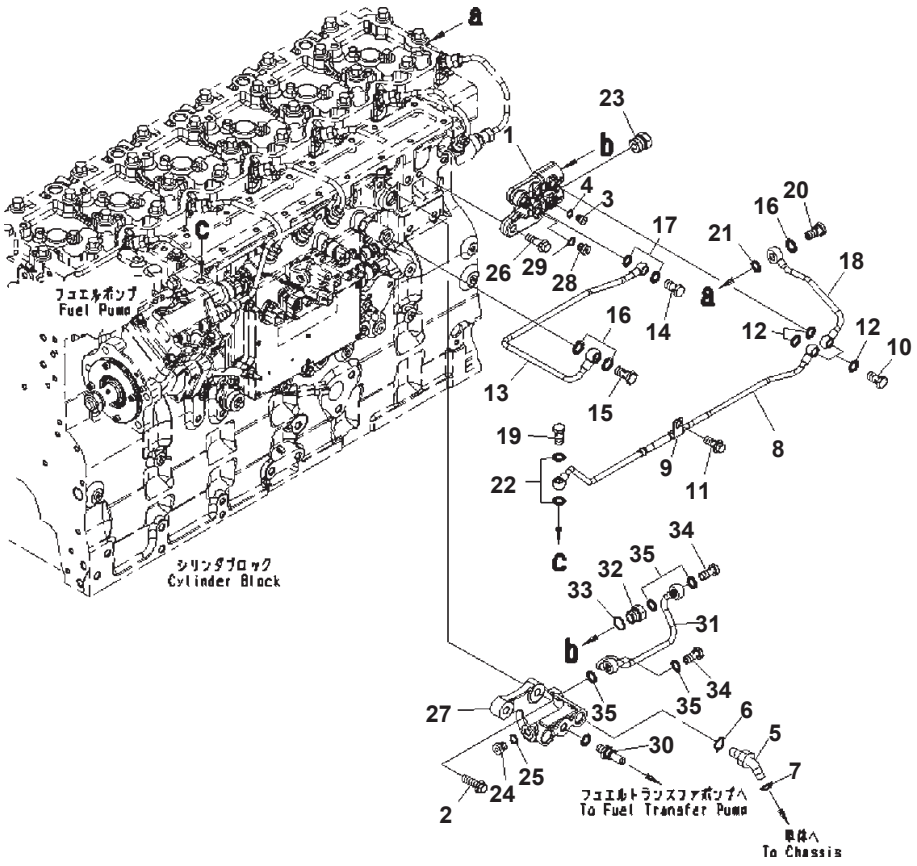

Fuel Piping

Index	Part Number	Description	Qty	Serial No.
1	6745-71-5610	Connector	1	26852077-
2	6732-22-3110	Bolt	2	26852077-
	6732-21-1960	Plug Assembly	1	26852077-
3	6215-81-9510	・ Plug	1	26852077-
4	6215-81-9710	・ O-ring	1	26852077-
5	6745-71-5180	Elbow	1	26852077-
6	6735-21-4160	O-ring	1	26852077-26854799
7	02896-11009	O-ring	1	26852077-
8	6745-71-5440	Tube	1	26852077-
9	6745-71-5450	Clip	1	26852077-
10	6732-71-6510	Connector	2	26852077-
11	6732-61-3140	Bolt	1	26852077-
12	6745-71-1130	Washer	4	26852077-
13	6745-71-5460	Tube	1	26852077-
14	6732-71-6510	Connector	1	26852077-
15	6732-71-5620	Connector	1	26852077-
16	6731-74-5910	Washer	2	26852077-
17	6745-71-1130	Washer	2	26852077-
18	6745-71-5470	Tube	1	26852077-
19	6732-71-6510	Connector	1	26852077-
20	6754-71-5430	Valve, Check	1	26852077-
21	6731-74-5910	Washer	1	26852077-
22	6745-71-1130	Washer	3	26852077-
23	6745-71-5190	Plug	1	26852077-
	6744-71-3050	Plug Assembly	1	26852077-
24	6744-71-3060	・ Plug, Threaded	1	26852077-
25	6737-51-8770	・ O-ring	1	26852077-
26	6216-74-6190	Bolt	2	26852077-
27	6745-71-5580	Connector	1	26852077-
	6744-71-3050	Plug Assembly	1	26852077-
28	6744-71-3060	・ Plug, Threaded	1	26852077-
29	6737-51-8770	・ O-ring	1	26852077-
30	6745-71-6130	Connector	1	26852077-
31	6745-71-5480	Tube	1	26852077-
	6745-71-5490	Union Assembly	1	26852077-
32	6745-71-5620	・ Union	1	26852077-
33	6735-21-4160	・ O-ring	1	26852077-
34	6732-71-6510	Connector	2	26852077-
35	6745-71-1130	Washer	5	26852077-

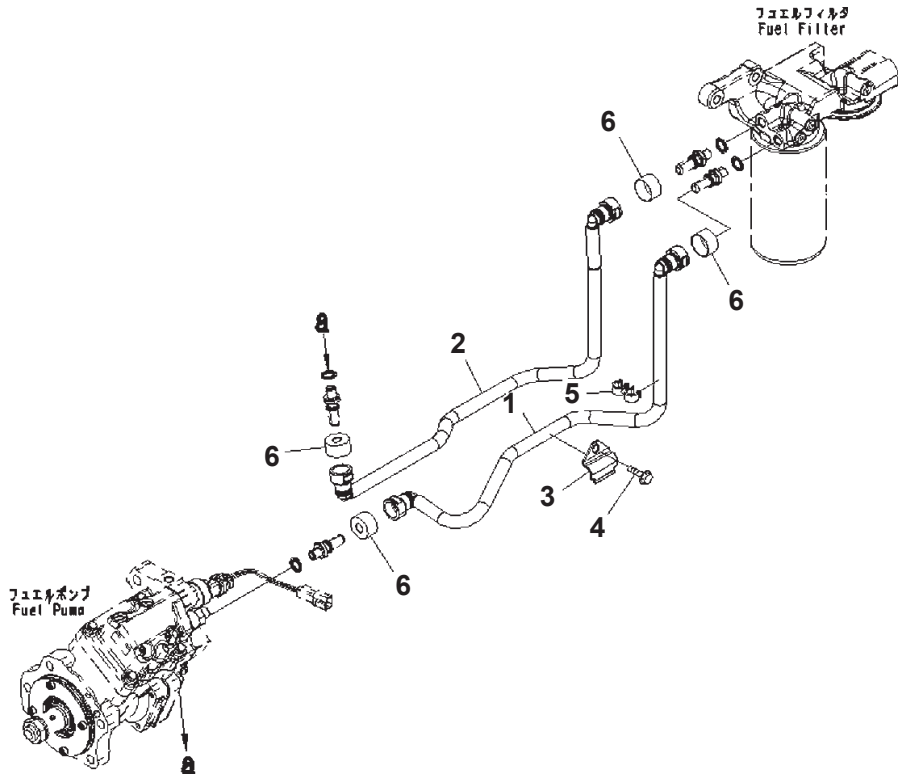

Index	Part Number	Description	Qty	Serial No.
1	6745-71-5110	Tube	1	26852077-
2	6745-71-5120	Tube	1	26852077-
3	6745-71-5210	Brace	1	26852077-
4	6736-21-5310	Bolt	1	26852077-
5	6745-71-5220	Clamp	1	26852077-
6	6745-71-5160	Cover	4	26852077-

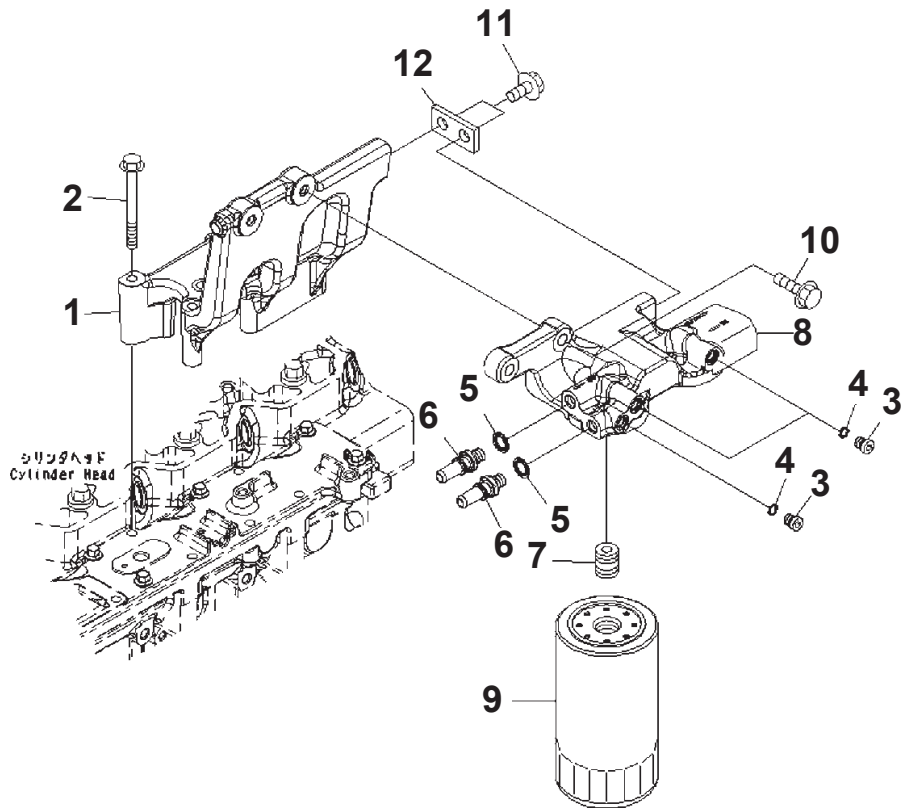

Fuel Filter

Index	Part Number	Description	Qty	Serial No.
1	6745-71-6210	Support	1	26852077-
2	6732-11-4170	Bolt	5	26852077-
	6745-72-6110	Head Assembly	1	26852077-
	6732-21-1960	・ Plug Assembly	3	26852077-
3	6215-81-9510	・・ Plug	1	26852077-
4	6215-81-9710	・・ O-ring	1	26852077-
5	6745-71-1130	・ Washer	2	26852077-
6	6745-71-6130	・ Connector	2	26852077-
7	6754-71-6330	・ Adapter	1	26852077-
8	6745-71-6150	・ Head	1	26852077-
9	6754-79-6140	・ Filter	1	26854422-
10	6732-22-3110	Bolt	2	26852077-
11	6731-61-4250	Bolt	2	26852077-
12	6745-71-6230	Brace	1	26852077-

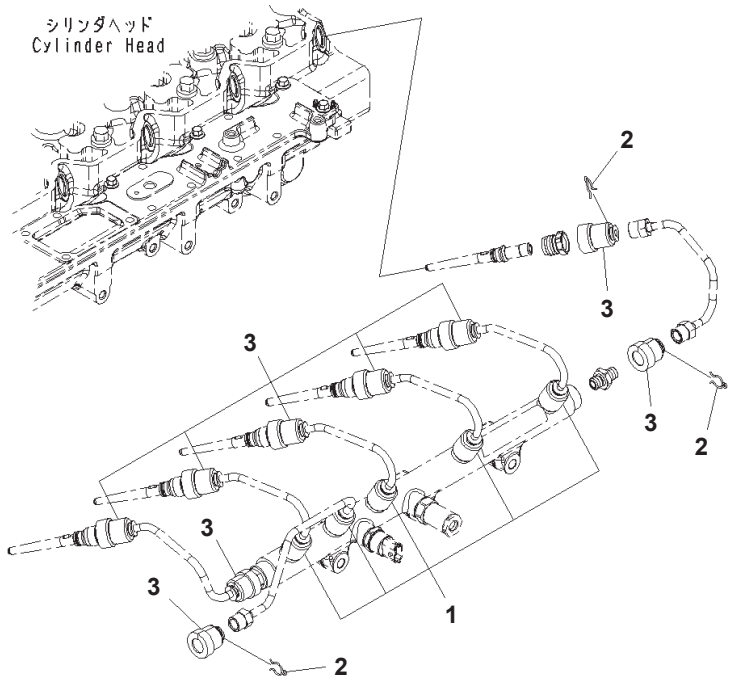

Index	Part Number	Description	Qty	Serial No.
1	6745-71-9710	Cover	5	26852077-
2	6217-71-5770	Clamp	14	26852077-
3	6754-71-9710	Cover	9	26852077-

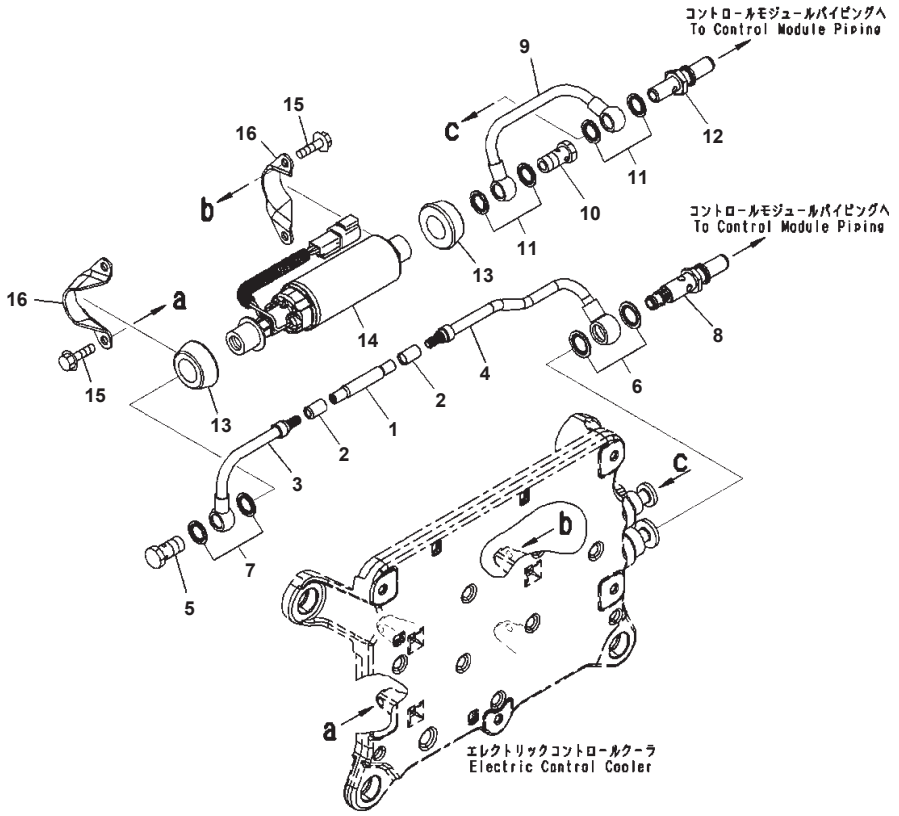

Fuel Transfer Pump

Index	Part Number	Description	Qty	Serial No.
	6745-71-5311	Tube	1	26857027-
1	6745-71-5320	・ Hose	1	26852077-
2	6745-71-5330	・ Socket	2	26857027-
3	6745-71-5340	・ Tube	1	26852077-
4	6745-71-5370	・ Tube	1	26857027-
5	6732-71-6510	Connector	1	26852077-
6	6745-71-5860	Washer	2	26852077-
7	6745-71-1130	Washer	2	26852077-
8	6745-71-5391	Valve, Check	1	26852077-
9	6745-71-5410	Tube	1	26852077-
10	6732-71-6510	Connector	1	26852077-
11	6745-71-1130	Washer	4	26852077-
12	6745-71-5430	Connector	1	26852077-
	6745-71-1820	Pump Assembly, Fuel Transfer	1	26852077-
13	6745-71-1830	・ Isolator, Vibration	2	26852077-
14	6745-71-1840	・ Pump, Fuel Transfer	1	26852077-
15	6732-21-4180	Bolt	4	26852077-
16	6745-71-1860	Bracket	2	26852077-

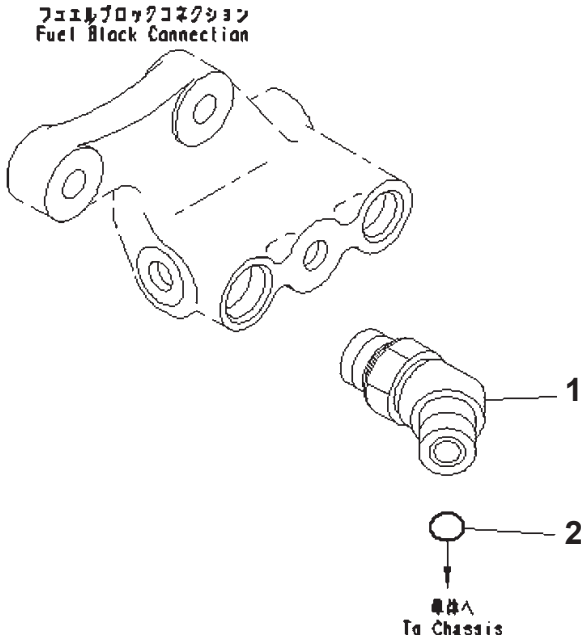

Fuel Inlet Fitting

Index	Part Number	Description	Qty	Serial No.
	6745-71-5250	Elbow Assembly	1	26852077-
1	6745-71-5170	・ Elbow	1	26852077-
2	6738-54-8110	・ O-ring	1	26852077-

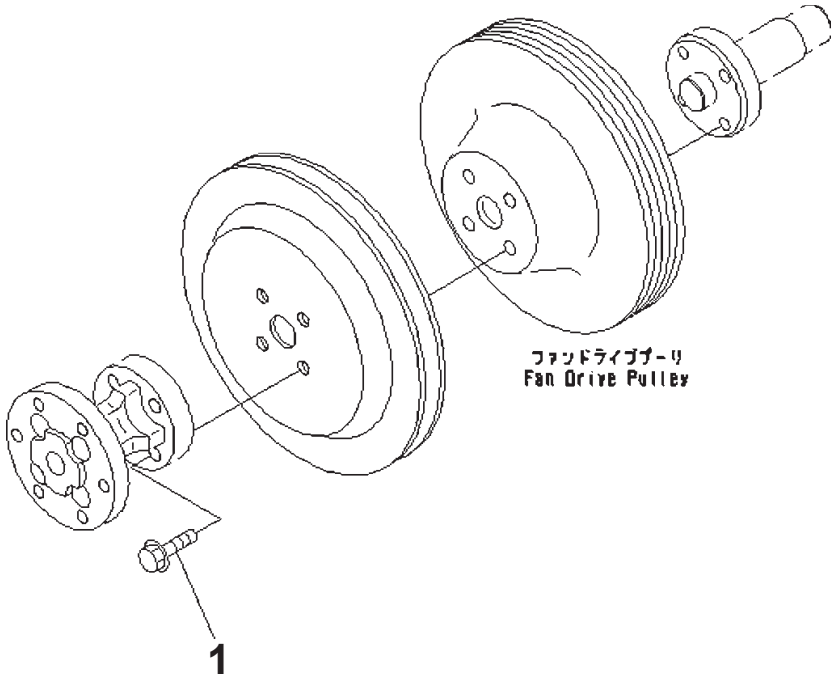

Index	Part Number	Description	Qty	Serial No.
1	6735-71-3220	Bolt	4	26852077-

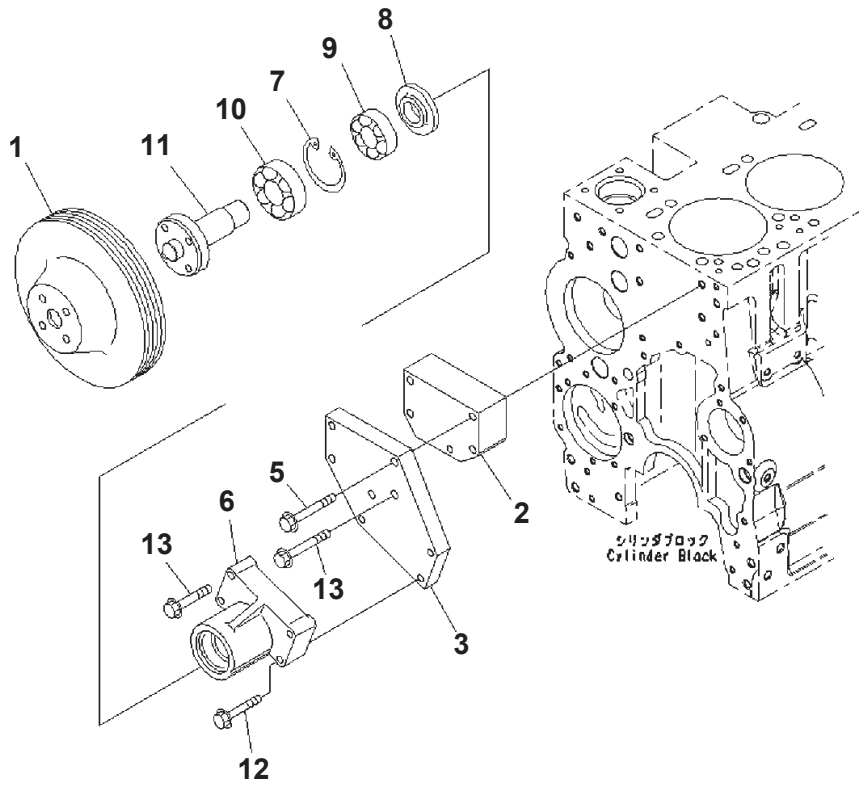

Cooling Fan Drive Pulley

Index	Code	Part Number	Description	Qty	Serial No.
1		6743-61-3310	Pulley	1	26852077-
2		6743-61-3210	Spacer	1	26852077-
3		6743-61-3220	Plate	1	26852077-
4		01435-01095	Bolt	1	26852077-
5		01435-01085	Bolt	1	26852077-
		6743-61-3501	Support Assembly	1	26852077-
6	C1		・ Support	1	26852077-
7		6731-61-3420	・ Ring, Snap	2	26852077-
8		6731-61-3430	・ Retainer	1	26852077-
9		6743-61-3530	・ Bearing, Ball	1	26852077-
10		6743-61-3560	・ Bearing, Ball	1	26852077-
11		6743-61-3550	・ Hub	1	26852077-
12		6743-61-3610	Bolt	3	26852077-
13		01435-01075	Bolt	1	26852077-

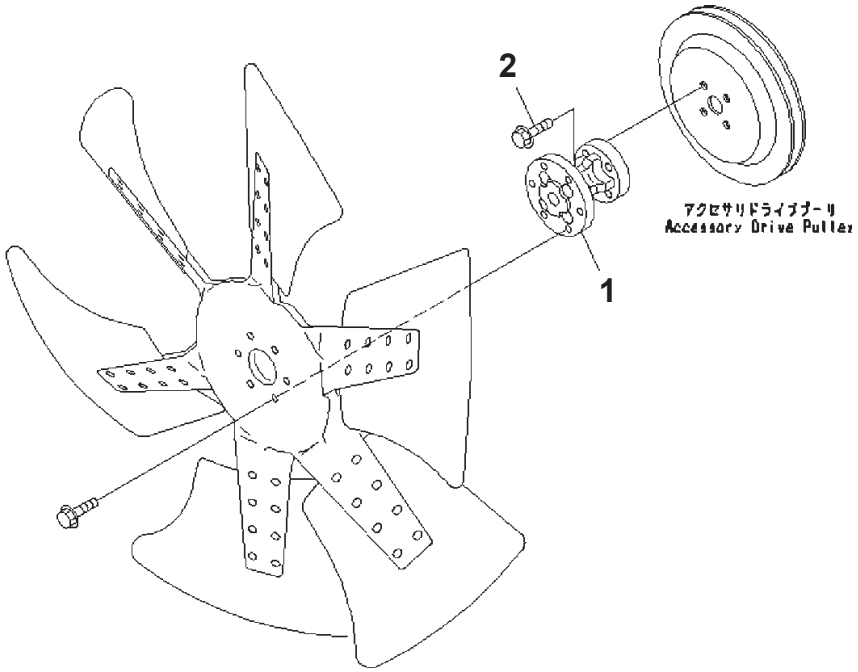

Cooling Fan

Index	Part Number	Description	Qty	Serial No.
1	6743-61-3810	Spacer	1	26852077-
2	01435-01045	Bolt	4	26852077-

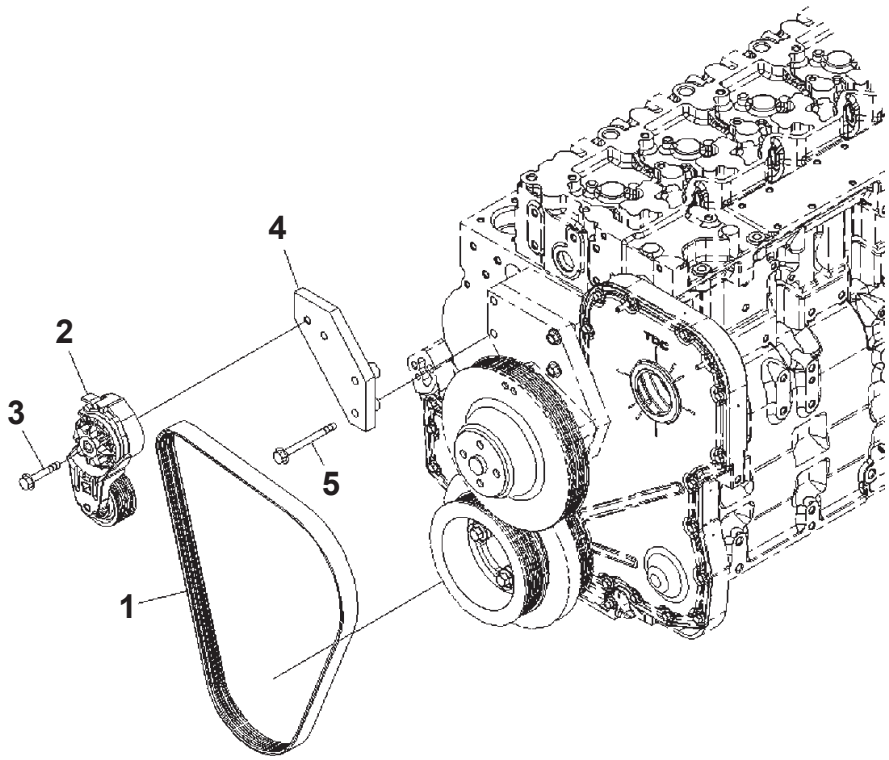

Index	Part Number	Description	Qty	Serial No.
1	6743-61-3720	Belt	1	26852077-
2	6743-61-4120	Tensioner	1	26852077-
3	6736-81-6190	Bolt	1	26852077-
4	6743-61-4110	Bracket	1	26852077-
5	6743-62-3110	Bolt	2	26852077-

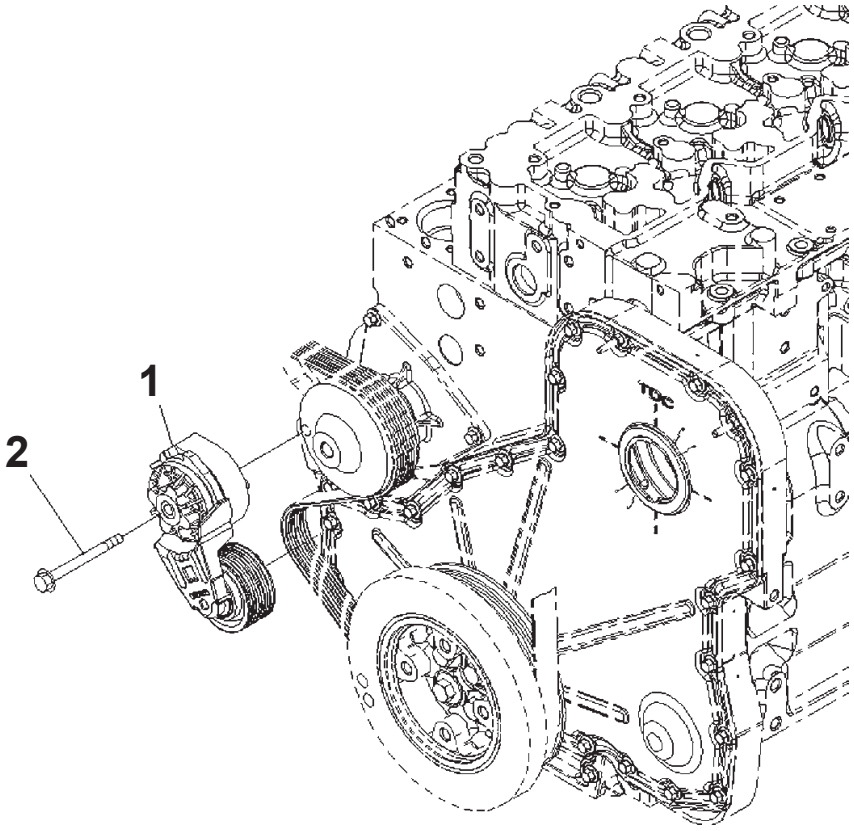

Index	Part Number	Description	Qty	Serial No.
1	6743-61-4120	Tensioner	1	26852077-
2	6732-61-3260	Bolt	1	26852077-

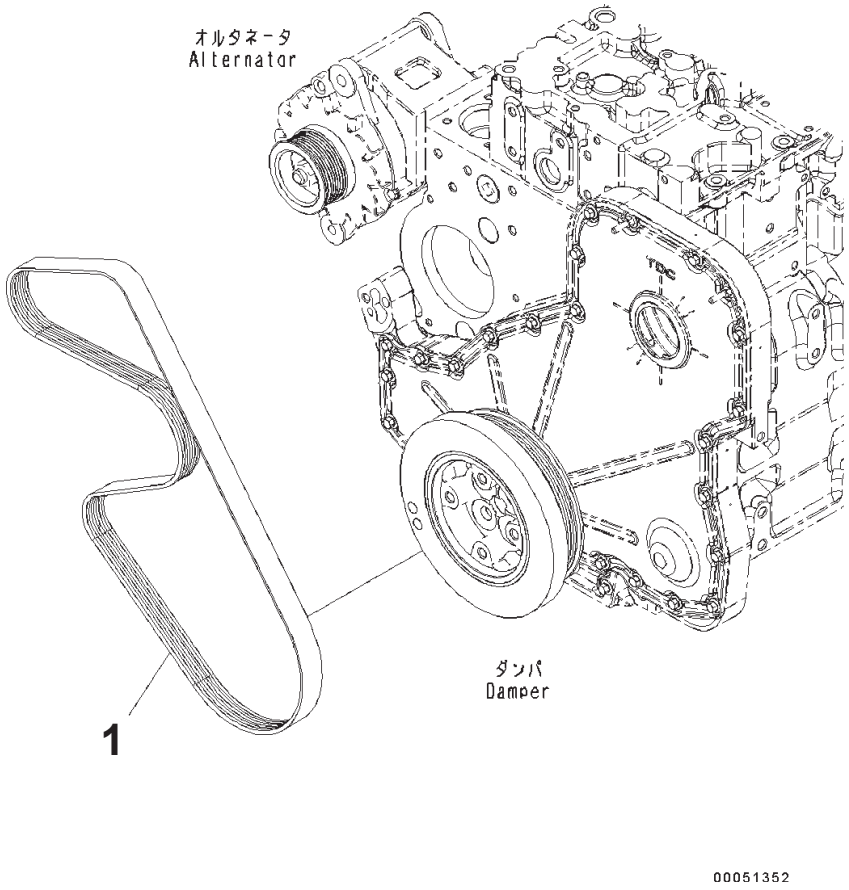

Index	Part Number	Description	Qty	Serial No.
1	6743-62-3710	Belt	1	26852077-

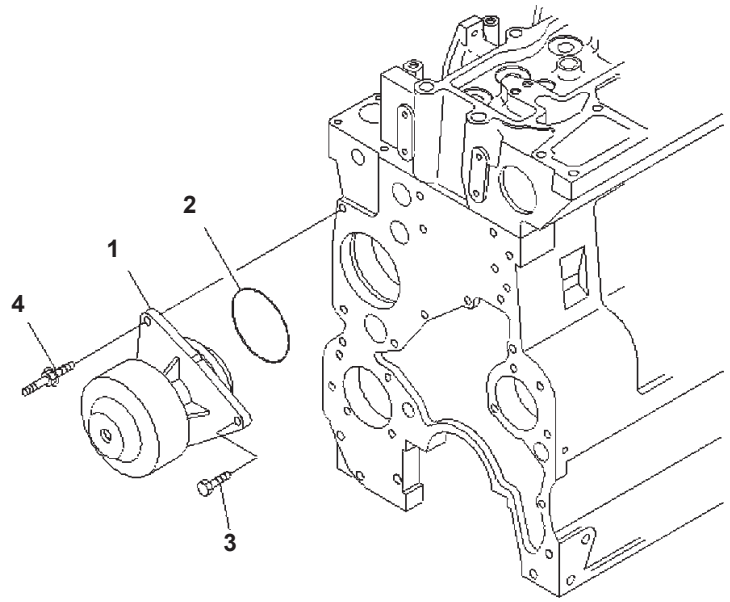

00049568

Water Pump

Index	Code	Part Number	Description	Qty	Serial No.
		6743-61-1530	Kit, Water Pump	1	26852077-
1	C1		・ Water Pump Assembly, Water Pump	1	26852077-
2		6741-61-1520	・ Seal	1	26852077-
3		01435-00825	Bolt	2	26852077-
4		6742-01-5195	Screw	1	26852077-

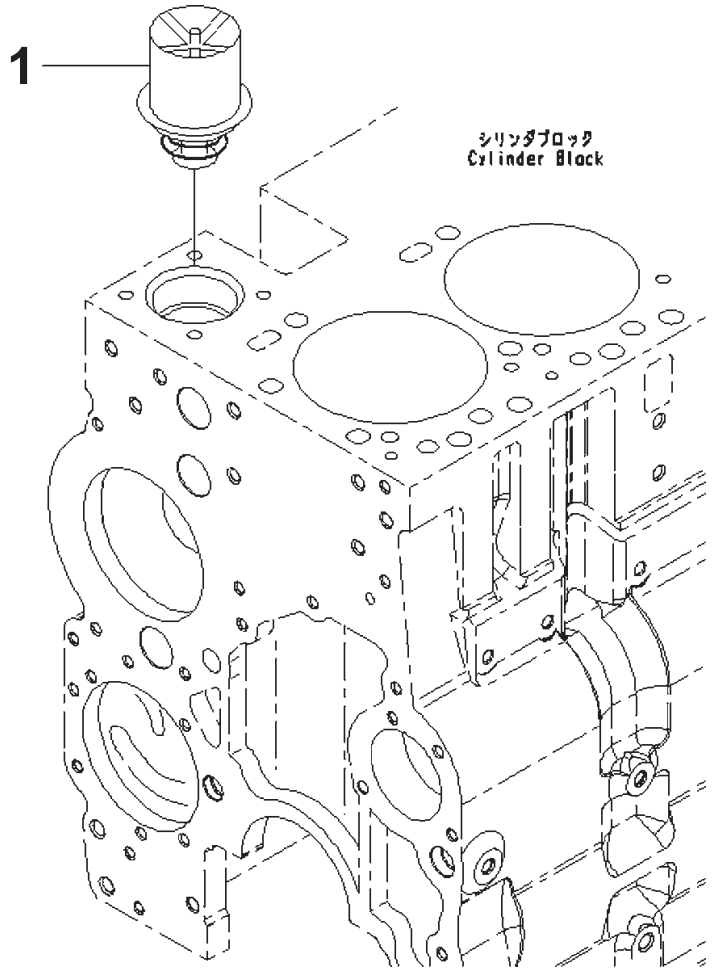

Thermostat

Index	Part Number	Description	Qty	Serial No.
1	6741-61-1610	Thermostat	1	26852735-

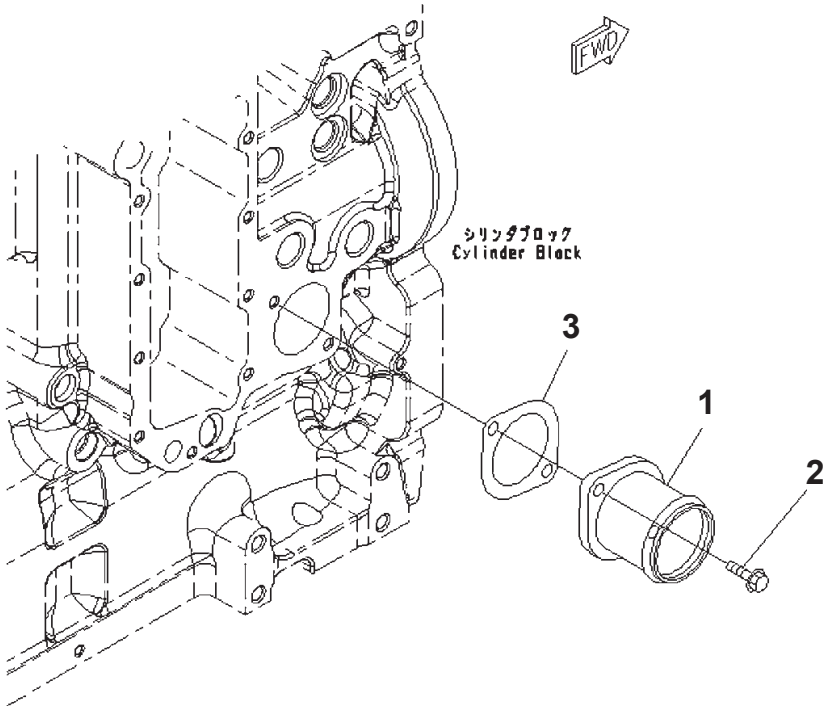

Index	Part Number	Description	Qty	Serial No.
1	6742-01-4490	Connector	1	26852077-
2	6732-71-3220	Bolt	2	26852077-
3	6741-61-6130	Gasket	1	26852077-

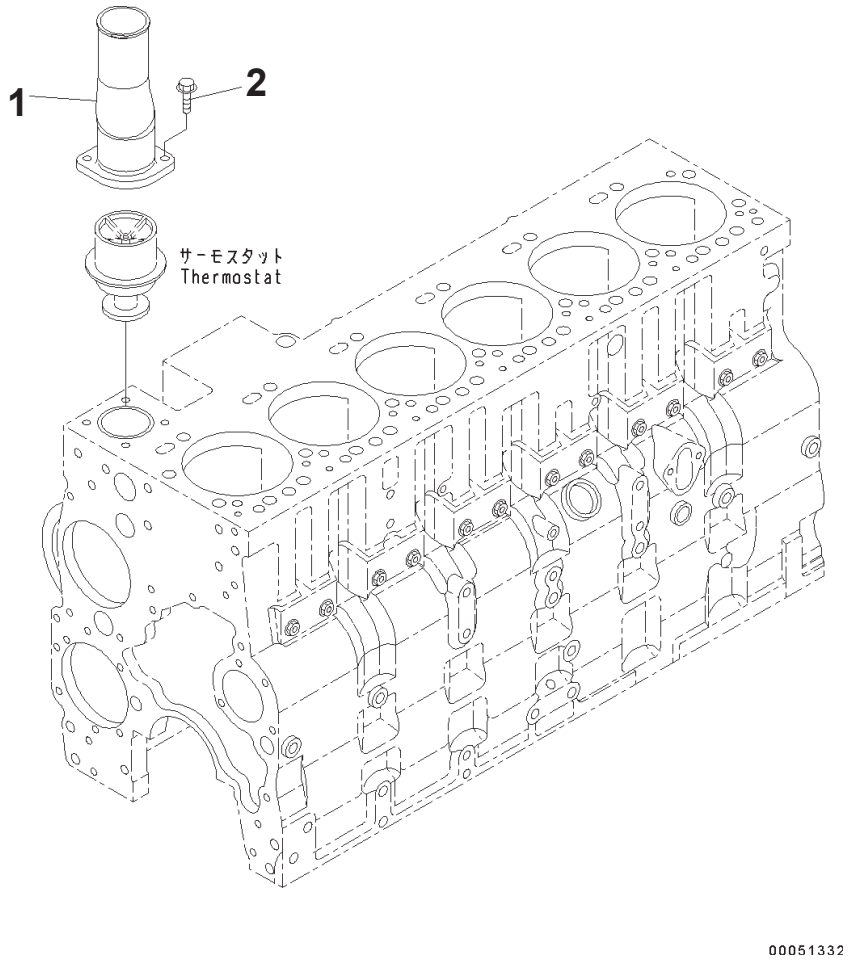

Coolant Outlet Connector

Index	Part Number	Description	Qty	Serial No.
1	6745-61-6130	Connection	1	26852077-
2	6732-21-5160	Bolt	2	26852077-

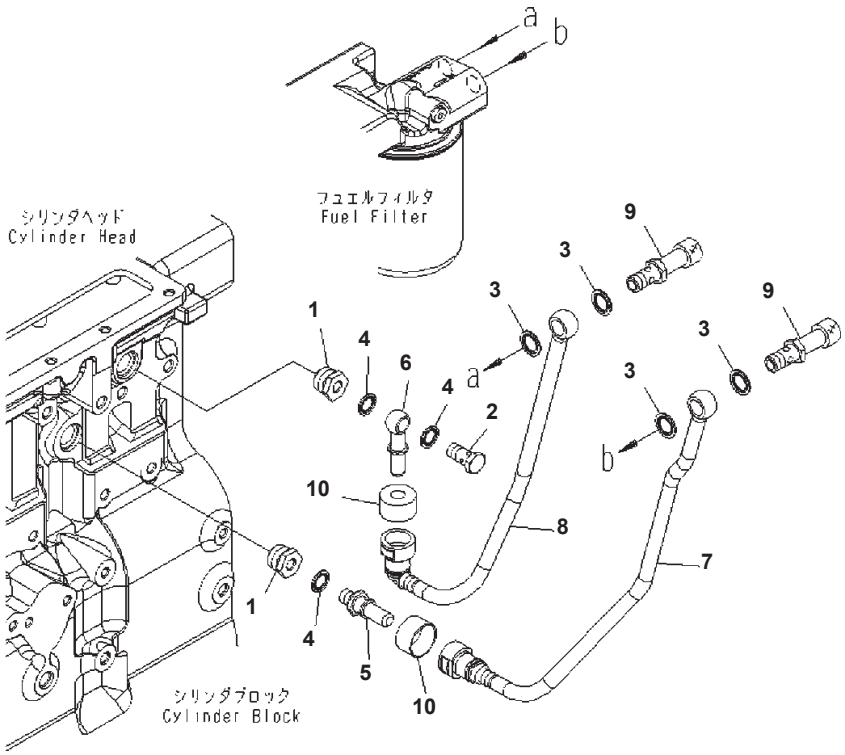

Corrosion Piping

Index	Part Number	Description	Qty	Serial No.
1	6745-61-8110	Union	2	26852077-
2	6732-71-6510	Connector	1	26852077-
3	6731-74-5910	Washer	4	26852077-
4	6745-71-1130	Washer	3	26852077-
5	6745-71-6130	Connector	1	26852077-
6	6745-61-8120	Connector	1	26852077-
7	6745-61-8130	Tube	1	26852077-
8	6745-61-8140	Tube	1	26852077-
9	6745-61-8150	Valve	2	26852077-
10	6745-71-5160	Cover	2	26852077-

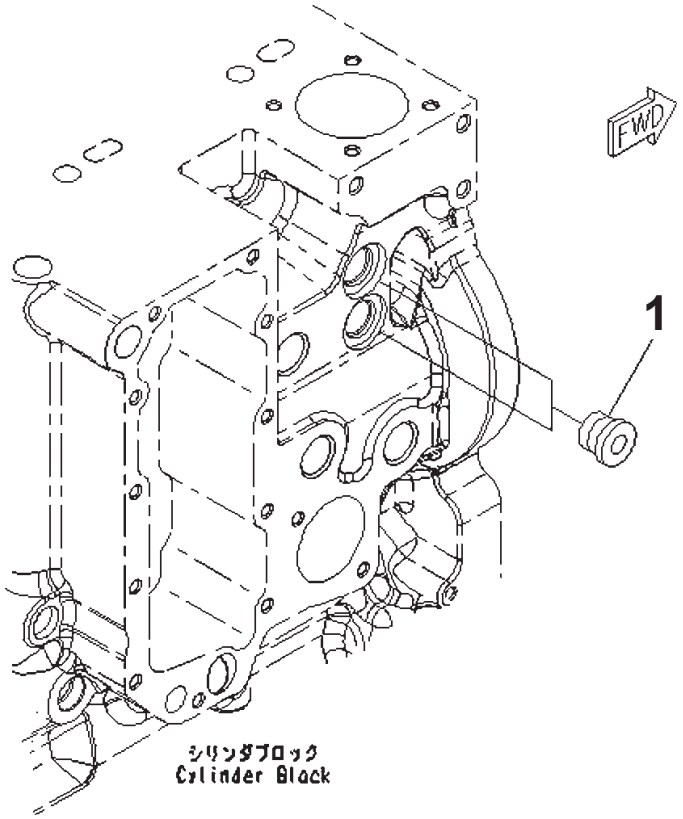

Plug, Torque Converter Cooling

Index	Part Number	Description	Qty	Serial No.
1	6216-14-6820	Plug	2	26852077-

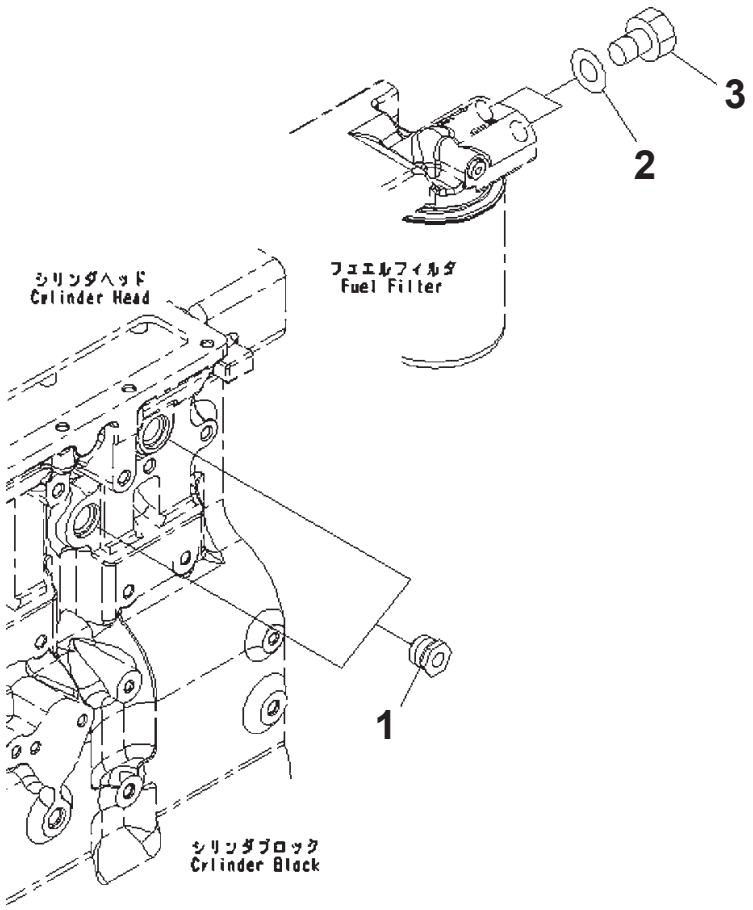

Plug, For Corrosion Resistor

Index	Part Number	Description	Qty	Serial No.
1	6732-11-1910	Plug	2	26852077-
2	07005-01412	Washer	2	26852077-
3	07040-11409	Plug	2	26852077-

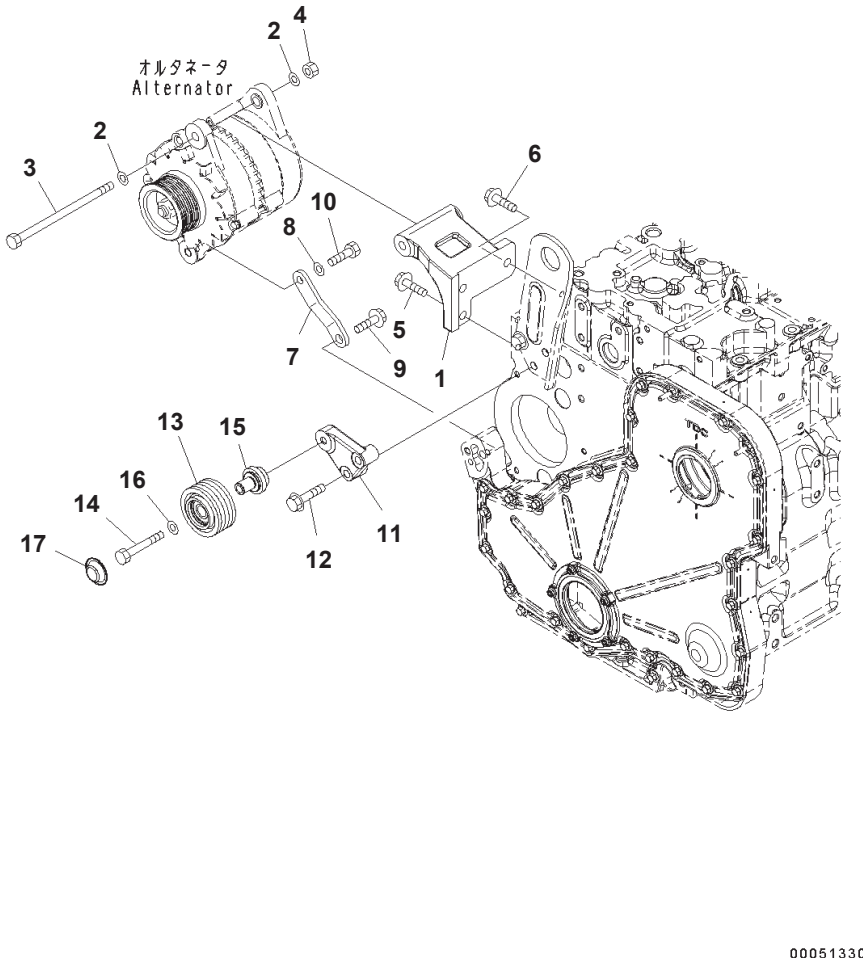

Alternator Mount Parts

Index	Part Number	Description	Qty	Serial No.
1	6741-81-6520	Bracket	1	26852077-
2	01643-31232	Washer	2	26852077-
3	6207-81-6980	Bolt	1	26852077-
4	01580-11210	Nut	1	26852077-
5	6735-71-3220	Bolt	1	26852077-
6	6735-61-3810	Bolt	2	26852077-
7	6741-81-6510	Brace	1	26852077-
8	01643-31232	Washer	1	26852077-
9	01435-01020	Bolt	1	26852077-
10	01050-31230	Bolt	1	26852077-
11	6745-61-4130	Support	1	26852077-
12	6745-61-4230	Bolt	2	26852077-
13	6743-61-3441	Pulley	1	26855671-
14	6745-61-4120	Bolt	1	26852077-
15	6742-01-5123	Shaft	1	26852077-
16	01643-31032	Washer	1	26852077-
17	6742-01-4560	Cover	1	26852077-

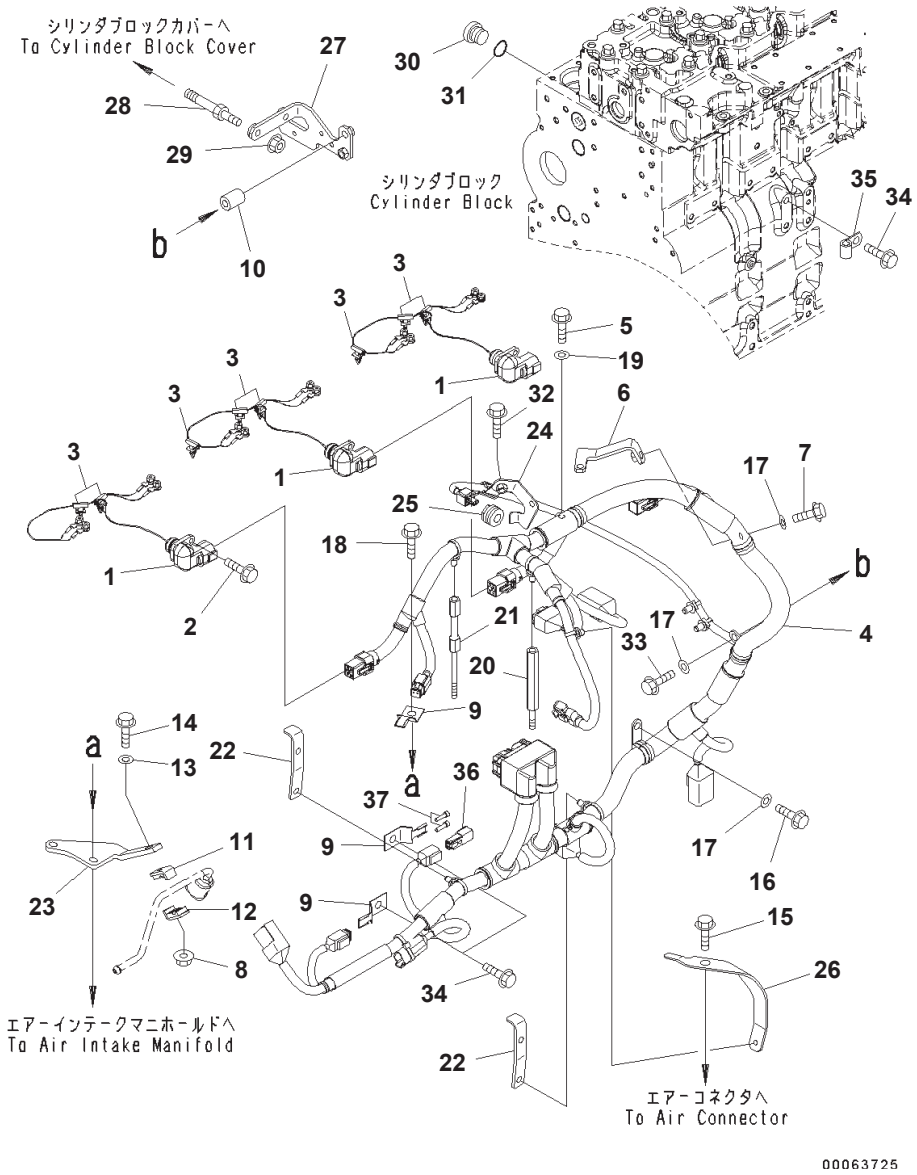

Electric Wiring

Index	Part Number	Description	Qty	Serial No.
1	6745-81-9240	Wire Harness	3	26854680-
2	6732-21-4180	Bolt	3	26852077-
3	6745-81-9390	Clip	8	26852077-
4	6745-81-9250	Wire Harness	1	26852077-
5	6742-01-3770	Bolt	1	26852077-
6	6745-81-9710	Bracket	1	26852077-
7	6732-71-3220	Bolt	1	26852077-
8	01584-00605	Nut	1	26852077-
9	08193-20010	Clip	3	26852077-
10	6130-12-4581	Spacer	1	26852077-
11	6155-71-5810	Clamp	1	26852077-
12	6155-71-5820	Clamp	1	26852077-
13	01643-30623	Washer	1	26852077-
14	6745-81-9430	Bolt	1	26852077-
15	6732-61-3140	Bolt	1	26852077-
16	6732-21-3120	Bolt	1	26852077-
17	01640-20816	Washer	3	26852077-
18	6732-61-6140	Bolt	2	26852077-
19	01640-20716	Washer	1	26852077-
20	6745-81-9720	Spacer	1	26852077-
21	6745-81-9730	Spacer	1	26852077-
22	6745-81-9740	Bracket	2	26852077-
23	6745-81-9750	Brace	1	26852077-
24	6745-81-9810	Bracket	1	26852077-
25	6745-81-9770	Bushing	1	26852077-
26	6745-81-9780	Bracket	1	26852077-
27	6745-81-9790	Brace	1	26852077-
28	6745-81-9580	Bolt	2	26852077-
29	6732-71-3210	Nut	2	26852077-
	6735-21-1910	Plug Assembly	1	26852077-
30	6735-21-1920	・ Plug	1	26852077-
31	6735-21-1930	・ O-ring	1	26852077-
32	6216-74-6180	Bolt	2	26852077-
33	6754-81-9390	Bolt	1	26852077-
34	6216-54-7320	Bolt	3	26852077-
35	04434-51010	Clip	1	26852077-
36	6745-71-5830	Cover, Protective	1	26852077-
37	08191-00770	Plug, Connector	2	26852077-

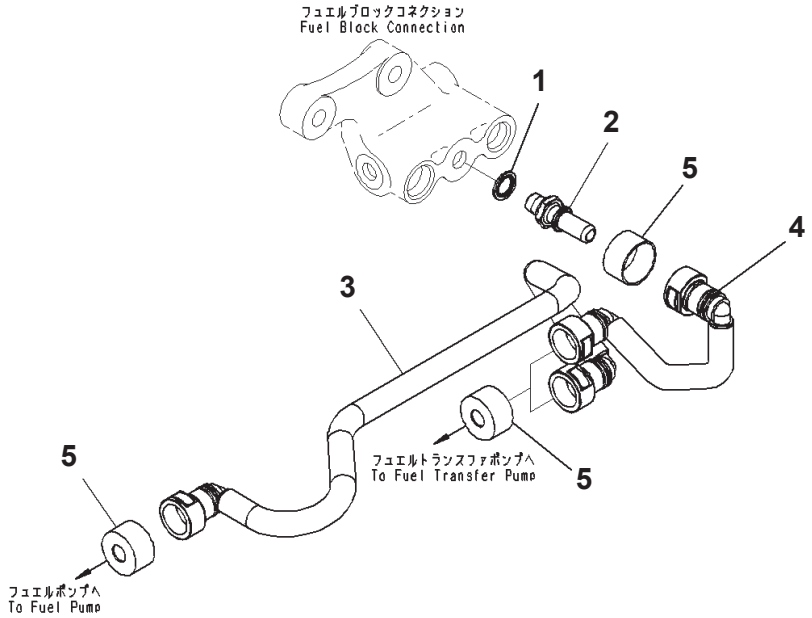

Electric Controller Piping

Index	Part Number	Description	Qty	Serial No.
1	6745-71-1130	Washer	1	26852077-
2	6745-71-6130	Connector	1	26852077-
3	6745-71-5230	Tube	1	26852077-
4	6745-71-5240	Tube	1	26852077-
5	6745-71-5160	Cover	4	26852077-

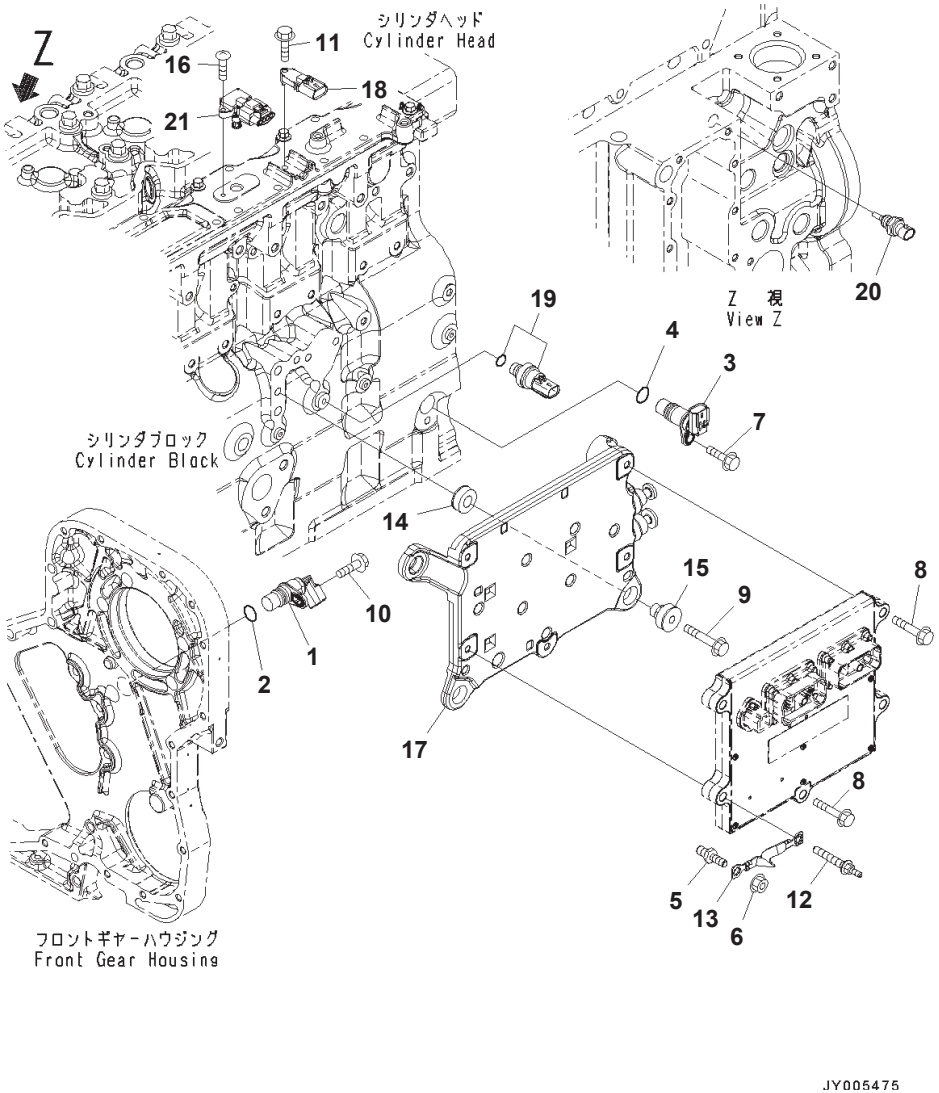

Electric Controller Mounts, North America EPA 3RD Regulations, EU Exhaust Emissions 3RD Regulations

Index	Part Number	Description	Qty	Serial No.
	6271-81-9200	Sensor Assembly, Position	1	26852077-
1	6754-81-9410	・ Sensor Assembly, Position	1	26852077-
2	6271-81-9220	・ O-ring	1	26852077-
	6261-81-2901	Sensor Assembly	1	26852077-
3	6261-81-2911	・ Sensor	1	26852077-
4	6271-81-9220	・ O-ring	1	26852077-
5	6745-81-9440	Bolt	1	26852077-
6	6732-71-3210	Nut	1	26852077-
7	6732-71-3220	Bolt	1	26852077-
8	6732-61-3110	Bolt	2	26852077-
9	6735-61-2120	Bolt	4	26852077-
10	6732-21-4180	Bolt	1	26852077-
11	6734-71-5520	Bolt	1	26852077-
12	6745-81-9560	Bolt	3	26852077-
13	6754-81-9170	Wire	1	26852077-
14	6754-81-9110	Isolator	4	26852077-
15	6754-81-9130	Isolator	4	26852077-
16	6754-81-9180	Screw	1	26852077-
17	6745-81-9511	Cooler	1	26852077-
18	6261-81-1900	Sensor, Pressure	1	26852077-
19	6744-81-4010	Switch, Pressure	1	26852077-
20	6261-81-6901	Sensor Assembly	1	26852077-
21	6754-81-2701	Sensor, Temperature	1	26852077-

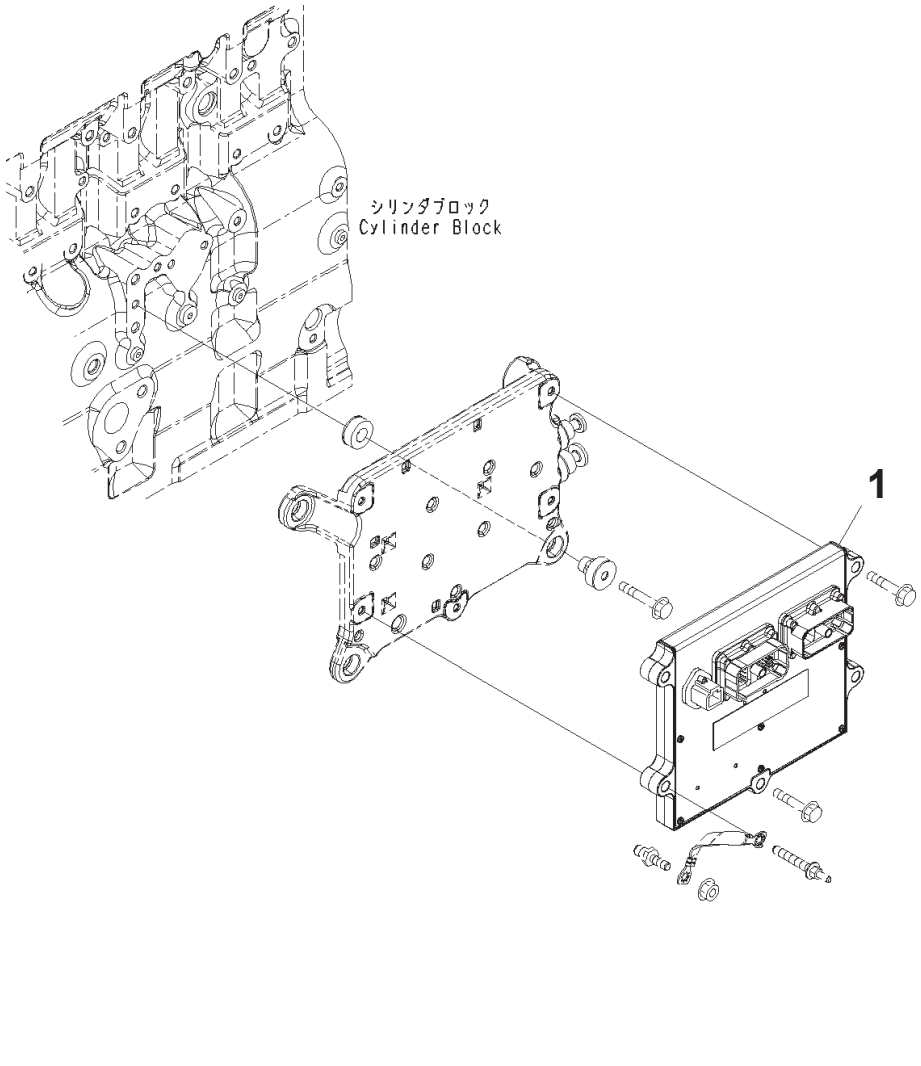

Index	Part Number	Description	Qty	Serial No.
1	600-468-1200	Controller Assembly	1	26852077-

SAA6D114E-3D S/N 26852735-UP
Repair Service Parts

Index	Code	Part Number	Description	Qty	Serial No.
		12954-65-H92	Seal Assembly	1	26852077-
1		6741-39-1220	· Tool	1	26852077-
2		6741-39-1110	· Seal	1	26852077-
3		6741-39-1120	· Sleeve	1	26852077-
4		6741-39-1130	· Shield	1	26852077-
		6736-39-1140	Sleeve	1	26852077-
5		6736-39-1150	· Sleeve, Dry	1	26852077-
6		6736-39-1160	· Sleeve, Wear	1	26852077-
		6742-01-5199	Main Metal Assembly, Lower,Standard	1	26852077-
7	C1		· Metal, Upper,Standard	7	26852077-
8	C1		· Metal, Thrust,Standard	6	26852077-
9	C1		· Metal, Standard	1	26852077-
		6742-01-5233	Main Metal Assembly, Undersized, 0.25mm, Undersize 0.25mm	1	26852077-
10	C1		· Metal, Lower,Undersize 0.25mm	7	26852077-
11	C1		· Metal, Upper,Undersize 0.25mm	6	26852077-
12	C1		· Metal, Thrust,Undersize 0.25mm	1	26852077-
		6742-01-5240	Main Metal Assembly, Undersized, 0.50mm, Undersize 0.50mm	1	26852077-
13	C1		· Metal, lower,Undersize 0.50mm	7	26852077-
14	C1		· Metal, Upper,Undersize 0.50mm	6	26852077-
15	C1		· Metal, Thrust,Undersize 0.50mm	1	26852077-
		6742-01-5287	Main Metal Assembly, Undersized, 0.75mm, Undersize 0.75mm	1	26852077-
16	C1		· Metal, Lower,Undersize 0.75mm	7	26852077-
17	C1		· Metal, Upper,Undersize 0.75mm	6	26852077-
18	C1		· Metal, Thrust,Undersize 0.75mm	1	26852077-
		6742-01-5288	Main Metal Assembly, Undersized, 1.00mm, Undersize 1.00mm	1	26852077-
19	C1		· Metal, Lower,Undersize 1.00mm	7	26852077-
20	C1		· Metal, Upper,Undersize 1.00mm	6	26852077-
21	C1		· Metal, Thrust,Undersize 1.00mm	1	26852077-
22		6745-41-4220	Insert, Exhaust Valve	12	26852077-

ENGINE RELATED PARTS

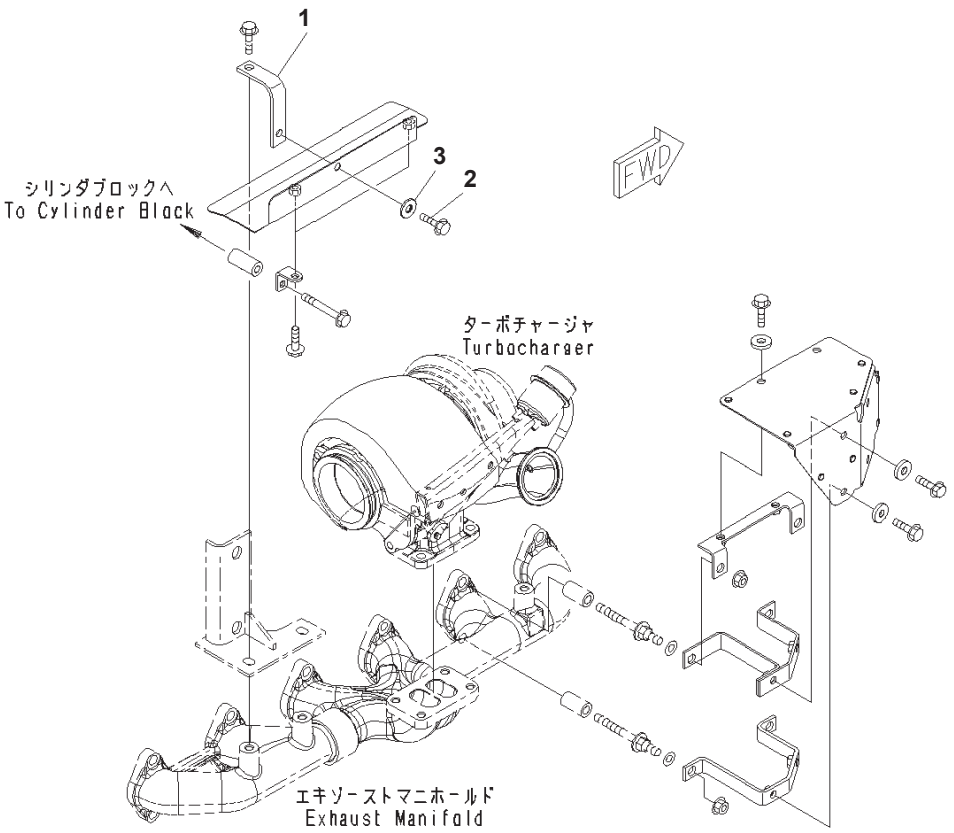

Heat Shield

Index	Part Number	Description	Qty	Options
1	6743-81-8490	Bracket	1	SN:B10001--
2	01435-00820	Bolt	1	SN:B10001--
3	154-61-16570	Washer	1	SN:B10001--

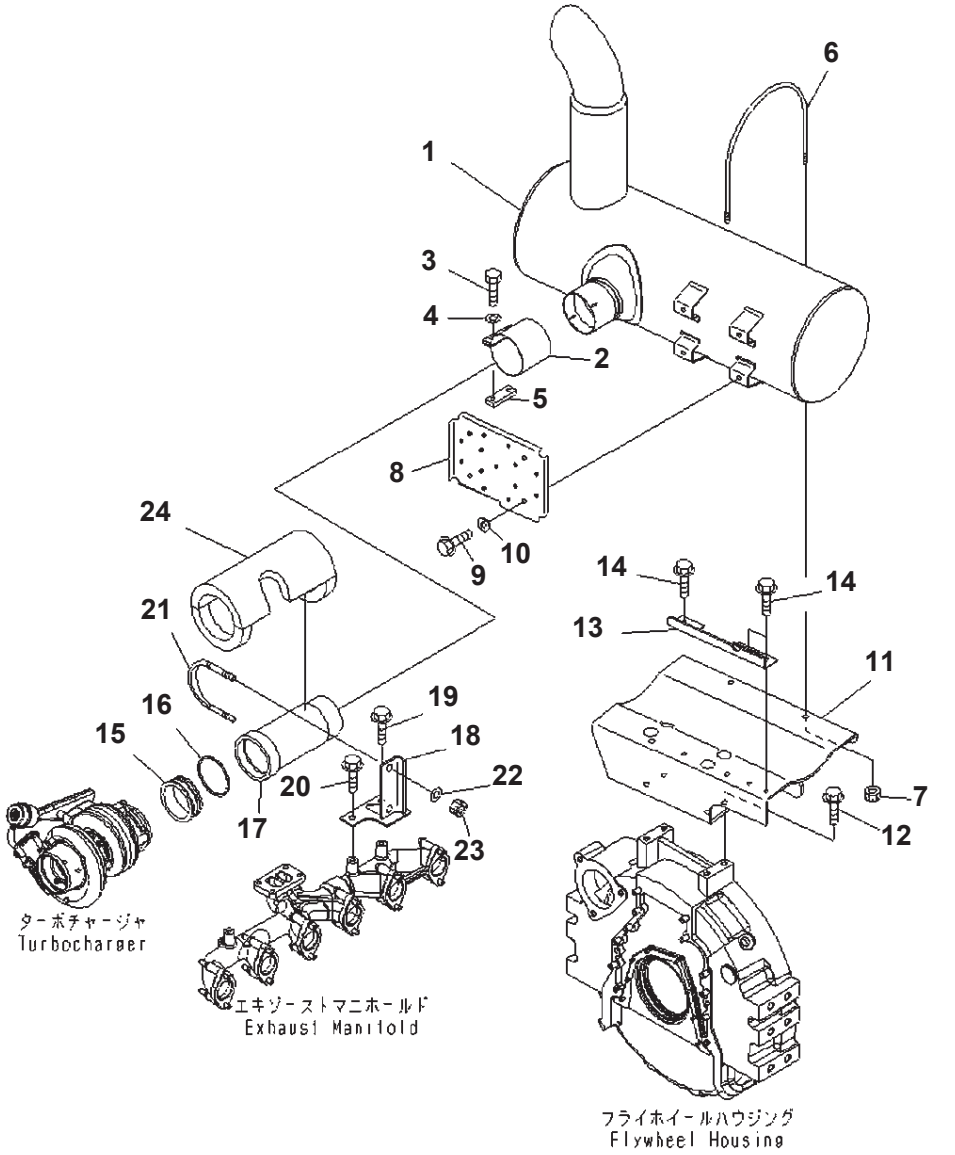

Exhaust Muffler And Mount Bracket

Index	Part Number	Description	Qty	Options
1	6745-11-6120	Muffler	1	SN:B10001--
2	6743-11-5230	Clamp	1	SN:B10001--
3	01010-E1235	Bolt	2	SN:B10001--
4	01643-31232	Washer	2	SN:B10001--
5	6206-11-5850	Plate	1	SN:B10001--
6	6222-11-5940	Bolt, U	2	SN:B10001--
7	01594-01008	Nut, Flanged	4	SN:B10001--
8	6745-11-6130	Cover	1	SN:B10001--
9	01435-00820	Bolt	4	SN:B10001--
10	154-61-16570	Washer	4	SN:B10001--
11	6745-11-6140	Bracket	1	SN:B10001--
12	01435-01225	Bolt	4	SN:B10001--
13	6745-11-6150	Bracket	1	SN:B10001--
14	01435-00820	Bolt	3	SN:B10001--
15	207-01-68170	Tube	1	SN:B10001--
16	6151-11-5280	Ring	1	SN:B10001--
17	6745-11-5710	Tube	1	SN:B10001--
18	6743-11-5750	Bracket	1	SN:B10001--
19	01435-01025	Bolt	1	SN:B10001--
20	01435-01020	Bolt	1	SN:B10001--
21	07283-31079	Clip	1	SN:B10001--
22	01643-31232	Washer	2	SN:B10001--
23	01597-01211	Nut	2	SN:B10001--
24	6745-81-8464	Cover	1	SN:B10001--

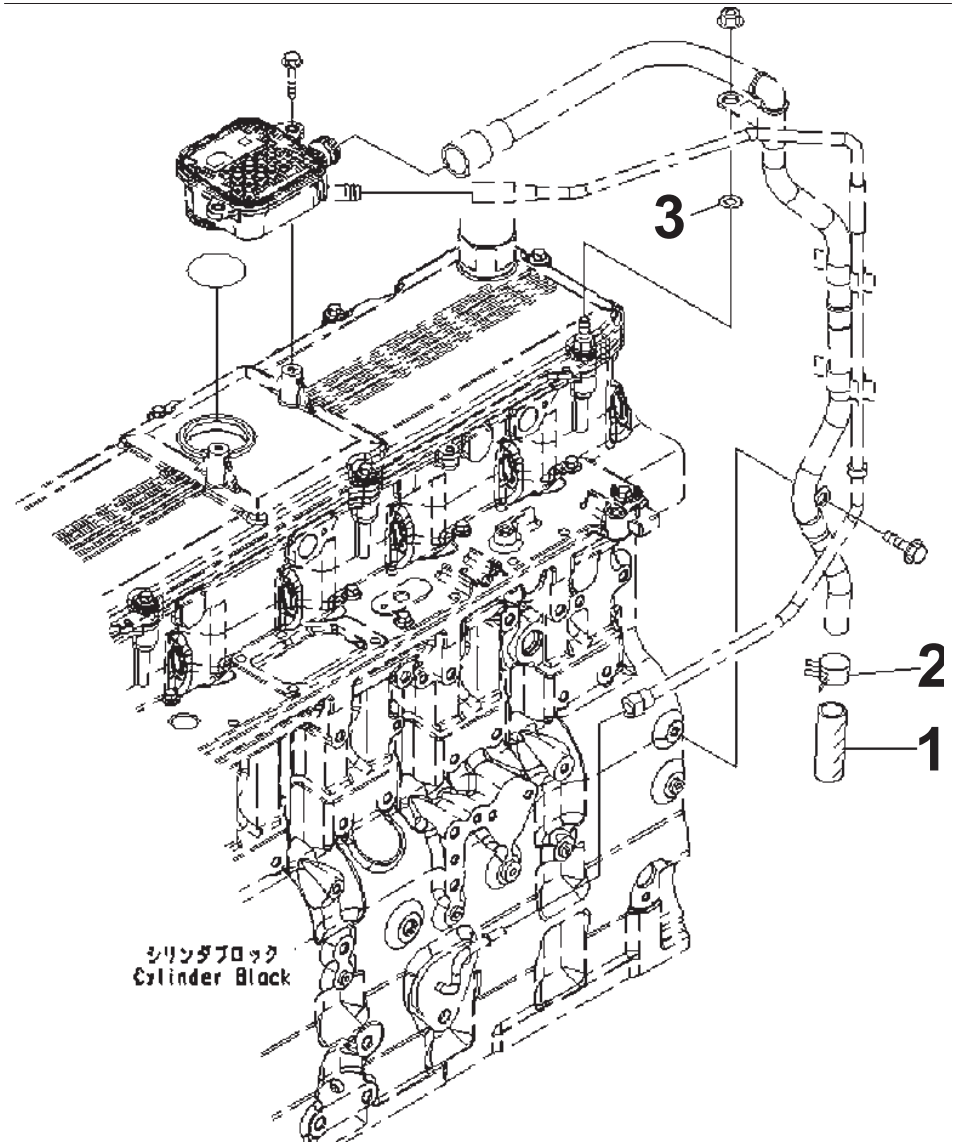

Breather Hose

Index	Part Number	Description	Qty	Options
1	07286-01960	Hose	1	SN:B10001--
2	07285-00220	Clip	1	SN:B10001--
3	01643-30823	Washer	1	SN:B10001--

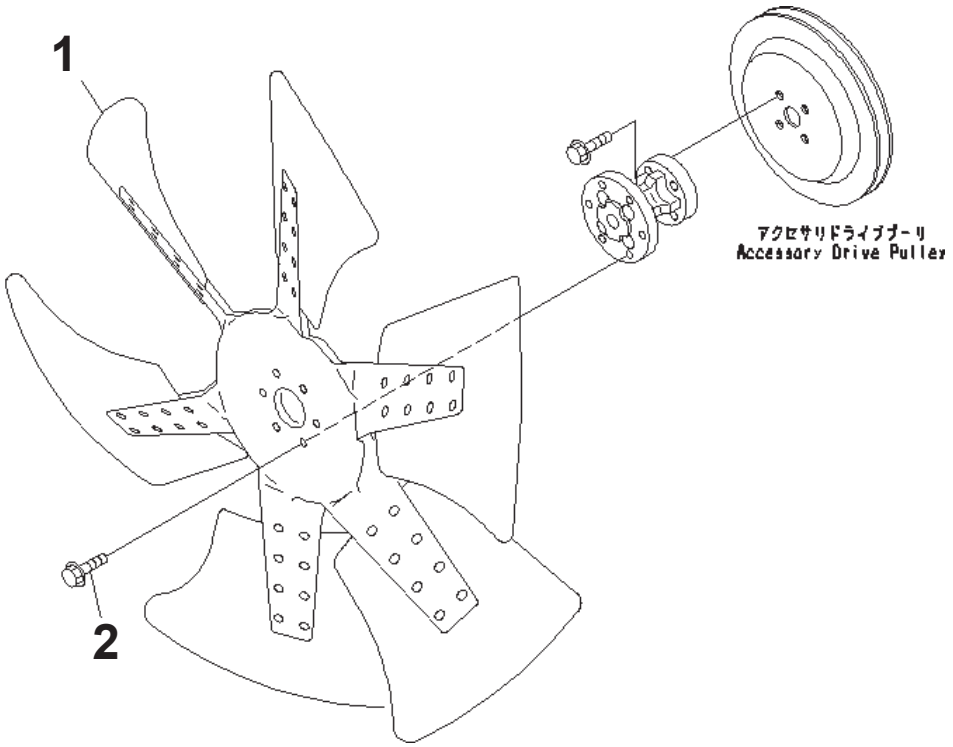

Cooling Fan

Index	Part Number	Description	Qty	Options
1	600-635-7870	Fan	1	SN:B10001--
2	01435-01030	Bolt	6	SN:B10001--

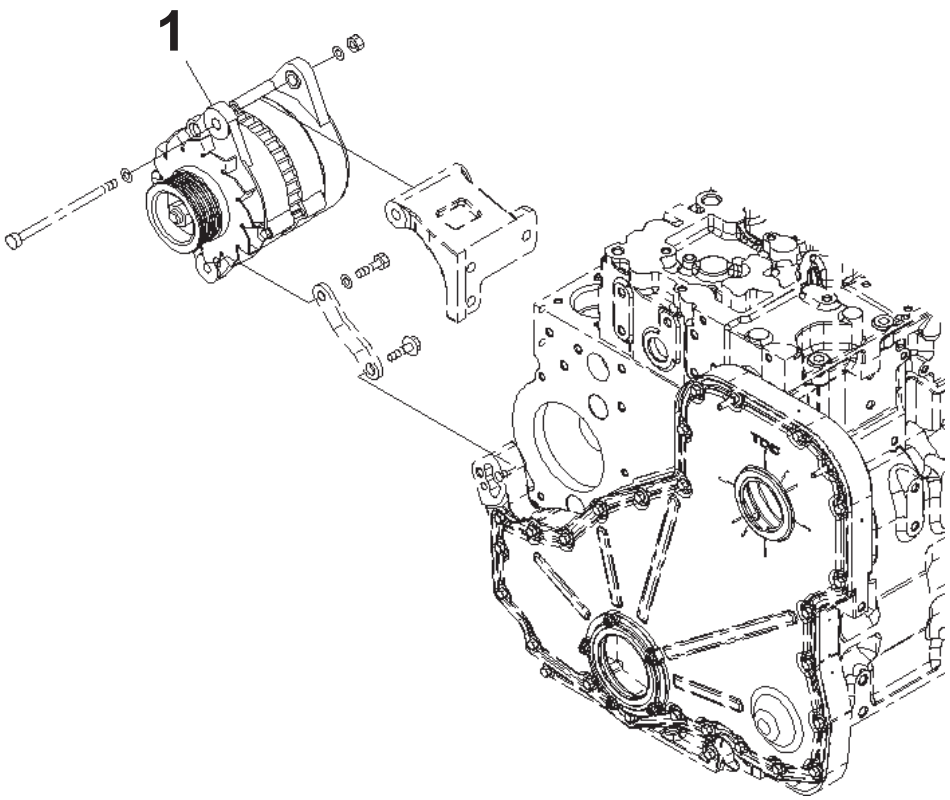

Alternator, 60Amp. (1/2)

Index	Code	Part Number	Description	Qty	Options
1		600-861-6111	Alternator, 60Amp.	1	SN:B10274--
	A1	600-861-6110	Alternator, 60Amp.	1	SN:B10001--B10273

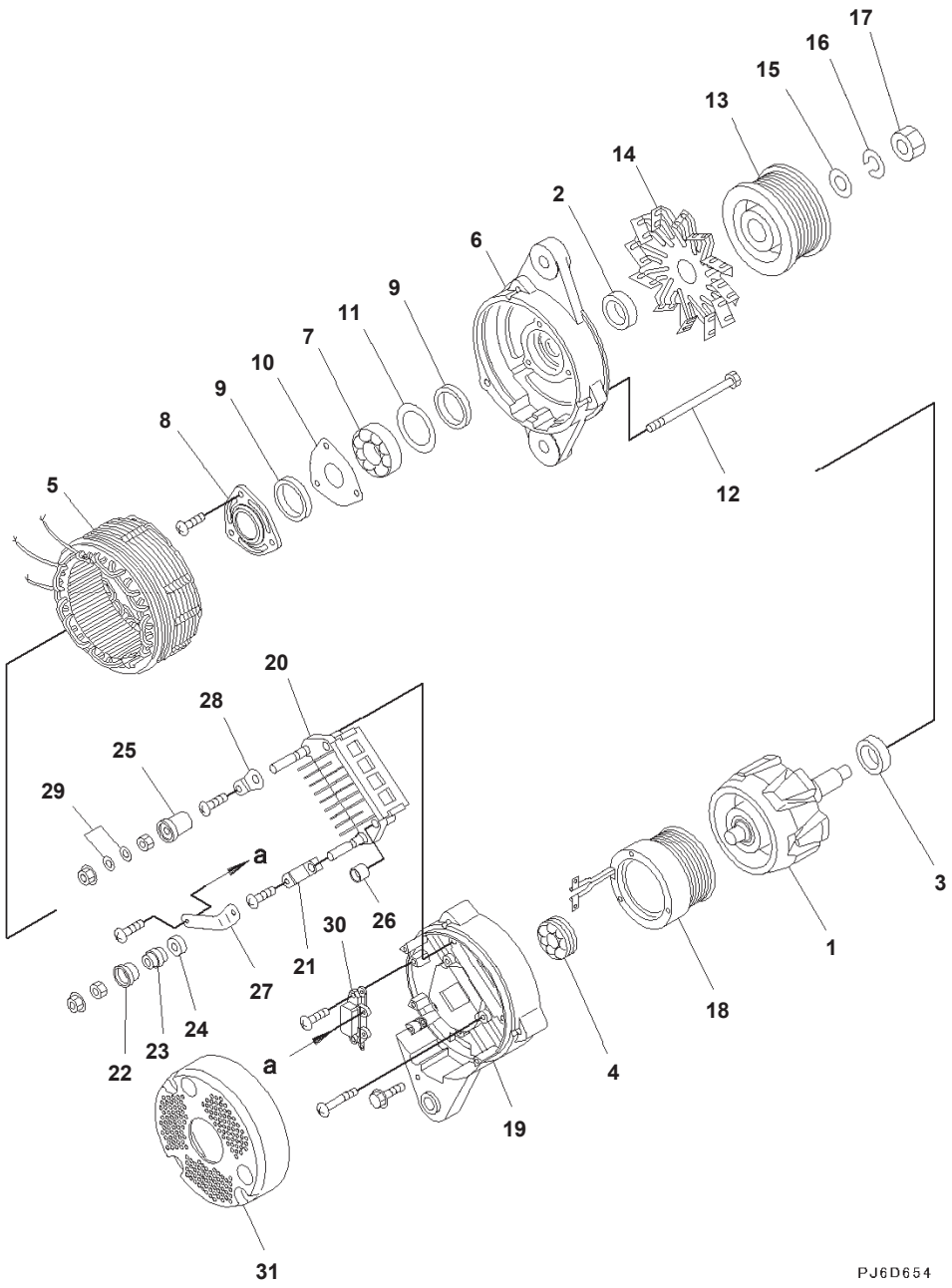

Alternator, 60Amp. (2/2) (#B10001~B10273)

Index	Code	Part Number	Description	Qty	Options
1	A2	600-861-6110	Alternator, 60Amp.	1	SN:B10001--B10273
		KD0-35100-0300	・ Rotor Assembly	1	SN:B10001--B10273
2		KD1-33923-0790	・ Collar	1	SN:B10001--B10273
3		KD1-35923-0160	・ Collar	1	SN:B10001--B10273
4		KD0-09201-0980	・ Bearing, Ball	1	SN:B10001--B10273
5		KD0-35200-0460	・ Stator Assembly	1	SN:B10001--B10273
6		KD0-35300-0350	・ Bracket Assembly	1	SN:B10001--B10273
7		KD0-09201-1140	・・ Bearing	1	SN:B10001--B10273
8		KD0-35926-0070	・・ Retainer	1	SN:B10001--B10273
9		KD0-35951-0060	・・ Packing	2	SN:B10001--B10273
10		KD0-35926-0090	・・ Retainer	1	SN:B10001--B10273
11		KD1-33926-0730	・・ Retainer	1	SN:B10001--B10273
12		KD0-0275-06802	・ Bolt	3	SN:B10001--B10273
13		KD0-35411-0640	・ Pulley	1	SN:B10001--B10273
14		KD0-35421-0240	・ Fan	1	SN:B10001--B10273
15		KD1-0330-16012	・ Washer	1	SN:B10001--B10273
16		KD1-0335-16002	・ Washer, Spring	1	SN:B10001--B10273
17		KD0-0280-16022	・ Nut	1	SN:B10001--B10273
18		KD0-35120-0290	・ Coil, Field	1	SN:B10001--B10273
		KD0-35700-0950	・ Bracket Assembly	1	SN:B10001--B10273
19		KD0-35710-1150	・・ Bracket	1	SN:B10001--B10273
20		KD0-35730-0700	・・ Rectifier Assembly	1	SN:B10001--B10273
21		KD0-09170-2501	・・ Condenser	1	SN:B10001--B10273
22		KD0-35943-0150	・・ Bushing, Insulate	1	SN:B10001--B10273
23		KD0-35923-0130	・・ Collar	1	SN:B10001--B10273
24		KD0-35943-0160	・・ Bushing	1	SN:B10001--B10273
25		KD0-35943-0140	・・ Bushing	1	SN:B10001--B10273
26		KD0-35943-0170	・・ Bushing	2	SN:B10001--B10273
27		KD0-35784-0210	・・ Bar	1	SN:B10001--B10273
28		KD0-35784-0290	・・ Bar	1	SN:B10001--B10273
29		KD0-09057-0220	・・ Washer	2	SN:B10001--B10273
30		KD7-35719-0211	・・ Regulator Assembly	1	SN:B10001--B10273
31		KD0-35761-0250	・ Cover	1	SN:B10001--B10273

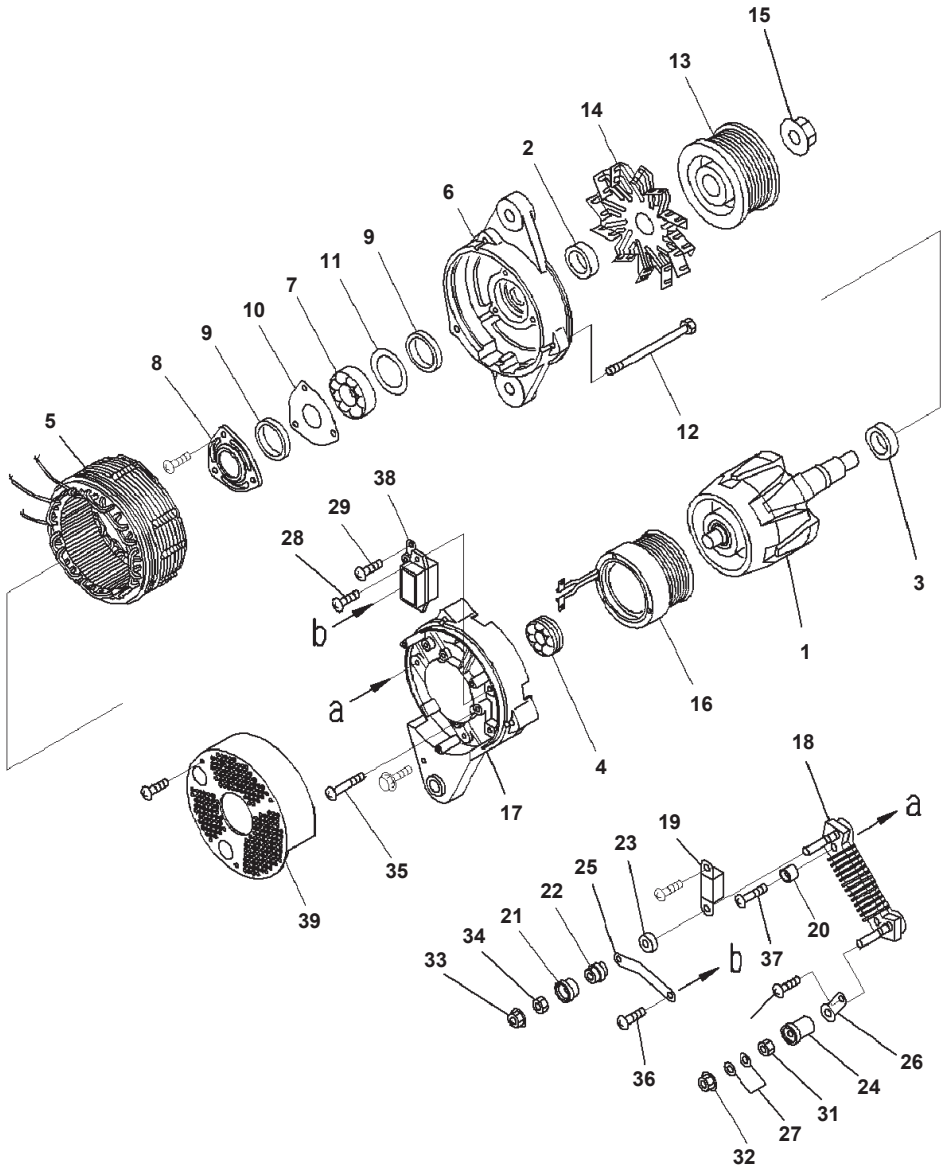

Alternator, 60Amp. (2/2) (#B10274~)

Index	Part Number	Description	Qty	Options
	600-861-6111	Alternator, 60Amp.	1	SN:B10274--
1	KD0-35100-0418	· Rotor Assembly	1	SN:B10274--
2	KD1-33923-0240	· Collar	1	SN:B10274--
3	KD1-35923-0160	· Collar	1	SN:B10274--
4	KD0-09201-0980	· Bearing, Ball	1	SN:B10274--
5	KD0-35200-0528	· Stator Assembly	1	SN:B10274--
6	KD0-35300-0450	· Bracket Assembly	1	SN:B10274--
7	KD0-09201-1140	· · Bearing	1	SN:B10274--
8	KD0-35926-0070	· · Retainer	1	SN:B10274--
9	KD0-35951-0060	· · Packing	2	SN:B10274--
10	KD0-35926-0090	· · Retainer	1	SN:B10274--
11	KD1-33926-0730	· · Retainer	1	SN:B10274--
12	KD0-0275-06802	· Bolt	3	SN:B10274--
13	KD0-35411-0648	· Pulley	1	SN:B10274--
14	KD0-35421-0240	· Fan	1	SN:B10274--
15	KD0-09006-0730	· Nut	1	SN:B10274--
16	KD0-35120-0528	· Coil, Field	1	SN:B10274--
	KD0-35700-0950	· Bracket Assembly	1	SN:B10274--
17	KD0-35710-1330	· · Bracket	1	SN:B10274--
18	KD0-35730-0700	· · Rectifier Assembly	1	SN:B10274--
19	KD0-09170-2501	· · Condenser	1	SN:B10274--
20	KD0-35943-0170	· · Bushing	2	SN:B10274--
21	KD0-35943-0154	· · Bushing	1	SN:B10274--
22	KD0-35923-0134	· · Collar	1	SN:B10274--
23	KD0-35943-0160	· · Bushing	1	SN:B10274--
24	KD0-35943-0140	· · Bushing	1	SN:B10274--
25	KD0-35784-0210	· · Bar	1	SN:B10274--
26	KD0-35784-0290	· · Bar	1	SN:B10274--
27	KD0-09057-0220	· · Washer	2	SN:B10274--
28	KD0-0055-05202	· · Screew	2	SN:B10274--
29	KD0-0055-05122	· · Screew	2	SN:B10274--
30	KD0-09011-3540	· · Screew	1	SN:B10274--
31	KD0-0056-05302	· · Screew	2	SN:B10274--
32	KD0-09011-3540	· · Screew	2	SN:B10274--
33	KD0-35719-0201	· · Regulator Assembly	1	SN:B10274--
34	KD0-35761-0308	· Cover	1	SN:B10274--
35	KD0-35902-0010	· · Nut	1	SN:B10274--
36	KD0-09006-0370	· · Nut	1	SN:B10274--
37	KD0-33902-0080	· · Nut	1	SN:B10274--
38	KD0-33902-0090	· · Nut	1	SN:B10274--
39	KD0-0056-05302	· · Screew	3	SN:B10274--

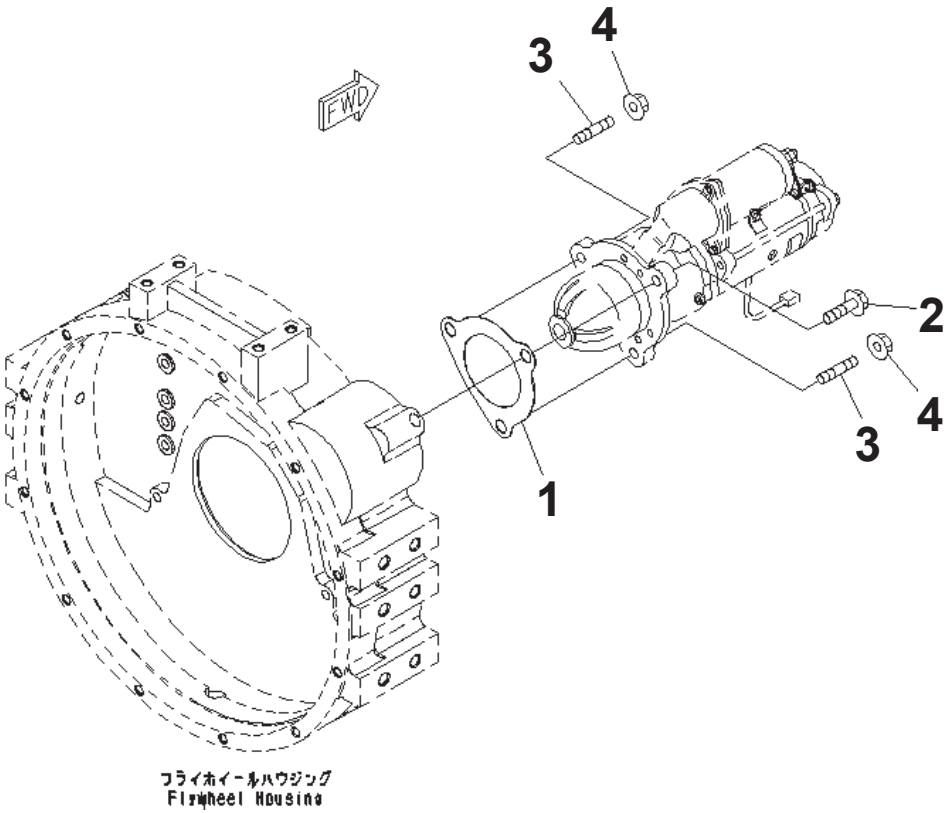

Index	Part Number	Description	Qty	Options
1	6221-81-6810	Gasket	1	SN:B10001--
2	01435-01240	Bolt	1	SN:B10001--
3	6743-81-6310	Stud	2	SN:B10001--
4	01584-01210	Nut	2	SN:B10001--

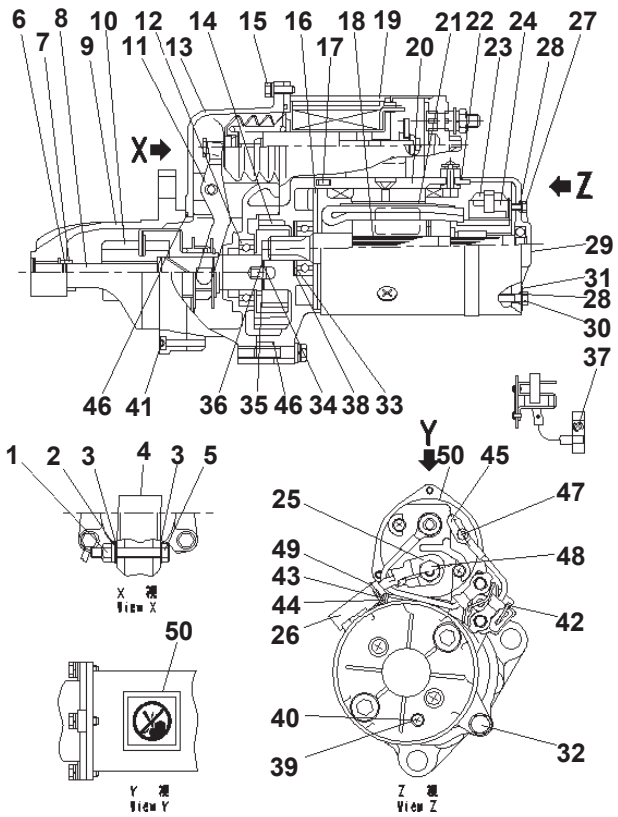

Index	Part Number	Description	Qty	Options
	600-863-8112	Starting Motor Assembly, 11Kw	1	SN:B10001--
1	KD1-09279-0090	Nut	1	SN:B10001--
2	KD1-0335-08002	Washer, Spring	4	SN:B10001--
3	KD1-0330-08022	Washer, Plain	5	SN:B10001--
4	KD1-0345-08001	Washer, Seal	2	SN:B10001--
5	KD0-23303-0020	Pin, Lever	1	SN:B10001--
6	KD1-23914-0020	Ring	1	SN:B10001--
7	KD1-23181-0020	Stopper	1	SN:B10001--
8	KD0-23120-0180	Shaft Assembly	1	SN:B10001--
9	KD0-23310-1740	Bracket Assembly	1	SN:B10001--
10	KD1-23500-0970	Clutch Assembly, Over Running	1	SN:B10001--
11	KD1-23320-0290	Lever Assembly	1	SN:B10001--
12	KD0-09201-0850	Bearing, Ball	1	SN:B10001--
13	KD0-23600-0410	Bracket Assembly	1	SN:B10001--
14	KD0-23611-1101	Bracket	1	SN:B10001--
15	KD0-0274-06202	Bolt	3	SN:B10001--
16	KD1-23951-0051	Packing	1	SN:B10001--
17	KD1-0400-30100	Pin, Straight	1	SN:B10001--
18	KD0-23100-0430	Armature Assembly	1	SN:B10001--
19	KD0-47100-4651	Switch Assembly, Magnetic	1	SN:B10001--
20	KD0-23200-0671	Yoke Assembly	1	SN:B10001--
21	KD0-09271-3620	Name Plate	1	SN:B10001--
22	KD1-09211-1120	O-ring	1	SN:B10001--
23	KD0-23740-0351	Brush Assembly	2	SN:B10001--
24	KD0-23750-0490	Holder Assembly, Brush	1	SN:B10001--
25	KD0-47761-2681	Cover	1	SN:B10001--
26	KD0-47761-2691	Cover	1	SN:B10001--
27	KD0-09011-3140	Screw	2	SN:B10001--
28	KD1-09211-0081	O-ring	4	SN:B10001--
29	KD0-23710-0221	Bracket, Rear	1	SN:B10001--
30	KD0-09001-4380	Bolt	2	SN:B10001--
31	KD1-47921-0790	Washer, Insulate	2	SN:B10001--
32	KD0-0276-08402	Bolt	3	SN:B10001--
33	KD0-09057-0110	Washer	1	SN:B10001--
34	KD1-23941-0040	Washer, Insulate	1	SN:B10001--
35	KD1-23921-0140	Washer	1	SN:B10001--
36	KD1-23921-0130	Washer	1	SN:B10001--
37	KD0-0055-05082	Screw	2	SN:B10001--
38	KD0-09057-0190	Washer	1	SN:B10001--
39	KD0-0020-05062	Screw	1	SN:B10001--
40	KD1-0345-05001	Washer, Seal	1	SN:B10001--
41	KD1-0240-06305	Bolt	6	SN:B10001--
42	KD0-25000-8521	Switch Assembly	1	SN:B10001--
43	KD0-0270-06602	Bolt	1	SN:B10001--
44	KD0-47927-1390	Holder	1	SN:B10001--
45	KD0-47761-2671	Cover	1	SN:B10001--
46	KD1-09211-0981	O-ring	2	SN:B10001--
47	KD0-09006-0660	Nut	1	SN:B10001--
48	KD0-09006-0670	Nut	1	SN:B10001--
49	KD1-09257-0050	Band	1	SN:B10001--
50	KD0-09275-1430	Plate, Caution	1	SN:B10001--

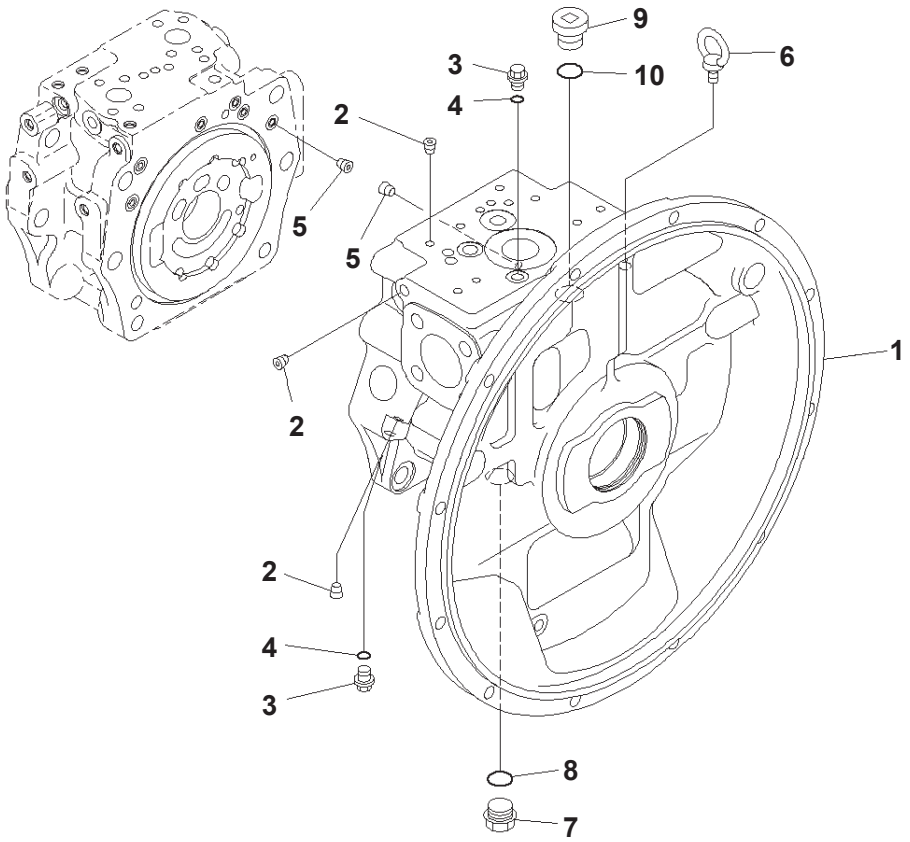

00038555

Main Piston Pump Inner Parts (1/11) (#B10001-B10230)

Index	Code	Part Number	Description	Qty	Options
		708-2G-00700	Pump Assembly	1	SN:B10001--B10230
		708-2G-01073	・ Pump Subassembly	1	SN:B10001--B10230
	C2	708-2G-04241	・・ Case Assembly	1	SN:B10001--B10230
1	C1		・・・ Case	1	SN:B10001--B10230
2	C1		・・・ Plug	33	SN:B10001--B10230
3		708-8E-16150	・・ Plug	2	SN:B10001--B10230
4		07002-61023	・・ O-ring	2	SN:B10001--B10230
5		708-1L-29340	・・ Orifice	2	SN:B10001--B10230
6		04530-01222	・・ Bolt, Eye	1	SN:B10001--B10230
7		07044-12412	・・ Plug	1	SN:B10001--B10230
8		07002-62434	・・ O-ring	1	SN:B10001--B10230
9		07040-12414	・・ Plug	1	SN:B10001--B10230
10		07002-62434	・・ O-ring	1	SN:B10001--B10230

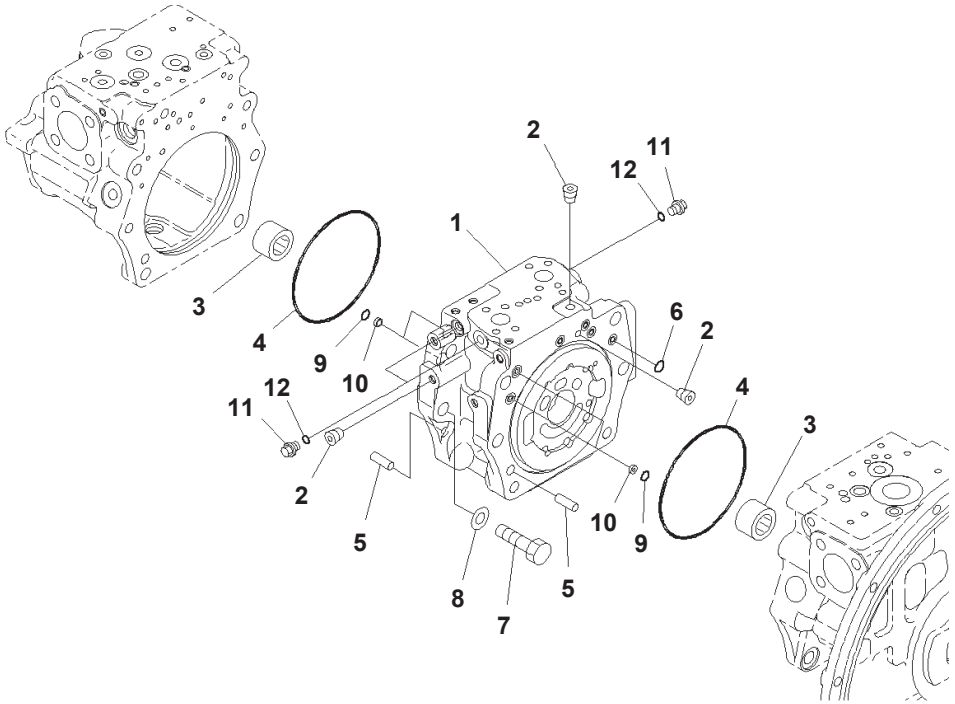

00038556

Main Piston Pump Inner Parts (2/11) (#B10001-B10230)

Index	Code	Part Number	Description	Qty	Options
		708-2G-00700	Pump Assembly	1	SN:B10001--B10230
		708-2G-01073	· Pump Subassembly	1	SN:B10001--B10230
	C2	708-2G-04430	· · Cap Assembly	1	SN:B10001--B10230
1	C1		· · · Cap	1	SN:B10001--B10230
2	C1		· · · Plug	18	SN:B10001--B10230
3	C2	708-2G-12151	· · Bearing	2	SN:B10001--B10230
4	C2	07000-A5185	· · O-ring	2	SN:B10001--B10230
5	C2	04020-01434	· · Pin, Dowel	2	SN:B10001--B10230
6	C2	07000-B2012	· · O-ring	7	SN:B10001--B10230
7	C2	01010-61655	· · Bolt	12	SN:B10001--B10230
8	C2	01643-51645	· · Washer	12	SN:B10001--B10230
9	C2	07000-B2014	· · O-ring	4	SN:B10001--B10230
10	C2	708-2L-25480	· · Filter	4	SN:B10001--B10230
11		708-8E-16150	· · Plug	3	SN:B10001--B10230
12		07002-61023	· · O-ring	3	SN:B10001--B10230

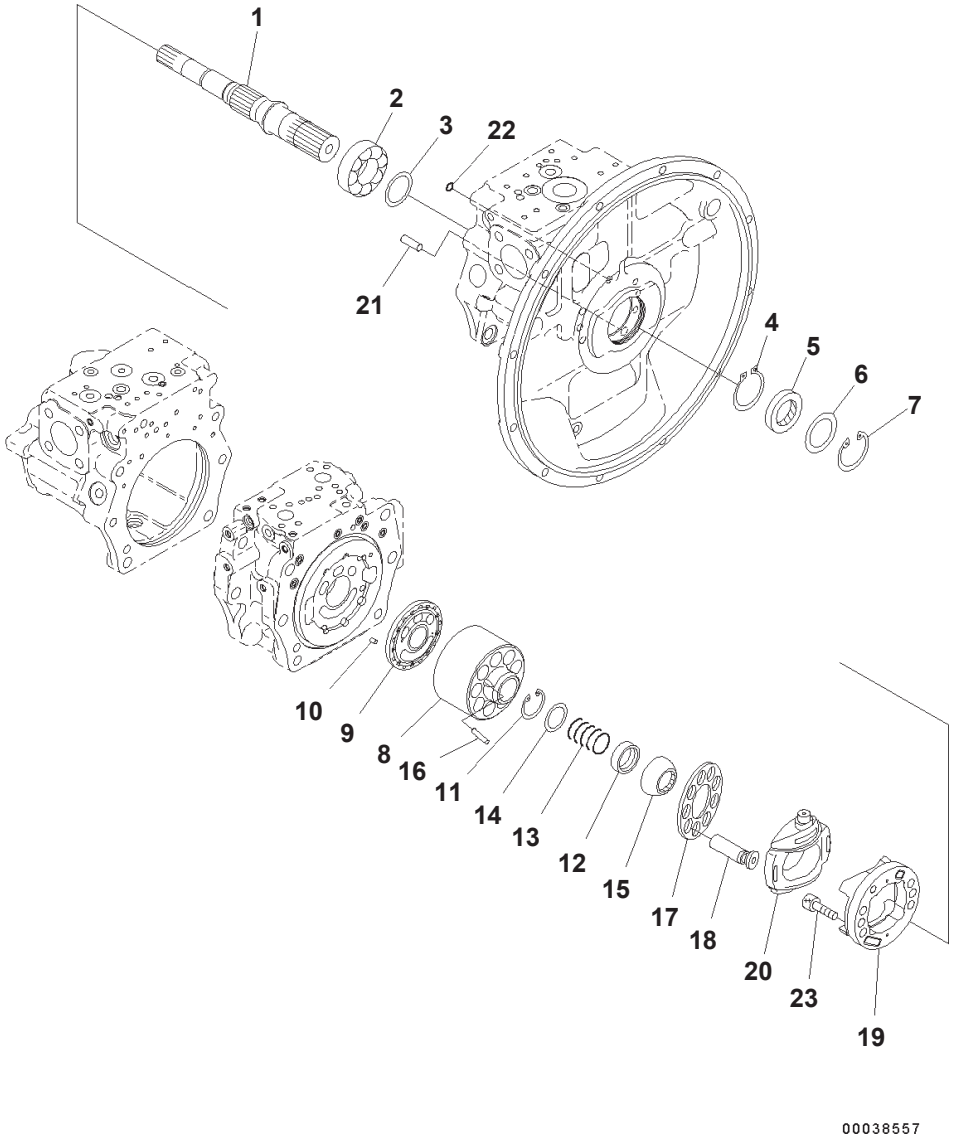

Main Piston Pump Inner Parts (3/11) (#B10001-B10230)

Index	Code	Part Number	Description	Qty	Options
		708-2G-00700	Pump Assembly	1	SN:B10001--B10230
		708-2G-01073	· Pump Subassembly	1	SN:B10001--B10230
1	C2	708-2G-12180	· · Shaft	1	SN:B10001--B10230
2	C2	708-2G-12251	· · Bearing	1	SN:B10001--B10230
3	C2	708-2G-05010	· · Washer Kit	1	SN:B10001--B10230
	C1		· · · Washer, 3.0mm	1	SN:B10001--B10230
	C1		· · · Washer, 3.1mm	1	SN:B10001--B10230
	C1		· · · Washer, 3.2mm	1	SN:B10001--B10230
4	C2	708-1F-12270	· · Ring, Snap	1	SN:B10001--B10230
5		708-2G-12230	· · Seal, Oil	1	SN:B10001--B10230
6		708-8H-32160	· · Spacer	1	SN:B10001--B10230
7		04065-07825	· · Ring, Snap	1	SN:B10001--B10230
	C2	708-2G-04262	· · Cylinder Block Assembly	1	SN:B10001--B10230
8	C1		· · · Block	1	SN:B10001--B10230
9	C1		· · · Plate, (VALVE)	1	SN:B10001--B10230
10	C2	708-18-13230	· · Pin	1	SN:B10001--B10230
11	C2	04065-05520	· · Ring, Snap, for Hole Side	1	SN:B10001--B10230
12	C2	708-2G-13131	· · Seat	1	SN:B10001--B10230
13	C2	708-2G-13152	· · Spring	1	SN:B10001--B10230
14	C2	708-2G-13141	· · Seat	1	SN:B10001--B10230
15	C2	708-2G-13510	· · Guide	1	SN:B10001--B10230
16	C2	708-2H-23360	· · Pin	3	SN:B10001--B10230
17	C2	708-2G-13341	· · Retainer	1	SN:B10001--B10230
18	C2	708-2G-13370	· · Piston Subassembly	9	SN:B10001--B10230
	C2	708-2G-04290	· · Cradle Subassembly	1	SN:B10001--B10230
19	C1		· · · Cradle	1	SN:B10001--B10230
20	C1		· · · Cam, (ROCKER)	1	SN:B10001--B10230
21	C2	04020-01434	· · Pin, Dowel	1	SN:B10001--B10230
22	C2	07000-B1009	· · O-ring	1	SN:B10001--B10230
23	C2	01252-61230	· · Bolt	6	SN:B10001--B10230

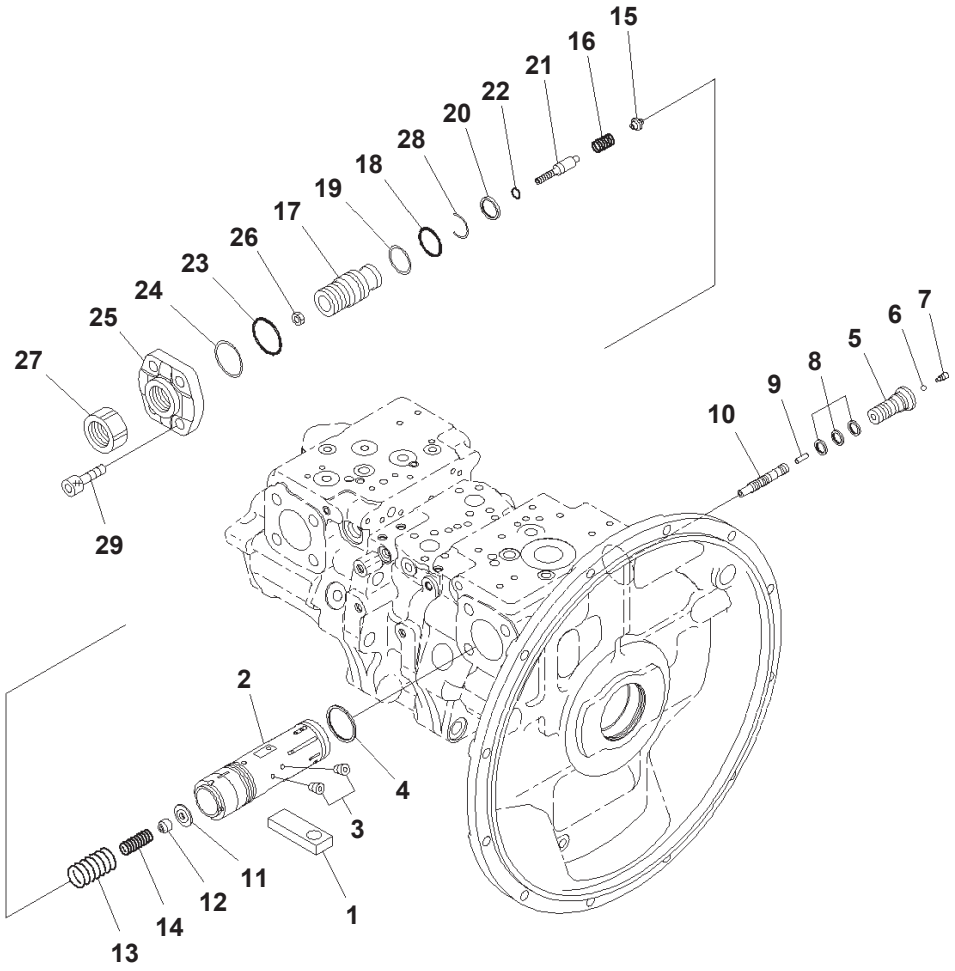

Main Piston Pump Inner Parts (4/11) (#B10001-B10230)

Index	Code	Part Number	Description	Qty	Options
		708-2G-00700	Pump Assembly	1	SN:B10001--B10230
		708-2G-01073	· Pump Subassembly	1	SN:B10001--B10230
1	C2	708-2G-14120	· · Slider	1	SN:B10001--B10230
	C2	708-2G-03580	· · Valve Assembly	1	SN:B10001--B10230
	C2	708-2G-03590	· · · Piston Assembly	1	SN:B10001--B10230
2	C1		· · · · Piston	1	SN:B10001--B10230
3	C1		· · · · Screw	8	SN:B10001--B10230
4	C2	708-2G-15320	· · · Seal	1	SN:B10001--B10230
5	C2	708-2G-15221	· · · Plug	1	SN:B10001--B10230
6	C2	708-2L-35760	· · · Ball	1	SN:B10001--B10230
7	C2	708-2L-35770	· · · Plug	1	SN:B10001--B10230
8	C2	708-2L-35690	· · · Seal	3	SN:B10001--B10230
9	C2	708-2L-35170	· · · Pin	1	SN:B10001--B10230
10	C2	708-2G-15211	· · · Spool	1	SN:B10001--B10230
11	C2	708-2G-15290	· · · Retainer	1	SN:B10001--B10230
12	C2	708-2G-15140	· · · Seat	1	SN:B10001--B10230
13	C2	708-2G-15270	· · · Spring	1	SN:B10001--B10230
14	C2	708-2G-15280	· · · Spring	1	SN:B10001--B10230
15	C2	708-2G-15151	· · · Seat	1	SN:B10001--B10230
16	C2	708-2G-15250	· · · Spring	1	SN:B10001--B10230
17	C2	708-2G-14340	· · · Screw	1	SN:B10001--B10230
18	C2	07000-B3038	· · · O-ring	1	SN:B10001--B10230
19	C2	708-2G-15230	· · · Ring, Back-up	1	SN:B10001--B10230
20	C2	708-2G-15260	· · · Seal	1	SN:B10001--B10230
21	C2	708-2G-15240	· · · Plug	1	SN:B10001--B10230
22	C2	07000-B2012	· · · O-ring	1	SN:B10001--B10230
23	C2	07000-B2050	· · · O-ring	1	SN:B10001--B10230
24	C2	708-2G-15310	· · · Ring	1	SN:B10001--B10230
25	C2	708-2G-14190	· · · Cover	1	SN:B10001--B10230
26	C2	01580-10806	· · · Nut	1	SN:B10001--B10230
27	C2	708-2L-35290	· · · Nut	1	SN:B10001--B10230
28	C2	708-2G-15330	· · · Ring, Wear	1	SN:B10001--B10230
29	C2	01252-61645	· · Bolt, Hexagon Socket Head	4	SN:B10001--B10230

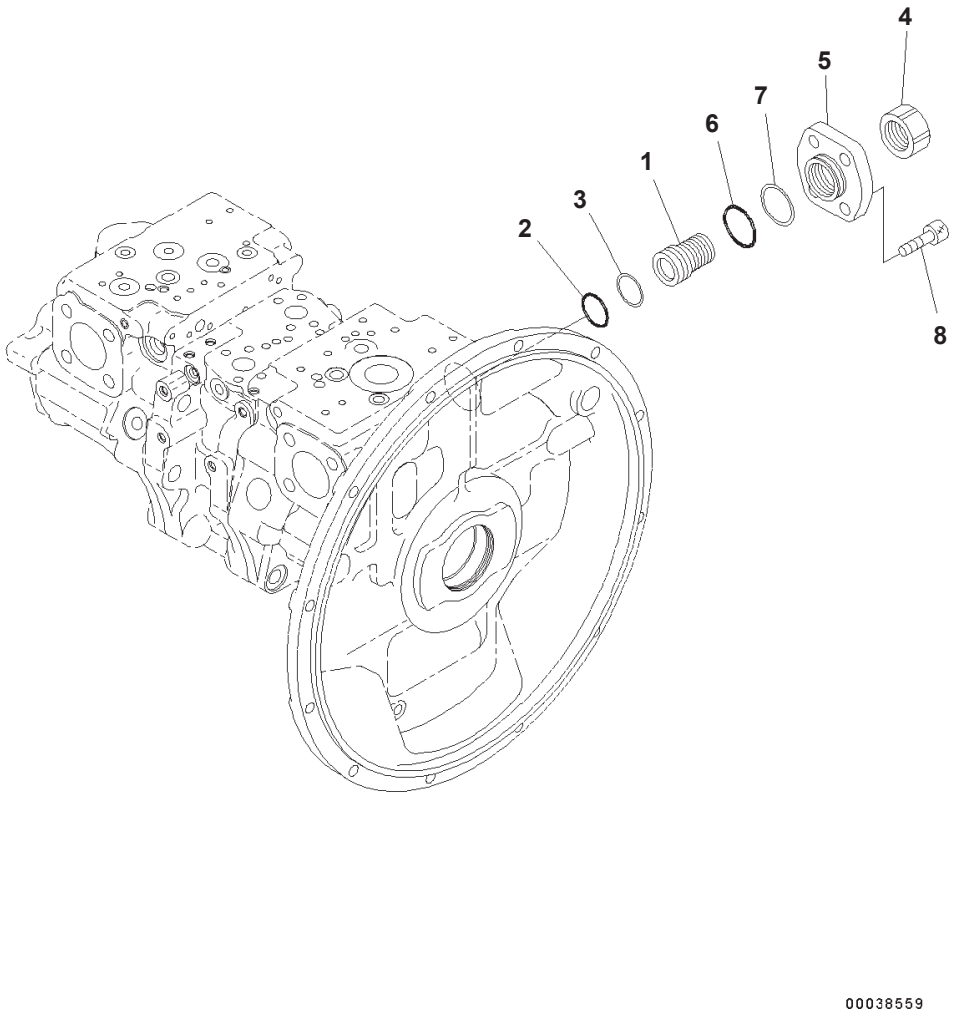

Main Piston Pump Inner Parts (5/11) (#B10001-B10230)

Index	Code	Part Number	Description	Qty	Options
		708-2G-00700	Pump Assembly	1	SN:B10001--B10230
		708-2G-01073	・ Pump Subassembly	1	SN:B10001--B10230
	C2	708-2G-03480	・・ Cover Assembly	1	SN:B10001--B10230
1	C2	708-2G-14310	・・・ Screw	1	SN:B10001--B10230
2	C2	07000-B3038	・・・ O-ring	1	SN:B10001--B10230
3	C2	708-2G-15230	・・・ Ring, Back-up	1	SN:B10001--B10230
4	C2	708-2L-35290	・・・ Nut	1	SN:B10001--B10230
5	C2	708-2G-14170	・・・ Cover	1	SN:B10001--B10230
6	C2	07000-B2050	・・・ O-ring	1	SN:B10001--B10230
7	C2	708-2G-15310	・・・ Ring	1	SN:B10001--B10230
8	C2	01252-61645	・・ Bolt, Hexagon Socket Head	4	SN:B10001--B10230

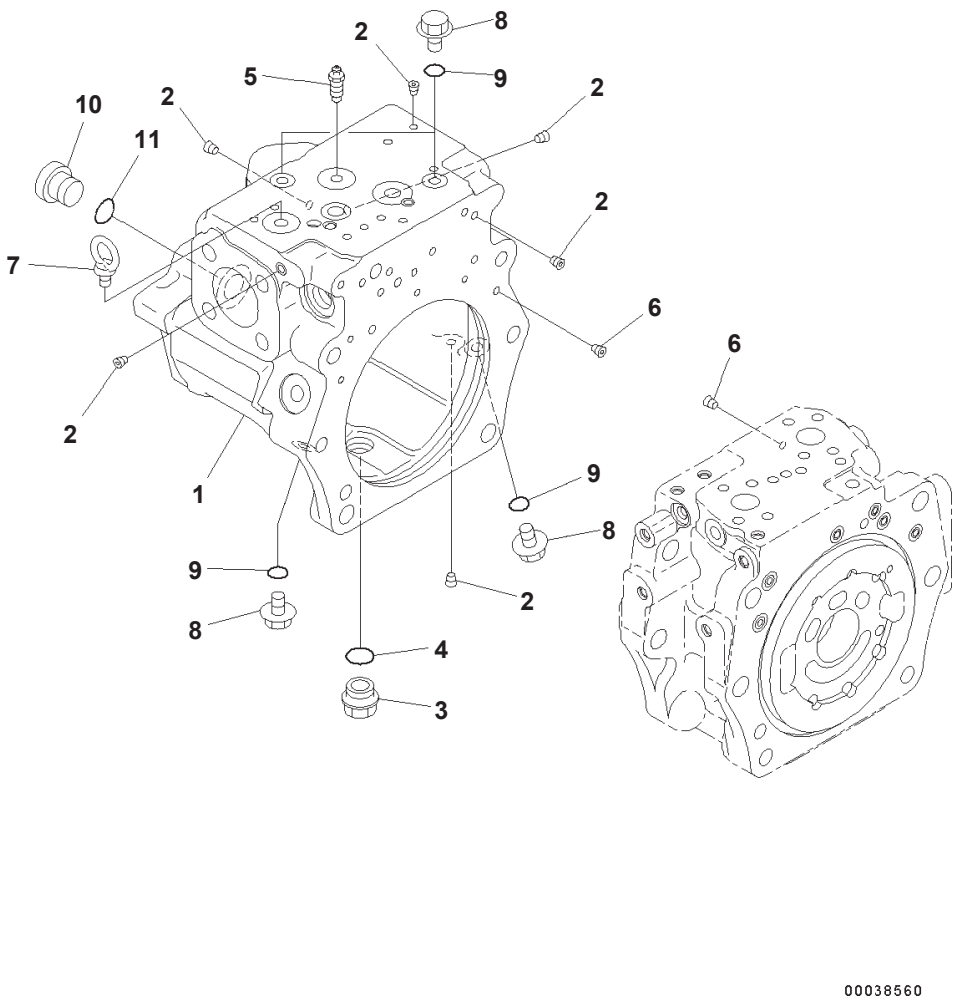

Main Piston Pump Inner Parts (6/11) (#B10001-B10230)

Index	Code	Part Number	Description	Qty	Options
		708-2G-00700	Pump Assembly	1	SN:B10001--B10230
		708-2G-01073	・ Pump Subassembly	1	SN:B10001--B10230
	C2	708-2G-04251	・・ Case Assembly, (REAR)	1	SN:B10001--B10230
1	C1		・・・ Case, (REAR)	1	SN:B10001--B10230
2	C1		・・・ Plug	36	SN:B10001--B10230
3		07044-12412	・・ Plug	1	SN:B10001--B10230
4		07002-62434	・・ O-ring	1	SN:B10001--B10230
5		20B-27-11210	・・ Bleeder	1	SN:B10001--B10230
6		708-1L-29340	・・ Orifice	2	SN:B10001--B10230
7		04530-01222	・・ Bolt, Eye	1	SN:B10001--B10230
8		708-8E-16150	・・ Plug	4	SN:B10001--B10230
9		07002-61023	・・ O-ring	4	SN:B10001--B10230
10		07040-12414	・・ Plug	1	SN:B10001--B10230
11		07002-62434	・・ O-ring	1	SN:B10001--B10230

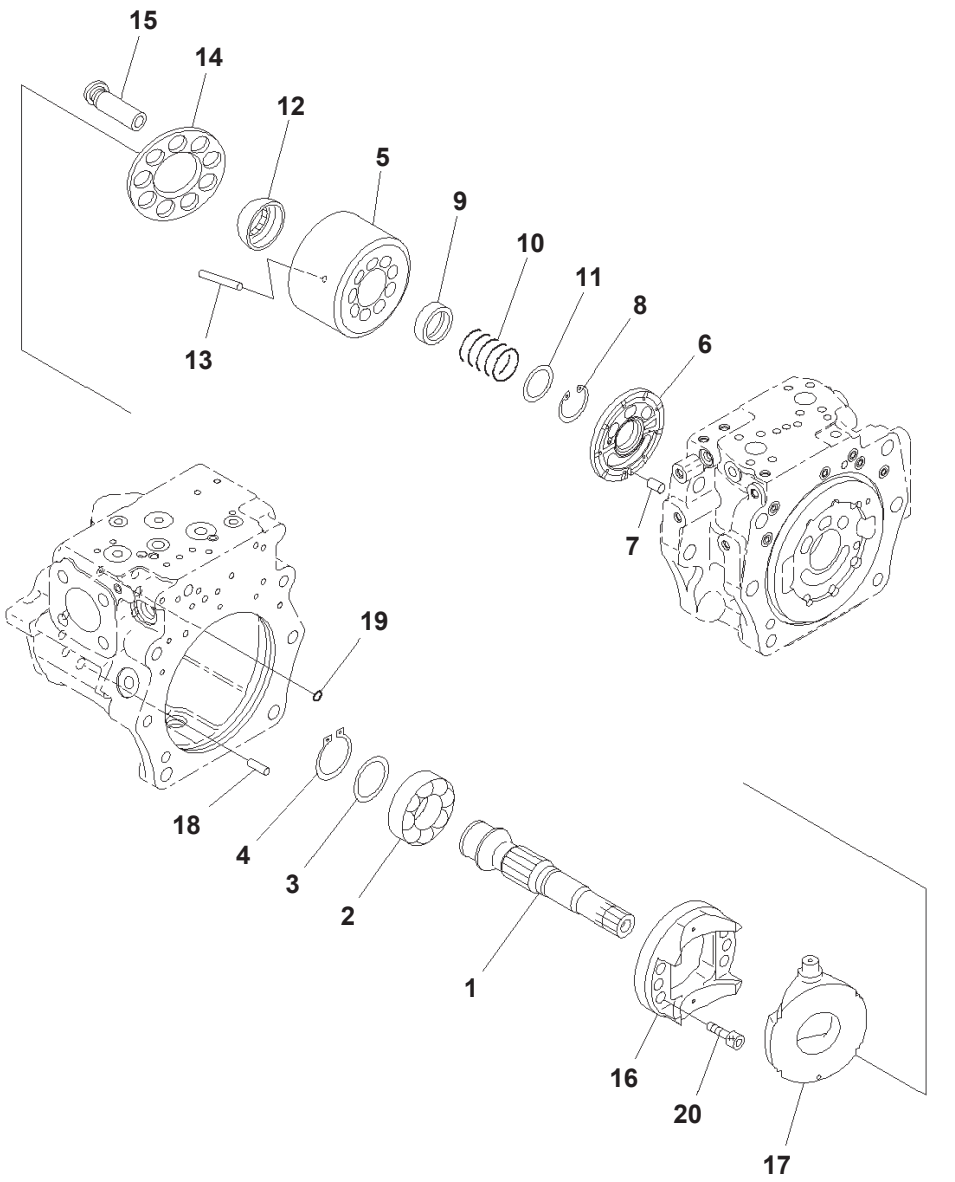

Main Piston Pump Inner Parts (7/11) (#B10001-B10230)

Index	Code	Part Number	Description	Qty	Options
		708-2G-00700	Pump Assembly	1	SN:B10001--B10230
		708-2G-01073	・ Pump Subassembly	1	SN:B10001--B10230
1	C2	708-2G-12190	・・ Shaft	1	SN:B10001--B10230
2	C2	708-2G-12251	・・ Bearing	1	SN:B10001--B10230
3	C2	708-2G-05010	・・ Washer Kit	1	SN:B10001--B10230
	C1		・・・ Washer, 3.0mm	1	SN:B10001--B10230
	C1		・・・ Washer, 3.1mm	1	SN:B10001--B10230
	C1		・・・ Washer, 3.2mm	1	SN:B10001--B10230
4	C2	708-1F-12270	・・ Ring, Snap	1	SN:B10001--B10230
	C2	708-2G-04272	・・ Block Assembly, (REAR)	1	SN:B10001--B10230
5	C1		・・・ Block	1	SN:B10001--B10230
6	C1		・・・ Plate, (VALVE)	1	SN:B10001--B10230
7	C2	708-18-13230	・・ Pin	1	SN:B10001--B10230
8	C2	04065-05520	・・ Ring, Snap, for Hole Side	1	SN:B10001--B10230
9	C2	708-2G-13131	・・ Seat	1	SN:B10001--B10230
10	C2	708-2G-13152	・・ Spring	1	SN:B10001--B10230
11	C2	708-2G-13141	・・ Seat	1	SN:B10001--B10230
12	C2	708-2G-13510	・・ Guide	1	SN:B10001--B10230
13	C2	708-2H-23360	・・ Pin	3	SN:B10001--B10230
14	C2	708-2G-13341	・・ Retainer	1	SN:B10001--B10230
15	C2	708-2G-13370	・・ Piston Subassembly	9	SN:B10001--B10230
	C2	708-2G-04290	・・ Cradle Subassembly	1	SN:B10001--B10230
16	C1		・・・ Cradle	1	SN:B10001--B10230
17	C1		・・・ Cam, (ROCKER)	1	SN:B10001--B10230
18	C2	04020-01434	・・ Pin, Dowel	1	SN:B10001--B10230
19	C2	07000-B1009	・・ O-ring	1	SN:B10001--B10230
20	C2	01252-61230	・・ Bolt	6	SN:B10001--B10230

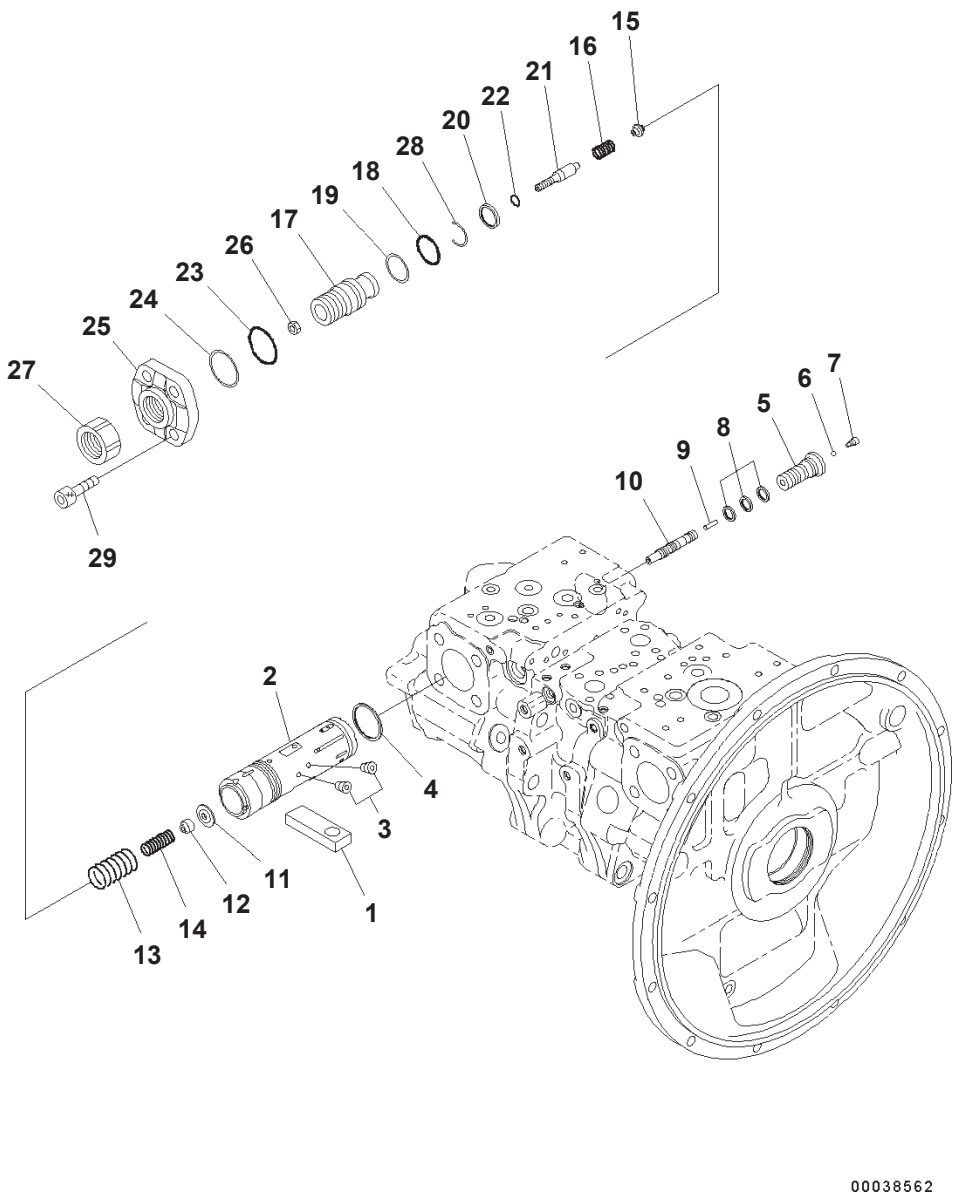

Main Piston Pump Inner Parts (8/11) (#B10001-B10230)

Index	Code	Part Number	Description	Qty	Options
		708-2G-00700	Pump Assembly	1	SN:B10001--B10230
		708-2G-01073	・ Pump Subassembly	1	SN:B10001--B10230
1	C2	708-2G-14120	・・ Slider	1	SN:B10001--B10230
	C2	708-2G-03580	・・ Valve Assembly, (PC)	1	SN:B10001--B10230
	C2	708-2G-03590	・・・ Piston Assembly	1	SN:B10001--B10230
2	C1		・・・・ Piston	1	SN:B10001--B10230
3	C1		・・・・ Screw	8	SN:B10001--B10230
4	C2	708-2G-15320	・・・ Seal	1	SN:B10001--B10230
5	C2	708-2G-15221	・・・ Plug	1	SN:B10001--B10230
6	C2	708-2L-35760	・・・ Ball	1	SN:B10001--B10230
7	C2	708-2L-35770	・・・ Plug	1	SN:B10001--B10230
8	C2	708-2L-35690	・・・ Seal	3	SN:B10001--B10230
9	C2	708-2L-35170	・・・ Pin	1	SN:B10001--B10230
10	C2	708-2G-15211	・・・ Spool	1	SN:B10001--B10230
11	C2	708-2G-15290	・・・ Retainer	1	SN:B10001--B10230
12	C2	708-2G-15140	・・・ Seat	1	SN:B10001--B10230
13	C2	708-2G-15270	・・・ Spring	1	SN:B10001--B10230
14	C2	708-2G-15280	・・・ Spring	1	SN:B10001--B10230
15	C2	708-2G-15151	・・・ Seat	1	SN:B10001--B10230
16	C2	708-2G-15250	・・・ Spring	1	SN:B10001--B10230
17	C2	708-2G-14340	・・・ Screw	1	SN:B10001--B10230
18	C2	07000-B3038	・・・ O-ring	1	SN:B10001--B10230
19	C2	708-2G-15230	・・・ Ring, Back-up	1	SN:B10001--B10230
20	C2	708-2G-15260	・・・ Seal	1	SN:B10001--B10230
21	C2	708-2G-15240	・・・ Plug	1	SN:B10001--B10230
22	C2	07000-B2012	・・・ O-ring	1	SN:B10001--B10230
23	C2	07000-B2050	・・・ O-ring	1	SN:B10001--B10230
24	C2	708-2G-15310	・・・ Ring	1	SN:B10001--B10230
25	C2	708-2G-14190	・・・ Cover	1	SN:B10001--B10230
26	C2	01580-10806	・・・ Nut	1	SN:B10001--B10230
27	C2	708-2L-35290	・・・ Nut	1	SN:B10001--B10230
28	C2	708-2G-15330	・・・ Ring, Wear	1	SN:B10001--B10230
29	C2	01252-61645	・・ Bolt, Hexagon Socket Head	4	SN:B10001--B10230

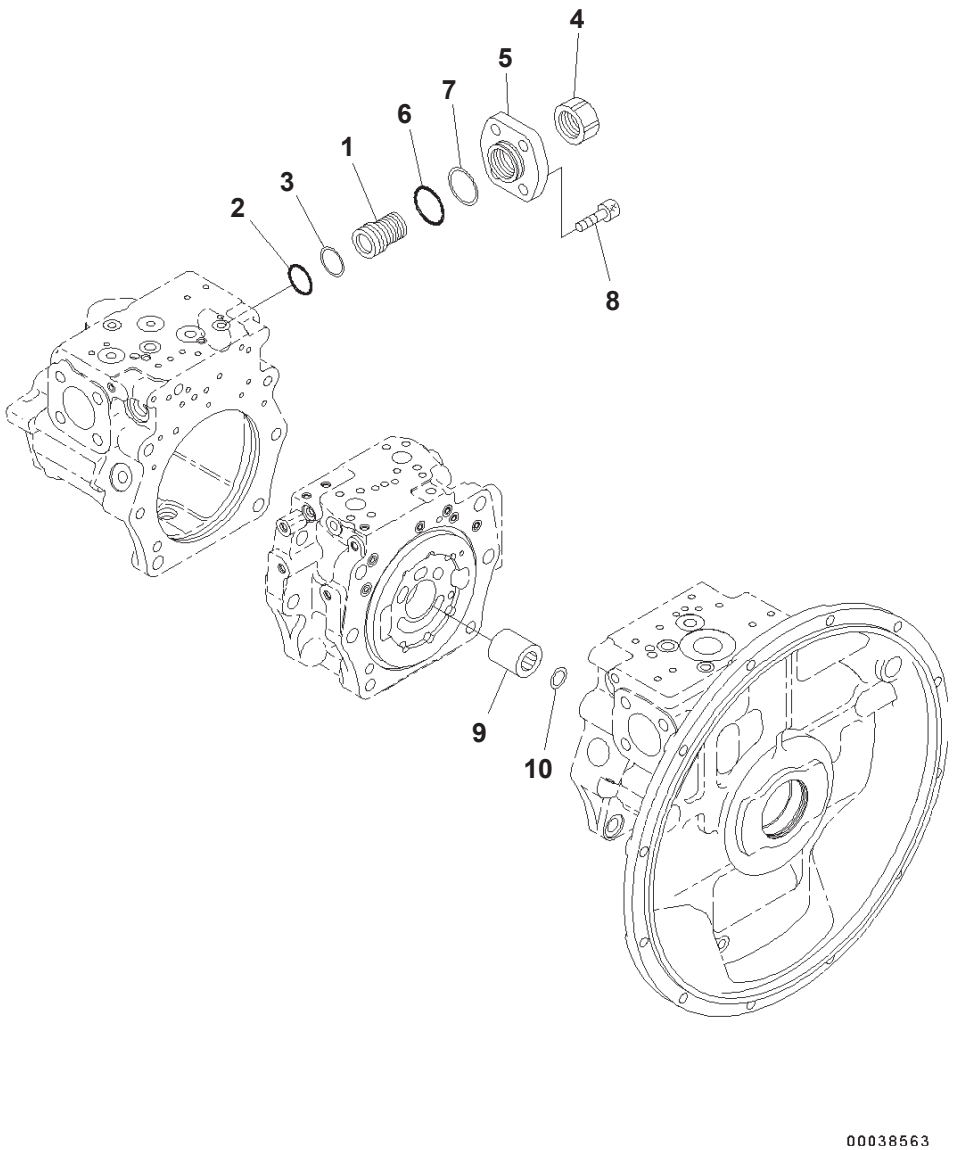

Main Piston Pump Inner Parts (9/11) (#B10001-B10230)

Index	Code	Part Number	Description	Qty	Options
		708-2G-00700	Pump Assembly	1	SN:B10001--B10230
		708-2G-01073	・ Pump Subassembly	1	SN:B10001--B10230
	C2	708-2G-03480	・・ Cover Assembly	1	SN:B10001--B10230
1	C2	708-2G-14310	・・・ Screw	1	SN:B10001--B10230
2	C2	07000-B3038	・・・ O-ring	1	SN:B10001--B10230
3	C2	708-2G-15230	・・・ Ring, Back-up	1	SN:B10001--B10230
4	C2	708-2L-35290	・・・ Nut	1	SN:B10001--B10230
5	C2	708-2G-14170	・・・ Cover	1	SN:B10001--B10230
6	C2	07000-B2050	・・・ O-ring	1	SN:B10001--B10230
7	C2	708-2G-15310	・・・ Ring	1	SN:B10001--B10230
8	C2	01252-61645	・・ Bolt, Hexagon Socket Head	4	SN:B10001--B10230
9	C2	708-2G-12340	・・ Coupling	1	SN:B10001--B10230
10	C2	708-2F-12420	・・ Ring	1	SN:B10001--B10230

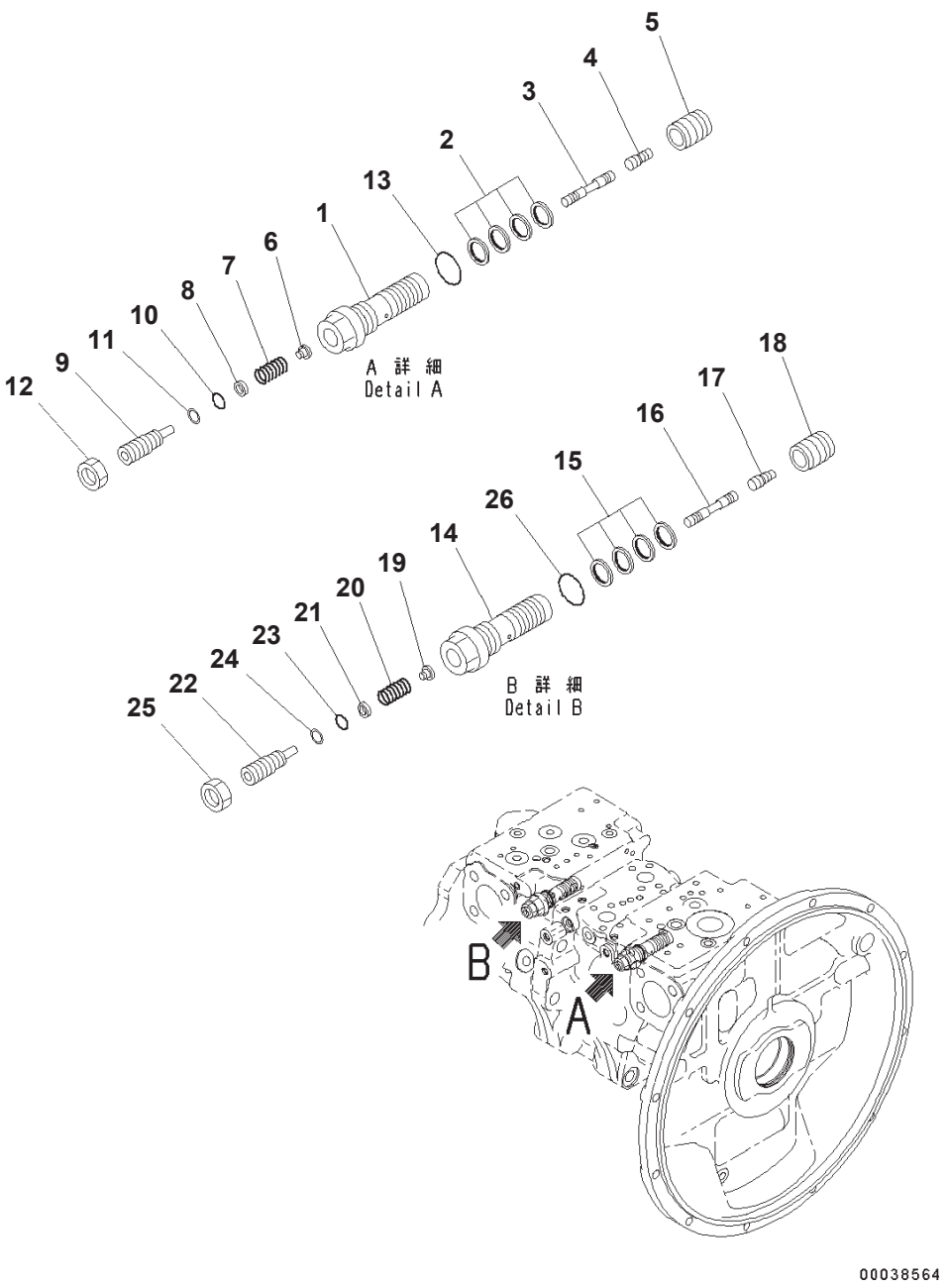

Main Piston Pump Inner Parts (10/11) (#B10001-B10230)

Index	Code	Part Number	Description	Qty	Options
		708-2G-00700	Pump Assembly	1	SN:B10001--B10230
		708-2G-03710	· Valve Assembly, (LS)	1	SN:B10001--B10230
1	C2	708-2L-35311	· · Sleeve	1	SN:B10001--B10230
2		708-2L-24680	· · Seal	4	SN:B10001--B10230
3	C2	708-2G-15412	· · Spool	1	SN:B10001--B10230
4	C2	708-2L-28540	· · Piston	1	SN:B10001--B10230
5	C2	708-2L-35360	· · Sleeve	1	SN:B10001--B10230
6	C2	708-2L-35331	· · Seat	1	SN:B10001--B10230
7	C2	708-2L-35410	· · Spring	1	SN:B10001--B10230
8	C2	708-2L-35341	· · Seat	1	SN:B10001--B10230
9	C2	708-2L-35351	· · Plug	1	SN:B10001--B10230
10	C2	07000-B1009	· · O-ring	1	SN:B10001--B10230
11	C2	07001-01009	· · Ring, Back-up	1	SN:B10001--B10230
12		01583-11408	· · Nut	1	SN:B10001--B10230
13		07002-62434	· · O-ring	1	SN:B10001--B10230
		708-2G-03910	· Valve Assembly, (LS)	1	SN:B10001--B10230
14	C2	708-2L-35311	· · Sleeve	1	SN:B10001--B10230
15		708-2L-24680	· · Seal	4	SN:B10001--B10230
16	C2	708-2G-15412	· · Spool	1	SN:B10001--B10230
17	C2	708-2L-28540	· · Piston	1	SN:B10001--B10230
18	C2	708-2L-35360	· · Sleeve	1	SN:B10001--B10230
19	C2	708-2G-15420	· · Seat	1	SN:B10001--B10230
20	C2	708-2L-35410	· · Spring	1	SN:B10001--B10230
21	C2	708-2L-35341	· · Seat	1	SN:B10001--B10230
22	C2	708-2L-35351	· · Plug	1	SN:B10001--B10230
23	C2	07000-B1009	· · O-ring	1	SN:B10001--B10230
24	C2	07001-01009	· · Ring, Back-up	1	SN:B10001--B10230
25		01583-11408	· · Nut	1	SN:B10001--B10230
26		07002-62434	· · O-ring	1	SN:B10001--B10230

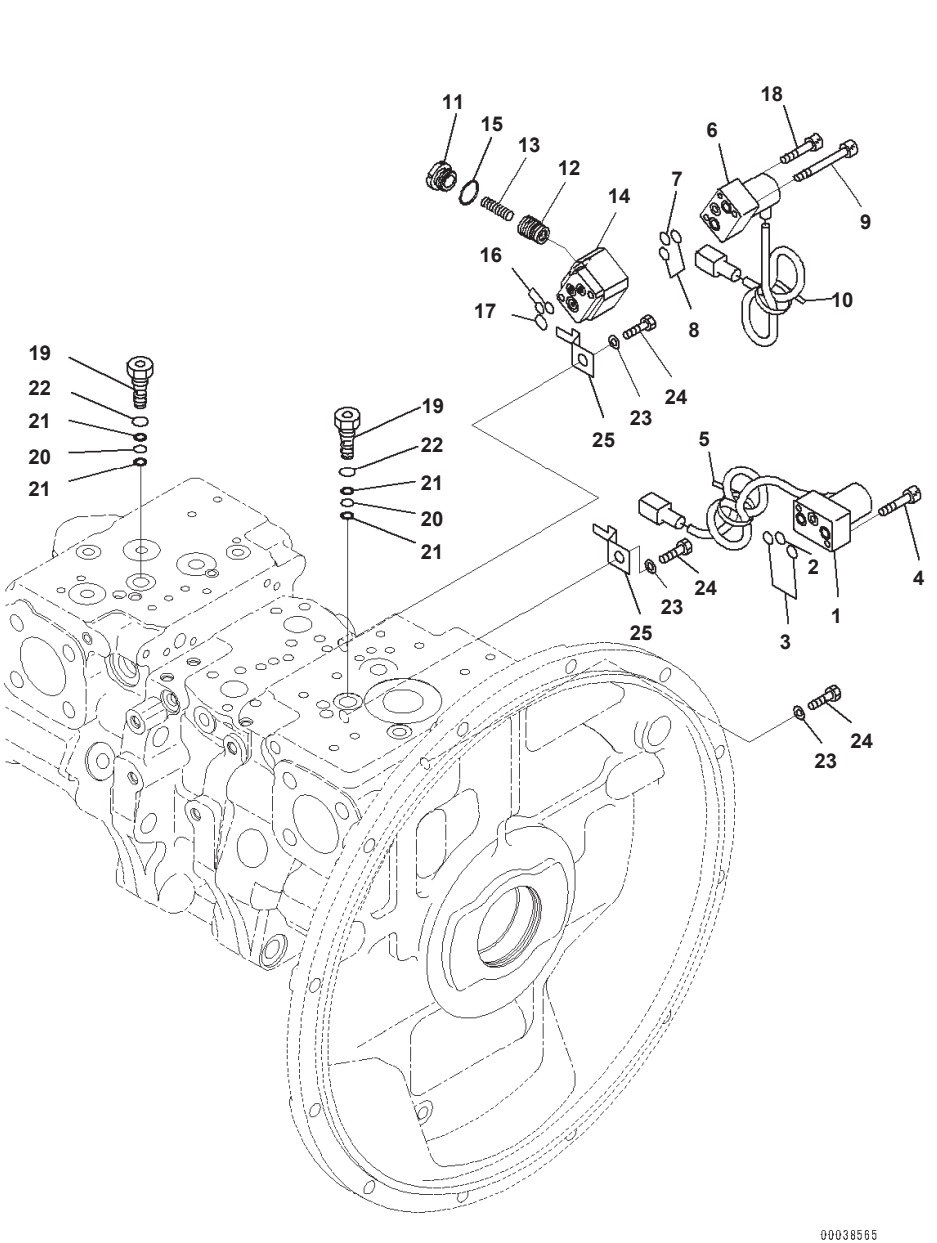

Main Piston Pump Inner Parts (11/11) (#B10001-B10230)

Index	Part Number	Description	Qty	Options
	708-2G-00700	Pump Assembly	1	SN:B10001--B10230
1	702-21-57600	· Valve, Pilot	1	SN:B10001--B10230
2	723-11-19960	· · O-ring	1	SN:B10001--B10230
3	702-21-54910	· · O-ring	2	SN:B10001--B10230
4	01252-60635	· Bolt	2	SN:B10001--B10230
5	20Y-62-22790	· Band, Red	1	SN:B10001--B10230
6	702-21-57500	· Valve, Pilot	1	SN:B10001--B10230
7	723-11-19960	· · O-ring	1	SN:B10001--B10230
8	702-21-54910	· · O-ring	2	SN:B10001--B10230
9	702-16-55260	· Bolt	2	SN:B10001--B10230
10	20Y-62-22830	· Band, White	1	SN:B10001--B10230
	702-21-56600	· Valve Assembly	1	SN:B10001--B10230
11	702-21-55920	· · Plug	1	SN:B10001--B10230
12	702-21-55930	· · Piston	1	SN:B10001--B10230
13	702-21-56610	· · Spring	1	SN:B10001--B10230
14	702-21-55951	· · Block	1	SN:B10001--B10230
15	07002-12034	· · O-ring	1	SN:B10001--B10230
16	07000-11008	· O-ring	2	SN:B10001--B10230
17	722-12-18240	· O-ring	1	SN:B10001--B10230
18	01252-60530	· Bolt, Hexagon Socket Head	1	SN:B10001--B10230
19	708-2G-15680	· Plug	2	SN:B10001--B10230
20	07000-B1008	· O-ring	2	SN:B10001--B10230
21	07001-01008	· Ring, Back-up	4	SN:B10001--B10230
22	07002-61423	· O-ring	2	SN:B10001--B10230
23	01643-51232	· Washer	3	SN:B10001--B10230
24	01010-81220	· Bolt	3	SN:B10001--B10230
25	08193-21012	· Clip	2	SN:B10001--B10230

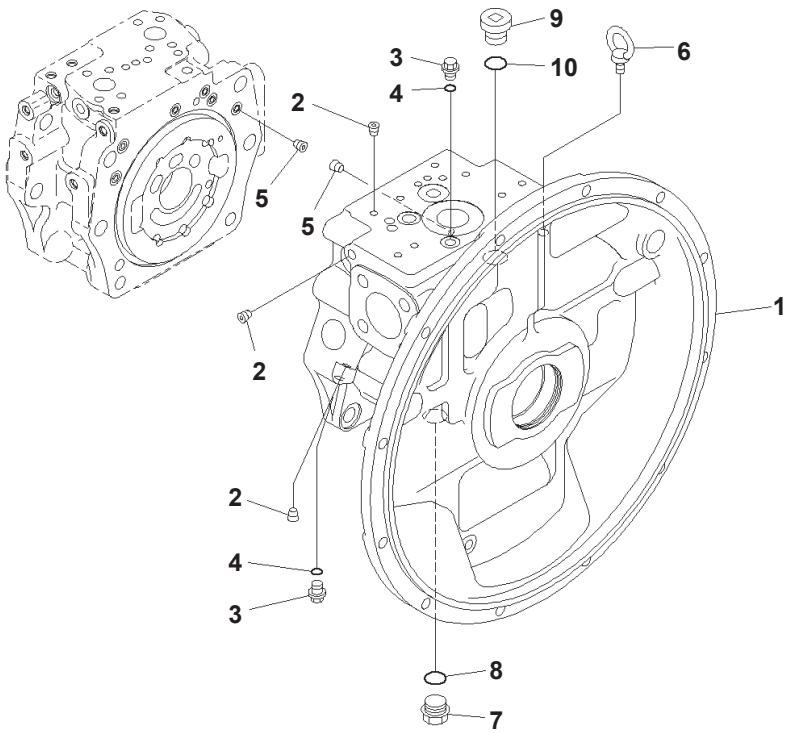

Main Piston Pump Inner Parts (1/12) (#B10231-B10328)

Index	Code	Part Number	Description	Qty	Options
	C1	708-2G-00150	Pump Assembly	1	SN:B10231--B10326
	C1	(708-2G-01150)	・ Pump Subassembly	1	SN:B10231--B10326
	C2	708-2G-04241	・・ Case Assembly	1	SN:B10231--B10326
1	C1		・・・ Case	1	SN:B10231--B10326
2	C1		・・・ Plug	33	SN:B10231--B10326
3		708-8E-16150	・・ Plug	2	SN:B10231--B10326
4		07002-61023	・・ O-ring	2	SN:B10231--B10326
5		(708-1L-29340)	・・ Orifice	2	SN:B10231--B10326
6		04530-01222	・・ Bolt, Eye	1	SN:B10231--B10326
7		07044-12412	・・ Plug	1	SN:B10231--B10326
8		07002-62434	・・ O-ring	1	SN:B10231--B10326
9		07040-12414	・・ Plug	1	SN:B10231--B10326
10		07002-62434	・・ O-ring	1	SN:B10231--B10326

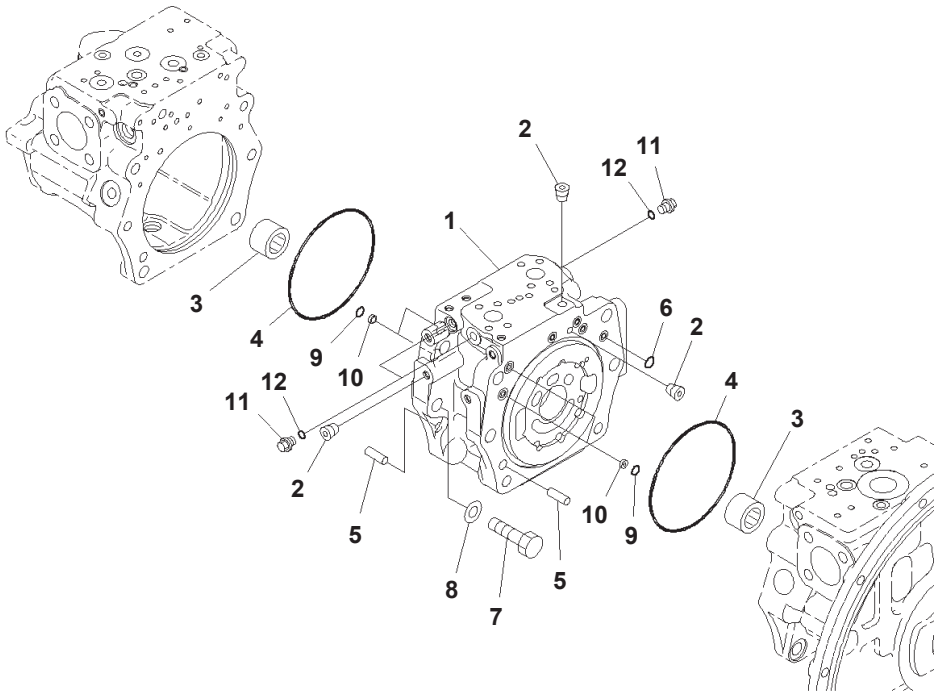

Main Piston Pump Inner Parts (2/12) (#B10231-B10326)

Index	Code	Part Number	Description	Qty	Options
	C1	708-2G-00150	Pump Assembly	1	SN:B10231--B10326
	C1	(708-2G-01150)	Pump Subassembly	1	SN:B10231--B10326
	C2	(708-2G-04680)	Cap Assembly	1	SN:B10231--B10326
1	C1		・ Cap	1	SN:B10231--B10326
2	C1		・ Plug	17	SN:B10231--B10326
3	C2	(708-2G-12151)	Bearing	2	SN:B10231--B10326
4	C2	(07000-A5185)	O-ring	2	SN:B10231--B10326
5	C2	(04020-01434)	Pin, Dowel	2	SN:B10231--B10326
6	C2	(07000-B2012)	O-ring	7	SN:B10231--B10326
7	C2	(01010-61655)	Bolt	12	SN:B10231--B10326
8	C2	(01643-51645)	Washer	12	SN:B10231--B10326
9	C2	(07000-B2014)	O-ring	4	SN:B10231--B10326
10	C2	(708-2L-25480)	Filter	4	SN:B10231--B10326
11		708-8E-16150	Plug	3	SN:B10231--B10326
12		07002-61023	O-ring	3	SN:B10231--B10326

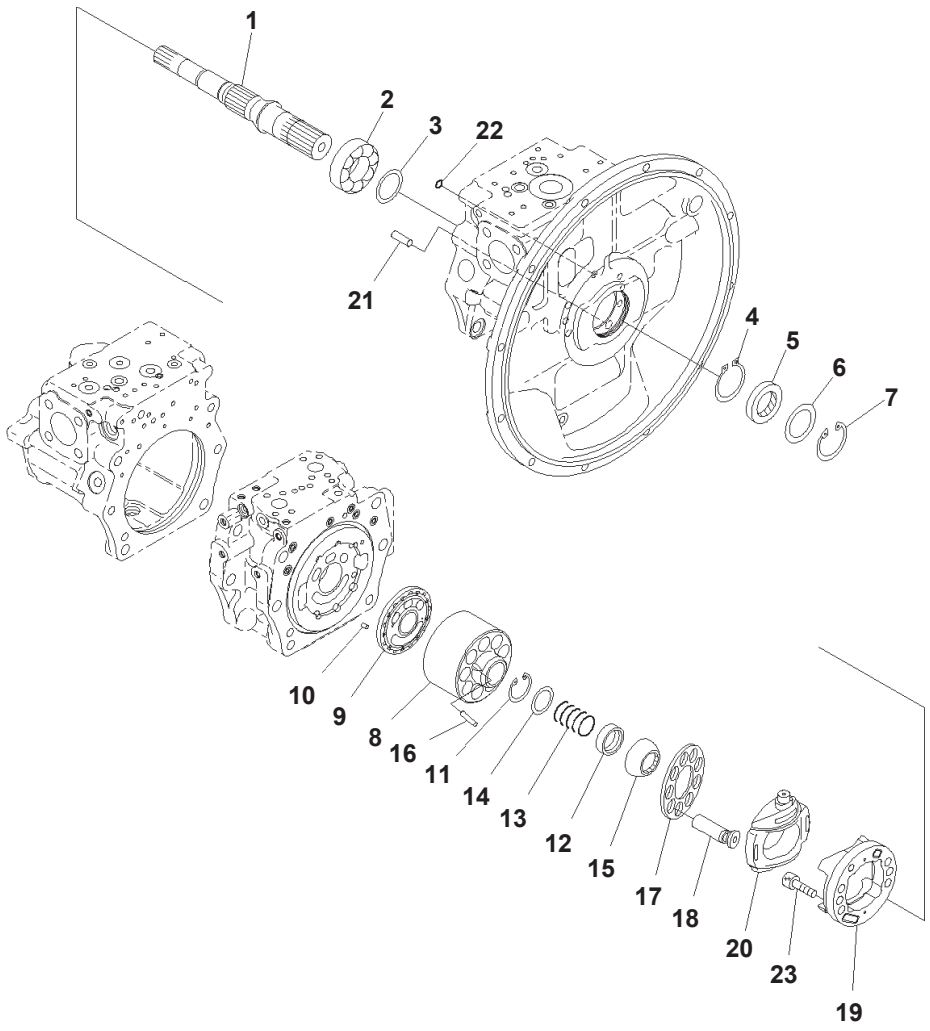

Main Piston Pump Inner Parts (3/12) (#B10231-B10326)

Index	Code	Part Number	Description	Qty	Options
	C1	708-2G-00150	Pump Assembly	1	SN:B10231--B10326
	C1	(708-2G-01150)	· Pump Subassembly	1	SN:B10231--B10326
1	C2	(708-2G-12640)	· · Shaft	1	SN:B10231--B10326
2	C2	(708-2G-12251)	· · Bearing	1	SN:B10231--B10326
3	C2	(708-2G-05010)	· · Washer Kit	1	SN:B10231--B10326
	C1		· · · Washer, 3.0mm	1	SN:B10231--B10326
	C1		· · · Washer, 3.1mm	1	SN:B10231--B10326
	C1		· · · Washer, 3.2mm	1	SN:B10231--B10326
4	C2	(708-1F-12270)	· · Ring, Snap	1	SN:B10231--B10326
5		708-2G-12230	· · Seal, Oil	1	SN:B10231--B10326
6		708-8H-32160	· · Spacer	1	SN:B10231--B10326
7		04065-07825	· · Ring, Snap	1	SN:B10231--B10326
	C2	(708-2G-04710)	· · Cylinder Block Assembly	1	SN:B10231--B10326
8	C1		· · · Block	1	SN:B10231--B10326
9	C1		· · · Plate, (VALVE)	1	SN:B10231--B10326
10	C2	(708-18-13230)	· · Pin	1	SN:B10231--B10326
11	C2	(04065-05520)	· · Ring, Snap, for Hole Side	1	SN:B10231--B10326
12	C2	(708-2G-13131)	· · Seat	1	SN:B10231--B10326
13	C2	(708-2G-13152)	· · Spring	1	SN:B10231--B10326
14	C2	(708-2G-13141)	· · Seat	1	SN:B10231--B10326
15	C2	(708-2G-13510)	· · Guide	1	SN:B10231--B10326
16	C2	(708-2H-23360)	· · Pin	3	SN:B10231--B10326
17	C2	(708-2G-13341)	· · Retainer	1	SN:B10231--B10326
18	C2	(708-2G-13810)	· · Piston Subassembly	9	SN:B10231--B10326
	C2	(708-2G-04670)	· · Cradle Subassembly	1	SN:B10231--B10326
19	C1		· · · Cradle	1	SN:B10231--B10326
20	C1		· · · Cam, (ROCKER)	1	SN:B10231--B10326
21	C2	(04020-01434)	· · Pin, Dowel	1	SN:B10231--B10326
22	C2	(07000-B1009)	· · O-ring	1	SN:B10231--B10326
23	C2	(01252-61230)	· · Bolt	6	SN:B10231--B10326

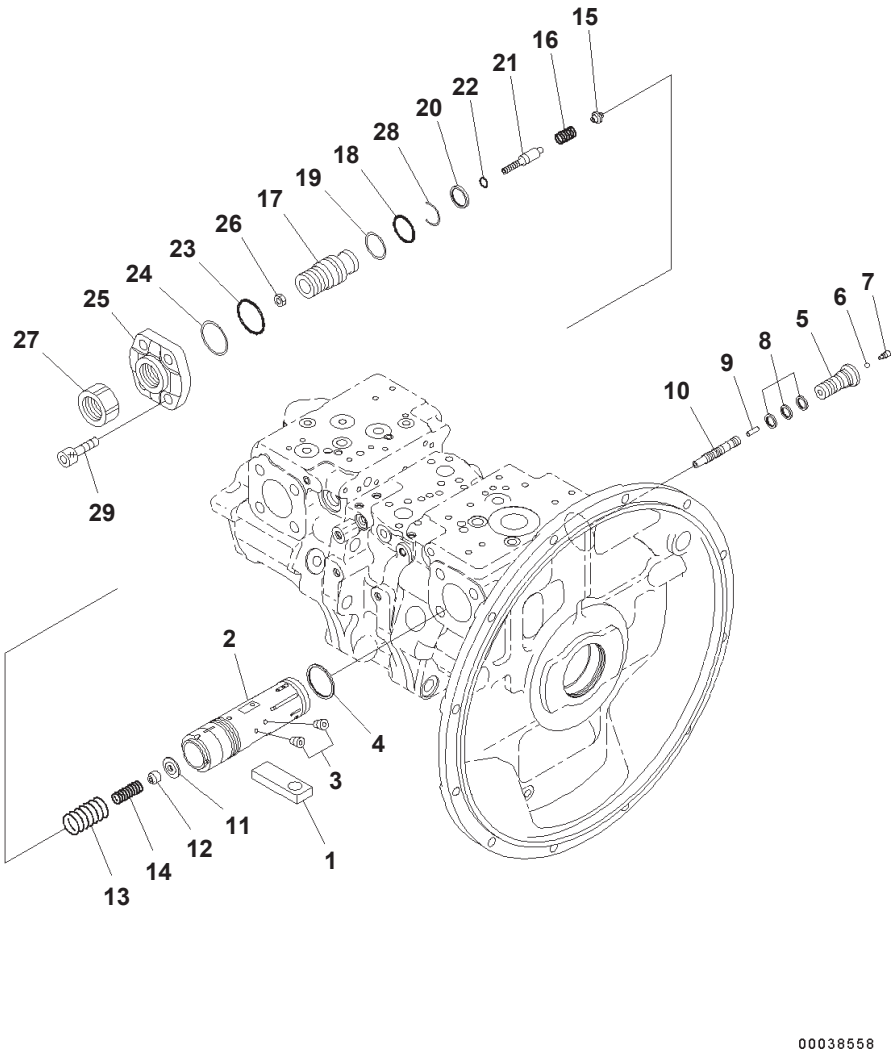

Main Piston Pump Inner Parts (4/12) (#B10231-B10326)

Index	Code	Part Number	Description	Qty	Options
	C1	708-2G-00150	Pump Assembly	1	SN:B10231--B10326
	C1	(708-2G-01150)	・ Pump Subassembly	1	SN:B10231--B10326
1	C2	(708-2G-14120)	・・ Slider	1	SN:B10231--B10326
	C2	(708-2G-03640)	・・ Valve Assembly	1	SN:B10231--B10326
	C2	(708-2G-03650)	・・・ Piston Assembly	1	SN:B10231--B10326
2	C1		・・・・ Piston	1	SN:B10231--B10326
3	C1		・・・・ Screw	8	SN:B10231--B10326
4	C1		・・・ Seal	1	SN:B10231--B10326
5	C1		・・・ Plug	1	SN:B10231--B10326
6	C2	(708-2L-35760)	・・・ Ball	1	SN:B10231--B10326
7	C2	(708-2L-35770)	・・・ Plug	1	SN:B10231--B10326
8	C1		・・・ Seal	3	SN:B10231--B10326
9	C2	(708-2L-35170)	・・・ Pin	1	SN:B10231--B10326
10	C2	(708-2G-15211)	・・・ Spool	1	SN:B10231--B10326
11	C2	(708-2G-15290)	・・・ Retainer	1	SN:B10231--B10326
12	C2	(708-2G-15140)	・・・ Seat	1	SN:B10231--B10326
13	C2	(708-2G-15270)	・・・ Spring	1	SN:B10231--B10326
14	C2	(708-2G-15280)	・・・ Spring	1	SN:B10231--B10326
15	C2	(708-2G-15151)	・・・ Seat	1	SN:B10231--B10326
16	C2	(708-2G-15250)	・・・ Spring	1	SN:B10231--B10326
17	C2	(708-2G-14340)	・・・ Screw	1	SN:B10231--B10326
18	C2	(07000-B3038)	・・・ O-ring	1	SN:B10231--B10326
19	C2	(708-2G-15230)	・・・ Ring, Back-up	1	SN:B10231--B10326
20	C1		・・・ Seal	1	SN:B10231--B10326
21	C2	(708-2G-15240)	・・・ Plug	1	SN:B10231--B10326
22	C2	(07000-B2012)	・・・ O-ring	1	SN:B10231--B10326
23	C2	(07000-B2050)	・・・ O-ring	1	SN:B10231--B10326
24	C2	(708-2G-15310)	・・・ Ring	1	SN:B10231--B10326
25	C2	(708-2G-14190)	・・・ Cover	1	SN:B10231--B10326
26	C2	(01580-10806)	・・・ Nut	1	SN:B10231--B10326
27	C2	(708-2L-35290)	・・・ Nut	1	SN:B10231--B10326
28	C2	(708-2G-15330)	・・・ Ring, Wear	1	SN:B10231--B10326
29	C2	(01252-61645)	・・ Bolt, Hexagon Socket Head	4	SN:B10231--B10326

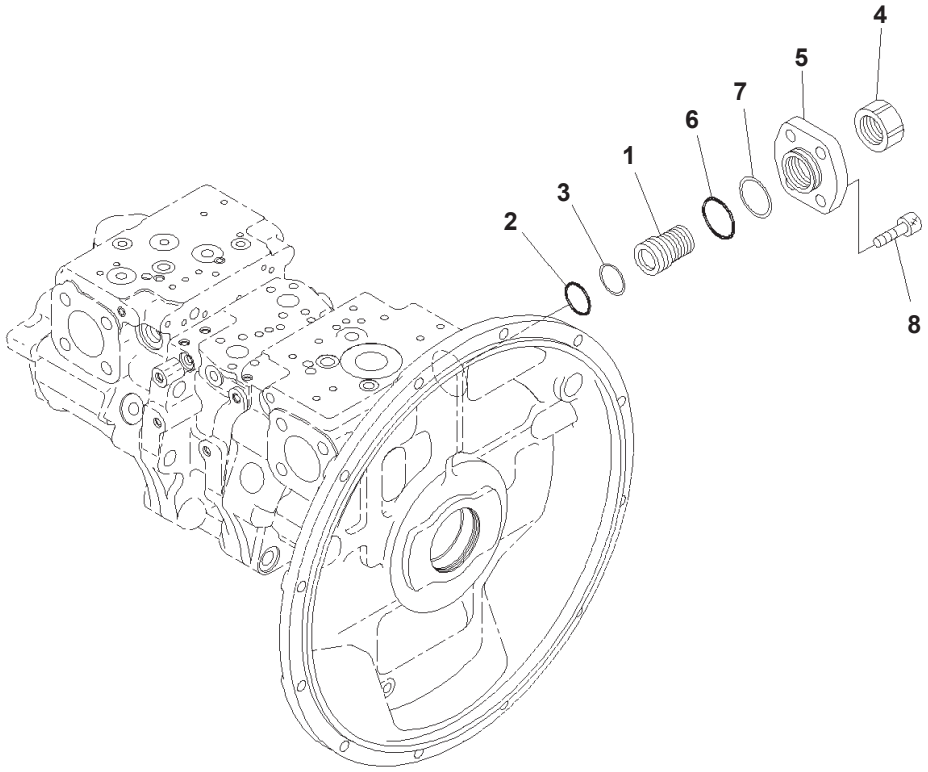

Main Piston Pump Inner Parts (5/12) (#B10231-B10326)

Index	Code	Part Number	Description	Qty	Options
	C1	708-2G-00150	Pump Assembly	1	SN:B10231--B10326
	C1	(708-2G-01150)	・ Pump Subassembly	1	SN:B10231--B10326
	C2	(708-2G-03480)	・・ Cover Assembly	1	SN:B10231--B10326
1	C2	(708-2G-14310)	・・・ Screw	1	SN:B10231--B10326
2	C2	(07000-B3038)	・・・ O-ring	1	SN:B10231--B10326
3	C2	(708-2G-15230)	・・・ Ring, Back-up	1	SN:B10231--B10326
4	C2	(708-2L-35290)	・・・ Nut	1	SN:B10231--B10326
5	C2	(708-2G-14170)	・・・ Cover	1	SN:B10231--B10326
6	C2	(07000-B2050)	・・・ O-ring	1	SN:B10231--B10326
7	C2	(708-2G-15310)	・・・ Ring	1	SN:B10231--B10326
8	C2	(01252-61645)	・・ Bolt, Hexagon Socket Head	4	SN:B10231--B10326

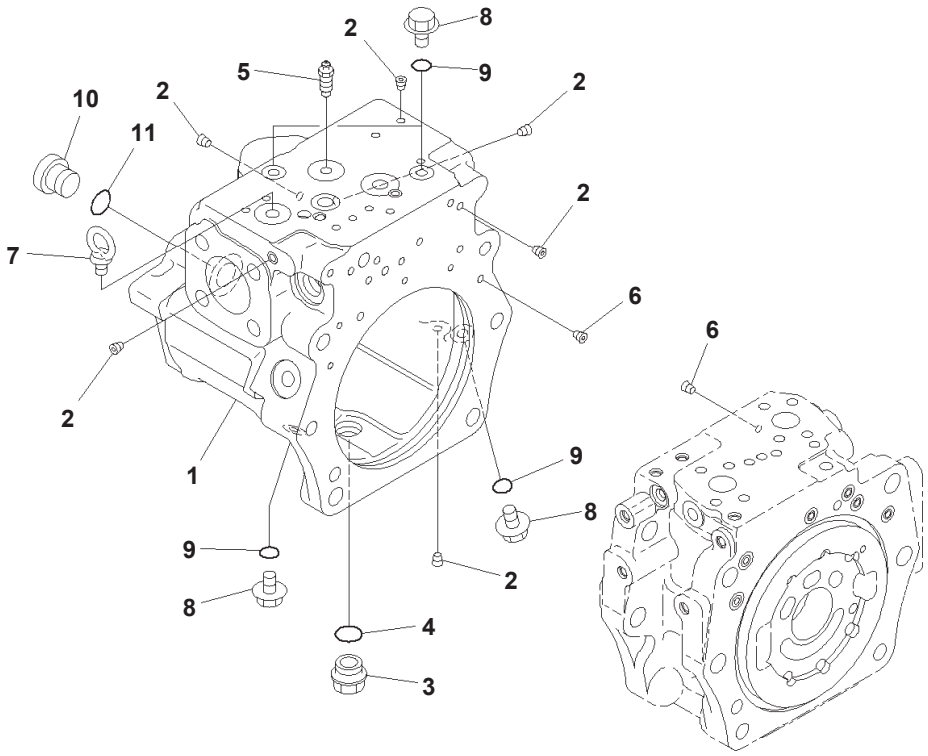

Main Piston Pump Inner Parts (6/12) (#B10231-B10326)

Index	Code	Part Number	Description	Qty	Options
	C1	708-2G-00150	Pump Assembly	1	SN:B10231--B10326
	C1	(708-2G-01150)	・ Pump Subassembly	1	SN:B10231--B10326
	C2	(708-2G-04252)	・・ Case Assembly, (REAR)	1	SN:B10231--B10326
1	C1		・・・ Case, (REAR)	1	SN:B10231--B10326
2	C1		・・・ Plug	36	SN:B10231--B10326
3		(07044-12412)	・・ Plug	1	SN:B10231--B10326
4		(07002-62434)	・・ O-ring	1	SN:B10231--B10326
5		(20B-27-11210)	・・ Bleeder	1	SN:B10231--B10326
6		(708-1L-29340)	・・ Orifice	2	SN:B10231--B10326
7		(04530-01222)	・・ Bolt, Eye	1	SN:B10231--B10326
8		(708-8E-16150)	・・ Plug	4	SN:B10231--B10326
9		(07002-61023)	・・ O-ring	4	SN:B10231--B10326
10		(07040-12414)	・・ Plug	1	SN:B10231--B10326
11		(07002-62434)	・・ O-ring	1	SN:B10231--B10326

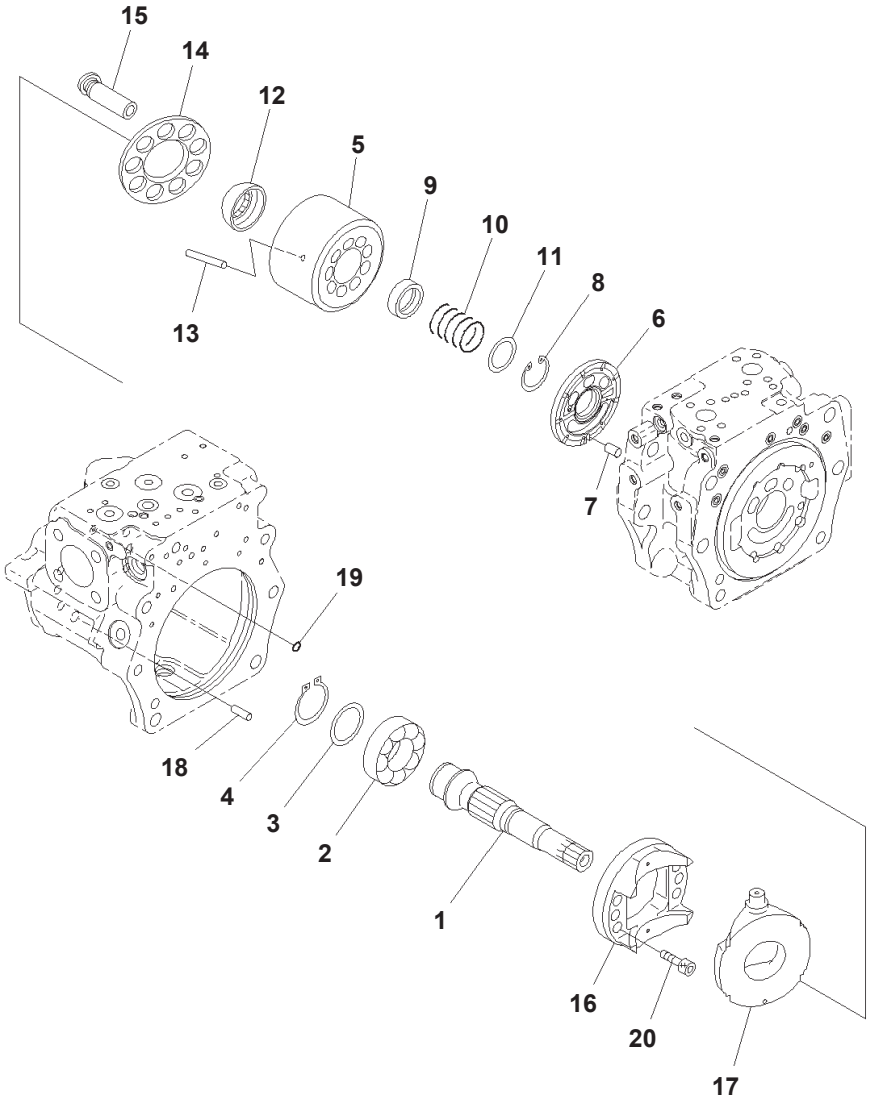

Main Piston Pump Inner Parts (7/12) (#B10231-B10326)

Index	Code	Part Number	Description	Qty	Options
	C1	708-2G-00150	Pump Assembly	1	SN:B10231--B10326
	C1	(708-2G-01150)	· Pump Subassembly	1	SN:B10231--B10326
1		(708-2G-12650)	· · Shaft	1	SN:B10231--B10326
2	C2	(708-2G-12251)	· · Bearing	1	SN:B10231--B10326
3	C2	(708-2G-05010)	· · Washer Kit	1	SN:B10231--B10326
	C1		· · · Washer, 3.0mm	1	SN:B10231--B10326
	C1		· · · Washer, 3.1mm	1	SN:B10231--B10326
	C1		· · · Washer, 3.2mm	1	SN:B10231--B10326
4	C2	(708-1F-12270)	· · Ring, Snap	1	SN:B10231--B10326
	C2	(708-2G-04272)	· · Block Assembly, (REAR)	1	SN:B10231--B10326
5	C1		· · · Block	1	SN:B10231--B10326
6	C1		· · · Plate, (VALVE)	1	SN:B10231--B10326
7	C2	(708-18-13230)	· · Pin	1	SN:B10231--B10326
8	C2	(04065-05520)	· · Ring, Snap, for Hole Side	1	SN:B10231--B10326
9	C2	(708-2G-13131)	· · Seat	1	SN:B10231--B10326
10	C2	(708-2G-13152)	· · Spring	1	SN:B10231--B10326
11	C2	(708-2G-13141)	· · Seat	1	SN:B10231--B10326
12	C2	(708-2G-13510)	· · Guide	1	SN:B10231--B10326
13	C2	(708-2H-23360)	· · Pin	3	SN:B10231--B10326
14	C2	(708-2G-13341)	· · Retainer	1	SN:B10231--B10326
15	C2	(708-2G-13370)	· · Piston Subassembly	9	SN:B10231--B10326
	C2	(708-2G-04290)	· · Cradle Subassembly	1	SN:B10231--B10326
16	C1		· · · Cradle	1	SN:B10231--B10326
17	C1		· · · Cam, (ROCKER)	1	SN:B10231--B10326
18	C2	(04020-01434)	· · Pin, Dowel	1	SN:B10231--B10326
19	C2	(07000-B1009)	· · O-ring	1	SN:B10231--B10326
20	C2	(01252-61230)	· · Bolt	6	SN:B10231--B10326

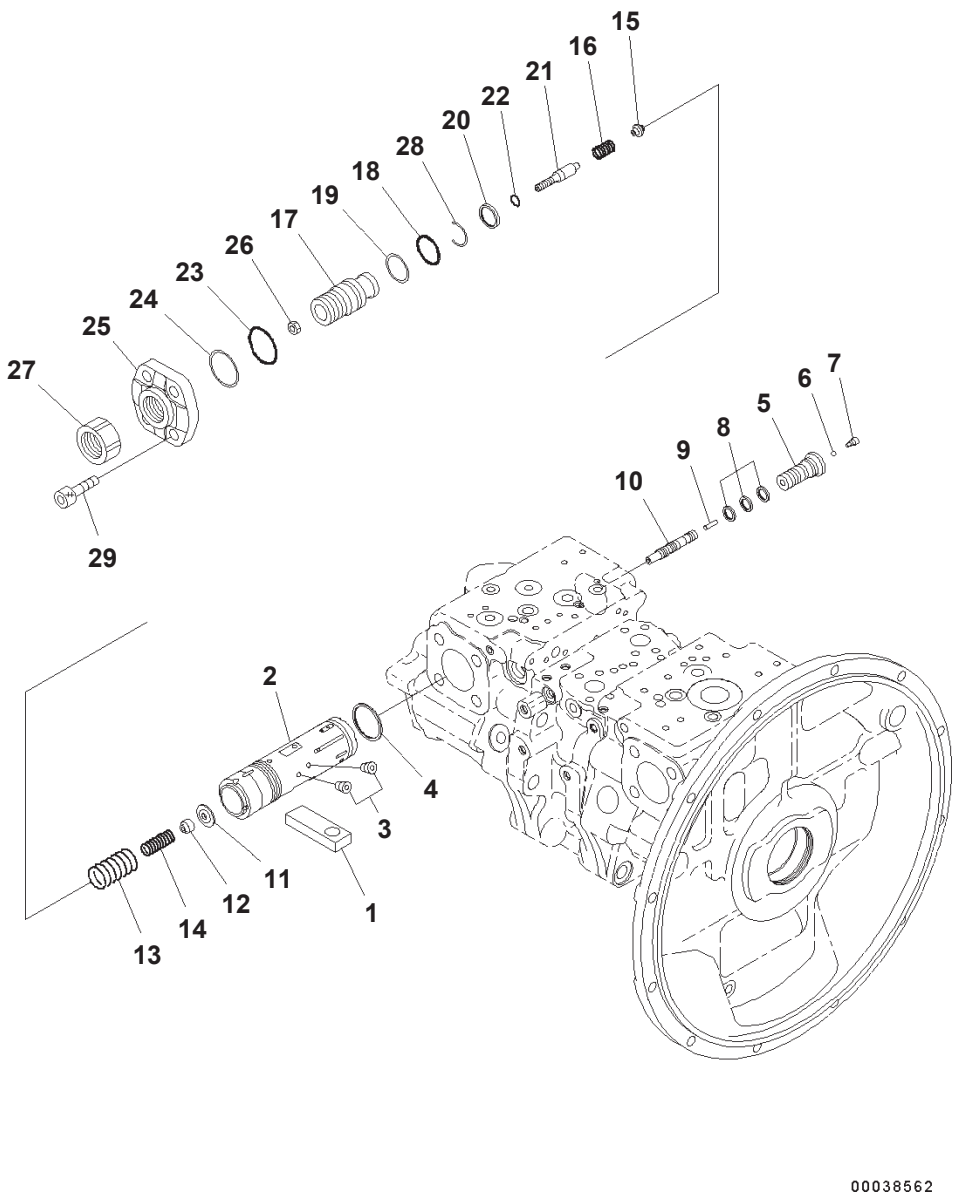

Main Piston Pump Inner Parts (8/12) (#B10231-B10326)

Index	Code	Part Number	Description	Qty	Options
	C1	708-2G-00150	Pump Assembly	1	SN:B10231--B10326
	C1	(708-2G-01150)	・ Pump Subassembly	1	SN:B10231--B10326
1	C2	(708-2G-14120)	・・ Slider	1	SN:B10231--B10326
	C2	(708-2G-03640)	・・ Valve Assembly, (PC)	1	SN:B10231--B10326
	C2	(708-2G-03650)	・・・ Piston Assembly	1	SN:B10231--B10326
2	C1		・・・・ Piston	1	SN:B10231--B10326
3	C1		・・・・ Screw	8	SN:B10231--B10326
4	C1		・・・ Seal	1	SN:B10231--B10326
5	C1		・・・ Plug	1	SN:B10231--B10326
6	C2	(708-2L-35760)	・・・ Ball	1	SN:B10231--B10326
7	C2	(708-2L-35770)	・・・ Plug	1	SN:B10231--B10326
8	C1		・・・ Seal	3	SN:B10231--B10326
9	C2	(708-2L-35170)	・・・ Pin	1	SN:B10231--B10326
10	C2	(708-2G-15211)	・・・ Spool	1	SN:B10231--B10326
11	C2	(708-2G-15290)	・・・ Retainer	1	SN:B10231--B10326
12	C2	(708-2G-15140)	・・・ Seat	1	SN:B10231--B10326
13	C2	(708-2G-15270)	・・・ Spring	1	SN:B10231--B10326
14	C2	(708-2G-15280)	・・・ Spring	1	SN:B10231--B10326
15	C2	(708-2G-15151)	・・・ Seat	1	SN:B10231--B10326
16	C2	(708-2G-15250)	・・・ Spring	1	SN:B10231--B10326
17	C2	(708-2G-14340)	・・・ Screw	1	SN:B10231--B10326
18	C2	(07000-B3038)	・・・ O-ring	1	SN:B10231--B10326
19	C2	(708-2G-15230)	・・・ Ring, Back-up	1	SN:B10231--B10326
20	C1		・・・ Seal	1	SN:B10231--B10326
21	C2	(708-2G-15240)	・・・ Plug	1	SN:B10231--B10326
22	C2	(07000-B2012)	・・・ O-ring	1	SN:B10231--B10326
23	C2	(07000-B2050)	・・・ O-ring	1	SN:B10231--B10326
24	C2	(708-2G-15310)	・・・ Ring	1	SN:B10231--B10326
25	C2	(708-2G-14190)	・・・ Cover	1	SN:B10231--B10326
26	C2	(01580-10806)	・・・ Nut	1	SN:B10231--B10326
27	C2	(708-2L-35290)	・・・ Nut	1	SN:B10231--B10326
28	C2	(708-2G-15330)	・・・ Ring, Wear	1	SN:B10231--B10326
29	C2	(01252-61645)	・・ Bolt, Hexagon Socket Head	4	SN:B10231--B10326

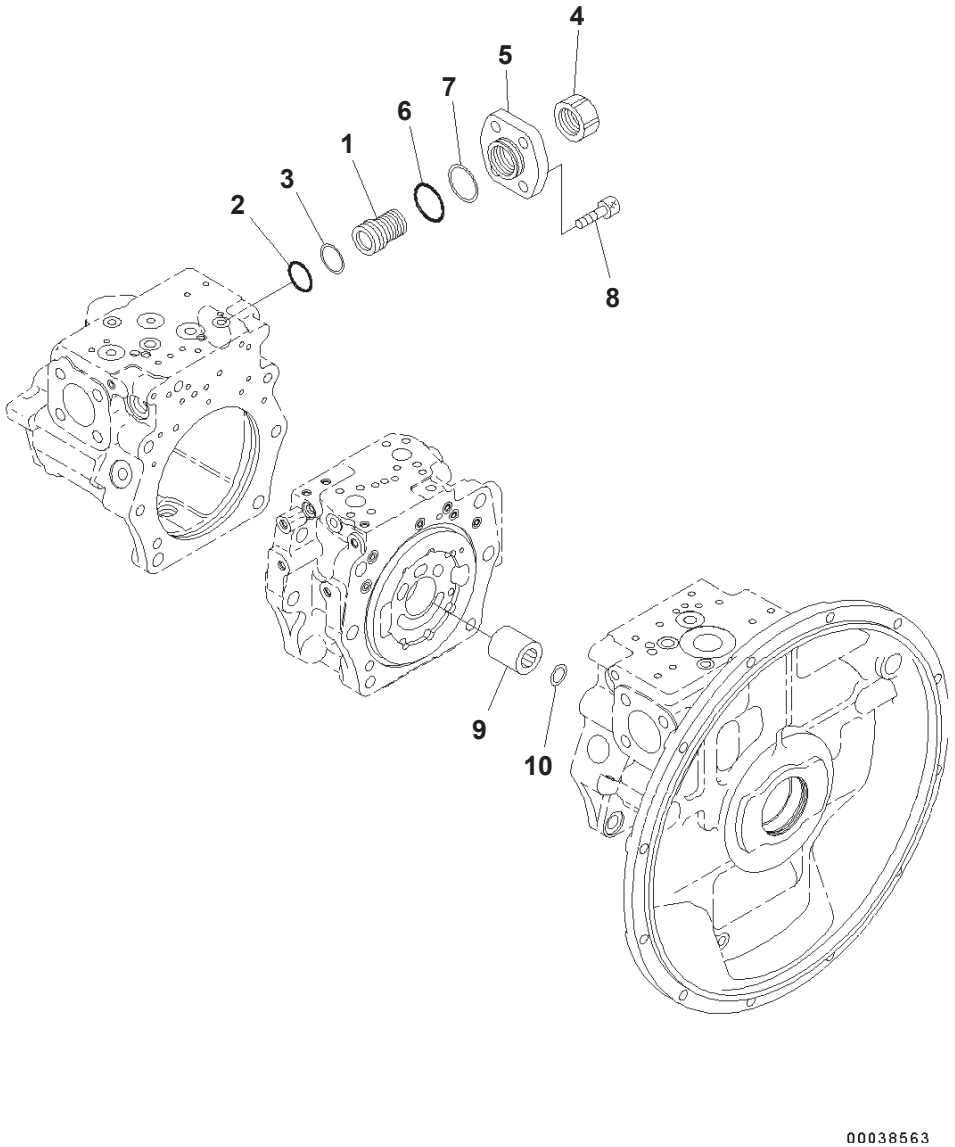

Main Piston Pump Inner Parts (9/12) (#B10231-B10326)

Index	Code	Part Number	Description	Qty	Options
	C1	708-2G-00150	Pump Assembly	1	SN:B10231--B10326
	C1	(708-2G-01150)	・ Pump Subassembly	1	SN:B10231--B10326
	C2	(708-2G-03480)	・・ Cover Assembly	1	SN:B10231--B10326
1	C2	(708-2G-14310)	・・・ Screw	1	SN:B10231--B10326
2	C2	(07000-B3038)	・・・ O-ring	1	SN:B10231--B10326
3	C2	(708-2G-15230)	・・・ Ring, Back-up	1	SN:B10231--B10326
4	C2	(708-2L-35290)	・・・ Nut	1	SN:B10231--B10326
5	C2	(708-2G-14170)	・・・ Cover	1	SN:B10231--B10326
6	C2	(07000-B2050)	・・・ O-ring	1	SN:B10231--B10326
7	C2	(708-2G-15310)	・・・ Ring	1	SN:B10231--B10326
8	C2	(01252-61645)	・・ Bolt, Hexagon Socket Head	4	SN:B10231--B10326

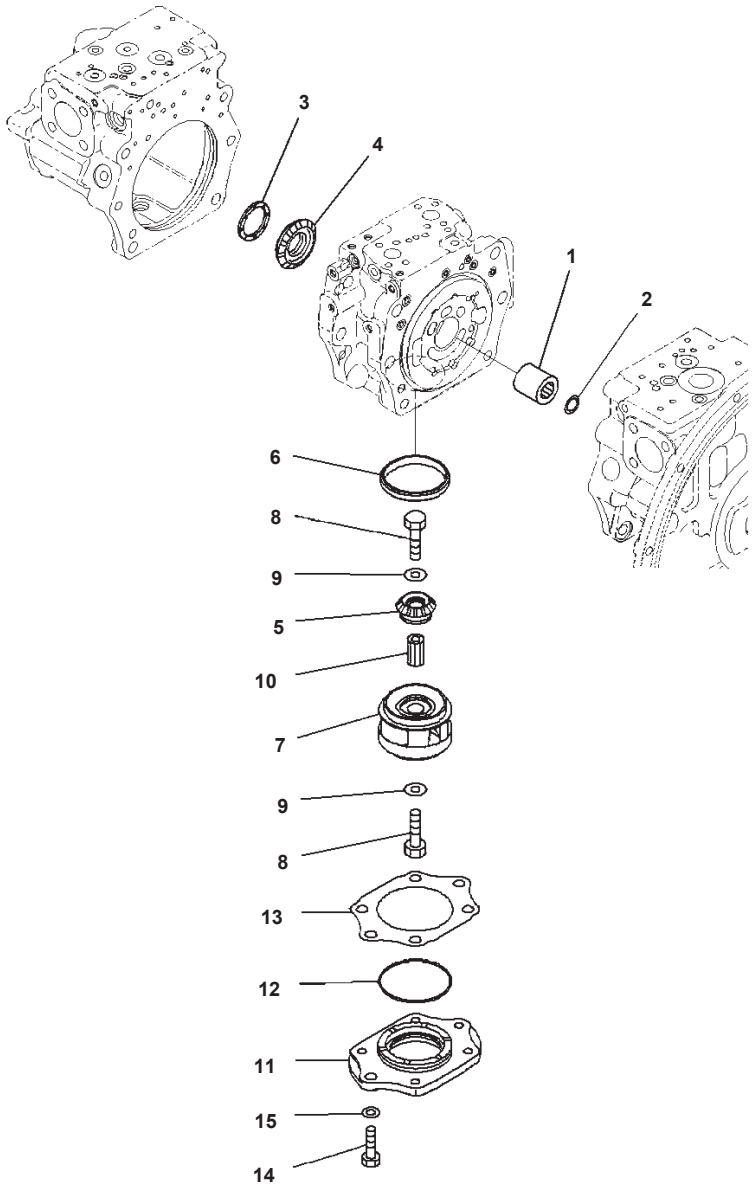

Main Piston Pump Inner Parts (10/12) (#B10231-B10326)

Index	Code	Part Number	Description	Qty	Options
	C1	708-2G-00150	Pump Assembly	1	SN:B10231--B10326
	C1	(708-2G-01150)	・Pump Subassembly	1	SN:B10231--B10326
	C2	708-2G-12340	・・Coupling	1	SN:B10231--B10326
1	C2	(708-2F-12420)	・・Ring	1	SN:B10231--B10326
2	C2	708-2H-21860	・・Plate	1	SN:B10231--B10326
3	C1	708-2G-04730	・・Gear Kit	1	SN:B10231--B10326
4	C1		・・Gear, Bevel	1	SN:B10231--B10326
5	C1		・・Pinion	1	SN:B10231--B10326
6	C2	708-2H-32320	・・Bushing	1	SN:B10231--B10326
7	C2	708-2H-32330	・・Impeller	1	SN:B10231--B10326
8	C2	01010-61220	・・Bolt	2	SN:B10231--B10326
9	C2	708-2H-32350	・・Washer	2	SN:B10231--B10326
10	C2	708-2H-32360	・・Shaft	1	SN:B10231--B10326
11	C2	07000-A2105	・・Cover	1	SN:B10231--B10326
12	C2	(07000-A2105)	・・O-Ring	1	SN:B10231--B10326
13	C2	(708-2G-05020)	・・Shim Kit	1	SN:B10231--B10326
	C1		・・・Shim, T=0.1mm	2	SN:B10231--B10326
	C1		・・・Shim, T=0.2mm	2	SN:B10231--B10326
	C1		・・・Shim, T=0.5mm	3	SN:B10231--B10326
14		01010-81235	・・Bolt	2	SN:B10231--B10326
15		01643-31232	・・Washer	2	SN:B10231--B10326

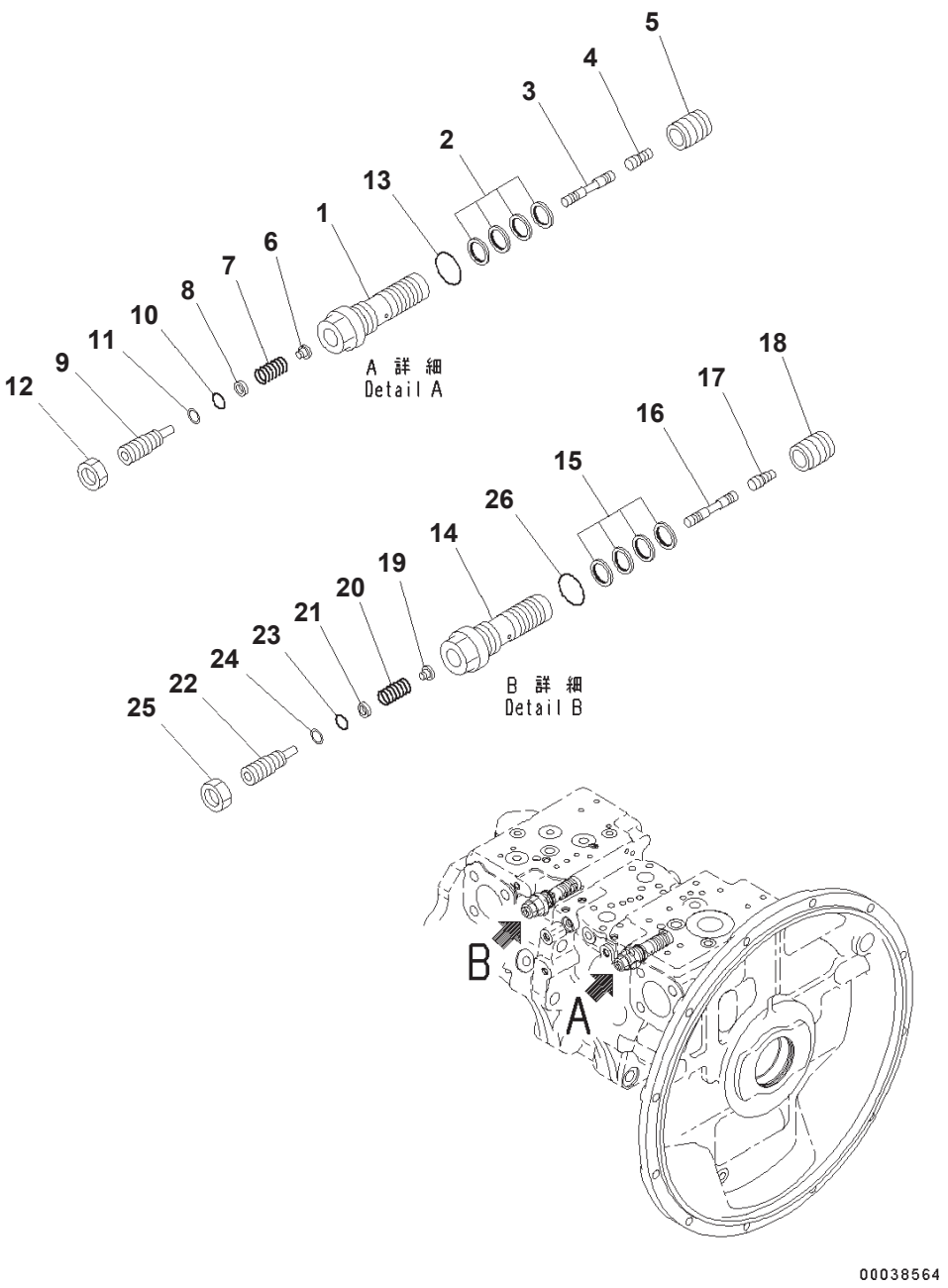

Main Piston Pump Inner Parts (11/12) (#B10231-B10326)

Index	Code	Part Number	Description	Qty	Options
	C1	708-2G-00150	Pump Assembly	1	SN:B10231--B10326
		708-2G-03720	・ Valve Assembly, (LS)	1	SN:B10231--B10326
1	C1		・・ Sleeve	1	SN:B10231--B10326
2	C1		・・ Seal	4	SN:B10231--B10326
3	C2	708-2J-15310	・・ Spool	1	SN:B10231--B10326
4	C2	708-2L-28540	・・ Piston	1	SN:B10231--B10326
5	C2	708-2L-35360	・・ Sleeve	1	SN:B10231--B10326
6	C2	708-2L-35331	・・ Seat	1	SN:B10231--B10326
7	C2	708-2L-35410	・・ Spring	1	SN:B10231--B10326
8	C2	708-2L-35341	・・ Seat	1	SN:B10231--B10326
9	C2	708-2L-35351	・・ Plug	1	SN:B10231--B10326
10	C2	07000-B1009	・・ O-ring	1	SN:B10231--B10326
11	C2	07001-01009	・・ Ring, Back-up	1	SN:B10231--B10326
12		01583-11408	・・ Nut	1	SN:B10231--B10326
13		07002-62434	・・ O-ring	1	SN:B10231--B10326
		708-2G-03920	・ Valve Assembly, (LS)	1	SN:B10231--B10326
14	C1		・・ Sleeve	1	SN:B10231--B10326
15	C1		・・ Seal	4	SN:B10231--B10326
16	C2	708-2J-15310	・・ Spool	1	SN:B10231--B10326
17	C2	708-2L-28540	・・ Piston	1	SN:B10231--B10326
18	C2	708-2L-35360	・・ Sleeve	1	SN:B10231--B10326
19	C2	708-2G-15420	・・ Seat	1	SN:B10231--B10326
20	C2	708-2L-35410	・・ Spring	1	SN:B10231--B10326
21	C2	708-2L-35341	・・ Seat	1	SN:B10231--B10326
22	C2	708-2L-35351	・・ Plug	1	SN:B10231--B10326
23	C2	07000-B1009	・・ O-ring	1	SN:B10231--B10326
24	C2	07001-01009	・・ Ring, Back-up	1	SN:B10231--B10326
25		01583-11408	・・ Nut	1	SN:B10231--B10326
26		07002-62434	・・ O-ring	1	SN:B10231--B10326

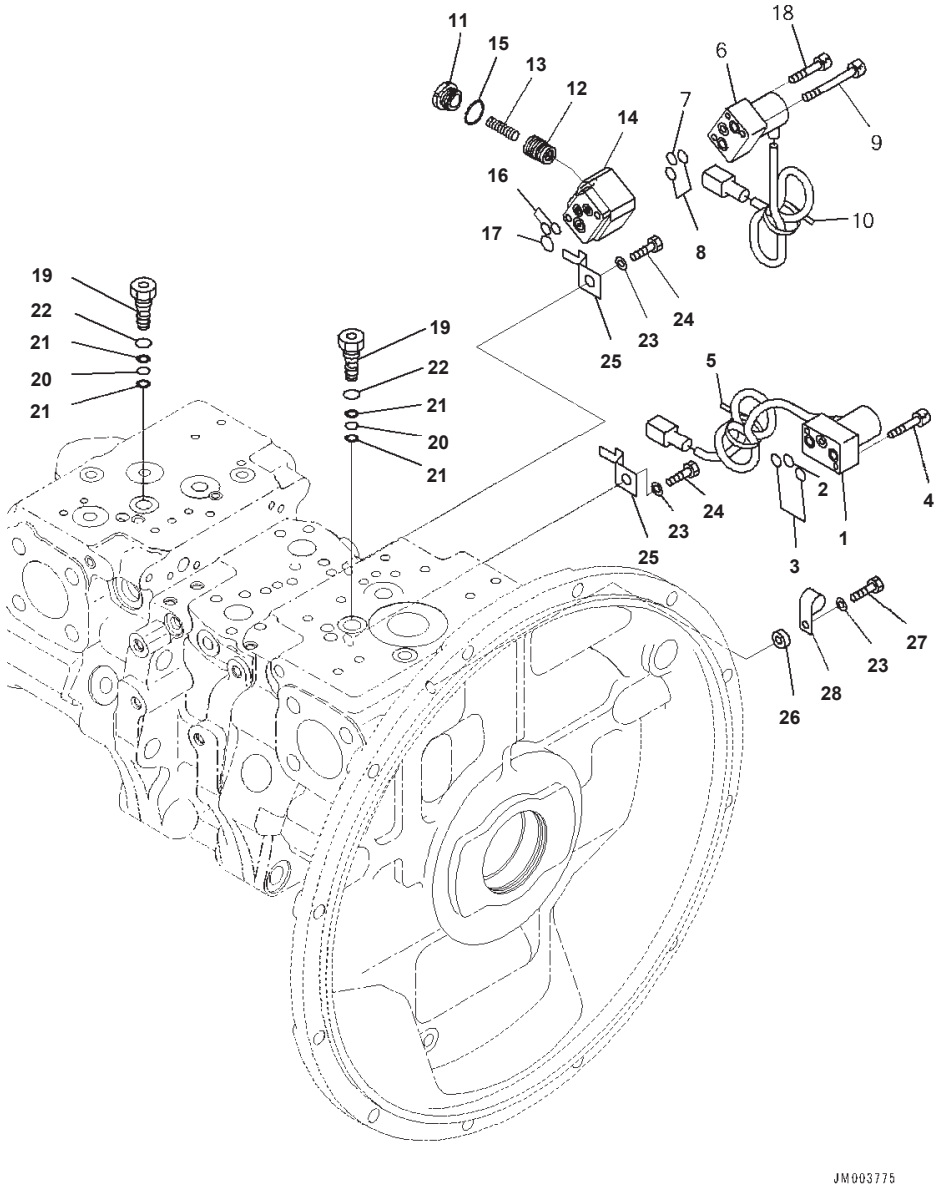

Index	Part Number	Description	Qty	Options
	708-2G-00150	Pump Assembly	1	SN:B10231--B10326
1	702-21-57400	・ Valve, Pilot	1	SN:B10231--B10326
2	723-11-19960	・・ O-ring	1	SN:B10231--B10326
3	702-21-54910	・・ O-ring	2	SN:B10231--B10326
4	01252-60635	・ Bolt	2	SN:B10231--B10326
5	20Y-62-22790	・ Band, Red	1	SN:B10231--B10326
6	702-21-57500	・ Valve, Pilot	1	SN:B10231--B10326
7	723-11-19960	・・ O-ring	1	SN:B10231--B10326
8	702-21-54910	・・ O-ring	2	SN:B10231--B10326
9	702-16-55260	・ Bolt	2	SN:B10231--B10326
10	20Y-62-22830	・ Band, White	1	SN:B10231--B10326
	702-21-56600	・ Valve Assembly	1	SN:B10231--B10326
11	702-21-55920	・・ Plug	1	SN:B10231--B10326
12	702-21-55930	・・ Piston	1	SN:B10231--B10326
13	702-21-56610	・・ Spring	1	SN:B10231--B10326
14	702-21-55951	・・ Block	1	SN:B10231--B10326
15	07002-12034	・・ O-ring	1	SN:B10231--B10326
16	07000-11008	・ O-ring	2	SN:B10231--B10326
17	722-12-18240	・ O-ring	1	SN:B10231--B10326
18	01252-60530	・ Bolt, Hexagon Socket Head	1	SN:B10231--B10326
19	708-2G-15680	・ Plug	2	SN:B10231--B10326
20	07000-B1008	・ O-ring	2	SN:B10231--B10326
21	07001-01008	・ Ring, Back-up	4	SN:B10231--B10326
22	07002-61423	・ O-ring	2	SN:B10231--B10326
23	01643-51232	・ Washer	3	SN:B10231--B10326
24	01010-81220	・ Bolt	3	SN:B10231--B10326
25	08193-21012	・ Clip	2	SN:B10231--B10326
26	708-2G-19130	・ Spacer	1	SN:B10231--B10326
27	01010-81235	・ Bolt	1	SN:B10231--B10326
28	04434-50612	・ Clip	1	SN:B10231--B10326

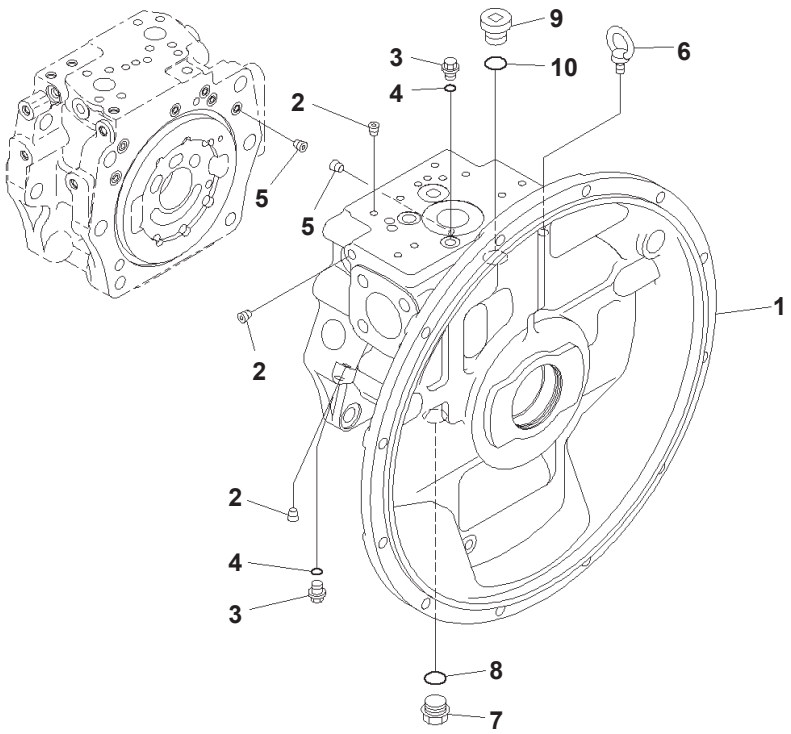

00038555

Main Piston Pump Inner Parts (1/12) (#B10327-)

Index	Code	Part Number	Description	Qty	Options
		708-2G-00151	Pump Assembly	1	SN:B10327--
		(708-2G-01151)	・ Pump Subassembly	1	SN:B10327--
	C2	708-2G-04241	・・ Case Assembly	1	SN:B10327--
1	C1		・・・ Case	1	SN:B10327--
2	C1		・・・ Plug	33	SN:B10327--
3		708-8E-16150	・・ Plug	2	SN:B10327--
4		07002-61023	・・ O-ring	2	SN:B10327--
5		(708-1L-29340)	・・ Orifice	2	SN:B10327--
6		04530-01222	・・ Bolt, Eye	1	SN:B10327--
7		07044-12412	・・ Plug	1	SN:B10327--
8		07002-62434	・・ O-ring	1	SN:B10327--
9		07040-12414	・・ Plug	1	SN:B10327--
10		07002-62434	・・ O-ring	1	SN:B10327--

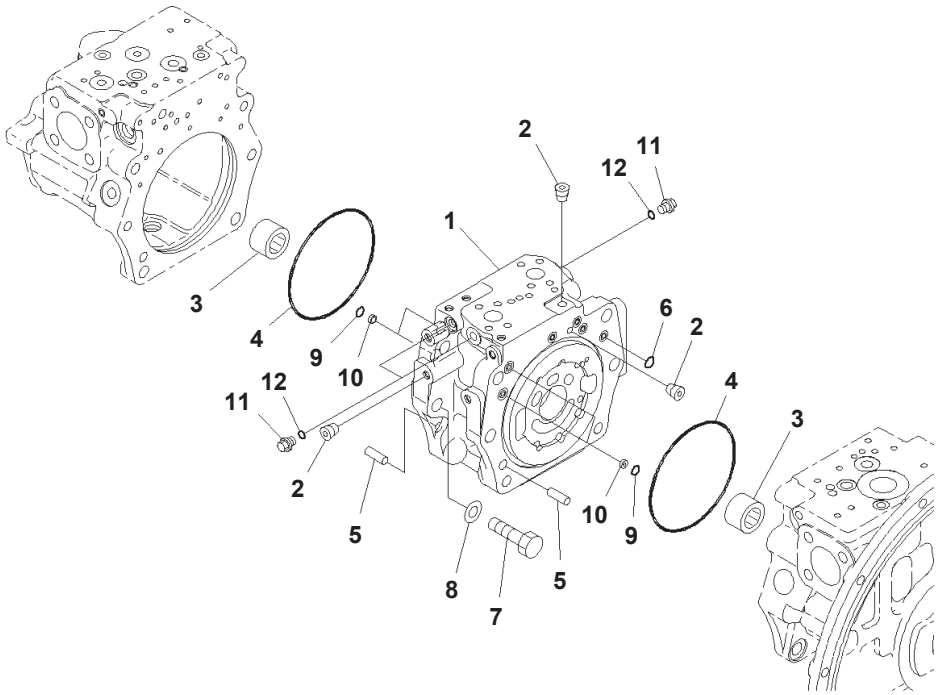

Main Piston Pump Inner Parts (2/12) (#B10327-)

Index	Code	Part Number	Description	Qty	Options
		708-2G-00151	Pump Assembly	1	SN:B10327--
		(708-2G-01151)	・ Pump Subassembly	1	SN:B10327--
	C2	(708-2G-04680)	・・ Cap Assembly	1	SN:B10327--
1	C1		・・・ Cap	1	SN:B10327--
2	C1		・・・ Plug	17	SN:B10327--
3	C2	(708-2G-12151)	・・ Bearing	2	SN:B10327--
4	C2	(07000-A5185)	・・ O-ring	2	SN:B10327--
5	C2	(04020-01434)	・・ Pin, Dowel	2	SN:B10327--
6	C2	(07000-B2012)	・・ O-ring	7	SN:B10327--
7	C2	(01010-61655)	・・ Bolt	12	SN:B10327--
8	C2	(01643-51645)	・・ Washer	12	SN:B10327--
9	C2	(07000-B2014)	・・ O-ring	4	SN:B10327--
10	C2	(708-2L-25480)	・・ Filter	4	SN:B10327--
11		708-8E-16150	・・ Plug	3	SN:B10327--
12		07002-61023	・・ O-ring	3	SN:B10327--

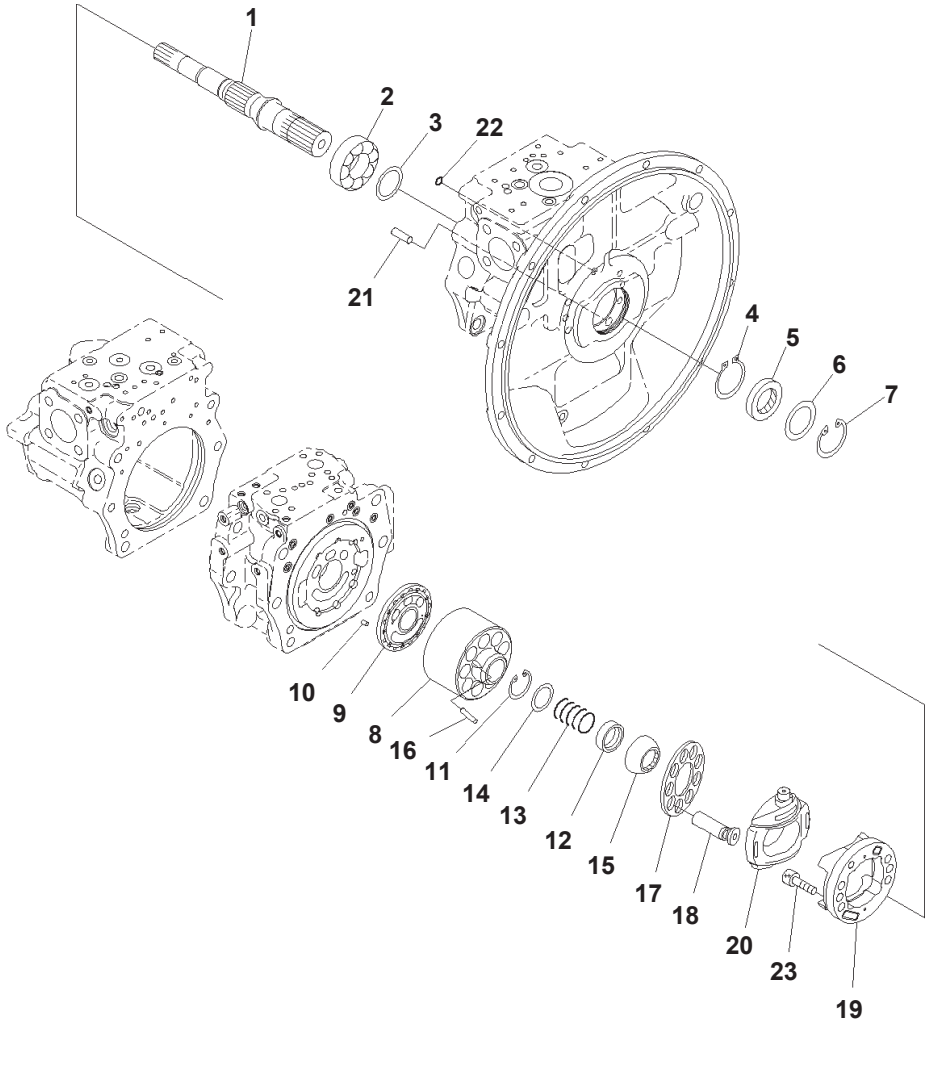

Main Piston Pump Inner Parts (3/12) (#B10327-)

Index	Code	Part Number	Description	Qty	Options
		708-2G-00151	Pump Assembly	1	SN:B10327--
		(708-2G-01151)	· Pump Subassembly	1	SN:B10327--
1	C2	(708-2G-12640)	· · Shaft	1	SN:B10327--
2	C2	(708-2G-12251)	· · Bearing	1	SN:B10327--
3	C2	(708-2G-05010)	· · Washer Kit	1	SN:B10327--
	C1		· · · Washer, 3.0mm	1	SN:B10327--
	C1		· · · Washer, 3.1mm	1	SN:B10327--
	C1		· · · Washer, 3.2mm	1	SN:B10327--
4	C2	(708-1F-12270)	· · Ring, Snap	1	SN:B10327--
5		708-2G-12230	· · Seal, Oil	1	SN:B10327--
6		708-8H-32160	· · Spacer	1	SN:B10327--
7		04065-07825	· · Ring, Snap	1	SN:B10327--
	C2	(708-2G-04710)	· · Cylinder Block Assembly	1	SN:B10327--
8	C1		· · · Block	1	SN:B10327--
9	C1		· · · Plate, (VALVE)	1	SN:B10327--
10	C2	(708-18-13230)	· · Pin	1	SN:B10327--
11	C2	(04065-05520)	· · Ring, Snap, for Hole Side	1	SN:B10327--
12	C2	(708-2G-13131)	· · Seat	1	SN:B10327--
13	C2	(708-2G-13152)	· · Spring	1	SN:B10327--
14	C2	(708-2G-13141)	· · Seat	1	SN:B10327--
15	C2	(708-2G-13510)	· · Guide	1	SN:B10327--
16	C2	(708-2H-23360)	· · Pin	3	SN:B10327--
17	C2	(708-2G-13341)	· · Retainer	1	SN:B10327--
18	C2	(708-2G-13810)	· · Piston Subassembly	9	SN:B10327--
	C2	(708-2G-04670)	· · Cradle Subassembly	1	SN:B10327--
19	C1		· · · Cradle	1	SN:B10327--
20	C1		· · · Cam, (ROCKER)	1	SN:B10327--
21	C2	(04020-01434)	· · Pin, Dowel	1	SN:B10327--
22	C2	(07000-B1009)	· · O-ring	1	SN:B10327--
23	C2	(01252-61230)	· · Bolt	6	SN:B10327--

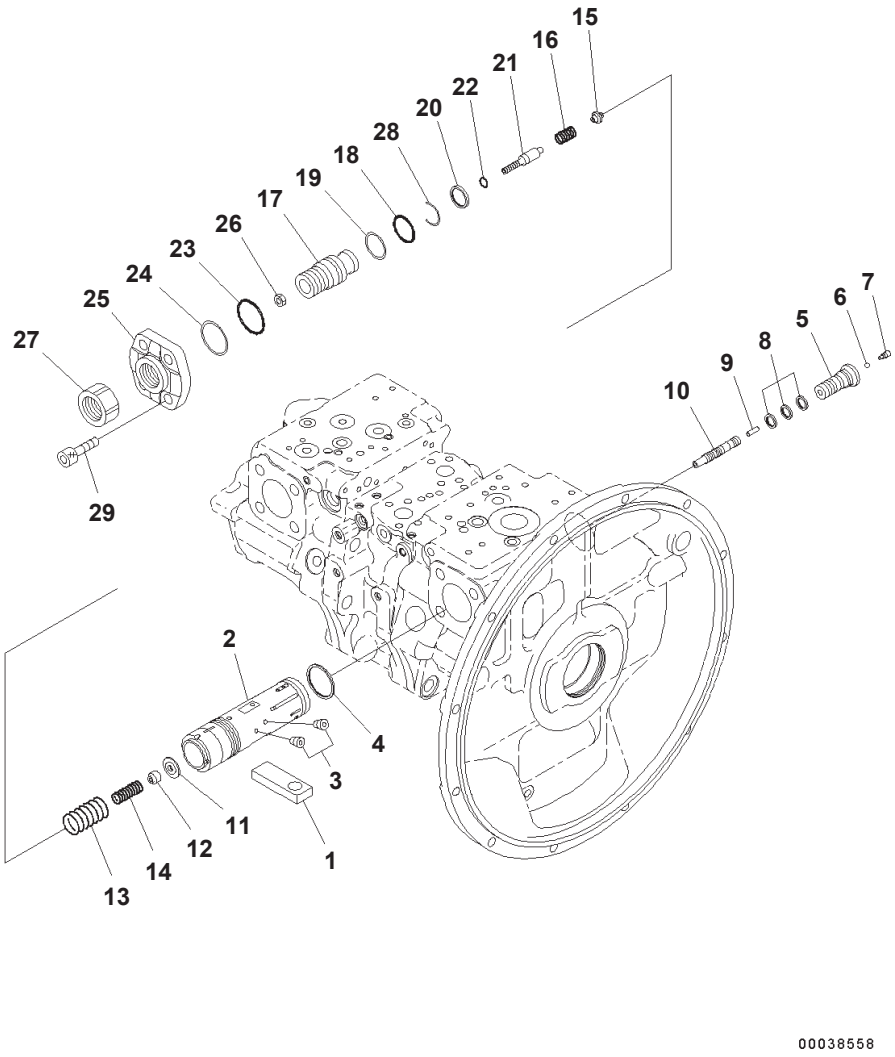

Main Piston Pump Inner Parts (4/12) (#B10327-)

Index	Code	Part Number	Description	Qty	Options
		708-2G-00151	Pump Assembly	1	SN:B10327--
		(708-2G-01151)	・ Pump Subassembly	1	SN:B10327--
1	C2	(708-2G-14120)	・・ Slider	1	SN:B10327--
	C2	(708-2G-03640)	・・ Valve Assembly	1	SN:B10327--
	C2	(708-2G-03650)	・・・ Piston Assembly	1	SN:B10327--
2	C1		・・・・ Piston	1	SN:B10327--
3	C1		・・・・ Screw	8	SN:B10327--
4	C1		・・・ Seal	1	SN:B10327--
5	C1		・・・ Plug	1	SN:B10327--
6	C2	(708-2L-35760)	・・・ Ball	1	SN:B10327--
7	C2	(708-2L-35770)	・・・ Plug	1	SN:B10327--
8	C1		・・・ Seal	3	SN:B10327--
9	C2	(708-2L-35170)	・・・ Pin	1	SN:B10327--
10	C2	(708-2G-15211)	・・・ Spool	1	SN:B10327--
11	C2	(708-2G-15290)	・・・ Retainer	1	SN:B10327--
12	C2	(708-2G-15140)	・・・ Seat	1	SN:B10327--
13	C2	(708-2G-15270)	・・・ Spring	1	SN:B10327--
14	C2	(708-2G-15280)	・・・ Spring	1	SN:B10327--
15	C2	(708-2G-15151)	・・・ Seat	1	SN:B10327--
16	C2	(708-2G-15250)	・・・ Spring	1	SN:B10327--
17	C2	(708-2G-14340)	・・・ Screw	1	SN:B10327--
18	C2	(07000-B3038)	・・・ O-ring	1	SN:B10327--
19	C2	(708-2G-15230)	・・・ Ring, Back-up	1	SN:B10327--
20	C1		・・・ Seal	1	SN:B10327--
21	C2	(708-2G-15240)	・・・ Plug	1	SN:B10327--
22	C2	(07000-B2012)	・・・ O-ring	1	SN:B10327--
23	C2	(07000-B2050)	・・・ O-ring	1	SN:B10327--
24	C2	(708-2G-15310)	・・・ Ring	1	SN:B10327--
25	C2	(708-2G-14190)	・・・ Cover	1	SN:B10327--
26	C2	(01580-10806)	・・・ Nut	1	SN:B10327--
27	C2	(708-2L-35290)	・・・ Nut	1	SN:B10327--
28	C2	(708-2G-15330)	・・・ Ring, Wear	1	SN:B10327--
29	C2	(01252-61645)	・・ Bolt, Hexagon Socket Head	4	SN:B10327--

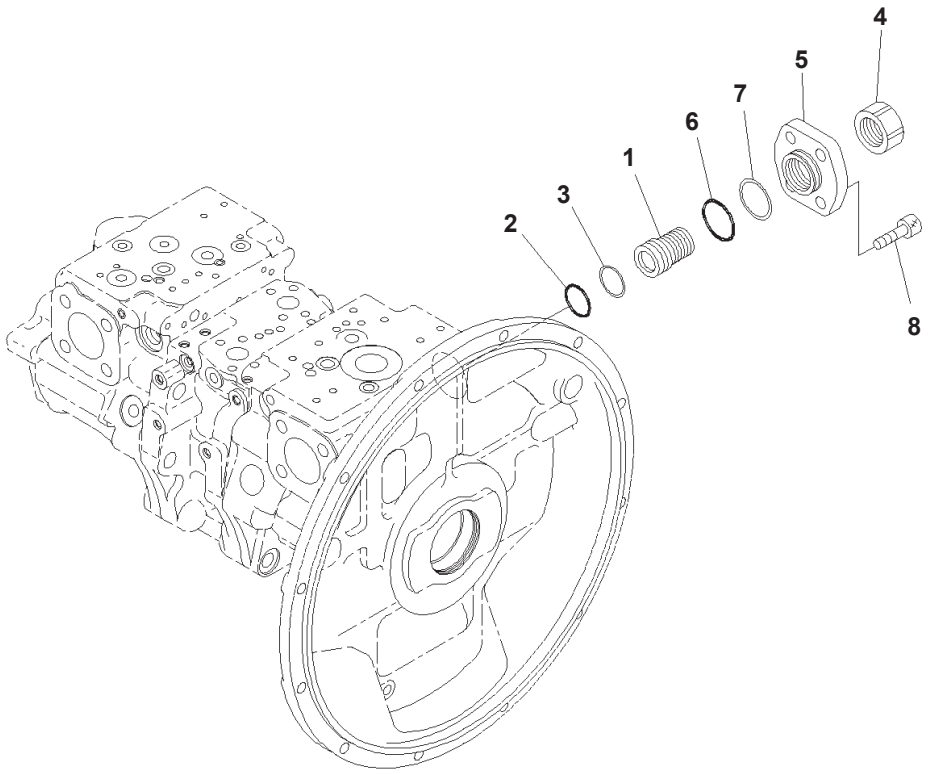

Main Piston Pump Inner Parts (5/12) (#B10327-)

Index	Code	Part Number	Description	Qty	Options
		708-2G-00151	Pump Assembly	1	SN:B10327--
		(708-2G-01151)	・ Pump Subassembly	1	SN:B10327--
	C2	(708-2G-03480)	・・ Cover Assembly	1	SN:B10327--
1	C2	(708-2G-14310)	・・・ Screw	1	SN:B10327--
2	C2	(07000-B3038)	・・・ O-ring	1	SN:B10327--
3	C2	(708-2G-15230)	・・・ Ring, Back-up	1	SN:B10327--
4	C2	(708-2L-35290)	・・・ Nut	1	SN:B10327--
5	C2	(708-2G-14170)	・・・ Cover	1	SN:B10327--
6	C2	(07000-B2050)	・・・ O-ring	1	SN:B10327--
7	C2	(708-2G-15310)	・・・ Ring	1	SN:B10327--
8	C2	(01252-61645)	・・ Bolt, Hexagon Socket Head	4	SN:B10327--

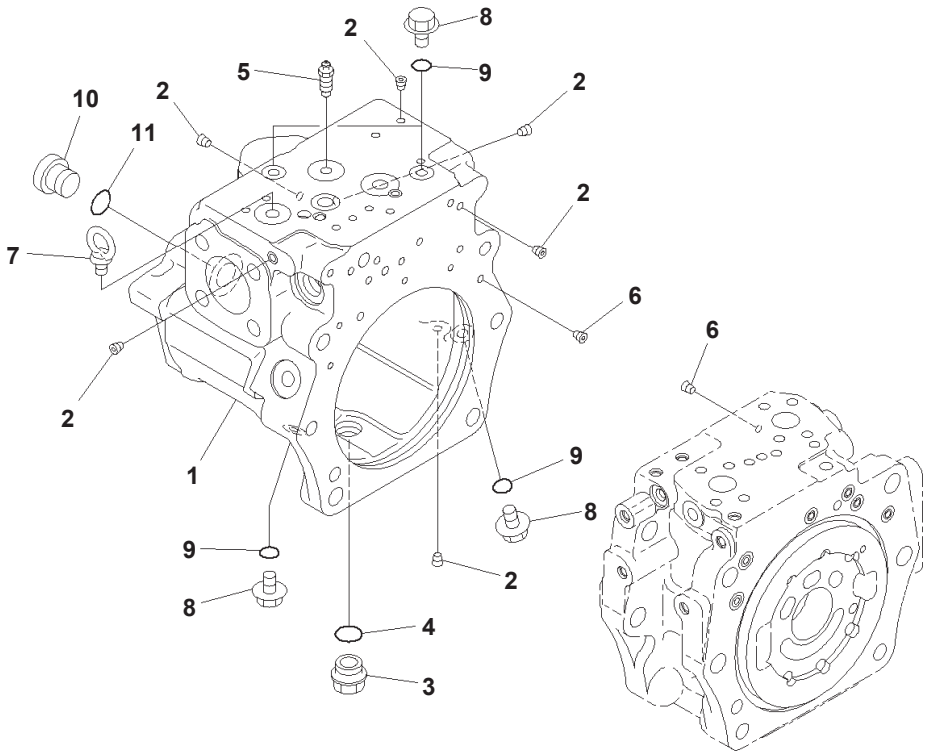

Index	Code	Part Number	Description	Qty	Options
		708-2G-00151	Pump Assembly	1	SN:B10327--
		(708-2G-01151)	・ Pump Subassembly	1	SN:B10327--
	C2	(708-2G-04252)	・・ Case Assembly, (REAR)	1	SN:B10327--
1	C1		・・・ Case, (REAR)	1	SN:B10327--
2	C1		・・・ Plug	36	SN:B10327--
3		(07044-12412)	・・ Plug	1	SN:B10327--
4		(07002-62434)	・・ O-ring	1	SN:B10327--
5		(20B-27-11210)	・・ Bleeder	1	SN:B10327--
6		(708-1L-29340)	・・ Orifice	2	SN:B10327--
7		(04530-01222)	・・ Bolt, Eye	1	SN:B10327--
8		(708-8E-16150)	・・ Plug	4	SN:B10327--
9		(07002-61023)	・・ O-ring	4	SN:B10327--
10		(07040-12414)	・・ Plug	1	SN:B10327--
11		(07002-62434)	・・ O-ring	1	SN:B10327--

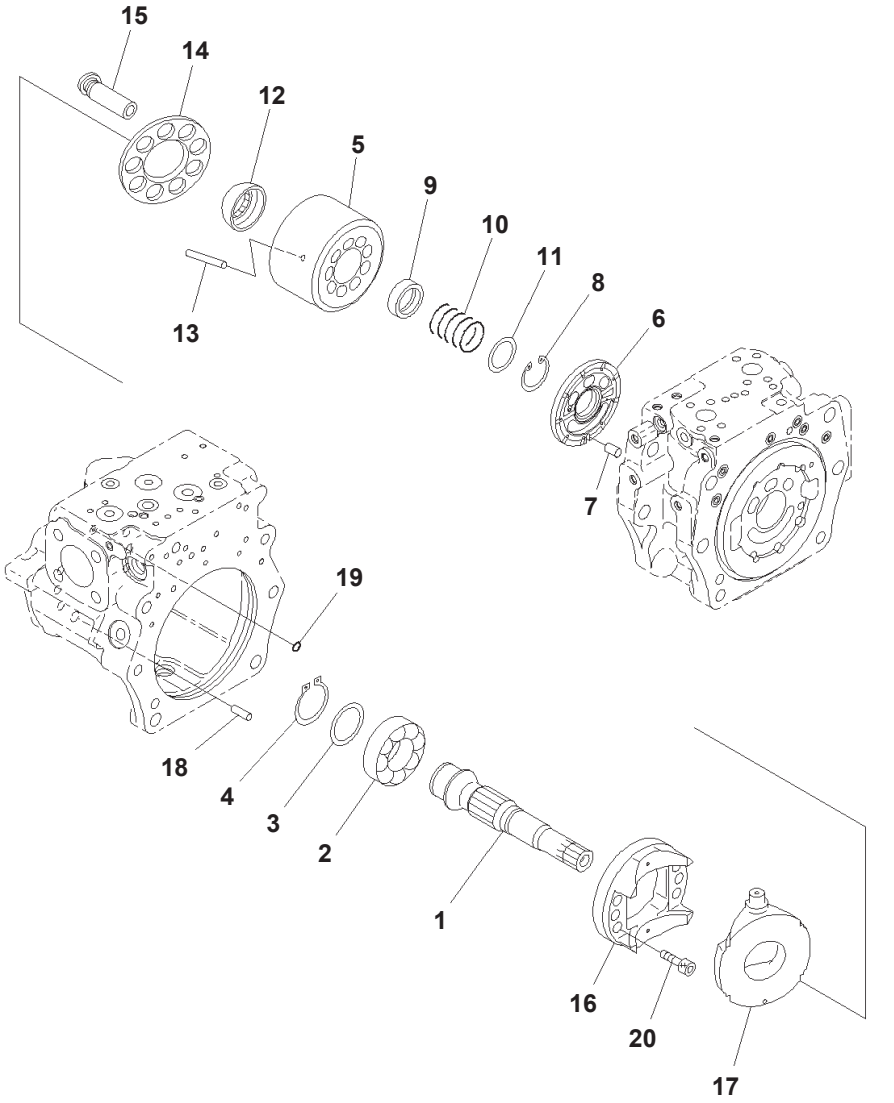

Index	Code	Part Number	Description	Qty	Options
		708-2G-00151	Pump Assembly	1	SN:B10327---
		(708-2G-01151)	・ Pump Subassembly	1	SN:B10327---
1	C2	(708-2G-12720)	・・ Shaft	1	SN:B10327---
2	C2	(708-2G-12251)	・・ Bearing	1	SN:B10327--
3	C2	(708-2G-05010)	・・ Washer Kit	1	SN:B10327--
	C1		・・・ Washer, 3.0mm	1	SN:B10327--
	C1		・・・ Washer, 3.1mm	1	SN:B10327--
	C1		・・・ Washer, 3.2mm	1	SN:B10327--
4	C2	(708-1F-12270)	・・ Ring, Snap	1	SN:B10327--
	C2	(708-2G-04272)	・・ Block Assembly, (REAR)	1	SN:B10327--
5	C1		・・・ Block	1	SN:B10327--
6	C1		・・・ Plate, (VALVE)	1	SN:B10327--
7	C2	(708-18-13230)	・・ Pin	1	SN:B10327--
8	C2	(04065-05520)	・・ Ring, Snap, for Hole Side	1	SN:B10327--
9	C2	(708-2G-13131)	・・ Seat	1	SN:B10327--
10	C2	(708-2G-13152)	・・ Spring	1	SN:B10327--
11	C2	(708-2G-13141)	・・ Seat	1	SN:B10327--
12	C2	(708-2G-13510)	・・ Guide	1	SN:B10327--
13	C2	(708-2H-23360)	・・ Pin	3	SN:B10327--
14	C2	(708-2G-13341)	・・ Retainer	1	SN:B10327--
15	C2	(708-2G-13370)	・・ Piston Subassembly	9	SN:B10327--
	C2	(708-2G-04290)	・・ Cradle Subassembly	1	SN:B10327--
16	C1		・・・ Cradle	1	SN:B10327--
17	C1		・・・ Cam, (ROCKER)	1	SN:B10327--
18	C2	(04020-01434)	・・ Pin, Dowel	1	SN:B10327--
19	C2	(07000-B1009)	・・ O-ring	1	SN:B10327--
20	C2	(01252-61230)	・・ Bolt	6	SN:B10327--

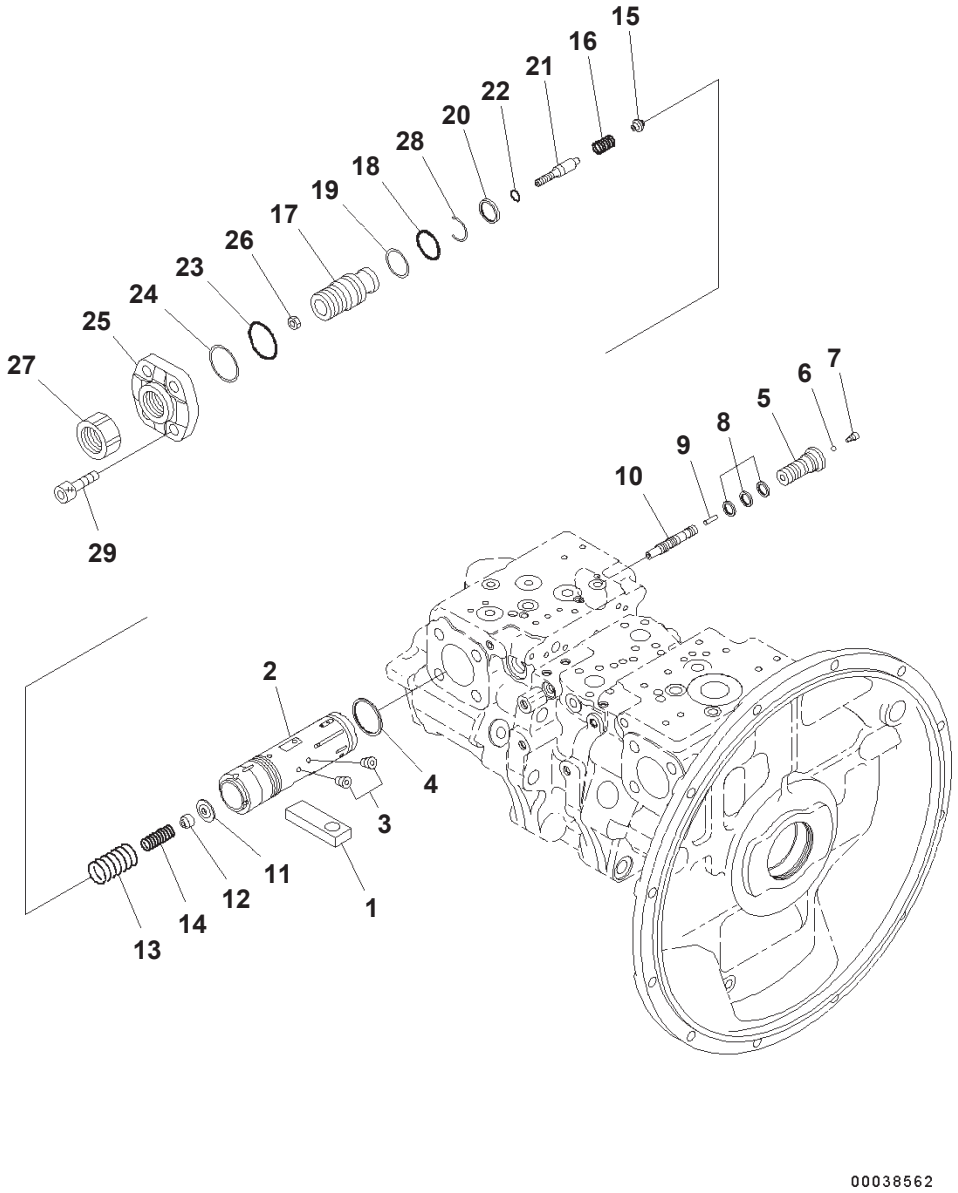

Main Piston Pump Inner Parts (8/12) (#B10327-)

Index	Code	Part Number	Description	Qty	Options
		708-2G-00151	Pump Assembly	1	SN:B10327--
		(708-2G-01151)	・ Pump Subassembly	1	SN:B10327--
1	C2	(708-2G-14120)	・・ Slider	1	SN:B10327--
	C2	(708-2G-03640)	・・ Valve Assembly, (PC)	1	SN:B10327--
	C2	(708-2G-03650)	・・・ Piston Assembly	1	SN:B10327--
2	C1		・・・・ Piston	1	SN:B10327--
3	C1		・・・・ Screw	8	SN:B10327--
4	C1		・・・ Seal	1	SN:B10327--
5	C1		・・・ Plug	1	SN:B10327--
6	C2	(708-2L-35760)	・・・ Ball	1	SN:B10327--
7	C2	(708-2L-35770)	・・・ Plug	1	SN:B10327--
8	C1		・・・ Seal	3	SN:B10327--
9	C2	(708-2L-35170)	・・・ Pin	1	SN:B10327--
10	C2	(708-2G-15211)	・・・ Spool	1	SN:B10327--
11	C2	(708-2G-15290)	・・・ Retainer	1	SN:B10327--
12	C2	(708-2G-15140)	・・・ Seat	1	SN:B10327--
13	C2	(708-2G-15270)	・・・ Spring	1	SN:B10327--
14	C2	(708-2G-15280)	・・・ Spring	1	SN:B10327--
15	C2	(708-2G-15151)	・・・ Seat	1	SN:B10327--
16	C2	(708-2G-15250)	・・・ Spring	1	SN:B10327--
17	C2	(708-2G-14340)	・・・ Screw	1	SN:B10327--
18	C2	(07000-B3038)	・・・ O-ring	1	SN:B10327--
19	C2	(708-2G-15230)	・・・ Ring, Back-up	1	SN:B10327--
20	C1		・・・ Seal	1	SN:B10327--
21	C2	(708-2G-15240)	・・・ Plug	1	SN:B10327--
22	C2	(07000-B2012)	・・・ O-ring	1	SN:B10327--
23	C2	(07000-B2050)	・・・ O-ring	1	SN:B10327--
24	C2	(708-2G-15310)	・・・ Ring	1	SN:B10327--
25	C2	(708-2G-14190)	・・・ Cover	1	SN:B10327--
26	C2	(01580-10806)	・・・ Nut	1	SN:B10327--
27	C2	(708-2L-35290)	・・・ Nut	1	SN:B10327--
28	C2	(708-2G-15330)	・・・ Ring, Wear	1	SN:B10327--
29	C2	(01252-61645)	・・ Bolt, Hexagon Socket Head	4	SN:B10327--

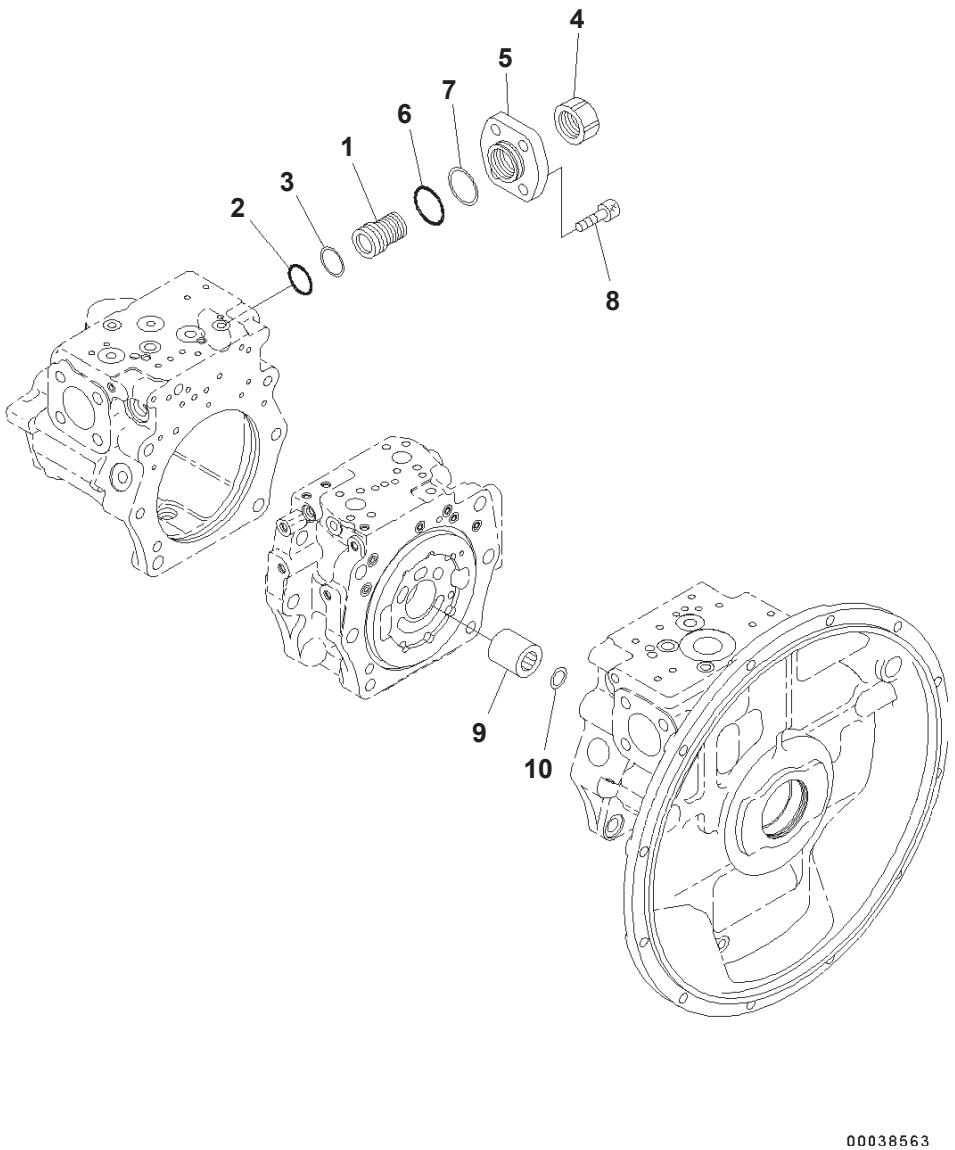

Main Piston Pump Inner Parts (9/12) (#B10327-)

Index	Code	Part Number	Description	Qty	Options
		708-2G-00151	Pump Assembly	1	SN:B10327--
	C2	(708-2G-01151)	・ Pump Subassembly	1	SN:B10327--
	C2	(708-2G-03480)	・・ Cover Assembly	1	SN:B10327--
1	C2	(708-2G-14310)	・・・ Screw	1	SN:B10327--
2	C2	(07000-B3038)	・・・ O-ring	1	SN:B10327--
3	C2	(708-2G-15230)	・・・ Ring, Back-up	1	SN:B10327--
4	C2	(708-2L-35290)	・・・ Nut	1	SN:B10327--
5	C2	(708-2G-14170)	・・・ Cover	1	SN:B10327--
6	C2	(07000-B2050)	・・・ O-ring	1	SN:B10327--
7	C2	(708-2G-15310)	・・・ Ring	1	SN:B10327--
8	C2	(01252-61645)	・・ Bolt, Hexagon Socket Head	4	SN:B10327--

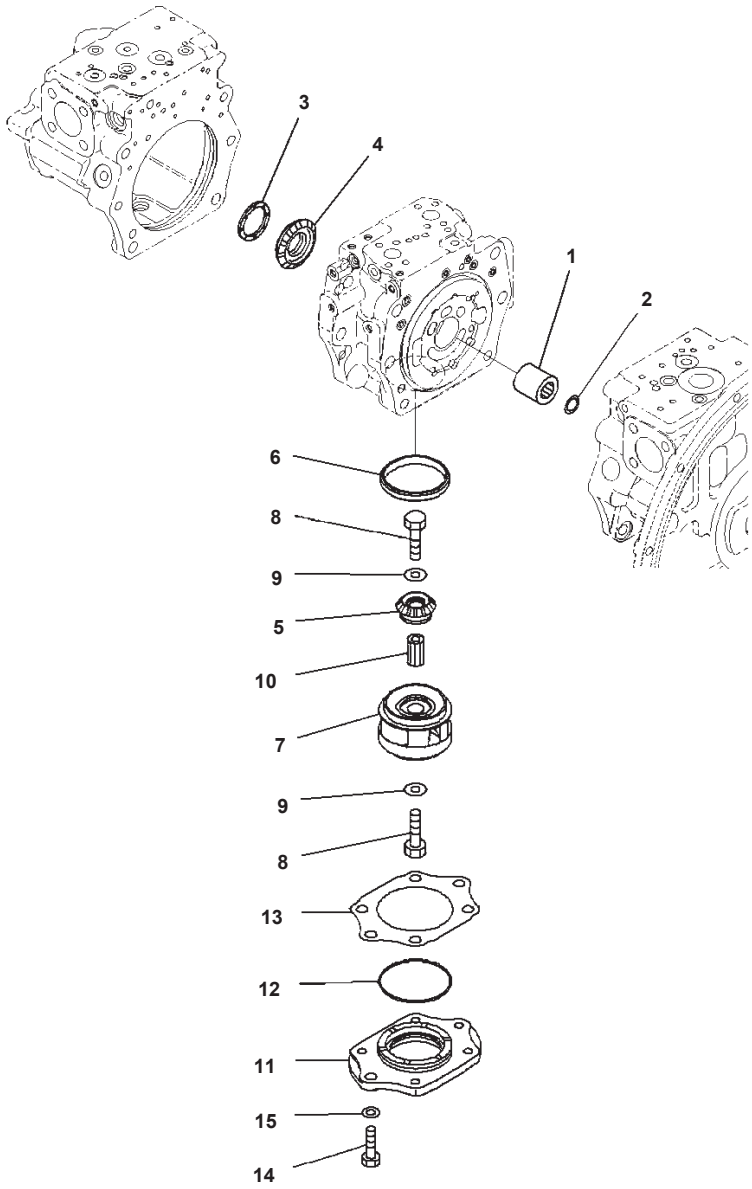

Main Piston Pump Inner Parts (10/12) (#B10327-)

Index	Code	Part Number	Description	Qty	Options
		708-2G-00151	Pump Assembly	1	SN:B10327--
		(708-2G-01151)	・ Pump Subassembly	1	SN:B10327--
	C2	708-2G-12340	・・ Coupling	1	SN:B10327--
1	C2	(708-2F-12420)	・・ Ring	1	SN:B10327--
2	C2	708-2H-21860	・・ Plate	1	SN:B10327--
3	C2	708-2G-04760	・・ Gear Kit	1	SN:B10327--
4	C1		・・・ Gear, Bevel	1	SN:B10327--
5	C1		・・・ Pinion	1	SN:B10327--
6	C2	708-2H-32320	・・ Bushing	1	SN:B10327--
7	C2	708-2H-32330	・・ Impeller	1	SN:B10327--
8	C2	01010-61220	・・ Bolt	2	SN:B10327--
9	C2	708-2H-32350	・・ Washer	2	SN:B10327--
10	C2	708-2H-32360	・・ Shaft	1	SN:B10327--
11	C2	07000-A2105	・・ Cover	1	SN:B10327--
12	C2	(07000-A2105)	・・ O-Ring	1	SN:B10327--
13	C2	(708-2G-05020)	・・ Shim Kit	1	SN:B10327--
	C1		・・・ Shim, T=0.1mm	2	SN:B10327--
	C1		・・・ Shim, T=0.2mm	2	SN:B10327--
	C1		・・・ Shim, T=0.5mm	3	SN:B10327--
14		01010-81235	・・ Bolt	2	SN:B10327--
15		01643-31232	・・ Washer	2	SN:B10327--

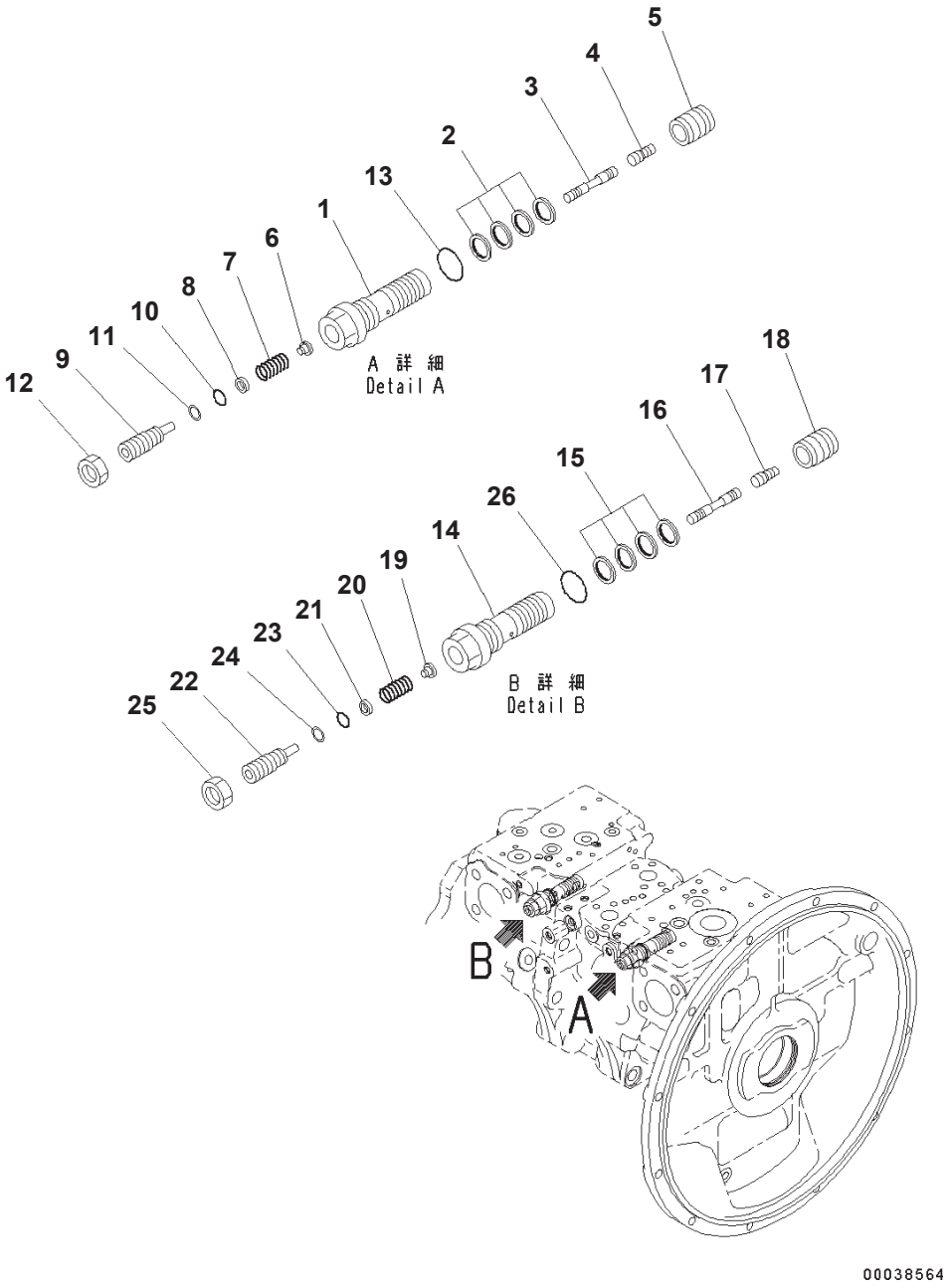

Main Piston Pump Inner Parts (11/12) (#B10327-)

Index	Code	Part Number	Description	Qty	Options
		708-2G-00151	Pump Assembly	1	SN:B10327---
		708-2G-03720	· Valve Assembly, (LS)	1	SN:B10327--
1	C1		· · Sleeve	1	SN:B10327--
2	C1		· · Seal	4	SN:B10327--
3	C2	708-2J-15310	· · Spool	1	SN:B10327--
4	C2	708-2L-28540	· · Piston	1	SN:B10327--
5	C2	708-2L-35360	· · Sleeve	1	SN:B10327--
6	C2	708-2L-35331	· · Seat	1	SN:B10327--
7	C2	708-2L-35410	· · Spring	1	SN:B10327--
8	C2	708-2L-35341	· · Seat	1	SN:B10327--
9	C2	708-2L-35351	· · Plug	1	SN:B10327--
10	C2	07000-B1009	· · O-ring	1	SN:B10327--
11	C2	07001-01009	· · Ring, Back-up	1	SN:B10327--
12		01583-11408	· · Nut	1	SN:B10327--
13		07002-62434	· · O-ring	1	SN:B10327--
		708-2G-03920	· Valve Assembly, (LS)	1	SN:B10327--
14	C1		· · Sleeve	1	SN:B10327--
15	C1		· · Seal	4	SN:B10231--
16	C2	708-2J-15310	· · Spool	1	SN:B10327--
17	C2	708-2L-28540	· · Piston	1	SN:B10327--
18	C2	708-2L-35360	· · Sleeve	1	SN:B10327--
19	C2	708-2G-15420	· · Seat	1	SN:B10327--
20	C2	708-2L-35410	· · Spring	1	SN:B10327--
21	C2	708-2L-35341	· · Seat	1	SN:B10327--
22	C2	708-2L-35351	· · Plug	1	SN:B10327--
23	C2	07000-B1009	· · O-ring	1	SN:B10327--
24	C2	07001-01009	· · Ring, Back-up	1	SN:B10327--
25		01583-11408	· · Nut	1	SN:B10327--
26		07002-62434	· · O-ring	1	SN:B10327--

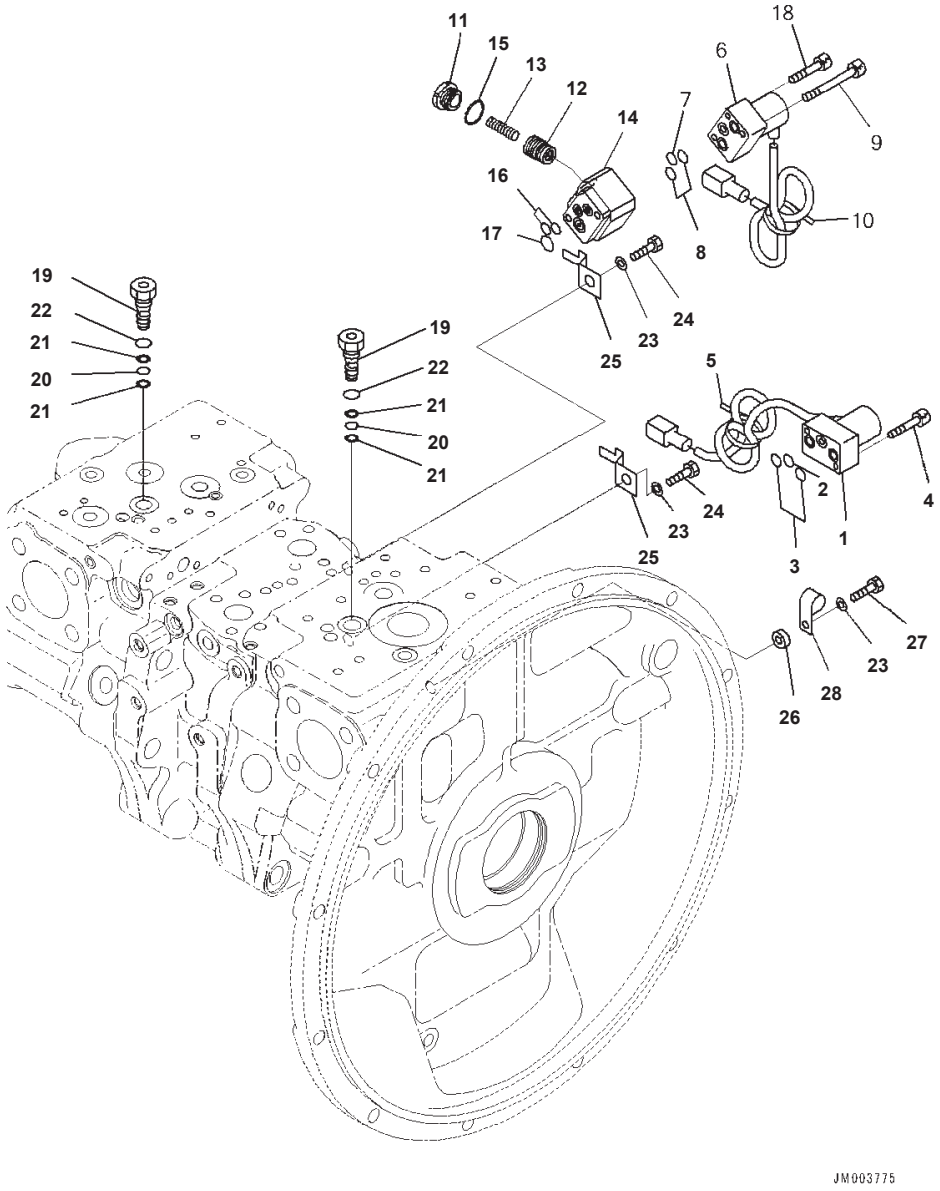

Index	Part Number	Description	Qty	Options
	708-2G-00151	Pump Assembly	1	SN:B10327--
1	702-21-57400	· Valve, Pilot	1	SN:B10327--
2	723-11-19960	· · O-ring	1	SN:B10327--
3	702-21-54910	· · O-ring	2	SN:B10327--
4	01252-60635	· Bolt	2	SN:B10327--
5	20Y-62-22790	· Band, Red	1	SN:B10327--
6	702-21-57500	· Valve, Pilot	1	SN:B10327--
7	723-11-19960	· · O-ring	1	SN:B10327--
8	702-21-54910	· · O-ring	2	SN:B10327--
9	702-16-55260	· Bolt	2	SN:B10327--
10	20Y-62-22830	· Band, White	1	SN:B10327--
	702-21-56600	· Valve Assembly	1	SN:B10327--
11	702-21-55920	· · Plug	1	SN:B10327--
12	702-21-55930	· · Piston	1	SN:B10327--
13	702-21-56610	· · Spring	1	SN:B10327--
14	702-21-55951	· · Block	1	SN:B10327--
15	07002-12034	· · O-ring	1	SN:B10327--
16	07000-11008	· O-ring	2	SN:B10327--
17	722-12-18240	· O-ring	1	SN:B10327--
18	01252-60530	· Bolt, Hexagon Socket Head	1	SN:B10327--
19	708-2G-15680	· Plug	2	SN:B10327--
20	07000-B1008	· O-ring	2	SN:B10327--
21	07001-01008	· Ring, Back-up	4	SN:B10327--
22	07002-61423	· O-ring	2	SN:B10327--
23	01643-51232	· Washer	3	SN:B10327--
24	01010-81220	· Bolt	3	SN:B10327--
25	08193-21012	· Clip	2	SN:B10327--
26	708-2G-19130	· Spacer	1	SN:B10327--
27	01010-81235	· Bolt	1	SN:B10327--
28	04434-50612	· Clip	1	SN:B10327--

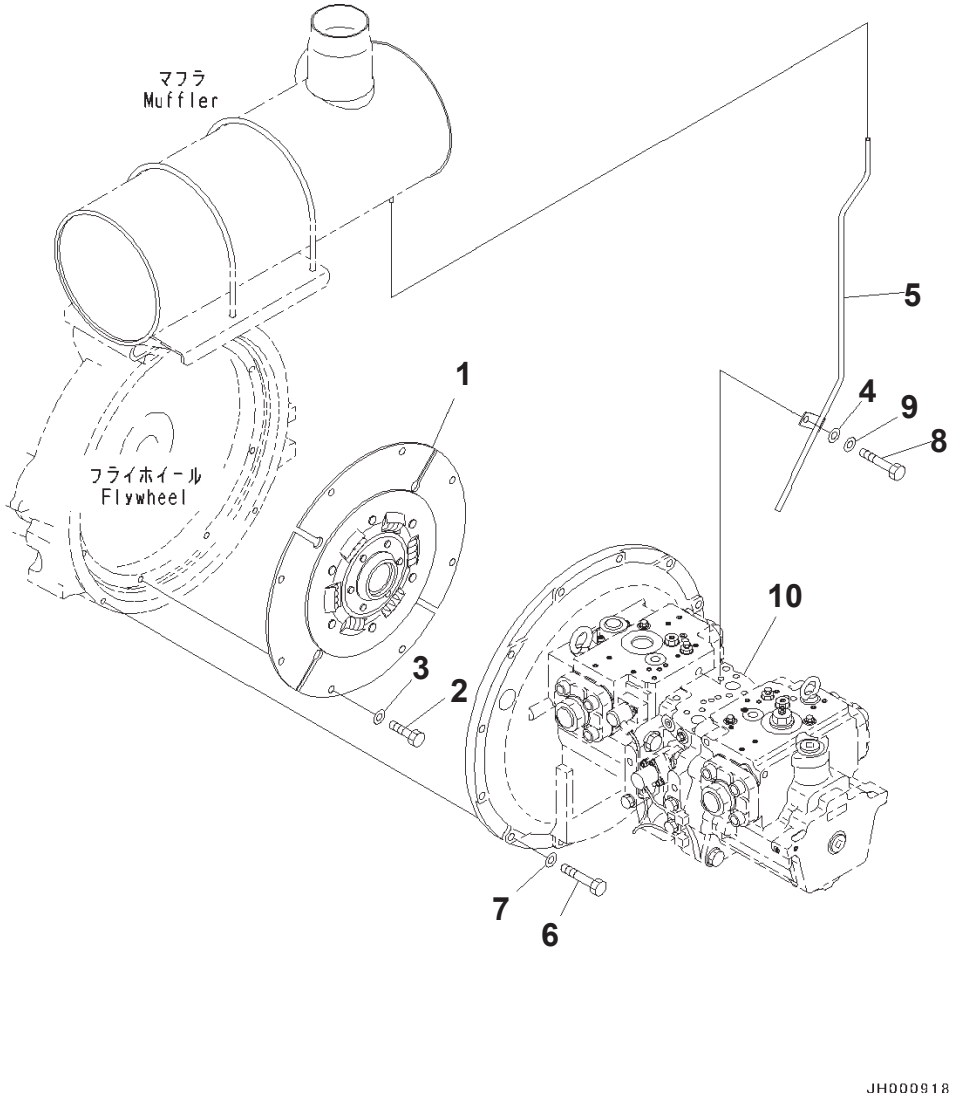

Index	Part Number	Description	Page	Item	Qty	Options
1	207-01-71310	Disc			1	SN:B10001--@
2	01010-81225	Bolt			8	SN:B10001--@
3	01643-31232	Washer			8	SN:B10001--@
4	6691-21-6360	Washer			1	SN:B10001--B10177
5	6745-11-5740	Tube			1	SN:B10001--B10177
6	01010-81240	Bolt			11	SN:B10001--B10177
7	01643-31232	Washer			11	SN:B10001--B10177
8	01010-81245	Bolt			1	SN:B10001--B10177
9	01643-31232	Washer			1	SN:B10001--B10177
10	(708-2G-00700)	Pump Assembly	A9999-002001	1		SN:--

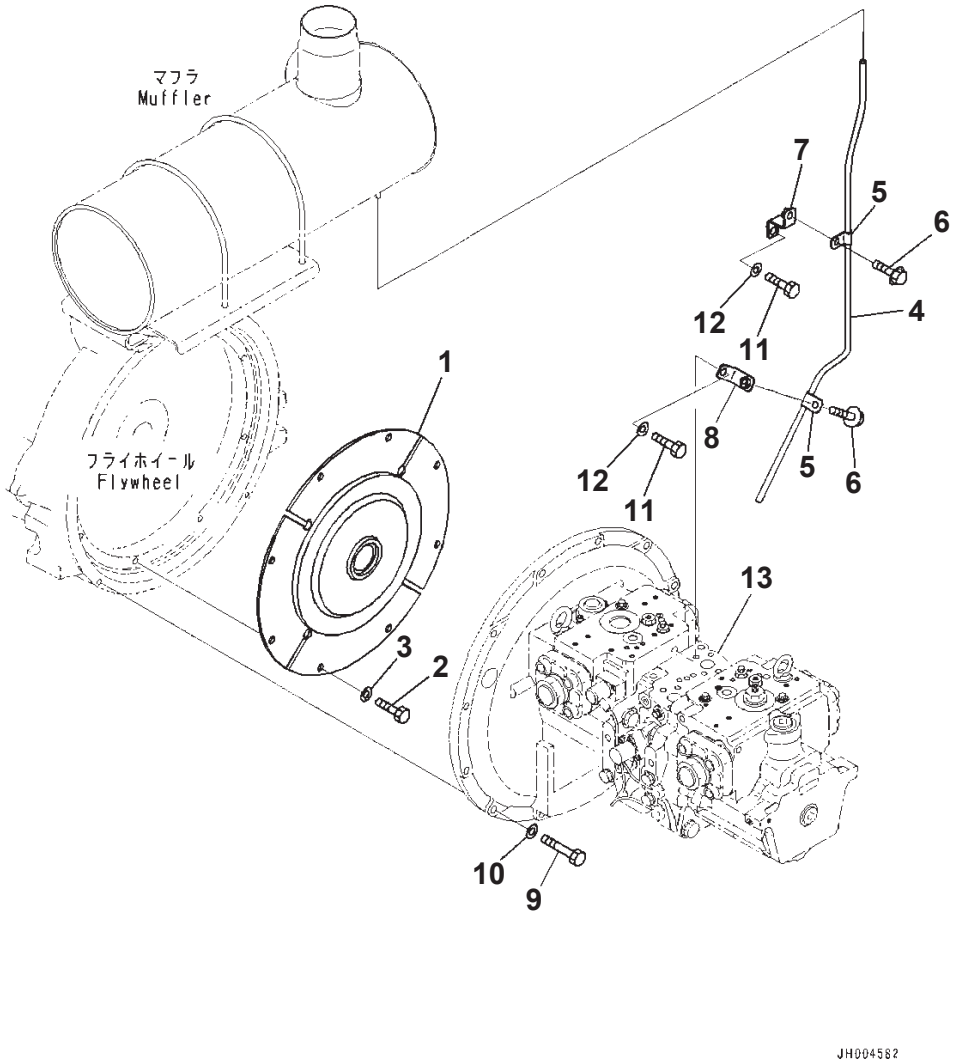

Index	Part Number	Description	Page	Item	Qty	Options
1	207-01-71310	Disc			1	SN:B10001--
2	01010-81225	Bolt			8	SN:B10001--
3	01643-31232	Washer			8	SN:B10001--
4	207-01-75360	Tube			1	SN:B10178--
5	6991-11-5990	Clamp			2	SN:B10178--
6	01435-01016	Bolt			2	SN:B10178--
7	6745-11-8260	Bracket			1	SN:B10178--
8	6745-11-8270	Bracket			1	SN:B10178--
9	01010-81240	Bolt			11	SN:B10178--
10	01643-31232	Washer			11	SN:B10178--
11	01010-81245	Bolt			2	SN:B10178--
12	01643-31232	Washer			2	SN:B10178--
13	(708-2G-00151)	Pump Assembly	A9999-003012	1		SN:--

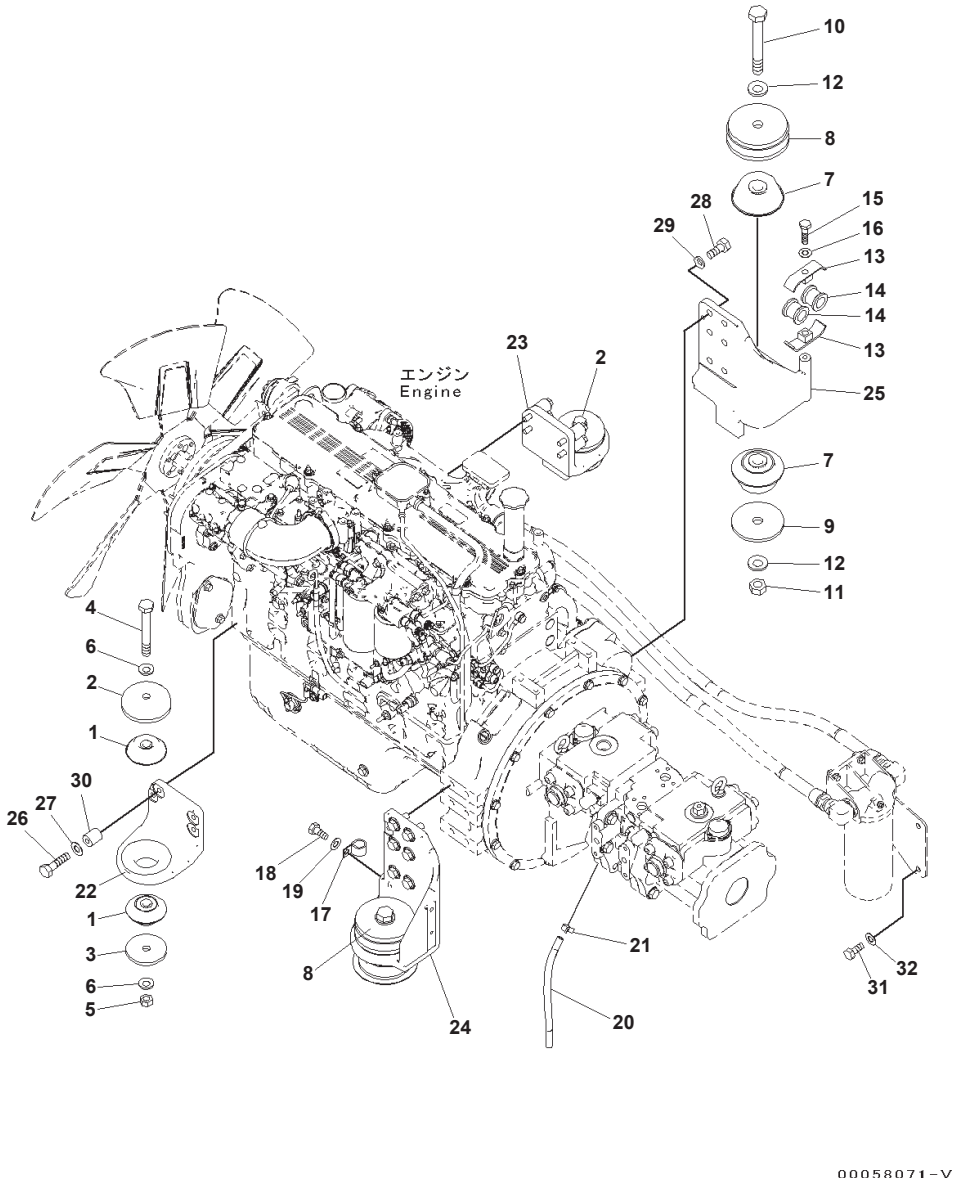

Engine Mounts

Index	Code	Part Number	Description	Qty	Options
1		23S-01-11140	Cushion	4	SN:B10001--
2		207-01-61150	Stopper	2	SN:B10001--
3		207-01-75150	Plate	2	SN:B10001--
4		207-01-55181	Bolt	2	SN:B10001--
5		01580-11815	Nut	2	SN:B10250--
	A2	01580-01815	Nut	2	SN:B10001--B10249
6		01643-31845	Washer	4	SN:B10001--
7		208-01-55220	Cushion	4	SN:B10001--
8		207-01-61170	Stopper	2	SN:B10001--
9		208-01-11161	Washer	2	SN:B10001--
10		208-01-11181	Bolt	2	SN:B10001--
11		01580-12419	Nut	2	SN:B10250--
	A2	01580-02419	Nut	2	SN:B10001--B10249
12		01643-32460	Washer	4	SN:B10001--
13		07094-30620	Clamp	2	SN:B10001--
14		07095-00630	Cushion	2	SN:B10001--
15		01010-81275	Bolt	1	SN:B10001--
16		01643-31232	Washer	1	SN:B10001--
17		04434-52512	Clip	1	SN:B10001--
18		01010-81220	Bolt	1	SN:B10001--
19		01643-31232	Washer	1	SN:B10001--
20		07260-20932	Hose	1	SN:B10001--
21		07285-00155	Clip	1	SN:B10001--
22		207-01-75110	Bracket	1	SN:B10001--
23		207-01-75120	Bracket	1	SN:B10001--
24		207-01-75130	Bracket	1	SN:B10001--
25		207-01-75140	Bracket	1	SN:B10001--
26		01010-81275	Bolt	8	SN:B10001--
27		01643-31232	Washer	8	SN:B10001--
28		01010-81645	Bolt	12	SN:B10001--
29		01643-31645	Washer	12	SN:B10001--
30		195-43-41530	Collar	8	SN:B10001--
31		01010-81230	Bolt	2	SN:B10001--
32		01643-31232	Washer	2	SN:B10001--

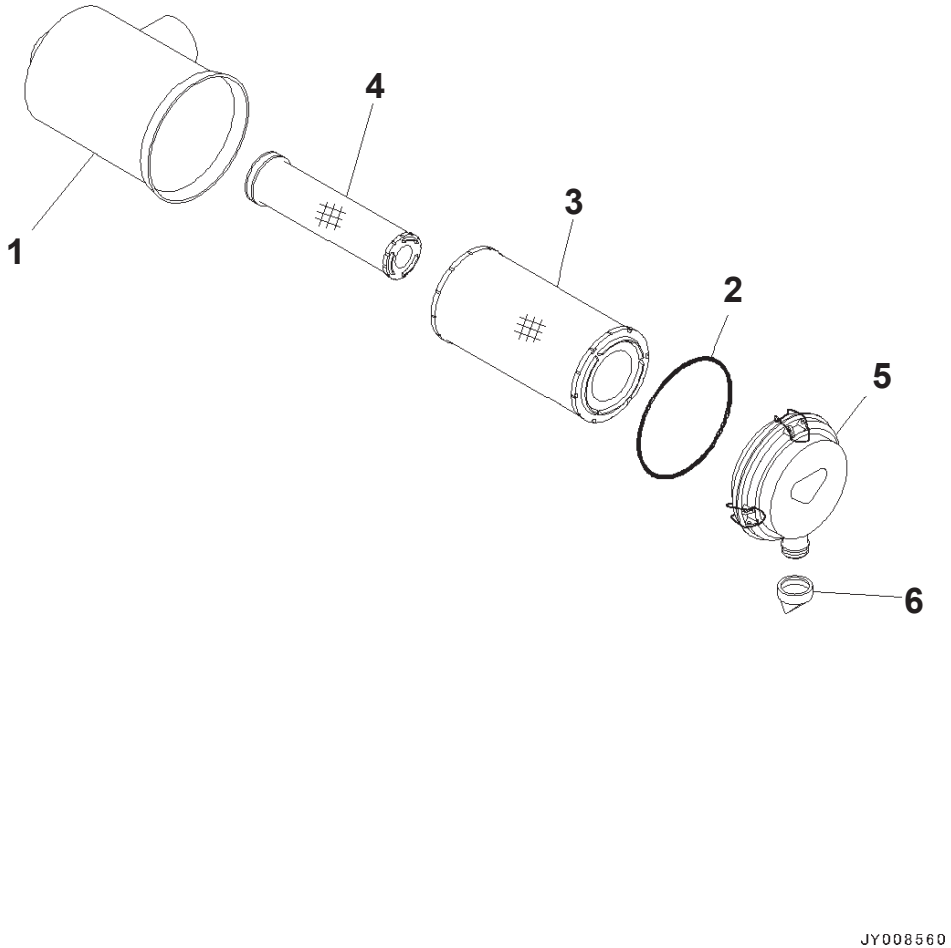

Air Cleaner (1/2)

Index	Code	Part Number	Description	Qty	Options
		6156-81-7202	Air Cleaner Assembly	1	SN:B10270--
	A2	6156-81-7201	Air Cleaner Assembly	1	SN:B10001--B10269
1		6156-81-7210	・Body	1	SN:B10001--
		600-185-6100	・Element Assembly	1	SN:B10001--
2		600-184-1671	・・O-ring	1	SN:B10001--
3		600-185-6110	・・Element, Outer	1	SN:B10001--
4	C1		・・Element, Inner	1	SN:B10001--
5		600-184-1611	・Cover Assembly	1	SN:B10001--
		600-184-2810	・・Plate	1	SN:B10001--
6		600-184-1350	・Valve, Vacuator	1	SN:B10001--

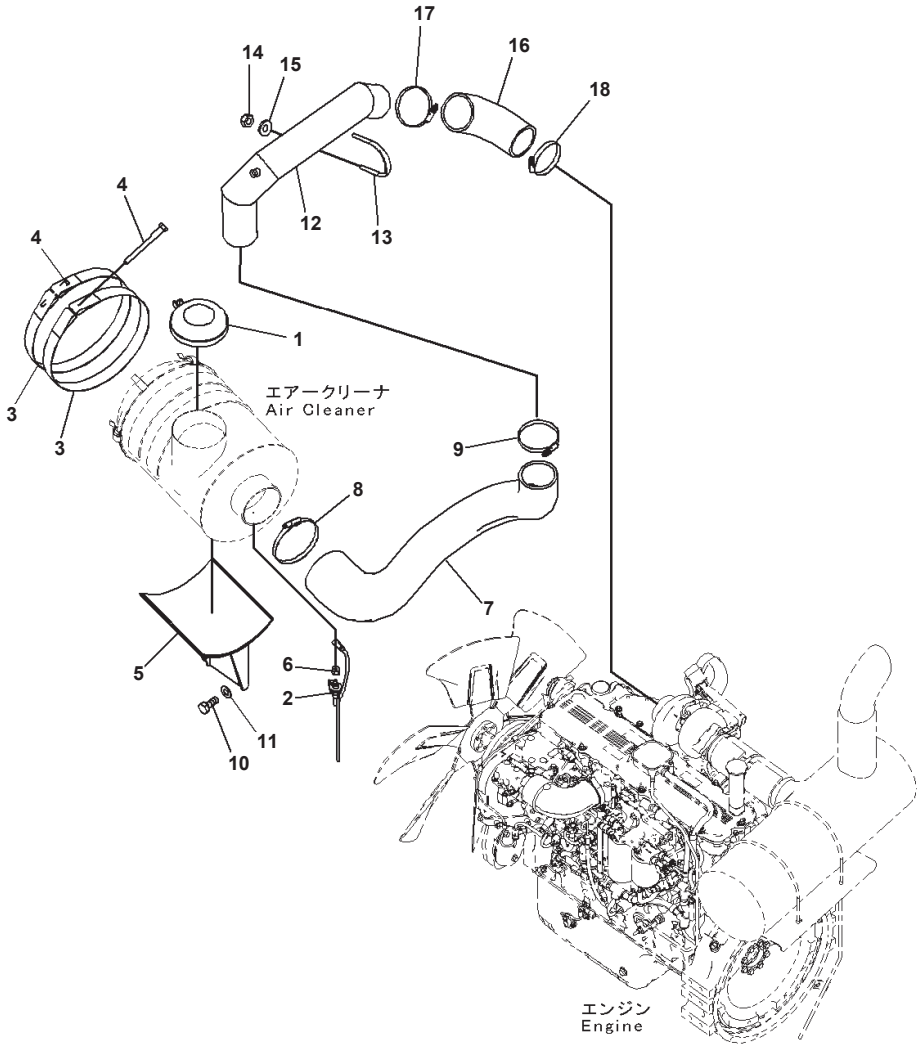

JY001385-V

Index	Code	Part Number	Description	Qty	Options
1		6128-81-7420	Screen	1	SN:B10001--
2		20Y-06-42910	Sensor, Switch	1	SN:B10219--
	A2	7861-93-1421	Sensor, Switch	1	SN:B10037--B10218
	A2	7861-93-1420	Sensor, Switch	1	SN:B10001--B10036
3		6151-11-9970	Band Assembly	2	SN:B10001--
4		6643-11-4641	Bolt	2	SN:B10001--
5		207-01-75160	Bracket	1	SN:B10001--
6		11Y-01-11920	Joint	1	SN:B10001--
7		207-01-75170	Hose	1	SN:B10001--
8		208-01-72180	Clamp	1	SN:B10001--
9		07299-00130	Clamp, Hose	1	SN:B10001--
10		01010-81225	Bolt	4	SN:B10001--
11		01643-31232	Washer	4	SN:B10001--
12		207-01-75180	Tube	1	SN:B10001--
13		07283-31185	Clip	1	SN:B10001--
14		01597-01211	Nut	2	SN:B10001--
15		01643-31232	Washer	2	SN:B10001--
16		207-01-75190	Hose	1	SN:B10001--
17		07299-00130	Clamp, Hose	1	SN:B10001--
18		07299-00120	Clamp	1	SN:B10001--

COOLING SYSTEM

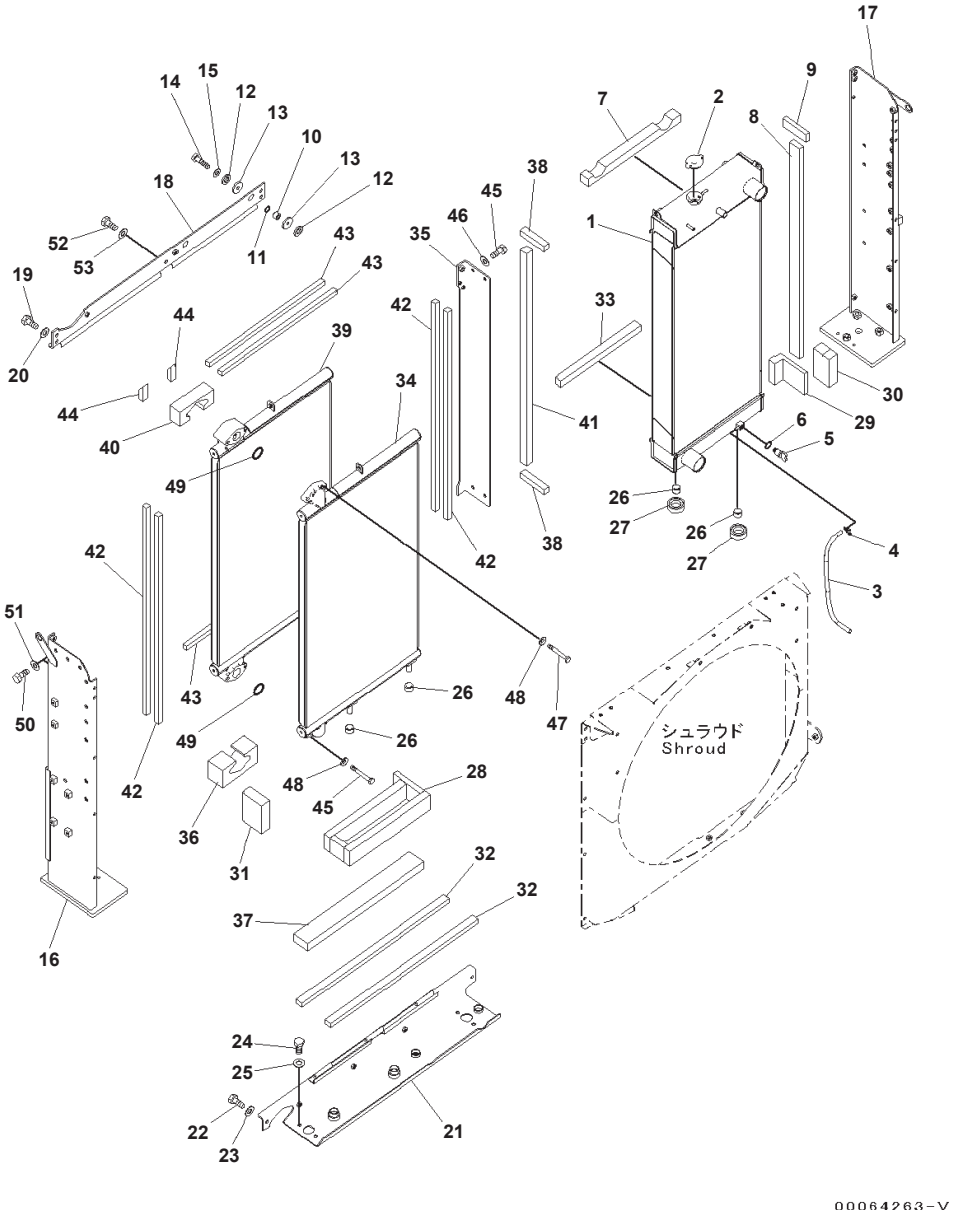

Cooling System Radiator And Oil Cooler (#B10001-B10031)

Index	Part Number	Description	Qty	Options
1	207-03-75120	Radiator	1	SN:B10001--B10031
2	20Y-03-22110	Cap	1	SN:B10001--@
3	205-03-71230	Hose	1	SN:B10001--@
4	20Y-03-11330	Clip	1	SN:B10001--@
5	205-03-62660	Plug	1	SN:B10001--@
6	07000-11007	・ O-ring	1	SN:B10001--@
7	208-03-71730	Seal	1	SN:B10001--B10031
8	208-03-71810	Seal	1	SN:B10001--@
9	208-03-71840	Seal	1	SN:B10001--@
10	201-03-29160	Spacer	2	SN:B10001--B10031
11	07002-12434	O-ring	2	SN:B10001--B10031
12	201-910-6730	Cushion	4	SN:B10001--B10031
13	207-03-75590	Plate	4	SN:B10001--B10031
14	01010-81045	Bolt	2	SN:B10001--B10031
15	01643-31032	Washer	2	SN:B10001--@
16	207-03-75171	Frame	1	SN:B10001--@
17	207-03-75181	Frame	1	SN:B10001--@
18	207-03-76340	Frame	1	SN:B10001--B10031
19	01010-81225	Bolt	2	SN:B10001--@
20	01643-31232	Washer	2	SN:B10001--@
21	207-03-76350	Frame	1	SN:B10001--@
22	01010-81030	Bolt	2	SN:B10001--@
23	01643-31032	Washer	2	SN:B10001--@
24	01010-81020	Bolt	4	SN:B10001--@
25	01643-31032	Washer	4	SN:B10001--@
26	22B-03-12590	Cushion	4	SN:B10001--@
27	208-03-71380	Cushion	2	SN:B10001--@
28	208-03-71480	Seal	1	SN:B10001--@
29	208-03-71490	Seal	1	SN:B10001--@
30	208-03-71780	Seal	1	SN:B10001--@
31	207-03-76410	Seal	1	SN:B10001--@
32	208-03-71821	Seal	2	SN:B10001--@
33	208-03-71830	Seal	1	SN:B10001--@
34	207-03-76320	Oil Cooler Assembly	1	SN:B10001--@
35	207-03-76330	Frame	1	SN:B10001--@
36	207-03-76380	Seal	1	SN:B10001--@
37	207-03-76390	Seal	1	SN:B10001--@
38	207-03-76420	Seal	2	SN:B10001--@
39	208-03-71131	Oil Cooler	1	SN:B10001--@
40	208-03-71690	Seal	1	SN:B10001--@
41	208-03-71850	Seal	1	SN:B10001--@
42	208-03-71860	Seal	4	SN:B10001--@
43	208-03-71870	Seal	3	SN:B10001--@
44	208-03-71890	Seal	2	SN:B10001--@
45	01010-81020	Bolt	4	SN:B10001--@
46	01643-31032	Washer	4	SN:B10001--@
47	01010-81240	Bolt	4	SN:B10001--@
48	01643-31232	Washer	4	SN:B10001--@
49	07000-13045	O-ring	2	SN:B10001--@
50	01010-81030	Bolt	3	SN:B10001--@
51	01643-31032	Washer	3	SN:B10001--@
52	01010-81225	Bolt	1	SN:B10001--@
53	01643-31232	Washer	1	SN:B10001--@

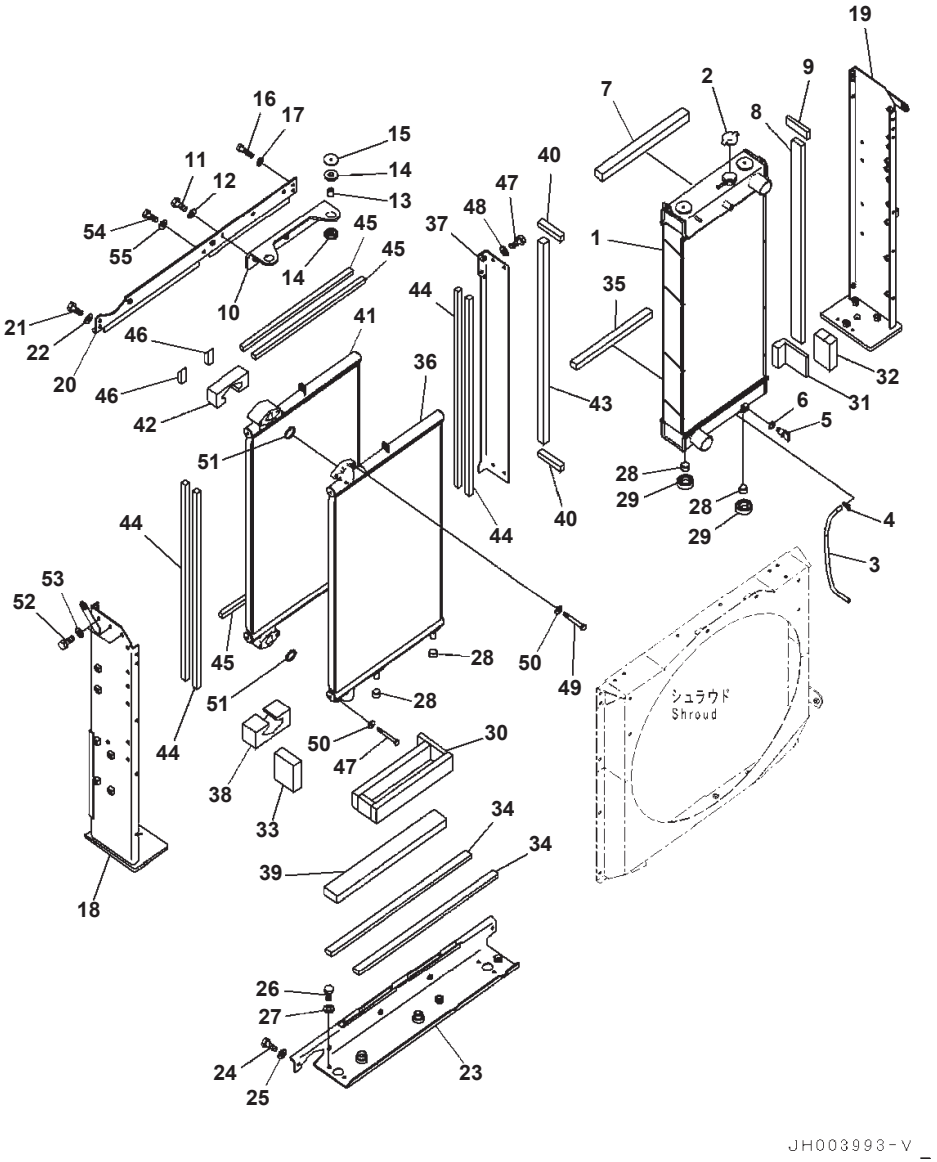

Cooling System Radiator And Oil Cooler (#B10032-)

Index	Code	Part Number	Description	Qty	Options
1		207-03-75121	Radiator	1	SN:B10032--
2		20Y-03-22110	Cap	1	SN:B10001--
3		205-03-71230	Hose	1	SN:B10001--
4		20Y-03-11330	Clip	1	SN:B10001--
5		205-03-62660	Plug	1	SN:B10001--
6		07000-11007	・ O-ring	1	SN:B10001--
7		208-03-71731	Seal	1	SN:B10032--
8		208-03-71810	Seal	1	SN:B10001--
9		208-03-71840	Seal	1	SN:B10001--
10		207-03-76450	Bracket	1	SN:B10032--
11		01010-81235	Bolt	3	SN:B10032--
12		01643-31232	Washer	3	SN:B10032--
13		14X-03-51640	Spacer	2	SN:B10032--
14		14X-03-51621	Cushion	4	SN:B10032--
15		14X-03-51770	Washer	2	SN:B10032--
16		01010-81045	Bolt	2	SN:B10084--
	A2	01010-81055	Bolt	2	SN:B10032--B10083
17	A2	01643-31032	Washer	2	SN:B10001--B10083
18		207-03-75171	Frame	1	SN:B10001--
19		207-03-75181	Frame	1	SN:B10001--
20		207-03-76341	Frame	1	SN:B10032--
21		01010-81225	Bolt	2	SN:B10001--
22		01643-31232	Washer	2	SN:B10001--
23		207-03-76350	Frame	1	SN:B10001--
24		01010-81030	Bolt	2	SN:B10001--
25		01643-31032	Washer	2	SN:B10001--
26		01010-81020	Bolt	4	SN:B10001--
27		01643-31032	Washer	4	SN:B10001--
28		22B-03-12590	Cushion	4	SN:B10001--
29		208-03-71380	Cushion	2	SN:B10001--
30		208-03-71480	Seal	1	SN:B10001--
31		208-03-71490	Seal	1	SN:B10001--
32		208-03-71780	Seal	1	SN:B10001--
33		207-03-76410	Seal	1	SN:B10001--
34		208-03-71821	Seal	2	SN:B10001--
35		208-03-71830	Seal	1	SN:B10001--
36		207-03-76320	Oil Cooler Assembly	1	SN:B10001--
37		207-03-76330	Frame	1	SN:B10001--
38		207-03-76380	Seal	1	SN:B10001--
39		207-03-76390	Seal	1	SN:B10001--
40		207-03-76420	Seal	2	SN:B10001--
41		208-03-71131	Oil Cooler	1	SN:B10001--
42		208-03-71690	Seal	1	SN:B10001--
43		208-03-71850	Seal	1	SN:B10001--
44		208-03-71860	Seal	4	SN:B10001--
45		208-03-71870	Seal	3	SN:B10001--
46		208-03-71890	Seal	2	SN:B10001--
47		01010-81020	Bolt	4	SN:B10001--
48		01643-31032	Washer	4	SN:B10001--
49		01010-81240	Bolt	4	SN:B10001--
50		01643-31232	Washer	4	SN:B10001--
51		07000-13045	O-ring	2	SN:B10001--
52		01010-81030	Bolt	3	SN:B10001--
53		01643-31032	Washer	3	SN:B10001--

PC350LC-8 S/N B10001-UP

Cooling System Radiator And Oil Cooler (#B10032-)

Index	Code	Part Number	Description	Qty	Options
54		01010-81225	Bolt	1	SN:B10001--
55		01643-31232	Washer	1	SN:B10001--

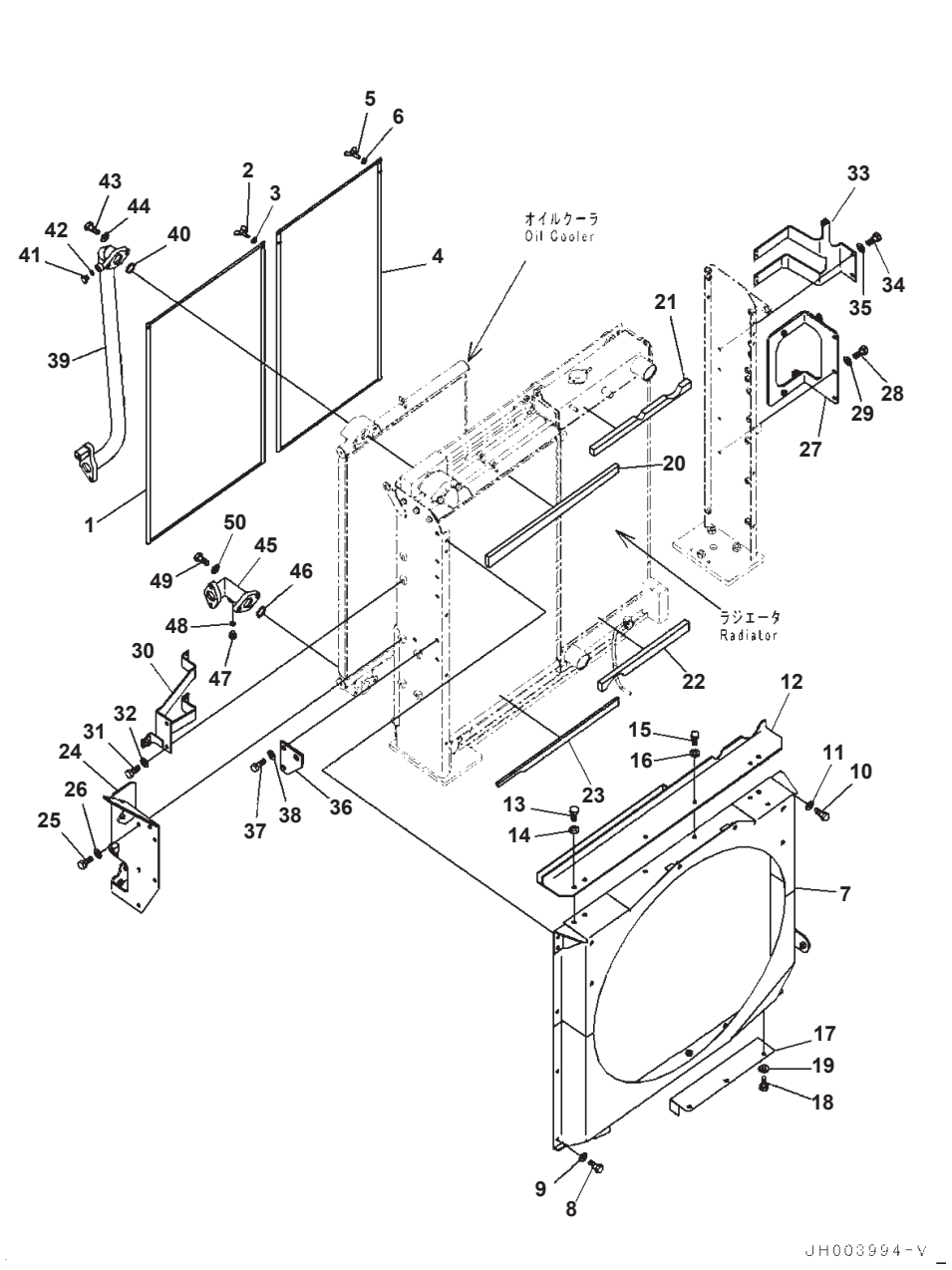

Index	Code	Part Number	Description	Qty	Options
1		208-03-71360	Net	1	SN:B10001--
2		01434-10616	Bolt, Wing	2	SN:B10001--
3		01643-30623	Washer	2	SN:B10001--
4		208-03-71370	Net	1	SN:B10001--
5		01434-10616	Bolt, Wing	2	SN:B10001--
6		01643-30623	Washer	2	SN:B10001--
7		207-03-75252	Cover	1	SN:B10001--
8		01010-81020	Bolt	7	SN:B10001--
9		01643-31032	Washer	7	SN:B10001--
10		01010-81030	Bolt	4	SN:B10001--
11		01643-31032	Washer	4	SN:B10001--
12		207-03-76371	Cover	1	SN:B10032--
	A2	207-03-76370	Cover	1	SN:B10001--B10031
13		01010-81030	Bolt	4	SN:B10001--
14		01643-31032	Washer	4	SN:B10001--
15		01010-81020	Bolt	2	SN:B10001--
16		01643-31032	Washer	2	SN:B10001--
17		207-03-75270	Cover	1	SN:B10001--
18		01010-81020	Bolt	3	SN:B10001--
19		01643-31032	Washer	3	SN:B10001--
20		208-03-71720	Seal	1	SN:B10001--
21		208-03-71741	Seal	1	SN:B10001--
22		208-03-71751	Seal	1	SN:B10001--
23		208-03-71760	Seal	1	SN:B10001--
24		207-03-75231	Bracket	1	SN:B10001--
25		01010-81030	Bolt	4	SN:B10001--
26		01643-31032	Washer	4	SN:B10001--
27		207-03-75241	Bracket	1	SN:B10001--
28		01010-81020	Bolt	2	SN:B10001--
29		01643-31032	Washer	2	SN:B10001--
30		207-979-7623	Bracket	1	SN:B10001--
31		01010-81020	Bolt	2	SN:B10001--
32		01643-31032	Washer	2	SN:B10001--
33		207-979-7631	Bracket	1	SN:B10001--
34		01010-81020	Bolt	2	SN:B10001--
35		01643-31032	Washer	2	SN:B10001--
36		207-03-75190	Bracket	1	SN:B10001--
37		01010-81225	Bolt	2	SN:B10001--
38		01643-31232	Washer	2	SN:B10001--
39		207-03-75211	Tube	3	SN:B10001--
40		07002-11423	O-ring	1	SN:B10001--
41		07040-11409	Plug	1	SN:B10001--
42		07000-13045	O-ring	1	SN:B10001--
43		01010-81235	Bolt	3	SN:B10001--
44		01643-31232	Washer	3	SN:B10001--
45		208-03-71350	Tube	1	SN:B10001--
46		07000-13045	O-ring	1	SN:B10001--
47		07040-11409	Plug	1	SN:B10001--
48		07002-11423	O-ring	1	SN:B10001--
49		01010-81235	Bolt	2	SN:B10001--
50		01643-31232	Washer	2	SN:B10001--
53		01643-31232	Washer	3	SN:B10027--

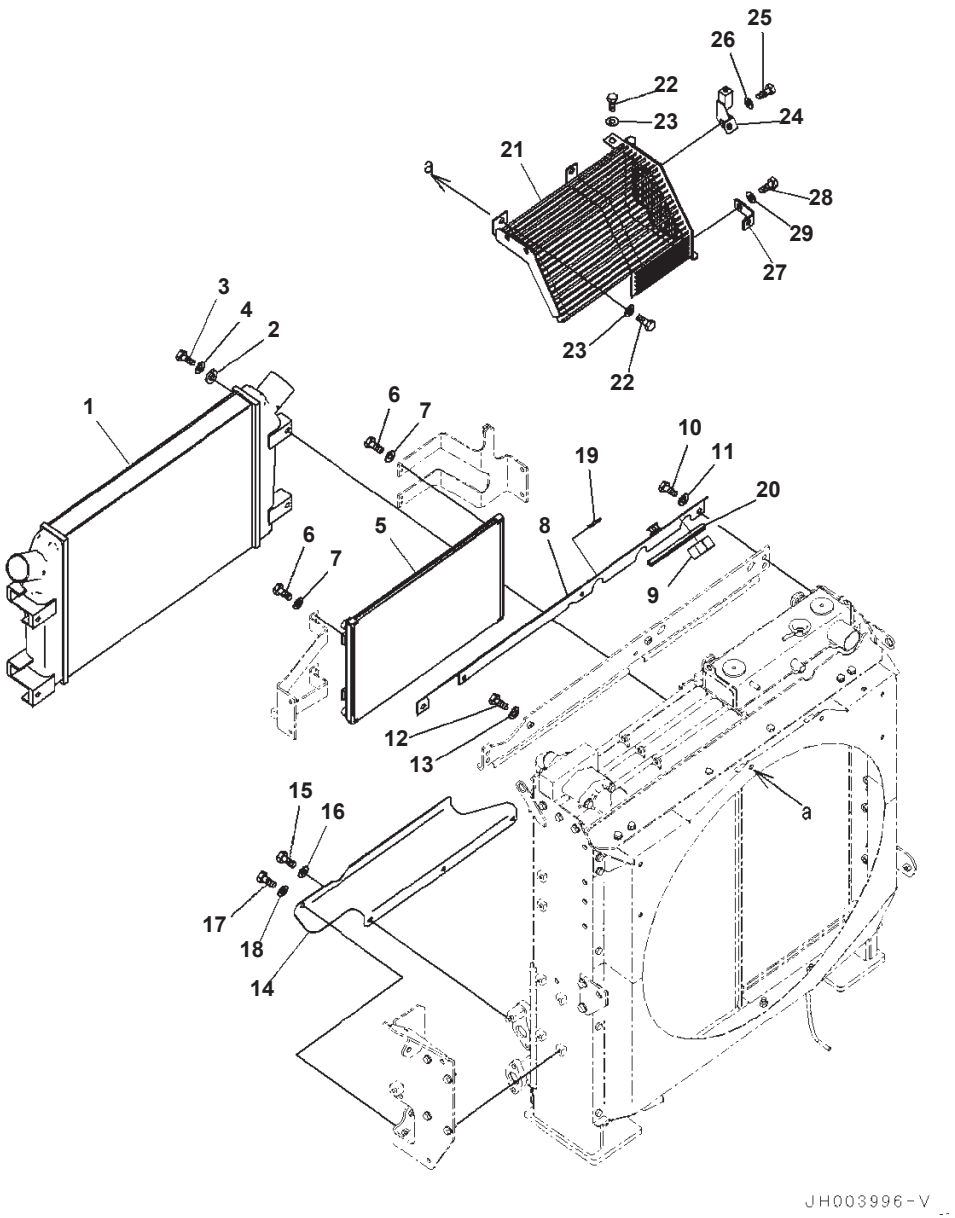

Index	Code	Part Number	Description	Qty	Options
1		6152-62-5110	After Cooler Assembly	1	SN:B10001--
2		6110-23-6490	Spacer	4	SN:B10001--
3		01010-81045	Bolt	4	SN:B10001--
4		01643-31032	Washer	4	SN:B10001--
5		208-979-7520	Condenser Assembly	1	SN:B10001--
6		01010-80616	Bolt	8	SN:B10001--
7		01643-30623	Washer	8	SN:B10001--
8		207-03-76361	Cover	1	SN:B10032--
	A2	207-03-76360	Cover	1	SN:B10001--B10031
9		208-03-71770	Seal	1	SN:B10001--
10		01010-81225	Bolt	2	SN:B10001--
11		01643-31232	Washer	2	SN:B10001--
12		01010-81020	Bolt	2	SN:B10001--
13		01643-31032	Washer	2	SN:B10001--
14		207-03-75471	Cover	1	SN:B10001--
15		01010-81020	Bolt	4	SN:B10001--
16		01643-31032	Washer	4	SN:B10001--
17		01010-81020	Bolt	1	SN:B10001--
18		01643-31032	Washer	1	SN:B10001--
19		207-03-76460	Seal	1	SN:B10032--
20		208-60-75120	Trim	1	SN:B10032--
21		207-03-75521	Guard	1	SN:B10001--
22		01010-81225	Bolt	5	SN:B10001--
23		01643-31232	Washer	5	SN:B10001--
24		207-03-75610	Bracket	1	SN:B10001--
25		01010-81225	Bolt	1	SN:B10001--
26		01643-31232	Washer	1	SN:B10001--
27		207-979-6180	Bracket	1	SN:B10001--
28		01010-81225	Bolt	1	SN:B10001--
29		01643-31232	Washer	1	SN:B10001--

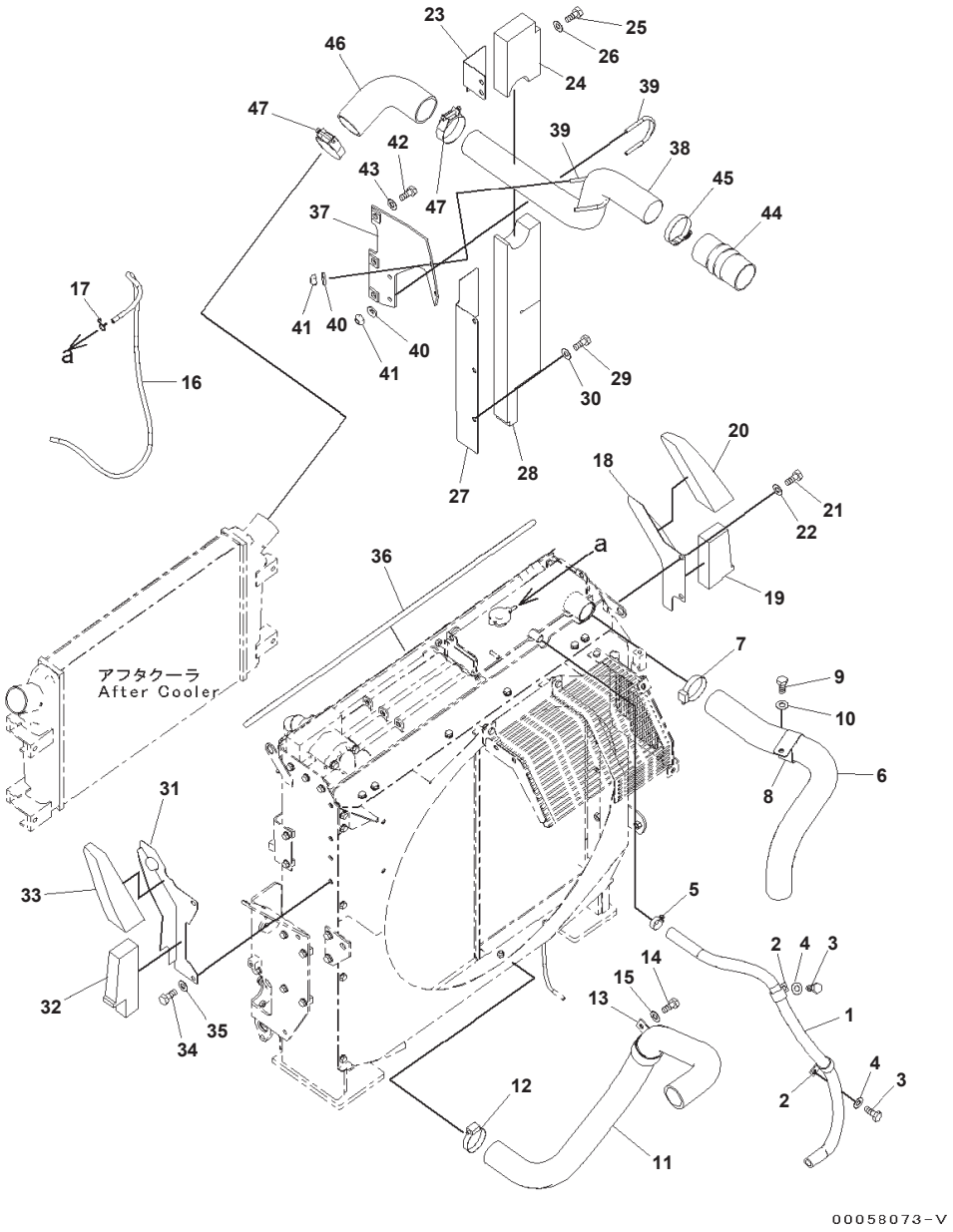

Index	Code	Part Number	Description	Qty	Options
1		208-03-72151	Hose	1	SN:B10001--
2		04434-53212	Clip	2	SN:B10001--
3		01010-81220	Bolt	2	SN:B10001--
4		01643-31232	Washer	2	SN:B10001--
5		07281-00359	Clamp, Hose	1	SN:B10001--
6		207-03-75640	Hose	1	SN:B10001--
7		07289-00070	Clamp, Hose	1	SN:B10001--
8		207-03-51530	Clip	1	SN:B10001--
9		01010-81230	Bolt	1	SN:B10001--
10		01643-31232	Washer	1	SN:B10001--
11		207-03-75311	Hose	1	SN:B10001--
12		07289-00070	Clamp, Hose	1	SN:B10001--
13		207-03-51530	Clip	1	SN:B10001--
14		01010-81230	Bolt	1	SN:B10001--
15		01643-31232	Washer	1	SN:B10001--
16		21M-03-15260	Hose	1	SN:B10027--
	A2	20Y-03-31470	Hose	1	SN:B10001--B10026
17		206-03-43340	Clip	1	SN:B10001--
18		207-03-75360	Cover	1	SN:B10001--
19		207-03-75410	・ Seal	1	SN:B10001--
20		207-03-75460	・ Seal	1	SN:B10001--
21		01010-81225	Bolt	2	SN:B10001--
22		01643-31232	Washer	2	SN:B10001--
23		207-03-75371	Cover	1	SN:B10001--
24		207-03-75431	・ Seal	1	SN:B10001--
25		01010-81225	Bolt	2	SN:B10001--
26		01643-31232	Washer	2	SN:B10001--
27		207-03-75381	Cover	1	SN:B10001--
28		207-03-75441	・ Seal	1	SN:B10001--
29		01010-81225	Bolt	3	SN:B10001--
30		01643-31232	Washer	3	SN:B10001--
31		207-03-75351	Cover	1	SN:B10001--
32		207-03-75391	・ Seal	1	SN:B10001--
33		207-03-75450	・ Seal	1	SN:B10001--
34		01010-81225	Bolt	2	SN:B10001--
35		01643-31232	Washer	2	SN:B10001--
36		208-03-71410	Seal	1	SN:B10001--
37		207-01-75220	Bracket	1	SN:B10001--
38		207-01-75231	Tube	1	SN:B10001--
39		07283-37663	Clip, Pipe	2	SN:B10001--
40		01643-31032	Washer	4	SN:B10001--
41		01597-01009	Nut	4	SN:B10001--
42		01010-81235	Bolt	3	SN:B10001--
43		01643-31232	Washer	3	SN:B10001--
44		6152-12-4420	Hose	1	SN:B10001--
45		07299-00080	Clamp, Hose	1	SN:B10001--
46		207-01-75270	Hose	1	SN:B10001--
47		207-01-75340	Clamp	2	SN:B10001--

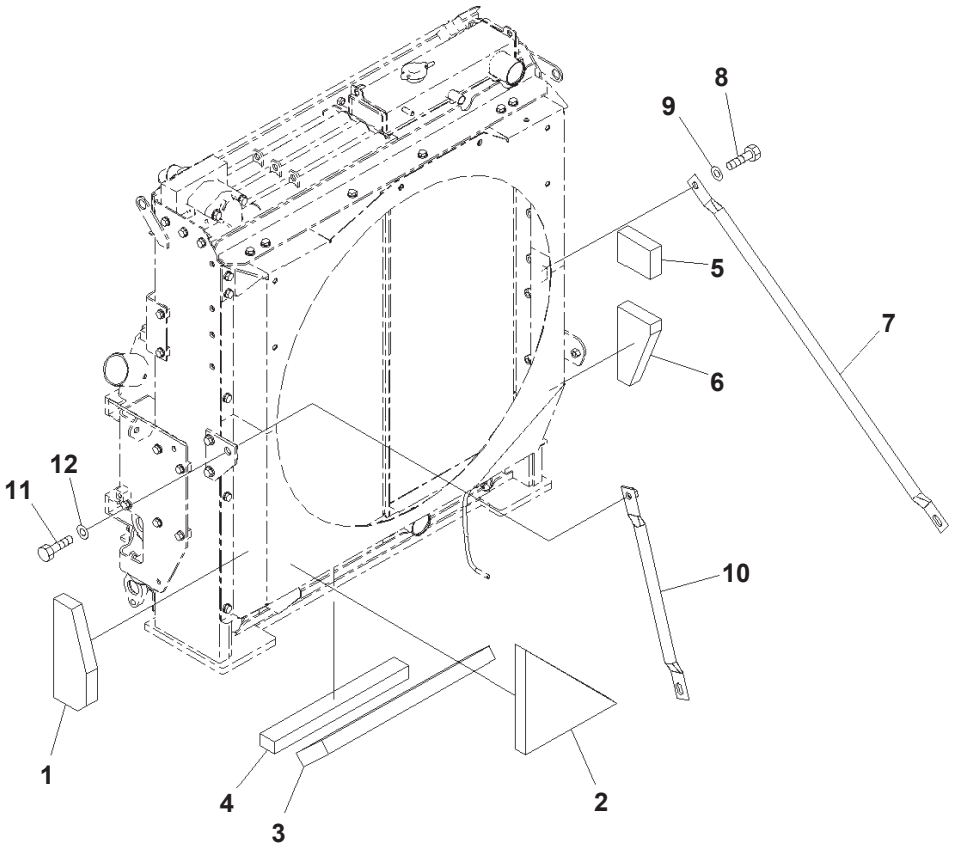

Index	Part Number	Description	Qty	Options
1	207-03-76130	Sheet	1	SN:B10001--
2	207-03-76140	Sheet	1	SN:B10001--
3	207-03-76150	Sheet	1	SN:B10001--
4	207-03-76160	Sheet	1	SN:B10001--
5	207-03-76181	Sheet	1	SN:B10001--
6	207-03-76190	Sheet	1	SN:B10001--
7	207-03-71211	Stay	1	SN:B10001--
8	01010-81640	Bolt	1	SN:B10001--
9	01643-31645	Washer	1	SN:B10001--
10	22U-03-22280	Stay	1	SN:B10001--
11	01010-81635	Bolt	1	SN:B10001--
12	01643-31645	Washer	1	SN:B10001--

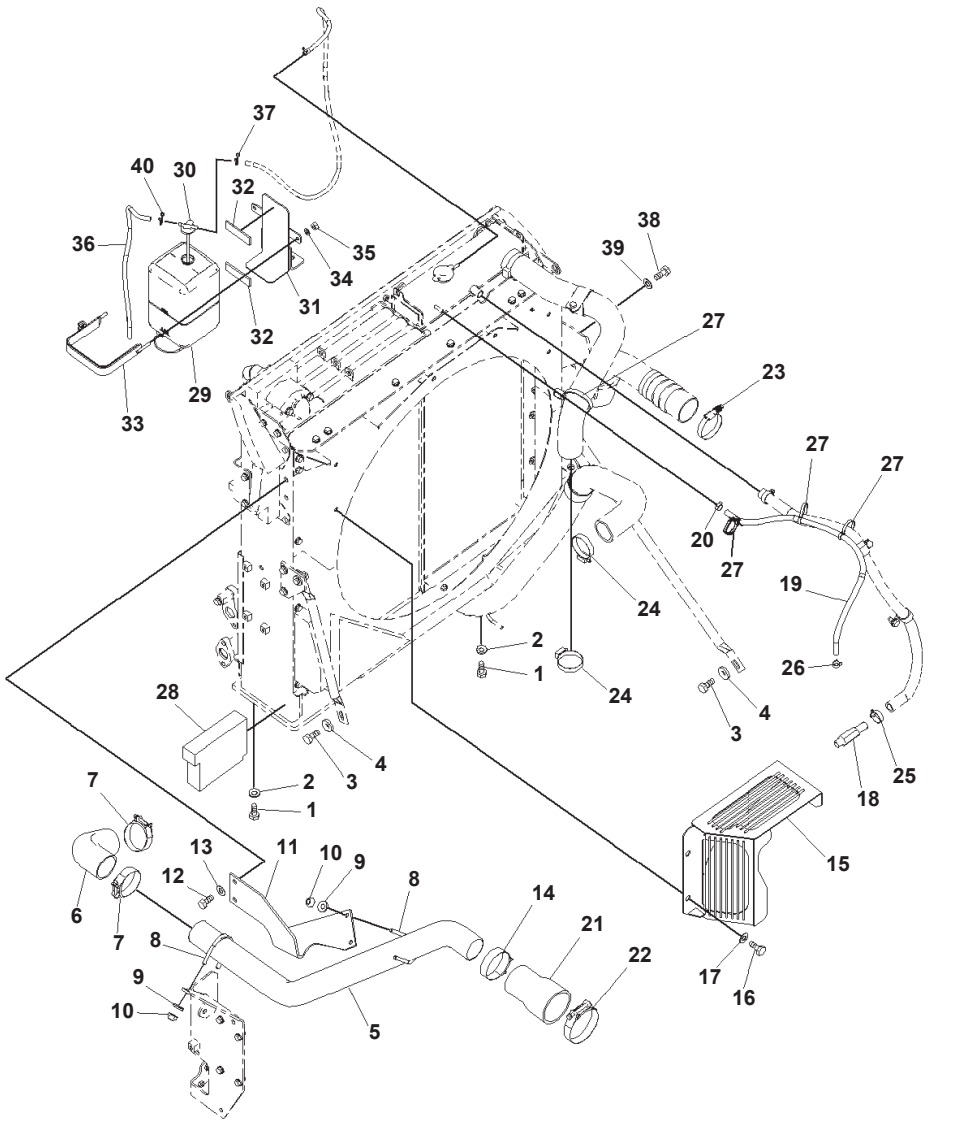

Cooling System Air Cooler Piping And Sub Tank

Index	Code	Part Number	Description	Qty	Options
1		01010-81640	Bolt	6	SN:B10001--
2		01643-31645	Washer	6	SN:B10001--
3		01010-81640	Bolt	2	SN:B10001--
4		21T-54-16150	Washer	2	SN:B10001--
5		207-01-75241	Tube	1	SN:B10001--
6		207-01-75250	Hose	1	SN:B10001--
7		207-01-75340	Clamp	2	SN:B10001--
8		07283-37663	Clip, Pipe	2	SN:B10001--
9		01643-31032	Washer	4	SN:B10001--
10		01597-01009	Nut	4	SN:B10001--
11		207-01-75210	Bracket	1	SN:B10001--
12		01010-81230	Bolt	2	SN:B10001--
13		01643-31232	Washer	2	SN:B10001--
14		207-03-76440	Clamp	1	SN:B10001--
15		207-03-75511	Guard	1	SN:B10001--
16		01010-81225	Bolt	4	SN:B10001--
17		01643-31232	Washer	4	SN:B10001--
18		207-03-75330	Nipple	1	SN:B10001--
19		09483-10309	Hose	1	SN:B10001--
20		11Y-09-11140	Clip	1	SN:B10001--
21		207-03-76430	Hose	1	SN:B10001--
22		14X-01-35570	Clamp	1	SN:B10001--
23		07299-00080	Clamp, Hose	1	SN:B10001--
24		07289-00070	Clamp, Hose	2	SN:B10001--
25		07281-00359	Clamp, Hose	1	SN:B10001--
26		11Y-09-11140	Clip	1	SN:B10001--
27		134-03-61410	Band	5	SN:B10032--
	A2	134-03-61410	Band	4	SN:B10001--B10031
28		207-46-77340	Seal	1	SN:B10001--
29		419-03-21320	Tank, Reservoir	1	SN:B10001--
30		421-03-22170	· Cap	1	SN:B10001--
31		207-03-75620	Bracket	1	SN:B10001--
32		205-03-71440	· Sheet	2	SN:B10001--
33		207-03-75630	Band	1	SN:B10001--
34		01643-30823	Washer	2	SN:B10001--
35		01580-10806	Nut	2	SN:B10001--
36		208-03-58310	Hose	1	SN:B10001--
37		206-03-43340	Clip	1	SN:B10001--
38		01010-81230	Bolt	2	SN:B10001--
39		01643-31232	Washer	2	SN:B10001--
40		206-03-43340	Clip	1	SN:B10001--

FUEL TANK AND RELATED PARTS

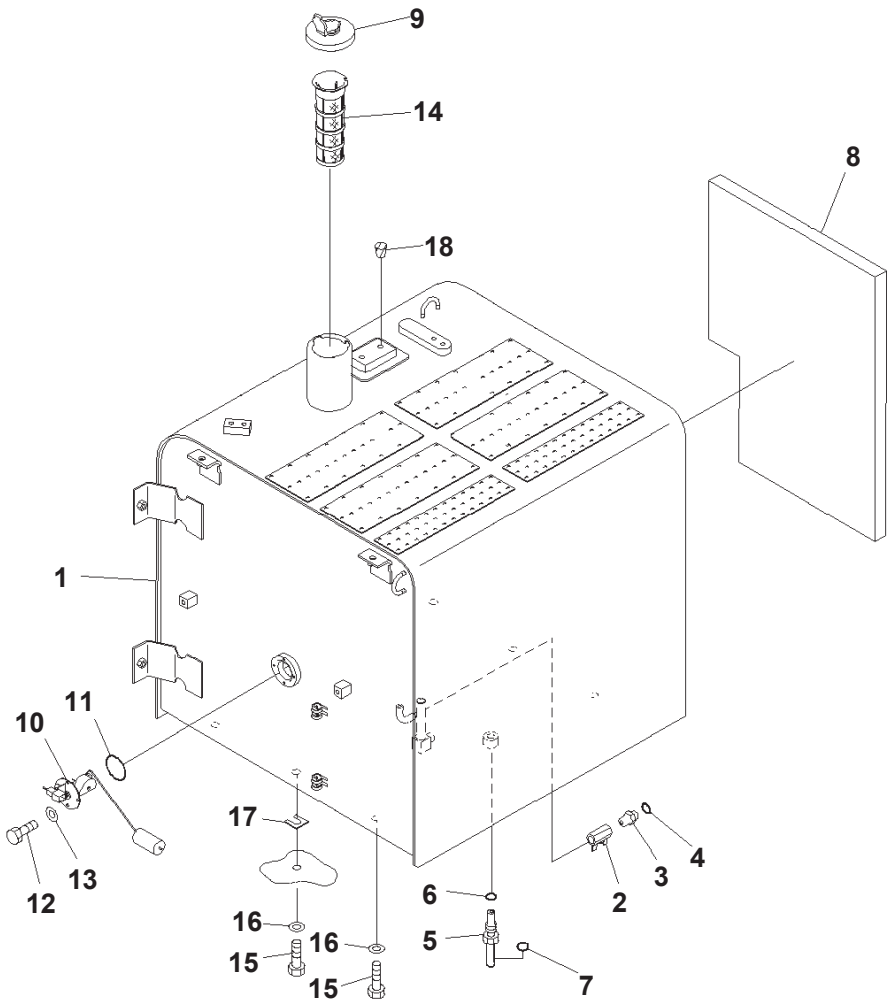

Index	Part Number	Description	Qty	Options
1	207-04-75111	Tank	1	SN:B10001--B10386
2	07700-50455	Valve, Fuel Drain	1	SN:B10001--@
3	8255-62-4591	Connector	1	SN:B10001--@
4	02896-11012	O-ring	1	SN:B10001--@
5	207-04-75390	Elbow	1	SN:B10001--@
6	07002-12034	O-ring	1	SN:B10001--@
7	02896-11009	O-ring	1	SN:B10001--@
8	207-04-75310	Sheet	1	SN:B10001--@
9	20Y-04-11161	Cap	1	SN:B10001--@
10	7861-92-5810	Sensor	1	SN:B10001--@
11	07000-13050	O-ring	1	SN:B10001--@
12	01010-80612	Bolt	4	SN:B10001--@
13	01643-30623	Washer	4	SN:B10001--@
14	07056-18422	Strainer	1	SN:B10001--@
15	01010-81635	Bolt	6	SN:B10001--@
16	01643-31645	Washer	6	SN:B10001--@
17	195-03-11570	Shim, T=1.0mm	2	SN:B10001--@
18	07049-01215	Plug	2	SN:B10001--@

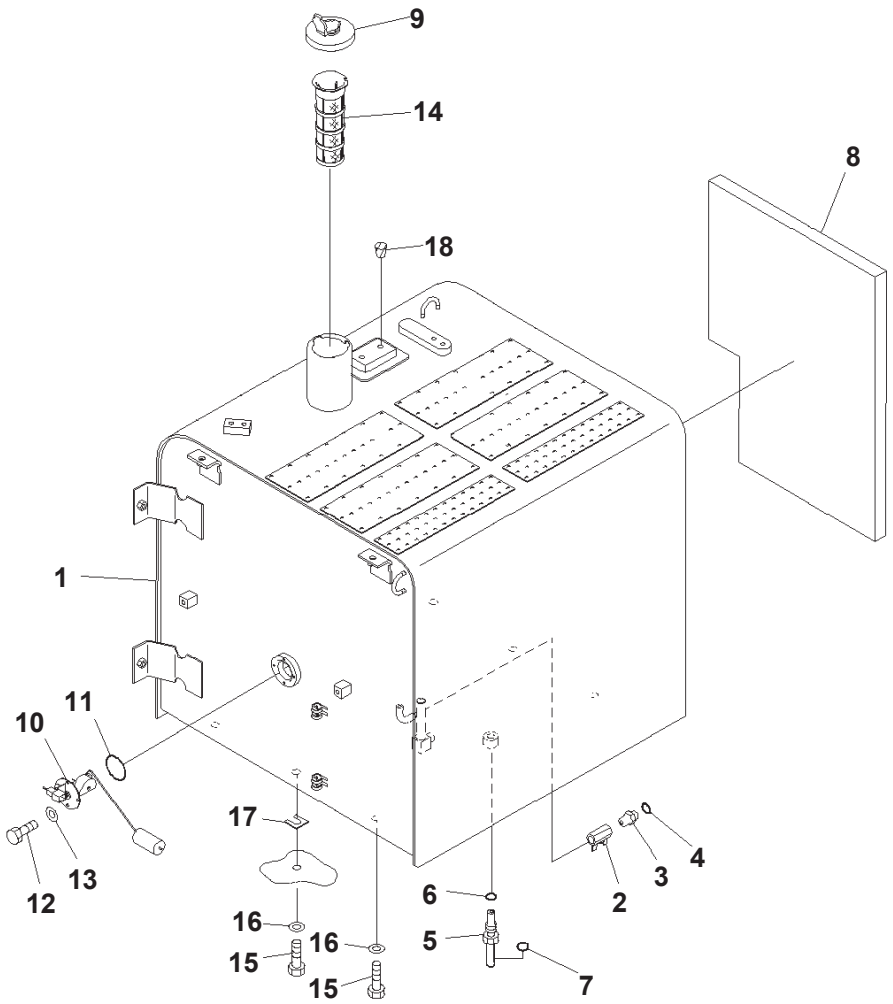

Index	Part Number	Description	Qty	Options
1	207-04-75112	Tank	1	SN:B10387--
2	07700-50455	Valve, Fuel Drain	1	SN:B10001--
3	8255-62-4591	Connector	1	SN:B10001--
4	02896-11012	O-ring	1	SN:B10001--
5	207-04-75390	Elbow	1	SN:B10001--
6	07002-12034	O-ring	1	SN:B10001--
7	02896-11009	O-ring	1	SN:B10001--
8	207-04-75310	Sheet	1	SN:B10001--
9	20Y-04-11161	Cap	1	SN:B10001--
10	7861-92-5810	Sensor	1	SN:B10001--
11	07000-13050	O-ring	1	SN:B10001--
12	01010-80612	Bolt	4	SN:B10001--
13	01643-30623	Washer	4	SN:B10001--
14	07056-18422	Strainer	1	SN:B10001--
15	01010-81635	Bolt	6	SN:B10001--
16	01643-31645	Washer	6	SN:B10001--
17	195-03-11570	Shim, T=1.0mm	2	SN:B10001--
18	07049-01215	Plug	2	SN:B10001--

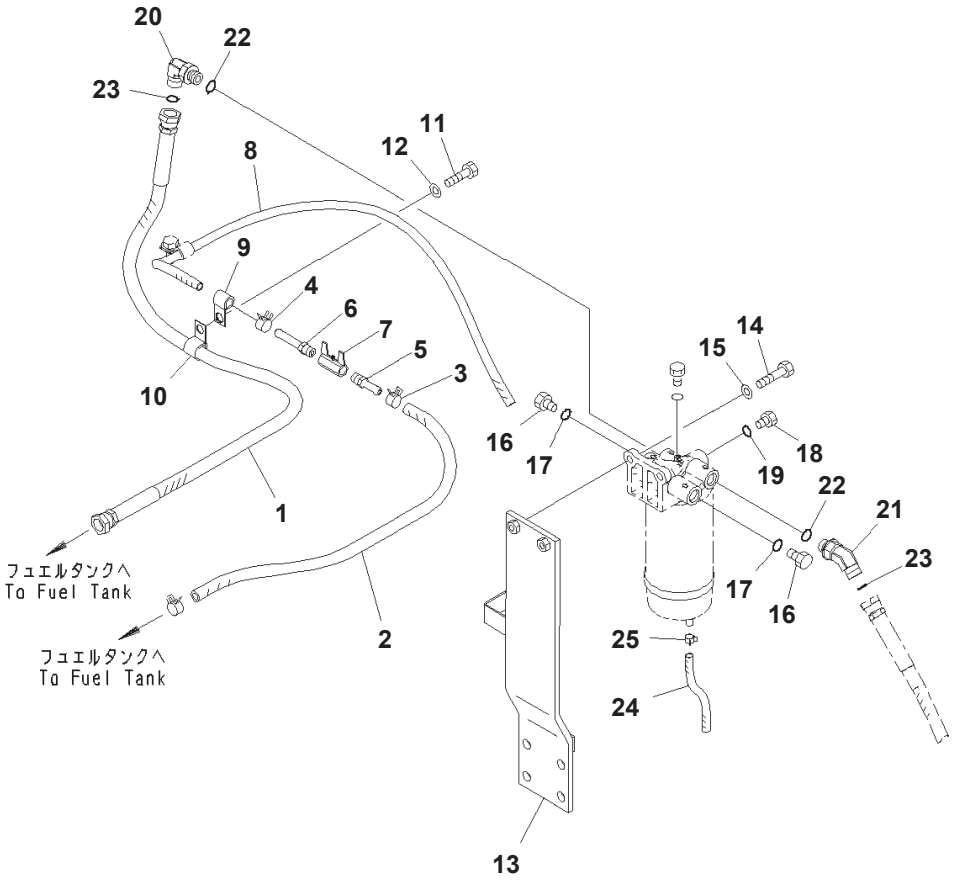

Index	Part Number	Description	Qty	Options
1	02762-00411	Hose, L=1100mm	1	SN:B10001--
2	07288-01007	Hose	1	SN:B10001--
3	11Y-09-11140	Clip	1	SN:B10001--
4	07285-00115	Clip	1	SN:B10001--
5	20Y-04-31170	Nipple	1	SN:B10001--
6	20Y-04-31170	Nipple	1	SN:B10001--
7	07700-50240	Valve	1	SN:B10001--
8	07270-01085	Tube	1	SN:B10001--
9	04434-51312	Clip	1	SN:B10001--
10	04434-51812	Clip	1	SN:B10001--
11	01010-81220	Bolt	1	SN:B10001--
12	01643-31232	Washer	1	SN:B10001--
13	207-04-75120	Bracket	1	SN:B10001--
14	01010-81035	Bolt	2	SN:B10001--
15	01643-31032	Washer	2	SN:B10001--
16	07040-11812	Plug	2	SN:B10001--
17	07002-11823	O-ring	2	SN:B10001--
18	07040-11612	Plug	1	SN:B10001--
19	07002-11623	O-ring	1	SN:B10001--
20	02782-10420	Elbow	1	SN:B10001--
21	20U-62-41610	Elbow	1	SN:B10001--
22	07002-11823	O-ring	2	SN:B10001--
23	02896-11012	O-ring	2	SN:B10001--
24	07270-00825	Tube	1	SN:B10001--
25	07285-00100	Clip	1	SN:B10001--

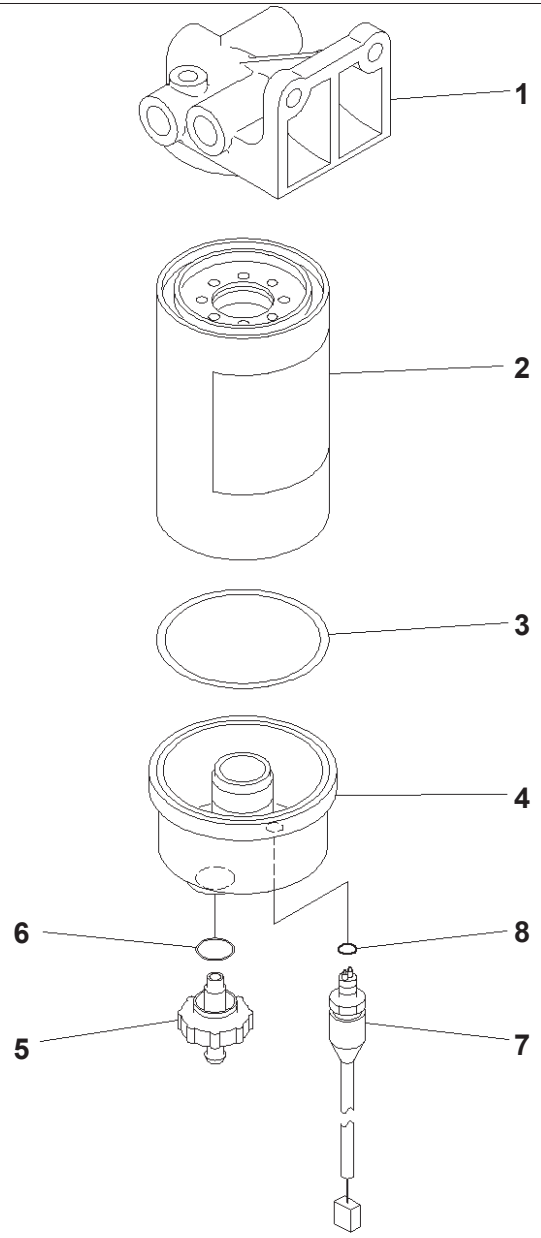

Pre Filter

Index	Part Number	Description	Qty	Options
	6745-71-7203	Filter Assembly	1	SN:B10001--
1	6745-71-7211	・ Head	1	SN:B10001--
	600-319-3602	・ Filter Assembly	1	SN:B10001--
2	600-319-3610	・・ Cartridge Assembly	1	SN:B10001--
3	600-311-3630	・・・ Seal	1	SN:B10001--
4	600-311-3640	・・ Bowl	1	SN:B10001--
5	600-311-3660	・・ Valve Assembly	1	SN:B10001--
6	600-311-3670	・・・ Seal	1	SN:B10001--
7	600-311-3722	・・ Sensor	1	SN:B10001--
8	600-311-3690	・・・ O-ring	1	SN:B10001--

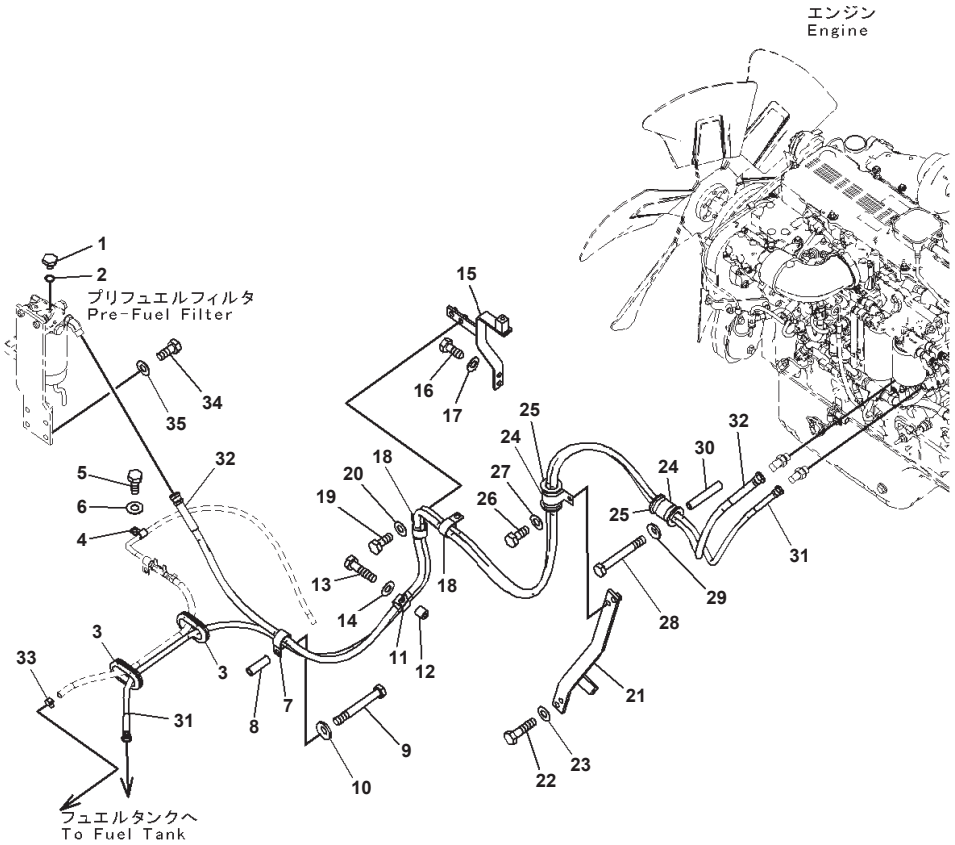

Index	Part Number	Description	Qty	Options
1	07040-10807	Plug	1	SN:B10001--
2	07002-10823	O-ring	1	SN:B10001--
3	150-952-7160	Grommet	2	SN:B10001--
4	04434-51312	Clip	1	SN:B10001--
5	01010-81225	Bolt	1	SN:B10001--
6	01643-31232	Washer	1	SN:B10001--
7	04434-53412	Clip	1	SN:B10001--
8	195-979-3570	Collar	1	SN:B10001--
9	01011-81200	Bolt	1	SN:B10001--
10	01643-31232	Washer	1	SN:B10001--
11	04434-53412	Clip	1	SN:B10001--
12	195-33-11220	Spacer	1	SN:B10001--
13	01010-81245	Bolt	1	SN:B10001--
14	01643-31232	Washer	1	SN:B10001--
15	207-04-75130	Bracket	1	SN:B10001--
16	01010-81225	Bolt	2	SN:B10001--
17	01643-31232	Washer	2	SN:B10001--
18	04434-53412	Clip	2	SN:B10001--
19	01010-81225	Bolt	2	SN:B10001--
20	01643-31232	Washer	2	SN:B10001--
21	207-04-71161	Bracket	1	SN:B10001--
22	01010-81245	Bolt	2	SN:B10001--
23	01643-31232	Washer	2	SN:B10001--
24	21T-62-76850	Clip	2	SN:B10001--
25	07095-01034	Cushion	2	SN:B10001--
26	01010-81225	Bolt	1	SN:B10001--
27	01643-31232	Washer	1	SN:B10001--
28	01011-81040	Bolt	1	SN:B10001--
29	01643-31032	Washer	1	SN:B10001--
30	6151-51-5490	Spacer	1	SN:B10001--
31	02762-00335	Hose, Face Seal Type, L=3500mm	1	SN:B10001--
32	02762-00432	Hose, Face Seal Type, L=3200mm	1	SN:B10001--
33	11Y-09-11140	Clip	1	SN:B10001--
34	01010-81240	Bolt	4	SN:B10001--
35	01643-31232	Washer	4	SN:B10001--

ELECTRICAL SYSTEM

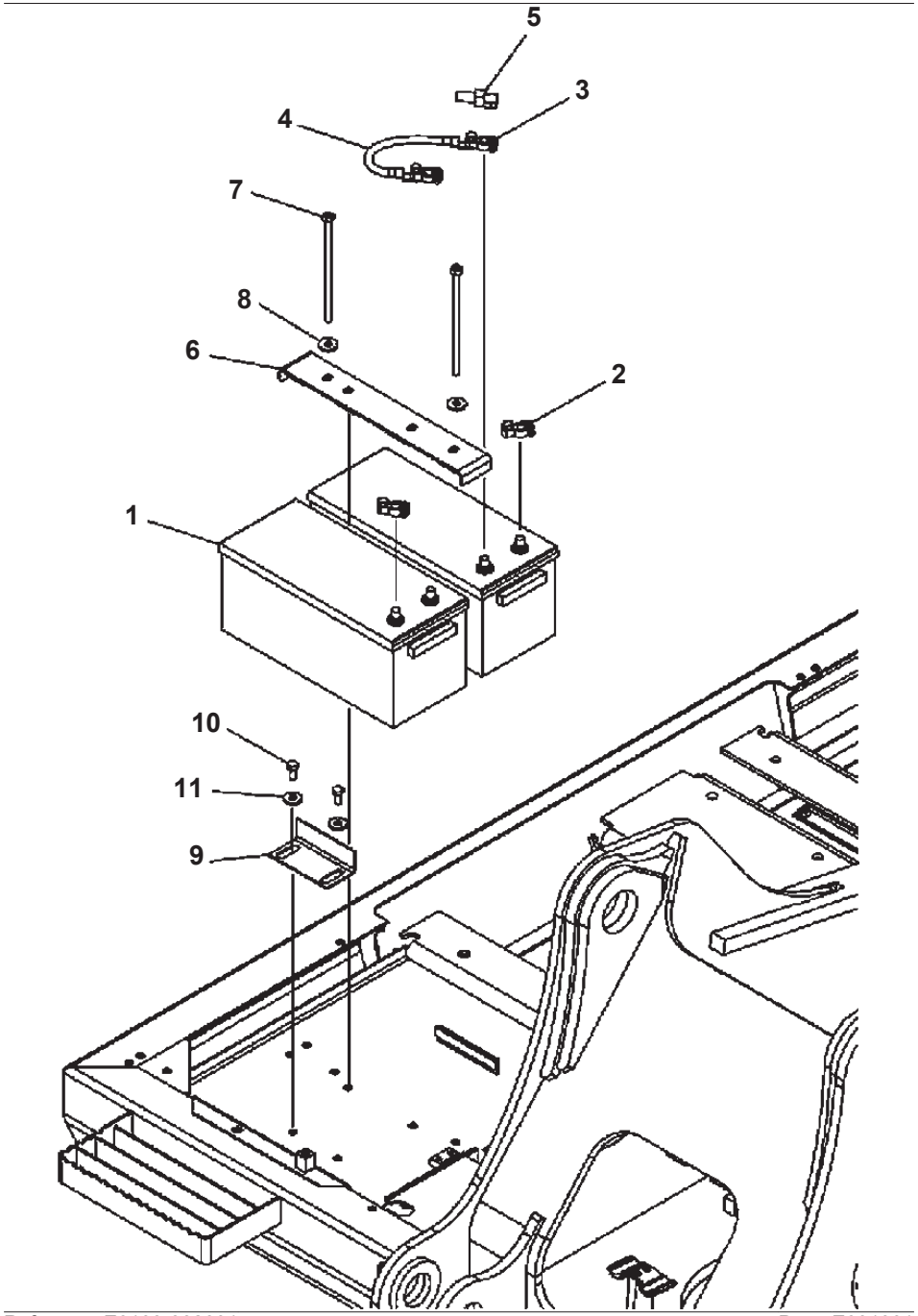

Battery, With Large Capacity Battery

Index	Part Number	Description	Qty	Options
1	134-06-61540	Battery, Wet, (170AH)	2	SN:B10001--
2	08000-00000	Terminal, (+)	2	SN:B10001--
3	08000-00001	Terminal, (-)	2	SN:B10001--
4	08028-64035	Wire	1	SN:B10001--
5	08038-42511	Cap	2	SN:B10001--
6	20Y-06-B1211	Bracket	1	SN:B10001--
7	20Y-06-B1150	Bolt	2	SN:B10001--
8	175-54-34170	Washer	2	SN:B10001--
9	207-06-61461	Bracket	1	SN:B10001--
10	01010-81225	Bolt	2	SN:B10001--
11	175-54-34170	Washer	2	SN:B10001--

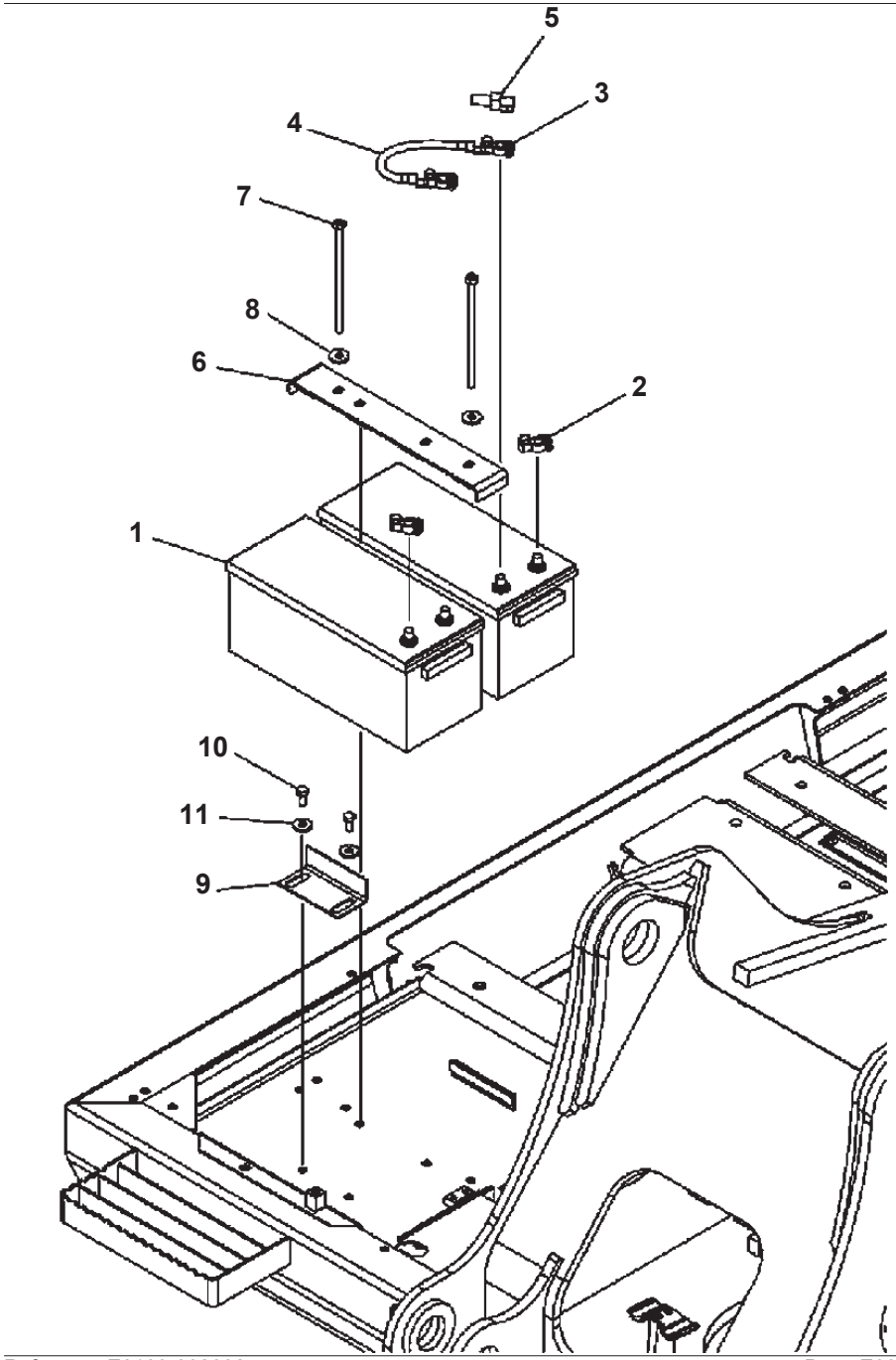

Battery, (150 Ah)

Index	Part Number	Description	Qty	Options
1	134-06-61550	Battery, Wet, (150AH)	2	SN:B10001--
2	08000-00000	Terminal, (+)	2	SN:B10001--
3	08000-00001	Terminal, (-)	2	SN:B10001--
4	08028-64035	Wire	1	SN:B10001--
5	08038-42511	Cap	2	SN:B10001--
6	20Y-06-B1211	Bracket	1	SN:B10001--
7	20Y-06-B1150	Bolt	2	SN:B10001--
8	175-54-34170	Washer	2	SN:B10001--
9	207-06-61461	Bracket	1	SN:B10001--
10	01010-81225	Bolt	2	SN:B10001--
11	175-54-34170	Washer	2	SN:B10001--

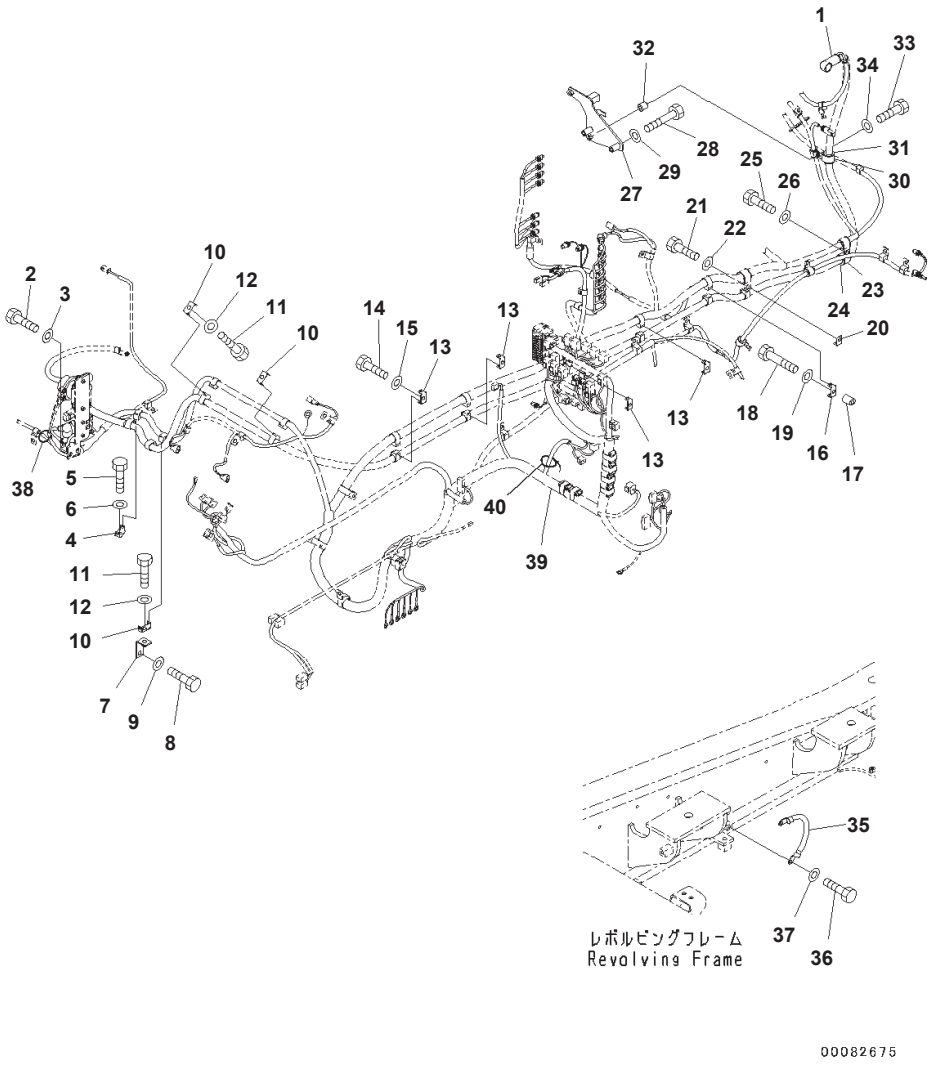

Index	Code	Part Number	Description	Page	Item	Qty	Options
1		08038-10035	Cap			1	SN:B10001--
2		01010-81225	Bolt			2	SN:B10001--
3		01643-31232	Washer			2	SN:B10001--
4		08057-22012	Clip			1	SN:B10001--
5		01010-81225	Bolt			1	SN:B10001--
6		01643-31232	Washer			1	SN:B10001--
7		207-979-6180	Bracket			1	SN:B10001--
8		01010-81225	Bolt			1	SN:B10001--
9		01643-31232	Washer			1	SN:B10001--
10		08057-22012	Clip			3	SN:B10001--
11		01010-81225	Bolt			3	SN:B10001--
12		01643-31232	Washer			3	SN:B10001--
13		08057-22012	Clip			4	SN:B10001--
14		01010-81225	Bolt			4	SN:B10001--
15		01643-31232	Washer			4	SN:B10001--
16		08057-22012	Clip			1	SN:B10001--
17		142-03-11160	Spacer			1	SN:B10001--
18		01010-81260	Bolt			1	SN:B10001--
19		01643-31232	Washer			1	SN:B10001--
20		08057-12012	Clip			1	SN:B10001--
21		01010-81225	Bolt			1	SN:B10001--
22		01643-31232	Washer			1	SN:B10001--
23		04434-53212	Clip			1	SN:B10001--
24		07095-20523	Cushion			1	SN:B10001--
25		01010-81225	Bolt			1	SN:B10001--
26		01643-31232	Washer			1	SN:B10001--
27		207-06-75190	Bracket			1	SN:B10001--
28		01010-80855	Bolt			2	SN:B10001--
29		01643-30823	Washer			2	SN:B10001--
30		04434-53212	Clip			1	SN:B10001--
31		198-06-53610	Cushion			1	SN:B10001--
32		195-33-11220	Spacer			1	SN:B10001--
33		01010-81250	Bolt			1	SN:B10001--
34		01643-31232	Washer			1	SN:B10001--
35		08028-44035	Cable, Ground			1	SN:B10001--
36		01010-81020	Bolt			2	SN:B10001--
37		01643-31032	Washer			2	SN:B10001--
38		08034-20536	Band			1	SN:B10001--
39		(207-06-76730)	Wire Harness	K1110-024031	1		SN:---
	A2	(207-06-76111)	Wire Harness	K1110-024031	1		SN:--
40		08034-20536	Band			1	SN:B10235--

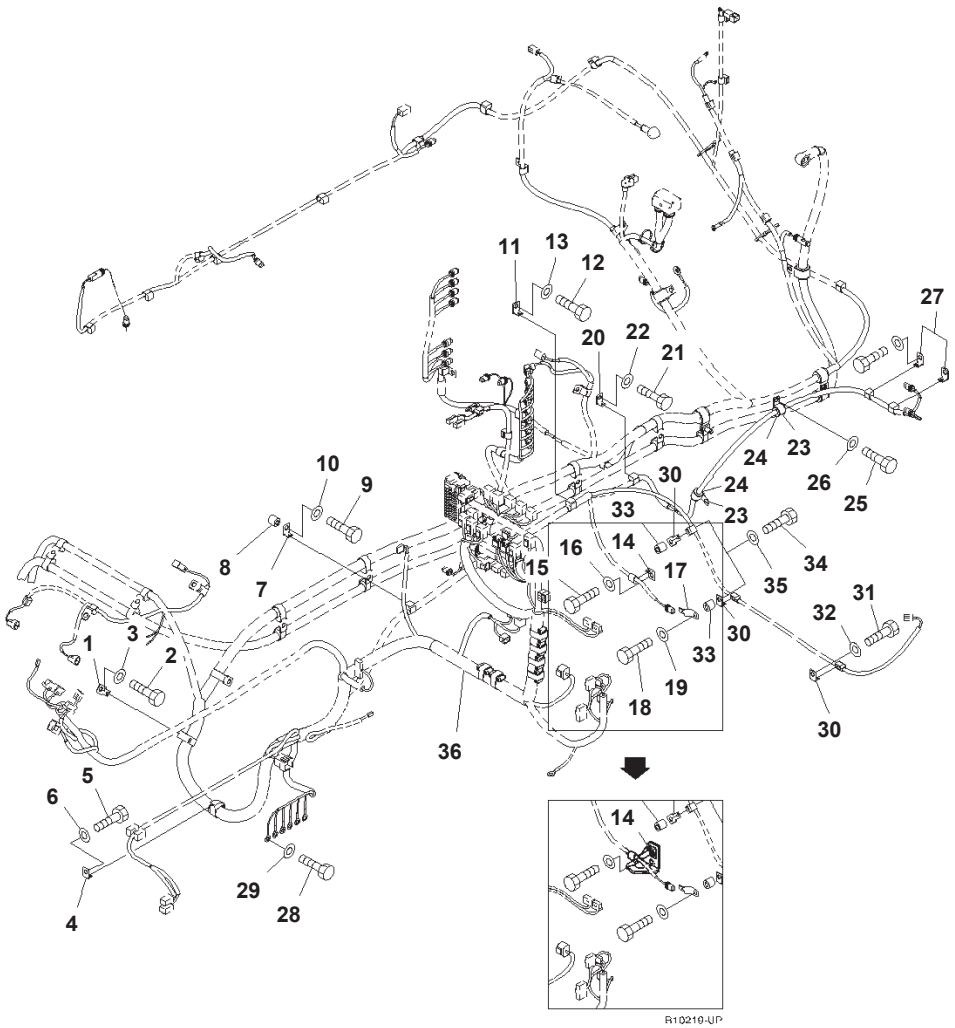

Index	Code	Part Number	Description	Page	Item	Qty	Options
1		08057-12012	Clip			1	SN:B10001--
2		01010-81225	Bolt			1	SN:B10001--
3		01643-31232	Washer			1	SN:B10001--
4		08057-12012	Clip			1	SN:B10001--
5		01010-81225	Bolt			1	SN:B10001--
6		01643-31232	Washer			1	SN:B10001--
7		08057-12012	Clip			2	SN:B10001--
8		195-33-11220	Spacer			2	SN:B10001--
9		01010-81250	Bolt			2	SN:B10001--
10		01643-31232	Washer			2	SN:B10001--
11		08057-12012	Clip			1	SN:B10001--
12		01010-81225	Bolt			1	SN:B10001--
13		01643-31232	Washer			1	SN:B10001--
14		207-60-75180	Bracket			1	SN:B10219--
		08057-12012	Clip			1	SN:B10001--B10218
15		01010-81220	Bolt			1	SN:B10001--
16		01643-31232	Washer			1	SN:B10001--
17		08193-20012	Clip			1	SN:B10001--
18		01010-81220	Bolt			1	SN:B10001--
19		01643-31232	Washer			1	SN:B10001--
20		08057-12012	Clip			1	SN:B10001--
21		01010-81225	Bolt			1	SN:B10001--
22		01643-31232	Washer			1	SN:B10001--
23		04434-52112	Clip			2	SN:B10001--
24		07095-20314	Cushion			2	SN:B10001--
25		01010-81225	Bolt			2	SN:B10001--
26		01643-31232	Washer			2	SN:B10001--
27		08057-12012	Clip			2	SN:B10001--
28		01010-81020	Bolt			6	SN:B10001--
29		01643-31032	Washer			6	SN:B10001--
30		08057-12012	Clip			3	SN:B10001--
31		01010-81225	Bolt			1	SN:B10001--
32		01643-31232	Washer			1	SN:B10001--
33		195-33-11220	Spacer			2	SN:B10001--
34		01010-81250	Bolt			2	SN:B10001--
35		01643-31232	Washer			2	SN:B10001--
36		(207-06-76730)	Wire Harness	K1110-024031	1		SN:---
	A2	(207-06-76111)	Wire Harness	K1110-024031	1		SN:--

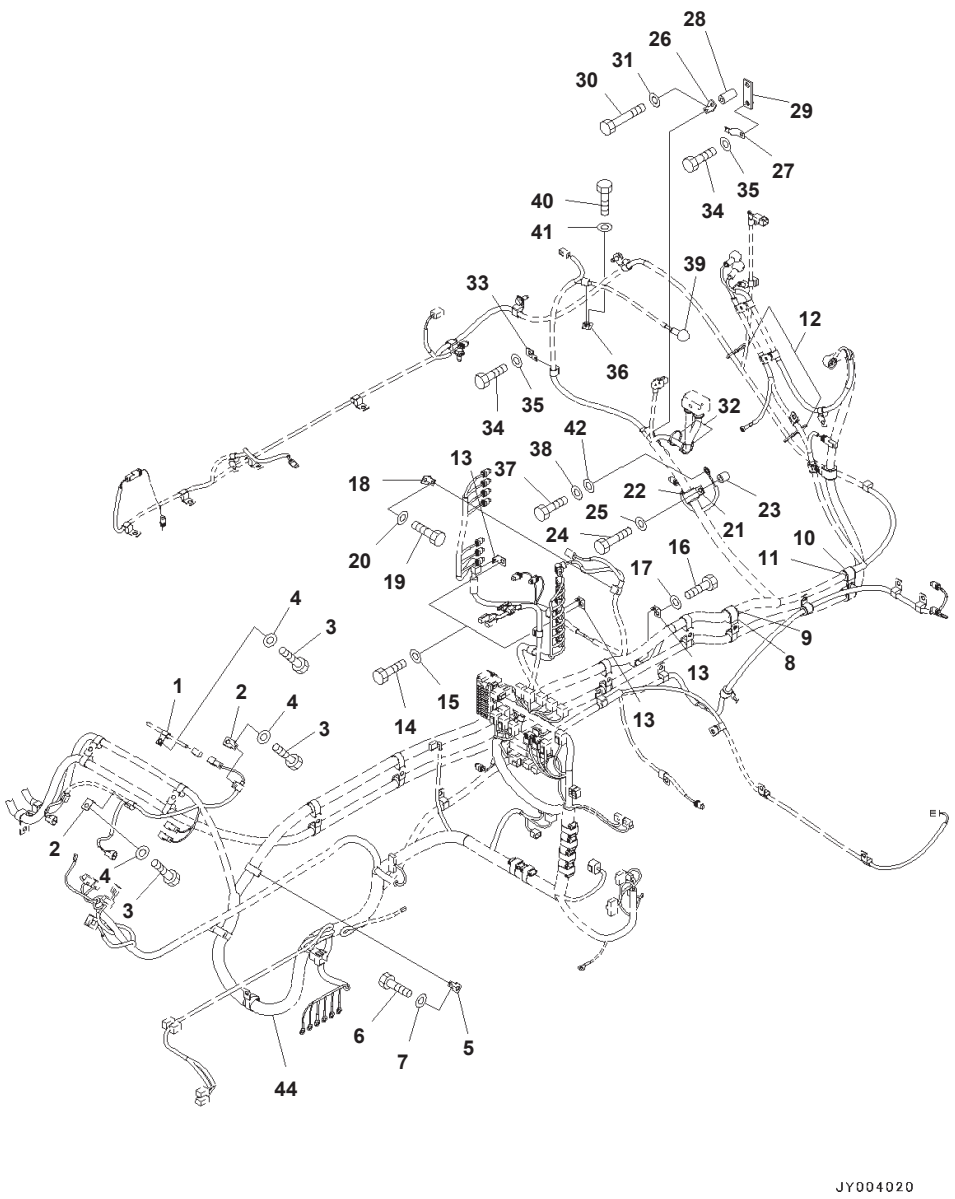

Index	Code	Part Number	Description	Page	Item	Qty	Options
1		04434-51012	Clip			1	SN:B10001--
2		08057-12012	Clip			2	SN:B10001--
3		01010-81225	Bolt			3	SN:B10001--
4		01643-31232	Washer			3	SN:B10001--
5		08057-12012	Clip			1	SN:B10001--
6		01010-81225	Bolt			1	SN:B10001--
7		01643-31232	Washer			1	SN:B10001--
8		04434-53412	Clip			1	SN:B10001--
9		07095-20625	Cushion			1	SN:B10001--
10		04434-52712	Clip			1	SN:B10001--
11		07095-20418	Cushion			1	SN:B10001--
12		134-03-61410	Band			2	SN:B10001--
13		08057-12012	Clip			3	SN:B10001--
14		01010-81225	Bolt			2	SN:B10001--
15		01643-31232	Washer			2	SN:B10001--
16		01010-81225	Bolt			1	SN:B10001--
17		01643-31232	Washer			1	SN:B10001--
18		08057-12012	Clip			1	SN:B10001--
19		01010-81225	Bolt			1	SN:B10001--
20		01643-31232	Washer			1	SN:B10001--
21		04434-53212	Clip			1	SN:B10001--
22		198-06-53610	Cushion			1	SN:B10001--
23		195-33-11220	Spacer			1	SN:B10001--
24		01010-81245	Bolt			1	SN:B10001--
25		01643-31232	Washer			1	SN:B10001--
26		08057-12010	Clip			1	SN:B10001--
27		08193-20012	Clip			1	SN:B10001--
28		175-40-22540	Spacer			1	SN:B10001--
29		198-61-44110	Plate			1	SN:B10001--
30		01010-81075	Bolt			1	SN:B10001--
31		01643-31032	Washer			1	SN:B10001--
32		08034-20519	Band			3	SN:B10001--
33		08057-00810	Clip			1	SN:B10001--
34		01010-81020	Bolt			2	SN:B10001--
35		01643-31032	Washer			2	SN:B10001--
36		08057-12012	Clip			1	SN:B10001--
37		01010-81220	Bolt			1	SN:B10001--
38		01643-31232	Washer			1	SN:B10001--
39		08038-02027	Cap			1	SN:B10001--
40		01010-81220	Bolt			1	SN:B10001--
41		01643-31232	Washer			1	SN:B10001--
42		01643-31232	Washer			1	SN:B10001--
43		(207-06-76730)	Wire Harness	K1110-024031	1		SN:---
	A2	(207-06-76111)	Wire Harness	K1110-024031	1		SN:--

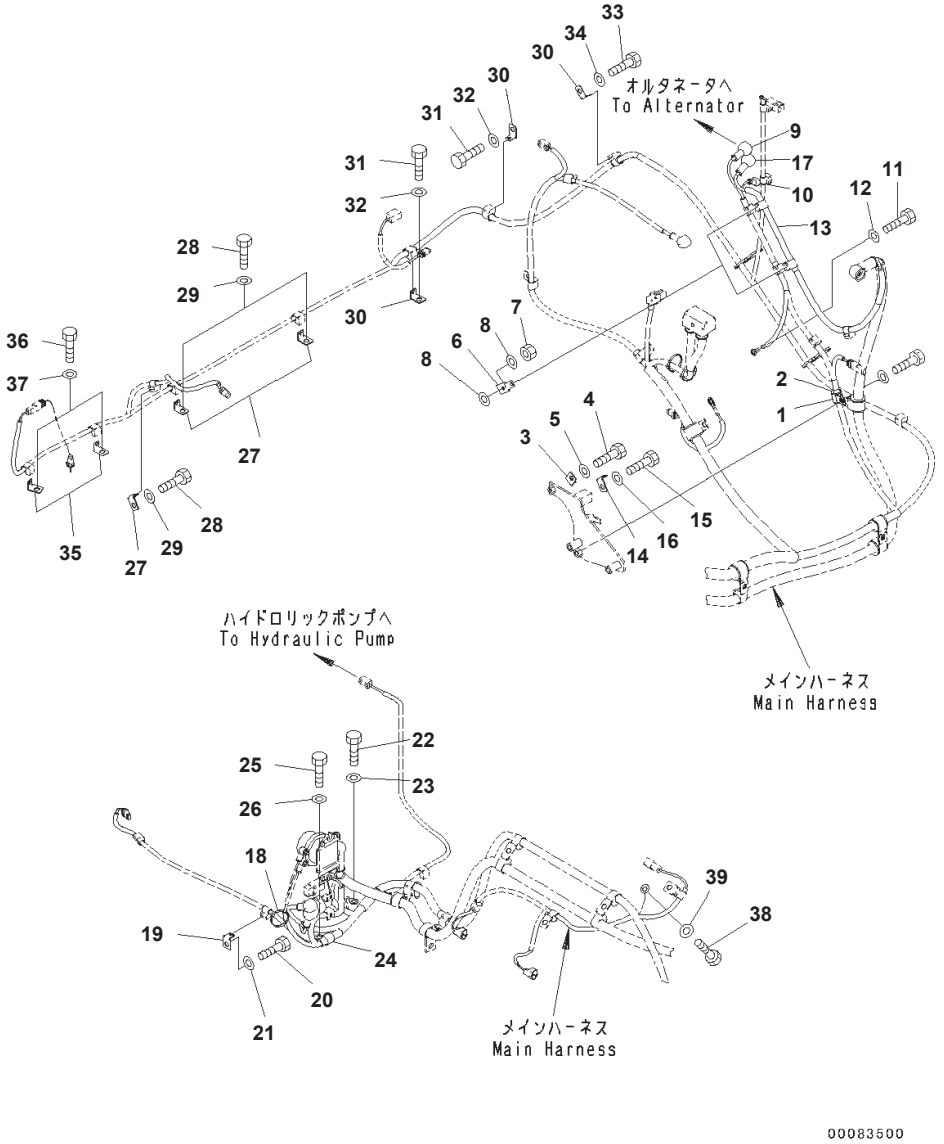

Index	Part Number	Description	Qty	Options
1	04434-51912	Clip	1	SN:B10001--
2	198-06-53540	Cushion	1	SN:B10001--
3	08057-12012	Clip	1	SN:B10001--
4	01010-81225	Bolt	1	SN:B10001--
5	01643-31232	Washer	1	SN:B10001--
6	08057-22008	Clip	2	SN:B10001--
7	01580-10605	Nut	2	SN:B10001--
8	01643-30623	Washer	4	SN:B10001--
9	08038-02027	Cap	1	SN:B10001--
10	08038-00519	Cap	1	SN:B10001--
11	01010-80816	Bolt	1	SN:B10001--
12	01643-30823	Washer	1	SN:B10001--
13	207-06-75150	Cable	1	SN:B10001--
14	08057-12012	Clip	1	SN:B10001--
15	01010-81225	Bolt	1	SN:B10001--
16	01643-31232	Washer	1	SN:B10001--
17	08038-02027	Cap	1	SN:B10001--
18	08034-20519	Band	1	SN:B10001--
19	08057-12012	Clip	2	SN:B10001--
20	01010-81225	Bolt	2	SN:B10001--
21	01643-31232	Washer	2	SN:B10001--
22	01010-81025	Bolt	1	SN:B10001--
23	01643-31032	Washer	1	SN:B10001--
24	04434-51912	Clip	1	SN:B10001--
25	01010-81225	Bolt	1	SN:B10001--
26	01643-31232	Washer	1	SN:B10001--
27	08057-12012	Clip	3	SN:B10001--
28	01010-81225	Bolt	3	SN:B10001--
29	01643-31232	Washer	3	SN:B10001--
30	08057-12012	Clip	3	SN:B10001--
31	01010-81225	Bolt	2	SN:B10001--
32	01643-31232	Washer	2	SN:B10001--
33	01010-81220	Bolt	1	SN:B10001--
34	01643-31232	Washer	1	SN:B10001--
35	08057-12012	Clip	2	SN:B10001--
36	01010-81225	Bolt	2	SN:B10001--
37	01643-31232	Washer	2	SN:B10001--
38	01010-81225	Bolt	1	SN:B10001--
39	01643-31232	Washer	1	SN:B10001--

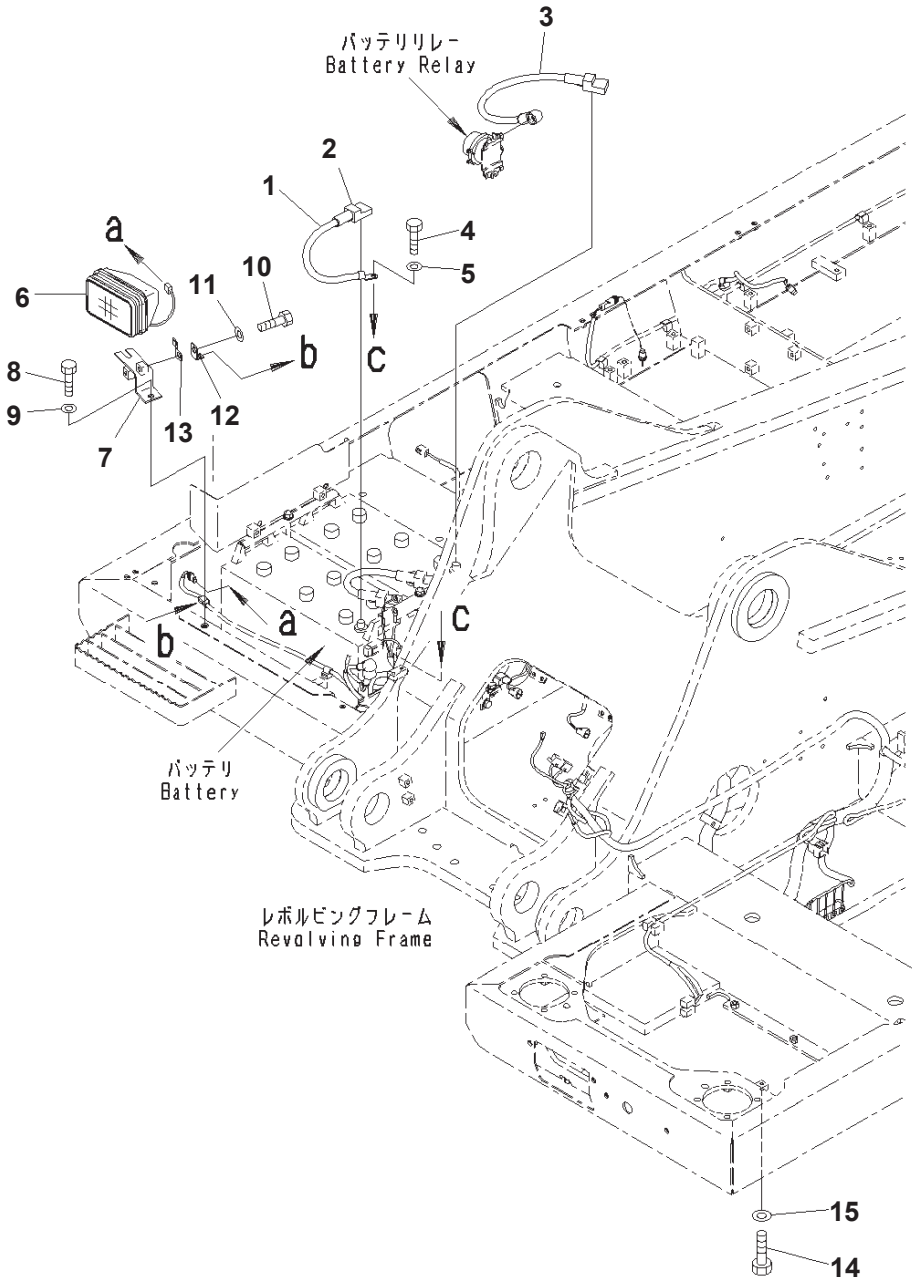

Index	Part Number	Description	Qty	Options
1	08028-44040	Cable, Ground	1	SN:B10001--
2	08038-22511	Cap	1	SN:B10001--
3	08038-42511	Cap	1	SN:B10001--
4	01010-81025	Bolt	1	SN:B10001--
5	01643-31032	Washer	1	SN:B10001--
6	21T-06-32810	Working Lamp Assembly	1	SN:B10001--
	421-06-23330	・ Bulb, 24volt, 70watt	1	SN:B10001--
7	20Y-06-31680	Bracket	1	SN:B10001--
8	01010-81230	Bolt	1	SN:B10001--
9	01643-31232	Washer	1	SN:B10001--
10	01010-81220	Bolt	1	SN:B10001--
11	01643-31232	Washer	1	SN:B10001--
12	08057-12012	Clip	1	SN:B10001--
13	08193-20012	Clip	1	SN:B10001--
14	01010-81016	Bolt	1	SN:B10001--
15	01643-31032	Washer	1	SN:B10001--

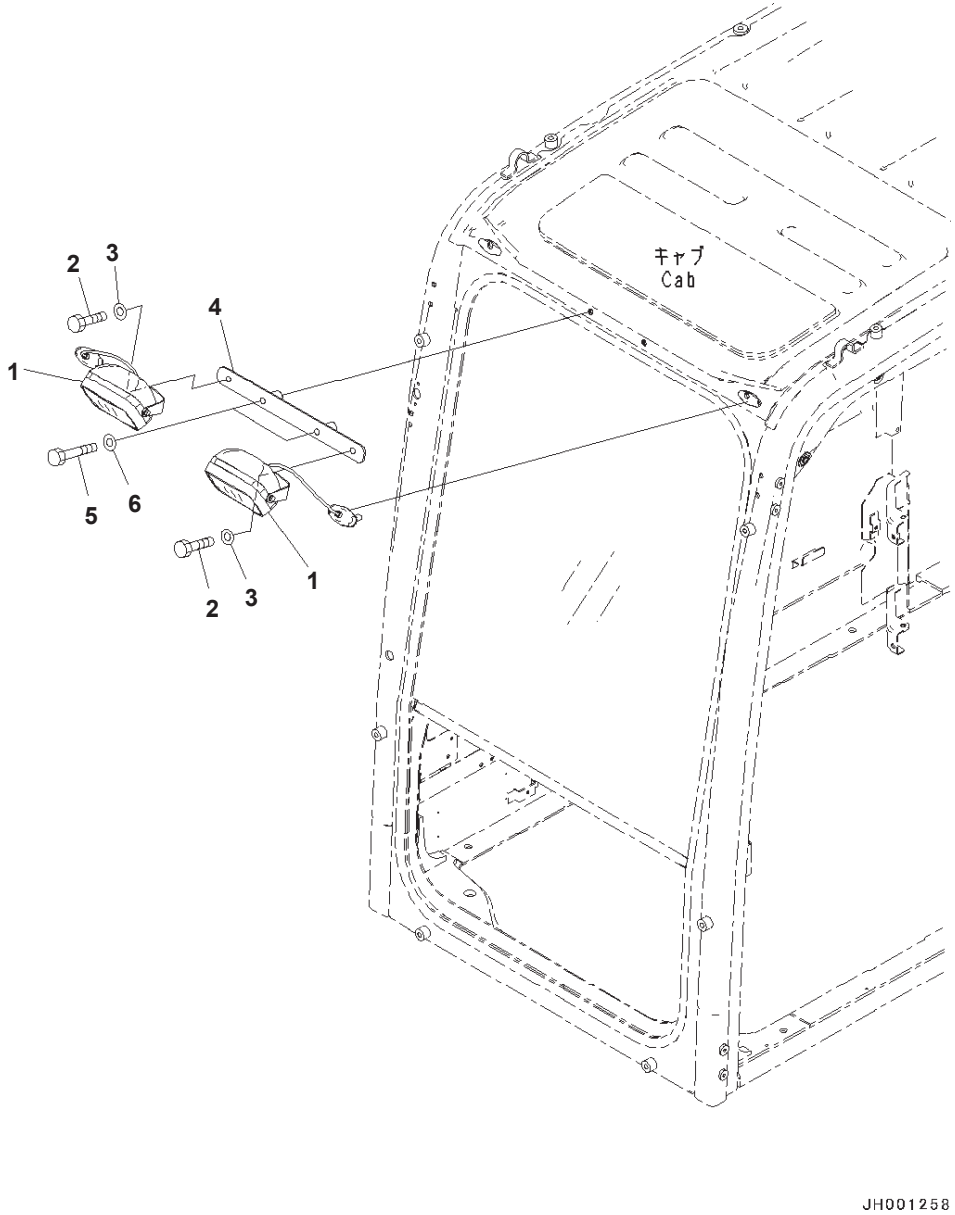

Index	Part Number	Description	Qty	Options
1	20Y-53-15210	Light Assembly, Working	2	SN:B10001--
	421-06-23330	・ Bulb, 24volt, 70watt	1	SN:B10001--
2	01010-D1025	Bolt	2	SN:B10001--
3	01643-71032	Washer	2	SN:B10001--
4	20Y-53-15150	Bracket	1	SN:B10001--
5	01010-D1060	Bolt	2	SN:B10001--
6	01643-71032	Washer	2	SN:B10001--

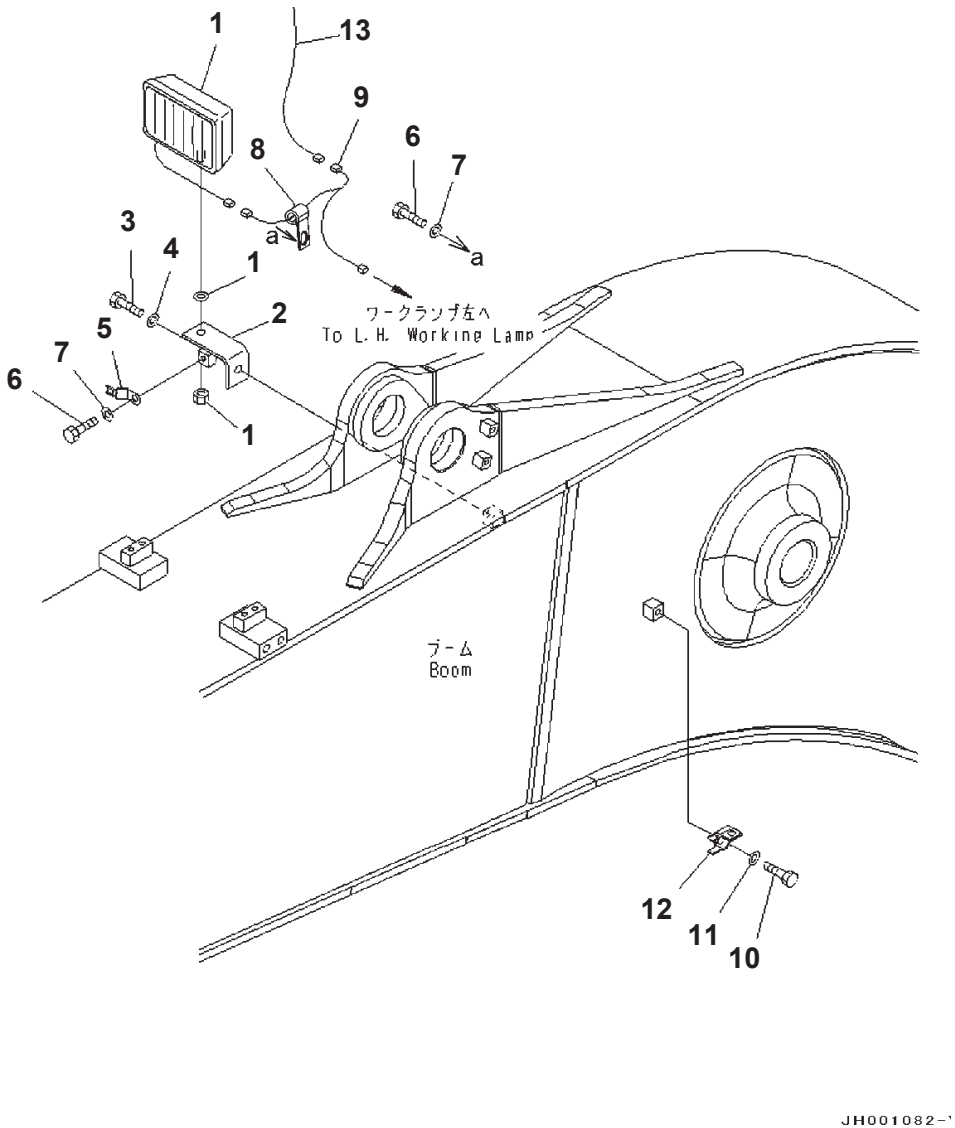

Index	Part Number	Description	Page	Item	Qty	Options
1	21T-06-32810	Light Assembly, Working			1	SN:B10001--
2	20Y-06-21551	Bracket			1	SN:B10001--
3	01010-81430	Bolt			1	SN:B10001--
4	01643-31445	Washer			1	SN:B10001--
5	08193-21012	Clip			1	SN:B10001--
6	01010-81220	Bolt			2	SN:B10001--
7	01643-31232	Washer			2	SN:B10001--
8	04434-51012	Clip			1	SN:B10001--
9	20Y-06-48150	Wire Harness			1	SN:B10001--
10	01010-81220	Bolt			1	SN:B10001--
11	01643-31232	Washer			1	SN:B10001--
12	20Y-06-48260	Bracket			1	SN:B10001--
13	(207-06-75161)	Wiring Harness	T1110-005005	24		SN: --

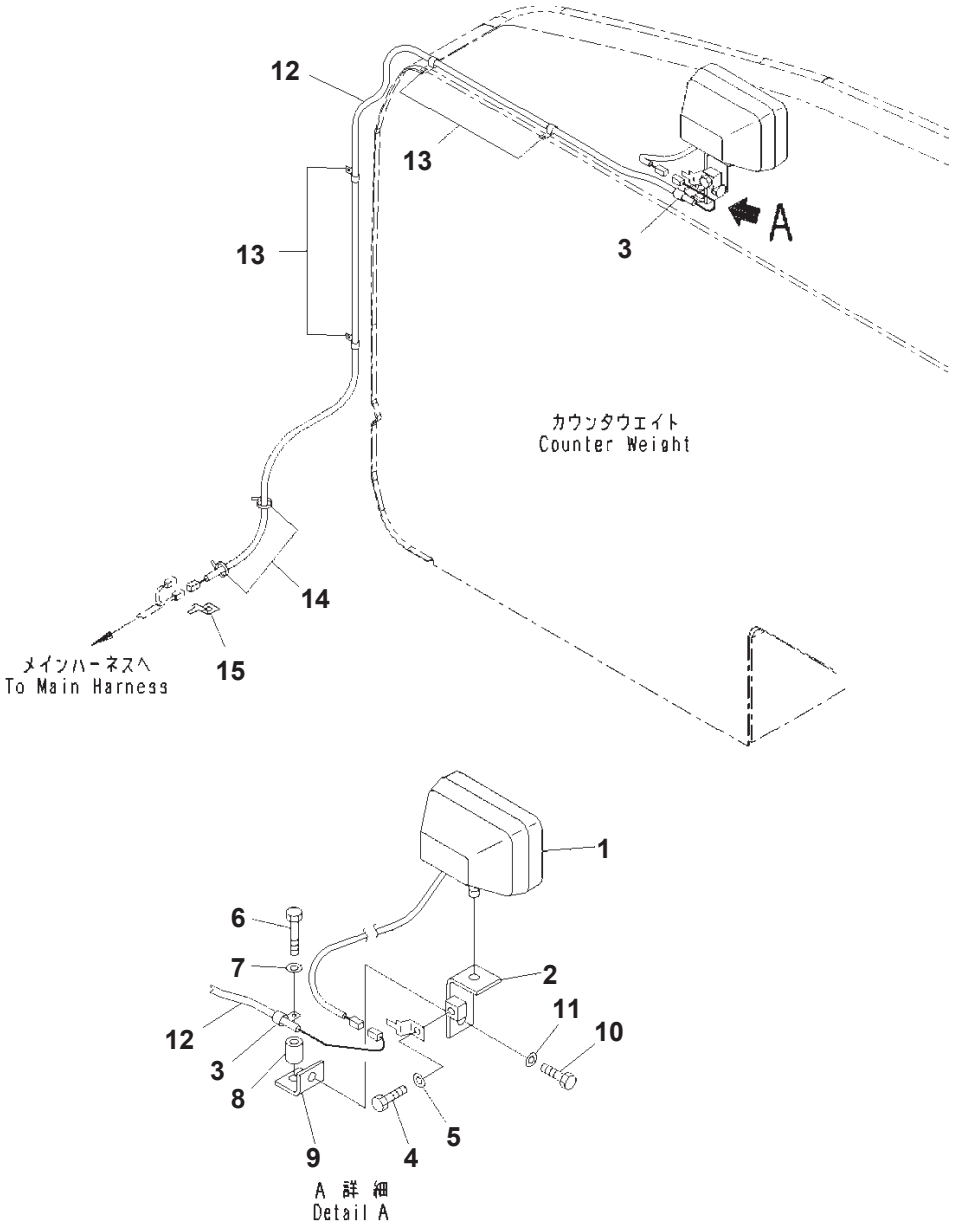

Index	Part Number	Description	Qty	Options
1	21T-06-32810	Working Lamp Assembly, 24volt, 70watt	1	SN:B10027--
	421-06-23330	・ Bulb, 70watt, 24volt	1	SN:B10027--
2	20Y-06-21551	Bracket	1	SN:B10027--
3	04434-51012	Clip	1	SN:B10027--
4	01010-81225	Bolt	1	SN:B10027--
5	01643-31232	Washer	1	SN:B10027--
6	01010-81260	Bolt	1	SN:B10027--
7	01643-31232	Washer	1	SN:B10027--
8	142-03-11160	Spacer	1	SN:B10027--
9	20Y06-21590	Bracket	1	SN:B10027--
10	01010-81225	Bolt	1	SN:B10027--
11	01643-31232	Washer	1	SN:B10027--
12	207-06-75180	Wiring Harness	1	SN:B10027--
13	04434-51012	Clip	4	SN:B10027--
14	08034-20519	Band	2	SN:B10027--
15	08193-20012	Clip	2	SN:B10027--

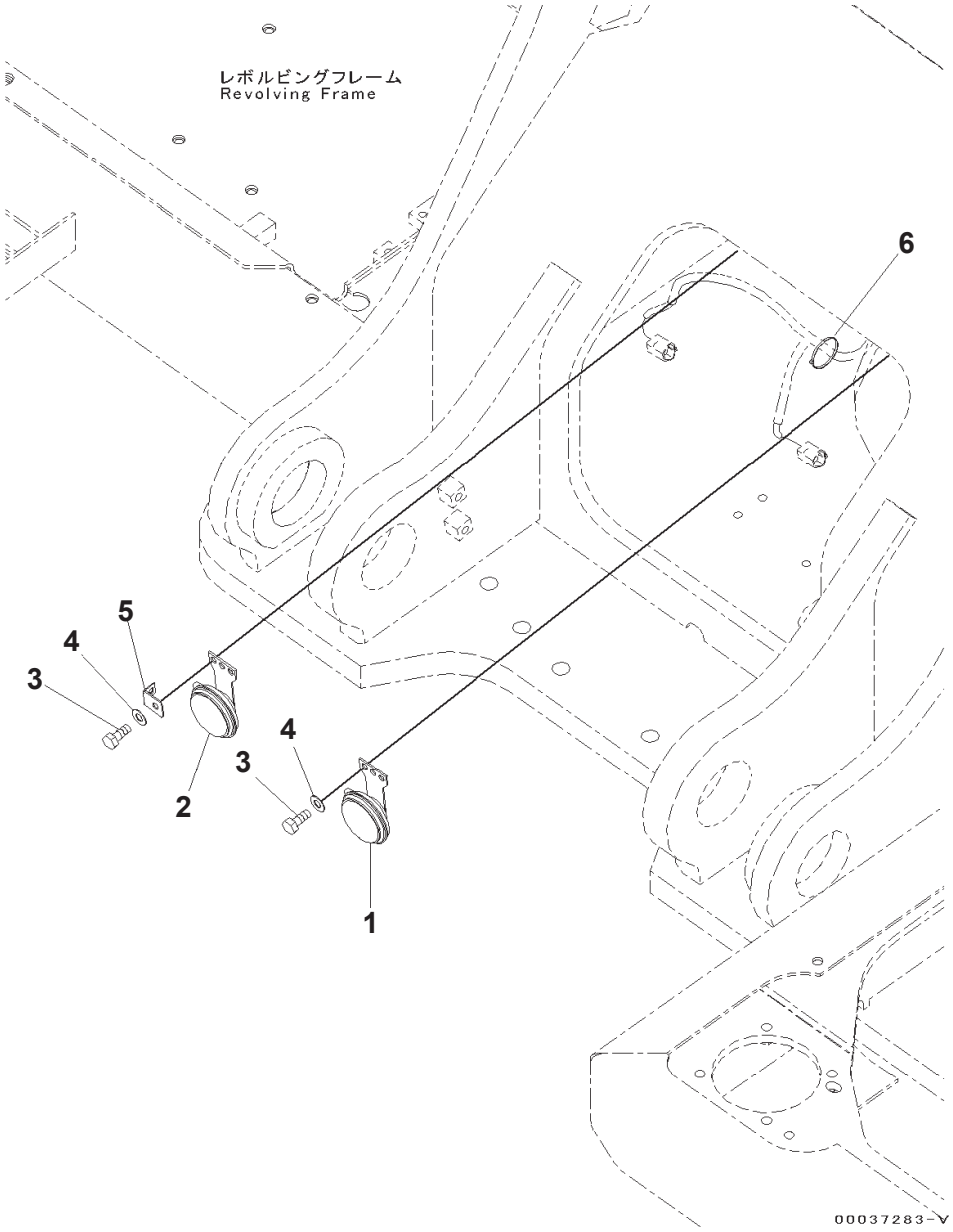

Horn

Index	Part Number	Description	Qty	Options
1	08160-72400	Horn, L.H.	1	SN: B10001--
2	08160-72420	Horn, R.H	1	SN: B10001--
3	01010-80825	Bolt	4	SN: B10001--
4	01643-30823	Washer	4	SN: B10001--
5	08057-12008	Clip	1	SN: B10001--
6	08034-20414	Band	1	SN: B10001--

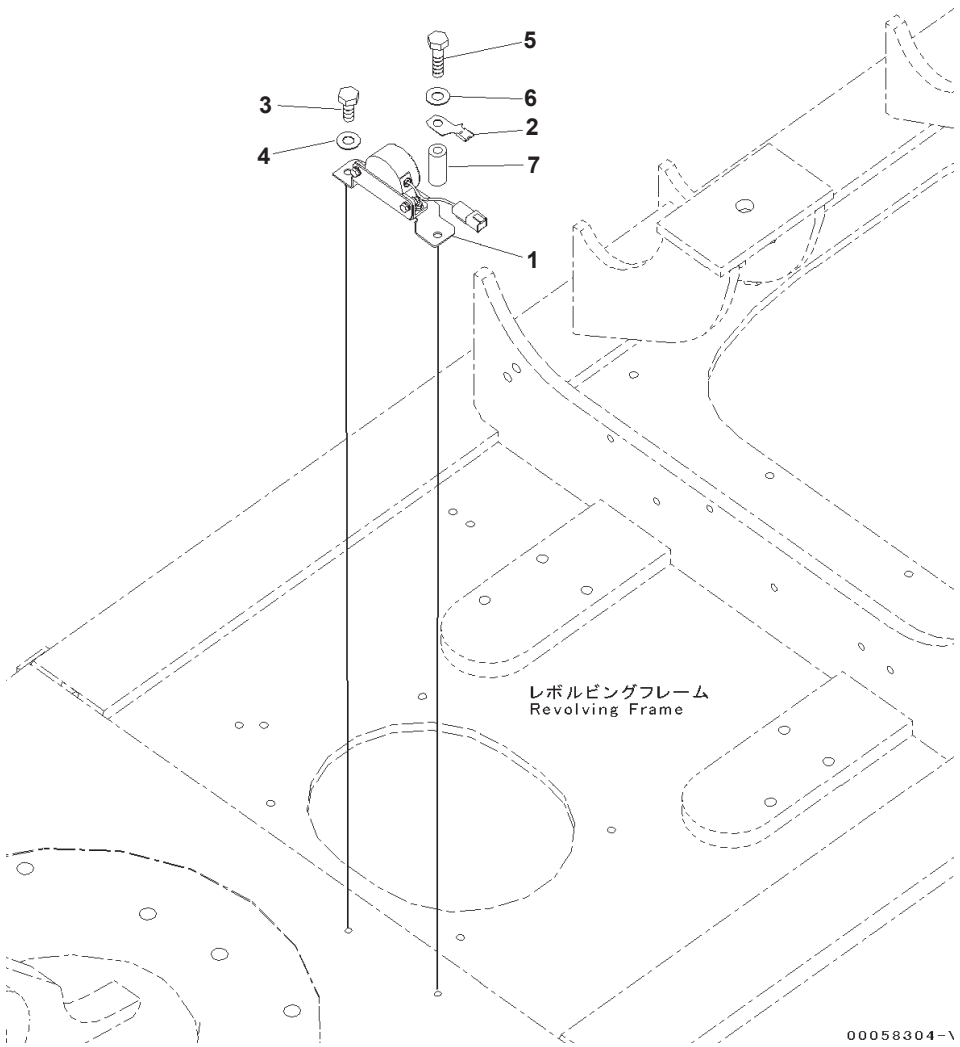

Travel Alarm

Index	Code	Part Number	Description	Qty	Options
1		22B-06-21930	Back-up Alarm	1	SN:B10275--
	A2	20Y-06-41822	Back-up Alarm	1	SN: B10001--B10274
2		08193-20010	Clip	1	SN: B10001--
3		01010-81020	Bolt	1	SN: B10001--
4		01643-31032	Washer	1	SN: B10001--
5		01011-81015	Bolt	1	SN: B10001--
6		01643-31032	Washer	1	SN: B10001--
7		195-01-16420	Collar	1	SN: B10001--

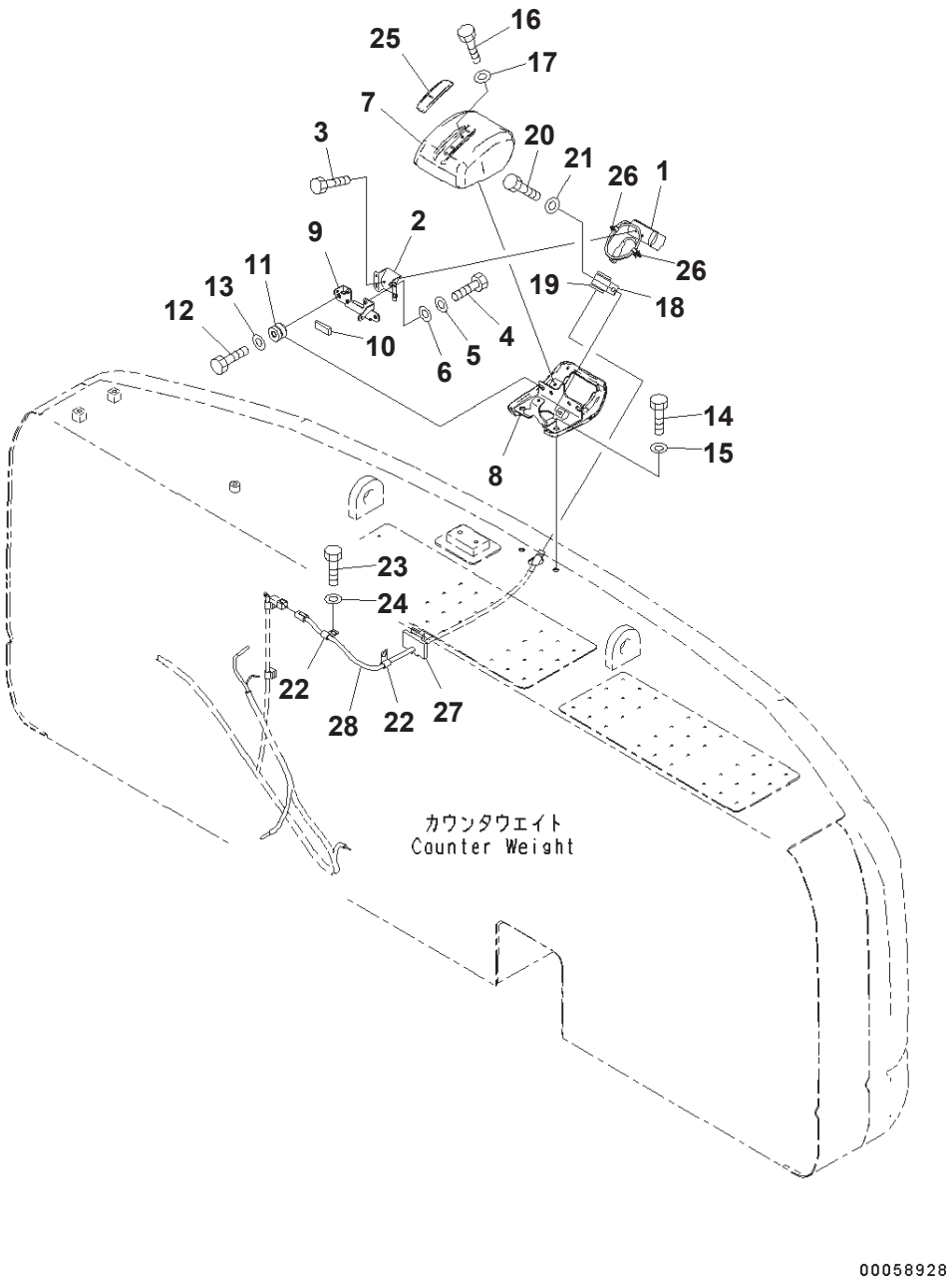

Index	Code	Part Number	Description	Qty	Options
		7835-33-1001	Camera Assembly	1	SN: B10001--
1	C1		· Camera	1	SN: B10001--
2	C1		· Bracket	1	SN: B10001--
3	C1		· Bolt	2	SN: B10001--
4	C1		· Bolt	4	SN: B10001--
5	C1		· Washer	4	SN: B10001--
6	C1		· Washer	4	SN: B10001--
7		207-06-76420	Cover	1	SN: B10001--
8		207-06-76431	Cover	1	SN: B10001--
9		207-06-76440	Bracket	1	SN: B10001--
10		207-06-76460	· Sheet	1	SN: B10001--
11		20Y-810-1240	Cushion	2	SN: B10001--
12		01010-80835	Bolt	2	SN: B10001--
13		01643-30823	Washer	2	SN: B10001--
14		01010-81230	Bolt	2	SN: B10001--
15		01643-31232	Washer	2	SN: B10001--
16		01010-80616	Bolt	2	SN: B10001--
17		01643-30623	Washer	2	SN: B10001--
18		04434-52711	Clip	1	SN: B10019--
	A2	04434-53211	Clip	1	SN: B10001--B10018
19		07095-00317	Cushion	1	SN: B10001--
20		01010-81016	Bolt	1	SN: B10001--
21		01643-31032	Washer	1	SN: B10001--
22		04434-51012	Clip	2	SN: B10001--
23		01010-81230	Bolt	2	SN: B10001--
24		01643-31232	Washer	2	SN: B10001--
25		207-06-76451	Cover	1	SN: B10001--
26		08059-00310	Clip	2	SN: B10001--
27		207-06-76490	Sheet	1	SN: B10001--
28		207-06-76310	Cable	1	SN: B10001--

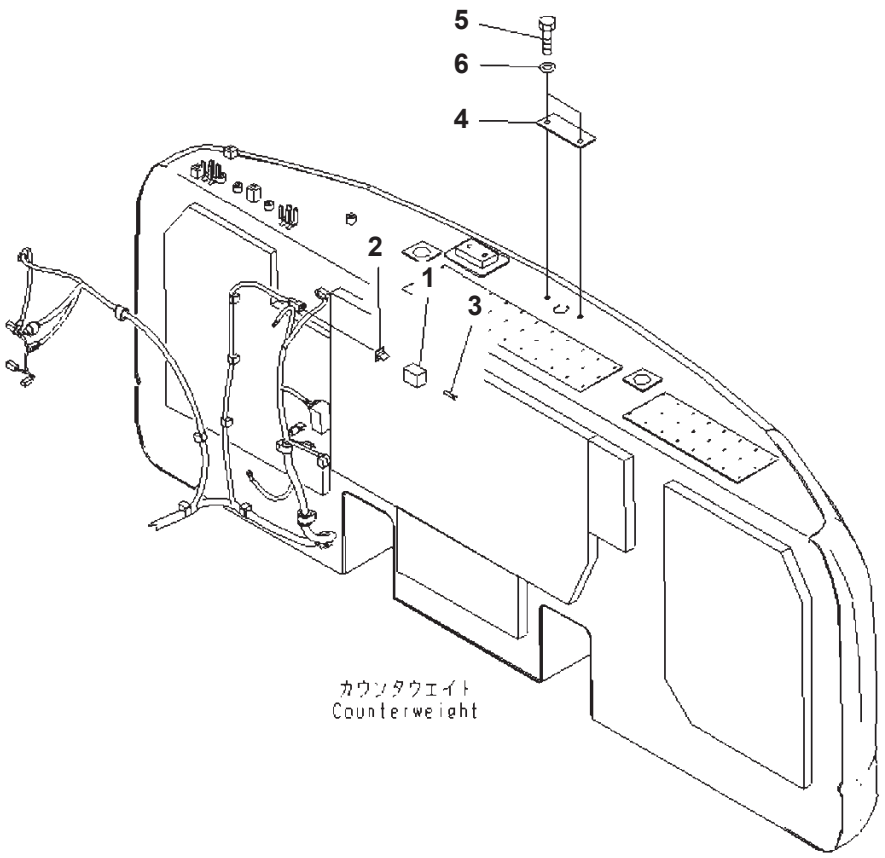

Index	Part Number	Description	Qty	Options
1	08192-24200	Connector	1	SN:B10001--
2	08192-14400	Wedge	1	SN:B10001--
3	08191-00770	Plug, Connector	4	SN:B10001--
4	207-06-76270	Plate	1	SN:B10001--
5	01010-81220	Bolt	2	SN:B10001--
6	01643-31232	Washer	2	SN:B10001--

HYDRAULIC SYSTEM

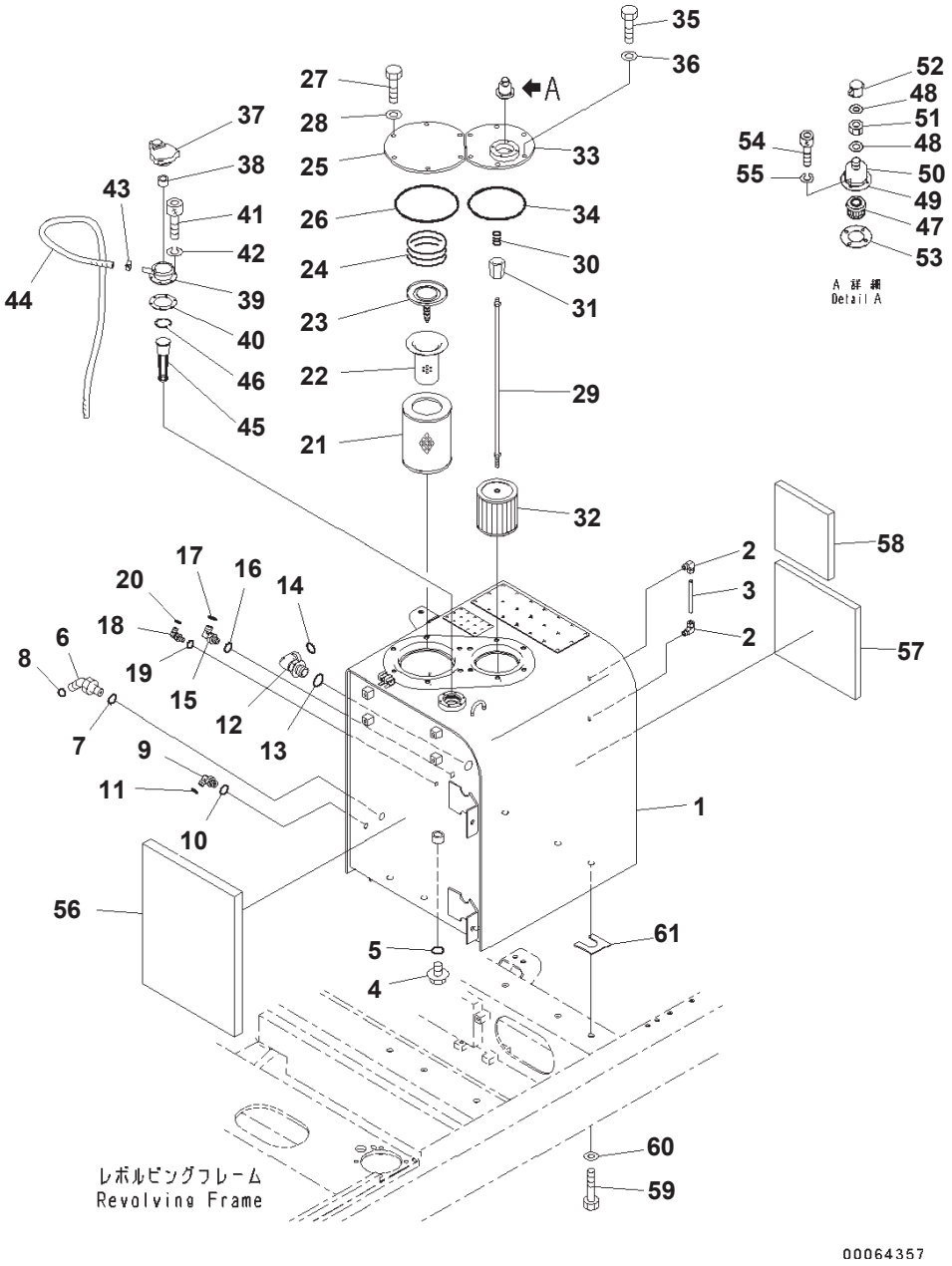

Index	Code	Part Number	Description	Qty	Options
1		207-60-75110	Tank	1	SN:B10001--
2		203-60-31100	Elbow Assembly	2	SN:B10001--
3		203-60-31160	Tube	1	SN:B10001--
4		07044-12412	Plug	1	SN:B10001--
5		07002-12434	O-ring	1	SN:B10001--
6		02783-10628	Elbow	1	SN:B10001--
7		07002-12434	O-ring	1	SN:B10001--
8		02896-11018	O-ring	1	SN:B10001--
9		02782-10315	Elbow	1	SN:B10001--
10		07002-12034	O-ring	1	SN:B10001--
11		02896-11009	O-ring	1	SN:B10001--
12		21W-62-42640	Elbow	1	SN:B10001--
13		07002-13334	O-ring	1	SN:B10001--
14		207-62-64740	O-ring	1	SN:B10001--
15		02782-10422	Elbow	1	SN:B10001--
16		07002-12034	O-ring	1	SN:B10001--
17		02896-11012	O-ring	1	SN:B10001--
18		11Y-62-12160	Elbow	1	SN:B10001--
19		07002-11423	O-ring	1	SN:B10001--
20		02896-11008	O-ring	1	SN:B10001--
21		207-60-71182	Element	1	SN:B10001--
22		20Y-60-31140	Strainer	1	SN:B10001--
23		20Y-60-31131	Valve Assembly	1	SN:B10001--
24		07069-34075	Spring	1	SN:B10001--
25		22U-60-21232	Cover	1	SN:B10001--
26		07000-15195	O-ring	1	SN:B10001--
27		01010-81230	Bolt	6	SN:B10001--
28		01643-31232	Washer	6	SN:B10001--
		207-60-75120	Strainer Assembly	1	SN:B10001--
29		208-60-71150	・ Rod Assembly	1	SN:B10001--
30		12R-60-11230	・・ Spring	1	SN:B10001--
31		20Y-60-21320	・・ Holder	1	SN:B10001--
32		22B-60-11160	・ Strainer	1	SN:B10001--
33		207-60-75131	Cover	1	SN:B10001--
34		07000-15160	O-ring	1	SN:B10001--
35		01010-81230	Bolt	6	SN:B10001--
36		01643-31232	Washer	6	SN:B10001--
37		17A-60-11310	Cap Assembly	1	SN:B10001--
38		20Y-60-21470	・ Element	1	SN:B10001--
39		208-60-71180	Neck	1	SN:B10001--
40		20Y-60-21340	Gasket	1	SN:B10001--
41		01252-70516	Bolt	6	SN:B10001--
42		01601-20513	Washer	6	SN:B10001--
43		07285-00200	Clip	1	SN:B10209--
		07285-00155	Clip	1	SN:B10001--B10208
44		07261-21415	Tube	1	SN:B10209--
		07270-61415	Tube	1	SN:B10001--B10208
45		07056-10045	Strainer	1	SN:B10001--
46		04065-04718	Ring	1	SN:B10001--
		20Y-60-31271	Breather Assembly	1	SN:B10001--
47	C1	207-60-51311	・ Element	1	SN:B10001--
48	C1	207-60-51320	・ Seal	2	SN:B10001--
49	C1		・ Body	1	SN:B10001--
50	C1		・ Cover	1	SN:B10001--

PC350LC-8 S/N B10001-UP
Hydraulic Oil Tank

Index	Code	Part Number	Description	Qty	Options
51	C1		· Nut	1	SN:B10001--
52	C1		· Nut	1	SN:B10001--
53	C1		· Packing	1	SN:B10001--
54		01252-70516	Bolt	4	SN:B10001--
55		01601-20513	Washer	4	SN:B10001--
56		207-60-75910	Sheet	1	SN:B10001--
57		207-60-75920	Sheet	1	SN:B10001--
58		207-60-75930	Sheet	1	SN:B10001--
59		01010-81635	Bolt	6	SN:B10001--
60		01643-31645	Washer	6	SN:B10001--
61		195-03-11570	Shim, T=1.0mm	2	SN:B10001--

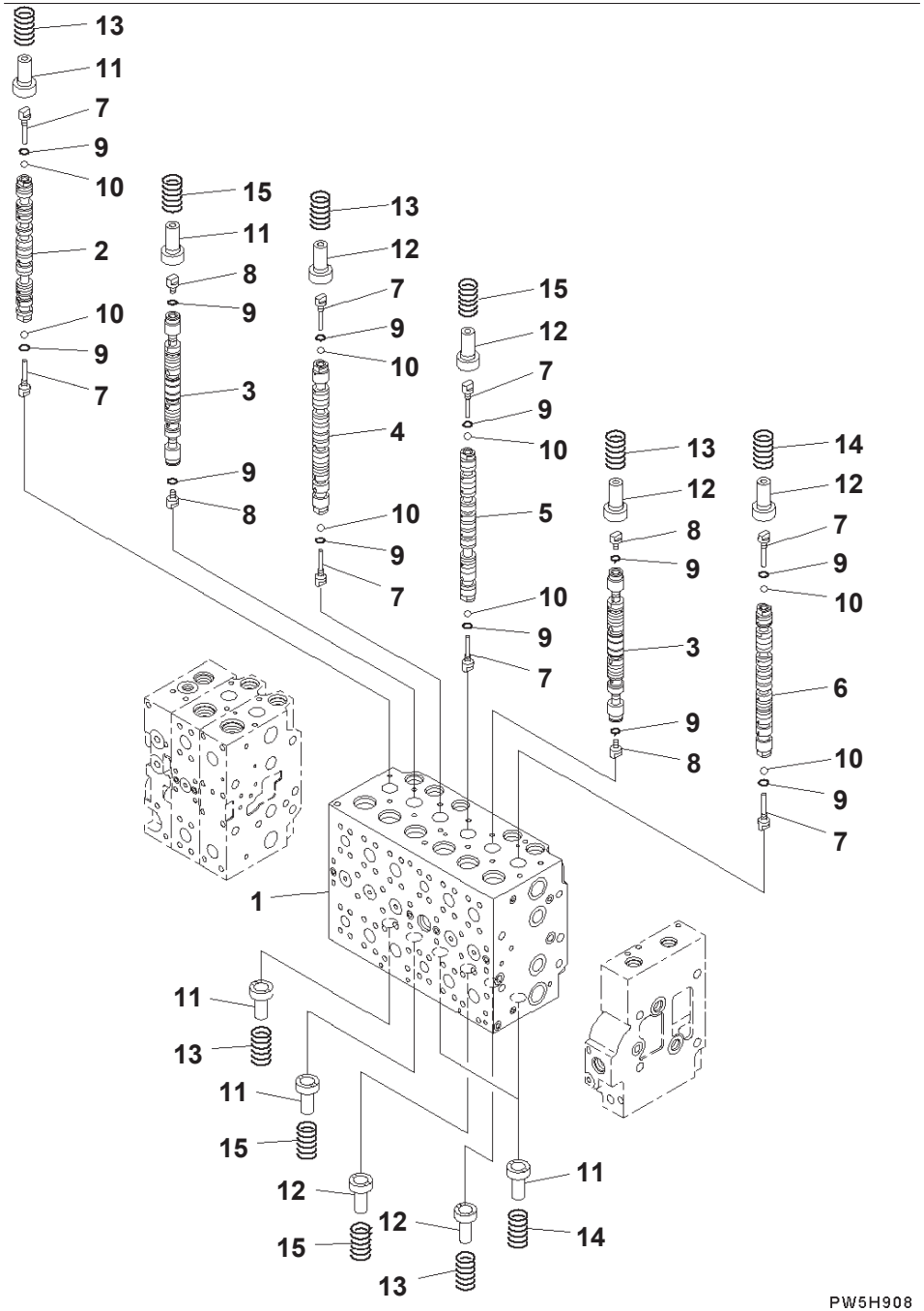

Index	Code	Part Number	Description	Qty	Options
		723-48-26604	Valve Assembly, Control	1	SN:B10402--
	A2	723-48-26603	Valve Assembly, Control	1	SN:B10380--B10401
	A2	723-48-26602	Valve Assembly, Control	1	SN:B10335--B10379
	A2	723-48-26601	Valve Assembly, Control	1	SN: B10109--B10334
	A2	723-48-26600	Valve Assembly, Control	1	SN: B10001--B10108
	C1		・ Body Subassembly	1	SN: B10001--
1	C1		・・ Block	1	SN: B10001--
2	C1		・・ Spool	1	SN: B10001--
3	C1		・・ Spool	2	SN: B10001--
4	C1		・・ Spool	1	SN: B10001--
5	C1		・・ Spool	1	SN: B10001--
6	C1		・・ Spool	1	SN: B10001--
7		723-46-15130	・・ Plug	8	SN: B10001--
8		723-46-15140	・・ Plug	4	SN: B10001--
9		07002-10823	・・ O-ring	12	SN: B10001--
10		708-7T-16460	・・ Ball	8	SN: B10001--
11		723-46-15120	・・ Retainer	6	SN: B10001--
12		723-46-15690	・・ Retainer	6	SN: B10001--
13		723-46-14110	・・ Spring	5	SN: B10001--
14		723-46-14170	・・ Spring	3	SN: B10001--
15		723-46-14131	・・ Spring	4	SN: B10001--

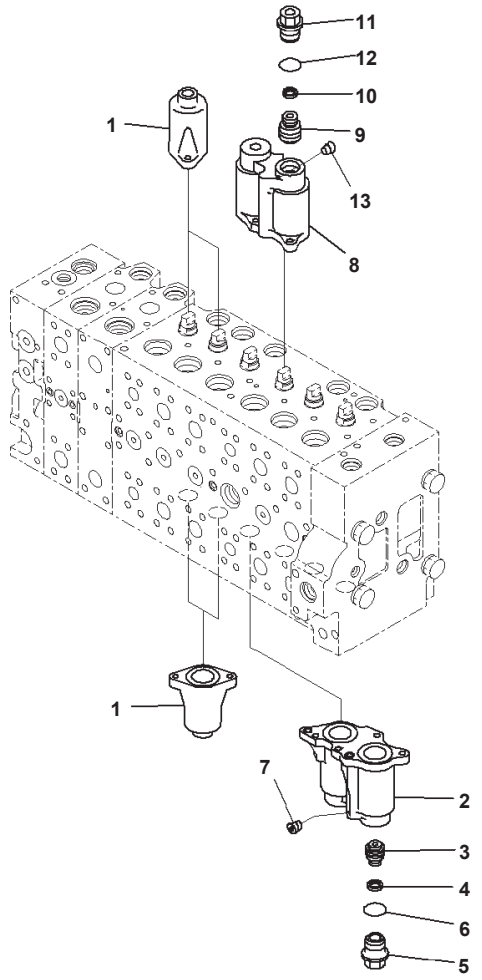

Main Control Valve, 1-actuator Inner Parts (2/24)

Index	Code	Part Number	Description	Qty	Options
		723-48-26604	Valve Assembly, Control	1	SN:B10402--
	A2	723-48-26603	Valve Assembly, Control	1	SN:B10380--B10401
	A2	723-48-26602	Valve Assembly, Control	1	SN:B10335--B10379
	A2	723-48-26601	Valve Assembly, Control	1	SN: B10109--B10334
	A2	723-48-26600	Valve Assembly, Control	1	SN: B10001--B10108
	C1		・ Body Subassembly	1	SN: B10001--
1		723-46-15111	・・ Case	4	SN: B10001--
		723-46-18131	・・ Case Subassembly	1	SN: B10001--
2	C1		・・・ Case	1	SN: B10001--
3	C1		・・・ Piston	1	SN: B10001--
4	C1		・・・ Seal	1	SN: B10001--
5		723-46-15630	・・・ Plug	1	SN: B10001--
6		07000-13024	・・・ O-ring	1	SN: B10001--
7	C1		・・・ Screw	1	SN: B10001--
		723-46-18231	・・ Case Subassembly	1	SN: B10001--
8	C1		・・・ Case	1	SN: B10001--
9	C1		・・・ Piston	1	SN: B10001--
10	C1		・・・ Seal	1	SN: B10001--
11		723-46-15630	・・・ Plug	1	SN: B10001--
12		07000-13024	・・・ O-ring	1	SN: B10001--
13	C1		・・・ Screw	1	SN: B10001--

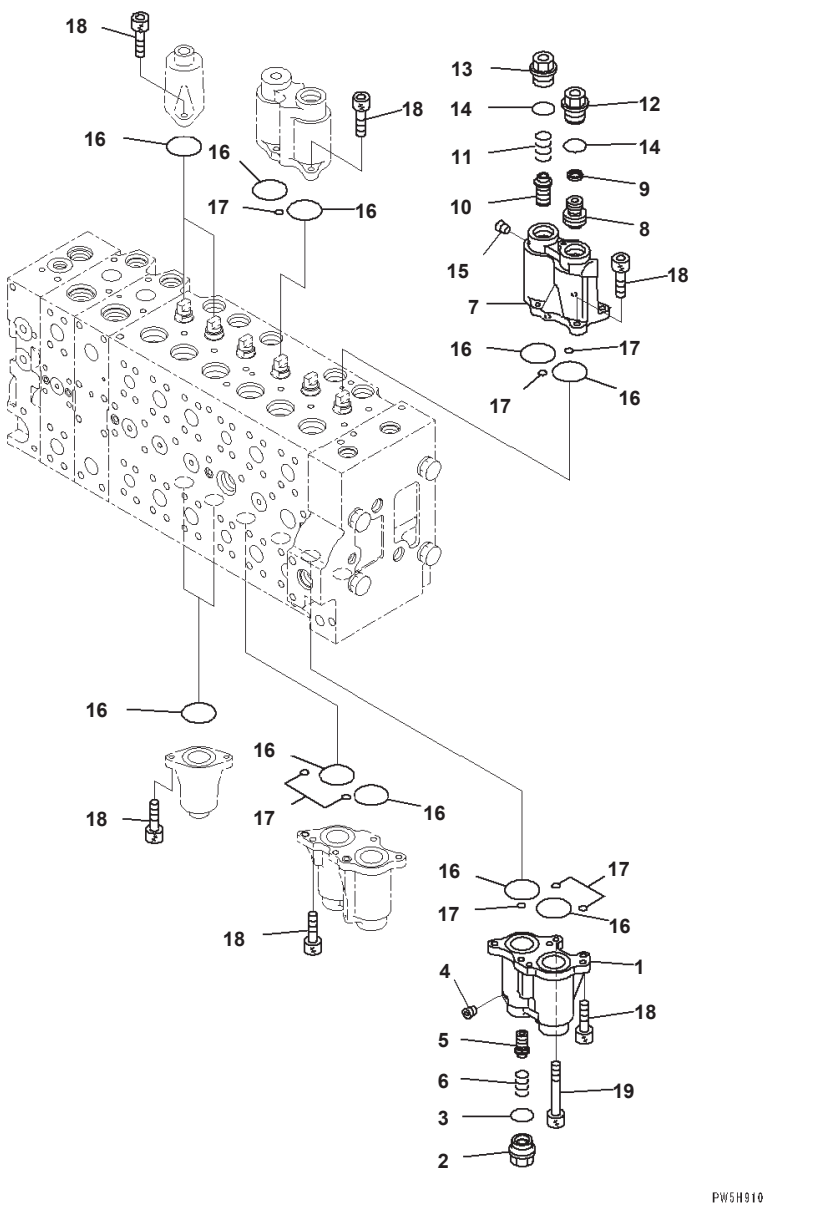

Main Control Valve, 1-actuator Inner Parts (3/24)

Index	Code	Part Number	Description	Qty	Options
		723-48-26604	Valve Assembly, Control	1	SN:B10402--
	A2	723-48-26603	Valve Assembly, Control	1	SN:B10380--B10401
	A2	723-48-26602	Valve Assembly, Control	1	SN:B10335--B10379
	A2	723-48-26601	Valve Assembly, Control	1	SN: B10109--B10334
	A2	723-48-26600	Valve Assembly, Control	1	SN: B10001--B10108
	C1		· Body Subassembly	1	SN: B10001--
		723-46-18330	· · Case Subassembly	1	SN: B10001--
1	C1		· · · Case	1	SN: B10001--
2		723-46-17340	· · · Plug	1	SN: B10001--
3		07000-13024	· · · O-ring	1	SN: B10001--
4	C1		· · · Screw	1	SN: B10001--
5		723-46-17320	· · · Spool	1	SN: B10001--
6		723-46-17330	· · · Spring	1	SN: B10001--
		723-46-18431	· · Case Subassembly	1	SN: B10001--
7	C1		· · · Case	1	SN: B10001--
8	C1		· · · Piston	1	SN: B10001--
9	C1		· · · Seal	1	SN: B10001--
10		723-46-17320	· · · Spool	1	SN: B10001--
11		723-46-17330	· · · Spring	1	SN: B10001--
12		723-46-15630	· · · Plug	1	SN: B10001--
13		723-46-17340	· · · Plug	1	SN: B10001--
14		07000-13024	· · · O-ring	2	SN: B10001--
15	C1		· · · Screw	3	SN: B10001--
16		07430-71380	· · O-ring	12	SN: B10001--
17		702-16-53920	· · O-ring	8	SN: B10001--
18		01252-60820	· · Bolt	23	SN: B10001--
19		723-46-17350	· · Bolt	1	SN: B10001--

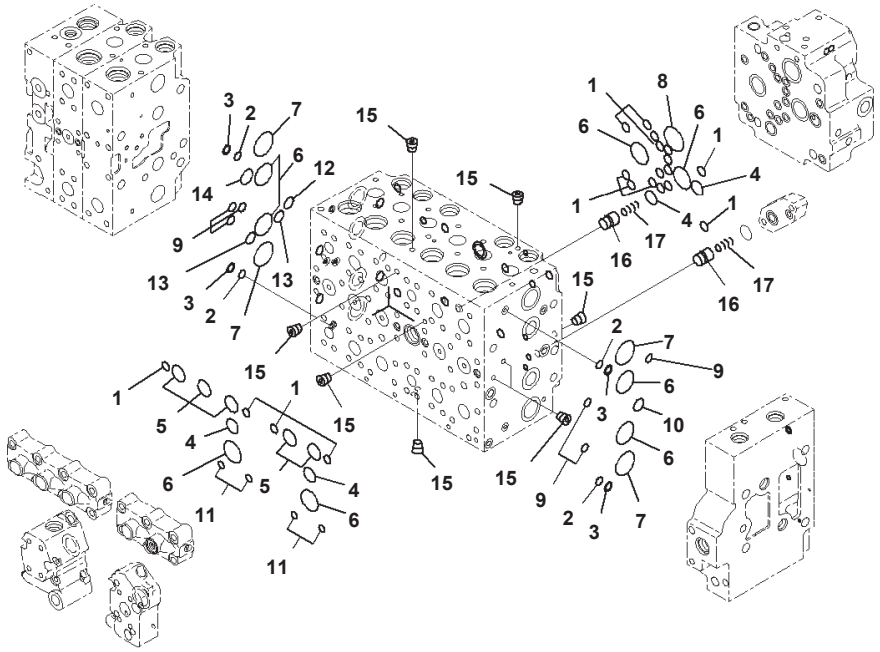

Main Control Valve, 1-actuator Inner Parts (4/24)

Index	Code	Part Number	Description	Qty	Options
		723-48-26604	Valve Assembly, Control	1	SN:B10402--
	A2	723-48-26603	Valve Assembly, Control	1	SN:B10380--B10401
	A2	723-48-26602	Valve Assembly, Control	1	SN:B10335--B10379
	A2	723-48-26601	Valve Assembly, Control	1	SN: B10109--B10334
	A2	723-48-26600	Valve Assembly, Control	1	SN: B10001--B10108
	C1		・ Body Subassembly	1	SN: B10001--
1		07000-12012	・・ O-ring	19	SN: B10001--
2		723-11-19130	・・ O-ring	4	SN: B10001--
3		723-46-17520	・・ Ring, Back-up	4	SN: B10001--
4		07000-12021	・・ O-ring	4	SN: B10001--
5		07000-13028	・・ O-ring	5	SN: B10001--
6		07000-13032	・・ O-ring	8	SN: B10001--
7		723-46-17510	・・ O-ring	4	SN: B10001--
8		07000-13036	・・ O-ring	1	SN: B10001--
9		723-46-17530	・・ O-ring	11	SN: B10001--
10		723-11-18150	・・ O-ring	2	SN: B10001--
11		702-16-53920	・・ O-ring	4	SN: B10001--
12		723-46-18710	・・ O-ring	1	SN: B10001--
13		722-12-19070	・・ O-ring	2	SN: B10001--
14		723-46-18720	・・ O-ring	1	SN: B10001--
15	C1		・・ Plug	14	SN: B10001--
16		723-46-17650	・・ Valve	2	SN: B10001--
17		723-46-14150	・・ Spring	2	SN: B10001--

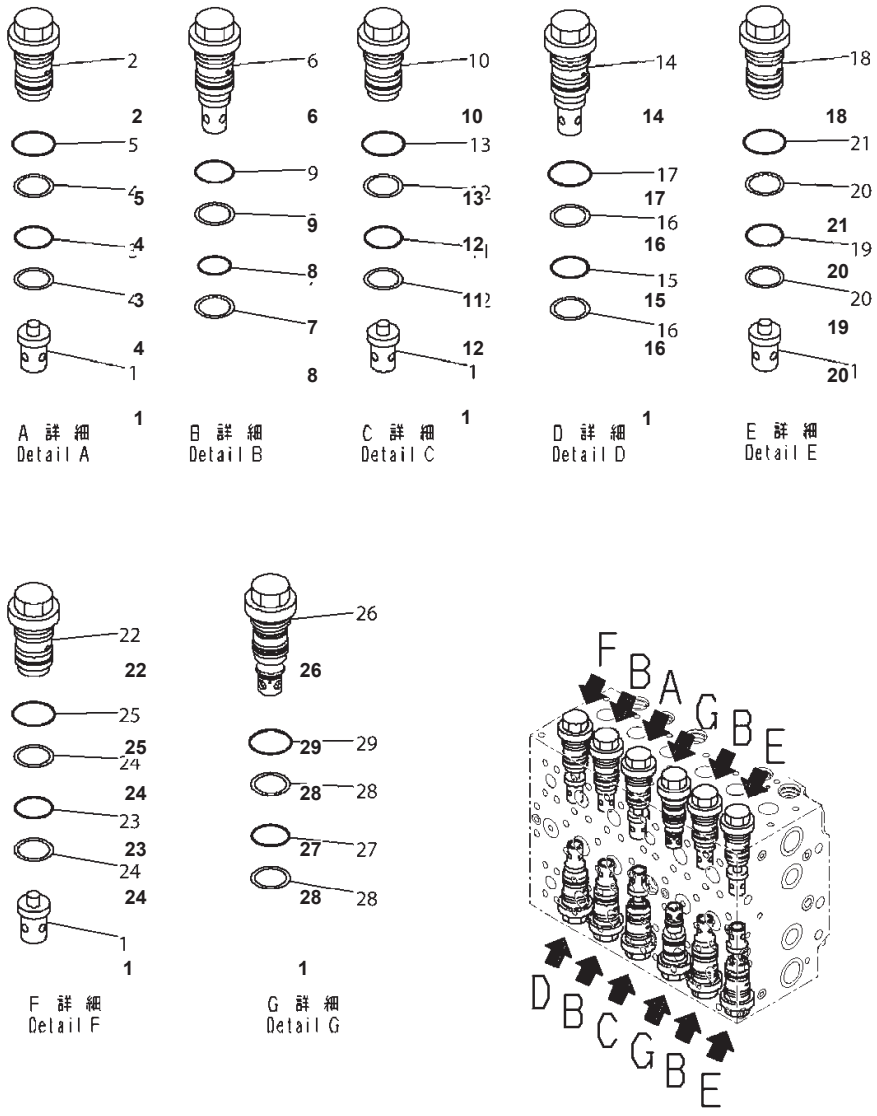

Main Control Valve, 1-actuator Inner Parts (5/24) (#B10001-B10401)

Index	Code	Part Number	Description	Qty	Options
		723-48-26603	Valve Assembly, Control	1	SN:B10380--B10401
	A2	723-48-26602	Valve Assembly, Control	1	SN:B10335--B10379
	A2	723-48-26601	Valve Assembly, Control	1	SN:B10109--B10334
	A2	723-48-26600	Valve Assembly, Control	1	SN: B10001--B10108
	C1		・ Body Subassembly	1	SN:B10001--B10401
1		723-46-41210	・・ Valve	7	SN:B10001--B10401
2		723-46-40100	・・ Valve Assembly	1	SN: B10001--@
3		700-93-11320	・・・ O-ring	1	SN: B10001--@
4		723-46-41950	・・・ Ring	2	SN: B10001--@
5		07002-13634	・・・ O-ring	1	SN: B10001--@
6		723-46-42800	・・ Valve Assembly	4	SN: B10001--@
7		700-93-11320	・・・ O-ring	1	SN: B10001--@
8		723-46-41950	・・・ Ring	2	SN: B10001--@
9		07002-13634	・・・ O-ring	1	SN: B10001--@
10		723-46-40601	・・ Valve Assembly	1	SN: B10001--@
11		700-93-11320	・・・ O-ring	1	SN: B10001--@
12		723-46-41950	・・・ Ring	2	SN: B10001--@
13		07002-13634	・・・ O-ring	1	SN: B10001--@
14		723-46-43100	・・ Valve Assembly	1	SN: B10001--@
15		700-93-11320	・・・ O-ring	1	SN: B10001--@
16		723-46-41950	・・・ Ring	2	SN: B10001--@
17		07002-13634	・・・ O-ring	1	SN: B10001--@
18		723-46-43400	・・ Valve Assembly	1	SN: B10001--@
19		700-93-11320	・・・ O-ring	1	SN: B10001--@
20		723-46-41950	・・・ Ring	2	SN: B10001--@
21		07002-13634	・・・ O-ring	1	SN: B10001--@
22		723-46-44100	・・ Valve Assembly	1	SN: B10001--@
23		700-93-11320	・・・ O-ring	1	SN: B10001--@
24		723-46-41950	・・・ Ring	2	SN: B10001--@
25		07002-13634	・・・ O-ring	1	SN: B10001--@
26		723-46-45100	・・ Valve Assembly	3	SN:B10001--B10401
27		700-93-11320	・・・ O-ring	1	SN:B10001--B10401
28		723-46-41950	・・・ Ring	2	SN:B10001--B10401
29		07002-13634	・・・ O-ring	1	SN:B10001--B10401

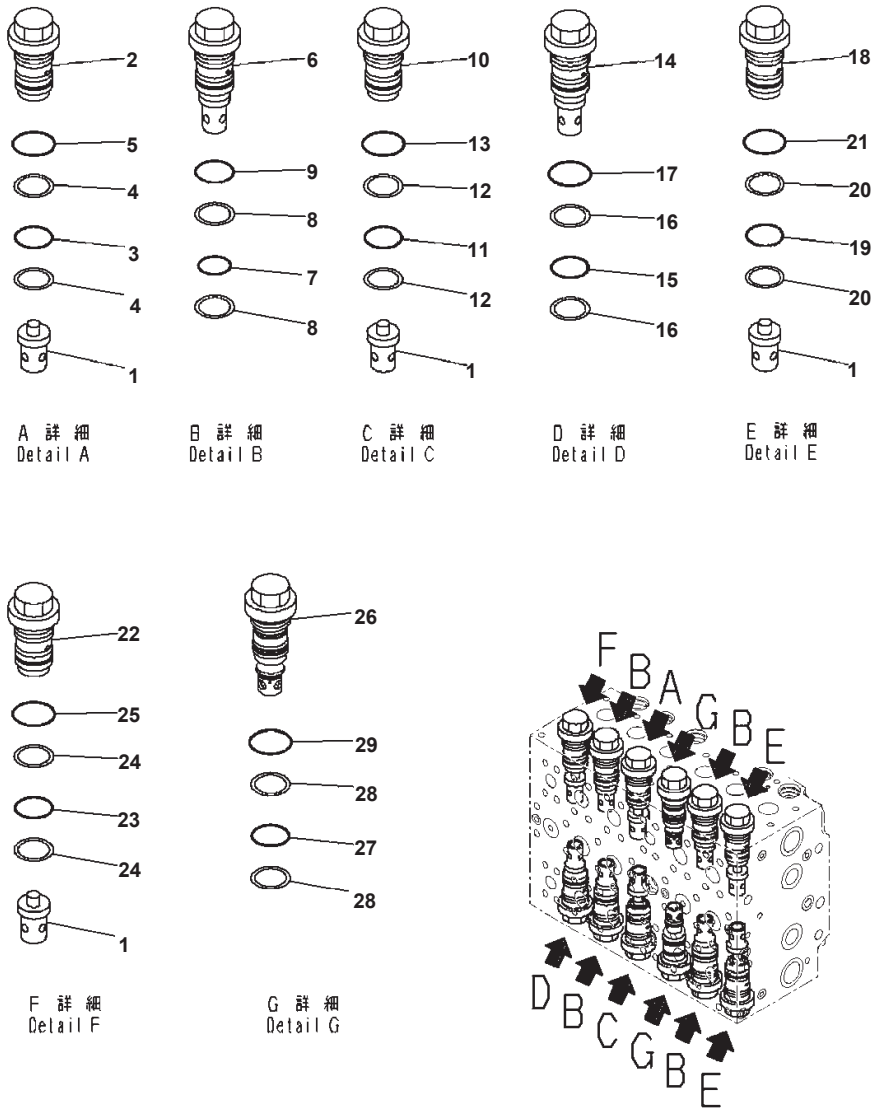

Main Control Valve, 1-actuator Inner Parts (5/24) (#B10402-)

Index	Code	Part Number	Description	Qty	Options
		723-48-26604	Valve Assembly, Control	1	SN:B10402--
	C1		・ Body Subassembly	1	SN:B10402--
1		723-46-41210	・・ Valve	7	SN:B10402--
2		723-46-40100	・・ Valve Assembly	1	SN: B10001--
3		700-93-11320	・・・ O-ring	1	SN: B10001--
4		723-46-41950	・・・ Ring	2	SN: B10001--
5		07002-13634	・・・ O-ring	1	SN: B10001--
6		723-46-42800	・・ Valve Assembly	4	SN: B10001--
7		700-93-11320	・・・ O-ring	1	SN: B10001--
8		723-46-41950	・・・ Ring	2	SN: B10001--
9		07002-13634	・・・ O-ring	1	SN: B10001--
10		723-46-40601	・・ Valve Assembly	1	SN: B10001--
11		700-93-11320	・・・ O-ring	1	SN: B10001--
12		723-46-41950	・・・ Ring	2	SN: B10001--
13		07002-13634	・・・ O-ring	1	SN: B10001--
14		723-46-43100	・・ Valve Assembly	1	SN: B10001--
15		700-93-11320	・・・ O-ring	1	SN: B10001--
16		723-46-41950	・・・ Ring	2	SN: B10001--
17		07002-13634	・・・ O-ring	1	SN: B10001--
18		723-46-43400	・・ Valve Assembly	1	SN: B10001--
19		700-93-11320	・・・ O-ring	1	SN: B10001--
20		723-46-41950	・・・ Ring	2	SN: B10001--
21		07002-13634	・・・ O-ring	1	SN: B10001--
22		723-46-44100	・・ Valve Assembly	1	SN: B10001--
23		700-93-11320	・・・ O-ring	1	SN: B10001--
24		723-46-41950	・・・ Ring	2	SN: B10001--
25		07002-13634	・・・ O-ring	1	SN: B10001--
26		723-46-45100	・・ Valve Assembly	1	SN:B10402--
27		700-93-11320	・・・ O-ring	1	SN:B10402--
28		723-46-41950	・・・ Ring	2	SN:B10402--
29		07002-13634	・・・ O-ring	1	SN:B10402--
30		723-46-45800	・・ Valve Assembly	2	SN:B10402--
31		700-93-11320	・・・ O-ring	1	SN:B10402--
32		723-46-41950	・・・ Ring	2	SN:B10402--
33		07002-13634	・・・ O-ring	1	SN:B10402--

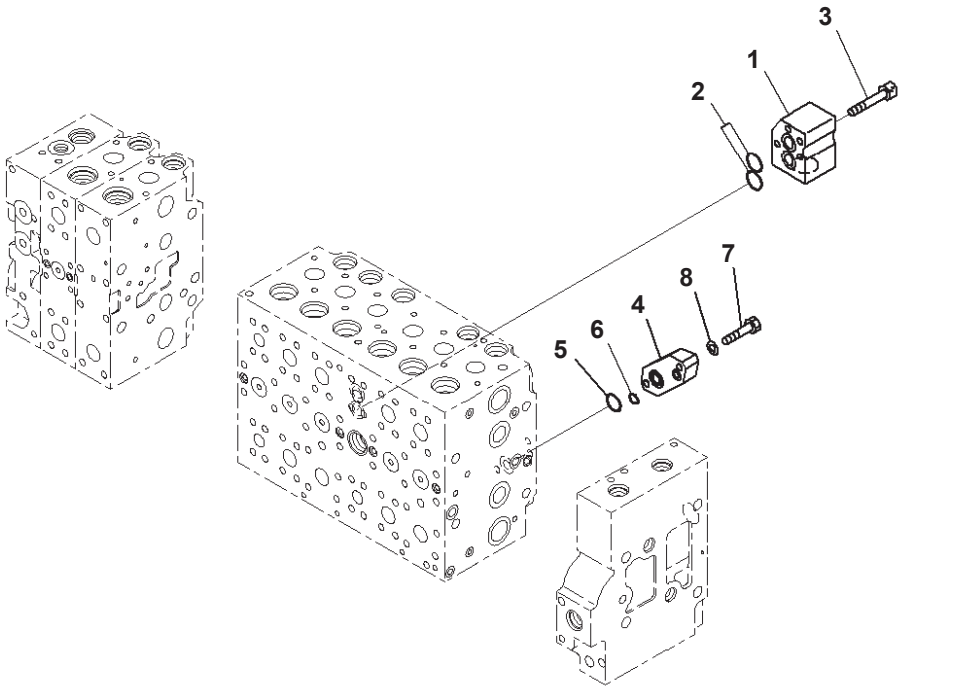

JH001410

Main Control Valve, 1-actuator Inner Parts (6/24)

Index	Code	Part Number	Description	Qty	Options
		723-48-26604	Valve Assembly, Control	1	SN:B10402--
	A2	723-48-26603	Valve Assembly, Control	1	SN:B10380--B10401
	A2	723-48-26602	Valve Assembly, Control	1	SN:B10335--B10379
	A2	723-48-26601	Valve Assembly, Control	1	SN: B10109--B10334
	A2	723-48-26600	Valve Assembly, Control	1	SN: B10001--B10108
	C1		・ Body Subassembly	1	SN: B10001--
1		723-46-11910	・・ Block	1	SN: B10001--
2		723-46-15510	・・ O-ring	2	SN: B10001--
3		01252-60865	・・ Bolt, Hexagon Socket Head	4	SN: B10001--
4		723-46-18730	・・ Plate	1	SN: B10001--
5		07000-12021	・・ O-ring	1	SN: B10001--
6		07000-12011	・・ O-ring	1	SN: B10001--
7		01010-81040	・・ Bolt	2	SN: B10001--
8		01643-51032	・・ Washer	2	SN: B10001--

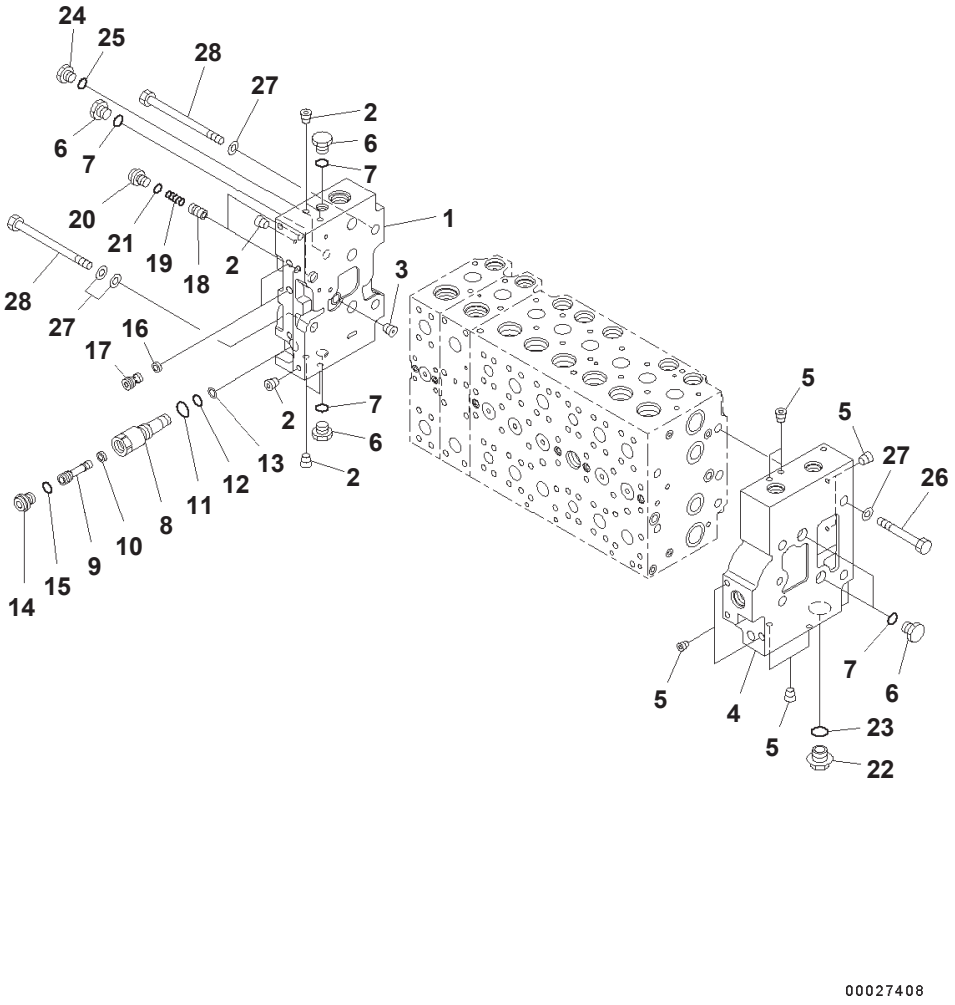

Main Control Valve, 1-actuator Inner Parts (7/24)

Index	Code	Part Number	Description	Qty	Options
		723-48-26604	Valve Assembly, Control	1	SN:B10402--
	A2	723-48-26603	Valve Assembly, Control	1	SN:B10380--B10401
	A2	723-48-26602	Valve Assembly, Control	1	SN:B10335--B10379
	A2	723-48-26601	Valve Assembly, Control	1	SN:B10109--B10334
	A2	723-48-26600	Valve Assembly, Control	1	SN: B10001--B10108
		723-46-00760	・ Cover Assembly	1	SN: B10001--
1	C1		・・ Cover, A	1	SN: B10001--
2	C1		・・ Plug	7	SN: B10001--
3	C1		・・ Plug	1	SN: B10001--
		723-46-00742	・ Cover Assembly	1	SN: B10001--
4	C1		・・ Cover, B	1	SN: B10001--
5	C1		・・ Plug	8	SN: B10001--
6		708-8E-16250	・ Plug	5	SN: B10001--
7		07002-11823	・ O-ring	5	SN: B10001--
		723-46-17600	・ Plug Assembly	1	SN: B10001--
8		723-46-17610	・・ Sleeve	1	SN: B10001--
9		723-46-17640	・・ Plug	1	SN: B10001--
10		702-21-55760	・・ Filter	1	SN: B10001--
11		07002-11423	・・ O-ring	1	SN: B10001--
12		07000-11007	・・ O-ring	1	SN: B10001--
13		07001-01007	・・ Ring, Back-up	1	SN: B10001--
14		708-8E-16160	・・ Plug	1	SN: B10001--
15		07002-11023	・・ O-ring	1	SN: B10001--
16		723-40-82220	・ Filter	2	SN: B10001--
17		723-46-17550	・ Plug	2	SN: B10001--
18		723-46-15190	・ Valve	2	SN: B10001--
19		723-46-14140	・ Spring	2	SN: B10001--
20		708-8E-16160	・ Plug	2	SN: B10001--
21		07002-11023	・ O-ring	2	SN: B10001--
22		709-74-91860	・ Plug	1	SN: B10001--
23		07002-12434	・ O-ring	1	SN: B10001--
24		708-8H-11530	・ Plug	1	SN: B10001--
25		07002-11423	・ O-ring	1	SN: B10001--
26		01010-61490	・ Bolt	4	SN: B10001--
27		01643-31445	・ Washer	10	SN: B10001--
28		723-46-15220	・ Bolt	4	SN: B10001--

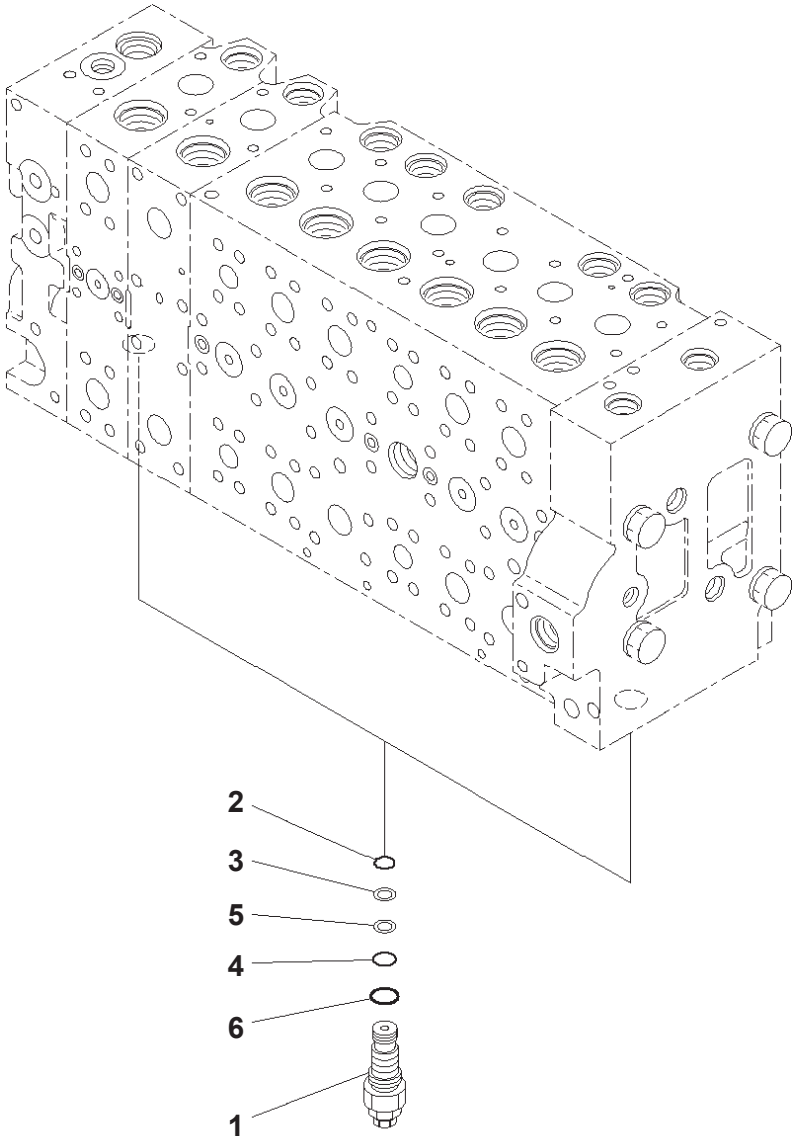

Main Control Valve, 1-actuator Inner Parts (8/24)

Index	Code	Part Number	Description	Qty	Options
		723-48-26604	Valve Assembly, Control	1	SN:B10402--
	A2	723-48-26603	Valve Assembly, Control	1	SN:B10380--B10401
	A2	723-48-26602	Valve Assembly, Control	1	SN:B10335--B10379
	A2	723-48-26601	Valve Assembly, Control	1	SN:B10109--B10334
	A2	723-48-26600	Valve Assembly, Control	1	SN: B10001--B10108
1		723-40-56800	・ Valve Assembly, Unloader, UNLOAD	2	SN: B10001--
2		07000-12014	・・ O-ring	1	SN: B10001--
3		723-40-56350	・・ Ring	1	SN: B10001--
4		07000-12016	・・ O-ring	1	SN: B10001--
5		723-60-22230	・・ Ring, Back-up	1	SN: B10001--
6		07002-12434	・・ O-ring	1	SN: B10001--

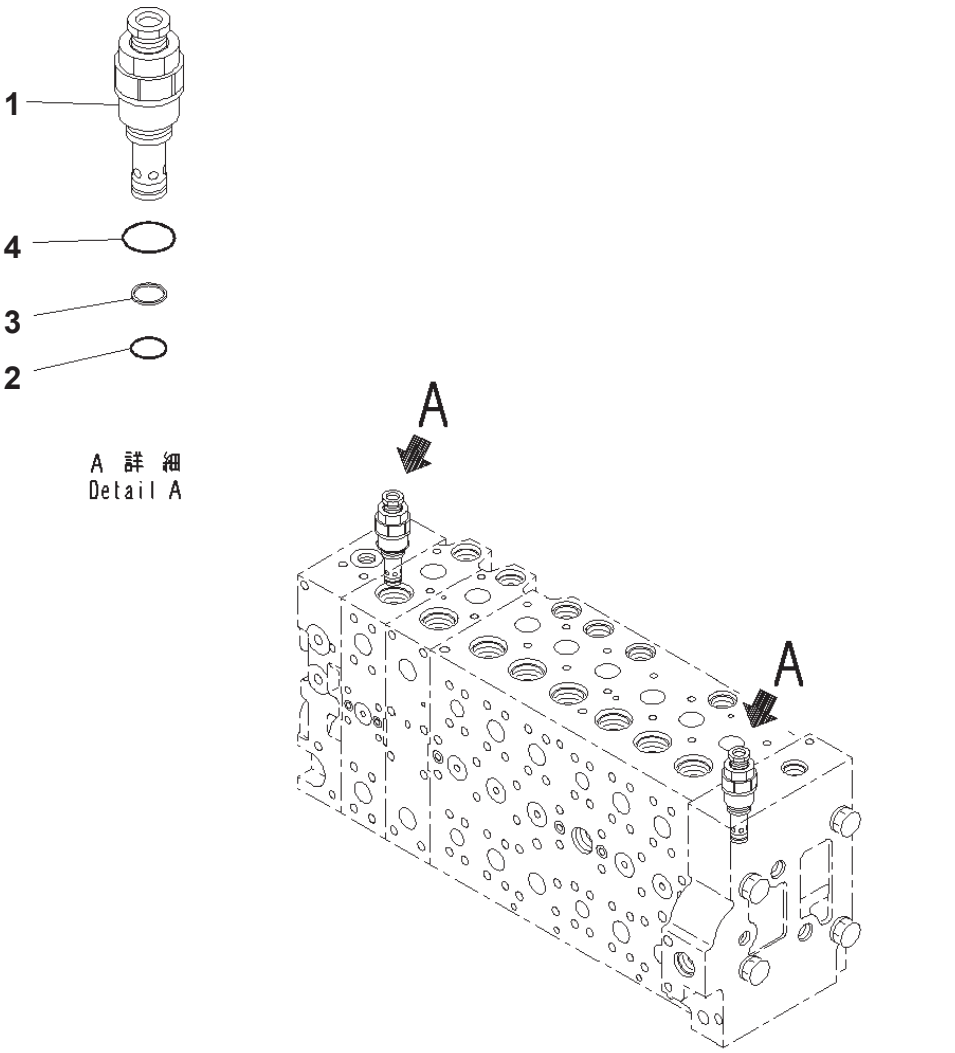

Main Control Valve, 1-actuator Inner Parts (9/24)

Index	Code	Part Number	Description	Qty	Options
		723-48-26604	Valve Assembly, Control	1	SN:B10402--
	A2	723-48-26603	Valve Assembly, Control	1	SN:B10380--B10401
	A2	723-48-26602	Valve Assembly, Control	1	SN:B10335--B10379
	A2	723-48-26601	Valve Assembly, Control	1	SN:B10109--B10334
	A2	723-48-26600	Valve Assembly, Control	1	SN: B10001--B10108
1		723-40-93801	・ Valve, Relief	2	SN:B10335--
	A2	723-40-93800	・ Valve, Relief	2	SN: B10001--B10379
2		700-22-11410	・・ O-ring	1	SN: B10001--
3		700-80-64220	・・ Ring, Back-up	1	SN: B10001--
4		07002-12434	・・ O-ring	1	SN: B10001--

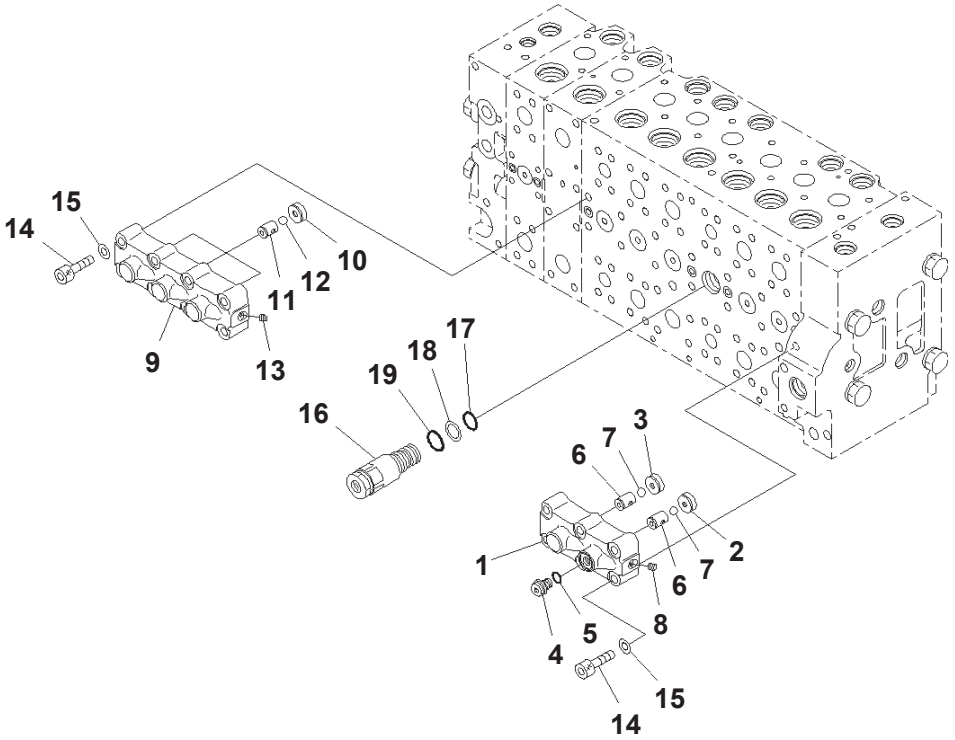

00014704

Main Control Valve, 1-actuator Inner Parts (10/24)

Index	Code	Part Number	Description	Qty	Options
		723-48-26604	Valve Assembly, Control	1	SN:B10402--
	A2	723-48-26603	Valve Assembly, Control	1	SN:B10380--B10401
	A2	723-48-26602	Valve Assembly, Control	1	SN:B10335--B10379
	A2	723-48-26601	Valve Assembly, Control	1	SN: B10109--B10334
	A2	723-48-26600	Valve Assembly, Control	1	SN: B10001--B10108
		723-40-93800	· Valve, Relief	2	SN: B10001--
		723-40-66701	· Valve Assembly	1	SN: B10001--
1	C1		· · Case	1	SN: B10001--
2	C1		· · Seat	1	SN: B10001--
3	C1		· · Seat	1	SN: B10001--
4		708-8H-11530	· · Plug	1	SN: B10001--
5		07002-11423	· · O-ring	1	SN: B10001--
6	C1		· · Seat	2	SN: B10001--
7	C1		· · Ball	2	SN: B10001--
8	C1		· · Plug	1	SN: B10001--
		723-40-66601	· Valve Assembly	1	SN: B10001--
9	C1		· · Case	1	SN: B10001--
10	C1		· · Seat	3	SN: B10001--
11	C1		· · Seat	3	SN: B10001--
12	C1		· · Ball	3	SN: B10001--
13	C1		· · Plug	1	SN: B10001--
14		01252-61050	· Bolt, Hexagon Socket Head	14	SN: B10001--
15		01643-51032	· Washer	14	SN: B10001--
16		723-40-60101	· Valve Assembly	1	SN: B10001--
17		07000-12020	· · O-ring	1	SN: B10001--
18		07001-02020	· · Ring, Back-up	1	SN: B10001--
19		709-25-11390	· · O-ring	1	SN: B10001--

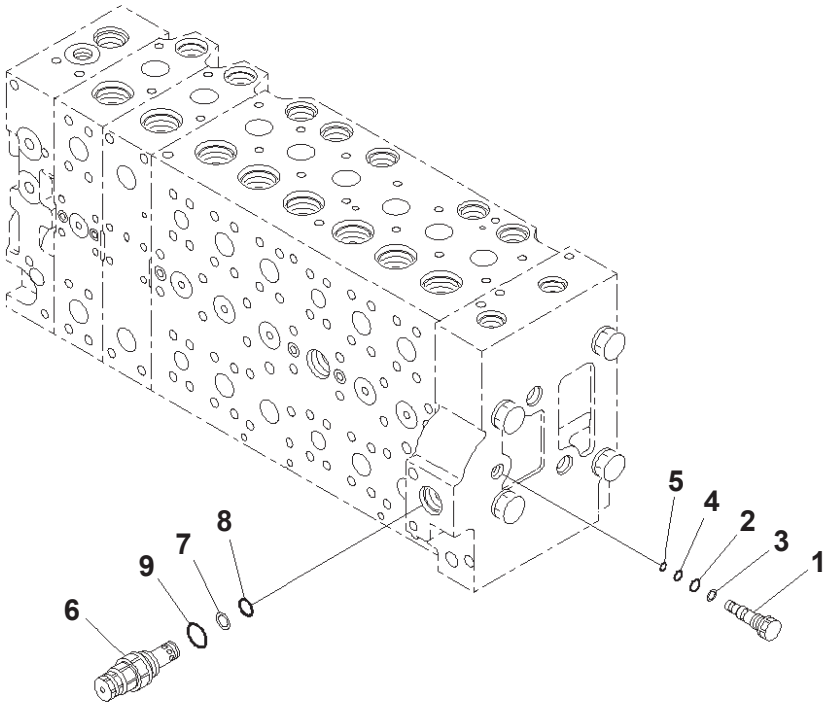

00014705

Main Control Valve, 1-actuator Inner Parts (11/24)

Index	Code	Part Number	Description	Qty	Options
		723-48-26604	Valve Assembly, Control	1	SN:B10402--
	A2	723-48-26603	Valve Assembly, Control	1	SN:B10380--B10401
	A2	723-48-26602	Valve Assembly, Control	1	SN:B10335--B10379
	A2	723-48-26601	Valve Assembly, Control	1	SN: B10109--B10334
	A2	723-48-26600	Valve Assembly, Control	1	SN: B10001--B10108
		723-40-60101	・ Valve Assembly	1	SN: B10001--
		723-46-17701	・ Plug Assembly	1	SN: B10001--
1		723-46-17711	・・ Plug	1	SN: B10001--
2		07000-11009	・・ O-ring	1	SN: B10001--
3		07001-01009	・・ Ring, Back-up	1	SN: B10001--
4		07000-11007	・・ O-ring	1	SN: B10001--
5		07001-01007	・・ Ring, Back-up	1	SN: B10001--
6		723-40-91500	・ Valve Assembly, Relief	1	SN: B10001--
7		700-80-64220	・・ Ring, Back-up	1	SN: B10001--
8		700-22-11410	・・ O-ring	1	SN: B10001--
9		709-25-11390	・・ O-ring	1	SN: B10001--

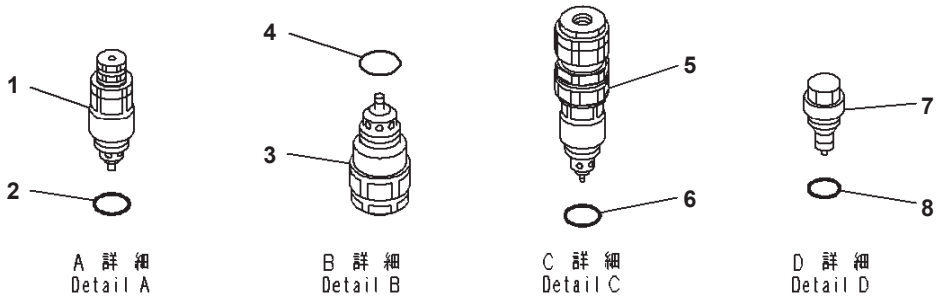

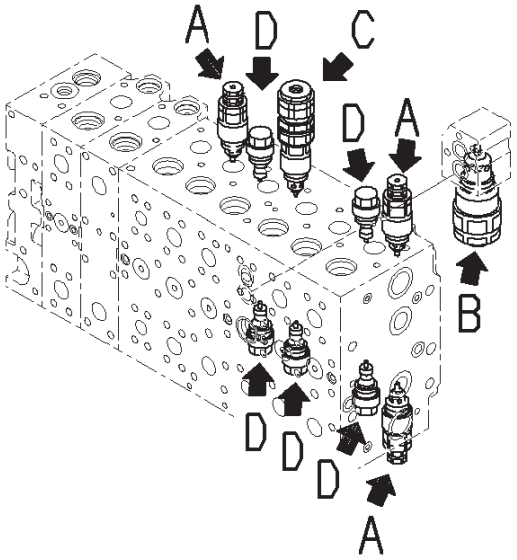

JH000519

Main Control Valve, 1-actuator Inner Parts (12/24)

Index	Code	Part Number	Description	Qty	Options
		723-48-26604	Valve Assembly, Control	1	SN:B10402--
	A2	723-48-26603	Valve Assembly, Control	1	SN:B10380--B10401
	A2	723-48-26602	Valve Assembly, Control	1	SN:B10335--B10379
	A2	723-48-26601	Valve Assembly, Control	1	SN: B10109--B10334
	A2	723-48-26600	Valve Assembly, Control	1	SN: B10001--B10108
		723-40-91500	・ Valve Assembly, Relief	1	SN: B10001--
1		723-40-91200	・ Valve Assembly, Suction and Relief	2	SN: B10001--
2		709-25-11390	・・ O-ring	1	SN: B10001--
3		723-90-69100	・ Valve Assembly, Suction and Relief	1	SN: B10001--
4		07002-13634	・・ O-ring	1	SN: B10001--
5		723-90-76201	・ Valve Assembly, Suction and Relief	1	SN: B10001--
6		07000-13024	・・ O-ring	1	SN: B10001--
7		723-40-85100	・ Valve Assembly, Suction	6	SN: B10001--
8		709-25-11390	・・ O-ring	1	SN: B10001--

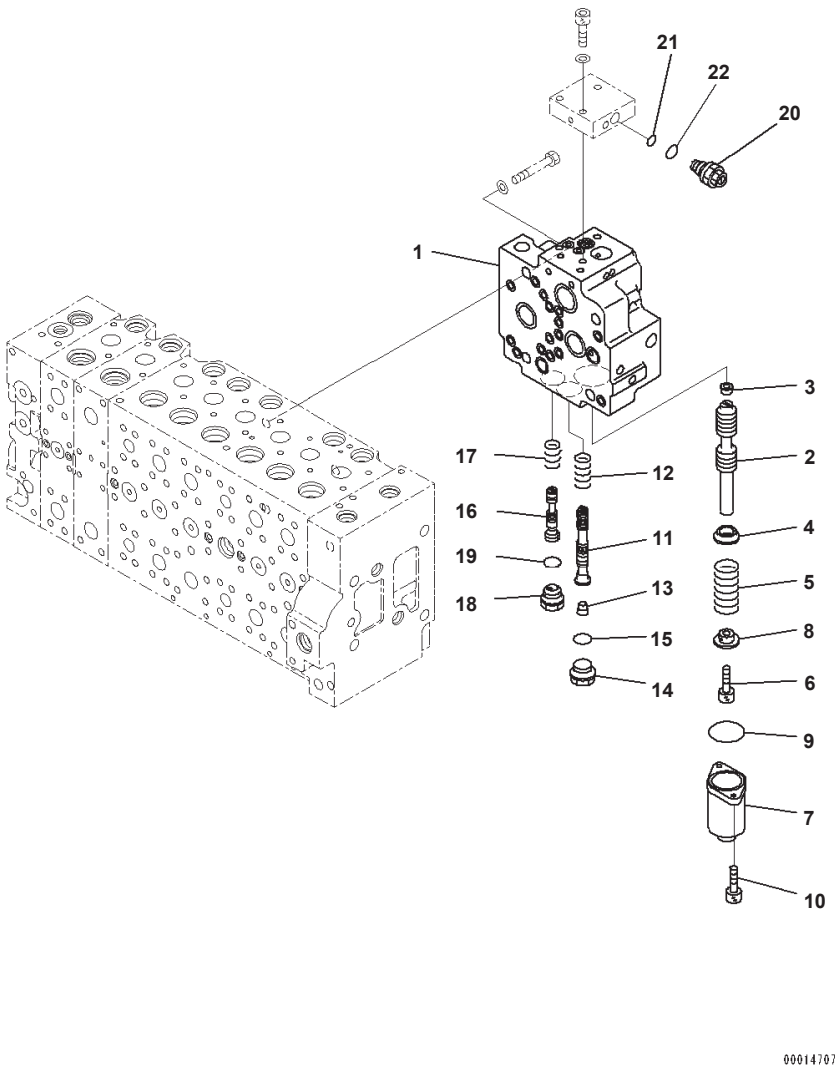

Main Control Valve, 1-actuator Inner Parts (13/24)

Index	Code	Part Number	Description	Qty	Options
		723-48-26604	Valve Assembly, Control	1	SN:B10402---
	A2	723-48-26603	Valve Assembly, Control	1	SN:B10380--B10401
	A2	723-48-26602	Valve Assembly, Control	1	SN:B10335--B10379
	A2	723-48-26601	Valve Assembly, Control	1	SN:B10109--B10334
	A2	723-48-26600	Valve Assembly, Control	1	SN:B10001--B10108
		723-40-71201	・ Valve Assembly	1	SN:B10001--
1	C1		・・ Valve Body	1	SN:B10001--
2	C1		・・ Spool	1	SN:B10001--
3	C1		・・ Plug	1	SN:B10001--
4		723-40-71330	・・ Retainer	1	SN:B10001--
5		723-40-71340	・・ Spring	1	SN:B10001--
6		01252-60816	・・ Bolt	1	SN:B10001--
7		723-46-15111	・・ Case	1	SN:B10001--
8		723-40-71350	・・ Retainer	1	SN:B10001--
9		07430-71380	・・ O-ring	1	SN:B10001--
10		01252-60820	・・ Bolt	2	SN:B10001--
11	C1		・・ Spool	1	SN:B10001--
12		723-40-71440	・・ Spring	1	SN:B10001--
13	C1		・・ Plug	1	SN:B10001--
14		709-74-91860	・・ Plug	1	SN:B10001--
15		07002-12434	・・ O-ring	1	SN:B10001--
16	C1		・・ Spool	1	SN:B10001--
17		723-40-71390	・・ Spring	1	SN:B10001--
18		723-40-61150	・・ Plug	1	SN:B10001--
19		07002-12434	・・ O-ring	1	SN:B10001--
		723-40-71800	・・ Valve Assembly	1	SN:B10001--
20		723-40-91600	・・・ Valve Assembly, Relief	1	SN:B10001--
21		702-16-53920	・・・・ O-ring	1	SN:B10001--
22		07002-11623	・・・・ O-ring	1	SN:B10001--

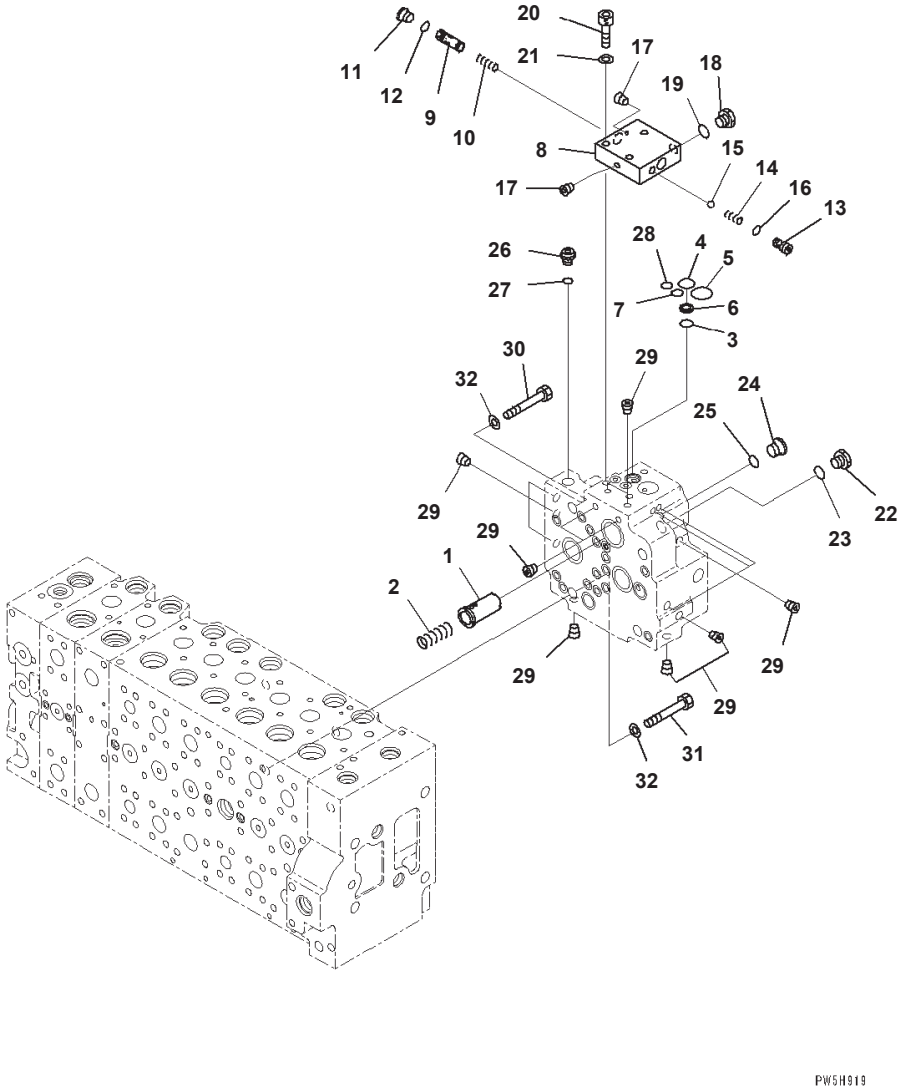

Main Control Valve, 1-actuator Inner Parts (14/24)

Index	Code	Part Number	Description	Qty	Options
		723-48-26604	Valve Assembly, Control	1	SN:B10402---
	A2	723-48-26603	Valve Assembly, Control	1	SN:B10380--B10401
	A2	723-48-26602	Valve Assembly, Control	1	SN:B10335--B10379
	A2	723-48-26601	Valve Assembly, Control	1	SN:B10109--B10334
	A2	723-48-26600	Valve Assembly, Control	1	SN:B10001--B10108
		723-40-71201	· Valve Assembly	1	SN:B10001--
1		723-40-71430	· · Valve	1	SN:B10001--
2		702-21-55460	· · Spring	1	SN:B10001--
3		702-21-55420	· · O-ring	1	SN:B10001--
4		702-21-55520	· · O-ring	1	SN:B10001--
5		702-21-55440	· · O-ring	1	SN:B10001--
6		702-21-53140	· · Filter	1	SN:B10335--
		702-21-53120	· · Filter	1	SN:B10001--B10334
7	A2	07000-12011	· · O-ring	1	SN:B10001--
		723-40-71800	· · Valve Assembly	1	SN:B10001--
8	C1		· · · Block	1	SN:B10001--
9	C1		· · · Spool	1	SN:B10001--
10	C1		· · · Spring	1	SN:B10001--
11		702-21-55620	· · · Plug	1	SN:B10001--
12		07002-11423	· · · O-ring	1	SN:B10001--
13		702-21-55710	· · · Seat	1	SN:B10001--
14		702-21-55720	· · · Spring	1	SN:B10001--
15		04260-00793	· · · Ball, Steel	1	SN:B10001--
16		07000-11009	· · · O-ring	1	SN:B10001--
17	C1		· · · Plug	2	SN:B10001--
18		708-8H-11530	· · · Plug	1	SN:B10001--
19		07002-11423	· · · O-ring	1	SN:B10001--
20		01252-61040	· · Bolt, Hexagon Socket Head	3	SN:B10001--
21		01643-51032	· · Washer	3	SN:B10001--
22		708-8H-11530	· · Plug	1	SN:B10001--
23		07002-11423	· · O-ring	1	SN:B10001--
24		702-21-55620	· · Plug	1	SN:B10001--
25		07002-11423	· · O-ring	1	SN:B10001--
26		708-8E-16160	· · Plug	1	SN:B10001--
27		07002-11023	· · O-ring	1	SN:B10001--
28		07000-12011	· · O-ring	1	SN:B10001--
29	C1		· · Plug	17	SN:B10001--
30		01010-61460	· Bolt	1	SN:B10001--
31		01010-61470	· Bolt	3	SN:B10001--
32		01643-31445	· Washer	4	SN:B10001--

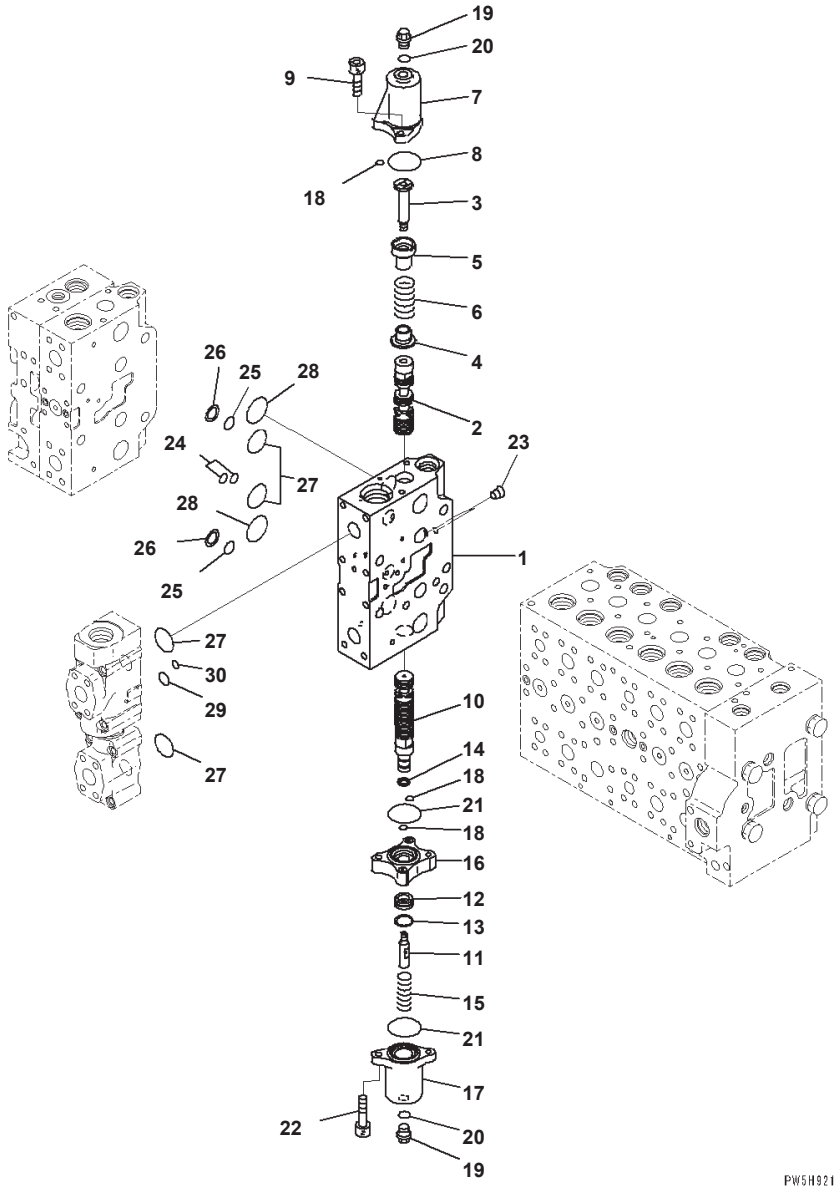

Main Control Valve, 1-actuator Inner Parts (15/24)

Index	Code	Part Number	Description	Qty	Options
		723-48-26604	Valve Assembly, Control	1	SN:B10402---
	A2	723-48-26603	Valve Assembly, Control	1	SN:B10380--B10401
	A2	723-48-26602	Valve Assembly, Control	1	SN:B10335--B10379
	A2	723-48-26601	Valve Assembly, Control	1	SN:B10109--B10334
	A2	723-48-26600	Valve Assembly, Control	1	SN:B10001--B10108
	C1		・ Body Subassembly	1	SN:B10001--
1	C1		・・ Valve Body	1	SN:B10001--
2	C1		・・ Spool	1	SN:B10001--
3		723-46-15390	・・ Plug	1	SN:B10001--
4		723-46-15370	・・ Retainer	1	SN:B10001--
5		723-46-15380	・・ Retainer	1	SN:B10001--
6		723-46-14110	・・ Spring	1	SN:B10001--
7		723-46-17840	・・ Case	1	SN:B10001--
8		07430-71380	・・ O-ring	1	SN:B10001--
9		01252-60820	・・ Bolt	2	SN:B10001--
10	C1		・・ Spool	1	SN:B10001--
11		723-46-15330	・・ Bolt	1	SN:B10001--
12	C1		・・ Piston	1	SN:B10001--
13	C1		・・ Seal	1	SN:B10001--
14	C1		・・ Seal	1	SN:B10001--
15		723-46-14180	・・ Spring	1	SN:B10001--
16		723-46-17850	・・ Case	1	SN:B10001--
17		723-46-17860	・・ Case	1	SN:B10001--
18		723-11-19960	・・ O-ring	3	SN:B10001--
19		706-73-71450	・・ Plug	2	SN:B10001--
20		07002-11423	・・ O-ring	2	SN:B10001--
21		07430-71380	・・ O-ring	2	SN:B10001--
22		01252-60845	・・ Bolt, Hexagon Socket Head	2	SN:B10001--
23	C1		・・ Plug	2	SN:B10001--
24		723-46-17530	・・ O-ring	2	SN:B10001--
25		723-11-19130	・・ O-ring	2	SN:B10001--
26		723-46-17520	・・ Ring, Back-up	2	SN:B10001--
27		07000-13032	・・ O-ring	4	SN:B10001--
28		723-46-17510	・・ O-ring	2	SN:B10001--
29		07000-12016	・・ O-ring	1	SN:B10001--
30		702-16-53920	・・ O-ring	1	SN:B10001--

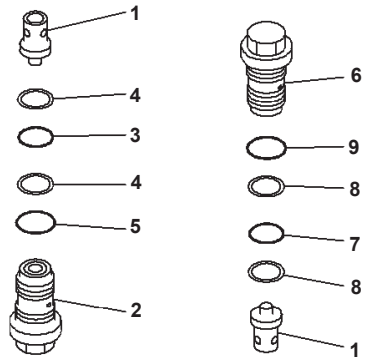

A 詳 細
Detail A

B 詳 細
Detail B

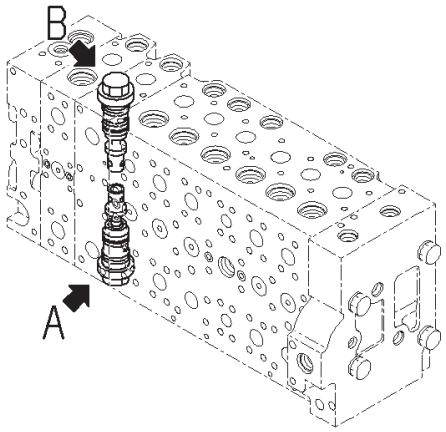

00014709

Main Control Valve, 1-actuator Inner Parts (16/24)

Index	Code	Part Number	Description	Qty	Options
		723-48-26604	Valve Assembly, Control	1	SN:B10402--
	A2	723-48-26603	Valve Assembly, Control	1	SN:B10380--B10401
	A2	723-48-26602	Valve Assembly, Control	1	SN:B10335--B10379
	A2	723-48-26601	Valve Assembly, Control	1	SN:B10109--B10334
	A2	723-48-26600	Valve Assembly, Control	1	SN:B10001--B10108
	C1		・ Body Subassembly	1	SN:B10001--
1		723-46-41210	・・ Valve	2	SN:B10001--
2		723-46-40601	・・ Valve Assembly	1	SN:B10001--
3		700-93-11320	・・・ O-ring	1	SN:B10001--
4		723-46-41950	・・・ Ring	2	SN:B10001--
5		07002-13634	・・・ O-ring	1	SN:B10001--
6		723-46-44600	・・ Valve Assembly	1	SN:B10380--
	A2	723-46-47500	・・ Valve Assembly	1	SN:B10109--B10379
	A2	723-46-43100	・・ Valve Assembly	1	SN:B10001--B10108
7		700-93-11320	・・・ O-ring	1	SN:B10001--
8		723-46-41950	・・・ Ring	2	SN:B10001--
9		07002-13634	・・・ O-ring	1	SN:B10001--

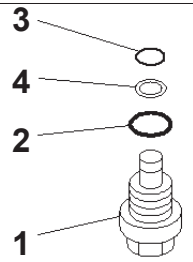

A 詳 細
Detail A

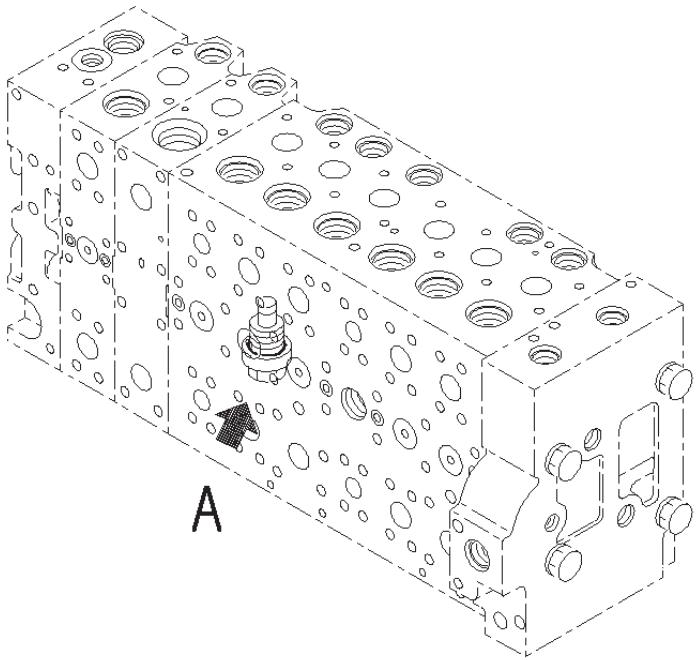

JY002726

Main Control Valve, 1-actuator Inner Parts (17/24)

Index	Code	Part Number	Description	Qty	Options
		723-48-26604	Valve Assembly, Control	1	SN:B10402--
	A2	723-48-26603	Valve Assembly, Control	1	SN:B10380--B10401
	A2	723-48-26602	Valve Assembly, Control	1	SN:B10335--B10379
	A2	723-48-26601	Valve Assembly, Control	1	SN:B10109--B10334
	A2	723-48-26600	Valve Assembly, Control	1	SN:B10001--B10108
	C1		・ Body Subassembly	1	SN:B10001--
1		709-74-91510	・・ Plug	1	SN:B10001--
2		07000-13024	・・ O-ring	1	SN:B10001--
3		07000-11009	・・ O-ring	1	SN:B10001--
4		07001-01009	・・ Ring, Back-up	1	SN:B10001--

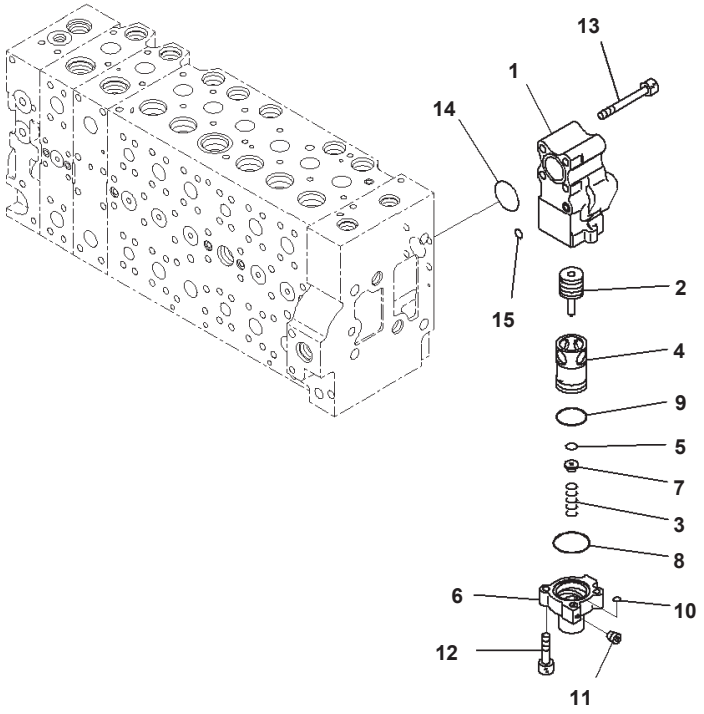

Main Control Valve, 1-actuator Inner Parts (18/24)

Index	Code	Part Number	Description	Qty	Options
		723-48-26604	Valve Assembly, Control	1	SN:B10402--
	A2	723-48-26603	Valve Assembly, Control	1	SN:B10380--B10401
	A2	723-48-26602	Valve Assembly, Control	1	SN:B10335--B10379
	A2	723-48-26601	Valve Assembly, Control	1	SN:B10109--B10334
	A2	723-48-26600	Valve Assembly, Control	1	SN:B10001--B10108
		723-40-87100	・ Valve Assembly	1	SN:B10001--
1		723-40-87110	・・ Body	1	SN:B10001--
2		723-40-87140	・・ Spool	1	SN:B10001--
3		723-40-87160	・・ Spring	1	SN:B10001--
4	C1		・・ Sleeve	1	SN:B10001--
5	C1		・・ Seal	1	SN:B10001--
6	C1		・・ Case	1	SN:B10001--
7		723-40-87150	・・ Retainer	1	SN:B10001--
8		723-40-87170	・・ O-ring	1	SN:B10001--
9		07000-13035	・・ O-ring	1	SN:B10001--
10		07000-11007	・・ O-ring	1	SN:B10001--
11	C1		・・ Screw	1	SN:B10001--
12		01252-60830	・・ Bolt	2	SN:B10001--
13		01252-61075	・ Bolt, Hexagon Socket Head	4	SN:B10001--
14		07000-13038	・ O-ring	1	SN:B10001--
15		07000-11010	・ O-ring	1	SN:B10001--

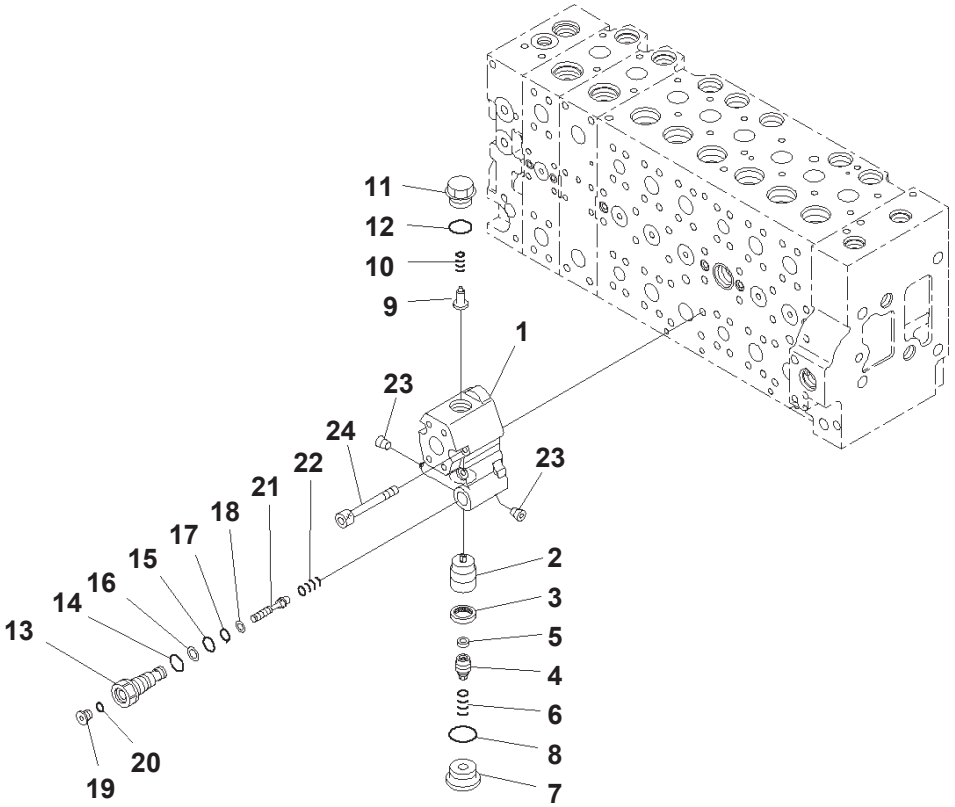

Main Control Valve, 1-actuator Inner Parts (19/24)

Index	Code	Part Number	Description	Qty	Options
		723-48-26604	Valve Assembly, Control	1	SN:B10402--
	A2	723-48-26603	Valve Assembly, Control	1	SN:B10380--B10401
	A2	723-48-26602	Valve Assembly, Control	1	SN:B10335--B10379
	A2	723-48-26601	Valve Assembly, Control	1	SN:B10109--B10334
	A2	723-48-26600	Valve Assembly, Control	1	SN:B10001--B10108
		723-40-82401	· Valve Assembly	1	SN:B10001--
1		723-40-82411	· · Body	1	SN:B10335--
	A2	723-40-82410	· · Body	1	SN:B10001--B10334
2		723-40-82120	· · Valve	1	SN:B10001--
3		723-40-82130	· · Seal	1	SN:B10001--
4		723-40-82210	· · Plug	1	SN:B10001--
5		723-40-82220	· · Filter	1	SN:B10001--
6		723-40-82140	· · Spring	1	SN:B10001--
7		723-40-82150	· · Plug	1	SN:B10001--
8		07002-13334	· · O-ring	1	SN:B10001--
9		723-40-84420	· · Valve, Check	1	SN:B10001--
10		723-40-84430	· · Spring	1	SN:B10001--
11		723-40-84441	· · Plug	1	SN:B10335--
	A2	723-40-84440	· · Plug	1	SN:B10001--B10334
12		07000-13024	· · O-ring	1	SN:B10001--
13		723-40-82310	· · Plug	1	SN:B10001--
14		07002-11823	· · O-ring	1	SN:B10001--
15		07000-12011	· · O-ring	1	SN:B10001--
16		07001-02011	· · Ring, Back-up	1	SN:B10001--
17		07000-11010	· · O-ring	1	SN:B10001--
18		07001-01010	· · Ring, Back-up	1	SN:B10001--
19		723-11-18190	· · Plug	1	SN:B10001--
20		07002-11023	· · O-ring	1	SN:B10001--
21		723-40-82280	· · Piston	1	SN:B10001--
22		723-40-82290	· · Spring	1	SN:B10001--
23		708-1S-19810	· · Plug	2	SN:B10109--
	A2	702-16-54490	· · Screw	2	SN:B10001--B10108
24		01252-61075	· Bolt, Hexagon Socket Head	4	SN:B10001--

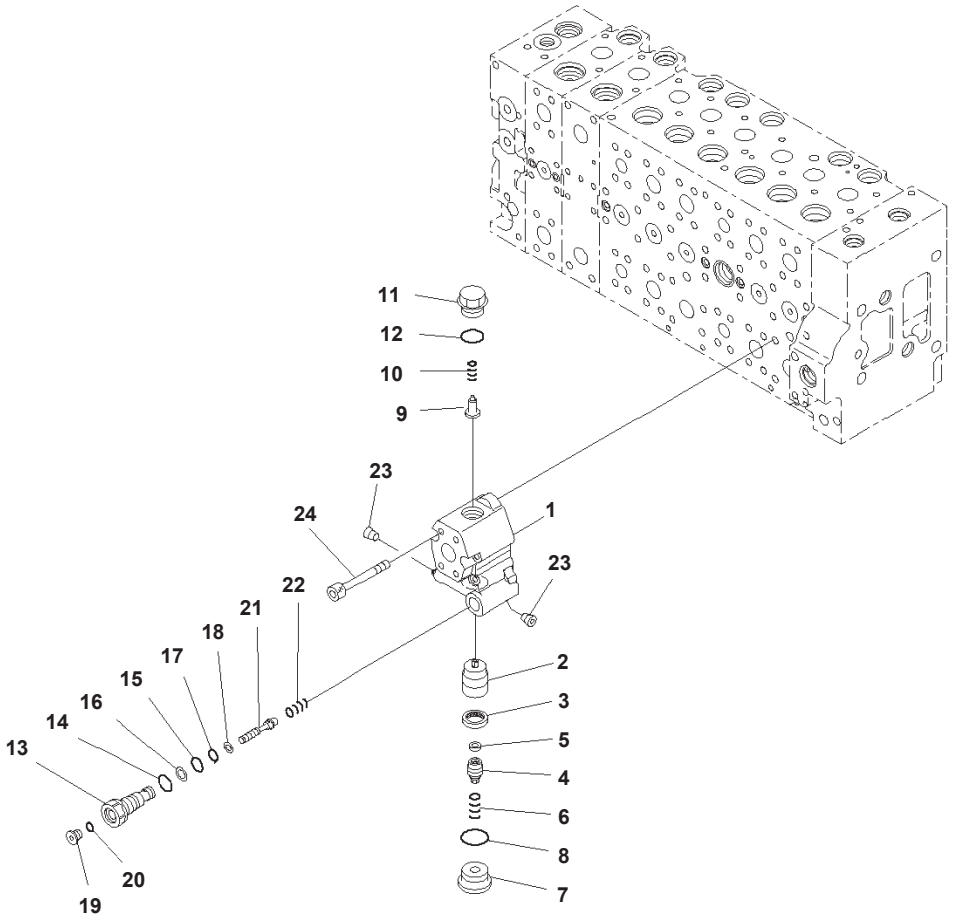

Main Control Valve, 1-actuator Inner Parts (20/24)

Index	Code	Part Number	Description	Qty	Options
		723-48-26604	Valve Assembly, Control	1	SN:B10402--
	A2	723-48-26603	Valve Assembly, Control	1	SN:B10380--B10401
	A2	723-48-26602	Valve Assembly, Control	1	SN:B10335--B10379
	A2	723-48-26601	Valve Assembly, Control	1	SN:B10109--B10334
	A2	723-48-26600	Valve Assembly, Control	1	SN:B10001--B10108
		723-40-82902	・ Valve Assembly	1	SN:B10335--
	A2	723-40-82901	・ Valve Assembly	1	SN:B10001--B10334
1		723-40-82422	・・ Body	1	SN:B10335--
	A2	723-40-82420	・・ Body	1	SN:B10001--B10334
2		723-40-82120	・・ Valve	1	SN:B10001--
3		723-40-82130	・・ Seal	1	SN:B10001--
4		723-40-82210	・・ Plug	1	SN:B10001--
5		723-40-82220	・・ Filter	1	SN:B10001--
6		723-40-82140	・・ Spring	1	SN:B10001--
7		723-40-82150	・・ Plug	1	SN:B10001--
8		07002-13334	・・ O-ring	1	SN:B10001--
9		723-40-84420	・・ Valve, Check	1	SN:B10001--
10		723-40-84430	・・ Spring	1	SN:B10001--
11		723-40-84441	・・ Plug	1	SN:B10335--
	A2	723-40-84440	・・ Plug	1	SN:B10001--B10334
12		07000-13024	・・ O-ring	1	SN:B10001--
13		723-40-82310	・・ Plug	1	SN:B10001--
14		07002-11823	・・ O-ring	1	SN:B10001--
15		07000-12011	・・ O-ring	1	SN:B10001--
16		07001-02011	・・ Ring, Back-up	1	SN:B10001--
17		07000-11010	・・ O-ring	1	SN:B10001--
18		07001-01010	・・ Ring, Back-up	1	SN:B10001--
19		723-11-18190	・・ Plug	1	SN:B10001--
20		07002-11023	・・ O-ring	1	SN:B10001--
21		723-40-82280	・・ Piston	1	SN:B10001--
22		723-40-82290	・・ Spring	1	SN:B10001--
23		708-15-19810	・・ Screw	2	SN:B10001--
24		01252-61075	・ Bolt, Hexagon Socket Head	4	SN:B10001--

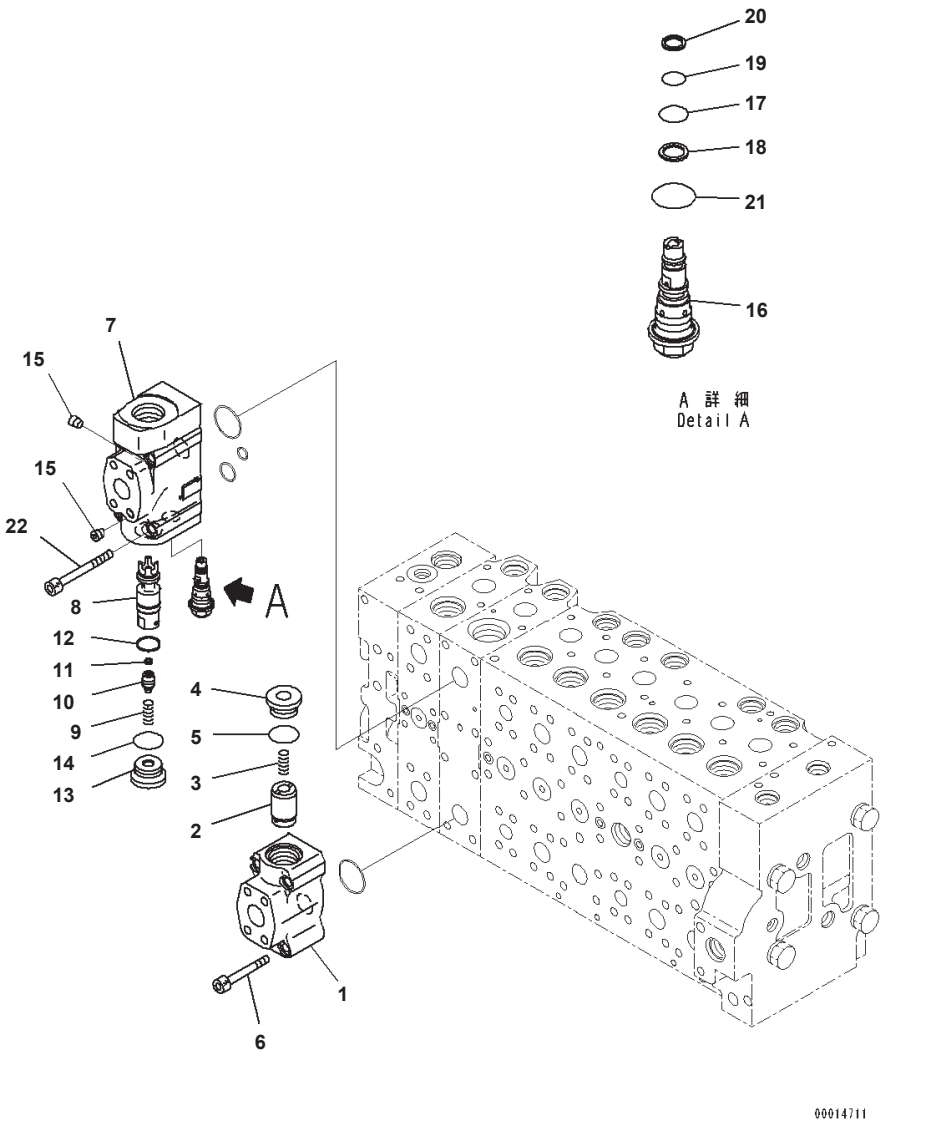

Main Control Valve, 1-actuator Inner Parts (21/24)

Index	Code	Part Number	Description	Qty	Options
		723-48-26604	Valve Assembly, Control	1	SN:B10402--
	A2	723-48-26603	Valve Assembly, Control	1	SN:B10001--B10401
	A2	723-48-26602	Valve Assembly, Control	1	SN:B10335--
	A2	723-48-26601	Valve Assembly, Control	1	SN:B10109--B10334
	A2	723-48-26600	Valve Assembly, Control	1	SN:B10001--B10108
		723-40-84100	· Valve Assembly	1	SN:B10001--
1	C1		· · Body	1	SN:B10001--
2	C1		· · Valve	1	SN:B10001--
3		723-40-82140	· · Spring	1	SN:B10001--
4		723-40-84130	· · Plug	1	SN:B10001--
5		07002-13034	· · O-ring	1	SN:B10001--
6		01252-61065	· Bolt, Hexagon Socket Head	4	SN:B10001--
		723-40-84200	· Valve Assembly	1	SN:B10001--
7	C1		· · Body	1	SN:B10001--
8	C1		· · Valve	1	SN:B10001--
9		723-40-82140	· · Spring	1	SN:B10001--
10		723-40-84230	· · Plug	1	SN:B10001--
11		723-40-82220	· · Filter	1	SN:B10001--
12		723-46-15350	· · Seal	1	SN:B10001--
13		723-40-84130	· · Plug	1	SN:B10001--
14		07002-13034	· · O-ring	1	SN:B10001--
15		708-21-12541	· · Plug	2	SN:B10001--
16		723-40-92900	· · Valve Assembly	1	SN:B10001--
17		07000-12012	· · · O-ring	1	SN:B10001--
18		07001-02012	· · · Ring, Back-up	1	SN:B10001--
19		07000-11010	· · · O-ring	1	SN:B10001--
20		07001-01010	· · · Ring, Back-up	1	SN:B10001--
21		07002-12034	· · · O-ring	1	SN:B10001--
22		723-46-18770	· Bolt	4	SN:B10001--

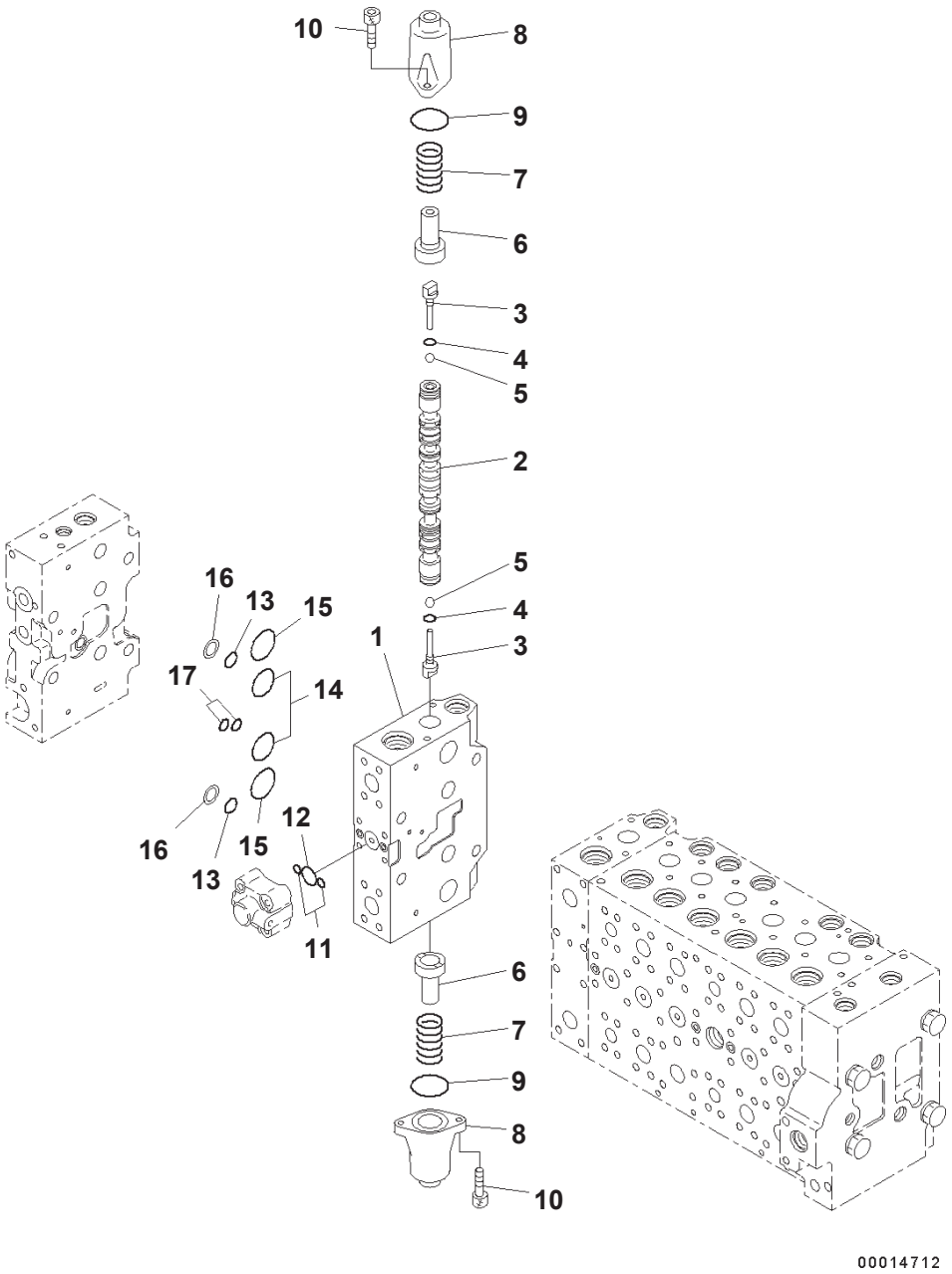

Main Control Valve, 1-actuator Inner Parts (22/24)

Index	Code	Part Number	Description	Qty	Options
		723-48-26604	Valve Assembly, Control	1	SN:B10402--
	A2	723-48-26603	Valve Assembly, Control	1	SN:B10380--B10401
	A2	723-48-26602	Valve Assembly, Control	1	SN:B10335--B10379
	A2	723-48-26601	Valve Assembly, Control	1	SN:B10109--B10334
	A2	723-48-26600	Valve Assembly, Control	1	SN:B10001--B10108
	C1		・ Body Subassembly	1	SN:B10001--
1	C1		・・ Block	1	SN:B10001--
2	C1		・・ Spool	1	SN:B10001--
3		723-46-15130	・・ Plug	2	SN:B10001--
4		07002-10823	・・ O-ring	2	SN:B10001--
5		708-7T-16460	・・ Ball	2	SN:B10001--
6		723-46-15120	・・ Retainer	2	SN:B10001--
7		723-46-14110	・・ Spring	2	SN:B10001--
8		723-46-15111	・・ Case	2	SN:B10001--
9		07430-71380	・・ O-ring	2	SN:B10001--
10		01252-60820	・・ Bolt	4	SN:B10001--
11		07000-11009	・・ O-ring	2	SN:B10001--
12		07000-12021	・・ O-ring	1	SN:B10001--
13		723-11-19130	・・ O-ring	2	SN:B10001--
14		07000-13032	・・ O-ring	2	SN:B10001--
15		723-46-17510	・・ O-ring	2	SN:B10001--
16		723-46-17520	・・ Ring, Back-up	2	SN:B10001--
17		723-46-17530	・・ O-ring	2	SN:B10001--

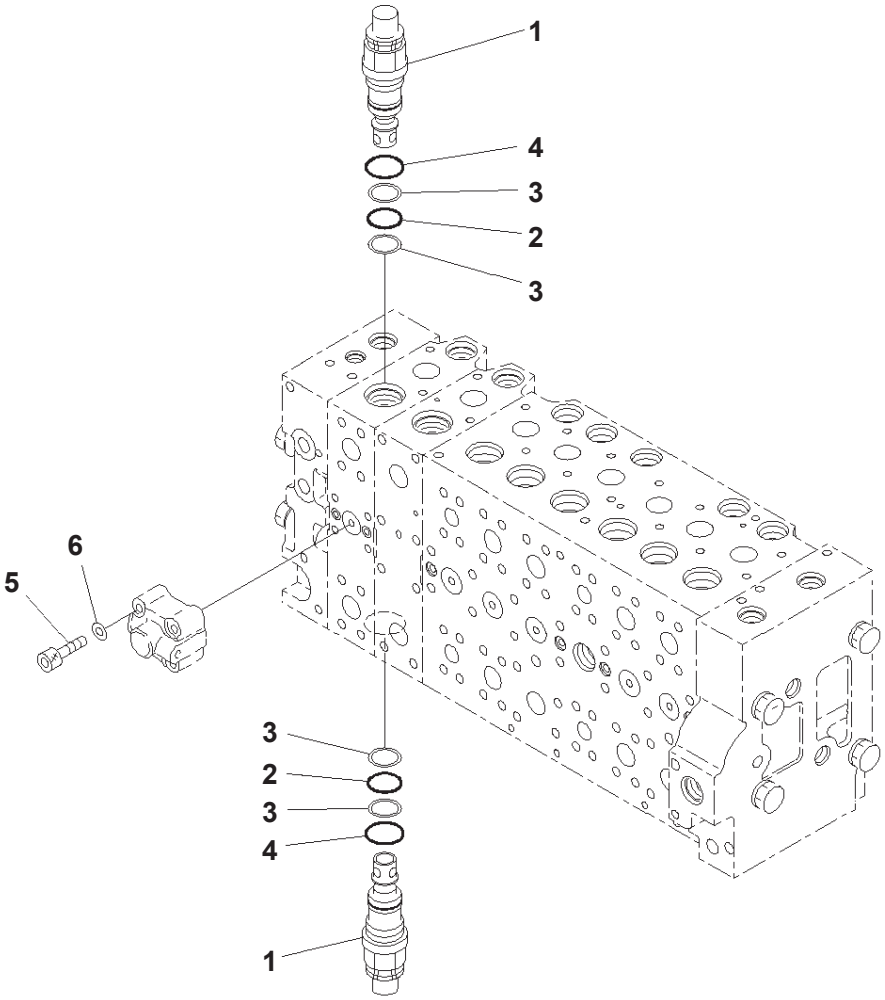

Main Control Valve, 1-actuator Inner Parts (23/24)

Index	Code	Part Number	Description	Qty	Options
		723-48-26604	Valve Assembly, Control	1	SN:B10402--
		723-48-26603	Valve Assembly, Control	1	SN:B10380--B10401
	A2	723-48-26602	Valve Assembly, Control	1	SN:B10335--B10379
	A2	723-48-26601	Valve Assembly, Control	1	SN:B10109--B10334
	A2	723-48-26600	Valve Assembly, Control	1	SN:B10001--B10108
	C1		・Body Subassembly	1	SN:B10001--
1		723-46-48100	・・Valve Assembly	2	SN:B10001--
2		700-93-11320	・・・O-ring	1	SN:B10001--
3		723-46-41950	・・・Ring	2	SN:B10001--
4		07002-13634	・・・O-ring	1	SN:B10001--
5		01252-60845	・・Bolt, Hexagon Socket Head	4	SN:B10001--
6		01643-50823	・・Washer	4	SN:B10001--

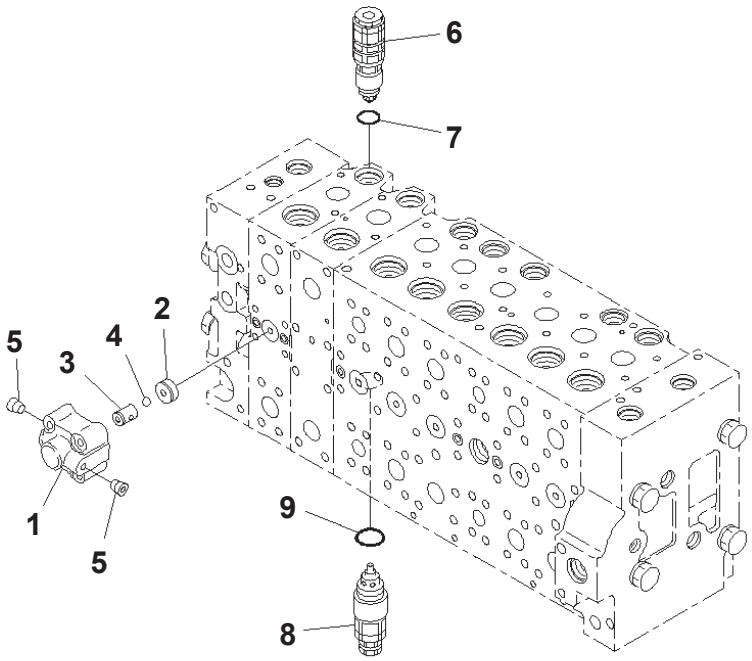

00014714

Main Control Valve, 1-actuator Inner Parts (24/24)

Index	Code	Part Number	Description	Qty	Options
		723-48-26604	Valve Assembly, Control	1	SN:B10402--
	A2	723-48-26603	Valve Assembly, Control	1	SN:B10380--B10401
	A2	723-48-26602	Valve Assembly, Control	1	SN:B10335--B10379
	A2	723-48-26601	Valve Assembly, Control	1	SN:B10109--B10334
	A2	723-48-26600	Valve Assembly, Control	1	SN:B10001--B10108
		723-40-66300	・ Valve Assembly	2	SN:B10001--
1	C1		・・ Case	1	SN:B10001--
2	C1		・・ Seat	1	SN:B10001--
3	C1		・・ Seat	1	SN:B10001--
4	C1		・・ Ball	1	SN:B10001--
5	C1		・・ Plug	2	SN:B10001--
6		723-90-76300	・ Valve Assembly, Suction and Relief, Suction and Safety	1	SN:B10380--
	A2	723-90-76501	・ Valve Assembly, Suction and Relief, Suction and Safety	1	SN:B10001--B10379
7		07000-13024	・・ O-ring	1	SN:B10001--
8		723-40-91300	・ Valve Assembly, Suction and Relief, Suction and Safety	3	SN:B10380--
	A2	723-90-61700	・ Valve Assembly, Suction and Relief, Suction and Safety	3	SN:B10001--B10379
9		709-25-11390	・・ O-ring	1	SN:B10380--
	A2	07000-13024	・・ O-ring	1	SN:B10001--B10379

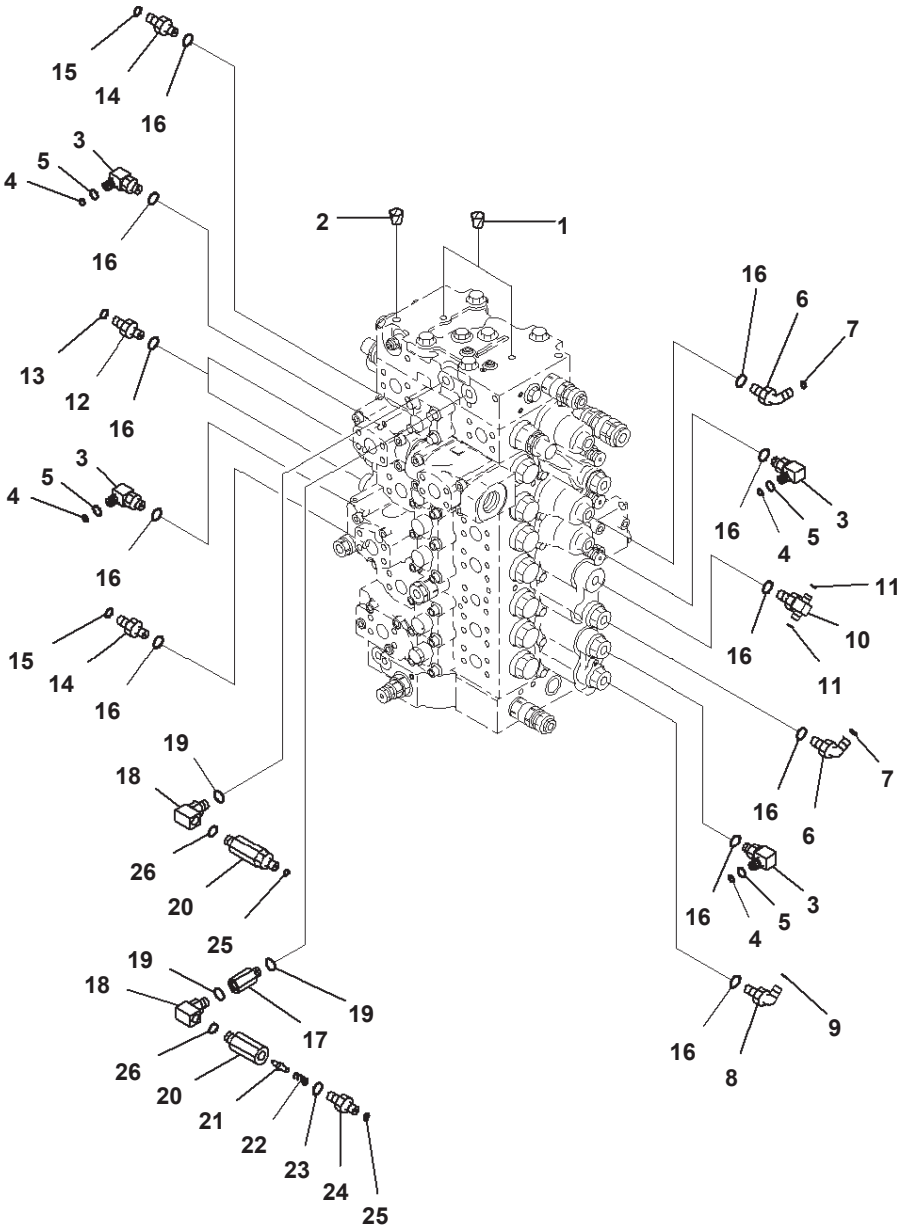

Main Control Valve, 1-actuator Control Valve Related Parts (1/2)

Index	Code	Part Number	Description	Qty	Options
		723-48-26602	Valve Assembly, Control	1	SN:B10335--
	A2	723-48-26601	Valve Assembly, Control	1	SN:B10109--B10334
	A2	723-48-26600	Valve Assembly, Control	1	SN:B10001--B10108
		723-90-61700	・ Valve Assembly, Suction and Relief, Suction and Safety	1	SN:B10001--
1		07049-01012	Plug	2	SN:B10001--
2		07049-01215	Plug	1	SN:B10001--
3		22U-62-22480	Elbow	4	SN:B10001--
4		201-60-11390	・ O-ring	1	SN:B10001--
5		20Y-62-19560	・ O-ring	1	SN:B10001--
6		11Y-62-12160	Elbow	2	SN:B10001--
7		02896-11008	O-ring	2	SN:B10001--
8		21W-62-42490	Elbow	1	SN:B10001--
9		02896-11009	O-ring	1	SN:B10001--
10		11Y-62-12250	Tee	1	SN:B10001--
11		02896-11008	O-ring	2	SN:B10001--
12		11Y-62-12130	Nipple	2	SN:B10001--
13		02896-11008	O-ring	2	SN:B10001--
14		11Y-62-12520	Nipple	2	SN:B10001--
15		02896-11009	O-ring	2	SN:B10001--
16		07002-11423	O-ring	12	SN:B10001--
17		20Y-62-22160	Adapter	1	SN:B10001--
18		20Y-62-23541	Elbow	2	SN:B10001--
19		07002-11423	O-ring	3	SN:B10001--
		20Y-62-41701	Valve Assembly	2	SN:B10001--
20	C1		・ Body	1	SN:B10001--
21		20Y-60-22270	・ Poppet	1	SN:B10001--
22		701-20-61230	・ Spring	1	SN:B10001--
23		07002-11423	・ O-ring	1	SN:B10001--
24		20Y-62-47630	・ Nipple	1	SN:B10001--
25		02896-11008	O-ring	2	SN:B10001--
26		07002-11423	O-ring	2	SN:B10001--

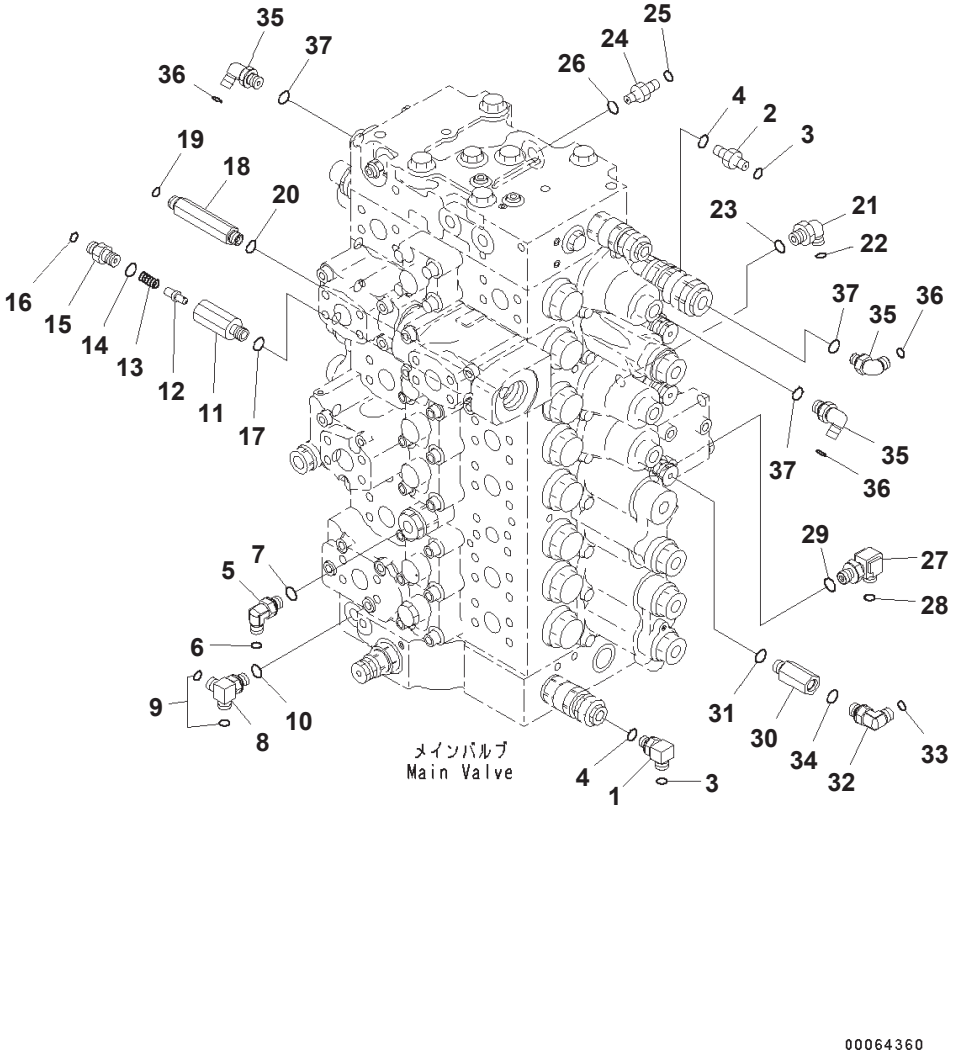

Index	Part Number	Description	Qty	Options
1	20Y-62-41920	Elbow	1	SN:B10001--
2	208-62-71540	Nipple	1	SN:B10001--
3	02896-11008	O-ring	2	SN:B10001--
4	07002-11223	O-ring	2	SN:B10001--
5	11Y-62-12160	Elbow	1	SN:B10001--
6	02896-11008	O-ring	1	SN:B10001--
7	07002-11423	O-ring	1	SN:B10001--
8	207-62-72141	Elbow	1	SN:B10001--
9	02896-11008	O-ring	2	SN:B10001--
10	07002-11423	O-ring	1	SN:B10001--
	20Y-62-41701	Valve Assembly	1	SN:B10001--
11	20Y-60-22210	・ Body	1	SN:B10001--
12	20Y-60-22270	・ Poppet	1	SN:B10001--
13	701-20-61230	・ Spring	1	SN:B10001--
14	07002-11423	・ O-ring	1	SN:B10001--
15	20Y-62-47630	・ Nipple	1	SN:B10001--
16	02896-11008	O-ring	1	SN:B10001--
17	07002-11423	O-ring	1	SN:B10001--
18	207-62-71531	Union	1	SN:B10001--
19	02896-11008	O-ring	1	SN:B10001--
20	07002-11423	O-ring	1	SN:B10001--
21	11Y-62-12160	Elbow	1	SN:B10001--
22	02896-11008	O-ring	1	SN:B10001--
23	07002-11423	O-ring	1	SN:B10001--
24	22L-62-22590	Nipple	1	SN:B10001--
25	02896-11008	O-ring	1	SN:B10001--
26	07002-11423	O-ring	1	SN:B10001--
27	21W-62-42490	Elbow	1	SN:B10001--
28	02896-11009	O-ring	1	SN:B10001--
29	07002-11423	O-ring	1	SN:B10001--
30	20Y-62-22160	Adapter	1	SN:B10001--
31	07002-11423	O-ring	1	SN:B10001--
32	11Y-62-12160	Elbow	1	SN:B10001--
33	02896-11008	O-ring	1	SN:B10001--
34	07002-11423	O-ring	1	SN:B10001--
35	11Y-62-12160	Elbow	3	SN:B10001--
36	02896-11008	O-ring	3	SN:B10001--
37	07002-11423	O-ring	3	SN:B10001--

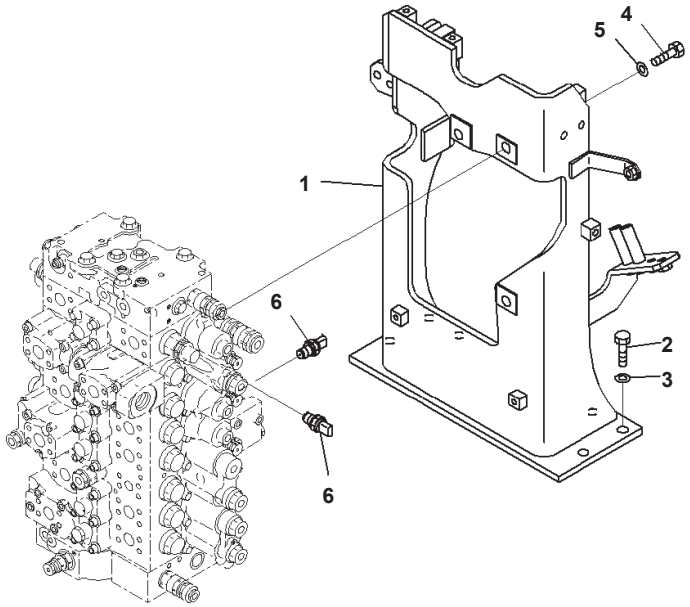

Main Control Valve, 1-actuator Valve Bracket

Index	Code	Part Number	Description	Qty	Options
1		207-62-74610	Bracket	1	SN:B10001--
2		01010-81640	Bolt	6	SN:B10001--
3		01643-31645	Washer	6	SN:B10001--
4		01010-81645	Bolt	3	SN:B10001--
5		01643-31645	Washer	3	SN:B10001--
6		7861-93-1812	Sensor, Pressure	2	SN:B10077--
	A2	7861-93-1811	Sensor, Pressure	2	SN:B10001--B10076

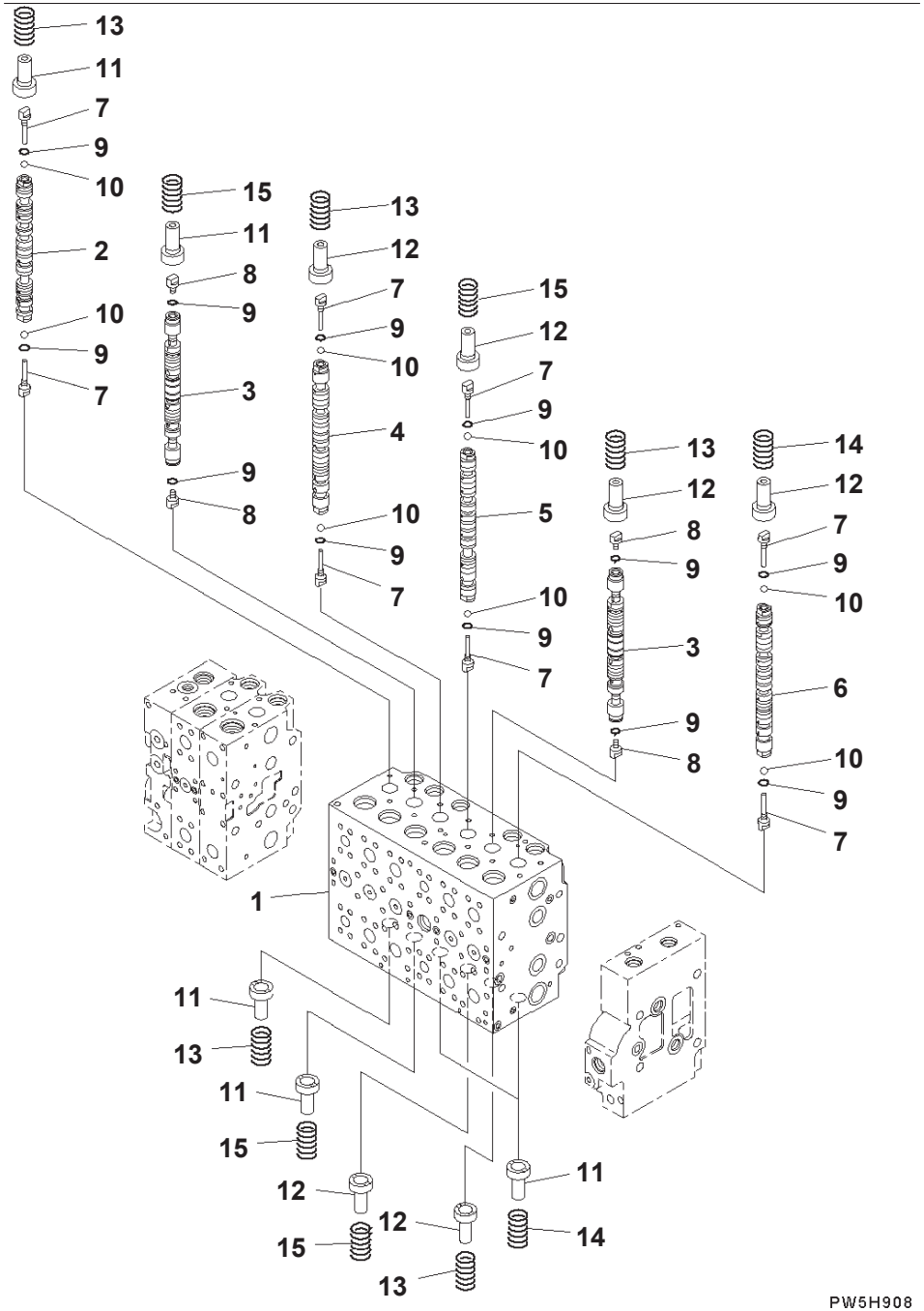

Main Control Valve, 1-actuator, Piping Less, Inner Parts (1/24) (#B10172-)

Index	Code	Part Number	Description	Qty	Options
		723-48-26604	Valve Assembly, Control	1	SN:B10402--
	A2	723-48-26603	Valve Assembly, Control	1	SN:B10380--B10401
	A2	723-48-26602	Valve Assembly, Control	1	SN:B10335--B10379
	C1	723-48-26601	Valve Assembly, Control	1	SN:B10172--B10334
	C1		・Body Subassembly	1	SN: B10172--
1	C1		・・Block	1	SN: B10172--
2	C1		・・Spool	1	SN: B10172--
3	C1		・・Spool	2	SN: B10172--
4	C1		・・Spool	1	SN: B10172--
5	C1		・・Spool	1	SN: B10172--
6	C1		・・Spool	1	SN: B10172--
7		723-46-15130	・・Plug	8	SN: B10172--
8		723-46-15140	・・Plug	4	SN: B10172--
9		07002-10823	・・O-ring	12	SN: B10172--
10		708-7T-16460	・・Ball	8	SN: B10172--
11		723-46-15120	・・Retainer	6	SN: B10172--
12		723-46-15690	・・Retainer	6	SN: B10172--
13		723-46-14110	・・Spring	5	SN: B10172--
14		723-46-14170	・・Spring	3	SN: B10172--
15		723-46-14131	・・Spring	4	SN: B10172--

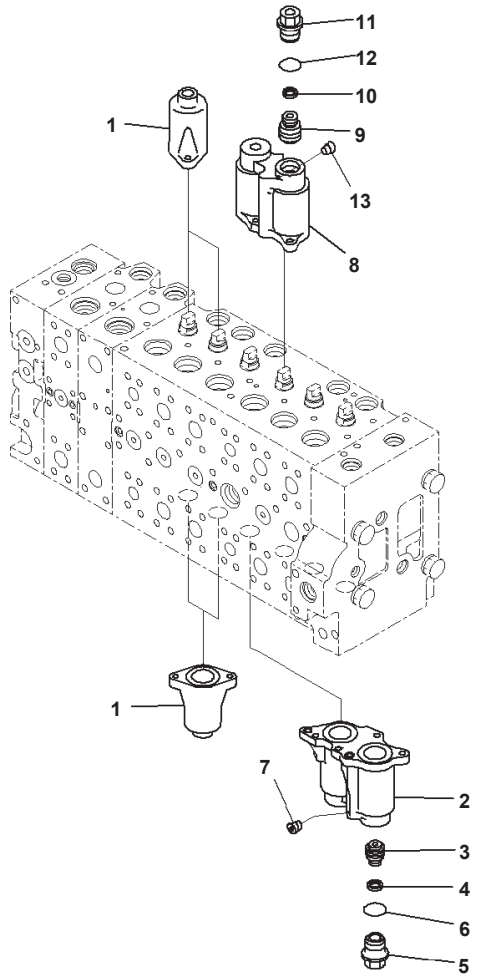

Main Control Valve, 1-actuator, Piping Less, Inner Parts (2/24) (#B10172-)

Index	Code	Part Number	Description	Qty	Options
		723-48-26604	Valve Assembly, Control	1	SN:B10402--
	A2	723-48-26603	Valve Assembly, Control	1	SN:B10380--B10401
	A2	723-48-26602	Valve Assembly, Control	1	SN:B10335--B10379
	C1	723-48-26601	Valve Assembly, Control	1	SN: B10172--B10334
	C1		・ Body Subassembly	1	SN: B10172--
1		723-46-15111	・・ Case	4	SN: B10172--
		723-46-18131	・・ Case Subassembly	1	SN: B10172--
2	C1		・・・ Case	1	SN: B10172--
3	C1		・・・ Piston	1	SN: B10172--
4	C1		・・・ Seal	1	SN: B10172--
5		723-46-15630	・・・ Plug	1	SN: B10172--
6		07000-13024	・・・ O-ring	1	SN: B10172--
7	C1		・・・ Screw	1	SN: B10172--
		723-46-18231	・・ Case Subassembly	1	SN: B10172--
8	C1		・・・ Case	1	SN: B10172--
9	C1		・・・ Piston	1	SN: B10172--
10	C1		・・・ Seal	1	SN: B10172--
11		723-46-15630	・・・ Plug	1	SN: B10172--
12		07000-13024	・・・ O-ring	1	SN: B10172--
13	C1		・・・ Screw	1	SN: B10172--

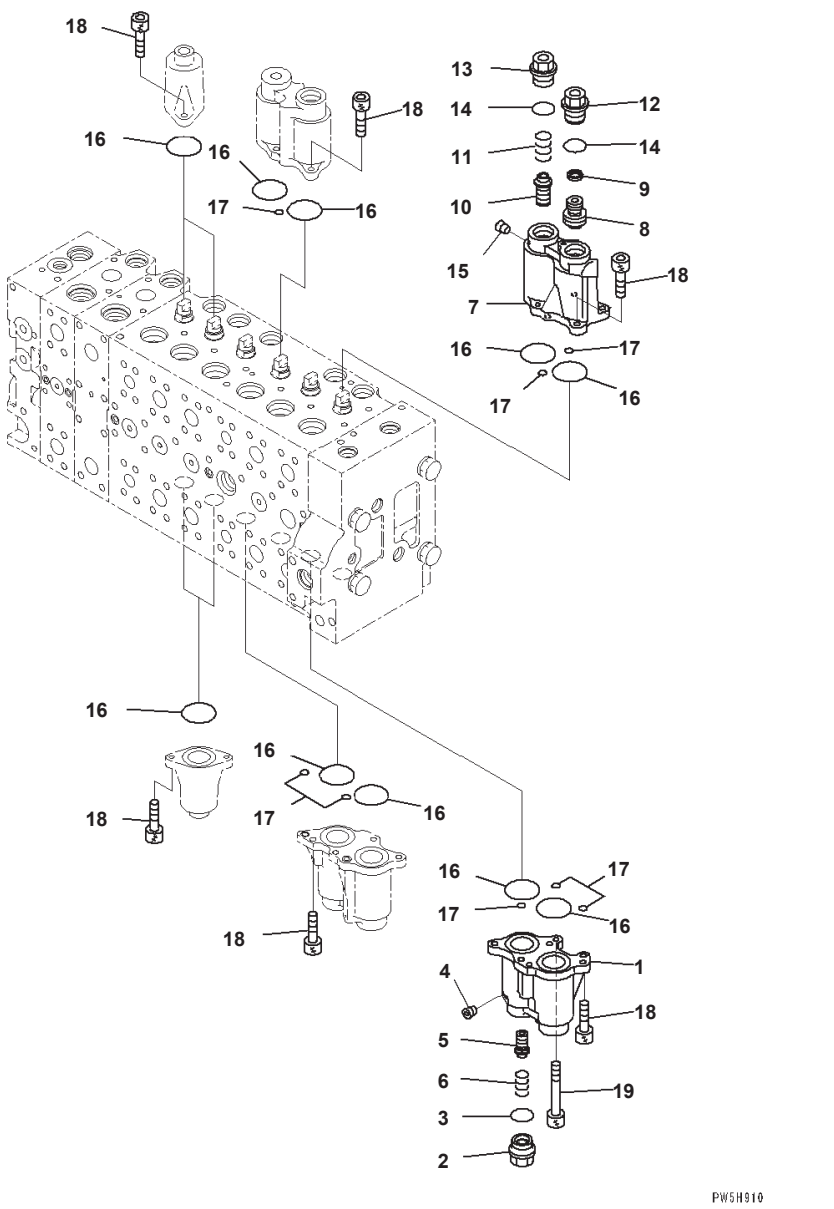

Main Control Valve, 1-actuator, Piping Less, Inner Parts (3/24) (#B10172-)

Index	Code	Part Number	Description	Qty	Options
		723-48-26604	Valve Assembly, Control	1	SN:B10402--
	A2	723-48-26603	Valve Assembly, Control	1	SN:B10380--B10401
	A2	723-48-26602	Valve Assembly, Control	1	SN:B10335--B10379
	C1	723-48-26601	Valve Assembly, Control	1	SN: B10172--B10334
	C1		・ Body Subassembly	1	SN: B10172--
		723-46-18330	・・ Case Subassembly	1	SN: B10172--
1	C1		・・・ Case	1	SN: B10172--
2		723-46-17340	・・・ Plug	1	SN: B10172--
3		07000-13024	・・・ O-ring	1	SN: B10172--
4	C1		・・・ Screw	1	SN: B10172--
5		723-46-17320	・・・ Spool	1	SN: B10172--
6		723-46-17330	・・・ Spring	1	SN: B10172--
		723-46-18431	・・ Case Subassembly	1	SN: B10172--
7	C1		・・・ Case	1	SN: B10172--
8	C1		・・・ Piston	1	SN: B10172--
9	C1		・・・ Seal	1	SN: B10172--
10		723-46-17320	・・・ Spool	1	SN: B10172--
11		723-46-17330	・・・ Spring	1	SN: B10172--
12		723-46-15630	・・・ Plug	1	SN: B10172--
13		723-46-17340	・・・ Plug	1	SN: B10172--
14		07000-13024	・・・ O-ring	2	SN: B10172--
15	C1		・・・ Screw	3	SN: B10172--
16		07430-71380	・・ O-ring	12	SN: B10172--
17		702-16-53920	・・ O-ring	8	SN: B10172--
18		01252-60820	・・ Bolt	23	SN: B10172--
19		723-46-17350	・・ Bolt	1	SN: B10172--

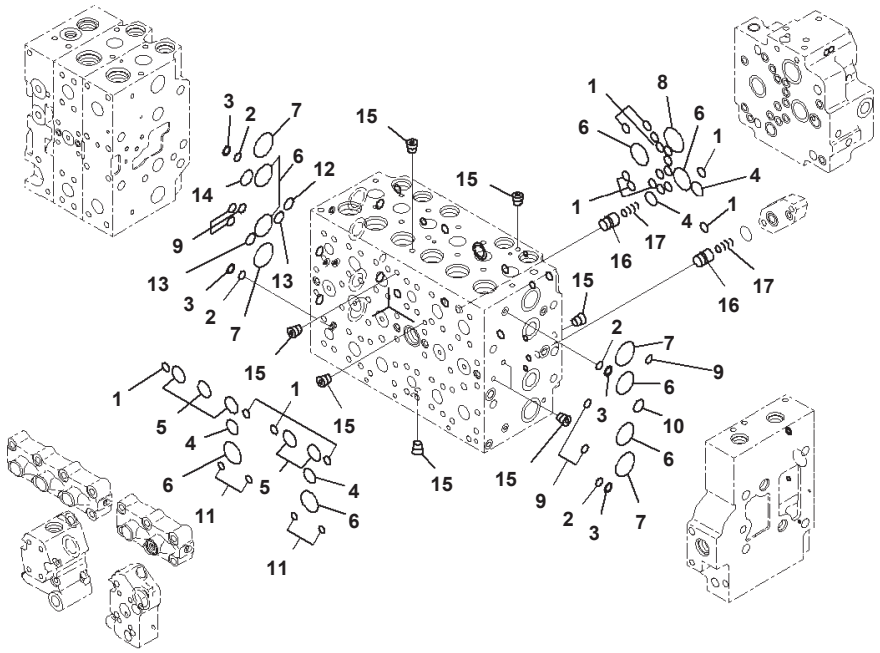

Main Control Valve, 1-actuator, Piping Less, Inner Parts (4/24) (#B10172-)

Index	Code	Part Number	Description	Qty	Options
		723-48-26604	Valve Assembly, Control	1	SN:B10402--
	A2	723-48-26603	Valve Assembly, Control	1	SN:B10380--B10401
	A2	723-48-26602	Valve Assembly, Control	1	SN:B10335--B10379
	C1	723-48-26601	Valve Assembly, Control	1	SN:B10172--B10334
	C1		・ Body Subassembly	1	SN: B10172--
1		07000-12012	・・ O-ring	19	SN: B10172--
2		723-11-19130	・・ O-ring	4	SN: B10172--
3		723-46-17520	・・ Ring, Back-up	4	SN: B10172--
4		07000-12021	・・ O-ring	4	SN: B10172--
5		07000-13028	・・ O-ring	5	SN: B10172--
6		07000-13032	・・ O-ring	8	SN: B10172--
7		723-46-17510	・・ O-ring	4	SN: B10172--
8		07000-13036	・・ O-ring	1	SN: B10172--
9		723-46-17530	・・ O-ring	11	SN: B10172--
10		723-11-18150	・・ O-ring	2	SN: B10172--
11		702-16-53920	・・ O-ring	4	SN: B10172--
12		723-46-18710	・・ O-ring	1	SN: B10172--
13		722-12-19070	・・ O-ring	2	SN: B10172--
14		723-46-18720	・・ O-ring	1	SN: B10172--
15	C1		・・ Plug	14	SN: B10172--
16		723-46-17650	・・ Valve	2	SN: B10172--
17		723-46-14150	・・ Spring	2	SN: B10172--

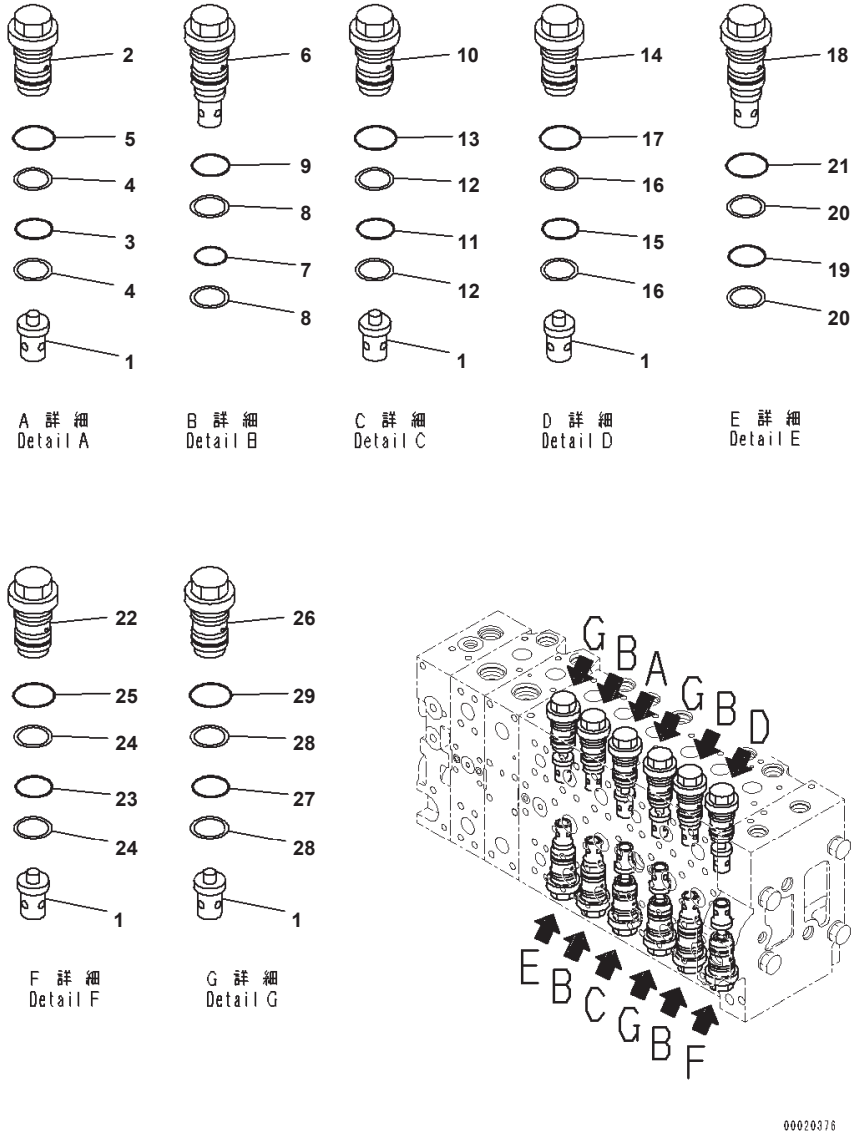

Main Control Valve, 1-actuator, Piping Less, Inner Parts (5/24) (#B10172-B10401)

Index	Code	Part Number	Description	Qty	Options
		723-48-26603	Valve Assembly, Control	1	SN:B10380--B10401
	A2	723-48-26602	Valve Assembly, Control	1	SN:B10335--B10379
	A2	723-48-26601	Valve Assembly, Control	1	SN: B10172--B10334
	C1		・ Body Subassembly	1	SN: B10172--B10401
1		723-46-41210	・・ Valve	7	SN: B10172--B10401
2		723-46-40100	・・ Valve Assembly	1	SN: B10172--@
3		700-93-11320	・・・ O-ring	1	SN: B10172--@
4		723-46-41950	・・・ Ring	2	SN: B10172--@
5		07002-13634	・・・ O-ring	1	SN: B10172--@
6		723-46-42800	・・ Valve Assembly	4	SN: B10172--@
7		700-93-11320	・・・ O-ring	1	SN: B10172--@
8		723-46-41950	・・・ Ring	2	SN: B10172--@
9		07002-13634	・・・ O-ring	1	SN: B10172--@
10		723-46-40601	・・ Valve Assembly	1	SN: B10172--@
11		700-93-11320	・・・ O-ring	1	SN: B10172--@
12		723-46-41950	・・・ Ring	2	SN: B10172--@
13		07002-13634	・・・ O-ring	1	SN: B10172--@
14		723-46-43100	・・ Valve Assembly	1	SN: B10172--@
15		700-93-11320	・・・ O-ring	1	SN: B10172--@
16		723-46-41950	・・・ Ring	2	SN: B10172--@
17		07002-13634	・・・ O-ring	1	SN: B10172--@
18		723-46-43400	・・ Valve Assembly	1	SN: B10172--@
19		700-93-11320	・・・ O-ring	1	SN: B10172--@
20		723-46-41950	・・・ Ring	2	SN: B10172--@
21		07002-13634	・・・ O-ring	1	SN: B10172--@
22		723-46-44100	・・ Valve Assembly	1	SN: B10172--@
23		700-93-11320	・・・ O-ring	1	SN: B10172--@
24		723-46-41950	・・・ Ring	2	SN: B10172--@
25		07002-13634	・・・ O-ring	1	SN: B10172--@
26		723-46-45100	・・ Valve Assembly	3	SN: B10172--B10401
27		700-93-11320	・・・ O-ring	1	SN: B10172--B10401
28		723-46-41950	・・・ Ring	2	SN: B10172--B10401
29		07002-13634	・・・ O-ring	1	SN: B10172--B10401

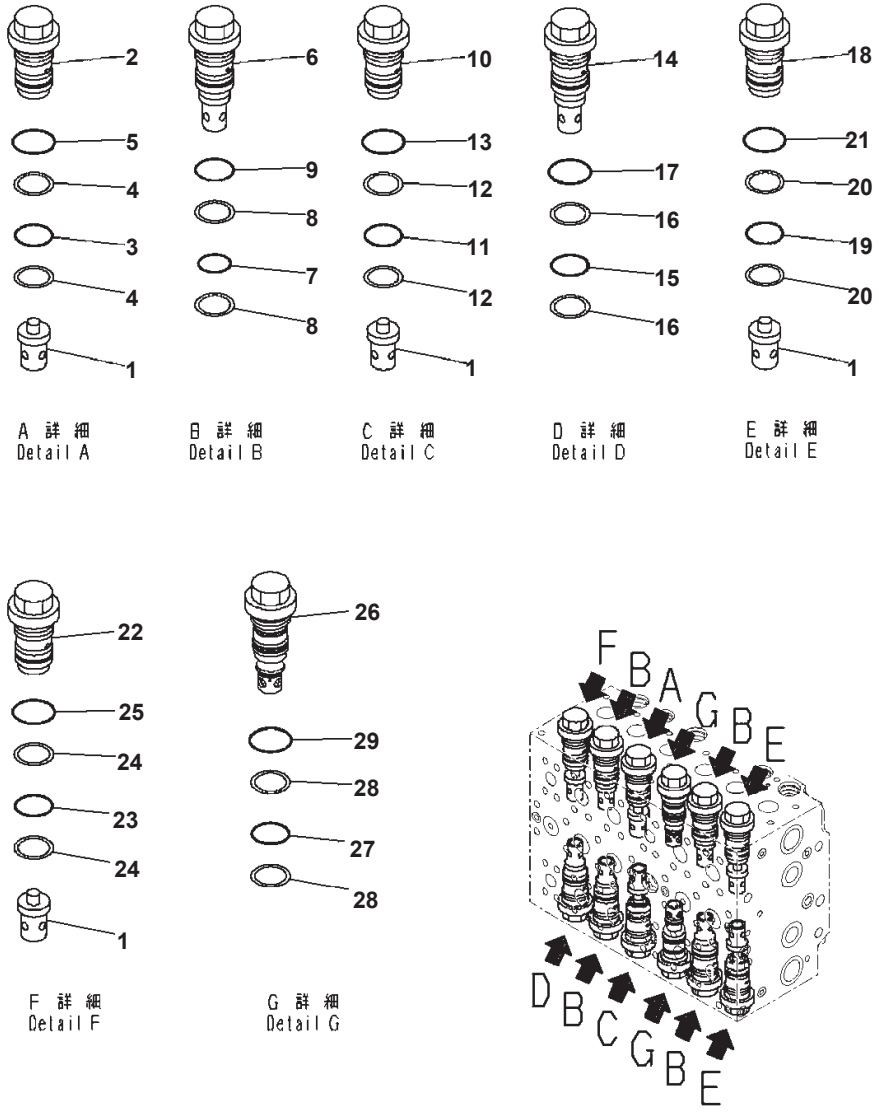

Main Control Valve, 1-actuator, Piping Less, Inner Parts (5/24) (#B10402-)

Index	Code	Part Number	Description	Qty	Options
		723-48-26604	Valve Assembly, Control	1	SN:B10402--
	C1		・ Body Subassembly	1	SN:B10402--
1		723-46-41210	・・ Valve	5	SN:B10402--
2		723-46-40100	・・ Valve Assembly	1	SN: B10172--
3		700-93-11320	・・・ O-ring	1	SN: B10172--
4		723-46-41950	・・・ Ring	2	SN: B10172--
5		07002-13634	・・・ O-ring	1	SN: B10172--
6		723-46-42800	・・ Valve Assembly	4	SN: B10172--
7		700-93-11320	・・・ O-ring	1	SN: B10172--
8		723-46-41950	・・・ Ring	2	SN: B10172--
9		07002-13634	・・・ O-ring	1	SN: B10172--
10		723-46-40601	・・ Valve Assembly	1	SN: B10172--
11		700-93-11320	・・・ O-ring	1	SN: B10172--
12		723-46-41950	・・・ Ring	2	SN: B10172--
13		07002-13634	・・・ O-ring	1	SN: B10172--
14		723-46-43100	・・ Valve Assembly	1	SN: B10172--
15		700-93-11320	・・・ O-ring	1	SN: B10172--
16		723-46-41950	・・・ Ring	2	SN: B10172--
17		07002-13634	・・・ O-ring	1	SN: B10172--
18		723-46-43400	・・ Valve Assembly	1	SN: B10172--
19		700-93-11320	・・・ O-ring	1	SN: B10172--
20		723-46-41950	・・・ Ring	2	SN: B10172--
21		07002-13634	・・・ O-ring	1	SN: B10172--
22		723-46-44100	・・ Valve Assembly	1	SN: B10172--
23		700-93-11320	・・・ O-ring	1	SN: B10172--
24		723-46-41950	・・・ Ring	2	SN: B10172--
25		07002-13634	・・・ O-ring	1	SN: B10172--
26		723-46-45100	・・ Valve Assembly	1	SN:B10402--
27		700-93-11320	・・・ O-ring	1	SN:B10402--
28		723-46-41950	・・・ Ring	2	SN:B10402--
29		07002-13634	・・・ O-ring	1	SN:B10402--
30		723-46-45800	・・ Valve Assembly	2	SN:B10402--
31		700-93-11320	・・・ O-ring	1	SN:B10402--
32		723-46-41950	・・・ Ring	2	SN:B10402--
33		07002-13634	・・・ O-ring	1	SN:B10402--

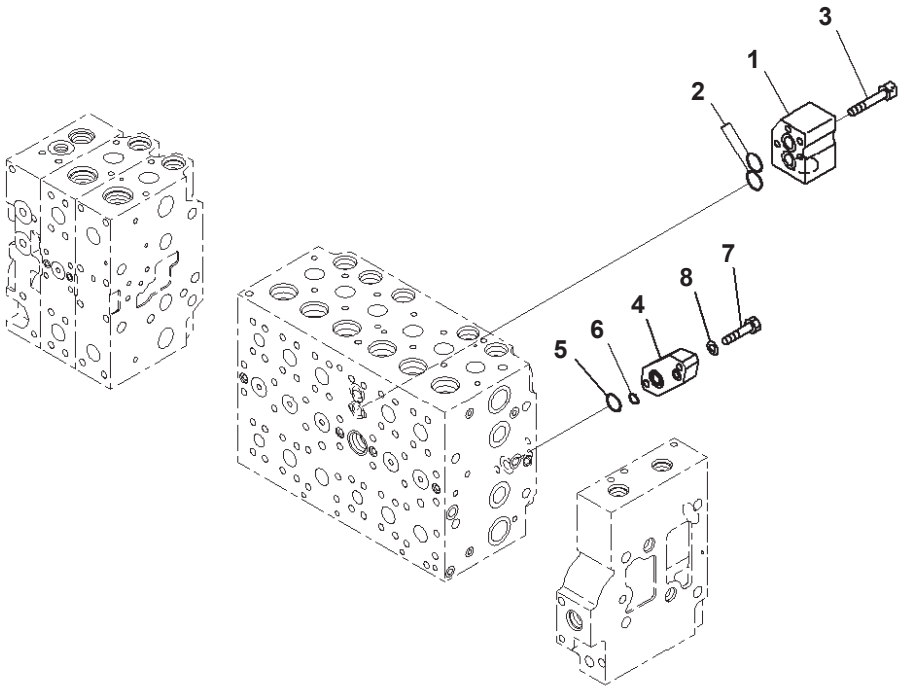

JH001410

Main Control Valve, 1-actuator, Piping Less, Inner Parts (6/24) (#B10172-)

Index	Code	Part Number	Description	Qty	Options
		723-48-26604	Valve Assembly, Control	1	SN:B10402--
	A2	723-48-26603	Valve Assembly, Control	1	SN:B10380--B10401
	A2	723-48-26602	Valve Assembly, Control	1	SN:B10335--B10379
	C1	723-48-26601	Valve Assembly, Control	1	SN: B10172--B10334
	C1		・ Body Subassembly	1	SN: B10172--
1		723-46-11910	・・ Block	1	SN: B10172--
2		723-46-15510	・・ O-ring	2	SN: B10172--
3		01252-60865	・・ Bolt, Hexagon Socket Head	4	SN: B10172--
4		723-46-18730	・・ Plate	1	SN: B10172--
5		07000-12021	・・ O-ring	1	SN: B10172--
6		07000-12011	・・ O-ring	1	SN: B10172--
7		01010-81040	・・ Bolt	2	SN: B10172--
8		01643-51032	・・ Washer	2	SN: B10172--

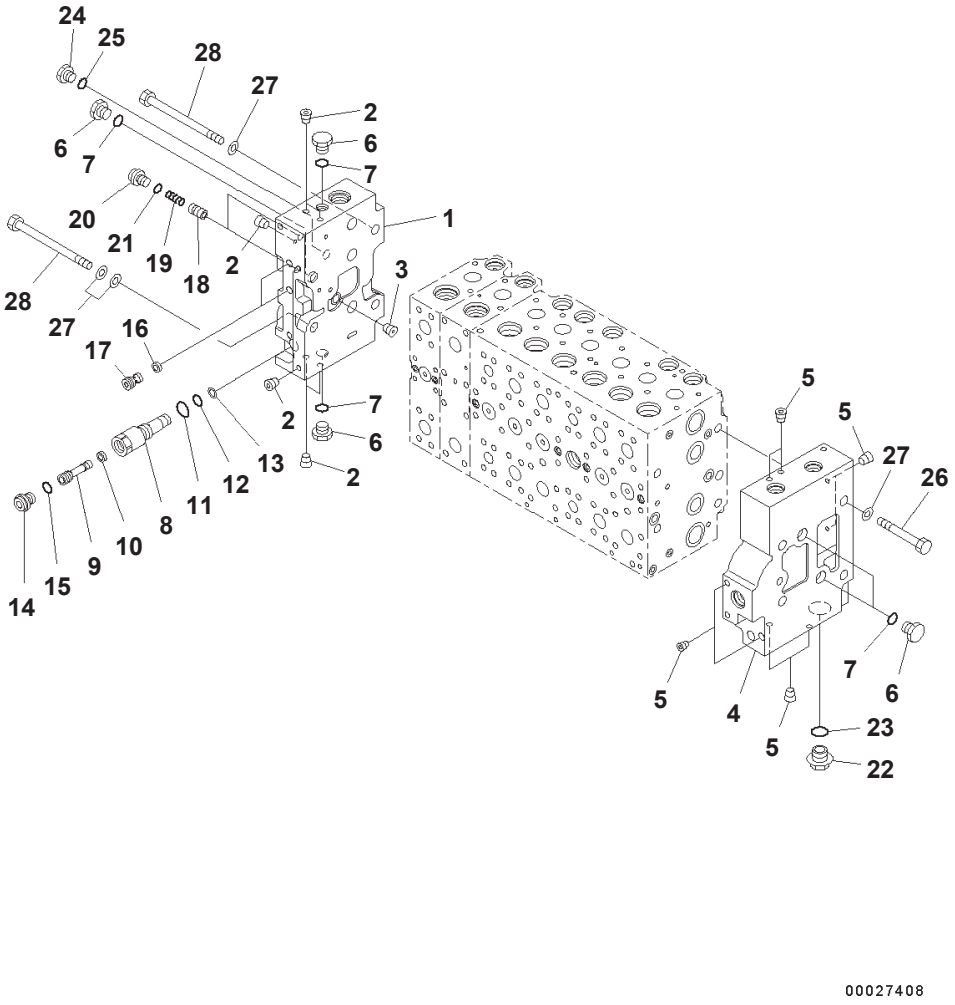

Main Control Valve, 1-actuator, Piping Less, Inner Parts (7/24) (#B10172-)

Index	Code	Part Number	Description	Qty	Options
		723-48-26604	Valve Assembly, Control	1	SN:B10402---
	A2	723-48-26603	Valve Assembly, Control	1	SN:B10380--B10401
	A2	723-48-26602	Valve Assembly, Control	1	SN:B10335--B10379
	C1	723-48-26601	Valve Assembly, Control	1	SN: B10172--B10334
		723-46-00760	· Cover Assembly	1	SN: B10172--
1	C1		· · Cover, A	1	SN: B10172--
2	C1		· · Plug	7	SN: B10172--
3	C1		· · Plug	1	SN: B10172--
		723-46-00742	· Cover Assembly	1	SN: B10172--
4	C1		· · Cover, B	1	SN: B10172--
5	C1		· · Plug	8	SN: B10172--
6		708-8E-16250	· Plug	5	SN: B10172--
7		07002-11823	· O-ring	5	SN: B10172--
		723-46-17600	· Plug Assembly	1	SN: B10172--
8		723-46-17610	· · Sleeve	1	SN: B10172--
9		723-46-17640	· · Plug	1	SN: B10172--
10		702-21-55760	· · Filter	1	SN: B10172--
11		07002-11423	· · O-ring	1	SN: B10172--
12		07000-11007	· · O-ring	1	SN: B10172--
13		07001-01007	· · Ring, Back-up	1	SN: B10172--
14		708-8E-16160	· · Plug	1	SN: B10172--
15		07002-11023	· · O-ring	1	SN: B10172--
16		723-40-82220	· Filter	2	SN: B10172--
17		723-46-17550	· Plug	2	SN: B10172--
18		723-46-15190	· Valve	2	SN: B10172--
19		723-46-14140	· Spring	2	SN: B10172--
20		708-8E-16160	· Plug	2	SN: B10172--
21		07002-11023	· O-ring	2	SN: B10172--
22		709-74-91860	· Plug	1	SN: B10172--
23		07002-12434	· O-ring	1	SN: B10172--
24		708-8H-11530	· Plug	1	SN: B10172--
25		07002-11423	· O-ring	1	SN: B10172--
26		01010-61490	· Bolt	4	SN: B10172--
27		01643-31445	· Washer	10	SN: B10172--
28		723-46-15220	· Bolt	4	SN: B10172--

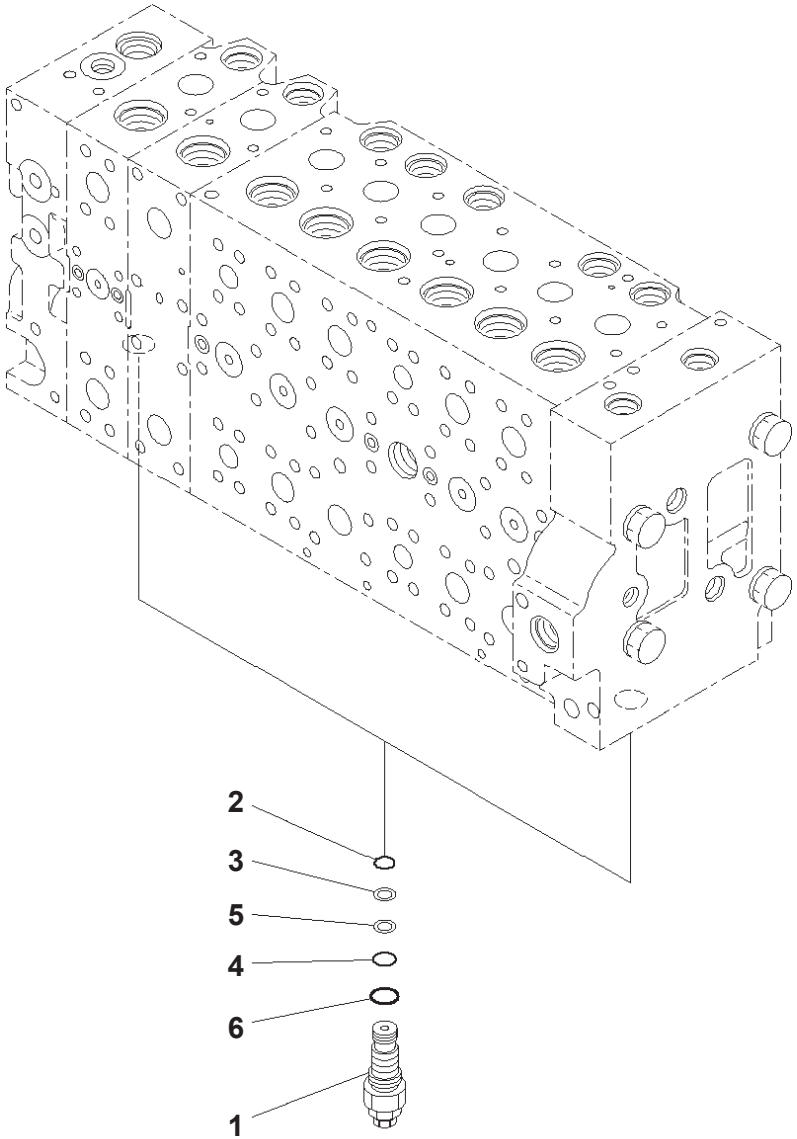

Main Control Valve, 1-actuator, Piping Less, Inner Parts (8/24) (#B10172-)

Index	Code	Part Number	Description	Qty	Options
		723-48-26604	Valve Assembly, Control	1	SN:B10402--
	A2	723-48-26603	Valve Assembly, Control	1	SN:B10380--B10401
	A2	723-48-26602	Valve Assembly, Control	1	SN:B10335--B10379
	C1	723-48-26601	Valve Assembly, Control	1	SN: B10172--B10334
1		723-40-56800	・ Valve Assembly, Unloader, UNLOAD	2	SN: B10172--
2		07000-12014	・・ O-ring	1	SN: B10172--
3		723-40-56350	・・ Ring	1	SN: B10172--
4		07000-12016	・・ O-ring	1	SN: B10172--
5		723-60-22230	・・ Ring, Back-up	1	SN: B10172--
6		07002-12434	・・ O-ring	1	SN: B10172--

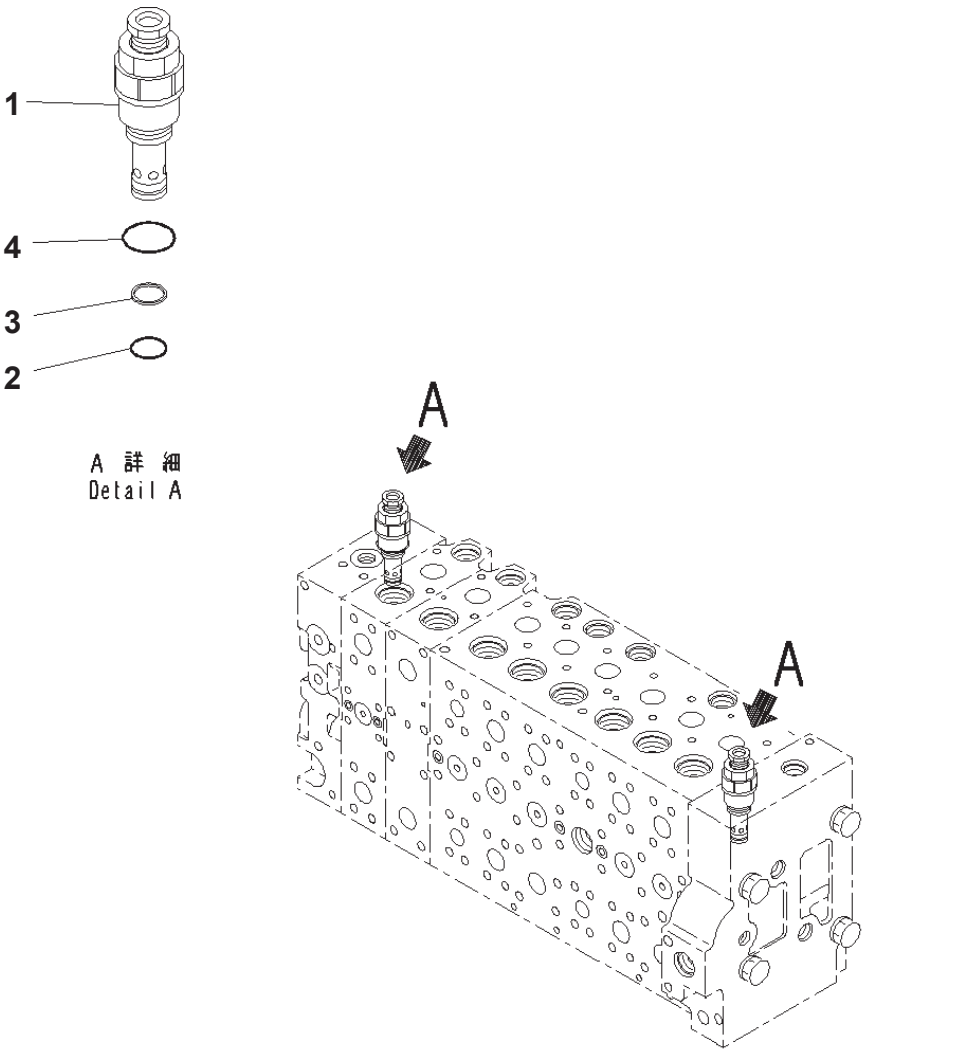

Main Control Valve, 1-actuator, Piping Less, Inner Parts (9/24) (#B10172-)

Index	Code	Part Number	Description	Qty	Options
		723-48-26604	Valve Assembly, Control	1	SN:B10402--
		723-48-26603	Valve Assembly, Control	1	SN:B10380--B10401
	A2	723-48-26602	Valve Assembly, Control	1	SN:B10335--B10379
	C1	723-48-26601	Valve Assembly, Control	1	SN: B10172--B10334
1	C1	723-40-93801	・ Valve, Relief	2	SN:B10335--
	C1	723-40-93800	・ Valve, Relief	2	SN: B10172--B10334
2		700-22-11410	・・ O-ring	1	SN: B10172--
3		700-80-64220	・・ Ring, Back-up	1	SN: B10172--
4		07002-12434	・・ O-ring	1	SN: B10172--

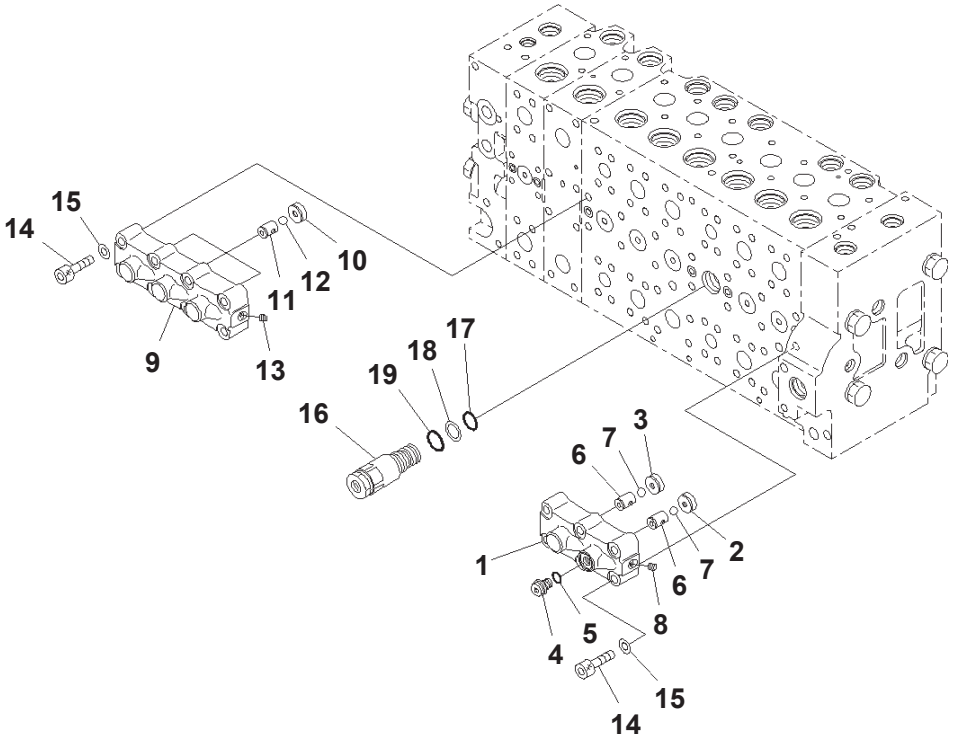

00014704

Main Control Valve, 1-actuator, Piping Less, Inner Parts (10/24) (#B10172-)

Index	Code	Part Number	Description	Qty	Options
		723-48-26604	Valve Assembly, Control	1	SN:B10402--
	A2	723-48-26603	Valve Assembly, Control	1	SN:B10380--B10401
	A2	723-48-26602	Valve Assembly, Control	1	SN:B10335--B10379
	C1	723-48-26601	Valve Assembly, Control	1	SN: B10172--B10334
		723-40-93800	· Valve, Relief	2	SN: B10172--
		723-40-66701	· Valve Assembly	1	SN: B10172--
1	C1		· · Case	1	SN: B10172--
2	C1		· · Seat	1	SN: B10172--
3	C1		· · Seat	1	SN: B10172--
4		708-8H-11530	· · Plug	1	SN: B10172--
5		07002-11423	· · O-ring	1	SN: B10172--
6	C1		· · Seat	2	SN: B10172--
7	C1		· · Ball	2	SN: B10172--
8	C1		· · Plug	1	SN: B10172--
		723-40-66601	· Valve Assembly	1	SN: B10172--
9	C1		· · Case	1	SN: B10172--
10	C1		· · Seat	3	SN: B10172--
11	C1		· · Seat	3	SN: B10172--
12	C1		· · Ball	3	SN: B10172--
13	C1		· · Plug	1	SN: B10172--
14		01252-61050	· Bolt, Hexagon Socket Head	14	SN: B10172--
15		01643-51032	· Washer	14	SN: B10172--
16		723-40-60101	· Valve Assembly	1	SN: B10172--
17		07000-12020	· · O-ring	1	SN: B10172--
18		07001-02020	· · Ring, Back-up	1	SN: B10172--
19		709-25-11390	· · O-ring	1	SN: B10172--

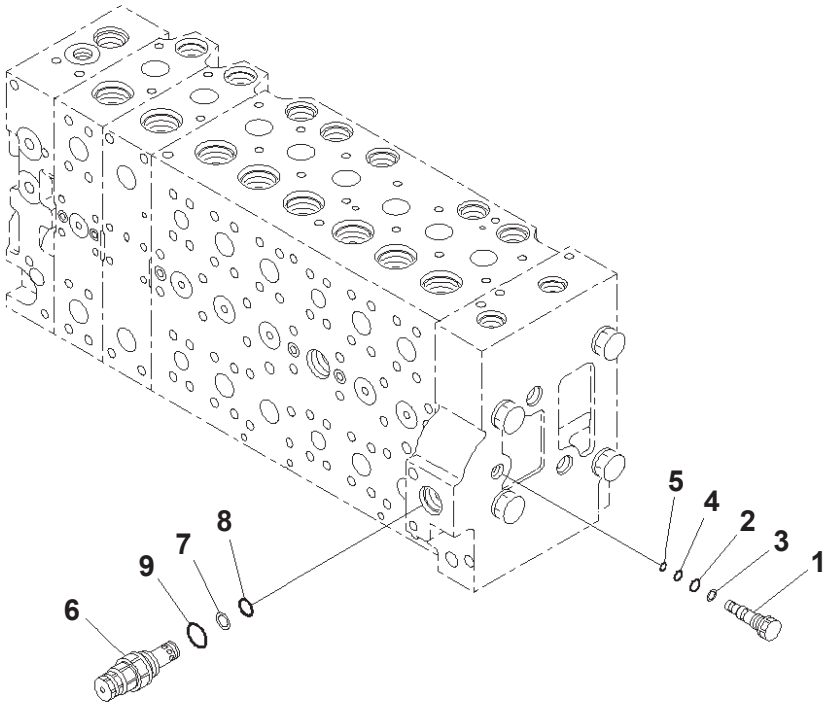

00014705

Main Control Valve, 1-actuator, Piping Less, Inner Parts (11/24) (#B10172-)

Index	Code	Part Number	Description	Qty	Options
		723-48-26604	Valve Assembly, Control	1	SN:B10402--
	A2	723-48-26603	Valve Assembly, Control	1	SN:B10380--B10401
	A2	723-48-26602	Valve Assembly, Control	1	SN:B10335--B10379
	C1	723-48-26601	Valve Assembly, Control	1	SN: B10172--B10334
		723-40-60101	・ Valve Assembly	1	SN: B10172--
		723-46-17701	・ Plug Assembly	1	SN: B10172--
1		723-46-17711	・・ Plug	1	SN: B10172--
2		07000-11009	・・ O-ring	1	SN: B10172--
3		07001-01009	・・ Ring, Back-up	1	SN: B10172--
4		07000-11007	・・ O-ring	1	SN: B10172--
5		07001-01007	・・ Ring, Back-up	1	SN: B10172--
6		723-40-91500	・ Valve Assembly, Relief	1	SN: B10172--
7		700-80-64220	・・ Ring, Back-up	1	SN: B10172--
8		700-22-11410	・・ O-ring	1	SN: B10172--
9		709-25-11390	・・ O-ring	1	SN: B10172--

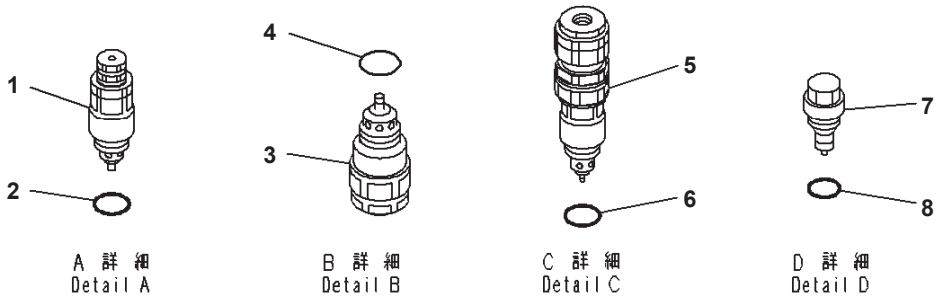

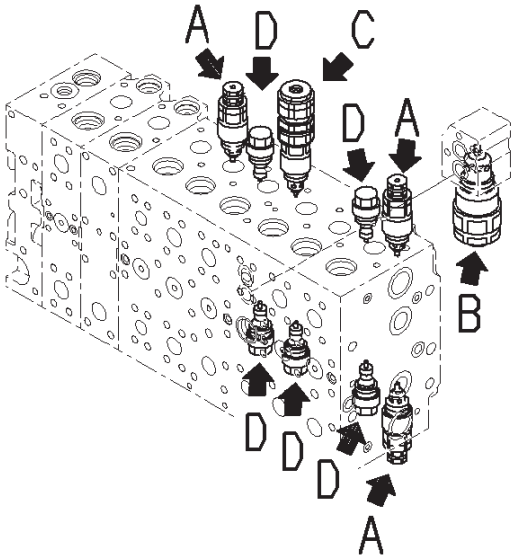

JH000519

Main Control Valve, 1-actuator, Piping Less, Inner Parts (12/24) (#B10172-)

Index	Code	Part Number	Description	Qty	Options
		723-48-26604	Valve Assembly, Control	1	SN:B10402--
	A2	723-48-26603	Valve Assembly, Control	1	SN:B10380--B10401
	A2	723-48-26602	Valve Assembly, Control	1	SN:B10335--B10379
	C1	723-48-26601	Valve Assembly, Control	1	SN: B10172--B10334
		723-40-91500	・ Valve Assembly, Relief	1	SN: B10172--
1		723-40-91200	・ Valve Assembly, Suction and Relief	2	SN: B10172--
2		709-25-11390	・・ O-ring	1	SN: B10172--
3		723-90-69100	・ Valve Assembly, Suction and Relief	1	SN: B10172--
4		07002-13634	・・ O-ring	1	SN: B10172--
5		723-90-76201	・ Valve Assembly, Suction and Relief	1	SN: B10172--
6		07000-13024	・・ O-ring	1	SN: B10172--
7		723-40-85100	・ Valve Assembly, Suction	6	SN: B10172--
8		709-25-11390	・・ O-ring	1	SN: B10172--

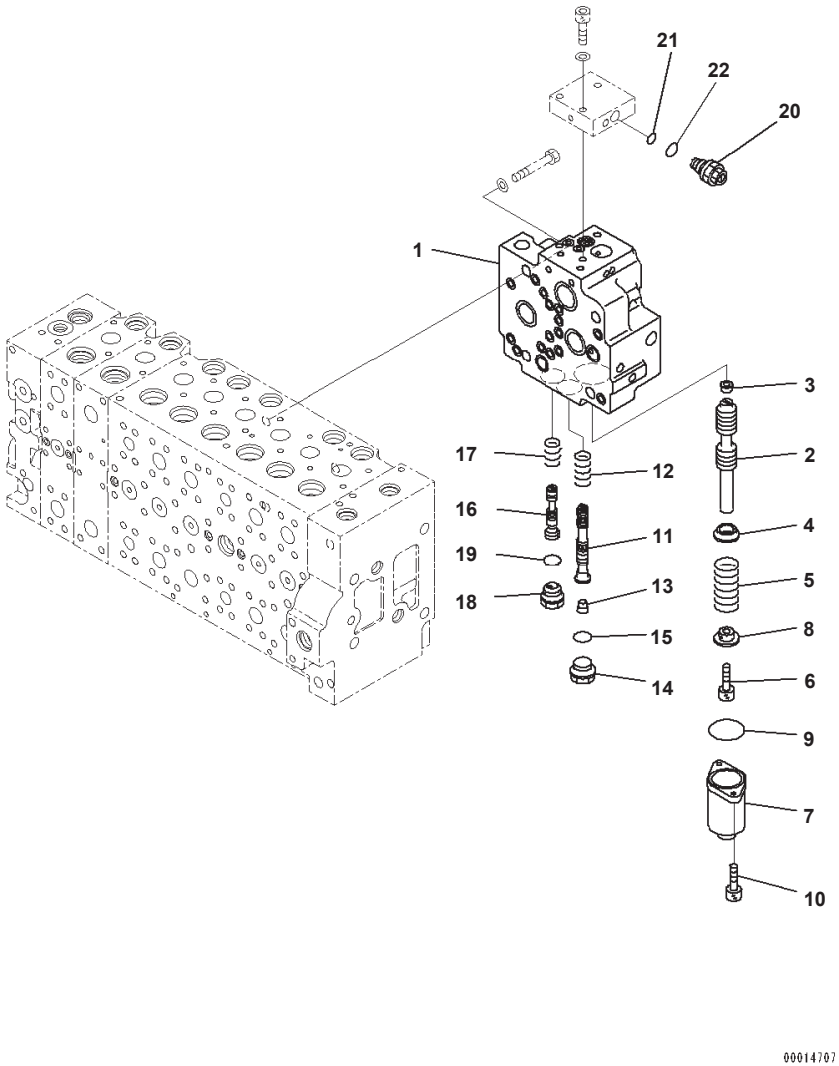

Main Control Valve, 1-actuator, Piping Less, Inner Parts (13/24) (#B10172-)

Index	Code	Part Number	Description	Qty	Options
		723-48-26604	Valve Assembly, Control	1	SN:B10402--
	A2	723-48-26603	Valve Assembly, Control	1	SN:B10380--B10401
	A2	723-48-26602	Valve Assembly, Control	1	SN:B10335--B10379
	C1	723-48-26601	Valve Assembly, Control	1	SN: B10172--B10334
		723-40-71201	・ Valve Assembly	1	SN: B10172--
1	C1		・・ Valve Body	1	SN: B10172--
2	C1		・・ Spool	1	SN: B10172--
3	C1		・・ Plug	1	SN: B10172--
4		723-40-71330	・・ Retainer	1	SN: B10172--
5		723-40-71340	・・ Spring	1	SN: B10172--
6		01252-60816	・・ Bolt	1	SN: B10172--
7		723-46-15111	・・ Case	1	SN: B10172--
8		723-40-71350	・・ Retainer	1	SN: B10172--
9		07430-71380	・・ O-ring	1	SN: B10172--
10		01252-60820	・・ Bolt	2	SN: B10172--
11	C1		・・ Spool	1	SN: B10172--
12		723-40-71440	・・ Spring	1	SN: B10172--
13	C1		・・ Plug	1	SN: B10172--
14		709-74-91860	・・ Plug	1	SN: B10172--
15		07002-12434	・・ O-ring	1	SN: B10172--
16	C1		・・ Spool	1	SN: B10172--
17		723-40-71390	・・ Spring	1	SN: B10172--
18		723-40-61150	・・ Plug	1	SN: B10172--
19		07002-12434	・・ O-ring	1	SN: B10172--
		723-40-71800	・・ Valve Assembly	1	SN: B10172--
20		723-40-91600	・・・ Valve Assembly, Relief	1	SN: B10172--
21		702-16-53920	・・・・ O-ring	1	SN: B10172--
22		07002-11623	・・・・ O-ring	1	SN: B10172--

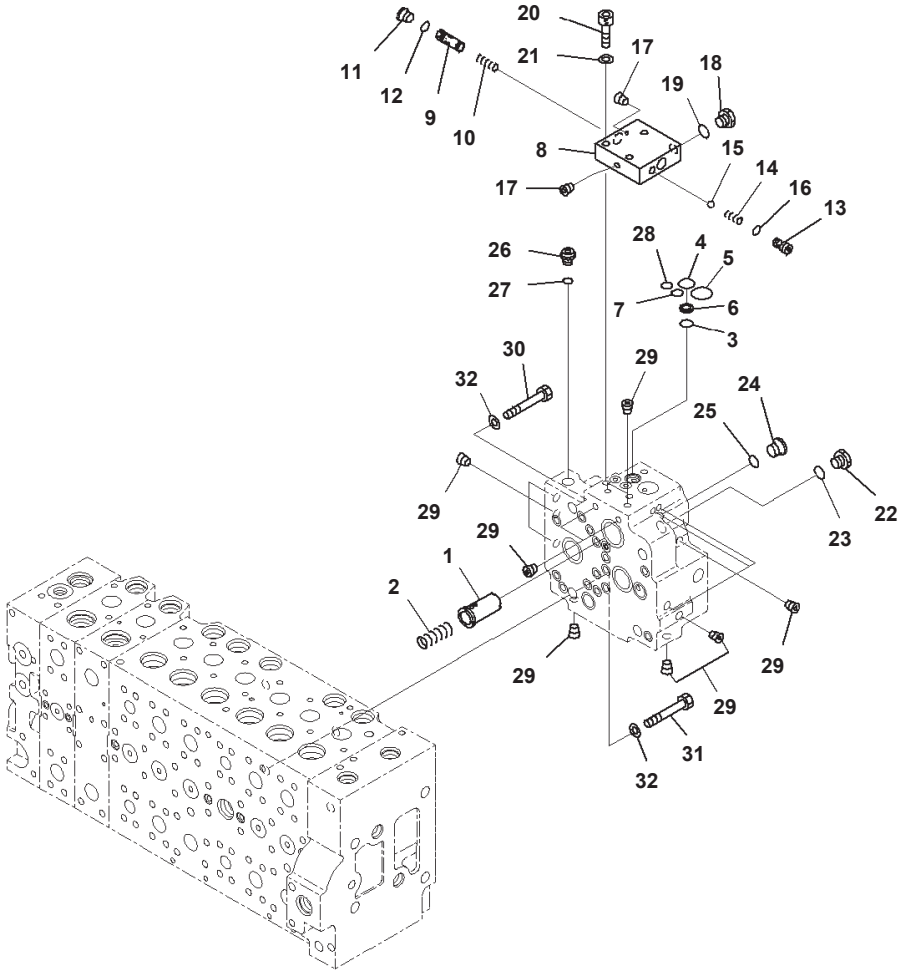

Main Control Valve, 1-actuator, Piping Less, Inner Parts (14/24) (#B10172-)

Index	Code	Part Number	Description	Qty	Options
		723-48-26604	Valve Assembly, Control	1	SN:B10402---
	A2	723-48-26603	Valve Assembly, Control	1	SN:B10380--B10401
	A2	723-48-26602	Valve Assembly, Control	1	SN:B10335--B10379
	C1	723-48-26601	Valve Assembly, Control	1	SN: B10172--B10334
		723-40-71201	· Valve Assembly	1	SN:B10172--
1		723-40-71430	· · Valve	1	SN:B10172--
2		702-21-55460	· · Spring	1	SN:B10172--
3		702-21-55420	· · O-ring	1	SN:B10172--
4		702-21-55520	· · O-ring	1	SN:B10172--
5		702-21-55440	· · O-ring	1	SN:B10172--
6		702-21-53140	· · Filter	1	SN:B10335--
	A2	702-21-53120	· · Filter	1	SN: B10172--B10334
7		07000-12011	· · O-ring	1	SN:B10172--
		723-40-71800	· · Valve Assembly	1	SN:B10172--
8	C1		· · · Block	1	SN:B10172--
9	C1		· · · Spool	1	SN:B10172--
10	C1		· · · Spring	1	SN:B10172--
11		702-21-55620	· · · Plug	1	SN:B10172--
12		07002-11423	· · · O-ring	1	SN:B10172--
13		702-21-55710	· · · Seat	1	SN:B10172--
14		702-21-55720	· · · Spring	1	SN:B10172--
15		04260-00793	· · · Ball, Steel	1	SN:B10172--
16		07000-11009	· · · O-ring	1	SN:B10172--
17	C1		· · · Plug	2	SN:B10172--
18		708-8H-11530	· · · Plug	1	SN:B10172--
19		07002-11423	· · · O-ring	1	SN:B10172--
20		01252-61040	· · Bolt, Hexagon Socket Head	3	SN:B10172--
21		01643-51032	· · Washer	3	SN:B10172--
22		708-8H-11530	· · Plug	1	SN:B10172--
23		07002-11423	· · O-ring	1	SN:B10172--
24		702-21-55620	· · Plug	1	SN:B10172--
25		07002-11423	· · O-ring	1	SN:B10172--
26		708-8E-16160	· · Plug	1	SN:B10172--
27		07002-11023	· · O-ring	1	SN:B10172--
28		07000-12011	· · O-ring	1	SN:B10172--
29	C1		· · Plug	17	SN:B10172--
30		01010-61460	· Bolt	1	SN:B10172--
31		01010-61470	· Bolt	3	SN:B10172--
32		01643-31445	· Washer	4	SN:B10172--

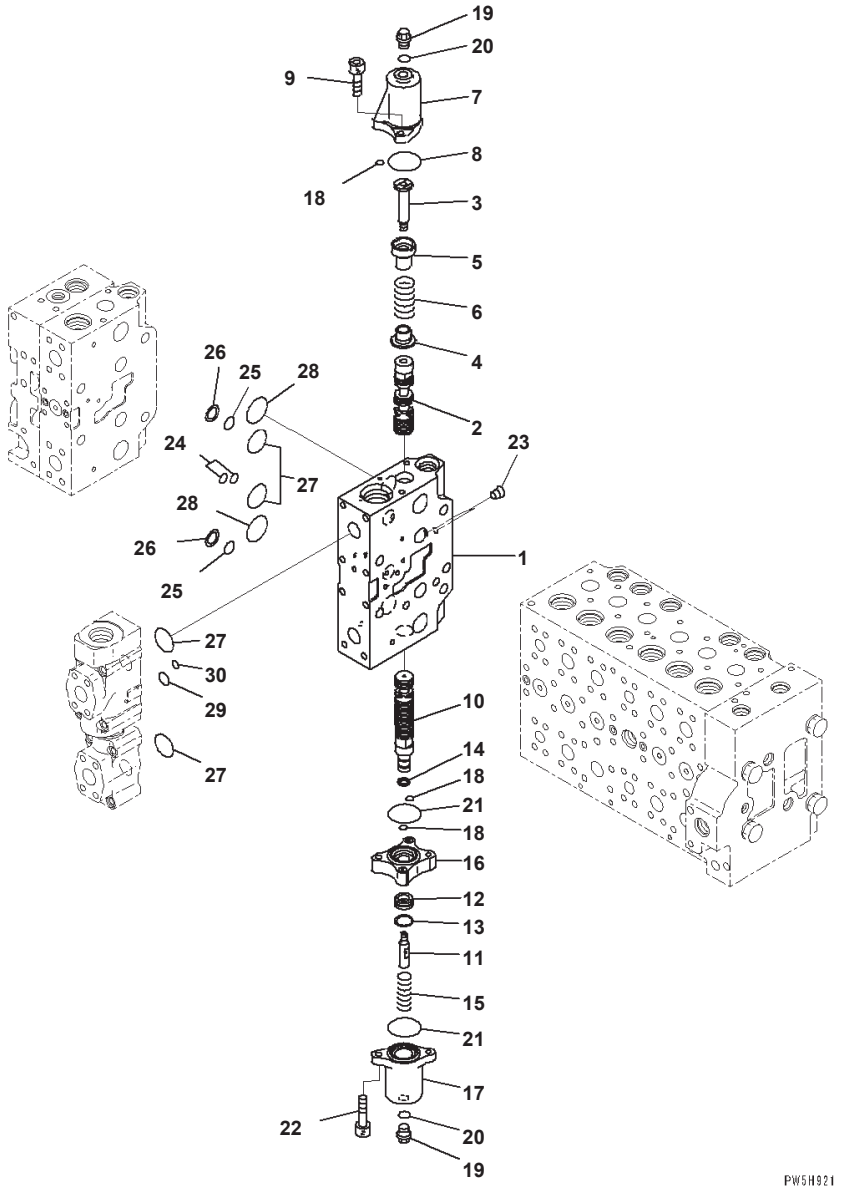

Main Control Valve, 1-actuator, Piping Less, Inner Parts (15/24) (#B10172-)

Index	Code	Part Number	Description	Qty	Options
		723-48-26604	Valve Assembly, Control	1	SN:B10402--
	A2	723-48-26603	Valve Assembly, Control	1	SN:B10380--B10401
	A2	723-48-26602	Valve Assembly, Control	1	SN:B10335--B10379
	C1	723-48-26601	Valve Assembly, Control	1	SN:B10172--B10334
	C1		・ Body Subassembly	1	SN:B10172--
1	C1		・・ Valve Body	1	SN:B10172--
2	C1		・・ Spool	1	SN:B10172--
3		723-46-15390	・・ Plug	1	SN:B10172--
4		723-46-15370	・・ Retainer	1	SN:B10172--
5		723-46-15380	・・ Retainer	1	SN:B10172--
6		723-46-14110	・・ Spring	1	SN:B10172--
7		723-46-17840	・・ Case	1	SN:B10172--
8		07430-71380	・・ O-ring	1	SN:B10172--
9		01252-60820	・・ Bolt	2	SN:B10172--
10	C1		・・ Spool	1	SN:B10172--
11		723-46-15330	・・ Bolt	1	SN:B10172--
12	C1		・・ Piston	1	SN:B10172--
13	C1		・・ Seal	1	SN:B10172--
14	C1		・・ Seal	1	SN:B10172--
15		723-46-14180	・・ Spring	1	SN:B10172--
16		723-46-17850	・・ Case	1	SN:B10172--
17		723-46-17860	・・ Case	1	SN:B10172--
18		723-11-19960	・・ O-ring	3	SN:B10172--
19		706-73-71450	・・ Plug	2	SN:B10172--
20		07002-11423	・・ O-ring	2	SN:B10172--
21		07430-71380	・・ O-ring	2	SN:B10172--
22		01252-60845	・・ Bolt, Hexagon Socket Head	2	SN:B10172--
23	C1		・・ Plug	2	SN:B10172--
24		723-46-17530	・・ O-ring	2	SN:B10172--
25		723-11-19130	・・ O-ring	2	SN:B10172--
26		723-46-17520	・・ Ring, Back-up	2	SN:B10172--
27		07000-13032	・・ O-ring	4	SN:B10172--
28		723-46-17510	・・ O-ring	2	SN:B10172--
29		07000-12016	・・ O-ring	1	SN:B10172--
30		702-16-53920	・・ O-ring	1	SN:B10172--

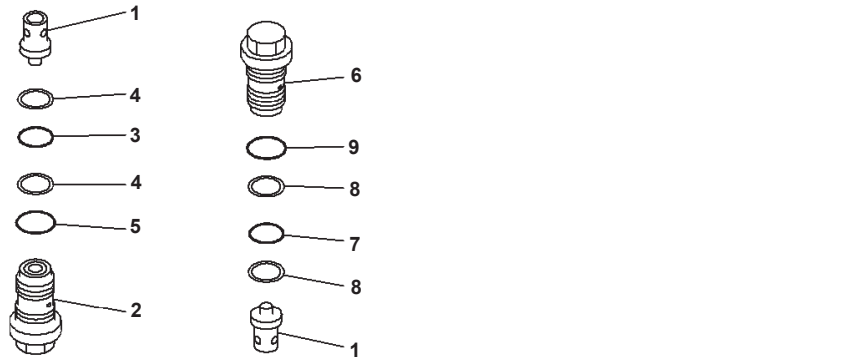

Main Control Valve, 1-actuator, Piping Less, Inner Parts (16/24) (#B10172-)

Index	Code	Part Number	Description	Qty	Options
		723-48-26604	Valve Assembly, Control	1	SN:B10402--
	A2	723-48-26603	Valve Assembly, Control	1	SN:B10380--B10401
	A2	723-48-26602	Valve Assembly, Control	1	SN:B10335--B10379
	C1	723-48-26601	Valve Assembly, Control	1	SN:B10172--B10334
	C1		・ Body Subassembly	1	SN:B10172--
1		723-46-41210	・・ Valve	2	SN:B10172--
2		723-46-40601	・・ Valve Assembly	1	SN:B10172--
3		700-93-11320	・・・ O-ring	1	SN:B10172--
4		723-46-41950	・・・ Ring	2	SN:B10172--
5		07002-13634	・・・ O-ring	1	SN:B10172--
6		723-46-44600	・・ Valve Assembly	1	SN:B10380--
	A2	723-46-47500	・・ Valve Assembly	1	SN:B10172--B10379
7		700-93-11320	・・・ O-ring	1	SN:B10172--
8		723-46-41950	・・・ Ring	2	SN:B10172--
9		07002-13634	・・・ O-ring	1	SN:B10172--

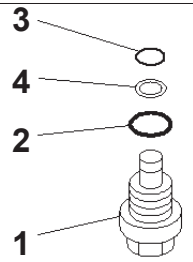

A 詳 細
Detail A

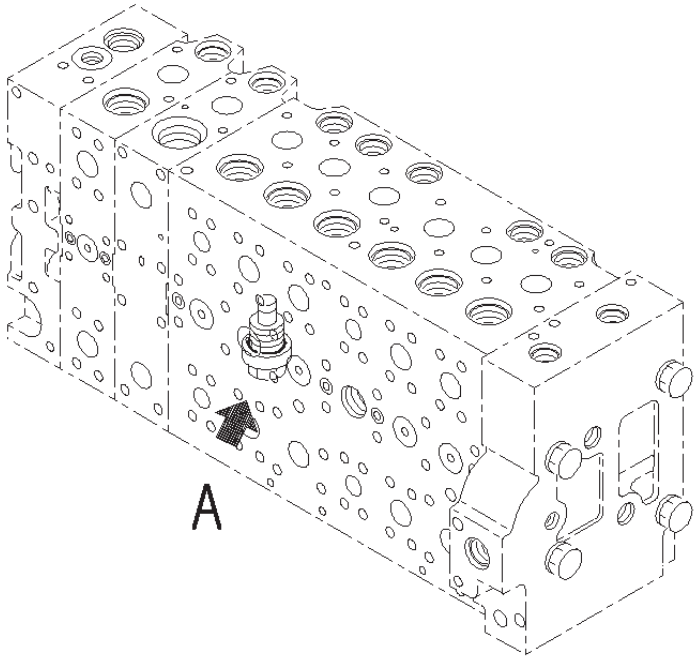

JY002726

Main Control Valve, 1-actuator, Piping Less, Inner Parts (17/24) (#B10172-)

Index	Code	Part Number	Description	Qty	Options
		723-48-26604	Valve Assembly, Control	1	SN:B10402--
	A2	723-48-26603	Valve Assembly, Control	1	SN:B10380--B10401
	A2	723-48-26602	Valve Assembly, Control	1	SN:B10335--
	C1	723-48-26601	Valve Assembly, Control	1	SN:B10172--B10334
	C1		・ Body Subassembly	1	SN:B10380--
	C1		・ Body Subassembly	1	SN:B10172--B10379
1		709-74-91510	・・ Plug	1	SN:B10172--
2		07000-13024	・・ O-ring	1	SN:B10172--
3		07000-11009	・・ O-ring	1	SN:B10172--
4		07001-01009	・・ Ring, Back-up	1	SN:B10172--

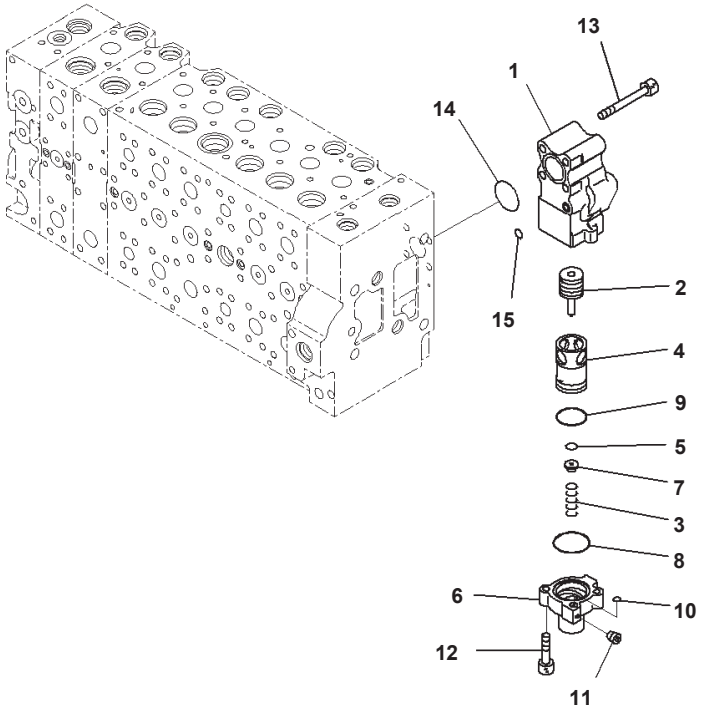

Main Control Valve, 1-actuator, Piping Less, Inner Parts (18/24) (#B10172-)

Index	Code	Part Number	Description	Qty	Options
		723-48-26604	Valve Assembly, Control	1	SN:B10402--
	A2	723-48-26603	Valve Assembly, Control	1	SN:B10380--B10401
	A2	723-48-26602	Valve Assembly, Control	1	SN:B10335--B10379
	C1	723-48-26601	Valve Assembly, Control	1	SN:B10172--B10334
		723-40-87100	・ Valve Assembly	1	SN:B10172--
1		723-40-87110	・・ Body	1	SN:B10172--
2		723-40-87140	・・ Spool	1	SN:B10172--
3		723-40-87160	・・ Spring	1	SN:B10172--
4	C1		・・ Sleeve	1	SN:B10172--
5	C1		・・ Seal	1	SN:B10172--
6	C1		・・ Case	1	SN:B10172--
7		723-40-87150	・・ Retainer	1	SN:B10172--
8		723-40-87170	・・ O-ring	1	SN:B10172--
9		07000-13035	・・ O-ring	1	SN:B10172--
10		07000-11007	・・ O-ring	1	SN:B10172--
11	C1		・・ Screw	1	SN:B10172--
12		01252-60830	・・ Bolt	2	SN:B10172--
13		01252-61075	・ Bolt, Hexagon Socket Head	4	SN:B10172--
14		07000-13038	・ O-ring	1	SN:B10172--
15		07000-11010	・ O-ring	1	SN:B10172--

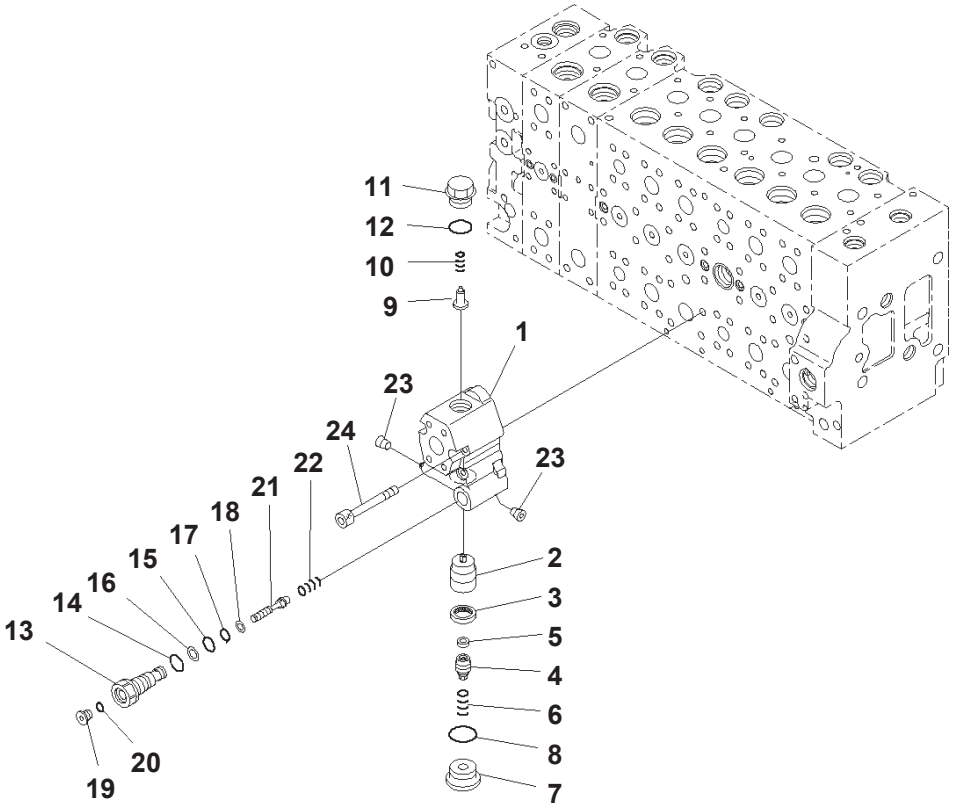

Main Control Valve, 1-actuator, Piping Less, Inner Parts (19/24) (#B10172-)

Index	Code	Part Number	Description	Qty	Options
		723-48-26604	Valve Assembly, Control	1	SN:B10402--
	A2	723-48-26603	Valve Assembly, Control	1	SN:B10380--B10401
	A2	723-48-26602	Valve Assembly, Control	1	SN:B10335--B10379
	C1	723-48-26601	Valve Assembly, Control	1	SN:B10172--B10334
		723-40-82401	・ Valve Assembly	1	SN:B10172--
1		723-40-82411	・・ Body	1	SN:B10335--
	C1	723-40-82410	・・ Body	1	SN:B10172--B10334
2		723-40-82120	・・ Valve	1	SN:B10172--
3		723-40-82130	・・ Seal	1	SN:B10172--
4		723-40-82210	・・ Plug	1	SN:B10172--
5		723-40-82220	・・ Filter	1	SN:B10172--
6		723-40-82140	・・ Spring	1	SN:B10172--
7		723-40-82150	・・ Plug	1	SN:B10172--
8		07002-13334	・・ O-ring	1	SN:B10172--
9		723-40-84420	・・ Valve, Check	1	SN:B10172--
10		723-40-84430	・・ Spring	1	SN:B10172--
11		723-40-84441	・・ Plug	1	SN:B10335--
	C1	723-40-84440	・・ Plug	1	SN:B10172--B10334
12		07000-13024	・・ O-ring	1	SN:B10172--
13		723-40-82310	・・ Plug	1	SN:B10172--
14		07002-11823	・・ O-ring	1	SN:B10172--
15		07000-12011	・・ O-ring	1	SN:B10172--
16		07001-02011	・・ Ring, Back-up	1	SN:B10172--
17		07000-11010	・・ O-ring	1	SN:B10172--
18		07001-01010	・・ Ring, Back-up	1	SN:B10172--
19		723-11-18190	・・ Plug	1	SN:B10172--
20		07002-11023	・・ O-ring	1	SN:B10172--
21		723-40-82280	・・ Piston	1	SN:B10172--
22		723-40-82290	・・ Spring	1	SN:B10172--
23		708-1S-19810	・・ Plug	2	SN:B10172--
24		01252-61075	・ Bolt, Hexagon Socket Head	4	SN:B10172--

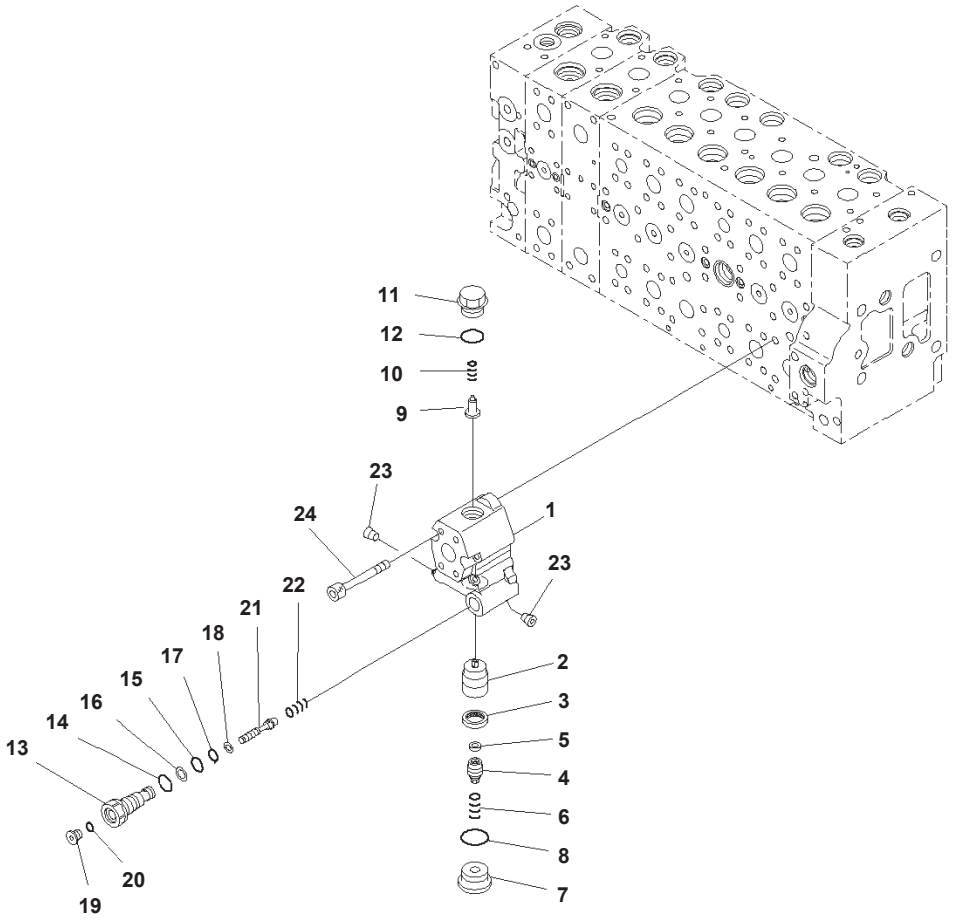

Main Control Valve, 1-actuator, Piping Less, Inner Parts (20/24) (#B10172-)

Index	Code	Part Number	Description	Qty	Options
		723-48-26604	Valve Assembly, Control	1	SN:B10402--
	A2	723-48-26603	Valve Assembly, Control	1	SN:B10380--B10401
	A2	723-48-26602	Valve Assembly, Control	1	SN:B10335--B10379
	A2	723-48-26601	Valve Assembly, Control	1	SN:B10172--B10334
		723-40-82902	・ Valve Assembly	1	SN:B10335--
	A2	723-40-82901	・ Valve Assembly	1	SN:B10172--B10334
1		723-40-82422	・・ Body	1	SN:B10335--
	A2	723-40-82420	・・ Body	1	SN:B10172--B10334
2		723-40-82120	・・ Valve	1	SN:B10172--
3		723-40-82130	・・ Seal	1	SN:B10172--
4		723-40-82210	・・ Plug	1	SN:B10172--
5		723-40-82220	・・ Filter	1	SN:B10172--
6		723-40-82140	・・ Spring	1	SN:B10172--
7		723-40-82150	・・ Plug	1	SN:B10172--
8		07002-13334	・・ O-ring	1	SN:B10172--
9		723-40-84420	・・ Valve, Check	1	SN:B10172--
10		723-40-84430	・・ Spring	1	SN:B10172--
11		723-40-84441	・・ Plug	1	SN:B10335---
	A2	723-40-84440	・・ Plug	1	SN:B10172--B10334
12		07000-13024	・・ O-ring	1	SN:B10172--
13		723-40-82310	・・ Plug	1	SN:B10172--
14		07002-11823	・・ O-ring	1	SN:B10172--
15		07000-12011	・・ O-ring	1	SN:B10172--
16		07001-02011	・・ Ring, Back-up	1	SN:B10172--
17		07000-11010	・・ O-ring	1	SN:B10172--
18		07001-01010	・・ Ring, Back-up	1	SN:B10172--
19		723-11-18190	・・ Plug	1	SN:B10172--
20		07002-11023	・・ O-ring	1	SN:B10172--
21		723-40-82280	・・ Piston	1	SN:B10172--
22		723-40-82290	・・ Spring	1	SN:B10172--
23		708-15-19810	・・ Screw	2	SN:B10172--
24		01252-61075	・ Bolt, Hexagon Socket Head	4	SN:B10172--

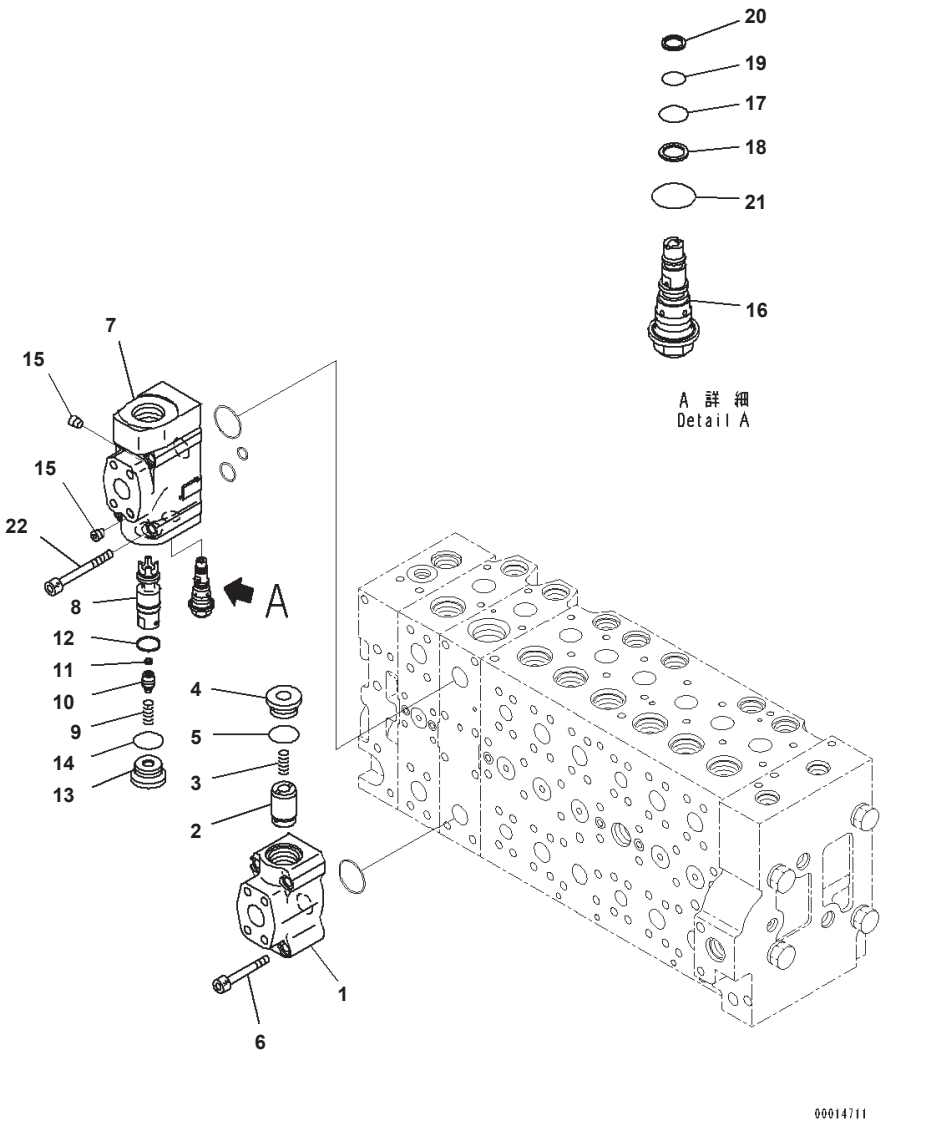

Main Control Valve, 1-actuator, Piping Less, Inner Parts (21/24) (#B10172-)

Index	Code	Part Number	Description	Qty	Options
		723-48-26604	Valve Assembly, Control	1	SN:B10402--
	A2	723-48-26603	Valve Assembly, Control	1	SN:B10380--B10401
	A2	723-48-26602	Valve Assembly, Control	1	SN:B10335--B10379
	C1	723-48-26601	Valve Assembly, Control	1	SN:B10172--B10334
		723-40-84100	・ Valve Assembly	1	SN:B10172--
1	C1		・・ Body	1	SN:B10172--
2	C1		・・ Valve	1	SN:B10172--
3		723-40-82140	・・ Spring	1	SN:B10172--
4		723-40-84130	・・ Plug	1	SN:B10172--
5		07002-13034	・・ O-ring	1	SN:B10172--
6		01252-61065	・ Bolt, Hexagon Socket Head	4	SN:B10172--
		723-40-84200	・ Valve Assembly	1	SN:B10172--
7	C1		・・ Body	1	SN:B10172--
8	C1		・・ Valve	1	SN:B10172--
9		723-40-82140	・・ Spring	1	SN:B10172--
10		723-40-84230	・・ Plug	1	SN:B10172--
11		723-40-82220	・・ Filter	1	SN:B10172--
12		723-46-15350	・・ Seal	1	SN:B10172--
13		723-40-84130	・・ Plug	1	SN:B10172--
14		07002-13034	・・ O-ring	1	SN:B10172--
15		708-21-12541	・・ Plug	2	SN:B10172--
16		723-40-92900	・・ Valve Assembly	1	SN:B10172--
17		07000-12012	・・・ O-ring	1	SN:B10172--
18		07001-02012	・・・ Ring, Back-up	1	SN:B10172--
19		07000-11010	・・・ O-ring	1	SN:B10172--
20		07001-01010	・・・ Ring, Back-up	1	SN:B10172--
21		07002-12034	・・・ O-ring	1	SN:B10172--
22		723-46-18770	・ Bolt	4	SN:B10172--

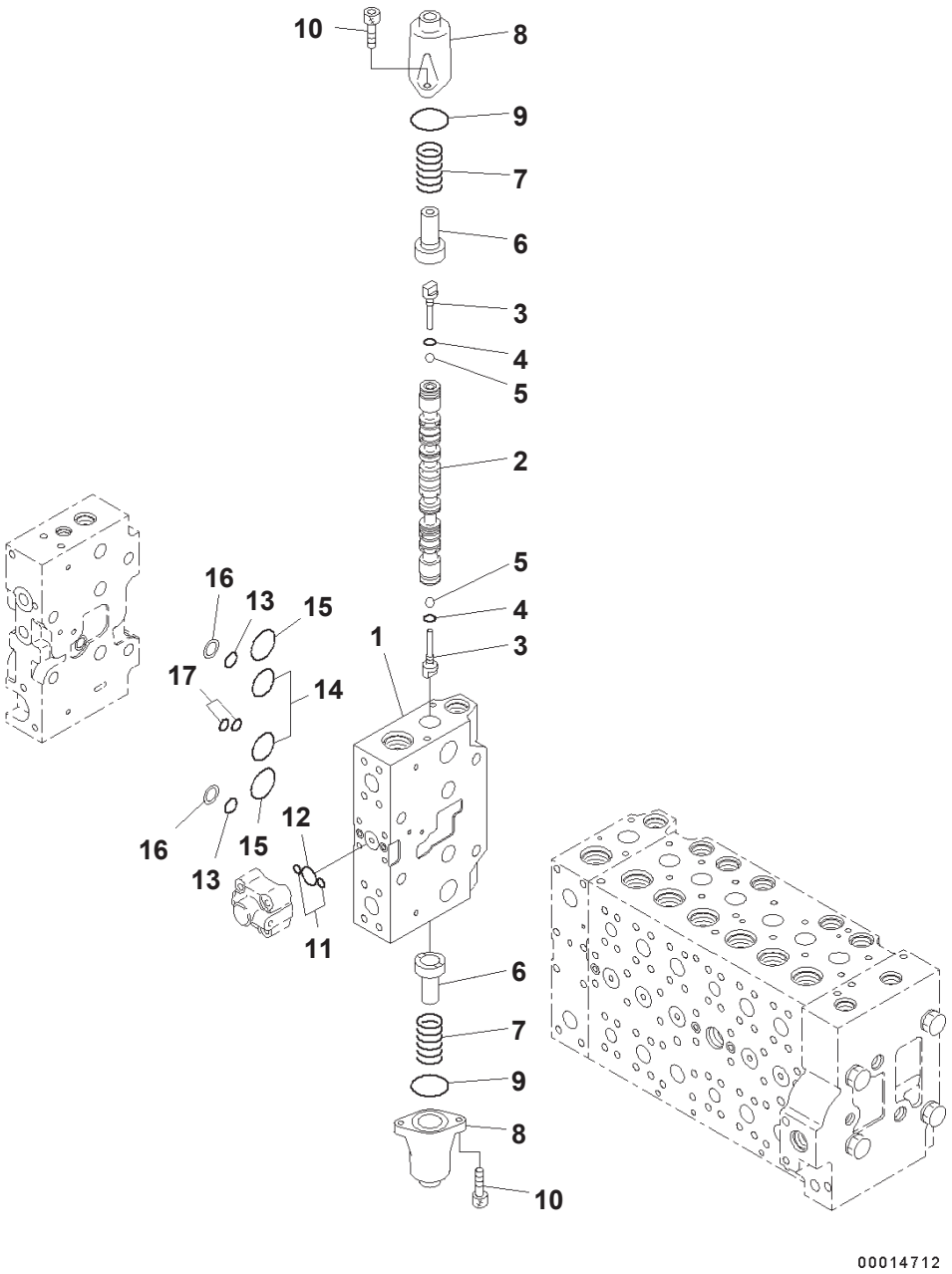

Main Control Valve, 1-actuator, Piping Less, Inner Parts (22/24) (#B10172-)

Index	Code	Part Number	Description	Qty	Options
		723-48-26604	Valve Assembly, Control	1	SN:B10402--
	A2	723-48-26603	Valve Assembly, Control	1	SN:B10380--B10401
	A2	723-48-26602	Valve Assembly, Control	1	SN:B10335--B10379
	C1	723-48-26601	Valve Assembly, Control	1	SN:B10172--B10334
	C1		・Body Subassembly	1	SN:B10172--
1	C1		・・Block	1	SN:B10172--
2	C1		・・Spool	1	SN:B10172--
3		723-46-15130	・・Plug	2	SN:B10172--
4		07002-10823	・・O-ring	2	SN:B10172--
5		708-7T-16460	・・Ball	2	SN:B10172--
6		723-46-15120	・・Retainer	2	SN:B10172--
7		723-46-14110	・・Spring	2	SN:B10172--
8		723-46-15111	・・Case	2	SN:B10172--
9		07430-71380	・・O-ring	2	SN:B10172--
10		01252-60820	・・Bolt	4	SN:B10172--
11		07000-11009	・・O-ring	2	SN:B10172--
12		07000-12021	・・O-ring	1	SN:B10172--
13		723-11-19130	・・O-ring	2	SN:B10172--
14		07000-13032	・・O-ring	2	SN:B10172--
15		723-46-17510	・・O-ring	2	SN:B10172--
16		723-46-17520	・・Ring, Back-up	2	SN:B10172--
17		723-46-17530	・・O-ring	2	SN:B10172--

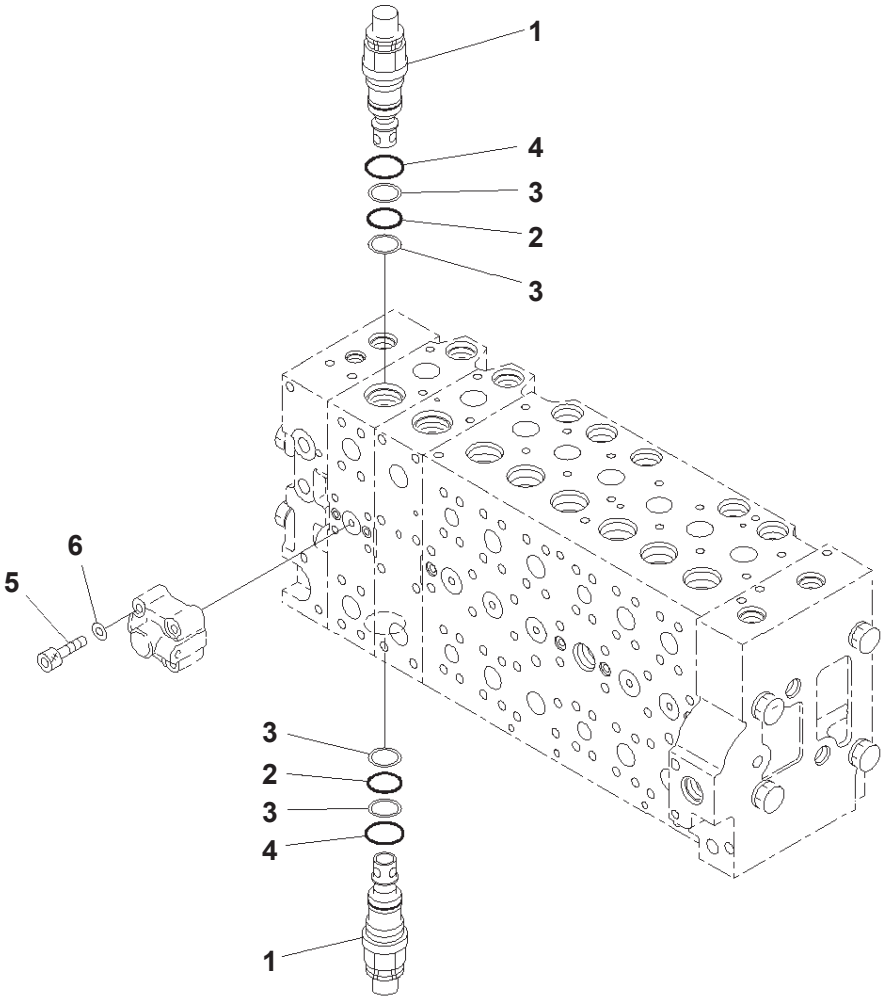

Main Control Valve, 1-actuator, Piping Less, Inner Parts (23/24) (#B10172-)

Index	Code	Part Number	Description	Qty	Options
		723-48-26604	Valve Assembly, Control	1	SN:B10402--
	A2	723-48-26603	Valve Assembly, Control	1	SN:B10380--B10401
	A2	723-48-26602	Valve Assembly, Control	1	SN:B10335--B10379
	C1	723-48-26601	Valve Assembly, Control	1	SN:B10172--B10334
	C1		・ Body Subassembly	1	SN:B10172--
1		723-46-48100	・・ Valve Assembly	2	SN:B10172--
2		700-93-11320	・・・ O-ring	1	SN:B10172--
3		723-46-41950	・・・ Ring	2	SN:B10172--
4		07002-13634	・・・ O-ring	1	SN:B10172--
5		01252-60845	・・ Bolt, Hexagon Socket Head	4	SN:B10172--
6		01643-50823	・・ Washer	4	SN:B10172--

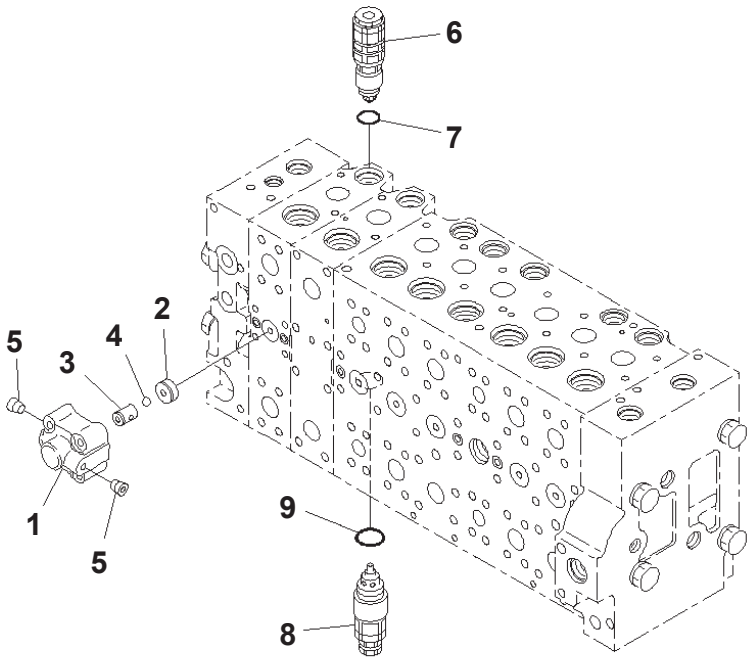

00014714

Main Control Valve, 1-actuator, Piping Less, Inner Parts (24/24) (#B10172-)

Index	Code	Part Number	Description	Qty	Options
		723-48-26604	Valve Assembly, Control	1	SN:B10402---
	A2	723-48-26603	Valve Assembly, Control	1	SN:B10380--B10401
	A2	723-48-26602	Valve Assembly, Control	1	SN:B10335--B10379
	C1	723-48-26601	Valve Assembly, Control	1	SN:B10172--B10334
		723-40-66300	・Valve Assembly	2	SN:B10172--
1	C1		・・Case	1	SN:B10172--
2	C1		・・Seat	1	SN:B10172--
3	C1		・・Seat	1	SN:B10172--
4	C1		・・Ball	1	SN:B10172--
5	C1		・・Plug	2	SN:B10172--
6		723-90-76300	・Valve Assembly, Suction and Relief, Suction and Safety	1	SN:B10380--
	C1	723-90-76501	・Valve Assembly, Suction and Relief, Suction and Safety	1	SN:B10172--B10379
7		07000-13024	・・O-ring	1	SN:B10172--
8		723-40-91300	・Valve Assembly, Suction and Relief, Suction and Safety	3	SN:B10380--
	C1	723-90-61700	・Valve Assembly, Suction and Relief, Suction and Safety	3	SN:B10172--B10379
9		709-25-11390	・・O-ring	1	SN:B10380--
	C1	07000-13024	・・O-ring	1	SN:B10172--B10379

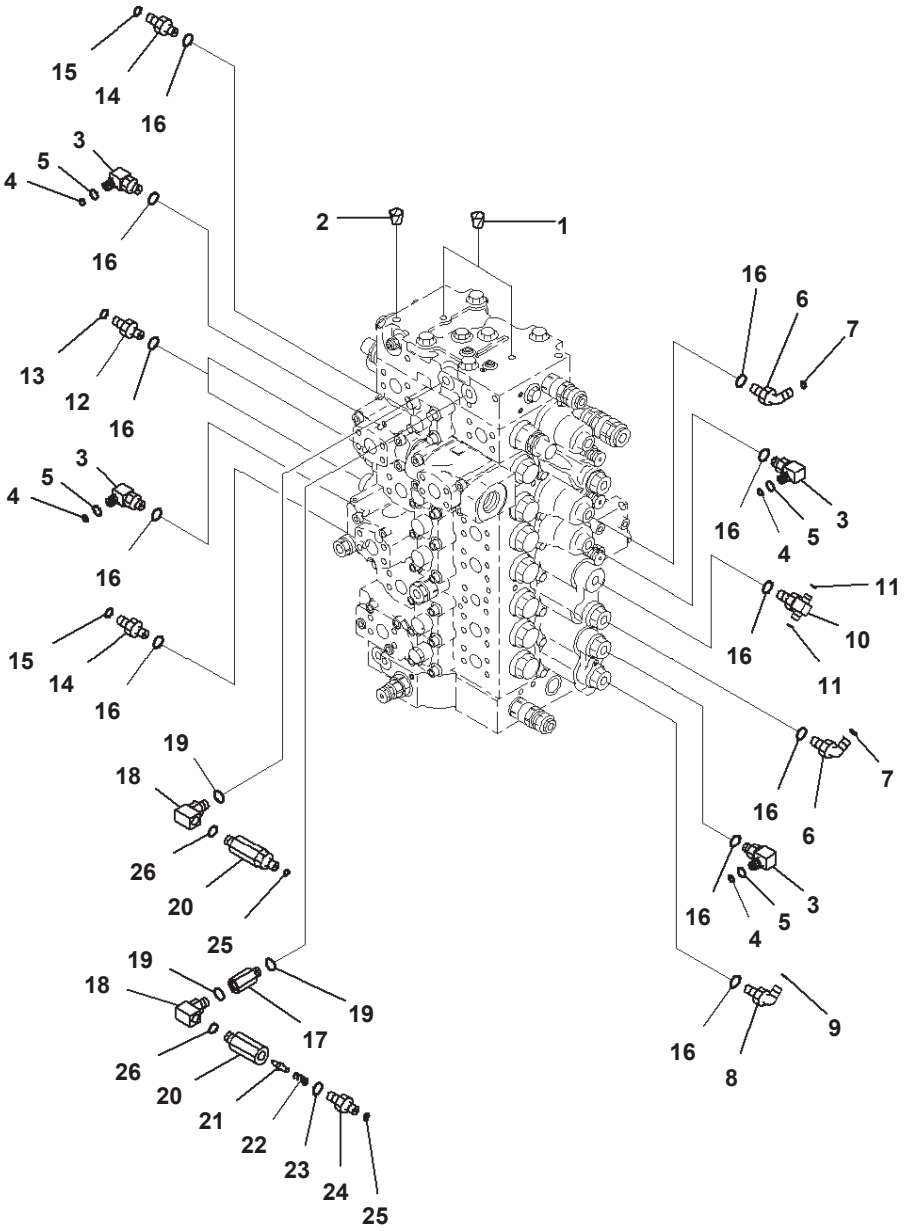

JH001515

Main Control Valve, 1-actuator, Piping Less, Control Valve Related Parts (1/2) (#B10172-)

Index	Code	Part Number	Description	Qty	Options
1		07049-01012	Plug	2	SN:B10172--
2		07049-01215	Plug	1	SN:B10172--
3		22U-62-22480	Elbow	4	SN:B10172--
4		201-60-11390	・ O-ring	1	SN:B10172--
5		20Y-62-19560	・ O-ring	1	SN:B10172--
6		11Y-62-12160	Elbow	2	SN:B10172--
7		02896-11008	O-ring	2	SN:B10172--
8		21W-62-42490	Elbow	1	SN:B10172--
9		02896-11009	O-ring	1	SN:B10172--
10		11Y-62-12250	Tee	1	SN:B10172--
11		02896-11008	O-ring	2	SN:B10172--
12		11Y-62-12130	Nipple	2	SN:B10172--
13		02896-11008	O-ring	2	SN:B10172--
14		11Y-62-12520	Nipple	2	SN:B10172--
15		02896-11009	O-ring	2	SN:B10172--
16		07002-11423	O-ring	12	SN:B10172--
17		20Y-62-22160	Adapter	1	SN:B10172--
18		20Y-62-23541	Elbow	2	SN:B10172--
19		07002-11423	O-ring	3	SN:B10172--
		20Y-62-41701	Valve Assembly	2	SN:B10172--
20	C1		・ Body	1	SN:B10172--
21		20Y-60-22270	・ Poppet	1	SN:B10172--
22		701-20-61230	・ Spring	1	SN:B10172--
23		07002-11423	・ O-ring	1	SN:B10172--
24		20Y-62-47630	・ Nipple	1	SN:B10172--
25		02896-11008	O-ring	2	SN:B10172--
26		07002-11423	O-ring	2	SN:B10172--

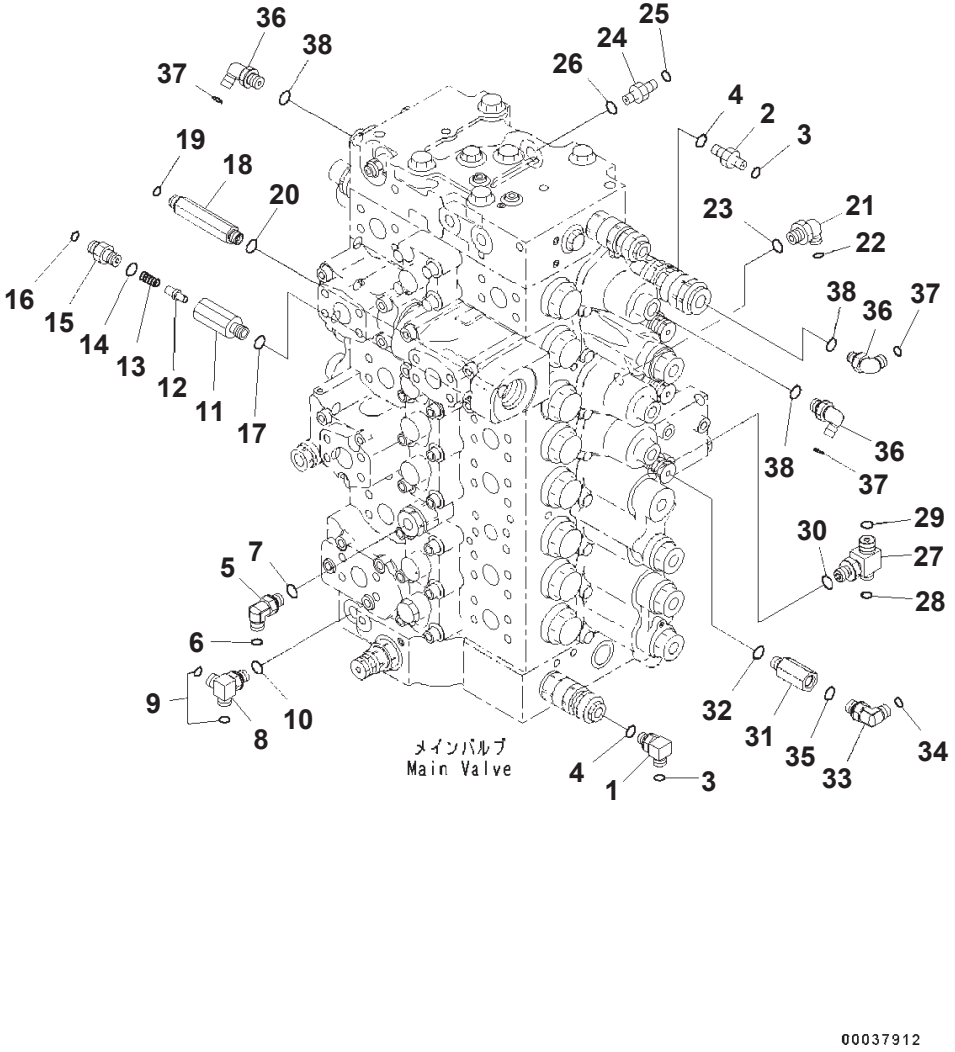

Main Control Valve, 1-actuator, Piping Less, Control Valve Related Parts (2/2) (#B10172-)

Index	Code	Part Number	Description	Qty	Options
1		20Y-62-41920	Elbow	1	SN:B10172--
2		208-62-71540	Nipple	1	SN:B10172--
3		02896-11008	O-ring	2	SN:B10172--
4		07002-11223	O-ring	2	SN:B10172--
5		11Y-62-12160	Elbow	1	SN:B10172--
6		02896-11008	O-ring	1	SN:B10172--
7		07002-11423	O-ring	1	SN:B10172--
8		207-62-72141	Elbow	1	SN:B10172--
9		02896-11008	O-ring	2	SN:B10172--
10		07002-11423	O-ring	1	SN:B10172--
		20Y-62-41701	Valve Assembly	1	SN:B10172--
11	C1		・ Body	1	SN:B10172--
12		20Y-60-22270	・ Poppet	1	SN:B10172--
13		701-20-61230	・ Spring	1	SN:B10172--
14		07002-11423	・ O-ring	1	SN:B10172--
15		20Y-62-47630	・ Nipple	1	SN:B10172--
16		02896-11008	O-ring	1	SN:B10172--
17		07002-11423	O-ring	1	SN:B10172--
18		207-62-71531	Union	1	SN:B10172--
19		02896-11008	O-ring	1	SN:B10172--
20		07002-11423	O-ring	1	SN:B10172--
21		11Y-62-12160	Elbow	1	SN:B10172--
22		02896-11008	O-ring	1	SN:B10172--
23		07002-11423	O-ring	1	SN:B10172--
24		22L-62-22590	Nipple	1	SN:B10172--
25		02896-11008	O-ring	1	SN:B10172--
26		07002-11423	O-ring	1	SN:B10172--
27		11Y-62-12820	Tee	1	SN:B10172--
28		02896-11008	O-ring	1	SN:B10172--
29		02896-11009	O-ring	1	SN:B10172--
30		07002-11423	O-ring	1	SN:B10172--
31		20Y-62-22160	Adapter	1	SN:B10172--
32		07002-11423	O-ring	1	SN:B10172--
33		11Y-62-12160	Elbow	1	SN:B10172--
34		02896-11008	O-ring	1	SN:B10172--
35		07002-11423	O-ring	1	SN:B10172--
36		11Y-62-12160	Elbow	3	SN:B10172--
37		02896-11008	O-ring	3	SN:B10172--
38		07002-11423	O-ring	3	SN:B10172--

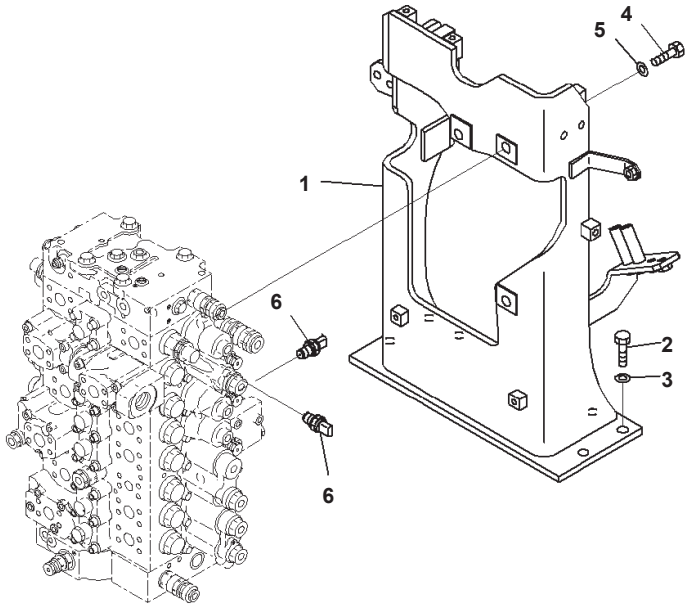

メインバルブ
Main Valve

JH002779

Main Control Valve, 1-actuator, Piping Less, Valve Bracket (#B10172-)

Index	Part Number	Description	Qty	Options
1	207-62-74610	Bracket	1	SN:B10172--
2	01010-81640	Bolt	6	SN:B10172--
3	01643-31645	Washer	6	SN:B10172--
4	01010-81645	Bolt	3	SN:B10172--
5	01643-31645	Washer	3	SN:B10172--
6	7861-93-1812	Sensor, Pressure	2	SN:B10172--

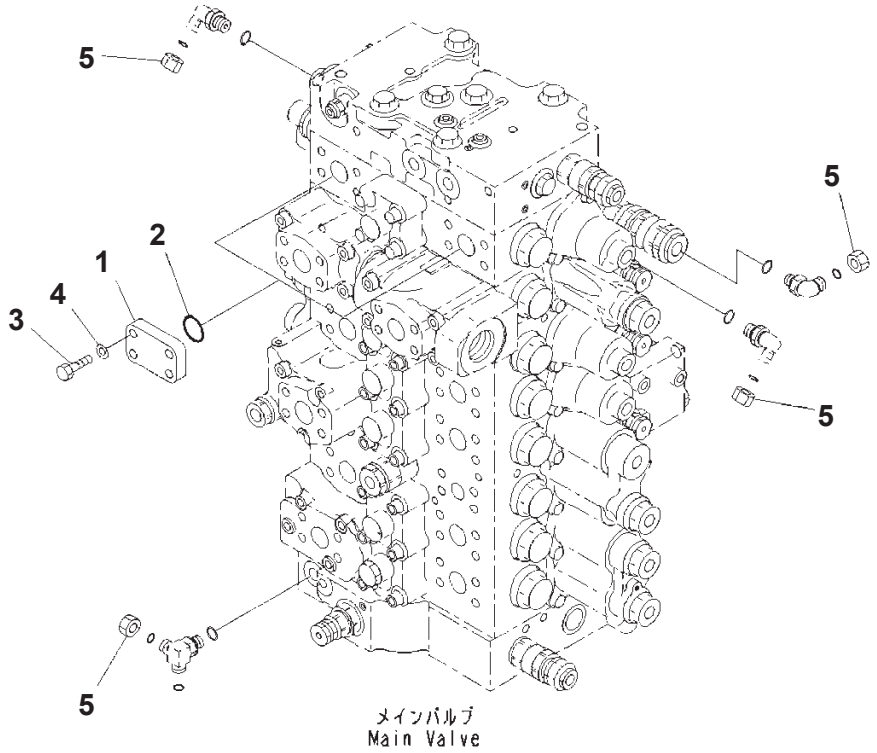

Main Control Valve, 1-actuator, Piping Less, Blind Parts (#B10172-)

Index	Part Number	Description	Qty	Options
1	207-62-56190	Flange	2	SN:B10172--
2	07000-13035	O-ring	2	SN:B10172--
3	07372-21040	Bolt	8	SN:B10172--
4	01643-51032	Washer	8	SN:B10172--
5	02789-00210	Plug, Face Seal Type	4	SN:B10172--

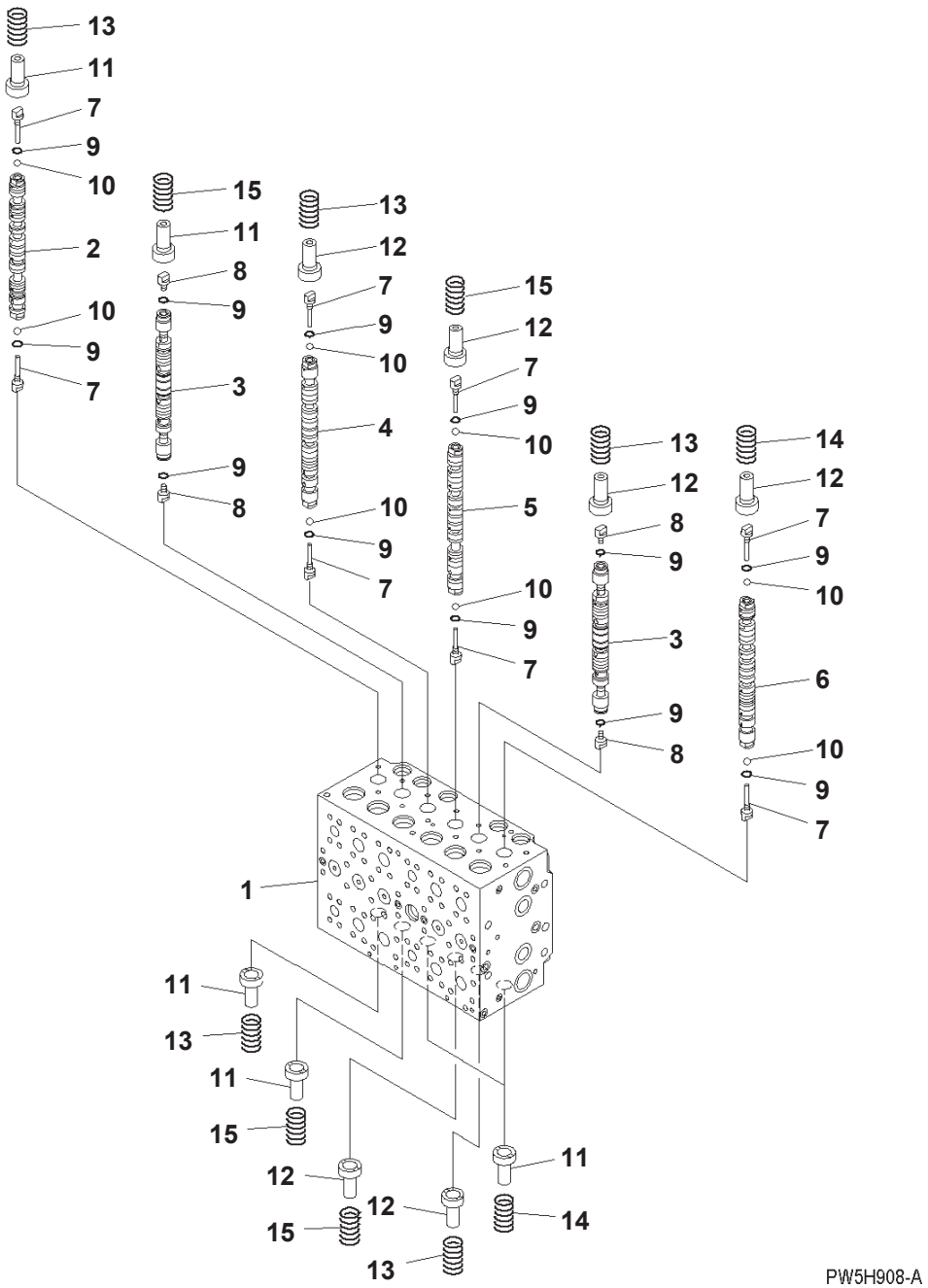

Control Valve, Without 1-additional Actuator Piping, 7-spool, Inner Parts (1/22)

Index	Code	Part Number	Description	Qty	Options
	C1	723-47-26601	Valve Assembly, Control	1	SN:B10333--
	C1	723-47-26600	Valve Assembly, Control	1	SN:B10001--B10332
	C1		・Body Subassembly	1	SN:B10001--
1	C1		・・Block	1	SN:B10001--
2	C1		・・Spool	1	SN:B10001--
3	C1		・・Spool	2	SN:B10001--
4	C1		・・Spool	1	SN:B10001--
5	C1		・・Spool	1	SN:B10001--
6	C1		・・Spool	1	SN:B10001--
7		723-46-15130	・・Plug	8	SN:B10001--
8		723-46-15140	・・Plug	4	SN:B10001--
9		07002-10823	・・O-ring	12	SN:B10001--
10		708-7T-16460	・・Ball	8	SN:B10001--
11		723-46-15120	・・Retainer	6	SN:B10001--
12		723-46-15690	・・Retainer	6	SN:B10001--
13		723-46-14110	・・Spring	5	SN:B10001--
14		723-46-14170	・・Spring	3	SN:B10001--
15		723-46-14131	・・Spring	4	SN:B10001--

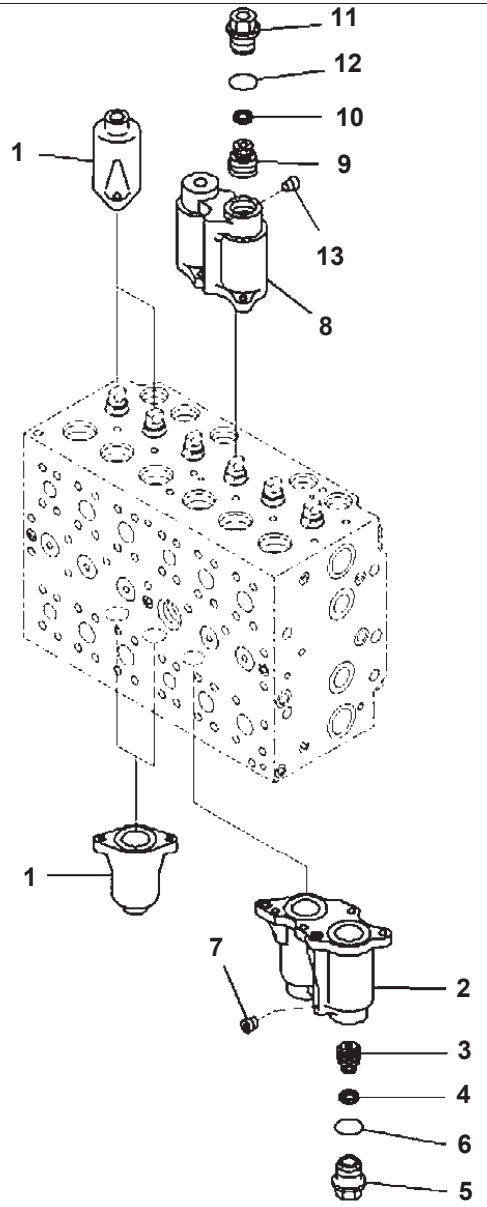

Control Valve, Without 1-additional Actuator Piping, 7-spool, Inner Parts (2/22)

Index	Code	Part Number	Description	Qty	Options
	C1	723-47-26601	Valve Assembly, Control	1	SN:B10333--
	C1	723-47-26600	Valve Assembly, Control	1	SN:B10001--B10332
	C1		・Body Subassembly	1	SN:B10001--
1		723-46-15111	・・Case	4	SN:B10001--
		723-46-18330	・・・Case Subassembly	1	SN:B10001--
2	C1		・・・Case	1	SN:B10001--
3	C1		・・・Piston	1	SN:B10001--
4	C1		・・・Seal	1	SN:B10001--
5		723-46-15630	・・・Plug	1	SN:B10001--
6		07000-13024	・・・O-ring	1	SN:B10001--
7	C1		・・・Plug	1	SN:B10001--
		723-46-18231	・・Case Subassembly	1	SN:B10001--
8	C1		・・・Case	1	SN:B10001--
9	C1		・・・Piston	1	SN:B10001--
10	C1		・・・Seal	1	SN:B10001--
11		723-46-15630	・・・Plug	1	SN:B10001--
12		07000-13024	・・・O-ring	1	SN:B10001--
13	C1		・・・Plug	1	SN:B10001--

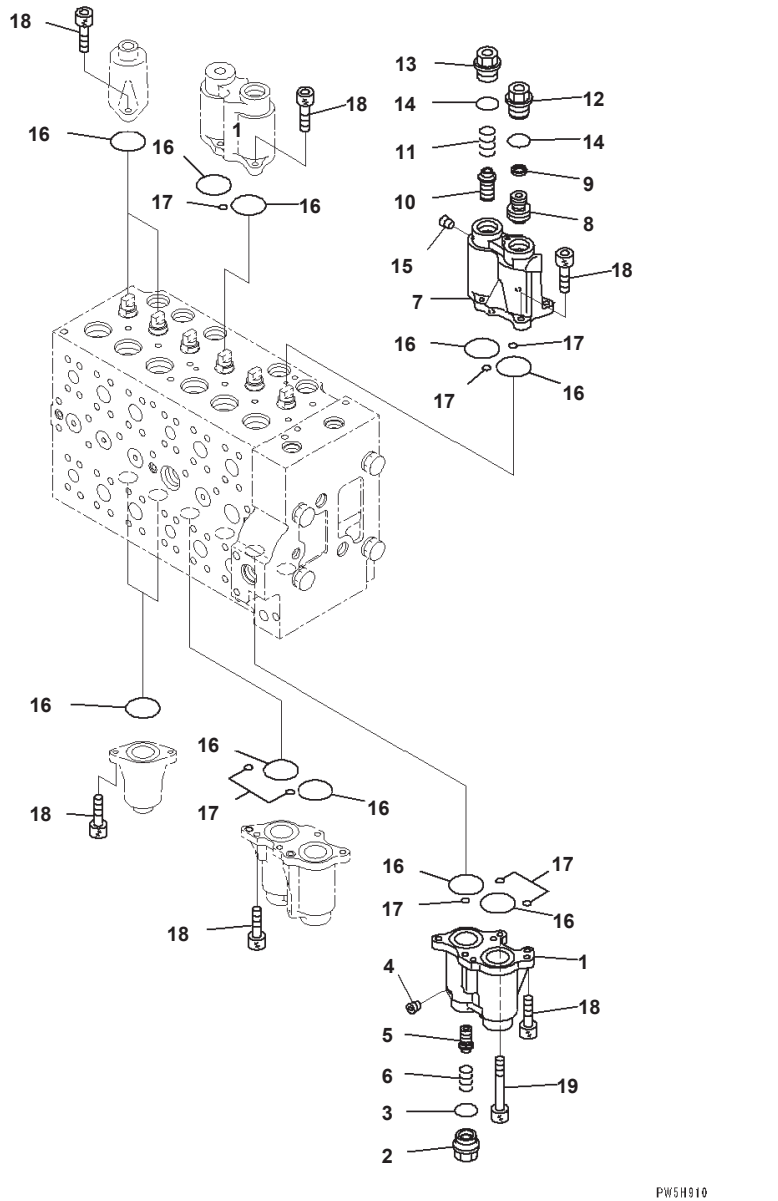

Control Valve, Without 1-additional Actuator Piping, 7-spool, Inner Parts (3/22)

Index	Code	Part Number	Description	Qty	Options
	C1	723-47-26601	Valve Assembly, Control	1	SN:B10333--
	C1	723-47-26600	Valve Assembly, Control	1	SN:B10001--B10332
	C1		・Body Subassembly	1	SN:B10001--
		723-46-18330	・・Case Subassembly	1	SN:B10001--
1	C1		・・・Case	1	SN:B10001--
2		723-46-17340	・・・Plug	1	SN:B10001--
3		07000-13024	・・・O-ring	1	SN:B10001--
4	C1		・・・Plug	1	SN:B10001--
5		723-46-17320	・・・Spool	1	SN:B10001--
6		723-46-17330	・・・Spring	1	SN:B10001--
		723-46-18431	・・Case Subassembly	1	SN:B10001--
7	C1		・・・Case	1	SN:B10001--
8	C1		・・・Piston	1	SN:B10001--
9	C1		・・・Seal	1	SN:B10001--
10		723-46-17320	・・・Spool	1	SN:B10001--
11		723-46-17330	・・・Spring	1	SN:B10001--
12		723-46-15630	・・・Plug	1	SN:B10001--
13		723-46-17340	・・・Plug	1	SN:B10001--
14		07000-13024	・・・O-ring	2	SN:B10001--
15	C1		・・・Plug	3	SN:B10001--
16		07430-71380	・・O-ring	12	SN:B10001--
17		702-16-53920	・・O-ring	8	SN:B10001--
18		01252-60820	・・Bolt	23	SN:B10001--
19		723-46-17350	・・Bolt	1	SN:B10001--

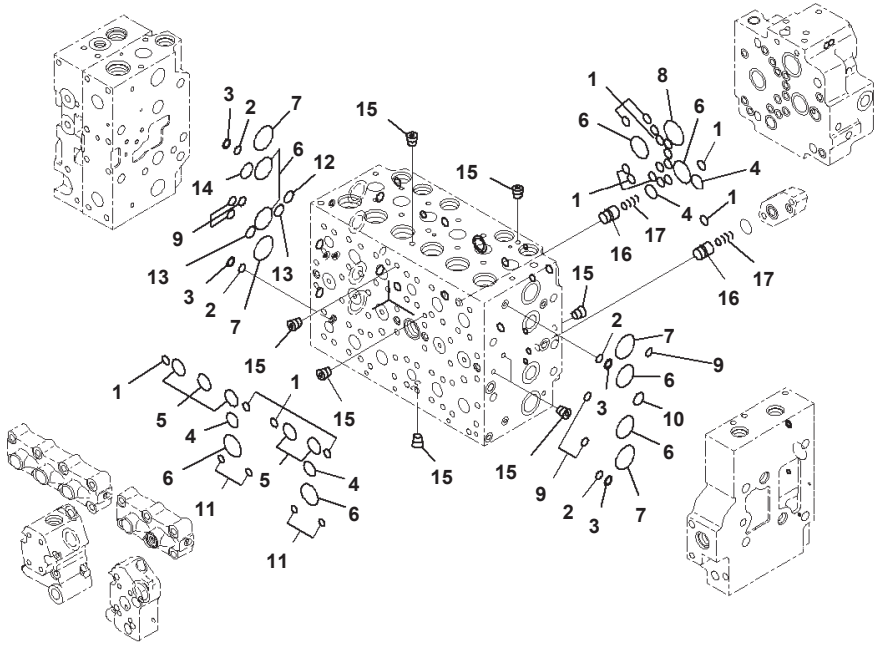

Control Valve, Without 1-additional Actuator Piping, 7-spool, Inner Parts (4/22)

Index	Code	Part Number	Description	Qty	Options
	C1	723-47-26601	Valve Assembly, Control	1	SN:B10333--
	C1	723-47-26600	Valve Assembly, Control	1	SN:B10001--B10332
	C1		・Body Subassembly	1	SN:B10001--
1		07000-12012	・・O-ring	19	SN:B10001--
2		723-11-19130	・・O-ring	4	SN:B10001--
3		723-46-17520	・・Ring, Back-up	4	SN:B10001--
4		07000-12021	・・O-ring	4	SN:B10001--
5		07000-13028	・・O-ring	5	SN:B10001--
6		07000-13032	・・O-ring	8	SN:B10001--
7		723-46-17510	・・O-ring	4	SN:B10001--
8		07000-13036	・・O-ring	1	SN:B10001--
9		723-46-17530	・・O-ring	11	SN:B10001--
10		723-11-18150	・・O-ring	2	SN:B10001--
11		702-16-53920	・・O-ring	4	SN:B10001--
12		723-46-18710	・・O-ring	1	SN:B10001--
13		722-12-19070	・・O-ring	2	SN:B10001--
14		723-46-18720	・・O-ring	1	SN:B10001--
15	C1		・・Plug	14	SN:B10001--
16		723-46-17650	・・Valve	2	SN:B10001--
17		723-46-14150	・・Spring	2	SN:B10001--

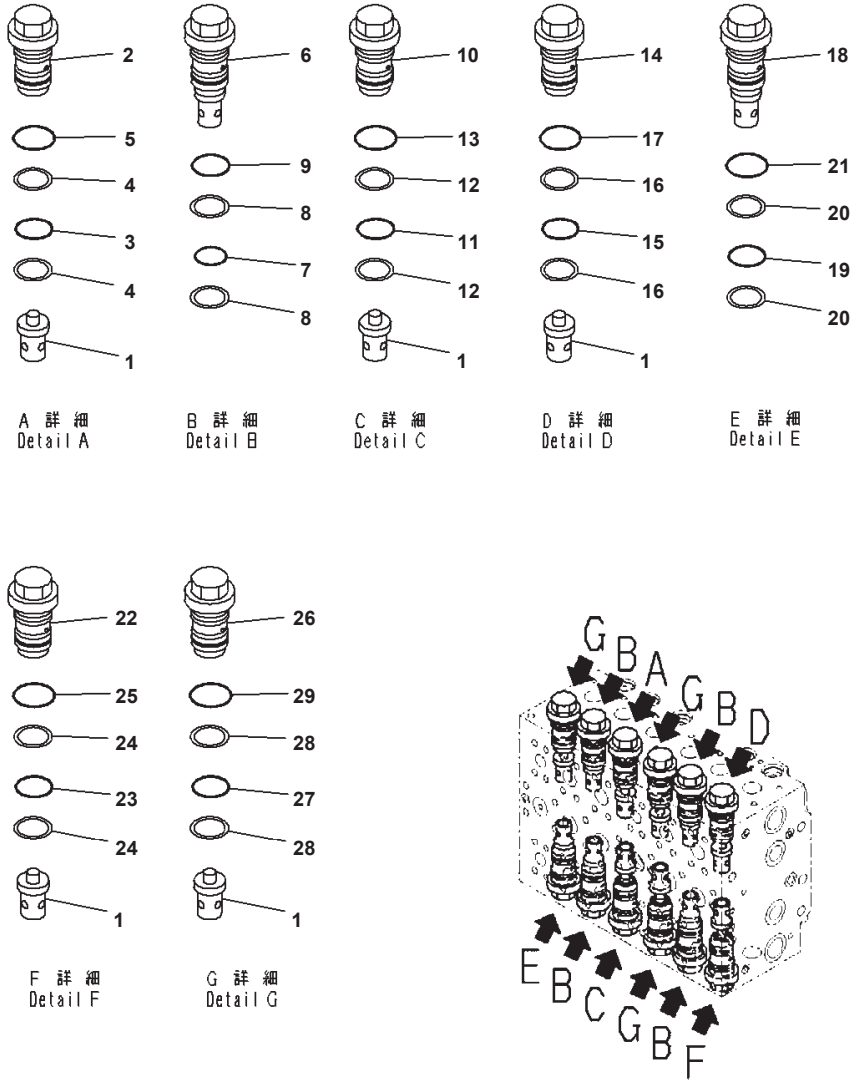

Control Valve, Without 1-additional Actuator Piping, 7-spool, Inner Parts (5/22)

Index	Code	Part Number	Description	Qty	Options
	C1	723-47-26601	Valve Assembly, Control	1	SN:B10333--
	C1	723-47-26600	Valve Assembly, Control	1	SN:B10172---B10332
	C1		・ Body Subassembly	1	SN:B10172---
1		723-46-41210	・・ Valve	7	SN:B10172---
2		723-46-40100	・・ Valve Assembly	1	SN:B10172---
3		700-93-11320	・・・ O-ring	1	SN:B10172---
4		723-46-41950	・・・ Ring, Back-up	2	SN:B10172---
5		07002-13634	・・・ O-ring	1	SN:B10172---
6		723-46-42800	・・ Valve Assembly	4	SN:B10172---
7		700-93-11320	・・・ O-ring	1	SN:B10172---
8		723-46-41950	・・・ Ring, Back-up	2	SN:B10172---
9		07002-13634	・・・ O-ring	1	SN:B10172---
10		723-46-40601	・・ Valve Assembly	1	SN:B10172---
11		700-93-11320	・・・ O-ring	1	SN:B10172---
12		723-46-41950	・・・ Ring, Back-up	2	SN:B10172---
13		07002-13634	・・・ O-ring	1	SN:B10172---
14		723-46-43100	・・ Valve Assembly	1	SN:B10172---
15		700-93-11320	・・・ O-ring	1	SN:B10172---
16		723-46-41950	・・・ Ring, Back-up	2	SN:B10172---
17		07002-13634	・・・ O-ring	1	SN:B10172---
18		723-46-43400	・・ Valve Assembly	1	SN:B10172---
19		700-93-11320	・・・ O-ring	1	SN:B10172---
20		723-46-41950	・・・ Ring, Back-up	2	SN:B10172---
21		07002-13634	・・・ O-ring	1	SN:B10172---
22		723-46-44100	・・ Valve Assembly	1	SN:B10172---
23		700-93-11320	・・・ O-ring	1	SN:B10172---
24		723-46-41950	・・・ Ring, Back-up	2	SN:B10172---
25		07002-13634	・・・ O-ring	1	SN:B10172---
26		723-46-45100	・・ Valve Assembly	3	SN:B10172---
27		700-93-11320	・・・ O-ring	1	SN:B10172---
28		723-46-41950	・・・ Ring, Back-up	2	SN:B10172---
29		07002-13634	・・・ O-ring	1	SN:B10172---

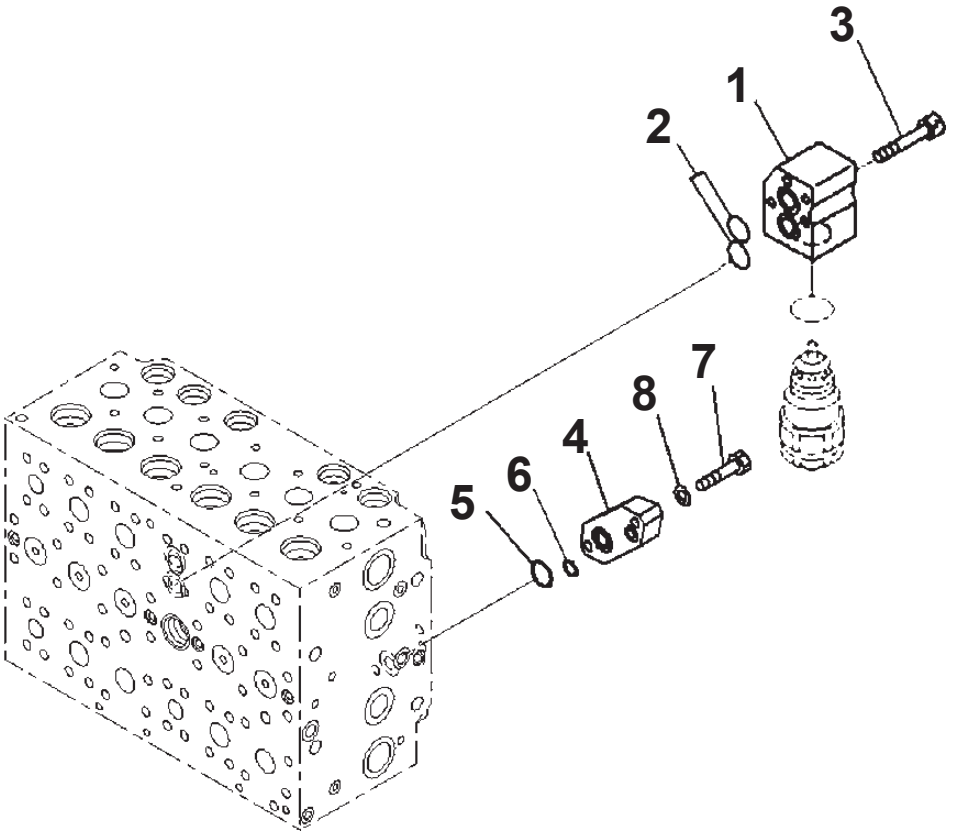

Control Valve, Without 1-additional Actuator Piping, 7-spool, Inner Parts (6/22)

Index	Code	Part Number	Description	Qty	Options
	C1	723-47-26601	Valve Assembly, Control	1	SN:B10333--
	C1	723-47-26600	Valve Assembly, Control	1	SN:B10001--B10332
	C1		・Body Subassembly	1	SN:B10001--
1		723-46-11910	・・Block	1	SN:B10001--
2		723-46-15510	・・O-ring	2	SN:B10001--
3		01252-60865	・・Bolt, Hexagon Socket Head	4	SN:B10001--
4		723-46-18730	・・Plate	1	SN:B10001--
5		07000-12021	・・O-ring	1	SN:B10001--
6		07000-12011	・・O-ring	1	SN:B10001--
7		01010-81040	・・Bolt	2	SN:B10001--
8		01643-51032	・・Washer	2	SN:B10001--

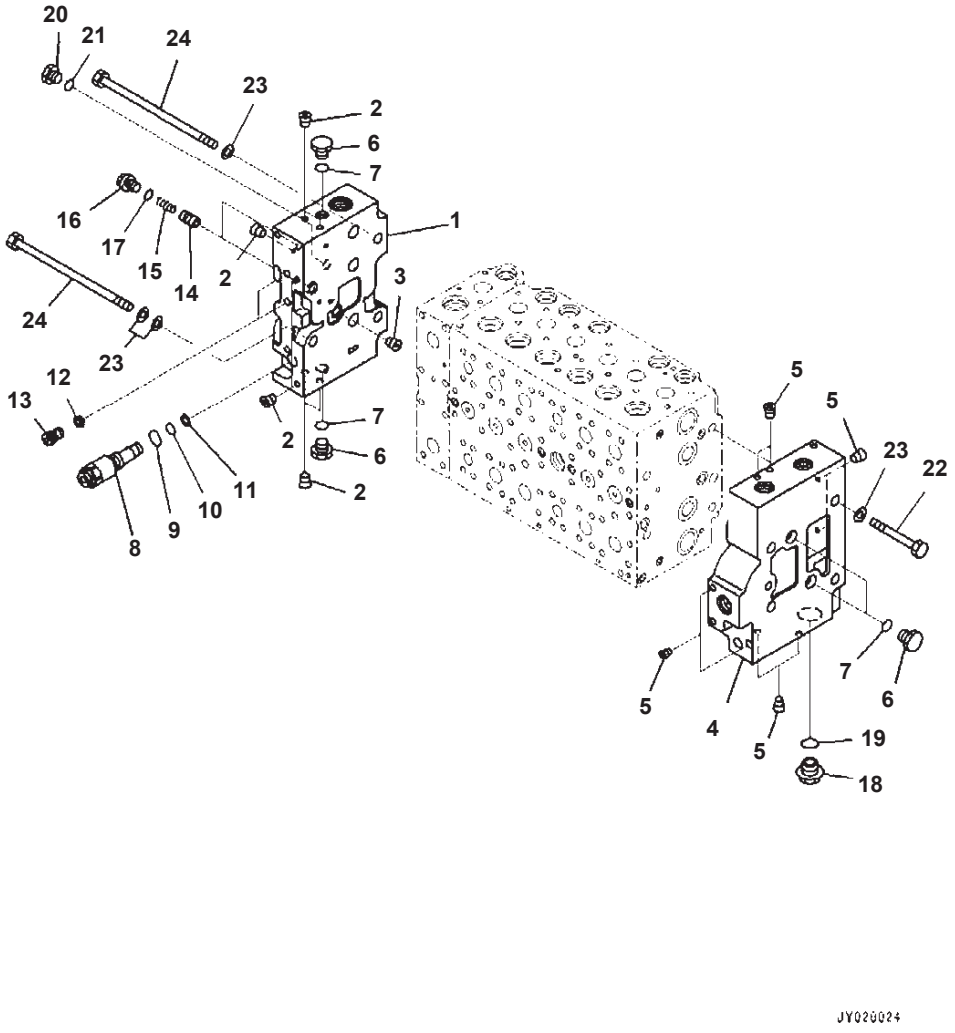

Control Valve, Without 1-additional Actuator Piping, 7-spool, Inner Parts (7/22)

Index	Code	Part Number	Description	Qty	Options
	C1	723-47-26601	Valve Assembly, Control	1	SN:B10333--
	C1	723-47-26600	Valve Assembly, Control	1	SN:B10001--B10332
		723-46-00660	・ Cover Assembly	1	SN:B10001--
1	C1		・・ Cover	1	SN:B10001--
2	C1		・・ Plug	7	SN:B10001--
3	C1		・・ Plug	1	SN:B10001--
		723-46-00742	・ Cover Assembly	1	SN:B10001--
4	C1		・・ Cover	1	SN:B10001--
5	C1		・・ Plug	8	SN:B10001--
6		708-8E-16250	・ Plug	4	SN:B10001--
7		07002-11823	・ O-ring	4	SN:B10001--
8		723-46-17600	・ Plug Assembly	1	SN:B10001--
9		07002-11423	・・ O-ring	1	SN:B10001--
10		07000-11007	・・ O-ring	1	SN:B10001--
11		07001-01007	・・ Ring, Back-up	1	SN:B10001--
12		723-40-82220	・ Filter	2	SN:B10001--
13		723-46-17550	・ Plug	2	SN:B10001--
14		723-46-15190	・ Valve	2	SN:B10001--
15		723-46-14140	・ Spring	2	SN:B10001--
16		708-8E-16160	・ Plug	2	SN:B10001--
17		07002-11023	・ O-ring	2	SN:B10001--
18		709-74-91860	・ Plug	1	SN:B10001--
19		07002-12434	・ O-ring	1	SN:B10001--
20		708-8H-11530	・ Plug	1	SN:B10001--
21		07002-11423	・ O-ring	1	SN:B10001--
22		01010-61490	・ Bolt	4	SN:B10001--
23		01643-31445	・ Washer	10	SN:B10001--
24		01011-61455	・ Bolt	4	SN:B10001--

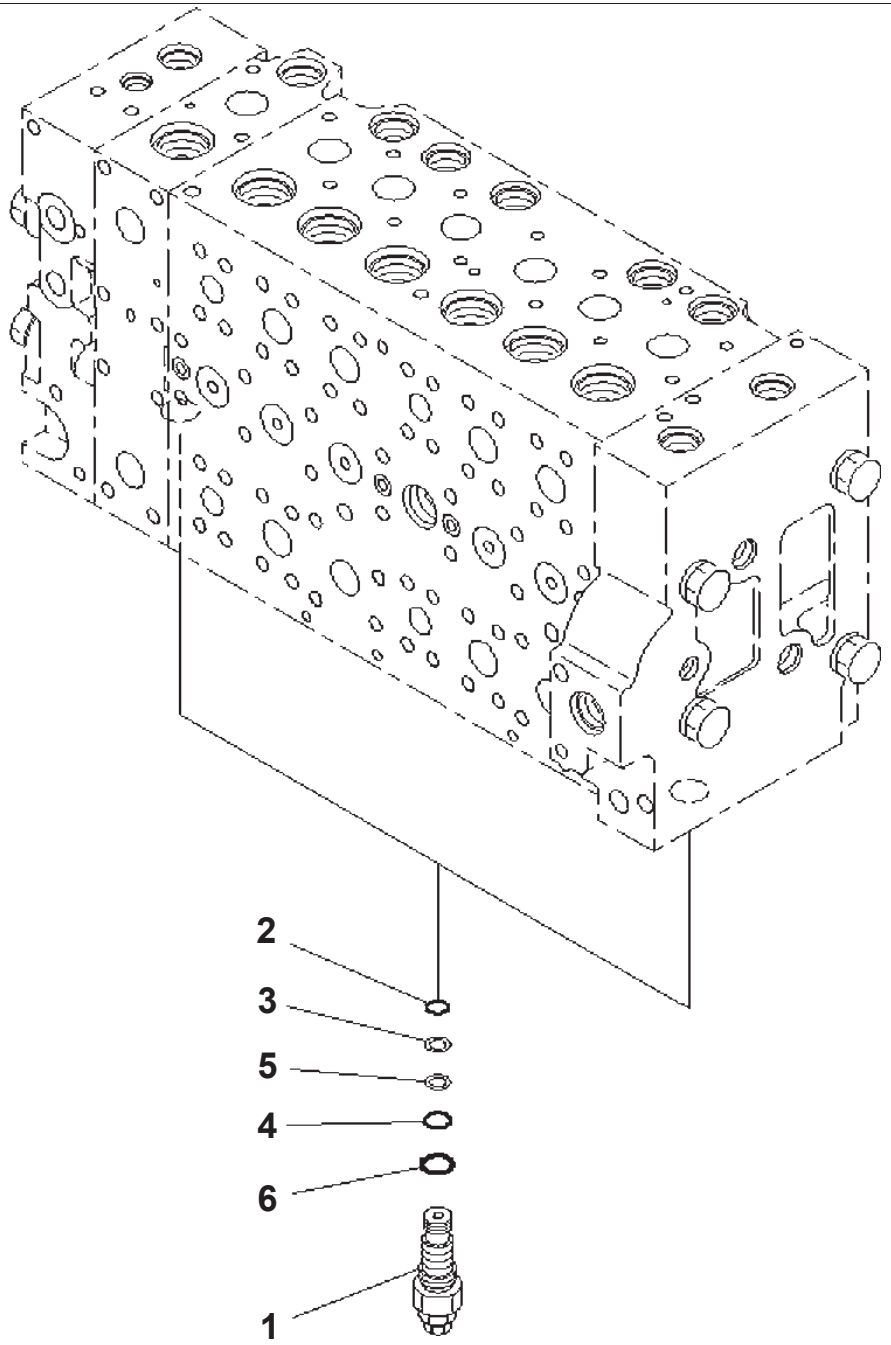

Control Valve, Without 1-additional Actuator Piping, 7-spool, Inner Parts (8/22)

Index	Code	Part Number	Description	Qty	Options
	C1	723-47-26601	Valve Assembly, Control	1	SN:B10333--
	C1	723-47-26600	Valve Assembly, Control	1	SN:B10001--B10332
1		723-40-56800	・Valve Assembly, Unloader, UNLOAD	2	SN:B10001--
2		07000-12014	・・O-ring	1	SN:B10001--
3		723-40-56350	・・Ring, Back-up	1	SN:B10001--
4		07000-12016	・・O-ring	1	SN:B10001--
5		723-60-22230	・・Ring, Back-up	1	SN:B10001--
6		07002-12434	・・O-ring	1	SN:B10001--

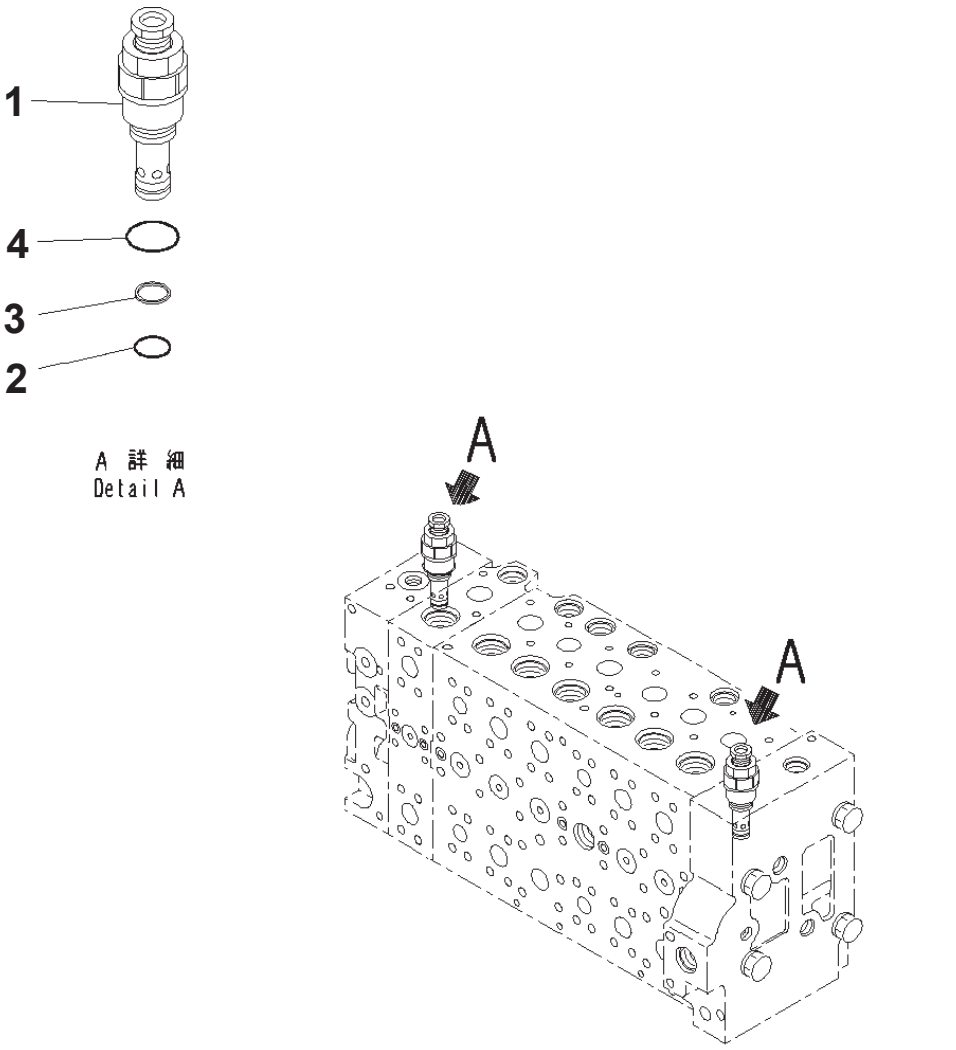

Control Valve, Without 1-additional Actuator Piping, 7-spool, Inner Parts (9/22)

Index	Code	Part Number	Description	Qty	Options
	C1	723-47-26601	Valve Assembly, Control	1	SN:B10333--
	C1	723-47-26600	Valve Assembly, Control	1	SN:B10001--B10332
1		723-40-93801	・ Valve, Relief	2	SN:B10001--
2		700-22-11410	・・ O-ring	1	SN:B10001--
3		700-80-64220	・・ Ring, Back-up	1	SN:B10001--
4		07002-12434	・・ O-ring	1	SN:B10001--

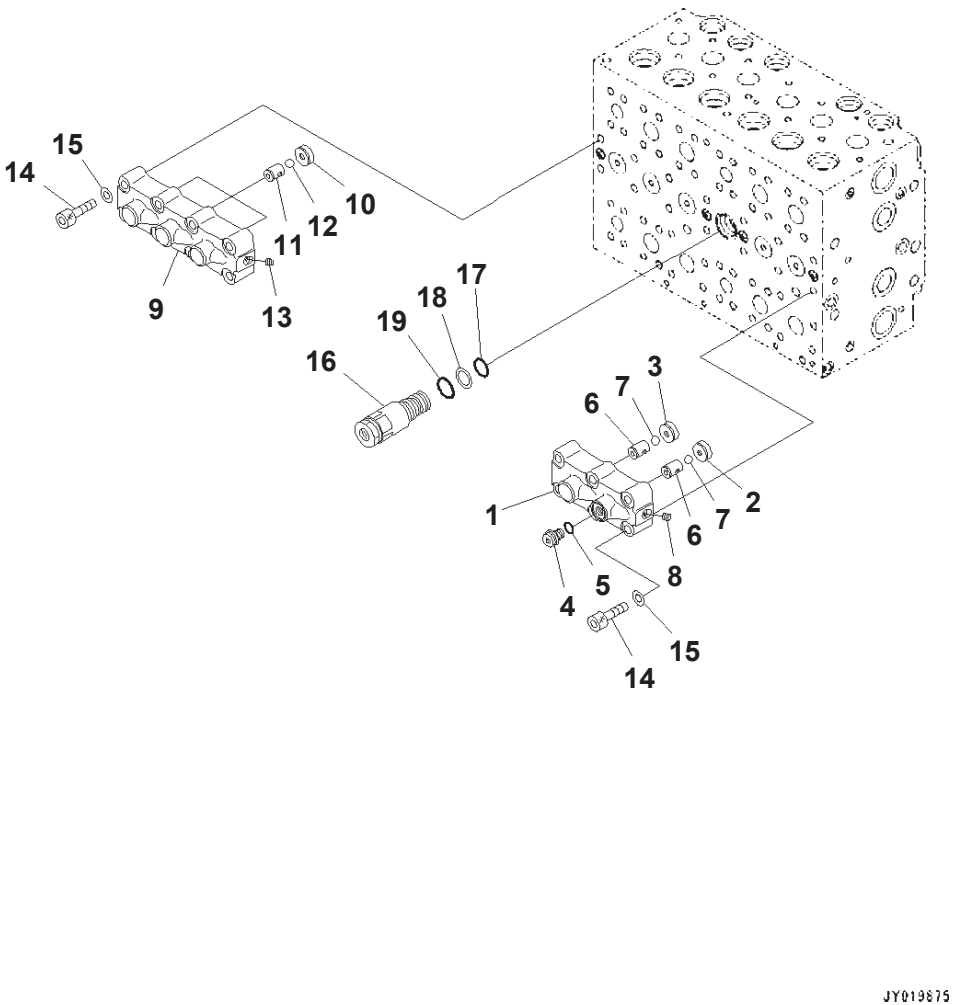

Control Valve, Without 1-additional Actuator Piping, 7-spool, Inner Parts (10/22)

Index	Code	Part Number	Description	Qty	Options
	C1	723-47-26601	Valve Assembly, Control	1	SN:B10333--
	C1	723-47-26600	Valve Assembly, Control	1	SN:B10001--B10332
		723-40-93801	・ Valve, Relief	2	SN:B10001--
		723-40-66701	・ Valve Assembly	1	SN:B10001--
1	C1		・・ Case	1	SN:B10001--
2	C1		・・ Seat	1	SN:B10001--
3	C1		・・ Seat	1	SN:B10001--
4		708-8H-11530	・・ Plug	1	SN:B10001--
5		07002-11423	・・ O-ring	1	SN:B10001--
6	C1		・・ Seat	2	SN:B10001--
7	C1		・・ Ball	2	SN:B10001--
8	C1		・・ Plug	1	SN:B10001--
		723-40-66601	・ Valve Assembly	1	SN:B10001--
9	C1		・・ Case	1	SN:B10001--
10	C1		・・ Seat	3	SN:B10001--
11	C1		・・ Seat	3	SN:B10001--
12	C1		・・ Ball	3	SN:B10001--
13	C1		・・ Plug	1	SN:B10001--
14		01252-61050	・ Bolt, Hexagon Socket Head	14	SN:B10001--
15		01643-51032	・ Washer	14	SN:B10001--
16		723-40-60101	・ Valve Assembly	1	SN:B10001--
17		07000-12020	・・ O-ring	1	SN:B10001--
18		07001-02020	・・ Ring, Back-up	1	SN:B10001--
19		709-25-11390	・・ O-ring	1	SN:B10001--

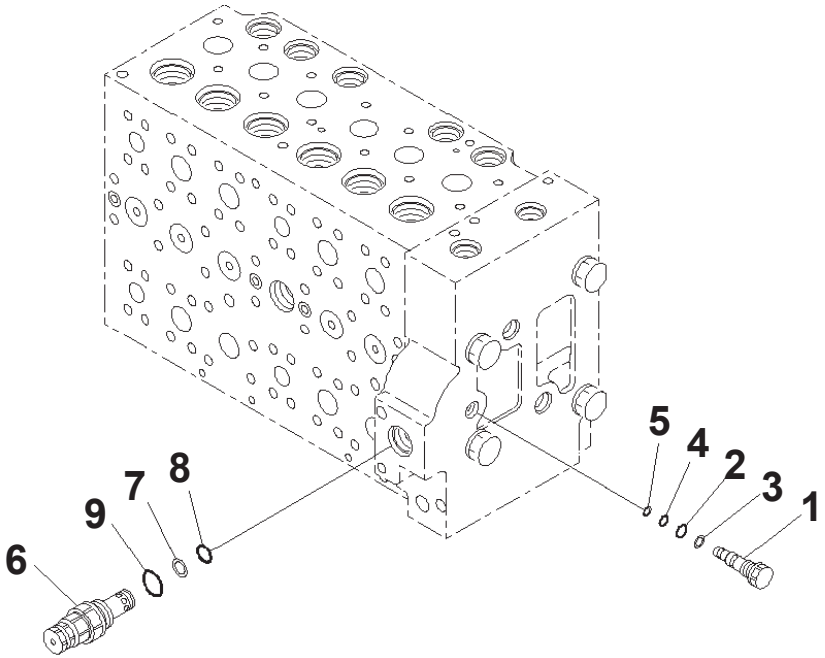

00014705

Control Valve, Without 1-additional Actuator Piping, 7-spool, Inner Parts (11/22)

Index	Code	Part Number	Description	Qty	Options
	C1	723-47-26601	Valve Assembly, Control	1	SN:B10333--
	C1	723-47-26600	Valve Assembly, Control	1	SN:B10001--B10332
		723-40-60101	・ Valve Assembly	1	SN:B10001--
		723-46-17701	・ Plug Assembly	1	SN:B10001--
1		723-46-17711	・・ Plug	1	SN:B10001--
2		07000-11009	・・ O-ring	1	SN:B10001--
3		07001-01009	・・ Ring, Back-up	1	SN:B10001--
4		07000-11007	・・ O-ring	1	SN:B10001--
5		07001-01007	・・ Ring, Back-up	1	SN:B10001--
6		723-40-91500	・ Valve Assembly, Relief	1	SN:B10001--
7		700-80-64220	・・ Ring, Back-up	1	SN:B10001--
8		700-22-11410	・・ O-ring	1	SN:B10001--
9		709-25-11390	・・ O-ring	1	SN:B10001--

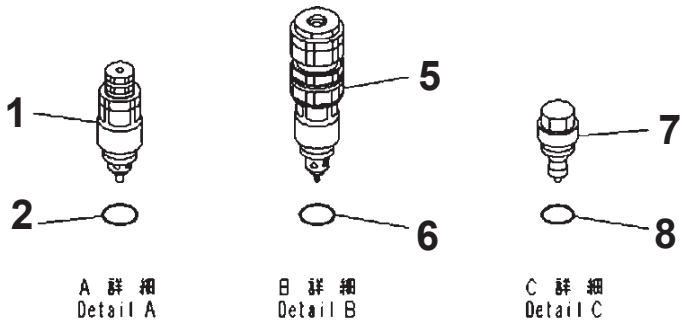

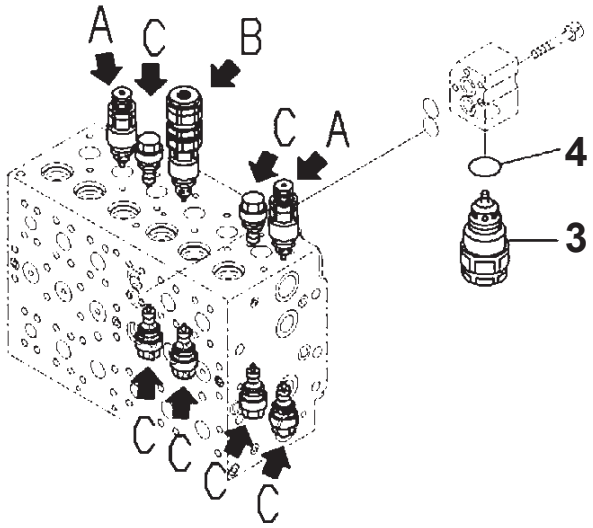

Control Valve, Without 1-additional Actuator Piping, 7-spool, Inner Parts (12/22)

Index	Code	Part Number	Description	Qty	Options
	C1	723-47-26601	Valve Assembly, Control	1	SN:B10333--
	C1	723-47-26600	Valve Assembly, Control	1	SN:B10001--B10332
1		723-40-91200	・ Valve Assembly, Suction and Relief	2	SN:B10001--
2		709-25-11390	・・ O-ring	1	SN:B10001--
3		723-90-69100	・ Valve Assembly, Suction and Relief	1	SN:B10001--
4		07002-13634	・・ O-ring	1	SN:B10001--
5		723-90-76201	・ Valve Assembly, Suction and Relief	1	SN:B10001--
6		07000-13024	・・ O-ring	1	SN:B10001--
7		723-40-85100	・ Valve Assembly, Suction	6	SN:B10001--
8		709-25-11390	・・ O-ring	1	SN:B10001--

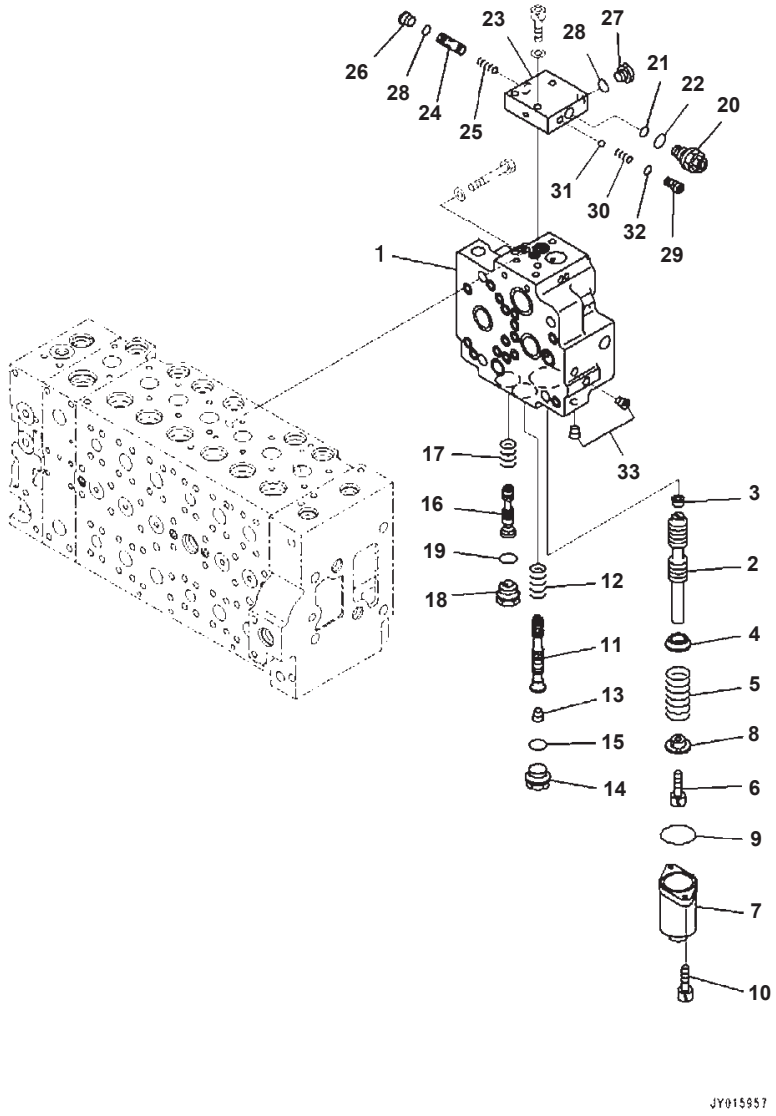

Control Valve, Without 1-additional Actuator Piping, 7-spool, Inner Parts (13/22)

Index	Code	Part Number	Description	Qty	Options
	C1	723-47-26601	Valve Assembly, Control	1	SN:B10333--
	C1	723-47-26600	Valve Assembly, Control	1	SN:B10001--B10332
		723-40-71201	· Valve Assembly	1	SN:B10001--
1	C1		· · Valve Body	1	SN:B10001--
2	C1		· · Spool	1	SN:B10001--
3	C1		· · Plug	1	SN:B10001--
4		723-40-71330	· · Retainer	1	SN:B10001--
5		723-40-71340	· · Spring	1	SN:B10001--
6		01252-60816	· · Bolt	1	SN:B10001--
7		723-46-15111	· · Case	1	SN:B10001--
8		723-40-71350	· · Retainer	1	SN:B10001--
9		07430-71380	· · O-ring	1	SN:B10001--
10		01252-60820	· · Bolt	2	SN:B10001--
11	C1		· · Spool	1	SN:B10001--
12		723-40-71440	· · Spring	1	SN:B10001--
13	C1		· · Plug	1	SN:B10001--
14		709-74-91860	· · Plug	1	SN:B10001--
15		07002-12434	· · O-ring	1	SN:B10001--
16	C1		· · Spool	1	SN:B10001--
17		723-40-71390	· · Spring	1	SN:B10001--
18		723-40-61150	· · Plug	1	SN:B10001--
19		07002-12434	· · O-ring	1	SN:B10001--
		723-40-71800	· · Valve Assembly	1	SN:B10001--
20		723-40-91600	· · · Valve Assembly, Relief	1	SN:B10001--
21		702-16-53920	· · · · O-ring	1	SN:B10001--
22		07002-11623	· · · · O-ring	1	SN:B10001--
23			· · · Block	1	SN:B10001--
24	C1		· · · Spool	1	SN:B10001--
25	C1		· · · Spring	1	SN:B10001--
26	C1	702-21-55620	· · · Plug	1	SN:B10001--
27		708-8H-11530	· · · Plug	1	SN:B10001--
28		07002-11423	· · · O-ring	2	SN:B10001--
29		702-21-55710	· · · Seat	1	SN:B10001--
30		702-21-55720	· · · Spring	1	SN:B10001--
31		04260-00793	· · · Ball	1	SN:B10001--
32		07000-11009	· · · O-ring	1	SN:B10001--
33	C1		· · · Plug	2	SN:B10001--

Reference:H0120-004113 Page:H004013

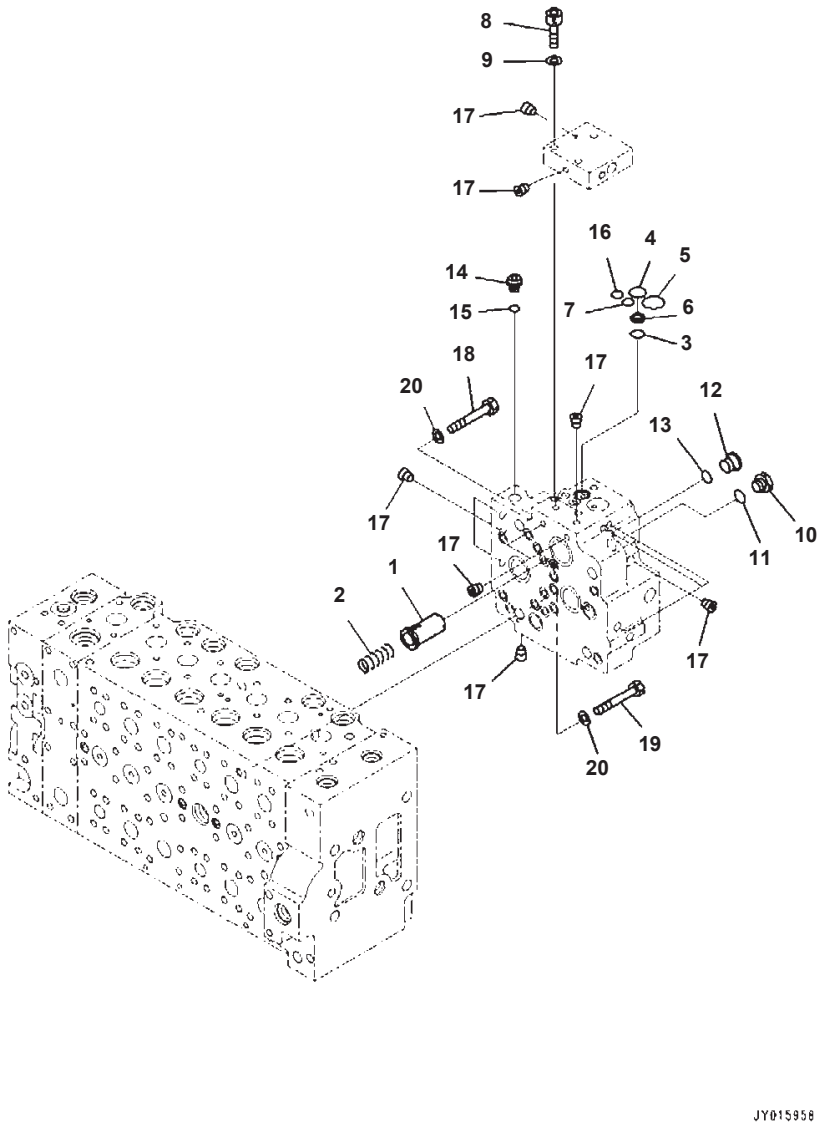

Control Valve, Without 1-additional Actuator Piping, 7-spool, Inner Parts (14/22)

Index	Code	Part Number	Description	Qty	Options
	C1	723-47-26601	Valve Assembly, Control	1	SN:B10333--
	C1	723-47-26600	Valve Assembly, Control	1	SN:B10001--B10332
		723-40-71201	・ Valve Assembly	1	SN:B10001--
1		723-40-71430	・・ Valve	1	SN:B10001--
2		702-21-55460	・・ Spring	1	SN:B10001--
3		702-21-55420	・・ O-ring	1	SN:B10001--
4		702-21-55520	・・ O-ring	1	SN:B10001--
5		702-21-55440	・・ O-ring	1	SN:B10001--
6		702-21-53120	・・ Filter	1	SN:B10001--
7		07000-12011	・・ O-ring	1	SN:B10001--
8		01252-61040	・・ Bolt, Hexagon Socket Head	3	SN:B10001--
9		01643-51032	・・ Washer	3	SN:B10001--
10		708-8H-11530	・・ Plug	1	SN:B10001--
11		07002-11423	・・ O-ring	1	SN:B10001--
12		702-21-55620	・・ Plug	1	SN:B10001--
13		07002-11423	・・ O-ring	1	SN:B10001--
14		708-8E-16160	・・ Plug	1	SN:B10001--
15		07002-11023	・・ O-ring	1	SN:B10001--
16		07000-12011	・・ O-ring	1	SN:B10001--
17	C1		・・ Plug	17	SN:B10001--
18		01010-61460	・ Bolt	1	SN:B10001--
19		01010-61470	・ Bolt	3	SN:B10001--
20		01643-31445	・ Washer	4	SN:B10001--

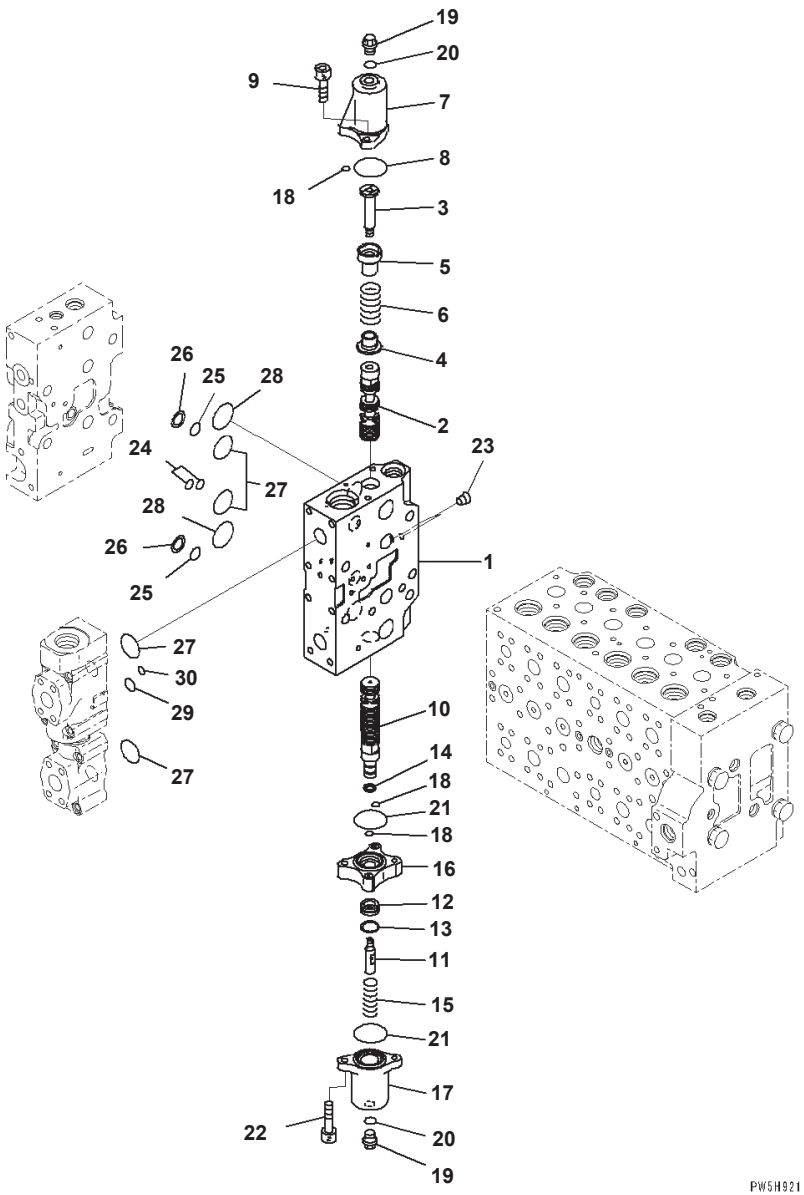

Control Valve, Without 1-additional Actuator Piping, 7-spool, Inner Parts (15/22)

Index	Code	Part Number	Description	Qty	Options
	C1	723-47-26601	Valve Assembly, Control	1	SN:B10333--
	C1	723-47-26600	Valve Assembly, Control	1	SN:B10001--B10332
	C1		・Body Subassembly	1	SN:B10001--
1	C1		・・Block, Valve	1	SN:B10001--
2	C1		・・Spool	1	SN:B10001--
3		723-46-15390	・・Plug	1	SN:B10001--
4		723-46-15370	・・Retainer	1	SN:B10001--
5		723-46-15380	・・Retainer	1	SN:B10001--
6		723-46-14110	・・Spring	1	SN:B10001--
7		723-46-17840	・・Case	1	SN:B10001--
8		07430-71380	・・O-ring	1	SN:B10001--
9		01252-60820	・・Bolt	2	SN:B10001--
10	C1		・・Spool	1	SN:B10001--
11		723-46-15330	・・Bolt	1	SN:B10001--
12	C1		・・Piston	1	SN:B10001--
13	C1		・・Seal	1	SN:B10001--
14	C1		・・Seal	1	SN:B10001--
15		723-46-14180	・・Spring	1	SN:B10001--
16		723-46-17850	・・Case	1	SN:B10001--
17		723-46-17860	・・Case	1	SN:B10001--
18		723-11-19960	・・O-ring	3	SN:B10001--
19		706-73-71450	・・Plug	2	SN:B10001--
20		07002-11423	・・O-ring	2	SN:B10001--
21		07430-71380	・・O-ring	2	SN:B10001--
22		01252-60845	・・Bolt, Hexagon Socket Head	2	SN:B10001--
23	C1		・・Plug	2	SN:B10001--
24		723-46-17530	・・O-ring	2	SN:B10001--
25		723-11-19130	・・O-ring	2	SN:B10001--
26		723-46-17520	・・Ring, Back-up	2	SN:B10001--
27		07000-13032	・・O-ring	4	SN:B10001--
28		723-46-17510	・・O-ring	2	SN:B10001--
29		07000-12016	・・O-ring	1	SN:B10001--
30		702-16-53920	・・O-ring	1	SN:B10001--

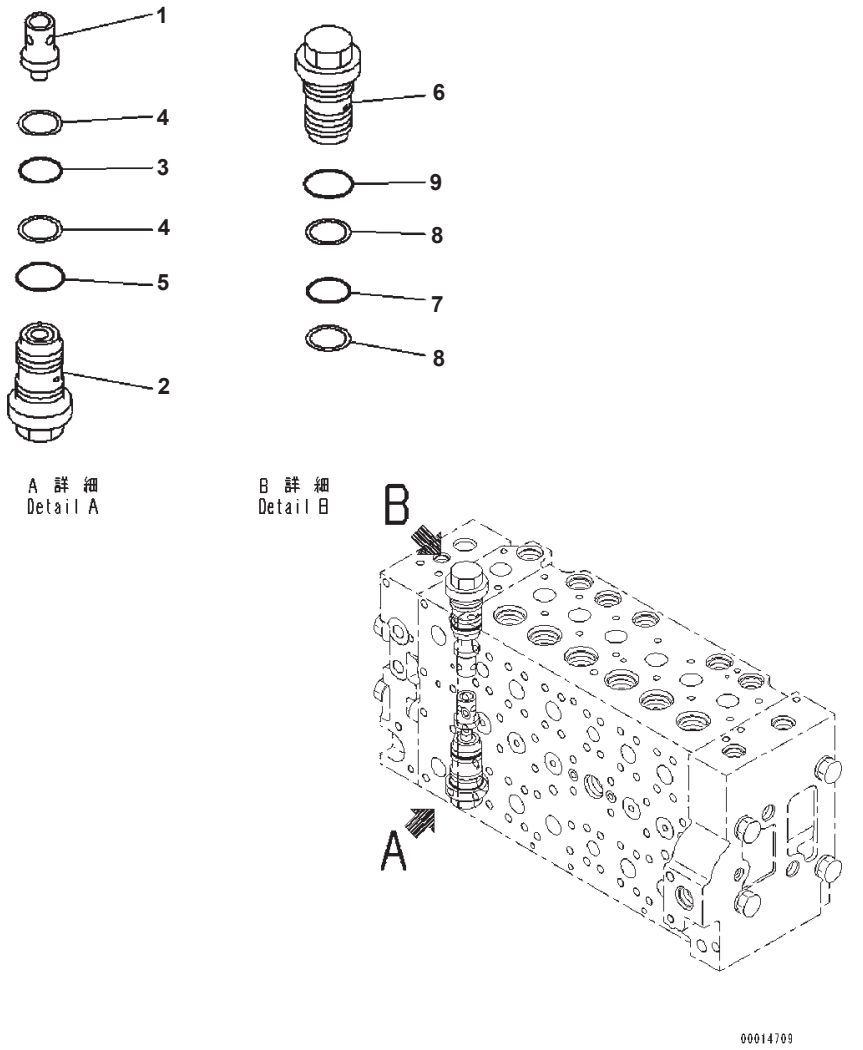

Control Valve, Without 1-additional Actuator Piping, 7-spool, Inner Parts (16/22)

Index	Code	Part Number	Description	Qty	Options
	C1	723-47-26601	Valve Assembly, Control	1	SN:B10333--
	C1	723-47-26600	Valve Assembly, Control	1	SN:B10001--B10332
	C1		・ Body Subassembly	1	SN:B10001--
1		723-46-41210	・・ Valve	1	SN:B10001--
2		723-46-40601	・・ Valve Assembly	1	SN:B10001--
3		700-93-11320	・・・ O-ring	1	SN:B10001--
4		723-46-41950	・・・ Ring	2	SN:B10001--
5		07002-13634	・・・ O-ring	1	SN:B10001--
6		723-46-47500	・・ Valve Assembly	1	SN:B10001--
7		700-93-11320	・・・ O-ring	1	SN:B10001--
8		723-46-41950	・・・ Ring	2	SN:B10001--
9		07002-13634	・・・ O-ring	1	SN:B10001--

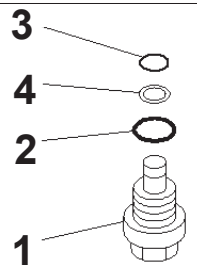

A 詳 細
Detail A

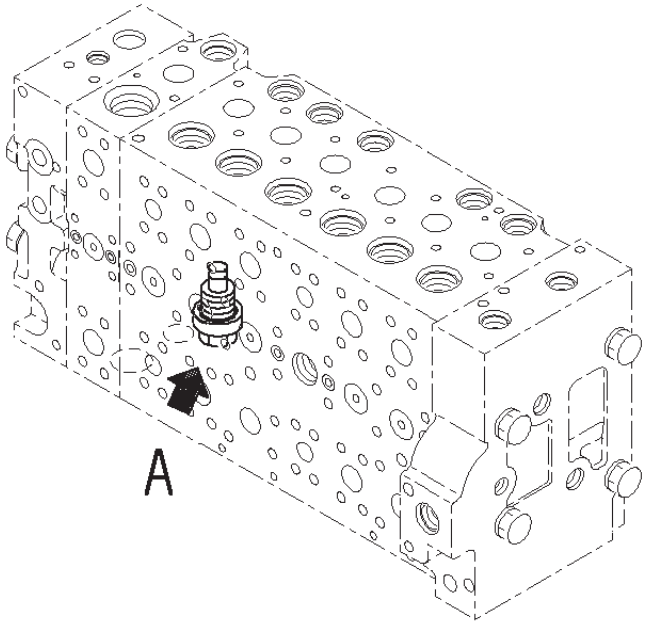

JY002726

Control Valve, Without 1-additional Actuator Piping, 7-spool, Inner Parts (17/22)

Index	Code	Part Number	Description	Qty	Options
	C1	723-47-26601	Valve Assembly, Control	1	SN:B10333--
	C1	723-47-26600	Valve Assembly, Control	1	SN:B10001--B10332
	C1		・ Body Subassembly	1	SN:B10001--
1		709-74-91510	・・ Plug	1	SN:B10001--
2		07000-13024	・・ O-ring	1	SN:B10001--
3		07000-11009	・・ O-ring	1	SN:B10001--
4		07001-01009	・・ Ring, Back-up	1	SN:B10001--

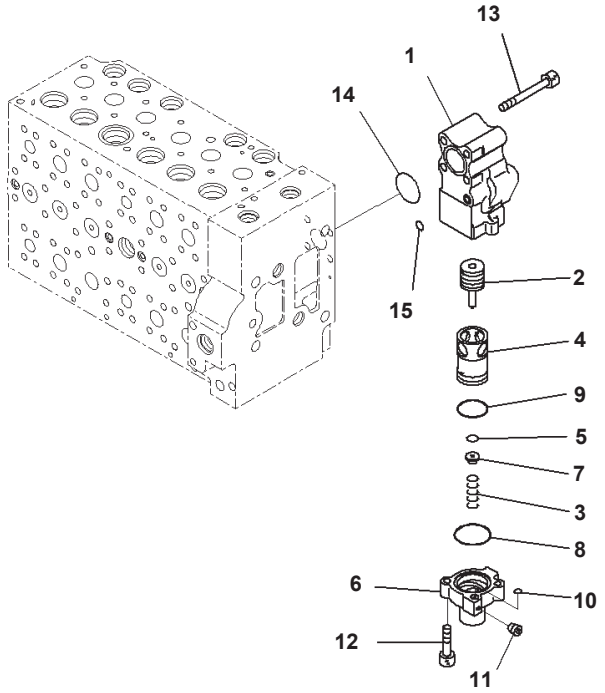

Control Valve, Without 1-additional Actuator Piping, 7-spool, Inner Parts (18/22)

Index	Code	Part Number	Description	Qty	Options
	C1	723-47-26601	Valve Assembly, Control	1	SN:B10333--
	C1	723-47-26600	Valve Assembly, Control	1	SN:B10001--B10332
		723-40-87100	・Valve Assembly	1	SN:B10001--
1		723-40-87110	・・Body	1	SN:B10001--
2		723-40-87140	・・Spool	1	SN:B10001--
3		723-40-87160	・・Spring	1	SN:B10001--
4	C1		・・Sleeve	1	SN:B10001--
5	C1		・・Seal	1	SN:B10001--
6	C1		・・Case	1	SN:B10001--
7		723-40-87150	・・Retainer	1	SN:B10001--
8		723-40-87170	・・O-ring	1	SN:B10001--
9		07000-13035	・・O-ring	1	SN:B10001--
10		07000-11007	・・O-ring	1	SN:B10001--
11	C1		・・Screw	1	SN:B10001--
12		01252-60830	・・Bolt	2	SN:B10001--
13		01252-61075	・Bolt, Hexagon Socket Head	4	SN:B10001--
14		07000-13038	・O-ring	1	SN:B10001--
15		07000-11010	・O-ring	1	SN:B10001--

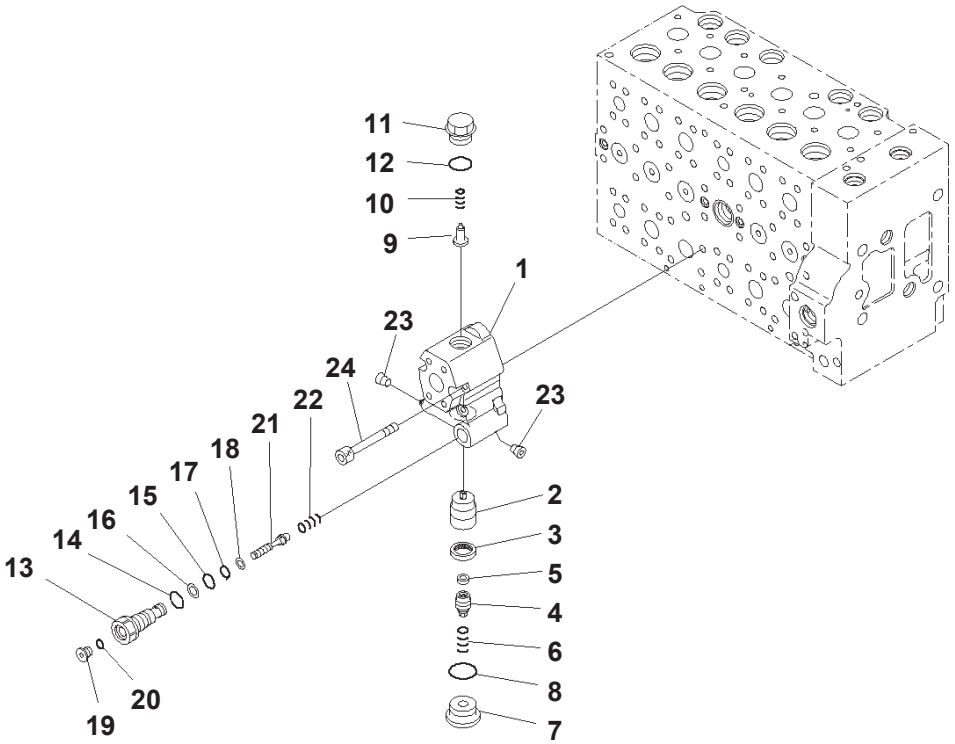

Control Valve, Without 1-additional Actuator Piping, 7-spool, Inner Parts (19/22)

Index	Code	Part Number	Description	Qty	Options
	C1	723-47-26601	Valve Assembly, Control	1	SN:B10333--
	C1	723-47-26600	Valve Assembly, Control	1	SN:B10001--B10332
		723-40-82401	・ Valve Assembly	1	SN:B10001--
1	C1		・・ Body	1	SN:B10001--
2	C1		・・ Valve	1	SN:B10001--
3	C1		・・ Seal	1	SN:B10001--
4	C1		・・ Plug	1	SN:B10001--
5	C1		・・ Filter	1	SN:B10001--
6	C1		・・ Spring	1	SN:B10001--
7	C1		・・ Plug	1	SN:B10001--
8		07002-13334	・・ O-ring	1	SN:B10001--
9	C1		・・ Valve, Check	1	SN:B10001--
10	C1		・・ Spring	1	SN:B10001--
11	C1		・・ Plug	1	SN:B10001--
12		07000-13024	・・ O-ring	1	SN:B10001--
13	C1		・・ Plug	1	SN:B10001--
14		07002-11823	・・ O-ring	1	SN:B10001--
15		07000-12011	・・ O-ring	1	SN:B10001--
16		07001-02011	・・ Ring, Back-up	1	SN:B10001--
17		07000-11010	・・ O-ring	1	SN:B10001--
18		07001-01010	・・ Ring, Back-up	1	SN:B10001--
19		723-11-18190	・・ Plug	1	SN:B10001--
20		07002-11023	・・ O-ring	1	SN:B10001--
21	C1		・・ Piston	1	SN:B10001--
22	C1		・・ Spring	1	SN:B10001--
23	C1		・・ Plug	2	SN:B10001--
24		01252-61075	・ Bolt, Hexagon Socket Head	4	SN:B10001--

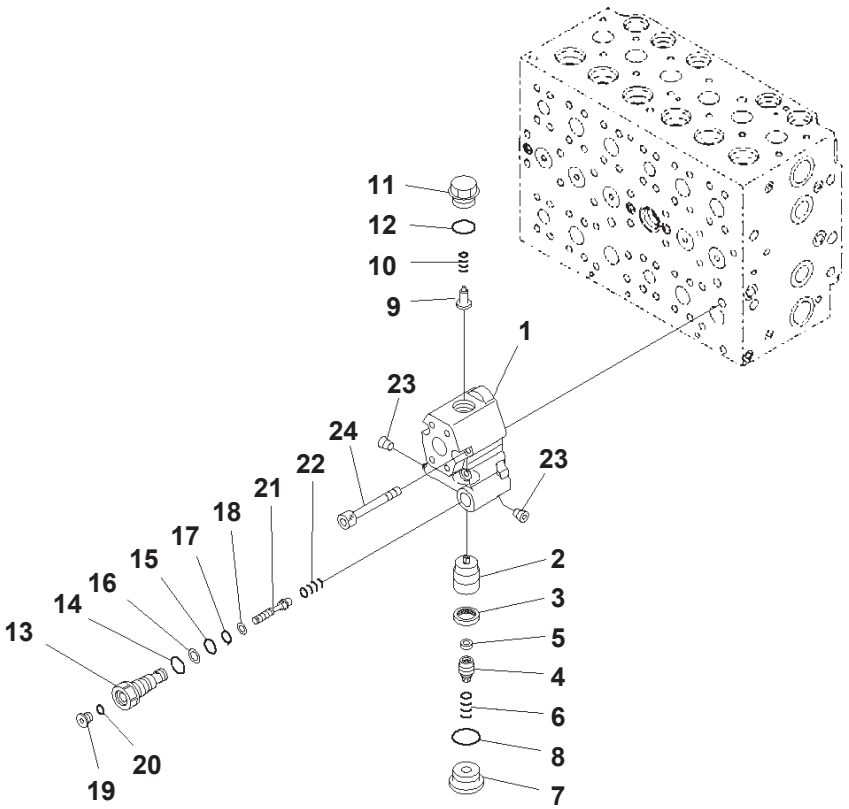

00014708

Control Valve, Without 1-additional Actuator Piping, 7-spool, Inner Parts (20/22)

Index	Code	Part Number	Description	Qty	Options
	C1	723-47-26601	Valve Assembly, Control	1	SN:B10333--
	C1	723-47-26600	Valve Assembly, Control	1	SN:B10001--B10332
		723-40-82901	・Valve Assembly	1	SN:B10001--
1		723-40-82420	・・Body	1	SN:B10001--
2		723-40-82120	・・Valve	1	SN:B10001--
3		723-40-82130	・・Seal	1	SN:B10001--
4		723-40-82210	・・Plug	1	SN:B10001--
5		723-40-82220	・・Filter	1	SN:B10001--
6		723-40-82140	・・Spring	1	SN:B10001--
7		723-40-82150	・・Plug	1	SN:B10001--
8		07002-13334	・・O-ring	1	SN:B10001--
9		723-40-84420	・・Valve, Check	1	SN:B10001--
10		723-40-84430	・・Spring	1	SN:B10001--
11		723-40-84440	・・Plug	1	SN:B10001--
12		07000-13024	・・O-ring	1	SN:B10001--
13		723-40-82310	・・Plug	1	SN:B10001--
14		07002-11823	・・O-ring	1	SN:B10001--
15		07000-12011	・・O-ring	1	SN:B10001--
16		07001-02011	・・Ring, Back-up	1	SN:B10001--
17		07000-11010	・・O-ring	1	SN:B10001--
18		07001-01010	・・Ring, Back-up	1	SN:B10001--
19		723-11-18190	・・Plug	1	SN:B10001--
20		07002-11023	・・O-ring	1	SN:B10001--
21		723-40-82280	・・Piston	1	SN:B10001--
22		723-40-82290	・・Spring	1	SN:B10001--
23		702-16-54490	・・Screw	2	SN:B10001--
24		01252-61075	・Bolt, Hexagon Socket Head	4	SN:B10001--

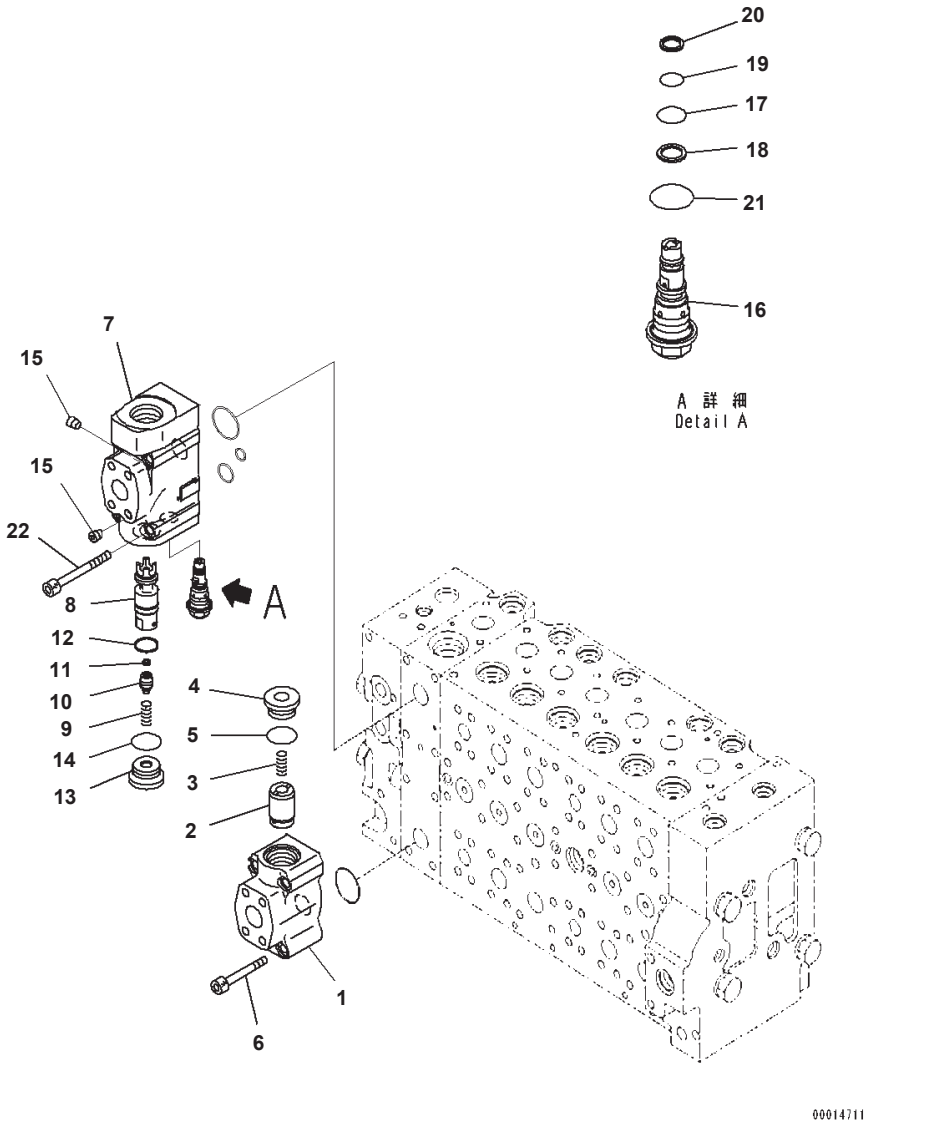

Control Valve, Without 1-additional Actuator Piping, 7-spool, Inner Parts (21/22)

Index	Code	Part Number	Description	Qty	Options
	C1	723-47-26601	Valve Assembly, Control	1	SN:B10333--
	C1	723-47-26600	Valve Assembly, Control	1	SN:B10001--B10332
		723-40-84100	・ Valve Assembly	1	SN:B10001--
1	C1		・・ Body	1	SN:B10001--
2	C1		・・ Valve	1	SN:B10001--
3		723-40-82140	・・ Spring	1	SN:B10001--
4		723-40-84130	・・ Plug	1	SN:B10001--
5		07002-13034	・・ O-ring	1	SN:B10001--
6		01252-61065	・ Bolt, Hexagon Socket Head	4	SN:B10001--
		723-40-84200	・ Valve Assembly	1	SN:B10001--
7	C1		・・ Body	1	SN:B10001--
8	C1		・・ Valve	1	SN:B10001--
9		723-40-82140	・・ Spring	1	SN:B10001--
10		723-40-84230	・・ Plug	1	SN:B10001--
11		723-40-82220	・・ Filter	1	SN:B10001--
12		723-46-15350	・・ Seal	1	SN:B10001--
13		723-40-84130	・・ Plug	1	SN:B10001--
14		07002-13034	・・ O-ring	1	SN:B10001--
15		708-21-12541	・・ Plug	2	SN:B10001--
16		723-40-92900	・・ Valve Assembly	1	SN:B10001--
17		07000-12012	・・・ O-ring	1	SN:B10001--
18		07001-02012	・・・ Ring, Back-up	1	SN:B10001--
19		07000-11010	・・・ O-ring	1	SN:B10001--
20		07001-01010	・・・ Ring, Back-up	1	SN:B10001--
21		07002-12034	・・・ O-ring	1	SN:B10001--
22		723-46-18770	・ Bolt	4	SN:B10001--

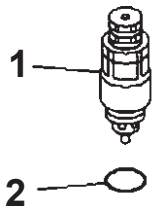

A 詳 細
Detail A

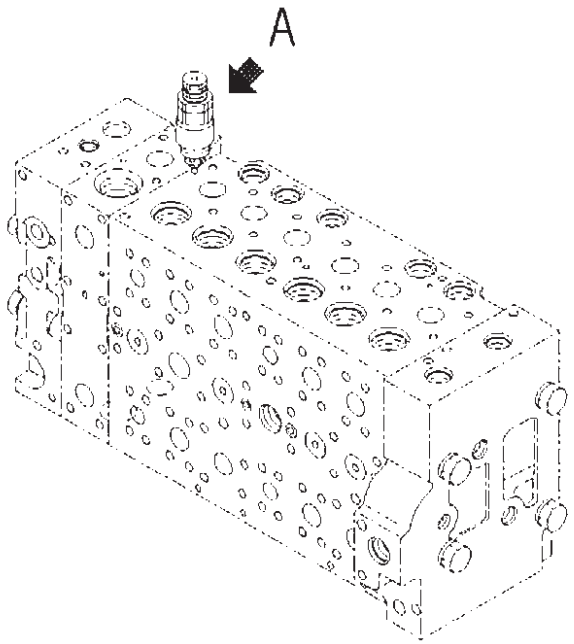

00061058

Control Valve, Without 1-additional Actuator Piping, 7-spool, Inner Parts (22/22)

Index	Code	Part Number	Description	Qty	Options
	C1	723-47-26601	Valve Assembly, Control	1	SN:B10333--
	C1	723-47-26600	Valve Assembly, Control	1	SN:B10001--B10332
1		723-40-91200	・ Valve Assembly, Suction and Relief	1	SN:B10001--
2		709-25-11390	・・ O-ring	1	SN:B10001--

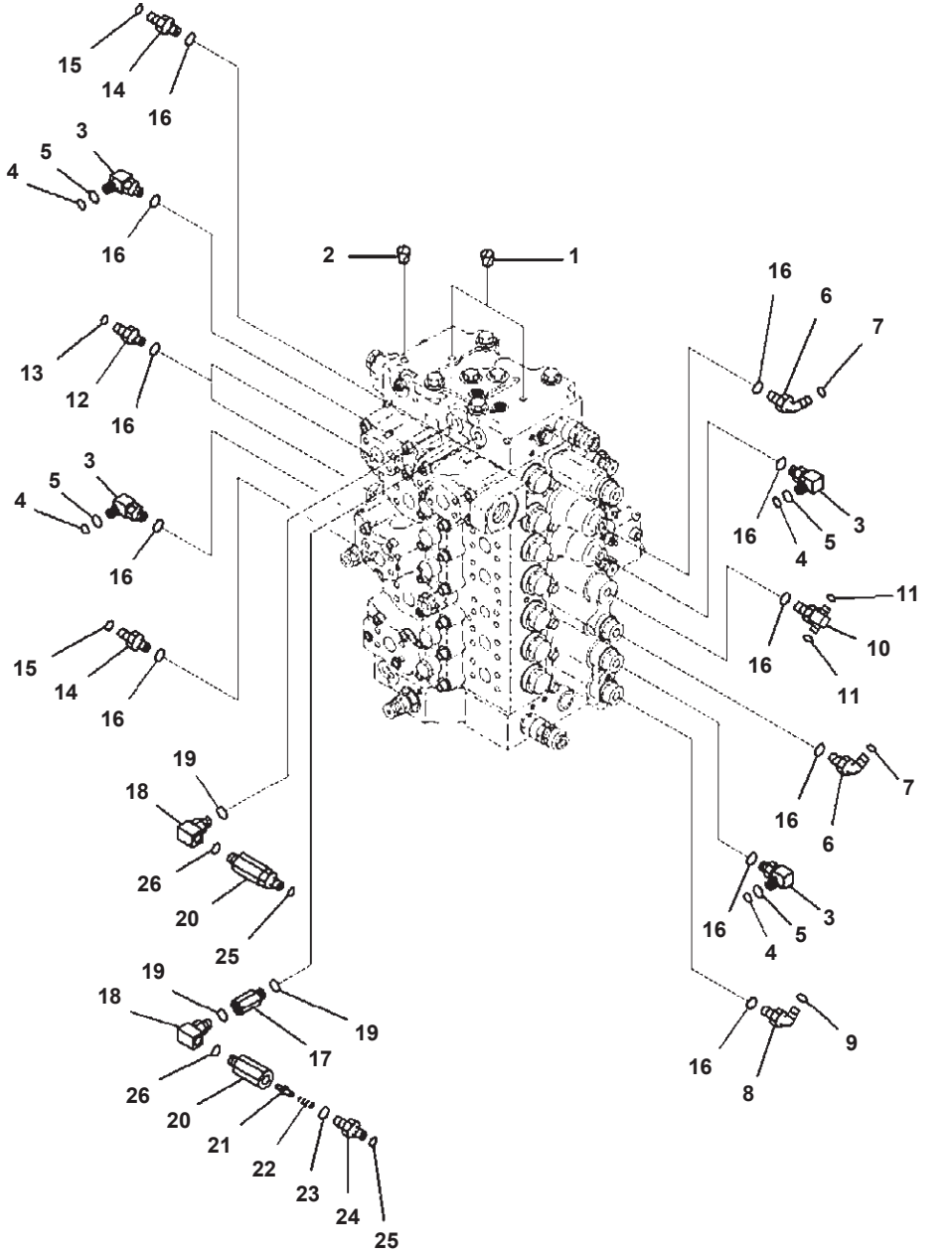

Control Valve, Without 1-additional Actuator Piping, Control Valve Related Parts (1/2)

Index	Code	Part Number	Description	Qty	Options
1		07049-01012	Plug	2	SN:B10001--
2		07049-01215	Plug	1	SN:B10001--
3		22U-62-22480	Elbow	4	SN:B10001--
4		201-60-11390	・ O-ring	1	SN:B10001--
5		20Y-62-19560	・ O-ring	1	SN:B10001--
6		11Y-62-12160	Elbow	2	SN:B10001--
7		02896-11008	O-ring	2	SN:B10001--
8		21W-62-42490	Elbow	1	SN:B10001--
9		02896-11009	O-ring	1	SN:B10001--
10		11Y-62-12250	Tee	1	SN:B10001--
11		02896-11008	O-ring	2	SN:B10001--
12		11Y-62-12130	Nipple	2	SN:B10001--
13		02896-11008	O-ring	2	SN:B10001--
14		11Y-62-12520	Nipple	2	SN:B10001--
15		02896-11009	O-ring	2	SN:B10001--
16		07002-11423	O-ring	12	SN:B10001--
17		20Y-62-22160	Adapter	1	SN:B10001--
18		20Y-62-23541	Elbow	2	SN:B10001--
19		07002-11423	O-ring	3	SN:B10001--
		20Y-62-41701	Valve Assembly	2	SN:B10001--
20	C1		・ Body	1	SN:B10001--
21		20Y-60-22270	・ Poppet	1	SN:B10001--
22		701-20-61230	・ Spring	1	SN:B10001--
23		07002-11423	・ O-ring	1	SN:B10001--
24		20Y-62-47630	・ Nipple	1	SN:B10001--
25		02896-11008	O-ring	2	SN:B10001--
26		07002-11423	O-ring	2	SN:B10001--

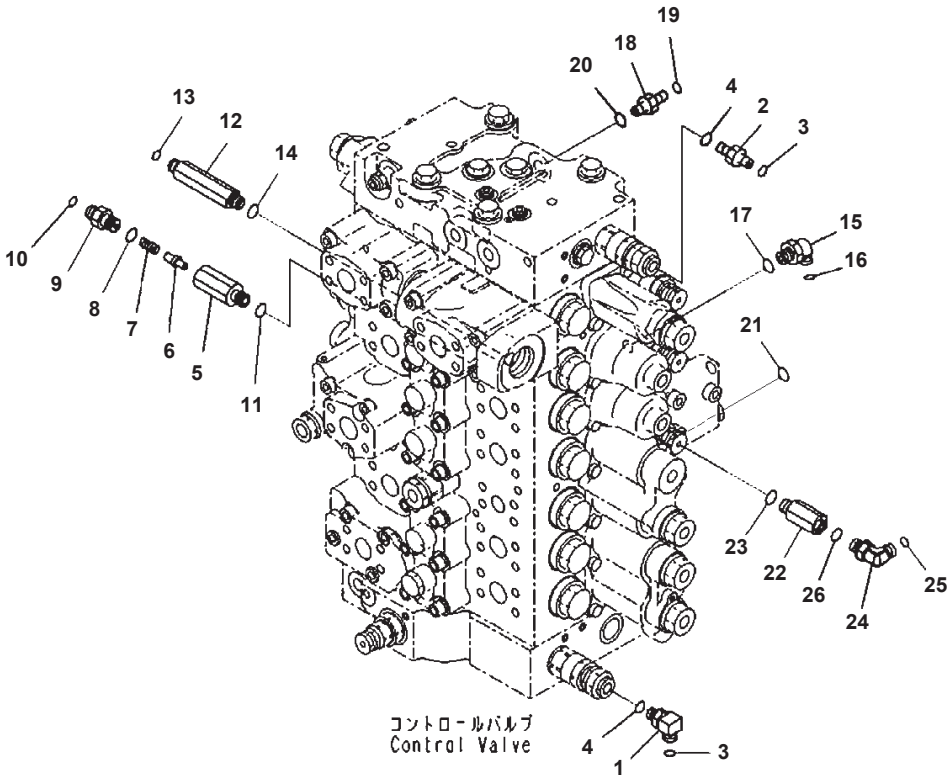

Control Valve, Without 1-additional Actuator Piping, Control Valve Related Parts (2/2)

Index	Code	Part Number	Description	Qty	Options
1		20Y-62-41920	Elbow	1	SN:B10001--
2		208-62-71540	Nipple	1	SN:B10001--
3		02896-11008	O-ring	2	SN:B10001--
4		07002-11223	O-ring	2	SN:B10001--
		20Y-62-41701	Valve Assembly	1	SN:B10001--
5	C1		・ Body	1	SN:B10001--
6		20Y-60-22270	・ Poppet	1	SN:B10001--
7		701-20-61230	・ Spring	1	SN:B10001--
8		07002-11423	・ O-ring	1	SN:B10001--
9		20Y-62-47630	・ Nipple	1	SN:B10001--
10		02896-11008	O-ring	1	SN:B10001--
11		07002-11423	O-ring	1	SN:B10001--
12		207-62-71531	Union	1	SN:B10001--
13		02896-11008	O-ring	1	SN:B10001--
14		07002-11423	O-ring	1	SN:B10001--
15		11Y-62-12160	Nipple	1	SN:B10001--
16		02896-11008	O-ring	1	SN:B10001--
17		07002-11423	O-ring	1	SN:B10001--
18		11Y-62-12130	Nipple	1	SN:B10001--
19		02896-11008	O-ring	1	SN:B10001--
20		07002-11423	O-ring	1	SN:B10001--
21		07002-11423	O-ring	1	SN:B10001--
22		20Y-62-22160	Adapter	1	SN:B10001--
23		07002-11423	O-ring	1	SN:B10001--
24		11Y-62-12160	Elbow	1	SN:B10001--
25		02896-11008	O-ring	1	SN:B10001--
26		07002-11423	O-ring	1	SN:B10001--

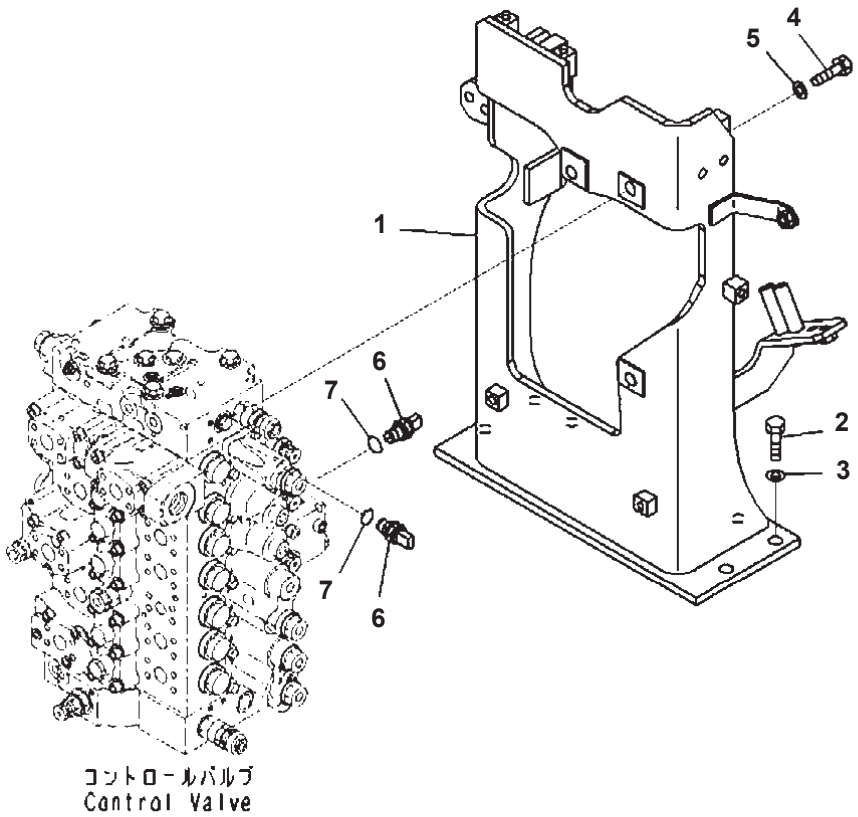

Index	Part Number	Description	Qty	Options
1	207-62-74610	Bracket	1	SN:B10001--
2	01010-81640	Bolt	6	SN:B10001--
3	01643-31645	Washer	6	SN:B10001--
4	01010-81645	Bolt	3	SN:B10001--
5	01643-31645	Washer	3	SN:B10001--
6	7861-93-1812	Sensor, Pressure	2	SN:B10001--
7	07002-61823	・ O-ring	1	SN:B10001--

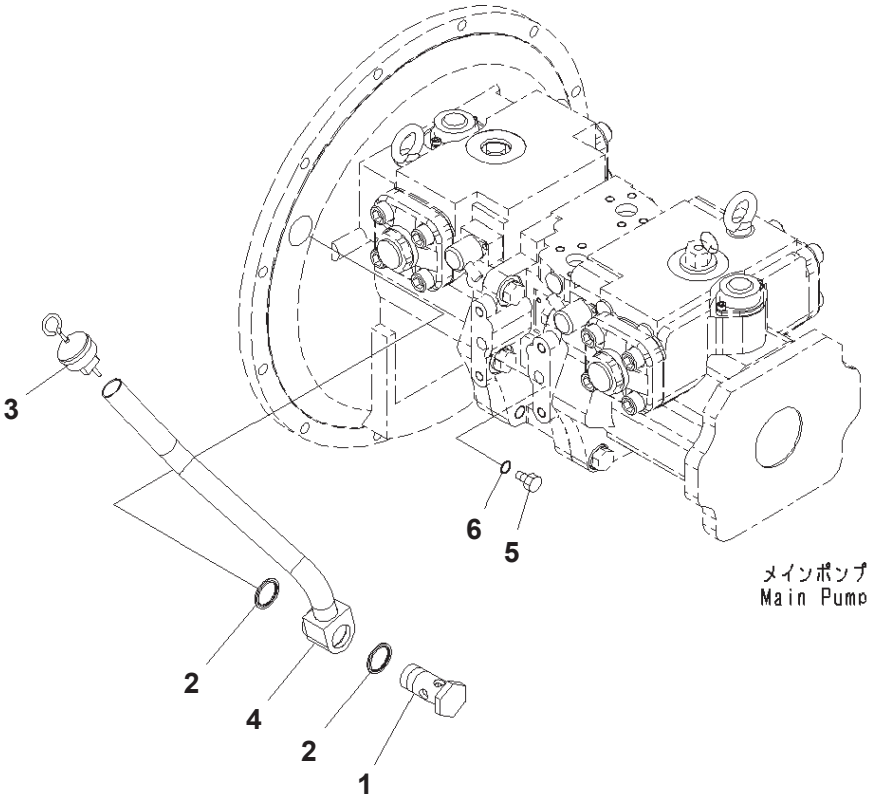

Index	Part Number	Description	Qty	Options
1	207-01-31141	Joint	1	SN:B10001--
2	07005-03016	Gasket	2	SN:B10001--
3	207-01-31150	Gauge	1	SN:B10001--
4	207-01-71320	Tube	1	SN:B10001--
5	07040-11209	Plug	1	SN:B10001--
6	07002-11223	O-ring	1	SN:B10001--

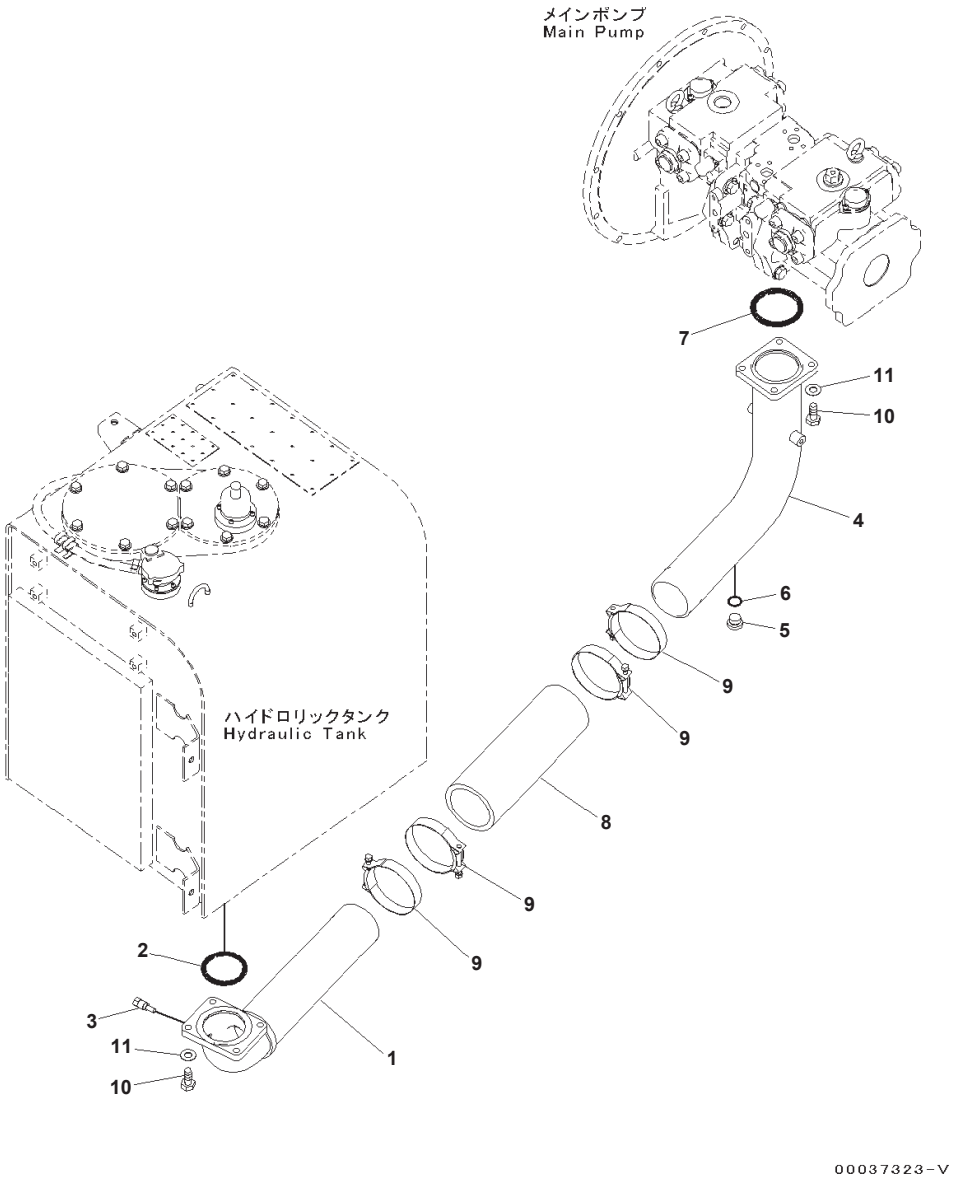

Suction Piping (#B10001-B10230)

Index	Part Number	Description	Qty	Options
1	207-62-71141	Tube	1	SN:B10001--B10230
2	07000-12105	O-ring	1	SN:B10001--B10230
3	7861-93-3320	Sensor	1	SN:B10001--B10230
4	207-62-74640	Tube	1	SN:B10001--B10230
5	07040-12414	Plug	1	SN:B10001--B10230
6	07002-12434	O-ring	1	SN:B10001--B10230
7	07000-12105	O-ring	1	SN:B10001--B10230
8	07260-09936	Hose	1	SN:B10001--B10230
9	208-62-73910	Clamp	4	SN:B10001--B10230
10	01010-81240	Bolt	8	SN:B10001--B10230
11	01643-31232	Washer	8	SN:B10001--B10230

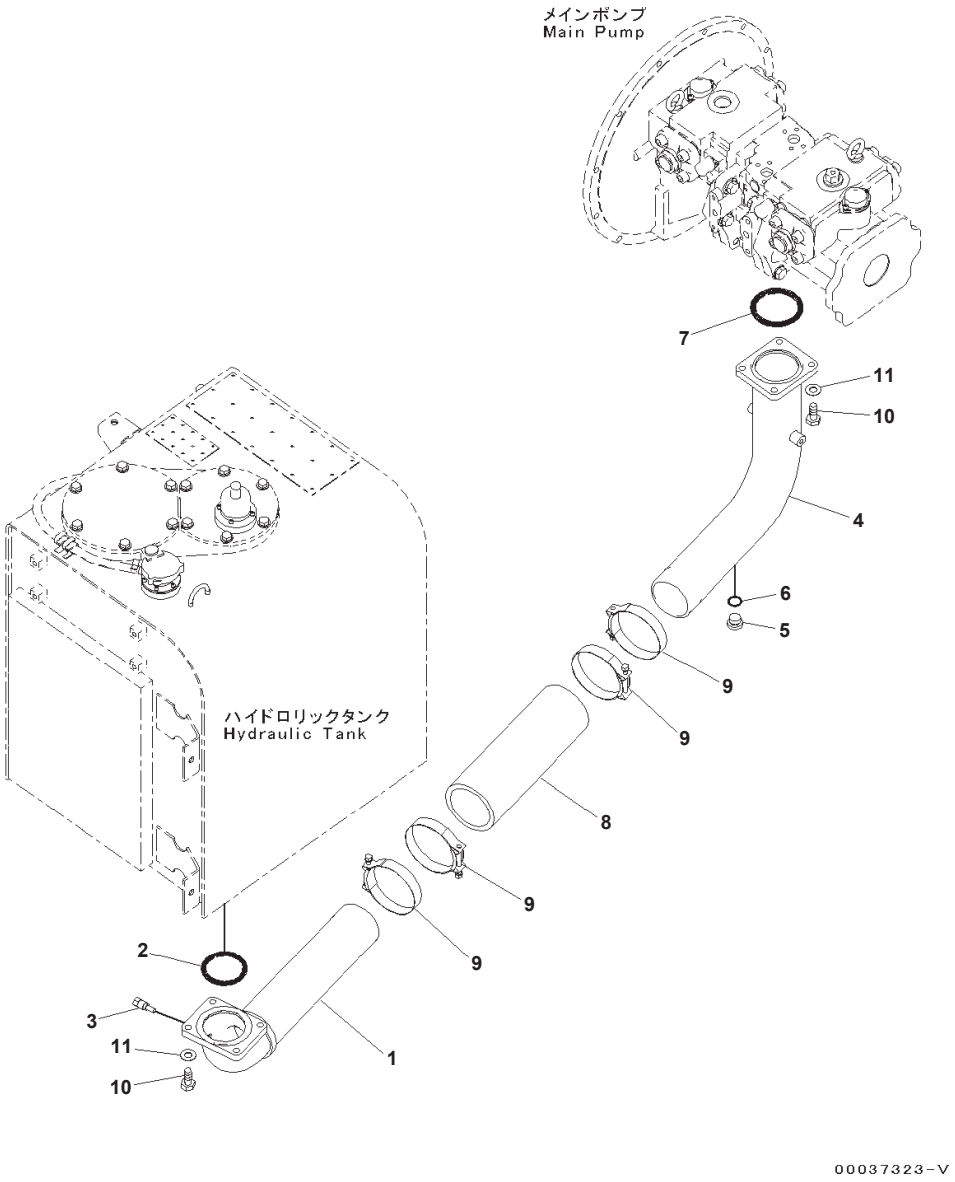

Index	Part Number	Description	Qty	Options
1	207-62-74660	Tube	1	SN:B10231--
2	07000-12105	O-ring	1	SN:B10231--
3	7861-93-3320	Sensor	1	SN:B10231--
4	207-62-74450	Tube	1	SN:B10231--
5	07040-12414	Plug	1	SN:B10231--
6	07002-12434	O-ring	1	SN:B10231--
7	07000-12105	O-ring	1	SN:B10231--
8	07260-09936	Hose	1	SN:B10231--
9	208-62-73910	Clamp	4	SN:B10231--
10	01010-81240	Bolt	8	SN:B10231--
11	01643-31232	Washer	8	SN:B10231--

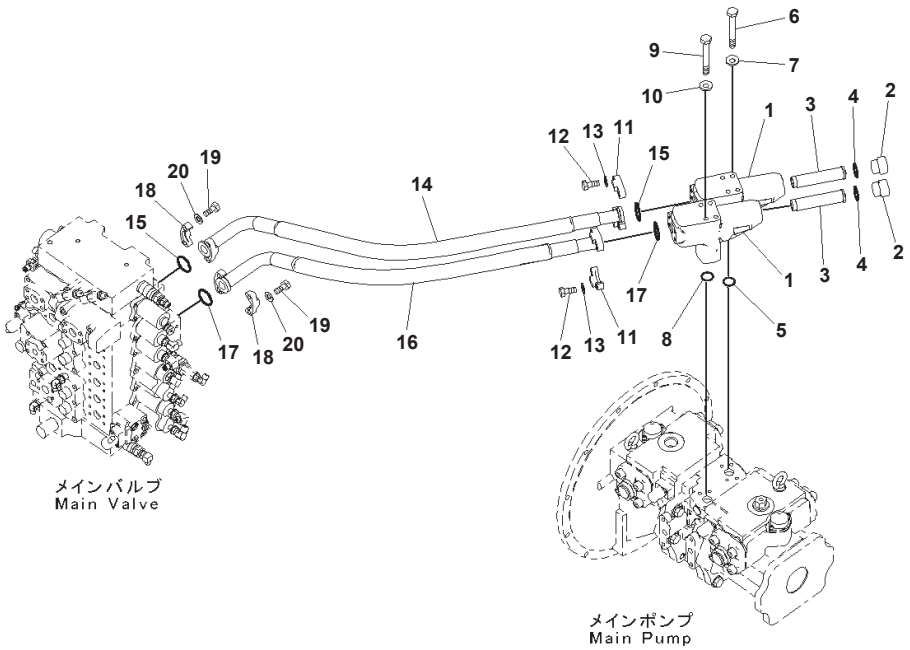

Delivery Piping, With In-line Filter (#B10001-B10265)

Index	Code	Part Number	Description	Qty	Options
		208-62-71102	Filter Assembly	2	SN:B10271--B10265
	A2	208-62-71101	Filter Assembly	2	SN:B10001--B10270
1		208-62-71811	・ Case	1	SN:B10271--B10265
	A2	208-62-71810	・ Case	1	SN:B10001--B10270
2		20Y-60-22372	・ Plug	1	SN:B10001--B10265
3		207-60-61250	・ Strainer	1	SN:B10001--B10265
4		07002-13634	・ O-ring	1	SN:B10001--B10265
5		07000-13035	O-ring	1	SN:B10001--B10265
6		01011-81070	Bolt	4	SN:B10001--B10265
7		01643-31032	Washer	4	SN:B10001--B10265
8		07000-13035	O-ring	1	SN:B10001--B10265
9		01011-81070	Bolt	4	SN:B10001--B10265
10		01643-31032	Washer	4	SN:B10001--B10265
11		07371-31049	Flange	4	SN:B10001--B10265
12		07372-21035	Bolt	8	SN:B10001--B10265
13		01643-51032	Washer	8	SN:B10001--B10265
14		207-62-71750	Hose	1	SN:B10001--B10265
15		07000-13032	O-ring	2	SN:B10001--B10265
16		207-62-71880	Hose	1	SN:B10001--B10265
17		07000-13032	O-ring	2	SN:B10001--B10265
18		07371-31049	Flange	4	SN:B10001--B10265
19		07372-21035	Bolt	8	SN:B10001--B10265
20		01643-51032	Washer	8	SN:B10001--B10265

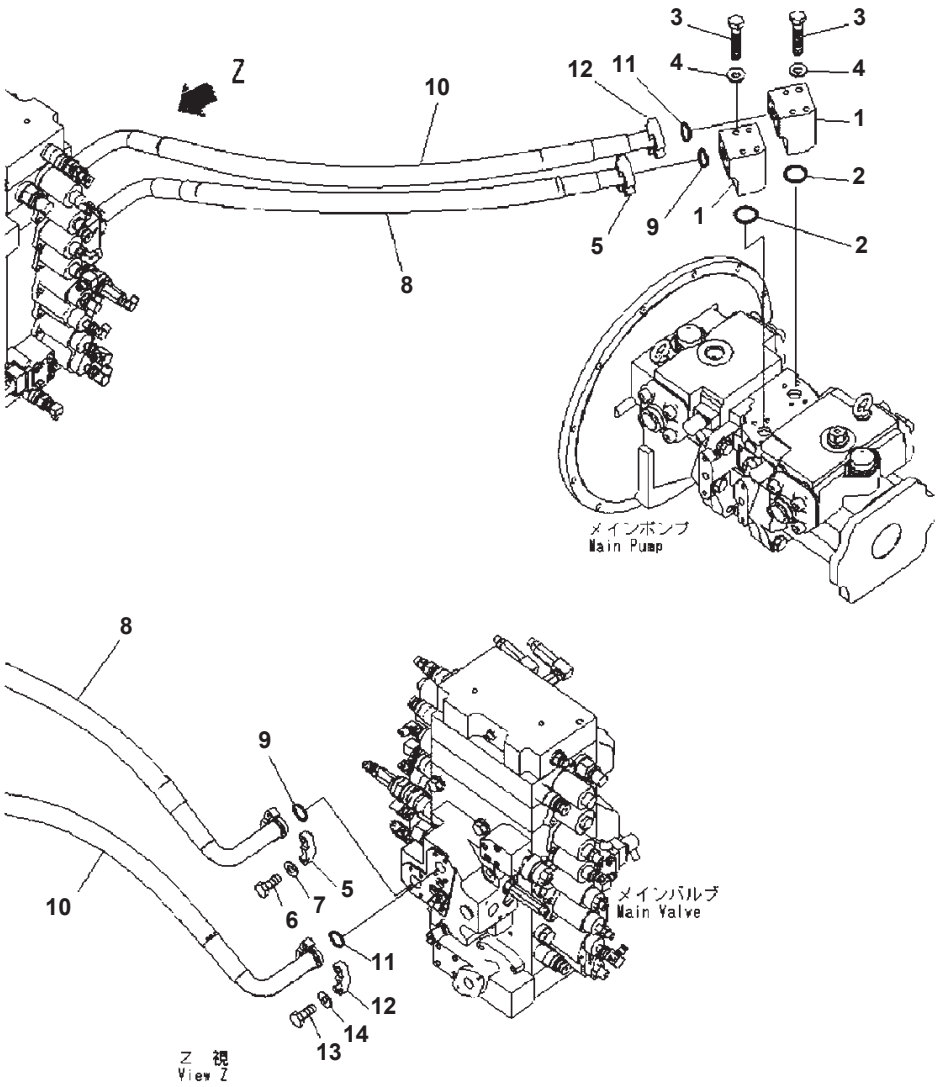

H007002

Delivery Piping, With In-line Filter (#B10266-)

Index	Part Number	Description	Qty	Options
1	208-62-71820	Block	2	SN:B10266--
2	07000-13035	O-ring	2	SN:B10266--
3	01011-81020	Bolt	8	SN:B10266--
4	01643-31032	Washer	8	SN:B10266--
5	07371-31049	Flange	4	SN:B10266--
6	07372-21035	Bolt	8	SN:B10266--
7	01643-51032	Washer	8	SN:B10266--
8	207-62-71750	Hose	1	SN:B10266--
9	01011-81070	O-ring	2	SN:B10266--
10	207-62-71380	Hose	1	SN:B10266--
11	07000-13032	O-ring	2	SN:B10266--
12	07371-31049	Flange	4	SN:B10266--
13	07372-21035	Bolt	8	SN:B10266--
14	01643-51032	Washer	8	SN:B10266--

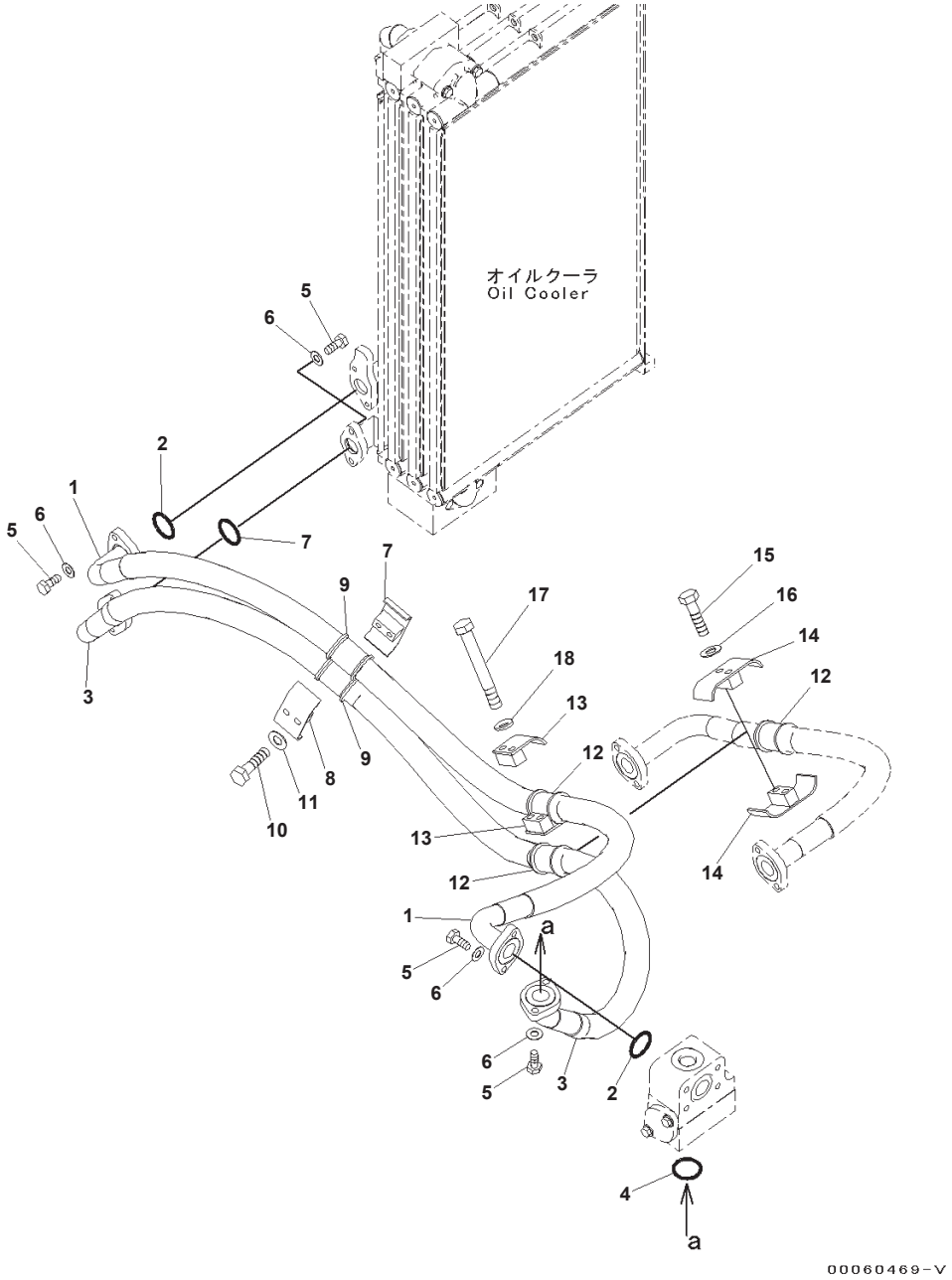

Index	Part Number	Description	Qty	Options
1	207-62-74650	Hose	1	SN:B10001--
2	07000-13048	O-ring	2	SN:B10001--
3	207-62-74660	Hose	1	SN:B10001--
4	07000-13048	O-ring	2	SN:B10001--
5	01010-81240	Bolt	8	SN:B10001--
6	01643-31232	Washer	8	SN:B10001--
7	207-62-71490	Clamp	1	SN:B10001--
8	07094-31228	Clamp	1	SN:B10001--
9	07095-01245	Cushion	2	SN:B10001--
10	01010-81270	Bolt	2	SN:B10001--
11	01643-31232	Washer	2	SN:B10001--
12	07095-01245	Cushion	3	SN:B10001--
13	07094-11228	Clamp	2	SN:B10001--
14	07094-31228	Clamp	2	SN:B10001--
15	01010-81295	Bolt	2	SN:B10001--
16	01643-31232	Washer	2	SN:B10001--
17	01011-81265	Bolt	2	SN:B10001--
18	01643-31232	Washer	2	SN:B10001--

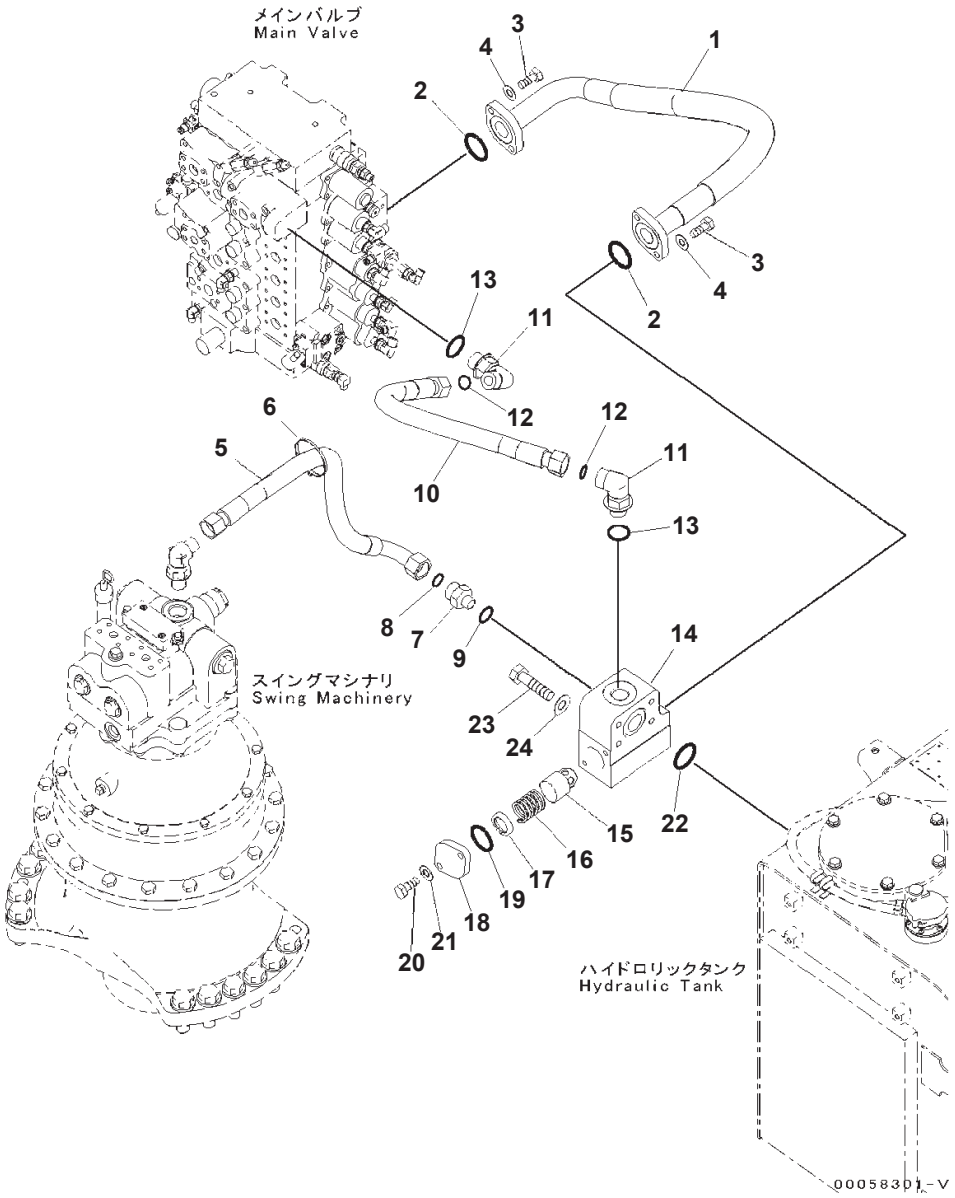

Index	Part Number	Description	Qty	Options
1	207-62-74670	Hose	1	SN:B10172--
2	07000-13048	O-ring	2	SN:B10172--
3	01010-81240	Bolt	4	SN:B10172--
4	01643-31232	Washer	4	SN:B10172--
5	207-62-74781	Hose	1	SN:B10172--
6	08034-20536	Band	1	SN:B10172--
7	20U-62-41810	Nipple	1	SN:B10172--
8	207-62-64740	O-ring	1	SN:B10172--
9	07002-12434	O-ring	1	SN:B10172--
10	207-62-74681	Hose	1	SN:B10172--
11	21W-62-42640	Elbow	2	SN:B10172--
12	207-62-64740	O-ring	2	SN:B10172--
13	07002-13334	O-ring	2	SN:B10172--
14	208-62-71410	Block	1	SN:B10172--
15	207-60-75160	Valve	1	SN:B10172--
16	706-76-71190	Spring	1	SN:B10172--
17	207-60-51170	Spacer	1	SN:B10172--
18	207-62-75250	Flange	1	SN:B10172--
19	07000-12060	O-ring	1	SN:B10172--
20	01010-81235	Bolt	2	SN:B10172--
21	01643-31232	Washer	2	SN:B10172--
22	07000-12060	O-ring	1	SN:B10172--
23	01010-81290	Bolt	4	SN:B10172--
24	01643-31232	Washer	4	SN:B10172--

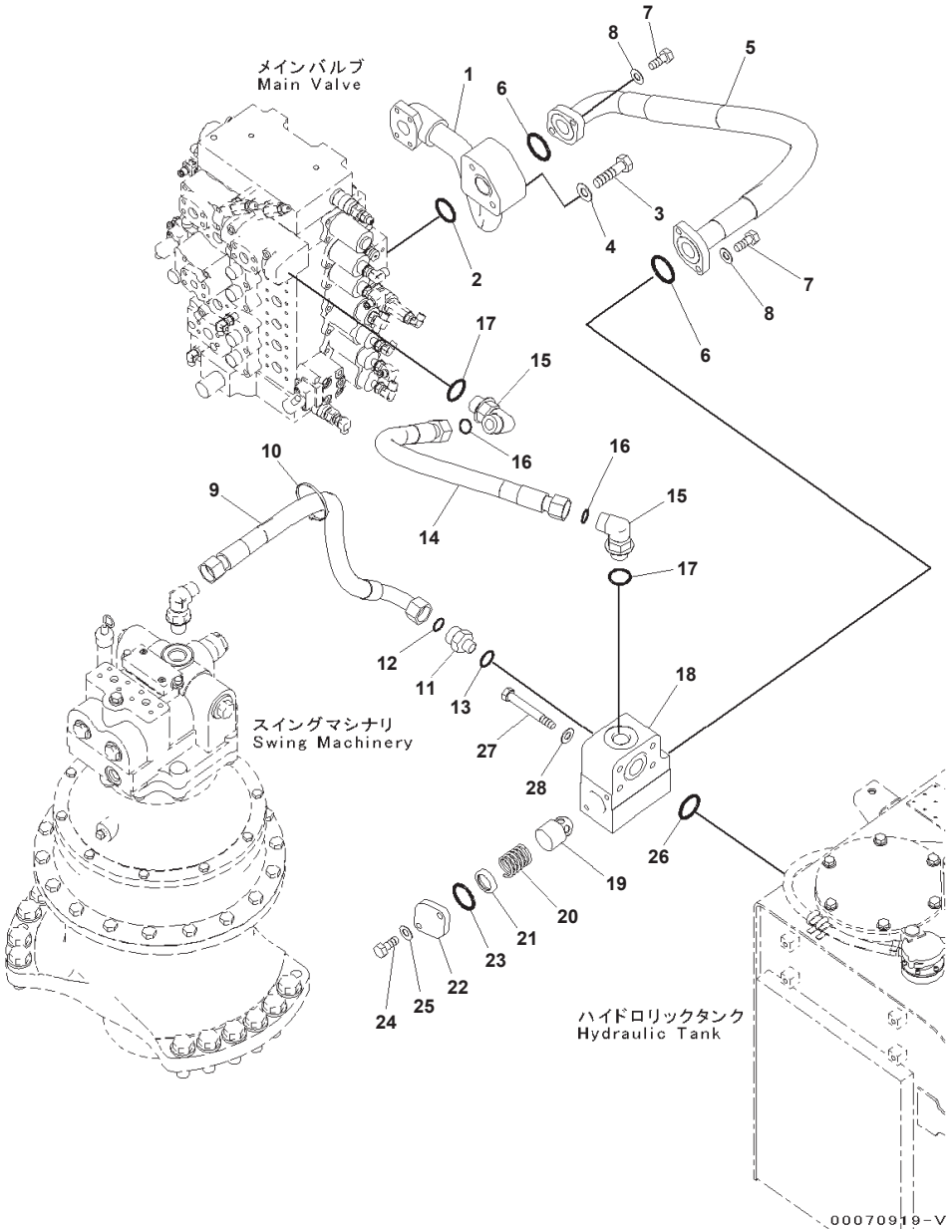

Index	Part Number	Description	Qty	Options
1	207-62-73211	Tube	1	SN:B10001--
2	07000-13045	O-ring	1	SN:B10001--
3	01010-81275	Bolt	2	SN:B10001--
4	01643-31232	Washer	2	SN:B10001--
5	207-62-74791	Hose	1	SN:B10001--
6	07000-13048	O-ring	2	SN:B10001--
7	01010-81240	Bolt	4	SN:B10001--
8	01643-31232	Washer	4	SN:B10001--
9	207-62-74781	Hose	1	SN:B10001--
10	08034-20536	Band	1	SN:B10001--
11	20U-62-41810	Nipple	1	SN:B10001--
12	207-62-64740	O-ring	1	SN:B10001--
13	07002-12434	O-ring	1	SN:B10001--
14	207-62-74681	Hose, L=680mm	1	SN:B10001--
15	21W-62-42640	Elbow	2	SN:B10001--
16	207-62-64740	O-ring	2	SN:B10001--
17	07002-13334	O-ring	2	SN:B10001--
18	208-62-71410	Block	1	SN:B10001--
19	207-60-75160	Valve	1	SN:B10001--
20	706-76-71190	Spring	1	SN:B10001--
21	207-60-51170	Spacer	1	SN:B10001--
22	207-62-75250	Flange	1	SN:B10001--
23	07000-12060	O-ring	1	SN:B10001--
24	01010-81235	Bolt	2	SN:B10001--
25	01643-31232	Washer	2	SN:B10001--
26	07000-12060	O-ring	1	SN:B10001--
27	01010-81290	Bolt	4	SN:B10001--
28	01643-31232	Washer	4	SN:B10001--

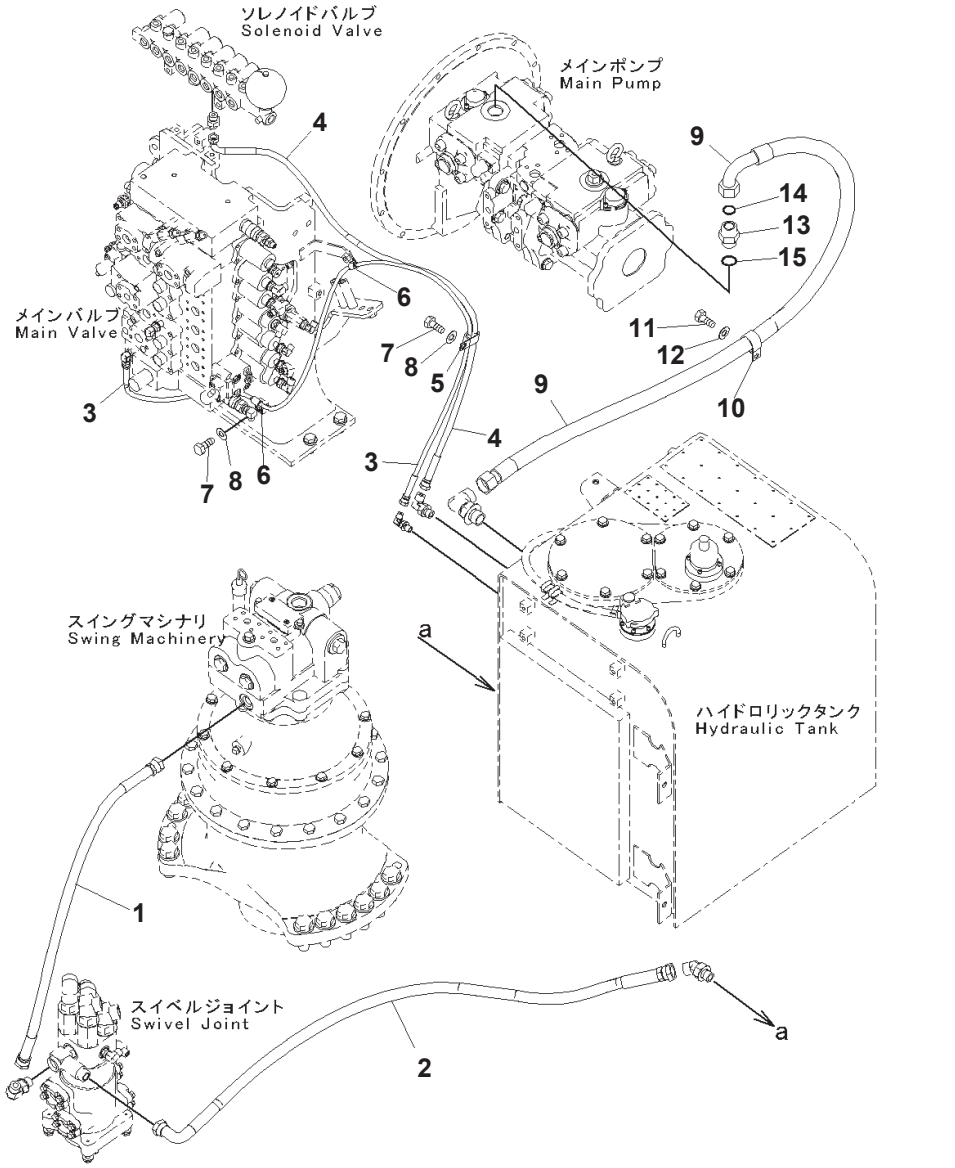

Drain Piping

Index	Part Number	Description	Qty	Options
1	02762-00509	Hose, Face Seal Type, L=900mm	1	SN:B10001--
2	207-62-74170	Hose, L=1400mm	1	SN:B10001--
3	207-62-74760	Hose, L=2100mm	1	SN:B10001--
4	02763-00415	Hose, Face Seal Type, L=1500mm	1	SN:B10001--
5	04435-51812	Clip	1	SN:B10001--
6	04434-51012	Clip	2	SN:B10001--
7	01010-81220	Bolt	2	SN:B10001--
8	01643-31232	Washer	2	SN:B10001--
9	208-62-71390	Hose, L=1750mm	1	SN:B10001--
10	113-899-7950	Clip	1	SN:B10001--
11	01010-81220	Bolt	1	SN:B10001--
12	01643-31232	Washer	1	SN:B10001--
13	207-62-72110	Union	1	SN:B10001--
14	207-62-64740	O-ring	1	SN:B10001--
15	07002-13334	O-ring	1	SN:B10001--

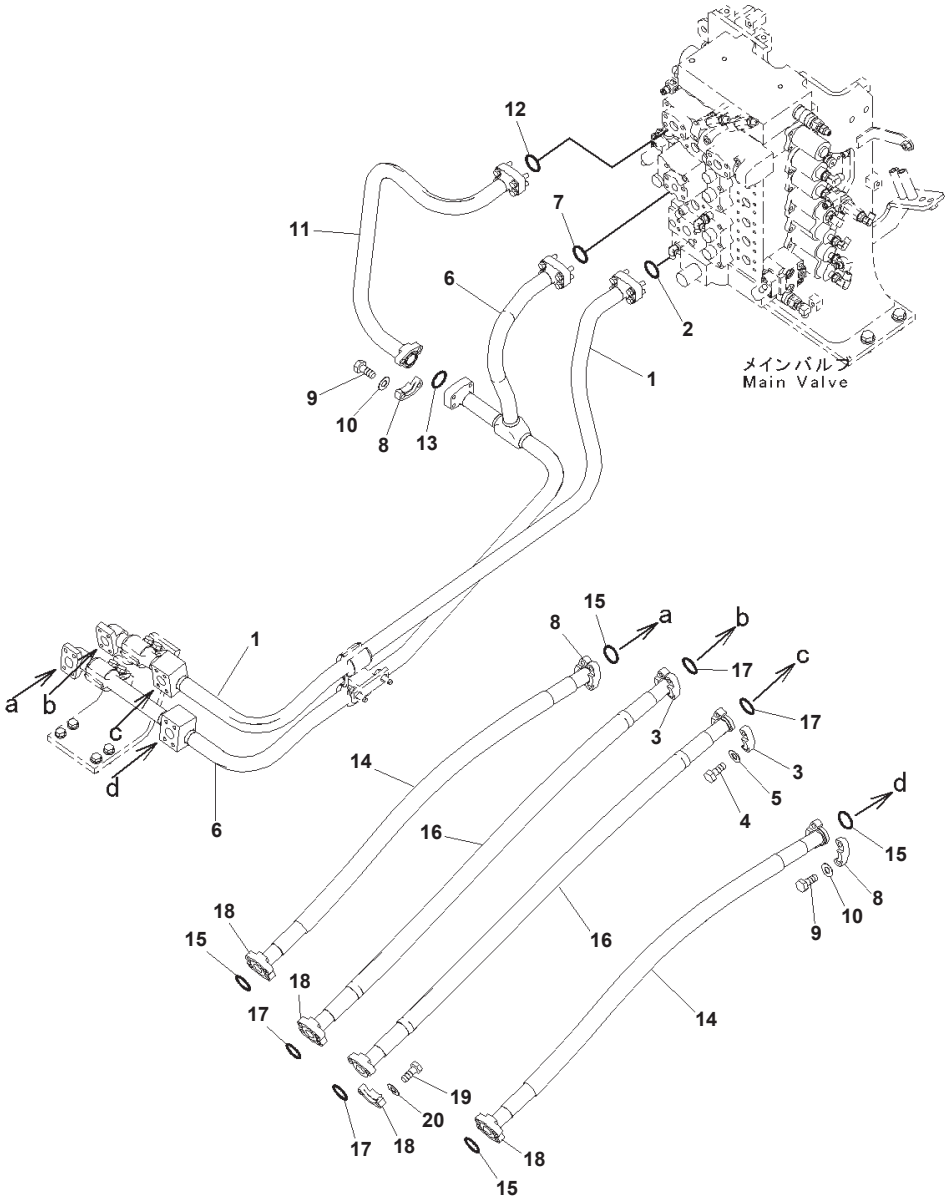

Index	Part Number	Description	Qty	Options
1	207-62-71211	Tube	1	SN:B10001--
2	07000-13035	O-ring	1	SN:B10001--
3	07371-31049	Flange	4	SN:B10001--
4	07372-21035	Bolt	8	SN:B10001--
5	01643-51032	Washer	8	SN:B10001--
6	207-62-71223	Tube	1	SN:B10001--
7	07000-13035	O-ring	1	SN:B10001--
8	07371-31049	Flange	6	SN:B10001--
9	07372-21035	Bolt	12	SN:B10001--
10	01643-51032	Washer	12	SN:B10001--
11	207-62-71231	Tube	1	SN:B10001--
12	07000-13035	O-ring	1	SN:B10001--
13	07000-13032	O-ring	1	SN:B10001--
14	207-62-52621	Hose, L=1100mm	2	SN:B10001--
15	07000-13032	O-ring	4	SN:B10001--
16	207-62-52610	Hose, L=1200mm	2	SN:B10001--
17	07000-13032	O-ring	4	SN:B10001--
18	07371-31049	Flange	8	SN:B10001--
19	07372-21035	Bolt	16	SN:B10001--
20	01643-51032	Washer	16	SN:B10001--

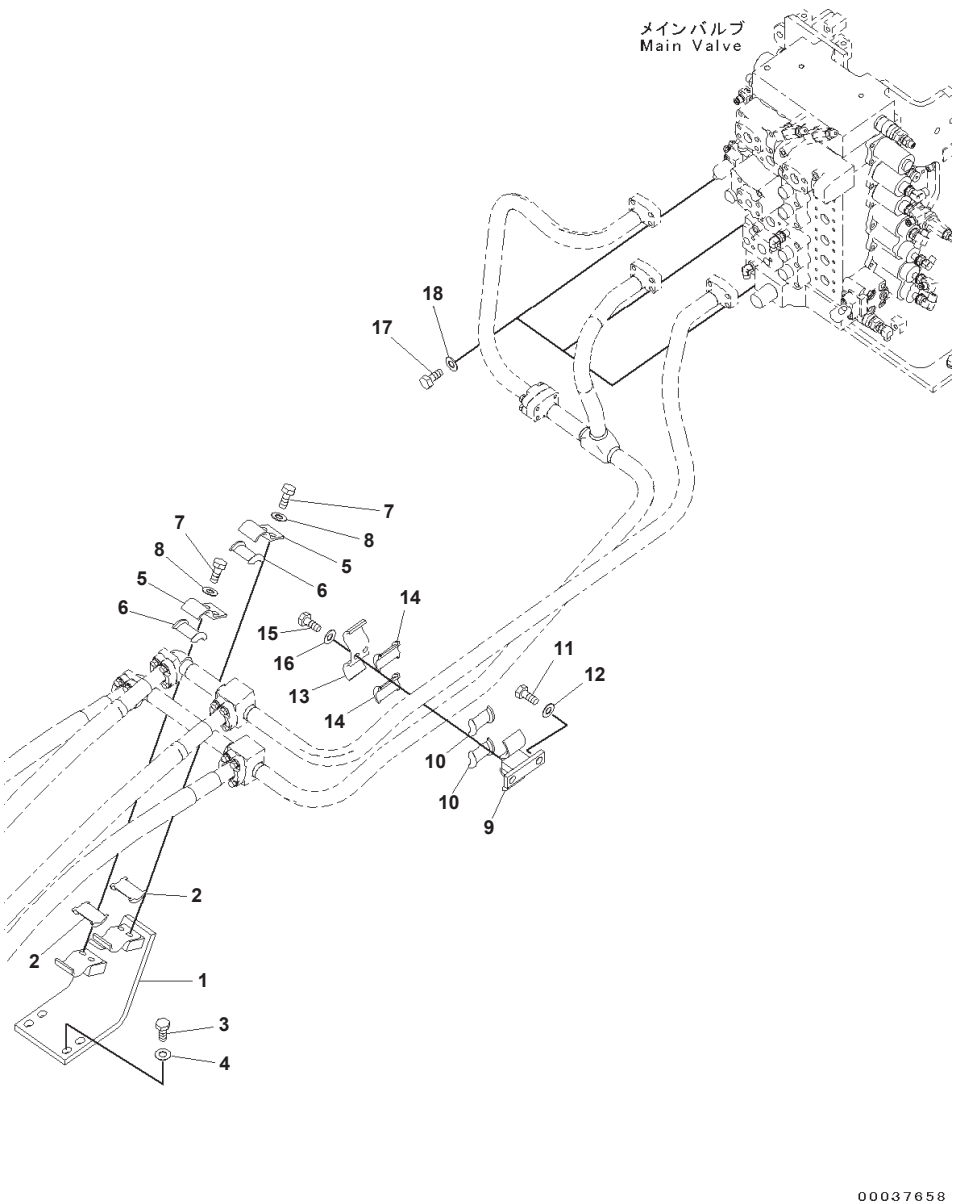

Index	Part Number	Description	Qty	Options
1	207-62-71321	Bracket	1	SN:B10001--
2	205-62-73430	・ Seat	2	SN:B10001--
3	01010-81235	Bolt	4	SN:B10001--
4	01643-31232	Washer	4	SN:B10001--
5	207-62-52430	Clamp	2	SN:B10001--
6	205-62-73430	・ Seat	1	SN:B10001--
7	01010-81230	Bolt	4	SN:B10001--
8	01643-31232	Washer	4	SN:B10001--
9	207-62-71330	Clamp	1	SN:B10001--
10	205-62-73430	・ Seat	2	SN:B10001--
11	01010-81230	Bolt	2	SN:B10001--
12	01643-31232	Washer	2	SN:B10001--
13	207-62-54770	Clamp	1	SN:B10001--
14	205-62-73430	・ Seat	2	SN:B10001--
15	01010-81230	Bolt	2	SN:B10001--
16	01643-31232	Washer	2	SN:B10001--
17	07372-21040	Bolt	12	SN:B10001--
18	01643-51032	Washer	12	SN:B10001--

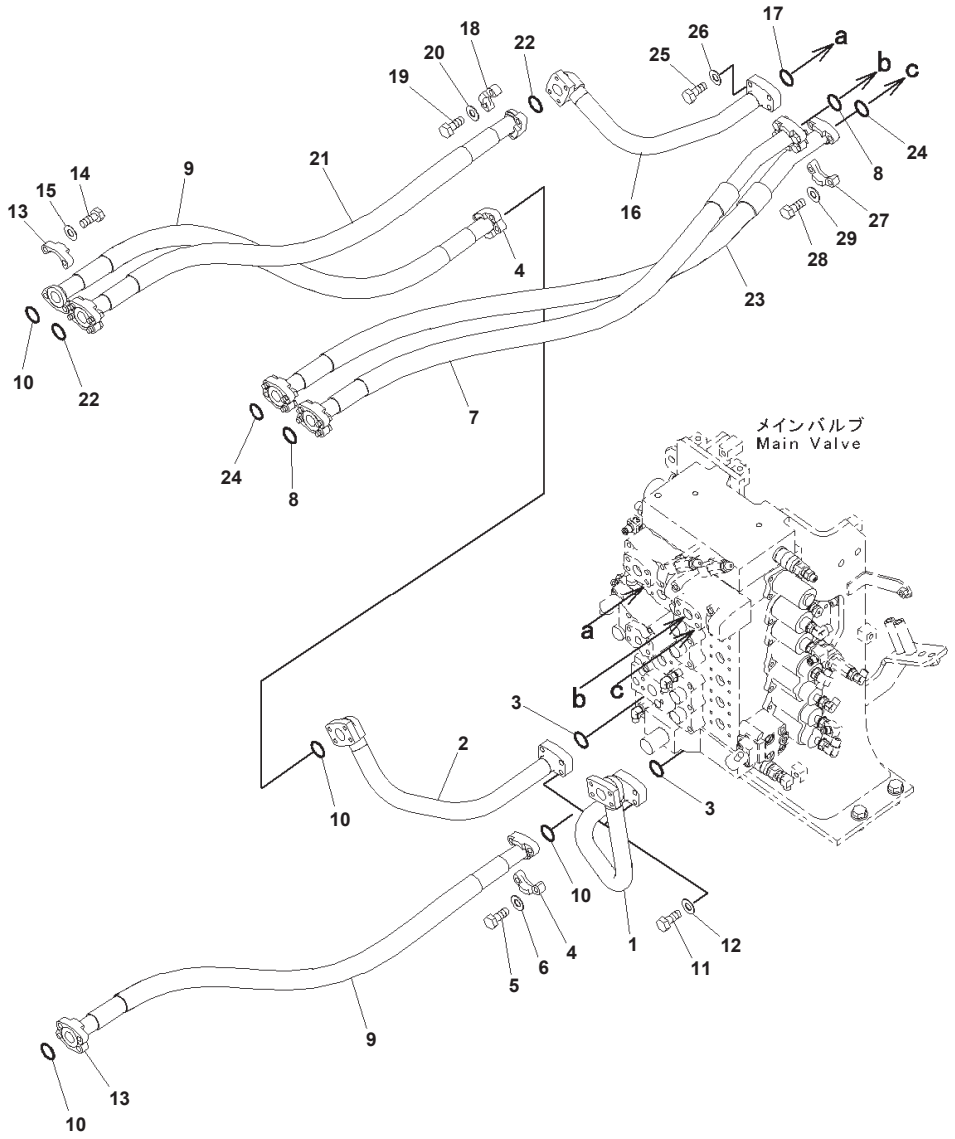

Index	Code	Part Number	Description	Qty	Options
1		207-62-71261	Tube	1	SN:B10001--
2		207-62-71281	Tube	1	SN:B10265--
	A2	207-62-71280	Tube	1	SN:B10001--B10264
3		07000-13035	O-ring	2	SN:B10001--
4		07371-31049	Flange	4	SN:B10001--
5		07372-21035	Bolt	8	SN:B10001--
6		01643-51032	Washer	8	SN:B10001--
7		207-62-71740	Hose Assembly	1	SN:B10001--
8		07000-13032	O-ring	2	SN:B10001--
9		207-62-71360	Hose Assembly, L=1380mm	2	SN:B10001--
10		07000-13032	O-ring	4	SN:B10001--
11		07372-21040	Bolt	8	SN:B10001--
12		01643-51032	Washer	8	SN:B10001--
13		07371-31049	Flange	4	SN:B10001--
14		07372-21035	Bolt	8	SN:B10001--
15		01643-51032	Washer	8	SN:B10001--
16		207-62-71311	Tube	1	SN:B10001--
17		07000-13035	O-ring	1	SN:B10001--
18		07371-31049	Flange	2	SN:B10001--
19		07372-21035	Bolt	4	SN:B10001--
20		01643-51032	Washer	4	SN:B10001--
21		207-62-71350	Hose, L=1280mm	1	SN:B10001--
22		07000-13032	O-ring	2	SN:B10001--
23		207-62-71370	Hose Assembly	1	SN:B10001--
24		07000-13032	O-ring	2	SN:B10001--
25		07372-21040	Bolt	4	SN:B10001--
26		01643-51032	Washer	4	SN:B10001--
27		07371-31049	Flange	2	SN:B10001--
28		07372-21035	Bolt	4	SN:B10001--
29		01643-51032	Washer	4	SN:B10001--

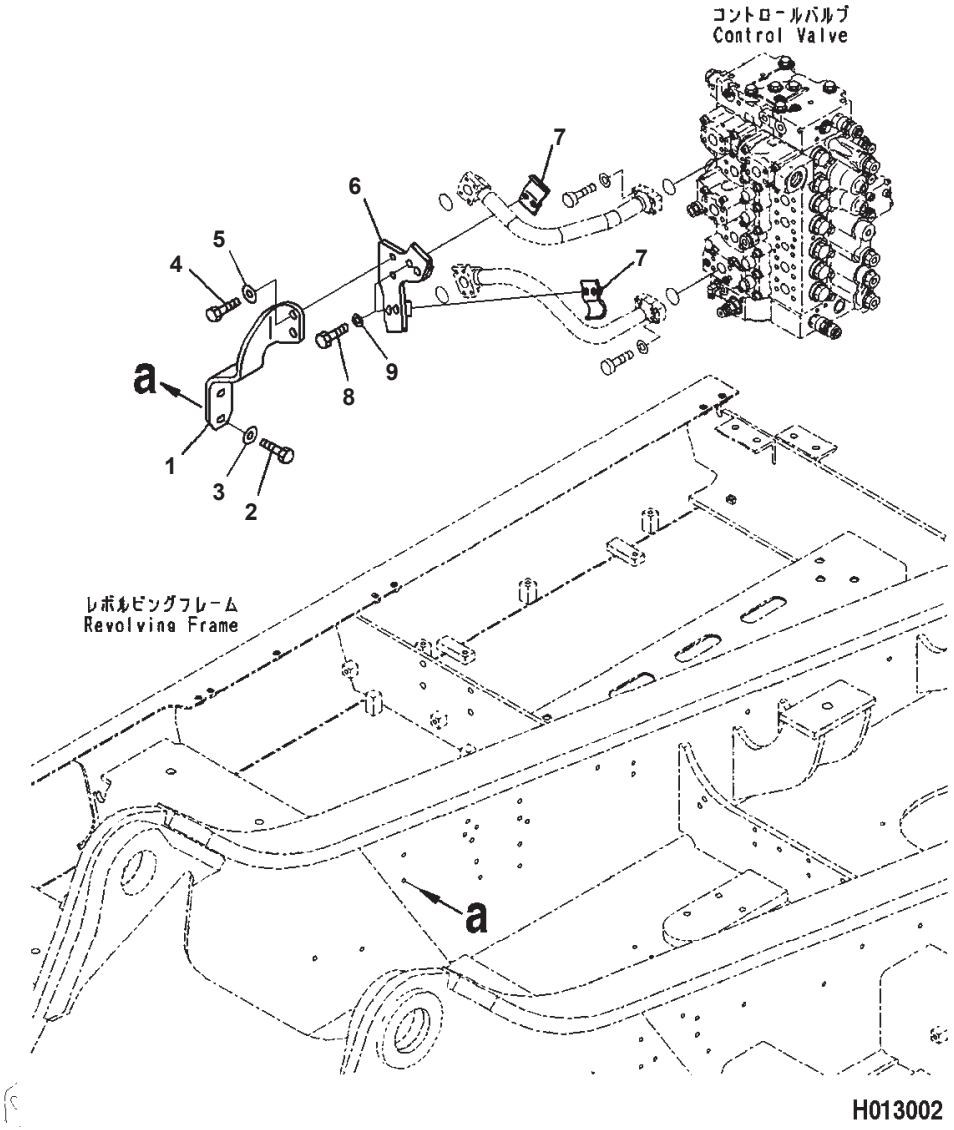

Arm And Bucket Piping, For Machine With Arm Holding Valve (2/2)

Index	Part Number	Description	Qty	Options
1	207-62-74582	Bracket	1	SN:B10265--
2	01010-81230	Bolt	2	SN:B10265--
3	01643-31032	Washer	2	SN:B10265--
4	01010-81240	Bolt	2	SN:B10265--
5	01643-31032	Washer	2	SN:B10265--
6	207-62-74560	Bracket	1	SN:B10265--
7	208-62-76910	Clamp	2	SN:B10265--
8	01010-81255	Bolt	3	SN:B10265--
9	01643-31232	Washer	3	SN:B10265--

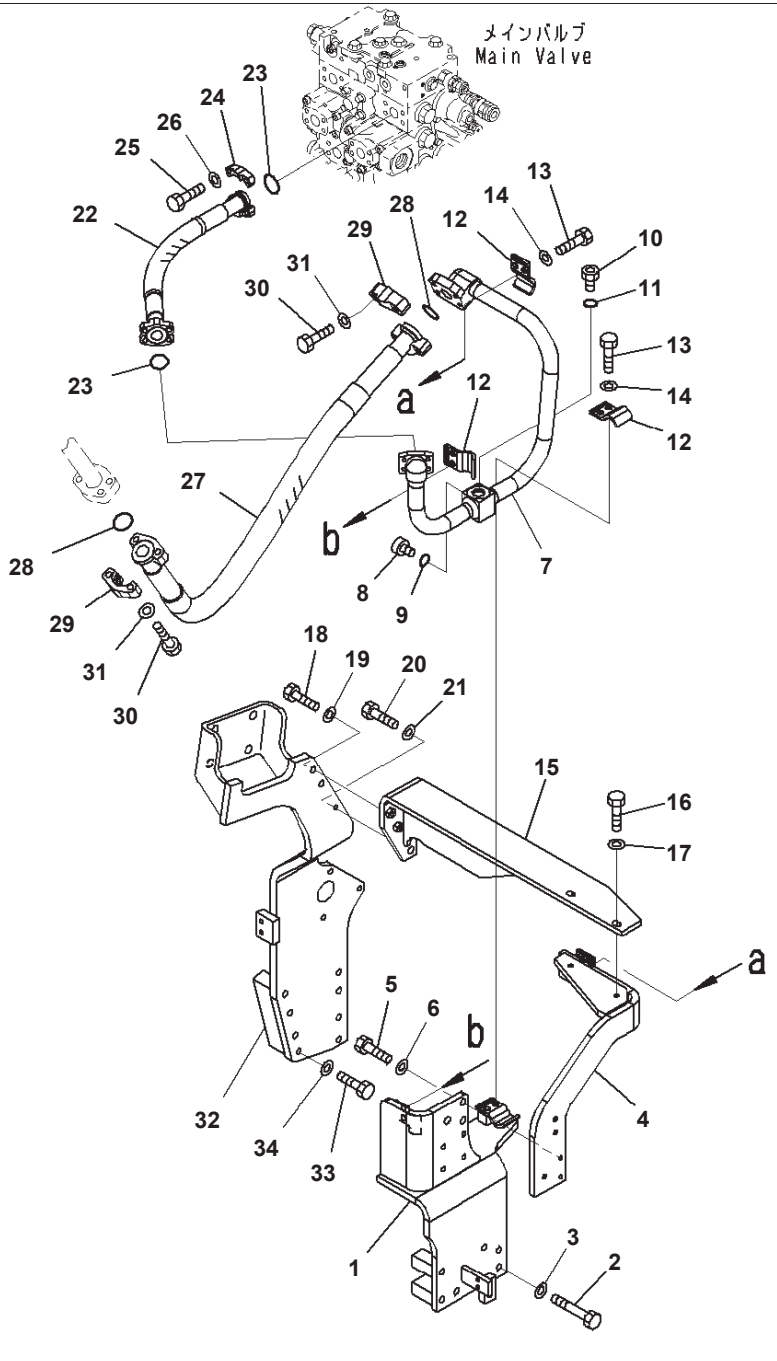

Index	Part Number	Description	Qty	Options
1	207-62-73112	Bracket	1	SN:B10001--
2	01011-81200	Bolt	6	SN:B10001--
3	01643-31232	Washer	6	SN:B10001--
4	207-62-73131	Bracket	1	SN:B10001--
5	01010-81235	Bolt	3	SN:B10001--
6	01643-31232	Washer	3	SN:B10001--
7	207-62-73120	Tube	1	SN:B10001--
8	07040-11007	Plug	1	SN:B10001--
9	07002-11023	O-ring	1	SN:B10001--
10	07040-12412	Plug	1	SN:B10001--
11	07002-12434	O-ring	1	SN:B10001--
12	207-62-31330	Clamp	3	SN:B10001--
13	01010-81235	Bolt	6	SN:B10001--
14	01643-31232	Washer	6	SN:B10001--
15	207-62-73621	Bracket	1	SN:B10001--
16	01010-81240	Bolt	2	SN:B10001--
17	01643-31232	Washer	2	SN:B10001--
18	01010-81245	Bolt	2	SN:B10001--
19	01643-31232	Washer	2	SN:B10001--
20	01010-81235	Bolt	1	SN:B10001--
21	01643-31232	Washer	1	SN:B10001--
22	207-62-73340	Hose, L=625mm	1	SN:B10001--
23	07000-13032	O-ring	2	SN:B10001--
24	07371-31049	Flange	4	SN:B10001--
25	07372-21035	Bolt	8	SN:B10001--
26	01643-51032	Washer	8	SN:B10001--
27	207-62-73390	Hose, L=1500mm	1	SN:B10001--
28	07000-13038	O-ring	2	SN:B10001--
29	07371-51260	Flange	4	SN:B10001--
30	01010-81245	Bolt	8	SN:B10001--
31	01643-31232	Washer	8	SN:B10001--
32	207-62-73141	Bracket	1	SN:B10001--
33	01011-81200	Bolt	8	SN:B10001--
34	01643-31232	Washer	8	SN:B10001--

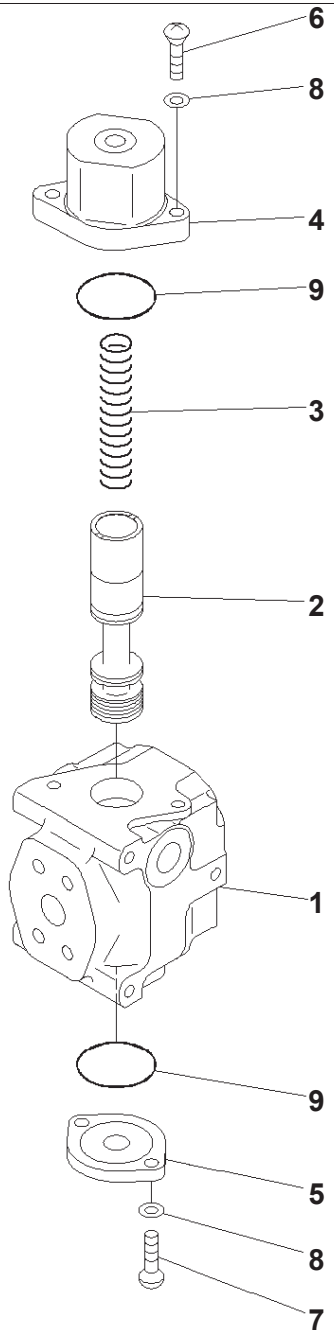

Index	Code	Part Number	Description	Qty	Options
		702-21-01920	Valve Assembly	1	SN:B10001--
1	C1		・ Block	1	SN:B10001--
2	C1		・ Spool	1	SN:B10001--
3		702-21-11930	・ Spring	1	SN:B10001--
4		702-21-11940	・ Case	1	SN:B10001--
5		709-10-91240	・ Flange	1	SN:B10001--
6		01252-61040	・ Bolt, Hexagon Socket Head	2	SN:B10001--
7		01252-61030	・ Bolt, Hexagon Socket Head	2	SN:B10001--
8		01643-51032	・ Washer	4	SN:B10001--
9		07000-12055	・ O-ring	2	SN:B10001--

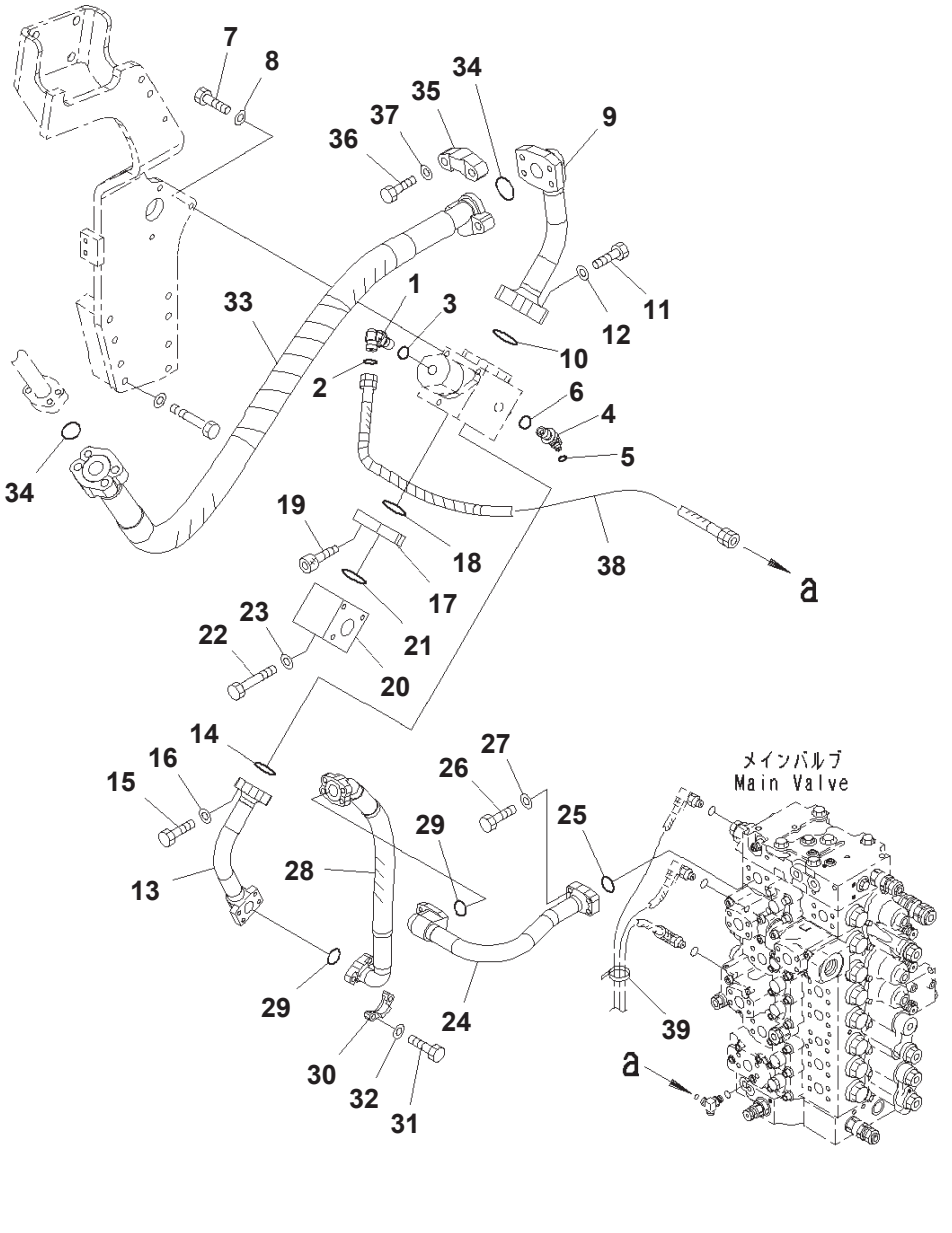

Index	Part Number	Description	Qty	Options
1	11Y-62-12160	Elbow	1	SN:B10001--
2	02896-11008	O-ring	1	SN:B10001--
3	07002-11423	O-ring	1	SN:B10001--
4	11Y-62-12170	Elbow	1	SN:B10001--
5	02896-11008	O-ring	1	SN:B10001--
6	07002-12034	O-ring	1	SN:B10001--
7	01010-81040	Bolt	3	SN:B10001--
8	01643-31032	Washer	3	SN:B10001--
9	207-62-73150	Tube	1	SN:B10001--
10	07000-13048	O-ring	1	SN:B10001--
11	01010-81455	Bolt	4	SN:B10001--
12	01643-31445	Washer	1	SN:B10001--
13	207-62-73190	Tube	1	SN:B10001--
14	07000-13035	O-ring	1	SN:B10001--
15	07372-21040	Bolt	4	SN:B10001--
16	01643-51032	Washer	4	SN:B10001--
17	207-62-73260	Plate	1	SN:B10001--
18	07000-13048	O-ring	1	SN:B10001--
19	01252-71225	Bolt, Hexagon Socket Head	2	SN:B10001--
20	207-62-73230	Block	1	SN:B10001--
21	07000-13048	O-ring	1	SN:B10001--
22	01011-81210	Bolt	2	SN:B10001--
23	01643-31232	Washer	2	SN:B10001--
24	207-62-73180	Tube	1	SN:B10001--
25	07000-13035	O-ring	1	SN:B10001--
26	07372-21040	Bolt	4	SN:B10001--
27	01643-51032	Washer	4	SN:B10001--
28	207-62-73290	Hose, L=630mm	1	SN:B10001--
29	07000-13032	O-ring	2	SN:B10001--
30	07371-31049	Flange	4	SN:B10001--
31	07372-21035	Bolt	8	SN:B10001--
32	01643-51032	Washer	8	SN:B10001--
33	207-62-73280	Hose, L=1830mm	1	SN:B10001--
34	07000-13048	O-ring	2	SN:B10001--
35	07371-51470	Flange, Split	4	SN:B10001--
36	01010-81455	Bolt	8	SN:B10001--
37	01643-31445	Washer	8	SN:B10001--
38	207-62-73380	Hose, L=700mm	1	SN:B10001--
39	08034-20536	Band	1	SN:B10001--

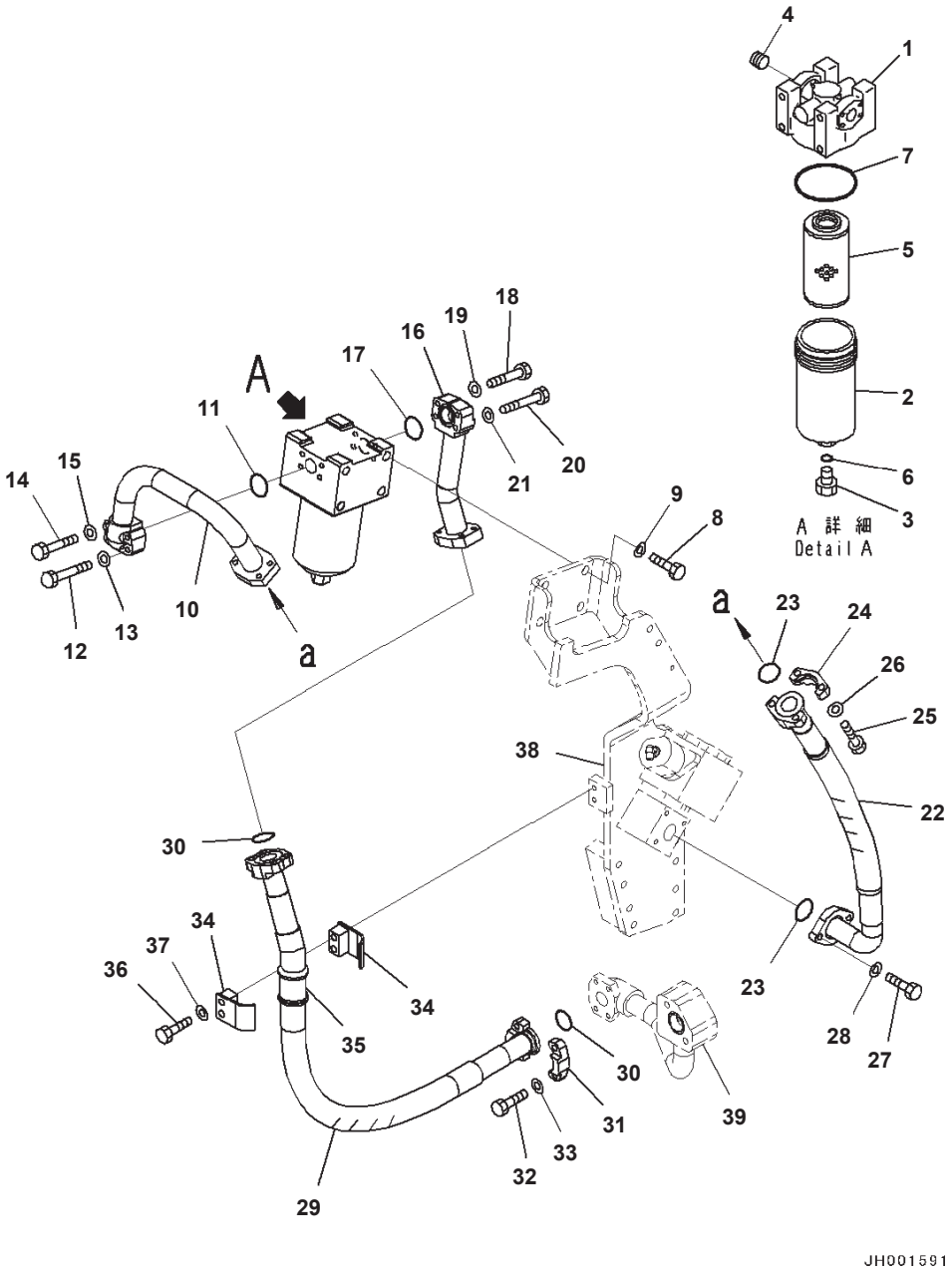

Index	Code	Part Number	Description	Page	Item	Qty	Options
		207-970-5111	Filter			1	SN:B10001--
1	C1		· Cover			1	SN:B10001--
2	C1		· Case			1	SN:B10001--
3	C1		· Bolt			1	SN:B10001--
4	C1		· Valve			1	SN:B10001--
5		207-970-5121	· Element			1	SN:B10001--
6		07000-12011	· O-ring			1	SN:B10001--
7		07000-12125	· O-ring			1	SN:B10001--
8		01010-81635	Bolt			4	SN:B10001--
9		01643-31645	Washer			4	SN:B10001--
10		207-62-73160	Tube			1	SN:B10001--
11		07000-13040	O-ring			1	SN:B10001--
12		01010-81055	Bolt			2	SN:B10001--
13		01643-31032	Washer			2	SN:B10001--
14		01010-81070	Bolt			2	SN:B10001--
15		01643-31032	Washer			2	SN:B10001--
16		207-62-73170	Tube			1	SN:B10001--
17		07000-13040	O-ring			1	SN:B10001--
18		01010-81055	Bolt			2	SN:B10001--
19		01643-31032	Washer			2	SN:B10001--
20		01010-81070	Bolt			2	SN:B10001--
21		01643-31032	Washer			2	SN:B10001--
22		207-62-73310	Hose, L=740mm			1	SN:B10001--
23		07000-13048	O-ring			2	SN:B10001--
24		07371-31465	Flange			2	SN:B10001--
25		07372-21240	Bolt			4	SN:B10001--
26		01643-51232	Washer			4	SN:B10001--
27		01010-81240	Bolt			2	SN:B10001--
28		01643-31232	Washer			2	SN:B10001--
29		207-62-73320	Hose, L=1350mm			1	SN:B10001--
30		07000-13048	O-ring			2	SN:B10001--
31		07371-31465	Flange			4	SN:B10001--
32		07372-21240	Bolt			8	SN:B10001--
33		01643-51232	Washer			8	SN:B10001--
34		07094-11228	Clamp			2	SN:B10001--
35		07095-01245	Cushion			1	SN:B10001--
36		01010-81285	Bolt			2	SN:B10001--
37		01643-31232	Washer			2	SN:B10001--
38		(207-62-73141)	Bracket	H1270-003001	32		SN:--
39		(207-62-73211)	Tube	H0330-002001	1		SN:--

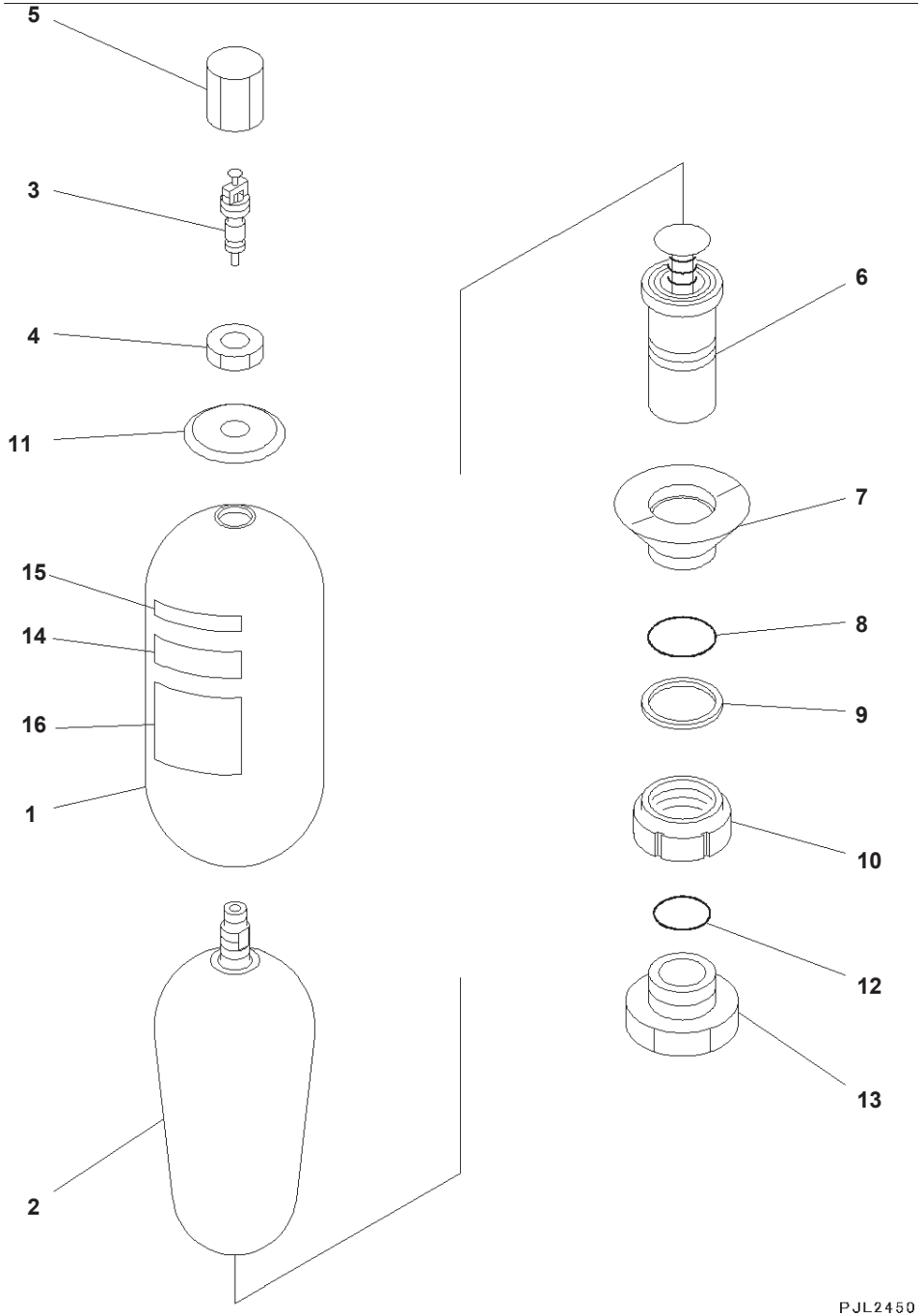

Index	Code	Part Number	Description	Qty	Options
		20Y-970-6451	Accumulator Assembly	1	SN:B10361--
	A2	20Y-970-6450	Accumulator Assembly	1	SN:B10001--B10360
1	C1		・ Shell	1	SN:B10001--
		NFEB3401 A1	・ Bleeder Assembly	1	SN:B10001--
2		NFEB3026 A1	・・ Bleeder	1	SN:B10001--
3		NFEB4475 Z0	・・ Core	1	SN:B10001--
4	C1		・ Nut	1	SN:B10001--
5	C1		・ Cap	1	SN:B10001--
6		NFEB0427 Z0	・ Body Assembly	1	SN:B10001--
7		NFEB4477 Z0	・ Ring	1	SN:B10001--
8	C1		・ O-ring, (Kit : K01)	1	SN:B10001--
9	C1		・ Ring, Back-up, (Kit : K01)	1	SN:B10001--
10	C1		・ Ring	1	SN:B10001--
11	C1		・ Plate	1	SN:B10001--
12		205-970-5560	・ O-ring, (Kit : K01)	1	SN:B10001--
13	C1		・ Bushing	1	SN:B10001--
14		09659-A057B	・ Plate	1	SN:B10361--
15	C1		・ Plate	1	SN:B10361--
16	C1		・ Plate	1	SN:B10361--

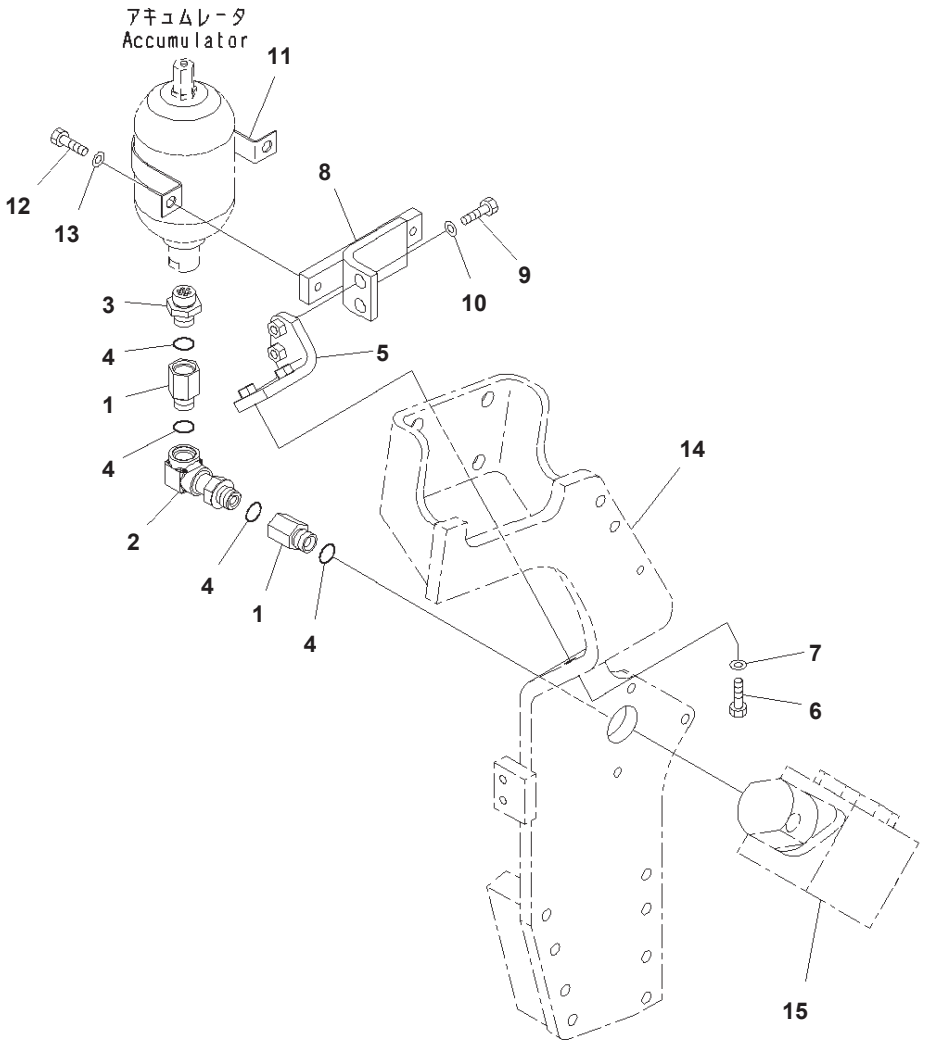

Index	Code	Part Number	Description	Page	Item	Qty	Options
		20Y-970-6451	Accumulator Assembly			1	SN:B10361--
	A2	20Y-970-6450	Accumulator Assembly			1	SN:B10001--B10360
1		201-62-71810	Joint			2	SN:B10001--
2		207-62-73350	Elbow			1	SN:B10001--
3		205-970-5550	Nipple			1	SN:B10001--
4		07002-12434	O-ring			4	SN:B10001--
5		207-62-73251	Bracket			1	SN:B10001--
6		01010-81250	Bolt			2	SN:B10001--
7		01643-31232	Washer			2	SN:B10001--
8		207-62-73240	Bracket			1	SN:B10001--
9		01010-81240	Bolt			2	SN:B10001--
10		01643-31232	Washer			2	SN:B10001--
11		175-61-51750	Plate			1	SN:B10001--
12		01010-81225	Bolt			2	SN:B10001--
13		01643-31232	Washer			2	SN:B10001--
14		(207-62-73141)	Bracket	H1270-003001	32		SN:--
15		(702-21-01920)	Valve Assembly	H1270-003002	1		SN:--

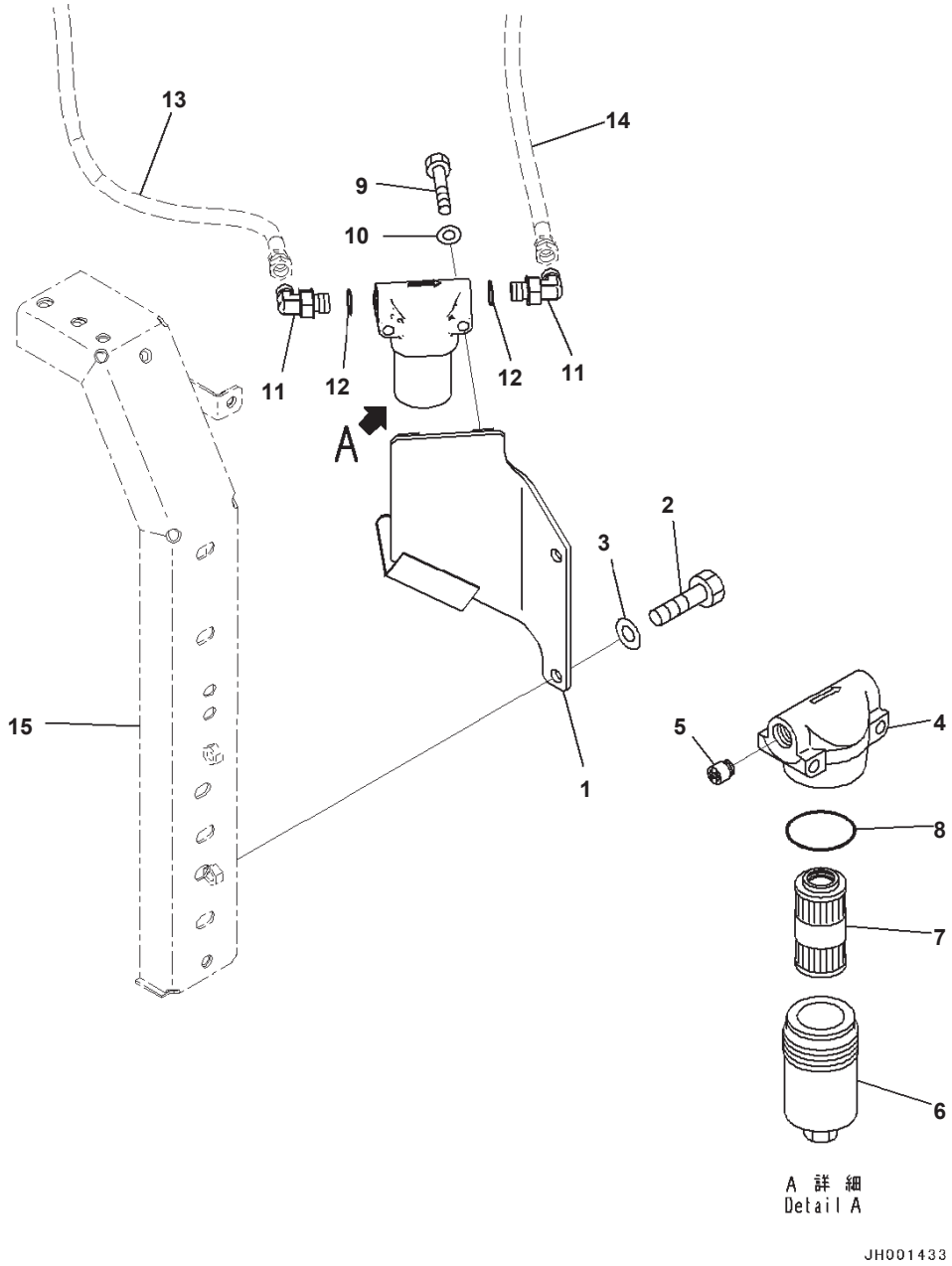

Index	Code	Part Number	Description	Page	Item	Qty	Options
1		207-62-75120	Bracket			1	SN:B10001--
2		01010-81225	Bolt			2	SN:B10001--
3		01643-31232	Washer			2	SN:B10001--
		20Y-62-51681	Valve Assembly			1	SN:B10001--
4	C1		・ Head			1	SN:B10001--
5	C1		・ Valve Assembly			1	SN:B10001--
6	C1		・ Case			1	SN:B10001--
7		20Y-62-51691	・ Filter			1	SN:B10001--
8		706-76-71390	・ O-ring			1	SN:B10001--
9		01010-81075	Bolt			2	SN:B10001--
10		01643-31032	Washer			2	SN:B10001--
11		02782-10315	Elbow			2	SN:B10001--
12		07002-12034	O-ring			2	SN:B10001--
13		(02760-00321)	Hose, Face Seal Type	H1810-001001	11		SN:--
14		(207-62-75180)	Hose	H1810-001001	26		SN:--
15		(207-54-76140)	Frame	M1130-001001	2		SN:--

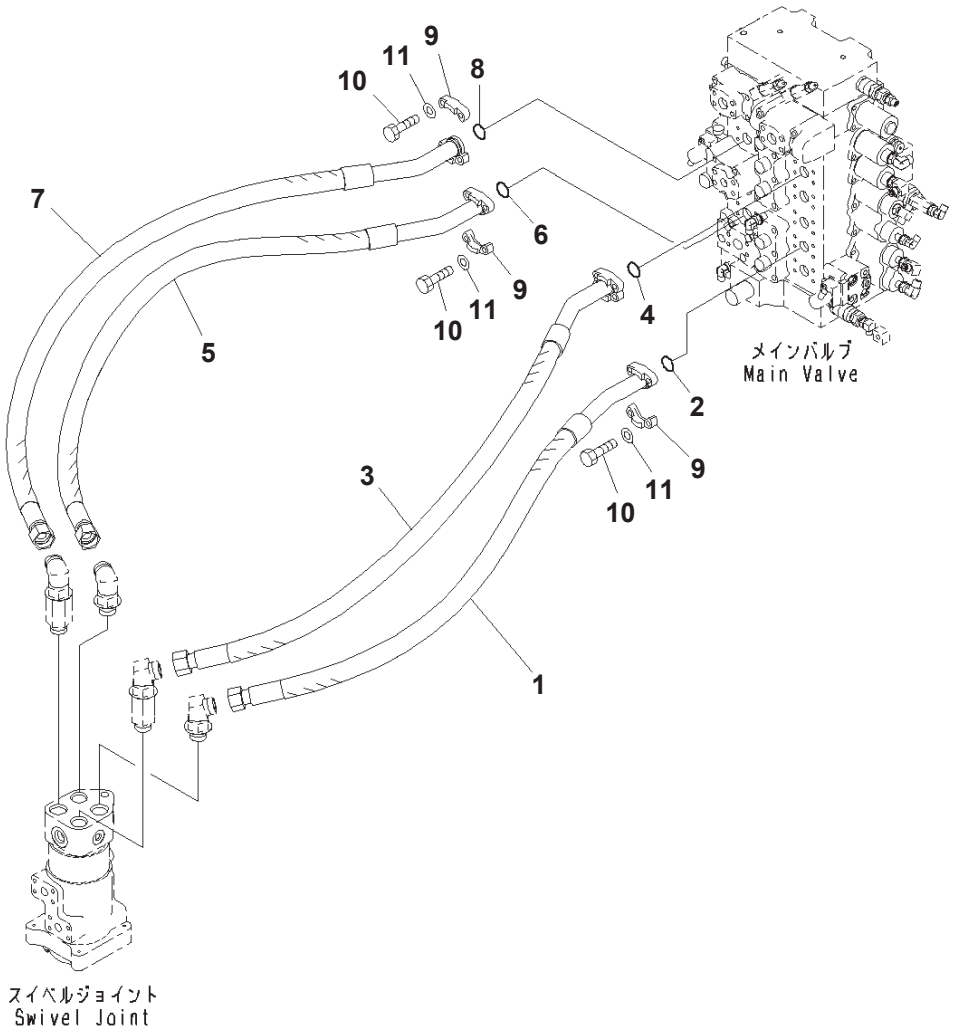

Travel Piping

Index	Part Number	Description	Qty	Options
1	207-62-71430	Hose Assembly, L=1250mm	1	SN:B10001--
2	07000-13032	O-ring	1	SN:B10001--
3	207-62-71440	Hose Assembly, L=1350mm	1	SN:B10001--
4	07000-13032	O-ring	1	SN:B10001--
5	207-62-71450	Hose Assembly, L=1400mm	1	SN:B10001--
6	07000-13032	O-ring	1	SN:B10001--
7	207-62-71460	Hose Assembly, L=1500mm	1	SN:B10001--
8	07000-13032	O-ring	1	SN:B10001--
9	07371-31049	Flange	8	SN:B10001--
10	07372-21035	Bolt	16	SN:B10001--
11	01643-51032	Washer	16	SN:B10001--

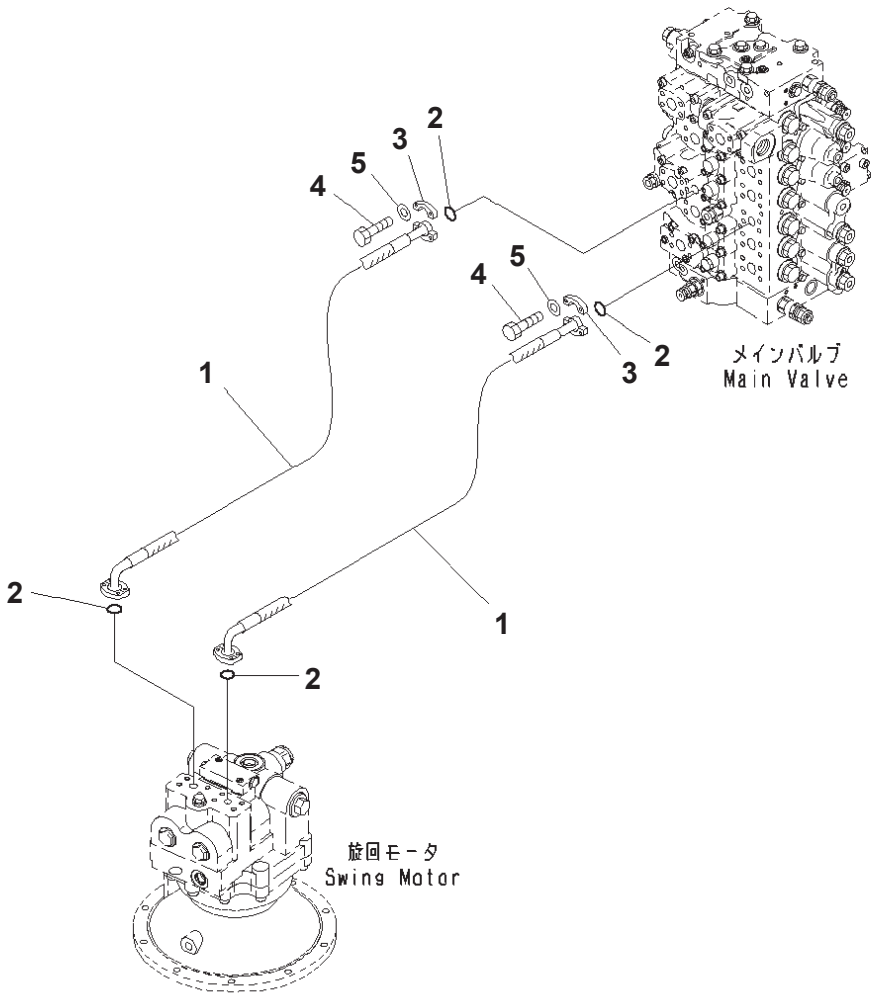

Index	Part Number	Description	Qty	Options
1	07098-010A9	Hose, Flange Type	2	SN:B10001--
2	07000-13032	O-ring	4	SN:B10001--
3	07371-31049	Flange	8	SN:B10001--
4	07372-21035	Bolt	16	SN:B10001--
5	01643-51032	Washer	16	SN:B10001--

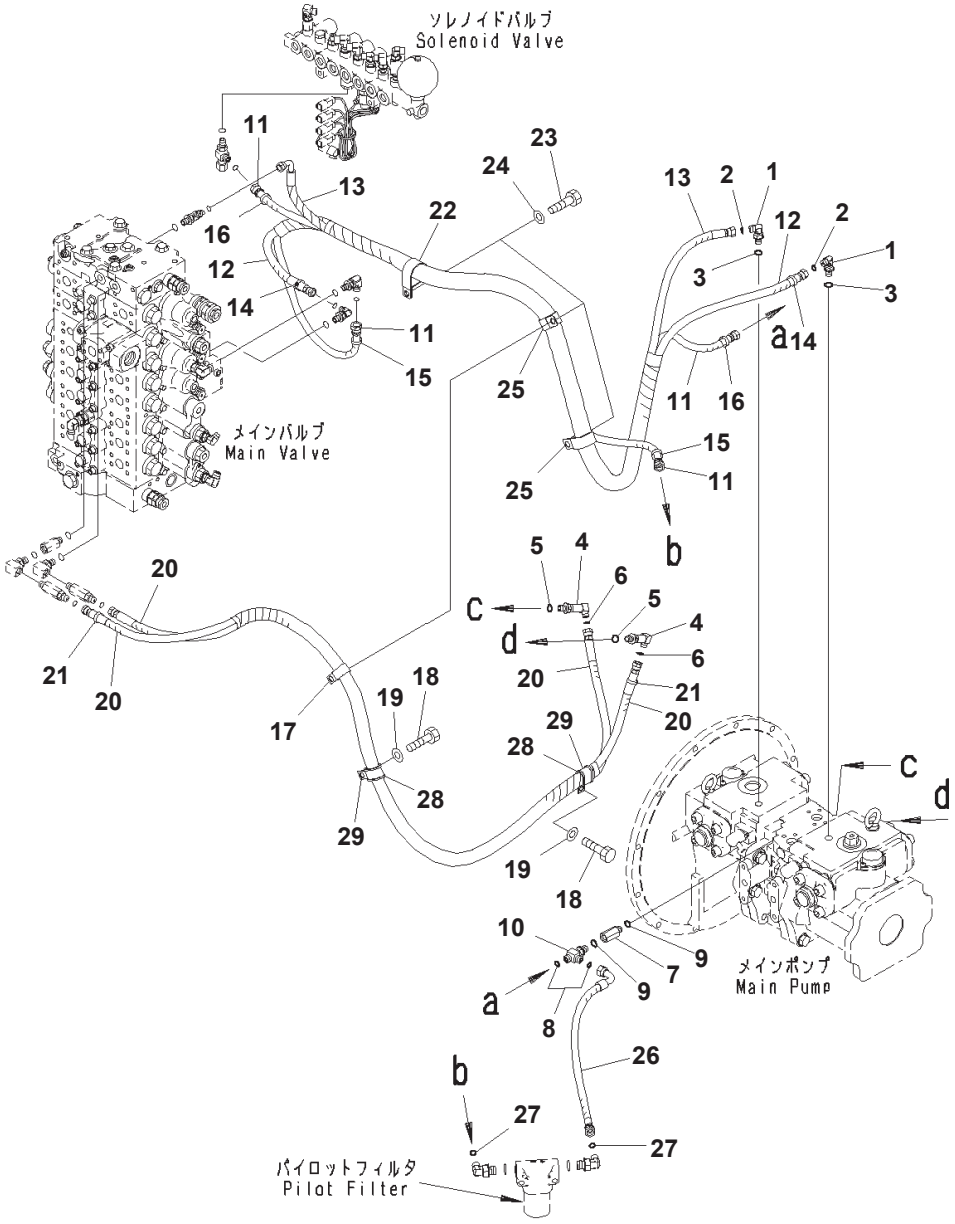

Index	Part Number	Description	Qty	Options
1	11Y-62-12160	Elbow	2	SN:B10001--
2	02896-11008	O-ring	2	SN:B10001--
3	07002-11423	O-ring	2	SN:B10001--
4	11Y-62-12370	Elbow	2	SN:B10001--
5	02896-11008	O-ring	2	SN:B10001--
6	07002-11423	O-ring	2	SN:B10001--
7	20Y-62-22160	Adapter	1	SN:B10001--
8	02896-11009	O-ring	2	SN:B10001--
9	07002-11423	O-ring	2	SN:B10001--
10	21N-64-36680	Tee	1	SN:B10001--
11	02760-00321	Hose, Face Seal Type, L=2100mm	2	SN:B10001--
12	207-62-74860	Hose, L=2400mm	1	SN:B10001--
13	207-62-74870	Hose	1	SN:B10001--
14	20Y-62-22790	Band, Red	2	SN:B10001--
15	20Y-62-22810	Band, Yellow	2	SN:B10001--
16	20Y-62-22830	Band, White	2	SN:B10001--
17	04435-51812	Clip	1	SN:B10001--
18	01010-81220	Bolt	2	SN:B10001--
19	01643-31232	Washer	2	SN:B10001--
20	207-62-74850	Hose, L=2500mm	2	SN:B10001--
21	20Y-62-22790	Band, Red	2	SN:B10001--
22	21T-06-11950	Clip	1	SN:B10001--
23	01010-81225	Bolt	3	SN:B10001--
24	01643-31232	Washer	3	SN:B10001--
25	208-06-19170	Clip	2	SN:B10001--
26	207-62-75180	Hose	1	SN:B10001--
27	02896-11009	O-ring	2	SN:B10001--
28	198-06-53630	Cushion	2	SN:B10001--
29	04435-52112	Clip	2	SN:B10001--

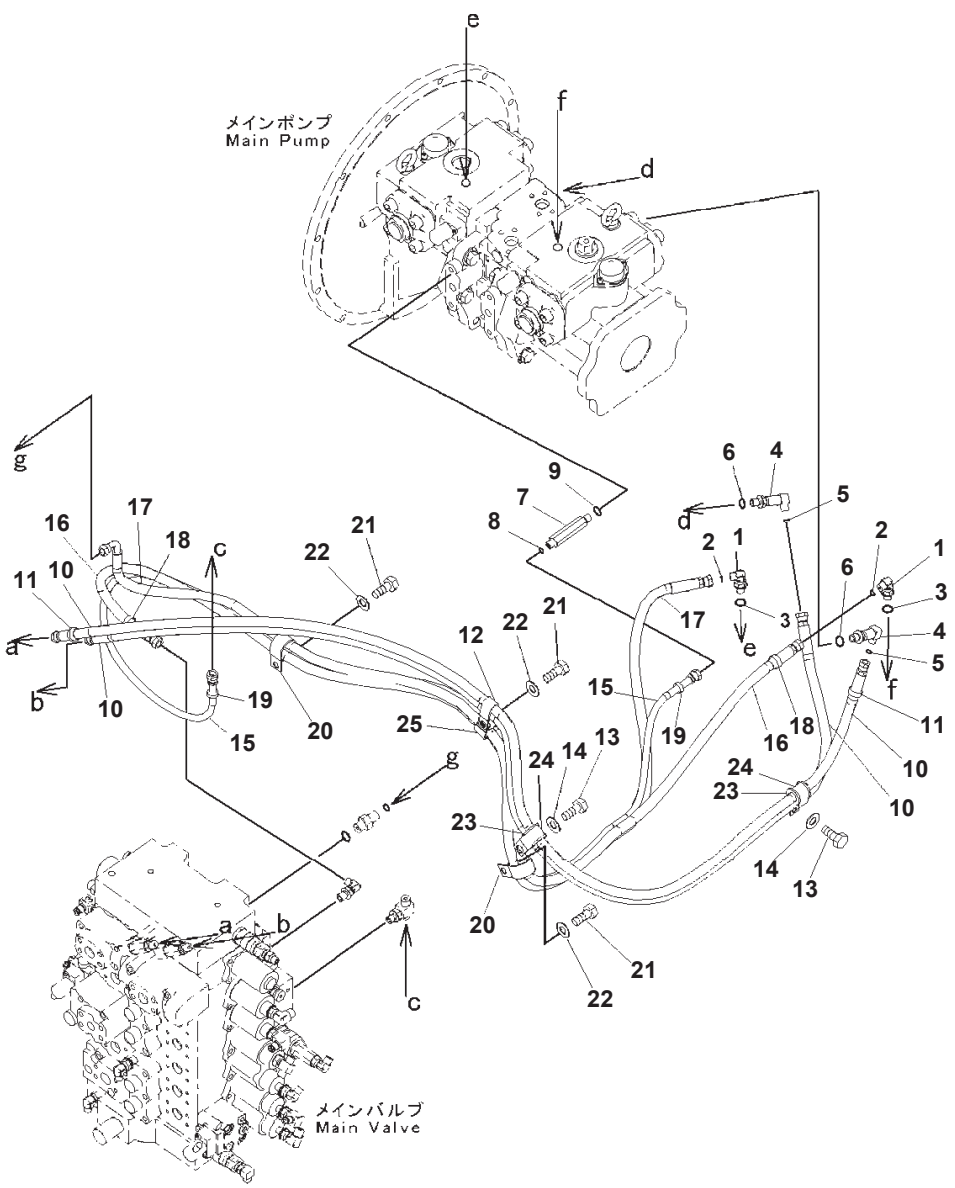

Index	Part Number	Description	Qty	Options
1	11Y-62-12160	Elbow	2	SN:B10172--
2	02896-11008	O-ring	2	SN:B10172--
3	07002-11423	O-ring	2	SN:B10172--
4	11Y-62-12370	Elbow	2	SN:B10172--
5	02896-11008	O-ring	2	SN:B10172--
6	07002-11423	O-ring	2	SN:B10172--
7	207-62-71531	Union	1	SN:B10172--
8	02896-11008	O-ring	1	SN:B10172--
9	07002-11423	O-ring	1	SN:B10172--
10	207-62-74850	Hose	2	SN:B10172--
11	20Y-62-22790	Band, Red	2	SN:B10172--
12	04435-51812	Clip	1	SN:B10172--
13	01010-81220	Bolt	2	SN:B10172--
14	01643-31232	Washer	2	SN:B10172--
15	02760-00227	Hose, Face Seal Type	1	SN:B10172--
16	207-62-74860	Hose	1	SN:B10172--
17	207-62-74870	Hose	1	SN:B10172--
18	20Y-62-22790	Band, Red	2	SN:B10172--
19	20Y-62-22810	Band, Yellow	2	SN:B10172--
20	113-899-7950	Clip	2	SN:B10172--
21	01010-81225	Bolt	3	SN:B10172--
22	01643-31232	Washer	3	SN:B10172--
23	198-06-53630	Cushion	2	SN:B10172--
24	04435-52112	Clip	2	SN:B10172--
25	20Y-62-15951	Clip	1	SN:B10172--

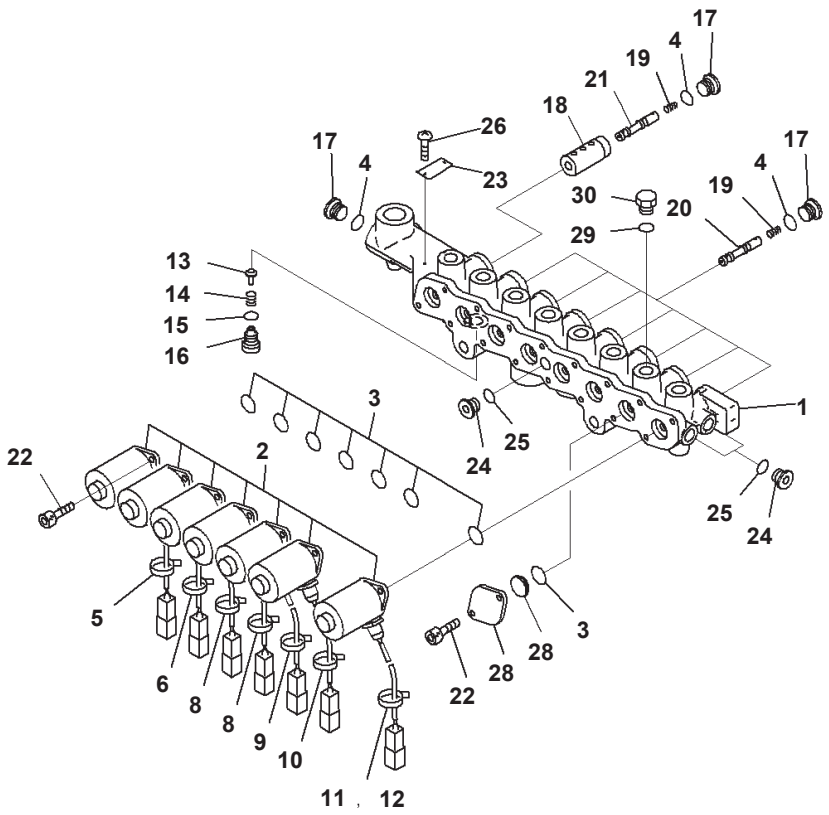

Solenoid Valve Piping, Solenoid Valve (1/2) (#B10172-)

Index	Code	Part Number	Description	Qty	Options
		207-60-71311	Valve Assembly	1	SN:B10172--
1	C1		· Block	1	SN:B10172--
2		20Y-60-32121	· Solenoid Assembly	7	SN:B10172--
3		07000-12016	· O-ring	8	SN:B10172--
4		07000-12011	· O-ring	9	SN:B10172--
5		NY07207-11700	· Tube	1	SN:B10172--
6		NY07529-10200	· Tube	1	SN:B10172--
7		NY07529-10300	· Tube	1	SN:B10172--
8		NY07529-10400	· Tube	1	SN:B10172--
9		NY07529-10500	· Tube	1	SN:B10172--
10		NY07529-10600	· Tube	1	SN:B10172--
11		NY07207-11800	· Tube	1	SN:B10172--
12		NY89103-00090	· Band	7	SN:B10172--
13		NY05062-1170A	· Plunger	1	SN:B10172--
14		NY05062-11800	· Spring	1	SN:B10172--
15		07000-11010	· O-ring	1	SN:B10172--
16		NY06277-1320A	· Plug	1	SN:B10172--
17		NY80000-02200	· Plug	9	SN:B10172--
18		NY16207-10200	· Sleeve	1	SN:B10172--
19		NY06339-10200	· Spring	8	SN:B10172--
20		NY07493-10200	· Spool	7	SN:B10172--
21		NY16207-10300	· Spool	1	SN:B10172--
22		NY81446-05012	· Bolt	16	SN:B10172--
23		NY09000-11400	· Plate	1	SN:B10172--
24		NY80000-02100	· Plug	3	SN:B10172--
25		07000-11008	· O-ring	3	SN:B10172--
26		NY84110-00248	· Screw	2	SN:B10172--
27		NY07926-10100	· Plate	1	SN:B10172--
28		NY01720-10600	· Stopper	1	SN:B10172--
29		07002-11423	· O-ring	1	SN:B10172--
30		07040-11409	· Plug	1	SN:B10172--

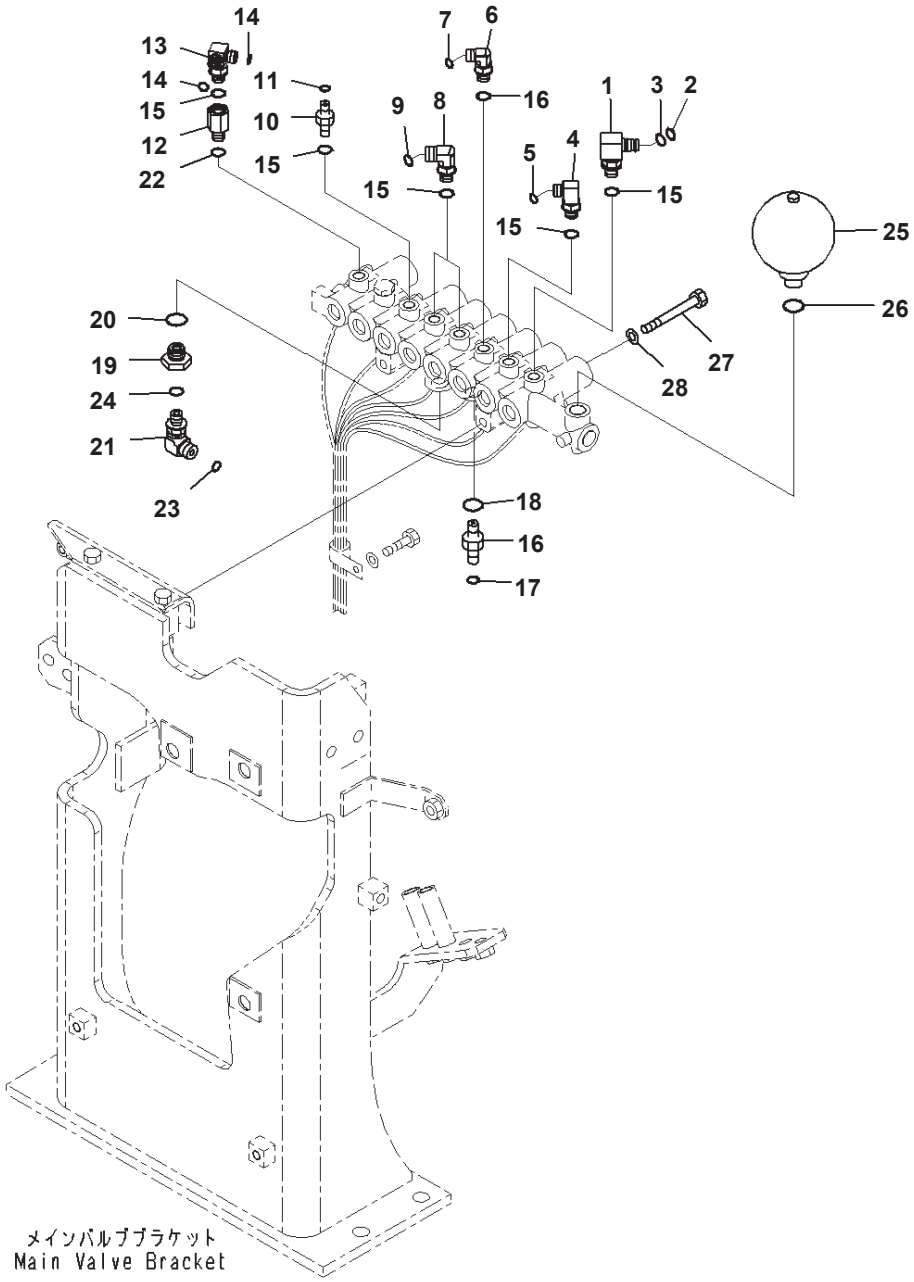

Solenoid Valve Piping, Solenoid Valve (2/2) (#B10172-)

Index	Code	Part Number	Description	Qty	Options
1		20Y-62-22271	Elbow	1	SN:B10172--
2		201-60-11390	・O-ring	1	SN:B10172--
3		20Y-62-19560	・O-ring	1	SN:B10172--
4		207-62-72120	Elbow	1	SN:B10172--
5		02896-11008	O-ring	1	SN:B10172--
6		11Y-62-12160	Elbow	1	SN:B10172--
7		02896-11008	O-ring	1	SN:B10172--
8		21W-62-42490	Elbow	2	SN:B10172--
9		02896-11009	O-ring	2	SN:B10172--
10		11Y-62-12130	Nipple	1	SN:B10172--
11		02896-11009	O-ring	1	SN:B10172--
12		21M-62-16350	Adapter	1	SN:B10172--
13		207-62-72141	Elbow	1	SN:B10172--
14		02896-11008	O-ring	2	SN:B10172--
15		07002-11423	O-ring	7	SN:B10172--
16		02781-00422	Union	1	SN:B10172--
17		02896-11012	O-ring	1	SN:B10172--
18		07002-12034	O-ring	1	SN:B10172--
19		20Y-62-21940	Filter Assembly	1	SN:B10172--
20		07002-12034	O-ring	1	SN:B10172--
21		21W-62-42490	Elbow	1	SN:B10172--
22		07002-11423	O-ring	1	SN:B10172--
23		02896-11009	O-ring	1	SN:B10172--
24		07002-11423	O-ring	1	SN:B10172--
25		22U-60-21331	Accumulator	1	SN:B10320--
	C1	22U-60-21330	Accumulator	1	SN:B10172--B10319
26		07002-12034	O-ring	1	SN:B10172--
27		01010-81095	Bolt	2	SN:B10172--
28		01643-31032	Washer	2	SN:B10172--

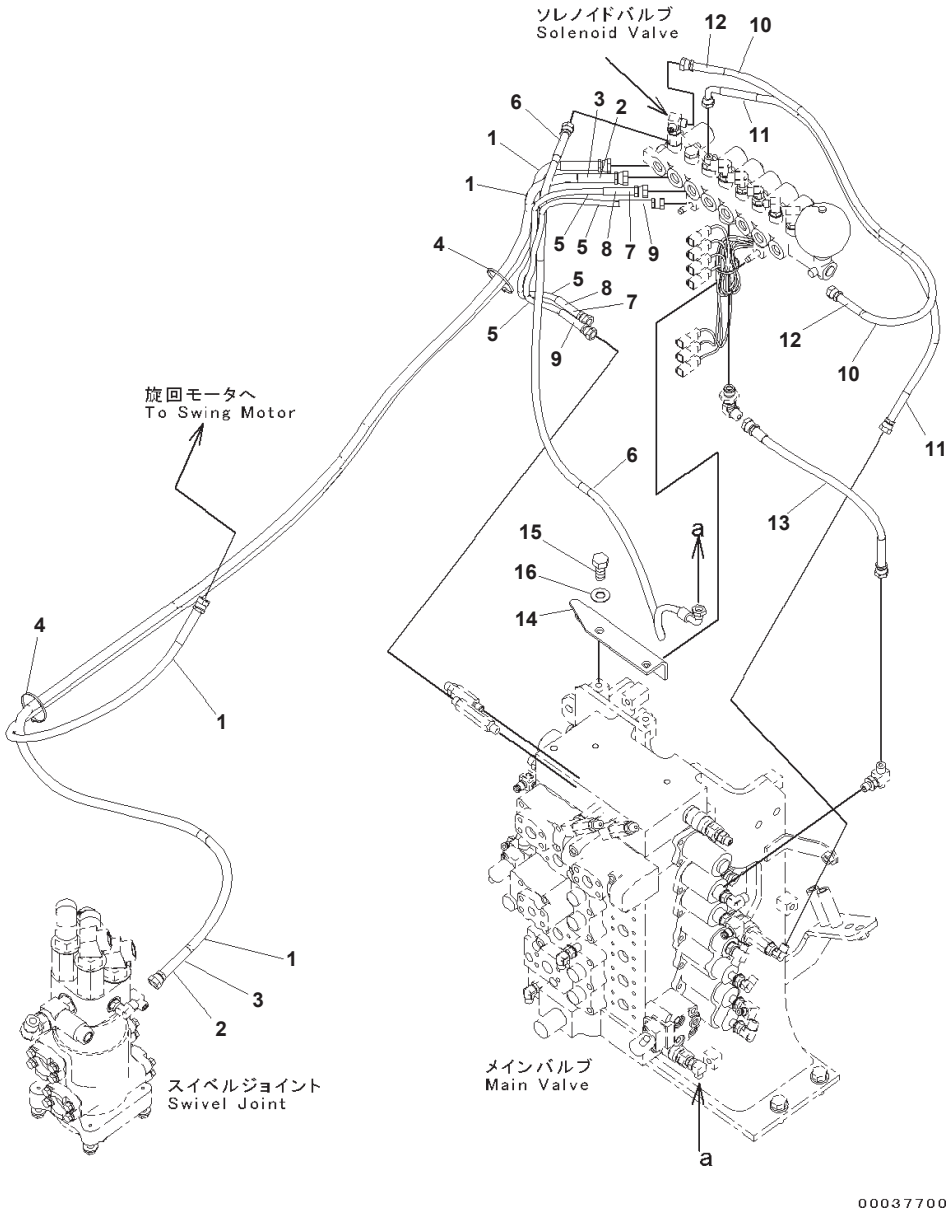

Solenoid Valve Piping, Hose And Bracket (#B10172-)

Index	Part Number	Description	Qty	Options
1	208-62-72131	Hose, L=2500mm	2	SN:B10172--
2	20Y-62-22790	Band, Red	2	SN:B10172--
3	20Y-62-22810	Band, Yellow	2	SN:B10172--
4	08034-20519	Band	2	SN:B10172--
5	02760-002A6	Hose, Face Seal Type, L=650mm	2	SN:B10172--
6	02760-00215	Hose, Face Seal Type, L=1500mm	1	SN:B10172--
7	20Y-62-22810	Band, Yellow	2	SN:B10172--
8	20Y-62-22820	Band, Blue	2	SN:B10172--
9	20Y-62-22860	Band, Brown	2	SN:B10172--
10	208-62-72180	Hose, L=950mm	1	SN:B10172--
11	208-62-72190	Hose, L=830mm	1	SN:B10172--
12	20Y-62-22820	Band, Blue	2	SN:B10172--
13	208-62-71640	Hose, L=400mm	1	SN:B10172--
14	207-62-71510	Bracket	1	SN:B10172--
15	01010-81230	Bolt	2	SN:B10172--
16	01643-31232	Washer	2	SN:B10172--

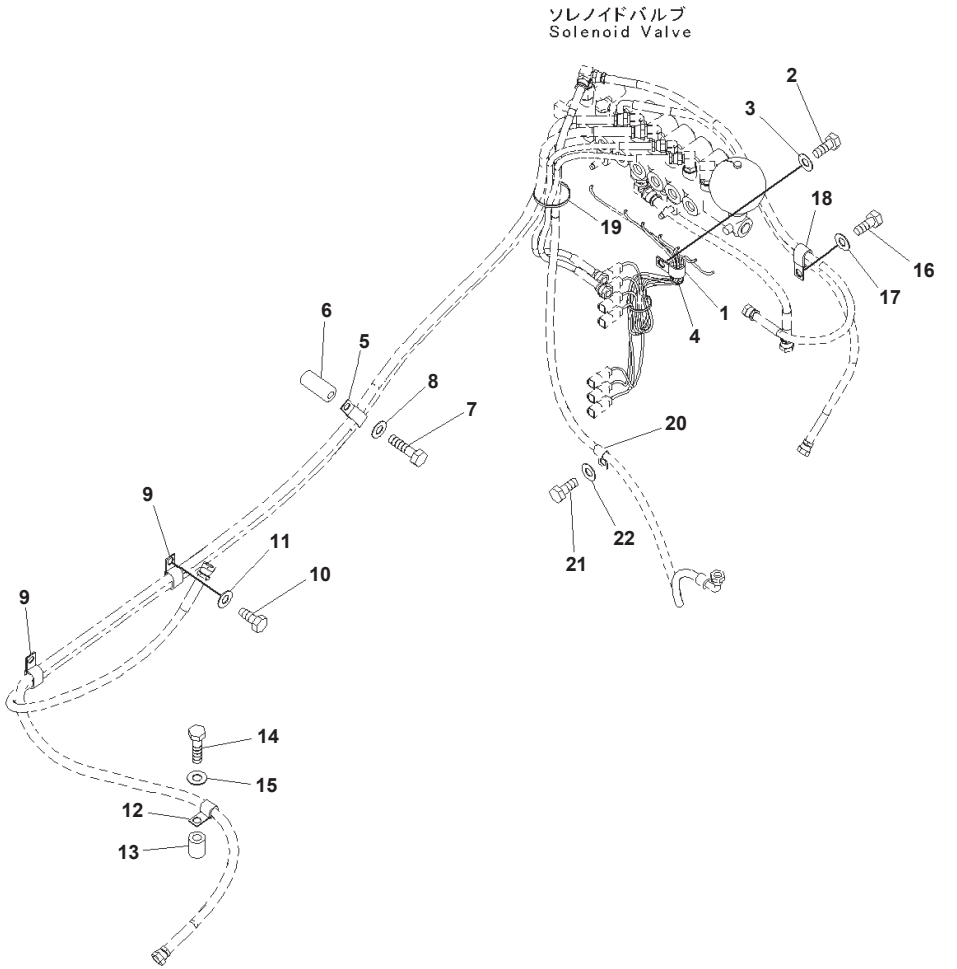

Index	Part Number	Description	Qty	Options
1	04434-51912	Clip	1	SN:B10172--
2	01010-81225	Bolt	1	SN:B10172--
3	01643-31232	Washer	1	SN:B10172--
4	08034-20536	Band	2	SN:B10172--
5	04435-51512	Clip	1	SN:B10172--
6	176-38-41350	Spacer	1	SN:B10172--
7	01010-81285	Bolt	1	SN:B10172--
8	01643-31232	Washer	1	SN:B10172--
9	04435-51512	Clip	2	SN:B10172--
10	01010-81225	Bolt	2	SN:B10172--
11	01643-31232	Washer	2	SN:B10172--
12	04434-51512	Clip	1	SN:B10172--
13	142-03-11160	Spacer	1	SN:B10172--
14	01010-81260	Bolt	1	SN:B10172--
15	01643-31232	Washer	1	SN:B10172--
16	01010-81225	Bolt	1	SN:B10172--
17	01643-31232	Washer	1	SN:B10172--
18	04434-51512	Clip	1	SN:B10172--
19	08034-20536	Band	1	SN:B10172--
20	04434-51212	Clip	1	SN:B10172--
21	01010-81220	Bolt	1	SN:B10172--
22	01643-31232	Washer	1	SN:B10172--

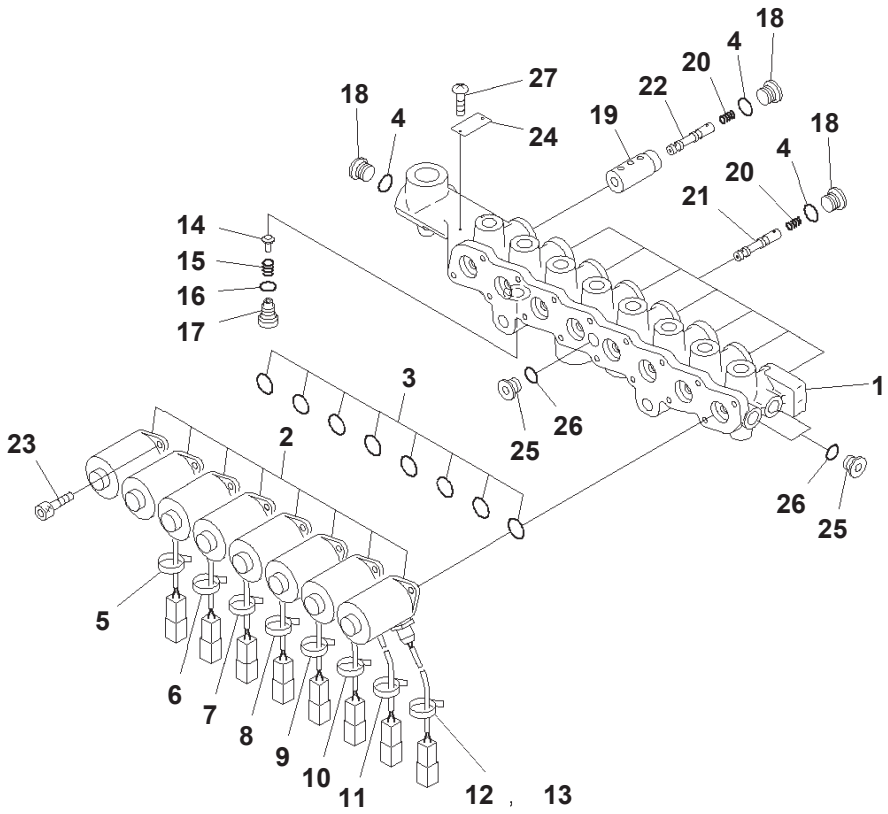

00004505

Solenoid Valve Piping, For Additional Actuator Piping, Solenoid Valve

Index	Code	Part Number	Description	Qty	Options
		207-60-71320	Valve Assembly	1	SN:B10001--
1	C1		· Block	1	SN:B10001--
2		20Y-60-32121	· Solenoid Assembly	8	SN:B10001--
3		07000-12011	· O-ring	8	SN:B10320--
	C1	20Y-60-31240	· O-ring	8	SN:B10001--B10319
4		07000-12011	· O-ring	9	SN:B10320--
	C1	20Y-60-31250	· O-ring	9	SN:B10001--B10319
5		NY07207-11700	· Tube	1	SN:B10001--
6		NY07529-10200	· Tube	1	SN:B10001--
7		NY07529-10300	· Tube	1	SN:B10001--
8		NY07529-10400	· Tube	1	SN:B10001--
9		NY07529-10500	· Tube	1	SN:B10001--
10		NY07529-10600	· Tube	1	SN:B10001--
11		NY07505-10200	· Tube	1	SN:B10001--
12		NY07880-10900	· Tube	1	SN:B10001--
13		NY89103-00090	· Band	8	SN:B10001--
14		NY05062-1170A	· Plunger	1	SN:B10001--
15		NY05062-11800	· Spring	1	SN:B10001--
16		07000-11010	· O-ring	1	SN:B10001--
17		NY06277-1320A	· Plug	1	SN:B10001--
18		NY80000-02200	· Plug	9	SN:B10001--
19		NY16207-10200	· Sleeve	1	SN:B10001--
20		NY06339-10200	· Spring	8	SN:B10001--
21		NY07493-10200	· Spool	7	SN:B10001--
22		NY16207-10300	· Spool	1	SN:B10001--
23		NY81446-05012	· Bolt	16	SN:B10001--
24		NY09000-11400	· Plate	1	SN:B10001--
25		NY80000-02100	· Plug	3	SN:B10001--
26		07000-11008	· O-ring	3	SN:B10001--
27		NY84110-00248	· Screw	2	SN:B10001--

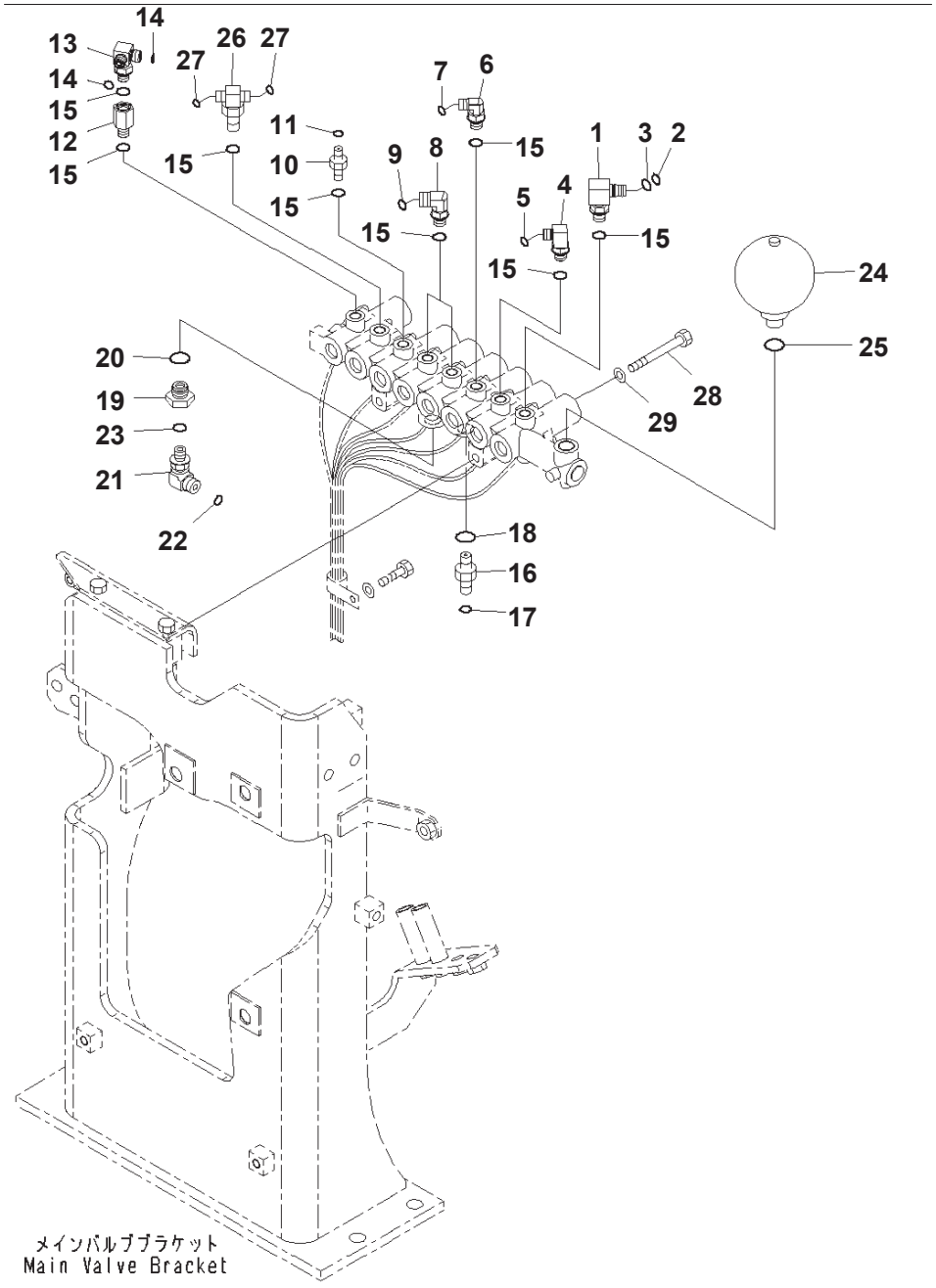

Index	Part Number	Description	Qty	Options
1	20Y-62-22271	Elbow	1	SN:B10001--
2	201-60-11390	・ O-ring	1	SN:B10001--
3	20Y-62-19560	・ O-ring	1	SN:B10001--
4	207-62-72120	Elbow	1	SN:B10001--
5	02896-11008	O-ring	1	SN:B10001--
6	11Y-62-12160	Elbow	1	SN:B10001--
7	02896-11008	O-ring	1	SN:B10001--
8	21W-62-42490	Elbow	2	SN:B10001--
9	02896-11009	O-ring	2	SN:B10001--
10	11Y-62-12130	Nipple	1	SN:B10001--
11	02896-11009	O-ring	1	SN:B10001--
12	21M-62-16350	Adapter	1	SN:B10001--
13	207-62-72141	Elbow	1	SN:B10001--
14	02896-11008	O-ring	2	SN:B10001--
15	07002-11423	O-ring	8	SN:B10001--
16	02781-00422	Union	1	SN:B10001--
17	02896-11012	O-ring	1	SN:B10001--
18	07002-12034	O-ring	1	SN:B10001--
19	20Y-62-21940	Filter Assembly	1	SN:B10001--
20	07002-12034	O-ring	1	SN:B10001--
21	21W-62-42490	Elbow	1	SN:B10001--
22	02896-11009	O-ring	1	SN:B10001--
23	07002-11423	O-ring	1	SN:B10001--
24	22U-60-21330	Accumulator	1	SN:B10001--
25	07002-12034	O-ring	1	SN:B10001--
26	20Y-62-43690	Tee	1	SN:B10001--
27	02896-11008	O-ring	2	SN:B10001--
28	01010-81095	Bolt	2	SN:B10001--
29	01643-31032	Washer	2	SN:B10001--

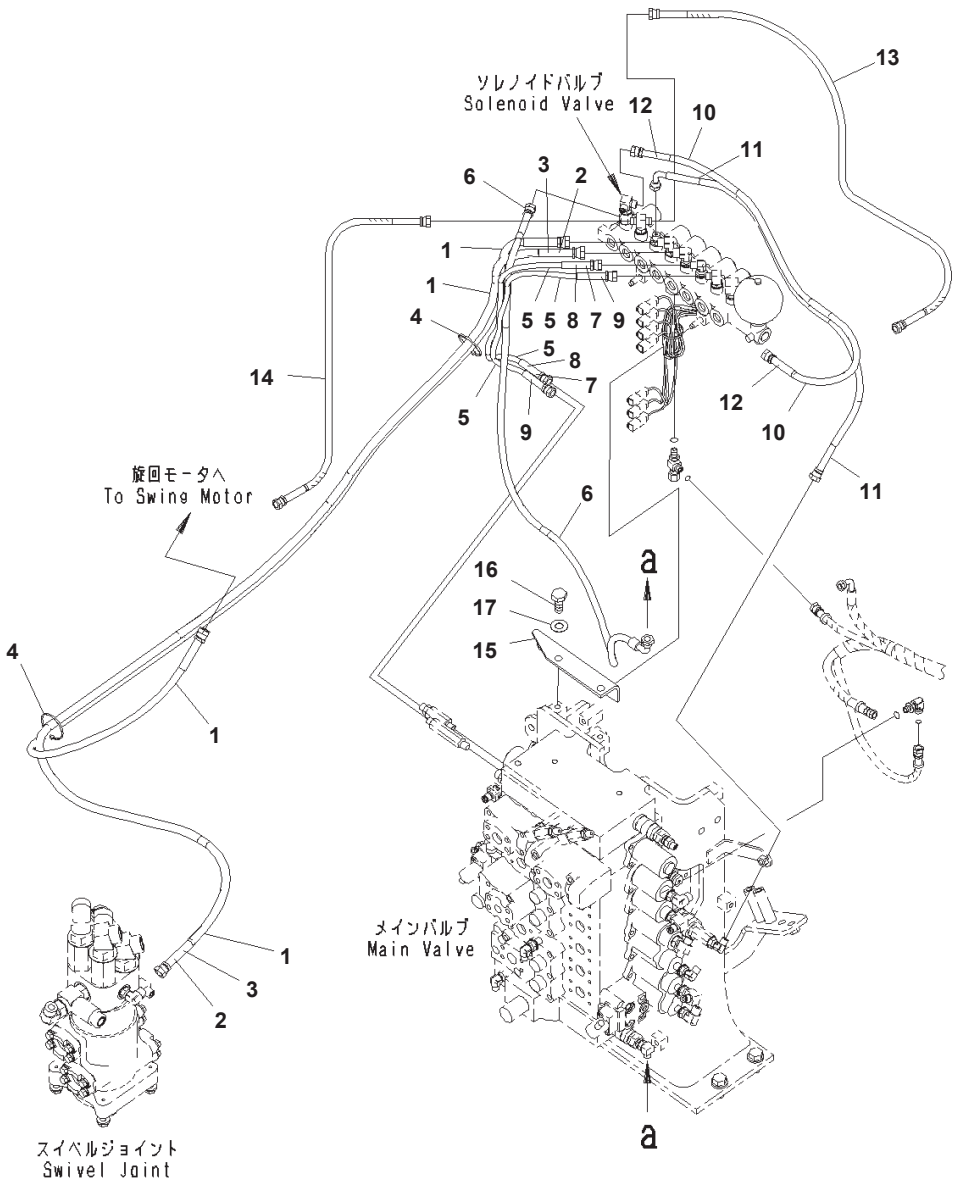

Solenoid Valve Piping, For Additional Actuator Piping, Hose And Bracket

Index	Part Number	Description	Qty	Options
1	208-62-72131	Hose, L=2500mm	2	SN:B10001--
2	20Y-62-22790	Band, Red	2	SN:B10001--
3	20Y-62-22810	Band, Yellow	2	SN:B10001--
4	08034-20519	Band	2	SN:B10001--
5	02760-002A6	Hose, Face Seal Type, L=650mm	2	SN:B10001--
6	02760-00215	Hose, Face Seal Type, L=1500mm	1	SN:B10001--
7	20Y-62-22810	Band, Yellow	2	SN:B10001--
8	20Y-62-22820	Band, Blue	2	SN:B10001--
9	20Y-62-22860	Band, Brown	2	SN:B10001--
10	208-62-72180	Hose, L=950mm	1	SN:B10001--
11	208-62-72190	Hose, L=830mm	1	SN:B10001--
12	20Y-62-22820	Band, Blue	2	SN:B10001--
13	207-62-73380	Hose, L=700mm	1	SN:B10001--
14	02760-002A5	Hose, Face Seal Type, L=550mm	1	SN:B10001--
15	207-62-71510	Bracket	1	SN:B10001--
16	01010-81230	Bolt	2	SN:B10001--
17	01643-31232	Washer	2	SN:B10001--

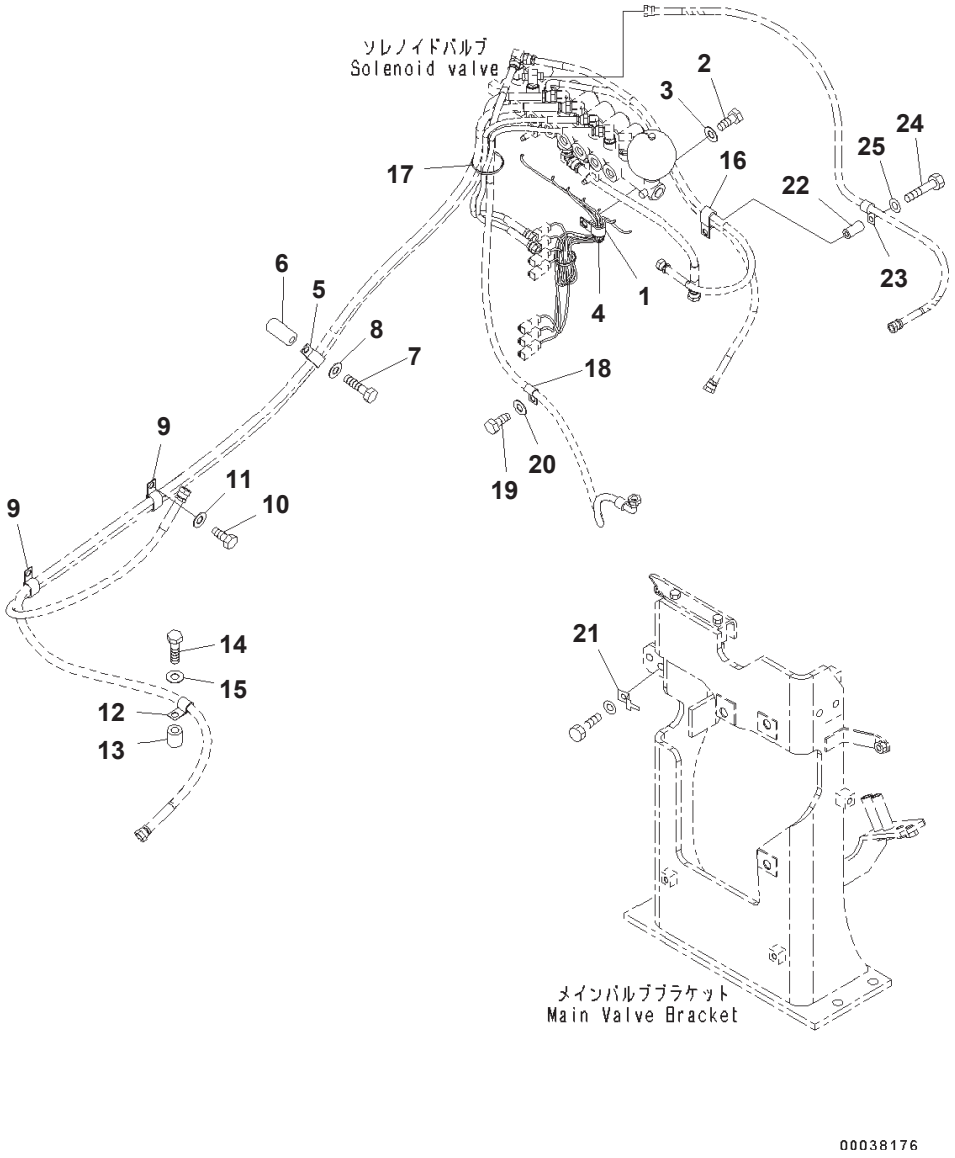

Index	Part Number	Description	Qty	Options
1	04434-51912	Clip	1	SN:B10001--
2	01010-81225	Bolt	1	SN:B10001--
3	01643-31232	Washer	1	SN:B10001--
4	08034-20536	Band	2	SN:B10001--
5	04435-51512	Clip	1	SN:B10001--
6	142-03-11160	Spacer	1	SN:B10001--
7	01010-81260	Bolt	1	SN:B10001--
8	01643-31232	Washer	1	SN:B10001--
9	04435-51512	Clip	2	SN:B10001--
10	01010-81225	Bolt	2	SN:B10001--
11	01643-31232	Washer	2	SN:B10001--
12	04434-51512	Clip	1	SN:B10001--
13	142-03-11160	Spacer	1	SN:B10001--
14	01010-81260	Bolt	1	SN:B10001--
15	01643-31232	Washer	1	SN:B10001--
16	04435-51512	Clip	1	SN:B10001--
17	08034-20536	Band	1	SN:B10001--
18	04434-51212	Clip	1	SN:B10001--
19	01010-81220	Bolt	1	SN:B10001--
20	01643-31232	Washer	1	SN:B10001--
21	08193-21012	Clip	1	SN:B10001--
22	142-03-11160	Spacer	1	SN:B10001--
23	04434-51012	Clip	1	SN:B10001--
24	01010-81260	Bolt	1	SN:B10001--
25	01643-31232	Washer	1	SN:B10001--

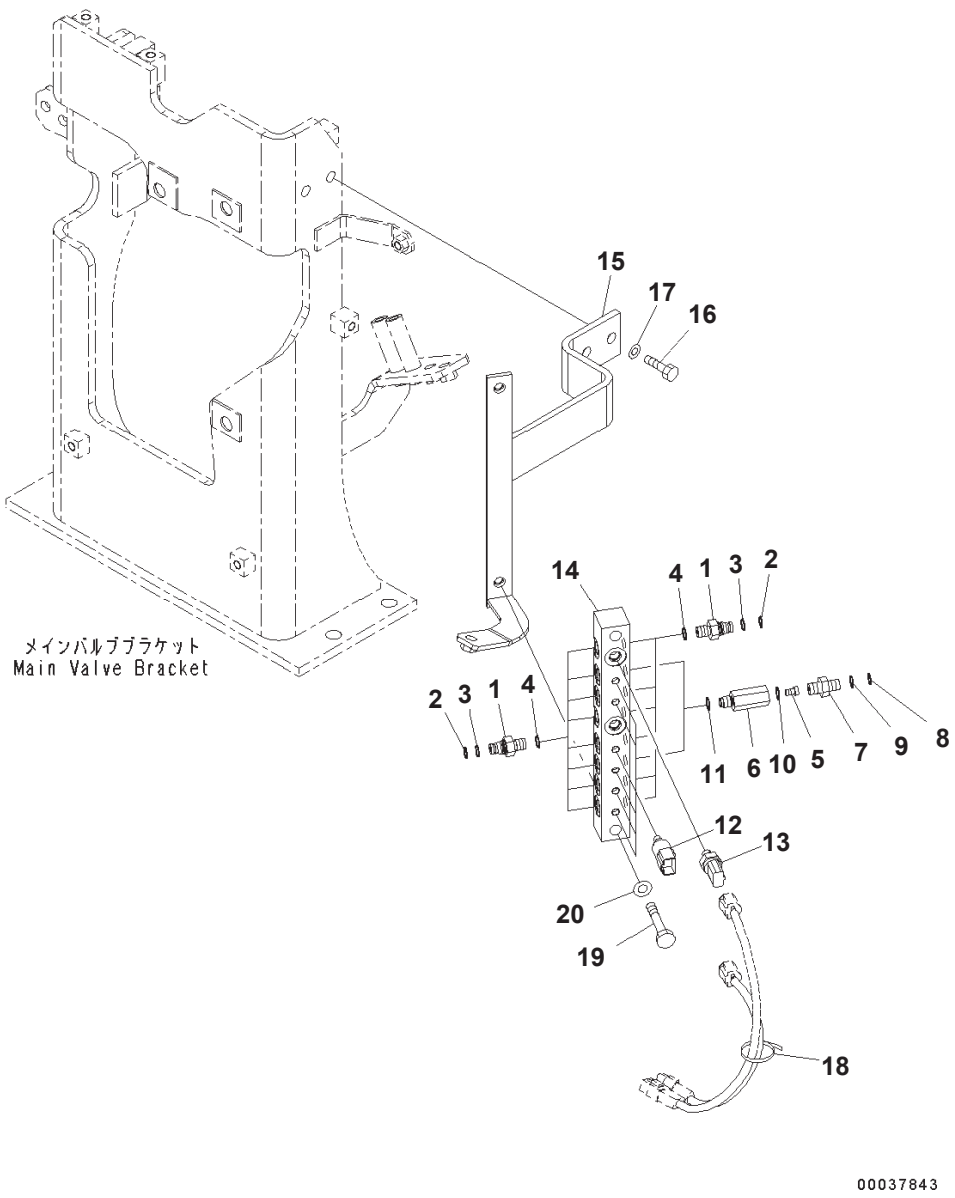

Index	Part Number	Description	Qty	Options
1	20Y-62-16630	Nipple	14	SN:B10001--
2	201-60-11390	・ O-ring	1	SN:B10001--
3	20Y-62-19560	・ O-ring	1	SN:B10001--
4	07002-11423	O-ring	14	SN:B10001--
	20Y-60-22201	Valve Assembly	2	SN:B10001--
5	20Y-60-11750	・ Poppet	1	SN:B10001--
6	20Y-60-22350	・ Body	1	SN:B10001--
7	20Y-62-22410	・ Nipple	1	SN:B10001--
8	201-60-11390	・・ O-ring	1	SN:B10001--
9	20Y-62-19560	・・ O-ring	1	SN:B10001--
10	07002-11423	・ O-ring	1	SN:B10001--
11	07002-11423	O-ring	2	SN:B10001--
12	206-06-61130	Switch	6	SN:B10001--
13	7861-93-1840	Sensor	2	SN:B10001--
14	207-62-74980	Block	1	SN:B10001--
15	207-62-74621	Bracket	1	SN:B10001--
16	01010-81235	Bolt	2	SN:B10001--
17	01643-31232	Washer	2	SN:B10001--
18	08034-20536	Band	1	SN:B10001--
19	01010-81260	Bolt	2	SN:B10001--
20	01643-31232	Washer	2	SN:B10001--

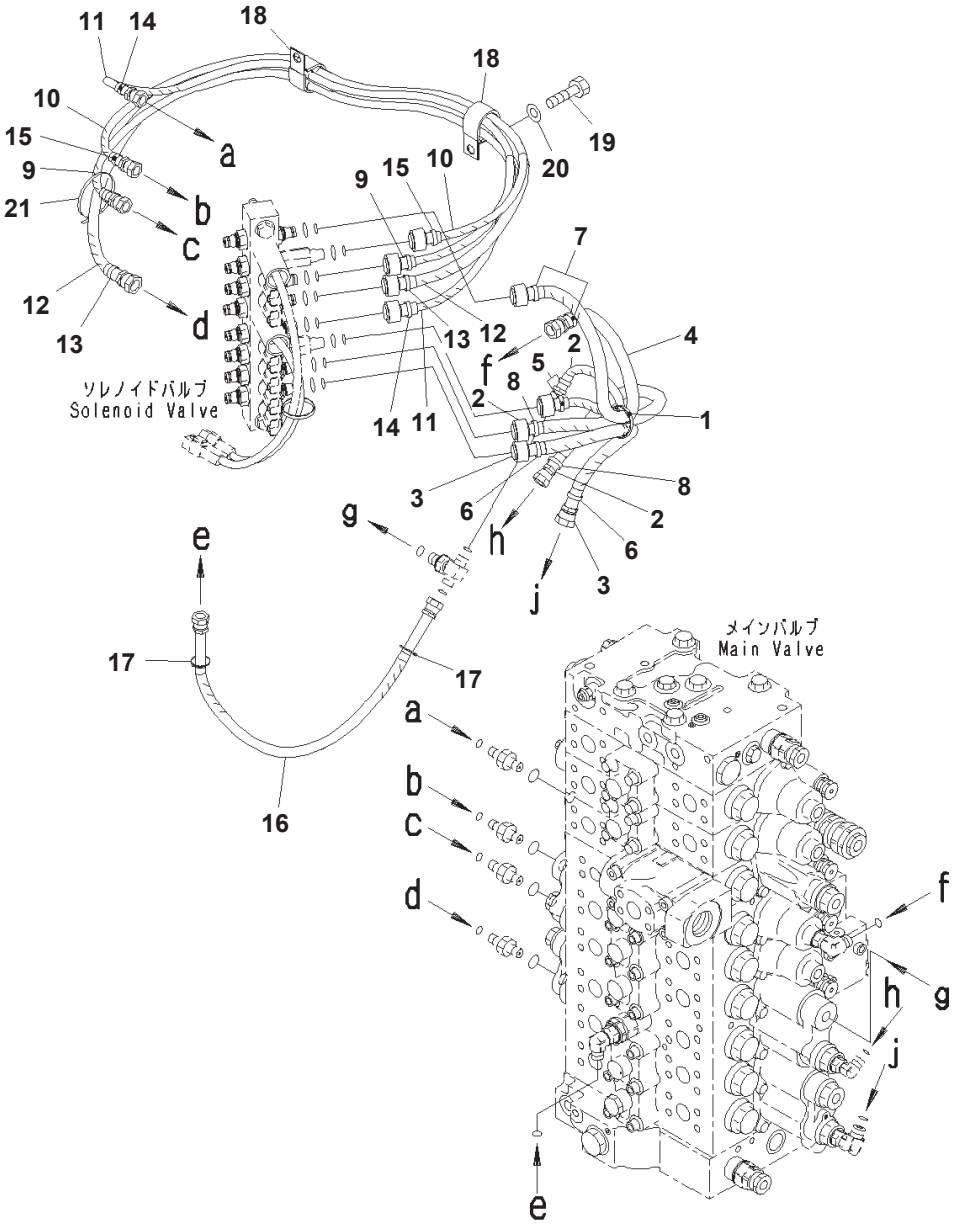

Index	Code	Part Number	Description	Qty	Options
1		08034-20536	Band	1	SN:B10001--
2		208-62-72210	Hose, L=400mm	2	SN:B10001--
3		208-62-72230	Hose, L=700mm	1	SN:B10001--
4		208-62-72240	Hose, L=600mm	1	SN:B10001--
5		20Y-62-22790	Band, Red	2	SN:B10001--
6		20Y-62-22810	Band, Yellow	2	SN:B10001--
7		20Y-62-22830	Band, White	2	SN:B10001--
8		20Y-62-22850	Band, Green	2	SN:B10001--
9		207-62-72550	Hose, L=1250mm	1	SN:B10001--
10		207-62-72560	Hose, L=1300mm	1	SN:B10001--
11		207-62-72630	Hose, L=1300mm	1	SN:B10001--
12		207-62-72640	Hose, L=1400mm	1	SN:B10001--
13		20Y-62-22820	Band, Blue	2	SN:B10001--
14		20Y-62-22840	Band, Black	2	SN:B10001--
15		20Y-62-22860	Band, Brown	2	SN:B10001--
16		02740-002A5	Hose, L=550mm	1	SN:B10271--
	A2	208-62-71670	Hose, L=550mm	1	SN:B10001--B10270
17		08034-20536	Band	2	SN:B10001--
18		113-899-7950	Clip	2	SN:B10001--
19		01010-81225	Bolt	2	SN:B10001--
20		01643-31232	Washer	2	SN:B10001--
21		08034-20536	Band	1	SN:B10001--

MAIN FRAME AND RELATED PARTS

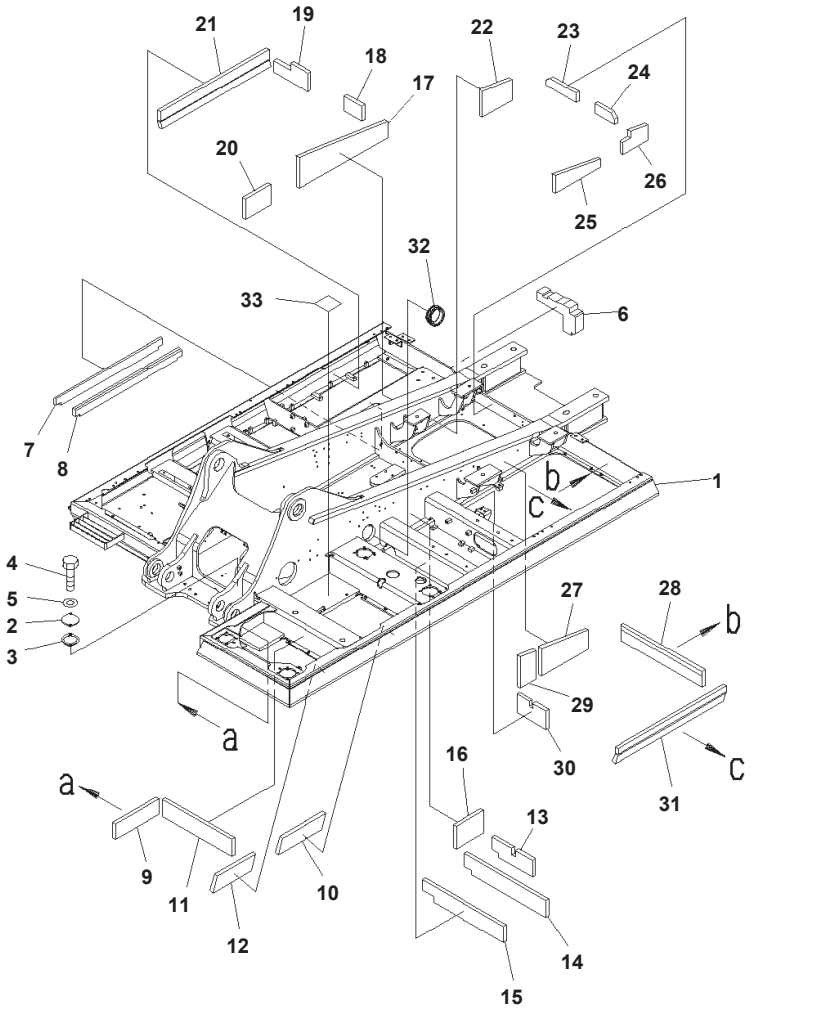

Revolving Frame, With Deck Guard

Index	Code	Part Number	Description	Qty	Options
1		207-46-75603	Frame	1	SN:B10265--
	A2	207-46-75602	Frame	1	SN:B10001--B10264
2		205-30-71181	Cover	1	SN:B10001--
3		205-30-71191	Gasket	1	SN:B10001--
4		01010-81230	Bolt	2	SN:B10001--
5		01643-31232	Washer	2	SN:B10001--
6		207-46-77310	Sheet	1	SN:B10001--
7		207-46-77321	Sheet	1	SN:B10001--
8		207-46-77331	Sheet	1	SN:B10001--
9		20Y-46-42320	Sheet	1	SN:B10001--
10		20Y-46-42330	Sheet	1	SN:B10001--
11		20Y-46-42340	Sheet	1	SN:B10001--
12		207-46-71510	Sheet	1	SN:B10001--
13		207-46-78430	Sheet	1	SN:B10001--
14		207-46-78440	Sheet	1	SN:B10001--
15		207-46-78450	Sheet	1	SN:B10001--
16		207-46-78421	Sheet	1	SN:B10001--
17		207-46-78120	Sheet	1	SN:B10001--
18		207-46-78230	Sheet	1	SN:B10001--
19		207-46-78480	Sheet	1	SN:B10001--
20		207-46-78520	Sheet	1	SN:B10001--
21		208-46-75110	Sheet	1	SN:B10001--
22		207-46-78130	Sheet	1	SN:B10001--
23		207-46-78210	Sheet	1	SN:B10001--
24		207-46-78221	Sheet	1	SN:B10001--
25		207-46-78291	Sheet	1	SN:B10001--
26		207-46-78311	Sheet	1	SN:B10001--
27		207-46-78110	Sheet	1	SN:B10001--
28		207-46-78160	Sheet	1	SN:B10001--
29		207-46-78320	Sheet	1	SN:B10001--
30		207-46-78410	Sheet	1	SN:B10001--
31		208-46-75110	Sheet	1	SN:B10001--
32		207-62-71791	Grommet	1	SN:B10001--
33		203-62-52210	Rubber	1	SN:B10001--

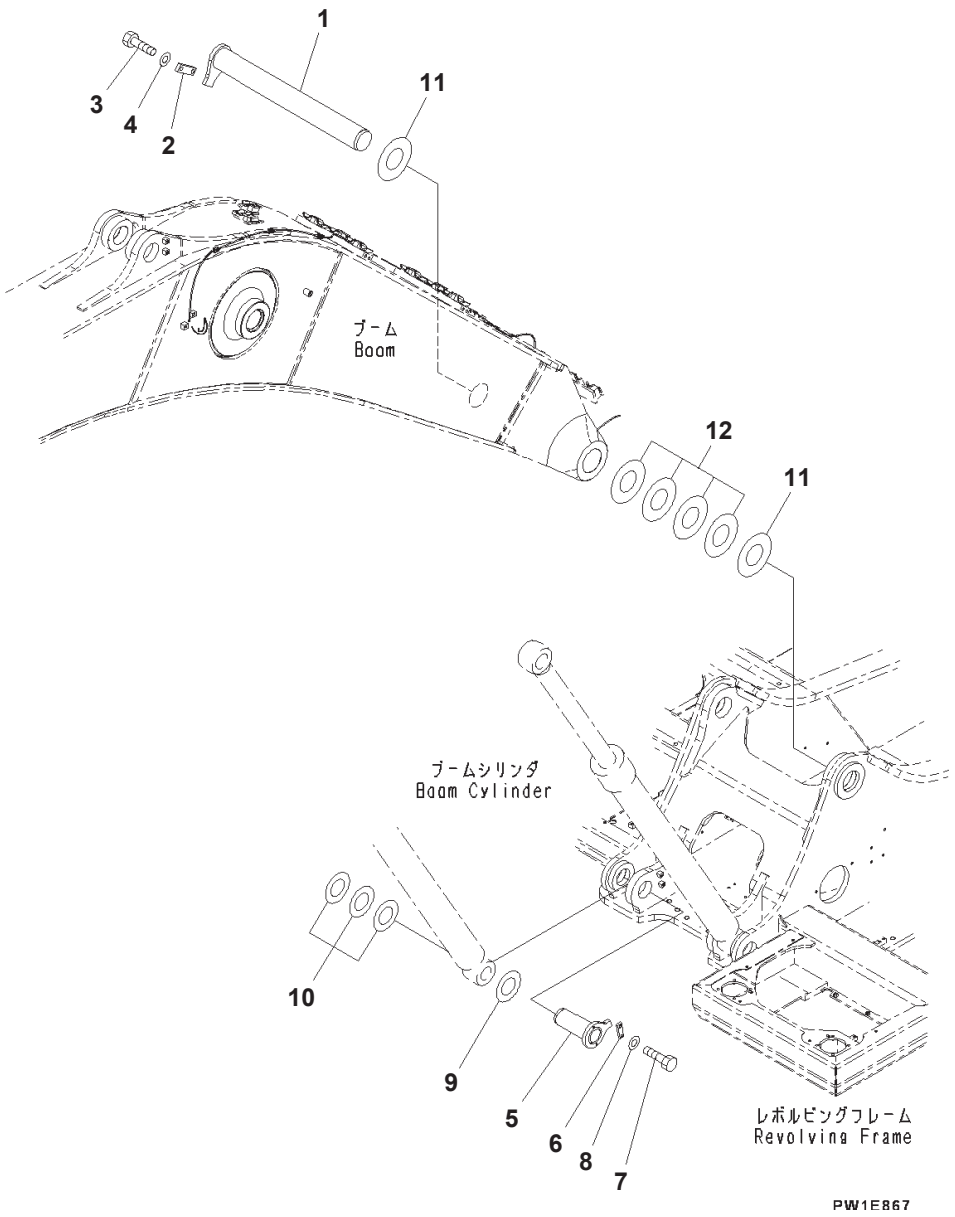

Boom Foot Pin, 100 Hours Greasing Type

Index	Part Number	Description	Qty	Options
1	207-70-71130	Pin	1	SN:B10001--
2	207-70-31230	Plate	1	SN:B10001--
3	01010-81640	Bolt	2	SN:B10001--
4	01643-31645	Washer	2	SN:B10001--
5	207-70-61210	Pin	2	SN:B10001--
6	205-70-66580	Plate	2	SN:B10001--
7	01010-81235	Bolt	4	SN:B10001--
8	01643-31232	Washer	4	SN:B10001--
9	207-70-24190	Spacer, T=0.8mm, 0.8MM	2	SN:B10001--
10	207-70-24210	Spacer, T=1.5mm, 1.5MM	6	SN:B10001--
11	207-70-31290	Spacer, T=0.8mm, 0.8MM	2	SN:B10001--
12	207-70-51310	Spacer, T=1.5mm, 1.5MM	4	SN:B10001--

OPERATOR'S COMPARTMENT AND CONTROL SYSTEM

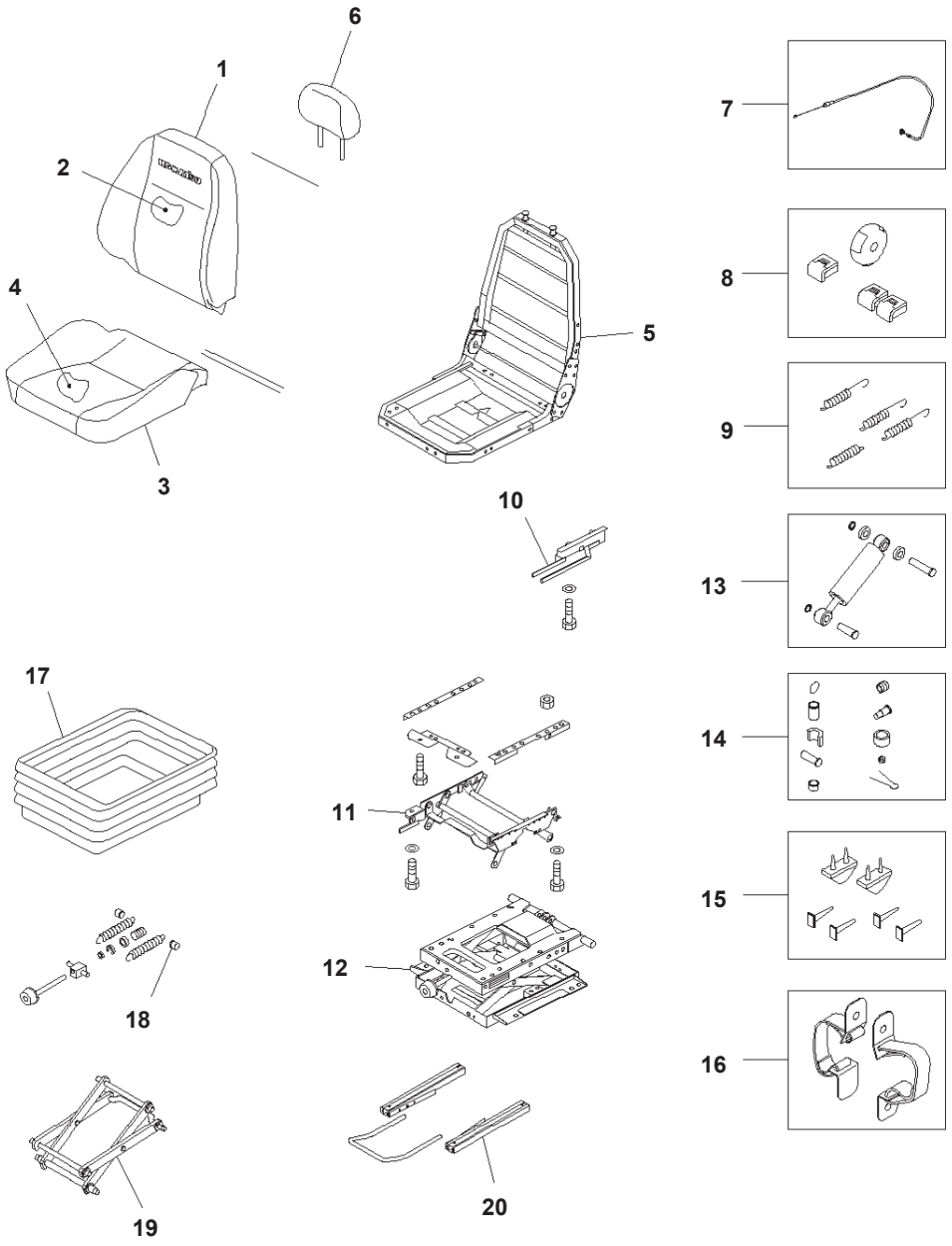

Index	Code	Part Number	Description	Qty	Options
		20Y-57-42200	Seat Assembly	1	SN:B10343--
	A2	20Y-57-41104	Seat Assembly	1	SN:B10259--B10342
	A2	20Y-57-41103	Seat Assembly	1	SN:B10001--B10258
		AS195381	・Seat Assembly	1	SN:B10001--
1		AS195367	・・Back Seat Cover Kit	1	SN:B10001--
2		AS195369	・・Back Seat Foam Kit	1	SN:B10001--
3		AS195370	・・Seat Cover Kit	1	SN:B10001--
4		AS195372	・・Seat Foam Kit	1	SN:B10001--
5		AS195373	・・Frame Kit	1	SN:B10001--
6		AS195374	・・Headrest Kit	1	SN:B10001--
7		AS192161	・・Cable Kit	1	SN:B10001--
8		AS186833	・・Handle Kit	1	SN:B10001--
9		AS160122	・Spring Kit	1	SN:B10001--
10		AS195376	・Latch Kit	1	SN:B10001--
11		AS200179	・Riser Kit	1	SN:B10343--
	A2	AS200024	・Riser Kit	1	SN:B10259--B10342
	A2	AS195377	・Riser Kit	1	SN:B10001--B10258
12		AS207078	・Suspension Kit	1	SN:B10343--
		AS195388	・Suspension Kit	1	SN:B10001--B10342
13		AS198243	・Damper Kit	1	SN:B10343--
	A2	AS164899	・Damper Kit	1	SN:B10001--B10342
14		AS166011	・Bearing Kit	1	SN:B10001--
15		AS195389	・Up Stop And Bump Stop Kit	1	SN:B10001--
16		AS195390	・Tether Belt Kit	1	SN:B10001--
17		AS195391	・Suspension Cover Kit	1	SN:B10001--
18		AS195392	・Adjuster Kit, Weight	1	SN:B10001--
19		AS165989	・Lever	1	SN:B10001--
20		AS207079	・Adjuster Kit	1	SN:B10343--
	A2	AS195393	・Adjuster Kit	1	SN:B10001--B10342

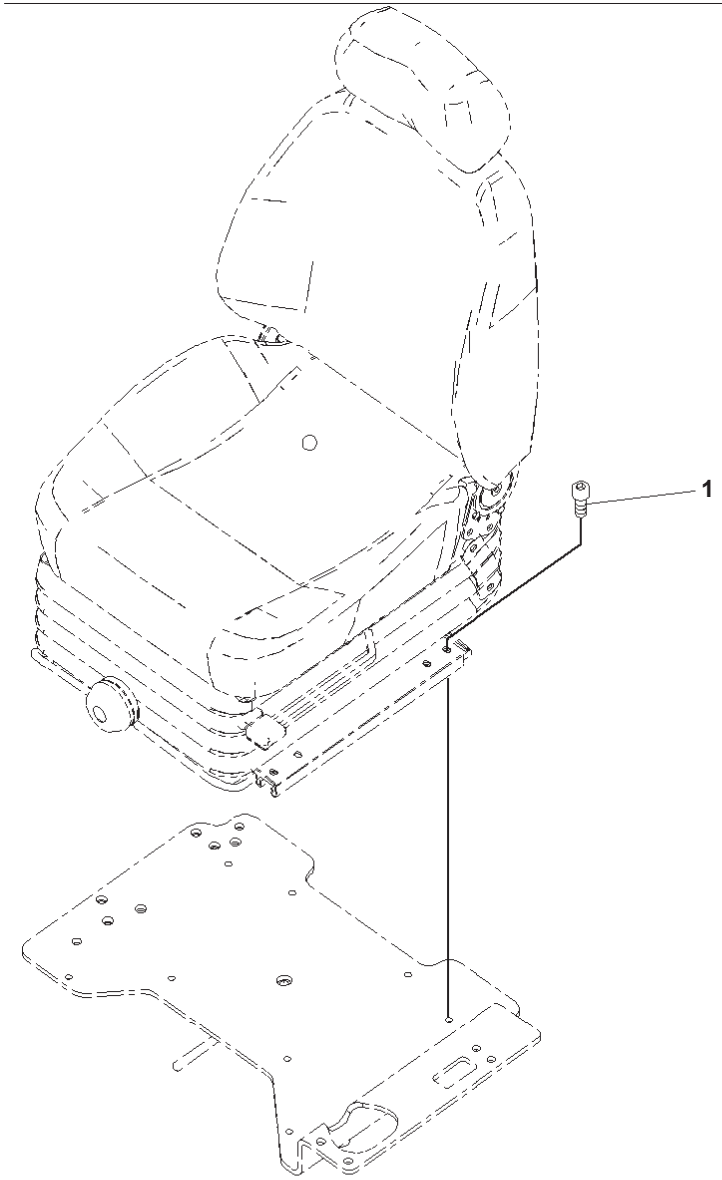

Index	Part Number	Description	Qty	Options
1	01252-80825	Bolt	4	SN:B10001--

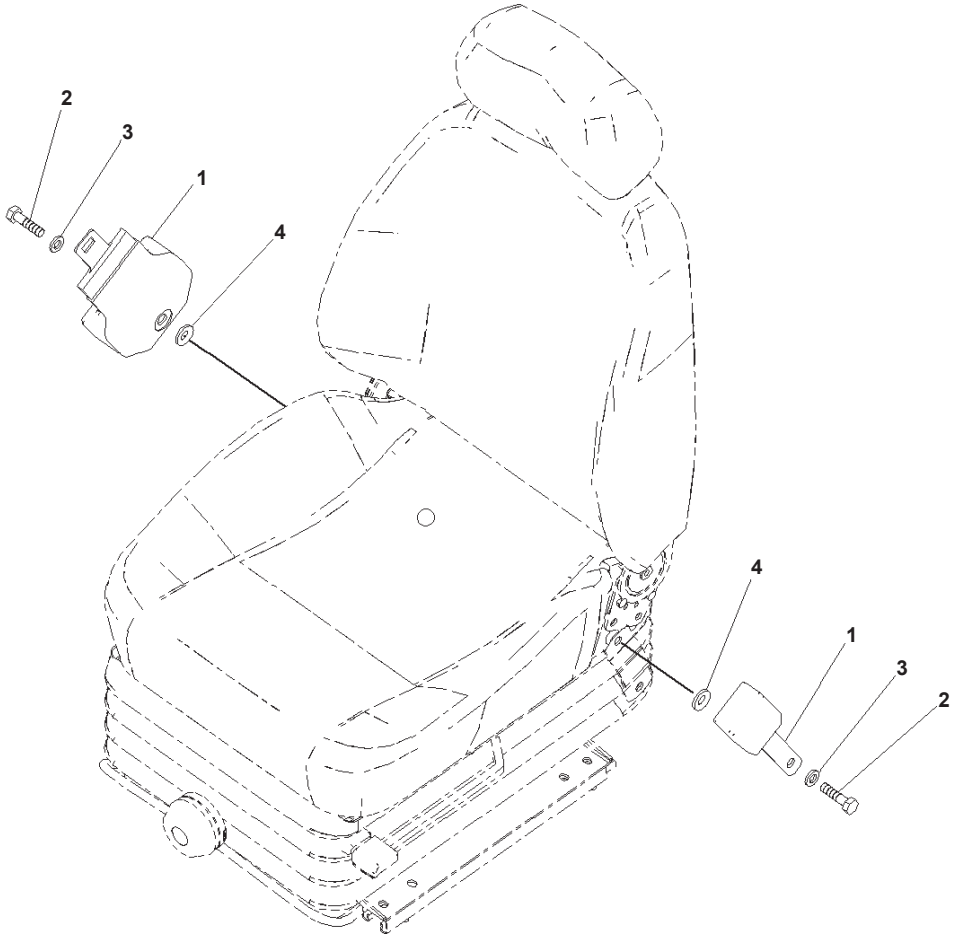

Index	Part Number	Description	Qty	Options
1	22B-57-11911	Belt, W=78mm	1	SN:B10001--
2	02030-70757	· Bolt	2	SN:B10001--
3	09409-00002	· Washer	2	SN:B10001--
4	01643-11232	Washer	2	SN:B10001--

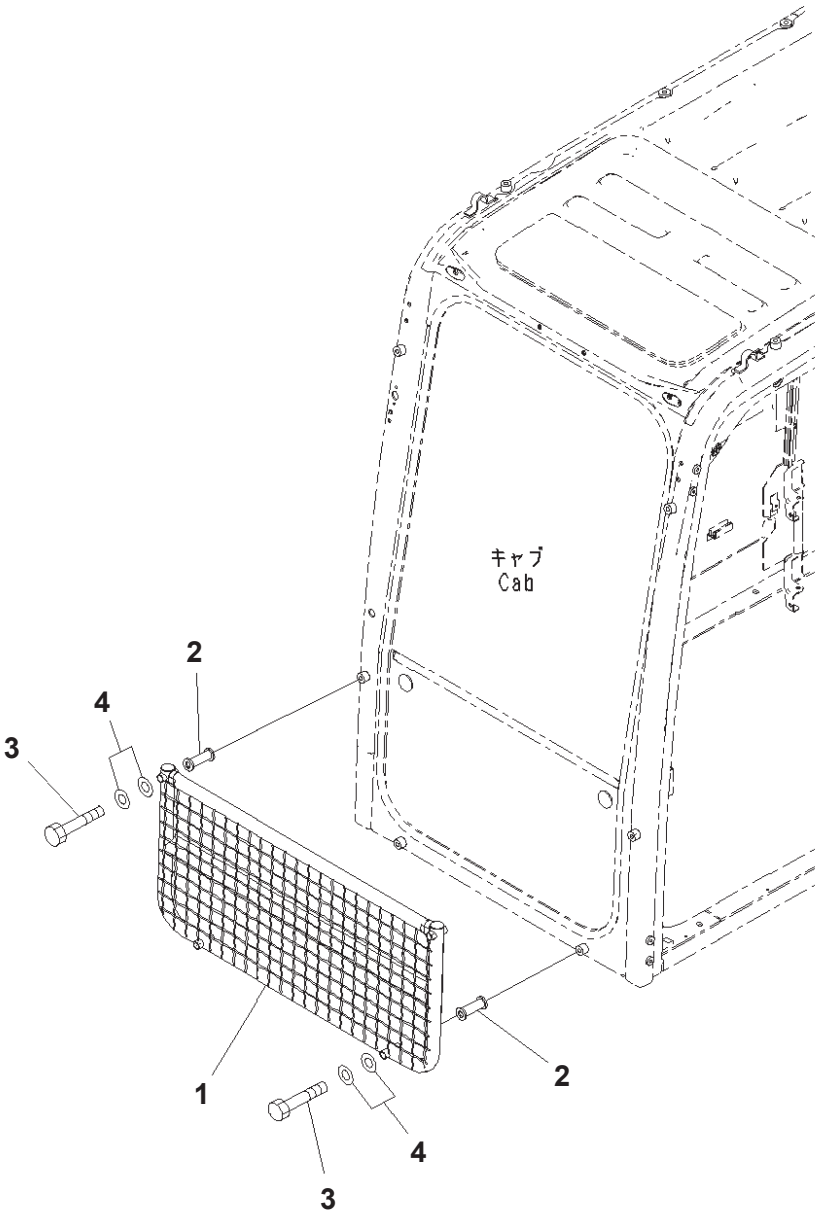

Index	Part Number	Description	Qty	Options
1	20Y-954-6132	Guard	1	SN:B10001--
2	20Y-954-6192	Spacer	4	SN:B10001--
3	01011-D1245	Bolt	4	SN:B10001--
4	01643-71232	Washer	4	SN:B10001--

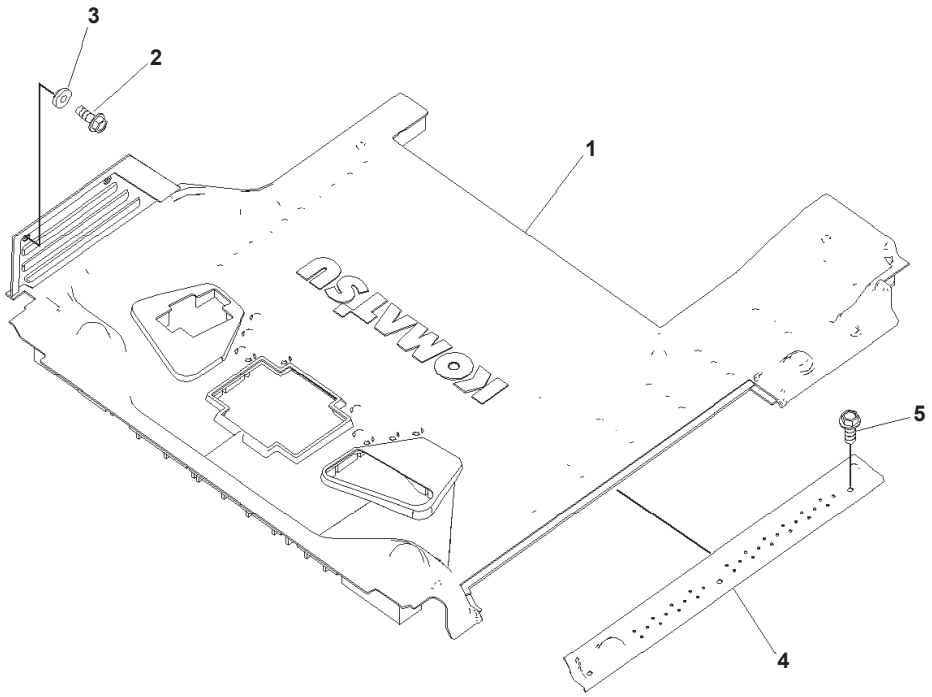

00055417-1

Index	Part Number	Description	Qty	Options
1	206-53-14711	Floor Mat	1	SN:B10172--
2	01435-40616	Bolt	2	SN:B10172--
3	20Y-43-41290	Collar	2	SN:B10172--
4	20Y-53-11953	Cover	1	SN:B10172--
5	01435-40612	Bolt	3	SN:B10172--

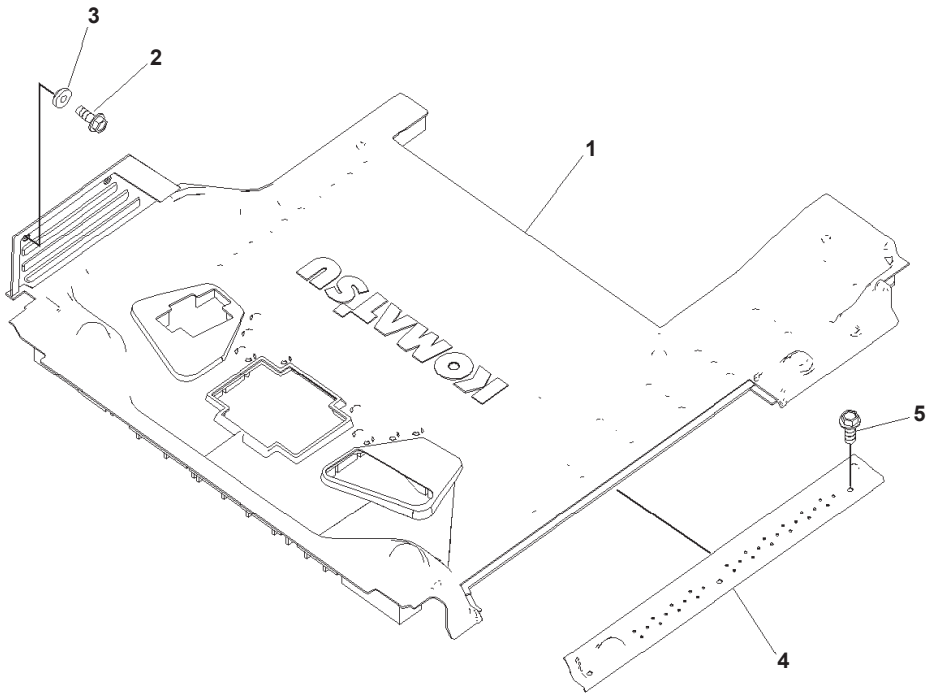

00055417-1

Index	Part Number	Description	Qty	Options
1	206-53-14721	Mat	1	SN:B10001--
2	01435-40616	Bolt	2	SN:B10001--
3	20Y-43-41290	Collar	2	SN:B10001--
4	20Y-53-11953	Cover	1	SN:B10001--
5	01435-40612	Bolt	3	SN:B10001--

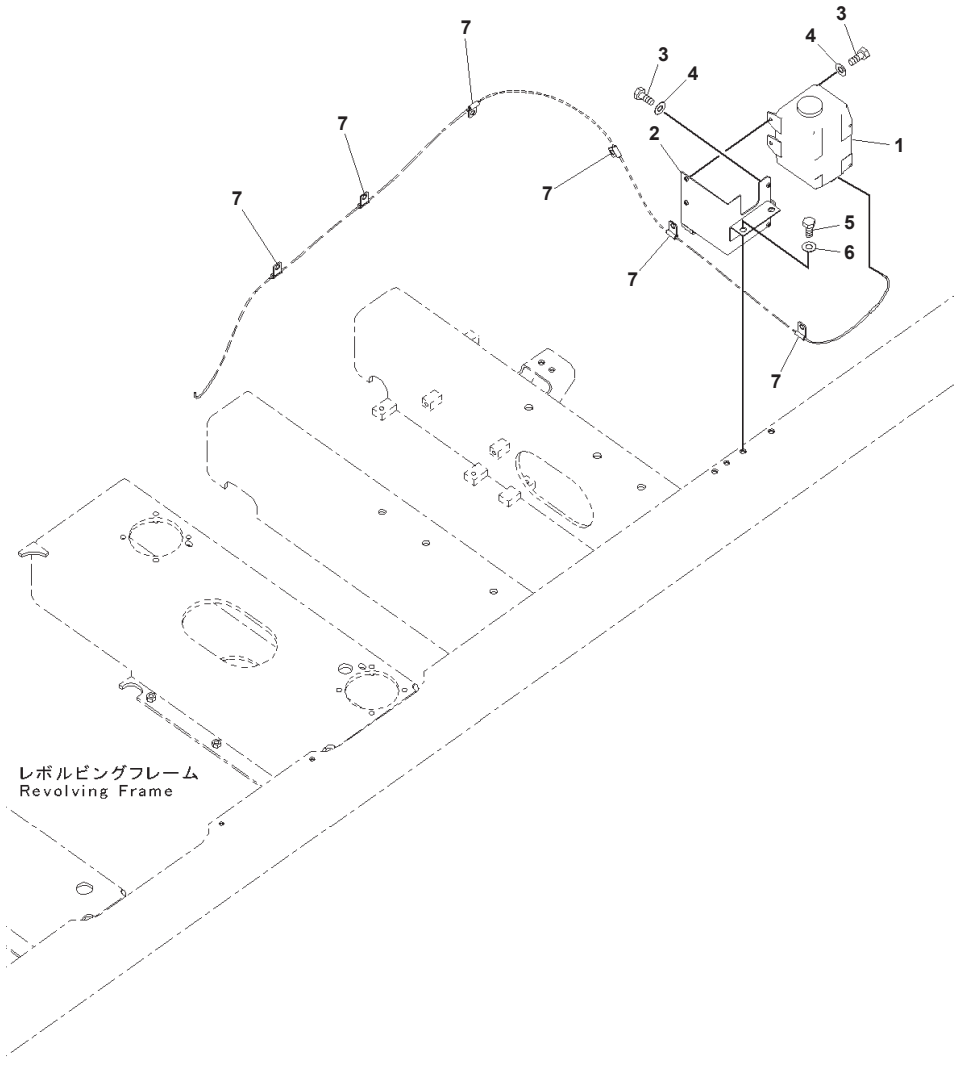

Windshield Washer Tank

Index	Part Number	Description	Qty	Options
1	21T-06-11350	Tank Assembly	1	SN:B10001--
2	207-06-71132	Bracket	1	SN:B10001--
3	01010-80616	Bolt	4	SN:B10001--
4	01643-30623	Washer	4	SN:B10001--
5	01010-81225	Bolt	2	SN:B10001--
6	01643-31232	Washer	2	SN:B10001--
7	21T-38-12270	Clip	6	SN:B10001--

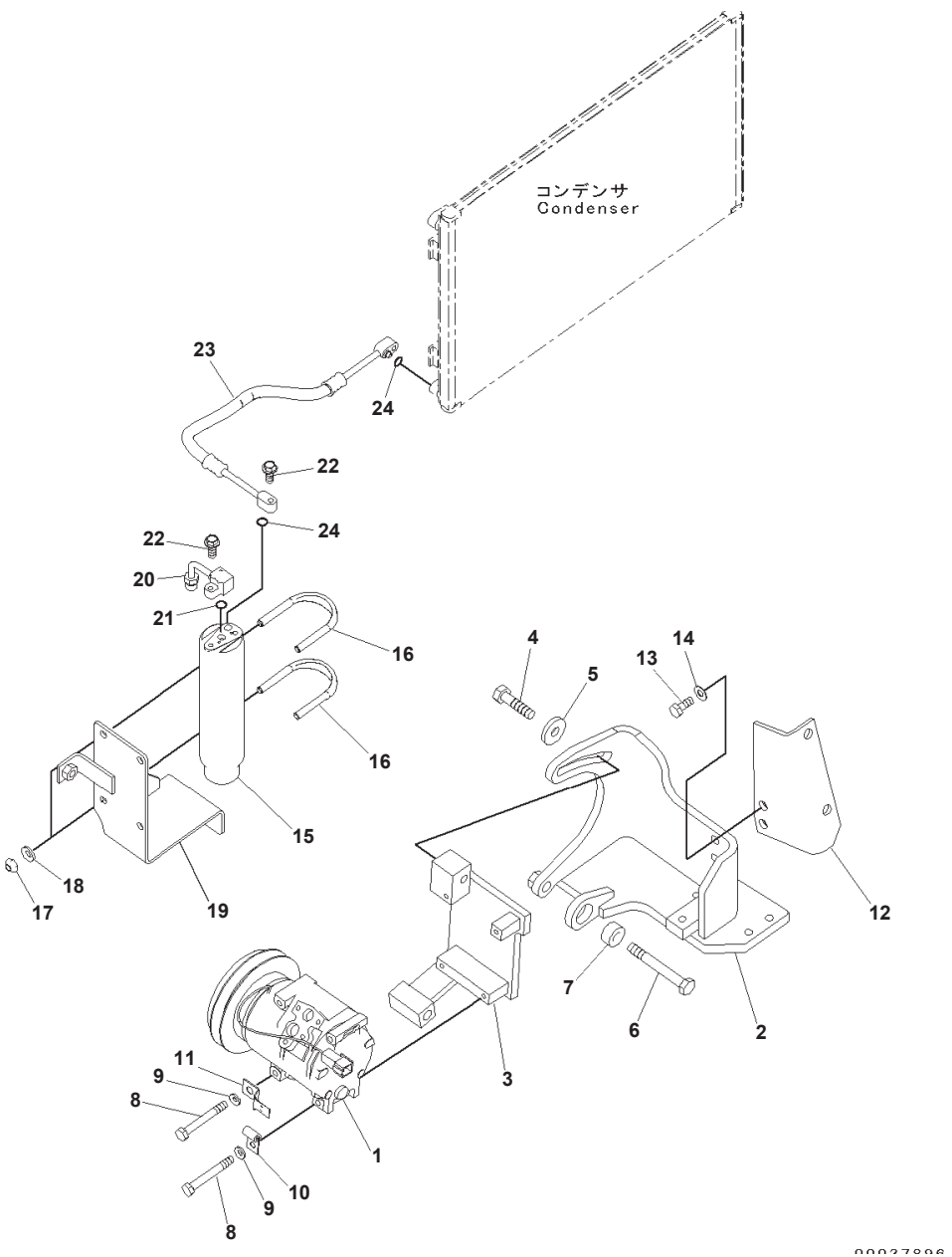

Index	Code	Part Number	Description	Qty	Options
1		205-979-4241	Compressor Assembly		SN:B10394--
	A2	205-979-4240	Compressor Assembly	1	SN:B10373--B10393
	A1	20Y-810-1260	Compressor Assembly	1	SN:B10001--B10372
2		207-979-7440	Bracket	1	SN:B10001--
3		20Y-979-6612	Bracket	1	SN:B10001--
4		01010-81440	Bolt	1	SN:B10001--
5		195-71-32220	Washer	1	SN:B10001--
6		01019-31400	Bolt	1	SN:B10001--
7		198-38-12460	Spacer	1	SN:B10001--
8		01010-80875	Bolt	4	SN:B10001--
9		01643-30823	Washer	4	SN:B10001--
10		04434-50608	Clip	1	SN:B10001--
11		08053-01510	Clip	1	SN:B10001--
12		207-979-7450	Bracket	1	SN:B10001--
13		01010-81235	Bolt	2	SN:B10001--
14		01643-31232	Washer	2	SN:B10001--
15		20Y-979-3120	Tank	1	SN:B10001--
16		07283-36155	Clip, Pipe	2	SN:B10001--
17		01597-01009	Nut	4	SN:B10001--
18		01643-31032	Washer	4	SN:B10001--
19		207-979-7610	Bracket	1	SN:B10001--
20		20Y-979-6650	Tube	1	SN:B10001--
21		20Y-979-3150	・ O-ring	1	SN:B10001--
22		01435-00625	Bolt	2	SN:B10001--
23		207-979-7470	Hose	1	SN:B10001--
24		20Y-979-3150	・ O-ring	2	SN:B10001--

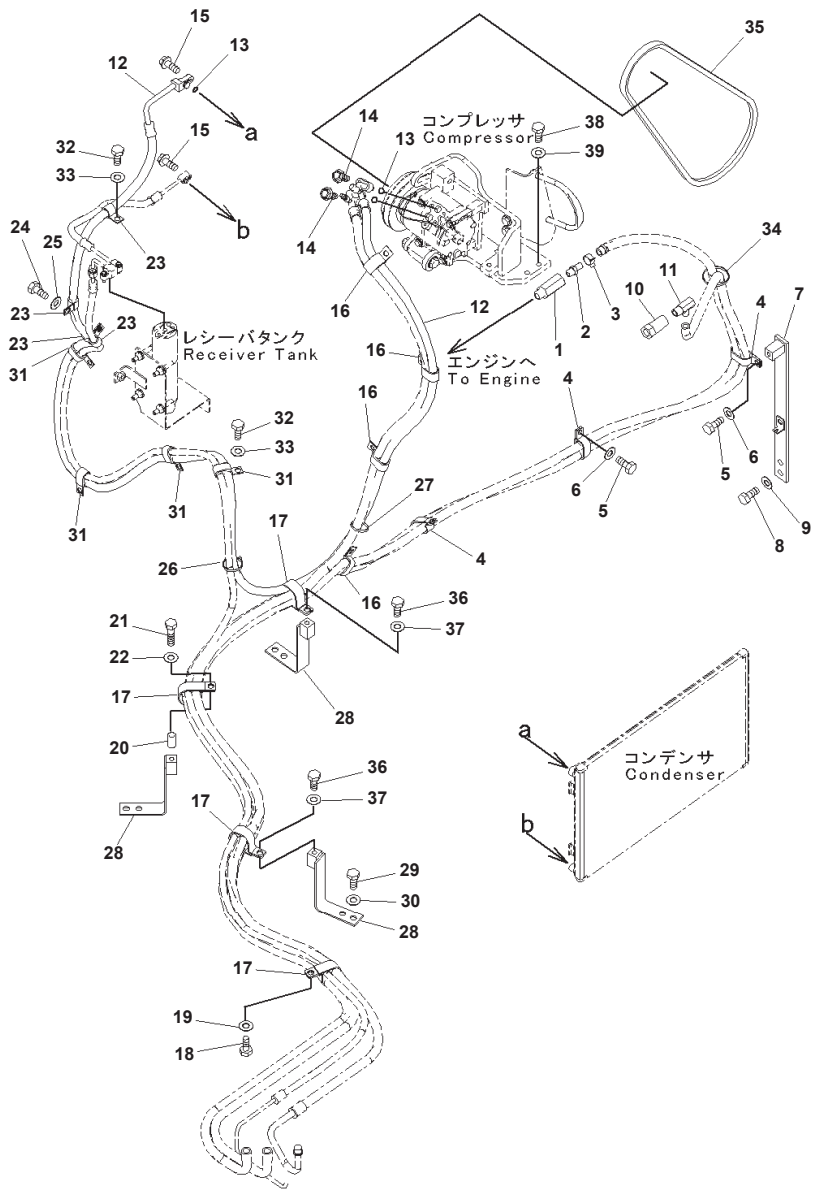

Index	Code	Part Number	Description	Qty	Options
1		207-979-7390	Nipple	1	SN:B10001--
2		20T-54-42510	Nipple	1	SN:B10001--
3		11Y-09-11160	Clip	2	SN:B10001--
4		155-06-15180	Clamp	3	SN:B10001--
5		01010-81225	Bolt	3	SN:B10001--
6		01643-31232	Washer	3	SN:B10001--
7		207-979-7540	Bracket	1	SN:B10001--
8		01010-81230	Bolt	2	SN:B10250--
	A2	01010-81225	Bolt	2	SN:B10001--B10249
9		01643-31232	Washer	2	SN:B10001--
10		209-98-81280	Nipple	1	SN:B10001--
11		202-98-11340	Joint	1	SN:B10001--
12		207-979-7462	Hose	1	SN:B10001--
13		20Y-979-3140	O-ring	2	SN:B10001--
14		01435-00630	Bolt	2	SN:B10001--
15		01435-00625	Bolt	2	SN:B10001--
16		141-06-11220	Clip	4	SN:B10001--
17		21T-06-11950	Clip	4	SN:B10001--
18		01010-81225	Bolt	5	SN:B10001--
19		01643-31232	Washer	5	SN:B10001--
20		195-01-16140	Spacer	1	SN:B10001--
21		01010-81260	Bolt	1	SN:B10001--
22		01643-31232	Washer	1	SN:B10001--
23		04434-51812	Clip	4	SN:B10001--
24		01010-81225	Bolt	2	SN:B10001--
25		01643-31232	Washer	2	SN:B10001--
26		08034-20519	Band	1	SN:B10001--
27		08034-20536	Band	2	SN:B10001--
28		207-979-7381	Bracket	3	SN:B10001--
29		01010-81225	Bolt	6	SN:B10001--
30		01643-31232	Washer	6	SN:B10001--
31		04435-51812	Clip	4	SN:B10001--
32		01010-81225	Bolt	5	SN:B10001--
33		01643-31232	Washer	5	SN:B10001--
34		08034-20536	Band	2	SN:B10001--
35		04120-21761	V-belt	1	SN:B10001--
36		01010-81225	Bolt	2	SN:B10001--
37		01643-31232	Washer	2	SN:B10001--
38		01010-81035	Bolt	4	SN:B10001--
39		01643-31032	Washer	4	SN:B10001--

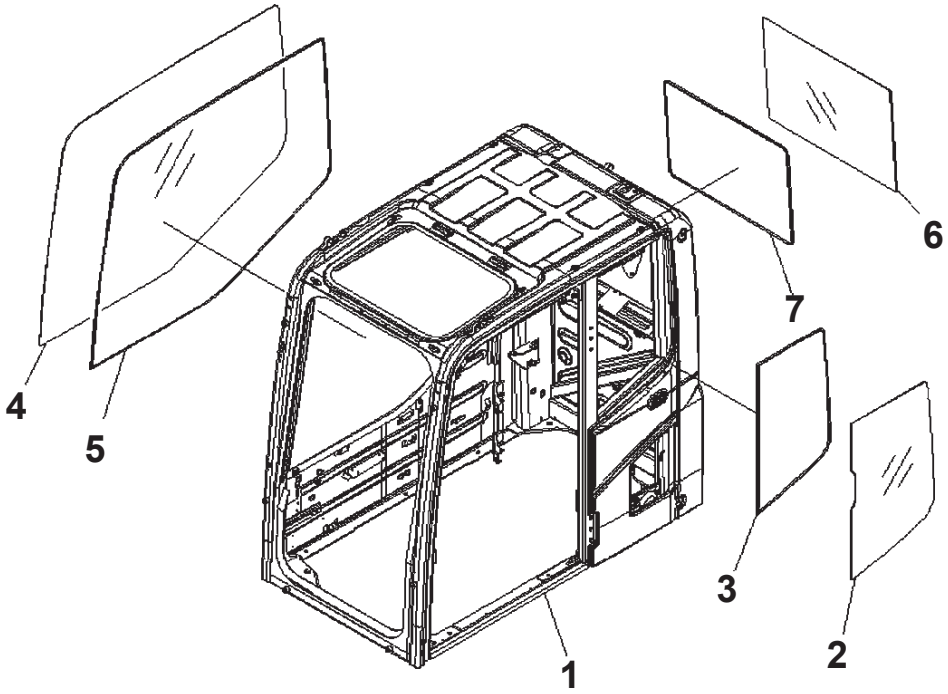

Cab, EOPS Cabin Front Fix, 1-actuator, With AM-FM Radio, With Master Key, For KOMTRAX, Cab And Window

Index	Code	Part Number	Description	Qty	Options
		208-53-00851	Cab Assembly	1	SN:B10102--
	A2	208-53-00850	Cab Assembly	1	SN:B10080--B10101
	A4	208-53-00552	Cab Assembly	1	SN:B10001--B10079
1	C1		・ Cab	1	SN:B10102--
	C1		・ Cab	1	SN:B10080--B10101
	C1		・ Cab	1	SN:B10001--B10079
2		20Y-53-11241	・ Glass	1	SN:B10001--
3		20Y-53-11260	・ Seal	1	SN:B10001--
4		20Y-53-11841	・ Glass	1	SN:B10001--
5		20Y-53-11850	・ Seal	1	SN:B10001--
6		20Y-53-11271	・ Glass	1	SN:B10001--
7		20Y-53-11250	・ Seal	1	SN:B10001--

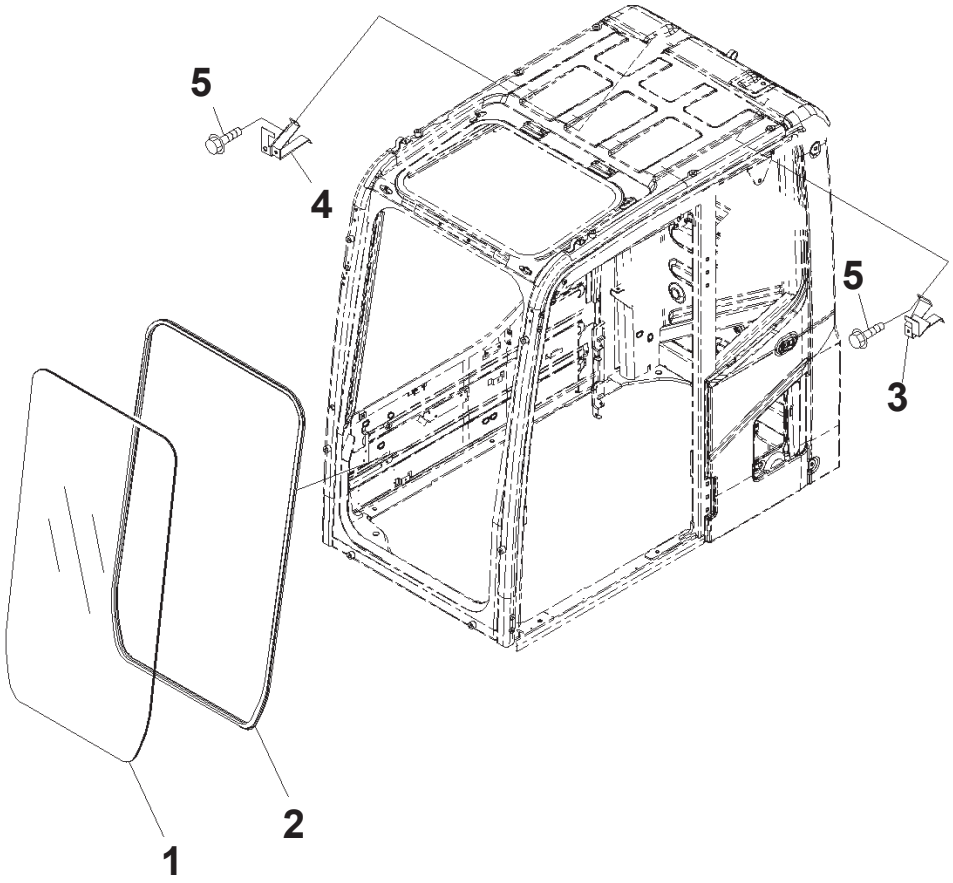

Cab, EOPS Cabin Front Fix, 1-actuator, With AM-FM Radio, With Master Key, For KOMTRAX, Front Window

Index	Code	Part Number	Description	Qty	Options
		208-53-00851	Cab Assembly	1	SN:B10102--
	A2	208-53-00850	Cab Assembly	1	SN:B10080--B10101
	A4	208-53-00552	Cab Assembly	1	SN:B10001--B10079
1		208-53-23330	・ Glass	1	SN:B10001--
2		208-53-23341	・ Weather Strip	1	SN:B10001--
3		20Y-53-11581	・ Bracket	1	SN:B10001--
4		20Y-53-11641	・ Bracket	1	SN:B10001--
5		01435-00612	・ Bolt	4	SN:B10001--

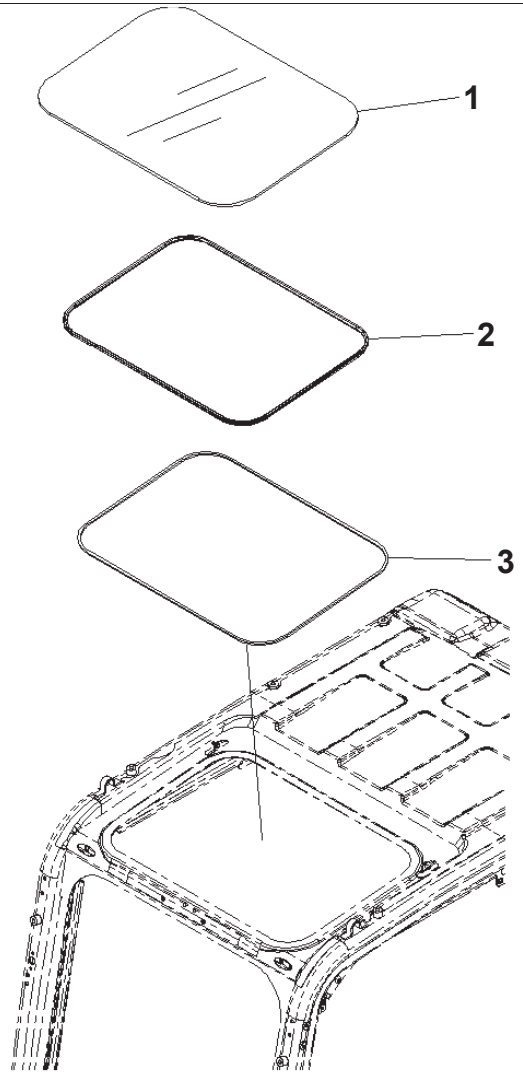

00040715

Cab, EOPS Cabin Front Fix, 1-actuator, With AM-FM Radio, With Master Key, For KOMTRAX, Roof Window

Index	Code	Part Number	Description	Qty	Options
		208-53-00851	Cab Assembly	1	SN:B10102--
	A2	208-53-00850	Cab Assembly	1	SN:B10080--B10101
	A4	208-53-00552	Cab Assembly	1	SN:B10001--B10079
1		20Y-53-13770	· Plate	1	SN:B10001--
2		20Y-53-13741	· Trim	1	SN:B10001--
3		20Y-53-13790	· Seal	1	SN:B10001--

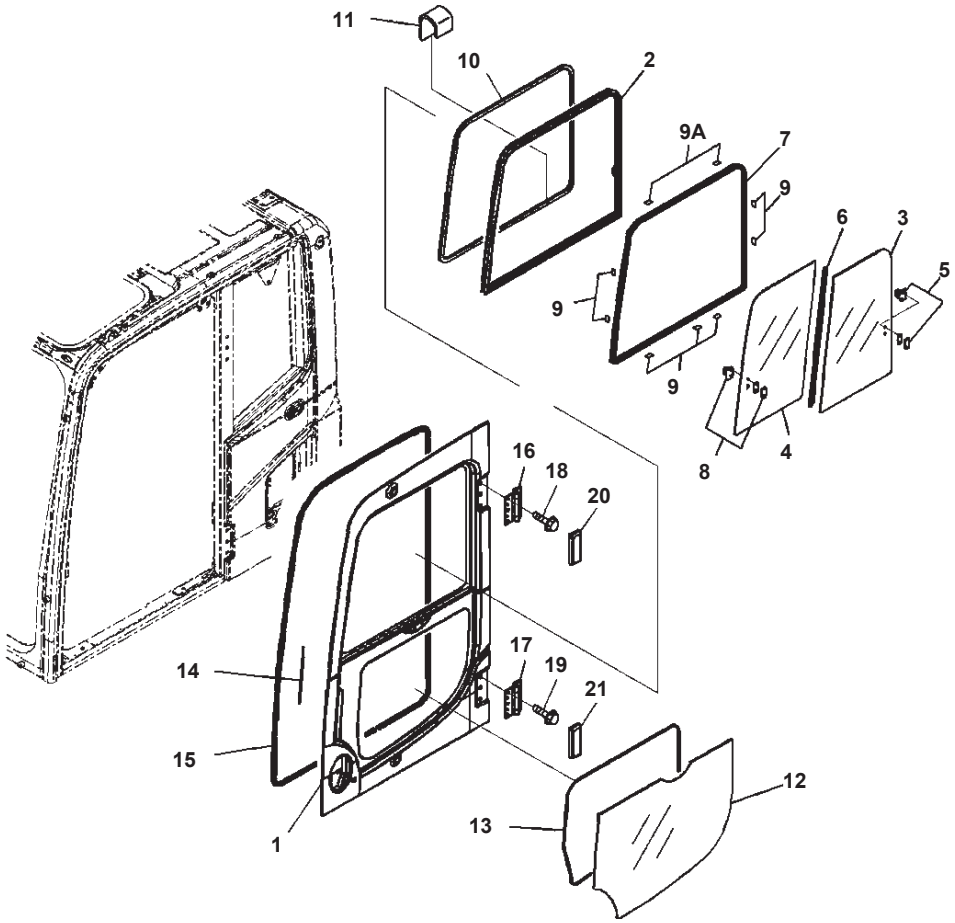

Cab, EOPS Cabin Front Fix, 1-actuator, With AM-FM Radio, With Master Key, For KOMTRAX, Door

Index	Code	Part Number	Description	Qty	Options
		208-53-00851	Cab Assembly	1	SN:B10102--
	A2	208-53-00850	Cab Assembly	1	SN:B10080--B10101
	A4	208-53-00552	Cab Assembly	1	SN:B10001--B10079
		20Y-53-00072	・ Door Assembly	1	SN:B10001--
1	C1		Door	1	SN:B10001--
		20Y-53-11402	・・ Sash Assembly	1	SN:B10001--
2	C1		・・・ Sash	1	SN:B10001--
3		20Y-53-12840	・・・ Glass	1	SN:B10001--
4		20Y-53-12850	・・・ Glass	1	SN:B10001--
5		20Y-54-52860	・・・ Lock Assembly	1	SN:B10001--
6		20Y-53-12870	・・・ Seal	1	SN:B10001--
7		20Y-53-12880	・・・ Seal	1	SN:B10001--
8		20Y-54-13322	・・・ Lock Assembly	1	SN:B10001--
9		20Y-53-12971	・・ Seat	7	SN:B10218---
	A2	20Y-53-12971	・・ Seat	9	SN:B10001--B10217
9A		20Y-54-13180	・・ Seat	2	SN:B10218---
10		20Y-53-11470	・・ Trim	1	SN:B10001--
11		20Y-53-13910	・・ Cover	1	SN:B10001--
12		20Y-53-11451	・・ Glass	1	SN:B10001--
13		20Y-53-11460	・・ Seal	1	SN:B10001--
14		20Y-53-13880	・・ Seal	1	SN:B10001--
15		20Y-53-11484	・・ Weather Strip	1	SN:B10001--
16		20Y-53-11332	・・ Hinge	1	SN:B10001--
17		20Y-53-11332	・・ Hinge	1	SN:B10001--
18		01435-01220	・・ Bolt	6	SN:B10001--
19		01435-01220	・・ Bolt	6	SN:B10001--
20		20Y-53-11411	・・ Cover	1	SN:B10001--
21		20Y-53-11421	・・ Cover	1	SN:B10001--

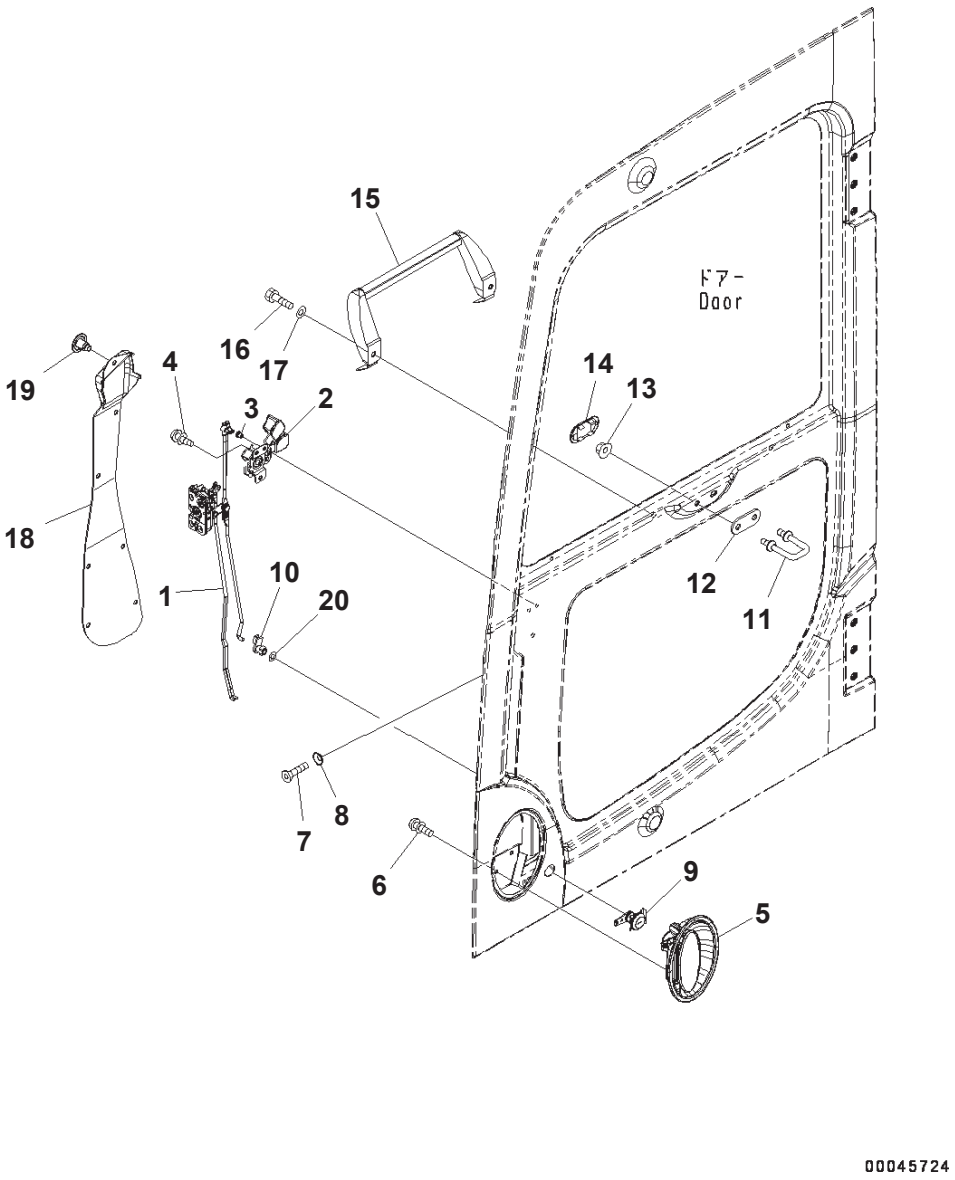

Cab, EOPS Cabin Front Fix, 1-actuator, With AM-FM Radio, With Master Key, For KOMTRAX, Door Lock

Index	Code	Part Number	Description	Qty	Options
		208-53-00851	Cab Assembly	1	SN:B10102--
	A2	208-53-00850	Cab Assembly	1	SN:B10080--B10101
	A4	208-53-00552	Cab Assembly	1	SN:B10001--B10079
		20Y-53-00072	・Door Assembly	1	SN:B10001--
1		20Y-53-12201	・・Latch Assembly	1	SN:B10001--
2		20Y-54-52300	・・Handle Assembly	1	SN:B10001--
3		22B-54-16340	・・・Snap	1	SN:B10001--
4		01023-10612	・・Screw	3	SN:B10001--
5		20Y-53-12991	・・Handle	1	SN:B10001--
6		01023-10612	・・Screw	3	SN:B10001--
7		01240-00616	・・Screw	3	SN:B10001--
8		195-Z11-1690	・・Washer	3	SN:B10001--
9		20Y-54-52820	・・Lock Assembly	1	SN:B10001--
10		22B-54-16330	・・Snap	1	SN:B10001--
11		20Y-53-11320	・・Striker	1	SN:B10001--
12		20Y-53-12940	・・Plate	1	SN:B10001--
13		01584-01008	・・Nut	2	SN:B10001--
14		20Y-53-12661	・・Cover	1	SN:B10001--
15		2A5-53-13130	・・Grip	1	SN:B10247--
	A2	20Y-54-51393	・・Grip	1	SN:B10172--B10246
16		01010-80820	・・Bolt	2	SN:B10001--
17		01643-30823	・・Washer	2	SN:B10001--
18		20Y-53-11441	・・Cover	1	SN:B10001--
19		22B-54-16461	・・Rivet	7	SN:B10001--
20		145-Z79-6270	・・Washer	1	SN:B10001--

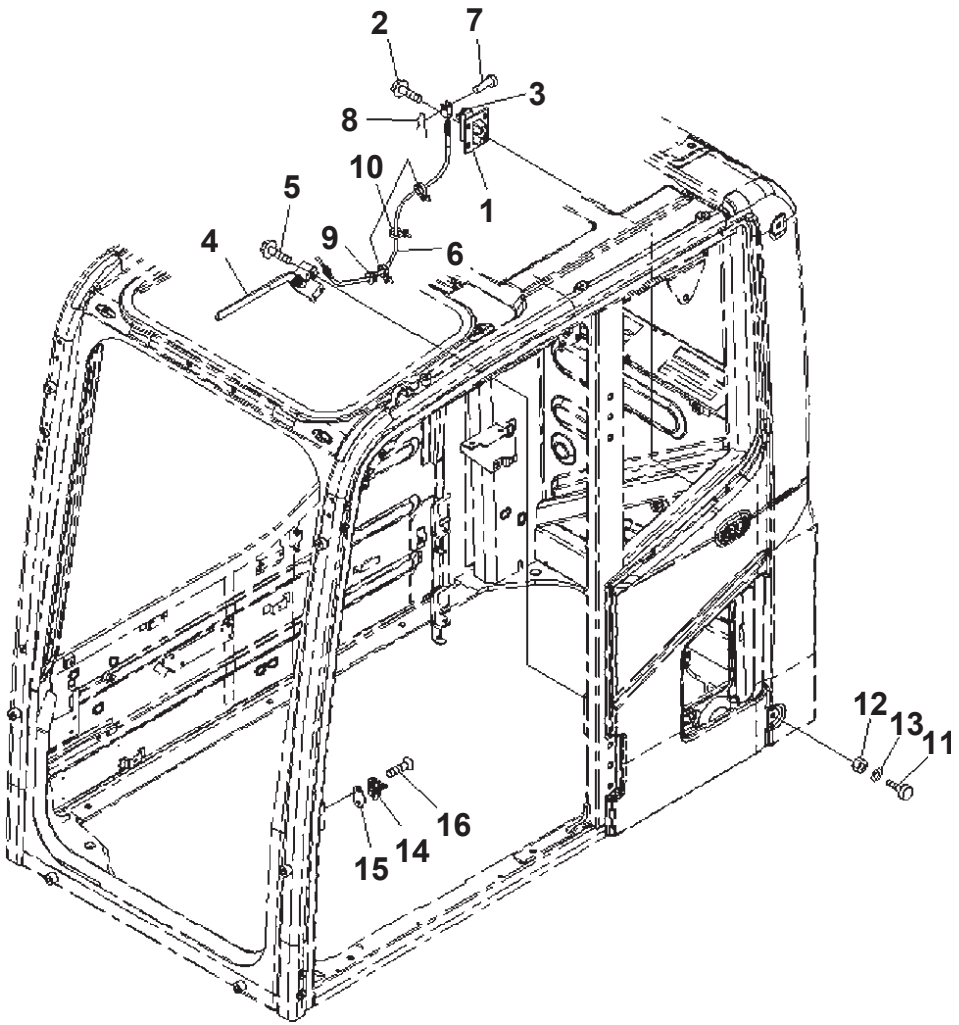

Cab, EOPS Cabin Front Fix, 1-actuator, With AM-FM Radio, With Master Key, For KOMTRAX, Open Lock and Door Catch

Index	Code	Part Number	Description	Qty	Options
		208-53-00851	Cab Assembly	1	SN:B10102--
	A2	208-53-00850	Cab Assembly	1	SN:B10080--B10101
	A4	208-53-00552	Cab Assembly	1	SN:B10001--B10079
1		20Y-53-11981	· Lock	1	SN:B10001--
2		01435-40825	· Bolt	4	SN:B10001--
3		20Y-53-12280	· Cover	1	SN:B10001--
4		208-53-14540	· Lever Assembly	1	SN:B10001--
5		01435-40616	· Bolt	3	SN:B10001--
6		20Y-53-11990	· Cable	1	SN:B10001--
7		04205-10520	· Pin	1	SN:B10001--
8		04052-10530	· Pin	1	SN:B10001--
9		08034-20414	· Band	1	SN:B10001--
10		08059-00413	· Clip	2	SN:B10001--
11		20Y-54-11611	· Stopper	2	SN:B10001--
12		01580-11008	· Nut	2	SN:B10001--
13		01643-31032	· Washer	2	SN:B10001--
14		208-53-22810	· Striker	1	SN:B10080--
	A2	20Y-53-11810	· Striker	1	SN:B10001--B10079
15		20Y-53-11890	· Plate	1	SN:B10001--
16		01240-01025	· Screw	2	SN:B10001--

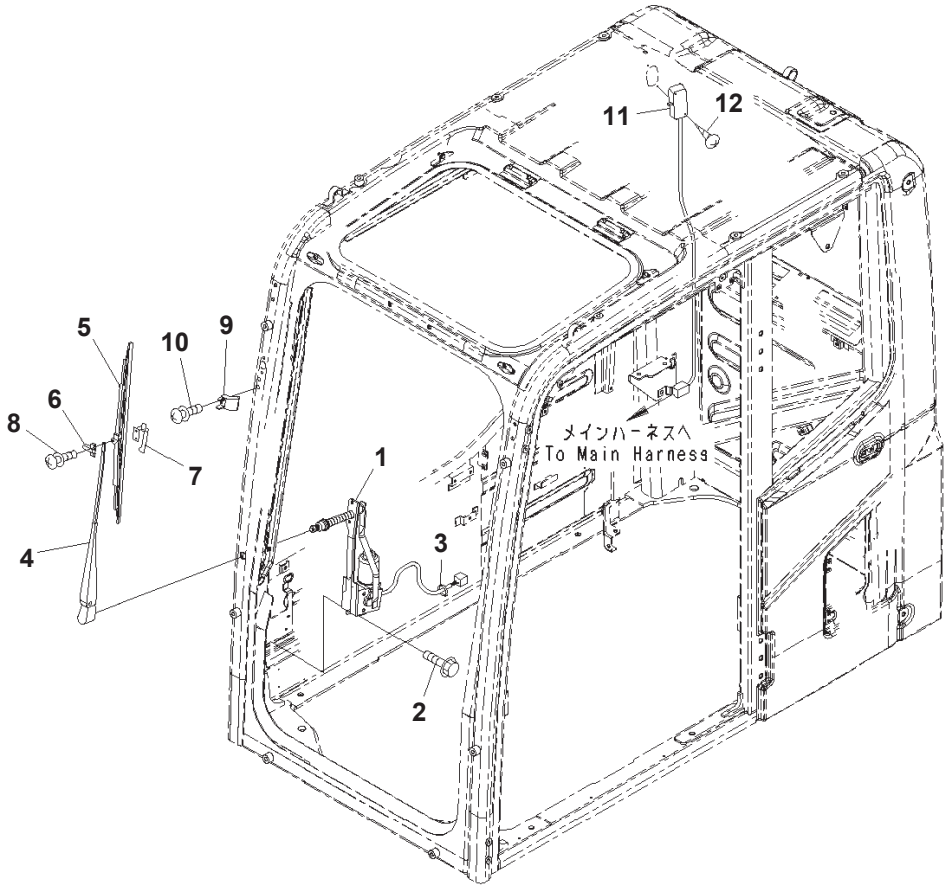

Cab, EOPS Cabin Front Fix, 1-actuator, With AM-FM Radio, With Master Key, For KOMTRAX, Wiper and Room Lamp

Index	Code	Part Number	Description	Qty	Options
		208-53-00851	Cab Assembly	1	SN:B10102--
	A2	208-53-00850	Cab Assembly	1	SN:B10080--B10101
	A4	208-53-00552	Cab Assembly	1	SN:B10001--B10079
1		20Y-54-52211	・ Wiper Motor Assembly	1	SN:B10001--
2		01435-00616	・ Bolt	6	SN:B10001--
3		08034-20414	・ Band	1	SN:B10001--
		20Y-54-52221	・ Wiper Assembly	1	SN:B10001--
4		20Y-54-52350	・・ Arm	1	SN:B10001--
5		20Y-54-39450	・・ Blade	1	SN:B10001--
6		20Y-54-39460	・・ Slider	1	SN:B10001--
7		20Y-54-39480	・・ Plate	1	SN:B10001--
8		ND949007-2350	・・ Screw and Washer	2	SN:B10001--
9		20Y-53-12232	・ Stopper	1	SN:B10001--
10		01023-20620	・ Screw	2	SN:B10001--
11		2A5-53-13540	・ Lamp Assembly	1	SN:B10386--
	A2	20Y-53-12790	・ Light	1	SN:B10001--B10385
		08116-02410	・・ Bulb, 10watt	1	SN:B10001--
12		01370-00420	・ Screw	2	SN:B10001--

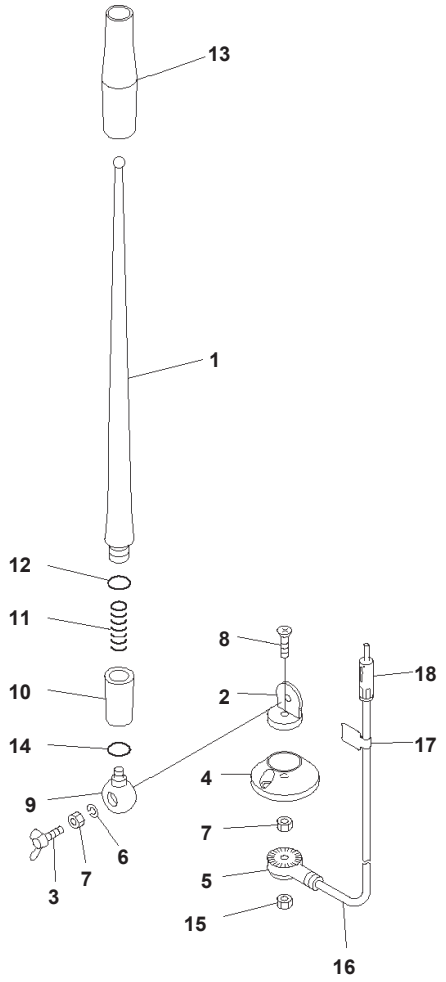

JH002177

Cab, EOPS Cabin Front Fix, 1-actuator, With AM-FM Radio, With Master Key, For KOMTRAX, Rubber Antenna

Index	Code	Part Number	Description	Qty	Options
		208-53-00851	Cab Assembly	1	SN:B10102--
	A2	208-53-00850	Cab Assembly	1	SN:B10080--B10101
	A4	208-53-00552	Cab Assembly	1	SN:B10001--B10079
		20Y-06-41990	・Rubber Antenna	1	SN:B10001--
1		RFU419B-418-A	・・Rod	1	SN:B10001--
2	C1		・・Holder	1	SN:B10001--
3		RFU419B-418-D	・・Bolt, Wing	1	SN:B10001--
4		RFU419B-418-E	・・Base	1	SN:B10001--
5	C1		・・Holder	1	SN:B10001--
6		RFU419B-418-B	・・Washer, Spring	1	SN:B10001--
7		RFU419B-418-C	・・Nut	2	SN:B10001--
8	C1		・・Screw	1	SN:B10001--
9	C1		・・Holder	1	SN:B10001--
10	C1		・・Holder Assembly	1	SN:B10001--
11	C1		・・Spring	1	SN:B10001--
12	C1		・・O-ring	1	SN:B10001--
13	C1		・・Tube	1	SN:B10001--
14	C1		・・O-ring	1	SN:B10001--
15		REU419B-418-C	・・Nut	1	SN:B10001--
16		RFU419B-418-F	・・Cable	1	SN:B10001--
17	C1		・・Plate	1	SN:B10001--
18	C1		・・Plug	1	SN:B10001--

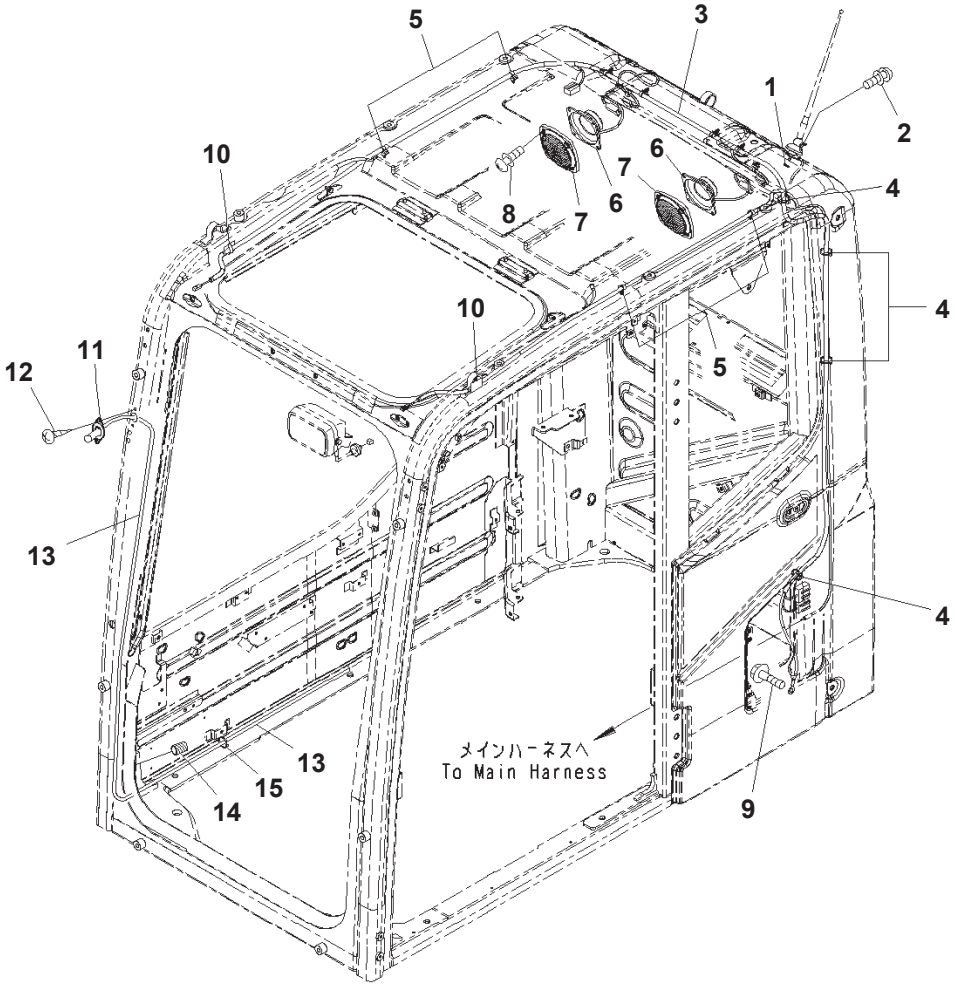

JY002309

Cab, EOPS Cabin Front Fix, 1-actuator, With AM-FM Radio, With Master Key, For KOMTRAX, Speaker and Window Washer

Index	Code	Part Number	Description	Qty	Options
		208-53-00851	Cab Assembly	1	SN:B10102--
	A4	208-53-00850	Cab Assembly	1	SN:B10080--B10101
	A4	208-53-00552	Cab Assembly	1	SN:B10001--B10079
1		01643-30623	・ Washer	1	SN:B10001--
2		01023-20412	・ Screw	2	SN:B10001--
3		20Y-06-41141	・ Wire Harness	1	SN:B10001--
4		08034-20414	・ Band	4	SN:B10001--
5		08059-00413	・ Clip	8	SN:B10001--
6		20Y-06-42180	・ Speaker	2	SN:B10001--
7		20Y-53-13190	・ Cover	2	SN:B10353--
		20Y-53-12221	・ Cover	2	SN:B10001--B10352
8		01023-20416	・ Screw	8	SN:B10001--
9		01435-40812	・ Bolt	1	SN:B10001--
10		08051-00801	・ Clip	2	SN:B10001--
11		20Y-54-39511	・ Nozzle	1	SN:B10001--
12		01023-70412	・ Screw	2	SN:B10001--
13		195-979-7770	・ Hose	1	SN:B10001--
14		08017-B0701	・ Conduit	1	SN:B10001--
15		08034-20414	・ Band	1	SN:B10001--

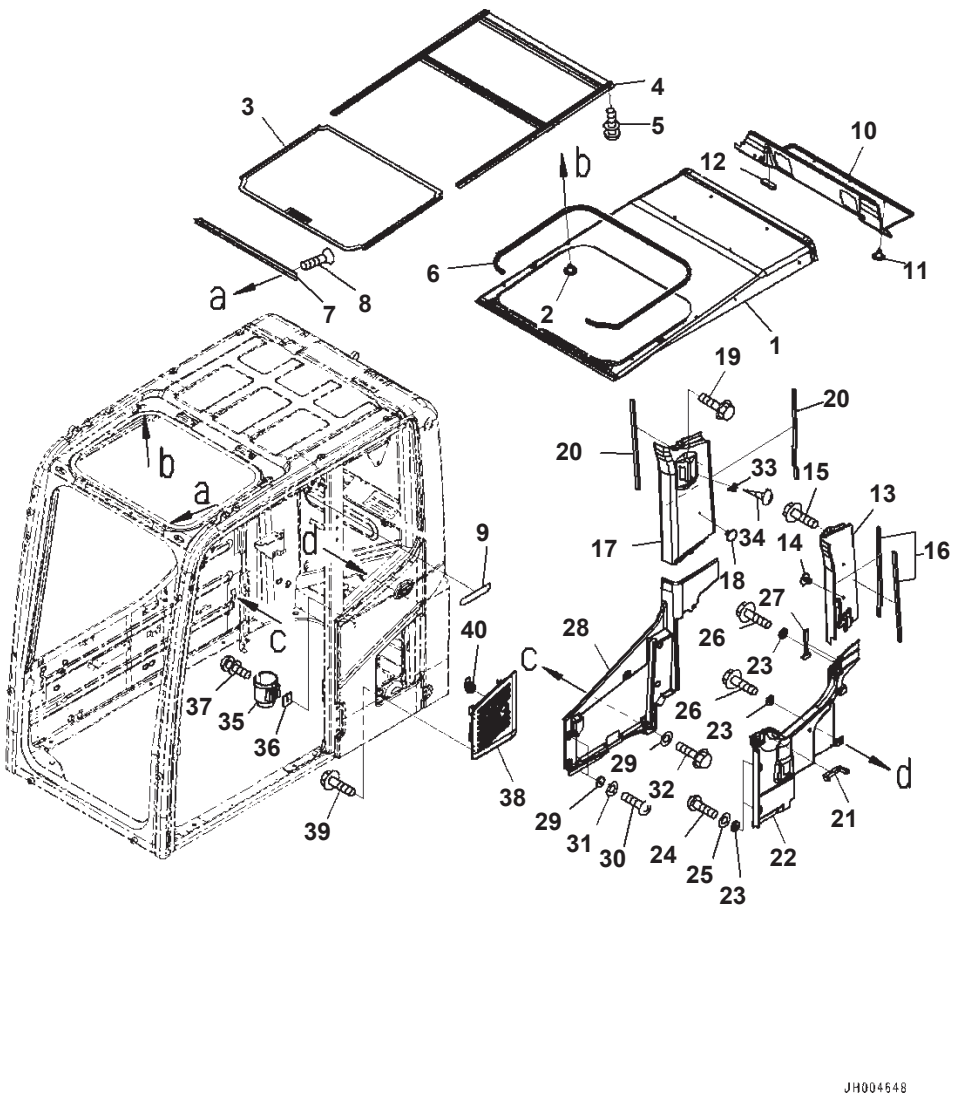

Cab, EOPS Cabin Front Fix, 1-actuator, With AM-FM Radio, With Master Key, For KOMTRAX, Roof Cover and Air Intake

Index	Code	Part Number	Description	Qty	Options
		208-53-00851	Cab Assembly	1	SN:B10102--
	A2	208-53-00850	Cab Assembly	1	SN:B10080--B10101
	A4	208-53-00552	Cab Assembly	1	SN:B10001--B10079
1		20Y-53-13712	・ Cover	1	SN:B10001--
2		09416-10200	・ Button	18	SN:B10001--
		20Y-53-13722	・ Cover Assembly	1	SN:B10001--
3		20Y-53-13732	・・ Cover	1	SN:B10001--
4		20Y-53-13781	・・ Rail	1	SN:B10001--
5		01023-10410	・ Screw	6	SN:B10001--
6		20Y-53-13751	・ Trim	1	SN:B10001--
7		20Y-53-13763	・ Plate	1	SN:B10001--
8		01224-70408	・ Screw, Philips Head	2	SN:B10001--
9		205-53-22140	・ Seal	1	SN:B10080--
10		208-53-23420	・ Cover	1	SN:B10001--
11		09416-10200	・ Button	3	SN:B10001--
12		20Y-53-13870	・ Seal	1	SN:B10080--
13		20Y-53-12431	・ Cover	1	SN:B10001--
14		208-53-13270	・ Rivet	2	SN:B10001--
15		01435-00612	・ Bolt	1	SN:B10001--
16		20Y-53-12710	・ Seal	2	SN:B10001--
17		208-53-23440	・ Cover	1	SN:B10001--
18		09416-10200	・ Button	1	SN:B10001--
19		01435-00612	・ Bolt	1	SN:B10001--
20		20Y-53-12710	・ Seal	2	SN:B10001--
21		20Y-53-12552	・ Seal	1	SN:B10001--
22		20Y-53-12463	・ Cover	1	SN:B10001--
23		20Y-53-12310	・ Collar	4	SN:B10001--
24		01245-00616	・ Screw, Hexagon Socket Head	2	SN:B10001--
25		01643-70623	・ Washer	2	SN:B10001--
26		01435-00612	・ Bolt	2	SN:B10001--
27		22B-54-17380	・ Hammer	1	SN:B10001--
28		20Y-53-12472	・ Cover	1	SN:B10001--
29		20Y-53-12310	・ Collar	5	SN:B10001--
30		01245-00616	・ Screw, Hexagon Socket Head	3	SN:B10001--
31		01643-70623	・ Washer	3	SN:B10001--
32		01435-00612	・ Bolt	2	SN:B10001--
33		205-54-51250	・ Hanger	1	SN:B10001--
34		01370-30416	・ Screw	2	SN:B10001--
35		208-53-12991	・ Holder	1	SN:B10001--
36		208-53-12980	・ Plate	1	SN:B10001--
37		01023-20616	・ Screw	2	SN:B10001--
38		20Y-53-11752	・ Cover	1	SN:B10001--
39		01435-40610	・ Bolt	4	SN:B10001--
40		20Y-53-11761	・ Lock Assembly	1	SN:B10001--

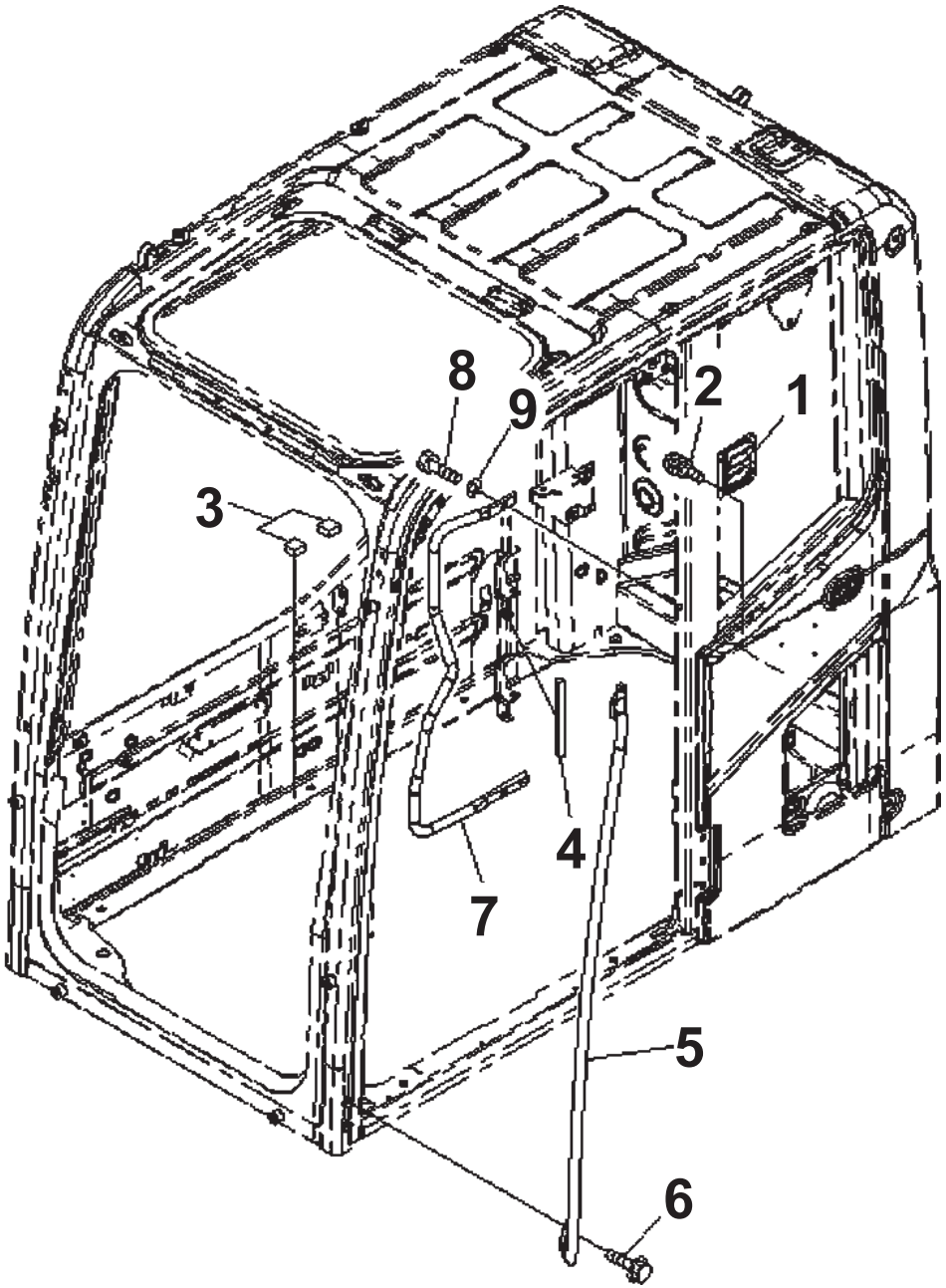

Cab, EOPS Cabin Front Fix, 1-actuator, With AM-FM Radio, With Master Key, For KOMTRAX, Pressure Valve and Grip

Index	Code	Part Number	Description	Qty	Options
		208-53-00851	Cab Assembly	1	SN:B10102--
	A2	208-53-00850	Cab Assembly	1	SN:B10080--B10101
	A4	208-53-00552	Cab Assembly	1	SN:B10001--B10079
1		20Y-53-11961	・ Valve Assembly	1	SN:B10001--
2		01023-60512	・ Screw	4	SN:B10001--
3		20Y-53-13490	・ Rubber	2	SN:B10001--
4		20Y-53-12591	・ Seal	1	SN:B10001--
5		2A5-53-13140	・ Grip	1	SN:B10353--
	A2	20Y-53-11821	・ Grip	1	SN:B10001--B10352
6		01435-40825	・ Bolt	4	SN:B10001--
7		20Y-53-11831	・ Grip	1	SN:B10001--
		01010-D1030	・ Bolt	3	SN:B10352--
8	A2	01010-D1025	・ Bolt	3	SN:B10001--B10352
9		01643-71032	・ Washer	3	SN:B10001--

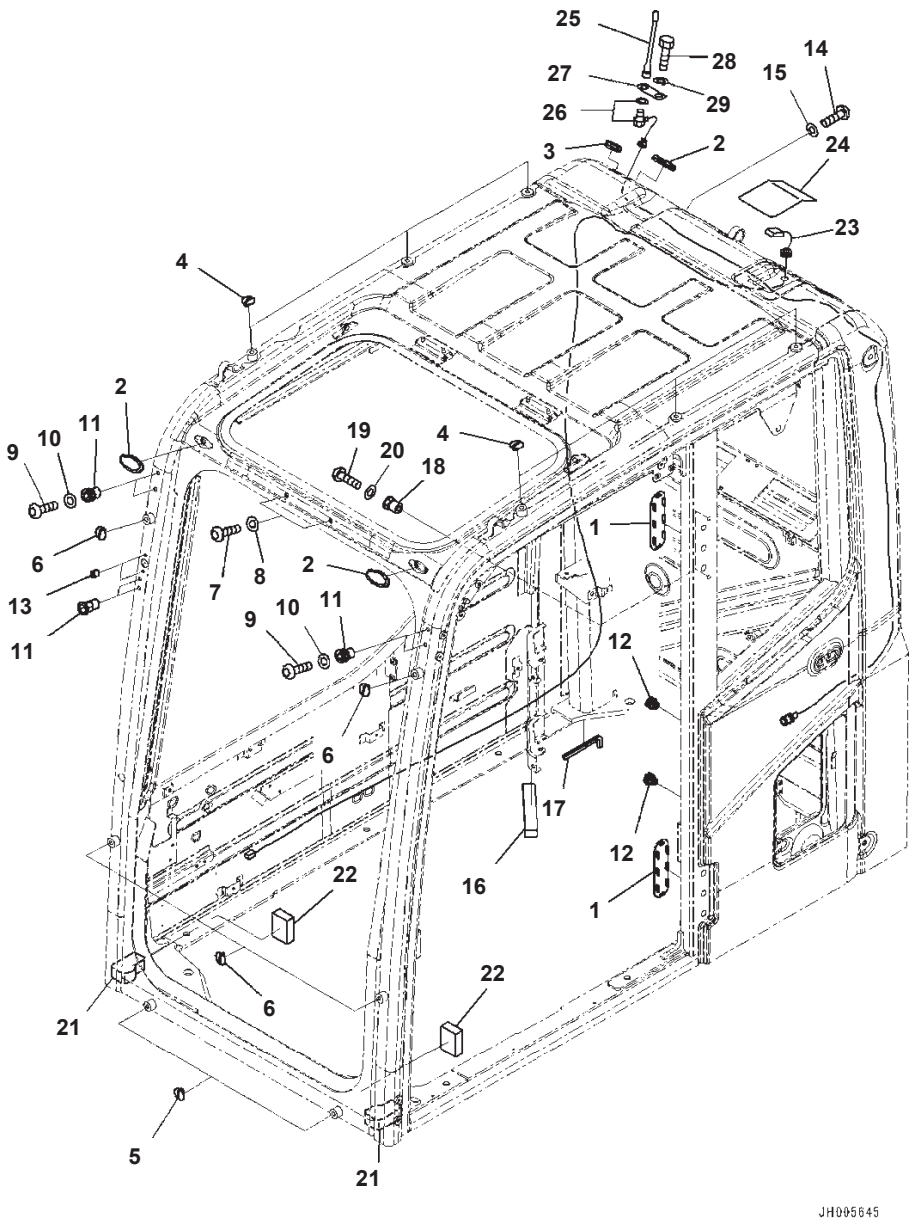

PC350LC-8 S/N B10001-UP
Cab, EOPS Cabin Front Fix, 1-actuator, With AM-FM Radio, With Master Key, For KOMTRAX KOMTRAX, Film Antenna and ORBCOM Type

Index	Code	Part Number	Description	Qty	Options
		208-53-00851	Cab Assembly	1	SN:B10102--
	A4	208-53-00850	Cab Assembly	1	SN:B10080--B10101
	A4	208-53-00552	Cab Assembly	1	SN:B10001--B10079
1		20Y-53-12960	· Cover	2	SN:B10001--
2		22B-54-17282	· Cap	3	SN:B10001--
3		09415-02512	· Cap	1	SN:B10001--
4		20Y-53-11390	· Cap	6	SN:B10001--
5		20Y-53-11390	· Cap	2	SN:B10001--
6		20Y-53-11380	· Cap	4	SN:B10001--
7		01245-01016	· Screw, Hexagon Socket Head	2	SN:B10001--
8		01643-71032	· Washer	2	SN:B10001--
9		01245-00616	· Screw, Hexagon Socket Head	4	SN:B10001--
10		01643-70623	· Washer	4	SN:B10001--
11		20Y-53-12260	· Nut	6	SN:B10001--
12		20Y-54-35451	· Nut	2	SN:B10001--
13		20Y-53-12320	· Nut	2	SN:B10001--
14		01245-01016	· Screw, Hexagon Socket Head	1	SN:B10001--
15		01643-71032	· Washer	1	SN:B10001--
16		20Y-53-12580	· Seal	1	SN:B10001--
17		20Y-53-12740	· Trim	1	SN:B10001--
18		20Y-53-12270	· Nut	2	SN:B10001--
19		01245-00816	· Screw, Hexagon Socket Head	2	SN:B10001--
20		01643-70823	· Washer	2	SN:B10001--
21		20Y-53-18880	· Seal	2	SN:B10001--
22		20Y-53-18940	· Seal	2	SN:B10001--
23		8A13-10-4320	· Antenna	1	SN:B10121--
	A2	8A13-10-4300	· Antenna	1	SN:B10001--B10120
24		20Y-53-12951	· Cover	1	SN:B10001--
25		8A13-10-2100	· Antenna	1	SN:B10001--
26		8A13-10-2200	· Cable	1	SN:B10001--
27		20Y-53-15140	· Plate	1	SN:B10001--
28		01010-D1225	· Bolt	1	SN:B10001--
29		01643-71232	· Washer	1	SN:B10001--

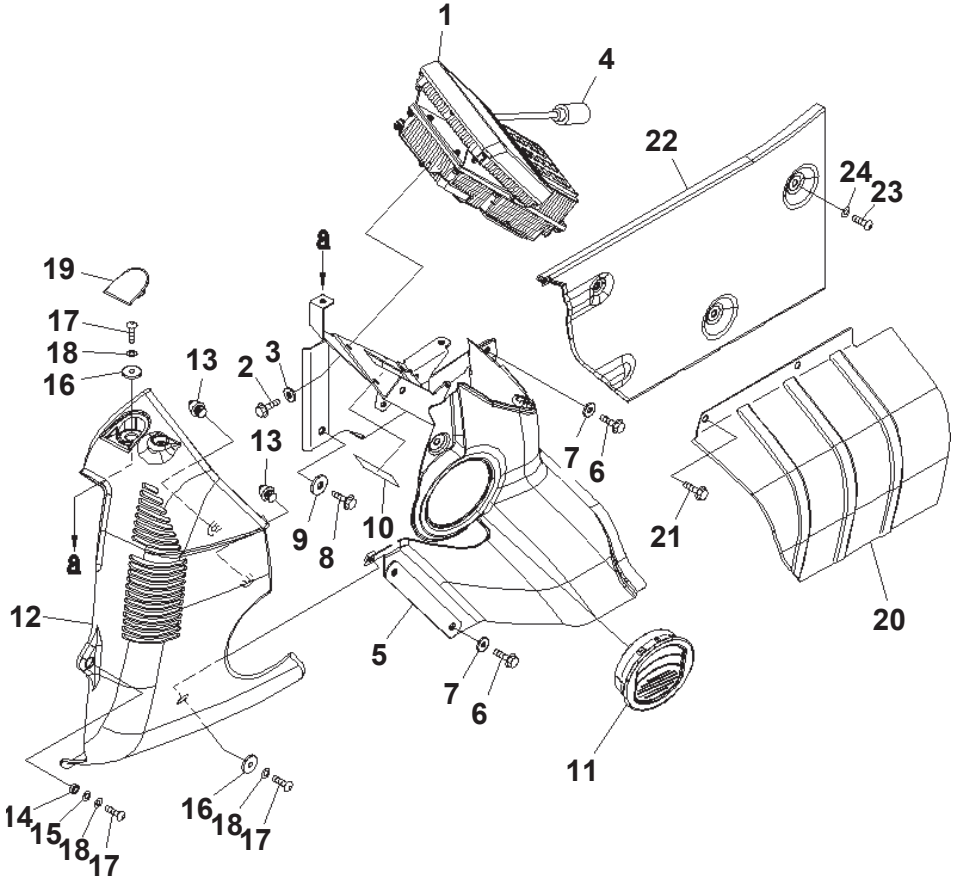

Cab, EOPS Cabin Front Fix, 1-actuator, With AM-FM Radio, With Master Key, For KOMTRAX, Cab In Parts, Monitor And Cover

Index	Code	Part Number	Description	Qty	Options
1		7835-31-5009	Monitor	1	SN:B10172--
	A2	7835-31-5007	Monitor	1	SN:B10102--B10171
	A2	7835-31-5006	Monitor	1	SN:B10026--B10101
	A2	7835-31-5005	Monitor	1	SN:B10008--B10025
	A2	7835-31-5004	Monitor	1	SN:B10001--B10007
2		01435-00616	Bolt	4	SN:B10001--
3		209-72-12230	Washer	4	SN:B10001--
4		20Y-53-12810	Cover	1	SN:B10001--
5		20Y-53-12154	Cover	1	SN:B10001--
6		01435-00616	Bolt	4	SN:B10001--
7		209-72-12230	Washer	4	SN:B10001--
8		01435-00820	Bolt	1	SN:B10001--
9		208-53-11330	Washer	1	SN:B10001--
10		20Y-00-41330	Plate	1	SN:B10001--
11		20Y-53-12172	Grille	1	SN:B10001--
12		20Y-53-12122	Cover	1	SN:B10001--
13		22U-54-25360	· Clip	2	SN:B10026--
	A2	22U-54-25340	· Clip	2	SN:B10001--B10025
14		205-54-75240	Collar	1	SN:B10001--
15		01643-70823	Washer	1	SN:B10001--
16		20Y-53-12310	Collar	2	SN:B10001--
17		01245-00616	Screw, Hexagon Socket Head	3	SN:B10001--
18		01643-70623	Washer	3	SN:B10001--
19		20Y-53-12291	Cap	1	SN:B10001--
20		20Y-53-12161	Cover	1	SN:B10001--
21		01435-00616	Bolt	2	SN:B10001--
22		20Y-53-12483	Cover	1	SN:B10001--
23		01245-00616	Screw, Hexagon Socket Head	3	SN:B10026--
	A2	01245-00612	Screw	3	SN:B10001--B10025
24		01643-70623	Washer	3	SN:B10001--

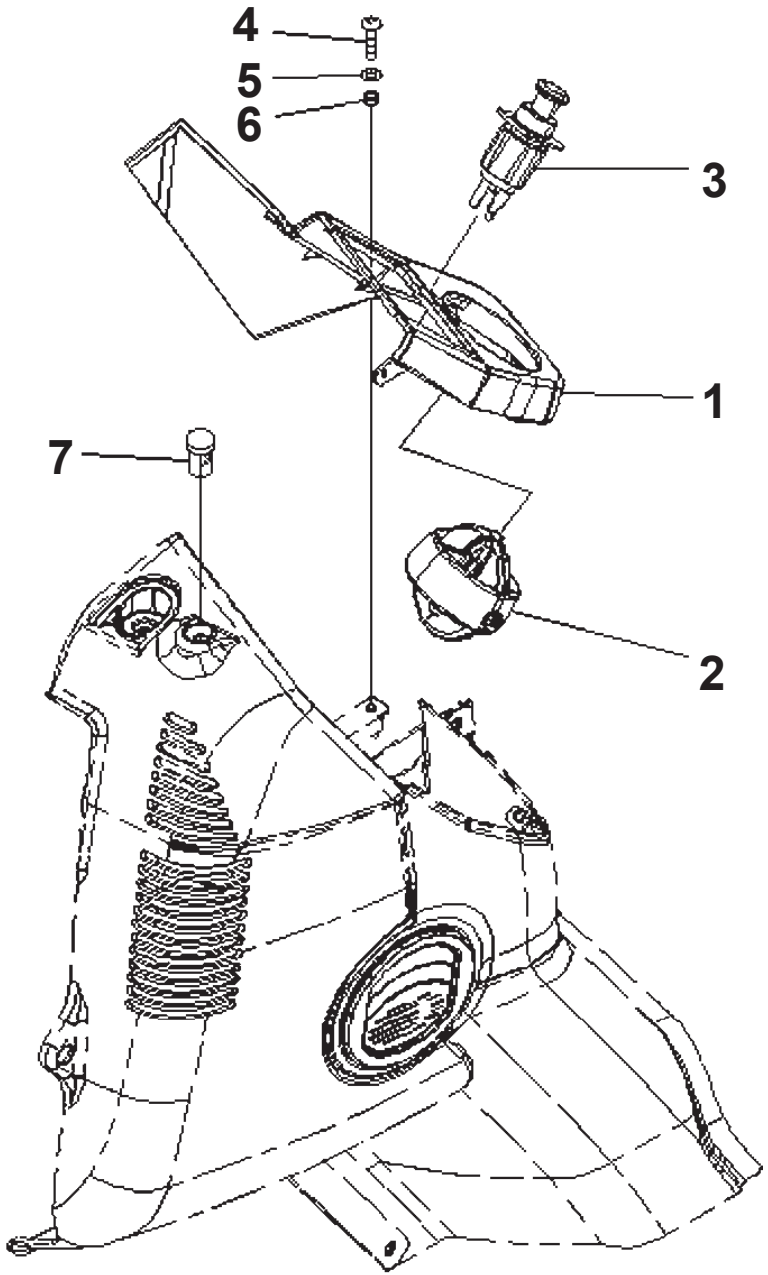

Cab, EOPS Cabin Front Fix, 1-actuator, With AM-FM Radio, With Master Key, For KOMTRAX, Cab In Parts, Monitor Cover (#B10001-B101

Index	Part Number	Description	Qty	Options
1	20Y-53-12111	Cover	1	SN:B10001--@
2	20Y-53-12240	Louver	1	SN:B10001--@
3	20Y-06-23472	Cigarette Lighter	1	SN:B10001--B10120
4	01245-00616	Screw, Hexagon Socket Head	1	SN:B10001--@
5	01643-70623	Washer	1	SN:B10001--@
6	20Y-43-41290	Collar	1	SN:B10001--@
7	20Y-979-6161	Sensor	1	SN:B10001--@

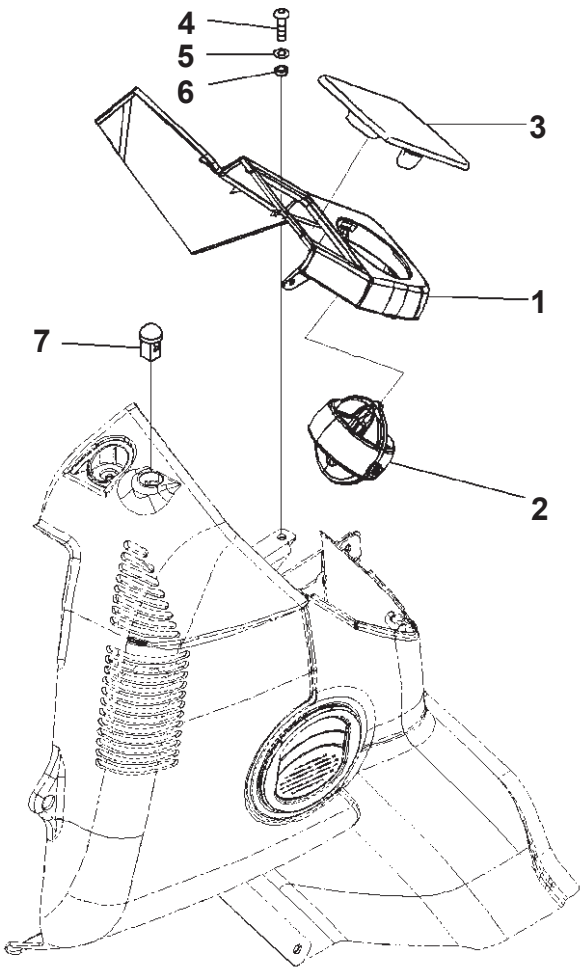

モニタカバー
Monitor Cover

JH004557

Cab, EOPS Cabin Front Fix, 1-actuator, With AM-FM Radio, With Master Key, For KOMTRAX, Cab In Parts, Monitor Cover (#B10121-)

Index	Part Number	Description	Qty	Options
1	20Y-53-12111	Cover	1	SN:B10001--
2	20Y-53-12240	Louver	1	SN:B10001--
3	20Y-53-14230	Cap	1	SN:B10121--
4	01245-00616	Screw, Hexagon Socket Head	1	SN:B10001--
5	01643-70623	Washer	1	SN:B10001--
6	20Y-43-41290	Collar	1	SN:B10001--
7	20Y-979-6161	Sensor	1	SN:B10001--

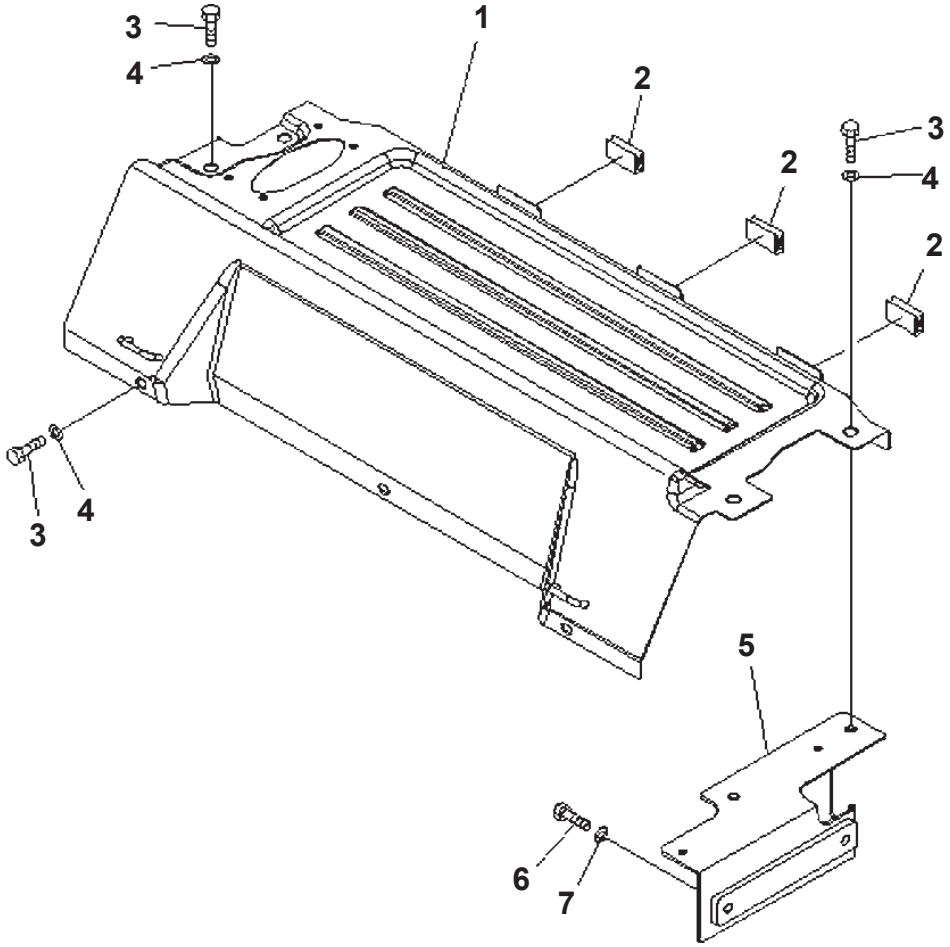

Cab, EOPS Cabin Front Fix, 1-actuator, With AM-FM Radio, With Master Key, For KOMTRAX, Cab In Parts, Luggage Plate (#B10001-B101

Index	Code	Part Number	Description	Qty	Options
		20Y-53-13616	Cover Assembly	1	SN:B10001--B10120
1	C1		・ Cover	1	SN:B10001--B10120
2		208-53-12460	・ Seat	3	SN:B10001--@
3		01010-D0825	Bolt	7	SN:B10001--@
4		01643-70823	Washer	7	SN:B10001--@
5		20Y-53-12771	Plate	1	SN:B10001--@
6		01010-D0825	Bolt	2	SN:B10001--@
7		01643-70823	Washer	2	SN:B10001--@

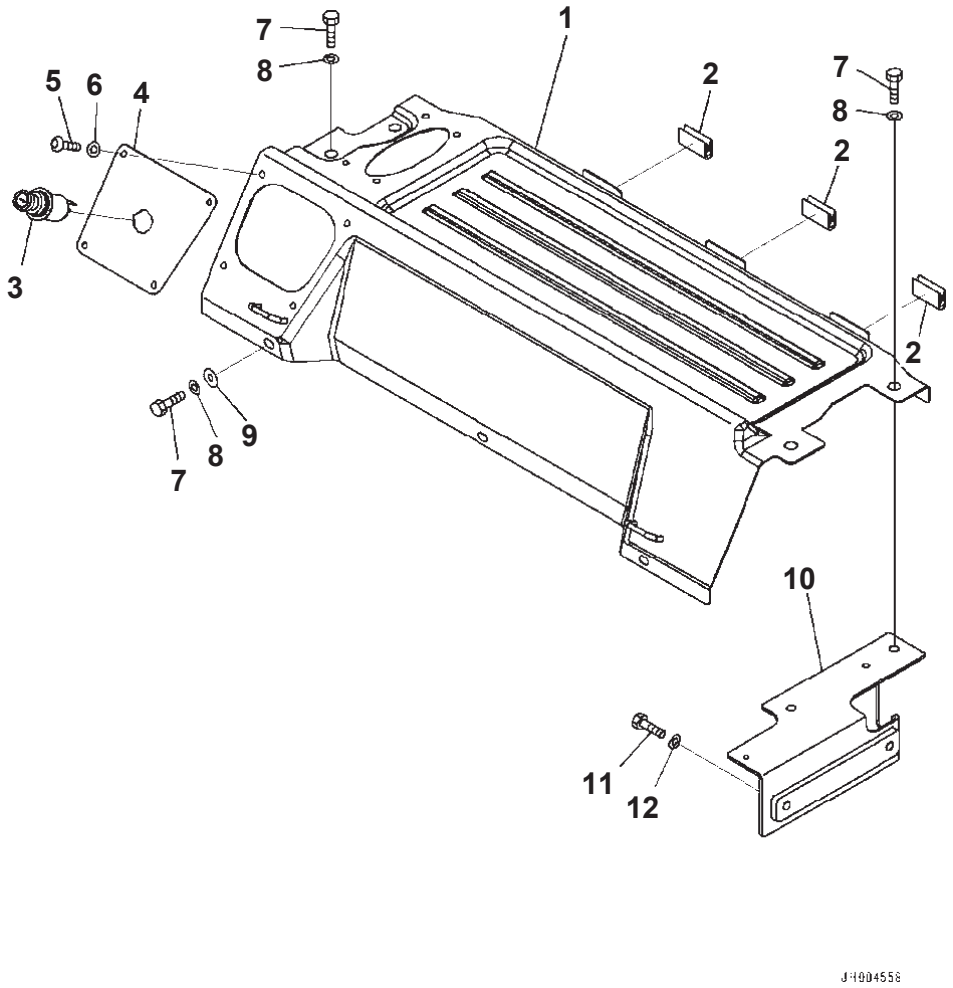

Cab, EOPS Cabin Front Fix, 1-actuator, With AM-FM Radio, With Master Key, For KOMTRAX, Cab In Parts, Luggage Plate (#B10121-)

Index	Code	Part Number	Description	Qty	Options
		20Y-53-13617	Cover Assembly	1	SN:B10121--
		20Y-53-12258	・ Cover	1	SN:B32874--
1	C1		・ Cover	1	SN:B10121--B32873
2		208-53-12460	・ Seat	3	SN:B10001--
3		20Y-06-23472	Cigarrete Lighter	1	SN:B10121--
4		20Y-53-13680	Plate	1	SN:B10121--
5		01245-00616	Screw, Hexagon Socket Head	4	SN:B10121--
6		01643-70623	Washer	4	SN:B10121--
7		01010-D0825	Bolt	7	SN:B10001--
8		01643-70823	Washer	7	SN:B10001--
9		418-54-35450	Washer	3	SN:B10001--
10		20Y-53-12771	Plate	1	SN:B10001--
11		01010-D0825	Bolt	2	SN:B10001--
12		01643-70823	Washer	2	SN:B10001--

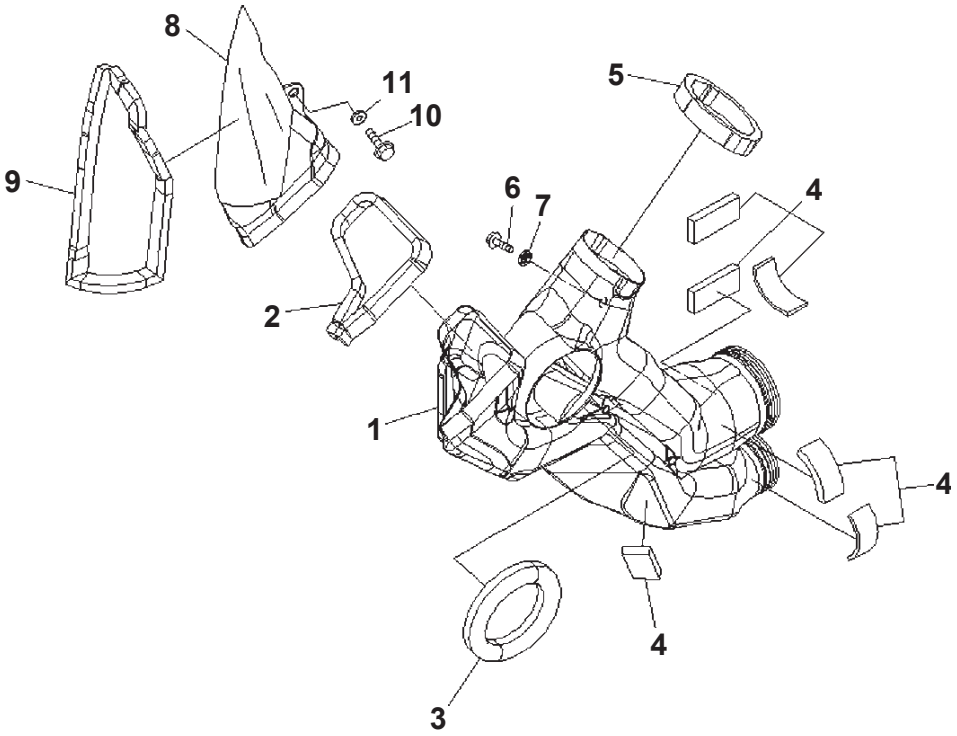

Cab, EOPS Cabin Front Fix, 1-actuator, With AM-FM Radio, With Master Key, For KOMTRAX, Cab In Parts, Monitor Duct

Index	Part Number	Description	Qty	Options
1	20Y-53-13371	Duct	1	SN:B10001--
2	20Y-53-13480	Seal	1	SN:B10001--
3	20Y-53-13280	Seal	1	SN:B10001--
4	208-53-12440	Seal	6	SN:B10001--
5	208-53-11941	Seal	1	SN:B10001--
6	01435-00612	Bolt	1	SN:B10001--
7	20Y-53-12310	Collar	1	SN:B10001--
8	20Y-53-13421	Duct	1	SN:B10001--
9	208-53-11920	Seal	1	SN:B10001--
10	01435-00612	Bolt	1	SN:B10001--
11	20Y-53-12310	Collar	1	SN:B10001--

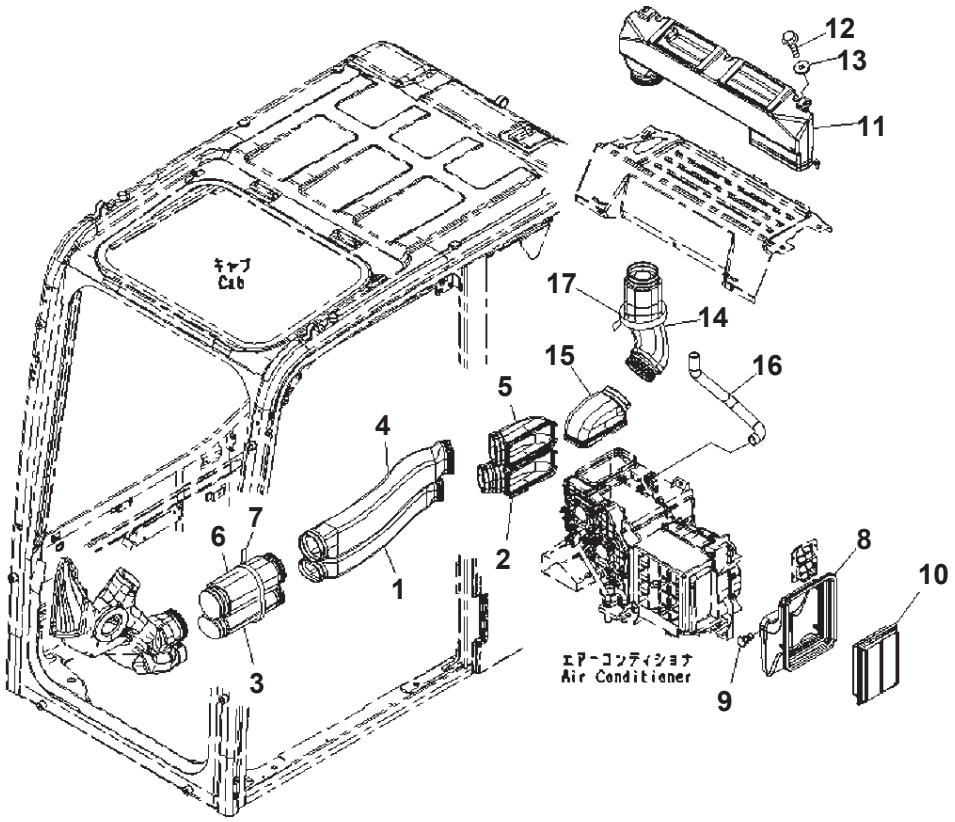

Cab, EOPS Cabin Front Fix, 1-actuator, With AM-FM Radio, With Master Key, For KOMTRAX, Cab In Parts, Air Duct, With Air Conditio

Index	Part Number	Description	Qty	Options
1	20Y-53-13311	Duct	1	SN:B10001--
2	20Y-53-13331	Duct	1	SN:B10001--
3	20Y-53-13351	Duct	1	SN:B10001--
4	20Y-53-13321	Duct	1	SN:B10001--
5	20Y-53-13341	Duct	1	SN:B10001--
6	20Y-53-13361	Duct	1	SN:B10001--
7	08034-20876	Band	1	SN:B10001--
8	20Y-53-12522	Duct	1	SN:B10001--
9	208-53-12680	Clip	1	SN:B10001--
10	17M-911-3530	Element	1	SN:B10001--
11	20Y-53-13451	Duct	1	SN:B10001--
12	01435-40616	Bolt	2	SN:B10001--
13	20Y-53-12310	Collar	2	SN:B10001--
14	20Y-53-13461	Duct	1	SN:B10001--
15	208-53-12120	Duct	1	SN:B10001--
16	208-53-12432	Hose	1	SN:B10001--
17	08034-20876	Band	1	SN:B10001--

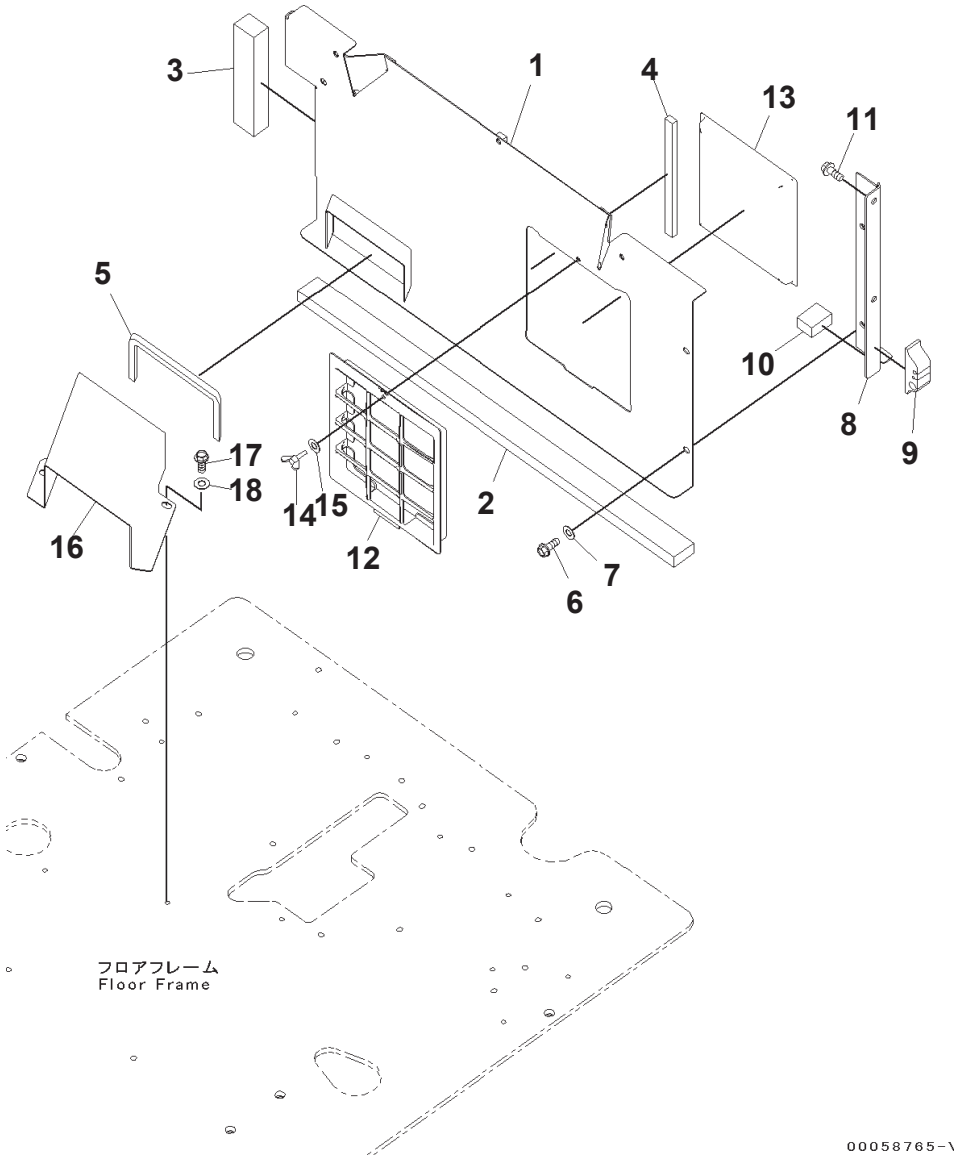

Cab, EOPS Cabin Front Fix, 1-actuator, With AM-FM Radio, With Master Key, For KOMTRAX, Cab In Parts, Partition And Filter, With

Index	Code	Part Number	Description	Qty	Options
1		20Y-53-12565	Bracket	1	SN:B10121--
	A2	20Y-53-12564	Bracket	1	SN:B10001--B10120
2		20Y-53-11870	Seal	1	SN:B10001--
3		20Y-53-11880	Seal	1	SN:B10001--
4		208-53-11890	Seal	1	SN:B10001--
5		208-53-12230	Seal	1	SN:B10001--
6		01435-40820	Bolt	3	SN:B10001--
7		418-54-35450	Washer	3	SN:B10001--
8		20Y-53-12781	Plate	1	SN:B10001--
9		20Y-53-12751	Seal	1	SN:B10001--
10		20Y-53-12760	Seal	1	SN:B10001--
11		01435-40820	Bolt	2	SN:B10001--
12		208-979-7530	Holder	1	SN:B10001--
13		208-979-7620	Filter	1	SN:B10001--
14		20Y-54-65790	Bolt	1	SN:B10001--
15		20Y-54-65690	Washer	1	SN:B10001--
16		208-53-12551	Duct	1	SN:B10001--
17		01010-D0820	Bolt	2	SN:B10001--
18		01643-70823	Washer	2	SN:B10001--

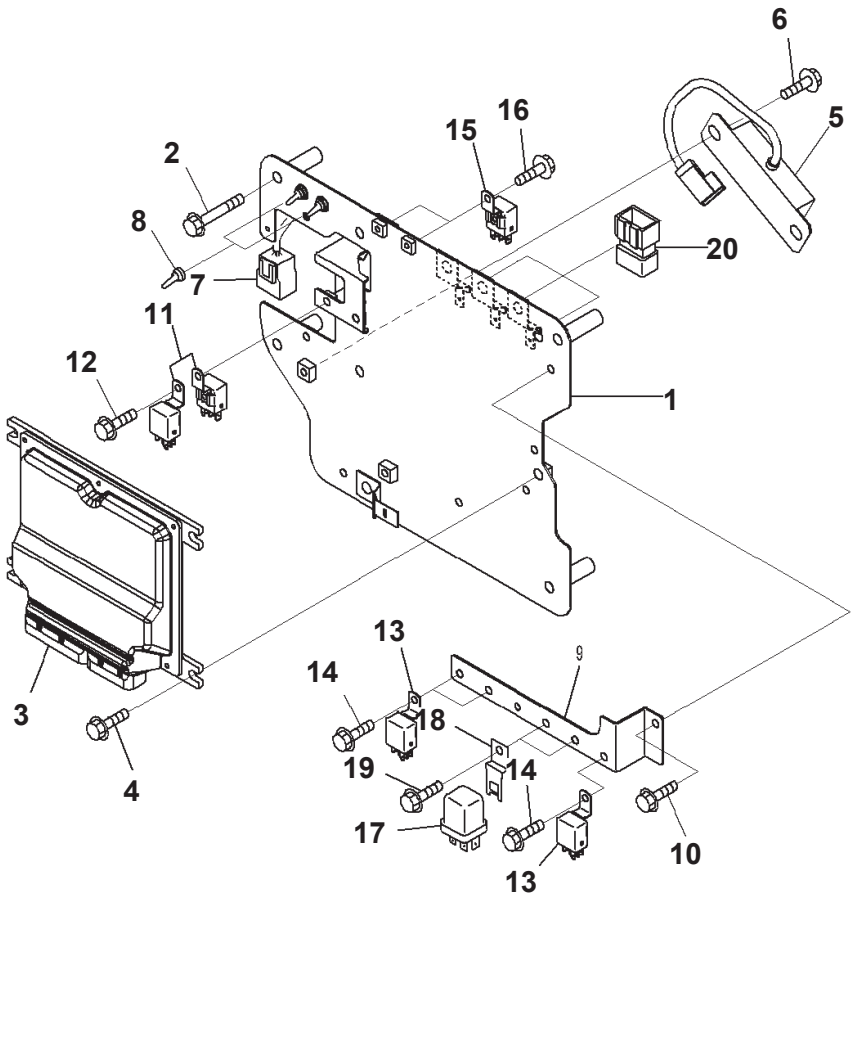

Cab, EOPS Cabin Front Fix, 1-actuator, With AM-FM Radio, With Master Key, For KOMTRAX, Cab In Parts, Sub Plate And Relay

Index	Code	Part Number	Description	Qty	Options
1		20Y-53-14812	Bracket	1	SN:B10001--
2		01435-00860	Bolt	4	SN:B10001--
3		7835-46-3006	Controller	1	SN:B10398--
	A2	7835-46-3005	Controller	1	SN:B10247--B10397
	A2	7835-46-3004	Controller	1	SN:B10218--B10246
	A2	7835-46-3003	Controller	1	SN:B10001--B10217
4		01435-00820	Bolt	4	SN:B10001--
5		7861-94-2000	Resistor	1	SN:B10001--
6		01435-00820	Bolt	2	SN:B10001--
7		20Y-06-41150	Wire Harness	1	SN:B10001--
8		208-43-71420	Cap	2	SN:B10001--
9		20Y-53-18211	Bracket	1	SN:B10001--
10		01435-00610	Bolt	1	SN:B10001--
11		7861-74-5100	Relay	2	SN:B10001--
12		01435-00610	Bolt	1	SN:B10001--
13		7861-74-5100	Relay	3	SN:B10001--
14		01435-00610	Bolt	3	SN:B10001--
15		7861-74-5100	Relay	2	SN:B10001--
16		01435-00610	Bolt	2	SN:B10001--
17		569-06-61960	Relay	2	SN:B10001--
18		287-06-16420	Bracket	2	SN:B10001--
19		01435-00610	Bolt	2	SN:B10001--
20		8233-06-3350	Diode	3	SN:B10001--

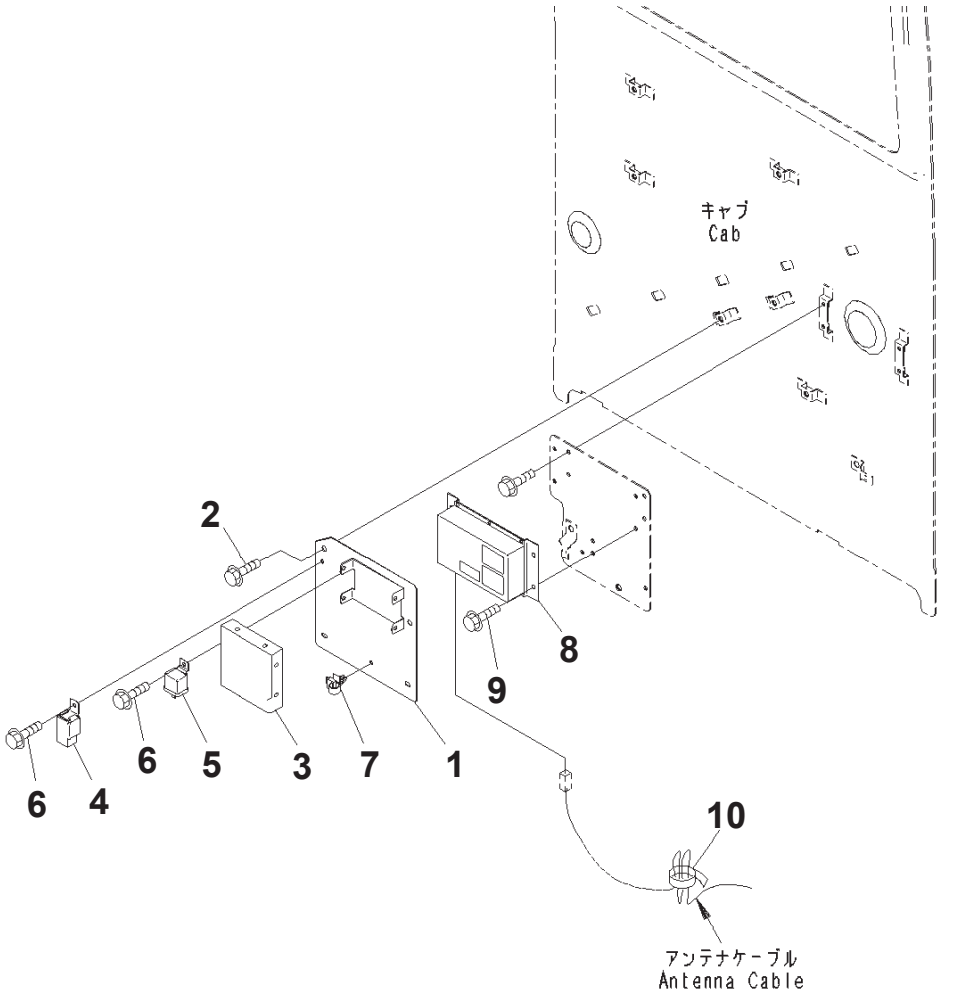

Cab, EOPS Cabin Front Fix, 1-actuator, With AM-FM Radio, With Master Key, For KOMTRAX, Cab In Parts, Air Conditioner And

Index	Code	Part Number	Description	Qty	Options
1		20Y-53-14821	Plate	1	SN:B10247--
	A2	20Y-53-14820	Plate	1	SN:B10001--B10246
2		01435-40812	Bolt	2	SN:B10001--
3		17A-979-3180	Controller	1	SN:B10001--
4		421-07-31270	Relay	1	SN:B10001--
5		20Y-979-6771	Relay	1	SN:B10001--
6		01435-00610	Bolt	2	SN:B10001--
7		08059-00515	Clip	1	SN:B10001--
8		7826-23-3017	Controller, ORBCOMM Type	1	SN:B10385--
	A2	7826-23-3016	Controller, ORBCOMM Type	1	SN:B10381--B10384
	A2	7826-23-3014	Controller, ORBCOMM Type	1	SN:B10373--B10380
	A2	7826-23-3012	Controller, ORBCOMM Type	1	SN:B10027--B10372
	A2	7826-23-3011	Controller, ORBCOMM Type	1	SN:B10001--B10026
9		01435-00612	Bolt	4	SN:B10001--
10		08034-20414	Band	1	SN:B10001--

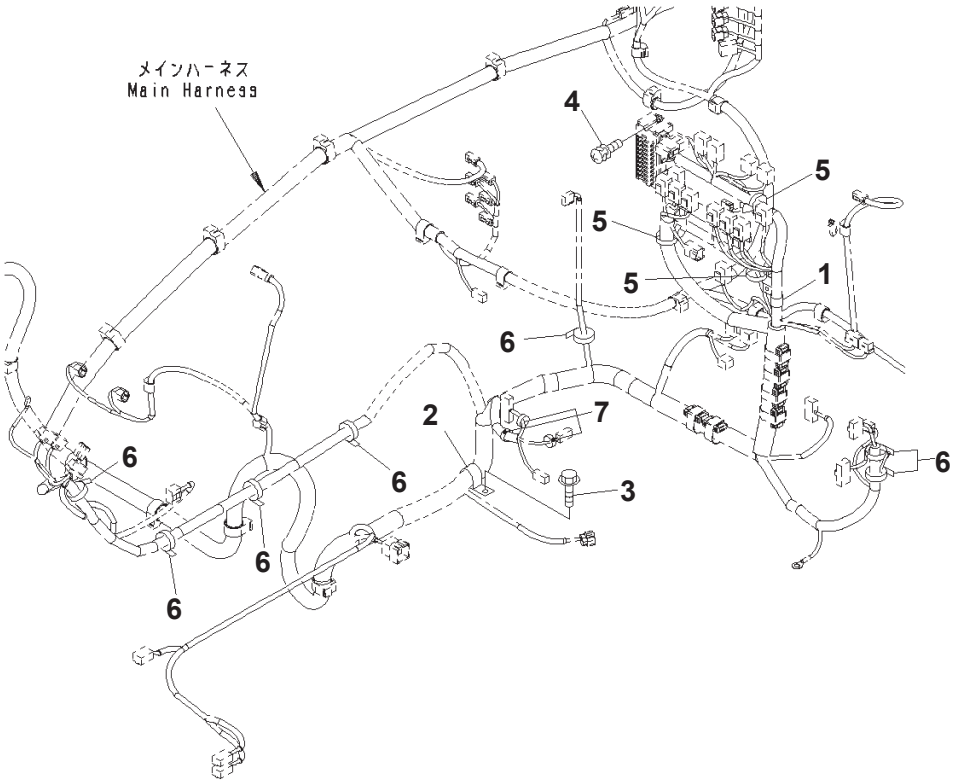

Cab, EOPS Cabin Front Fix, 1-actuator, With AM-FM Radio, With Master Key, For KOMTRAX, Cab In Parts, Main Harness Clamp

Index	Part Number	Description	Qty	Options
1	04434-53411	Clip	1	SN:B10001--
2	04434-51708	Clip	1	SN:B10001--
3	01435-00816	Bolt	1	SN:B10001--
4	01023-60620	Screw	2	SN:B10001--
5	08059-00515	Clip	3	SN:B10001--
6	08034-20414	Band	6	SN:B10001--
7	08034-20519	Band	5	SN:B10001--

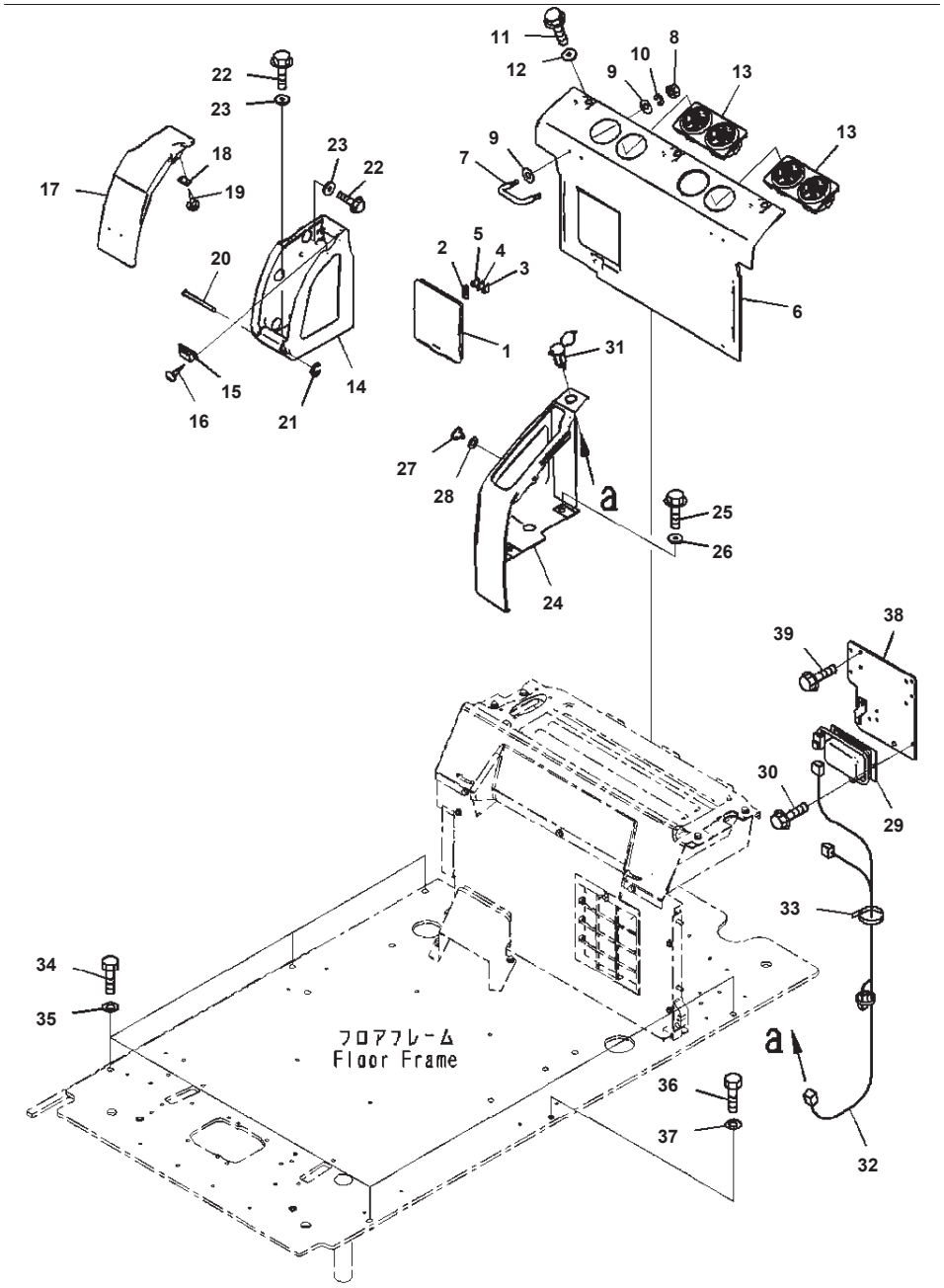

Cab, EOPS Cabin Front Fix, 1-actuator, With AM-FM Radio, With Master Key, For KOMTRAX, Cab In Parts, Rear Cover

Index	Code	Part Number	Description	Qty	Options
		20Y-53-13631	Cover Assembly	1	SN:B10001--
1	C1		· Cover	1	SN:B10001--
2		22U-43-22340	· Puller	1	SN:B10001--
3		08041-01000	· Fuse, 10Amp.	1	SN:B10001--
4		08041-02000	· Fuse, 20Amp.	1	SN:B10001--
5		08041-03000	· Fuse, 30Amp.	1	SN:B10001--
6		20Y-53-12371	Cover	1	SN:B10001--
7		208-53-12290	· Hook	2	SN:B10001--
8		01580-10403	· Nut	4	SN:B10001--
9		01640-20408	· Washer, Flat	8	SN:B10001--
10		01601-20410	· Washer	4	SN:B10001--
11		01435-40616	Bolt	3	SN:B10001--
12		20Y-53-12310	Collar	3	SN:B10001--
13		208-979-7560	Grille	2	SN:B10001--
14		20Y-53-12381	Cover	1	SN:B10001--
15		09452-14503	Catcher	1	SN:B10001--
16		01370-10308	Screw	2	SN:B10001--
17		20Y-53-12391	Cover	1	SN:B10001--
18		208-53-12410	Plate	1	SN:B10001--
19		01370-20308	Screw	2	SN:B10001--
20		208-53-12320	Pin	1	SN:B10001--
21		208-53-12330	Ring	1	SN:B10001--
22		01435-40616	Bolt	5	SN:B10001--
23		20Y-53-12310	Collar	5	SN:B10001--
24		20Y-53-12731	Cover	1	SN:B10001--
25		01435-40620	Bolt	2	SN:B10001--
26		20Y-53-12310	Collar	2	SN:B10001--
27		23D-950-4450	Button	1	SN:B10001--
28		20Y-53-12860	Spacer	1	SN:B10001--
29		22U-06-22251	Converter	1	SN:B10001--
30		01435-00610	Bolt	2	SN:B10001--
31		198-Z11-2640	Socket Assembly	1	SN:B10001--
32		20Y-06-41270	Wire Harness	1	SN:B10001--
33		08034-20414	Band	1	SN:B10001--
34		01010-81245	Bolt	5	SN:B10001--
35		01643-31232	Washer	5	SN:B10001--
36		01010-81655	Bolt	1	SN:B10080--
	A2	208-53-23221	Bolt	1	SN:B10001--B10079
37		01643-31645	Washer	1	SN:B10080--
	A2	01643-31232	Washer	1	SN:B10001--B10079
38		20Y-53-18221	Bracket	1	SN:B10001--
39		01435-00612	Bolt	4	SN:B10001--

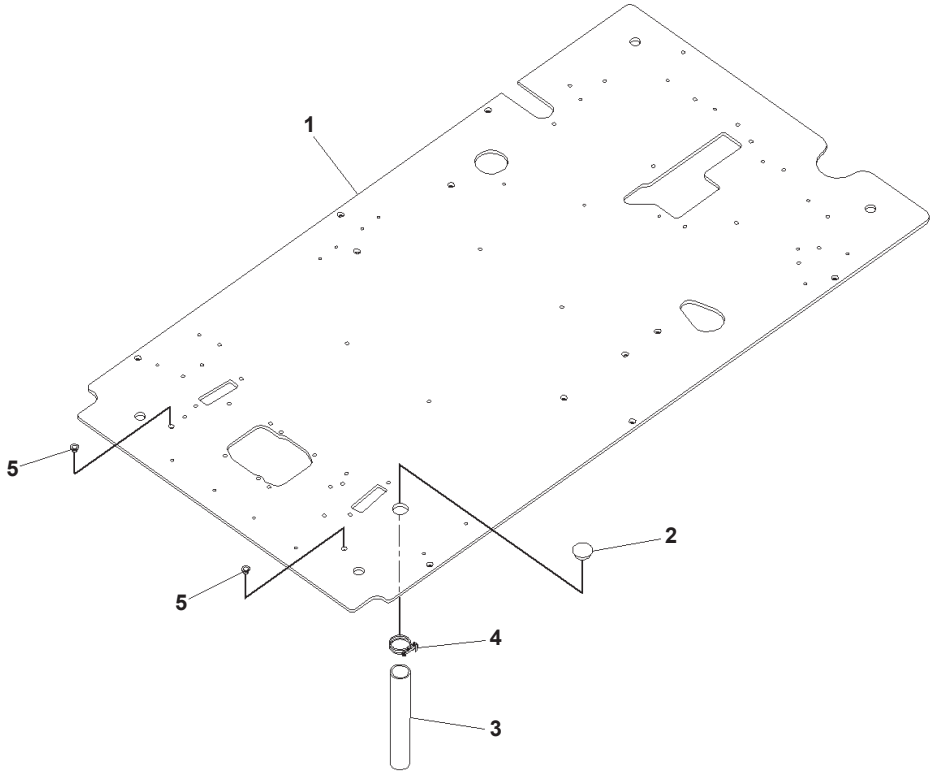

00059781-\

Cab, EOPS Cabin Front Fix, 1-actuator, With AM-FM Radio, With Master Key, For KOMTRAX, Floor, Frame

Index	Code	Part Number	Description	Qty	Options
1		20Y-53-14116	Floor	1	SN:B10080--
	A2	207-53-14120	Floor, Frame	1	SN:B10001--B10079
2		22U-54-25581	Grommet	1	SN:B10001--
3		07286-03828	Hose	1	SN:B10001--
4		07280-04726	Clamp	1	SN:B10001--
5		07048-01310	Plug	2	SN:B10001--

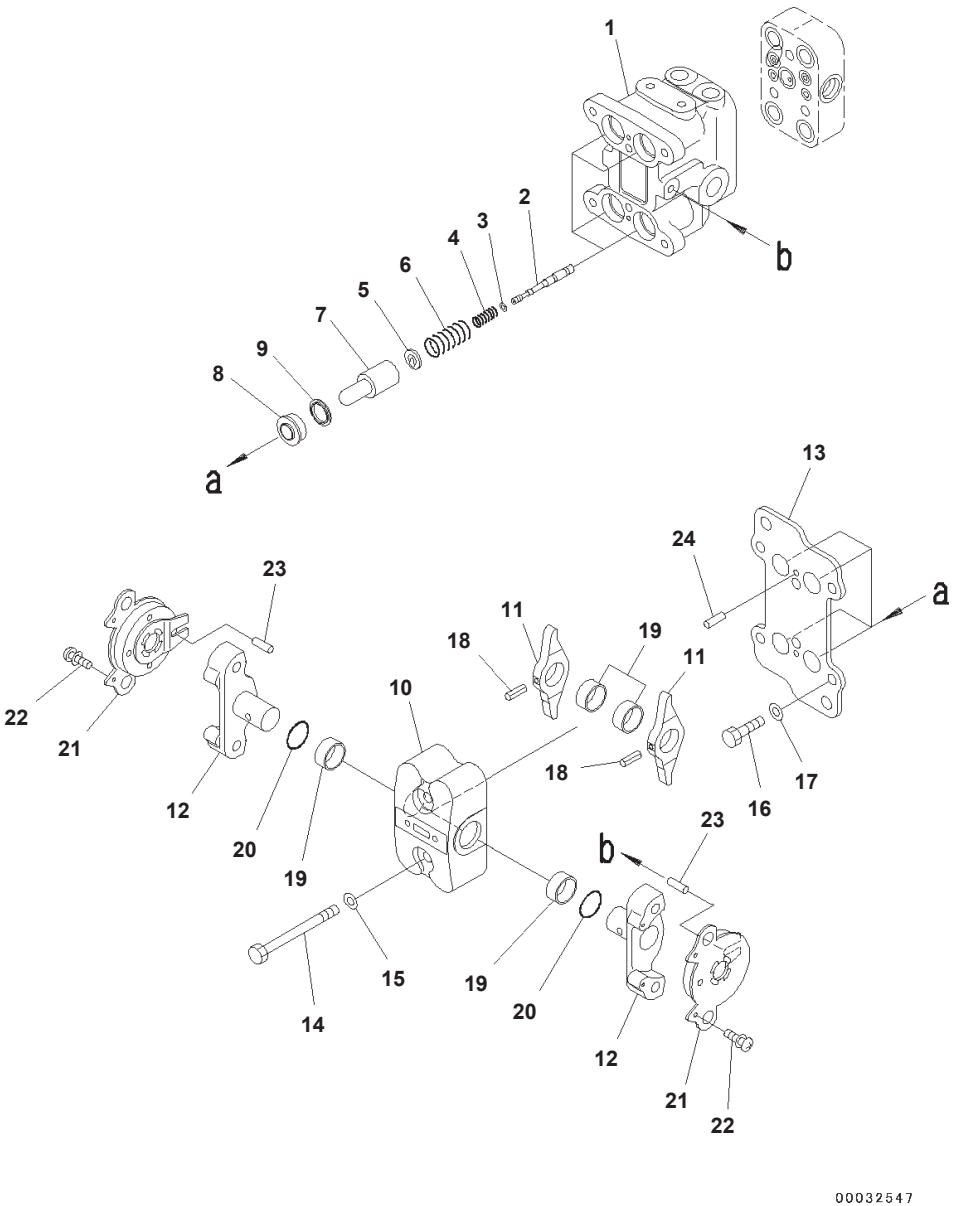

Cab, EOPS Cabin Front Fix, 1-actuator, With AM-FM Radio, With Master Key, For KOMTRAX, Floor, P.P.C. Valve, For Travel (1/2)

Index	Code	Part Number	Description	Qty	Options
		702-16-04250	Valve, Pilot	1	SN:B10001--
1	C1		· Valve Body	1	SN:B10001--
2	C1		· Valve	4	SN:B10001--
3		702-16-51140	· Shim, T=0.30mm	4	SN:B10001--
4		702-16-53420	· Spring	4	SN:B10001--
5		702-16-53140	· Retainer	4	SN:B10001--
6		702-16-54420	· Spring	4	SN:B10001--
7		702-16-53170	· Piston	4	SN:B10001--
8		702-16-71150	· Seal	4	SN:B10001--
9		702-16-71160	· Seat	4	SN:B10001--
10		702-16-73630	· Case	1	SN:B10001--
11	C1		· Lever	2	SN:B10001--
12	C1		· Shaft	2	SN:B10001--
13	C1		· Plate	1	SN:B10001--
14		01010-80855	· Bolt	2	SN:B10001--
15		01643-30823	· Washer	2	SN:B10001--
16		01010-80816	· Bolt	4	SN:B10001--
17		702-16-54331	· Washer, T=1.60mm	4	SN:B10001--
		702-16-54341	· Washer, T=1.30mm	4	SN:B10001--
		702-16-54351	· Washer, T=1.00mm	4	SN:B10001--
		702-16-56380	· Washer, T=1.90mm	4	SN:B10001--
		702-16-56390	· Washer, T=2.20mm	4	SN:B10001--
18		04025-00432	· Pin, Spring	2	SN:B10001--
19		702-16-54430	· Bushing	4	SN:B10001--
20		07000-12018	· O-ring	2	SN:B10001--
21	C2	702-16-73610	· Damper Assembly	2	SN:B10001--
22		01023-10306	· Screw	4	SN:B10001--
23		702-16-73650	· Pin	2	SN:B10001--
24		04022-04016	· Pin, Dowel	2	SN:B10001--

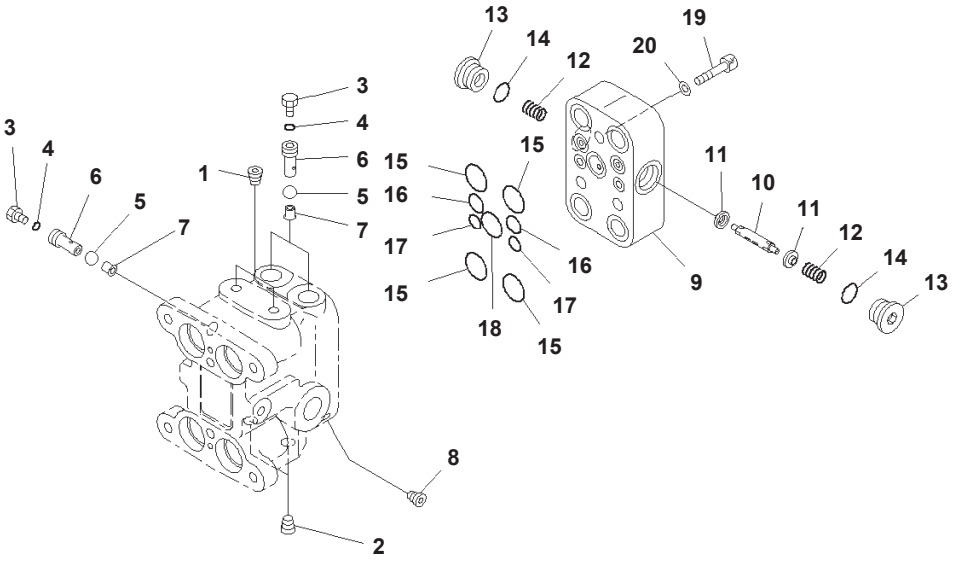

Cab, EOPS Cabin Front Fix, 1-actuator, With AM-FM Radio, With Master Key, For KOMTRAX, Floor, P.P.C. Valve, For Travel (2/2)

Index	Code	Part Number	Description	Qty	Options
		702-16-04250	Valve, Pilot	1	SN:B10001--
1	C1		· Plug	2	SN:B10001--
2	C1		· Plug	2	SN:B10001--
3		07040-11209	· Plug	3	SN:B10001--
4		07002-11223	· O-ring	3	SN:B10001--
5	C1		· Ball	3	SN:B10001--
6		702-16-55940	· Plug	3	SN:B10001--
7		702-16-55950	· Seat	3	SN:B10001--
8	C1		· Screw	2	SN:B10001--
9	C1		· Body, Valve, Valve	1	SN:B10001--
10	C1		· Spool	1	SN:B10001--
11		702-16-57440	· Retainer	2	SN:B10001--
12		702-16-57450	· Spring	2	SN:B10001--
13		723-11-15110	· Plug	2	SN:B10001--
14		07002-11623	· O-ring	2	SN:B10001--
15		07000-12015	· O-ring	4	SN:B10001--
16		07000-11010	· O-ring	2	SN:B10001--
17		07000-11007	· O-ring	2	SN:B10001--
18		700-22-11410	· O-ring	1	SN:B10001--
19		01252-60835	· Bolt	3	SN:B10001--
20		01643-50823	· Washer	3	SN:B10001--

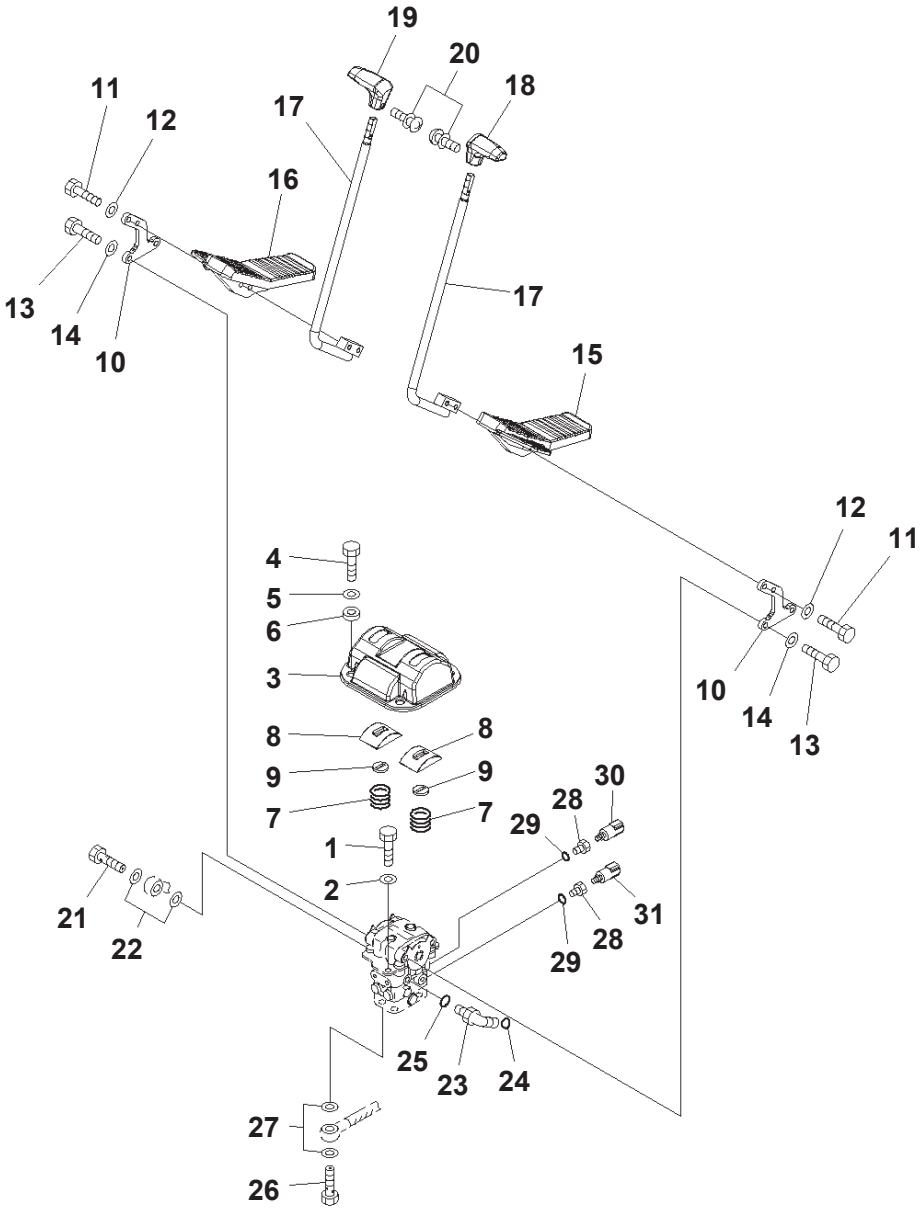

Cab, EOPS Cabin Front Fix, 1-actuator, With AM-FM Radio, With Master Key, For KOMTRAX, Floor, Travel Control

Index	Code	Part Number	Description	Qty	Options
1		01010-81020	Bolt	2	SN:B10001--
2		01643-31032	Washer	2	SN:B10001--
3		20Y-43-41121	Cover	1	SN:B10001--
4		01010-81020	Bolt	4	SN:B10001--
5		01643-31032	Washer	4	SN:B10001--
6		20Y-43-41361	Collar	4	SN:B10001--
7		203-43-51620	Spring	2	SN:B10001--
		22U-43-21350	Cover Assembly	2	SN:B10001--
8	C1		· Cover	1	SN:B10001--
9		22U-43-21360	· Seal	1	SN:B10001--
10		20Y-43-41111	Lever	2	SN:B10001--
11		01010-D1045	Bolt	4	SN:B10001--
12		01643-71032	Washer	4	SN:B10001--
13		01010-81030	Bolt	4	SN:B10001--
14		01643-31032	Washer	4	SN:B10001--
15		22U-43-21111	Pedal	1	SN:B10001--
16		22U-43-21121	Pedal	1	SN:B10001--
17		22U-43-21131	Lever	2	SN:B10001--
18		20Y-43-21231	Knob	1	SN:B10001--
19		20Y-43-21241	Knob	1	SN:B10001--
20		01023-20416	Screw	2	SN:B10001--
21		20Y-62-18910	Bolt, Eye	1	SN:B10001--
22		07000-12018	O-ring	2	SN:B10001--
23		11Y-62-12160	Elbow	1	SN:B10001--
24		02896-11008	O-ring	1	SN:B10001--
25		07002-11423	O-ring	1	SN:B10001--
26		20Y-62-18890	Bolt	4	SN:B10001--
27		07000-12015	O-ring	8	SN:B10001--
28		20Y-62-41390	Adapter	2	SN:B10001--
29		07002-11423	O-ring	2	SN:B10001--
30		20Y-06-21710	Switch	1	SN:B10001--
31		206-06-61130	Switch	1	SN:B10001--

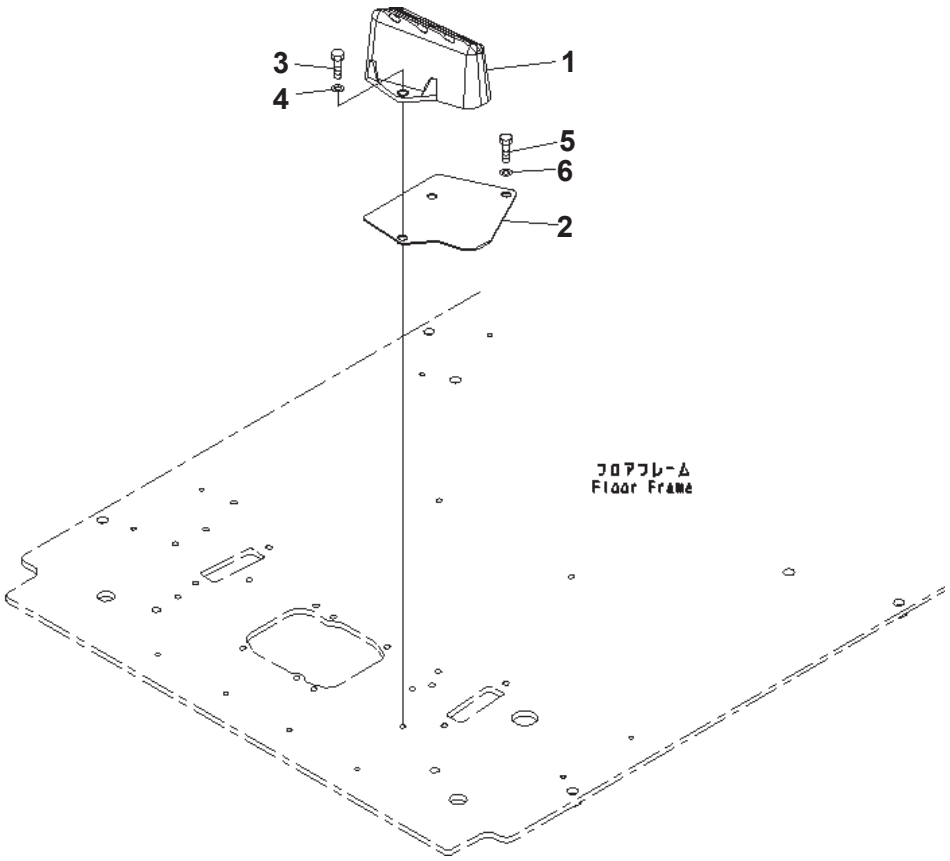

Cab, EOPS Cabin Front Fix, 1-actuator, With AM-FM Radio, With Master Key, For KOMTRAX, Floor, Foot Rest, LHS

Index	Part Number	Description	Qty	Options
1	22U-54-25110	Foot Rest	1	SN:B10001--
2	22U-54-25521	Plate	1	SN:B10001--
3	01010-81025	Bolt	2	SN:B10001--
4	01643-31032	Washer	2	SN:B10001--
5	01010-81020	Bolt	2	SN:B10001--
6	01643-31032	Washer	2	SN:B10001--

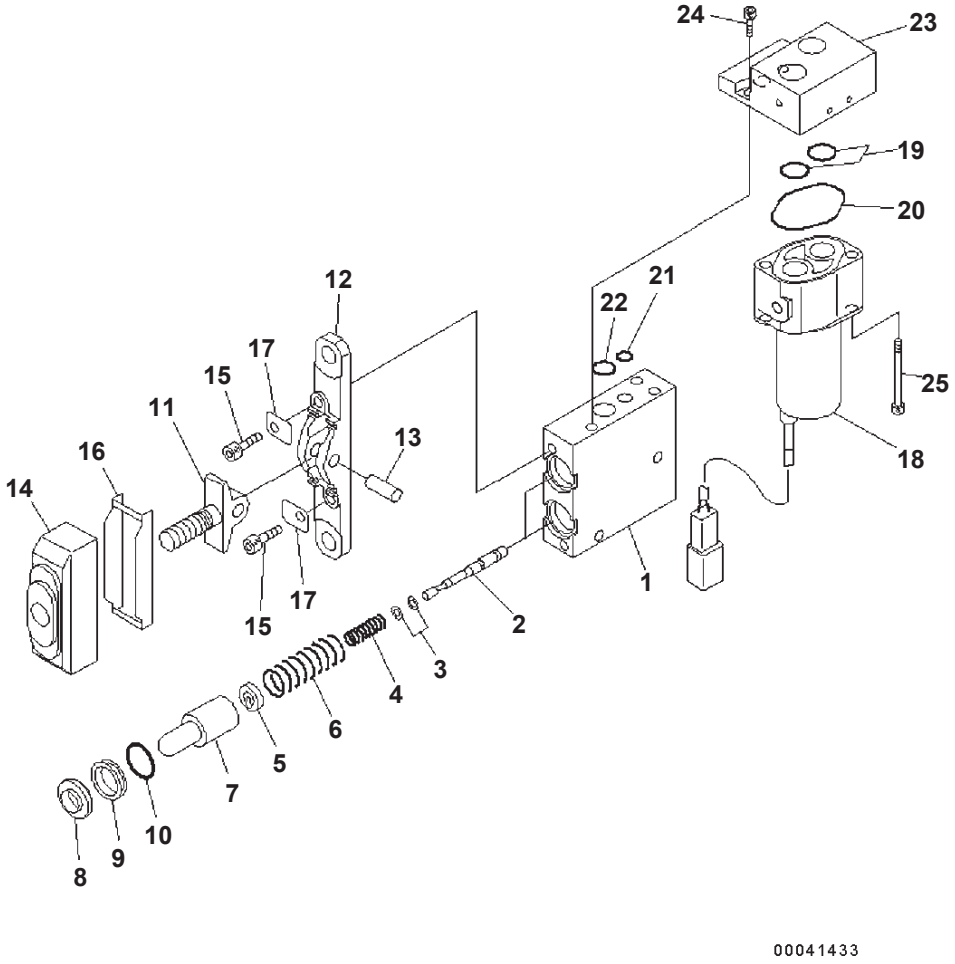

Cab, EOPS Cabin Front Fix, 1-actuator, With AM-FM Radio, With Master Key, For KOMTRAX, Floor, P.P.C. Valve, For 1st. Attachment

Index	Code	Part Number	Description	Qty	Options
		702-16-04290	Valve, Pilot	1	SN:B10001--
1	C1		· Valve Body	1	SN:B10001--
2	C1		· Valve	2	SN:B10001--
3		702-16-51140	· Shim, T=0.30mm	2	SN:B10001--
		702-16-54670	· Shim, T=0.20mm	4	SN:B10001--
4		702-16-54550	· Spring	2	SN:B10001--
5		702-16-54571	· Retainer	2	SN:B10001--
6		702-16-54560	· Spring	2	SN:B10001--
7		702-16-53170	· Piston	2	SN:B10001--
8		702-16-51270	· Seal	2	SN:B10001--
9		702-16-54580	· Collar	2	SN:B10001--
10		702-16-54590	· O-ring	2	SN:B10001--
11	C1		· Lever	1	SN:B10001--
12	C1		· Plate	1	SN:B10001--
13	C1		· Shaft	1	SN:B10001--
14		702-16-54641	· Boot	1	SN:B10001--
15		01252-30625	· Bolt	2	SN:B10001--
16		702-16-54660	· Plate	1	SN:B10001--
17		702-16-54650	· Plate	2	SN:B10001--
18		702-21-07610	· Valve, Solenoid	1	SN:B10001--
19		700-22-11410	· O-ring	2	SN:B10001--
20		702-21-39450	· O-ring	1	SN:B10001--
21		07000-11008	· O-ring	1	SN:B10001--
22		07000-12012	· O-ring	1	SN:B10001--
23	C1		· Body	1	SN:B10001--
24		01252-60612	· Bolt	3	SN:B10001--
25		203-60-62220	· Bolt	2	SN:B10001--

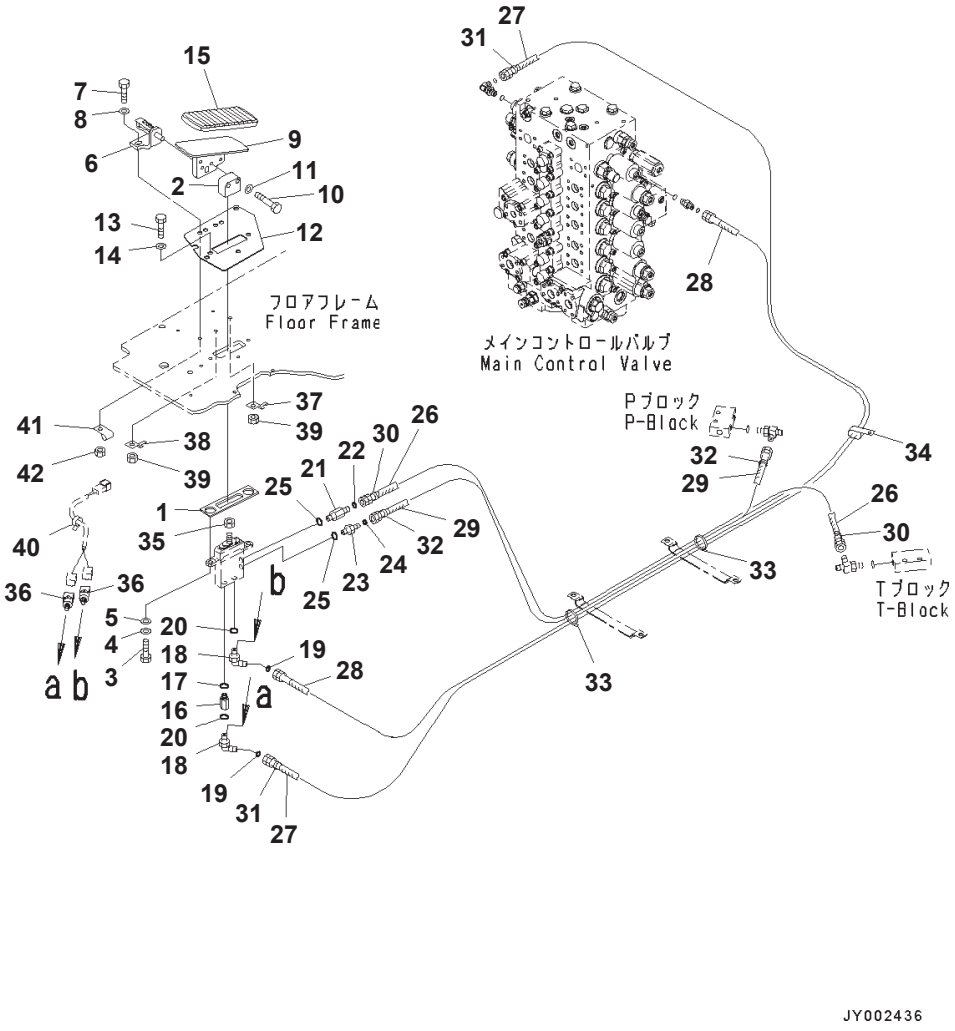

Cab, EOPS Cabin Front Fix, 1-actuator, With AM-FM Radio, With Master Key, For KOMTRAX, Floor, 1st. Attachment Control

Index	Part Number	Description	Qty	Options
1	22U-54-25660	Seal	1	SN:B10001--
2	20Y-43-41760	Seat	1	SN:B10001--
3	01010-81025	Bolt	2	SN:B10001--
4	01643-31032	Washer	2	SN:B10001--
5	01643-31032	Washer	2	SN:B10001--
6	20Y-62-25360	Bracket	1	SN:B10001--
7	01010-D1035	Bolt	2	SN:B10001--
8	01643-71032	Washer	2	SN:B10001--
9	20Y-53-14220	Pedal	1	SN:B10001--
10	01010-D1045	Bolt	2	SN:B10001--
11	01643-71032	Washer	2	SN:B10001--
12	22U-54-25541	Plate	1	SN:B10001--
13	01010-81025	Bolt	3	SN:B10001--
14	01643-31032	Washer	3	SN:B10001--
15	207-43-81240	Cap	1	SN:B10001--
16	20T-910-8660	Nipple	1	SN:B10001--
17	07000-12011	O-ring	1	SN:B10001--
18	20Y-62-52160	Elbow	2	SN:B10001--
19	02896-11008	O-ring	2	SN:B10001--
20	07000-12011	O-ring	2	SN:B10001--
21	20Y-62-43470	Nipple	1	SN:B10001--
22	02896-11008	O-ring	1	SN:B10001--
23	11Y-62-12140	Nipple	1	SN:B10001--
24	02896-11008	O-ring	1	SN:B10001--
25	07000-12011	O-ring	2	SN:B10001--
26	20Y-62-52330	Hose, L=900mm	1	SN:B10001--
27	207-62-75840	Hose, L=3850mm	1	SN:B10001--
28	207-62-75830	Hose, L=3500mm	1	SN:B10001--
29	208-62-72480	Hose, L=1080mm	1	SN:B10001--
30	20Y-62-22790	Band, Red	2	SN:B10001--
31	20Y-62-22810	Band, Yellow	2	SN:B10001--
32	20Y-62-22820	Band, Blue	2	SN:B10001--
33	08034-20519	Band	2	SN:B10001--
34	04435-51210	Clip	1	SN:B10001--
35	01583-11408	Nut	1	SN:B10001--
36	206-06-61130	Switch	2	SN:B10001--
37	08193-21012	Clip	1	SN:B10001--
38	08053-01510	Clip	1	SN:B10001--
39	01580-01008	Nut	2	SN:B10001--
40	08034-20536	Band	1	SN:B10001--
41	04434-50610	Clip	1	SN:B10001--
42	01580-01008	Nut	1	SN:B10001--

Reference:K1110-024031 Page:K008029

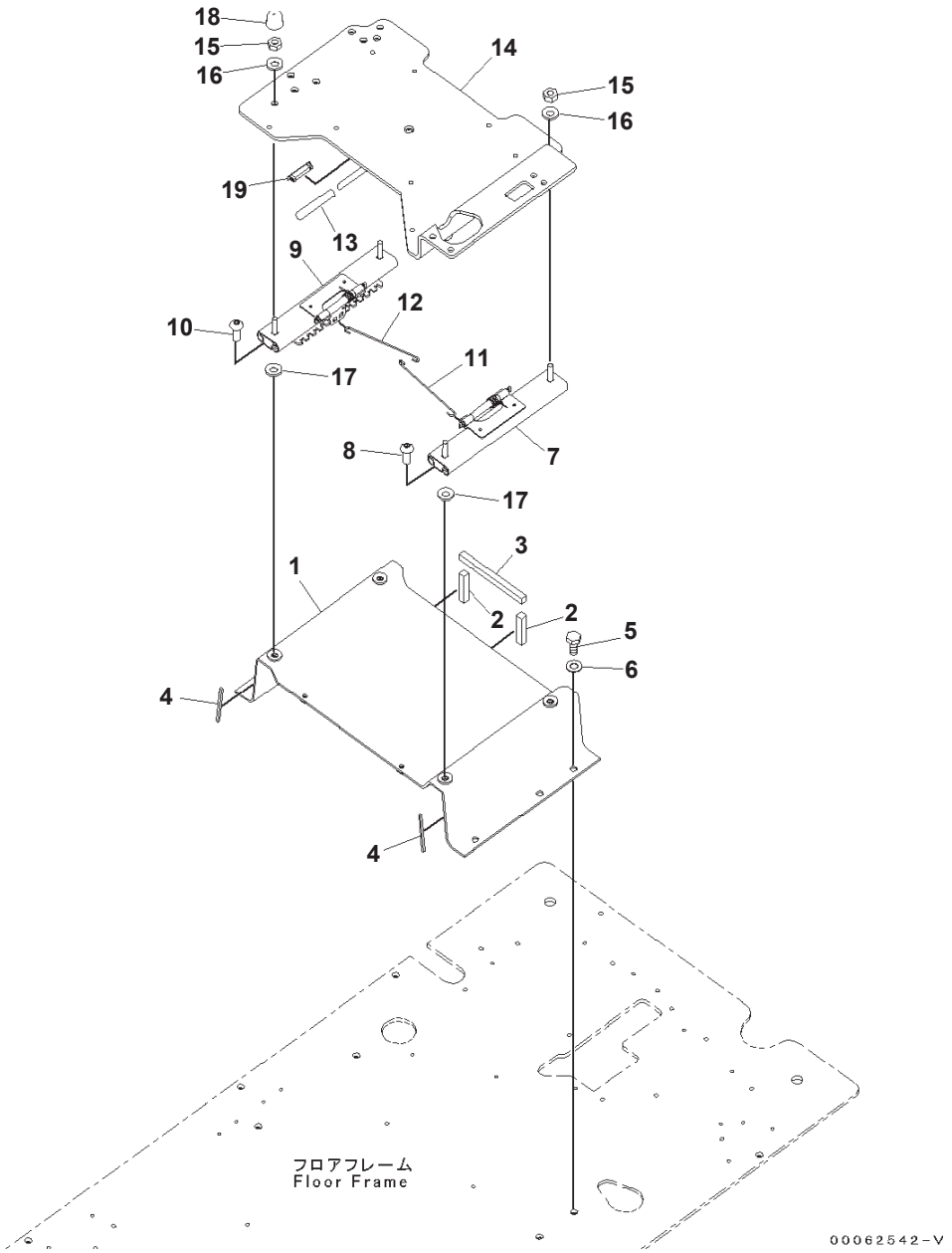

Cab, EOPS Cabin Front Fix, 1-actuator, With AM-FM Radio, With Master Key, For KOMTRAX, Floor, Base (B10001-B10171)

Index	Part Number	Description	Qty	Options
1	20Y-43-41230	Frame	1	SN:B10001--B10171
2	208-43-71520	・ Seal	2	SN:B10001--@
3	208-43-71530	・ Seal	1	SN:B10001--@
4	208-43-71590	・ Seal	2	SN:B10001--@
5	01010-81230	Bolt	5	SN:B10001--@
6	01643-31232	Washer	5	SN:B10001--@
7	20Y-43-41813	Adjuster	1	SN:B10001--B10171
8	01245-01025	Screw	2	SN:B10001--B10171
9	20Y-43-41823	Adjuster	1	SN:B10001--B10171
10	01245-01025	Screw	2	SN:B10001--B10171
11	20Y-43-41832	Wire	1	SN:B10001--B10171
12	20Y-43-41891	Wire	1	SN:B10001--B10171
13	22U-43-21390	Cap	1	SN:B10001--@
14	20Y-43-41252	Frame	1	SN:B10026--B10171
	20Y-43-41251	Frame	1	SN:B10001--B10025
15	20Y-54-65340	Nut	4	SN:B10001--B10171
16	01643-71032	Washer	4	SN:B10001--B10171
17	01640-21016	Washer	4	SN:B10001--B10171
18	20Y-54-65540	Cap	2	SN:B10001--B10171
19	20Y-979-6630	Catcher	1	SN:B10001--@

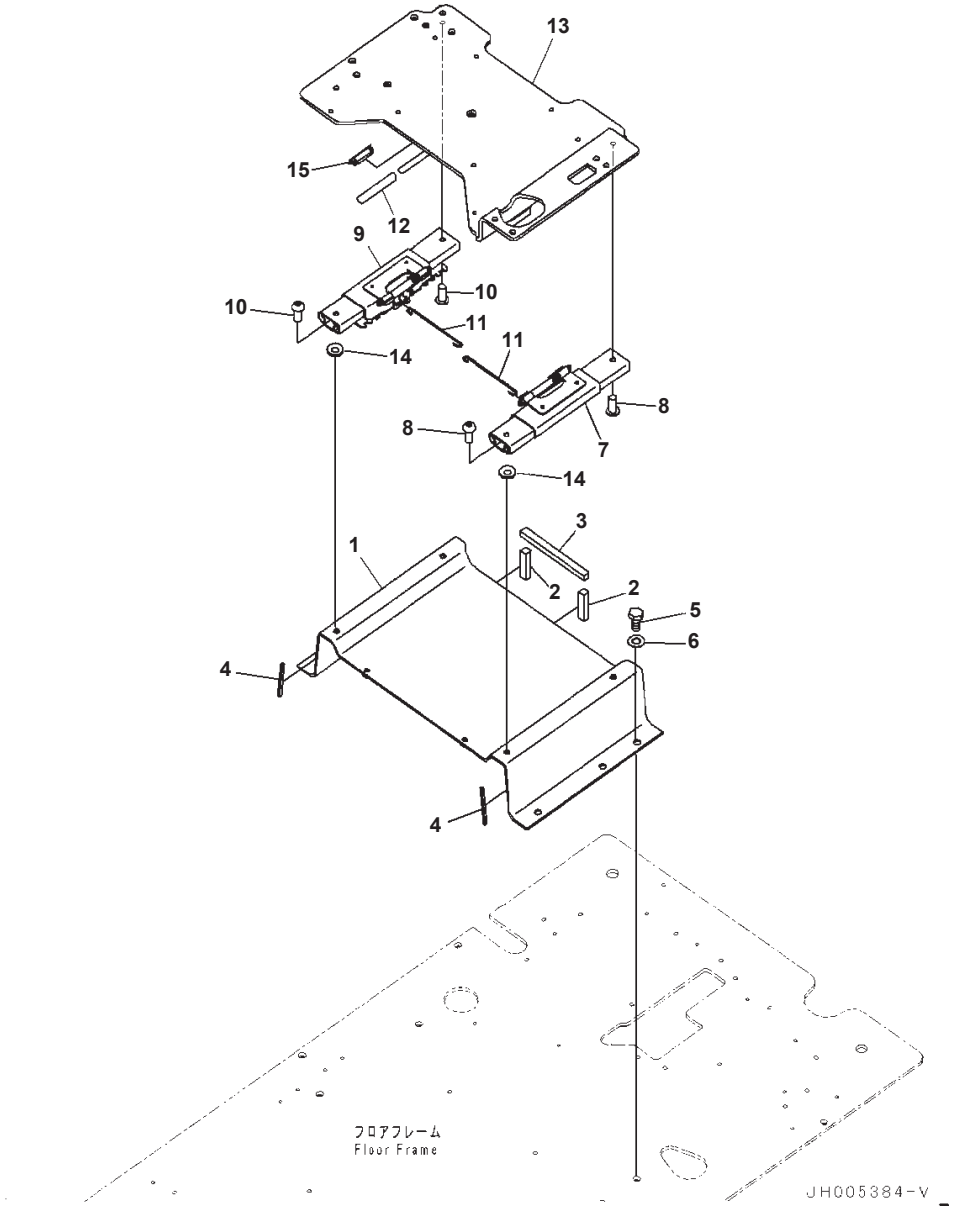

Cab, EOPS Cabin Front Fix, 1-actuator, With AM-FM Radio, With Master Key, For KOMTRAX, Floor, Base (#B10172-)

Index	Code	Part Number	Description	Qty	Options
1		20Y-43-41231	Frame	1	SN:B10172--
2		208-43-71520	・ Seal	2	SN:B10001--
3		208-43-71530	・ Seal	1	SN:B10001--
4		208-43-71590	・ Seal	2	SN:B10001--
5		01010-81230	Bolt	5	SN:B10001--
6		01643-31232	Washer	5	SN:B10001--
7		2A5-43-12353	Adjuster	1	SN:B10279--
	A2	2A5-43-12351	Adjuster	1	SN:B10172--B10278
8		01245-01025	Screw	4	SN:B10172--
9		2A5-43-12363	Adjuster	1	SN:B10279--
	A2	2A5-43-12361	Adjuster	1	SN:B10172--B10278
10		01245-01025	Screw	4	SN:B10172--
11		20Y-43-41833	Wire	2	SN:B10172--
12		22U-43-21390	Cap	1	SN:B10001--
13		20Y-43-41253	Frame	1	SN:B10172--
14		2A5-43-12480	Washer	4	SN:B10172--
15		20Y-979-6630	Catcher	1	SN:B10001--

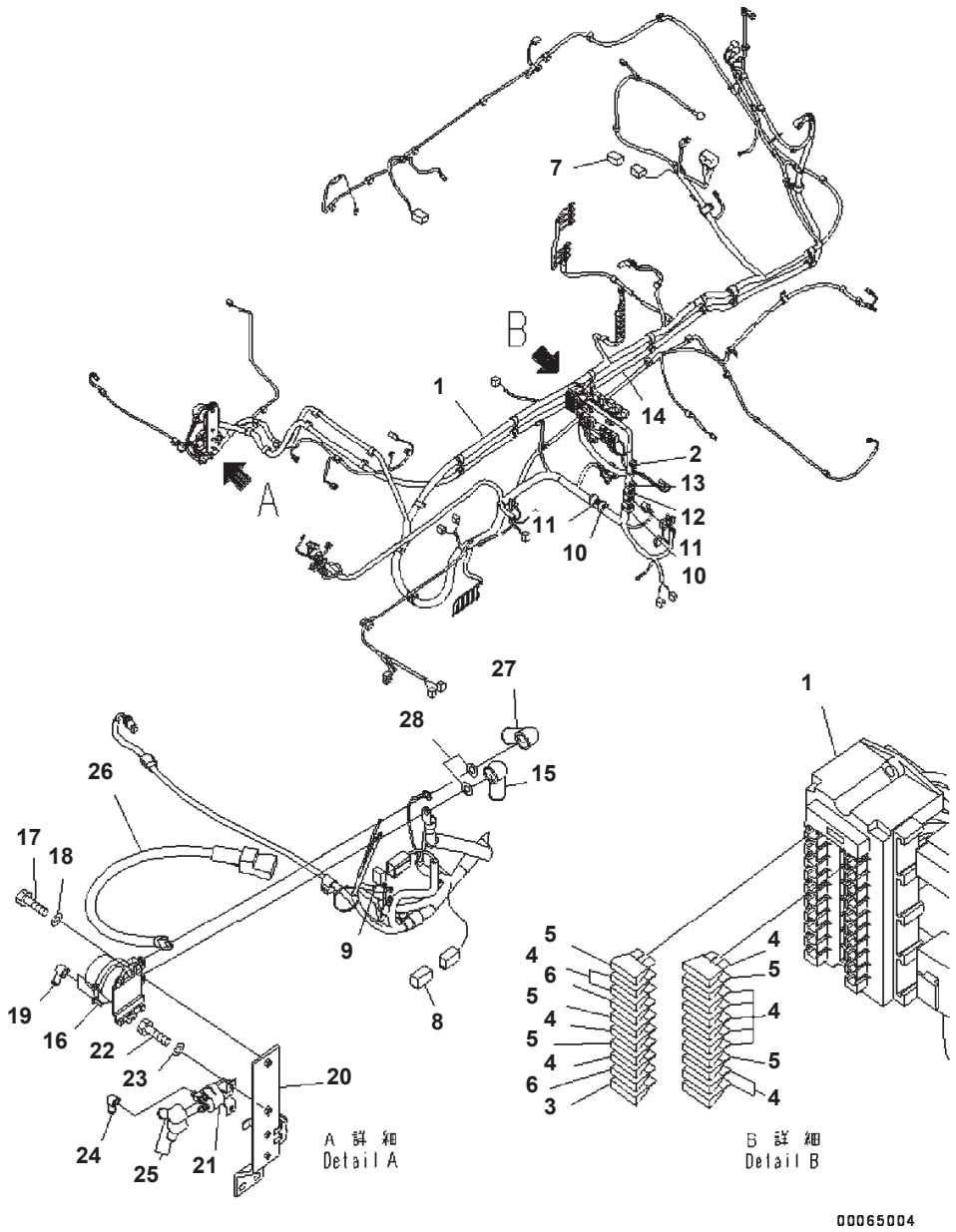

Cab, EOPS Cabin Front Fix, 1-actuator, With AM-FM Radio, With Master Key, For KOMTRAX, Floor, Harness

Index	Code	Part Number	Description	Qty	Options
1		207-06-76730	Wire Harness	1	SN:B10121--
	A2	207-06-76111	Wire Harness	1	SN:B10001--B10120
2		08020-20000	・ Diode	2	SN:B10001--
3		08041-00500	・ Fuse, 5Amp.	1	SN:B10001--
4		08041-01000	・ Fuse, 10Amp.	12	SN:B10001--
5		08041-02000	・ Fuse, 20Amp.	5	SN:B10001--
6		08041-03000	・ Fuse, 30Amp.	2	SN:B10001--
7		19M-06-31720	・ Resistor	1	SN:B10001--
8		20Y-06-31660	・ Fusible Link, 30Amp.	1	SN:B10001--
9		22U-06-11270	・ Fusible Link, 65Amp.	1	SN:B10001--
10		HM6400-0012	・ Connector, Black	2	SN:B10001--
		HM6409-0071	・ Connector, Black	2	SN:B10001--
11		HM6400-0013	・ Connector, Green	2	SN:B10001--
		HM6409-0072	・ Connector, Green	2	SN:B10001--
12		HM6440-0129	・ Connector, Pink	1	SN:B10001--
		HM6440-0128	・ Connector, Pink	1	SN:B10001--
13		HM6400-0016	・ Connector, Orange	1	SN:B10001--
		HM6409-0075	・ Connector, Orange	1	SN:B10001--
14		207-06-75140	Cable	1	SN:B10001--
15		08038-00035	Cap	1	SN:B10001--
16		08088-30000	Switch, Battery Relay	1	SN:B10001--
17		01010-80830	Bolt	2	SN:B10001--
18		01643-30823	Washer	2	SN:B10001--
19		08038-00519	Cap	2	SN:B10001--
20		207-06-75122	Bracket	1	SN:B10001--
21		600-815-2170	Switch, Heater	1	SN:B10001--
22		01010-80616	Bolt	2	SN:B10001--
23		01643-30623	Washer	2	SN:B10001--
24		08038-00519	Cap	1	SN:B10001--
25		08038-02027	Cap	2	SN:B10001--
26		08028-CD065	Cable, Ground	1	SN:B10001--
27		08038-00035	Cap	1	SN:B10001--
28		01643-30823	Washer	2	SN:B10001--

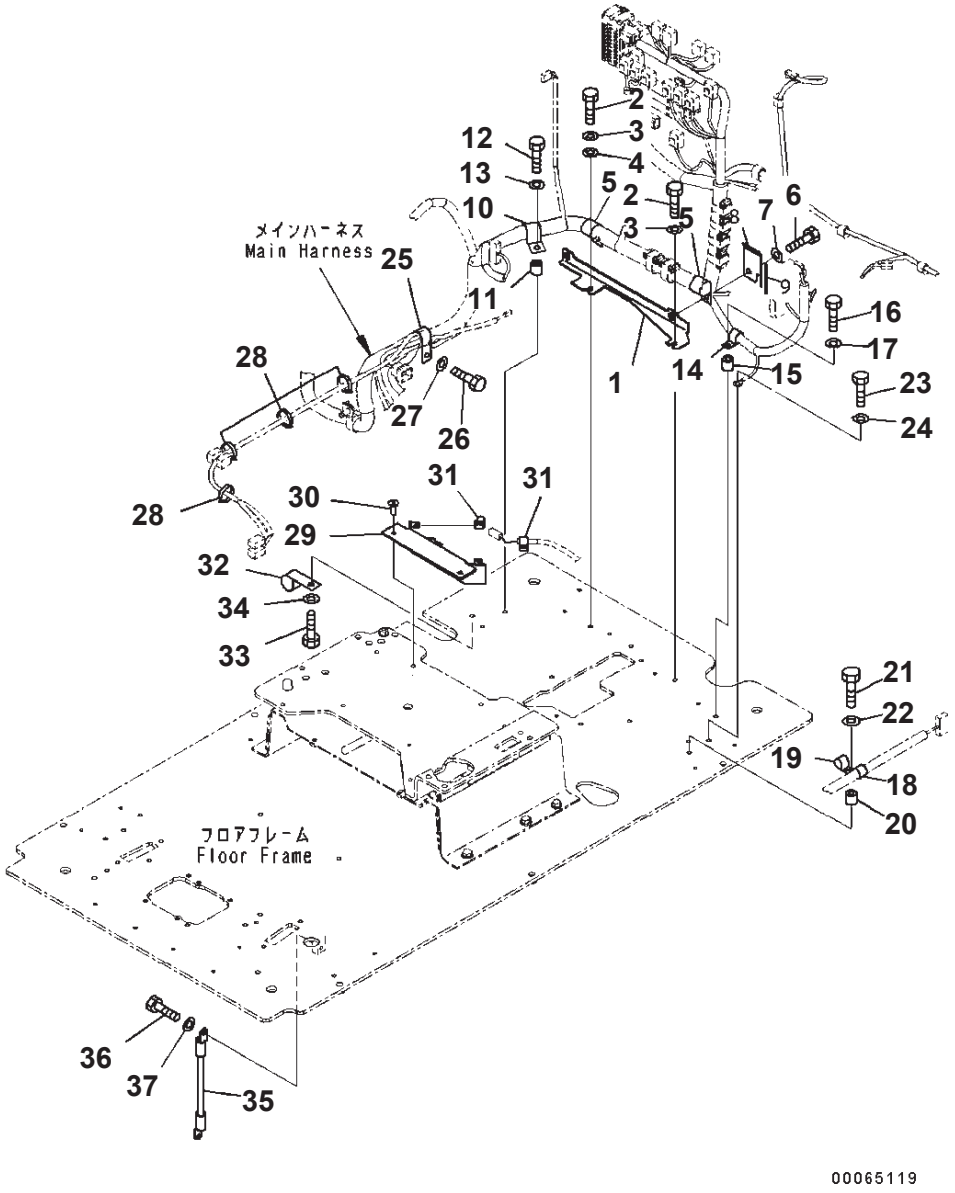

Cab, EOPS Cabin Front Fix, 1-actuator, With AM-FM Radio, With Master Key, For KOMTRAX, Floor, Harness Clamp And Earth

Index	Code	Part Number	Description	Qty	Options
1		20Y-53-14121	Bracket	1	SN:B10001--
2		01010-81016	Bolt	2	SN:B10001--
3		01643-31032	Washer	2	SN:B10001--
4		01643-31032	Washer	1	SN:B10001--
5		04434-53411	Clip	2	SN:B10001--
6		01010-81025	Bolt	2	SN:B10001--
7		01643-31032	Washer	2	SN:B10001--
		20Y-53-14150	Plate Assembly	1	SN:B10001--
8	C1		・Plate	1	SN:B10001--
9		20Y-53-14170	・Trim	1	SN:B10001--
10		04434-53411	Clip	1	SN:B10001--
11		195-33-11220	Spacer	1	SN:B10001--
12		01010-81040	Bolt	1	SN:B10001--
13		01643-31032	Washer	1	SN:B10001--
14		04434-51910	Clip	1	SN:B10001--
15		195-33-11220	Spacer	1	SN:B10001--
16		01010-81040	Bolt	1	SN:B10001--
17		01643-31032	Washer	1	SN:B10001--
18		04434-51410	Clip	1	SN:B10001--
19		04434-51010	Clip	1	SN:B10001--
20		175-40-22540	Spacer	1	SN:B10001--
21		01010-81070	Bolt	1	SN:B10001--
22		01643-31032	Washer	1	SN:B10001--
23		01010-81020	Bolt	1	SN:B10001--
24		01643-31032	Washer	1	SN:B10001--
25		04434-53411	Clip	1	SN:B10001--
26		01010-81020	Bolt	1	SN:B10001--
27		01643-31032	Washer	1	SN:B10001--
28		08034-20519	Band	4	SN:B10001--
29		20Y-53-18331	Bracket	1	SN:B10001--
30		01240-00820	Screw, Hexagon Socket Head	2	SN:B10001--
31		08211-00720	Clip	2	SN:B10001--
32		04434-51910	Clip	1	SN:B10001--
33		01010-81020	Bolt	1	SN:B10001--
34		01643-31032	Washer	1	SN:B10001--
35		08028-43030	Cable, Ground	1	SN:B10001--
36		01010-81020	Bolt	1	SN:B10001--
37		01643-31032	Washer	1	SN:B10001--

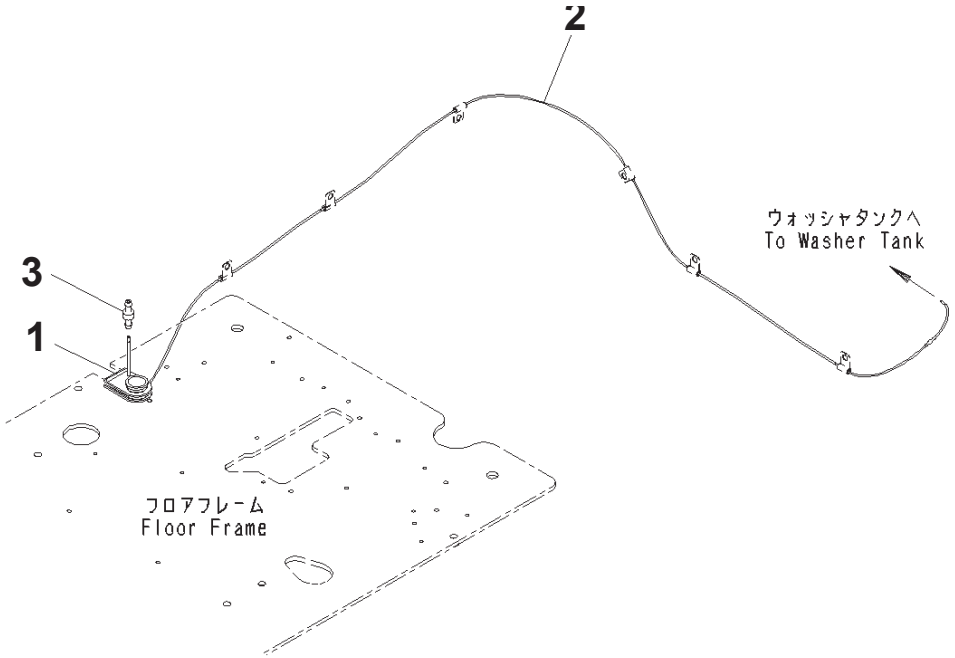

Cab, EOPS Cabin Front Fix, 1-actuator, With AM-FM Radio, With Master Key, For KOMTRAX, Floor, Window Washer Hose

Index	Part Number	Description	Qty	Options
1	20Y-53-14991	Grommet	1	SN:B10001--
2	195-979-8580	Hose	1	SN:B10001--
3	207-06-61490	Valve	1	SN:B10001--

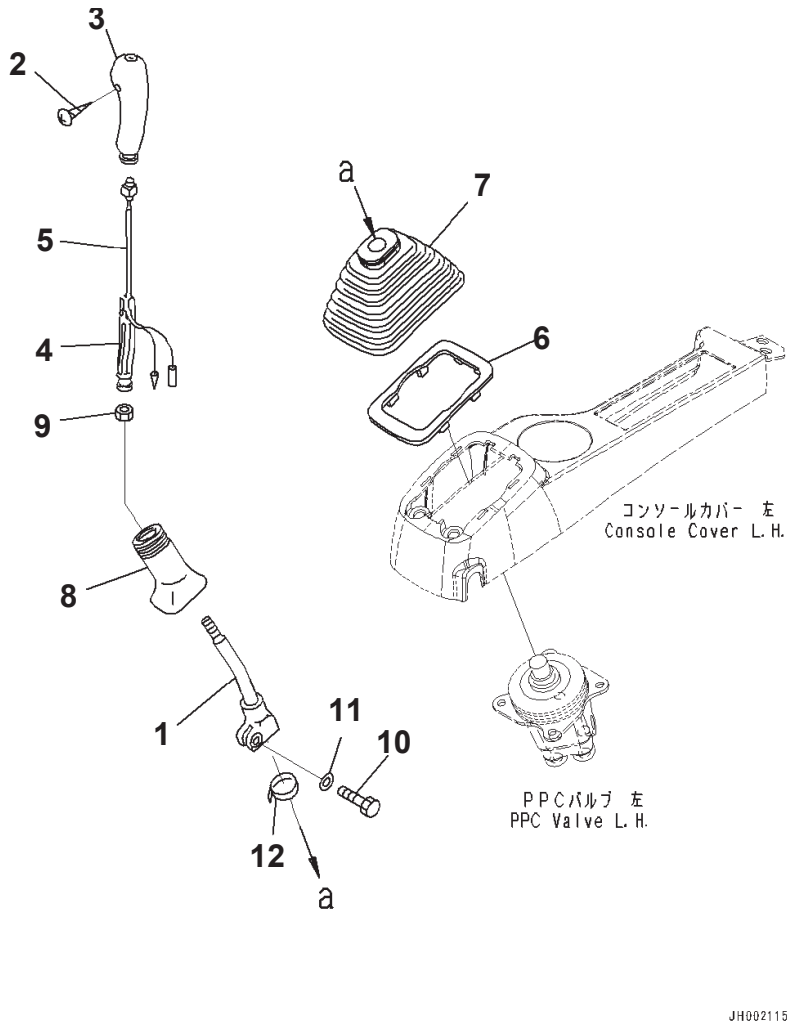

Cab, EOPS Cabin Front Fix, 1-actuator, With AM-FM Radio, With Master Key, For KOMTRAX, Floor, Lever, LHS

Index	Code	Part Number	Description	Qty	Options
1		20Y-43-22211	Lever	1	SN:B10001--
		22U-43-21182	Knob	1	SN:B10001--
2	C1		・ Knob	1	SN:B10001--
3		20Y-43-22381	・ Knob	1	SN:B10001--
4		20Y-43-22421	・ Insert	1	SN:B10001--
5		22U-43-21211	・ Switch	1	SN:B10001--
6		20Y-43-22250	Plate	1	SN:B10001--
7		20Y-43-22261	Boot	1	SN:B10001--
8		20Y-43-22370	Boot	1	SN:B10001--
9		600-411-1280	Nut	1	SN:B10001--
10		01252-41025	Bolt, Hexagon Socket Head	1	SN:B10001--
11		01643-51032	Washer	1	SN:B10001--
12		08034-20536	Band	1	SN:B10001--

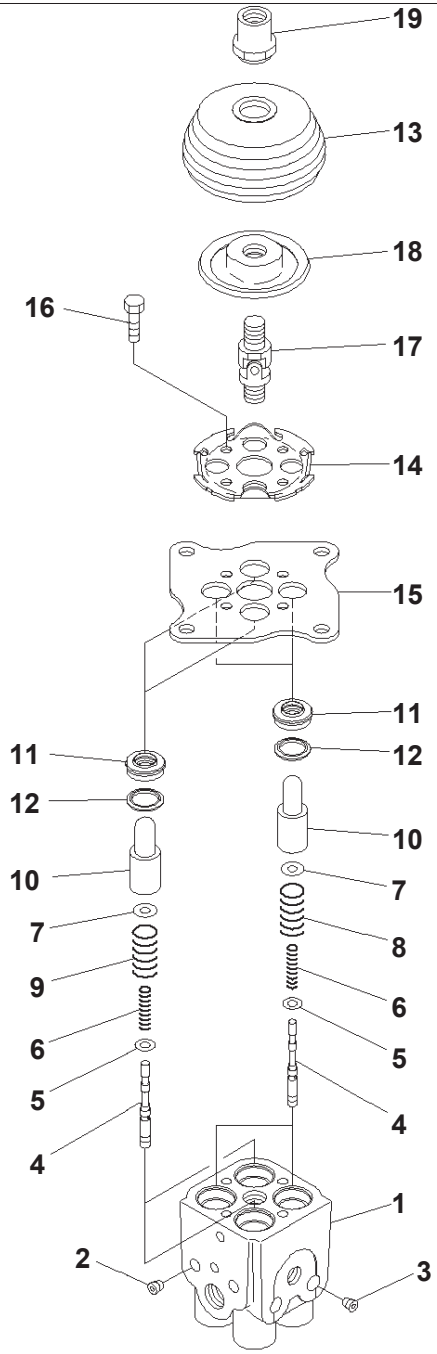

Cab, EOPS Cabin Front Fix, 1-actuator, With AM-FM Radio, With Master Key, For KOMTRAX, Floor, P.P.C. Valve, For Work Equipment,

Index	Code	Part Number	Description	Qty	Options
		702-16-03910	Valve, Pilot	1	SN:B10001--
1	C1		・ Valve Body, Valve	1	SN:B10001--
2	C1		・ Plug	2	SN:B10001--
3	C1		・ Plug	2	SN:B10001--
4	C1		・ Valve	4	SN:B10001--
5		702-16-51140	・ Shim, T=0.30mm	4	SN:B10001--
6		702-16-53420	・ Spring	4	SN:B10001--
7		702-16-53140	・ Retainer	4	SN:B10001--
8		702-16-53470	・ Spring	2	SN:B10001--
9		702-16-53590	・ Spring	2	SN:B10001--
10		702-16-53170	・ Piston	4	SN:B10001--
11		702-16-71210	・ Seal	4	SN:B10001--
12		702-16-71160	・ Seat	4	SN:B10001--
13		702-16-71280	・ Boot	1	SN:B10001--
14		702-16-71131	・ Plate	1	SN:B10001--
15		702-16-71141	・ Plate	1	SN:B10001--
16		01010-80620	・ Bolt	4	SN:B10001--
17		702-16-51240	・ Universal Joint	1	SN:B10001--
18		702-16-71361	・ Disc	1	SN:B10001--
19		702-16-71441	・ Nut	1	SN:B10001--

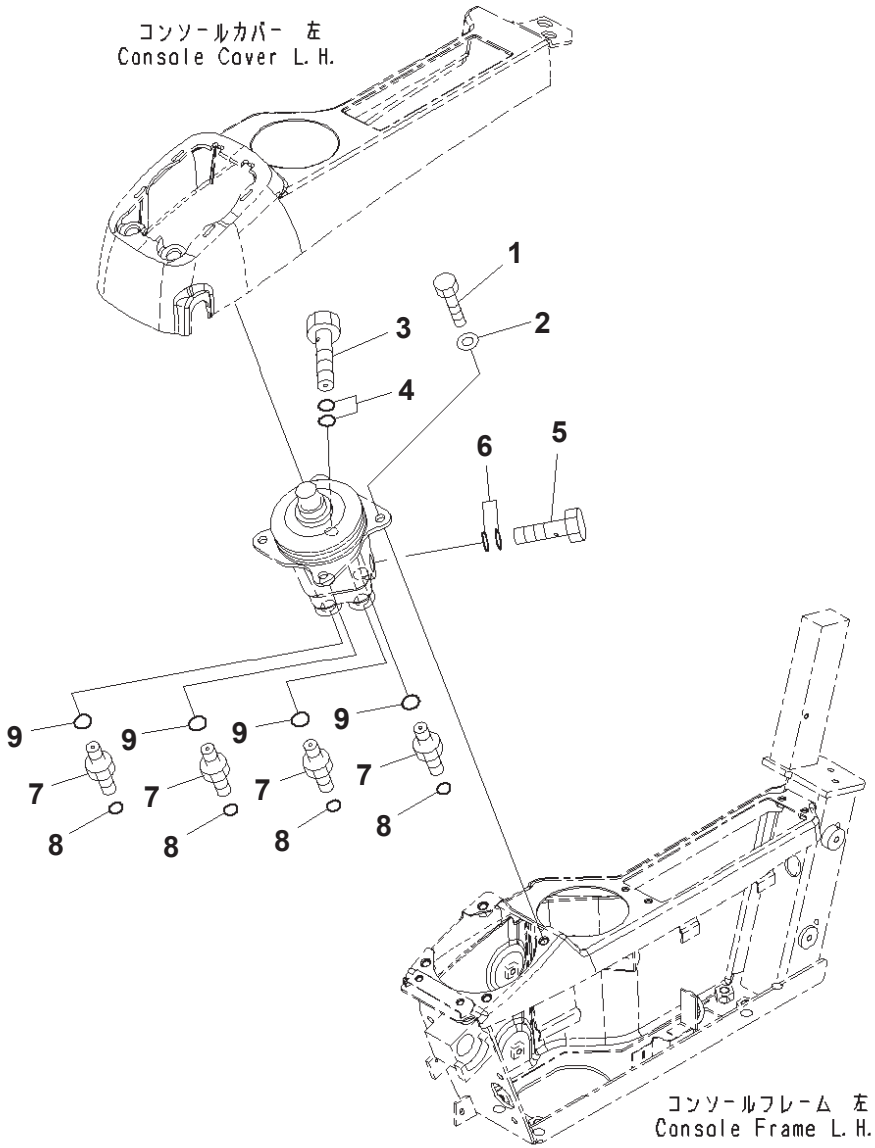

JY001272

Cab, EOPS Cabin Front Fix, 1-actuator, With AM-FM Radio, With Master Key, For KOMTRAX, Floor, Valve, LHS

Index	Part Number	Description	Qty	Options
1	01010-80820	Bolt	4	SN:B10001--
2	01643-30823	Washer	4	SN:B10001--
3	20Y-62-18910	Bolt, Eye	1	SN:B10001--
4	07000-12018	O-ring	2	SN:B10001--
5	20Y-62-18890	Bolt	1	SN:B10001--
6	07000-12015	O-ring	2	SN:B10172--B10278
7	11Y-62-12520	Nipple	4	SN:B10001--
8	02896-11009	O-ring	4	SN:B10001--
9	07002-11423	O-ring	4	SN:B10001--

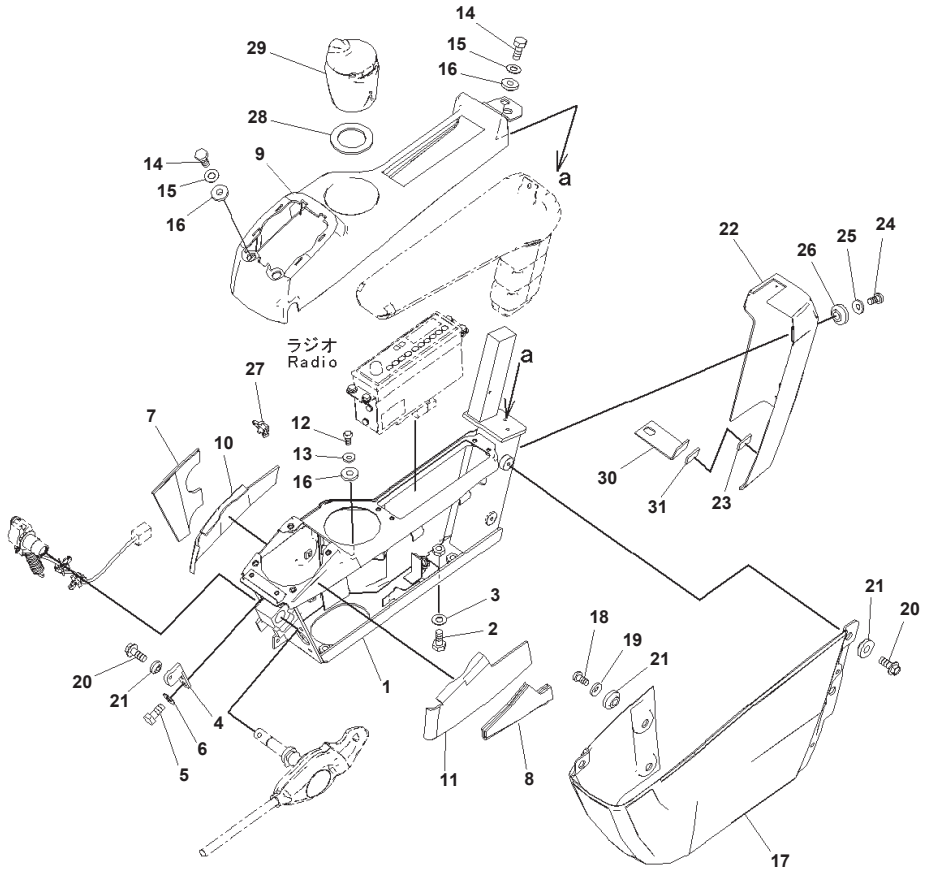

Cab, EOPS Cabin Front Fix, 1-actuator, With AM-FM Radio, With Master Key, For KOMTRAX, Floor, Console, LHS

Index	Code	Part Number	Description	Qty	Options
1		20Y-43-41416	Frame	1	SN:B10080--
	A2	20Y-43-41415	Frame	1	SN:B10001--B10079
2		01010-81030	Bolt	4	SN:B10001--
3		01643-31032	Washer	4	SN:B10001--
4		20Y-43-41472	Bracket	1	SN:B10001--
5		01010-80616	Bolt	2	SN:B10001--
6		01643-30623	Washer	2	SN:B10001--
7		20Y-43-41621	Sheet	1	SN:B10001--
8		20Y-43-41641	Sheet	1	SN:B10001--
9		20Y-43-41424	Cover	1	SN:B10279--
	A2	20Y-43-41423	Cover	1	SN:B10172--B10278
10		20Y-43-41651	Sheet	1	SN:B10001--
11		20Y-43-41661	Sheet	1	SN:B10001--
12		01245-00616	Screw, Hexagon Socket Head	1	SN:B10001--
13		01643-70623	Washer	1	SN:B10001--
14		01010-80616	Bolt	4	SN:B10001--
15		01643-30623	Washer	4	SN:B10001--
16		20Y-43-41290	Collar	5	SN:B10001--
17		20Y-43-41442	Cover	1	SN:B10001--
18		01245-00616	Screw, Hexagon Socket Head	2	SN:B10001--
19		01643-70623	Washer	2	SN:B10001--
20		01435-00612	Bolt	3	SN:B10001--
21		20Y-43-41290	Collar	5	SN:B10001--
		20Y-43-42450	Cover	1	SN:B10001--
22	C1		・ Cover	1	SN:B10001--
23		20Y-43-42170	・ Tape	1	SN:B10001--
24		01245-00616	Screw, Hexagon Socket Head	2	SN:B10001--
25		01643-70623	Washer	2	SN:B10001--
26		20Y-43-41290	Collar	2	SN:B10001--
27		22U-43-23260	Clip	1	SN:B10001--
28		20Y-43-41970	Sheet	1	SN:B10001--
29		20Y-43-41491	Ashtray	1	SN:B10001--
30		20Y-43-41981	Bracket	1	SN:B10001--
31		20Y-43-42180	・ Tape	1	SN:B10001--

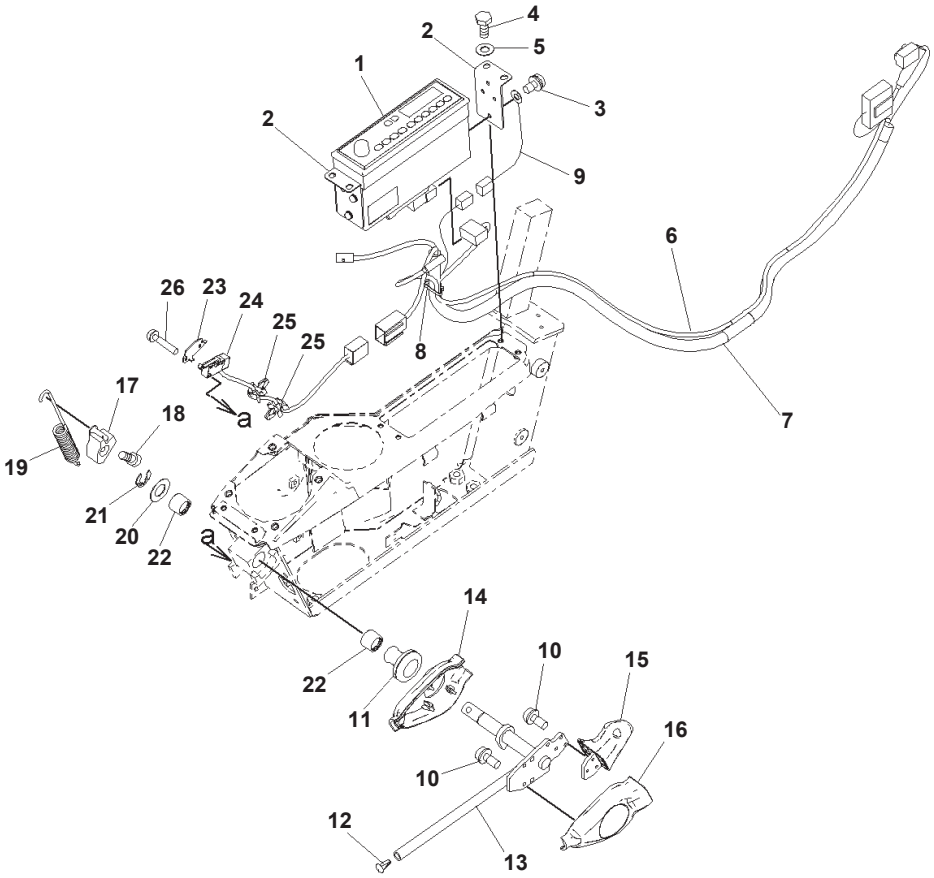

Cab, EOPS Cabin Front Fix, 1-actuator, With AM-FM Radio, With Master Key, For KOMTRAX, Floor, P.P.C. Lock Lever And Radio

Index	Code	Part Number	Description	Qty	Options
1		20Y-06-42440	Radio	1	SN:B10121--
	A2	20Y-06-41248	Radio	1	SN:B10001--B10120
2		20Y-43-42130	Plate	2	SN:B10001--
3		01023-60510	Screw	6	SN:B10001--
4		01010-80616	Bolt	4	SN:B10001--
5		01643-30623	Washer	4	SN:B10001--
6		08912-51600	Cord	1	SN:B10001--
7		21M-06-31170	Wire Harness	1	SN:B10080--
	A2	20Y-06-41121	Wire Harness	1	SN:B10001--B10079
8		08034-20414	Band	1	SN:B10001--
9		20Y-06-41830	Wire Harness	1	SN:B10001--
10		01023-60410	Screw	6	SN:B10001--
11		08037-11425	Grommet	1	SN:B10001--
12		208-53-12280	Cap	1	SN:B10001--
13		20Y-43-31513	Lever	1	SN:B10001--
14		20Y-43-31522	Cover	1	SN:B10001--
15		20Y-43-31611	Knob	1	SN:B10001--
16		20Y-43-31621	Cover	1	SN:B10001--
17		20Y-43-31432	Cam	1	SN:B10001--
18		01252-70816	Bolt	1	SN:B10001--
19		20Y-43-31421	Spring	1	SN:B10001--
20		20Y-43-31440	Ring	1	SN:B10001--
21		20Y-43-31450	Ring	1	SN:B10001--
22		06124-01616	Bearing	2	SN:B10001--
23		22U-06-22490	Plate	1	SN:B10001--
24		22U-06-22360	Switch Assembly	1	SN:B10001--
25		22U-43-23260	Clip	2	SN:B10001--
26		01023-60320	Screw	2	SN:B10001--

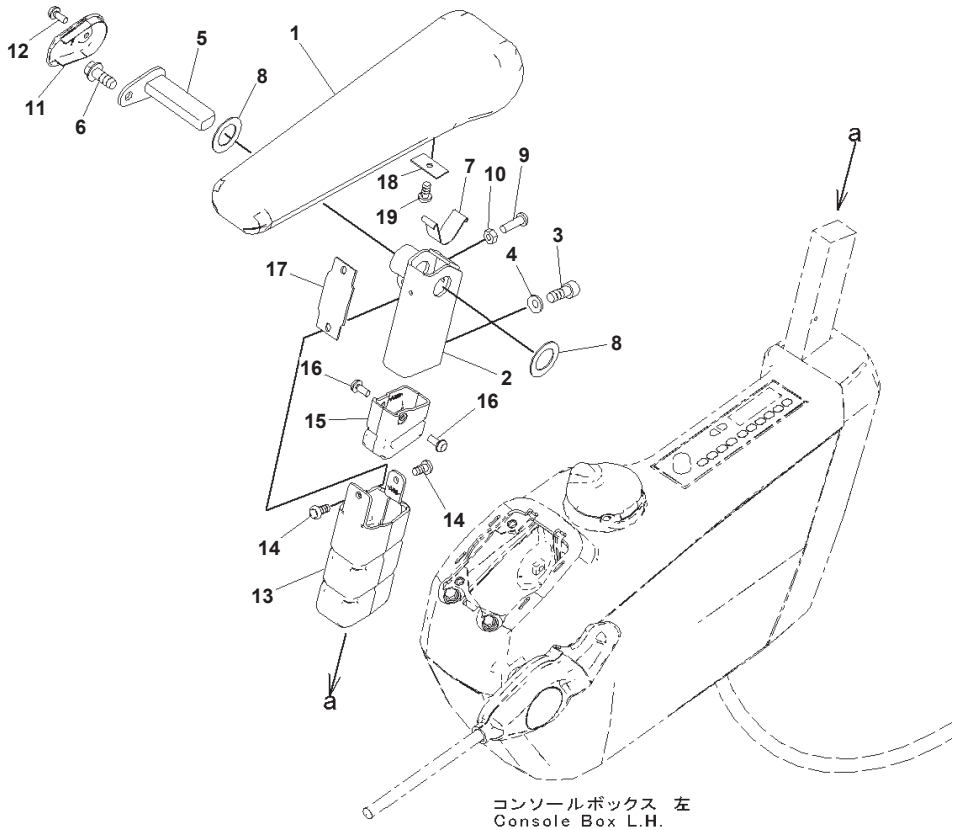

コンソールボックス　左
Console Box L.H.

00048924

Cab, EOPS Cabin Front Fix, 1-actuator, With AM-FM Radio, With Master Key, For KOMTRAX, Floor, Arm Rest, LHS

Index	Part Number	Description	Qty	Options
1	20Y-43-41143	Armrest	1	SN:B10001--
2	20Y-43-41173	Bracket	1	SN:B10001--
3	01252-80820	Bolt	2	SN:B10001--
4	01643-70823	Washer	2	SN:B10001--
5	20Y-43-41162	Pin	1	SN:B10001--
6	01435-40816	Bolt	1	SN:B10001--
7	20Y-43-41152	Spring	1	SN:B10001--
8	437-40-26240	Washer	2	SN:B10001--
9	01245-00620	Screw	1	SN:B10001--
10	01580-40605	Nut	1	SN:B10001--
11	20Y-43-41181	Cap	1	SN:B10001--
12	01023-20512	Screw	1	SN:B10001--
13	20Y-43-41191	Cover	1	SN:B10001--
14	01370-40510	Screw	2	SN:B10001--
15	20Y-43-41591	Cover	1	SN:B10001--
16	01023-20512	Screw	2	SN:B10001--
17	20Y-43-41281	Rubber	1	SN:B10001--
18	20Y-43-41461	Plate	1	SN:B10001--
19	01370-40610	Screw	1	SN:B10001--

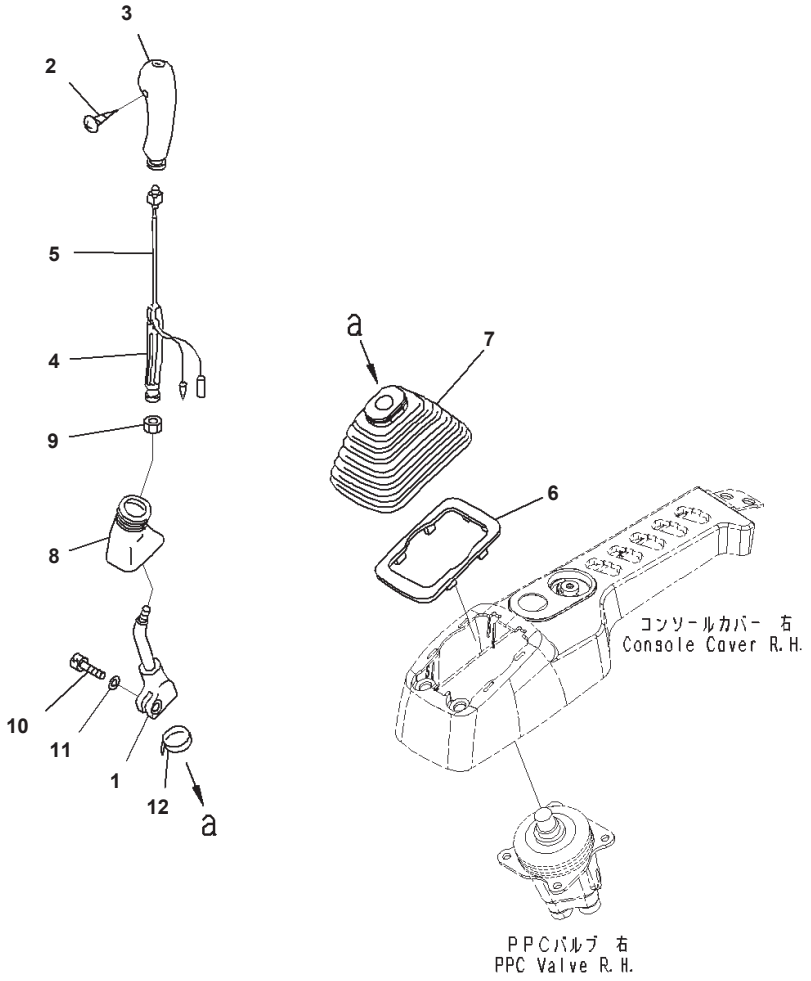

Cab, EOPS Cabin Front Fix, 1-actuator, With AM-FM Radio, With Master Key, For KOMTRAX, Floor, Lever, RHS

Index	Code	Part Number	Description	Qty	Options
1		20Y-43-22221	Lever	1	SN:B10001--
		22U-43-21192	Knob	1	SN:B10001--
2	C1		・ Knob	1	SN:B10001--
3		20Y-43-22390	・ Knob	1	SN:B10001--
4		20Y-43-22421	・ Insert	1	SN:B10001--
5		22U-43-21211	・ Switch	1	SN:B10001--
6		20Y-43-22250	Plate	1	SN:B10001--
7		20Y-43-22261	Boot	1	SN:B10001--
8		20Y-43-22370	Boot	1	SN:B10001--
9		600-411-1280	Nut	1	SN:B10001--
10		01252-41025	Bolt, Hexagon Socket Head	1	SN:B10001--
11		01643-51032	Washer	1	SN:B10001--
12		08034-20536	Band	1	SN:B10001--

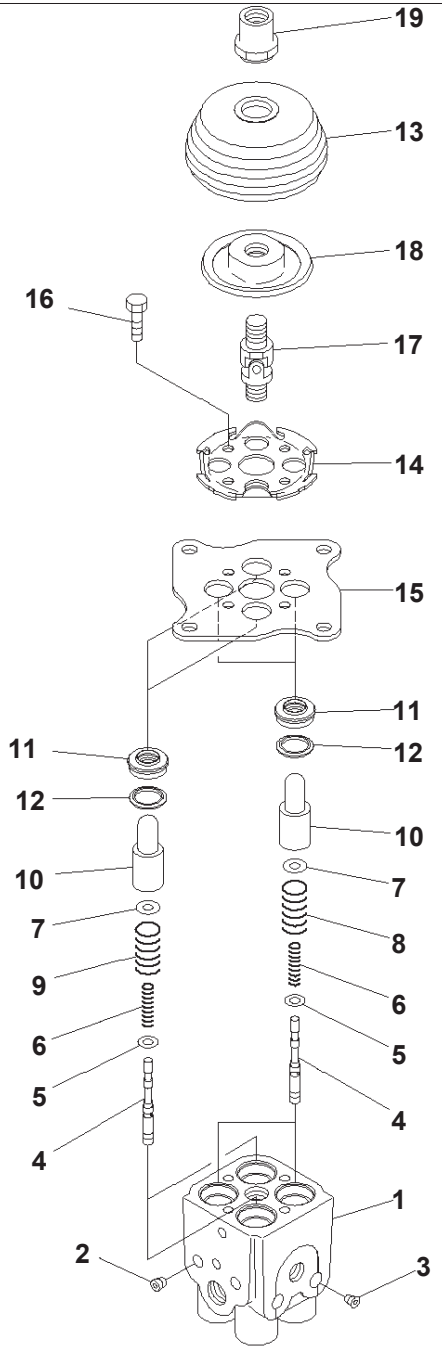

Cab, EOPS Cabin Front Fix, 1-actuator, With AM-FM Radio, With Master Key, For KOMTRAX, Floor, P.P.C. Valve, For Work Equipment,

Index	Code	Part Number	Description	Qty	Options
		702-16-03910	Valve, Pilot	1	SN:B10001--
1	C1		・ Valve Body, Valve	1	SN:B10001--
2	C1		・ Plug	2	SN:B10001--
3	C1		・ Plug	2	SN:B10001--
4	C1		・ Valve	4	SN:B10001--
5		702-16-51140	・ Shim, T=0.30mm	4	SN:B10001--
6		702-16-53420	・ Spring	4	SN:B10001--
7		702-16-53140	・ Retainer	4	SN:B10001--
8		702-16-53470	・ Spring	2	SN:B10001--
9		702-16-53590	・ Spring	2	SN:B10001--
10		702-16-53170	・ Piston	4	SN:B10001--
11		702-16-71210	・ Seal	4	SN:B10001--
12		702-16-71160	・ Seat	4	SN:B10001--
13		702-16-71280	・ Boot	1	SN:B10001--
14		702-16-71131	・ Plate	1	SN:B10001--
15		702-16-71141	・ Plate	1	SN:B10001--
16		01010-80620	・ Bolt	4	SN:B10001--
17		702-16-51240	・ Universal Joint	1	SN:B10001--
18		702-16-71361	・ Disc	1	SN:B10001--
19		702-16-71441	・ Nut	1	SN:B10001--

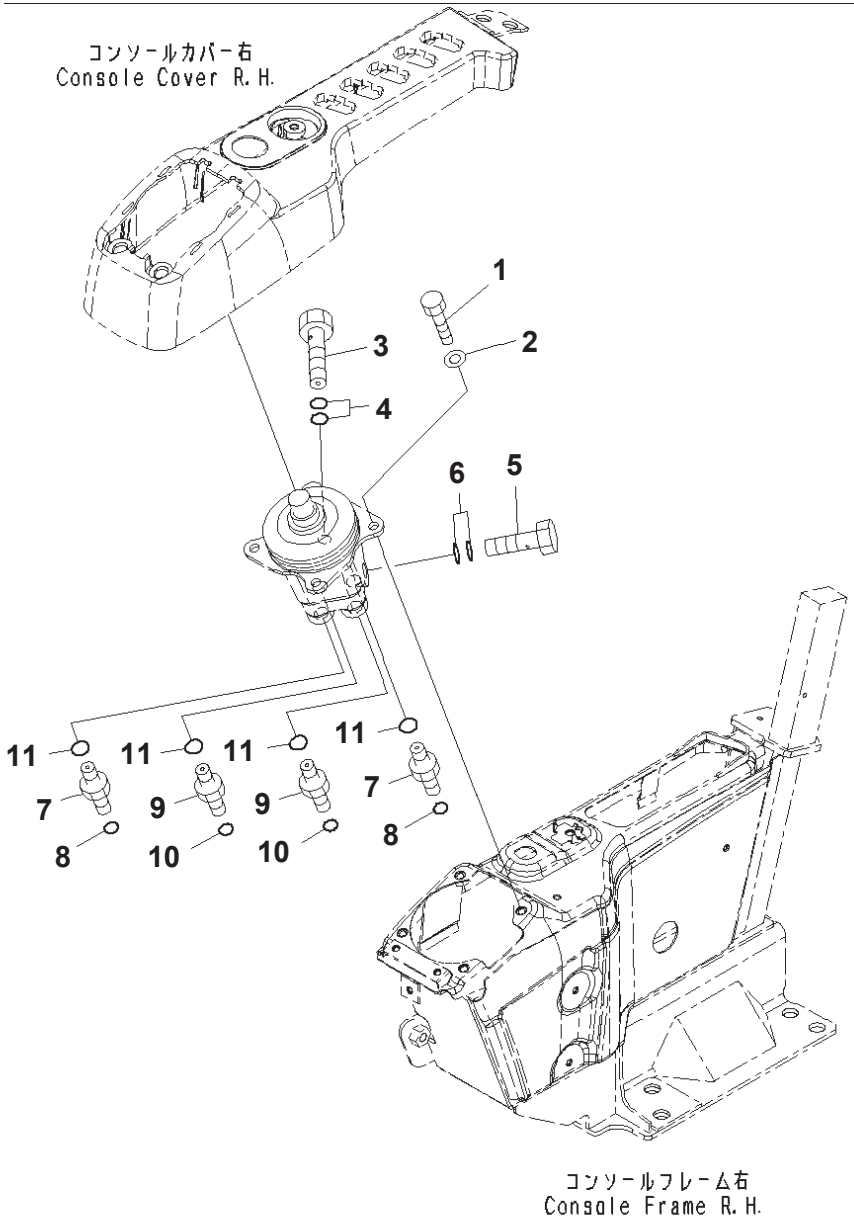

JY001285

Cab, EOPS Cabin Front Fix, 1-actuator, With AM-FM Radio, With Master Key, For KOMTRAX, Floor, Valve, RHS

Index	Part Number	Description	Qty	Options
1	01010-80820	Bolt	4	SN:B10001--
2	01643-30823	Washer	4	SN:B10001--
3	20Y-62-18910	Bolt, Eye	1	SN:B10172--B10278
4	07000-12018	O-ring	2	SN:B10001--
5	20Y-62-18890	Bolt	1	SN:B10001--
6	07000-12015	O-ring	2	SN:B10172--B10278
7	11Y-62-12130	Nipple	2	SN:B10001--
8	02896-11008	O-ring	2	SN:B10172--B10278
9	11Y-62-12520	Nipple	2	SN:B10001--
10	02896-11009	O-ring	2	SN:B10001--
11	07002-11423	O-ring	4	SN:B10001--

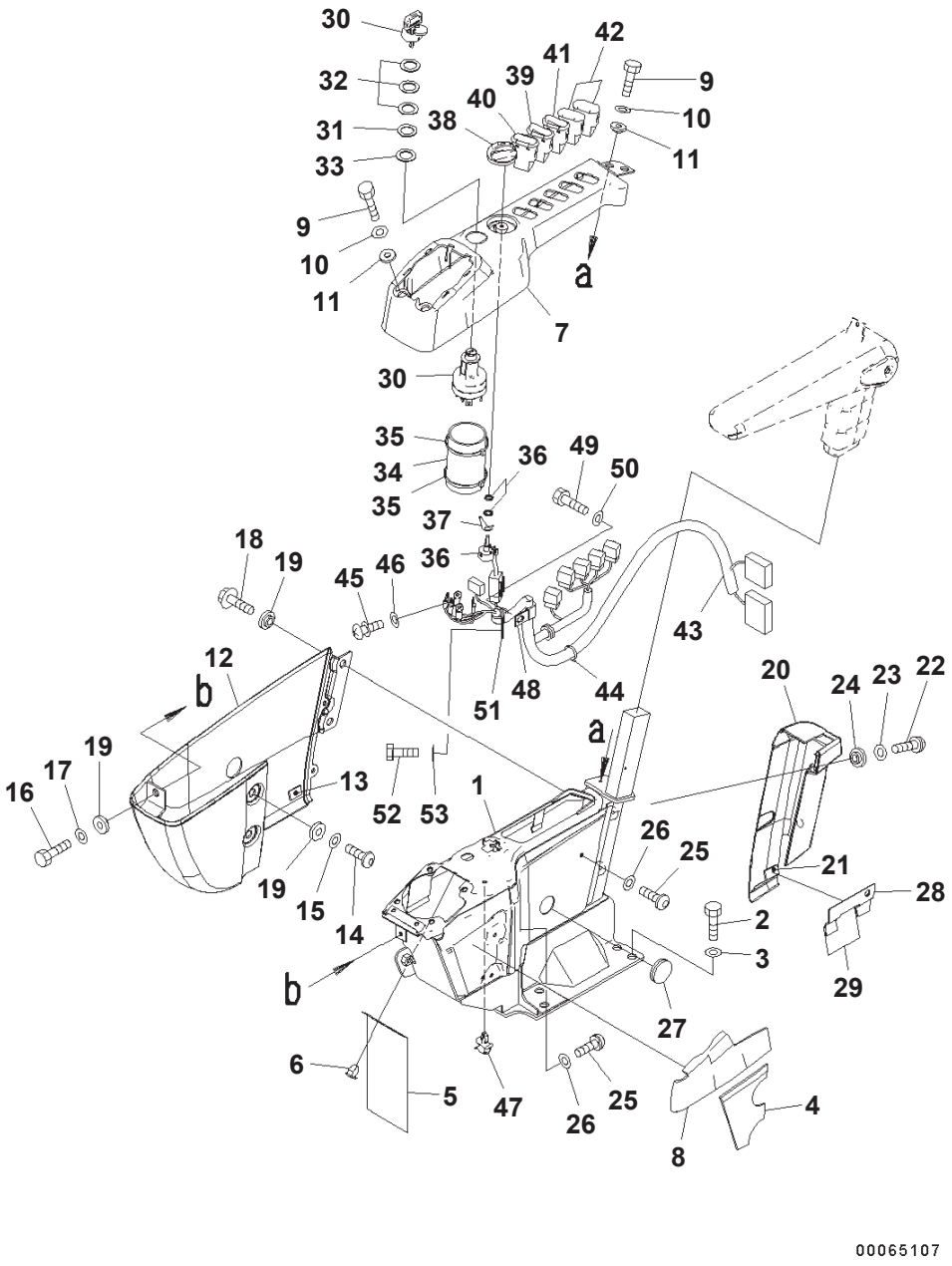

Cab, EOPS Cabin Front Fix, 1-actuator, With AM-FM Radio, With Master Key, For KOMTRAX, Floor, Console, RHS

Index	Code	Part Number	Description	Qty	Options
1		20Y-43-41314	Frame	1	SN:B10080--
	A2	20Y-43-41313	Frame	1	SN:B10001--B10079
2		01010-D1230	Bolt	4	SN:B10001--
3		01643-71232	Washer	4	SN:B10001--
4		20Y-43-41631	Sheet	1	SN:B10001--
5		22U-43-23251	Sheet	1	SN:B10001--
6		22U-43-23290	Clip	2	SN:B10001--
7		20Y-43-41324	Cover	1	SN:B10279--
	A2	20Y-43-41323	Cover	1	SN:B10001--B10278
8		20Y-43-41661	Sheet	1	SN:B10001--
9		01010-80616	Bolt	4	SN:B10001--
10		01643-30623	Washer	4	SN:B10001--
11		20Y-43-41290	Collar	4	SN:B10001--
		20Y-43-42330	Cover	1	SN:B10001--
12	C1		･ Cover	1	SN:B10001--
13		20Y-43-42170	･ Tape	1	SN:B10001--
14		01245-00616	Screw, Hexagon Socket Head	2	SN:B10001--
15		01643-70623	Washer	2	SN:B10001--
16		01010-80616	Bolt	1	SN:B10001--
17		01643-30623	Washer	1	SN:B10001--
18		01435-00612	Bolt	2	SN:B10001--
19		20Y-43-41290	Collar	5	SN:B10001--
		20Y-43-42350	Cover	1	SN:B10001--
20	C1		･ Cover	1	SN:B10001--
21		20Y-43-42170	･ Tape	1	SN:B10001--
22		01245-00616	Screw, Hexagon Socket Head	2	SN:B10001--
23		01643-70623	Washer	2	SN:B10001--
24		20Y-43-41290	Collar	2	SN:B10001--
25		01245-00616	Screw, Hexagon Socket Head	3	SN:B10001--
26		01643-70623	Washer	3	SN:B10001--
27		09415-02512	Cap	1	SN:B10001--
28		20Y-43-41991	Bracket	1	SN:B10001--
29		20Y-43-42180	･ Tape	1	SN:B10001--
30		08086-20000	Switch	1	SN:B10001--
31		20Y-43-41740	Plate	1	SN:B10001--
32		20Y-43-41750	Washer	3	SN:B10001--
33		20Y-43-41790	Washer	1	SN:B10001--
34		20Y-43-41671	Sheet	1	SN:B10001--
35		08034-20519	Band	2	SN:B10001--
36		22U-06-22380	Potentiometer	1	SN:B10001--
37		22U-06-22460	Spring	1	SN:B10001--
38		20Y-43-41781	Knob	1	SN:B10247--
	A2	□20Y-43-41780	Knob	1	SN:B10001--B10246
39		20Y-06-42110	Switch	1	SN:B10001--
40		20Y-06-42121	Switch, Light	1	SN:B10001--
41		21T-06-33760	Switch Assembly	1	SN:B10001--
42		20Y-06-42190	Cover	2	SN:B10001--
43		207-06-76130	Wire Harness	1	SN:B10001--
44		08034-20414	Band	1	SN:B10001--
45		01023-10508	Screw	5	SN:B10001--
46		01601-20513	Washer	5	SN:B10001--
47		22U-43-23260	Clip	1	SN:B10001--
48		04434-51710	Clip	1	SN:B10001--

PC350LC-8 S/N B10001-UP

Cab, EOPS Cabin Front Fix, 1-actuator, With AM-FM Radio, With Master Key, For KOMTRAX, Floor, Console, RHS

Index	Code	Part Number	Description	Qty	Options
49		01010-81016	Bolt	1	SN:B10001--
50		01643-31032	Washer	1	SN:B10001--
51		04434-51410	Clip	1	SN:B10001--
52		01010-81016	Bolt	1	SN:B10001--
53		01643-31032	Washer	1	SN:B10001--

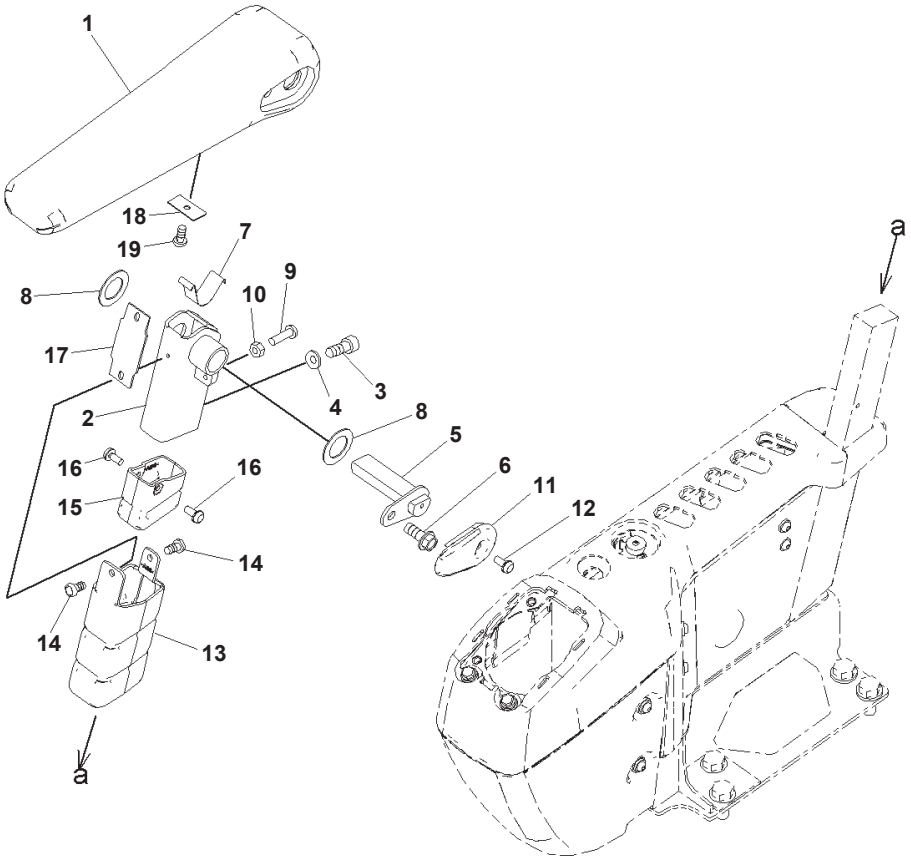

00048930

Cab, EOPS Cabin Front Fix, 1-actuator, With AM-FM Radio, With Master Key, For KOMTRAX, Floor, Arm Rest, RHS

Index	Part Number	Description	Qty	Options
1	20Y-43-41343	Arm Rest	1	SN:B10001--
2	20Y-43-41533	Bracket	1	SN:B10001--
3	01252-80820	Bolt	2	SN:B10001--
4	01643-70823	Washer	2	SN:B10001--
5	20Y-43-41850	Pin	1	SN:B10001--
6	01435-40816	Bolt	1	SN:B10001--
7	20Y-43-41152	Spring	1	SN:B10001--
8	437-40-26240	Washer	2	SN:B10001--
9	01245-00620	Screw	1	SN:B10001--
10	01580-40605	Nut	1	SN:B10001--
11	20Y-43-41181	Cap	1	SN:B10001--
12	01023-20512	Screw	1	SN:B10001--
13	20Y-43-41191	Cover	1	SN:B10001--
14	01370-40510	Screw	2	SN:B10001--
15	20Y-43-41591	Cover	1	SN:B10001--
16	01023-20512	Screw	2	SN:B10001--
17	20Y-43-41281	Rubber	1	SN:B10001--
18	20Y-43-41461	Plate	1	SN:B10001--
19	01370-40610	Screw	1	SN:B10001--

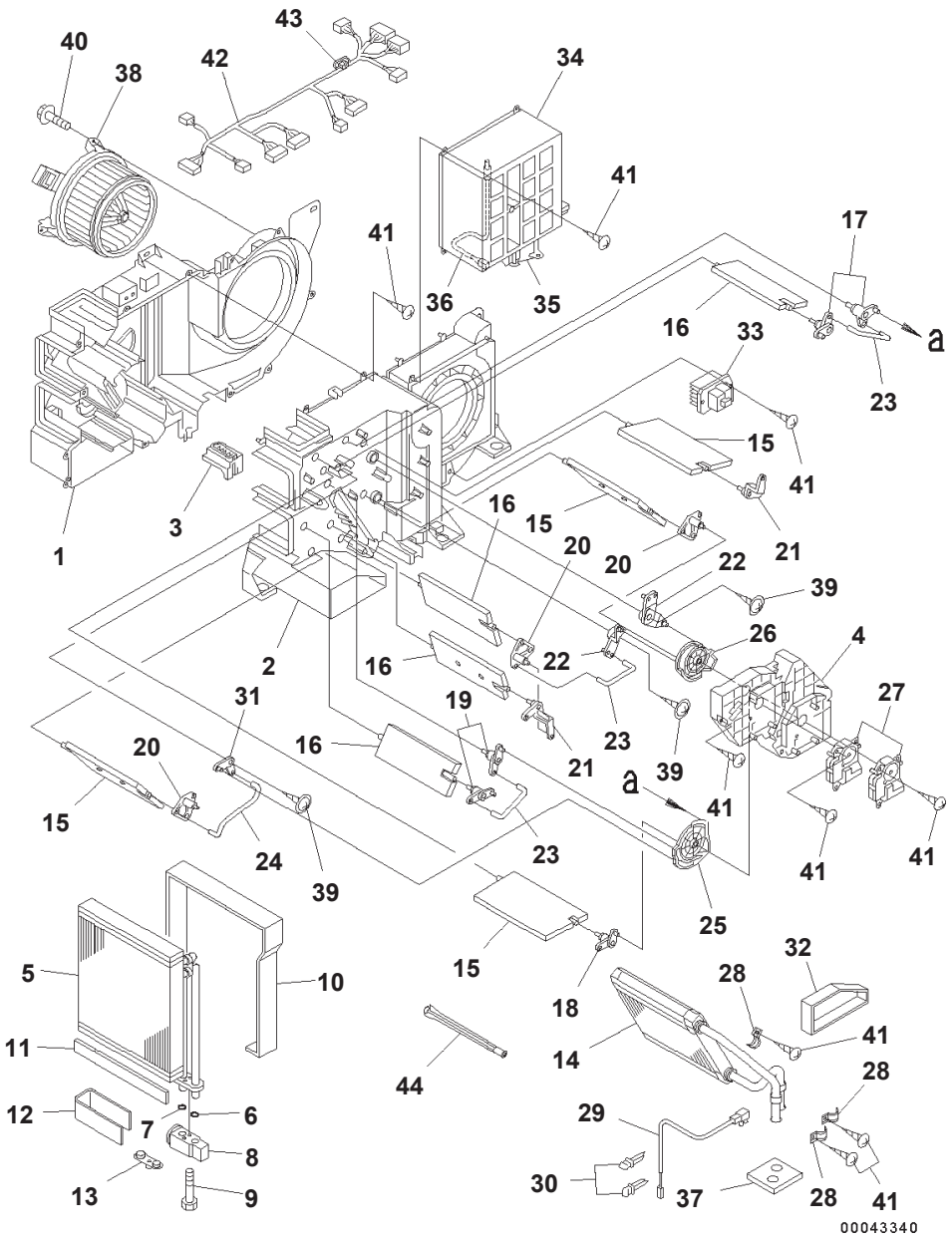

PC350LC-8 S/N B10001-UP

Cab, EOPS Cabin Front Fix, 1-actuator, With AM-FM Radio, With Master Key, For KOMTRAX, Air Conditioner Unit

Index	Code	Part Number	Description	Qty	Options
		20Y-810-1213	Air Conditioner Assembly	1	SN:B10343--
	A2	20Y-810-1212	Air Conditioner Assembly	1	SN:B10302--B10342
	A2	20Y-810-1211	Air Conditioner Assembly	1	SN:B10001--B10301
1		ND245450-5831	・ Case, COOLING	1	SN:B10001--
2		ND245450-5840	・ Case, COOLING	1	SN:B10001--
3		ND116576-3810	・ Plate	1	SN:B10001--
4		ND116576-3820	・ Plate	1	SN:B10001--
		ND446010-3132	・ Evaporator, Part	1	SN:B10001--
5		ND446600-0991	・・ Evaporator Assembly	1	SN:B10001--
6		ND949142-0020	・・ O-ring	1	SN:B10001--
7		ND949142-0030	・・ O-ring	1	SN:B10001--
8		ND447500-4760	・・ Valve, Expansion	1	SN:B10302--
	A2	ND447500-2750	・・ Valve, Expansion	1	SN:B10001--B10301
9		ND949046-3100	・・ Bolt	2	SN:B10001--
10		ND146657-8841	・・ Packing	1	SN:B10001--
11		ND146657-9811	・・ Packing	3	SN:B10001--
12		ND146657-8850	・・ Packing	1	SN:B10001--
13		ND445021-3091	・・ Plug	1	SN:B10343--
	A2	ND445021-3941	・・ Plug	1	SN:B10302--B10342
14		ND116140-0050	・ Core Subassembly, Heater	1	SN:B10001--
15		ND116660-7570	・ Door Assembly	4	SN:B10001--
16		ND116650-6850	・ Door Assembly	4	SN:B10001--
17		ND116780-2481	・ Lever Subassembly, Link	2	SN:B10001--
18		ND116780-2491	・ Lever Subassembly, Link	1	SN:B10001--
19		ND116780-2501	・ Lever Subassembly, Link	2	SN:B10001--
20		ND116780-2510	・ Lever Subassembly, Link	3	SN:B10001--
21		ND116781-3000	・ Lever	2	SN:B10001--
22		ND116780-3130	・ Lever Subassembly, Link	2	SN:B10001--
23		ND116662-7670	・ Shaft	3	SN:B10001--
24		ND116662-7681	・ Shaft	1	SN:B10001--
25		ND116576-3852	・ Plate	1	SN:B10001--
26		ND116576-3862	・ Plate	1	SN:B10001--
27		ND063800-0300	・ Servo Motor Assembly	2	SN:B10001--
28		ND017231-0700	・ Clamp	3	SN:B10001--
29		ND077500-5890	・ Thermistor Assembly	1	SN:B10001--
30		ND246790-2060	・ Clamp	2	SN:B10001--
31		ND116780-3920	・ Lever Subassembly, LINK	1	SN:B10001--
32		ND146667-0440	・ Packing	1	SN:B10001--
33		ND077800-1120	・ Transistor	1	SN:B10343--
	A2	ND077800-0750	・ Transistor	1	SN:B10302--B10342
34		ND146340-0560	・ Box Assembly	1	SN:B10001--
35		ND063600-4580	・・ Servo Motor Assembly	1	SN:B10001--
36		ND077500-5650	・・ Thermistor Assembly	1	SN:B10001--
37		ND146657-8860	・ Packing	1	SN:B10001--
38		ND116340-7350	・ Motor Assembly, FAN	1	SN:B10001--
39		ND949008-0460	・ Screw, Tapping	3	SN:B10001--
40		ND949008-0330	・ Screw, Tapping	3	SN:B10001--
41		ND949001-1730	・ Screw, Tapping	32	SN:B10001--
42		ND246470-4312	・ Wire Harness Assembly, WIRE	1	SN:B10302--
	A2	ND246470-4311	・ Wire Harness Assembly, WIRE	1	SN:B10001--B10301
43		ND93950-05003	・・ Fuse	1	SN:B10001--
44		ND116662-8320	・ Shaft	1	SN:B10001--

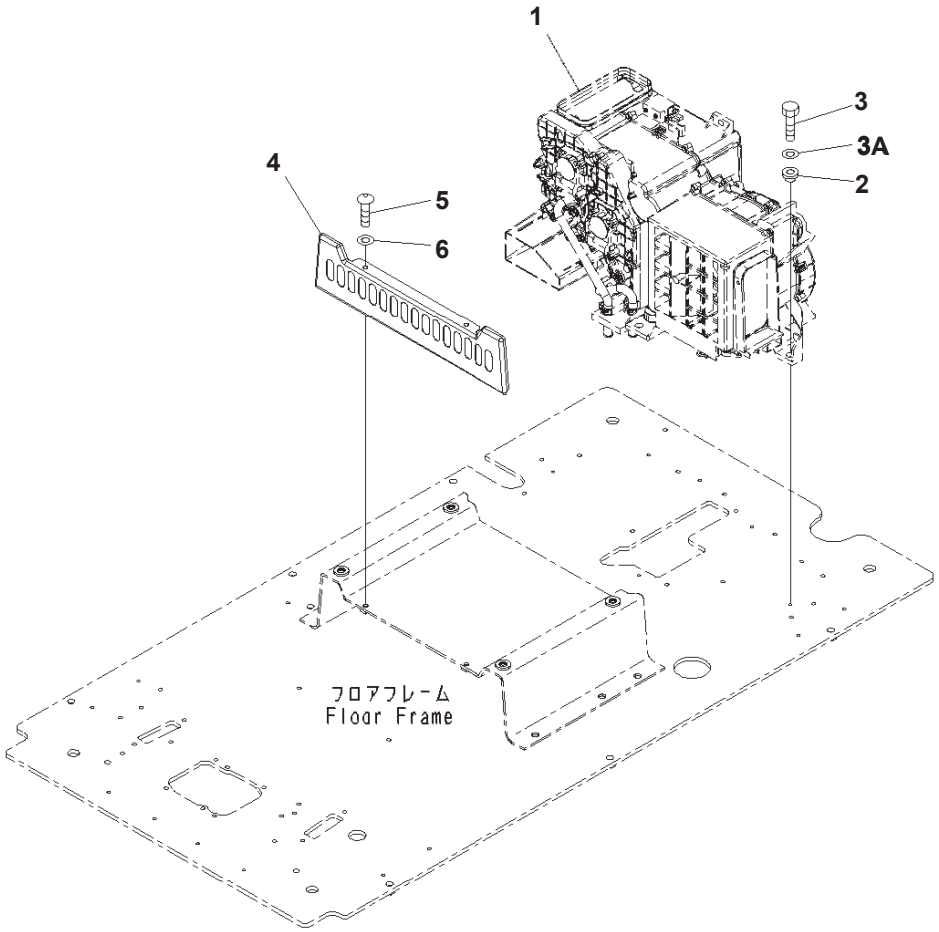

Cab, EOPS Cabin Front Fix, 1-actuator, With AM-FM Radio, With Master Key, For KOMTRAX, Floor, Air Conditioner Unit

Index	Code	Part Number	Description	Qty	Options
1		20Y-810-1213	Air Conditioner	1	SN:B10343--
	A2	20Y-810-1212	Air Conditioner	1	SN:B10302--B10342
	A2	20Y-810-1211	Air Conditioner	1	SN:B10001--B10301
2		208-979-7540	・ Collar	7	SN:B10001--
3		01010-80825	・ Bolt	7	SN:B10001--
3A		01643-30823	・ Washer	7	SN:B10001--
4		20Y-43-41240	・ Cover	1	SN:B10001--
5		01245-00820	・ Screw	2	SN:B10001--
6		01643-70823	・ Washer	2	SN:B10001--

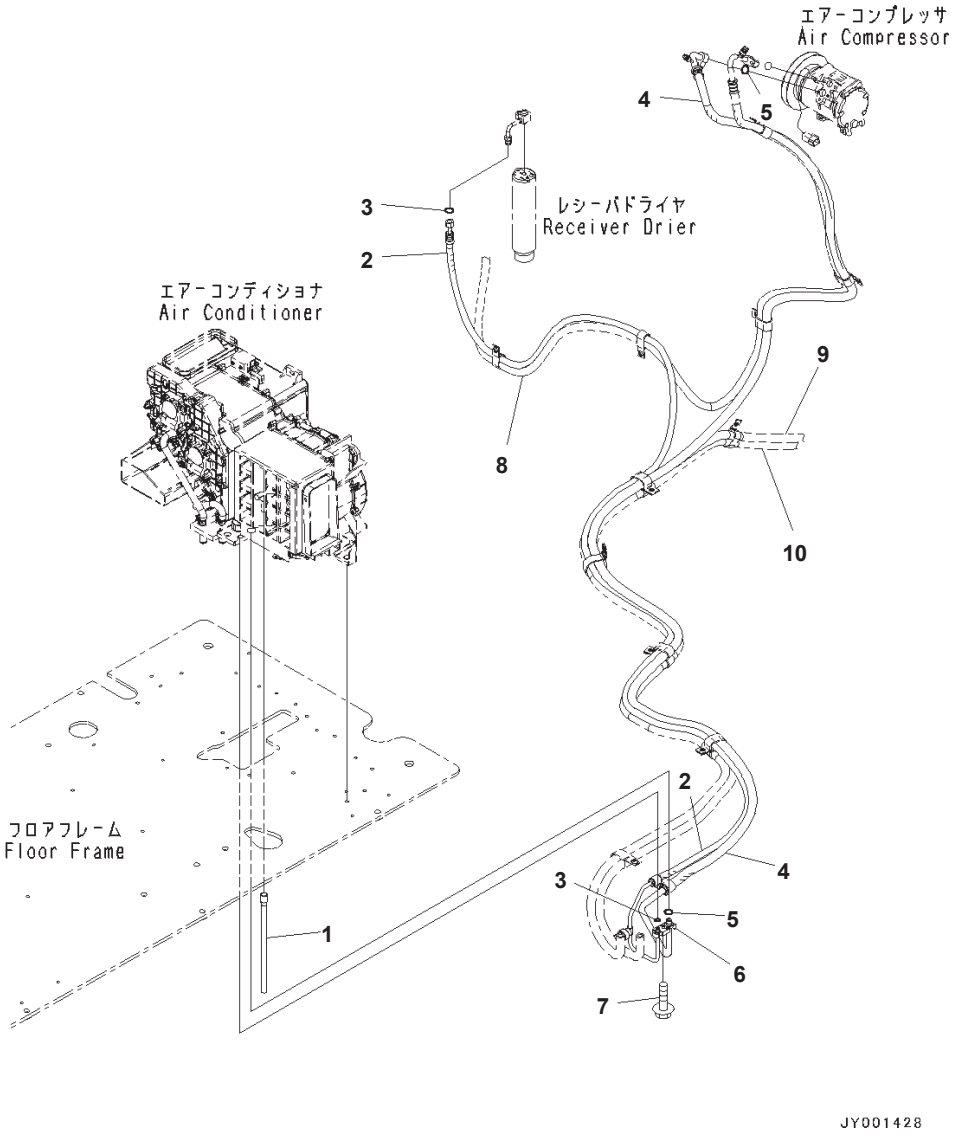

Cab, EOPS Cabin Front Fix, 1-actuator, With AM-FM Radio, With Master Key, For KOMTRAX, Floor, Air Conditioner Hose

Index	Part Number	Description	Page	Item	Qty	Options
1	208-979-7640	Hose, L=300mm			1	SN:B10001--
2	207-810-1311	Hose, L=4026mm			1	SN:B10001--
3	20Y-979-3150	・ O-ring			2	SN:B10001--
4	207-810-1321	Hose, L=4134mm			1	SN:B10001--
5	20Y-979-3130	・ O-ring			2	SN:B10001--
6	208-979-7650	Connector			1	SN:B10001--
7	01435-40620	Bolt			1	SN:B10001--
8	(207-979-7462)	Hose	K0700-001002	12		SN:--
9	(207-810-1332)	Hose Assembly	K1110-024050	1		SN:--
10	(207-810-1342)	Hose Assembly	K1110-024050	3		SN:--

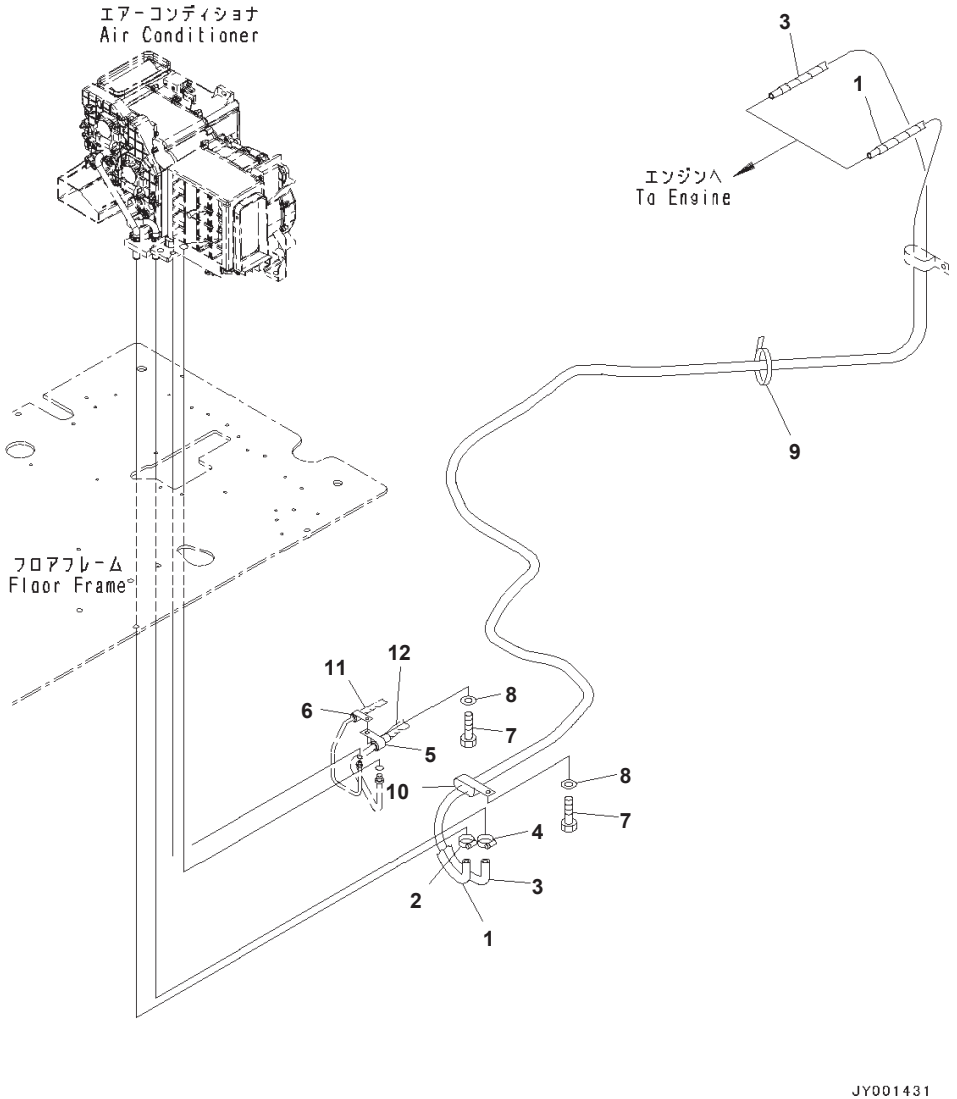

Cab, EOPS Cabin Front Fix, 1-actuator, With AM-FM Radio, With Master Key, For KOMTRAX, Floor, Heater Hose

Index	Part Number	Description	Page	Item	Qty	Options
1	207-810-1332	Hose Assembly			1	SN:B10001--
2	09479-02400	Clamp			1	SN:B10001--
3	207-810-1342	Hose Assembly			1	SN:B10001--
4	09479-02400	Clamp			1	SN:B10001--
5	04434-52110	Clip			1	SN:B10001--
6	04434-52511	Clip			1	SN:B10001--
7	01010-81020	Bolt			2	SN:B10001--
8	01643-31032	Washer			2	SN:B10001--
9	08034-20536	Band			1	SN:B10001--
10	141-06-11220	Clip			1	SN:B10001--
11	(207-810-1311)	Hose	K1110-024049	2		SN:--
12	(207-810-1321)	Hose	K1110-024049	4		SN:--

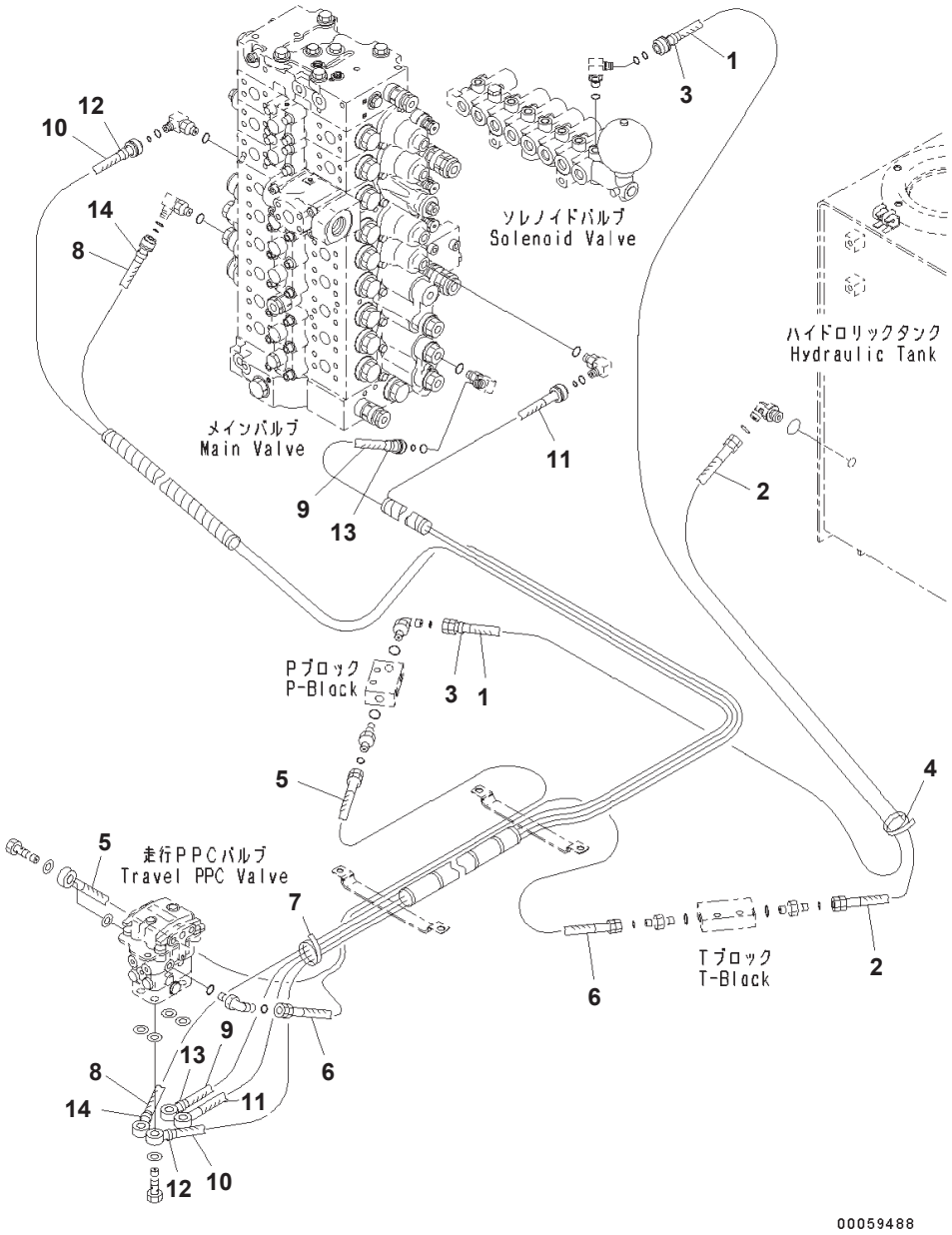

Cab, EOPS Cabin Front Fix, 1-actuator, With AM-FM Radio, With Master Key, For KOMTRAX, Floor, P.P.C. Piping For Travel Valve

Index	Part Number	Description	Qty	Options
1	22U-62-31180	Hose, L=3100mm	1	SN:B10001--
2	208-62-72331	Hose, L=1400mm	1	SN:B10001--
3	20Y-62-22790	Band, Red	2	SN:B10001--
4	08034-20519	Band	1	SN:B10001--
5	208-62-72290	Hose, L=950mm	1	SN:B10001--
6	208-62-72310	Hose, L=950mm	1	SN:B10001--
7	08034-20519	Band	1	SN:B10001--
8	208-62-72360	Hose, L=3550mm	1	SN:B10001--
9	207-62-75870	Hose, L=3200mm	1	SN:B10001--
10	207-62-75880	Hose, L=3600mm	1	SN:B10001--
11	207-62-75890	Hose, L=3350mm	1	SN:B10001--
12	20Y-62-22790	Band, Red	2	SN:B10001--
13	20Y-62-22820	Band, Blue	2	SN:B10001--
14	20Y-62-22850	Band, Green	2	SN:B10001--

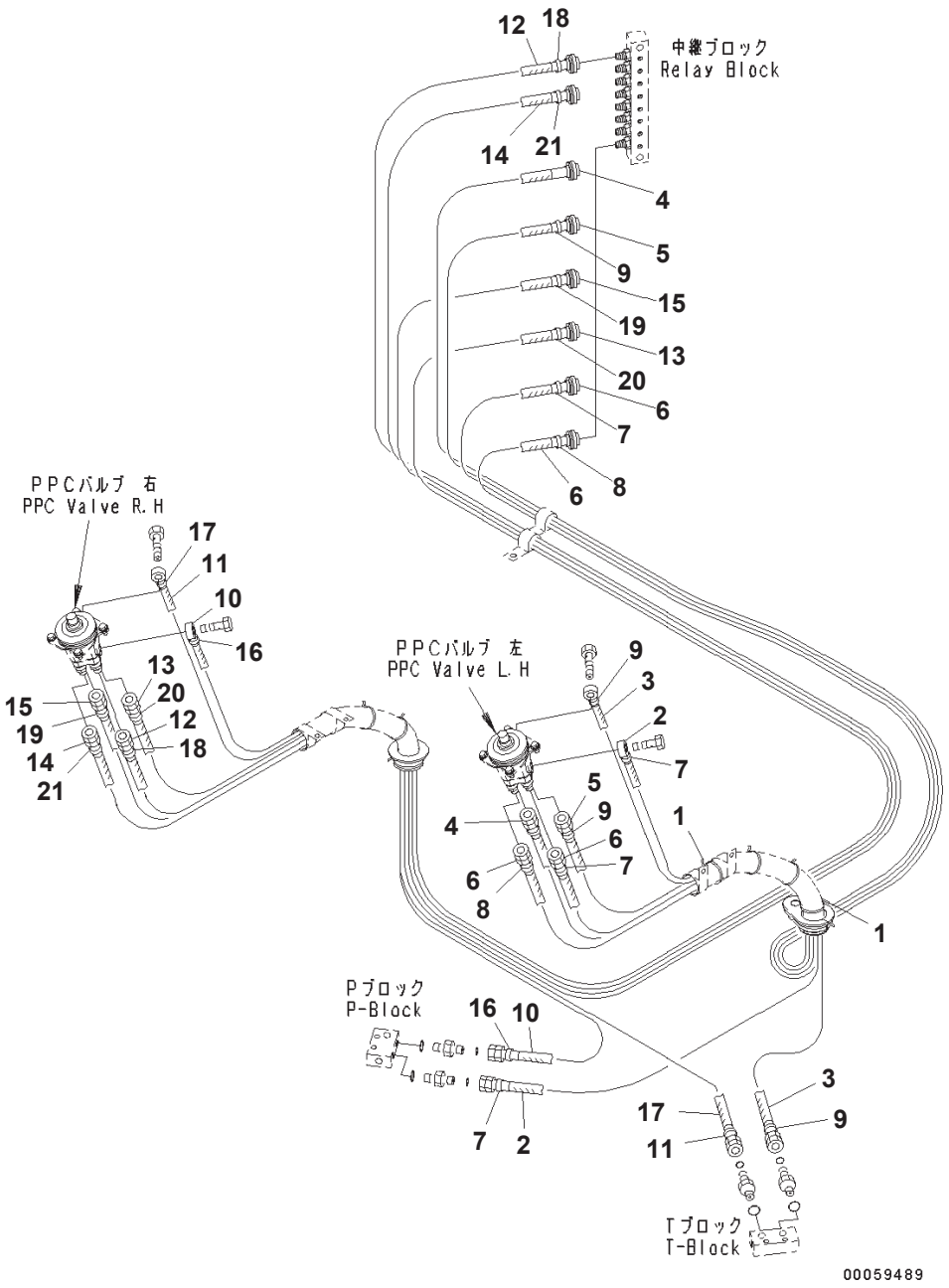

Cab, EOPS Cabin Front Fix, 1-actuator, With AM-FM Radio, With Master Key, For KOMTRAX, Floor, P.P.C. Piping For Pilot Valve

Index	Part Number	Description	Qty	Options
1	08034-20536	Band	2	SN:B10001--
2	20Y-62-53410	Hose, L=1500mm	1	SN:B10001--
3	20Y-62-53420	Hose, L=1350mm	1	SN:B10001--
4	207-62-72690	Hose, L=3700mm	1	SN:B10001--
5	207-62-75810	Hose, L=3650mm	1	SN:B10001--
6	207-62-75820	Hose, L=3550mm	2	SN:B10001--
7	20Y-62-22790	Band, Red	4	SN:B10001--
8	20Y-62-22810	Band, Yellow	2	SN:B10001--
9	20Y-62-22820	Band, Blue	4	SN:B10001--
10	20Y-62-42251	Hose, L=1250mm	1	SN:B10001--
11	208-62-72870	Hose, L=1500mm	1	SN:B10001--
12	207-62-72670	Hose, L=3300mm	1	SN:B10001--
13	20Y-62-42271	Hose, L=3150mm	1	SN:B10001--
14	20Y-62-42290	Hose, L=3300mm	1	SN:B10001--
15	21N-62-36790	Hose, L=3200mm	1	SN:B10001--
16	20Y-62-22790	Band, Red	2	SN:B10001--
17	20Y-62-22820	Band, Blue	2	SN:B10001--
18	20Y-62-22830	Band, White	2	SN:B10001--
19	20Y-62-22840	Band, Black	2	SN:B10001--
20	20Y-62-22850	Band, Green	2	SN:B10001--
21	20Y-62-22860	Band, Brown	2	SN:B10001--

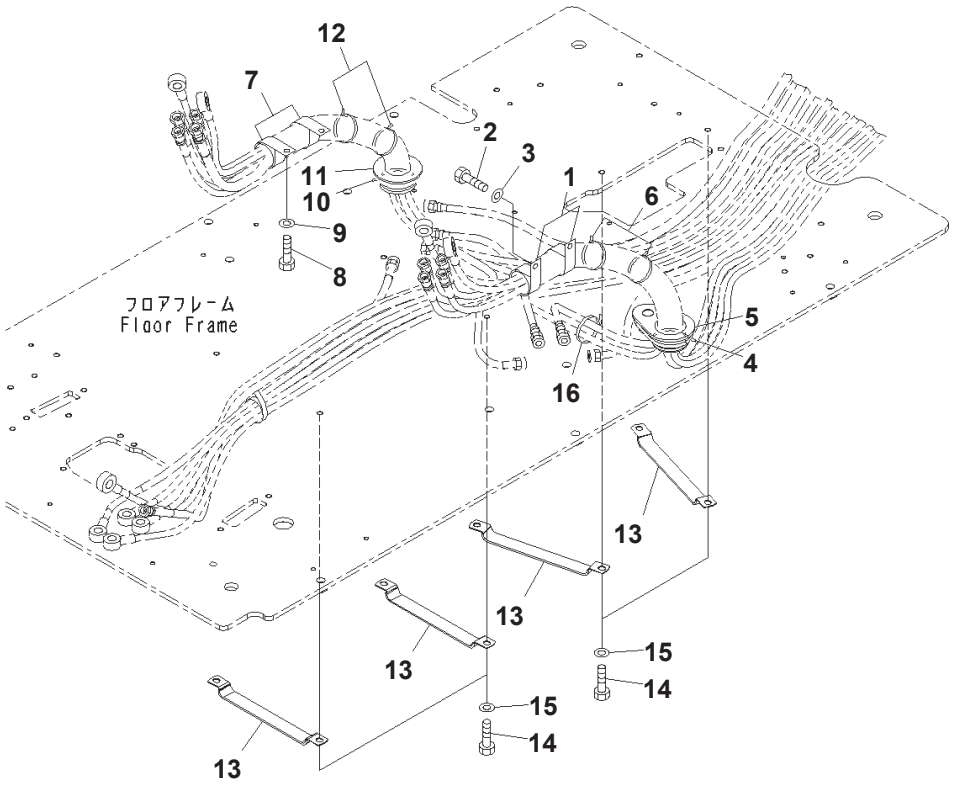

Cab, EOPS Cabin Front Fix, 1-actuator, With AM-FM Radio, With Master Key, For KOMTRAX, Floor, P.P.C. Hose Clamp

Index	Part Number	Description	Qty	Options
1	208-06-19170	Clip	2	SN:B10001--
2	01010-81025	Bolt	2	SN:B10001--
3	01643-31032	Washer	2	SN:B10001--
4	08034-20536	Band	2	SN:B10001--
5	207-53-14140	Grommet	1	SN:B10001--
6	08034-20536	Band	2	SN:B10001--
7	04434-53411	Clip	2	SN:B10001--
8	01010-81025	Bolt	2	SN:B10001--
9	01643-31032	Washer	2	SN:B10001--
10	08034-20536	Band	2	SN:B10001--
11	20Y-54-65121	Grommet	1	SN:B10001--
12	08034-20536	Band	2	SN:B10001--
13	20Y-62-27770	Clamp	4	SN:B10001--
14	01010-81016	Bolt	8	SN:B10001--
15	01643-31032	Washer	8	SN:B10001--
16	08034-20536	Band	1	SN:B10001--

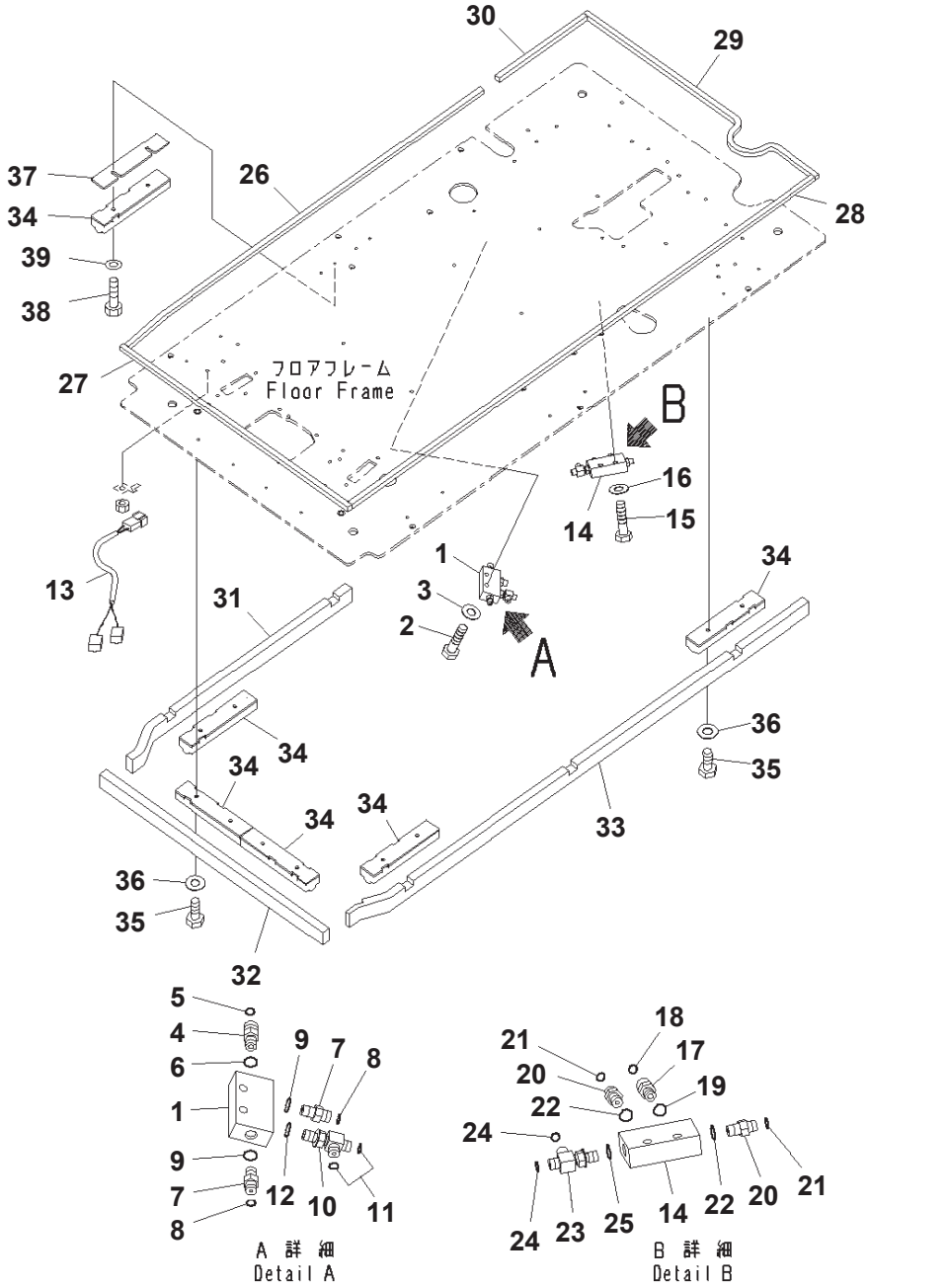

Cab, EOPS Cabin Front Fix, 1-actuator, With AM-FM Radio, With Master Key, For KOMTRAX, Floor, P, T
Block And Seal

Index	Part Number	Description	Qty	Options
1	20Y-62-15831	Block	1	SN:B10001--
2	01010-81045	Bolt	2	SN:B10001--
3	01643-31032	Washer	2	SN:B10001--
4	02781-0031D	Union	1	SN:B10001--
5	02896-11009	O-ring	1	SN:B10001--
6	07002-11423	O-ring	1	SN:B10001--
7	02781-0021D	Union	2	SN:B10001--
8	02896-11008	O-ring	2	SN:B10001--
9	07002-11423	O-ring	2	SN:B10001--
10	11Y-62-12330	Tee	1	SN:B10001--
11	02896-11008	O-ring	2	SN:B10001--
12	07002-11423	O-ring	1	SN:B10001--
13	20Y-06-41251	Wire Harness	1	SN:B10001--
14	20Y-62-15831	Block	1	SN:B10001--
15	01010-81045	Bolt	2	SN:B10001--
16	01643-31032	Washer	2	SN:B10001--
17	02781-0031D	Union	1	SN:B10001--
18	02896-11009	O-ring	1	SN:B10001--
19	07002-11423	O-ring	1	SN:B10001--
20	02781-0021D	Union	2	SN:B10001--
21	02896-11008	O-ring	2	SN:B10001--
22	07002-11423	O-ring	2	SN:B10001--
23	11Y-62-12330	Tee	1	SN:B10001--
24	02896-11008	O-ring	2	SN:B10001--
25	07002-11423	O-ring	1	SN:B10001--
26	20Y-53-14910	Seal	1	SN:B10001--
27	20Y-53-14920	Seal	1	SN:B10001--
28	20Y-53-14930	Seal	1	SN:B10001--
29	20Y-53-14940	Seal	1	SN:B10001--
30	20Y-53-14950	Seal	1	SN:B10001--
31	20Y-53-14963	Sheet	1	SN:B10001--
32	20Y-53-14973	Sheet	1	SN:B10001--
33	20Y-53-14983	Sheet	1	SN:B10001--
34	20Y-53-14831	Sheet	6	SN:B10001--
35	01010-80830	Bolt	10	SN:B10001--
36	01643-30823	Washer	10	SN:B10001--
37	20Y-53-14841	Plate	1	SN:B10001--
38	01010-80840	Bolt	2	SN:B10001--
39	01643-30823	Washer	2	SN:B10001--

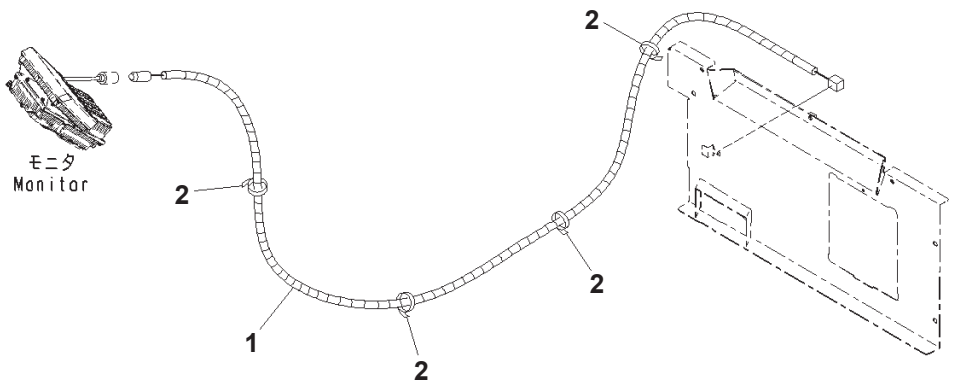

Cab, EOPS Cabin Front Fix, 1-actuator, With AM-FM Radio, With Master Key, For KOMTRAX, Floor, Rear Camera Cable

Index	Part Number	Description	Qty	Options
1	20Y-06-42320	Cable	1	SN:B10001--
2	08034-20519	Band	4	SN:B10001--

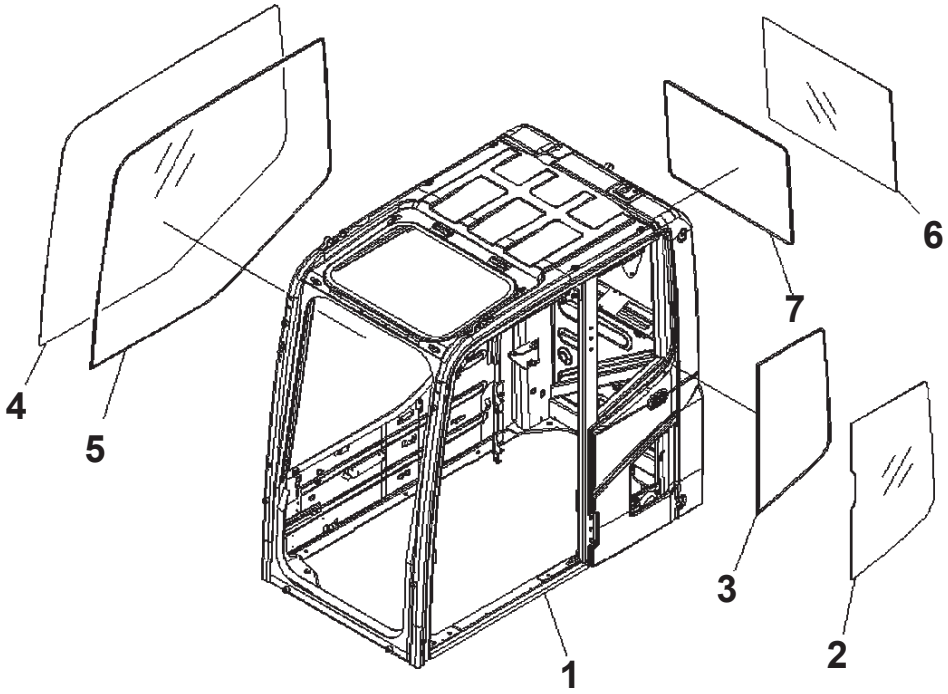

Cab, EOPS Cabin Front Fix, With AM-FM Radio, With Master Key, For KOMTRAX, Cab And Window (#B10172-)

Index	Code	Part Number	Description	Qty	Options
		208-53-00851	Cab Assembly	1	SN:B10172--
1	C1		・Cab	1	SN:B10172--
2		20Y-53-11241	・Glass	1	SN:B10172--
3		20Y-53-11260	・Seal	1	SN:B10172--
4		20Y-53-11841	・Glass	1	SN:B10172--
5		20Y-53-11850	・Seal	1	SN:B10172--
6		20Y-53-11271	・Glass	1	SN:B10172--
7		20Y-53-11250	・Seal	1	SN:B10172--

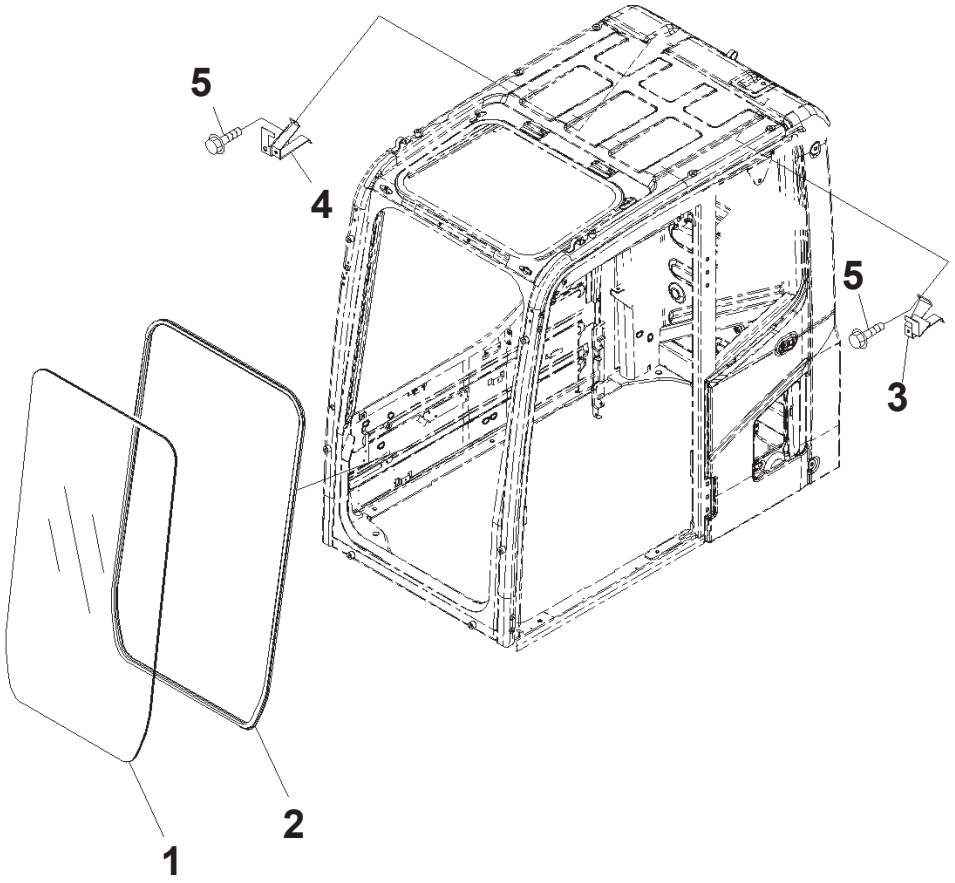

Cab, EOPS Cabin Front Fix, With AM-FM Radio, With Master Key, For KOMTRAX, Front Window (#B10172-)

Index	Part Number	Description	Qty	Options
	208-53-00851	Cab Assembly	1	SN:B10172--
1	208-53-23330	・ Glass	1	SN:B10172--
2	208-53-23341	・ Weather Strip	1	SN:B10172--
3	20Y-53-11581	・ Bracket	1	SN:B10172--
4	20Y-53-11641	・ Bracket	1	SN:B10172--
5	01435-00612	・ Bolt	4	SN:B10172--

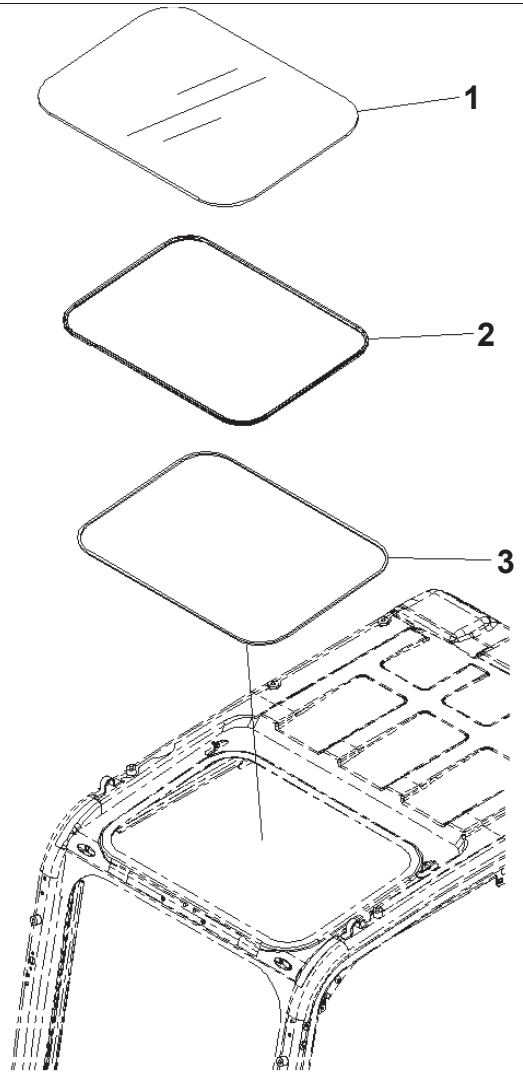

00040715

Cab, EOPS Cabin Front Fix, With AM-FM Radio, With Master Key, For KOMTRAX, Roof Window (#B10172-)

Index	Part Number	Description	Qty	Options
	208-53-00851	Cab Assembly	1	SN:B10172--
1	20Y-53-13770	· Plate	1	SN:B10172--
2	20Y-53-13741	· Trim	1	SN:B10172--
3	20Y-53-13790	· Seal	1	SN:B10172--

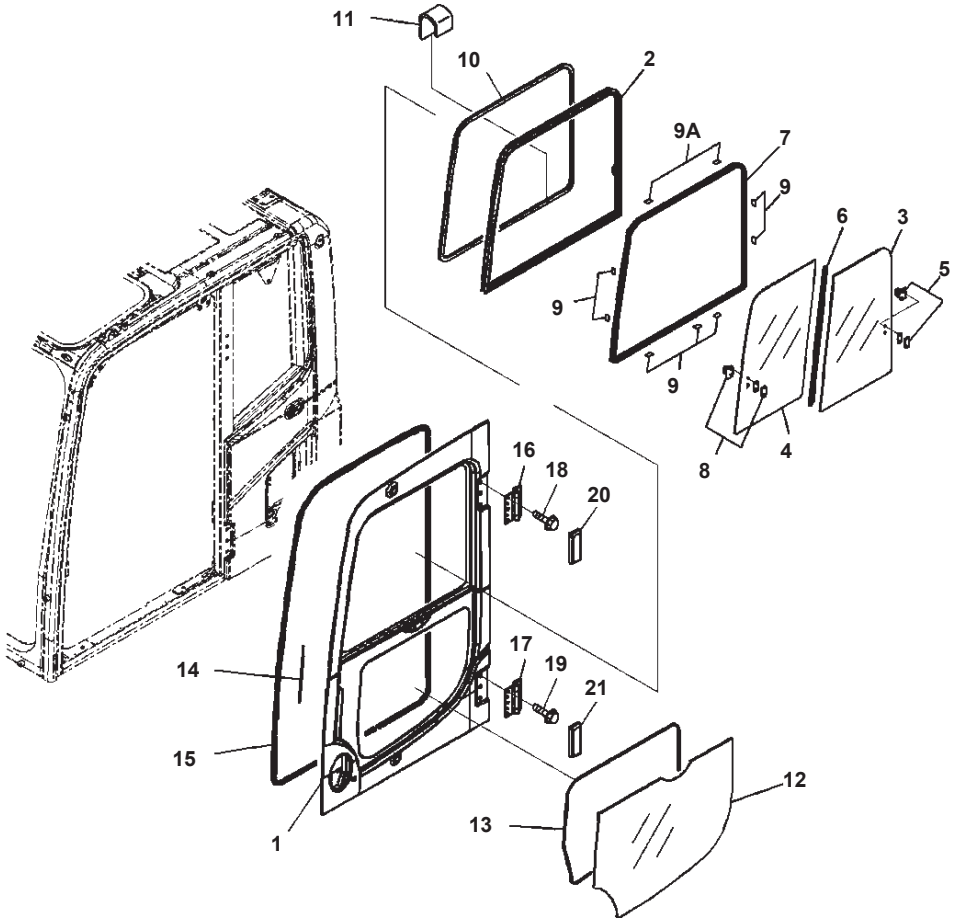

Cab, EOPS Cabin Front Fix, With AM-FM Radio, With Master Key, For KOMTRAX, Door (#B10172-)

Index	Code	Part Number	Description	Qty	Options
		208-53-00851	Cab Assembly	1	SN:B10172--
		20Y-53-00072	・ Door Assembly	1	SN:B10172--
1	C1		・・ Door	1	SN:B10172--
		20Y-53-11402	・・ Sash Assembly	1	SN:B10172--
2	C1		・・・ Sash	1	SN:B10172--
3		20Y-53-12840	・・・ Glass	1	SN:B10172--
4		20Y-53-12850	・・・ Glass	1	SN:B10172--
5		20Y-54-52860	・・・ Lock Assembly	1	SN:B10172--
6		20Y-53-12870	・・・ Seal	1	SN:B10172--
7		20Y-53-12880	・・・ Seal	1	SN:B10172--
8		20Y-54-13322	・・・ Lock Assembly	1	SN:B10172--
9		20Y-53-12971	・・ Seat	7	SN:B10218--
	A2	20Y-53-12971	・・ Seat	9	SN:B10172--B10217
9A		20Y-54-13180	・・ Seat	2	SN:B10218--
10		20Y-53-11470	・・ Trim	1	SN:B10172--
11		20Y-53-13910	・・ Cover	1	SN:B10172--
12		20Y-53-11451	・・ Glass	1	SN:B10172--
13		20Y-53-11460	・・ Seal	1	SN:B10172--
14		20Y-53-13880	・・ Seal	1	SN:B10172--
15		20Y-53-11484	・・ Weather Strip	1	SN:B10172--
16		20Y-53-11332	・・ Hinge	1	SN:B10172--
17		20Y-53-11332	・・ Hinge	1	SN:B10172--
18		01435-01220	・・ Bolt	6	SN:B10172--
19		01435-01220	・・ Bolt	6	SN:B10172--
20		20Y-53-11411	・・ Cover	1	SN:B10172--
21		20Y-53-11421	・・ Cover	1	SN:B10172--

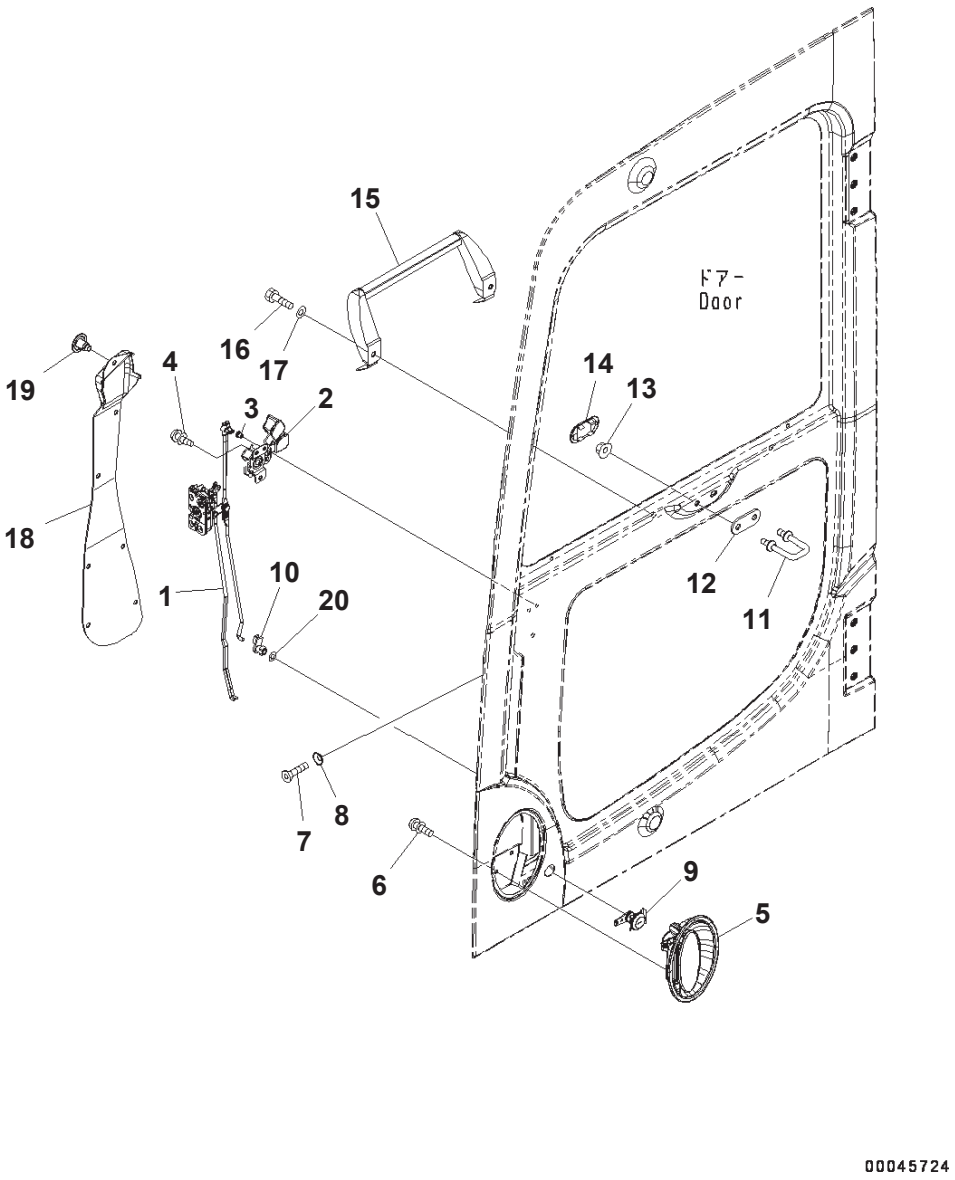

Cab, EOPS Cabin Front Fix, With AM-FM Radio, With Master Key, For KOMTRAX, Door Lock (#B10172-)

Index	Code	Part Number	Description	Qty	Options
		208-53-00851	Cab Assembly	1	SN:B10172--
		20Y-53-00072	・ Door Assembly	1	SN:B10172--
1		20Y-53-12201	・・ Latch Assembly	1	SN:B10172--
2		20Y-54-52300	・・ Handle Assembly	1	SN:B10172--
3		22B-54-16340	・・・ Snap	1	SN:B10172--
4		01023-10612	・・ Screw	3	SN:B10172--
5		20Y-53-12991	・・ Handle	1	SN:B10172--
6		01023-10612	・・ Screw	3	SN:B10172--
7		01240-00616	・・ Screw	3	SN:B10172--
8		195-Z11-1690	・・ Washer	3	SN:B10172--
9		20Y-54-52820	・・ Lock Assembly	1	SN:B10172--
10		22B-54-16330	・・ Snap	1	SN:B10172--
11		20Y-53-11320	・・ Striker	1	SN:B10172--
12		20Y-53-12940	・・ Plate	1	SN:B10172--
13		01584-01008	・・ Nut	2	SN:B10172--
14		20Y-53-12661	・・ Cover	1	SN:B10172--
15		2A5-53-13130	・・ Grip	1	SN:B10247--
	A2	20Y-54-51393	・・ Grip	1	SN:B10172-- -.
16		01010-80820	・・ Bolt	2	SN:B10172--
17		01643-30823	・・ Washer	2	SN:B10172--
18		20Y-53-11441	・・ Cover	1	SN:B10172--
19		22B-54-16461	・・ Rivet	7	SN:B10172--
20		145-Z79-6270	・・ Washer	1	SN:B10172--

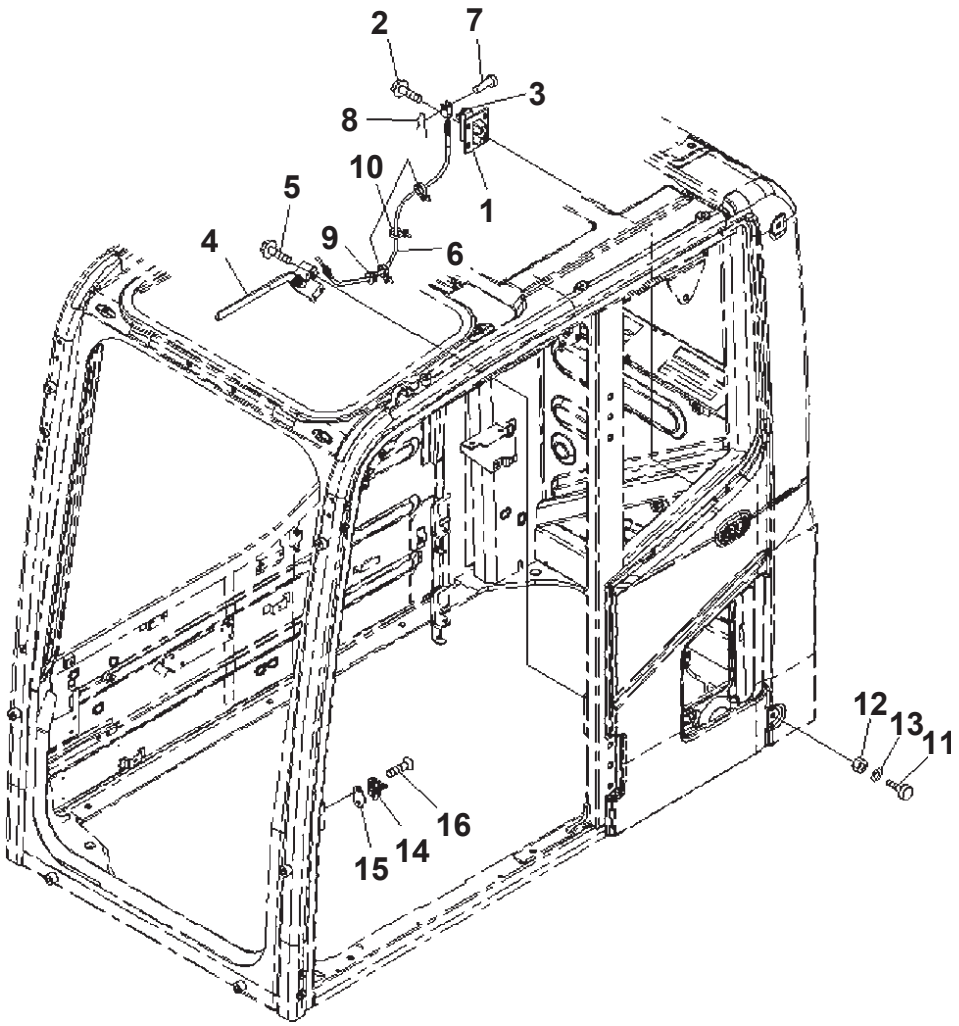

PC350LC-8 S/N B10001-UP
Cab, EOPS Cabin Front Fix, With AM-FM Radio, With Master Key, For KOMTRAX, Open Lock and Door Catch (#B10172-)

Index	Part Number	Description	Qty	Options
	208-53-00851	Cab Assembly	1	SN:B10172--
1	20Y-53-11981	・ Lock	1	SN:B10172--
2	01435-40825	・ Bolt	4	SN:B10172--
3	20Y-53-12280	・ Cover	1	SN:B10172--
4	208-53-14540	・ Lever Assembly	1	SN:B10172--
5	01435-40616	・ Bolt	3	SN:B10172--
6	20Y-53-11990	・ Cable	1	SN:B10172--
7	04205-10520	・ Pin	1	SN:B10172--
8	04052-10530	・ Pin	1	SN:B10172--
9	08034-20414	・ Band	1	SN:B10172--
10	08059-00413	・ Clip	2	SN:B10172--
11	20Y-54-11611	・ Stopper	2	SN:B10172--
12	01580-11008	・ Nut	2	SN:B10172--
13	01643-31032	・ Washer	2	SN:B10172--
14	208-53-22810	・ Striker	1	SN:B10172--
15	20Y-53-11890	・ Plate	1	SN:B10172--
16	01240-01025	・ Screw	2	SN:B10172--

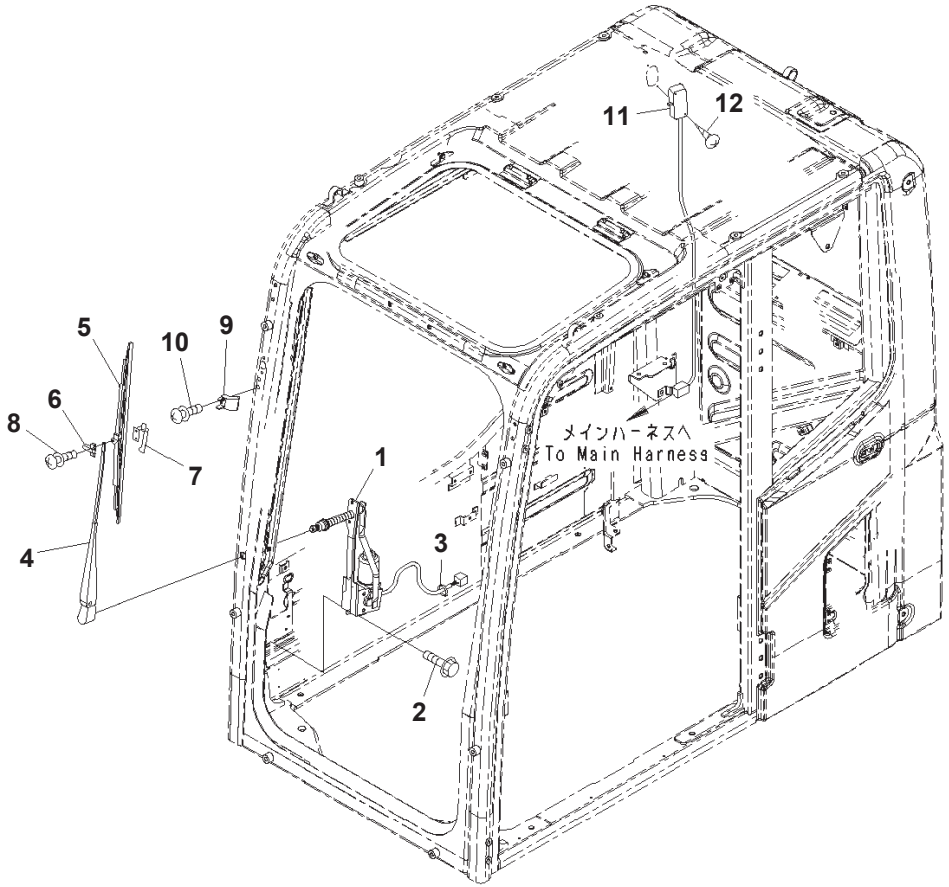

Cab, EOPS Cabin Front Fix, With AM-FM Radio, With Master Key, For KOMTRAX, Wiper and Room Lamp (#B10172-)

Index	Code	Part Number	Description	Qty	Options
		208-53-00851	Cab Assembly	1	SN:B10172--
1		20Y-54-52211	・ Wiper Motor Assembly	1	SN:B10172--
2		01435-00616	・ Bolt	6	SN:B10172--
3		08034-20414	・ Band	1	SN:B10172--
		20Y-54-52221	・ Wiper Assembly	1	SN:B10172--
4		20Y-54-52350	・・ Arm	1	SN:B10172--
5		20Y-54-39450	・・ Blade	1	SN:B10172--
6		20Y-54-39460	・・ Slider	1	SN:B10172--
7		20Y-54-39480	・・ Plate	1	SN:B10172--
8		ND949007-2350	・・ Screw and Washer	2	SN:B10172--
9		20Y-53-12232	・ Stopper	1	SN:B10172--
10		01023-20620	・ Screw	2	SN:B10172--
11		2A5-53-13540	・ Lamp Assembly	1	SN:B10386--
	A2	20Y-53-12790	・ Light	1	SN:B10172--B10385
		08116-02410	・・ Bulb, 10watt	1	SN:B10172--
12		01370-00420	・ Screw	2	SN:B10172--

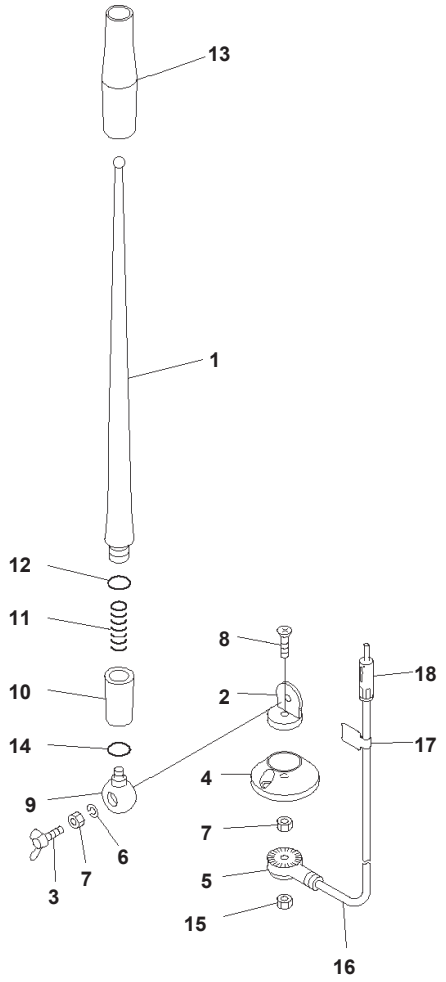

Cab, EOPS Cabin Front Fix, With AM-FM Radio, With Master Key, For KOMTRAX, Rubber Antenna (#B10172-)

Index	Code	Part Number	Description	Qty	Options
		208-53-00851	Cab Assembly	1	SN:B10172--
		20Y-06-41990	・Rubber Antenna	1	SN:B10172--
1		RFU419B-418-A	・・Rod	1	SN:B10172--
2	C1		・・Holder	1	SN:B10172--
3		RFU419B-418-D	・・Bolt, Wing	1	SN:B10172--
4		RFU419B-418-E	・・Base	1	SN:B10172--
5	C1		・・Holder	1	SN:B10172--
6		RFU419B-418-B	・・Washer, Spring	1	SN:B10172--
7		RFU419B-418-C	・・Nut	2	SN:B10172--
8	C1		・・Screw	1	SN:B10172--
9	C1		・・Holder	1	SN:B10172--
10	C1		・・Holder Assembly	1	SN:B10172--
11	C1		・・Spring	1	SN:B10172--
12	C1		・・O-ring	1	SN:B10172--
13	C1		・・Tube	1	SN:B10172--
14	C1		・・O-ring	1	SN:B10172--
15		REU419B-418-C	・・Nut	1	SN:B10172--
16		RFU419B-418-F	・・Cable	1	SN:B10172--
17	C1		・・Plate	1	SN:B10172--
18	C1		・・Plug	1	SN:B10172--

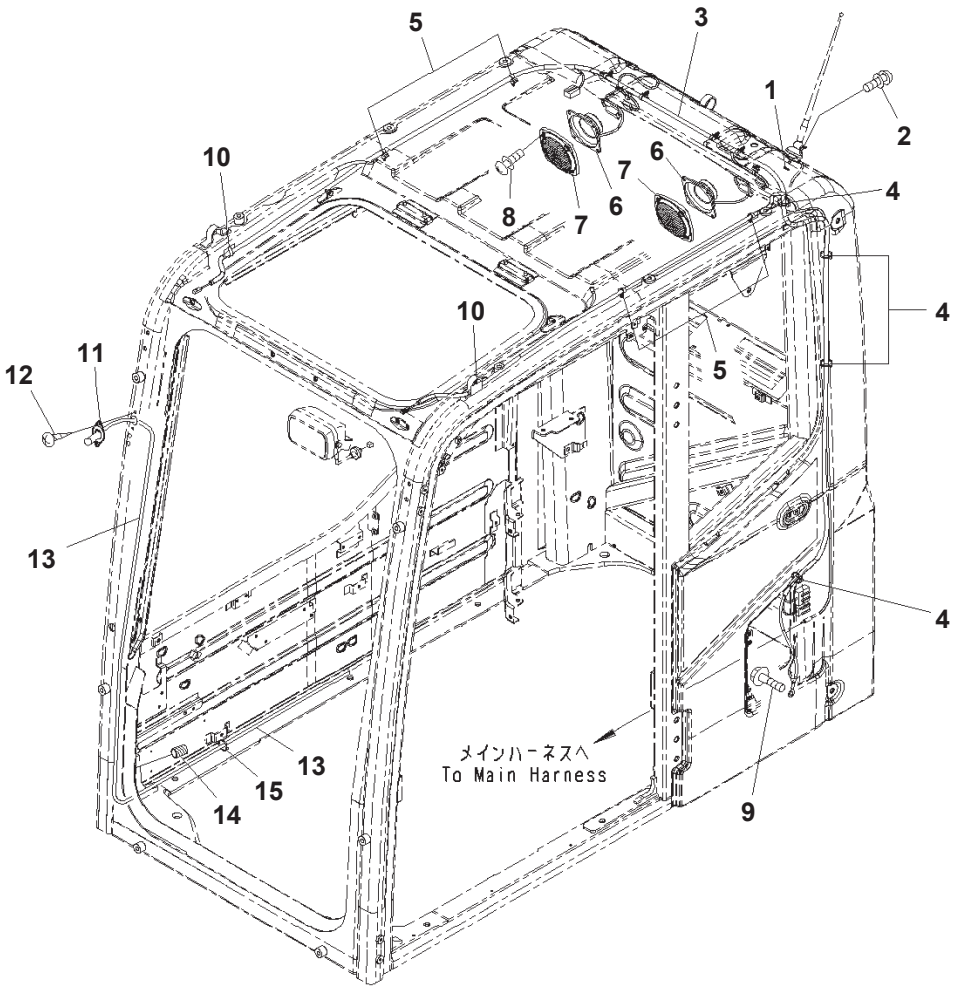

JY002309

PC350LC-8 S/N B10001-UP
Cab, EOPS Cabin Front Fix, With AM-FM Radio, With Master Key, For KOMTRAX, Speaker and Window Washer (#B10172-)

Index	Code	Part Number	Description	Qty	Options
		208-53-00851	Cab Assembly	1	SN:B10172--
1		01643-30623	・ Washer	1	SN:B10172--
2		01023-20412	・ Screw	2	SN:B10172--
3		20Y-06-41141	・ Wire Harness	1	SN:B10172--
4		08034-20414	・ Band	4	SN:B10172--
5		08059-00413	・ Clip	8	SN:B10172--
6		20Y-06-42180	・ Speaker	2	SN:B10172--
7		20Y-53-13190	・ Cover	2	SN:B10353--
	A2	20Y-53-12221	・ Cover	2	SN:B10172--B10352
8		01023-20416	・ Screw	8	SN:B10172--
9		01435-40812	・ Bolt	1	SN:B10172--
10		08051-00801	・ Clip	2	SN:B10172--
11		20Y-54-39511	・ Nozzle	1	SN:B10172--
12		01023-70412	・ Screw	2	SN:B10172--
13		195-979-7770	・ Hose	1	SN:B10172--
14		08017-B0701	・ Conduit	1	SN:B10172--
15		08034-20414	・ Band	1	SN:B10172--

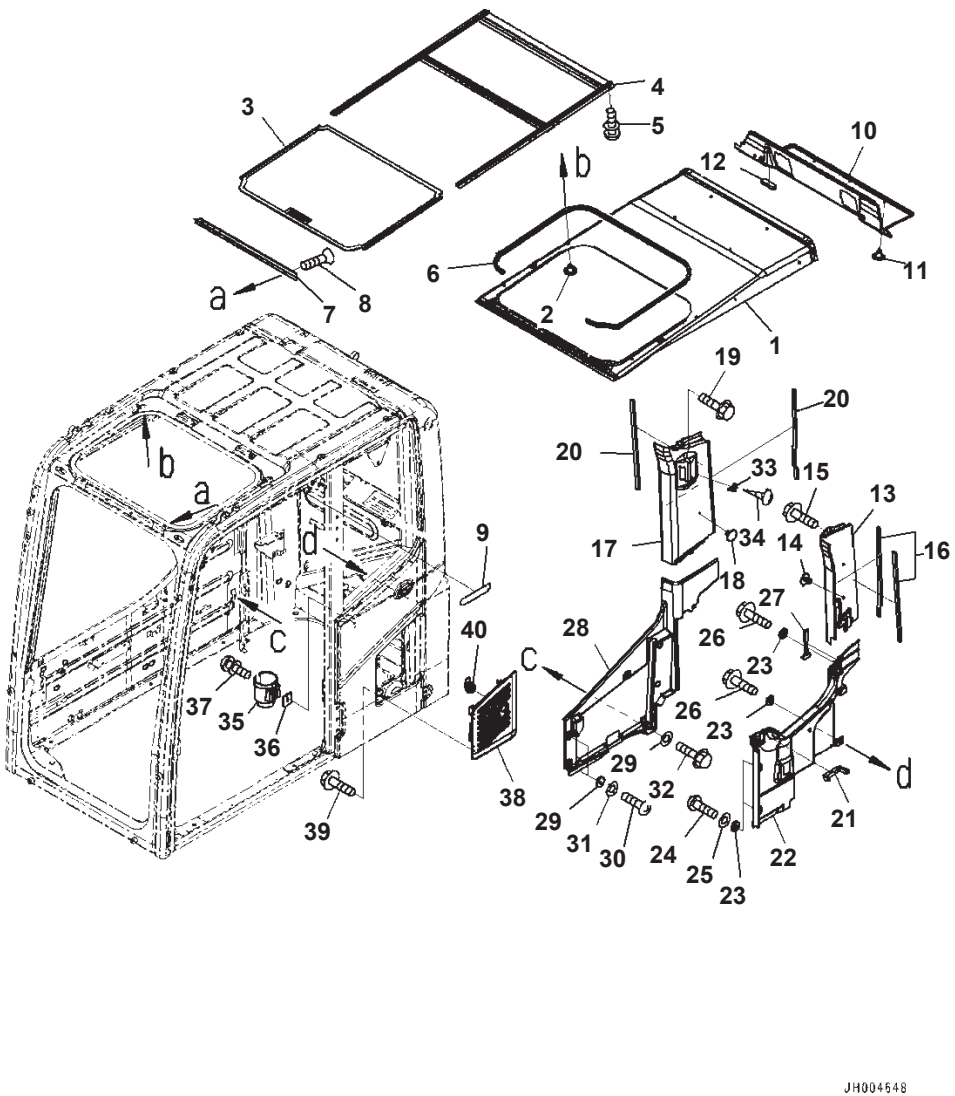

Cab, EOPS Cabin Front Fix, With AM-FM Radio, With Master Key, For KOMTRAX, Roof Cover and Air Intake (#B10172-)

Index	Part Number	Description	Qty	Options
	208-53-00851	Cab Assembly	1	SN:B10172--
1	20Y-53-13712	・ Cover	1	SN:B10172--
2	09416-10200	・ Button	18	SN:B10172--
	20Y-53-13722	・ Cover Assembly	1	SN:B10172--
3	20Y-53-13732	・・ Cover	1	SN:B10172--
4	20Y-53-13781	・・ Rail	1	SN:B10172--
5	01023-10410	・ Screw	6	SN:B10172--
6	20Y-53-13751	・ Trim	1	SN:B10172--
7	20Y-53-13763	・ Plate	1	SN:B10172--
8	01224-70408	・ Screw, Philips Head	2	SN:B10172--
9	205-53-22140	・ Seal	1	SN:B10172--
10	208-53-23420	・ Cover	1	SN:B10172--
11	20Y-53-13870	・ Seal	1	SN:B10172--
12	09416-10200	・ Button	3	SN:B10172--
13	20Y-53-12431	・ Cover	1	SN:B10172--
14	208-53-13270	・ Rivet	2	SN:B10172--
15	01435-00612	・ Bolt	1	SN:B10172--
16	20Y-53-12710	・ Seal	2	SN:B10172--
17	208-53-23440	・ Cover	1	SN:B10172--
18	09416-10200	・ Button	1	SN:B10172--
19	01435-00612	・ Bolt	1	SN:B10172--
20	20Y-53-12710	・ Seal	2	SN:B10172--
21	20Y-53-12552	・ Seal	1	SN:B10172--
22	20Y-53-12463	・ Cover	1	SN:B10172--
23	20Y-53-12310	・ Collar	4	SN:B10172--
24	01245-00616	・ Screw, Hexagon Socket Head	2	SN:B10172--
25	01643-70623	・ Washer	2	SN:B10172--
26	01435-00612	・ Bolt	2	SN:B10172--
27	22B-54-17380	・ Hammer	1	SN:B10172--
28	20Y-53-12472	・ Cover	1	SN:B10172--
29	20Y-53-12310	・ Collar	5	SN:B10172--
30	01245-00616	・ Screw, Hexagon Socket Head	3	SN:B10172--
31	01643-70623	・ Washer	3	SN:B10172--
32	01435-00612	・ Bolt	2	SN:B10172--
33	205-54-51250	・ Hanger	1	SN:B10172--
34	01370-30416	・ Screw	2	SN:B10172--
35	208-53-12991	・ Holder	1	SN:B10172--
36	208-53-12980	・ Plate	1	SN:B10172--
37	01023-20616	・ Screw	2	SN:B10172--
38	20Y-53-11752	・ Cover	1	SN:B10172--
39	01435-40610	・ Bolt	4	SN:B10172--
40	20Y-53-11761	・ Lock Assembly	1	SN:B10172--

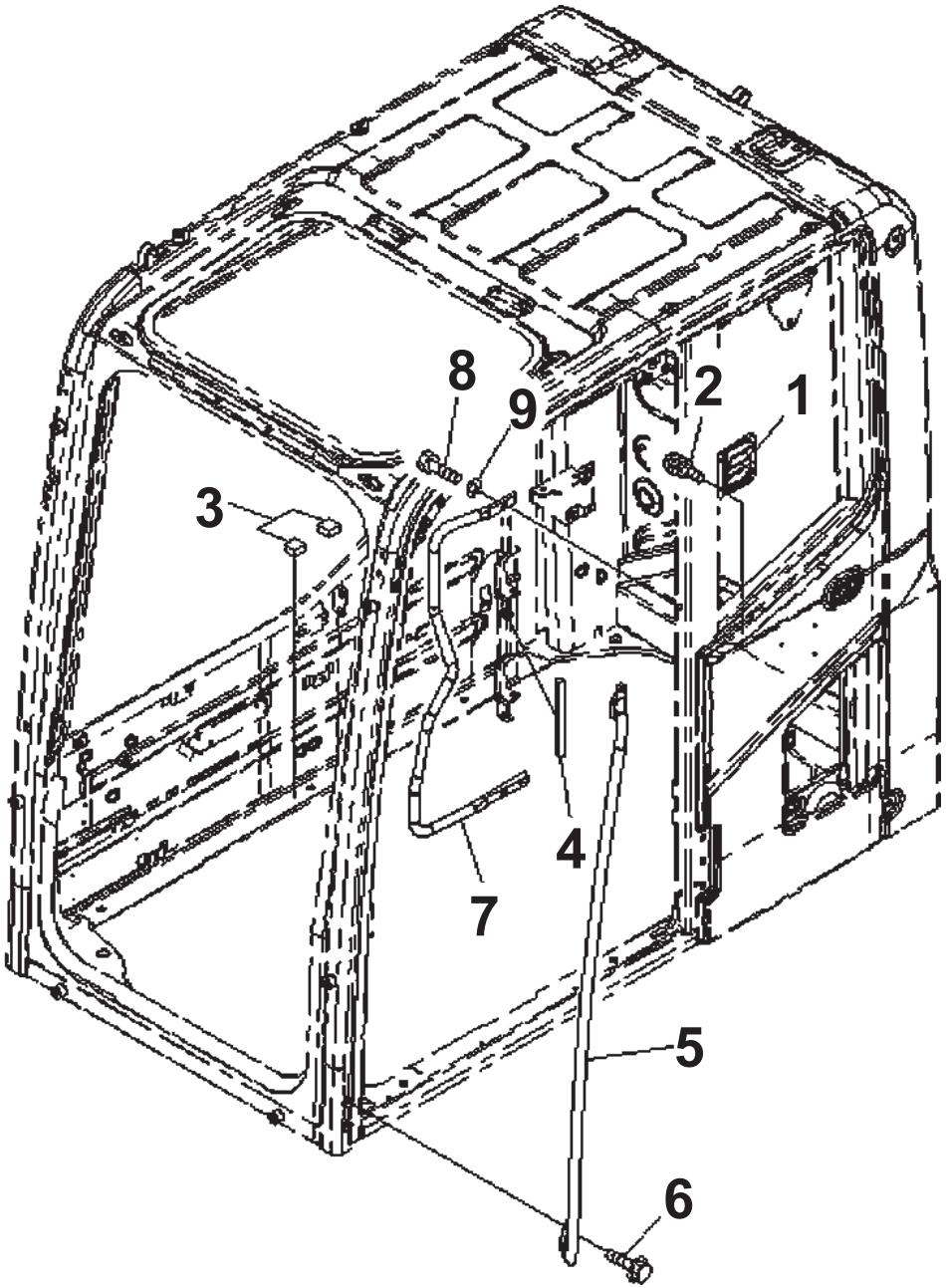

Cab, EOPS Cabin Front Fix, With AM-FM Radio, With Master Key, For KOMTRAX, Pressure Valve and Grip (#B10172-)

Index	Code	Part Number	Description	Qty	Options
		208-53-00851	Cab Assembly	1	SN:B10172--
1		20Y-53-11961	・ Valve Assembly	1	SN:B10172--
2		01023-60512	・ Screw	4	SN:B10172--
3		20Y-53-13490	・ Rubber	2	SN:B10172--
4		20Y-53-12591	・ Seal	1	SN:B10172--
5		20Y-53-11821	・ Grip	1	SN:B10172--
6		01435-40825	・ Bolt	4	SN:B10172--
7		2A5-53-13140	・ Grip	1	SN:B10353--
	A2	20Y-53-11831	・ Grip	1	SN:B10172--B10352
8		01010-D1030	・ Bolt	3	SN:B10353--
	A2	01010-D1025	・ Bolt	3	SN:B10172--B10352
9		01643-71032	・ Washer	3	SN:B10172--

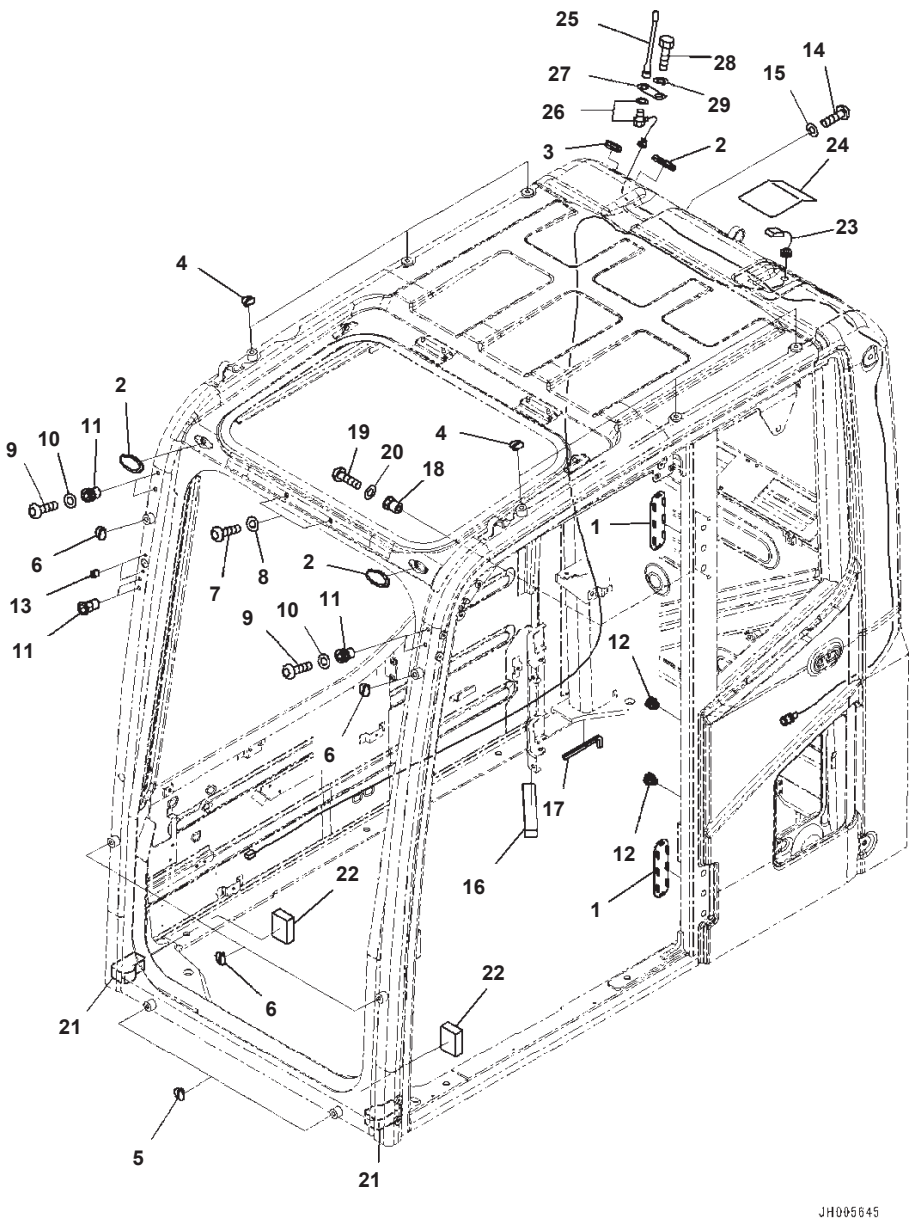

Cab, EOPS Cabin Front Fix, With AM-FM Radio, With Master Key, For KOMTRAX KOMTRAX, Film Antenna and ORBCOM Type (#B10172-)

Index	Part Number	Description	Qty	Options
	208-53-00851	Cab Assembly	1	SN:B10172--
1	20Y-53-12960	· Cover	2	SN:B10172--
2	22B-54-17282	· Cap	3	SN:B10172--
3	09415-02512	· Cap	1	SN:B10172--
4	20Y-53-11390	· Cap	6	SN:B10172--
5	20Y-53-11390	· Cap	2	SN:B10172--
6	20Y-53-11380	· Cap	4	SN:B10172--
7	01245-01016	· Screw, Hexagon Socket Head	2	SN:B10172--
8	01643-71032	· Washer	2	SN:B10172--
9	01245-00616	· Screw, Hexagon Socket Head	4	SN:B10172--
10	01643-70623	· Washer	4	SN:B10172--
11	20Y-53-12260	· Nut	6	SN:B10172--
12	20Y-54-35451	· Nut	2	SN:B10172--
13	20Y-53-12320	· Nut	2	SN:B10172--
14	01245-01016	· Screw, Hexagon Socket Head	1	SN:B10172--
15	01643-71032	· Washer	1	SN:B10172--
16	20Y-53-12580	· Seal	1	SN:B10172--
17	20Y-53-12740	· Trim	1	SN:B10172--
18	20Y-53-12270	· Nut	2	SN:B10172--
19	01245-00816	· Screw, Hexagon Socket Head	2	SN:B10172--
20	01643-70823	· Washer	2	SN:B10172--
21	20Y-53-18880	· Seal	2	SN:B10172--
22	20Y-53-18940	· Seal	2	SN:B10172--
23	8A13-10-4320	· Antenna	1	SN:B10172--
24	20Y-53-12951	· Cover	1	SN:B10172--
25	8A13-10-2100	· Antenna	1	SN:B10172--
26	8A13-10-2200	· Cable	1	SN:B10172--
27	20Y-53-15140	· Plate	1	SN:B10172--
28	01010-D1225	· Bolt	1	SN:B10172--
29	01643-71232	· Washer	1	SN:B10172--

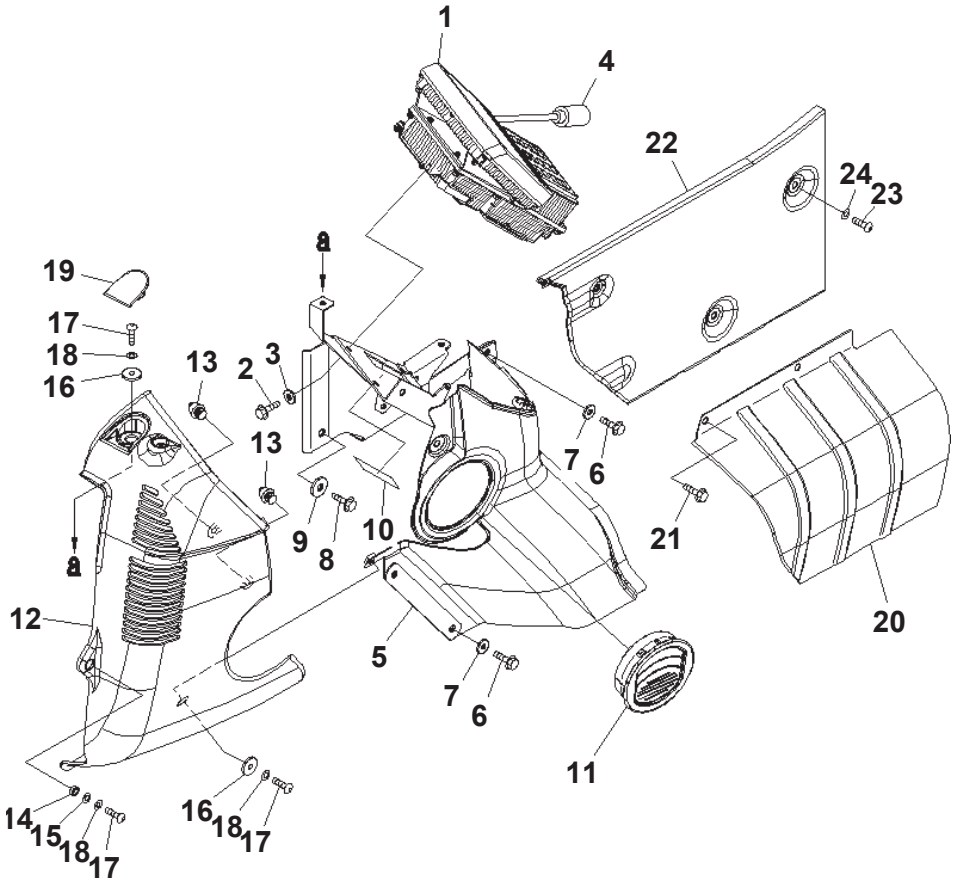

Cab, EOPS Cabin Front Fix, With AM-FM Radio, With Master Key, For KOMTRAX, Cab In Parts, Monitor And Cover (#B10172-)

Index	Part Number	Description	Qty	Options
1	7835-31-5009	Monitor	1	SN:B10172--
2	01435-00616	Bolt	4	SN:B10172--
3	209-72-12230	Washer	4	SN:B10172--
4	20Y-53-12810	Cover	1	SN:B10172--
5	20Y-53-12154	Cover	1	SN:B10172--
6	01435-00616	Bolt	4	SN:B10172--
7	209-72-12230	Washer	4	SN:B10172--
8	01435-00820	Bolt	1	SN:B10172--
9	208-53-11330	Washer	1	SN:B10172--
10	20Y-00-41330	Plate	1	SN:B10172--
11	20Y-53-12172	Grille	1	SN:B10172--
12	20Y-53-12122	Cover	1	SN:B10172--
13	22U-54-25360	・ Clip	2	SN:B10172--
14	205-54-75240	Collar	1	SN:B10172--
15	01643-70823	Washer	1	SN:B10172--
16	20Y-53-12310	Collar	2	SN:B10172--
17	01245-00616	Screw, Hexagon Socket Head	3	SN:B10172--
18	01643-70623	Washer	3	SN:B10172--
19	20Y-53-12291	Cap	1	SN:B10172--
20	20Y-53-12161	Cover	1	SN:B10172--
21	01435-00616	Bolt	2	SN:B10172--
22	20Y-53-12483	Cover	1	SN:B10172--
23	01245-00616	Screw, Hexagon Socket Head	3	SN:B10172--
24	01643-70623	Washer	3	SN:B10172--

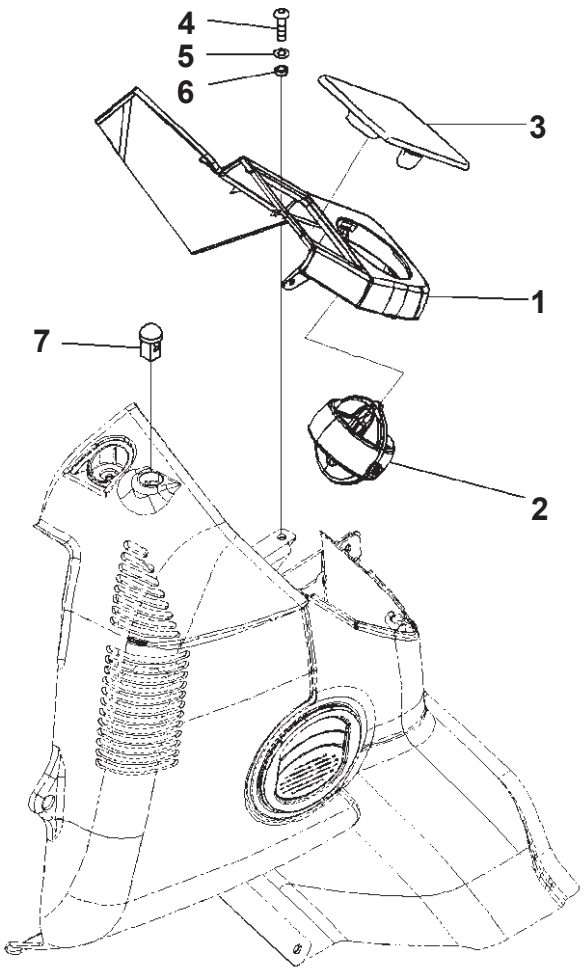

モニタカバー
Monitor Cover

JH004557

Cab, EOPS Cabin Front Fix, With AM-FM Radio, With Master Key, For KOMTRAX, Cab In Parts, Monitor Cover (#B10172-)

Index	Part Number	Description	Qty	Options
1	20Y-53-12111	Cover	1	SN:B10172--
2	20Y-53-12240	Louver	1	SN:B10172--
3	20Y-53-14230	Cap	1	SN:B10172--
4	01245-00616	Screw, Hexagon Socket Head	1	SN:B10172--
5	01643-70623	Washer	1	SN:B10172--
6	20Y-43-41290	Collar	1	SN:B10172--
7	20Y-979-6161	Sensor	1	SN:B10172--

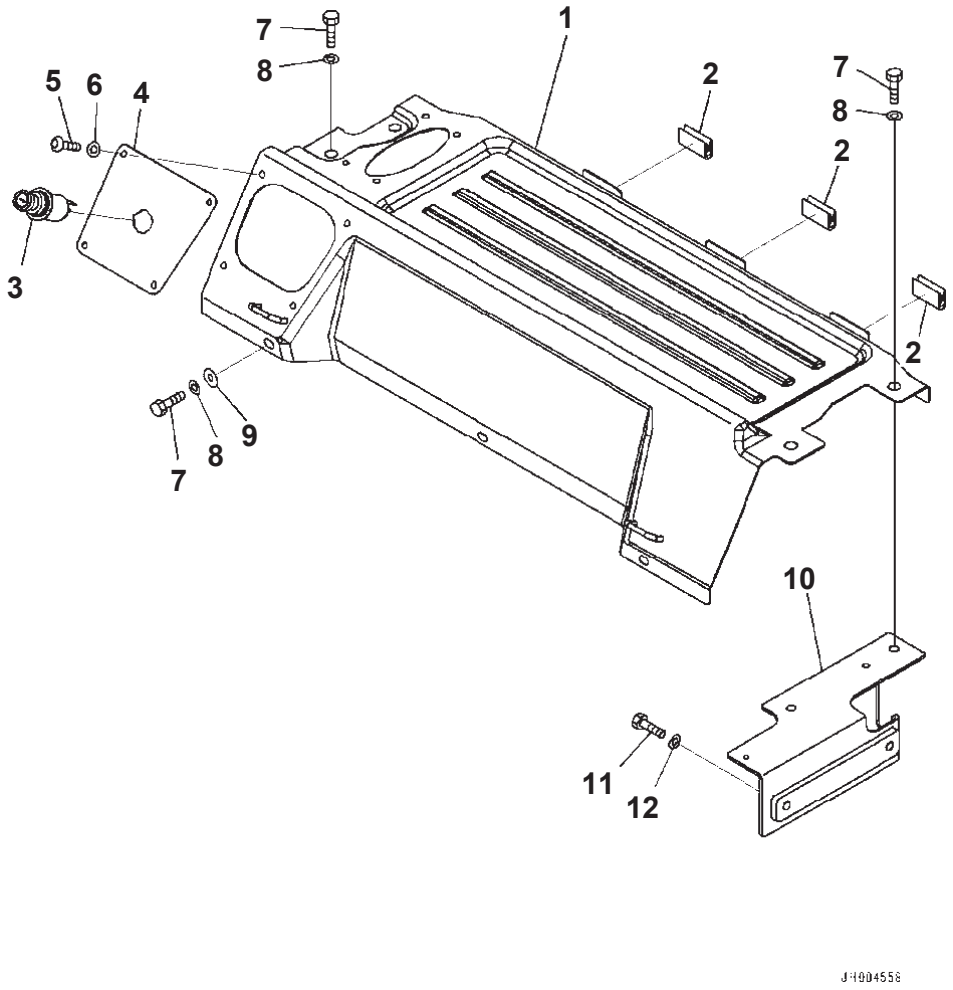

Cab, EOPS Cabin Front Fix, With AM-FM Radio, With Master Key, For KOMTRAX, Cab In Parts, Luggage Plate (#B10172-)

Index	Code	Part Number	Description	Qty	Options
		20Y-53-13617	Cover Assembly	1	SN:B10172--
1	C1		・ Cover	1	SN:B10172--
2		208-53-12460	・ Seat	3	SN:B10172--
3		20Y-06-23472	Cigarrete Lighter	1	SN:B10172--
4		20Y-53-13680	Plate	1	SN:B10172--
5		01245-00616	Screw, Hexagon Socket Head	4	SN:B10172--
6		01643-70623	Washer	4	SN:B10172--
7		01010-D0825	Bolt	7	SN:B10172--
8		01643-70823	Washer	7	SN:B10172--
9		418-54-35450	Washer	3	SN:B10172--
10		20Y-53-12771	Plate	1	SN:B10172--
11		01010-D0825	Bolt	2	SN:B10172--
12		01643-70823	Washer	2	SN:B10172--

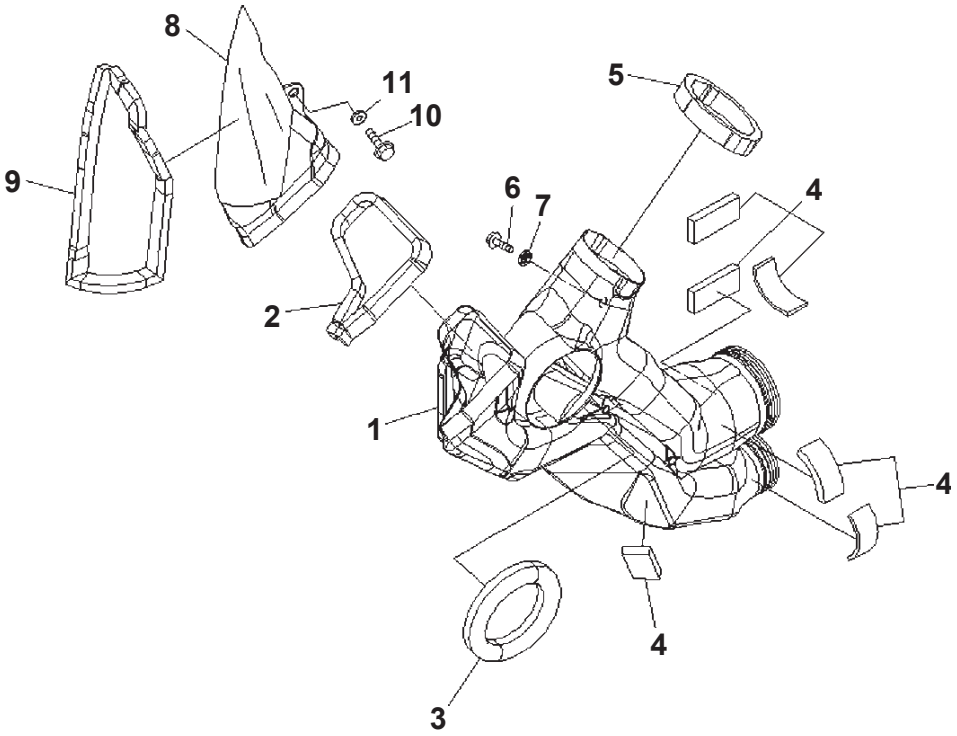

Cab, EOPS Cabin Front Fix, With AM-FM Radio, With Master Key, For KOMTRAX, Cab In Parts, Monitor Duct (#B10172-)

Index	Part Number	Description	Qty	Options
1	20Y-53-13371	Duct	1	SN:B10172--
2	20Y-53-13480	Seal	1	SN:B10172--
3	20Y-53-13280	Seal	1	SN:B10172--
4	208-53-12440	Seal	6	SN:B10172--
5	208-53-11941	Seal	1	SN:B10172--
6	01435-00612	Bolt	1	SN:B10172--
7	20Y-53-12310	Collar	1	SN:B10172--
8	20Y-53-13421	Duct	1	SN:B10172--
9	208-53-11920	Seal	1	SN:B10172--
10	01435-00612	Bolt	1	SN:B10172--
11	20Y-53-12310	Collar	1	SN:B10172--

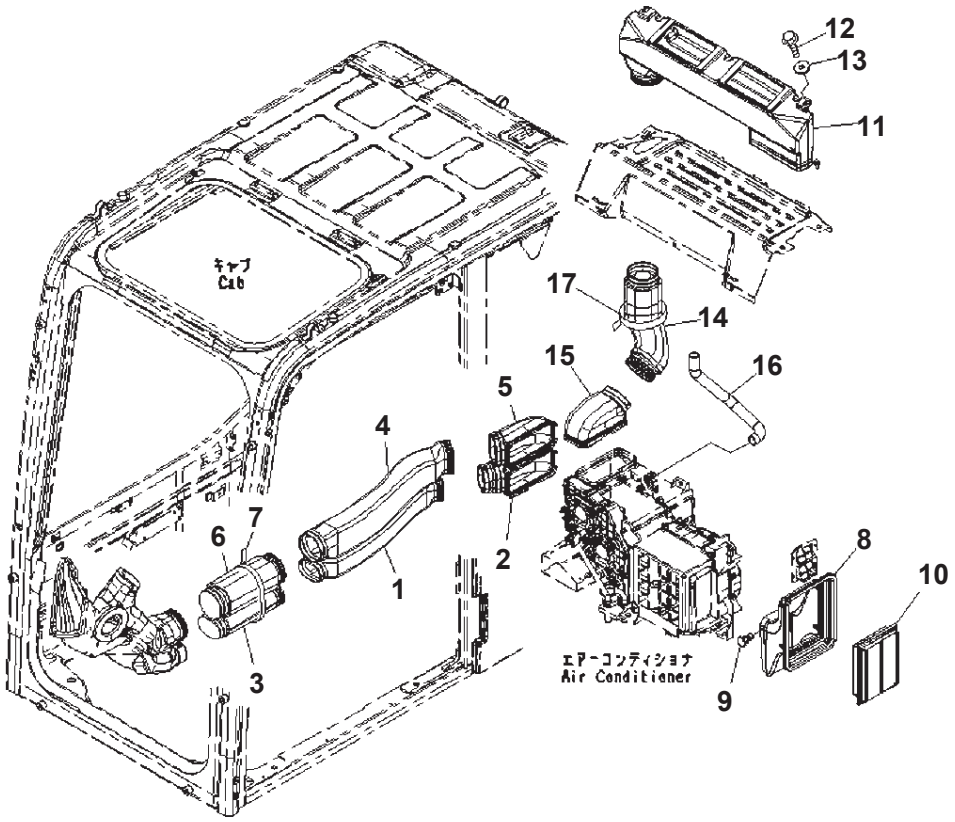

Cab, EOPS Cabin Front Fix, With AM-FM Radio, With Master Key, For KOMTRAX, Cab In Parts, Air Duct, With Air Condition (#B10172-)

Index	Part Number	Description	Qty	Options
1	20Y-53-13311	Duct	1	SN:B10172--
2	20Y-53-13331	Duct	1	SN:B10172--
3	20Y-53-13351	Duct	1	SN:B10172--
4	20Y-53-13321	Duct	1	SN:B10172--
5	20Y-53-13341	Duct	1	SN:B10172--
6	20Y-53-13361	Duct	1	SN:B10172--
7	08034-20876	Band	1	SN:B10172--
8	20Y-53-12522	Duct	1	SN:B10172--
9	208-53-12680	Clip	1	SN:B10172--
10	17M-911-3530	Element	1	SN:B10172--
11	20Y-53-13451	Duct	1	SN:B10172--
12	01435-40616	Bolt	2	SN:B10172--
13	20Y-53-12310	Collar	2	SN:B10172--
14	20Y-53-13461	Duct	1	SN:B10172--
15	208-53-12120	Duct	1	SN:B10172--
16	208-53-12432	Hose	1	SN:B10172--
17	08034-20876	Band	1	SN:B10172--

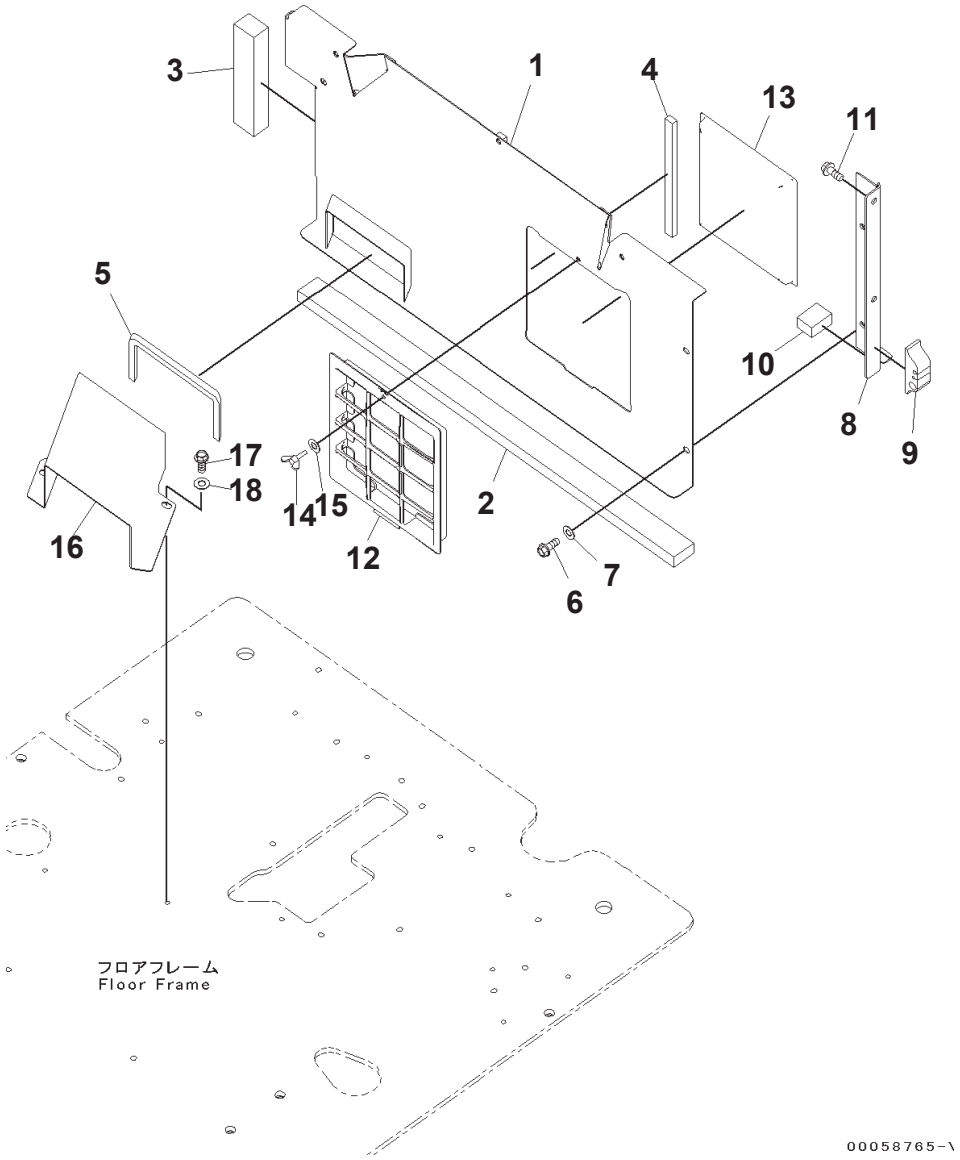

Cab, EOPS Cabin Front Fix, With AM-FM Radio, With Master Key, For KOMTRAX, Cab In Parts, Partition And Filter, With Air Conditio

Index	Part Number	Description	Qty	Options
1	20Y-53-12565	Bracket	1	SN:B10172--
2	20Y-53-11870	Seal	1	SN:B10172--
3	20Y-53-11880	Seal	1	SN:B10172--
4	208-53-11890	Seal	1	SN:B10172--
5	208-53-12230	Seal	1	SN:B10172--
6	01435-40820	Bolt	3	SN:B10172--
7	418-54-35450	Washer	3	SN:B10172--
8	20Y-53-12781	Plate	1	SN:B10172--
9	20Y-53-12751	Seal	1	SN:B10172--
10	20Y-53-12760	Seal	1	SN:B10172--
11	01435-40820	Bolt	2	SN:B10172--
12	208-979-7530	Holder	1	SN:B10172--
13	208-979-7620	Filter	1	SN:B10172--
14	20Y-54-65790	Bolt	1	SN:B10172--
15	20Y-54-65690	Washer	1	SN:B10172--
16	208-53-12551	Duct	1	SN:B10172--
17	01010-D0820	Bolt	2	SN:B10172--
18	01643-70823	Washer	2	SN:B10172--

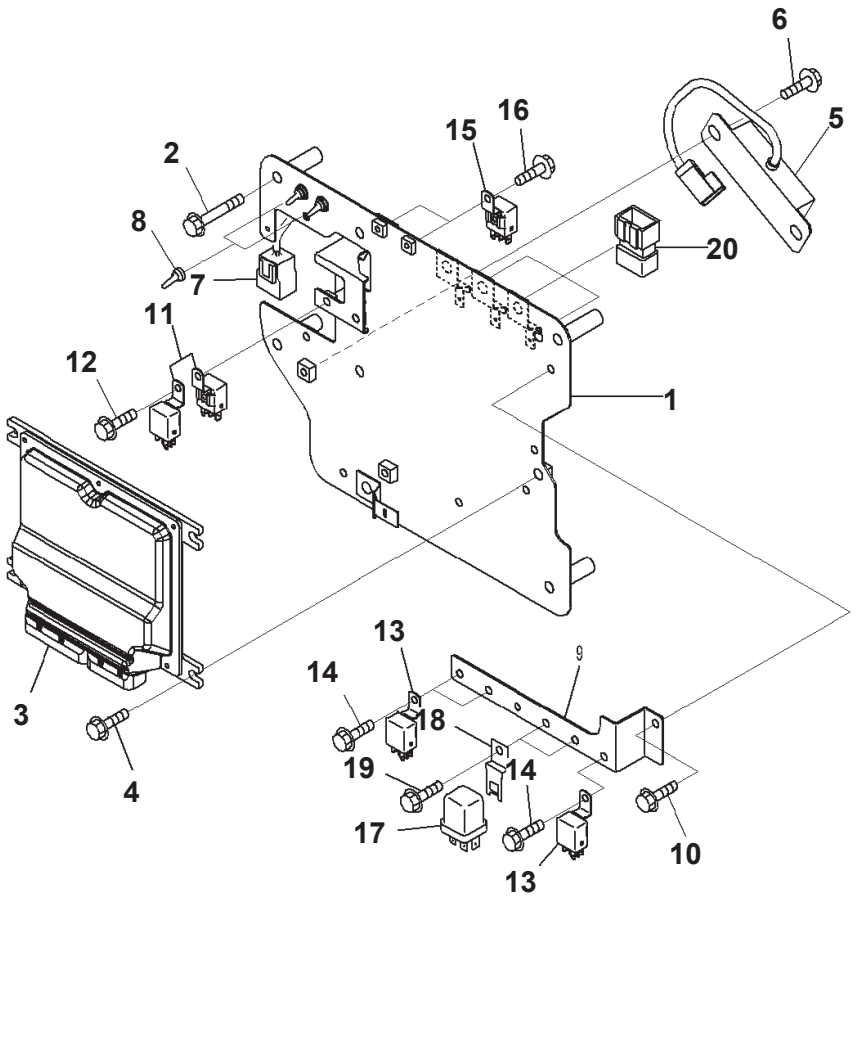

Cab, EOPS Cabin Front Fix, With AM-FM Radio, With Master Key, For KOMTRAX Cab In Parts, Sub Plate And Relay (#B10172-)

Index	Code	Part Number	Description	Qty	Options
1		20Y-53-14812	Bracket	1	SN:B10172--
2		01435-00860	Bolt	4	SN:B10172--
3		7835-46-3006	Controller	1	SN:B10398--
	A2	7835-46-3005	Controller	1	SN:B10247--B10397
	A2	7835-46-3004	Controller	1	SN:B10218--B10246
	A2	7835-46-3003	Controller	1	SN:B10172--B10217
4		01435-00820	Bolt	4	SN:B10172--
5		7861-94-2000	Resistor	1	SN:B10172--
6		01435-00820	Bolt	2	SN:B10172--
7		20Y-06-41151	Wire Harness	1	SN:B10218--
	A2	20Y-06-41150	Wire Harness	1	SN:B10172--B10217
8		208-43-71420	Cap	2	SN:B10172--
9		20Y-53-18211	Bracket	1	SN:B10172--
10		01435-00610	Bolt	1	SN:B10172--
11		7861-74-5100	Relay	2	SN:B10172--
12		01435-00610	Bolt	1	SN:B10172--
13		7861-74-5100	Relay	3	SN:B10172--
14		01435-00610	Bolt	3	SN:B10172--
15		7861-74-5100	Relay	2	SN:B10172--
16		01435-00610	Bolt	2	SN:B10172--
17		569-06-61960	Relay	2	SN:B10172--
18		287-06-16420	Bracket	2	SN:B10172--
19		01435-00610	Bolt	2	SN:B10172--
20		8233-06-3350	Diode	3	SN:B10172--

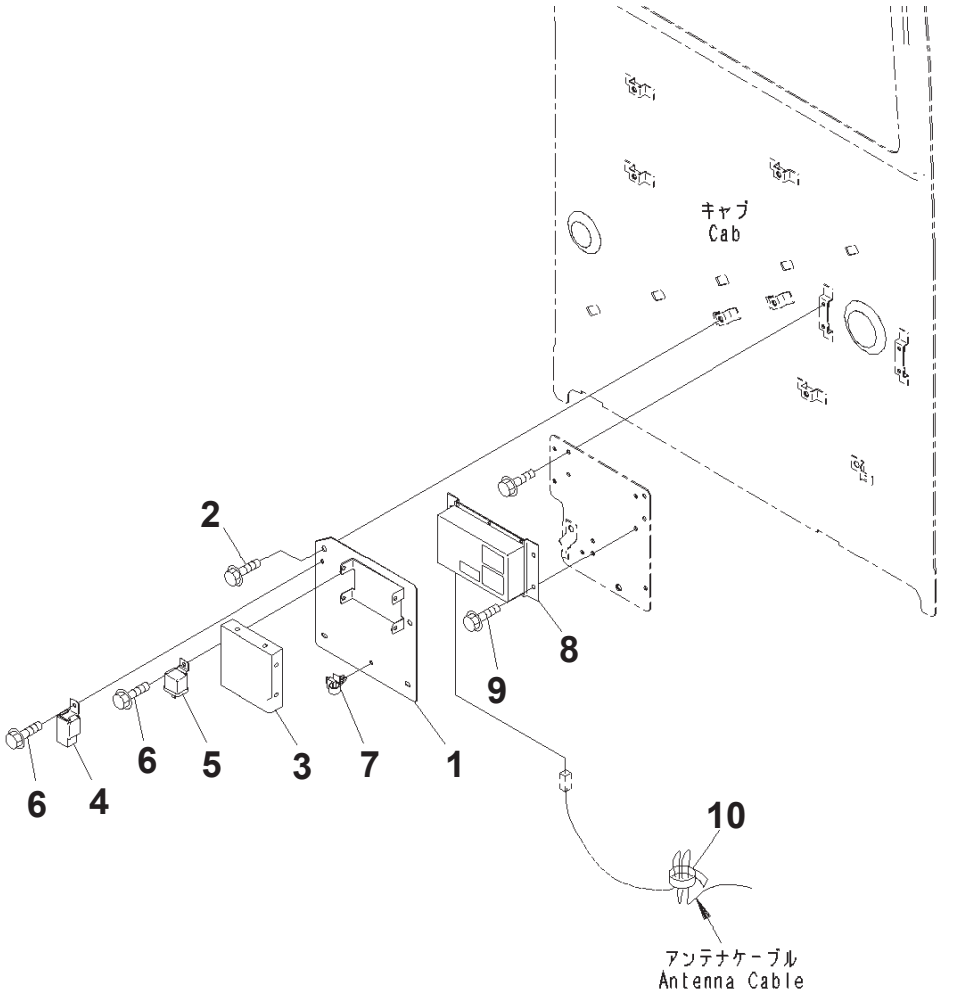

Cab, EOPS Cabin Front Fix, With AM-FM Radio, With Master Key, For KOMTRAX, Cab In Parts, Air Conditioner And KOMTRAX Controller

Index	Code	Part Number	Description	Qty	Options
1		20Y-53-14821	Plate	1	SN:B10247---
	A2	20Y-53-14820	Plate	1	SN:B10172--B10246
2		01435-40812	Bolt	2	SN:B10172--
3		17A-979-3180	Controller	1	SN:B10172--
4		421-07-31270	Relay	1	SN:B10172--
5		20Y-979-6771	Relay	1	SN:B10247--
6		01435-00610	Bolt	2	SN:B10172--
7		08059-00515	Clip	1	SN:B10172--
8		7826-23-3017	Controller, ORBCOMM Type	1	SN:B10385--
	A2	7826-23-3016	Controller, ORBCOMM Type	1	SN:B10381--B10384
	A2	7826-23-3014	Controller, ORBCOMM Type	1	SN:B10373--B10380
	A2	7826-23-3012	Controller, ORBCOMM Type	1	SN:B10172--B10372
9		01435-00612	Bolt	4	SN:B10172--
10		08034-20414	Band	1	SN:B10172--

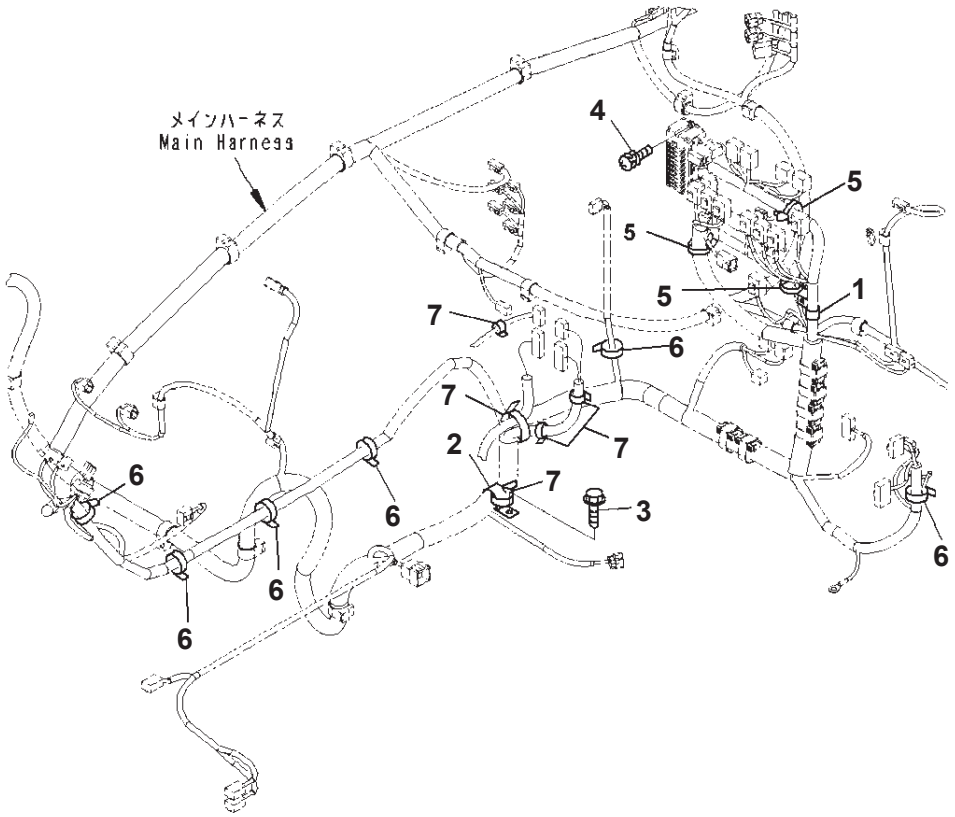

Cab, EOPS Cabin Front Fix, With AM-FM Radio, With Master Key, For KOMTRAX, Cab In Parts, Main Harness Clamp (#B10172-)

Index	Part Number	Description	Qty	Options
1	04434-53411	Clip	1	SN:B10172--
2	04434-51708	Clip	1	SN:B10172--
3	01435-00816	Bolt	1	SN:B10172--
4	01023-60620	Screw	2	SN:B10172--
5	08059-00515	Clip	3	SN:B10172--
6	08034-20414	Band	6	SN:B10172--
7	08034-20519	Band	5	SN:B10172--

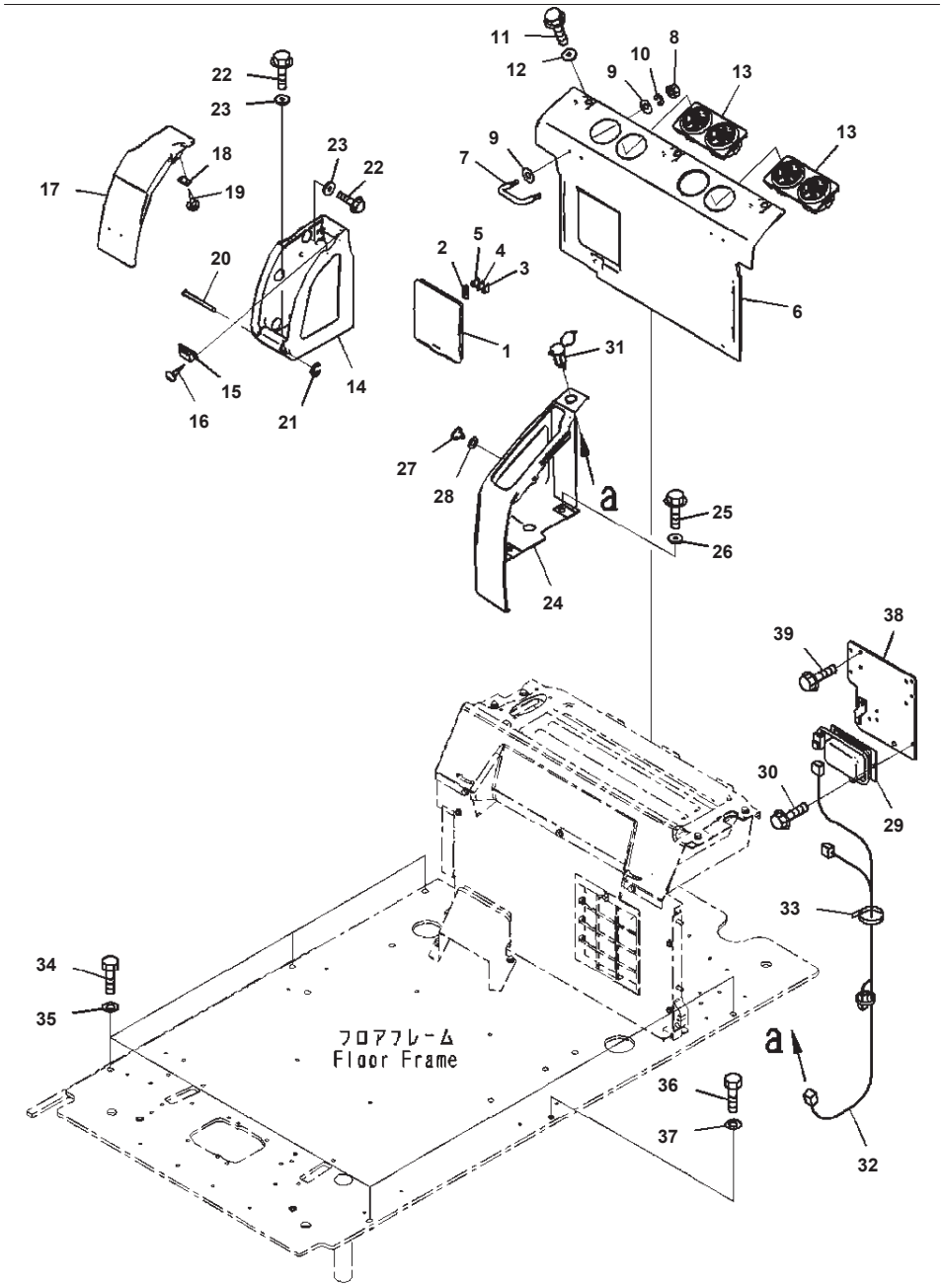

Index	Code	Part Number	Description	Qty	Options
		20Y-53-13631	Cover Assembly	1	SN:B10172--
1	C1		· Cover	1	SN:B10172--
2		22U-43-22340	· Puller	1	SN:B10172--
3		08041-01000	· Fuse, 10Amp.	1	SN:B10172--
4		08041-02000	· Fuse, 20Amp.	1	SN:B10172--
5		08041-03000	· Fuse, 30Amp.	1	SN:B10172--
6		20Y-53-12371	Cover	1	SN:B10172--
7		208-53-12290	· Hook	2	SN:B10172--
8		01580-10403	· Nut	4	SN:B10172--
9		01640-20408	· Washer, Flat	8	SN:B10172--
10		01601-20410	· Washer	4	SN:B10172--
11		01435-40616	Bolt	3	SN:B10172--
12		20Y-53-12310	Collar	3	SN:B10172--
13		208-979-7560	Grille	2	SN:B10172--
14		20Y-53-12381	Cover	1	SN:B10172--
15		09452-14503	Catcher	1	SN:B10172--
16		01370-10308	Screw	2	SN:B10172--
17		20Y-53-12391	Cover	1	SN:B10172--
18		208-53-12410	Plate	1	SN:B10172--
19		01370-20308	Screw	2	SN:B10172--
20		208-53-12320	Pin	1	SN:B10172--
21		208-53-12330	Ring	1	SN:B10172--
22		01435-40616	Bolt	5	SN:B10172--
23		20Y-53-12310	Collar	5	SN:B10172--
24		20Y-53-12731	Cover	1	SN:B10172--
25		01435-40620	Bolt	2	SN:B10172--
26		20Y-53-12310	Collar	2	SN:B10172--
27		23D-950-4450	Button	1	SN:B10172--
28		20Y-53-12860	Spacer	1	SN:B10172--
29		22U-06-22251	Converter	1	SN:B10172--
30		01435-00610	Bolt	2	SN:B10172--
31		198-Z11-2640	Socket Assembly	1	SN:B10172--
32		20Y-06-41270	Wire Harness	1	SN:B10172--
33		08034-20414	Band	1	SN:B10172--
34		01010-81245	Bolt	5	SN:B10172--
35		01643-31232	Washer	5	SN:B10172--
36		01010-81655	Bolt	1	SN:B10172--
37		01643-31645	Washer	1	SN:B10172--
38		20Y-53-18221	Bracket	1	SN:B10172--
39		01435-00612	Bolt	4	SN:B10172--

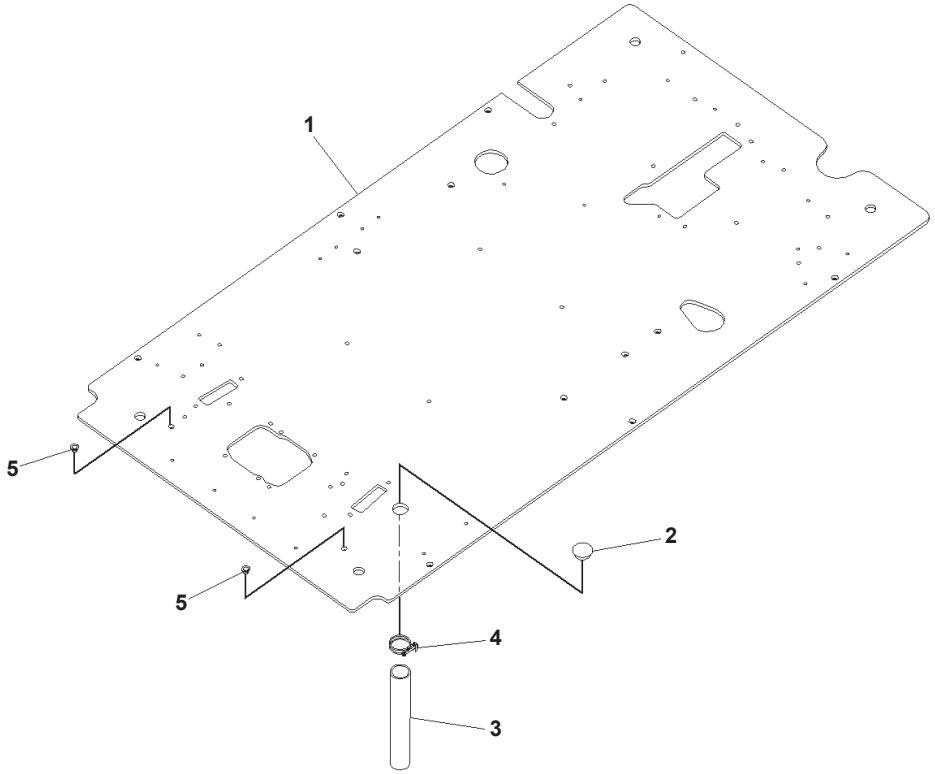

00059781-\

Cab, EOPS Cabin Front Fix, With AM-FM Radio, With Master Key, For KOMTRAX, Floor, Frame (#B10172-)

Index	Part Number	Description	Qty	Options
1	20Y-53-14116	Floor	1	SN:B10172--
2	22U-54-25581	Grommet	1	SN:B10172--
3	07286-03828	Hose	1	SN:B10172--
4	07280-04726	Clamp	1	SN:B10172--
5	07048-01310	Plug	2	SN:B10172--

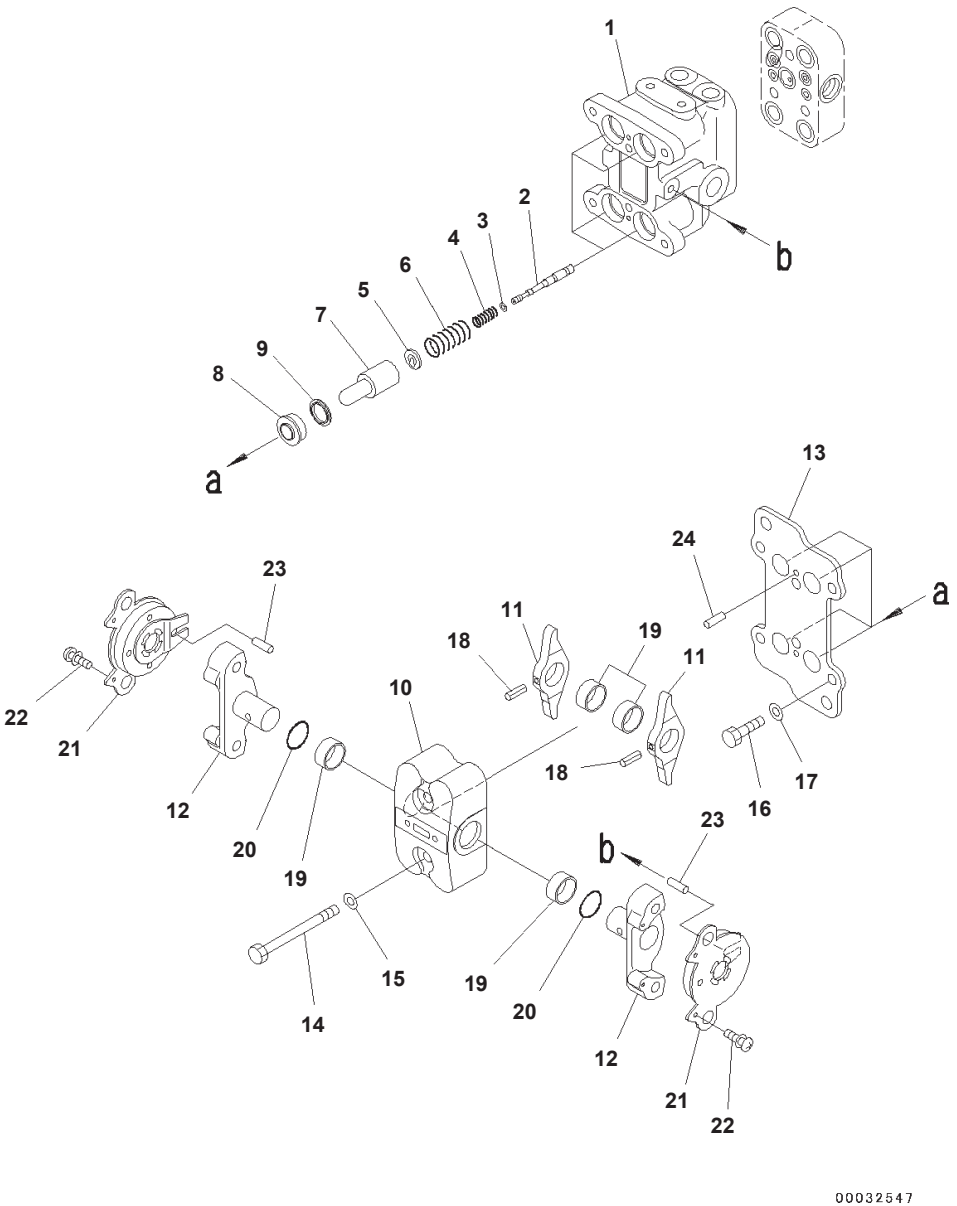

Cab, EOPS Cabin Front Fix, With AM-FM Radio, With Master Key, For KOMTRAX, Floor, P.P.C. Valve, For Travel (1/2) (#B10172-)

Index	Code	Part Number	Description	Qty	Options
		702-16-04250	Valve, Pilot	1	SN:B10172--
1	C1		・ Valve Body	1	SN:B10172--
2	C1		・ Valve	4	SN:B10172--
3		702-16-51140	・ Shim, T=0.30mm	4	SN:B10172--
4		702-16-53420	・ Spring	4	SN:B10172--
5		702-16-53140	・ Retainer	4	SN:B10172--
6		702-16-54420	・ Spring	4	SN:B10172--
7		702-16-53170	・ Piston	4	SN:B10172--
8		702-16-71150	・ Seal	4	SN:B10172--
9		702-16-71160	・ Seat	4	SN:B10172--
10		702-16-73630	・ Case	1	SN:B10172--
11	C1		・ Lever	2	SN:B10172--
12	C1		・ Shaft	2	SN:B10172--
13	C1		・ Plate	1	SN:B10172--
14		01010-80855	・ Bolt	2	SN:B10172--
15		01643-30823	・ Washer	2	SN:B10172--
16		01010-80816	・ Bolt	4	SN:B10172--
17		702-16-54331	・ Washer, T=1.60mm	4	SN:B10172--
		702-16-54341	・ Washer, T=1.30mm	4	SN:B10172--
		702-16-54351	・ Washer, T=1.00mm	4	SN:B10172--
		702-16-56380	・ Washer, T=1.90mm	4	SN:B10172--
		702-16-56390	・ Washer, T=2.20mm	4	SN:B10172--
18		04025-00432	・ Pin, Spring	2	SN:B10172--
19		702-16-54430	・ Bushing	4	SN:B10172--
20		07000-12018	・ O-ring	2	SN:B10172--
21	C2	702-16-73610	・ Damper Assembly	2	SN:B10172--
22		01023-10306	・ Screw	4	SN:B10172--
23		702-16-73650	・ Pin	2	SN:B10172--
24		04022-04016	・ Pin, Dowel	2	SN:B10172--

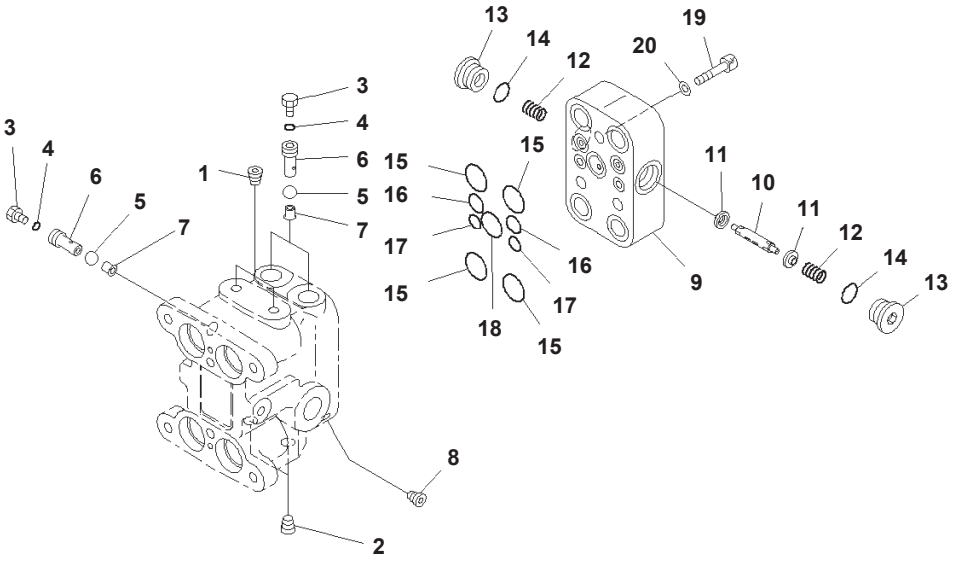

Cab, EOPS Cabin Front Fix, With AM-FM Radio, With Master Key, For KOMTRAX, Floor, P.P.C. Valve, For Travel (2/2) (#B10172-)

Index	Code	Part Number	Description	Qty	Options
		702-16-04250	Valve, Pilot	1	SN:B10172--
1	C1		・ Plug	2	SN:B10172--
2	C1		・ Plug	2	SN:B10172--
3		07040-11209	・ Plug	3	SN:B10172--
4		07002-11223	・ O-ring	3	SN:B10172--
5	C1		・ Ball	3	SN:B10172--
6		702-16-55940	・ Plug	3	SN:B10172--
7		702-16-55950	・ Seat	3	SN:B10172--
8	C1		・ Screw	2	SN:B10172--
9	C1		・ Body, Valve, Valve	1	SN:B10172--
10	C1		・ Spool	1	SN:B10172--
11		702-16-57440	・ Retainer	2	SN:B10172--
12		702-16-57450	・ Spring	2	SN:B10172--
13		723-11-15110	・ Plug	2	SN:B10172--
14		07002-11623	・ O-ring	2	SN:B10172--
15		07000-12015	・ O-ring	4	SN:B10172--
16		07000-11010	・ O-ring	2	SN:B10172--
17		07000-11007	・ O-ring	2	SN:B10172--
18		700-22-11410	・ O-ring	1	SN:B10172--
19		01252-60835	・ Bolt	3	SN:B10172--
20		01643-50823	・ Washer	3	SN:B10172--

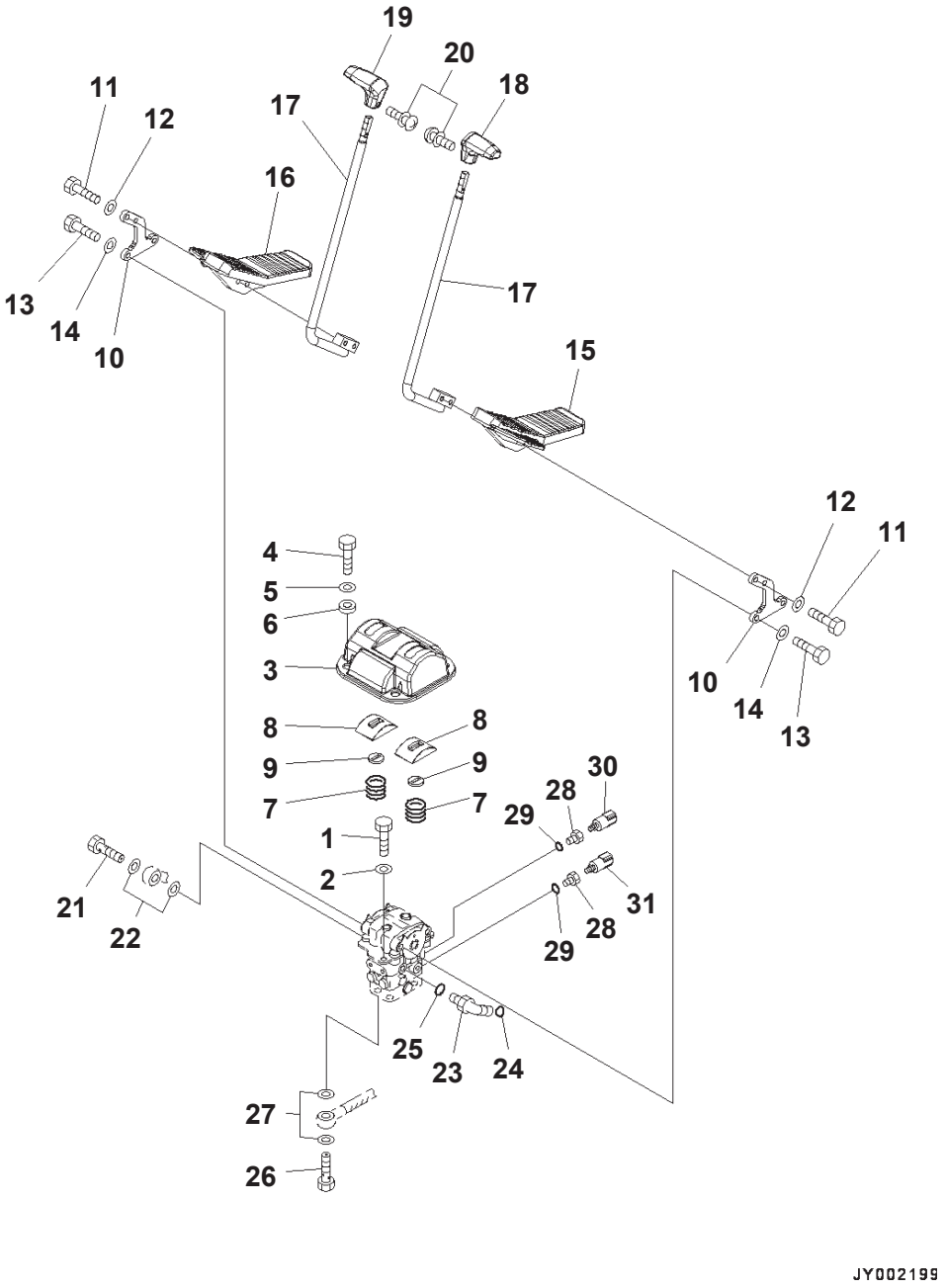

Cab, EOPS Cabin Front Fix, With AM-FM Radio, With Master Key, For KOMTRAX, Floor, Travel Control (#B10172-)

Index	Code	Part Number	Description	Qty	Options
1		01010-81020	Bolt	2	SN:B10172--
2		01643-31032	Washer	2	SN:B10172--
3		20Y-43-41121	Cover	1	SN:B10172--
4		01010-81020	Bolt	4	SN:B10172--
5		01643-31032	Washer	4	SN:B10172--
6		20Y-43-41361	Collar	4	SN:B10172--
7		203-43-51620	Spring	2	SN:B10172--
		22U-43-21350	Cover Assembly	2	SN:B10172--
8	C1		・ Cover	1	SN:B10172--
9		22U-43-21360	・ Seal	1	SN:B10172--
10		20Y-43-41111	Lever	2	SN:B10172--
11		01010-D1045	Bolt	4	SN:B10172--
12		01643-71032	Washer	4	SN:B10172--
13		01010-81030	Bolt	4	SN:B10172--
14		01643-31032	Washer	4	SN:B10172--
15		22U-43-21111	Pedal	1	SN:B10172--
16		22U-43-21121	Pedal	1	SN:B10172--
17		22U-43-21131	Lever	2	SN:B10172--
18		20Y-43-21231	Knob	1	SN:B10172--
19		20Y-43-21241	Knob	1	SN:B10172--
20		01023-20416	Screw	2	SN:B10172--
21		20Y-62-18910	Bolt, Eye	1	SN:B10172--
22		07000-12018	O-ring	2	SN:B10172--
23		11Y-62-12160	Elbow	1	SN:B10172--
24		02896-11008	O-ring	1	SN:B10172--
25		07002-11423	O-ring	1	SN:B10172--
26		20Y-62-18890	Bolt	4	SN:B10172--
27		07000-12015	O-ring	8	SN:B10172--
28		20Y-62-41390	Adapter	2	SN:B10172--
29		07002-11423	O-ring	2	SN:B10172--
30		20Y-06-21710	Switch	1	SN:B10172--
31		206-06-61130	Switch	1	SN:B10172--

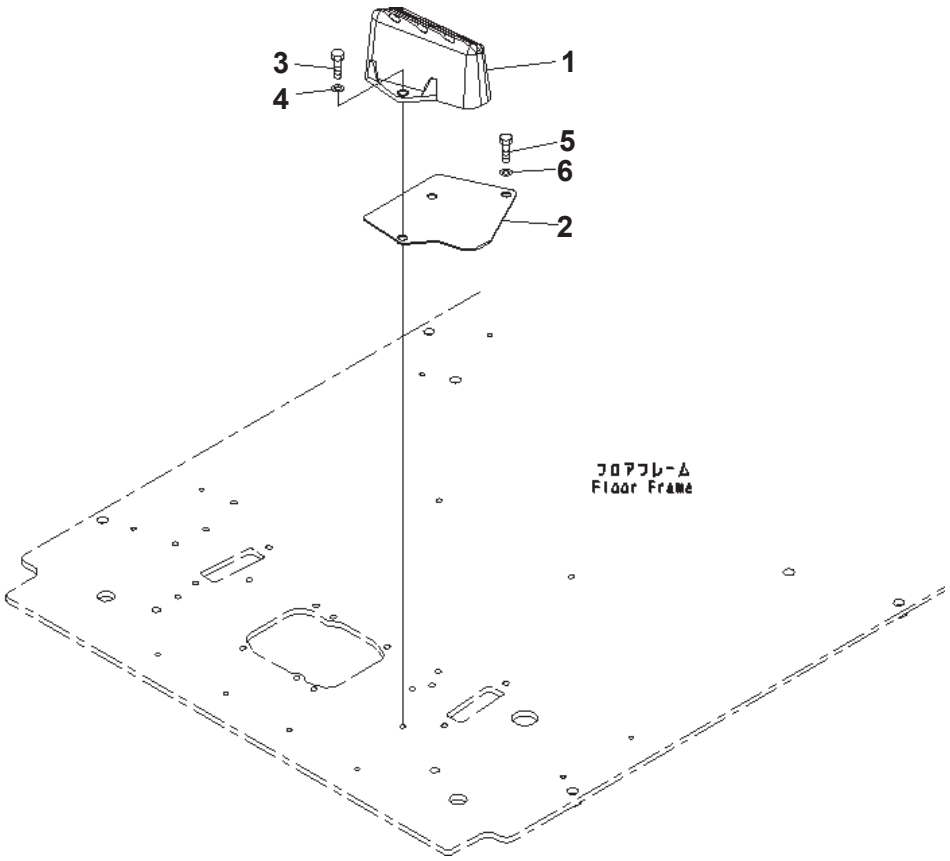

Cab, EOPS Cabin Front Fix, With AM-FM Radio, With Master Key, For KOMTRAX, Floor, Foot Rest, LHS
(#B10172-)

Index	Part Number	Description	Qty	Options
1	22U-54-25110	Foot Rest	1	SN:B10172--
2	22U-54-25521	Plate	1	SN:B10172--
3	01010-81025	Bolt	2	SN:B10172--
4	01643-31032	Washer	2	SN:B10172--
5	01010-81020	Bolt	2	SN:B10172--
6	01643-31032	Washer	2	SN:B10172--

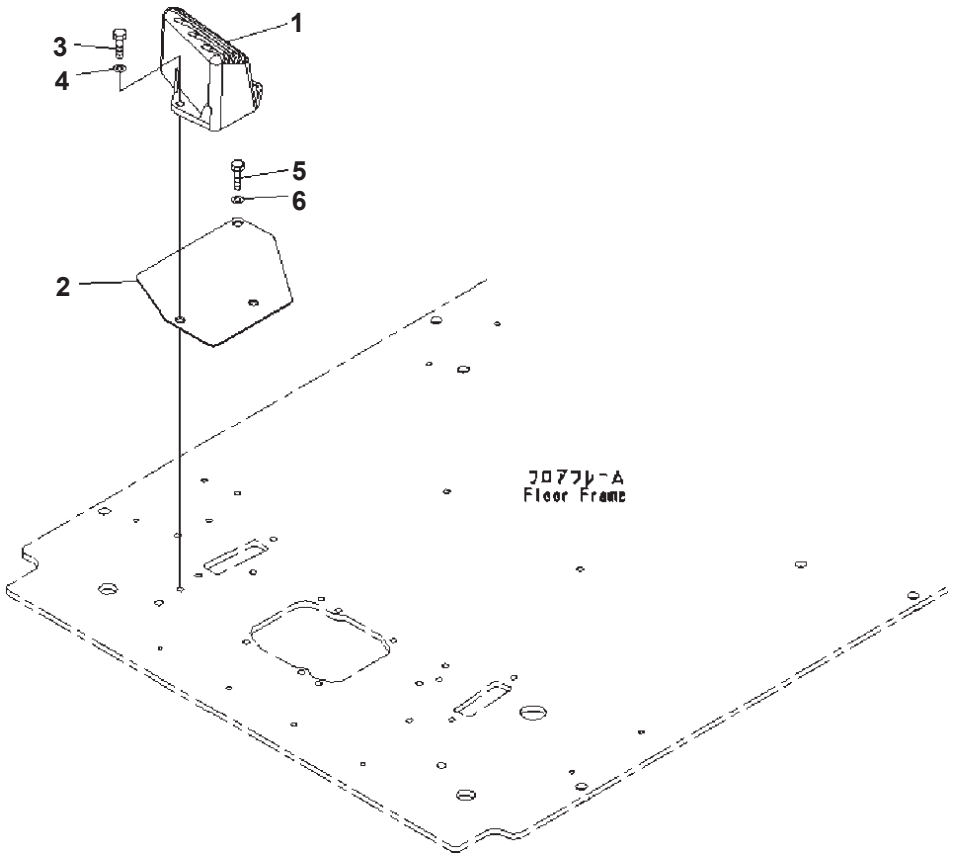

Cab, EOPS Cabin Front Fix, With AM-FM Radio, With Master Key, For KOMTRAX, Floor, Foot Rest, RHS
(#B10172-)

Index	Part Number	Description	Qty	Options
1	22U-54-25120	Footrest	1	SN:B10172--
2	22U-54-25531	Plate	1	SN:B10172--
3	01010-81025	Bolt	2	SN:B10172--
4	01643-31032	Washer	2	SN:B10172--
5	01010-81020	Bolt	1	SN:B10172--
6	01643-31032	Washer	1	SN:B10172--

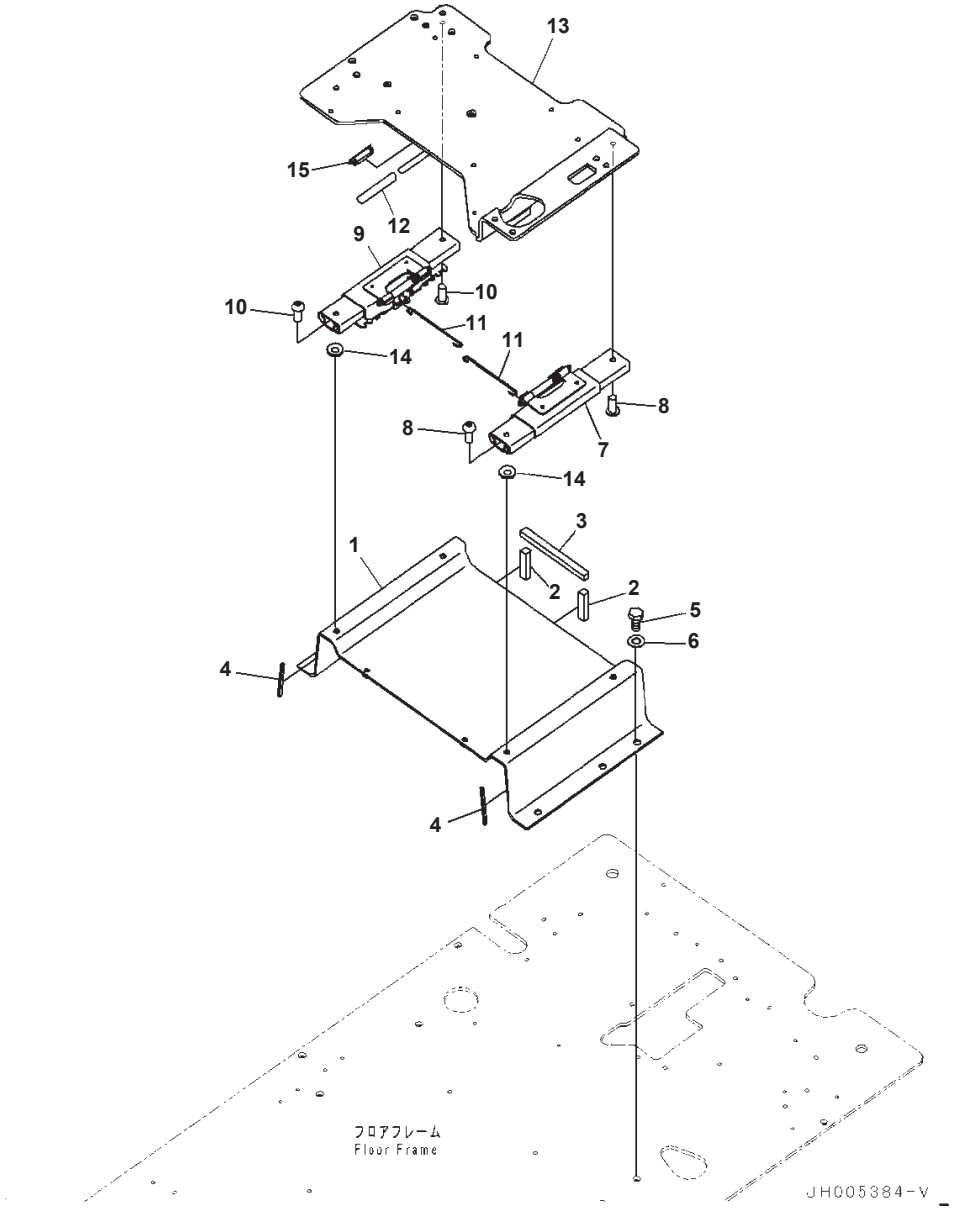

Cab, EOPS Cabin Front Fix, With AM-FM Radio, With Master Key, For KOMTRAX, Floor, Base (#B10172-)

Index	Code	Part Number	Description	Qty	Options
1		20Y-43-41231	Frame	1	SN:B10172--
2		208-43-71520	・ Seal	2	SN:B10172--
3		208-43-71530	・ Seal	1	SN:B10172--
4		208-43-71590	・ Seal	2	SN:B10172--
5		01010-81230	Bolt	5	SN:B10172--
6		01643-31232	Washer	5	SN:B10172--
7		2A5-43-12353	Adjuster	1	SN:B10279--
	A2	2A5-43-12351	Adjuster	1	SN:B10172--
8		01245-01025	Screw	4	SN:B10172--
9		2A5-43-12363	Adjuster	1	SN:B10279--
	A2	2A5-43-12361	Adjuster	1	SN:B10172--
10		01245-01025	Screw	4	SN:B10172--
11		20Y-43-41833	Wire	2	SN:B10172--
12		22U-43-21390	Cap	1	SN:B10172--
13		20Y-43-41253	Frame	1	SN:B10172--
14		2A5-43-12480	Washer	4	SN:B10172--
15		20Y-979-6630	Catcher	1	SN:B10172--

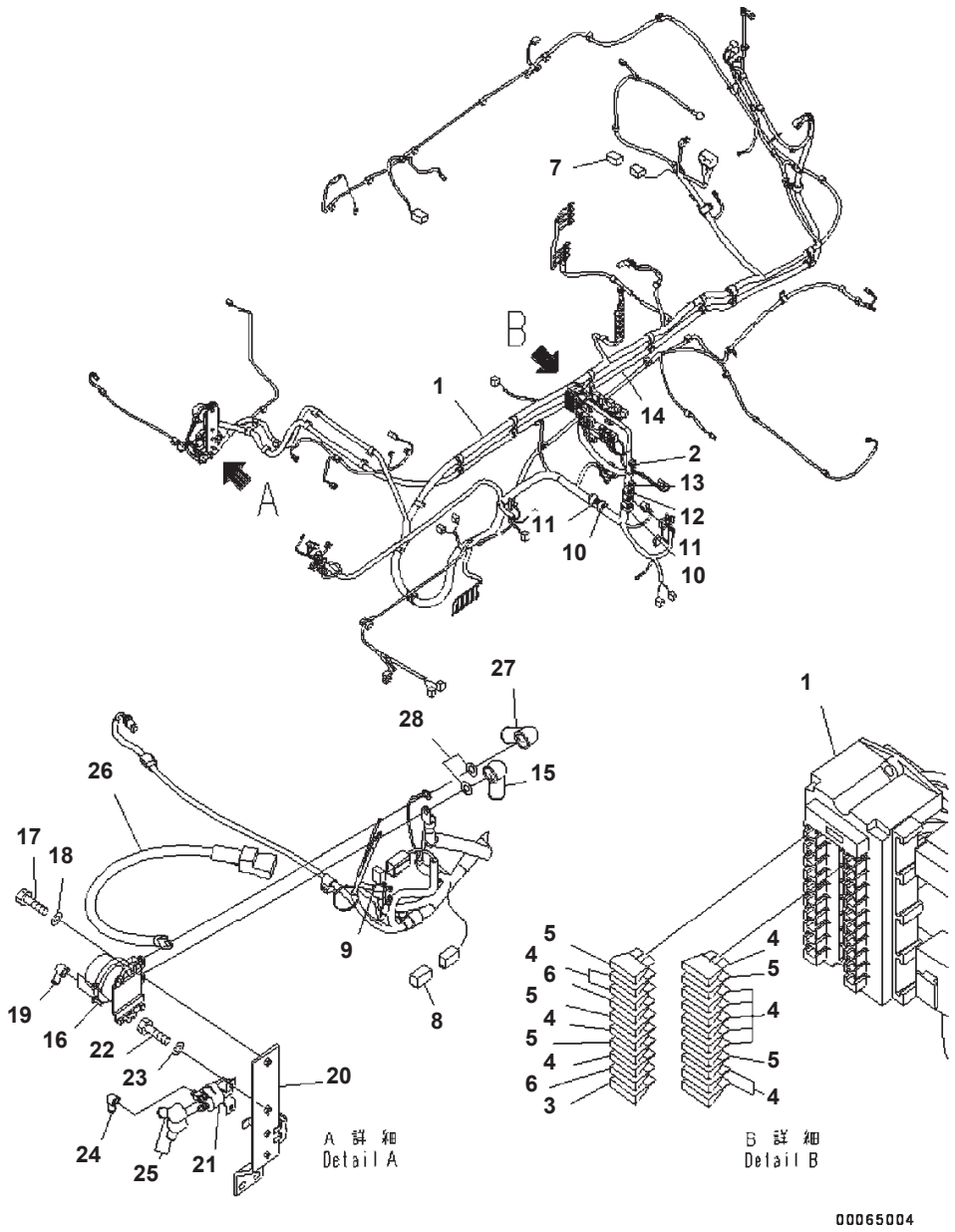

Cab, EOPS Cabin Front Fix, With AM-FM Radio, With Master Key, For KOMTRAX, Floor, Harness (#B10172-)

Index	Part Number	Description	Qty	Options
1	207-06-76730	Wire Harness	1	SN:B10172--
2	08020-20000	・ Diode	2	SN:B10172--
3	08041-00500	・ Fuse, 5Amp.	1	SN:B10172--
4	08041-01000	・ Fuse, 10Amp.	12	SN:B10172--
5	08041-02000	・ Fuse, 20Amp.	5	SN:B10172--
6	08041-03000	・ Fuse, 30Amp.	2	SN:B10172--
7	19M-06-31720	・ Resistor	1	SN:B10172--
8	20Y-06-31660	・ Fusible Link, 30Amp.	1	SN:B10172--
9	22U-06-11270	・ Fusible Link, 65Amp.	1	SN:B10172--
10	HM6400-0012	・ Connector, Black	2	SN:B10172--
	HM6409-0071	・ Connector, Black	2	SN:B10172--
11	HM6400-0013	・ Connector, Green	2	SN:B10172--
	HM6409-0072	・ Connector, Green	2	SN:B10172--
12	HM6440-0129	・ Connector, Pink	1	SN:B10172--
	HM6440-0128	・ Connector, Pink	1	SN:B10172--
13	HM6400-0016	・ Connector, Orange	1	SN:B10172--
	HM6409-0075	・ Connector, Orange	1	SN:B10172--
14	207-06-75140	Cable	1	SN:B10172--
15	08038-00035	Cap	1	SN:B10172--
16	08088-30000	Switch, Battery Relay	1	SN:B10172--
17	01010-80830	Bolt	2	SN:B10172--
18	01643-30823	Washer	2	SN:B10172--
19	08038-00519	Cap	2	SN:B10172--
20	207-06-75122	Bracket	1	SN:B10172--
21	600-815-2170	Switch, Heater	1	SN:B10172--
22	01010-80616	Bolt	2	SN:B10172--
23	01643-30623	Washer	2	SN:B10172--
24	08038-00519	Cap	1	SN:B10172--
25	08038-02027	Cap	2	SN:B10172--
26	08028-CD065	Cable, Ground	1	SN:B10172--
27	08038-00035	Cap	1	SN:B10172--
28	01643-30823	Washer	2	SN:B10172--

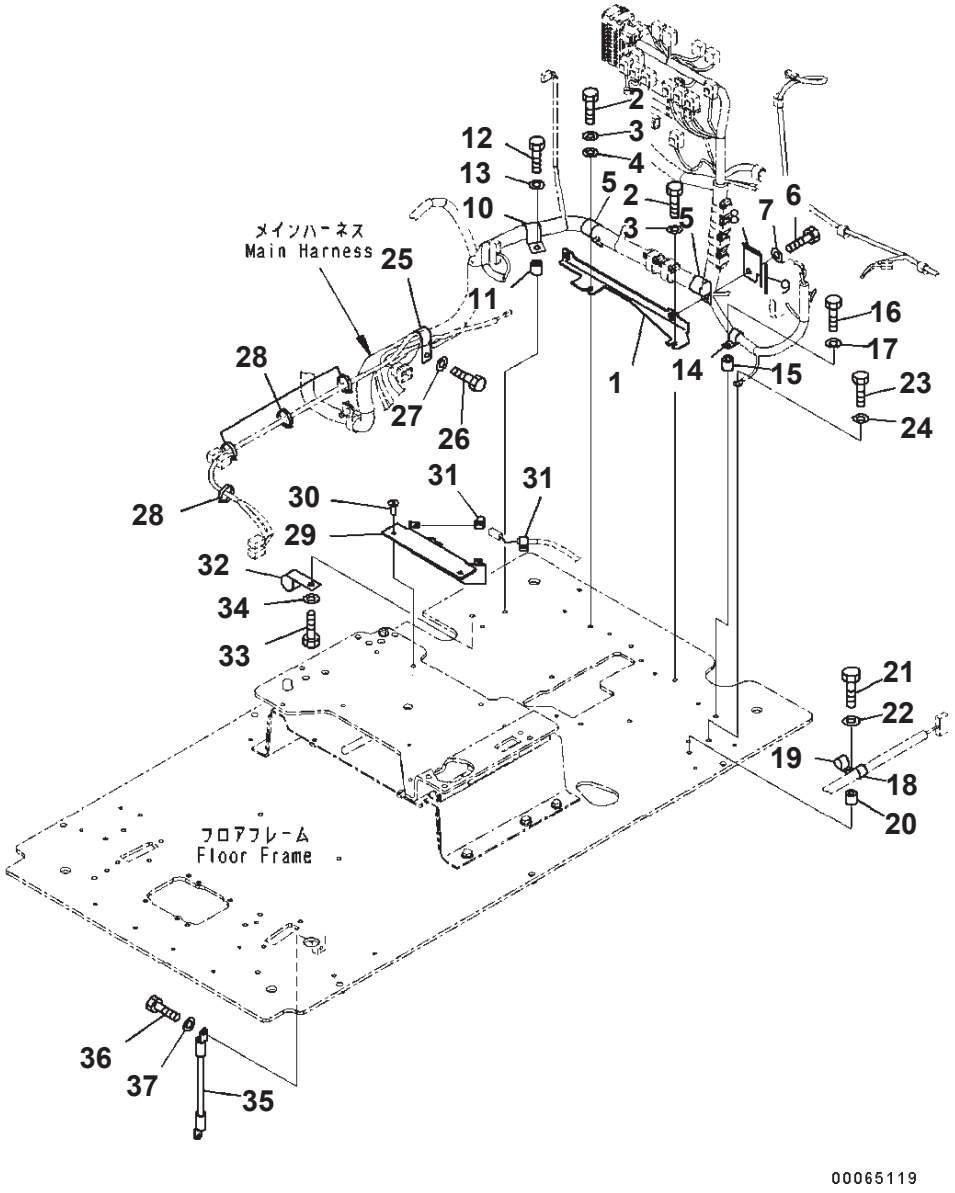

Cab, EOPS Cabin Front Fix, With AM-FM Radio, With Master Key, For KOMTRAX Floor, Harness Clamp And Earth (#B10172-)

Index	Code	Part Number	Description	Qty	Options
1		20Y-53-14121	Bracket	1	SN:B10172--
2		01010-81016	Bolt	2	SN:B10172--
3		01643-31032	Washer	2	SN:B10172--
4		01643-31032	Washer	1	SN:B10172--
5		04434-53411	Clip	2	SN:B10172--
6		01010-81025	Bolt	2	SN:B10172--
7		01643-31032	Washer	2	SN:B10172--
		20Y-53-14150	Plate Assembly	1	SN:B10172--
8	C1		・Plate	1	SN:B10172--
9		20Y-53-14170	・Trim	1	SN:B10172--
10		04434-53411	Clip	1	SN:B10172--
11		195-33-11220	Spacer	1	SN:B10172--
12		01010-81040	Bolt	1	SN:B10172--
13		01643-31032	Washer	1	SN:B10172--
14		04434-51910	Clip	1	SN:B10172--
15		195-33-11220	Spacer	1	SN:B10172--
16		01010-81040	Bolt	1	SN:B10172--
17		01643-31032	Washer	1	SN:B10172--
18		04434-51410	Clip	1	SN:B10172--
19		04434-51010	Clip	1	SN:B10172--
20		175-40-22540	Spacer	1	SN:B10172--
21		01010-81070	Bolt	1	SN:B10172--
22		01643-31032	Washer	1	SN:B10172--
23		01010-81020	Bolt	1	SN:B10172--
24		01643-31032	Washer	1	SN:B10172--
25		04434-53411	Clip	1	SN:B10172--
26		01010-81020	Bolt	1	SN:B10172--
27		01643-31032	Washer	1	SN:B10172--
28		08034-20519	Band	4	SN:B10172--
29		20Y-53-18331	Bracket	1	SN:B10172--
30		01240-00820	Screw, Hexagon Socket Head	2	SN:B10172--
31		08211-00720	Clip	2	SN:B10172--
32		04434-51910	Clip	1	SN:B10172--
33		01010-81020	Bolt	1	SN:B10172--
34		01643-31032	Washer	1	SN:B10172--
35		08028-43030	Cable, Ground	1	SN:B10172--
36		01010-81020	Bolt	1	SN:B10172--
37		01643-31032	Washer	1	SN:B10172--

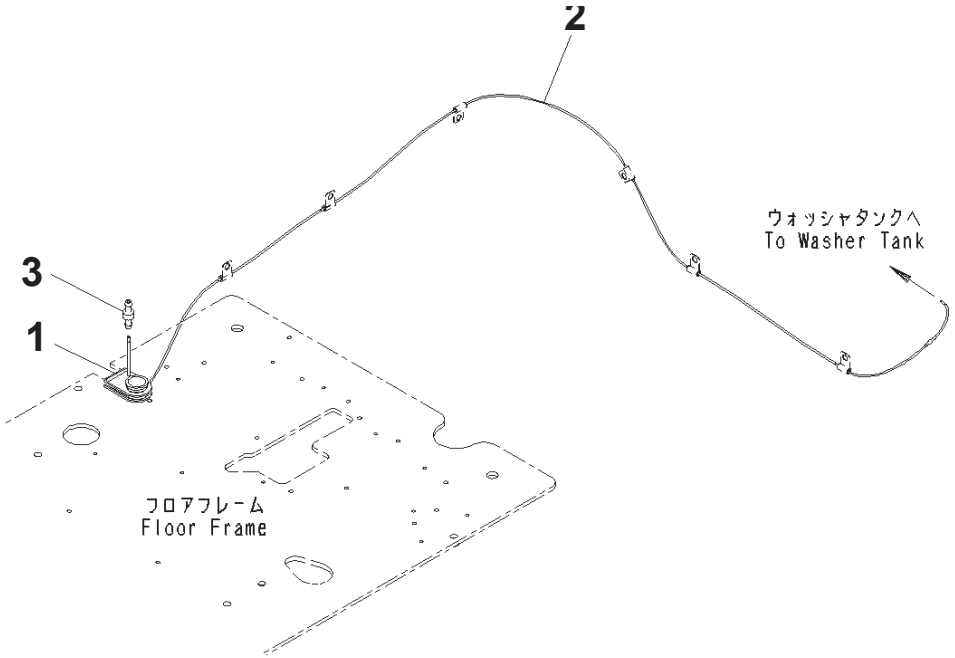

Cab, EOPS Cabin Front Fix, With AM-FM Radio, With Master Key, For KOMTRAX, Floor, Window Washer Hose (#B10172-)

Index	Part Number	Description	Qty	Options
1	20Y-53-14991	Grommet	1	SN:B10172--
2	195-979-8580	Hose	1	SN:B10172--
3	207-06-61490	Valve	1	SN:B10172--

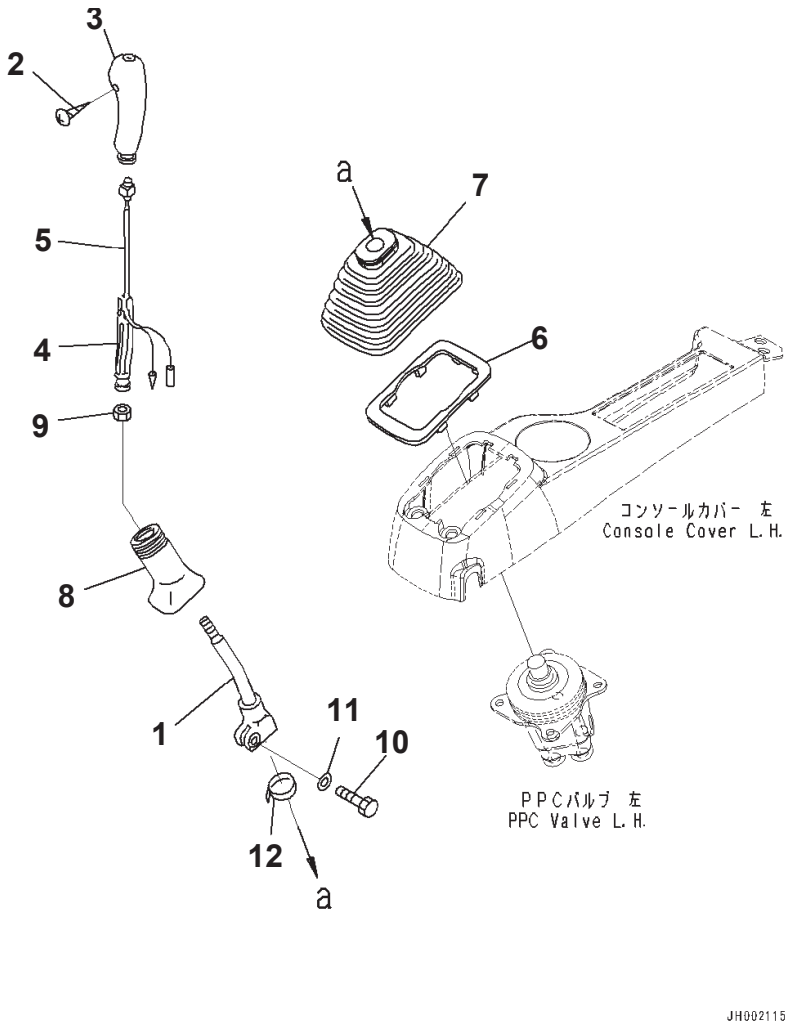

Cab, EOPS Cabin Front Fix, With AM-FM Radio, With Master Key, For KOMTRAX, Floor, Lever, LHS
(#B10172-)

Index	Code	Part Number	Description	Qty	Options
1		20Y-43-22211	Lever	1	SN:B10172--
		22U-43-21182	Knob	1	SN:B10172--
2	C1		・ Knob	1	SN:B10172--
3		20Y-43-22381	・ Knob	1	SN:B10172--
4		20Y-43-22421	・ Insert	1	SN:B10172--
5		22U-43-21211	・ Switch	1	SN:B10172--
6		20Y-43-22250	Plate	1	SN:B10172--
7		20Y-43-22261	Boot	1	SN:B10172--
8		20Y-43-22370	Boot	1	SN:B10172--
9		600-411-1280	Nut	1	SN:B10172--
10		01252-41025	Bolt, Hexagon Socket Head	1	SN:B10172--
11		01643-51032	Washer	1	SN:B10172--
12		08034-20536	Band	1	SN:B10172--

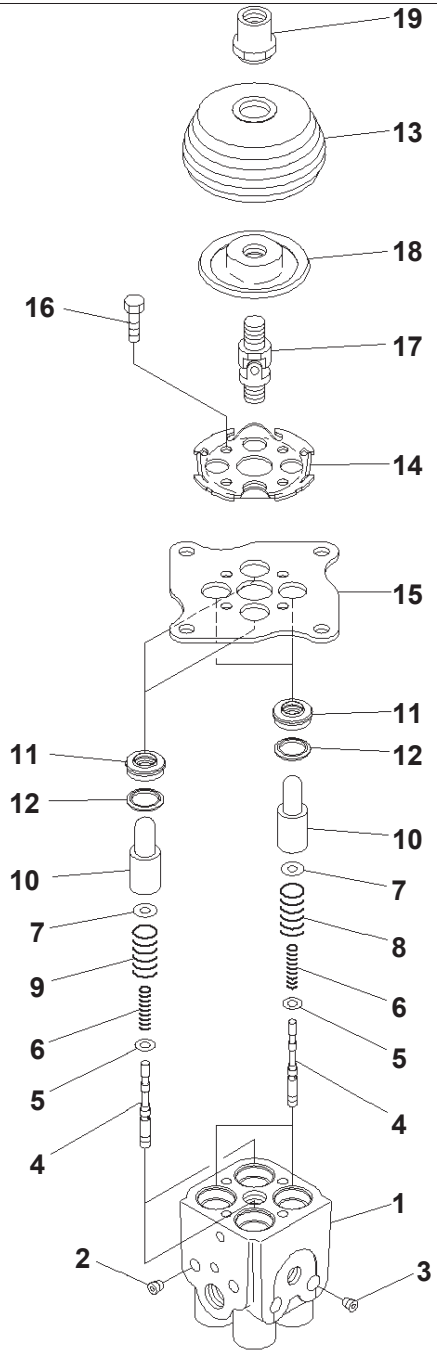

Cab, EOPS Cabin Front Fix, With AM-FM Radio, With Master Key, For KOMTRAX, Floor, P.P.C. Valve, For Work Equipment, LHS (#B10172

Index	Code	Part Number	Description	Qty	Options
		702-16-03910	Valve, Pilot	1	SN:B10172--
1	C1		・ Valve Body, Valve	1	SN:B10172--
2	C1		・ Plug	2	SN:B10172--
3	C1		・ Plug	2	SN:B10172--
4	C1		・ Valve	4	SN:B10172--
5		702-16-51140	・ Shim, T=0.30mm	4	SN:B10172--
6		702-16-53420	・ Spring	4	SN:B10172--
7		702-16-53140	・ Retainer	4	SN:B10172--
8		702-16-53470	・ Spring	2	SN:B10172--
9		702-16-53590	・ Spring	2	SN:B10172--
10		702-16-53170	・ Piston	4	SN:B10172--
11		702-16-71210	・ Seal	4	SN:B10172--
12		702-16-71160	・ Seat	4	SN:B10172--
13		702-16-71280	・ Boot	1	SN:B10172--
14		702-16-71131	・ Plate	1	SN:B10172--
15		702-16-71141	・ Plate	1	SN:B10172--
16		01010-80620	・ Bolt	4	SN:B10172--
17		702-16-51240	・ Universal Joint	1	SN:B10172--
18		702-16-71361	・ Disc	1	SN:B10172--
19		702-16-71441	・ Nut	1	SN:B10172--

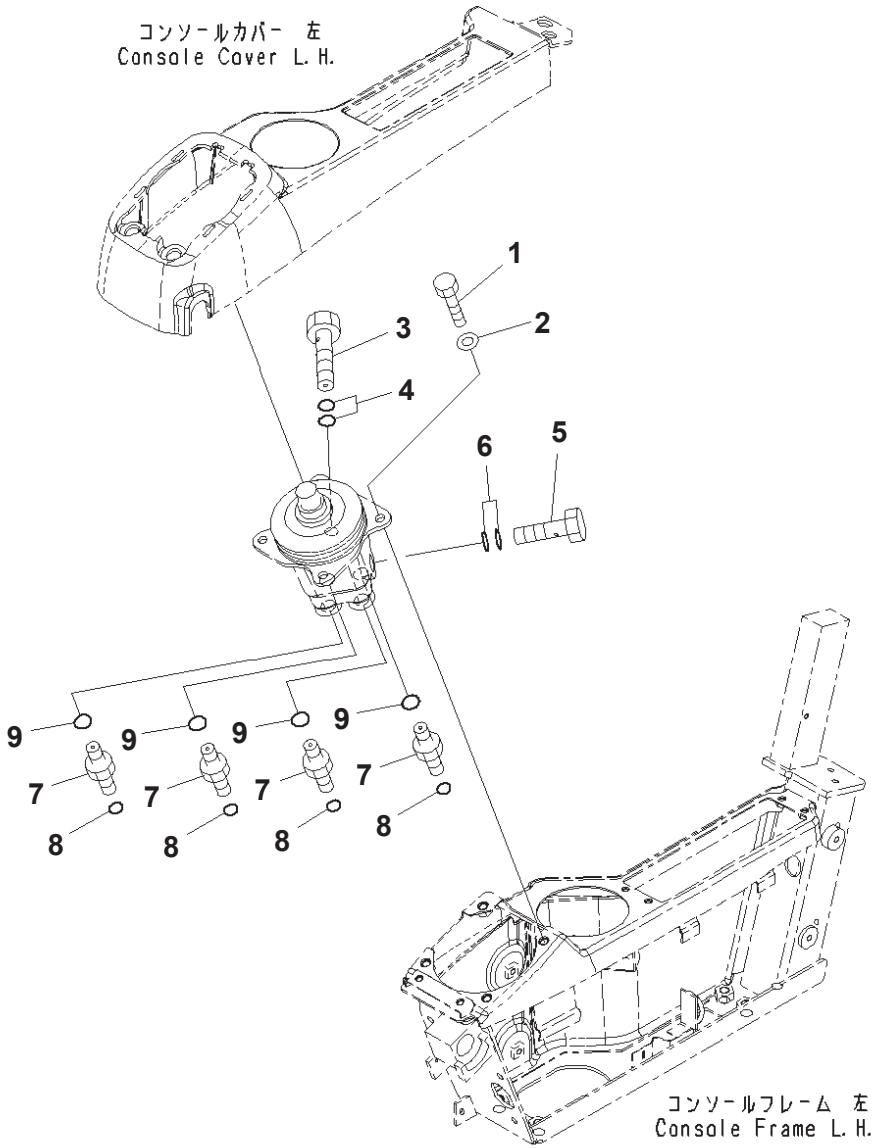

Cab, EOPS Cabin Front Fix, With AM-FM Radio, With Master Key, For KOMTRAX, Floor, Valve, LHS
(#B10172-)

Index	Part Number	Description	Qty	Options
1	01010-80820	Bolt	4	SN:B10172--
2	01643-30823	Washer	4	SN:B10172--
3	20Y-62-18910	Bolt, Eye	1	SN:B10172--B10278
4	07000-12018	O-ring	2	SN:B10172--
5	20Y-62-18890	Bolt	1	SN:B10172--
6	07000-12015	O-ring	2	SN:B10172--B10278
7	11Y-62-12520	Nipple	4	SN:B10172--
8	02896-11009	O-ring	4	SN:B10172--
9	07002-11423	O-ring	4	SN:B10172--

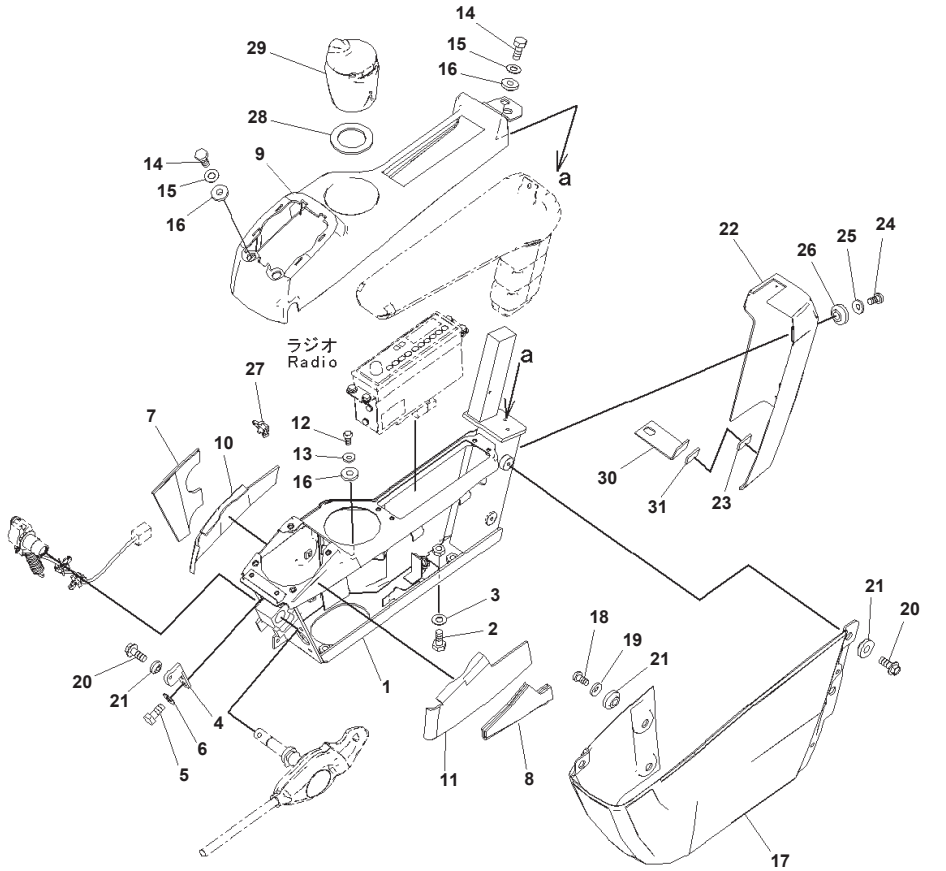

Cab, EOPS Cabin Front Fix, With AM-FM Radio, With Master Key, For KOMTRAX Floor, Console, LHS
(#B10172-)

Index	Code	Part Number	Description	Qty	Options
1		20Y-43-41416	Frame	1	SN:B10172--
2		01010-81030	Bolt	4	SN:B10172--
3		01643-31032	Washer	4	SN:B10172--
4		20Y-43-41472	Bracket	1	SN:B10172--
5		01010-80616	Bolt	2	SN:B10172--
6		01643-30623	Washer	2	SN:B10172--
7		20Y-43-41621	Sheet	1	SN:B10172--
8		20Y-43-41641	Sheet	1	SN:B10172--
9		20Y-43-41424	Cover	1	SN:B10279--
	A2	20Y-43-41423	Cover	1	SN:B10172--B10278
10		20Y-43-41651	Sheet	1	SN:B10172--
11		20Y-43-41661	Sheet	1	SN:B10172--
12		01245-00616	Screw, Hexagon Socket Head	1	SN:B10172--
13		01643-70623	Washer	1	SN:B10172--
14		01010-80616	Bolt	4	SN:B10172--
15		01643-30623	Washer	4	SN:B10172--
16		20Y-43-41290	Collar	5	SN:B10172--
17		20Y-43-41442	Cover	1	SN:B10172--
18		01245-00616	Screw, Hexagon Socket Head	2	SN:B10172--
19		01643-70623	Washer	2	SN:B10172--
20		01435-00612	Bolt	3	SN:B10172--
21		20Y-43-41290	Collar	5	SN:B10172--
		20Y-43-42450	Cover	1	SN:B10172--
22	C1		・ Cover	1	SN:B10172--
23		20Y-43-42170	・ Tape	1	SN:B10172--
24		01245-00616	Screw, Hexagon Socket Head	2	SN:B10172--
25		01643-70623	Washer	2	SN:B10172--
26		20Y-43-41290	Collar	2	SN:B10172--
27		22U-43-23260	Clip	1	SN:B10172--
28		20Y-43-41970	Sheet	1	SN:B10172--
29		20Y-43-41491	Ashtray	1	SN:B10172--
30		20Y-43-41981	Bracket	1	SN:B10172--
31		20Y-43-42180	・ Tape	1	SN:B10172--

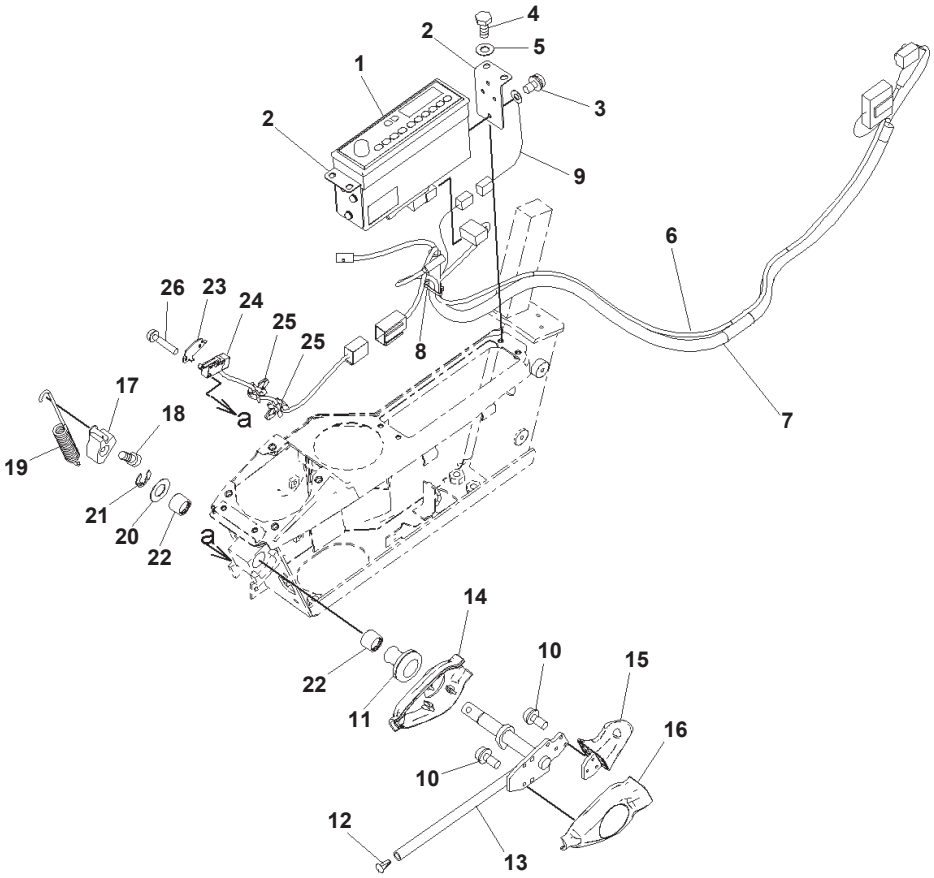

Cab, EOPS Cabin Front Fix, With AM-FM Radio, With Master Key, For KOMTRAX, Floor, P.P.C. Lock Lever And Radio (#B10172-)

Index	Part Number	Description	Qty	Options
1	20Y-06-42440	Radio	1	SN:B10172--
2	20Y-43-42130	Plate	2	SN:B10172--
3	01023-60510	Screw	6	SN:B10172--
4	01010-80616	Bolt	4	SN:B10172--
5	01643-30623	Washer	4	SN:B10172--
6	08912-51600	Cord	1	SN:B10172--
7	21M-06-31170	Wire Harness	1	SN:B10172--
8	08034-20414	Band	1	SN:B10172--
9	20Y-06-41830	Wire Harness	1	SN:B10172--
10	01023-60410	Screw	6	SN:B10172--
11	08037-11425	Grommet	1	SN:B10172--
12	208-53-12280	Cap	1	SN:B10172--
13	20Y-43-31513	Lever	1	SN:B10172--
14	20Y-43-31522	Cover	1	SN:B10172--
15	20Y-43-31611	Knob	1	SN:B10172--
16	20Y-43-31621	Cover	1	SN:B10172--
17	20Y-43-31432	Cam	1	SN:B10172--
18	01252-70816	Bolt	1	SN:B10172--
19	20Y-43-31421	Spring	1	SN:B10172--
20	20Y-43-31440	Ring	1	SN:B10172--
21	20Y-43-31450	Ring	1	SN:B10172--
22	06124-01616	Bearing	2	SN:B10172--
23	22U-06-22490	Plate	1	SN:B10172--
24	22U-06-22360	Switch Assembly	1	SN:B10172--
25	22U-43-23260	Clip	2	SN:B10172--
26	01023-60320	Screw	2	SN:B10172--

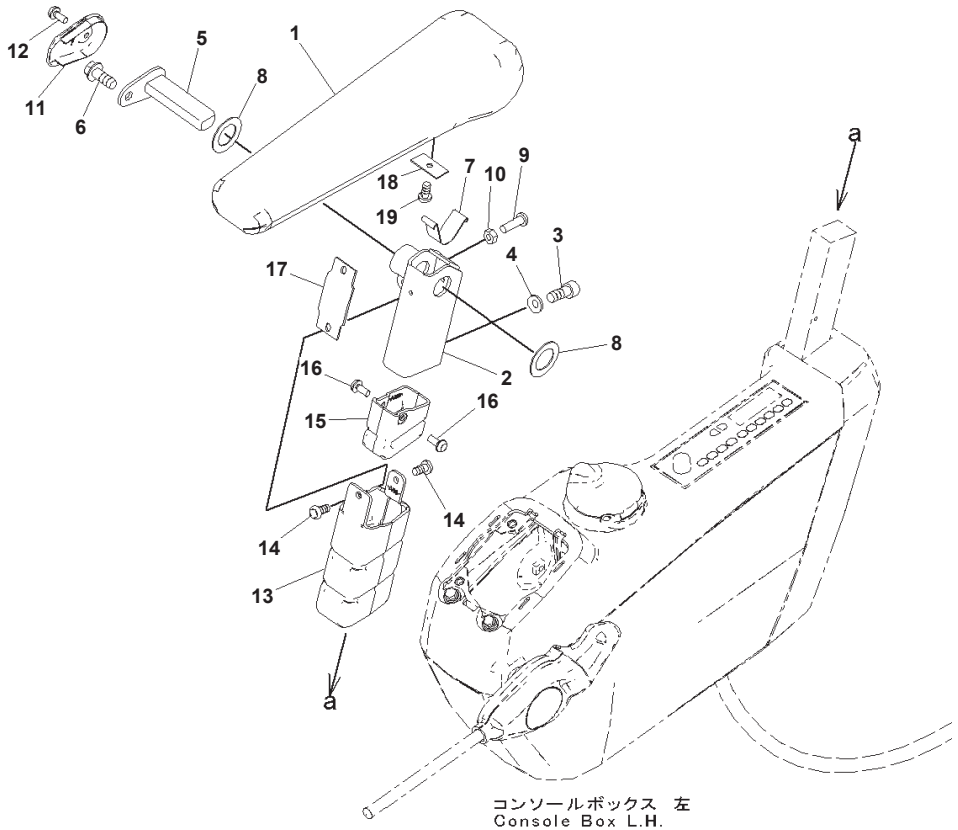

コンソールボックス 左
Console Box L.H.

00048924

Cab, EOPS Cabin Front Fix, With AM-FM Radio, With Master Key, For KOMTRAX, Floor, Arm Rest, LHS
(#B10172-)

Index	Part Number	Description	Qty	Options
1	20Y-43-41143	Armrest	1	SN:B10172--
2	20Y-43-41173	Bracket	1	SN:B10172--
3	01252-80820	Bolt	2	SN:B10172--
4	01643-70823	Washer	2	SN:B10172--
5	20Y-43-41162	Pin	1	SN:B10172--
6	01435-40816	Bolt	1	SN:B10172--
7	20Y-43-41152	Spring	1	SN:B10172--
8	437-40-26240	Washer	2	SN:B10172--
9	01245-00620	Screw	1	SN:B10172--
10	01580-40605	Nut	1	SN:B10172--
11	20Y-43-41181	Cap	1	SN:B10172--
12	01023-20512	Screw	1	SN:B10172--
13	20Y-43-41191	Cover	1	SN:B10172--
14	01370-40510	Screw	2	SN:B10172--
15	20Y-43-41591	Cover	1	SN:B10172--
16	01023-20512	Screw	2	SN:B10172--
17	20Y-43-41281	Rubber	1	SN:B10172--
18	20Y-43-41461	Plate	1	SN:B10172--
19	01370-40610	Screw	1	SN:B10172--

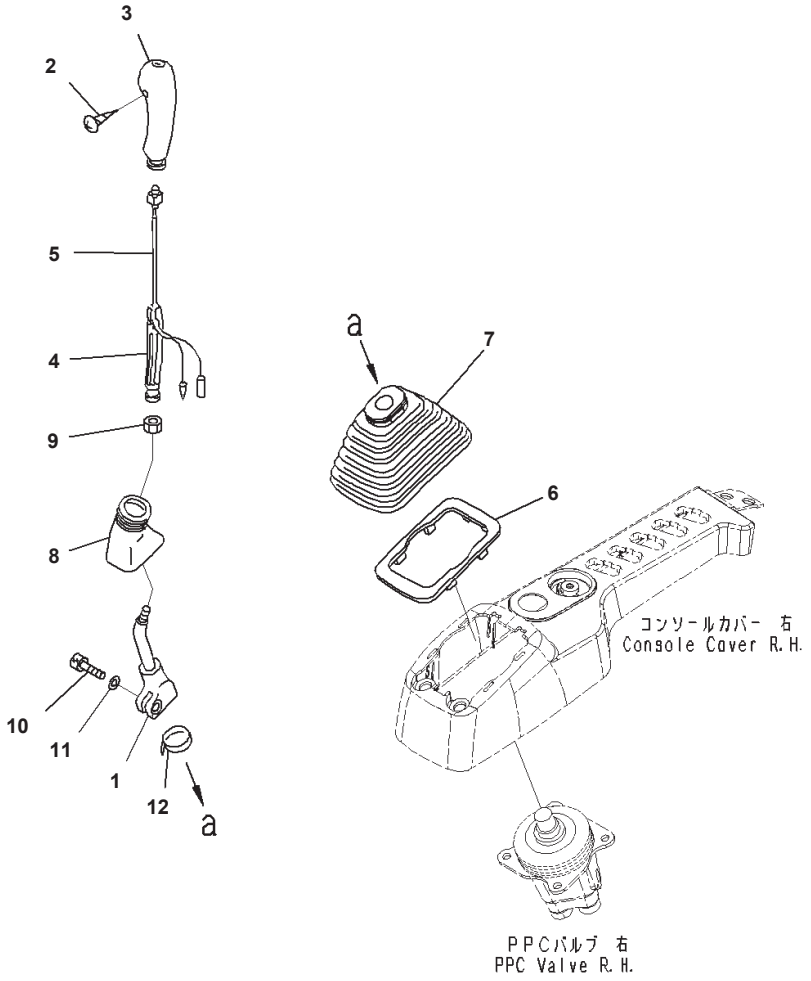

Cab, EOPS Cabin Front Fix, With AM-FM Radio, With Master Key, For KOMTRAX, Floor, Lever, RHS
(#B10172-)

Index	Code	Part Number	Description	Qty	Options
1		20Y-43-22221	Lever	1	SN:B10172--
		22U-43-21192	Knob	1	SN:B10172--
2	C1		・ Knob	1	SN:B10172--
3		20Y-43-22390	・ Knob	1	SN:B10172--
4		20Y-43-22421	・ Insert	1	SN:B10172--
5		22U-43-21211	・ Switch	1	SN:B10172--
6		20Y-43-22250	Plate	1	SN:B10172--
7		20Y-43-22261	Boot	1	SN:B10172--
8		20Y-43-22370	Boot	1	SN:B10172--
9		600-411-1280	Nut	1	SN:B10172--
10		01252-41025	Bolt, Hexagon Socket Head	1	SN:B10172--
11		01643-51032	Washer	1	SN:B10172--
12		08034-20536	Band	1	SN:B10172--

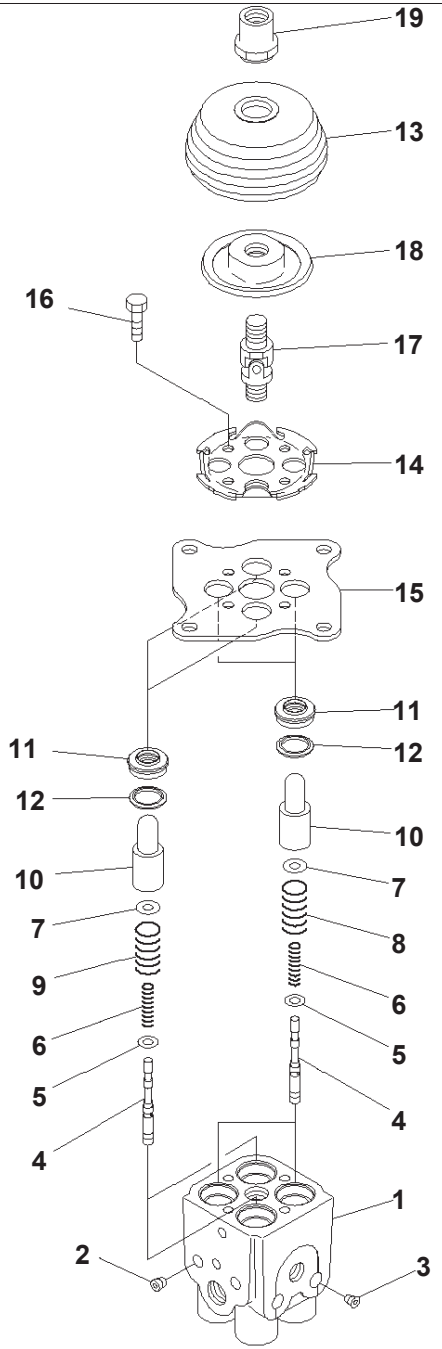

Cab, EOPS Cabin Front Fix, With AM-FM Radio, With Master Key, For KOMTRAX, Floor, P.P.C. Valve, For Work Equipment, RHS (#B10172

Index	Code	Part Number	Description	Qty	Options
		702-16-03910	Valve, Pilot	1	SN:B10172--
1	C1		・ Valve Body, Valve	1	SN:B10172--
2	C1		・ Plug	2	SN:B10172--
3	C1		・ Plug	2	SN:B10172--
4	C1		・ Valve	4	SN:B10172--
5		702-16-51140	・ Shim, T=0.30mm	4	SN:B10172--
6		702-16-53420	・ Spring	4	SN:B10172--
7		702-16-53140	・ Retainer	4	SN:B10172--
8		702-16-53470	・ Spring	2	SN:B10172--
9		702-16-53590	・ Spring	2	SN:B10172--
10		702-16-53170	・ Piston	4	SN:B10172--
11		702-16-71210	・ Seal	4	SN:B10172--
12		702-16-71160	・ Seat	4	SN:B10172--
13		702-16-71280	・ Boot	1	SN:B10172--
14		702-16-71131	・ Plate	1	SN:B10172--
15		702-16-71141	・ Plate	1	SN:B10172--
16		01010-80620	・ Bolt	4	SN:B10172--
17		702-16-51240	・ Universal Joint	1	SN:B10172--
18		702-16-71361	・ Disc	1	SN:B10172--
19		702-16-71441	・ Nut	1	SN:B10172--

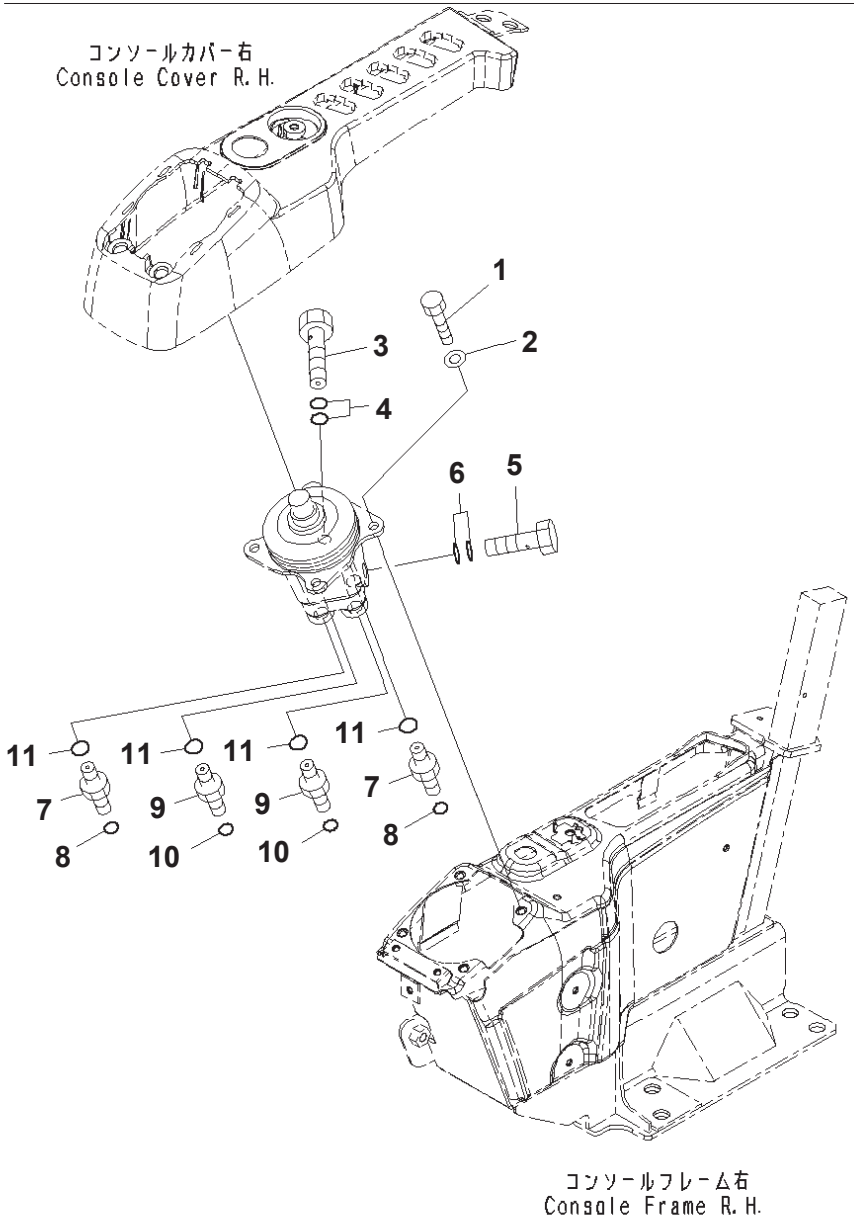

JY001285

Cab, EOPS Cabin Front Fix, With AM-FM Radio, With Master Key, For KOMTRAX, Floor, Valve, RHS
(#B10172-)

Index	Part Number	Description	Qty	Options
1	01010-80820	Bolt	4	SN:B10172--
2	01643-30823	Washer	4	SN:B10172--
3	20Y-62-18910	Bolt, Eye	1	SN:B10172--B10278
4	07000-12018	O-ring	2	SN:B10172--
5	20Y-62-18890	Bolt	1	SN:B10172--
6	07000-12015	O-ring	2	SN:B10172--B10278
7	11Y-62-12130	Nipple	2	SN:B10172--
8	02896-11008	O-ring	2	SN:B10172--B10278
9	11Y-62-12520	Nipple	2	SN:B10172--
10	02896-11009	O-ring	2	SN:B10172--
11	07002-11423	O-ring	4	SN:B10172--

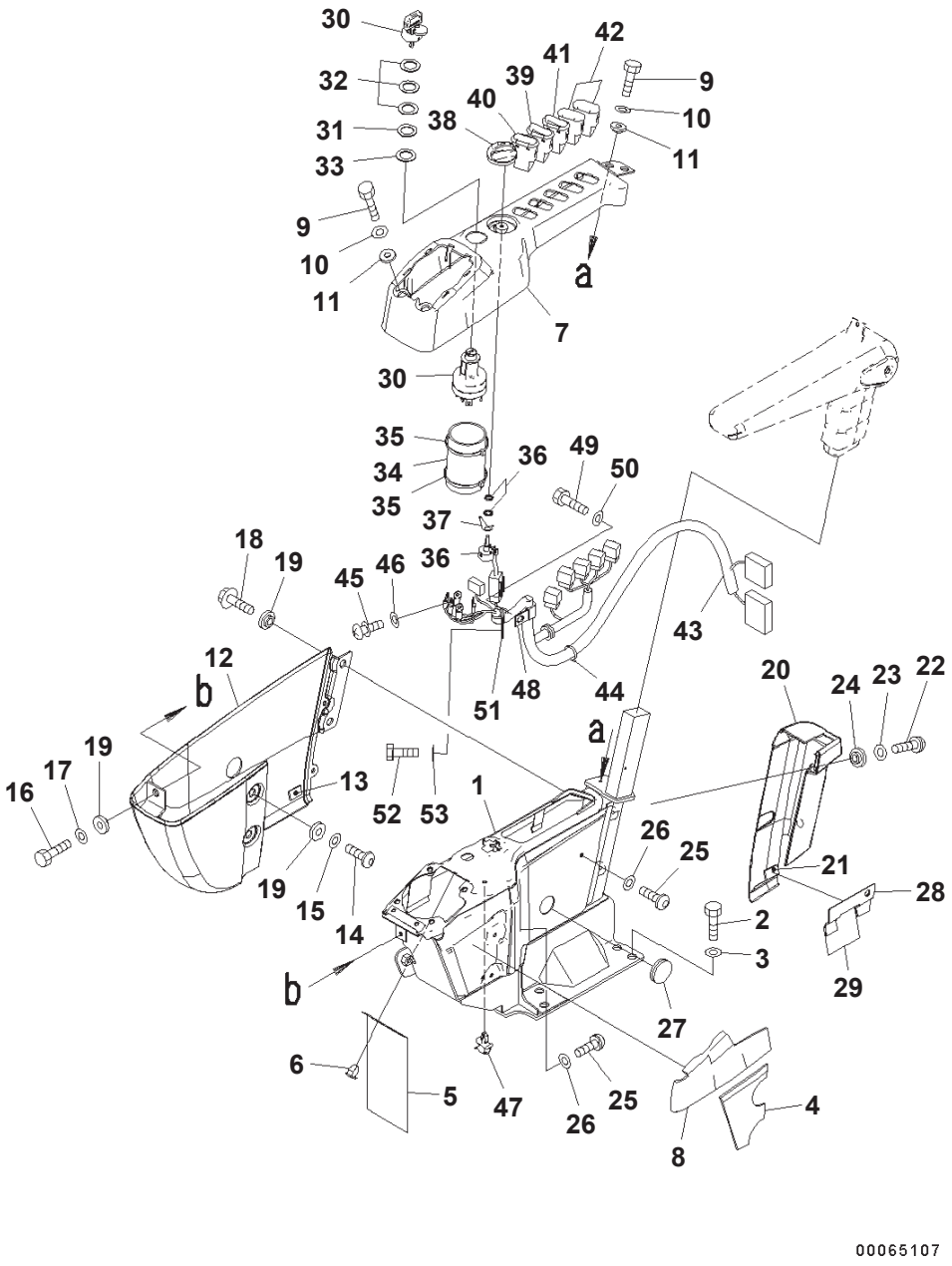

Cab, EOPS Cabin Front Fix, With AM-FM Radio, With Master Key, For KOMTRAX, Floor, Console, RHS (#B10172-)

Index	Code	Part Number	Description	Qty	Options
1		20Y-43-41314	Frame	1	SN:B10172--
2		01010-D1230	Bolt	4	SN:B10172--
3		01643-71232	Washer	4	SN:B10172--
4		20Y-43-41631	Sheet	1	SN:B10172--
5		22U-43-23251	Sheet	1	SN:B10172--
6		22U-43-23290	Clip	2	SN:B10172--
7		20Y-43-41324	Cover	1	SN:B10279--
	A2	20Y-43-41323	Cover	1	SN:B10172--
8		20Y-43-41661	Sheet	1	SN:B10172--
9		01010-80616	Bolt	4	SN:B10172--
10		01643-30623	Washer	4	SN:B10172--
11		20Y-43-41290	Collar	4	SN:B10172--
		20Y-43-42330	Cover	1	SN:B10172--
12	C1		・Cover	1	SN:B10172--
13		20Y-43-42170	・Tape	1	SN:B10172--
14		01245-00616	Screw, Hexagon Socket Head	2	SN:B10172--
15		01643-70623	Washer	2	SN:B10172--
16		01010-80616	Bolt	1	SN:B10172--
17		01643-30623	Washer	1	SN:B10172--
18		01435-00612	Bolt	2	SN:B10172--
19		20Y-43-41290	Collar	5	SN:B10172--
		20Y-43-42350	Cover	1	SN:B10172--
20	C1		・Cover	1	SN:B10172--
21		20Y-43-42170	・Tape	1	SN:B10172--
22		01245-00616	Screw, Hexagon Socket Head	2	SN:B10172--
23		01643-70623	Washer	2	SN:B10172--
24		20Y-43-41290	Collar	2	SN:B10172--
25		01245-00616	Screw, Hexagon Socket Head	3	SN:B10172--
26		01643-70623	Washer	3	SN:B10172--
27		09415-02512	Cap	1	SN:B10172--
28		20Y-43-41991	Bracket	1	SN:B10172--
29		20Y-43-42180	・Tape	1	SN:B10172--
30		08086-20000	Switch	1	SN:B10172--
31		20Y-43-41740	Plate	1	SN:B10172--
32		20Y-43-41750	Washer	3	SN:B10172--
33		20Y-43-41790	Washer	1	SN:B10172--
34		20Y-43-41671	Sheet	1	SN:B10172--
35		08034-20519	Band	2	SN:B10172--
36		22U-06-22380	Potentiometer	1	SN:B10172--
37		22U-06-22460	Spring	1	SN:B10172--
38		20Y-43-41781	Knob	1	SN:B10247--
	A2	□20Y-43-41780	Knob	1	SN:B10172--B10246
39		20Y-06-42110	Switch	1	SN:B10172--
40		20Y-06-42121	Switch, Light	1	SN:B10172--
41		21T-06-33760	Switch Assembly	1	SN:B10172--
42		20Y-06-42190	Cover	2	SN:B10172--
43		207-06-76130	Wire Harness	1	SN:B10172--
44		08034-20414	Band	1	SN:B10172--
45		01023-10508	Screw	5	SN:B10172--
46		01601-20513	Washer	5	SN:B10172--
47		22U-43-23260	Clip	1	SN:B10172--
48		04434-51710	Clip	1	SN:B10172--
49		01010-81016	Bolt	1	SN:B10172--

PC350LC-8 S/N B10001-UP
Cab, EOPS Cabin Front Fix, With AM-FM Radio, With Master Key, For KOMTRAX, Floor, Console, RHS (#B10172-)

Index	Code	Part Number	Description	Qty	Options
50		01643-31032	Washer	1	SN:B10172--
51		04434-51410	Clip	1	SN:B10172--
52		01010-81016	Bolt	1	SN:B10172--
53		01643-31032	Washer	1	SN:B10172--

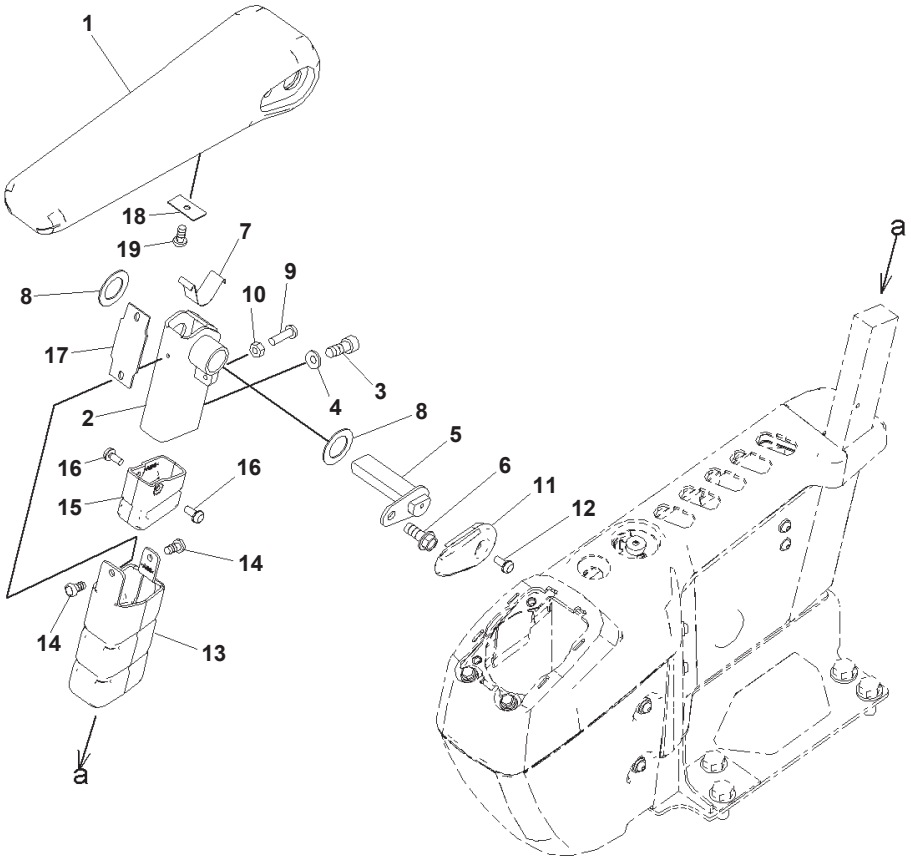

00048930

Cab, EOPS Cabin Front Fix, With AM-FM Radio, With Master Key, For KOMTRAX, Floor, Arm Rest, RHS
(#B10172-)

Index	Part Number	Description	Qty	Options
1	20Y-43-41343	Arm Rest	1	SN:B10172--
2	20Y-43-41533	Bracket	1	SN:B10172--
3	01252-80820	Bolt	2	SN:B10172--
4	01643-70823	Washer	2	SN:B10172--
5	20Y-43-41850	Pin	1	SN:B10172--
6	01435-40816	Bolt	1	SN:B10172--
7	20Y-43-41152	Spring	1	SN:B10172--
8	437-40-26240	Washer	2	SN:B10172--
9	01245-00620	Screw	1	SN:B10172--
10	01580-40605	Nut	1	SN:B10172--
11	20Y-43-41181	Cap	1	SN:B10172--
12	01023-20512	Screw	1	SN:B10172--
13	20Y-43-41191	Cover	1	SN:B10172--
14	01370-40510	Screw	2	SN:B10172--
15	20Y-43-41591	Cover	1	SN:B10172--
16	01023-20512	Screw	2	SN:B10172--
17	20Y-43-41281	Rubber	1	SN:B10172--
18	20Y-43-41461	Plate	1	SN:B10172--
19	01370-40610	Screw	1	SN:B10172--

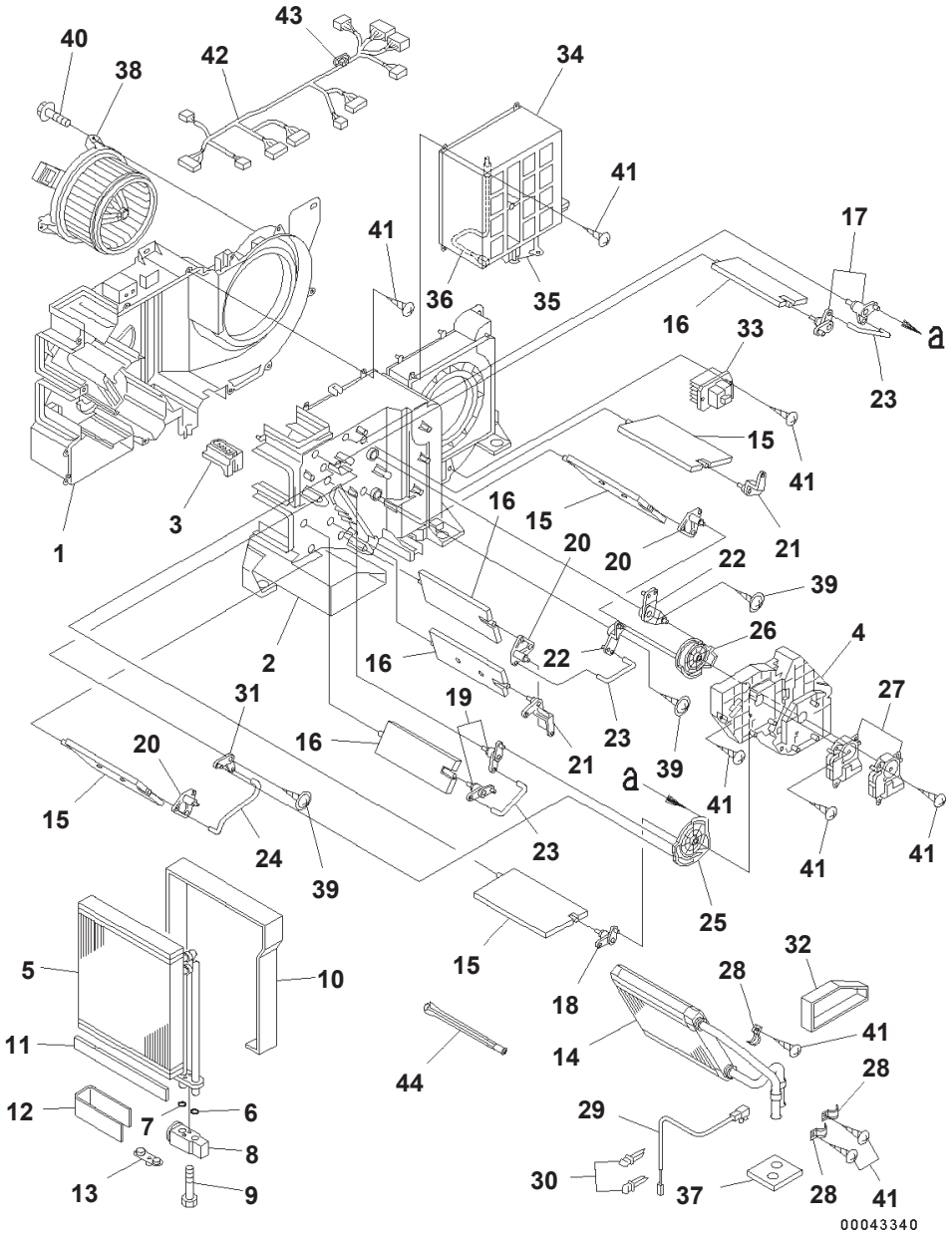

Cab, EOPS Cabin Front Fix, With AM-FM Radio, With Master Key, For KOMTRAX, Air Conditioner Unit (#B10172-)

Index	Code	Part Number	Description	Qty	Options
		20Y-810-1213	Air Conditioner Assembly	1	SN:B10343--
	A2	20Y-810-1212	Air Conditioner Assembly	1	SN:B10302--B10342
	A2	20Y-810-1211	Air Conditioner Assembly	1	SN:B10172--B10301
1		ND245450-5831	・ Case, COOLING	1	SN:B10172--
2		ND245450-5840	・ Case, COOLING	1	SN:B10172--
3		ND116576-3810	・ Plate	1	SN:B10172--
4		ND116576-3820	・ Plate	1	SN:B10172--
		ND446010-3132	・ Evaporator, Part	1	SN:B10172--
5		ND446600-0991	・・ Evaporator Assembly	1	SN:B10172--
6		ND949142-0020	・・ O-ring	1	SN:B10172--
7		ND949142-0030	・・ O-ring	1	SN:B10172--
8		ND447500-4760	・・ Valve, Expansion	1	SN:B10302--
		ND447500-2750	・・ Valve, Expansion	1	SN:B10172--B10301
9		ND949046-3100	・・ Bolt	2	SN:B10172--
10		ND146657-8841	・・ Packing	1	SN:B10172--
11		ND146657-9811	・・ Packing	3	SN:B10172--
12		ND146657-8850	・・ Packing	1	SN:B10172--
13		ND445021-3941	・・ Plug	1	SN:B10172--
14		ND116140-0050	・ Core Subassembly, Heater	1	SN:B10172--
15		ND116660-7570	・ Door Assembly	4	SN:B10172--
16		ND116650-6850	・ Door Assembly	4	SN:B10172--
17		ND116780-2481	・ Lever Subassembly, Link	2	SN:B10172--
18		ND116780-2491	・ Lever Subassembly, Link	1	SN:B10172--
19		ND116780-2501	・ Lever Subassembly, Link	2	SN:B10172--
20		ND116780-2510	・ Lever Subassembly, Link	3	SN:B10172--
21		ND116781-3000	・ Lever	2	SN:B10172--
22		ND116780-3130	・ Lever Subassembly, Link	2	SN:B10172--
23		ND116662-7670	・ Shaft	3	SN:B10172--
24		ND116662-7681	・ Shaft	1	SN:B10172--
25		ND116576-3852	・ Plate	1	SN:B10172--
26		ND116576-3862	・ Plate	1	SN:B10172--
27		ND063800-0300	・ Servo Motor Assembly	2	SN:B10172--
28		ND017231-0700	・ Clamp	3	SN:B10172--
29		ND077500-5890	・ Thermistor Assembly	1	SN:B10172--
30		ND246790-2060	・ Clamp	2	SN:B10172--
31		ND116780-3920	・ Lever Subassembly, LINK	1	SN:B10172--
32		ND146667-0440	・ Packing	1	SN:B10172--
33		ND077800-0750	・ Transistor	1	SN:B10172--
34		ND146340-0560	・ Box Assembly	1	SN:B10172--
35		ND063600-4580	・・ Servo Motor Assembly	1	SN:B10172--
36		ND077500-5650	・・ Thermistor Assembly	1	SN:B10172--
37		ND146657-8860	・ Packing	1	SN:B10172--
38		ND116340-7350	・ Motor Assembly, FAN	1	SN:B10172--
39		ND949008-0460	・ Screw, Tapping	3	SN:B10172--
40		ND949008-0330	・ Screw, Tapping	3	SN:B10172--
41		ND949001-1730	・ Screw, Tapping	32	SN:B10172--
42		ND246470-4311	・ Wire Harness Assembly, WIRE	1	SN:B10302--
		ND246470-4311	・ Wire Harness Assembly, WIRE	1	SN:B10172--B10301
43		ND93950-05003	・・ Fuse	1	SN:B10172--
44		ND116662-8320	・ Shaft	1	SN:B10172--

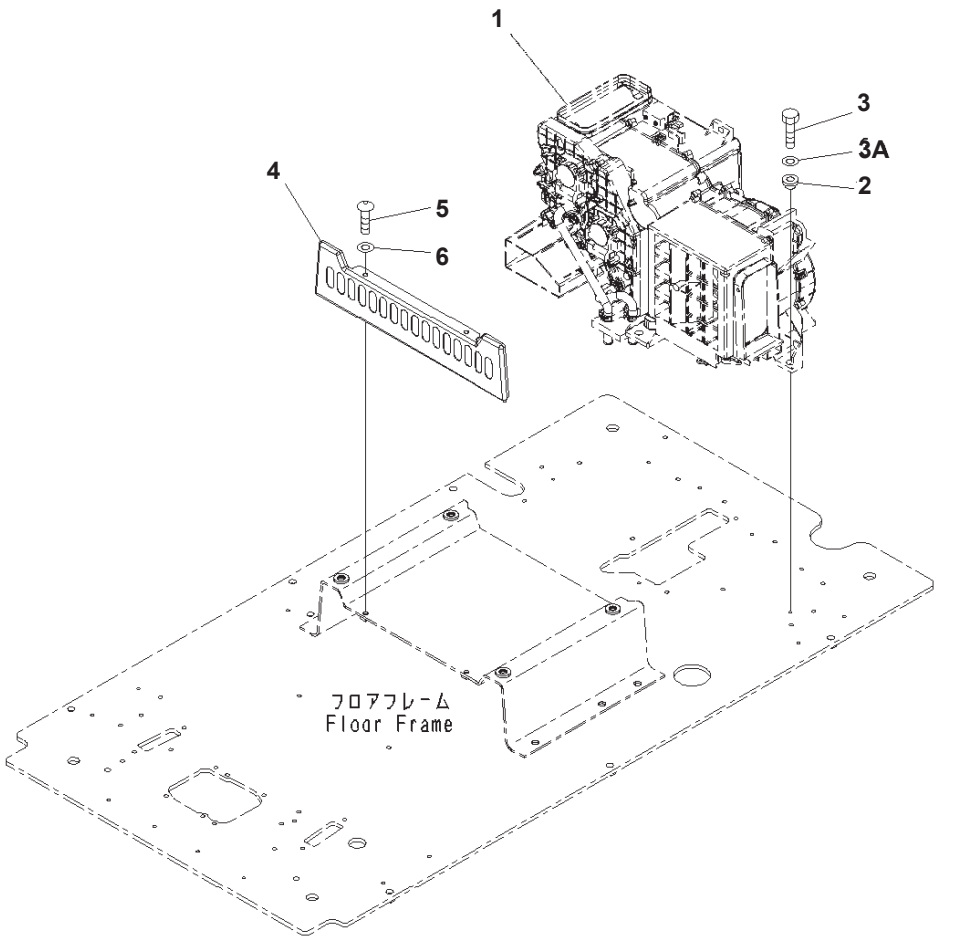

Cab, EOPS Cabin Front Fix, With AM-FM Radio, With Master Key, For KOMTRAX, Floor, Air Conditioner Unit (#B10172-)

Index	Code	Part Number	Description	Qty	Options
1		20Y-810-1213	Air Conditioner	1	SN:B10343--
	A2	20Y-810-1212	Air Conditioner	1	SN:B10302--B10342
	A2	20Y-810-1211	Air Conditioner	1	SN:B10172--B10301
2		208-979-7540	・ Collar	7	SN:B10172--
3		01010-80825	・ Bolt	7	SN:B10172--
3A		01643-30823	・ Washer	7	SN:B10172--
4		20Y-43-41240	・ Cover	1	SN:B10343--
5		01245-00820	・ Screw	2	SN:B10172--
6		01643-70823	・ Washer	2	SN:B10172--

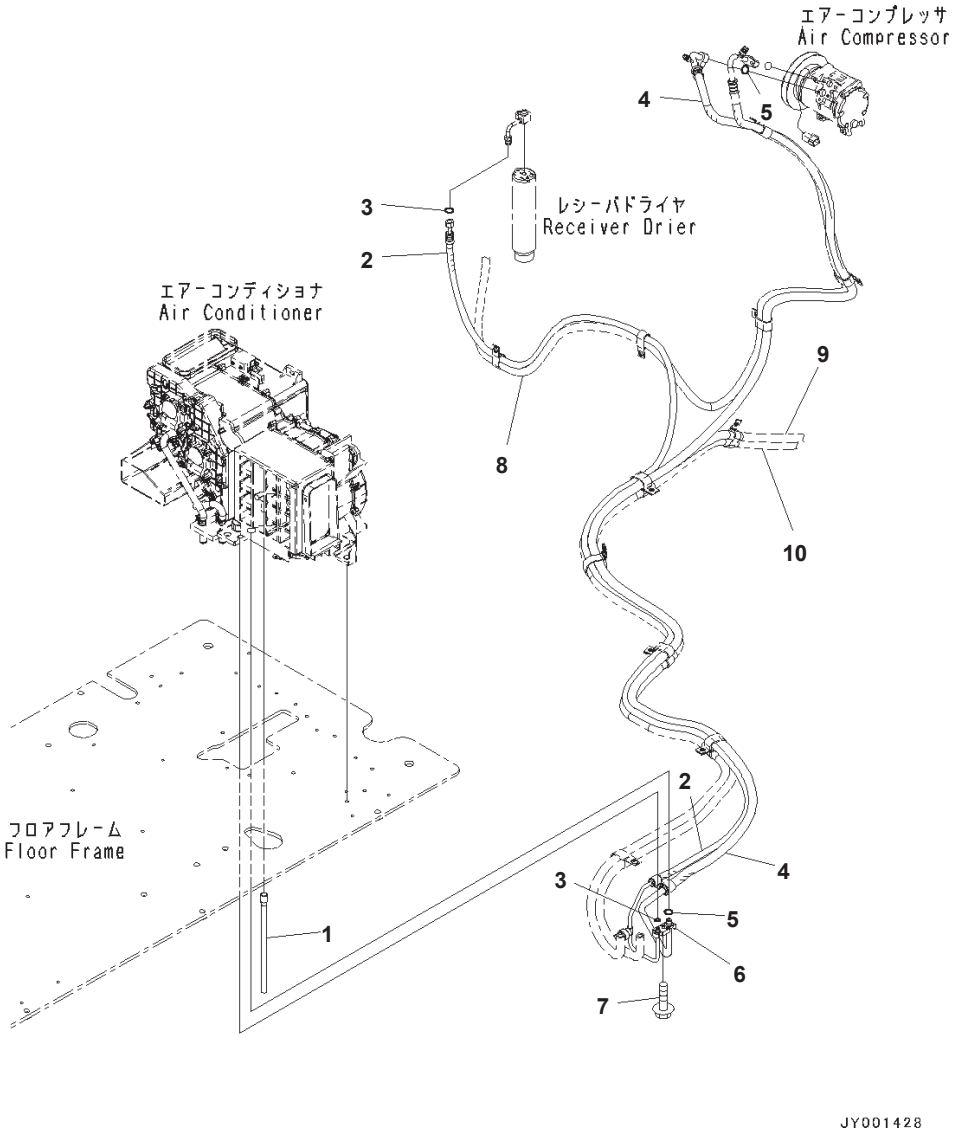

Cab, EOPS Cabin Front Fix, With AM-FM Radio, With Master Key, For KOMTRAX, Floor, Air Conditioner Hose (#B10172-)

Index	Part Number	Description	Page	Item	Qty	Options
1	208-979-7640	Hose, L=300mm			1	SN:B10172--
2	207-810-1311	Hose, L=4026mm			1	SN:B10172--
3	20Y-979-3150	・ O-ring			2	SN:B10172--
4	207-810-1321	Hose, L=4134mm			1	SN:B10172--
5	20Y-979-3130	・ O-ring			2	SN:B10172--
6	208-979-7650	Connector			1	SN:B10172--
7	01435-40620	Bolt			1	SN:B10172--
8	(207-979-7462)	Hose	K0700-001002	12		SN:--
9	(207-810-1332)	Hose Assembly	K1110-024050	1		SN:--
10	(207-810-1342)	Hose Assembly	K1110-024050	3		SN:--

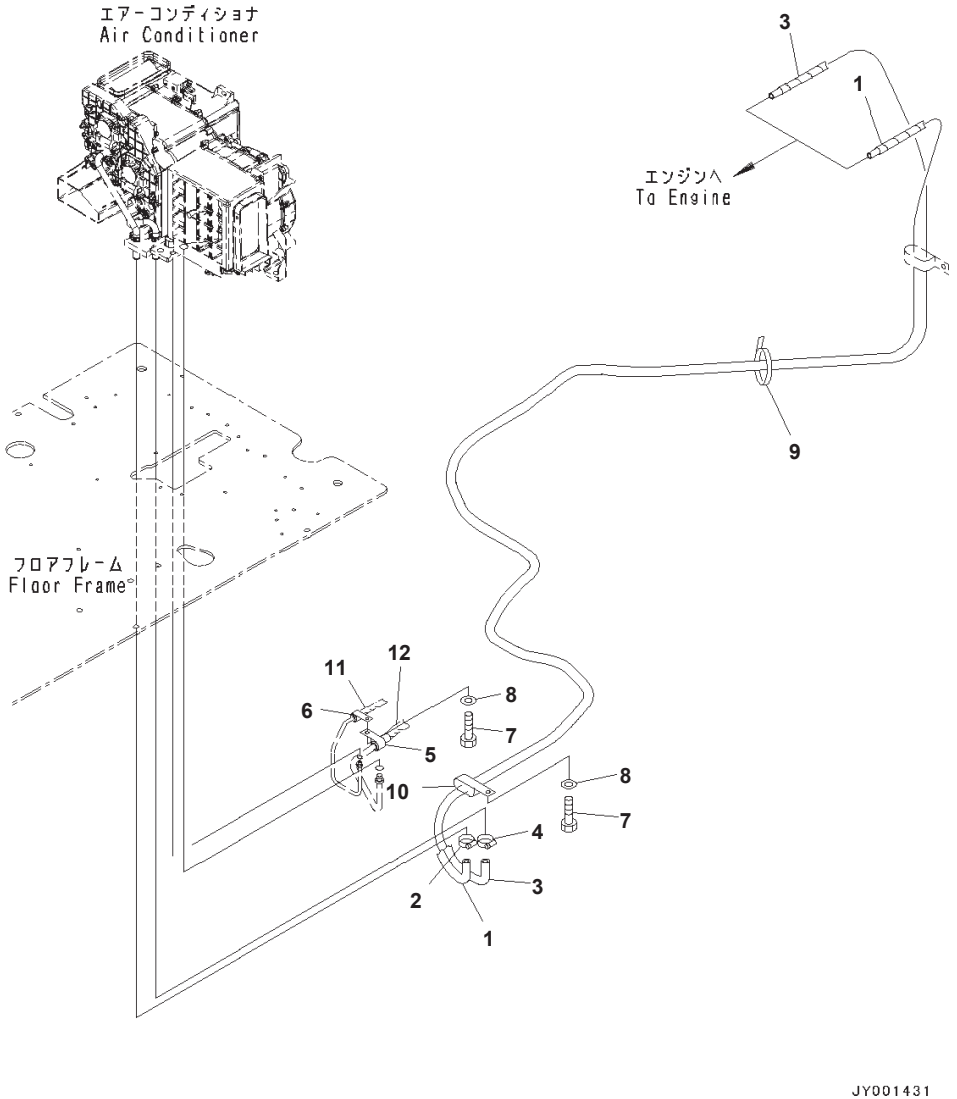

Cab, EOPS Cabin Front Fix, With AM-FM Radio, With Master Key, For KOMTRAX, Floor, Heater Hose (#B10172-)

Index	Part Number	Description	Page	Item	Qty	Options
1	207-810-1332	Hose Assembly			1	SN:B10172--
2	09479-02400	Clamp			1	SN:B10172--
3	207-810-1342	Hose Assembly			1	SN:B10172--
4	09479-02400	Clamp			1	SN:B10172--
5	04434-52110	Clip			1	SN:B10172--
6	04434-52511	Clip			1	SN:B10172--
7	01010-81020	Bolt			2	SN:B10172--
8	01643-31032	Washer			2	SN:B10172--
9	08034-20536	Band			1	SN:B10172--
10	141-06-11220	Clip			1	SN:B10172--
11	(207-810-1311)	Hose	K1110-024049	2		SN:--
12	(207-810-1321)	Hose	K1110-024049	4		SN:--

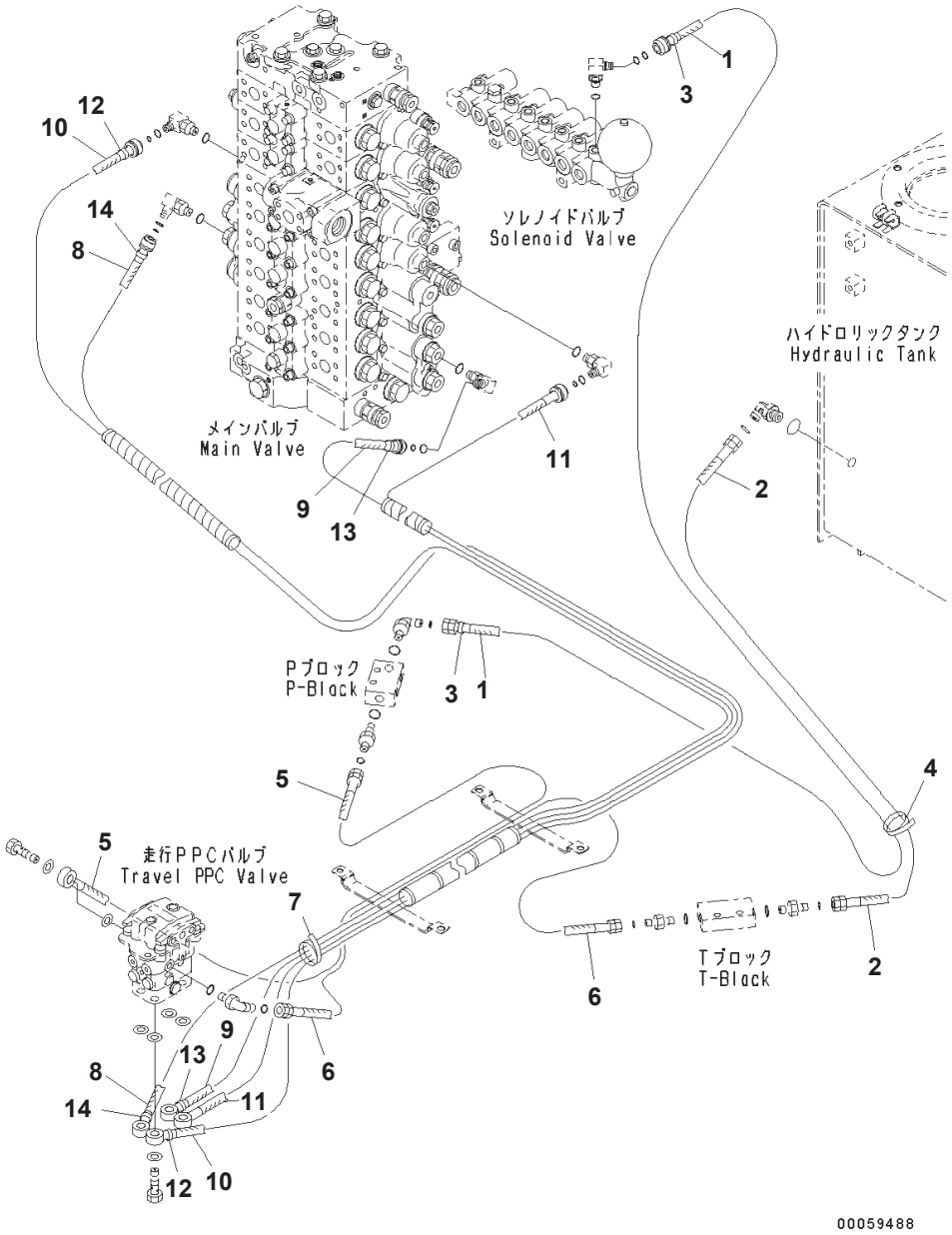

Cab, EOPS Cabin Front Fix, With AM-FM Radio, With Master Key, For KOMTRAX, Floor, P.P.C. Piping For Travel Valve (#B10172-)

Index	Part Number	Description	Qty	Options
1	22U-62-31180	Hose, L=3100mm	1	SN:B10172--
2	22U-62-31180	Hose, L=1400mm	1	SN:B10172--
3	20Y-62-22790	Band, Red	2	SN:B10172--
4	08034-20519	Band	1	SN:B10172--
5	208-62-72290	Hose, L=950mm	1	SN:B10172--
6	208-62-72310	Hose, L=950mm	1	SN:B10172--
7	08034-20519	Band	1	SN:B10172--
8	208-62-72360	Hose, L=3550mm	1	SN:B10172--
9	207-62-75870	Hose, L=3200mm	1	SN:B10172--
10	207-62-75880	Hose, L=3600mm	1	SN:B10172--
11	207-62-75890	Hose, L=3350mm	1	SN:B10172--
12	20Y-62-22790	Band, Red	2	SN:B10172--
13	20Y-62-22820	Band, Blue	2	SN:B10172--
14	20Y-62-22850	Band, Green	2	SN:B10172--

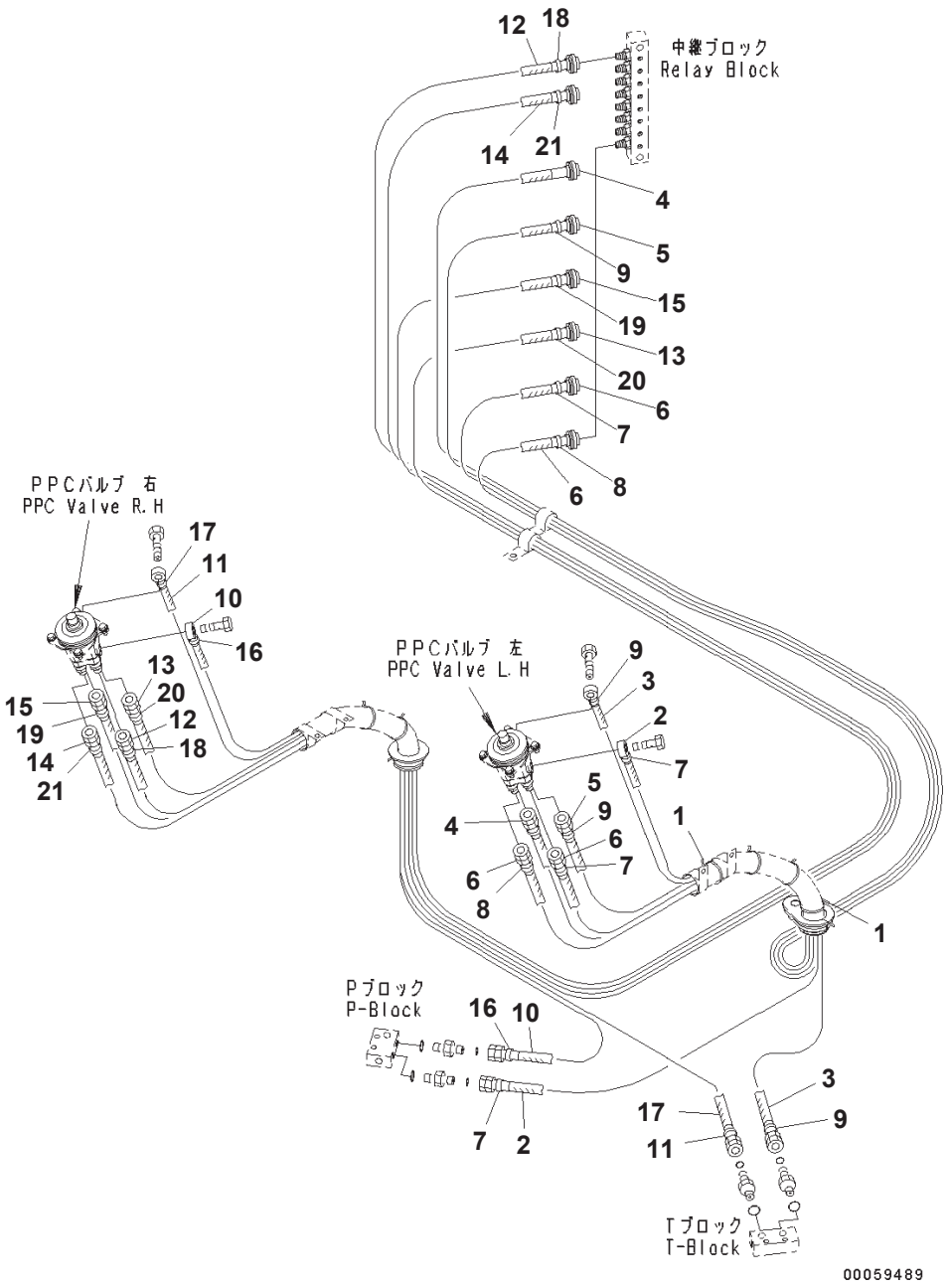

Cab, EOPS Cabin Front Fix, With AM-FM Radio, With Master Key, For KOMTRAX, Floor, P.P.C. Piping For Pilot Valve (#B10172-)

Index	Part Number	Description	Qty	Options
1	08034-20536	Band	2	SN:B10172--
2	20Y-62-53410	Hose, L=1500mm	1	SN:B10172--
3	20Y-62-53420	Hose, L=1350mm	1	SN:B10172--
4	207-62-72690	Hose, L=3700mm	1	SN:B10172--
5	207-62-75810	Hose, L=3650mm	1	SN:B10172--
6	207-62-75820	Hose, L=3550mm	2	SN:B10172--
7	20Y-62-22790	Band, Red	4	SN:B10172--
8	20Y-62-22810	Band, Yellow	2	SN:B10172--
9	20Y-62-22820	Band, Blue	4	SN:B10172--
10	20Y-62-42251	Hose, L=1250mm	1	SN:B10172--
11	208-62-72870	Hose, L=1500mm	1	SN:B10172--
12	207-62-72670	Hose, L=3300mm	1	SN:B10172--
13	20Y-62-42271	Hose, L=3150mm	1	SN:B10172--
14	20Y-62-42290	Hose, L=3300mm	1	SN:B10172--
15	21N-62-36790	Hose, L=3200mm	1	SN:B10172--
16	20Y-62-22790	Band, Red	2	SN:B10172--
17	20Y-62-22820	Band, Blue	2	SN:B10172--
18	20Y-62-22830	Band, White	2	SN:B10172--
19	20Y-62-22840	Band, Black	2	SN:B10172--
20	20Y-62-22850	Band, Green	2	SN:B10172--
21	20Y-62-22860	Band, Brown	2	SN:B10172--

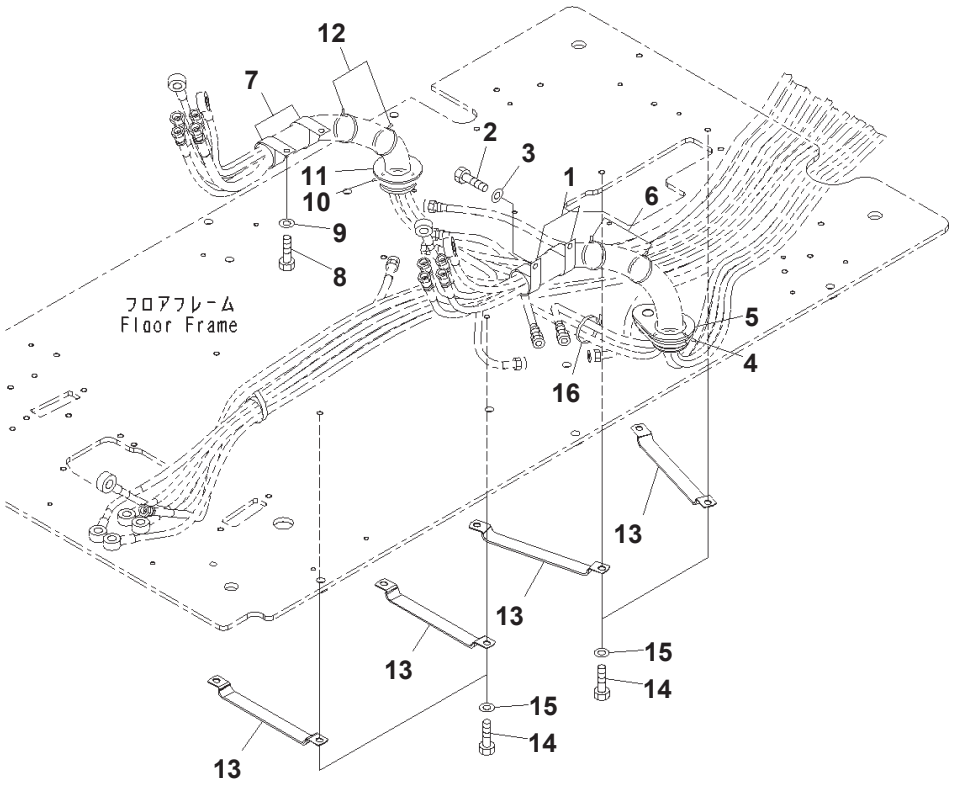

Cab, EOPS Cabin Front Fix, With AM-FM Radio, With Master Key, For KOMTRAX, Floor, P.P.C. Hose Clamp (#B10172-)

Index	Part Number	Description	Qty	Options
1	208-06-19170	Clip	2	SN:B10172--
2	01010-81025	Bolt	2	SN:B10172--
3	01643-31032	Washer	2	SN:B10172--
4	08034-20536	Band	2	SN:B10172--
5	207-53-14140	Grommet	1	SN:B10172--
6	08034-20536	Band	2	SN:B10172--
7	04434-53411	Clip	2	SN:B10172--
8	01010-81025	Bolt	2	SN:B10172--
9	01643-31032	Washer	2	SN:B10172--
10	08034-20536	Band	2	SN:B10172--
11	20Y-54-65121	Grommet	1	SN:B10172--
12	08034-20536	Band	2	SN:B10172--
13	20Y-62-27770	Clamp	4	SN:B10172--
14	01010-81016	Bolt	8	SN:B10172--
15	01643-31032	Washer	8	SN:B10172--
16	08034-20536	Band	1	SN:B10172--

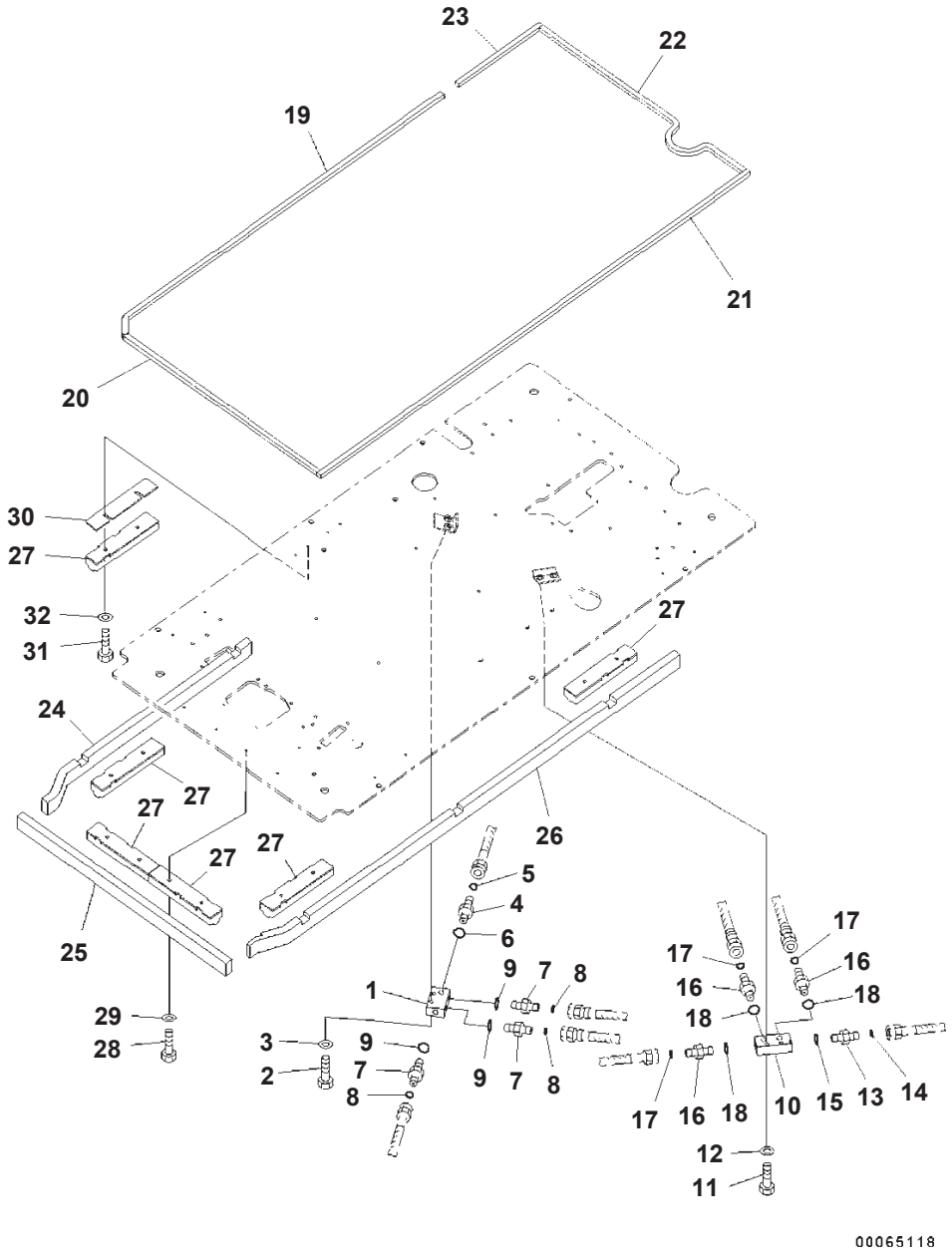

Cab, EOPS Cabin Front Fix, With AM-FM Radio, With Master Key, For KOMTRAX, Floor, P, T Block And Seal (#B10172-)

Index	Part Number	Description	Qty	Options
1	20Y-62-15831	Block	1	SN:B10172--
2	01010-81045	Bolt	2	SN:B10172--
3	01643-31032	Washer	2	SN:B10172--
4	02781-0031D	Union	1	SN:B10172--
5	02896-11009	O-ring	1	SN:B10172--
6	07002-11423	O-ring	1	SN:B10172--
7	02781-0021D	Union	3	SN:B10172--
8	02896-11008	O-ring	3	SN:B10172--
9	07002-11423	O-ring	3	SN:B10172--
10	20Y-62-15831	Block	1	SN:B10172--
11	01010-81045	Bolt	2	SN:B10172--
12	01643-31032	Washer	2	SN:B10172--
13	02781-0031D	Union	1	SN:B10172--
14	02896-11009	O-ring	1	SN:B10172--
15	07002-11423	O-ring	1	SN:B10172--
16	02781-0021D	Union	2	SN:B10172--
17	02896-11008	O-ring	2	SN:B10172--
18	07002-11423	O-ring	2	SN:B10172--
19	20Y-53-14910	Seal	1	SN:B10172--
20	20Y-53-14920	Seal	1	SN:B10172--
21	20Y-53-14930	Seal	1	SN:B10172--
22	20Y-53-14940	Seal	1	SN:B10172--
23	20Y-53-14950	Seal	1	SN:B10172--
24	20Y-53-14963	Sheet	1	SN:B10172--
25	20Y-53-14973	Sheet	1	SN:B10172--
26	20Y-53-14983	Sheet	1	SN:B10172--
27	20Y-53-14831	Sheet	6	SN:B10172--
28	01010-80830	Bolt	10	SN:B10172--
29	01643-30823	Washer	10	SN:B10172--
30	20Y-53-14841	Plate	1	SN:B10172--
31	01010-80840	Bolt	2	SN:B10172--
32	01643-30823	Washer	2	SN:B10172--

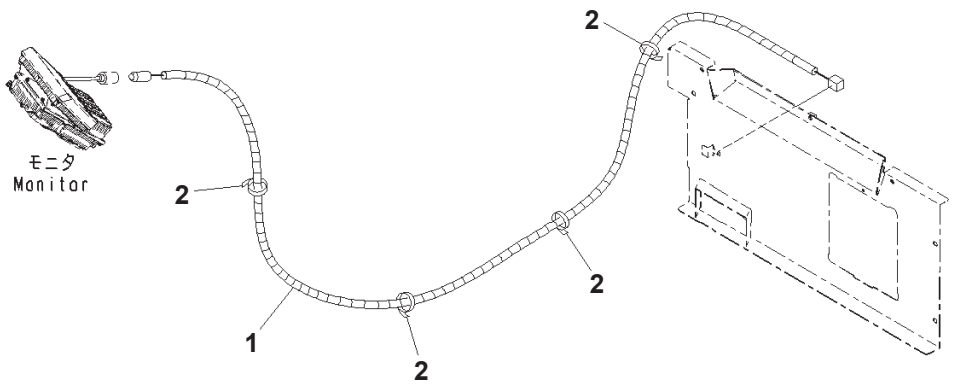

Cab, EOPS Cabin Front Fix, With AM-FM Radio, With Master Key, For KOMTRAX, Floor, Rear Camera Cable (#B10172-)

Index	Part Number	Description	Qty	Options
1	20Y-06-42320	Cable	1	SN:B10172--
2	08034-20519	Band	4	SN:B10172--

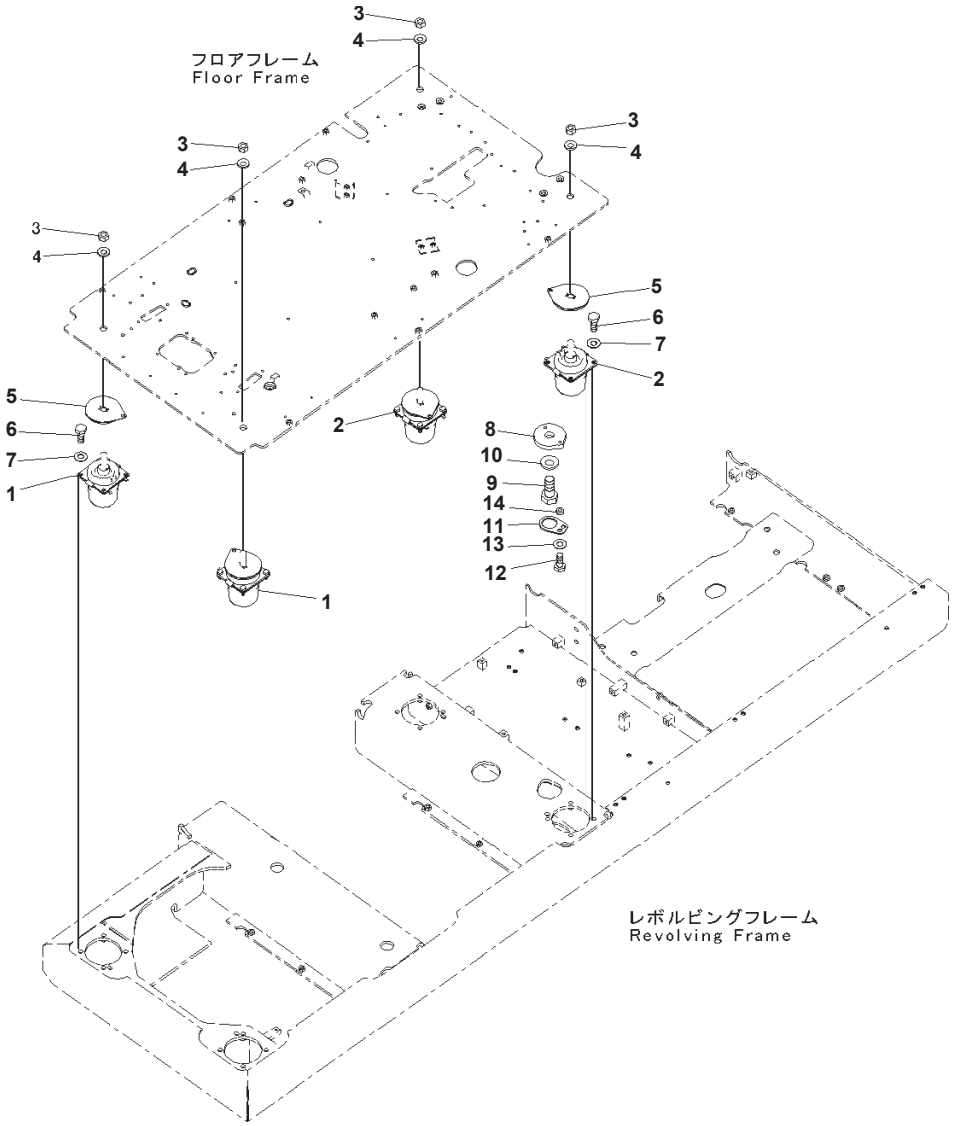

Floor Mounts

Index	Part Number	Description	Qty	Options
1	208-53-23210	Cushion	2	SN:B10001--
2	206-53-13121	Cushion	2	SN:B10001--
3	01580-12016	Nut	4	SN:B10001--
4	01643-32060	Washer	4	SN:B10001--
5	20Y-53-13130	Spacer	4	SN:B10001--
6	01010-81235	Bolt	16	SN:B10121--
	01010-81240	Bolt	16	SN:B10001--B10120
7	01643-31232	Washer	16	SN:B10001--
8	20Y-53-13142	Plate	1	SN:B10121--
	20Y-53-13141	Plate	1	SN:B10001--B10120
9	01011-83030	Bolt	1	SN:B10121--
	01010-83075	Bolt	1	SN:B10001--B10120
10	01643-33080	Washer	1	SN:B10001--
11	20Y-53-13151	Lock	1	SN:B10001--
12	01010-81235	Bolt	1	SN:B10001--
13	01643-31232	Washer	1	SN:B10001--
14	198-43-15310	Collar, T=10mm	1	SN:B10001--

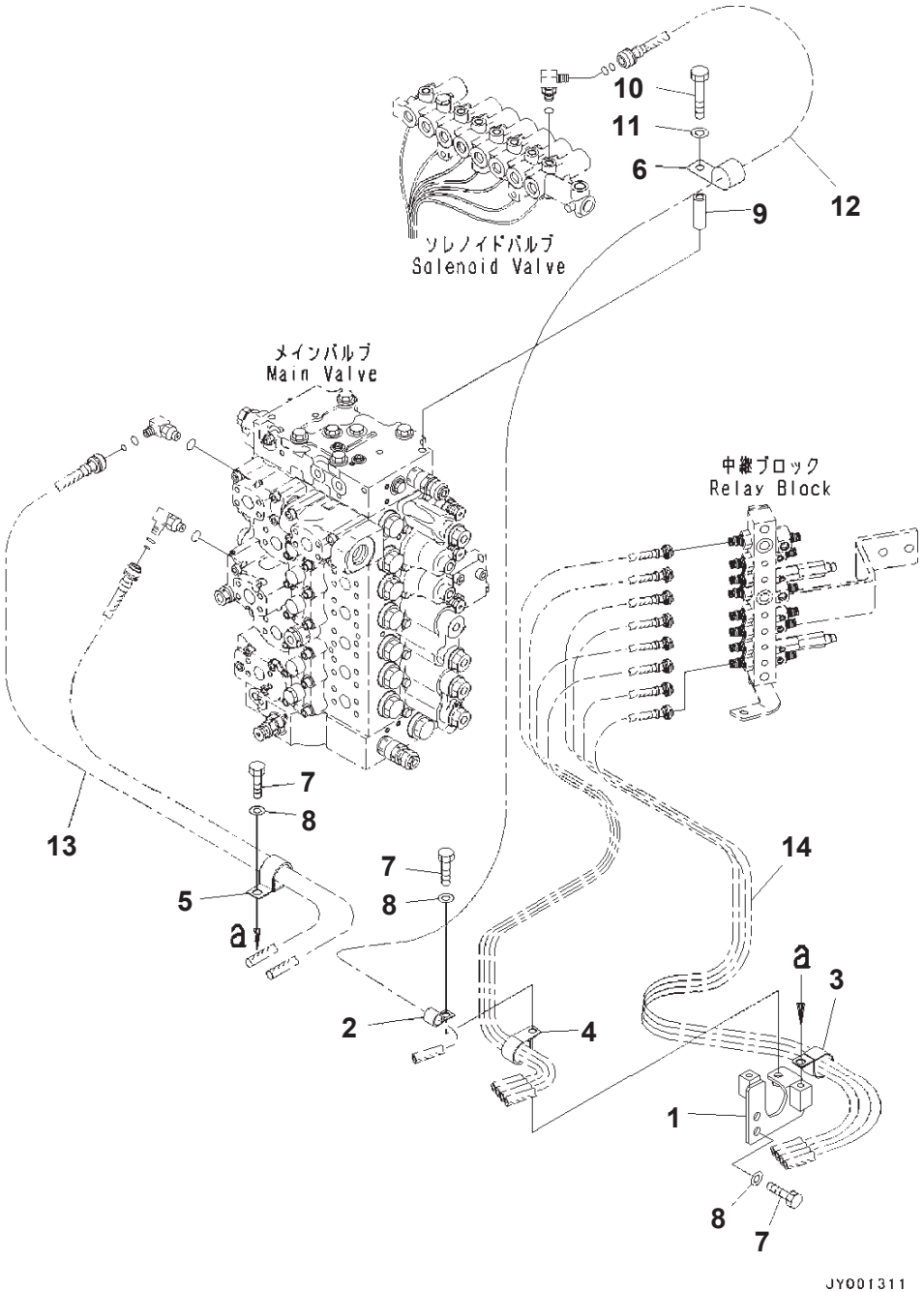

Proportional Pressure Control (PPC) Piping (#B10172-)

Index	Part Number	Description	Page	Item	Qty	Options
1	207-62-75190	Bracket			1	SN:B10172--
2	04434-51812	Clip			1	SN:B10172--
3	20Y-62-15951	Clip			1	SN:B10172--
4	581-04-22290	Clip			2	SN:B10172--
5	04434-53412	Clip			1	SN:B10172--
6	04435-51512	Clip			2	SN:B10172--
7	01010-81225	Bolt			6	SN:B10172--
8	01643-31232	Washer			6	SN:B10172--
9	175-61-17240	Collar			1	SN:B10172--
10	01010-81285	Bolt			1	SN:B10172--
11	01643-31232	Washer			1	SN:B10172--
12	(22U-62-31180)	Hose	K1110-039048	2		SN:--
13	(207-62-75880)	Hose	K1110-039048	10		SN:--
14	(207-62-75820)	Hose	K1110-039049	6		SN:--

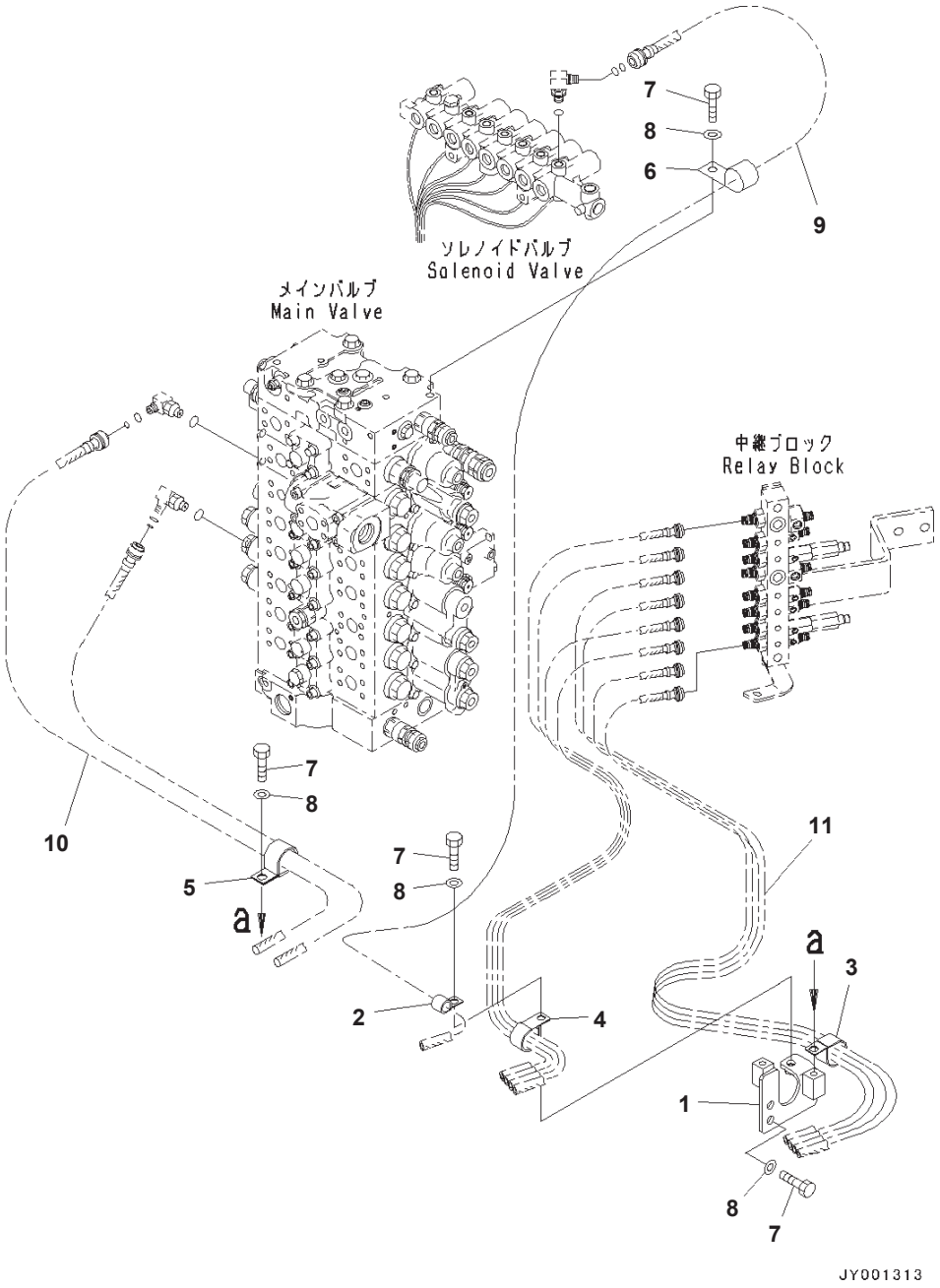

Proportional Pressure Control (PPC) Piping, For Additional Actuator Piping

Index	Part Number	Description	Page	Item	Qty	Options
1	207-62-75190	Bracket			1	SN:B10001--
2	04434-51812	Clip			1	SN:B10001--
3	20Y-62-15951	Clip			1	SN:B10001--
4	581-04-22290	Clip			2	SN:B10001--
5	04434-53412	Clip			1	SN:B10001--
6	04435-51512	Clip			2	SN:B10001--
7	01010-81225	Bolt			6	SN:B10001--
8	01643-31232	Washer			6	SN:B10001--
9	(22U-62-31180)	Hose	K1110-024051	2		SN:--
10	(207-62-75880)	Hose	K1110-024051	10		SN:--
11	(207-62-75820)	Hose	K1110-024052	6		SN:--

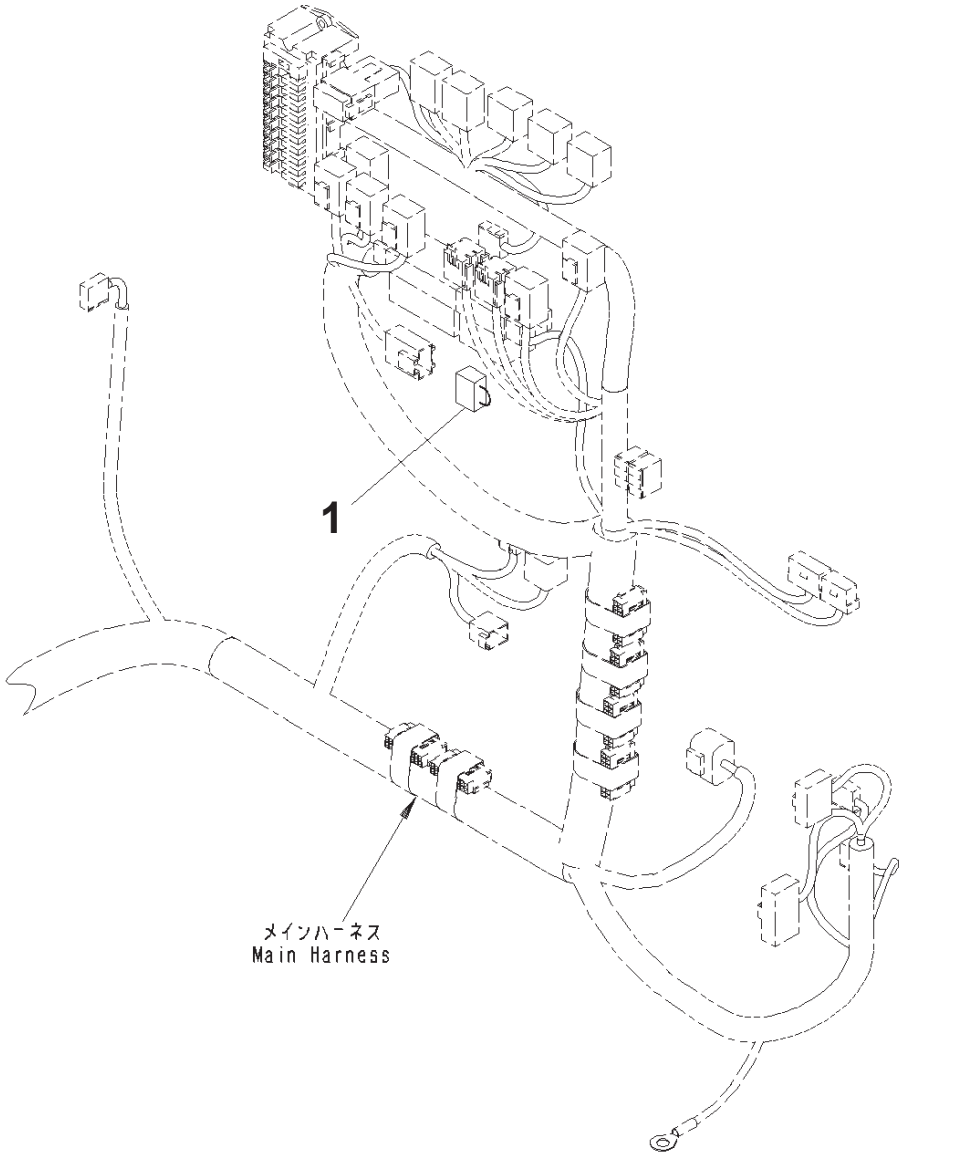

Index	Part Number	Description	Qty	Options
1	207-06-61250	Switch	1	SN:B10001--

GUARD AND RELATED PARTS

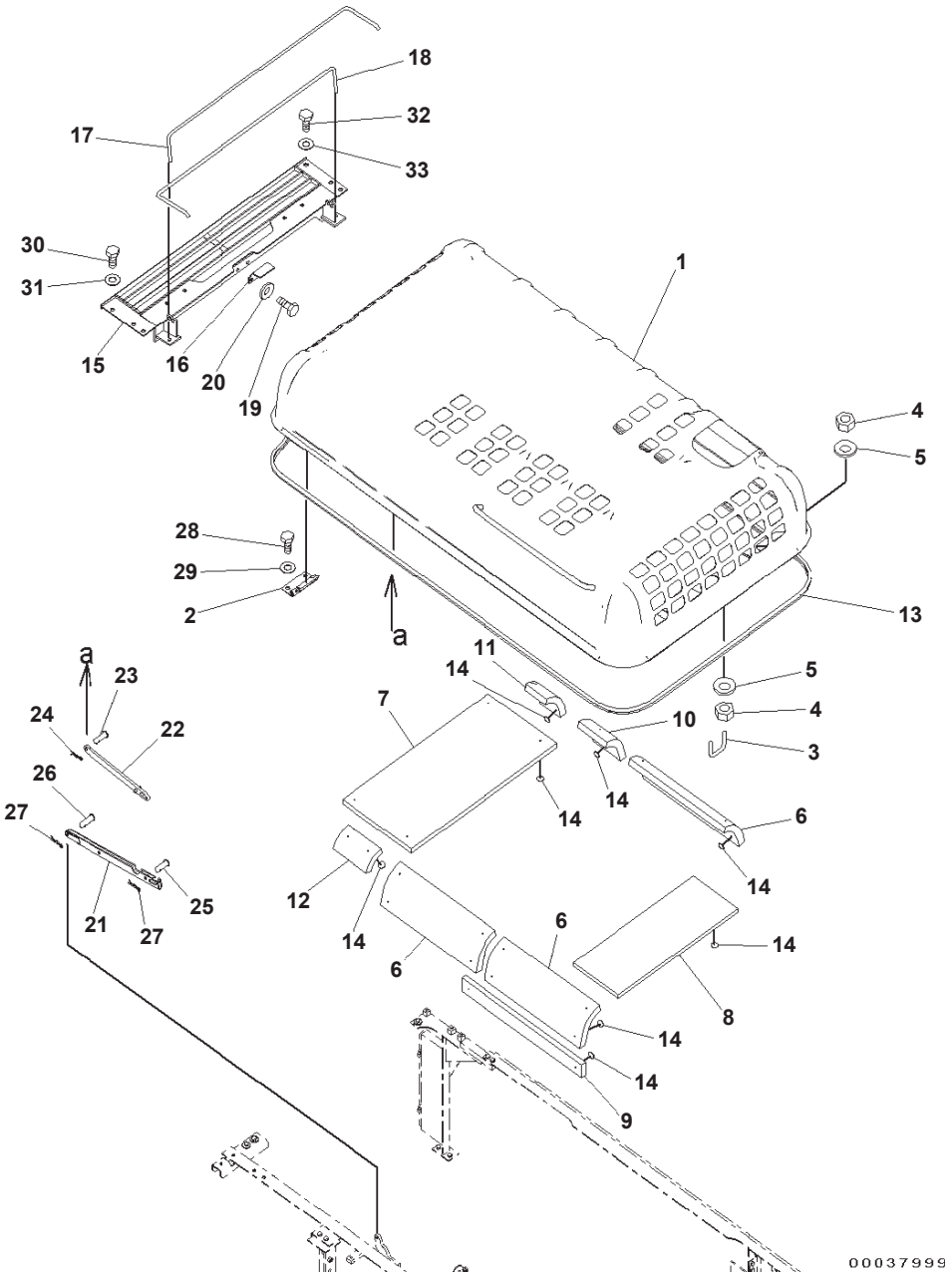

Index	Part Number	Description	Qty	Options
1	207-54-78110	Hood	1	SN:B10001--
2	20Y-54-27123	・ Hinge,Welded	2	SN:B10001--
3	207-54-61270	U-bolt	1	SN:B10001--
4	01580-11613	Nut	4	SN:B10001--
5	01643-31645	Washer	4	SN:B10001--
6	207-54-77630	Sheet	3	SN:B10001--
7	207-54-77860	Sheet	1	SN:B10001--
8	207-54-77871	Sheet	1	SN:B10001--
9	207-54-78130	Sheet	1	SN:B10001--
10	207-54-78170	Sheet	1	SN:B10001--
11	207-54-78180	Sheet	1	SN:B10001--
12	207-54-78190	Sheet	1	SN:B10001--
13	207-54-62131	Seal	1	SN:B10001--
14	124-A62-1920	Cap	30	SN:B10001--
15	207-54-78121	Frame	1	SN:B10001--
16	20Y-54-27360	Bracket	1	SN:B10001--
17	207-54-62150	Spring	1	SN:B10001--
18	207-54-62160	Spring	1	SN:B10001--
19	01010-81230	Bolt	2	SN:B10001--
20	01643-31232	Washer	2	SN:B10001--
21	207-54-72150	Stay	1	SN:B10001--
22	20Y-54-27290	Stay	1	SN:B10001--
23	04205-31230	Pin	1	SN:B10001--
24	04052-01253	Pin	1	SN:B10001--
25	04205-31230	Pin	1	SN:B10001--
26	04205-31238	Pin	1	SN:B10001--
27	04052-01253	Pin	2	SN:B10001--
28	01010-81230	Bolt	4	SN:B10001--
29	01643-31232	Washer	4	SN:B10001--
30	01010-81230	Bolt	3	SN:B10001--
31	01643-31232	Washer	3	SN:B10001--
32	01010-81225	Bolt	3	SN:B10001--
33	01643-31232	Washer	3	SN:B10001--

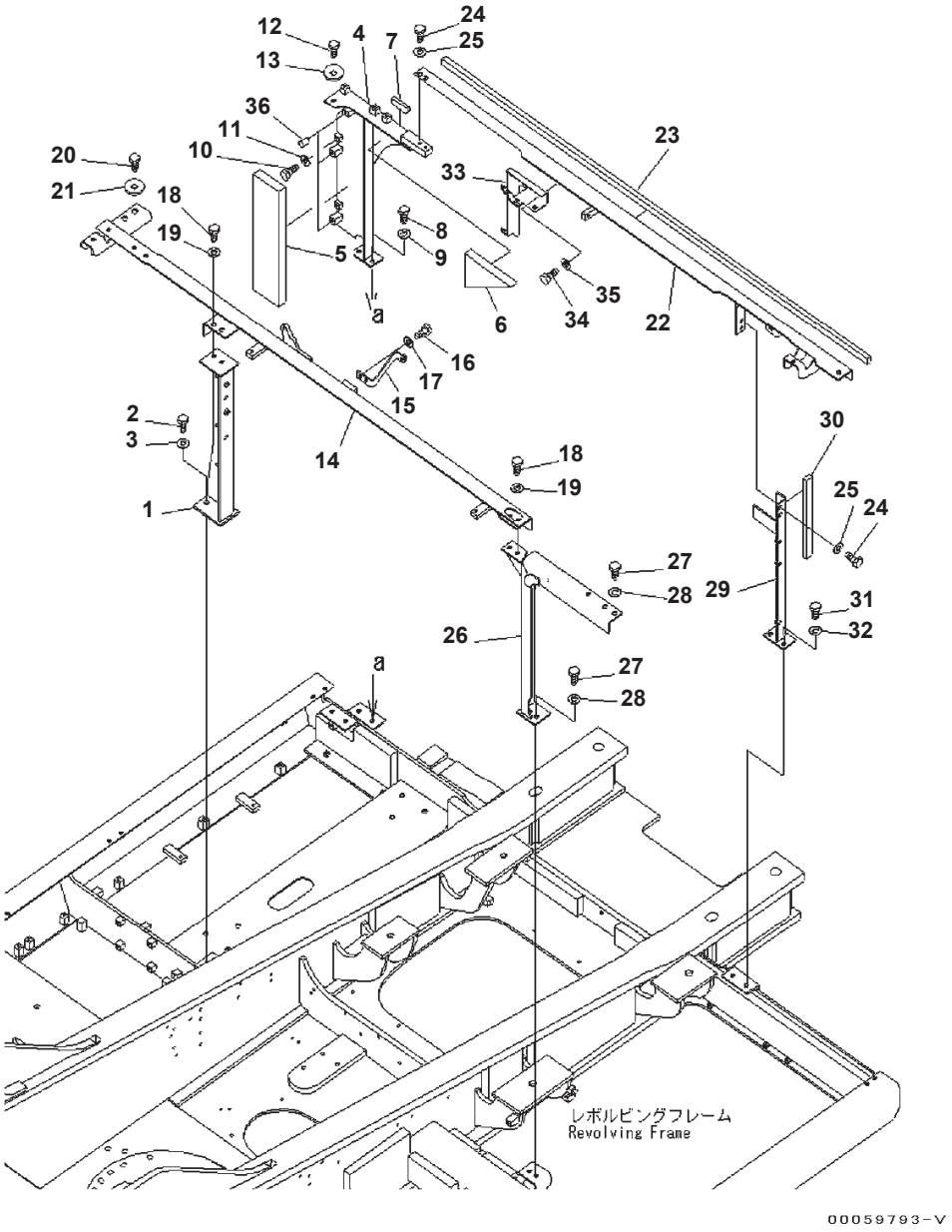

Index	Part Number	Description	Qty	Options
1	207-54-76451	Frame	1	SN:B10001--
2	01010-81240	Bolt	2	SN:B10001--
3	01643-31232	Washer	2	SN:B10001--
4	207-54-78690	Frame	1	SN:B10001--
5	207-54-77690	・ Sheet	1	SN:B10001--
6	207-54-77710	・ Sheet	1	SN:B10001--
7	207-54-77190	・ Sheet	1	SN:B10001--
8	01010-81230	Bolt	2	SN:B10001--
9	01643-31232	Washer	2	SN:B10001--
10	01010-81225	Bolt	2	SN:B10001--
11	01643-31232	Washer	2	SN:B10001--
12	01010-81230	Bolt	1	SN:B10001--
13	175-54-34170	Washer	1	SN:B10001--
14	207-54-76421	Frame	1	SN:B10001--
15	207-979-7560	Bracket	1	SN:B10001--
16	01010-81230	Bolt	2	SN:B10001--
17	01643-31232	Washer	2	SN:B10001--
18	01010-81230	Bolt	4	SN:B10001--
19	01643-31232	Washer	4	SN:B10001--
20	01010-81230	Bolt	2	SN:B10001--
21	175-54-34170	Washer	2	SN:B10001--
22	207-54-78670	Frame	1	SN:B10001--
23	207-54-71721	・ Sheet	1	SN:B10001--
24	01010-81230	Bolt	5	SN:B10001--
25	01643-31232	Washer	5	SN:B10001--
26	207-54-76410	Frame	1	SN:B10001--
27	01010-81230	Bolt	3	SN:B10001--
28	01643-31232	Washer	3	SN:B10001--
29	207-54-76480	Frame	1	SN:B10001--
30	207-54-76491	・ Sheet	1	SN:B10001--
31	01010-81230	Bolt	2	SN:B10001--
32	01643-31232	Washer	2	SN:B10001--
33	207-54-78680	Bracket	1	SN:B10001--
34	01010-81230	Bolt	2	SN:B10001--
35	01643-31232	Washer	2	SN:B10001--
36	07049-01215	Plug	3	SN:B10001--

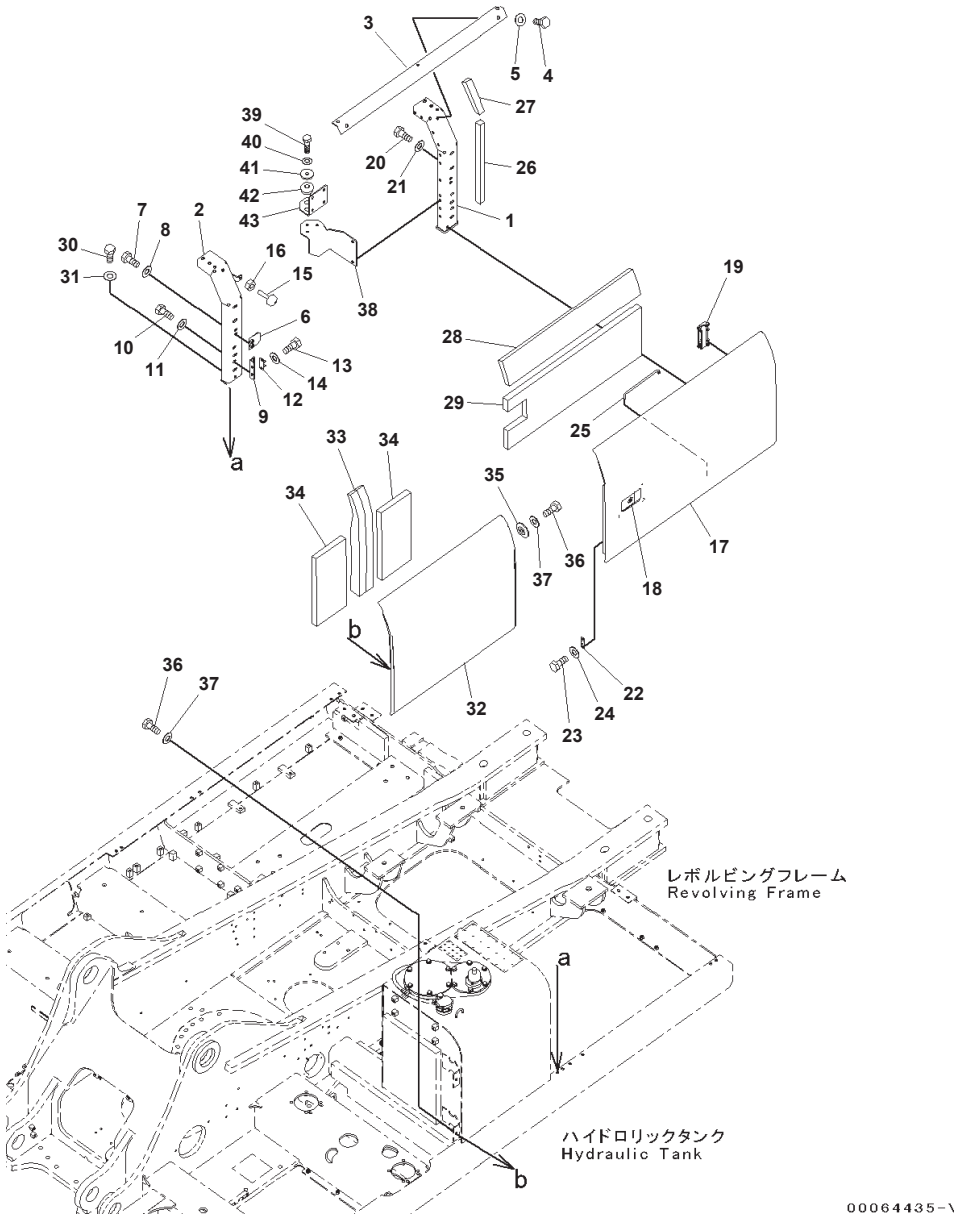

Side Cover, LHS

Index	Code	Part Number	Description	Qty	Options
1		207-54-76121	Frame	1	SN:B10001--
2		207-54-76140	Frame	1	SN:B10001--
3		208-54-71380	Frame	1	SN:B10001--
4		01010-81225	Bolt	2	SN:B10001--
5		01643-31232	Washer	2	SN:B10001--
6		20Y-54-61470	Plate	1	SN:B10001--
7		01010-81225	Bolt	2	SN:B10001--
8		01643-31232	Washer	2	SN:B10001--
9		20Y-54-28170	Bracket	1	SN:B10001--
10		01010-81225	Bolt	2	SN:B10001--
11		01643-31232	Washer	2	SN:B10001--
12		205-54-51971	Dovetail	1	SN:B10294--
	A2	205-54-51970	Dovetail	1	SN:B10001--B10293
13		01010-80616	Bolt	2	SN:B10001--
14		01643-30623	Washer	2	SN:B10001--
15		20Y-54-11611	Stopper	1	SN:B10001--
16		01580-11008	Nut	1	SN:B10001--
17		207-54-78810	Cover	1	SN:B10001--
18		20Y-54-71372	・ Lock,Welded	1	SN:B10001--
19		20Y-54-63414	・ Hinge,Welded	2	SN:B10001--
20		01010-81225	Bolt	4	SN:B10001--
21		01643-31232	Washer	4	SN:B10001--
22		205-54-53550	Dovetail	1	SN:B10001--
23		01010-80612	Bolt	2	SN:B10001--
24		01643-30623	Washer	2	SN:B10001--
25		20Y-54-29232	Bar	1	SN:B10001--
26		208-54-73710	Sheet	1	SN:B10001--
27		208-54-73720	Sheet	1	SN:B10001--
28		208-54-73821	Sheet	1	SN:B10001--
29		208-54-73830	Sheet	1	SN:B10001--
30		01010-81230	Bolt	4	SN:B10001--
31		01643-31232	Washer	4	SN:B10001--
32		207-54-78431	Cover	1	SN:B10001--
33		208-54-73131	・ Sheet	2	SN:B10001--
34		207-54-76130	・ Sheet	2	SN:B10001--
35		203-54-62670	Collar	1	SN:B10001--
36		01010-81230	Bolt	4	SN:B10001--
37		01643-31232	Washer	4	SN:B10001--
38		207-54-76161	Bracket	1	SN:B10001--
39		01010-81050	Bolt	3	SN:B10001--
40		01643-31032	Washer	3	SN:B10001--
41		207-03-75590	Plate	3	SN:B10001--
42		195-03-41380	Cushion	3	SN:B10001--
43		207-54-76190	Sheet	1	SN:B10001--

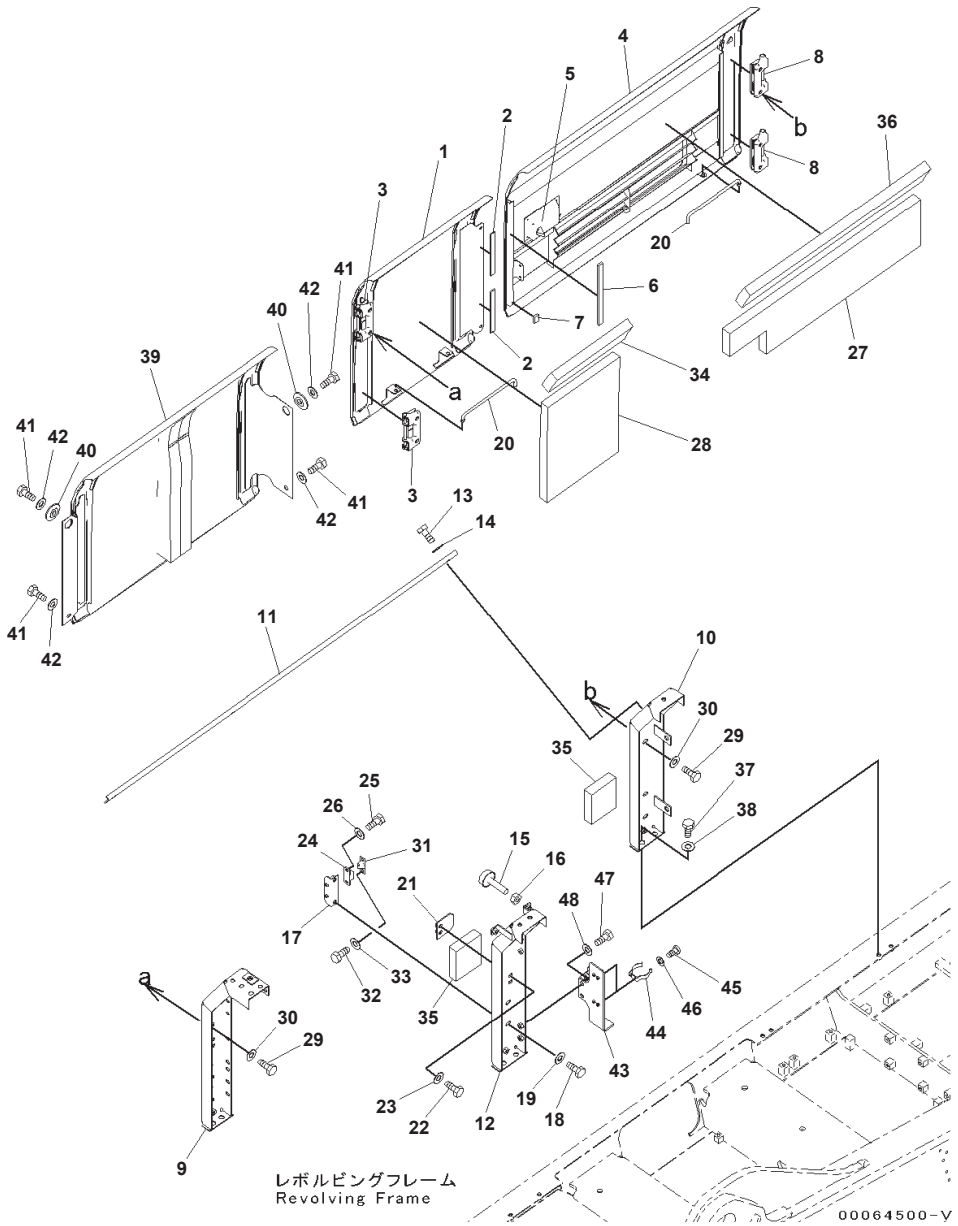

Index	Part Number	Description	Qty	Options
1	207-54-78830	Cover	1	SN:B10001--
2	20Y-54-63390	· Sheet	2	SN:B10001--
3	20Y-54-63414	· Hinge,Welded	2	SN:B10001--
4	207-54-78910	Cover	1	SN:B10001--
5	20Y-54-71491	· Lock,Welded	1	SN:B10001--
6	207-54-76330	· Sheet	1	SN:B10001--
7	207-54-76360	· Sheet	1	SN:B10001--
8	20Y-54-63414	· Hinge,Welded	2	SN:B10001--
9	207-54-76340	Frame	1	SN:B10001--
10	207-54-71221	Frame	1	SN:B10001--
11	207-54-71241	Plate	1	SN:B10001--
12	207-54-71251	Frame	1	SN:B10001--
13	01010-81225	Bolt	3	SN:B10001--
14	01643-31232	Washer	3	SN:B10001--
15	20Y-54-11611	Stopper	2	SN:B10001--
16	01580-11008	Nut	2	SN:B10001--
17	20Y-54-28170	Bracket	1	SN:B10001--
18	01010-81225	Bolt	2	SN:B10001--
19	01643-31232	Washer	2	SN:B10001--
20	20Y-54-29232	Bar	2	SN:B10001--
21	20Y-54-61470	Plate	1	SN:B10001--
22	01010-81225	Bolt	2	SN:B10001--
23	01643-31232	Washer	2	SN:B10001--
24	205-54-51970	Dovetail	1	SN:B10001--
25	01010-80616	Bolt	2	SN:B10001--
26	01643-30623	Washer	2	SN:B10001--
27	207-54-76321	Sheet	1	SN:B10001--
28	207-54-78930	Sheet	1	SN:B10001--
29	01010-81225	Bolt	8	SN:B10001--
30	01643-31232	Washer	8	SN:B10001--
31	205-54-53550	Dovetail	1	SN:B10001--
32	01010-80612	Bolt	2	SN:B10001--
33	01643-30623	Washer	2	SN:B10001--
34	207-54-77560	Sheet	1	SN:B10001--
35	207-54-77640	Sheet	2	SN:B10001--
36	207-54-77880	Sheet	1	SN:B10001--
37	01010-81230	Bolt	6	SN:B10001--
38	01643-31232	Washer	6	SN:B10001--
39	207-54-76350	Cover	1	SN:B10001--
40	203-54-62670	Collar	2	SN:B10001--
41	01010-81230	Bolt	4	SN:B10001--
42	01643-31232	Washer	4	SN:B10001--
43	207-54-78890	Bracket	1	SN:B10001--
44	203-54-63230	Clamp	2	SN:B10001--
45	01220-40612	Screw, Philips Head	4	SN:B10001--
46	01641-20608	Washer	4	SN:B10001--
47	01010-81230	Bolt	2	SN:B10001--
48	01643-31232	Washer	2	SN:B10001--

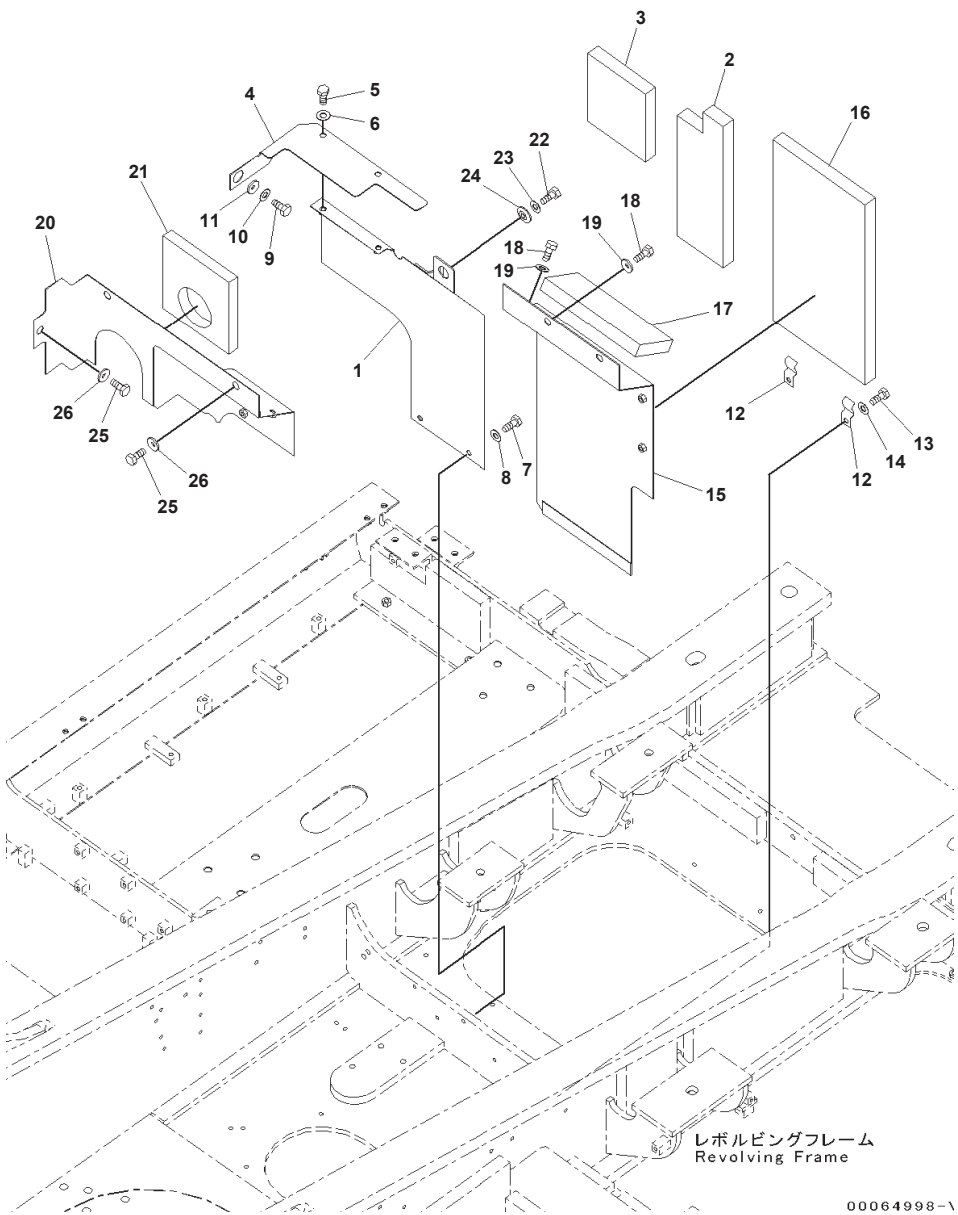

Index	Part Number	Description	Qty	Options
1	207-54-72511	Cover	1	SN:B10001--
2	207-54-72861	・ Sheet	1	SN:B10001--
3	207-54-72871	・ Sheet	1	SN:B10001--
4	207-54-76591	Cover	1	SN:B10001--
5	01010-81230	Bolt	2	SN:B10001--
6	01643-31232	Washer	2	SN:B10001--
7	01010-81230	Bolt	2	SN:B10001--
8	01643-31232	Washer	2	SN:B10001--
9	01010-81230	Bolt	1	SN:B10001--
10	01643-31232	Washer	1	SN:B10001--
11	203-54-62670	Collar	1	SN:B10001--
12	20Y-54-27761	Catcher	2	SN:B10001--
13	01010-81230	Bolt	2	SN:B10001--
14	01643-31232	Washer	2	SN:B10001--
15	207-54-76512	Cover	1	SN:B10001--
16	207-54-72851	・ Sheet	1	SN:B10001--
17	207-54-77840	・ Sheet	1	SN:B10001--
18	01010-81230	Bolt	3	SN:B10001--
19	175-54-34170	Washer	3	SN:B10001--
20	207-54-76521	Cover	1	SN:B10001--
21	207-54-76570	・ Sheet	1	SN:B10001--
22	01010-81230	Bolt	1	SN:B10001--
23	01643-31232	Washer	1	SN:B10001--
24	208-54-57180	Collar	1	SN:B10001--
25	01010-81230	Bolt	3	SN:B10001--
26	175-54-34170	Washer	3	SN:B10001--

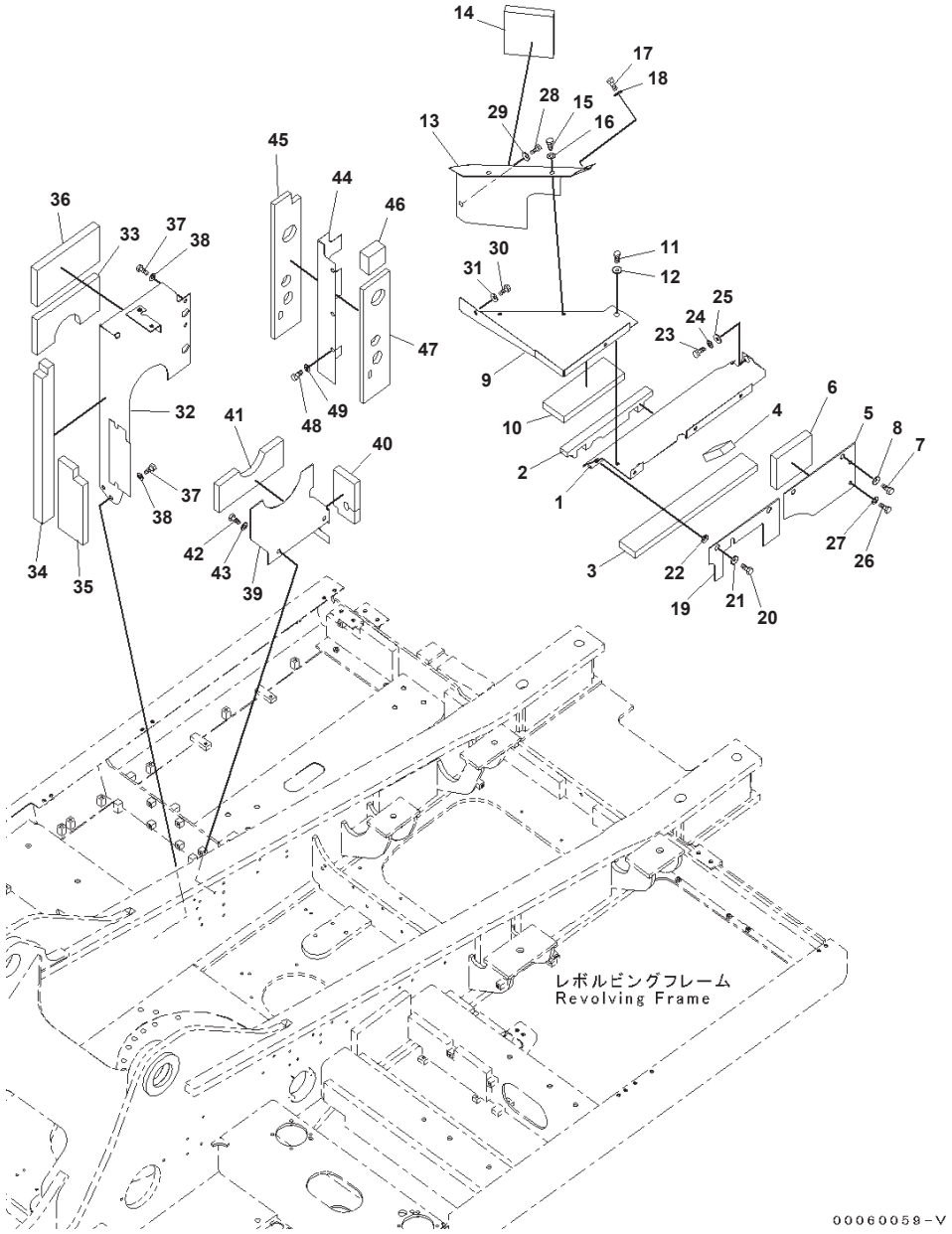

Index	Code	Part Number	Description	Qty	Options
1		207-54-76840	Cover	1	SN:B10159--
	A2	207-54-76841	Cover	1	SN:B10099--B10158
	A2	207-54-76840	Cover	1	SN:B10001--B10098
2		207-54-76860	・Sheet	1	SN:B10001--
3		207-54-77770	・Sheet	1	SN:B10001--
4		207-54-77980	・Sheet	1	SN:B10001--
5		207-54-76950	Cover	1	SN:B10001--
6		207-54-72990	・Sheet	1	SN:B10001--
7		01010-81220	Bolt	2	SN:B10001--
8		175-54-34170	Washer	2	SN:B10001--
9		207-54-76850	Cover	1	SN:B10001--
10		207-54-77780	・Sheet	1	SN:B10001--
11		01010-81220	Bolt	1	SN:B10001--
12		175-54-34170	Washer	1	SN:B10001--
13		207-54-72552	Cover	1	SN:B10001--
14		207-54-72871	・Sheet	1	SN:B10001--
15		01010-81220	Bolt	2	SN:B10001--
16		01643-31232	Washer	2	SN:B10001--
17		01010-81220	Bolt	1	SN:B10001--
18		175-54-34170	Washer	1	SN:B10001--
19		207-54-76870	Sheet	1	SN:B10001--
20		01010-81230	Bolt	2	SN:B10001--
21		175-54-34170	Washer	2	SN:B10001--
22		01643-51232	Washer	2	SN:B10001--
23		01010-81230	Bolt	1	SN:B10001--
24		01643-31232	Washer	1	SN:B10001--
25		205-54-76410	Collar	1	SN:B10001--
26		01010-81230	Bolt	2	SN:B10001--
27		01643-31232	Washer	2	SN:B10001--
28		01010-81220	Bolt	2	SN:B10001--
29		175-54-34170	Washer	2	SN:B10001--
30		01010-81230	Bolt	1	SN:B10001--
31		175-54-34170	Washer	1	SN:B10001--
32		207-54-76611	Cover	1	SN:B10001--
33		207-54-76630	・Sheet	1	SN:B10001--
34		208-54-73351	・Sheet	1	SN:B10001--
35		207-54-76640	・Sheet	1	SN:B10001--
36		207-54-76651	・Sheet	1	SN:B10001--
37		01010-81230	Bolt	4	SN:B10001--
38		01643-31232	Washer	4	SN:B10001--
39		207-54-76621	Cover	1	SN:B10001--
40		207-54-76690	・Sheet	1	SN:B10001--
41		207-54-76661	・Sheet	1	SN:B10001--
42		01010-81230	Bolt	2	SN:B10001--
43		01643-31232	Washer	2	SN:B10001--
44		207-54-76552	Cover	1	SN:B10001--
45		207-54-76541	・Sheet	1	SN:B10001--
46		207-54-76560	・Sheet	1	SN:B10001--
47		207-54-76810	・Sheet	1	SN:B10001--
48		01010-81230	Bolt	3	SN:B10001--
49		01643-31232	Washer	3	SN:B10001--

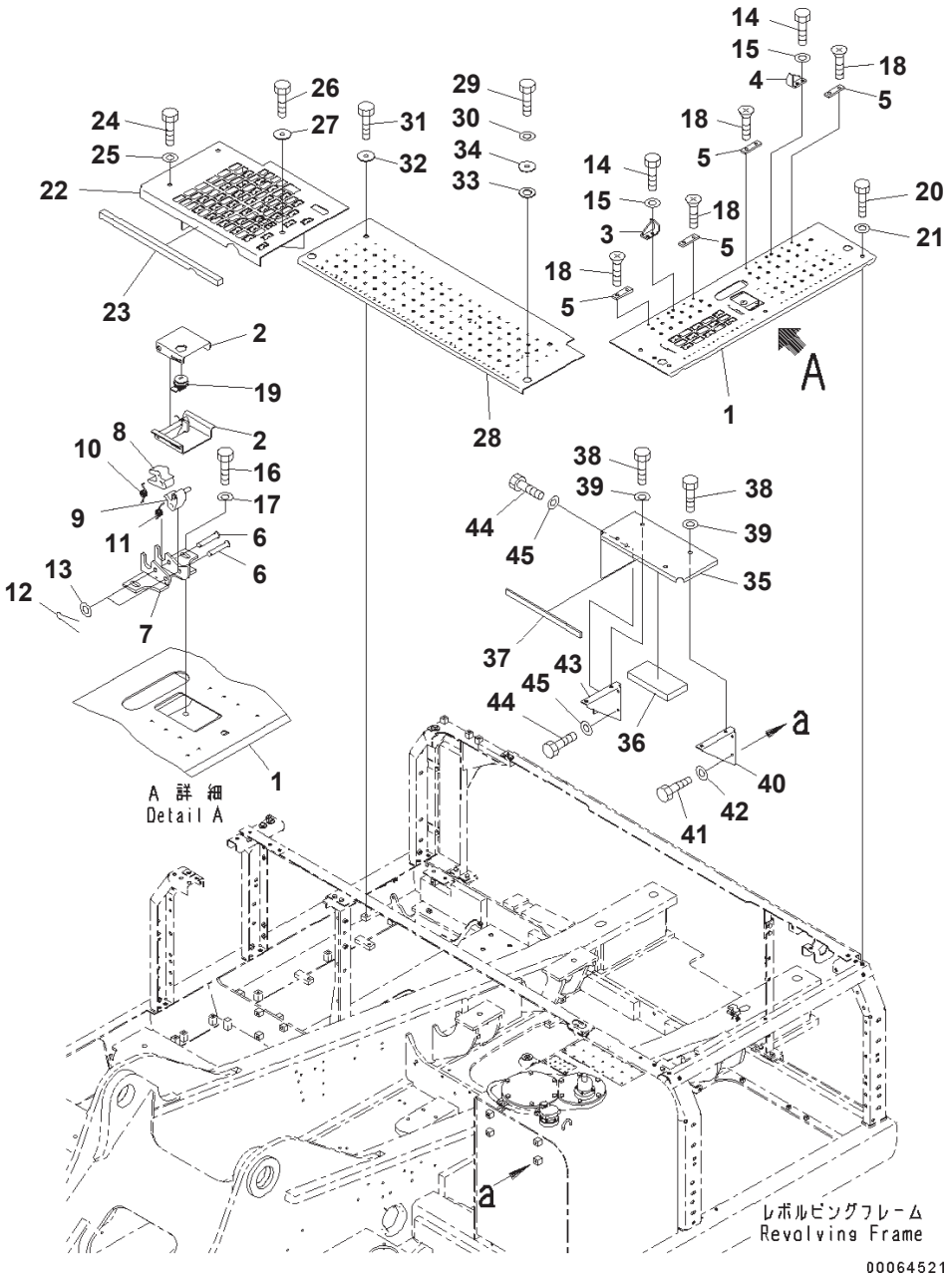

Index	Part Number	Description	Qty	Options
1	207-54-78950	Cover	1	SN:B10001--
2	20Y-54-25852	· Lock	1	SN:B10001--
	207-54-77610	· Sheet	1	SN:B10001--
3	207-54-61441	Bracket,LHS	1	SN:B10001--
4	207-54-61450	Bracket,RHS	1	SN:B10001--
5	205-54-68440	Plate	4	SN:B10001--
6	154-54-22520	Pin	2	SN:B10001--
7	208-54-71920	Bracket	1	SN:B10001--
8	208-54-71910	Lever	1	SN:B10001--
9	207-54-72230	Lever	1	SN:B10001--
10	20X-54-21460	Spring	1	SN:B10001--
11	21K-54-26351	Spring	1	SN:B10001--
12	04050-13020	Pin, Cotter	2	SN:B10001--
13	01640-21123	Washer, Flat	2	SN:B10001--
14	01010-81025	Bolt	4	SN:B10001--
15	01643-31032	Washer	4	SN:B10001--
16	01010-81030	Bolt	2	SN:B10001--
17	01643-31032	Washer	2	SN:B10001--
18	01224-40616	Screw, Philips Head	8	SN:B10001--
19	20Y-54-73190	Lock Assembly	1	SN:B10001--
20	01010-81230	Bolt	10	SN:B10001--
21	01643-31232	Washer	10	SN:B10001--
22	207-54-76731	Cover	1	SN:B10001--
23	207-54-76780	· Sheet	1	SN:B10001--
24	01010-81230	Bolt	2	SN:B10001--
25	01643-31232	Washer	2	SN:B10001--
26	01010-81230	Bolt	1	SN:B10001--
27	175-54-34170	Washer	1	SN:B10001--
28	207-54-76720	Cover	1	SN:B10001--
29	01010-81230	Bolt	2	SN:B10001--
30	01643-31232	Washer	2	SN:B10001--
31	01010-81230	Bolt	2	SN:B10001--
32	175-54-34170	Washer	2	SN:B10001--
33	20Y-54-19920	Plate	2	SN:B10001--
34	20Y-54-19930	Collar	2	SN:B10001--
35	207-54-78440	Cover Assembly	1	SN:B10001--
36	207-54-76760	· Sheet	1	SN:B10001--
37	207-54-78460	· Sheet	1	SN:B10001--
38	01010-81225	Bolt	4	SN:B10001--
39	01643-31232	Washer	4	SN:B10001--
40	207-54-76770	Bracket	1	SN:B10001--
41	01010-81225	Bolt	2	SN:B10001--
42	01643-31232	Washer	2	SN:B10001--
43	207-54-76890	Bracket	1	SN:B10001--
44	01010-81225	Bolt	3	SN:B10001--
45	01643-31232	Washer	3	SN:B10001--

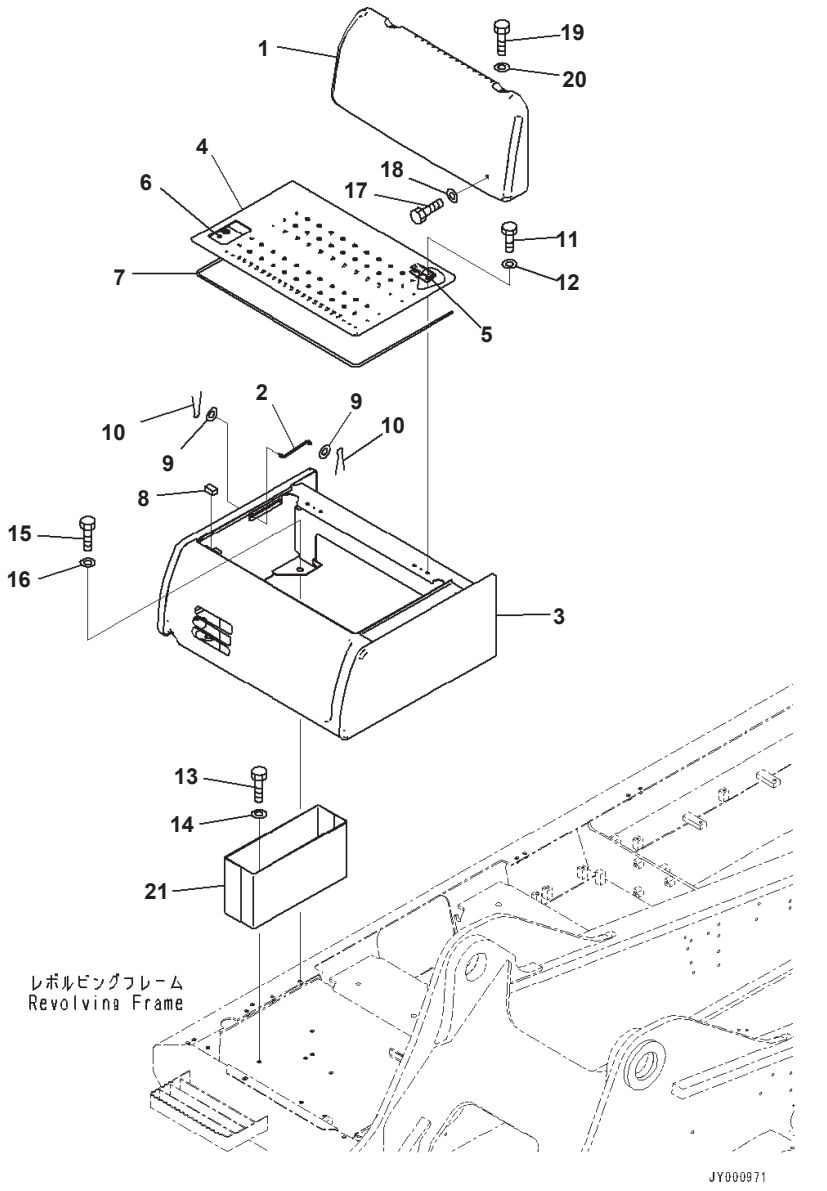

Battery Case

Index	Code	Part Number	Description	Qty	Options
1		208-54-74480	Cover	1	SN:B10399--
	A2	207-54-77451	Cover	1	SN:B10001--B10398
2		203-54-56630	Rod	1	SN:B10001--
3		207-54-78970	Cover	1	SN:B10399--
	A2	207-54-77421	Cover	1	SN:B10001--B10398
4		207-54-78820	Cover	1	SN:B10001--
5		20Y-54-74161	・ Hinge,Welded	2	SN:B10001--
6		20Y-54-74172	・ Lock,Welded	1	SN:B10001--
7		208-54-71470	Seal	1	SN:B10001--
8		20Y-54-29680	Sheet	1	SN:B10001--
9		01643-30623	Washer	2	SN:B10001--
10		04050-11612	Pin, Cotter	2	SN:B10001--
11		01010-81020	Bolt	4	SN:B10001--
12		01643-31032	Washer	4	SN:B10001--
13		01010-81230	Bolt	2	SN:B10001--
14		01643-31232	Washer	2	SN:B10001--
15		01010-81230	Bolt	4	SN:B10001--
16		175-54-34170	Washer	4	SN:B10001--
17		01010-81230	Bolt	2	SN:B10001--
18		175-54-34170	Washer	2	SN:B10001--
19		01010-81230	Bolt	2	SN:B10001--
20		01643-31232	Washer	2	SN:B10001--
21		207-54-B1110	Box, Tool	1	SN:B10001--

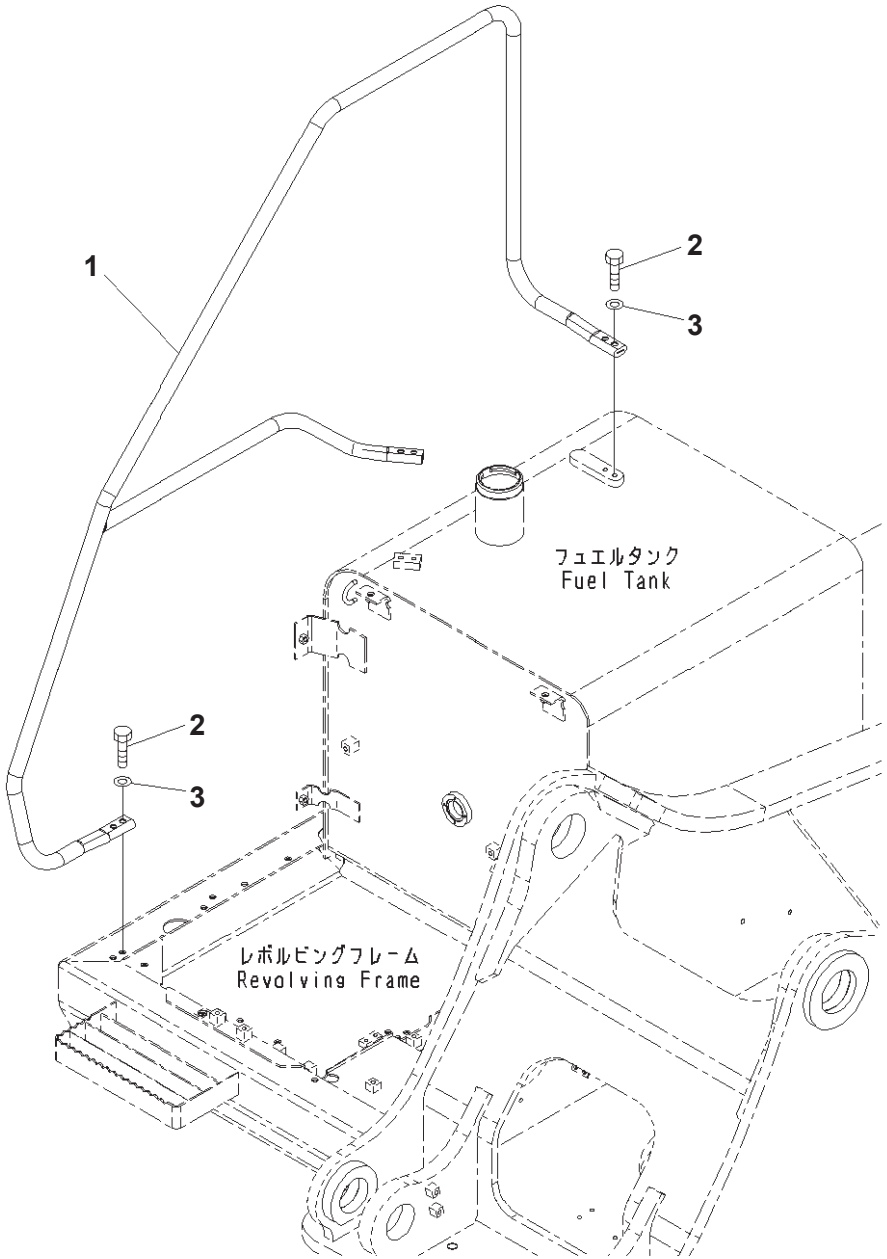

Index	Part Number	Description	Qty	Options
1	20Y-54-73991	Handrail	1	SN:B10001--
2	01010-81240	Bolt	6	SN:B10001--
3	01643-31232	Washer	6	SN:B10001--

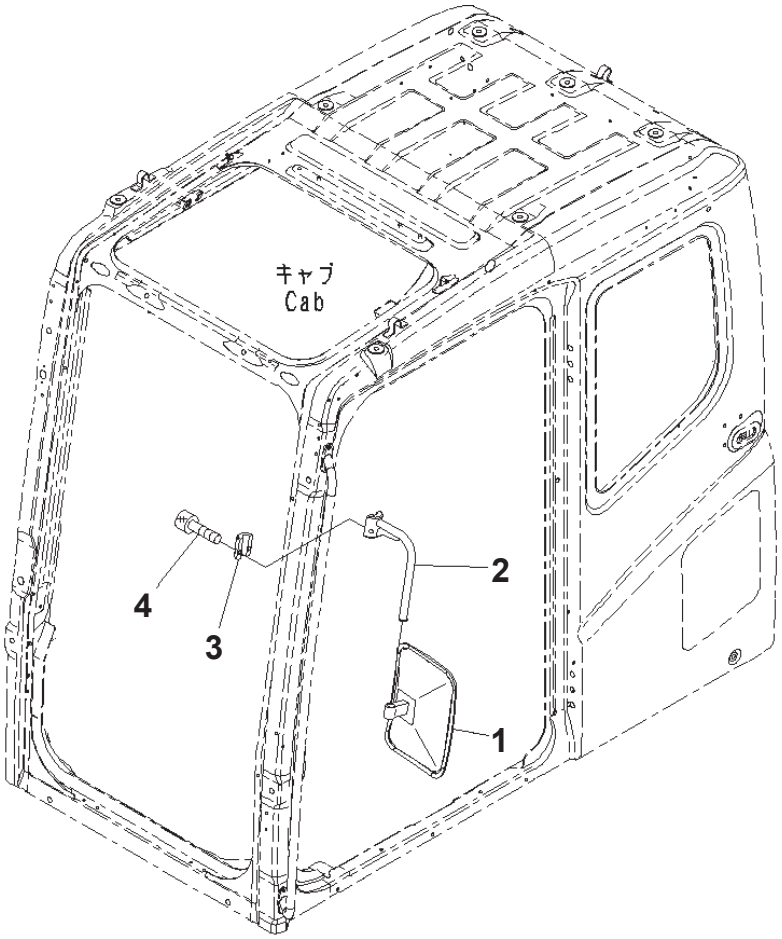

00039854

Index	Part Number	Description	Qty	Options
1	20Y-54-74280	Mirror, Rearview	1	SN:B10001--
2	20Y-54-74260	Support	1	SN:B10001--
3	20Y-54-35430	Clamp	1	SN:B10001--
4	01252-71030	Bolt, Hexagon Socket Head	2	SN:B10001--

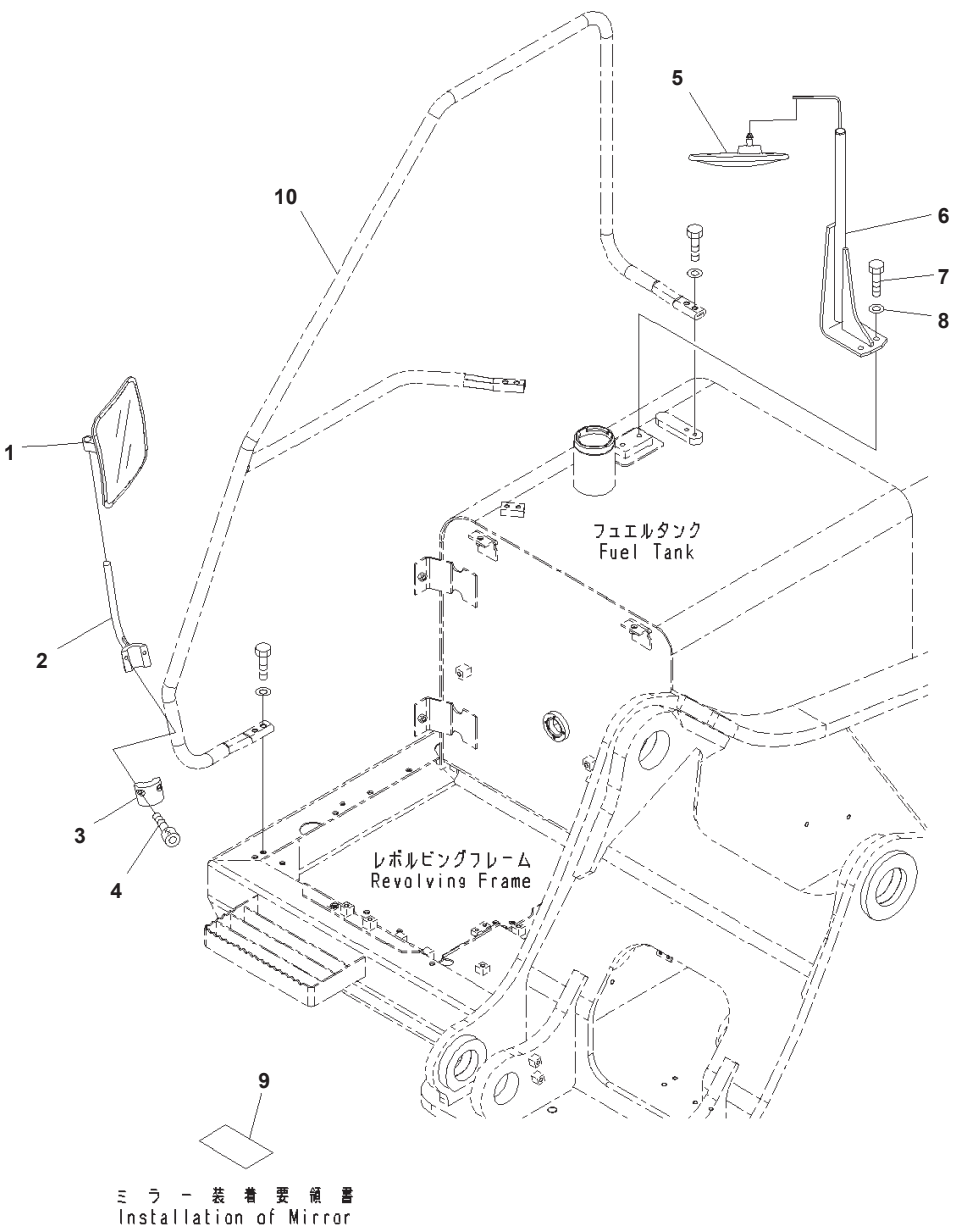

Rearview Mirror, RHS

Index	Part Number	Description	Page	Item	Qty	Options
1	20Y-54-74280	Mirror, Rearview			1	SN:B10001--
2	20Y-54-74270	Support			1	SN:B10001--
3	20Y-54-61630	Clamp			1	SN:B10001--
4	01252-71030	Bolt, Hexagon Socket Head			2	SN:B10001--
5	207-54-75710	Mirror, Rearview			1	SN:B10001--
6	207-54-77930	Bracket			1	SN:B10001--
7	01010-81230	Bolt			2	SN:B10001--
8	01643-31232	Washer			2	SN:B10001--
9	207-98-B1110	Plate			1	SN:B10001--
10	(20Y-54-73991)	Handrail	M1310-002001	1		SN:--

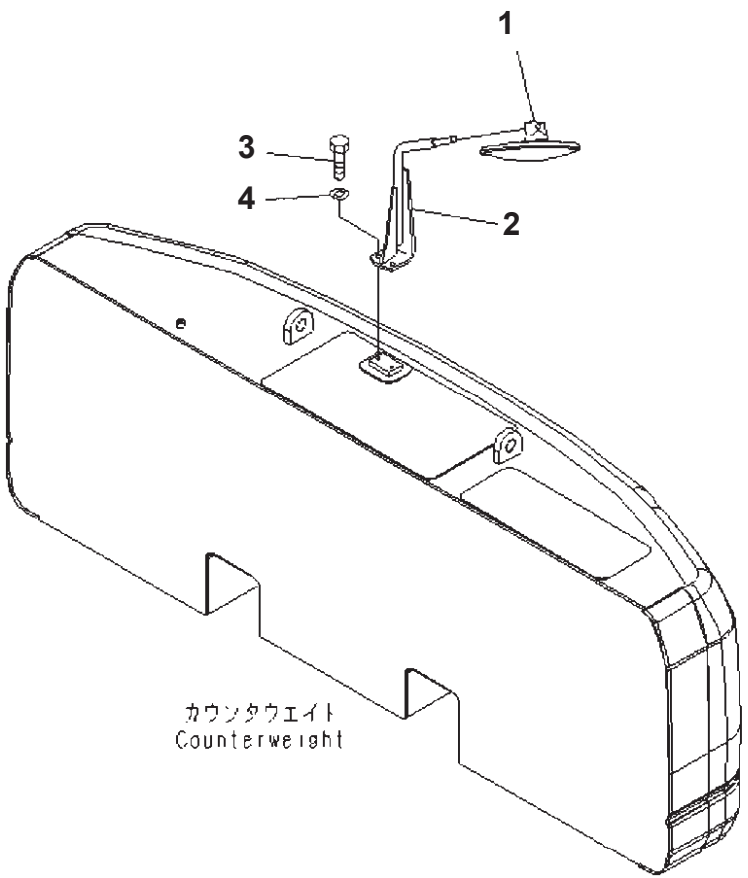

00033837

Rearview Mirror, Mounted On Counterweight

Index	Part Number	Description	Qty	Options
1	207-54-77960	Mirror, Rearview	1	SN:B10001--
2	207-54-77940	Bracket	1	SN:B10001--
3	01010-81230	Bolt	2	SN:B10001--
4	01643-31232	Washer	2	SN:B10001--

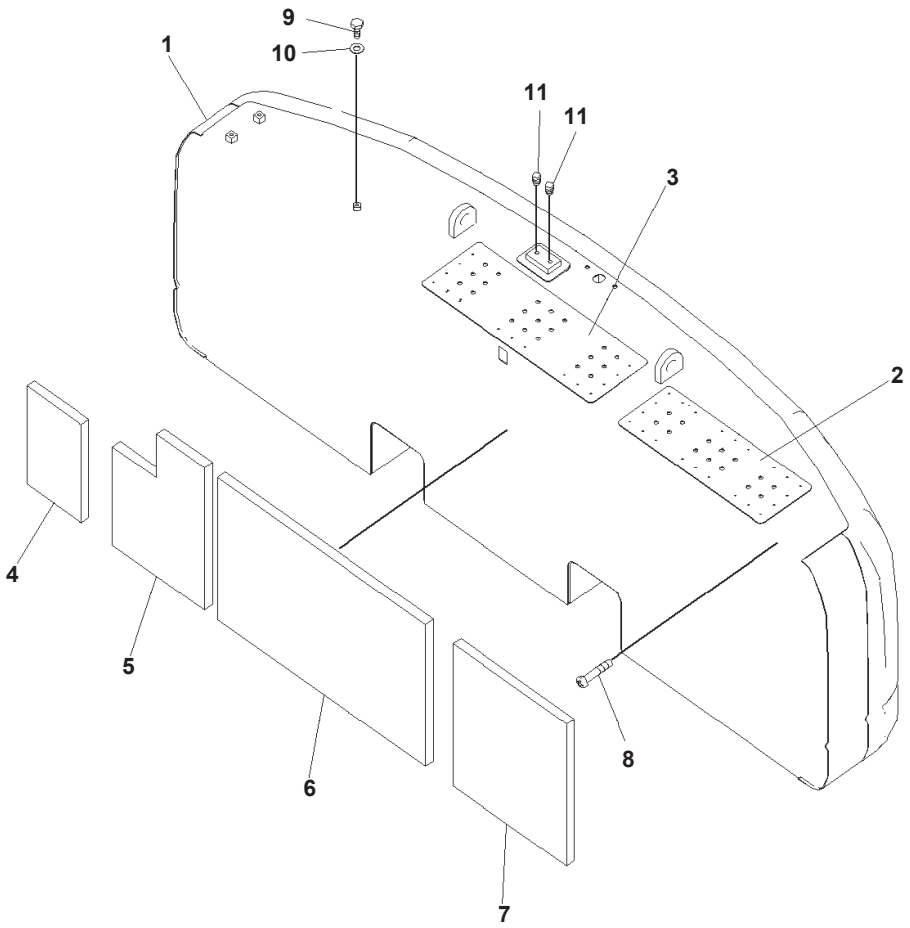

Index	Part Number	Description	Qty	Options
	207-46-B1210	Weight	1	SN:B10001--
1	207-46-B1240	・ Weight	1	SN:B10001--
2	207-46-74430	・・ Plate,Welded	1	SN:B10001--
3	207-46-74621	・・ Plate,Welded	1	SN:B10001--
4	207-46-78610	・ Sheet	1	SN:B10001--
5	207-46-78620	・ Sheet	1	SN:B10001--
6	207-46-78630	・ Sheet	1	SN:B10001--
7	207-46-78640	・ Sheet	1	SN:B10001--
8	01370-00508	Screw	1	SN:B10001--
9	01010-81220	Bolt	1	SN:B10001--
10	01643-31232	Washer	1	SN:B10001--
11	07049-01215	Plug	4	SN:B10001--

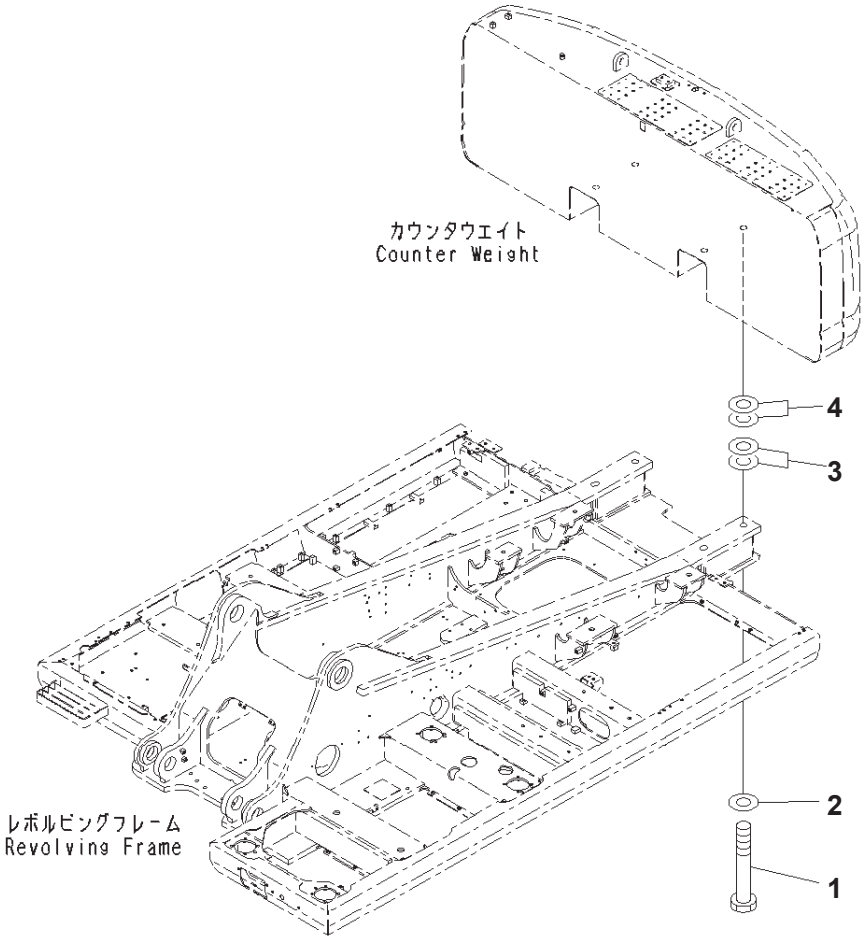

Index	Code	Part Number	Description	Qty	Options
1		21T-09-11240	Bolt	4	SN:B10001--
2		207-46-52130	Washer	4	SN:B10001--
3		207-46-32150	Shim, T=1.0mm	4	SN:B10001--
4		207-46-32140	Shim, T=2.0mm	4	SN:B10001--
	A2	207-46-32160	Shim, T=2.0mm	4	SN:B10001--B10185

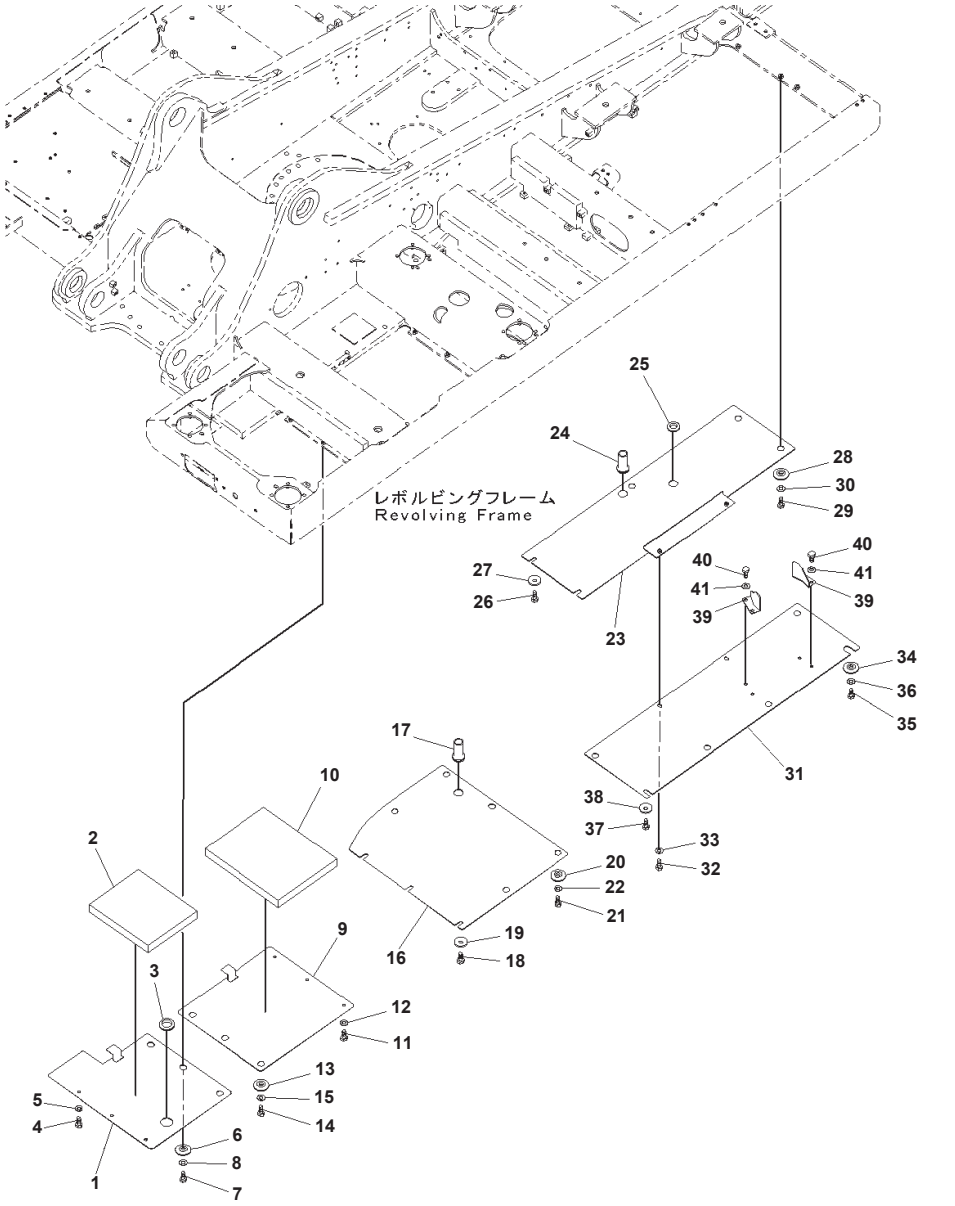

Index	Part Number	Description	Qty	Options
1	208-54-78340	Cover	1	SN:B10001--
2	208-54-73520	Sheet	1	SN:B10001--
3	08037-05016	Grommet	1	SN:B10001--
4	01010-81230	Bolt	3	SN:B10001--
5	01643-31232	Washer	3	SN:B10001--
6	208-54-57180	Collar	3	SN:B10001--
7	01010-81230	Bolt	3	SN:B10001--
8	01643-31232	Washer	3	SN:B10001--
9	207-54-78240	Cover	1	SN:B10001--
10	208-54-73490	Sheet	1	SN:B10001--
11	01010-81230	Bolt	3	SN:B10001--
12	01643-31232	Washer	3	SN:B10001--
13	208-54-57180	Collar	3	SN:B10001--
14	01010-81230	Bolt	3	SN:B10001--
15	01643-31232	Washer	3	SN:B10001--
16	207-54-78660	Cover	1	SN:B10001--
17	22U-54-24760	Grommet	1	SN:B10001--
18	01010-81230	Bolt	3	SN:B10001--
19	175-54-34170	Washer	3	SN:B10001--
20	208-54-57180	Collar	5	SN:B10001--
21	01010-81230	Bolt	5	SN:B10001--
22	01643-31232	Washer	5	SN:B10001--
23	207-54-78750	Cover	1	SN:B10001--
24	22U-54-24760	Grommet	1	SN:B10001--
25	08037-03614	Grommet	1	SN:B10001--
26	01010-81230	Bolt	2	SN:B10001--
27	175-54-34170	Washer	2	SN:B10001--
28	208-54-57180	Collar	3	SN:B10001--
29	01010-81230	Bolt	3	SN:B10001--
30	01643-31232	Washer	3	SN:B10001--
31	207-54-77220	Cover	1	SN:B10001--
32	01010-81230	Bolt	2	SN:B10001--
33	01643-31232	Washer	2	SN:B10001--
34	208-54-57180	Collar	5	SN:B10001--
35	01010-81230	Bolt	5	SN:B10001--
36	01643-31232	Washer	5	SN:B10001--
37	01010-81230	Bolt	1	SN:B10001--
38	175-54-34170	Washer	1	SN:B10001--
39	20Y-54-61670	Bracket	2	SN:B10001--
40	01010-81230	Bolt	4	SN:B10001--
41	01643-31232	Washer	4	SN:B10001--

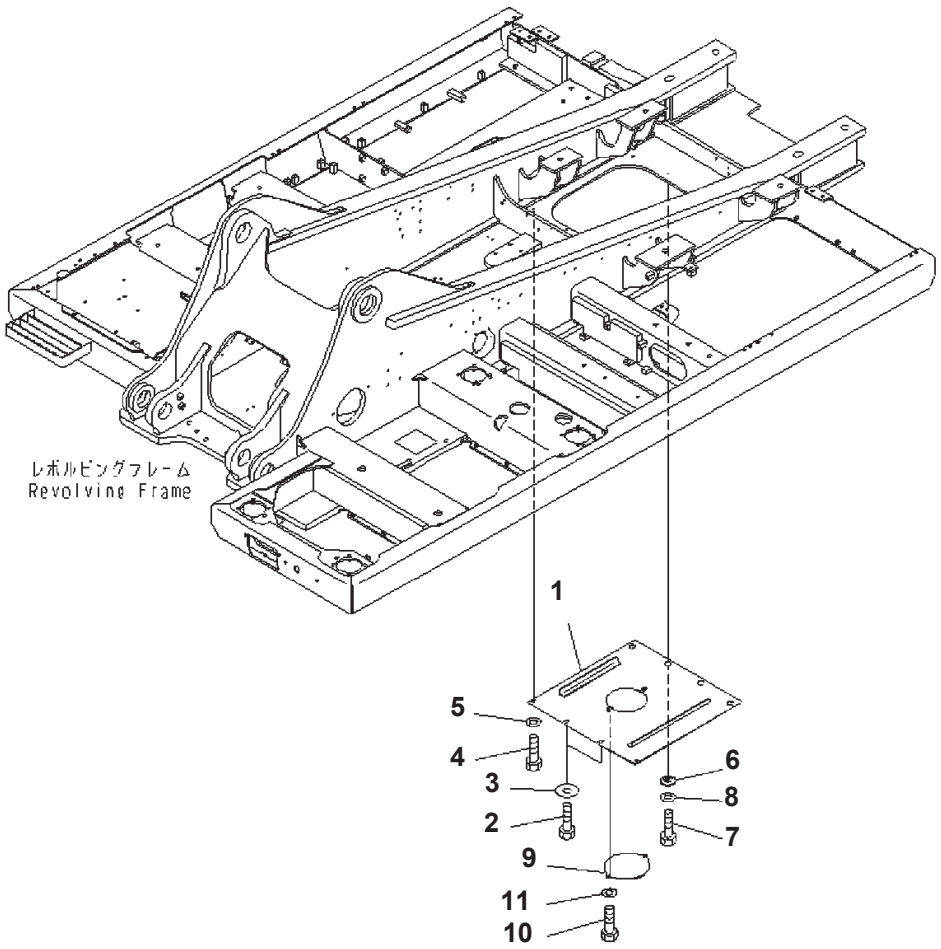

Index	Part Number	Description	Qty	Options
1	207-54-77272	Cover	1	SN:B10001--
2	01010-81230	Bolt	2	SN:B10001--
3	175-54-34170	Washer	2	SN:B10001--
4	01010-81230	Bolt	2	SN:B10001--
5	01643-31232	Washer	2	SN:B10001--
6	208-54-57180	Collar	4	SN:B10001--
7	01010-81230	Bolt	4	SN:B10001--
8	01643-31232	Washer	4	SN:B10001--
9	207-54-51440	Plate	1	SN:B10001--
10	01010-81230	Bolt	2	SN:B10001--
11	01643-31232	Washer	2	SN:B10001--

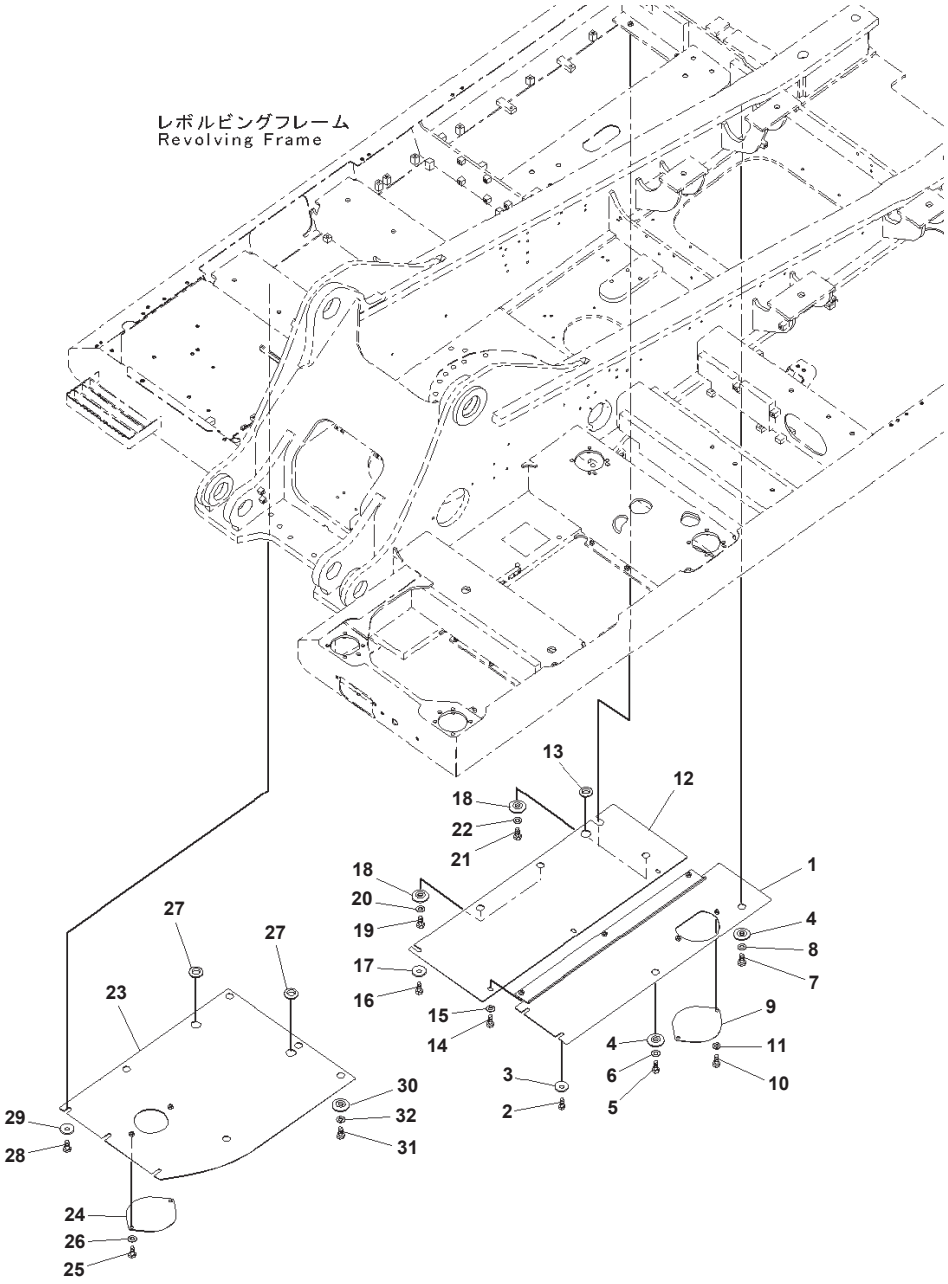

Index	Part Number	Description	Qty	Options
1	207-54-77260	Cover	1	SN:B10001--
2	01010-81230	Bolt	2	SN:B10001--
3	175-54-34170	Washer	2	SN:B10001--
4	208-54-57180	Collar	2	SN:B10001--
5	01010-81230	Bolt	1	SN:B10001--
6	01643-31232	Washer	1	SN:B10001--
7	01010-81235	Bolt	1	SN:B10001--
8	01643-31232	Washer	1	SN:B10001--
9	207-54-51440	Plate	1	SN:B10001--
10	01010-81230	Bolt	2	SN:B10001--
11	01643-31232	Washer	2	SN:B10001--
12	207-54-78770	Cover	1	SN:B10001--
13	08037-03614	Grommet	1	SN:B10001--
14	01010-81230	Bolt	3	SN:B10001--
15	01643-31232	Washer	3	SN:B10001--
16	01010-81230	Bolt	1	SN:B10001--
17	175-54-34170	Washer	1	SN:B10001--
18	208-54-57180	Collar	4	SN:B10001--
19	01010-81230	Bolt	2	SN:B10001--
20	01643-31232	Washer	2	SN:B10001--
21	01010-81235	Bolt	2	SN:B10001--
22	01643-31232	Washer	2	SN:B10001--
23	207-54-78860	Cover	1	SN:B10001--
24	207-54-51440	Plate	1	SN:B10001--
25	01010-81230	Bolt	2	SN:B10001--
26	01643-31232	Washer	2	SN:B10001--
27	08037-03614	Grommet	2	SN:B10001--
28	01010-81230	Bolt	3	SN:B10001--
29	175-54-34170	Washer	3	SN:B10001--
30	208-54-57180	Collar	5	SN:B10001--
31	01010-81230	Bolt	5	SN:B10001--
32	01643-31232	Washer	5	SN:B10001--

SWING CIRCLE AND RELATED PARTS

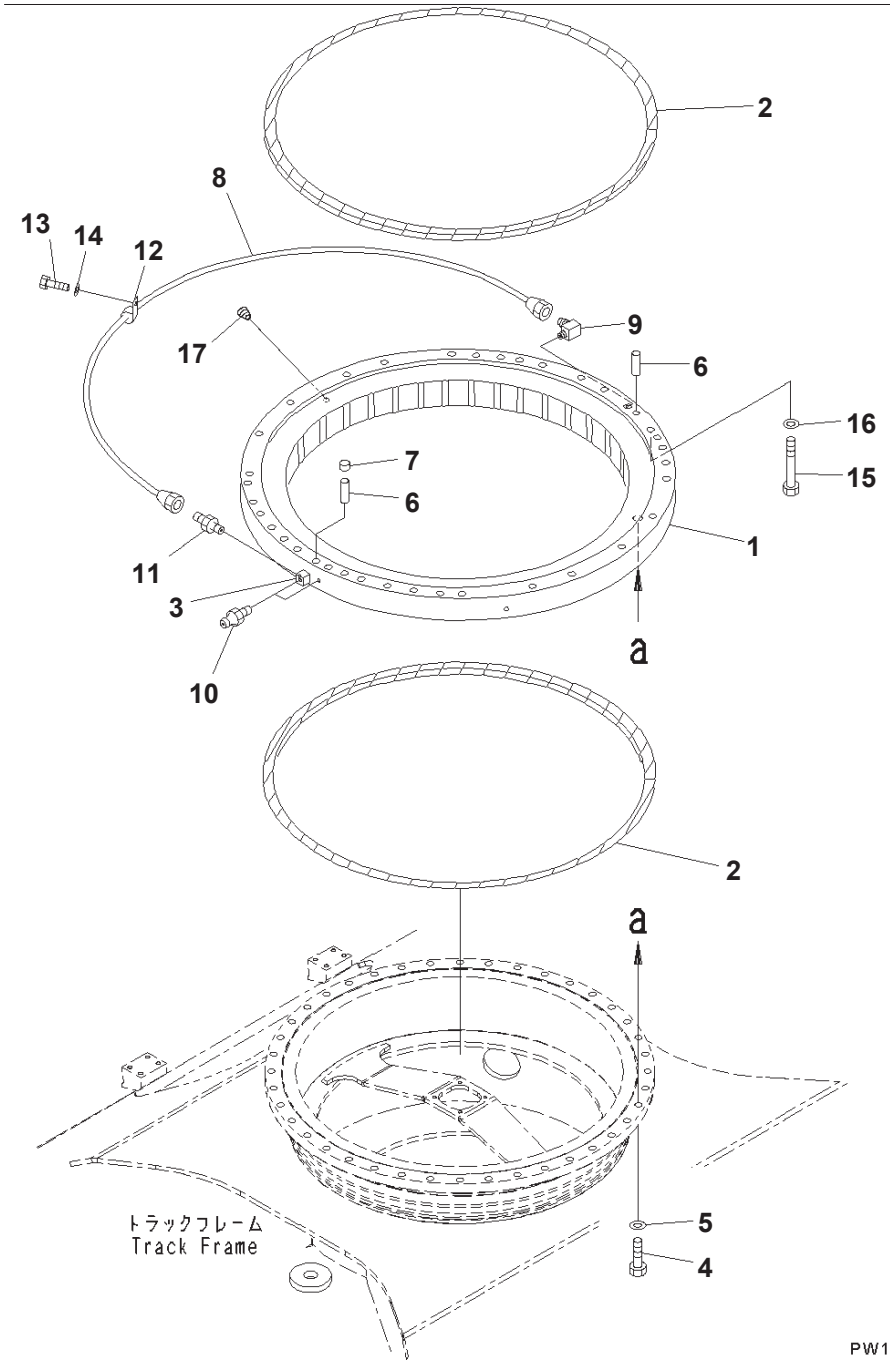

Index	Code	Part Number	Description	Qty	Options
1		207-25-00121	Swing Circle Assembly	1	SN:B10398--
	C1	207-25-00120	Swing Circle Assembly	1	SN:B10362--B10397
	C1	207-25-61100	Swing Circle Assembly	1	SN:B10001--B10361
2		207-25-61160	・ Seal	2	SN:B10001--
3		205-25-71280	・ Nipple	1	SN:B10001--
4		207-25-31180	Bolt	40	SN:B10001--
5		01643-72460	Washer, Flat	40	SN:B10001--
6		04020-01842	Pin, Dowel	2	SN:B10001--
7		20Y-46-21520	Cap	1	SN:B10001--
8		207-25-62110	Tube	1	SN:B10001--
9		20Y-25-11270	Elbow	1	SN:B10001--
10		07020-00000	Fitting, Grease	2	SN:B10001--
11		07214-50813	Connector	1	SN:B10001--
12		08036-00814	Clip	2	SN:B10001--
13		01010-81020	Bolt	2	SN:B10001--
14		01643-31032	Washer	2	SN:B10001--
15		207-25-75110	Bolt	35	SN:B10001--
16		01643-72460	Washer, Flat	35	SN:B10001--
17		07049-01012	Plug	1	SN:B10001--

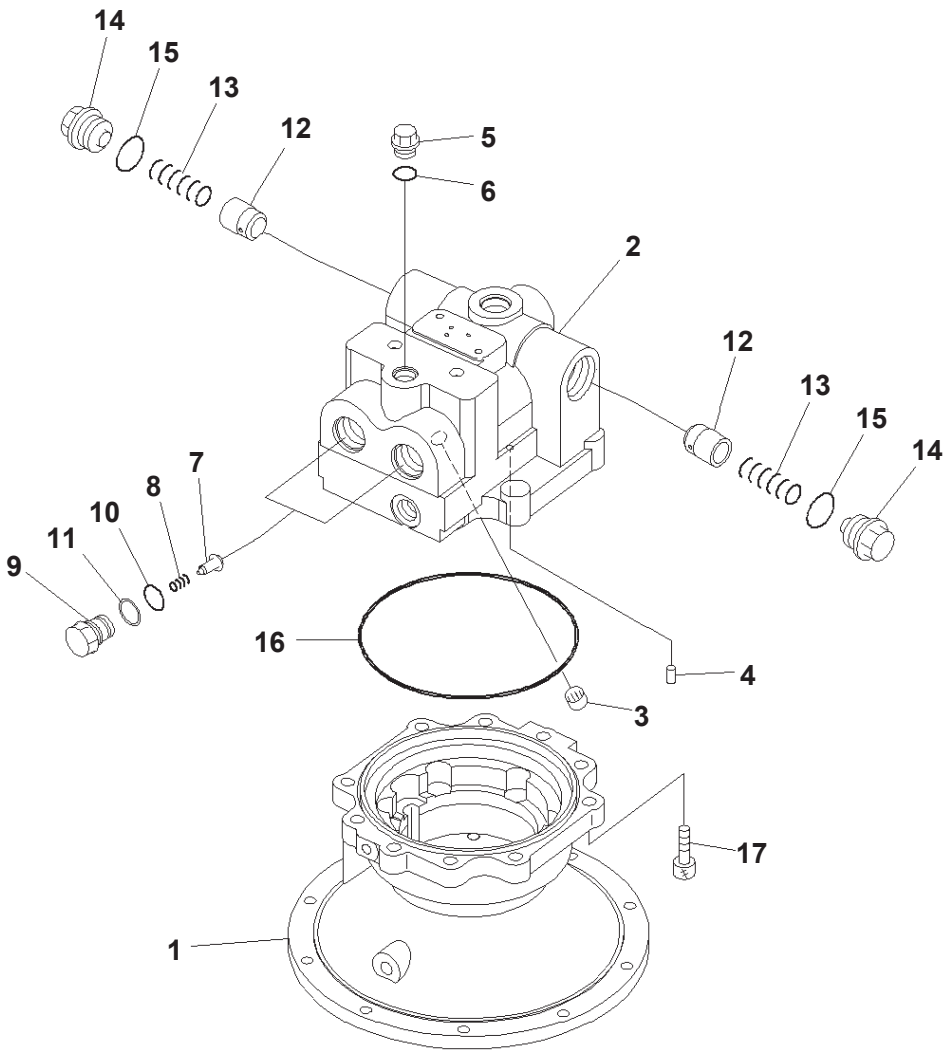

Swing Machinery Inner Parts (1/3)

Index	Code	Part Number	Description	Qty	Options
		706-7K-01170	Swing Motor Assembly	1	SN:B10076--
	A2	706-7K-01040	Swing Motor Assembly	1	SN:B10001--B10075
		706-7K-03140	・ Motor Subassembly	1	SN:B10076--
	A2	706-7K-03030	・ Motor Subassembly	1	SN:B10001--B10075
1	C2	706-7K-41150	・・ Case	1	SN:B10001--
2	C2	706-7K-71110	・・ Housing	1	SN:B10001--
3	C2	706-7K-40010	・・ Bearing	1	SN:B10001--
4	C2	706-75-42830	・・ Pin, Dowel	1	SN:B10001--
5		706-77-72280	・・ Plug	1	SN:B10001--
6		07002-62034	・・ O-ring	1	SN:B10076--
	A2	07002-12034	・・ O-ring	1	SN:B10001--B10075
7		709-74-92810	・・ Valve	2	SN:B10001--
8		709-75-92220	・・ Spring	2	SN:B10001--
9		709-74-92821	・・ Plug	2	SN:B10001--
10		708-2L-23960	・・ O-ring	2	SN:B10076--
	A2	700-93-11320	・・ O-ring	2	SN:B10001--B10075
11		700-93-11330	・・ Ring, Back-up	2	SN:B10001--
12		706-77-72130	・・ Valve	2	SN:B10001--
13		706-77-72140	・・ Spring	2	SN:B10001--
14		706-77-72150	・・ Plug	2	SN:B10001--
15		07002-64234	・・ O-ring	2	SN:B10076--
	A2	07002-14234	・・ O-ring	2	SN:B10001--B10075
16	C2	706-7K-40040	・・ O-ring	1	SN:B10076--
	C2	706-7K-40020	・・ O-ring	1	SN:B10001--B10075
17		01252-61450	・・ Bolt	10	SN:B10001--

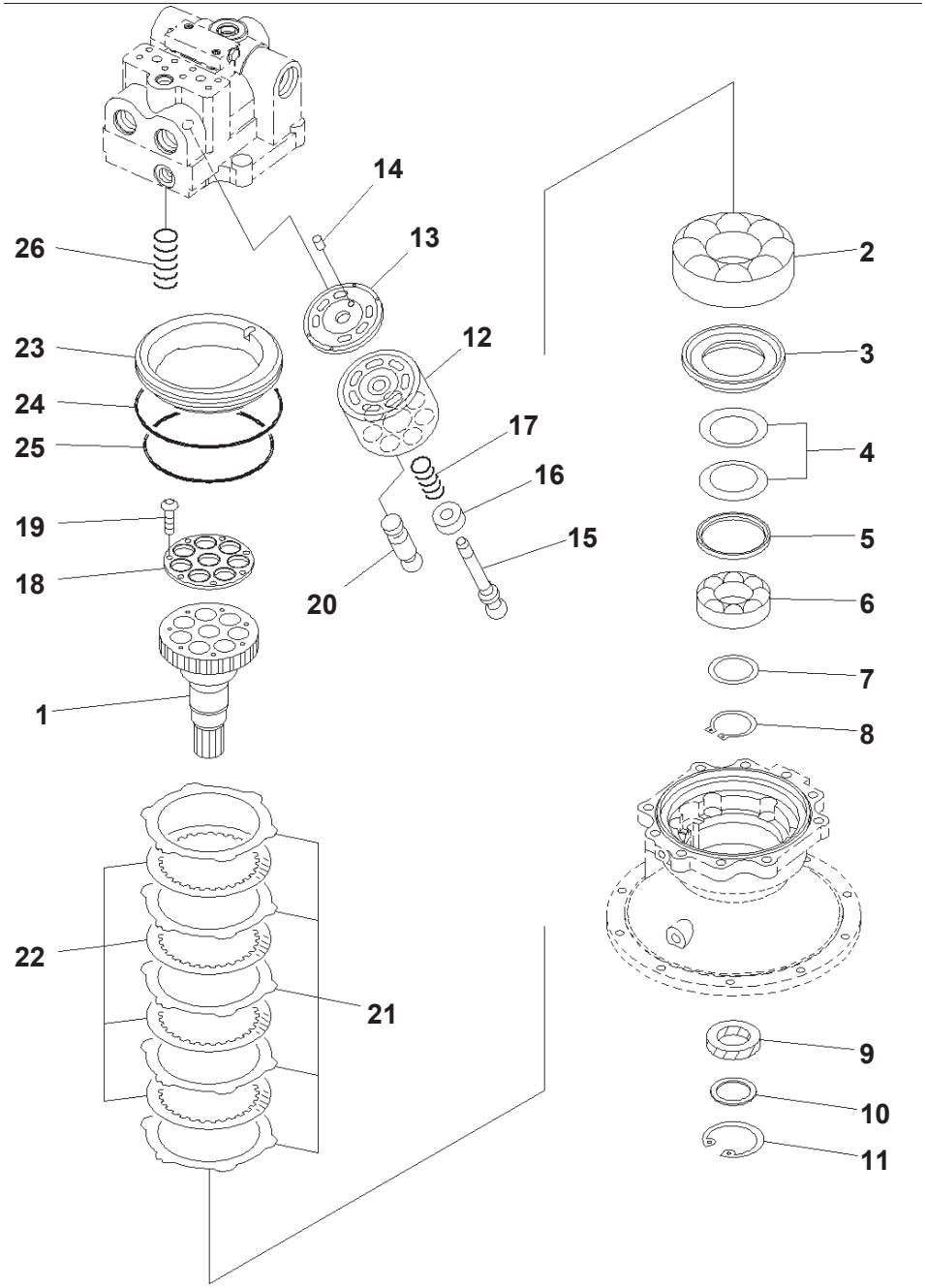

Index	Code	Part Number	Description	Qty	Options
		706-7K-01170	Swing Motor Assembly	1	SN:B10076--
	A2	706-7K-01040	Swing Motor Assembly	1	SN:B10001--B10075
		706-7K-03140	· Motor Subassembly	1	SN:B10076--
	A2	706-7K-03030	· Motor Subassembly	1	SN:B10001--B10075
1	C2	706-7K-41610	· · Shaft	1	SN:B10001--
2	C2	706-77-43890	· · Bearing	1	SN:B10076--
	C2	706-77-43880	· · Bearing	1	SN:B10001--B10075
3	C2	706-7K-41810	· · Spacer	1	SN:B10001--
4	C2	706-77-42051	· · Spring	2	SN:B10001--
5	C2	706-77-42041	· · Seat	1	SN:B10001--
6	C2	706-77-42890	· · Bearing	1	SN:B10001--
7	C2	706-77-05010	· · Spacer Kit	1	SN:B10001--
		706-77-42440	· · · Spacer, T=2.3mm	2	SN:B10001--
		706-77-42450	· · · Spacer, T=2.5mm	2	SN:B10001--
		706-77-42460	· · · Spacer, T=2.7mm	2	SN:B10001--
8		04064-06525	· · Ring, Snap, for Shaft Side	1	SN:B10001--
9		706-8J-41420	· · Seal, Oil	1	SN:B10076--
	A2	706-7K-41650	· · Seal, Oil	1	SN:B10001--B10075
10		706-7K-41920	· · Spacer	1	SN:B10001--
11		04065-07525	· · Ring, Snap, for Hole Side	1	SN:B10001--
12	C2	706-7K-41210	· · Cylinder Block	1	SN:B10001--
13	C2	706-7K-41710	· · Plate	1	SN:B10001--
14	C2	708-18-13230	· · Pin	1	SN:B10001--
15	C2	706-7K-41120	· · Shaft	1	SN:B10001--
16	C2	706-77-42130	· · Ring	1	SN:B10001--
17	C2	706-7K-41140	· · Spring	1	SN:B10001--
	C2	706-7K-05010	· · Retainer Kit	1	SN:B10001--
18	C1		· · · Retainer	1	SN:B10001--
19	C1		· · · Screw	7	SN:B10001--
20	C2	706-7K-41160	· · Piston Subassembly	7	SN:B10001--
21	C2	706-7K-91340	· · Plate	5	SN:B10001--
22	C2	706-7K-91350	· · Disc	4	SN:B10001--
23	C2	706-7K-91111	· · Brake Piston	1	SN:B10001--
24	C2	07000-B5230	· · O-ring	1	SN:B10076--
	C2	07000-15230	· · O-ring	1	SN:B10001--B10075
25	C2	706-86-90290	· · O-ring	1	SN:B10076--
	C2	708-8H-15220	· · O-ring	1	SN:B10001--B10075
26	C2	706-7K-91360	· · Spring	6	SN:B10001--

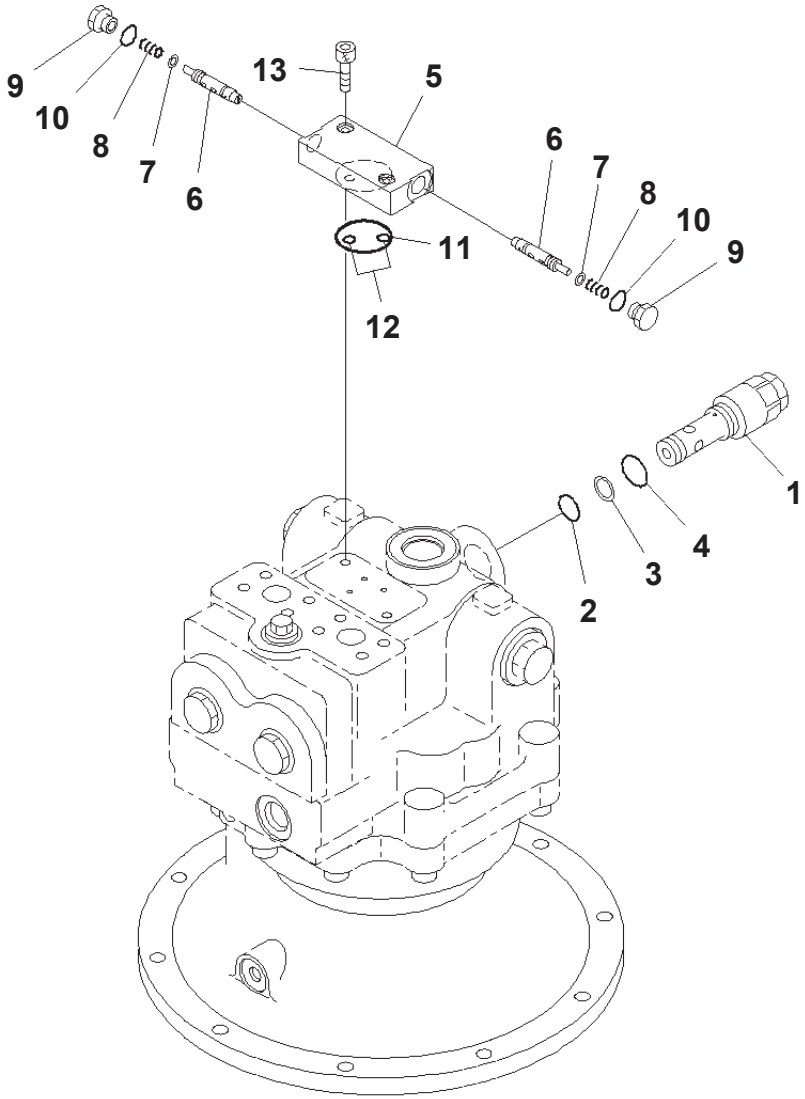

00011429

Index	Code	Part Number	Description	Qty	Options
		706-7K-01170	Swing Motor Assembly	1	SN:B10076--
	A2	706-7K-01040	Swing Motor Assembly	1	SN:B10001--B10075
1		702-77-02170	・ Valve, Relief	1	SN:B10076--
	A2	702-77-02120	・ Valve, Relief	1	SN:B10001--B10075
2		07000-F3022	・・ O-ring	1	SN:B10001--
3		07001-03022	・・ Ring, Back-up	2	SN:B10001--
4		07002-63634	・・ O-ring	1	SN:B10076--
	A2	07002-13634	・・ O-ring	1	SN:B10001--B10075
		702-15-80000	・ Valve Assembly	1	SN:B10076--
	A2	702-15-78000	・ Valve Assembly	1	SN:B10001--B10075
5	C1		・・ Body	1	SN:B10001--
6	C1		・・ Spool	2	SN:B10001--
7		706-7K-40050	・・ Seal	2	SN:B10076--
	A2	709-70-71610	・・ Seal	2	SN:B10001--B10075
8		702-15-71130	・・ Spring	2	SN:B10001--
9		702-15-71140	・・ Plug	2	SN:B10001--
10		07002-61423	・・ O-ring	2	SN:B10076--
	A2	07002-01423	・・ O-ring	2	SN:B10001--B10075
11		07000-B3042	・ O-ring	1	SN:B10076--
	A2	07000-13042	・ O-ring	1	SN:B10001--B10075
12		07000-B1009	・ O-ring	2	SN:B10076--
	A2	07000-11009	・ O-ring	2	SN:B10001--B10075
13		01252-60825	・ Bolt	2	SN:B10001--

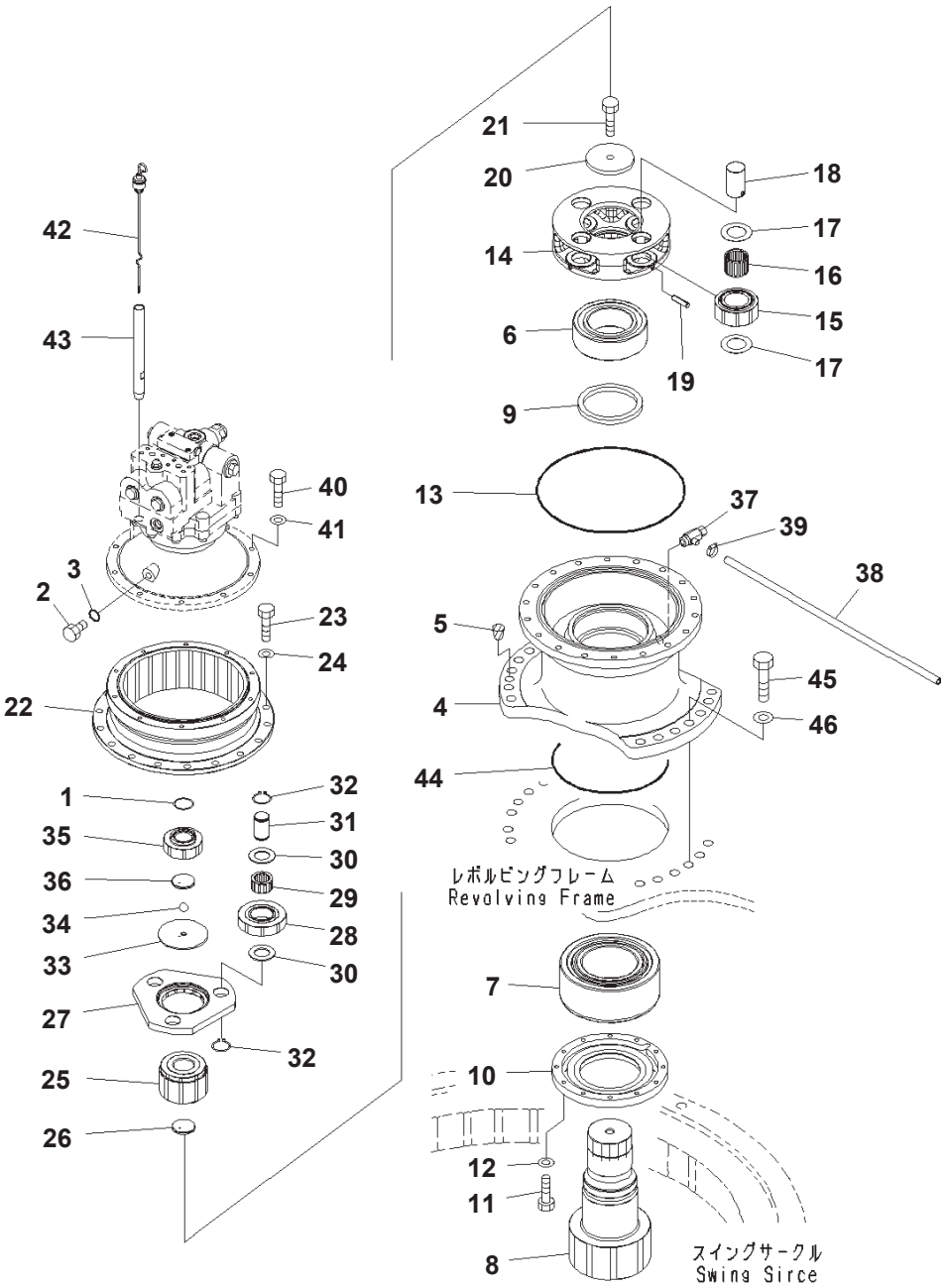

Index	Code	Part Number	Description	Qty	Options
1		207-26-71240	Ring	1	SN:B10001--
2		07040-11209	Plug	1	SN:B10001--
3		07002-11223	O-ring	1	SN:B10001--
4		207-26-75130	Case	1	SN:B10324--
	A1	207-26-75110	Case	1	SN:B10001--B10323
5		07049-02430	Plug	2	SN:B10001--
6		06000-22222	Bearing	1	SN:B10001--
7		207-26-73150	Bearing	1	SN:B10324--
	A1	06000-22324	Bearing	1	SN:B10001--B10323
8		207-26-62181	Shaft	1	SN:B10324--
	A1	207-26-62180	Shaft	1	SN:B10001--B10323
9		207-26-61210	Seal	1	SN:B10001--
10		207-26-75140	Cover	1	SN:B10324--
	A1	207-26-75120	Cover	1	SN:B10001--B10323
11		01010-81030	Bolt	12	SN:B10001--
12		01643-31032	Washer	12	SN:B10001--
13		07000-15390	O-ring	1	SN:B10001--
14		207-26-71581	Carrier	1	SN:B10001--
15		207-26-71540	Gear	4	SN:B10001--
16		206-26-71270	Bearing	4	SN:B10001--
17		20Y-27-21250	Washer	8	SN:B10001--
18		20Y-26-21320	Pin	4	SN:B10001--
19		20Y-26-21330	Pin	4	SN:B10001--
20		207-26-54230	Plate	1	SN:B10001--
21		205-32-51211	Bolt	1	SN:B10001--
22		207-26-71551	Gear, Ring	1	SN:B10001--
23		01010-81645	Bolt	18	SN:B10001--
24		01643-31645	Washer	18	SN:B10001--
25		207-26-71530	Gear	1	SN:B10001--
26		207-26-71261	Plate	1	SN:B10001--
27		207-26-71570	Carrier	1	SN:B10001--
28		207-26-71521	Gear	1	SN:B10324--
	A1	207-26-71520	Gear	3	SN:B10001--B10323
29		22U-26-21320	Bearing	3	SN:B10001--
30		22U-26-21240	Washer	6	SN:B10001--
31		207-26-71210	Pin	3	SN:B10001--
32		04064-04018	Ring, Snap	6	SN:B10001--
33		207-26-71250	Holder	1	SN:B10001--
34		04260-01270	Ball	1	SN:B10001--
35		207-26-71511	Gear	1	SN:B10324--
	A1	207-26-71510	Gear	1	SN:B10001--B10323
36		207-26-71261	Plate	1	SN:B10001--
37		144-60-11151	Valve	1	SN:B10001--
38		07270-21590	Tube	1	SN:B10001--
39		07281-00197	Clamp, Hose	1	SN:B10001--
40		01010-81240	Bolt	10	SN:B10001--
41		01643-31232	Washer	10	SN:B10001--
42		207-26-71410	Gauge	1	SN:B10001--
43		20Y-26-21350	Filler	1	SN:B10001--
44		07000-15290	O-ring	1	SN:B10001--
45		01010-82475	Bolt	12	SN:B10001--
46		01643-32460	Washer	12	SN:B10001--

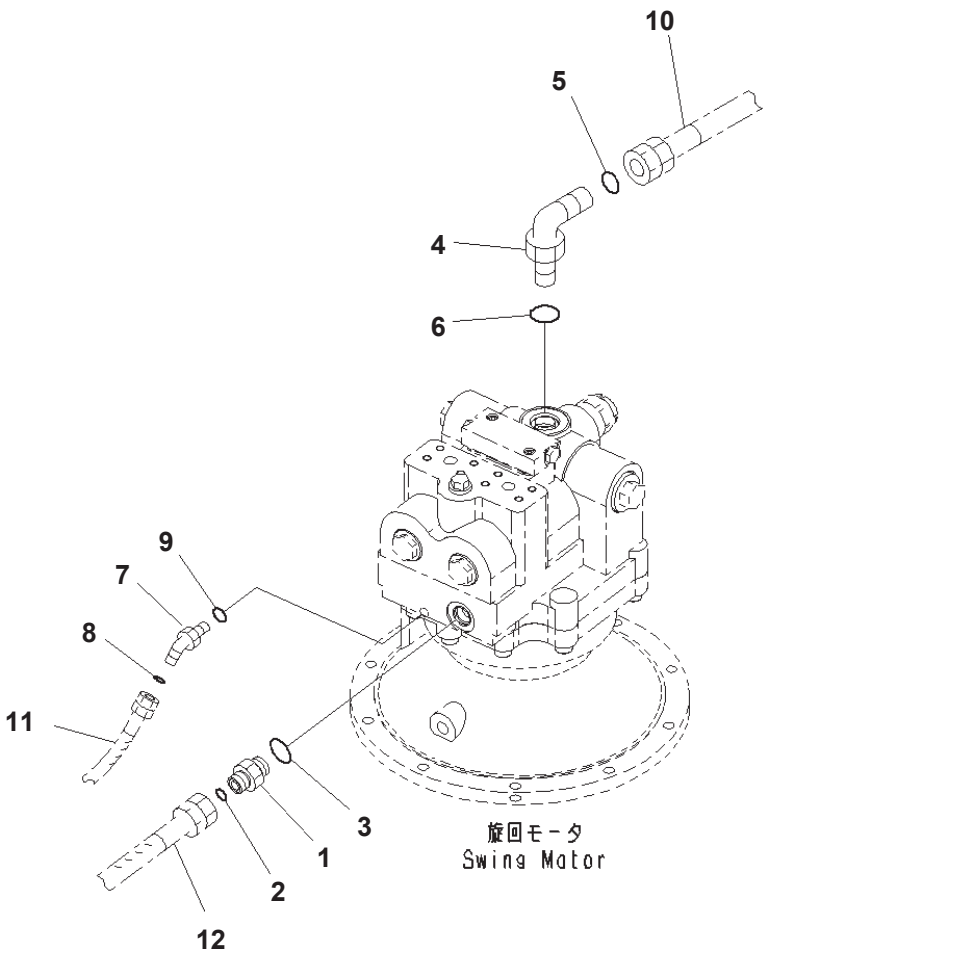

Index	Part Number	Description	Page	Item	Qty	Options
1	02781-00522	Union			1	SN:B10001--
2	02896-11015	O-ring			1	SN:B10001--
3	07002-12434	O-ring			1	SN:B10001--
4	21W-62-42640	Elbow			1	SN:B10001--
5	207-62-64740	O-ring			1	SN:B10001--
6	07002-13334	O-ring			1	SN:B10001--
7	11Y-62-12510	Elbow			1	SN:B10001--
8	02896-11009	O-ring			1	SN:B10001--
9	07002-11423	O-ring			1	SN:B10001--
10	(207-62-74781)	Hose	H0330-002001	9		SN:--
11	(208-62-72131)	Hose	H1831-002003	1		SN:--
12	(02762-00509)	Hose, Face Seal Type	H0340-001001	1		SN:--

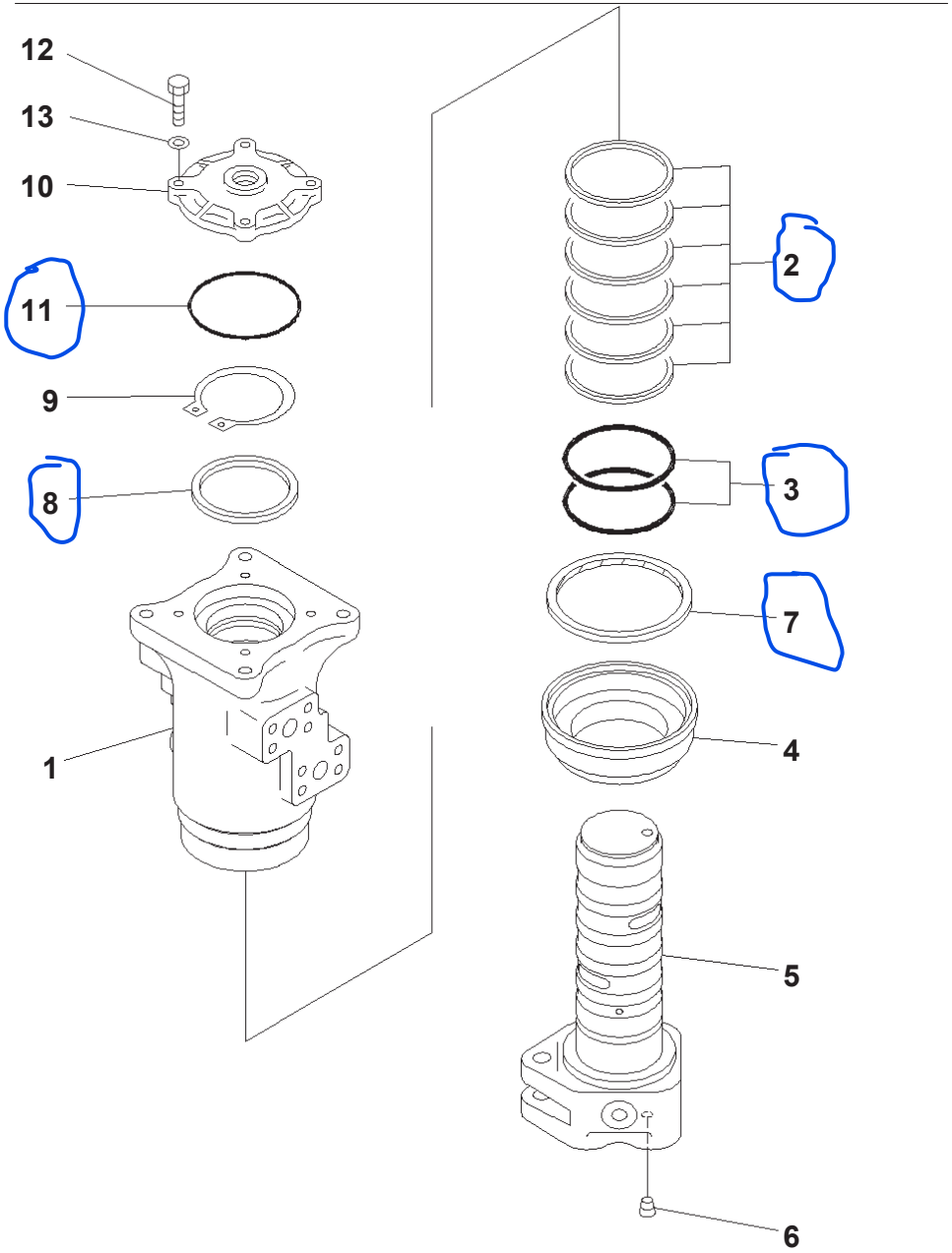

00023033

Index	Part Number	Description	Qty	Options
	703-08-33651	Swivel Joint Assembly	1	SN:B10001--B10348
1	703-08-91211	・ Rotor	1	SN:B10001--B10348
2	703-08-95620	・ Seal, Oil	6	SN:B10001--@
3	07000-15080	・ O-ring	2	SN:B10001--B10348
4	703-08-93771	・ Cover	1	SN:B10001--@
5	703-08-92211	・ Shaft	1	SN:B10001--@
6	703-13-98930	・ ・ Plug	1	SN:B10001--@
7	703-08-95770	・ Seal, Dust	1	SN:B10001--@
8	703-08-94510	・ Ring	1	SN:B10001--@
9	04064-07525	・ Ring, Snap	1	SN:B10001--@
10	703-08-93170	・ Cover	1	SN:B10001--@
11	07000-12105	・ O-ring	1	SN:B10001--B10348
12	01010-80835	・ Bolt	4	SN:B10001--B10348
13	01643-30823	・ Washer	4	SN:B10001--B10348

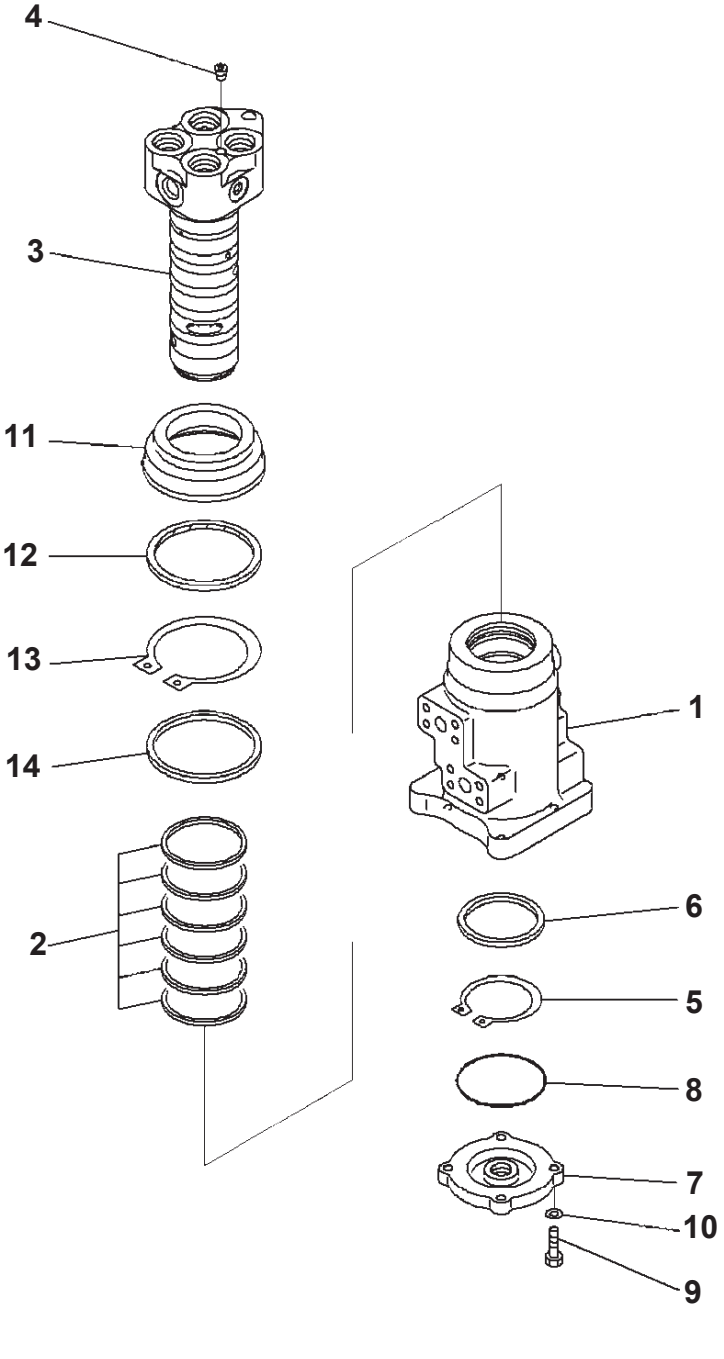

Swivel Joint, Inner Parts (#B10349-)

Index	Part Number	Description	Qty	Options
	703-08-33652	Swivel Joint Assembly	1	SN:B10349---
1	703-08-91212	・ Rotor	1	SN:B10349---
2	703-08-95620	・ Seal, Oil	6	SN:B10001--
3	703-08-92211	・ Shaft	1	SN:B10001--
4	703-13-98930	・・ Plug	1	SN:B10001--
5	04064-07525	・ Ring, Snap	1	SN:B10001--
6	703-08-94510	・ Ring	1	SN:B10001--
7	703-08-93170	・ Cover	1	SN:B10001--
8	07000-B2105	・ O-ring	1	SN:B10001--
9	01010-80835	・ Bolt	4	SN:B10349---
10	01643-30823	・ Washer	4	SN:B10001--
11	703-08-93771	・ Cover	1	SN:B10001--
12	703-08-95770	・ Seal, Dust	1	SN:B10349---
13	04065-01054	・ Ring, Snap	1	SN:B10349---
14	703-08-96120	・ Seal, Oil	1	SN:B10349---

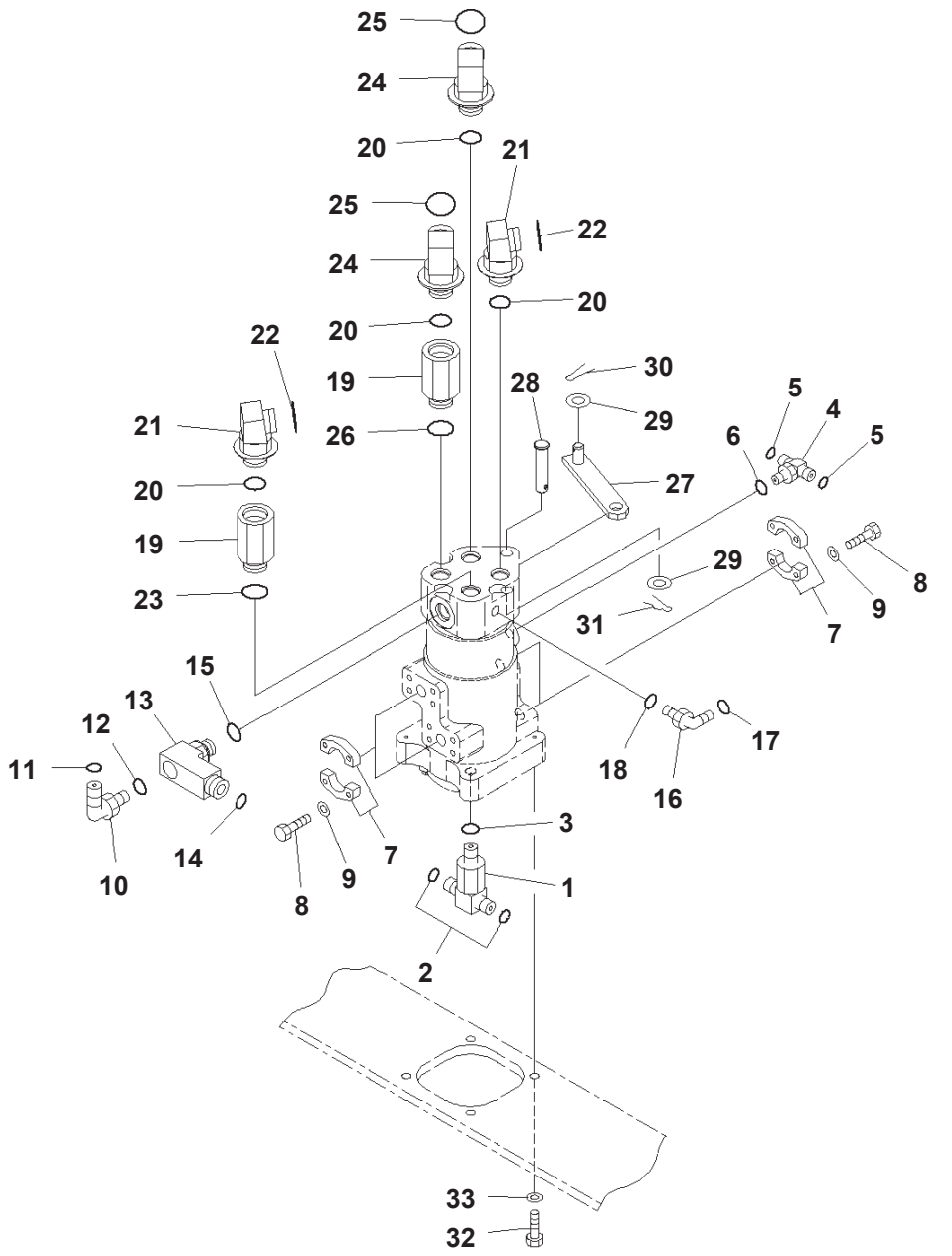

Index	Part Number	Description	Qty	Options
1	207-62-72151	Tee	1	SN:B10001--
2	02896-11015	O-ring	2	SN:B10001--
3	07002-12434	O-ring	1	SN:B10001--
4	21W-62-42630	Tee	1	SN:B10001--
5	02896-11009	O-ring	2	SN:B10001--
6	07002-11423	O-ring	1	SN:B10001--
7	07371-31049	Flange	8	SN:B10001--
8	07372-21035	Bolt	16	SN:B10001--
9	01643-51032	Washer	16	SN:B10001--
10	02782-10522	Elbow	1	SN:B10001--
11	02896-11015	O-ring	1	SN:B10001--
12	07002-12434	O-ring	1	SN:B10001--
13	207-62-72171	Elbow	1	SN:B10001--
14	02896-11018	O-ring	1	SN:B10001--
15	07002-12434	O-ring	1	SN:B10001--
16	21W-62-42490	Elbow	1	SN:B10001--
17	02896-11009	O-ring	1	SN:B10001--
18	07002-11423	O-ring	1	SN:B10001--
19	203-62-63740	Joint	2	SN:B10001--
20	07002-63334	O-ring	2	SN:B10001--
21	207-62-71410	Elbow	2	SN:B10001--
22	11Y-62-11980	O-ring	2	SN:B10001--
23	07002-63334	O-ring	2	SN:B10001--
24	21W-62-42640	Elbow	2	SN:B10001--
25	11Y-62-11980	O-ring	2	SN:B10001--
26	07002-63334	O-ring	2	SN:B10001--
27	207-62-71420	Plate	1	SN:B10001--
28	22U-62-21870	Pin	1	SN:B10001--
29	01641-21626	Washer	1	SN:B10001--
30	04050-14025	Pin, Cotter	1	SN:B10001--
31	22U-62-24420	Pin	1	SN:B10001--
32	01010-81240	Bolt	4	SN:B10001--
33	01643-31232	Washer	4	SN:B10001--

TRAVEL AND LOWER PIPING

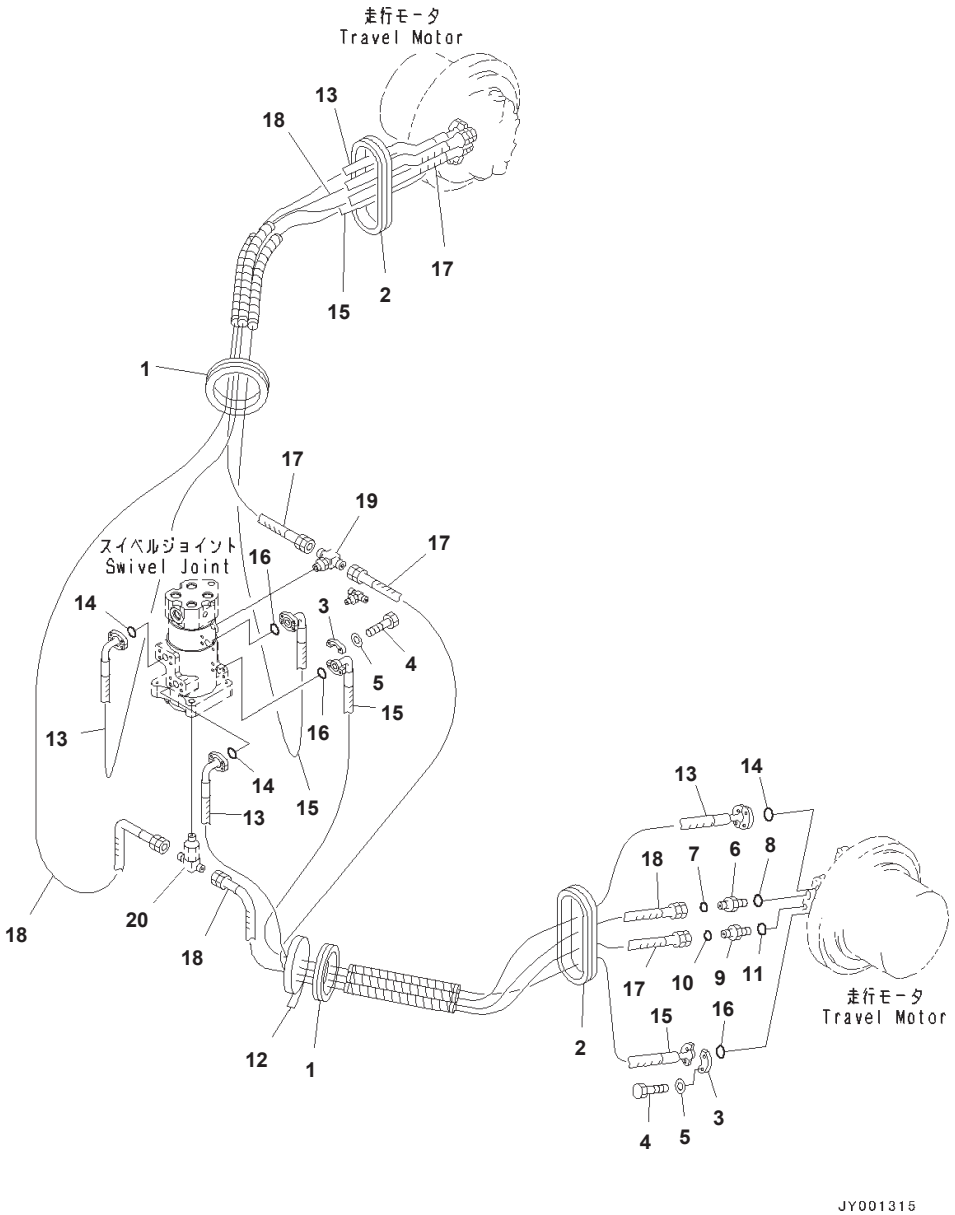

Index	Part Number	Description	Page	Item	Qty	Options
1	20Y-62-12121	Grommet			2	SN:B10001--
2	207-62-53350	Grommet			2	SN:B10001--
3	07371-31049	Flange			8	SN:B10001--
4	07372-21035	Bolt			16	SN:B10001--
5	01643-51032	Washer			16	SN:B10001--
6	02781-00522	Union			2	SN:B10001--
7	02896-11015	O-ring			2	SN:B10001--
8	07002-12434	O-ring			2	SN:B10001--
9	11Y-62-12520	Nipple			2	SN:B10001--
10	02896-11009	O-ring			2	SN:B10001--
11	07002-11423	O-ring			2	SN:B10001--
12	08034-20536	Band			2	SN:B10001--
13	207-62-64860	Hose Assembly			2	SN:B10001--
14	07000-13032	O-ring			4	SN:B10001--
15	207-62-64820	Hose Assembly			2	SN:B10001--
16	07000-13032	O-ring			4	SN:B10001--
17	02762-00325	Hose, Face Seal Type, L=2500mm			2	SN:B10001--
18	02762-00525	Hose, Face Seal Type, L=2500mm			2	SN:B10001--
19	(21W-62-42630)	Tee	N1310-001002	4		SN:--
20	(207-62-72151)	Tee	N1310-001002	1		SN:--

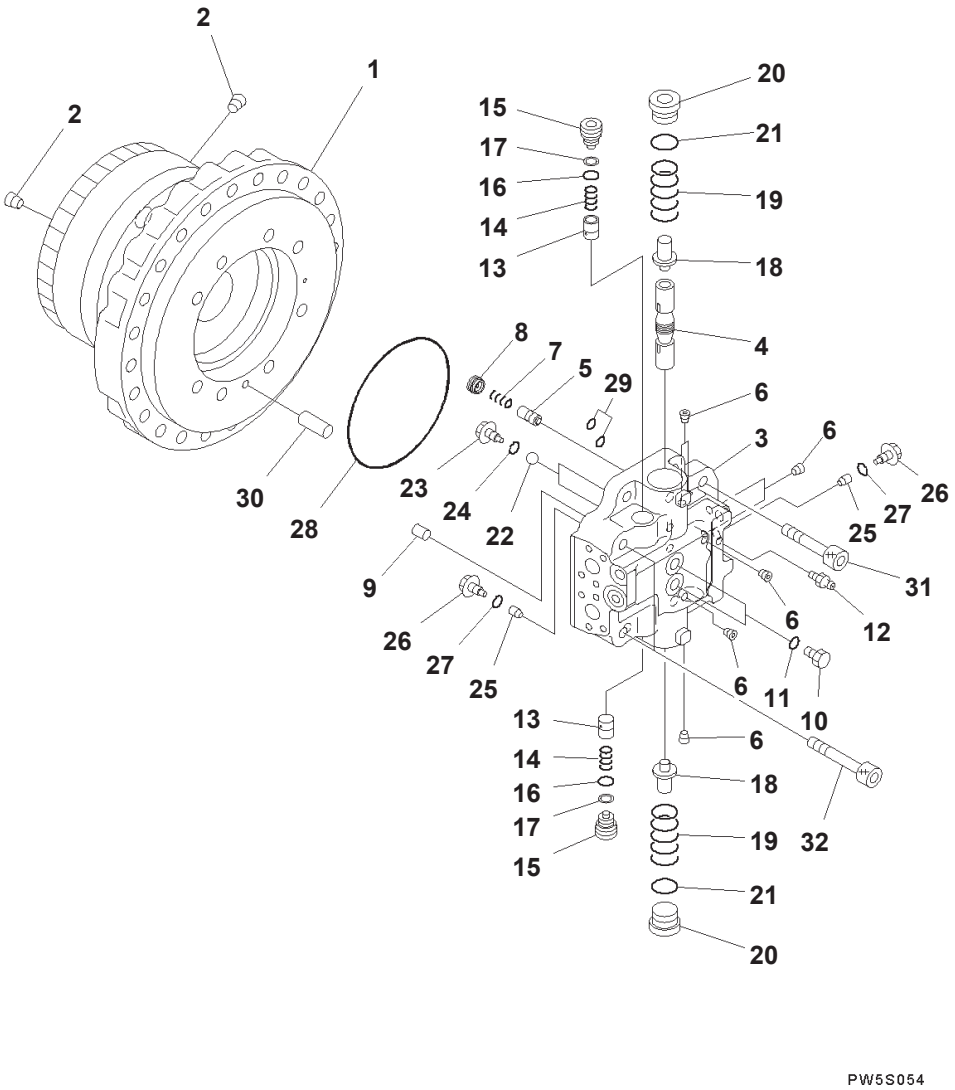

Index	Code	Part Number	Description	Qty	Options
		207-27-00441	Final Drive Assembly	2	SN:B10001--B10313
		708-8H-00320	· Motor Assembly	1	SN:B10001--B10313
	C2	708-8H-04711	· · Case Subassembly	1	SN:B10001--B10313
1	C1		· · · Case	1	SN:B10001--B10313
2	C1		· · · Plug	2	SN:B10001--B10313
	C2	708-8H-04721	· · Cover Subassembly	1	SN:B10001--B10313
3	C1		· · · Cover	1	SN:B10001--B10313
4	C1		· · · Spool	1	SN:B10001--B10313
5	C1		· · · Spool	1	SN:B10001--B10313
6	C1		· · · Plug	7	SN:B10001--B10313
7	C1		· · · Spring	1	SN:B10001--B10313
8	C1		· · · Plug	1	SN:B10001--B10313
9	C2	706-75-42820	· · Pin, Dowel	1	SN:B10001--B10313
10		708-8H-11530	· · Plug	2	SN:B10001--B10313
11		07002-11423	· · O-ring	2	SN:B10001--B10313
12		20B-27-11210	· · Bleeder	1	SN:B10001--B10313
13		706-73-72420	· · Valve	2	SN:B10001--B10313
14		706-73-72440	· · Spring	2	SN:B10001--B10313
15		708-8H-36150	· · Plug	2	SN:B10001--B10313
16		07000-12018	· · O-ring	2	SN:B10001--B10313
17		07001-02018	· · Ring, Back-up	2	SN:B10001--B10313
18		706-78-71160	· · Piston	2	SN:B10001--B10313
19		708-8H-36121	· · Spring	2	SN:B10001--B10313
20		708-8H-16141	· · Plug	2	SN:B10001--B10313
21		07002-13634	· · O-ring	2	SN:B10001--B10313
22	C2	04260-00793	· · Ball, Steel	2	SN:B10001--B10313
23	C2	706-8E-14110	· · Plug	2	SN:B10001--B10313
24	C2	07002-11023	· · O-ring	2	SN:B10001--B10313
25		708-8E-16180	· · Valve	2	SN:B10001--B10313
26	C2	708-8E-16160	· · Plug	2	SN:B10001--B10313
27	C2	07002-11023	· · O-ring	2	SN:B10001--B10313
28	C2	708-8H-31210	· · O-ring	1	SN:B10001--B10313
29	C2	07000-12012	· · O-ring	2	SN:B10001--B10313
30	C2	04020-01228	· · Pin, Dowel	1	SN:B10001--B10313
31	C2	01252-62055	· · Bolt	6	SN:B10001--B10313
32	C2	01252-62095	· · Bolt	2	SN:B10001--B10313

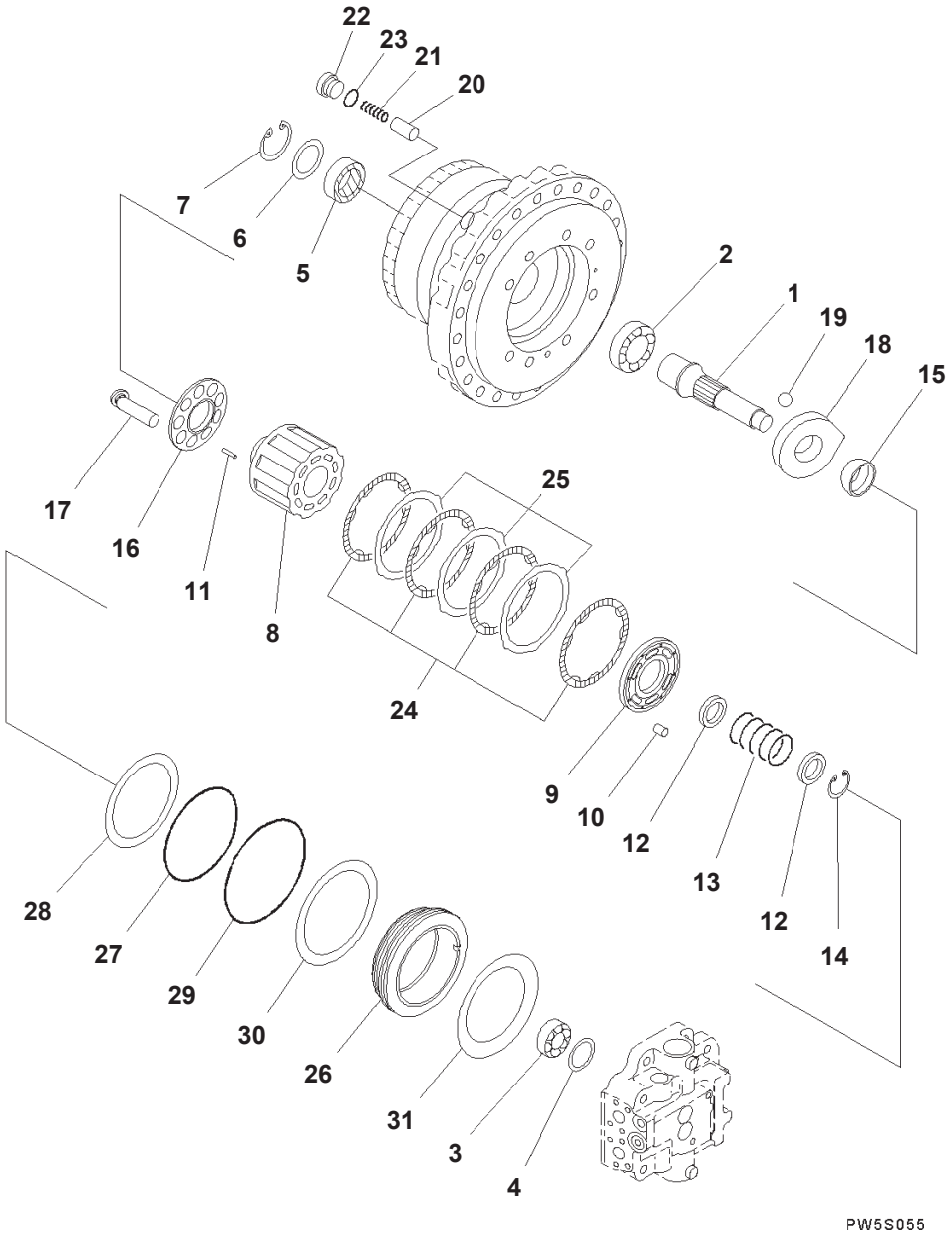

Index	Code	Part Number	Description	Qty	Options
		207-27-00441	Final Drive Assembly	2	SN:B10001--B10313
		708-8H-00320	· Motor Assembly	1	SN:B10001--B10313
1	C2	708-8H-32120	· · Shaft	1	SN:B10001--B10313
2	C2	708-8H-32150	· · Bearing	1	SN:B10001--B10313
3	C2	708-8H-32170	· · Bearing	1	SN:B10001--B10313
4	C2	708-8H-05050	· · Spacer Kit	1	SN:B10001--B10313
	C1		· · · Spacer, T=1.6mm	1	SN:B10001--B10313
	C1		· · · Spacer, T=1.7mm	1	SN:B10001--B10313
	C1		· · · Spacer, T=1.8mm	1	SN:B10001--B10313
	C1		· · · Spacer, T=1.9mm	1	SN:B10001--B10313
	C1		· · · Spacer, T=2.0mm	1	SN:B10001--B10313
	C1		· · · Spacer, T=2.1mm	1	SN:B10001--B10313
	C1		· · · Spacer, T=2.2mm	1	SN:B10001--B10313
5		708-1F-12281	· · Seal, Oil	1	SN:B10001--B10313
6		708-8H-32160	· · Spacer	1	SN:B10001--B10313
7		04065-07825	· · Ring, Snap	1	SN:B10001--B10313
	C2	708-8H-04810	· · Cylinder Block Assembly	1	SN:B10001--B10313
8	C2	708-8H-33710	· · · Block	1	SN:B10001--B10313
9	C2	708-8H-33810	· · · Plate	1	SN:B10001--B10313
10	C2	708-18-13230	· · Pin	1	SN:B10001--B10313
11	C2	708-8H-33360	· · Pin	3	SN:B10001--B10313
12	C2	708-8H-33141	· · Spacer	2	SN:B10001--B10313
13	C2	708-8H-33750	· · Spring	1	SN:B10001--B10313
14	C2	04065-06020	· · Ring, Snap	1	SN:B10001--B10313
15	C2	708-8H-33512	· · Retainer	1	SN:B10001--B10313
16	C2	708-8H-33340	· · Retainer	1	SN:B10001--B10313
17	C2	708-8H-33650	· · Piston Subassembly	9	SN:B10001--B10313
18	C2	708-8H-33471	· · Cam	1	SN:B10001--B10313
19	C2	04260-02857	· · Ball	2	SN:B10001--B10313
20		708-8H-34190	· · Piston	1	SN:B10001--B10313
21		708-8H-34151	· · Spring	1	SN:B10001--B10313
22		X17-8320160	· · Plug	1	SN:B10001--B10313
23		07002-13334	· · · O-ring	1	SN:B10001--B10313
24	C2	708-8H-35130	· · Plate	4	SN:B10001--B10313
25	C2	708-8H-35180	· · Disc	3	SN:B10001--B10313
26	C2	708-8H-35141	· · Piston, Brake	1	SN:B10001--B10313
27	C2	07000-15175	· · O-ring	1	SN:B10001--B10313
28	C2	07001-05175	· · Ring, Back-up	1	SN:B10001--B10313
29	C2	07000-15195	· · O-ring	1	SN:B10001--B10313
30	C2	07001-05195	· · Ring, Back-up	1	SN:B10001--B10313
31	C2	708-8H-35150	· · Spring	1	SN:B10001--B10313

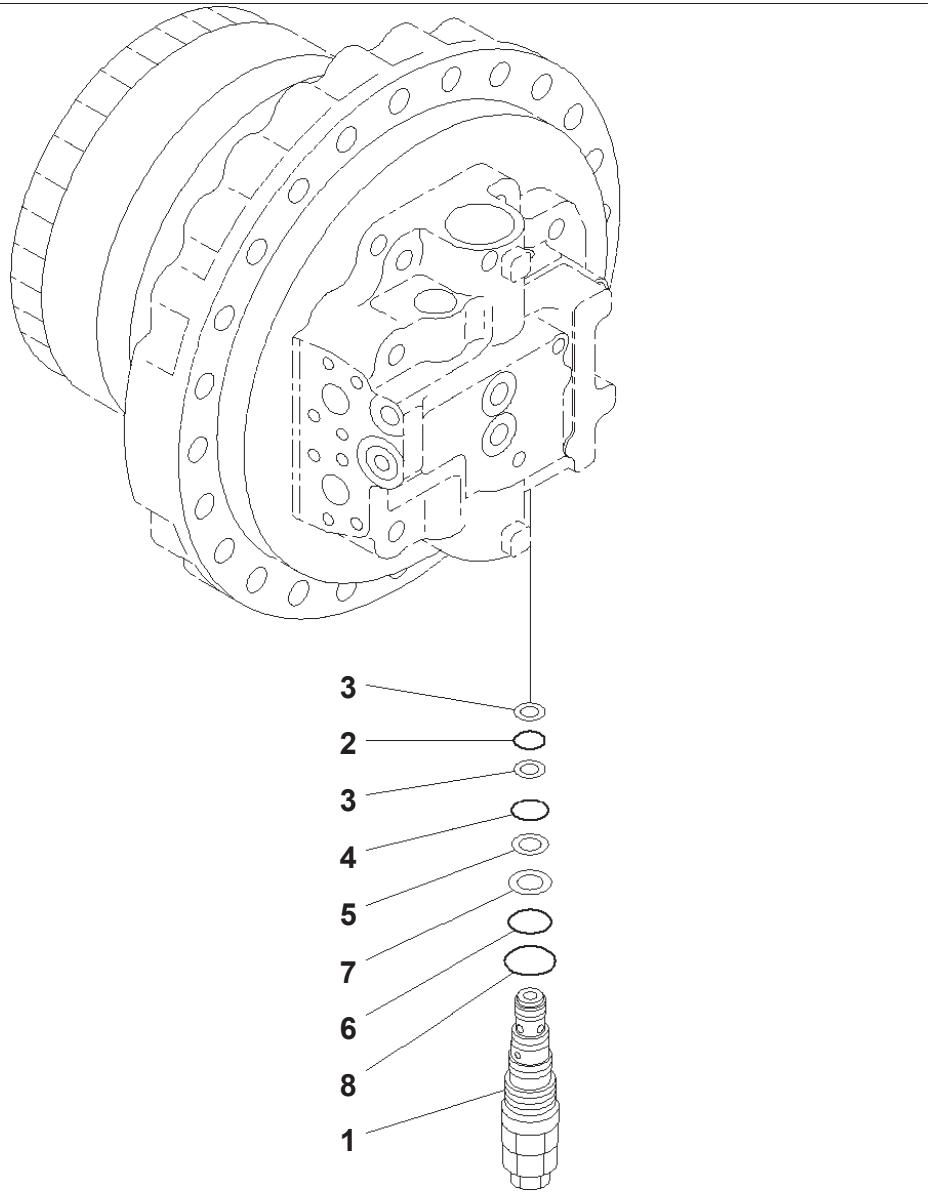

Index	Part Number	Description	Qty	Options
	207-27-00441	Final Drive Assembly	2	SN:B10001--B10313
	708-8H-00320	・ Motor Assembly	1	SN:B10001--B10313
1	702-75-04600	・・ Valve Assembly, Relief	1	SN:B10001--B10313
2	07000-22018	・・・ O-ring	1	SN:B10001--B10313
3	07001-02018	・・・ Ring, Back-up	2	SN:B10001--B10313
4	07000-12021	・・・ O-ring	1	SN:B10001--B10313
5	07001-02021	・・・ Ring, Back-up	1	SN:B10001--B10313
6	702-75-11520	・・・ O-ring	1	SN:B10001--B10313
7	702-75-11530	・・・ Ring, Back-up	1	SN:B10001--B10313
8	07002-13634	・・・ O-ring	1	SN:B10001--B10313

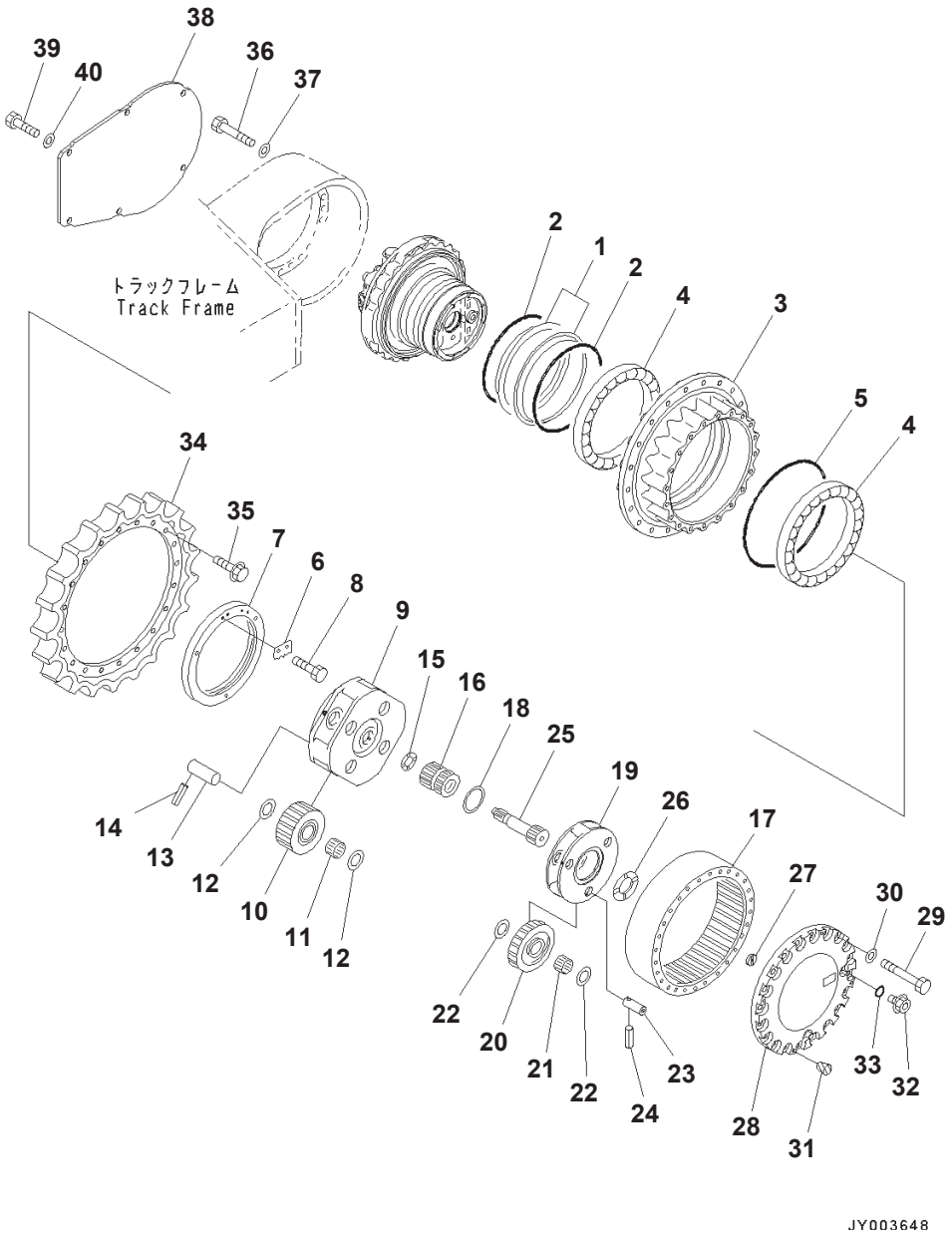

Travel Motor And Final Drive, L.H. (4/4) (#B10001-B10313)

Index	Code	Part Number	Description	Qty	Options
		207-27-00441	Final Drive Assembly	2	SN:B10001--B10313
		207-27-00310	Seal Assembly	1	SN:B10001--B10313
1	C1		・ Seal	2	SN:B10001--B10313
2	C1		・ O-ring	2	SN:B10001--B10313
3		207-27-71311	Hub	1	SN:B10001--B10313
4		207-27-71330	Bearing	2	SN:B10001--B10313
5		207-27-52350	O-ring	1	SN:B10001--B10313
6		207-27-71370	Lock	1	SN:B10001--B10313
7		207-27-71360	Nut, Lock	1	SN:B10001--B10313
8		01010-81020	Bolt	2	SN:B10001--B10313
9		207-27-71320	Carrier	1	SN:B10001--B10313
10		207-27-71140	Gear	4	SN:B10001--B10313
11		207-27-63210	Bearing	4	SN:B10001--B10313
12		20Y-27-21250	Washer	8	SN:B10001--B10313
13		207-27-63230	Pin	4	SN:B10001--B10313
14		20Y-26-21330	Pin	4	SN:B10001--B10313
15		20Y-27-13310	Washer	1	SN:B10001--B10313
16		207-27-71130	Gear	1	SN:B10001--B10313
17		207-27-71152	Gear, Ring	1	SN:B10001--B10313
18		207-27-71250	Washer	1	SN:B10001--B10313
19		207-27-71161	Carrier	1	SN:B10001--B10313
20		207-27-71121	Gear	3	SN:B10001--B10313
21		207-27-61220	Bearing	3	SN:B10001--B10313
22		20Y-27-21240	Washer	6	SN:B10001--B10313
23		207-27-61240	Pin	3	SN:B10001--B10313
24		20Y-27-21280	Pin	3	SN:B10001--B10313
25		207-27-71352	Shaft	1	SN:B10001--B10313
26		20Y-27-11250	Spacer	1	SN:B10001--B10313
27		20Y-27-22250	Button	1	SN:B10001--B10313
28		207-27-71341	Cover	1	SN:B10001--B10313
29		01011-61880	Bolt	20	SN:B10001--B10313
30		01643-31845	Washer	20	SN:B10001--B10313
31		07049-01215	Plug	2	SN:B10001--B10313
32		07044-12412	Plug	3	SN:B10001--B10313
33		07002-02434	O-ring	3	SN:B10001--B10313
34		207-27-71460	Sprocket	1	SN:B10001--B10313
35		207-27-51311	Bolt	20	SN:B10001--B10313
36		01010-82075	Bolt	42	SN:B10001--B10313
37		01643-32060	Washer	42	SN:B10001--B10313
38		207-30-B1260	Cover	2	SN:B10001--B10313
	A2	207-30-71242	Cover	2	SN:B10001--B10313
39		01010-81640	Bolt	12	SN:B10001--B10313
40		01643-31645	Washer	12	SN:B10001--B10313

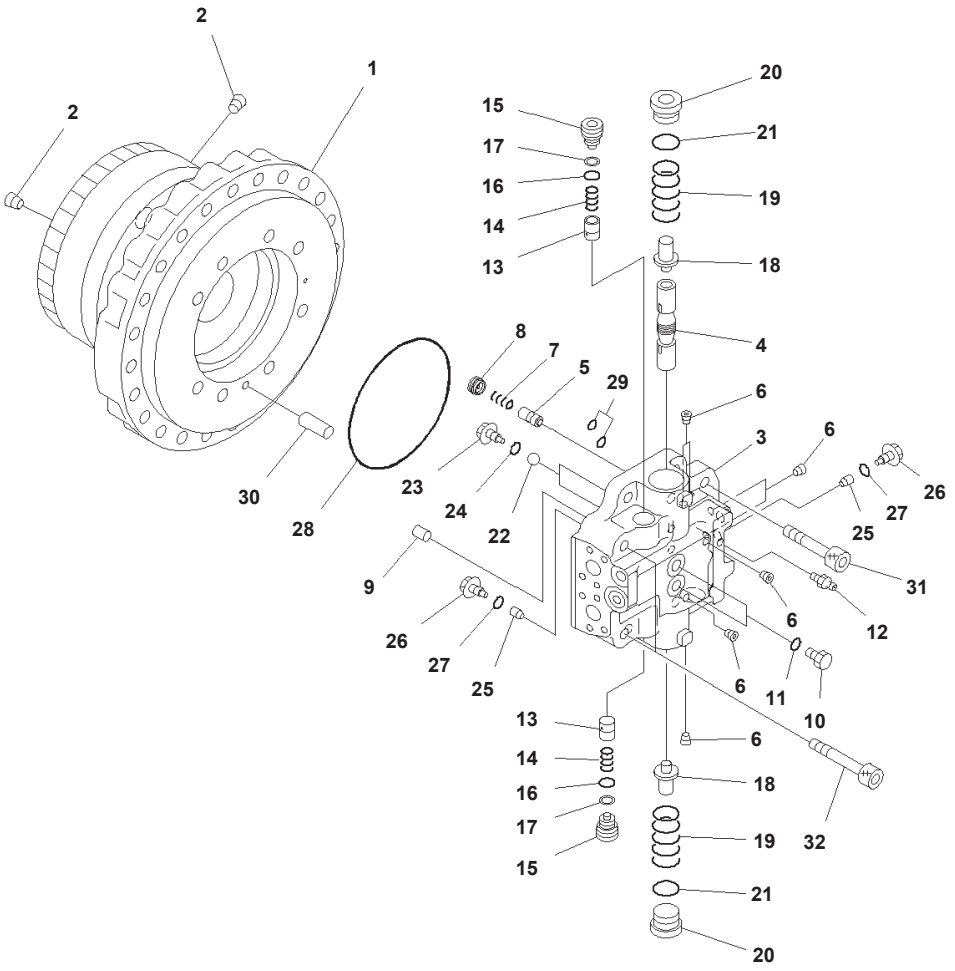

Travel Motor And Final Drive, L.H. (1/4) (#B10314-)

Index	Code	Part Number	Description	Qty	Options
		207-27-00560	Final Drive Assembly, L.H.	1	SN:B10314--
		708-8H-00420	· Motor Assembly	1	SN:B10314--
	C2	708-8H-04780	· · Case Subassembly	1	SN:B10314--
1	C1		· · · Case	1	SN:B10314--
2	C1		· · · Plug	2	SN:B10314--
	C2	708-8H-04721	· · Cover Subassembly	1	SN:B10314--
3	C1		· · · Cover	1	SN:B10314--
4	C1		· · · Spool	1	SN:B10314--
5	C1		· · · Spool	1	SN:B10314--
6	C1		· · · Plug	7	SN:B10314--
7	C1		· · · Spring	1	SN:B10314--
8	C1		· · · Plug	1	SN:B10314--
9	C2	706-75-42820	· · Pin, Dowel	1	SN:B10314--
10		702-21-55620	· · Plug	2	SN:B10314--
11		07002-11423	· · O-ring	2	SN:B10314--
12		20B-27-11210	· · Bleeder	1	SN:B10314--
13		706-73-72420	· · Valve	2	SN:B10314--
14		706-73-72440	· · Spring	2	SN:B10314--
15		708-8H-36150	· · Plug	2	SN:B10314--
16		07000-12018	· · O-ring	2	SN:B10314--
17		708-8H-36160	· · Ring, Back-up	2	SN:B10314--
18		706-78-71160	· · Piston	2	SN:B10314--
19		708-8H-36121	· · Spring	2	SN:B10314--
20		708-8H-16141	· · Plug	2	SN:B10314--
21		07002-13634	· · O-ring	2	SN:B10314--
22	C2	04260-00793	· · Ball, Steel	2	SN:B10314--
23	C2	706-8E-14110	· · Plug	2	SN:B10314--
24	C2	07002-11023	· · O-ring	2	SN:B10314--
25		708-8E-16180	· · Valve	2	SN:B10314--
26	C2	708-8E-16160	· · Plug	2	SN:B10314--
27	C2	07002-11023	· · O-ring	2	SN:B10314--
28	C2	708-8H-31210	· · O-ring	1	SN:B10314--
29	C2	07000-12012	· · O-ring	2	SN:B10314--
30	C2	04020-01228	· · Pin, Dowel	1	SN:B10314--
31	C2	01252-62055	· · Bolt	6	SN:B10314--
32	C2	01252-62095	· · Bolt	2	SN:B10314--

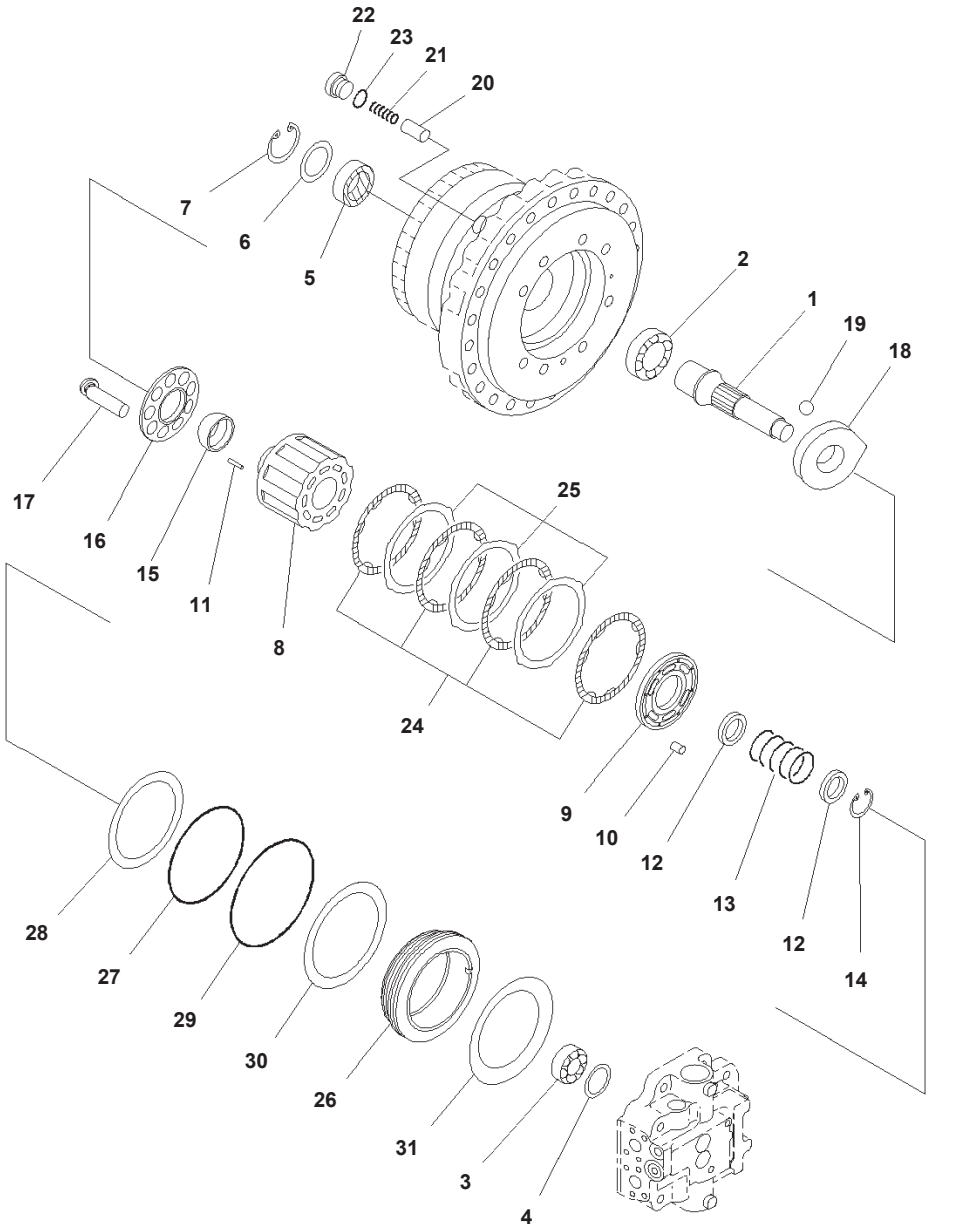

Index	Code	Part Number	Description	Qty	Options
		207-27-00560	Final Drive Assembly, L.H.	1	SN:B10314--
		708-8H-00420	· Motor Assembly	1	SN:B10314--
1	C2	708-8H-32120	· · Shaft	1	SN:B10314--
2	C2	708-8H-32150	· · Bearing	1	SN:B10314--
3	C2	708-8H-32170	· · Bearing	1	SN:B10314--
4	C2	708-8H-05050	· · Spacer Kit	1	SN:B10314--
	C1		· · · Spacer, T=1.6mm	1	SN:B10314--
	C1		· · · Spacer, T=1.7mm	1	SN:B10314--
	C1		· · · Spacer, T=1.8mm	1	SN:B10314--
	C1		· · · Spacer, T=1.9mm	1	SN:B10314--
	C1		· · · Spacer, T=2.0mm	1	SN:B10314--
	C1		· · · Spacer, T=2.1mm	1	SN:B10314--
	C1		· · · Spacer, T=2.2mm	1	SN:B10314--
5		708-1F-12281	· · Seal, Oil	1	SN:B10314--
6		708-8H-32160	· · Spacer	1	SN:B10314--
7		04065-07825	· · Ring, Snap	1	SN:B10314--
	C2	708-8H-04810	· · Cylinder Block Assembly	1	SN:B10314--
8	C2	708-8H-33710	· · · Block	1	SN:B10314--
9	C2	708-8H-33810	· · · Plate	1	SN:B10314--
10	C2	708-18-13230	· · Pin	1	SN:B10314--
11	C2	708-8H-33360	· · Pin	3	SN:B10314--
12	C2	708-8H-33141	· · Spacer	2	SN:B10314--
13	C2	708-8H-33750	· · Spring	1	SN:B10314--
14	C2	04065-06020	· · Ring, Snap	1	SN:B10314--
15	C2	708-8H-33512	· · Retainer	1	SN:B10314--
16	C2	708-8H-33340	· · Retainer	1	SN:B10314--
17	C2	708-8H-33650	· · Piston Subassembly	9	SN:B10314--
18	C2	708-8H-33471	· · Cam	1	SN:B10314--
19	C2	04260-02857	· · Ball	2	SN:B10314--
20		708-8H-34190	· · Piston	1	SN:B10314--
21		708-8H-34151	· · Spring	1	SN:B10314--
22		X17-8320160	· · Plug	1	SN:B10314--
23		07002-13334	· · · O-ring	1	SN:B10314--
24	C2	708-8H-35130	· · Plate	4	SN:B10314--
25	C2	708-8H-35180	· · Disc	3	SN:B10314--
26	C2	708-8H-35141	· · Piston, Brake	1	SN:B10314--
27	C2	07000-15175	· · O-ring	1	SN:B10314--
28	C2	07001-05175	· · Ring, Back-up	1	SN:B10314--
29	C2	07000-15195	· · O-ring	1	SN:B10314--
30	C2	07001-05195	· · Ring, Back-up	1	SN:B10314--
31	C2	708-8H-35150	· · Spring	1	SN:B10314--

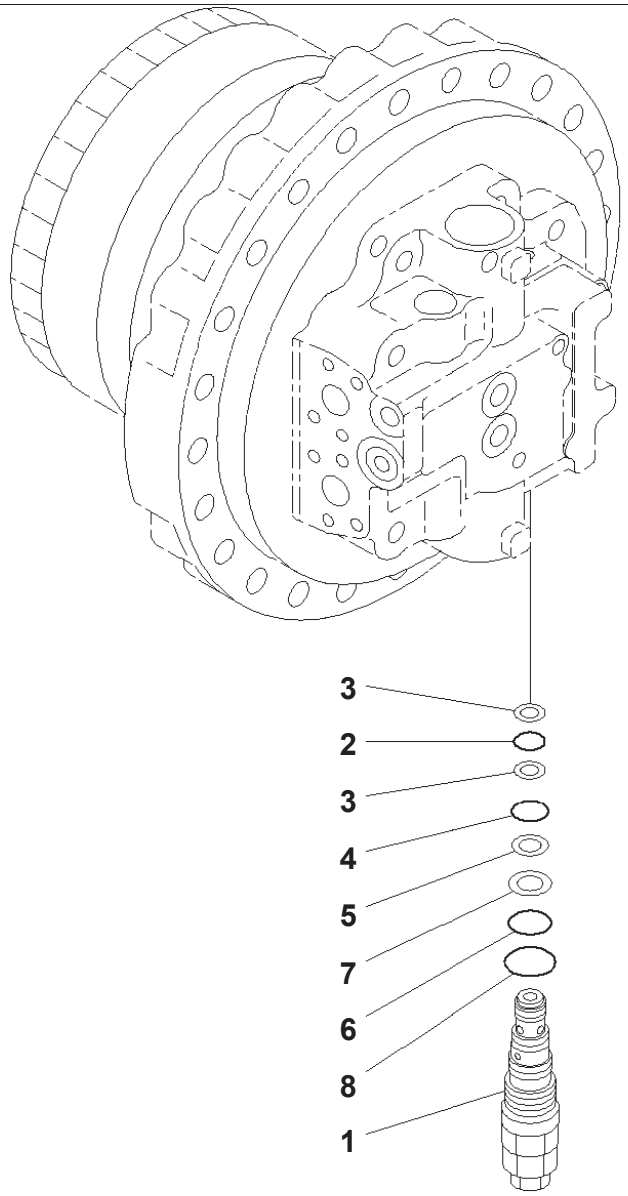

Travel Motor And Final Drive, L.H. (3/4) (B10314-)

Index	Part Number	Description	Qty	Options
	207-27-00560	Final Drive Assembly, L.H.	1	SN:B10314--
	708-8H-00420	・ Motor Assembly	1	SN:B10314--
1	702-75-04601	・・ Valve Assembly, Relief	1	SN:B10314--
2	07000-22018	・・・ O-ring	1	SN:B10314--
3	702-75-11830	・・・ Ring, Back-up	2	SN:B10314--
4	07000-12021	・・・ O-ring	1	SN:B10314--
5	702-75-11840	・・・ Ring, Back-up	1	SN:B10314--
6	702-75-11520	・・・ O-ring	1	SN:B10314--
7	702-75-11850	・・・ Ring, Back-up	1	SN:B10314--
8	07002-13634	・・・ O-ring	1	SN:B10314--

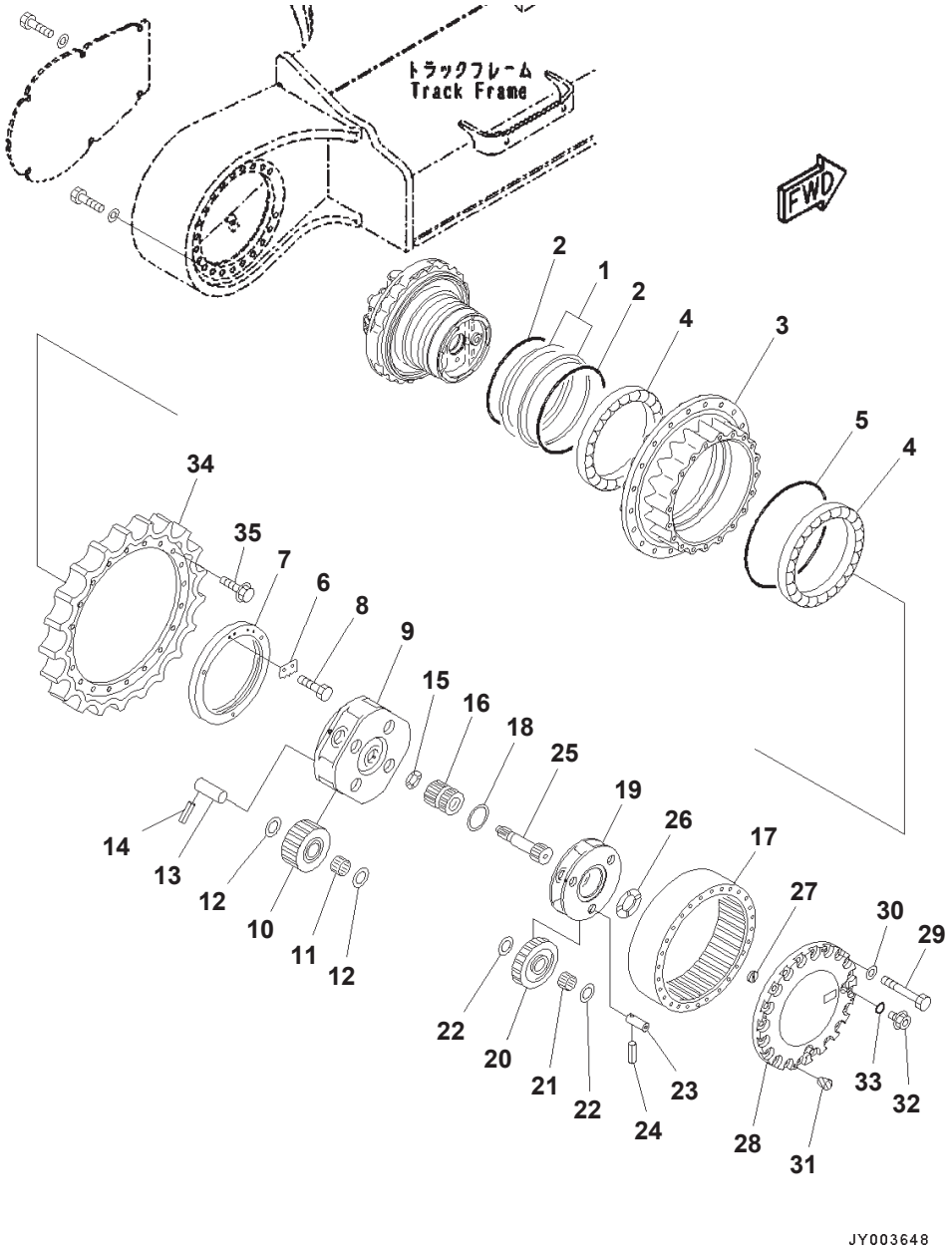

Index	Part Number	Description	Qty	Options
	207-27-00560	Final Drive Assembly, L.H.	1	SN:B10314--
	207-27-00310	・ Seal Assembly	1	SN:B10314--
1	207-27-71311	・・ Seal	2	SN:B10314--
2	421-33-11680	・・ O-ring	2	SN:B10314--
3	207-27-71710	・ Hub	1	SN:B10314--
4	207-27-71330	・ Bearing	2	SN:B10314--
5	207-27-52350	・ O-ring	1	SN:B10314--
6	207-27-71370	・ Lock	1	SN:B10314--
7	207-27-71360	・ Nut, Lock	1	SN:B10314--
8	01010-81020	・ Bolt	2	SN:B10314--
9	207-27-71320	・ Carrier	1	SN:B10314--
10	207-27-71140	・ Gear	4	SN:B10314--
11	207-27-63210	・ Bearing	4	SN:B10314--
12	20Y-27-21250	・ Washer	8	SN:B10314--
13	207-27-63230	・ Pin	4	SN:B10314--
14	20Y-26-21330	・ Pin	4	SN:B10314--
15	20Y-27-13310	・ Washer	1	SN:B10314--
16	207-27-71130	・ Gear	1	SN:B10314--
17	207-27-71152	・ Gear, Ring	1	SN:B10314--
18	207-27-71250	・ Washer	1	SN:B10314--
19	207-27-71161	・ Carrier	1	SN:B10314--
20	207-27-71121	・ Gear	3	SN:B10314--
21	207-27-61220	・ Bearing	3	SN:B10314--
22	20Y-27-21240	・ Washer	6	SN:B10314--
23	207-27-61240	・ Pin	3	SN:B10314--
24	20Y-27-21280	・ Pin	3	SN:B10314--
25	207-27-71352	・ Shaft	1	SN:B10314--
26	20Y-27-11250	・ Spacer	1	SN:B10314--
27	20Y-27-22250	・ Button	1	SN:B10314--
28	207-27-71341	・ Cover	1	SN:B10314--
29	01011-61880	・ Bolt	20	SN:B10314--
30	01643-31845	・ Washer	20	SN:B10314--
31	07049-01215	・ Plug	2	SN:B10314--
32	07044-12412	・ Plug	3	SN:B10314--
33	07002-02434	・ O-ring	3	SN:B10314--
34	207-27-71460	・ Sprocket	1	SN:B10314--
35	207-27-51311	・ Bolt	20	SN:B10314--

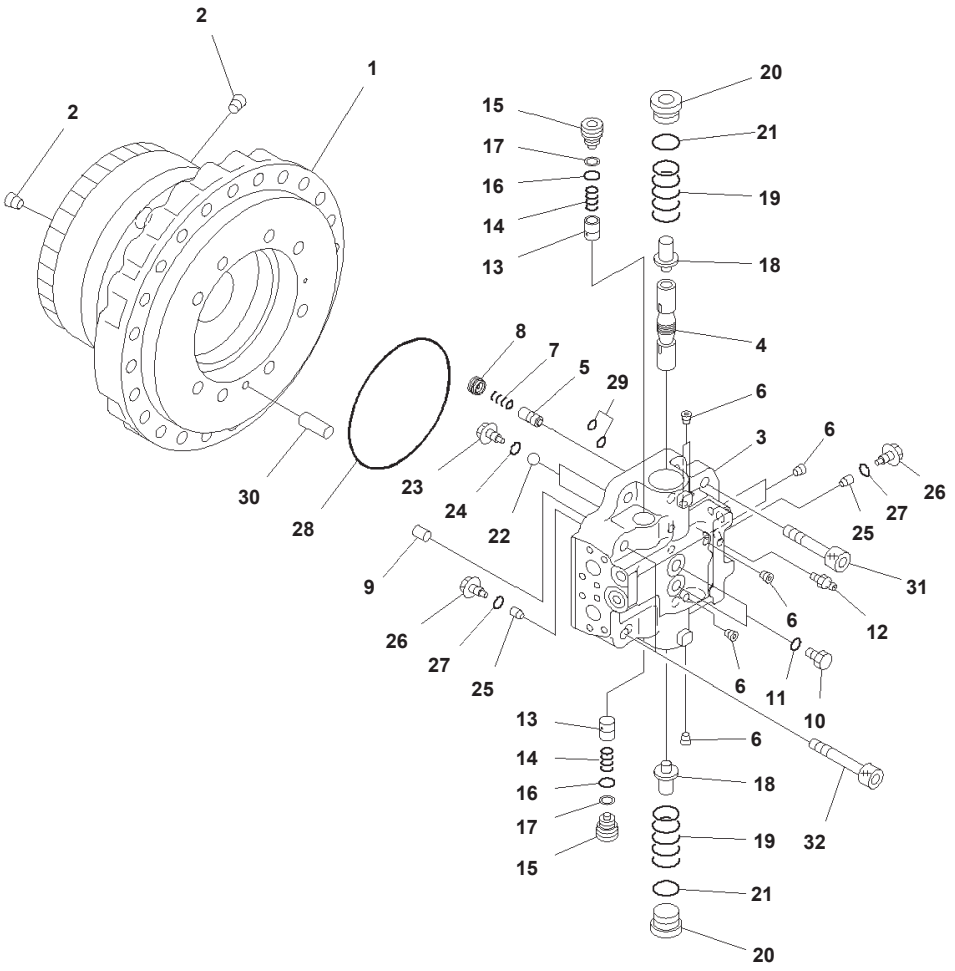

P002005

Travel Motor And Final Drive, R.H. (1/4) (#B10314-)

Index	Code	Part Number	Description	Qty	Options
		207-27-00570	Final Drive Assembly, R.H.	1	SN:B10314--
		708-8H-00410	· Motor Assembly	1	SN:B10314--
	C2	708-8H-04780	· · Case Subassembly	1	SN:B10314--
1	C1		· · · Case	1	SN:B10314--
2	C1		· · · Plug	2	SN:B10314--
	C2	708-8H-04721	· · Cover Subassembly	1	SN:B10314--
3	C1		· · · Cover	1	SN:B10314--
4	C1		· · · Spool	1	SN:B10314--
5	C1		· · · Spool	1	SN:B10314--
6	C1		· · · Plug	7	SN:B10314--
7	C1		· · · Spring	1	SN:B10314--
8	C1		· · · Plug	1	SN:B10314--
9	C2	706-75-42820	· · Pin, Dowel	1	SN:B10314--
10		702-21-55620	· · Plug	2	SN:B10314--
11		07002-11423	· · O-ring	2	SN:B10314--
12		20B-27-11210	· · Bleeder	1	SN:B10314--
13		706-73-72420	· · Valve	2	SN:B10314--
14		706-73-72440	· · Spring	2	SN:B10314--
15		708-8H-36150	· · Plug	2	SN:B10314--
16		07000-12018	· · O-ring	2	SN:B10314--
17		708-8H-36160	· · Ring, Back-up	2	SN:B10314--
18		706-78-71160	· · Piston	2	SN:B10314--
19		708-8H-36121	· · Spring	2	SN:B10314--
20		708-8H-16141	· · Plug	2	SN:B10314--
21		07002-13634	· · O-ring	2	SN:B10314--
22	C2	04260-00793	· · Ball, Steel	2	SN:B10314--
23	C2	706-8E-14110	· · Plug	2	SN:B10314--
24	C2	07002-11023	· · O-ring	2	SN:B10314--
25		708-8E-16180	· · Valve	2	SN:B10314--
26	C2	708-8E-16160	· · Plug	2	SN:B10314--
27	C2	07002-11023	· · O-ring	2	SN:B10314--
28	C2	708-8H-31210	· · O-ring	1	SN:B10314--
29	C2	07000-12012	· · O-ring	2	SN:B10314--
30	C2	04020-01228	· · Pin, Dowel	1	SN:B10314--
31	C2	01252-62055	· · Bolt	6	SN:B10314--
32	C2	01252-62095	· · Bolt	2	SN:B10314--

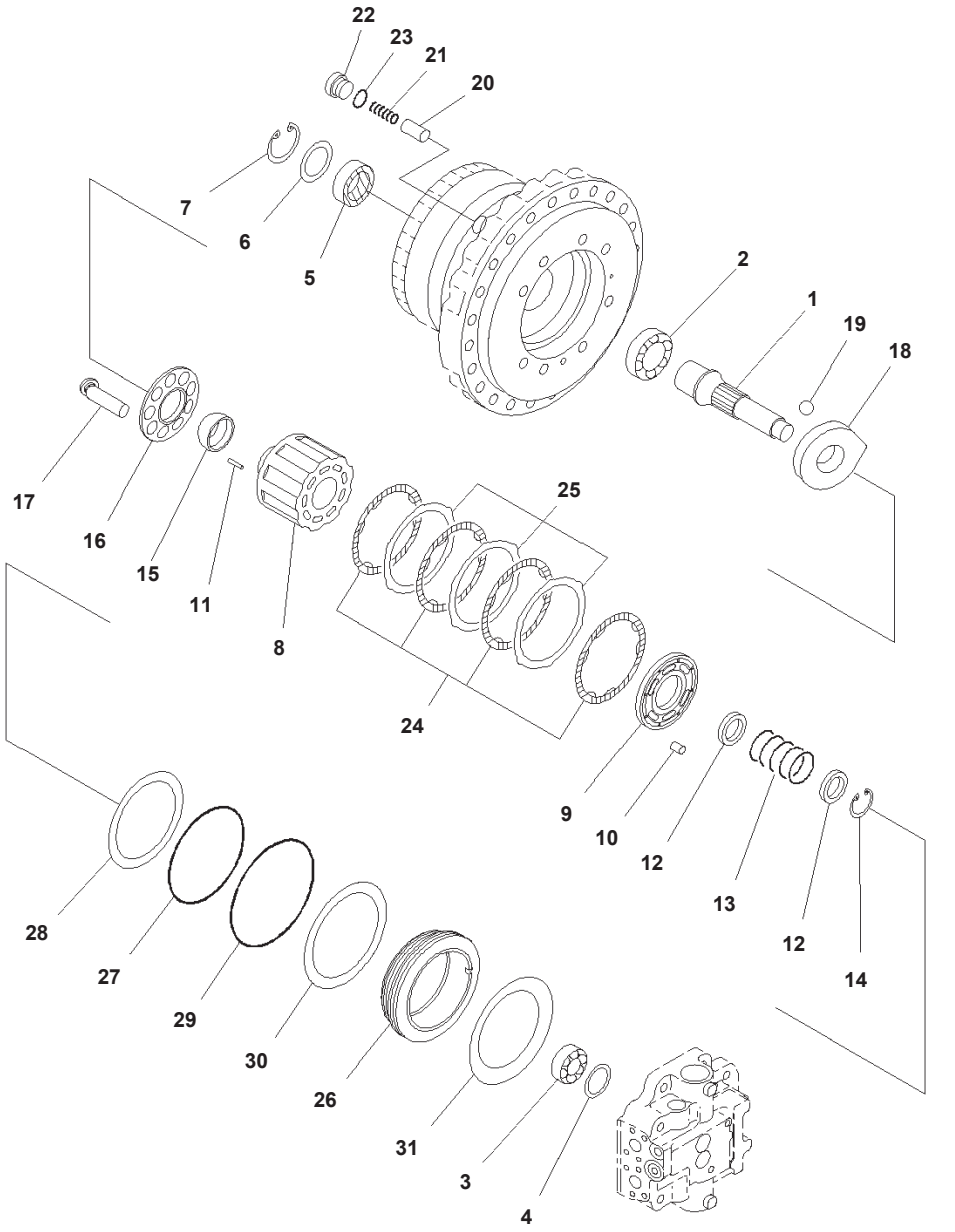

Travel Motor And Final Drive, R.H. (2/4) (#B10314-)

Index	Code	Part Number	Description	Qty	Options
		207-27-00570	Final Drive Assembly, R.H.	1	SN:B10314--
		708-8H-00410	· Motor Assembly	1	SN:B10314--
1	C2	708-8H-32120	· · Shaft	1	SN:B10314--
2	C2	708-8H-32150	· · Bearing	1	SN:B10314--
3	C2	708-8H-32170	· · Bearing	1	SN:B10314--
4	C2	708-8H-05050	· · Spacer Kit	1	SN:B10314--
	C1		· · · Spacer, T=1.6mm	1	SN:B10314--
	C1		· · · Spacer, T=1.7mm	1	SN:B10314--
	C1		· · · Spacer, T=1.8mm	1	SN:B10314--
	C1		· · · Spacer, T=1.9mm	1	SN:B10314--
	C1		· · · Spacer, T=2.0mm	1	SN:B10314--
	C1		· · · Spacer, T=2.1mm	1	SN:B10314--
	C1		· · · Spacer, T=2.2mm	1	SN:B10314--
5		708-1F-12281	· · Seal, Oil	1	SN:B10314--
6		708-8H-32160	· · Spacer	1	SN:B10314--
7		04065-07825	· · Ring, Snap	1	SN:B10314--
	C2	708-8H-04810	· · Cylinder Block Assembly	1	SN:B10314--
8	C2	708-8H-33710	· · · Block	1	SN:B10314--
9	C2	708-8H-33810	· · · Plate	1	SN:B10314--
10	C2	708-18-13230	· · Pin	1	SN:B10314--
11	C2	708-8H-33360	· · Pin	3	SN:B10314--
12	C2	708-8H-33141	· · Spacer	2	SN:B10314--
13	C2	708-8H-33750	· · Spring	1	SN:B10314--
14	C2	04065-06020	· · Ring, Snap	1	SN:B10314--
15	C2	708-8H-33512	· · Retainer	1	SN:B10314--
16	C2	708-8H-33340	· · Retainer	1	SN:B10314--
17	C2	708-8H-33650	· · Piston Subassembly	9	SN:B10314--
18	C2	708-8H-33471	· · Cam	1	SN:B10314--
19	C2	04260-02857	· · Ball	2	SN:B10314--
20		708-8H-34190	· · Piston	1	SN:B10314--
21		708-8H-34151	· · Spring	1	SN:B10314--
22		X17-8320160	· · Plug	1	SN:B10314--
23		07002-13334	· · · O-ring	1	SN:B10314--
24	C2	708-8H-35130	· · Plate	4	SN:B10314--
25	C2	708-8H-35180	· · Disc	3	SN:B10314--
26	C2	708-8H-35141	· · Piston, Brake	1	SN:B10314--
27	C2	07000-15175	· · O-ring	1	SN:B10314--
28	C2	07001-05175	· · Ring, Back-up	1	SN:B10314--
29	C2	07000-15195	· · O-ring	1	SN:B10314--
30	C2	07001-05195	· · Ring, Back-up	1	SN:B10314--
31	C2	708-8H-35150	· · Spring	1	SN:B10314--

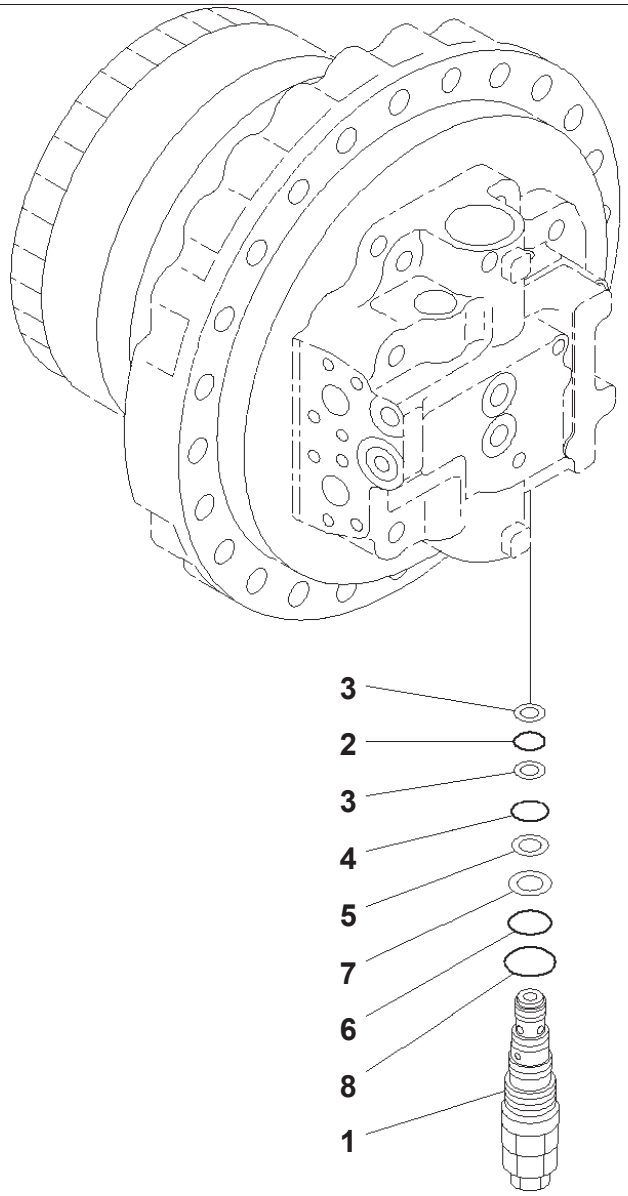

Travel Motor And Final Drive, R.H. (3/4) (B10314-)

Index	Part Number	Description	Qty	Options
	207-27-00570	Final Drive Assembly, R.H.	1	SN:B10314--
	708-8H-00410	・ Motor Assembly	1	SN:B10314--
1	702-75-04601	・・ Valve Assembly, Relief	1	SN:B10314--
2	07000-22018	・・・ O-ring	1	SN:B10314--
3	702-75-11830	・・・ Ring, Back-up	2	SN:B10314--
4	07000-12021	・・・ O-ring	1	SN:B10314--
5	702-75-11840	・・・ Ring, Back-up	1	SN:B10314--
6	702-75-11520	・・・ O-ring	1	SN:B10314--
7	702-75-11850	・・・ Ring, Back-up	1	SN:B10314--
8	07002-13634	・・・ O-ring	1	SN:B10314--

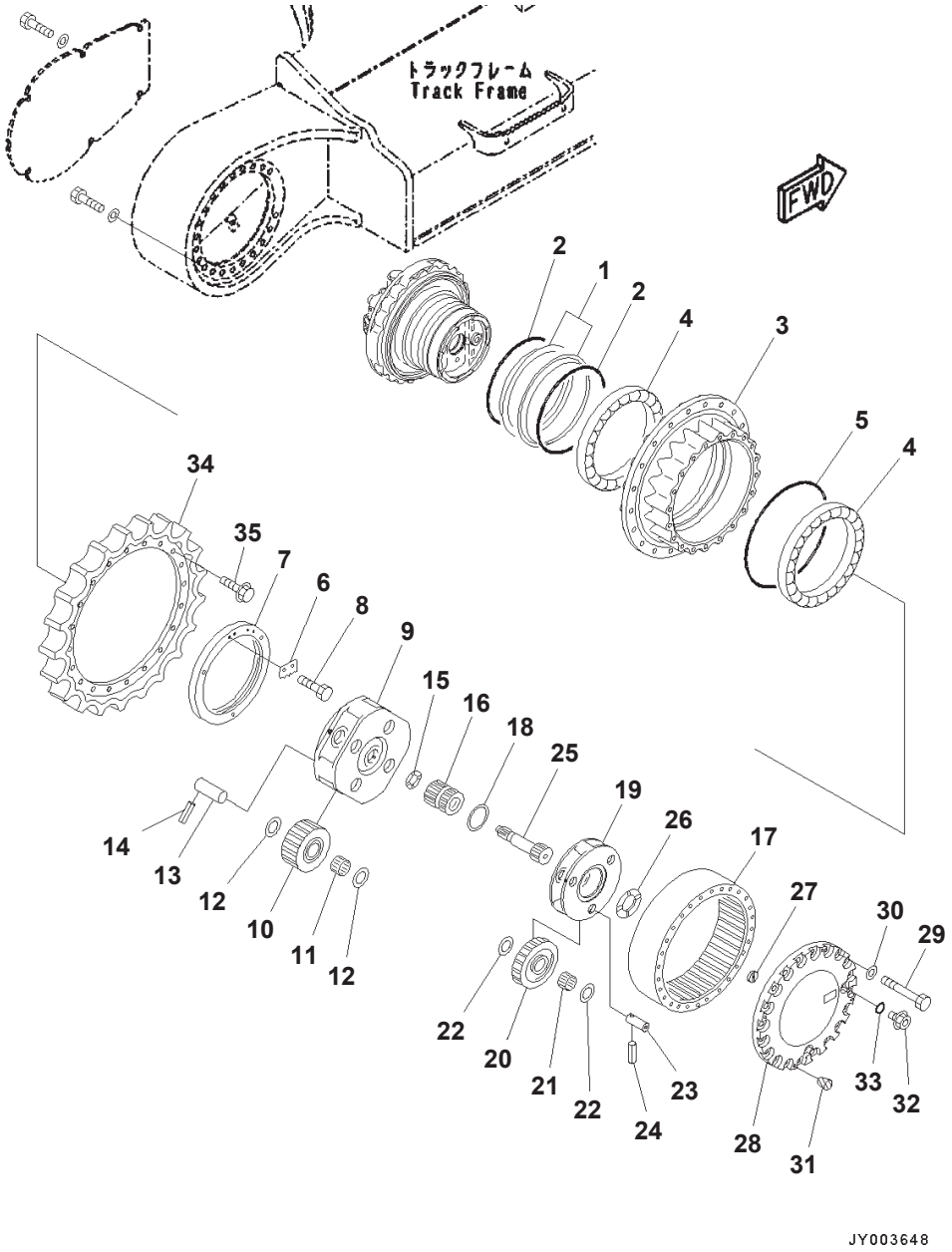

Index	Part Number	Description	Qty	Options
	207-27-00570	Final Drive Assembly, R.H.	1	SN:B10314--
	207-27-00310	・ Seal Assembly	1	SN:B10314--
1	207-27-71311	・・ Seal	2	SN:B10314--
2	421-33-11680	・・ O-ring	2	SN:B10314--
3	207-27-71710	・ Hub	1	SN:B10314--
4	207-27-71330	・ Bearing	2	SN:B10314--
5	207-27-52350	・ O-ring	1	SN:B10314--
6	207-27-71370	・ Lock	1	SN:B10314--
7	207-27-71360	・ Nut, Lock	1	SN:B10314--
8	01010-81020	・ Bolt	2	SN:B10314--
9	207-27-71320	・ Carrier	1	SN:B10314--
10	207-27-71140	・ Gear	4	SN:B10314--
11	207-27-63210	・ Bearing	4	SN:B10314--
12	20Y-27-21250	・ Washer	8	SN:B10314--
13	207-27-63230	・ Pin	4	SN:B10314--
14	20Y-26-21330	・ Pin	4	SN:B10314--
15	20Y-27-13310	・ Washer	1	SN:B10314--
16	207-27-71130	・ Gear	1	SN:B10314--
17	207-27-71152	・ Gear, Ring	1	SN:B10314--
18	207-27-71250	・ Washer	1	SN:B10314--
19	207-27-71161	・ Carrier	1	SN:B10314--
20	207-27-71121	・ Gear	3	SN:B10314--
21	207-27-61220	・ Bearing	3	SN:B10314--
22	20Y-27-21240	・ Washer	6	SN:B10314--
23	207-27-61240	・ Pin	3	SN:B10314--
24	20Y-27-21280	・ Pin	3	SN:B10314--
25	207-27-71352	・ Shaft	1	SN:B10314--
26	20Y-27-11250	・ Spacer	1	SN:B10314--
27	20Y-27-22250	・ Button	1	SN:B10314--
28	207-27-71341	・ Cover	1	SN:B10314--
29	01011-61880	・ Bolt	20	SN:B10314--
30	01643-31845	・ Washer	20	SN:B10314--
31	07049-01215	・ Plug	2	SN:B10314--
32	07044-12412	・ Plug	3	SN:B10314--
33	07002-02434	・ O-ring	3	SN:B10314--
34	207-27-71460	・ Sprocket	1	SN:B10314--
35	207-27-51311	・ Bolt	20	SN:B10314--

UNDER CARRIAGE

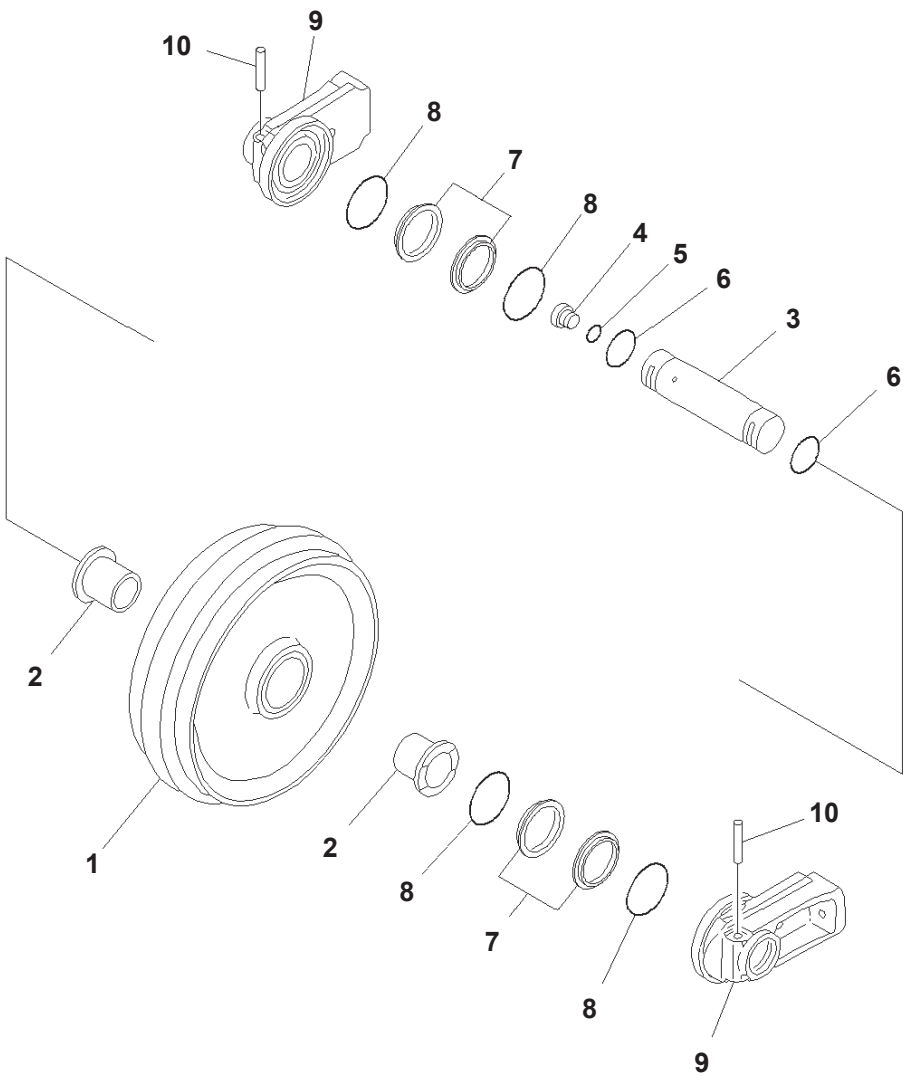

Front Idler And Idler Cushion (1/2) (#B10001-B10400)

Index	Code	Part Number	Description	Qty	Options
		207-30-B0011	Idler Assembly	2	SN:B10338--B10400
		207-30-B0010	Idler Assembly	2	SN:B10001--B10337
	C1	207-30-B1280	・ Idler	2	SN:B10338--@
1	C1	207-30-53112	・ Idler	2	SN:B10001--B10337
2		207-30-53140	・ Bushing	2	SN:B10001--@
3		207-30-53130	・ Shaft	1	SN:B10001--@
4		07040-13618	・ Plug	1	SN:B10001--@
5		07002-13634	・ O-ring	1	SN:B10001--@
6		07000-12075	・ O-ring	2	SN:B10001--@
7	C1	208-30-00390	・ Seal Assembly	2	SN:B10338--B10400
	C1	207-30-00101	・ Seal Assembly	2	SN:B10001--B10337
	C1	208-30-76160	・・ Seal	2	SN:B10338--@
	C1	207-30-53171	・・ Seal	2	SN:B10001--B10337
8	C1	208-30-76170	・・ O-ring	2	SN:B10338--@
	C1	207-30-53181	・・ O-ring	2	SN:B10001--B10337
9	C1	207-30-48150	・ Support	2	SN:B10338--B10400
	C1	207-30-53151	・ Support	2	SN:B10001--B10337
10		207-30-53160	・ Pin	2	SN:B10001--@

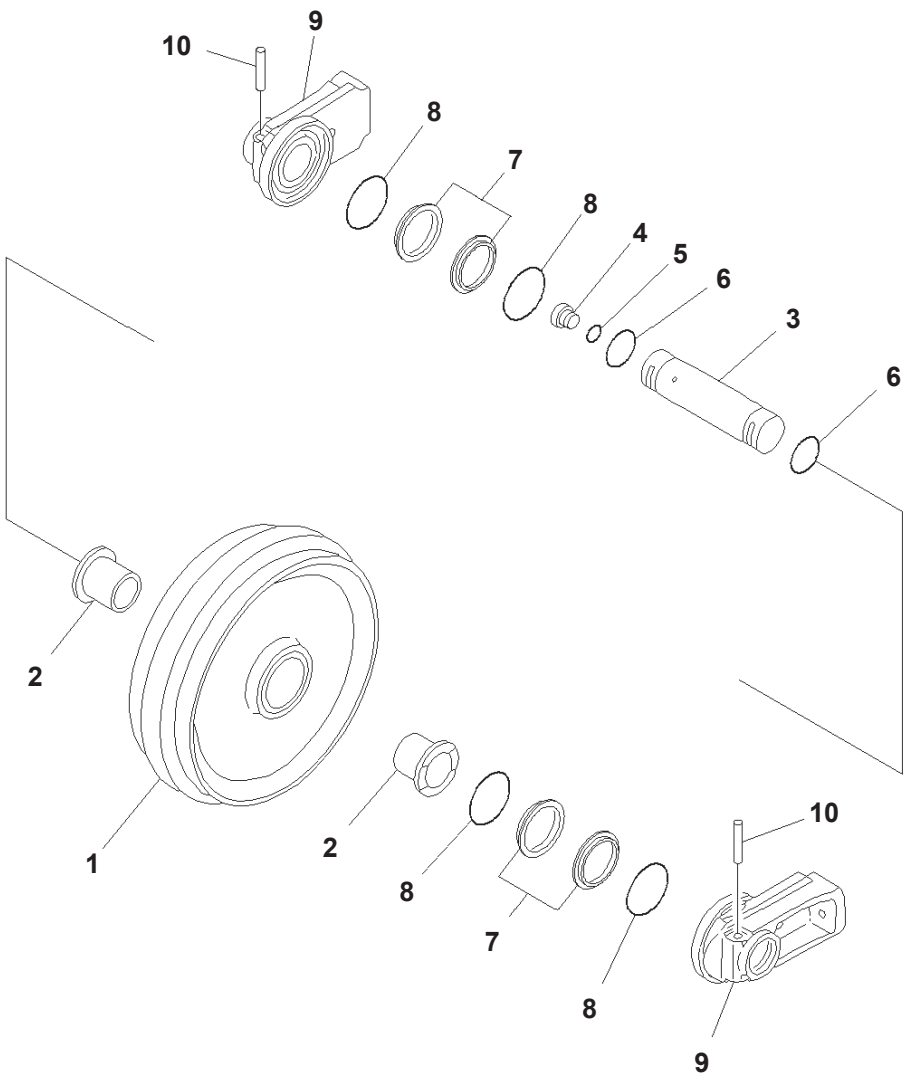

Front Idler And Idler Cushion (1/2) (#B10401-)

Index	Part Number	Description	Qty	Options
	207-30-B0012	Idler Assembly	2	SN:B10401--
1	207-30-B1280	・ Idler	2	SN:B10338--
2	207-30-53140	・ Bushing	2	SN:B10001--
3	207-30-53130	・ Shaft	1	SN:B10001--
4	07040-13618	・ Plug	1	SN:B10001--
5	07002-13634	・ O-ring	1	SN:B10001--
6	07000-12075	・ O-ring	2	SN:B10001--
7	208-30-00390	・ Seal Assembly	2	SN:B10338--
	208-30-76160	・・ Seal	2	SN:B10338--
8	208-30-76170	・・ O-ring	2	SN:B10338--
9	207-30-48450	・ Support	2	SN:B10401--
10	207-30-53160	・ Pin	2	SN:B10001--

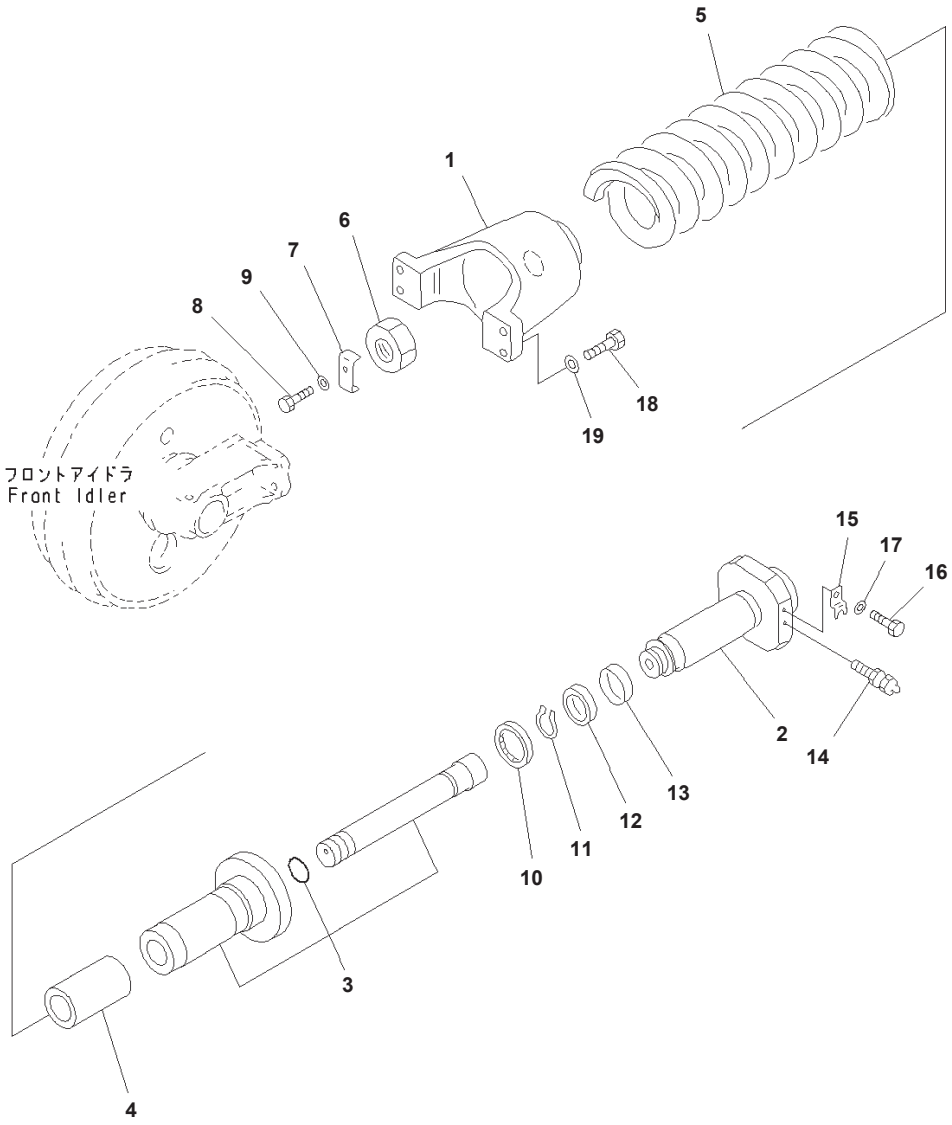

Front Idler And Idler Cushion (2/2) (#B10001-B10400)

Index	Part Number	Description	Qty	Options
1	207-30-74111	Yoke	2	SN:B10001--B10400
2	207-30-74120	Shaft	2	SN:B10001--B10400
3	207-30-71441	Cylinder Assembly	2	SN:B10001--B10400
4	207-30-71431	Pipe	2	SN:B10001--@
5	207-30-74142	Spring	2	SN:B10001--B10400
6	208-30-11760	Nut	2	SN:B10001--@
7	207-30-34191	Lock	2	SN:B10001--@
8	01010-81225	Bolt	2	SN:B10001--@
9	01643-31232	Washer	2	SN:B10001--@
10	207-30-54160	Seal	2	SN:B10001--@
11	04064-06525	Ring, Snap, for Shaft Side	2	SN:B10001--@
12	09370-00090	U-packing	2	SN:B10001--@
13	07155-00925	Ring, Wear	2	SN:B10001--@
14	07959-20001	Valve	2	SN:B10001--@
15	205-30-72170	Plate	2	SN:B10001--@
16	01010-81225	Bolt	2	SN:B10001--@
17	01643-31232	Washer	2	SN:B10001--@
18	01010-82075	Bolt	8	SN:B10001--B10400
19	01643-32060	Washer	8	SN:B10001--B10400

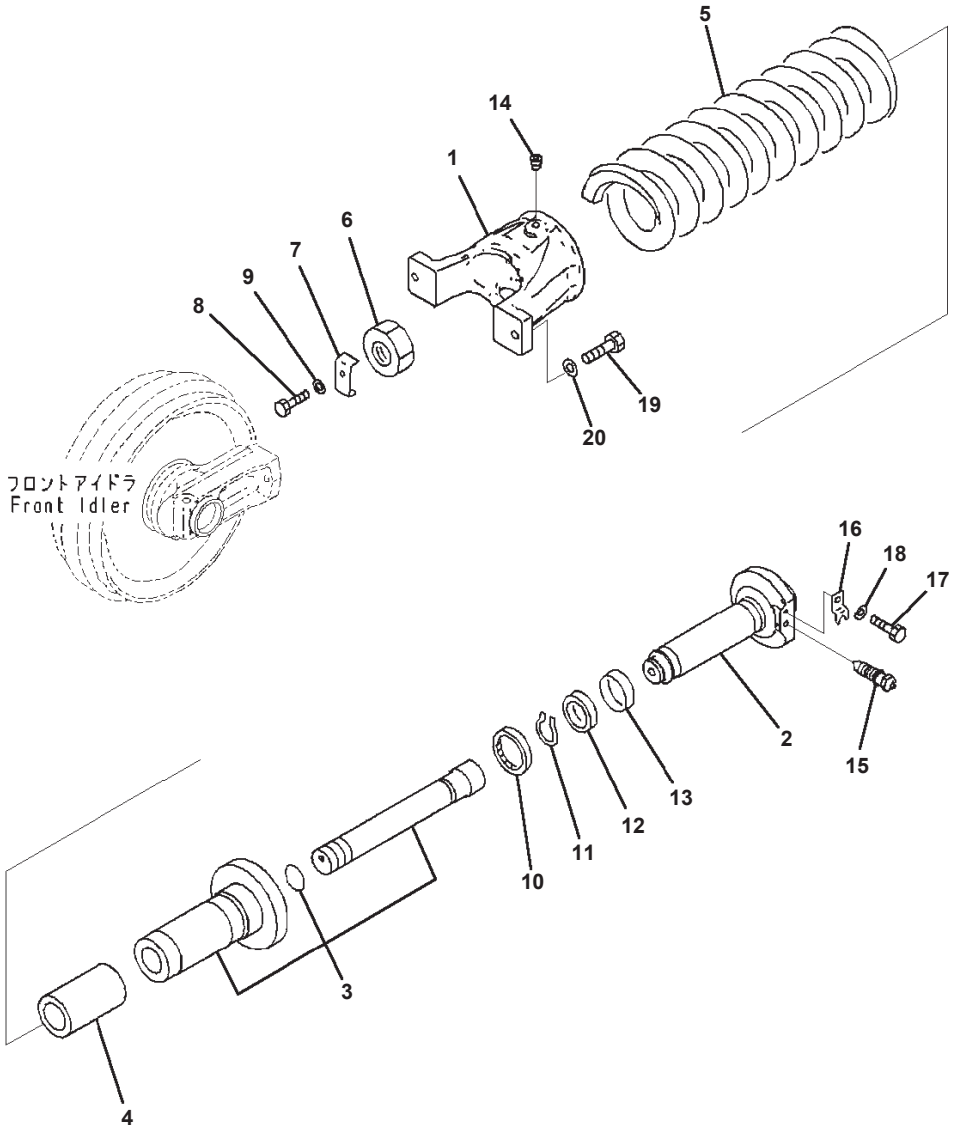

Front Idler And Idler Cushion (2/2) (#B10401-)

Index	Part Number	Description	Qty	Options
1	207-30-73411	Yoke	2	SN:B10401--
2	207-30-73421	Shaft	2	SN:B10401--
3	207-30-71481	Cylinder Assembly	2	SN:B10401--
4	207-30-71431	Pipe	2	SN:B10001--
5	2A6-30-12150	Spring	2	SN:B10401--
6	208-30-11760	Nut	2	SN:B10001--
7	207-30-34191	Lock	2	SN:B10001--
8	01010-81225	Bolt	2	SN:B10001--
9	01643-31232	Washer	2	SN:B10001--
10	207-30-54160	Seal	2	SN:B10001--
11	04064-06525	Ring, Snap, for Shaft Side	2	SN:B10001--
12	09370-00090	U-packing	2	SN:B10001--
13	07155-00925	Ring, Wear	2	SN:B10001--
14	207-30-73450	Plug	2	SN:B10401--
15	07959-20001	Valve	2	SN:B10001--
16	205-30-72170	Plate	2	SN:B10001--
17	01010-81225	Bolt	2	SN:B10001--
18	01643-31232	Washer	2	SN:B10001--
19	01010-82075	Bolt	4	SN:B10401--
20	01643-32060	Washer	4	SN:B10401--

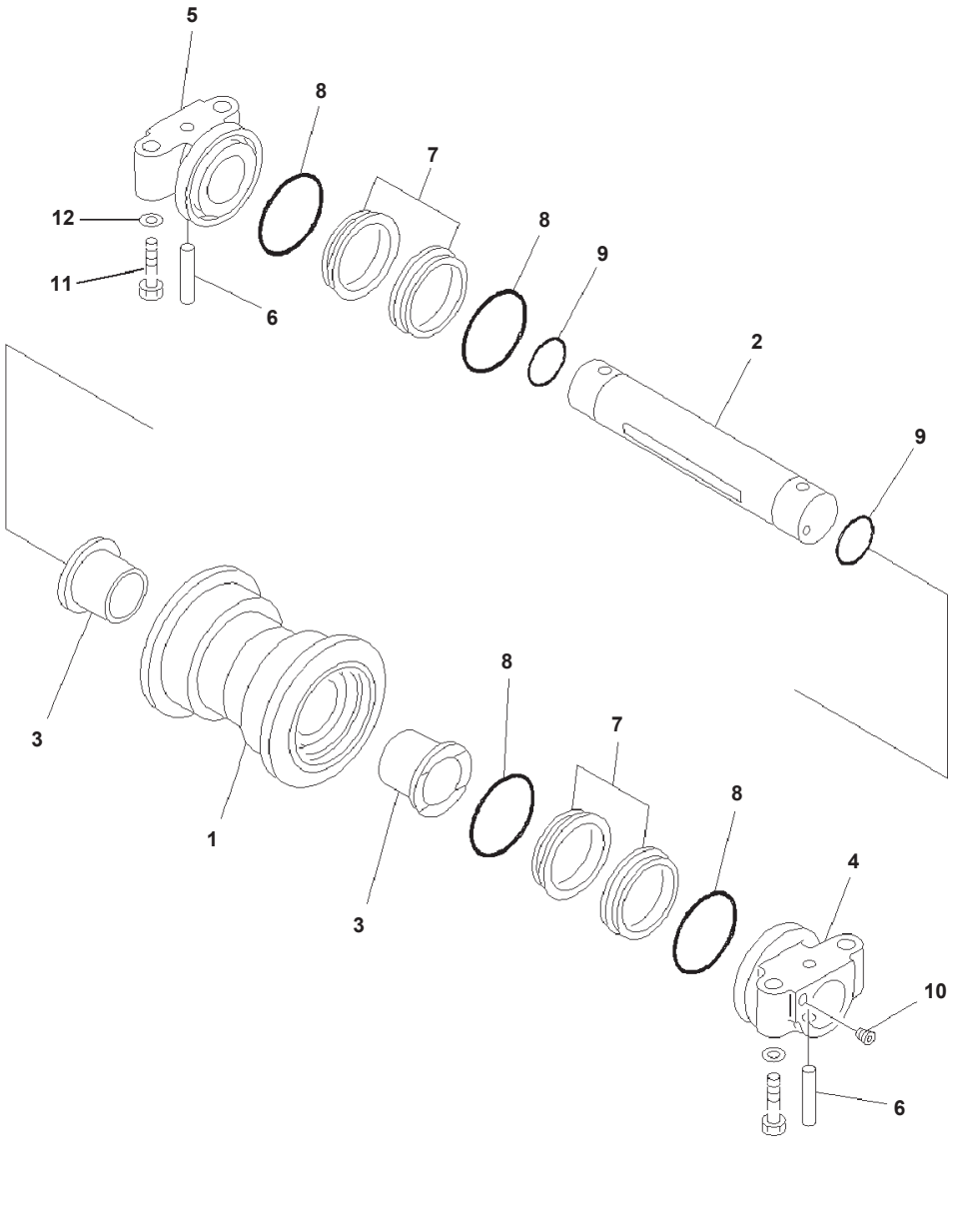

Track Roller, Single Flanged (#B10001-B10387) (1/2)

Index	Code	Part Number	Description	Qty	Options
		207-30-00511	Roller, Track	8	SN:B10001--B10387
1		207-30-71510	・ Roller	1	SN:B10001--B10387
2		207-30-56131	・ Shaft	1	SN:B10001--B10387
3		207-30-71540	・ Bushing	2	SN:B10001--B10387
4		207-30-71551	・ Collar	1	SN:B10001--B10387
5		207-30-71561	・ Collar	1	SN:B10001--B10387
6		207-30-56170	・ Pin	2	SN:B10001--B10387
		205-30-00052	・ Floating Seal Assembly	2	SN:B10001--B10387
7	C1		・・ Seal	2	SN:B10001--B10387
8	C1		・・ O-ring	2	SN:B10001--B10387
9		427-15-15910	・ O-ring	2	SN:B10001--B10387
10		20Y-30-16330	・ Plug	1	SN:B10001--B10387
11		207-30-56190	Bolt	64	SN:B10001--B10387
12		01643-32060	Washer	64	SN:B10001--B10387

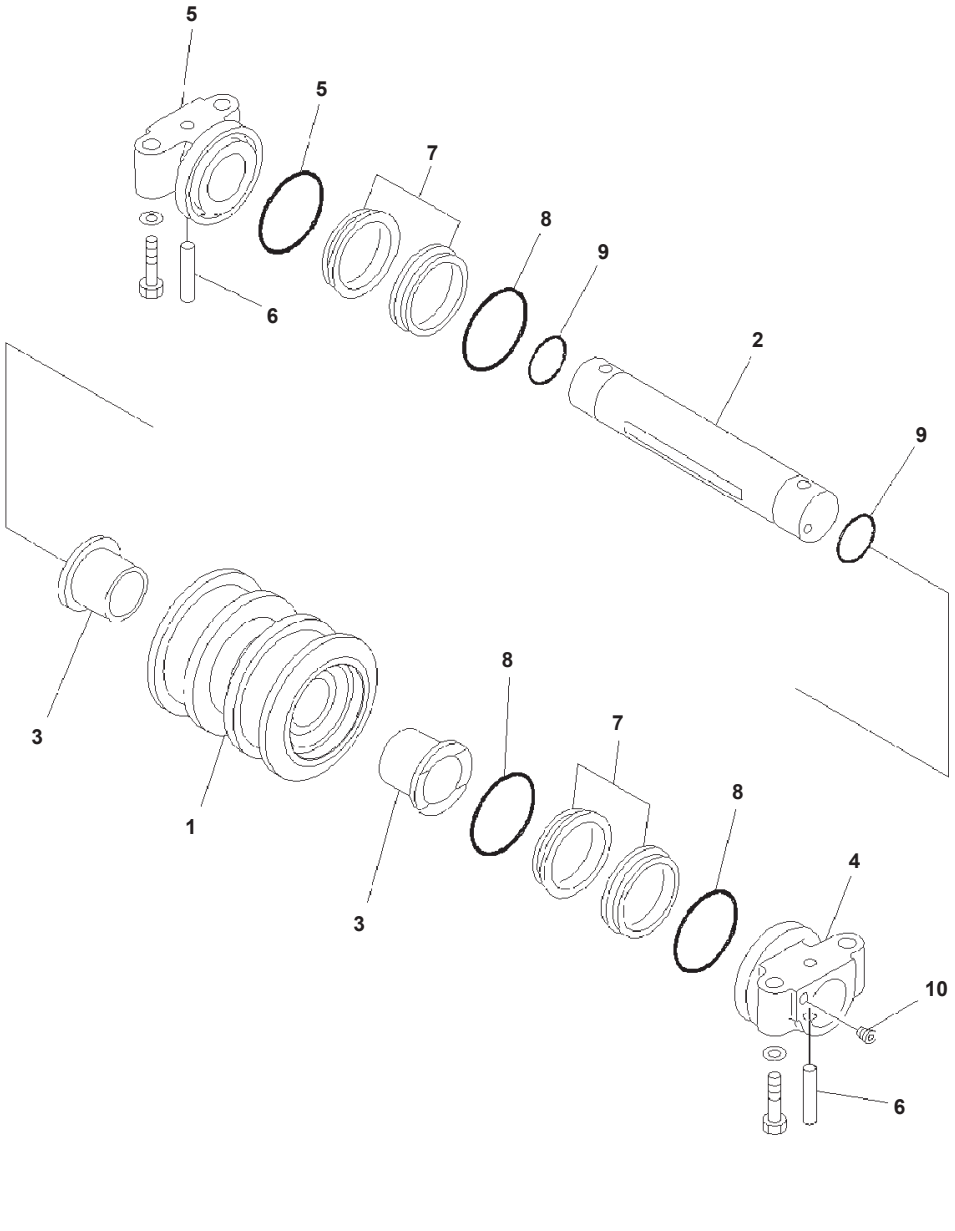

Track Roller, Double Flanged (#B10001-B10264) (2/2)

Index	Code	Part Number	Description	Qty	Options
		207-30-00521	Roller Assembly	8	SN:B10001--B10264
1		207-30-71520	・ Roller	1	SN:B10001--B10264
2		207-30-56131	・ Shaft	1	SN:B10001--B10264
3		207-30-71540	・ Bushing	2	SN:B10001--B10264
4		207-30-71551	・ Collar	1	SN:B10001--B10264
5		207-30-71561	・ Collar	1	SN:B10001--B10264
6		207-30-56170	・ Pin	2	SN:B10001--B10264
		205-30-00052	・ Floating Seal Assembly	2	SN:B10001--B10264
7	C1		・・ Seal	2	SN:B10001--B10264
8	C1		・・ O-ring	2	SN:B10001--B10264
9		427-15-15910	・ O-ring	2	SN:B10001--B10264
10		20Y-30-16330	・ Plug	1	SN:B10001--B10264

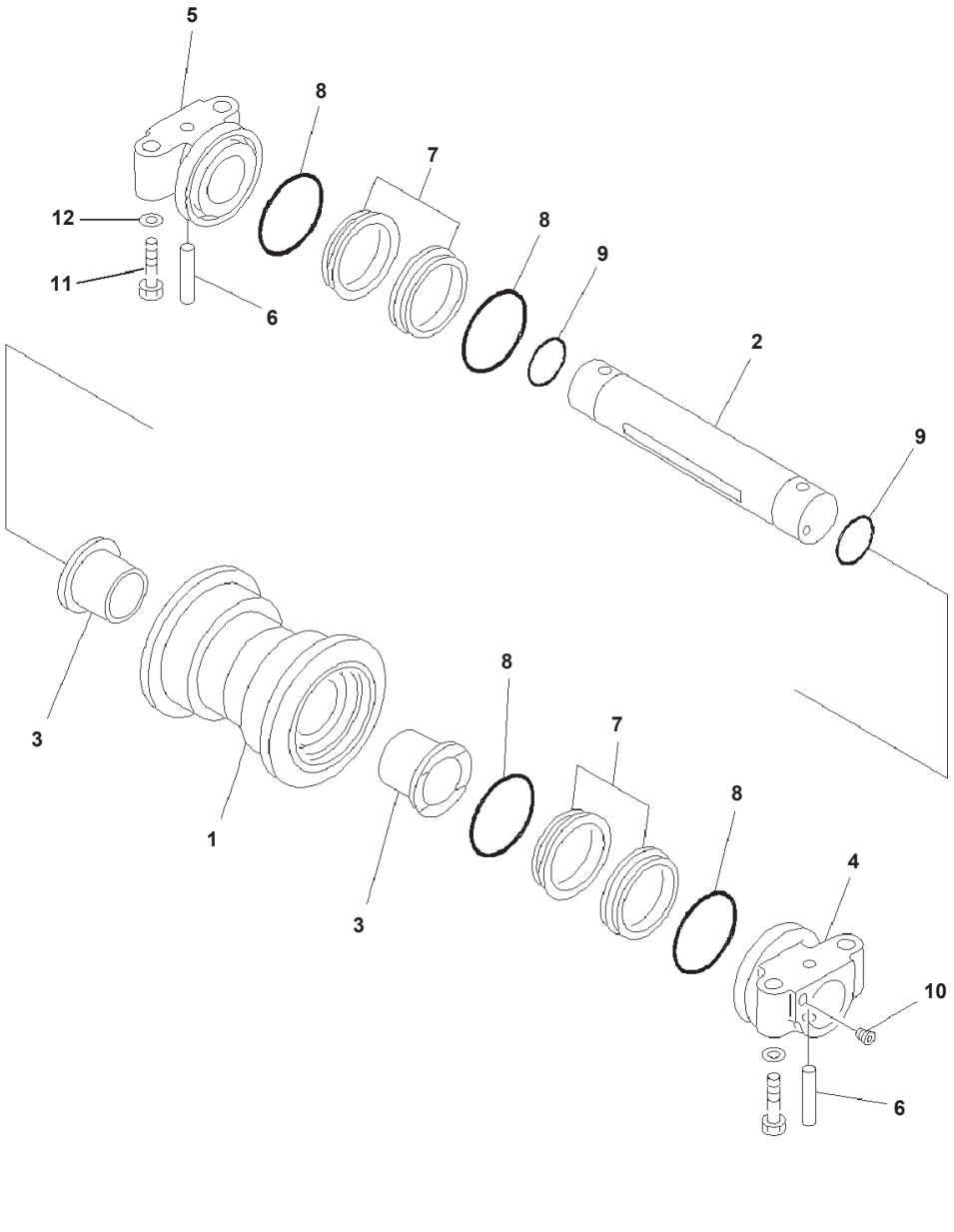

Index	Code	Part Number	Description	Qty	Options
		207-30-00651	Roller, Track	16	SN:B10388--
1		207-30-21510	・ Roller	1	SN:B10388--
2		207-30-21670	・ Shaft	1	SN:B10388--
3		207-30-71541	・ Bushing	2	SN:B10388--
4		207-30-21750	・ Collar	1	SN:B10388--
5		207-30-21760	・ Collar	1	SN:B10388--
6		207-30-56170	・ Pin	2	SN:B10388--
		205-30-00052	・ Floating Seal Assembly	2	SN:B10388--
7	C1		・・ Seal	2	SN:B10388--
8	C1		・・ O-ring	2	SN:B10388--
9		427-15-15910	・ O-ring	2	SN:B10388--
10		20Y-30-16330	・ Plug	1	SN:B10388--
11		207-30-56190	Bolt	64	SN:B10388--
12		01643-32060	Washer	64	SN:B10388--

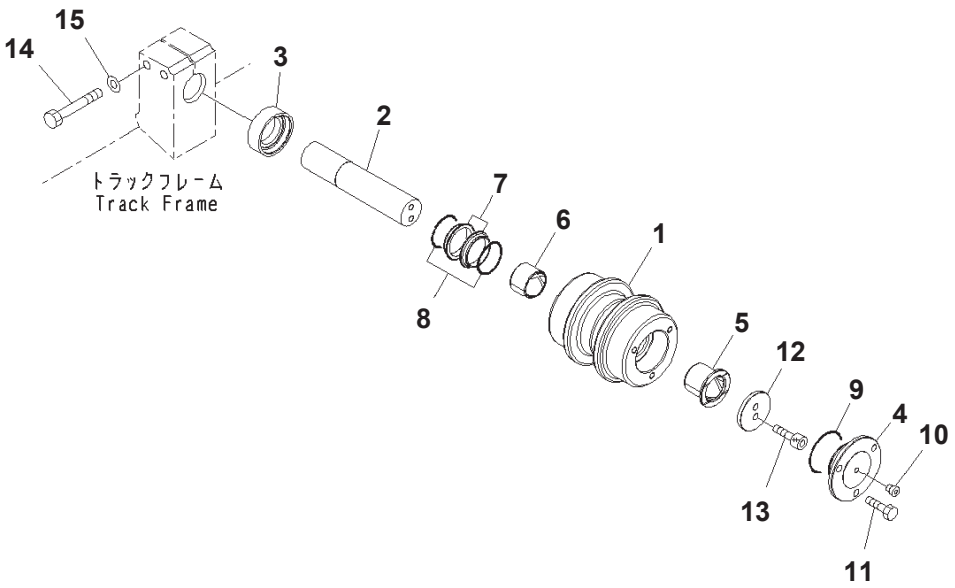

Index	Code	Part Number	Description	Qty	Options
		207-30-00551	Carrier Assembly	4	SN:B10001--B10397
1		207-30-75310	・ Roller	1	SN:B10001--B10397
2		207-30-75320	・ Shaft	1	SN:B10001--B10397
3		207-30-75330	・ Ring	1	SN:B10001--@
4		207-30-75341	・ Cover	1	SN:B10001--B10397
5		207-30-75360	・ Bushing	1	SN:B10001--@
6		207-30-75370	・ Bushing	1	SN:B10001--@
		140-30-00141	・ Floating Seal Assembly	1	SN:B10001--@
7	C1		・・ Seal	2	SN:B10001--@
8	C1		・・ O-ring	2	SN:B10001--@
9		07000-12080	・ O-ring	1	SN:B10001--@
10		20Y-30-16330	・ Plug	1	SN:B10001--@
11		01010-81225	・ Bolt	3	SN:B10001--@
12		207-30-75350	・ Plate	1	SN:B10001--B10397
13		01252-61230	・ Bolt	2	SN:B10001--B10397
14		01010-82095	Bolt	8	SN:B10001--@
15		01643-32060	Washer	8	SN:B10001--@

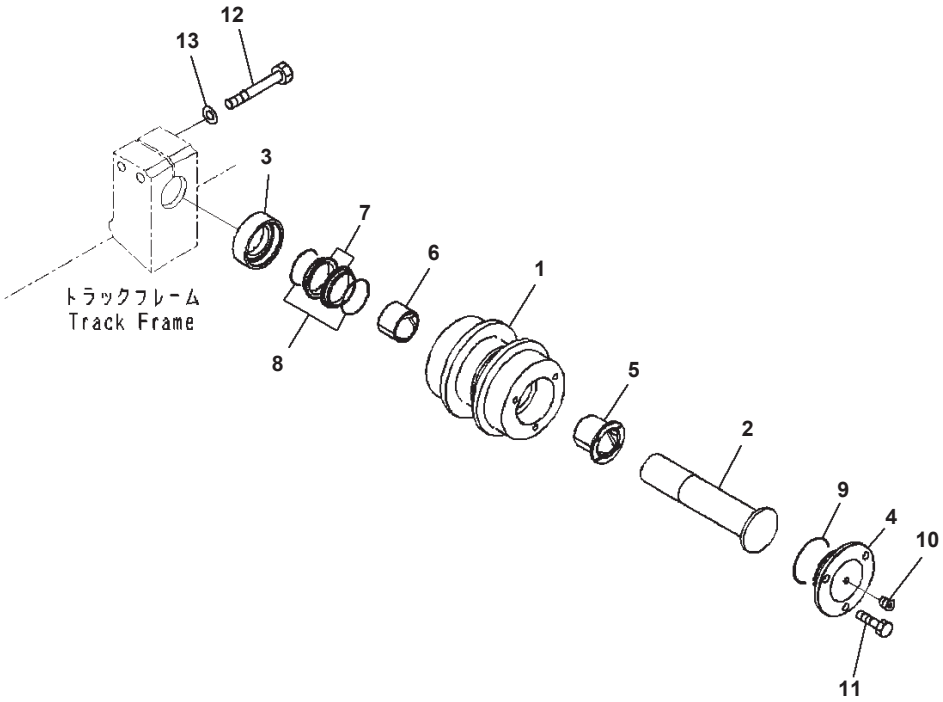

Index	Code	Part Number	Description	Qty	Options
		207-30-00620	Carrier Assembly	4	SN:B10001--
1		207-30-21610	・ Roller	1	SN:B10001--
2		207-30-21620	・ Shaft	1	SN:B10001--
3		207-30-75330	・ Ring	1	SN:B10001--
4		207-30-21640	・ Cover	1	SN:B10001--
5		207-30-75360	・ Bushing	1	SN:B10001--
6		207-30-75370	・ Bushing	1	SN:B10001--
		140-30-00141	・ Floating Seal Assembly	1	SN:B10001--
7	C1		・・ Seal	2	SN:B10001--
8	C1		・・ O-ring	2	SN:B10001--
9		07000-12080	・ O-ring	1	SN:B10001--
10		20Y-30-16330	・ Plug	1	SN:B10001--
11		01010-81225	・ Bolt	3	SN:B10001--
12		01010-82095	Bolt	8	SN:B10001--
13		01643-32060	Washer	8	SN:B10001--

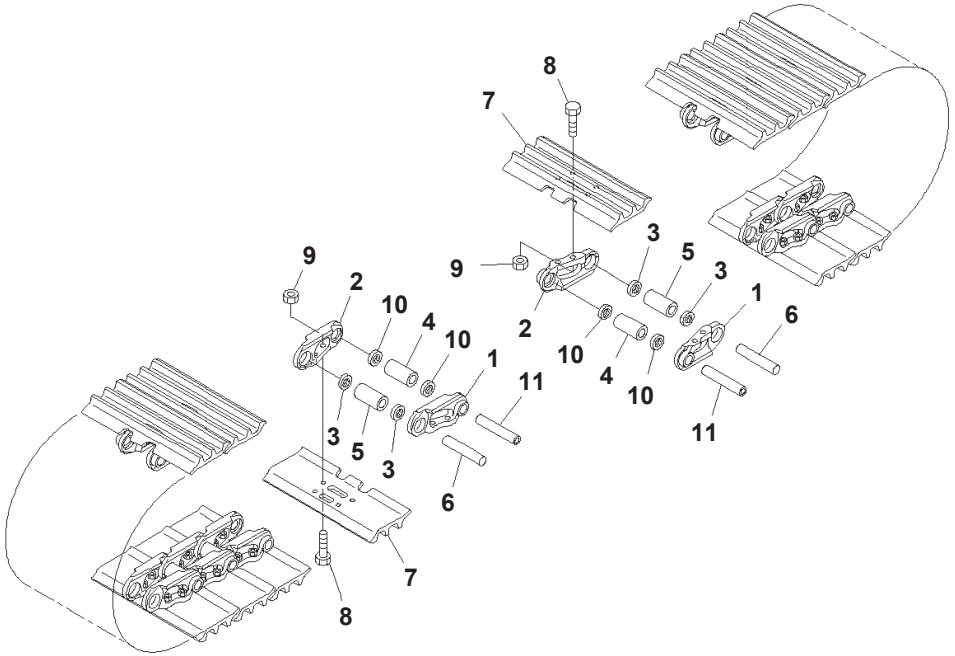

Track Shoe Assembly, Triple Shoe Grouser, With Holed, 600mm Width (#B10001-B10262)

Index	Part Number	Description	Qty	Options
	207-32-03821	Track Shoe Assembly	1	SN:B10001--B10262
1	207-32-71120	· Link	96	SN:B10001--B10262
2	207-32-71130	· Link	96	SN:B10001--B10262
3	144-32-11240	· Seal	184	SN:B10001--B10262
4	207-32-51170	· Bushing, Master	4	SN:B10001--B10262
5	207-32-51140	· Bushing, Regular	92	SN:B10001--B10262
6	207-32-61150	· Pin	92	SN:B10001--B10262
7	207-32-61110	· Shoe	96	SN:B10001--B10262
8	207-32-71210	· Bolt, Shoe, (Kit : K02)	384	SN:B10001--B10262
9	154-32-71220	· Nut, (Kit : K02)	384	SN:B10001--B10262
10	207-32-61260	· Seal	8	SN:B10001--B10262
11	207-32-61190	· Pin	4	SN:B10001--B10262

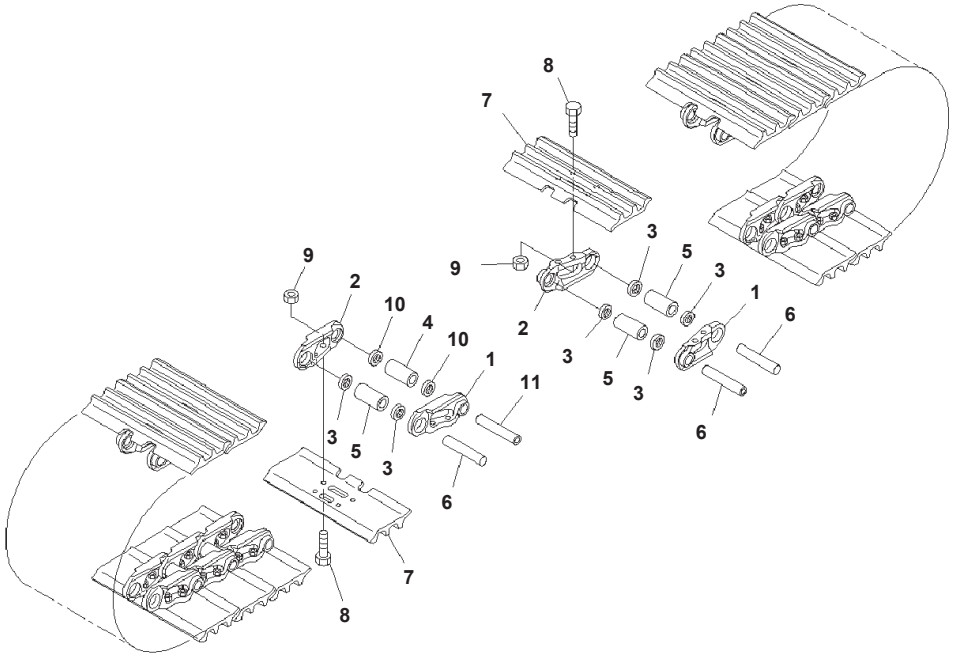

Track Shoe Assembly, Triple Shoe Grouser, With Holed, 600mm Width (#B10263-)

Index	Part Number	Description	Qty	Options
	207-32-B1200	Track Shoe Assembly	2	SN:B10263--
1	207-32-71120	· Link	48	SN:B10263--
2	207-32-71130	· Link	48	SN:B10263--
3	144-32-11240	· Seal	94	SN:B10263--
4	207-32-51170	· Bushing, Master	1	SN:B10263--
5	207-32-51140	· Bushing, Regular	47	SN:B10263--
6	207-32-61150	· Pin	47	SN:B10263--
7	207-32-61110	· Shoe	48	SN:B10263--
8	207-32-71210	· Bolt, Shoe, (Kit : K02)	192	SN:B10263--
9	154-32-71220	· Nut, (Kit : K02)	192	SN:B10263--
10	207-32-61260	· Seal	2	SN:B10263--
11	207-32-61190	· Pin	1	SN:B10263--

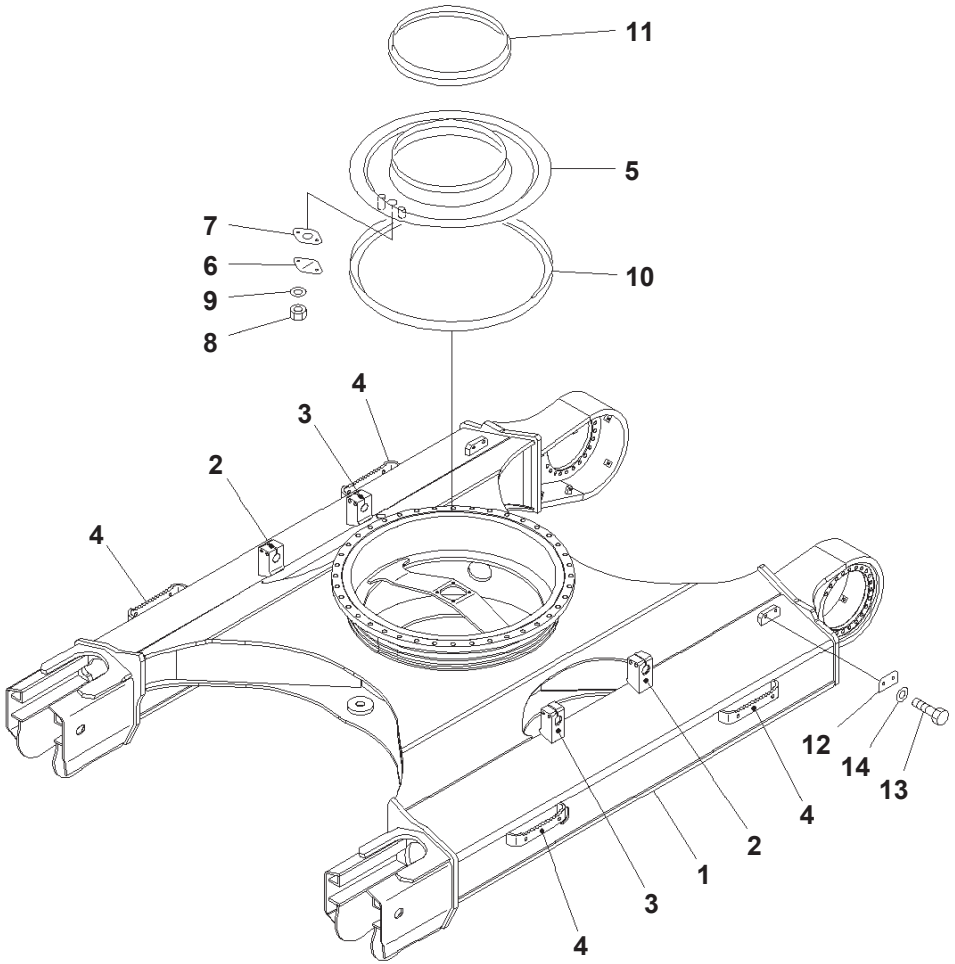

Track Frame, With Under Cover

Index	Code	Part Number	Description	Qty	Options
1		207-30-B1210	Frame	1	SN:B10276--
	A2	207-30-B1110	Frame	1	SN:B10001--B10275
2		207-30-76A11	· Bracket,Welded	2	SN:B10001--
3		207-30-76A11	· Bracket,Welded	2	SN:B10001--
4		207-30-76A81	· Plate,Welded	4	SN:B10001--
5		207-30-61220	Cover	1	SN:B10001--
6		205-30-71181	Cover	1	SN:B10001--
7		205-30-71191	Gasket	1	SN:B10001--
8		01580-11008	Nut	2	SN:B10001--
9		01643-31032	Washer	2	SN:B10001--
10		207-30-51260	Seal	1	SN:B10001--
11		205-30-71171	Seal	1	SN:B10001--
12		208-30-72120	Plate	2	SN:B10001--
13		01010-62070	Bolt	4	SN:B10001--
14		01643-32060	Washer	4	SN:B10001--

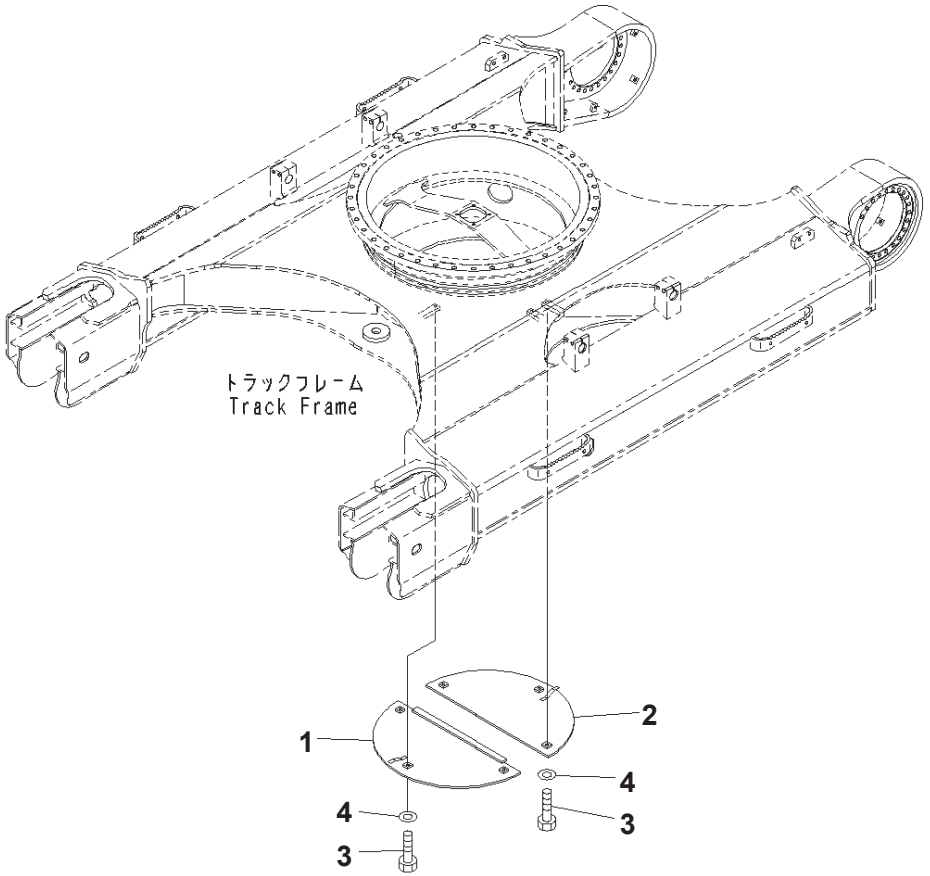

Track Frame Under Cover

Index	Part Number	Description	Qty	Options
1	20Y-973-2220	Cover	1	SN:B10001--
2	20Y-973-2230	Cover	1	SN:B10001--
3	01010-81235	Bolt	6	SN:B10001--
4	20Y-54-12670	Washer	6	SN:B10365--
	01643-31232	Washer	6	SN:B10001--B10364

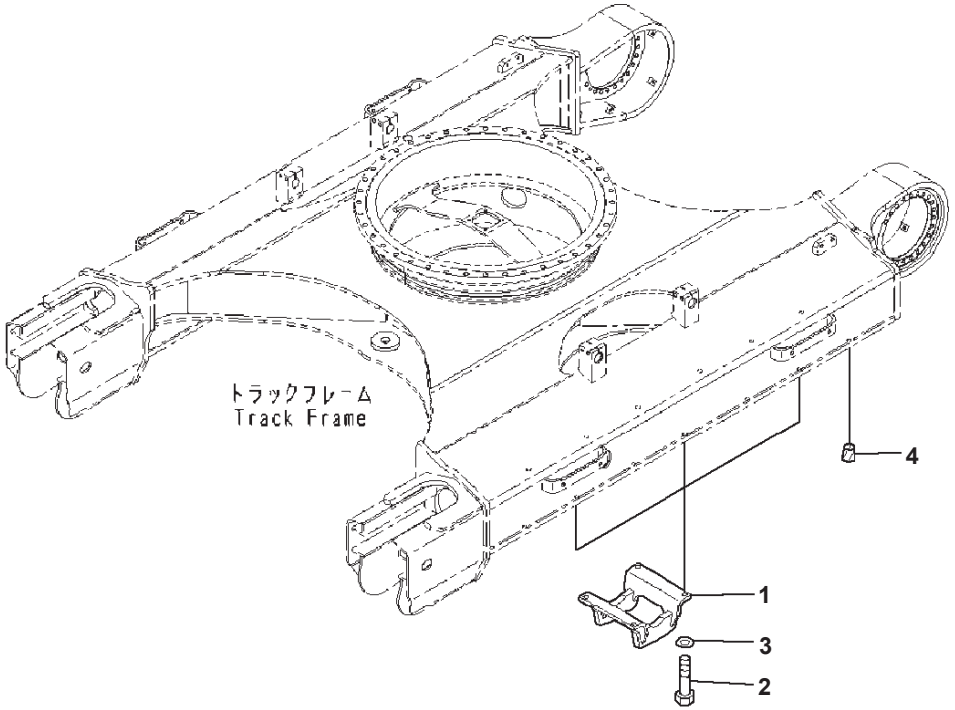

Center Frame

Index	Part Number	Description	Qty	Options
1	207-30-51191	Guard	6	SN:B10001--
2	01010-82455	Bolt	24	SN:B10001--
3	01643-32460	Washer	24	SN:B10001--
4	07049-02430	Plug	4	SN:B10001--

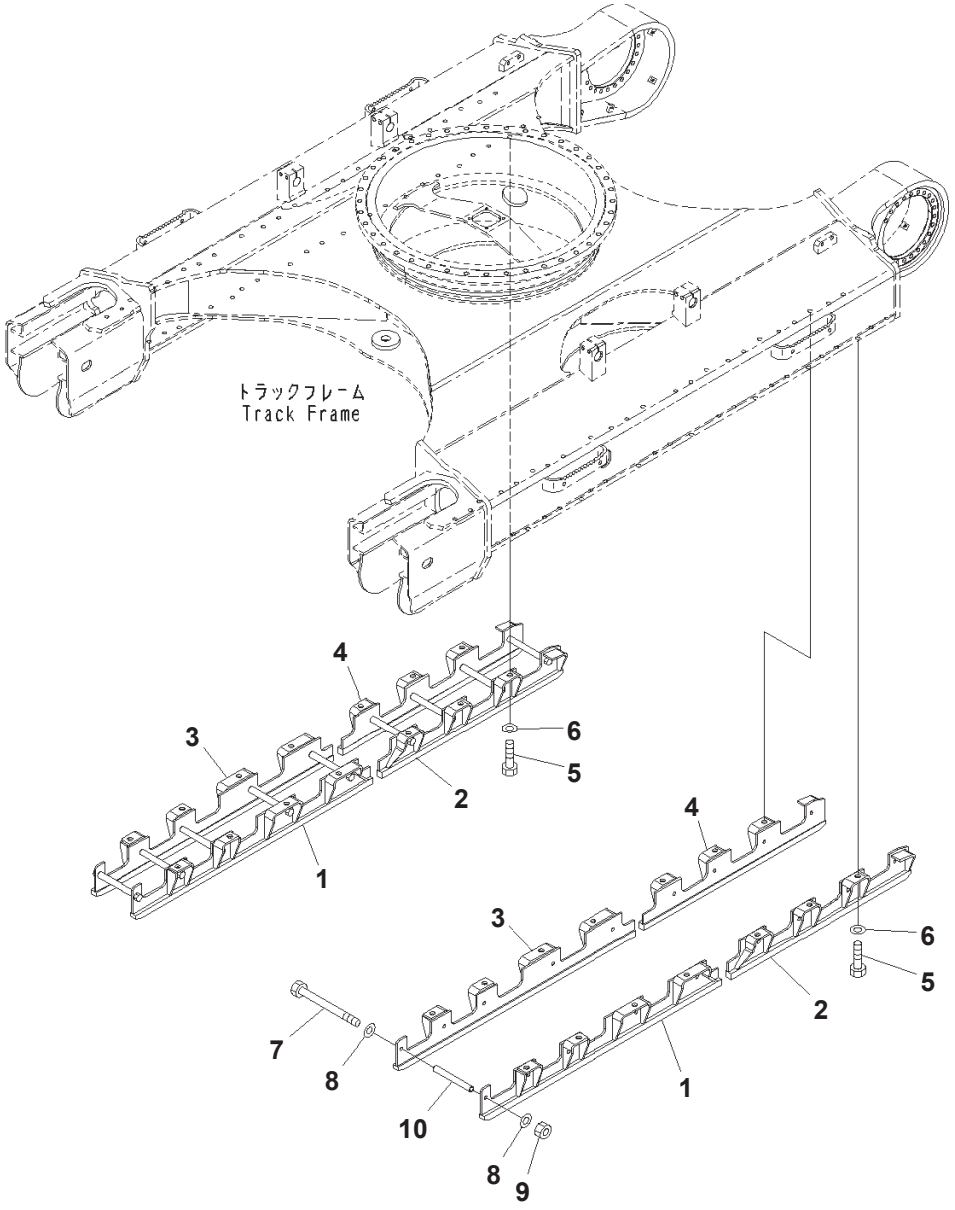

Track Roller Guard, Full Length

Index	Part Number	Description	Qty	Options
1	207-30-77210	Guard	2	SN:B10001--
2	207-30-77220	Guard	2	SN:B10001--
3	207-30-77230	Guard	2	SN:B10001--
4	207-30-77240	Guard	2	SN:B10001--
5	01010-62450	Bolt	28	SN:B10001--
6	01643-32460	Washer	28	SN:B10001--
7	09205-18325	Bolt	18	SN:B10001--
8	01643-31845	Washer	36	SN:B10001--
9	01580-11815	Nut	18	SN:B10001--
10	141-30-32181	Collar	18	SN:B10001--

WORK EQUIPMENT

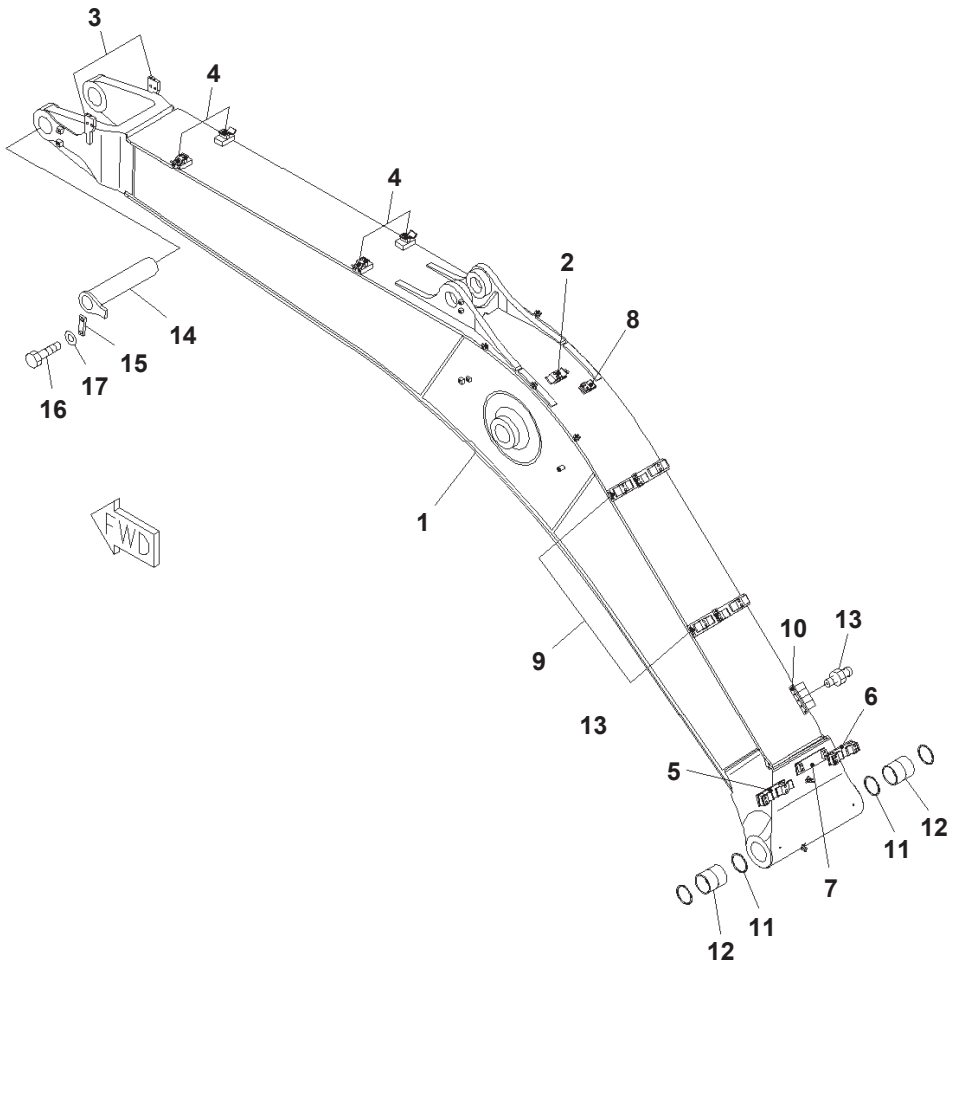

Boom, 6.5m, Strengthened, 1-attachment, 100 Hours Greasing Type, Boom And Top Pin

Index	Code	Part Number	Description	Qty	Options
		207-70-B0012	Boom Assembly	1	SN:B10349--
	A2	207-70-B0011	Boom Assembly	1	SN:B10013--B10348
	A2	207-70-B0010	Boom Assembly	1	SN:B10001--B10012
	C1	207-70-B1112	・ Boom	1	SN:B10349--
1	C1	207-70-B1111	・ Boom	1	SN:B10013--B10348
2		207-62-54750	・・ Bracket,Welded	1	SN:B10001--
3		207-62-74221	・・ Bracket,Welded	2	SN:B10001--
4		207-62-74230	・・ Bracket,Welded	4	SN:B10001--
5		207-62-74240	・・ Bracket,Welded	1	SN:B10001--
6		207-62-74251	・・ Bracket,Welded	1	SN:B10001--
7		207-62-74281	・・ Bracket,Welded	1	SN:B10001--
8		207-62-74340	・・ Bracket,Welded	1	SN:B10001--
9		207-62-74371	・・ Bracket,Welded	2	SN:B10001--
10		20Y-70-11651	・・ Seat,Welded	1	SN:B10001--
11		07145-00110	・ Seal, Dust	2	SN:B10001--
12		207-70-61610	・ Bushing	2	SN:B10001--
13		07020-00000	・ Fitting, Grease	5	SN:B10001--
14		207-70-61182	Pin	1	SN:B10001--
15		207-70-31230	Plate	1	SN:B10001--
16		01010-81640	Bolt	2	SN:B10001--
17		01643-31645	Washer	2	SN:B10001--

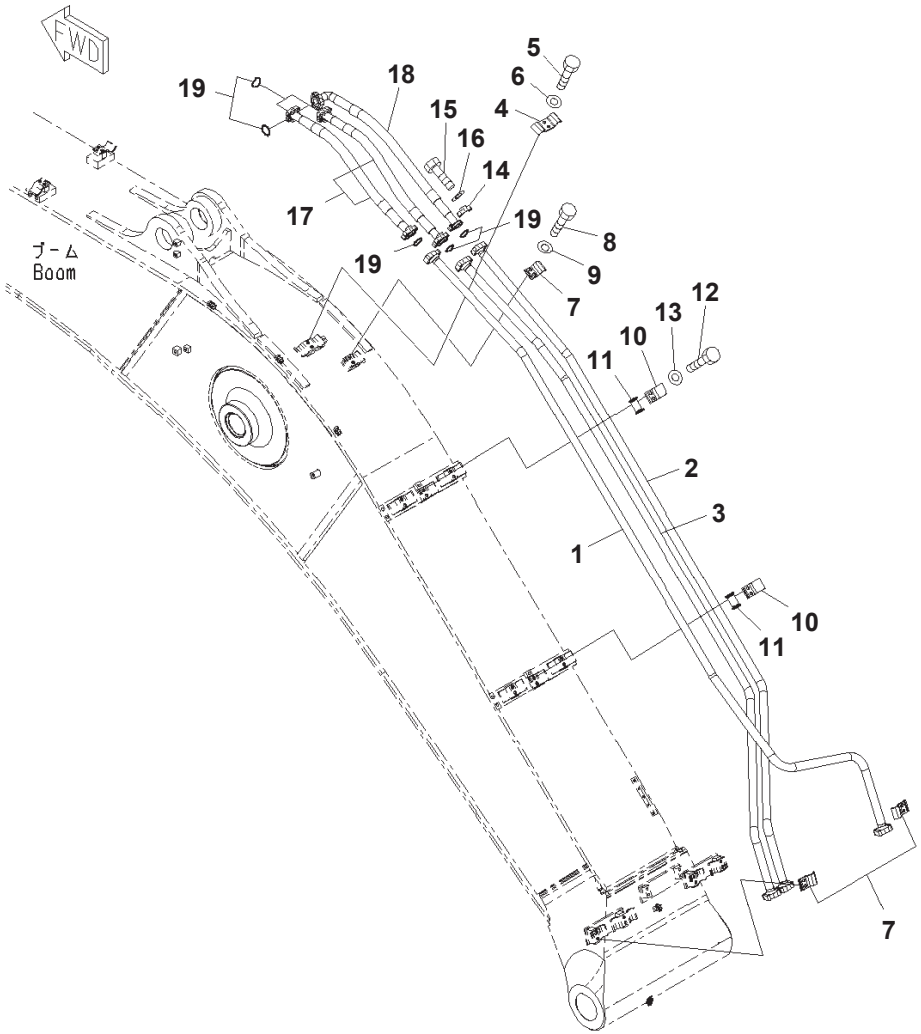

Boom, 6.5m, Strengthened, 1-attachment, 100 Hours Greasing Type, Arm Cylinder Lines

Index	Part Number	Description	Qty	Options
1	207-62-74160	Tube	1	SN:B10001--
2	207-62-74131	Tube	1	SN:B10001--
3	207-62-74150	Tube	1	SN:B10001--
4	207-62-54760	Clamp	1	SN:B10001--
5	01010-81235	Bolt	2	SN:B10001--
6	01643-31232	Washer	2	SN:B10001--
7	207-62-31330	Clamp	3	SN:B10001--
8	01010-81235	Bolt	6	SN:B10001--
9	01643-31232	Washer	6	SN:B10001--
10	207-62-52350	Clamp	2	SN:B10001--
11	205-62-73431	Seat	2	SN:B10001--
12	01010-81235	Bolt	4	SN:B10001--
13	01643-31232	Washer	4	SN:B10001--
14	07371-31049	Flange	12	SN:B10001--
15	07372-21035	Bolt	24	SN:B10001--
16	01643-51032	Washer	24	SN:B10001--
17	07074-01008	Hose, Flange Type, L=800mm	2	SN:B10001--
18	07073-01A09	Hose, Flange Type	1	SN:B10001--
19	07000-13032	O-ring	6	SN:B10001--

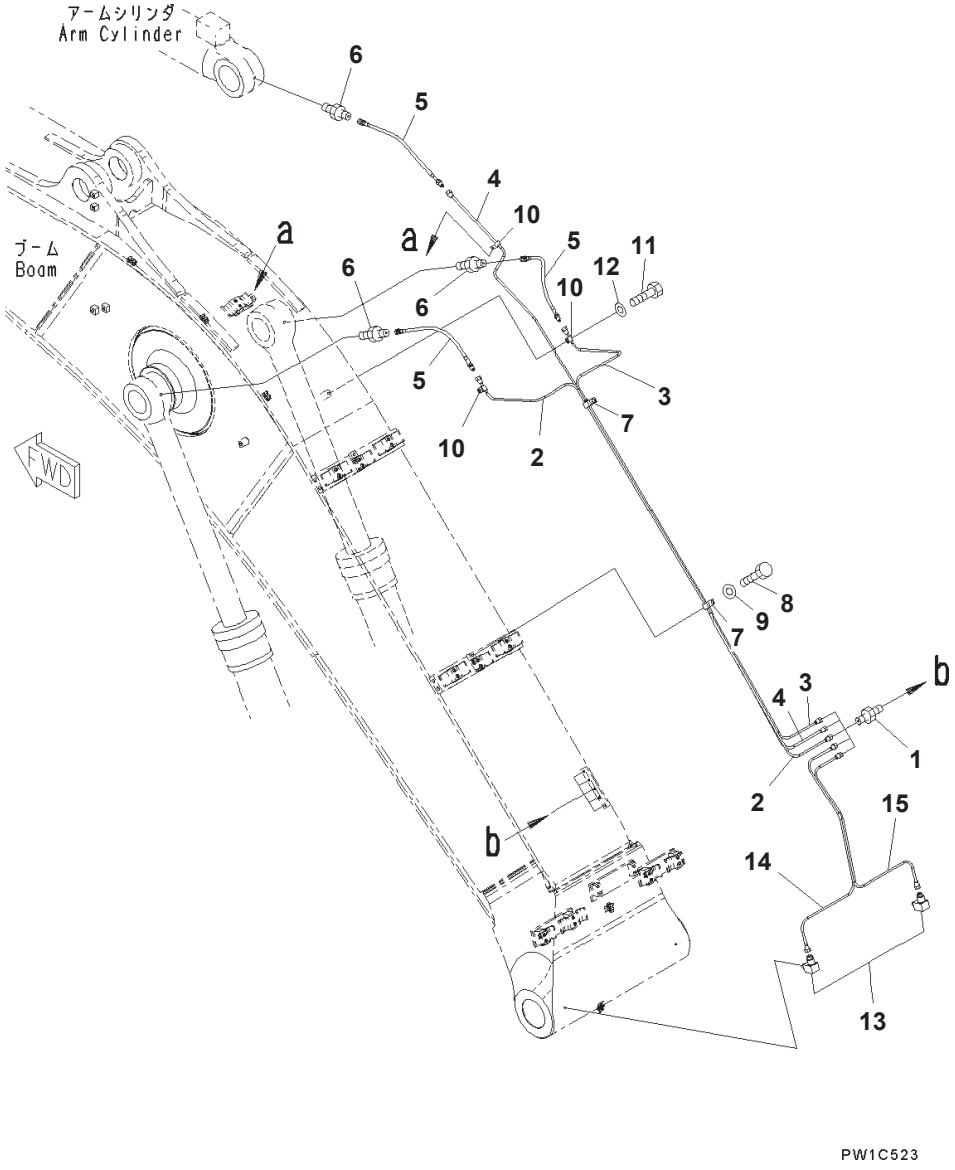

Boom, 6.5m, Strengthened, 1-attachment, 100 Hours Greasing Type, Lubricating Line

Index	Part Number	Description	Qty	Options
1	20Y-70-11540	Connector	5	SN:B10001--
2	207-70-77310	Tube	1	SN:B10001--
3	207-70-77320	Tube	1	SN:B10001--
4	207-70-77330	Tube	1	SN:B10001--
5	20Y-70-11520	Hose, L=440mm	3	SN:B10001--
6	205-70-51390	Nipple	3	SN:B10001--
7	04434-51912	Clip	2	SN:B10001--
8	01010-81220	Bolt	2	SN:B10001--
9	01643-51232	Washer	2	SN:B10001--
10	08036-01014	Clip	3	SN:B10001--
11	01010-81220	Bolt	3	SN:B10001--
12	01643-31232	Washer	3	SN:B10001--
13	20Y-25-11270	Elbow	2	SN:B10001--
14	207-70-77341	Tube	1	SN:B10001--
15	207-70-77351	Tube	1	SN:B10001--

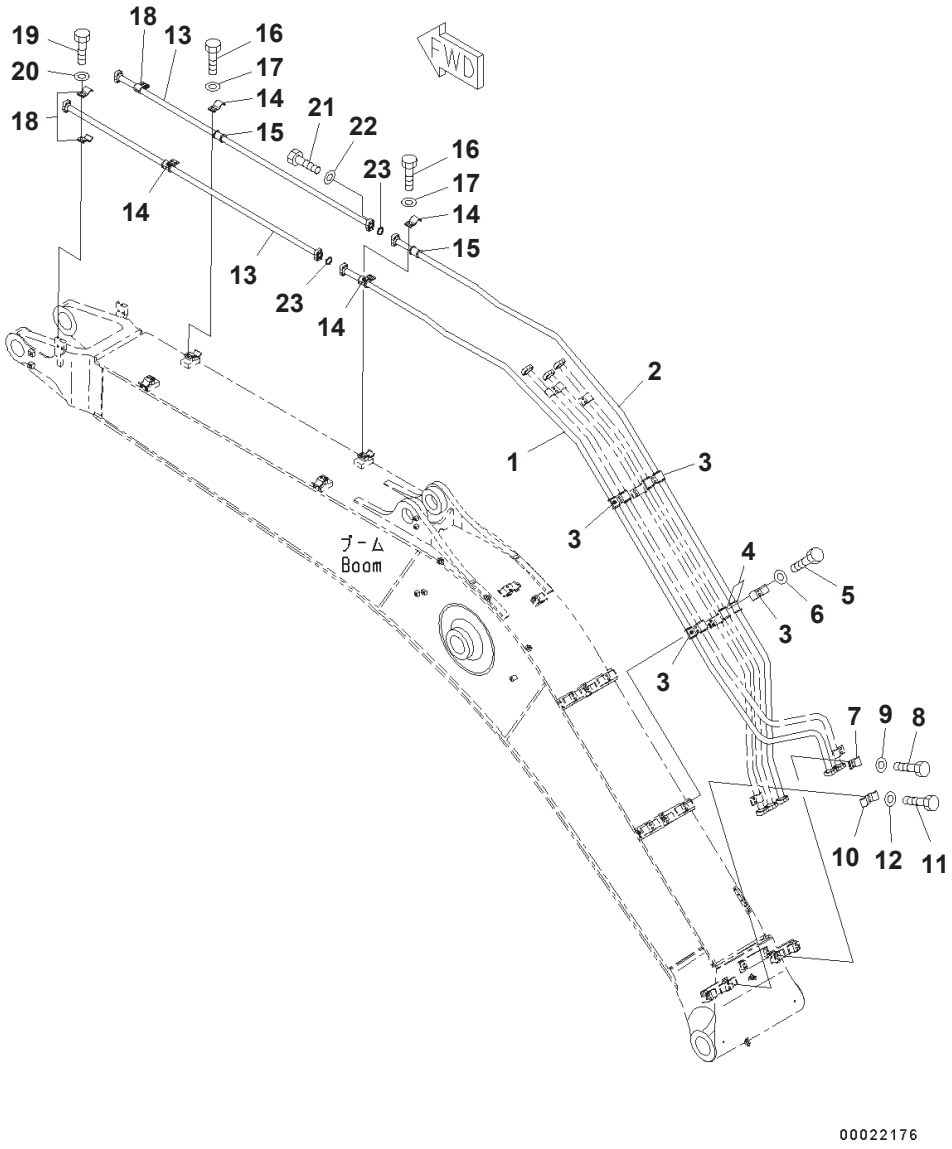

Boom, 6.5m, Strengthened, 1-attachment, 100 Hours Greasing Type, Bucket Cylinder Line

Index	Part Number	Description	Qty	Options
1	207-62-74111	Tube	1	SN:B10001--
2	207-62-74121	Tube	1	SN:B10001--
3	207-62-54780	Clamp	4	SN:B10001--
4	205-62-73431	Seat	8	SN:B10001--
5	01010-81235	Bolt	8	SN:B10001--
6	01643-31232	Washer	8	SN:B10001--
7	207-62-31330	Clamp	1	SN:B10001--
8	01010-81235	Bolt	2	SN:B10001--
9	01643-31232	Washer	2	SN:B10001--
10	207-62-54760	Clamp	1	SN:B10001--
11	01010-81235	Bolt	2	SN:B10001--
12	01643-31232	Washer	2	SN:B10001--
13	207-62-74140	Tube	2	SN:B10001--
14	207-62-52350	Clamp	4	SN:B10001--
15	205-62-73431	Seat	4	SN:B10001--
16	01010-81235	Bolt	8	SN:B10001--
17	01643-31232	Washer	8	SN:B10001--
18	207-62-31330	Clamp	4	SN:B10001--
19	01010-81235	Bolt	4	SN:B10001--
20	01643-31232	Washer	4	SN:B10001--
21	07372-21040	Bolt	8	SN:B10001--
22	01643-51032	Washer	8	SN:B10001--
23	07000-13035	O-ring	2	SN:B10001--

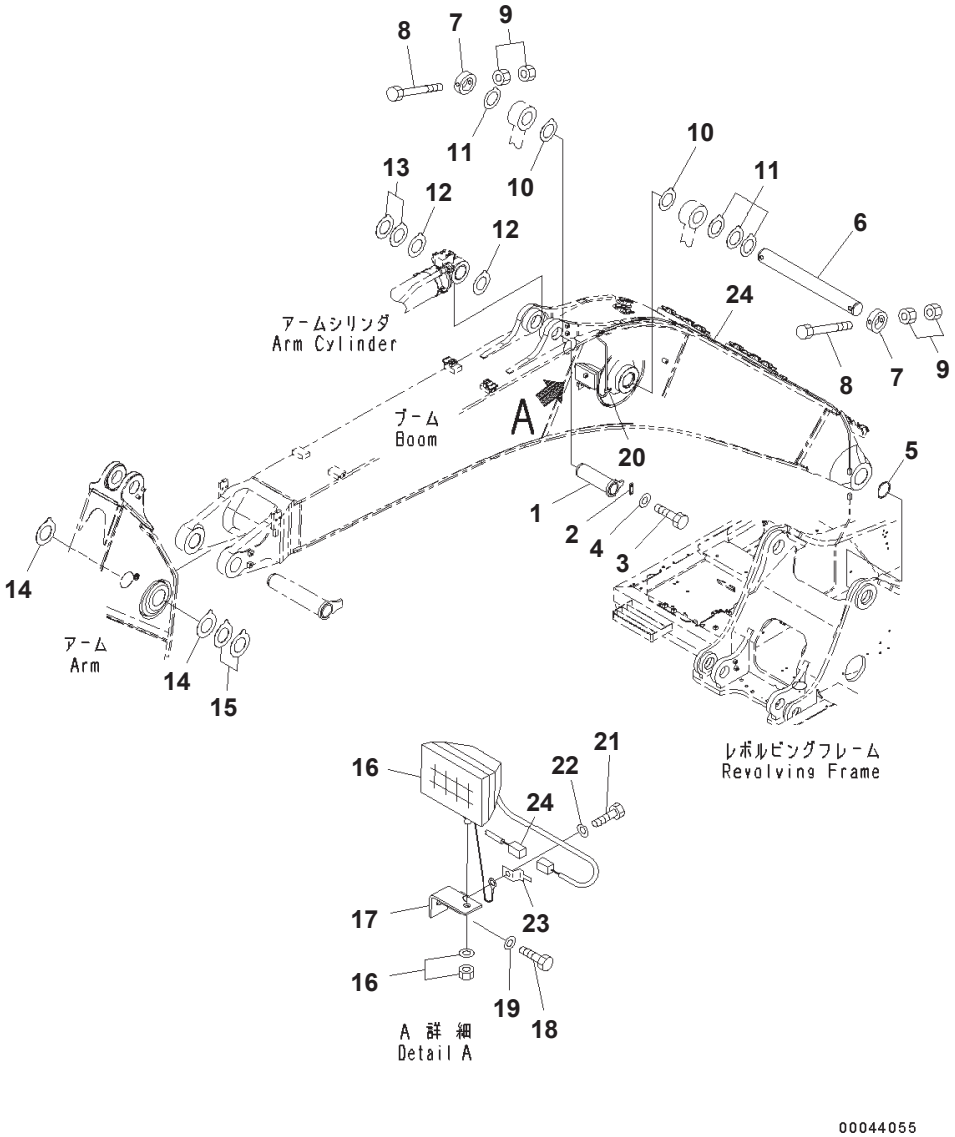

Boom, 6.5m, Strengthened, 1-attachment, 100 Hours Greasing Type, Cylinder Pin And Working Lamp

Index	Part Number	Description	Qty	Options
1	207-70-61192	Pin	1	SN:B10001--
2	205-70-66581	Plate	1	SN:B10001--
3	01010-81235	Bolt	2	SN:B10001--
4	01643-31232	Washer	2	SN:B10001--
5	07145-00110	Seal, Dust	2	SN:B10001--
6	207-70-31172	Pin	1	SN:B10001--
7	207-70-31242	Plate	2	SN:B10001--
8	207-70-13340	Bolt	2	SN:B10001--
9	01580-12419	Nut	4	SN:B10001--
10	207-70-31340	Spacer, T=0.8mm	2	SN:B10001--
11	207-70-51320	Spacer, T=1.5mm	5	SN:B10001--
12	207-70-11340	Spacer, T=0.8mm	3	SN:B10001--
13	207-70-11350	Spacer, T=1.5mm	2	SN:B10001--
14	207-70-11360	Spacer, T=1.0mm	2	SN:B10001--
15	207-70-11370	Spacer, T=1.5mm	2	SN:B10001--
16	21T-06-32810	Working Lamp Assembly	1	SN:B10001--
	421-06-23330	・ Bulb, 24volt, 70watt	1	SN:B10001--
17	20Y-06-21551	Bracket	1	SN:B10001--
18	01010-81430	Bolt	1	SN:B10001--
19	01643-31445	Washer	1	SN:B10001--
20	04434-51012	Clip	1	SN:B10001--
21	01010-81220	Bolt	2	SN:B10001--
22	01643-31232	Washer	2	SN:B10001--
23	08193-20012	Clip	1	SN:B10001--
24	207-06-75161	Wire Harness	1	SN:B10001--

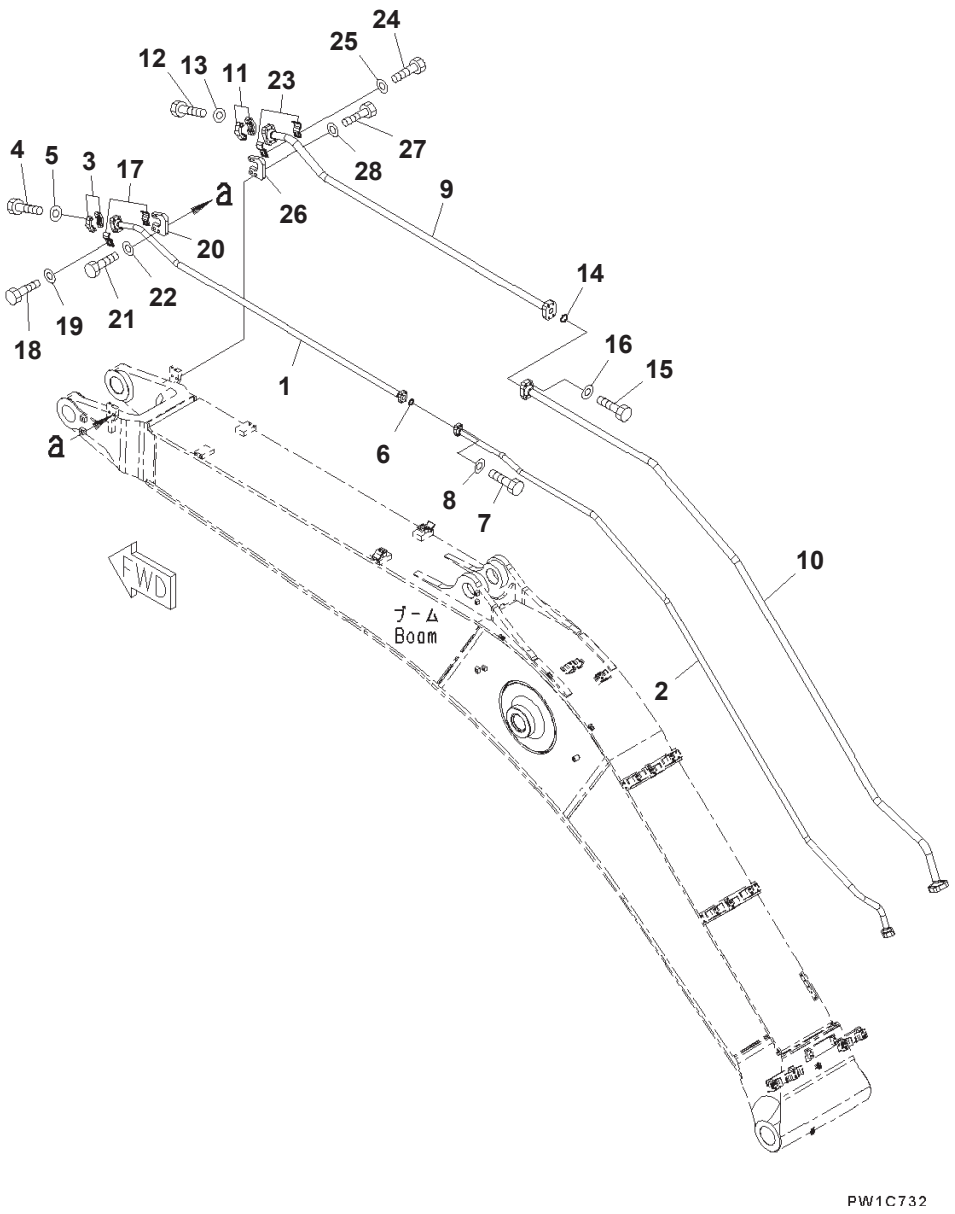

Boom, 6.5m, Strengthened, 1-attachment, 100 Hours Greasing Type, Additional Piping

Index	Part Number	Description	Qty	Options
1	207-970-7110	Tube	1	SN:B10001--
2	207-970-7130	Tube	1	SN:B10001--
3	07371-51260	Flange	2	SN:B10001--
4	01010-81245	Bolt	4	SN:B10001--
5	01643-31232	Washer	4	SN:B10001--
6	07000-13035	O-ring	1	SN:B10001--
7	01010-81040	Bolt	4	SN:B10001--
8	01643-31032	Washer	4	SN:B10001--
9	207-970-7120	Tube	1	SN:B10001--
10	207-970-7140	Tube	1	SN:B10001--
11	07371-51470	Flange, Split	2	SN:B10001--
12	01010-81455	Bolt	8	SN:B10001--
13	01643-31445	Washer	8	SN:B10001--
14	07000-13048	O-ring	1	SN:B10001--
15	01010-81455	Bolt	4	SN:B10001--
16	01643-31445	Washer	4	SN:B10001--
17	208-970-7220	Clamp	2	SN:B10001--
18	01010-81235	Bolt	2	SN:B10001--
19	01643-31232	Washer	2	SN:B10001--
20	207-970-7151	Bracket	1	SN:B10001--
21	01010-81655	Bolt	2	SN:B10001--
22	01643-31645	Washer	2	SN:B10001--
23	208-970-7210	Clamp	2	SN:B10001--
24	01010-81235	Bolt	2	SN:B10001--
25	01643-31232	Washer	2	SN:B10001--
26	207-970-7151	Bracket	1	SN:B10001--
27	01010-81655	Bolt	2	SN:B10001--
28	01643-31645	Washer	2	SN:B10001--

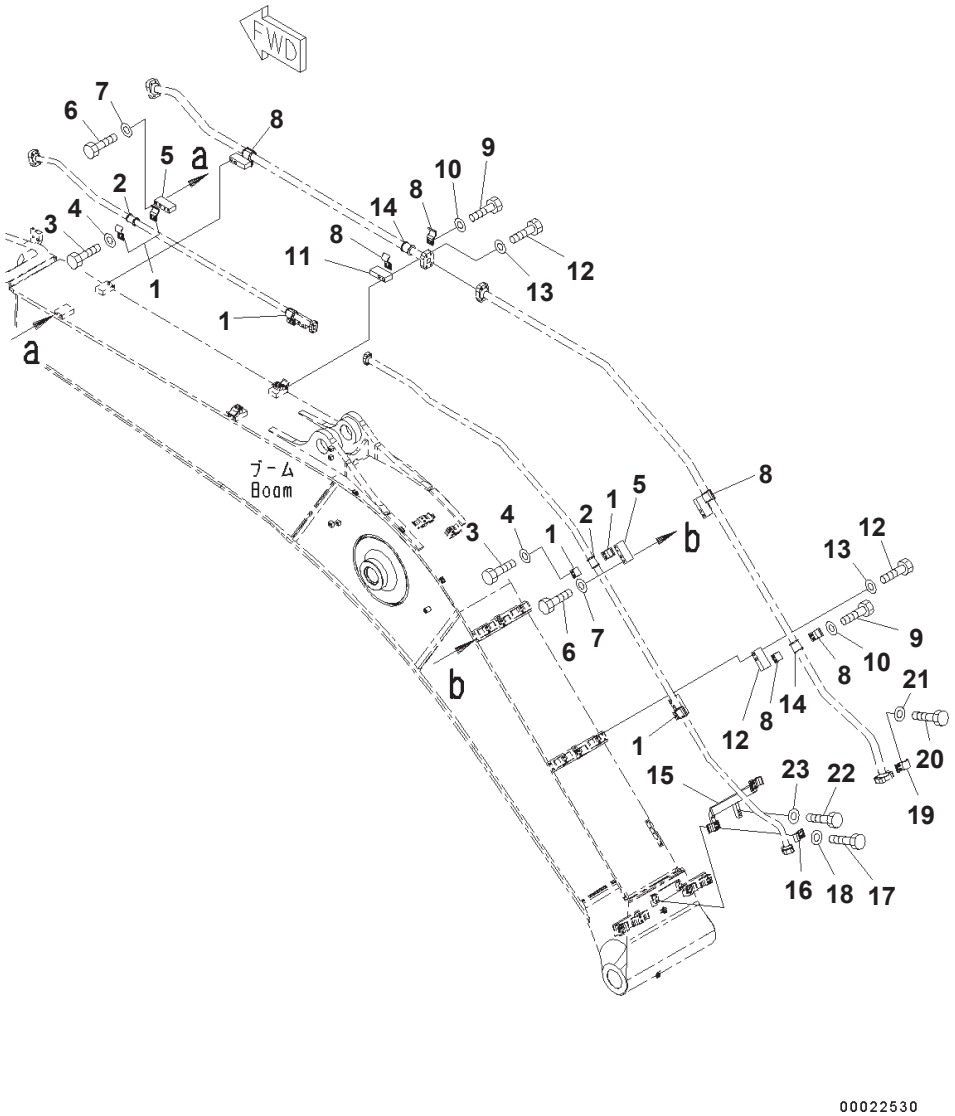

Boom, 6.5m, Strengthened, 1-attachment, 100 Hours Greasing Type, Clamp

Index	Part Number	Description	Qty	Options
1	207-62-52350	Clamp	8	SN:B10001--
2	205-62-73431	Seat	4	SN:B10001--
3	01010-81235	Bolt	8	SN:B10001--
4	01643-31232	Washer	8	SN:B10001--
5	207-970-7171	Bracket	4	SN:B10001--
6	01010-81685	Bolt	8	SN:B10001--
7	01643-31645	Washer	8	SN:B10001--
8	207-970-7320	Clamp	8	SN:B10001--
9	01010-81235	Bolt	8	SN:B10001--
10	01643-31232	Washer	8	SN:B10001--
11	207-970-7171	Bracket	4	SN:B10001--
12	01010-81685	Bolt	8	SN:B10001--
13	01643-31645	Washer	8	SN:B10001--
14	207-970-7331	Seat	4	SN:B10001--
15	207-970-7162	Bracket	1	SN:B10001--
16	207-62-31330	Clamp	1	SN:B10001--
17	01010-81250	Bolt	2	SN:B10001--
18	01643-31232	Washer	2	SN:B10001--
19	207-970-7310	Clamp	1	SN:B10001--
20	01010-81235	Bolt	2	SN:B10001--
21	01643-31232	Washer	2	SN:B10001--
22	01010-81250	Bolt	2	SN:B10001--
23	01643-31232	Washer	2	SN:B10001--

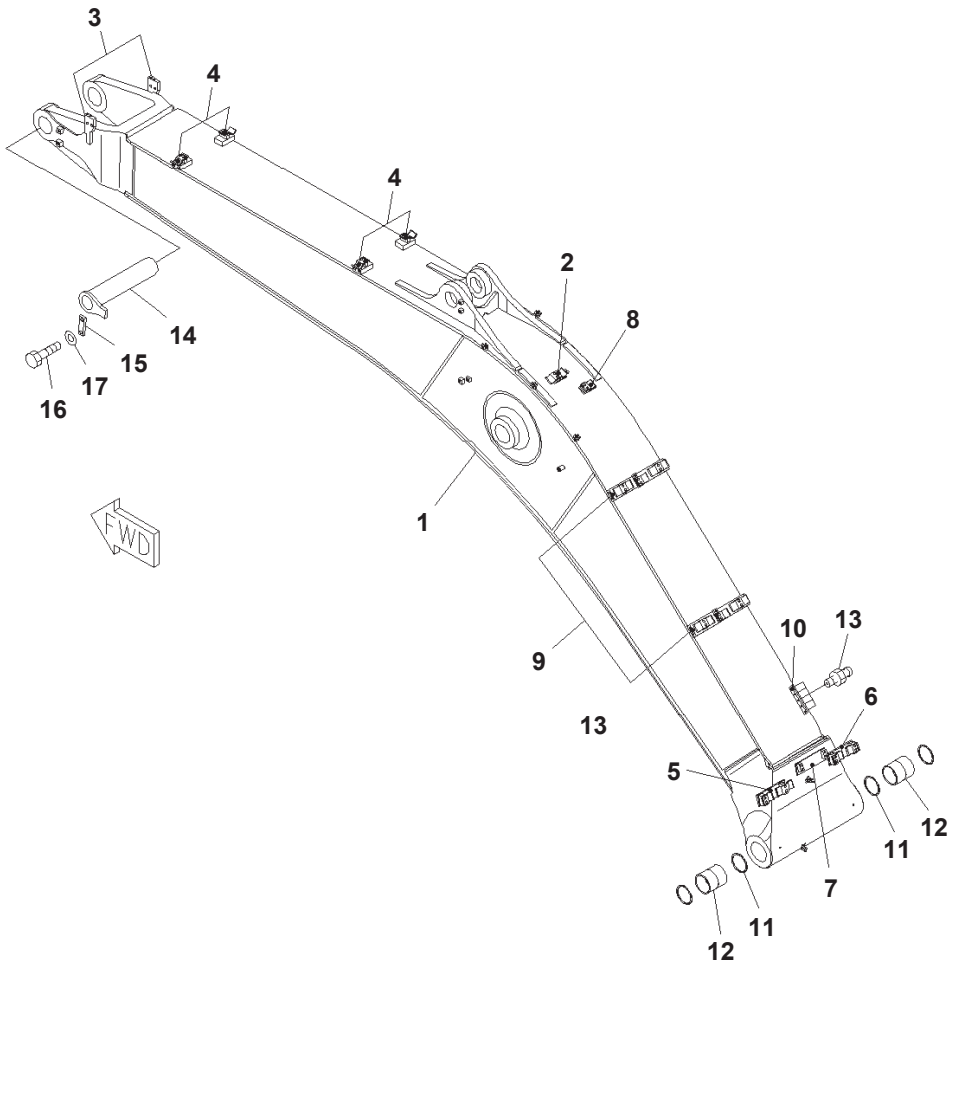

Boom, 6.5m, Strengthened, 100 Hours Greasing Type, Boom And Top Pin (#B10172-)

Index	Code	Part Number	Description	Qty	Options
		207-70-B0011	Boom Assembly	1	SN:B10172--
1	C1		・ Boom	1	SN:B10172--
2		207-62-54750	・・ Bracket,Welded	1	SN:B10172--
3		207-62-74221	・・ Bracket,Welded	2	SN:B10172--
4		207-62-74230	・・ Bracket,Welded	4	SN:B10172--
5		207-62-74240	・・ Bracket,Welded	1	SN:B10172--
6		207-62-74251	・・ Bracket,Welded	1	SN:B10172--
7		207-62-74281	・・ Bracket,Welded	1	SN:B10172--
8		207-62-74340	・・ Bracket,Welded	1	SN:B10172--
9		207-62-74371	・・ Bracket,Welded	2	SN:B10172--
10		20Y-70-11651	・・ Seat,Welded	1	SN:B10172--
11		07145-00110	・ Seal, Dust	2	SN:B10172--
12		207-70-61610	・ Bushing	2	SN:B10172--
13		07020-00000	Fitting, Grease	5	SN:B10172--
14		207-70-61182	Pin	1	SN:B10172--
15		207-70-31230	Plate	1	SN:B10172--
16		01010-81640	Bolt	2	SN:B10172--
17		01643-31645	Washer	2	SN:B10172--

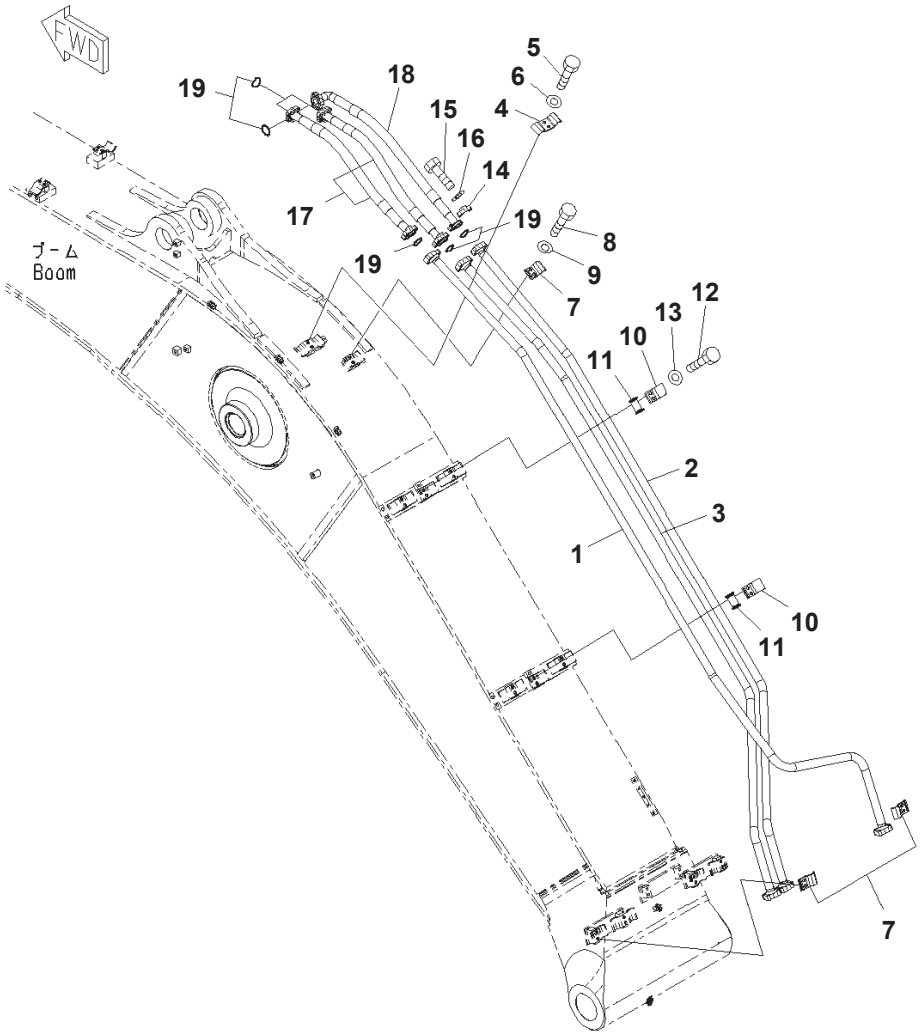

Boom, 6.5m, Strengthened, 100 Hours Greasing Type, Arm Cylinder Lines (#B10172-)

Index	Part Number	Description	Qty	Options
1	207-62-74160	Tube	1	SN:B10172--
2	207-62-74131	Tube	1	SN:B10172--
3	207-62-74150	Tube	1	SN:B10172--
4	207-62-54760	Clamp	1	SN:B10172--
5	01010-81235	Bolt	2	SN:B10172--
6	01643-31232	Washer	2	SN:B10172--
7	207-62-31330	Clamp	3	SN:B10172--
8	01010-81235	Bolt	6	SN:B10172--
9	01643-31232	Washer	6	SN:B10172--
10	207-62-52350	Clamp	2	SN:B10172--
11	205-62-73431	Seat	2	SN:B10172--
12	01010-81235	Bolt	4	SN:B10172--
13	01643-31232	Washer	4	SN:B10172--
14	07371-31049	Flange	12	SN:B10172--
15	07372-21035	Bolt	24	SN:B10172--
16	01643-51032	Washer	24	SN:B10172--
17	07074-01008	Hose, Flange Type, L=800mm	2	SN:B10172--
18	07073-01A09	Hose, Flange Type	1	SN:B10172--
19	07000-13032	O-ring	6	SN:B10172--

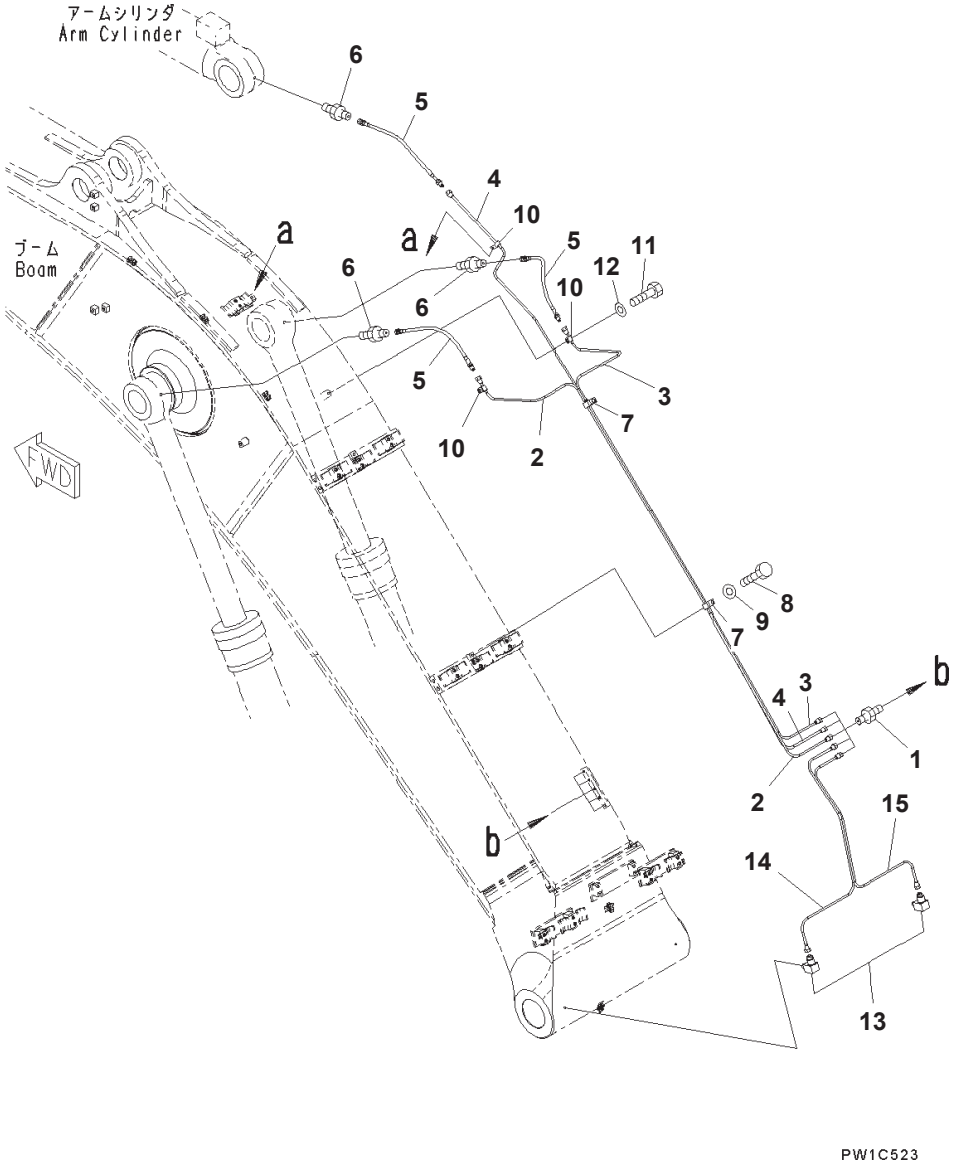

Boom, 6.5m, Strengthened, 100 Hours Greasing Type, Lubricating Line (#B10172-)

Index	Part Number	Description	Qty	Options
1	20Y-70-11540	Connector	5	SN:B10172--
2	207-70-77310	Tube	1	SN:B10172--
3	207-70-77320	Tube	1	SN:B10172--
4	207-70-77330	Tube	1	SN:B10172--
5	20Y-70-11520	Hose, L=440mm	3	SN:B10172--
6	205-70-51390	Nipple	3	SN:B10172--
7	04434-51912	Clip	2	SN:B10172--
8	01010-81220	Bolt	2	SN:B10172--
9	01643-51232	Washer	2	SN:B10172--
10	08036-01014	Clip	3	SN:B10172--
11	01010-81220	Bolt	3	SN:B10172--
12	01643-31232	Washer	3	SN:B10172--
13	20Y-25-11270	Elbow	2	SN:B10172--
14	207-70-77341	Tube	1	SN:B10172--
15	207-70-77351	Tube	1	SN:B10172--

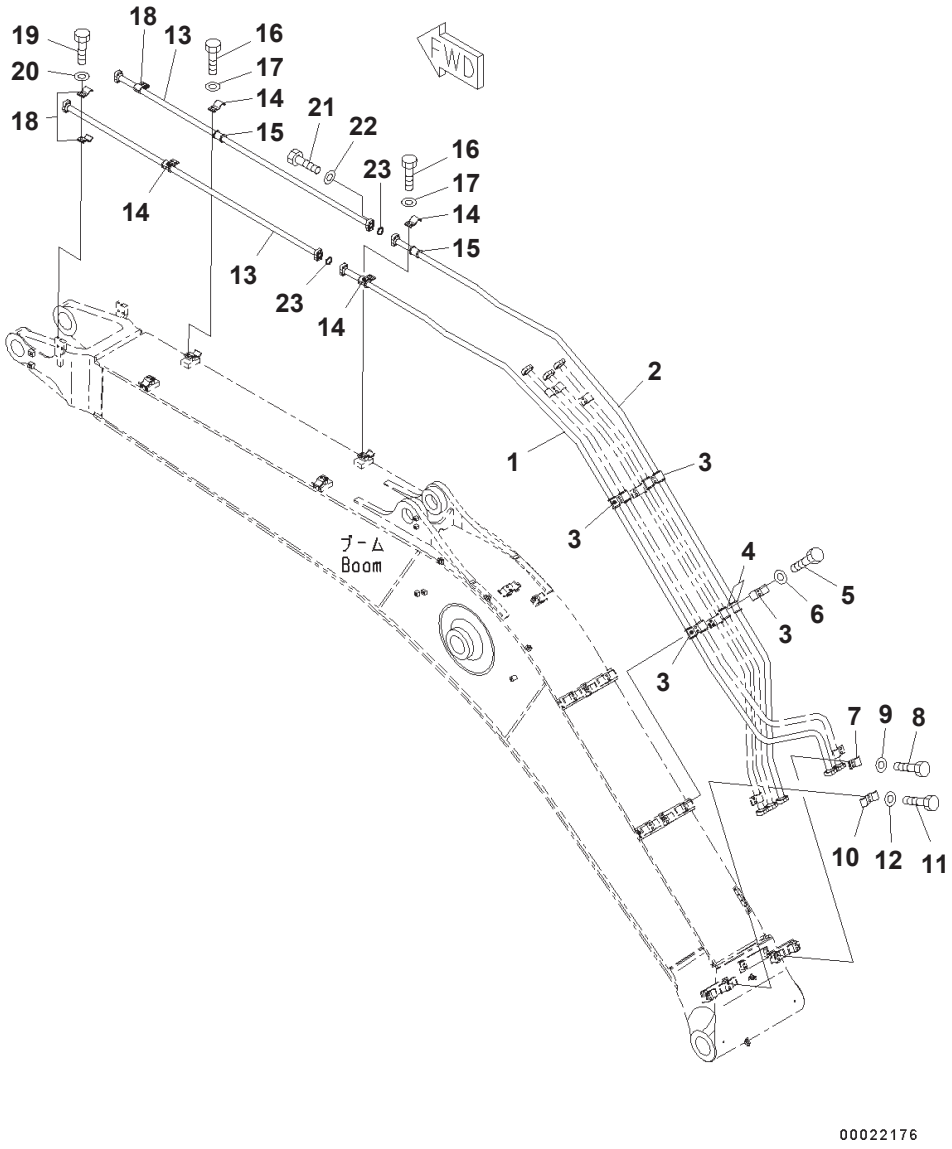

Boom, 6.5m, Strengthened, 100 Hours Greasing Type, Bucket Cylinder Line (#B10172-)

Index	Part Number	Description	Qty	Options
1	207-62-74111	Tube	1	SN:B10172--
2	207-62-74121	Tube	1	SN:B10172--
3	207-62-54780	Clamp	4	SN:B10172--
4	205-62-73431	Seat	8	SN:B10172--
5	01010-81235	Bolt	8	SN:B10172--
6	01643-31232	Washer	8	SN:B10172--
7	207-62-31330	Clamp	1	SN:B10172--
8	01010-81235	Bolt	2	SN:B10172--
9	01643-31232	Washer	2	SN:B10172--
10	207-62-54760	Clamp	1	SN:B10172--
11	01010-81235	Bolt	2	SN:B10172--
12	01643-31232	Washer	2	SN:B10172--
13	207-62-74140	Tube	2	SN:B10172--
14	207-62-52350	Clamp	4	SN:B10172--
15	205-62-73431	Seat	4	SN:B10172--
16	01010-81235	Bolt	8	SN:B10172--
17	01643-31232	Washer	8	SN:B10172--
18	207-62-31330	Clamp	4	SN:B10172--
19	01010-81235	Bolt	4	SN:B10172--
20	01643-31232	Washer	4	SN:B10172--
21	07372-21040	Bolt	8	SN:B10172--
22	01643-51032	Washer	8	SN:B10172--
23	07000-13035	O-ring	2	SN:B10172--

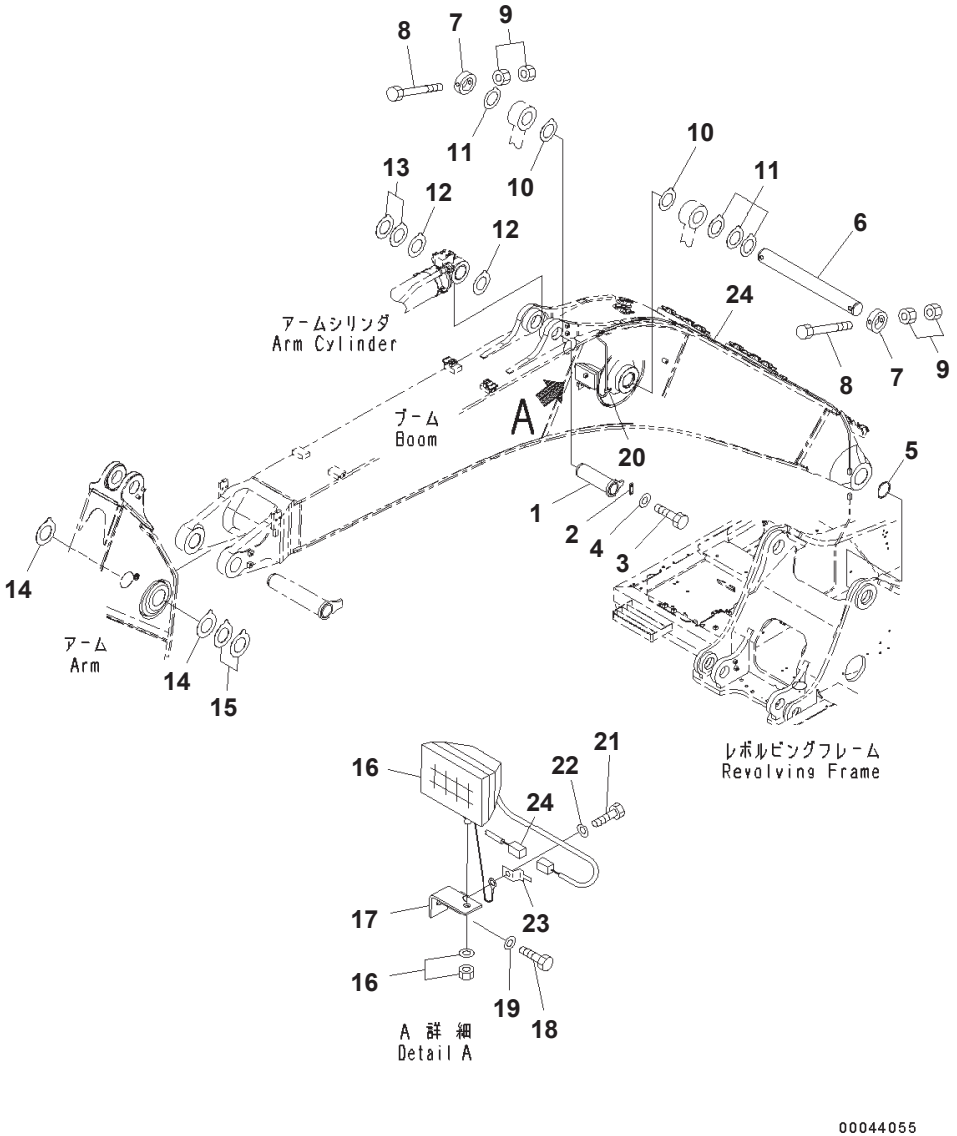

Boom, 6.5m, Strengthened, 100 Hours Greasing Type, Cylinder Pin And Working Lamp (#B10172-)

Index	Part Number	Description	Qty	Options
1	207-70-61192	Pin	1	SN:B10172--
2	205-70-66581	Plate	1	SN:B10172--
3	01010-81235	Bolt	2	SN:B10172--
4	01643-31232	Washer	2	SN:B10172--
5	07145-00110	Seal, Dust	2	SN:B10172--
6	207-70-31172	Pin	1	SN:B10172--
7	207-70-31242	Plate	2	SN:B10172--
8	207-70-13340	Bolt	2	SN:B10172--
9	01580-12419	Nut	4	SN:B10172--
10	207-70-31340	Spacer, T=0.8mm	2	SN:B10172--
11	207-70-51320	Spacer, T=1.5mm	5	SN:B10172--
12	207-70-11340	Spacer, T=0.8mm	3	SN:B10172--
13	207-70-11350	Spacer, T=1.5mm	2	SN:B10172--
14	207-70-11360	Spacer, T=1.0mm	2	SN:B10172--
15	207-70-11370	Spacer, T=1.5mm	2	SN:B10172--
16	21T-06-32810	Working Lamp Assembly	1	SN:B10172--
	421-06-23330	・ Bulb, 24volt, 70watt	1	SN:B10172--
17	20Y-06-21551	Bracket	1	SN:B10172--
18	01010-81430	Bolt	1	SN:B10172--
19	01643-31445	Washer	1	SN:B10172--
20	04434-51012	Clip	1	SN:B10172--
21	01010-81220	Bolt	2	SN:B10172--
22	01643-31232	Washer	2	SN:B10172--
23	08193-20012	Clip	1	SN:B10172--
24	207-06-75161	Wire Harness	1	SN:B10172--

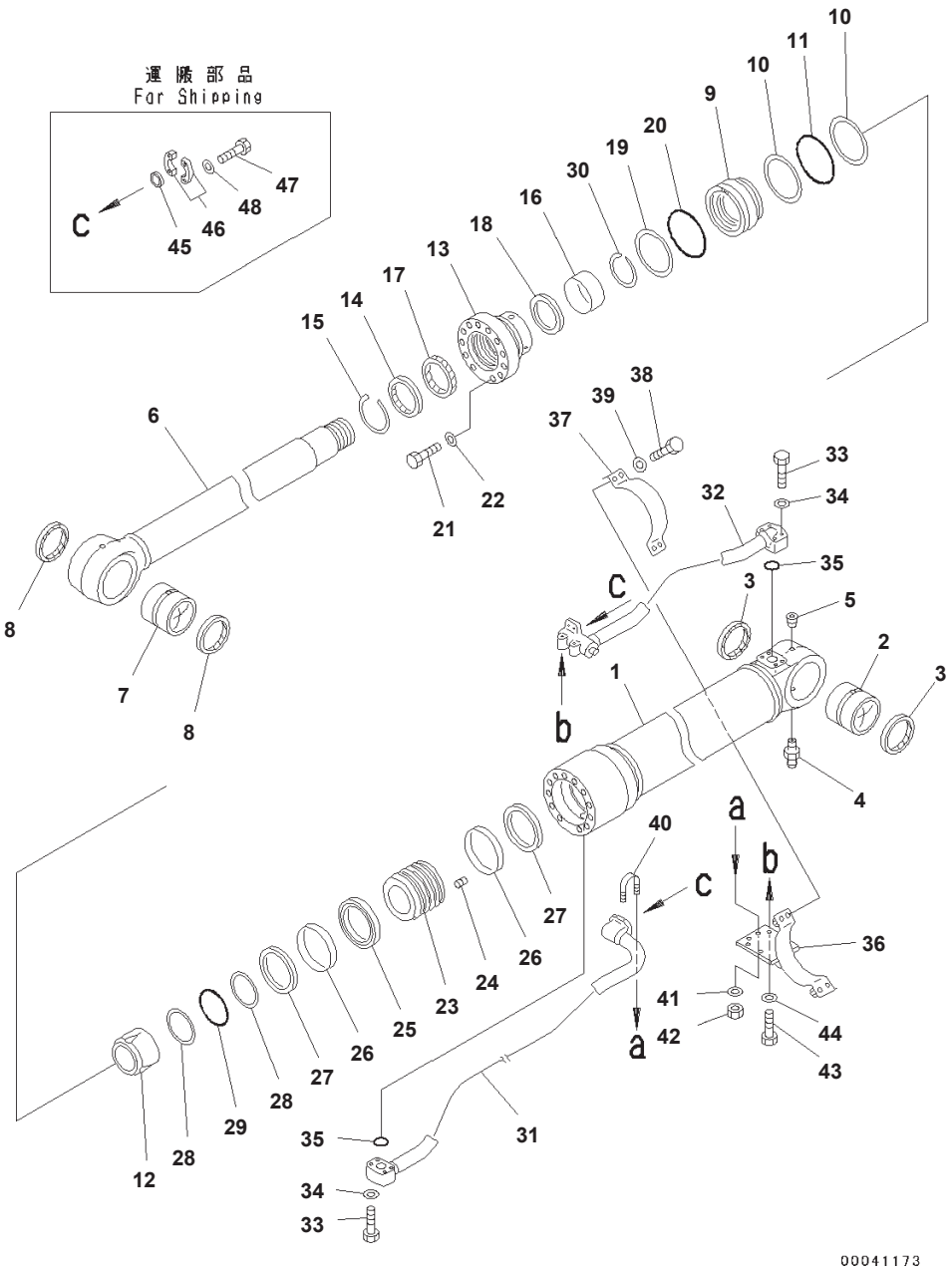

Index	Part Number	Description	Qty	Options
	707-01-XY991	Assembly Cylinder 100 X 140	1	SN:B10001--
	707-01-0C581	· Assembly Cylinder	1	SN:B10001--
1	707-13-14580	· · Cylinder	1	SN:B10001--
2	707-76-90390	· · Bushing	1	SN:B10001--
* 3	07145-00090	· · Seal, Dust, (Kit : K05)	2	SN:B10001--
4	07020-00000	· · Fitting, Grease	1	SN:B10001--
5	07043-00108	· · Plug, Taper	1	SN:B10001--
6	707-58-10720	· · Rod	1	SN:B10001--
7	707-76-10130	· · Bushing	1	SN:B10001--
* 8	07145-00100	· · Seal, Dust, (Kit : K05)	2	SN:B10001--
9	707-71-34800	· · Collar	1	SN:B10001--
* 10	707-35-91420	· · Ring, Back-up, (Kit : K05)	2	SN:B10001--
* 11	07000-15130	· · O-ring, (Kit : K05)	1	SN:B10001--
12	707-71-61090	· · Plunger	1	SN:B10001--
13	707-27-14890	· · Head	1	SN:B10001--
* 14	176-63-56170	· · Seal, Dust, (Kit : K05)	1	SN:B10001--
15	07179-13114	· · Ring, Snap	1	SN:B10001--
16	707-52-90780	· · Bushing	1	SN:B10001--
* 17	707-51-10030	· · Packing, Rod, (Kit : K05)	1	SN:B10001--
* 18	707-51-10640	· · Ring, Buffer, (Kit : K05)	1	SN:B10001--
* 19	707-35-91420	· · Ring, Back-up, (Kit : K05)	1	SN:B10001--
* 20	07000-15130	· · O-ring, (Kit : K05)	1	SN:B10001--
21	01010-81875	· · Bolt	12	SN:B10001--
22	707-41-11840	· · Washer	12	SN:B10001--
23	707-36-14650	· · Piston	1	SN:B10001--
24	01310-01216	· · Screw	1	SN:B10001--
* 25	707-44-14180	· · Ring, Piston, (Kit : K05)	1	SN:B10001--
* 26	707-39-14110	· · Ring, Wear, (Kit : K05)	2	SN:B10001--
27	707-44-14910	· · Ring	2	SN:B10001--
*28	07001-05090	· · Ring, Back-up, (Kit : K05)	2	SN:B10001--
* 29	07000-15090	· · O-ring, (Kit : K05)	1	SN:B10001--
30	707-75-10160	· · Ring, Snap	1	SN:B10001--
31	707-86-11580	· Tube	1	SN:B10001--
32	207-63-54580	· Tube	1	SN:B10001--
33	07372-21060	· Bolt	8	SN:B10001--
34	01643-51032	· Washer	8	SN:B10001--
* 35	07000-13035	· O-ring, (Kit : K05)	2	SN:B10001--
36	207-63-54590	· Bracket	1	SN:B10001--
37	707-88-21370	· Band	1	SN:B10001--
38	07372-21240	· Bolt	4	SN:B10001--
39	01643-51232	· Washer	4	SN:B10001--
40	07283-33442	· Clip, Pipe	1	SN:B10001--
41	01643-31032	· Washer	2	SN:B10001--
42	01597-01009	· Nut	2	SN:B10001--
43	01010-81025	· Bolt	2	SN:B10001--
44	01643-31032	· Washer	2	SN:B10001--
45	707-88-33040	· Cap	2	SN:B10001--
46	07371-31049	· Flange	4	SN:B10001--
47	07372-21035	· Bolt	8	SN:B10001--
48	01643-51032	· Washer	8	SN:B10001--
*	7079958080 REP.LANÇA LEVANT.			

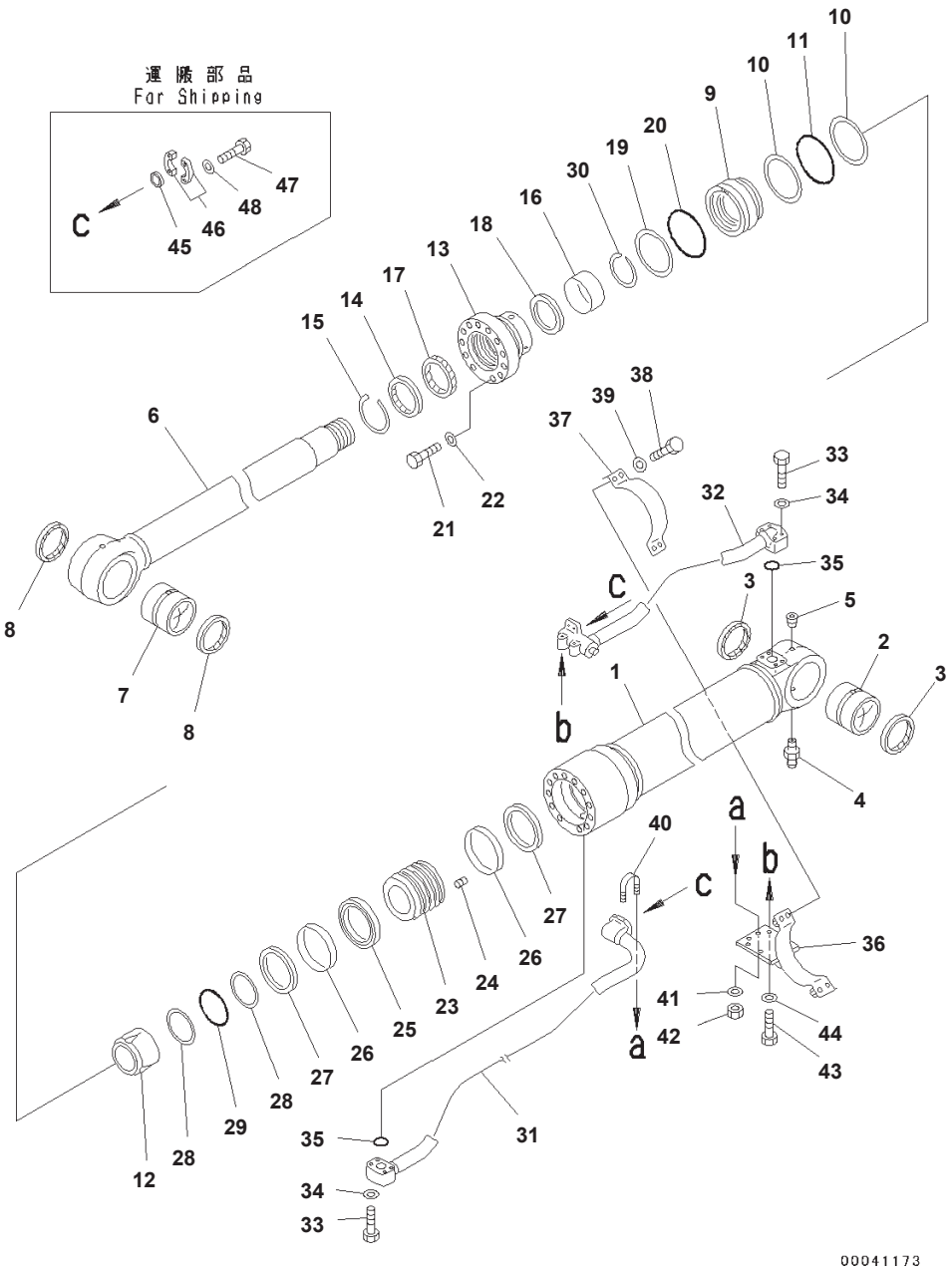

Index	Part Number	Description	Qty	Options
	707-01-XY991	Cylinder Assembly 100 X 140	1	SN:B10001--
	707-01-0C581	・ Cylinder Assembly	1	SN:B10001--
1	707-13-14580	・・ Cylinder	1	SN:B10001--
2	707-76-90390	・・ Bushing	1	SN:B10001--
3	07145-00090	・・ Seal, Dust, (Kit : K05)	2	SN:B10001--
4	07020-00000	・・ Fitting, Grease	1	SN:B10001--
5	07043-00108	・・ Plug, Taper	1	SN:B10001--
6	707-58-10720	・・ Rod	1	SN:B10001--
7	707-76-10130	・・ Bushing	1	SN:B10001--
8	07145-00100	・・ Seal, Dust, (Kit : K05)	2	SN:B10001--
9	707-71-34800	・・ Collar	1	SN:B10001--
10	707-35-91420	・・ Ring, Back-up, (Kit : K05)	2	SN:B10001--
11	07000-15130	・・ O-ring, (Kit : K05)	1	SN:B10001--
12	707-71-61090	・・ Plunger	1	SN:B10001--
13	707-27-14890	・・ Head	1	SN:B10001--
14	176-63-56170	・・ Seal, Dust, (Kit : K05)	1	SN:B10001--
15	07179-13114	・・ Ring, Snap	1	SN:B10001--
16	707-52-90780	・・ Bushing	1	SN:B10001--
17	707-51-10030	・・ Packing, Rod, (Kit : K05)	1	SN:B10001--
18	707-51-10640	・・ Ring, Buffer, (Kit : K05)	1	SN:B10001--
19	707-35-91420	・・ Ring, Back-up, (Kit : K05)	1	SN:B10001--
20	07000-15130	・・ O-ring, (Kit : K05)	1	SN:B10001--
21	01010-81875	・・ Bolt	12	SN:B10001--
22	707-41-11840	・・ Washer	12	SN:B10001--
23	707-36-14650	・・ Piston	1	SN:B10001--
24	01310-01216	・・ Screw	1	SN:B10001--
25	707-44-14180	・・ Ring, Piston, (Kit : K05)	1	SN:B10001--
26	707-39-14110	・・ Ring, Wear, (Kit : K05)	2	SN:B10001--
27	707-44-14910	・・ Ring	2	SN:B10001--
28	07001-05090	・・ Ring, Back-up, (Kit : K05)	2	SN:B10001--
29	07000-15090	・・ O-ring, (Kit : K05)	1	SN:B10001--
30	707-75-10160	・・ Ring, Snap	1	SN:B10001--
31	707-86-11590	・ Tube	1	SN:B10001--
32	207-63-54680	・ Tube	1	SN:B10001--
33	07372-21060	・ Bolt	8	SN:B10001--
34	01643-51032	・ Washer	8	SN:B10001--
35	07000-13035	・ O-ring, (Kit : K05)	2	SN:B10001--
36	207-63-54590	・ Bracket	1	SN:B10001--
37	707-88-21370	・ Band	1	SN:B10001--
38	07372-21240	・ Bolt	4	SN:B10001--
39	01643-51232	・ Washer	4	SN:B10001--
40	07283-33442	・ Clip, Pipe	1	SN:B10001--
41	01643-31032	・ Washer	2	SN:B10001--
42	01597-01009	・ Nut	2	SN:B10001--
43	01010-81025	・ Bolt	2	SN:B10001--
44	01643-31032	・ Washer	2	SN:B10001--
45	707-88-33040	・ Cap	2	SN:B10001--
46	07371-31049	・ Flange	4	SN:B10001--
47	07372-21035	・ Bolt	8	SN:B10001--
48	01643-51032	・ Washer	8	SN:B10001--
*	7079958080 REP.LANÇA LEVANT.			

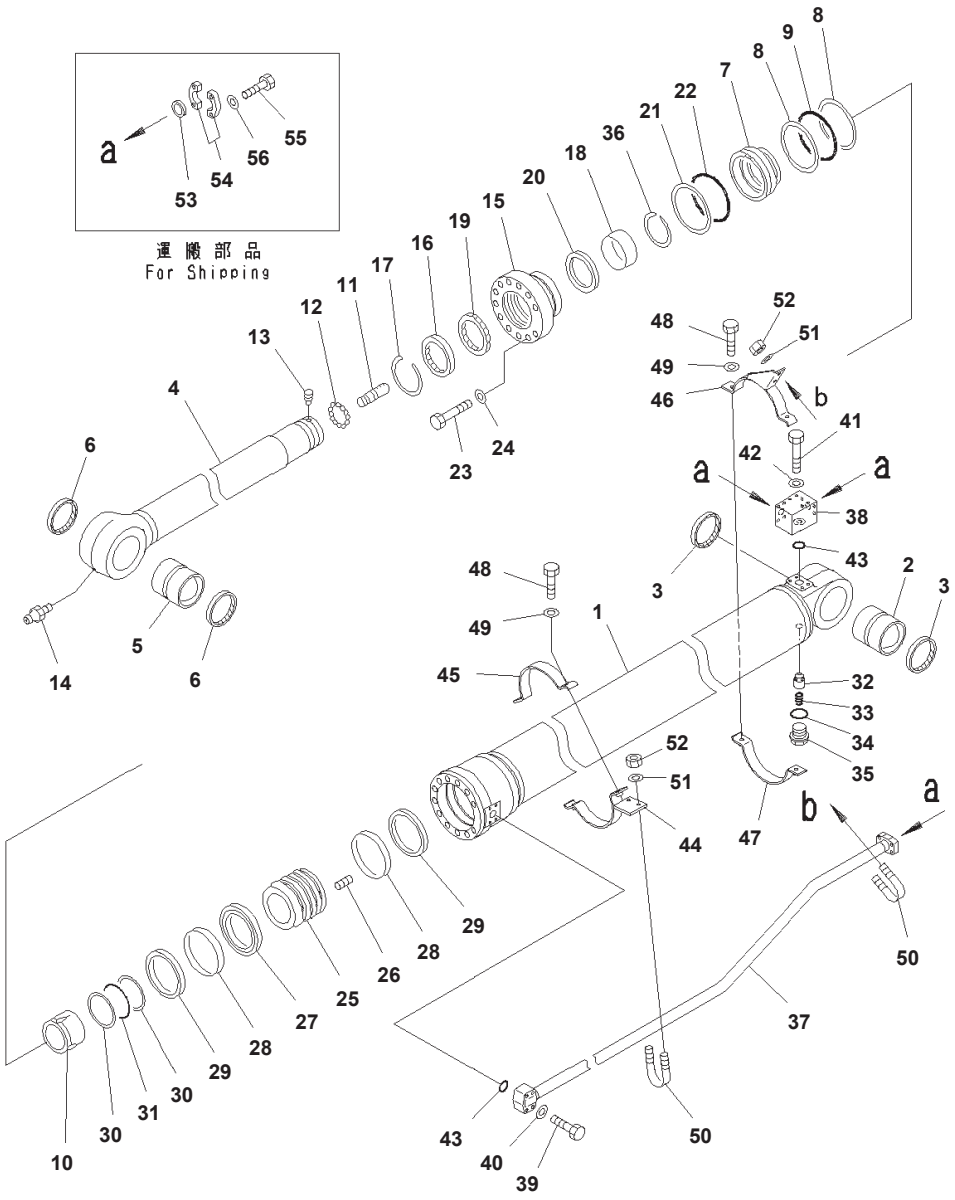

Arm Cylinder, 100 Hours Greasing Type (#B10001-.)

Index	Part Number	Description	Qty	Options
	707-01-XX021	Cylinder Assembly	1	SN:B10001--@
	707-01-0C601	・ Cylinder Assembly	1	SN:B10001--@
1	707-13-16710	・・ Cylinder	1	SN:B10001--@
2	707-76-10130	・・ Bushing	1	SN:B10001--@
3	07145-00100	・・ Seal, Dust, (Kit : K09)	2	SN:B10001--@
4	707-58-11360	・・ Rod	1	SN:B10001--@
5	707-76-10130	・・ Bushing	1	SN:B10001--@
6	07145-00100	・・ Seal, Dust, (Kit : K09)	2	SN:B10001--@
7	707-71-32800	・・ Collar	1	SN:B10001--@
8	707-35-91640	・・ Ring, Back-up, (Kit : K09)	2	SN:B10001--@
9	07000-15150	・・ O-ring, (Kit : K09)	1	SN:B10001--@
10	707-71-61130	・・ Plunger	1	SN:B10001--@
11	707-71-70290	・・ Plunger	1	SN:B10001--@
12	04260-00635	・・ Ball, Steel	12	SN:B10001--@
13	707-71-91270	・・ Cap	1	SN:B10001--@
14	07020-00000	・・ Fitting, Grease	1	SN:B10001--@
15	707-27-16571	・・ Head	1	SN:B10001--@
16	198-63-94170	・・ Seal, Dust, (Kit : K10)	1	SN:B10001--@
17	07179-13126	・・ Ring, Snap	1	SN:B10001--@
18	707-52-90850	・・ Bushing	1	SN:B10001--@
19	707-51-11030	・・ Packing, Rod, Rod, (Kit : K09)	1	SN:B10001--@
20	707-51-11640	・・ Ring, Buffer, Buffer, (Kit : K09)	1	SN:B10001--@
21	707-35-91640	・・ Ring, Back-up, (Kit : K09)	1	SN:B10001--@
22	07000-15150	・・ O-ring, (Kit : K09)	1	SN:B10001--@
23	01010-82085	・・ Bolt	12	SN:B10001--@
24	707-88-75310	・・ Washer	12	SN:B10001--@
25	707-36-16580	・・ Piston	1	SN:B10001--@
26	01310-01216	・・ Screw	1	SN:B10001--@
27	707-44-16180	・・ Ring, Piston, (Kit : K09)	1	SN:B10001--@
28	707-39-16120	・・ Ring, Wear, (Kit : K09)	2	SN:B10001--@
29	707-44-16910	・・ Ring	2	SN:B10001--@
30	07001-05100	・・ Ring, Back-up, (Kit : K09)	2	SN:B10001--@
31	07000-15100	・・ O-ring, (Kit : K09)	1	SN:B10001--@
32	707-83-13010	・・ Valve	1	SN:B10001--@
33	07750-01628	・・ Spring	1	SN:B10001--@
34	707-87-14070	・・ Plug	1	SN:B10001--@
35	07002-12034	・・ O-ring, (Kit : K09)	1	SN:B10001--@
36	707-75-11040	・・ Ring, Snap	1	SN:B10001--@
37	707-86-11600	・ Tube	1	SN:B10001--@
38	707-86-11610	・ Block	1	SN:B10001--@
39	07372-21060	・ Bolt	4	SN:B10001--@
40	01643-51032	・ Washer	4	SN:B10001--@
41	01010-81095	・ Bolt	4	SN:B10001--@
42	01643-31032	・ Washer	4	SN:B10001--@
43	07000-13035	・ O-ring, (Kit : K09)	2	SN:B10001--@
44	707-88-22740	・ Bracket	1	SN:B10001--.
45	707-88-21380	・ Band	1	SN:B10001--.
46	207-63-64190	・ Bracket	1	SN:B10001--.
47	707-88-21390	・ Band	1	SN:B10001--.
48	01435-01235	・ Bolt	4	SN:B10001--@
49	01643-51232	・ Washer	4	SN:B10001--@
50	07283-33442	・ Clip, Pipe	2	SN:B10001--.
51	01643-31032	・ Washer	4	SN:B10001--.
52	01597-01009	・ Nut	4	SN:B10001--.

PC350LC-8 S/N B10001-UP

Arm Cylinder, 100 Hours Greasing Type (#B10001-.)

Index	Part Number	Description	Qty	Options
53	707-88-33040	· Cap	3	SN:B10001--@
54	07371-31049	· Flange	6	SN:B10001--@
55	07372-21035	· Bolt	12	SN:B10001--@
56	01643-51032	· Washer	12	SN:B10001--@

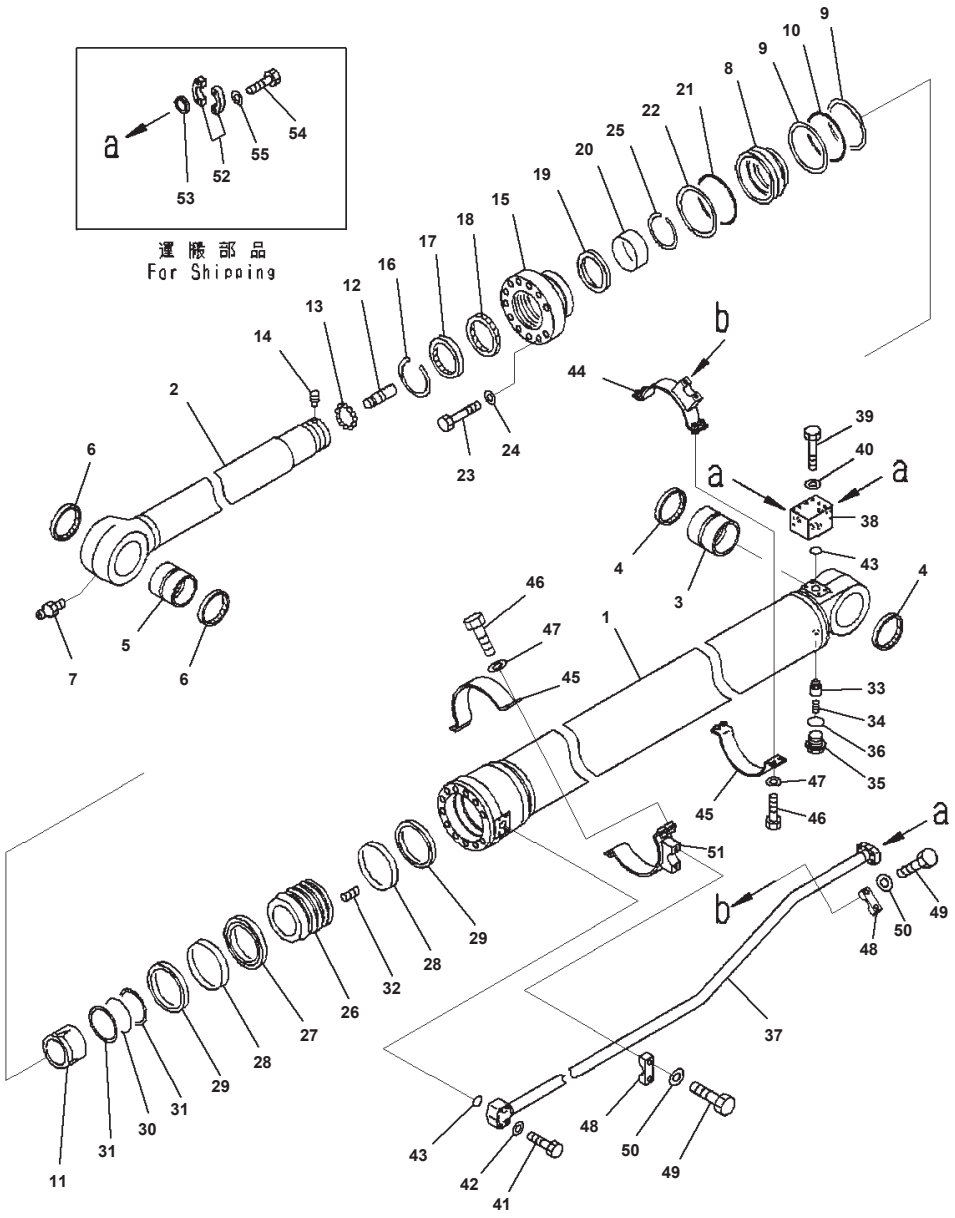

Arm Cylinder, 100 Hours Greasing Type (#.-)

Index	Part Number	Description	Qty	Options
	707-01-XX021	Cylinder Assembly	1	SN:B10001--
	707-01-0C601	· Cylinder Assembly	1	SN:B10001--
1	707-13-16710	· · Cylinder	1	SN:B10001--
2	707-76-10130	· · Bushing	1	SN:B10001--
3	07145-00100	· · Seal, Dust, (Kit : K09)	2	SN:B10001--
4	707-58-11360	· · Rod	1	SN:B10001--
5	707-76-10130	· · Bushing	1	SN:B10001--
6	07145-00100	· · Seal, Dust, (Kit : K09)	2	SN:B10001--
7	707-71-32800	· · Collar	1	SN:B10001--
8	707-35-91640	· · Ring, Back-up, (Kit : K09)	2	SN:B10001--
9	07000-15150	· · O-ring, (Kit : K09)	1	SN:B10001--
10	707-71-61130	· · Plunger	1	SN:B10001--
11	707-71-70290	· · Plunger	1	SN:B10001--
12	04260-00635	· · Ball, Steel	12	SN:B10001--
13	707-71-91270	· · Cap	1	SN:B10001--
14	07020-00000	· · Fitting, Grease	1	SN:B10001--
15	707-27-16571	· · Head	1	SN:B10001--
16	07179-13126	· · Ring, Snap	1	SN:B10001--
17	707-56-11740	· · Seal, Dust, (Kit : K09)	1	SN:B10001--
18	707-51-11030	· · Packing, Rod, Rod, (Kit : K09)	1	SN:B10001--
19	707-51-11640	· · Ring, Buffer, Buffer, (Kit : K09)	1	SN:B10001--
20	707-52-90850	· · Bushing	1	SN:B10001--
21	07000-15150	· · O-ring, (Kit : K09)	1	SN:B10001--
22	707-35-91640	· · Ring, Back-up, (Kit : K09)	1	SN:B10001--
23	01010-82085	· · Bolt	12	SN:B10001--
24	707-88-75310	· · Washer	12	SN:B10001--
25	707-75-11040	· · Ring, Snap	1	SN:B10001--
26	707-36-16580	· · Piston	1	SN:B10001--
27	707-44-16180	· · Ring, Piston, (Kit : K09)	1	SN:B10001--
28	707-39-16120	· · Ring, Wear, (Kit : K09)	2	SN:B10001--
29	707-44-16910	· · Ring	2	SN:B10001--
30	07000-15100	· · O-ring, (Kit : K09)	2	SN:B10001--
31	07001-05100	· · Ring, Back-up, (Kit : K09)	1	SN:B10001--
32	01310-01216	· · Screw	1	SN:B10001--
33	707-83-13010	· · Valve	1	SN:B10001--
34	07750-01628	· · Spring	1	SN:B10001--
35	707-87-14071	· · Plug	1	SN:B10001--
36	07002-12034	· · O-ring, (Kit : K09)	1	SN:B10001--
37	707-86-11600	· Tube	1	SN:B10001--
38	707-86-11610	· Block	1	SN:B10001--
39	01010-81095	· Bolt	4	SN:B10001--
40	01643-31032	· Washer	4	SN:B10001--
41	07372-21060	· Bolt	4	SN:B10001--
42	01643-51032	· Washer	4	SN:B10001--
43	07000-13035	· O-ring, (Kit : K09)	2	SN:B10001--
44	707-88-51200	· Bracket	1	SN:.--
45	707-88-21850	· Band	2	SN:.--
46	07372-21240	· Bolt	8	SN:B10001--
47	01643-51232	· Washer	8	SN:B10001--
48	707-88-10150	· Clamp	2	SN:.--
49	01010-81245	· Bolt	4	SN:.--
50	01643-31232	· Washer	4	SN:.--
51	707-88-51190	· Bracket	1	SN:.--
52	07371-31049	· Flange	6	SN:B10001--

PC350LC-8 S/N B10001-UP
Arm Cylinder, 100 Hours Greasing Type (#.-)

Index	Part Number	Description	Qty	Options
53	707-88-33040	· Cap	3	SN:B10001--
54	07372-21035	· Bolt	12	SN:B10001--
55	01643-51032	· Washer	12	SN:B10001--

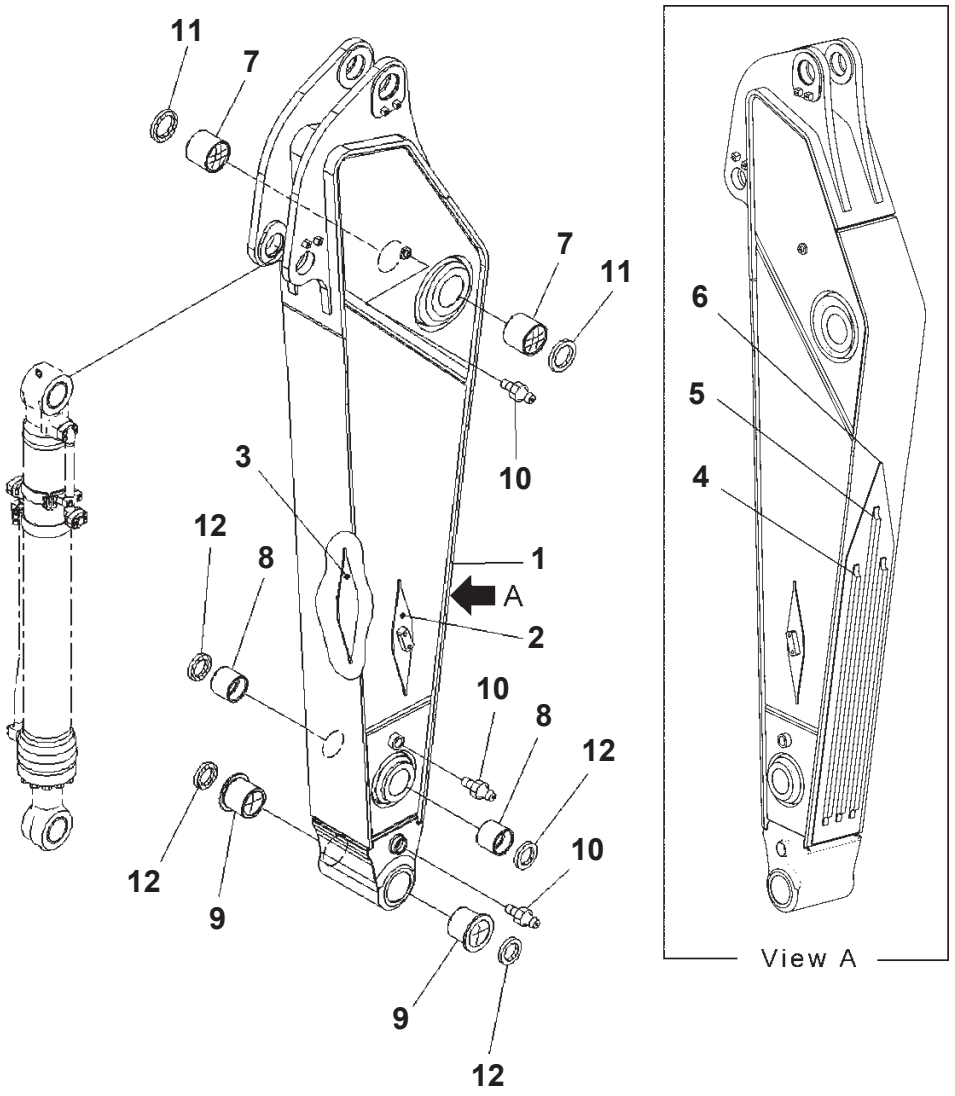

Arm, 2.6m, Strengthened, 1-attachment, 100 Hours Greasing Type

Index	Code	Part Number	Description	Qty	Options
		207-970-B120	Arm	1	SN:B10019--
	A2	207-970-7611	Arm	1	SN:B10001--B10018
1	C1		· Arm	1	SN:B10019--
	C1		· Arm	1	SN:B10001--B10018
2		207-970-7621	· Bracket, Welded	1	SN:B10019--
	A2	207-970-7620	· Bracket, Welded	1	SN:B10001--B10018
3		207-970-7631	· Bracket, Welded	1	SN:B10019--
	A2	207-970-7630	· Bracket, Welded	1	SN:B10001--B10018
4		207-70-72C10	· Plate, Welded	2	SN:B10019--
5		207-70-72C20	· Plate, Welded	1	SN:B10019--
6		207-70-72B90	· Plate, Welded	1	SN:B10019--
7		207-70-61521	Bushing	2	SN:B10001--
8		207-70-32150	Bushing	2	SN:B10001--
9		207-70-72460	Bushing	2	SN:B10001--
10		07020-00000	Fitting, Grease	3	SN:B10001--
11		07145-00110	Seal, Dust	2	SN:B10001--
12		207-70-72120	Seal, Dust	4	SN:B10001--

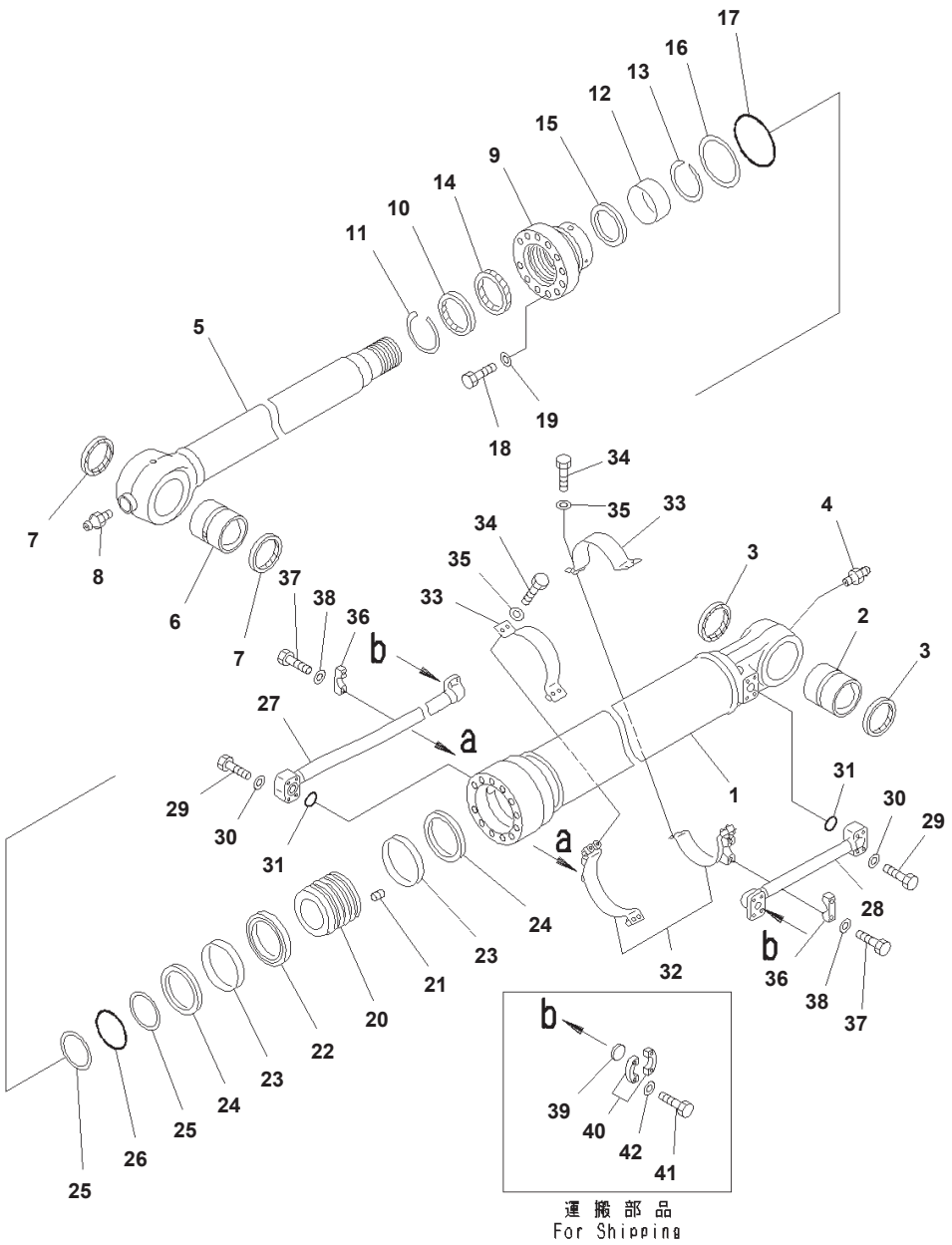

Index	Part Number	Description	Qty	Options
	707-01-XX032	Cylinder Assembly	1	SN:B10001--
	707-01-0C622	・ Cylinder Assembly	1	SN:B10001--
1	707-13-15261	・・ Cylinder	1	SN:B10001--
2	707-76-90130	・・ Bushing	1	SN:B10001--
3	07145-00090	・・ Seal, Dust, (Kit : K12)	2	SN:B10001--
4	07020-00000	・・ Fitting, Grease	1	SN:B10001--
5	707-58-11370	・・ Rod	1	SN:B10001--
6	207-63-76170	・・ Bushing	1	SN:B10001--
7	207-70-72120	・・ Seal, Dust, (Kit : K12)	2	SN:B10001--
8	07020-00000	・・ Fitting, Grease	1	SN:B10001--
9	707-27-15650	・・ Head	1	SN:B10001--
10	198-63-94170	・・ Seal, Dust, (Kit : K12)	1	SN:B10001--
11	07179-13126	・・ Ring, Snap	1	SN:B10001--
12	707-52-90850	・・ Bushing	1	SN:B10001--
13	707-75-11040	・・ Ring, Snap	1	SN:B10001--
14	707-51-11030	・・ Packing, Rod, (Kit : K12)	1	SN:B10001--
15	707-51-11640	・・ Ring, Buffer, (Kit : K12)	1	SN:B10001--
16	707-35-91660	・・ Ring, Back-up, (Kit : K12)	1	SN:B10001--
17	07000-15140	・・ O-ring, (Kit : K12)	1	SN:B10001--
18	01010-82085	・・ Bolt	12	SN:B10001--
19	707-88-75310	・・ Washer	12	SN:B10001--
20	707-36-15260	・・ Piston	1	SN:B10001--
21	01310-01216	・・ Screw	1	SN:B10001--
22	707-44-15180	・・ Ring, Piston, (Kit : K12)	1	SN:B10001--
23	707-39-15110	・・ Ring, Wear, (Kit : K12)	2	SN:B10001--
24	707-44-15911	・・ Ring	2	SN:B10001--
25	07001-05100	・・ Ring, Back-up, (Kit : K12)	2	SN:B10001--
26	07000-15100	・・ O-ring, (Kit : K12)	1	SN:B10001--
27	707-86-11631	・ Tube	1	SN:B10001--
28	207-63-73180	・ Tube	1	SN:B10001--
29	07372-21060	・ Bolt	8	SN:B10001--
30	01643-51032	・ Washer	8	SN:B10001--
31	07000-13035	・ O-ring, (Kit : K12)	2	SN:B10001--
32	707-88-22690	・ Bracket	2	SN:B10001--
33	707-88-21420	・ Band	2	SN:B10001--
34	07372-21240	・ Bolt	8	SN:B10001--
35	01643-51232	・ Washer	8	SN:B10001--
36	707-88-10150	・ Clamp	2	SN:B10001--
37	01010-81245	・ Bolt	4	SN:B10001--
38	01643-31232	・ Washer	4	SN:B10001--
39	707-88-33040	・ Cap	2	SN:B10001--
40	07371-31049	・ Flange	4	SN:B10001--
41	07372-21035	・ Bolt	8	SN:B10001--
42	01643-51032	・ Washer	8	SN:B10001--

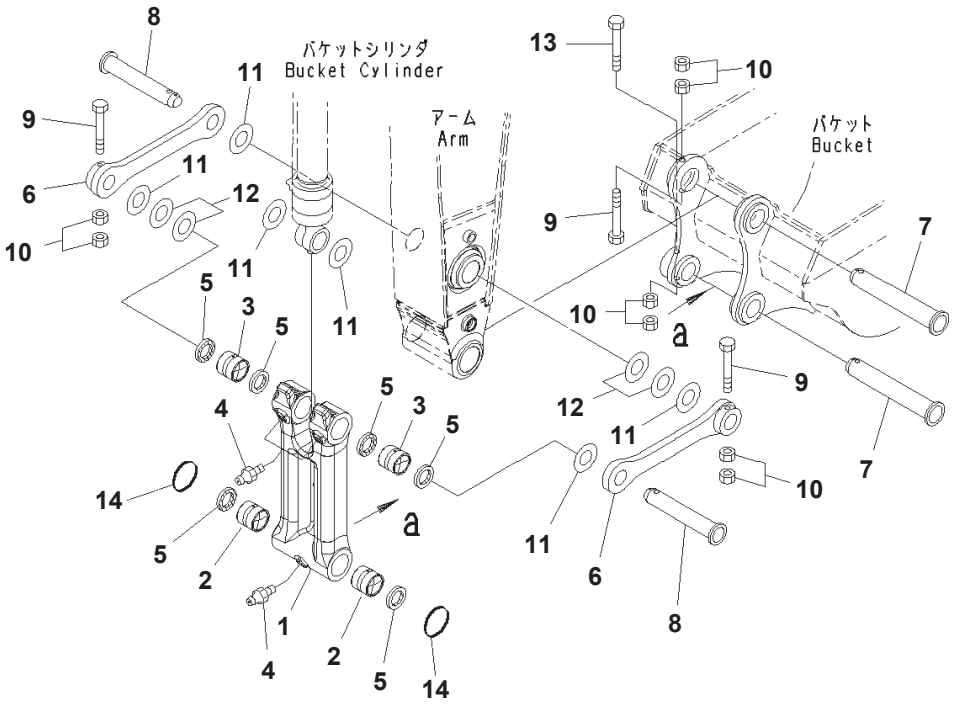

Arm, 2.6m, Strengthened, 1-attachment, 100 Hours Greasing Type, Bucket Link

Index	Code	Part Number	Description	Qty	Options
		207-70-00480	Link Assembly	1	SN:B10001--
1	C1		・ Link	1	SN:B10001--
2		207-70-33160	・ Bushing	2	SN:B10001--
3		207-70-33160	・ Bushing	2	SN:B10001--
4		07020-00000	・ Fitting, Grease	3	SN:B10001--
5		207-70-72120	・ Seal, Dust	6	SN:B10001--
6		207-70-B1140	Link	2	SN:B10001--
7		207-70-73210	Pin	2	SN:B10001--
8		207-70-33141	Pin	2	SN:B10001--
9		208-70-73160	Bolt	3	SN:B10001--
10		01580-12419	Nut	8	SN:B10001--
11		207-70-24190	Spacer, T=0.8mm	8	SN:B10001--
12		207-70-24210	Spacer, T=1.5mm	4	SN:B10001--
13		01011-82475	Bold	1	SN:B10001--
14		205-70-73280	O-Ring	2	SN:B10001--

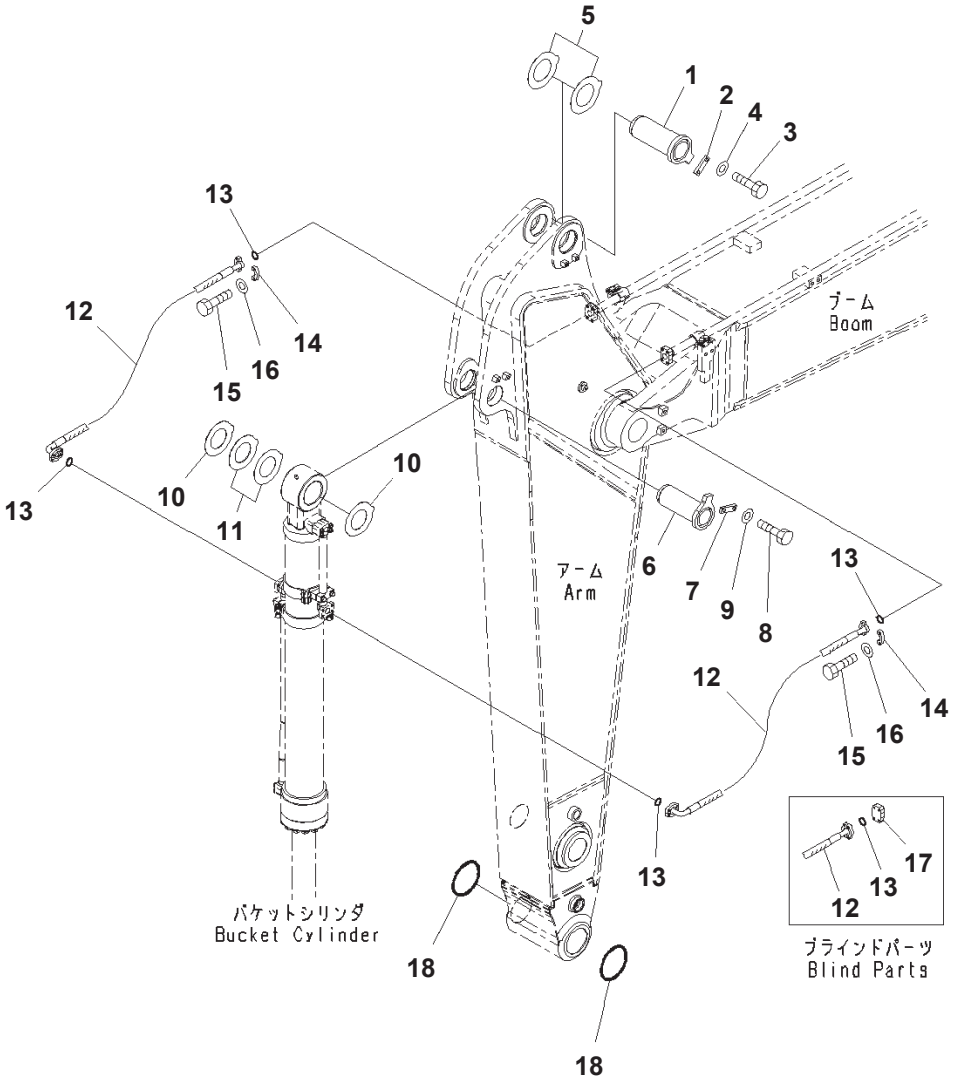

Arm, 2.6m, Strengthened, 1-attachment, 100 Hours Greasing Type, Bucket Cylinder Hose and Pin

Index	Part Number	Description	Qty	Options
1	208-70-61241	Pin	1	SN:B10001--
2	205-70-66581	Plate	1	SN:B10001--
3	01010-81235	Bolt	2	SN:B10001--
4	01643-31232	Washer	2	SN:B10001--
5	207-70-31340	Spacer, T=0.8mm	2	SN:B10001--
6	207-70-61221	Pin	1	SN:B10001--
7	205-70-66581	Plate	1	SN:B10001--
8	01010-81235	Bolt	2	SN:B10001--
9	01643-31232	Washer	2	SN:B10001--
10	207-70-24190	Spacer, T=0.8mm	3	SN:B10001--
11	207-70-24210	Spacer, T=1.5mm	2	SN:B10001--
12	207-62-74190	Hose	2	SN:B10001--
13	07000-13032	O-ring	4	SN:B10001--
14	07371-31049	Flange	8	SN:B10001--
15	07372-21035	Bolt	16	SN:B10001--
16	01643-51032	Washer	16	SN:B10001--
17	07379-01044	Flange	2	SN:B10001--
18	207-70-33181	O-ring	2	SN:B10001--

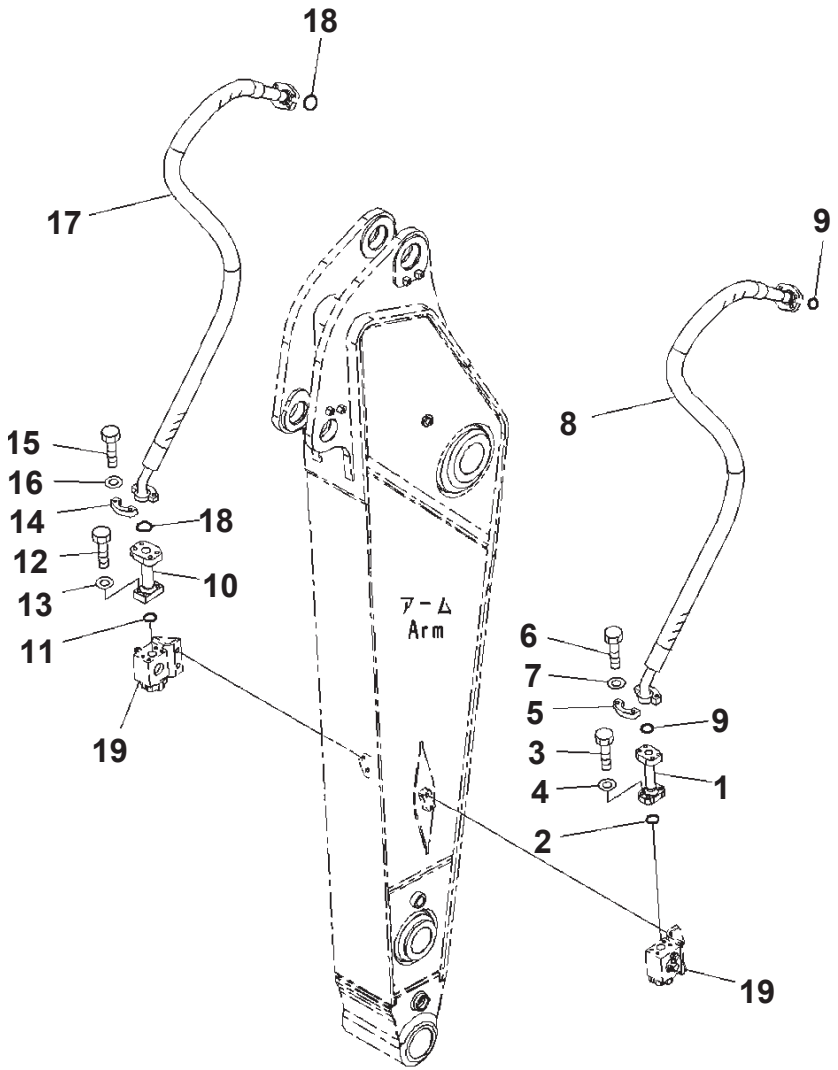

Arm, 2.6m, Strengthened, 1-attachment, 100 Hours Greasing Type, Additional Piping

Index	Part Number	Description	Page	Item	Qty	Options
1	207-970-7640	Tube			1	SN:B10001--
2	07000-13038	O-ring			1	SN:B10001--
3	01010-81245	Bolt			4	SN:B10001--
4	01643-31232	Washer			4	SN:B10001--
5	07371-51260	Flange			2	SN:B10001--
6	01010-81245	Bolt			4	SN:B10001--
7	01643-31232	Washer			4	SN:B10001--
8	07098-21221	Hose, Flange Type			1	SN:B10001--
9	07000-13038	O-ring			2	SN:B10001--
10	207-970-7650	Tube			1	SN:B10001--
11	07000-13038	O-ring			1	SN:B10001--
12	01010-81250	Bolt			4	SN:B10001--
13	01643-31232	Washer			4	SN:B10001--
14	07371-51470	Flange, Split			2	SN:B10001--
15	01010-81455	Bolt			4	SN:B10001--
16	01643-31445	Washer			4	SN:B10001--
17	07098-21421	Hose, Flange Type			1	SN:B10001--
18	07000-13048	O-ring			2	SN:B10001--
19	(21M-970-1204)	Valve Assembly	T1200-010006	1		SN: --

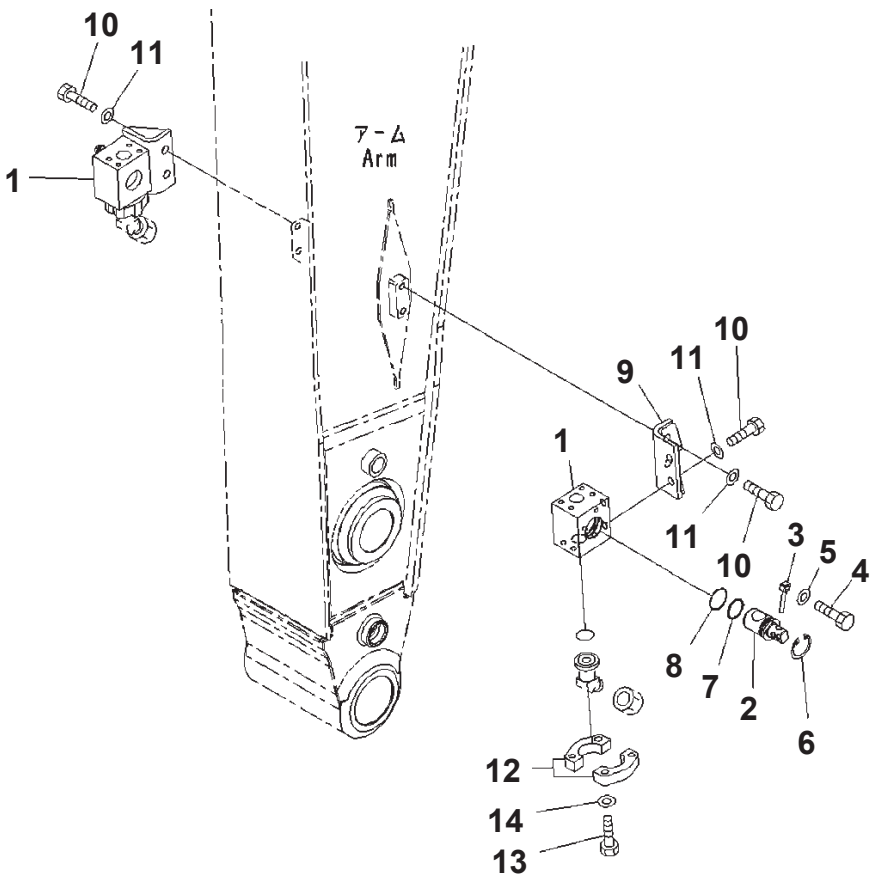

Arm, 2.6m, Strengthened, 1-attachment, 100 Hours Greasing Type, Valve

Index	Code	Part Number	Description	Qty	Options
		21M-970-1204	Valve Assembly	2	SN:B10001--
1	C1		・ Block	1	SN:B10001--
2		21M-970-1223	・ Rotor	1	SN:B10001--
3		202-970-2210	・ Pin	1	SN:B10001--
4		01010-81230	・ Bolt	1	SN:B10001--
5		01643-31232	・ Washer	1	SN:B10001--
6		04065-05820	・ Ring, Snap	1	SN:B10001--
7		07000-12050	・ O-ring	1	SN:B10001--
8		07000-12055	・ O-ring	1	SN:B10001--
9		21M-970-1173	Bracket	2	SN:B10001--
10		01010-81640	Bolt	8	SN:B10001--
11		01643-31645	Washer	8	SN:B10001--
12		07371-51260	Flange	4	SN:B10001--
13		01010-81245	Bolt	8	SN:B10001--
14		01643-31232	Washer	8	SN:B10001--

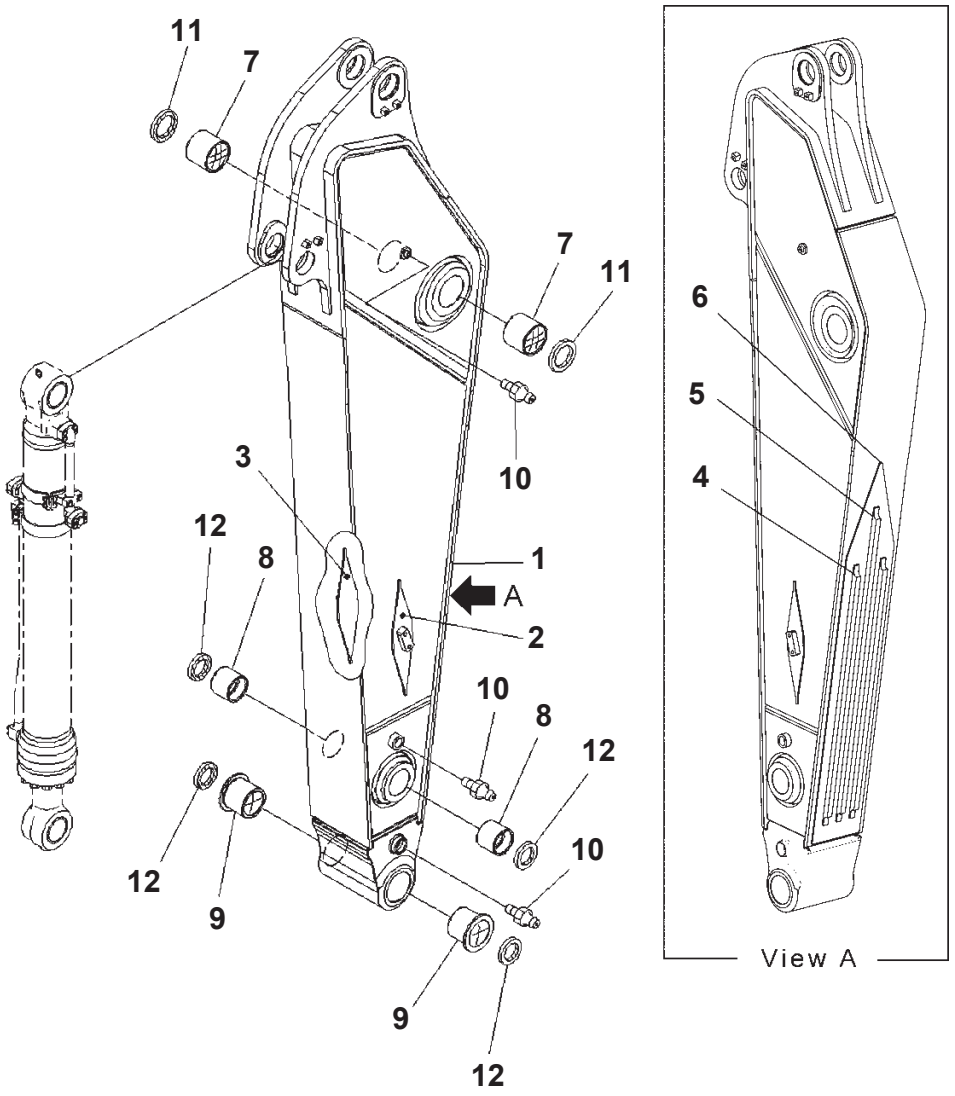

Arm, 2.6m, Strengthened, 100 Hours Greasing Type (#B10172-)

Index	Code	Part Number	Description	Qty	Options
		207-970-B120	Arm	1	SN:B10172--
1	C1		· Arm	1	SN:B10172--
2		207-970-7621	· Bracket, Welded	1	SN:B10172--
3		207-970-7631	· Bracket, Welded	1	SN:B10172--
4		207-70-72C10	· Plate, Welded	2	SN:B10172--
5		207-70-72C20	· Plate, Welded	1	SN:B10172--
6		207-70-72B90	· Plate, Welded	1	SN:B10172--
7		207-70-61521	Bushing	2	SN:B10172--
8		207-70-32150	Bushing	2	SN:B10172--
9		207-70-72460	Bushing	2	SN:B10172--
10		07020-00000	Fitting, Grease	3	SN:B10172--
11		07145-00110	Seal, Dust	2	SN:B10172--
12		207-70-72120	Seal, Dust	4	SN:B10172--

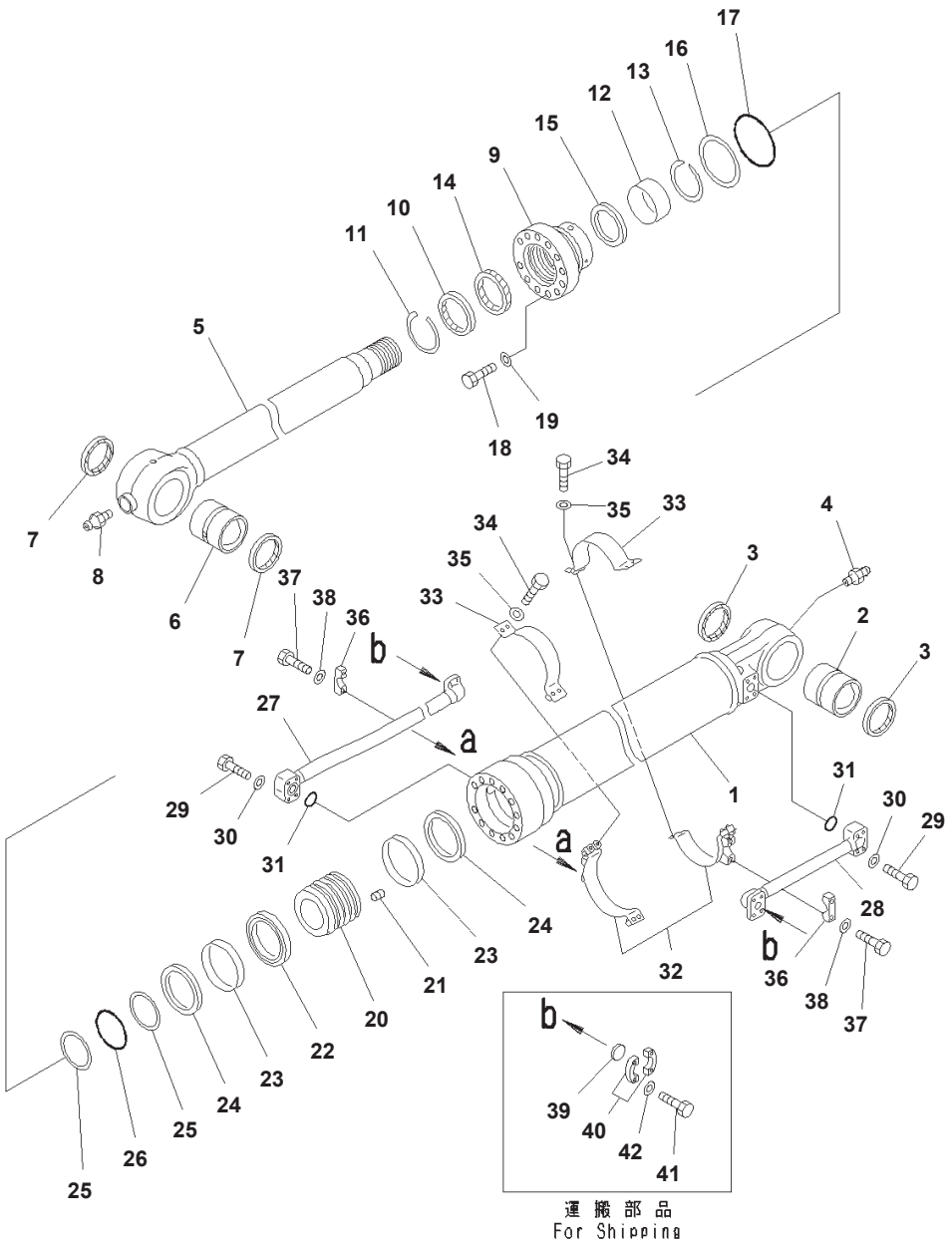

Arm, 2.6m, Strengthened, 100 Hours Greasing Type, Bucket Cylinder

Index	Part Number	Description	Qty	Options
	707-01-XX032	Cylinder Assembly	1	SN:B10172--
	707-01-0C622	・ Cylinder Assembly	1	SN:B10172--
1	707-13-15261	・・ Cylinder	1	SN:B10172--
2	707-76-90130	・・ Bushing	1	SN:B10172--
3	07145-00090	・・ Seal, Dust, (Kit : K12)	2	SN:B10172--
4	07020-00000	・・ Fitting, Grease	1	SN:B10172--
5	707-58-11370	・・ Rod	1	SN:B10172--
6	207-63-76170	・・ Bushing	1	SN:B10172--
7	207-70-72120	・・ Seal, Dust, (Kit : K12)	2	SN:B10172--
8	07020-00000	・・ Fitting, Grease	1	SN:B10172--
9	707-27-15650	・・ Head	1	SN:B10172--
10	198-63-94170	・・ Seal, Dust, (Kit : K12)	1	SN:B10172--
11	07179-13126	・・ Ring, Snap	1	SN:B10172--
12	707-52-90850	・・ Bushing	1	SN:B10172--
13	707-75-11040	・・ Ring, Snap	1	SN:B10172--
14	707-51-11030	・・ Packing, Rod, (Kit : K12)	1	SN:B10172--
15	707-51-11640	・・ Ring, Buffer, (Kit : K12)	1	SN:B10172--
16	707-35-91660	・・ Ring, Back-up, (Kit : K12)	1	SN:B10172--
17	07000-15140	・・ O-ring, (Kit : K12)	1	SN:B10172--
18	01010-82085	・・ Bolt	12	SN:B10172--
19	707-88-75310	・・ Washer	12	SN:B10172--
20	707-36-15260	・・ Piston	1	SN:B10172--
21	01310-01216	・・ Screw	1	SN:B10172--
22	707-44-15180	・・ Ring, Piston, (Kit : K12)	1	SN:B10172--
23	707-39-15110	・・ Ring, Wear, (Kit : K12)	2	SN:B10172--
24	707-44-15911	・・ Ring	2	SN:B10172--
25	07001-05100	・・ Ring, Back-up, (Kit : K12)	2	SN:B10172--
26	07000-15100	・・ O-ring, (Kit : K12)	1	SN:B10172--
27	707-86-11631	・ Tube	1	SN:B10172--
28	207-63-73180	・ Tube	1	SN:B10172--
29	07372-21060	・ Bolt	8	SN:B10172--
30	01643-51032	・ Washer	8	SN:B10172--
31	07000-13035	・ O-ring, (Kit : K12)	2	SN:B10172--
32	707-88-22690	・ Bracket	2	SN:B10172--
33	707-88-21420	・ Band	2	SN:B10172--
34	07372-21240	・ Bolt	8	SN:B10172--
35	01643-51232	・ Washer	8	SN:B10172--
36	707-88-10150	・ Clamp	2	SN:B10172--
37	01010-81245	・ Bolt	4	SN:B10172--
38	01643-31232	・ Washer	4	SN:B10172--
39	707-88-33040	・ Cap	2	SN:B10172--
40	07371-31049	・ Flange	4	SN:B10172--
41	07372-21035	・ Bolt	8	SN:B10172--
42	01643-51032	・ Washer	8	SN:B10172--

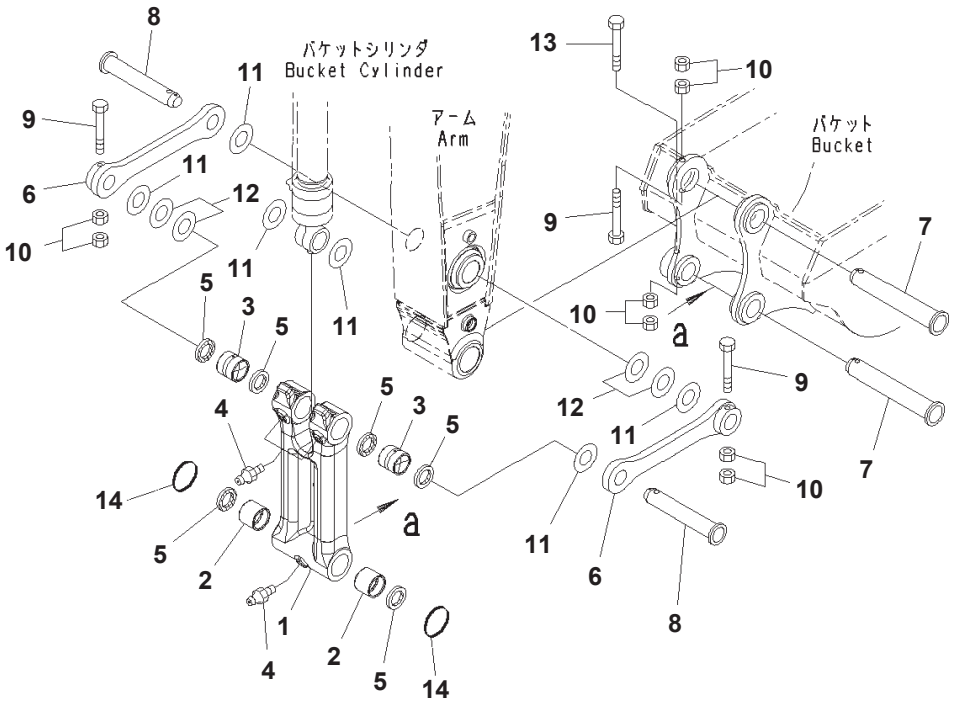

Arm, 2.6m, Strengthened, 100 Hours Greasing Type, Bucket Link (#B10172-)

Index	Code	Part Number	Description	Qty	Options
		207-70-00480	Link Assembly	1	SN:B10172--
1	C1		・ Link	1	SN:B10172--
2		207-70-33160	・ Bushing	2	SN:B10172--
3		207-70-33160	・ Bushing	2	SN:B10172--
4		07020-00000	・ Fitting, Grease	3	SN:B10172--
5		207-70-72120	・ Seal, Dust	6	SN:B10172--
6		207-70-B1140	Link	2	SN:B10172--
7		207-70-73210	Pin	2	SN:B10172--
8		207-70-33141	Pin	2	SN:B10172--
9		208-70-73160	Bolt	3	SN:B10172--
10		01580-12419	Nut	8	SN:B10172--
11		207-70-24190	Spacer, T=0.8mm	8	SN:B10172--
12		207-70-24210	Spacer, T=1.5mm	4	SN:B10172--
13		01011-82475	Bold	1	SN:B10172--
14		205-70-73280	O-Ring	2	SN:B10172--

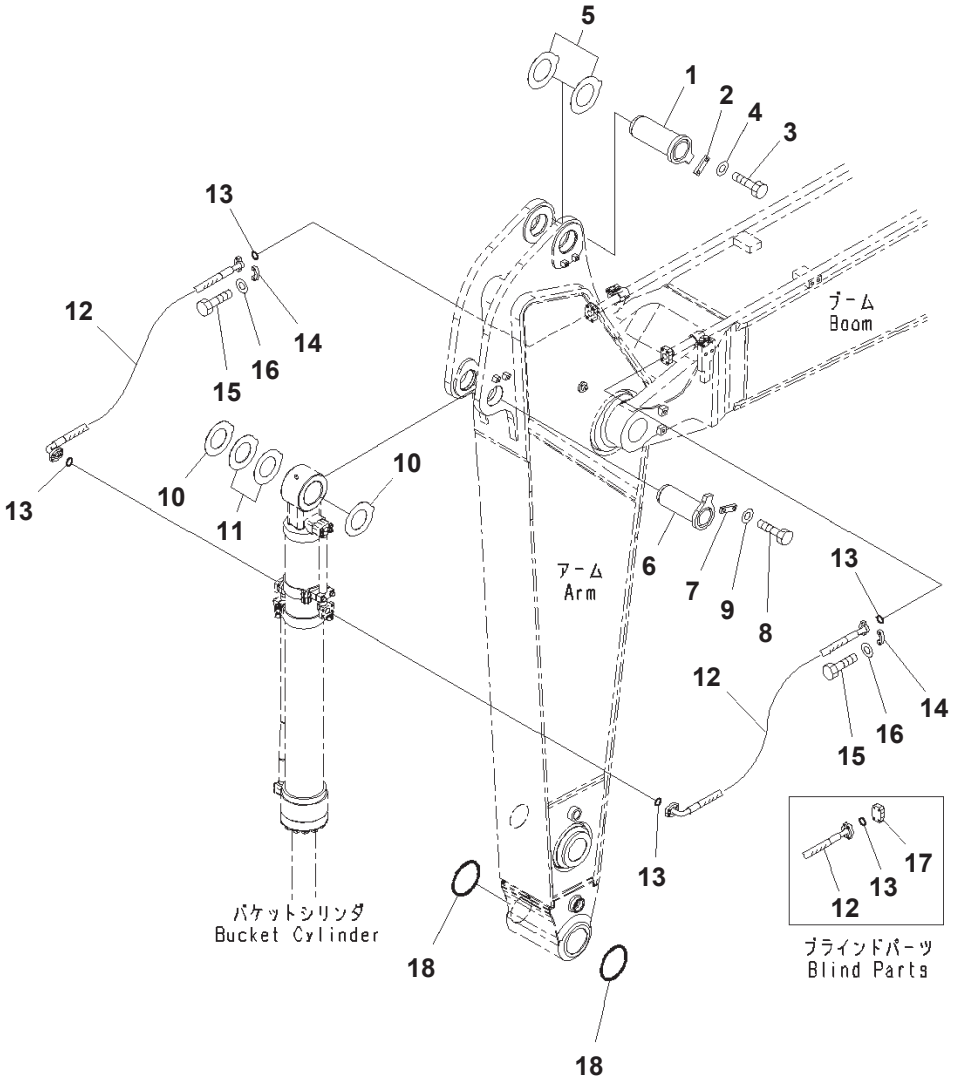

Arm, 2.6m, Strengthened, 100 Hours Greasing Type, Bucket Cylinder Hose and Pin (#B10172-)

Index	Part Number	Description	Qty	Options
1	208-70-61241	Pin	1	SN:B10172--
2	205-70-66581	Plate	1	SN:B10172--
3	01010-81235	Bolt	2	SN:B10172--
4	01643-31232	Washer	2	SN:B10172--
5	207-70-31340	Spacer, T=0.8mm	2	SN:B10172--
6	207-70-61221	Pin	1	SN:B10172--
7	205-70-66581	Plate	1	SN:B10172--
8	01010-81235	Bolt	2	SN:B10172--
9	01643-31232	Washer	2	SN:B10172--
10	207-70-24190	Spacer, T=0.8mm	3	SN:B10172--
11	207-70-24210	Spacer, T=1.5mm	2	SN:B10172--
12	207-62-74190	Hose	2	SN:B10172--
13	07000-13032	O-ring	4	SN:B10172--
14	07371-31049	Flange	8	SN:B10172--
15	07372-21035	Bolt	16	SN:B10172--
16	01643-51032	Washer	16	SN:B10172--
17	07379-01044	Flange	2	SN:B10172--
18	207-70-33181	O-ring	2	SN:B10172--

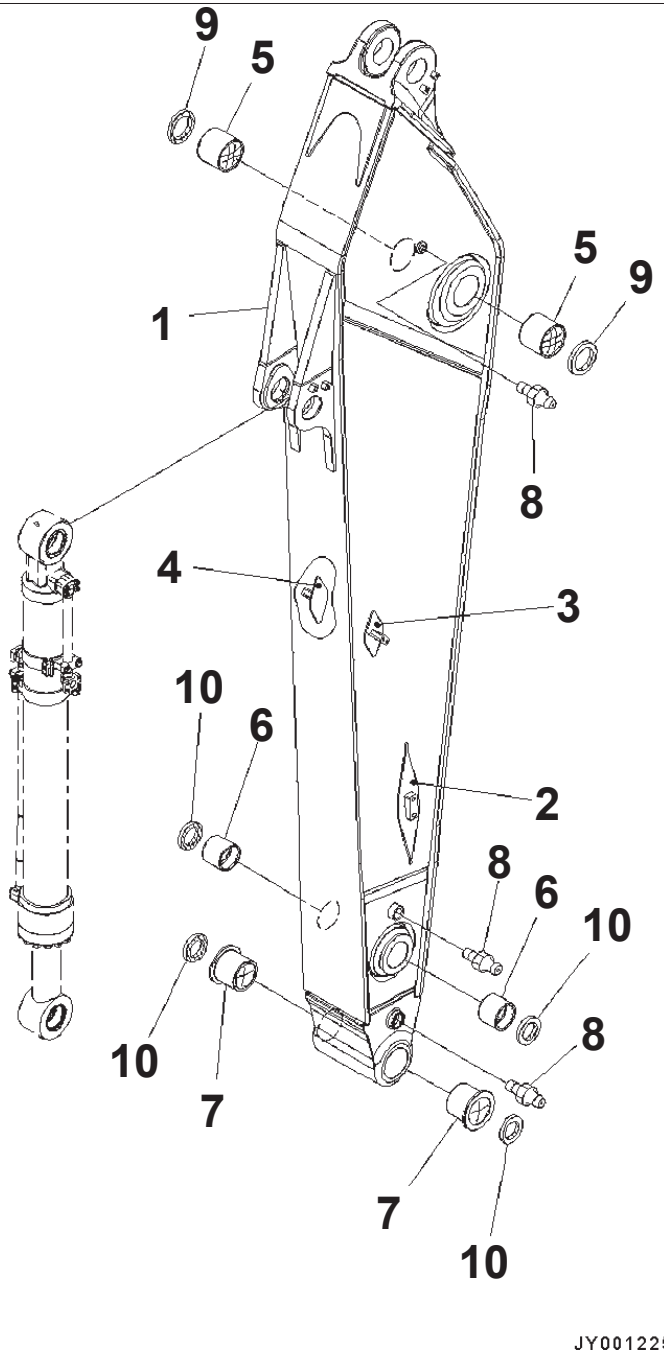

JY001225

Arm, 3.2m, Strengthened, 1-attachment, 100 Hours Greasing Type

Index	Code	Part Number	Description	Qty	Options
		207-70-00542	Arm Assembly	1	SN:B10001--
1	C1		・Arm	1	SN:B10001--
2		208-970-7171	・・Bracket, Welded	2	SN:B10001--
3		207-970-7420	・・Bracket, Welded	1	SN:B10001--
4		207-970-7430	・・Bracket, Welded	1	SN:B10001--
5		207-70-61521	・Bushing	2	SN:B10001--
6		207-70-32150	・Bushing	2	SN:B10001--
7		207-70-72460	・Bushing	2	SN:B10001--
8		07020-00000	・Fitting, Grease	3	SN:B10001--
9		07145-00110	・Seal, Dust	2	SN:B10001--
10		207-70-72120	・Seal, Dust	4	SN:B10001--

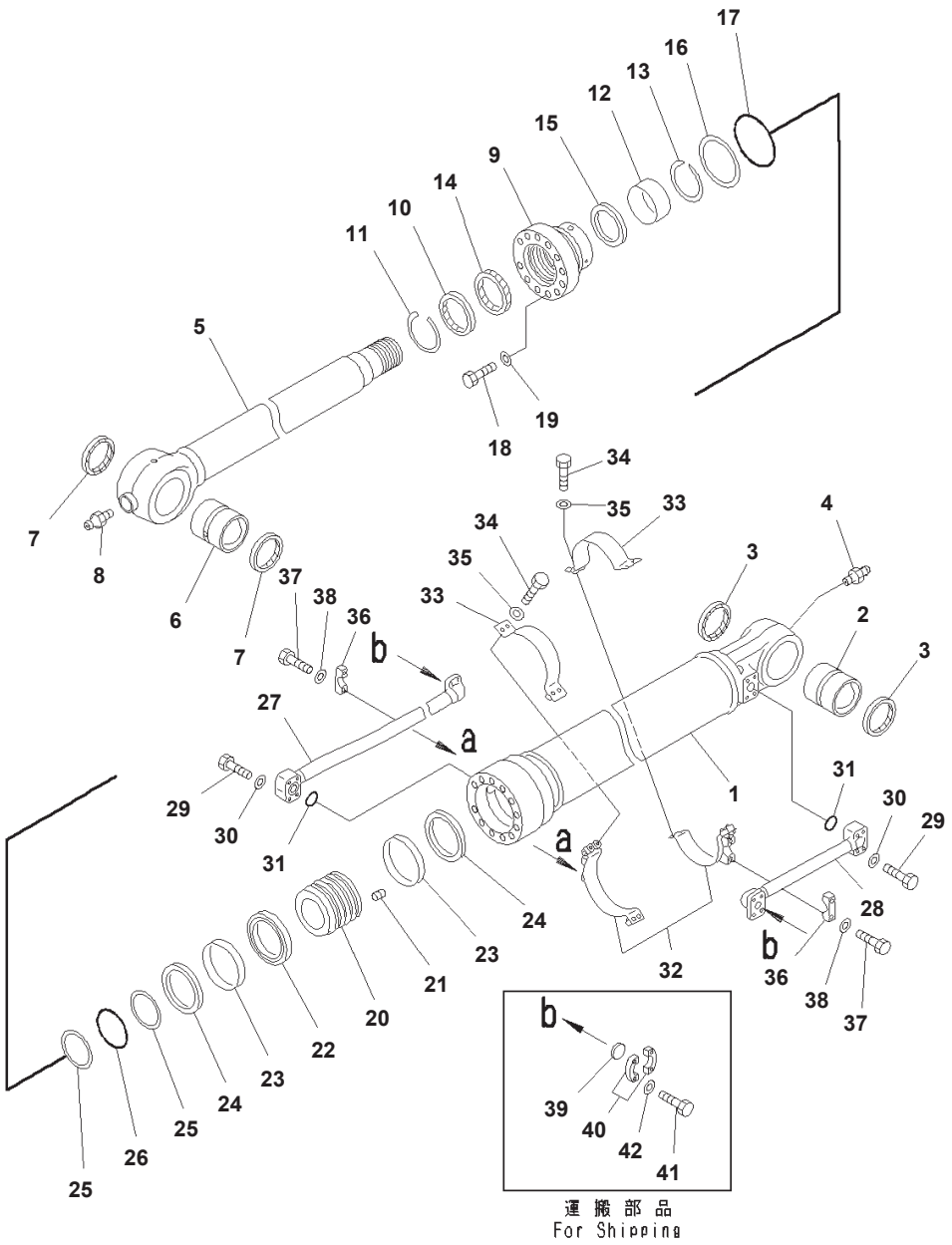

Arm, 3.2m, Strengthened, 1-attachment, 100 Hours Greasing Type, Bucket Cylinder

Index	Part Number	Description	Qty	Options
	707-01-XX032	Cylinder Assembly	1	SN:B10001--
	707-01-0C612	・ Cylinder Assembly	1	SN:B10001--
1	707-13-14591	・・ Cylinder	1	SN:B10001--
2	707-76-90130	・・ Bushing	1	SN:B10001--
3	07145-00090	・・ Seal, Dust, (Kit : K11)	2	SN:B10001--
4	07020-00000	・・ Fitting, Grease	1	SN:B10001--
5	707-58-10730	・・ Rod	1	SN:B10001--
6	207-63-76170	・・ Bushing	1	SN:B10001--
7	207-70-72120	・・ Seal, Dust, (Kit : K11)	2	SN:B10001--
8	07020-00000	・・ Fitting, Grease	1	SN:B10001--
9	707-27-14690	・・ Head, Cylinder	1	SN:B10001--
10	176-63-56170	・・ Seal, Dust, (Kit : K11)	1	SN:B10001--
11	07179-13114	・・ Ring, Snap	1	SN:B10001--
12	707-52-90780	・・ Bushing	1	SN:B10001--
13	707-75-10160	・・ Ring, Snap	1	SN:B10001--
14	707-51-10030	・・ Packing, Rod, (Kit : K11)	1	SN:B10001--
15	707-51-10640	・・ Ring, Buffer, (Kit : K11)	1	SN:B10001--
16	707-35-91420	・・ Ring, Back-up, (Kit : K11)	1	SN:B10001--
17	07000-15130	・・ O-ring, (Kit : K11)	1	SN:B10001--
18	01010-81875	・・ Bolt	12	SN:B10001--
19	707-41-11840	・・ Washer	12	SN:B10001--
20	707-36-14650	・・ Piston	1	SN:B10001--
21	01310-01216	・・ Screw	1	SN:B10001--
22	707-44-14180	・・ Ring, Piston, (Kit : K11)	1	SN:B10001--
23	707-39-14110	・・ Ring, Wear, (Kit : K11)	2	SN:B10001--
24	707-44-14910	・・ Ring	2	SN:B10001--
25	07001-05090	・・ Ring, Back-up, (Kit : K11)	2	SN:B10001--
26	07000-15090	・・ O-ring, (Kit : K11)	1	SN:B10001--
27	707-86-11621	・ Tube	1	SN:B10001--
28	207-63-73180	・ Tube	1	SN:B10001--
29	07372-21060	・ Bolt	8	SN:B10001--
30	01643-51032	・ Washer	8	SN:B10001--
31	07000-13035	・ O-ring, (Kit : K11)	2	SN:B10001--
32	207-63-73790	・ Bracket	2	SN:B10001--
33	707-88-21410	・ Band	2	SN:B10001--
34	07372-21240	・ Bolt	8	SN:B10001--
35	01643-51232	・ Washer	8	SN:B10001--
36	707-88-10150	・ Clamp	2	SN:B10001--
37	01010-81245	・ Bolt	4	SN:B10001--
38	01643-31232	・ Washer	4	SN:B10001--
39	707-88-33040	・ Cap	2	SN:B10001--
40	07371-31049	・ Flange	4	SN:B10001--
41	07372-21035	・ Bolt	8	SN:B10001--
42	01643-51032	・ Washer	8	SN:B10001--

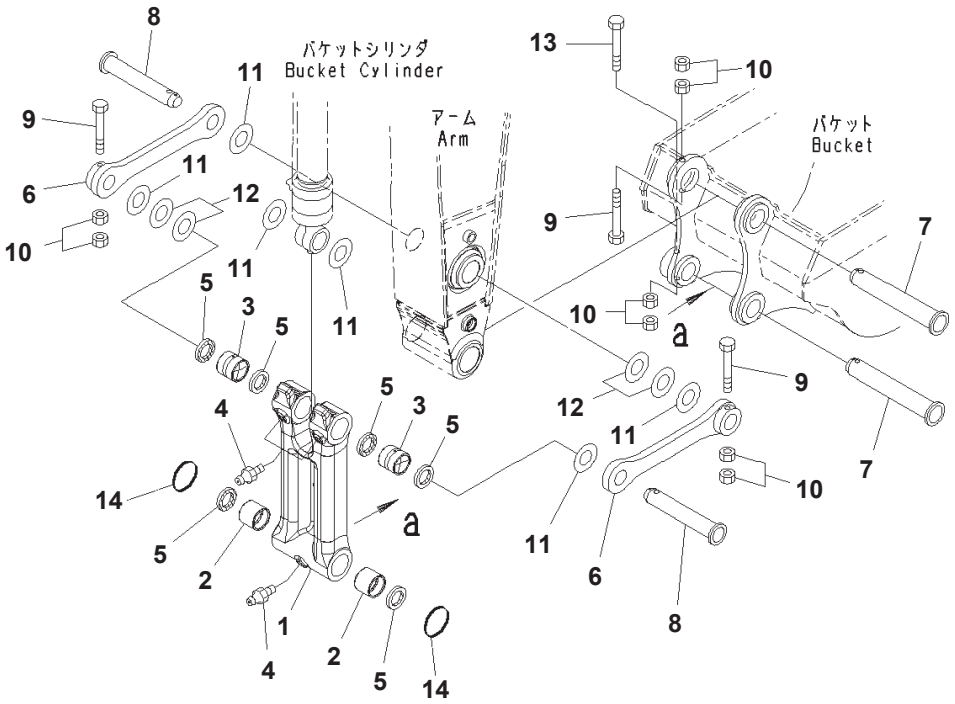

Arm, 3.2m, Strengthened, 1-attachment, 100 Hours Greasing Type, Bucket Link

Index	Code	Part Number	Description	Qty	Options
		207-70-00480	Link Assembly	1	SN:B10001--
1	C1		・ Link	1	SN:B10001--
2		207-70-33160	・ Bushing	2	SN:B10001--
3		207-70-33160	・ Bushing	2	SN:B10001--
4		07020-00000	・ Fitting, Grease	3	SN:B10001--
5		207-70-72120	・ Seal, Dust	6	SN:B10001--
6		207-70-B1140	Link	2	SN:B10001--
7		207-70-73210	Pin	2	SN:B10001--
8		207-70-33141	Pin	2	SN:B10001--
9		208-70-73160	Bolt	3	SN:B10001--
10		01580-12419	Nut	8	SN:B10001--
11		207-70-24190	Spacer, T=0.8mm	8	SN:B10001--
12		207-70-24210	Spacer, T=1.5mm	4	SN:B10001--
13		01011-82475	Bolt	1	SN:B10001--
14		205-70-73280	O-Ring	2	SN:B10001--

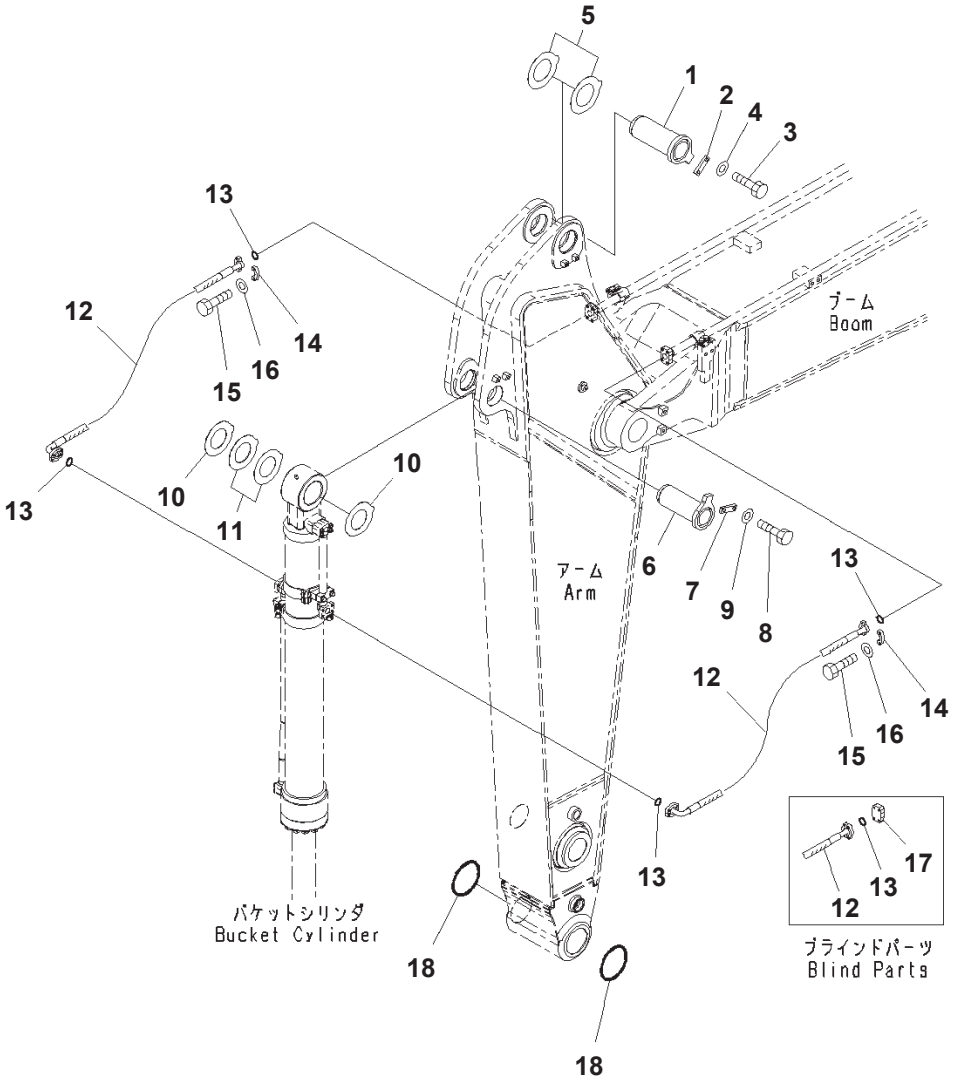

Arm, 3.2m, Strengthened, 1-attachment, 100 Hours Greasing Type, Bucket Cylinder Hose and Pin

Index	Part Number	Description	Qty	Options
1	208-70-61241	Pin	1	SN:B10001--
2	205-70-66581	Plate	1	SN:B10001--
3	01010-81235	Bolt	2	SN:B10001--
4	01643-31232	Washer	2	SN:B10001--
5	207-70-31340	Spacer, T=0.8mm	2	SN:B10001--
6	207-70-61221	Pin	1	SN:B10001--
7	205-70-66581	Plate	1	SN:B10001--
8	01010-81235	Bolt	2	SN:B10001--
9	01643-31232	Washer	2	SN:B10001--
10	207-70-24190	Spacer, T=0.8mm	3	SN:B10001--
11	207-70-24210	Spacer, T=1.5mm	2	SN:B10001--
12	207-62-74190	Hose	2	SN:B10001--
13	07000-13032	O-ring	4	SN:B10001--
14	07371-31049	Flange	8	SN:B10001--
15	07372-21035	Bolt	16	SN:B10001--
16	01643-51032	Washer	16	SN:B10001--
17	07379-01044	Flange	2	SN:B10001--
18	207-70-33181	O-ring	2	SN:B10001--

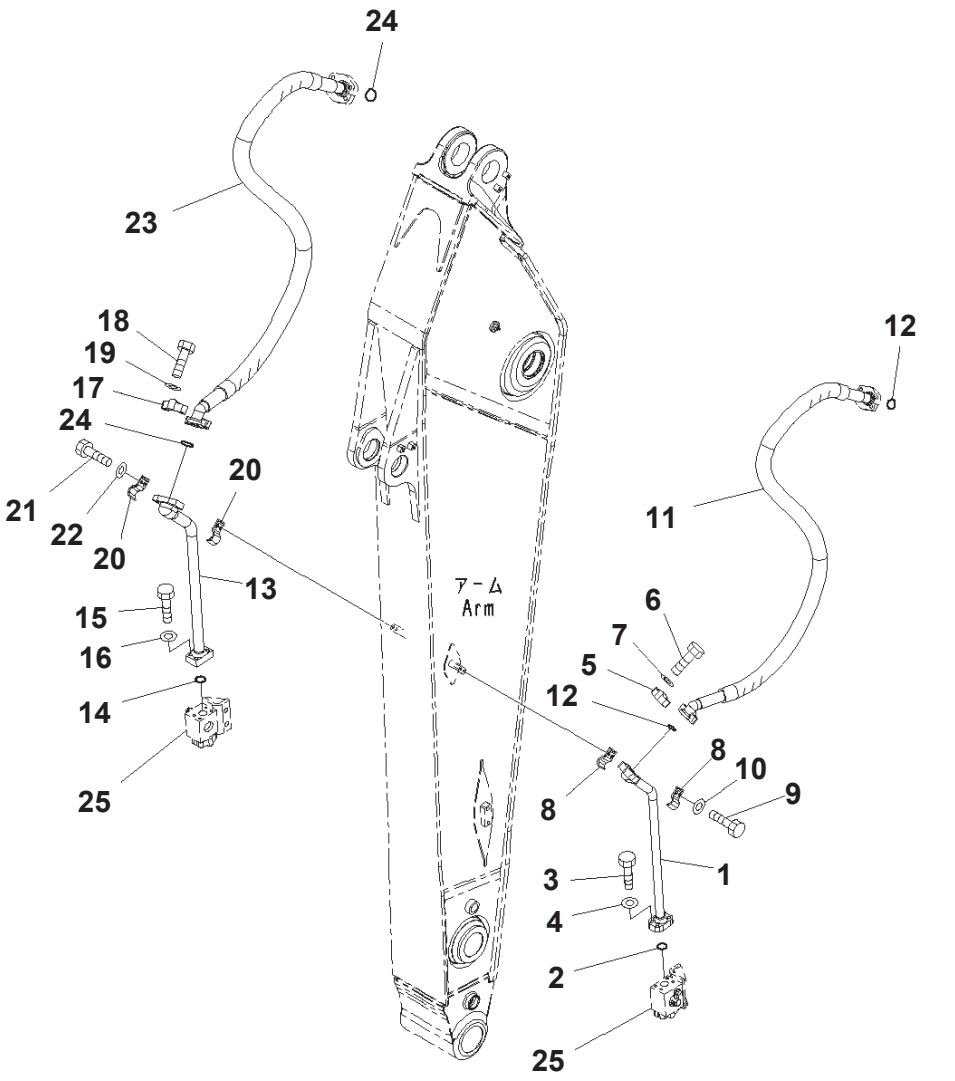

Arm, 3.2m, Strengthened, 1-attachment, 100 Hours Greasing Type, Additional Piping

Index	Part Number	Description	Page	Item	Qty	Options
1	207-970-7210	Tube			1	SN:B10001--
2	07000-13038	O-ring			1	SN:B10001--
3	01010-81245	Bolt			4	SN:B10001--
4	01643-31232	Washer			4	SN:B10001--
5	07371-51260	Flange			2	SN:B10001--
6	01010-81245	Bolt			4	SN:B10001--
7	01643-31232	Washer			4	SN:B10001--
8	207-62-31330	Clamp			2	SN:B10001--
9	01010-81235	Bolt			2	SN:B10001--
10	01643-31232	Washer			2	SN:B10001--
11	07097-21222	Hose, Flange Type			1	SN:B10001--
12	07000-13038	O-ring			2	SN:B10001--
13	207-970-7221	Tube			1	SN:B10001--
14	07000-13038	O-ring			1	SN:B10001--
15	01010-81250	Bolt			4	SN:B10001--
16	01643-31232	Washer			4	SN:B10001--
17	07371-51470	Flange, Split			2	SN:B10001--
18	01010-81455	Bolt			4	SN:B10001--
19	01643-31445	Washer			4	SN:B10001--
20	207-970-7310	Clamp			2	SN:B10001--
21	01010-81235	Bolt			2	SN:B10001--
22	01643-31232	Washer			2	SN:B10001--
23	07097-21422	Hose, Flange Type			1	SN:B10001--
24	07000-13048	O-ring			2	SN:B10001--
25	(21M-970-1204)	Valve Assembly	T1200-008006	1		SN:--

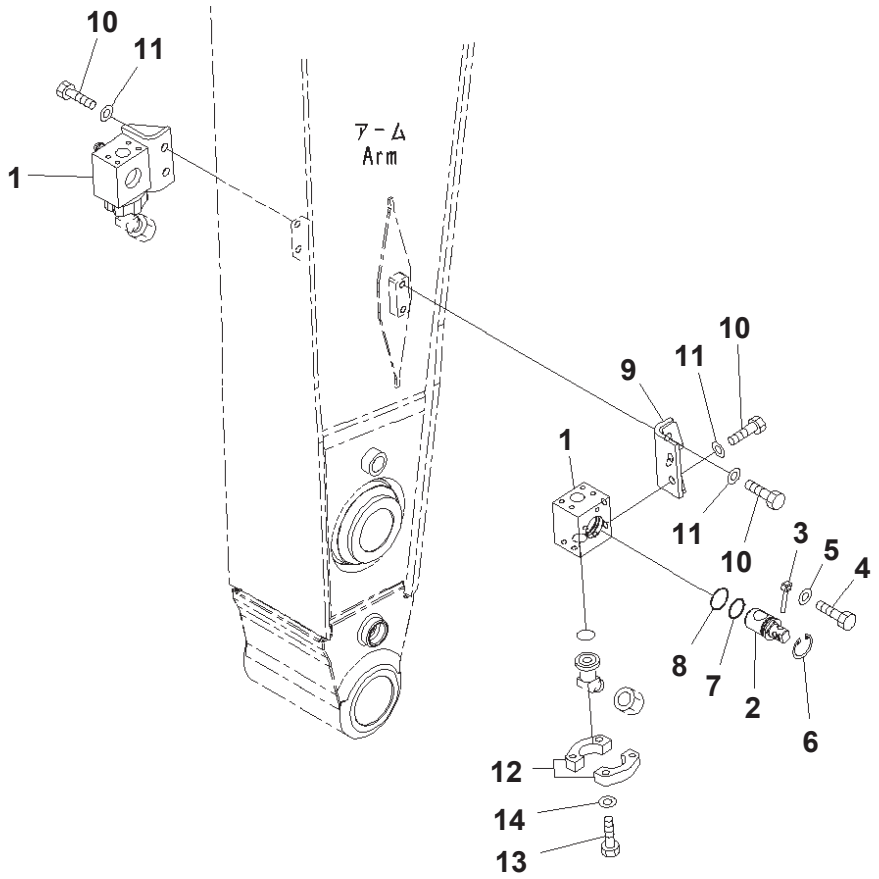

Arm, 3.2m, Strengthened, 1-attachment, 100 Hours Greasing Type, Valve, For Additional Piping

Index	Code	Part Number	Description	Qty	Options
		21M-970-1204	Valve Assembly	2	SN:B10001--
1	C1		・ Block	1	SN:B10001--
2		21M-970-1223	・ Rotor	1	SN:B10001--
3		202-970-2210	・ Pin	1	SN:B10001--
4		01010-81230	・ Bolt	1	SN:B10001--
5		01643-31232	・ Washer	1	SN:B10001--
6		04065-05820	・ Ring, Snap, for Hole Side	1	SN:B10001--
7		07000-12050	・ O-ring	1	SN:B10001--
8		07000-12055	・ O-ring	1	SN:B10001--
9		21M-970-1173	Bracket	2	SN:B10001--
10		01010-81640	Bolt	8	SN:B10001--
11		01643-31645	Washer	8	SN:B10001--
12		07371-51260	Flange	4	SN:B10001--
13		01010-81245	Bolt	8	SN:B10001--
14		01643-31232	Washer	8	SN:B10001--

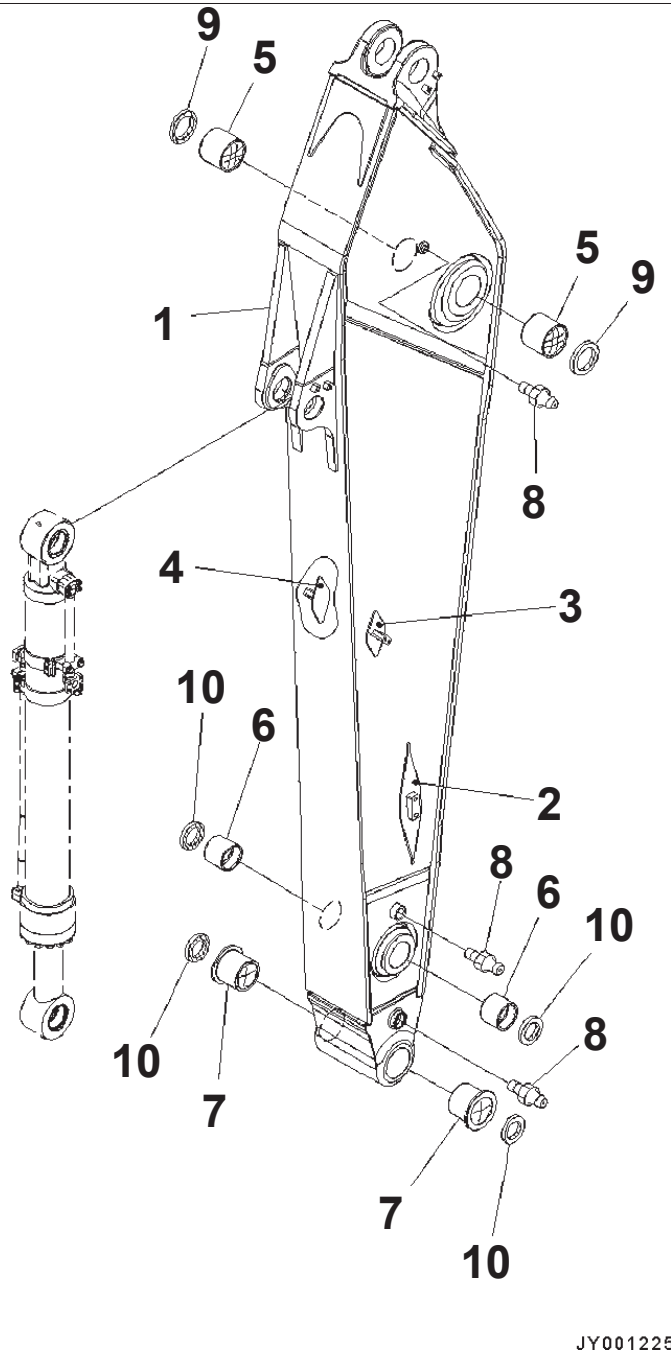

JY001225

Arm, 3.2m, Strengthened, 100 Hours Greasing Type (#B10172-)

Index	Code	Part Number	Description	Qty	Options
		207-70-00542	Arm Assembly	1	SN:B10172--
1	C1		・ Arm	1	SN:B10172--
2		208-970-7171	・・ Bracket, Welded	2	SN:B10172--
3		207-970-7420	・・ Bracket, Welded	1	SN:B10172--
4		207-970-7430	・・ Bracket, Welded	1	SN:B10172--
5		207-70-61521	・ Bushing	2	SN:B10172--
6		207-70-32150	・ Bushing	2	SN:B10172--
7		207-70-72460	・ Bushing	2	SN:B10172--
8		07020-00000	・ Fitting, Grease	3	SN:B10172--
9		07145-00110	・ Seal, Dust	2	SN:B10172--
10		207-70-72120	・ Seal, Dust	4	SN:B10172--

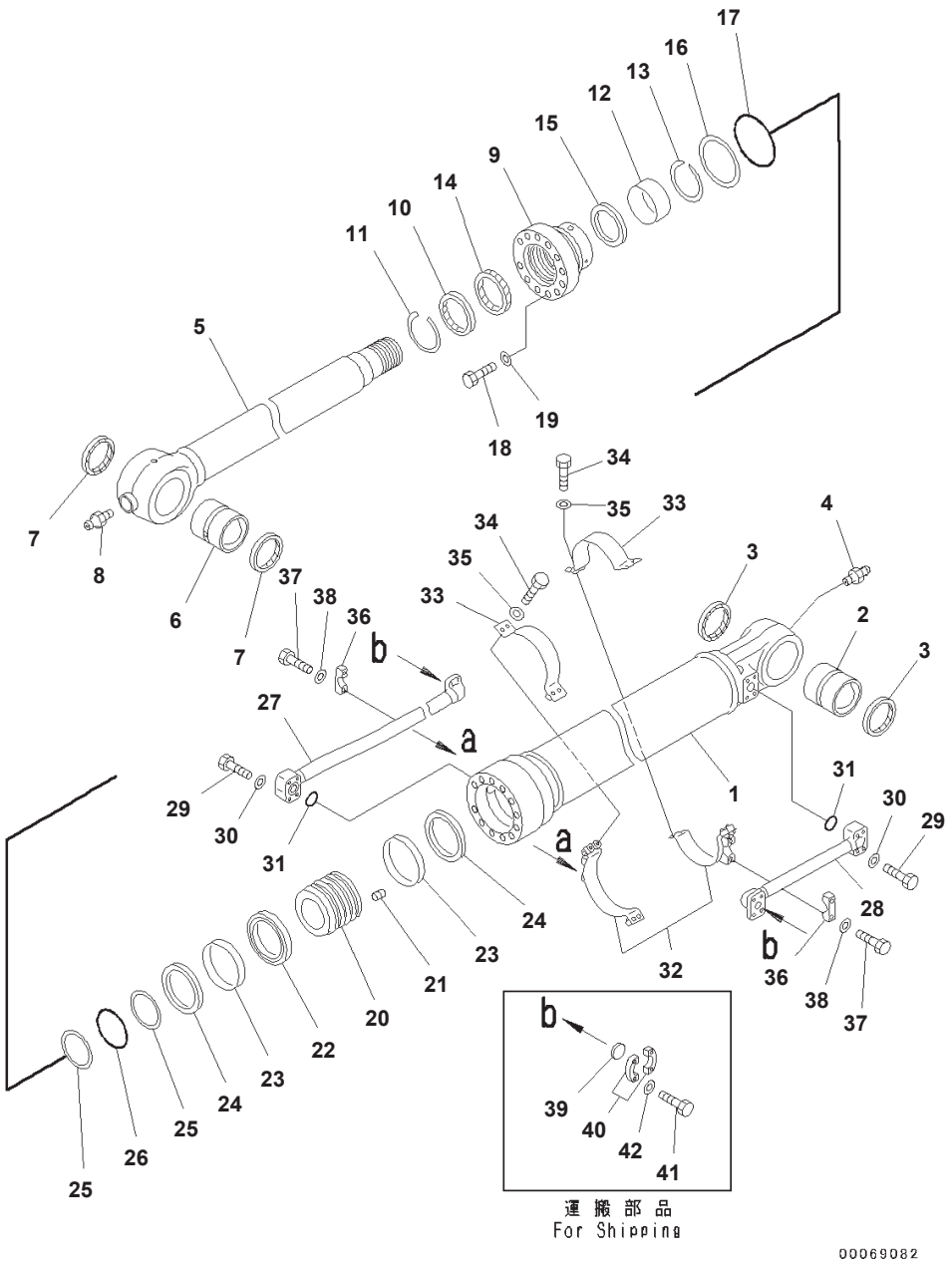

Arm, 3.2m, Strengthened, 100 Hours Greasing Type, Bucket Cylinder (#B10172-)

Index	Part Number	Description	Qty	Options
	707-01-0C612	Cylinder Assembly	1	SN:B10172--
1	707-13-14591	· Cylinder	1	SN:B10172--
2	707-76-90130	· Bushing	1	SN:B10172--
3	07145-00090	· Seal, Dust, (Kit : K11)	2	SN:B10172--
4	07020-00000	· Fitting, Grease	1	SN:B10172--
5	707-58-10730	· Rod	1	SN:B10172--
6	207-63-76170	· Bushing	1	SN:B10172--
7	207-70-72120	· Seal, Dust, (Kit : K11)	2	SN:B10172--
8	07020-00000	· Fitting, Grease	1	SN:B10172--
9	707-27-14690	· Head, Cylinder	1	SN:B10172--
10	176-63-56170	· Seal, Dust, (Kit : K11)	1	SN:B10172--
11	07179-13114	· Ring, Snap	1	SN:B10172--
12	707-52-90780	· Bushing	1	SN:B10172--
13	707-75-10160	· Ring, Snap	1	SN:B10172--
14	707-51-10030	· Packing, Rod, (Kit : K11)	1	SN:B10172--
15	707-51-10640	· Ring, Buffer, (Kit : K11)	1	SN:B10172--
16	707-35-91420	· Ring, Back-up, (Kit : K11)	1	SN:B10172--
17	07000-15130	· O-ring, (Kit : K11)	1	SN:B10172--
18	01010-81875	· Bolt	12	SN:B10172--
19	707-41-11840	· Washer	12	SN:B10172--
20	707-36-14650	· Piston	1	SN:B10172--
21	01310-01216	· Screw	1	SN:B10172--
22	707-44-14180	· Ring, Piston, (Kit : K11)	1	SN:B10172--
23	707-39-14110	· Ring, Wear, (Kit : K11)	2	SN:B10172--
24	707-44-14910	· Ring	2	SN:B10172--
25	07001-05090	· Ring, Back-up, (Kit : K11)	2	SN:B10172--
26	07000-15090	· O-ring, (Kit : K11)	1	SN:B10172--
27	707-86-11621	Tube	1	SN:B10172--
28	207-63-73180	Tube	1	SN:B10172--
29	07372-21060	Bolt	8	SN:B10172--
30	01643-51032	Washer	8	SN:B10172--
31	07000-13035	O-ring, (Kit : K11)	2	SN:B10172--
32	207-63-73790	Bracket	2	SN:B10172--
33	707-88-21410	Band	2	SN:B10172--
34	07372-21240	Bolt	8	SN:B10172--
35	01643-51232	Washer	8	SN:B10172--
36	707-88-10150	Clamp	2	SN:B10172--
37	01010-81245	Bolt	4	SN:B10172--
38	01643-31232	Washer	4	SN:B10172--
39	707-88-33040	Cap	2	SN:B10172--
40	07371-31049	Flange	4	SN:B10172--
41	07372-21035	Bolt	8	SN:B10172--
42	01643-51032	Washer	8	SN:B10172--

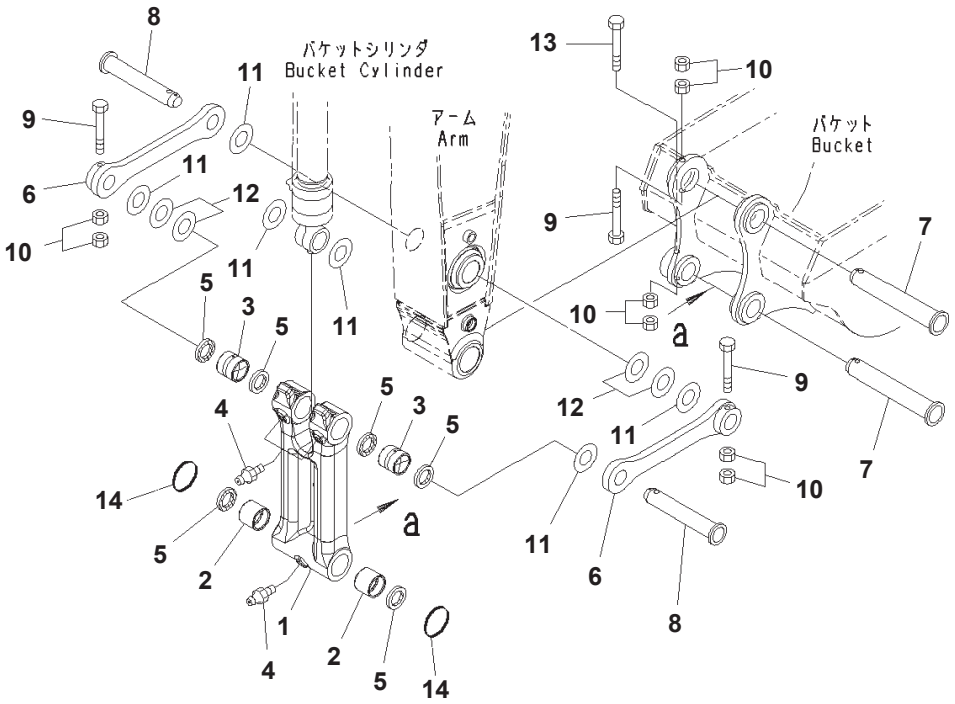

Arm, 3.2m, Strengthened, 100 Hours Greasing Type Bucket Link (#B10172-)

Index	Code	Part Number	Description	Qty	Options
		207-70-00480	Link Assembly	1	SN:B10172--
1	C1		・ Link	1	SN:B10172--
2		207-70-33160	・ Bushing	2	SN:B10172--
3		207-70-33160	・ Bushing	2	SN:B10172--
4		07020-00000	・ Fitting, Grease	3	SN:B10172--
5		207-70-72120	・ Seal, Dust	6	SN:B10172--
6		207-70-B1140	Link	2	SN:B10172--
7		207-70-73210	Pin	2	SN:B10172--
8		207-70-33141	Pin	2	SN:B10172--
9		208-70-73160	Bolt	3	SN:B10172--
10		01580-12419	Nut	8	SN:B10172--
11		207-70-24190	Spacer, T=0.8mm	8	SN:B10172--
12		207-70-24210	Spacer, T=1.5mm	4	SN:B10172--
13		01011-82475	Bolt	1	SN:B10172--
14		205-70-73280	O-Ring	2	SN:B10172--

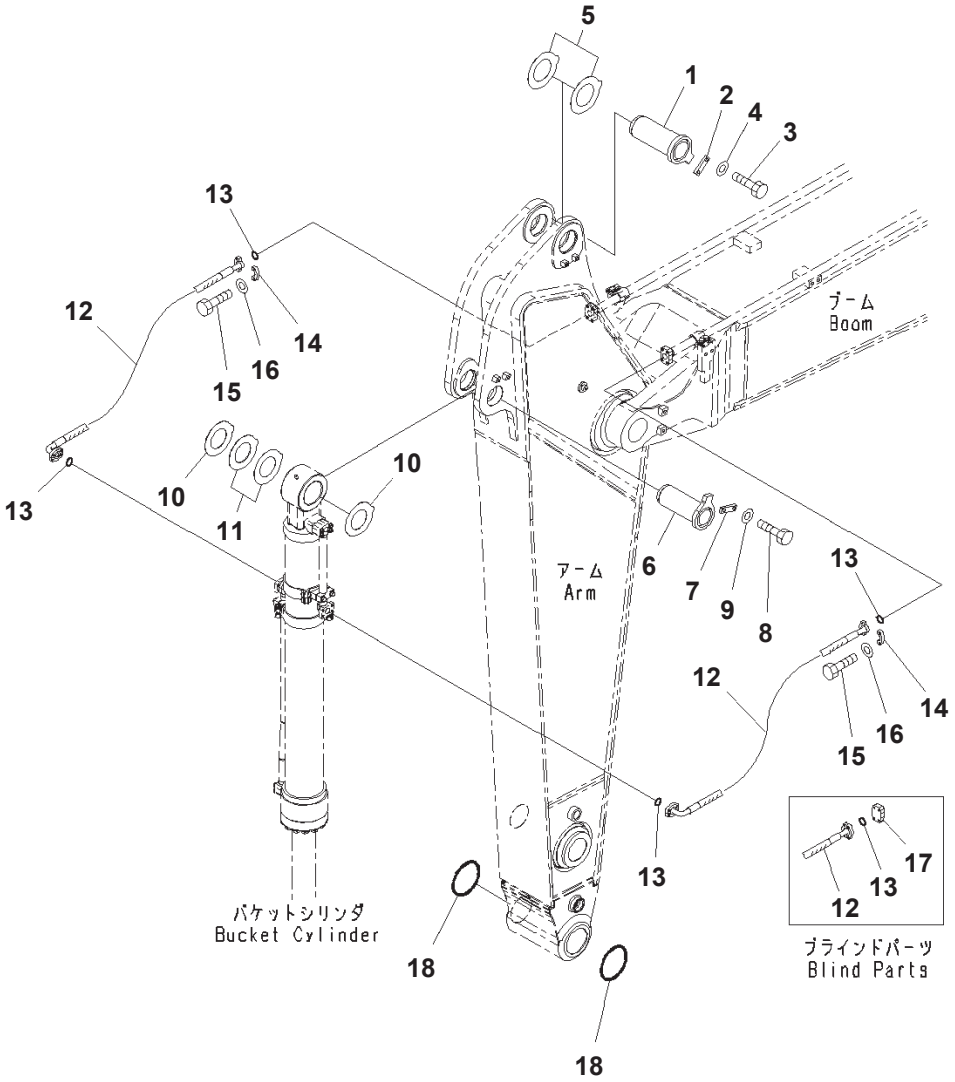

Arm, 3.2m, Strengthened, 100 Hours Greasing Type, Bucket Cylinder Hose and Pin (#B10172-)

Index	Part Number	Description	Qty	Options
1	208-70-61241	Pin	1	SN:B10172--
2	205-70-66581	Plate	1	SN:B10172--
3	01010-81235	Bolt	2	SN:B10172--
4	01643-31232	Washer	2	SN:B10172--
5	207-70-31340	Spacer, T=0.8mm	2	SN:B10172--
6	207-70-61221	Pin	1	SN:B10172--
7	205-70-66581	Plate	1	SN:B10172--
8	01010-81235	Bolt	2	SN:B10172--
9	01643-31232	Washer	2	SN:B10172--
10	207-70-24190	Spacer, T=0.8mm	3	SN:B10172--
11	207-70-24210	Spacer, T=1.5mm	2	SN:B10172--
12	207-62-74190	Hose	2	SN:B10172--
13	07000-13032	O-ring	4	SN:B10172--
14	07371-31049	Flange	8	SN:B10172--
15	07372-21035	Bolt	16	SN:B10172--
16	01643-51032	Washer	16	SN:B10172--
17	07379-01044	Flange	2	SN:B10172--
18	207-70-33181	O-ring	2	SN:B10172--

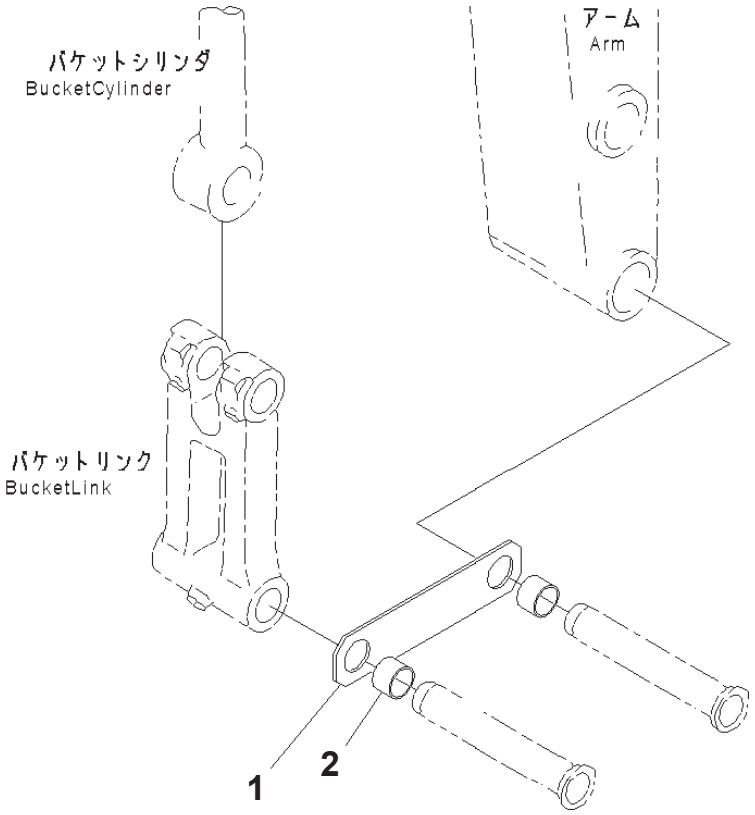

PEB3804

Index	Part Number	Description	Qty	Options
1	208-70-33220	Plate	1	SN:B10001--
2	20Y-70-B1340	Collar	4	SN:B10001--

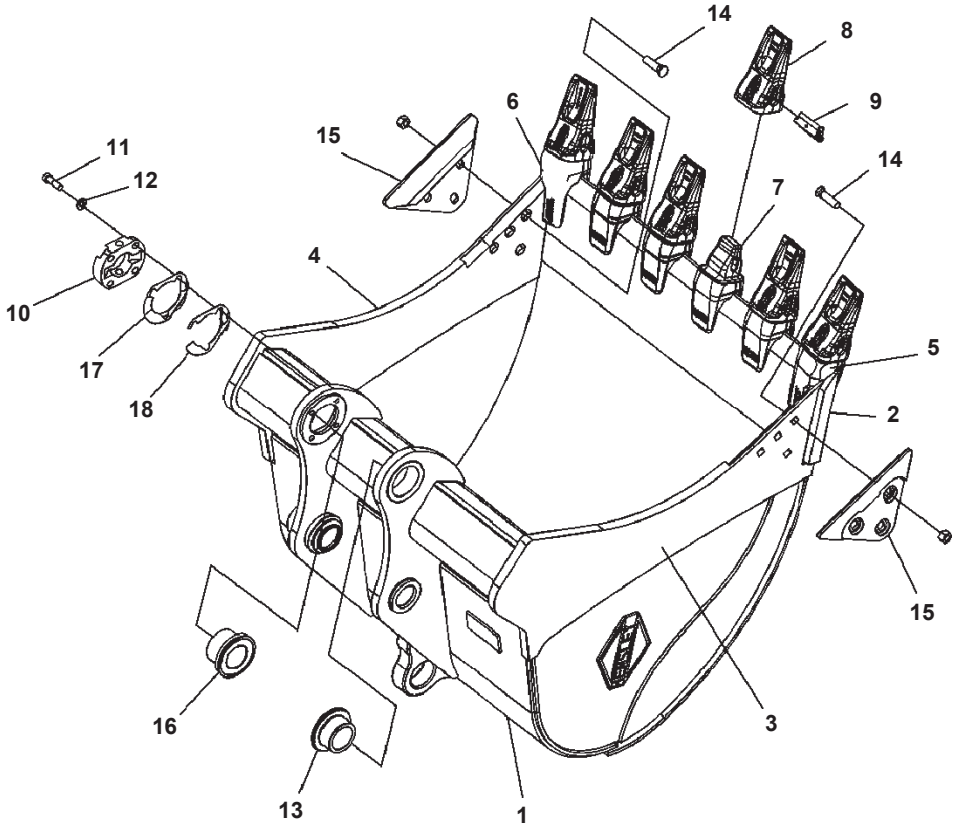

Bucket, 2.23 M3 HP (With Hook)

Index	Code	Part Number	Description	Qty	Options
1		207-70-B1610	Bucket HP	1	SN:B10001--
2		207-70-B1220	· Plate (Welded)	1	SN:B10001--
3		207-70-B1290	· Plate (Welded)	1	SN:B10001--
4		207-70-B1310	· Plate (Welded)	1	SN:B10001--
5		207-70-B1540	· Adapter L.H (Welded)	1	SN:B10001--
6		207-70-B1550	· Adapter R.H (Welded)	1	SN:B10001--
7		207-70-B1560	· Adapter (Welded)	4	SN:B10001--
8		207-70-B1510	Tooth	6	SN:B10001--
9		207-70-B1520	Pin	6	SN:B10001--
10		207-70-34240	Cover	1	SN:B10001--
11		01010-82065	Bolt	4	SN:B10001--
12		01643-32060	Washer	4	SN:B10001--
13		207-934-7251	Bushing	1	SN:B10001--
14		207-70-B1590	Plow Bolt Ass'y	6	SN:B10001--
	C1		· Bolt	1	SN:B10001--
	C1		· Nut	1	SN:B10001--
15		207-70-B1580	Cutter	2	SN:B10001--
16		207-934-7261	Bushing	1	SN:B10001--
17		207-70-34260	Shim	4	SN:B10001--
18		207-70-34250	Shim	16	SN:B10001--

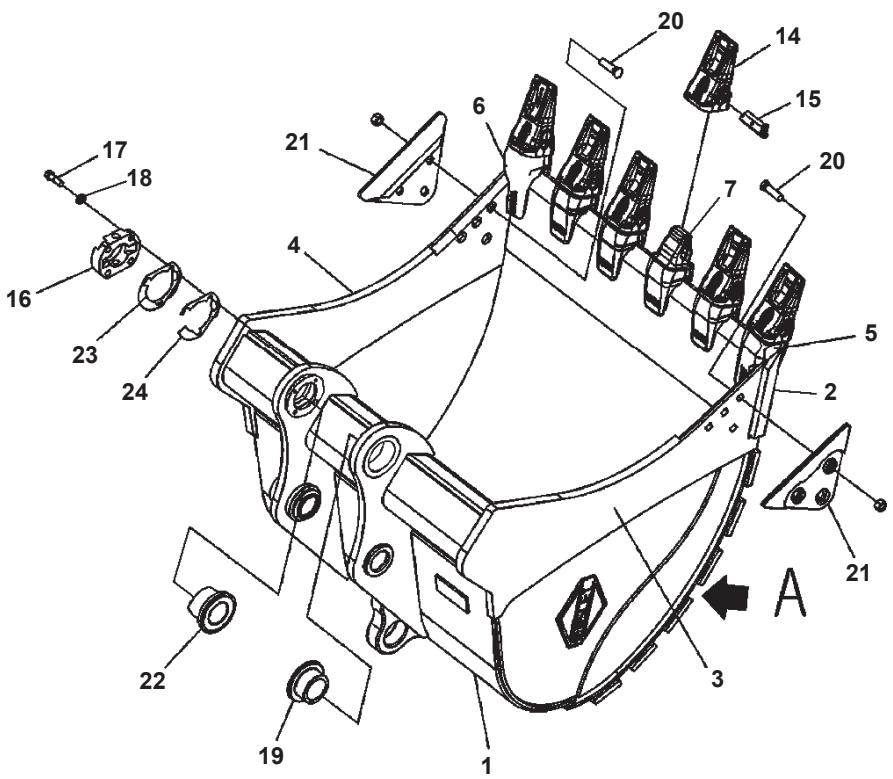

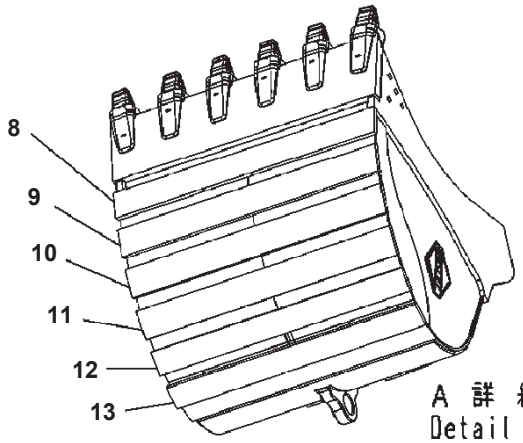

T010002

Bucket, 2.23 M3 HPS (With Hook)

Index	Code	Part Number	Description	Qty	Options
1		207-70-B1210	Bucket HP	1	SN:B10001--
2		207-70-B1220	・ Plate (Welded)	1	SN:B10001--
3		207-70-B1290	・ Plate (Welded)	1	SN:B10001--
4		207-70-B1310	・ Plate (Welded)	1	SN:B10001--
5		207-70-B1540	・ Adapter L.H. (Welded)	1	SN:B10001--
6		207-70-B1550	・ Adapter R.H. (Welded)	1	SN:B10001--
7		207-70-B1560	・ Adapter (Welded)	4	SN:B10001--
8		207-70-B1280	・ Plate (Welded)	1	SN:B10001--
9		207-70-B1270	・ Plate (Welded)	1	SN:B10001--
10		207-70-B1260	・ Plate (Welded)	1	SN:B10001--
11		207-70-B1250	・ Plate (Welded)	1	SN:B10001--
12		207-70-B1240	・ Plate (Welded)	1	SN:B10001--
13		207-70-B1230	・ Plate (Welded)	1	SN:B10001--
14		207-70-B1510	Tooth	6	SN:B10001--
15		207-70-B1520	Pin	6	SN:B10001--
16		207-70-34240	Cover	1	SN:B10001--
17		01010-82065	Bolt	4	SN:B10001--
18		01643-32060	Washer	4	SN:B10001--
19		207-934-7251	Bushing	1	SN:B10001--
20		207-70-B1590	Plow Bolt Ass'y	6	SN:B10001--
	C1		・ Bolt	1	SN:B10001--
	C1		・ Nut	1	SN:B10001--
21		207-70-B1580	Cutter	2	SN:B10001--
22		207-934-7261	Bushing	1	SN:B10001--
23		207-70-34260	Shim	4	SN:B10001--
24		207-70-34250	Shim	16	SN:B10001--

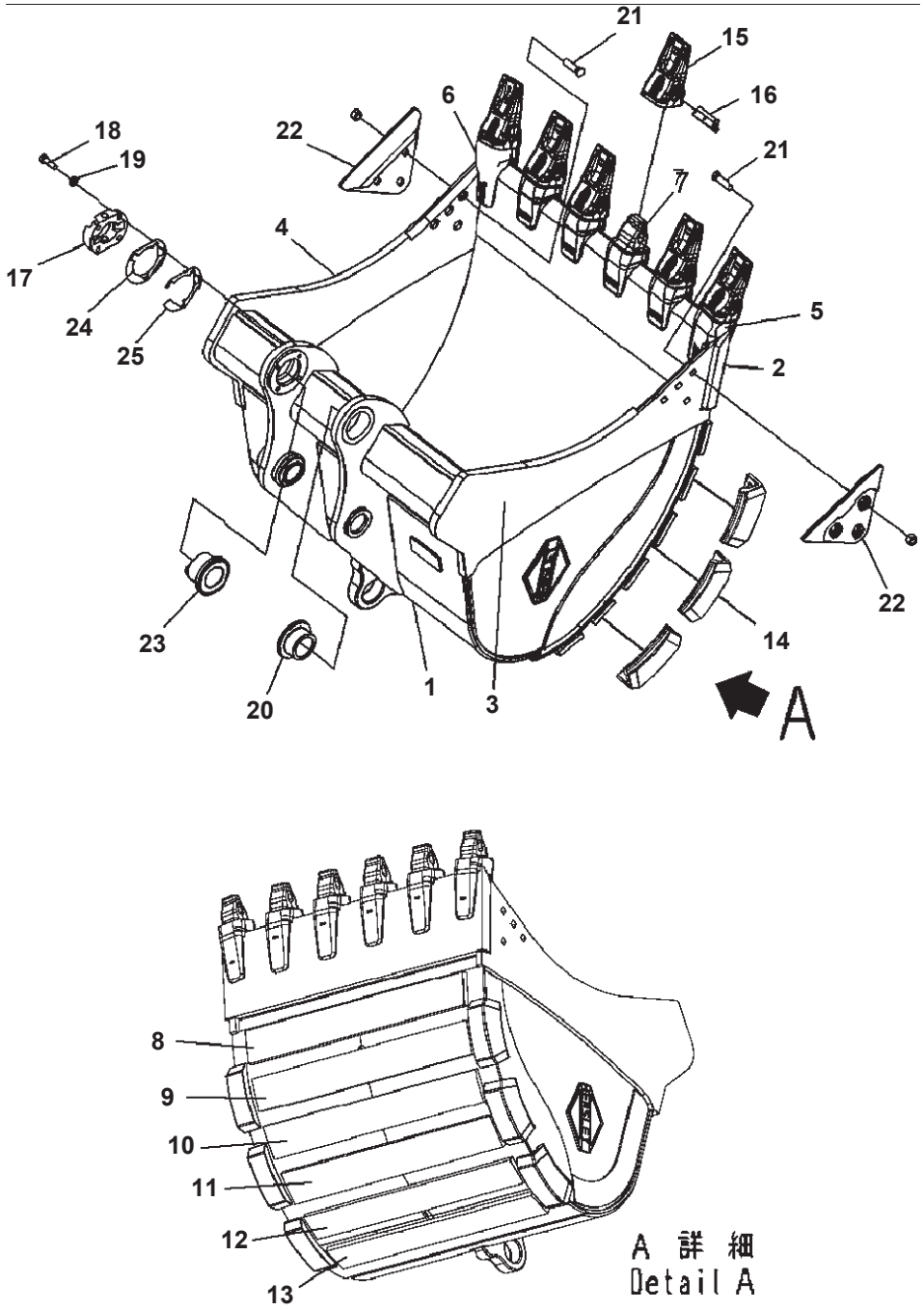

Index	Code	Part Number	Description	Qty	Options
1		207-70-B1710	Bucket HP	1	SN:B10001--
2		207-70-B1220	· Plate (Welded)	1	SN:B10001--
3		207-70-B1290	· Plate (Welded)	1	SN:B10001--
4		207-70-B1310	· Plate (Welded)	1	SN:B10001--
5		207-70-B1540	· Adapter L.H. (Welded)	1	SN:B10001--
6		207-70-B1550	· Adapter R.H. (Welded)	1	SN:B10001--
7		207-70-B1560	· Adapter (Welded)	4	SN:B10001--
8		207-70-B1720	· Plate (Welded)	1	SN:B10001--
9		207-70-B1730	· Plate (Welded)	1	SN:B10001--
10		207-70-B1740	· Plate (Welded)	1	SN:B10001--
11		207-70-B1750	· Plate (Welded)	1	SN:B10001--
12		207-70-B1760	· Plate (Welded)	1	SN:B10001--
13		207-70-B1770	· Plate (Welded)	1	SN:B10001--
14		207-70-B1790	· Plate (Welded)	6	SN:B10001--
15		207-70-B1510	Tooth	6	SN:B10001--
16		207-70-B1520	Pin	1	SN:B10001--
17		207-70-34240	Cover	1	SN:B10001--
18		01010-82065	Bolt	4	SN:B10001--
19		01643-32060	Washer	4	SN:B10001--
20		207-934-7251	Bushing	1	SN:B10001--
21		207-70-B1590	Plow Bolt Ass'y	6	SN:B10001--
	C1		· Bolt	1	SN:B10001--
	C1		· Nut	1	SN:B10001--
22		207-70-B1580	Cutter	2	SN:B10001--
23		207-934-7261	Bushing	1	SN:B10001--
24		207-70-34260	Shim	4	SN:B10001--
25		207-70-34250	Shim	16	SN:B10001--

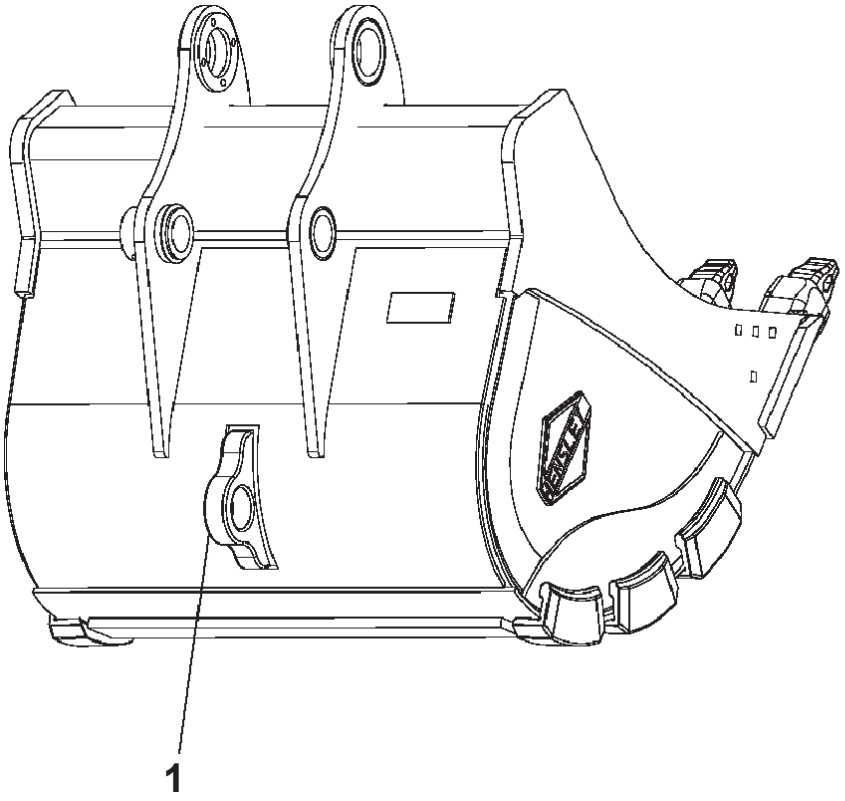

T014001

Index	Part Number	Description	Qty	Options
1	207-70-B1370	Hook	1	SN:B10001--

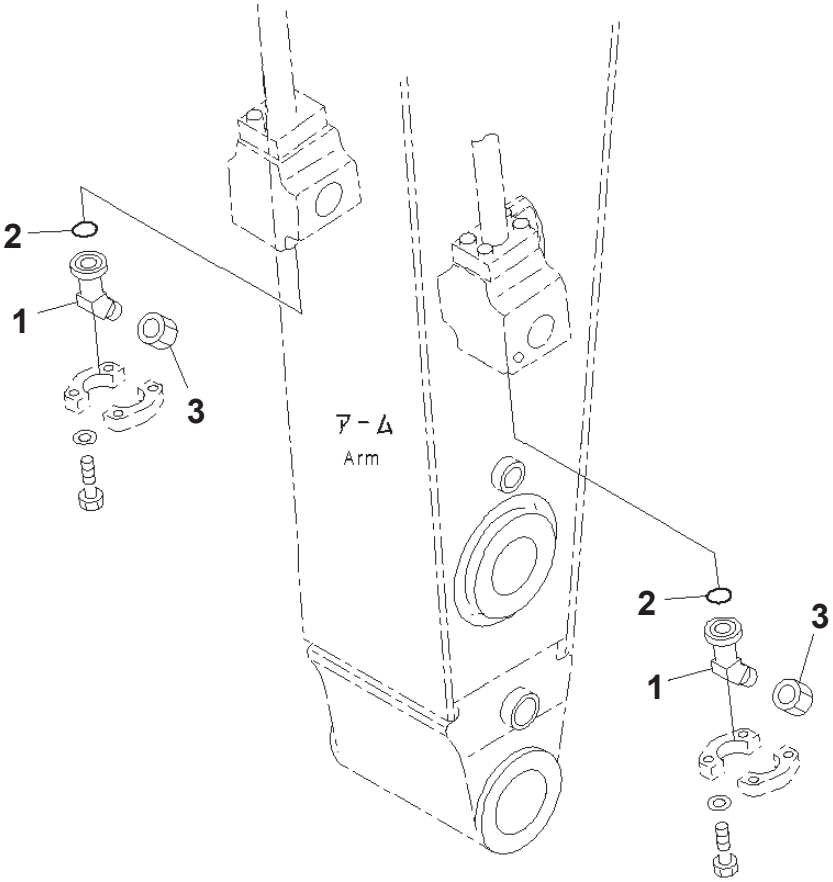

Index	Part Number	Description	Qty	Options
1	207-970-5510	Elbow	2	SN:B10001--
2	07000-13038	O-ring	2	SN:B10001--
3	205-970-7680	Plug	2	SN:B10001--

MARKS AND PLATES

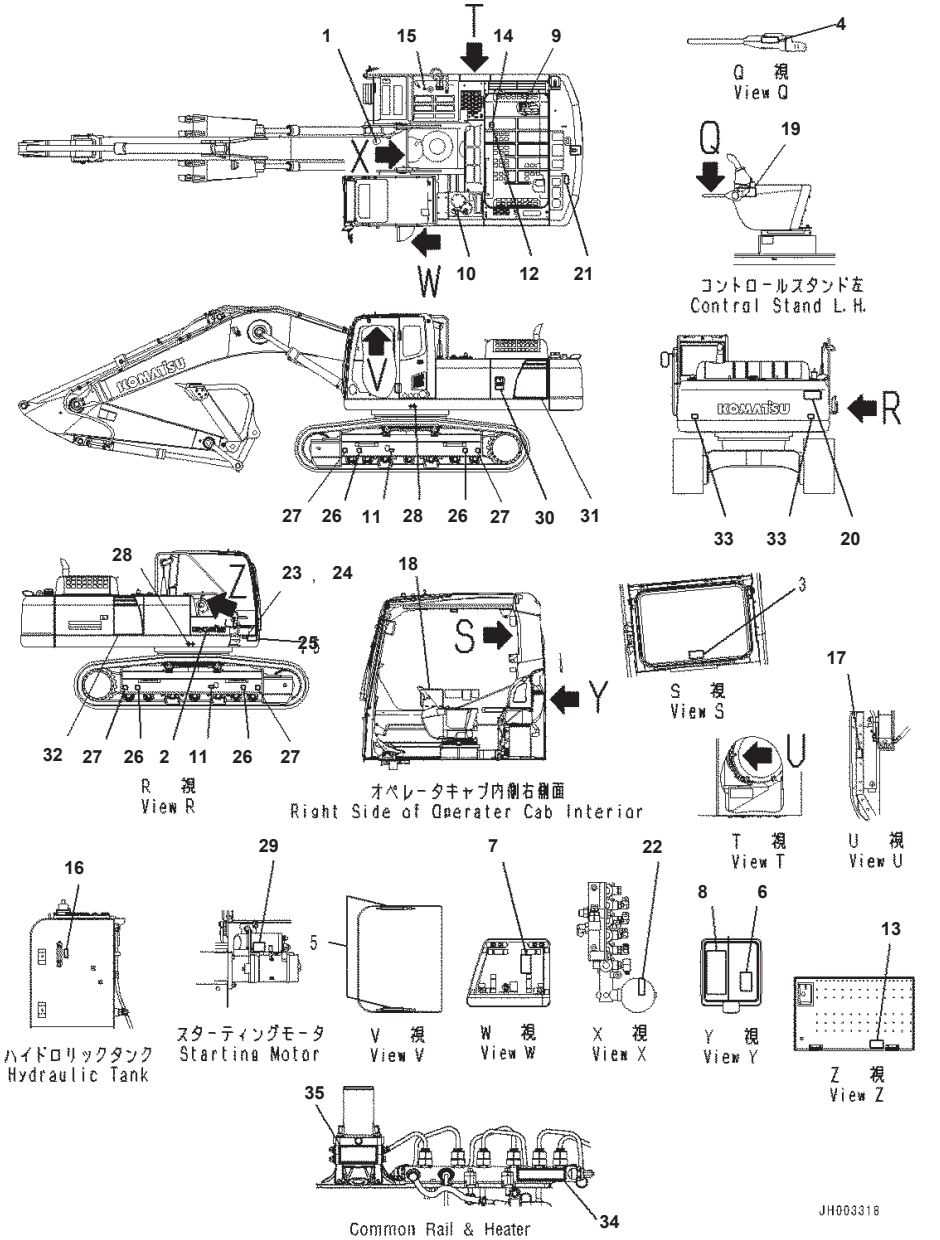

PC350LC-8 S/N B10001-UP
Marks And Plates, Portuguese, Lettering Type

Index	Code	Part Number	Description	Qty	Options
1		09690-M0063	Plate, Mark, Komatsu Logo	1	SN:B10001--B10245
2		09690-P0630	Decal, Komatsu Logo	1	SN:B10001--
3		09844-00050	Plate	1	SN:B10001--
4		09685-00002	Plate, Operating	1	SN:B10001--
5	A2	09659-57100	Plate, Safety	2	SN:(B10001--B10001)
6		22B-00-21920	Plate	1	SN:B10001--
7		207-00-B1210	Plate	1	SN:B10001--
8		207-00-B1220	Plate	1	SN:B10001--
9		09668-07101	Plate	1	SN:B10001--
10		09653-07101	Plate	1	SN:B10001--
11		09657-07102	Plate, Warning, Track Adjustment	2	SN:B10001--
12		09805-17100	Plate	1	SN:B10001--
13		09808-07100	Plate, Warning, Battery Cables	1	SN:B10001--
14		09667-07101	Plate	1	SN:B10001--
15		09669-0000E	Decal, Caution, Fuel Tank Drain	1	SN:B10001--
16		205-00-73360	Plate, Operating	1	SN:B10001--
17		207-00-B1230	Plate	1	SN:B10001--
18		207-00-71741	Plate, Caution	1	SN:B10001--
19		09963-07001	Tag	1	SN:B10001--
20		09133-27000	Plate	1	SN:B10001--
21		09805-27100	Plate	1	SN:B10001--
22		09659-57100	Plate	1	SN:B10001--
23	C2	09601-12051	Plate, Name	1	SN:B10001--
24		04418-13060	Screw	4	SN:B10001--
25		20Y-00-31840	Plate, Warning, Lifting Operation	1	SN:B10001--
26		09960-00801	Mark	4	SN:B10001--
27		09960-00802	Mark	4	SN:B10001--
28		21U-98-31160	Decal, Balancing Position Mark	2	SN:B10001--
29		09842-A0481	Plate, Caution	1	SN:B10001--
30		20Y-00-41530	Plate, Symbol, Ecot3, Mark	1	SN:B10001--
31		207-00-76570	Mark	1	SN:B10001--
32		207-00-76580	Mark	1	SN:B10001--
33		14X-98-35181	Plate, Reflector	2	SN:B10001--
34		12Y-98-11340	Plate	1	SN:B10318--
35		12Y-98-11350	Plate	1	SN:B10318--

Reference:U0100-005001 Page:U001001

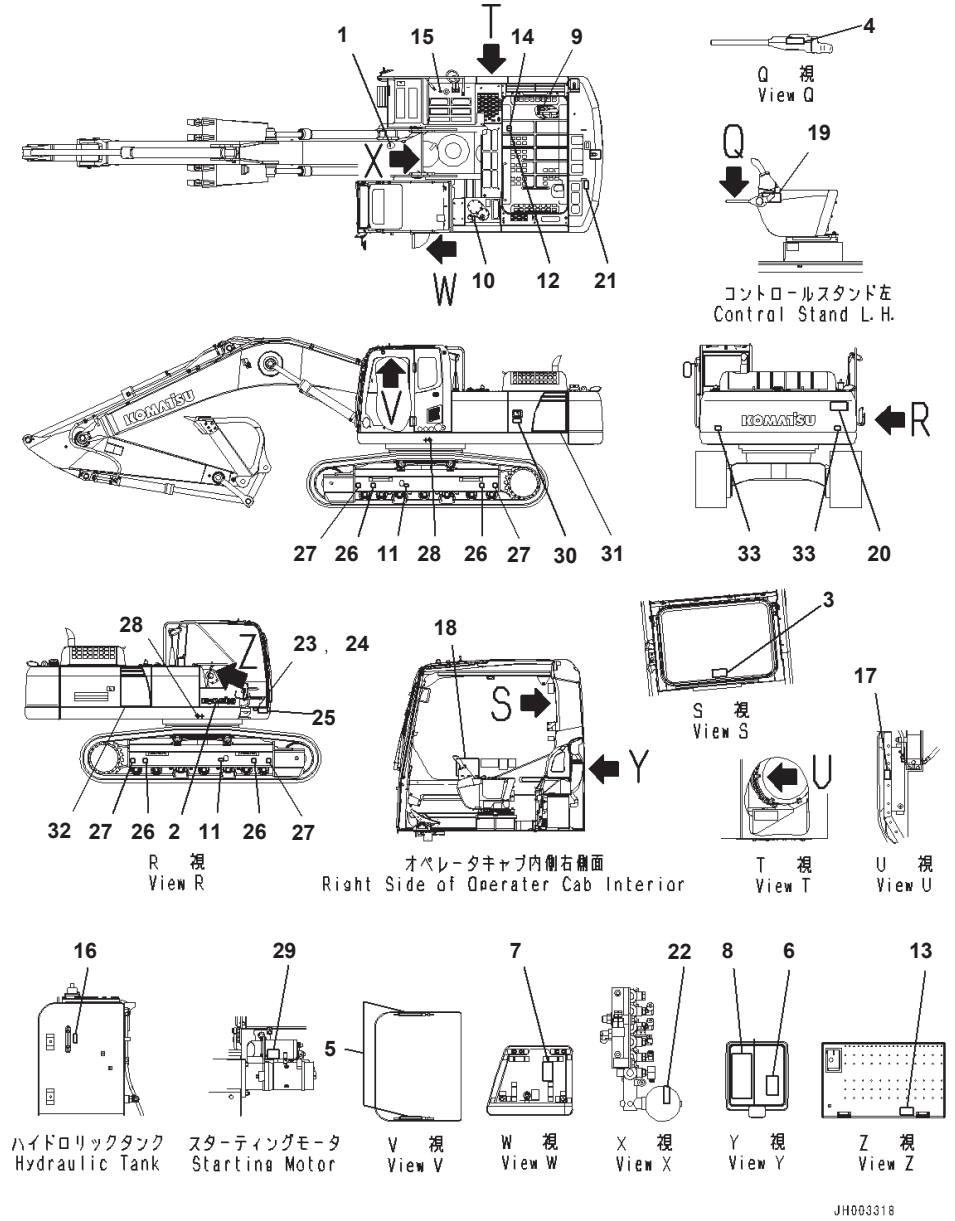

Index	Code	Part Number	Description	Qty	Options
1		09690-M0063	Plate, Mark, Komatsu Logo	1	SN:B10001--
2		09690-P0630	Decal, Komatsu Logo	1	SN:B10001--
3		09844-00050	Plate	1	SN:B10001--
4		09685-00002	Plate, Operating	1	SN:B10001--
5	A2	09659-51000	Plate, Warning, Explosive Hazard, Safety	2	SN:(B10001--B10001)
6		20Y-00-31640	Plate	1	SN:B10001--
7		208-00-71430	Plate	1	SN:B10001--
8		207-00-76750	Plate	1	SN:B10001--
9		09668-01001	Plate	1	SN:B10001--
10		09653-01001	Plate	1	SN:B10001--
11		09657-01004	Plate	2	SN:B10001--
12		09805-11000	Plate	1	SN:B10001--
13		09808-01000	Plate, Warning, Battery Cables	1	SN:B10001--
14		09667-01001	Plate, Caution, Rotating Object	1	SN:B10001--
15		09669-0000E	Plate, Symbol, Fuel Filler	1	SN:B10001--
16		205-00-73360	Plate, Operating	1	SN:B10001--
17		20Y-00-41710	Plate, Pre Filter Caution	1	SN:B10001--
18		20Y-00-31680	Plate	1	SN:B10001--
19		09963-01001	Tag, Danger, Do Not Operate	1	SN:B10001--
20		09133-21000	Decal, Danger, Keep Off Swing Area	1	SN:B10001--
21		09805-21000	Plate	1	SN:B10001--
22		09659-51000	Plate, Warning, Explosive Hazard, Safety	1	SN:B10001--
23	C2	09601-10001	Plate, Name (Limited Supply)	1	SN:B10001--
24		04418-13060	Screw	4	SN:B10001--
25		20Y-00-31840	Plate	1	SN:B10001--
26		09960-00801	Decal, Lift Point Mark	4	SN:B10001--
27		09960-00802	Decal, Tie Down Point Mark	4	SN:B10001--
28		21U-98-31160	Plate, Mark, Location Of Center Of Gravity	2	SN:B10001--
29		09842-A0481	Plate, Caution, No Jump Start	1	SN:B10001--
30		20Y-00-41530	Plate, Symbol, Ecot3, Mark	1	SN:B10001--
31		207-00-76570	Mark	1	SN:B10001--
32		207-00-76580	Mark	1	SN:B10001--
33		14X-98-35181	Plate, Reflector	2	SN:B10001--

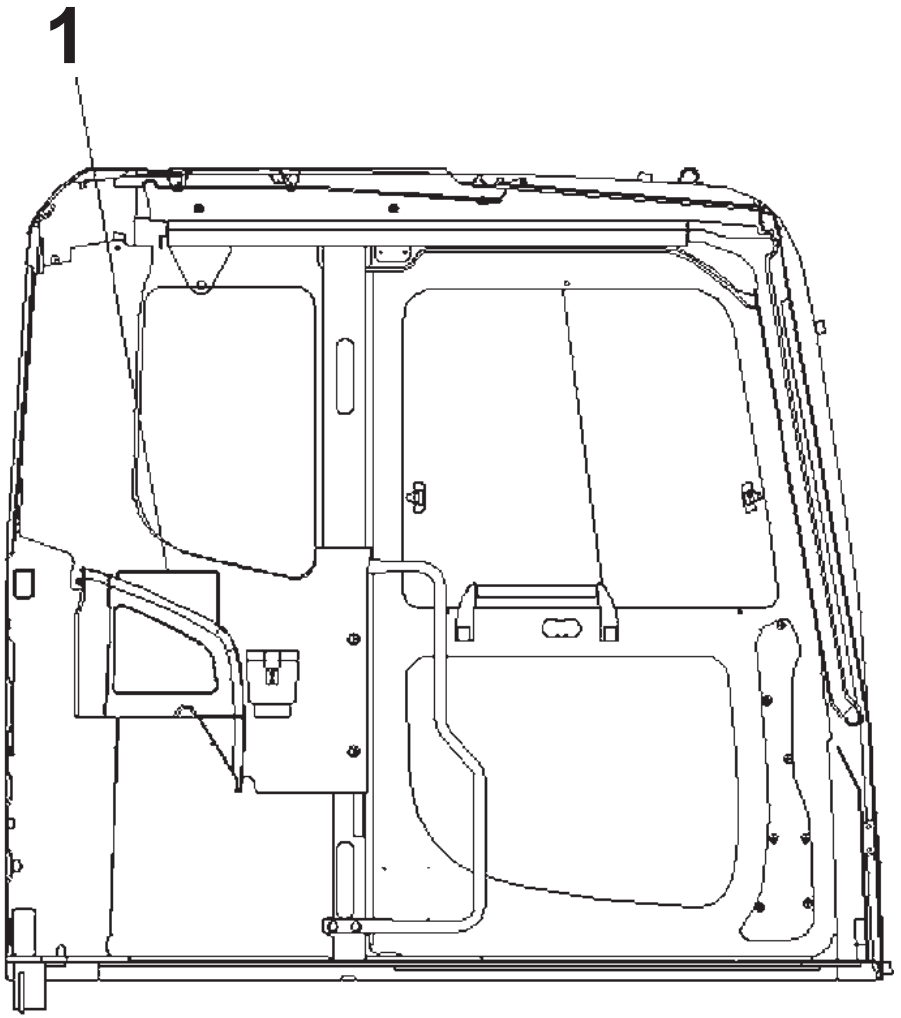

左 ド ア ー 内 側
L. H. Door Inside

00038302

Index	Part Number	Description	Qty	Options
1	207-00-76171	Plate	1	SN:B10001--

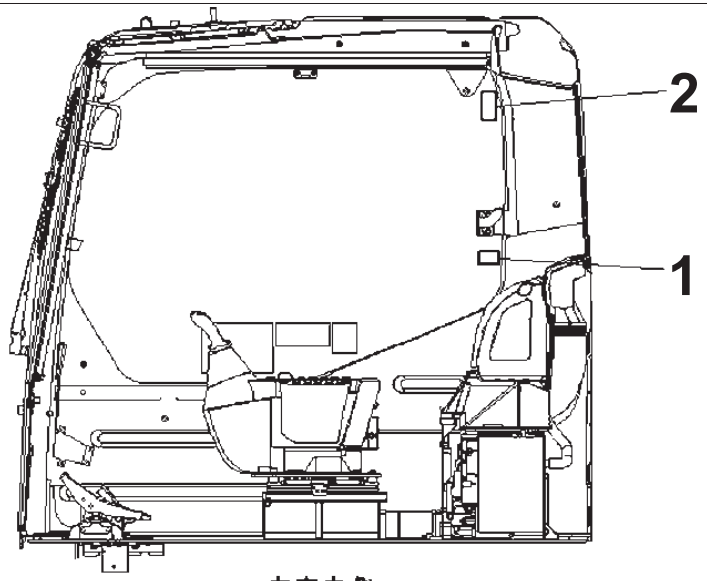

右窓内側
R. H. Window Inside

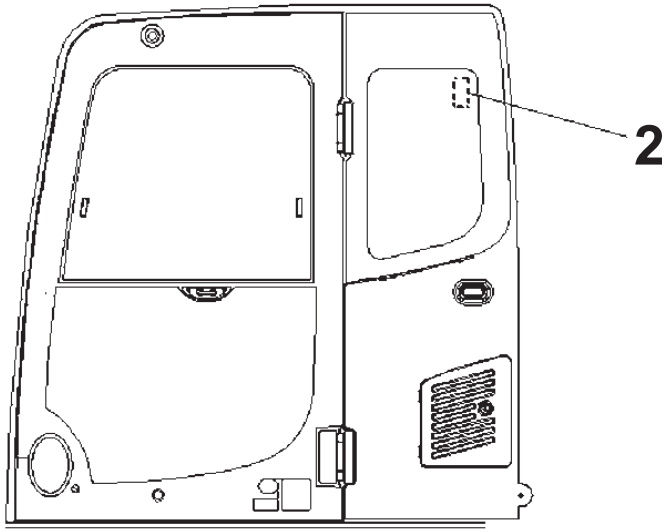

オペレータキャブ左側面
Left Side of Operater Cab

1813

Index	Part Number	Description	Qty	Options
1	22U-00-27840	Plate, Lock For Front Lower Window	1	SN:B10001--B10018
2	09803-07100	Plate, Warning, Window Lock	2	SN:B10001--B10018

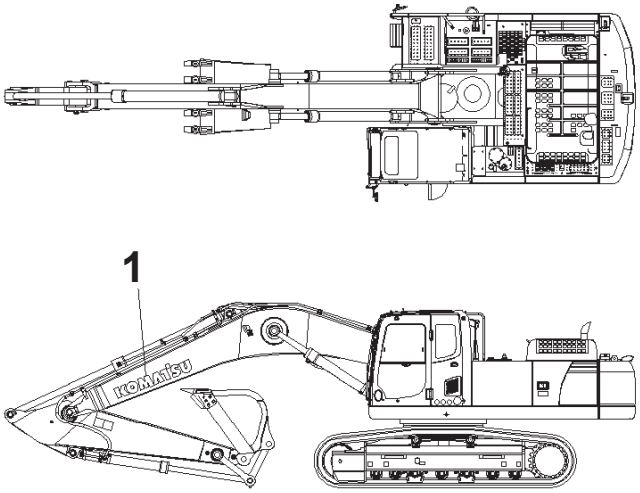

00065437

Index	Part Number	Description	Qty	Options
1	09690-P1400	Plate	1	SN:B10001--
2	09690-P1400	Plate	1	SN:B10001--

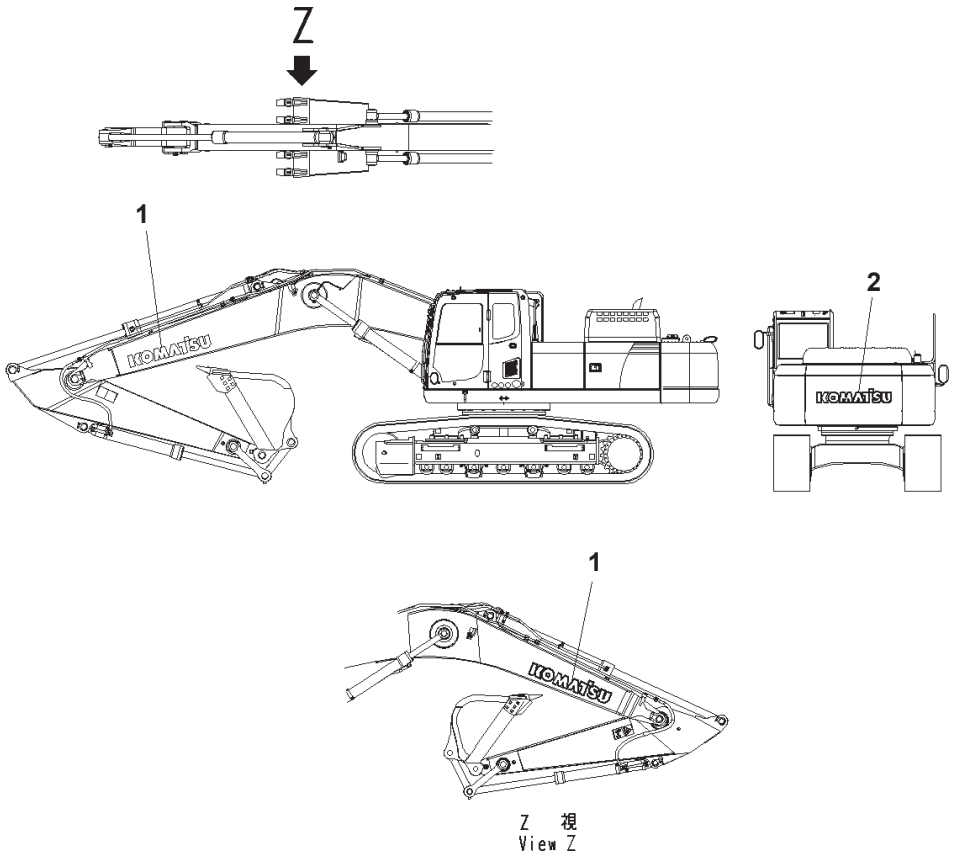

Index	Part Number	Description	Qty	Options
1	09690-P1400	Plate	2	SN:B10001--
2	09690-P1400	Plate	1	SN:B10001--

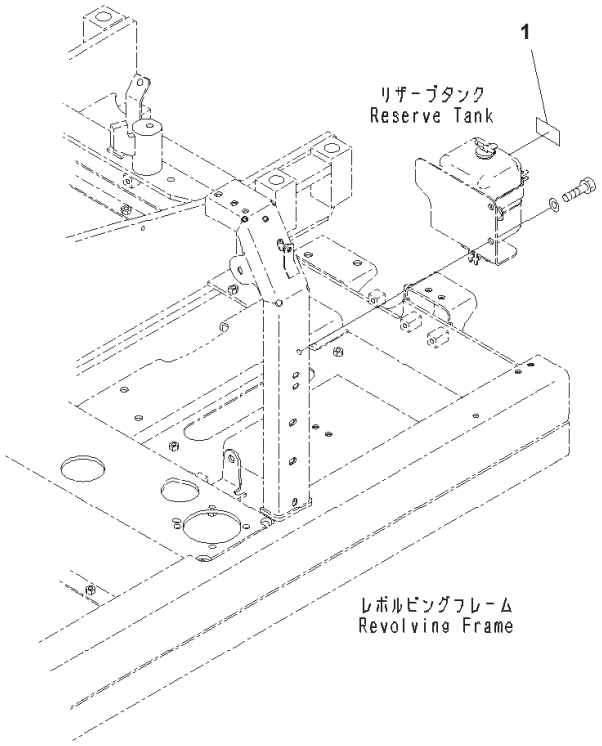

Index	Part Number	Description	Qty	Options
1	09642-17000	Plate, Service Instruction, Engine Coolant AF-NAC	1	SN:B10001--

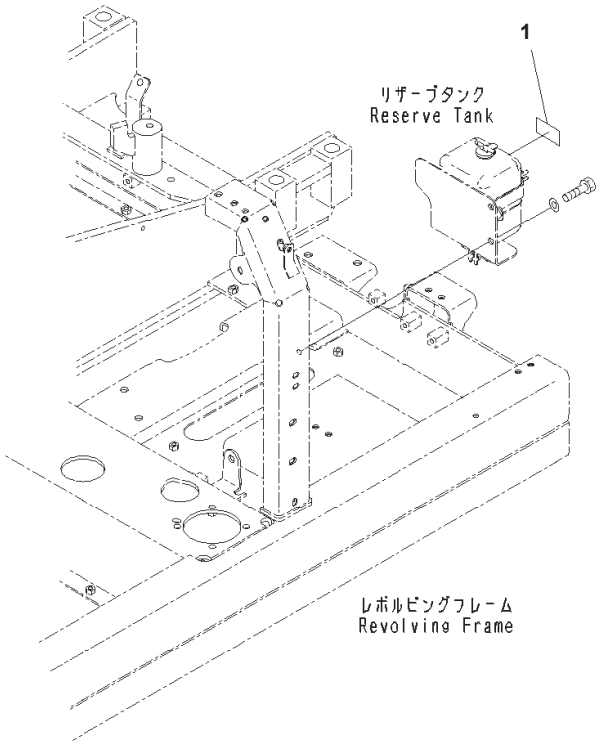

Index	Part Number	Description	Qty	Options
1	09642-11000	Plate, Service Instruction, Engine Coolant AF-NAC	1	SN:B10001--

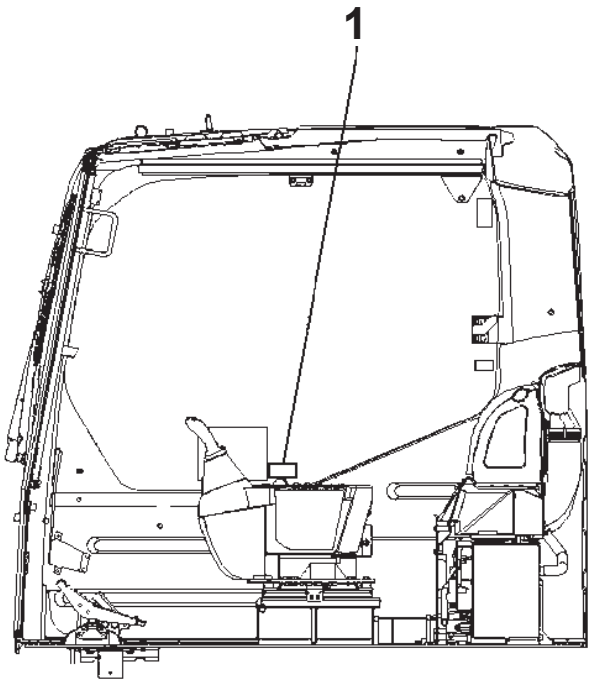

JH004199

Index	Part Number	Description	Qty	Options
1	09845-00480	Plate, Caution, Blast Site	1	SN:B10113--

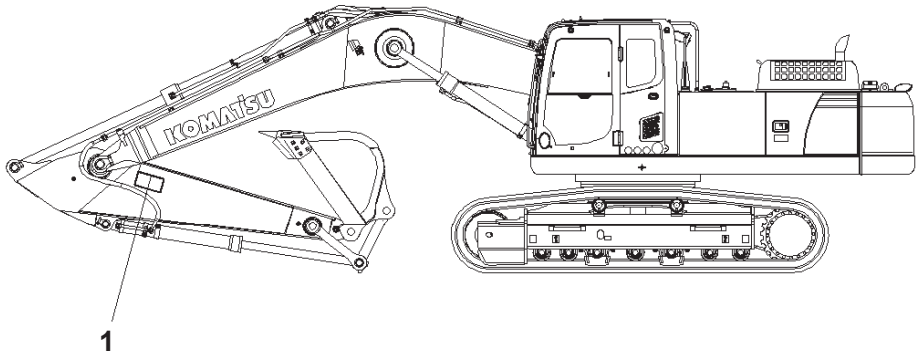

00065388

Index	Part Number	Description	Qty	Options
1	09134-A1681	Plate, Caution	2	SN:B10001--

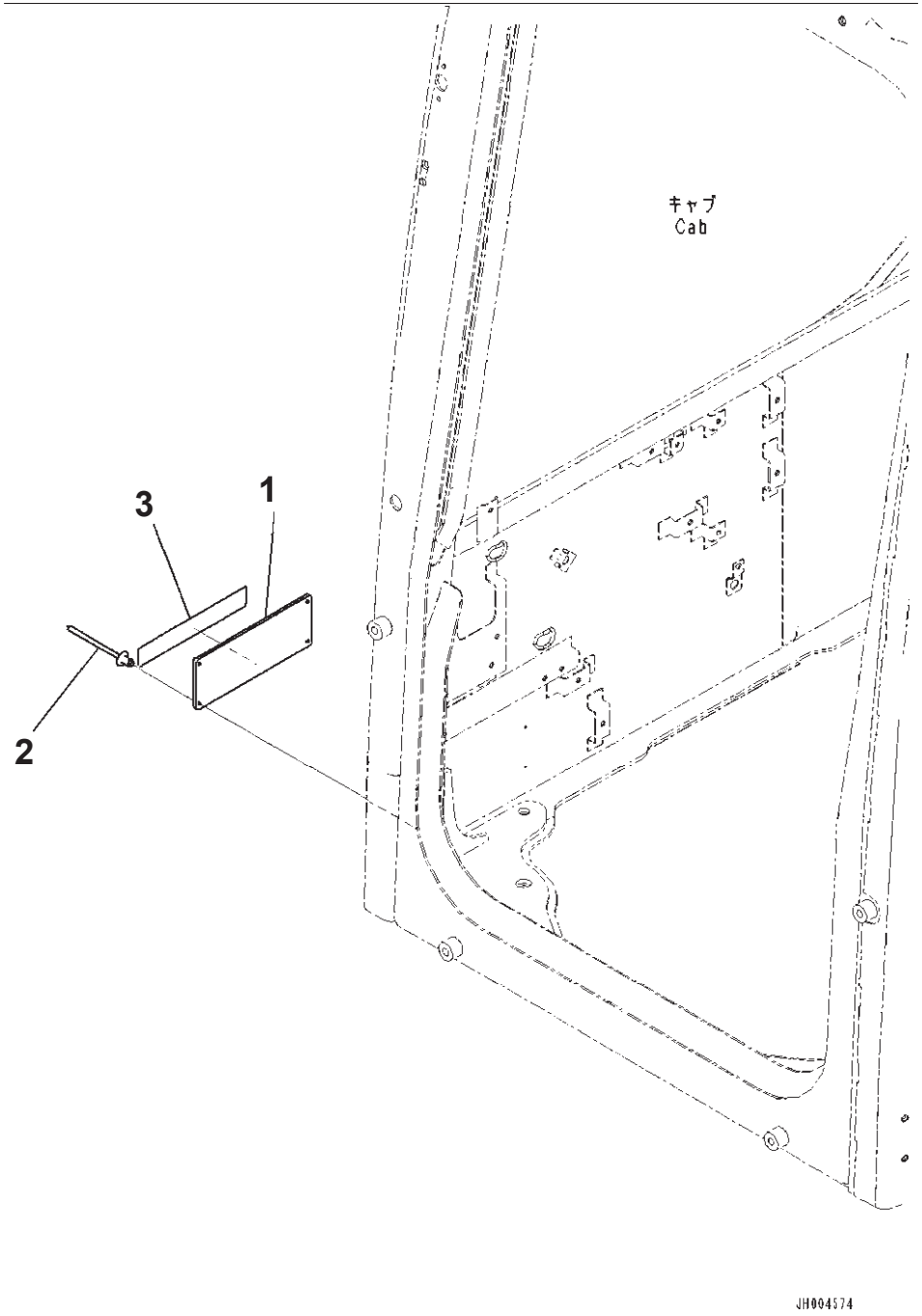

Index	Code	Part Number	Description	Qty	Options
1		20Y-00-B1422	Plate, Certification Mark, ROPS	1	SN:B10319--
	A2	20Y-00-B1421	Plate, Certification Mark, ROPS	1	SN:B10001--B10318
2		205-00-72430	Rivet	4	SN:B10001--
3		09620-A2160	Plate	1	SN:B10319--

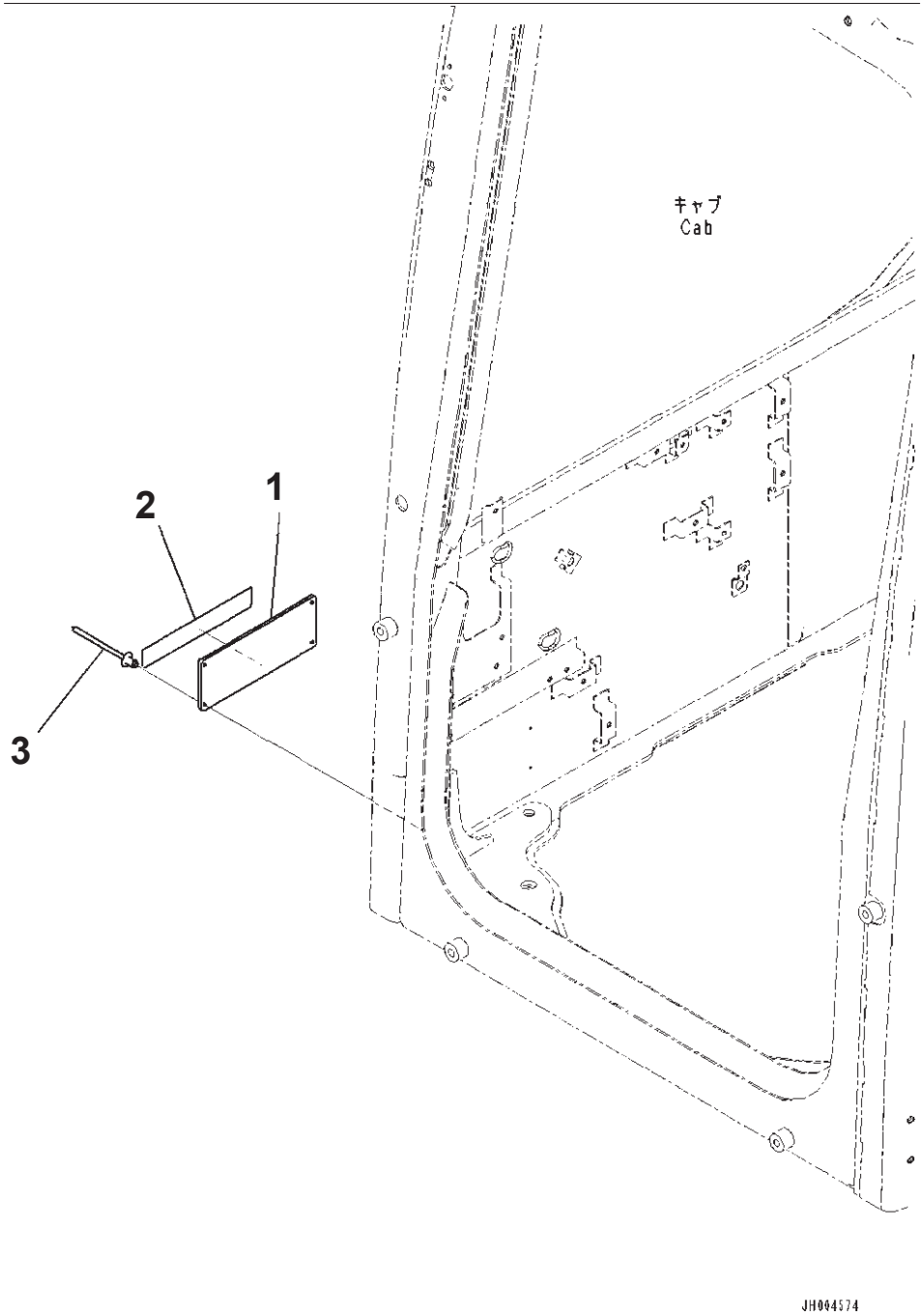

Caution Plates, Spanish-English

Index	Code	Part Number	Description	Qty	Options
1		20Y-00-B1422		1	SN:B10319--
	A2	20Y-00-B1421	Plate, Certification Mark, ROPS	1	SN:B10001--B10318
2		09620-B2070	Plate, Safety	1	SN:B10001--
3		205-00-72430	Rivet	4	SN:B10001--

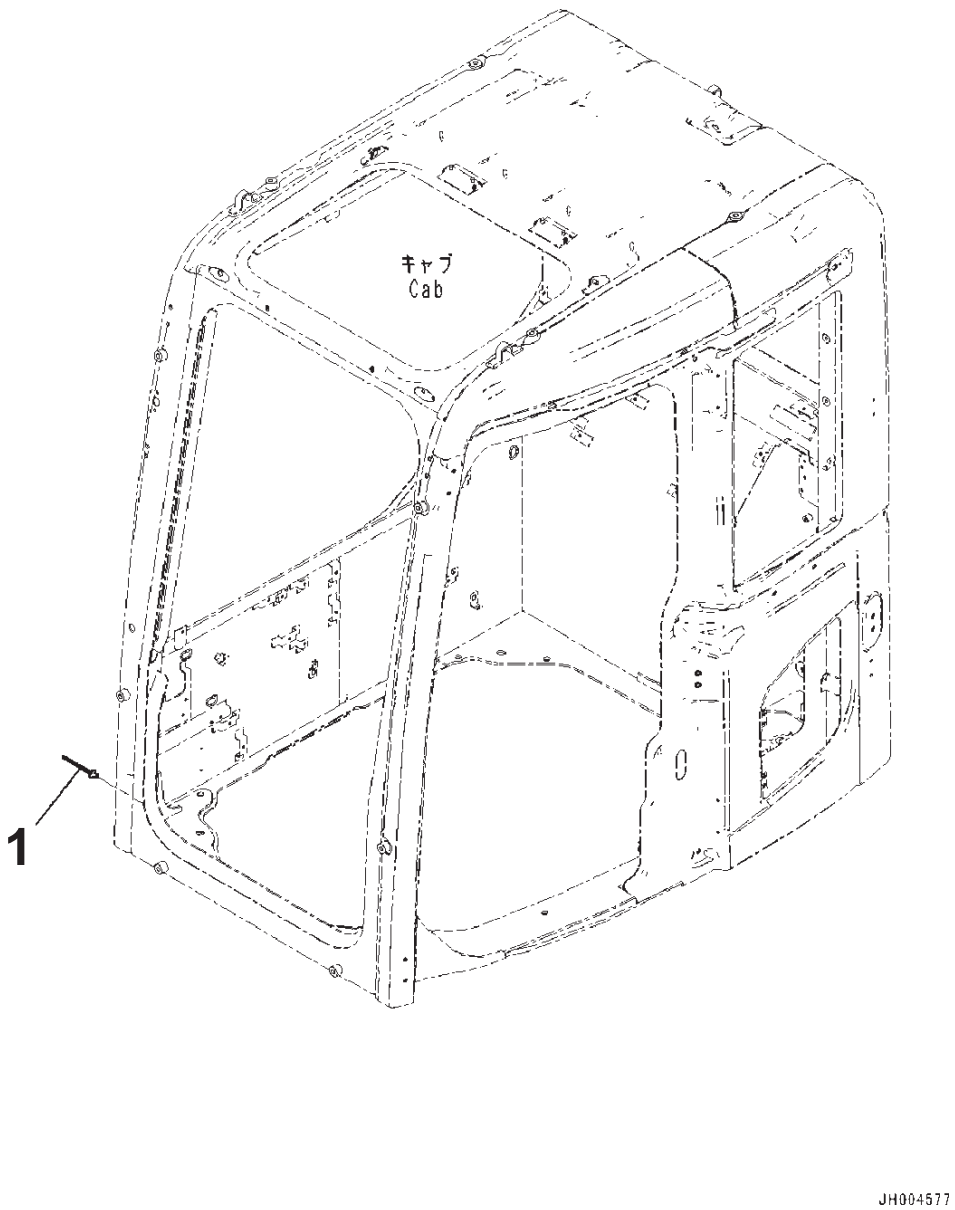

Index	Part Number	Description	Qty	Options
1	205-00-72430	Rivet	4	SN:B10001--

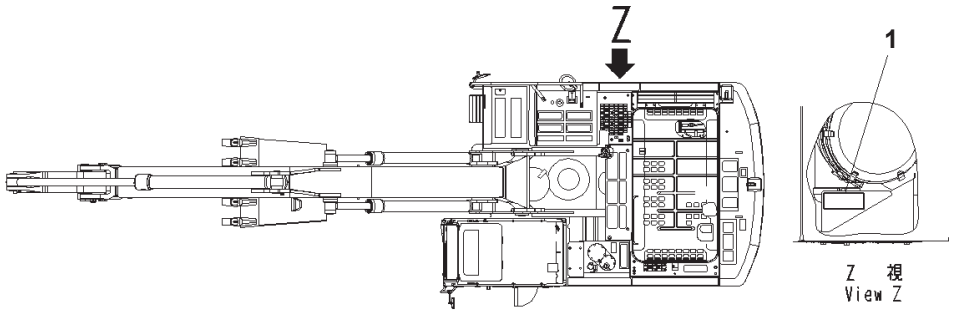

Index	Part Number	Description	Qty	Options
1	09637-51263	Decal, Service Instruction, Air Cleaner	1	SN:B10001--

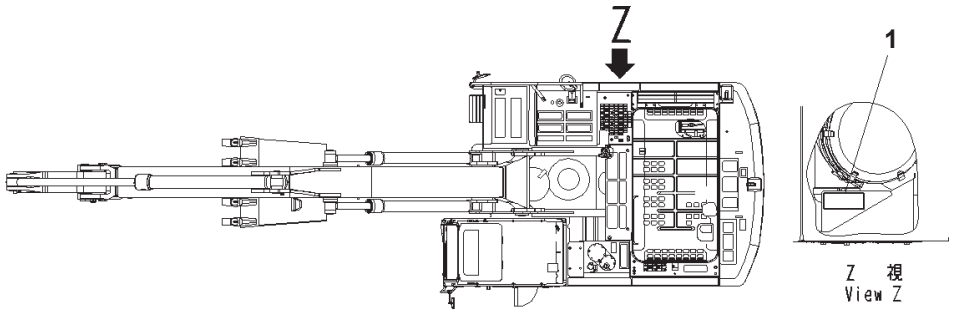

00060817

Index	Part Number	Description	Qty	Options
1	09637-70163	Decal, Service Instruction, Air Cleaner	1	SN:B10001--

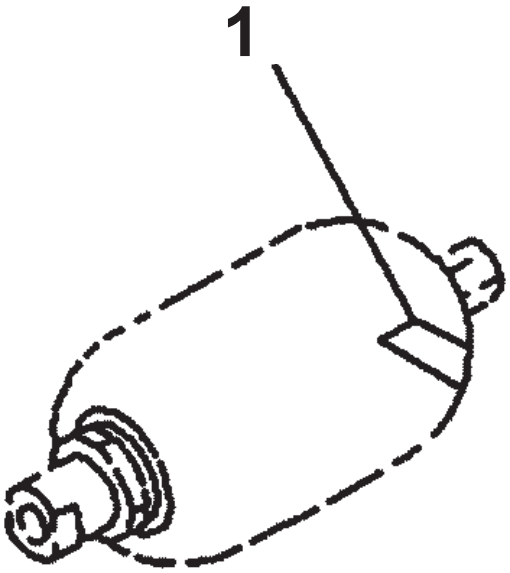

PW10073

Index	Part Number	Description	Qty	Options
1	09659-57100	Plate, Warning, Explosive Hazard, Safety	1	SN:B10001--

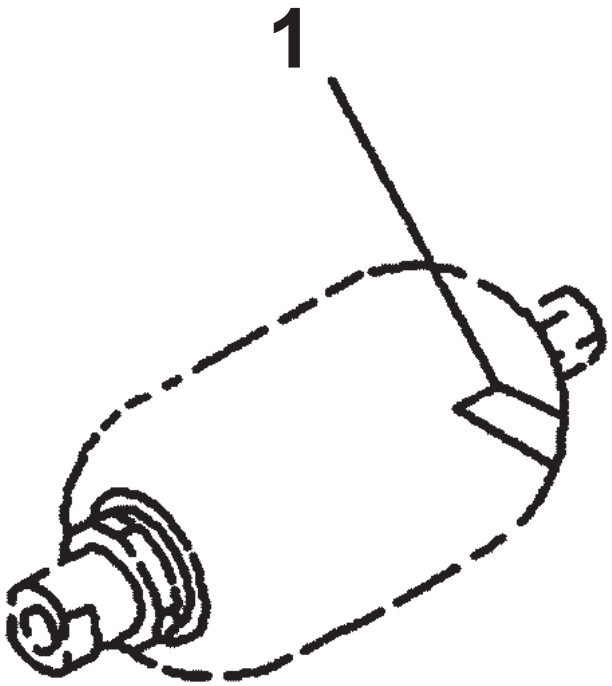

PW10073

Index	Part Number	Description	Qty	Options
1	09659-51000	Plate, Warning, Explosive Hazard, Safety	1	SN:B10001--

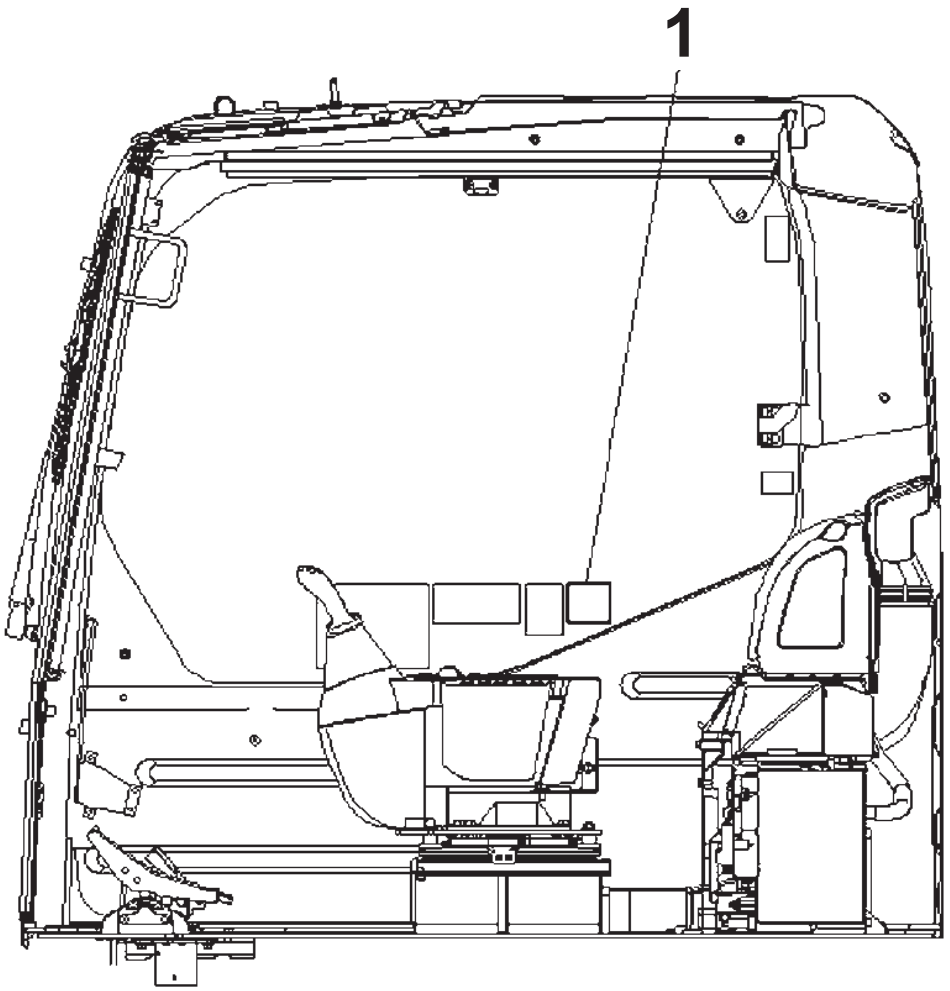

Index	Part Number	Description	Qty	Options
1	207-00-B1240	Plate, Warning	1	SN:B10001--

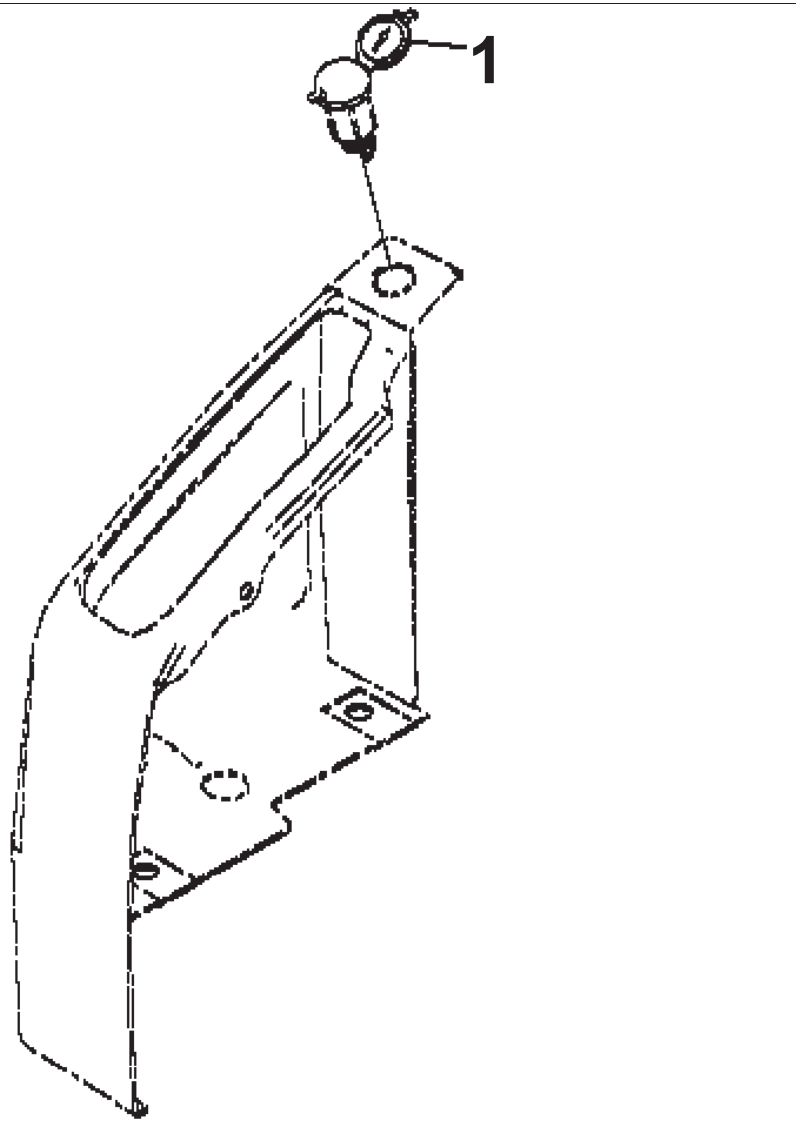

Caution Plate, With 12volt Power Outlet, Except Japan

Index	Part Number	Description	Qty	Options
1	207-00-B1250	Plate	1	SN:B10001--

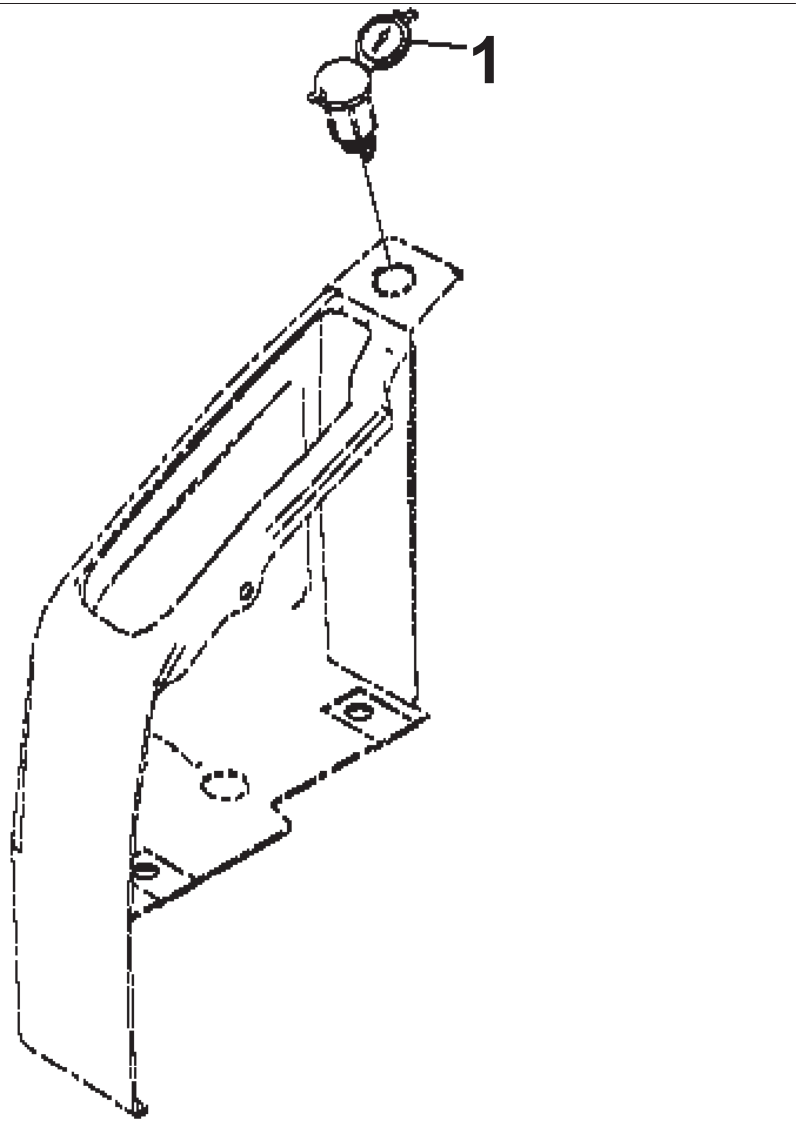

Caution Plate, With 12volt Power Outlet, Spanish

Index	Part Number	Description	Qty	Options
1	207-00-B1270	Plate	1	SN:B10001--

MISCELLANEOUS

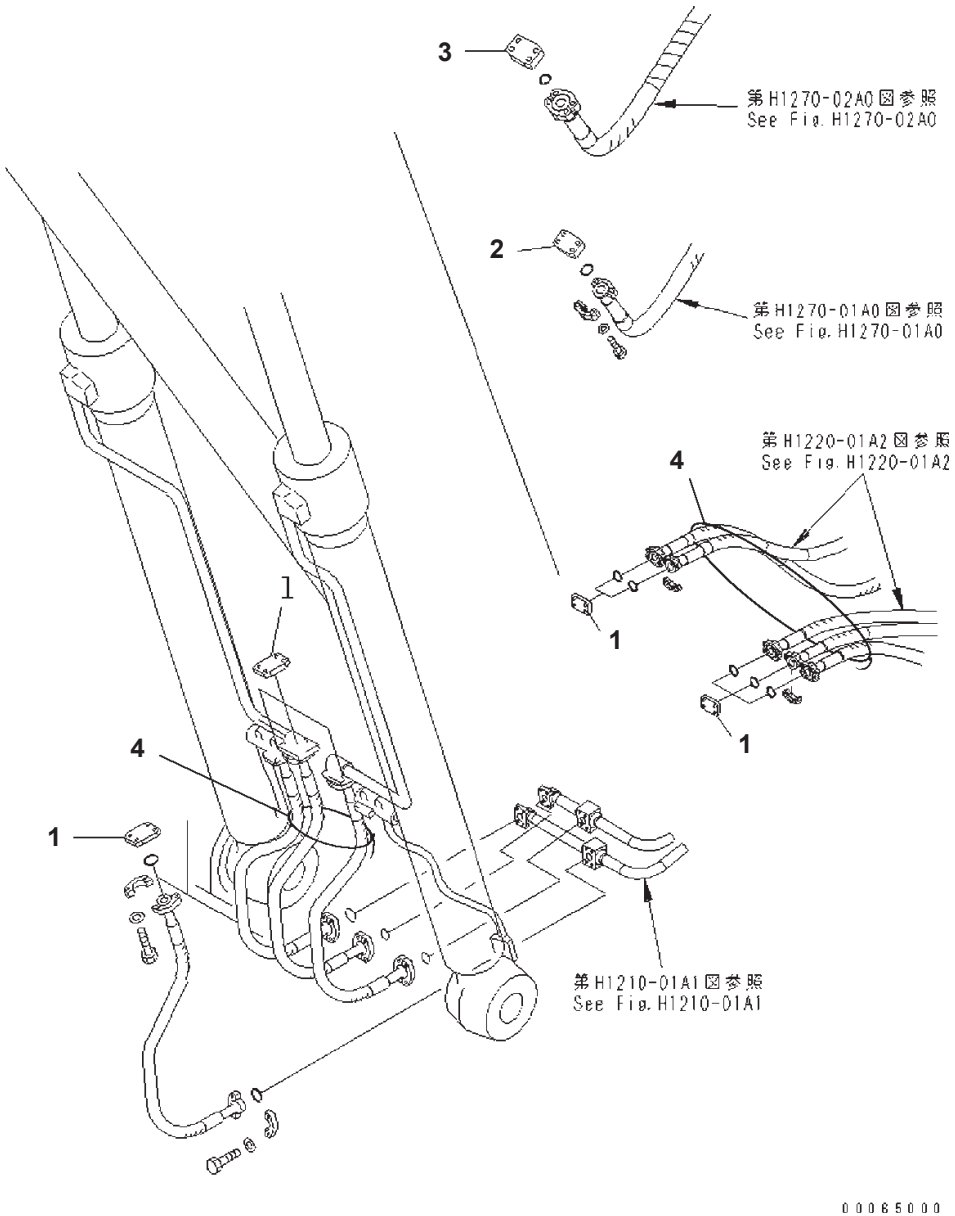

Blind Parts (Body) (1 Actuator)

Index	Part Number	Description	Qty	Options
1	07379-01044	Flange	9	SN:B10001--
2	07379-01260	Flange	1	SN:B10001--
3	07379-01470	Flange	1	SN:B10001--
4	08034-20816	Band	2	SN:B10001--

PC350LC-8 S/N B10001-UP
Service Kit Parts (#B10001-)

Index	Code	Part Number	Description	Qty	Options
K01		NFEB1601	Service Kit		SN:B10001--
		205-970-5560	· O-Ring	1	
	C1		· O-Ring	1	
	C1		· Ring, Back-up	1	
K02		207-32-05060	Service Kit, Shoe Bolt and Nut	1	SN:B10001--
		154-32-71220	· Nut	30	
		207-32-71210	· Bolt	30	
K05		707-99-58080	Service Kit, Boom Cylinder		SN:B10001--
		07000-13035	· O-Ring	2	
		07000-15090	· O-Ring	1	
		07000-15130	· O-Ring	2	
		07001-05090	· Ring, Back-Up	2	
		07145-00090	· Seal, Dust	2	
		07145-00100	· Seal, Dust	2	
		176-63-56170	· Seal, Dust	1	
		707-35-91420	· Ring, Back-Up	2	
		707-39-14110	· Ring, Wear	2	
		707-44-14180	· Ring, Piston	1	
		707-51-10030	· Packing, Rod	1	
		707-51-10640	· Ring, Buffer	1	
K09		707-99-72300	Service Kit, Arm Cylinder		SN:B10001--
		07000-13035	· O-Ring	2	
		07000-15100	· O-Ring	1	
		07000-15150	· O-Ring	1	
		07001-05100	· Ring, Back-Up	2	
		07002-12034	· O-Ring	1	
		07145-00100	· Seal, Dust	2	
		198-63-94170	· Seal, Dust	1	
		707-35-91640	· Ring, Back-Up	1	
		707-39-16120	· Ring, Wear	2	
		707-44-16180	· Ring, Piston	1	
		707-51-11030	· Packing, Rod	1	
		707-51-11640	· Ring, Buffer	1	
K11		707-99-58090	Service Kit, Bucket Cylinder		SN:B10001--
		07000-13035	· O-Ring	2	
		07000-15090	· O-Ring	1	
		07000-15130	· O-Ring	1	
		07001-05090	· Ring, Back-Up	2	
		07145-00090	· Seal, Dust	2	
		176-63-56170	· Seal, Dust	1	
		207-70-72120	· Seal, Dust	2	
		707-35-91420	· Ring, Back-Up	1	
		707-39-14110	· Ring, Wear	2	
		707-44-14180	· Ring, Piston	1	
		707-51-10030	· Packing, Rod	1	
		707-51-10640	· Ring, Buffer	1	
K12		707-99-59610	Service Kit, Bucket Cylinder		SN:B10001--
		07000-13035	· O-Ring	2	
		07000-15100	· O-Ring	1	
		07000-15140	· O-Ring	1	
		07001-05100	· Ring, Back-Up	2	
		07145-00090	· Seal, Dust	2	
		198-63-94170	· Seal, Dust	1	
		207-70-72120	· Seal, Dust	2	

PC350LC-8 S/N B10001-UP
Service Kit Parts (#B10001-)

Index	Code	Part Number	Description	Qty	Options
		707-35-91660	· Ring, Back-Up	1	
		707-39-15110	· Ring, Wear	2	
		707-44-15180	· Ring, Piston	1	
		707-51-11030	· Packing, Rod	1	
		707-51-11640	· Ring, Buffer	1	

Reference:KIT
Page:Y010001

NUMERICAL INDEX

PARTS Nº	FIG. Nº	INDEX	PAGE
01010-61220	A9999-002021	8	B001021
01010-61220	A9999-003021	8	B001041
01010-61460	H0120-004014	30	H003014
01010-61460	H0120-004114	18	H004014
01010-61460	H0120-005014	30	H002014
01010-61470	H0120-004014	31	H003014
01010-61470	H0120-004114	19	H004014
01010-61470	H0120-005014	31	H002014
01010-61490	H0120-004007	26	H003007
01010-61490	H0120-004107	22	H004007
01010-61490	H0120-005007	26	H002007
01010-61655	A9999-002002	7	B001002
01010-61655	A9999-002013	7	B001013
01010-61655	A9999-003013	7	B001033
01010-62070	R1100-002001	13	R005001
01010-62450	R1200-002001	5	R007001
01010-80612	D0100-001001	12	D001001
01010-80612	D0100-001001A	12	D001001A
01010-80612	M1130-001001	23	M003001
01010-80612	M1140-001001	32	M004001
01010-80616	C0100-001004	6	C001004
01010-80616	E0450-001001	16	E008001
01010-80616	K0350-001001	3	K006001
01010-80616	K1110-024034	22	K008031
01010-80616	K1110-024040	14	K008037
01010-80616	K1110-024040	5	K008037
01010-80616	K1110-024041	4	K008038
01010-80616	K1110-024046	16	K008043
01010-80616	K1110-024046	9	K008043
01010-80616	K1110-039030	22	K009030
01010-80616	K1110-039036	14	K009036
01010-80616	K1110-039036	5	K009036
01010-80616	K1110-039037	4	K009037
01010-80616	K1110-039042	16	K009042
01010-80616	K1110-039042	9	K009042
01010-80616	M1130-001001	13	M003001
01010-80616	M1140-001001	25	M004001
01010-80620	K1110-024038	16	K008035
01010-80620	K1110-024044	16	K008041
01010-80620	K1110-039034	16	K009034
01010-80620	K1110-039040	16	K009040
01010-80816	E0200-001004	11	E002004
01010-80816	K1110-024026	16	K008024
01010-80816	K1110-039024	16	K009024
01010-80820	K1110-024005	16	K008005
01010-80820	K1110-024039	1	K008036
01010-80820	K1110-024045	1	K008042
01010-80820	K1110-039005	16	K009005
01010-80820	K1110-039035	1	K009035
01010-80820	K1110-039041	1	K009041
01010-80825	E0410-001001	3	E006001
01010-80825	K1110-024049	3	K008046
01010-80825	K1110-039045	3	K009045
01010-80830	K1110-024034	17	K008031
01010-80830	K1110-024055	35	K008052
01010-80830	K1110-039030	17	K009030
01010-80830	K1110-039051	28	K009051
01010-80835	E0450-001001	12	E008001
01010-80835	N1310-001001	12	N004001
01010-80835	N1310-001001A	9	N004002
01010-80840	K1110-024055	38	K008052
01010-80840	K1110-039051	31	K009051
01010-80855	E0200-001001	28	E002001
01010-80855	K1110-024026	14	K008024
01010-80855	K1110-039024	14	K009024
01010-80875	K0700-001001	8	K007001
01010-81016	E0200-001005	14	E002005
01010-81016	E0450-001001	20	E008001
01010-81016	K1110-024035	2	K008032
01010-81016	K1110-024046	49	K008043
01010-81016	K1110-024046	52	K008043
01010-81016	K1110-024054	14	K008051
01010-81016	K1110-039031	2	K009031
01010-81016	K1110-039042	49	K009042
01010-81016	K1110-039042	52	K009042
01010-81016	K1110-039050	14	K009050
01010-81020	C0100-001001	24	C001001
01010-81020	C0100-001001	45	C001001
01010-81020	C0100-001002	26	C001002
01010-81020	C0100-001002	47	C001002
01010-81020	C0100-001003	15	C001003
01010-81020	C0100-001003	18	C001003
01010-81020	C0100-001003	28	C001003
01010-81020	C0100-001003	31	C001003
01010-81020	C0100-001003	34	C001003
01010-81020	C0100-001003	8	C001003
01010-81020	C0100-001004	12	C001004
01010-81020	C0100-001004	15	C001004
01010-81020	C0100-001004	17	C001004
01010-81020	E0200-001001	36	E002001
01010-81020	E0200-001002	28	E002002
01010-81020	E0200-001003	34	E002003
01010-81020	E0420-001001	3	E007001
01010-81020	K1110-024028	1	K008026
01010-81020	K1110-024028	4	K008026
01010-81020	K1110-024029	5	K008027
01010-81020	K1110-024035	23	K008032
01010-81020	K1110-024035	26	K008032
01010-81020	K1110-024035	33	K008032
01010-81020	K1110-024035	36	K008032
01010-81020	K1110-024051	7	K008048
01010-81020	K1110-039026	1	K009026
01010-81020	K1110-039026	4	K009026
01010-81020	K1110-039027	5	K009027
01010-81020	K1110-039028	5	K009028
01010-81020	K1110-039031	23	K009031
01010-81020	K1110-039031	26	K009031
01010-81020	K1110-039031	33	K009031
01010-81020	K1110-039031	36	K009031
01010-81020	K1110-039047	7	K009047
01010-81020	M1220-001001	11	M007001
01010-81020	N1110-001001	13	N001001
01010-81020	P1210-002004	8	P002004
01010-81020	P1210-002008	8	P002008
01010-81020	P1210-002012	8	P002012
01010-81025	E0200-001004	22	E002004
01010-81025	E0200-001005	4	E002005
01010-81025	K1110-024029	3	K008027
01010-81025	K1110-024031	13	K008029
01010-81025	K1110-024031	3	K008029
01010-81025	K1110-024035	6	K008032
01010-81025	K1110-024054	2	K008051
01010-81025	K1110-024054	8	K008051
01010-81025	K1110-039027	3	K009027
01010-81025	K1110-039028	3	K009028
01010-81025	K1110-039031	6	K009031
01010-81025	K1110-039050	2	K009050
01010-81025	K1110-039050	8	K009050
01010-81025	M1210-002001	14	M006001
01010-81025	T1120-003001	43	T003001
01010-81025	T1120-003002	43	T003002
01010-81030	C0100-001001	22	C001001
01010-81030	C0100-001001	50	C001001
01010-81030	C0100-001002	24	C001002
01010-81030	C0100-001002	52	C001002
01010-81030	C0100-001003	10	C001003
01010-81030	C0100-001003	13	C001003
01010-81030	C0100-001003	25	C001003
01010-81030	K1110-024028	13	K008026
01010-81030	K1110-024040	2	K008037
01010-81030	K1110-039026	13	K009026
01010-81030	K1110-039036	2	K009036
01010-81030	M1210-002001	16	M006001
01010-81030	N1210-001004	11	N002004
01010-81035	D0200-002001	14	D002001
01010-81035	K0700-001002	38	K007002
01010-81040	H0120-004006	7	H003006
01010-81040	H0120-004106	7	H004006
01010-81040	H0120-005006	7	H002006
01010-81040	H1270-003003	7	H014003
01010-81040	K1110-024035	12	K008032
01010-81040	K1110-024035	16	K008032
01010-81040	K1110-039031	12	K009031
01010-81040	K1110-039031	16	K009031
01010-81040	T1110-005006	7	T001006
01010-81045	C0100-001001	14	C001001
01010-81045	C0100-001002	16	C001002
01010-81045	C0100-001004	3	C001004
01010-81045	K1110-024055	15	K008052
01010-81045	K1110-024055	2	K008052
01010-81045	K1110-039051	11	K009051
01010-81045	K1110-039051	2	K009051
01010-81050	M1130-001001	39	M003001
01010-81055	C0100-001002	16	C001002
01010-81055	H1270-003004	12	H014004
01010-81055	H1270-003004	18	H014004
01010-81070	H1270-003004	14	H014004
01010-81070	H1270-003004	20	H014004
01010-81070	K1110-024035	21	K008032
01010-81070	K1110-039031	21	K009031
01010-81075	E0200-001003	30	E002003
01010-81075	H1270-003007	9	H014007
01010-81095	H1831-001002	27	H019002
01010-81095	H1831-002002	28	H020002
01010-81095	T1140-003001	41	T004001
01010-81095	T1140-004001	39	T004011
01010-81220	A9999-002011	24	B001011
01010-81220	A9999-002023	24	B001023
01010-81220	A9999-003023	24	B001043
01010-81220	B0100-001001	18	B003001
01010-81220	C0100-001005	3	C001005
01010-81220	D0200-002001	11	D002001
01010-81220	E0200-001002	15	E002002
01010-81220	E0200-001002	18	E002002
01010-81220	E0200-001003	37	E002003
01010-81220	E0200-001003	40	E002003
01010-81220	E0200-001004	33	E002004
01010-81220	E0200-001005	10	E002005
01010-81220	E0310-004001	10	E004001
01010-81220	E0310-004001	6	E004001
01010-81220	E0450-001002	5	E009001
01010-81220	H0340-001001	11	H011001
01010-81220	H0340-001001	7	H011001
01010-81220	H1810-001001	18	H017001
01010-81220	H1810-002001	13	H018001
01010-81220	H1831-001004	21	H019004
01010-81220	H1831-002004	19	H020004
01010-81220	M1150-002002	11	M005002
01010-81220	M1150-002002	15	M005002
01010-81220	M1150-002002	17	M005002
01010-81220	M1150-002002	28	M005002
01010-81220	M1150-002002	7	M005002
01010-81220	M1510-001001	9	M012001
01010-81220	T1110-004003	11	T002003
01010-81220	T1110-004003	8	T002003
01010-81220	T1110-004005	21	T002005
01010-81220	T1110-005003	11	T001003
01010-81220	T1110-005003	8	T001003
01010-81220	T1110-005005	21	T001005
01010-81225	A9999-003001	2	B002001
01010-81225	A9999-003001A	2	B002002
01010-81225	B0200-002002	10	B004002
01010-81225	C0100-001001	19	C001001
01010-81225	C0100-001001	52	C001001
01010-81225	C0100-001002	21	C001002
01010-81225	C0100-001002	54	C001002
01010-81225	C0100-001003	37	C001003
01010-81225	C0100-001004	10	C001004
01010-81225	C0100-001004	22	C001004
01010-81225	C0100-001004	25	C001004
01010-81225	C0100-001004	28	C001004
01010-81225	C0100-001005	21	C001005
01010-81225	C0100-001005	25	C001005
01010-81225	C0100-001005	29	C001005
01010-81225	C0100-001005	34	C001005
01010-81225	C0100-001007	16	C001007
01010-81225	D0200-002003	16	D002003
01010-81225	D0200-002003	19	D002003
01010-81225	D0200-002003	26	D002003
01010-81225	D0200-002003	5	D002003
01010-81225	E0100-002001	10	E001001
01010-81225	E0100-002002	10	E001002
01010-81225	E0200-001001	11	E002001
01010-81225	E0200-001001	14	E002001
01010-81225	E0200-001001	2	E002001
01010-81225	E0200-001001	21	E002001
01010-81225	E0200-001001	25	E002001
01010-81225	E0200-001001	5	E002001
01010-81225	E0200-001001	8	E002001
01010-81225	E0200-001002	12	E002002
01010-81225	E0200-001002	2	E002002
01010-81225	E0200-001002	21	E002002
01010-81225	E0200-001002	25	E002002
01010-81225	E0200-001002	31	E002002
01010-81225	E0200-001002	5	E002002
01010-81225	E0200-001003	14	E002003
01010-81225	E0200-001003	16	E002003
01010-81225	E0200-001003	19	E002003
01010-81225	E0200-001003	3	E002003
01010-81225	E0200-001003	6	E002003
01010-81225	E0200-001004	15	E002004
01010-81225	E0200-001004	20	E002004
01010-81225	E0200-001004	25	E002004
01010-81225	E0200-001004	28	E002004
01010-81225	E0200-001004	31	E002004
01010-81225	E0200-001004	36	E002004
01010-81225	E0200-001004	38	E002004
01010-81225	E0200-001004	4	E002004
01010-81225	E0320-001001	10	E005001
01010-81225	E0320-001001	4	E005001
01010-81225	H1270-003006	12	H014006
01010-81225	H1270-003007	2	H014007
01010-81225	H1810-001001	23	H017001
01010-81225	H1810-002001	21	H018001
01010-81225	H1831-001004	10	H019004
01010-81225	H1831-001004	16	H019004
01010-81225	H1831-001004	2	H019004
01010-81225	H1831-002004	10	H020004
01010-81225	H1831-002004	2	H020004
01010-81225	H1840-001001	19	H022001
01010-81225	K0350-001001	5	K006001
01010-81225	K0700-001002	8	K007002
01010-81225	K0700-001002	18	K007002
01010-81225	K0700-001002	24	K007002
01010-81225	K0700-001002	29	K007002
01010-81225	K0700-001002	32	K007002
01010-81225	K0700-001002	36	K007002
01010-81225	K0700-001002	5	K007002
01010-81225	K1520-001001	7	K011001
01010-81225	K1520-002001	7	K012001
01010-81225	M1110-001001	32	M001001
01010-81225	M1120-001001	10	M002001
01010-81225	M1130-001001	10	M003001
01010-81225	M1130-001001	20	M003001
01010-81225	M1130-001001	4	M003001
01010-81225	M1130-001001	7	M003001
01010-81225	M1140-001001	13	M004001
01010-81225	M1140-001001	18	M004001
01010-81225	M1140-001001	22	M004001
01010-81225	M1140-001001	29	M004001
01010-81225	M1210-002001	38	M006001
01010-81225	M1210-002001	41	M006001
01010-81225	M1210-002001	44	M006001
01010-81225	R0110-001002	16	R001002
01010-81225	R0110-001002	8	R001002
01010-81225	R0110-001002A	17	R001002A
01010-81225	R0110-001002A	8	R001002A
01010-81225	R0300-003001	11	R003001
01010-81225	R0300-003011	11	R003011
01010-81230	B0100-001001	31	B003001

PARTS Nº	FIG. Nº	INDEX	PAGE
01010-81230	C0100-001005	14	C001005
01010-81230	C0100-001005	9	C001005
01010-81230	C0100-001007	12	C001007
01010-81230	C0100-001007	38	C001007
01010-81230	E0200-001005	8	E002005
01010-81230	E0450-001001	14	E008001
01010-81230	E0450-001001	23	E008001
01010-81230	H0110-002001	27	H001001
01010-81230	H0110-002001	35	H001001
01010-81230	H1210-001002	11	H012002
01010-81230	H1210-001002	15	H012002
01010-81230	H1210-001002	7	H012002
01010-81230	H1220-003002	2	H013002
01010-81230	H1831-001003	15	H019003
01010-81230	H1831-002003	16	H020003
01010-81230	J1110-001001	4	J001001
01010-81230	K0700-001002	8	K007002
01010-81230	K1110-024032	5	K008030
01010-81230	K1110-024033	5	K008030A
01010-81230	K1110-039029	5	K009029
01010-81230	M1110-001001	19	M001001
01010-81230	M1110-001001	28	M001001
01010-81230	M1110-001001	30	M001001
01010-81230	M1120-001001	12	M002001
01010-81230	M1120-001001	16	M002001
01010-81230	M1120-001001	18	M002001
01010-81230	M1120-001001	20	M002001
01010-81230	M1120-001001	24	M002001
01010-81230	M1120-001001	27	M002001
01010-81230	M1120-001001	31	M002001
01010-81230	M1120-001001	34	M002001
01010-81230	M1120-001001	8	M002001
01010-81230	M1130-001001	30	M003001
01010-81230	M1130-001001	36	M003001
01010-81230	M1140-001001	37	M004001
01010-81230	M1140-001001	41	M004001
01010-81230	M1140-001001	47	M004001
01010-81230	M1150-002001	13	M005001
01010-81230	M1150-002001	18	M005001
01010-81230	M1150-002001	22	M005001
01010-81230	M1150-002001	25	M005001
01010-81230	M1150-002001	5	M005001
01010-81230	M1150-002001	7	M005001
01010-81230	M1150-002001	9	M005001
01010-81230	M1150-002002	20	M005002
01010-81230	M1150-002002	23	M005002
01010-81230	M1150-002002	26	M005002
01010-81230	M1150-002002	30	M005002
01010-81230	M1150-002002	37	M005002
01010-81230	M1150-002002	42	M005002

PARTS Nº	FIG. Nº	INDEX	PAGE
01010-81230	M1150-002002	48	M005002
01010-81230	M1210-002001	20	M006001
01010-81230	M1210-002001	24	M006001
01010-81230	M1210-002001	26	M006001
01010-81230	M1210-002001	29	M006001
01010-81230	M1210-002001	31	M006001
01010-81230	M1220-001001	13	M007001
01010-81230	M1220-001001	15	M007001
01010-81230	M1220-001001	17	M007001
01010-81230	M1220-001001	19	M007001
01010-81230	M1420-001001	7	M010001
01010-81230	M1430-001001	3	M011001
01010-81230	M1810-004001	11	M014001
01010-81230	M1810-004001	14	M014001
01010-81230	M1810-004001	18	M014001
01010-81230	M1810-004001	21	M014001
01010-81230	M1810-004001	26	M014001
01010-81230	M1810-004001	29	M014001
01010-81230	M1810-004001	32	M014001
01010-81230	M1810-004001	35	M014001
01010-81230	M1810-004001	37	M014001
01010-81230	M1810-004001	4	M014001
01010-81230	M1810-004001	40	M014001
01010-81230	M1810-004001	7	M014001
01010-81230	M1810-004002	10	M014002
01010-81230	M1810-004002	2	M014002
01010-81230	M1810-004002	4	M014002
01010-81230	M1810-004002	7	M014002
01010-81230	M1810-004003	10	M014003
01010-81230	M1810-004003	14	M014003
01010-81230	M1810-004003	16	M014003
01010-81230	M1810-004003	19	M014003
01010-81230	M1810-004003	2	M014003
01010-81230	M1810-004003	25	M014003
01010-81230	M1810-004003	28	M014003
01010-81230	M1810-004003	31	M014003
01010-81230	M1810-004003	5	M014003
01010-81230	T1200-008006	4	T007006
01010-81230	T1200-010006	4	T005006
01010-81235	A9999-002021	14	B001021
01010-81235	A9999-002023	27	B001023
01010-81235	A9999-003021	14	B001041
01010-81235	A9999-003023	27	B001043
01010-81235	C0100-001002	11	C001002
01010-81235	C0100-001003	43	C001003
01010-81235	C0100-001003	49	C001003
01010-81235	C0100-001005	42	C001005
01010-81235	H0330-001001	20	H009001
01010-81235	H0330-002001	24	H010001
01010-81235	H1210-001002	3	H012002

PARTS Nº	FIG. Nº	INDEX	PAGE
01010-81235	H1270-003001	13	H014001
01010-81235	H1270-003001	20	H014001
01010-81235	H1270-003001	5	H014001
01010-81235	H1833-001001	16	H021001
01010-81235	J1310-002001	7	J002001
01010-81235	K0700-001001	13	K007001
01010-81235	K1120-001001	12	K010001
01010-81235	K1120-001001	6	K010001
01010-81235	M1810-004003	21	M014003
01010-81235	M1810-004003	7	M014003
01010-81235	R1140-001001	3	R006001
01010-81235	T1110-004002	12	T002002
01010-81235	T1110-004002	5	T002002
01010-81235	T1110-004002	8	T002002
01010-81235	T1110-004004	11	T002004
01010-81235	T1110-004004	16	T002004
01010-81235	T1110-004004	19	T002004
01010-81235	T1110-004004	5	T002004
01010-81235	T1110-004004	8	T002004
01010-81235	T1110-004005	3	T002005
01010-81235	T1110-005002	12	T001002
01010-81235	T1110-005002	5	T001002
01010-81235	T1110-005002	8	T001002
01010-81235	T1110-005004	11	T001004
01010-81235	T1110-005004	16	T001004
01010-81235	T1110-005004	19	T001004
01010-81235	T1110-005004	5	T001004
01010-81235	T1110-005004	8	T001004
01010-81235	T1110-005005	3	T001005
01010-81235	T1110-005006	18	T001006
01010-81235	T1110-005006	24	T001006
01010-81235	T1110-005007	20	T001007
01010-81235	T1110-005007	3	T001007
01010-81235	T1110-005007	9	T001007
01010-81235	T1200-007004	3	T008004
01010-81235	T1200-007004	8	T008004
01010-81235	T1200-008004	3	T007004
01010-81235	T1200-008004	8	T007004
01010-81235	T1200-008005	21	T007005
01010-81235	T1200-008005	9	T007005
01010-81235	T1200-010004	3	T005004
01010-81235	T1200-010004	8	T005004
01010-81235	T1200-011004	3	T006004
01010-81235	T1200-011004	8	T006004
01010-81240	A9999-003001	6	B002001
01010-81240	A9999-003001A	9	B002002
01010-81240	C0100-001001	47	C001001
01010-81240	C0100-001002	49	C001002
01010-81240	D0200-002003	34	D002003
01010-81240	H0311-001001	10	H006001

PARTS Nº	FIG. Nº	INDEX	PAGE
01010-81240	H0311-001002	10	H006002
01010-81240	H0320-001001	5	H008001
01010-81240	H0330-001001	3	H009001
01010-81240	H0330-002001	7	H010001
01010-81240	H1220-003002	4	H013002
01010-81240	H1270-003001	16	H014001
01010-81240	H1270-003004	27	H014004
01010-81240	H1270-003006	9	H014006
01010-81240	K1120-001001	6	K010001
01010-81240	M1120-001001	2	M002001
01010-81240	M1310-002001	2	M008001
01010-81240	N1210-001004	40	N002004
01010-81240	N1310-001002	32	N004003
01010-81245	A9999-003001	8	B002001
01010-81245	A9999-003001A	11	B002002
01010-81245	D0200-002003	13	D002003
01010-81245	D0200-002003	22	D002003
01010-81245	E0200-001003	24	E002003
01010-81245	H1270-003001	18	H014001
01010-81245	H1270-003001	30	H014001
01010-81245	K1110-024024	34	K008022
01010-81245	K1110-039022	34	K009022
01010-81245	T1110-005006	4	T001006
01010-81245	T1140-004001	49	T004011
01010-81245	T1200-007002	37	T008002
01010-81245	T1200-008002	37	T007002
01010-81245	T1200-008005	3	T007005
01010-81245	T1200-008005	6	T007005
01010-81245	T1200-008006	13	T007006
01010-81245	T1200-010002	37	T005002
01010-81245	T1200-010005	3	T005005
01010-81245	T1200-010005	6	T005005
01010-81245	T1200-010006	13	T005006
01010-81245	T1200-011002	37	T006002
01010-81250	E0200-001001	33	E002001
01010-81250	E0200-001002	34	E002002
01010-81250	E0200-001002	9	E002002
01010-81250	H1270-003006	6	H014006
01010-81250	T1110-005007	17	T001007
01010-81250	T1110-005007	22	T001007
01010-81250	T1200-008005	15	T007005
01010-81250	T1200-010005	12	T005005
01010-81255	H1220-003002	8	H013002
01010-81260	E0200-001001	18	E002001
01010-81260	E0320-001001	6	E005001
01010-81260	H1831-001004	14	H019004
01010-81260	H1831-002004	14	H020004
01010-81260	H1831-002004	24	H020004
01010-81260	H1831-002004	7	H020004
01010-81260	H1833-001001	19	H021001

PARTS Nº	FIG. Nº	INDEX	PAGE
01010-81260	K0700-001002	21	K007002
01010-81270	H0320-001001	10	H008001
01010-81275	B0100-001001	15	B003001
01010-81275	B0100-001001	26	B003001
01010-81275	H0330-002001	3	H010001
01010-81285	H1270-003004	36	H014004
01010-81285	H1831-001004	7	H019004
01010-81285	K1520-001001	10	K011001
01010-81290	H0330-001001	23	H009001
01010-81290	H0330-002001	27	H010001
01010-81295	H0320-001001	15	H008001
01010-81430	E0310-004001	3	E004001
01010-81430	T1110-004005	18	T002005
01010-81430	T1110-005005	18	T001005
01010-81440	K0700-001001	4	K007001
01010-81455	H1270-003003	11	H014003
01010-81455	H1270-003003	36	H014003
01010-81455	T1110-005006	12	T001006
01010-81455	T1110-005006	15	T001006
01010-81455	T1200-008005	18	T007005
01010-81455	T1200-010005	15	T005005
01010-81635	C0100-001006	11	C001006
01010-81635	D0100-001001	15	D001001
01010-81635	D0100-001001A	15	D001001A
01010-81635	H0110-002001	59	H001001
01010-81635	H1270-003004	8	H014004
01010-81640	C0100-001006	8	C001006
01010-81640	C0100-001007	1	C001007
01010-81640	C0100-001007	3	C001007
01010-81640	H0120-004027	2	H003027
01010-81640	H0120-004125	2	H004025
01010-81640	H0120-005027	2	H002027
01010-81640	J1310-002001	3	J002001
01010-81640	P1210-002004	39	P002004
01010-81640	T1110-004001	16	T002001
01010-81640	T1110-005001	16	T001001
01010-81640	T1200-008006	10	T007006
01010-81640	T1200-010006	10	T005006
01010-81645	B0100-001001	28	B003001
01010-81645	H0120-004027	4	H003027
01010-81645	H0120-004125	4	H004025
01010-81645	H0120-005027	4	H002027
01010-81645	N1210-001004	23	N002004
01010-81655	K1110-024024	36	K008022
01010-81655	K1110-039022	36	K009022
01010-81655	T1110-005006	21	T001006
01010-81655	T1110-005006	27	T001006
01010-81685	T1110-005007	12	T001007
01010-81685	T1110-005007	6	T001007
01010-81875	T1120-003001	21	T003001

PARTS Nº	FIG. Nº	INDEX	PAGE
01010-81875	T1120-003002	21	T003002
01010-81875	T1200-007002	18	T008002
01010-81875	T1200-008002	18	T007002
01010-82065	T1510-000001	11	T010001
01010-82065	T1510-000002	17	T010002
01010-82065	T1510-000003	18	T010003
01010-82075	P1210-002004	36	P002004
01010-82075	R0110-001002	18	R001002
01010-82075	R0110-001002A	19	R001002A
01010-82085	T1140-003001	23	T004001
01010-82085	T1140-004001	23	T004011
01010-82085	T1200-010002	18	T005002
01010-82085	T1200-011002	18	T006002
01010-82095	R0300-003001	14	R003001
01010-82095	R0300-003011	12	R003011
01010-82455	R1140-001002	2	R006002
01010-82475	N1210-001004	45	N002004
01010-83075	K1120-001001	9	K010001
01010-D0820	K1110-024020	17	K008018
01010-D0820	K1110-039018	17	K009018
01010-D0825	K1110-024016	3	K008015
01010-D0825	K1110-024016	6	K008015
01010-D0825	K1110-024017	11	K008015A
01010-D0825	K1110-024017	7	K008015A
01010-D0825	K1110-039015	11	K009015
01010-D0825	K1110-039015	7	K009015
01010-D1025	E0310-005001	2	E003001
01010-D1025	K1110-024011	8	K008011
01010-D1025	K1110-039011	8	K009011
01010-D1030	K1110-024011	8	K008011
01010-D1030	K1110-039011	8	K009011
01010-D1035	K1110-024031	7	K008029
01010-D1045	K1110-024028	11	K008026
01010-D1045	K1110-024031	10	K008029
01010-D1045	K1110-039026	11	K009026
01010-D1060	E0310-005001	5	E003001
01010-D1225	K1110-024012	28	K008012
01010-D1225	K1110-039012	28	K009012
01010-D1230	K1110-024046	2	K008043
01010-D1230	K1110-039042	2	K009042
01010-E1235	A1610-001001	3	B000021
01011-61455	H0120-004107	24	H004007
01011-61880	P1210-002004	29	P002004
01011-61880	P1210-002008	29	P002008
01011-61880	P1210-002012	29	P002012
01011-81015	E0420-001001	5	E007001
01011-81020	H0312-002010	3	H007002
01011-81040	D0200-002003	28	D002003
01011-81070	H0312-002001	6	H007001
01011-81070	H0312-002001	9	H007001

PARTS Nº	FIG. Nº	INDEX	PAGE
01011-81070	H0312-002010	9	H007002
01011-81200	D0200-002003	9	D002003
01011-81200	H1270-003001	2	H014001
01011-81200	H1270-003001	33	H014001
01011-81210	H1270-003003	22	H014003
01011-81265	H0320-001001	17	H008001
01011-82475	T1200-007003	13	T008003
01011-82475	T1200-008003	13	T007003
01011-82475	T1200-010003	13	T005003
01011-82475	T1200-011003	13	T006003
01011-83030	K1120-001001	9	K010001
01011-D1245	K0230-002001	3	K003001
01019-31400	K0700-001001	6	K007001
01023-10306	K1110-024026	22	K008024
01023-10306	K1110-039024	22	K009024
01023-10410	K1110-024010	5	K008010
01023-10410	K1110-039010	5	K009010
01023-10508	K1110-024046	45	K008043
01023-10508	K1110-039042	45	K009042
01023-10612	K1110-024005	4	K008005
01023-10612	K1110-024005	6	K008005
01023-10612	K1110-039005	4	K009005
01023-10612	K1110-039005	6	K009005
01023-20412	K1110-024009	2	K008009
01023-20412	K1110-039009	2	K009009
01023-20416	K1110-024009	8	K008009
01023-20416	K1110-024028	20	K008026
01023-20416	K1110-039009	8	K009009
01023-20416	K1110-039026	20	K009026
01023-20512	K1110-024042	12	K008039
01023-20512	K1110-024042	16	K008039
01023-20512	K1110-024047	12	K008044
01023-20512	K1110-024047	16	K008044
01023-20512	K1110-039038	12	K009038
01023-20512	K1110-039038	16	K009038
01023-20512	K1110-039043	12	K009043
01023-20512	K1110-039043	16	K009043
01023-20616	K1110-024010	37	K008010
01023-20616	K1110-039010	37	K009010
01023-20620	K1110-024007	10	K008007
01023-20620	K1110-039007	10	K009007
01023-60320	K1110-024041	26	K008038
01023-60320	K1110-039037	26	K009037
01023-60410	K1110-024041	10	K008038
01023-60410	K1110-039037	10	K009037
01023-60510	K1110-024041	3	K008038
01023-60510	K1110-039037	3	K009037
01023-60512	K1110-024011	2	K008011
01023-60512	K1110-039011	2	K009011
01023-60620	K1110-024023	4	K008021
01023-60620	K1110-039021	4	K009021
01023-70412	K1110-024009	12	K008009
01023-70412	K1110-039009	12	K009009
01050-31230	AEH20-001001	10	F001001
01220-40612	M1140-001001	45	M004001
01224-40616	M1210-002001	18	M006001
01224-70408	K1110-024010	8	K008010
01224-70408	K1110-039010	8	K009010
01240-00616	K1110-024005	7	K008005
01240-00616	K1110-039005	7	K009005
01240-00820	K1110-024035	30	K008032
01240-00820	K1110-039031	30	K009031
01240-01025	K1110-024006	16	K008006
01240-01025	K1110-039006	16	K009006
01245-00612	K1110-024013	23	K008013
01245-00616	K1110-024010	24	K008010
01245-00616	K1110-024010	30	K008010
01245-00616	K1110-024012	9	K008012
01245-00616	K1110-024013	17	K008013
01245-00616	K1110-024013	23	K008013
01245-00616	K1110-024014	4	K008014
01245-00616	K1110-024015	4	K008014A
01245-00616	K1110-024017	5	K008015A
01245-00616	K1110-024040	12	K008037
01245-00616	K1110-024040	18	K008037
01245-00616	K1110-024040	24	K008037
01245-00616	K1110-024046	14	K008043
01245-00616	K1110-024046	22	K008043
01245-00616	K1110-024046	25	K008043
01245-00616	K1110-039010	24	K009010
01245-00616	K1110-039010	30	K009010
01245-00616	K1110-039012	9	K009012
01245-00616	K1110-039013	17	K009013
01245-00616	K1110-039013	23	K009013
01245-00616	K1110-039014	4	K009014
01245-00616	K1110-039015	5	K009015
01245-00616	K1110-039036	12	K009036
01245-00616	K1110-039036	18	K009036
01245-00616	K1110-039036	24	K009036
01245-00616	K1110-039042	14	K009042
01245-00616	K1110-039042	22	K009042
01245-00616	K1110-039042	25	K009042
01245-00620	K1110-024042	9	K008039
01245-00620	K1110-024047	9	K008044
01245-00620	K1110-039038	9	K009038
01245-00620	K1110-039043	9	K009043
01245-00816	K1110-024012	19	K008012
01245-00816	K1110-039012	19	K009012
01245-00820	K1110-024049	5	K008046
01245-00820	K1110-039045	5	K009045
01245-01016	K1110-024012	14	K008012
01245-01016	K1110-024012	7	K008012
01245-01016	K1110-039012	14	K009012
01245-01016	K1110-039012	7	K009012
01245-01025	K1110-024032	10	K008030
01245-01025	K1110-024032	8	K008030
01245-01025	K1110-024033	10	K008030A
01245-01025	K1110-024033	8	K008030A
01245-01025	K1110-039029	10	K009029
01245-01025	K1110-039029	8	K009029
01252-30625	K1110-024030	15	K008028
01252-41025	K1110-024037	10	K008034
01252-41025	K1110-024043	10	K008040
01252-41025	K1110-039033	10	K009033
01252-41025	K1110-039039	10	K009039
01252-60530	A9999-002011	18	B001011
01252-60530	A9999-002023	18	B001023
01252-60530	A9999-003023	18	B001043
01252-60612	K1110-024030	24	K008028
01252-60635	A9999-002011	4	B001011
01252-60635	A9999-002023	4	B001023
01252-60635	A9999-003023	4	B001043
01252-60816	H0120-004013	6	H003013
01252-60816	H0120-004113	6	H004013
01252-60816	H0120-005013	6	H002013
01252-60820	H0120-004003	18	H003003
01252-60820	H0120-004013	10	H003013
01252-60820	H0120-004015	9	H003015
01252-60820	H0120-004022	10	H003022
01252-60820	H0120-004103	18	H004003
01252-60820	H0120-004113	10	H004013
01252-60820	H0120-004115	9	H004015
01252-60820	H0120-005003	18	H002003
01252-60820	H0120-005013	10	H002013
01252-60820	H0120-005015	9	H002015
01252-60820	H0120-005022	10	H002022
01252-60825	N1210-001003	13	N002003
01252-60830	H0120-004018	12	H003018
01252-60830	H0120-004118	12	H004018
01252-60830	H0120-005018	12	H002018
01252-60835	K1110-024027	19	K008025
01252-60835	K1110-039024	19	K009024
01252-60845	H0120-004015	22	H003015
01252-60845	H0120-004023	5	H003023
01252-60845	H0120-004115	22	H004015
01252-60845	H0120-005015	22	H002015
01252-60845	H0120-005023	5	H002023
01252-60865	H0120-004006	3	H003006
01252-60865	H0120-004106	3	H004006
01252-60865	H0120-005006	3	H002006

PARTS Nº	FIG. Nº	INDEX	PAGE
01252-61030	H1270-003002	7	H014002
01252-61040	H0120-004014	20	H003014
01252-61040	H0120-004114	8	H004014
01252-61040	H0120-005014	20	H002014
01252-61040	H1270-003002	6	H014002
01252-61050	H0120-004010	14	H003010
01252-61050	H0120-004110	14	H004010
01252-61050	H0120-005010	14	H002010
01252-61065	H0120-004021	6	H003021
01252-61065	H0120-004121	6	H004021
01252-61065	H0120-005021	6	H002021
01252-61075	H0120-004018	13	H003018
01252-61075	H0120-004019	24	H003019
01252-61075	H0120-004020	24	H003020
01252-61075	H0120-004118	13	H004018
01252-61075	H0120-004119	24	H004019
01252-61075	H0120-004120	24	H004020
01252-61075	H0120-005018	13	H002018
01252-61075	H0120-005019	24	H002019
01252-61075	H0120-005020	24	H002020
01252-61230	A9999-002003	23	B001003
01252-61230	A9999-002007	20	B001007
01252-61230	A9999-002014	23	B001014
01252-61230	A9999-002018	20	B001018
01252-61230	A9999-003014	23	B001034
01252-61230	A9999-003018	20	B001038
01252-61230	R0300-003001	13	R003001
01252-61450	N1210-001001	17	N002001
01252-61645	A9999-002004	29	B001004
01252-61645	A9999-002005	8	B001005
01252-61645	A9999-002008	29	B001008
01252-61645	A9999-002009	8	B001009
01252-61645	A9999-002015	29	B001015
01252-61645	A9999-002016	8	B001016
01252-61645	A9999-002019	29	B001019
01252-61645	A9999-002020	8	B001020
01252-61645	A9999-003015	29	B001035
01252-61645	A9999-003016	8	B001036
01252-61645	A9999-003019	29	B001039
01252-61645	A9999-003020	8	B001040
01252-62055	P1210-002001	31	P002001
01252-62055	P1210-002005	31	P002005
01252-62055	P1210-002009	31	P002009
01252-62095	P1210-002001	32	P002001
01252-62095	P1210-002005	32	P002005
01252-62095	P1210-002009	32	P002009
01252-70516	H0110-002001	41	H001001
01252-70516	H0110-002001	54	H001001
01252-70816	K1110-024041	18	K008038
01252-70816	K1110-039037	18	K009037
01252-71030	M1410-001001	4	M009001
01252-71030	M1420-001001	4	M010001
01252-71225	H1270-003003	19	H014003
01252-80820	K1110-024042	3	K008039
01252-80820	K1110-024047	3	K008044
01252-80820	K1110-039038	3	K009038
01252-80820	K1110-039043	3	K009043
01252-80825	K0110-001002	1	K001002
01310-01216	T1120-003001	24	T003001
01310-01216	T1120-003002	24	T003002
01310-01216	T1140-003001	26	T004001
01310-01216	T1140-004001	32	T004011
01310-01216	T1200-007002	21	T008002
01310-01216	T1200-008002	21	T007002
01310-01216	T1200-010002	21	T005002
01310-01216	T1200-011002	21	T006002
01370-00420	K1110-024007	12	K008007
01370-00420	K1110-039007	12	K009007
01370-00508	M1510-001001	8	M012001
01370-10308	K1110-024024	16	K008022
01370-10308	K1110-039022	16	K009022
01370-20308	K1110-024024	19	K008022
01370-20308	K1110-039022	19	K009022
01370-30416	K1110-024010	34	K008010
01370-30416	K1110-039010	34	K009010
01370-40510	K1110-024042	14	K008039
01370-40510	K1110-024047	14	K008044
01370-40510	K1110-039038	14	K009038
01370-40510	K1110-039043	14	K009043
01370-40610	K1110-024042	19	K008039
01370-40610	K1110-024047	19	K008044
01370-40610	K1110-039038	19	K009038
01370-40610	K1110-039043	19	K009043
01434-10616	C0100-001003	2	C001003
01434-10616	C0100-001003	5	C001003
01435-00610	K1110-024021	10	K008019
01435-00610	K1110-024021	12	K008019
01435-00610	K1110-024021	14	K008019
01435-00610	K1110-024021	16	K008019
01435-00610	K1110-024021	19	K008019
01435-00610	K1110-024022	6	K008020
01435-00610	K1110-024024	30	K008022
01435-00610	K1110-039019	10	K009019
01435-00610	K1110-039019	12	K009019
01435-00610	K1110-039019	14	K009019
01435-00610	K1110-039019	16	K009019
01435-00610	K1110-039019	19	K009019
01435-00610	K1110-039020	6	K009020
01435-00610	K1110-039022	30	K009022
01435-00612	K1110-024002	5	K008002
01435-00612	K1110-024010	15	K008010
01435-00612	K1110-024010	19	K008010
01435-00612	K1110-024010	26	K008010
01435-00612	K1110-024010	32	K008010
01435-00612	K1110-024018	10	K008016
01435-00612	K1110-024018	6	K008016
01435-00612	K1110-024022	9	K008020
01435-00612	K1110-024024	39	K008022
01435-00612	K1110-024040	20	K008037
01435-00612	K1110-024046	18	K008043
01435-00612	K1110-039002	5	K009002
01435-00612	K1110-039010	15	K009010
01435-00612	K1110-039010	19	K009010
01435-00612	K1110-039010	26	K009010
01435-00612	K1110-039010	32	K009010
01435-00612	K1110-039016	10	K009016
01435-00612	K1110-039016	6	K009016
01435-00612	K1110-039020	9	K009020
01435-00612	K1110-039022	39	K009022
01435-00612	K1110-039036	20	K009036
01435-00612	K1110-039042	18	K009042
01435-00616	K1110-024007	2	K008007
01435-00616	K1110-024013	2	K008013
01435-00616	K1110-024013	21	K008013
01435-00616	K1110-024013	6	K008013
01435-00616	K1110-039007	2	K009007
01435-00616	K1110-039013	2	K009013
01435-00616	K1110-039013	21	K009013
01435-00616	K1110-039013	6	K009013
01435-00625	K0700-001001	22	K007001
01435-00625	K0700-001002	15	K007002
01435-00630	K0700-001002	14	K007002
01435-00816	A1570-001001	12	A013001
01435-00816	K1110-024023	3	K008021
01435-00816	K1110-039021	3	K009021
01435-00820	A1570-001001	6	A013001
01435-00820	A1570-001001	2	B000011
01435-00820	A1610-001001	14	B000021
01435-00820	A1610-001001	9	B000021
01435-00820	K1110-024013	8	K008013
01435-00820	K1110-024021	4	K008019
01435-00820	K1110-024021	6	K008019
01435-00820	K1110-039013	8	K009013
01435-00820	K1110-039019	4	K009019
01435-00820	K1110-039019	6	K009019
01435-00825	A5019-001001	3	E007001
01435-00855	A1570-001001	14	A013001
01435-00860	K1110-024021	2	K008019
01435-00860	K1110-039019	2	K009019
01435-01016	A9999-003001A	6	B002002

PARTS Nº	FIG. Nº	INDEX	PAGE
01435-01020	A1610-001001	20	B000021
01435-01020	A2119-001001	8	B008001
01435-01020	AEH20-001001	9	F001001
01435-01025	A1610-001001	19	B000021
01435-01030	A5030-001001	2	B000041
01435-01045	A5030-001001	2	E003001
01435-01075	AFA10-001001	13	E002001
01435-01085	AFA10-001001	5	E002001
01435-01095	AFA10-001001	4	E002001
01435-01220	K1110-024004	18	K008004
01435-01220	K1110-024004	19	K008004
01435-01220	K1110-039004	18	K009004
01435-01220	K1110-039004	19	K009004
01435-01225	A1610-001001	12	B000021
01435-01235	T1140-003001	48	T004001
01435-01240	A6250-001001	2	B000061
01435-40610	K1110-024010	39	K008010
01435-40610	K1110-039010	39	K009010
01435-40612	K0310-001001	5	K004001
01435-40612	K0310-002001	5	K005001
01435-40616	K0310-001001	2	K004001
01435-40616	K0310-002001	2	K005001
01435-40616	K1110-024006	5	K008006
01435-40616	K1110-024019	12	K008017
01435-40616	K1110-024024	11	K008022
01435-40616	K1110-024024	22	K008022
01435-40616	K1110-039006	5	K009006
01435-40616	K1110-039017	12	K009017
01435-40616	K1110-039022	11	K009022
01435-40616	K1110-039022	22	K009022
01435-40620	K1110-024024	25	K008022
01435-40620	K1110-024050	7	K008047
01435-40620	K1110-039022	25	K009022
01435-40620	K1110-039046	7	K009046
01435-40812	K1110-024009	9	K008009
01435-40812	K1110-024022	2	K008020
01435-40812	K1110-039009	9	K009009
01435-40812	K1110-039020	2	K009020
01435-40816	K1110-024042	6	K008039
01435-40816	K1110-024047	6	K008044
01435-40816	K1110-039038	6	K009038
01435-40816	K1110-039043	6	K009043
01435-40820	K1110-024020	11	K008018
01435-40820	K1110-024020	6	K008018
01435-40820	K1110-039018	11	K009018
01435-40820	K1110-039018	6	K009018
01435-40825	K1110-024006	2	K008006
01435-40825	K1110-024011	6	K008011
01435-40825	K1110-039006	2	K009006
01435-40825	K1110-039011	6	K009011
01580-01008	K1110-024031	39	K008029
01580-01008	K1110-024031	42	K008029
01580-01815	B0100-001001	5	B003001
01580-02419	B0100-001001	11	B003001
01580-10403	K1110-024024	8	K008022
01580-10403	K1110-039022	8	K009022
01580-10605	E0200-001004	7	E002004
01580-10806	A9999-002004	26	B001004
01580-10806	A9999-002008	26	B001008
01580-10806	A9999-002015	26	B001015
01580-10806	A9999-002019	26	B001019
01580-10806	A9999-003015	26	B001035
01580-10806	A9999-003019	26	B001039
01580-10806	C0100-001007	35	C001007
01580-11008	K1110-024006	12	K008006
01580-11008	K1110-039006	12	K009006
01580-11008	M1130-001001	16	M003001
01580-11008	M1140-001001	16	M004001
01580-11008	R1100-002001	8	R005001
01580-11210	AEH20-001001	4	F001001
01580-11613	M1110-001001	4	M001001
01580-11815	B0100-001001	5	B003001
01580-11815	R1200-002001	9	R007001
01580-12016	K1120-001001	3	K010001
01580-12419	B0100-001001	11	B003001
01580-12419	T1110-004005	9	T002005
01580-12419	T1110-005005	9	T001005
01580-12419	T1200-007003	10	T008003
01580-12419	T1200-008003	10	T007003
01580-12419	T1200-010003	10	T005003
01580-12419	T1200-011003	10	T006003
01580-40605	K1110-024042	10	K008039
01580-40605	K1110-024047	10	K008044
01580-40605	K1110-039038	10	K009038
01580-40605	K1110-039043	10	K009043
01583-11408	A9999-002010	12	B001010
01583-11408	A9999-002010	25	B001010
01583-11408	A9999-002022	12	B001022
01583-11408	A9999-002022	25	B001022
01583-11408	A9999-003022	12	B001042
01583-11408	A9999-003022	25	B001042
01583-11408	K1110-024031	35	K008029
01584-00605	AWR00-002001	8	F002001
01584-01008	K1110-024005	13	K008005
01584-01008	K1110-039005	13	K009005
01584-01210	A6250-001001	4	B000061
01594-01008	A1610-001001	7	B000021
01597-01009	C0100-001005	41	C001005
01597-01009	C0100-001007	10	C001007
01597-01009	K0700-001001	17	K007001
01597-01009	T1120-003001	42	T003001
01597-01009	T1120-003002	42	T003002
01597-01009	T1140-003001	52	T004001
01597-01211	A1610-001001	23	B000021
01597-01211	B0200-002002	14	B004002
01601-20410	K1110-024024	10	K008022
01601-20410	K1110-039022	10	K009022
01601-20513	H0110-002001	42	H001001
01601-20513	H0110-002001	55	H001001
01601-20513	K1110-024046	46	K008043
01601-20513	K1110-039042	46	K009042
01640-20408	K1110-024024	9	K008022
01640-20408	K1110-039022	9	K009022
01640-20716	AWR00-002001	19	F002001
01640-20816	AWR00-002001	17	F002001
01640-21016	K1110-024032	17	K008030
01640-21123	M1210-002001	13	M006001
01641-20608	M1140-001001	46	M004001
01641-21626	N1310-001002	29	N004003
01643-11232	K0160-002001	4	K002001
01643-30623	AWR00-002001	13	F002001
01643-30623	C0100-001003	3	C001003
01643-30623	C0100-001003	6	C001003
01643-30623	C0100-001004	7	C001004
01643-30623	D0100-001001	13	D001001
01643-30623	D0100-001001A	13	D001001A
01643-30623	E0200-001004	8	E002004
01643-30623	E0450-001001	17	E008001
01643-30623	K0350-001001	4	K006001
01643-30623	K1110-024009	1	K008009
01643-30623	K1110-024034	23	K008031
01643-30623	K1110-024040	15	K008037
01643-30623	K1110-024040	6	K008037
01643-30623	K1110-024041	5	K008038
01643-30623	K1110-024046	10	K008043
01643-30623	K1110-024046	17	K008043
01643-30623	K1110-039009	1	K009009
01643-30623	K1110-039030	23	K009030
01643-30623	K1110-039036	15	K009036
01643-30623	K1110-039036	6	K009036
01643-30623	K1110-039037	5	K009037
01643-30623	K1110-039042	10	K009042
01643-30623	K1110-039042	17	K009042
01643-30623	M1130-001001	14	M003001
01643-30623	M1130-001001	24	M003001
01643-30623	M1140-001001	26	M004001
01643-30623	M1140-001001	33	M004001
01643-30623	M1220-001001	9	M007001
01643-30823	A2080-001001	3	B000031
01643-30823	ABR00-002001	9	B013001

PARTS Nº	FIG. Nº	INDEX	PAGE
01643-30823	C0100-001007	34	C001007
01643-30823	E0200-001001	29	E002001
01643-30823	E0200-001004	12	E002004
01643-30823	E0410-001001	4	E006001
01643-30823	E0450-001001	13	E008001
01643-30823	K0700-001001	9	K007001
01643-30823	K1110-024005	17	K008005
01643-30823	K1110-024026	15	K008024
01643-30823	K1110-024034	18	K008031
01643-30823	K1110-024034	28	K008031
01643-30823	K1110-024039	2	K008036
01643-30823	K1110-024045	2	K008042
01643-30823	K1110-024049	3A	K008046
01643-30823	K1110-024055	36	K008052
01643-30823	K1110-024055	39	K008052
01643-30823	K1110-039005	17	K009005
01643-30823	K1110-039024	15	K009024
01643-30823	K1110-039030	18	K009030
01643-30823	K1110-039030	28	K009030
01643-30823	K1110-039035	2	K009035
01643-30823	K1110-039041	2	K009041
01643-30823	K1110-039045	3A	K009045
01643-30823	K1110-039051	29	K009051
01643-30823	K1110-039051	32	K009051
01643-30823	N1310-001001	13	N004001
01643-30823	N1310-001001A	10	N004002
01643-31032	A1570-001001	8	A013001
01643-31032	AEH20-001001	16	F001001
01643-31032	C0100-001001	15	C001001
01643-31032	C0100-001001	23	C001001
01643-31032	C0100-001001	25	C001001
01643-31032	C0100-001001	46	C001001
01643-31032	C0100-001001	51	C001001
01643-31032	C0100-001002	17	C001002
01643-31032	C0100-001002	25	C001002
01643-31032	C0100-001002	27	C001002
01643-31032	C0100-001002	48	C001002
01643-31032	C0100-001002	53	C001002
01643-31032	C0100-001003	11	C001003
01643-31032	C0100-001003	14	C001003
01643-31032	C0100-001003	16	C001003
01643-31032	C0100-001003	19	C001003
01643-31032	C0100-001003	26	C001003
01643-31032	C0100-001003	29	C001003
01643-31032	C0100-001003	32	C001003
01643-31032	C0100-001003	35	C001003
01643-31032	C0100-001003	9	C001003
01643-31032	C0100-001004	13	C001004
01643-31032	C0100-001004	16	C001004
01643-31032	C0100-001004	18	C001004
01643-31032	C0100-001004	4	C001004
01643-31032	C0100-001005	40	C001005
01643-31032	C0100-001007	9	C001007
01643-31032	D0200-002001	15	D002001
01643-31032	D0200-002003	29	D002003
01643-31032	E0200-001001	37	E002001
01643-31032	E0200-001002	29	E002002
01643-31032	E0200-001003	31	E002003
01643-31032	E0200-001003	35	E002003
01643-31032	E0200-001004	23	E002004
01643-31032	E0200-001005	15	E002005
01643-31032	E0200-001005	5	E002005
01643-31032	E0420-001001	4	E007001
01643-31032	E0420-001001	6	E007001
01643-31032	E0450-001001	21	E008001
01643-31032	H0312-002001	10	H007001
01643-31032	H0312-002001	7	H007001
01643-31032	H0312-002010	4	H007002
01643-31032	H1220-003002	3	H013002
01643-31032	H1220-003002	5	H013002
01643-31032	H1270-003003	8	H014003
01643-31032	H1270-003004	13	H014004
01643-31032	H1270-003004	15	H014004
01643-31032	H1270-003004	19	H014004
01643-31032	H1270-003004	21	H014004
01643-31032	H1270-003007	10	H014007
01643-31032	H1831-001002	28	H019002
01643-31032	H1831-002002	29	H020002
01643-31032	K0700-001001	18	K007001
01643-31032	K0700-001002	39	K007002
01643-31032	K1110-024006	13	K008006
01643-31032	K1110-024028	14	K008026
01643-31032	K1110-024028	2	K008026
01643-31032	K1110-024028	5	K008026
01643-31032	K1110-024029	4	K008027
01643-31032	K1110-024029	6	K008027
01643-31032	K1110-024031	14	K008029
01643-31032	K1110-024031	4	K008029
01643-31032	K1110-024031	5	K008029
01643-31032	K1110-024035	13	K008032
01643-31032	K1110-024035	17	K008032
01643-31032	K1110-024035	22	K008032
01643-31032	K1110-024035	24	K008032
01643-31032	K1110-024035	27	K008032
01643-31032	K1110-024035	3	K008032
01643-31032	K1110-024035	34	K008032
01643-31032	K1110-024035	37	K008032
01643-31032	K1110-024035	4	K008032
01643-31032	K1110-024035	7	K008032
01643-31032	K1110-024040	3	K008037
01643-31032	K1110-024046	50	K008043
01643-31032	K1110-024046	53	K008043
01643-31032	K1110-024051	8	K008048
01643-31032	K1110-024054	15	K008051
01643-31032	K1110-024054	3	K008051
01643-31032	K1110-024054	9	K008051
01643-31032	K1110-024055	16	K008052
01643-31032	K1110-024055	3	K008052
01643-31032	K1110-039006	13	K009006
01643-31032	K1110-039026	14	K009026
01643-31032	K1110-039026	2	K009026
01643-31032	K1110-039026	5	K009026
01643-31032	K1110-039027	4	K009027
01643-31032	K1110-039027	6	K009027
01643-31032	K1110-039028	4	K009028
01643-31032	K1110-039028	6	K009028
01643-31032	K1110-039031	13	K009031
01643-31032	K1110-039031	17	K009031
01643-31032	K1110-039031	22	K009031
01643-31032	K1110-039031	24	K009031
01643-31032	K1110-039031	27	K009031
01643-31032	K1110-039031	3	K009031
01643-31032	K1110-039031	34	K009031
01643-31032	K1110-039031	37	K009031
01643-31032	K1110-039031	4	K009031
01643-31032	K1110-039031	7	K009031
01643-31032	K1110-039036	3	K009036
01643-31032	K1110-039042	50	K009042
01643-31032	K1110-039042	53	K009042
01643-31032	K1110-039047	8	K009047
01643-31032	K1110-039050	15	K009050
01643-31032	K1110-039050	3	K009050
01643-31032	K1110-039050	9	K009050
01643-31032	K1110-039051	12	K009051
01643-31032	K1110-039051	3	K009051
01643-31032	M1130-001001	40	M003001
01643-31032	M1210-002001	15	M006001
01643-31032	M1210-002001	17	M006001
01643-31032	M1220-001001	12	M007001
01643-31032	N1110-001001	14	N001001
01643-31032	N1210-001004	12	N002004
01643-31032	R1100-002001	9	R005001
01643-31032	T1110-005006	8	T001006
01643-31032	T1120-003001	41	T003001
01643-31032	T1120-003001	44	T003001
01643-31032	T1120-003002	41	T003002
01643-31032	T1120-003002	44	T003002
01643-31032	T1140-003001	42	T004001
01643-31032	T1140-003001	51	T004001
01643-31032	T1140-004001	40	T004011

PARTS Nº	FIG. Nº	INDEX	PAGE
01643-31232	A1610-001001	22	B000021
01643-31232	A1610-001001	4	B000021
01643-31232	A9999-002021	15	B001021
01643-31232	A9999-003001	3	B002001
01643-31232	A9999-003001	7	B002001
01643-31232	A9999-003001	9	B002001
01643-31232	A9999-003001A	10	B002002
01643-31232	A9999-003001A	12	B002002
01643-31232	A9999-003001A	3	B002002
01643-31232	A9999-003021	15	B001041
01643-31232	AEH20-001001	2	F001001
01643-31232	AEH20-001001	8	F001001
01643-31232	B0100-001001	16	B003001
01643-31232	B0100-001001	19	B003001
01643-31232	B0100-001001	27	B003001
01643-31232	B0100-001001	32	B003001
01643-31232	B0200-002002	11	B004002
01643-31232	B0200-002002	15	B004002
01643-31232	C0100-001001	20	C001001
01643-31232	C0100-001001	48	C001001
01643-31232	C0100-001001	53	C001001
01643-31232	C0100-001002	12	C001002
01643-31232	C0100-001002	22	C001002
01643-31232	C0100-001002	50	C001002
01643-31232	C0100-001002	55	C001002
01643-31232	C0100-001003	38	C001003
01643-31232	C0100-001003	44	C001003
01643-31232	C0100-001003	50	C001003
01643-31232	C0100-001003	53	C001003
01643-31232	C0100-001004	11	C001004
01643-31232	C0100-001004	23	C001004
01643-31232	C0100-001004	26	C001004
01643-31232	C0100-001004	29	C001004
01643-31232	C0100-001005	10	C001005
01643-31232	C0100-001005	15	C001005
01643-31232	C0100-001005	22	C001005
01643-31232	C0100-001005	26	C001005
01643-31232	C0100-001005	30	C001005
01643-31232	C0100-001005	35	C001005
01643-31232	C0100-001005	4	C001005
01643-31232	C0100-001005	43	C001005
01643-31232	C0100-001007	13	C001007
01643-31232	C0100-001007	17	C001007
01643-31232	C0100-001007	39	C001007
01643-31232	D0200-002001	12	D002001
01643-31232	D0200-002003	10	D002003
01643-31232	D0200-002003	14	D002003
01643-31232	D0200-002003	17	D002003
01643-31232	D0200-002003	20	D002003
01643-31232	D0200-002003	23	D002003
01643-31232	D0200-002003	27	D002003
01643-31232	D0200-002003	35	D002003
01643-31232	D0200-002003	6	D002003
01643-31232	E0200-001001	12	E002001
01643-31232	E0200-001001	15	E002001
01643-31232	E0200-001001	19	E002001
01643-31232	E0200-001001	22	E002001
01643-31232	E0200-001001	26	E002001
01643-31232	E0200-001001	3	E002001
01643-31232	E0200-001001	34	E002001
01643-31232	E0200-001001	6	E002001
01643-31232	E0200-001001	9	E002001
01643-31232	E0200-001002	10	E002002
01643-31232	E0200-001002	13	E002002
01643-31232	E0200-001002	16	E002002
01643-31232	E0200-001002	19	E002002
01643-31232	E0200-001002	22	E002002
01643-31232	E0200-001002	26	E002002
01643-31232	E0200-001002	3	E002002
01643-31232	E0200-001002	32	E002002
01643-31232	E0200-001002	35	E002002
01643-31232	E0200-001002	6	E002002
01643-31232	E0200-001003	15	E002003
01643-31232	E0200-001003	17	E002003
01643-31232	E0200-001003	20	E002003
01643-31232	E0200-001003	25	E002003
01643-31232	E0200-001003	38	E002003
01643-31232	E0200-001003	4	E002003
01643-31232	E0200-001003	41	E002003
01643-31232	E0200-001003	42	E002003
01643-31232	E0200-001003	7	E002003
01643-31232	E0200-001004	16	E002004
01643-31232	E0200-001004	21	E002004
01643-31232	E0200-001004	26	E002004
01643-31232	E0200-001004	29	E002004
01643-31232	E0200-001004	32	E002004
01643-31232	E0200-001004	34	E002004
01643-31232	E0200-001004	37	E002004
01643-31232	E0200-001004	39	E002004
01643-31232	E0200-001004	5	E002004
01643-31232	E0200-001005	11	E002005
01643-31232	E0200-001005	9	E002005
01643-31232	E0310-004001	11	E004001
01643-31232	E0310-004001	7	E004001
01643-31232	E0320-001001	11	E005001
01643-31232	E0320-001001	5	E005001
01643-31232	E0320-001001	7	E005001
01643-31232	E0450-001001	15	E008001
01643-31232	E0450-001001	24	E008001
01643-31232	E0450-001002	6	E009001
01643-31232	H0110-002001	28	H001001
01643-31232	H0110-002001	36	H001001
01643-31232	H0311-001001	11	H006001
01643-31232	H0311-002004	11	H006002
01643-31232	H0320-001001	11	H008001
01643-31232	H0320-001001	16	H008001
01643-31232	H0320-001001	18	H008001
01643-31232	H0320-001001	6	H008001
01643-31232	H0330-001001	21	H009001
01643-31232	H0330-001001	24	H009001
01643-31232	H0330-001001	4	H009001
01643-31232	H0330-002001	25	H010001
01643-31232	H0330-002001	28	H010001
01643-31232	H0330-002001	4	H010001
01643-31232	H0330-002001	8	H010001
01643-31232	H0340-001001	12	H011001
01643-31232	H0340-001001	8	H011001
01643-31232	H1210-001002	12	H012002
01643-31232	H1210-001002	16	H012002
01643-31232	H1210-001002	4	H012002
01643-31232	H1210-001002	8	H012002
01643-31232	H1220-003002	9	H013002
01643-31232	H1270-003001	14	H014001
01643-31232	H1270-003001	17	H014001
01643-31232	H1270-003001	19	H014001
01643-31232	H1270-003001	21	H014001
01643-31232	H1270-003001	3	H014001
01643-31232	H1270-003001	31	H014001
01643-31232	H1270-003001	34	H014001
01643-31232	H1270-003001	6	H014001
01643-31232	H1270-003003	23	H014003
01643-31232	H1270-003004	28	H014004
01643-31232	H1270-003004	37	H014004
01643-31232	H1270-003006	10	H014006
01643-31232	H1270-003006	13	H014006
01643-31232	H1270-003006	7	H014006
01643-31232	H1270-003007	3	H014007
01643-31232	H1810-001001	19	H017001
01643-31232	H1810-001001	24	H017001
01643-31232	H1810-002001	14	H018001
01643-31232	H1810-002001	22	H018001
01643-31232	H1831-001003	16	H019003
01643-31232	H1831-001004	11	H019004
01643-31232	H1831-001004	15	H019004
01643-31232	H1831-001004	17	H019004
01643-31232	H1831-001004	22	H019004
01643-31232	H1831-001004	3	H019004
01643-31232	H1831-001004	8	H019004
01643-31232	H1831-002003	17	H020003
01643-31232	H1831-002004	11	H020004

PARTS Nº	FIG. Nº	INDEX	PAGE
01643-31232	H1831-002004	15	H020004
01643-31232	H1831-002004	20	H020004
01643-31232	H1831-002004	25	H020004
01643-31232	H1831-002004	3	H020004
01643-31232	H1831-002004	8	H020004
01643-31232	H1833-001001	17	H021001
01643-31232	H1833-001001	20	H021001
01643-31232	H1840-001001	20	H022001
01643-31232	J1110-001001	5	J001001
01643-31232	J1310-002001	8	J002001
01643-31232	K0350-001001	6	K006001
01643-31232	K0700-001001	14	K007001
01643-31232	K0700-001002	19	K007002
01643-31232	K0700-001002	22	K007002
01643-31232	K0700-001002	25	K007002
01643-31232	K0700-001002	30	K007002
01643-31232	K0700-001002	33	K007002
01643-31232	K0700-001002	37	K007002
01643-31232	K0700-001002	6	K007002
01643-31232	K0700-001002	9	K007002
01643-31232	K1110-024024	37	K008022
01643-31232	K1110-024024	35	K008022
01643-31232	K1110-024032	6	K008030
01643-31232	K1110-024033	6	K008030A
01643-31232	K1110-039022	35	K009022
01643-31232	K1110-039029	6	K009029
01643-31232	K1120-001001	13	K010001
01643-31232	K1120-001001	7	K010001
01643-31232	K1520-001001	11	K011001
01643-31232	K1520-001001	8	K011001
01643-31232	K1520-002001	8	K012001
01643-31232	M1110-001001	20	M001001
01643-31232	M1110-001001	29	M001001
01643-31232	M1110-001001	31	M001001
01643-31232	M1110-001001	33	M001001
01643-31232	M1120-001001	11	M002001
01643-31232	M1120-001001	17	M002001
01643-31232	M1120-001001	19	M002001
01643-31232	M1120-001001	25	M002001
01643-31232	M1120-001001	28	M002001
01643-31232	M1120-001001	3	M002001
01643-31232	M1120-001001	32	M002001
01643-31232	M1120-001001	35	M002001
01643-31232	M1120-001001	9	M002001
01643-31232	M1130-001001	11	M003001
01643-31232	M1130-001001	21	M003001
01643-31232	M1130-001001	31	M003001
01643-31232	M1130-001001	37	M003001
01643-31232	M1130-001001	5	M003001
01643-31232	M1130-001001	8	M003001
01643-31232	M1140-001001	14	M004001
01643-31232	M1140-001001	19	M004001
01643-31232	M1140-001001	23	M004001
01643-31232	M1140-001001	30	M004001
01643-31232	M1140-001001	38	M004001
01643-31232	M1140-001001	42	M004001
01643-31232	M1140-001001	48	M004001
01643-31232	M1150-002001	10	M005001
01643-31232	M1150-002001	14	M005001
01643-31232	M1150-002001	23	M005001
01643-31232	M1150-002001	6	M005001
01643-31232	M1150-002001	8	M005001
01643-31232	M1150-002002	16	M005002
01643-31232	M1150-002002	24	M005002
01643-31232	M1150-002002	27	M005002
01643-31232	M1150-002002	38	M005002
01643-31232	M1150-002002	43	M005002
01643-31232	M1150-002002	49	M005002
01643-31232	M1210-002001	21	M006001
01643-31232	M1210-002001	25	M006001
01643-31232	M1210-002001	30	M006001
01643-31232	M1210-002001	39	M006001
01643-31232	M1210-002001	42	M006001
01643-31232	M1210-002001	45	M006001
01643-31232	M1220-001001	14	M007001
01643-31232	M1220-001001	20	M007001
01643-31232	M1310-002001	3	M008001
01643-31232	M1420-001001	8	M010001
01643-31232	M1430-001001	4	M011001
01643-31232	M1510-001001	10	M012001
01643-31232	M1810-004001	12	M014001
01643-31232	M1810-004001	15	M014001
01643-31232	M1810-004001	22	M014001
01643-31232	M1810-004001	30	M014001
01643-31232	M1810-004001	33	M014001
01643-31232	M1810-004001	36	M014001
01643-31232	M1810-004001	41	M014001
01643-31232	M1810-004001	5	M014001
01643-31232	M1810-004001	8	M014001
01643-31232	M1810-004002	11	M014002
01643-31232	M1810-004002	5	M014002
01643-31232	M1810-004002	8	M014002
01643-31232	M1810-004003	11	M014003
01643-31232	M1810-004003	15	M014003
01643-31232	M1810-004003	20	M014003
01643-31232	M1810-004003	22	M014003
01643-31232	M1810-004003	26	M014003
01643-31232	M1810-004003	32	M014003
01643-31232	M1810-004003	6	M014003
01643-31232	M1810-004003	8	M014003
01643-31232	N1210-001004	41	N002004
01643-31232	N1310-001002	33	N004003
01643-31232	R0110-001002	17	R001002
01643-31232	R0110-001002	9	R001002
01643-31232	R0110-001002A	18	R001002A
01643-31232	R0110-001002A	9	R001002A
01643-31232	R1140-001001	4	R006001
01643-31232	T1110-004002	13	T002002
01643-31232	T1110-004002	6	T002002
01643-31232	T1110-004002	9	T002002
01643-31232	T1110-004003	12	T002003
01643-31232	T1110-004004	12	T002004
01643-31232	T1110-004004	17	T002004
01643-31232	T1110-004004	20	T002004
01643-31232	T1110-004004	6	T002004
01643-31232	T1110-004004	9	T002004
01643-31232	T1110-004005	22	T002005
01643-31232	T1110-004005	4	T002005
01643-31232	T1110-005002	13	T001002
01643-31232	T1110-005002	6	T001002
01643-31232	T1110-005002	9	T001002
01643-31232	T1110-005003	12	T001003
01643-31232	T1110-005004	12	T001004
01643-31232	T1110-005004	17	T001004
01643-31232	T1110-005004	20	T001004
01643-31232	T1110-005004	6	T001004
01643-31232	T1110-005004	9	T001004
01643-31232	T1110-005005	22	T001005
01643-31232	T1110-005005	4	T001005
01643-31232	T1110-005006	19	T001006
01643-31232	T1110-005006	25	T001006
01643-31232	T1110-005006	5	T001006
01643-31232	T1110-005007	10	T001007
01643-31232	T1110-005007	18	T001007
01643-31232	T1110-005007	21	T001007
01643-31232	T1110-005007	23	T001007
01643-31232	T1110-005007	4	T001007
01643-31232	T1140-004001	50	T004011
01643-31232	T1200-007002	38	T008002
01643-31232	T1200-007004	4	T008004
01643-31232	T1200-007004	9	T008004
01643-31232	T1200-008002	38	T007002
01643-31232	T1200-008004	4	T007004
01643-31232	T1200-008004	9	T007004
01643-31232	T1200-008005	10	T007005
01643-31232	T1200-008005	16	T007005
01643-31232	T1200-008005	22	T007005
01643-31232	T1200-008005	4	T007005
01643-31232	T1200-008005	7	T007005
01643-31232	T1200-008006	14	T007006

PARTS Nº	FIG. Nº	INDEX	PAGE
01643-31232	T1200-008006	5	T007006
01643-31232	T1200-010002	38	T005002
01643-31232	T1200-010004	4	T005004
01643-31232	T1200-010004	9	T005004
01643-31232	T1200-010005	13	T005005
01643-31232	T1200-010005	4	T005005
01643-31232	T1200-010005	7	T005005
01643-31232	T1200-010006	14	T005006
01643-31232	T1200-010006	5	T005006
01643-31232	T1200-011002	38	T006002
01643-31232	T1200-011004	4	T006004
01643-31232	T1200-011004	9	T006004
01643-31445	E0310-004001	4	E004001
01643-31445	H0120-004007	27	H003007
01643-31445	H0120-004014	32	H003014
01643-31445	H0120-004107	23	H004007
01643-31445	H0120-004114	20	H004014
01643-31445	H0120-005007	27	H002007
01643-31445	H0120-005014	32	H002014
01643-31445	H1270-003003	12	H014003
01643-31445	H1270-003003	37	H014003
01643-31445	T1110-004005	19	T002005
01643-31445	T1110-005005	19	T001005
01643-31445	T1110-005006	13	T001006
01643-31445	T1110-005006	16	T001006
01643-31445	T1200-008005	19	T007005
01643-31445	T1200-010005	16	T005005
01643-31645	B0100-001001	29	B003001
01643-31645	C0100-001006	12	C001006
01643-31645	C0100-001006	9	C001006
01643-31645	C0100-001007	2	C001007
01643-31645	D0100-001001	16	D001001
01643-31645	D0100-001001A	16	D001001A
01643-31645	H0110-002001	60	H001001
01643-31645	H0120-004027	3	H003027
01643-31645	H0120-004027	5	H003027
01643-31645	H0120-004125	3	H004025
01643-31645	H0120-004125	5	H004025
01643-31645	H0120-005027	3	H002027
01643-31645	H0120-005027	5	H002027
01643-31645	H1270-003004	9	H014004
01643-31645	J1310-002001	4	J002001
01643-31645	K1110-024024	37	K008022
01643-31645	K1110-039022	37	K009022
01643-31645	M1110-001001	5	M001001
01643-31645	N1210-001004	24	N002004
01643-31645	P1210-002004	40	P002004
01643-31645	T1110-004001	17	T002001
01643-31645	T1110-005001	17	T001001
01643-31645	T1110-005006	22	T001006

PARTS Nº	FIG. Nº	INDEX	PAGE
01643-31645	T1110-005006	28	T001006
01643-31645	T1110-005007	13	T001007
01643-31645	T1110-005007	7	T001007
01643-31645	T1200-008006	11	T007006
01643-31645	T1200-010006	11	T005006
01643-31845	B0100-001001	6	B003001
01643-31845	P1210-002004	30	P002004
01643-31845	P1210-002008	30	P002008
01643-31845	P1210-002012	30	P002012
01643-31845	R1200-002001	8	R007001
01643-32060	K1120-001001	4	K010001
01643-32060	P1210-002004	37	P002004
01643-32060	R0110-001002	19	R001002
01643-32060	R0110-001002A	20	R001002A
01643-32060	R0200-002001	12	R002001
01643-32060	R0200-002011	12	R002011
01643-32060	R0300-003001	15	R003001
01643-32060	R0300-003011	13	R003011
01643-32060	R1100-002001	14	R005001
01643-32060	T1510-000001	12	T010001
01643-32060	T1510-000002	18	T010002
01643-32060	T1510-000003	19	T010003
01643-32460	B0100-001001	12	B003001
01643-32460	N1210-001004	46	N002004
01643-32460	R1140-001002	3	R006002
01643-32460	R1200-002001	6	R007001
01643-33080	K1120-001001	10	K010001
01643-50823	H0120-004023	6	H003023
01643-50823	H0120-005023	6	H002023
01643-50823	K1110-024027	20	K008025
01643-50823	K1110-039024	20	K009024
01643-51032	H0120-004006	8	H003006
01643-51032	H0120-004010	15	H003010
01643-51032	H0120-004014	21	H003014
01643-51032	H0120-004028	4	H003028
01643-51032	H0120-004106	8	H004006
01643-51032	H0120-004110	15	H004010
01643-51032	H0120-004114	9	H004014
01643-51032	H0120-005006	8	H002006
01643-51032	H0120-005010	15	H002010
01643-51032	H0120-005014	21	H002014
01643-51032	H0312-002001	13	H007001
01643-51032	H0312-002001	20	H007001
01643-51032	H0312-002010	14	H007002
01643-51032	H0312-002010	7	H007002
01643-51032	H1210-001001	10	H012001
01643-51032	H1210-001001	20	H012001
01643-51032	H1210-001001	5	H012001
01643-51032	H1210-001002	18	H012002
01643-51032	H1220-003001	12	H013001

PARTS Nº	FIG. Nº	INDEX	PAGE
01643-51032	H1220-003001	15	H013001
01643-51032	H1220-003001	20	H013001
01643-51032	H1220-003001	26	H013001
01643-51032	H1220-003001	29	H013001
01643-51032	H1220-003001	6	H013001
01643-51032	H1270-003001	26	H014001
01643-51032	H1270-003002	8	H014002
01643-51032	H1270-003003	16	H014003
01643-51032	H1270-003003	27	H014003
01643-51032	H1270-003003	32	H014003
01643-51032	H1310-001001	11	H015001
01643-51032	H1340-001001	5	H016001
01643-51032	K1110-024037	11	K008034
01643-51032	K1110-024043	11	K008040
01643-51032	K1110-039033	11	K009033
01643-51032	K1110-039039	11	K009039
01643-51032	N1310-001002	9	N004003
01643-51032	P1120-001001	5	P001001
01643-51032	T1110-004002	16	T002002
01643-51032	T1110-004004	22	T002004
01643-51032	T1110-005002	16	T001002
01643-51032	T1110-005004	22	T001004
01643-51032	T1120-003001	34	T003001
01643-51032	T1120-003001	48	T003001
01643-51032	T1120-003002	34	T003002
01643-51032	T1120-003002	48	T003002
01643-51032	T1140-003001	40	T004001
01643-51032	T1140-003001	56	T004001
01643-51032	T1140-004001	42	T004011
01643-51032	T1140-004001	55	T004011
01643-51032	T1200-007002	30	T008002
01643-51032	T1200-007002	42	T008002
01643-51032	T1200-007004	16	T008004
01643-51032	T1200-008002	30	T007002
01643-51032	T1200-008002	42	T007002
01643-51032	T1200-008004	16	T007004
01643-51032	T1200-010002	30	T005002
01643-51032	T1200-010002	42	T005002
01643-51032	T1200-010004	16	T005004
01643-51032	T1200-011002	42	T006002
01643-51032	T1200-011004	16	T006004
01643-51232	A9999-002011	23	B001011
01643-51232	A9999-002023	23	B001023
01643-51232	A9999-003023	23	B001043
01643-51232	H1270-003004	26	H014004
01643-51232	H1270-003004	33	H014004
01643-51232	M1150-002002	22	M005002
01643-51232	T1110-004003	9	T002003
01643-51232	T1110-005003	9	T001003

PARTS Nº	FIG. Nº	INDEX	PAGE
01643-51232	T1120-003001	39	T003001
01643-51232	T1120-003002	39	T003002
01643-51232	T1140-003001	49	T004001
01643-51232	T1140-004001	47	T004011
01643-51232	T1200-007002	35	T008002
01643-51232	T1200-008002	35	T007002
01643-51232	T1200-010002	35	T005002
01643-51232	T1200-011002	35	T006002
01643-51645	A9999-002002	8	B001002
01643-51645	A9999-002013	8	B001013
01643-51645	A9999-003013	8	B001033
01643-70623	K1110-024010	25	K008010
01643-70623	K1110-024010	31	K008010
01643-70623	K1110-024012	10	K008012
01643-70623	K1110-024013	18	K008013
01643-70623	K1110-024013	24	K008013
01643-70623	K1110-024014	5	K008014
01643-70623	K1110-024015	5	K008014A
01643-70623	K1110-024017	6	K008015A
01643-70623	K1110-024040	13	K008037
01643-70623	K1110-024040	19	K008037
01643-70623	K1110-024040	25	K008037
01643-70623	K1110-024046	15	K008043
01643-70623	K1110-024046	23	K008043
01643-70623	K1110-024046	26	K008043
01643-70623	K1110-039010	25	K009010
01643-70623	K1110-039010	31	K009010
01643-70623	K1110-039012	10	K009012
01643-70623	K1110-039013	18	K009013
01643-70623	K1110-039013	24	K009013
01643-70623	K1110-039014	5	K009014
01643-70623	K1110-039015	6	K009015
01643-70623	K1110-039036	13	K009036
01643-70623	K1110-039036	19	K009036
01643-70623	K1110-039036	25	K009036
01643-70623	K1110-039042	15	K009042
01643-70623	K1110-039042	23	K009042
01643-70623	K1110-039042	26	K009042
01643-70823	K1110-024012	20	K008012
01643-70823	K1110-024013	15	K008013
01643-70823	K1110-024016	4	K008015
01643-70823	K1110-024016	7	K008015
01643-70823	K1110-024017	12	K008015A
01643-70823	K1110-024017	8	K008015A
01643-70823	K1110-024020	18	K008018
01643-70823	K1110-024042	4	K008039
01643-70823	K1110-024047	4	K008044
01643-70823	K1110-024049	6	K008046
01643-70823	K1110-039012	20	K009012
01643-70823	K1110-039013	15	K009013

PARTS Nº	FIG. Nº	INDEX	PAGE
01643-70823	K1110-039015	12	K009015
01643-70823	K1110-039015	8	K009015
01643-70823	K1110-039018	18	K009018
01643-70823	K1110-039038	4	K009038
01643-70823	K1110-039043	4	K009043
01643-70823	K1110-039045	6	K009045
01643-71032	E0310-005001	3	E003001
01643-71032	E0310-005001	6	E003001
01643-71032	K1110-024011	9	K008011
01643-71032	K1110-024012	15	K008012
01643-71032	K1110-024012	8	K008012
01643-71032	K1110-024028	12	K008026
01643-71032	K1110-024031	11	K008029
01643-71032	K1110-024031	8	K008029
01643-71032	K1110-024032	16	K008030
01643-71032	K1110-039011	9	K009011
01643-71032	K1110-039012	15	K009012
01643-71032	K1110-039012	8	K009012
01643-71032	K1110-039026	12	K009026
01643-71232	K0230-002001	4	K003001
01643-71232	K1110-024012	29	K008012
01643-71232	K1110-024046	3	K008043
01643-71232	K1110-039012	29	K009012
01643-71232	K1110-039042	3	K009042
01643-72460	N1110-001001	16	N001001
01643-72460	N1110-001001	5	N001001
02030-70757	K0160-002001	2	K002001
02740-002A5	H1840-001001	16	H022001
02760-00215	H1831-001003	6	H019003
02760-00215	H1831-002003	6	H020003
02760-00227	H1810-002001	15	H018001
02760-002A5	H1831-002003	14	H020003
02760-002A6	H1831-001003	5	H019003
02760-002A6	H1831-002003	5	H020003
02760-00321	H1270-003007	13	H014007
02760-00321	H1810-001001	11	H017001
02762-00325	P1120-001001	17	P001001
02762-00335	D0200-002003	31	D002003
02762-00411	D0200-002001	1	D002001
02762-00432	D0200-002003	32	D002003
02762-00509	H0340-001001	1	H011001
02762-00509	N1220-001001	12	N003001
02762-00525	P1120-001001	18	P001001
02763-00415	H0340-001001	4	H011001
02781-0021D	K1110-024055	20	K008052
02781-0021D	K1110-024055	7	K008052
02781-0021D	K1110-039051	16	K009051
02781-0021D	K1110-039051	7	K009051
02781-0031D	K1110-024055	17	K008052
02781-0031D	K1110-024055	4	K008052

PARTS Nº	FIG. Nº	INDEX	PAGE
02781-0031D	K1110-039051	13	K009051
02781-0031D	K1110-039051	4	K009051
02781-00422	H1831-001002	16	H019002
02781-00422	H1831-002002	16	H020002
02781-00522	N1220-001001	1	N003001
02781-00522	P1120-001001	6	P001001
02782-10315	H0110-002001	9	H001001
02782-10315	H1270-003007	11	H014007
02782-10420	D0200-002001	20	D002001
02782-10422	H0110-002001	15	H001001
02782-10522	N1310-001002	10	N004003
02783-10628	H0110-002001	6	H001001
02789-00210	H0120-004028	5	H003028
02896-11008	H0110-002001	20	H001001
02896-11008	H0120-004025	11	H003025
02896-11008	H0120-004025	13	H003025
02896-11008	H0120-004025	25	H003025
02896-11008	H0120-004025	7	H003025
02896-11008	H0120-004026	16	H003026
02896-11008	H0120-004026	19	H003026
02896-11008	H0120-004026	22	H003026
02896-11008	H0120-004026	25	H003026
02896-11008	H0120-004026	28	H003026
02896-11008	H0120-004026	3	H003026
02896-11008	H0120-004026	34	H003026
02896-11008	H0120-004026	37	H003026
02896-11008	H0120-004026	6	H003026
02896-11008	H0120-004026	9	H003026
02896-11008	H0120-004123	11	H004023
02896-11008	H0120-004123	13	H004023
02896-11008	H0120-004123	25	H004023
02896-11008	H0120-004123	7	H004023
02896-11008	H0120-004124	10	H004024
02896-11008	H0120-004124	13	H004024
02896-11008	H0120-004124	16	H004024
02896-11008	H0120-004124	19	H004024
02896-11008	H0120-004124	25	H004024
02896-11008	H0120-004124	3	H004024
02896-11008	H0120-005025	11	H002025
02896-11008	H0120-005025	13	H002025
02896-11008	H0120-005025	25	H002025
02896-11008	H0120-005025	7	H002025
02896-11008	H0120-005026	16	H002026
02896-11008	H0120-005026	19	H002026
02896-11008	H0120-005026	22	H002026
02896-11008	H0120-005026	25	H002026
02896-11008	H0120-005026	3	H002026
02896-11008	H0120-005026	33	H002026
02896-11008	H0120-005026	36	H002026
02896-11008	H0120-005026	6	H002026

PARTS Nº	FIG. Nº	INDEX	PAGE
02896-11008	H0120-005026	9	H002026
02896-11008	H1270-003003	2	H014003
02896-11008	H1270-003003	5	H014003
02896-11008	H1810-001001	2	H017001
02896-11008	H1810-001001	5	H017001
02896-11008	H1810-002001	2	H018001
02896-11008	H1810-002001	5	H018001
02896-11008	H1810-002001	8	H018001
02896-11008	H1831-001002	14	H019002
02896-11008	H1831-001002	5	H019002
02896-11008	H1831-001002	7	H019002
02896-11008	H1831-002002	14	H020002
02896-11008	H1831-002002	27	H020002
02896-11008	H1831-002002	5	H020002
02896-11008	H1831-002002	7	H020002
02896-11008	K1110-024028	24	K008026
02896-11008	K1110-024031	19	K008029
02896-11008	K1110-024031	22	K008029
02896-11008	K1110-024031	24	K008029
02896-11008	K1110-024045	8	K008042
02896-11008	K1110-024055	11	K008052
02896-11008	K1110-024055	21	K008052
02896-11008	K1110-024055	24	K008052
02896-11008	K1110-024055	8	K008052
02896-11008	K1110-039026	24	K009026
02896-11008	K1110-039041	8	K009041
02896-11008	K1110-039051	17	K009051
02896-11008	K1110-039051	8	K009051
02896-11009	AFT00-001001	7	D005001
02896-11009	D0100-001001	7	D001001
02896-11009	D0100-001001A	7	D001001A
02896-11009	H0110-002001	11	H001001
02896-11009	H0120-004025	15	H003025
02896-11009	H0120-004025	9	H003025
02896-11009	H0120-004026	29	H003026
02896-11009	H0120-004123	15	H004023
02896-11009	H0120-004123	9	H004023
02896-11009	H0120-005025	15	H002025
02896-11009	H0120-005025	9	H002025
02896-11009	H0120-005026	28	H002026
02896-11009	H1810-001001	27	H017001
02896-11009	H1810-001001	8	H017001
02896-11009	H1831-001002	11	H019002
02896-11009	H1831-001002	23	H019002
02896-11009	H1831-001002	9	H019002
02896-11009	H1831-002002	11	H020002
02896-11009	H1831-002002	22	H020002
02896-11009	H1831-002002	9	H020002
02896-11009	K1110-024039	8	K008036
02896-11009	K1110-024045	10	K008042
02896-11009	K1110-024055	18	K008052
02896-11009	K1110-024055	5	K008052
02896-11009	K1110-039035	8	K009035
02896-11009	K1110-039041	10	K009041
02896-11009	K1110-039051	14	K009051
02896-11009	K1110-039051	5	K009051
02896-11009	N1220-001001	8	N003001
02896-11009	N1310-001002	17	N004003
02896-11009	N1310-001002	5	N004003
02896-11009	P1120-001001	10	P001001
02896-11012	D0100-001001	4	D001001
02896-11012	D0100-001001A	4	D001001A
02896-11012	D0200-002001	23	D002001
02896-11012	H0110-002001	17	H001001
02896-11012	H1831-001002	17	H019002
02896-11012	H1831-002002	17	H020002
02896-11015	N1220-001001	2	N003001
02896-11015	N1310-001002	11	N004003
02896-11015	N1310-001002	2	N004003
02896-11015	P1120-001001	7	P001001
02896-11018	H0110-002001	8	H001001
02896-11018	N1310-001002	14	N004003
04020-01228	P1210-002001	30	P002001
04020-01228	P1210-002005	30	P002005
04020-01228	P1210-002009	30	P002009
04020-01434	A9999-002002	5	B001002
04020-01434	A9999-002003	21	B001003
04020-01434	A9999-002007	18	B001007
04020-01434	A9999-002013	5	B001013
04020-01434	A9999-002014	21	B001014
04020-01434	A9999-002018	18	B001018
04020-01434	A9999-003013	5	B001033
04020-01434	A9999-003014	21	B001034
04020-01434	A9999-003018	18	B001038
04020-01842	N1110-001001	6	N001001
04022-04016	K1110-024026	24	K008024
04022-04016	K1110-039024	24	K009024
04025-00432	K1110-024026	18	K008024
04025-00432	K1110-039024	18	K009024
04050-11612	M1220-001001	10	M007001
04050-13020	M1210-002001	12	M006001
04050-14025	N1310-001002	30	N004003
04052-01253	M1110-001001	24	M001001
04052-01253	M1110-001001	27	M001001
04052-10530	K1110-024006	8	K008006
04052-10530	K1110-039006	8	K009006
04064-04018	N1210-001004	32	N002004
04064-06525	N1210-001002	8	N002002
04064-06525	R0110-001002	11	R001002
04064-06525	R0110-001002A	11	R001002A
04064-07525	N1310-001001	9	N004001
04064-07525	N1310-001001A	5	N004002
04065-01054	N1310-001001A	13	N004002
04065-04718	H0110-002001	46	H001001
04065-05520	A9999-002003	11	B001003
04065-05520	A9999-002007	8	B001007
04065-05520	A9999-002014	11	B001014
04065-05520	A9999-002018	8	B001018
04065-05520	A9999-003014	11	B001034
04065-05520	A9999-003018	8	B001038
04065-05820	T1200-008006	6	T007006
04065-05820	T1200-010006	6	T005006
04065-06020	P1210-002002	14	P002002
04065-06020	P1210-002006	14	P002006
04065-06020	P1210-002010	14	P002010
04065-07525	N1210-001002	11	N002002
04065-07825	A9999-002003	7	B001003
04065-07825	A9999-002014	7	B001014
04065-07825	A9999-003014	7	B001034
04065-07825	P1210-002002	7	P002002
04065-07825	P1210-002006	7	P002006
04065-07825	P1210-002010	7	P002010
04120-21761	K0700-001002	35	K007002
04205-10520	K1110-024006	7	K008006
04205-10520	K1110-039006	7	K009006
04205-31230	M1110-001001	23	M001001
04205-31230	M1110-001001	25	M001001
04205-31238	M1110-001001	26	M001001
04260-00635	T1140-003001	12	T004001
04260-00635	T1140-004001	12	T004011
04260-00793	H0120-004014	15	H003014
04260-00793	H0120-004113	31	H004013
04260-00793	H0120-005014	15	H002014
04260-00793	P1210-002001	22	P002001
04260-00793	P1210-002005	22	P002005
04260-00793	P1210-002009	22	P002009
04260-01270	N1210-001004	34	N002004
04260-02857	P1210-002002	19	P002002
04260-02857	P1210-002006	19	P002006
04260-02857	P1210-002010	19	P002010
04418-13060	U0100-005001	24	U001001
04418-13060	U0100-006001	24	U002001
04434-50608	K0700-001001	10	K007001
04434-50610	K1110-024031	41	K008029
04434-50612	A9999-002023	28	B001023
04434-50612	A9999-003023	28	B001043
04434-51008	ABR00-002001	7	B013001
04434-51010	AWR00-002001	35	F002001
04434-51010	K1110-024035	19	K008032
04434-51010	K1110-039031	19	K009031

PARTS Nº	FIG. Nº	INDEX	PAGE
04434-51012	E0200-001003	1	E002003
04434-51012	E0310-004001	8	E004001
04434-51012	E0320-001001	13	E005001
04434-51012	E0320-001001	3	E005001
04434-51012	E0450-001001	22	E008001
04434-51012	H0340-001001	6	H011001
04434-51012	H1831-002004	23	H020004
04434-51012	T1110-004005	20	T002005
04434-51012	T1110-005005	20	T001005
04434-51212	H1831-001004	20	H019004
04434-51212	H1831-002004	18	H020004
04434-51312	D0200-002001	9	D002001
04434-51312	D0200-002003	4	D002003
04434-51410	K1110-024035	18	K008032
04434-51410	K1110-024046	51	K008043
04434-51410	K1110-039031	18	K009031
04434-51410	K1110-039042	51	K009042
04434-51512	H1831-001004	12	H019004
04434-51512	H1831-001004	18	H019004
04434-51512	H1831-002004	12	H020004
04434-51708	K1110-024023	2	K008021
04434-51708	K1110-039021	2	K009021
04434-51710	K1110-024046	48	K008043
04434-51710	K1110-039042	48	K009042
04434-51812	D0200-002001	10	D002001
04434-51812	K0700-001002	23	K007002
04434-51812	K1520-001001	2	K011001
04434-51812	K1520-002001	2	K012001
04434-51910	K1110-024035	14	K008032
04434-51910	K1110-024035	32	K008032
04434-51910	K1110-039031	14	K009031
04434-51910	K1110-039031	32	K009031
04434-51912	E0200-001004	1	E002004
04434-51912	E0200-001004	24	E002004
04434-51912	H1831-001004	1	H019004
04434-51912	H1831-002004	1	H020004
04434-51912	T1110-004003	7	T002003
04434-51912	T1110-005003	7	T001003
04434-52110	K1110-024051	5	K008048
04434-52110	K1110-039047	5	K009047
04434-52112	E0200-001002	23	E002002
04434-52511	K1110-024051	6	K008048
04434-52511	K1110-039047	6	K009047
04434-52512	B0100-001001	17	B003001
04434-52711	E0450-001001	18	E008001
04434-52712	E0200-001003	10	E002003
04434-53211	E0450-001001	18	E008001
04434-53212	C0100-001005	2	C001005
04434-53212	E0200-001001	23	E002001
04434-53212	E0200-001001	30	E002001
04434-53212	E0200-001003	21	E002003
04434-53411	K1110-024023	1	K008021
04434-53411	K1110-024035	10	K008032
04434-53411	K1110-024035	25	K008032
04434-53411	K1110-024035	5	K008032
04434-53411	K1110-024054	7	K008051
04434-53411	K1110-039021	1	K009021
04434-53411	K1110-039031	10	K009031
04434-53411	K1110-039031	25	K009031
04434-53411	K1110-039031	5	K009031
04434-53411	K1110-039050	7	K009050
04434-53412	D0200-002003	11	D002003
04434-53412	D0200-002003	18	D002003
04434-53412	D0200-002003	7	D002003
04434-53412	E0200-001003	8	E002003
04434-53412	K1520-001001	5	K011001
04434-53412	K1520-002001	5	K012001
04435-51210	K1110-024031	34	K008029
04435-51512	H1831-001004	5	H019004
04435-51512	H1831-001004	9	H019004
04435-51512	H1831-002004	16	H020004
04435-51512	H1831-002004	5	H020004
04435-51812	H1831-002004	9	H020004
04435-51512	K1520-001001	6	K011001
04435-51512	K1520-002001	6	K012001
04435-51812	H0340-001001	5	H011001
04435-51812	H1810-001001	17	H017001
04435-51812	H1810-002001	12	H018001
04435-51812	K0700-001002	31	K007002
04435-52112	H1810-001001	29	H017001
04435-52112	H1810-002001	24	H018001
04530-01222	A9999-002001	6	B001001
04530-01222	A9999-002006	7	B001006
04530-01222	A9999-002012	6	B001012
04530-01222	A9999-002017	7	B001017
04530-01222	A9999-003012	6	B001032
04530-01222	A9999-003017	7	B001037
06000-22222	N1210-001004	6	N002004
06000-22324	N1210-001004	7	N002004
06124-01616	K1110-024041	22	K008038
06124-01616	K1110-039037	22	K009037
07000-11007	C0100-001001	6	C001001
07000-11007	C0100-001002	6	C001002
07000-11007	H0120-004007	12	H003007
07000-11007	H0120-004011	4	H003011
07000-11007	H0120-004018	10	H003018
07000-11007	H0120-004107	10	H004007
07000-11007	H0120-004111	4	H004011
07000-11007	H0120-004118	10	H004018
07000-11007	H0120-005007	12	H002007
07000-11007	H0120-005011	4	H002011
07000-11007	H0120-005018	10	H002018
07000-11007	K1110-024027	17	K008025
07000-11007	K1110-039024	17	K009024
07000-11008	A9999-002011	16	B001011
07000-11008	A9999-002023	16	B001023
07000-11008	A9999-003023	16	B001043
07000-11008	H1831-001001	25	H019001
07000-11008	H1831-002001	26	H020001
07000-11008	K1110-024030	21	K008028
07000-11009	H0120-004011	2	H003011
07000-11009	H0120-004014	16	H003014
07000-11009	H0120-004017	3	H003017
07000-11009	H0120-004022	11	H003022
07000-11009	H0120-004111	2	H004011
07000-11009	H0120-004113	32	H004013
07000-11009	H0120-004117	3	H004017
07000-11009	H0120-005011	2	H002011
07000-11009	H0120-005014	16	H002014
07000-11009	H0120-005017	3	H002017
07000-11009	H0120-005022	11	H002022
07000-11009	N1210-001003	12	N002003
07000-11010	H0120-004018	15	H003018
07000-11010	H0120-004019	17	H003019
07000-11010	H0120-004020	17	H003020
07000-11010	H0120-004021	19	H003021
07000-11010	H0120-004118	15	H004018
07000-11010	H0120-004119	17	H004019
07000-11010	H0120-004120	17	H004020
07000-11010	H0120-004121	19	H004021
07000-11010	H0120-005018	15	H002018
07000-11010	H0120-005019	17	H002019
07000-11010	H0120-005020	17	H002020
07000-11010	H0120-005021	19	H002021
07000-11010	H1831-001001	15	H019001
07000-11010	H1831-002001	16	H020001
07000-11010	K1110-024027	16	K008025
07000-11010	K1110-039024	16	K009024
07000-12011	H0120-004006	6	H003006
07000-12011	H0120-004014	28	H003014
07000-12011	H0120-004014	7	H003014
07000-12011	H0120-004019	15	H003019
07000-12011	H0120-004020	15	H003020
07000-12011	H0120-004106	6	H004006
07000-12011	H0120-004114	16	H004014
07000-12011	H0120-004114	7	H004014
07000-12011	H0120-004119	15	H004019
07000-12011	H0120-004120	15	H004020
07000-12011	H0120-005006	6	H002006
07000-12011	H0120-005014	28	H002014

PARTS Nº	FIG. Nº	INDEX	PAGE
07000-12011	H0120-005014	7	H002014
07000-12011	H0120-005019	15	H002019
07000-12011	H0120-005020	15	H002020
07000-12011	H1270-003004	6	H014004
07000-12011	H1831-001001	4	H019001
07000-12011	H1831-002001	3	H020001
07000-12011	H1831-002001	4	H020001
07000-12011	K1110-024031	17	K008029
07000-12011	K1110-024031	20	K008029
07000-12011	K1110-024031	25	K008029
07000-12012	H0120-004004	1	H003004
07000-12012	H0120-004021	17	H003021
07000-12012	H0120-004104	1	H004004
07000-12012	H0120-004121	17	H004021
07000-12012	H0120-005004	1	H002004
07000-12012	H0120-005021	17	H002021
07000-12012	K1110-024030	22	K008028
07000-12012	P1210-002001	29	P002001
07000-12012	P1210-002005	29	P002005
07000-12012	P1210-002009	29	P002009
07000-12014	H0120-004008	2	H003008
07000-12014	H0120-004108	2	H004008
07000-12014	H0120-005008	2	H002008
07000-12015	K1110-024027	15	K008025
07000-12015	K1110-024028	27	K008026
07000-12015	K1110-024039	6	K008036
07000-12015	K1110-024045	6	K008042
07000-12015	K1110-039024	15	K009024
07000-12015	K1110-039026	27	K009026
07000-12015	K1110-039035	6	K009035
07000-12015	K1110-039041	6	K009041
07000-12016	H0120-004008	4	H003008
07000-12016	H0120-004015	29	H003015
07000-12016	H0120-004108	4	H004008
07000-12016	H0120-004115	29	H004015
07000-12016	H0120-005008	4	H002008
07000-12016	H0120-005015	29	H002015
07000-12016	H1831-001001	3	H019001
07000-12018	K1110-024026	20	K008024
07000-12018	K1110-024028	22	K008026
07000-12018	K1110-024039	4	K008036
07000-12018	K1110-024045	4	K008042
07000-12018	K1110-039024	20	K009024
07000-12018	K1110-039026	22	K009026
07000-12018	K1110-039035	4	K009035
07000-12018	K1110-039041	4	K009041
07000-12018	P1210-002001	16	P002001
07000-12018	P1210-002005	16	P002005
07000-12018	P1210-002009	16	P002009
07000-12020	H0120-004010	17	H003010
07000-12020	H0120-004110	17	H004010
07000-12020	H0120-005010	17	H002010
07000-12021	H0120-004004	4	H003004
07000-12021	H0120-004006	5	H003006
07000-12021	H0120-004022	12	H003022
07000-12021	H0120-004104	4	H004004
07000-12021	H0120-004106	5	H004006
07000-12021	H0120-005004	4	H002004
07000-12021	H0120-005006	5	H002006
07000-12021	H0120-005022	12	H002022
07000-12021	P1210-002003	4	P002003
07000-12021	P1210-002007	4	P002007
07000-12021	P1210-002011	4	P002011
07000-12050	T1200-008006	7	T007006
07000-12050	T1200-010006	7	T005006
07000-12055	H1270-003002	9	H014002
07000-12055	T1200-008006	8	T007006
07000-12055	T1200-010006	8	T005006
07000-12060	H0330-001001	19	H009001
07000-12060	H0330-001001	22	H009001
07000-12060	H0330-002001	23	H010001
07000-12060	H0330-002001	26	H010001
07000-12075	R0110-001001	6	R001001
07000-12075	R0110-001001A	6	R001001A
07000-12080	R0300-003001	9	R003001
07000-12080	R0300-003011	9	R003011
07000-12105	H0311-001001	2	H006001
07000-12105	H0311-001001	7	H006001
07000-12105	H0311-001002	2	H006002
07000-12105	H0311-001002	7	H006002
07000-12105	N1310-001001	11	N004001
07000-12125	H1270-003004	7	H014004
07000-13024	H0120-004002	12	H003002
07000-13024	H0120-004002	6	H003002
07000-13024	H0120-004003	14	H003003
07000-13024	H0120-004003	3	H003003
07000-13024	H0120-004012	6	H003012
07000-13024	H0120-004017	2	H003017
07000-13024	H0120-004019	12	H003019
07000-13024	H0120-004020	12	H003020
07000-13024	H0120-004024	9	H003024
07000-13024	H0120-004024	7	H003024
07000-13024	H0120-004102	12	H004002
07000-13024	H0120-004102	6	H004002
07000-13024	H0120-004103	14	H004003
07000-13024	H0120-004103	3	H004003
07000-13024	H0120-004112	6	H004012
07000-13024	H0120-004117	2	H004017
07000-13024	H0120-004119	12	H004019
07000-13024	H0120-004120	12	H004020
07000-13024	H0120-005002	12	H002002
07000-13024	H0120-005002	6	H002002
07000-13024	H0120-005003	14	H002003
07000-13024	H0120-005003	3	H002003
07000-13024	H0120-005012	6	H002012
07000-13024	H0120-005017	2	H002017
07000-13024	H0120-005019	12	H002019
07000-13024	H0120-005020	12	H002020
07000-13024	H0120-005024	9	H002024
07000-13024	H0120-005024	7	H002024
07000-13028	H0120-004004	5	H003004
07000-13028	H0120-004104	5	H004004
07000-13028	H0120-005004	5	H002004
07000-13032	H0120-004004	6	H003004
07000-13032	H0120-004015	27	H003015
07000-13032	H0120-004022	14	H003022
07000-13032	H0120-004104	6	H004004
07000-13032	H0120-004115	27	H004015
07000-13032	H0120-005004	6	H002004
07000-13032	H0120-005015	27	H002015
07000-13032	H0120-005022	14	H002022
07000-13032	H0312-002001	15	H007001
07000-13032	H0312-002001	17	H007001
07000-13032	H0312-002010	11	H007002
07000-13032	H1210-001001	13	H012001
07000-13032	H1210-001001	15	H012001
07000-13032	H1210-001001	17	H012001
07000-13032	H1220-003001	10	H013001
07000-13032	H1220-003001	22	H013001
07000-13032	H1220-003001	24	H013001
07000-13032	H1220-003001	8	H013001
07000-13032	H1270-003001	23	H014001
07000-13032	H1270-003003	29	H014003
07000-13032	H1310-001001	2	H015001
07000-13032	H1310-001001	4	H015001
07000-13032	H1310-001001	6	H015001
07000-13032	H1310-001001	8	H015001
07000-13032	H1340-001001	2	H016001
07000-13032	P1120-001001	14	P001001
07000-13032	P1120-001001	16	P001001
07000-13032	T1110-004002	19	T002002
07000-13032	T1110-005002	19	T001002
07000-13032	T1200-007004	13	T008004
07000-13032	T1200-008004	13	T007004
07000-13032	T1200-010004	13	T005004
07000-13032	T1200-011004	13	T006004
07000-13035	H0120-004018	9	H003018
07000-13035	H0120-004028	2	H003028
07000-13035	H0120-004118	9	H004018
07000-13035	H0120-005018	9	H002018

PARTS Nº	FIG. Nº	INDEX	PAGE
07000-13035	H0312-002001	5	H007001
07000-13035	H0312-002001	8	H007001
07000-13035	H0312-002010	2	H007002
07000-13035	H1210-001001	12	H012001
07000-13035	H1210-001001	2	H012001
07000-13035	H1210-001001	7	H012001
07000-13035	H1220-003001	17	H013001
07000-13035	H1220-003001	3	H013001
07000-13035	H1270-003003	14	H014003
07000-13035	H1270-003003	25	H014003
07000-13035	KIT	K05	Y010001
07000-13035	KIT	K09	Y010001
07000-13035	KIT	K11	Y010001
07000-13035	KIT	K12	Y010001
07000-13035	T1110-004004	23	T002004
07000-13035	T1110-005004	23	T001004
07000-13035	T1110-005006	6	T001006
07000-13035	T1120-003001	35	T003001
07000-13035	T1120-003002	35	T003002
07000-13035	T1140-003001	43	T004001
07000-13035	T1140-004001	43	T004011
07000-13035	T1200-007002	31	T008002
07000-13035	T1200-008002	31	T007002
07000-13035	T1200-010002	31	T005002
07000-13035	T1200-011002	31	T006002
07000-13036	H0120-004004	8	H003004
07000-13036	H0120-004104	8	H004004
07000-13036	H0120-005004	8	H002004
07000-13038	H0120-004018	14	H003018
07000-13038	H0120-004118	14	H004018
07000-13038	H0120-005018	14	H002018
07000-13038	H1270-003001	28	H014001
07000-13038	T1200-008005	12	T007005
07000-13038	T1200-008005	14	T007005
07000-13038	T1200-008005	2	T007005
07000-13038	T1200-010005	11	T005005
07000-13038	T1200-010005	2	T005005
07000-13038	T1200-010005	9	T005005
07000-13038	T1920-001001	2	T011001
07000-13040	H1270-003004	11	H014004
07000-13040	H1270-003004	17	H014004
07000-13042	N1210-001003	11	N002003
07000-13045	C0100-001001	49	C001001
07000-13045	C0100-001002	51	C001002
07000-13045	C0100-001003	42	C001003
07000-13045	C0100-001003	46	C001003
07000-13045	H0330-002001	2	H010001
07000-13048	H0320-001001	2	H008001
07000-13048	H0320-001001	4	H008001
07000-13048	H0330-001001	2	H009001
07000-13048	H0330-002001	6	H010001
07000-13048	H1270-003003	10	H014003
07000-13048	H1270-003003	18	H014003
07000-13048	H1270-003003	21	H014003
07000-13048	H1270-003003	34	H014003
07000-13048	H1270-003004	23	H014004
07000-13048	H1270-003004	30	H014004
07000-13048	T1110-005006	14	T001006
07000-13048	T1200-008005	24	T007005
07000-13048	T1200-010005	18	T005005
07000-13050	D0100-001001	11	D001001
07000-13050	D0100-001001A	11	D001001A
07000-15080	N1310-001001	3	N004001
07000-15090	KIT	K05	Y010001
07000-15090	KIT	K11	Y010001
07000-15090	T1120-003001	29	T003001
07000-15090	T1120-003002	29	T003002
07000-15090	T1200-007002	26	T008002
07000-15090	T1200-008002	26	T007002
07000-15100	KIT	K09	Y010001
07000-15100	KIT	K12	Y010001
07000-15100	T1140-003001	31	T004001
07000-15100	T1140-004001	30	T004011
07000-15100	T1200-010002	26	T005002
07000-15100	T1200-011002	26	T006002
07000-15130	KIT	K05	Y010001
07000-15130	KIT	K11	Y010001
07000-15130	T1120-003001	11	T003001
07000-15130	T1120-003001	20	T003001
07000-15130	T1120-003002	11	T003002
07000-15130	T1120-003002	20	T003002
07000-15130	T1200-007002	17	T008002
07000-15130	T1200-008002	17	T007002
07000-15140	KIT	K12	Y010001
07000-15140	T1200-010002	17	T005002
07000-15140	T1200-011002	17	T006002
07000-15150	KIT	K09	Y010001
07000-15150	T1140-003001	22	T004001
07000-15150	T1140-003001	9	T004001
07000-15150	T1140-004001	21	T004011
07000-15150	T1140-004001	9	T004011
07000-15160	H0110-002001	34	H001001
07000-15175	P1210-002002	27	P002002
07000-15175	P1210-002006	27	P002006
07000-15175	P1210-002010	27	P002010
07000-15195	H0110-002001	26	H001001
07000-15195	P1210-002002	29	P002002
07000-15195	P1210-002006	29	P002006
07000-15195	P1210-002010	29	P002010
07000-15230	N1210-001002	24	N002002
07000-15290	N1210-001004	44	N002004
07000-15390	N1210-001004	13	N002004
07000-22018	P1210-002003	2	P002003
07000-22018	P1210-002007	2	P002007
07000-22018	P1210-002011	2	P002011
07000-A2105	A9999-002021	11	B001021
07000-A2105	A9999-002021	12	B001021
07000-A2105	A9999-003021	11	B001041
07000-A2105	A9999-003021	12	B001041
07000-A5185	A9999-002002	4	B001002
07000-A5185	A9999-002013	4	B001013
07000-A5185	A9999-003013	4	B001033
07000-B1008	A9999-002011	20	B001011
07000-B1008	A9999-002023	20	B001023
07000-B1008	A9999-003023	20	B001043
07000-B1009	A9999-002003	22	B001003
07000-B1009	A9999-002007	19	B001007
07000-B1009	A9999-002010	10	B001010
07000-B1009	A9999-002010	23	B001010
07000-B1009	A9999-002014	22	B001014
07000-B1009	A9999-002018	19	B001018
07000-B1009	A9999-002022	10	B001022
07000-B1009	A9999-002022	23	B001022
07000-B1009	A9999-003014	22	B001034
07000-B1009	A9999-003018	19	B001038
07000-B1009	A9999-003022	10	B001042
07000-B1009	A9999-003022	23	B001042
07000-B1009	N1210-001003	12	N002003
07000-B2012	A9999-002002	6	B001002
07000-B2012	A9999-002004	22	B001004
07000-B2012	A9999-002008	22	B001008
07000-B2012	A9999-002013	6	B001013
07000-B2012	A9999-002015	22	B001015
07000-B2012	A9999-002019	22	B001019
07000-B2012	A9999-003013	6	B001033
07000-B2012	A9999-003015	22	B001035
07000-B2012	A9999-003019	22	B001039
07000-B2014	A9999-002002	9	B001002
07000-B2014	A9999-002013	9	B001013
07000-B2014	A9999-003013	9	B001033
07000-B2050	A9999-002004	23	B001004
07000-B2050	A9999-002005	6	B001005
07000-B2050	A9999-002008	23	B001008
07000-B2050	A9999-002009	6	B001009
07000-B2050	A9999-002015	23	B001015
07000-B2050	A9999-002016	6	B001016
07000-B2050	A9999-002019	23	B001019
07000-B2050	A9999-002020	6	B001020
07000-B2050	A9999-003015	23	B001035
07000-B2050	A9999-003016	6	B001036

PARTS Nº	FIG. Nº	INDEX	PAGE
07000-B2050	A9999-003019	23	B001039
07000-B2050	A9999-003020	6	B001040
07000-B2105	N1310-001001A	8	N004002
07000-B3038	A9999-002004	18	B001004
07000-B3038	A9999-002005	2	B001005
07000-B3038	A9999-002008	18	B001008
07000-B3038	A9999-002009	2	B001009
07000-B3038	A9999-002015	18	B001015
07000-B3038	A9999-002016	2	B001016
07000-B3038	A9999-002019	18	B001019
07000-B3038	A9999-002020	2	B001020
07000-B3038	A9999-003015	18	B001035
07000-B3038	A9999-003016	2	B001036
07000-B3038	A9999-003019	18	B001039
07000-B3038	A9999-003020	2	B001040
07000-B3042	N1210-001003	11	N002003
07000-B5230	N1210-001002	24	N002002
07000-F3022	N1210-001003	2	N002003
07001-01007	H0120-004007	13	H003007
07001-01007	H0120-004011	5	H003011
07001-01007	H0120-004107	11	H004007
07001-01007	H0120-004111	5	H004011
07001-01007	H0120-005007	13	H002007
07001-01007	H0120-005011	5	H002011
07001-01008	A9999-002011	21	B001011
07001-01008	A9999-002023	21	B001023
07001-01008	A9999-003023	21	B001043
07001-01009	A9999-002010	11	B001010
07001-01009	A9999-002010	24	B001010
07001-01009	A9999-002022	11	B001022
07001-01009	A9999-002022	24	B001022
07001-01009	A9999-003022	11	B001042
07001-01009	A9999-003022	24	B001042
07001-01009	H0120-004011	3	H003011
07001-01009	H0120-004017	4	H003017
07001-01009	H0120-004111	3	H004011
07001-01009	H0120-004117	4	H004017
07001-01009	H0120-005011	3	H002011
07001-01009	H0120-005017	4	H002017
07001-01010	H0120-004019	18	H003019
07001-01010	H0120-004020	18	H003020
07001-01010	H0120-004021	20	H003021
07001-01010	H0120-004119	18	H004019
07001-01010	H0120-004120	18	H004020
07001-01010	H0120-004121	20	H004021
07001-01010	H0120-005019	18	H002019
07001-01010	H0120-005020	18	H002020
07001-01010	H0120-005021	20	H002021
07001-02011	H0120-004019	16	H003019
07001-02011	H0120-004020	16	H003020
07001-02011	H0120-004119	16	H004019
07001-02011	H0120-004120	16	H004020
07001-02011	H0120-005019	16	H002019
07001-02011	H0120-005020	16	H002020
07001-02012	H0120-004021	18	H003021
07001-02012	H0120-004121	18	H004021
07001-02012	H0120-005021	18	H002021
07001-02018	P1210-002001	17	P002001
07001-02018	P1210-002003	3	P002003
07001-02020	H0120-004010	18	H003010
07001-02020	H0120-004110	18	H004010
07001-02020	H0120-005010	18	H002010
07001-02021	P1210-002003	5	P002003
07001-03022	N1210-001003	3	N002003
07001-05090	KIT	K05	Y010001
07001-05090	KIT	K11	Y010001
07001-05090	T1120-003001	28	T003001
07001-05090	T1120-003002	28	T003002
07001-05090	T1200-007002	25	T008002
07001-05090	T1200-008002	25	T007002
07001-05100	KIT	K09	Y010001
07001-05100	KIT	K12	Y010001
07001-05100	T1140-003001	30	T004001
07001-05100	T1140-004001	31	T004011
07001-05100	T1200-010002	25	T005002
07001-05100	T1200-011002	25	T006002
07001-05175	P1210-002002	28	P002002
07001-05175	P1210-002006	28	P002006
07001-05175	P1210-002010	28	P002010
07001-05195	P1210-002002	30	P002002
07001-05195	P1210-002006	30	P002006
07001-05195	P1210-002010	30	P002010
07002-01423	N1210-001003	10	N002003
07002-02434	P1210-002004	33	P002004
07002-02434	P1210-002008	33	P002008
07002-02434	P1210-002012	33	P002012
07002-10823	D0200-002003	2	D002003
07002-10823	H0120-004001	9	H003001
07002-10823	H0120-004022	4	H003022
07002-10823	H0120-004101	9	H004001
07002-10823	H0120-005001	9	H002001
07002-10823	H0120-005022	4	H002022
07002-11023	H0120-004007	15	H003007
07002-11023	H0120-004007	21	H003007
07002-11023	H0120-004014	27	H003014
07002-11023	H0120-004019	20	H003019
07002-11023	H0120-004020	20	H003020
07002-11023	H0120-004107	17	H004007
07002-11023	H0120-004114	15	H004014
07002-11023	H0120-004119	20	H004019
07002-11023	H0120-004120	20	H004020
07002-11023	H0120-005007	15	H002007
07002-11023	H0120-005007	21	H002007
07002-11023	H0120-005014	27	H002014
07002-11023	H0120-005019	20	H002019
07002-11023	H0120-005020	20	H002020
07002-11023	H1270-003001	9	H014001
07002-11023	P1210-002001	24	P002001
07002-11023	P1210-002001	27	P002001
07002-11023	P1210-002005	24	P002005
07002-11023	P1210-002005	27	P002005
07002-11023	P1210-002009	24	P002009
07002-11023	P1210-002009	27	P002009
07002-11223	H0120-004026	4	H003026
07002-11223	H0120-004124	4	H004024
07002-11223	H0120-005026	4	H002026
07002-11223	H0210-001001	6	H005001
07002-11223	K1110-024027	4	K008025
07002-11223	K1110-039024	4	K009024
07002-11223	N1210-001004	3	N002004
07002-11423	C0100-001003	40	C001003
07002-11423	C0100-001003	48	C001003
07002-11423	H0110-002001	19	H001001
07002-11423	H0120-004007	11	H003007
07002-11423	H0120-004007	25	H003007
07002-11423	H0120-004010	5	H003010
07002-11423	H0120-004014	12	H003014
07002-11423	H0120-004014	19	H003014
07002-11423	H0120-004014	23	H003014
07002-11423	H0120-004014	25	H003014
07002-11423	H0120-004015	20	H003015
07002-11423	H0120-004025	16	H003025
07002-11423	H0120-004025	19	H003025
07002-11423	H0120-004025	23	H003025
07002-11423	H0120-004025	26	H003025
07002-11423	H0120-004026	10	H003026
07002-11423	H0120-004026	14	H003026
07002-11423	H0120-004026	17	H003026
07002-11423	H0120-004026	20	H003026
07002-11423	H0120-004026	23	H003026
07002-11423	H0120-004026	26	H003026
07002-11423	H0120-004026	30	H003026
07002-11423	H0120-004026	32	H003026
07002-11423	H0120-004026	35	H003026
07002-11423	H0120-004026	38	H003026
07002-11423	H0120-004026	7	H003026
07002-11423	H0120-004107	21	H004007
07002-11423	H0120-004107	9	H004007
07002-11423	H0120-004110	5	H004010
07002-11423	H0120-004113	28	H004013

PARTS Nº	FIG. Nº	INDEX	PAGE
07002-11423	H0120-004114	11	H004014
07002-11423	H0120-004114	13	H004014
07002-11423	H0120-004115	20	H004015
07002-11423	H0120-004123	16	H004023
07002-11423	H0120-004123	19	H004023
07002-11423	H0120-004123	23	H004023
07002-11423	H0120-004123	26	H004023
07002-11423	H0120-004124	11	H004024
07002-11423	H0120-004124	14	H004024
07002-11423	H0120-004124	17	H004024
07002-11423	H0120-004124	20	H004024
07002-11423	H0120-004124	21	H004024
07002-11423	H0120-004124	23	H004024
07002-11423	H0120-004124	26	H004024
07002-11423	H0120-004124	8	H004024
07002-11423	H0120-005007	11	H002007
07002-11423	H0120-005007	25	H002007
07002-11423	H0120-005010	5	H002010
07002-11423	H0120-005014	12	H002014
07002-11423	H0120-005014	19	H002014
07002-11423	H0120-005014	23	H002014
07002-11423	H0120-005014	25	H002014
07002-11423	H0120-005015	20	H002015
07002-11423	H0120-005025	16	H002025
07002-11423	H0120-005025	19	H002025
07002-11423	H0120-005025	23	H002025
07002-11423	H0120-005025	26	H002025
07002-11423	H0120-005026	10	H002026
07002-11423	H0120-005026	14	H002026
07002-11423	H0120-005026	17	H002026
07002-11423	H0120-005026	20	H002026
07002-11423	H0120-005026	23	H002026
07002-11423	H0120-005026	26	H002026
07002-11423	H0120-005026	29	H002026
07002-11423	H0120-005026	31	H002026
07002-11423	H0120-005026	34	H002026
07002-11423	H0120-005026	37	H002026
07002-11423	H0120-005026	7	H002026
07002-11423	H1270-003003	3	H014003
07002-11423	H1810-001001	3	H017001
07002-11423	H1810-001001	6	H017001
07002-11423	H1810-001001	9	H017001
07002-11423	H1810-002001	3	H018001
07002-11423	H1810-002001	6	H018001
07002-11423	H1810-002001	9	H018001
07002-11423	H1831-001001	29	H019001
07002-11423	H1831-001002	15	H019002
07002-11423	H1831-001002	22	H019002
07002-11423	H1831-001002	24	H019002
07002-11423	H1831-002002	15	H020002
07002-11423	H1831-002002	23	H020002
07002-11423	H1833-001001	10	H021001
07002-11423	H1833-001001	11	H021001
07002-11423	H1833-001001	4	H021001
07002-11423	K1110-024028	25	K008026
07002-11423	K1110-024028	29	K008026
07002-11423	K1110-024039	9	K008036
07002-11423	K1110-024045	11	K008042
07002-11423	K1110-024055	12	K008052
07002-11423	K1110-024055	19	K008052
07002-11423	K1110-024055	22	K008052
07002-11423	K1110-024055	25	K008052
07002-11423	K1110-024055	6	K008052
07002-11423	K1110-024055	9	K008052
07002-11423	K1110-039026	25	K009026
07002-11423	K1110-039026	29	K009026
07002-11423	K1110-039035	9	K009035
07002-11423	K1110-039041	11	K009041
07002-11423	K1110-039051	15	K009051
07002-11423	K1110-039051	18	K009051
07002-11423	K1110-039051	6	K009051
07002-11423	K1110-039051	9	K009051
07002-11423	N1220-001001	9	N003001
07002-11423	N1310-001002	18	N004003
07002-11423	N1310-001002	6	N004003
07002-11423	P1120-001001	11	P001001
07002-11423	P1210-002001	11	P002001
07002-11423	P1210-002005	11	P002005
07002-11423	P1210-002009	11	P002009
07002-11623	D0200-002001	19	D002001
07002-11623	H0120-004013	22	H003013
07002-11623	H0120-004113	22	H004013
07002-11623	H0120-005013	22	H002013
07002-11623	K1110-024027	14	K008025
07002-11623	K1110-039024	14	K009024
07002-11823	D0200-002001	17	D002001
07002-11823	D0200-002001	22	D002001
07002-11823	H0120-004007	7	H003007
07002-11823	H0120-004019	14	H003019
07002-11823	H0120-004020	14	H003020
07002-11823	H0120-004107	7	H004007
07002-11823	H0120-004119	14	H004019
07002-11823	H0120-004120	14	H004020
07002-11823	H0120-005007	7	H002007
07002-11823	H0120-005019	14	H002019
07002-11823	H0120-005020	14	H002020
07002-12034	A9999-002011	15	B001011
07002-12034	A9999-002023	15	B001023
07002-12034	A9999-003023	15	B001043
07002-12034	D0100-001001	6	D001001
07002-12034	D0100-001001A	6	D001001A
07002-12034	H0110-002001	10	H001001
07002-12034	H0110-002001	16	H001001
07002-12034	H0120-004021	21	H003021
07002-12034	H0120-004121	21	H004021
07002-12034	H0120-005021	21	H002021
07002-12034	H1270-003003	6	H014003
07002-12034	H1270-003007	12	H014007
07002-12034	H1831-001002	18	H019002
07002-12034	H1831-001002	20	H019002
07002-12034	H1831-001002	26	H019002
07002-12034	H1831-002002	18	H020002
07002-12034	H1831-002002	20	H020002
07002-12034	H1831-002002	25	H020002
07002-12034	KIT	K09	Y010001
07002-12034	N1210-001001	6	N002001
07002-12034	T1140-003001	35	T004001
07002-12034	T1140-004001	36	T004011
07002-12434	C0100-001001	11	C001001
07002-12434	H0110-002001	5	H001001
07002-12434	H0110-002001	7	H001001
07002-12434	H0120-004007	23	H003007
07002-12434	H0120-004008	6	H003008
07002-12434	H0120-004009	4	H003009
07002-12434	H0120-004013	15	H003013
07002-12434	H0120-004013	19	H003013
07002-12434	H0120-004107	19	H004007
07002-12434	H0120-004108	6	H004008
07002-12434	H0120-004109	4	H004009
07002-12434	H0120-004113	15	H004013
07002-12434	H0120-004113	19	H004013
07002-12434	H0120-005007	23	H002007
07002-12434	H0120-005008	6	H002008
07002-12434	H0120-005009	4	H002009
07002-12434	H0120-005013	15	H002013
07002-12434	H0120-005013	19	H002013
07002-12434	H0311-001001	6	H006001
07002-12434	H0311-001002	6	H006002
07002-12434	H0330-001001	9	H009001
07002-12434	H0330-002001	13	H010001
07002-12434	H1270-003001	11	H014001
07002-12434	H1270-003006	4	H014006
07002-12434	N1220-001001	3	N003001
07002-12434	N1310-001002	12	N004003
07002-12434	N1310-001002	15	N004003
07002-12434	N1310-001002	3	N004003
07002-12434	P1120-001001	8	P001001
07002-13034	H0120-004021	14	H003021
07002-13034	H0120-004021	5	H003021
07002-13034	H0120-004121	14	H004021

PARTS Nº	FIG. Nº	INDEX	PAGE
07002-13034	H0120-004121	5	H004021
07002-13034	H0120-005021	14	H002021
07002-13034	H0120-005021	5	H002021
07002-13334	H0110-002001	13	H001001
07002-13334	H0120-004019	8	H003019
07002-13334	H0120-004020	8	H003020
07002-13334	H0120-004119	8	H004019
07002-13334	H0120-004120	8	H004020
07002-13334	H0120-005019	8	H002019
07002-13334	H0120-005020	8	H002020
07002-13334	H0330-001001	13	H009001
07002-13334	H0330-002001	17	H010001
07002-13334	H0340-001001	15	H011001
07002-13334	N1220-001001	6	N003001
07002-13334	P1210-002002	23	P002002
07002-13334	P1210-002006	23	P002006
07002-13334	P1210-002010	23	P002010
07002-13634	H0120-004005	13	H003005
07002-13634	H0120-004005	17	H003005
07002-13634	H0120-004005	21	H003005
07002-13634	H0120-004005	25	H003005
07002-13634	H0120-004005	29	H003005
07002-13634	H0120-004005	5	H003005
07002-13634	H0120-004005	9	H003005
07002-13634	H0120-004005A	13	H003005A
07002-13634	H0120-004005A	17	H003005A
07002-13634	H0120-004005A	21	H003005A
07002-13634	H0120-004005A	25	H003005A
07002-13634	H0120-004005A	29	H003005A
07002-13634	H0120-004005A	33	H003005A
07002-13634	H0120-004005A	5	H003005A
07002-13634	H0120-004005A	9	H003005A
07002-13634	H0120-004012	4	H003012
07002-13634	H0120-004016	5	H003016
07002-13634	H0120-004016	9	H003016
07002-13634	H0120-004023	4	H003023
07002-13634	H0120-004105	13	H004005
07002-13634	H0120-004105	17	H004005
07002-13634	H0120-004105	21	H004005
07002-13634	H0120-004105	25	H004005
07002-13634	H0120-004105	29	H004005
07002-13634	H0120-004105	5	H004005
07002-13634	H0120-004105	9	H004005
07002-13634	H0120-004112	4	H004012
07002-13634	H0120-004116	5	H004016
07002-13634	H0120-004116	9	H004016
07002-13634	H0120-005005	13	H002005
07002-13634	H0120-005005	17	H002005
07002-13634	H0120-005005	21	H002005
07002-13634	H0120-005005	25	H002005

PARTS Nº	FIG. Nº	INDEX	PAGE
07002-13634	H0120-005005	29	H002005
07002-13634	H0120-005005	5	H002005
07002-13634	H0120-005005	9	H002005
07002-13634	H0120-005005A	13	H002005A
07002-13634	H0120-005005A	17	H002005A
07002-13634	H0120-005005A	21	H002005A
07002-13634	H0120-005005A	25	H002005A
07002-13634	H0120-005005A	29	H002005A
07002-13634	H0120-005005A	33	H002005A
07002-13634	H0120-005005A	5	H002005A
07002-13634	H0120-005005A	9	H002005A
07002-13634	H0120-005012	4	H002012
07002-13634	H0120-005016	5	H002016
07002-13634	H0120-005016	9	H002016
07002-13634	H0120-005023	4	H002023
07002-13634	H0312-002001	4	H007001
07002-13634	N1210-001003	4	N002003
07002-13634	P1210-002001	21	P002001
07002-13634	P1210-002003	8	P002003
07002-13634	P1210-002005	21	P002005
07002-13634	P1210-002007	8	P002007
07002-13634	P1210-002009	21	P002009
07002-13634	P1210-002011	8	P002011
07002-13634	R0110-001001	5	R001001
07002-13634	R0110-001001A	5	R001001A
07002-14234	N1210-001001	15	N002001
07002-23634	AVC00-001001	5	A002001
07002-61023	A9999-002001	4	B001001
07002-61023	A9999-002002	12	B001002
07002-61023	A9999-002006	9	B001006
07002-61023	A9999-002012	4	B001012
07002-61023	A9999-002013	12	B001013
07002-61023	A9999-002017	9	B001017
07002-61023	A9999-003012	4	B001032
07002-61023	A9999-003013	12	B001033
07002-61023	A9999-003017	9	B001037
07002-61423	A9999-002011	22	B001011
07002-61423	A9999-002023	22	B001023
07002-61423	A9999-003023	22	B001043
07002-61423	N1210-001003	10	N002003
07002-61823	H0120-004125	7	H004025
07002-62034	N1210-001001	6	N002001
07002-62434	A9999-002001	10	B001001
07002-62434	A9999-002001	8	B001001
07002-62434	A9999-002006	11	B001006
07002-62434	A9999-002006	4	B001006
07002-62434	A9999-002010	13	B001010
07002-62434	A9999-002010	26	B001010
07002-62434	A9999-002012	10	B001012
07002-62434	A9999-002012	8	B001012

PARTS Nº	FIG. Nº	INDEX	PAGE
07002-62434	A9999-002017	11	B001017
07002-62434	A9999-002017	4	B001017
07002-62434	A9999-002022	13	B001022
07002-62434	A9999-002022	26	B001022
07002-62434	A9999-003012	10	B001032
07002-62434	A9999-003012	8	B001032
07002-62434	A9999-003017	11	B001037
07002-62434	A9999-003017	4	B001037
07002-62434	A9999-003022	13	B001042
07002-62434	A9999-003022	26	B001042
07002-63334	N1310-001002	20	N004003
07002-63334	N1310-001002	23	N004003
07002-63334	N1310-001002	26	N004003
07002-63634	N1210-001003	4	N002003
07002-64234	N1210-001001	15	N002001
07005-01412	AWF00-002001	2	E013001
07005-02216	A2119-001001	18	B008001
07005-03016	H0210-001001	2	H005001
07020-00000	N1110-001001	10	N001001
07020-00000	T1110-004001	13	T002001
07020-00000	T1110-005001	13	T001001
07020-00000	T1120-003001	4	T003001
07020-00000	T1120-003002	4	T003002
07020-00000	T1140-003001	14	T004001
07020-00000	T1140-004001	14	T004011
07020-00000	T1200-007001	8	T008001
07020-00000	T1200-007002	4	T008002
07020-00000	T1200-007002	8	T008002
07020-00000	T1200-007003	4	T008003
07020-00000	T1200-008001	8	T007001
07020-00000	T1200-008002	4	T007002
07020-00000	T1200-008002	8	T007002
07020-00000	T1200-008003	4	T007003
07020-00000	T1200-010001	10	T005001
07020-00000	T1200-010002	4	T005002
07020-00000	T1200-010002	8	T005002
07020-00000	T1200-010003	4	T005003
07020-00000	T1200-011001	10	T006001
07020-00000	T1200-011002	4	T006002
07020-00000	T1200-011002	8	T006002
07020-00000	T1200-011003	4	T006003
07040-10807	D0200-002003	1	D002003
07040-11007	H1270-003001	8	H014001
07040-11209	H0210-001001	5	H005001
07040-11209	K1110-024027	3	K008025
07040-11209	K1110-039024	3	K009024
07040-11209	N1210-001004	2	N002004
07040-11409	AWF00-002001	3	E013001
07040-11409	C0100-001003	41	C001003
07040-11409	C0100-001003	47	C001003

PARTS Nº	FIG. Nº	INDEX	PAGE
07040-11409	H1831-001001	30	H019001
07040-11612	D0200-002001	18	D002001
07040-11812	D0200-002001	16	D002001
07040-12412	H1270-003001	10	H014001
07040-12414	A9999-002001	9	B001001
07040-12414	A9999-002006	10	B001006
07040-12414	A9999-002012	9	B001012
07040-12414	A9999-002017	10	B001017
07040-12414	A9999-003012	9	B001032
07040-12414	A9999-003017	10	B001037
07040-12414	H0311-001001	5	H006001
07040-12414	H0311-001002	5	H006002
07040-13618	R0110-001001	4	R001001
07040-13618	R0110-001001A	4	R001001A
07043-00108	T1120-003001	5	T003001
07043-00108	T1120-003002	5	T003002
07044-12412	A9999-002001	7	B001001
07044-12412	A9999-002006	3	B001006
07044-12412	A9999-002012	7	B001012
07044-12412	A9999-002017	3	B001017
07044-12412	A9999-003012	7	B001032
07044-12412	A9999-003017	3	B001037
07044-12412	H0110-002001	4	H001001
07044-12412	P1210-002004	32	P002004
07044-12412	P1210-002008	32	P002008
07044-12412	P1210-002012	32	P002012
07048-01310	K1110-024025	5	K008023
07048-01310	K1110-039023	5	K009023
07049-01012	H0120-004025	1	H003025
07049-01012	H0120-004123	1	H004023
07049-01012	H0120-005025	1	H002025
07049-01012	N1110-001001	17	N001001
07049-01215	D0100-001001	18	D001001
07049-01215	D0100-001001A	18	D001001A
07049-01215	H0120-004025	2	H003025
07049-01215	H0120-004123	2	H004023
07049-01215	H0120-005025	2	H002025
07049-01215	M1120-001001	36	M002001
07049-01215	M1510-001001	11	M012001
07049-01215	P1210-002004	31	P002004
07049-01215	P1210-002008	31	P002008
07049-01215	P1210-002012	31	P002012
07049-02430	N1210-001004	5	N002004
07049-02430	R1140-001002	4	R006002
07056-10045	H0110-002001	45	H001001
07056-18422	D0100-001001	14	D001001
07056-18422	D0100-001001A	14	D001001A
07069-34075	H0110-002001	24	H001001
07073-01A09	T1110-004002	18	T002002
07073-01A09	T1110-005002	18	T001002

PARTS Nº	FIG. Nº	INDEX	PAGE
07074-01008	T1110-004002	17	T002002
07074-01008	T1110-005002	17	T001002
07094-11228	H0320-001001	13	H008001
07094-11228	H1270-003004	34	H014004
07094-30620	B0100-001001	13	B003001
07094-31228	H0320-001001	14	H008001
07094-31228	H0320-001001	8	H008001
07095-00317	E0450-001001	19	E008001
07095-00630	B0100-001001	14	B003001
07095-01034	D0200-002003	25	D002003
07095-01245	H0320-001001	12	H008001
07095-01245	H0320-001001	9	H008001
07095-01245	H1270-003004	35	H014004
07095-20314	E0200-001002	24	E002002
07095-20418	E0200-001003	11	E002003
07095-20523	E0200-001001	24	E002001
07095-20625	E0200-001003	9	E002003
07097-21222	T1200-008005	11	T007005
07097-21422	T1200-008005	23	T007005
07098-010A9	H1340-001001	1	H016001
07098-21221	T1200-010005	8	T005005
07098-21421	T1200-010005	17	T005005
07145-00090	KIT	K05	Y010001
07145-00090	KIT	K11	Y010001
07145-00090	KIT	K12	Y010001
07145-00090	T1120-003001	3	T003001
07145-00090	T1120-003002	3	T003002
07145-00090	T1200-007002	3	T008002
07145-00090	T1200-008002	3	T007002
07145-00090	T1200-010002	3	T005002
07145-00090	T1200-011002	3	T006002
07145-00100	KIT	K05	Y010001
07145-00100	KIT	K09	Y010001
07145-00100	T1120-003001	8	T003001
07145-00100	T1120-003002	8	T003002
07145-00100	T1140-003001	3	T004001
07145-00100	T1140-003001	6	T004001
07145-00100	T1140-004001	3	T004011
07145-00100	T1140-004001	6	T004011
07145-00110	T1110-004001	11	T002001
07145-00110	T1110-004005	5	T002005
07145-00110	T1110-005001	11	T001001
07145-00110	T1110-005005	5	T001005
07145-00110	T1200-007001	9	T008001
07145-00110	T1200-008001	9	T007001
07145-00110	T1200-010001	11	T005001
07145-00110	T1200-011001	11	T006001
07155-00925	R0110-001002	13	R001002
07155-00925	R0110-001002A	13	R001002A
07179-13114	T1120-003001	15	T003001

PARTS Nº	FIG. Nº	INDEX	PAGE
07179-13114	T1120-003002	15	T003002
07179-13114	T1200-007002	11	T008002
07179-13114	T1200-008002	11	T007002
07179-13126	T1140-003001	17	T004001
07179-13126	T1140-004001	16	T004011
07179-13126	T1200-010002	11	T005002
07179-13126	T1200-011002	11	T006002
07214-50813	N1110-001001	11	N001001
07260-09936	H0311-001001	8	H006001
07260-09936	H0311-001002	8	H006002
07260-20932	B0100-001001	20	B003001
07261-21415	H0110-002001	44	H001001
07270-00825	D0200-002001	24	D002001
07270-01085	D0200-002001	8	D002001
07270-21590	N1210-001004	38	N002004
07270-61415	H0110-002001	44	H001001
07280-04726	K1110-024025	4	K008023
07280-04726	K1110-039023	4	K009023
07281-00197	N1210-001004	39	N002004
07281-00359	C0100-001005	5	C001005
07281-00359	C0100-001007	25	C001007
07283-31079	A1610-001001	21	B000021
07283-31185	B0200-002002	13	B004002
07283-33442	T1120-003001	40	T003001
07283-33442	T1120-003002	40	T003002
07283-33442	T1140-003001	50	T004001
07283-36155	K0700-001001	16	K007001
07283-37663	C0100-001005	39	C001005
07283-37663	C0100-001007	8	C001007
07285-00100	D0200-002001	25	D002001
07285-00115	D0200-002001	4	D002001
07285-00155	B0100-001001	21	B003001
07285-00155	H0110-002001	43	H001001
07285-00200	H0110-002001	43	H001001
07285-00220	A2080-001001	2	B000031
07286-01960	A2080-001001	1	B000031
07286-03828	K1110-024025	3	K008023
07286-03828	K1110-039023	3	K009023
07288-01007	D0200-002001	2	D002001
07289-00070	C0100-001005	12	C001005
07289-00070	C0100-001005	7	C001005
07289-00070	C0100-001007	24	C001007
07299-00080	C0100-001005	45	C001005
07299-00080	C0100-001007	23	C001007
07299-00120	B0200-002002	18	B004002
07299-00130	B0200-002002	17	B004002
07299-00130	B0200-002002	9	B004002
07371-31049	H0312-002001	11	H007001
07371-31049	H0312-002001	18	H007001
07371-31049	H0312-002010	12	H007002

PARTS Nº	FIG. Nº	INDEX	PAGE
07371-31049	H0312-002010	5	H007002
07371-31049	H1210-001001	18	H012001
07371-31049	H1210-001001	3	H012001
07371-31049	H1210-001001	8	H012001
07371-31049	H1220-003001	13	H013001
07371-31049	H1220-003001	18	H013001
07371-31049	H1220-003001	27	H013001
07371-31049	H1220-003001	4	H013001
07371-31049	H1270-003001	24	H014001
07371-31049	H1270-003003	30	H014003
07371-31049	H1310-001001	9	H015001
07371-31049	H1340-001001	3	H016001
07371-31049	N1310-001002	7	N004003
07371-31049	P1120-001001	3	P001001
07371-31049	T1110-004002	14	T002002
07371-31049	T1110-005002	14	T001002
07371-31049	T1120-003001	46	T003001
07371-31049	T1120-003002	46	T003002
07371-31049	T1140-003001	54	T004001
07371-31049	T1140-004001	52	T004011
07371-31049	T1200-007002	40	T008002
07371-31049	T1200-007004	14	T008004
07371-31049	T1200-008002	40	T007002
07371-31049	T1200-008004	14	T007004
07371-31049	T1200-010002	40	T005002
07371-31049	T1200-010004	14	T005004
07371-31049	T1200-011002	40	T006002
07371-31049	T1200-011004	14	T006004
07371-31465	H1270-003004	24	H014004
07371-31465	H1270-003004	31	H014004
07371-51260	H1270-003001	29	H014001
07371-51260	T1110-005006	3	T001006
07371-51260	T1200-008005	5	T007005
07371-51260	T1200-008006	12	T007006
07371-51260	T1200-010005	5	T005005
07371-51260	T1200-010006	12	T005006
07371-51470	H1270-003003	35	H014003
07371-51470	T1110-005006	11	T001006
07371-51470	T1200-008005	17	T007005
07371-51470	T1200-010005	14	T005005
07372-21035	H0312-002001	12	H007001
07372-21035	H0312-002001	19	H007001
07372-21035	H0312-002010	13	H007002
07372-21035	H0312-002010	6	H007002
07372-21035	H1210-001001	19	H012001
07372-21035	H1210-001001	4	H012001
07372-21035	H1210-001001	9	H012001
07372-21035	H1220-003001	14	H013001
07372-21035	H1220-003001	19	H013001
07372-21035	H1220-003001	28	H013001
07372-21035	H1220-003001	5	H013001
07372-21035	H1270-003001	25	H014001
07372-21035	H1270-003003	31	H014003
07372-21035	H1310-001001	10	H015001
07372-21035	H1340-001001	4	H016001
07372-21035	N1310-001002	8	N004003
07372-21035	P1120-001001	4	P001001
07372-21035	T1110-004002	15	T002002
07372-21035	T1110-005002	15	T001002
07372-21035	T1120-003001	47	T003001
07372-21035	T1120-003002	47	T003002
07372-21035	T1140-003001	55	T004001
07372-21035	T1140-004001	54	T004011
07372-21035	T1200-007002	41	T008002
07372-21035	T1200-007004	15	T008004
07372-21035	T1200-008002	41	T007002
07372-21035	T1200-008004	15	T007004
07372-21035	T1200-010002	41	T005002
07372-21035	T1200-010004	15	T005004
07372-21035	T1200-011002	41	T006002
07372-21035	T1200-011004	15	T006004
07372-21040	H0120-004028	3	H003028
07372-21040	H1210-001002	17	H012002
07372-21040	H1220-003001	11	H013001
07372-21040	H1220-003001	25	H013001
07372-21040	H1270-003003	15	H014003
07372-21040	H1270-003003	26	H014003
07372-21040	T1110-004004	21	T002004
07372-21040	T1110-005004	21	T001004
07372-21060	T1120-003001	33	T003001
07372-21060	T1120-003002	33	T003002
07372-21060	T1140-003001	39	T004001
07372-21060	T1140-004001	41	T004011
07372-21060	T1200-007002	29	T008002
07372-21060	T1200-008002	29	T007002
07372-21060	T1200-010002	29	T005002
07372-21060	T1200-011002	29	T006002
07372-21240	H1270-003004	25	H014004
07372-21240	H1270-003004	32	H014004
07372-21240	T1120-003001	38	T003001
07372-21240	T1120-003002	38	T003002
07372-21240	T1140-004001	46	T004011
07372-21240	T1200-007002	34	T008002
07372-21240	T1200-008002	34	T007002
07372-21240	T1200-010002	34	T005002
07372-21240	T1200-011002	34	T006002
07379-01044	T1200-007004	17	T008004
07379-01044	T1200-008004	17	T007004
07379-01044	T1200-010004	17	T005004
07379-01044	T1200-011004	17	T006004
07379-01044	W1200-001001	1	W001001
07379-01260	W1200-001001	2	W001001
07379-01470	W1200-001001	3	W001001
07430-71380	H0120-004003	16	H003003
07430-71380	H0120-004013	9	H003013
07430-71380	H0120-004015	21	H003015
07430-71380	H0120-004015	8	H003015
07430-71380	H0120-004022	9	H003022
07430-71380	H0120-004103	16	H004003
07430-71380	H0120-004113	9	H004013
07430-71380	H0120-004115	21	H004015
07430-71380	H0120-004115	8	H004015
07430-71380	H0120-005003	16	H002003
07430-71380	H0120-005013	9	H002013
07430-71380	H0120-005015	21	H002015
07430-71380	H0120-005015	8	H002015
07430-71380	H0120-005022	9	H002022
07700-50240	D0200-002001	7	D002001
07700-50455	D0100-001001	2	D001001
07700-50455	D0100-001001A	2	D001001A
07750-01628	T1140-003001	33	T004001
07750-01628	T1140-004001	34	T004011
07959-20001	R0110-001002	14	R001002
07959-20001	R0110-001002A	15	R001002A
08000-00000	E0100-002001	2	E001001
08000-00000	E0100-002002	2	E001002
08000-00001	E0100-002001	3	E001001
08000-00001	E0100-002002	3	E001002
08017-B0701	K1110-024009	14	K008009
08017-B0701	K1110-039009	14	K009009
08020-20000	K1110-024034	2	K008031
08020-20000	K1110-039030	2	K009030
08028-43030	K1110-024035	35	K008032
08028-43030	K1110-039031	35	K009031
08028-44035	E0200-001001	35	E002001
08028-44040	E0200-001005	1	E002005
08028-64035	E0100-002001	4	E001001
08028-64035	E0100-002002	4	E001002
08028-CD065	K1110-024034	26	K008031
08028-CD065	K1110-039030	26	K009030
08034-20414	E0410-001001	6	E006001
08034-20414	K1110-024006	9	K008006
08034-20414	K1110-024007	3	K008007
08034-20414	K1110-024009	15	K008009
08034-20414	K1110-024009	4	K008009
08034-20414	K1110-024022	10	K008020
08034-20414	K1110-024023	6	K008021
08034-20414	K1110-024024	33	K008022
08034-20414	K1110-024041	8	K008038
08034-20414	K1110-024046	44	K008043

PARTS Nº	FIG. Nº	INDEX	PAGE
08034-20414	K1110-039006	9	K009006
08034-20414	K1110-039007	3	K009007
08034-20414	K1110-039009	15	K009009
08034-20414	K1110-039009	4	K009009
08034-20414	K1110-039020	10	K009020
08034-20414	K1110-039021	6	K009021
08034-20414	K1110-039022	33	K009022
08034-20414	K1110-039037	8	K009037
08034-20414	K1110-039042	44	K009042
08034-20519	E0200-001003	32	E002003
08034-20519	E0200-001004	18	E002004
08034-20519	E0320-001001	14	E005001
08034-20519	H1831-001003	4	H019003
08034-20519	H1831-002003	4	H020003
08034-20519	K0700-001002	26	K007002
08034-20519	K1110-024023	7	K008021
08034-20519	K1110-024031	33	K008029
08034-20519	K1110-024035	28	K008032
08034-20519	K1110-024046	35	K008043
08034-20519	K1110-024052	4	K008049
08034-20519	K1110-024052	7	K008049
08034-20519	K1110-024056	2	K008053
08034-20519	K1110-039021	7	K009021
08034-20519	K1110-039031	28	K009031
08034-20519	K1110-039042	35	K009042
08034-20519	K1110-039048	4	K009048
08034-20519	K1110-039048	7	K009048
08034-20519	K1110-039052	2	K009052
08034-20536	E0200-001001	38	E002001
08034-20536	E0200-001001	40	E002001
08034-20536	H0330-001001	6	H009001
08034-20536	H0330-002001	10	H010001
08034-20536	H1270-003003	39	H014003
08034-20536	H1831-001004	19	H019004
08034-20536	H1831-001004	4	H019004
08034-20536	H1831-002004	17	H020004
08034-20536	H1831-002004	4	H020004
08034-20536	H1833-001001	18	H021001
08034-20536	H1840-001001	1	H022001
08034-20536	H1840-001001	17	H022001
08034-20536	H1840-001001	21	H022001
08034-20536	K0700-001002	27	K007002
08034-20536	K0700-001002	34	K007002
08034-20536	K1110-024031	40	K008029
08034-20536	K1110-024037	12	K008034
08034-20536	K1110-024043	12	K008040
08034-20536	K1110-024051	9	K008048
08034-20536	K1110-024053	1	K008050
08034-20536	K1110-024054	10	K008051
08034-20536	K1110-024054	12	K008051
08034-20536	K1110-024054	16	K008051
08034-20536	K1110-024054	4	K008051
08034-20536	K1110-024054	6	K008051
08034-20536	K1110-039033	12	K009033
08034-20536	K1110-039039	12	K009039
08034-20536	K1110-039047	9	K009047
08034-20536	K1110-039049	1	K009049
08034-20536	K1110-039050	10	K009050
08034-20536	K1110-039050	12	K009050
08034-20536	K1110-039050	16	K009050
08034-20536	K1110-039050	4	K009050
08034-20536	K1110-039050	6	K009050
08034-20816	W1200-001001	4	W001001
08034-20876	K1110-024019	17	K008017
08034-20876	K1110-024019	7	K008017
08034-20876	K1110-039017	17	K009017
08034-20876	K1110-039017	7	K009017
08036-00814	N1110-001001	12	N001001
08036-01014	T1110-004003	10	T002003
08036-01014	T1110-005003	10	T001003
08037-03614	M1810-004001	25	M014001
08037-03614	M1810-004003	13	M014003
08037-03614	M1810-004003	27	M014003
08037-05016	M1810-004001	3	M014001
08037-11425	K1110-024041	11	K008038
08037-11425	K1110-039037	11	K009037
08038-00035	K1110-024034	15	K008031
08038-00035	K1110-024034	27	K008031
08038-00035	K1110-039030	15	K009030
08038-00035	K1110-039030	27	K009030
08038-00519	E0200-001004	10	E002004
08038-00519	K1110-024034	19	K008031
08038-00519	K1110-024034	24	K008031
08038-00519	K1110-039030	19	K009030
08038-00519	K1110-039030	24	K009030
08038-02027	E0200-001003	39	E002003
08038-02027	E0200-001004	17	E002004
08038-02027	E0200-001004	9	E002004
08038-02027	K1110-024034	25	K008031
08038-02027	K1110-039030	25	K009030
08038-10035	E0200-001001	1	E002001
08038-22511	E0200-001005	2	E002005
08038-42511	E0100-002001	5	E001001
08038-42511	E0100-002002	5	E001002
08038-42511	E0200-001005	3	E002005
08041-00500	K1110-024034	3	K008031
08041-00500	K1110-039030	3	K009030
08041-01000	K1110-024024	3	K008022
08041-01000	K1110-024034	4	K008031
08041-01000	K1110-039022	3	K009022
08041-01000	K1110-039030	4	K009030
08041-02000	K1110-024024	4	K008022
08041-02000	K1110-024034	5	K008031
08041-02000	K1110-039022	4	K009022
08041-02000	K1110-039030	5	K009030
08041-03000	K1110-024024	5	K008022
08041-03000	K1110-024034	6	K008031
08041-03000	K1110-039022	5	K009022
08041-03000	K1110-039030	6	K009030
08051-00801	K1110-024009	10	K008009
08051-00801	K1110-039009	10	K009009
08053-01510	K0700-001001	11	K007001
08053-01510	K1110-024031	38	K008029
08057-00810	E0200-001003	33	E002003
08057-12008	E0410-001001	5	E006001
08057-12010	E0200-001003	26	E002003
08057-12012	E0200-001001	20	E002001
08057-12012	E0200-001002	14	E002002
08057-12012	E0200-001002	1	E002002
08057-12012	E0200-001002	11	E002002
08057-12012	E0200-001002	20	E002002
08057-12012	E0200-001002	27	E002002
08057-12012	E0200-001002	30	E002002
08057-12012	E0200-001002	4	E002002
08057-12012	E0200-001002	7	E002002
08057-12012	E0200-001003	13	E002003
08057-12012	E0200-001003	18	E002003
08057-12012	E0200-001003	2	E002003
08057-12012	E0200-001003	36	E002003
08057-12012	E0200-001003	5	E002003
08057-12012	E0200-001004	14	E002004
08057-12012	E0200-001004	19	E002004
08057-12012	E0200-001004	27	E002004
08057-12012	E0200-001004	3	E002004
08057-12012	E0200-001004	30	E002004
08057-12012	E0200-001004	35	E002004
08057-12012	E0200-001005	12	E002005
08057-22008	E0200-001004	6	E002004
08057-22012	E0200-001001	10	E002001
08057-22012	E0200-001001	13	E002001
08057-22012	E0200-001001	16	E002001
08057-22012	E0200-001001	4	E002001
08059-00310	E0450-001001	26	E008001
08059-00413	K1110-024006	10	K008006
08059-00413	K1110-024009	5	K008009
08059-00413	K1110-039006	10	K009006
08059-00413	K1110-039009	5	K009009
08059-00515	K1110-024022	7	K008020
08059-00515	K1110-024023	5	K008021

PARTS Nº	FIG. Nº	INDEX	PAGE
08059-00515	K1110-039020	7	K009020
08059-00515	K1110-039021	5	K009021
08086-20000	K1110-024046	30	K008043
08086-20000	K1110-039042	30	K009042
08088-30000	K1110-024034	16	K008031
08088-30000	K1110-039030	16	K009030
08116-02410	K1110-024007	11	K008007
08116-02410	K1110-039007	11	K009007
08160-72400	E0410-001001	1	E006001
08160-72420	E0410-001001	2	E006001
08191-00770	AWR00-002001	37	F002001
08191-00770	E0450-001002	3	E009001
08192-14400	E0450-001002	2	E009001
08192-24200	E0450-001002	1	E009001
08193-20010	ASD00-001001	6	B009001
08193-20010	AWR00-002001	9	F002001
08193-20010	E0420-001001	2	E007001
08193-20012	E0200-001002	17	E002002
08193-20012	E0200-001003	27	E002003
08193-20012	E0200-001005	13	E002005
08193-20012	E0320-001001	15	E005001
08193-20012	T1110-004005	23	T002005
08193-20012	T1110-005005	23	T001005
08193-21012	A9999-002011	25	B001011
08193-21012	A9999-002023	25	B001023
08193-21012	A9999-003023	25	B001043
08193-21012	E0310-004001	5	E004001
08193-21012	H1831-002004	21	H020004
08193-21012	K1110-024031	37	K008029
08211-00720	K1110-024035	31	K008032
08211-00720	K1110-039031	31	K009031
08912-51600	K1110-024041	6	K008038
08912-51600	K1110-039037	6	K009037
09133-21000	U0100-006001	20	U002001
09133-27000	U0100-005001	20	U001001
09134-A1681	U0510-002001	1	U010001
09205-18325	R1200-002001	7	R007001
09370-00090	R0110-001002	12	R001002
09370-00090	R0110-001002A	12	R001002A
09409-00002	K0160-002001	3	K002001
09415-02512	K1110-024012	3	K008012
09415-02512	K1110-024046	27	K008043
09415-02512	K1110-039012	3	K009012
09415-02512	K1110-039042	27	K009042
09416-10200	K1110-024010	11	K008010
09416-10200	K1110-024010	18	K008010
09416-10200	K1110-024010	2	K008010
09416-10200	K1110-039010	12	K009010
09416-10200	K1110-039010	18	K009010
09416-10200	K1110-039010	2	K009010
09452-14503	K1110-024024	15	K008022
09452-14503	K1110-039022	15	K009022
09479-02400	K1110-024051	2	K008048
09479-02400	K1110-024051	4	K008048
09479-02400	K1110-039047	2	K009047
09479-02400	K1110-039047	4	K009047
09483-10309	C0100-001007	19	C001007
09601-10001	U0100-006001	23	U002001
09601-12051	U0100-005001	23	U001001
09620-A2160	U0521-002001	3	U011001
09620-B2070	U0521-007001	2	U012001
09637-51263	U0550-001001	1	U014001
09637-70163	U0550-002001	1	U015001
09642-11000	U0202-004001	1	U008001
09642-17000	U0202-003001	1	U007001
09653-01001	U0100-006001	10	U002001
09653-07101	U0100-005001	10	U001001
09657-01004	U0100-006001	11	U002001
09657-07102	U0100-005001	11	U001001
09659-51000	U0100-006001	22	U002001
09659-51000	U0100-006001	5	U002001
09659-51000	U0580-007001	1	U017001
09659-57100	U0100-005001	22	U001001
09659-57100	U0100-005001	5	U001001
09659-57100	U0580-005001	1	U016001
09659-A057B	H1270-003005	14	H014005
09667-01001	U0100-006001	14	U002001
09667-07101	U0100-005001	14	U001001
09668-01001	U0100-006001	9	U002001
09668-07101	U0100-005001	9	U001001
09669-0000E	U0100-005001	15	U001001
09669-0000E	U0100-006001	15	U002001
09685-00002	U0100-005001	4	U001001
09685-00002	U0100-006001	4	U002001
09690-M0063	U0100-005001	1	U001001
09690-M0063	U0100-006001	1	U002001
09690-P0630	U0100-005001	2	U001001
09690-P0630	U0100-006001	2	U002001
09690-P1400	U0150-001001	1	U005001
09690-P1400	U0150-001001	2	U005001
09690-P1400	U0150-003001	1	U006001
09690-P1400	U0150-003001	2	U006001
09803-07100	U0120-010001	2	U004001
09805-11000	U0100-006001	12	U002001
09805-17100	U0100-005001	12	U001001
09805-21000	U0100-006001	21	U002001
09805-27100	U0100-005001	21	U001001
09808-01000	U0100-006001	13	U002001
09808-07100	U0100-005001	13	U001001
09842-A0481	U0100-005001	29	U001001
09842-A0481	U0100-006001	29	U002001
09844-00050	U0100-005001	3	U001001
09844-00050	U0100-006001	3	U002001
09845-00480	U0205-001001	1	U009001
09920-00150	A2049-001001	13	B003001
09920-00150	A2119-001001	22	B008001
09920-00150	A2219-001001	13	B005001
09960-00801	U0100-005001	26	U001001
09960-00801	U0100-006001	26	U002001
09960-00802	U0100-005001	27	U001001
09960-00802	U0100-006001	27	U002001
09963-01001	U0100-006001	19	U002001
09963-07001	U0100-005001	19	U001001
113-899-7950	H0340-001001	10	H011001
113-899-7950	H1810-002001	20	H018001
113-899-7950	H1840-001001	18	H022001
11Y-01-11920	B0200-002002	6	B004002
11Y-09-11140	C0100-001007	20	C001007
11Y-09-11140	C0100-001007	26	C001007
11Y-09-11140	D0200-002001	3	D002001
11Y-09-11140	D0200-002003	33	D002003
11Y-09-11160	K0700-001002	3	K007002
11Y-62-11980	N1310-001002	22	N004003
11Y-62-11980	N1310-001002	25	N004003
11Y-62-12130	H0120-004025	12	H003025
11Y-62-12130	H0120-004123	12	H004023
11Y-62-12130	H0120-004124	18	H004024
11Y-62-12130	H0120-005025	12	H002025
11Y-62-12130	H1831-001002	10	H019002
11Y-62-12130	H1831-002002	10	H020002
11Y-62-12130	K1110-024045	7	K008042
11Y-62-12130	K1110-039041	7	K009041
11Y-62-12140	K1110-024031	23	K008029
11Y-62-12160	H0110-002001	18	H001001
11Y-62-12160	H0120-004025	6	H003025
11Y-62-12160	H0120-004026	21	H003026
11Y-62-12160	H0120-004026	33	H003026
11Y-62-12160	H0120-004026	36	H003026
11Y-62-12160	H0120-004026	5	H003026
11Y-62-12160	H0120-004123	6	H004023
11Y-62-12160	H0120-004124	15	H004024
11Y-62-12160	H0120-004124	24	H004024
11Y-62-12160	H0120-005025	6	H002025
11Y-62-12160	H0120-005026	21	H002026
11Y-62-12160	H0120-005026	32	H002026
11Y-62-12160	H0120-005026	35	H002026
11Y-62-12160	H0120-005026	5	H002026
11Y-62-12160	H1270-003003	1	H014003
11Y-62-12160	H1810-001001	1	H017001
11Y-62-12160	H1810-002001	1	H018001

PARTS Nº	FIG. Nº	INDEX	PAGE
11Y-62-12160	H1831-001002	6	H019002
11Y-62-12160	H1831-002002	6	H020002
11Y-62-12160	K1110-024028	23	K008026
11Y-62-12160	K1110-039026	23	K009026
11Y-62-12170	H1270-003003	4	H014003
11Y-62-12250	H0120-004025	10	H003025
11Y-62-12250	H0120-004123	10	H004023
11Y-62-12250	H0120-005025	10	H002025
11Y-62-12330	K1110-024055	10	K008052
11Y-62-12330	K1110-024055	23	K008052
11Y-62-12370	H1810-001001	4	H017001
11Y-62-12370	H1810-002001	4	H018001
11Y-62-12510	N1220-001001	7	N003001
11Y-62-12520	H0120-004025	14	H003025
11Y-62-12520	H0120-004123	14	H004023
11Y-62-12520	H0120-005025	14	H002025
11Y-62-12520	K1110-024039	7	K008036
11Y-62-12520	K1110-024045	9	K008042
11Y-62-12520	K1110-039035	7	K009035
11Y-62-12520	K1110-039041	9	K009041
11Y-62-12520	P1120-001001	9	P001001
11Y-62-12820	H0120-004026	27	H003026
124-01-01H1	AIT00-001001	2	A012001
124-A62-1920	M1110-001001	14	M001001
12954-65-H92	A8110-001001	1	Y001001
12R-60-11230	H0110-002001	30	H001001
12Y-98-11340	U0100-005001	34	U001001
12Y-98-11350	U0100-005001	35	U001001
1304869H1	A2359-001001	9	B017001
1304891H1	A2119-001001	20	B008001
130-76-82H1	AIT00-001001	1	A012001
134-03-61410	C0100-001007	27	C001007
134-03-61410	C0100-001007	27	C001007
134-03-61410	E0200-001003	12	E002003
134-06-61540	E0100-002001	1	E001001
134-06-61550	E0100-002002	1	E001002
140-30-00141	R0300-003001	7	R003001
140-30-00141	R0300-003011	7	R003011
141-06-11220	K0700-001002	16	K007002
141-06-11220	K1110-024051	10	K008048
141-06-11220	K1110-039047	10	K009047
141-30-32181	R1200-002001	10	R007001
142-03-11160	E0200-001001	17	E002001
142-03-11160	E0320-001001	8	E005001
142-03-11160	H1831-001004	13	H019004
142-03-11160	H1831-002004	13	H020004
142-03-11160	H1831-002004	22	H020004
142-03-11160	H1831-002004	6	H020004
144-32-11240	R0500-001001	3	R004001
144-32-11240	R0500-001002	3	R004002
144-60-11151	N1210-001004	37	N002004
145-Z79-6270	K1110-024005	20	K008005
145-Z79-6270	K1110-039005	20	K009005
14X-01-35570	C0100-001007	22	C001007
14X-03-51621	C0100-001002	14	C001002
14X-03-51640	C0100-001002	13	C001002
14X-03-51770	C0100-001002	15	C001002
14X-98-35181	U0100-005001	33	U001001
14X-98-35181	U0100-006001	33	U002001
150-952-7160	D0200-002003	3	D002003
154-32-71220	KIT	K02	Y010001
154-32-71220	R0500-001001	9	R004001
154-32-71220	R0500-001002	9	R004002
154-54-22520	M1210-002001	6	M006001
154-61-16570	A1570-001001	7	A013001
154-61-16570	A1570-001001	3	B000011
154-61-16570	A1610-001001	10	B000021
155-06-15180	K0700-001002	4	K007002
175-40-22540	E0200-001003	28	E002003
175-40-22540	K1110-024035	20	K008032
175-40-22540	K1110-039031	20	K009031
175-54-34170	E0100-002001	11	E001001
175-54-34170	E0100-002001	8	E001001
175-54-34170	E0100-002002	11	E001002
175-54-34170	E0100-002002	8	E001002
175-54-34170	M1120-001001	13	M002001
175-54-34170	M1120-001001	21	M002001
175-54-34170	M1150-002001	19	M005001
175-54-34170	M1150-002001	26	M005001
175-54-34170	M1150-002002	12	M005002
175-54-34170	M1150-002002	18	M005002
175-54-34170	M1150-002002	21	M005002
175-54-34170	M1150-002002	29	M005002
175-54-34170	M1150-002002	31	M005002
175-54-34170	M1150-002002	8	M005002
175-54-34170	M1210-002001	27	M006001
175-54-34170	M1210-002001	32	M006001
175-54-34170	M1220-001001	16	M007001
175-54-34170	M1220-001001	18	M007001
175-54-34170	M1810-004001	19	M014001
175-54-34170	M1810-004001	27	M014001
175-54-34170	M1810-004001	38	M014001
175-54-34170	M1810-004002	3	M014002
175-54-34170	M1810-004003	17	M014003
175-54-34170	M1810-004003	29	M014003
175-54-34170	M1810-004003	3	M014003
175-61-17240	K1520-001001	9	K011001
175-61-51750	H1270-003006	11	H014006
176-38-41350	H1831-001004	6	H019004
176-63-56170	KIT	K05	Y010001
176-63-56170	KIT	K11	Y010001
176-63-56170	T1120-003001	14	T003001
176-63-56170	T1120-003002	14	T003002
176-63-56170	T1200-007002	10	T008002
176-63-56170	T1200-008002	10	T007002
17A-60-11310	H0110-002001	37	H001001
17A-979-3180	K1110-024022	3	K008020
17A-979-3180	K1110-039020	3	K009020
17M-911-3530	K1110-024019	10	K008017
17M-911-3530	K1110-039017	10	K009017
195-01-16140	K0700-001002	20	K007002
195-01-16420	E0420-001001	7	E007001
195-03-11570	D0100-001001	17	D001001
195-03-11570	D0100-001001A	17	D001001A
195-03-11570	H0110-002001	61	H001001
195-03-41380	M1130-001001	42	M003001
195-33-11220	D0200-002003	12	D002003
195-33-11220	E0200-001001	32	E002001
195-33-11220	E0200-001002	33	E002002
195-33-11220	E0200-001002	8	E002002
195-33-11220	E0200-001003	23	E002003
195-33-11220	K1110-024035	11	K008032
195-33-11220	K1110-024035	15	K008032
195-33-11220	K1110-039031	11	K009031
195-33-11220	K1110-039031	15	K009031
195-43-41530	B0100-001001	30	B003001
195-71-32220	K0700-001001	5	K007001
195-979-3570	D0200-002003	8	D002003
195-979-7770	K1110-024009	13	K008009
195-979-7770	K1110-039009	13	K009009
195-979-8580	K1110-024036	2	K008033
195-979-8580	K1110-039032	2	K009032
195-Z11-1690	K1110-024005	8	K008005
195-Z11-1690	K1110-039005	8	K009005
198-06-53540	E0200-001004	2	E002004
198-06-53610	E0200-001001	31	E002001
198-06-53610	E0200-001003	22	E002003
198-06-53630	H1810-001001	28	H017001
198-06-53630	H1810-002001	23	H018001
198-38-12460	K0700-001001	7	K007001
198-43-15310	K1120-001001	14	K010001
198-61-44110	E0200-001003	29	E002003
198-63-94170	KIT	K09	Y010001
198-63-94170	KIT	K12	Y010001
198-63-94170	T1140-003001	16	T004001
198-63-94170	T1200-010002	10	T005002
198-63-94170	T1200-011002	10	T006002
198-Z11-2640	K1110-024024	31	K008022
198-Z11-2640	K1110-039022	31	K009022
19M-06-31720	K1110-024034	7	K008031

PARTS Nº	FIG. Nº	INDEX	PAGE
19M-06-31720	K1110-039030	7	K009030
201-03-29160	C0100-001001	10	C001001
201-60-11390	H0120-004025	4	H003025
201-60-11390	H0120-004123	4	H004023
201-60-11390	H0120-005025	4	H002025
201-60-11390	H1831-001002	2	H019002
201-60-11390	H1831-002002	2	H020002
201-60-11390	H1833-001001	2	H021001
201-60-11390	H1833-001001	8	H021001
201-62-71810	H1270-003006	1	H014006
201-910-6730	C0100-001001	12	C001001
202-970-2210	T1200-008006	3	T007006
202-970-2210	T1200-010006	3	T005006
202-98-11340	K0700-001002	11	K007002
203-43-51620	K1110-024028	7	K008026
203-43-51620	K1110-039026	7	K009026
203-54-56630	M1220-001001	2	M007001
203-54-62670	M1130-001001	35	M003001
203-54-62670	M1140-001001	40	M004001
203-54-62670	M1150-002001	11	M005001
203-54-63230	M1140-001001	44	M004001
203-60-31100	H0110-002001	2	H001001
203-60-31160	H0110-002001	3	H001001
203-60-62220	K1110-024030	25	K008028
203-62-52210	J1110-001001	33	J001001
203-62-63740	N1310-001002	19	N004003
205-00-72430	U0521-002001	2	U011001
205-00-72430	U0521-007001	3	U012001
205-00-72430	U0521-010001	1	U013001
205-00-73360	U0100-005001	16	U001001
205-00-73360	U0100-006001	16	U002001
205-03-62660	C0100-001001	5	C001001
205-03-62660	C0100-001002	5	C001002
205-03-71230	C0100-001001	3	C001001
205-03-71230	C0100-001002	3	C001002
205-03-71440	C0100-001007	32	C001007
205-25-71280	N1110-001001	3	N001001
205-30-00052	R0200-002001	7	R002001
205-30-00052	R0200-002002	7	R002002
205-30-00052	R0200-002011	7	R002011
205-30-71171	R1100-002001	11	R005001
205-30-71181	J1110-001001	2	J001001
205-30-71181	R1100-002001	6	R005001
205-30-71191	J1110-001001	3	J001001
205-30-71191	R1100-002001	7	R005001
205-30-72170	R0110-001002	15	R001002
205-30-72170	R0110-001002A	16	R001002A
205-32-51211	N1210-001004	21	N002004
205-53-22140	K1110-024010	9	K008010
205-53-22140	K1110-039010	9	K009010
205-54-51250	K1110-024010	33	K008010
205-54-51250	K1110-039010	33	K009010
205-54-51970	M1130-001001	12	M003001
205-54-51970	M1140-001001	24	M004001
205-54-51971	M1130-001001	12	M003001
205-54-53550	M1130-001001	22	M003001
205-54-53550	M1140-001001	31	M004001
205-54-68440	M1210-002001	5	M006001
205-54-75240	K1110-024013	14	K008013
205-54-75240	K1110-039013	14	K009013
205-54-76410	M1150-002002	25	M005002
205-62-73430	H1210-001002	10	H012002
205-62-73430	H1210-001002	14	H012002
205-62-73430	H1210-001002	2	H012002
205-62-73430	H1210-001002	6	H012002
205-62-73431	T1110-004002	11	T002002
205-62-73431	T1110-004004	15	T002004
205-62-73431	T1110-004004	4	T002004
205-62-73431	T1110-005002	11	T001002
205-62-73431	T1110-005004	15	T001004
205-62-73431	T1110-005004	4	T001004
205-62-73431	T1110-005007	2	T001007
205-70-51390	T1110-004003	6	T002003
205-70-51390	T1110-005003	6	T001003
205-70-66580	J1310-002001	6	J002001
205-70-66581	T1110-004005	2	T002005
205-70-66581	T1110-005005	2	T001005
205-70-66581	T1200-007004	2	T008004
205-70-66581	T1200-007004	7	T008004
205-70-66581	T1200-008004	2	T007004
205-70-66581	T1200-008004	7	T007004
205-70-66581	T1200-010004	2	T005004
205-70-66581	T1200-010004	7	T005004
205-70-66581	T1200-011004	2	T006004
205-70-66581	T1200-011004	7	T006004
205-70-73280	T1200-007003	14	T008003
205-70-73280	T1200-008003	14	T007003
205-70-73280	T1200-010003	14	T005003
205-70-73280	T1200-011003	14	T006003
205-970-5550	H1270-003006	3	H014006
205-970-5560	H1270-003005	12	H014005
205-970-5560	KIT	K01	Y010001
205-970-7680	T1920-001001	3	T011001
205-979-4240	K0700-001001	1	K007001
205-979-4241	K0700-001001	1	K007001
206-03-43340	C0100-001005	17	C001005
206-03-43340	C0100-001007	37	C001007
206-03-43340	C0100-001007	40	C001007
206-06-61130	H1833-001001	12	H021001
206-06-61130	K1110-024028	31	K008026
206-06-61130	K1110-024031	36	K008029
206-06-61130	K1110-039026	31	K009026
206-26-71270	N1210-001004	16	N002004
206-53-13121	K1120-001001	2	K010001
206-53-14711	K0310-001001	1	K004001
206-53-14721	K0310-002001	1	K005001
207-00-71741	U0100-005001	18	U001001
207-00-76171	U0110-003001	1	U003001
207-00-76570	U0100-005001	31	U001001
207-00-76570	U0100-006001	31	U002001
207-00-76580	U0100-005001	32	U001001
207-00-76580	U0100-006001	32	U002001
207-00-76750	U0100-006001	8	U002001
207-00-B1210	U0100-005001	7	U001001
207-00-B1220	U0100-005001	8	U001001
207-00-B1230	U0100-005001	17	U001001
207-00-B1240	U0610-002001	1	U018001
207-00-B1250	U0710-001001	1	U019001
207-00-B1270	U0710-002001	1	U020001
207-01-31141	H0210-001001	1	H005001
207-01-31150	H0210-001001	3	H005001
207-01-55181	B0100-001001	4	B003001
207-01-61150	B0100-001001	2	B003001
207-01-61170	B0100-001001	8	B003001
207-01-68170	A1610-001001	15	B000021
207-01-71310	A9999-003001	1	B002001
207-01-71310	A9999-003001A	1	B002002
207-01-71320	H0210-001001	4	H005001
207-01-75110	B0100-001001	22	B003001
207-01-75120	B0100-001001	23	B003001
207-01-75130	B0100-001001	24	B003001
207-01-75140	B0100-001001	25	B003001
207-01-75150	B0100-001001	3	B003001
207-01-75160	B0200-002002	5	B004002
207-01-75170	B0200-002002	7	B004002
207-01-75180	B0200-002002	12	B004002
207-01-75190	B0200-002002	16	B004002
207-01-75210	C0100-001007	11	C001007
207-01-75220	C0100-001005	37	C001005
207-01-75231	C0100-001005	38	C001005
207-01-75241	C0100-001007	5	C001007
207-01-75250	C0100-001007	6	C001007
207-01-75270	C0100-001005	46	C001005
207-01-75340	C0100-001005	47	C001005
207-01-75340	C0100-001007	7	C001007
207-01-75360	A9999-003001A	4	B002002
207-03-51530	C0100-001005	13	C001005
207-03-51530	C0100-001005	8	C001005
207-03-71211	C0100-001006	7	C001006
207-03-75120	C0100-001001	1	C001001

PARTS Nº	FIG. Nº	INDEX	PAGE
207-03-75121	C0100-001002	1	C001002
207-03-75171	C0100-001001	16	C001001
207-03-75171	C0100-001002	18	C001002
207-03-75181	C0100-001001	17	C001001
207-03-75181	C0100-001002	19	C001002
207-03-75190	C0100-001003	36	C001003
207-03-75211	C0100-001003	39	C001003
207-03-75231	C0100-001003	24	C001003
207-03-75241	C0100-001003	27	C001003
207-03-75252	C0100-001003	7	C001003
207-03-75270	C0100-001003	17	C001003
207-03-75311	C0100-001005	11	C001005
207-03-75330	C0100-001007	18	C001007
207-03-75351	C0100-001005	31	C001005
207-03-75360	C0100-001005	18	C001005
207-03-75371	C0100-001005	23	C001005
207-03-75381	C0100-001005	27	C001005
207-03-75391	C0100-001005	32	C001005
207-03-75410	C0100-001005	19	C001005
207-03-75431	C0100-001005	24	C001005
207-03-75441	C0100-001005	28	C001005
207-03-75450	C0100-001005	33	C001005
207-03-75460	C0100-001005	20	C001005
207-03-75471	C0100-001004	14	C001004
207-03-75511	C0100-001007	15	C001007
207-03-75521	C0100-001004	21	C001004
207-03-75590	C0100-001001	13	C001001
207-03-75590	M1130-001001	41	M003001
207-03-75610	C0100-001004	24	C001004
207-03-75620	C0100-001007	31	C001007
207-03-75630	C0100-001007	33	C001007
207-03-75640	C0100-001005	6	C001005
207-03-76130	C0100-001006	1	C001006
207-03-76140	C0100-001006	2	C001006
207-03-76150	C0100-001006	3	C001006
207-03-76160	C0100-001006	4	C001006
207-03-76181	C0100-001006	5	C001006
207-03-76190	C0100-001006	6	C001006
207-03-76320	C0100-001001	34	C001001
207-03-76320	C0100-001002	36	C001002
207-03-76330	C0100-001001	35	C001001
207-03-76330	C0100-001002	37	C001002
207-03-76340	C0100-001001	18	C001001
207-03-76341	C0100-001002	20	C001002
207-03-76350	C0100-001001	21	C001001
207-03-76350	C0100-001002	23	C001002
207-03-76360	C0100-001004	8	C001004
207-03-76361	C0100-001004	8	C001004
207-03-76370	C0100-001003	12	C001003
207-03-76371	C0100-001003	12	C001003
207-03-76380	C0100-001001	36	C001001
207-03-76380	C0100-001002	38	C001002
207-03-76390	C0100-001001	37	C001001
207-03-76390	C0100-001002	39	C001002
207-03-76410	C0100-001001	31	C001001
207-03-76410	C0100-001002	33	C001002
207-03-76420	C0100-001001	38	C001001
207-03-76420	C0100-001002	40	C001002
207-03-76430	C0100-001007	21	C001007
207-03-76440	C0100-001007	14	C001007
207-03-76450	C0100-001002	10	C001002
207-03-76460	C0100-001004	19	C001004
207-04-71161	D0200-002003	21	D002003
207-04-75111	D0100-001001	1	D001001
207-04-75112	D0100-001001A	1	D001001A
207-04-75120	D0200-002001	13	D002001
207-04-75130	D0200-002003	15	D002003
207-04-75310	D0100-001001	8	D001001
207-04-75310	D0100-001001A	8	D001001A
207-04-75390	D0100-001001	5	D001001
207-04-75390	D0100-001001A	5	D001001A
207-06-61250	K1730-001001	1	K013001
207-06-61461	E0100-002001	9	E001001
207-06-61461	E0100-002002	9	E001002
207-06-61490	K1110-024036	3	K008033
207-06-61490	K1110-039032	3	K009032
207-06-71132	K0350-001001	2	K006001
207-06-75122	K1110-024034	20	K008031
207-06-75122	K1110-039030	20	K009030
207-06-75140	K1110-024034	14	K008031
207-06-75140	K1110-039030	14	K009030
207-06-75150	E0200-001004	13	E002004
207-06-75161	E0310-004001	13	E004001
207-06-75161	T1110-004005	24	T002005
207-06-75161	T1110-005005	24	T001005
207-06-75180	E0320-001001	12	E005001
207-06-75190	E0200-001001	27	E002001
207-06-76111	E0200-001001	39	E002001
207-06-76111	E0200-001002	36	E002002
207-06-76111	E0200-001003	43	E002003
207-06-76111	K1110-024034	1	K008031
207-06-76130	K1110-024046	43	K008043
207-06-76130	K1110-039042	43	K009042
207-06-76270	E0450-001002	4	E009001
207-06-76310	E0450-001001	28	E008001
207-06-76420	E0450-001001	7	E008001
207-06-76431	E0450-001001	8	E008001
207-06-76440	E0450-001001	9	E008001
207-06-76451	E0450-001001	25	E008001
207-06-76460	E0450-001001	10	E008001
207-06-76490	E0450-001001	27	E008001
207-06-76730	E0200-001001	39	E002001
207-06-76730	E0200-001002	36	E002002
207-06-76730	E0200-001003	43	E002003
207-06-76730	K1110-024034	1	K008031
207-06-76730	K1110-039030	1	K009030
207-25-00120	N1110-001001	1	N001001
207-25-00121	N1110-001001	1	N001001
207-25-31180	N1110-001001	4	N001001
207-25-61100	N1110-001001	1	N001001
207-25-61160	N1110-001001	2	N001001
207-25-62110	N1110-001001	8	N001001
207-25-75110	N1110-001001	15	N001001
207-26-54230	N1210-001004	20	N002004
207-26-61210	N1210-001004	9	N002004
207-26-62180	N1210-001004	8	N002004
207-26-62181	N1210-001004	8	N002004
207-26-71210	N1210-001004	31	N002004
207-26-71240	N1210-001004	1	N002004
207-26-71250	N1210-001004	33	N002004
207-26-71261	N1210-001004	26	N002004
207-26-71261	N1210-001004	36	N002004
207-26-71410	N1210-001004	42	N002004
207-26-71510	N1210-001004	35	N002004
207-26-71511	N1210-001004	35	N002004
207-26-71520	N1210-001004	28	N002004
207-26-71521	N1210-001004	28	N002004
207-26-71530	N1210-001004	25	N002004
207-26-71540	N1210-001004	15	N002004
207-26-71551	N1210-001004	22	N002004
207-26-71570	N1210-001004	27	N002004
207-26-71581	N1210-001004	14	N002004
207-26-73150	N1210-001004	7	N002004
207-26-75110	N1210-001004	4	N002004
207-26-75120	N1210-001004	10	N002004
207-26-75130	N1210-001004	4	N002004
207-26-75140	N1210-001004	10	N002004
207-27-00310	P1210-002004	1	P002004
207-27-00310	P1210-002008	1	P002008
207-27-00310	P1210-002012	1	P002012
207-27-00441	P1210-002001	1	P002001
207-27-00441	P1210-002002	1	P002002
207-27-00441	P1210-002003	1	P002003
207-27-00441	P1210-002004	1	P002004
207-27-00560	P1210-002005	1	P002005
207-27-00560	P1210-002006	1	P002006
207-27-00560	P1210-002007	1	P002007
207-27-00560	P1210-002008	1	P002008
207-27-00570	P1210-002009	1	P002009
207-27-00570	P1210-002010	1	P002010

PARTS Nº	FIG. Nº	INDEX	PAGE
207-27-00570	P1210-002011	1	P002011
207-27-00570	P1210-002012	1	P002012
207-27-51311	P1210-002004	35	P002004
207-27-51311	P1210-002008	35	P002008
207-27-51311	P1210-002012	35	P002012
207-27-52350	P1210-002004	5	P002004
207-27-52350	P1210-002008	5	P002008
207-27-52350	P1210-002012	5	P002012
207-27-61220	P1210-002004	21	P002004
207-27-61220	P1210-002008	21	P002008
207-27-61220	P1210-002012	21	P002012
207-27-61240	P1210-002004	23	P002004
207-27-61240	P1210-002008	23	P002008
207-27-61240	P1210-002012	23	P002012
207-27-63210	P1210-002004	11	P002004
207-27-63210	P1210-002008	11	P002008
207-27-63210	P1210-002012	11	P002012
207-27-63230	P1210-002004	13	P002004
207-27-63230	P1210-002008	13	P002008
207-27-63230	P1210-002012	13	P002012
207-27-71121	P1210-002004	20	P002004
207-27-71121	P1210-002008	20	P002008
207-27-71121	P1210-002012	20	P002012
207-27-71130	P1210-002004	16	P002004
207-27-71130	P1210-002008	16	P002008
207-27-71130	P1210-002012	16	P002012
207-27-71140	P1210-002004	10	P002004
207-27-71140	P1210-002008	10	P002008
207-27-71140	P1210-002012	10	P002012
207-27-71152	P1210-002004	17	P002004
207-27-71152	P1210-002008	17	P002008
207-27-71152	P1210-002012	17	P002012
207-27-71161	P1210-002004	19	P002004
207-27-71161	P1210-002008	19	P002008
207-27-71161	P1210-002012	19	P002012
207-27-71250	P1210-002004	18	P002004
207-27-71250	P1210-002008	18	P002008
207-27-71250	P1210-002012	18	P002012
207-27-71311	P1210-002004	3	P002004
207-27-71311	P1210-002008	1	P002008
207-27-71311	P1210-002012	1	P002012
207-27-71320	P1210-002004	9	P002004
207-27-71320	P1210-002008	9	P002008
207-27-71320	P1210-002012	9	P002012
207-27-71330	P1210-002004	4	P002004
207-27-71330	P1210-002008	4	P002008
207-27-71330	P1210-002012	4	P002012
207-27-71341	P1210-002004	28	P002004
207-27-71341	P1210-002008	28	P002008
207-27-71341	P1210-002012	28	P002012
207-27-71352	P1210-002004	25	P002004
207-27-71352	P1210-002008	25	P002008
207-27-71352	P1210-002012	25	P002012
207-27-71360	P1210-002004	7	P002004
207-27-71360	P1210-002008	7	P002008
207-27-71360	P1210-002012	7	P002012
207-27-71370	P1210-002004	6	P002004
207-27-71370	P1210-002008	6	P002008
207-27-71370	P1210-002012	6	P002012
207-27-71460	P1210-002004	34	P002004
207-27-71460	P1210-002008	34	P002008
207-27-71460	P1210-002012	34	P002012
207-27-71710	P1210-002008	3	P002008
207-27-71710	P1210-002012	3	P002012
207-30-00101	R0110-001001	7	R001001
207-30-00511	R0200-002001	1	R002001
207-30-00521	R0200-002002	1	R002002
207-30-00551	R0300-003001	1	R003001
207-30-00620	R0300-003011	1	R003011
207-30-00651	R0200-002011	1	R002011
207-30-21510	R0200-002011	1	R002011
207-30-21610	R0300-003011	1	R003011
207-30-21620	R0300-003011	2	R003011
207-30-21640	R0300-003011	4	R003011
207-30-21670	R0200-002011	2	R002011
207-30-21750	R0200-002011	4	R002011
207-30-21760	R0200-002011	5	R002011
207-30-34191	R0110-001002	7	R001002
207-30-34191	R0110-001002A	7	R001002A
207-30-48150	R0110-001001	9	R001001
207-30-48450	R0110-001001A	9	R001001A
207-30-51191	R1140-001002	1	R006002
207-30-51260	R1100-002001	10	R005001
207-30-53112	R0110-001001	1	R001001
207-30-53130	R0110-001001	3	R001001
207-30-53130	R0110-001001A	3	R001001A
207-30-53140	R0110-001001	2	R001001
207-30-53140	R0110-001001A	2	R001001A
207-30-53151	R0110-001001	9	R001001
207-30-53160	R0110-001001	10	R001001
207-30-53160	R0110-001001A	10	R001001A
207-30-53171	R0110-001001	7	R001001
207-30-53181	R0110-001001	8	R001001
207-30-54160	R0110-001002	10	R001002
207-30-54160	R0110-001002A	10	R001002A
207-30-56131	R0200-002001	2	R002001
207-30-56131	R0200-002002	2	R002002
207-30-56170	R0200-002001	6	R002001
207-30-56170	R0200-002002	6	R002002
207-30-56170	R0200-002011	6	R002011
207-30-56190	R0200-002001	11	R002001
207-30-56190	R0200-002011	11	R002011
207-30-61220	R1100-002001	5	R005001
207-30-71242	P1210-002004	38	P002004
207-30-71431	R0110-001002	4	R001002
207-30-71431	R0110-001002A	4	R001002A
207-30-71441	R0110-001002	3	R001002
207-30-71481	R0110-001002A	3	R001002A
207-30-71510	R0200-002001	1	R002001
207-30-71520	R0200-002002	1	R002002
207-30-71540	R0200-002001	3	R002001
207-30-71540	R0200-002002	3	R002002
207-30-71541	R0200-002011	3	R002011
207-30-71551	R0200-002001	4	R002001
207-30-71551	R0200-002002	4	R002002
207-30-71561	R0200-002001	5	R002001
207-30-71561	R0200-002002	5	R002002
207-30-73411	R0110-001002A	1	R001002A
207-30-73421	R0110-001002A	2	R001002A
207-30-73450	R0110-001002A	14	R001002A
207-30-74111	R0110-001002	1	R001002
207-30-74120	R0110-001002	2	R001002
207-30-74142	R0110-001002	5	R001002
207-30-75310	R0300-003001	1	R003001
207-30-75320	R0300-003001	2	R003001
207-30-75330	R0300-003001	3	R003001
207-30-75330	R0300-003011	3	R003011
207-30-75341	R0300-003001	4	R003001
207-30-75350	R0300-003001	12	R003001
207-30-75360	R0300-003001	5	R003001
207-30-75360	R0300-003011	5	R003011
207-30-75370	R0300-003001	6	R003001
207-30-75370	R0300-003011	6	R003011
207-30-76A11	R1100-002001	2	R005001
207-30-76A11	R1100-002001	3	R005001
207-30-76A81	R1100-002001	4	R005001
207-30-77210	R1200-002001	1	R007001
207-30-77220	R1200-002001	2	R007001
207-30-77230	R1200-002001	3	R007001
207-30-77240	R1200-002001	4	R007001
207-30-B0010	R0110-001001	1	R001001
207-30-B0011	R0110-001001	1	R001001
207-30-B0012	R0110-001001A	1	R001001A
207-30-B1110	R1100-002001	1	R005001
207-30-B1210	R1100-002001	1	R005001
207-30-B1260	P1210-002004	38	P002004
207-30-B1280	R0110-001001	1	R001001
207-30-B1280	R0110-001001A	1	R001001A
207-32-03821	R0500-001001	1	R004001
207-32-05060	KIT	K02	Y010001
207-32-51140	R0500-001001	5	R004001
207-32-51140	R0500-001002	5	R004002
207-32-51170	R0500-001001	4	R004001
207-32-51170	R0500-001002	4	R004002
207-32-61110	R0500-001001	7	R004001
207-32-61110	R0500-001002	7	R004002
207-32-61150	R0500-001001	6	R004001
207-32-61150	R0500-001002	6	R004002
207-32-61190	R0500-001001	11	R004001
207-32-61190	R0500-001002	11	R004002
207-32-61260	R0500-001001	10	R004001
207-32-61260	R0500-001002	10	R004002
207-32-71120	R0500-001001	1	R004001
207-32-71120	R0500-001002	1	R004002
207-32-71130	R0500-001001	2	R004001
207-32-71130	R0500-001002	2	R004002
207-32-71210	KIT	K02	Y010001
207-32-71210	R0500-001001	8	R004001
207-32-71210	R0500-001002	8	R004002
207-32-B1200	R0500-001002	1	R004002
207-43-81240	K1110-024031	15	K008029
207-46-32140	M1520-001001	4	M013001
207-46-32150	M1520-001001	3	M013001
207-46-32160	M1520-001001	4	M013001
207-46-52130	M1520-001001	2	M013001
207-46-71510	J1110-001001	12	J001001
207-46-74430	M1510-001001	2	M012001
207-46-74621	M1510-001001	3	M012001
207-46-75602	J1110-001001	1	J001001
207-46-75603	J1110-001001	1	J001001
207-46-77310	J1110-001001	6	J001001
207-46-77321	J1110-001001	7	J001001
207-46-77331	J1110-001001	8	J001001
207-46-77340	C0100-001007	28	C001007
207-46-78110	J1110-001001	27	J001001
207-46-78120	J1110-001001	17	J001001
207-46-78130	J1110-001001	22	J001001
207-46-78160	J1110-001001	28	J001001
207-46-78210	J1110-001001	23	J001001
207-46-78221	J1110-001001	24	J001001
207-46-78230	J1110-001001	18	J001001
207-46-78291	J1110-001001	25	J001001
207-46-78311	J1110-001001	26	J001001
207-46-78320	J1110-001001	29	J001001
207-46-78410	J1110-001001	30	J001001
207-46-78421	J1110-001001	16	J001001
207-46-78430	J1110-001001	13	J001001
207-46-78440	J1110-001001	14	J001001
207-46-78450	J1110-001001	15	J001001
207-46-78480	J1110-001001	19	J001001
207-46-78520	J1110-001001	20	J001001
207-46-78610	M1510-001001	4	M012001
207-46-78620	M1510-001001	5	M012001
207-46-78630	M1510-001001	6	M012001
207-46-78640	M1510-001001	7	M012001
207-46-B1210	M1510-001001	1	M012001
207-46-B1240	M1510-001001	1	M012001
207-53-14120	K1110-024025	1	K008023
207-53-14140	K1110-024054	5	K008051
207-53-14140	K1110-039050	5	K009050
207-54-51440	M1810-004002	9	M014002
207-54-51440	M1810-004003	24	M014003
207-54-51440	M1810-004003	9	M014003
207-54-61270	M1110-001001	3	M001001
207-54-61441	M1210-002001	3	M006001
207-54-61450	M1210-002001	4	M006001
207-54-62131	M1110-001001	13	M001001
207-54-62150	M1110-001001	17	M001001
207-54-62160	M1110-001001	18	M001001
207-54-71221	M1140-001001	10	M004001
207-54-71241	M1140-001001	11	M004001
207-54-71251	M1140-001001	12	M004001
207-54-71721	M1120-001001	23	M002001
207-54-72150	M1110-001001	21	M001001
207-54-72230	M1210-002001	9	M006001
207-54-72511	M1150-002001	1	M005001
207-54-72552	M1150-002002	13	M005002
207-54-72851	M1150-002001	16	M005001
207-54-72861	M1150-002001	2	M005001
207-54-72871	M1150-002001	3	M005001
207-54-72871	M1150-002002	14	M005002
207-54-72990	M1150-002002	6	M005002
207-54-75710	M1420-001001	5	M010001
207-54-76121	M1130-001001	1	M003001
207-54-76130	M1130-001001	34	M003001
207-54-76140	H1270-003007	15	H014007
207-54-76140	M1130-001001	2	M003001
207-54-76161	M1130-001001	38	M003001
207-54-76190	M1130-001001	43	M003001
207-54-76321	M1140-001001	27	M004001
207-54-76330	M1140-001001	6	M004001
207-54-76340	M1140-001001	9	M004001
207-54-76350	M1140-001001	39	M004001
207-54-76360	M1140-001001	7	M004001
207-54-76410	M1120-001001	26	M002001
207-54-76421	M1120-001001	14	M002001
207-54-76451	M1120-001001	1	M002001
207-54-76480	M1120-001001	29	M002001
207-54-76491	M1120-001001	30	M002001
207-54-76512	M1150-002001	15	M005001
207-54-76521	M1150-002001	20	M005001
207-54-76541	M1150-002002	45	M005002
207-54-76552	M1150-002002	44	M005002
207-54-76560	M1150-002002	46	M005002
207-54-76570	M1150-002001	21	M005001
207-54-76591	M1150-002001	4	M005001
207-54-76611	M1150-002002	32	M005002
207-54-76621	M1150-002002	39	M005002
207-54-76630	M1150-002002	33	M005002
207-54-76640	M1150-002002	35	M005002
207-54-76651	M1150-002002	36	M005002
207-54-76661	M1150-002002	41	M005002
207-54-76690	M1150-002002	40	M005002
207-54-76720	M1210-002001	28	M006001
207-54-76731	M1210-002001	22	M006001
207-54-76760	M1210-002001	36	M006001
207-54-76770	M1210-002001	40	M006001
207-54-76780	M1210-002001	23	M006001
207-54-76810	M1150-002002	47	M005002
207-54-76840	M1150-002002	1	M005002
207-54-76840	M1150-002002	1	M005002
207-54-76841	M1150-002002	1	M005002
207-54-76850	M1150-002002	9	M005002
207-54-76860	M1150-002002	2	M005002
207-54-76870	M1150-002002	19	M005002
207-54-76890	M1210-002001	43	M006001
207-54-76950	M1150-002002	5	M005002
207-54-77190	M1120-001001	7	M002001
207-54-77220	M1810-004001	31	M014001
207-54-77260	M1810-004003	1	M014003
207-54-77272	M1810-004002	1	M014002
207-54-77421	M1220-001001	3	M007001
207-54-77451	M1220-001001	1	M007001
207-54-77560	M1140-001001	34	M004001
207-54-77610	M1210-002001	2	M006001
207-54-77630	M1110-001001	6	M001001
207-54-77640	M1140-001001	35	M004001
207-54-77690	M1120-001001	5	M002001
207-54-77710	M1120-001001	6	M002001
207-54-77770	M1150-002002	3	M005002
207-54-77780	M1150-002002	10	M005002
207-54-77840	M1150-002001	17	M005001
207-54-77860	M1110-001001	7	M001001
207-54-77871	M1110-001001	8	M001001
207-54-77880	M1140-001001	36	M004001
207-54-77930	M1420-001001	6	M010001
207-54-77940	M1430-001001	2	M011001
207-54-77960	M1430-001001	1	M011001
207-54-77980	M1150-002002	4	M005002
207-54-78110	M1110-001001	1	M001001

PARTS Nº	FIG. Nº	INDEX	PAGE
207-54-78121	M1110-001001	15	M001001
207-54-78130	M1110-001001	9	M001001
207-54-78170	M1110-001001	10	M001001
207-54-78180	M1110-001001	11	M001001
207-54-78190	M1110-001001	12	M001001
207-54-78240	M1810-004001	9	M014001
207-54-78431	M1130-001001	32	M003001
207-54-78440	M1210-002001	35	M006001
207-54-78460	M1210-002001	37	M006001
207-54-78660	M1810-004001	16	M014001
207-54-78670	M1120-001001	22	M002001
207-54-78680	M1120-001001	33	M002001
207-54-78690	M1120-001001	4	M002001
207-54-78750	M1810-004001	23	M014001
207-54-78770	M1810-004003	12	M014003
207-54-78810	M1130-001001	17	M003001
207-54-78820	M1220-001001	4	M007001
207-54-78830	M1140-001001	1	M004001
207-54-78860	M1810-004003	23	M014003
207-54-78890	M1140-001001	43	M004001
207-54-78910	M1140-001001	4	M004001
207-54-78930	M1140-001001	28	M004001
207-54-78950	M1210-002001	1	M006001
207-54-78970	M1220-001001	3	M007001
207-54-B1110	M1220-001001	21	M007001
207-60-51170	H0330-001001	17	H009001
207-60-51170	H0330-002001	21	H010001
207-60-51311	H0110-002001	47	H001001
207-60-51320	H0110-002001	48	H001001
207-60-61250	H0312-002001	3	H007001
207-60-71182	H0110-002001	21	H001001
207-60-71311	H1831-001001	1	H019001
207-60-71320	H1831-002001	1	H020001
207-60-75110	H0110-002001	1	H001001
207-60-75120	H0110-002001	29	H001001
207-60-75131	H0110-002001	33	H001001
207-60-75160	H0330-001001	15	H009001
207-60-75160	H0330-002001	19	H010001
207-60-75180	E0200-001002	14	E002002
207-60-75910	H0110-002001	56	H001001
207-60-75920	H0110-002001	57	H001001
207-60-75930	H0110-002001	58	H001001
207-62-31330	H1270-003001	12	H014001
207-62-31330	T1110-004002	7	T002002
207-62-31330	T1110-004004	18	T002004
207-62-31330	T1110-004004	7	T002004
207-62-31330	T1110-005002	7	T001002
207-62-31330	T1110-005004	18	T001004
207-62-31330	T1110-005004	7	T001004
207-62-31330	T1110-005007	16	T001007

PARTS Nº	FIG. Nº	INDEX	PAGE
207-62-31330	T1200-008005	8	T007005
207-62-52350	T1110-004002	10	T002002
207-62-52350	T1110-004004	14	T002004
207-62-52350	T1110-005002	10	T001002
207-62-52350	T1110-005004	14	T001004
207-62-52350	T1110-005007	1	T001007
207-62-52430	H1210-001002	5	H012002
207-62-52610	H1210-001001	16	H012001
207-62-52621	H1210-001001	14	H012001
207-62-53350	P1120-001001	2	P001001
207-62-54750	T1110-004001	2	T002001
207-62-54750	T1110-005001	2	T001001
207-62-54760	T1110-004002	4	T002002
207-62-54760	T1110-004004	10	T002004
207-62-54760	T1110-005002	4	T001002
207-62-54760	T1110-005004	10	T001004
207-62-54770	H1210-001002	13	H012002
207-62-54780	T1110-004004	3	T002004
207-62-54780	T1110-005004	3	T001004
207-62-56190	H0120-004028	1	H003028
207-62-64740	H0110-002001	14	H001001
207-62-64740	H0330-001001	12	H009001
207-62-64740	H0330-001001	8	H009001
207-62-64740	H0330-002001	12	H010001
207-62-64740	H0330-002001	16	H010001
207-62-64740	H0340-001001	14	H011001
207-62-64740	N1220-001001	5	N003001
207-62-64820	P1120-001001	15	P001001
207-62-64860	P1120-001001	13	P001001
207-62-71141	H0311-001001	1	H006001
207-62-71211	H1210-001001	1	H012001
207-62-71223	H1210-001001	6	H012001
207-62-71231	H1210-001001	11	H012001
207-62-71261	H1220-003001	1	H013001
207-62-71280	H1220-003001	2	H013001
207-62-71281	H1220-003001	2	H013001
207-62-71311	H1220-003001	16	H013001
207-62-71321	H1210-001002	1	H012002
207-62-71330	H1210-001002	9	H012002
207-62-71350	H1220-003001	21	H013001
207-62-71360	H1220-003001	9	H013001
207-62-71370	H1220-003001	23	H013001
207-62-71380	H0312-002010	10	H007002
207-62-71410	N1310-001002	21	N004003
207-62-71420	N1310-001002	27	N004003
207-62-71430	H1310-001001	1	H015001
207-62-71440	H1310-001001	3	H015001
207-62-71450	H1310-001001	5	H015001
207-62-71460	H1310-001001	7	H015001
207-62-71490	H0320-001001	7	H008001

PARTS Nº	FIG. Nº	INDEX	PAGE
207-62-71510	H1831-001003	14	H019003
207-62-71510	H1831-002003	15	H020003
207-62-71531	H0120-004026	18	H003026
207-62-71531	H0120-004124	12	H004024
207-62-71531	H0120-005026	18	H002026
207-62-71531	H1810-002001	7	H018001
207-62-71740	H1220-003001	7	H013001
207-62-71750	H0312-002001	14	H007001
207-62-71750	H0312-002010	8	H007002
207-62-71791	J1110-001001	32	J001001
207-62-71880	H0312-002001	16	H007001
207-62-72110	H0340-001001	13	H011001
207-62-72120	H1831-001002	4	H019002
207-62-72120	H1831-002002	4	H020002
207-62-72141	H0120-004026	8	H003026
207-62-72141	H0120-005026	8	H002026
207-62-72141	H1831-001002	13	H019002
207-62-72141	H1831-002002	13	H020002
207-62-72151	N1310-001002	1	N004003
207-62-72151	P1120-001001	20	P001001
207-62-72171	N1310-001002	13	N004003
207-62-72550	H1840-001001	9	H022001
207-62-72560	H1840-001001	10	H022001
207-62-72630	H1840-001001	11	H022001
207-62-72640	H1840-001001	12	H022001
207-62-72670	K1110-024053	12	K008050
207-62-72670	K1110-039049	12	K009049
207-62-72690	K1110-024053	4	K008050
207-62-72690	K1110-039049	4	K009049
207-62-73112	H1270-003001	1	H014001
207-62-73120	H1270-003001	7	H014001
207-62-73131	H1270-003001	4	H014001
207-62-73141	H1270-003001	32	H014001
207-62-73141	H1270-003004	38	H014004
207-62-73141	H1270-003006	14	H014006
207-62-73150	H1270-003003	9	H014003
207-62-73160	H1270-003004	10	H014004
207-62-73170	H1270-003004	16	H014004
207-62-73180	H1270-003003	24	H014003
207-62-73190	H1270-003003	13	H014003
207-62-73211	H0330-002001	1	H010001
207-62-73211	H1270-003004	39	H014004
207-62-73230	H1270-003003	20	H014003
207-62-73240	H1270-003006	8	H014006
207-62-73251	H1270-003006	5	H014006
207-62-73260	H1270-003003	17	H014003
207-62-73280	H1270-003003	33	H014003
207-62-73290	H1270-003003	28	H014003
207-62-73310	H1270-003004	22	H014004
207-62-73320	H1270-003004	29	H014004

PARTS Nº	FIG. Nº	INDEX	PAGE
207-62-73340	H1270-003001	22	H014001
207-62-73350	H1270-003006	2	H014006
207-62-73380	H1270-003003	38	H014003
207-62-73380	H1831-002003	13	H020003
207-62-73390	H1270-003001	27	H014001
207-62-73621	H1270-003001	15	H014001
207-62-74111	T1110-004004	1	T002004
207-62-74111	T1110-005004	1	T001004
207-62-74121	T1110-004004	2	T002004
207-62-74121	T1110-005004	2	T001004
207-62-74131	T1110-004002	2	T002002
207-62-74131	T1110-005002	2	T001002
207-62-74140	T1110-004004	13	T002004
207-62-74140	T1110-005004	13	T001004
207-62-74150	T1110-004002	3	T002002
207-62-74150	T1110-005002	3	T001002
207-62-74160	T1110-004002	1	T002002
207-62-74160	T1110-005002	1	T001002
207-62-74170	H0340-001001	2	H011001
207-62-74190	T1200-007004	12	T008004
207-62-74190	T1200-008004	12	T007004
207-62-74190	T1200-010004	12	T005004
207-62-74190	T1200-011004	12	T006004
207-62-74221	T1110-004001	3	T002001
207-62-74221	T1110-005001	3	T001001
207-62-74230	T1110-004001	4	T002001
207-62-74230	T1110-005001	4	T001001
207-62-74240	T1110-004001	5	T002001
207-62-74240	T1110-005001	5	T001001
207-62-74251	T1110-004001	6	T002001
207-62-74251	T1110-005001	6	T001001
207-62-74281	T1110-004001	7	T002001
207-62-74281	T1110-005001	7	T001001
207-62-74340	T1110-004001	8	T002001
207-62-74340	T1110-005001	8	T001001
207-62-74371	T1110-004001	9	T002001
207-62-74371	T1110-005001	9	T001001
207-62-74450	H0311-001002	4	H006002
207-62-74560	H1220-003002	6	H013002
207-62-74582	H1220-003002	1	H013002
207-62-74610	H0120-004027	1	H003027
207-62-74610	H0120-004125	1	H004025
207-62-74610	H0120-005027	1	H002027
207-62-74621	H1833-001001	15	H021001
207-62-74640	H0311-001001	4	H006001
207-62-74650	H0320-001001	1	H008001
207-62-74660	H0311-001002	1	H006002
207-62-74660	H0320-001001	3	H008001
207-62-74670	H0330-001001	1	H009001
207-62-74681	H0330-001001	10	H009001

PARTS Nº	FIG. Nº	INDEX	PAGE
207-62-74681	H0330-002001	14	H010001
207-62-74760	H0340-001001	3	H011001
207-62-74781	H0330-001001	5	H009001
207-62-74781	H0330-002001	9	H010001
207-62-74781	N1220-001001	10	N003001
207-62-74791	H0330-002001	5	H010001
207-62-74850	H1810-001001	20	H017001
207-62-74850	H1810-002001	10	H018001
207-62-74860	H1810-001001	12	H017001
207-62-74860	H1810-002001	16	H018001
207-62-74870	H1810-001001	13	H017001
207-62-74870	H1810-002001	17	H018001
207-62-74980	H1833-001001	14	H021001
207-62-75120	H1270-003007	1	H014007
207-62-75180	H1270-003007	14	H014007
207-62-75180	H1810-001001	26	H017001
207-62-75190	K1520-001001	1	K011001
207-62-75190	K1520-002001	1	K012001
207-62-75250	H0330-001001	18	H009001
207-62-75250	H0330-002001	22	H010001
207-62-75810	K1110-024053	5	K008050
207-62-75810	K1110-039049	5	K009049
207-62-75820	K1110-024053	6	K008050
207-62-75820	K1110-039049	6	K009049
207-62-75820	K1520-001001	14	K011001
207-62-75820	K1520-002001	11	K012001
207-62-75830	K1110-024031	28	K008029
207-62-75840	K1110-024031	27	K008029
207-62-75870	K1110-024052	9	K008049
207-62-75870	K1110-039048	9	K009048
207-62-75880	K1110-024052	10	K008049
207-62-75880	K1110-039048	10	K009048
207-62-75880	K1520-001001	13	K011001
207-62-75880	K1520-002001	10	K012001
207-62-75890	K1110-024052	11	K008049
207-62-75890	K1110-039048	11	K009048
207-63-54580	T1120-003001	32	T003001
207-63-54590	T1120-003001	36	T003001
207-63-54590	T1120-003002	36	T003002
207-63-54680	T1120-003002	32	T003002
207-63-64190	T1140-003001	46	T004001
207-63-73180	T1200-007002	28	T008002
207-63-73180	T1200-008002	28	T007002
207-63-73180	T1200-010002	28	T005002
207-63-73180	T1200-011002	28	T006002
207-63-73790	T1200-007002	32	T008002
207-63-73790	T1200-008002	32	T007002
207-63-76170	T1200-007002	6	T008002
207-63-76170	T1200-008002	6	T007002
207-63-76170	T1200-010002	6	T005002

PARTS Nº	FIG. Nº	INDEX	PAGE
207-63-76170	T1200-011002	6	T006002
207-70-00480	T1200-007003	1	T008003
207-70-00480	T1200-008003	1	T007003
207-70-00480	T1200-010003	1	T005003
207-70-00480	T1200-011003	1	T006003
207-70-00542	T1200-007001	1	T008001
207-70-00542	T1200-008001	1	T007001
207-70-11340	T1110-004005	12	T002005
207-70-11340	T1110-005005	12	T001005
207-70-11350	T1110-004005	13	T002005
207-70-11350	T1110-005005	13	T001005
207-70-11360	T1110-004005	14	T002005
207-70-11360	T1110-005005	14	T001005
207-70-11370	T1110-004005	15	T002005
207-70-11370	T1110-005005	15	T001005
207-70-13340	T1110-004005	8	T002005
207-70-13340	T1110-005005	8	T001005
207-70-24190	J1310-002001	9	J002001
207-70-24190	T1200-007003	11	T008003
207-70-24190	T1200-007004	10	T008004
207-70-24190	T1200-008003	11	T007003
207-70-24190	T1200-008004	10	T007004
207-70-24190	T1200-010003	11	T005003
207-70-24190	T1200-010004	10	T005004
207-70-24190	T1200-011003	11	T006003
207-70-24190	T1200-011004	10	T006004
207-70-24210	J1310-002001	10	J002001
207-70-24210	T1200-007003	12	T008003
207-70-24210	T1200-007004	11	T008004
207-70-24210	T1200-008003	12	T007003
207-70-24210	T1200-008004	11	T007004
207-70-24210	T1200-010003	12	T005003
207-70-24210	T1200-010004	11	T005004
207-70-24210	T1200-011003	12	T006003
207-70-24210	T1200-011004	11	T006004
207-70-31172	T1110-004005	6	T002005
207-70-31172	T1110-005005	6	T001005
207-70-31230	J1310-002001	2	J002001
207-70-31230	T1110-004001	15	T002001
207-70-31230	T1110-005001	15	T001001
207-70-31242	T1110-004005	7	T002005
207-70-31242	T1110-005005	7	T001005
207-70-31290	J1310-002001	11	J002001
207-70-31340	T1110-004005	10	T002005
207-70-31340	T1110-005005	10	T001005
207-70-31340	T1200-007004	5	T008004
207-70-31340	T1200-008004	5	T007004
207-70-31340	T1200-010004	5	T005004
207-70-31340	T1200-011004	5	T006004
207-70-32150	T1200-007001	6	T008001

PARTS Nº	FIG. Nº	INDEX	PAGE
207-70-32150	T1200-008001	6	T007001
207-70-32150	T1200-010001	8	T005001
207-70-32150	T1200-011001	8	T006001
207-70-33141	T1200-007003	8	T008003
207-70-33141	T1200-008003	8	T007003
207-70-33141	T1200-010003	8	T005003
207-70-33141	T1200-011003	8	T006003
207-70-33160	T1200-007003	2	T008003
207-70-33160	T1200-007003	3	T008003
207-70-33160	T1200-008003	2	T007003
207-70-33160	T1200-008003	3	T007003
207-70-33160	T1200-010003	2	T005003
207-70-33160	T1200-010003	3	T005003
207-70-33160	T1200-011003	2	T006003
207-70-33160	T1200-011003	3	T006003
207-70-33181	T1200-007004	18	T008004
207-70-33181	T1200-008004	18	T007004
207-70-33181	T1200-010004	18	T005004
207-70-33181	T1200-011004	18	T006004
207-70-34240	T1510-000001	10	T010001
207-70-34240	T1510-000002	16	T010002
207-70-34240	T1510-000003	17	T010003
207-70-34250	T1510-000001	18	T010001
207-70-34250	T1510-000002	24	T010002
207-70-34250	T1510-000003	25	T010003
207-70-34260	T1510-000001	17	T010001
207-70-34260	T1510-000002	23	T010002
207-70-34260	T1510-000003	24	T010003
207-70-51310	J1310-002001	12	J002001
207-70-51320	T1110-004005	11	T002005
207-70-51320	T1110-005005	11	T001005
207-70-61182	T1110-004001	14	T002001
207-70-61182	T1110-005001	14	T001001
207-70-61192	T1110-004005	1	T002005
207-70-61192	T1110-005005	1	T001005
207-70-61210	J1310-002001	5	J002001
207-70-61221	T1200-007004	6	T008004
207-70-61221	T1200-008004	6	T007004
207-70-61221	T1200-010004	6	T005004
207-70-61221	T1200-011004	6	T006004
207-70-61521	T1200-007001	5	T008001
207-70-61521	T1200-008001	5	T007001
207-70-61521	T1200-010001	7	T005001
207-70-61521	T1200-011001	7	T006001
207-70-61610	T1110-004001	12	T002001
207-70-61610	T1110-005001	12	T001001
207-70-71130	J1310-002001	1	J002001
207-70-72120	KIT	K11	Y010001
207-70-72120	KIT	K12	Y010001
207-70-72120	T1200-007001	10	T008001
207-70-72120	T1200-007002	7	T008002
207-70-72120	T1200-007003	5	T008003
207-70-72120	T1200-008001	10	T007001
207-70-72120	T1200-008002	7	T007002
207-70-72120	T1200-008003	5	T007003
207-70-72120	T1200-010001	12	T005001
207-70-72120	T1200-010002	7	T005002
207-70-72120	T1200-010003	5	T005003
207-70-72120	T1200-011001	12	T006001
207-70-72120	T1200-011002	7	T006002
207-70-72120	T1200-011003	5	T006003
207-70-72460	T1200-007001	7	T008001
207-70-72460	T1200-008001	7	T007001
207-70-72460	T1200-010001	9	T005001
207-70-72460	T1200-011001	9	T006001
207-70-72B90	T1200-010001	6	T005001
207-70-72B90	T1200-011001	6	T006001
207-70-72C10	T1200-010001	4	T005001
207-70-72C10	T1200-011001	4	T006001
207-70-72C20	T1200-010001	5	T005001
207-70-72C20	T1200-011001	5	T006001
207-70-73210	T1200-007003	7	T008003
207-70-73210	T1200-008003	7	T007003
207-70-73210	T1200-010003	7	T005003
207-70-73210	T1200-011003	7	T006003
207-70-77310	T1110-004003	2	T002003
207-70-77310	T1110-005003	2	T001003
207-70-77320	T1110-004003	3	T002003
207-70-77320	T1110-005003	3	T001003
207-70-77330	T1110-004003	4	T002003
207-70-77330	T1110-005003	4	T001003
207-70-77341	T1110-004003	14	T002003
207-70-77341	T1110-005003	14	T001003
207-70-77351	T1110-004003	15	T002003
207-70-77351	T1110-005003	15	T001003
207-70-B0010	T1110-005001	1	T001001
207-70-B0011	T1110-004001	1	T002001
207-70-B0011	T1110-005001	1	T001001
207-70-B0012	T1110-005001	1	T001001
207-70-B1111	T1110-005001	1	T001001
207-70-B1112	T1110-005001	1	T001001
207-70-B1140	T1200-007003	6	T008003
207-70-B1140	T1200-008003	6	T007003
207-70-B1140	T1200-010003	6	T005003
207-70-B1140	T1200-011003	6	T006003
207-70-B1210	T1510-000002	1	T010002
207-70-B1220	T1510-000001	2	T010001
207-70-B1220	T1510-000002	2	T010002
207-70-B1220	T1510-000003	2	T010003
207-70-B1230	T1510-000002	13	T010002
207-70-B1240	T1510-000002	12	T010002
207-70-B1250	T1510-000002	11	T010002
207-70-B1260	T1510-000002	10	T010002
207-70-B1270	T1510-000002	9	T010002
207-70-B1280	T1510-000002	8	T010002
207-70-B1290	T1510-000001	3	T010001
207-70-B1290	T1510-000002	3	T010002
207-70-B1290	T1510-000003	3	T010003
207-70-B1310	T1510-000001	4	T010001
207-70-B1310	T1510-000002	4	T010002
207-70-B1310	T1510-000003	4	T010003
207-70-B1370	T1510-000004	1	T010004
207-70-B1510	T1510-000001	8	T010001
207-70-B1510	T1510-000002	14	T010002
207-70-B1510	T1510-000003	15	T010003
207-70-B1520	T1510-000001	9	T010001
207-70-B1520	T1510-000002	15	T010002
207-70-B1520	T1510-000003	16	T010003
207-70-B1540	T1510-000001	5	T010001
207-70-B1540	T1510-000002	5	T010002
207-70-B1540	T1510-000003	5	T010003
207-70-B1550	T1510-000001	6	T010001
207-70-B1550	T1510-000002	6	T010002
207-70-B1550	T1510-000003	6	T010003
207-70-B1560	T1510-000001	7	T010001
207-70-B1560	T1510-000002	7	T010002
207-70-B1560	T1510-000003	7	T010003
207-70-B1580	T1510-000001	15	T010001
207-70-B1580	T1510-000002	21	T010002
207-70-B1580	T1510-000003	22	T010003
207-70-B1590	T1510-000001	14	T010001
207-70-B1590	T1510-000002	20	T010002
207-70-B1590	T1510-000003	21	T010003
207-70-B1610	T1510-000001	1	T010001
207-70-B1710	T1510-000003	1	T010003
207-70-B1720	T1510-000003	8	T010003
207-70-B1730	T1510-000003	9	T010003
207-70-B1740	T1510-000003	10	T010003
207-70-B1750	T1510-000003	11	T010003
207-70-B1760	T1510-000003	12	T010003
207-70-B1770	T1510-000003	13	T010003
207-70-B1790	T1510-000003	14	T010003
207-810-1311	K1110-024050	2	K008047
207-810-1311	K1110-024051	11	K008048
207-810-1311	K1110-039046	2	K009046
207-810-1311	K1110-039047	11	K009047
207-810-1321	K1110-024050	4	K008047
207-810-1321	K1110-024051	12	K008048
207-810-1321	K1110-039046	4	K009046
207-810-1321	K1110-039047	12	K009047

PARTS Nº	FIG. Nº	INDEX	PAGE
207-810-1332	K1110-024050	9	K008047
207-810-1332	K1110-024051	1	K008048
207-810-1332	K1110-039046	9	K009046
207-810-1332	K1110-039047	1	K009047
207-810-1342	K1110-024050	10	K008047
207-810-1342	K1110-024051	3	K008048
207-810-1342	K1110-039046	10	K009046
207-810-1342	K1110-039047	3	K009047
207-934-7251	T1510-000001	13	T010001
207-934-7251	T1510-000002	19	T010002
207-934-7251	T1510-000003	20	T010003
207-934-7261	T1510-000001	16	T010001
207-934-7261	T1510-000002	22	T010002
207-934-7261	T1510-000003	23	T010003
207-970-5111	H1270-003004	1	H014004
207-970-5121	H1270-003004	5	H014004
207-970-5510	T1920-001001	1	T011001
207-970-7110	T1110-005006	1	T001006
207-970-7120	T1110-005006	9	T001006
207-970-7130	T1110-005006	2	T001006
207-970-7140	T1110-005006	10	T001006
207-970-7151	T1110-005006	20	T001006
207-970-7151	T1110-005006	26	T001006
207-970-7162	T1110-005007	15	T001007
207-970-7171	T1110-005007	11	T001007
207-970-7171	T1110-005007	5	T001007
207-970-7210	T1200-008005	1	T007005
207-970-7221	T1200-008005	13	T007005
207-970-7310	T1110-005007	19	T001007
207-970-7310	T1200-008005	20	T007005
207-970-7320	T1110-005007	8	T001007
207-970-7331	T1110-005007	14	T001007
207-970-7420	T1200-007001	3	T008001
207-970-7420	T1200-008001	3	T007001
207-970-7430	T1200-007001	4	T008001
207-970-7430	T1200-008001	4	T007001
207-970-7611	T1200-010001	1	T005001
207-970-7620	T1200-010001	2	T005001
207-970-7621	T1200-010001	2	T005001
207-970-7621	T1200-011001	2	T006001
207-970-7630	T1200-010001	3	T005001
207-970-7631	T1200-010001	3	T005001
207-970-7631	T1200-011001	3	T006001
207-970-7640	T1200-010005	1	T005005
207-970-7650	T1200-010005	10	T005005
207-970-B120	T1200-010001	1	T005001
207-970-B120	T1200-011001	1	T006001
207-979-6180	C0100-001004	27	C001004
207-979-6180	E0200-001001	7	E002001
207-979-7381	K0700-001002	28	K007002
207-979-7390	K0700-001002	1	K007002
207-979-7440	K0700-001001	2	K007001
207-979-7450	K0700-001001	12	K007001
207-979-7462	K0700-001002	12	K007002
207-979-7462	K1110-024050	8	K008047
207-979-7462	K1110-039046	8	K009046
207-979-7470	K0700-001001	23	K007001
207-979-7540	K0700-001002	7	K007002
207-979-7560	M1120-001001	15	M002001
207-979-7610	K0700-001001	19	K007001
207-979-7623	C0100-001003	30	C001003
207-979-7631	C0100-001003	33	C001003
207-98-B1110	M1420-001001	9	M010001
208-00-71430	U0100-006001	7	U002001
208-01-11161	B0100-001001	9	B003001
208-01-11181	B0100-001001	10	B003001
208-01-55220	B0100-001001	7	B003001
208-01-72180	B0200-002002	8	B004002
208-03-58310	C0100-001007	36	C001007
208-03-71131	C0100-001001	39	C001001
208-03-71131	C0100-001002	41	C001002
208-03-71350	C0100-001003	45	C001003
208-03-71360	C0100-001003	1	C001003
208-03-71370	C0100-001003	4	C001003
208-03-71380	C0100-001001	27	C001001
208-03-71380	C0100-001002	29	C001002
208-03-71410	C0100-001005	36	C001005
208-03-71480	C0100-001001	28	C001001
208-03-71480	C0100-001002	30	C001002
208-03-71490	C0100-001001	29	C001001
208-03-71490	C0100-001002	31	C001002
208-03-71690	C0100-001001	40	C001001
208-03-71690	C0100-001002	42	C001002
208-03-71720	C0100-001003	20	C001003
208-03-71730	C0100-001001	7	C001001
208-03-71731	C0100-001002	7	C001002
208-03-71741	C0100-001003	21	C001003
208-03-71751	C0100-001003	22	C001003
208-03-71760	C0100-001003	23	C001003
208-03-71770	C0100-001004	9	C001004
208-03-71780	C0100-001001	30	C001001
208-03-71780	C0100-001002	32	C001002
208-03-71810	C0100-001001	8	C001001
208-03-71810	C0100-001002	8	C001002
208-03-71821	C0100-001001	32	C001001
208-03-71821	C0100-001002	34	C001002
208-03-71830	C0100-001001	33	C001001
208-03-71830	C0100-001002	35	C001002
208-03-71840	C0100-001001	9	C001001
208-03-71840	C0100-001002	9	C001002
208-03-71850	C0100-001001	41	C001001
208-03-71850	C0100-001002	43	C001002
208-03-71860	C0100-001001	42	C001001
208-03-71860	C0100-001002	44	C001002
208-03-71870	C0100-001001	43	C001001
208-03-71870	C0100-001002	45	C001002
208-03-71890	C0100-001001	44	C001001
208-03-71890	C0100-001002	46	C001002
208-03-72151	C0100-001005	1	C001005
208-06-19170	H1810-001001	25	H017001
208-06-19170	K1110-024054	1	K008051
208-06-19170	K1110-039050	1	K009050
208-30-00390	R0110-001001	7	R001001
208-30-00390	R0110-001001A	7	R001001A
208-30-11760	R0110-001002	6	R001002
208-30-11760	R0110-001002A	6	R001002A
208-30-72120	R1100-002001	12	R005001
208-30-76160	R0110-001001	7	R001001
208-30-76160	R0110-001001A	7	R001001A
208-30-76170	R0110-001001	8	R001001
208-30-76170	R0110-001001A	8	R001001A
208-43-71420	K1110-024021	8	K008019
208-43-71420	K1110-039019	8	K009019
208-43-71520	K1110-024032	2	K008030
208-43-71520	K1110-024033	2	K008030A
208-43-71520	K1110-039029	2	K009029
208-43-71530	K1110-024032	3	K008030
208-43-71530	K1110-024033	3	K008030A
208-43-71530	K1110-039029	3	K009029
208-43-71590	K1110-024032	4	K008030
208-43-71590	K1110-024033	4	K008030A
208-43-71590	K1110-039029	4	K009029
208-46-75110	J1110-001001	21	J001001
208-46-75110	J1110-001001	31	J001001
208-53-00552	K1110-024001	1	K008001
208-53-00552	K1110-024002	1	K008002
208-53-00552	K1110-024003	1	K008003
208-53-00552	K1110-024004	1	K008004
208-53-00552	K1110-024005	1	K008005
208-53-00552	K1110-024006	1	K008006
208-53-00552	K1110-024007	1	K008007
208-53-00552	K1110-024008	1	K008008
208-53-00552	K1110-024009	1	K008009
208-53-00552	K1110-024010	1	K008010
208-53-00552	K1110-024011	1	K008011
208-53-00552	K1110-024012	1	K008012
208-53-00850	K1110-024001	1	K008001
208-53-00850	K1110-024002	1	K008002
208-53-00850	K1110-024003	1	K008003
208-53-00850	K1110-024004	1	K008004

PARTS Nº	FIG. Nº	INDEX	PAGE
208-53-00850	K1110-024005	1	K008005
208-53-00850	K1110-024006	1	K008006
208-53-00850	K1110-024007	1	K008007
208-53-00850	K1110-024008	1	K008008
208-53-00850	K1110-024009	1	K008009
208-53-00850	K1110-024010	1	K008010
208-53-00850	K1110-024011	1	K008011
208-53-00850	K1110-024012	1	K008012
208-53-00851	K1110-024001	1	K008001
208-53-00851	K1110-024002	1	K008002
208-53-00851	K1110-024003	1	K008003
208-53-00851	K1110-024004	1	K008004
208-53-00851	K1110-024005	1	K008005
208-53-00851	K1110-024006	1	K008006
208-53-00851	K1110-024007	1	K008007
208-53-00851	K1110-024008	1	K008008
208-53-00851	K1110-024009	1	K008009
208-53-00851	K1110-024010	1	K008010
208-53-00851	K1110-024011	1	K008011
208-53-00851	K1110-024012	1	K008012
208-53-00851	K1110-039001	1	K009001
208-53-00851	K1110-039002	1	K009002
208-53-00851	K1110-039003	1	K009003
208-53-00851	K1110-039004	1	K009004
208-53-00851	K1110-039005	1	K009005
208-53-00851	K1110-039006	1	K009006
208-53-00851	K1110-039007	1	K009007
208-53-00851	K1110-039008	1	K009008
208-53-00851	K1110-039009	1	K009009
208-53-00851	K1110-039010	1	K009010
208-53-00851	K1110-039011	1	K009011
208-53-00851	K1110-039012	1	K009012
208-53-11330	K1110-024013	9	K008013
208-53-11330	K1110-039013	9	K009013
208-53-11890	K1110-024020	4	K008018
208-53-11890	K1110-039018	4	K009018
208-53-11920	K1110-024018	9	K008016
208-53-11920	K1110-039016	9	K009016
208-53-11941	K1110-024018	5	K008016
208-53-11941	K1110-039016	5	K009016
208-53-12120	K1110-024019	15	K008017
208-53-12120	K1110-039017	15	K009017
208-53-12230	K1110-024020	5	K008018
208-53-12230	K1110-039018	5	K009018
208-53-12280	K1110-024041	12	K008038
208-53-12280	K1110-039037	12	K009037
208-53-12290	K1110-024024	7	K008022
208-53-12290	K1110-039022	7	K009022
208-53-12320	K1110-024024	20	K008022
208-53-12320	K1110-039022	20	K009022
208-53-12330	K1110-024024	21	K008022
208-53-12330	K1110-039022	21	K009022
208-53-12410	K1110-024024	18	K008022
208-53-12410	K1110-039022	18	K009022
208-53-12432	K1110-024019	16	K008017
208-53-12432	K1110-039017	16	K009017
208-53-12440	K1110-024018	4	K008016
208-53-12440	K1110-039016	4	K009016
208-53-12460	K1110-024016	2	K008015
208-53-12460	K1110-024017	2	K008015A
208-53-12460	K1110-039015	2	K009015
208-53-12551	K1110-024020	16	K008018
208-53-12551	K1110-039018	16	K009018
208-53-12680	K1110-024019	9	K008017
208-53-12680	K1110-039017	9	K009017
208-53-12980	K1110-024010	36	K008010
208-53-12980	K1110-039010	36	K009010
208-53-12991	K1110-024010	35	K008010
208-53-12991	K1110-039010	35	K009010
208-53-13270	K1110-024010	14	K008010
208-53-13270	K1110-039010	14	K009010
208-53-14540	K1110-024006	4	K008006
208-53-14540	K1110-039006	4	K009006
208-53-22810	K1110-024006	14	K008006
208-53-22810	K1110-039006	14	K009006
208-53-23210	K1120-001001	1	K010001
208-53-23221	K1110-024024	36	K008022
208-53-23330	K1110-024002	1	K008002
208-53-23330	K1110-039002	1	K009002
208-53-23341	K1110-024002	2	K008002
208-53-23341	K1110-039002	2	K009002
208-53-23420	K1110-024010	10	K008010
208-53-23420	K1110-039010	10	K009010
208-53-23440	K1110-024010	17	K008010
208-53-23440	K1110-039010	17	K009010
208-54-57180	M1150-002001	24	M005001
208-54-57180	M1810-004001	13	M014001
208-54-57180	M1810-004001	20	M014001
208-54-57180	M1810-004001	28	M014001
208-54-57180	M1810-004001	34	M014001
208-54-57180	M1810-004001	6	M014001
208-54-57180	M1810-004002	6	M014002
208-54-57180	M1810-004003	18	M014003
208-54-57180	M1810-004003	30	M014003
208-54-57180	M1810-004003	4	M014003
208-54-71380	M1130-001001	3	M003001
208-54-71470	M1220-001001	7	M007001
208-54-71910	M1210-002001	8	M006001
208-54-71920	M1210-002001	7	M006001
208-54-73131	M1130-001001	33	M003001
208-54-73351	M1150-002002	34	M005002
208-54-73490	M1810-004001	10	M014001
208-54-73520	M1810-004001	2	M014001
208-54-73710	M1130-001001	26	M003001
208-54-73720	M1130-001001	27	M003001
208-54-73821	M1130-001001	28	M003001
208-54-73830	M1130-001001	29	M003001
208-54-74480	M1220-001001	1	M007001
208-54-78340	M1810-004001	1	M014001
208-60-71150	H0110-002001	29	H001001
208-60-71180	H0110-002001	39	H001001
208-60-75120	C0100-001004	20	C001004
208-62-71101	H0312-002001	1	H007001
208-62-71102	H0312-002001	1	H007001
208-62-71390	H0340-001001	9	H011001
208-62-71410	H0330-001001	14	H009001
208-62-71410	H0330-002001	18	H010001
208-62-71540	H0120-004026	2	H003026
208-62-71540	H0120-004124	2	H004024
208-62-71540	H0120-005026	2	H002026
208-62-71640	H1831-001003	13	H019003
208-62-71670	H1840-001001	16	H022001
208-62-71810	H0312-002001	1	H007001
208-62-71811	H0312-002001	1	H007001
208-62-71820	H0312-002010	1	H007002
208-62-72131	H1831-001003	1	H019003
208-62-72131	H1831-002003	1	H020003
208-62-72131	N1220-001001	11	N003001
208-62-72180	H1831-001003	10	H019003
208-62-72180	H1831-002003	10	H020003
208-62-72190	H1831-001003	11	H019003
208-62-72190	H1831-002003	11	H020003
208-62-72210	H1840-001001	2	H022001
208-62-72230	H1840-001001	3	H022001
208-62-72240	H1840-001001	4	H022001
208-62-72290	K1110-024052	5	K008049
208-62-72290	K1110-039048	5	K009048
208-62-72310	K1110-024052	6	K008049
208-62-72310	K1110-039048	6	K009048
208-62-72331	K1110-024052	2	K008049
208-62-72360	K1110-024052	8	K008049
208-62-72360	K1110-039048	8	K009048
208-62-72480	K1110-024031	29	K008029
208-62-72870	K1110-024053	11	K008050
208-62-72870	K1110-039049	11	K009049
208-62-73910	H0311-001001	9	H006001
208-62-73910	H0311-001002	9	H006002
208-62-76910	H1220-003002	7	H013002
208-70-33220	T1290-002001	1	T009001
208-70-61241	T1200-007004	1	T008004

PARTS Nº	FIG. Nº	INDEX	PAGE
208-70-61241	T1200-008004	1	T007004
208-70-61241	T1200-010004	1	T005004
208-70-61241	T1200-011004	1	T006004
208-70-73160	T1200-007003	9	T008003
208-70-73160	T1200-008003	9	T007003
208-70-73160	T1200-010003	9	T005003
208-70-73160	T1200-011003	9	T006003
208-970-7171	T1200-007001	2	T008001
208-970-7171	T1200-008001	2	T007001
208-970-7210	T1110-005006	23	T001006
208-970-7220	T1110-005006	17	T001006
208-979-7520	C0100-001004	5	C001004
208-979-7530	K1110-024020	12	K008018
208-979-7530	K1110-039018	12	K009018
208-979-7540	K1110-024049	2	K008046
208-979-7540	K1110-039045	2	K009045
208-979-7560	K1110-024024	13	K008022
208-979-7560	K1110-039022	13	K009022
208-979-7620	K1110-024020	13	K008018
208-979-7620	K1110-039018	13	K009018
208-979-7640	K1110-024050	1	K008047
208-979-7640	K1110-039046	1	K009046
208-979-7650	K1110-024050	6	K008047
208-979-7650	K1110-039046	6	K009046
209-72-12230	K1110-024013	3	K008013
209-72-12230	K1110-024013	7	K008013
209-72-12230	K1110-039013	3	K009013
209-72-12230	K1110-039013	7	K009013
209-98-81280	K0700-001002	10	K007002
20B-27-11210	A9999-002006	5	B001006
20B-27-11210	A9999-002017	5	B001017
20B-27-11210	A9999-003017	5	B001037
20B-27-11210	P1210-002001	12	P002001
20B-27-11210	P1210-002005	12	P002005
20B-27-11210	P1210-002009	12	P002009
20T-54-42510	K0700-001002	2	K007002
20T-910-8660	K1110-024031	16	K008029
20U-62-41610	D0200-002001	21	D002001
20U-62-41810	H0330-001001	7	H009001
20U-62-41810	H0330-002001	11	H010001
20X-54-21460	M1210-002001	10	M006001
20Y-00-31640	U0100-006001	6	U002001
20Y-00-31680	U0100-006001	18	U002001
20Y-00-31840	U0100-005001	25	U001001
20Y-00-31840	U0100-006001	25	U002001
20Y-00-41330	K1110-024013	10	K008013
20Y-00-41330	K1110-039013	10	K009013
20Y-00-41530	U0100-005001	30	U001001
20Y-00-41530	U0100-006001	30	U002001
20Y-00-41710	U0100-006001	17	U002001
20Y-00-B1421	U0521-002001	1	U011001
20Y-00-B1421	U0521-007001	1	U012001
20Y-00-B1422	U0521-002001	1	U011001
20Y-00-B1422	U0521-007001	1	U012001
20Y-03-11330	C0100-001001	4	C001001
20Y-03-11330	C0100-001002	4	C001002
20Y-03-22110	C0100-001001	2	C001001
20Y-03-22110	C0100-001002	2	C001002
20Y-03-31470	C0100-001005	16	C001005
20Y-04-11161	D0100-001001	9	D001001
20Y-04-11161	D0100-001001A	9	D001001A
20Y-04-31170	D0200-002001	5	D002001
20Y-04-31170	D0200-002001	6	D002001
20Y-06-21551	E0310-004001	2	E004001
20Y-06-21551	E0320-001001	2	E005001
20Y-06-21551	T1110-004005	17	T002005
20Y-06-21551	T1110-005005	17	T001005
20Y06-21590	E0320-001001	9	E005001
20Y-06-21710	K1110-024028	30	K008026
20Y-06-21710	K1110-039026	30	K009026
20Y-06-23472	K1110-024014	3	K008014
20Y-06-23472	K1110-024017	3	K008015A
20Y-06-23472	K1110-039015	3	K009015
20Y-06-31660	K1110-024034	8	K008031
20Y-06-31660	K1110-039030	8	K009030
20Y-06-31680	E0200-001005	7	E002005
20Y-06-41121	K1110-024041	7	K008038
20Y-06-41141	K1110-024009	3	K008009
20Y-06-41141	K1110-039009	3	K009009
20Y-06-41150	K1110-024021	7	K008019
20Y-06-41150	K1110-039019	7	K009019
20Y-06-41151	K1110-039019	7	K009019
20Y-06-41248	K1110-024041	1	K008038
20Y-06-41251	K1110-024055	13	K008052
20Y-06-41270	K1110-024024	32	K008022
20Y-06-41270	K1110-039022	32	K009022
20Y-06-41822	E0420-001001	1	E007001
20Y-06-41830	K1110-024041	9	K008038
20Y-06-41830	K1110-039037	9	K009037
20Y-06-41990	K1110-024008	1	K008008
20Y-06-41990	K1110-039008	1	K009008
20Y-06-42110	K1110-024046	39	K008043
20Y-06-42110	K1110-039042	39	K009042
20Y-06-42121	K1110-024046	40	K008043
20Y-06-42121	K1110-039042	40	K009042
20Y-06-42180	K1110-024009	6	K008009
20Y-06-42180	K1110-039009	6	K009009
20Y-06-42190	K1110-024046	42	K008043
20Y-06-42190	K1110-039042	42	K009042
20Y-06-42320	K1110-024056	1	K008053
20Y-06-42320	K1110-039052	1	K009052
20Y-06-42440	K1110-024041	1	K008038
20Y-06-42440	K1110-039037	1	K009037
20Y-06-42910	B0200-002002	2	B004002
20Y-06-48150	E0310-004001	9	E004001
20Y-06-48260	E0310-004001	12	E004001
20Y-06-B1150	E0100-002001	7	E001001
20Y-06-B1150	E0100-002002	7	E001002
20Y-06-B1211	E0100-002001	6	E001001
20Y-06-B1211	E0100-002002	6	E001002
20Y-25-11270	N1110-001001	9	N001001
20Y-25-11270	T1110-004003	13	T002003
20Y-25-11270	T1110-005003	13	T001003
20Y-26-21320	N1210-001004	18	N002004
20Y-26-21330	N1210-001004	19	N002004
20Y-26-21330	P1210-002004	14	P002004
20Y-26-21330	P1210-002008	14	P002008
20Y-26-21330	P1210-002012	14	P002012
20Y-26-21350	N1210-001004	43	N002004
20Y-27-11250	P1210-002004	26	P002004
20Y-27-11250	P1210-002008	26	P002008
20Y-27-11250	P1210-002012	26	P002012
20Y-27-13310	P1210-002004	15	P002004
20Y-27-13310	P1210-002008	15	P002008
20Y-27-13310	P1210-002012	15	P002012
20Y-27-21240	P1210-002004	22	P002004
20Y-27-21240	P1210-002008	22	P002008
20Y-27-21240	P1210-002012	22	P002012
20Y-27-21250	N1210-001004	17	N002004
20Y-27-21250	P1210-002004	12	P002004
20Y-27-21250	P1210-002008	12	P002008
20Y-27-21250	P1210-002012	12	P002012
20Y-27-21280	P1210-002004	24	P002004
20Y-27-21280	P1210-002008	24	P002008
20Y-27-21280	P1210-002012	24	P002012
20Y-27-22250	P1210-002004	27	P002004
20Y-27-22250	P1210-002008	27	P002008
20Y-27-22250	P1210-002012	27	P002012
20Y-30-16330	R0200-002001	10	R002001
20Y-30-16330	R0200-002002	10	R002002
20Y-30-16330	R0200-002011	10	R002011
20Y-30-16330	R0300-003001	10	R003001
20Y-30-16330	R0300-003011	10	R003011
20Y-43-21231	K1110-024028	18	K008026
20Y-43-21231	K1110-039026	18	K009026
20Y-43-21241	K1110-024028	19	K008026
20Y-43-21241	K1110-039026	19	K009026
20Y-43-22211	K1110-024037	1	K008034
20Y-43-22211	K1110-039033	1	K009033
20Y-43-22221	K1110-024043	1	K008040

PARTS N°	FIG. N°	INDEX	PAGE
20Y-43-22221	K1110-039039	1	K009039
20Y-43-22250	K1110-024037	6	K008034
20Y-43-22250	K1110-024043	6	K008040
20Y-43-22250	K1110-039033	6	K009033
20Y-43-22250	K1110-039039	6	K009039
20Y-43-22261	K1110-024037	7	K008034
20Y-43-22261	K1110-024043	7	K008040
20Y-43-22261	K1110-039033	7	K009033
20Y-43-22261	K1110-039039	7	K009039
20Y-43-22370	K1110-024037	8	K008034
20Y-43-22370	K1110-024043	8	K008040
20Y-43-22370	K1110-039033	8	K009033
20Y-43-22370	K1110-039039	8	K009039
20Y-43-22381	K1110-024037	3	K008034
20Y-43-22381	K1110-039033	3	K009033
20Y-43-22390	K1110-024043	3	K008040
20Y-43-22390	K1110-039039	3	K009039
20Y-43-22421	K1110-024037	4	K008034
20Y-43-22421	K1110-024043	4	K008040
20Y-43-22421	K1110-039033	4	K009033
20Y-43-22421	K1110-039039	4	K009039
20Y-43-31421	K1110-024041	19	K008038
20Y-43-31421	K1110-039037	19	K009037
20Y-43-31432	K1110-024041	17	K008038
20Y-43-31432	K1110-039037	17	K009037
20Y-43-31440	K1110-024041	20	K008038
20Y-43-31440	K1110-039037	20	K009037
20Y-43-31450	K1110-024041	21	K008038
20Y-43-31450	K1110-039037	21	K009037
20Y-43-31513	K1110-024041	13	K008038
20Y-43-31513	K1110-039037	13	K009037
20Y-43-31522	K1110-024041	14	K008038
20Y-43-31522	K1110-039037	14	K009037
20Y-43-31611	K1110-024041	15	K008038
20Y-43-31611	K1110-039037	15	K009037
20Y-43-31621	K1110-024041	16	K008038
20Y-43-31621	K1110-039037	16	K009037
20Y-43-41111	K1110-024028	10	K008026
20Y-43-41111	K1110-039026	10	K009026
20Y-43-41121	K1110-024028	3	K008026
20Y-43-41121	K1110-039026	3	K009026
20Y-43-41143	K1110-024042	1	K008039
20Y-43-41143	K1110-039038	1	K009038
20Y-43-41152	K1110-024042	7	K008039
20Y-43-41152	K1110-024047	7	K008044
20Y-43-41152	K1110-039038	7	K009038
20Y-43-41152	K1110-039043	7	K009043
20Y-43-41162	K1110-024042	5	K008039
20Y-43-41162	K1110-039038	5	K009038
20Y-43-41173	K1110-024042	2	K008039
20Y-43-41173	K1110-039038	2	K009038
20Y-43-41181	K1110-024042	11	K008039
20Y-43-41181	K1110-024047	11	K008044
20Y-43-41181	K1110-039038	11	K009038
20Y-43-41181	K1110-039043	11	K009043
20Y-43-41191	K1110-024042	13	K008039
20Y-43-41191	K1110-024047	13	K008044
20Y-43-41191	K1110-039038	13	K009038
20Y-43-41191	K1110-039043	13	K009043
20Y-43-41230	K1110-024032	1	K008030
20Y-43-41231	K1110-024033	1	K008030A
20Y-43-41231	K1110-039029	1	K009029
20Y-43-41240	K1110-024049	4	K008046
20Y-43-41240	K1110-039045	4	K009045
20Y-43-41251	K1110-024032	14	K008030
20Y-43-41252	K1110-024032	14	K008030
20Y-43-41253	K1110-024033	13	K008030A
20Y-43-41253	K1110-039029	13	K009029
20Y-43-41281	K1110-024042	17	K008039
20Y-43-41281	K1110-024047	17	K008044
20Y-43-41281	K1110-039038	17	K009038
20Y-43-41281	K1110-039043	17	K009043
20Y-43-41290	K0310-001001	3	K004001
20Y-43-41290	K0310-002001	3	K005001
20Y-43-41290	K1110-024014	6	K008014
20Y-43-41290	K1110-024015	6	K008014A
20Y-43-41290	K1110-024040	16	K008037
20Y-43-41290	K1110-024040	21	K008037
20Y-43-41290	K1110-024040	26	K008037
20Y-43-41290	K1110-024046	11	K008043
20Y-43-41290	K1110-024046	19	K008043
20Y-43-41290	K1110-024046	24	K008043
20Y-43-41290	K1110-039014	6	K009014
20Y-43-41290	K1110-039036	16	K009036
20Y-43-41290	K1110-039036	21	K009036
20Y-43-41290	K1110-039036	26	K009036
20Y-43-41290	K1110-039042	11	K009042
20Y-43-41290	K1110-039042	19	K009042
20Y-43-41290	K1110-039042	24	K009042
20Y-43-41313	K1110-024046	1	K008043
20Y-43-41314	K1110-024046	1	K008043
20Y-43-41314	K1110-039042	1	K009042
20Y-43-41323	K1110-024046	7	K008043
20Y-43-41323	K1110-039042	7	K009042
20Y-43-41324	K1110-024046	7	K008043
20Y-43-41324	K1110-039042	7	K009042
20Y-43-41343	K1110-024047	1	K008044
20Y-43-41343	K1110-039043	1	K009043
20Y-43-41361	K1110-024028	6	K008026
20Y-43-41361	K1110-039026	6	K009026
20Y-43-41415	K1110-024040	1	K008037
20Y-43-41416	K1110-024040	1	K008037
20Y-43-41416	K1110-039036	1	K009036
20Y-43-41423	K1110-024040	9	K008037
20Y-43-41423	K1110-039036	9	K009036
20Y-43-41424	K1110-024040	9	K008037
20Y-43-41424	K1110-039036	9	K009036
20Y-43-41442	K1110-024040	17	K008037
20Y-43-41442	K1110-039036	17	K009036
20Y-43-41461	K1110-024042	18	K008039
20Y-43-41461	K1110-024047	18	K008044
20Y-43-41461	K1110-039038	18	K009038
20Y-43-41461	K1110-039043	18	K009043
20Y-43-41472	K1110-024040	4	K008037
20Y-43-41472	K1110-039036	4	K009036
20Y-43-41491	K1110-024040	29	K008037
20Y-43-41491	K1110-039036	29	K009036
20Y-43-41533	K1110-024047	2	K008044
20Y-43-41533	K1110-039043	2	K009043
20Y-43-41591	K1110-024042	15	K008039
20Y-43-41591	K1110-024047	15	K008044
20Y-43-41591	K1110-039038	15	K009038
20Y-43-41591	K1110-039043	15	K009043
20Y-43-41621	K1110-024040	7	K008037
20Y-43-41621	K1110-039036	7	K009036
20Y-43-41631	K1110-024046	4	K008043
20Y-43-41631	K1110-039042	4	K009042
20Y-43-41641	K1110-024040	8	K008037
20Y-43-41641	K1110-039036	8	K009036
20Y-43-41651	K1110-024040	10	K008037
20Y-43-41651	K1110-039036	10	K009036
20Y-43-41661	K1110-024040	11	K008037
20Y-43-41661	K1110-024046	8	K008043
20Y-43-41661	K1110-039036	11	K009036
20Y-43-41661	K1110-039042	8	K009042
20Y-43-41671	K1110-024046	34	K008043
20Y-43-41671	K1110-039042	34	K009042
20Y-43-41740	K1110-024046	31	K008043
20Y-43-41740	K1110-039042	31	K009042
20Y-43-41750	K1110-024046	32	K008043
20Y-43-41750	K1110-039042	32	K009042
20Y-43-41760	K1110-024031	2	K008029
20Y-43-41780	K1110-024046	38	K008043
20Y-43-41780	K1110-039042	38	K009042
20Y-43-41781	K1110-024046	38	K008043
20Y-43-41781	K1110-039042	38	K009042
20Y-43-41790	K1110-024046	33	K008043
20Y-43-41790	K1110-039042	33	K009042
20Y-43-41813	K1110-024032	7	K008030
20Y-43-41823	K1110-024032	9	K008030

PARTS N°	FIG. N°	INDEX	PAGE
20Y-43-41832	K1110-024032	11	K008030
20Y-43-41833	K1110-024033	11	K008030A
20Y-43-41833	K1110-039029	11	K009029
20Y-43-41850	K1110-024047	5	K008044
20Y-43-41850	K1110-039043	5	K009043
20Y-43-41891	K1110-024032	12	K008030
20Y-43-41970	K1110-024040	28	K008037
20Y-43-41970	K1110-039036	28	K009036
20Y-43-41981	K1110-024040	30	K008037
20Y-43-41981	K1110-039036	30	K009036
20Y-43-41991	K1110-024046	28	K008043
20Y-43-41991	K1110-039042	28	K009042
20Y-43-42130	K1110-024041	2	K008038
20Y-43-42130	K1110-039037	2	K009037
20Y-43-42170	K1110-024040	23	K008037
20Y-43-42170	K1110-024046	13	K008043
20Y-43-42170	K1110-024046	21	K008043
20Y-43-42170	K1110-039036	23	K009036
20Y-43-42170	K1110-039042	13	K009042
20Y-43-42170	K1110-039042	21	K009042
20Y-43-42180	K1110-024040	31	K008037
20Y-43-42180	K1110-024046	29	K008043
20Y-43-42180	K1110-039036	31	K009036
20Y-43-42180	K1110-039042	29	K009042
20Y-43-42330	K1110-024046	12	K008043
20Y-43-42330	K1110-039042	12	K009042
20Y-43-42350	K1110-024046	20	K008043
20Y-43-42350	K1110-039042	20	K009042
20Y-43-42450	K1110-024040	22	K008037
20Y-43-42450	K1110-039036	22	K009036
20Y-46-21520	N1110-001001	7	N001001
20Y-46-42320	J1110-001001	9	J001001
20Y-46-42330	J1110-001001	10	J001001
20Y-46-42340	J1110-001001	11	J001001
20Y-53-00072	K1110-024004	1	K008004
20Y-53-00072	K1110-024005	1	K008005
20Y-53-00072	K1110-039004	1	K009004
20Y-53-00072	K1110-039005	1	K009005
20Y-53-11241	K1110-024001	2	K008001
20Y-53-11241	K1110-039001	2	K009001
20Y-53-11250	K1110-024001	7	K008001
20Y-53-11250	K1110-039001	7	K009001
20Y-53-11260	K1110-024001	3	K008001
20Y-53-11260	K1110-039001	3	K009001
20Y-53-11271	K1110-024001	6	K008001
20Y-53-11271	K1110-039001	6	K009001
20Y-53-11320	K1110-024005	11	K008005
20Y-53-11320	K1110-039005	11	K009005
20Y-53-11332	K1110-024004	16	K008004
20Y-53-11332	K1110-024004	17	K008004
20Y-53-11332	K1110-039004	16	K009004
20Y-53-11332	K1110-039004	17	K009004
20Y-53-11380	K1110-024012	6	K008012
20Y-53-11380	K1110-039012	6	K009012
20Y-53-11390	K1110-024012	4	K008012
20Y-53-11390	K1110-024012	5	K008012
20Y-53-11390	K1110-039012	4	K009012
20Y-53-11390	K1110-039012	5	K009012
20Y-53-11402	K1110-024004	2	K008004
20Y-53-11402	K1110-039004	2	K009004
20Y-53-11411	K1110-024004	20	K008004
20Y-53-11411	K1110-039004	20	K009004
20Y-53-11421	K1110-024004	21	K008004
20Y-53-11421	K1110-039004	21	K009004
20Y-53-11441	K1110-024005	18	K008005
20Y-53-11441	K1110-039005	18	K009005
20Y-53-11451	K1110-024004	12	K008004
20Y-53-11451	K1110-039004	12	K009004
20Y-53-11460	K1110-024004	13	K008004
20Y-53-11460	K1110-039004	13	K009004
20Y-53-11470	K1110-024004	10	K008004
20Y-53-11470	K1110-039004	10	K009004
20Y-53-11484	K1110-024004	15	K008004
20Y-53-11484	K1110-039004	15	K009004
20Y-53-11581	K1110-024002	3	K008002
20Y-53-11581	K1110-039002	3	K009002
20Y-53-11641	K1110-024002	4	K008002
20Y-53-11641	K1110-039002	4	K009002
20Y-53-11752	K1110-024010	38	K008010
20Y-53-11752	K1110-039010	38	K009010
20Y-53-11761	K1110-024010	40	K008010
20Y-53-11761	K1110-039010	40	K009010
20Y-53-11810	K1110-024006	14	K008006
20Y-53-11821	K1110-024011	5	K008011
20Y-53-11821	K1110-039011	5	K009011
20Y-53-11831	K1110-024011	7	K008011
20Y-53-11831	K1110-039011	7	K009011
20Y-53-11841	K1110-024001	4	K008001
20Y-53-11841	K1110-039001	4	K009001
20Y-53-11850	K1110-024001	5	K008001
20Y-53-11850	K1110-039001	5	K009001
20Y-53-11870	K1110-024020	2	K008018
20Y-53-11870	K1110-039018	2	K009018
20Y-53-11880	K1110-024020	3	K008018
20Y-53-11880	K1110-039018	3	K009018
20Y-53-11890	K1110-024006	15	K008006
20Y-53-11890	K1110-039006	15	K009006
20Y-53-11953	K0310-001001	4	K004001
20Y-53-11953	K0310-002001	4	K005001
20Y-53-11961	K1110-024011	1	K008011
20Y-53-11961	K1110-039011	1	K009011
20Y-53-11981	K1110-024006	1	K008006
20Y-53-11981	K1110-039006	1	K009006
20Y-53-11990	K1110-024006	6	K008006
20Y-53-11990	K1110-039006	6	K009006
20Y-53-12111	K1110-024014	1	K008014
20Y-53-12111	K1110-024015	1	K008014A
20Y-53-12111	K1110-039014	1	K009014
20Y-53-12122	K1110-024013	12	K008013
20Y-53-12122	K1110-039013	12	K009013
20Y-53-12154	K1110-024013	5	K008013
20Y-53-12154	K1110-039013	5	K009013
20Y-53-12161	K1110-024013	20	K008013
20Y-53-12161	K1110-039013	20	K009013
20Y-53-12172	K1110-024013	11	K008013
20Y-53-12172	K1110-039013	11	K009013
20Y-53-12201	K1110-024005	1	K008005
20Y-53-12201	K1110-039005	1	K009005
20Y-53-12221	K1110-024009	7	K008009
20Y-53-12221	K1110-039009	7	K009009
20Y-53-12232	K1110-024007	9	K008007
20Y-53-12232	K1110-039007	9	K009007
20Y-53-12240	K1110-024014	2	K008014
20Y-53-12240	K1110-024015	2	K008014A
20Y-53-12240	K1110-039014	2	K009014
20Y-53-12258	K1110-024017	1	K008015A
20Y-53-12260	K1110-024012	11	K008012
20Y-53-12260	K1110-039012	11	K009012
20Y-53-12270	K1110-024012	18	K008012
20Y-53-12270	K1110-039012	18	K009012
20Y-53-12280	K1110-024006	3	K008006
20Y-53-12280	K1110-039006	3	K009006
20Y-53-12291	K1110-024013	19	K008013
20Y-53-12291	K1110-039013	19	K009013
20Y-53-12310	K1110-024010	23	K008010
20Y-53-12310	K1110-024010	29	K008010
20Y-53-12310	K1110-024013	16	K008013
20Y-53-12310	K1110-024018	11	K008016
20Y-53-12310	K1110-024018	7	K008016
20Y-53-12310	K1110-024019	13	K008017
20Y-53-12310	K1110-024024	12	K008022
20Y-53-12310	K1110-024024	23	K008022
20Y-53-12310	K1110-024024	26	K008022
20Y-53-12310	K1110-039010	23	K009010
20Y-53-12310	K1110-039010	29	K009010
20Y-53-12310	K1110-039013	16	K009013
20Y-53-12310	K1110-039016	11	K009016
20Y-53-12310	K1110-039016	7	K009016
20Y-53-12310	K1110-039017	13	K009017
20Y-53-12310	K1110-039022	12	K009022

PARTS Nº	FIG. Nº	INDEX	PAGE
20Y-53-12310	K1110-039022	23	K009022
20Y-53-12310	K1110-039022	26	K009022
20Y-53-12320	K1110-024012	13	K008012
20Y-53-12320	K1110-039012	13	K009012
20Y-53-12371	K1110-024024	6	K008022
20Y-53-12371	K1110-039022	6	K009022
20Y-53-12381	K1110-024024	14	K008022
20Y-53-12381	K1110-039022	14	K009022
20Y-53-12391	K1110-024024	17	K008022
20Y-53-12391	K1110-039022	17	K009022
20Y-53-12431	K1110-024010	13	K008010
20Y-53-12431	K1110-039010	13	K009010
20Y-53-12463	K1110-024010	22	K008010
20Y-53-12463	K1110-039010	22	K009010
20Y-53-12472	K1110-024010	28	K008010
20Y-53-12472	K1110-039010	28	K009010
20Y-53-12483	K1110-024013	22	K008013
20Y-53-12483	K1110-039013	22	K009013
20Y-53-12522	K1110-024019	8	K008017
20Y-53-12522	K1110-039017	8	K009017
20Y-53-12552	K1110-024010	21	K008010
20Y-53-12552	K1110-039010	21	K009010
20Y-53-12564	K1110-024020	1	K008018
20Y-53-12565	K1110-024020	1	K008018
20Y-53-12565	K1110-039018	1	K009018
20Y-53-12580	K1110-024012	16	K008012
20Y-53-12580	K1110-039012	16	K009012
20Y-53-12591	K1110-024011	4	K008011
20Y-53-12591	K1110-039011	4	K009011
20Y-53-12661	K1110-024005	14	K008005
20Y-53-12661	K1110-039005	14	K009005
20Y-53-12710	K1110-024010	16	K008010
20Y-53-12710	K1110-024010	20	K008010
20Y-53-12710	K1110-039010	16	K009010
20Y-53-12710	K1110-039010	20	K009010
20Y-53-12731	K1110-024024	24	K008022
20Y-53-12731	K1110-039022	24	K009022
20Y-53-12740	K1110-024012	17	K008012
20Y-53-12740	K1110-039012	17	K009012
20Y-53-12751	K1110-024020	9	K008018
20Y-53-12751	K1110-039018	9	K009018
20Y-53-12760	K1110-024020	10	K008018
20Y-53-12760	K1110-039018	10	K009018
20Y-53-12771	K1110-024016	5	K008015
20Y-53-12771	K1110-024017	10	K008015A
20Y-53-12771	K1110-039015	10	K009015
20Y-53-12781	K1110-024020	8	K008018
20Y-53-12781	K1110-039018	8	K009018
20Y-53-12790	K1110-024007	11	K008007
20Y-53-12790	K1110-039007	11	K009007
20Y-53-12810	K1110-024013	4	K008013
20Y-53-12810	K1110-039013	4	K009013
20Y-53-12840	K1110-024004	3	K008004
20Y-53-12840	K1110-039004	3	K009004
20Y-53-12850	K1110-024004	4	K008004
20Y-53-12850	K1110-039004	4	K009004
20Y-53-12860	K1110-024024	28	K008022
20Y-53-12860	K1110-039022	28	K009022
20Y-53-12870	K1110-024004	6	K008004
20Y-53-12870	K1110-039004	6	K009004
20Y-53-12880	K1110-024004	7	K008004
20Y-53-12880	K1110-039004	7	K009004
20Y-53-12940	K1110-024005	12	K008005
20Y-53-12940	K1110-039005	12	K009005
20Y-53-12951	K1110-024012	24	K008012
20Y-53-12951	K1110-039012	24	K009012
20Y-53-12960	K1110-024012	1	K008012
20Y-53-12960	K1110-039012	1	K009012
20Y-53-12971	K1110-024004	9	K008004
20Y-53-12971	K1110-024004	9	K008004
20Y-53-12971	K1110-039004	9	K009004
20Y-53-12971	K1110-039004	9	K009004
20Y-53-12991	K1110-024005	5	K008005
20Y-53-12991	K1110-039005	5	K009005
20Y-53-13130	K1120-001001	5	K010001
20Y-53-13141	K1120-001001	8	K010001
20Y-53-13142	K1120-001001	8	K010001
20Y-53-13151	K1120-001001	11	K010001
20Y-53-13190	K1110-024009	7	K008009
20Y-53-13190	K1110-039009	7	K009009
20Y-53-13280	K1110-024018	3	K008016
20Y-53-13280	K1110-039016	3	K009016
20Y-53-13311	K1110-024019	1	K008017
20Y-53-13311	K1110-039017	1	K009017
20Y-53-13321	K1110-024019	4	K008017
20Y-53-13321	K1110-039017	4	K009017
20Y-53-13331	K1110-024019	2	K008017
20Y-53-13331	K1110-039017	2	K009017
20Y-53-13341	K1110-024019	5	K008017
20Y-53-13341	K1110-039017	5	K009017
20Y-53-13351	K1110-024019	3	K008017
20Y-53-13351	K1110-039017	3	K009017
20Y-53-13361	K1110-024019	6	K008017
20Y-53-13361	K1110-039017	6	K009017
20Y-53-13371	K1110-024018	1	K008016
20Y-53-13371	K1110-039016	1	K009016
20Y-53-13421	K1110-024018	8	K008016
20Y-53-13421	K1110-039016	8	K009016
20Y-53-13451	K1110-024019	11	K008017
20Y-53-13451	K1110-039017	11	K009017
20Y-53-13461	K1110-024019	14	K008017
20Y-53-13461	K1110-039017	14	K009017
20Y-53-13480	K1110-024018	2	K008016
20Y-53-13480	K1110-039016	2	K009016
20Y-53-13490	K1110-024011	3	K008011
20Y-53-13490	K1110-039011	3	K009011
20Y-53-13616	K1110-024016	1	K008015
20Y-53-13617	K1110-024017	1	K008015A
20Y-53-13617	K1110-039015	1	K009015
20Y-53-13631	K1110-024024	1	K008022
20Y-53-13631	K1110-039022	1	K009022
20Y-53-13680	K1110-024017	4	K008015A
20Y-53-13680	K1110-039015	4	K009015
20Y-53-13712	K1110-024010	1	K008010
20Y-53-13712	K1110-039010	1	K009010
20Y-53-13722	K1110-024010	3	K008010
20Y-53-13722	K1110-039010	3	K009010
20Y-53-13732	K1110-024010	3	K008010
20Y-53-13732	K1110-039010	3	K009010
20Y-53-13741	K1110-024003	2	K008003
20Y-53-13741	K1110-039003	2	K009003
20Y-53-13751	K1110-024010	6	K008010
20Y-53-13751	K1110-039010	6	K009010
20Y-53-13763	K1110-024010	7	K008010
20Y-53-13763	K1110-039010	7	K009010
20Y-53-13770	K1110-024003	1	K008003
20Y-53-13770	K1110-039003	1	K009003
20Y-53-13781	K1110-024010	4	K008010
20Y-53-13781	K1110-039010	4	K009010
20Y-53-13790	K1110-024003	3	K008003
20Y-53-13790	K1110-039003	3	K009003
20Y-53-13870	K1110-024010	12	K008010
20Y-53-13870	K1110-039010	11	K009010
20Y-53-13880	K1110-024004	14	K008004
20Y-53-13880	K1110-039004	14	K009004
20Y-53-13910	K1110-024004	11	K008004
20Y-53-13910	K1110-039004	11	K009004
20Y-53-14116	K1110-024025	1	K008023
20Y-53-14116	K1110-039023	1	K009023
20Y-53-14121	K1110-024035	1	K008032
20Y-53-14121	K1110-039031	1	K009031
20Y-53-14150	K1110-024035	8	K008032
20Y-53-14150	K1110-039031	8	K009031
20Y-53-14170	K1110-024035	9	K008032
20Y-53-14170	K1110-039031	9	K009031
20Y-53-14220	K1110-024031	9	K008029
20Y-53-14230	K1110-024015	3	K008014A
20Y-53-14230	K1110-039014	3	K009014
20Y-53-14812	K1110-024021	1	K008019
20Y-53-14812	K1110-039019	1	K009019

PARTS Nº	FIG. Nº	INDEX	PAGE
20Y-53-14820	K1110-024022	1	K008020
20Y-53-14820	K1110-039020	1	K009020
20Y-53-14821	K1110-024022	1	K008020
20Y-53-14821	K1110-039020	1	K009020
20Y-53-14831	K1110-024055	34	K008052
20Y-53-14831	K1110-039051	27	K009051
20Y-53-14841	K1110-024055	37	K008052
20Y-53-14841	K1110-039051	30	K009051
20Y-53-14910	K1110-024055	26	K008052
20Y-53-14910	K1110-039051	19	K009051
20Y-53-14920	K1110-024055	27	K008052
20Y-53-14920	K1110-039051	20	K009051
20Y-53-14930	K1110-024055	28	K008052
20Y-53-14930	K1110-039051	21	K009051
20Y-53-14940	K1110-024055	29	K008052
20Y-53-14940	K1110-039051	22	K009051
20Y-53-14950	K1110-024055	30	K008052
20Y-53-14950	K1110-039051	23	K009051
20Y-53-14963	K1110-024055	31	K008052
20Y-53-14963	K1110-039051	24	K009051
20Y-53-14973	K1110-024055	32	K008052
20Y-53-14973	K1110-039051	25	K009051
20Y-53-14983	K1110-024055	33	K008052
20Y-53-14983	K1110-039051	26	K009051
20Y-53-14991	K1110-024036	1	K008033
20Y-53-14991	K1110-039032	1	K009032
20Y-53-15140	K1110-024012	27	K008012
20Y-53-15140	K1110-039012	27	K009012
20Y-53-15150	E0310-005001	4	E003001
20Y-53-15210	E0310-005001	1	E003001
20Y-53-18211	K1110-024021	9	K008019
20Y-53-18211	K1110-039019	9	K009019
20Y-53-18221	K1110-024024	38	K008022
20Y-53-18221	K1110-039022	38	K009022
20Y-53-18331	K1110-024035	29	K008032
20Y-53-18331	K1110-039031	29	K009031
20Y-53-18880	K1110-024012	21	K008012
20Y-53-18880	K1110-039012	21	K009012
20Y-53-18940	K1110-024012	22	K008012
20Y-53-18940	K1110-039012	22	K009012
20Y-54-11611	K1110-024006	11	K008006
20Y-54-11611	K1110-039006	11	K009006
20Y-54-11611	M1130-001001	15	M003001
20Y-54-11611	M1140-001001	15	M004001
20Y-54-12670	R1140-001001	4	R006001
20Y-54-13180	K1110-024004	9A	K008004
20Y-54-13180	K1110-039004	9A	K009004
20Y-54-13322	K1110-024004	8	K008004
20Y-54-13322	K1110-039004	8	K009004
20Y-54-19920	M1210-002001	33	M006001
20Y-54-19930	M1210-002001	34	M006001
20Y-54-25852	M1210-002001	2	M006001
20Y-54-27123	M1110-001001	2	M001001
20Y-54-27290	M1110-001001	22	M001001
20Y-54-27360	M1110-001001	16	M001001
20Y-54-27761	M1150-002001	12	M005001
20Y-54-28170	M1130-001001	9	M003001
20Y-54-28170	M1140-001001	17	M004001
20Y-54-29232	M1130-001001	25	M003001
20Y-54-29232	M1140-001001	20	M004001
20Y-54-29680	M1220-001001	8	M007001
20Y-54-35430	M1410-001001	3	M009001
20Y-54-35451	K1110-024012	12	K008012
20Y-54-35451	K1110-039012	12	K009012
20Y-54-39450	K1110-024007	5	K008007
20Y-54-39450	K1110-039007	5	K009007
20Y-54-39460	K1110-024007	6	K008007
20Y-54-39460	K1110-039007	6	K009007
20Y-54-39480	K1110-024007	7	K008007
20Y-54-39480	K1110-039007	7	K009007
20Y-54-39511	K1110-024009	11	K008009
20Y-54-39511	K1110-039009	11	K009009
20Y-54-51393	K1110-024005	15	K008005
20Y-54-51393	K1110-039005	15	K009005
20Y-54-52211	K1110-024007	1	K008007
20Y-54-52211	K1110-039007	1	K009007
20Y-54-52221	K1110-024007	4	K008007
20Y-54-52221	K1110-039007	4	K009007
20Y-54-52300	K1110-024005	2	K008005
20Y-54-52300	K1110-039005	2	K009005
20Y-54-52350	K1110-024007	4	K008007
20Y-54-52350	K1110-039007	4	K009007
20Y-54-52820	K1110-024005	9	K008005
20Y-54-52820	K1110-039005	9	K009005
20Y-54-52860	K1110-024004	5	K008004
20Y-54-52860	K1110-039004	5	K009004
20Y-54-61470	M1130-001001	6	M003001
20Y-54-61470	M1140-001001	21	M004001
20Y-54-61630	M1420-001001	3	M010001
20Y-54-61670	M1810-004001	39	M014001
20Y-54-63390	M1140-001001	2	M004001
20Y-54-63414	M1130-001001	19	M003001
20Y-54-63414	M1140-001001	3	M004001
20Y-54-63414	M1140-001001	8	M004001
20Y-54-65121	K1110-024054	11	K008051
20Y-54-65121	K1110-039050	11	K009050
20Y-54-65340	K1110-024032	15	K008030
20Y-54-65540	K1110-024032	18	K008030
20Y-54-65690	K1110-024020	15	K008018
20Y-54-65690	K1110-039018	15	K009018
20Y-54-65790	K1110-024020	14	K008018
20Y-54-65790	K1110-039018	14	K009018
20Y-54-71372	M1130-001001	18	M003001
20Y-54-71491	M1140-001001	5	M004001
20Y-54-73190	M1210-002001	19	M006001
20Y-54-73991	M1310-002001	1	M008001
20Y-54-73991	M1420-001001	10	M010001
20Y-54-74161	M1220-001001	5	M007001
20Y-54-74172	M1220-001001	6	M007001
20Y-54-74260	M1410-001001	2	M009001
20Y-54-74270	M1420-001001	2	M010001
20Y-54-74280	M1410-001001	1	M009001
20Y-54-74280	M1420-001001	1	M010001
20Y-57-41103	K0110-001001	1	K001001
20Y-57-41104	K0110-001001	1	K001001
20Y-57-42200	K0110-001001	1	K001001
20Y-60-11750	H1833-001001	5	H021001
20Y-60-21320	H0110-002001	31	H001001
20Y-60-21340	H0110-002001	40	H001001
20Y-60-21470	H0110-002001	38	H001001
20Y-60-22201	H1833-001001	5	H021001
20Y-60-22210	H0120-005026	11	H002026
20Y-60-22270	H0120-004025	21	H003025
20Y-60-22270	H0120-004026	12	H003026
20Y-60-22270	H0120-004123	21	H004023
20Y-60-22270	H0120-004124	6	H004024
20Y-60-22270	H0120-005025	21	H002025
20Y-60-22270	H0120-005026	12	H002026
20Y-60-22350	H1833-001001	6	H021001
20Y-60-22372	H0312-002001	2	H007001
20Y-60-31131	H0110-002001	23	H001001
20Y-60-31140	H0110-002001	22	H001001
20Y-60-31240	H1831-002001	3	H020001
20Y-60-31250	H1831-002001	4	H020001
20Y-60-31271	H0110-002001	47	H001001
20Y-60-32121	H1831-001001	2	H019001
20Y-60-32121	H1831-002001	2	H020001
20Y-62-12121	P1120-001001	1	P001001
20Y-62-15831	K1110-024055	1	K008052
20Y-62-15831	K1110-024055	14	K008052
20Y-62-15831	K1110-039051	1	K009051
20Y-62-15831	K1110-039051	10	K009051
20Y-62-15951	H1810-002001	25	H018001
20Y-62-15951	K1520-001001	3	K011001
20Y-62-15951	K1520-002001	3	K012001
20Y-62-16630	H1833-001001	1	H021001
20Y-62-18890	K1110-024028	26	K008026
20Y-62-18890	K1110-024039	5	K008036
20Y-62-18890	K1110-024045	5	K008042
20Y-62-18890	K1110-039026	26	K009026

PARTS Nº	FIG. Nº	INDEX	PAGE
20Y-62-18890	K1110-039035	5	K009035
20Y-62-18890	K1110-039041	5	K009041
20Y-62-18910	K1110-024028	21	K008026
20Y-62-18910	K1110-024039	3	K008036
20Y-62-18910	K1110-024045	3	K008042
20Y-62-18910	K1110-039026	21	K009026
20Y-62-18910	K1110-039035	3	K009035
20Y-62-18910	K1110-039041	3	K009041
20Y-62-19560	H0120-004025	5	H003025
20Y-62-19560	H0120-004123	5	H004023
20Y-62-19560	H0120-005025	5	H002025
20Y-62-19560	H1831-001002	3	H019002
20Y-62-19560	H1831-002002	3	H020002
20Y-62-19560	H1833-001001	3	H021001
20Y-62-19560	H1833-001001	9	H021001
20Y-62-21940	H1831-001002	19	H019002
20Y-62-21940	H1831-002002	19	H020002
20Y-62-22160	H0120-004025	17	H003025
20Y-62-22160	H0120-004026	31	H003026
20Y-62-22160	H0120-004123	17	H004023
20Y-62-22160	H0120-004124	22	H004024
20Y-62-22160	H0120-005025	17	H002025
20Y-62-22160	H0120-005026	30	H002026
20Y-62-22160	H1810-001001	7	H017001
20Y-62-22271	H1831-001002	1	H019002
20Y-62-22271	H1831-002002	1	H020002
20Y-62-22410	H1833-001001	7	H021001
20Y-62-22790	A9999-002011	5	B001011
20Y-62-22790	A9999-002023	5	B001023
20Y-62-22790	A9999-003023	5	B001043
20Y-62-22790	H1810-001001	14	H017001
20Y-62-22790	H1810-001001	21	H017001
20Y-62-22790	H1810-002001	11	H018001
20Y-62-22790	H1810-002001	18	H018001
20Y-62-22790	H1831-001003	2	H019003
20Y-62-22790	H1831-002003	2	H020003
20Y-62-22790	H1840-001001	5	H022001
20Y-62-22790	K1110-024031	30	K008029
20Y-62-22790	K1110-024052	12	K008049
20Y-62-22790	K1110-024052	3	K008049
20Y-62-22790	K1110-024053	16	K008050
20Y-62-22790	K1110-024053	7	K008050
20Y-62-22790	K1110-039048	12	K009048
20Y-62-22790	K1110-039048	3	K009048
20Y-62-22790	K1110-039049	16	K009049
20Y-62-22790	K1110-039049	7	K009049
20Y-62-22810	H1810-001001	15	H017001
20Y-62-22810	H1810-002001	19	H018001
20Y-62-22810	H1831-001003	3	H019003
20Y-62-22810	H1831-001003	7	H019003
20Y-62-22810	H1831-002003	3	H020003
20Y-62-22810	H1831-002003	7	H020003
20Y-62-22810	H1840-001001	6	H022001
20Y-62-22810	K1110-024031	31	K008029
20Y-62-22810	K1110-024053	8	K008050
20Y-62-22810	K1110-039049	8	K009049
20Y-62-22820	H1831-001003	12	H019003
20Y-62-22820	H1831-001003	8	H019003
20Y-62-22820	H1831-002003	12	H020003
20Y-62-22820	H1831-002003	8	H020003
20Y-62-22820	H1840-001001	13	H022001
20Y-62-22820	K1110-024031	32	K008029
20Y-62-22820	K1110-024052	13	K008049
20Y-62-22820	K1110-024053	17	K008050
20Y-62-22820	K1110-024053	9	K008050
20Y-62-22820	K1110-039048	13	K009048
20Y-62-22820	K1110-039049	17	K009049
20Y-62-22820	K1110-039049	9	K009049
20Y-62-22830	A9999-002011	10	B001011
20Y-62-22830	A9999-002023	10	B001023
20Y-62-22830	A9999-003023	10	B001043
20Y-62-22830	H1810-001001	16	H017001
20Y-62-22830	H1840-001001	7	H022001
20Y-62-22830	K1110-024053	18	K008050
20Y-62-22830	K1110-039049	18	K009049
20Y-62-22840	H1840-001001	14	H022001
20Y-62-22840	K1110-024053	19	K008050
20Y-62-22840	K1110-039049	19	K009049
20Y-62-22850	H1840-001001	8	H022001
20Y-62-22850	K1110-024052	14	K008049
20Y-62-22850	K1110-024053	20	K008050
20Y-62-22850	K1110-039048	14	K009048
20Y-62-22850	K1110-039049	20	K009049
20Y-62-22860	H1831-001003	9	H019003
20Y-62-22860	H1831-002003	9	H020003
20Y-62-22860	H1840-001001	15	H022001
20Y-62-22860	K1110-024053	21	K008050
20Y-62-22860	K1110-039049	21	K009049
20Y-62-23541	H0120-004025	18	H003025
20Y-62-23541	H0120-004123	18	H004023
20Y-62-23541	H0120-005025	18	H002025
20Y-62-25360	K1110-024031	6	K008029
20Y-62-27770	K1110-024054	13	K008051
20Y-62-27770	K1110-039050	13	K009050
20Y-62-41390	K1110-024028	28	K008026
20Y-62-41390	K1110-039026	28	K009026
20Y-62-41701	H0120-004025	20	H003025
20Y-62-41701	H0120-004026	11	H003026
20Y-62-41701	H0120-004123	20	H004023
20Y-62-41701	H0120-004124	5	H004024
20Y-62-41701	H0120-005025	20	H002025
20Y-62-41701	H0120-005026	11	H002026
20Y-62-41920	H0120-004026	1	H003026
20Y-62-41920	H0120-004124	1	H004024
20Y-62-41920	H0120-005026	1	H002026
20Y-62-42251	K1110-024053	10	K008050
20Y-62-42251	K1110-039049	10	K009049
20Y-62-42271	K1110-024053	13	K008050
20Y-62-42271	K1110-039049	13	K009049
20Y-62-42290	K1110-024053	14	K008050
20Y-62-42290	K1110-039049	14	K009049
20Y-62-43470	K1110-024031	21	K008029
20Y-62-43690	H1831-002002	26	H020002
20Y-62-47630	H0120-004025	24	H003025
20Y-62-47630	H0120-004026	15	H003026
20Y-62-47630	H0120-004123	24	H004023
20Y-62-47630	H0120-004124	9	H004024
20Y-62-47630	H0120-005025	24	H002025
20Y-62-47630	H0120-005026	15	H002026
20Y-62-51681	H1270-003007	4	H014007
20Y-62-51691	H1270-003007	7	H014007
20Y-62-52160	K1110-024031	18	K008029
20Y-62-52330	K1110-024031	26	K008029
20Y-62-53410	K1110-024053	2	K008050
20Y-62-53410	K1110-039049	2	K009049
20Y-62-53420	K1110-024053	3	K008050
20Y-62-53420	K1110-039049	3	K009049
20Y-70-11520	T1110-004003	5	T002003
20Y-70-11520	T1110-005003	5	T001003
20Y-70-11540	T1110-004003	1	T002003
20Y-70-11540	T1110-005003	1	T001003
20Y-70-11651	T1110-004001	10	T002001
20Y-70-11651	T1110-005001	10	T001001
20Y-70-B1340	T1290-002001	2	T009001
20Y-810-1211	K1110-024048	1	K008045
20Y-810-1211	K1110-024049	1	K008046
20Y-810-1211	K1110-039044	1	K009044
20Y-810-1211	K1110-039045	1	K009045
20Y-810-1212	K1110-024048	1	K008045
20Y-810-1212	K1110-024049	1	K008046
20Y-810-1212	K1110-039044	1	K009044
20Y-810-1212	K1110-039045	1	K009045
20Y-810-1213	K1110-024048	1	K008045
20Y-810-1213	K1110-024049	1	K008046
20Y-810-1213	K1110-039044	1	K009044
20Y-810-1213	K1110-039045	1	K009045
20Y-810-1240	E0450-001001	11	E008001
20Y-810-1260	K0700-001001	1	K007001
20Y-954-6132	K0230-002001	1	K003001
20Y-954-6192	K0230-002001	2	K003001

PARTS Nº	FIG. Nº	INDEX	PAGE
20Y-970-6450	H1270-003005	1	H014005
20Y-970-6450	H1270-003006	1	H014006
20Y-970-6451	H1270-003005	1	H014005
20Y-970-6451	H1270-003006	1	H014006
20Y-973-2220	R1140-001001	1	R006001
20Y-973-2230	R1140-001001	2	R006001
20Y-979-3120	K0700-001001	15	K007001
20Y-979-3130	K1110-024050	5	K008047
20Y-979-3130	K1110-039046	5	K009046
20Y-979-3140	K0700-001002	13	K007002
20Y-979-3150	K0700-001001	21	K007001
20Y-979-3150	K0700-001001	24	K007001
20Y-979-3150	K1110-024050	3	K008047
20Y-979-3150	K1110-039046	3	K009046
20Y-979-6161	K1110-024014	7	K008014
20Y-979-6161	K1110-024015	7	K008014A
20Y-979-6161	K1110-039014	7	K009014
20Y-979-6612	K0700-001001	3	K007001
20Y-979-6630	K1110-024032	19	K008030
20Y-979-6630	K1110-024033	15	K008030A
20Y-979-6630	K1110-039029	15	K009029
20Y-979-6650	K0700-001001	20	K007001
20Y-979-6771	K1110-024022	5	K008020
20Y-979-6771	K1110-039020	5	K009020
21K-54-26351	M1210-002001	11	M006001
21M-03-15260	C0100-001005	16	C001005
21M-06-31170	K1110-024041	7	K008038
21M-06-31170	K1110-039037	7	K009037
21M-62-16350	H1831-001002	12	H019002
21M-62-16350	H1831-002002	12	H020002
21M-970-1173	T1200-008006	9	T007006
21M-970-1173	T1200-010006	9	T005006
21M-970-1204	T1200-008005	25	T007005
21M-970-1204	T1200-008006	1	T007006
21M-970-1204	T1200-010005	19	T005005
21M-970-1204	T1200-010006	1	T005006
21M-970-1223	T1200-008006	2	T007006
21M-970-1223	T1200-010006	2	T005006
21N-62-36790	K1110-024053	15	K008050
21N-62-36790	K1110-039049	15	K009049
21N-64-36680	H1810-001001	10	H017001
21T-06-11350	K0350-001001	1	K006001
21T-06-11950	H1810-001001	22	H017001
21T-06-11950	K0700-001002	17	K007002
21T-06-32810	E0200-001005	6	E002005
21T-06-32810	E0310-004001	1	E004001
21T-06-32810	E0320-001001	1	E005001
21T-06-32810	T1110-004005	16	T002005
21T-06-32810	T1110-005005	16	T001005
21T-06-33760	K1110-024046	41	K008043
21T-06-33760	K1110-039042	41	K009042
21T-09-11240	M1520-001001	1	M013001
21T-38-12270	K0350-001001	7	K006001
21T-54-16150	C0100-001007	4	C001007
21T-62-76850	D0200-002003	24	D002003
21U-98-31160	U0100-005001	28	U001001
21U-98-31160	U0100-006001	28	U002001
21W-62-42490	H0120-004025	8	H003025
21W-62-42490	H0120-004123	8	H004023
21W-62-42490	H0120-005025	8	H002025
21W-62-42490	H0120-005026	27	H002026
21W-62-42490	H1831-001002	21	H019002
21W-62-42490	H1831-001002	8	H019002
21W-62-42490	H1831-002002	21	H020002
21W-62-42490	H1831-002002	8	H020002
21W-62-42490	N1310-001002	16	N004003
21W-62-42630	N1310-001002	4	N004003
21W-62-42630	P1120-001001	19	P001001
21W-62-42640	H0110-002001	12	H001001
21W-62-42640	H0330-001001	11	H009001
21W-62-42640	H0330-002001	15	H010001
21W-62-42640	N1220-001001	4	N003001
21W-62-42640	N1310-001002	24	N004003
22B-00-21920	U0100-005001	6	U001001
22B-03-12590	C0100-001001	26	C001001
22B-03-12590	C0100-001002	28	C001002
22B-06-21930	E0420-001001	1	E007001
22B-54-16330	K1110-024005	10	K008005
22B-54-16330	K1110-039005	10	K009005
22B-54-16340	K1110-024005	3	K008005
22B-54-16340	K1110-039005	3	K009005
22B-54-16461	K1110-024005	19	K008005
22B-54-16461	K1110-039005	19	K009005
22B-54-17282	K1110-024012	2	K008012
22B-54-17282	K1110-039012	2	K009012
22B-54-17380	K1110-024010	27	K008010
22B-54-17380	K1110-039010	27	K009010
22B-57-11911	K0160-002001	1	K002001
22B-60-11160	H0110-002001	32	H001001
22L-62-22590	H0120-004026	24	H003026
22L-62-22590	H0120-005026	24	H002026
22U-00-27840	U0120-010001	1	U004001
22U-03-22280	C0100-001006	10	C001006
22U-06-11270	K1110-024034	9	K008031
22U-06-11270	K1110-039030	9	K009030
22U-06-22251	K1110-024024	29	K008022
22U-06-22251	K1110-039022	29	K009022
22U-06-22360	K1110-024041	24	K008038
22U-06-22360	K1110-039037	24	K009037
22U-06-22380	K1110-024046	36	K008043
22U-06-22380	K1110-039042	36	K009042
22U-06-22460	K1110-024046	37	K008043
22U-06-22460	K1110-039042	37	K009042
22U-06-22490	K1110-024041	23	K008038
22U-06-22490	K1110-039037	23	K009037
22U-26-21240	N1210-001004	30	N002004
22U-26-21320	N1210-001004	29	N002004
22U-43-21111	K1110-024028	15	K008026
22U-43-21111	K1110-039026	15	K009026
22U-43-21121	K1110-024028	16	K008026
22U-43-21121	K1110-039026	16	K009026
22U-43-21131	K1110-024028	17	K008026
22U-43-21131	K1110-039026	17	K009026
22U-43-21182	K1110-024037	2	K008034
22U-43-21182	K1110-039033	2	K009033
22U-43-21192	K1110-024043	2	K008040
22U-43-21192	K1110-039039	2	K009039
22U-43-21211	K1110-024037	5	K008034
22U-43-21211	K1110-024043	5	K008040
22U-43-21211	K1110-039033	5	K009033
22U-43-21211	K1110-039039	5	K009039
22U-43-21350	K1110-024028	8	K008026
22U-43-21350	K1110-039026	8	K009026
22U-43-21360	K1110-024028	9	K008026
22U-43-21360	K1110-039026	9	K009026
22U-43-21390	K1110-024032	13	K008030
22U-43-21390	K1110-024033	12	K008030A
22U-43-21390	K1110-039029	12	K009029
22U-43-22340	K1110-024024	2	K008022
22U-43-22340	K1110-039022	2	K009022
22U-43-23251	K1110-024046	5	K008043
22U-43-23251	K1110-039042	5	K009042
22U-43-23260	K1110-024040	27	K008037
22U-43-23260	K1110-024041	25	K008038
22U-43-23260	K1110-024046	47	K008043
22U-43-23260	K1110-039036	27	K009036
22U-43-23260	K1110-039037	25	K009037
22U-43-23260	K1110-039042	47	K009042
22U-43-23290	K1110-024046	6	K008043
22U-43-23290	K1110-039042	6	K009042
22U-54-24760	M1810-004001	17	M014001
22U-54-24760	M1810-004001	24	M014001
22U-54-25110	K1110-024029	1	K008027
22U-54-25110	K1110-039027	1	K009027
22U-54-25120	K1110-039028	1	K009028
22U-54-25340	K1110-024013	13	K008013
22U-54-25360	K1110-024013	13	K008013
22U-54-25360	K1110-039013	13	K009013
22U-54-25521	K1110-024029	2	K008027
22U-54-25521	K1110-039027	2	K009027

PARTS Nº	FIG. Nº	INDEX	PAGE
22U-54-25531	K1110-039028	2	K009028
22U-54-25541	K1110-024031	12	K008029
22U-54-25581	K1110-024025	2	K008023
22U-54-25581	K1110-039023	2	K009023
22U-54-25660	K1110-024031	1	K008029
22U-60-21232	H0110-002001	25	H001001
22U-60-21330	H1831-001002	25	H019002
22U-60-21330	H1831-002002	24	H020002
22U-60-21331	H1831-001002	25	H019002
22U-62-21870	N1310-001002	28	N004003
22U-62-22480	H0120-004025	3	H003025
22U-62-22480	H0120-004123	3	H004023
22U-62-22480	H0120-005025	3	H002025
22U-62-24420	N1310-001002	31	N004003
22U-62-31180	K1110-024052	1	K008049
22U-62-31180	K1110-039048	1	K009048
22U-62-31180	K1110-039048	2	K009048
22U-62-31180	K1520-001001	12	K011001
22U-62-31180	K1520-002001	9	K012001
23D-950-4450	K1110-024024	27	K008022
23D-950-4450	K1110-039022	27	K009022
23S-01-11140	B0100-001001	1	B003001
287-06-16420	K1110-024021	18	K008019
287-06-16420	K1110-039019	18	K009019
2A5-43-12351	K1110-024033	7	K008030A
2A5-43-12351	K1110-039029	7	K009029
2A5-43-12353	K1110-024033	7	K008030A
2A5-43-12353	K1110-039029	7	K009029
2A5-43-12361	K1110-024033	9	K008030A
2A5-43-12361	K1110-039029	9	K009029
2A5-43-12363	K1110-024033	9	K008030A
2A5-43-12363	K1110-039029	9	K009029
2A5-43-12480	K1110-024033	14	K008030A
2A5-43-12480	K1110-039029	14	K009029
2A5-53-13130	K1110-024005	15	K008005
2A5-53-13130	K1110-039005	15	K009005
2A5-53-13140	K1110-024011	5	K008011
2A5-53-13140	K1110-039011	7	K009011
2A5-53-13540	K1110-024007	11	K008007
2A5-53-13540	K1110-039007	11	K009007
2A6-30-12150	R0110-001002A	5	R001002A
418-54-35450	K1110-024017	9	K008015A
418-54-35450	K1110-024020	7	K008018
418-54-35450	K1110-039015	9	K009015
418-54-35450	K1110-039018	7	K009018
419-03-21320	C0100-001007	29	C001007
421-03-22170	C0100-001007	30	C001007
421-06-23330	E0200-001005	6	E002005
421-06-23330	E0310-005001	1	E003001
421-06-23330	E0320-001001	1	E005001
421-06-23330	T1110-004005	16	T002005
421-06-23330	T1110-005005	16	T001005
421-07-31270	K1110-024022	4	K008020
421-07-31270	K1110-039020	4	K009020
421-33-11680	P1210-002008	2	P002008
421-33-11680	P1210-002012	2	P002012
427-15-15910	R0200-002001	9	R002001
427-15-15910	R0200-002002	9	R002002
427-15-15910	R0200-002011	9	R002011
437-40-26240	K1110-024042	8	K008039
437-40-26240	K1110-024047	8	K008044
437-40-26240	K1110-039038	8	K009038
437-40-26240	K1110-039043	8	K009043
569-06-61960	K1110-024021	17	K008019
569-06-61960	K1110-039019	17	K009019
581-04-22290	K1520-001001	4	K011001
581-04-22290	K1520-002001	4	K012001
600-184-1350	B0200-002001	6	B004001
600-184-1611	B0200-002001	5	B004001
600-184-1671	B0200-002001	2	B004001
600-184-2810	B0200-002001	5	B004001
600-185-6100	B0200-002001	2	B004001
600-185-6110	B0200-002001	3	B004001
600-311-3630	D0200-002002	3	D002002
600-311-3640	D0200-002002	4	D002002
600-311-3660	D0200-002002	5	D002002
600-311-3670	D0200-002002	6	D002002
600-311-3690	D0200-002002	8	D002002
600-311-3722	D0200-002002	7	D002002
600-319-3602	D0200-002002	2	D002002
600-319-3610	D0200-002002	2	D002002
600-411-1280	K1110-024037	9	K008034
600-411-1280	K1110-024043	9	K008040
600-411-1280	K1110-039033	9	K009033
600-411-1280	K1110-039039	9	K009039
600-468-1200	A4719-001001	1	F005001
600-635-7870	A5030-001001	1	B000041
600-815-2170	K1110-024034	21	K008031
600-815-2170	K1110-039030	21	K009030
600-861-6110	A6010-001001	1	B000051
600-861-6110	A6010-001002	1	B000052
600-861-6111	A6010-001001	1	B000051
600-861-6111	A6010-001004	1	B000054
600-863-8112	A6250-002001	1	B000071
6110-23-6490	C0100-001004	2	C001004
6128-81-7420	B0200-002002	1	B004002
6130-12-4581	AWR00-002001	10	F002001
6130-12-8610	AVC00-001001	2	A002001
6138-81-8660	A1570-001001	13	A013001
6151-11-5280	A1610-001001	16	B000021
6151-11-9970	B0200-002002	3	B004002
6151-51-5490	D0200-002003	30	D002003
6152-12-4420	C0100-001005	44	C001005
6152-62-5110	C0100-001004	1	C001004
6155-71-5810	AWR00-002001	11	F002001
6155-71-5820	AWR00-002001	12	F002001
6156-81-7201	B0200-002001	1	B004001
6156-81-7202	B0200-002001	1	B004001
6156-81-7210	B0200-002001	1	B004001
6206-11-5850	A1610-001001	5	B000021
6207-81-6980	AEH20-001001	3	F001001
6215-81-9510	A2019-001001	18	B011001
6215-81-9510	AFF10-001001	3	D007001
6215-81-9510	AFT00-001001	3	D005001
6215-81-9530	A2219-001001	11	B005001
6215-81-9710	A2019-001001	19	B011001
6215-81-9710	AFF10-001001	4	D007001
6215-81-9710	AFT00-001001	4	D005001
6215-81-9730	A2219-001001	12	B005001
6216-14-6820	ATK00-001001	1	E012001
6216-24-5730	ABR00-002001	6	B013001
6216-54-7320	AWR00-002001	34	F002001
6216-71-7210	ATP00-001001	13	A011001
6216-74-6180	AWR00-002001	32	F002001
6216-74-6190	AFT00-001001	26	D005001
6216-94-3450	A2019-001001	16	B011001
6217-71-5770	AFS20-001001	2	D008001
6221-81-6810	A6250-001001	1	B000061
6222-11-5940	A1610-001001	6	B000021
6261-81-1900	APH00-001001	18	F004001
6261-81-2901	APH00-001001	3	F004001
6261-81-2911	APH00-001001	3	F004001
6261-81-6901	APH00-001001	20	F004001
6271-81-9200	APH00-001001	1	F004001
6271-81-9220	APH00-001001	2	F004001
6271-81-9220	APH00-001001	4	F004001
6560-81-4530	A4019-001001	4	D001001
6643-11-4641	B0200-002002	4	B004002
6691-21-6360	A9999-003001	4	B002001
6731-11-8290	ALF00-001001	12	C003001
6731-51-6280	ALF00-001001	9	C003001
6731-51-6290	ALF00-001001	11	C003001
6731-51-8150	ATP00-001001	8	A011001
6731-61-2151	ALC00-001001	2	C004001
6731-61-3420	AFA10-001001	7	E002001
6731-61-3430	AFA10-001001	8	E002001
6731-61-4250	AFF10-001001	11	D007001
6731-71-6270	ABR00-002001	10	B013001
6731-74-5910	AFT00-001001	16	D005001
6731-74-5910	AFT00-001001	21	D005001

PARTS Nº	FIG. Nº	INDEX	PAGE
6731-74-5910	AWF00-001001	3	E011001
6732-11-1720	AAF00-002001	2	B010001
6732-11-1720	AOB10-001001	6	B012001
6732-11-1910	A1009-001001	11	A001001
6732-11-1910	A2019-001001	24	B011001
6732-11-1910	AHC00-001001	2	B014001
6732-11-1910	AWF00-002001	1	E013001
6732-11-1920	A1009-001001	12	A001001
6732-11-1920	A2019-001001	25	B011001
6732-11-1920	AHC00-001001	3	B014001
6732-11-1930	ALC00-001001	6	C004001
6732-11-4170	AFF10-001001	2	D007001
6732-11-5860	ATB30-001001	3	A008001
6732-21-1311	A2219-001001	3	B005001
6732-21-1810	A2019-001001	3	B011001
6732-21-1960	A1009-001001	12	A001001
6732-21-1960	A2019-001001	18	B011001
6732-21-1960	A4019-001001	3	D001001
6732-21-1960	AFF10-001001	3	D007001
6732-21-1960	AFT00-001001	3	D005001
6732-21-3120	AWR00-002001	16	F002001
6732-21-3190	AOB10-001001	2	B012001
6732-21-3220	AOB10-001001	3	B012001
6732-21-4150	A2219-001001	8	B005001
6732-21-4161	A2219-001001	9	B005001
6732-21-4171	A2219-001001	5	B005001
6732-21-4180	AFS00-001001	15	D009001
6732-21-4180	APH00-001001	10	F004001
6732-21-4180	AWR00-002001	2	F002001
6732-21-4220	A2219-001001	7	B005001
6732-21-5160	A2119-001001	19	B008001
6732-21-5160	AWO00-001001	2	E010001
6732-21-5170	A2119-001001	14	B008001
6732-21-6120	A2019-001001	12	B011001
6732-21-6610	ALC00-001001	5	C004001
6732-21-6630	AIM00-001001	3	A004001
6732-22-3110	AFF10-001001	10	D007001
6732-22-3110	AFT00-001001	2	D005001
6732-31-4120	AFW10-001001	1	B007001
6732-31-4130	AFW10-001001	2	B007001
6732-41-1260	A2419-001001	4	B001001
6732-41-4520	A1009-001001	19	A001001
6732-41-5430	ARL00-001001	5	A014001
6732-41-5430	ARL00-001001	8	A014001
6732-41-6210	ALG00-002001	2	B018001
6732-51-5130	ADF10-001001	4	B002001
6732-61-3110	APH00-001001	8	F004001
6732-61-3140	AFT00-001001	11	D005001
6732-61-3140	ALA10-001001	2	A016001
6732-61-3140	ASD00-001001	8	B009001
6732-61-3140	AWR00-002001	15	F002001
6732-61-3170	A4019-001001	6	D001001
6732-61-3260	AWP20-001001	2	E005001
6732-61-4120	AFP20-001001	8	D002001
6732-61-4120	APP50-001001	8	D004001
6732-61-6140	AVC00-001001	1	A002001
6732-61-6140	AWR00-002001	18	F002001
6732-71-3210	ABR00-002001	8	B013001
6732-71-3210	APH00-001001	6	F004001
6732-71-3210	AWR00-002001	29	F002001
6732-71-3220	APH00-001001	7	F004001
6732-71-3220	ATP00-001001	10	A011001
6732-71-3220	AWI10-001001	2	E009001
6732-71-3220	AWR00-002001	7	F002001
6732-71-5620	AFT00-001001	15	D005001
6732-71-6510	AFS00-001001	5	D009001
6732-71-6510	AFS00-001001	10	D009001
6732-71-6510	AFT00-001001	10	D005001
6732-71-6510	AFT00-001001	14	D005001
6732-71-6510	AFT00-001001	19	D005001
6732-71-6510	AFT00-001001	34	D005001
6732-71-6510	AWF00-001001	2	E011001
6732-81-8810	A1539-001001	2	A009001
6732-81-8820	A1539-001001	3	A009001
6732-81-8830	A1539-001001	4	A009001
6732-81-8860	ATP00-001001	4	A011001
6733-61-3150	ARL00-001001	13	A014001
6733-71-5680	A2119-001001	21	B008001
6733-71-5840	A2119-001001	7	B008001
6734-71-5170	ATP00-001001	6	A011001
6734-71-5270	AFP20-001001	5	D002001
6734-71-5520	APH00-001001	11	F004001
6734-71-5610	ASD00-001001	1	B009001
6735-21-1910	A2019-001001	20	B011001
6735-21-1910	AWR00-002001	30	F002001
6735-21-1920	A2019-001001	20	B011001
6735-21-1920	AWR00-002001	30	F002001
6735-21-1930	A2019-001001	21	B011001
6735-21-1930	AWR00-002001	31	F002001
6735-21-4160	AFT00-001001	6	D005001
6735-21-4160	AFT00-001001	33	D005001
6735-21-5530	A1009-001001	2	A001001
6735-21-5530	AOB10-001001	1	B012001
6735-21-7240	A2049-001001	11	B003001
6735-51-1120	ALP00-001001	2	C001001
6735-51-8180	ATP00-001001	11	A011001
6735-61-2120	APH00-001001	9	F004001
6735-61-3810	AEH20-001001	6	F001001
6735-71-3220	A2119-001001	10	B008001
6735-71-3220	AEH20-001001	5	F001001
6735-71-3220	AFA20-001001	1	E001001
6735-71-3220	ALF00-001001	8	C003001
6735-71-5190	ABR00-002001	3	B013001
6736-11-4460	A2019-001001	15	B011001
6736-21-3360	AOB10-001001	5	B012001
6736-21-5310	A2049-001001	9	B003001
6736-21-5310	ABR00-002001	11	B013001
6736-21-5310	AFF20-001001	4	D006001
6736-21-5310	ALG00-002001	3	B018001
6736-21-5320	A2119-001001	13	B008001
6736-21-6110	ATP00-001001	5	A011001
6736-39-1140	A8110-001001	5	Y001001
6736-39-1150	A8110-001001	5	Y001001
6736-39-1160	A8110-001001	6	Y001001
6736-81-6170	A1570-001001	4	A013001
6736-81-6170	A2119-001001	9	B008001
6736-81-6170	AFP20-001001	3	D002001
6736-81-6170	ASD00-001001	7	B009001
6736-81-6190	AFA30-001001	3	E004001
6736-81-8730	AIC20-001001	1	A006001
6737-51-8770	AFT00-001001	25	D005001
6737-51-8770	AFT00-001001	29	D005001
6737-51-8770	ATP00-001001	2	A011001
6738-11-4370	AIT00-001001	3	A012001
6738-11-4380	AIT00-001001	5	A012001
6738-11-4390	AIT00-001001	4	A012001
6738-21-5610	A2119-001001	14	B008001
6738-21-5620	A2119-001001	15	B008001
6738-21-5630	A2119-001001	16	B008001
6738-21-5640	A2119-001001	17	B008001
6738-22-4110	A2219-001001	4	B005001
6738-22-5110	ASD00-001001	5	B009001
6738-54-8110	AFI00-001001	2	D010001
6738-82-5810	ASD00-001001	4	B009001
6741-21-1130	A2019-001001	7	B011001
6741-21-1140	A2019-001001	6	B011001
6741-21-3320	ADF10-001001	3	B002001
6741-21-3330	ADF10-001001	5	B002001
6741-21-3530	A2049-001001	7	B003001
6741-21-3541	A2049-001001	6	B003001
6741-21-3810	A2049-001001	4	B003001
6741-21-3820	A2049-001001	3	B003001
6741-21-4110	A2219-001001	6	B005001
6741-31-4100	AFW00-001001	1	B006001
6741-31-4180	AFW00-001001	1	B006001
6741-39-1110	A8110-001001	2	Y001001
6741-39-1120	A8110-001001	3	Y001001
6741-39-1130	A8110-001001	4	Y001001
6741-39-1220	A8110-001001	1	Y001001
6741-51-5210	ALF00-001001	1	C003001

PARTS Nº	FIG. Nº	INDEX	PAGE
6741-51-5230	ALF00-001001	3	C003001
6741-61-1520	A5019-001001	2	E007001
6741-61-1610	AEC00-001001	1	E008001
6741-61-2120	AFP20-001001	1	D002001
6741-61-2120	ALF00-001001	10	C003001
6741-61-6110	ALC00-001001	15	C004001
6741-61-6130	AWI10-001001	3	E009001
6741-81-6510	AEH20-001001	7	F001001
6741-81-6520	AEH20-001001	1	F001001
6741-81-9220	ASD00-001001	2	B009001
6742-01-0310	A2119-001001	4	B008001
6742-01-0520	AAF00-002001	1	B010001
6742-01-0530	A2049-001001	10	B003001
6742-01-0540	A2049-001001	2	B003001
6742-01-0950	A2049-001001	5	B003001
6742-01-1080	ALC00-001001	13	C004001
6742-01-1360	A2019-001001	1	B011001
6742-01-1370	A2019-001001	2	B011001
6742-01-1380	A2019-001001	26	B011001
6742-01-1380	AHC00-001001	1	B014001
6742-01-1420	A2019-001001	4	B011001
6742-01-1460	A2019-001001	17	B011001
6742-01-1470	A2019-001001	13	B011001
6742-01-1480	A2019-001001	22	B011001
6742-01-1520	A2019-001001	11	B011001
6742-01-1890	ADA00-001001	2	B016001
6742-01-2441	ALC00-001001	14	C004001
6742-01-2491	ALC00-001001	3	C004001
6742-01-2500	ALC00-001001	4	C004001
6742-01-2630	A2119-001001	3	B008001
6742-01-2920	A1009-001001	1	A001001
6742-01-3320	A2049-001001	12	B003001
6742-01-3620	AXS00-001001	1	A010001
6742-01-3770	AWR00-002001	5	F002001
6742-01-3780	AFP20-001001	7	D002001
6742-01-4080	A2019-001001	23	B011001
6742-01-4220	ALC00-001001	9	C004001
6742-01-4340	A2359-001001	10	B017001
6742-01-4490	AWI10-001001	1	E009001
6742-01-4540	ALF00-001001	6	C003001
6742-01-4560	AEH20-001001	17	F001001
6742-01-5053	A2219-001001	2	B005001
6742-01-5117	ALC00-001001	10	C004001
6742-01-5123	AEH20-001001	15	F001001
6742-01-5159	A2019-001001	10	B011001
6742-01-5160	A2019-001001	5	B011001
6742-01-5195	A5019-001001	4	E007001
6742-01-5199	A2319-001001	7	B015001
6742-01-5199	A8110-001001	7	Y001001
6742-01-5202	ALC00-001001	7	C004001
6742-01-5233	A8110-001001	10	Y001001
6742-01-5240	A8110-001001	13	Y001001
6742-01-5287	A8110-001001	16	Y001001
6742-01-5288	A8110-001001	19	Y001001
6742-01-5289	ADA00-001001	1	B016001
6742-01-5308	A2119-001001	12	B008001
6742-01-5309	A2359-001001	3	B017001
6742-01-5503	A2219-001001	1	B005001
6742-01-5507	AFP20-001001	4	D002001
6742-02-1110	A2049-001001	5	B003001
6742-21-8500	A2319-001001	9	B015001
6743-11-1610	A1009-001001	20	A001001
6743-11-3230	A4219-001001	5	D003001
6743-11-5230	A1610-001001	2	B000021
6743-11-5750	A1610-001001	18	B000021
6743-21-5540	ALG00-002001	5	B018001
6743-21-5610	ALG00-002001	6	B018001
6743-22-5110	ALG00-002001	4	B018001
6743-31-3101	A2359-001001	7	B017001
6743-31-3121	A2359-001001	7	B017001
6743-31-3210	A2359-001001	11	B017001
6743-51-4430	ALC00-001001	11	C004001
6743-51-5110	ALF00-001001	5	C003001
6743-51-5521	A2119-001001	1	B008001
6743-51-5550	A2119-001001	2	B008001
6743-51-6121	A2119-001001	5	B008001
6743-51-6161	A2119-001001	6	B008001
6743-51-9930	ALF00-001001	2	C003001
6743-51-9940	ALF00-001001	4	C003001
6743-51-9950	A3119-001001	1	C002001
6743-51-9960	A3119-001001	2	C002001
6743-61-1530	A5019-001001	1	E007001
6743-61-2111	ALC00-001001	1	C004001
6743-61-2150	ALC00-001001	8	C004001
6743-61-2210	ALC00-001001	12	C004001
6743-61-3210	AFA10-001001	2	E002001
6743-61-3220	AFA10-001001	3	E002001
6743-61-3310	AFA10-001001	1	E002001
6743-61-3441	AEH20-001001	13	F001001
6743-61-3501	AFA10-001001	6	E002001
6743-61-3530	AFA10-001001	9	E002001
6743-61-3550	AFA10-001001	11	E002001
6743-61-3560	AFA10-001001	10	E002001
6743-61-3610	AFA10-001001	12	E002001
6743-61-3810	A5030-001001	1	E003001
6743-61-4110	AFA30-001001	4	E004001
6743-61-4120	AWP20-001001	1	E005001
6743-62-3110	AFA30-001001	5	E004001
6743-62-3710	AWP10-001001	1	E006001
6743-62-3720	AFA30-001001	1	E004001
6743-81-6310	A6250-001001	3	B000061
6743-81-8490	A1570-001001	1	B000011
6743-91-6110	APA00-001001	1	B004001
6744-11-1070	A1009-001001	6	A001001
6744-41-1010	A2419-001001	3	B001001
6744-41-3020	ARL00-001001	3	A014001
6744-41-4031	A1009-001001	17	A001001
6744-41-4050	A1009-001001	18	A001001
6744-41-4070	A1009-001001	14	A001001
6744-41-4080	A1009-001001	16	A001001
6744-41-4110	A1009-001001	5	A001001
6744-41-4120	A1009-001001	7	A001001
6744-41-5010	ARL00-001001	1	A014001
6744-41-5030	ARL00-001001	2	A014001
6744-71-1020	A4019-001001	1	D001001
6744-71-1040	A4019-001001	2	D001001
6744-71-1250	A4019-001001	5	D001001
6744-71-3050	AFT00-001001	24	D005001
6744-71-3050	AFT00-001001	28	D005001
6744-71-3060	AFT00-001001	24	D005001
6744-71-3060	AFT00-001001	28	D005001
6744-81-4010	APH00-001001	19	F004001
6745-11-1121	A1009-001001	1	A001001
6745-11-1131	A1009-001001	10	A001001
6745-11-1190	A1009-001001	1	A001001
6745-11-1811	A1009-001001	21	A001001
6745-11-1910	ADF10-001001	1	B002001
6745-11-3102	A4219-001001	1	D003001
6745-11-3110	A4219-001001	2	D003001
6745-11-3150	A4219-001001	3	D003001
6745-11-4110	AIM00-001001	1	A004001
6745-11-4120	AIM00-001001	2	A004001
6745-11-4140	AIC00-001001	2	A005001
6745-11-4150	AIC00-001001	3	A005001
6745-11-4161	AIC00-001001	4	A005001
6745-11-4180	AIC20-001001	2	A006001
6745-11-4190	AIC00-001001	1	A005001
6745-11-5110	ATB30-001001	1	A008001
6745-11-5120	ATB30-001001	6	A008001
6745-11-5170	ATB30-001001	4	A008001
6745-11-5310	A1570-001001	10	A013001
6745-11-5320	A1570-001001	11	A013001
6745-11-5590	ATB30-001001	2	A008001
6745-11-5710	A1610-001001	17	B000021
6745-11-5740	A9999-003001	5	B002001
6745-11-5810	ATB30-001001	2	A008001
6745-11-5810	ATB30-001001	2	A008001
6745-11-6120	A1610-001001	1	B000021
6745-11-6130	A1610-001001	8	B000021
6745-11-6140	A1610-001001	11	B000021

PARTS Nº	FIG. Nº	INDEX	PAGE
6745-11-6150	A1610-001001	13	B000021
6745-11-7112	ARL00-001001	12	A014001
6745-11-7810	ARL00-001001	14	A014001
6745-11-8100	AVC00-001001	6	A002001
6745-11-8110	AVC00-001001	11	A002001
6745-11-8120	AVC00-001001	10	A002001
6745-11-8150	AVC00-001001	9	A002001
6745-11-8160	AVC00-001001	3	A002001
6745-11-8170	AVC00-001001	4	A002001
6745-11-8180	AVC00-001001	7	A002001
6745-11-8190	AVC00-001001	6	A002001
6745-11-8220	AVC00-001001	8	A002001
6745-11-8250	ABR00-002001	5	B013001
6745-11-8260	A9999-003001A	7	B002002
6745-11-8270	A9999-003001A	8	B002002
6745-11-8810	AVC00-001001	8	A002001
6745-21-1190	A2019-001001	1	B011001
6745-21-1290	A2019-001001	12	B011001
6745-21-1311	ALA00-001001	1	A015001
6745-21-1330	ALA00-001001	2	A015001
6745-21-1611	A2019-001001	14	B011001
6745-21-3111	A2049-001001	1	B003001
6745-21-3210	A2049-001001	8	B003001
6745-21-4110	A2219-001001	10	B005001
6745-21-4110	ADF10-001001	2	B002001
6745-21-5210	A2119-001001	11	B008001
6745-21-5640	ALG00-002001	1	B018001
6745-21-7110	ABR00-002001	1	B013001
6745-21-7120	ABR00-002001	1	B013001
6745-21-7180	ABR00-002001	4	B013001
6745-21-7210	AOB10-001001	4	B012001
6745-31-1120	A2319-001001	1	B015001
6745-31-2010	A2359-001001	3	B017001
6745-31-2110	A2359-001001	1	B017001
6745-31-2140	A2359-001001	2	B017001
6745-41-1110	A2419-001001	1	B001001
6745-41-1130	A2419-001001	2	B001001
6745-41-2151	A2019-001001	8	B011001
6745-41-3100	ARL00-001001	11	A014001
6745-41-4150	A1009-001001	15	A001001
6745-41-4160	A1009-001001	13	A001001
6745-41-4220	A8110-001001	22	Y001001
6745-41-5100	ARL00-001001	2	A014001
6745-41-5110	ARL00-001001	10	A014001
6745-41-5200	ARL00-001001	7	A014001
6745-41-5400	ARL00-001001	4	A014001
6745-41-5430	ARL00-001001	6	A014001
6745-41-5430	ARL00-001001	9	A014001
6745-51-1110	ALP00-001001	1	C001001
6745-51-5220	ALF00-001001	7	C003001
6745-51-8110	ATP00-001001	7	A011001
6745-51-8120	ATP00-001001	9	A011001
6745-51-8130	ATP00-001001	1	A011001
6745-51-8140	ATP00-001001	12	A011001
6745-61-4120	AEH20-001001	14	F001001
6745-61-4130	AEH20-001001	11	F001001
6745-61-4230	AEH20-001001	12	F001001
6745-61-6120	ARP00-001001	1	A003001
6745-61-6130	AWO00-001001	1	E010001
6745-61-8110	AWF00-001001	1	E011001
6745-61-8120	AWF00-001001	6	E011001
6745-61-8130	AWF00-001001	7	E011001
6745-61-8140	AWF00-001001	8	E011001
6745-61-8150	AWF00-001001	9	E011001
6745-61-8160	ATP00-001001	2	A011001
6745-71-1130	A4019-001001	18	D001001
6745-71-1130	AFF10-001001	5	D007001
6745-71-1130	AFS00-001001	7	D009001
6745-71-1130	AFS00-001001	11	D009001
6745-71-1130	AFT00-001001	12	D005001
6745-71-1130	AFT00-001001	17	D005001
6745-71-1130	AFT00-001001	22	D005001
6745-71-1130	AFT00-001001	35	D005001
6745-71-1130	APH10-001001	1	F003001
6745-71-1130	AWF00-001001	4	E011001
6745-71-1170	A4019-001001	1	D001001
6745-71-1180	A4019-001001	12	D001001
6745-71-1210	AFP20-001001	6	D002001
6745-71-1220	A4019-001001	7	D001001
6745-71-1230	A4019-001001	8	D001001
6745-71-1240	A4019-001001	13	D001001
6745-71-1250	A4019-001001	14	D001001
6745-71-1260	A4019-001001	17	D001001
6745-71-1820	AFS00-001001	13	D009001
6745-71-1830	AFS00-001001	13	D009001
6745-71-1840	AFS00-001001	14	D009001
6745-71-1860	AFS00-001001	16	D009001
6745-71-3210	AFP20-001001	2	D002001
6745-71-4110	APP50-001001	1	D004001
6745-71-4120	APP50-001001	2	D004001
6745-71-4140	APP50-001001	3	D004001
6745-71-4150	APP50-001001	4	D004001
6745-71-4310	APP50-001001	5	D004001
6745-71-4320	APP50-001001	6	D004001
6745-71-4330	APP50-001001	7	D004001
6745-71-5110	AFF20-001001	1	D006001
6745-71-5120	AFF20-001001	2	D006001
6745-71-5160	AFF20-001001	6	D006001
6745-71-5160	APH10-001001	5	F003001
6745-71-5160	AWF00-001001	10	E011001
6745-71-5170	AFI00-001001	1	D010001
6745-71-5180	AFT00-001001	5	D005001
6745-71-5190	AFT00-001001	23	D005001
6745-71-5210	AFF20-001001	3	D006001
6745-71-5220	AFF20-001001	5	D006001
6745-71-5230	APH10-001001	3	F003001
6745-71-5240	APH10-001001	4	F003001
6745-71-5250	AFI00-001001	1	D010001
6745-71-5311	AFS00-001001	1	D009001
6745-71-5320	AFS00-001001	1	D009001
6745-71-5330	AFS00-001001	2	D009001
6745-71-5340	AFS00-001001	3	D009001
6745-71-5370	AFS00-001001	4	D009001
6745-71-5391	AFS00-001001	8	D009001
6745-71-5410	AFS00-001001	9	D009001
6745-71-5430	AFS00-001001	12	D009001
6745-71-5440	AFT00-001001	8	D005001
6745-71-5450	AFT00-001001	9	D005001
6745-71-5460	AFT00-001001	13	D005001
6745-71-5470	AFT00-001001	18	D005001
6745-71-5480	AFT00-001001	31	D005001
6745-71-5490	AFT00-001001	32	D005001
6745-71-5540	APP50-001001	10	D004001
6745-71-5550	APP50-001001	11	D004001
6745-71-5580	AFT00-001001	27	D005001
6745-71-5610	AFT00-001001	1	D005001
6745-71-5620	AFT00-001001	32	D005001
6745-71-5830	AWR00-002001	36	F002001
6745-71-5860	AFS00-001001	6	D009001
6745-71-6130	A4019-001001	19	D001001
6745-71-6130	AFF10-001001	6	D007001
6745-71-6130	AFT00-001001	30	D005001
6745-71-6130	APH10-001001	2	F003001
6745-71-6130	AWF00-001001	5	E011001
6745-71-6150	AFF10-001001	8	D007001
6745-71-6210	AFF10-001001	1	D007001
6745-71-6230	AFF10-001001	12	D007001
6745-71-7203	D0200-002002	1	D002002
6745-71-7211	D0200-002002	1	D002002
6745-71-9710	AFS20-001001	1	D008001
6745-72-6110	AFF10-001001	3	D007001
6745-81-4111	AAH00-001001	1	A007001
6745-81-4120	AAH00-001001	2	A007001
6745-81-4120	AIC20-001001	3	A006001
6745-81-8110	A1539-001001	1	A009001
6745-81-8120	A1539-001001	1	A009001
6745-81-8410	A1570-001001	1	A013001
6745-81-8420	A1570-001001	2	A013001
6745-81-8430	A1570-001001	3	A013001
6745-81-8440	A1570-001001	5	A013001

PARTS Nº	FIG. Nº	INDEX	PAGE
6745-81-8451	A1570-001001	9	A013001
6745-81-8464	A1610-001001	24	B000021
6745-81-9240	AWR00-002001	1	F002001
6745-81-9250	AWR00-002001	4	F002001
6745-81-9380	APP50-001001	13	D004001
6745-81-9390	AWR00-002001	3	F002001
6745-81-9430	AWR00-002001	14	F002001
6745-81-9440	APH00-001001	5	F004001
6745-81-9511	APH00-001001	17	F004001
6745-81-9560	APH00-001001	12	F004001
6745-81-9580	AWR00-002001	28	F002001
6745-81-9710	AWR00-002001	6	F002001
6745-81-9720	AWR00-002001	20	F002001
6745-81-9730	AWR00-002001	21	F002001
6745-81-9740	AWR00-002001	22	F002001
6745-81-9750	AWR00-002001	23	F002001
6745-81-9770	AWR00-002001	25	F002001
6745-81-9780	AWR00-002001	26	F002001
6745-81-9790	AWR00-002001	27	F002001
6745-81-9810	AWR00-002001	24	F002001
6754-11-1160	A1009-001001	8	A001001
6754-11-3120	A4219-001001	4	D003001
6754-11-4130	ALA10-001001	1	A016001
6754-11-5150	ATB30-001001	5	A008001
6754-11-8140	AVC00-001001	7	A002001
6754-61-4111	AFA30-001001	2	E004001
6754-61-4111	AWP20-001001	1	E005001
6754-71-1991	APP50-001001	9	D004001
6754-71-5430	AFT00-001001	20	D005001
6754-71-5540	APP50-001001	12	D004001
6754-71-6330	AFF10-001001	7	D007001
6754-71-9710	AFS20-001001	3	D008001
6754-79-6140	AFF10-001001	9	D007001
6754-81-2701	APH00-001001	21	F004001
6754-81-9110	APH00-001001	14	F004001
6754-81-9130	APH00-001001	15	F004001
6754-81-9170	APH00-001001	13	F004001
6754-81-9180	APH00-001001	16	F004001
6754-81-9390	AWR00-002001	33	F002001
6754-81-9410	APH00-001001	1	F004001
6991-11-5990	A9999-003001A	5	B002002
700-22-11410	H0120-004009	2	H003009
700-22-11410	H0120-004011	8	H003011
700-22-11410	H0120-004109	2	H004009
700-22-11410	H0120-004111	8	H004011
700-22-11410	H0120-005009	2	H002009
700-22-11410	H0120-005011	8	H002011
700-22-11410	K1110-024027	18	K008025
700-22-11410	K1110-024030	19	K008028
700-22-11410	K1110-039024	18	K009024
700-80-64220	H0120-004009	3	H003009
700-80-64220	H0120-004011	7	H003011
700-80-64220	H0120-004109	3	H004009
700-80-64220	H0120-004111	7	H004011
700-80-64220	H0120-005009	3	H002009
700-80-64220	H0120-005011	7	H002011
700-93-11320	H0120-004005	11	H003005
700-93-11320	H0120-004005	15	H003005
700-93-11320	H0120-004005	19	H003005
700-93-11320	H0120-004005	23	H003005
700-93-11320	H0120-004005	27	H003005
700-93-11320	H0120-004005	3	H003005
700-93-11320	H0120-004005	7	H003005
700-93-11320	H0120-004005A	11	H003005A
700-93-11320	H0120-004005A	15	H003005A
700-93-11320	H0120-004005A	19	H003005A
700-93-11320	H0120-004005A	23	H003005A
700-93-11320	H0120-004005A	27	H003005A
700-93-11320	H0120-004005A	3	H003005A
700-93-11320	H0120-004005A	31	H003005A
700-93-11320	H0120-004005A	7	H003005A
700-93-11320	H0120-004016	3	H003016
700-93-11320	H0120-004016	7	H003016
700-93-11320	H0120-004023	2	H003023
700-93-11320	H0120-004105	11	H004005
700-93-11320	H0120-004105	15	H004005
700-93-11320	H0120-004105	19	H004005
700-93-11320	H0120-004105	23	H004005
700-93-11320	H0120-004105	27	H004005
700-93-11320	H0120-004105	3	H004005
700-93-11320	H0120-004105	7	H004005
700-93-11320	H0120-004116	3	H004016
700-93-11320	H0120-004116	7	H004016
700-93-11320	H0120-005005	11	H002005
700-93-11320	H0120-005005	15	H002005
700-93-11320	H0120-005005	19	H002005
700-93-11320	H0120-005005	23	H002005
700-93-11320	H0120-005005	27	H002005
700-93-11320	H0120-005005	3	H002005
700-93-11320	H0120-005005	7	H002005
700-93-11320	H0120-005005A	11	H002005A
700-93-11320	H0120-005005A	15	H002005A
700-93-11320	H0120-005005A	19	H002005A
700-93-11320	H0120-005005A	23	H002005A
700-93-11320	H0120-005005A	27	H002005A
700-93-11320	H0120-005005A	3	H002005A
700-93-11320	H0120-005005A	31	H002005A
700-93-11320	H0120-005005A	7	H002005A
700-93-11320	H0120-005016	3	H002016
700-93-11320	H0120-005016	7	H002016
700-93-11320	H0120-005023	2	H002023
700-93-11320	N1210-001001	10	N002001
700-93-11330	N1210-001001	11	N002001
701-20-61230	H0120-004025	22	H003025
701-20-61230	H0120-004026	13	H003026
701-20-61230	H0120-004123	22	H004023
701-20-61230	H0120-004124	7	H004024
701-20-61230	H0120-005025	22	H002025
701-20-61230	H0120-005026	13	H002026
702-15-71130	N1210-001003	8	N002003
702-15-71140	N1210-001003	9	N002003
702-15-78000	N1210-001003	5	N002003
702-15-80000	N1210-001003	5	N002003
702-16-03910	K1110-024038	1	K008035
702-16-03910	K1110-024044	1	K008041
702-16-03910	K1110-039034	1	K009034
702-16-03910	K1110-039040	1	K009040
702-16-04250	K1110-024026	1	K008024
702-16-04250	K1110-024027	1	K008025
702-16-04250	K1110-039024	1	K009024
702-16-04250	K1110-039024	1	K009024
702-16-04290	K1110-024030	1	K008028
702-16-51140	K1110-024026	3	K008024
702-16-51140	K1110-024030	3	K008028
702-16-51140	K1110-024038	5	K008035
702-16-51140	K1110-024044	5	K008041
702-16-51140	K1110-039024	3	K009024
702-16-51140	K1110-039034	5	K009034
702-16-51140	K1110-039040	5	K009040
702-16-51240	K1110-039024	17	K009024
702-16-51240	K1110-024044	17	K008041
702-16-51240	K1110-039034	17	K009034
702-16-51240	K1110-039040	17	K009040
702-16-51270	K1110-024030	8	K008028
702-16-53140	K1110-024026	5	K008024
702-16-53140	K1110-024038	7	K008035
702-16-53140	K1110-024044	7	K008041
702-16-53140	K1110-039024	5	K009024
702-16-53140	K1110-039034	7	K009034
702-16-53140	K1110-039040	7	K009040
702-16-53170	K1110-024026	7	K008024
702-16-53170	K1110-024030	7	K008028
702-16-53170	K1110-024038	10	K008035
702-16-53170	K1110-024044	10	K008041
702-16-53170	K1110-039024	7	K009024
702-16-53170	K1110-039034	10	K009034
702-16-53170	K1110-039040	10	K009040
702-16-53420	K1110-024026	6	K008024
702-16-53420	K1110-024038	8	K008035
702-16-53420	K1110-024044	8	K008041
702-16-53420	K1110-039034	8	K009034
702-16-53420	K1110-039040	8	K009040
702-16-53590	K1110-024038	9	K008035
702-16-53590	K1110-024044	9	K008041
702-16-53590	K1110-039034	9	K009034
702-16-53590	K1110-039040	9	K009040
702-16-53920	H0120-004003	17	H003003
702-16-53920	H0120-004004	11	H003004
702-16-53920	H0120-004013	21	H003013
702-16-53920	H0120-004015	30	H003015
702-16-53920	H0120-004103	17	H004003
702-16-53920	H0120-004104	11	H004004
702-16-53920	H0120-004113	21	H004013
702-16-53920	H0120-004115	30	H004015
702-16-53920	H0120-005003	17	H002003
702-16-53920	H0120-005004	11	H002004
702-16-53920	H0120-005013	21	H002013
702-16-53920	H0120-005015	30	H002015
702-16-54331	K1110-024026	17	K008024
702-16-54331	K1110-039024	17	K009024
702-16-54341	K1110-024026	17	K008024
702-16-54341	K1110-039024	17	K009024
702-16-54351	K1110-024026	17	K008024
702-16-54351	K1110-039024	17	K009024
702-16-54420	K1110-024026	6	K008024
702-16-54420	K1110-039024	6	K009024
702-16-54430	K1110-024026	19	K008024
702-16-54430	K1110-039024	19	K009024
702-16-54490	H0120-004120	23	H004020
702-16-54490	H0120-005019	23	H002019
702-16-54550	K1110-024030	4	K008028
702-16-54560	K1110-024030	6	K008028
702-16-54571	K1110-024030	5	K008028
702-16-54580	K1110-024030	9	K008028
702-16-54590	K1110-024030	10	K008028
702-16-54641	K1110-024030	14	K008028
702-16-54650	K1110-024030	17	K008028
702-16-54660	K1110-024030	16	K008028
702-16-54670	K1110-024030	3	K008028
702-16-55260	A9999-002011	9	B001011
702-16-55260	A9999-002023	9	B001023
702-16-55260	A9999-003023	9	B001043
702-16-55940	K1110-024027	6	K008025
702-16-55940	K1110-039024	6	K009024
702-16-55950	K1110-024027	7	K008025
702-16-55950	K1110-039024	7	K009024
702-16-56380	K1110-024026	17	K008024
702-16-56380	K1110-039024	17	K009024
702-16-56390	K1110-024026	17	K008024
702-16-56390	K1110-039024	17	K009024
702-16-57440	K1110-024027	11	K008025
702-16-57440	K1110-039024	11	K009024
702-16-57450	K1110-024027	12	K008025
702-16-57450	K1110-039024	12	K009024
702-16-71131	K1110-024038	14	K008035
702-16-71131	K1110-024044	14	K008041
702-16-71131	K1110-039034	14	K009034
702-16-71131	K1110-039040	14	K009040
702-16-71141	K1110-024038	15	K008035
702-16-71141	K1110-024044	15	K008041
702-16-71141	K1110-039034	15	K009034
702-16-71141	K1110-039040	15	K009040
702-16-71150	K1110-024026	8	K008024
702-16-71150	K1110-039024	8	K009024
702-16-71160	K1110-024026	9	K008024
702-16-71160	K1110-024038	12	K008035
702-16-71160	K1110-024044	12	K008041
702-16-71160	K1110-039024	9	K009024
702-16-71160	K1110-039034	12	K009034
702-16-71160	K1110-039040	12	K009040
702-16-71210	K1110-024038	11	K008035
702-16-71210	K1110-024044	11	K008041
702-16-71210	K1110-039034	11	K009034
702-16-71210	K1110-039040	11	K009040
702-16-71280	K1110-024038	13	K008035
702-16-71280	K1110-024044	13	K008041
702-16-71280	K1110-039034	13	K009034
702-16-71280	K1110-039040	13	K009040
702-16-71361	K1110-024038	18	K008035
702-16-71361	K1110-024044	18	K008041
702-16-71361	K1110-039034	18	K009034
702-16-71361	K1110-039040	18	K009040
702-16-71441	K1110-024038	19	K008035
702-16-71441	K1110-024044	19	K008041
702-16-71441	K1110-039034	19	K009034
702-16-71441	K1110-039040	19	K009040
702-16-73610	K1110-024026	21	K008024
702-16-73610	K1110-039024	21	K009024
702-16-73630	K1110-024026	10	K008024
702-16-73630	K1110-039024	10	K009024
702-16-73650	K1110-024026	23	K008024
702-16-73650	K1110-039024	23	K009024
702-21-01920	H1270-003002	1	H014002
702-21-01920	H1270-003006	15	H014006
702-21-07610	K1110-024030	18	K008028
702-21-11930	H1270-003002	3	H014002
702-21-11940	H1270-003002	4	H014002
702-21-39450	K1110-024030	20	K008028
702-21-53120	H0120-004014	6	H003014
702-21-53120	H0120-004114	6	H004014
702-21-53120	H0120-005014	6	H002014
702-21-53140	H0120-004014	6	H003014
702-21-53140	H0120-004114	6	H004014
702-21-53140	H0120-005014	6	H002014
702-21-54910	A9999-002011	3	B001011
702-21-54910	A9999-002011	8	B001011
702-21-54910	A9999-002023	3	B001023
702-21-54910	A9999-002023	8	B001023
702-21-54910	A9999-003023	3	B001043
702-21-54910	A9999-003023	8	B001043
702-21-55420	H0120-004014	3	H003014
702-21-55420	H0120-004114	3	H004014
702-21-55420	H0120-005014	3	H002014
702-21-55440	H0120-004014	5	H003014
702-21-55440	H0120-004114	5	H004014
702-21-55440	H0120-005014	5	H002014
702-21-55460	H0120-004014	2	H003014
702-21-55460	H0120-004114	2	H004014
702-21-55460	H0120-005014	2	H002014
702-21-55520	H0120-004014	4	H003014
702-21-55520	H0120-004114	4	H004014
702-21-55520	H0120-005014	4	H002014
702-21-55620	H0120-004014	11	H003014
702-21-55620	H0120-004014	24	H003014
702-21-55620	H0120-004113	26	H004013
702-21-55620	H0120-004114	12	H004014
702-21-55620	H0120-005014	11	H002014
702-21-55620	H0120-005014	24	H002014
702-21-55620	P1210-002005	10	P002005
702-21-55620	P1210-002009	10	P002009
702-21-55710	H0120-004014	13	H003014
702-21-55710	H0120-004113	29	H004013
702-21-55710	H0120-005014	13	H002014
702-21-55720	H0120-004014	14	H003014
702-21-55720	H0120-004113	30	H004013
702-21-55720	H0120-005014	14	H002014
702-21-55760	H0120-004007	10	H003007
702-21-55760	H0120-005007	10	H002007
702-21-55920	A9999-002011	11	B001011
702-21-55920	A9999-002023	11	B001023
702-21-55920	A9999-003023	11	B001043
702-21-55930	A9999-002011	12	B001011
702-21-55930	A9999-002023	12	B001023
702-21-55930	A9999-003023	12	B001043
702-21-55951	A9999-002011	14	B001011
702-21-55951	A9999-002023	14	B001023

PARTS Nº	FIG. Nº	INDEX	PAGE
702-21-55951	A9999-003023	14	B001043
702-21-56600	A9999-002011	11	B001011
702-21-56600	A9999-002023	11	B001023
702-21-56600	A9999-003023	11	B001043
702-21-56610	A9999-002011	13	B001011
702-21-56610	A9999-002023	13	B001023
702-21-56610	A9999-003023	13	B001043
702-21-57400	A9999-002023	1	B001023
702-21-57400	A9999-003023	1	B001043
702-21-57500	A9999-002011	6	B001011
702-21-57500	A9999-002023	6	B001023
702-21-57500	A9999-003023	6	B001043
702-21-57600	A9999-002011	1	B001011
702-75-04600	P1210-002003	1	P002003
702-75-04601	P1210-002007	1	P002007
702-75-04601	P1210-002011	1	P002011
702-75-11520	P1210-002003	6	P002003
702-75-11520	P1210-002007	6	P002007
702-75-11520	P1210-002011	6	P002011
702-75-11530	P1210-002003	7	P002003
702-75-11830	P1210-002007	3	P002007
702-75-11830	P1210-002011	3	P002011
702-75-11840	P1210-002007	5	P002007
702-75-11840	P1210-002011	5	P002011
702-75-11850	P1210-002007	7	P002007
702-75-11850	P1210-002011	7	P002011
702-77-02120	N1210-001003	1	N002003
702-77-02170	N1210-001003	1	N002003
703-08-33651	N1310-001001	1	N004001
703-08-33652	N1310-001001A	1	N004002
703-08-91211	N1310-001001	1	N004001
703-08-91212	N1310-001001A	1	N004002
703-08-92211	N1310-001001	5	N004001
703-08-92211	N1310-001001A	3	N004002
703-08-93170	N1310-001001	10	N004001
703-08-93170	N1310-001001A	7	N004002
703-08-93771	N1310-001001	4	N004001
703-08-93771	N1310-001001A	11	N004002
703-08-94510	N1310-001001	8	N004001
703-08-94510	N1310-001001A	6	N004002
703-08-95620	N1310-001001	2	N004001
703-08-95620	N1310-001001A	2	N004002
703-08-95770	N1310-001001	7	N004001
703-08-95770	N1310-001001A	12	N004002
703-08-96120	N1310-001001A	14	N004002
703-13-98930	N1310-001001	6	N004001
703-13-98930	N1310-001001A	4	N004002
706-73-71450	H0120-004015	19	H003015
706-73-71450	H0120-004115	19	H004015
706-73-71450	H0120-005015	19	H002015
706-73-72420	P1210-002001	13	P002001
706-73-72420	P1210-002005	13	P002005
706-73-72420	P1210-002009	13	P002009
706-73-72440	P1210-002001	14	P002001
706-73-72440	P1210-002005	14	P002005
706-73-72440	P1210-002009	14	P002009
706-75-42820	P1210-002001	9	P002001
706-75-42820	P1210-002005	9	P002005
706-75-42820	P1210-002009	9	P002009
706-75-42830	N1210-001001	4	N002001
706-76-71190	H0330-001001	16	H009001
706-76-71190	H0330-002001	20	H010001
706-76-71390	H1270-003007	8	H014007
706-77-05010	N1210-001002	7	N002002
706-77-42041	N1210-001002	5	N002002
706-77-42051	N1210-001002	4	N002002
706-77-42130	N1210-001002	16	N002002
706-77-42440	N1210-001002	7	N002002
706-77-42450	N1210-001002	7	N002002
706-77-42460	N1210-001002	7	N002002
706-77-42890	N1210-001002	6	N002002
706-77-43880	N1210-001002	2	N002002
706-77-43890	N1210-001002	2	N002002
706-77-72130	N1210-001001	12	N002001
706-77-72140	N1210-001001	13	N002001
706-77-72150	N1210-001001	14	N002001
706-77-72280	N1210-001001	5	N002001
706-78-71160	P1210-002001	18	P002001
706-78-71160	P1210-002005	18	P002005
706-78-71160	P1210-002009	18	P002009
706-7K-01040	N1210-001001	1	N002001
706-7K-01040	N1210-001002	1	N002002
706-7K-01040	N1210-001003	1	N002003
706-7K-01170	N1210-001001	1	N002001
706-7K-01170	N1210-001002	1	N002002
706-7K-01170	N1210-001003	1	N002003
706-7K-03030	N1210-001001	1	N002001
706-7K-03030	N1210-001002	1	N002002
706-7K-03140	N1210-001001	1	N002001
706-7K-03140	N1210-001002	1	N002002
706-7K-05010	N1210-001002	18	N002002
706-7K-40010	N1210-001001	3	N002001
706-7K-40020	N1210-001001	16	N002001
706-7K-40040	N1210-001001	16	N002001
706-7K-40050	N1210-001003	7	N002003
706-7K-41120	N1210-001002	15	N002002
706-7K-41140	N1210-001002	17	N002002
706-7K-41150	N1210-001001	1	N002001
706-7K-41160	N1210-001002	20	N002002
706-7K-41210	N1210-001002	12	N002002
706-7K-41610	N1210-001002	1	N002002
706-7K-41650	N1210-001002	9	N002002
706-7K-41710	N1210-001002	13	N002002
706-7K-41810	N1210-001002	3	N002002
706-7K-41920	N1210-001002	10	N002002
706-7K-71110	N1210-001001	2	N002001
706-7K-91111	N1210-001002	23	N002002
706-7K-91340	N1210-001002	21	N002002
706-7K-91350	N1210-001002	22	N002002
706-7K-91360	N1210-001002	26	N002002
706-86-90290	N1210-001002	25	N002002
706-8E-14110	P1210-002001	23	P002001
706-8E-14110	P1210-002005	23	P002005
706-8E-14110	P1210-002009	23	P002009
706-8J-41420	N1210-001002	9	N002002
707-01-0C581	T1120-003001	1	T003001
707-01-0C581	T1120-003002	1	T003002
707-01-0C601	T1140-003001	1	T004001
707-01-0C601	T1140-004001	1	T004011
707-01-0C612	T1200-007002	1	T008002
707-01-0C612	T1200-008002	1	T007002
707-01-0C622	T1200-010002	1	T005002
707-01-0C622	T1200-011002	1	T006002
707-01-XX021	T1140-003001	1	T004001
707-01-XX021	T1140-004001	1	T004011
707-01-XX032	T1200-008002	1	T007002
707-01-XX032	T1200-010002	1	T005002
707-01-XX032	T1200-011002	1	T006002
707-01-XY991	T1120-003001	1	T003001
707-01-XY991	T1120-003002	1	T003002
707-13-14580	T1120-003001	1	T003001
707-13-14580	T1120-003002	1	T003002
707-13-14591	T1200-007002	1	T008002
707-13-14591	T1200-008002	1	T007002
707-13-15261	T1200-010002	1	T005002
707-13-15261	T1200-011002	1	T006002
707-13-16710	T1140-003001	1	T004001
707-13-16710	T1140-004001	1	T004011
707-27-14690	T1200-007002	9	T008002
707-27-14690	T1200-008002	9	T007002
707-27-14890	T1120-003001	13	T003001
707-27-14890	T1120-003002	13	T003002
707-27-15650	T1200-010002	9	T005002
707-27-15650	T1200-011002	9	T006002
707-27-16571	T1140-003001	15	T004001
707-27-16571	T1140-004001	15	T004011
707-35-91420	KIT	K05	Y010001
707-35-91420	KIT	K11	Y010001
707-35-91420	T1120-003001	10	T003001

PARTS Nº	FIG. Nº	INDEX	PAGE
707-35-91420	T1120-003002	10	T003002
707-35-91420	T1120-003002	19	T003002
707-35-91420	T1200-007002	16	T008002
707-35-91420	T1200-008002	16	T007002
707-35-91640	KIT	K09	Y010001
707-35-91640	T1140-003001	21	T004001
707-35-91640	T1140-003001	8	T004001
707-35-91640	T1140-004001	22	T004011
707-35-91640	T1140-004001	8	T004011
707-35-91660	KIT	K12	Y010001
707-35-91660	T1200-010002	16	T005002
707-35-91660	T1200-011002	16	T006002
707-36-14650	T1120-003001	23	T003001
707-36-14650	T1120-003002	23	T003002
707-36-14650	T1200-007002	20	T008002
707-36-14650	T1200-008002	20	T007002
707-36-15260	T1200-010002	20	T005002
707-36-15260	T1200-011002	20	T006002
707-36-16580	T1140-003001	25	T004001
707-36-16580	T1140-004001	26	T004011
707-39-14110	KIT	K05	Y010001
707-39-14110	KIT	K11	Y010001
707-39-14110	T1120-003001	26	T003001
707-39-14110	T1120-003002	26	T003002
707-39-14110	T1200-007002	23	T008002
707-39-14110	T1200-008002	23	T007002
707-39-15110	KIT	K12	Y010001
707-39-15110	T1200-010002	23	T005002
707-39-15110	T1200-011002	23	T006002
707-39-16120	KIT	K09	Y010001
707-39-16120	T1140-003001	28	T004001
707-39-16120	T1140-004001	28	T004011
707-41-11840	T1120-003001	22	T003001
707-41-11840	T1120-003002	22	T003002
707-41-11840	T1200-007002	19	T008002
707-41-11840	T1200-008002	19	T007002
707-44-14180	KIT	K05	Y010001
707-44-14180	KIT	K11	Y010001
707-44-14180	T1120-003001	25	T003001
707-44-14180	T1120-003002	25	T003002
707-44-14180	T1200-007002	22	T008002
707-44-14180	T1200-008002	22	T007002
707-44-14910	T1120-003001	27	T003001
707-44-14910	T1120-003002	27	T003002
707-44-14910	T1200-007002	24	T008002
707-44-14910	T1200-008002	24	T007002
707-44-15180	KIT	K12	Y010001
707-44-15180	T1200-010002	22	T005002
707-44-15180	T1200-011002	22	T006002
707-44-15911	T1200-010002	24	T005002
707-44-15911	T1200-011002	24	T006002
707-44-16180	KIT	K09	Y010001
707-44-16180	T1140-003001	27	T004001
707-44-16180	T1140-004001	27	T004011
707-44-16910	T1140-003001	29	T004001
707-44-16910	T1140-004001	29	T004011
707-51-10030	KIT	K05	Y010001
707-51-10030	KIT	K11	Y010001
707-51-10030	T1120-003001	17	T003001
707-51-10030	T1120-003002	17	T003002
707-51-10030	T1200-007002	14	T008002
707-51-10030	T1200-008002	14	T007002
707-51-10640	KIT	K05	Y010001
707-51-10640	KIT	K11	Y010001
707-51-10640	T1120-003001	18	T003001
707-51-10640	T1120-003002	18	T003002
707-51-10640	T1200-007002	15	T008002
707-51-10640	T1200-008002	15	T007002
707-51-11030	KIT	K09	Y010001
707-51-11030	KIT	K12	Y010001
707-51-11030	T1140-003001	19	T004001
707-51-11030	T1140-004001	18	T004011
707-51-11030	T1200-010002	14	T005002
707-51-11030	T1200-011002	14	T006002
707-51-11640	KIT	K09	Y010001
707-51-11640	KIT	K12	Y010001
707-51-11640	T1140-003001	20	T004001
707-51-11640	T1140-004001	19	T004011
707-51-11640	T1200-010002	15	T005002
707-51-11640	T1200-011002	15	T006002
707-52-90780	T1120-003001	16	T003001
707-52-90780	T1120-003002	16	T003002
707-52-90780	T1200-007002	12	T008002
707-52-90780	T1200-008002	12	T007002
707-52-90850	T1140-003001	18	T004001
707-52-90850	T1140-004001	20	T004011
707-52-90850	T1200-010002	12	T005002
707-52-90850	T1200-011002	12	T006002
707-56-11740	T1140-004001	17	T004011
707-58-10720	T1120-003001	6	T003001
707-58-10720	T1120-003002	6	T003002
707-58-10730	T1200-007002	5	T008002
707-58-10730	T1200-008002	5	T007002
707-58-11360	T1140-003001	4	T004001
707-58-11360	T1140-004001	4	T004011
707-58-11370	T1200-010002	5	T005002
707-58-11370	T1200-011002	5	T006002
707-71-32800	T1140-003001	7	T004001
707-71-32800	T1140-004001	7	T004011
707-71-34800	T1120-003001	9	T003001
707-71-34800	T1120-003002	9	T003002
707-71-61090	T1120-003001	12	T003001
707-71-61090	T1120-003002	12	T003002
707-71-61130	T1140-003001	10	T004001
707-71-61130	T1140-004001	10	T004011
707-71-70290	T1140-003001	11	T004001
707-71-70290	T1140-004001	11	T004011
707-71-91270	T1140-003001	13	T004001
707-71-91270	T1140-004001	13	T004011
707-75-10160	T1120-003001	30	T003001
707-75-10160	T1120-003002	30	T003002
707-75-10160	T1200-007002	13	T008002
707-75-10160	T1200-008002	13	T007002
707-75-11040	T1140-003001	36	T004001
707-75-11040	T1140-004001	25	T004011
707-75-11040	T1200-010002	13	T005002
707-75-11040	T1200-011002	13	T006002
707-76-10130	T1120-003001	7	T003001
707-76-10130	T1120-003002	7	T003002
707-76-10130	T1140-003001	2	T004001
707-76-10130	T1140-003001	5	T004001
707-76-10130	T1140-004001	2	T004011
707-76-10130	T1140-004001	5	T004011
707-76-90130	T1200-007002	2	T008002
707-76-90130	T1200-008002	2	T007002
707-76-90130	T1200-010002	2	T005002
707-76-90130	T1200-011002	2	T006002
707-76-90390	T1120-003001	2	T003001
707-76-90390	T1120-003002	2	T003002
707-83-13010	T1140-003001	32	T004001
707-83-13010	T1140-004001	33	T004011
707-86-11580	T1120-003001	31	T003001
707-86-11590	T1120-003002	31	T003002
707-86-11600	T1140-003001	37	T004001
707-86-11600	T1140-004001	37	T004011
707-86-11610	T1140-003001	38	T004001
707-86-11610	T1140-004001	38	T004011
707-86-11621	T1200-007002	27	T008002
707-86-11621	T1200-008002	27	T007002
707-86-11631	T1200-010002	27	T005002
707-86-11631	T1200-011002	27	T006002
707-87-14070	T1140-003001	34	T004001
707-87-14071	T1140-004001	35	T004011
707-88-10150	T1140-004001	48	T004011
707-88-10150	T1200-007002	36	T008002
707-88-10150	T1200-008002	36	T007002
707-88-10150	T1200-010002	36	T005002
707-88-10150	T1200-011002	36	T006002
707-88-21370	T1120-003001	37	T003001
707-88-21370	T1120-003002	37	T003002

PARTS Nº	FIG. Nº	INDEX	PAGE
707-88-21380	T1140-003001	45	T004001
707-88-21390	T1140-003001	47	T004001
707-88-21410	T1200-007002	33	T008002
707-88-21410	T1200-008002	33	T007002
707-88-21420	T1200-010002	33	T005002
707-88-21420	T1200-011002	33	T006002
707-88-21850	T1140-004001	45	T004011
707-88-22690	T1200-010002	32	T005002
707-88-22690	T1200-011002	32	T006002
707-88-22740	T1140-003001	44	T004001
707-88-33040	T1120-003001	45	T003001
707-88-33040	T1120-003002	45	T003002
707-88-33040	T1140-003001	53	T004001
707-88-33040	T1140-004001	53	T004011
707-88-33040	T1200-007002	39	T008002
707-88-33040	T1200-008002	39	T007002
707-88-33040	T1200-010002	39	T005002
707-88-33040	T1200-011002	39	T006002
707-88-51190	T1140-004001	51	T004011
707-88-51200	T1140-004001	44	T004011
707-88-75310	T1140-003001	24	T004001
707-88-75310	T1140-004001	24	T004011
707-88-75310	T1200-010002	19	T005002
707-88-75310	T1200-011002	19	T006002
707-99-58080	KIT	K05	Y010001
707-99-58090	KIT	K11	Y010001
707-99-59610	KIT	K12	Y010001
707-99-72300	KIT	K09	Y010001
708-15-19810	H0120-004020	23	H003020
708-15-19810	H0120-005020	23	H002020
708-18-13230	A9999-002003	10	B001003
708-18-13230	A9999-002007	7	B001007
708-18-13230	A9999-002014	10	B001014
708-18-13230	A9999-002018	7	B001018
708-18-13230	A9999-003014	10	B001034
708-18-13230	A9999-003018	7	B001038
708-18-13230	N1210-001002	14	N002002
708-18-13230	P1210-002002	10	P002002
708-18-13230	P1210-002006	10	P002006
708-18-13230	P1210-002010	10	P002010
708-1F-12270	A9999-002003	4	B001003
708-1F-12270	A9999-002007	4	B001007
708-1F-12270	A9999-002014	4	B001014
708-1F-12270	A9999-002018	4	B001018
708-1F-12270	A9999-003014	4	B001034
708-1F-12270	A9999-003018	4	B001038
708-1F-12281	P1210-002002	5	P002002
708-1F-12281	P1210-002006	5	P002006
708-1F-12281	P1210-002010	5	P002010
708-1L-29340	A9999-002001	5	B001001
708-1L-29340	A9999-002006	6	B001006
708-1L-29340	A9999-002012	5	B001012
708-1L-29340	A9999-002017	6	B001017
708-1L-29340	A9999-003012	5	B001032
708-1L-29340	A9999-003017	6	B001037
708-1S-19810	H0120-004019	23	H003019
708-1S-19810	H0120-005019	23	H002019
708-21-12541	H0120-004021	15	H003021
708-21-12541	H0120-004121	15	H004021
708-21-12541	H0120-005021	15	H002021
708-2F-12420	A9999-002009	10	B001009
708-2F-12420	A9999-002021	1	B001021
708-2F-12420	A9999-003021	1	B001041
708-2G-00150	A9999-002012	1	B001012
708-2G-00150	A9999-002013	1	B001013
708-2G-00150	A9999-002014	1	B001014
708-2G-00150	A9999-002015	1	B001015
708-2G-00150	A9999-002016	1	B001016
708-2G-00150	A9999-002017	1	B001017
708-2G-00150	A9999-002018	1	B001018
708-2G-00150	A9999-002019	1	B001019
708-2G-00150	A9999-002020	1	B001020
708-2G-00150	A9999-002021	1	B001021
708-2G-00150	A9999-002022	1	B001022
708-2G-00150	A9999-002023	1	B001023
708-2G-00151	A9999-003001A	13	B002002
708-2G-00151	A9999-003012	1	B001032
708-2G-00151	A9999-003013	1	B001033
708-2G-00151	A9999-003014	1	B001034
708-2G-00151	A9999-003015	1	B001035
708-2G-00151	A9999-003016	1	B001036
708-2G-00151	A9999-003017	1	B001037
708-2G-00151	A9999-003018	1	B001038
708-2G-00151	A9999-003019	1	B001039
708-2G-00151	A9999-003020	1	B001040
708-2G-00151	A9999-003021	1	B001041
708-2G-00151	A9999-003022	1	B001042
708-2G-00151	A9999-003023	1	B001043
708-2G-00700	A9999-002001	1	B001001
708-2G-00700	A9999-002002	1	B001002
708-2G-00700	A9999-002003	1	B001003
708-2G-00700	A9999-002004	1	B001004
708-2G-00700	A9999-002005	1	B001005
708-2G-00700	A9999-002006	1	B001006
708-2G-00700	A9999-002007	1	B001007
708-2G-00700	A9999-002008	1	B001008
708-2G-00700	A9999-002009	1	B001009
708-2G-00700	A9999-002010	1	B001010
708-2G-00700	A9999-002011	1	B001011
708-2G-00700	A9999-003001	10	B002001
708-2G-01073	A9999-002001	1	B001001
708-2G-01073	A9999-002002	1	B001002
708-2G-01073	A9999-002003	1	B001003
708-2G-01073	A9999-002004	1	B001004
708-2G-01073	A9999-002005	1	B001005
708-2G-01073	A9999-002006	1	B001006
708-2G-01073	A9999-002007	1	B001007
708-2G-01073	A9999-002008	1	B001008
708-2G-01073	A9999-002009	1	B001009
708-2G-01150	A9999-002012	1	B001012
708-2G-01150	A9999-002013	1	B001013
708-2G-01150	A9999-002014	1	B001014
708-2G-01150	A9999-002015	1	B001015
708-2G-01150	A9999-002016	1	B001016
708-2G-01150	A9999-002017	1	B001017
708-2G-01150	A9999-002018	1	B001018
708-2G-01150	A9999-002019	1	B001019
708-2G-01150	A9999-002020	1	B001020
708-2G-01150	A9999-002021	1	B001021
708-2G-01151	A9999-003012	1	B001032
708-2G-01151	A9999-003013	1	B001033
708-2G-01151	A9999-003014	1	B001034
708-2G-01151	A9999-003015	1	B001035
708-2G-01151	A9999-003016	1	B001036
708-2G-01151	A9999-003017	1	B001037
708-2G-01151	A9999-003018	1	B001038
708-2G-01151	A9999-003019	1	B001039
708-2G-01151	A9999-003020	1	B001040
708-2G-01151	A9999-003021	1	B001041
708-2G-03480	A9999-002005	1	B001005
708-2G-03480	A9999-002009	1	B001009
708-2G-03480	A9999-002016	1	B001016
708-2G-03480	A9999-002020	1	B001020
708-2G-03480	A9999-003016	1	B001036
708-2G-03480	A9999-003020	1	B001040
708-2G-03580	A9999-002004	1	B001004
708-2G-03580	A9999-002008	1	B001008
708-2G-03590	A9999-002004	1	B001004
708-2G-03590	A9999-002008	2	B001008
708-2G-03640	A9999-002015	1	B001015
708-2G-03640	A9999-002019	1	B001019
708-2G-03640	A9999-003015	1	B001035
708-2G-03640	A9999-003019	1	B001039
708-2G-03650	A9999-002015	1	B001015
708-2G-03650	A9999-002019	2	B001019
708-2G-03650	A9999-003015	1	B001035
708-2G-03650	A9999-003019	2	B001039
708-2G-03710	A9999-002010	1	B001010
708-2G-03720	A9999-002022	1	B001022
708-2G-03720	A9999-003022	1	B001042

PARTS Nº	FIG. Nº	INDEX	PAGE
708-2G-03910	A9999-002010	14	B001010
708-2G-03920	A9999-002022	14	B001022
708-2G-03920	A9999-003022	14	B001042
708-2G-04241	A9999-002001	1	B001001
708-2G-04241	A9999-002012	1	B001012
708-2G-04241	A9999-003012	1	B001032
708-2G-04251	A9999-002006	1	B001006
708-2G-04252	A9999-002017	1	B001017
708-2G-04252	A9999-003017	1	B001037
708-2G-04262	A9999-002003	8	B001003
708-2G-04272	A9999-002007	5	B001007
708-2G-04272	A9999-002018	5	B001018
708-2G-04272	A9999-003018	5	B001038
708-2G-04290	A9999-002003	19	B001003
708-2G-04290	A9999-002007	16	B001007
708-2G-04290	A9999-002018	16	B001018
708-2G-04290	A9999-003018	16	B001038
708-2G-04430	A9999-002002	1	B001002
708-2G-04670	A9999-002014	19	B001014
708-2G-04670	A9999-003014	19	B001034
708-2G-04680	A9999-002013	1	B001013
708-2G-04680	A9999-003013	1	B001033
708-2G-04710	A9999-002014	8	B001014
708-2G-04710	A9999-003014	8	B001034
708-2G-04730	A9999-002021	3	B001021
708-2G-04760	A9999-003021	3	B001041
708-2G-05010	A9999-002003	3	B001003
708-2G-05010	A9999-002007	3	B001007
708-2G-05010	A9999-002014	3	B001014
708-2G-05010	A9999-002018	3	B001018
708-2G-05010	A9999-003014	3	B001034
708-2G-05010	A9999-003018	3	B001038
708-2G-05020	A9999-002021	13	B001021
708-2G-05020	A9999-003021	13	B001041
708-2G-12151	A9999-002002	3	B001002
708-2G-12151	A9999-002013	3	B001013
708-2G-12151	A9999-003013	3	B001033
708-2G-12180	A9999-002003	1	B001003
708-2G-12190	A9999-002007	1	B001007
708-2G-12230	A9999-002003	5	B001003
708-2G-12230	A9999-002014	5	B001014
708-2G-12230	A9999-003014	5	B001034
708-2G-12251	A9999-002003	2	B001003
708-2G-12251	A9999-002007	2	B001007
708-2G-12251	A9999-002014	2	B001014
708-2G-12251	A9999-002018	2	B001018
708-2G-12251	A9999-003014	2	B001034
708-2G-12251	A9999-003018	2	B001038
708-2G-12340	A9999-002009	9	B001009
708-2G-12340	A9999-002021	1	B001021
708-2G-12340	A9999-003021	1	B001041
708-2G-12640	A9999-002014	1	B001014
708-2G-12640	A9999-003014	1	B001034
708-2G-12650	A9999-002018	1	B001018
708-2G-12720	A9999-003018	1	B001038
708-2G-13131	A9999-002003	12	B001003
708-2G-13131	A9999-002007	9	B001007
708-2G-13131	A9999-002014	12	B001014
708-2G-13131	A9999-002018	9	B001018
708-2G-13131	A9999-003014	12	B001034
708-2G-13131	A9999-003018	9	B001038
708-2G-13141	A9999-002003	14	B001003
708-2G-13141	A9999-002007	11	B001007
708-2G-13141	A9999-002014	14	B001014
708-2G-13141	A9999-002018	11	B001018
708-2G-13141	A9999-003014	14	B001034
708-2G-13141	A9999-003018	11	B001038
708-2G-13152	A9999-002003	13	B001003
708-2G-13152	A9999-002007	10	B001007
708-2G-13152	A9999-002014	13	B001014
708-2G-13152	A9999-002018	10	B001018
708-2G-13152	A9999-003014	13	B001034
708-2G-13152	A9999-003018	10	B001038
708-2G-13341	A9999-002003	17	B001003
708-2G-13341	A9999-002007	14	B001007
708-2G-13341	A9999-002014	17	B001014
708-2G-13341	A9999-002018	14	B001018
708-2G-13341	A9999-003014	17	B001034
708-2G-13341	A9999-003018	14	B001038
708-2G-13370	A9999-002003	18	B001003
708-2G-13370	A9999-002007	15	B001007
708-2G-13370	A9999-002018	15	B001018
708-2G-13370	A9999-003018	15	B001038
708-2G-13510	A9999-002003	15	B001003
708-2G-13510	A9999-002007	12	B001007
708-2G-13510	A9999-002014	15	B001014
708-2G-13510	A9999-002018	12	B001018
708-2G-13510	A9999-003014	15	B001034
708-2G-13510	A9999-003018	12	B001038
708-2G-13810	A9999-002014	18	B001014
708-2G-13810	A9999-003014	18	B001034
708-2G-14120	A9999-002004	1	B001004
708-2G-14120	A9999-002008	1	B001008
708-2G-14120	A9999-002015	1	B001015
708-2G-14120	A9999-002019	1	B001019
708-2G-14120	A9999-003015	1	B001035
708-2G-14120	A9999-003019	1	B001039
708-2G-14170	A9999-002005	5	B001005
708-2G-14170	A9999-002009	5	B001009
708-2G-14170	A9999-002016	5	B001016
708-2G-14170	A9999-002020	5	B001020
708-2G-14170	A9999-003016	5	B001036
708-2G-14170	A9999-003020	5	B001040
708-2G-14190	A9999-002004	25	B001004
708-2G-14190	A9999-002008	25	B001008
708-2G-14190	A9999-002015	25	B001015
708-2G-14190	A9999-002019	25	B001019
708-2G-14190	A9999-003015	25	B001035
708-2G-14190	A9999-003019	25	B001039
708-2G-14310	A9999-002005	1	B001005
708-2G-14310	A9999-002009	1	B001009
708-2G-14310	A9999-002016	1	B001016
708-2G-14310	A9999-002020	1	B001020
708-2G-14310	A9999-003016	1	B001036
708-2G-14310	A9999-003020	1	B001040
708-2G-14340	A9999-002004	17	B001004
708-2G-14340	A9999-002008	17	B001008
708-2G-14340	A9999-002015	17	B001015
708-2G-14340	A9999-002019	17	B001019
708-2G-14340	A9999-003015	17	B001035
708-2G-14340	A9999-003019	17	B001039
708-2G-15140	A9999-002004	12	B001004
708-2G-15140	A9999-002008	12	B001008
708-2G-15140	A9999-002015	12	B001015
708-2G-15140	A9999-002019	12	B001019
708-2G-15140	A9999-003015	12	B001035
708-2G-15140	A9999-003019	12	B001039
708-2G-15151	A9999-002004	15	B001004
708-2G-15151	A9999-002008	15	B001008
708-2G-15151	A9999-002015	15	B001015
708-2G-15151	A9999-002019	15	B001019
708-2G-15151	A9999-003015	15	B001035
708-2G-15151	A9999-003019	15	B001039
708-2G-15211	A9999-002004	10	B001004
708-2G-15211	A9999-002008	10	B001008
708-2G-15211	A9999-002015	10	B001015
708-2G-15211	A9999-002019	10	B001019
708-2G-15211	A9999-003015	10	B001035
708-2G-15211	A9999-003019	10	B001039
708-2G-15221	A9999-002004	5	B001004
708-2G-15221	A9999-002008	5	B001008
708-2G-15230	A9999-002004	19	B001004
708-2G-15230	A9999-002005	3	B001005
708-2G-15230	A9999-002008	19	B001008
708-2G-15230	A9999-002009	3	B001009
708-2G-15230	A9999-002015	19	B001015
708-2G-15230	A9999-002016	3	B001016
708-2G-15230	A9999-002019	19	B001019
708-2G-15230	A9999-002020	3	B001020
708-2G-15230	A9999-003015	19	B001035

PARTS Nº	FIG. Nº	INDEX	PAGE
708-2G-15230	A9999-003016	3	B001036
708-2G-15230	A9999-003019	19	B001039
708-2G-15230	A9999-003020	3	B001040
708-2G-15240	A9999-002004	21	B001004
708-2G-15240	A9999-002008	21	B001008
708-2G-15240	A9999-002015	21	B001015
708-2G-15240	A9999-002019	21	B001019
708-2G-15240	A9999-003015	21	B001035
708-2G-15240	A9999-003019	21	B001039
708-2G-15250	A9999-002004	16	B001004
708-2G-15250	A9999-002008	16	B001008
708-2G-15250	A9999-002015	16	B001015
708-2G-15250	A9999-002019	16	B001019
708-2G-15250	A9999-003015	16	B001035
708-2G-15250	A9999-003019	16	B001039
708-2G-15260	A9999-002004	20	B001004
708-2G-15260	A9999-002008	20	B001008
708-2G-15270	A9999-002004	13	B001004
708-2G-15270	A9999-002008	13	B001008
708-2G-15270	A9999-002015	13	B001015
708-2G-15270	A9999-002019	13	B001019
708-2G-15270	A9999-003015	13	B001035
708-2G-15270	A9999-003019	13	B001039
708-2G-15280	A9999-002004	14	B001004
708-2G-15280	A9999-002008	14	B001008
708-2G-15280	A9999-002015	14	B001015
708-2G-15280	A9999-002019	14	B001019
708-2G-15280	A9999-003015	14	B001035
708-2G-15280	A9999-003019	14	B001039
708-2G-15290	A9999-002004	11	B001004
708-2G-15290	A9999-002008	11	B001008
708-2G-15290	A9999-002015	11	B001015
708-2G-15290	A9999-002019	11	B001019
708-2G-15290	A9999-003015	11	B001035
708-2G-15290	A9999-003019	11	B001039
708-2G-15310	A9999-002004	24	B001004
708-2G-15310	A9999-002005	7	B001005
708-2G-15310	A9999-002008	24	B001008
708-2G-15310	A9999-002009	7	B001009
708-2G-15310	A9999-002015	24	B001015
708-2G-15310	A9999-002016	7	B001016
708-2G-15310	A9999-002019	24	B001019
708-2G-15310	A9999-002020	7	B001020
708-2G-15310	A9999-003015	24	B001035
708-2G-15310	A9999-003016	7	B001036
708-2G-15310	A9999-003019	24	B001039
708-2G-15310	A9999-003020	7	B001040
708-2G-15320	A9999-002004	4	B001004
708-2G-15320	A9999-002008	4	B001008
708-2G-15330	A9999-002004	28	B001004
708-2G-15330	A9999-002008	28	B001008
708-2G-15330	A9999-002015	28	B001015
708-2G-15330	A9999-002019	28	B001019
708-2G-15330	A9999-003015	28	B001035
708-2G-15330	A9999-003019	28	B001039
708-2G-15412	A9999-002010	16	B001010
708-2G-15412	A9999-002010	3	B001010
708-2G-15420	A9999-002010	19	B001010
708-2G-15420	A9999-002022	19	B001022
708-2G-15420	A9999-003022	19	B001042
708-2G-15680	A9999-002011	19	B001011
708-2G-15680	A9999-002023	19	B001023
708-2G-15680	A9999-003023	19	B001043
708-2G-19130	A9999-002023	26	B001023
708-2G-19130	A9999-003023	26	B001043
708-2H-21860	A9999-002021	2	B001021
708-2H-21860	A9999-003021	2	B001041
708-2H-23360	A9999-002003	16	B001003
708-2H-23360	A9999-002007	13	B001007
708-2H-23360	A9999-002014	16	B001014
708-2H-23360	A9999-002018	13	B001018
708-2H-23360	A9999-003014	16	B001034
708-2H-23360	A9999-003018	13	B001038
708-2H-32320	A9999-002021	6	B001021
708-2H-32320	A9999-003021	6	B001041
708-2H-32330	A9999-002021	7	B001021
708-2H-32330	A9999-003021	7	B001041
708-2H-32350	A9999-002021	9	B001021
708-2H-32350	A9999-003021	9	B001041
708-2H-32360	A9999-002021	10	B001021
708-2H-32360	A9999-003021	10	B001041
708-2J-15310	A9999-002022	16	B001022
708-2J-15310	A9999-002022	3	B001022
708-2J-15310	A9999-003022	16	B001042
708-2J-15310	A9999-003022	3	B001042
708-2L-23960	N1210-001001	10	N002001
708-2L-24680	A9999-002010	15	B001010
708-2L-24680	A9999-002010	2	B001010
708-2L-25480	A9999-002002	10	B001002
708-2L-25480	A9999-002013	10	B001013
708-2L-25480	A9999-003013	10	B001033
708-2L-28540	A9999-002010	17	B001010
708-2L-28540	A9999-002010	4	B001010
708-2L-28540	A9999-002022	17	B001022
708-2L-28540	A9999-002022	4	B001022
708-2L-28540	A9999-003022	17	B001042
708-2L-28540	A9999-003022	4	B001042
708-2L-35170	A9999-002004	9	B001004
708-2L-35170	A9999-002008	9	B001008
708-2L-35170	A9999-002015	9	B001015
708-2L-35170	A9999-002019	9	B001019
708-2L-35170	A9999-003015	9	B001035
708-2L-35170	A9999-003019	9	B001039
708-2L-35290	A9999-002004	27	B001004
708-2L-35290	A9999-002005	4	B001005
708-2L-35290	A9999-002008	27	B001008
708-2L-35290	A9999-002009	4	B001009
708-2L-35290	A9999-002015	27	B001015
708-2L-35290	A9999-002016	4	B001016
708-2L-35290	A9999-002019	27	B001019
708-2L-35290	A9999-002020	4	B001020
708-2L-35290	A9999-003015	27	B001035
708-2L-35290	A9999-003016	4	B001036
708-2L-35290	A9999-003019	27	B001039
708-2L-35290	A9999-003020	4	B001040
708-2L-35311	A9999-002010	1	B001010
708-2L-35311	A9999-002010	14	B001010
708-2L-35331	A9999-002010	6	B001010
708-2L-35331	A9999-002022	6	B001022
708-2L-35331	A9999-003022	6	B001042
708-2L-35341	A9999-002010	21	B001010
708-2L-35341	A9999-002010	8	B001010
708-2L-35341	A9999-002022	21	B001022
708-2L-35341	A9999-002022	8	B001022
708-2L-35341	A9999-003022	21	B001042
708-2L-35341	A9999-003022	8	B001042
708-2L-35351	A9999-002010	22	B001010
708-2L-35351	A9999-002010	9	B001010
708-2L-35351	A9999-002022	22	B001022
708-2L-35351	A9999-002022	9	B001022
708-2L-35351	A9999-003022	22	B001042
708-2L-35351	A9999-003022	9	B001042
708-2L-35360	A9999-002010	18	B001010
708-2L-35360	A9999-002010	5	B001010
708-2L-35360	A9999-002022	18	B001022
708-2L-35360	A9999-002022	5	B001022
708-2L-35360	A9999-003022	18	B001042
708-2L-35360	A9999-003022	5	B001042
708-2L-35410	A9999-002010	20	B001010
708-2L-35410	A9999-002010	7	B001010
708-2L-35410	A9999-002022	20	B001022
708-2L-35410	A9999-002022	7	B001022
708-2L-35410	A9999-003022	20	B001042
708-2L-35410	A9999-003022	7	B001042
708-2L-35690	A9999-002004	8	B001004
708-2L-35690	A9999-002008	8	B001008
708-2L-35760	A9999-002004	6	B001004
708-2L-35760	A9999-002008	6	B001008
708-2L-35760	A9999-002015	6	B001015
708-2L-35760	A9999-002019	6	B001019

PARTS Nº	FIG. Nº	INDEX	PAGE
708-2L-35760	A9999-003015	6	B001035
708-2L-35760	A9999-003019	6	B001039
708-2L-35770	A9999-002004	7	B001004
708-2L-35770	A9999-002008	7	B001008
708-2L-35770	A9999-002015	7	B001015
708-2L-35770	A9999-002019	7	B001019
708-2L-35770	A9999-003015	7	B001035
708-2L-35770	A9999-003019	7	B001039
708-7T-16460	H0120-004001	10	H003001
708-7T-16460	H0120-004022	5	H003022
708-7T-16460	H0120-004101	10	H004001
708-7T-16460	H0120-005001	10	H002001
708-7T-16460	H0120-005022	5	H002022
708-8E-16150	A9999-002001	3	B001001
708-8E-16150	A9999-002002	11	B001002
708-8E-16150	A9999-002006	8	B001006
708-8E-16150	A9999-002012	3	B001012
708-8E-16150	A9999-002013	11	B001013
708-8E-16150	A9999-002017	8	B001017
708-8E-16150	A9999-003012	3	B001032
708-8E-16150	A9999-003013	11	B001033
708-8E-16150	A9999-003017	8	B001037
708-8E-16160	H0120-004007	14	H003007
708-8E-16160	H0120-004007	20	H003007
708-8E-16160	H0120-004014	26	H003014
708-8E-16160	H0120-004107	16	H004007
708-8E-16160	H0120-004114	14	H004014
708-8E-16160	H0120-005007	14	H002007
708-8E-16160	H0120-005007	20	H002007
708-8E-16160	H0120-005014	26	H002014
708-8E-16160	P1210-002001	26	P002001
708-8E-16160	P1210-002005	26	P002005
708-8E-16160	P1210-002009	26	P002009
708-8E-16180	P1210-002001	25	P002001
708-8E-16180	P1210-002005	25	P002005
708-8E-16180	P1210-002009	25	P002009
708-8E-16250	H0120-004007	6	H003007
708-8E-16250	H0120-004107	6	H004007
708-8E-16250	H0120-005007	6	H002007
708-8H-00320	P1210-002001	1	P002001
708-8H-00320	P1210-002002	1	P002002
708-8H-00320	P1210-002003	1	P002003
708-8H-00410	P1210-002009	1	P002009
708-8H-00410	P1210-002010	1	P002010
708-8H-00410	P1210-002011	1	P002011
708-8H-00420	P1210-002005	1	P002005
708-8H-00420	P1210-002006	1	P002006
708-8H-00420	P1210-002007	1	P002007
708-8H-04711	P1210-002001	1	P002001
708-8H-04721	P1210-002001	3	P002001
708-8H-04721	P1210-002005	3	P002005
708-8H-04721	P1210-002009	3	P002009
708-8H-04780	P1210-002005	1	P002005
708-8H-04780	P1210-002009	1	P002009
708-8H-04810	P1210-002002	8	P002002
708-8H-04810	P1210-002006	8	P002006
708-8H-04810	P1210-002010	8	P002010
708-8H-05050	P1210-002002	4	P002002
708-8H-05050	P1210-002006	4	P002006
708-8H-05050	P1210-002010	4	P002010
708-8H-11530	H0120-004007	24	H003007
708-8H-11530	H0120-004010	4	H003010
708-8H-11530	H0120-004014	18	H003014
708-8H-11530	H0120-004014	22	H003014
708-8H-11530	H0120-004107	20	H004007
708-8H-11530	H0120-004110	4	H004010
708-8H-11530	H0120-004113	27	H004013
708-8H-11530	H0120-004114	10	H004014
708-8H-11530	H0120-005007	24	H002007
708-8H-11530	H0120-005010	4	H002010
708-8H-11530	H0120-005014	18	H002014
708-8H-11530	H0120-005014	22	H002014
708-8H-11530	P1210-002001	10	P002001
708-8H-15220	N1210-001002	25	N002002
708-8H-16141	P1210-002001	20	P002001
708-8H-16141	P1210-002005	20	P002005
708-8H-16141	P1210-002009	20	P002009
708-8H-31210	P1210-002001	28	P002001
708-8H-31210	P1210-002005	28	P002005
708-8H-31210	P1210-002009	28	P002009
708-8H-32120	P1210-002002	1	P002002
708-8H-32120	P1210-002006	1	P002006
708-8H-32120	P1210-002010	1	P002010
708-8H-32150	P1210-002002	2	P002002
708-8H-32150	P1210-002006	2	P002006
708-8H-32150	P1210-002010	2	P002010
708-8H-32160	A9999-002003	6	B001003
708-8H-32160	A9999-002014	6	B001014
708-8H-32160	A9999-003014	6	B001034
708-8H-32160	P1210-002002	6	P002002
708-8H-32160	P1210-002006	6	P002006
708-8H-32160	P1210-002010	6	P002010
708-8H-32170	P1210-002002	3	P002002
708-8H-32170	P1210-002006	3	P002006
708-8H-32170	P1210-002010	3	P002010
708-8H-33141	P1210-002002	12	P002002
708-8H-33141	P1210-002006	12	P002006
708-8H-33141	P1210-002010	12	P002010
708-8H-33340	P1210-002002	16	P002002
708-8H-33340	P1210-002006	16	P002006
708-8H-33340	P1210-002010	16	P002010
708-8H-33360	P1210-002002	11	P002002
708-8H-33360	P1210-002006	11	P002006
708-8H-33360	P1210-002010	11	P002010
708-8H-33471	P1210-002002	18	P002002
708-8H-33471	P1210-002006	18	P002006
708-8H-33471	P1210-002010	18	P002010
708-8H-33512	P1210-002002	15	P002002
708-8H-33512	P1210-002006	15	P002006
708-8H-33512	P1210-002010	15	P002010
708-8H-33650	P1210-002002	17	P002002
708-8H-33650	P1210-002006	17	P002006
708-8H-33650	P1210-002010	17	P002010
708-8H-33710	P1210-002002	8	P002002
708-8H-33710	P1210-002006	8	P002006
708-8H-33710	P1210-002010	8	P002010
708-8H-33750	P1210-002002	13	P002002
708-8H-33750	P1210-002006	13	P002006
708-8H-33750	P1210-002010	13	P002010
708-8H-33810	P1210-002002	9	P002002
708-8H-33810	P1210-002006	9	P002006
708-8H-33810	P1210-002010	9	P002010
708-8H-34151	P1210-002002	21	P002002
708-8H-34151	P1210-002006	21	P002006
708-8H-34151	P1210-002010	21	P002010
708-8H-34190	P1210-002002	20	P002002
708-8H-34190	P1210-002006	20	P002006
708-8H-34190	P1210-002010	20	P002010
708-8H-35130	P1210-002002	24	P002002
708-8H-35130	P1210-002006	24	P002006
708-8H-35130	P1210-002010	24	P002010
708-8H-35141	P1210-002002	26	P002002
708-8H-35141	P1210-002006	26	P002006
708-8H-35141	P1210-002010	26	P002010
708-8H-35150	P1210-002002	31	P002002
708-8H-35150	P1210-002006	31	P002006
708-8H-35150	P1210-002010	31	P002010
708-8H-35180	P1210-002002	25	P002002
708-8H-35180	P1210-002006	25	P002006
708-8H-35180	P1210-002010	25	P002010
708-8H-36121	P1210-002001	19	P002001
708-8H-36121	P1210-002005	19	P002005
708-8H-36121	P1210-002009	19	P002009
708-8H-36150	P1210-002001	15	P002001
708-8H-36150	P1210-002005	15	P002005
708-8H-36150	P1210-002009	15	P002009
708-8H-36160	P1210-002005	17	P002005
708-8H-36160	P1210-002009	17	P002009
709-10-91240	H1270-003002	5	H014002
709-25-11390	H0120-004010	19	H003010

PARTS Nº	FIG. Nº	INDEX	PAGE
709-25-11390	H0120-004011	9	H003011
709-25-11390	H0120-004012	2	H003012
709-25-11390	H0120-004012	8	H003012
709-25-11390	H0120-004024	9	H003024
709-25-11390	H0120-004110	19	H004010
709-25-11390	H0120-004111	9	H004011
709-25-11390	H0120-004112	2	H004012
709-25-11390	H0120-004112	8	H004012
709-25-11390	H0120-004122	2	H004022
709-25-11390	H0120-005010	19	H002010
709-25-11390	H0120-005011	9	H002011
709-25-11390	H0120-005012	2	H002012
709-25-11390	H0120-005012	8	H002012
709-25-11390	H0120-005024	9	H002024
709-70-71610	N1210-001003	7	N002003
709-74-91510	H0120-004017	1	H003017
709-74-91510	H0120-004117	1	H004017
709-74-91510	H0120-005017	1	H002017
709-74-91860	H0120-004007	22	H003007
709-74-91860	H0120-004013	14	H003013
709-74-91860	H0120-004107	18	H004007
709-74-91860	H0120-004113	14	H004013
709-74-91860	H0120-005007	22	H002007
709-74-91860	H0120-005013	14	H002013
709-74-92810	N1210-001001	7	N002001
709-74-92821	N1210-001001	9	N002001
709-75-92220	N1210-001001	8	N002001
722-12-18240	A9999-002011	17	B001011
722-12-18240	A9999-002023	17	B001023
722-12-18240	A9999-003023	17	B001043
722-12-19070	H0120-004004	13	H003004
722-12-19070	H0120-004104	13	H004004
722-12-19070	H0120-005004	13	H002004
723-11-15110	K1110-024027	13	K008025
723-11-15110	K1110-039024	13	K009024
723-11-18150	H0120-004004	10	H003004
723-11-18150	H0120-004104	10	H004004
723-11-18150	H0120-005004	10	H002004
723-11-18190	H0120-004019	19	H003019
723-11-18190	H0120-004020	19	H003020
723-11-18190	H0120-004119	19	H004019
723-11-18190	H0120-004120	19	H004020
723-11-18190	H0120-005019	19	H002019
723-11-18190	H0120-005020	19	H002020
723-11-19130	H0120-004004	2	H003004
723-11-19130	H0120-004015	25	H003015
723-11-19130	H0120-004022	13	H003022
723-11-19130	H0120-004104	2	H004004
723-11-19130	H0120-004115	25	H004015
723-11-19130	H0120-005004	2	H002004
723-11-19130	H0120-005015	25	H002015
723-11-19130	H0120-005022	13	H002022
723-11-19960	A9999-002011	2	B001011
723-11-19960	A9999-002011	7	B001011
723-11-19960	A9999-002023	2	B001023
723-11-19960	A9999-002023	7	B001023
723-11-19960	A9999-003023	2	B001043
723-11-19960	A9999-003023	7	B001043
723-11-19960	H0120-004015	18	H003015
723-11-19960	H0120-004115	18	H004015
723-11-19960	H0120-005015	18	H002015
723-40-56350	H0120-004008	3	H003008
723-40-56350	H0120-004108	3	H004008
723-40-56350	H0120-005008	3	H002008
723-40-56800	H0120-004008	1	H003008
723-40-56800	H0120-004108	1	H004008
723-40-56800	H0120-005008	1	H002008
723-40-60101	H0120-004010	16	H003010
723-40-60101	H0120-004011	1	H003011
723-40-60101	H0120-004110	16	H004010
723-40-60101	H0120-004111	1	H004011
723-40-60101	H0120-005010	16	H002010
723-40-60101	H0120-005011	1	H002011
723-40-61150	H0120-004013	18	H003013
723-40-61150	H0120-004113	18	H004013
723-40-61150	H0120-005013	18	H002013
723-40-66300	H0120-004024	1	H003024
723-40-66300	H0120-005024	1	H002024
723-40-66601	H0120-004010	9	H003010
723-40-66601	H0120-004110	9	H004010
723-40-66601	H0120-005010	9	H002010
723-40-66701	H0120-004010	1	H003010
723-40-66701	H0120-004110	1	H004010
723-40-66701	H0120-005010	1	H002010
723-40-71201	H0120-004013	1	H003013
723-40-71201	H0120-004014	1	H003014
723-40-71201	H0120-004113	1	H004013
723-40-71201	H0120-004114	1	H004014
723-40-71201	H0120-005013	1	H002013
723-40-71201	H0120-005014	1	H002014
723-40-71330	H0120-004013	4	H003013
723-40-71330	H0120-004113	4	H004013
723-40-71330	H0120-005013	4	H002013
723-40-71340	H0120-004013	5	H003013
723-40-71340	H0120-004113	5	H004013
723-40-71340	H0120-005013	5	H002013
723-40-71350	H0120-004013	8	H003013
723-40-71350	H0120-004113	8	H004013
723-40-71350	H0120-005013	8	H002013
723-40-71390	H0120-004013	17	H003013
723-40-71390	H0120-004113	17	H004013
723-40-71390	H0120-005013	17	H002013
723-40-71430	H0120-004014	1	H003014
723-40-71430	H0120-004114	1	H004014
723-40-71430	H0120-005014	1	H002014
723-40-71440	H0120-004013	12	H003013
723-40-71440	H0120-004113	12	H004013
723-40-71440	H0120-005013	12	H002013
723-40-71800	H0120-004013	20	H003013
723-40-71800	H0120-004014	8	H003014
723-40-71800	H0120-004113	20	H004013
723-40-71800	H0120-005013	20	H002013
723-40-71800	H0120-005014	8	H002014
723-40-82120	H0120-004019	2	H003019
723-40-82120	H0120-004020	2	H003020
723-40-82120	H0120-004120	2	H004020
723-40-82120	H0120-005019	2	H002019
723-40-82120	H0120-005020	2	H002020
723-40-82130	H0120-004019	3	H003019
723-40-82130	H0120-004020	3	H003020
723-40-82130	H0120-004120	3	H004020
723-40-82130	H0120-005019	3	H002019
723-40-82130	H0120-005020	3	H002020
723-40-82140	H0120-004019	6	H003019
723-40-82140	H0120-004020	6	H003020
723-40-82140	H0120-004021	3	H003021
723-40-82140	H0120-004021	9	H003021
723-40-82140	H0120-004120	6	H004020
723-40-82140	H0120-004121	3	H004021
723-40-82140	H0120-004121	9	H004021
723-40-82140	H0120-005019	6	H002019
723-40-82140	H0120-005020	6	H002020
723-40-82140	H0120-005021	3	H002021
723-40-82140	H0120-005021	9	H002021
723-40-82150	H0120-004019	7	H003019
723-40-82150	H0120-004020	7	H003020
723-40-82150	H0120-004120	7	H004020
723-40-82150	H0120-005019	7	H002019
723-40-82150	H0120-005020	7	H002020
723-40-82210	H0120-004019	4	H003019
723-40-82210	H0120-004020	4	H003020
723-40-82210	H0120-004120	4	H004020
723-40-82210	H0120-005019	4	H002019
723-40-82210	H0120-005020	4	H002020
723-40-82220	H0120-004007	16	H003007
723-40-82220	H0120-004019	19	H003019
723-40-82220	H0120-004020	5	H003020
723-40-82220	H0120-004021	11	H003021
723-40-82220	H0120-004107	12	H004007
723-40-82220	H0120-004120	5	H004020

PARTS Nº	FIG. Nº	INDEX	PAGE
723-40-82220	H0120-004121	11	H004021
723-40-82220	H0120-005007	16	H002007
723-40-82220	H0120-005019	5	H002019
723-40-82220	H0120-005020	5	H002020
723-40-82220	H0120-005021	11	H002021
723-40-82280	H0120-004019	21	H003019
723-40-82280	H0120-004020	21	H003020
723-40-82280	H0120-004120	21	H004020
723-40-82280	H0120-005019	21	H002019
723-40-82280	H0120-005020	21	H002020
723-40-82290	H0120-004019	22	H003019
723-40-82290	H0120-004020	22	H003020
723-40-82290	H0120-004120	22	H004020
723-40-82290	H0120-005019	22	H002019
723-40-82290	H0120-005020	22	H002020
723-40-82310	H0120-004019	13	H003019
723-40-82310	H0120-004020	13	H003020
723-40-82310	H0120-004120	13	H004020
723-40-82310	H0120-005019	13	H002019
723-40-82310	H0120-005020	13	H002020
723-40-82401	H0120-004019	1	H003019
723-40-82401	H0120-004119	1	H004019
723-40-82401	H0120-005019	1	H002019
723-40-82410	H0120-004019	1	H003019
723-40-82410	H0120-005019	1	H002019
723-40-82411	H0120-004019	1	H003019
723-40-82411	H0120-005019	1	H002019
723-40-82420	H0120-004020	1	H003020
723-40-82420	H0120-004120	1	H004020
723-40-82420	H0120-005020	1	H002020
723-40-82422	H0120-004020	1	H003020
723-40-82422	H0120-005020	1	H002020
723-40-82901	H0120-004020	1	H003020
723-40-82901	H0120-004120	1	H004020
723-40-82901	H0120-005020	1	H002020
723-40-82902	H0120-004020	1	H003020
723-40-82902	H0120-005020	1	H002020
723-40-84100	H0120-004021	1	H003021
723-40-84100	H0120-004121	1	H004021
723-40-84100	H0120-005021	1	H002021
723-40-84130	H0120-004021	13	H003021
723-40-84130	H0120-004021	4	H003021
723-40-84130	H0120-004121	13	H004021
723-40-84130	H0120-004121	4	H004021
723-40-84130	H0120-005021	13	H002021
723-40-84130	H0120-005021	4	H002021
723-40-84200	H0120-004021	7	H003021
723-40-84200	H0120-004121	7	H004021
723-40-84200	H0120-005021	7	H002021
723-40-84230	H0120-004021	10	H003021
723-40-84230	H0120-004121	10	H004021
723-40-84230	H0120-005021	10	H002021
723-40-84420	H0120-004019	9	H003019
723-40-84420	H0120-004020	9	H003020
723-40-84420	H0120-004120	9	H004020
723-40-84420	H0120-005019	9	H002019
723-40-84420	H0120-005020	9	H002020
723-40-84430	H0120-004019	10	H003019
723-40-84430	H0120-004020	10	H003020
723-40-84430	H0120-004120	10	H004020
723-40-84430	H0120-005019	10	H002019
723-40-84430	H0120-005020	10	H002020
723-40-84440	H0120-004019	11	H003019
723-40-84440	H0120-004020	11	H003020
723-40-84440	H0120-004120	11	H004020
723-40-84440	H0120-005019	11	H002019
723-40-84440	H0120-005020	11	H002020
723-40-84441	H0120-004019	11	H003019
723-40-84441	H0120-004020	11	H003020
723-40-84441	H0120-005019	11	H002019
723-40-84441	H0120-005020	11	H002020
723-40-85100	H0120-004012	7	H003012
723-40-85100	H0120-004112	7	H004012
723-40-85100	H0120-005012	7	H002012
723-40-87100	H0120-004018	1	H003018
723-40-87100	H0120-004118	1	H004018
723-40-87100	H0120-005018	1	H002018
723-40-87110	H0120-004018	1	H003018
723-40-87110	H0120-004118	1	H004018
723-40-87110	H0120-005018	1	H002018
723-40-87140	H0120-004018	2	H003018
723-40-87140	H0120-004118	2	H004018
723-40-87140	H0120-005018	2	H002018
723-40-87150	H0120-004018	7	H003018
723-40-87150	H0120-004118	7	H004018
723-40-87150	H0120-005018	7	H002018
723-40-87160	H0120-004018	3	H003018
723-40-87160	H0120-004118	3	H004018
723-40-87160	H0120-005018	3	H002018
723-40-87170	H0120-004018	8	H003018
723-40-87170	H0120-004118	8	H004018
723-40-87170	H0120-005018	8	H002018
723-40-91200	H0120-004012	1	H003012
723-40-91200	H0120-004112	1	H004012
723-40-91200	H0120-004122	1	H004022
723-40-91200	H0120-005012	1	H002012
723-40-91300	H0120-004024	8	H003024
723-40-91300	H0120-005024	8	H002024
723-40-91500	H0120-004011	6	H003011
723-40-91500	H0120-004012	1	H003012
723-40-91500	H0120-004111	6	H004011
723-40-91500	H0120-005011	6	H002011
723-40-91500	H0120-005012	1	H002012
723-40-91600	H0120-004013	20	H003013
723-40-91600	H0120-004113	20	H004013
723-40-91600	H0120-005013	20	H002013
723-40-92900	H0120-004021	16	H003021
723-40-92900	H0120-004121	16	H004021
723-40-92900	H0120-005021	16	H002021
723-40-93800	H0120-004009	1	H003009
723-40-93800	H0120-004010	1	H003010
723-40-93800	H0120-005009	1	H002009
723-40-93800	H0120-005010	1	H002010
723-40-93801	H0120-004009	1	H003009
723-40-93801	H0120-004109	1	H004009
723-40-93801	H0120-004110	1	H004010
723-40-93801	H0120-005009	1	H002009
723-46-00660	H0120-004107	1	H004007
723-46-00742	H0120-004007	4	H003007
723-46-00742	H0120-004107	4	H004007
723-46-00742	H0120-005007	4	H002007
723-46-00760	H0120-004007	1	H003007
723-46-00760	H0120-005007	1	H002007
723-46-11910	H0120-004006	1	H003006
723-46-11910	H0120-004106	1	H004006
723-46-11910	H0120-005006	1	H002006
723-46-14110	H0120-004001	13	H003001
723-46-14110	H0120-004015	6	H003015
723-46-14110	H0120-004022	7	H003022
723-46-14110	H0120-004101	13	H004001
723-46-14110	H0120-004115	6	H004015
723-46-14110	H0120-005001	13	H002001
723-46-14110	H0120-005015	6	H002015
723-46-14110	H0120-005022	7	H002022
723-46-14131	H0120-004001	15	H003001
723-46-14131	H0120-004101	15	H004001
723-46-14131	H0120-005001	15	H002001
723-46-14140	H0120-004007	19	H003007
723-46-14140	H0120-004107	15	H004007
723-46-14140	H0120-005007	19	H002007
723-46-14150	H0120-004004	17	H003004
723-46-14150	H0120-004104	17	H004004
723-46-14150	H0120-005004	17	H002004
723-46-14170	H0120-004001	14	H003001
723-46-14170	H0120-004101	14	H004001
723-46-14170	H0120-005001	14	H002001
723-46-14180	H0120-004015	15	H003015
723-46-14180	H0120-004115	15	H004015
723-46-14180	H0120-005015	15	H002015
723-46-15111	H0120-004002	1	H003002

PARTS Nº	FIG. Nº	INDEX	PAGE
723-46-15111	H0120-004013	7	H003013
723-46-15111	H0120-004022	8	H003022
723-46-15111	H0120-004102	1	H004002
723-46-15111	H0120-004113	7	H004013
723-46-15111	H0120-005002	1	H002002
723-46-15111	H0120-005013	7	H002013
723-46-15111	H0120-005022	8	H002022
723-46-15120	H0120-004001	11	H003001
723-46-15120	H0120-004022	6	H003022
723-46-15120	H0120-004101	11	H004001
723-46-15120	H0120-005001	11	H002001
723-46-15120	H0120-005022	6	H002022
723-46-15130	H0120-004001	7	H003001
723-46-15130	H0120-004022	3	H003022
723-46-15130	H0120-004101	7	H004001
723-46-15130	H0120-005001	7	H002001
723-46-15130	H0120-005022	3	H002022
723-46-15140	H0120-004001	8	H003001
723-46-15140	H0120-004101	8	H004001
723-46-15140	H0120-005001	8	H002001
723-46-15190	H0120-004007	18	H003007
723-46-15190	H0120-004107	14	H004007
723-46-15190	H0120-005007	18	H002007
723-46-15220	H0120-004007	28	H003007
723-46-15220	H0120-005007	28	H002007
723-46-15330	H0120-004015	11	H003015
723-46-15330	H0120-004115	11	H004015
723-46-15330	H0120-005015	11	H002015
723-46-15350	H0120-004021	12	H003021
723-46-15350	H0120-004121	12	H004021
723-46-15350	H0120-005021	12	H002021
723-46-15370	H0120-004015	4	H003015
723-46-15370	H0120-004115	4	H004015
723-46-15370	H0120-005015	4	H002015
723-46-15380	H0120-004015	5	H003015
723-46-15380	H0120-004115	5	H004015
723-46-15380	H0120-005015	5	H002015
723-46-15390	H0120-004015	3	H003015
723-46-15390	H0120-004115	3	H004015
723-46-15390	H0120-005015	3	H002015
723-46-15510	H0120-004006	2	H003006
723-46-15510	H0120-004106	2	H004006
723-46-15510	H0120-005006	2	H002006
723-46-15630	H0120-004002	11	H003002
723-46-15630	H0120-004002	5	H003002
723-46-15630	H0120-004003	12	H003003
723-46-15630	H0120-004102	11	H004002
723-46-15630	H0120-004102	5	H004002
723-46-15630	H0120-004103	12	H004003
723-46-15630	H0120-005002	11	H002002
723-46-15630	H0120-005002	5	H002002
723-46-15630	H0120-005003	12	H002003
723-46-15690	H0120-004001	12	H003001
723-46-15690	H0120-004101	12	H004001
723-46-15690	H0120-005001	12	H002001
723-46-17320	H0120-004003	10	H003003
723-46-17320	H0120-004003	5	H003003
723-46-17320	H0120-004103	10	H004003
723-46-17320	H0120-004103	5	H004003
723-46-17320	H0120-005003	10	H002003
723-46-17320	H0120-005003	5	H002003
723-46-17330	H0120-004003	11	H003003
723-46-17330	H0120-004003	6	H003003
723-46-17330	H0120-004103	11	H004003
723-46-17330	H0120-004103	6	H004003
723-46-17330	H0120-005003	11	H002003
723-46-17330	H0120-005003	6	H002003
723-46-17340	H0120-004003	13	H003003
723-46-17340	H0120-004003	2	H003003
723-46-17340	H0120-004103	13	H004003
723-46-17340	H0120-004103	2	H004003
723-46-17340	H0120-005003	13	H002003
723-46-17340	H0120-005003	2	H002003
723-46-17350	H0120-004003	19	H003003
723-46-17350	H0120-004103	19	H004003
723-46-17350	H0120-005003	19	H002003
723-46-17510	H0120-004004	7	H003004
723-46-17510	H0120-004015	28	H003015
723-46-17510	H0120-004022	15	H003022
723-46-17510	H0120-004104	7	H004004
723-46-17510	H0120-004115	28	H004015
723-46-17510	H0120-005004	7	H002004
723-46-17510	H0120-005015	28	H002015
723-46-17510	H0120-005022	15	H002022
723-46-17520	H0120-004004	3	H003004
723-46-17520	H0120-004015	26	H003015
723-46-17520	H0120-004022	16	H003022
723-46-17520	H0120-004104	3	H004004
723-46-17520	H0120-004115	26	H004015
723-46-17520	H0120-005004	3	H002004
723-46-17520	H0120-005015	26	H002015
723-46-17520	H0120-005022	16	H002022
723-46-17530	H0120-004004	9	H003004
723-46-17530	H0120-004015	24	H003015
723-46-17530	H0120-004022	17	H003022
723-46-17530	H0120-004104	9	H004004
723-46-17530	H0120-004115	24	H004015
723-46-17530	H0120-005004	9	H002004
723-46-17530	H0120-005015	24	H002015
723-46-17530	H0120-005022	17	H002022
723-46-17550	H0120-004007	17	H003007
723-46-17550	H0120-004107	13	H004007
723-46-17550	H0120-005007	17	H002007
723-46-17600	H0120-004007	8	H003007
723-46-17600	H0120-004107	8	H004007
723-46-17600	H0120-005007	8	H002007
723-46-17610	H0120-004007	8	H003007
723-46-17610	H0120-005007	8	H002007
723-46-17640	H0120-004007	9	H003007
723-46-17640	H0120-005007	9	H002007
723-46-17650	H0120-004004	16	H003004
723-46-17650	H0120-004104	16	H004004
723-46-17650	H0120-005004	16	H002004
723-46-17701	H0120-004011	1	H003011
723-46-17701	H0120-004111	1	H004011
723-46-17701	H0120-005011	1	H002011
723-46-17711	H0120-004011	1	H003011
723-46-17711	H0120-004111	1	H004011
723-46-17711	H0120-005011	1	H002011
723-46-17840	H0120-004015	7	H003015
723-46-17840	H0120-004115	7	H004015
723-46-17840	H0120-005015	7	H002015
723-46-17850	H0120-004015	16	H003015
723-46-17850	H0120-004115	16	H004015
723-46-17850	H0120-005015	16	H002015
723-46-17860	H0120-004015	17	H003015
723-46-17860	H0120-004115	17	H004015
723-46-17860	H0120-005015	17	H002015
723-46-18131	H0120-004002	2	H003002
723-46-18131	H0120-005002	2	H002002
723-46-18231	H0120-004002	8	H003002
723-46-18231	H0120-004102	8	H004002
723-46-18231	H0120-005002	8	H002002
723-46-18330	H0120-004003	1	H003003
723-46-18330	H0120-004102	1	H004002
723-46-18330	H0120-004103	1	H004003
723-46-18330	H0120-005003	1	H002003
723-46-18431	H0120-004003	7	H003003
723-46-18431	H0120-004103	7	H004003
723-46-18431	H0120-005003	7	H002003
723-46-18710	H0120-004004	12	H003004
723-46-18710	H0120-004104	12	H004004
723-46-18710	H0120-005004	12	H002004
723-46-18720	H0120-004004	14	H003004
723-46-18720	H0120-004104	14	H004004
723-46-18720	H0120-005004	14	H002004
723-46-18730	H0120-004006	4	H003006
723-46-18730	H0120-004106	4	H004006
723-46-18730	H0120-005006	4	H002006
723-46-18770	H0120-004021	22	H003021
723-46-18770	H0120-004121	22	H004021
723-46-18770	H0120-005021	22	H002021
723-46-40100	H0120-004005	2	H003005
723-46-40100	H0120-004005A	2	H003005A
723-46-40100	H0120-004105	2	H004005
723-46-40100	H0120-005005	2	H002005
723-46-40100	H0120-005005A	2	H002005A
723-46-40601	H0120-004005	10	H003005
723-46-40601	H0120-004005A	10	H003005A
723-46-40601	H0120-004016	2	H003016
723-46-40601	H0120-004105	10	H004005
723-46-40601	H0120-004116	2	H004016
723-46-40601	H0120-005005	10	H002005
723-46-40601	H0120-005005A	10	H002005A
723-46-40601	H0120-005016	2	H002016
723-46-41210	H0120-004005	1	H003005
723-46-41210	H0120-004005A	1	H003005A
723-46-41210	H0120-004016	1	H003016
723-46-41210	H0120-004105	1	H004005
723-46-41210	H0120-004116	1	H004016
723-46-41210	H0120-005005	1	H002005
723-46-41210	H0120-005005A	1	H002005A
723-46-41210	H0120-005016	1	H002016
723-46-41950	H0120-004005	12	H003005
723-46-41950	H0120-004005	16	H003005
723-46-41950	H0120-004005	20	H003005
723-46-41950	H0120-004005	24	H003005
723-46-41950	H0120-004005	28	H003005
723-46-41950	H0120-004005	4	H003005
723-46-41950	H0120-004005	8	H003005
723-46-41950	H0120-004005A	12	H003005A
723-46-41950	H0120-004005A	16	H003005A
723-46-41950	H0120-004005A	20	H003005A
723-46-41950	H0120-004005A	24	H003005A
723-46-41950	H0120-004005A	28	H003005A
723-46-41950	H0120-004005A	32	H003005A
723-46-41950	H0120-004005A	4	H003005A
723-46-41950	H0120-004005A	8	H003005A
723-46-41950	H0120-004016	4	H003016
723-46-41950	H0120-004016	8	H003016
723-46-41950	H0120-004023	3	H003023
723-46-41950	H0120-004105	12	H004005
723-46-41950	H0120-004105	16	H004005
723-46-41950	H0120-004105	20	H004005
723-46-41950	H0120-004105	24	H004005
723-46-41950	H0120-004105	28	H004005
723-46-41950	H0120-004105	4	H004005
723-46-41950	H0120-004105	8	H004005
723-46-41950	H0120-004116	4	H004016
723-46-41950	H0120-004116	8	H004016
723-46-41950	H0120-005005	12	H002005
723-46-41950	H0120-005005	16	H002005
723-46-41950	H0120-005005	20	H002005
723-46-41950	H0120-005005	24	H002005
723-46-41950	H0120-005005	28	H002005
723-46-41950	H0120-005005	4	H002005
723-46-41950	H0120-005005	8	H002005
723-46-41950	H0120-005005A	12	H002005A
723-46-41950	H0120-005005A	16	H002005A
723-46-41950	H0120-005005A	20	H002005A
723-46-41950	H0120-005005A	24	H002005A
723-46-41950	H0120-005005A	28	H002005A
723-46-41950	H0120-005005A	4	H002005A
723-46-41950	H0120-005005A	8	H002005A
723-46-41950	H0120-005016	4	H002016
723-46-41950	H0120-005016	8	H002016
723-46-41950	H0120-005023	3	H002023
723-46-42800	H0120-004005	6	H003005
723-46-42800	H0120-004005A	6	H003005A
723-46-42800	H0120-004105	6	H004005
723-46-42800	H0120-005005	6	H002005
723-46-42800	H0120-005005A	6	H002005A
723-46-43100	H0120-004005	14	H003005
723-46-43100	H0120-004005A	14	H003005A
723-46-43100	H0120-004105	14	H004005
723-46-43100	H0120-005005	14	H002005
723-46-43100	H0120-005005A	14	H002005A
723-46-43100	H0120-005016	6	H002016
723-46-43400	H0120-004005	18	H003005
723-46-43400	H0120-004005A	18	H003005A
723-46-43400	H0120-004105	18	H004005
723-46-43400	H0120-005005	18	H002005
723-46-43400	H0120-005005A	18	H002005A
723-46-44100	H0120-004005	22	H003005
723-46-44100	H0120-004005A	22	H003005A
723-46-44100	H0120-004105	22	H004005
723-46-44100	H0120-005005	22	H002005
723-46-44100	H0120-005005A	22	H002005A
723-46-44600	H0120-004016	6	H003016
723-46-44600	H0120-005016	6	H002016
723-46-45100	H0120-004005	26	H003005
723-46-45100	H0120-004005A	26	H003005A
723-46-45100	H0120-004105	26	H004005
723-46-45100	H0120-005005	26	H002005
723-46-45100	H0120-005005A	26	H002005A
723-46-45800	H0120-004005A	30	H003005A
723-46-45800	H0120-005005A	30	H002005A
723-46-47500	H0120-004016	6	H003016
723-46-47500	H0120-004116	6	H004016
723-46-47500	H0120-005016	6	H002016
723-46-41950	H0120-005005	12	H002005
723-46-41950	H0120-005005	16	H002005
723-46-41950	H0120-005005	20	H002005
723-46-41950	H0120-005005	24	H002005
723-46-41950	H0120-005005	28	H002005
723-46-41950	H0120-005005	4	H002005
723-46-41950	H0120-005005	8	H002005
723-46-41950	H0120-005005A	12	H002005A
723-46-41950	H0120-005005A	16	H002005A
723-46-41950	H0120-005005A	20	H002005A
723-46-41950	H0120-005005A	24	H002005A
723-46-41950	H0120-005005A	28	H002005A
723-46-41950	H0120-005005A	4	H002005A
723-46-41950	H0120-005005A	8	H002005A
723-46-41950	H0120-005016	4	H002016
723-46-41950	H0120-005016	8	H002016
723-46-41950	H0120-005023	3	H002023
723-46-42800	H0120-004005	6	H003005
723-46-42800	H0120-004005A	6	H003005A
723-46-42800	H0120-004105	6	H004005
723-46-42800	H0120-005005	6	H002005
723-46-42800	H0120-005005A	6	H002005A
723-46-43100	H0120-004005	14	H003005
723-46-43100	H0120-004005A	14	H003005A
723-46-43100	H0120-004105	14	H004005
723-46-43100	H0120-005005	14	H002005
723-46-43100	H0120-005005A	14	H002005A
723-46-43100	H0120-005016	6	H002016
723-46-43400	H0120-004005	18	H003005
723-46-43400	H0120-004005A	18	H003005A
723-46-43400	H0120-004105	18	H004005
723-46-43400	H0120-005005	18	H002005
723-46-43400	H0120-005005A	18	H002005A
723-46-44100	H0120-004005	22	H003005
723-46-44100	H0120-004005A	22	H003005A
723-46-44100	H0120-004105	22	H004005
723-46-44100	H0120-005005	22	H002005
723-46-44100	H0120-005005A	22	H002005A
723-46-44600	H0120-004016	6	H003016
723-46-44600	H0120-005016	6	H002016
723-46-45100	H0120-004005	26	H003005
723-46-45100	H0120-004005A	26	H003005A
723-46-45100	H0120-004105	26	H004005
723-46-45100	H0120-005005	26	H002005
723-46-45100	H0120-005005A	26	H002005A
723-46-45800	H0120-004005A	30	H003005A
723-46-45800	H0120-005005A	30	H002005A
723-46-47500	H0120-004016	6	H003016
723-46-47500	H0120-004116	6	H004016
723-46-47500	H0120-005016	6	H002016
723-46-47500	H0120-005016	6	H002016
723-46-48100	H0120-004023	1	H003023
723-46-48100	H0120-005023	1	H002023
723-47-26600	H0120-004101	1	H004001
723-47-26600	H0120-004102	1	H004002
723-47-26600	H0120-004103	1	H004003
723-47-26600	H0120-004104	1	H004004
723-47-26600	H0120-004105	1	H004005
723-47-26600	H0120-004106	1	H004006
723-47-26600	H0120-004107	1	H004007
723-47-26600	H0120-004108	1	H004008
723-47-26600	H0120-004109	1	H004009
723-47-26600	H0120-004110	1	H004010
723-47-26600	H0120-004111	1	H004011
723-47-26600	H0120-004112	1	H004012
723-47-26600	H0120-004113	1	H004013
723-47-26600	H0120-004114	1	H004014
723-47-26600	H0120-004115	1	H004015
723-47-26600	H0120-004116	1	H004016
723-47-26600	H0120-004117	1	H004017
723-47-26600	H0120-004118	1	H004018
723-47-26600	H0120-004119	1	H004019
723-47-26600	H0120-004120	1	H004020
723-47-26600	H0120-004121	1	H004021
723-47-26600	H0120-004122	1	H004022
723-47-26601	H0120-004101	1	H004001
723-47-26601	H0120-004102	1	H004002
723-47-26601	H0120-004103	1	H004003
723-47-26601	H0120-004104	1	H004004
723-47-26601	H0120-004105	1	H004005
723-47-26601	H0120-004106	1	H004006
723-47-26601	H0120-004107	1	H004007
723-47-26601	H0120-004108	1	H004008
723-47-26601	H0120-004109	1	H004009
723-47-26601	H0120-004110	1	H004010
723-47-26601	H0120-004111	1	H004011
723-47-26601	H0120-004112	1	H004012
723-47-26601	H0120-004113	1	H004013
723-47-26601	H0120-004114	1	H004014
723-47-26601	H0120-004115	1	H004015
723-47-26601	H0120-004116	1	H004016
723-47-26601	H0120-004117	1	H004017
723-47-26600	H0120-004118	1	H004018
723-47-26600	H0120-004119	1	H004019
723-47-26600	H0120-004120	1	H004020
723-47-26600	H0120-004121	1	H004021
723-47-26601	H0120-004122	1	H004022
723-48-26600	H0120-005001	1	H002001
723-48-26600	H0120-005002	1	H002002
723-48-26600	H0120-005003	1	H002003

PARTS Nº	FIG. Nº	INDEX	PAGE
723-48-26600	H0120-005004	1	H002004
723-48-26600	H0120-005005	1	H002005
723-48-26600	H0120-005006	1	H002006
723-48-26600	H0120-005007	1	H002007
723-48-26600	H0120-005008	1	H002008
723-48-26600	H0120-005009	1	H002009
723-48-26600	H0120-005010	1	H002010
723-48-26600	H0120-005011	1	H002011
723-48-26600	H0120-005012	1	H002012
723-48-26600	H0120-005013	1	H002013
723-48-26600	H0120-005014	1	H002014
723-48-26600	H0120-005015	1	H002015
723-48-26600	H0120-005016	1	H002016
723-48-26600	H0120-005017	1	H002017
723-48-26600	H0120-005018	1	H002018
723-48-26600	H0120-005019	1	H002019
723-48-26600	H0120-005020	1	H002020
723-48-26600	H0120-005021	1	H002021
723-48-26600	H0120-005022	1	H002022
723-48-26600	H0120-005023	1	H002023
723-48-26600	H0120-005024	1	H002024
723-48-26600	H0120-005025	1	H002025
723-48-26601	H0120-004001	1	H003001
723-48-26601	H0120-004002	1	H003002
723-48-26601	H0120-004003	1	H003003
723-48-26601	H0120-004004	1	H003004
723-48-26601	H0120-004005	1	H003005
723-48-26601	H0120-004006	1	H003006
723-48-26601	H0120-004007	1	H003007
723-48-26601	H0120-004008	1	H003008
723-48-26601	H0120-004009	1	H003009
723-48-26601	H0120-004010	1	H003010
723-48-26601	H0120-004011	1	H003011
723-48-26601	H0120-004012	1	H003012
723-48-26601	H0120-004013	1	H003013
723-48-26601	H0120-004014	1	H003014
723-48-26601	H0120-004015	1	H003015
723-48-26601	H0120-004016	1	H003016
723-48-26601	H0120-004017	1	H003017
723-48-26601	H0120-004018	1	H003018
723-48-26601	H0120-004019	1	H003019
723-48-26601	H0120-004020	1	H003020
723-48-26601	H0120-004021	1	H003021
723-48-26601	H0120-004022	1	H003022
723-48-26601	H0120-004023	1	H003023
723-48-26601	H0120-004024	1	H003024
723-48-26601	H0120-005001	1	H002001
723-48-26601	H0120-005002	1	H002002
723-48-26601	H0120-005003	1	H002003
723-48-26601	H0120-005004	1	H002004
723-48-26601	H0120-005005	1	H002005
723-48-26602	H0120-005005	1	H002005
723-48-26602	H0120-005006	1	H002006
723-48-26602	H0120-005007	1	H002007
723-48-26602	H0120-005008	1	H002008
723-48-26602	H0120-005009	1	H002009
723-48-26602	H0120-005010	1	H002010
723-48-26602	H0120-005011	1	H002011
723-48-26602	H0120-005012	1	H002012
723-48-26602	H0120-005013	1	H002013
723-48-26602	H0120-005014	1	H002014
723-48-26602	H0120-005015	1	H002015
723-48-26602	H0120-005016	1	H002016
723-48-26602	H0120-005017	1	H002017
723-48-26602	H0120-005018	1	H002018
723-48-26602	H0120-005019	1	H002019
723-48-26602	H0120-005020	1	H002020
723-48-26602	H0120-005021	1	H002021
723-48-26602	H0120-005022	1	H002022
723-48-26602	H0120-005023	1	H002023
723-48-26602	H0120-005024	1	H002024
723-48-26602	H0120-005025	1	H002025
723-48-26603	H0120-004001	1	H003001
723-48-26603	H0120-004002	1	H003002
723-48-26603	H0120-004003	1	H003003
723-48-26603	H0120-004004	1	H003004
723-48-26603	H0120-004005	1	H003005
723-48-26603	H0120-004006	1	H003006
723-48-26603	H0120-004007	1	H003007
723-48-26603	H0120-004008	1	H003008
723-48-26603	H0120-004009	1	H003009
723-48-26603	H0120-004010	1	H003010
723-48-26603	H0120-004011	1	H003011
723-48-26603	H0120-004012	1	H003012
723-48-26603	H0120-004013	1	H003013
723-48-26603	H0120-004014	1	H003014
723-48-26603	H0120-004015	1	H003015
723-48-26603	H0120-004016	1	H003016
723-48-26603	H0120-004017	1	H003017
723-48-26603	H0120-004018	1	H003018
723-48-26603	H0120-004019	1	H003019
723-48-26603	H0120-004020	1	H003020
723-48-26603	H0120-004021	1	H003021
723-48-26603	H0120-004022	1	H003022
723-48-26603	H0120-004023	1	H003023
723-48-26603	H0120-004024	1	H003024
723-48-26603	H0120-005001	1	H002001
723-48-26603	H0120-005002	1	H002002
723-48-26603	H0120-005003	1	H002003
723-48-26603	H0120-005004	1	H002004
723-48-26603	H0120-005005	1	H002005
723-48-26603	H0120-005006	1	H002006

PARTS Nº	FIG. Nº	INDEX	PAGE
723-48-26603	H0120-005007	1	H002007
723-48-26603	H0120-005008	1	H002008
723-48-26603	H0120-005009	1	H002009
723-48-26603	H0120-005010	1	H002010
723-48-26603	H0120-005011	1	H002011
723-48-26603	H0120-005012	1	H002012
723-48-26603	H0120-005013	1	H002013
723-48-26603	H0120-005014	1	H002014
723-48-26603	H0120-005015	1	H002015
723-48-26603	H0120-005016	1	H002016
723-48-26603	H0120-005017	1	H002017
723-48-26603	H0120-005018	1	H002018
723-48-26603	H0120-005019	1	H002019
723-48-26603	H0120-005020	1	H002020
723-48-26603	H0120-005021	1	H002021
723-48-26603	H0120-005022	1	H002022
723-48-26603	H0120-005023	1	H002023
723-48-26603	H0120-005024	1	H002024
723-48-26604	H0120-004001	1	H003001
723-48-26604	H0120-004002	1	H003002
723-48-26604	H0120-004003	1	H003003
723-48-26604	H0120-004004	1	H003004
723-48-26604	H0120-004005A	1	H003005A
723-48-26604	H0120-004006	1	H003006
723-48-26604	H0120-004007	1	H003007
723-48-26604	H0120-004008	1	H003008
723-48-26604	H0120-004009	1	H003009
723-48-26604	H0120-004010	1	H003010
723-48-26604	H0120-004011	1	H003011
723-48-26604	H0120-004012	1	H003012
723-48-26604	H0120-004013	1	H003013
723-48-26604	H0120-004014	1	H003014
723-48-26604	H0120-004015	1	H003015
723-48-26604	H0120-004016	1	H003016
723-48-26604	H0120-004017	1	H003017
723-48-26604	H0120-004018	1	H003018
723-48-26604	H0120-004019	1	H003019
723-48-26604	H0120-004020	1	H003020
723-48-26604	H0120-004021	1	H003021
723-48-26604	H0120-004022	1	H003022
723-48-26604	H0120-004023	1	H003023
723-48-26604	H0120-004024	1	H003024
723-48-26604	H0120-005001	1	H002001
723-48-26604	H0120-005002	1	H002002
723-48-26604	H0120-005003	1	H002003
723-48-26604	H0120-005004	1	H002004
723-48-26604	H0120-005005A	1	H002005A
723-48-26604	H0120-005006	1	H002006
723-48-26604	H0120-005007	1	H002007
723-48-26604	H0120-005008	1	H002008
723-48-26604	H0120-005009	1	H002009
723-48-26604	H0120-005010	1	H002010
723-48-26604	H0120-005011	1	H002011
723-48-26604	H0120-005012	1	H002012
723-48-26604	H0120-005013	1	H002013
723-48-26604	H0120-005014	1	H002014
723-48-26604	H0120-005015	1	H002015
723-48-26604	H0120-005016	1	H002016
723-48-26604	H0120-005017	1	H002017
723-48-26604	H0120-005018	1	H002018
723-48-26604	H0120-005019	1	H002019
723-48-26604	H0120-005020	1	H002020
723-48-26604	H0120-005021	1	H002021
723-48-26604	H0120-005022	1	H002022
723-48-26604	H0120-005023	1	H002023
723-48-26604	H0120-005024	1	H002024
723-60-22230	H0120-004008	5	H003008
723-60-22230	H0120-004108	5	H004008
723-60-22230	H0120-005008	5	H002008
723-90-61700	H0120-004024	8	H003024
723-90-61700	H0120-005024	8	H002024
723-90-61700	H0120-005025	1	H002025
723-90-69100	H0120-004012	3	H003012
723-90-69100	H0120-004112	3	H004012
723-90-69100	H0120-005012	3	H002012
723-90-76201	H0120-004012	5	H003012
723-90-76201	H0120-004112	5	H004012
723-90-76201	H0120-005012	5	H002012
723-90-76300	H0120-004024	6	H003024
723-90-76300	H0120-005024	6	H002024
723-90-76501	H0120-004024	6	H003024
723-90-76501	H0120-005024	6	H002024
7826-23-3011	K1110-024022	8	K008020
7826-23-3012	K1110-024022	8	K008020
7826-23-3012	K1110-039020	8	K009020
7826-23-3014	K1110-024022	8	K008020
7826-23-3014	K1110-039020	8	K009020
7826-23-3016	K1110-024022	8	K008020
7826-23-3016	K1110-039020	8	K009020
7826-23-3017	K1110-024022	8	K008020
7826-23-3017	K1110-039020	8	K009020
7831-91-4220	ASD00-001001	3	B009001
7835-31-5004	K1110-024013	1	K008013
7835-31-5005	K1110-024013	1	K008013
7835-31-5006	K1110-024013	1	K008013
7835-31-5007	K1110-024013	1	K008013
7835-31-5009	K1110-024013	1	K008013
7835-31-5009	K1110-039013	1	K009013
7835-33-1001	E0450-001001	1	E008001
7835-46-3003	K1110-024021	3	K008019
7835-46-3003	K1110-039019	3	K009019
7835-46-3004	K1110-024021	3	K008019
7835-46-3004	K1110-039019	3	K009019
7835-46-3005	K1110-024021	3	K008019
7835-46-3005	K1110-039019	3	K009019
7835-46-3006	K1110-024021	3	K008019
7835-46-3006	K1110-039019	3	K009019
7861-74-5100	K1110-024021	11	K008019
7861-74-5100	K1110-024021	13	K008019
7861-74-5100	K1110-024021	15	K008019
7861-74-5100	K1110-039019	11	K009019
7861-74-5100	K1110-039019	13	K009019
7861-74-5100	K1110-039019	15	K009019
7861-92-5810	D0100-001001	10	D001001
7861-92-5810	D0100-001001A	10	D001001A
7861-93-1420	B0200-002002	2	B004002
7861-93-1421	B0200-002002	2	B004002
7861-93-1811	H0120-005027	6	H002027
7861-93-1812	H0120-004027	6	H003027
7861-93-1812	H0120-004125	6	H004025
7861-93-1812	H0120-005027	6	H002027
7861-93-1840	H1833-001001	13	H021001
7861-93-3320	H0311-001001	3	H006001
7861-93-3320	H0311-001002	3	H006002
7861-94-2000	K1110-024021	5	K008019
7861-94-2000	K1110-039019	5	K009019
8233-06-3350	K1110-024021	20	K008019
8233-06-3350	K1110-039019	20	K009019
8255-62-4591	D0100-001001	3	D001001
8255-62-4591	D0100-001001A	3	D001001A
8A13-10-2100	K1110-024012	25	K008012
8A13-10-2100	K1110-039012	25	K009012
8A13-10-2200	K1110-024012	26	K008012
8A13-10-2200	K1110-039012	26	K009012
8A13-10-4300	K1110-024012	23	K008012
8A13-10-4320	K1110-024012	23	K008012
8A13-10-4320	K1110-039012	23	K009012
AS160122	K0110-001001	9	K001001
AS164899	K0110-001001	13	K001001
AS165989	K0110-001001	19	K001001
AS166011	K0110-001001	14	K001001
AS186833	K0110-001001	8	K001001
AS192161	K0110-001001	7	K001001
AS195367	K0110-001001	1	K001001
AS195369	K0110-001001	2	K001001
AS195370	K0110-001001	3	K001001
AS195372	K0110-001001	4	K001001
AS195373	K0110-001001	5	K001001
AS195374	K0110-001001	6	K001001
AS195376	K0110-001001	10	K001001

PARTS Nº	FIG. Nº	INDEX	PAGE
AS195377	K0110-001001	11	K001001
AS195381	K0110-001001	1	K001001
AS195388	K0110-001001	12	K001001
AS195389	K0110-001001	15	K001001
AS195390	K0110-001001	16	K001001
AS195391	K0110-001001	17	K001001
AS195392	K0110-001001	18	K001001
AS195393	K0110-001001	20	K001001
AS198243	K0110-001001	13	K001001
AS200024	K0110-001001	11	K001001
AS200179	K0110-001001	11	K001001
AS207078	K0110-001001	12	K001001
AS207079	K0110-001001	20	K001001
HM6400-0012	K1110-024034	10	K008031
HM6400-0012	K1110-039030	10	K009030
HM6400-0013	K1110-024034	11	K008031
HM6400-0013	K1110-039030	11	K009030
HM6400-0016	K1110-024034	13	K008031
HM6400-0016	K1110-039030	13	K009030
HM6409-0071	K1110-024034	10	K008031
HM6409-0071	K1110-039030	10	K009030
HM6409-0072	K1110-024034	11	K008031
HM6409-0072	K1110-039030	11	K009030
HM6409-0075	K1110-024034	13	K008031
HM6409-0075	K1110-039030	13	K009030
HM6440-0128	K1110-024034	12	K008031
HM6440-0128	K1110-039030	12	K009030
HM6440-0129	K1110-024034	12	K008031
HM6440-0129	K1110-039030	12	K009030
KD0-0020-05062	A6250-002001	39	B000071
KD0-0055-05082	A6250-002001	37	B000071
KD0-0055-05122	A6010-001004	29	B000054
KD0-0055-05202	A6010-001004	28	B000054
KD0-0056-05302	A6010-001004	31	B000054
KD0-0056-05302	A6010-001004	39	B000054
KD0-0270-06602	A6250-002001	43	B000071
KD0-0274-06202	A6250-002001	15	B000071
KD0-0275-06802	A6010-001002	12	B000052
KD0-0275-06802	A6010-001004	12	B000054
KD0-0276-08402	A6250-002001	32	B000071
KD0-0280-16022	A6010-001002	17	B000052
KD0-09001-4380	A6250-002001	30	B000071
KD0-09006-0370	A6010-001004	36	B000054
KD0-09006-0660	A6250-002001	47	B000071
KD0-09006-0670	A6250-002001	48	B000071
KD0-09006-0730	A6010-001004	15	B000054
KD0-09011-3140	A6250-002001	27	B000071
KD0-09011-3540	A6010-001004	30	B000054
KD0-09011-3540	A6010-001004	32	B000054
KD0-09057-0110	A6250-002001	33	B000071
KD0-09057-0190	A6250-002001	38	B000071
KD0-09057-0220	A6010-001002	29	B000052
KD0-09057-0220	A6010-001004	27	B000054
KD0-09170-2501	A6010-001002	21	B000052
KD0-09170-2501	A6010-001004	19	B000054
KD0-09201-0850	A6250-002001	12	B000071
KD0-09201-0980	A6010-001002	4	B000052
KD0-09201-0980	A6010-001004	4	B000054
KD0-09201-1140	A6010-001002	7	B000052
KD0-09201-1140	A6010-001004	7	B000054
KD0-09271-3620	A6250-002001	21	B000071
KD0-09275-1430	A6250-002001	50	B000071
KD0-23100-0430	A6250-002001	18	B000071
KD0-23120-0180	A6250-002001	8	B000071
KD0-23200-0671	A6250-002001	20	B000071
KD0-23303-0020	A6250-002001	5	B000071
KD0-23310-1740	A6250-002001	9	B000071
KD0-23600-0410	A6250-002001	13	B000071
KD0-23611-1101	A6250-002001	14	B000071
KD0-23710-0221	A6250-002001	29	B000071
KD0-23740-0351	A6250-002001	23	B000071
KD0-23750-0490	A6250-002001	24	B000071
KD0-25000-8521	A6250-002001	42	B000071
KD0-33902-0080	A6010-001004	37	B000054
KD0-33902-0090	A6010-001004	38	B000054
KD0-35100-0300	A6010-001002	1	B000052
KD0-35100-0418	A6010-001004	1	B000054
KD0-35120-0290	A6010-001002	18	B000052
KD0-35120-0528	A6010-001004	16	B000054
KD0-35200-0460	A6010-001002	5	B000052
KD0-35200-0528	A6010-001004	5	B000054
KD0-35300-0350	A6010-001002	6	B000052
KD0-35300-0450	A6010-001004	6	B000054
KD0-35411-0640	A6010-001002	13	B000052
KD0-35411-0648	A6010-001004	13	B000054
KD0-35421-0240	A6010-001002	14	B000052
KD0-35421-0240	A6010-001004	14	B000054
KD0-35700-0950	A6010-001002	19	B000052
KD0-35700-0950	A6010-001004	16	B000054
KD0-35710-1150	A6010-001002	19	B000052
KD0-35710-1330	A6010-001004	17	B000054
KD0-35719-0201	A6010-001004	33	B000054
KD0-35730-0700	A6010-001002	20	B000052
KD0-35730-0700	A6010-001004	18	B000054
KD0-35761-0250	A6010-001002	31	B000052
KD0-35761-0308	A6010-001004	34	B000054
KD0-35784-0210	A6010-001002	27	B000052
KD0-35784-0210	A6010-001004	25	B000054
KD0-35784-0290	A6010-001002	28	B000052
KD0-35784-0290	A6010-001004	26	B000054
KD0-35902-0010	A6010-001004	35	B000054
KD0-35923-0130	A6010-001002	23	B000052
KD0-35923-0134	A6010-001004	22	B000054
KD0-35926-0070	A6010-001002	8	B000052
KD0-35926-0070	A6010-001004	8	B000054
KD0-35926-0090	A6010-001002	10	B000052
KD0-35926-0090	A6010-001004	10	B000054
KD0-35943-0140	A6010-001002	25	B000052
KD0-35943-0140	A6010-001004	24	B000054
KD0-35943-0150	A6010-001002	22	B000052
KD0-35943-0154	A6010-001004	21	B000054
KD0-35943-0160	A6010-001002	24	B000052
KD0-35943-0160	A6010-001004	23	B000054
KD0-35943-0170	A6010-001002	26	B000052
KD0-35943-0170	A6010-001004	20	B000054
KD0-35951-0060	A6010-001002	9	B000052
KD0-35951-0060	A6010-001004	9	B000054
KD0-47100-4651	A6250-002001	19	B000071
KD0-47761-2671	A6250-002001	45	B000071
KD0-47761-2681	A6250-002001	25	B000071
KD0-47761-2691	A6250-002001	26	B000071
KD0-47927-1390	A6250-002001	44	B000071
KD1-0240-06305	A6250-002001	41	B000071
KD1-0330-08022	A6250-002001	3	B000071
KD1-0330-16012	A6010-001002	15	B000052
KD1-0335-08002	A6250-002001	2	B000071
KD1-0335-16002	A6010-001002	16	B000052
KD1-0345-05001	A6250-002001	40	B000071
KD1-0345-08001	A6250-002001	4	B000071
KD1-0400-30100	A6250-002001	17	B000071
KD1-09211-0081	A6250-002001	28	B000071
KD1-09211-0981	A6250-002001	46	B000071
KD1-09211-1120	A6250-002001	22	B000071
KD1-09257-0050	A6250-002001	49	B000071
KD1-09279-0090	A6250-002001	1	B000071
KD1-23181-0020	A6250-002001	7	B000071
KD1-23320-0290	A6250-002001	11	B000071
KD1-23500-0970	A6250-002001	10	B000071
KD1-23914-0020	A6250-002001	6	B000071
KD1-23921-0130	A6250-002001	36	B000071
KD1-23921-0140	A6250-002001	35	B000071
KD1-23941-0040	A6250-002001	34	B000071
KD1-23951-0051	A6250-002001	16	B000071
KD1-33923-0240	A6010-001004	2	B000054
KD1-33923-0790	A6010-001002	2	B000052
KD1-33926-0730	A6010-001002	11	B000052
KD1-33926-0730	A6010-001004	11	B000054
KD1-35923-0160	A6010-001002	3	B000052
KD1-35923-0160	A6010-001004	3	B000054
KD1-47921-0790	A6250-002001	31	B000071

PARTS Nº	FIG. Nº	INDEX	PAGE
KD7-35719-0211	A6010-001002	30	B000052
ND017231-0700	K1110-024048	28	K008045
ND017231-0700	K1110-039044	28	K009044
ND063600-4580	K1110-024048	35	K008045
ND063600-4580	K1110-039044	35	K009044
ND063800-0300	K1110-024048	27	K008045
ND063800-0300	K1110-039044	27	K009044
ND077500-5650	K1110-024048	36	K008045
ND077500-5650	K1110-039044	36	K009044
ND077500-5890	K1110-024048	29	K008045
ND077500-5890	K1110-039044	29	K009044
ND077800-0750	K1110-024048	33	K008045
ND077800-0750	K1110-039044	33	K009044
ND077800-1120	K1110-024048	33	K008045
ND116140-0050	K1110-024048	14	K008045
ND116140-0050	K1110-039044	14	K009044
ND116340-7350	K1110-024048	38	K008045
ND116340-7350	K1110-039044	38	K009044
ND116576-3810	K1110-024048	3	K008045
ND116576-3810	K1110-039044	3	K009044
ND116576-3820	K1110-024048	4	K008045
ND116576-3820	K1110-039044	4	K009044
ND116576-3852	K1110-024048	25	K008045
ND116576-3852	K1110-039044	25	K009044
ND116576-3862	K1110-024048	26	K008045
ND116576-3862	K1110-039044	26	K009044
ND116650-6850	K1110-024048	16	K008045
ND116650-6850	K1110-039044	16	K009044
ND116660-7570	K1110-024048	15	K008045
ND116660-7570	K1110-039044	15	K009044
ND116662-7670	K1110-024048	23	K008045
ND116662-7670	K1110-039044	23	K009044
ND116662-7681	K1110-024048	24	K008045
ND116662-7681	K1110-039044	24	K009044
ND116662-8320	K1110-024048	44	K008045
ND116662-8320	K1110-039044	44	K009044
ND116780-2481	K1110-024048	17	K008045
ND116780-2481	K1110-039044	17	K009044
ND116780-2491	K1110-024048	18	K008045
ND116780-2491	K1110-039044	18	K009044
ND116780-2501	K1110-024048	19	K008045
ND116780-2501	K1110-039044	19	K009044
ND116780-2510	K1110-024048	20	K008045
ND116780-2510	K1110-039044	20	K009044
ND116780-3130	K1110-024048	22	K008045
ND116780-3130	K1110-039044	22	K009044
ND116780-3920	K1110-024048	31	K008045
ND116780-3920	K1110-039044	31	K009044
ND116781-3000	K1110-024048	21	K008045
ND116781-3000	K1110-039044	21	K009044
ND146340-0560	K1110-024048	34	K008045
ND146340-0560	K1110-039044	34	K009044
ND146657-8841	K1110-024048	10	K008045
ND146657-8841	K1110-039044	10	K009044
ND146657-8850	K1110-024048	12	K008045
ND146657-8850	K1110-039044	12	K009044
ND146657-8860	K1110-024048	37	K008045
ND146657-8860	K1110-039044	37	K009044
ND146657-9811	K1110-024048	11	K008045
ND146657-9811	K1110-039044	11	K009044
ND146667-0440	K1110-024048	32	K008045
ND146667-0440	K1110-039044	32	K009044
ND245450-5831	K1110-024048	1	K008045
ND245450-5831	K1110-039044	1	K009044
ND245450-5840	K1110-024048	2	K008045
ND245450-5840	K1110-039044	2	K009044
ND246470-4311	K1110-024048	42	K008045
ND246470-4311	K1110-039044	42	K009044
ND246470-4311	K1110-039044	42	K009044
ND246470-4312	K1110-024048	42	K008045
ND246790-2060	K1110-024048	30	K008045
ND246790-2060	K1110-039044	30	K009044
ND445021-3091	K1110-024048	13	K008045
ND445021-3941	K1110-024048	13	K008045
ND445021-3941	K1110-039044	13	K009044
ND446010-3132	K1110-024048	5	K008045
ND446010-3132	K1110-039044	5	K009044
ND446600-0991	K1110-024048	5	K008045
ND446600-0991	K1110-039044	5	K009044
ND447500-2750	K1110-024048	8	K008045
ND447500-2750	K1110-039044	8	K009044
ND447500-4760	K1110-024048	8	K008045
ND447500-4760	K1110-039044	8	K009044
ND93950-05003	K1110-024048	43	K008045
ND93950-05003	K1110-039044	43	K009044
ND949001-1730	K1110-024048	41	K008045
ND949001-1730	K1110-039044	41	K009044
ND949007-2350	K1110-024007	8	K008007
ND949007-2350	K1110-039007	8	K009007
ND949008-0330	K1110-024048	40	K008045
ND949008-0330	K1110-039044	40	K009044
ND949008-0460	K1110-024048	39	K008045
ND949008-0460	K1110-039044	39	K009044
ND949046-3100	K1110-024048	9	K008045
ND949046-3100	K1110-039044	9	K009044
ND949142-0020	K1110-024048	6	K008045
ND949142-0020	K1110-039044	6	K009044
ND949142-0030	K1110-024048	7	K008045
ND949142-0030	K1110-039044	7	K009044
NFEB0427 Z0	H1270-003005	6	H014005
NFEB1601	KIT	K01	Y010001
NFEB3026 A1	H1270-003005	2	H014005
NFEB3401 A1	H1270-003005	2	H014005
NFEB4475 Z0	H1270-003005	3	H014005
NFEB4477 Z0	H1270-003005	7	H014005
NY01720-10600	H1831-001001	28	H019001
NY05062-1170A	H1831-001001	13	H019001
NY05062-1170A	H1831-002001	14	H020001
NY05062-11800	H1831-001001	14	H019001
NY05062-11800	H1831-002001	15	H020001
NY06277-1320A	H1831-001001	16	H019001
NY06277-1320A	H1831-002001	17	H020001
NY06339-10200	H1831-001001	19	H019001
NY06339-10200	H1831-002001	20	H020001
NY07207-11700	H1831-001001	5	H019001
NY07207-11700	H1831-002001	5	H020001
NY07207-11800	H1831-001001	11	H019001
NY07493-10200	H1831-001001	20	H019001
NY07493-10200	H1831-002001	21	H020001
NY07505-10200	H1831-002001	11	H020001
NY07529-10200	H1831-001001	6	H019001
NY07529-10200	H1831-002001	6	H020001
NY07529-10300	H1831-001001	7	H019001
NY07529-10300	H1831-002001	7	H020001
NY07529-10400	H1831-001001	8	H019001
NY07529-10400	H1831-002001	8	H020001
NY07529-10500	H1831-001001	9	H019001
NY07529-10500	H1831-002001	9	H020001
NY07529-10600	H1831-001001	10	H019001
NY07529-10600	H1831-002001	10	H020001
NY07880-10900	H1831-002001	12	H020001
NY07926-10100	H1831-001001	27	H019001
NY09000-11400	H1831-001001	23	H019001
NY09000-11400	H1831-002001	24	H020001
NY16207-10200	H1831-001001	18	H019001
NY16207-10200	H1831-002001	19	H020001
NY16207-10300	H1831-001001	21	H019001
NY16207-10300	H1831-002001	22	H020001
NY80000-02100	H1831-001001	24	H019001
NY80000-02100	H1831-002001	25	H020001
NY80000-02200	H1831-001001	17	H019001
NY80000-02200	H1831-002001	18	H020001
NY81446-05012	H1831-001001	22	H019001
NY81446-05012	H1831-002001	23	H020001
NY84110-00248	H1831-001001	26	H019001
NY84110-00248	H1831-002001	27	H020001
NY89103-00090	H1831-001001	12	H019001
NY89103-00090	H1831-002001	13	H020001
REU419B-418-C	K1110-024008	15	K008008
REU419B-418-C	K1110-039008	15	K009008

PARTS Nº	FIG. Nº	INDEX	PAGE
RFU419B-418-A	K1110-024008	1	K008008
RFU419B-418-A	K1110-039008	1	K009008
RFU419B-418-B	K1110-024008	6	K008008
RFU419B-418-B	K1110-039008	6	K009008
RFU419B-418-C	K1110-024008	7	K008008
RFU419B-418-C	K1110-039008	7	K009008
RFU419B-418-D	K1110-024008	3	K008008
RFU419B-418-D	K1110-039008	3	K009008
RFU419B-418-E	K1110-024008	4	K008008
RFU419B-418-E	K1110-039008	4	K009008
RFU419B-418-F	K1110-024008	16	K008008
RFU419B-418-F	K1110-039008	16	K009008