RUTHZIL TRATOR COMERCIAL DE PEÇAS LTDA 11 97083-6812 ROLANDO CITRANGULO

Parts Book

KOMATSU

HYDRAULIC
EXCAVATOR

PC400-8
PC400LCSE-8

SERIAL NUMBERS : PC400-8 J30001 and up
PC400LCSE-8 J30001 and up

KOMATSU

PARTS BOOK

PC400-8R
Serial No. J30001 and up
PC400LCSE-8R
Serial No. J30001 and up
ENGINE SAA6D125E-5
Engine No. 660029 and up

FOREWORD

When ordering a spare part, specially the part number, part name, and quantity required, and also specify your machine model code, machine serial number, engine serial number and the service meter reading.

This Parts Book describes not only standard items but also optional equipment and attachments. To order a part, please contact your nearest Komatsu distributor.

This Parts Book contains the information and special symbols as follows :

Figure And List	When you open this Parts Book, you will find and illustration on the left page (even-numbered page) for the spare parts group. Each individual part in the group is given an index number. On the right page, the component parts of the group are listed in the order of the index numbers shown on the illustration page. The part number, part name, and applicable machine serial number are given for each part.
Ref.	The Ref. is the number of the illustration shown on the page. It is not the spare part number. The numbers are not always contionous.
item	This the same as the item number in the illustration. The parts are listed in item number order.
Part No.	The number given in the Part No. Column is the part number for the part shown. It is the code used when ordering that part. It is important that there be no mistake in this code number when ordering.
Description	This gives the name of part that has the part number listed. The mark . Is put in front of the part name of an assembly part and the item is entered following the assembly. If a part marked with . Is a sub assembly, its components are marked with .. Example : ELEMENT ASSEMBLY, AIR CLEANER .ELEMENT ASSEMBLY, OUTER ..ELEMENT, OUTER ..NUT, WING ..WASHER
Qty (Quantity)	This specifies the number of pieces used for one machine. However, if a part is included in the assembly and/or component is specified.
Options	Applicable engine serial number is indcated for the engine volume, in the chassis volume, this indicates the machine serial number in which the part is ud.

Symbols and codes	Symbols and codes used in the PART No. and DESCRIPTION columns,and represent the following:

A2	The part specified in the line above can be used instead of this part.
B2	This shows a discontinued part. The part specified in the DESCRIPTION column is supplied instead as a set.
C2	This part cannot be supplied as individual part. It is supplied as an assembly. It, however, is supplied as an individual part by authorized distributors only.
A3	This part can be used instead of the part specified in the line immediately above.
C3	This indicates a part supplied as semi-finished . It requires additional work before installation.
A1	The part and the part specified in the line immediately above are interchangable.
B1	This shows a discontinued part. The part specified in the above line is supplied instead.
C1	This part cannot be supplied as individual part. It is supplied as an assembly.
KIT	This indicates kit parts. For kit parts, refere to the service kit pages provided in this Parts Book.
A4	The part specified in the DESCRIPTION column can be used instead of this part if it is used as a set.

PC400-8
PC400LC-8
ENGINE
SAA6D125E-5

Serial No. J30001 and up
Serial No. J30001 and up
Engine No. 660029 and up

CONTENTS

Page	Reference	Title
QF-2		Foreword
QC-1		Contents
Page	Reference	Title
[ENGINE.]		
000000	A1111-A3C5	ROCKER ARM HOUSING COVER ACCESSORY (OIL FILLER)
000010	A1010-A3E2	CYLINDER HEAD
000020	A1110-A3C8	ROCKER ARM HOUSING COVER
000040	A1310-A3S9	AIR INTAKE MANIFOLD AND CONNECTING
000050	A1510-A3H5	EXHAUST MANIFOLD
000060	A1530-A3L9	TURBOCHARGER MOUNTING AND LUBRICATING OIL PIPING
000070	A1530-B3L9	TURBOCHARGER (KTR90-332E) (INNER PARTS)
000080	A1550-A3A9	COVER FOR EGR LESS
000090	A1570-A3D1	HEAT SHIELD
000100	A1610-A3Y3	MUFFLER
000110	A1730-A3K4	THERMOSTAT AND THERMOSTAT HOUSING
000120	A1790-A3H7	WATER TEMPERATURE SENSOR
000130	A2010-A3M3	CYLINDER BLOCK
000140	A2011-A3K6	CYLINDER BLOCK ACCESSORY (OIL PRESSURE SWITCH AND BLIND COVER)
000150	A2040-A3J6	FRONT COVER
000160	A2041-A3H5	FRONT COVER ACCESSORY (MOUNTING BOLT AND POINTER)
000170	A2050-A3B1	IDLER GEAR
000180	A2060-A3H4	CAM FOLLOWER COVER AND BREATHER
000190	A2110-A3R2	OIL PAN AND SUCTION TUBE
000200	A2210-A3L2	FLYWHEEL HOUSING
000210	A2230-A3F3	FLYWHEEL
000220	A2310-A3A6	CRANKSHAFT
000230	A2330-A3B9	VIBRATION DAMPER
000240	A2350-A3D8	PISTON AND CONNECTING ROD
000250	A2370-A3D8	CRANK PULLEY (NON HARDENING)
000260	A2370-A3E1	CRANK PULLEY (HARDENING)
000270	A2410-A3B8	CAMSHAFT AND CAMFOLLOWER
000280	A2410-B3B8	ROCKER ARM AND HOUSING
000290	A3010-A3A8	OIL PUMP
000300	A3110-A3K5	OIL FILTER AND PIPING
000310	A3310-A3D3	OIL COOLER
000320	A3311-A3B3	OIL COOLER MOUNTING PARTS
000330	A3330-A3A8	WATER DRAIN VALVE
000340	A4010-A3Z1	FUEL SUPPLY PUMP AND COMMON RAIL
000350	A4010-B3Z1	FUEL SUPPLY AND RETURN PIPING
000360	A4010-C3Z1	COMMON RAIL (INNER PARTS)
000370	A4010-D3Z1	FUEL SUPPLY PUMP (1/2) (PUMP) (INNER PARTS)
000371	A4010-D3Z1	FUEL SUPPLY PUMP (1/2) (PUMP) (INNER PARTS)
000380	A4010-E3Z1	FUEL SUPPLY PUMP (2/2) (PUMP) (INNER PARTS)
000390	A4030-A3F7	FUEL SUPPLY PIPING AND LUBRICATING OIL PIPING
000400	A4030-B3F7	OTHER PARTS FOR FUEL PIPING
000410	A4210-A3C9	FUEL SUPPLY PUMP DRIVE
000420	A4110-A3S5	FUEL FILTER AND PIPING (THREAD 1-5/8)
000421	A4110-A3S5	FUEL FILTER AND PIPING (THREAD 1-5/8)
000430	A4110-B3S5	FUEL PRIMING PUMP AND PIPING
000440	A4110-C3S5	FUEL AIR VENT
000450	A4119-A3A1	FUEL FILTER CARTRIDGE (THREAD 1-5/8) (SERVICE ONLY)
000460	A4210-A3K2	FUEL INJECTOR AND SPILL TUBE
000470	A4230-A3M5	FUEL RETURN
000480	A4710-A3H3	FUEL CONTROLLER
000490	A5010-A3N6	WATER PUMP MOUNTING AND AIR VENT
000500	A5030-A3K2	COOLING FAN (SUCTION TYPE)
000510	A5050-A3R3	FAN PULLEY AND DRIVE BELT
000520	A5050-A3R5	FAN PULLEY AND DRIVE BELT (HARDENING PULLEY)
000530	A5060-A3J9	FAN DRIVE
000540	A5210-A3G6	CORROSION RESISTOR

PC400-8 QC-1

Page	Reference	Title
000550	A6010-A3X5	ALTERNATOR AND MOUNTING (50A).....
000560	A6010-A3X6	ALTERNATOR AND MOUNTING (60A).....
000570	A6010-A3Y1	ALTERNATOR AND MOUNTING (50A) (SANDY AND DUSTY SPEC).....
000580	A6010-B3X5	ALTERNATOR AND MOUNTING (50A) (INNER PARTS).....
000590	A6010-B3X6	ALTERNATOR (60A) (INNER PARTS).....
000600	A6010-B3Y1	ALTERNATOR (50A) (INNER PARTS) (SANDY AND DASTY SPEC).....
000610	A6210-A3H5	STARTING MOTOR MOUNTING (7.5KW) (WITH PROTECT COVER).....
000620	A6210-A3H6	STARTING MOTOR MOUNTING (11KW) (WITH PROTECT COVER).....
000630	A6210-B3H5	STARTING MOTOR (7.5KW) (INNER PARTS).....
000631	A6210-B3H5	STARTING MOTOR (7.5KW) (INNER PARTS).....
000640	A6210-B3H6	STARTING MOTOR (11KW) (INNER PARTS).....
000641	A6210-B3H6	STARTING MOTOR (11KW) (INNER PARTS).....
000650	A6810-A3K5	ELECTRICAL WIRING (1/3) (ENGINE HARNESS).....
000660	A6810-B3K5	ELECTRICAL WIRING (2/3) (HARNESS SUPPORT).....
000661	A6810-B3K5	ELECTRICAL WIRING (2/3)(HARNESS SUPPORT).....
000670	A6810-C3K5	ELECTRICAL WIRING (3/3) (ENGINE HARNESS).....
000680	A9810-A373	NAME PLATE AND CAUTION PLATE (ENGLISH).....
000690	B9999-A3W5	AFTER COOLER.....
000700	B9999-A3W6	CORROSION RESISTOR.....
000710	B9999-A3W9	PRIMING PUMP AND PRE-FILTER.....
000720	B9999-A3X4	AIR CLEANER.....

[ENGINE RELATED PARTS]

030010	B0000-01A0	DAMPER AND PUMP.....
030020	B0100-01A0	ENGINE MOUNTING.....
030030	B0200-01A1	AIR CLEANER CONNECTION (WITH PRECLEANER).....
030040	B0200-01A2	AIR CLEANER CONNECTION (WITH FUEL SELF SUPPLY PUMP).....
030050	B0920-01A0	CORROSION RESISTOR.....

[COOLING SYSTEM]

060010	C0100-01A1	COOLING (RADIATOR AND FRAME).....
060020	C0100-02A1	COOLING (OIL COOLER AND SHROUD).....
060030	C0100-03A1	COOLING (AFTER COOLER AND CONDENSER).....
060031	C0100-03A1	COOLING (AFTER COOLER AND CONDENSER).....
060040	C0100-04A1	COOLING (AFTER COOLER PIPING).....
060050	C0100-05A1	COOLING (COVER).....
060060	C0100-06A1	COOLING (RADIATOR PIPING AND SUB TANK).....
060070	C0100-07A1	COOLING (SHEET).....
060080	C0310-01A0	FAN GUARD.....

[FUEL TANK AND RELATED PARTS]

090010	D0100-01A1	FUEL TANK (FOR FUEL REFILL PUMP).....
090020	D0100-01A2	FUEL TANK (FOR FUEL REFILL PUMP).....
090030	D0200-01A1	FUEL LINES (1/3).....
090040	D0200-02A1	FUEL LINES (2/3).....
090041	D0200-02A1	FUEL LINES (2/3).....
090050	D0200-03A1	FUEL LINES (3/3).....
090060	D0200-04A1	FUEL LINE.....

[ELECTRICAL SYSTEM]

120010	E0100-01A0	BATTERY (WET) (LARGE CAPACITY).....
120030	E0100-01A2	BATTERY STD (OPTIONAL).....
120040	E0200-01A1	ELECTRIC WIRING (STARTING HARNESS).....
120050	E0200-02A1	ELECTRIC WIRING (MAIN HARNESS) (1/3).....
120060	E0200-03A1	ELECTRIC WIRING (MAIN HARNESS) (2/3).....
120061	E0200-03A1	ELECTRIC WIRING (MAIN HARNESS)(2/3).....
120070	E0200-04A1	ELECTRIC WIRING (MAIN HARNESS) (3/3).....
120080	E0200-05A1	ELECTRIC WIRING (WORKING LAMP).....
120100	E0200-05A2	ELECTRIC WIRING (WORKING LAMP) (WITH ELECTRIC PRIMING PUMP TIMER SWITCH).....
120110	E0310-01A0	ADDITIONAL WORK LAMP.....
120120	E0310-01A3	ADDITIONAL WORK LAMP (WITH FRONT GUARD).....
120130	E0410-01A0	HORN.....
120140	E0420-01A0	TRAVEL ALARM.....
120150	E0450-01A0	REAR VIEW MONITORING SYSTEM (1 CAMERA).....
120160	E0450-01A1	REAR VIEW MONITORING SYSTEM (2 CAMERA).....
120170	E0450-01A2	REAR VIEW MONITORING SYSTEM LESS.....

[HYDRAULIC SYSTEM]

150010	H0110-01A1	HYDRAULIC TANK.....
150011	H0110-01A1	HYDRAULIC TANK.....
150030	H0120-01A1	MAIN VALVE (CONNECTION PARTS) (1/2) (1 ACTUATOR).....

PC400-8 QC-2

Page	Reference	Title
150040	H0120-01A4	MAIN VALVE (CONNECTION PARTS) (1/2).....
150050	H0120-02A1	MAIN VALVE (CONNECTING PARTS) (2/2) (1 ACTUATOR).....
150060	H0120-02A4	MAIN VALVE (CONNECTING PARTS) (2/2).....
150070	H0120-02A5	MAIN VALVE (CONNECTING PARTS) (2/2) (1 ACTUATOR).....
150080	H0120-03A1	MAIN VALVE (VALVE BRACKET).....
150090	H0120-04A2	MAIN VALVE (SERV. VALVE PLUG)(1 ATT)(WITH DRIFT PREVENTIVE)(PIP. LESS).....
150100	H0210-01A0	MAIN PUMP (CONNECTING PARTS).....
150110	H0311-01A1	SUCTION LINE.....
150120	H0312-01A0	DELIVERY LINE (WITH IN LINE FILTER).....
150130	H0312-01A1	DELIVERY LINE.....
150140	H0320-01A1	OIL COOLER LINE.....
150150	H0330-01A0	RETURN LINE.....
150160	H0330-01A1	RETURN LINE (1 ACTUATOR).....
150170	H0340-01A0	DRAIN LINE.....
150180	H1210-01A0	BOOM LINE (1/2).....
150200	H1210-02A0	BOOM LINE (2/2).....
150210	H1220-01A1	ARM AND BUCKET LINE.....
150220	H1220-01A2	ARM BUCKET LINES (WITH DRIFT PRIVENTIVE).....
150230	H1240-01A0	DRIFT PRIVENTIVE (ARM).....
150240	H1270-01A0	ATTACHMENT LINE (MAIN LINE. L.H) (1 ACTUATOR).....
150250	H1270-01A1	RELIEF VALVE (250 KG/CM2) (FOR SERVICE VALVE).....
150260	H1270-01A1A	RELIEF VALVE (220 KG/CM2) (FOR SERVICE VALVE).....
150270	H1270-02A0	ATTACHMENT LINE (MAIN LINE. R.H) (1 ACTUATOR).....
150280	H1270-03A0	ATTACHMENT LINE (RETURN FILTER) (1 ACTUATOR).....
150290	H1270-04A0	ATTACHMENT LINES (ACCUMULATOR) (1 ACTUATOR).....
150300	H1270-05A0	ATTACHMENT LINES (PILOT FILTER) (1 ACTUATOR).....
150310	H1310-01A0	TRAVEL LINE.....
150320	H1340-01A0	SWING LINE.....
150330	H1810-01A0	LS LINE.....
150340	H1810-01A1	LS LINE (QUICK COUPLER).....
150350	H1831-01A1	SOLENOID VALVE (VALVE) (1 ACTUATOR).....
150360	H1831-01A2	SOLENOID VALVE (VALVE).....
150370	H1831-02A2	SOLENOID VALVE (HOSE AND BRACKET).....
150380	H1831-02A3	SOLENOID VALVE (HOSE AND BRACKET) (1 ACTUATOR).....
150390	H1833-01A0	PRESSURE SWITCH.....
150400	H1840-01A0	PPC MAIN LINE.....

Page Reference Title

[MAIN FRAME AND RELATED PARTS]

180010	J1110-01A2	REVOLVING FRAME (1/2).....
180030	J1110-02A2	REVOLVING FRAME (2/2).....
180040	J1310-01A0	BOOM FOOT PIN.....
180050	J1310-01A1	BOOM FOOT PIN (100 HOURS LUBRICATING).....

[OPERATORS COMPARTMENT AND CONTROL]

210010	K0110-01A0	OPERATOR'S SEAT (SUSPENSION TYPE).....
210030	K0110-01A2	OPERATOR'S SEAT (RIGID TYPE).....
210040	K0110-01A3	OPERATOR'S SEAT (PVC LEATHER).....
210050	K0160-01A0	SEAT BELT (50MM WIDE).....
210060	K0160-01A1	SEAT BELT (78MM WIDE).....
210070	K0190-01A0	LUGGAGE BOX NET.....
210090	K0220-01A0	TOP GUARD.....
210100	K0230-01A0	FRONT GUARD.....
210110	K0230-01A1	HALF GUARD.....
210120	K0230-01A2	FRONT FULL GUARD.....
210130	K0310-01A0	FLOOR MAT.....
210140	K0310-01A1	FLOOR MAT (FOR 1 ACTUATOR).....
210150	K0320-01A0	RAIN VISOR.....
210160	K0330-01A0	SUN VISOR.....
210170	K0350-01A0	WINDOW WASHER.....
210180	K0700-01A0	AIR CONDITIONER (COMPRESSOR).....
210190	K0700-02A0	AIR CONDITIONER (PIPING).....
210200	K1110-01A8	OPERATOR'S CAB (CAB AND WINDOW).....
210210	K1110-02A8	OPERATOR'S CAB (FRONT WINDOW).....
210211	K1110-02A8	OPERATOR'S CAB (FRONT WINDOW).....
210220	K1110-03A8	OPERATOR'S CAB (FRONT LOWER WINDOW).....
210230	K1110-03A9	OPERATOR'S CAB (FRONT LOWER WINDOW) (FOR VANDALISM PROTECTIO N).....
210240	K1110-04A8	OPERATOR'S CAB (ROOF WINDOW) (FOR VANDALISM PROTECTION).....
210250	K1110-04A9	OPERATOR'S CAB (ROOF WINDOW) (FOR VANDALISM PROTECTION).....
210255	K1110-05A9	OPERATOR'S CAB (DOOR) (FOR VANDALISM PROTECTION).....
210260	K1110-06A9	OPERATOR'S CAB (DOOR LOCK) (FOR VANDALISM PROTECTION).....

Page	Reference	Title
210270	K1110-07A9	OPERATOR'S CAB (OPEN LOCK AND DOOR CATCH) (FOR VANDALISM PROTECTION).....
210280	K1110-08A9	OPERATOR'S CAB (WIPER AND ROOM LAMP) (FOR VANDALISM PROTECTION).....
210290	K1110-09A9	OPERATOR'S CAB (SPEAKER AND WINDOW WASHER) (FOR VANDALISM PROTECTION).....
210300	K1110-11A9	OPERATOR'S CAB (ROOF COVER AND AIR INTAKE) (FOR VANDALISM PROTECTION).....
210320	K1110-12A9	OPERATOR'S CAB (PRESSURE VALVE AND GRIP) (FOR VANDALISM PROTECTION).....
210340	K1110-12A10	OPERATOR'S CAB (PRESSURE VALVE AND GRIP) (FOR VANDALISM PROTECTION).....
210350	K1110-13A8	OPERATOR'S CAB (PLUG BOLT) (WITH RADIO AND KOMTRAX).....
210360	K1110-13A9	OPERATOR'S CAB (KOM. FILM ANTENA)(ORBCOM TYPE)(FOR VAND. PROTECTION).....
210370	K1110-21A1	OPERATOR'S CAB (CAB IN PARTS) (MONITOR AND COVER).....
210380	K1110-22A1	OPERATOR'S CAB (CAB IN PARTS) (MONITOR COVER).....
210390	K1110-23A1	OPERATOR'S CAB (CAB IN PARTS) (LUGGAGE PLATE).....
210420	K1110-24A1	OPERATOR'S CAB (CAB IN PARTS) (MONITOR DUCT).....
210430	K1110-25A1	OPERATOR'S CAB (CAB IN PARTS) (AIR DUCT) (WITH AIR CONDITIONER).....
210440	K1110-25A2	OPERATOR'S CAB (CAB IN PARTS) (AIR DUCT) (WITHOUT AIR CONDITIONER).....
210460	K1110-26A1	OPERATOR'S CAB (CAB IN PARTS) (PARTITION AND FILTER) (WITH AIR CONDITIONER).....
210490	K1110-27A1	OPERATOR'S CAB (CAB IN PARTS) (SUB PLATE AND RELAY).....
210500	K1110-28A8	OPERATOR'S CAB (CAB IN PARTS) (AIR CONDITIONER CONTROLLER)..
210520	K1110-28A9	OPERATOR'S CAB (CAB IN PARTS)(AC CONT&KOM)(ORBCOM TYPE).....
210530	K1110-29A1	OPERATOR'S CAB (CAB IN PARTS) (MAIN HARNESS CLAMP).....
210540	K1110-30A1	OPERATOR'S CAB (CAB IN PARTS) (REAR COVER).....
210550	K1110-30A9	OPERATOR'S CAB (CAB IN PARTS) (REAR COVER) (WITH KOMTRAX)...
210560	K1110-30A10	OPERATOR'S CAB (CAB IN PARTS) (REAR COVER) (WITHOUT KOMTRAX)
210570	K1110-31E2	OPERATOR'S CAB (FOOT COVER) (WITHOUT AIR CONDITIONER).....
210580	K1110-41A1	OPERATOR'S CAB (FLOOR) (FRAME).....
210590	K1110-42A1	OPERATOR'S CAB (FLOOR) (TRAVEL CONTROL).....
210600	K1110-43A1	OPERATOR'S CAB (FLOOR) (FOOT REST L.H).....
210610	K1110-44A1	OPERATOR'S CAB (FLOOR) (FOOT REST R.H).....
210620	K1110-44A2	OPERATOR'S CAB (FLOOR) (1ST. ATTACHIMENT CONTROL).....
210630	K1110-46A1	OPERATOR'S CAB (FLOOR) (BASE).....
210640	K1110-47A1	OPERATOR'S CAB (FLOOR) (HARNESS).....
210650	K1110-48A1	OPERATOR'S CAB (FLOOR) (HARNESS CLAMP AND EARTH).....
210660	K1110-49A1	OPERATOR'S CAB (FLOOR) (WINDOW WASHER HOSE).....
210670	K1110-50A1	OPERATOR'S CAB (FLOOR) (LEVER L.H).....
210680	K1110-51A1	OPERATOR'S CAB (FLOOR) (VALVE L.H).....
210690	K1110-52A1	OPERATOR'S CAB (FLOOR) (CONSOL. L.H).....
210710	K1110-53B2	OPERATOR'S CAB (FLOOR) (P.P.C LOCK LEVER AND RADIO).....
210720	K1110-54A1	OPERATOR'S CAB (FLOOR) (ARM REST. L.H).....
210730	K1110-55A1	OPERATOR'S CAB (FLOOR) (LEVER. R.H).....
210740	K1110-56A1	OPERATOR'S CAB (FLOOR) (VALVE. R.H).....
210750	K1110-57A1	OPERATOR'S CAB (FLOOR) (CONSOL. R.H).....
210751	K1110-57A1	OPERATOR'S CAB (FLOOR) (CONSOL, R.H).....
210760	K1110-59A1	OPERATOR'S CAB (FLOOR) (ARM REST. R.H).....
210770	K1110-60A1	OPERATOR'S CAB (FLOOR) (AIR CONDITIONER UNIT).....
210780	K1110-61A1	OPERATOR'S CAB (FLOOR) (AIR CONDITIONER HOSE).....
210790	K1110-62A1	OPERATOR'S CAB (FLOOR) (HEATER HOSE).....
210800	K1110-63A1	OPERATOR'S CAB (FLOOR) (P.P.C PIPING FOR TRAVEL VALVE).....
210810	K1110-64A1	OPERATOR'S CAB (FLOOR) (P.P.C PIPING FOR PILOT VALVE).....
210820	K1110-65A1	OPERATOR'S CAB (FLOOR) (P.P.C HOSE CLAMP).....
210830	K1110-66A1	OPERATOR'S CAB (FLOOR) (P.T BLOCK AND SEAL).....
210840	K1110-66A2	OPERATOR'S CAB (FLOOR) (P.T BLOCK AND SEAL) (1-ACTUATOR)....
210850	K1110-67A1	OPERATOR'S CAB (FLOOR) (REAR CAMERA CABLE).....
210860	K1120-01A0	FLOOR MOUNTS.....
210870	K1520-01A0	PPC WORK LINE CLAMP.....
210880	K1520-01A1	PPC WORK LINE CLAMP (1 ACTUATOR).....
210890	K1730-01A0	SWITCH (MODEL SELECTION CONNECTOR).....

[GUARD]

240010	M1110-01A1	HOOD (1/4).....
240020	M1110-02A1	HOOD (2/4).....
240030	M1110-03A1	HOOD (3/4).....
240031	M1110-03A1	HOOD (3/4).....
240040	M1110-04A1	HOOD (4/4).....
240050	M1120-01A1	FRAME (MACHINE CAB).....
240060	M1130-01A1	LEFT SIDE DOOR (MACHINE CAB).....
240070	M1140-01A1	RIGHT SIDE DOOR (MACHINE CAB) (1/3).....

PC400-8 QC-4

Page	Reference	Title
240080	M1140-02A1	RIGHT SIDE DOOR (MACHINE CAB) (2/3).....
240090	M1140-03A1	RIGHT SIDE DOOR (MACHINE CAB) (3/3).....
240100	M1150-01A1	PARTITION (MACHINE CAB) (1/2).....
240101	M1150-01A1	PARTITION (MACHINE CAB)(1/2).....
240110	M1150-02A1	PARTITION (MACHINE CAB) (2/2).....
240120	M1210-01A0	COVER (MACHINE CAB).....
240130	M1210-01A1	COVER (MACHINE CAB) (WITH PRE-CLEANER).....
240140	M1220-01A1	BATTERY CASE.....
240150	M1310-01A0	HAND RAIL.....
240160	M1410-01A0	REAR VIEW MIRROR. L.H (SINGLE).....
240170	M1420-01A1	REAR VIEW MIRROR. R.H.....
240180	M1430-01A0	REAR VIEW MIRROR.....
240190	M1430-01A1	REAR VIEW MIRROR.....
240200	M1510-01A0	COUNTER WEIGHT (9220KG).....
240210	M1520-01A0	COUNTER WEIGHT MOUNTING.....
240220	M1810-01A1	UNDER COVER (REVOLVING FRAME) (L.H) (HEAVY DUTY) (FOR FUEL REFILL PUMP).....
240230	M1810-01A2	UNDER COVER (REVOLVING FRAME) (L.H) (FOR FUEL REFILL PUMP)..
240240	M1810-01A2A	UNDER COVER (REVOLVING FRAME) (L.H).....
240250	M1810-01A3	UNDER COVER (REVOLVING FRAME) (L.H) (HEAVY DUTY).....
240260	M1810-02A1	UNDER COVER (REVOLVING FRAME) (CENTER) (HEAVY DUTY) (FOR FUEL REFILL PUMP).....
240270	M1810-02A2	UNDER COVER (REVOLVING FRAME) (CENTER) (FOR FUEL REFILL PUMP).....
240280	M1810-02A3	UNDER COVER (REVOLVING FRAME) (CENTER).....
240290	M1810-02A4	UNDER COVER (REVOLVING FRAME) (CENTER) (HEAVY DUTY).....
240300	M1810-03A1	UNDER COVER (REVOLVING FRAME) (R.H) (HEAVY DUTY) (FOR FUEL REFILL PUMP).....
240310	M1810-03A2	UNDER COVER (REVOLVING FRAME) (R.H) (FOR FUEL REFILL PUMP)..
240320	M1810-03A3	UNDER COVER (REVOLVING FRAME) (R.H).....
240330	M1810-03A4	UNDER COVER (REVOLVING FRAME) (R.H) (HEAVY DUTY).....

[SWING CIRCLE AND RELATED PARTS]

270010	N1110-01A0	SWING CIRCLE.....
270020	N1210-01A0	SWING MACHINERY.....
270021	N1210-01A0	SWING MACHINERY.....
270030	N1210-01A1	SWING MACHINERY (OPT).....
270031	N1210-01A1	SWING MACHINERY (OPT).....
270040	N1220-01A0	SWING MOTOR (CONNECTING PARTS).....
270050	N1310-01A0	SWIVEL JOINT.....

[TRAVEL AND LOWER PIPING]

300010	P1120-01A0	TRAVEL PIPING.....
300020	P1120-01A1	TRAVEL PIPING (FOR LC).....
300030	P1210-01A0	FINAL DRIVE.....

[UNDER CARRIAGE]

330010	R0110-01A0	FRONT IDLER.....
330030	R0110-02A0	IDLER CUSHION.....
330050	R0300-01A0	CARRIER ROLLER.....
330060	R0500-01A1	TRACK SHOE (TRIPLE GROUSER WITH HOLE) (600MM WIDE) (OPT)....
330070	R0500-01A3	TRACK SHOE (TRIPLE GROUSER WITH HOLE) (800MM WIDE) (OPT)....
330080	R0500-01A4	TRACK SHOE (TRIPLE GROUSER WITH HOLE) (600MM WIDE) (OPT)....
330090	R0500-01A5	TRACK SHOE (TRIPLE GROUSER WITH HOLE) (800MM WIDE) (OPT)....
330100	R0500-01A7	TRACK SHOE (TRIPLE GROUSER WITH HOLE) (600MM WIDE) (OPT)....
330120	R0500-01A8	TRACK SHOE (TRIPLE GROUSER WITH HOLE) (800MM WIDE) (FOR LC).
330130	R0500-01A9	TRACK SHOE (TRIPLE GROUSER WITH HOLE) (600MM WIDE) (FOR LC).
330140	R0500-01A10	TRACK SHOE (TRIPLE GROUSER WITH HOLE) (800MM WIDE) (FOR LC) (STD).....
330150	R1100-01A2	TRACK FRAME (FRAME).....
330160	R1100-01A3	TRACK FRAME (FRAME) (WITH UNDER COVER).....
330170	R1100-01A6	TRACK FRAME (FRAME) (FOR LC).....
330180	R1100-01A7	TRACK FRAME (FRAME) (WITH UNDER COVER) (FOR LC).....
330190	R1100-02A6	TRACK FRAME (TRACK ROLLER) (FOR LC).....
330200	R1100-03A6	TRACK FRAME (CENTER GUARD) (FOR LC).....
330210	R1100-03A8	TRACK FRAME (FULL ROLLER GUARD) (FOR LC).....
330220	R1100-04A6	TRACK FRAME (GREASE BATH AND STEP) (FOR LC).....
330230	R1140-01A0	UNDER COVER (FOR TRACK FRAME).....

[WORK EQUIPMENT]

360010	T1110-01A2	BOOM (7.0M BOOM) (500 HOURS GREASING TYPE) (OPT).....
360020	T1110-01A6	BOOM (7.0M BOOM) (100 HOURS GREASING TYPE) (STD).....
360030	T1110-01A7	BOOM (7.0M BOOM) (100 HOURS GREASING TYPE) (OPT).....

PC400-8 QC-5

Page	Reference	Title
360050	T1110-02A2	BOOM (500 HOURS GREASING TYPE) (TOP PIN AND BOTTOM PIN).....
360060	T1110-02A6	BOOM (100 HOURS GREASING TYPE) (TOP PIN AND BOTTOM PIN).....
360070	T1110-03A2	BOOM (BUCKET CYLINDER LINE).....
360080	T1110-04A2	BOOM (ARM CYLINDER LINE).....
360100	T1110-05A2	BOOM (BLIND PARTS).....
360110	T1110-06A2	BOOM (LUBRICATING LINE).....
360130	T1110-07A2	BOOM (500 HOURS GREASING TYPE) (WORKING LAMP AND SPACER).....
360140	T1110-07A6	BOOM (100 HOURS GREASING TYPE) (WORKING LAMP AND SPACER).....
360150	T1110-08A4	BOOM (ADDITIONAL LINE) (FOR ADDITIONAL PIPING).....
360160	T1110-09A4	BOOM (ADDITIONAL LINE) (CLAMP) (FOR ADDITIONAL PIPING).....
360200	T1120-01A2	BOOM CYLINDER (100 HOURS) (STD).....
360220	T1120-01A7	BOOM CYLINDER (500 HOURS) (OPTION).....
360230	T1125-01A0	BOOM CYLINDER TOP PIN (500 HOURS GREASING BOOM TYPE).....
360240	T1125-01A1	BOOM CYLINDER TOP PIN (100 HOURS GREASING BOOM TYPE).....
360250	T1140-01A0	ARM CYLINDER WITH RESISTENT (500 HOURS) (OPT).....
360260	T1140-01A1	ARM CYLINDER (2.4M ARM) (100 HOURS) (STD).....
360270	T1140-01A2	ARM CYLINDER (100 HOURS).....
360280	T1200-01A1	ARM (3.4M ARM) (500 HOURS GREASING TYPE) (OPT).....
360310	T1200-01A4	ARM (3.4M ARM) (100 HOURS GREASING TYPE) (OPT).....
360350	T1200-01A9	ARM (3.4M ARM) (500 HOURS GREASING TYPE) (FOR ADDITIONAL PIPING).....
360360	T1200-01A8	ARM (3.4 M) STD) (100 H GREASING TYPE) (OPT).....
360370	T1200-01B1	ARM (2.4M ARM) (STD).....
360420	T1200-01B7	ARM (2.4M) (HEAVY DUTY) (100 HOURS GREASING TYPE).....
360460	T1200-03A0	ARM (100 HOURS GREASING TYPE) (BUCKET LINK) (SE SPEC).....
360470	T1200-03A1	ARM (BUCKET LINK).....
360480	T1200-04A1	ARM (3.4M) (BUCKET CYLINDER HOSE AND LUBRICATING LINE).....
360500	T1200-04A5	ARM 3.4M (BUCKET CYL. HOSE & LUB. LINE) (FOR ADD PIPING).....
360540	T1200-04B1	ARM (2.4M) (HEAVY DUTY) (BUCKET CYLINDER HOSE AND LUBRICATING LINE).....
360580	T1200-05A5	ARM (3.4M) (ADDITIONAL PIPING).....
360610	T1200-06A5	ARM (3.4M) (VALVE AND SPACER) (FOR ADDITIONAL PIPING).....
360650	T1290-01A0	BUCKET LESS.....
360740	T1510-01C3	BUCKET 1.7M3 (VERTICAL PIN TYPE) (WITH ADJUSTING).....
360760	T1510-01C6	BUCKET 1.7M3 (HORIZONTAL PIN TYPE) (WITH ADJUSTING).....
360770	T1510-01C7	BUCKET (1.9M3) (HEAVY DUTY) (HORIZONTAL PIN TYPE) (WITH ADJUSTING) (50 HOURS).....
360780	T1510-01C8	BUCKET (2.4M3 SE) (VERTICAL PIN TYPE) (WITH ADJUSTING).....
360790	T1510-01C9	BUCKET (2.8M3 SE) (HORIZONTAL PIN TYPE).....
360800	T1510-01C10	BUCKET 3.0M3 (HORIZONTAL PIN TYPE) (WITH ADJUSTING) (HEAVY DUTY).....
360810	T1510-01C11	BUCKET 2.6M3 (HORIZONTAL PIN TYPE) (WITH ADJUSTING) (HEAVY DUTY).....
360815	T1510-01C12	BUCKET 3.0M3 (HORIZONTAL PIN TYPE)(WITH ADJUSTING)(TIGER BUCKET) STD.....
360820	T1510-02A2	SIDE CUTTER.....
360830	T1510-02C4	SIDE SHROUD (FOR HEAVY DUTY BUCKET).....
360850	T1510-03D0	HOOK (FOR BUCKET) (FOR 1.9M3 BUCKET).....

[MARK AND PLATES]

390010	U0100-01A0	DECAL AND PLATE (ENGLISH).....
390020	U0100-01A1	DECAL AND PLATE (ENGLISH) (STD).....
390030	U0100-01A2	DECAL AND PLATE (ENGLISH) (FOR LC).....
390040	U0100-01A3	DECAL AND PLATE (ENGLISH) (FOR LC) (KI SPEC).....
390050	U0110-01A0	PLATE (LUBRICATION STANDARD CHART) (500 HOURS GREASING TYPE)
390110	U0110-01A1	PLATE (LUBRICATION STANDARD CHART) (100 HOURS GREASING TYPE)
390120	U0120-01A6	CAUTION PLATE (CAB WINDSHIELD LOCK OPERATION) (ENGLISH).....
390130	U0120-01A8	CAUTION PLATE (CAB WINDSHIELD LOCK OPERATION) (ENGLISH).....
390140	U0150-01A0	KOMATSU LOGO (COUNTER WEIGHT).....
390150	U0150-01A1	KOMATSU LOGO (BOOM AND COUNTER WEIGHT).....
390210	U0150-01A2	KOMATSU LOGO (BOOM AND COUNTER WEIGHT).....
390220	U0510-01A0	CAUTION PLATE (ARM).....
390230	U0520-01A0	COUTION PLATE (TOP GUARD) (ENGLISH).....
390240	U0520-01A1	COUTION PLATE (FRONT GUARD) (ENGLISH).....
390250	U0520-01A6	COUTION PLATE (TOP GUARD) (INDONESIAN).....
390260	U0520-01B3	COUTION PLATE (FRONT GUARD) (INDONESIAN).....
390270	U0550-01A4	SERVICE INSTRUCTION (AIR CLEANER) (ENGLISH).....
390280	U0550-01A5	SERVICE INSTRUCTION (AIR CLEANER) (INDONESIAN).....
390290	U0580-01A0	CAUTION PLATE (1-ACCUMULATOR).....
390300	U0610-01A1	PLATE (SWING OR BACKING UP WARNING) (ENGLISH).....
390310	U0610-01A2	PLATE (SWING OR BACKING UP WARNING).....

[ACCESSORY]

420010	V0100-01A0	SPARE PARTS.....

PC400-8 QC-6

Page	Reference	Title
420020	V0200-01A0	CAP AND OVERALL
420030	V0300-01A0	TOOL

[MISCELLANEOUS]

Page	Reference	Title
450010	W1113-01A0	FUEL SELF SUPPLY PUMP
450020	W1113-01A1	FUEL SELF CHARGE PUMP,EXT. BAD FUEL&POOR FUEL ARR. SPEC. WATER+DUST
450030	W1200-01A0	BLIND PARTS (BODY)
450040	W1200-01A1	BLIND PARTS (BODY) (1 ACTUATOR)
450050	W1202-01A0	BLIND PARTS (FOR BRUST VALVE)
450060	W9950-01A1	EXPORT TOOL
450070	W9960-01A0	ENGINE DRAIN HOSE

[SERVICES KIT]

Page	Reference	Title
480010	Y0260-01A0	SWING MACHINERY ASS'Y (SUPPLY PARTS)
480020	Y0320-01A0	SHOE BOLT AND NUT SERVICE KIT
480030	Y0320-01A1	SHOE BOLT AND NUT SERVICE KIT
480040	Y0321-01A0	TRACK LINK (SUPPLY PARTS) (92 SET)
480050	Y1011-01A0	AIR CLEANER (INNER PARTS)
480060	Y1011-01A1	PRECLEANER (INNER PARTS)
480070	Y1040-01A0	FUEL SELF CHARGER PUMP (INNER PARTS)
480080	Y1062-01A0	RUBBER ANTENNA
480100	Y1570-01A1	OPERATOR'S SEAT ASS'Y
480120	Y1570-01A3	OPERATOR'S SEAT ASS'Y (PVC LEATHER)
480130	Y1600-01A0	MAIN PUMP (1/12)
480140	Y1600-02A0	MAIN PUMP (2/12)
480150	Y1600-03A0	MAIN PUMP (3/12)
480160	Y1600-04A0	MAIN PUMP (4/12)
480170	Y1600-05A0	MAIN PUMP (5/12)
480180	Y1600-06A0	MAIN PUMP (6/12)
480190	Y1600-07A0	MAIN PUMP (7/12)
480200	Y1600-08A0	MAIN PUMP (8/12)
480210	Y1600-09A0	MAIN PUMP (9/12)
480220	Y1600-10A0	MAIN PUMP (10/12)
480230	Y1600-11A0	MAIN PUMP (11/12)
480240	Y1600-12A0	MAIN PUMP (12/12)
480250	Y1620-01A1	BOOM CYLINDER (FOR 100 HOURS LUBRICATING) (STD)
480251	Y1620-01A1	BOOM CYLINDER (FOR 100 HOURS LUBRICATING) (STD)
480260	Y1620-01A6	BOOM CYLINDER (FOR 500 HOURS LUBRICATING) (OPT)
480261	Y1620-01A6	BOOM CYLINDER (FOR 500 HOURS LUBRICATING) (OPT)
480270	Y1620-01A8	ARM CYLINDER WITH RESISTENT (500 HOURS) (OPT)
480271	Y1620-01A8	ARM CYLINDER WITH RESISTANT (500 HOURS) (OPT)
480280	Y1620-11A2	ARM CYLINDER (FOR 2.4M ARM) (100 HOURS) (STD)
480281	Y1620-11A2	ARM CYLINDER (FOR 2.4M ARM) (100 HOURS) (STD)
480290	Y1620-11A3	ARM CYLINDER (100 HOURS) (OPT)
480291	Y1620-11A3	ARM CYLINDER (100 HOURS) (OPT)
480300	Y1620-41A0	BUCKET CYLINDER (500 HOURS) (OPT)
480301	Y1620-41A0	BUCKET CYLINDER (500 HOURS)(OPT)
480310	Y1620-41A1	BUCKET CYLINDER (100 HOURS)
480311	Y1620-41A1	BUCKET CYLINDER (100 HOURS)
480320	Y1620-41A2	BUCKET CYLINDER (100 HOURS) (STD)
480321	Y1620-41A2	BUCKET CYLINDER (100 HOURS)(STD)
480330	Y1627-01A0	SWIVEL JOINT
480340	Y1640-01A0	SWING MOTOR (1/3)
480350	Y1640-02A0	SWING MOTOR (2/3)
480360	Y1640-03A0	SWING MOTOR (3/3)
480370	Y1640-01A1	SWING MOTOR (1/3)
480380	Y1640-02A1	SWING MOTOR (2/3)
480390	Y1640-03A1	SWING MOTOR (3/3)
480400	Y1641-01A0	TRAVEL MOTOR (1/3)
480401	Y1641-01A0	TRAVEL MOTOR (1/3)
480410	Y1641-02A0	TRAVEL MOTOR (2/3)
480420	Y1641-03A0	TRAVEL MOTOR (3/3)
480430	Y1662-01A0	MAIN VALVE (1/20)
480440	Y1662-02A0	MAIN VALVE (2/20)
480450	Y1662-03A0	MAIN VALVE (3/20)
480460	Y1662-04A0	MAIN VALVE (4/20)
480470	Y1662-05A0	MAIN VALVE (5/20)
480480	Y1662-06A0	MAIN VALVE (6/20)
480490	Y1662-07A0	MAIN VALVE (7/20)
480500	Y1662-08A0	MAIN VALVE (8/20)
480510	Y1662-09A0	MAIN VALVE (9/20)

PC400-8 QC-7

Page	Reference	Title
480520	Y1662-10A0	MAIN VALVE (10/20)
480530	Y1662-11A0	MAIN VALVE (11/20)
480540	Y1662-12A0	MAIN VALVE (12/20)
480550	Y1662-13A0	MAIN VALVE (13/20)
480560	Y1662-14A0	MAIN VALVE (14/20)
480570	Y1662-15A0	MAIN VALVE (15/20)
480580	Y1662-16A0	MAIN VALVE (16/20)
480590	Y1662-17A0	MAIN VALVE (17/20)
480600	Y1662-18A0	MAIN VALVE (18/20)
480610	Y1662-19A0	MAIN VALVE (19/20)
480620	Y1662-20A0	MAIN VALVE (20/20)
480630	Y1664-01A0	MAIN VALVE (1/23) (1ACTUATOR)
480640	Y1664-02A0	MAIN VALVE (2/23)
480650	Y1664-03A0	MAIN VALVE (3/23)
480660	Y1664-04A0	MAIN VALVE (4/23)
480670	Y1664-05A0	MAIN VALVE (5/23)
480680	Y1664-06A0	MAIN VALVE (6/23)
480690	Y1664-07A0	MAIN VALVE (7/23)
480700	Y1664-08A0	MAIN VALVE (8/23)
480710	Y1664-09A0	MAIN VALVE (9/23)
480720	Y1664-10A0	MAIN VALVE (10/23)
480730	Y1664-11A0	MAIN VALVE (11/23)
480740	Y1664-12A0	MAIN VALVE (12/23)
480750	Y1664-13A0	MAIN VALVE (13/23)
480760	Y1664-14A0	MAIN VALVE (14/23)
480770	Y1664-15A0	MAIN VALVE (15/23)
480780	Y1664-16A0	MAIN VALVE (16/23)
480790	Y1664-17A0	MAIN VALVE (17/23)
480800	Y1664-18A0	MAIN VALVE (18/23)
480810	Y1664-19A0	MAIN VALVE (19/23)
480820	Y1664-20A0	MAIN VALVE (20/23)
480830	Y1664-21A0	MAIN VALVE (21/23)
480840	Y1664-22A0	MAIN VALVE (22/23)
480850	Y1664-23A0	MAIN VALVE (23/23)
481090	Y1670-01A0	PPC VALVE (FOR TRAVEL) (1/2)
481100	Y1670-02A0	PPC VALVE (FOR TRAVEL) (2/2)
481110	Y1670-11A1	PPC VALVE (FOR WORK EQUIPMENT)
481120	Y1670-21A0	PPC VALVE (1 ATTACHMENT)
481150	Y1840-01A0	ACCUMULATOR (AL300-1) (INNER PARTS)
481160	Y1850-01A0	FILTER (INNER PARTS)
481170	Y1851-01A0	FILTER (INNER PARTS)
481180	Y1890-01A0	BREATHER (FOR HTDRAULIC TANK)
481190	Y1970-01A1	VALVE (FOR ACCUMULATOR)
481200	Y1979-11A0	AIR CONDITIONER UNIT
481201	Y1979-11A0	AIR CONDITIONER UNIT

ENGINE.

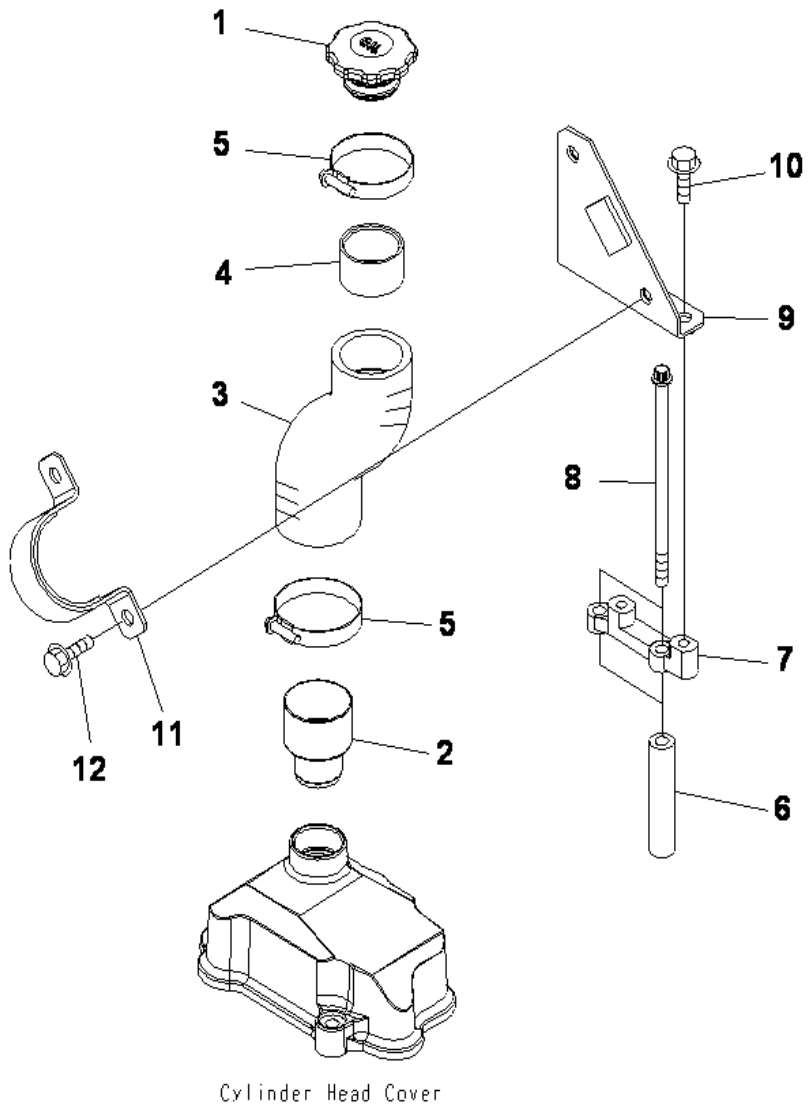

Cylinder Head Cover

SAA6D125E-5 S/N 660029-UP

ROCKER ARM HOUSING COVER ACCESSORY (OIL FILLER)

INDEX	CD	PART NO.	DESCRIPTION	QTY	SERIAL NO.
1		6130-12-8610	CAP, OIL FILLER.....	1	660029-UP
2		6251-21-6521	TUBE, FILLER.....	1	660029-UP
3		6251-21-6541	HOSE.....	1	660029-UP
4		6130-12-8630	PIPE, INNER.....	1	660029-UP
5		07281-00709	CLAMP.....	2	660029-UP
6		6207-11-5970	SPACER.....	2	660029-UP
7		6152-11-4820	SPACER.....	1	660029-UP
8		01438-01085	BOLT.....	2	660029-UP
9		6251-21-6550	BRACKET.....	1	660029-UP
10		01435-01025	BOLT.....	2	660029-UP
11		6251-21-6560	CLAMP.....	1	660029-UP
12		01435-01025	BOLT.....	2	660029-UP

Ref :A1111-A3C5 Page :000000

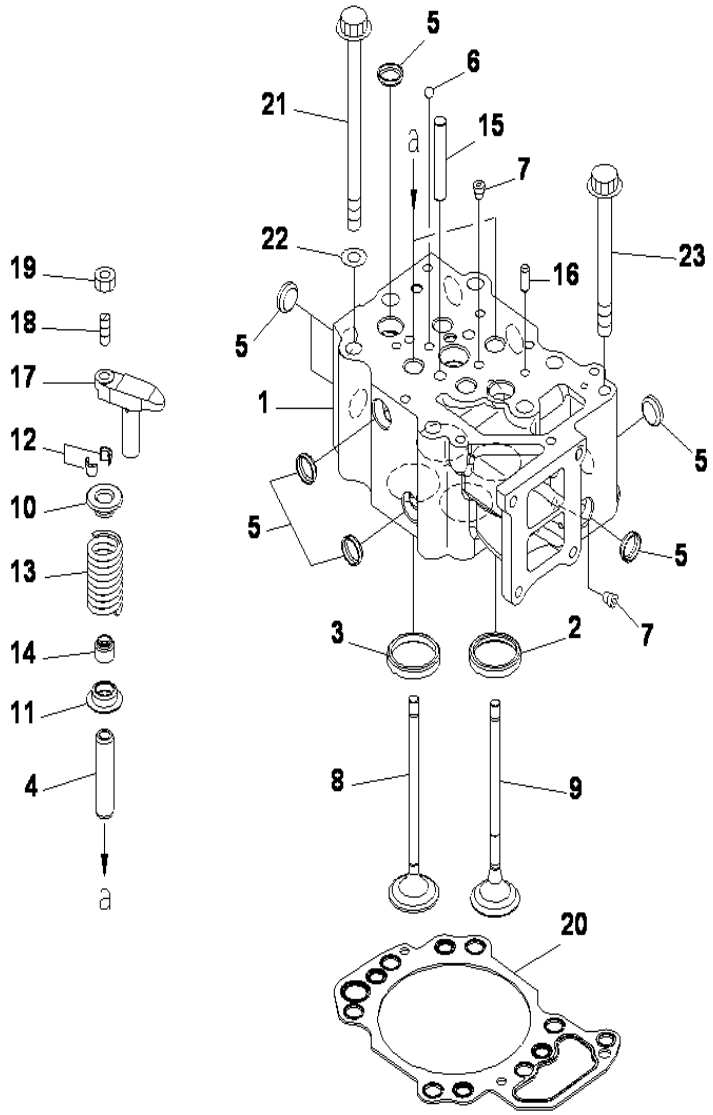

SAA6D125E-5 S/N 660029-UP

CYLINDER HEAD

INDEX	CD	PART NO.	DESCRIPTION	QTY	SERIAL NO.
		6251-11-1200	CYLINDER HEAD ASS'Y.....	6	660029-UP
1	C1		.HEAD, CYLINDER.....	1	660029-UP
2		6150-11-1320	.INSERT, EXHAUST VALVE (STD).....	2	660029-UP
		6150-19-1320	.INSERT, 0.25MM, EXHAUST VALVE. (OS).....	2	660029-UP
		6150-18-1320	.INSERT, 0.50MM, EXHAUST VALVE. (OS).....	2	660029-UP
		6150-17-1320	.INSERT, 0.75MM, EXHAUST VALVE. (OS).....	2	660029-UP
		6150-16-1320	.INSERT, 1.00MM, EXHAUST VALVE. (OS).....	2	660029-UP
3		6251-11-1380	.SEAT, INTAKE VALVE, (STD).....	2	660029-UP
		6251-19-1380	.INSERT, 0.25MM, INTAKE VALVE. (OS).....	2	660029-UP
		6251-18-1380	.INSERT, 0.50MM, INTAKE VALVE. (OS).....	2	660029-UP
		6251171380	.INSERT, 0.75MM, INTAKE VALVE. (OS).....	2	660029-UP
		6251-16-1380	.INSERT, 1.00MM, INTAKE VALVE. (OS).....	2	660029-UP
4		6150-12-1370	.GUIDE, VALVE (SERVICE ONLY).....	4	660029-UP
5		6162-13-1150	.PLUG, EXPANSION.....	11	660029-UP
6		04260-00793	.BALL.....	1	660029-UP
7		07043-70108	.PLUG.....	3	660029-UP
8		6150-42-4110	VALVE, INTAKE.....	12	660029-UP
9		6150-42-4210	VALVE, EXHAUST.....	12	660029-UP
10		6150-41-4510	SEAT, UPPER.....	24	660029-UP
11		6150-41-4430	SEAT, LOWER.....	24	660029-UP
12		6136-42-4520	COTTER, VALVE.....	48	660029-UP
13		6251-41-4450	SPRING, VALVE.....	24	660029-UP
14		6150-41-4570	SEAL, VALVE STEM.....	24	660029-UP
15		6210-11-1140	GUIDE, CROSSHEAD.....	12	660029-UP
16		04020-00820	PIN.....	12	660029-UP
		6150-42-5600	CROSSHEAD ASS'Y.....	12	660029-UP
17		6150-42-5610	.CROSSHEAD.....	1	660029-UP
18		6150-41-5621	.SCREW.....	1	660029-UP
19		6150-41-5630	.NUT.....	1	660029-UP
20		6251-11-1810	GASKET, CYLINDER HEAD.....	6	660029-UP
		6150-11-1970	.GROMMET, OIL.....	1	660029-UP
		6150-11-1930	.GROMMET, OIL.....	1	660029-UP
		6150-11-1950	.GROMMET, WATER.....	4	660029-UP
		6150-12-1960	.GROMMET, WATER.....	1	660029-UP
		6150-11-1960	.GROMMET, OIL.....	5	660029-UP
			OVERSIZE 0.4MM.....		
20		6251-11-1810	GASKET, CYLINDER HEAD.....	6	660029-UP
		6150-11-1970	.GROMMET, OIL.....	1	660029-UP
		6150-11-1930	.GROMMET, OIL.....	1	660029-UP
		6150-11-1950	.GROMMET, WATER.....	4	660029-UP
		6150-12-1960	.GROMMET, WATER.....	1	660029-UP
		6150-11-1960	.GROMMET, OIL.....	5	660029-UP
21		6150-11-1620	BOLT.....	36	660029-UP
22		6164-31-3330	WASHER.....	36	660029-UP
23		0143-80-1020	BOLT.....	6	660029-UP

Ref :A1010-A3E2 Page :000010

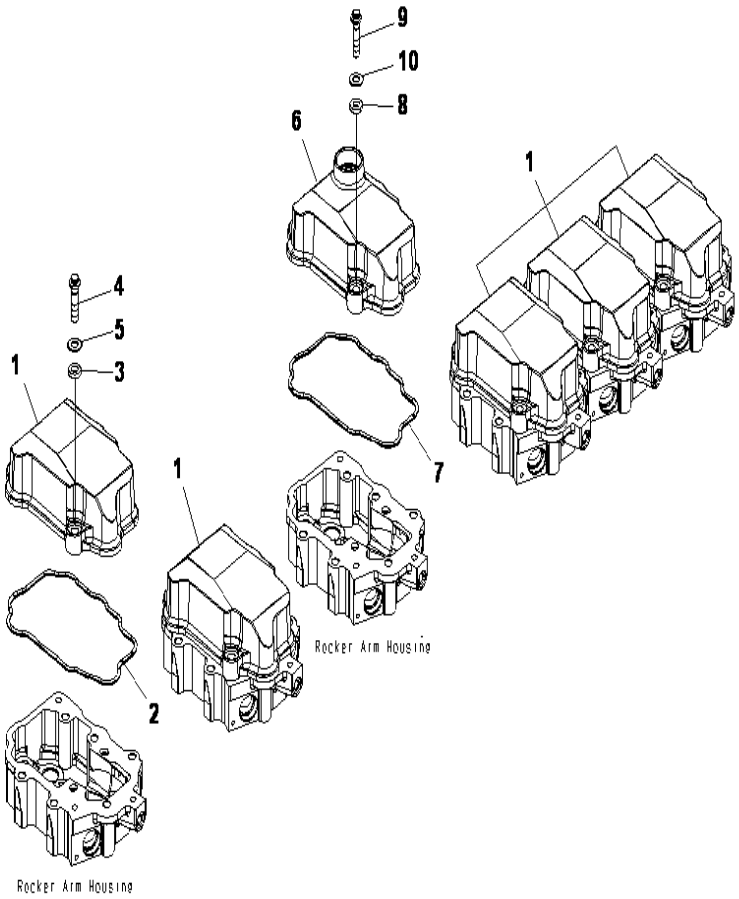

SAA6D125E-5 S/N 660029-UP

ROCKER ARM HOUSING COVER

INDEX	CD	PART NO.	DESCRIPTION	QTY	SERIAL NO.
1		6251-11-8110	COVER, NO.1, 2, 4, 5, 6.....	5	660029-UP
2		6251-11-8810	GASKET.....	5	660029-UP
3		6150-11-8820	RUBBER.....	10	660029-UP
4		6150-81-9370	BOLT.....	10	660029-UP
5		01640-21016	WASHER.....	10	660029-UP
6		6251-11-8150	COVER, NO.3.....	1	660029-UP
7		6251-11-8810	GASKET.....	1	660029-UP
8		6150-11-8820	RUBBER.....	2	660029-UP
9		6150-81-9370	BOLT.....	2	660029-UP
10		01640-21016	WASHER.....	2	660029-UP

Ref :A1110-A3C8 Page :000020

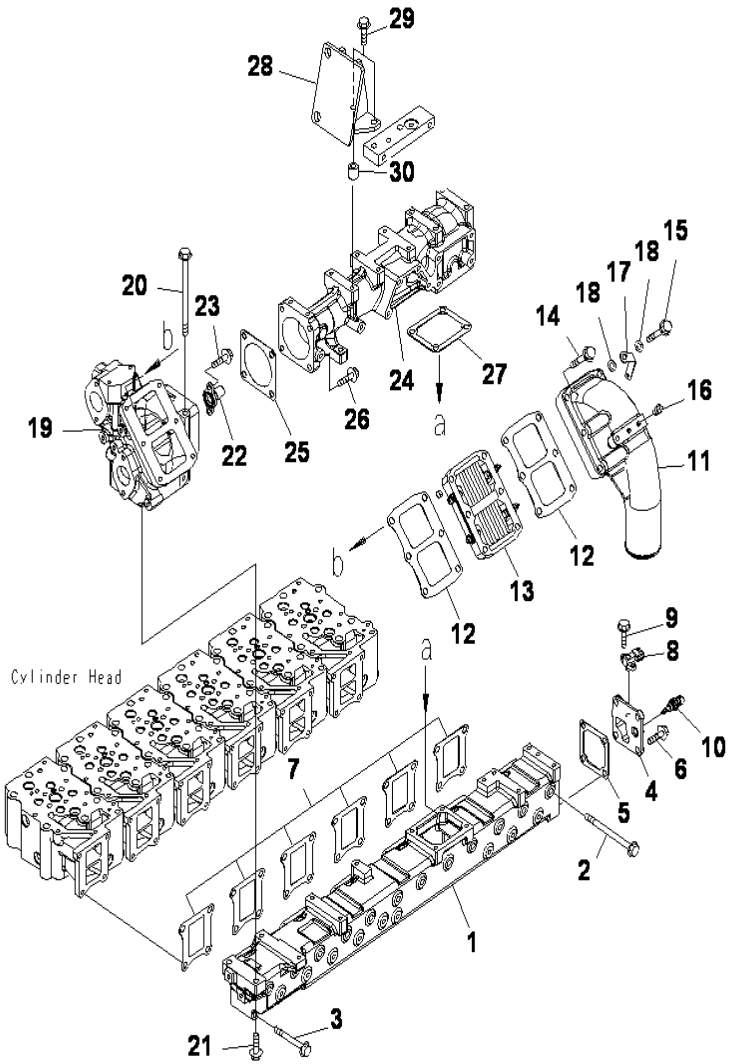

AIR INTAKE MANIFOLD AND CONNECTING

INDEX	CD	PART NO.	DESCRIPTION	QTY	SERIAL NO.
1		6251-11-4110	MANIFOLD, AIR INTAKE	1	660029-UP
2		01436-01030	BOLT	12	660029-UP
3		01435-01080	BOLT	12	660029-UP
4		6251-11-4250	COVER	1	660029-UP
5		6251-11-4260	GASKET	1	660029-UP
6		01435-01025	BOLT	2	660029-UP
7		6150-13-4810	GASKET	6	660029-UP
8		6261-81-2700	SENSOR ASS'Y, BOOST PRESSURE	1	660029-UP
		6261-81-2710	.SENSOR	1	660029-UP
		6261-81-2720	.O-RING	1	660029-UP
9		01435-00616	BOLT	2	660029-UP
10		6560-61-7300	SENSOR ASS'Y, TEMPERATURE AIR INTAKE	1	660029-UP
		6560-61-7310	.SENSOR	1	660029-UP
		6735-21-1930	.O-RING	1	660029-UP
11		6251-11-4320	CONNECTOR, AIR INLET	1	660029-UP
12		6251-11-4830	GASKET	2	660029-UP
13		600-815-3811	HEATER.RIBBON	1	660029-UP
14		01435-01070	BOLT	5	660029-UP
15		01435-01080	BOLT	1	660029-UP
16		07042-A0108	PLUG	2	660029-UP
17		6251-81-4520	PLATE	1	660029-UP
18		01643-31032	WASHER	2	660029-UP
19		6251-11-7210	HOUSING, AIR JUNCTION	1	660029-UP
20		01436-01060	BOLT	2	660029-UP
21		01435-01040	BOLT	2	660029-UP
22		6251-11-7410	CONNECTOR, UPPER	1	660029-UP
23		6251-11-7450	GASKET	1	660029-UP
24		01435-01035	BOLT	4	660029-UP
25		6251-11-4820	GASKET	1	660029-UP
26		6251-11-4410	BRACKET	1	660029-UP
27		01436-01045	BOLT	2	660029-UP
28		6251-11-4410	BRACKET	1	660029-UP
29		01435-01045	BOLT	2	660029-UP
30		6210-11-5820	SPACER	1	660029-UP

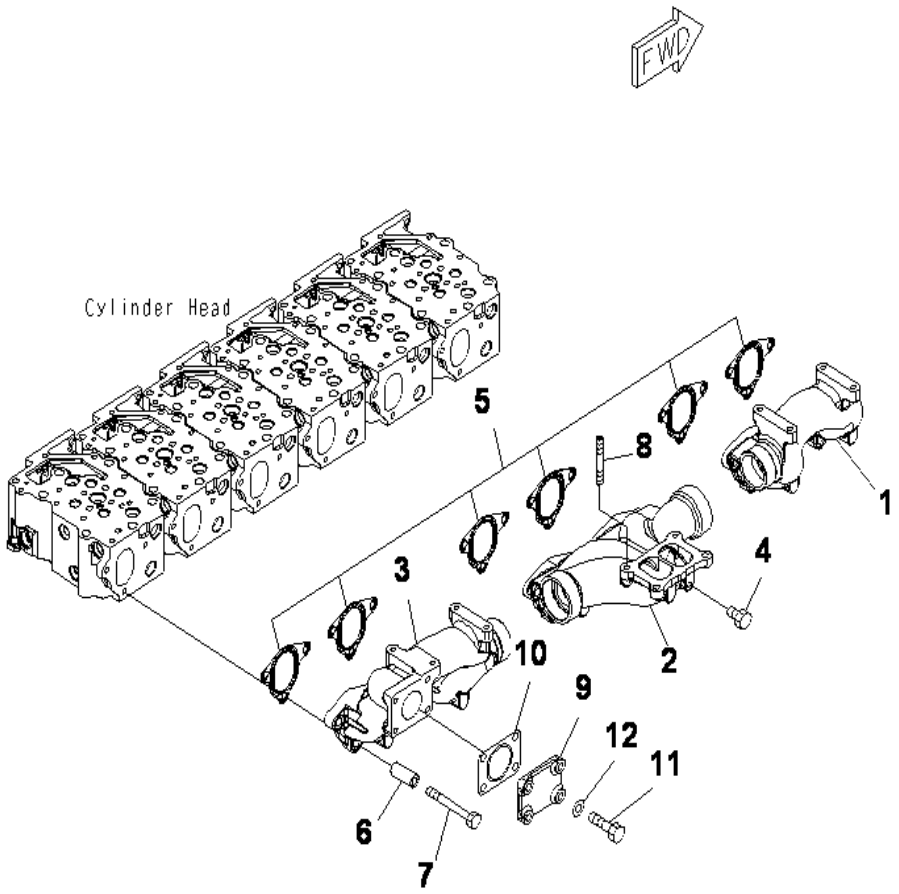

SAA6D125E-5 S/N 660029-UP

EXHAUST MANIFOLD

INDEX	CD	PART NO.	DESCRIPTION	QTY	SERIAL NO.
1		6151-11-5110	MANIFOLD, FRONT	1	660029-UP
2		6151-11-5120	MANIFOLD, CENTER	1	660029-UP
3		6251-11-5130	MANIFOLD, REAR	1	660029-UP
4		6215-11-5920	PLUG	1	660029-UP
5		6152-15-5830	GASKET	6	660029-UP
6		6134-11-5120	SPACER	18	660029-UP
7		01010-E1080	BOLT	18	660029-UP
8		6156-11-5170	STUD	2	660029-UP
9		6251-11-4210	COVER	1	660029-UP
10		6261-11-9520	GASKET	1	660029-UP
11		01010-E1035	BOLT	4	660029-UP
12		01643-31032	WASHER	4	660029-UP

Ref :A1510-A3H5 Page :000050

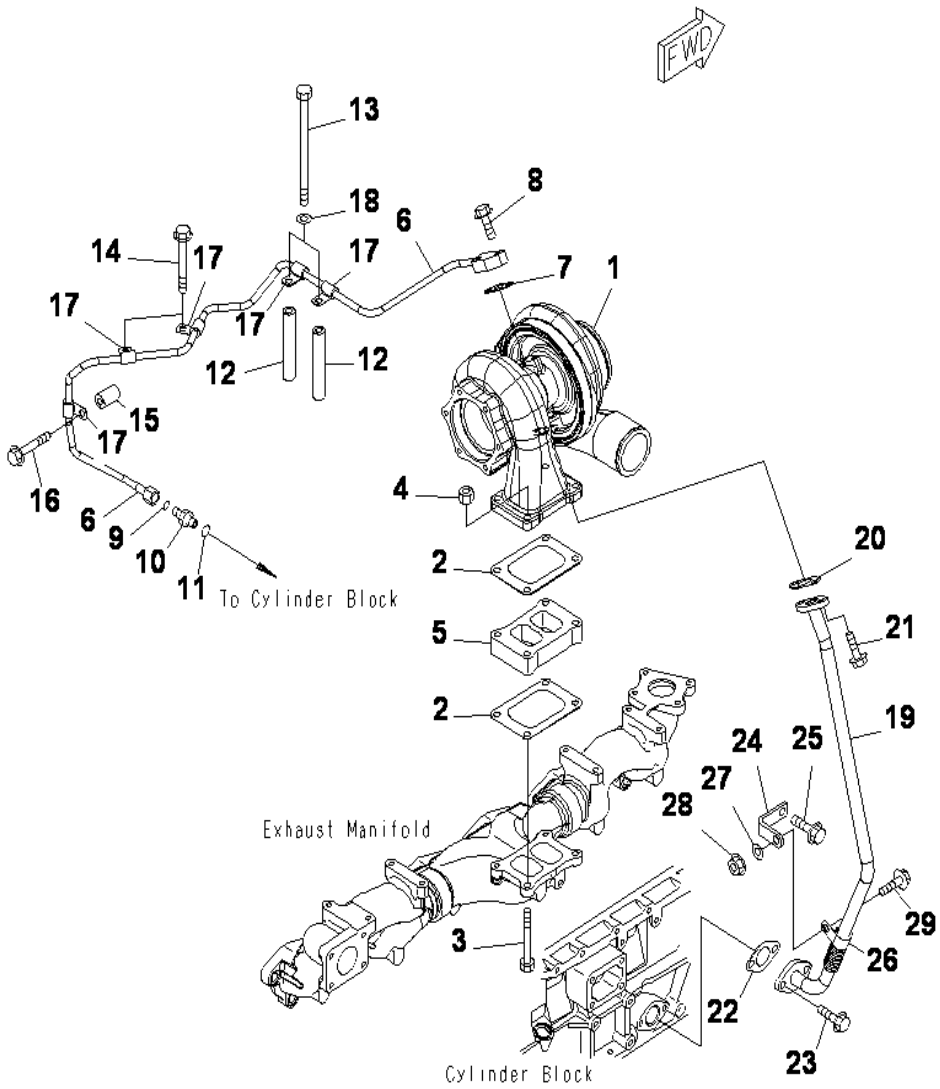

TURBOCHARGER MOUNTING AND LUBRICATING OIL PIPING

INDEX	CD	PART NO.	DESCRIPTION	QTY	SERIAL NO.
1		(6506-22-5030)	TURBOCHARGER ASS'Y, (SEE FIG.A1530-B3L9)....	1	660029-UP
2		6251-11-5830	GASKET.....	2	660029-UP
3		6156-11-5160	BOLT.....	2	660029-UP
4		6114-11-5590	NUT.....	4	660029-UP
5		6251-11-5180	PLATE.....	1	660029-UP
6		6251-51-8230	TUBE, SUPPLY.....	1	660029-UP
7		6221-51-8160	GASKET.....	1	660029-UP
8		01435-00830	BOLT.....	2	660029-UP
9		6251-51-9880	O-RING.....	1	660029-UP
10		6251-51-9850	UNION.....	1	660029-UP
11		6251-51-9890	O-RING.....	1	660029-UP
12		6151-51-5490	SPACER.....	2	660029-UP
13		01011-81095	BOLT.....	2	660029-UP
14		01435-01085	BOLT.....	2	660029-UP
15		6150-81-6920	SPACER.....	1	660029-UP
16		01435-01065	BOLT.....	1	660029-UP
17		600-051-6100	CLIP.....	5	660029-UP
18		01643-31032	WASHER.....	5	660029-UP
19		6251-51-8330	TUBE, RETURN.....	1	660029-UP
20		6151-51-8151	GASKET.....	1	660029-UP
21		01435-01025	BOLT.....	2	660029-UP
22		6154-51-8310	GASKET.....	1	660029-UP
23		01435-01025	BOLT.....	2	660029-UP
24		6251-21-5490	BRACKET.....	1	660029-UP
25		01435-01020	BOLT.....	1	660029-UP
26		600-051-6190	CLIP.....	1	660029-UP
27		01643-31032	WASHER.....	1	660029-UP
28		01584-01008	NUT.....	1	660029-UP
29		01435-01025	BOLT.....	1	660029-UP

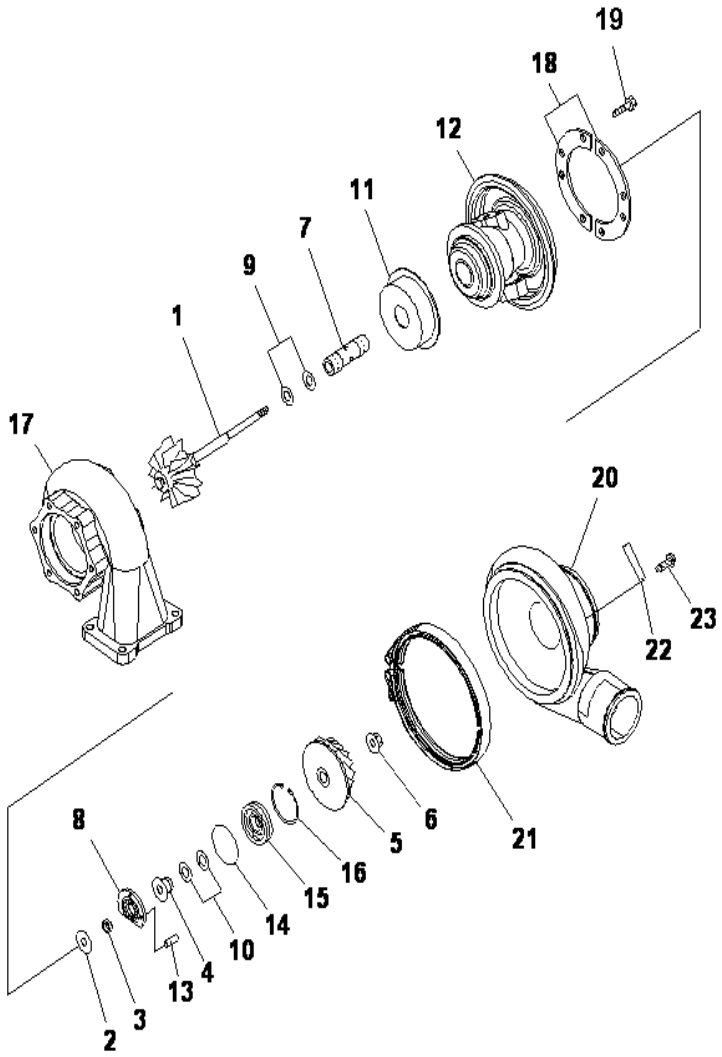

SAA6D125E-5 S/N 660029-UP

TURBOCHARGER (KTR90-332E) (INNER PARTS)

INDEX	CD	PART NO.	DESCRIPTION	QTY	SERIAL NO.
		6506-22-5030	TURBOCHARGER ASS'Y.....	1	660029-UP
		6506-22-5910	.CORE ASS'Y.....	1	660029-UP
1	C1		..ROTOR, TURBINE.....	1	660029-UP
2	C1		..PLATE, COLLAR.....	1	660029-UP
3	C1		..SPACER, COLLAR.....	1	660029-UP
4	C1		..FLINGER.....	1	660029-UP
5	C1		..IMPELLER, BLOWER.....	1	660029-UP
6	C1		..NUT, LOCK.....	1	660029-UP
7	C1		..BEARING, JOURNAL.....	1	660029-UP
8	C1		..BEARING, THRUST.....	1	660029-UP
9	C1		..RING, SEAL TURBINE.....	2	660029-UP
10	C1		..RING, SEAL TURBINE.....	2	660029-UP
11	C1		..SHIELD, HEAT.....	1	660029-UP
12	C1		..HOUSING, CENTER.....	1	660029-UP
13	C1		..PIN, DOWEL.....	1	660029-UP
14	C1		..O-RING.....	1	660029-UP
15	C1		..INSERT.....	1	660029-UP
16	C1		..RING, SNAP.....	1	660029-UP
17		6506-22-4230	.HOUSING, TURBINE.....	1	660029-UP
18		6505-11-0520	.PLATE.....	2	660029-UP
19		01020-01016	.BOLT.....	8	660029-UP
20		6506-22-2020	.HOUSING, BLOWER.....	1	660029-UP
21		6501-11-1721	.V-BAND.....	1	660029-UP
22		6505-99-9011	.PLATE, NAME.....	1	660029-UP
23		04418-02550	.SCREW.....	2	660029-UP

Ref :A1530-B3L9 Page :000070

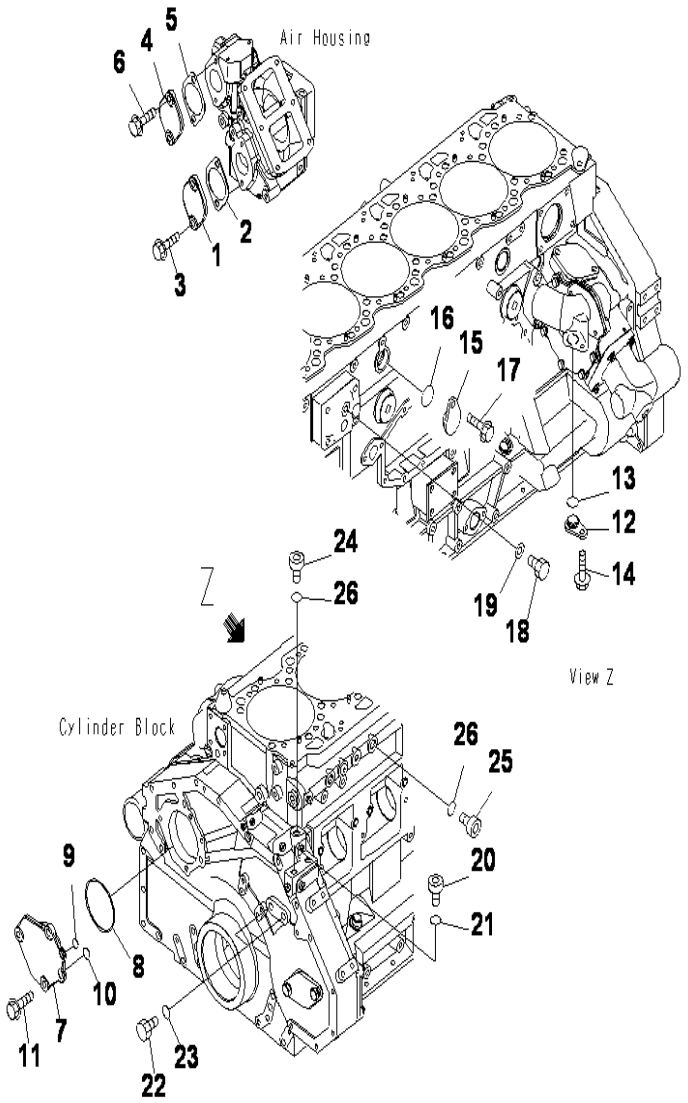

SAA6D125E-5 S/N 660029-UP

COVER FOR EGR LESS

INDEX	CD	PART NO.	DESCRIPTION	QTY	SERIAL NO.
1		6251-11-4220	COVER	1	660029-UP
2		6166-61-6341	GASKET	1	660029-UP
3		01435-01035	BOLT	2	660029-UP
4		6251-11-4220	COVER	1	660029-UP
5		6166-61-6341	GASKET	1	660029-UP
6		01435-01025	BOLT	2	660029-UP
7		6251-51-9240	COVER	1	660029-UP
8		07000-72085	O-RING	1	660029-UP
9		07000-72012	O-RING	1	660029-UP
10		07000-72015	O-RING	1	660029-UP
11		01435-01025	BOLT	3	660029-UP
12		6150-22-6110	COVER	1	660029-UP
13		07000-A2021	O-RING	1	660029-UP
14		01435-01020	BOLT	1	660029-UP
15		6251-61-7420	COVER	1	660029-UP
16		07000-A3029	O-RING	1	660029-UP
17		01435-01020	BOLT	1	660029-UP
18		07040-11209	PLUG	1	660029-UP
19		07005-01212	GASKET	1	660029-UP
20		6215-81-9520	PLUG	2	660029-UP
21		6251-51-9890	O-RING	2	660029-UP
22		6110-53-5910	PLUG	2	660029-UP
23		07005-01412	GASKET	2	660029-UP
24		6215-81-9520	PLUG	1	660029-UP
25		6215-81-9520	PLUG	1	660029-UP
26		6251-51-9890	O-RING	2	660029-UP

Ref :A1550-A3A9 Page :000080

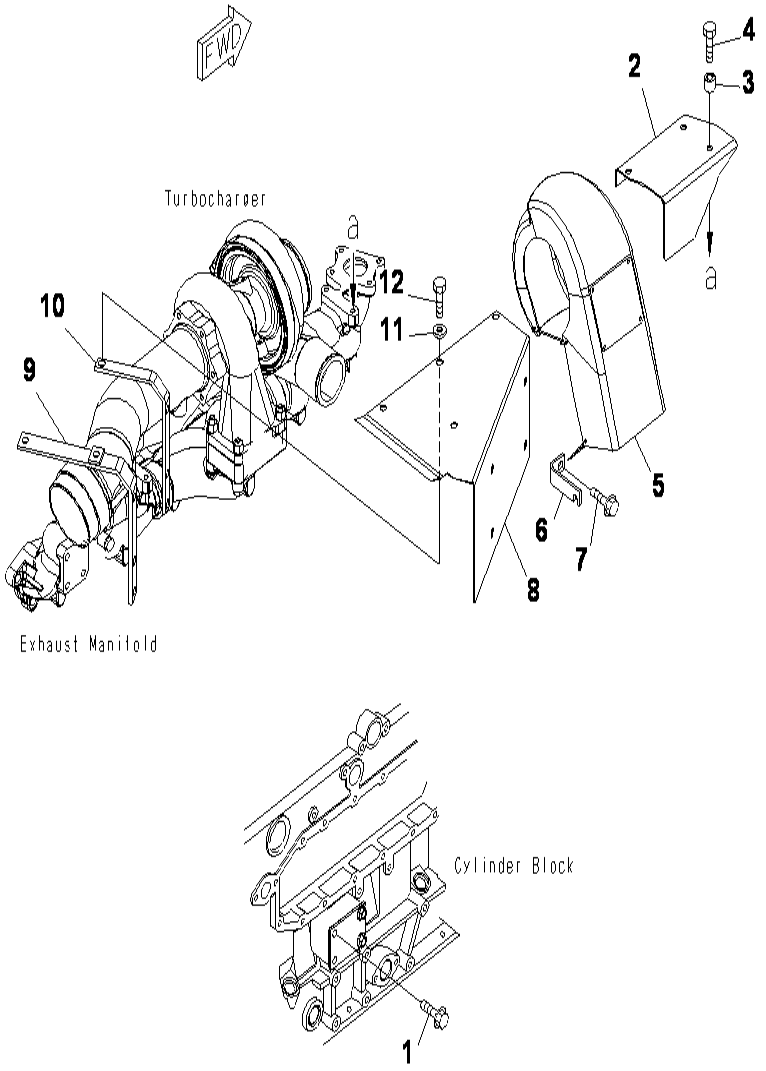

SAA6D125E-5 S/N 660029-UP

HEAT SHIELD

INDEX	CD	PART NO.	DESCRIPTION	QTY	SERIAL NO.
1		01435-01020	BOLT	1	660029-UP
2		6251-11-4710	BRACKET	1	660029-UP
3		6631-11-5630	SPACER	3	660029-UP
4		01010-E1035	BOLT	3	660029-UP
5		6251-11-5450	COVER, TURBOCHARGER	1	660029-UP
6		6251-11-5420	BRACKET	1	660029-UP
7		01435-01020	BOLT	1	660029-UP
8		208-01-71330	COVER	1	660029-UP
9		208-01-71370	BRACKET	1	660029-UP
10		208-01-71381	BRACKET	1	660029-UP
11		6110-23-6490	SPACER	11	660029-UP
12		01010-E1030	BOLT	11	660029-UP

Ref :A1570-A3D1 Page :000090

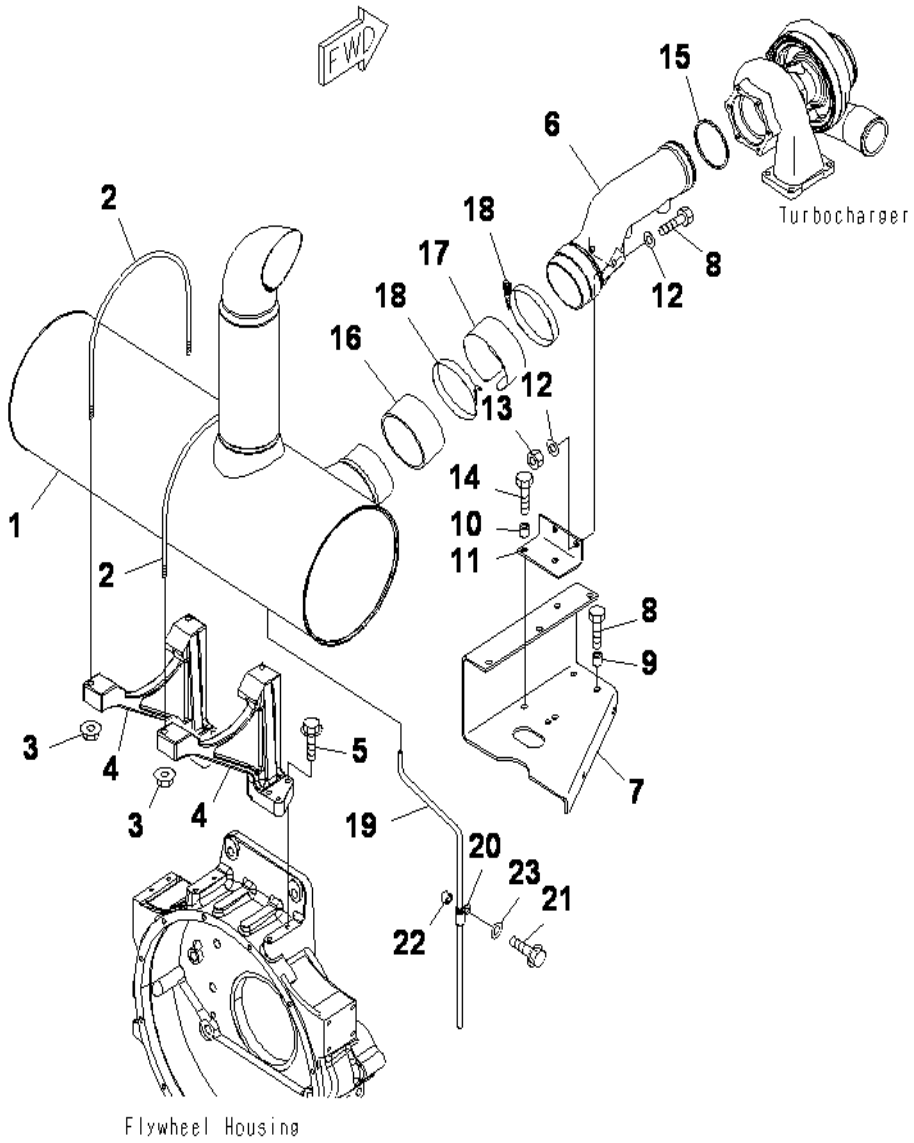

MUFFLER

INDEX	CD	PART NO.	DESCRIPTION	QTY	SERIAL NO.
1		6251-11-5440	MUFFLER	1	660029-UP
2		6222-11-5940	U-BOLT	2	660029-UP
3		01594-01008	NUT	4	660029-UP
4		6156-11-3510	BRACKET	2	660029-UP
5		01435-01045	BOLT	4	660029-UP
6		6251-11-5510	CONNECTOR	1	660029-UP
7		6251-11-5521	BRACKET	1	660029-UP
8		01010-E1040	BOLT	4	660029-UP
9		6631-11-5630	SPACER	2	660029-UP
10		6631-11-5630	SPACER	2	660029-UP
11		6251-11-5530	BRACKET	1	660029-UP
12		01643-31032	WASHER	4	660029-UP
13		01580-01008	NUT	2	660029-UP
14		01010-E1045	BOLT	2	660029-UP
15		6151-11-5280	RING, SEAL	1	660029-UP
16		6152-12-5120	SEAL	1	660029-UP
17		6152-12-5110	PLATE	1	660029-UP
18		07299-00120	CLAMP	2	660029-UP
19		6156-11-5510	TUBE, DRAIN	1	660029-UP
20		600-051-6100	CLIP	1	660029-UP
21		01435-01030	BOLT	1	660029-UP
22		6631-11-6390	SPACER	1	660029-UP
23		01643-31032	WASHER	1	660029-UP

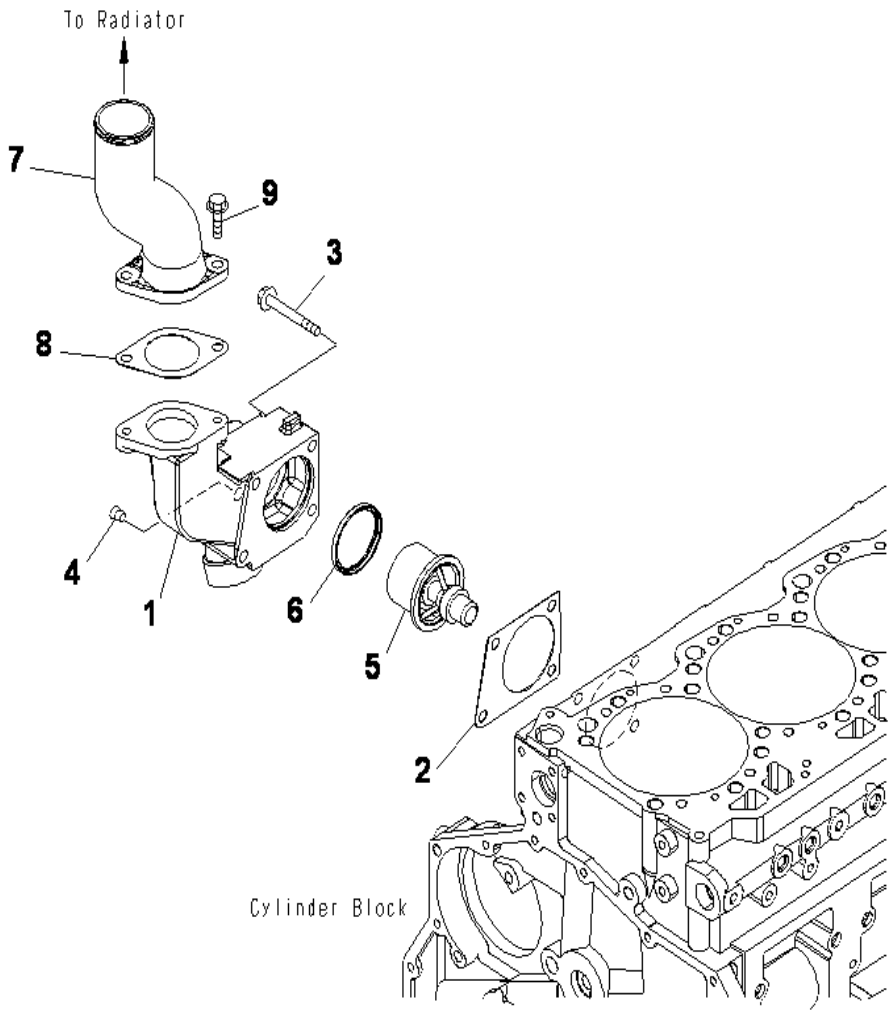

SAA6D125E-5 S/N 660029-UP

THERMOSTAT AND THERMOSTAT HOUSING

INDEX	CD	PART NO.	DESCRIPTION	QTY	SERIAL NO.
1		6251-21-6410	HOUSING, THERMOSTAT	1	660029-UP
2		6150-22-6490	GASKET	1	660029-UP
3		01437-01065	BOLT	2	660029-UP
4		02720-20204	PLUG	1	660029-UP
5		600-421-6630	THERMOSTAT	1	660029-UP
6		6162-13-6440	SEAL, THERMOSTAT	1	660029-UP
7		6251-61-6270	CONNECTOR	1	660029-UP
8		6210-61-6441	GASKET	1	660029-UP
9		01435-01025	BOLT	2	660029-UP

Ref :A1730-A3K4 Page :000110

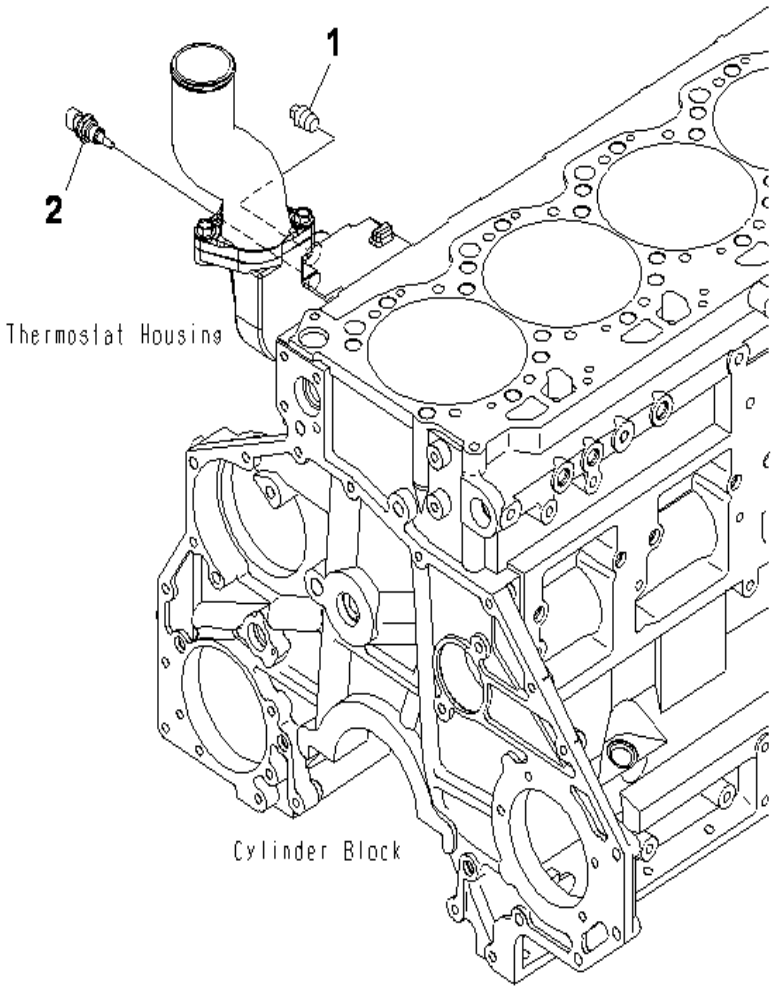

SAA6D125E-5 S/N 660029-UP

WATER TEMPERATURE SENSOR

INDEX	CD	PART NO.	DESCRIPTION	QTY	SERIAL NO.
1		07042-A0415	PLUG.....	1	660029-UP
2		6261-81-6901	SENSOR.....	1	660029-UP
		6261-81-6910	.SENSOR, WATER TEMPERATURE.....	1	660029-UP
		6216-84-9740	.SEAL.....	1	660029-UP

Ref :A1790-A3H7 Page :000120

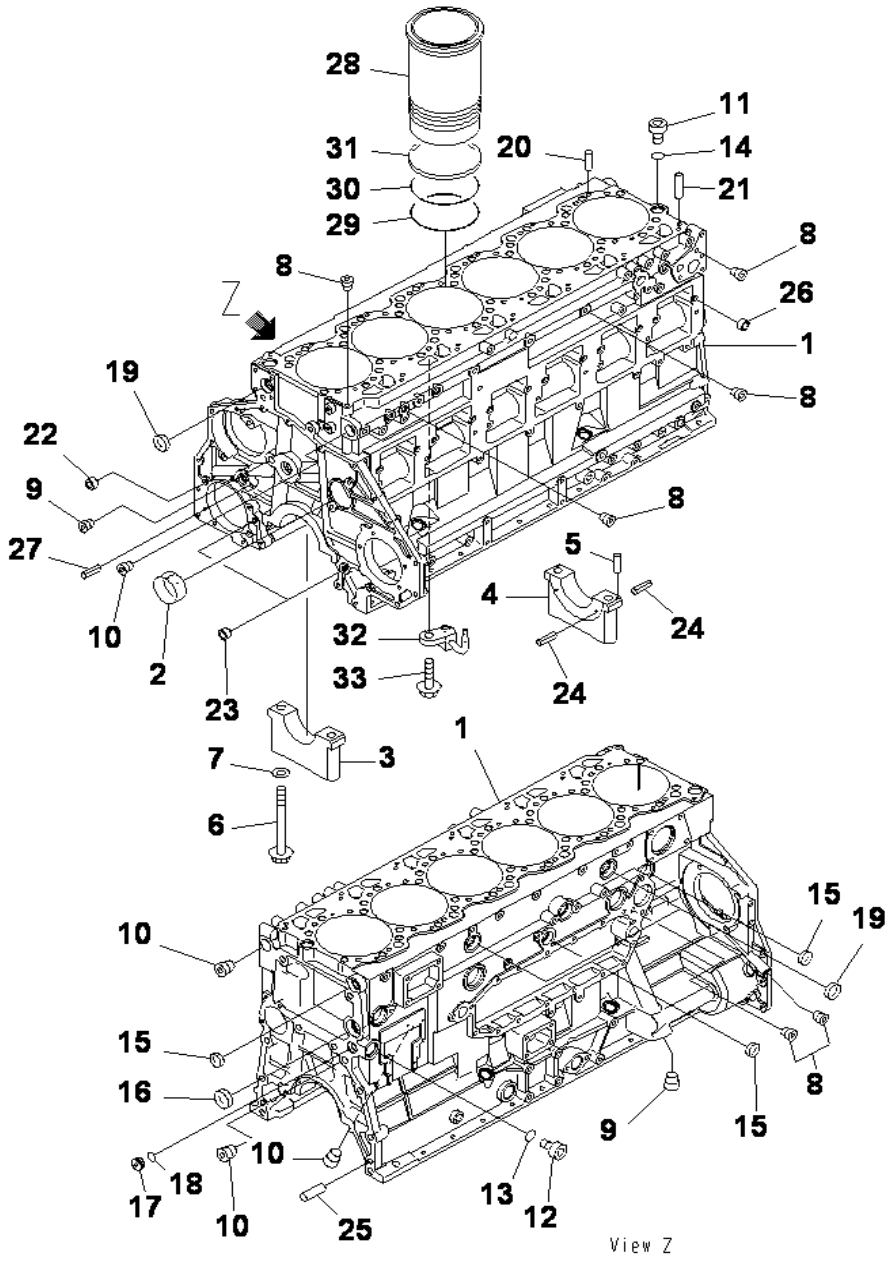

CYLINDER BLOCK

INDEX	CD	PART NO.	DESCRIPTION	QTY	SERIAL NO.
		6251-21-1100	CYLINDER BLOCK ASS'Y.....	1	660029-UP
1	C1		.BLOCK, CYLINDER.....	1	660029-UP
2		6150-21-1490	.BUSHING, CAMSHAFT.....	7	660029-UP
3		6150-21-1210	.CAP, MAIN METAL, NO.1,2,3,4,5,6.....	6	660029-UP
4		6150-21-1250	.CAP, MAIN METAL, NO.7.....	1	660029-UP
5		04020-00514	.PIN, DOWEL.....	2	660029-UP
6		6150-21-1710	.BOLT.....	14	660029-UP
7		01643-31645	.WASHER.....	14	660029-UP
8		07043-70108	.PLUG.....	8	660029-UP
9		07043-70211	.PLUG.....	3	660029-UP
10		07043-70617	.PLUG.....	3	660029-UP
11		07040-12414	.PLUG.....	1	660029-UP
12		07040-13016	.PLUG.....	1	660029-UP
13		07002-23034	.O-RING.....	1	660029-UP
14		07002-22434	.O-RING.....	1	660029-UP
15		07046-43016	.PLUG.....	3	660029-UP
16		07046-44016	.PLUG.....	1	660029-UP
17		6154-21-1981	.PLUG.....	1	660029-UP
18		07000-72022	.O-RING.....	1	660029-UP
19		07046-43516	.PLUG.....	3	660029-UP
20		04020-00820	.PIN. DOWEL.....	12	660029-UP
21		6150-21-1170	.TUBE.....	1	660029-UP
22		6150-41-2430	.PIN.....	1	660029-UP
23		6150-41-2440	.PIN.....	2	660029-UP
24		04025-00408	.PIN, SPRING.....	6	660029-UP
25		6150-21-4770	.PIN, DOWEL.....	2	660029-UP
26		6150-41-2430	.PIN.....	12	660029-UP
27		04025-00512	PIN, SPRING.....	1	660029-UP
28		6154-21-2220	LINER, CYLINDER.....	6	660029-UP
29		6150-21-2230	O-RING, LOWER.....	6	660029-UP
30		6251-21-2240	O-RING, CENTER.....	6	660029-UP
31		6150-21-2250	SEAL, CREVICE.....	6	660029-UP
32		6154-21-1810	NOZZLE, PISTON COOLING.....	6	660029-UP
33		01435-00816	BOLT.....	6	660029-UP

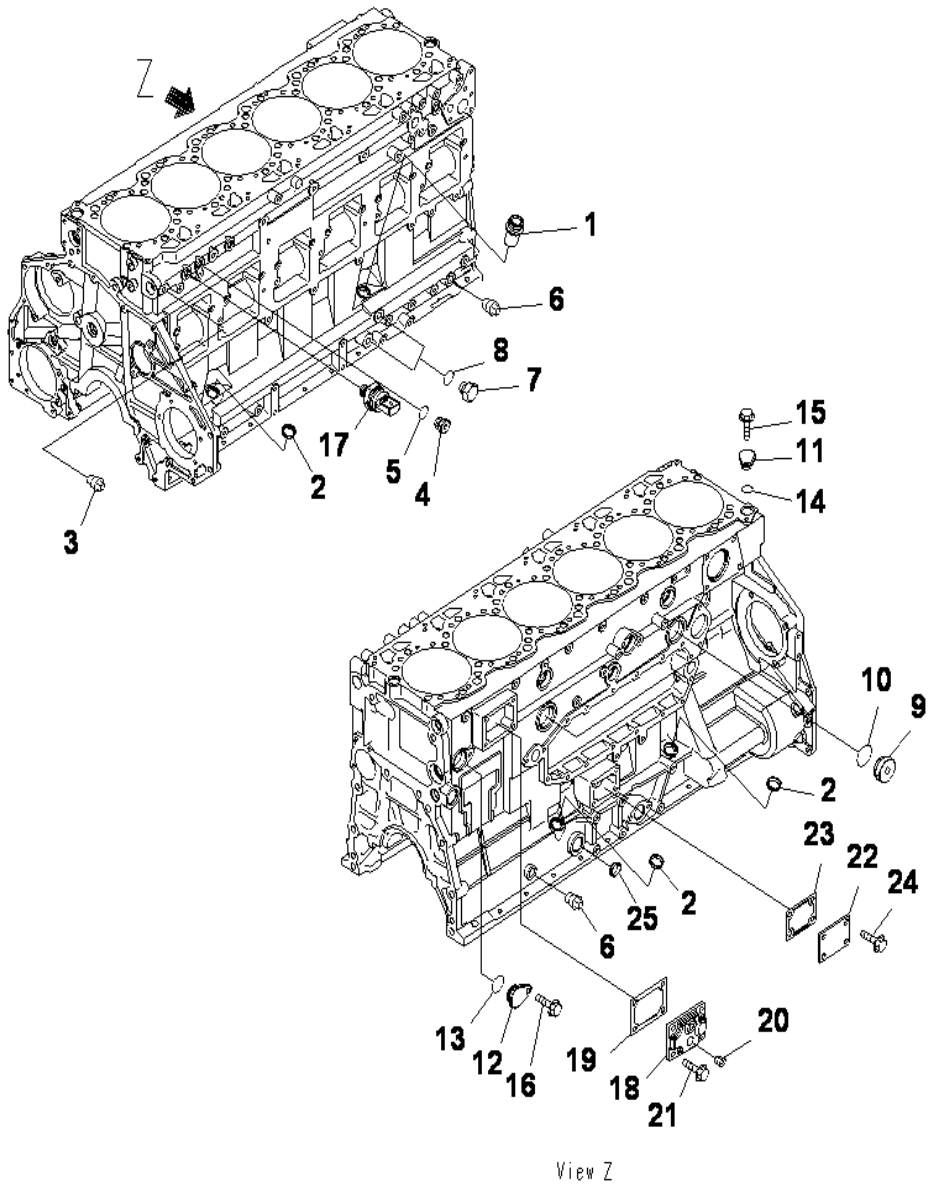

View Z

SAA6D125E-5 S/N 660029-UP

CYLINDER BLOCK ACCESSORY (OIL PRESSURE SWITCH AND BLIND COVER)

INDEX	CD	PART NO.	DESCRIPTION	QTY	SERIAL NO.
1		6150-21-5910	BUSHING	1	660029-UP
2		07046-22010	PLUG	3	660029-UP
3		07043-70108	PLUG	1	660029-UP
4		6215-81-9520	PLUG	1	660029-UP
5		6251-51-9890	O-RING	1	660029-UP
6		07042-70312	PLUG	2	660029-UP
7		6110-53-5910	PLUG	2	660029-UP
8		07005-01412	GASKET	2	660029-UP
9		6150-21-1180	PLUG	2	660029-UP
10		6150-21-1190	O-RING	2	660029-UP
11		6150-22-6110	COVER	1	660029-UP
12		6150-22-6120	COVER	1	660029-UP
13		07000-03030	O-RING	1	660029-UP
14		07000-02021	O-RING	1	660029-UP
15		01435-01020	BOLT	1	660029-UP
16		01435-01020	BOLT	1	660029-UP
17		6219-81-1961	SENSOR ASS'Y	1	660029-UP
		6219-81-2040	.SENSOR, PRESSURE	1	660029-UP
		6219-81-1991	.O-RING	1	660029-UP
		6219-81-1990	.O-RING	1	660029-UP
18		6251-21-1970	COVER	1	660029-UP
19		6210-21-1971	GASKET	1	660029-UP
20		07043-A0415	PLUG	1	660029-UP
21		01435-01025	BOLT	4	660029-UP
22		6306-21-4710	PLATE	1	660029-UP
23		6206-21-6871	GASKET	1	660029-UP
24		01435-01020	BOLT	2	660029-UP
25		07046-22816	PLUG	1	660029-UP

Ref :A2011-A3K6 Page :000140

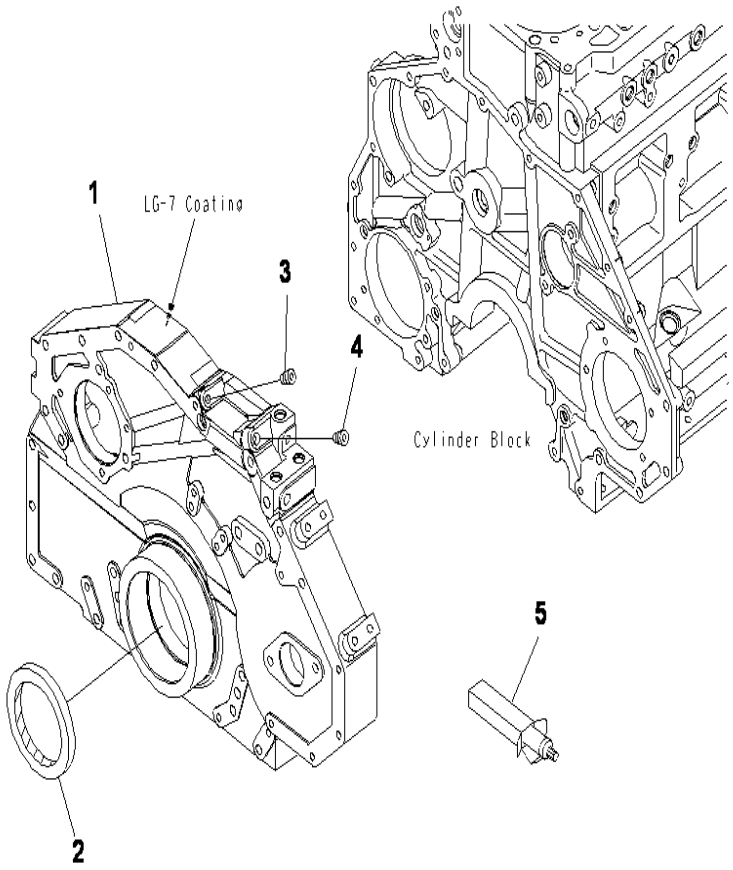

SAA6D125E-5 S/N 660029-UP

FRONT COVER

INDEX	CD	PART NO.	DESCRIPTION	QTY	SERIAL NO.
1		6251-21-3120	COVER.....	1	660029-UP
2		6150-21-3230	SEAL, FRONT.....	1	660029-UP
3		07043-70108	PLUG.....	3	660029-UP
4		07043-70211	PLUG.....	3	660029-UP
5		09920-00150	LIQUID GASKET, LG-7, 150G.....		660029-UP

Ref :A2040-A3J6 Page :000150

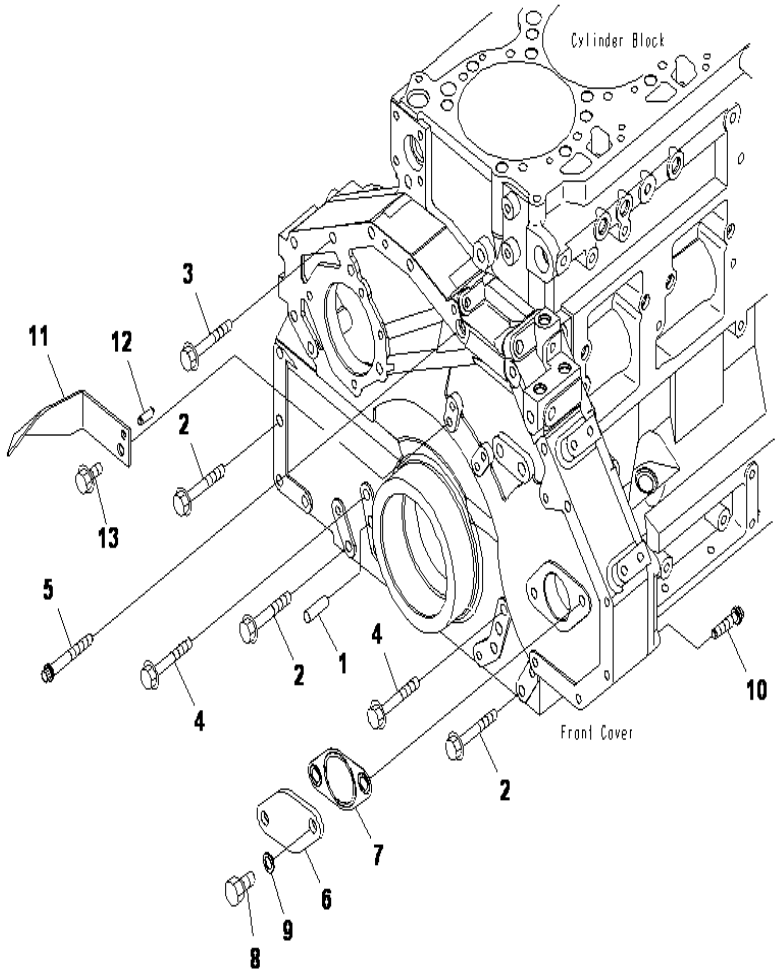

SAA6D125E-5 S/N 660029-UP

FRONT COVER ACCESSORY (MOUNTING BOLT AND POINTER)

INDEX	CD	PART NO.	DESCRIPTION	QTY	SERIAL NO.
1		04020-01228	PIN, DOWEL	2	660029-UP
2		01435-01070	BOLT	8	660029-UP
3		01435-01080	BOLT	5	660029-UP
4		01435-01075	BOLT	2	660029-UP
5		01437-01075	BOLT	1	660029-UP
6		6251-21-3211	PLATE	1	660029-UP
7		6251-21-3231	GASKET	1	660029-UP
8		01050-51225	BOLT	2	660029-UP
9		6251-21-3250	GASKET	2	660029-UP
10		6150-81-9130	BOLT	4	660029-UP
11		6156-21-3430	POINTER	1	660029-UP
12		175-30-35180	PIN, DOWEL	1	660029-UP
13		01435-01016	BOLT	1	660029-UP

Ref :A2041-A3H5 Page :000160

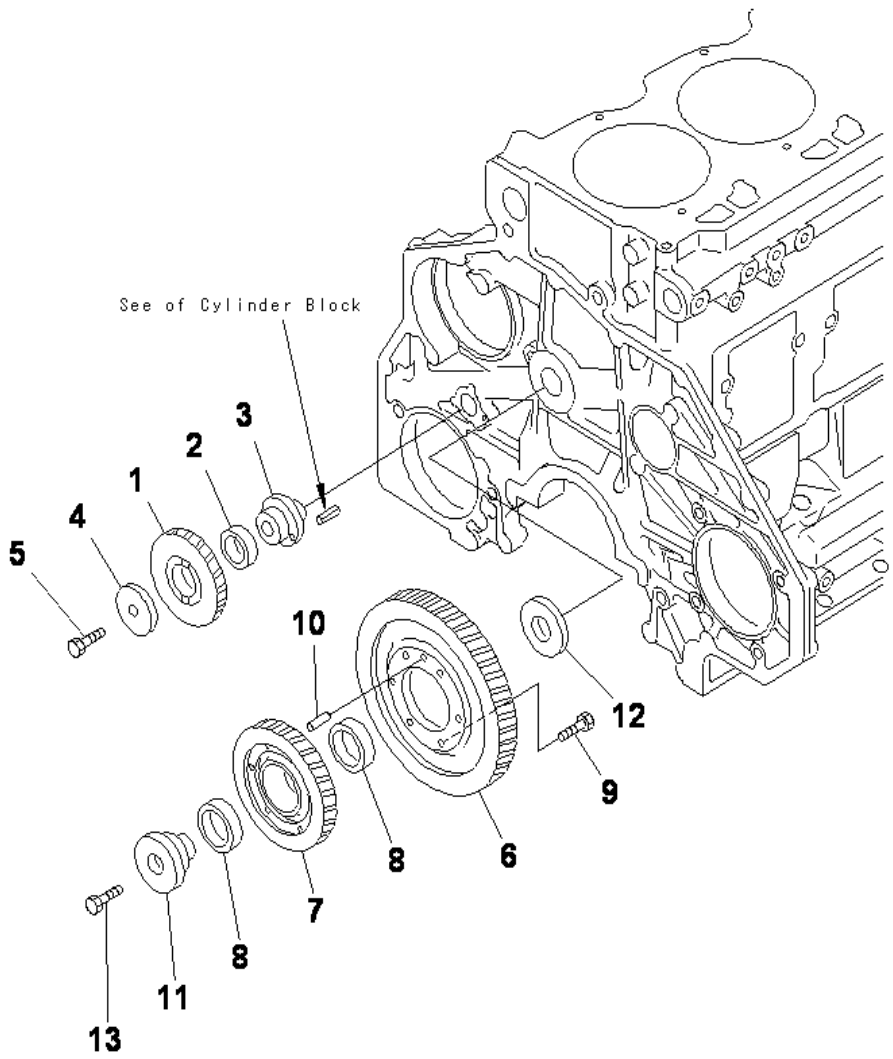

SAA6D125E-5 S/N 660029-UP

IDLER GEAR

INDEX	CD	PART NO.	DESCRIPTION	QTY	SERIAL NO.
		6150-31-6100	GEAR ASS'Y	1	660029-UP
1	C1		.GEAR, IDLER	1	660029-UP
2		6150-31-6120	.BUSHING	1	660029-UP
3		6150-21-2510	SHAFT, IDLER GEAR	1	660029-UP
4		6152-32-6110	PLATE, THRUST	1	660029-UP
5		01010-61460	BOLT	1	660029-UP
6		6154-31-6310	GEAR, IDLER	1	660029-UP
		6154-31-6200	GEAR ASS'Y	1	660029-UP
7	C1		.GEAR, IDLER	1	660029-UP
8		6150-31-6220	.BUSHING	2	660029-UP
9		01010-81025	BOLT	6	660029-UP
10		6127-21-1260	PIN, DOWEL	1	660029-UP
11		6150-21-2411	SHAFT, IDLER GEAR	1	660029-UP
12		6150-21-2421	PLATE, THRUST	1	660029-UP
13		6150-21-2431	BOLT	1	660029-UP

Ref :A2050-A3B1 Page :000170

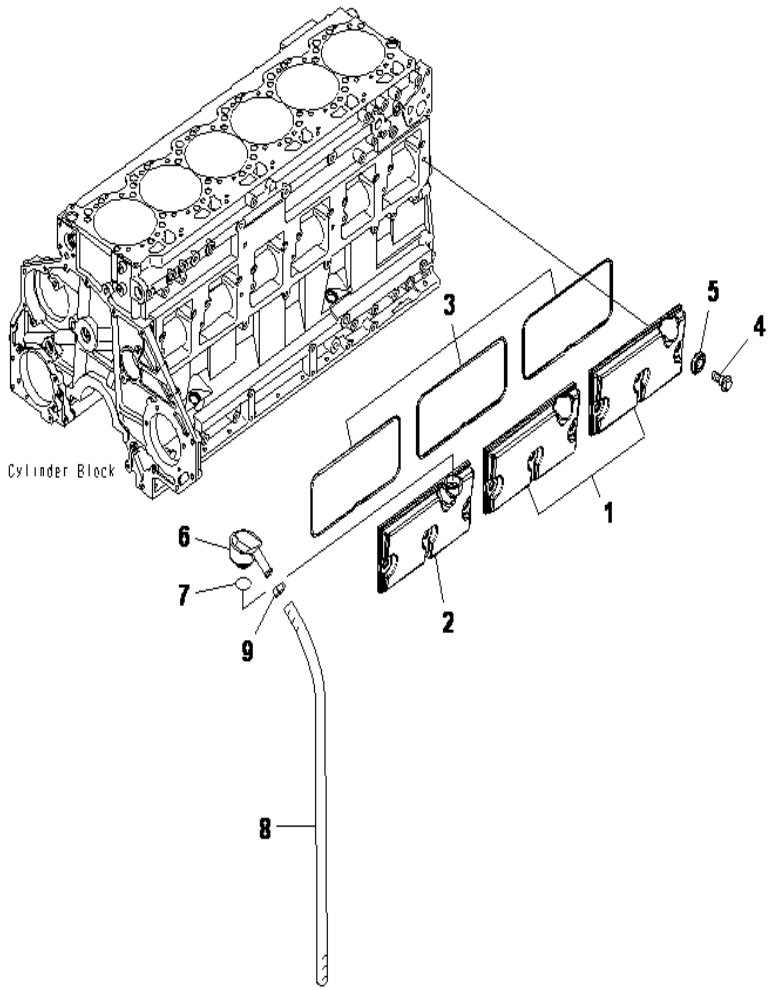

SAA6D125E-5 S/N 660029-UP

CAM FOLLOWER COVER AND BREATHER

INDEX	CD	PART NO.	DESCRIPTION	QTY	SERIAL NO.
1		6150-22-6430	COVER, CAM FOLLOWER.....	2	660029-UP
2		6251-21-6700	COVER ASS'Y, CAM FOLLOWER.....	1	660029-UP
3		6251-21-6450	GASKET.....	3	660029-UP
4		6210-21-6471	BOLT.....	9	660029-UP
5		6150-21-6391	PACKING.....	9	660029-UP
6		6150-21-6710	BREATHER.....	1	660029-UP
7		6114-21-5190	O-RING.....	1	660029-UP
8		07286-01985	HOSE.....	1	660029-UP
9		07285-00220	CLIP.....	1	660029-UP

Ref :A2060-A3H4 Page :000180

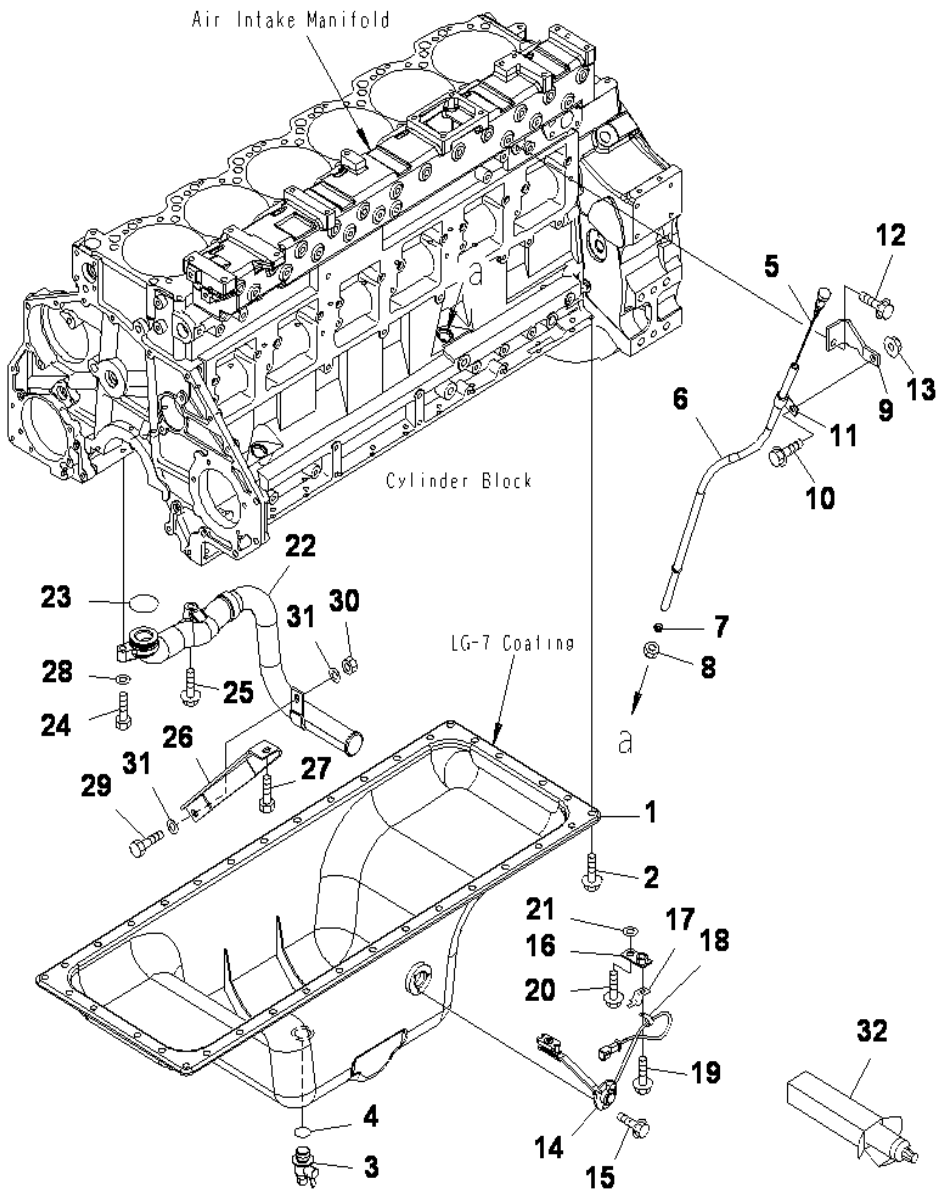

OIL PAN AND SUCTION TUBE

INDEX	CD	PART NO.	DESCRIPTION	QTY	SERIAL NO.
1		6150-23-5181	PAN, OIL	1	660029-UP
2		01435-01025	BOLT	35	660029-UP
3		07705-01400	VALVE, DRAIN	1	660029-UP
4		07002-22434	O-RING	1	660029-UP
5		6150-21-5650	GAUGE, OIL LEVEL	1	660029-UP
6		6251-21-5440	GUIDE, OIL GAUGE	1	660029-UP
7		6150-21-5920	COLLAR	1	660029-UP
8		6150-21-5930	NUT	1	660029-UP
9		6251-51-7170	BRACKET	1	660029-UP
10		01435-01020	BOLT	1	660029-UP
11		04434-51310	CLIP	1	660029-UP
12		01435-01055	BOLT	1	660029-UP
13		01584-01008	NUT	1	660029-UP
14		6741-81-9220	SENSOR, OIL LEVEL	1	660029-UP
		7861-91-4220	.O-RING	1	660029-UP
15		01435-00612	BOLT	3	660029-UP
16		4260-11-1310	BRACKET	1	660029-UP
17		08193-20010	CLIP	1	660029-UP
18		6240-81-4431	CLIP	1	660029-UP
19		01435-01020	BOLT	1	660029-UP
20		01435-01030	BOLT	1	660029-UP
21		01643-31032	WASHER	1	660029-UP
22		6150-51-6350	STRAINER	1	660029-UP
23		07000-73045	O-RING	1	660029-UP
24		01010-81035	BOLT	1	660029-UP
25		6150-81-9370	BOLT	1	660029-UP
26		6150-51-6241	BRACKET	1	660029-UP
27		01010-81020	BOLT	1	660029-UP
28		01643-31032	WASHER	1	660029-UP
29		01010-81025	BOLT	1	660029-UP
30		01580-01008	NUT	1	660029-UP
31		01643-31032	WASHER	2	660029-UP
32		09920-00150	LIQUID GASKET, LG-7, 150G		660029-UP

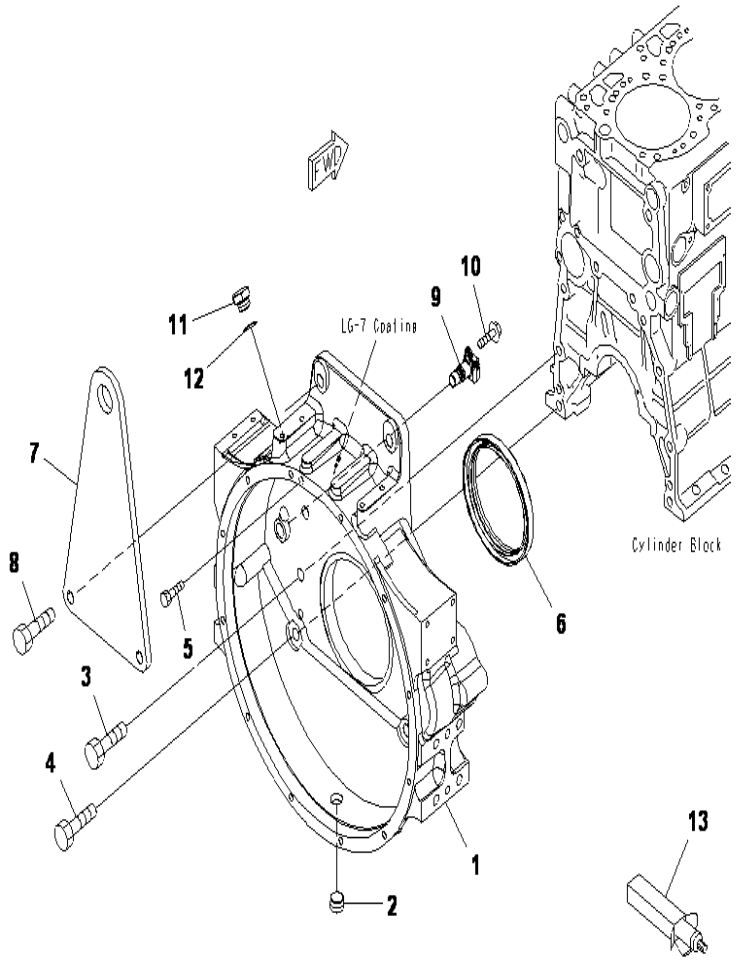

SAA6D125E-5 S/N 660029-UP

FLYWHEEL HOUSING

INDEX	CD	PART NO.	DESCRIPTION	QTY	SERIAL NO.
1		6251-21-4170	HOUSING, FLYWHEEL.....	1	660029-UP
2		07043-70617	PLUG.....	1	660029-UP
3		01010-61650	BOLT.....	6	660029-UP
4		01010-61660	BOLT.....	2	660029-UP
5		01010-81050	BOLT.....	2	660029-UP
6		6151-21-4161	SEAL, REAR.....	1	660029-UP
7		6156-21-3920	PLATE.....	1	660029-UP
8		01010-61665	BOLT.....	2	660029-UP
9		6261-81-2901	SENSOR ASS'Y, REVOLUTION.....	1	660029-UP
10		01435-00820	BOLT.....	1	660029-UP
11		6114-11-8910	PLUG.....	1	660029-UP
12		07005-02216	GASKET.....	1	660029-UP
13		(09920-00150)	LIQUID GASKET, LG-7, 150G.....		660029-UP

Ref :A2210-A3L2 Page :000200

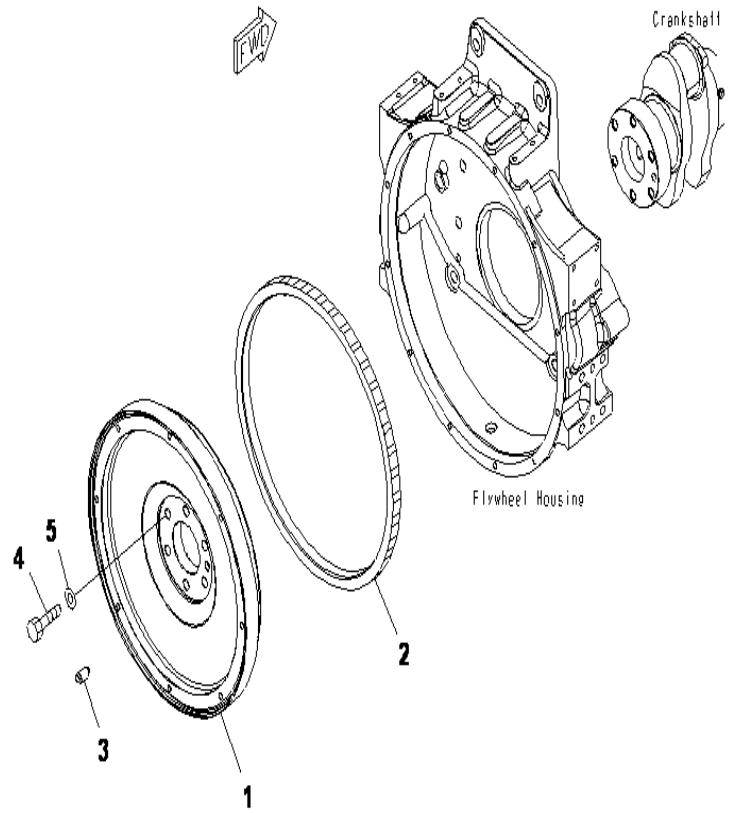

SAA6D125E-5 S/N 660029-UP

FLYWHEEL

INDEX	CD	PART NO.	DESCRIPTION	QTY	SERIAL NO.
		6251-31-1630	FLYWHEEL ASS'Y.....	1	660029-UP
1	C1		.FLYWHEEL.....	1	660029-UP
2		6150-31-1351	.GEAR.....	1	660029-UP
3		6156-31-4610	PIN, DOWEL.....	1	660029-UP
4		01050-31645	BOLT.....	6	660029-UP
5		01643-31645	WASHER.....	6	660029-UP

Ref :A2230-A3F3 Page :000210

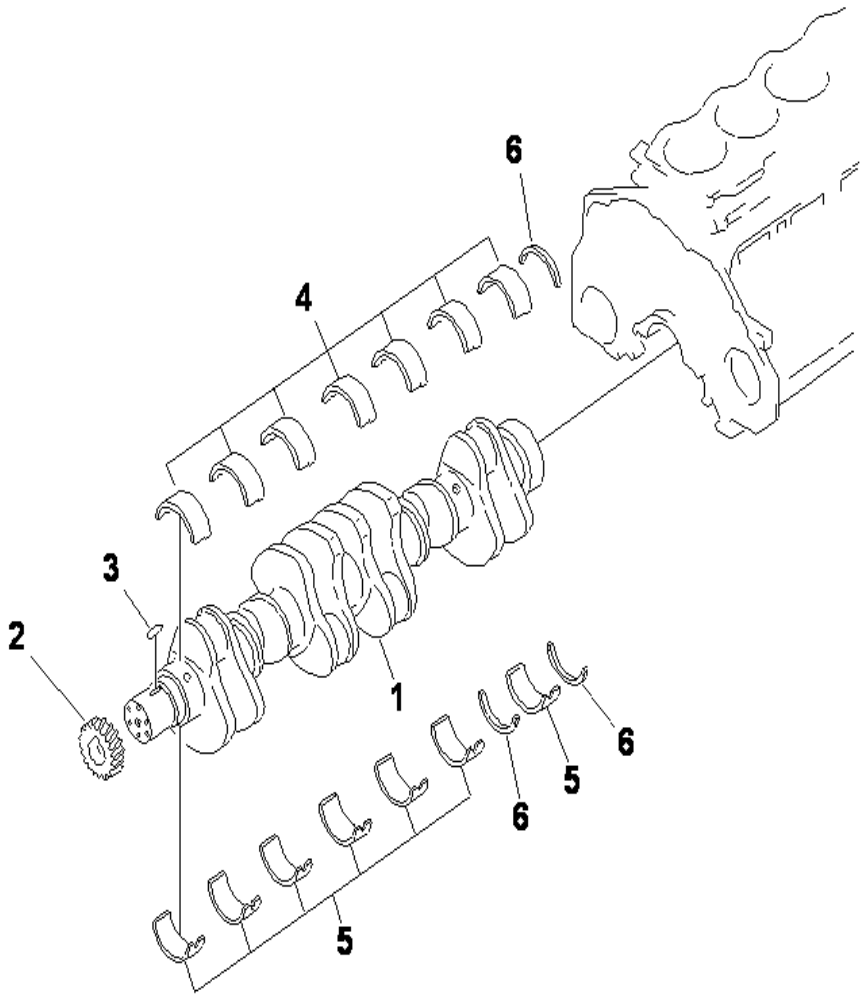

SAA6D125E-5 S/N 660029-UP

CRANKSHAFT

INDEX	CD	PART NO.	DESCRIPTION	QTY	SERIAL NO.
		6151-35-1010	CRANKSHAFT ASS'Y	1	660029-UP
1	C1		.CRANKSHAFT	1	660029-UP
2		6150-35-1120	.GEAR , CRANKSHAFT	1	660029-UP
3		6150-31-1130	.KEY	1	660029-UP
			STANDART		
		6150-21-8010	MAIN METAL ASS'Y	7	660029-UP
4	C1		.METAL, UPPER	1	660029-UP
5	C1		.METAL, LOWER	1	660029-UP
6		6150-21-8050	THRUST METAL ASS'Y	1	660029-UP
			.METAL, THRUST	3	660029-UP
			UNDERSIZE 0.25MM		
		6150-29-8010	MAIN METAL ASS'Y	7	660029-UP
4	C1		.METAL, UPPER	1	660029-UP
5	C1		.METAL, LOWER	1	660029-UP
			UNDERSIZE 0.50MM		
		6150-28-8010	MAIN METAL ASS'Y	7	660029-UP
4	C1		.METAL, UPPER	1	660029-UP
5	C1		.METAL, LOWER	1	660029-UP
			UNDERSIZE 0.75MM		
		6150-27-8010	MAIN METAL ASS'Y	7	660029-UP
4	C1		.METAL, UPPER	1	660029-UP
5	C1		.METAL, LOWER	1	660029-UP
			UNDERSIZE 1.00MM		
		6150-26-8010	MAIN METAL ASS'Y	7	660029-UP
4	C1		.METAL, UPPER	1	660029-UP
5	C1		.METAL, LOWER	1	660029-UP
			OVERSIZE 0.25MM		
6		6150-29-8050	THRUST METAL ASS'Y	1	660029-UP
	C1		.METAL, THRUST	3	660029-UP
			OVERSIZE 0.50MM		
		6150-28-8050	THRUST METAL ASS'Y	1	660029-UP
	C1		.METAL, THRUST	3	660029-UP
			OVERSIZE 0.75MM		
		6150-27-8050	THRUST METAL ASS'Y	1	660029-UP
	C1		.METAL, THRUST	3	660029-UP
			OVERSIZE 1.00MM		
6		6150-26-8050	THRUST METAL ASS'Y	1	660029-UP
	C1		.METAL, THRUST	3	660029-UP

Ref :A2310-A3A6 Page :000220

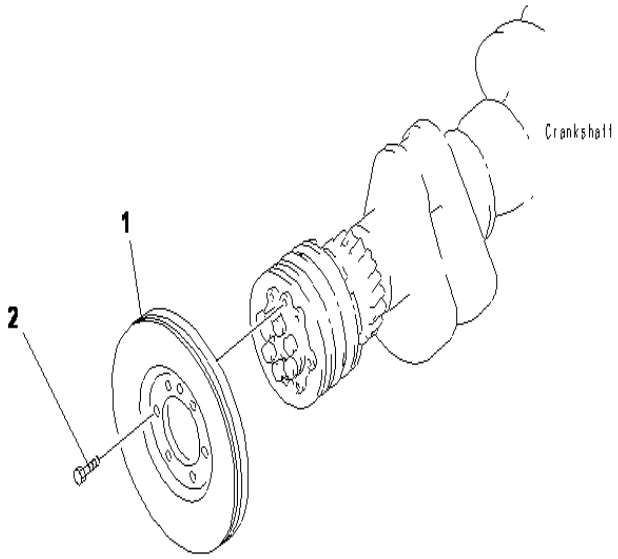

SAA6D125E-5 S/N 660029-UP

VIBRATION DAMPER

INDEX	CD	PART NO.	DESCRIPTION	QTY	SERIAL NO.
1		6151-31-8200	DAMPER ASS'Y.....	1	660029-UP
2		01010-81225	BOLT.....	6	660029-UP

Ref :A2330-A3B9 Page :000230

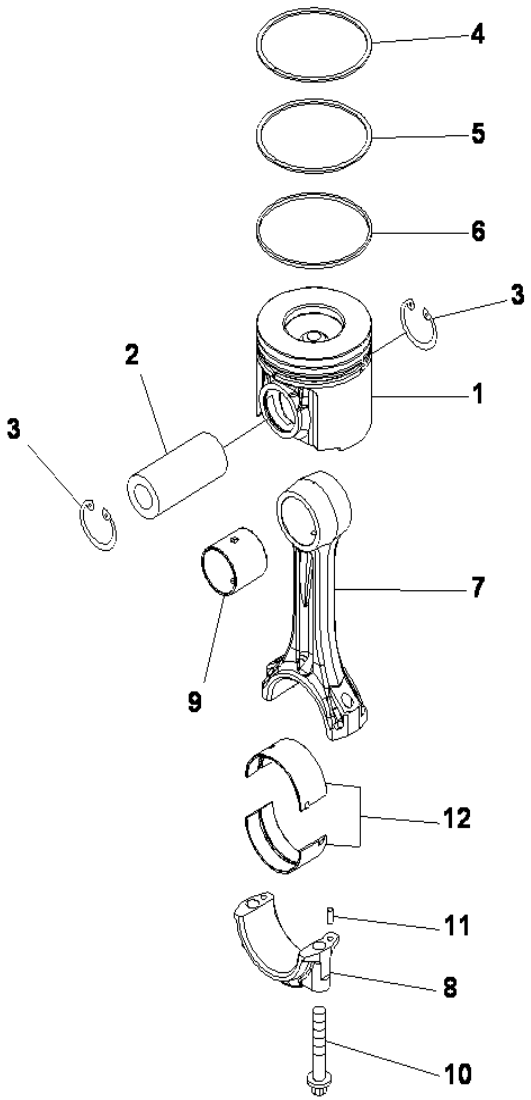

SAA6D125E-5 S/N 660029-UP

PISTON AND CONNECTING ROD

INDEX	CD	PART NO.	DESCRIPTION	QTY	SERIAL NO.
1		6251-31-2510	PISTON	6	660029-UP
2		6151-31-2410	PIN, PISTON	6	660029-UP
3		04065-04818	RING, SNAP	12	660029-UP
		6251-31-2030	PISTON RING ASS'Y, PER CYLINDER	6	660029-UP
4	C1		.RING, TOP	1	660029-UP
5	C1		.RING, SECOND	1	660029-UP
6	C1		.RING, OIL	1	660029-UP
		6251-31-3100	CONNECTING ROD	6	660029-UP
7	C1		.ROD, CONNECTING	1	660029-UP
8	C1		.CAP, CONNECTING ROD	1	660029-UP
9		6251-31-3130	.BUSHING	1	660029-UP
10		6150-31-3310	.BOLT	2	660029-UP
11		02400-10413	.PIN, DOWEL	2	660029-UP
			STANDART		
12		6151-31-3050	METAL ASS'Y	6	660029-UP
	C1		.METAL, UPPER	1	660029-UP
	C1		.METAL, LOWER	1	660029-UP
			UNDERSIZE 0.25MM		
12		6151-39-3050	METAL ASS'Y	6	660029-UP
	C1		.METAL, UPPER	1	660029-UP
	C1		.METAL, LOWER	1	660029-UP
			UNDERSIZE 0.50MM		
12		6151-38-3050	METAL ASS'Y	6	660029-UP
	C1		.METAL, UPPER	1	660029-UP
	C1		.METAL, LOWER	1	660029-UP
			UNDERSIZE 0.75MM		
12		6151-37-3050	METAL ASS'Y	6	660029-UP
	C1		.METAL, UPPER	1	660029-UP
	C1		.METAL, LOWER	1	660029-UP
			UNDERSIZE 1.00MM		
12		6151-36-3050	METAL ASS'Y	6	660029-UP
	C1		.METAL, UPPER	1	660029-UP
	C1		.METAL, LOWER	1	660029-UP

Ref :A2350-A3D8 Page :000240

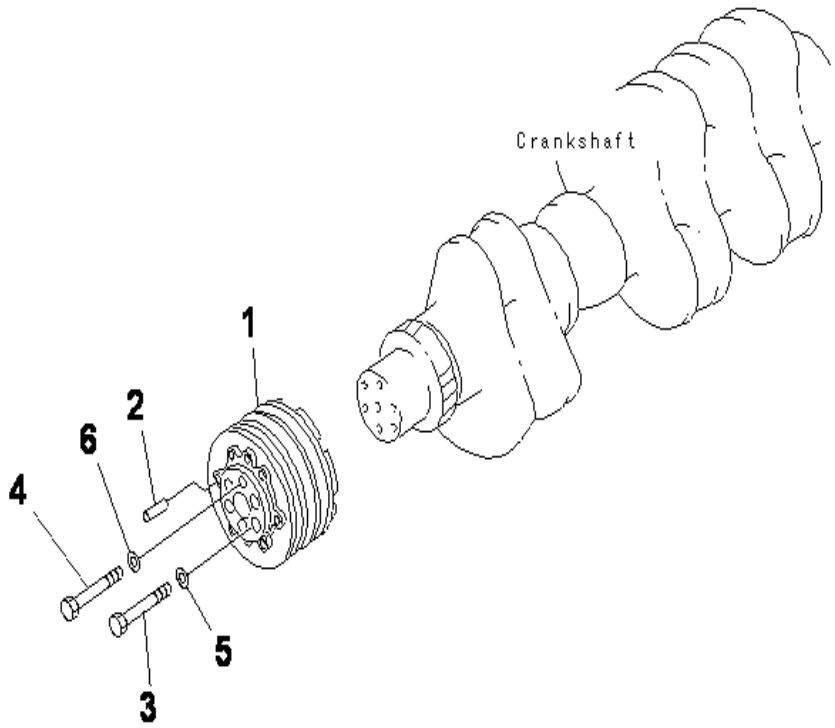

SAA6D125E-5 S/N 660029-UP

CRANK PULLEY (NON HARDENING)

INDEX	CD	PART NO.	DESCRIPTION	QTY	SERIAL NO.
1		6156-31-1550	PULLEY, NON HARDENING.....	1	660029-UP
2		04020-01228	PIN, DOWEL.....	1	660029-UP
3		01051-51635	BOLT.....	5	660029-UP
4		01051-51430	BOLT.....	1	660029-UP
5		6150-31-1810	WASHER.....	5	660029-UP
6		6130-32-1361	WASHER.....	1	660029-UP

Ref :A2370-A3D8 Page :000250

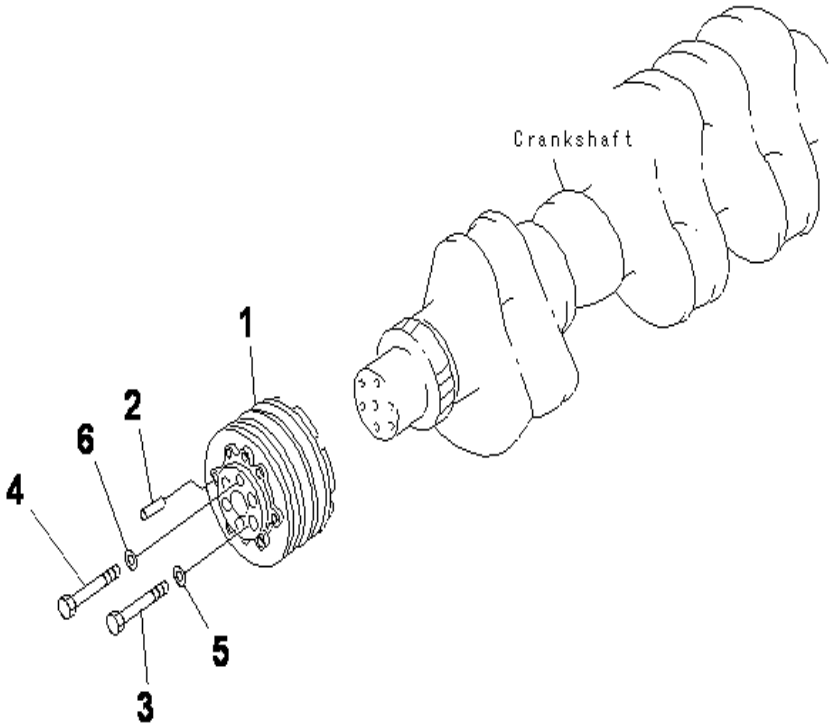

SAA6D125E-5 S/N 660029-UP

CRANK PULLEY (HARDENING)

INDEX	CD	PART NO.	DESCRIPTION	QTY	SERIAL NO.
1		6156-31-1560	PULLEY, HARDENING.....	1	660029-UP
2		04020-01228	PIN, DOWEL.....	1	660029-UP
3		01051-51635	BOLT.....	5	660029-UP
4		01051-51430	BOLT.....	1	660029-UP
5		6150-31-1810	WASHER.....	5	660029-UP
6		6130-32-1361	WASHER.....	1	660029-UP

Ref :A2370-A3E1 Page :000260

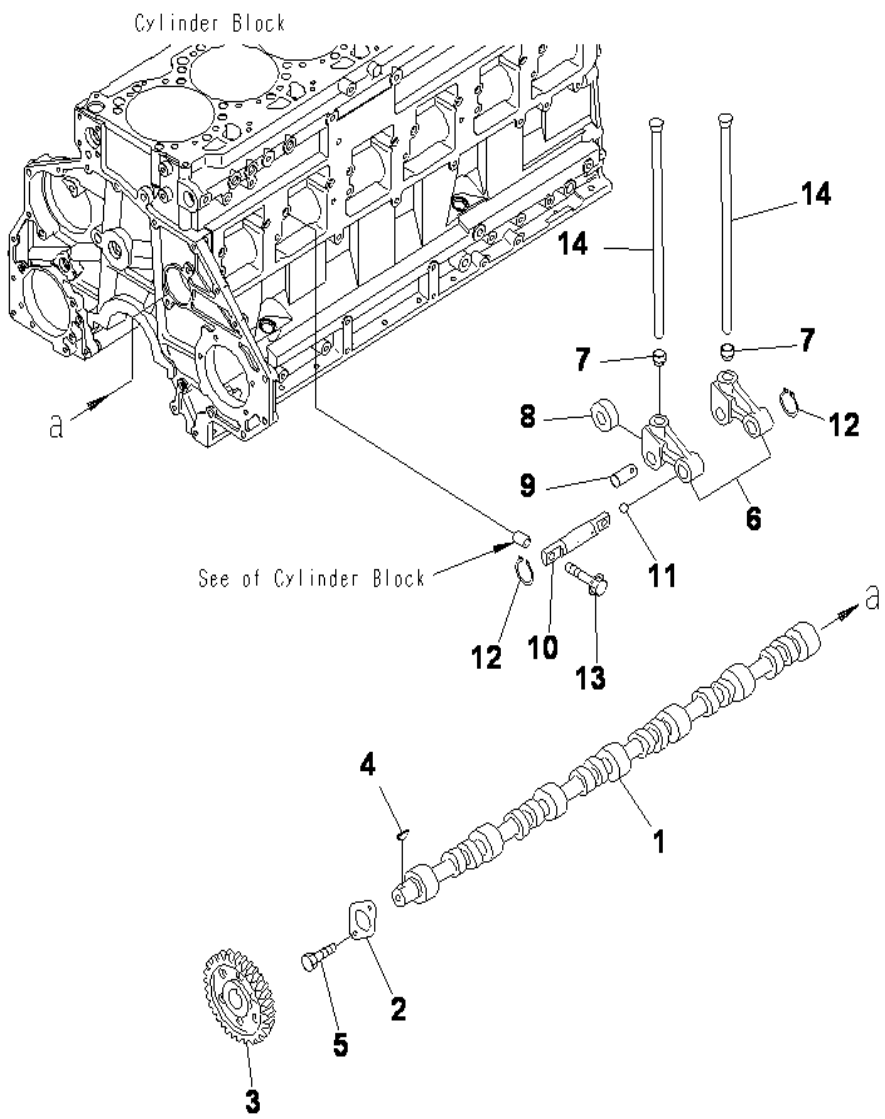

SAA6D125E-5 S/N 660029-UP

CAMSHAFT AND CAMFOLLOWER

INDEX	CD	PART NO.	DESCRIPTION	QTY	SERIAL NO.
		6150-41-1012	CAMSHAFT ASS'Y	1	660029-UP
1			.CAMSHAFT	1	660029-UP
2		6150-41-1130	.PLATE, THRUST	1	660029-UP
3		6150-41-1120	.GEAR, CAMSHAFT	1	660029-UP
4		04010-00725	.KEY	1	660029-UP
5		01010-81022	BOLT	2	660029-UP
		6150-41-2302	LEVER ASS'Y	12	660029-UP
6	C1		.LEVER	1	660029-UP
7	C1		.SOCKET	1	660029-UP
8	C1		.ROLLER	1	660029-UP
9	C1		.PIN	1	660029-UP
		6150-41-2401	SHAFT ASS'Y	6	660029-UP
10	C1		.SHAFT	1	660029-UP
11		6150-81-8420	.BALL	1	660029-UP
12		04064-02012	RING, SNAP	12	660029-UP
13		6150-41-2450	BOLT	12	660029-UP
14		6150-41-3111	ROD, PUSH	12	660029-UP

Ref :A2410-A3B8 Page :000270

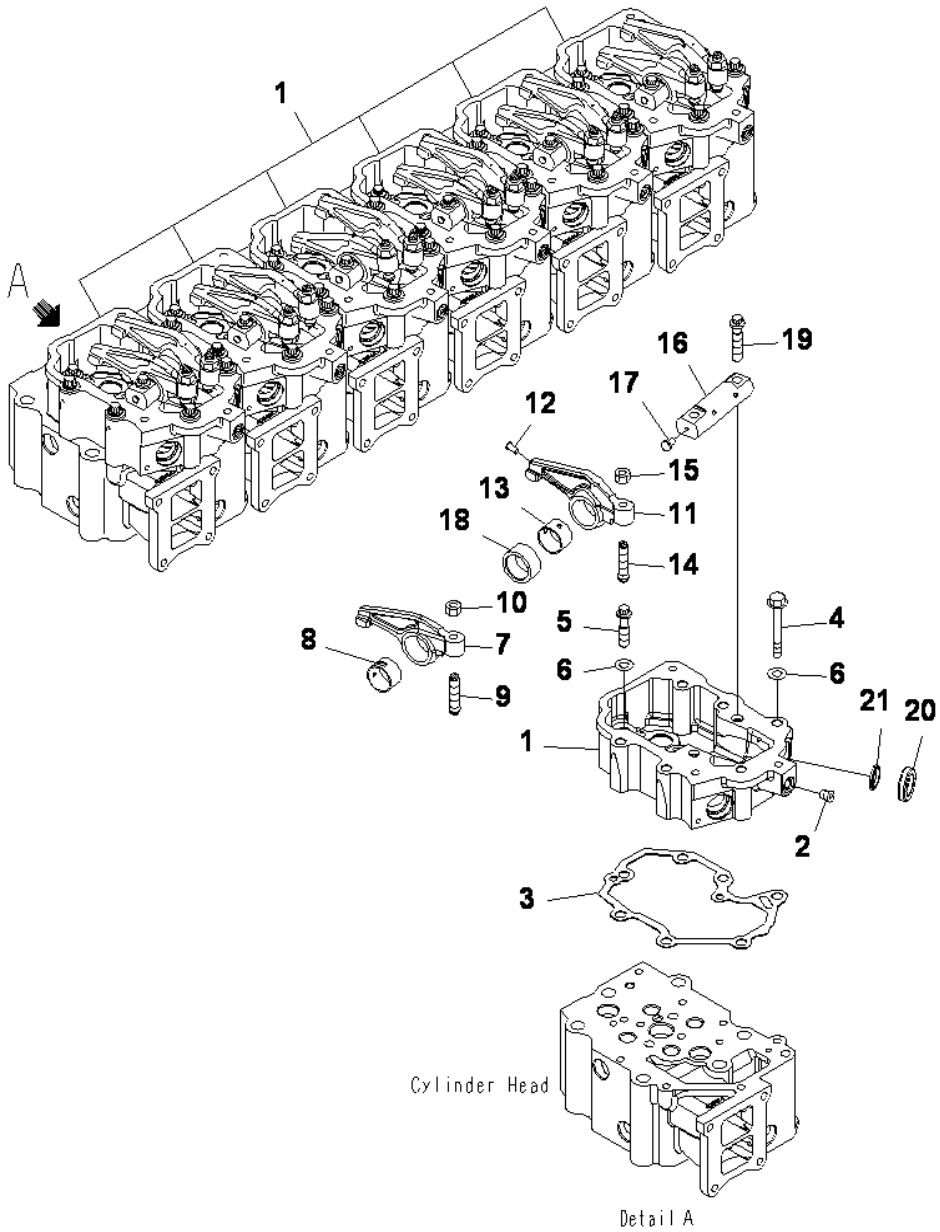

SAA6D125E-5 S/N 660029-UP

ROCKER ARM AND HOUSING

INDEX	CD	PART NO.	DESCRIPTION	QTY	SERIAL NO.
		6251-11-7100	HOUSING ASS'Y	6	660029-UP
1		6251-11-7110	.HOUSING, ROCKER ARM	1	660029-UP
2		07043-30108	.PLUG	1	660029-UP
3		6251-11-7220	GASKET	6	660029-UP
4		01437-01075	BOLT	34	660029-UP
5		6251-71-1170	BOLT	6	660029-UP
6		01643-31032	WASHER	40	660029-UP
		6150-41-5400	ARM ASS'Y, INTAKE	6	660029-UP
7	C1		.ARM, ROCKER	1	660029-UP
8		6150-41-5420	.BUSHING	1	660029-UP
9		6150-41-5541	SCREW	6	660029-UP
10		01582-01008	NUT	6	660029-UP
		6154-41-5500	ARM ASS'Y, EXHAUST	6	660029-UP
11	C1		.ARM, ROCKER	1	660029-UP
12		6162-43-5340	.RIVET	1	660029-UP
13		6150-41-5420	.BUSHING	1	660029-UP
14		6150-41-5541	SCREW	6	660029-UP
15		01582-01008	NUT	6	660029-UP
		6150-42-5300	ROCKER ARM SHAFT ASS'Y	6	660029-UP
16	C1		.SHAFT	1	660029-UP
17		6710-41-5340	.RIVET	1	660029-UP
18		6154-41-5321	COLLAR	6	660029-UP
19		6150-81-9370	BOLT	12	660029-UP
20		6251-11-8830	SEAL	6	660029-UP
21		6251-11-8840	RING	6	660029-UP

Ref :A2410-B3B8 Page :000280

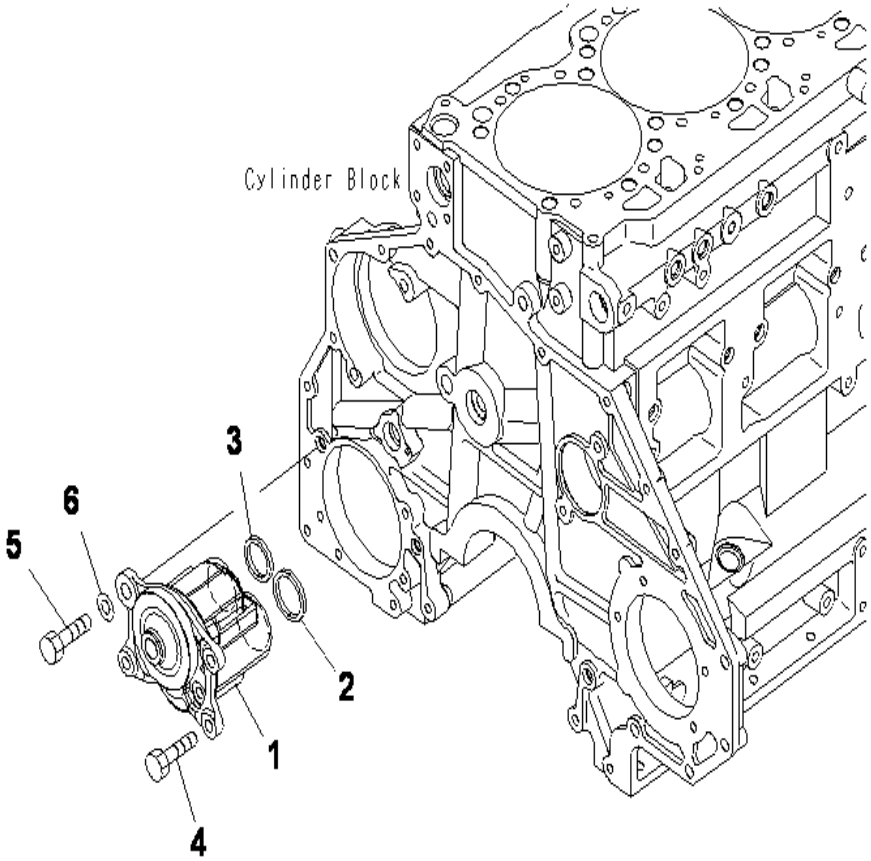

SAA6D125E-5 S/N 660029-UP

OIL PUMP

INDEX	CD	PART NO.	DESCRIPTION	QTY	SERIAL NO.
1		6251-51-1001	OIL PUMP ASS'Y.....	1	660029-UP
2		6150-51-1710	RING.....	1	660029-UP
3		6150-51-1720	RING.....	1	660029-UP
4		01010-81025	BOLT.....	3	660029-UP
5		01010-81035	BOLT.....	1	660029-UP
6		01643-31032	WASHER.....	1	660029-UP

Ref :A3010-A3A8 Page :000290

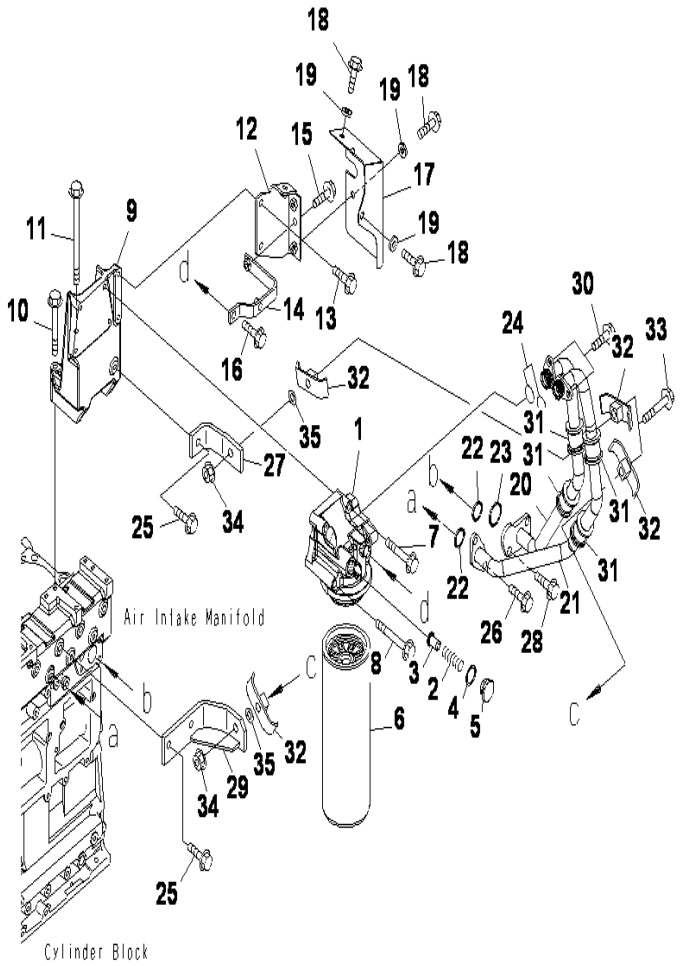

SAA6D125E-5 S/N 660029-UP

OIL FILTER AND PIPING

INDEX	CD	PART NO.	DESCRIPTION	QTY	SERIAL NO.
		6217-51-5102	HEAD ASS'Y, OIL FILTER	1	660029-UP
1		6217-51-5111	.HEAD	1	660029-UP
2		600-211-1890	.SPRING	1	660029-UP
3		6162-55-5230	.VALVE	1	660029-UP
4		6162-53-5430	.PACKING	1	660029-UP
5		6217-51-5660	.CAP	1	660029-UP
6		600-211-1340	CARTRIDGE, OIL	1	660029-UP
7		01435-01060	BOLT	2	660029-UP
8		01436-01010	BOLT	2	660029-UP
9		6251-51-5110	BRACKET	1	660029-UP
10		01435-01080	BOLT	2	660029-UP
11		01436-01085	BOLT	2	660029-UP
12		6251-51-5480	BRACKET	1	660029-UP
13		01435-01020	BOLT	2	660029-UP
14		6251-51-5490	BRACKET	1	660029-UP
15		01435-01020	BOLT	1	660029-UP
16		01436-01015	BOLT	1	660029-UP
17		6251-51-5380	COVER	1	660029-UP
18		01435-01025	BOLT	4	660029-UP
19		6110-23-6490	SPACER	4	660029-UP
20		6251-51-5650	TUBE, INLET	1	660029-UP
21		6251-51-5660	TUBE, RETURN	1	660029-UP
22		6124-61-2181	GROMMET	2	660029-UP
23		6154-51-5810	GROMMET	1	660029-UP
24		07000-73025	O-RING	2	660029-UP
25		01435-01025	BOLT	5	660029-UP
26		01435-01025	BOLT	2	660029-UP
27		6251-51-5170	BRACKET	1	660029-UP
28		01435-01025	BOLT	1	660029-UP
29		6251-51-5150	BRACKET	1	660029-UP
30		01435-01025	BOLT	2	660029-UP
31		6251-51-5180	CUSHION	4	660029-UP
32		07094-30518	CLAMP	4	660029-UP
33		01435-01275	BOLT	2	660029-UP
34		01584-01210	NUT	2	660029-UP
35		01643-31232	WASHER	2	660029-UP

Ref :A3110-A3K5 Page :000300

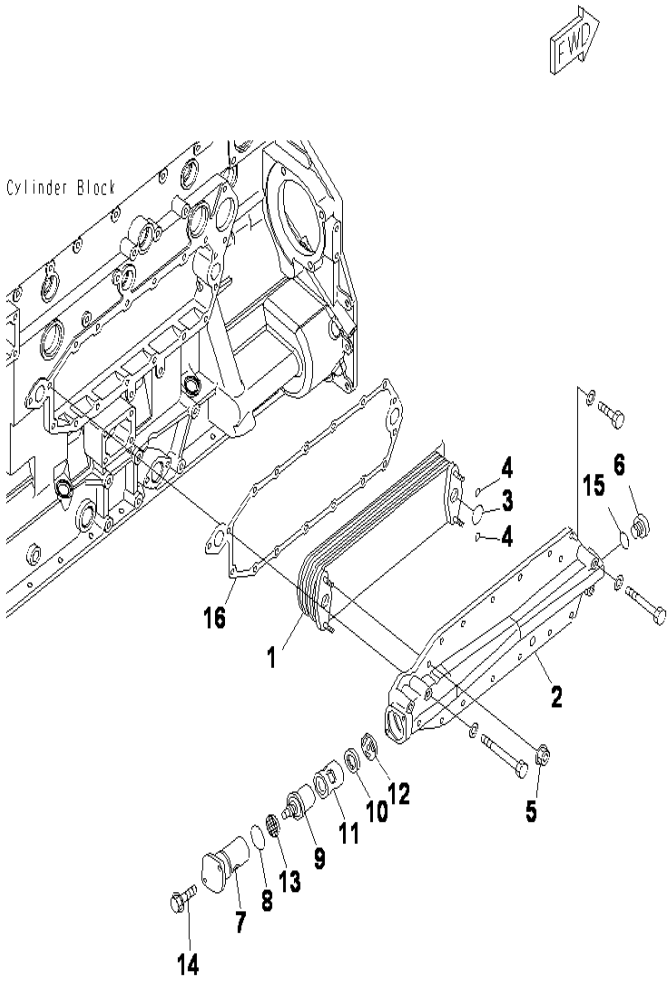

SAA6D125E-5 S/N 660029-UP

OIL COOLER

INDEX	CD	PART NO.	DESCRIPTION	QTY	SERIAL NO.
1		6152-62-2210	ELEMENT, OIL COOLER	1	660029-UP
2		6150-61-2125	COVER, OIL COOLER	1	660029-UP
3		6150-61-2510	O-RING	2	660029-UP
4		6150-61-2520	O-RING	4	660029-UP
5		6150-61-2580	NUT	4	660029-UP
6		6150-61-2530	PLUG	1	660029-UP
7		6151-62-2130	COVER	1	660029-UP
8		07000-63042	O-RING	1	660029-UP
9		6251-61-2610	VALVE	1	660029-UP
10		6150-61-2540	SEAL	1	660029-UP
11		6150-61-2141	CASE	1	660029-UP
12		6150-61-2151	PLATE	1	660029-UP
13		6151-62-2180	STRAINER	1	660029-UP
14		01435-00825	BOLT	2	660029-UP
15		6150-61-2550	O-RING	1	660029-UP
16		6150-61-2815	GASKET	1	660029-UP

Ref :A3310-A3D3 Page :000310

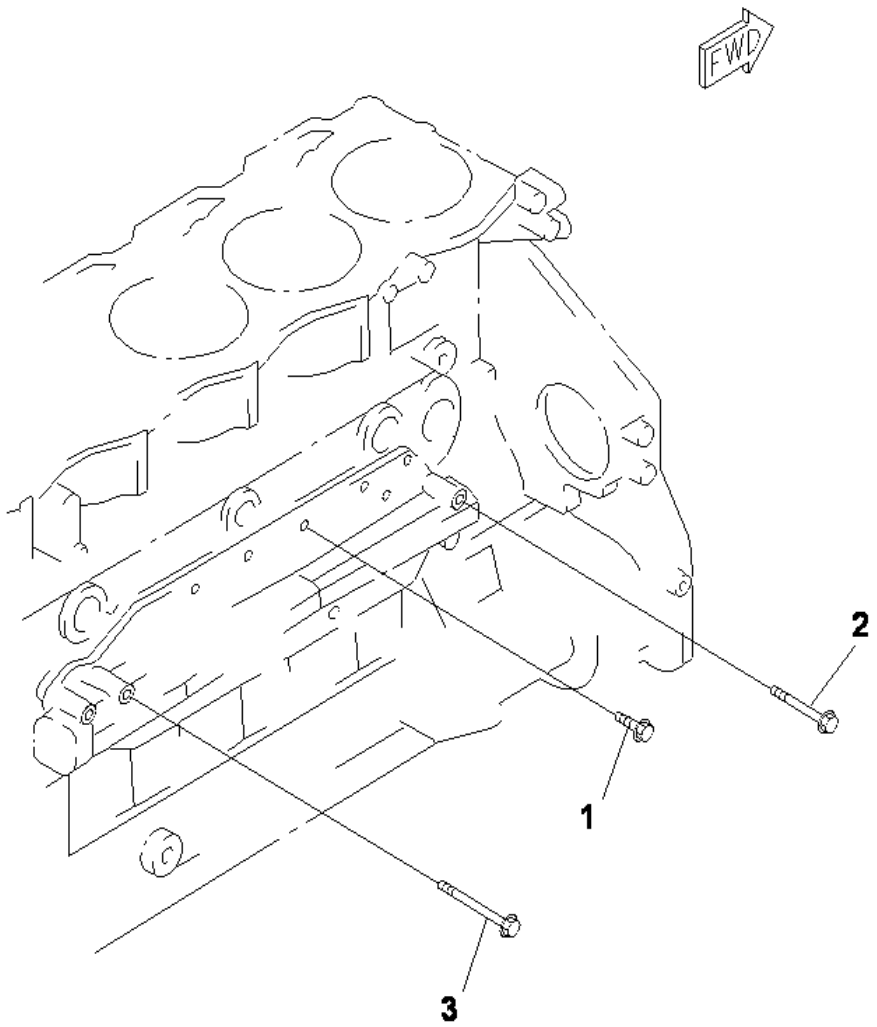

SAA6D125E-5 S/N 660029-UP

OIL COOLER MOUNTING PARTS

INDEX	CD	PART NO.	DESCRIPTION	QTY	SERIAL NO.
1		01435-01025	BOLT	13	660029-UP
2		01435-01065	BOLT	2	660029-UP
3		01435-01080	BOLT	2	660029-UP

Ref :A3311-A3B3 Page :000320

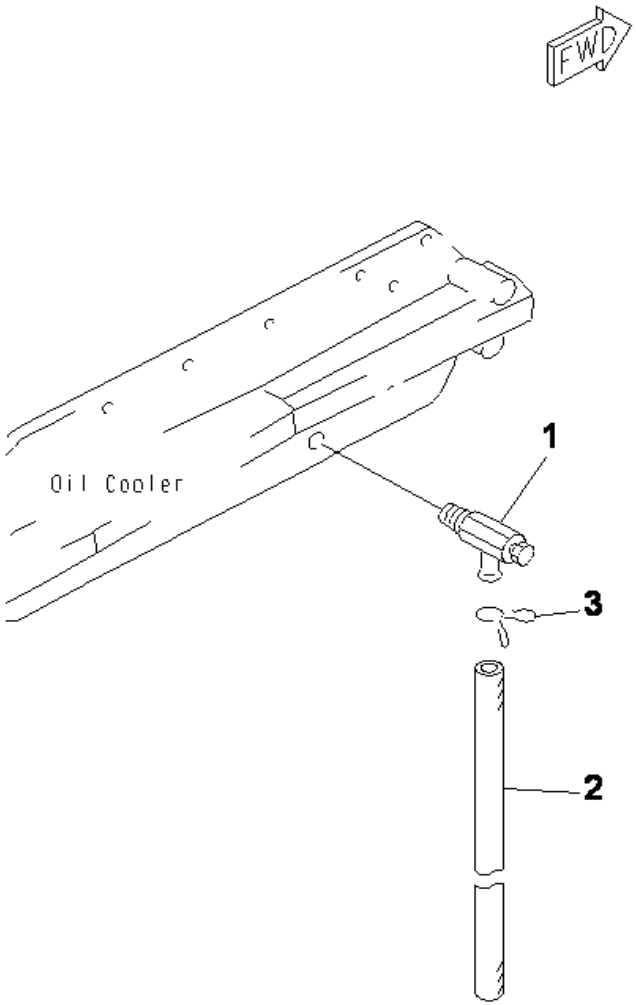

SAA6D125E-5 S/N 660029-UP

WATER DRAIN VALVE

INDEX	CD	PART NO.	DESCRIPTION	QTY	SERIAL NO.
1		6140-61-6512	VALVE, DRAIN.....	1	660029-UP
2		07286-00825	HOSE.....	1	660029-UP
3		6144-61-6510	CLIP.....	1	660029-UP

Ref :A3330-A3A8 Page :000330

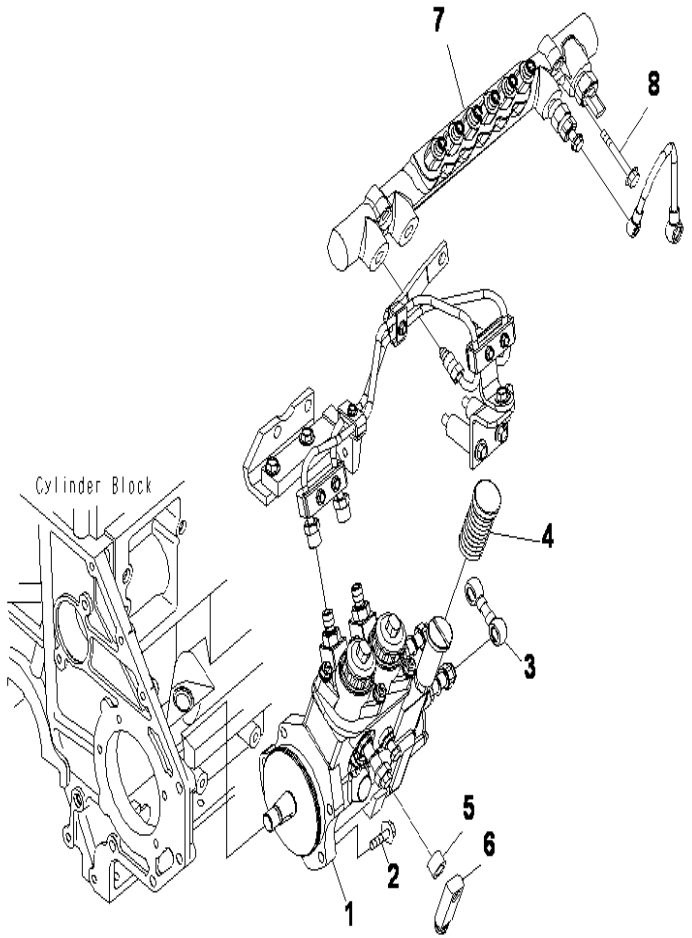

SAA6D125E-5 S/N 660029-UP

FUEL SUPPLY PUMP AND COMMON RAIL

INDEX	CD	PART NO.	DESCRIPTION	QTY	SERIAL NO.
1		(6251-71-1120)	FUEL PUMP ASS'Y.....	1	660029-UP
2		01435-01035	BOLT.....	4	660029-UP
3		6217-71-5910	TUBE, CROSS.....	1	660029-UP
4		6217-71-1910	COVER.....	1	660029-UP
5		6151-51-8490	SPACER.....	1	660029-UP
6		6156-71-5370	JOINT.....	1	660029-UP
7		(6261-71-1220)	COMMON RAIL ASS'Y, (SEE FIG.A4010-C3Y7).....	1	660029-UP
8		01435-01050	BOLT.....	2	660029-UP

Ref :A4010-A3Z1 Page :000340

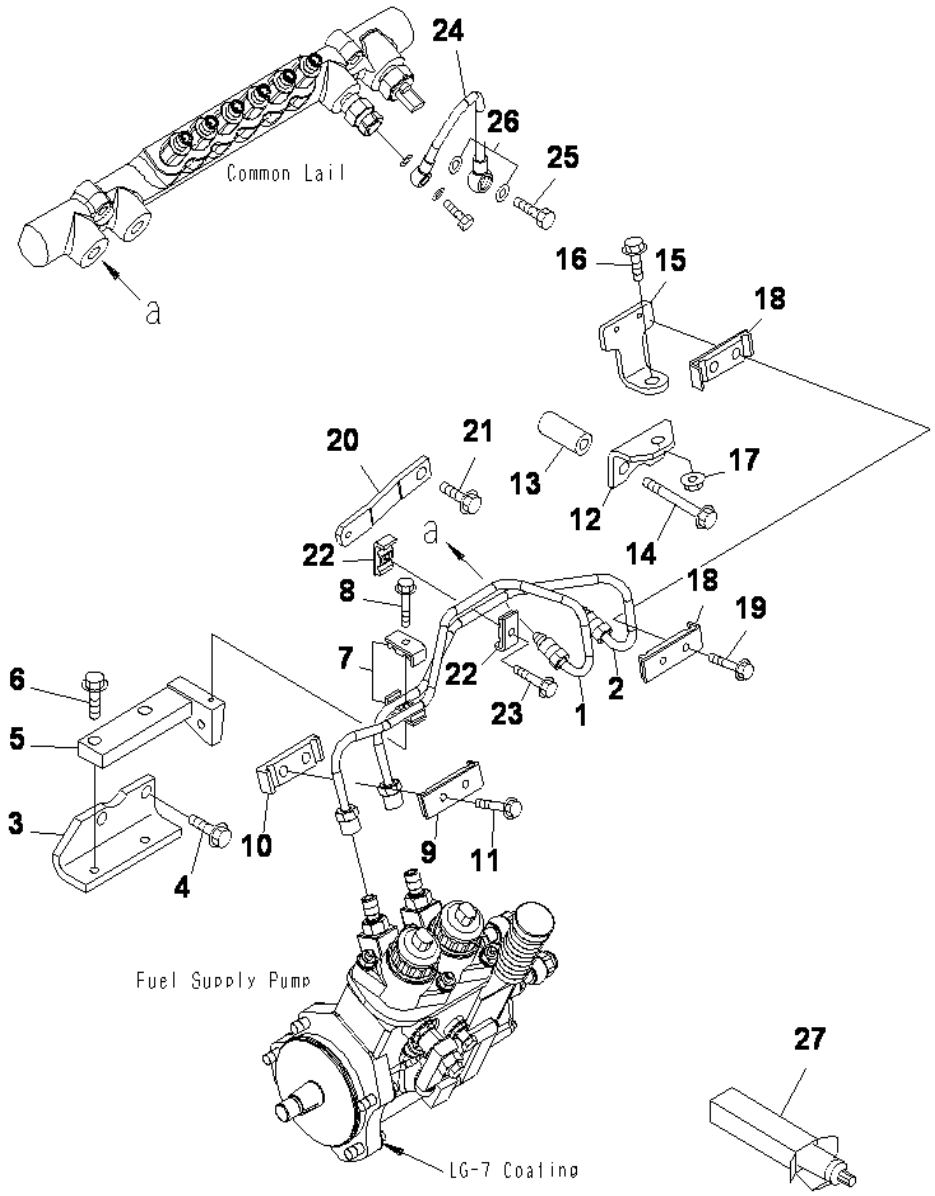

SAA6D125E-5 S/N 660029-UP

FUEL SUPPLY AND RETURN PIPING

INDEX	CD	PART NO.	DESCRIPTION	QTY	SERIAL NO.
1		6251-71-4110	TUBE,SUPPLY	1	660029-UP
2		6251-71-4120	TUBE,SUPPLY	1	660029-UP
3		6156-71-5281	BRACKET	1	660029-UP
4		01435-01025	BOLT	2	660029-UP
5		6251-71-5830	BRACKET	1	660029-UP
6		01435-01025	BOLT	2	660029-UP
7		6162-75-5820	CLAMP	2	660029-UP
8		01435-00630	BOLT	1	660029-UP
9		6217-71-5210	CLAMP	1	660029-UP
10		6217-71-5170	CLAMP	1	660029-UP
11		01435-00630	BOLT	2	660029-UP
12		6251-71-5860	BRACKET	1	660029-UP
13		6152-51-5520	SPACER	2	660029-UP
14		01435-01070	BOLT	2	660029-UP
15		6217715281	BRACKET	1	660029-UP
16		01435-01025	BOLT	1	660029-UP
17		01584-01008	NUT	1	660029-UP
18		6217-71-5210	CLAMP	2	660029-UP
19		01435-00630	BOLT	2	660029-UP
20		6251-71-5810	BRACKET	1	660029-UP
21		01435-01045	BOLT	1	660029-UP
22		6162-75-5820	CLAMP	2	660029-UP
23		01435-00630	BOLT	1	660029-UP
24		6251-71-5450	TUBE, RETURN	1	660029-UP
25		07206-31014	BOLT, JOINT	1	660029-UP
26		07005-01412	GASKET	2	660029-UP
27		(09920-00150)	LIQUID GASKET, LG-150G		660029-UP

Ref :A4010-B3Z1 Page :000350

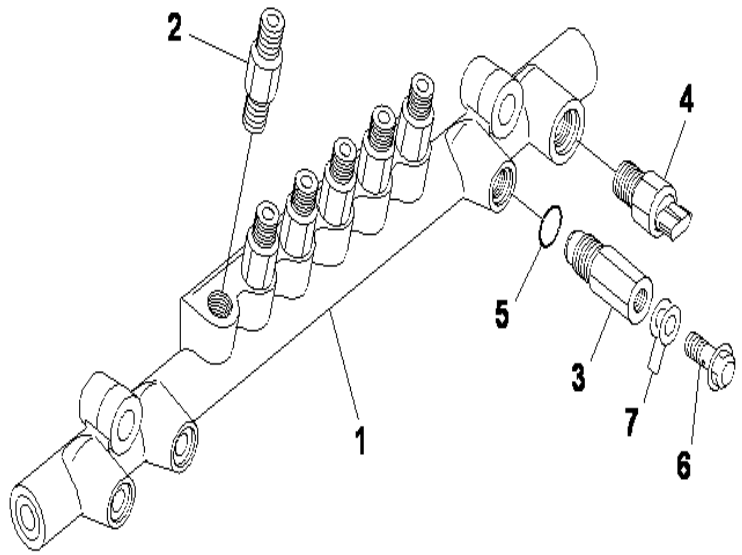

SAA6D125E-5 S/N 660029-UP

COMMON RAIL (INNER PARTS)

INDEX	CD	PART NO.	DESCRIPTION	QTY	SERIAL NO.
1		6261-71-1220	COMMON RAIL ASS'Y, COMMON.....	1	660029-UP
2		ND095400-03	.LIMITER ASS'Y, FUEL FLOW.....	6	660029-UP
3		ND095420-04	.LIMITER ASS'Y, FUEL PRESSURE.....	1	660029-UP
4		ND499000-61	.SENSOR ASS'Y, FUEL PRESSURE.....	1	660029-UP
5		ND095444-00	.PICCO RING.....	1	660029-UP
6		ND095438-00	.BOLT, JOINT.....	1	660029-UP
7		ND949010-25	.GASKET.....	2	660029-UP

Ref :A4010-C3Z1 Page :000360

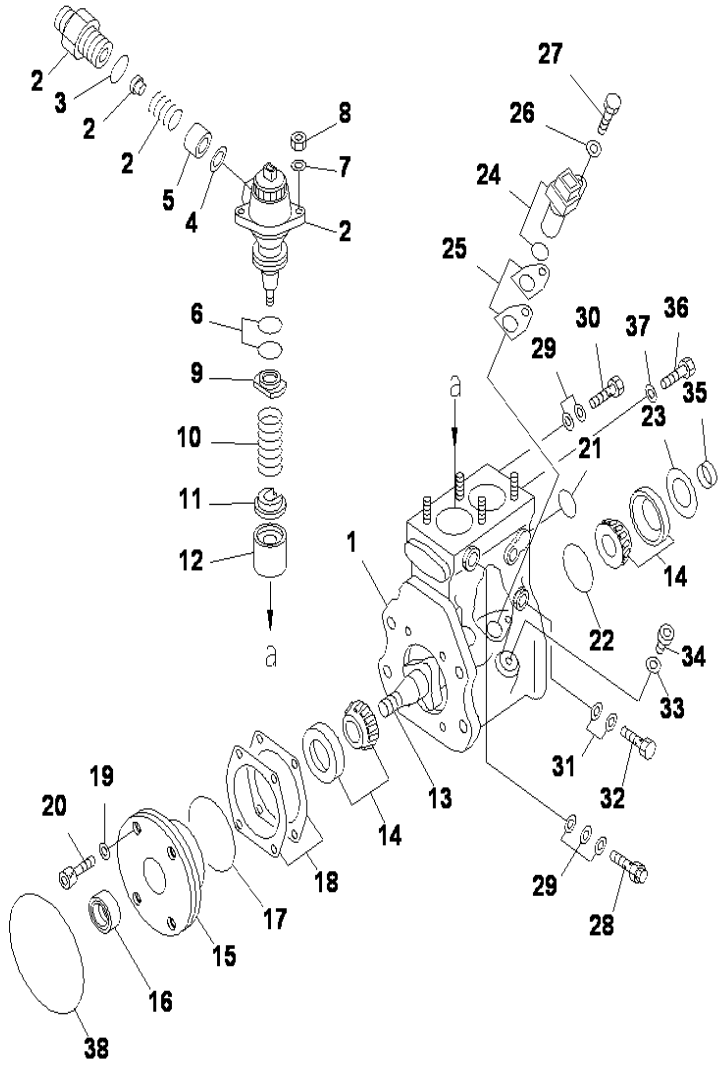

FUEL SUPPLY PUMP (1/2) (PUMP) (INNER PARTS)

INDEX	CD	PART NO.	DESCRIPTION	QTY	SERIAL NO.
		6251-71-1120	FUEL PUMP ASS'Y.....	1	660029-UP
			THIS ASSEMBLY CONSIST OG ALL PARTS.....		
			SHOW IN FIGS.A4010-D3Z1 AND A4010-E3Z1.....		
	C2	(ND094100-0460)	. BODY ASS'Y.....	1	660029-UP
1	C2	(ND094110-0210)	.. HOUSING ASS'Y.....	1	660029-UP
2	C2	(ND094040-0270)	.. PVC ELEMENT ASS'Y.....	2	660029-UP
3	C2	(ND094040-0090)	... O-RING.....	2	660029-UP
4	C2	(ND094137-0010)	...GASKET.....	2	660029-UP
5	C2	(ND094140-0040)	...VALVE ASS'Y.....	2	660029-UP
6	C2	(ND094086-0100)	..O-RING.....	4	660029-UP
7	C2	(ND949013-5880)	.. WASHER.....	4	660029-UP
8	C2	(ND921560-8081)	.. NUT.....	4	660029-UP
9	C2	(ND094132-0040)	..SEAT, SPRING UPPER.....	2	660029-UP
10	C2	(ND094164-0010)	.. SPRING, PLUNGER.....	2	660029-UP
11	C2	(ND094165-0021)	..SEAT, SPRING LOWER.....	2	660029-UP
12	C2	(ND094170-0100)	.. TAPPET ASS'Y.....	2	660029-UP
13	C2	(ND094191-0161)	..CAMSHAFT.....	1	660029-UP
14	C2	(ND949101-0230)	..BEARING, ROLLER.....	2	660029-UP
15	C2	(ND094104-0100)	.. COVER, BEARING.....	1	660029-UP
16	C2	(ND949150-3030)	.. SEAL, OIL.....	1	660029-UP
17	C2	(ND094086-0120)	..O-RING.....	1	660029-UP
18	C2	(ND094095-0100)	.. SHIM, 0.05MM.....		660029-UP
	C2	(ND094095-0130)	.. SHIM, 0.10MM.....		660029-UP
	C2	(ND094095-0140)	.. SHIM, 0.20MM.....		660029-UP
	C2	(ND094095-0150)	.. SHIM, 0.30MM.....		660029-UP
	C2	(ND094095-0160)	.. SHIM, 0.50MM.....		660029-UP
19	C2	(ND094092-0010)	..WASHER.....	4	660029-UP
20	C2	(ND949044-3320)	..BOLT.....	4	660029-UP
21	C2	(ND094086-0110)	..O-RING.....	1	660029-UP
22	C2	(ND094086-0130)	..O-RING.....	1	660029-UP
23	C2	(ND094093-0050)	.. SHIM, 0.40MM.....		660029-UP
	C2	(ND094093-0060)	.. SHIM, 0.60MM.....		660029-UP
	C2	(ND094093-0070)	.. SHIM, 0.80MM.....		660029-UP
	C2	(ND094093-0080)	.. SHIM, 1.00MM.....		660029-UP
24	C2	(ND949979-1300)	.. SENSOR ASS'Y.....	1	660029-UP
	C2	(ND949140-6310)	... O-RING.....	1	660029-UP
25	C2	(ND094096-0050)	.. SHIM, 0.15MM.....		660029-UP
	C2	(ND094096-0060)	.. SHIM, 0.20MM.....		660029-UP
	C2	(ND094096-0070)	.. SHIM, 0.25MM.....		660029-UP
	C2	(ND094096-0080)	.. SHIM, 0.40MM.....		660029-UP
26	C2	(ND902000-6081)	.. WASHER.....	1	660029-UP
27	C2	(ND901070-6161)	.. BOLT.....	1	660029-UP
28	C2	ND090310-0500	.. VALVE ASS'Y,OVERFLOW.....	1	660029-UP
29		ND090222-0070	.. WASHER.....	5	660029-UP
30		ND949180-0310	.. SCREW.....	1	660029-UP

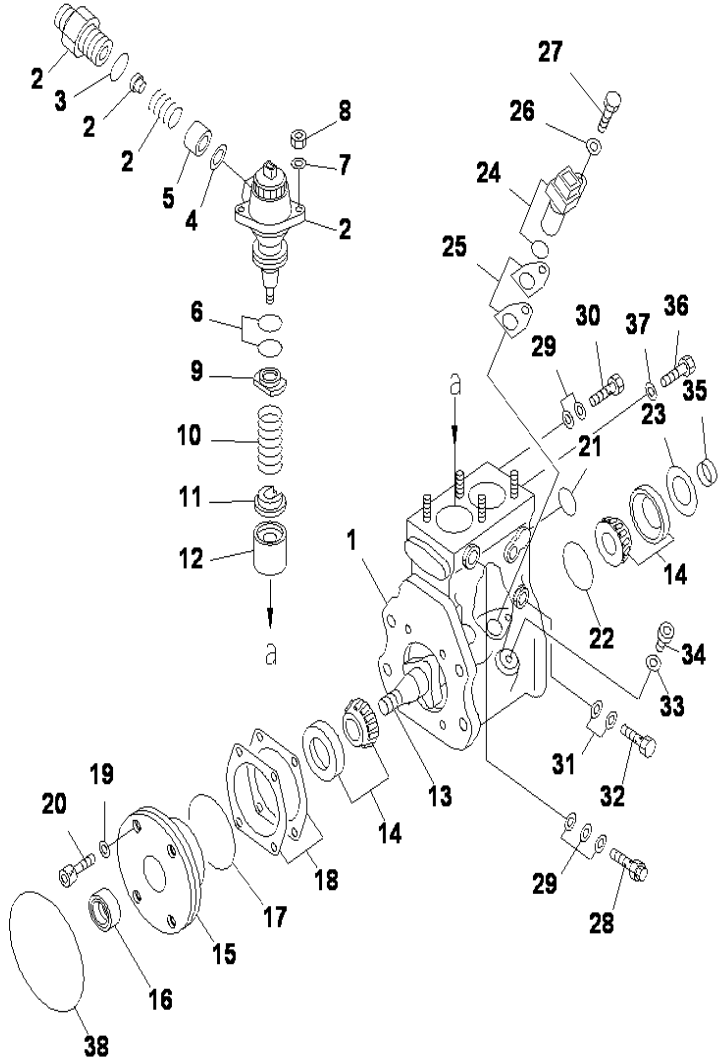

SAA6D125E-5 S/N 660029-UP

FUEL SUPPLY PUMP (1/2) (PUMP) (INNER PARTS)

INDEX	CD	PART NO.	DESCRIPTION	QTY	SERIAL NO.
31		ND0902220120	.. WASHER.....	2	660029-UP
32		ND9491800060	.. SCREW.....	1	660029-UP
33		ND9490180350	..WASHER.....	1	660029-UP
34		ND0903170480	.. PLUG, SCREW.....	1	660029-UP
35		ND0902070100	.. RING.....	1	660029-UP
36		ND090244-0010	..SCREW.....	1	660029-UP
37		ND949010-3020	..WASHER.....	1	660029-UP
38		ND094086-0210	. O-RING.....	1	660029-UP

Ref :A4010-D3Z1 Page :000371

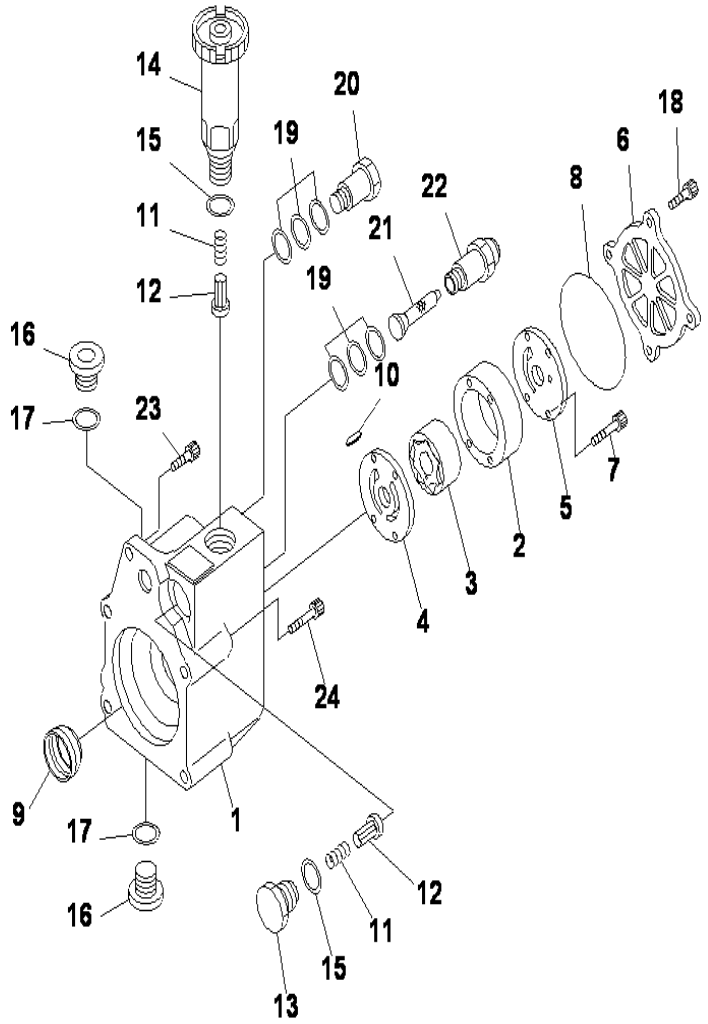

SAA6D125E-5 S/N 660029-UP

FUEL SUPPLY PUMP (2/2) (PUMP) (INNER PARTS)

INDEX	CD	PART NO.	DESCRIPTION	QTY	SERIAL NO.
		6251-71-1120	FUEL PUMP ASS'Y.....	1	660029-UP
			THIS ASSEMBLY CONSIST OG ALL PARTS.....		
			SHOW IN FIGS.A4010-D3Z1 AND A4010-E3Z1.....		
	C2	(ND094200-0390)	.FEED PUMP ASS'Y.....	1	660029-UP
1	C2	(ND094210-0070)	.. HOUSING ASS'Y.....	1	660029-UP
2	C2	(ND094231-0060)	.. CASING.....	1	660029-UP
3	C2	(ND094230-0080)	.. PUMP SUB ASS'Y.....	1	660029-UP
4	C2	(ND094241-0040)	.. PLATE.....	1	660029-UP
5	C2	(ND094244-0040)	.. PLATE.....	1	660029-UP
6	C2	(ND094251-0050)	..COVER.....	1	660029-UP
7	C2	(ND094082-0040)	.. SCREW.....	4	660029-UP
8	C2	(ND094082-0200)	.. O-RING.....	1	660029-UP
9	C2	(ND094087-0050)	.. SEAL, OIL.....	1	660029-UP
10	C2	(ND094205-0060)	.. KEY.....	1	660029-UP
11		ND092124-0010	.. SPRING, CHECK VALVE.....	2	660029-UP
12		ND092124-0011	.. VALVE, CHECK.....	2	660029-UP
13	C2	(ND092126-0010)	.. PLUG, CHAMBER.....	1	660029-UP
14		ND092130-0360	.. PRIMING PUMP.....	1	660029-UP
15		ND092125-0010	.. GASKET.....	2	660029-UP
16	C2	(ND090317-0060)	.. PLUG, SCREW.....	2	660029-UP
17	C2	(ND949018-1500)	.. WASHER, 1MM.....	2	660029-UP
18	C2	(ND949044-3320)	.. BOLT.....	4	660029-UP
19		ND090222-0070	.. WASHER.....	6	660029-UP
20		ND090310-0490	..VALVE, OVERFLOW.....	1	660029-UP
21		ND092220-0040	.. FILTER.....	1	660029-UP
22		ND092223-0042	.. SCREW.....	1	660029-UP
23	C2	(ND949044-3320)	.BOLT.....	1	660029-UP
24		ND096449-0070	.BOLT, SOCKET.....	4	660029-UP

Ref :A4010-E3Z1 Page :000380

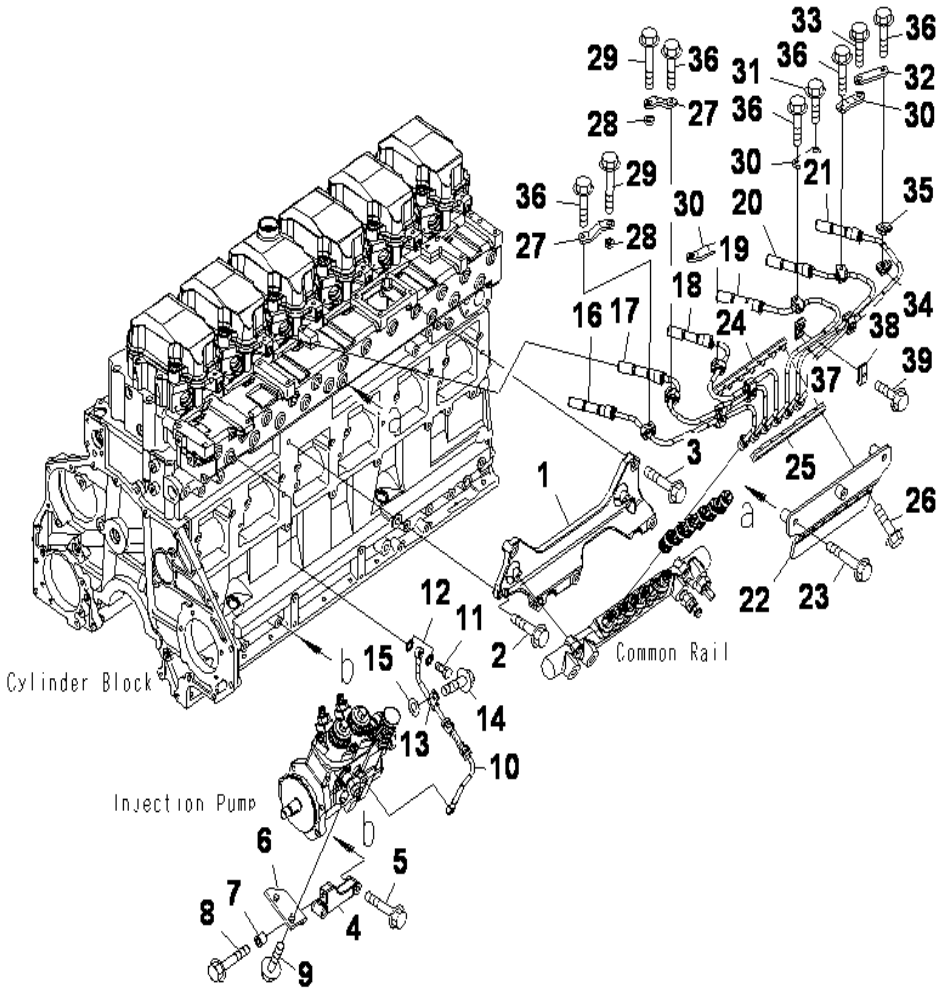

FUEL SUPPLY PIPING AND LUBRICATING OIL PIPING

INDEX	CD	PART NO.	DESCRIPTION	QTY	SERIAL NO.
1		6251-21-6110	BRACKET, COMMON RAIL	1	660029-UP
2		01435-01030	BOLT	2	660029-UP
3		01435-01040	BOLT	1	660029-UP
4		6156-21-6121	BRACKET	1	660029-UP
5		01435-01045	BOLT	2	660029-UP
6		6251-21-6130	BRACKET, SUPPLY PUMP	1	660029-UP
7		6631-11-5630	SPACER	1	660029-UP
8		01435-01040	BOLT	1	660029-UP
9		01435-01220	BOLT	2	660029-UP
10		6156-71-5611	HOSE, LUBRICATOR	1	660029-UP
11		07206-30710	BOLT, JOINT	1	660029-UP
12		07005-01012	GASKET	2	660029-UP
13		600-051-6080	CLIP	1	660029-UP
14		01435-01020	BOLT	1	660029-UP
15		01643-31032	WASHER	1	660029-UP
16		6251-71-5110	TUBE, FUEL SUPPLY, NO.1	1	660029-UP
17		6251-71-5120	TUBE, FUEL SUPPLY, NO.2	1	660029-UP
18		6251-71-5130	TUBE, FUEL SUPPLY, NO.3	1	660029-UP
19		6251-71-5140	TUBE, FUEL SUPPLY, NO.4	1	660029-UP
20		6251-71-5150	TUBE, FUEL SUPPLY, NO.5	1	660029-UP
21		6251-71-5160	TUBE, FUEL SUPPLY, NO.6	1	660029-UP
22		6251-71-5240	BRACKET	1	660029-UP
23		01435-01050	BOLT	2	660029-UP
24		6217-71-5260	CLAMP, HALF	1	660029-UP
25		6217-71-5760	CLAMP, HALF	1	660029-UP
26		01435-00635	BOLT	7	660029-UP
27		6251-71-5210	BRACKET	2	660029-UP
28		6162-73-5940	SPACER	2	660029-UP
29		01435-01050	BOLT	2	660029-UP
30		6251-71-5230	BRACKET	3	660029-UP
31		01435-01020	BOLT	2	660029-UP
32		6251-71-5220	BRACKET	1	660029-UP
33		01435-01025	BOLT	1	660029-UP
34		6261-71-6660	CLAMP, HALF	6	660029-UP
35		6261-71-6670	CLAMP, HALF	6	660029-UP
36		01435-00630	BOLT	6	660029-UP
37		6251-71-5840	CLAMP, HALF	4	660029-UP
38		6251-71-5850	CLAMP, HALF	4	660029-UP
39		01435-00625	BOLT	4	660029-UP

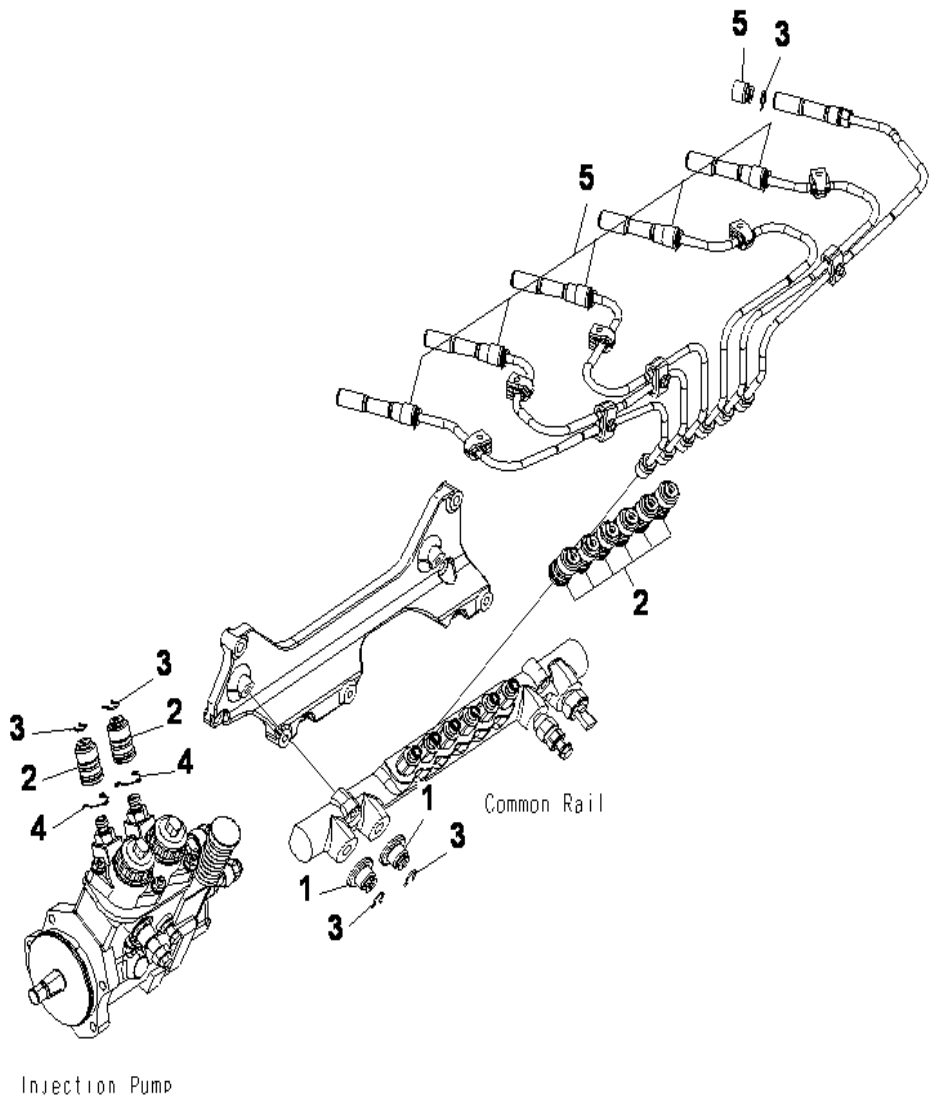

SAA6D125E-5 S/N 660029-UP

OTHER PARTS FOR FUEL PIPING

INDEX	CD	PART NO.	DESCRIPTION	QTY	SERIAL NO.
1		6217-71-9780	CAP, SUPPLY TUBE.....	2	660029-UP
2		6217-71-9791	COVER, SUPPLY TUBE.....	8	660029-UP
3		6217-71-5770	CLAMP.....	10	660029-UP
4		6156-71-9730	CLIP.....	2	660029-UP
5		6251-71-9710	COVER, SUPPLY TUBE.....	6	660029-UP

Ref :A4030-B3F7 Page :000400

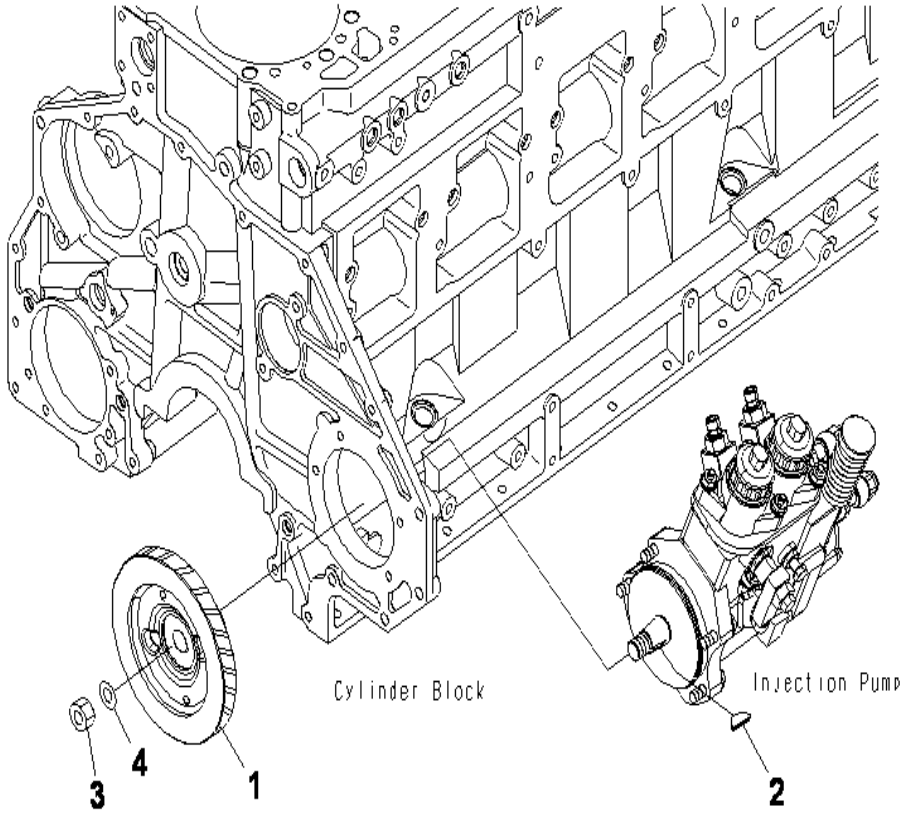

SAA6D125E-5 S/N 660029-UP

FUEL SUPPLY PUMP DRIVE

INDEX	CD	PART NO.	DESCRIPTION	QTY	SERIAL NO.
1		6251-71-3230	GEAR, PUMP DRIVE.....	1	660029-UP
2		04010-00519	KEY.....	1	660029-UP
3		01583-01811	NUT.....	1	660029-UP
4		01643-31845	WASHER.....	1	660029-UP

Ref :A4210-A3C9 Page :000410

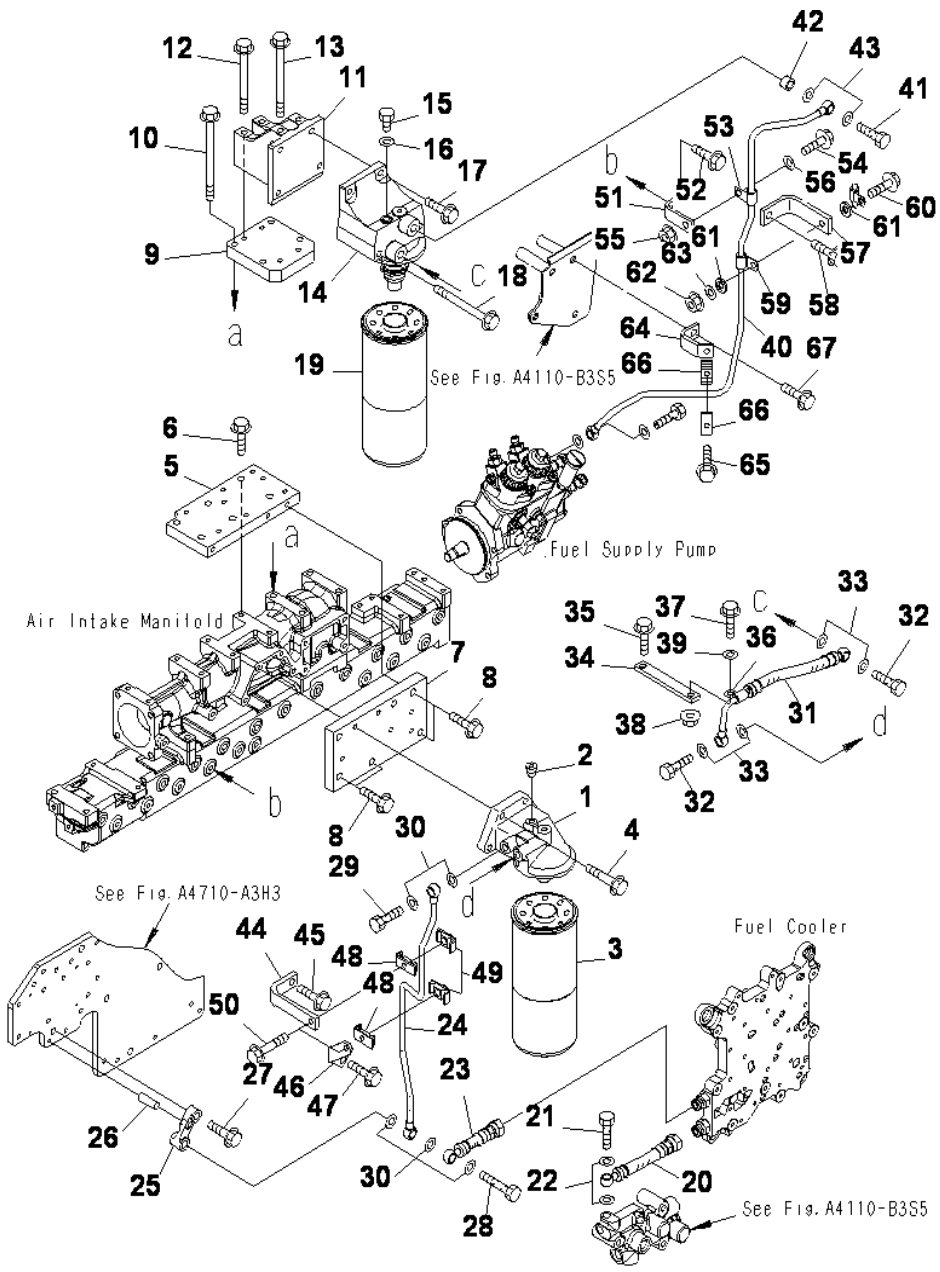

SAA6D125E-5 S/N 660029-UP

FUEL FILTER AND PIPING (THREAD 1-5/8)

INDEX	CD	PART NO.	DESCRIPTION	QTY	SERIAL NO.
		6251-71-6110	HEAD ASS'Y	1	660029-UP
1		6217-71-7310	. HEAD (1-5/8)	1	660029-UP
2		07043-70108	. PLUG	1	660029-UP
3	C1		CARTRIDGE (1-5/8). (SEE FIG.A4119-A3A1)	1	660029-UP
4		01435-01035	BOLT	4	660029-UP
5		6251-71-6420	BRACKET	1	660029-UP
6		01435-01035	BOLT	4	660029-UP
7		6251-71-6430	BRACKET	1	660029-UP
8		01435-01035	BOLT	4	660029-UP
9		6251-71-6550	BRACKET	1	660029-UP
10		01436-01070	BOLT	2	660029-UP
11		6251-71-6560	BRACKET	1	660029-UP
12		01435-01085	BOLT	2	660029-UP
13		01436-01035	BOLT	2	660029-UP
		6251-71-6200	HEAD ASS'Y	1	660029-UP
14		6219-71-6710	. HEAD	1	660029-UP
15		07040-11209	. PLUG	1	660029-UP
16		07005-01212	. GASKET	1	660029-UP
17		01435-01030	BOLT	2	660029-UP
18		01436-01010	BOLT	2	660029-UP
19	C1		CARTRIDGE (1-5/8), (SEE FIG.A4119-A3A1)	1	660029-UP
20		6251-71-5730	HOSE	1	660029-UP
21		07206-31014	BOLT	1	660029-UP
22		07005-01412	GASKET	2	660029-UP
23		6251-71-5710	HOSE	1	660029-UP
24		6251-71-5720	TUBE	1	660029-UP
25		6251-71-5740	BLOCK	1	660029-UP
26		04020-00616	PIN	1	660029-UP
27		01436-01005	BOLT	1	660029-UP
28		7700-45-1710	BOLT	1	660029-UP
29		07206-31014	BOLT	1	660029-UP
30		07005-01412	GASKET	5	660029-UP
31		6251716470	HOSE	1	660029-UP
32		07206-31014	BOLT	2	660029-UP
33		07005-01412	GASKET	4	660029-UP
34		6213-11-4770	BRACKET	1	660029-UP
35		01435-01050	BOLT	1	660029-UP
36		600-051-6100	CLIP	1	660029-UP
37		01435-01025	BOLT	1	660029-UP
38		01584-01008	NUT	1	660029-UP
39		01643-31032	WASHER	1	660029-UP
40		6251-71-6980	TUBE	1	660029-UP
41		7700-45-1710	BOLT	1	660029-UP
42		6151-51-8490	SPACER	1	660029-UP
43		07005-01412	GASKET	3	660029-UP

Ref :A4110-A3S5 Page :000420

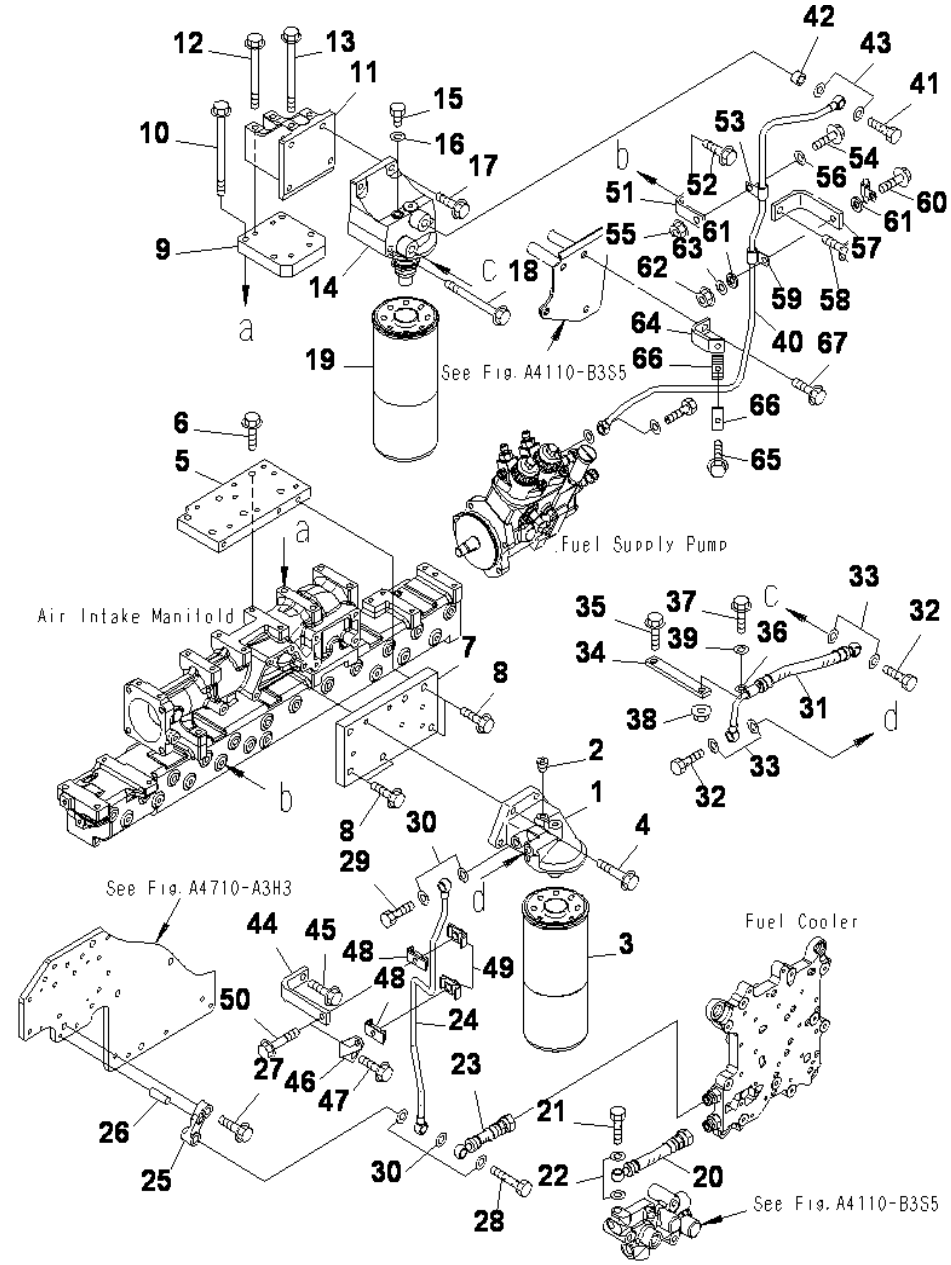

SAA6D125E-5 S/N 660029-UP

FUEL FILTER AND PIPING (THREAD 1-5/8)

INDEX	CD	PART NO.	DESCRIPTION	QTY	SERIAL NO.
44		6251-71-6130	BRACKET	1	660029-UP
45		01435-01025	BOLT	1	660029-UP
46		6251-71-6140	BRACKET	1	660029-UP
47		01435-01020	BOLT	1	660029-UP
48		6166-75-6820	CLAMP	2	660029-UP
49		6261-51-9480	CLAMP	2	660029-UP
50		01435-00840	BOLT	2	660029-UP
51		6251-71-6690	BRACKET	1	660029-UP
52		01435-01030	BOLT	1	660029-UP
53		600-051-6100	CLIP	1	660029-UP
54		01435-01025	BOLT	1	660029-UP
55		01584-01008	NUT	1	660029-UP
56		01643-31032	WASHER	1	660029-UP
57		6251-71-6350	BRACKET	1	660029-UP
58		01435-01060	BOLT	1	660029-UP
59		600-051-6100	CLIP	1	660029-UP
60		01435-01045	BOLT	1	660029-UP
61		6110-23-6490	SPACER	2	660029-UP
62		01584-01008	NUT	1	660029-UP
63		01643-31032	WASHER	1	660029-UP
64		6251-71-6990	BRACKET	1	660029-UP
65		01436-01005	BOLT	1	660029-UP
66		6166-75-6820	CLAMP	2	660029-UP
67		01435-00840	BOLT	1	660029-UP

Ref :A4110-A3S5 Page :000421

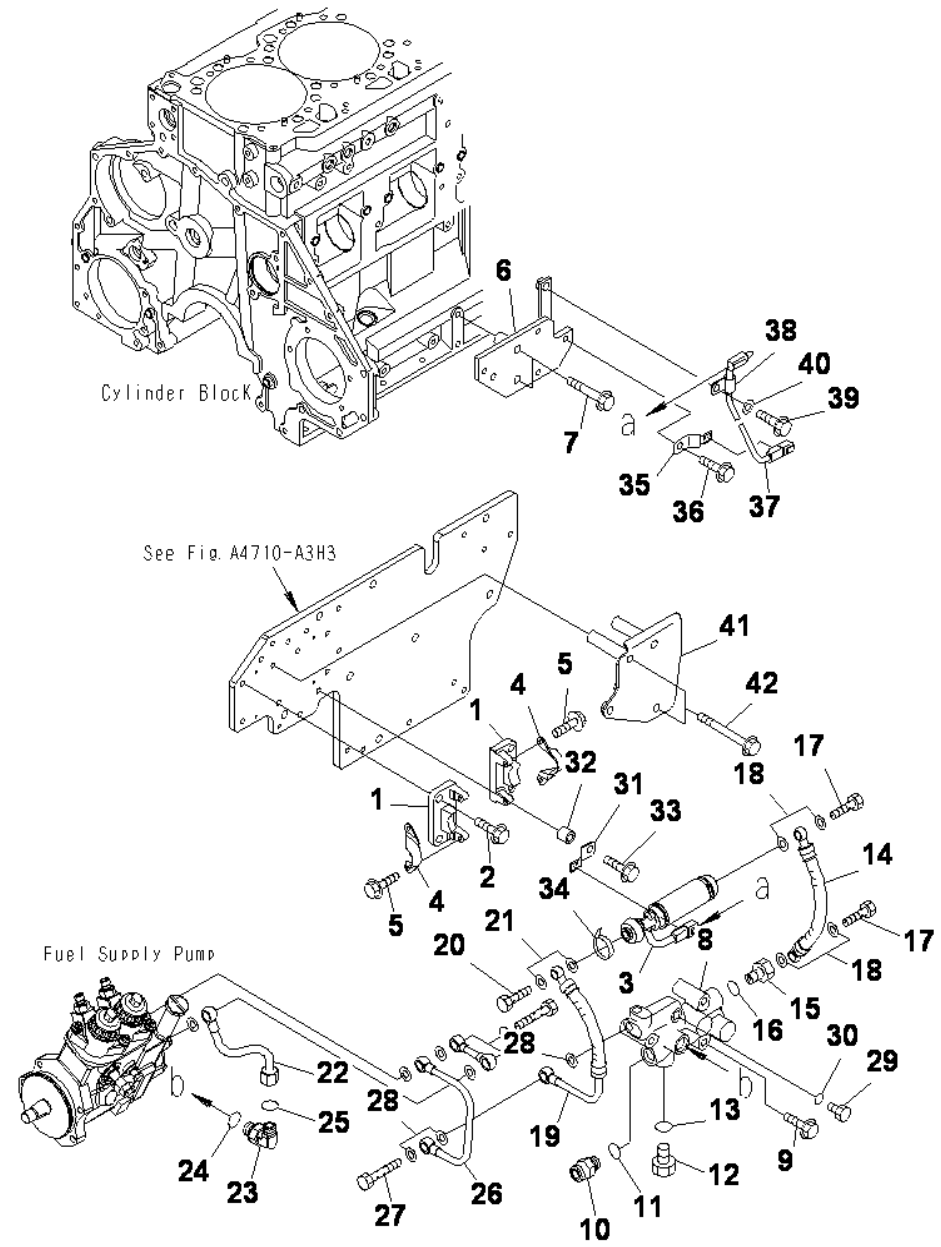

SAA6D125E-5 S/N 660029-UP

FUEL PRIMING PUMP AND PIPING

INDEX	CD	PART NO.	DESCRIPTION	QTY	SERIAL NO.
1		6219-71-8600	BLOCK	2	660029-UP
		6210-21-1390	. PIN	2	660029-UP
		6219-71-8610	. BLOCK	1	660029-UP
2		01435-01025	BOLT	4	660029-UP
3		6245-71-8110	PUMP ASS'Y, PRIMMING	1	660029-UP
4		6245-71-5680	BRACKET	2	660029-UP
5		01435-00612	BOLT	4	660029-UP
6		6251-71-7210	BRACKET	1	660029-UP
7		01435-01055	BOLT	3	660029-UP
8		6251-71-7230	BLOCK	1	660029-UP
9		01435-01070	BOLT	3	660029-UP
10		02781-00516	UNION	1	660029-UP
11		07002-12034	O-RING	1	660029-UP
12		07040-12012	PLUG	1	660029-UP
13		07002-12034	O-RING	1	660029-UP
14		07271-61225	HOSE	1	660029-UP
15		6251-71-7250	JOINT	1	660029-UP
16		07002-12034	O-RING	1	660029-UP
17		07206-30812	BOLT	2	660029-UP
18		07005-01212	GASKET	4	660029-UP
19		6251-71-7260	HOSE	1	660029-UP
20		07206-30812	BOLT	1	660029-UP
21		07005-01212	GASKET	2	660029-UP
22		6251-71-7270	TUBE	1	660029-UP
23		02782-10422	ELBOW	1	660029-UP
24		07002-12034	O-RING	1	660029-UP
25		02896-11012	O-RING	1	660029-UP
26		6251-71-7280	TUBE	1	660029-UP
27		7700-45-1710	BOLT	1	660029-UP
28		07005-01412	GASKET	3	660029-UP
29		6110-53-5910	PLUG	1	660029-UP
30		07005-01412	GASKET	1	660029-UP
31		08193-20010	CLIP	1	660029-UP
32		6631-11-5630	SPACER	1	660029-UP
33		01435-01035	BOLT	1	660029-UP
34		6218-81-8470	BAND	1	660029-UP
35		08193-20010	CLIP	1	660029-UP
36		01435-01016	BOLT	1	660029-UP
37		6251-71-7290	WIRING HARNESS	1	660029-UP
38		600-051-2080	CLIP	1	660029-UP
39		01435-01020	BOLT	1	660029-UP
40		01643-31032	WASHER	1	660029-UP
41		6251-71-7470	COVER	1	660029-UP
42		01436-01000	BOLT	2	660029-UP

Ref :A4110-B3S5 Page :000430

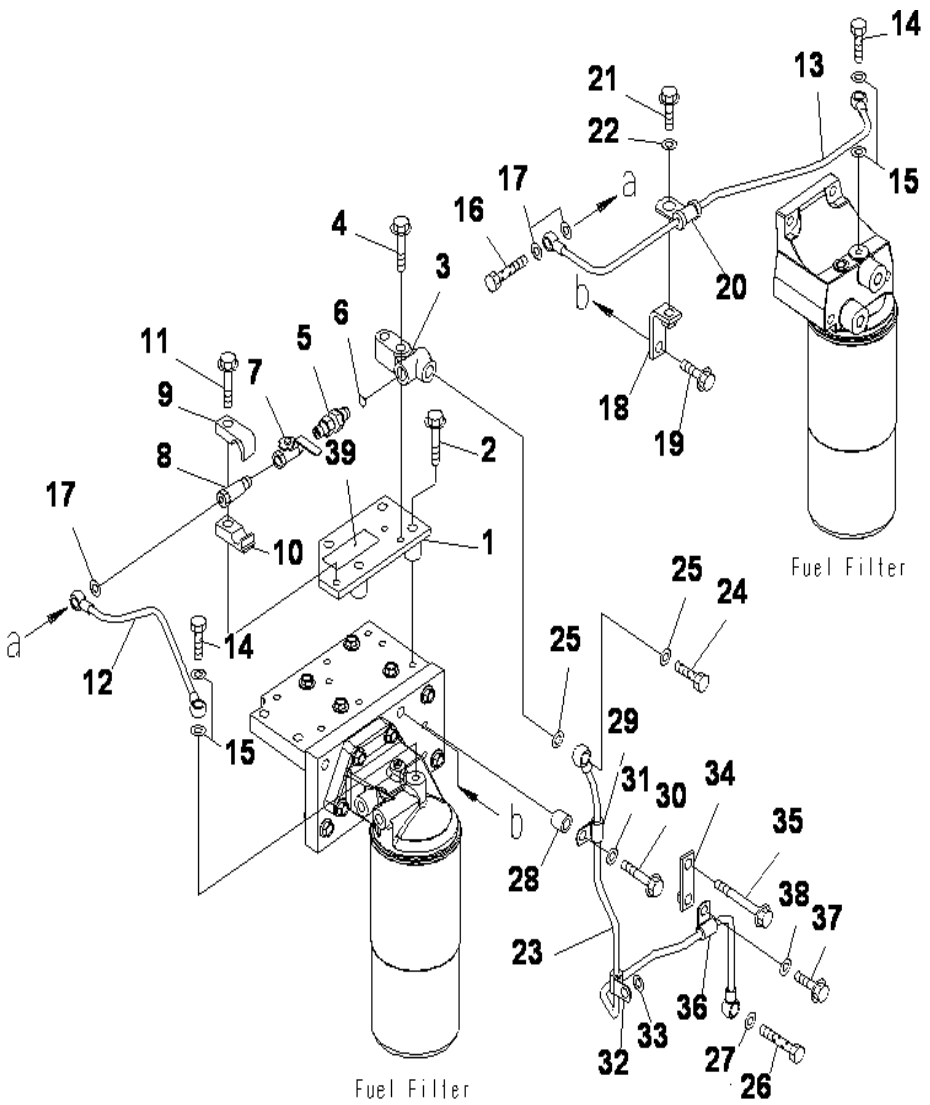

SAA6D125E-5 S/N 660029-UP

FUEL AIR VENT

INDEX	CD	PART NO.	DESCRIPTION	QTY	SERIAL NO.
1		6251-71-7310	BRACKET	1	660029-UP
2		01435-01050	BOLT	4	660029-UP
3		6251-71-7320	BLOCK	1	660029-UP
4		01435-01040	BOLT	2	660029-UP
5		205-62-74690	NIPPLE	1	660029-UP
6		07002-11423	O-RING	1	660029-UP
7		6128-81-4810	VALVE	1	660029-UP
8		6245-71-6180	BOLT	1	660029-UP
9		6240-71-6530	CLAMP	1	660029-UP
10		6240-71-6540	CLAMP	1	660029-UP
11		01435-01040	BOLT	1	660029-UP
12		6251-71-7330	TUBE	1	660029-UP
13		6251-71-7350	TUBE	1	660029-UP
14		6245-71-5960	BOLT	2	660029-UP
15		07005-00812	GASKET	4	660029-UP
16		6251-71-7550	BOLT	1	660029-UP
17		07005-00812	GASKET	3	660029-UP
18		6251-71-7360	BRACKET	1	660029-UP
19		01435-01040	BOLT	1	660029-UP
20		6245-71-5950	CLIP	1	660029-UP
21		01435-01020	BOLT	1	660029-UP
22		01643-31032	WASHER	1	660029-UP
23		6251-71-7340	TUBE	1	660029-UP
24		07206-31014	BOLT	1	660029-UP
25		07005-01412	GASKET	2	660029-UP
26		7700-45-1710	BOLT	1	660029-UP
27		07005-01412	GASKET	1	660029-UP
28		6631-11-5630	SPACER	1	660029-UP
29		600-051-6080	CLIP	1	660029-UP
30		01435-01035	BOLT	1	660029-UP
31		01643-31032	WASHER	1	660029-UP
32		600-051-6080	CLIP	1	660029-UP
33		01643-31032	WASHER	1	660029-UP
34		6934-71-5850	PLATE	1	660029-UP
35		01435-01060	BOLT	1	660029-UP
36		600-051-6080	CLIP	1	660029-UP
37		01435-01020	BOLT	1	660029-UP
38		01643-31032	WASHER	1	660029-UP
39		6245-81-9420	PLATE	1	660029-UP

Ref :A4110-C3S5 Page :000440

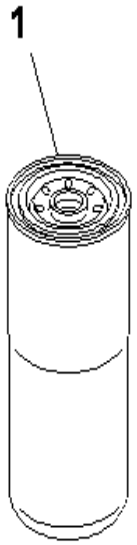

SAA6D125E-5 S/N 660029-UP

FUEL FILTER CARTRIDGE (THREAD 1-5/8) (SERVICE ONLY)

INDEX	CD	PART NO.	DESCRIPTION	QTY	SERIAL NO.
1		600-319-3550	CARTRIDGE (1-5/8).....	1	660029-UP

Ref :A4119-A3A1 Page :000450

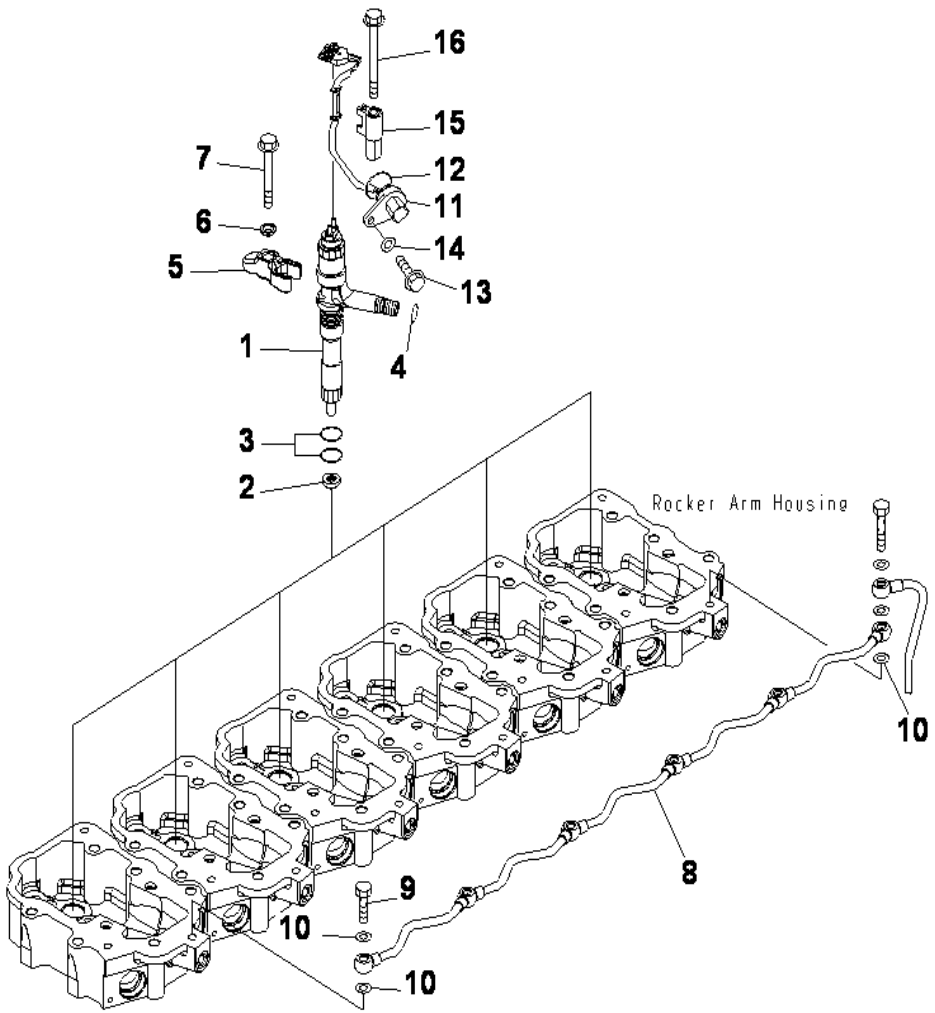

SAA6D125E-5 S/N 660029-UP

FUEL INJECTOR AND SPILL TUBE

INDEX	CD	PART NO.	DESCRIPTION	QTY	SERIAL NO.
1		6251-11-3100	INJECTOR ASS'Y	6	660029-UP
	C1		.HOLDER	1	660029-UP
	C1		.NOZZLE	1	660029-UP
2		6217-71-6112	GASKET	6	660029-UP
3		6219-71-1150	GASKET	12	660029-UP
4		6219-71-1160	GASKET	6	660029-UP
5		6156-71-1161	HOLDER, SUPPORT	6	660029-UP
6		6217-71-1140	WASHER	6	660029-UP
7		01437-01075	BOLT	6	660029-UP
8		6251-71-5340	TUBE	1	660029-UP
9		6934-72-7190	BOLT, JOINT	5	660029-UP
10		07005-01012	GASKET	11	660029-UP
11		6156-81-9110	WIRING HARNESS	6	660029-UP
12		07000-E3024	O-RING	6	660029-UP
13		6156-81-9130	BOLT	6	660029-UP
14		01640-20610	WASHER	6	660029-UP
15		6156-81-9150	HOLDER. HARNESS	6	660029-UP
16		01435-00870	BOLT	6	660029-UP

Ref :A4210-A3K2 Page :000460

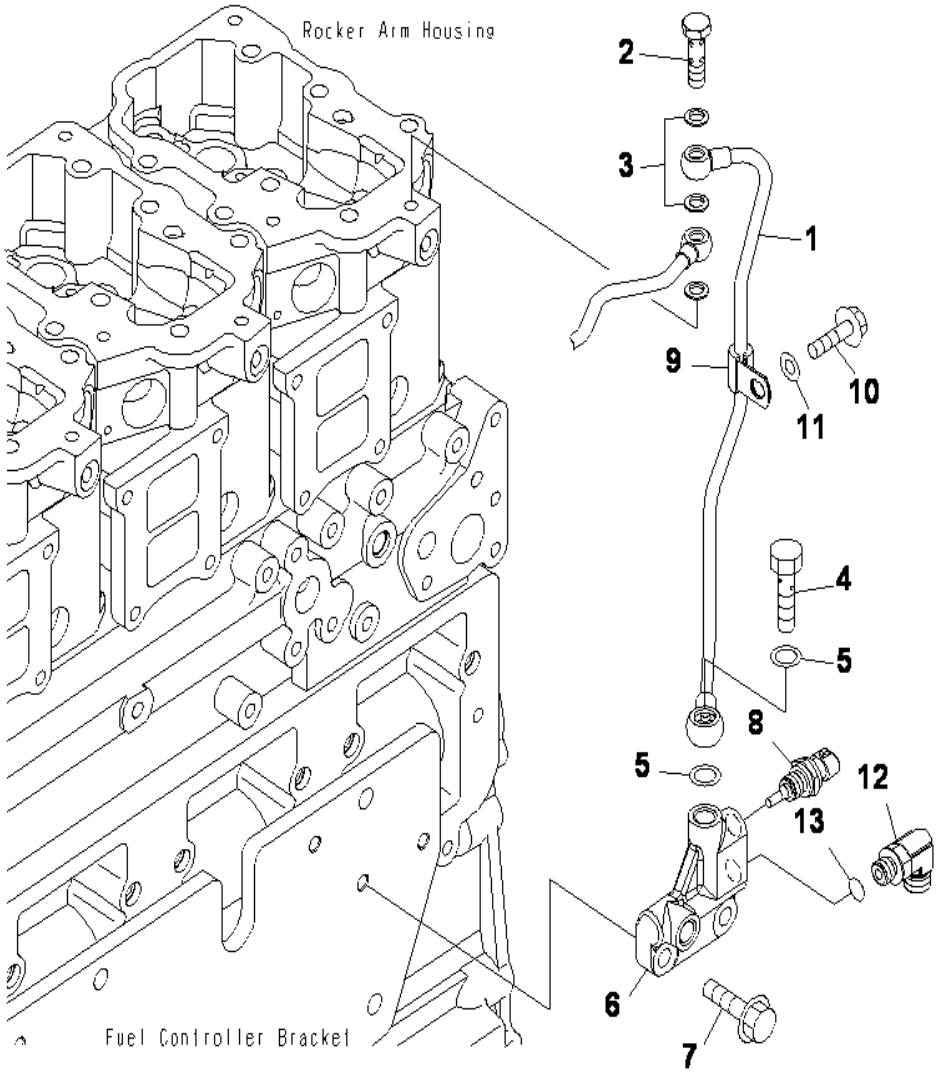

SAA6D125E-5 S/N 660029-UP

FUEL RETURN

INDEX	CD	PART NO.	DESCRIPTION	QTY	SERIAL NO.
1		6251-71-5490	TUBE	1	660029-UP
2		6215-11-6560	BOLT, JOINT	1	660029-UP
3		07005-01012	GASKET	2	660029-UP
4		07206-31014	BOLT, JOINT	1	660029-UP
5		07005-01412	GASKET	2	660029-UP
6		6251-71-5660	BLOCK	1	660029-UP
7		01435-01030	BOLT	2	660029-UP
8		6261-81-6900	SENSOR	1	660029-UP
		6261-81-6910	.SENSOR, TEMPERATURE	1	660029-UP
		6261-84-9740	.O-RING	1	660029-UP
9		600-051-6080	CLIP	1	660029-UP
10		01435-01030	BOLT	1	660029-UP
11		01643-31032	WASHER	2	660029-UP
12		6251-51-9810	ELBOW	1	660029-UP
13		6251-51-9910	O-RING	1	660029-UP

Ref :A4230-A3M5 Page :000470

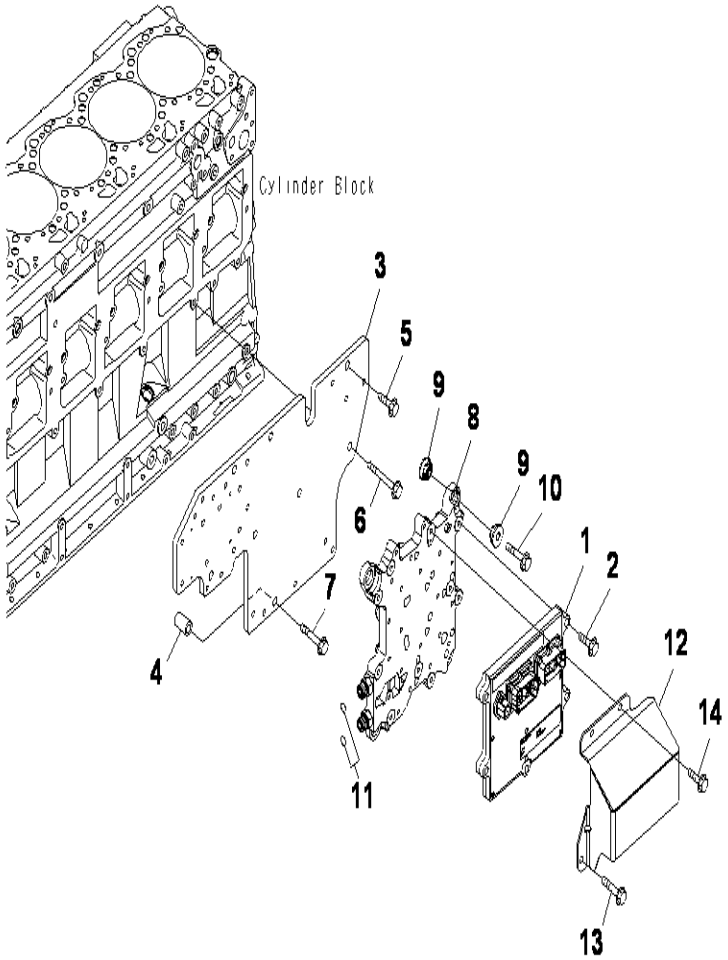

SAA6D125E-5 S/N 660029-UP

FUEL CONTROLLER

INDEX	CD	PART NO.	DESCRIPTION	QTY	SERIAL NO.
1		600-461-2100	CONTROLLER ASS'Y	1	660029-UP
2		01435-00840	BOLT	3	660029-UP
3		6251-21-6231	BRACKET	1	660029-UP
4		6251-21-6220	SPACER	1	660029-UP
5		01435-01030	BOLT	3	660029-UP
6		01435-01085	BOLT	4	660029-UP
7		01435-01060	BOLT	1	660029-UP
8		6261-81-7100	COOLER	1	660029-UP
9		6251-81-7210	CUSHION	8	660029-UP
10		01435-01050	BOLT	4	660029-UP
11		02896-11012	O-RING	2	660029-UP
12		6261-81-7330	COVER, CONTROLLER	1	660029-UP
13		01435-00845	BOLT	2	660029-UP
14		01435-00820	BOLT	2	660029-UP

Ref :A4710-A3H3 Page :000480

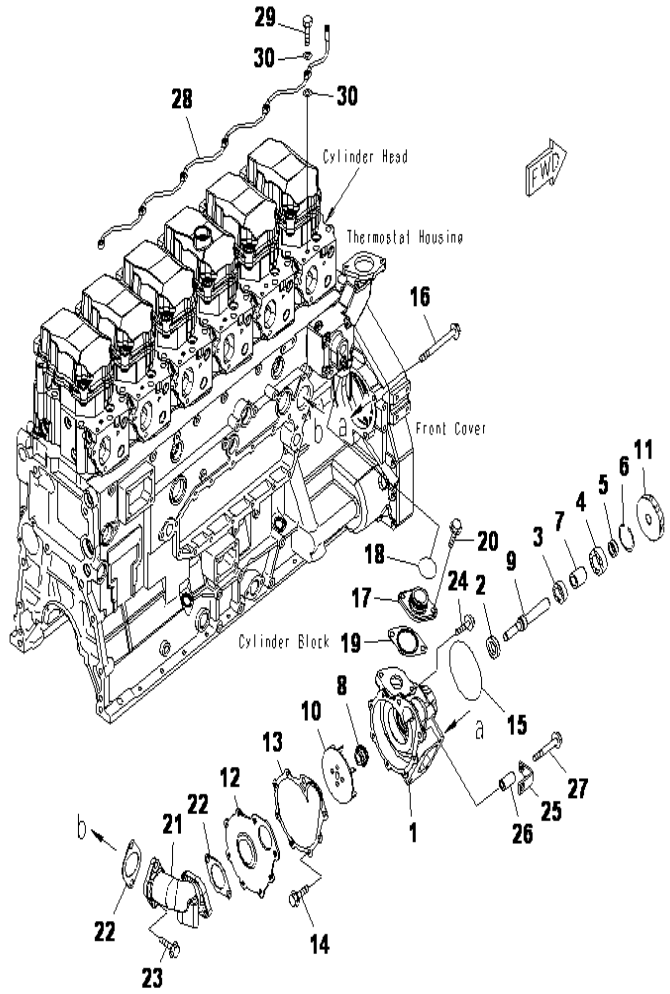

SAA6D125E-5 S/N 660029-UP

WATER PUMP MOUNTING AND AIR VENT

INDEX	CD	PART NO.	DESCRIPTION	QTY	SERIAL NO.
		6251-61-1101	WATER PUMP ASS'Y	1	660029-UP
1	C1		.BODY	1	660029-UP
2		6150-61-1510	.SEAL, OIL	1	660029-UP
3		06030-06004	.BEARING, BALL	1	660029-UP
4		06030-06304	.BEARING, BALL	1	660029-UP
5		6150-61-1350	.SPACER	1	660029-UP
6		04065-05220	.RING, SNAP	1	660029-UP
7		6151-61-1360	.SPACER	1	660029-UP
8		6211-61-1533	.SEAL, WATER	1	660029-UP
9		6151-62-1310	.SHAFT	1	660029-UP
10		6251-61-1210	.IMPELLER	1	660029-UP
11		6150-61-1410	.GEAR	1	660029-UP
12		6154-61-1150	.COVER	1	660029-UP
13		6151-61-1162	.GASKET	1	660029-UP
14		01435-00816	.BOLT	6	660029-UP
15		07000-72115	O-RING	1	660029-UP
16		01436-01025	BOLT	3	660029-UP
17		6150-62-6510	CONNECTOR	1	660029-UP
18		02893-05037	O-RING	1	660029-UP
19		6150-61-1821	GASKET	1	660029-UP
20		01435-01020	BOLT	2	660029-UP
21		6251-61-6310	CONNECTOR, WATER	1	660029-UP
22		6150-61-1821	GASKET	2	660029-UP
23		01435-01030	BOLT	2	660029-UP
24		01435-01035	BOLT	1	660029-UP
25		6934-71-5860	BRACKET	1	660029-UP
26		6142-22-4640	SPACER	1	660029-UP
27		01435-01080	BOLT	1	660029-UP
28		6251-11-6460	TUBE, AIR VENT	1	660029-UP
29		07206-30710	BOLT, JOINT	6	660029-UP
30		07005-01012	GASKET	12	660029-UP

Ref :A5010-A3N6 Page :000490

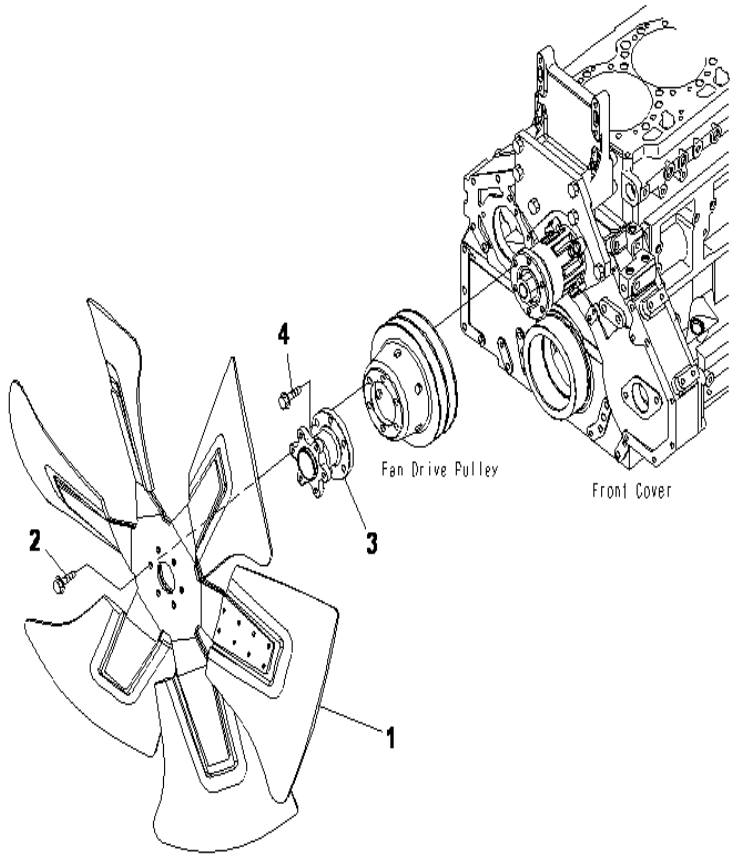

SAA6D125E-5 S/N 660029-UP

COOLING FAN (SUCTION TYPE)

INDEX	CD	PART NO.	DESCRIPTION	QTY	SERIAL NO.
1		600-635-5870	FAN, COOLING.....	1	660029-UP
2		01435-01030	BOLT.....	6	660029-UP
3		6156-61-3720	SPACER.....	1	660029-UP
4		01435-01040	BOLT.....	6	660029-UP

Ref :A5030-A3K2 Page :000500

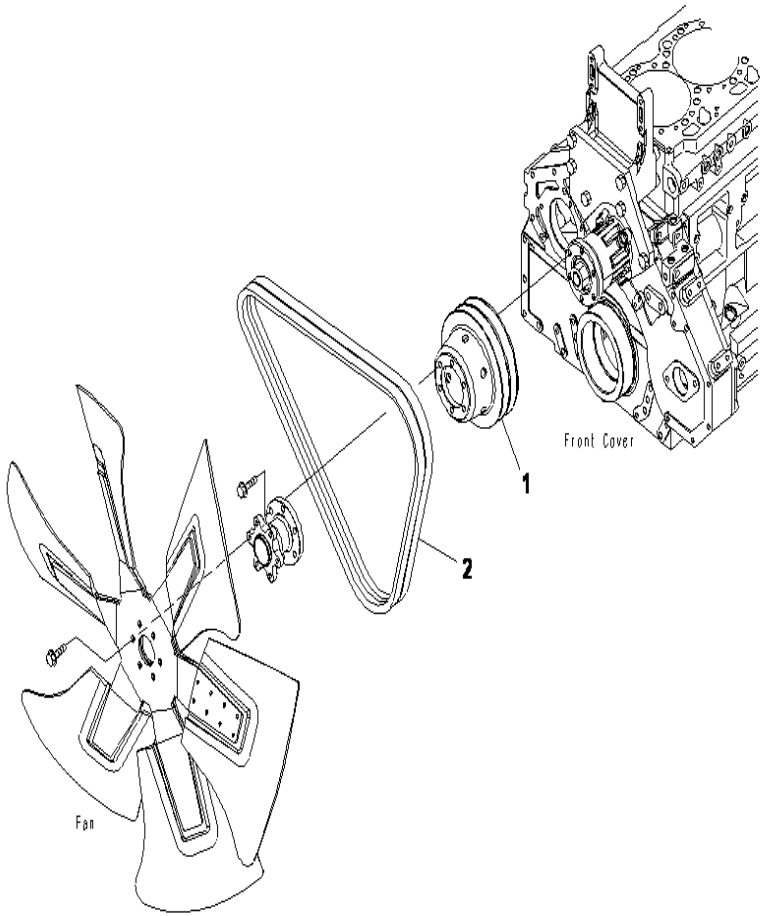

SAA6D125E-5 S/N 660029-UP

FAN PULLEY AND DRIVE BELT

INDEX	CD	PART NO.	DESCRIPTION	QTY	SERIAL NO.
1		6251-61-3210	PULLEY, FAN.....	1	660029-UP
2		04121-22264	V-BELT SET.....	1	660029-UP

Ref :A5050-A3R3 Page :000510

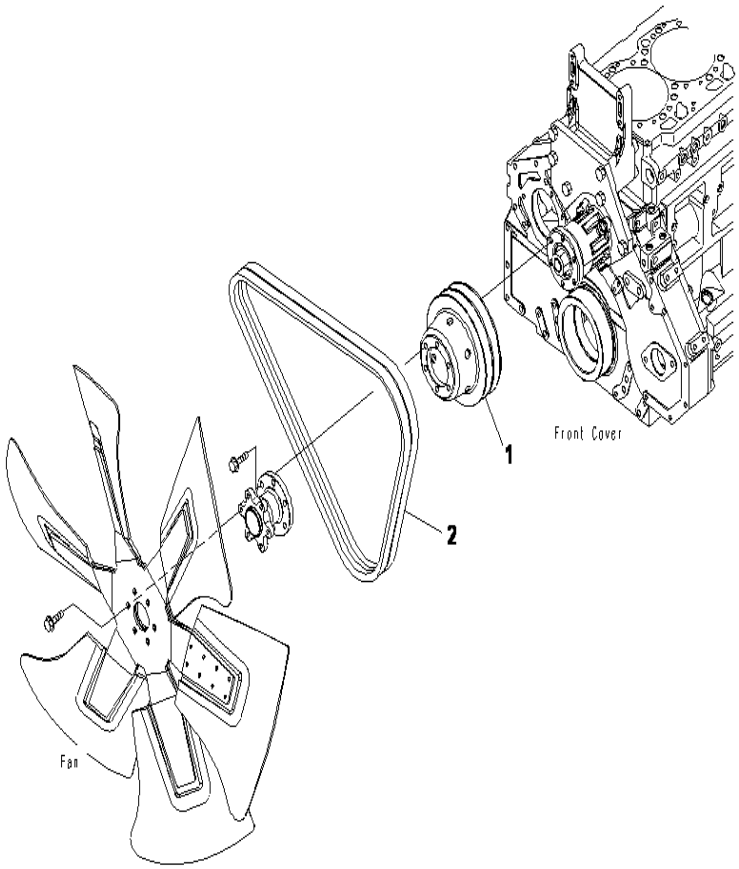

SAA6D125E-5 S/N 660029-UP

FAN PULLEY AND DRIVE BELT (HARDENING PULLEY)

INDEX	CD	PART NO.	DESCRIPTION	QTY	SERIAL NO.
1		6251-61-3260	PULLEY, HARDENING FAN.....	1	660029-UP
2		04121-22264	V-BELT SET.....	1	660029-UP

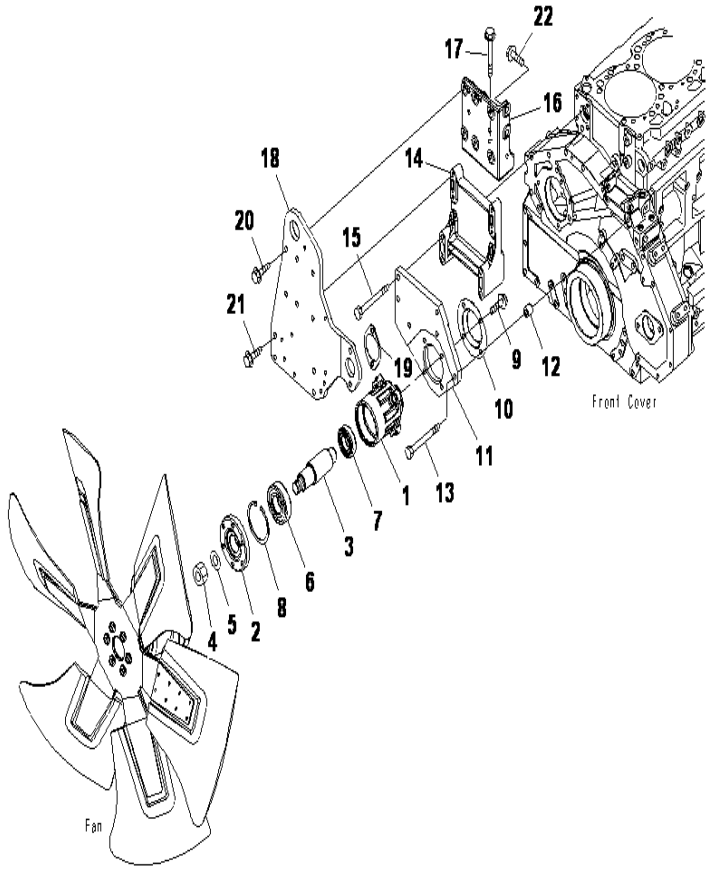

SAA6D125E-5 S/N 660029-UP

FAN DRIVE

INDEX	CD	PART NO.	DESCRIPTION	QTY	SERIAL NO.
		6151-61-3201	CASE ASS'Y	1	660029-UP
1		6151-61-3152	.CASE	1	660029-UP
2		6151-61-3120	.HUB	1	660029-UP
3		6151-61-3170	.SHAFT	1	660029-UP
4		01583-02414	.NUT	1	660029-UP
5		01643-32460	.WASHER	1	660029-UP
6		06037-06307	.BEARING, BALL	1	660029-UP
7		06037-06206	.BEARING, BALL	1	660029-UP
8		04065-08025	.RING, SNAP	1	660029-UP
9		01435-01030	BOLT	4	660029-UP
10		6151-61-3970	COVER	1	660029-UP
11		6251-61-3530	PLATE	1	660029-UP
12		6631-11-5630	SPACER	2	660029-UP
13		01011-81015	BOLT	2	660029-UP
14		6251-61-3520	BRACKET	1	660029-UP
15		01011-81015	BOLT	4	660029-UP
16		6251-61-3820	BRACKET	1	660029-UP
17		01435-01095	BOLT	2	660029-UP
18		6251-21-3950	PLATE, HANGER	1	660029-UP
19		6166-61-6341	GASKET	1	660029-UP
20		01435-01025	BOLT	6	660029-UP
21		01435-01035	BOLT	4	660029-UP
22		01435-01030	BOLT	2	660029-UP

Ref :A5060-A3J9 Page :000530

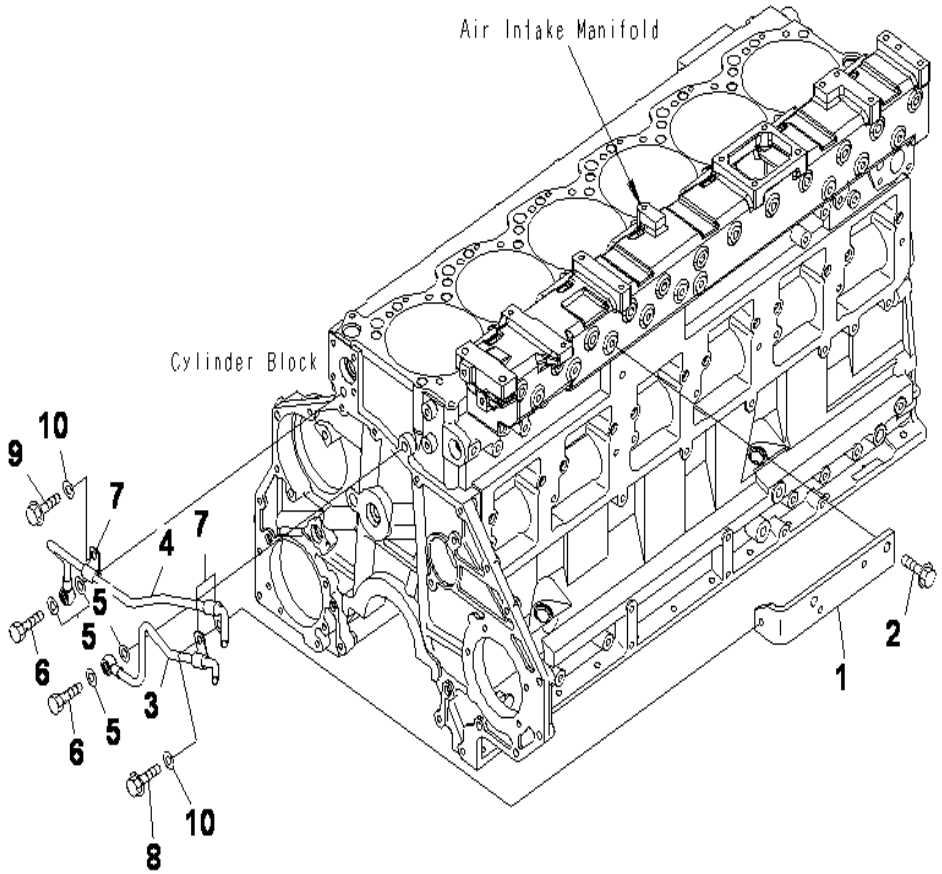

SAA6D125E-5 S/N 660029-UP

CORROSION RESISTOR

INDEX	CD	PART NO.	DESCRIPTION	QTY	SERIAL NO.
1		6251-61-8430	BRACKET	1	660029-UP
2		01435-01030	BOLT	2	660029-UP
3		6251-61-8230	TUBE, INLET	1	660029-UP
4		6251-61-8240	TUBE, RETURN	1	660029-UP
5		07005-01412	GASKET	4	660029-UP
6		07206-31014	BOLT, JOINT	2	660029-UP
7		600-051-6100	CLIP	3	660029-UP
8		01435-01016	BOLT	1	660029-UP
9		01435-01020	BOLT	1	660029-UP
10		01643-31232	WASHER	2	660029-UP

Ref :A5210-A3G6 Page :000540

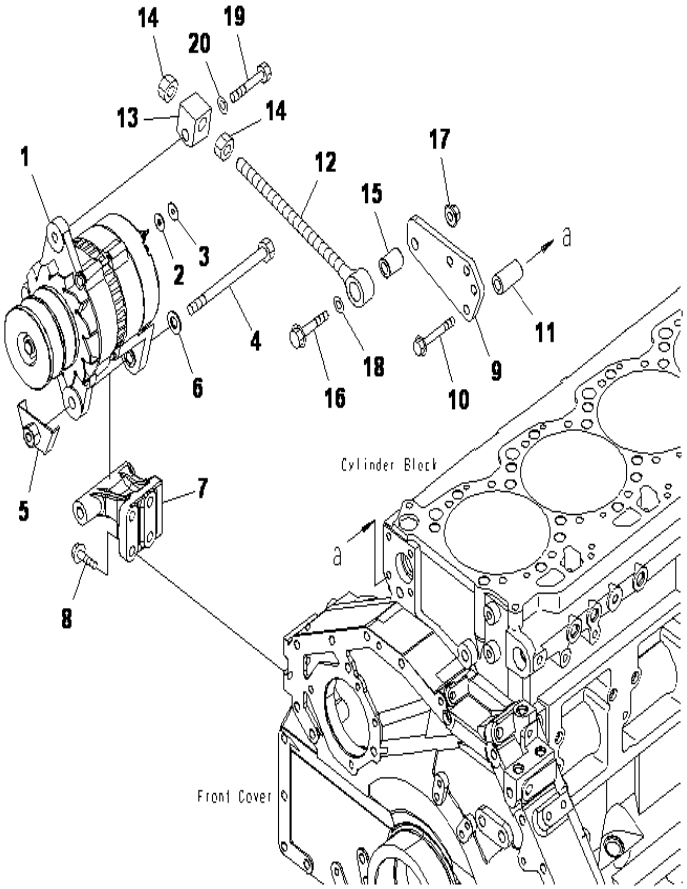

SAA6D125E-5 S/N 660029-UP

ALTERNATOR AND MOUNTING (50A)

INDEX	CD	PART NO.	DESCRIPTION	QTY	SERIAL NO.
1		(600-825-5150)	ALTERNATOR A, (50A) (SEE FIG.A6010-B3X5)....	1	660029-UP
2		600-815-9980	WASHER.....	1	660029-UP
3		600-815-9970	WASHER.....	1	660029-UP
4		6128-21-6780	BOLT.....	1	660029-UP
5		6156-81-6371	BRACKET.....	1	660029-UP
6		01640-21323	WASHER.....	1	660029-UP
7		6156-81-6480	BRACKET.....	1	660029-UP
8		01435-01030	BOLT.....	4	660029-UP
9		6150-82-8650	PLATE.....	1	660029-UP
10		01435-01065	BOLT.....	2	660029-UP
11		6206-11-4490	SPACER.....	2	660029-UP
12		6150-82-8610	ROD, ADJUSTING.....	1	660029-UP
13		6150-82-8690	PLATE.....	1	660029-UP
14		01580-11411	NUT.....	2	660029-UP
15		6215-81-6150	PIN, INNER.....	1	660029-UP
16		01435-01255	BOLT.....	1	660029-UP
17		01584-01210	NUT.....	1	660029-UP
18		01643-31232	WASHER.....	1	660029-UP
19		01050-51260	BOLT.....	1	660029-UP
20		01643-31232	WASHER.....	1	660029-UP

Ref :A6010-A3X5 Page :000550

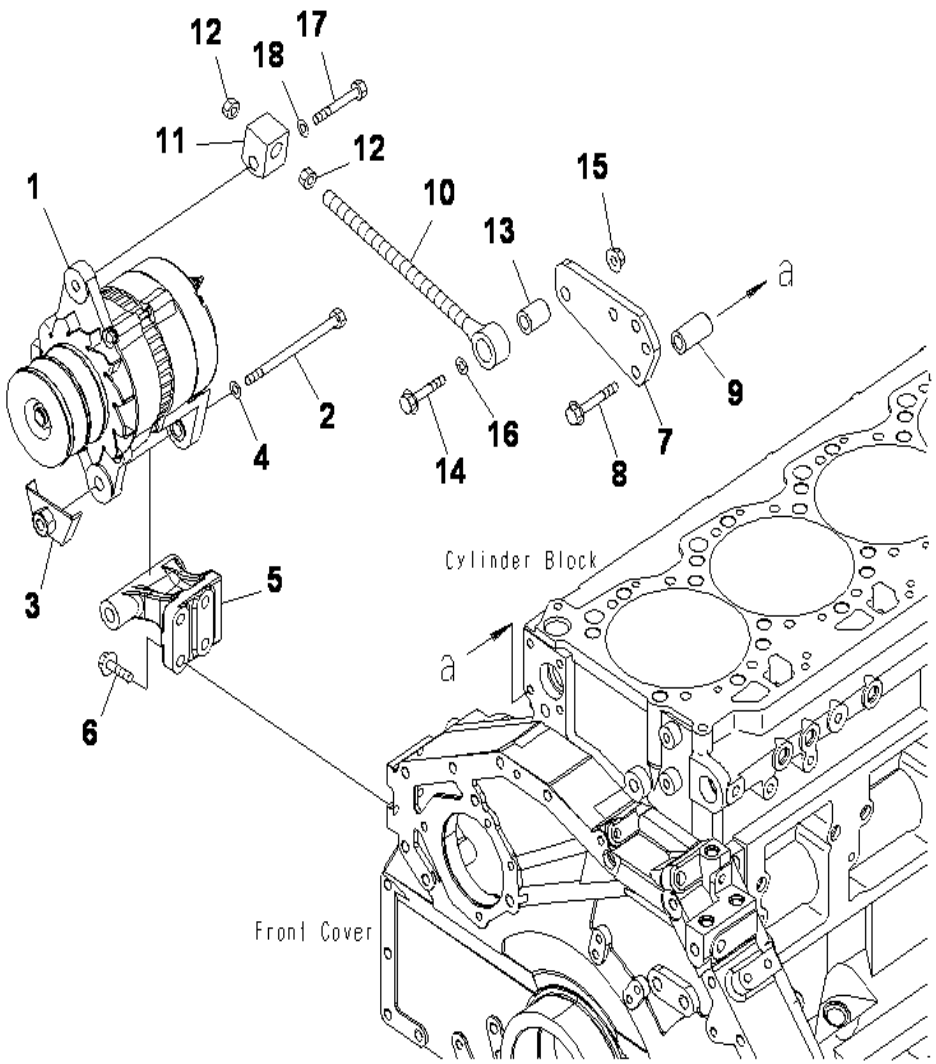

SAA6D125E-5 S/N 660029-UP

ALTERNATOR AND MOUNTING (60A)

INDEX	CD	PART NO.	DESCRIPTION	QTY	SERIAL NO.
1		(600-825-6150)	ALTERNATOR A, (60A), (SEE FIG.A6010-B3X6)...	1	660029-UP
2		6128-21-6780	BOLT.....	1	660029-UP
3		6156-81-6371	BRACKET.....	1	660029-UP
4		01640-21323	WASHER.....	1	660029-UP
5		6156-81-6480	BRACKET.....	1	660029-UP
6		01435-01030	BOLT.....	4	660029-UP
7		6150-82-8650	PLATE.....	1	660029-UP
8		01435-01065	BOLT.....	2	660029-UP
9		6206-11-4490	SPACER.....	2	660029-UP
10		6150-82-8610	ROD, ADJUSTING.....	1	660029-UP
11		6150-82-8690	PLATE.....	1	660029-UP
12		01580-11411	NUT.....	2	660029-UP
13		6215-81-6150	PIN, INNER.....	1	660029-UP
14		01435-01255	BOLT.....	1	660029-UP
15		01584-01210	NUT.....	1	660029-UP
16		01643-31232	WASHER.....	1	660029-UP
17		01050-51260	BOLT.....	1	660029-UP
18		01643-31232	WASHER.....	1	660029-UP

Ref :A6010-A3X6 Page :000560

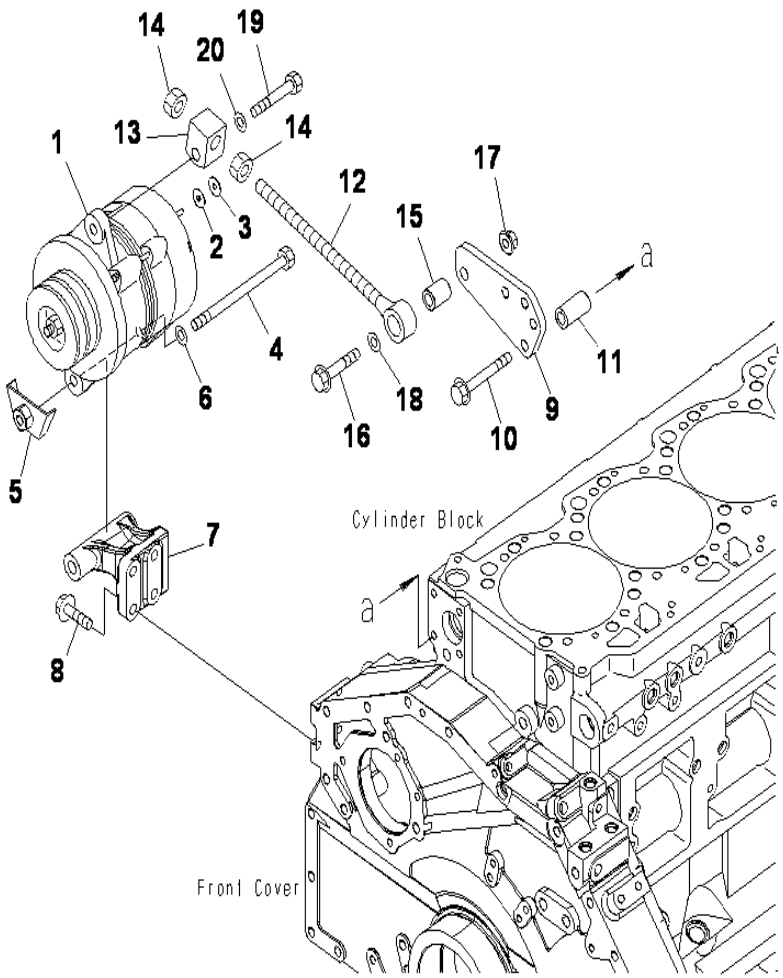

SAA6D125E-5 S/N 660029-UP

ALTERNATOR AND MOUNTING (50A) (SANDY AND DUSTY SPEC)

INDEX	CD	PART NO.	DESCRIPTION	QTY	SERIAL NO.
1		(600-825-5250)	ALTERNATOR A, (50A), (SEE FIG.A6010-B3X1)...	1	660029-UP
2		600-815-9980	WASHER.....	1	660029-UP
3		600-815-9970	WASHER.....	1	660029-UP
4		6128-21-6780	BOLT.....	1	660029-UP
5		6156-81-6371	BRACKET.....	1	660029-UP
6		01640-21323	WASHER.....	1	660029-UP
7		6156-81-6480	BRACKET.....	1	660029-UP
8		01435-01030	BOLT.....	4	660029-UP
9		6150-82-8650	PLATE.....	1	660029-UP
10		01435-01065	BOLT.....	2	660029-UP
11		6206-11-4490	SPACER.....	2	660029-UP
12		6150-82-8610	ROD, ADJUSTING.....	1	660029-UP
13		6150-82-8690	PLATE.....	1	660029-UP
14		01580-11411	NUT.....	2	660029-UP
15		6215-81-6150	PIN, INNER.....	1	660029-UP
16		01435-01255	BOLT.....	1	660029-UP
17		01584-01210	NUT.....	1	660029-UP
18		01643-31232	WASHER.....	1	660029-UP
19		01050-51260	BOLT.....	1	660029-UP
20		01643-31232	WASHER.....	1	660029-UP

Ref :A6010-A3Y1 Page :000570

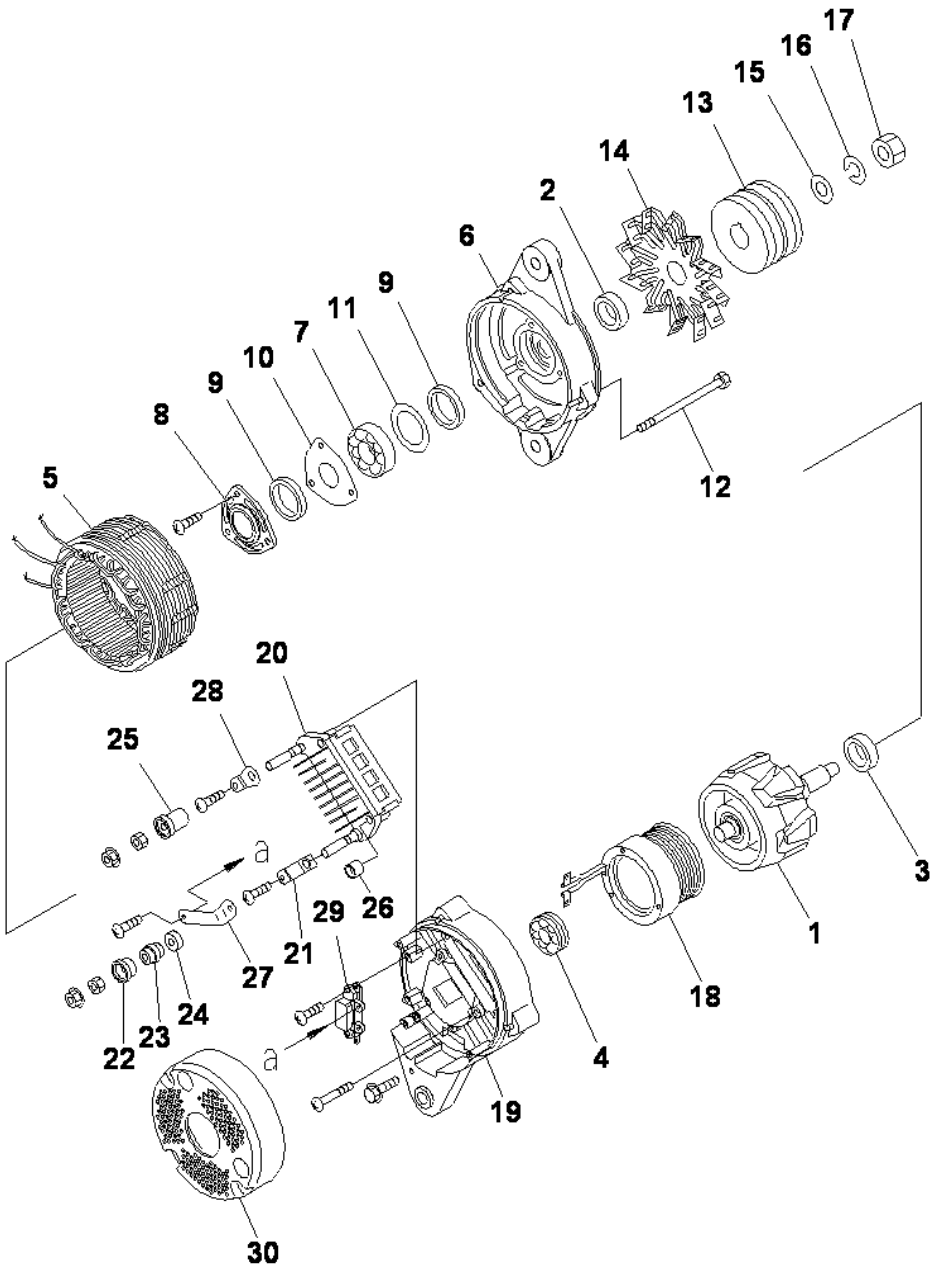

SAA6D125E-5 S/N 660029-UP

ALTERNATOR AND MOUNTING (50A) (INNER PARTS)

INDEX	CD	PART NO.	DESCRIPTION	QTY	SERIAL NO.
		600-825-5150	ALTERNATOR A. (50A).....	1	660029-UP
1		KD0-35100-0300	.ROTOR ASS'Y.....	1	660029-UP
2		KD1-33923-0790	.COLLAR.....	1	660029-UP
3		KD0-35923-0160	.COLLAR.....	1	660029-UP
4		KD0-09201-0980	.BEARING, BALL.....	1	660029-UP
5		KD0-35200-0440	.STATOR ASS'Y.....	1	660029-UP
6		KD0-35300-0190	.BRACKET ASS'Y.....	1	660029-UP
7		KD0-09201-0881	..BEARING, BALL.....	1	660029-UP
8		KD0-35926-0070	..RETAINER.....	1	660029-UP
9		KD0-35951-0060	..PACKING.....	2	660029-UP
10		KD0-35926-0090	..RETAINER.....	1	660029-UP
11		KD1-33926-0730	..RETAINER.....	1	660029-UP
12		KD0-02750-6802	.BOLT.....	3	660029-UP
13		KD0-35411-0560	.PULLEY.....	1	660029-UP
14		KD0-35421-0170	.FAN.....	1	660029-UP
15		KD1-03301-6012	.WASHER, PLAIN.....	1	660029-UP
16		KD1-03351-6002	.WASHER, SPRING.....	1	660029-UP
17		KD0-02801-6022	.NUT.....	1	660029-UP
18		KD0-35120-0230	.FIELD COIL.....	1	660029-UP
19		KD0-35710-1010	..BRACKET, REAR.....	1	660029-UP
20		KD0-35730-0510	..RECTIFIER ASS'Y.....	1	660029-UP
21		KD0-09170-2501	..CONDENSER.....	1	660029-UP
22		KD0-35943-0150	..BUSHING, INSULATE.....	1	660029-UP
23		KD0-35943-0130	..BUSHING, INSULATE.....	1	660029-UP
24		KD0-35943-0160	..BUSHING, INSULATE.....	1	660029-UP
25		KD0-35943-0140	..BUSHING, INSULATE.....	1	660029-UP
26		KD0-35923-0170	..COLLAR.....	2	660029-UP
27		KD0-35784-0210	..BAR, CONNECT.....	1	660029-UP
28		KD0-35784-0290	..BAR, PLATE.....	1	660029-UP
29		KD0-35719-0200	..REGULATOR ASS'Y.....	1	660029-UP
30		KD0-35761-0250	.COVER.....	1	660029-UP

Ref :A6010-B3X5 Page :000580

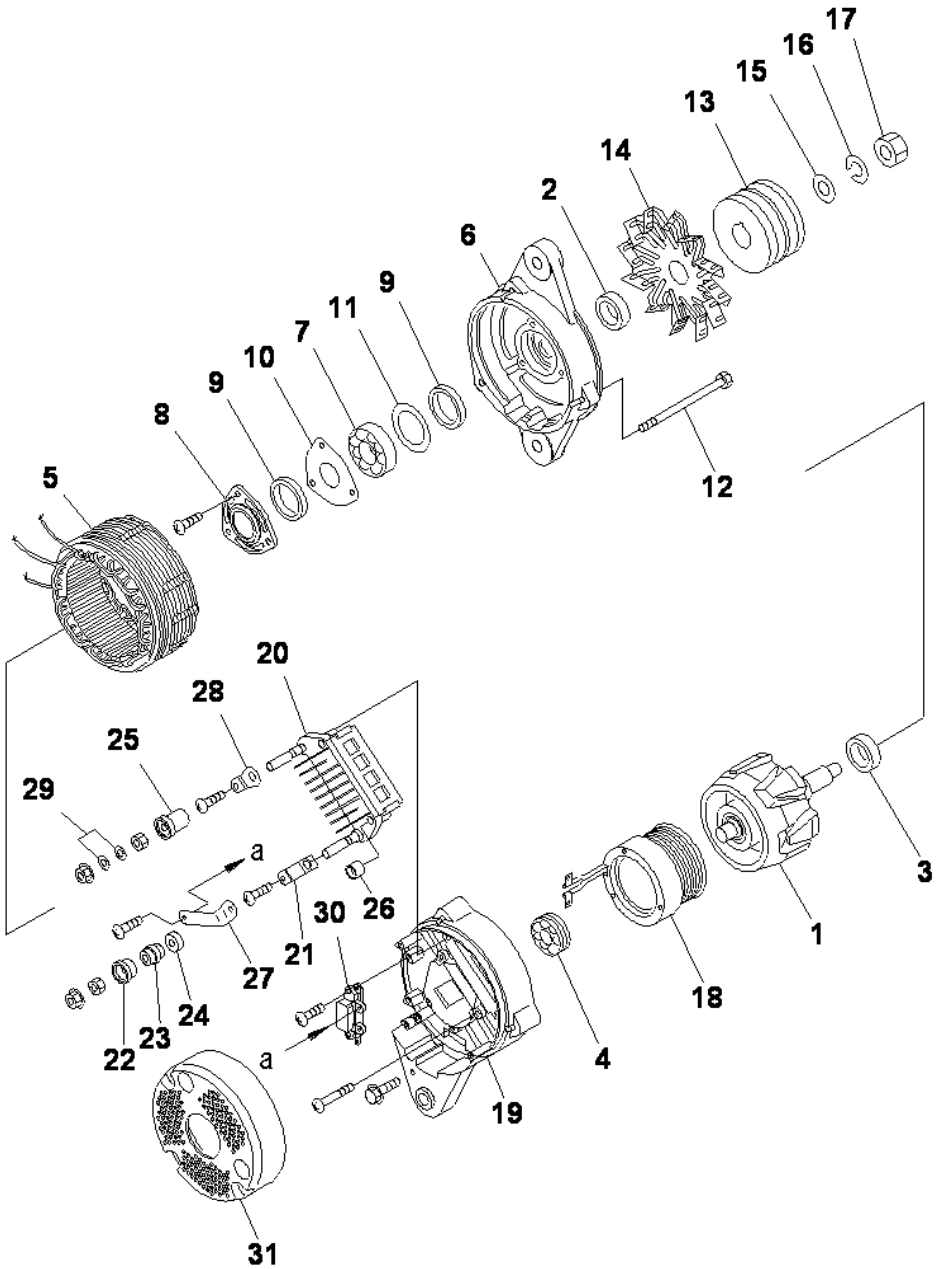

ALTERNATOR (60A) (INNER PARTS)

INDEX	CD	PART NO.	DESCRIPTION	QTY	SERIAL NO.
		600-825-6150	ALTERNATOR ASS'Y (60A).....	1	660029-UP
1		KD0-35100-0300	.ROTOR ASS'Y.....	1	660029-UP
2		KD1-33923-0790	.COLLAR.....	1	660029-UP
3		KD0-35923-0160	.COLLAR.....	1	660029-UP
4		KD0-09201-0980	.BEARING, BALL.....	1	660029-UP
5		KD0-35200-0460	.STATOR ASS'Y.....	1	660029-UP
6		KD0-35300-0350	.FRONT BRACKET ASS'Y.....	1	660029-UP
7		KD0-09201-1140	..BEARING, BALL.....	1	660029-UP
8		KD0-35926-0070	..RETAINER.....	1	660029-UP
9		KD0-35951-0060	..PACKING.....	2	660029-UP
10		KD0-35926-0090	..RETAINER.....	1	660029-UP
11		KD1-33926-0730	..RETAINER.....	1	660029-UP
12		KD0-02750-6802	.BOLT.....	3	660029-UP
13		KD0-35411-0560	.PULLEY.....	1	660029-UP
14		KD0-35421-0240	.FAN.....	1	660029-UP
15		KD1-03301-6012	.WASHER, PLAIN.....	1	660029-UP
16		KD1-03351-6002	.WASHER{SPRING}.....	1	660029-UP
17		KD0-02801-6022	.NUT.....	1	660029-UP
18		KD0-35120-0290	.FIELD COIL ASS'Y.....	1	660029-UP
		KD0-35700-0920	.REAR BRACKET ASS'Y.....	1	660029-UP
19		KD0-35710-1010	..BRACKET, REAR.....	1	660029-UP
20		KD0-35730-0700	..RECTIFIER ASS'Y.....	1	660029-UP
21		KD0-09170-2501	..CONDENSER.....	1	660029-UP
22		KD0-35943-0140	..BUSHING, INSULATE.....	1	660029-UP
23		KD0-35943-0150	..BUSHING, INSULATE.....	1	660029-UP
24		KD0-35943-0160	..BUSHING, INSULATE.....	1	660029-UP
25		KD0-35943-0170	..BUSHING, INSULATE.....	1	660029-UP
26		KD0-35923-0130	..COLLAR.....	1	660029-UP
27		KD0-35784-0210	..BAR, CONNECT.....	1	660029-UP
28		KD0-35784-0290	..BAR, PLATE.....	1	660029-UP
29		KD0-09057-0220	..WASHER.....	2	660029-UP
30		KD0-35719-0210	..REGULATOR ASS'Y.....	1	660029-UP
31		KD0-35761-0250	.COVER.....	1	660029-UP

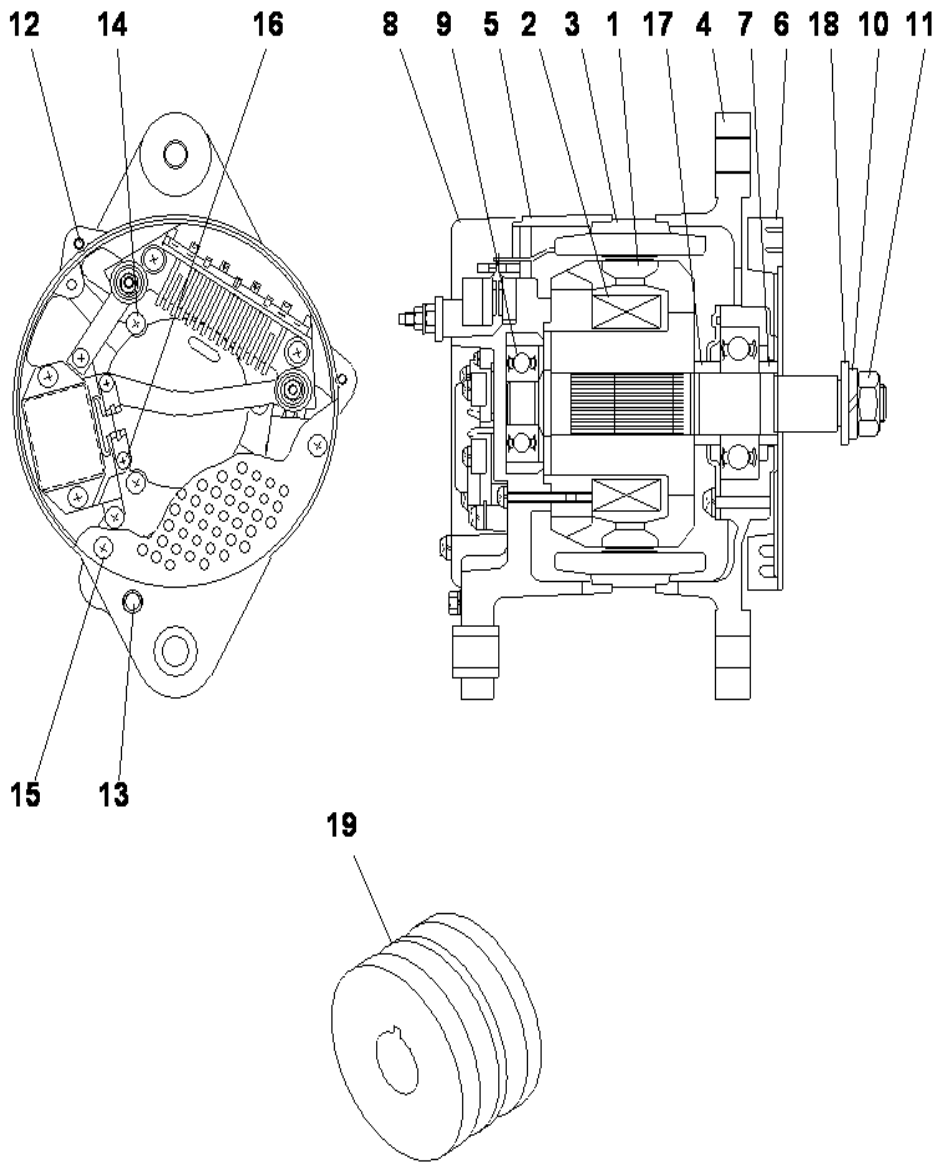

SAA6D125E-5 S/N 660029-UP

ALTERNATOR (50A) (INNER PARTS) (SANDY AND DASTY SPEC)

INDEX	CD	PART NO.	DESCRIPTION	QTY	SERIAL NO.
		600-825-5250	ALTERNATOR A. (50A).....	1	660029-UP
1		KD0-35100-0300	.ROTOR ASS'Y.....	1	660029-UP
2		KD0-35120-0230	.FIELD COIL.....	1	660029-UP
3		KD0-35200-0440	.STATOR ASS'Y.....	1	660029-UP
4		KD0-35300-0190	.BRACKET ASS'Y,FRONT.....	1	660029-UP
5		KD0-35700-0820	.BRACKET ASS'Y,REAR.....	1	660029-UP
6		KD0-35421-0170	.FAN.....	1	660029-UP
7		KD1-33923-0790	.COLLAR.....	1	660029-UP
8		KD0-35761-0250	.COVER,REAR.....	1	660029-UP
9		KD0-09201-0980	.BEARING,BALL.....	1	660029-UP
10		KD1-03351-6002	.WASHER,SPRING.....	1	660029-UP
11		KD0-02801-6022	.NUT.....	1	660029-UP
12		KD0-02750-6802	.BOLT.....	3	660029-UP
13		KD0-02740-5102	.BOLT.....	1	660029-UP
14		KD0-00560-5302	.SCREW.....	3	660029-UP
15		KD0-00550-5122	.SCREW.....	3	660029-UP
16		KD0-09011-3540	.SCREW.....	2	660029-UP
17		KD1-35923-0160	.COLLAR.....	1	660029-UP
18		KD1-03301-6012	.WASHER.....	1	660029-UP
19		KD0-35411-0180	.PULLEY, HARDENING.....	1	660029-UP

Ref :A6010-B3Y1 Page :000600

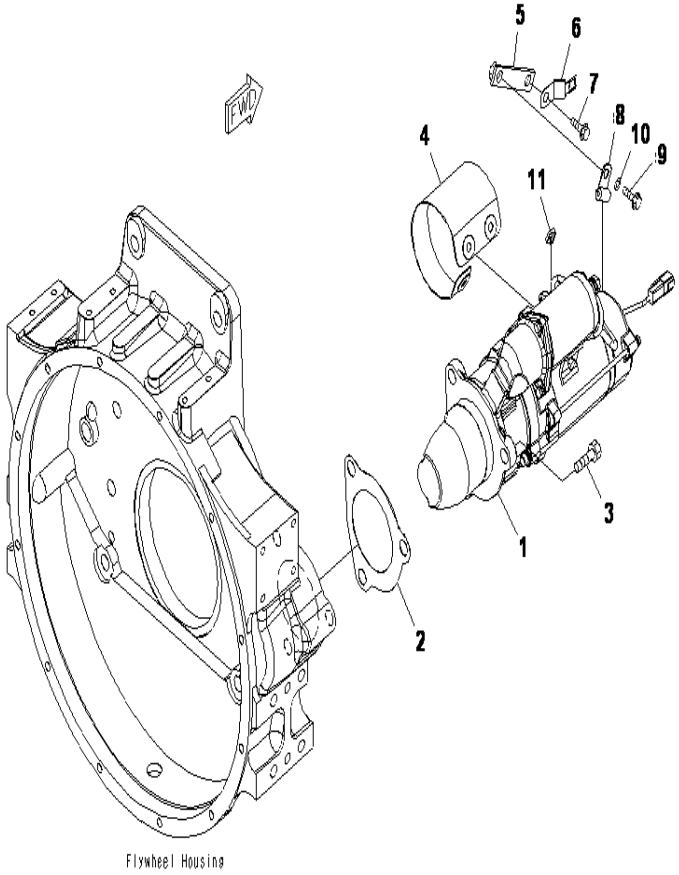

SAA6D125E-5 S/N 660029-UP

STARTING MOTOR MOUNTING (7.5KW) (WITH PROTECT COVER)

INDEX	CD	PART NO.	DESCRIPTION	QTY	SERIAL NO.
1		(600-813-6632)	STARTING MOTOR ASS'Y, (7.5KW) (SEE FIG.A6210-B3H5).....	1	660029-UP
2		6221-81-6810	GASKET.....	1	660029-UP
3		01010-81640	BOLT.....	3	660029-UP
4		6156-81-6210	COVER, PROTECT.....	1	660029-UP
5		421-62-11940	PLATE.....	1	660029-UP
6		08193-20010	CLIP.....	1	660029-UP
7		01435-01020	BOLT.....	1	660029-UP
8		600-051-2050	CLIP.....	1	660029-UP
9		01435-01020	BOLT.....	1	660029-UP
10		01643-31032	WASHER.....	1	660029-UP
11		6218-81-8470	BAND.....	1	660029-UP

Ref :A6210-A3H5 Page :000610

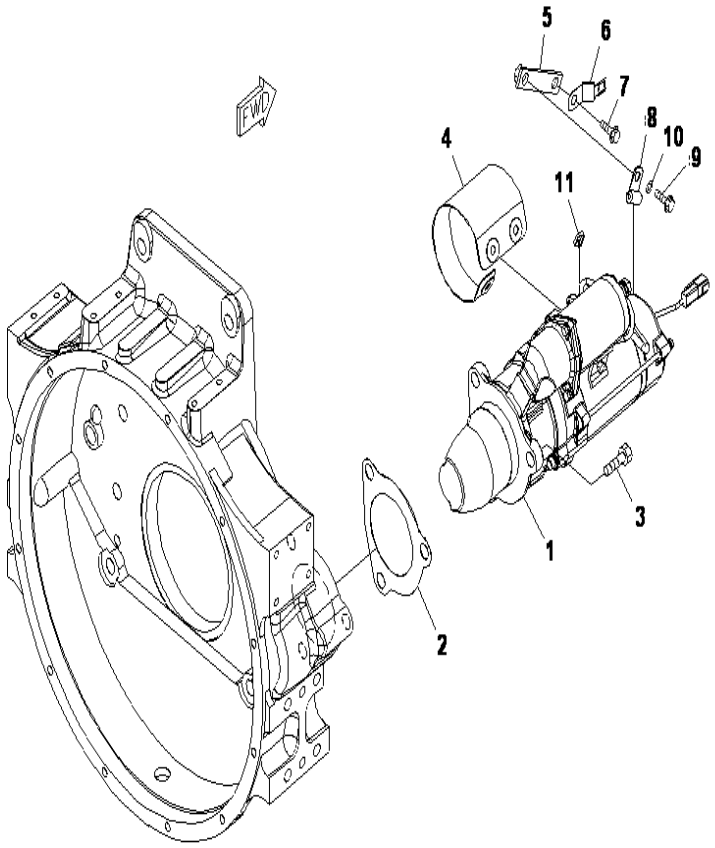

SAA6D125E-5 S/N 660029-UP

STARTING MOTOR MOUNTING (11KW) (WITH PROTECT COVER)

INDEX	CD	PART NO.	DESCRIPTION	QTY	SERIAL NO.
1		(600-813-9322)	STARTING MOTOR ASS'Y, (11KW) (SEE FIG.A6010-B3H6).....	1	660029-UP
2		6221-81-6810	GASKET.....	1	660029-UP
3		01010-81640	BOLT.....	3	660029-UP
4		6217-81-6110	COVER, PROTECT.....	1	660029-UP
5		421-62-11940	PLATE.....	1	660029-UP
6		08193-20010	CLIP.....	1	660029-UP
7		01435-01020	BOLT.....	1	660029-UP
8		600-051-2050	CLIP.....	1	660029-UP
9		01435-01020	BOLT.....	1	660029-UP
10		01643-31032	WASHER.....	1	660029-UP
11		6218818470	BAND.....	1	660029-UP

Ref :A6210-A3H6 Page :000620

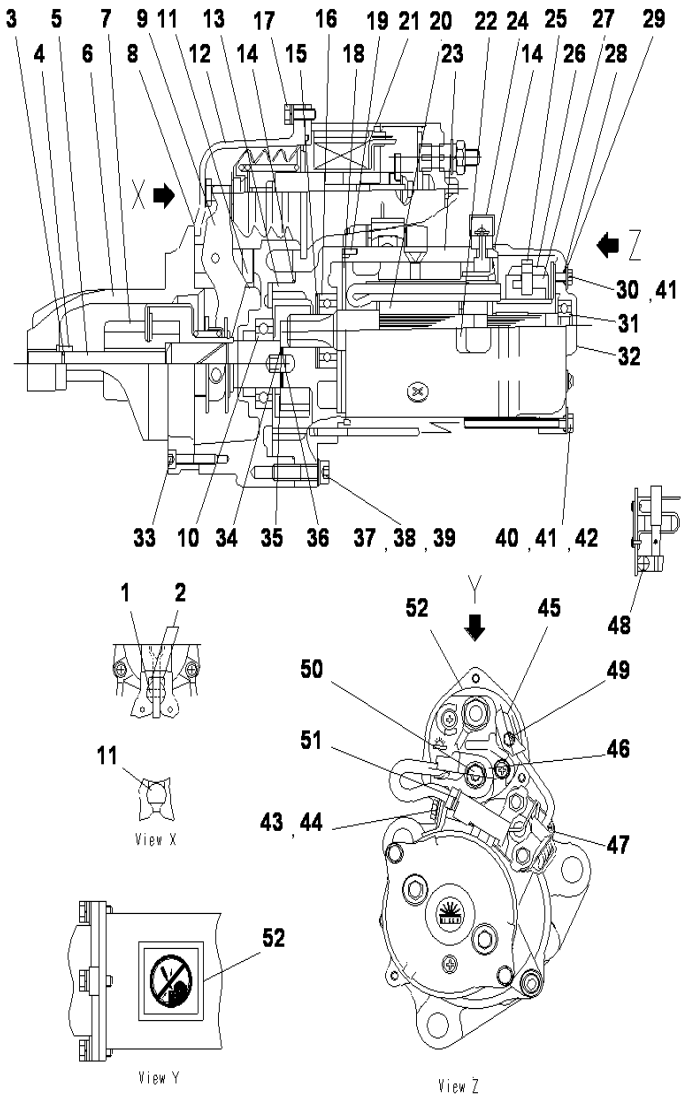

STARTING MOTOR (7.5KW) (INNER PARTS)

INDEX	CD	PART NO.	DESCRIPTION	QTY	SERIAL NO.
		600-813-6632	STARTING MOTOR ASS'Y, (7.5KW).....	1	660029-UP
1		KD0-23904-0070	.PIN.....	1	660029-UP
2		KD0-23927-0071	.HOLDER.....	2	660029-UP
3		KD1-23914-0020	.RING, CLIP.....	1	660029-UP
4		KD1-23181-0020	.STOPPER, PINION.....	1	660029-UP
5		KD1-23111-0160	.SHAFT.....	1	660029-UP
6		KD0-23310-0860	.BRACKET.....	1	660029-UP
7		KD1-23500-0170	.CLUTCH ASS'Y, OVER RUNNING.....	1	660029-UP
8		KD0-23951-0301	.PACKING.....	1	660029-UP
9		KD0-23320-0220	.SHIFT LEVER A.....	1	660029-UP
10		KD1-04566-0067	.BEARING, BALL.....	1	660029-UP
11		KD0-23951-0331	.PACKING.....	1	660029-UP
12		KD0-23600-0430	.CENTER BRACKET A.....	1	660029-UP
13		KD0-23611-0690	.BRACKET, CENTER.....	1	660029-UP
14		KD1-09211-0980	.O-RING.....	2	660029-UP
15		KD0-23921-0230	.WASHER.....	1	660029-UP
16		KD1-04546-2047	.BEARING, BALL.....	1	660029-UP
17		KD0-02740-6202	.BOLT.....	3	660029-UP
18		KD1-23951-0020	.PACKING.....	1	660029-UP
19		KD1-04002-0100	.PIN, STRAIGHT.....	1	660029-UP
20		KD0-23100-0251	.ARMATURE ASS'Y.....	1	660029-UP
21		KD0-47100-4800	.MAGNETIC SWITCH A.....	1	660029-UP
22		KD0-09271-3620	.NAME PLATE.....	1	660029-UP
23		KD0-23200-0331	.YOKE ASS'Y.....	1	660029-UP
24		KD0-47761-2691	.COVER.....	1	660029-UP
25		KD1-23913-0040	.SPRING, BRUSH.....	4	660029-UP
26		KD0-23740-0250	.BRUSH ASS'Y.....	4	660029-UP
27		KD0-23750-0250	.BRUSH HOLDER ASS'Y.....	1	660029-UP
28		KD1-05050-0601	.O-RING.....	2	660029-UP
29		KD1-47921-0790	.WASHER.....	2	660029-UP
30		KD0-09001-4580	.BOLT.....	2	660029-UP
31		KD1-04546-2007	.BEARING, BALL.....	1	660029-UP
32		KD0-23700-0130	.REAR BRACKET ASS'Y.....	1	660029-UP
33		KD1-02400-6305	.BOLT.....	6	660029-UP
34		KD1-23921-0130	.WASHER.....	1	660029-UP
35		KD1-23921-0140	.WASHER.....	1	660029-UP
36		KD1-23941-0040	.WASHER, INSULATE.....	1	660029-UP
37		KD1-02400-8405	.BOLT.....	3	660029-UP
38		KD1-03350-8002	.WASHER, SPRING.....	3	660029-UP
39		KD1-03300-8022	.WASHER, PLAIN.....	3	660029-UP
40		KD0-23901-0170	.BOLT.....	2	660029-UP
41		KD1-03350-6002	.WASHER, SPRING.....	4	660029-UP
42		KD1-03300-6012	.WASHER, PLAIN.....	2	660029-UP
43		KD0-02700-6402	.BOLT.....	1	660029-UP
44		KD1-47927-1250	.HOLDER.....	1	660029-UP

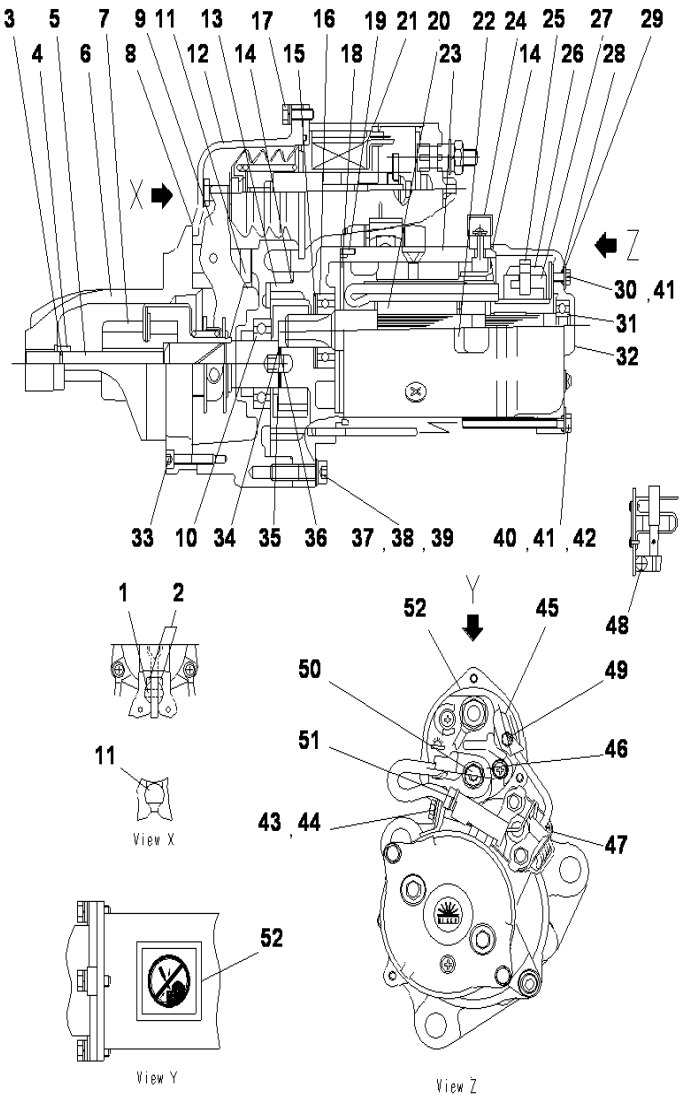

STARTING MOTOR (7.5KW) (INNER PARTS)

INDEX	CD	PART NO.	DESCRIPTION	QTY	SERIAL NO.
45		KD0-47761-2681	.COVER	1	660029-UP
46		KD0-47761-2671	.COVER	1	660029-UP
47		KD0-25000-8332	.SWITCH ASS'Y	1	660029-UP
48		KD0-00550-5082	.SCREW	4	660029-UP
49		KD0-09006-0660	.NUT	1	660029-UP
50		KD0-09006-0670	.NUT	1	660029-UP
51		KD1-09257-0050	.BAND	1	660029-UP
52		KD0-09275-1430	.PLATE, CAUTION	1	660029-UP

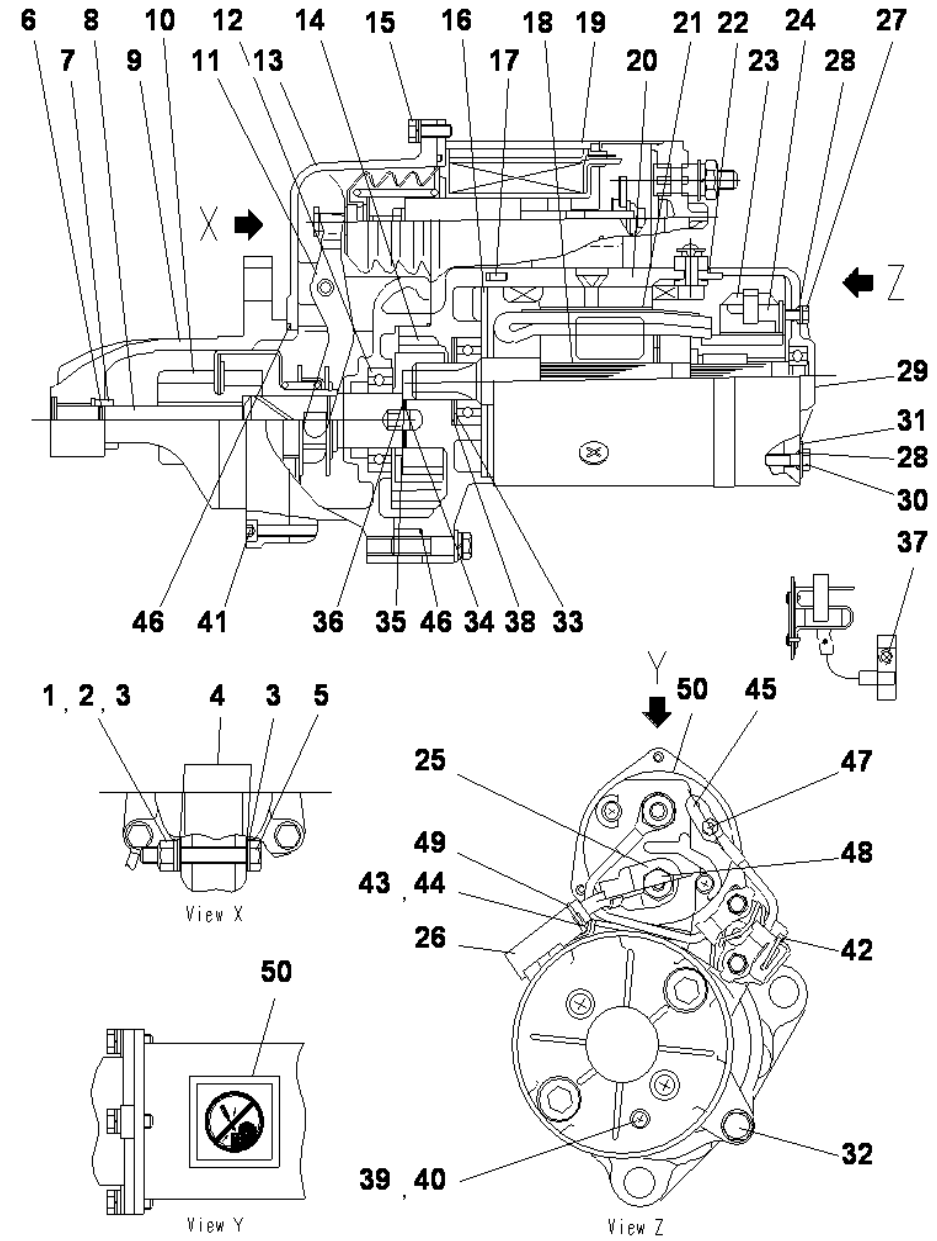

SAA6D125E-5 S/N 660029-UP

STARTING MOTOR (11KW) (INNER PARTS)

INDEX	CD	PART NO.	DESCRIPTION	QTY	SERIAL NO.
		600-813-9322	STARTING MOTOR ASS'Y, (11KW).....	1	660029-UP
1		KD1-09279-0090	.NUT.....	1	660029-UP
2		KD1-03350-8002	.WASHER, SPRING.....	4	660029-UP
3		KD1-03300-8022	.WASHER.....	5	660029-UP
4		KD1-03450-8001	.WASHER.....	2	660029-UP
5		KD0-23303-0020	.PIN, LEVER.....	1	660029-UP
6		KD1-23914-0020	.RING, CLIP.....	1	660029-UP
7		KD1-23181-0020	.STOPPER, PINION.....	1	660029-UP
8		KD0-23120-0180	.SHAFT ASS'Y.....	1	660029-UP
9		KD0-23310-1670	.FRONT BRACKET ASS'Y.....	1	660029-UP
10		KD1-23500-0970	.CLUTCH ASS'Y, OVER RUNNING.....	1	660029-UP
11		KD1-23320-0290	.SHIFT LEVER ASS'Y.....	1	660029-UP
12		KD0-09201-0850	.BEARING, BALL.....	1	660029-UP
13		KD0-23500-0410	.CENTER BRACKET A.....	1	660029-UP
14		KD0-23511-1101	.BRACKET, CENTER.....	1	660029-UP
15		KD0-02700-6202	.BOLT.....	3	660029-UP
16		KD1-23951-0051	.PACKING.....	1	660029-UP
17		KD1-04003-0100	.PIN, STRAIGHT.....	1	660029-UP
18		KD0-23100-0430	.ARMATURE ASS'Y.....	1	660029-UP
19		KD0-47100-4651	.MAGNETIC SWITCH A.....	1	660029-UP
20		KD0-23200-0671	.YOKE ASS'Y.....	1	660029-UP
21		KD0-09271-3620	.NAME PLATE.....	1	660029-UP
22		KD1-09211-1120	.O-RING.....	1	660029-UP
23		KD0-23740-0351	.BRUSH ASS'Y.....	2	660029-UP
24		KD0-23750-0490	.BRUSH HOLDER A.....	1	660029-UP
25		KD0-47761-2681	.COVER.....	1	660029-UP
26		KD0-47761-2691	.COVER.....	1	660029-UP
27		KD0-09011-3140	.SCREW.....	2	660029-UP
28		KD1-09211-0081	.O-RING.....	2	660029-UP
29		KD0-23710-0221	.BRACKET, REAR.....	1	660029-UP
30		KD0-09001-4380	.BOLT.....	2	660029-UP
31		KD1-47921-0790	.WASHER.....	2	660029-UP
32		KD0-02760-8402	.BOLT.....	3	660029-UP
33		KD0-09057-0110	.WASHER.....	1	660029-UP
34		KD1-23941-0040	.WASHER, INSULATE.....	1	660029-UP
35		KD1-23921-0140	.WASHER.....	1	660029-UP
36		KD1-23921-0130	.WASHER.....	1	660029-UP
37		KD0-00550-5082	.SCREW, REAR.....	2	660029-UP
38		KD0-09057-0190	.WASHER.....	1	660029-UP
39		KD0-00200-5062	.SCREW.....	1	660029-UP
40		KD1-03450-5001	.WASHER.....	1	660029-UP
41		KD1-02400-6305	.BOLT.....	6	660029-UP
42		KD0-25000-8332	.SWITCH ASS'Y.....	1	660029-UP
43		KD0-02700-6602	.BOLT.....	1	660029-UP
44		KD0-47927-1390	.HOLDER.....	1	660029-UP

Ref :A6210-B3H6 Page :000640

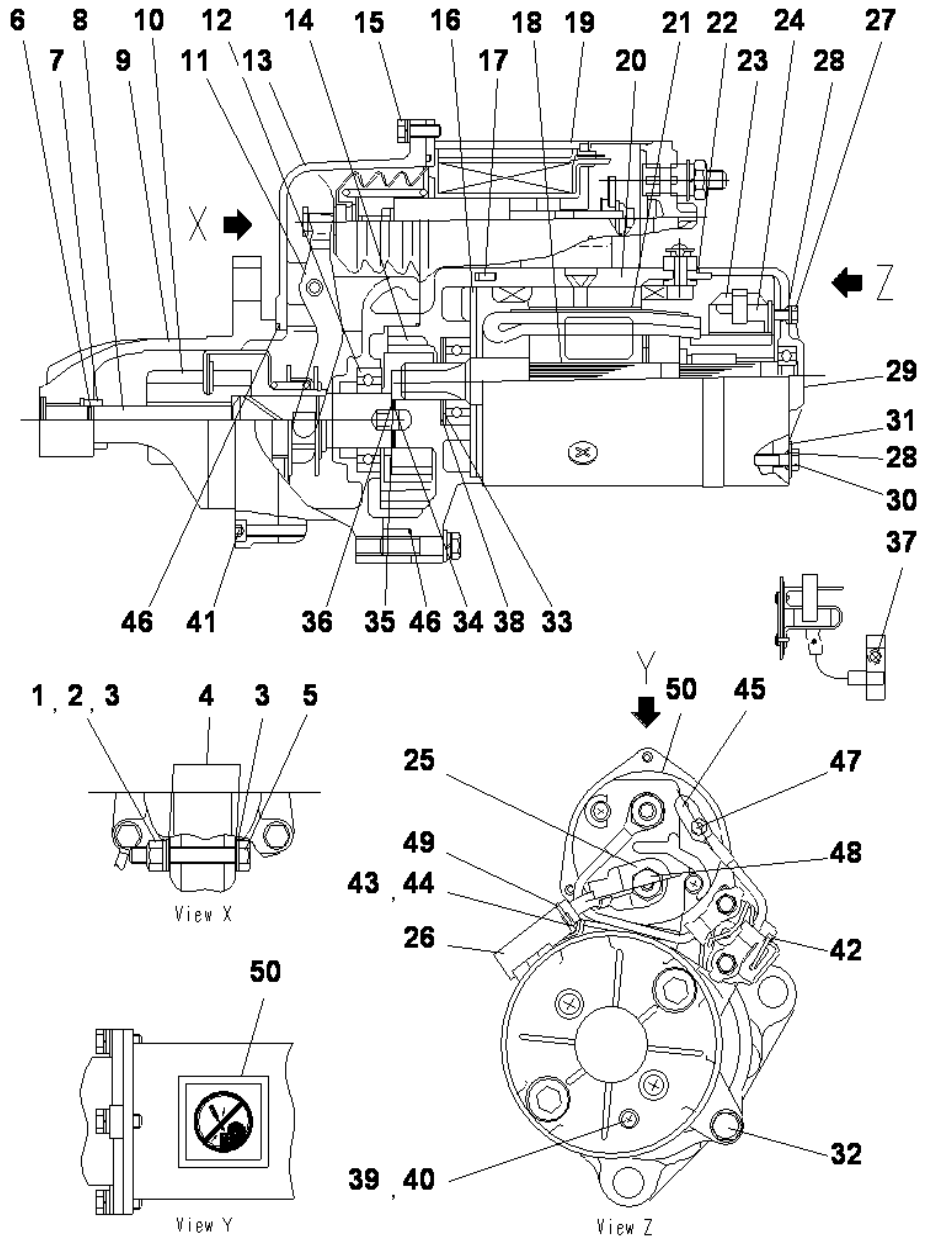

STARTING MOTOR (11KW) (INNER PARTS)

INDEX	CD	PART NO.	DESCRIPTION	QTY	SERIAL NO.
45		KD0-47761-2671	.COVER	1	660029-UP
46		KD1-09211-0981	.O-RING	2	660029-UP
47		KD0-09006-0660	.NUT	1	660029-UP
48		KD0-09006-0670	.NUT	1	660029-UP
49		KD1-09257-0050	.BAND	1	660029-UP
50		KD0-09275-1430	.PLATE, CAUTION	1	660029-UP

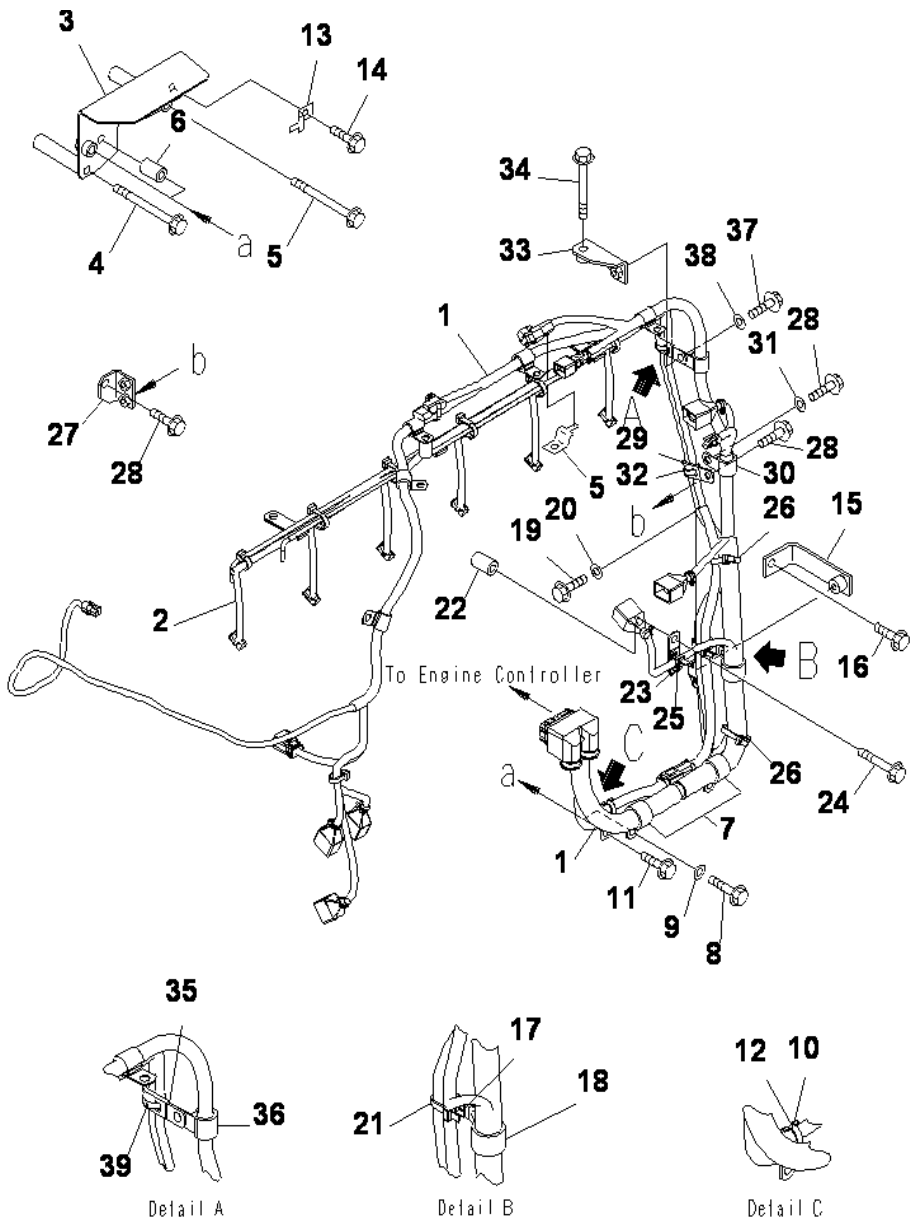

SAA6D125E-5 S/N 660029-UP

ELECTRICAL WIRING (1/3) (ENGINE HARNESS)

INDEX	CD	PART NO.	DESCRIPTION	QTY	SERIAL NO.
1		6251-81-9930	WIRING HARNESS	1	660029-UP
2		6251-81-9940	WIRING HARNESS	1	660029-UP
3		6251-81-9730	BRACKET	1	660029-UP
4		01436-01015	BOLT	1	660029-UP
5		01436-01025	BOLT	1	660029-UP
6		6144-11-5630	SPACER	1	660029-UP
7		600-051-2280	CLIP	2	660029-UP
8		01435-01055	BOLT	2	660029-UP
9		01643-31032	WASHER	2	660029-UP
10		6218-81-8440	CLAMP	2	660029-UP
11		01435-01025	BOLT	1	660029-UP
12		6218-81-8490	BAND	1	660029-UP
13		08193-20010	CLIP	1	660029-UP
14		01435-01016	BOLT	1	660029-UP
15		6251-81-9670	BRACKET	1	660029-UP
16		01435-01020	BOLT	1	660029-UP
17		6218-81-8440	CLAMP	1	660029-UP
18		600-051-2280	CLIP	1	660029-UP
19		01435-01025	BOLT	1	660029-UP
20		01643-31032	WASHER	1	660029-UP
21		6218-81-8490	BAND	1	660029-UP
22		6144-11-5630	SPACER	1	660029-UP
23		6218-81-8440	CLAMP	1	660029-UP
24		01435-01065	BOLT	1	660029-UP
25		6218-81-8490	BAND	1	660029-UP
26		6218-81-8490	BAND	2	660029-UP
27		6251-81-9270	BRACKET	1	660029-UP
28		01435-01020	BOLT	3	660029-UP
29		6218-81-8440	CLAMP	1	660029-UP
30		600-051-2200	CLIP	1	660029-UP
31		01643-31032	WASHER	1	660029-UP
32		6218-81-8490	BAND	1	660029-UP
33		6251-81-9660	BRACKET	1	660029-UP
34		01435-01090	BOLT	1	660029-UP
35		6218-81-8440	CLAMP	1	660029-UP
36		600-051-2180	CLIP	1	660029-UP
37		01435-01020	BOLT	1	660029-UP
38		01643-31032	WASHER	1	660029-UP
39		6218-81-8490	BAND	1	660029-UP

Ref :A6810-A3K5 Page :000650

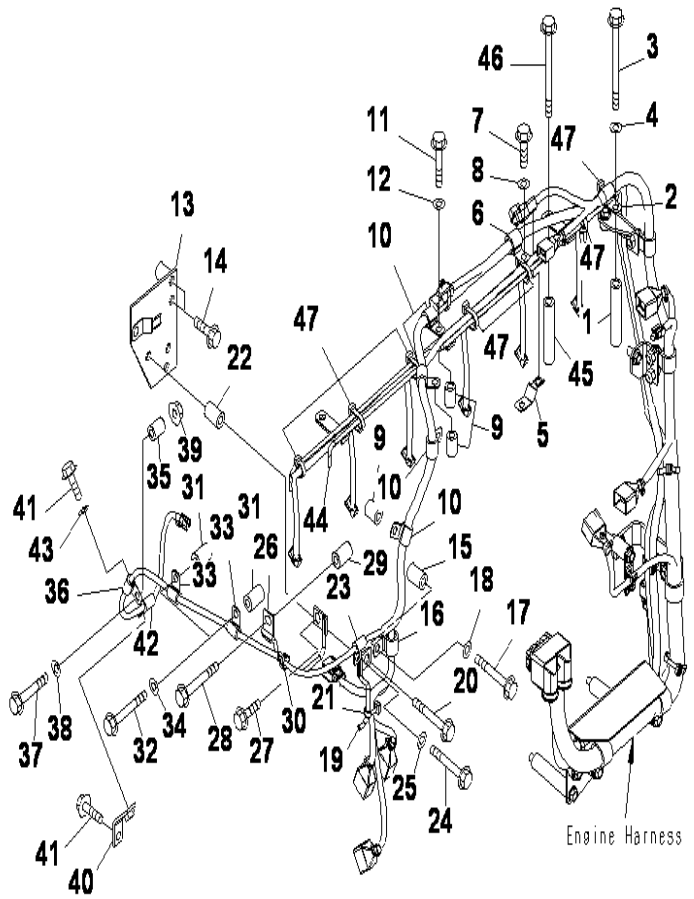

SAA6D125E-5 S/N 660029-UP

ELECTRICAL WIRING (2/3) (HARNESS SUPPORT)

INDEX	CD	PART NO.	DESCRIPTION	QTY	SERIAL NO.
1		6215-71-6190	SPACER	1	660029-UP
2		600-051-2140	CLIP	1	660029-UP
3		01436-01010	BOLT	1	660029-UP
4		01643-31032	WASHER	1	660029-UP
5		08193-20010	CLIP	1	660029-UP
6		600-051-2180	CLIP	1	660029-UP
7		01435-01020	BOLT	1	660029-UP
8		01643-31032	WASHER	1	660029-UP
9		6134-12-5120	SPACER	3	660029-UP
10		600-051-2140	CLIP	4	660029-UP
11		01435-01045	BOLT	2	660029-UP
12		01643-31032	WASHER	4	660029-UP
13		6251-81-9330	BRACKET	1	660029-UP
14		01435-01045	BOLT	2	660029-UP
15		6134-12-5120	SPACER	1	660029-UP
16		600-051-2180	CLIP	1	660029-UP
17		01435-01050	BOLT	1	660029-UP
18		01643-31032	WASHER	1	660029-UP
19		6251-81-9350	BRACKET	1	660029-UP
20		01435-01055	BOLT	1	660029-UP
21		6218-81-8490	BAND	1	660029-UP
22		6134-12-5120	SPACER	1	660029-UP
23		600-051-2080	CLIP	1	660029-UP
24		01435-01050	BOLT	1	660029-UP
25		01643-31032	WASHER	1	660029-UP
26		6251-81-9950	BRACKET	1	660029-UP
27		01435-01020	BOLT	1	660029-UP
28		01435-01050	BOLT	1	660029-UP
29		6144-11-5630	SPACER	1	660029-UP
30		6218-81-8490	BAND	1	660029-UP
31		6144-11-5630	SPACER	2	660029-UP
32		01435-01050	BOLT	2	660029-UP
33		600-051-2080	CLIP	2	660029-UP
34		01643-31032	WASHER	2	660029-UP
35		6134-12-5120	SPACER	1	660029-UP
36		600-051-2080	CLIP	1	660029-UP
37		01435-01055	BOLT	1	660029-UP
38		01643-31032	WASHER	1	660029-UP
39		01584-01008	NUT	1	660029-UP
40		6251-81-9640	BRACKET	1	660029-UP
41		01435-01020	BOLT	2	660029-UP
42		600-051-2080	CLIP	1	660029-UP
43		01643-31032	WASHER	1	660029-UP
44		6251-81-9720	BRACKET	1	660029-UP
45		6215-71-6190	SPACER	2	660029-UP

Ref :A6810-B3K5 Page :000660

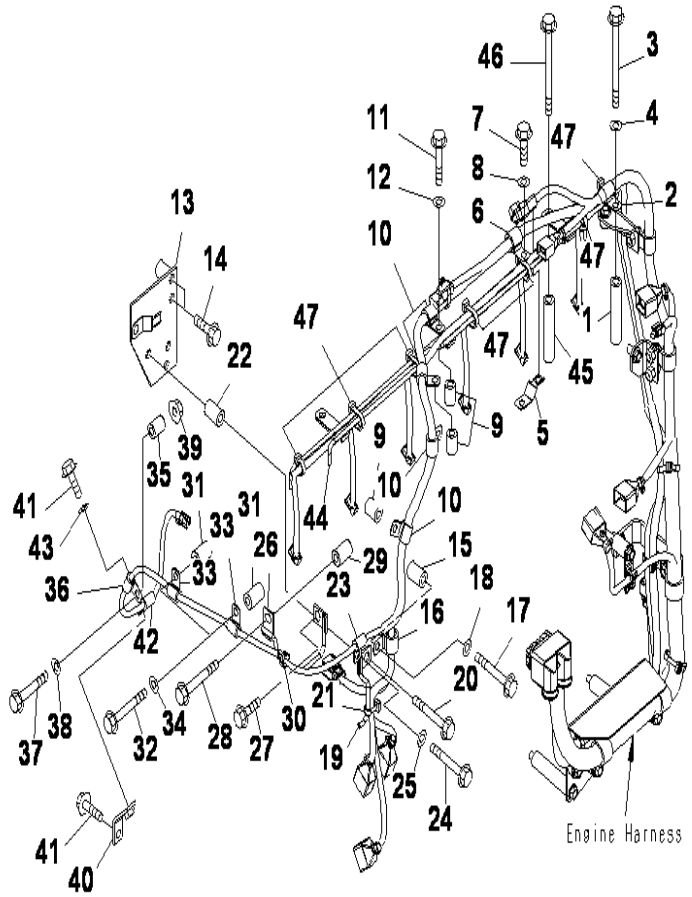

SAA6D125E-5 S/N 660029-UP

ELECTRICAL WIRING (2/3)(HARNESS SUPPORT)

INDEX	CD	PART NO.	DESCRIPTION	QTY	SERIAL NO.
46		01436-01065	BOLT	2	660029-UP
47		6218-81-8490	BAND	7	660029-UP

Ref :A6810-B3K5 Page :000661

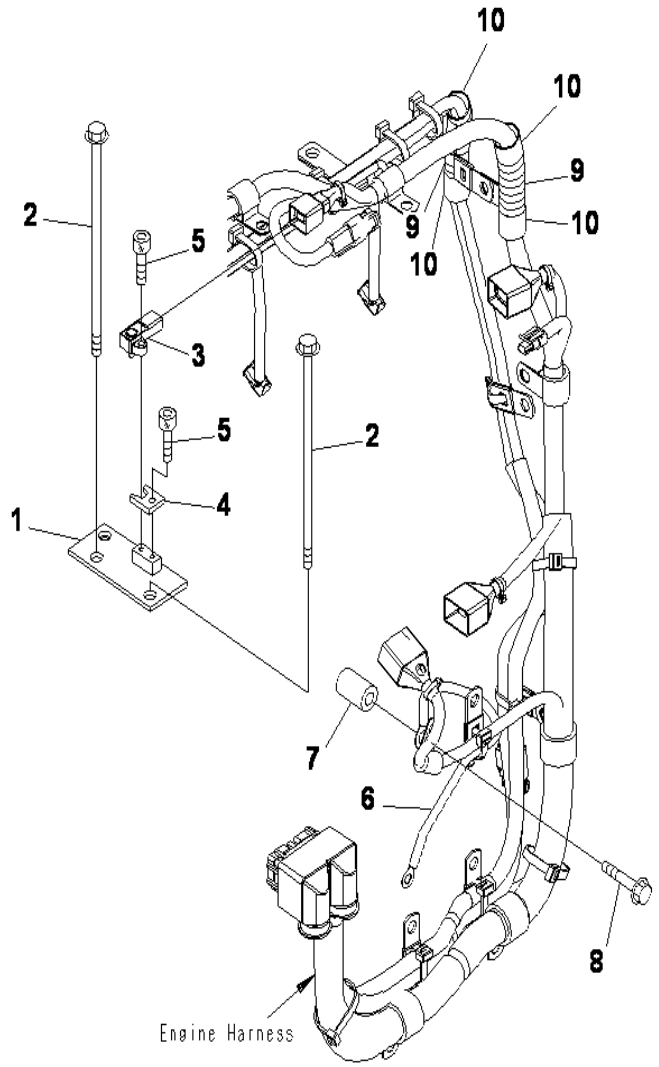

SAA6D125E-5 S/N 660029-UP

ELECTRICAL WIRING (3/3) (ENGINE HARNESS)

INDEX	CD	PART NO.	DESCRIPTION	QTY	SERIAL NO.
1		6251-81-9650	BRACKET	1	660029-UP
2		01436-01075	BOLT	2	660029-UP
3		6261-81-2600	SENSOR, AMBIENT TEMPERATURE	1	660029-UP
4		6251-81-9680	PLATE	1	660029-UP
5		01252-60516	BOLT	2	660029-UP
6		6245-81-5820	WIRE	1	660029-UP
7		6144-11-5630	SPACER	1	660029-UP
8		01435-01050	BOLT	1	660029-UP
9		6251-81-9870	COVER	2	660029-UP
10		6251-81-9880	TAPE	4	660029-UP

Ref :A6810-C3K5 Page :000670

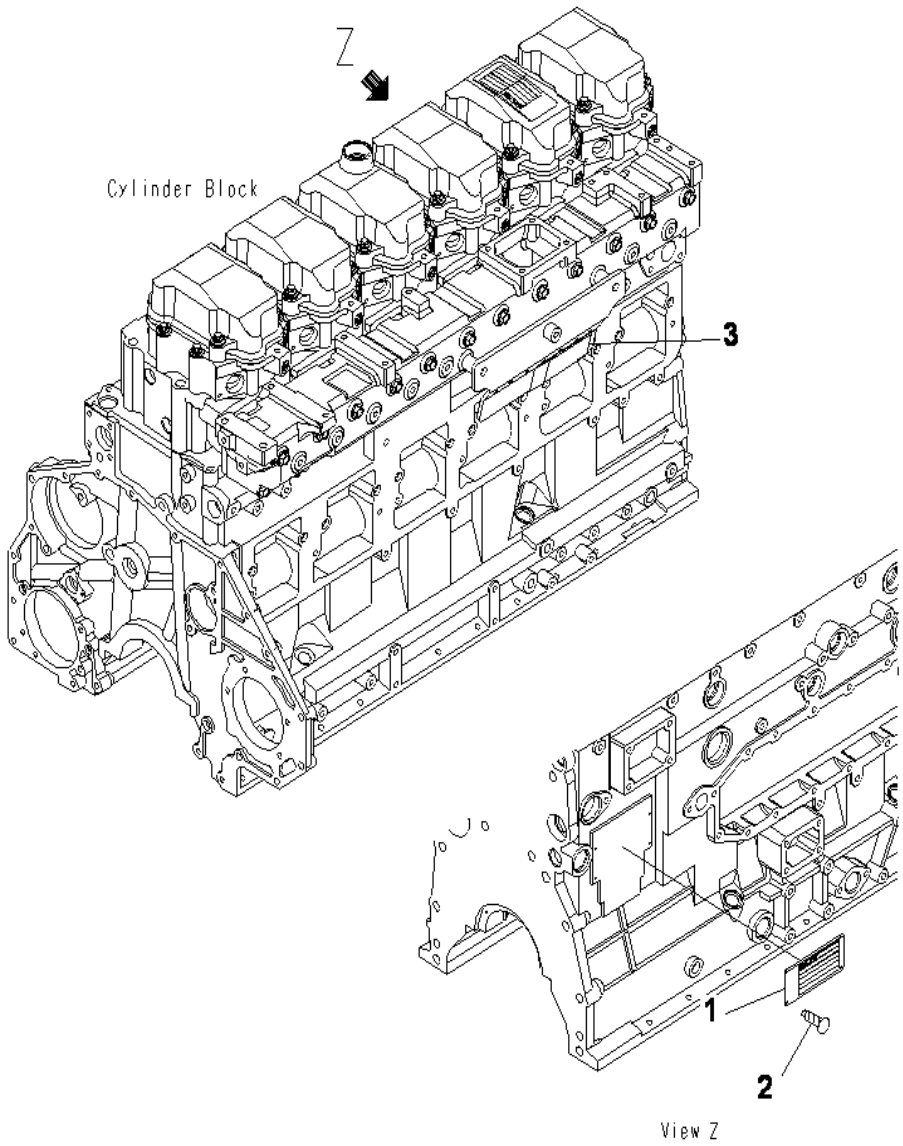

SAA6D125E-5 S/N 660029-UP

NAME PLATE AND CAUTION PLATE (ENGLISH)

INDEX	CD	PART NO.	DESCRIPTION	QTY	SERIAL NO.
1		600-023-2340	PLATE NAME.....	1	660029-UP
2		04418-02550	SCREW.....	4	660029-UP
3		6217-71-9331	PLATE, WARNING.....	1	660029-UP

Ref :A9810-A373 Page :000680

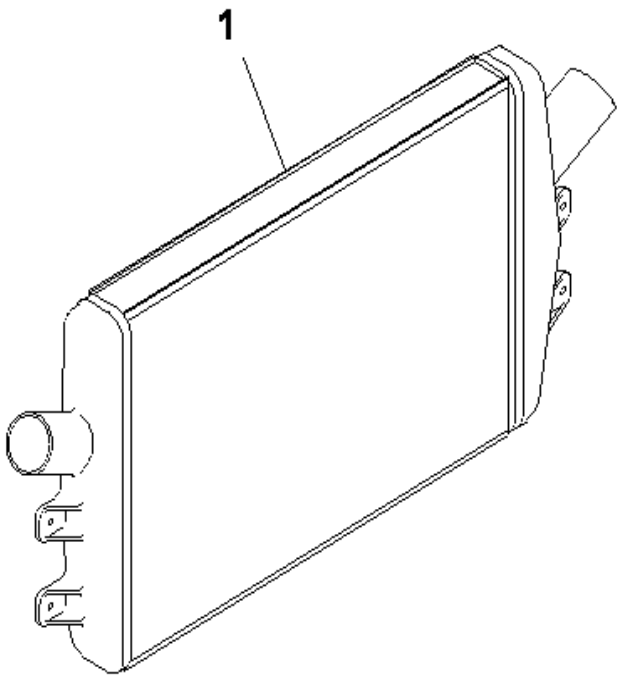

SAA6D125E-5 S/N 660029-UP

AFTER COOLER

INDEX	CD	PART NO.	DESCRIPTION	QTY	SERIAL NO.
1		6251-61-5110	AFTER COOLER.....	1	660029-UP

Ref :B9999-A3W5 Page :000690

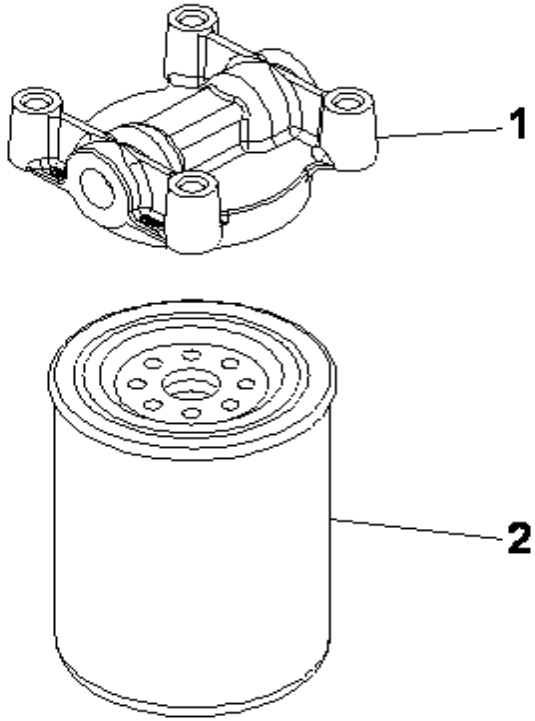

SAA6D125E-5 S/N 660029-UP

CORROSION RESISTOR

INDEX	CD	PART NO.	DESCRIPTION	QTY	SERIAL NO.
		6150-61-8172	RESISTOR ASS'Y, CORROSION.....	1	660029-UP
1		6150-61-8211	.HEAD.....	1	660029-UP
2		600-411-1151	.CARTRIDGE.....	1	660029-UP

Ref :B9999-A3W6 Page :000700

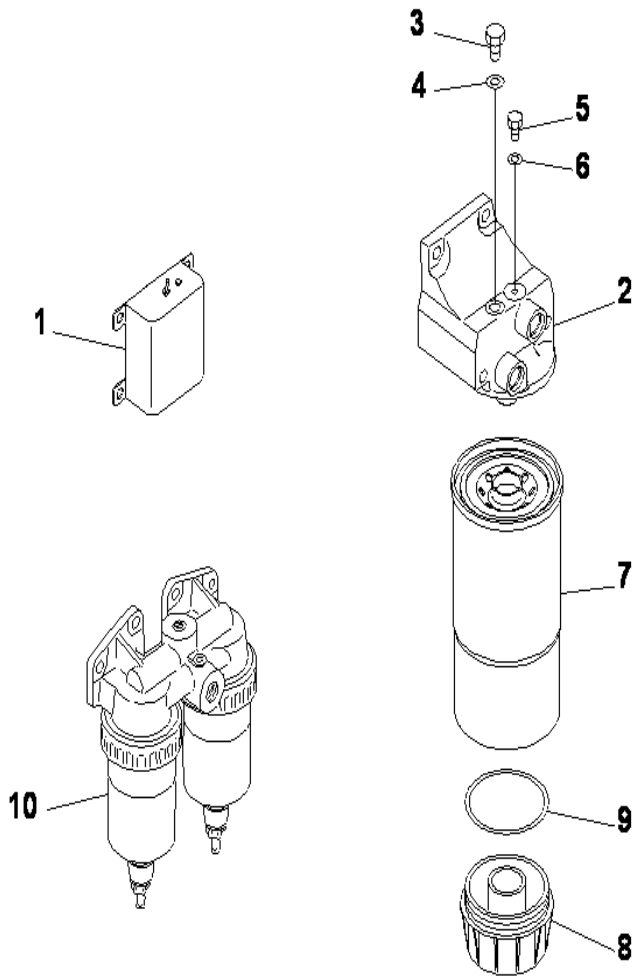

SAA6D125E-5 S/N 660029-UP

PRIMING PUMP AND PRE-FILTER

INDEX	CD	PART NO.	DESCRIPTION	QTY	SERIAL NO.
1		600-815-9471	SWITCH.....	1	660029-UP
		6251-71-7100	HEAD ASS'Y.....	1	660029-UP
2		6251-71-7110	.HEAD.....	1	660029-UP
3		07040-11209	.PLUG.....	1	660029-UP
4		07005-01212	.GASKET.....	1	660029-UP
5		6110-73-6231	.PLUG.....	1	660029-UP
6		07005-00812	.GASKET.....	1	660029-UP
		600-311-4500	FILTER ASS'Y.....	1	660029-UP
7	C1		.CARTRIDGE (1-1/4).....	1	660029-UP
8		600-311-3220	.CAP.....	1	660029-UP
9		600-311-3230	.SEAL.....	1	660029-UP
10		600-311-9340	WATER SEPARATOR.....	1	660029-UP

Ref :B9999-A3W9 Page :000710

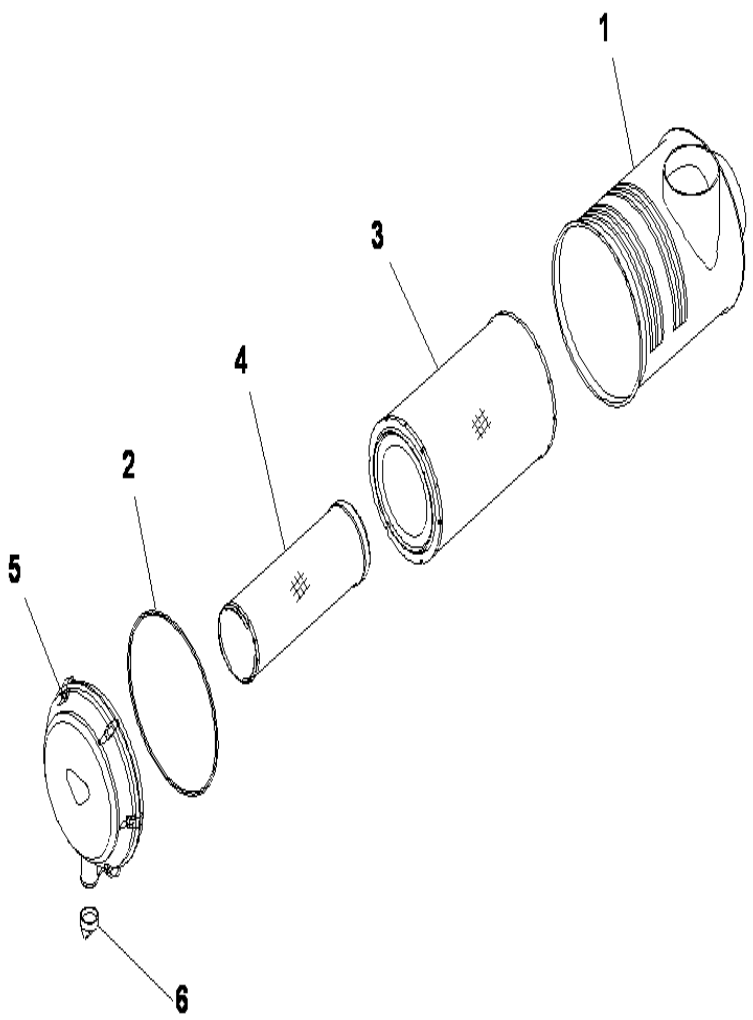

SAA6D125E-5 S/N 660029-UP

AIR CLEANER

INDEX	CD	PART NO.	DESCRIPTION	QTY	SERIAL NO.
		6156-81-7201	AIR CLEANER ASS'Y.....	1	660029-UP
1		6156-81-7210	.BODY.....	1	660029-UP
		600-185-6100	.ELEMENT ASS'Y.....	1	660029-UP
2		600-185-6110	..ELEMENT, OUTER.....	1	660029-UP
3		600-185-6120	..ELEMENT, INNER.....	1	660029-UP
4		600-184-1671	..O-RING.....	1	660029-UP
5		600-184-1611	.COVER ASS'Y.....	1	660029-UP
6		600-184-1350	.VALVE, VACUATOR.....	1	660029-UP

Ref :B9999-A3X4 Page :000720

ENGINE RELATED PARTS

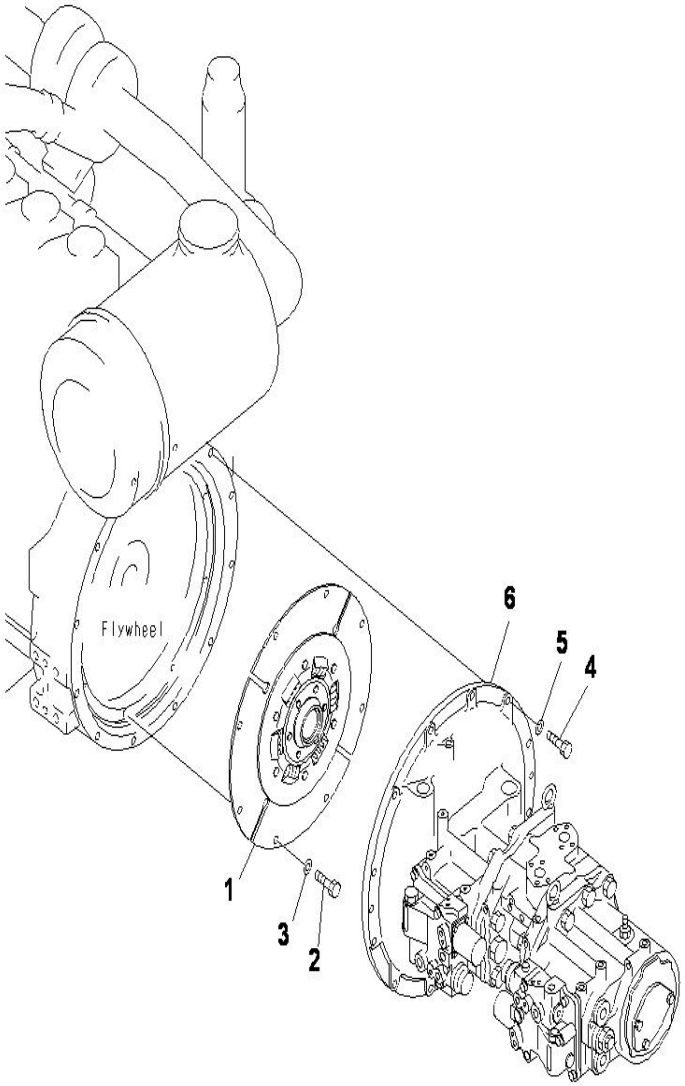

PC400-8 S/N J30001-UP

DAMPER AND PUMP

INDEX	CD	PART NO.	DESCRIPTION	QTY	SERIAL NO.
1		207-01-61311	DAMPER DISK.....	1	J30001-UP
2		01010-81225	BOLT.....	8	J30001-UP
3		01643-31232	WASHER.....	8	J30001-UP
4		01010-81240	BOLT.....	12	J30001-UP
5		01643-31232	WASHER.....	12	J30001-UP
6		708-2H-00450	PUMP ASS'Y.....	1	J30001-UP

Ref :B0000-01A0 Page :030010

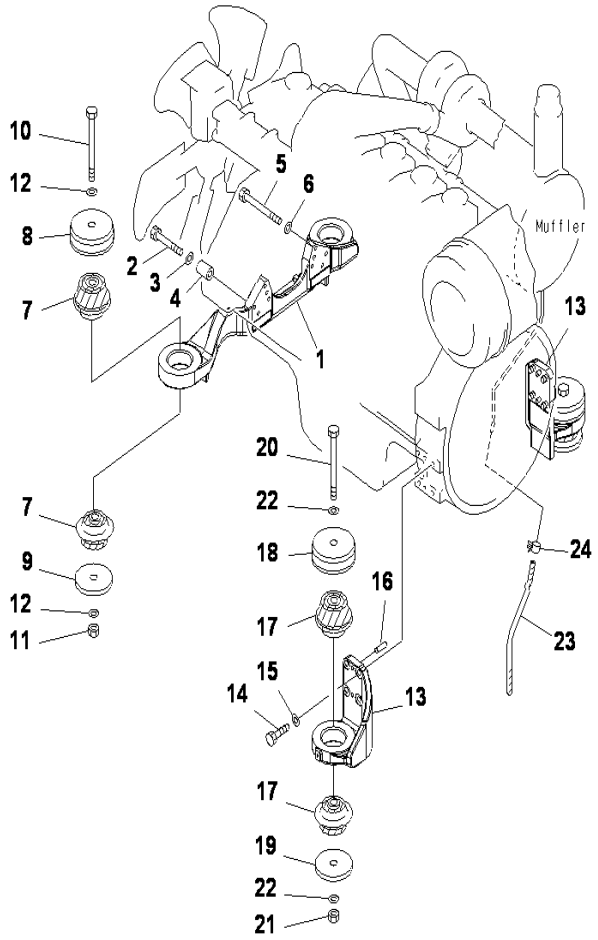

PC400-8 S/N J30001-UP

ENGINE MOUNTING

INDEX	CD	PART NO.	DESCRIPTION	QTY	SERIAL NO.
1		208-01-71111	BRACKET	1	J30001-UP
2		01010-81085	BOLT	2	J30001-UP
3		01643-31032	WASHER	2	J30001-UP
4		6167-21-5910	SPACER	2	J30001-UP
5		01011-81005	BOLT	6	J30001-UP
6		01643-31032	WASHER	6	J30001-UP
7		207-01-35140	CUSHION	4	J30001-UP
8		207-01-61170	STOPPER	2	J30001-UP
9		208-01-11161	WASHER	2	J30001-UP
10		208-01-11181	BOLT	2	J30001-UP
11		01580-02419	NUT	2	J30001-UP
12		01643-32460	WASHER	4	J30001-UP
13		208-01-71120	BRACKET	2	J30001-UP
14		01010-61650	BOLT	8	J30001-UP
15		01643-31645	WASHER	8	J30001-UP
16		04020-01228	PIN	4	J30001-UP
17		207-01-35140	CUSHION	4	J30001-UP
18		207-01-61170	STOPPER	2	J30001-UP
19		208-01-11161	WASHER	2	J30001-UP
20		208-01-11181	BOLT	2	J30001-UP
21		01580-02419	NUT	2	J30001-UP
22		01643-32460	WASHER	4	J30001-UP
23		07260-20950	HOSE	1	J30001-UP
24		07285-00155	CLIP	1	J30001-UP

Ref :B0100-01A0 Page :030020

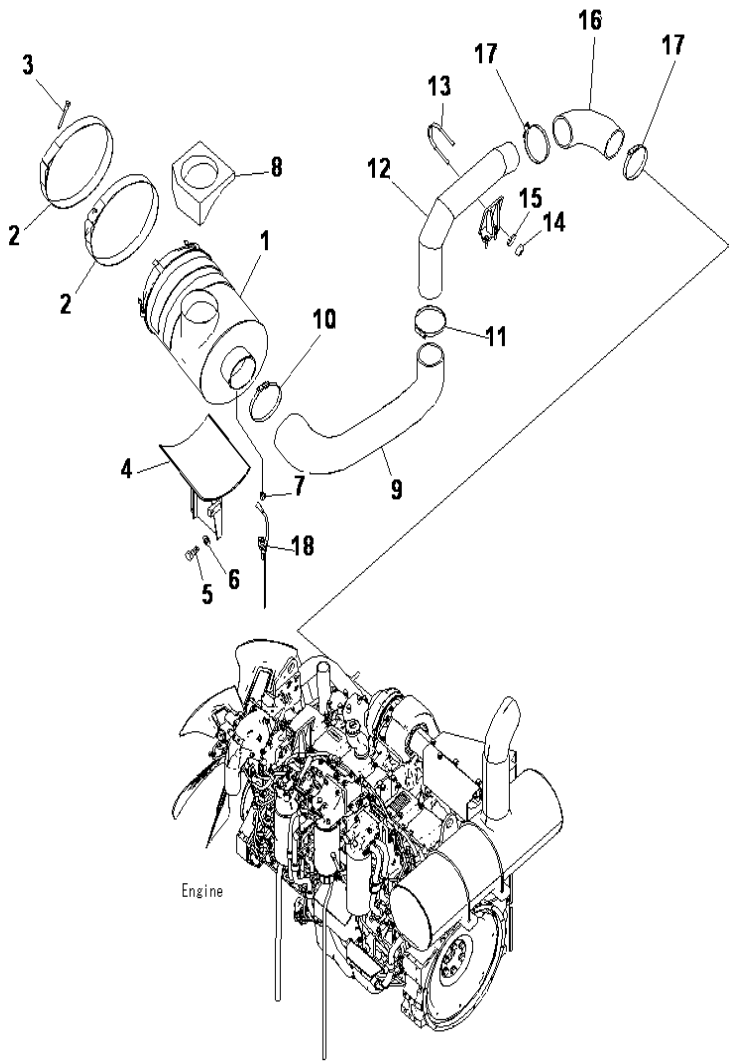

PC400-8 S/N J30001-UP

AIR CLEANER CONNECTION (WITH PRECLEANER)

INDEX	CD	PART NO.	DESCRIPTION	QTY	SERIAL NO.
1		(6156-81-7201)	AIR CLEANER ASS'Y	1	J30001-UP
2		6151-11-9970	BAND ASS'Y	2	J30001-UP
3		6643-11-4641	BOLT	2	J30001-UP
4		208-01-75220	BRACKET	1	J30001-UP
5		01010-81225	BOLT	4	J30001-UP
6		01643-31232	WASHER	4	J30001-UP
7		11Y-01-11920	JOINT	1	J30001-UP
8		208-01-72310	SEAL	1	J30001-UP
9		208-01-72111	HOSE	1	J30001-UP
10		208-01-72180	CLAMP	1	J30001-UP
11		07299-00130	CLAMP	1	J30001-UP
12		208-01-72151	TUBE	1	J30001-UP
13		07283-31185	CLIP	1	J30001-UP
14		01597-01211	NUT	2	J30001-UP
15		01643-31232	WASHER	2	J30001-UP
16		208-01-72161	HOSE	1	J30001-UP
17		07299-00130	CLAMP	2	J30001-UP
18		7861-93-1421	SENSOR	1	J30056-UP
		7861931420	SENSOR	1	J30001-J30055

Ref :B0200-01A1 Page :030030

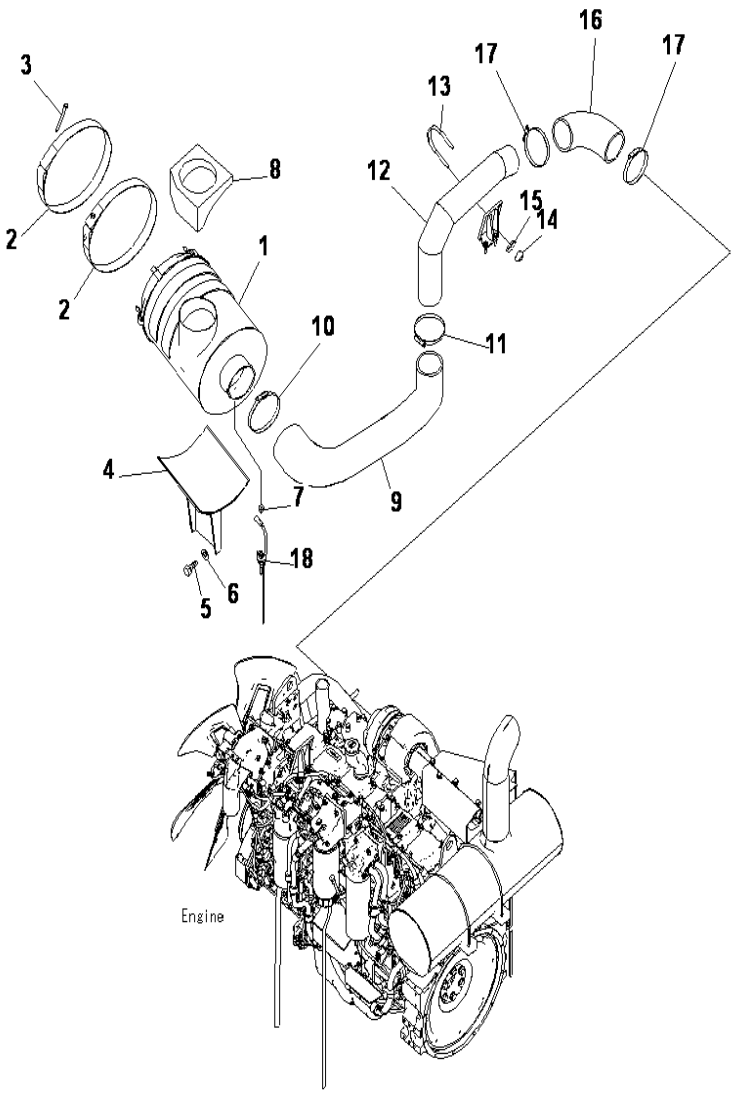

PC400-8 S/N J30001-UP

AIR CLEANER CONNECTION (WITH FUEL SELF SUPPLY PUMP)

INDEX	CD	PART NO.	DESCRIPTION	QTY	SERIAL NO.
1		(6156-81-7201)	AIR CLEANER	1	J30001-UP
2		6151-11-9970	BAND	2	J30001-UP
3		6643-11-4641	BOLT	2	J30001-UP
4		208-01-72220	BRACKET	1	J30001-UP
5		01010-81225	BOLT	4	J30001-UP
6		01643-31232	WASHER	4	J30001-UP
7		11Y-01-11920	JOINT	1	J30001-UP
8		208-01-72310	SEAL	1	J30001-UP
9		208-01-72111	HOSE	1	J30001-UP
10		208-01-72180	CLAMP	1	J30001-UP
11		07299-00130	CLAMP	1	J30001-UP
12		208-01-72151	TUBE	1	J30001-UP
13		07283-31185	CLIP	1	J30001-UP
14		01597-01211	NUT	2	J30001-UP
15		01643-31232	WASHER	2	J30001-UP
16		208-01-72161	HOSE	1	J30001-UP
17		07299-00130	CLAMP	2	J30001-UP
18		7861-93-1421	SENSOR	1	J30056-UP
		7861-93-1420	SENSOR	1	J30001-J30055

Ref :B0200-01A2 Page :030040

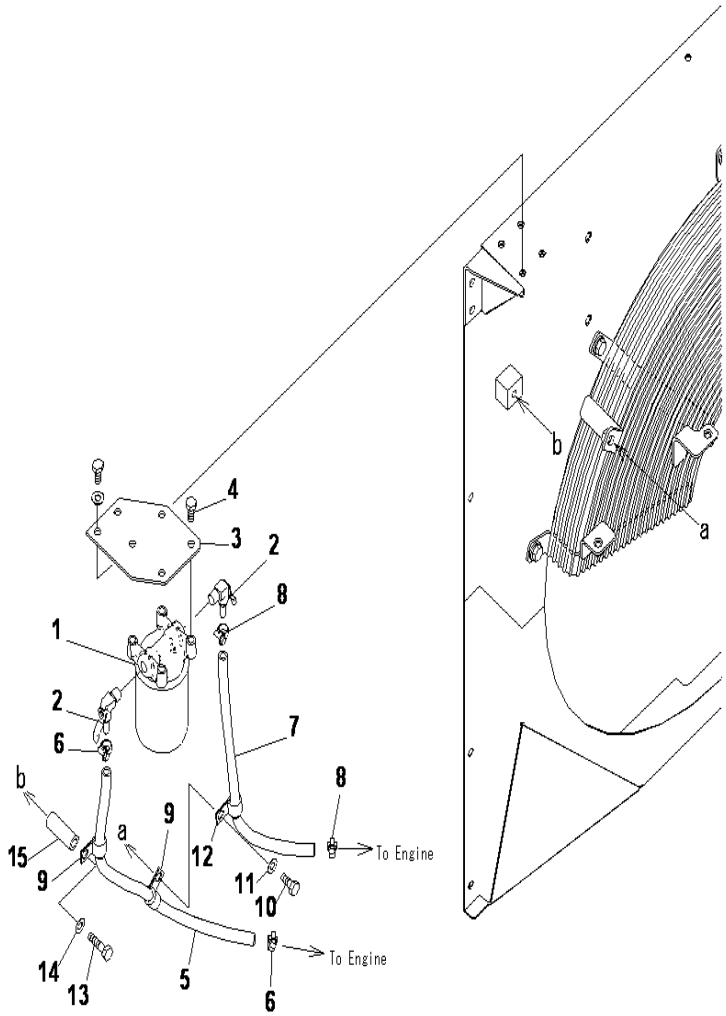

PC400-8 S/N J30001-UP

CORROSION RESISTOR

INDEX	CD	PART NO.	DESCRIPTION	QTY	SERIAL NO.
1		(6150-61-8172)	RESISTOR ASS'Y	1	J30001-UP
2		6150-61-8411	VALVE	2	J30001-UP
3		208-01-71510	PLATE	1	J30001-UP
4		02010-70625	BOLT	4	J30001-UP
5		07260-20950	HOSE	1	J30001-UP
6		07281-00197	CLAMP	2	J30001-UP
7		07260-20956	HOSE	1	J30001-UP
8		07281-00197	CLAMP	2	J30001-UP
9		04434-51612	CLIP	2	J30001-UP
10		01010-81225	BOLT	1	J30001-UP
11		01643-31232	WASHER	1	J30001-UP
12		04434-51612	CLIP	1	J30001-UP
13		01010-81285	BOLT	1	J30001-UP
14		01643-31232	WASHER	1	J30001-UP
15		175-61-17240	COLLAR	1	J30001-UP

Ref :B0920-01A0 Page :030050

COOLING SYSTEM

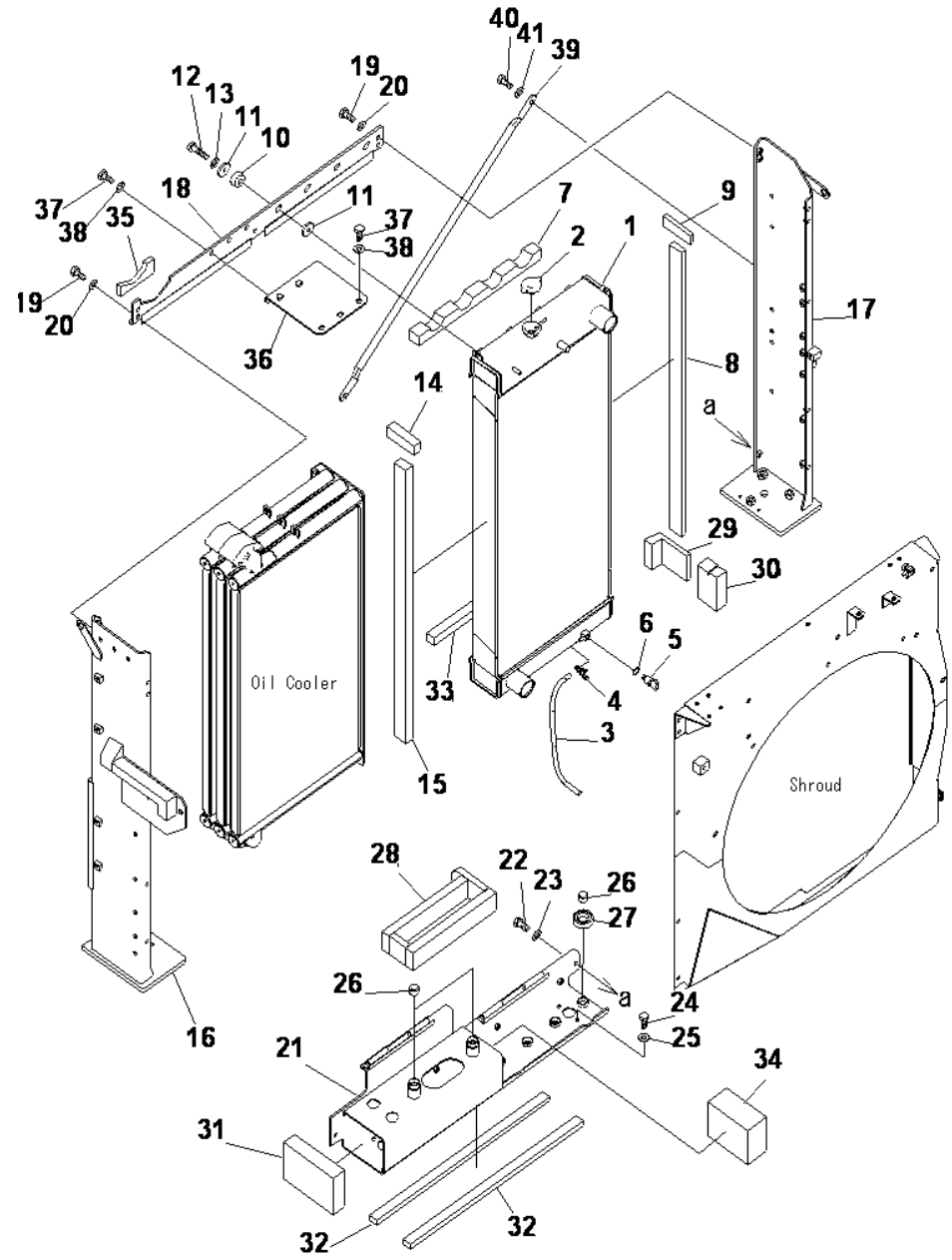

COOLING (RADIATOR AND FRAME)

INDEX	CD	PART NO.	DESCRIPTION	QTY	SERIAL NO.
1		208-03-75110	RADIATOR A	1	J30001-UP
2		20Y-03-22110	CAP	1	J30001-UP
3		205-03-71230	HOSE	1	J30001-UP
4		20Y-03-11330	CLIP	1	J30001-UP
5		205-03-62660	PLUG	1	J30001-UP
6		07000-11007	.O-RING	1	J30001-UP
7		208-03-75930	SEAL	1	J30001-UP
8		208-03-77340	SEAL	1	J30078-UP
		208-03-75940	SEAL	1	J30001-J30077
9		208-03-77310	SEAL	1	J30078-UP
		208-03-71840	SEAL	1	J30001-J30077
10		195-03-41380	CUSHION	4	J30001-UP
11		207-03-75590	PLATE	8	J30001-UP
12		01010-81050	BOLT	4	J30001-UP
13		01643-31032	WASHER	4	J30001-UP
14		208-03-75580	SEAL	1	J30001-UP
15		208-03-75590	SEAL	1	J30001-UP
16		208-03-77110	FRAME	1	J30001-UP
17		208-03-77120	FRAME	1	J30001-UP
18		208-03-76640	FRAME	1	J30001-UP
19		01010-81225	BOLT	4	J30001-UP
20		01643-31232	WASHER	4	J30001-UP
21		208-03-77380	FRAME	1	J30001-UP
22		01010-81030	BOLT	2	J30001-UP
23		01643-31032	WASHER	2	J30001-UP
24		01010-81020	BOLT	4	J30001-UP
25		01643-31032	WASHER	4	J30001-UP
26		22B-03-12590	CUSHION	6	J30001-UP
27		208-03-71380	CUSHION	4	J30001-UP
28		208-03-77370	SEAL	1	J30001-UP
29		208-03-77270	SEAL	1	J30001-UP
30		208-03-77290	SEAL	1	J30001-UP
31		208-03-77330	SEAL	1	J30001-UP
32		208-03-71821	SEAL	2	J30001-UP
33		208-03-75920	SEAL	1	J30001-UP
34		208-03-75680	SEAL	1	J30001-UP
35		208-03-75690	SEAL	1	J30001-UP
36		208-03-76370	BRACKET	1	J30001-UP
37		01010-81225	BOLT	6	J30001-UP
38		01643-31232	WASHER	6	J30001-UP
39		207-03-71680	STAY	1	J30001-UP
40		01010-81235	BOLT	2	J30001-UP
41		01643-31232	WASHER	2	J30001-UP

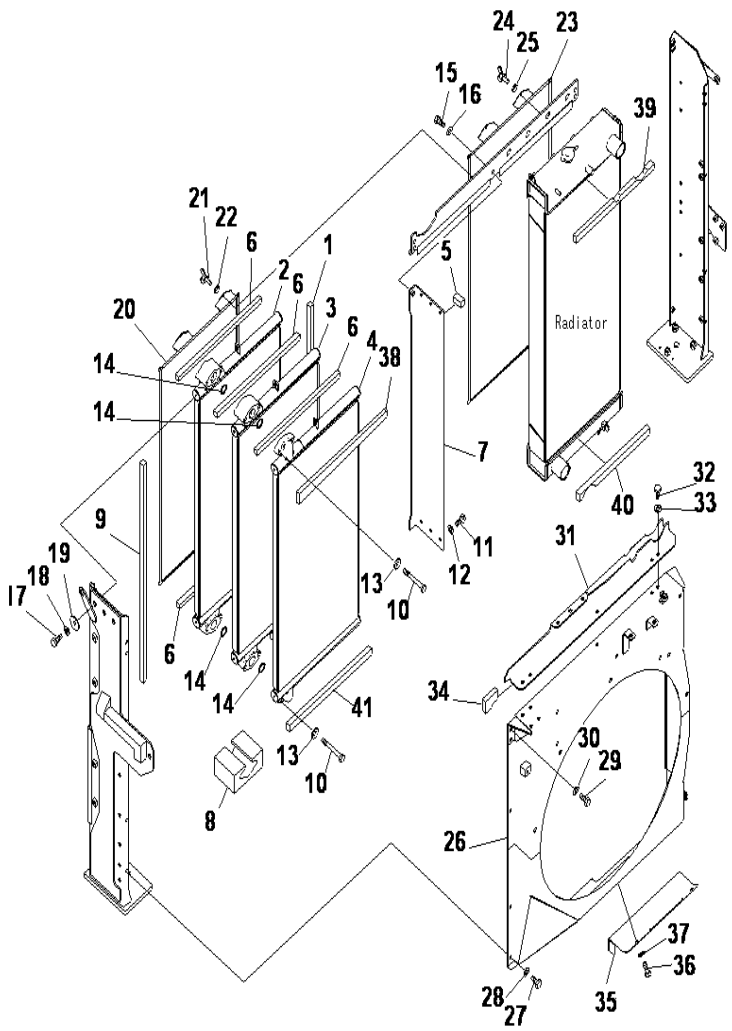

PC400-8 S/N J30001-UP

COOLING (OIL COOLER AND SHROUD)

INDEX	CD	PART NO.	DESCRIPTION	QTY	SERIAL NO.
1		208-03-71860	SEAL	1	J30001-UP
2		208-03-75140	OIL COOLER	1	J30001-UP
3		208-03-75150	OIL COOLER	1	J30001-UP
4		208-03-75160	OIL COOLER	1	J30001-UP
5		208-03-75670	SEAL	1	J30001-UP
6		208-03-75870	SEAL	4	J30001-UP
7		208-03-76120	FRAME	1	J30001-UP
8		208-03-77280	SEAL	1	J30001-UP
9		208-03-77320	SEAL	1	J30001-UP
10		01011-81205	BOLT	4	J30001-UP
11		01010-81020	BOLT	6	J30001-UP
12		01643-31032	WASHER	6	J30001-UP
13		01643-31232	WASHER	4	J30001-UP
14		07000-13045	O-RING	4	J30001-UP
15		01010-81225	BOLT	1	J30001-UP
16		01643-31232	WASHER	1	J30001-UP
17		01010-81040	BOLT	3	J30001-UP
18		01643-31032	WASHER	3	J30001-UP
19		124-54-26540	WASHER	3	J30001-UP
20		208-03-75450	NET	1	J30001-UP
21		01434-10616	BOLT, WING	2	J30001-UP
22		01643-30623	WASHER	2	J30001-UP
23		208-03-75440	NET	1	J30001-UP
24		01434-10616	WING BOLT	2	J30001-UP
25		01643-30623	WASHER	2	J30001-UP
26		208-03-77390	SHROUD	1	J30001-UP
27		01010-81020	BOLT	6	J30001-UP
28		01643-31032	WASHER	6	J30001-UP
29		01010-81030	BOLT	4	J30001-UP
30		01643-31032	WASHER	4	J30001-UP
31		208-03-76381	COVER	1	J30013-UP
		208-03-76380	COVER	1	J30001-J30012
32		01010-81030	BOLT	5	J30001-UP
33		01643-31032	WASHER	5	J30001-UP
34		208-03-77360	SEAL	1	J30001-UP
35		208-03-77141	COVER	1	J30013-UP
		208-03-77140	COVER	1	J30001-J30012
36		01010-81020	BOLT	3	J30001-UP
37		01643-31032	WASHER	3	J30001-UP
38		208-03-77250	SEAL	1	J30001-UP
39		208-03-77350	SEAL	1	J30001-UP
40		208-03-75970	SEAL	1	J30001-UP
41		208-03-75980	SEAL	1	J30001-UP

Ref :C0100-02A1 Page :060020

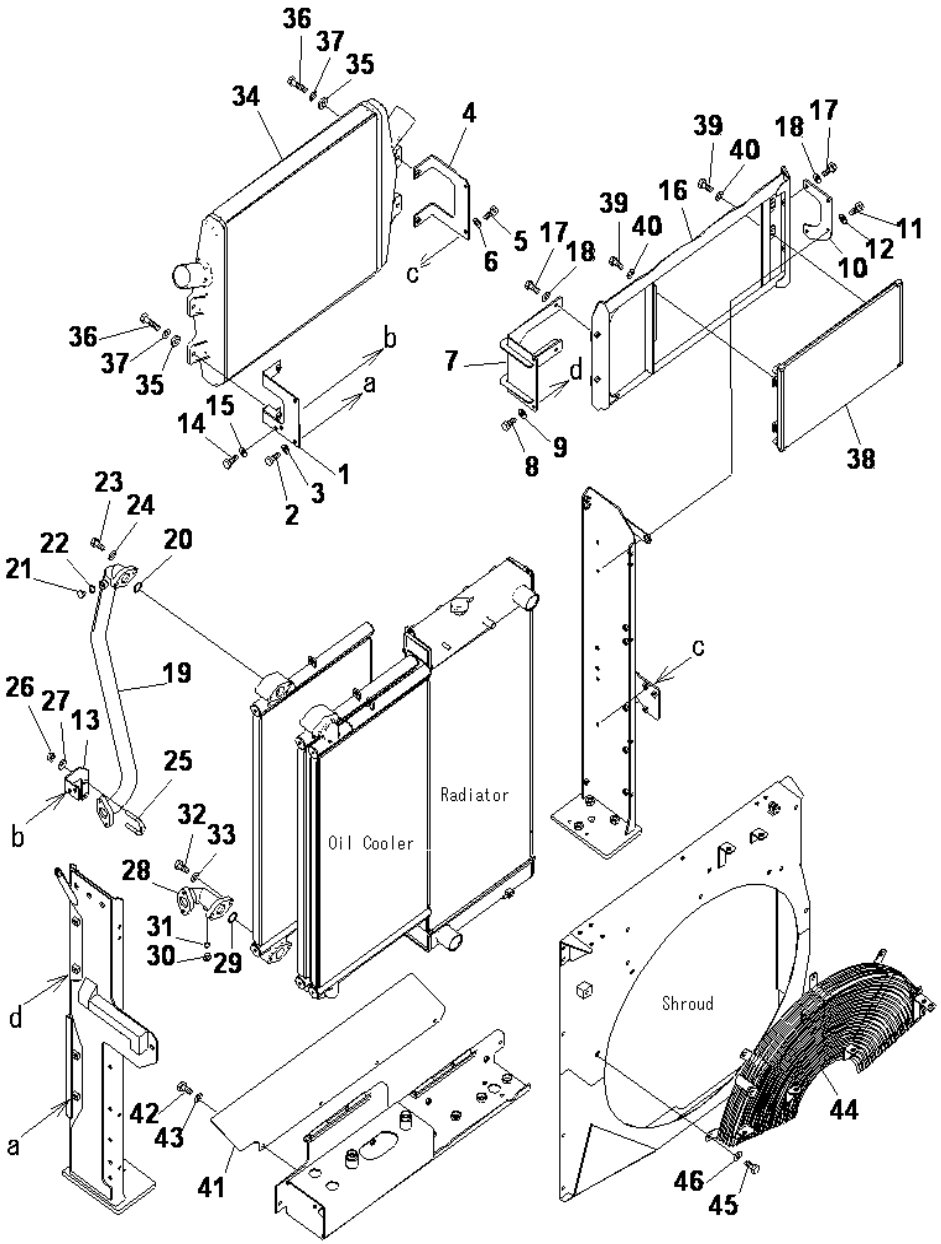

COOLING (AFTER COOLER AND CONDENSER)

INDEX	CD	PART NO.	DESCRIPTION	QTY	SERIAL NO.
1		208-03-77230	BRACKET	1	J30001-UP
2		01010-81020	BOLT	2	J30001-UP
3		01643-31032	WASHER	2	J30001-UP
4		208-03-77240	BRACKET	1	J30001-UP
5		01010-81020	BOLT	2	J30001-UP
6		01643-31032	WASHER	2	J30001-UP
7		208-03-75283	BRACKET	1	J30001-UP
8		01010-81020	BOLT	2	J30001-UP
9		01643-31032	WASHER	2	J30001-UP
10		208-03-75292	BRACKET	1	J30001-UP
11		01010-81020	BOLT	2	J30001-UP
12		01643-31032	WASHER	2	J30001-UP
13		208-03-77150	BRACKET	1	J30001-UP
14		01010-81225	BOLT	2	J30001-UP
15		01643-31232	WASHER	2	J30001-UP
16		208-03-77260	BRACKET	1	J30001-UP
17		01010-81030	BOLT	4	J30001-UP
18		01643-31032	WASHER	4	J30001-UP
19		208-03-75410	TUBE	1	J30001-UP
20		07002-11423	O-RING	1	J30001-UP
21		07040-11409	PLUG	1	J30001-UP
22		07000-13045	O-RING	1	J30001-UP
23		01010-81235	BOLT	2	J30001-UP
24		01643-31232	WASHER	2	J30001-UP
25		07283-34949	CLIP	1	J30001-UP
26		01597-01009	NUT	2	J30001-UP
27		01643-31032	WASHER	2	J30001-UP
28		208-03-75420	TUBE	1	J30001-UP
29		07000-13045	O-RING	1	J30001-UP
30		07040-11409	PLUG	1	J30001-UP
31		07002-11423	O-RING	1	J30001-UP
32		01010-81235	BOLT	2	J30001-UP
33		01643-31232	WASHER	2	J30001-UP
34		6251-61-5110	AFTER COOLER	1	J30001-UP
35		6110-23-6490	SPACER	4	J30001-UP
36		01010-81040	BOLT	4	J30001-UP
37		01643-31032	WASHER	4	J30001-UP
38		208-979-7520	CONDENSER A	1	J30001-UP
39		01010-80616	BOLT	8	J30001-UP
40		01643-30623	WASHER	8	J30001-UP
41		208-03-76430	COVER	1	J30001-UP
42		01010-81020	BOLT	4	J30001-UP
43		01643-31032	WASHER	4	J30001-UP
44		208-03-75772	GUARD	1	J30001-UP
45		01010-81225	BOLT	5	J30001-UP

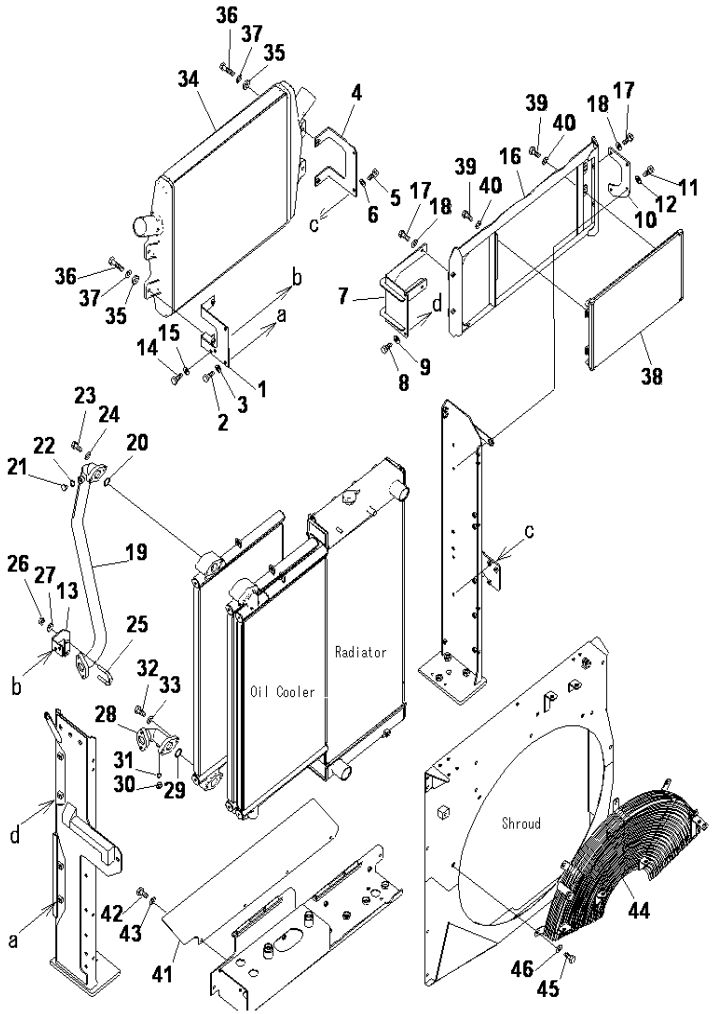

COOLING (AFTER COOLER AND CONDENSER)

INDEX	CD	PART NO.	DESCRIPTION	QTY	SERIAL NO.
46		01643-31232	WASHER.....	5	J30001-UP

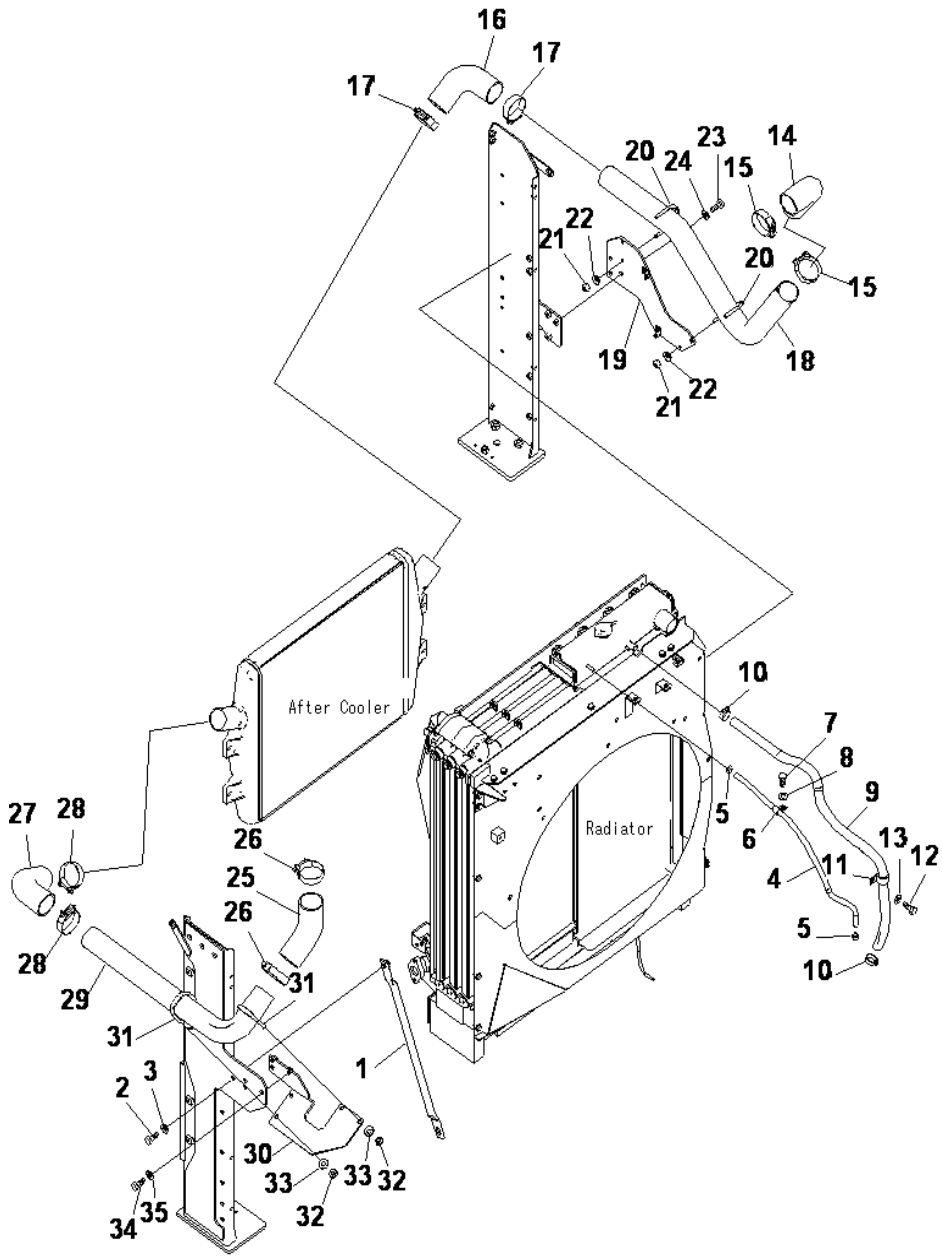

COOLING (AFTER COOLER PIPING)

INDEX	CD	PART NO.	DESCRIPTION	QTY	SERIAL NO.
1		208-03-75461	STAY	1	J30013-UP
		208-03-75460	STAY	1	J30001-J30012
2		01010-81650	BOLT	1	J30013-UP
		01010-81645	BOLT	1	J30001-J30012
3		01643-31645	WASHER	1	J30001-UP
4		09483-10308	HOSE	1	J30001-UP
5		11Y-09-11140	CLIP	2	J30001-UP
6		04434-51712	CLIP	1	J30001-UP
7		01010-81225	BOLT	1	J30001-UP
8		01643-31232	WASHER	1	J30001-UP
9		07261-22012	HOSE	1	J30001-UP
10		07281-00359	CLAMP	2	J30001-UP
11		04434-53212	CLIP	1	J30001-UP
12		01010-81225	BOLT	1	J30001-UP
13		01643-31232	WASHER	1	J30001-UP
14		208-03-76630	HOSE	1	J30001-UP
15		207-01-75340	CLAMP	2	J30001-UP
16		208-03-75491	HOSE	1	J30001-UP
17		207-01-75340	CLAMP	2	J30001-UP
18		208-03-75510	TUBE	1	J30001-UP
19		208-03-77130	BRACKET	1	J30001-UP
20		07283-37663	CLIP	2	J30001-UP
21		01597-01009	NUT	4	J30001-UP
22		01643-31032	WASHER	4	J30001-UP
23		01010-81230	BOLT	3	J30001-UP
24		01643-31232	WASHER	3	J30001-UP
25		208-03-76660	HOSE	1	J30001-UP
26		207-01-75340	CLAMP	2	J30001-UP
27		208-03-76650	HOSE	1	J30001-UP
28		207-01-75340	CLAMP	2	J30001-UP
29		208-03-75550	TUBE	1	J30001-UP
30		208-03-76670	BRACKET	1	J30001-UP
31		07283-37663	CLIP	2	J30001-UP
32		01597-01009	NUT	4	J30001-UP
33		01643-31032	WASHER	4	J30001-UP
34		01010-81225	BOLT	3	J30001-UP
35		01643-31232	WASHER	3	J30001-UP

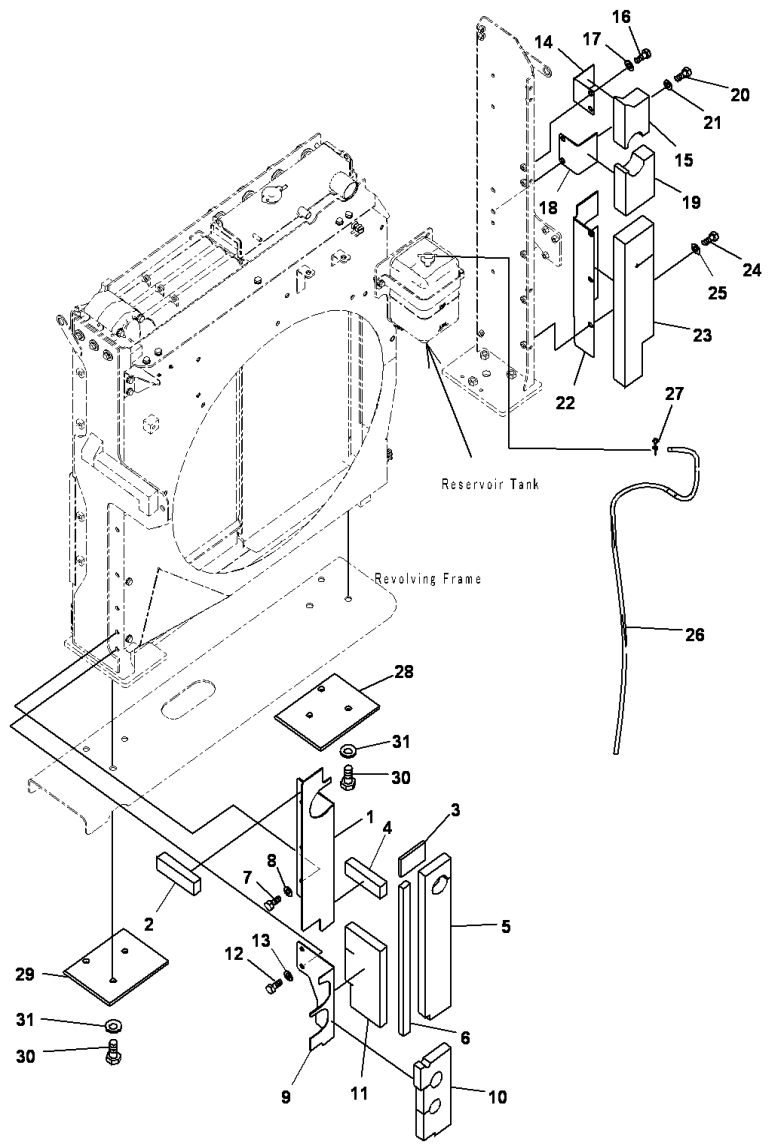

PC400-8 S/N J30001-UP

COOLING (COVER)

INDEX	CD	PART NO.	DESCRIPTION	QTY	SERIAL NO.
		2084673730	PLATE	1	J30001-UP
1		208-03-77160	COVER	1	J30001-UP
2		208-03-71580	.SEAL	1	J30001-UP
3		208-03-71610	.SEAL	1	J30001-UP
4		208-03-71670	.SEAL	1	J30001-UP
5		208-03-75640	.SEAL	1	J30001-UP
6		208-03-77170	.SEAL	1	J30001-UP
7		01010-81225	BOLT	3	J30001-UP
8		01643-31232	WASHER	3	J30001-UP
9		208-03-77180	COVER	1	J30001-UP
10		208-03-75840	.SEAL	1	J30001-UP
11		208-03-77190	.SEAL	1	J30001-UP
12		01010-81225	BOLT	2	J30001-UP
13		01643-31232	WASHER	2	J30001-UP
14		208-03-75711	COVER	1	J30001-UP
15		208-03-75721	.SEAL	1	J30001-UP
16		01010-81225	BOLT	2	J30001-UP
17		01643-31232	WASHER	2	J30001-UP
18		208-03-77210	COVER	1	J30001-UP
19		208-03-77220	.SEAL	1	J30001-UP
20		01010-81225	BOLT	2	J30001-UP
21		01643-31232	WASHER	2	J30001-UP
22		208-03-75751	COVER	1	J30001-UP
23		208-03-75761	.SEAL	1	J30001-UP
24		01010-81225	BOLT	3	J30001-UP
25		01643-31232	WASHER	3	J30001-UP
26		208-03-58310	HOSE	1	J30001-UP
27		206-03-43340	CLIP	1	J30001-UP
28		208-46-73720	PLATE	1	J30013-UP
29		208-46-73730	PLATE	1	J30013-UP
30		01010-81650	BOLT	6	J30013-UP
		01010-81640	BOLT	6	J30001-J30012
31		01643-31645	WASHER	6	J30001-UP

Ref :C0100-05A1 Page :060050

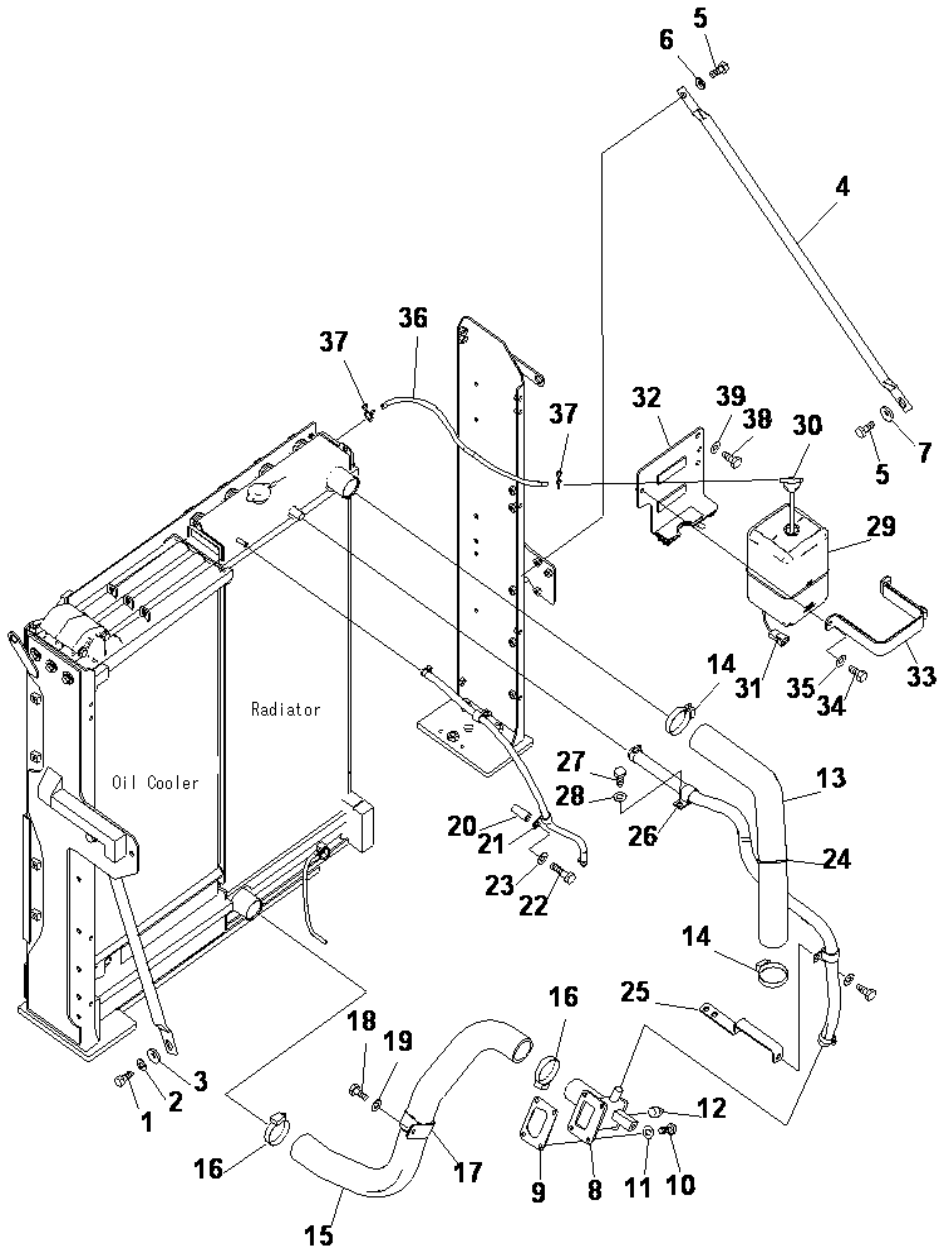

PC400-8 S/N J30001-UP

COOLING (RADIATOR PIPING AND SUB TANK)

INDEX	CD	PART NO.	DESCRIPTION	QTY	SERIAL NO.
1		01010-81650	BOLT	1	J30013-UP
		01010-81645	BOLT	1	J30001-J30012
2		01643-31645	WASHER	1	J30001-UP
3		21T-54-16150	WASHER	1	J30001-UP
4		207-03-71211	STAY	1	J30001-UP
5		01010-81635	BOLT	2	J30001-UP
6		01643-31645	WASHER	1	J30001-UP
7		21T-54-16150	WASHER	1	J30001-UP
8		208-03-75390	CONNECTOR	1	J30001-UP
9		207-03-31271	GASKET	1	J30001-UP
10		01010-81025	BOLT	4	J30001-UP
11		01643-31032	WASHER	4	J30001-UP
12		07042-00312	PLUG	1	J30001-UP
13		208-03-75470	HOSE	1	J30001-UP
14		07289-00070	CLAMP	2	J30001-UP
15		208-03-75481	HOSE	1	J30001-UP
16		07289-00070	CLAMP	2	J30001-UP
17		207-03-51530	CLIP	1	J30001-UP
18		01010-81225	BOLT	1	J30001-UP
19		01643-31232	WASHER	1	J30001-UP
20		6152-51-5520	SPACER	1	J30001-UP
21		04434-51710	CLIP	1	J30001-UP
22		01010-81070	BOLT	1	J30001-UP
23		01643-31032	WASHER	1	J30001-UP
24		134-03-61410	BAND	1	J30001-UP
25		208-03-75380	BRACKET	1	J30001-UP
26		04434-53212	CLIP	1	J30001-UP
27		01010-81225	BOLT	1	J30001-UP
28		01643-31232	WASHER	1	J30001-UP
29		419-03-21320	TANK ASS'Y	1	J30001-UP
30		421-03-22170	.CAP	1	J30001-UP
31		08055-00282	.CONNECTOR	1	J30001-UP
32		208-03-75370	BRACKET	1	J30001-UP
33		17A-03-14130	BAND	1	J30001-UP
34		01010-81020	BOLT	2	J30001-UP
35		01643-31032	WASHER	2	J30001-UP
36		208-03-75830	HOSE	1	J30001-UP
37		206-03-43340	CLIP	2	J30001-UP
38		01010-81225	BOLT	2	J30001-UP
39		01643-31232	WASHER	2	J30001-UP

Ref :C0100-06A1 Page :060060

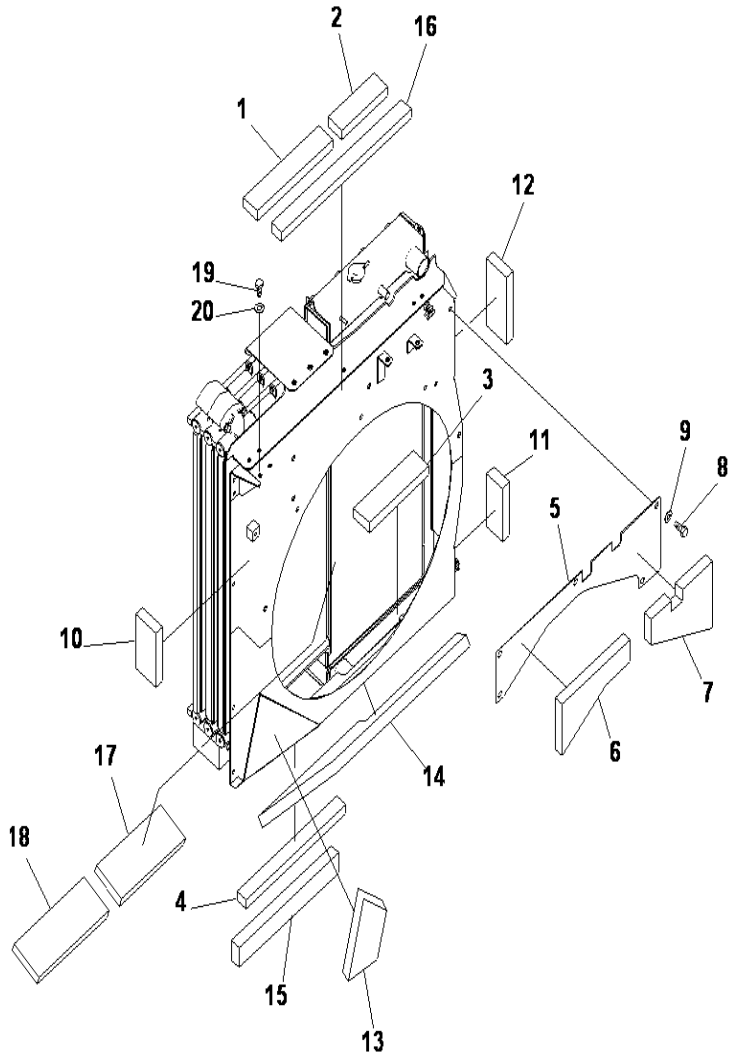

PC400-8 S/N J30001-UP

COOLING (SHEET)

INDEX	CD	PART NO.	DESCRIPTION	QTY	SERIAL NO.
1		208-03-72110	SHEET	1	J30001-UP
2		208-03-72120	SHEET	1	J30001-UP
3		208-03-76170	SHEET	1	J30001-UP
4		208-03-76180	SHEET	1	J30001-UP
5		208-03-76212	COVER	1	J30001-UP
6		208-03-76220	.SHEET	1	J30001-UP
7		208-03-76232	.SHEET	1	J30001-UP
8		01010-81220	BOLT	5	J30001-UP
9		01643-31232	WASHER	5	J30001-UP
10		208-03-76240	SHEET	1	J30001-UP
11		208-03-76250	SHEET	1	J30001-UP
12		208-03-76260	SHEET	1	J30001-UP
13		208-03-77410	SHEET	1	J30001-UP
14		208-03-77420	SHEET	1	J30001-UP
15		208-03-76290	SHEET	1	J30001-UP
16		208-03-76280	SHEET	1	J30001-UP
17		208-03-76340	SHEET	1	J30001-UP
18		208-03-76350	SHEET	1	J30001-UP
19		01010-81030	BOLT	2	J30001-UP
20		01643-31032	WASHER	2	J30001-UP

Ref :C0100-07A1 Page :060070

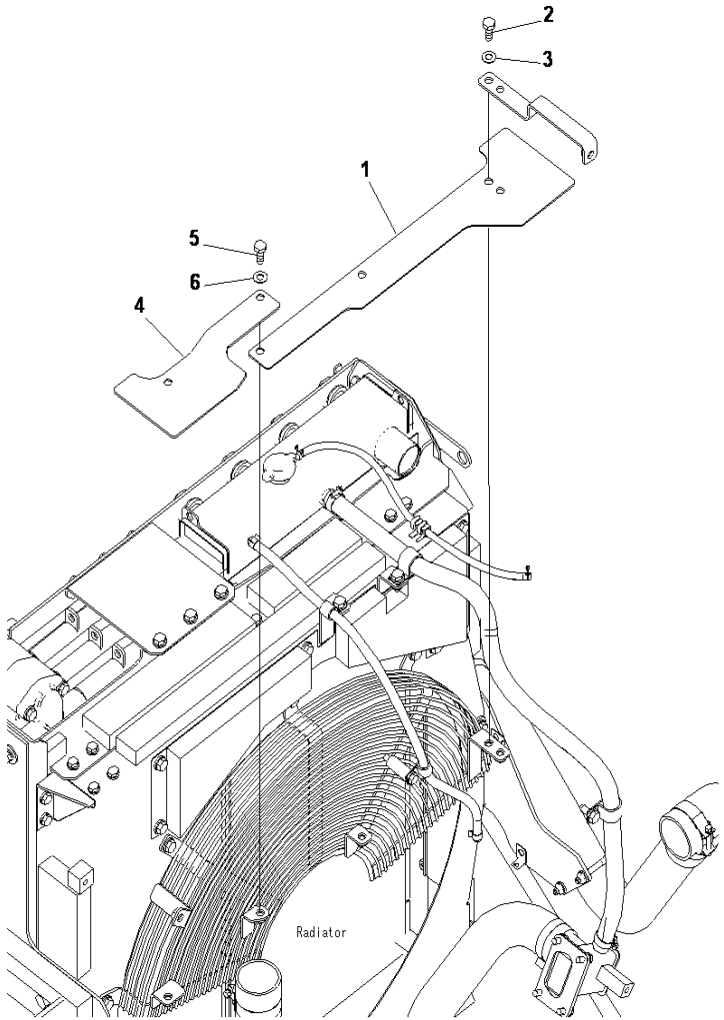

PC400-8 S/N J30001-UP

FAN GUARD

INDEX	CD	PART NO.	DESCRIPTION	QTY	SERIAL NO.
1		208-03-75811	COVER	1	J30001-UP
2		01010-81230	BOLT	3	J30001-UP
3		01643-31232	WASHER	3	J30001-UP
4		208-03-75821	COVER	1	J30001-UP
5		01010-81230	BOLT	2	J30001-UP
6		01643-31232	WASHER	2	J30001-UP

Ref :C0310-01A0 Page :060080

FUEL TANK AND RELATED PARTS

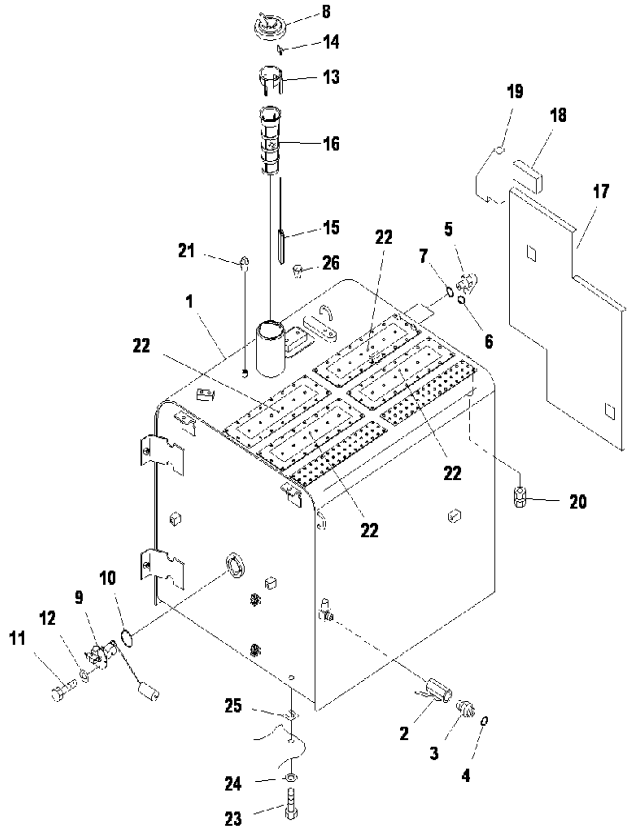

PC400-8 S/N J30001-UP

FUEL TANK (FOR FUEL REFILL PUMP)

INDEX	CD	PART NO.	DESCRIPTION	QTY	SERIAL NO.
1		208-04-75312	TANK	1	J30001-UP
2		07700-40460	VALVE	1	J30001-UP
3		208-04-71740	NIPPLE	1	J30001-UP
4		02896-11015	O-RING	1	J30001-UP
5		02782-10315	ELBOW	2	J30001-UP
6		02896-11009	O-RING	2	J30001-UP
7		07002-12034	O-RING	2	J30001-UP
8		20Y-04-11161	CAP	1	J30001-UP
9		7861-92-5810	SENSOR	1	J30001-UP
10		07000-13050	O-RING	1	J30001-UP
11		01010-80612	BOLT	4	J30001-UP
12		01643-30623	WASHER	4	J30001-UP
		22U-04-21241	STRAINER ASS'Y	1	J30001-UP
		22U-04-21200	.FLOAT ASS'Y	1	J30001-UP
13		22U-04-21210	..GUIDE	1	J30001-UP
14		20Y-04-21580	..CAP	1	J30001-UP
15		22U-04-21220	..FLOAT	1	J30001-UP
16		07056-18425	.STRAINER	1	J30001-UP
17		208-04-76280	SHEET	1	J30001-UP
18		208-04-71231	SHEET	1	J30001-UP
19		208-04-71241	SHEET	1	J30001-UP
20		203-04-K1140	BLANKING END	1	J30001-UP
21		07042-30211	PLUG	1	J30001-UP
22		20Y-00-42120	PLATE	4	J30001-UP
23		01010-81635	BOLT	6	J30001-UP
24		01643-31645	WASHER	6	J30001-UP
25		195-03-11570	SHIM, 1.0MM	2	J30001-UP
26		07049-01215	PLUG	2	J30001-UP

Ref :D0100-01A1 Page :090010

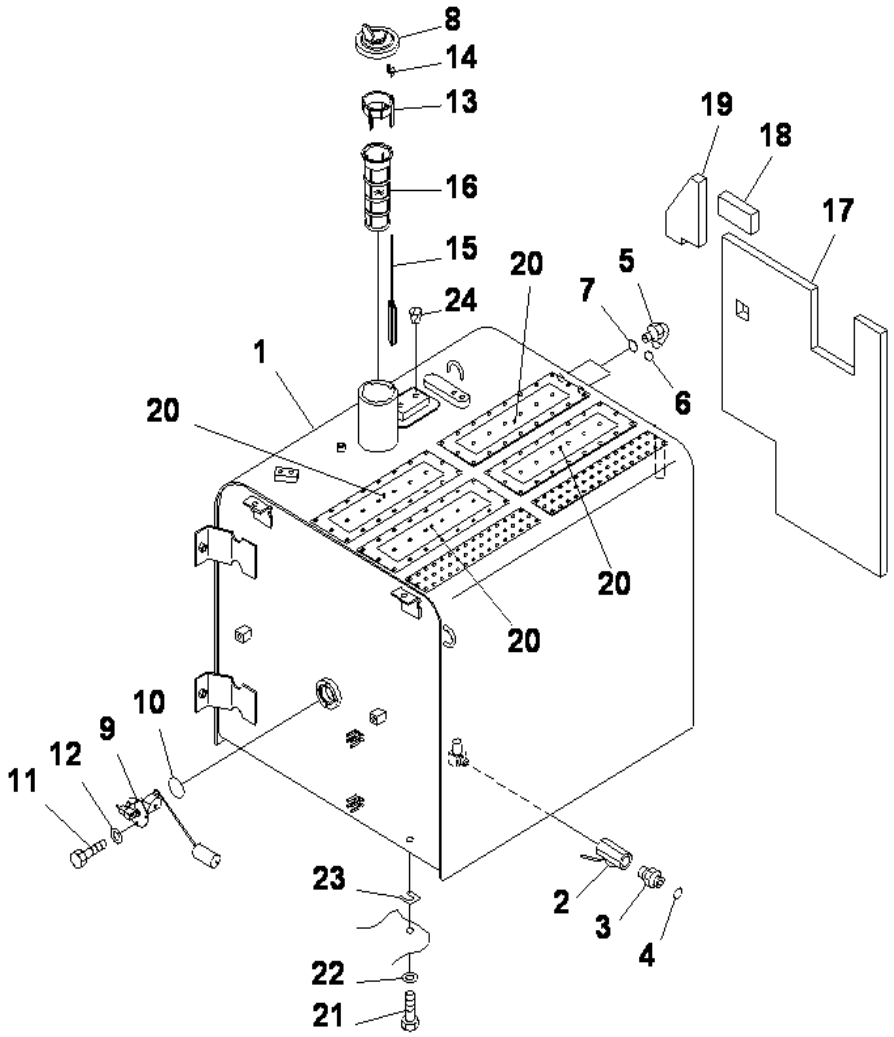

PC400-8 S/N J30001-UP

FUEL TANK (FOR FUEL REFILL PUMP)

INDEX	CD	PART NO.	DESCRIPTION	QTY	SERIAL NO.
1		208-04-75112	TANK	1	J30001-UP
2		07700-40460	VALVE	1	J30001-UP
3		208-04-71740	NIPPLE	1	J30001-UP
4		02896-11015	O-RING	1	J30001-UP
5		02782-10315	ELBOW	2	J30001-UP
6		02896-11009	O-RING	2	J30001-UP
7		07002-12034	O-RING	2	J30001-UP
8		20Y-04-11161	CAP	1	J30001-UP
9		7861-92-5810	SENSOR	1	J30001-UP
10		07000-13050	O-RING	1	J30001-UP
11		01010-80612	BOLT	4	J30001-UP
12		01643-30623	WASHER	4	J30001-UP
		22U-04-21241	STRAINER ASS'Y	1	J30001-UP
		22U-04-21200	.FLOAT ASS'Y	1	J30001-UP
13		22U-04-21210	..GUIDE	1	J30001-UP
14		20Y-04-21580	..CAP	1	J30001-UP
15		22U-04-21220	..FLOAT	1	J30001-UP
16		07056-18425	.STRAINER	1	J30001-UP
17		208-04-76210	SHEET	1	J30001-UP
18		208-04-71231	SHEET	1	J30001-UP
19		208-04-71241	SHEET	1	J30001-UP
20		20Y-00-42120	PLATE	4	J30001-UP
21		01010-81635	BOLT	6	J30001-UP
22		01643-31645	WASHER	6	J30001-UP
23		195-03-11570	SHIM, 1.0MM	2	J30001-UP
24		07049-01215	PLUG	2	J30001-UP

Ref :D0100-01A2 Page :090020

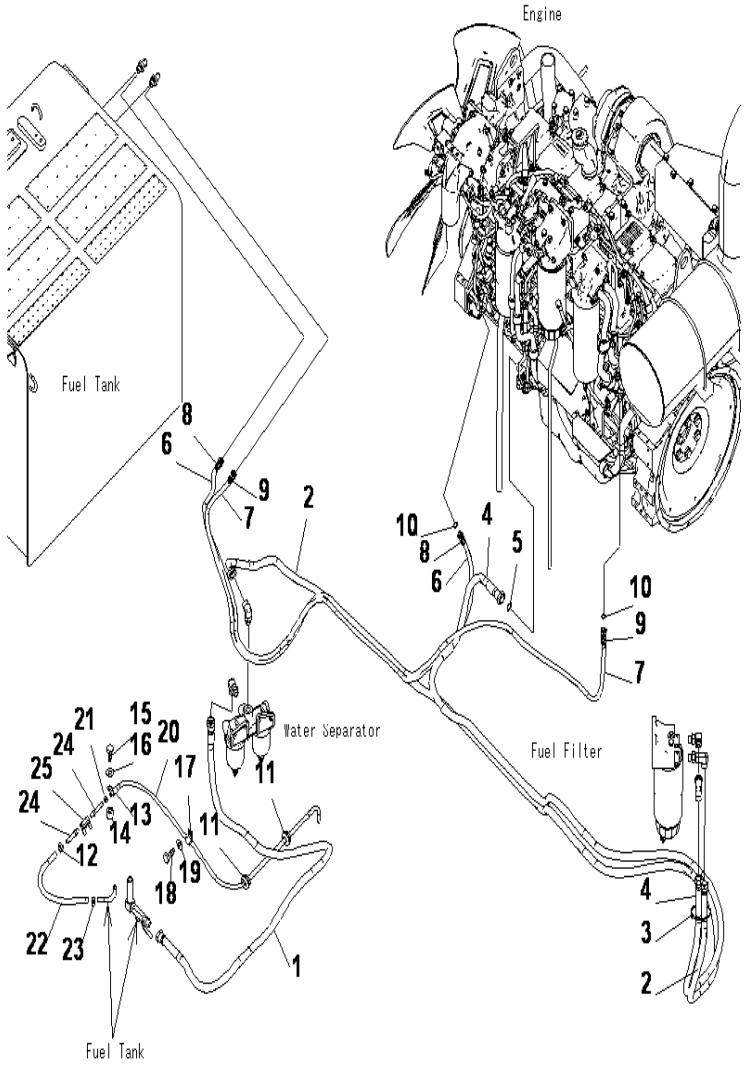

PC400-8 S/N J30001-UP

FUEL LINES (1/3)

INDEX	CD	PART NO.	DESCRIPTION	QTY	SERIAL NO.
1		02762-00521	HOSE	1	J30001-UP
2		02763-00516	HOSE	1	J30078-UP
		02763-00538	HOSE	1	J30001-J30077
3		08034-20519	BAND	1	J30001-UP
4		02762-00533	HOSE	1	J30001-UP
5		02896-11015	O-RING	1	J30001-UP
6		02762-00324	HOSE	1	J30001-UP
7		02762-00331	HOSE	1	J30001-UP
8		20Y-62-22790	BAND (RED)	2	J30001-UP
9		20Y-62-22820	BAND (BLUE)	2	J30001-UP
10		02896-11009	O-RING	2	J30001-UP
11		205-977-7310	GROMMET	2	J30001-UP
12		11Y-09-11140	CLIP	1	J30001-UP
13		04434-51312	CLIP	1	J30001-UP
14		195-33-11220	SPACER	1	J30001-UP
15		01010-81250	BOLT	1	J30001-UP
16		01643-31232	WASHER	1	J30001-UP
17		04434-51312	CLIP	1	J30001-UP
18		01010-81225	BOLT	1	J30001-UP
19		01643-31232	WASHER	1	J30001-UP
20		07270-61014	TUBE	1	J30001-UP
21		07285-00115	CLIP	1	J30001-UP
22		07288-01004	HOSE	1	J30001-UP
23		11Y-09-11140	CLIP	1	J30001-UP
24		20Y-04-31170	NIPPLE	2	J30001-UP
25		07700-50240	VALVE	1	J30001-UP

Ref :D0200-01A1 Page :090030

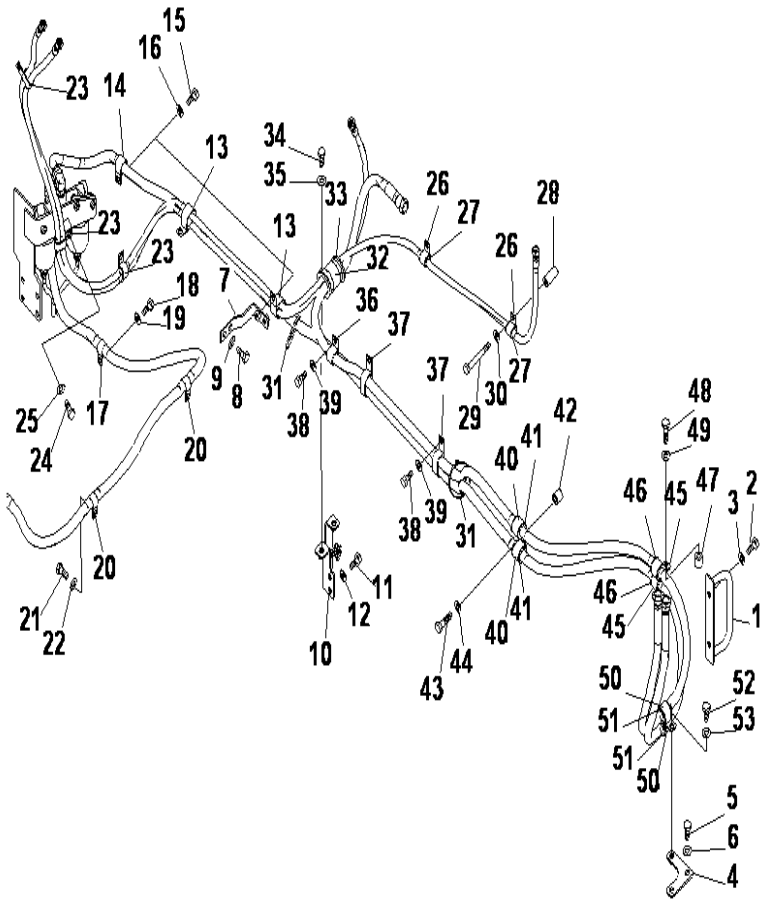

PC400-8 S/N J30001-UP

FUEL LINES (2/3)

INDEX	CD	PART NO.	DESCRIPTION	QTY	SERIAL NO.
1		208-04-76251	HANDRAIL	1	J30001-UP
2		01010-81230	BOLT	2	J30001-UP
3		01643-31232	WASHER	2	J30001-UP
4		208-04-76271	BRACKET	1	J30001-UP
5		01010-81230	BOLT	2	J30001-UP
6		01643-31232	WASHER	2	J30001-UP
7		208-979-7451	BRACKET	1	J30001-UP
8		01010-81225	BOLT	2	J30001-UP
9		01643-31232	WASHER	2	J30001-UP
10		208-979-7472	BRACKET	1	J30001-UP
11		01010-81225	BOLT	2	J30001-UP
12		01643-31232	WASHER	2	J30001-UP
13		20Y-62-15951	CLIP	2	J30001-UP
14		04434-52712	CLIP	1	J30001-UP
15		01010-81225	BOLT	3	J30001-UP
16		01643-31232	WASHER	3	J30001-UP
17		04434-52112	CLIP	1	J30001-UP
18		01010-81235	BOLT	1	J30001-UP
19		01643-31232	WASHER	1	J30001-UP
20		04434-52112	CLIP	2	J30001-UP
21		01010-81225	BOLT	2	J30001-UP
22		01643-31232	WASHER	2	J30001-UP
23		04435-51812	CLIP	3	J30001-UP
24		01010-81225	BOLT	3	J30001-UP
25		01643-31232	WASHER	3	J30001-UP
26		04434-52110	CLIP	2	J30001-UP
27		07095-20314	CUSHION	2	J30001-UP
28		6152-51-5520	SPACER	1	J30001-UP
29		01010-81070	BOLT	1	J30001-UP
30		01643-31032	WASHER	1	J30001-UP
31		08034-20536	BAND	2	J30001-UP
32		21T-62-76830	CLIP	1	J30001-UP
33		07095-01245	CUSHION	1	J30001-UP
34		01010-81225	BOLT	1	J30001-UP
35		01643-31232	WASHER	1	J30001-UP
36		04434-52712	CLIP	1	J30001-UP
37		144-A7-41460	CLIP	2	J30001-UP
38		01010-81225	BOLT	3	J30001-UP
39		01643-31232	WASHER	3	J30001-UP
40		04434-53412	CLIP	2	J30001-UP
41		07095-20627	CUSHION	2	J30001-UP
42		195-33-11220	SPACER	1	J30001-UP
43		01010-81245	BOLT	1	J30001-UP
44		01643-31232	WASHER	1	J30001-UP
45		04434-53412	CLIP	2	J30001-UP

Ref :D0200-02A1 Page :090040

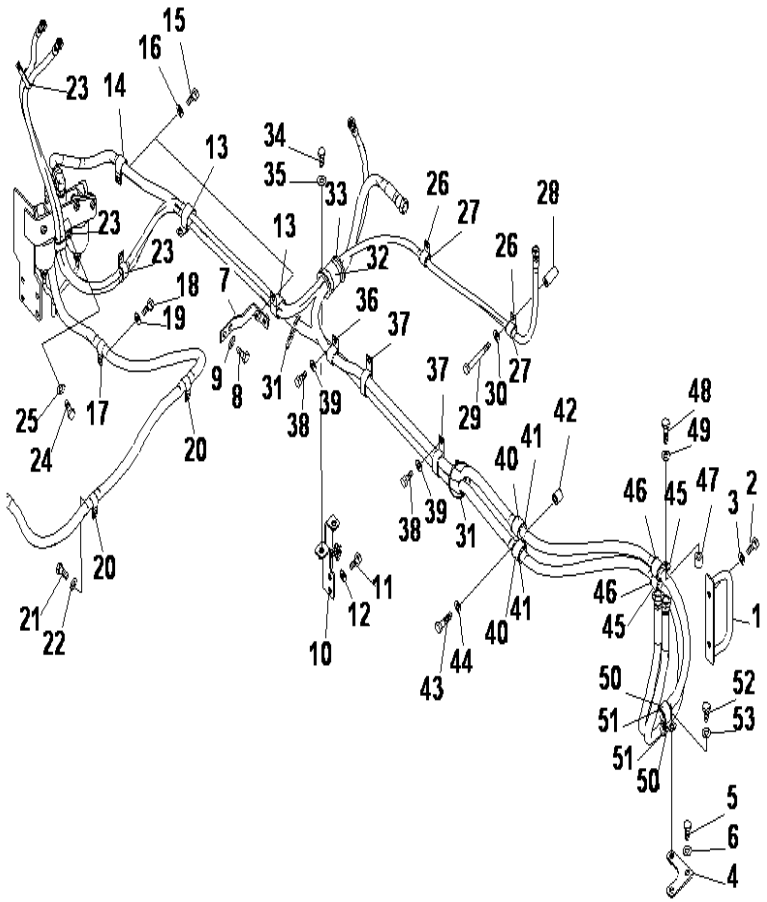

FUEL LINES (2/3)

INDEX	CD	PART NO.	DESCRIPTION	QTY	SERIAL NO.
46		07095-20627	CUSHION	2	J30001-UP
47		195-33-11220	SPACER	1	J30001-UP
48		01010-81245	BOLT	1	J30001-UP
49		01643-31232	WASHER	1	J30001-UP
50		04434-53412	CLIP	2	J30001-UP
51		07095-20627	CUSHION	2	J30001-UP
52		01010-81230	BOLT	1	J30001-UP
53		01643-31232	WASHER	1	J30001-UP

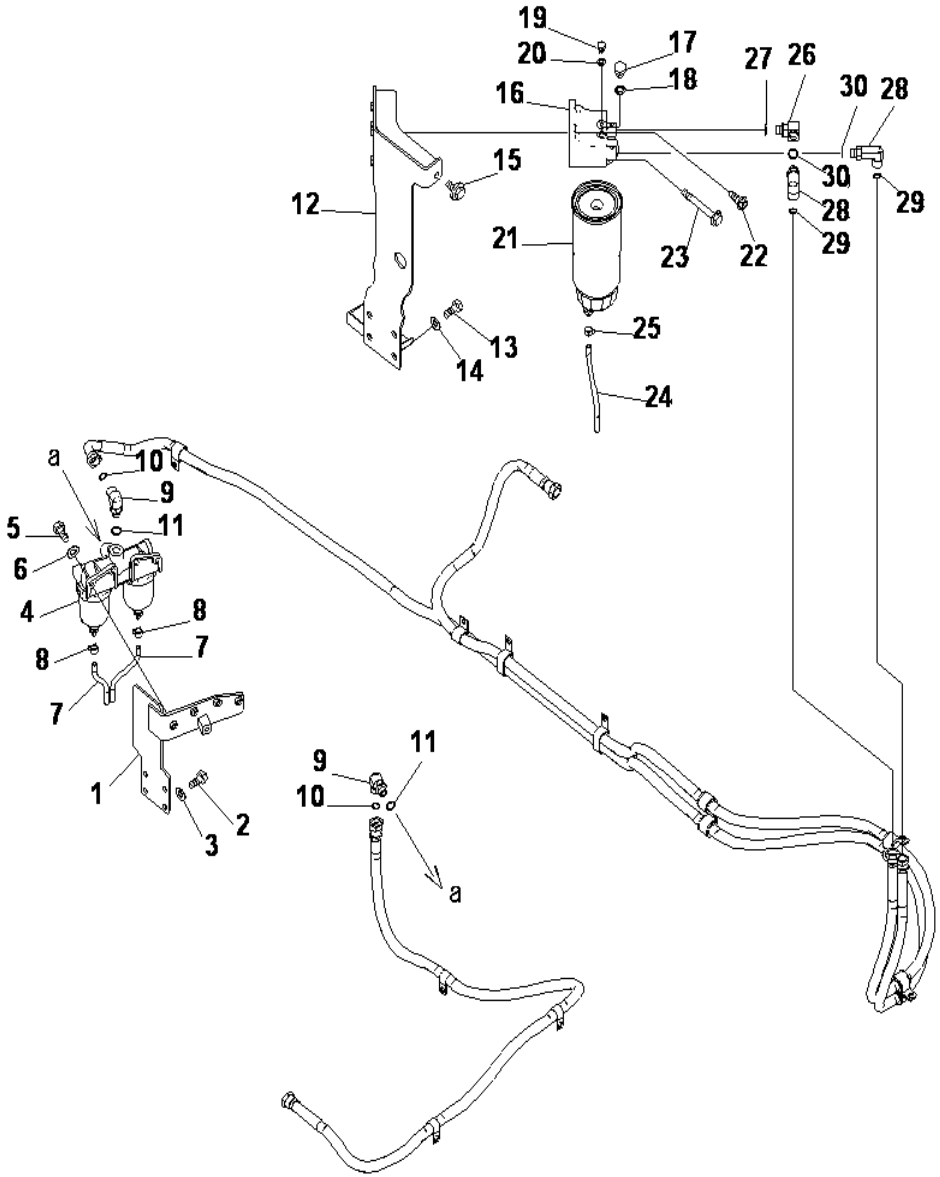

FUEL LINES (3/3)

INDEX	CD	PART NO.	DESCRIPTION	QTY	SERIAL NO.
1		208-04-76170	BRACKET	1	J30001-UP
2		01010-81235	BOLT	4	J30001-UP
3		01643-31232	WASHER	4	J30001-UP
4		600-311-9340	WATER SEPARATOR	1	J30001-UP
5		01010-81030	BOLT	4	J30001-UP
6		01643-31032	WASHER	4	J30001-UP
7		07270-00815	TUBE	2	J30001-UP
8		07285-00100	CLIP	2	J30001-UP
9		02782-10516	ELBOW	2	J30001-UP
10		02896-11015	O-RING	2	J30001-UP
11		07002-12034	O-RING	2	J30001-UP
12		208-04-76180	BRACKET	1	J30001-UP
13		01010-81230	BOLT	4	J30001-UP
14		01643-31232	WASHER	4	J30001-UP
15		01035-81230	BOLT,SPAT	1	J30001-UP
16		6251-71-7100	HEAD ASS'Y	1	J30001-UP
	C1	6251-71-7110	HEAD	1	J30001-UP
17		07040-11209	.PLUG	1	J30001-UP
18		07005-01212	.GASKET	1	J30001-UP
19		6110-73-6231	.PLUG	1	J30001-UP
20		07005-00812	.GASKET	1	J30001-UP
21		600-311-4500	FILTER,CARTRIDG	1	J30001-UP
22		01435-01030	BOLT	2	J30001-UP
23		01436-01010	BOLT	2	J30001-UP
24		07270-00825	TUBE	1	J30001-UP
25		07285-00100	CLIP	1	J30001-UP
26		21X-62-21140	ELBOW	1	J30001-UP
27		07002-12034	O-RING	1	J30001-UP
28		02782-10518	ELBOW	2	J30001-UP
29		02896-11015	O-RING	2	J30001-UP
30		07002-12034	O-RING	2	J30001-UP

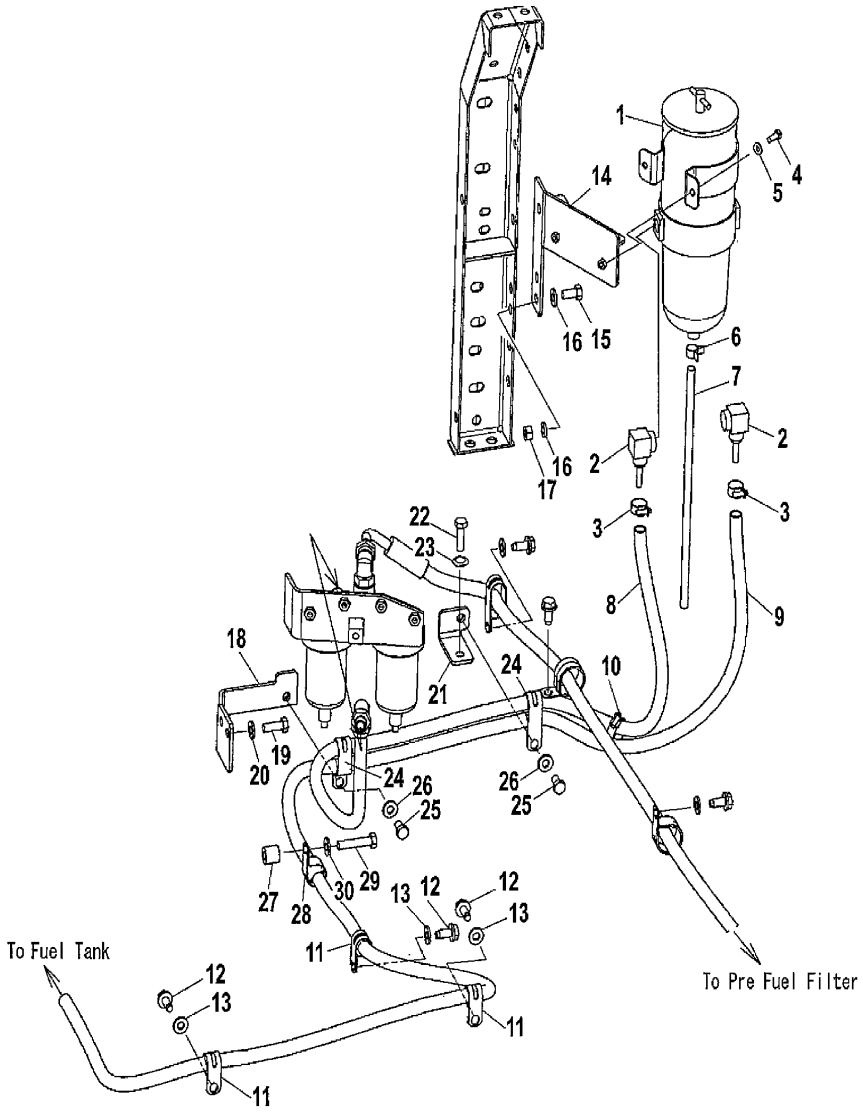

PC400-8 S/N J30001-UP

FUEL LINE

INDEX	CD	PART NO.	DESCRIPTION	QTY	SERIAL NO.
1		208-04-J1320	FUEL FILTER	1	J30001-UP
2		208-04-J1380	ELBOW	2	J30001-UP
3		07281-00359	CLAMP	2	J30001-UP
4		01010-80820	BOLT	2	J30001-UP
5		01643-31023	WASHER	2	J30001-UP
6		07270-00835	TUBE	1	J30001-UP
7		07285-00100	CLIP	1	J30001-UP
8		208-04-J1331	HOSE	1	J30001-UP
9		208-04-J1341	HOSE	1	J30001-UP
10		08034-20519	BAND	1	J30001-UP
11		04434-52712	CLIP	3	J30001-UP
12		01010-81225	BOLT	3	J30001-UP
13		01643-31232	WASHER	3	J30001-UP
14		208-04-J1350	BRACKET	1	J30001-UP
15		01010-81225	BOLT	3	J30001-UP
16		01643-31232	WASHER	6	J30001-UP
17		01580-01210	NUT	3	J30001-UP
18		208-04-J1360	BRACKET	1	J30001-UP
19		01010-81245	BOLT	2	J30001-UP
20		01643-31232	WASHER	2	J30001-UP
21		208-04-J1370	BRACKET	1	J30001-UP
22		01010-81230	BOLT	1	J30001-UP
23		01643-31232	WASHER	1	J30001-UP
24		562-06-15180	CLIP	2	J30001-UP
25		01010-81220	BOLT	2	J30001-UP
26		01643-31232	WASHER	2	J30001-UP
27		195-33-11220	SPACER	1	J30001-UP
28		04434-52712	CLIP	1	J30001-UP
29		01010-81260	BOLT	1	J30001-UP
30		01643-31232	WASHER	1	J30001-UP

Ref :D0200-04A1 Page :090060

ELECTRICAL SYSTEM

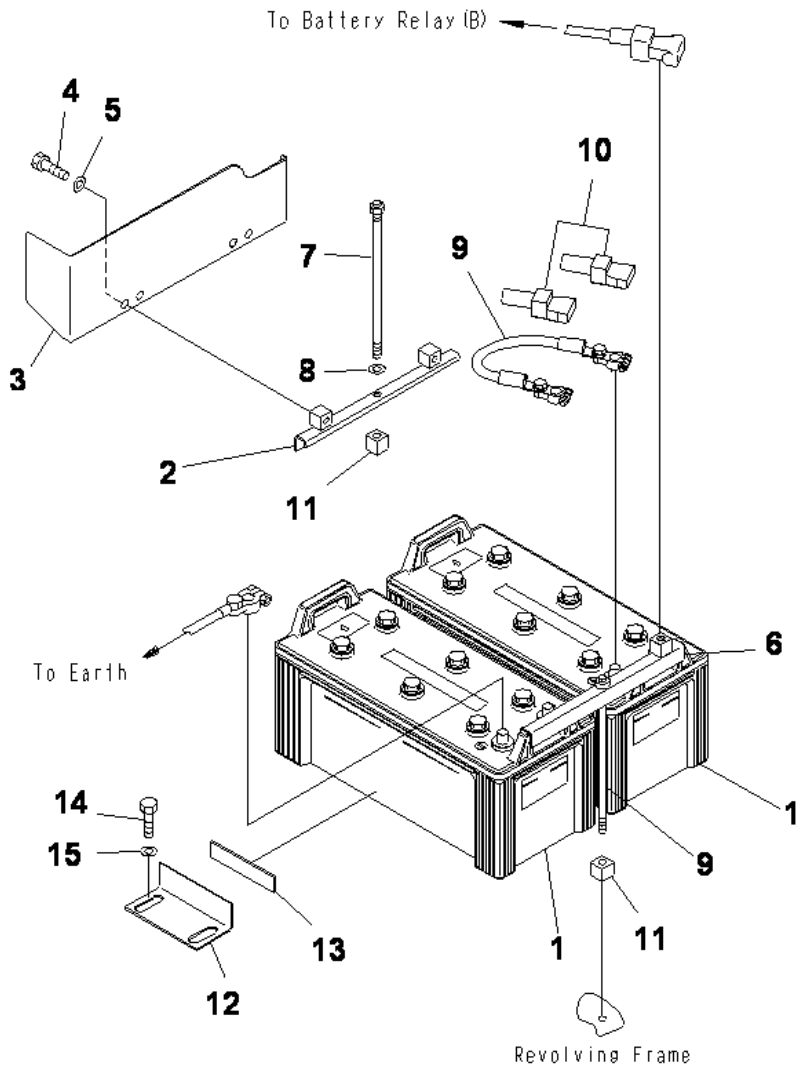

PC400-8 S/N J30001-UP

BATTERY (WET) (LARGE CAPACITY)

INDEX	CD	PART NO.	DESCRIPTION	QTY	SERIAL NO.
1		207-06-61280	BATTERY	2	J30001-UP
2		207-06-75310	CLAMP	1	J30001-UP
3		207-06-75321	COVER	1	J30001-UP
4		01010-81225	BOLT	2	J30001-UP
5		01643-31232	WASHER	2	J30001-UP
6		207-06-51470	CLAMP	1	J30001-UP
7		207-06-11370	BOLT	2	J30001-UP
8		01643-31232	WASHER	2	J30001-UP
9		08028-64035	CABLE	1	J30001-UP
10		08038-42511	CAP	2	J30001-UP
11		207-06-51461	BLOCK	2	J30001-UP
12		207-06-61461	BRACKET	1	J30001-UP
13		207-06-51330	.SHEET	1	J30001-UP
14		01010-81225	BOLT	2	J30001-UP
15		175-54-34170	WASHER	2	J30001-UP

Ref :E0100-01A0 Page :120010

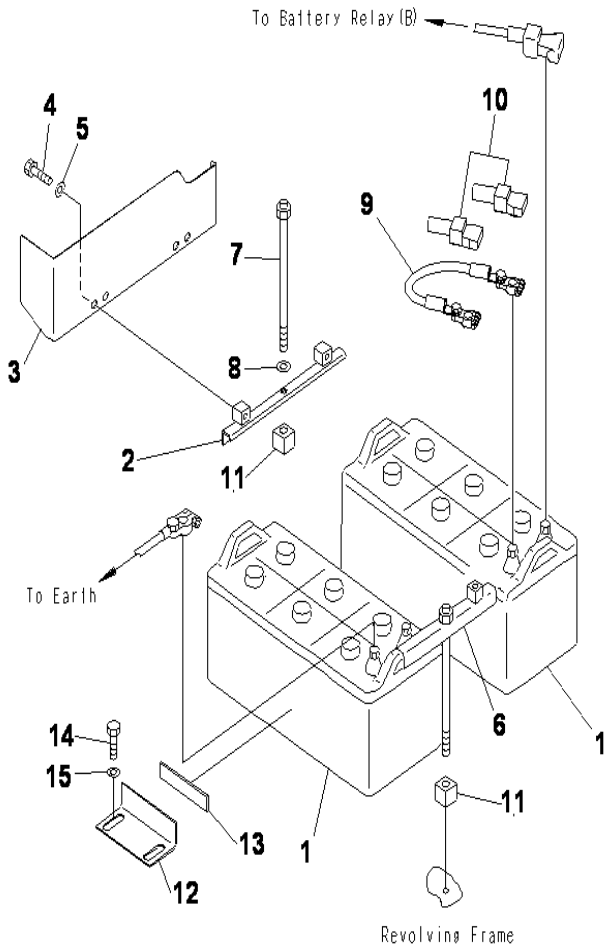

PC400-8 S/N J30001-UP

BATTERY STD (OPTIONAL)

INDEX	CD	PART NO.	DESCRIPTION	QTY	SERIAL NO.
1		208-06-61460	BATTERY	2	J30001-UP
2		207-06-75310	CLAMP	1	J30001-UP
3		207-06-75321	COVER	1	J30001-UP
4		01010-81225	BOLT	2	J30001-UP
5		01643-31232	WASHER	2	J30001-UP
6		207-06-51470	CLAMP	1	J30001-UP
7		207-06-11370	BOLT	2	J30001-UP
8		01643-31232	WASHER	2	J30001-UP
9		08028-64035	CABLE	1	J30001-UP
10		08038-42511	CAP	2	J30001-UP
11		207-06-51461	BLOCK	2	J30001-UP
12		207-06-61461	BRACKET	1	J30001-UP
13		207-06-51330	SHEET	1	J30001-UP
14		01010-81225	BOLT	2	J30001-UP
15		175-54-34170	WASHER	2	J30001-UP

Ref :E0100-01A2 Page :120030

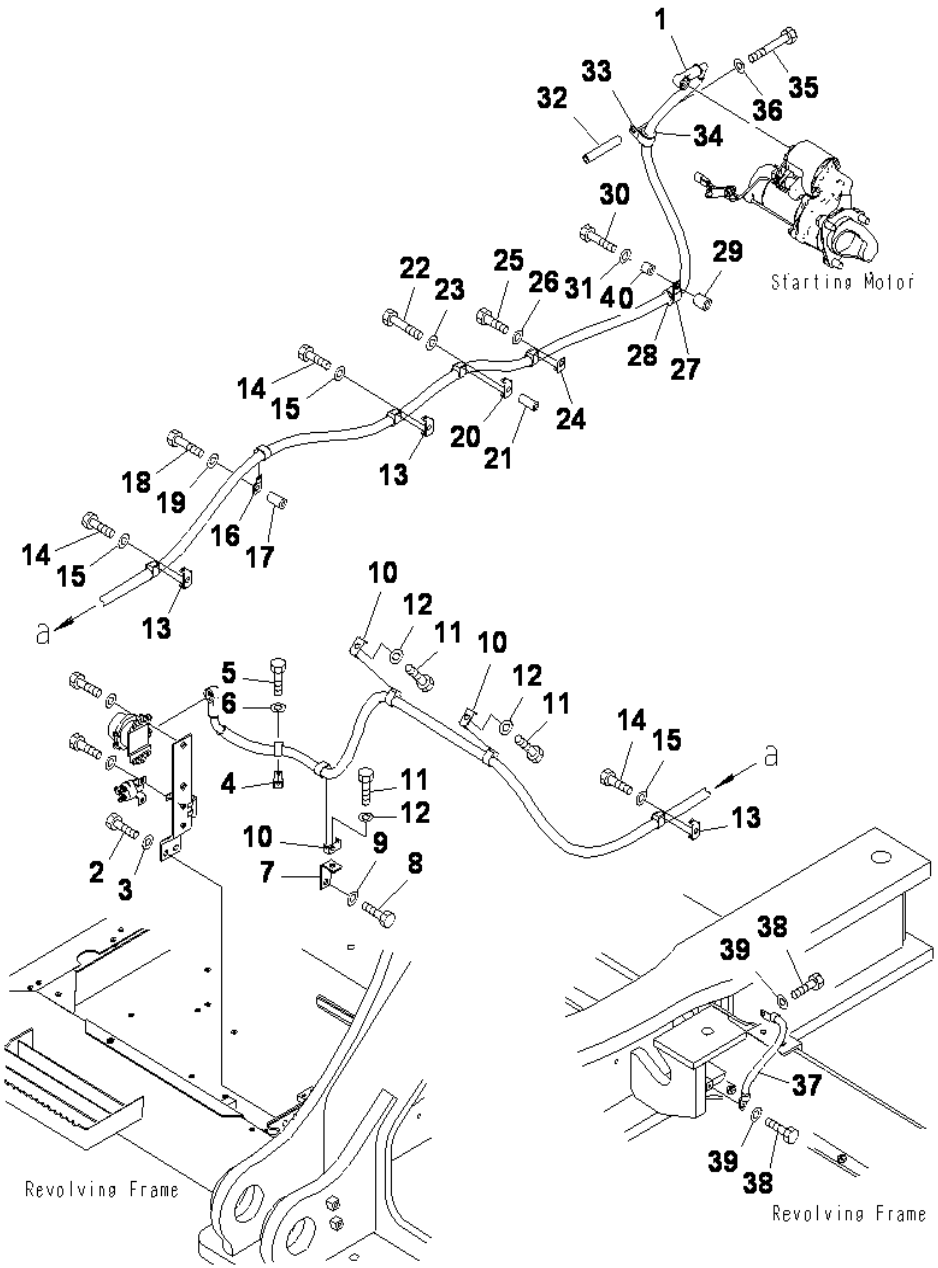

ELECTRIC WIRING (STARTING HARNESS)

INDEX	CD	PART NO.	DESCRIPTION	QTY	SERIAL NO.
1		08038-10035	CAP	1	J30001-UP
2		01010-81225	BOLT	2	J30001-UP
3		01643-31232	WASHER	2	J30001-UP
4		08057-22012	CLIP	1	J30001-UP
5		01010-81225	BOLT	1	J30001-UP
6		01643-31232	WASHER	1	J30001-UP
7		207-979-6180	BRACKET	1	J30001-UP
8		01010-81225	BOLT	1	J30001-UP
9		01643-31232	WASHER	1	J30001-UP
10		08057-22012	CLIP	3	J30001-UP
11		01010-81225	BOLT	3	J30001-UP
12		01643-31232	WASHER	3	J30001-UP
13		08057-22012	CLIP	3	J30001-UP
14		01010-81225	BOLT	3	J30001-UP
15		01643-31232	WASHER	3	J30001-UP
16		08057-00812	PLATE	1	J30001-UP
17		208-06-75180	SPACER	1	J30001-UP
18		01010-81265	BOLT	1	J30001-UP
19		01643-31232	WASHER	1	J30001-UP
20		08057-22012	CLIP	1	J30001-UP
21		14X-54-26640	COLLAR	1	J30001-UP
22		01010-81275	BOLT	1	J30001-UP
23		01643-31232	WASHER	1	J30001-UP
24		08057-12012	CLIP	1	J30001-UP
25		01010-81225	BOLT	1	J30001-UP
26		01643-31232	WASHER	1	J30001-UP
27		04434-53212	CLIP	1	J30001-UP
28		07095-20523	CUSHION	1	J30001-UP
29		195-97-93570	COLLAR	1	J30001-UP
30		22D-62-12120	SPACER	1	J30001-UP
31		01011-81200	BOLT	1	J30001-UP
32		01643-31232	WASHER	1	J30001-UP
33		6151-51-5490	SPACER	1	J30001-UP
34		04434-53211	CLIP	1	J30001-UP
35		198-06-53610	CUSHION	1	J30001-UP
36		01011-81040	BOLT	1	J30001-UP
37		01643-31032	WASHER	1	J30001-UP
38		08028-44035	CABLE	1	J30001-UP
39		01010-81020	BOLT	2	J30001-UP
40		01643-31032	WASHER	2	J30001-UP

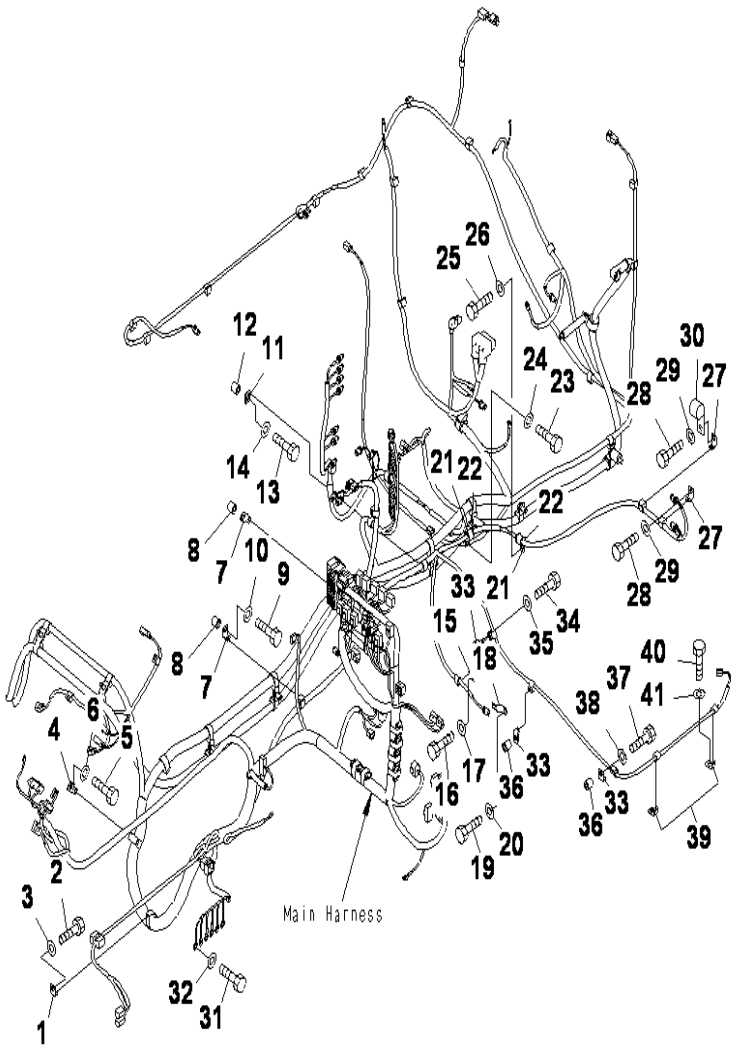

PC400-8 S/N J30001-UP

ELECTRIC WIRING (MAIN HARNESS) (1/3)

INDEX	CD	PART NO.	DESCRIPTION	QTY	SERIAL NO.
1		08057-12012	CLIP	1	J30001-UP
2		01010-81225	BOLT	1	J30001-UP
3		01643-31232	WASHER	1	J30001-UP
4		08057-12012	CLIP	1	J30001-UP
5		01010-81225	BOLT	1	J30001-UP
6		01643-31232	WASHER	1	J30001-UP
7		08057-12012	CLIP	2	J30001-UP
8		195-33-11220	SPACER	2	J30001-UP
9		01010-81250	BOLT	2	J30001-UP
10		01643-31232	WASHER	2	J30001-UP
11		08057-12012	CLIP	1	J30001-UP
12		195-33-11220	SPACER	1	J30001-UP
13		01010-81250	BOLT	1	J30001-UP
14		01643-31232	WASHER	1	J30001-UP
15		08057-12012	CLIP	1	J30001-UP
16		01010-81225	BOLT	1	J30001-UP
17		01643-31232	WASHER	1	J30001-UP
18		08193-20012	CLIP	1	J30001-UP
19		01010-81225	BOLT	1	J30001-UP
20		01643-31232	WASHER	1	J30001-UP
21		04434-52112	CLIP	2	J30001-UP
22		07095-20314	CUSHION	2	J30001-UP
23		01010-81225	BOLT	1	J30001-UP
24		01643-31232	WASHER	1	J30001-UP
25		01010-81025	BOLT	1	J30001-UP
26		01643-31032	WASHER	1	J30001-UP
27		08057-12012	CLIP	2	J30001-UP
28		01010-81225	BOLT	1	J30001-UP
29		01643-31232	WASHER	1	J30001-UP
30		04434-51012	CLIP	1	J30001-UP
31		01010-81020	BOLT	6	J30001-UP
32		01643-31032	WASHER	6	J30001-UP
33		08057-12012	CLIP	3	J30001-UP
34		01010-81225	BOLT	1	J30001-UP
35		01643-31232	WASHER	1	J30001-UP
36		195-33-11220	SPACER	2	J30001-UP
37		01010-81250	BOLT	2	J30001-UP
38		01643-31232	WASHER	2	J30001-UP
39		08057-12012	CLIP	2	J30001-UP
40		01010-81225	BOLT	2	J30001-UP
41		01643-31232	WASHER	2	J30001-UP

Ref :E0200-02A1 Page :120050

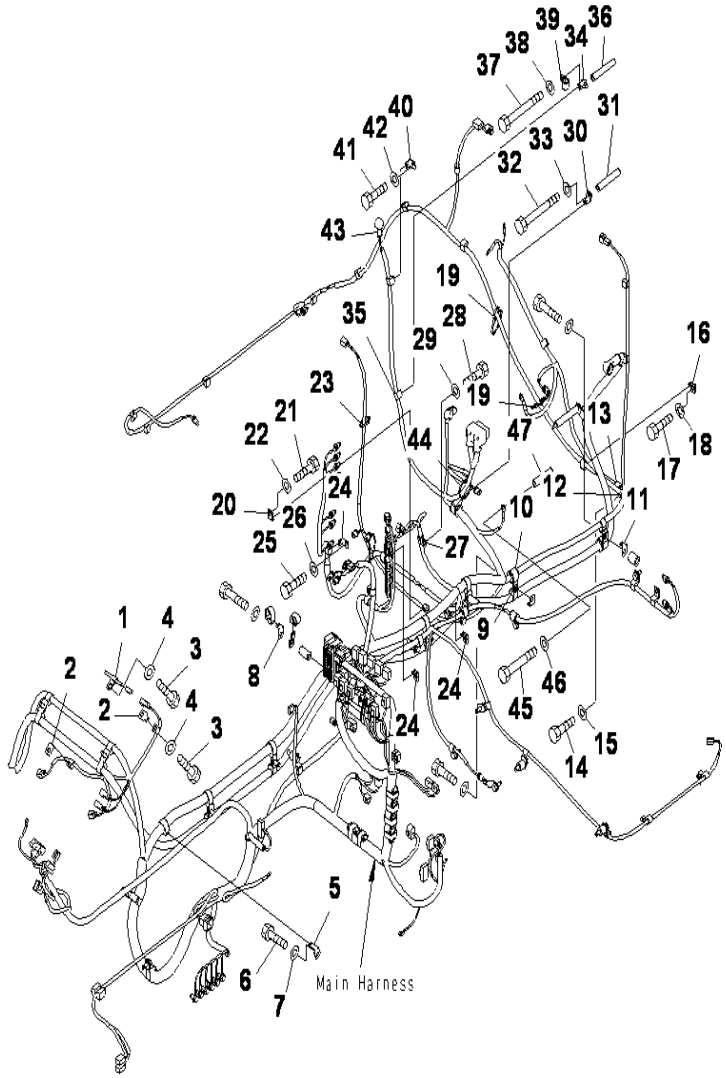

PC400-8 S/N J30001-UP

ELECTRIC WIRING (MAIN HARNESS) (2/3)

INDEX	CD	PART NO.	DESCRIPTION	QTY	SERIAL NO.
1		04434-51012	CLIP	1	J30001-UP
2		08057-12012	CLIP	2	J30001-UP
3		01010-81225	BOLT	3	J30001-UP
4		01643-31232	WASHER	3	J30001-UP
5		08057-14012	CLIP	1	J30001-UP
6		01010-81225	BOLT	1	J30001-UP
7		01643-31232	WASHER	1	J30001-UP
8		08057-00812	PLATE	1	J30001-UP
9		04434-52712	CLIP	1	J30001-UP
10		07095-20418	CUSHION	1	J30001-UP
11		08057-12012	CLIP	1	J30001-UP
12		04434-52712	CLIP	1	J30001-UP
13		07095-20418	CUSHION	1	J30001-UP
14		01010-81225	BOLT	1	J30001-UP
15		01643-31232	WASHER	1	J30001-UP
16		08057-12012	CLIP	1	J30001-UP
17		01010-81225	BOLT	1	J30001-UP
18		01643-31232	WASHER	1	J30001-UP
19		134-03-61410	BAND	2	J30001-UP
20		08057-12012	CLIP	1	J30001-UP
21		01010-81225	BOLT	1	J30001-UP
22		01643-31232	WASHER	1	J30001-UP
23		08034-20519	BAND	1	J30001-UP
24		08057-12012	CLIP	3	J30001-UP
25		01010-81225	BOLT	3	J30001-UP
26		01643-31232	WASHER	3	J30001-UP
27		04434-51412	CLIP	1	J30001-UP
28		01010-81225	BOLT	1	J30001-UP
29		01643-31232	WASHER	1	J30001-UP
30		08057-12010	CLIP	1	J30001-UP
31		6151-51-5490	SPACER	1	J30001-UP
32		01011-81040	BOLT	1	J30001-UP
33		01643-31032	WASHER	1	J30001-UP
34		08057-12010	CLIP	1	J30001-UP
35		08211-11020	CLIP,RESIN	1	J30001-UP
36		6151-51-5490	SPACER	1	J30001-UP
37		01011-81040	BOLT	1	J30001-UP
38		01643-31032	WASHER	1	J30001-UP
39		04434-53211	CLIP	1	J30001-UP
40		08057-12010	CLIP	1	J30001-UP
41		01010-81016	BOLT	1	J30001-UP
42		01643-31032	WASHER	1	J30001-UP
43		08038-02027	CAP	1	J30001-UP
44		08034-20519	BAND	1	J30001-UP
45		01011-81010	BOLT	1	J30001-UP

Ref :E0200-03A1 Page :120060

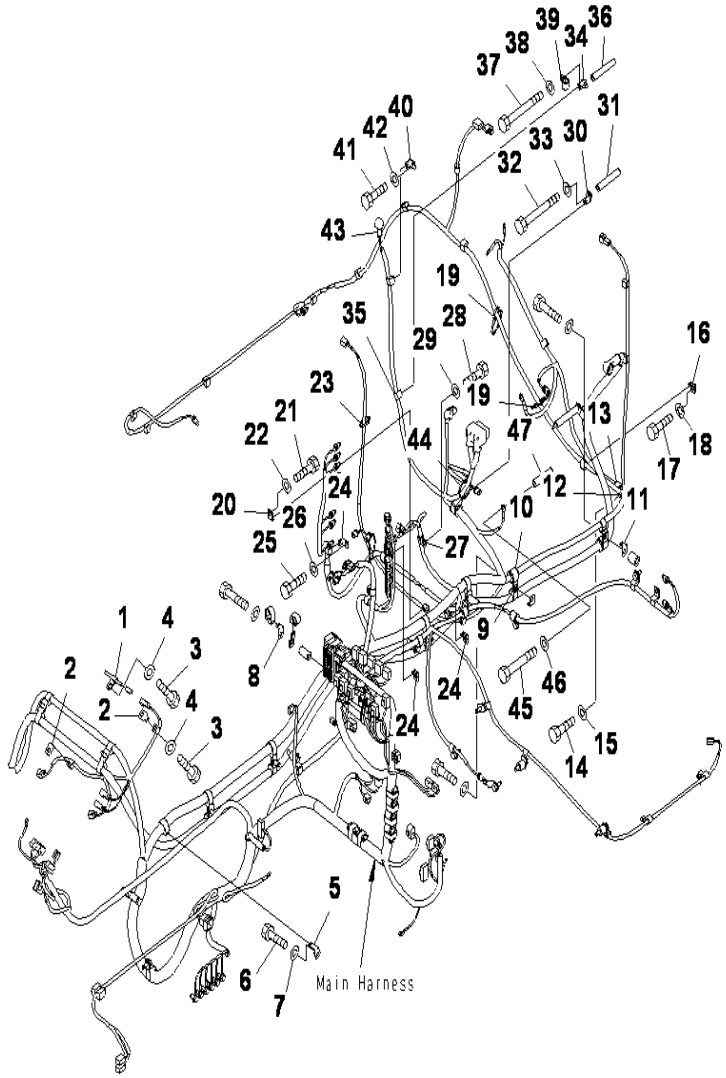

PC400-8 S/N J30001-UP

ELECTRIC WIRING (MAIN HARNESS)(2/3)

INDEX	CD	PART NO.	DESCRIPTION	QTY	SERIAL NO.
46		01643-31032	WASHER	1	J30001-UP
47		195-01-16420	COLLAR	1	J30001-UP

Ref :E0200-03A1 Page :120061

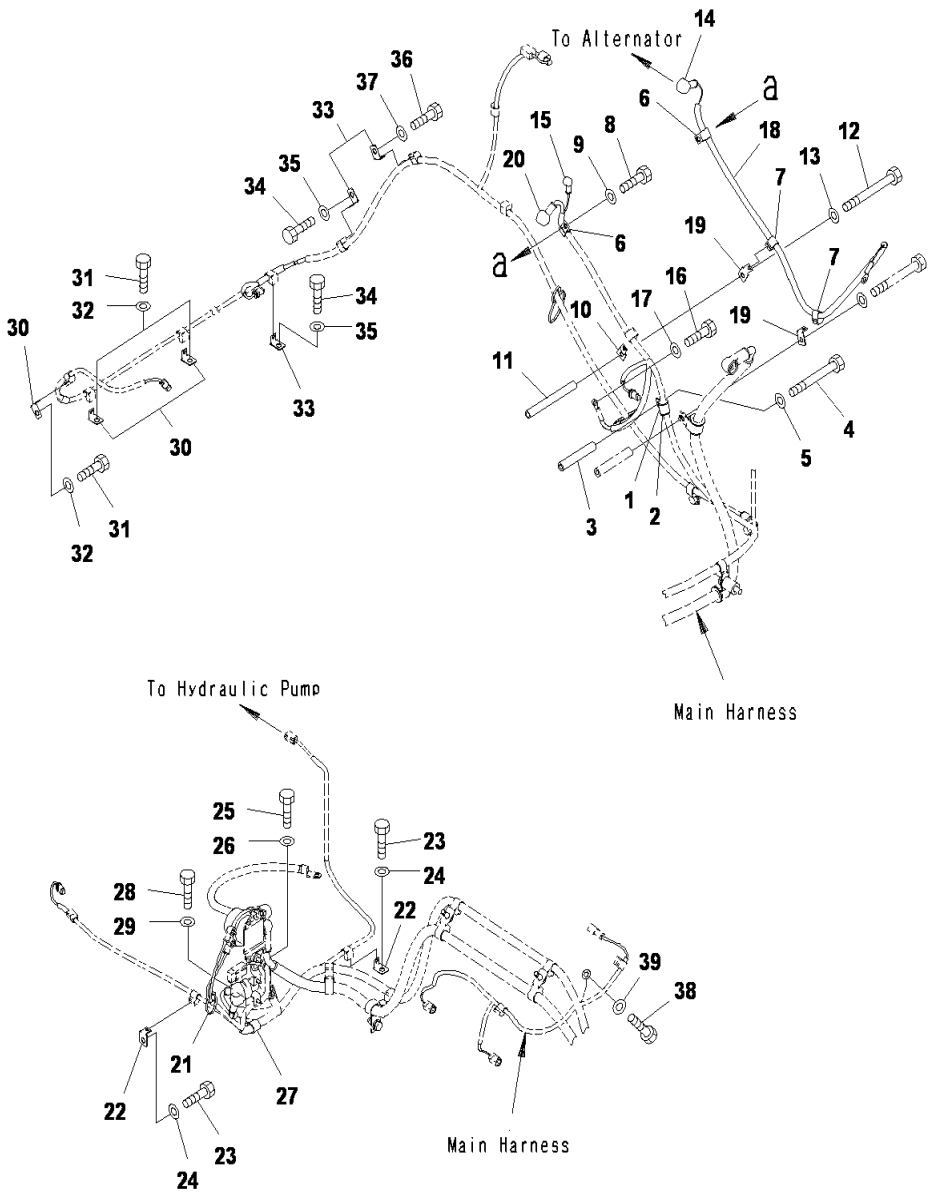

PC400-8 S/N J30001-UP

ELECTRIC WIRING (MAIN HARNESS) (3/3)

INDEX	CD	PART NO.	DESCRIPTION	QTY	SERIAL NO.
1		04434-51910	CLIP	1	J30001-UP
2		198-06-53540	CUSHION	1	J30001-UP
3		6151-51-5490	SPACER	1	J30001-UP
4		01011-81040	BOLT	1	J30001-UP
5		01643-31032	WASHER	1	J30001-UP
6		08057-12010	CLIP	2	J30001-UP
7		08211-11020	CLIP,RESIN	2	J30001-UP
8		01010-81020	BOLT	1	J30001-UP
9		01643-31032	WASHER	1	J30001-UP
10		08057-00810	CLIP	1	J30001-UP
11		170-10-16361	SPACER	1	J30001-UP
12		01011-81090	BOLT	1	J30001-UP
13		01643-31032	WASHER	1	J30001-UP
14		08038-02027	CAP	1	J30001-UP
15		08038-00519	CAP	1	J30001-UP
16		01010-81020	BOLT	1	J30001-UP
17		01643-31032	WASHER	1	J30001-UP
18		208-06-75122	CABLE	1	J30001-UP
19		08057-12010	CLIP	2	J30001-UP
20		08038-02027	CAP	1	J30001-UP
21		08034-20519	BAND	1	J30001-UP
22		08057-12012	CLIP	2	J30001-UP
23		01010-81225	BOLT	2	J30001-UP
24		01643-31232	WASHER	2	J30001-UP
25		01010-81025	BOLT	1	J30001-UP
26		01643-31032	WASHER	1	J30001-UP
27		04434-51912	CLIP	1	J30001-UP
28		01010-81225	BOLT	1	J30001-UP
29		01643-31232	WASHER	1	J30001-UP
30		08057-12012	CLIP	3	J30001-UP
31		01010-81225	BOLT	3	J30001-UP
32		01643-31232	WASHER	3	J30001-UP
33		08057-12012	CLIP	3	J30001-UP
34		01010-81225	BOLT	2	J30001-UP
35		01643-31232	WASHER	2	J30001-UP
36		01010-81220	BOLT	1	J30001-UP
37		01643-31232	WASHER	1	J30001-UP
38		01010-81225	BOLT	1	J30002-UP
39		01643-31232	WASHER	1	J30002-UP

Ref :E0200-04A1 Page :120070

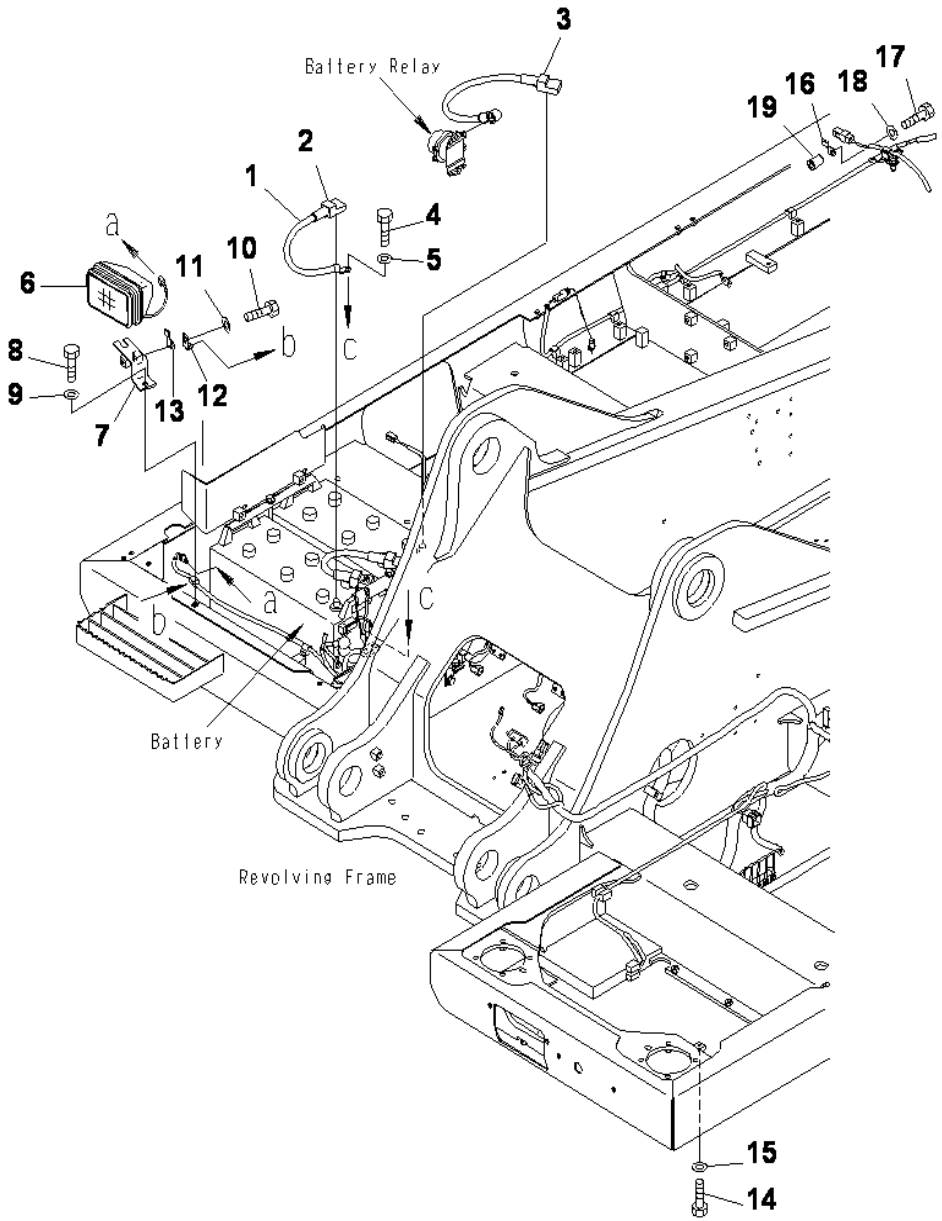

ELECTRIC WIRING (WORKING LAMP)

INDEX	CD	PART NO.	DESCRIPTION	QTY	SERIAL NO.
1		08028-44040	WIRE	1	J30001-UP
2		08038-22511	CAP	1	J30001-UP
3		08038-42511	CAP	1	J30001-UP
4		01010-81025	BOLT	1	J30001-UP
5		01643-31032	WASHER	1	J30001-UP
6		21T-06-32810	WORK LAMP ASS'Y	1	J30001-UP
		421-06-23330	.BULB. 70W	1	J30001-UP
7		20Y-06-31680	BRACKET	1	J30001-UP
8		01010-81230	BOLT	1	J30001-UP
9		01643-31232	WASHER	1	J30001-UP
10		01010-81220	BOLT	1	J30001-UP
11		01643-31232	WASHER	1	J30001-UP
12		08057-12012	CLIP	1	J30001-UP
13		08193-20012	CLIP	1	J30001-UP
14		01010-81016	BOLT	1	J30001-UP
15		01643-31032	WASHER	1	J30001-UP
16		08193-20012	CLIP	1	J30001-UP
17		01010-81260	BOLT	1	J30001-UP
18		01643-31232	WASHER	1	J30001-UP
19		142-03-11160	SPACER	1	J30001-UP

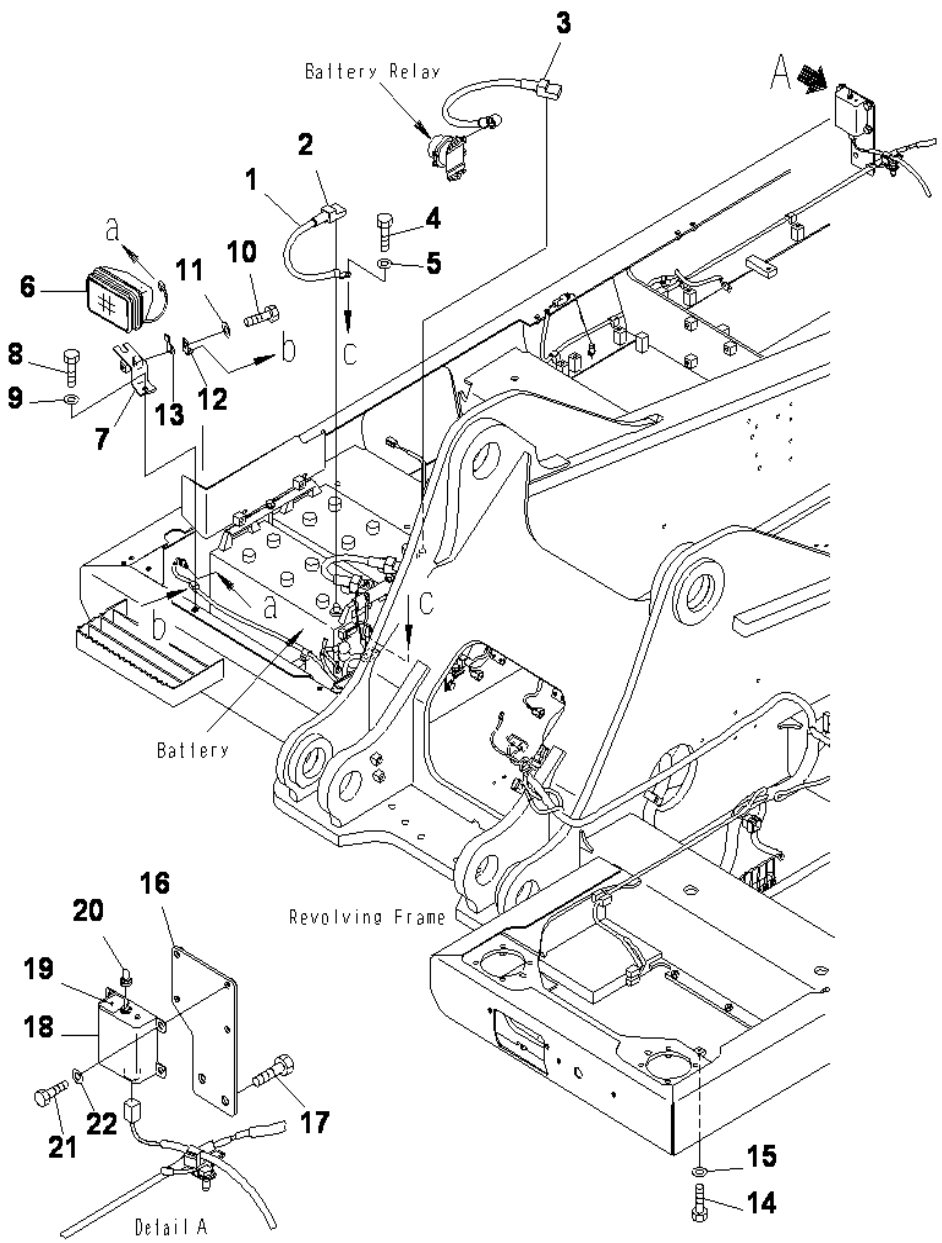

PC400-8 S/N J30001-UP

ELECTRIC WIRING (WORKING LAMP) (WITH ELECTRIC PRIMING PUMP TIMER SWITCH)

INDEX	CD	PART NO.	DESCRIPTION	QTY	SERIAL NO.
1		08028-44040	WIRE	1	J30001-UP
2		08038-22511	CAP	1	J30001-UP
3		08038-42511	CAP	1	J30001-UP
4		01010-81025	BOLT	1	J30001-UP
5		01643-31032	WASHER	1	J30001-UP
6		21T-06-32810	WORK LAMP A	1	J30001-UP
		421-06-23330	.BULB, 70W	1	J30001-UP
7		20Y-06-31680	BRACKET	1	J30001-UP
8		01010-81230	BOLT	1	J30001-UP
9		01643-31232	WASHER	1	J30001-UP
10		01010-81220	BOLT	1	J30001-UP
11		01643-31232	WASHER	1	J30001-UP
12		08057-12012	CLIP	1	J30001-UP
13		08193-20012	CLIP	1	J30001-UP
14		01010-81016	BOLT	1	J30001-UP
15		01643-31032	WASHER	1	J30001-UP
16		208-54-78532	BRACKET	1	J30002-UP
		208-54-78530	BRACKET	1	J30001-J30001
17		01035-81230	BOLT,SPAT	2	J30001-UP
18		600-815-9471	SWITCH,TIMER	1	J30001-UP
19		208-00-76790	PLATE	1	J30001-UP
20		08504-10000	CAP	1	J30001-UP
21		01010-80816	BOLT	4	J30001-UP
22		01643-30823	WASHER	4	J30001-UP

Ref :E0200-05A2 Page :120100

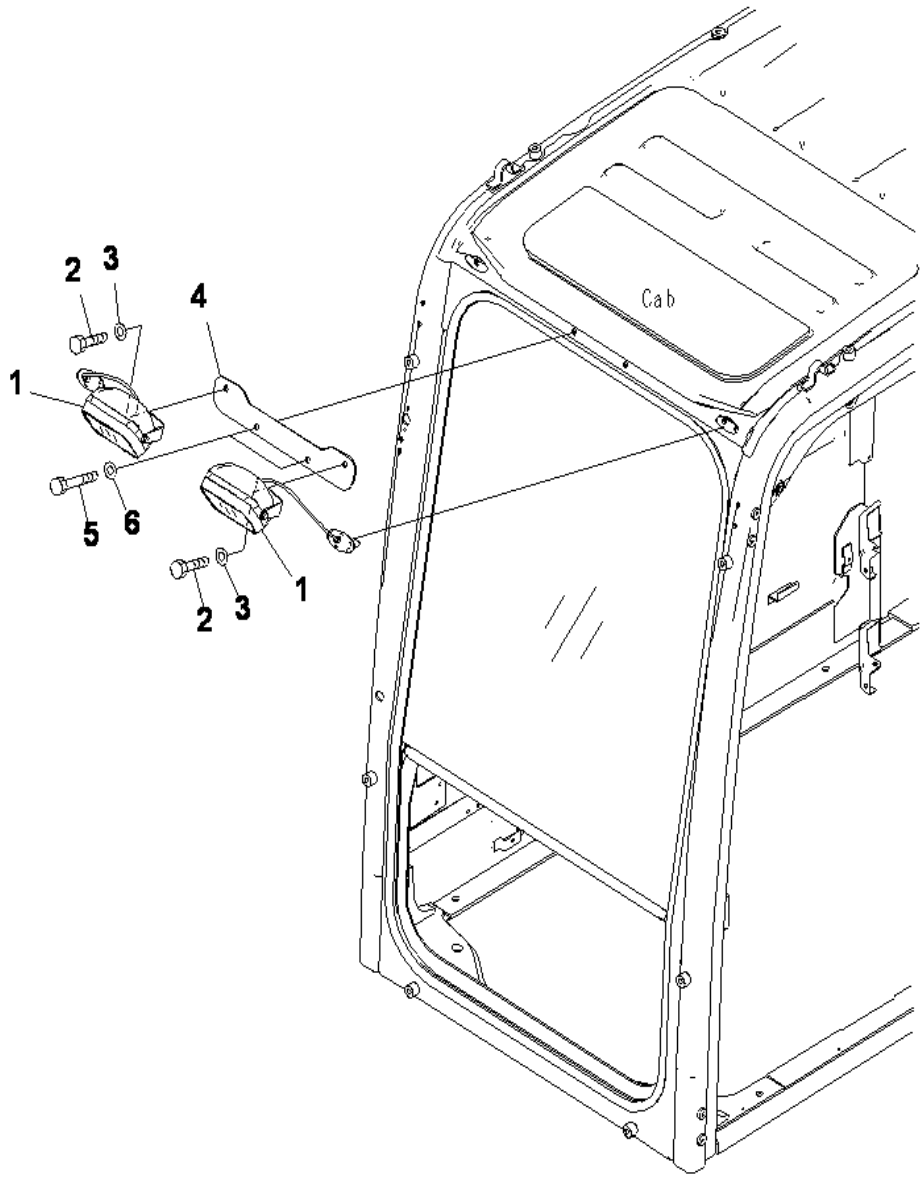

PC400-8 S/N J30001-UP

ADDITIONAL WORK LAMP

INDEX	CD	PART NO.	DESCRIPTION	QTY	SERIAL NO.
1		20Y-53-15210	WORK LAMP ASS'Y	2	J30001-UP
2		01010-D1025	BOLT	2	J30001-UP
3		01643-71032	WASHER	2	J30001-UP
4		20Y-53-15150	BRACKET	1	J30001-UP
5		01010-D1060	BOLT	2	J30001-UP
6		01643-71032	WASHER	2	J30001-UP

Ref :E0310-01A0 Page :120110

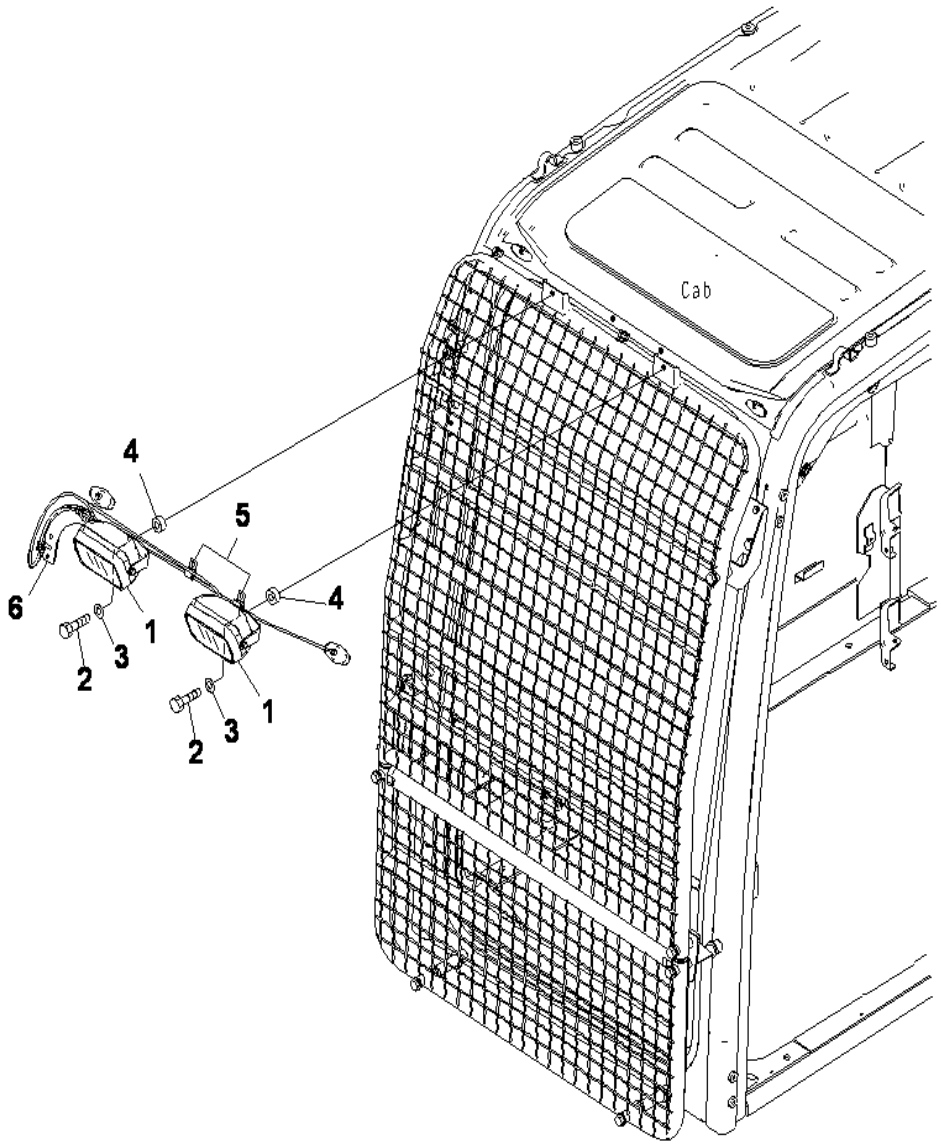

PC400-8 S/N J30001-UP

ADDITIONAL WORK LAMP (WITH FRONT GUARD)

INDEX	CD	PART NO.	DESCRIPTION	QTY	SERIAL NO.
1		20Y-53-15220	WORK LAMP ASS.....	2	J30001-UP
		421-06-23330	.BULB.....	1	J30001-UP
2		01010-D1030	BOLT.....	2	J30001-UP
3		01643-71032	WASHER.....	2	J30001-UP
4		560-43-15220	WASHER.....	2	J30001-UP
5		08036-10810	CLIP.....	2	J30001-UP
6		20Y-54-54480	BRACKET.....	1	J30001-UP

Ref :E0310-01A3 Page :120120

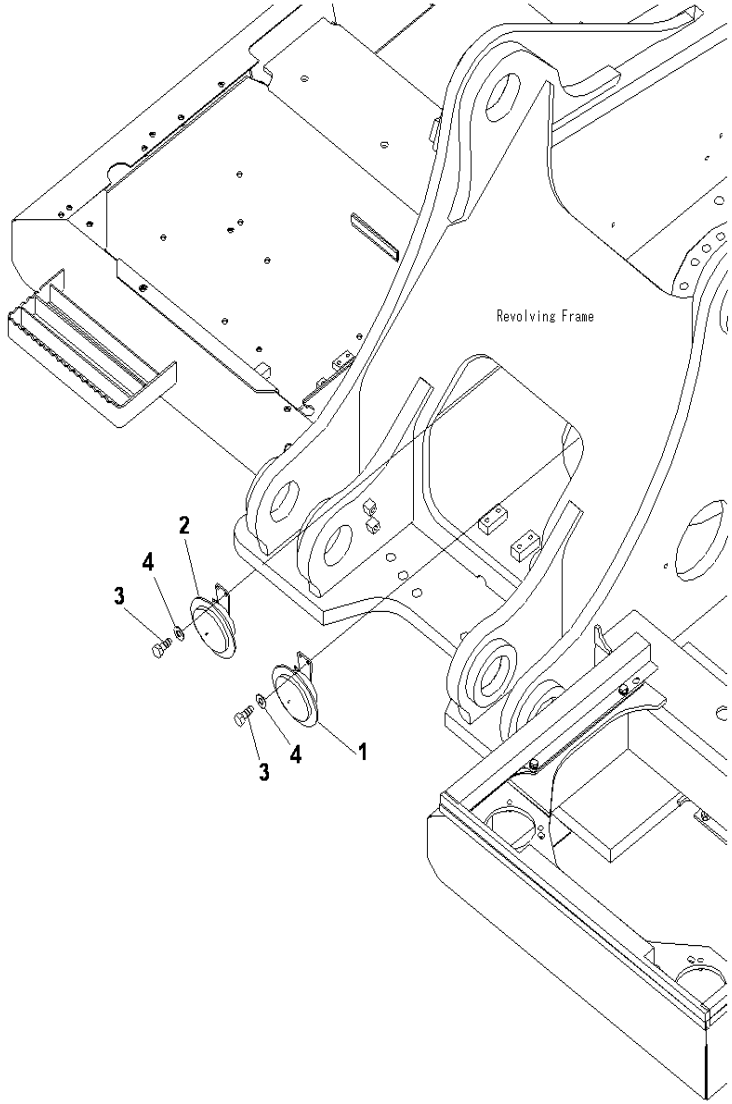

PC400-8 S/N J30001-UP

HORN

INDEX	CD	PART NO.	DESCRIPTION	QTY	SERIAL NO.
1		208-06-71390	HORN	1	J30002-UP
2		208-06-71380	HORN	1	J30002-UP
		08160-82400	HORN	1	J30001-J30001
3		01010-80825	BOLT	4	J30001-UP
4		01643-30823	WASHER	4	J30001-UP

Ref :E0410-01A0 Page :120130

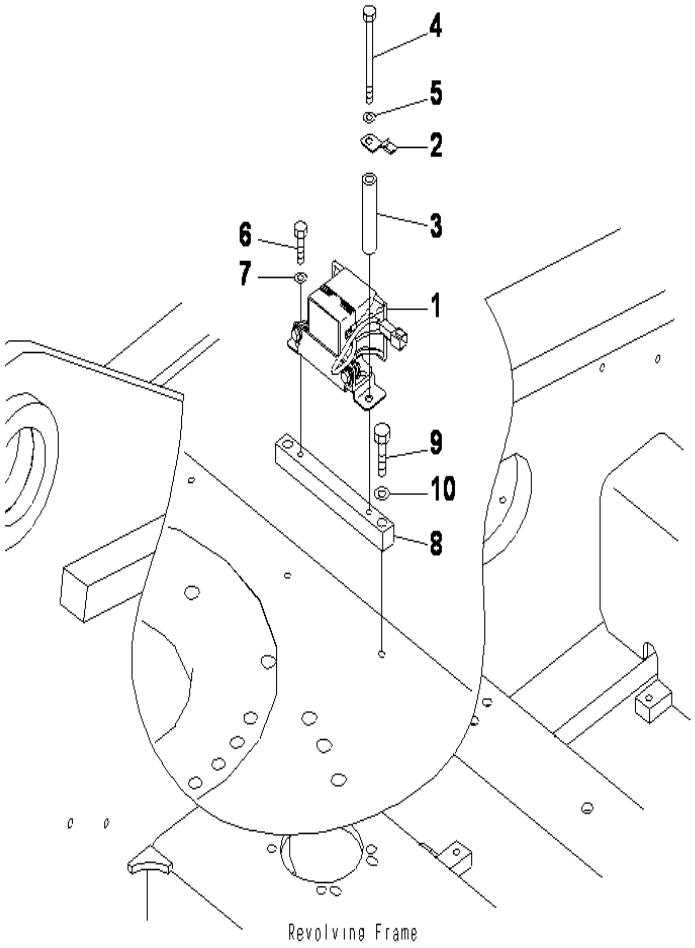

PC400-8 S/N J30001-UP

TRAVEL ALARM

INDEX	CD	PART NO.	DESCRIPTION	QTY	SERIAL NO.
1		20Y-06-41812	BUZZER	1	J30001-UP
2		08193-20010	CLIP	1	J30001-UP
3		195-01-16420	COLLAR	1	J30001-UP
4		01011-81015	BOLT	1	J30001-UP
5		01643-31032	WASHER	1	J30001-UP
6		01010-81020	BOLT	1	J30001-UP
7		01643-31032	WASHER	1	J30001-UP
8		20Y-06-21770	PLATE	1	J30001-UP
9		01010-81245	BOLT	2	J30001-UP
10		01643-31232	WASHER	2	J30001-UP

Ref :E0420-01A0 Page :120140

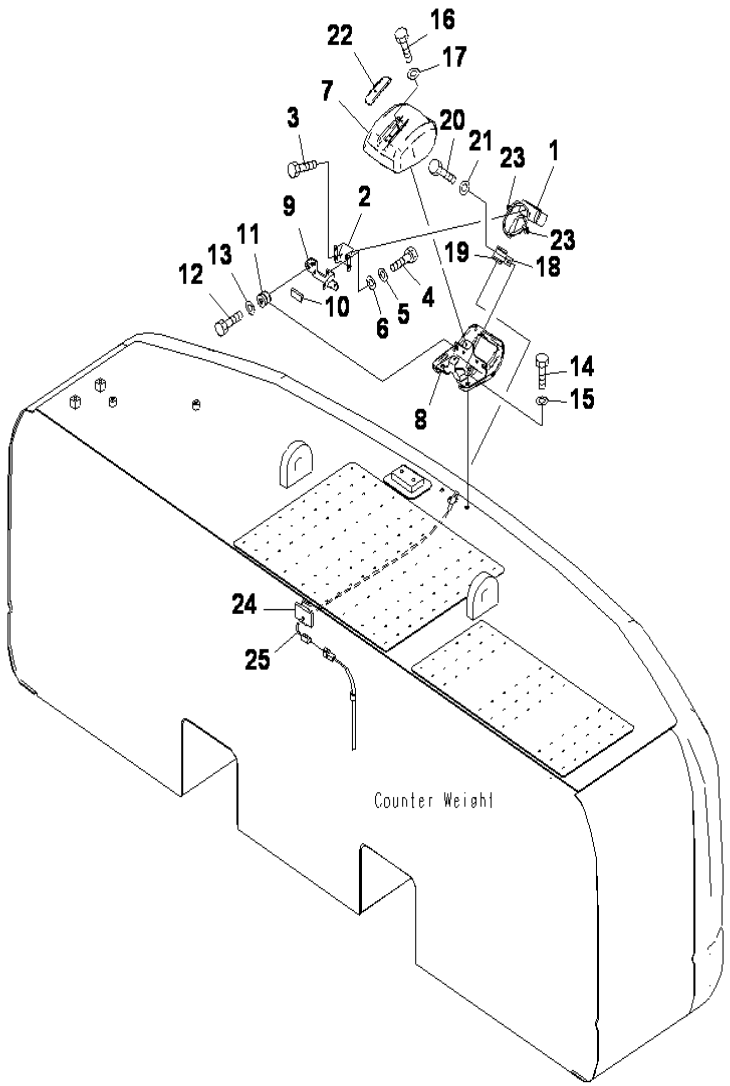

PC400-8 S/N J30001-UP

REAR VIEW MONITORING SYSTEM (1 CAMERA)

INDEX	CD	PART NO.	DESCRIPTION	QTY	SERIAL NO.
1		783-53-31100	CAMERA	1	J30001-UP
2		783-53-31201	BRACKET	1	J30001-UP
3		783-53-31310	BOLT	2	J30001-UP
4		783-53-31320	BOLT	4	J30001-UP
5		783-53-31330	WASHER	4	J30001-UP
6		783-53-31340	WASHER	4	J30001-UP
7		207-06-76420	COVER	1	J30001-UP
8		207-06-76431	COVER	1	J30001-UP
9		207-06-76440	BRACKET	1	J30001-UP
10		207-06-76460	.SHEET	1	J30001-UP
11		20Y-810-1240	CUSHION	2	J30001-UP
12		01010-80835	BOLT	2	J30001-UP
13		01643-30823	WASHER	2	J30001-UP
14		01010-81230	BOLT	2	J30001-UP
15		01643-31232	WASHER	2	J30001-UP
16		01010-80616	BOLT	2	J30001-UP
17		01643-30623	WASHER	2	J30001-UP
18		04434-53211	CLIP	1	J30001-UP
19		07095-00317	CUSHION	1	J30001-UP
20		01010-81016	BOLT	1	J30001-UP
21		01643-31032	WASHER	1	J30001-UP
22		207-06-76451	COVER	1	J30001-UP
23		08059-00310	CLAMP	2	J30001-UP
24		207-06-76490	SHEET	1	J30001-UP
25		207-06-76310	CABLE	1	J30001-UP

Ref :E0450-01A0 Page :120150

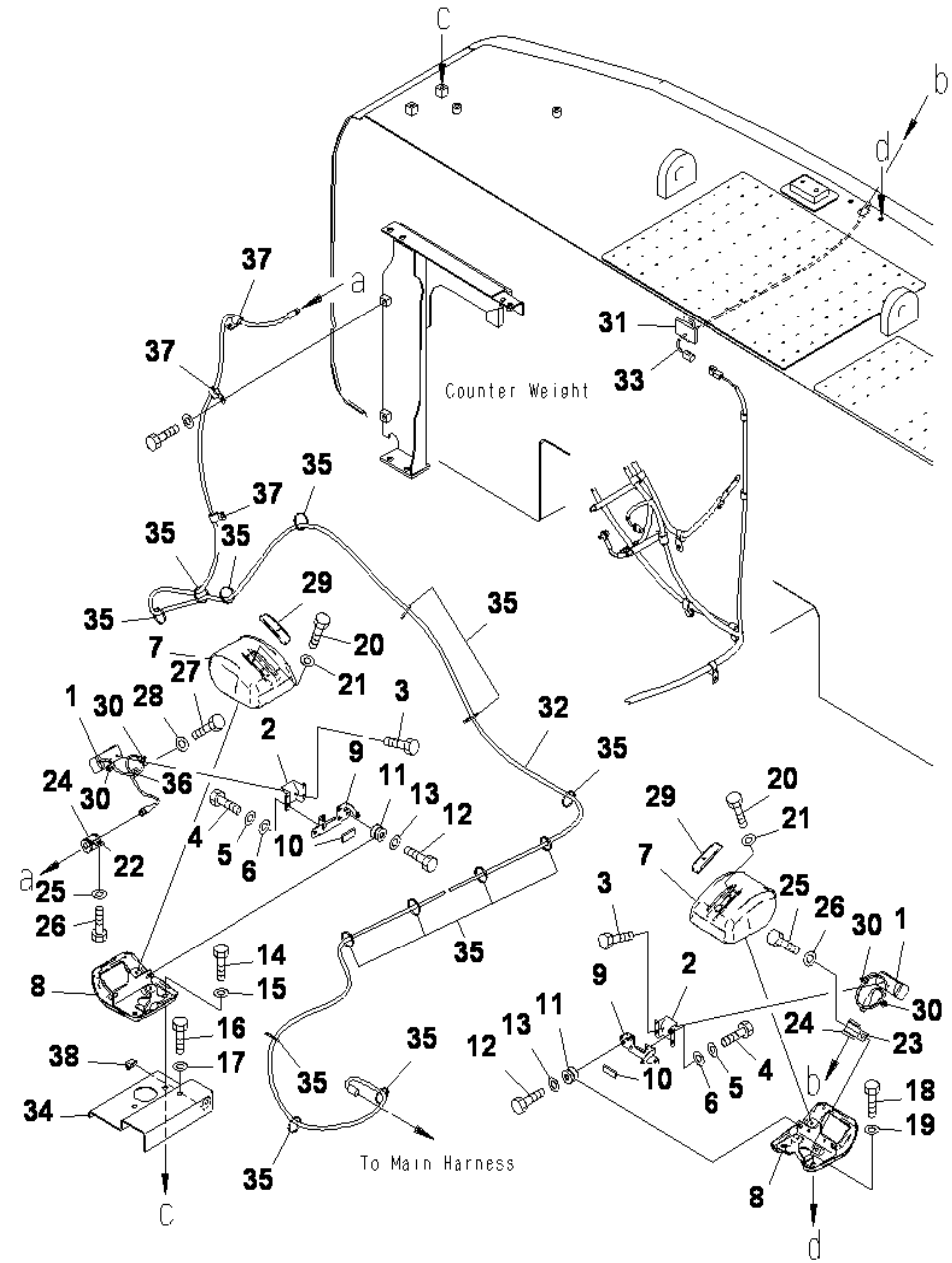

REAR VIEW MONITORING SYSTEM (2 CAMERA)

INDEX	CD	PART NO.	DESCRIPTION	QTY	SERIAL NO.
1		783-53-31100	CAMERA	2	J30001-UP
2		783-53-31201	BRACKET	2	J30001-UP
3		783-53-31310	BOLT	4	J30001-UP
4		783-53-31320	BOLT	8	J30001-UP
5		783-53-31330	WASHER	8	J30001-UP
6		783-53-31340	WASHER	8	J30001-UP
7		207-06-76420	COVER	2	J30001-UP
8		207-06-76431	COVER	2	J30001-UP
9		207-06-76440	BRACKET	2	J30001-UP
10		207-06-76460	.SHEET	1	J30001-UP
11		20Y-810-1240	CUSHION	4	J30001-UP
12		01010-80835	BOLT	4	J30001-UP
13		01643-30823	WASHER	4	J30001-UP
14		01010-81225	BOLT	2	J30001-UP
15		01643-31232	WASHER	2	J30001-UP
16		01010-81265	BOLT	1	J30001-UP
17		01643-31232	WASHER	1	J30001-UP
18		01010-81230	BOLT	2	J30001-UP
19		01643-31232	WASHER	2	J30001-UP
20		01010-80616	BOLT	4	J30001-UP
21		01643-30623	WASHER	4	J30001-UP
22		04434-53212	CLIP	1	J30001-UP
23		04434-53211	CLIP	1	J30001-UP
24		07095-00317	CUSHION	2	J30001-UP
25		01010-81220	BOLT	1	J30001-UP
26		01643-31232	WASHER	1	J30001-UP
27		01010-81016	BOLT	2	J30001-UP
28		01643-31032	WASHER	2	J30001-UP
29		207-06-76451	COVER	2	J30001-UP
30		08059-00310	CLAMP	4	J30001-UP
31		207-06-76490	SHEET	1	J30001-UP
32		207-06-76340	CABLE	1	J30001-UP
33		207-06-76310	CABLE	1	J30001-UP
34		208-06-72110	COVER	1	J30001-UP
35		08034-20536	BAND	20	J30001-UP
36		04434-50510	CLIP	1	J30001-UP
37		04434-51012	CLIP	3	J30001-UP
38		08211-00720	CLIP,RESIN	1	J30001-UP

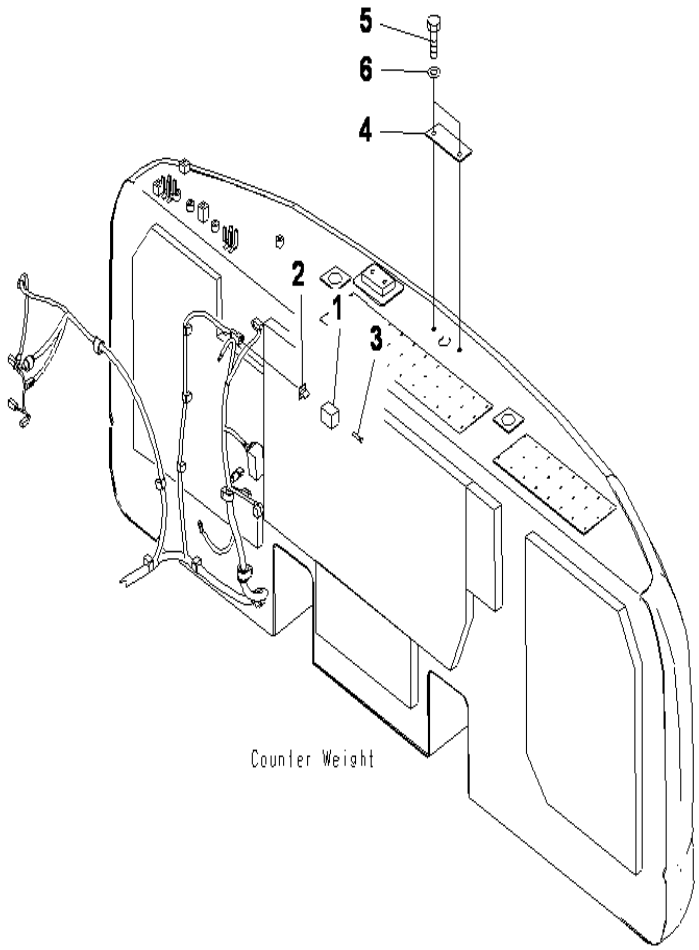

PC400-8 S/N J30001-UP

REAR VIEW MONITORING SYSTEM LESS

INDEX	CD	PART NO.	DESCRIPTION	QTY	SERIAL NO.
1		08192-24200	CONNECTOR	1	J30001-UP
2		08192-14400	WEDGE	1	J30001-UP
3		08191-00770	PLUG	4	J30001-UP
4		207-06-76270	COVER	1	J30001-UP
5		01010-81220	BOLT	2	J30001-UP
6		01643-31232	WASHER	2	J30001-UP

Ref :E0450-01A2 Page :120170

HYDRAULIC SYSTEM

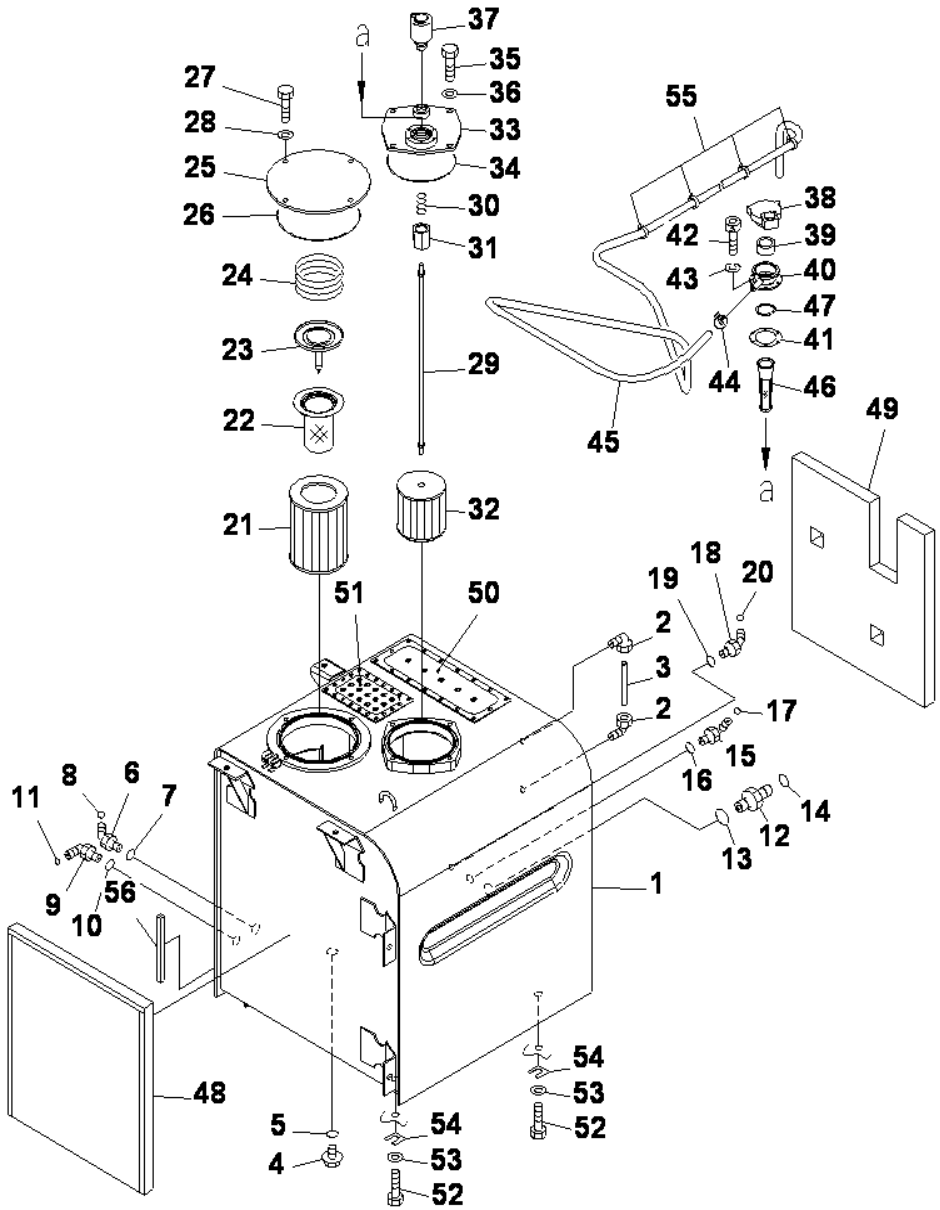

HYDRAULIC TANK

INDEX	CD	PART NO.	DESCRIPTION	QTY	SERIAL NO.
1		208-60-75111	TANK	1	J30114-UP
		208-60-75110	TANK	1	J30001-J30113
2		203-60-31100	ELBOW ASS'Y	2	J30001-UP
3		203-60-31160	TUBE	1	J30001-UP
4		07044-12412	PLUG	1	J30001-UP
5		07002-12434	O-RING	1	J30001-UP
6		02783-10628	UNION	1	J30001-UP
7		07002-12434	O-RING	1	J30001-UP
8		02896-11018	O-RING	1	J30001-UP
9		02782-10315	ELBOW	1	J30001-UP
10		07002-12034	O-RING	1	J30001-UP
11		02896-11009	O-RING	1	J30001-UP
12		207-62-72110	UNION	1	J30001-UP
13		07002-13334	O-RING	1	J30001-UP
14		207-62-64740	O-RING	1	J30001-UP
15		02782-10422	ELBOW	1	J30001-UP
16		07002-12034	O-RING	1	J30001-UP
17		02896-11012	O-RING	1	J30001-UP
18		02783-10210	ELBOW	1	J30001-UP
19		07002-11423	O-RING	1	J30001-UP
20		02896-11008	O-RING	1	J30001-UP
21		208-60-71123	ELEMENT	1	J30001-UP
22		07069-25400	STRAINER	1	J30001-UP
23		208-60-71160	VALVE A	1	J30001-UP
24		07069-34075	SPRING	1	J30001-UP
25		208-60-71130	PLATE	1	J30001-UP
26		07000-15210	O-RING	1	J30001-UP
27		01010-81225	BOLT	4	J30001-UP
28		01643-31232	WASHER	4	J30001-UP
		208-60-71140	STRAINER ASS'Y	1	J30001-UP
29		208-60-71150	.ROD ASS'Y	1	J30001-UP
30		12R-60-11230	..SPRING	1	J30001-UP
31		20Y-60-21320	..HOLDER	1	J30001-UP
32		22B-60-11160	.STRAINER	1	J30001-UP
33		208-60-61190	COVER	1	J30001-UP
34		07000-15180	O-RING	1	J30001-UP
35		01010-81225	BOLT	4	J30001-UP
36		01643-31232	WASHER	4	J30001-UP
37		(198-60-55510)	BREATHER	1	J30001-UP
38		17A-60-11310	CAP ASS'Y	1	J30001-UP
39		20Y-60-21470	.ELEMENT	1	J30001-UP
40		208-60-71181	FILLER NECK	1	J30002-UP
		208-60-71180	FILLER NECK	1	J30001-J30001
41		20Y-60-21340	GASKET	1	J30001-UP
42		01252-70516	SCREW	6	J30001-UP
43		01601-20513	WASHER	6	J30001-UP

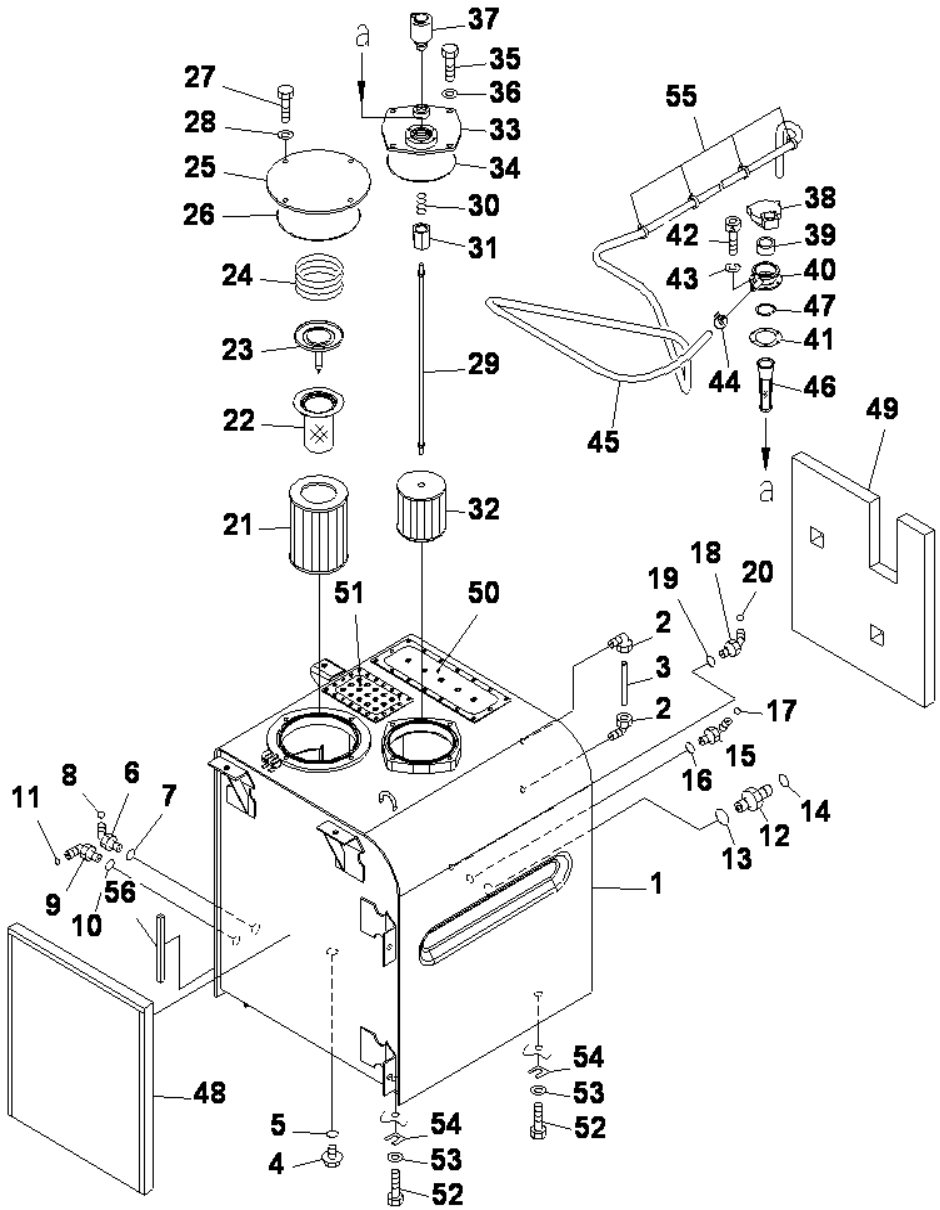

HYDRAULIC TANK

INDEX	CD	PART NO.	DESCRIPTION	QTY	SERIAL NO.
44		07285-00200	CLIP	1	J30002-UP
		07285-00155	CLIP	1	J30001-J30001
45		07261-21431	TUBE	1	J30002-UP
		07270-61431	TUBE	1	J30001-J30001
46		07056-10045	STRAINER	1	J30001-UP
47		04065-04718	RING	1	J30001-UP
48		208-60-71250	SHEET	1	J30001-UP
49		208-60-75240	SHEET	1	J30001-UP
50		20Y-00-42110	PLATE	1	J30001-UP
51		21M-00-21290	PLATE	1	J30001-UP
52		01010-81635	BOLT	6	J30001-UP
53		01643-31645	WASHER	6	J30001-UP
54		195-03-11570	SHIM, 1.0MM	2	J30001-UP
55		134-03-61410	BAND	4	J30001-UP
56		208-60-75120	TRIM	1	J30001-UP

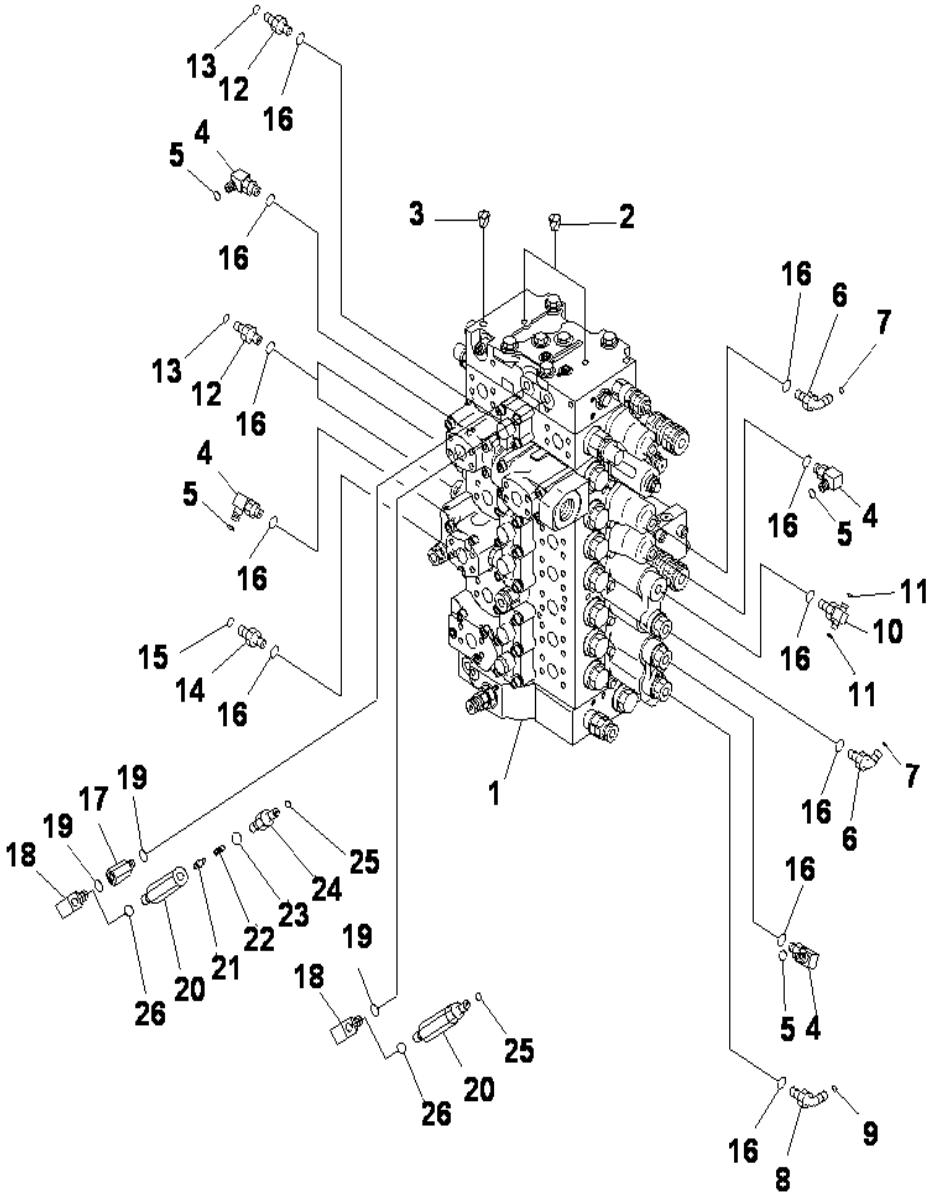

MAIN VALVE (CONNECTION PARTS) (1/2) (1 ACTUATOR)

INDEX	CD	PART NO.	DESCRIPTION	QTY	SERIAL NO.
1		(723-48-27502)	CONTROL VALVE	1	J30001-UP
2		07049-01012	PLUG	2	J30001-UP
3		07049-01215	PLUG	1	J30001-UP
4		20Y-62-45620	ELBOW	4	J30001-UP
5		02896-11008	O-RING	4	J30001-UP
6		11Y-62-12160	ELBOW	2	J30001-UP
7		02896-11008	O-RING	2	J30001-UP
8		21W-62-42490	ELBOW	1	J30001-UP
9		02896-11009	O-RING	1	J30001-UP
10		11Y-62-12250	TEE	1	J30001-UP
11		02896-11008	O-RING	2	J30001-UP
12		11Y-62-12130	NIPPLE	3	J30001-UP
13		02896-11008	O-RING	3	J30001-UP
14		11Y-62-12520	UNION	1	J30001-UP
15		02896-11009	O-RING	1	J30001-UP
16		07002-11423	O-RING	12	J30001-UP
17		20Y-62-22160	ADAPTER	1	J30001-UP
18		208-62-61140	ELBOW	2	J30001-UP
19		07002-11423	O-RING	3	J30001-UP
		20Y-62-41701	VALVE ASS'Y	2	J30001-UP
20	C1	20Y-60-22210	.BODY	1	J30001-UP
21		20Y-60-22270	.POPPET	1	J30001-UP
22		701-20-61230	.SPRING	1	J30001-UP
23		07002-11423	.O-RING	1	J30001-UP
24		20Y-62-47630	.NIPPLE	1	J30001-UP
25		02896-11008	O-RING	2	J30001-UP
26		07002-11423	O-RING	2	J30001-UP

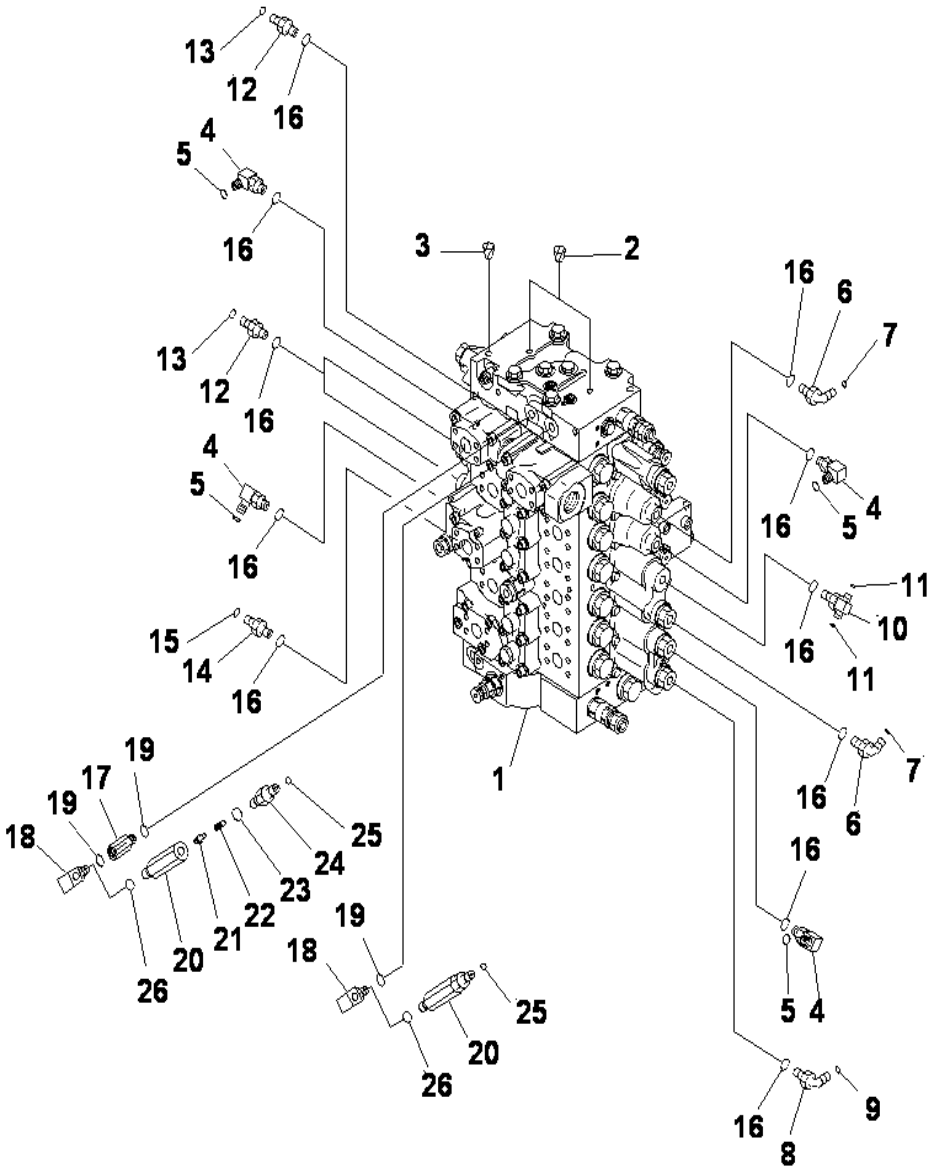

MAIN VALVE (CONNECTION PARTS) (1/2)

INDEX	CD	PART NO.	DESCRIPTION	QTY	SERIAL NO.
1		(723-47-27502)	CONTROL VALVE	1	J30002-UP
		(723-47-27501)	CONTROL VALVE	2	J30001-J30001
2		07049-01012	PLUG	2	J30001-UP
3		07049-01215	PLUG	1	J30001-UP
4		20Y-62-45620	ELBOW	4	J30001-UP
5		02896-11008	O-RING	4	J30001-UP
6		11Y-62-12160	ELBOW	2	J30001-UP
7		02896-11008	O-RING	2	J30001-UP
8		21W-62-42490	ELBOW	1	J30001-UP
9		02896-11009	O-RING	1	J30001-UP
10		11Y-62-12250	TEE	1	J30001-UP
11		02896-11008	O-RING	2	J30001-UP
12		11Y-62-12130	NIPPLE	3	J30001-UP
13		02896-11008	O-RING	3	J30001-UP
14		11Y-62-12520	UNION	1	J30001-UP
15		02896-11009	O-RING	1	J30001-UP
16		07002-11423	O-RING	12	J30001-UP
17		20Y-62-22160	ADAPTER	1	J30001-UP
18		208-62-61140	ELBOW	2	J30001-UP
19		07002-11423	O-RING	3	J30001-UP
		20Y-62-41701	VALVE ASS'Y	2	J30001-UP
20	C1	20Y-60-22210	.BODY	1	J30001-UP
21		20Y-60-22270	.POPPET	1	J30001-UP
22		701-20-61230	.SPRING	1	J30001-UP
23		07002-11423	.O-RING	1	J30001-UP
24		20Y-62-47630	.NIPPLE	1	J30001-UP
25		02896-11008	O-RING	2	J30001-UP
26		07002-11423	O-RING	2	J30001-UP

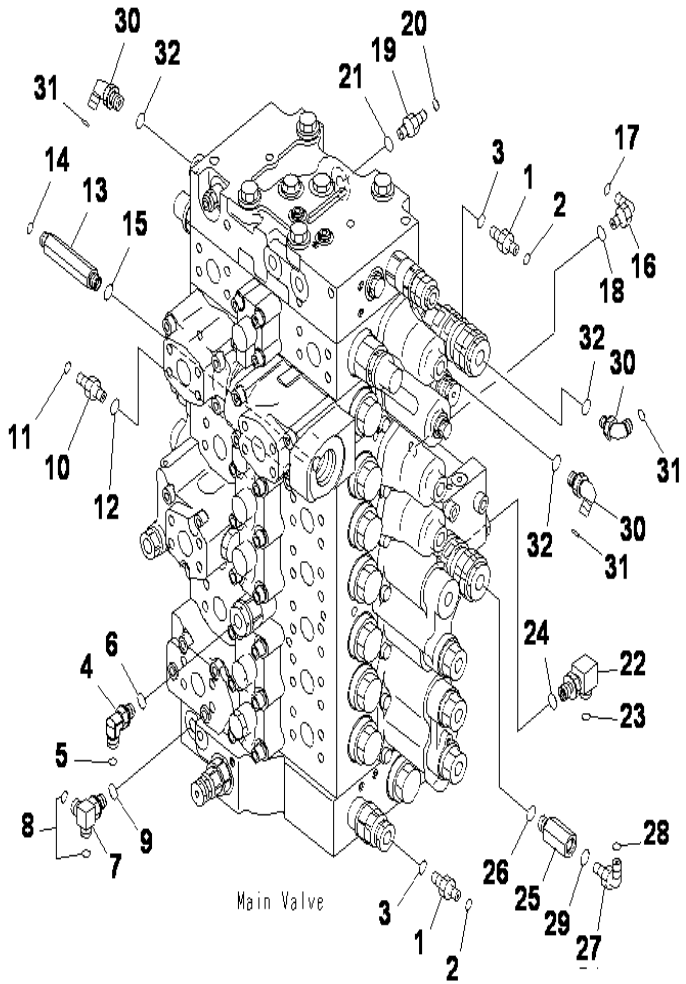

PC400-8 S/N J30001-UP

MAIN VALVE (CONNECTING PARTS) (2/2) (1 ACTUATOR)

INDEX	CD	PART NO.	DESCRIPTION	QTY	SERIAL NO.
1		208-62-71540	NIPPLE	2	J30001-UP
2		02896-11008	O-RING	2	J30001-UP
3		07002-11223	O-RING	2	J30001-UP
4		11Y-62-12160	ELBOW	1	J30001-UP
5		02896-11008	O-RING	1	J30001-UP
6		07002-11423	O-RING	1	J30001-UP
7		207-62-72141	ELBOW	1	J30001-UP
8		02896-11008	O-RING	2	J30001-UP
9		07002-11423	O-RING	1	J30001-UP
10		20U-62-43720	NIPPLE	1	J30001-UP
11		02896-11008	O-RING	1	J30001-UP
12		07002-11423	O-RING	1	J30001-UP
13		207-62-71531	UNION	1	J30001-UP
14		02896-11008	O-RING	1	J30001-UP
15		07002-11423	O-RING	1	J30001-UP
16		11Y-62-12160	ELBOW	1	J30001-UP
17		02896-11008	O-RING	1	J30001-UP
18		07002-11423	O-RING	1	J30001-UP
19		22L-62-22590	NIPPLE	1	J30001-UP
20		02896-11008	O-RING	1	J30001-UP
21		07002-11423	O-RING	1	J30001-UP
22		21W-62-42490	ELBOW	1	J30001-UP
23		02896-11009	O-RING	1	J30001-UP
24		07002-11423	O-RING	1	J30001-UP
25		20Y-62-22160	ADAPTER	1	J30001-UP
26		07002-11423	O-RING	1	J30001-UP
27		11Y-62-12160	ELBOW	1	J30001-UP
28		02896-11008	O-RING	1	J30001-UP
29		07002-11423	O-RING	1	J30001-UP
30		11Y-62-12160	ELBOW	3	J30001-UP
31		02896-11008	O-RING	3	J30001-UP
32		07002-11423	O-RING	3	J30001-UP

Ref :H0120-02A1 Page :150050

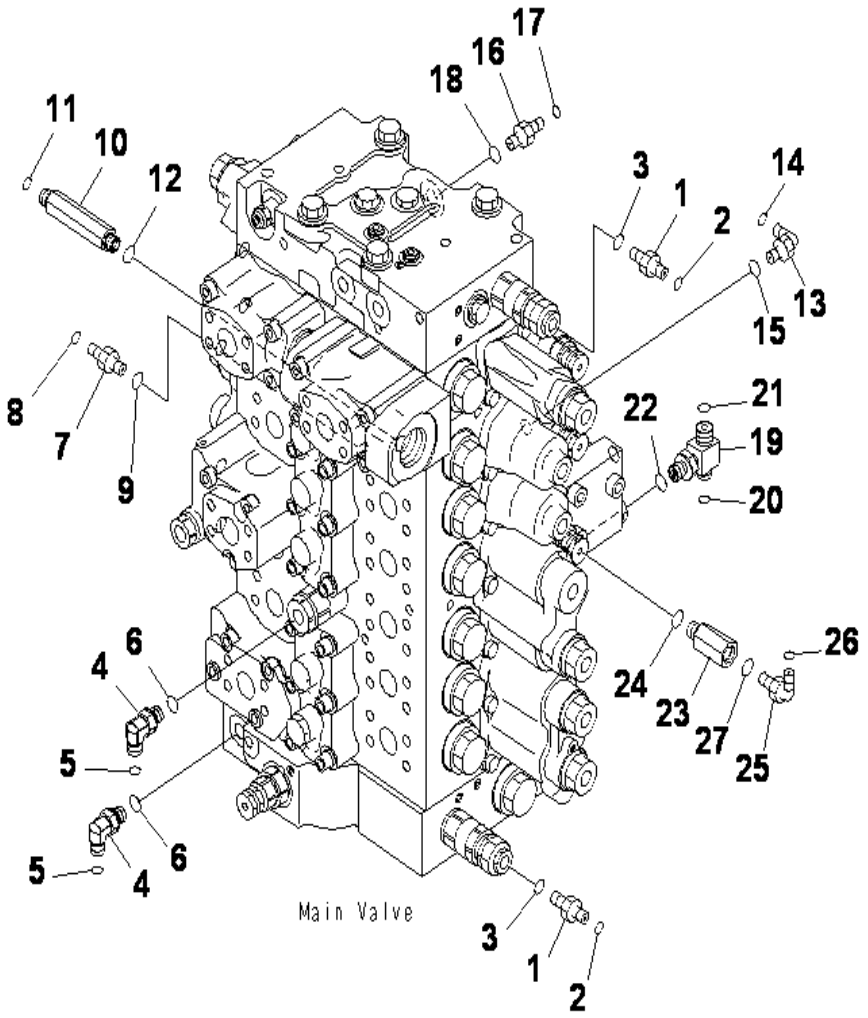

MAIN VALVE (CONNECTING PARTS) (2/2)

INDEX	CD	PART NO.	DESCRIPTION	QTY	SERIAL NO.
1		208-62-71540	NIPPLE	2	J30001-UP
2		02896-11008	O-RING	2	J30001-UP
3		07002-11223	O-RING	2	J30001-UP
4		11Y-62-12160	ELBOW	2	J30001-UP
5		02896-11008	O-RING	2	J30001-UP
6		07002-11423	O-RING	2	J30001-UP
7		20U-62-43720	NIPPLE	1	J30001-UP
8		02896-11008	O-RING	1	J30001-UP
9		07002-11423	O-RING	1	J30001-UP
10		207-62-71531	UNION	1	J30001-UP
11		02896-11008	O-RING	1	J30001-UP
12		07002-11423	O-RING	1	J30001-UP
13		11Y-62-12160	ELBOW	1	J30001-UP
14		02896-11008	O-RING	1	J30001-UP
15		07002-11423	O-RING	1	J30001-UP
16		22L-62-22590	NIPPLE	1	J30001-UP
17		02896-11008	O-RING	1	J30001-UP
18		07002-11423	O-RING	1	J30001-UP
19		11Y-62-12820	TEE	1	J30001-UP
20		02896-11008	O-RING	1	J30001-UP
21		02896-11009	O-RING	1	J30001-UP
22		07002-11423	O-RING	1	J30001-UP
23		20Y-62-22160	ADAPTER	1	J30001-UP
24		07002-11423	O-RING	1	J30001-UP
25		11Y-62-12160	ELBOW	1	J30001-UP
26		02896-11008	O-RING	1	J30001-UP
27		07002-11423	O-RING	1	J30001-UP

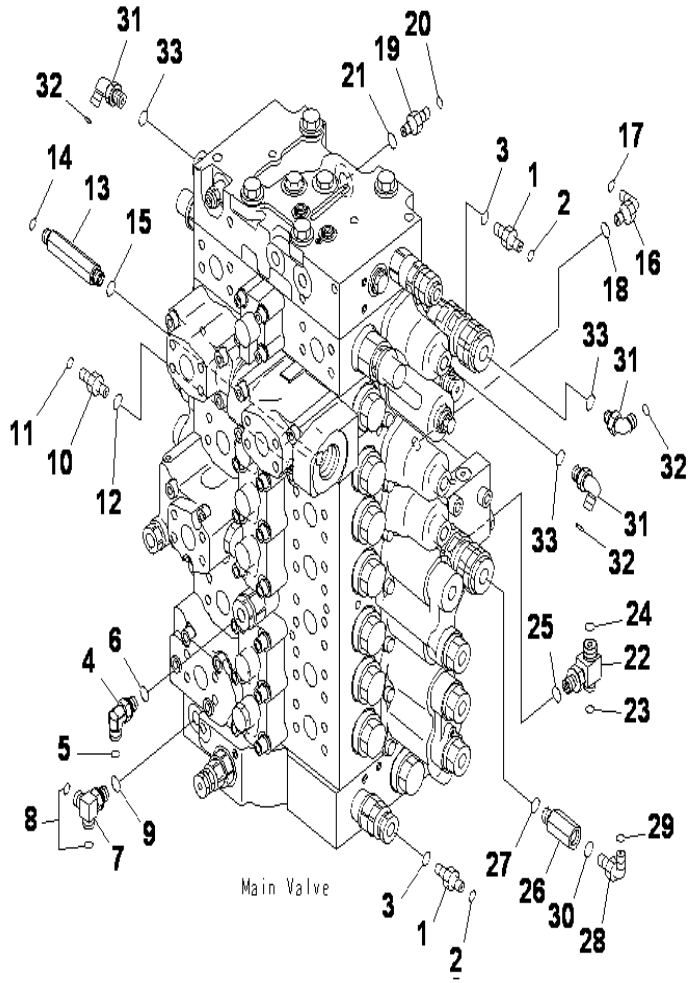

PC400-8 S/N J30001-UP

MAIN VALVE (CONNECTING PARTS) (2/2) (1 ACTUATOR)

INDEX	CD	PART NO.	DESCRIPTION	QTY	SERIAL NO.
1		208-62-71540	NIPPLE	2	J30001-UP
2		02896-11008	O-RING	2	J30001-UP
3		07002-11223	O-RING	2	J30001-UP
4		11Y-62-12160	ELBOW	1	J30001-UP
5		02896-11008	O-RING	1	J30001-UP
6		07002-11423	O-RING	1	J30001-UP
7		11Y-62-12160	ELBOW	1	J30001-UP
8		02896-11008	O-RING	2	J30001-UP
9		07002-11423	O-RING	1	J30001-UP
10		20U-62-43720	NIPPLE	1	J30001-UP
11		02896-11008	O-RING	1	J30001-UP
12		07002-11423	O-RING	1	J30001-UP
13		207-62-71531	UNION	1	J30001-UP
14		02896-11008	O-RING	1	J30001-UP
15		07002-11423	O-RING	1	J30001-UP
16		11Y-62-12160	ELBOW	1	J30001-UP
17		02896-11008	O-RING	1	J30001-UP
18		07002-11423	O-RING	1	J30001-UP
19		11Y-62-12130	NIPPLE	1	J30001-UP
20		02896-11008	O-RING	1	J30001-UP
21		07002-11423	O-RING	1	J30001-UP
22		11Y-62-12820	TEE	1	J30001-UP
23		02896-11008	O-RING	1	J30001-UP
24		02896-11009	O-RING	1	J30001-UP
25		07002-11423	O-RING	1	J30001-UP
26		20Y-62-22160	ADAPTER	1	J30001-UP
27		07002-11423	O-RING	1	J30001-UP
28		11Y-62-12160	ELBOW	1	J30001-UP
29		02896-11008	O-RING	1	J30001-UP
30		07002-11423	O-RING	1	J30001-UP
31		11Y-62-12160	ELBOW	3	J30001-UP
32		02896-11008	O-RING	3	J30001-UP
33		07002-11423	O-RING	3	J30001-UP

Ref :H0120-02A5 Page :150070

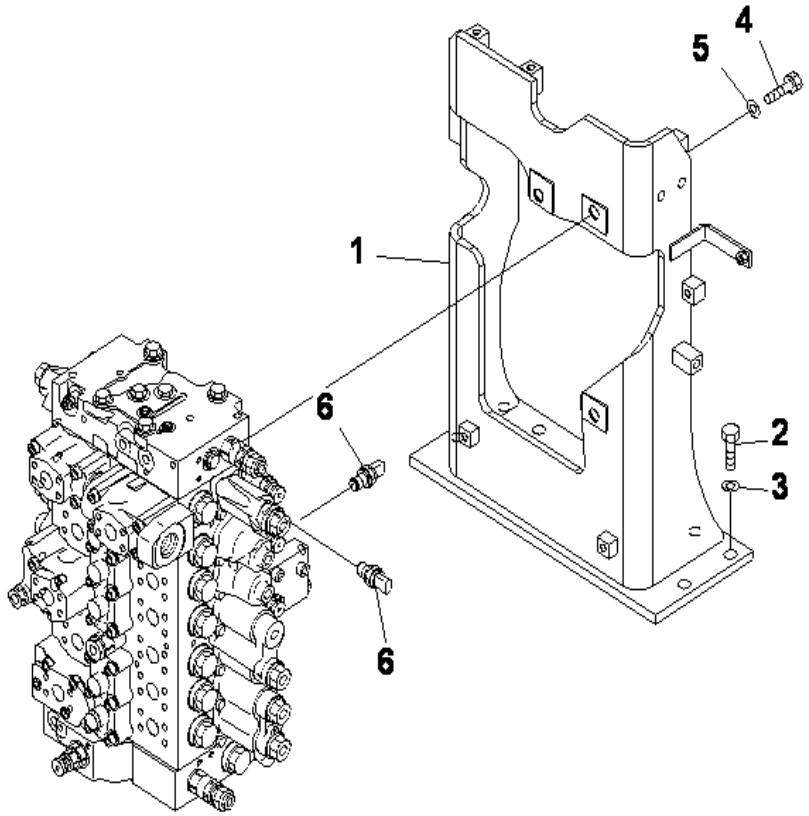

Main Valve

PC400-8 S/N J30001-UP

MAIN VALVE (VALVE BRACKET)

INDEX	CD	PART NO.	DESCRIPTION	QTY	SERIAL NO.
1		208-62-71111	BRACKET	1	J30001-UP
2		01010-81640	BOLT	5	J30001-UP
3		01643-31645	WASHER	5	J30001-UP
4		01010-81645	BOLT	3	J30001-UP
5		01643-31645	WASHER	3	J30001-UP
6		786-19-31812	SENSOR, PRESSUR	2	J30104-UP
		786-19-31811	SENSOR	2	J30001-J30103

Ref :H0120-03A1 Page :150080

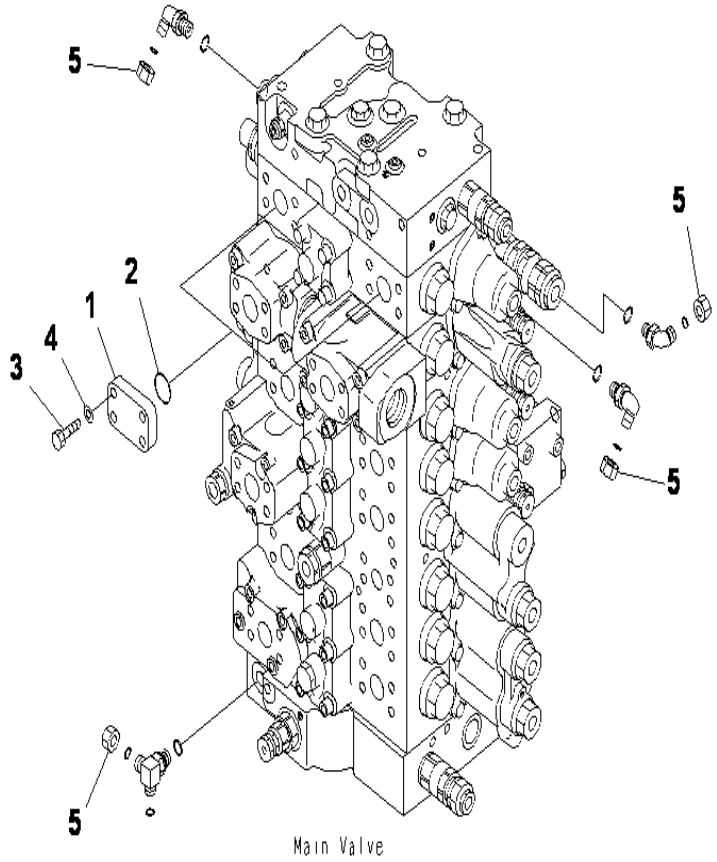

Main Valve

PC400-8 S/N J30001-UP

MAIN VALVE (SERV. VALVE PLUG)(1 ATT)(WITH DRIFT PREVENTIVE)(PIP. LESS)

INDEX	CD	PART NO.	DESCRIPTION	QTY	SERIAL NO.
1		207-62-56190	FLANGE	2	J30001-UP
2		07000-13035	O-RING	2	J30001-UP
3		07372-21040	BOLT	8	J30001-UP
4		01643-51032	WASHER	8	J30001-UP
5		02789-00210	PLUG	4	J30001-UP

Ref :H0120-04A2 Page :150090

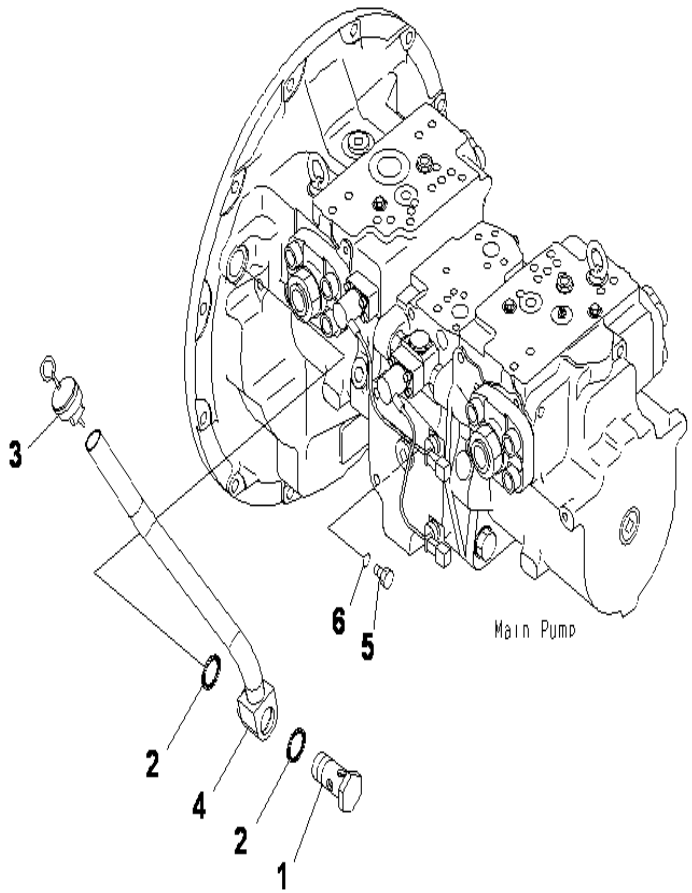

PC400-8 S/N J30001-UP

MAIN PUMP (CONNECTING PARTS)

INDEX	CD	PART NO.	DESCRIPTION	QTY	SERIAL NO.
1		207-01-31141	BOLT	1	J30001-UP
2		07005-03016	GASKET	2	J30001-UP
3		208-01-71350	GAUGE	1	J30001-UP
4		208-01-75210	TUBE	1	J30001-UP
5		07040-11209	PLUG	1	J30001-UP
6		07002-11223	O-RING	1	J30001-UP

Ref :H0210-01A0 Page :150100

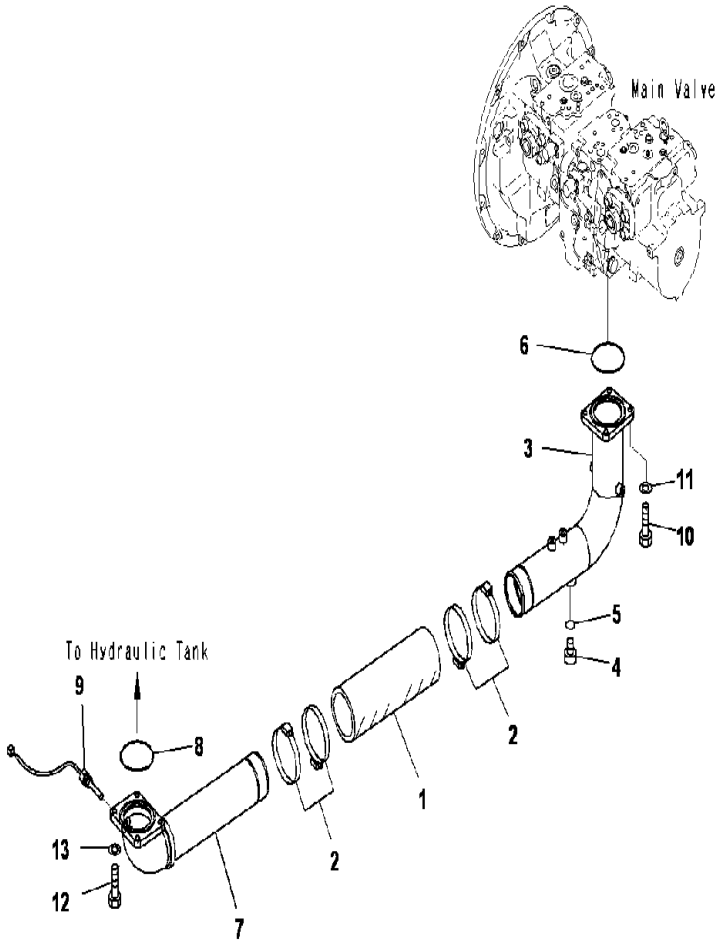

PC400-8 S/N J30001-UP

SUCTION LINE

INDEX	CD	PART NO.	DESCRIPTION	QTY	SERIAL NO.
1		07260-09936	HOSE	1	J30001-UP
2		208-62-73910	CLAMP	4	J30001-UP
3		208-62-74870	TUBE	1	J30002-UP
		208-62-75160	TUBE	1	J30001-J30001
4		07040-12414	PLUG	1	J30001-UP
5		07002-12434	O-RING	1	J30001-UP
6		07000-12105	O-RING	1	J30001-UP
7		207-62-71141	TUBE	1	J30001-UP
8		07000-12105	O-RING	1	J30001-UP
9		7861-93-3320	SENSOR	1	J30001-UP
10		01010-81255	BOLT	4	J30002-UP
		01010-81240	BOLT	8	J30001-J30001
11		01643-31232	WASHER	4	J30002-UP
		01643-31232	WASHER	8	J30001-J30001
12		01010-81240	BOLT	4	J30002-UP
13		01643-31232	WASHER	4	J30002-UP

Ref :H0311-01A1 Page :150110

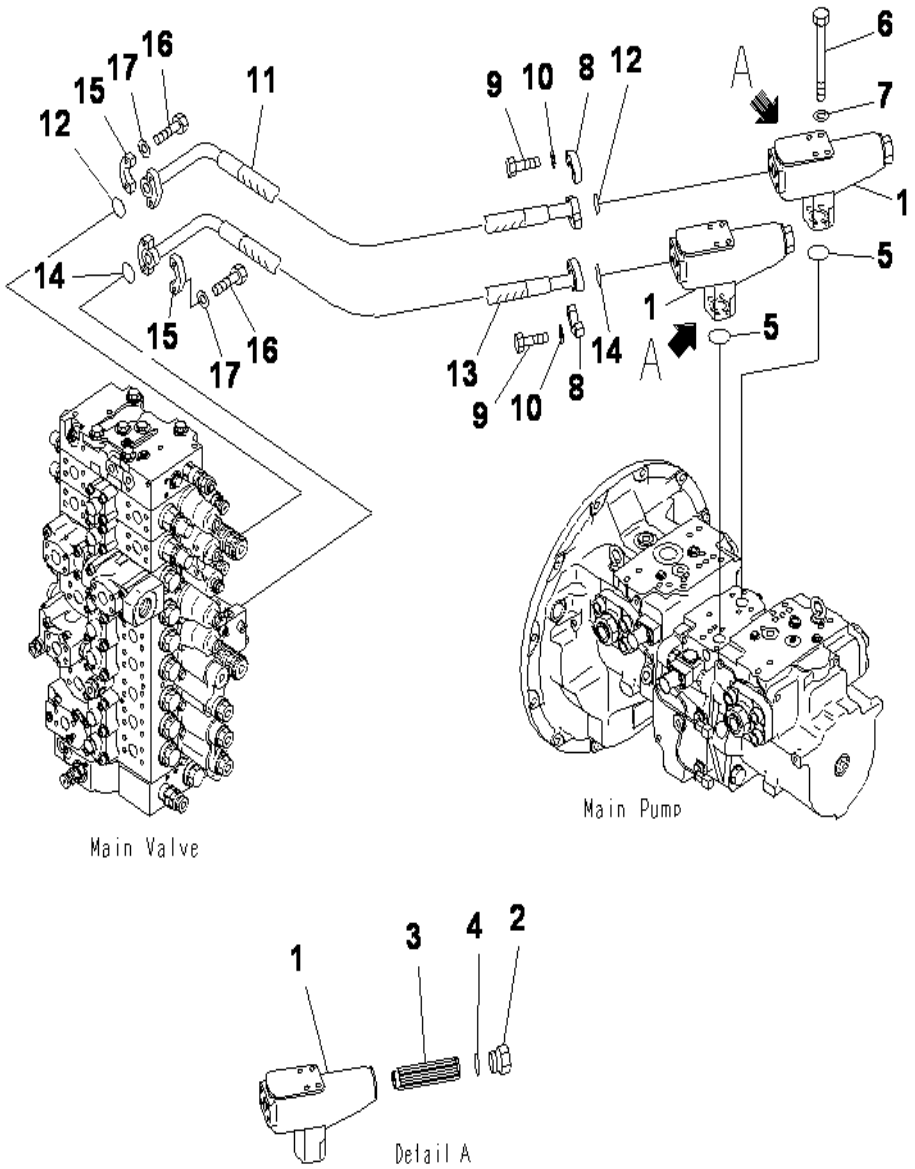

DELIVERY LINE (WITH IN LINE FILTER)

INDEX	CD	PART NO.	DESCRIPTION	QTY	SERIAL NO.
		208-62-71101	FILTER A.....	2	J30001-UP
1	C1	208-62-71810	.CASE.....	1	J30001-UP
2		20Y-60-22372	.PLUG.....	1	J30001-UP
3		207-60-61250	.STRAINER.....	1	J30001-UP
4		07002-13634	.O-RING.....	1	J30001-UP
5		07000-13035	O-RING.....	2	J30001-UP
6		01011-81070	BOLT.....	8	J30001-UP
7		01643-31032	WASHER.....	8	J30001-UP
8		07371-31049	FLANGE.....	4	J30001-UP
9		07372-21035	BOLT.....	8	J30001-UP
10		01643-51032	WASHER.....	8	J30001-UP
11		207-62-71750	HOSE.....	1	J30001-UP
12		07000-13032	O-RING.....	2	J30001-UP
13		207-62-71880	HOSE.....	1	J30001-UP
14		07000-13032	O-RING.....	2	J30001-UP
15		07371-31049	FLANGE.....	4	J30001-UP
16		07372-21035	BOLT.....	8	J30001-UP
17		01643-51032	WASHER.....	8	J30001-UP

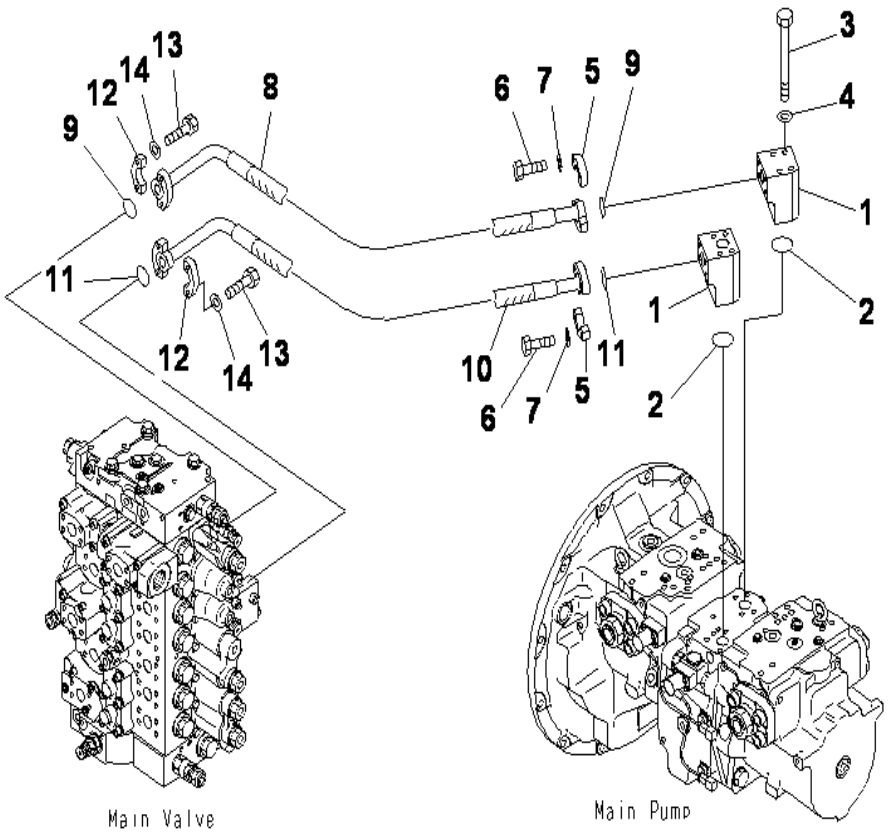

PC400-8 S/N J30001-UP

DELIVERY LINE

INDEX	CD	PART NO.	DESCRIPTION	QTY	SERIAL NO.
1		208-62-71820	BLOCK	2	J30001-UP
2		07000-13035	O-RING	2	J30001-UP
3		01011-81020	BOLT	8	J30001-UP
4		01643-31032	WASHER	8	J30001-UP
5		07371-31049	FLANGE	4	J30001-UP
6		07372-21035	BOLT	8	J30001-UP
7		01643-51032	WASHER	8	J30001-UP
8		208-62-71220	HOSE, 1240MM	1	J30001-UP
9		07000-13032	O RING	2	J30001-UP
10		207-62-71880	HOSE	1	J30001-UP
11		07000-13032	O RING	2	J30001-UP
12		07371-31049	FLANGE	4	J30001-UP
13		07372-21035	BOLT	8	J30001-UP
14		01643-51032	WASHER	8	J30001-UP

Ref :H0312-01A1 Page :150130

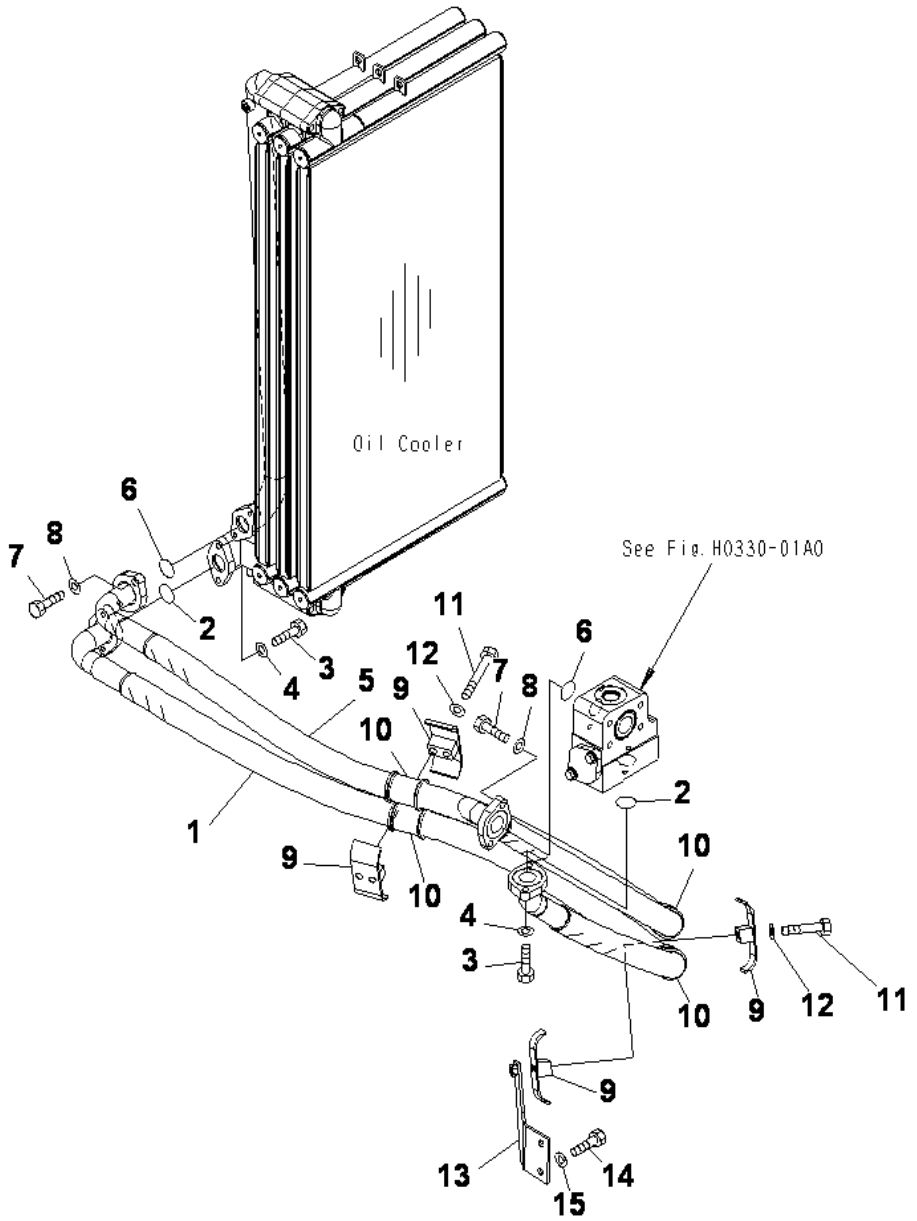

PC400-8 S/N J30001-UP

OIL COOLER LINE

INDEX	CD	PART NO.	DESCRIPTION	QTY	SERIAL NO.
1		208-62-74621	HOSE	1	J30001-UP
2		07000-13048	O-RING	2	J30001-UP
3		01010-81240	BOLT	4	J30001-UP
4		01643-31232	WASHER	4	J30001-UP
5		208-62-75380	HOSE ASS'Y	1	J30001-UP
6		07000-13048	O-RING	2	J30001-UP
7		01010-81240	BOLT	4	J30001-UP
8		01643-31232	WASHER	4	J30001-UP
9		07094-31228	CLAMP	4	J30001-UP
10		07095-01245	CUSHION	4	J30001-UP
11		01010-81290	BOLT	4	J30001-UP
12		01643-31232	WASHER	4	J30001-UP
13		208-62-71490	BRACKET	1	J30001-UP
14		01010-81225	BOLT	2	J30001-UP
15		01643-31232	WASHER	2	J30001-UP

Ref :H0320-01A1 Page :150140

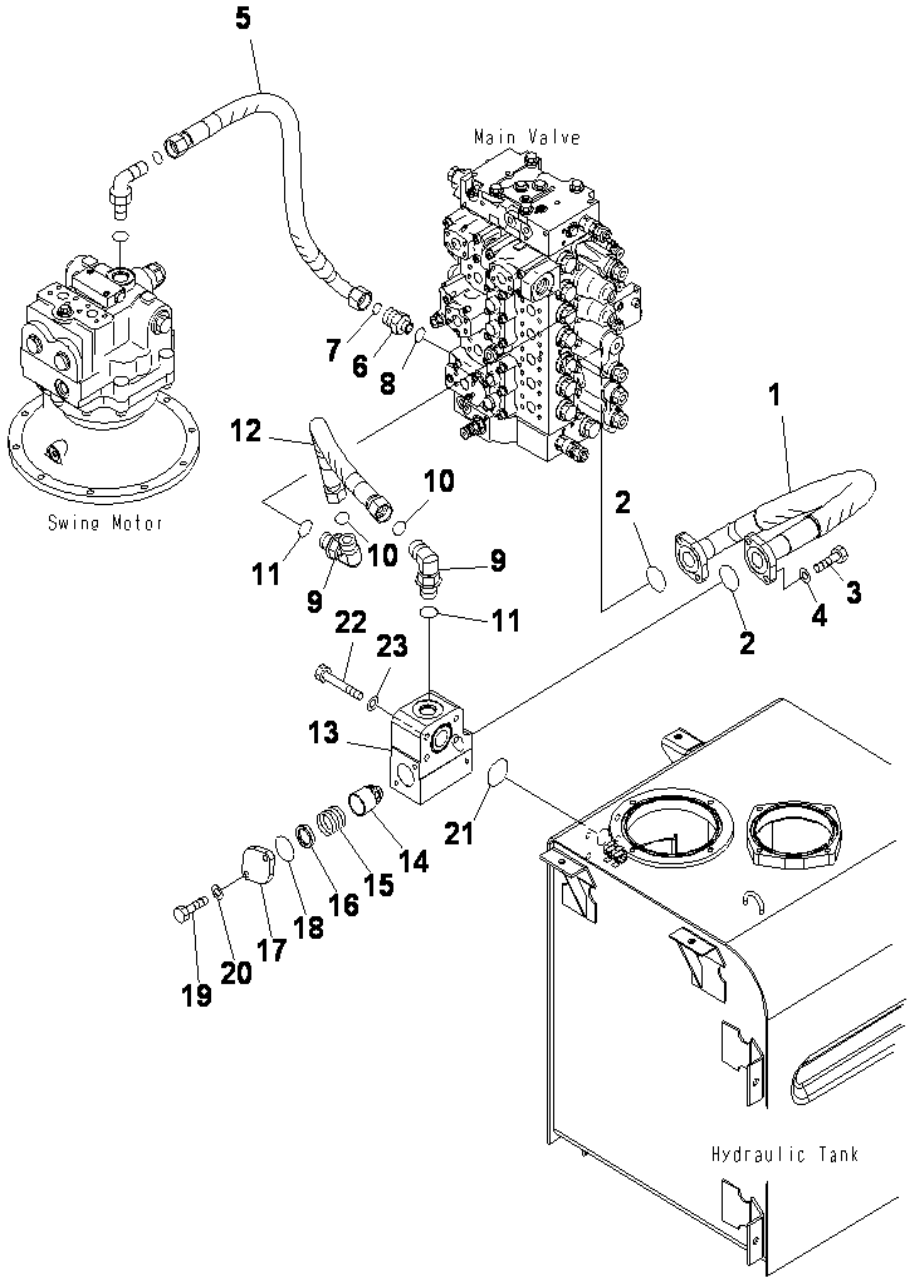

RETURN LINE

INDEX	CD	PART NO.	DESCRIPTION	QTY	SERIAL NO.
1		208-62-71240	HOSE, 1250MM	1	J30001-UP
2		07000-13048	O-RING	2	J30001-UP
3		01010-81240	BOLT	4	J30001-UP
4		01643-31232	WASHER	4	J30001-UP
5		208-62-71370	HOSE, 1100MM	1	J30001-UP
6		20U-62-41810	NIPPLE	1	J30001-UP
7		207-62-64740	O-RING	1	J30001-UP
8		07002-12434	O-RING	1	J30001-UP
9		21W-62-42640	ELBOW	2	J30001-UP
10		207-62-64740	O-RING	2	J30001-UP
11		07002-13334	O-RING	2	J30001-UP
12		208-62-71380	HOSE, 650MM	1	J30001-UP
13		208-62-71410	BLOCK	1	J30001-UP
14		205-60-71230	POPPET	1	J30001-UP
15		706-76-71190	SPRING	1	J30001-UP
16		207-60-51170	SPACER	1	J30001-UP
17		208-62-71420	FLANGE	1	J30001-UP
18		07000-12060	O-RING	1	J30001-UP
19		01010-81235	BOLT	2	J30001-UP
20		01643-31232	WASHER	2	J30001-UP
21		07000-12060	O-RING	1	J30001-UP
22		01010-81290	BOLT	4	J30001-UP
23		01643-31232	WASHER	4	J30001-UP

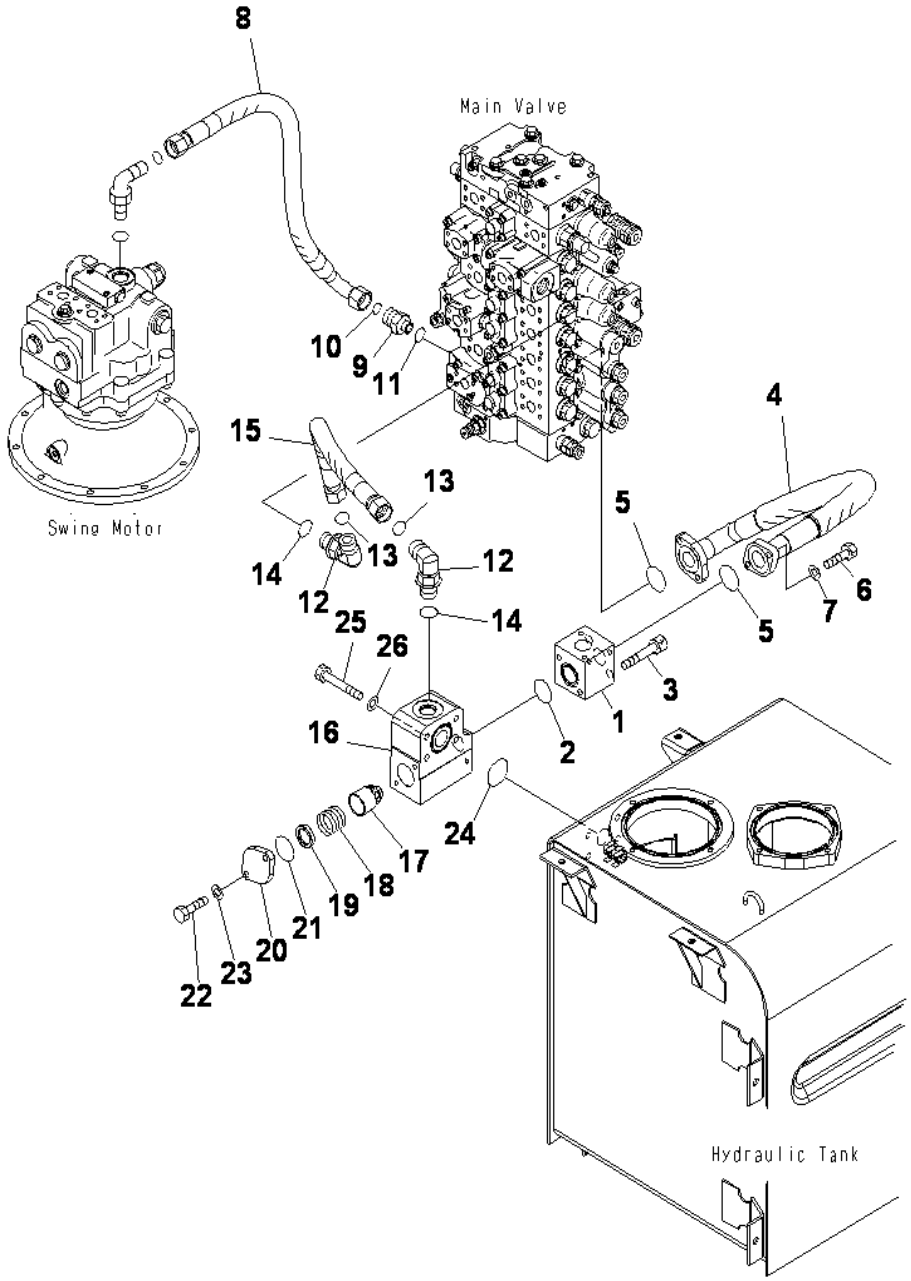

RETURN LINE (1 ACTUATOR)

INDEX	CD	PART NO.	DESCRIPTION	QTY	SERIAL NO.
1		208-62-71831	BLOCK	1	J30001-UP
2		07000-13048	O-RING	1	J30001-UP
3		01252-71295	BOLT	2	J30001-UP
4		208-62-72550	HOSE, 1200MM	1	J30001-UP
5		07000-13048	O-RING	2	J30001-UP
6		01010-81240	BOLT	4	J30001-UP
7		01643-31232	WASHER	4	J30001-UP
8		208-62-71370	HOSE	1	J30001-UP
9		20U-62-41810	NIPPLE	1	J30001-UP
10		207-62-64740	O-RING	1	J30001-UP
11		07002-12434	O-RING	1	J30001-UP
12		21W-62-42640	ELBOW	2	J30001-UP
13		207-62-64740	O-RING	2	J30001-UP
14		07002-13334	O-RING	2	J30001-UP
15		208-62-71380	HOSE	1	J30001-UP
16		208-62-71410	BLOCK	1	J30001-UP
17		205-60-71230	POPPET	1	J30001-UP
18		706-76-71190	SPRING	1	J30001-UP
19		207-60-51170	SPACER	1	J30001-UP
20		208-62-71420	FLANGE	1	J30001-UP
21		07000-12060	O-RING	1	J30001-UP
22		01010-81235	BOLT	2	J30001-UP
23		01643-31232	WASHER	2	J30001-UP
24		07000-12060	O-RING	1	J30001-UP
25		01010-81290	BOLT	4	J30001-UP
26		01643-31232	WASHER	4	J30001-UP

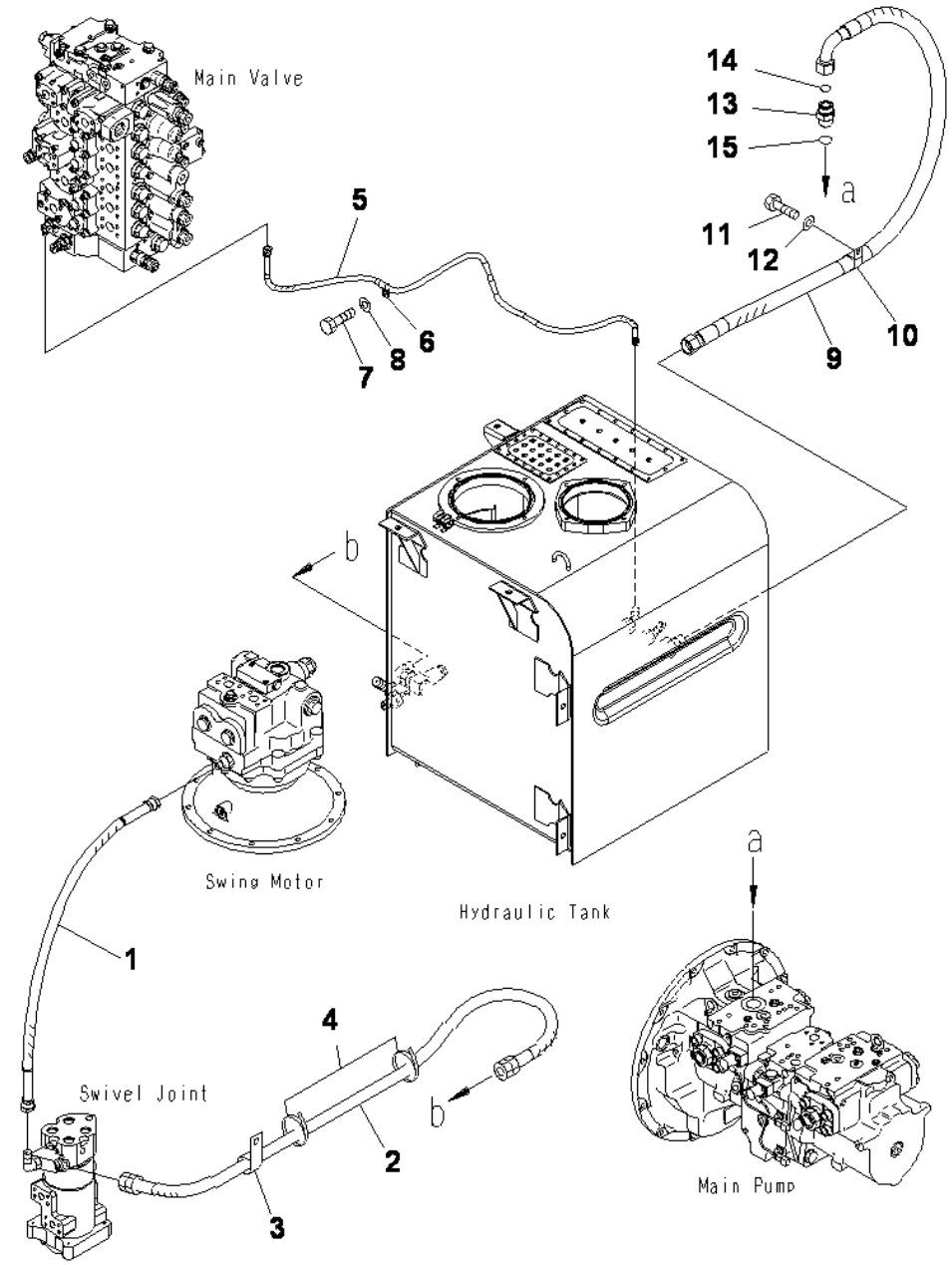

DRAIN LINE

INDEX	CD	PART NO.	DESCRIPTION	QTY	SERIAL NO.
1		02762-005A9	HOSE	1	J30001-UP
2		208-62-71470	HOSE, 1700MM	1	J30001-UP
3		04434-53212	CLIP	1	J30001-UP
4		08034-20536	BAND	2	J30001-UP
5		02760-00213	HOSE, 1300MM	1	J30001-UP
6		04434-51012	CLIP	1	J30001-UP
7		01010-81220	BOLT	1	J30001-UP
8		01643-31232	WASHER	1	J30001-UP
9		208-62-71390	HOSE, 1750MM	1	J30001-UP
10		113-89-97950	CLIP	1	J30001-UP
11		01010-81220	BOLT	1	J30001-UP
12		01643-31232	WASHER	1	J30001-UP
13		207-62-72110	UNION	1	J30001-UP
14		207-62-64740	O-RING	1	J30001-UP
15		07002-13334	O-RING	1	J30001-UP

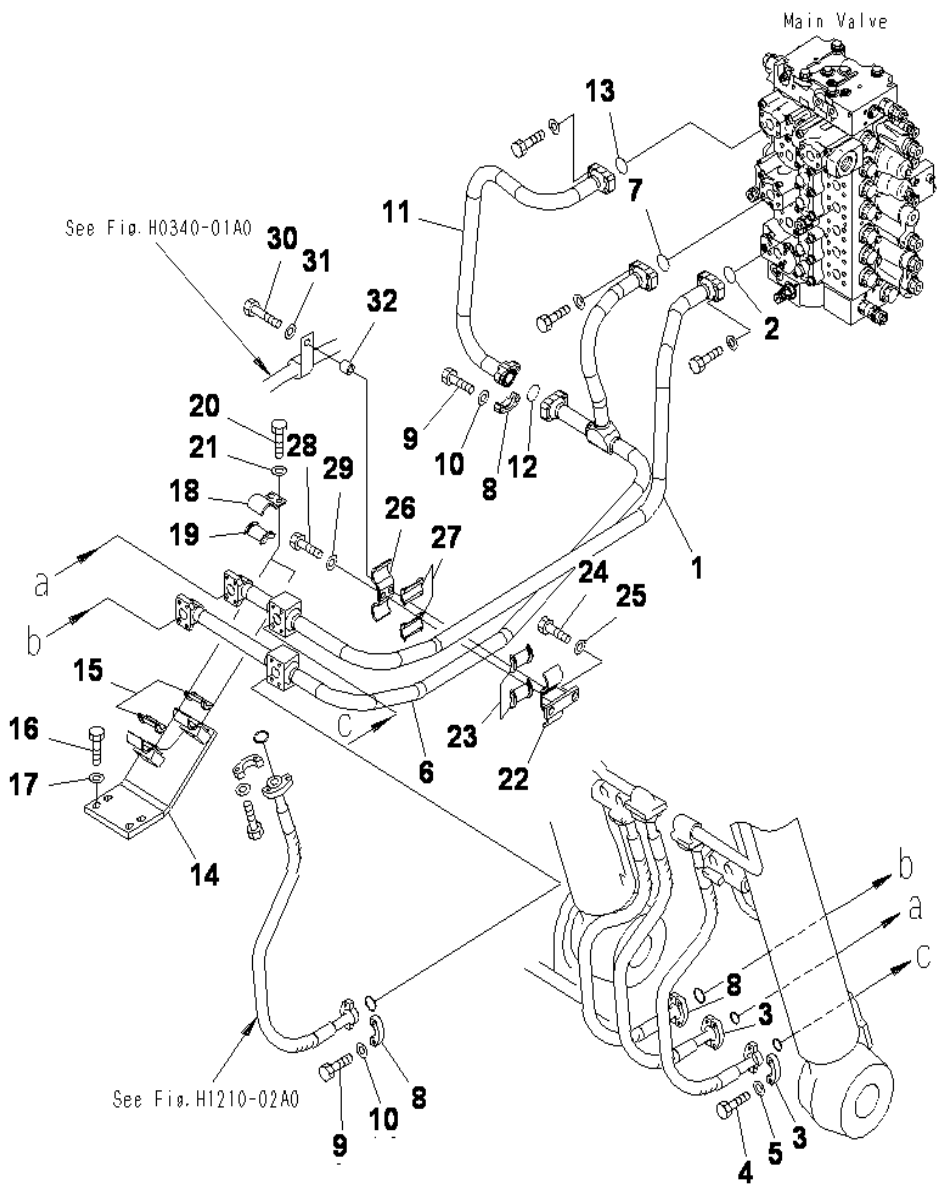

BOOM LINE (1/2)

INDEX	CD	PART NO.	DESCRIPTION	QTY	SERIAL NO.
1		208-62-71271	TUBE	1	J30001-UP
2		07000-13035	O-RING	1	J30001-UP
3		07371-31049	FLANGE	4	J30001-UP
4		07372-21035	BOLT	8	J30001-UP
5		01643-51032	WASHER	8	J30001-UP
6		208-62-71281	TUBE	1	J30001-UP
7		07000-13035	O-RING	1	J30001-UP
8		07371-31049	FLANGE	6	J30001-UP
9		07372-21035	BOLT	12	J30001-UP
10		01643-51032	WASHER	12	J30001-UP
11		208-62-71290	TUBE	1	J30001-UP
12		07000-13032	O-RING	1	J30001-UP
13		07000-13035	O-RING	1	J30001-UP
14		208-62-71741	BRACKET	1	J30001-UP
15		205-62-73430	.SEAT	2	J30001-UP
16		01010-81235	BOLT	4	J30001-UP
17		01643-31232	WASHER	4	J30001-UP
18		207-62-52430	CLAMP	2	J30001-UP
19		205-62-73430	.SEAT	1	J30001-UP
20		01010-81230	BOLT	4	J30001-UP
21		01643-31232	WASHER	4	J30001-UP
22		207-62-71330	BRACKET	1	J30001-UP
23		205-62-73430	.SEAT	2	J30001-UP
24		01010-81230	BOLT	2	J30001-UP
25		01643-31232	WASHER	2	J30001-UP
26		207-62-54770	CLAMP	1	J30001-UP
27		205-62-73430	.SEAT	2	J30001-UP
28		01010-81230	BOLT	1	J30001-UP
29		01643-31232	WASHER	1	J30001-UP
30		01010-81270	BOLT	1	J30001-UP
31		01643-31232	WASHER	1	J30001-UP
32		20Y-03-11220	COLLAR	1	J30001-UP

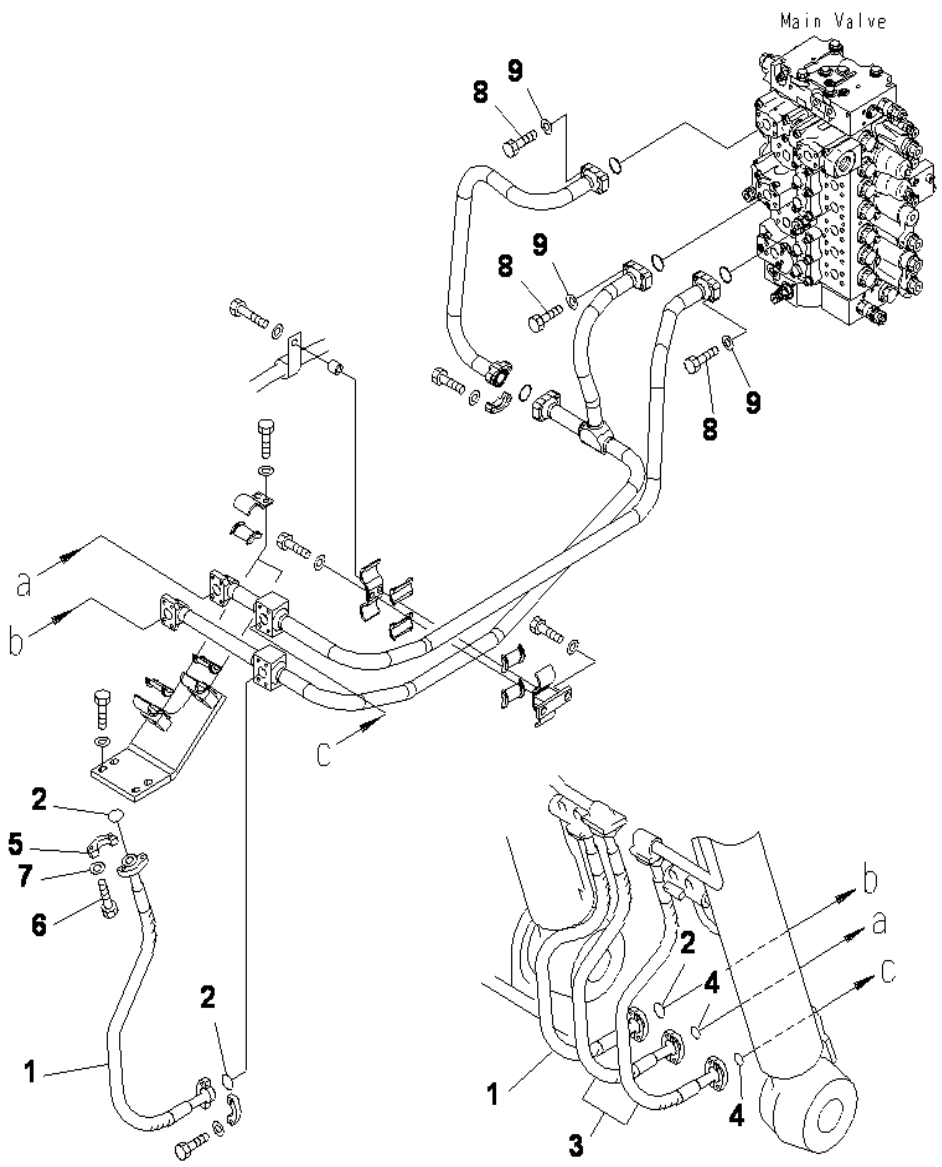

PC400-8 S/N J30001-UP

BOOM LINE (2/2)

INDEX	CD	PART NO.	DESCRIPTION	QTY	SERIAL NO.
1		207-62-52610	HOSE	2	J30001-UP
2		07000-13032	O RING	4	J30001-UP
3		206-62-51650	HOSE	2	J30001-UP
4		07000-13032	O RING	4	J30001-UP
5		07371-31049	FLANGE	12	J30001-UP
6		07372-21035	BOLT	24	J30001-UP
7		01643-51032	WASHER	24	J30001-UP
8		07372-21040	BOLT	12	J30001-UP
9		01643-51032	WASHER	12	J30001-UP

Ref :H1210-02A0 Page :150200

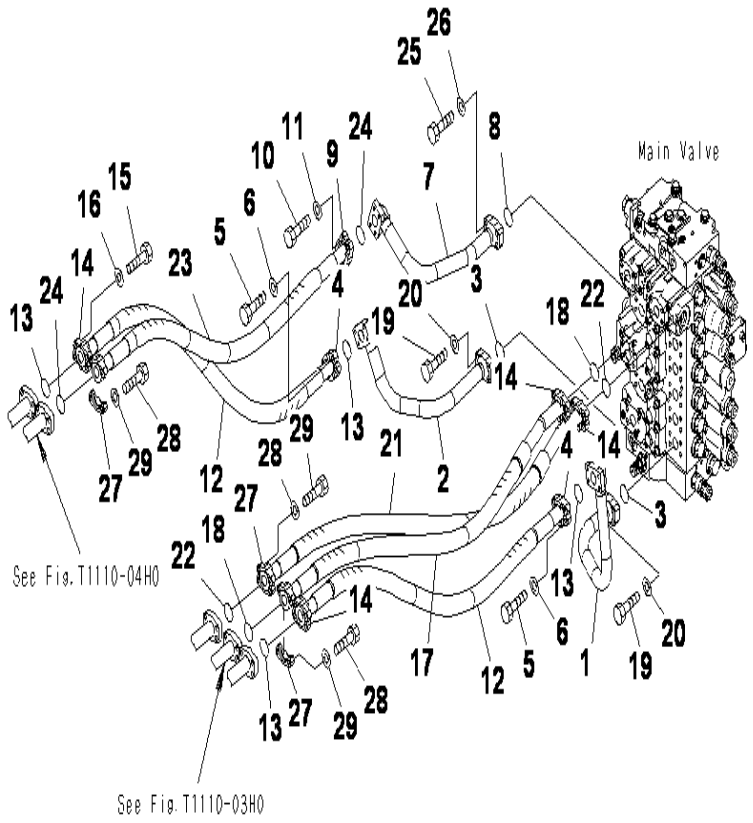

PC400-8 S/N J30001-UP

ARM AND BUCKET LINE

INDEX	CD	PART NO.	DESCRIPTION	QTY	SERIAL NO.
1		208-62-71560	TUBE	1	J30001-UP
2		208-62-71570	TUBE	1	J30001-UP
3		07000-13035	O-RING	2	J30001-UP
4		07371-31049	FLANGE	4	J30001-UP
5		07372-21035	BOLT	8	J30001-UP
6		01643-51032	WASHER	8	J30001-UP
7		208-62-71580	TUBE	1	J30001-UP
8		07000-13035	O-RING	1	J30001-UP
9		07371-31049	FLANGE	2	J30001-UP
10		07372-21035	BOLT	4	J30001-UP
11		01643-51032	WASHER	4	J30001-UP
12		208-62-71160	HOSE, 1320MM	2	J30001-UP
13		07000-13032	O-RING	4	J30001-UP
14		07371-31049	FLANGE	8	J30001-UP
15		07372-21035	BOLT	16	J30001-UP
16		01643-51032	WASHER	16	J30001-UP
17		208-62-71190	HOSE, 1450MM	1	J30001-UP
18		07000-13032	O RING	2	J30001-UP
19		07372-21040	BOLT	8	J30001-UP
20		01643-51032	WASHER	8	J30001-UP
21		207-62-71370	HOSE	1	J30001-UP
22		07000-13032	O RING	2	J30001-UP
23		208-62-71170	HOSE, 1210MM	1	J30001-UP
24		07000-13032	O RING	2	J30001-UP
25		07372-21040	BOLT	4	J30001-UP
26		01643-51032	WASHER	4	J30001-UP
27		07371-31049	FLANGE	6	J30001-UP
28		07372-21035	BOLT	12	J30001-UP
29		01643-51032	WASHER	12	J30001-UP

Ref :H1220-01A1 Page :150210

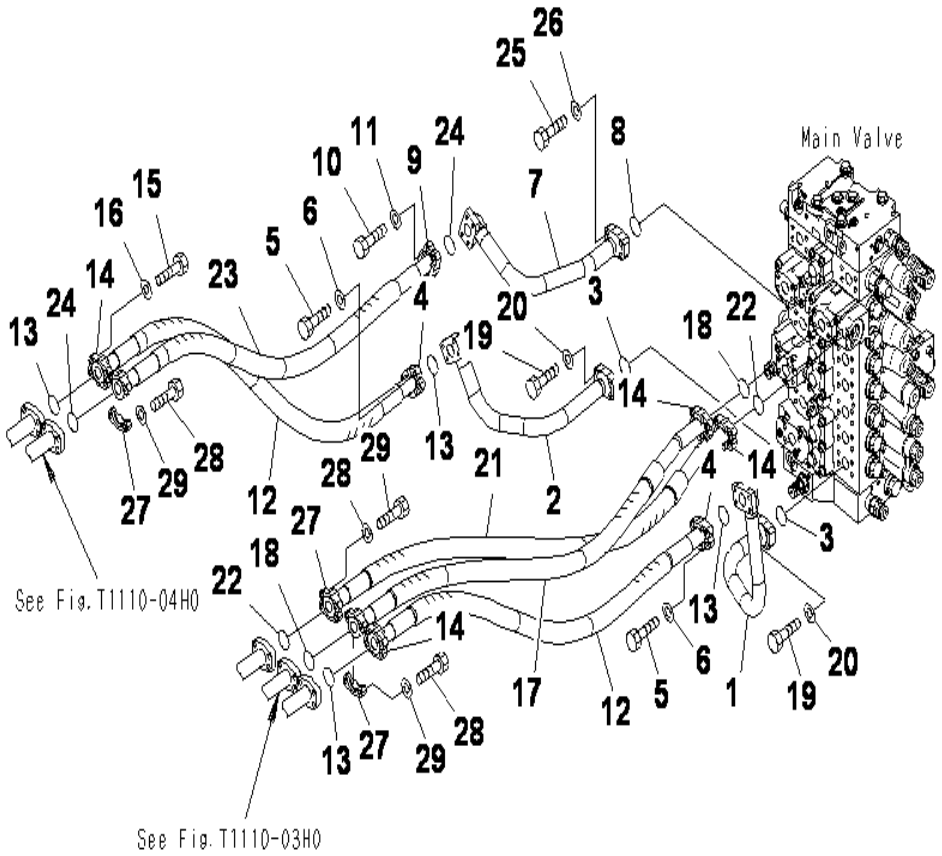

PC400-8 S/N J30001-UP

ARM BUCKET LINES (WITH DRIFT PRIVENTIVE)

INDEX	CD	PART NO.	DESCRIPTION	QTY	SERIAL NO.
1		208-62-71560	TUBE	1	J30001-UP
2		208-62-72760	TUBE	1	J30001-UP
3		07000-13035	O-RING	2	J30001-UP
4		07371-31049	FLANGE	4	J30001-UP
5		07372-21035	BOLT	8	J30001-UP
6		01643-51032	WASHER	8	J30001-UP
7		208-62-71580	TUBE	1	J30001-UP
8		07000-13035	O-RING	1	J30001-UP
9		07371-31049	FLANGE	2	J30001-UP
10		07372-21035	BOLT	4	J30001-UP
11		01643-51032	WASHER	4	J30001-UP
12		208-62-71160	HOSE,1320MM	2	J30001-UP
13		07000-13032	O RING	4	J30001-UP
14		07371-31049	FLANGE	8	J30001-UP
15		07372-21035	BOLT	16	J30001-UP
16		01643-51032	WASHER	16	J30001-UP
17		208-62-71190	HOSE,1450MM	1	J30001-UP
18		07000-13032	O RING	2	J30001-UP
19		07372-21040	BOLT	8	J30001-UP
20		01643-51032	WASHER	8	J30001-UP
21		207-62-71370	HOSE	1	J30001-UP
22		07000-13032	O RING	2	J30001-UP
23		208-62-71170	HOSE,1210MM	1	J30001-UP
24		07000-13032	O RING	2	J30001-UP
25		07372-21040	BOLT	4	J30001-UP
26		01643-51032	WASHER	4	J30001-UP
27		07371-31049	FLANGE	6	J30001-UP
28		07372-21035	BOLT	12	J30001-UP
29		01643-51032	WASHER	12	J30001-UP

Ref :H1220-01A2 Page :150220

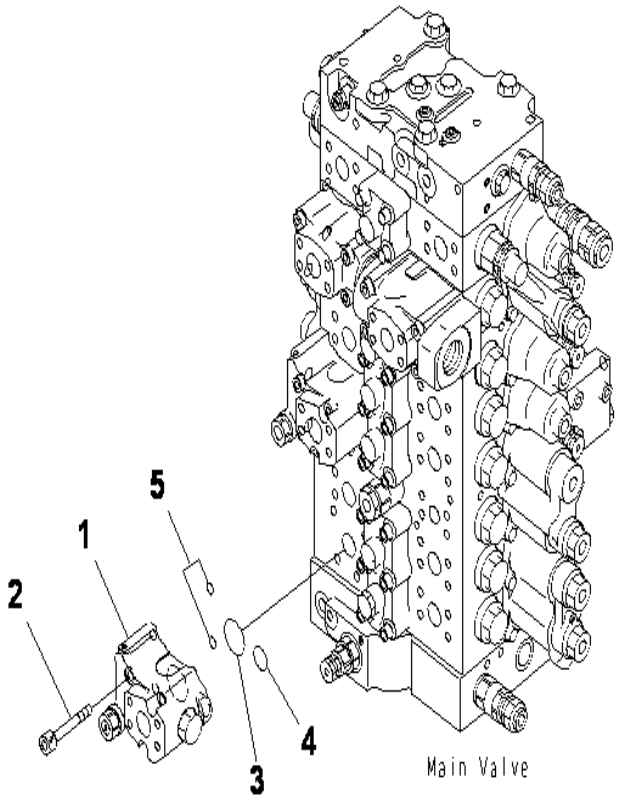

PC400-8 S/N J30001-UP

DRIFT PRIVENTIVE (ARM)

INDEX	CD	PART NO.	DESCRIPTION	QTY	SERIAL NO.
1		(723-40-82701)	VALVE ASS'Y	1	J30001-UP
2		01252-61075	BOLT	4	J30001-UP
3		07000-13032	O-RING	1	J30001-UP
4		07000-12021	O-RING	1	J30001-UP
5		702-16-53920	O-RING	2	J30001-UP

Ref :H1240-01A0 Page :150230

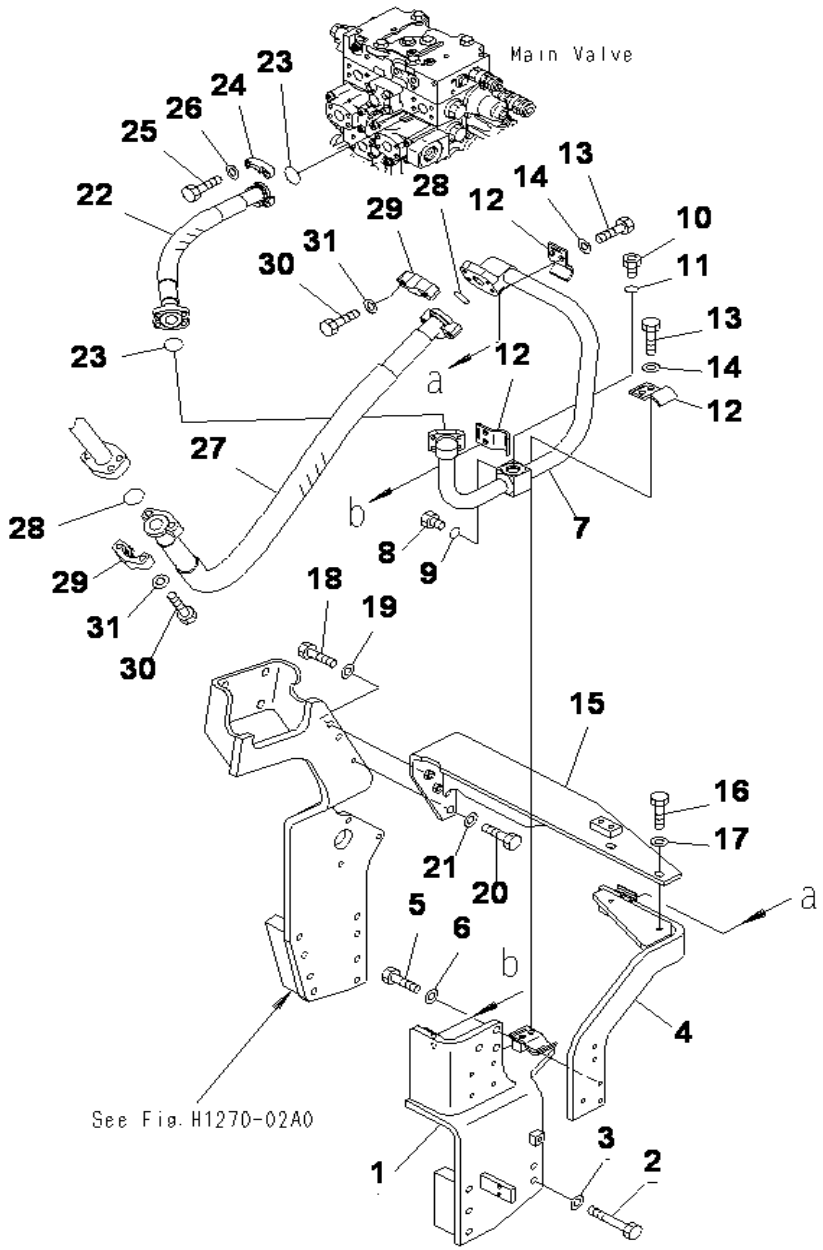

PC400-8 S/N J30001-UP

ATTACHMENT LINE (MAIN LINE. L.H) (1 ACTUATOR)

INDEX	CD	PART NO.	DESCRIPTION	QTY	SERIAL NO.
1		208-62-71912	BRACKET	1	J30001-UP
2		01011-81205	BOLT	5	J30001-UP
3		01643-31232	WASHER	5	J30001-UP
4		207-62-73131	BRACKET	1	J30001-UP
5		01010-81235	BOLT	3	J30001-UP
6		01643-31232	WASHER	3	J30001-UP
7		208-62-71940	TUBE	1	J30001-UP
8		07040-11007	PLUG	1	J30001-UP
9		07002-11023	O-RING	1	J30001-UP
10		07040-12412	PLUG	1	J30001-UP
11		07002-12434	O-RING	1	J30001-UP
12		207-62-31330	CLAMP	3	J30001-UP
13		01010-81235	BOLT	6	J30001-UP
14		01643-31232	WASHER	6	J30001-UP
15		208-62-71850	FRAME	1	J30001-UP
16		01010-81240	BOLT	2	J30001-UP
17		01643-31232	WASHER	2	J30001-UP
18		01010-81245	BOLT	2	J30001-UP
19		01643-31232	WASHER	2	J30001-UP
20		01010-81235	BOLT	1	J30001-UP
21		01643-31232	WASHER	1	J30001-UP
22		208-62-72510	HOSE, 670MM	1	J30001-UP
23		07000-13032	O-RING	2	J30001-UP
24		07371-31049	FLANGE	4	J30001-UP
25		07372-21035	BOLT	8	J30001-UP
26		01643-51032	WASHER	8	J30001-UP
27		208-62-72520	HOSE, 1350MM	1	J30001-UP
28		07000-13038	O-RING	2	J30001-UP
29		07371-51260	FLANGE	4	J30001-UP
30		01010-81245	BOLT	8	J30001-UP
31		01643-31232	WASHER	8	J30001-UP

Ref :H1270-01A0 Page :150240

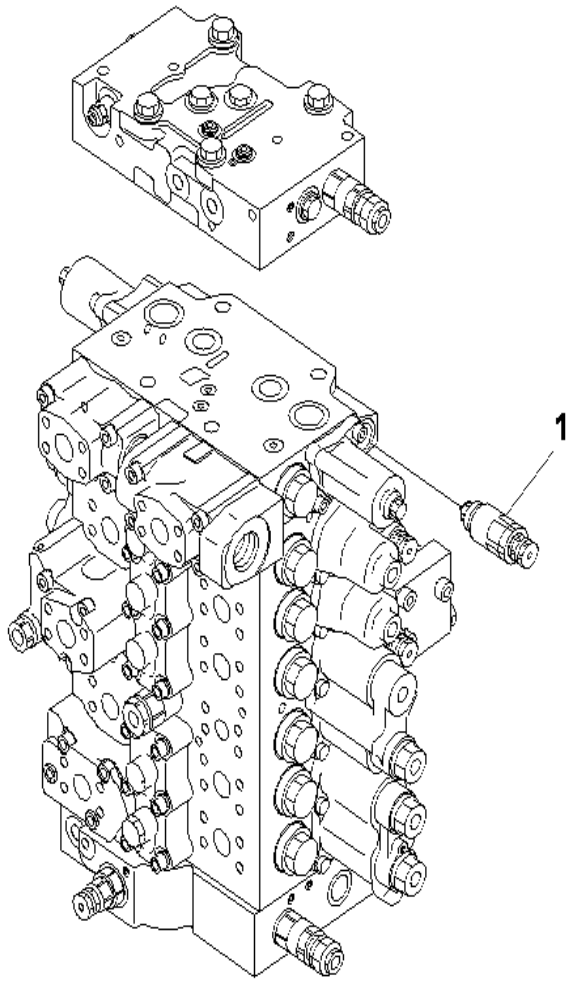

PC400-8 S/N J30001-UP

RELIEF VALVE (250 KG/CM2) (FOR SERVICE VALVE)

INDEX	CD	PART NO.	DESCRIPTION	QTY	SERIAL NO.
1		(723-90-61300)	VALVE ASS'Y.....	1	J30001-UP

Ref :H1270-01A1 Page :150250

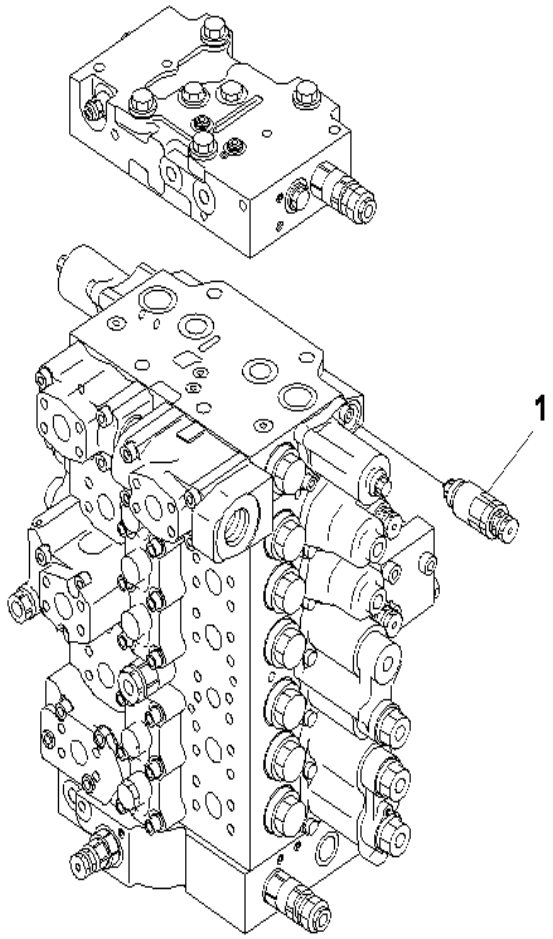

PC400-8 S/N J30001-UP

RELIEF VALVE (220 KG/CM2) (FOR SERVICE VALVE)

INDEX	CD	PART NO.	DESCRIPTION	QTY	SERIAL NO.
1		(723-90-61700)	VALVE ASS'Y.....	1	J30001-UP

Ref :H1270-01A1A Page :150260

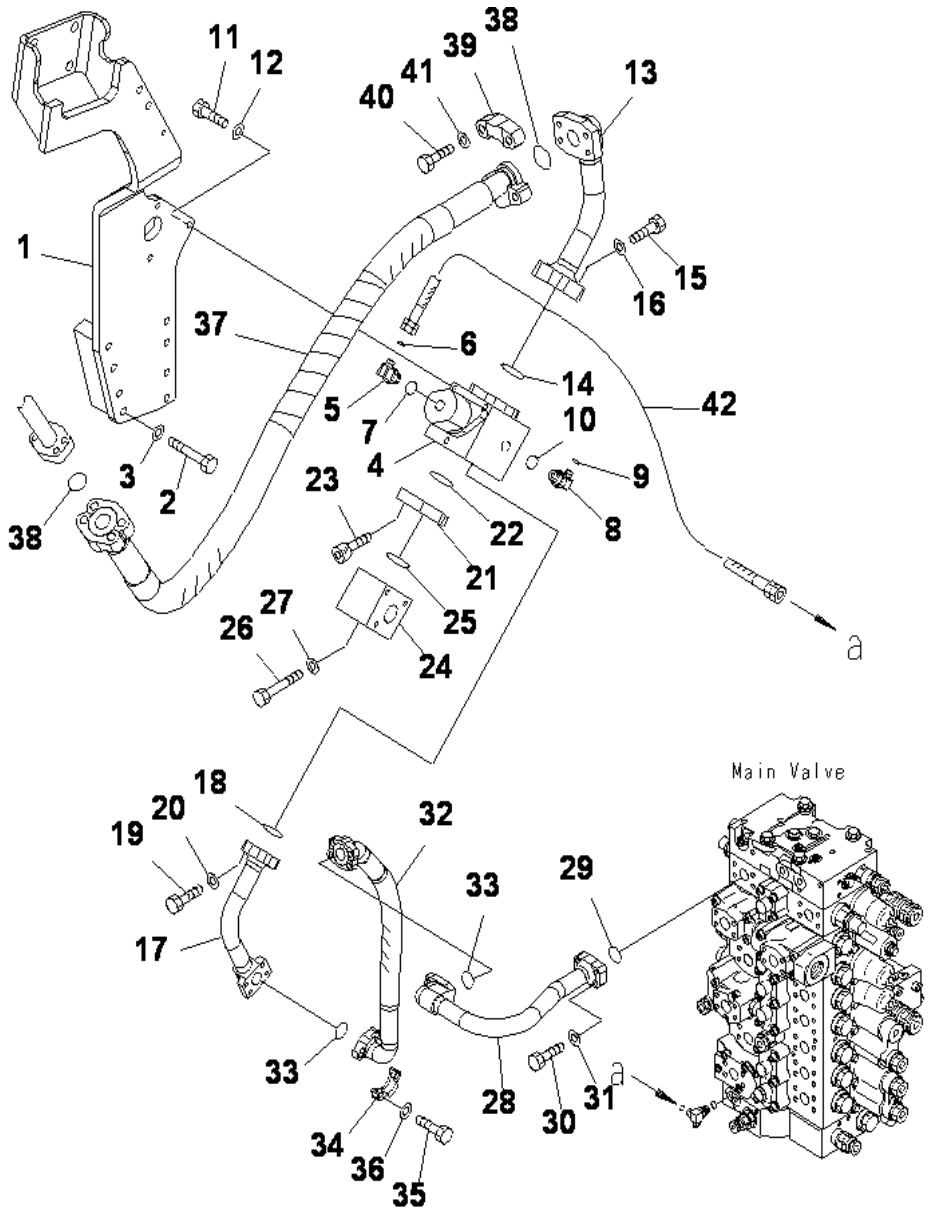

PC400-8 S/N J30001-UP

ATTACHMENT LINE (MAIN LINE. R.H) (1 ACTUATOR)

INDEX	CD	PART NO.	DESCRIPTION	QTY	SERIAL NO.
1		208-62-71920	BRACKET	1	J30001-UP
2		01011-81200	BOLT	8	J30001-UP
3		01643-31232	WASHER	8	J30001-UP
4		(702-21-01920)	VALVE ASS'Y	1	J30001-UP
5		11Y-62-12160	ELBOW	1	J30001-UP
6		02896-11008	O-RING	1	J30001-UP
7		07002-11423	O-RING	1	J30001-UP
8		11Y-62-12170	ELBOW	1	J30001-UP
9		02896-11008	O-RING	1	J30001-UP
10		07002-12034	O-RING	1	J30001-UP
11		01010-81040	BOLT	3	J30001-UP
12		01643-31032	WASHER	3	J30001-UP
13		207-62-73150	TUBE	1	J30001-UP
14		07000-13048	O-RING	1	J30001-UP
15		01010-81455	BOLT	4	J30001-UP
16		01643-31445	WASHER	4	J30001-UP
17		207-62-73190	TUBE	1	J30001-UP
18		07000-13035	O-RING	1	J30001-UP
19		07372-21040	BOLT	4	J30001-UP
20		01643-51032	WASHER	4	J30001-UP
21		207-62-73260	PLATE	1	J30001-UP
22		07000-13048	O-RING	1	J30001-UP
23		01252-71225	BOLT	2	J30001-UP
24		207-62-73230	BLOCK	1	J30001-UP
25		07000-13048	O-RING	1	J30001-UP
26		01011-81210	BOLT	2	J30001-UP
27		01643-31232	WASHER	2	J30001-UP
28		207-62-73180	TUBE	1	J30001-UP
29		07000-13035	O-RING	1	J30001-UP
30		07372-21040	BOLT	4	J30001-UP
31		01643-51032	WASHER	4	J30001-UP
32		208-62-72750	HOSE, 570MM	1	J30001-UP
33		07000-13032	O-RING	2	J30001-UP
34		07371-31049	FLANGE	4	J30001-UP
35		07372-21035	BOLT	8	J30001-UP
36		01643-51032	WASHER	8	J30001-UP
37		208-62-72530	HOSE, 1750MM	1	J30001-UP
38		07000-13048	O-RING	2	J30001-UP
39		07371-51470	FLANGE	4	J30001-UP
40		01010-81455	BOLT	8	J30001-UP
41		01643-31445	WASHER	8	J30001-UP
42		02760-00208	HOSE, 800MM	1	J30001-UP

Ref :H1270-02A0 Page :150270

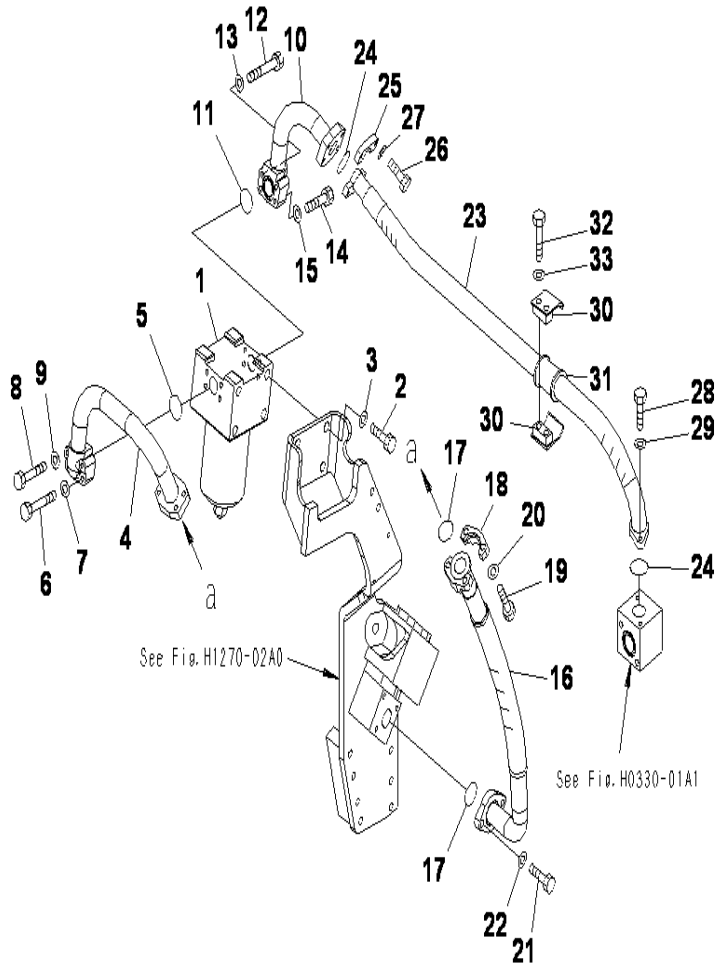

PC400-8 S/N J30001-UP

ATTACHMENT LINE (RETURN FILTER) (1 ACTUATOR)

INDEX	CD	PART NO.	DESCRIPTION	QTY	SERIAL NO.
1		(207-970-5111)	FILTER	1	J30001-UP
2		01010-81635	BOLT	4	J30001-UP
3		01643-31645	WASHER	4	J30001-UP
4		207-62-73160	TUBE	1	J30001-UP
5		07000-13040	O-RING	1	J30001-UP
6		01010-81055	BOLT	2	J30001-UP
7		01643-31032	WASHER	2	J30001-UP
8		01010-81070	BOLT	2	J30001-UP
9		01643-31032	WASHER	2	J30001-UP
10		208-62-71840	TUBE	1	J30001-UP
11		07000-13040	O-RING	1	J30001-UP
12		01010-81055	BOLT	2	J30001-UP
13		01643-31032	WASHER	2	J30001-UP
14		01010-81070	BOLT	2	J30001-UP
15		01643-31032	WASHER	2	J30001-UP
16		207-62-73310	HOSE. 740MM	1	J30001-UP
17		07000-13048	O-RING	2	J30001-UP
18		07371-31465	FLANGE	2	J30001-UP
19		07372-21240	BOLT	4	J30001-UP
20		01643-51232	WASHER	4	J30001-UP
21		01010-81240	BOLT	2	J30001-UP
22		01643-31232	WASHER	2	J30001-UP
23		208-62-71890	HOSE. 1170MM	1	J30001-UP
24		07000-13048	O-RING	2	J30001-UP
25		07371-31465	FLANGE	2	J30001-UP
26		07372-21240	BOLT	4	J30001-UP
27		01643-51232	WASHER	4	J30001-UP
28		01010-81240	BOLT	2	J30001-UP
29		01643-31232	WASHER	2	J30001-UP
30		07094-11228	CLAMP	2	J30001-UP
31		07095-01245	CUSHION	1	J30001-UP
32		01010-81285	BOLT	2	J30001-UP
33		01643-31232	WASHER	2	J30001-UP

Ref :H1270-03A0 Page :150280

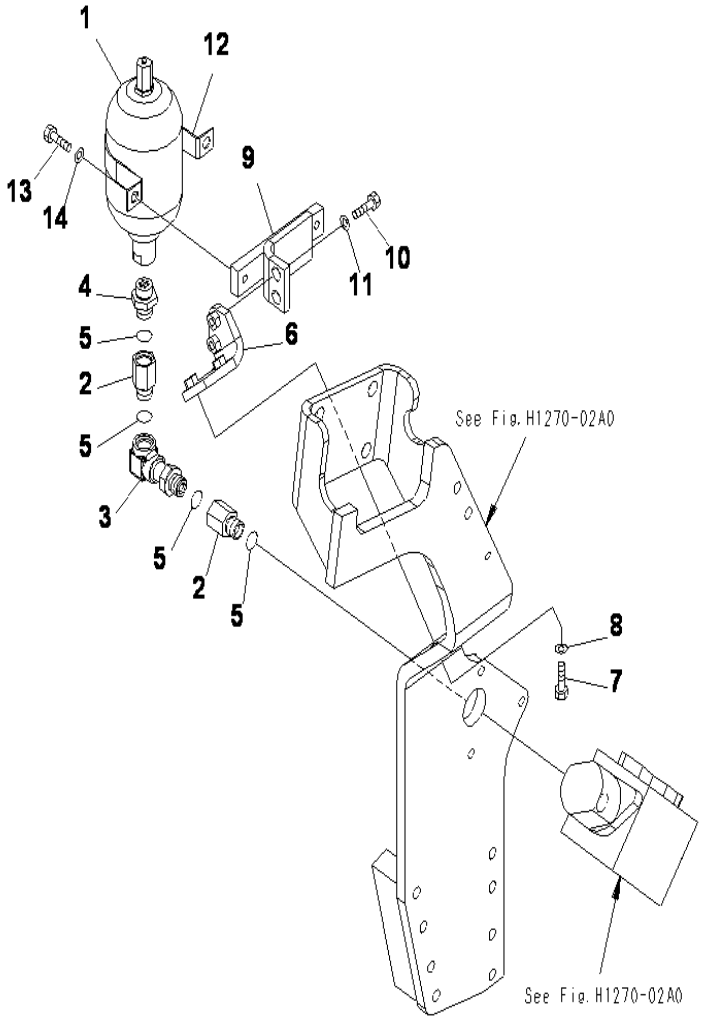

ATTACHMENT LINES (ACCUMULATOR) (1 ACTUATOR)

INDEX	CD	PART NO.	DESCRIPTION	QTY	SERIAL NO.
1		(20Y-970-6450)	ACCUMULATOR	1	J30001-UP
2		201-62-71810	JOINT	2	J30001-UP
3		207-62-73350	ELBOW	1	J30001-UP
4		205-970-5550	NIPPLE	1	J30001-UP
5		07002-12434	O-RING	4	J30001-UP
6		207-62-73251	BRACKET	1	J30001-UP
7		01010-81250	BOLT	2	J30001-UP
8		01643-31232	WASHER	2	J30001-UP
9		207-62-73240	BRACKET	1	J30001-UP
10		01010-81240	BOLT	2	J30001-UP
11		01643-31232	WASHER	2	J30001-UP
12		175-61-51750	PLATE	1	J30001-UP
13		01010-81225	BOLT	2	J30001-UP
14		01643-31232	WASHER	2	J30001-UP

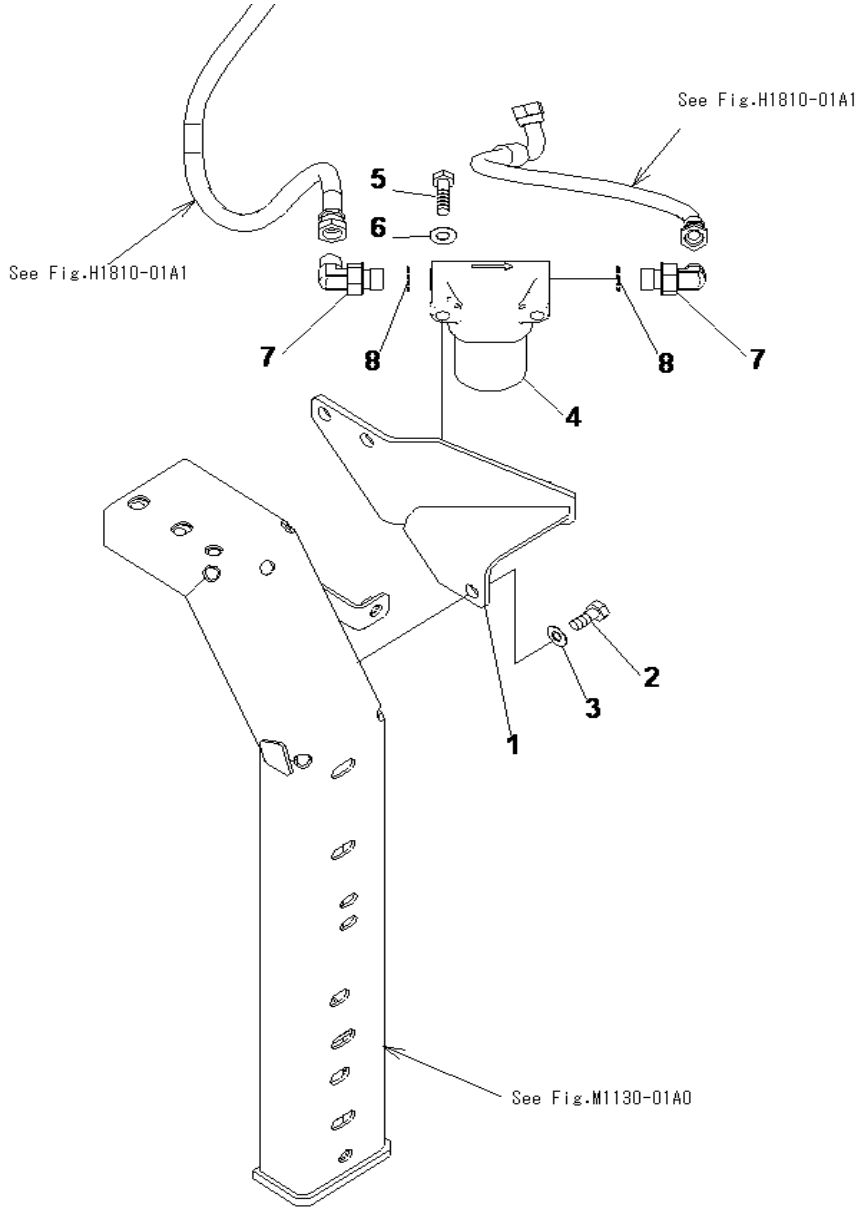

PC400-8 S/N J30001-UP

ATTACHMENT LINES (PILOT FILTER) (1 ACTUATOR)

INDEX	CD	PART NO.	DESCRIPTION	QTY	SERIAL NO.
1		208-62-75150	BRACKET	1	J30001-UP
2		01010-81230	BOLT	3	J30001-UP
3		01643-31232	WASHER	3	J30001-UP
4		(20Y-62-51681)	FILTER A	1	J30001-UP
5		01010-81075	BOLT	2	J30001-UP
6		01643-31032	WASHER	2	J30001-UP
7		02782-10315	ELBOW	2	J30001-UP
8		07002-12034	O-RING	2	J30001-UP

Ref :H1270-05A0 Page :150300

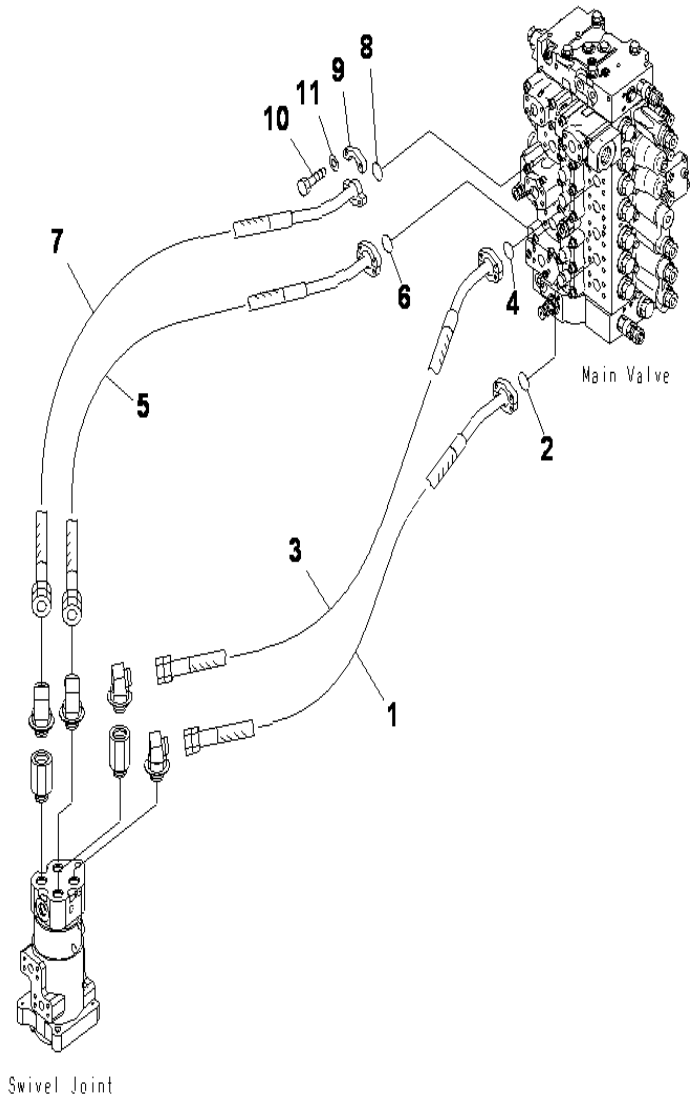

PC400-8 S/N J30001-UP

TRAVEL LINE

INDEX	CD	PART NO.	DESCRIPTION	QTY	SERIAL NO.
1		208-62-71120	HOSE, 1200MM.....	1	J30001-UP
2		07000-13032	O RING.....	1	J30001-UP
3		208-62-71130	HOSE, 1300MM.....	1	J30001-UP
4		07000-13032	O RING.....	1	J30001-UP
5		207-62-71440	HOSE, 1350MM.....	1	J30001-UP
6		07000-13032	O RING.....	1	J30001-UP
7		208-62-71150	HOSE, 1450MM.....	1	J30001-UP
8		07000-13032	O RING.....	1	J30001-UP
9		07371-31049	FLANGE.....	8	J30001-UP
10		07372-21035	BOLT.....	16	J30001-UP
11		01643-51032	WASHER.....	16	J30001-UP

Ref :H1310-01A0 Page :150310

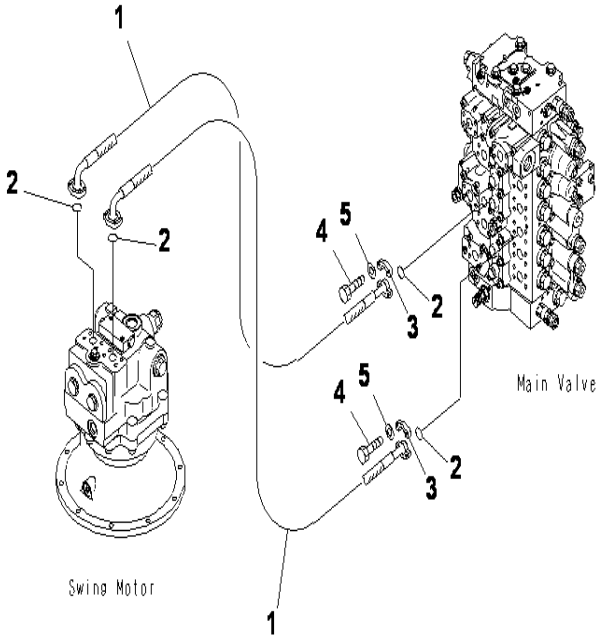

PC400-8 S/N J30001-UP

SWING LINE

INDEX	CD	PART NO.	DESCRIPTION	QTY	SERIAL NO.
1		07098-01011	HOSE.....	2	J30001-UP
2		07000-13032	O RING.....	4	J30001-UP
3		07371-31049	FLANGE.....	8	J30001-UP
4		07372-21035	BOLT.....	16	J30001-UP
5		01643-51032	WASHER.....	16	J30001-UP

Ref :H1340-01A0 Page :150320

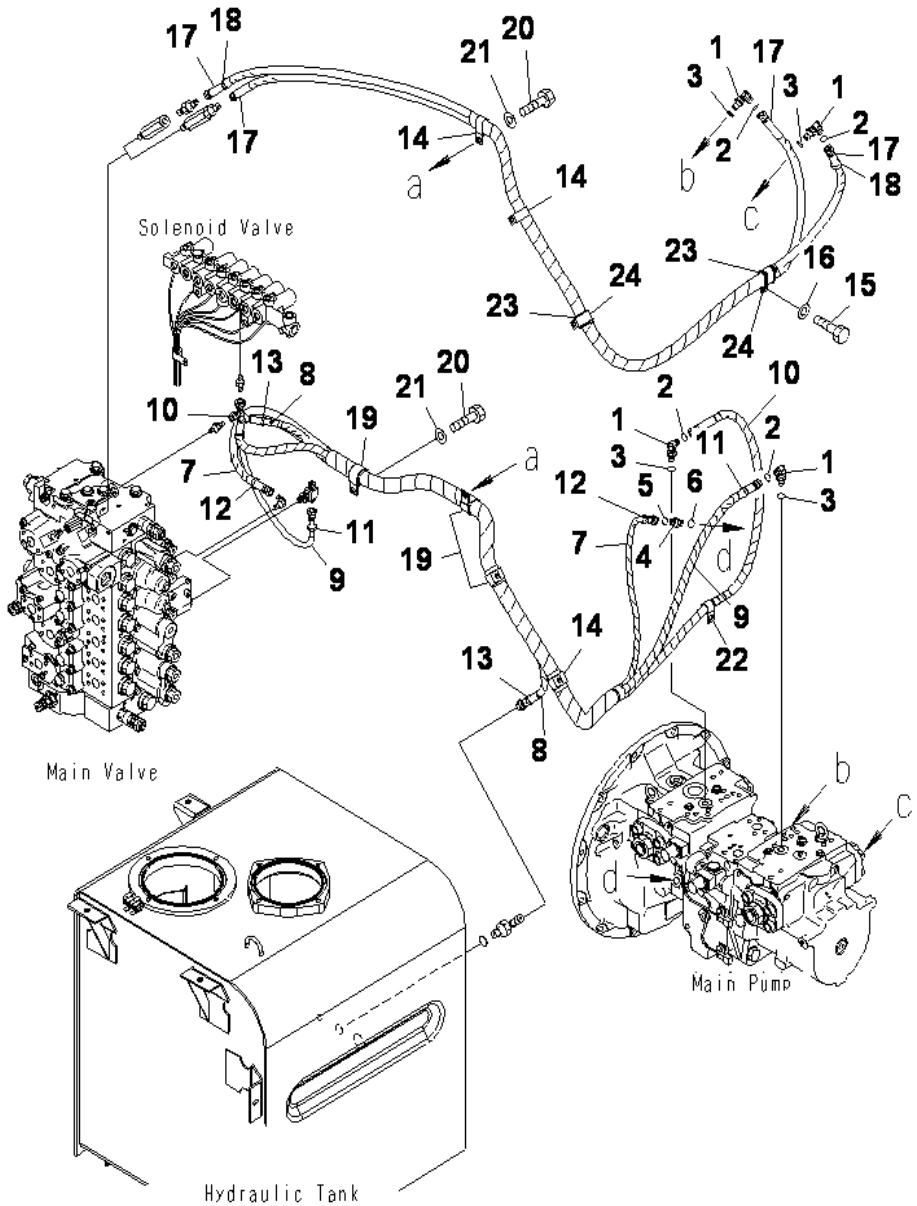

PC400-8 S/N J30001-UP

LS LINE

INDEX	CD	PART NO.	DESCRIPTION	QTY	SERIAL NO.
1		11Y-62-12160	ELBOW	4	J30001-UP
2		02896-11008	O-RING	4	J30001-UP
3		07002-11423	O-RING	4	J30001-UP
4		11Y-62-12130	NIPPLE	1	J30001-UP
5		02896-11008	O-RING	1	J30001-UP
6		07002-11423	O-RING	1	J30001-UP
7		02760-00227	HOSE	1	J30001-UP
8		02763-00414	HOSE	1	J30001-UP
9		02777-00224	HOSE	1	J30001-UP
10		02778-00229	HOSE	1	J30001-UP
11		20Y-62-22790	BAND, RED	2	J30001-UP
12		20Y-62-22810	BAND, YELLOW	2	J30001-UP
13		20Y-62-22820	BAND, BLUE	2	J30001-UP
14		04435-51812	CLIP	2	J30001-UP
15		01010-81220	BOLT	1	J30001-UP
16		01643-31232	WASHER	1	J30001-UP
17		208-62-73830	HOSE	2	J30001-UP
18		20Y-62-22790	BAND, RED	2	J30001-UP
19		113-899-7950	CLIP	4	J30001-UP
20		01010-81225	BOLT	4	J30001-UP
21		01643-31232	WASHER	4	J30001-UP
22		04434-51812	CLIP	1	J30001-UP
23		198-06-53630	CUSHION	2	J30001-UP
24		04435-52112	CLIP	2	J30001-UP

Ref :H1810-01A0 Page :150330

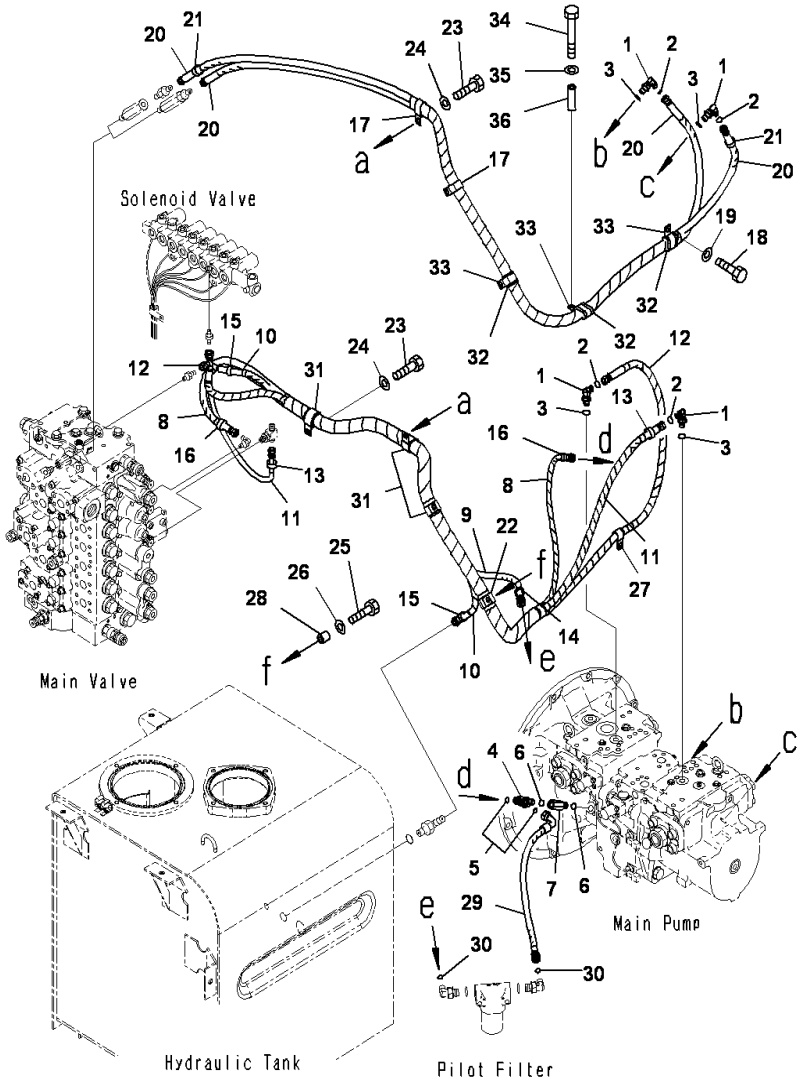

LS LINE (QUICK COUPLER)

INDEX	CD	PART NO.	DESCRIPTION	QTY	SERIAL NO.
1		11Y-62-12160	ELBOW	4	J30001-UP
2		02896-11008	O-RING	4	J30001-UP
3		07002-11423	O-RING	4	J30001-UP
4		21N-64-36680	TEE	1	J30001-UP
5		02896-11009	O-RING	2	J30001-UP
6		07002-11423	O-RING	2	J30001-UP
7		20Y-62-22160	ADAPTER	1	J30001-UP
8		02760-00321	HOSE	1	J30001-UP
9		02760-00322	HOSE	1	J30001-UP
10		02763-00414	HOSE	1	J30001-UP
11		02777-00225	HOSE	1	J30001-UP
12		02778-00229	HOSE	1	J30001-UP
13		20Y-62-22790	BAND, RED	2	J30001-UP
14		20Y-62-22810	BAND, YELLOW	2	J30001-UP
15		20Y-62-22820	BAND, BLUE	2	J30001-UP
16		20Y-62-22830	BAND, WHITE	2	J30001-UP
17		04435-51812	CLIP	2	J30001-UP
18		01010-81220	BOLT	1	J30001-UP
19		01643-31232	WASHER	1	J30001-UP
20		208-62-73830	HOSE	2	J30001-UP
21		20Y-62-22790	BAND, RED	2	J30001-UP
22		113-89-97950	CLIP	1	J30001-UP
23		01010-81225	BOLT	3	J30001-UP
24		01643-31232	WASHER	3	J30001-UP
25		01010-81250	BOLT	1	J30001-UP
26		01643-31232	WASHER	1	J30001-UP
27		04434-51812	CLIP	1	J30001-UP
28		195-33-11220	SPACER	1	J30001-UP
29		02761-00306	HOSE	1	J30001-UP
30		02896-11009	O-RING	2	J30001-UP
31		20Y-62-15951	CLIP	3	J30001-UP
32		198-06-53630	CUSHION	3	J30001-UP
33		04435-52112	CLIP	3	J30001-UP
34		01010-81290	BOLT	1	J30001-UP
35		01643-31232	WASHER	1	J30001-UP
36		195-97-93570	COLLAR	1	J30001-UP

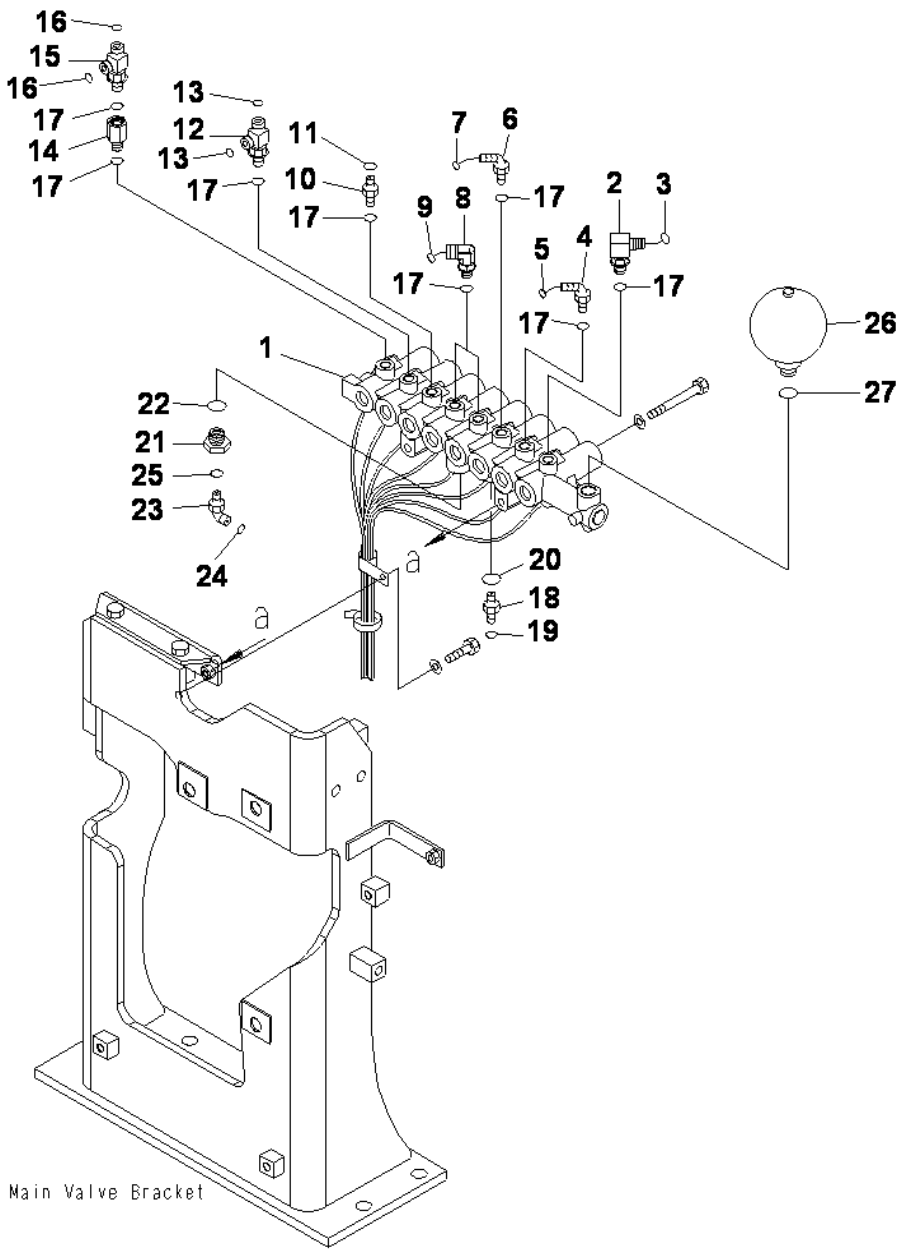

SOLENOID VALVE (VALVE) (1 ACTUATOR)

INDEX	CD	PART NO.	DESCRIPTION	QTY	SERIAL NO.
1		(207-60-71320)	VALVE ASS'Y	1	J30001-UP
2		21W-62-42490	ELBOW	1	J30001-UP
3		02896-11009	O-RING	1	J30001-UP
4		208-62-71750	ELBOW	1	J30001-UP
5		02896-11008	O-RING	1	J30001-UP
6		02783-10210	ELBOW	1	J30001-UP
7		02896-11008	O-RING	1	J30001-UP
8		21W-62-42490	ELBOW	2	J30001-UP
9		02896-11009	O-RING	2	J30001-UP
10		11Y-62-12130	NIPPLE	1	J30001-UP
11		02896-11008	O-RING	1	J30001-UP
12		11Y-62-12330	ELBOW	1	J30001-UP
13		02896-11008	O-RING	2	J30001-UP
14		21M-62-16350	ADAPTER	1	J30001-UP
15		20Y-62-41960	ELBOW	1	J30001-UP
16		02896-11008	O-RING	2	J30001-UP
17		07002-11423	O-RING	9	J30001-UP
18		02781-00422	UNION	1	J30001-UP
19		02896-11012	O-RING	1	J30001-UP
20		07002-12034	O-RING	1	J30001-UP
21		20Y-62-21940	FILTER ASS'Y	1	J30001-UP
22		07002-12034	O-RING	1	J30001-UP
23		21W-62-42490	ELBOW	1	J30001-UP
24		02896-11009	O-RING	1	J30001-UP
25		07002-11423	O-RING	1	J30001-UP
26		22U-60-21330	ACCUMULATOR	1	J30001-UP
27		07002-12034	O-RING	1	J30001-UP

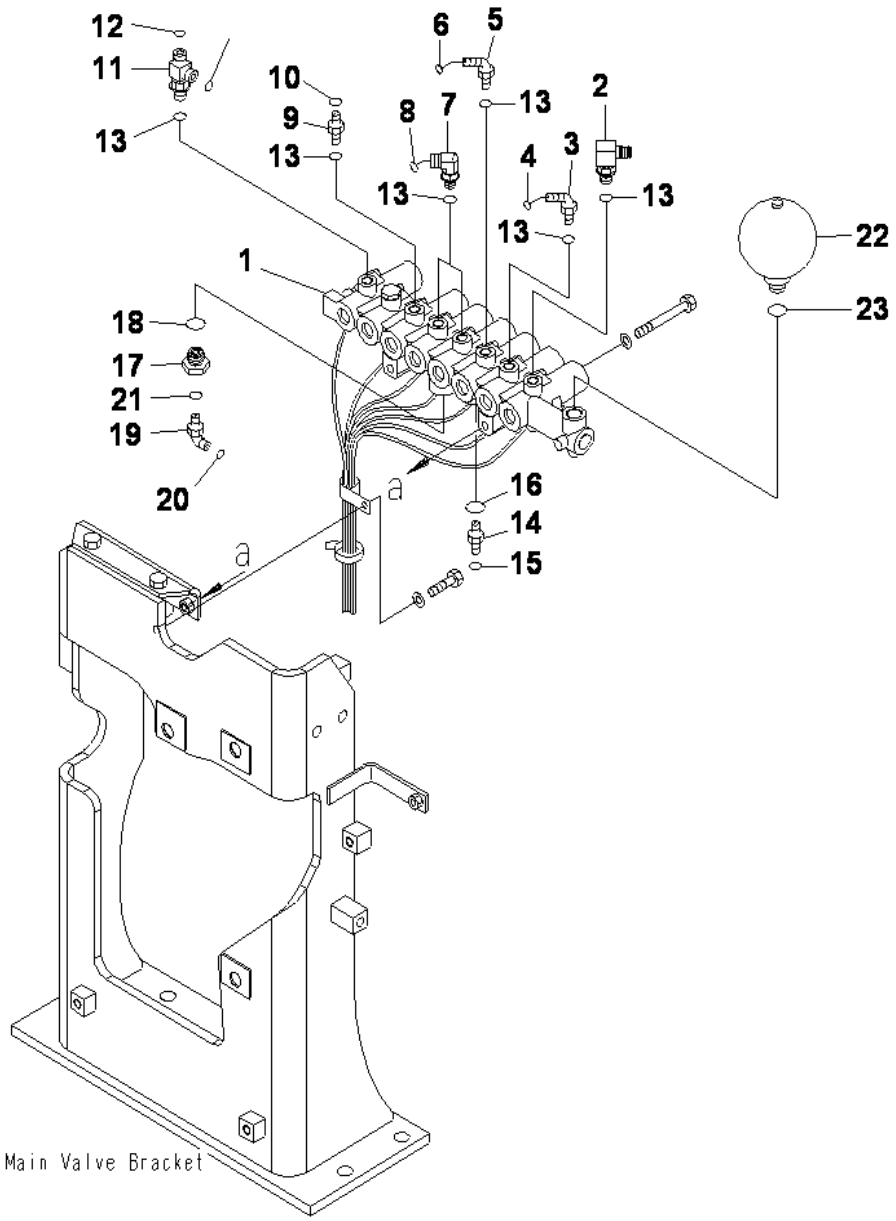

SOLENOID VALVE (VALVE)

INDEX	CD	PART NO.	DESCRIPTION	QTY	SERIAL NO.
1		207-60-71311	VALVE ASS'Y	1	J30001-UP
2		21W-62-42490	ELBOW	1	J30001-UP
3		208-62-71750	ELBOW	1	J30001-UP
4		02896-11008	O-RING	1	J30001-UP
5		02783-10210	ELBOW	1	J30001-UP
6		02896-11008	O-RING	1	J30001-UP
7		21W-62-42490	ELBOW	2	J30001-UP
8		02896-11009	O-RING	2	J30001-UP
9		11Y-62-12130	NIPPLE	1	J30001-UP
10		02896-11008	O-RING	1	J30001-UP
11		11Y-62-12330	ELBOW	1	J30001-UP
12		02896-11008	O-RING	2	J30001-UP
13		07002-11423	O-RING	8	J30001-UP
14		02781-00422	UNION	1	J30001-UP
15		02896-11012	O-RING	1	J30001-UP
16		07002-12034	O-RING	1	J30001-UP
17		20Y-62-21940	FILTER ASS'Y	1	J30001-UP
18		07002-12034	O-RING	1	J30001-UP
19		21W-62-42490	ELBOW	1	J30001-UP
20		02896-11009	O-RING	1	J30001-UP
21		07002-11423	O-RING	1	J30001-UP
22		22U-60-21330	ACCUMULATOR	1	J30001-UP
23		07002-12034	O-RING	1	J30001-UP

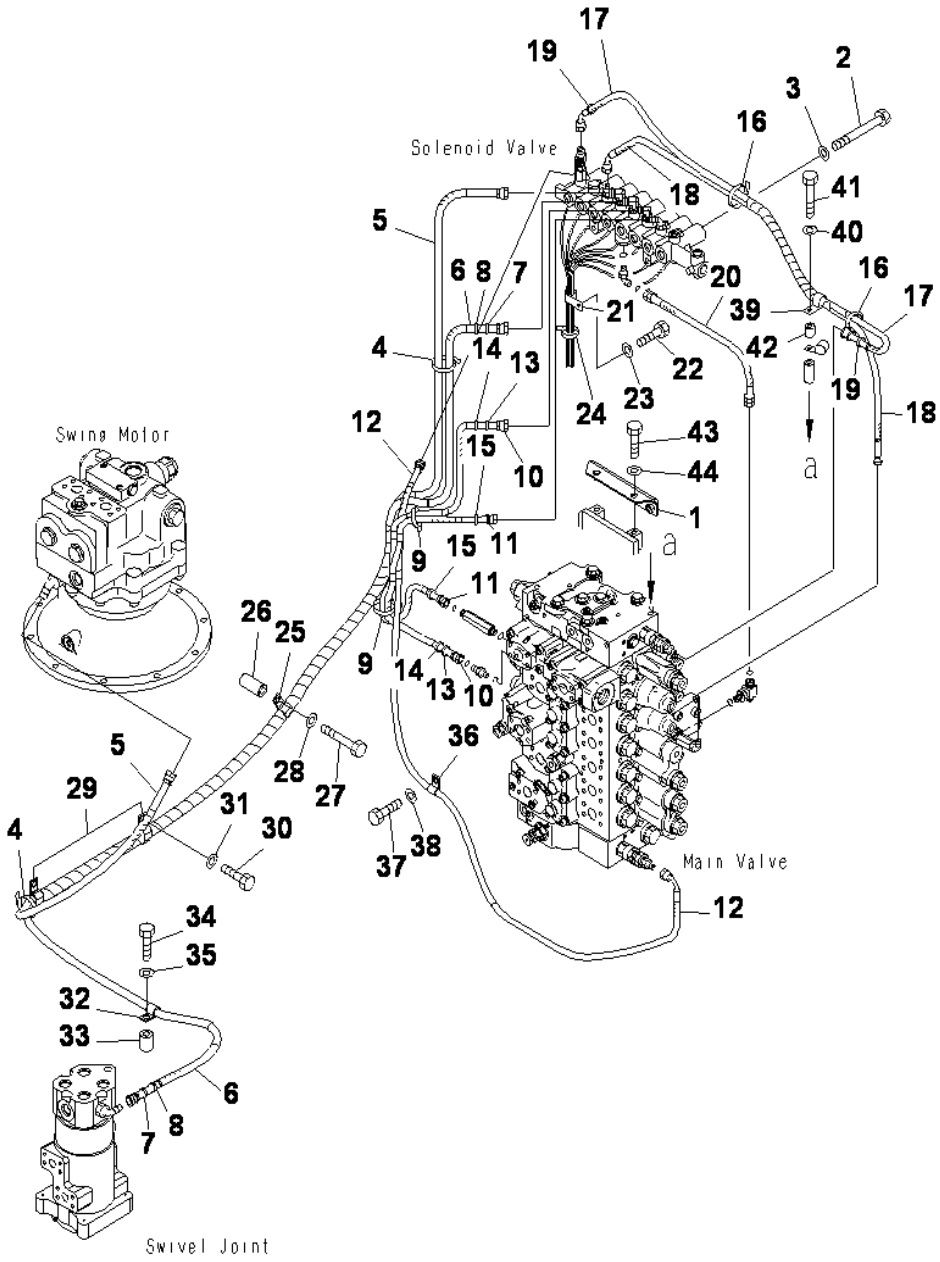

PC400-8 S/N J30001-UP

SOLENOID VALVE (HOSE AND BRACKET)

INDEX	CD	PART NO.	DESCRIPTION	QTY	SERIAL NO.
1		208-62-71791	BRACKET	1	J30001-UP
2		01010-81090	BOLT	2	J30001-UP
3		01643-31032	WASHER	2	J30001-UP
4		08034-20519	BAND	2	J30001-UP
5		02760-00325	HOSE, 2500MM	1	J30001-UP
6		02760-00324	HOSE, 2400MM	1	J30001-UP
7		20Y-62-22790	BAND, RED	2	J30001-UP
8		20Y-62-22810	BAND, YELLOW	2	J30001-UP
9		08034-20536	BAND	2	J30001-UP
10		02760-00207	HOSE, 700MM	1	J30001-UP
11		11Y-62-29480	HOSE, 720MM	1	J30001-UP
12		02761-00214	HOSE	1	J30001-UP
13		20Y-62-22810	BAND, YELLOW	2	J30001-UP
14		20Y-62-22820	BAND, BLUE	2	J30001-UP
15		20Y-62-22860	BAND, BROWN	2	J30001-UP
16		08034-20519	BAND	2	J30001-UP
17		02764-002A8	HOSE	1	J30001-UP
18		02764-00209	HOSE	1	J30001-UP
19		20Y-62-22820	BAND (BLUE)	2	J30001-UP
20		02760-00304	HOSE,400MM	1	J30001-UP
21		04435-51312	CLIP	1	J30078-UP
		04434-51912	CLIP	1	J30001-J30077
22		01010-81225	BOLT	1	J30001-UP
23		01643-31232	WASHER	1	J30001-UP
24		08034-20536	BAND	1	J30001-UP
25		04435-51512	CLIP	1	J30001-UP
26		176-38-41350	SPACER	1	J30001-UP
27		01010-81285	BOLT	1	J30001-UP
28		01643-31232	WASHER	1	J30001-UP
29		04435-51512	CLIP	2	J30001-UP
30		01010-81225	BOLT	2	J30001-UP
31		01643-31232	WASHER	2	J30001-UP
32		04434-51412	CLIP	1	J30001-UP
33		142-03-11160	SPACER	1	J30001-UP
34		01010-81260	BOLT	1	J30001-UP
35		01643-31232	WASHER	1	J30001-UP
36		04434-51012	CLIP	1	J30001-UP
37		01010-81220	BOLT	1	J30001-UP
38		01643-31232	WASHER	1	J30001-UP
39		04435-51312	CLIP	1	J30078-UP
		04435-51912	CLIP	1	J30001-J30077
40		01643-31232	WASHER	1	J30001-UP
41		01011-81210	BOLT	1	J30001-UP
42		195-33-11220	SPACER	1	J30001-UP
43		01010-81230	BOLT	2	J30001-UP
44		01643-31232	WASHER	2	J30001-UP

Ref :H1831-02A2 Page :150370

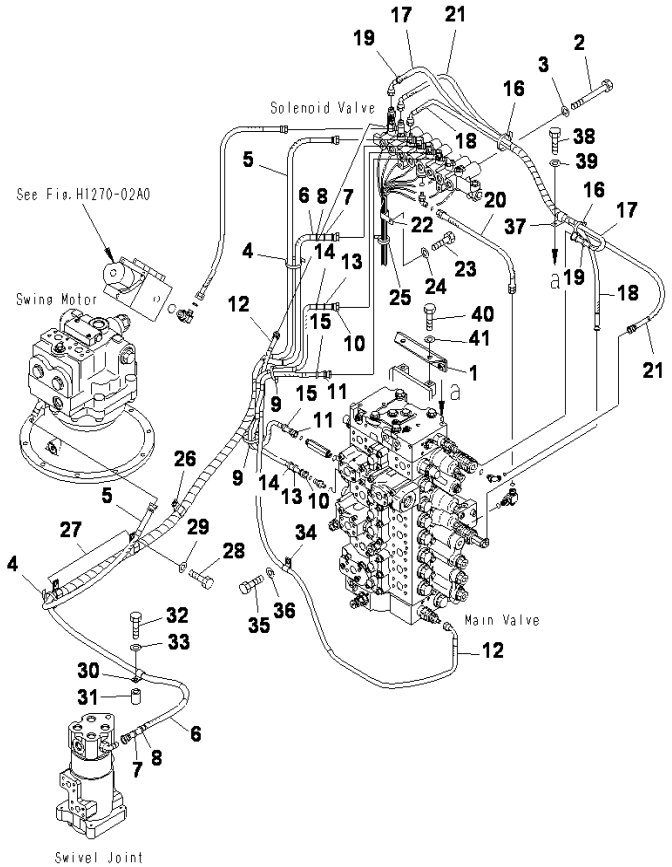

PC400-8 S/N J30001-UP

SOLENOID VALVE (HOSE AND BRACKET) (1 ACTUATOR)

INDEX	CD	PART NO.	DESCRIPTION	QTY	SERIAL NO.
1		208-62-71791	BRACKET	1	J30001-UP
2		01010-81090	BOLT	2	J30001-UP
3		01643-31032	WASHER	2	J30001-UP
4		08034-20519	BAND	2	J30001-UP
5		02760-00325	HOSE, 2500MM	1	J30001-UP
6		02760-00324	HOSE, 2400MM	1	J30001-UP
7		20Y-62-22790	BAND, RED	2	J30001-UP
8		20Y-62-22810	BAND, YELLOW	2	J30001-UP
9		08034-20536	BAND	2	J30001-UP
10		02760-00207	HOSE, 700MM	1	J30001-UP
11		11Y-62-29480	HOSE, 720MM	1	J30001-UP
12		02761-00214	HOSE	1	J30001-UP
13		20Y-62-22810	BAND, YELLOW	2	J30001-UP
14		20Y-62-22820	BAND, BLUE	2	J30001-UP
15		20Y-62-22860	BAND, BROWN	2	J30001-UP
16		08034-20519	BAND	2	J30001-UP
17		02764-002A8	HOSE	1	J30001-UP
18		02764-00209	HOSE	1	J30001-UP
19		20Y-62-22820	BAND, BLUE	2	J30001-UP
20		02760-002A4	HOSE. 450MM	1	J30001-UP
21		02764-00207	HOSE	1	J30001-UP
22		04434-52112	CLIP	1	J30001-UP
23		01010-81225	BOLT	1	J30001-UP
24		01643-31232	WASHER	1	J30001-UP
25		08034-20536	BAND	1	J30001-UP
26		04435-51512	CLIP	1	J30001-UP
27		04435-51512	CLIP	2	J30001-UP
28		01010-81225	BOLT	2	J30001-UP
29		01643-31232	WASHER	2	J30001-UP
30		04434-51412	CLIP	1	J30001-UP
31		142-03-11160	SPACER	1	J30001-UP
32		01010-81260	BOLT	1	J30001-UP
33		01643-31232	WASHER	1	J30001-UP
34		04434-51012	CLIP	1	J30001-UP
35		01010-81220	BOLT	1	J30001-UP
36		01643-31232	WASHER	1	J30001-UP
37		6150-51-5480	CLIP	1	J30001-UP
38		01010-81225	BOLT	1	J30001-UP
39		01643-31232	WASHER	1	J30001-UP
40		01010-81230	BOLT	2	J30001-UP
41		01643-31232	WASHER	2	J30001-UP

Ref :H1831-02A3 Page :150380

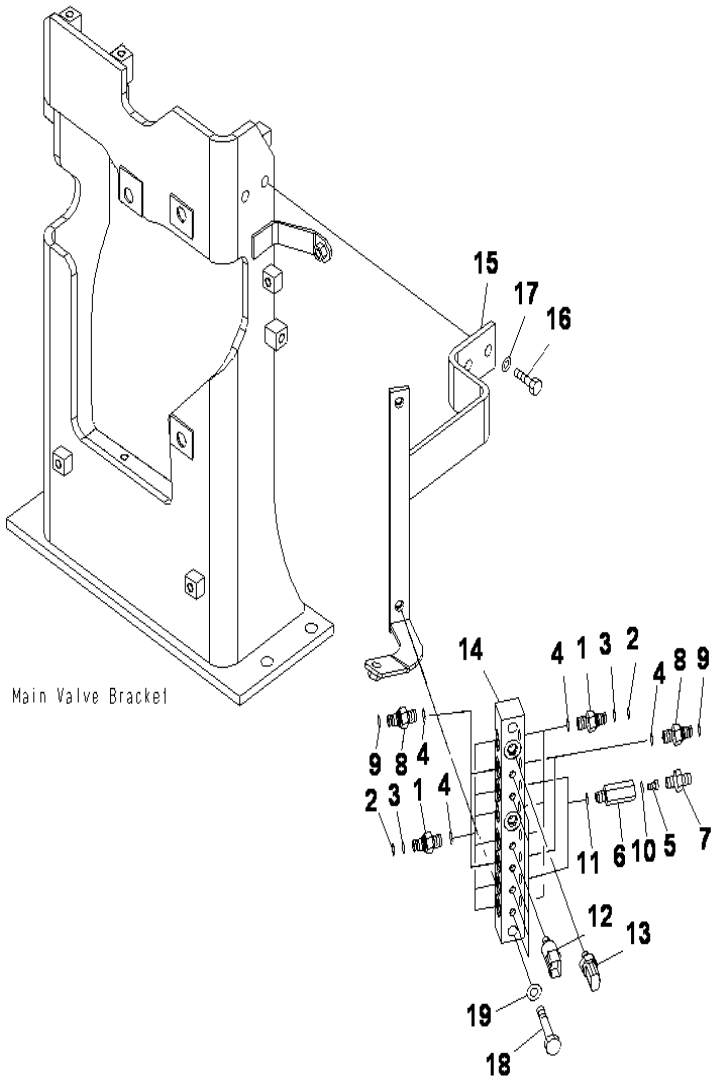

PRESSURE SWITCH

INDEX	CD	PART NO.	DESCRIPTION	QTY	SERIAL NO.
1		20Y-62-16630	NIPPLE	10	J30001-UP
2		201-60-11390	.O-RING	1	J30001-UP
3		20Y-62-19560	.O-RING	1	J30001-UP
4		07002-11423	O-RING	14	J30001-UP
		207-60-71400	VALVE ASS'Y	2	J30001-UP
5		20Y-60-11750	.POPPET	1	J30001-UP
6		20Y-60-22350	.BODY	1	J30001-UP
7		21W-62-43930	.NIPPLE	1	J30001-UP
8		11Y-62-12130	NIPLLE	4	J30001-UP
9		02896-11008	O-RING	4	J30001-UP
10		07002-11423	O-RING	1	J30001-UP
11		07002-11423	O-RING	2	J30001-UP
12		206-06-61130	SWITCH	6	J30001-UP
13		7861-93-1840	SENSOR	2	J30001-UP
14		207-62-74980	BLOCK	1	J30001-UP
15		208-62-74342	BRACKET	1	J30058-UP
		208-62-74341	BRACKET	1	J30001-J30057
16		01010-81245	BOLT	1	J30058-UP
		01010-81235	BOLT	2	J30001-J30057
17		01643-31232	WASHER	2	J30001-UP
18		01010-81260	BOLT	2	J30001-UP
19		01643-31232	WASHER	2	J30001-UP

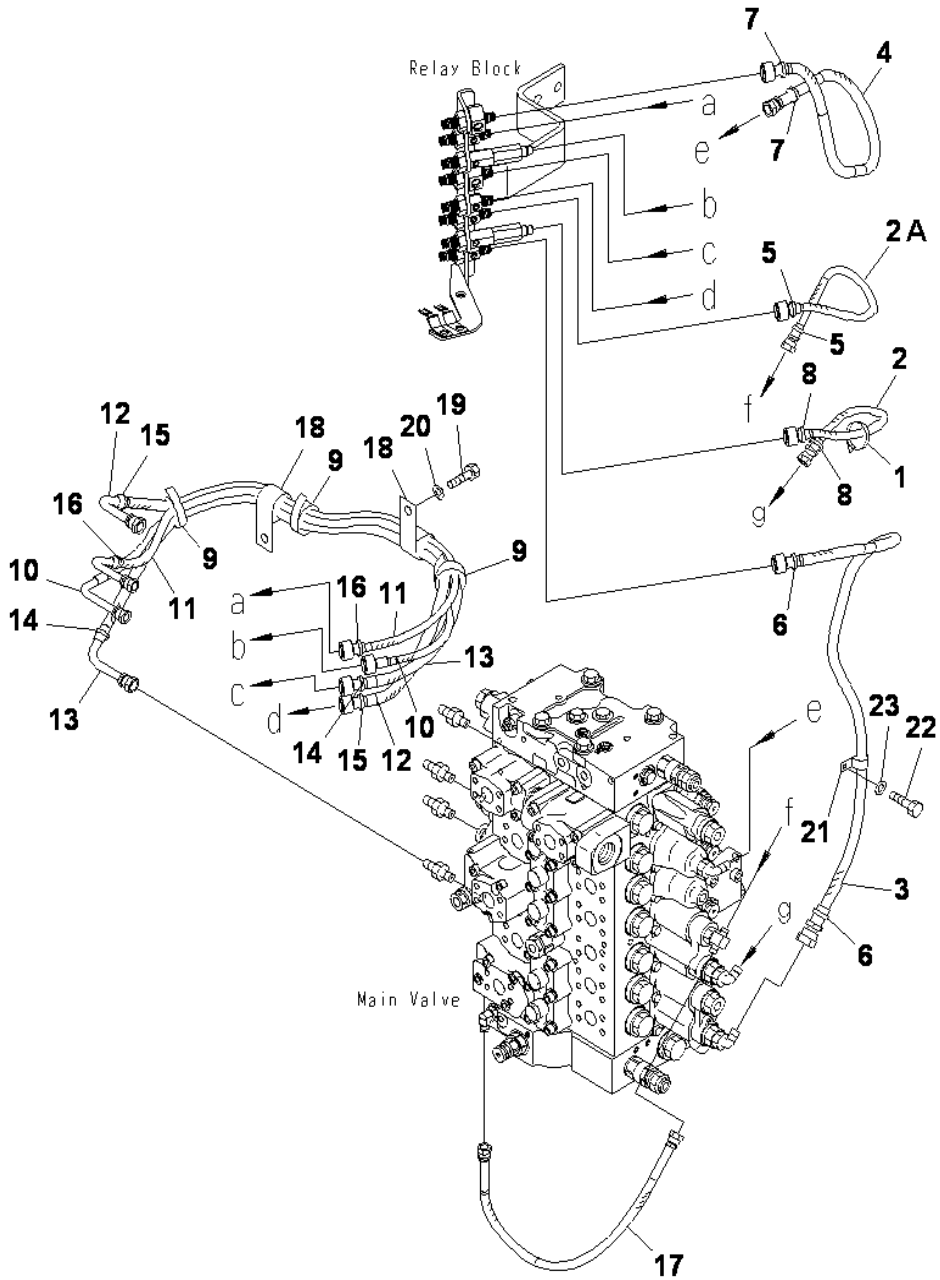

PPC MAIN LINE

INDEX	CD	PART NO.	DESCRIPTION	QTY	SERIAL NO.
1		08034-20536	BAND	1	J30001-UP
2		22B-62-18980	HOSE, 400MM	1	J30001-UP
2A		02760-00204	HOSE, 400MM	1	J30001-UP
3		02760-00307	HOSE, 700MM	1	J30001-UP
4		02760-00206	HOSE, 600MM	1	J30001-UP
5		20Y-62-22790	BAND, RED	2	J30001-UP
6		20Y-62-22810	BAND, YELLOW	2	J30001-UP
7		20Y-62-22830	BAND, WHITE	2	J30001-UP
8		20Y-62-22850	BAND, GREEN	2	J30001-UP
9		08034-20536	BAND	3	J30001-UP
10		208-62-75920	HOSE, 1250MM	1	J30001-UP
11		208-62-75950	HOSE, 1350MM	1	J30001-UP
12		208-62-75960	HOSE, 1300MM	1	J30001-UP
13		208-62-75970	HOSE, 1350MM	1	J30001-UP
14		20Y-62-22820	BAND, BLUE	2	J30001-UP
15		20Y-62-22840	BAND, BLACK	2	J30001-UP
16		20Y-62-22860	BAND, BROWN	2	J30001-UP
17		02760-002A5	HOSE, 550MM	1	J30001-UP
18		113-89-97950	CLIP	2	J30001-UP
19		01010-81225	BOLT	1	J30001-UP
20		01643-31232	WASHER	1	J30001-UP
21		04434-51412	CLIP	1	J30001-UP
22		01010-81225	BOLT	1	J30001-UP
23		01643-31232	WASHER	1	J30001-UP

MAIN FRAME AND RELATED PARTS

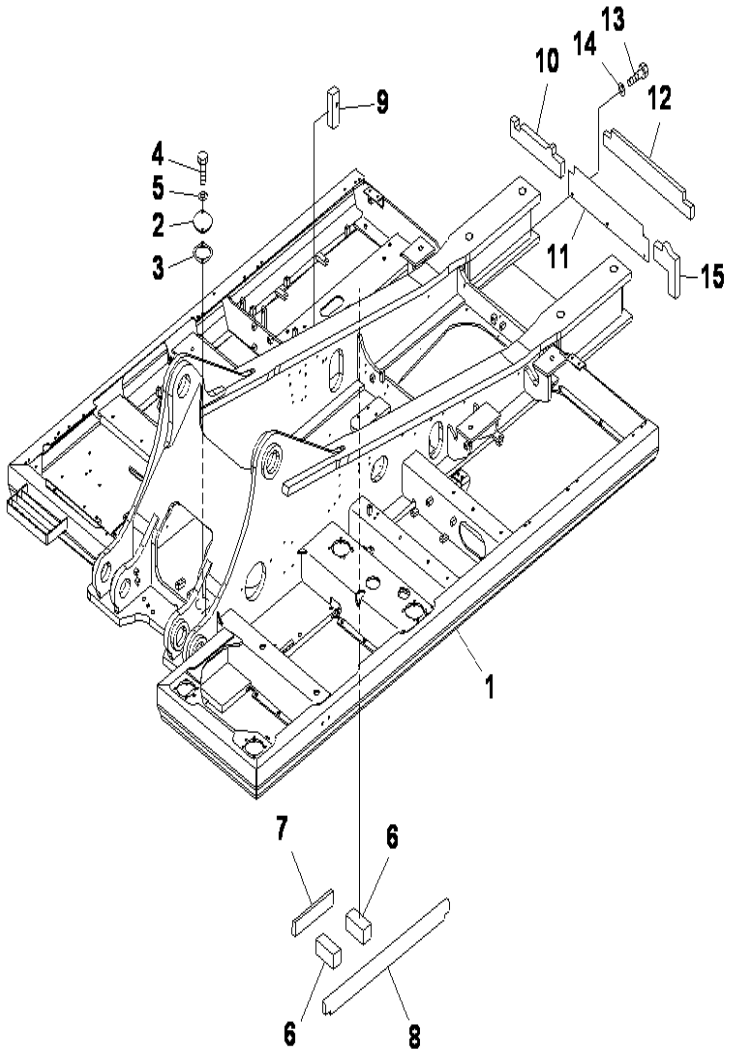

PC400-8 S/N J30001-UP

REVOLVING FRAME (1/2)

INDEX	CD	PART NO.	DESCRIPTION	QTY	SERIAL NO.
1		208-46-76103	FRAME	1	J30002-UP
		208-46-76102	FRAME	1	J30001-J30001
2		205-30-71181	COVER	1	J30001-UP
3		205-30-71191	GASKET	1	J30001-UP
4		01010-81230	BOLT	2	J30001-UP
5		01643-31232	WASHER	2	J30001-UP
6		208-46-75690	SHEET	2	J30001-UP
7		208-46-75670	SHEET	1	J30001-UP
8		208-46-75680	SHEET	1	J30001-UP
9		208-03-71711	SEAL	1	J30001-UP
10		208-46-73310	SHEET	1	J30001-UP
11		208-46-71410	COVER	1	J30001-UP
12		208-46-71420	. SHEET	1	J30001-UP
13		01010-81225	BOLT	3	J30001-UP
14		01643-31232	WASHER	3	J30001-UP
15		208-46-72410	SHEET	1	J30001-UP

Ref :J1110-01A2 Page :180010

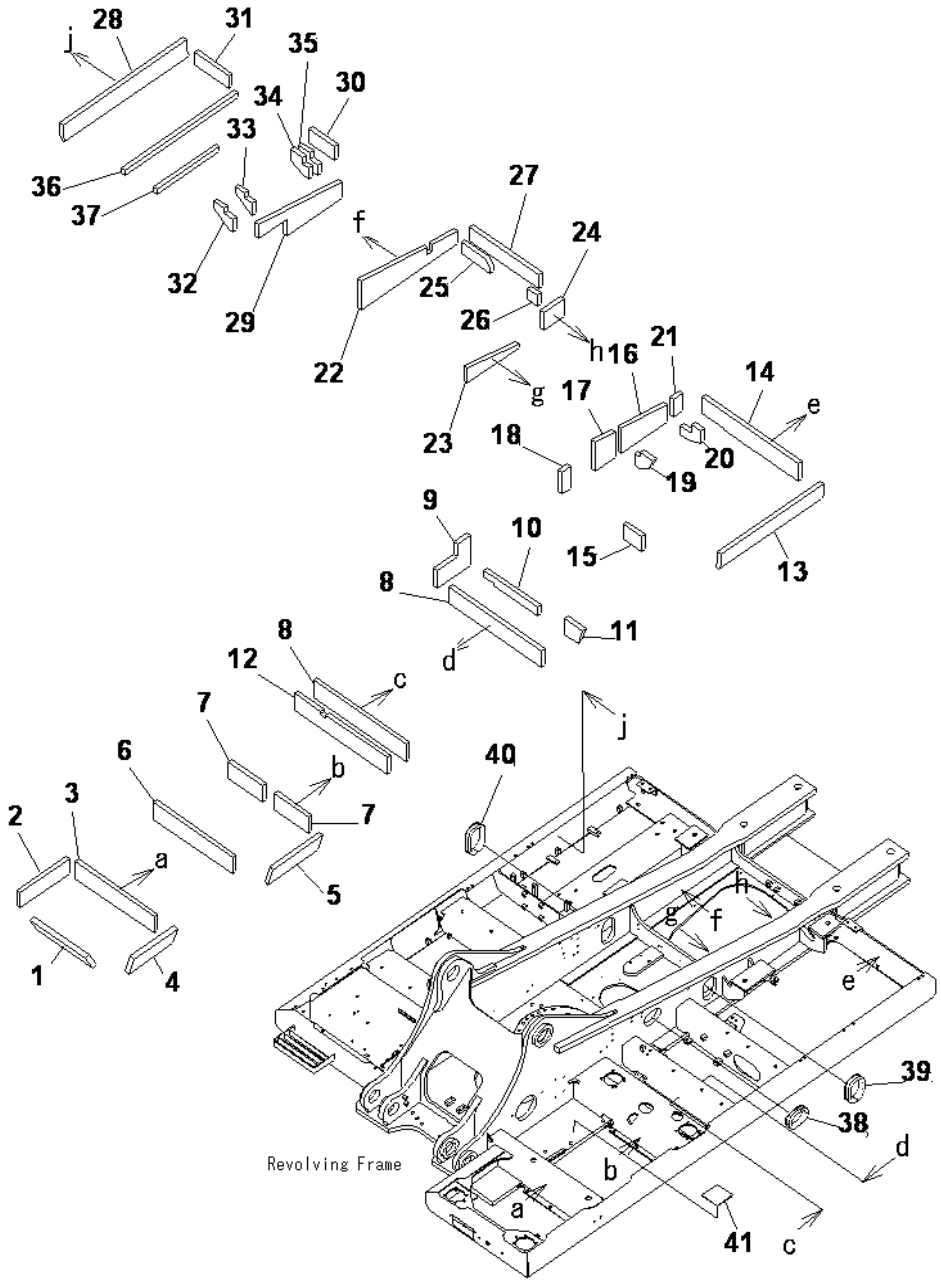

REVOLVING FRAME (2/2)

INDEX	CD	PART NO.	DESCRIPTION	QTY	SERIAL NO.
1		20Y-46-42310	SHEET	1	J30001-UP
2		20Y-46-42320	SHEET	1	J30001-UP
3		20Y-46-42340	SHEET	1	J30001-UP
4		207-46-71510	SHEET	1	J30001-UP
5		20Y-46-42330	SHEET	1	J30001-UP
6		20Y-46-42340	SHEET	1	J30001-UP
7		208-46-75650	SHEET	2	J30001-UP
8		208-46-75640	SHEET	2	J30001-UP
9		208-46-75880	SHEET	1	J30001-UP
10		208-46-75890	SHEET	1	J30001-UP
11		208-46-75910	SHEET	1	J30001-UP
12		208-46-76150	SHEET	1	J30001-UP
13		208-46-75990	SHEET	1	J30001-UP
14		208-46-75872	SHEET	1	J30001-UP
15		208-46-75280	SHEET	1	J30001-UP
16		208-46-75790	SHEET	1	J30001-UP
17		208-46-75810	SHEET	1	J30001-UP
18		208-46-75820	SHEET	1	J30001-UP
19		208-46-75840	SHEET	1	J30001-UP
20		208-46-75850	SHEET	1	J30001-UP
21		208-46-75860	SHEET	1	J30001-UP
22		208-46-75130	SHEET	1	J30001-UP
23		208-46-75770	SHEET	1	J30001-UP
24		208-46-75780	SHEET	1	J30001-UP
25		208-46-75710	SHEET	1	J30001-UP
26		208-46-75720	SHEET	1	J30001-UP
27		208-46-75950	SHEET	1	J30001-UP
28		208-46-75110	SHEET	1	J30001-UP
29		208-46-75140	SHEET	1	J30001-UP
30		208-46-75180	SHEET	1	J30001-UP
31		208-46-75190	SHEET	1	J30001-UP
32		208-46-75730	SHEET	1	J30001-UP
33		208-46-75740	SHEET	1	J30001-UP
34		208-46-75750	SHEET	1	J30001-UP
35		208-46-75760	SHEET	1	J30001-UP
36		208-46-75960	SHEET	1	J30001-UP
37		208-46-75970	SHEET	1	J30001-UP
38		208-62-72810	GROMMET	1	J30001-UP
39		208-62-72820	GROMMET	1	J30001-UP
40		208-62-72830	GROMMET	1	J30001-UP
41		203-62-52210	RUBBER	1	J30001-UP

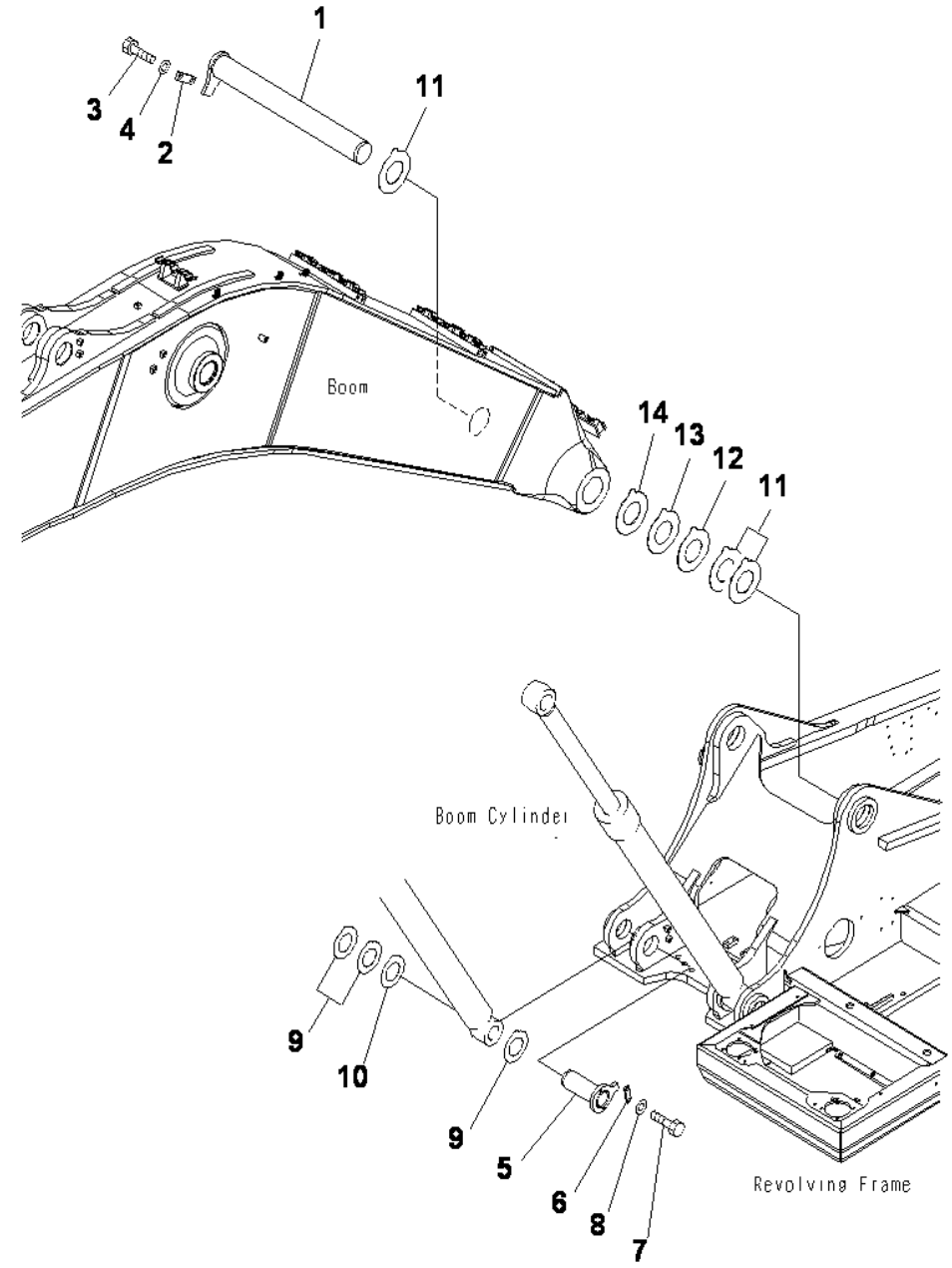

BOOM FOOT PIN

INDEX	CD	PART NO.	DESCRIPTION	QTY	SERIAL NO.
1		208-70-71590	PIN	1	J30001-UP
2		205-70-61560	PLATE	1	J30001-UP
3		01010-82045	BOLT	2	J30001-UP
4		01643-32060	WASHER	2	J30001-UP
5		208-70-61210	PIN	2	J30001-UP
6		205-70-66580	PLATE	2	J30001-UP
7		01010-81235	BOLT	4	J30001-UP
8		01643-31232	WASHER	4	J30001-UP
9		207-70-71251	SPACER, 1.0MM	6	J30001-UP
10		207-70-71261	SPACER, 2.0MM	2	J30001-UP
11		208-70-71611	SPACER	3	J30001-UP
12		208-70-71621	SPACER	1	J30001-UP
13		208-70-71631	SPACER	1	J30001-UP
14		208-70-71641	SPACER	1	J30001-UP

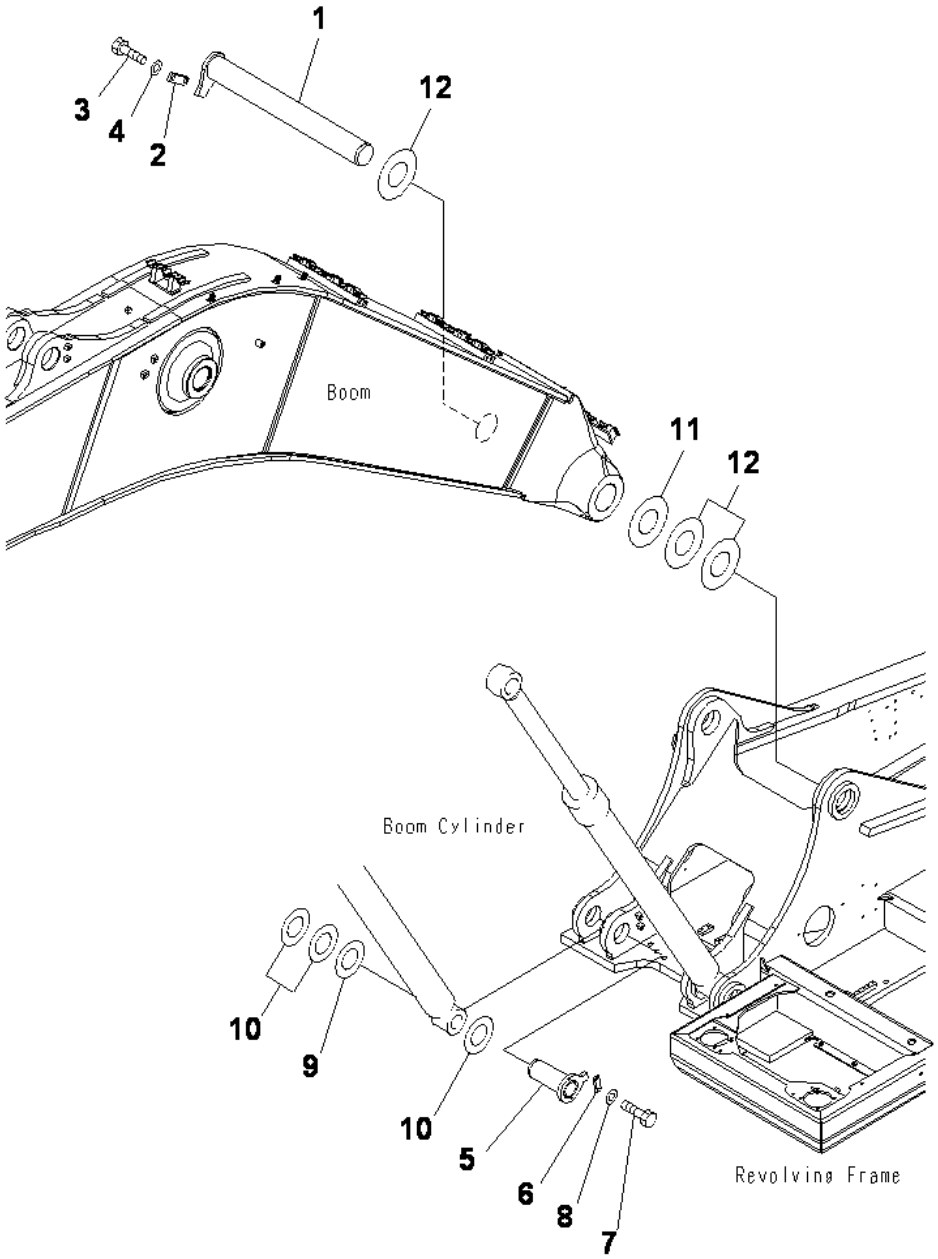

BOOM FOOT PIN (100 HOURS LUBRICATING)

INDEX	CD	PART NO.	DESCRIPTION	QTY	SERIAL NO.
1		208-70-71590	PIN	1	J30001-UP
2		205-70-61560	PLATE	1	J30001-UP
3		01010-82045	BOLT	2	J30001-UP
4		01643-32060	WASHER	2	J30001-UP
5		208-70-61210	PIN	2	J30001-UP
6		205-70-66580	PLATE	2	J30001-UP
7		01010-81235	BOLT	4	J30001-UP
8		01643-31232	WASHER	4	J30001-UP
9		207-70-11340	SPACER, 0.8MM	2	J30001-UP
10		207-70-11350	SPACER, 1.5MM	6	J30001-UP
11		208-70-31290	SPACER, 0.8MM	1	J30001-UP
12		208-70-51310	SPACER, 1.5MM	4	J30001-UP

OPERATORS COMPARTMENT AND CONTROL

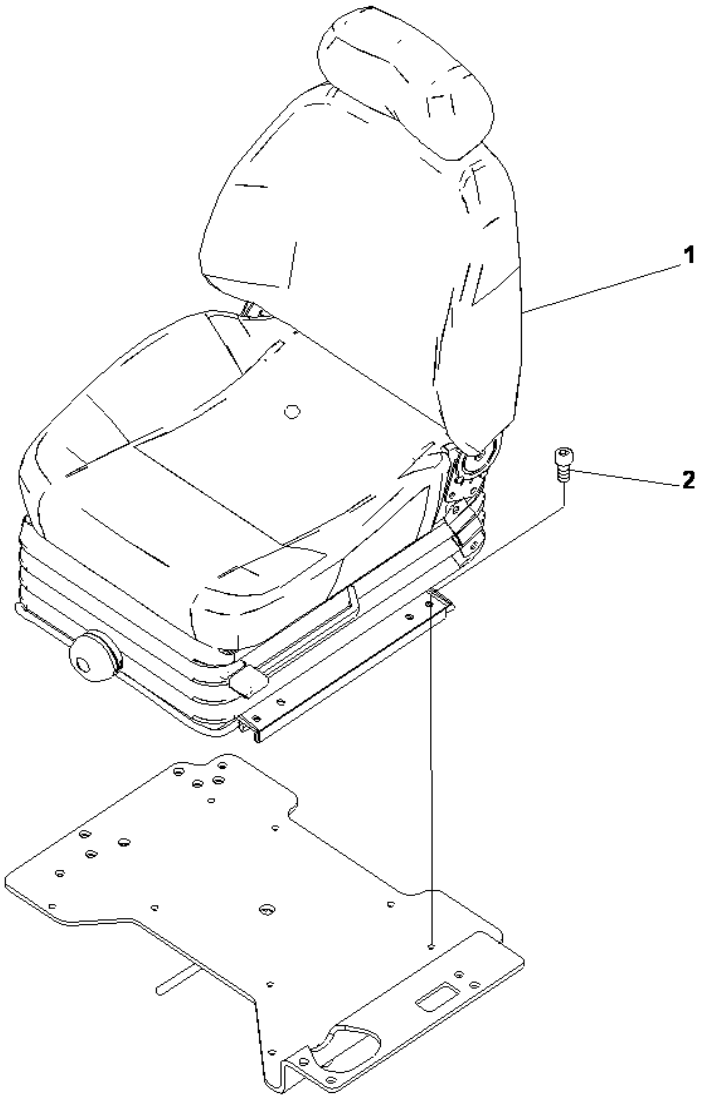

PC400-8 S/N J30001-UP

OPERATOR'S SEAT (SUSPENSION TYPE)

INDEX	CD	PART NO.	DESCRIPTION	QTY	SERIAL NO.
1		20Y-57-41103	SEAT A,SUSPENSI.....	1	J30045-UP
		20Y-57-41102	SEAT A,SUSPENSI.....	1	J30001-J30044
2		01252-80825	BOLT.....	4	J30001-UP

Ref :K0110-01A0 Page :210010

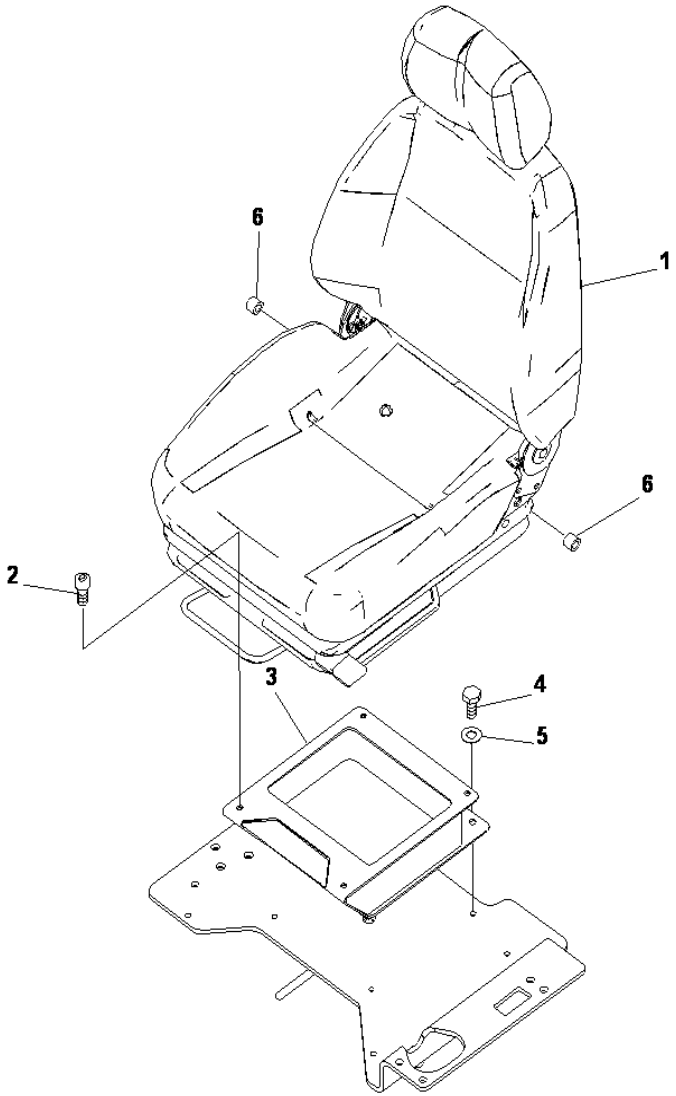

PC400-8 S/N J30001-UP

OPERATOR'S SEAT (RIGID TYPE)

INDEX	CD	PART NO.	DESCRIPTION	QTY	SERIAL NO.
1		(20Y-57-41203)	SEAT ASS'Y	1	J30045-UP
		(20Y-57-41202)	SEAT ASS'Y	1	J30001-J30044
2		01252-80825	BOLT	4	J30001-UP
3		20Y-57-41211	BRACKET	1	J30001-UP
4		01010-D0825	BOLT	4	J30001-UP
5		01643-70823	WASHER	4	J30001-UP
6		01643-11232	WASHER	2	J30001-UP

Ref :K0110-01A2 Page :210030

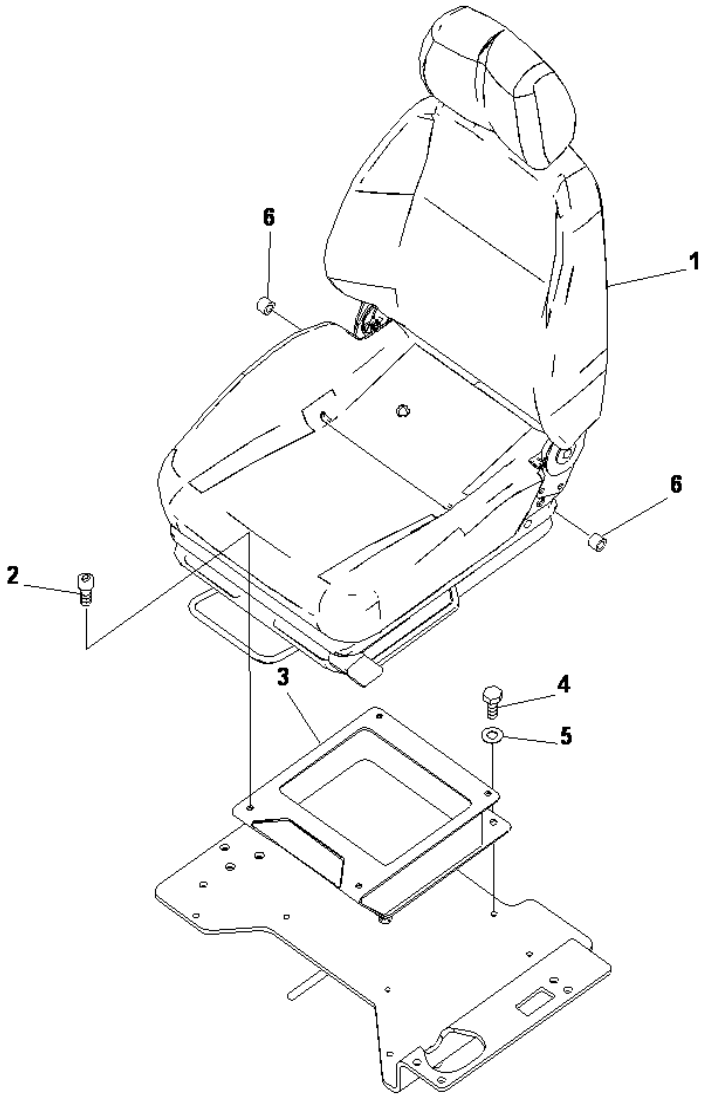

PC400-8 S/N J30001-UP

OPERATOR'S SEAT (PVC LEATHER)

INDEX	CD	PART NO.	DESCRIPTION	QTY	SERIAL NO.
1		(20Y-57-41801)	SEAT ASS'Y	1	J30001-UP
2		01252-80825	BOLT	4	J30001-UP
3		20Y-57-41211	BRACKET	1	J30001-UP
4		01010-D0825	BOLT	4	J30001-UP
5		01643-70823	WASHER	4	J30001-UP
6		01643-11232	WASHER	2	J30001-UP

Ref :K0110-01A3 Page :210040

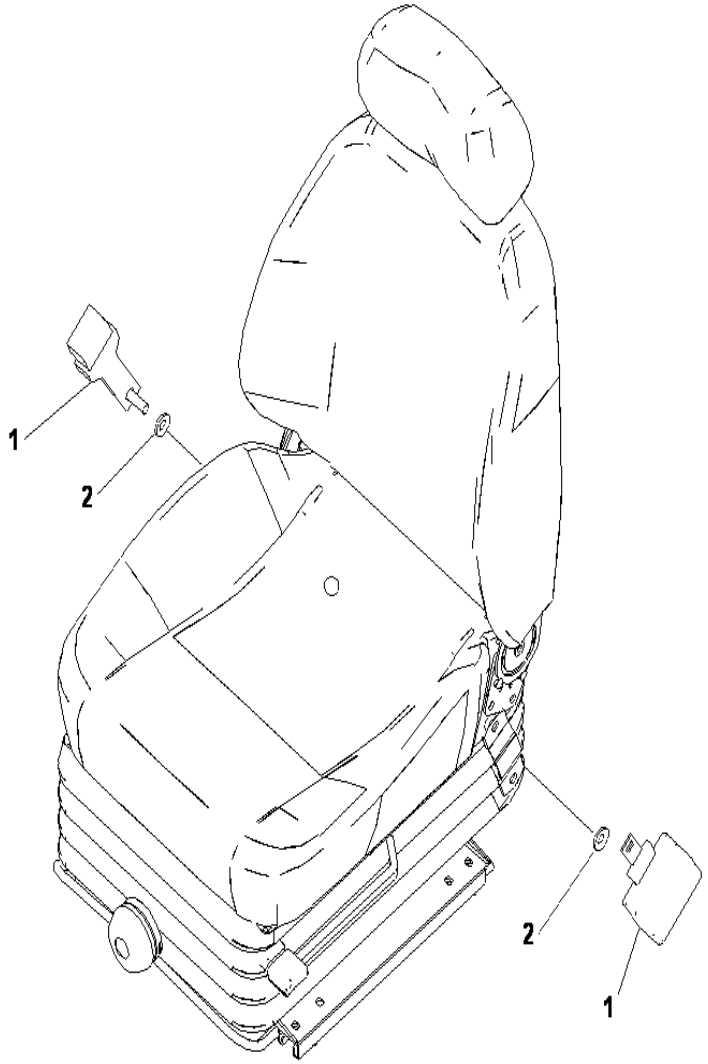

PC400-8 S/N J30001-UP

SEAT BELT (50MM WIDE)

INDEX	CD	PART NO.	DESCRIPTION	QTY	SERIAL NO.
1		20Y-57-41910	LAP BELT ,2 INCH.....	1	J30001-UP
2		01643-11232	WASHER.....	2	J30001-UP

Ref :K0160-01A0 Page :210050

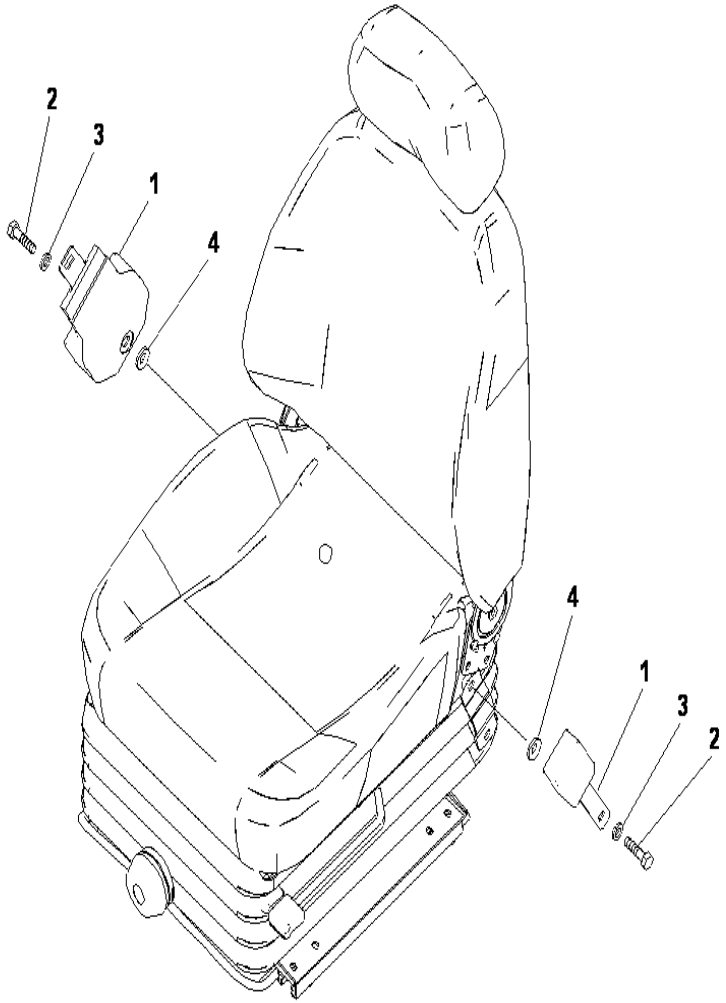

PC400-8 S/N J30001-UP

SEAT BELT (78MM WIDE)

INDEX	CD	PART NO.	DESCRIPTION	QTY	SERIAL NO.
1		22B-57-11911	LAP BELT ,3INCH.....	1	J30001-UP
2		02030-70751	.BOLT.....	2	J30001-UP
3		09409-00002	.WASHER.....	2	J30001-UP
4		01643-11232	WASHER.....	2	J30001-UP

Ref :K0160-01A1 Page :210060

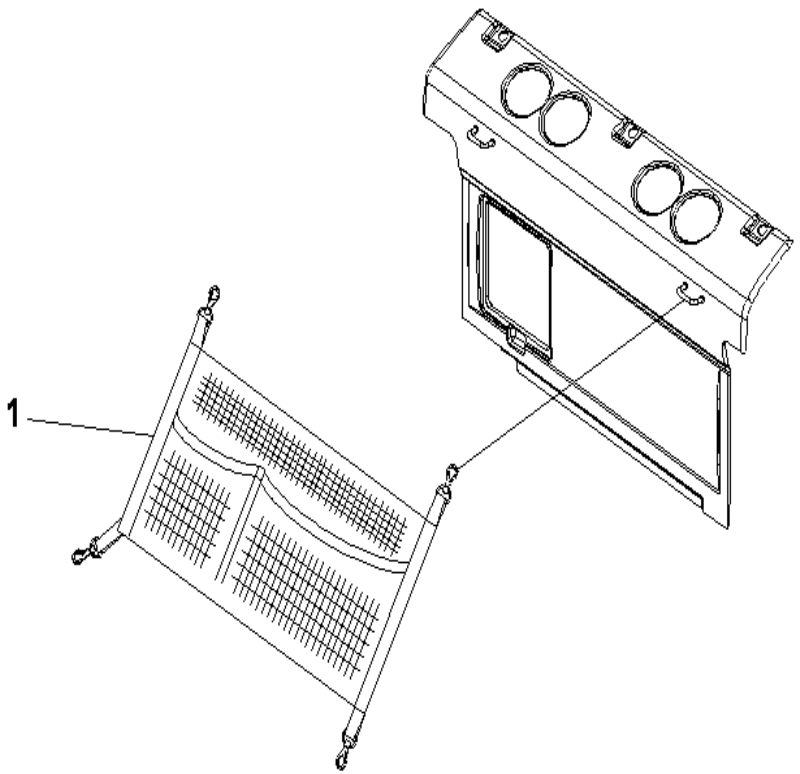

PC400-8 S/N J30001-UP

LUGGAGE BOX NET

INDEX	CD	PART NO.	DESCRIPTION	QTY	SERIAL NO.
1		208-53-13720	NET	1	J30001-UP

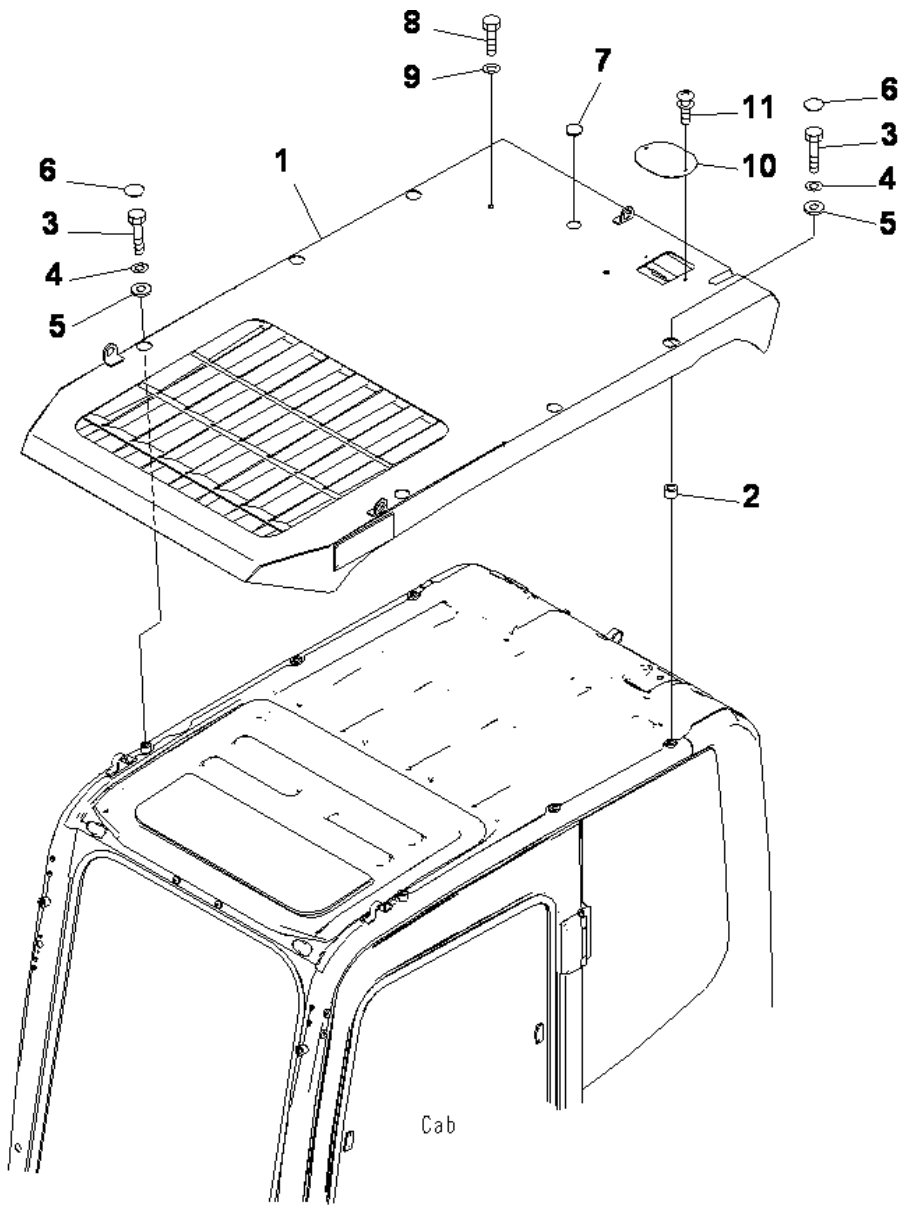

PC400-8 S/N J30001-UP

TOP GUARD

INDEX	CD	PART NO.	DESCRIPTION	QTY	SERIAL NO.
1		20Y-954-6122	GUARD(TOP).....	1	J30001-UP
2		20Y-954-6241	BOSS.....	4	J30001-UP
3		01010-81280	BOLT.....	6	J30001-UP
4		01643-31232	WASHER.....	6	J30001-UP
5		130-43-64260	COLLAR.....	6	J30001-UP
6		195-Z1-12970	CAP.....	6	J30001-UP
7		08037-02512	GROMMET.....	1	
8		01010-D1220	BOLT.....	2	J30001-UP
9		01643-71232	WASHER.....	2	J30001-UP
10		20Y-954-6250	PLATE.....	1	J30001-UP
11		01023-20612	SCREW.....	2	J30001-UP

Ref :K0220-01A0 Page :210090

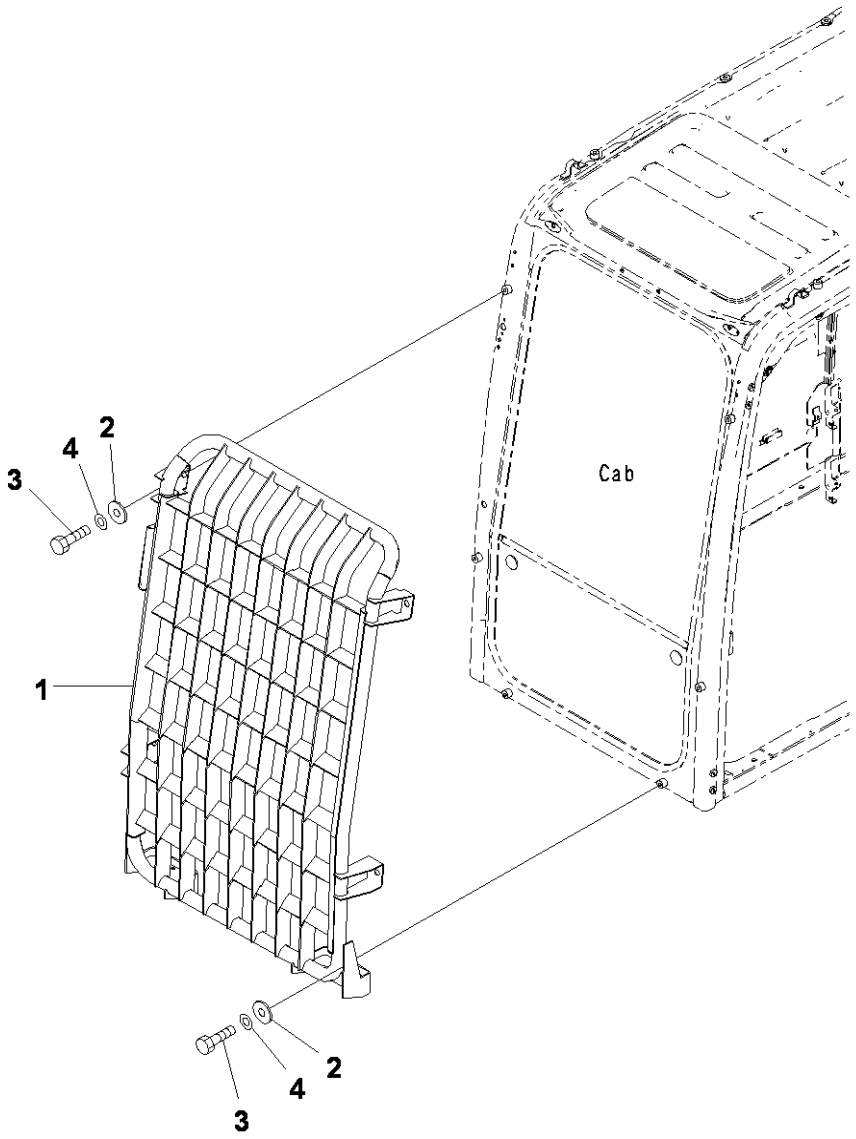

PC400-8 S/N J30001-UP

FRONT GUARD

INDEX	CD	PART NO.	DESCRIPTION	QTY	SERIAL NO.
1		20Y-954-6111	GUARD	1	J30001-UP
2		130-43-64260	COLLAR	6	J30001-UP
3		01010-D1225	BOLT	6	J30001-UP
4		01643-71232	WASHER	6	J30001-UP

Ref :K0230-01A0 Page :210100

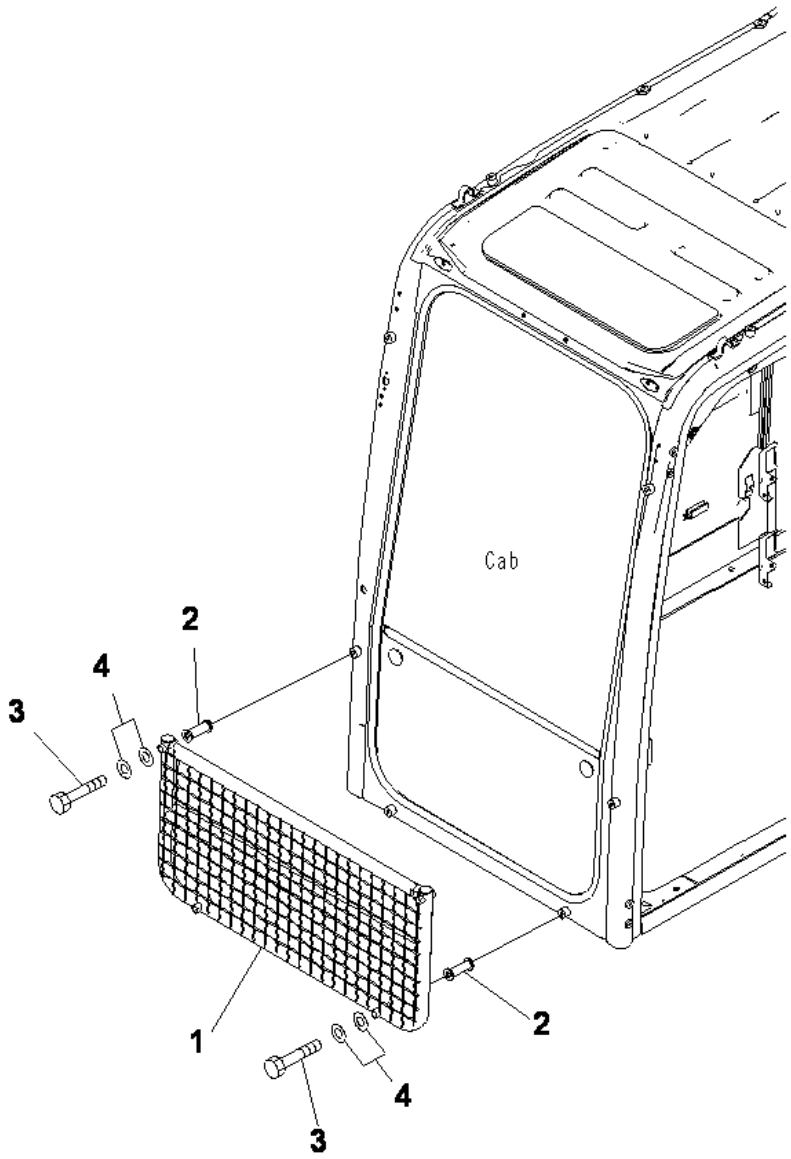

PC400-8 S/N J30001-UP

HALF GUARD

INDEX	CD	PART NO.	DESCRIPTION	QTY	SERIAL NO.
1		20Y-954-6132	GUARD	1	J30001-UP
2		20Y-954-6192	SPACER	4	J30001-UP
3		01011-D1245	BOLT	4	J30001-UP
4		01643-71232	WASHER	8	J30001-UP

Ref :K0230-01A1 Page :210110

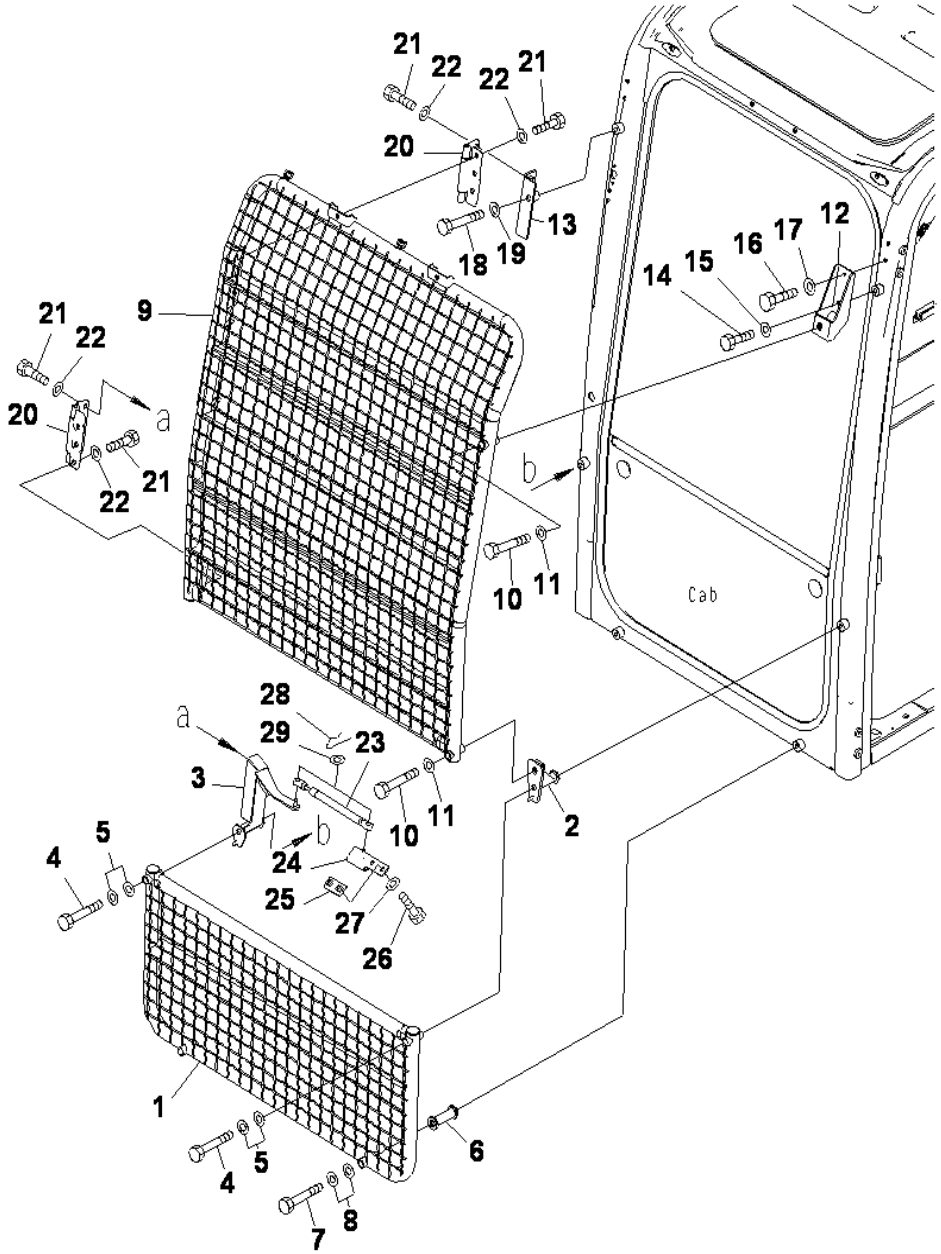

FRONT FULL GUARD

INDEX	CD	PART NO.	DESCRIPTION	QTY	SERIAL NO.
1		20Y-954-6132	GUARD	1	J30001-UP
2		20Y-954-6171	BRACKET	1	J30001-UP
3		20Y-954-6181	BRACKET	1	J30001-UP
4		01011-D1245	BOLT	2	J30001-UP
5		01643-71232	WASHER	4	J30001-UP
6		20Y-954-6192	SPACER	2	J30001-UP
7		01011-D1245	BOLT	2	J30001-UP
8		01643-71232	WASHER	4	J30001-UP
9		20Y-954-6142	GUARD	1	J30001-UP
10		01010-D1275	BOLT	2	J30001-UP
11		01643-71232	WASHER	2	J30001-UP
12		20Y-954-6151	BRACKET	1	J30001-UP
13		20Y-954-6161	BRACKET	1	J30001-UP
14		01010-D1220	BOLT	1	J30001-UP
15		01643-71232	WASHER	1	J30001-UP
16		01010-D0640	BOLT	1	J30001-UP
17		01643-70623	WASHER	1	J30001-UP
18		01010-D1245	BOLT	1	J30001-UP
19		01643-71232	WASHER	1	J30001-UP
20		14X-91-11330	HINGE	2	J30001-UP
21		01010-D1025	BOLT	12	J30001-UP
22		01643-71032	WASHER	12	J30001-UP
23		20Y-54-36342	GAS SPRING ASS'Y	1	J30001-UP
24		22B-95-41840	PLATE	1	J30001-UP
25		22B-95-41660	PLATE	1	J30001-UP
26		01010-D0820	BOLT	2	J30001-UP
27		01643-70823	WASHER	2	J30001-UP
28		04052-10833	PIN	2	J30001-UP
29		01643-70823	WASHER	2	J30001-UP

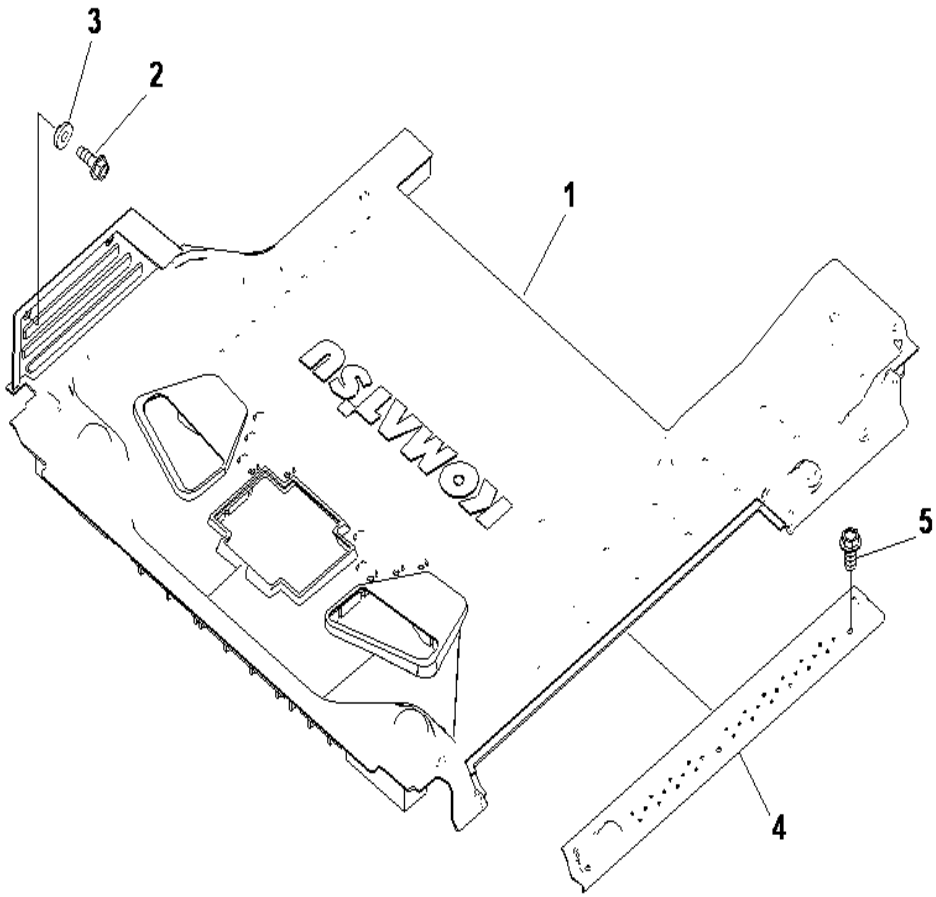

PC400-8 S/N J30001-UP

FLOOR MAT

INDEX	CD	PART NO.	DESCRIPTION	QTY	SERIAL NO.
1		206-53-14711	MAT	1	J30001-UP
2		01435-40616	BOLT	2	J30001-UP
3		20Y-43-41290	COLLAR	2	J30001-UP
4		20Y-53-11953	COVER	1	J30001-UP
5		01435-40612	BOLT	3	J30001-UP

Ref :K0310-01A0 Page :210130

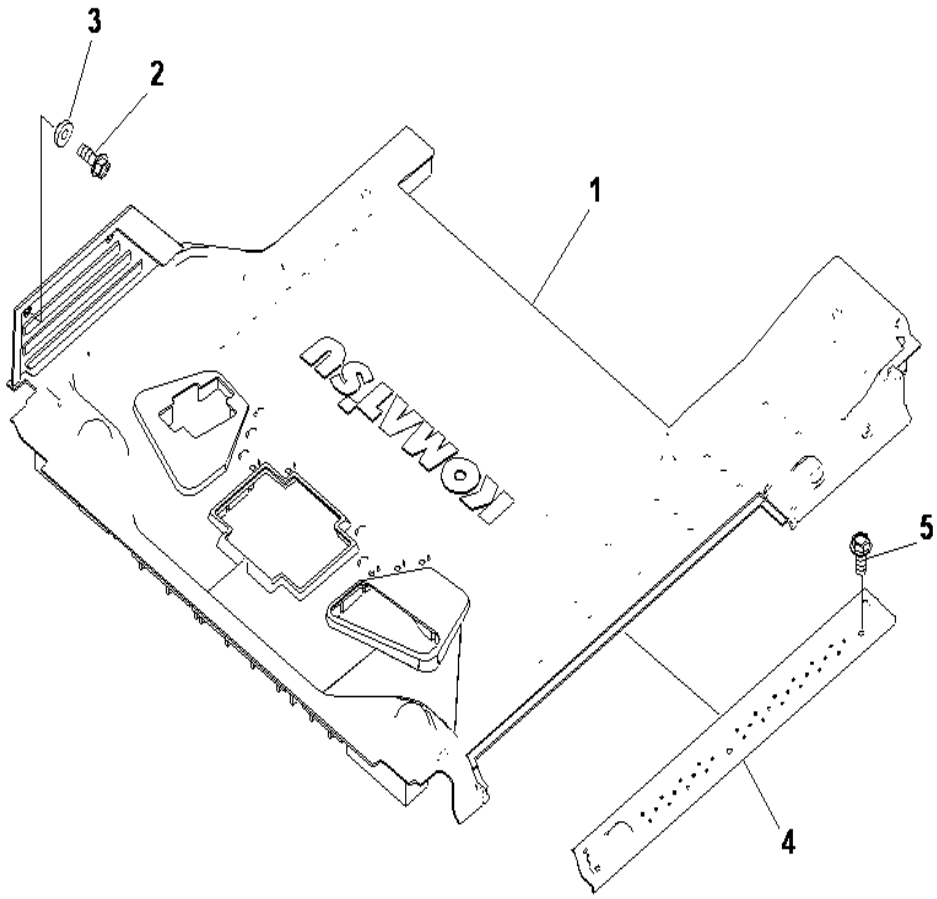

PC400-8 S/N J30001-UP

FLOOR MAT (FOR 1 ACTUATOR)

INDEX	CD	PART NO.	DESCRIPTION	QTY	SERIAL NO.
1		206-53-14721	MAT	1	J30001-UP
2		01435-40616	BOLT	2	J30001-UP
3		20Y-43-41290	COLLAR	2	J30001-UP
4		20Y-53-11953	COVER	1	J30001-UP
5		01435-40612	BOLT	3	J30001-UP

Ref :K0310-01A1 Page :210140

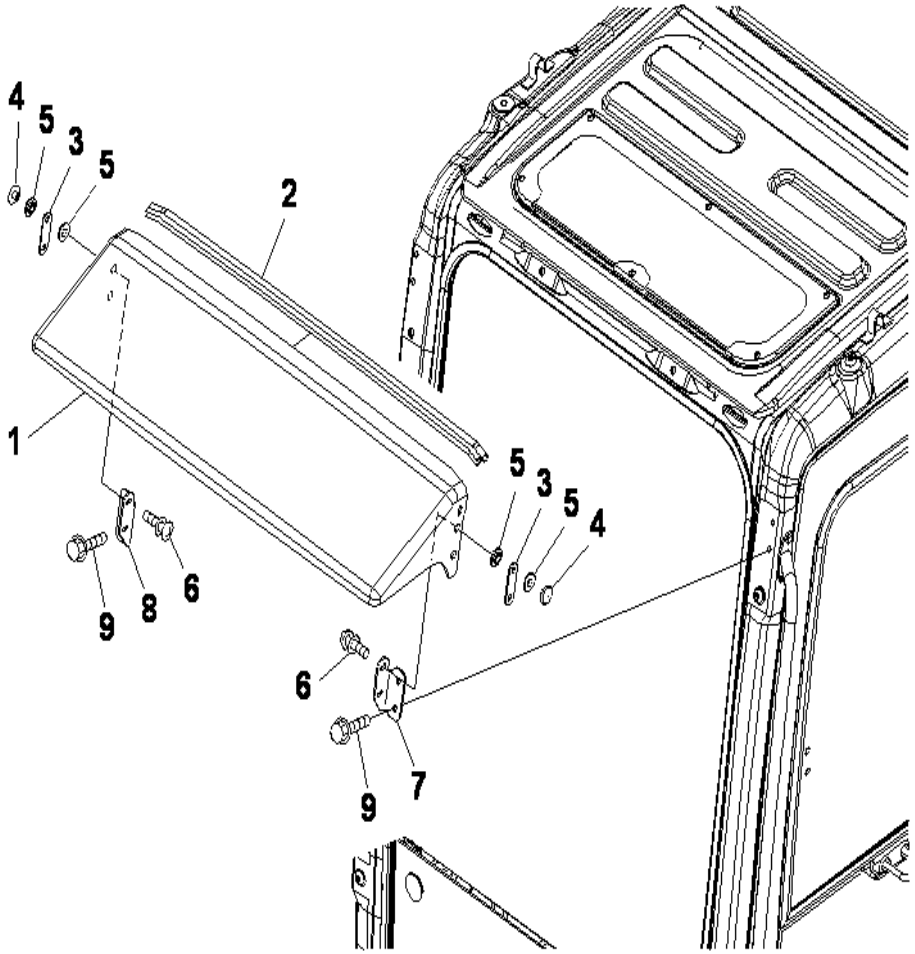

PC400-8 S/N J30001-UP

RAIN VISOR

INDEX	CD	PART NO.	DESCRIPTION	QTY	SERIAL NO.
1		20Y-53-15710	VISOR	1	J30001-UP
2		20Y-53-15750	.SEAL	1	J30001-UP
3		20Y-54-52530	PLATE	2	J30001-UP
4		205-54-51720	RETAINER	4	J30001-UP
5		205-54-51730	PACKING	8	J30001-UP
6		01023-20612	SCREW	4	J30001-UP
7		20Y-53-15780	PLATE	1	J30001-UP
8		20Y-53-15790	PLATE	1	J30001-UP
9		01435-40620	BOLT	4	J30001-UP

Ref :K0320-01A0 Page :210150

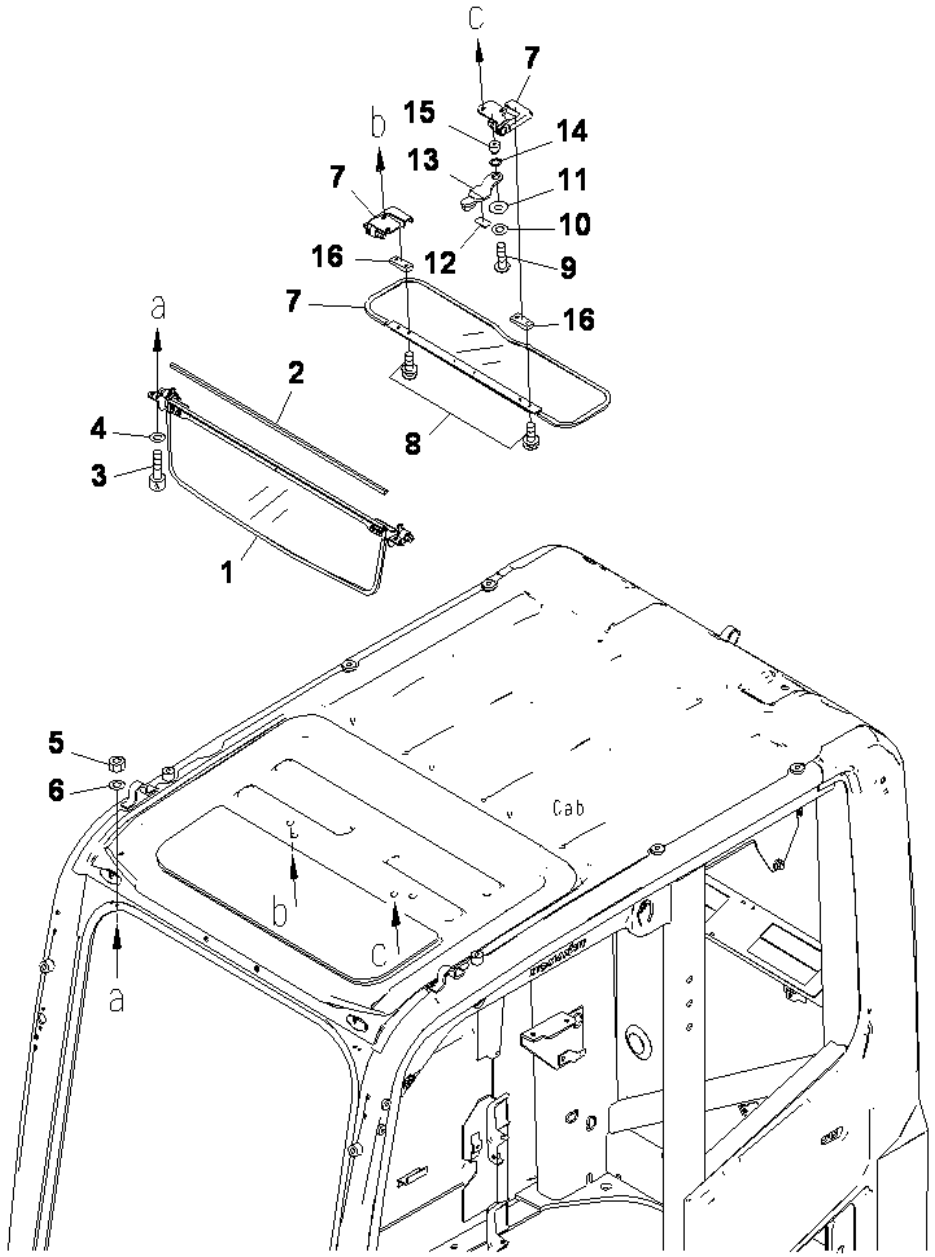

PC400-8 S/N J30001-UP

SUN VISOR

INDEX	CD	PART NO.	DESCRIPTION	QTY	SERIAL NO.
1		20Y-53-16741	VISOR	1	J30001-UP
2		20Y-53-16910	.SEAL	1	J30001-UP
3		01252-80616	BOLT	4	J30001-UP
4		01643-70623	WASHER	4	J30001-UP
5		01580-10605	NUT	4	J30001-UP
6		01640-20610	WASHER	4	J30001-UP
7		20Y-53-17411	SUN VISOR	1	J30001-UP
8		01023-20616	SCREW	4	J30001-UP
9		01245-00816	SCREW	1	J30001-UP
10		01643-70823	WASHER	1	J30001-UP
11		01643-71032	WASHER	1	J30001-UP
12		20Y-53-17420	SUN VISOR	1	J30001-UP
13		20Y-54-52961	LEVER	1	J30001-UP
14		20Y-54-52970	SPRING	1	J30001-UP
15		20Y-54-52980	BOSS	1	J30001-UP
16		08013-01513	CAP	2	J30001-UP

Ref :K0330-01A0 Page :210160

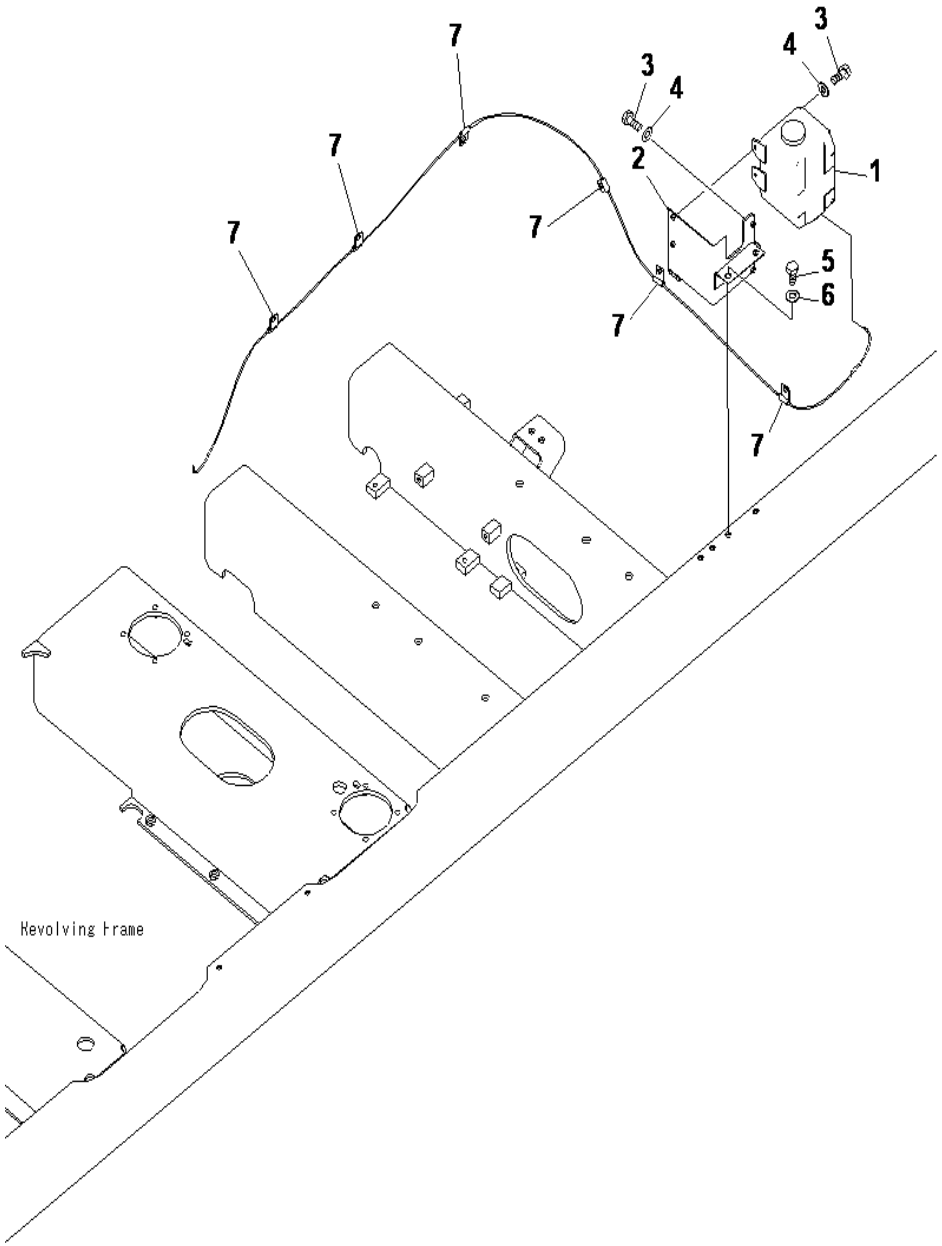

PC400-8 S/N J30001-UP

WINDOW WASHER

INDEX	CD	PART NO.	DESCRIPTION	QTY	SERIAL NO.
1		21T-06-11350	WASHER ASS'Y	1	J30001-UP
2		207-06-71132	BRACKET	1	J30001-UP
3		01010-80616	BOLT	4	J30001-UP
4		01643-30623	WASHER	4	J30001-UP
5		01010-81225	BOLT	2	J30001-UP
6		01643-31232	WASHER	2	J30001-UP
7		21T-38-12270	CLIP	8	J30001-UP

Ref :K0350-01A0 Page :210170

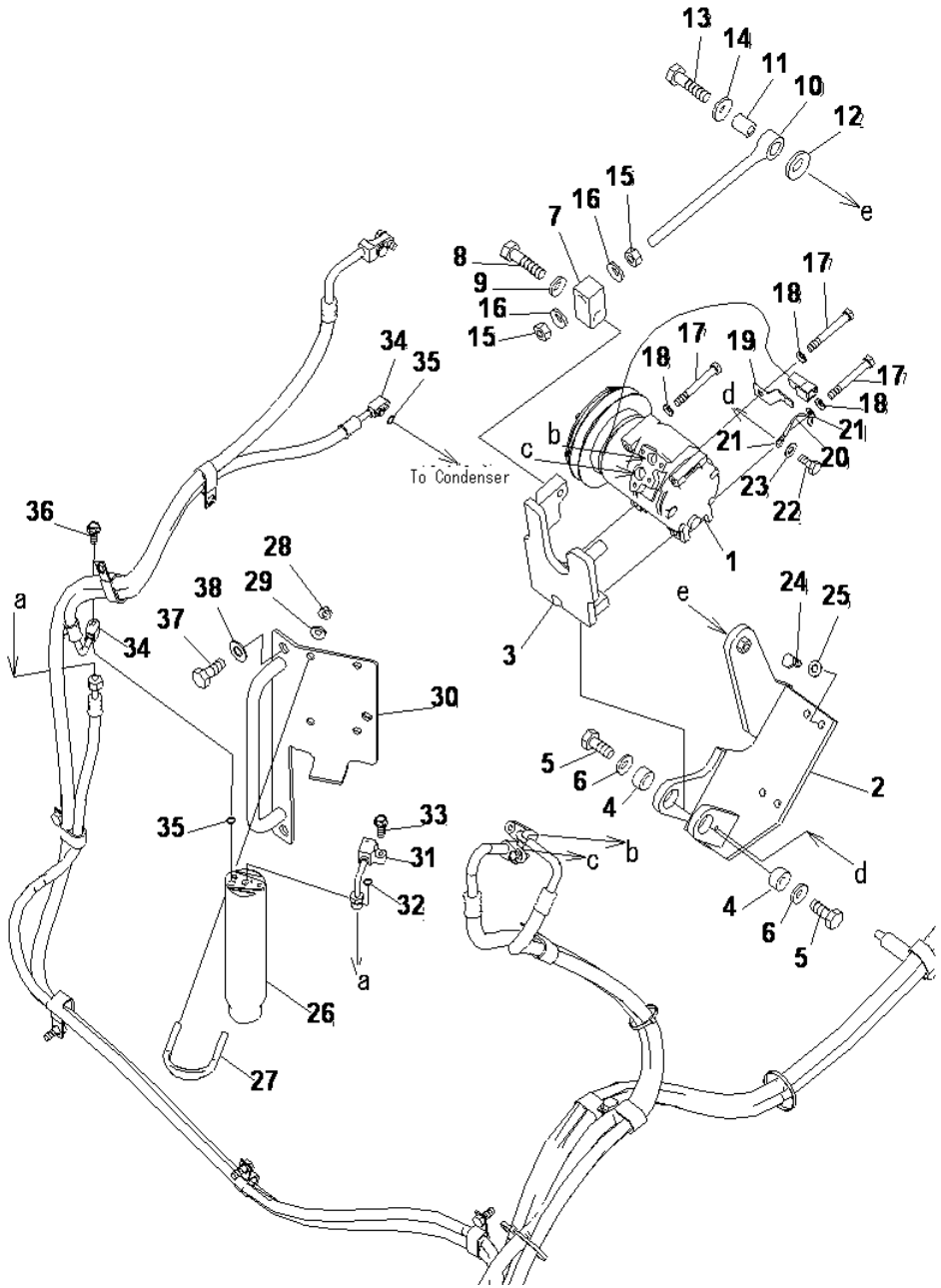

AIR CONDITIONER (COMPRESSOR)

INDEX	CD	PART NO.	DESCRIPTION	QTY	SERIAL NO.
1		(20Y-810-1260)	COMPRESSOR ASS'Y. (SEE FIG*Y1979-01A0).....	1	J30001-UP
2		208-979-8451	BRACKET.....	1	J30056-UP
		208-979-8450	BRACKET.....	1	J30001-J30055
3		208-979-8441	BRACKET.....	1	J30056-UP
		208-979-8440	BRACKET.....	1	J30001-J30055
4		208-979-8520	SPACER.....	2	J30056-UP
		198-38-12460	SPACER.....	2	J30001-J30055
5		01010-81440	BOLT.....	2	J30001-UP
6		01643-31445	WASHER.....	2	J30001-UP
7		208-979-8461	PLATE.....	1	J30056-UP
		208-979-8460	PLATE.....	1	J30001-J30055
8		01010-81460	BOLT.....	1	J30056-UP
		01010-81455	BOLT.....	1	J30001-J30055
9		01643-31445	WASHER.....	1	J30001-UP
10		6150-82-8610	ROD.....	1	J30001-UP
11		6215-81-6150	PIN.....	1	J30001-UP
12		01643-32260	WASHER.....	1	J30001-UP
13		01010-81260	BOLT.....	1	J30001-UP
14		175-54-34170	WASHER.....	1	J30001-UP
15		01583-11811	NUT.....	2	J30056-UP
		01580-11411	NUT.....	2	J30001-J30055
16		01643-31845	WASHER.....	2	J30056-UP
		01643-31445	WASHER.....	2	J30001-J30055
17		01010-80875	BOLT.....	4	J30001-UP
18		01643-30823	WASHER.....	4	J30001-UP
19		08053-01510	CLIP.....	1	J30001-UP
20		208-06-75140	CABLE.....	1	J30001-UP
21		08031-20108	TERMINAL.....	2	J30001-UP
22		01010-80816	BOLT.....	1	J30001-UP
23		01643-30823	WASHER.....	1	J30001-UP
24		01010-81035	BOLT.....	4	J30001-UP
25		01643-31032	WASHER.....	4	J30001-UP
26		20Y-979-3120	TANK.....	1	J30001-UP
27		07283-36155	CLIP.....	2	J30001-UP
28		01597-01009	NUT.....	4	J30001-UP
29		01643-31032	WASHER.....	4	J30001-UP
30		208-979-8410	BRACKET.....	1	J30001-UP
31		20Y-979-6650	TUBE.....	1	J30001-UP
32		20Y-979-3150	.O-RING.....	1	J30001-UP
33		01435-00625	BOLT.....	1	J30001-UP
34		208-979-8430	HOSE.....	1	J30001-UP
35		20Y-979-3150	O-RING.....	2	J30001-UP
36		01435-00625	BOLT.....	1	J30001-UP
37		01010-81225	BOLT.....	2	J30001-UP
38		01643-31232	WASHER.....	2	J30001-UP

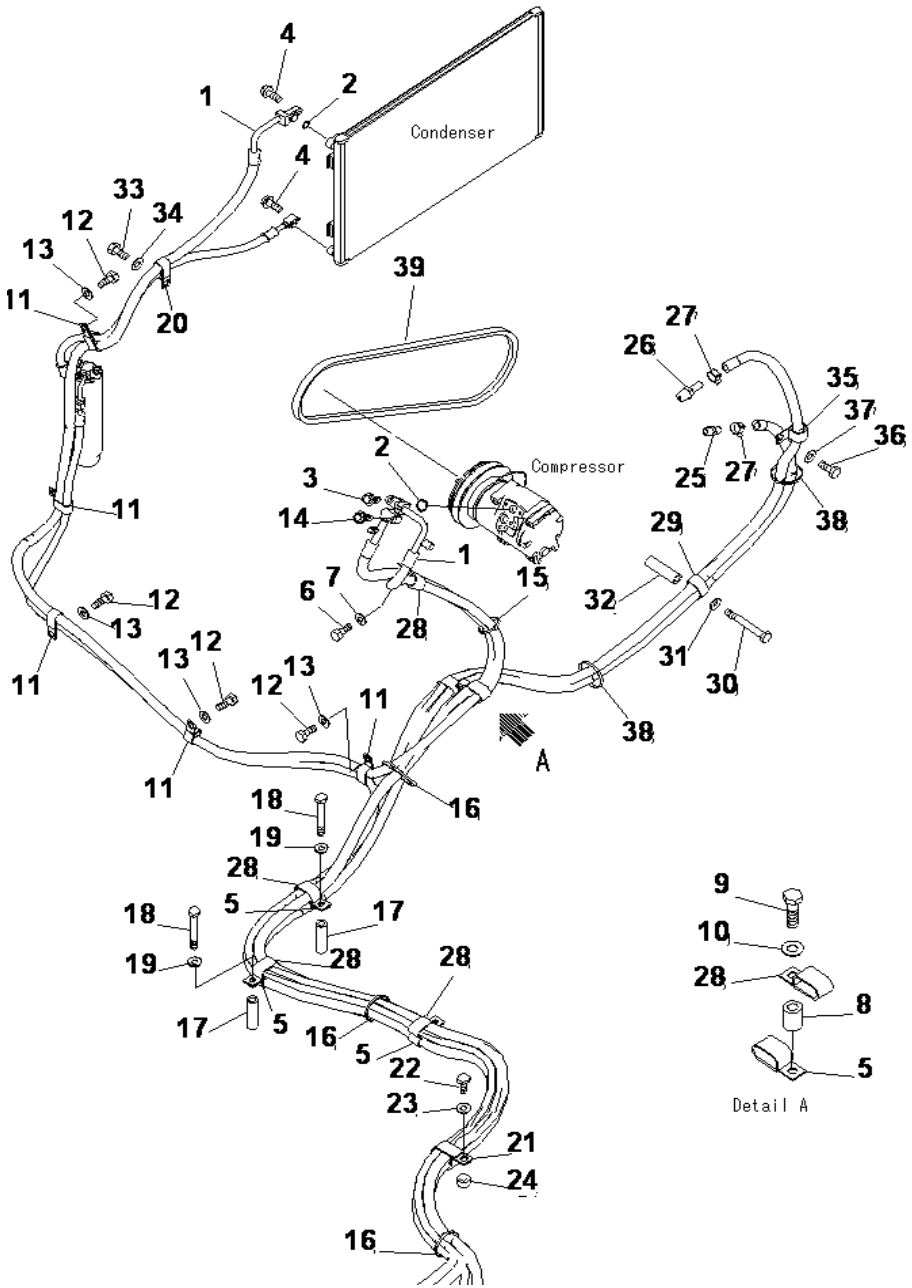

PC400-8 S/N J30001-UP

AIR CONDITIONER (PIPING)

INDEX	CD	PART NO.	DESCRIPTION	QTY	SERIAL NO.
1		208-979-8421	HOSE	1	J30001-UP
2		20Y-979-3140	.O-RING	2	J30001-UP
3		01435-00625	BOLT	1	J30001-UP
4		01435-00625	BOLT	2	J30001-UP
5		141-06-11220	CLIP	4	J30001-UP
6		01010-81225	BOLT	1	J30001-UP
7		01643-31232	WASHER	1	J30001-UP
8		20Y-03-11220	COLLAR	1	J30001-UP
9		01010-81260	BOLT	1	J30001-UP
10		01643-31232	WASHER	1	J30001-UP
11		04435-51812	CLIP	5	J30001-UP
12		01010-81225	BOLT	4	J30001-UP
13		01643-31232	WASHER	4	J30001-UP
14		01435-00630	BOLT	1	J30001-UP
15		08034-20519	BAND	1	J30001-UP
16		08034-20536	BAND	3	J30001-UP
17		22S-62-26210	SPACER	2	J30001-UP
18		01011-81205	BOLT	2	J30001-UP
19		01643-31232	WASHER	2	J30001-UP
20		04435-51810	CLIP	1	J30001-UP
21		21T-06-11950	CLIP	1	J30001-UP
22		01010-81240	BOLT	1	J30001-UP
23		01643-31232	WASHER	1	J30001-UP
24		198-33-12380	WASHER	1	J30001-UP
25		20T-54-42510	NIPPLE	1	J30001-UP
26		207-977-5111	NIPPLE	1	J30001-UP
27		11Y-09-11160	CLIP	2	J30001-UP
28		141-06-11220	CLIP	5	J30001-UP
29		155-06-15180	CLAMP	2	J30001-UP
30		01011-81205	BOLT	1	J30001-UP
31		01643-31232	WASHER	1	J30001-UP
32		22S-62-26210	SPACER	1	J30001-UP
33		01010-81225	BOLT	1	J30001-UP
34		01643-31232	WASHER	1	J30001-UP
35		04434-52712	CLIP	1	J30001-UP
36		01010-81225	BOLT	1	J30001-UP
37		01643-31232	WASHER	1	J30001-UP
38		08034-20536	BAND	4	J30001-UP
39		04120-21760	V-BELT	1	J30001-UP

Ref :K0700-02A0 Page :210190

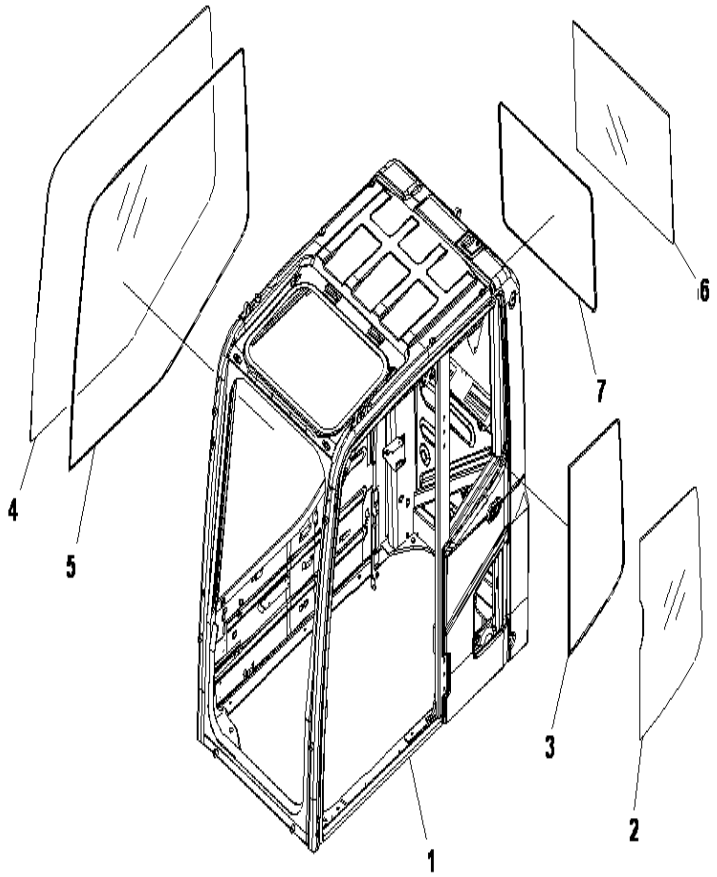

PC400-8 S/N J30001-UP

OPERATOR'S CAB (CAB AND WINDOW)

INDEX	CD	PART NO.	DESCRIPTION	QTY	SERIAL NO.
		207-53-00120	CAB ASS'Y (WITH KOMTRAX).....	1	J30001-UP
		206-53-00063	CAB A. VANDALISM.....	1	J30001-UP
		207-53-00140	CAB ASS'Y (KOMTRAX LESS).....	1	J30001-UP
1	C1	206-53-16314	CAB,VANDALISM.....	1	J30001-UP
2		20Y-53-11241	.GLASS.....	1	J30001-UP
3		20Y-53-11260	.SEAL.....	1	J30001-UP
4		20Y-53-11841	.GLASS.....	1	J30001-UP
5		20Y-53-11850	.SEAL.....	1	J30001-UP
6		20Y-53-11271	.GLASS.....	1	J30001-UP
7		20Y-53-11250	.SEAL.....	1	J30001-UP

Ref :K1110-01A8 Page :210200

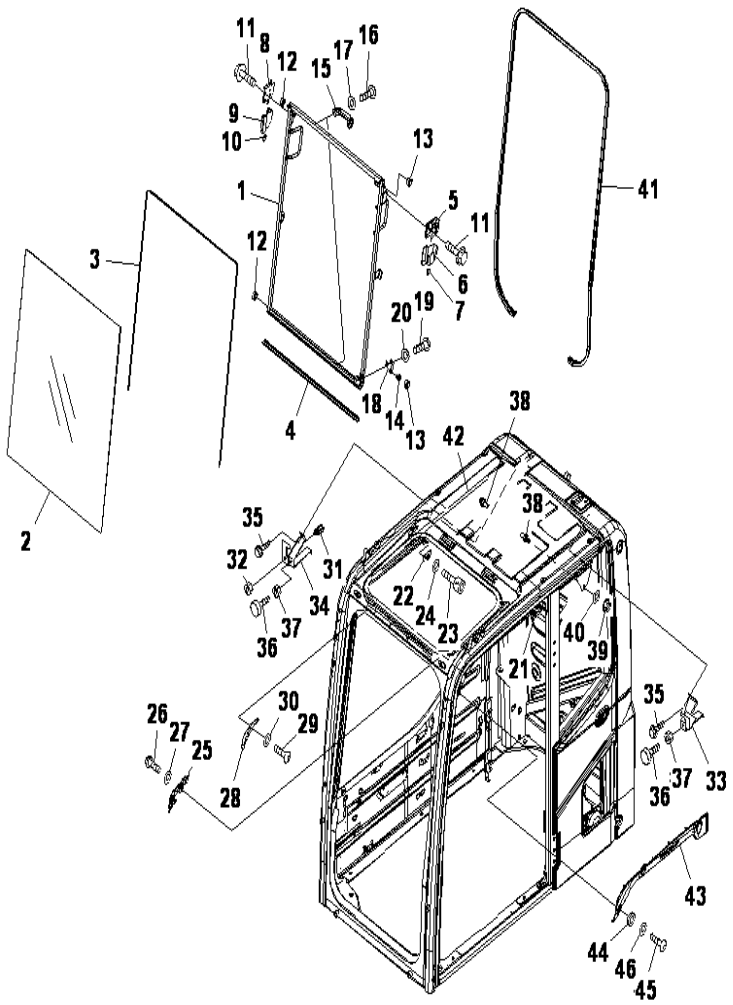

OPERATOR'S CAB (FRONT WINDOW)

INDEX	CD	PART NO.	DESCRIPTION	QTY	SERIAL NO.
		(207-53-00120)	CAB ASS'Y (WITH KOMTRAX).....	1	J30001-UP
		(206-53-00063)	CAB ASS'Y.....	1	J30001-UP
		(207-53-00140)	CAB ASS'Y (KOMTRAX LESS).....	1	J30001-UP
		20Y-53-00031	.WINDOW ASS'Y.....	1	J30001-UP
1		20Y-53-11511	..FRAME.....	1	J30001-UP
2		20Y-53-11520	..GLASS.....	1	J30001-UP
3		20Y-54-51531	..SEAL.....	1	J30001-UP
4		20Y-53-11551	..SEAL.....	1	J30001-UP
5		22B-54-15411	..LOCK ASS'Y.....	1	J30001-UP
6		22B-54-15440	..CASE.....	1	J30001-UP
7		22B-54-15470	..CASE.....	1	J30001-UP
8		22B-54-15421	..LOCK ASS'Y.....	1	J30001-UP
9		22B-54-15450	..CASE.....	1	J30001-UP
10		22B-54-15480	..KNOB.....	1	J30001-UP
11		01435-40812	..BOLT.....	4	J30001-UP
12		20Y-54-52621	..ROLLER.....	2	J30001-UP
13		20Y-54-52681	..ROLLER.....	2	J30001-UP
14		20Y-53-12330	..PIN.....	1	J30001-UP
15		20Y-54-14590	..HANDLE.....	2	J30001-UP
16		01245-00616	..SCREW.....	4	J30001-UP
17		01643-70623	..WASHER.....	4	J30001-UP
18		20Y-53-12830	..BRACKET.....	1	J30001-UP
19		01245-00816	..SCREW.....	2	J30001-UP
20		01643-70823	..WASHER.....	2	J30001-UP
21		20Y-54-51670	.STOPPER.....	1	J30001-UP
22		20Y-54-51680	.STOPPER.....	1	J30001-UP
23		01252-80616	.BOLT.....	4	J30001-UP
24		01643-70623	.WASHER.....	4	J30001-UP
25		20Y-53-11561	.BLOCK ASS'Y.....	1	J30001-UP
26		01245-00816	.SCREW.....	2	J30001-UP
27		01643-70823	.WASHER.....	2	J30001-UP
28		20Y-53-11661	.BRACKET.....	1	J30001-UP
29		01245-00816	.SCREW.....	2	J30001-UP
30		01643-70823	.WASHER.....	2	J30001-UP
31		21J-06-12440	.SWITCH.....	1	J30001-UP
32		01583-11811	.NUT.....	1	J30001-UP
33		20Y-53-11581	.BRACKET.....	1	J30001-UP
34		20Y-53-11641	.BRACKET.....	1	J30001-UP
35		01435-00612	.BOLT.....	4	J30001-UP
36		20Y-54-11611	.STOPPER.....	2	J30001-UP
37		01580-11008	.NUT.....	2	J30001-UP
38		20Y-54-51621	.STRIKER.....	2	J30001-UP
39		01584-31008	.NUT.....	2	J30001-UP
40		01643-71032	.WASHER.....	2	J30001-UP
41		20Y-53-11540	.TRIM SEAL.....	1	J30001-UP

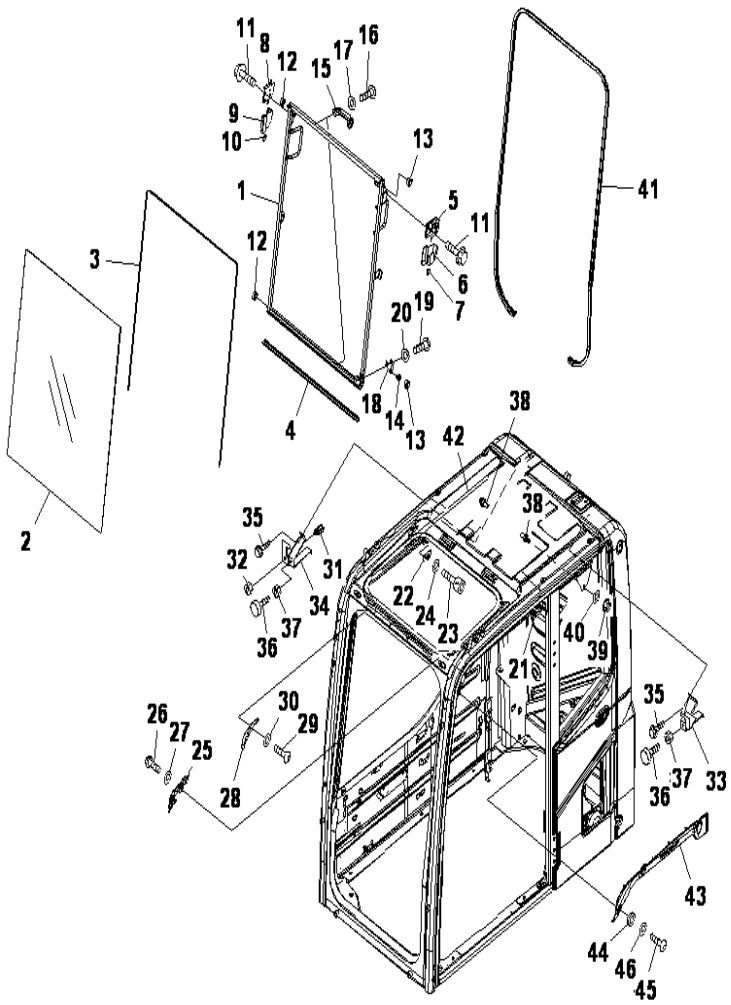

OPERATOR'S CAB (FRONT WINDOW)

INDEX	CD	PART NO.	DESCRIPTION	QTY	SERIAL NO.
42		20Y-54-51420	SEAL	1	J30001-UP
43		20Y-53-12531	COVER	1	J30001-UP
44		20Y-53-12310	COLLAR	3	J30001-UP
45		01245-00616	SCREW	3	J30001-UP
46		01643-70623	WASHER	3	J30001-UP

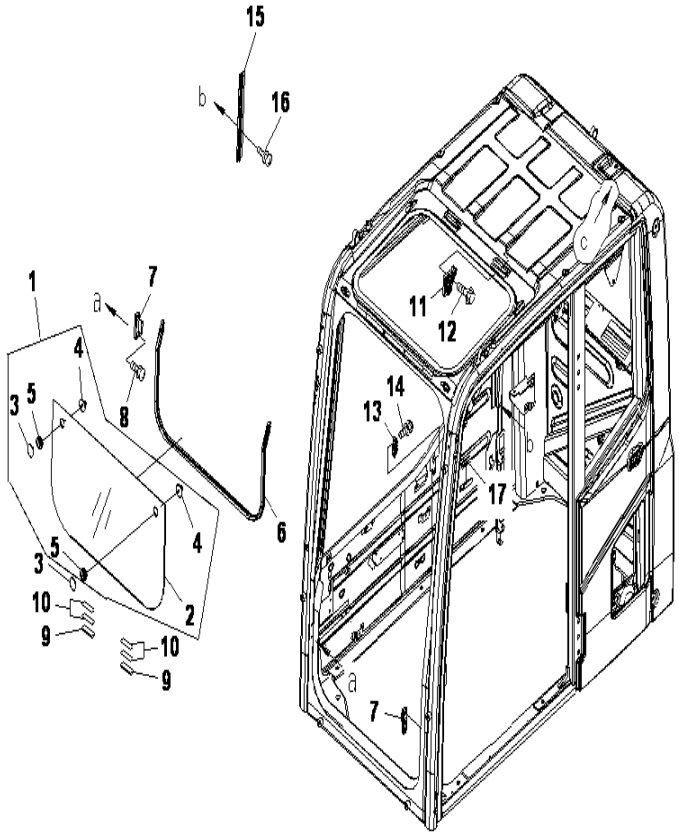

PC400-8 S/N J30001-UP

OPERATOR'S CAB (FRONT LOWER WINDOW)

INDEX	CD	PART NO.	DESCRIPTION	QTY	SERIAL NO.
		(207-53-00120)	CAB ASS'Y (WITH KOMTRAX).....	1	J30001-UP
		(206-53-00063)	CAB ASS'Y.....	1	J30001-UP
		(207-53-00140)	CAB ASS'Y (KOMTRAX LESS).....	1	J30001-UP
1		20Y-53-11601	.GLASS ASS'Y.....	1	J30001-UP
2		20Y-53-11611	..GLASS.....	1	J30001-UP
3		22B-54-15970	..RETAINER.....	2	J30001-UP
4		22B-54-15980	..KNOB.....	2	J30001-UP
5		08037-02512	..GROMMET.....	2	J30001-UP
6		208-53-11860	.TRIM.....	1	J30001-UP
7		20Y-53-11940	.SEAT.....	2	J30001-UP
8		01023-20612	.SCREW.....	4	J30001-UP
9		20Y-53-11973	.RUBBER.....	2	J30001-UP
10		20Y-53-12892	.RUBBER.....	4	J30001-UP
11		22B-54-15841	.LOCK ASS'Y.....	1	J30001-UP
12		01435-40616	.BOLT.....	2	J30001-UP
13		20Y-53-12611	.SEAT.....	1	J30001-UP
14		01023-20616	.SCREW.....	2	J30001-UP
15		20Y-53-12631	.RAIL.....	1	J30001-UP
16		01023-20616	.SCREW.....	2	J30001-UP
17		20U-54-25140	.STOPPER.....	1	J30001-UP

Ref :K1110-03A8 Page :210220

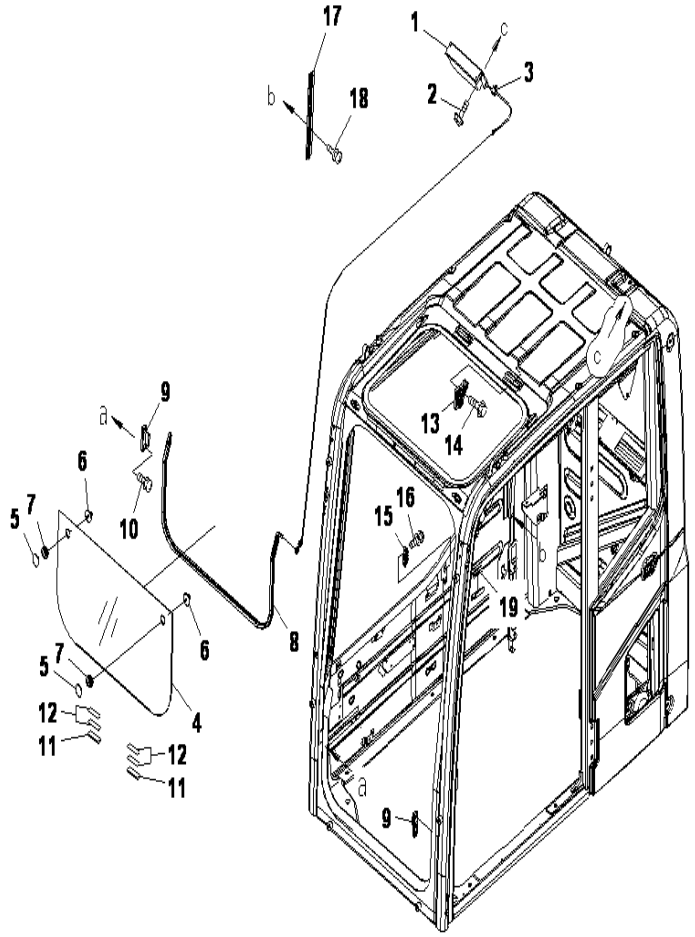

PC400-8 S/N J30001-UP

OPERATOR'S CAB (FRONT LOWER WINDOW) (FOR VANDALISM PROTECTION)

INDEX	CD	PART NO.	DESCRIPTION	QTY	SERIAL NO.
		(207-53-00120)	CAB ASS'Y (WITH KOMTRAX).....	1	J30001-UP
		(206-53-00063)	CAB ASS'Y.....	1	J30001-UP
		(207-53-00140)	CAB ASS'Y (KOMTRAX LESS).....	1	J30001-UP
1		20Y-53-11591	.SPRING ASS'Y.....	1	J30001-UP
2		01435-00616	.BOLT.....	2	J30001-UP
3		20Y-54-51640	.HOLDER.....	1	J30001-UP
		20Y-53-11601	.GLASS.....	1	J30001-UP
4		20Y-53-11611	..GLASS.....	1	J30001-UP
5		22B-54-15970	..RETAINER.....	2	J30001-UP
6		22B-54-15980	..KNOB.....	2	J30001-UP
7		08037-02512	..GROMMET.....	2	J30001-UP
8		208-53-11860	.TRIM.....	1	J30001-UP
9		20Y-53-11940	.SEAT.....	2	J30001-UP
10		01023-20612	.SCREW.....	4	J30001-UP
11		20Y-53-11973	.RUBBER.....	2	J30001-UP
12		20Y-53-12892	.RUBBER.....	4	J30001-UP
13		22B-54-15841	.LOCK ASS'Y.....	1	J30001-UP
14		01435-40616	.BOLT.....	2	J30001-UP
15		20Y-53-12611	.SEAT.....	1	J30001-UP
16		01023-20616	.SCREW.....	2	J30001-UP
17		20Y-53-12631	.RAIL.....	1	J30001-UP
18		01023-20616	.SCREW.....	2	J30001-UP
19		20U-54-25140	.STOPPER.....	1	J30001-UP

Ref :K1110-03A9 Page :210230

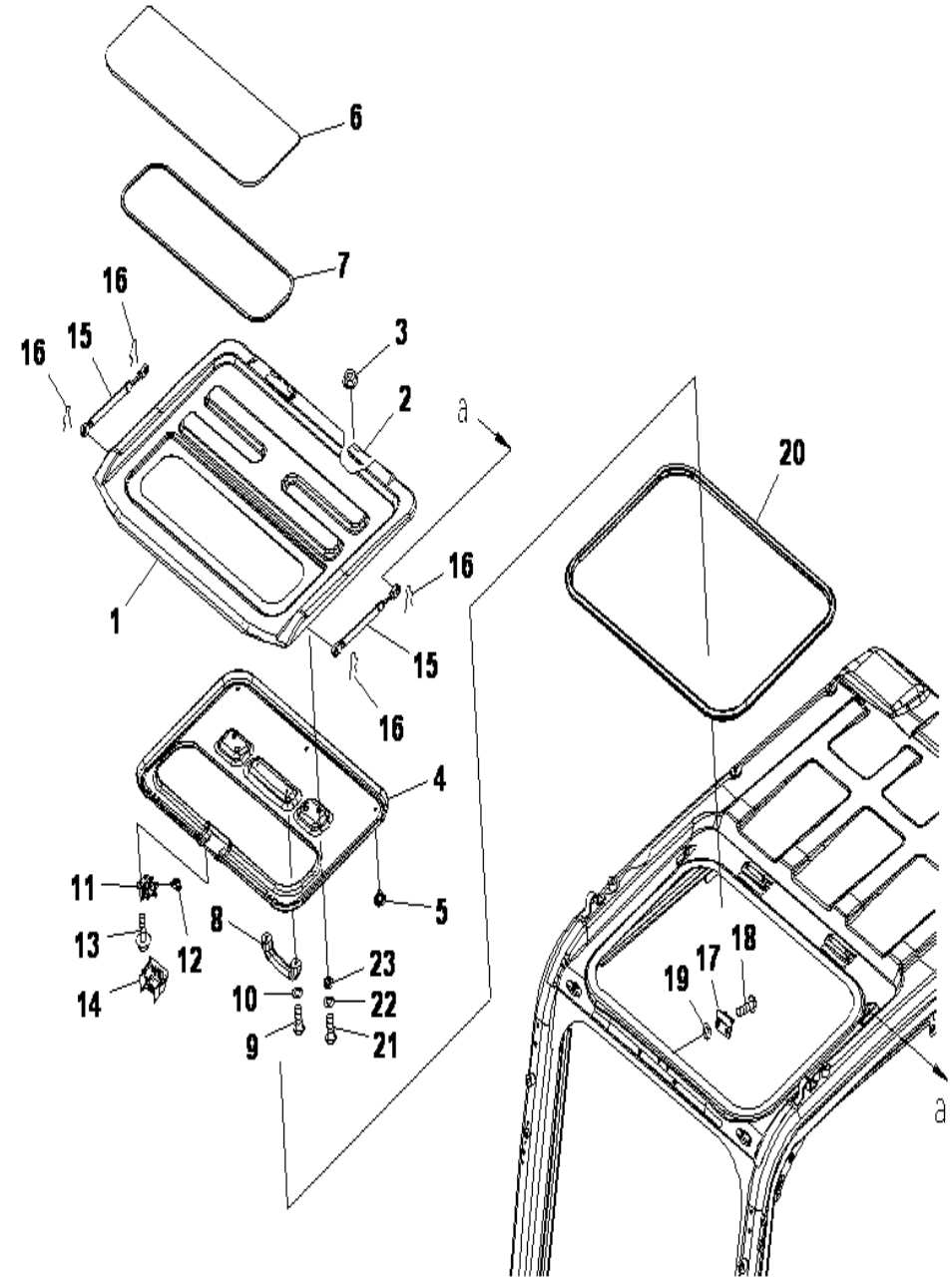

OPERATOR'S CAB (ROOF WINDOW) (FOR VANDALISM PROTECTION)

INDEX	CD	PART NO.	DESCRIPTION	QTY	SERIAL NO.
		(207-53-00120)	CAB ASS'Y (WITH KOMTRAX).....	1	J30001-UP
		(206-53-00063)	CAB ASS'Y.....	1	J30001-UP
		(207-53-00140)	CAB ASS'Y (KOMTRAX LESS).....	1	J30001-UP
1		20Y-53-11712	.ROOF.....	1	J30001-UP
2		20Y-53-11H71	.HINGE.....	2	J30001-UP
3		01584-30806	.NUT.....	4	J30001-UP
4		20Y-53-11921	.COVER (ROOF).....	1	J30001-UP
5		09416-10200	.BUTTAN.....	5	J30001-UP
6		20Y-53-11741	.CLEAR PLATE.....	1	J30001-UP
7		20Y-53-11790	.SEAL.....	1	J30001-UP
8		20Y-54-14590	.HANDLE.....	1	J30001-UP
9		01245-00616	.SCREW.....	2	J30001-UP
10		01643-70623	.WASHER.....	2	J30001-UP
11		20Y-53-11721	.LOCK.....	1	J30001-UP
12		20Y-53-11781	.KNOB.....	1	J30001-UP
13		01435-40610	.BOLT.....	3	J30001-UP
14		20Y-53-11931	.COVER.....	1	J30001-UP
15		20Y-54-36342	.GAS SPRING ASS'Y.....	2	J30001-UP
16		04052-10833	.PIN SNAP.....	4	J30001-UP
17		20Y-53-11771	.STRIKER.....	1	J30001-UP
18		01245-00820	.SCREW.....	2	J30001-UP
19		20Y-54-52651	.SPACER.....	2	J30001-UP
20		20Y-53-11861	.SEAL.....	1	J30001-UP
21		01245-00620	.SCREW.....	4	J30001-UP
22		01643-70623	.WASHER.....	4	J30001-UP
23		20Y-54-52651	.SPACER.....	4	J30001-UP

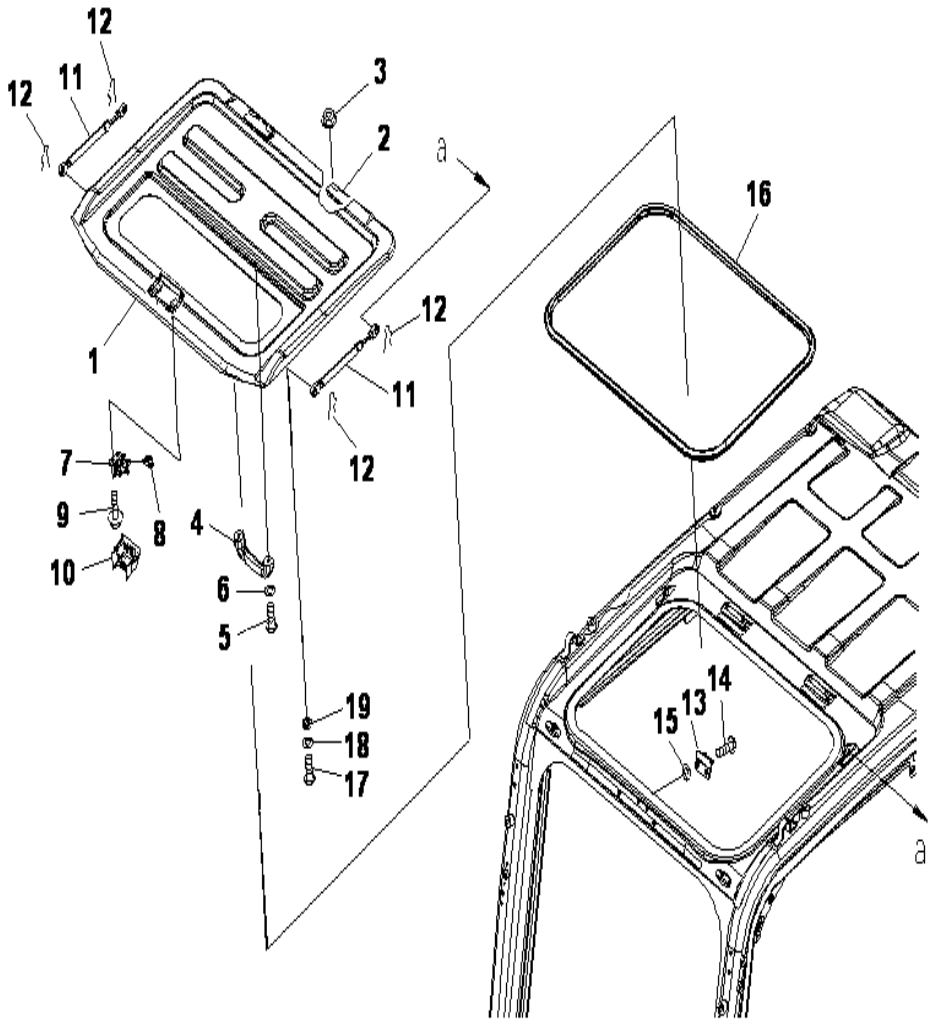

PC400-8 S/N J30001-UP

OPERATOR'S CAB (ROOF WINDOW) (FOR VANDALISM PROTECTION)

INDEX	CD	PART NO.	DESCRIPTION	QTY	SERIAL NO.
		(207-53-00120)	CAB ASS'Y (WITH KOMTRAX).....	1	J30001-UP
		(206-53-00063)	CAB ASS'Y.....	1	J30001-UP
		(207-53-00140)	CAB ASS'Y (KOMTRAX LESS).....	1	J30001-UP
1		20Y-53-16812	.ROOF.....	1	J30001-UP
2		20Y-53-11H71	..HINGE.....	2	J30001-UP
3		01584-30806	.NUT.....	4	J30001-UP
4		20Y-54-14590	.HANDLE.....	1	J30001-UP
5		01245-00616	.SCREW.....	2	J30001-UP
6		01643-70623	.WASHER.....	2	J30001-UP
7		20Y-53-11721	.LOCK.....	1	J30001-UP
8		20Y-53-11781	.KNOB.....	1	J30001-UP
9		01435-40610	.BOLT.....	3	J30001-UP
10		20Y-53-11931	.COVER.....	1	J30001-UP
11		20Y-54-36342	.GAS SPRING.....	2	J30001-UP
12		04052-10833	.PIN SNAP.....	4	J30001-UP
13		20Y-53-11771	.STRIKER.....	1	J30001-UP
14		01245-00820	.SCREW.....	2	J30001-UP
15		20Y-54-52651	.SPACER.....	2	J30001-UP
16		20Y-53-11861	.SEAL.....	1	J30001-UP
17		01245-00620	.SCREW.....	4	J30001-UP
18		01643-70623	.WASHER.....	4	J30001-UP
19		20Y-54-52651	.SPACER.....	4	J30001-UP

Ref :K1110-04A9 Page :210250

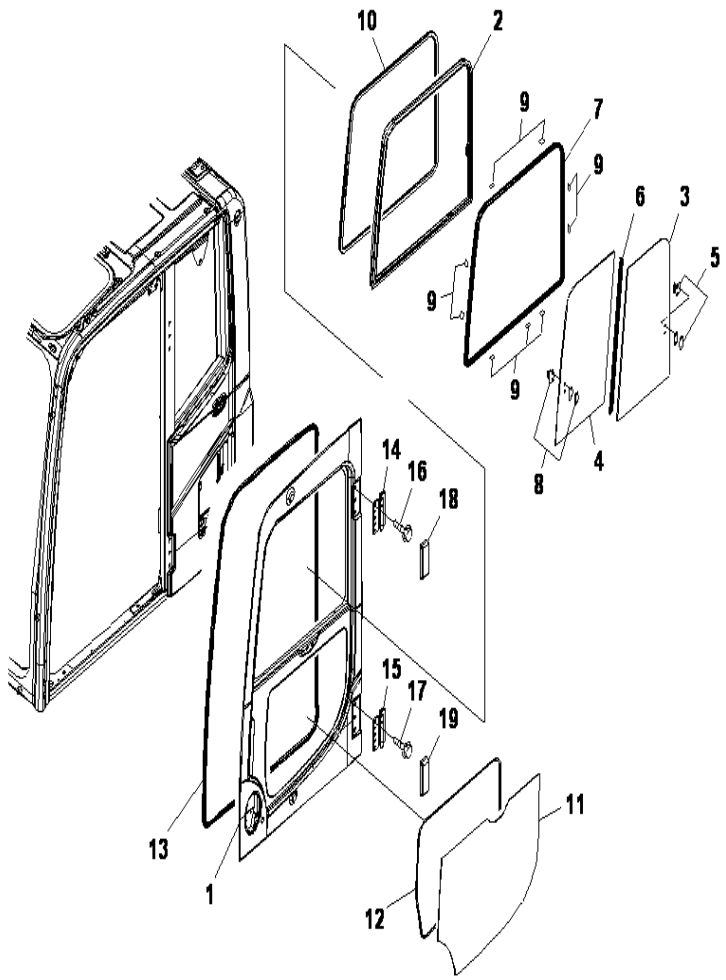

PC400-8 S/N J30001-UP

OPERATOR'S CAB (DOOR) (FOR VANDALISM PROTECTION)

INDEX	CD	PART NO.	DESCRIPTION	QTY	SERIAL NO.
		(207-53-00120)	CAB ASS'Y (WITH KOMTRAX).....	1	J30001-UP
		(206-53-00063)	CAB ASS'Y.....	1	J30001-UP
		(207-53-00140)	CAB ASS'Y (KOMTRAX LESS).....	1	J30001-UP
		20Y-53-16321	.DOOR,VANDALISM.....	1	J30001-UP
1	C1	20Y-53-11312	..DOOR.....	1	J30001-UP
		20Y-53-11402	..SASH ASS'Y.....	1	J30001-UP
2	C1	20Y-53-12821	...SASH.....	1	J30001-UP
3		20Y-53-12840	...GLASS.....	1	J30001-UP
4		20Y-53-12850	...GLASS.....	1	J30001-UP
5		20Y-54-52860	...LOCK ASS'Y.....	1	J30001-UP
6		20Y-53-12870	...SEAL.....	1	J30001-UP
7		20Y-53-12880	...SEAL.....	1	J30001-UP
8		20Y-54-13322	...LOCK.....	1	J30001-UP
9		20Y-53-12971	..SEAT.....	9	J30001-UP
10		20Y-53-11470	..TRIM.....	1	J30001-UP
11		20Y-53-11451	..GLASS.....	1	J30001-UP
12		20Y-53-11460	..SEAL.....	1	J30001-UP
13		20Y-53-11484	..WEATHER STRIP.....	1	J30001-UP
14		20Y-53-11332	..HINGE.....	1	J30001-UP
15		20Y-53-11332	..HINGE.....	1	J30001-UP
16		01435-01220	..BOLT.....	6	J30001-UP
17		01435-01220	..BOLT.....	6	J30001-UP
18		20Y-53-11411	..COVER.....	1	J30001-UP
19		20Y-53-11421	..COVER.....	1	J30001-UP

Ref :K1110-05A9 Page :210255

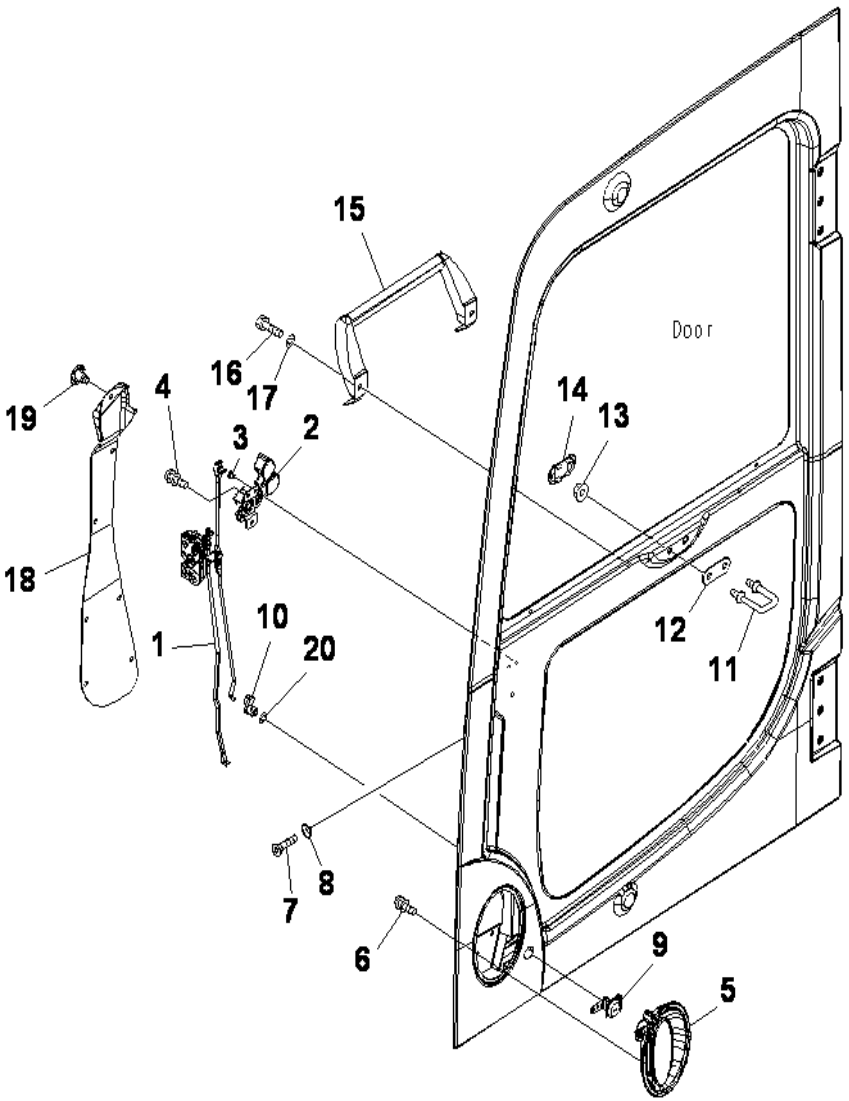

PC400-8 S/N J30001-UP

OPERATOR'S CAB (DOOR LOCK) (FOR VANDALISM PROTECTION)

INDEX	CD	PART NO.	DESCRIPTION	QTY	SERIAL NO.
		(207-53-00120)	CAB ASS'Y (WITH KOMTRAX).....	1	J30001-UP
		(206-53-00063)	CAB ASS'Y.....	1	J30001-UP
		(207-53-00140)	CAB ASS'Y (KOMTRAX LESS).....	1	J30001-UP
		20Y-53-16321	.DOOR,VANDALISM.....	1	J30001-UP
1		20Y-53-12201	..LATCH ASS'Y.....	1	J30001-UP
2		20Y-54-52300	..HANDLE ASS'Y.....	1	J30001-UP
3		22B-54-16340	...SNAP.....	1	J30001-UP
4		01023-10612	..SCREW.....	3	J30001-UP
5		20Y-53-12991	..HANDLE.....	1	J30001-UP
6		01023-10612	SCREW.....	3	J30001-UP
7		01240-00616	..SCREW.....	3	J30001-UP
8		195-Z1-11690	..WASHER.....	3	J30001-UP
9		20Y-54-52820	..LOCK ASS'Y.....	1	J30001-UP
10		22B-54-16330	..SNAP.....	1	J30001-UP
11		20Y-53-11320	..STRIKER.....	1	J30001-UP
12		20Y-53-12940	..PLATE.....	1	J30001-UP
13		01584-01008	..NUT.....	2	J30001-UP
14		20Y-53-12661	..COVER.....	1	J30001-UP
15		20Y-54-51393	..GRIP.....	1	J30001-UP
16		01010-80820	..BOLT.....	2	J30001-UP
17		01643-30823	..WASHER.....	2	J30001-UP
18		20Y-53-11441	..COVER.....	1	J30001-UP
19		22B-54-16461	..RIVET.....	7	J30001-UP
20		145-Z7-96270	..WASHER.....	1	J30001-UP

Ref :K1110-06A9 Page :210260

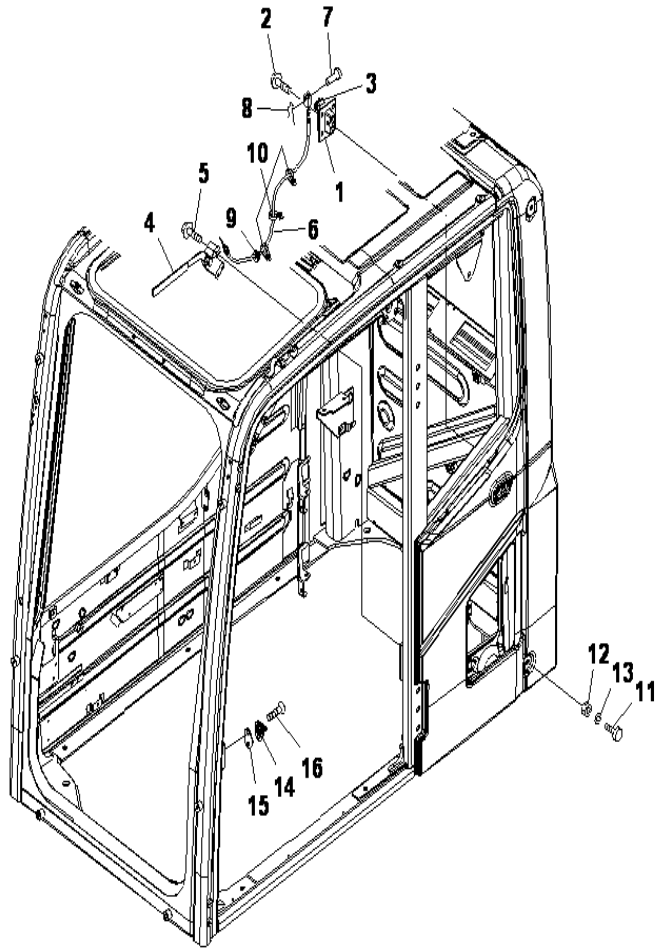

PC400-8 S/N J30001-UP

OPERATOR'S CAB (OPEN LOCK AND DOOR CATCH) (FOR VANDALISM PROTECTION)

INDEX	CD	PART NO.	DESCRIPTION	QTY	SERIAL NO.
		(207-53-00120)	CAB ASS'Y (WITH KOMTRAX).....	1	J30001-UP
		(206-53-00063)	CAB ASS'Y.....	1	J30001-UP
		(207-53-00140)	CAB ASS'Y (KOMTRAX LESS).....	1	J30001-UP
1		20Y-53-11981	.LOCK.....	1	J30001-UP
2		01435-40825	.BOLT.....	4	J30001-UP
3		20Y-53-12280	.COVER.....	1	J30001-UP
4		208-53-14540	.LEVER ASS'Y.....	1	J30001-UP
5		01435-40616	.BOLT.....	3	J30001-UP
6		20Y-53-11990	.CABLE.....	1	J30001-UP
7		04205-10520	.PIN.....	1	J30001-UP
8		04052-10530	.PIN.....	1	J30001-UP
9		08034-20414	.BAND.....	1	J30001-UP
10		08059-00413	.CLIP.....	2	J30001-UP
11		20Y-54-11611	.STOPPER.....	2	J30001-UP
12		01580-11008	.NUT.....	2	J30001-UP
13		01643-31032	.WASHER.....	2	J30001-UP
14		20Y-53-11810	.STRIKER.....	1	J30001-UP
15		20Y-53-11890	.PLATE.....	1	J30001-UP
16		01240-01025	.SCREW.....	2	J30001-UP

Ref :K1110-07A9 Page :210270

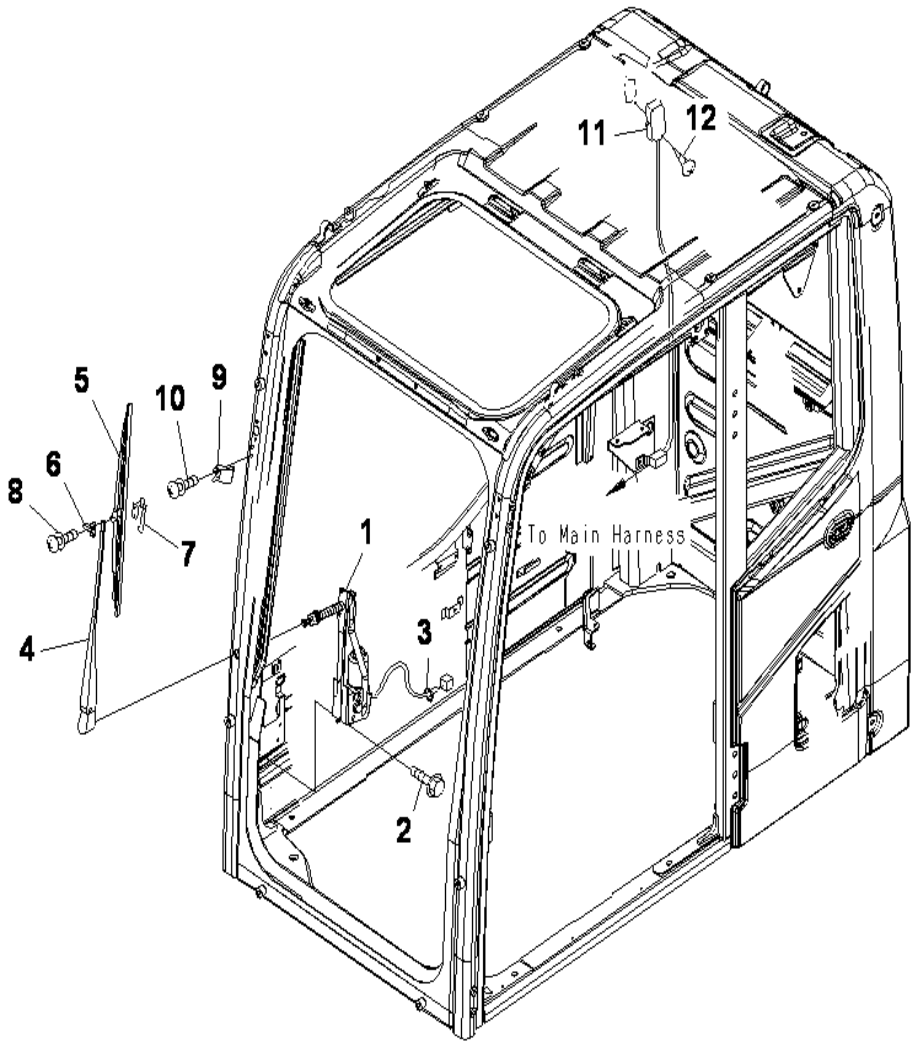

PC400-8 S/N J30001-UP

OPERATOR'S CAB (WIPER AND ROOM LAMP) (FOR VANDALISM PROTECTION)

INDEX	CD	PART NO.	DESCRIPTION	QTY	SERIAL NO.
		(207-53-00120)	CAB ASS'Y (WITH KOMTRAX).....	1	J30001-UP
		(206-53-00063)	CAB ASS'Y.....	1	J30001-UP
		(207-53-00140)	CAB ASS'Y (KOMTRAX LESS).....	1	J30001-UP
1		20Y-54-52211	.WIPER MOTOR ASS'Y.....	1	J30001-UP
2		01435-00616	.BOLT.....	6	J30001-UP
3		08034-20414	.BAND.....	1	J30001-UP
		20Y-54-52221	.WIPER ASS'Y.....	1	J30001-UP
4		20Y-54-52350	..ARM.....	1	J30001-UP
5		20Y-54-39450	..BLADE.....	1	J30001-UP
6		20Y-54-39460	..SLIDER.....	1	J30001-UP
7		20Y-54-39480	..PLATE.....	1	J30001-UP
8		ND94900723	..SCREW AND WASHER.....	2	J30001-UP
9		20Y-53-12232	.STOPPER.....	1	J30001-UP
10		01023-20620	.SCREW.....	2	J30001-UP
11		20Y-53-12790	.LIGHT.....	1	J30001-UP
		08116-02410	..BULB, 10W.....	1	J30001-UP
12		01370-00420	SCREW.....	2	J30001-UP

Ref :K1110-08A9 Page :210280

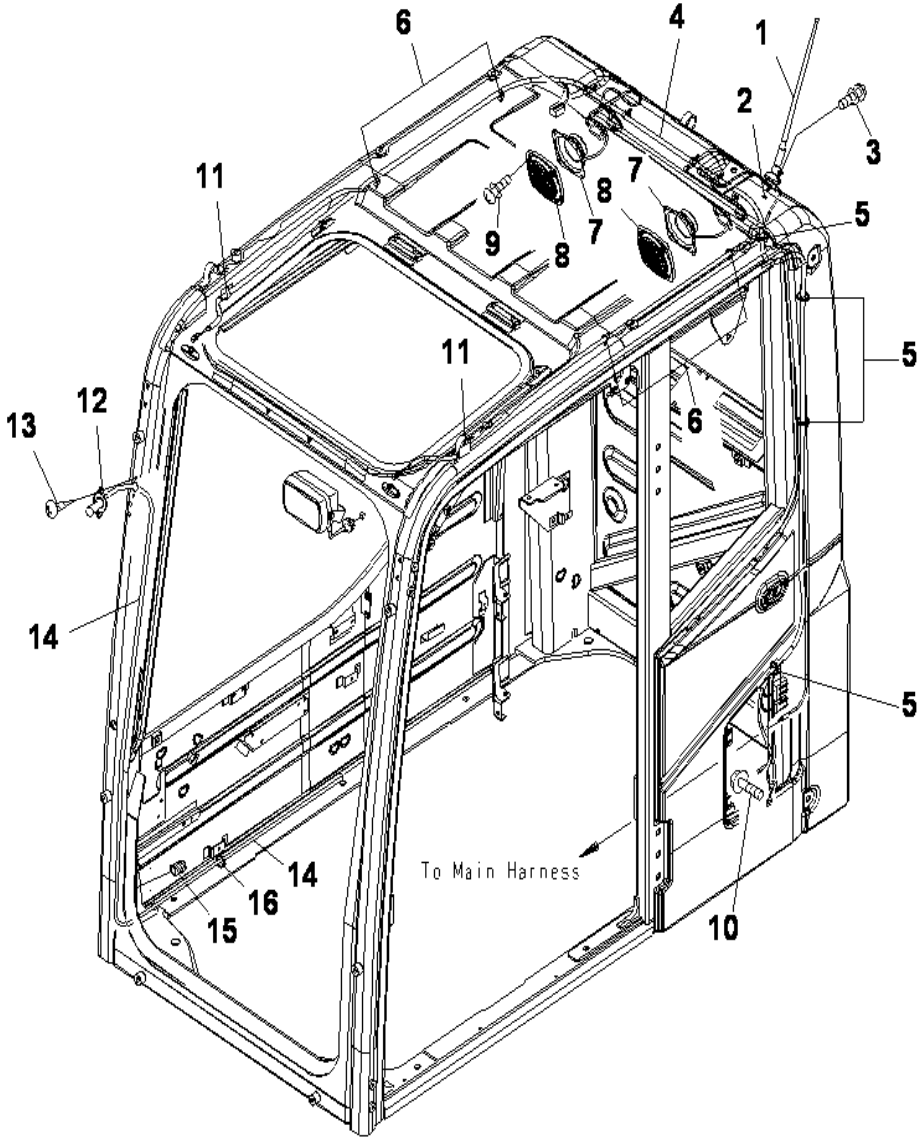

PC400-8 S/N J30001-UP

OPERATOR'S CAB (SPEAKER AND WINDOW WASHER) (FOR VANDALISM PROTECTION)

INDEX	CD	PART NO.	DESCRIPTION	QTY	SERIAL NO.
		(207-53-00120)	CAB ASS'Y (WITH KOMTRAX).....	1	J30001-UP
		(206-53-00063)	CAB ASS'Y.....	1	J30001-UP
		(207-53-00140)	CAB ASS'Y (KOMTRAX LESS).....	1	J30001-UP
1		(20Y-064-1990)	.RUBBER ANTENNA (SEE FIG. Y1062-01A0).....	1	J30001-UP
2		01643-30623	.WASHER.....	1	J30001-UP
3		01023-20412	.SCREW.....	2	J30001-UP
4		20Y-06-41141	.WIRING HARNESS.....	1	J30001-UP
5		08034-20414	.BAND.....	4	J30001-UP
6		08059-00413	.CLIP.....	8	J30001-UP
7		20Y-06-42180	.SPEAKER.....	2	J30001-UP
8		20Y-53-12221	.COVER.....	2	J30001-UP
9		01023-20416	.SCREW.....	8	J30001-UP
10		01435-40812	.BOLT.....	1	J30001-UP
11		08051-00801	.CLIP.....	2	J30001-UP
12		20Y-54-39511	.NOZZLE.....	1	J30001-UP
13		01023-70412	.SCREW.....	2	J30001-UP
14		195-97-97770	.HOSE.....	1	J30001-UP
15		08017-B0701	.CONDUIT.....	1	J30001-UP
16		08034-20414	.BAND.....	1	J30001-UP

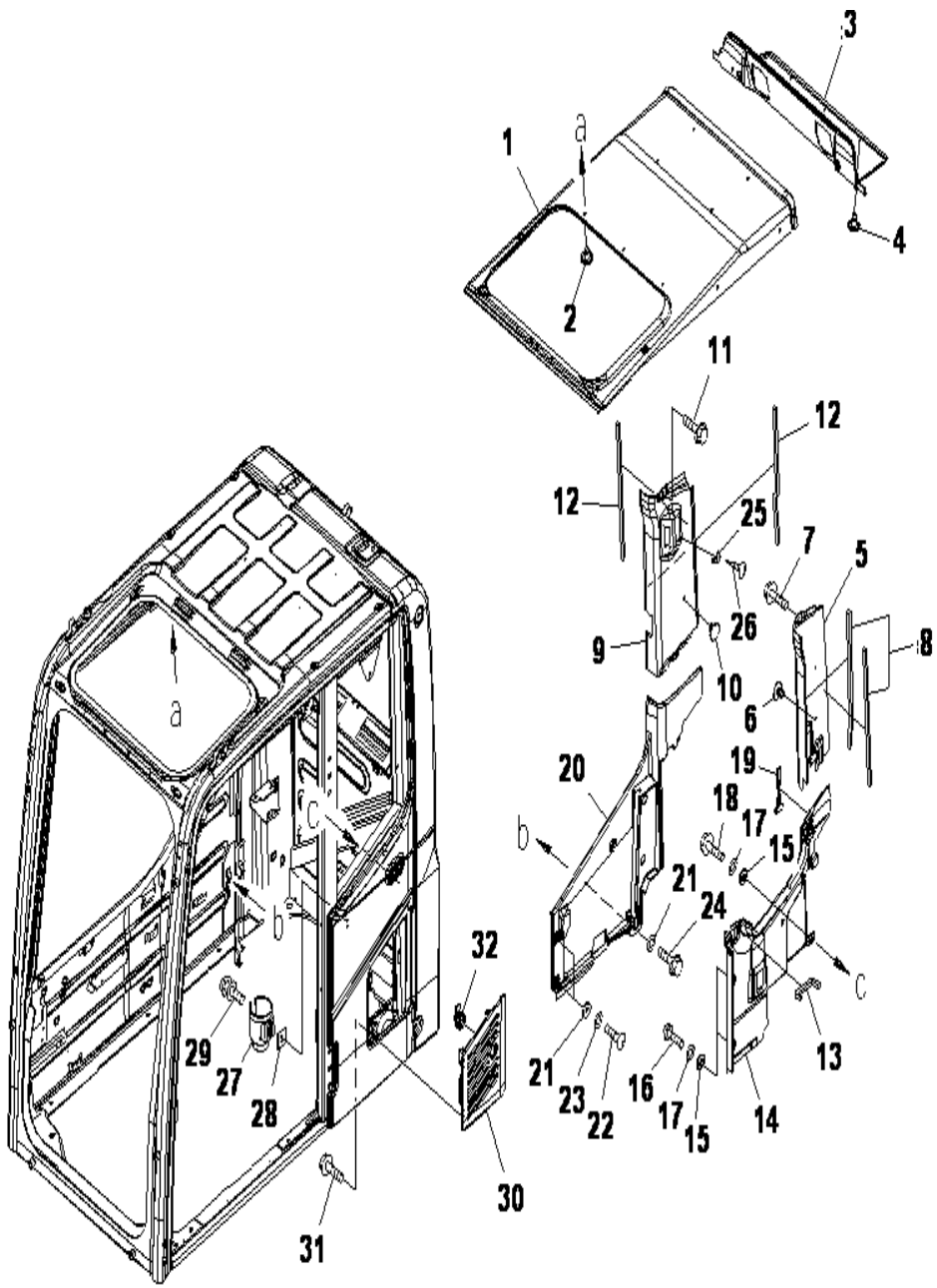

PC400-8 S/N J30001-UP

OPERATOR'S CAB (ROOF COVER AND AIR INTAKE) (FOR VANDALISM PROTECTION)

INDEX	CD	PART NO.	DESCRIPTION	QTY	SERIAL NO.
		(207-53-00120)	CAB ASS'Y (WITH KOMTRAX).....	1	J30001-UP
		(206-53-00063)	CAB ASS'Y.....	1	J30001-UP
		(207-53-00140)	CAB ASS'Y (KOMTRAX LESS).....	1	J30001-UP
1		20Y-53-12412	.COVER.....	1	J30001-UP
2		09416-10200	.BUTTAN.....	17	J30001-UP
3		20Y-53-12421	.COVER.....	1	J30001-UP
4		09416-10200	.BUTTAN.....	3	J30001-UP
5		20Y-53-12431	.COVER.....	1	J30001-UP
6		208-53-13270	.RIVET.....	2	J30001-UP
7		01435-00612	.BOLT.....	1	J30001-UP
8		20Y-53-12710	.SEAL.....	2	J30001-UP
9		20Y-53-12441	.COVER.....	1	J30001-UP
10		09416-10200	.BUTTAN.....	1	J30001-UP
11		01435-00612	.BOLT.....	1	J30001-UP
12		20Y-53-12710	.SEAL.....	2	J30001-UP
13		20Y-53-12552	.SEAL.....	1	J30001-UP
14		20Y-53-12463	.COVER.....	1	J30001-UP
15		20Y-53-12310	.COLLAR.....	4	J30001-UP
16		01245-00616	.SCREW.....	3	J30001-UP
17		01643-70623	.WASHER.....	3	J30001-UP
18		01435-00612	.BOLT.....	1	J30001-UP
19		22B-54-17380	.HAMMER.....	1	J30001-UP
20		20Y-53-12472	.COVER.....	1	J30001-UP
21		20Y-53-12310	.COLLAR.....	5	J30001-UP
22		01245-00616	.SCREW.....	3	J30001-UP
23		01643-70623	.WASHER.....	3	J30001-UP
24		01435-00612	.BOLT.....	2	J30001-UP
25		205-54-51250	.HANGER.....	1	J30001-UP
26		01370-30416	.SCREW.....	2	J30001-UP
27		208-53-12991	.HOLDER.....	1	J30001-UP
28		208-53-12980	.PLATE.....	1	J30001-UP
29		01023-20616	.SCREW.....	2	J30001-UP
30		20Y-53-11752	.COVER.....	1	J30001-UP
31		01435-40610	.BOLT.....	4	J30001-UP
32		20Y-53-11761	.LOCK ASS'Y.....	1	J30001-UP

Ref :K1110-11A9 Page :210300

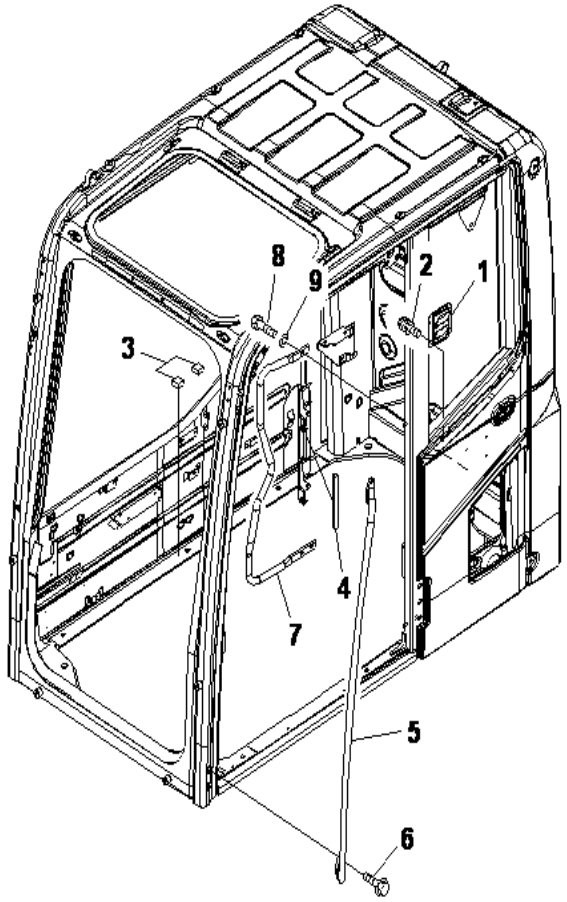

PC400-8 S/N J30001-UP

OPERATOR'S CAB (PRESSURE VALVE AND GRIP) (FOR VANDALISM PROTECTION)

INDEX	CD	PART NO.	DESCRIPTION	QTY	SERIAL NO.
		(207-53-00120)	CAB ASS'Y (WITH KOMTRAX).....	1	J30001-UP
		(206-53-00063)	CAB ASS'Y.....	1	J30001-UP
		(207-53-00140)	CAB ASS'Y (KOMTRAX LESS).....	1	J30001-UP
1		20Y-53-11961	.VALVE ASS'Y.....	1	J30001-UP
2		01023-60512	.SCREW.....	4	J30001-UP
3		20Y-53-13490	.RUBBER.....	2	J30001-UP
4		20Y-53-12591	.SEAL.....	1	J30001-UP
5		20Y-53-11821	.GRIP.....	1	J30001-UP
6		01435-40825	.BOLT.....	4	J30001-UP
7		20Y-53-11831	.GRIP.....	1	J30001-UP
8		01010-D1025	.BOLT.....	3	J30001-UP
9		01643-71032	.WASHER.....	3	J30001-UP

Ref :K1110-12A9 Page :210320

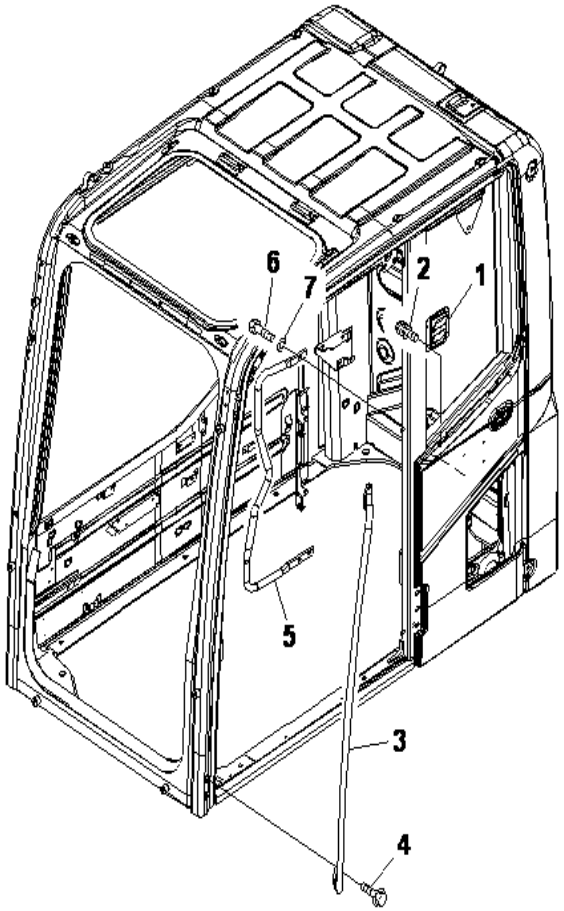

PC400-8 S/N J30001-UP

OPERATOR'S CAB (PRESSURE VALVE AND GRIP) (FOR VANDALISM PROTECTION)

INDEX	CD	PART NO.	DESCRIPTION	QTY	SERIAL NO.
		(207-53-00120)	CAB ASS'Y (WITH KOMTRAX).....	1	J30001-UP
		(206-53-00063)	CAB ASS'Y.....	1	J30001-UP
		(207-53-00140)	CAB ASS'Y (KOMTRAX LESS).....	1	J30001-UP
1		20Y-53-11961	.VALVE ASS'Y.....	1	J30001-UP
2		01023-60512	.SCREW.....	4	J30001-UP
3		20Y-53-11821	.GRIP.....	1	J30001-UP
4		01435-40825	.BOLT.....	4	J30001-UP
5		20Y-53-11831	.GRIP.....	1	J30001-UP
6		01010-D1025	.BOLT.....	3	J30001-UP
7		01643-71032	.WASHER.....	3	J30001-UP

Ref :K1110-12A10 Page :210340

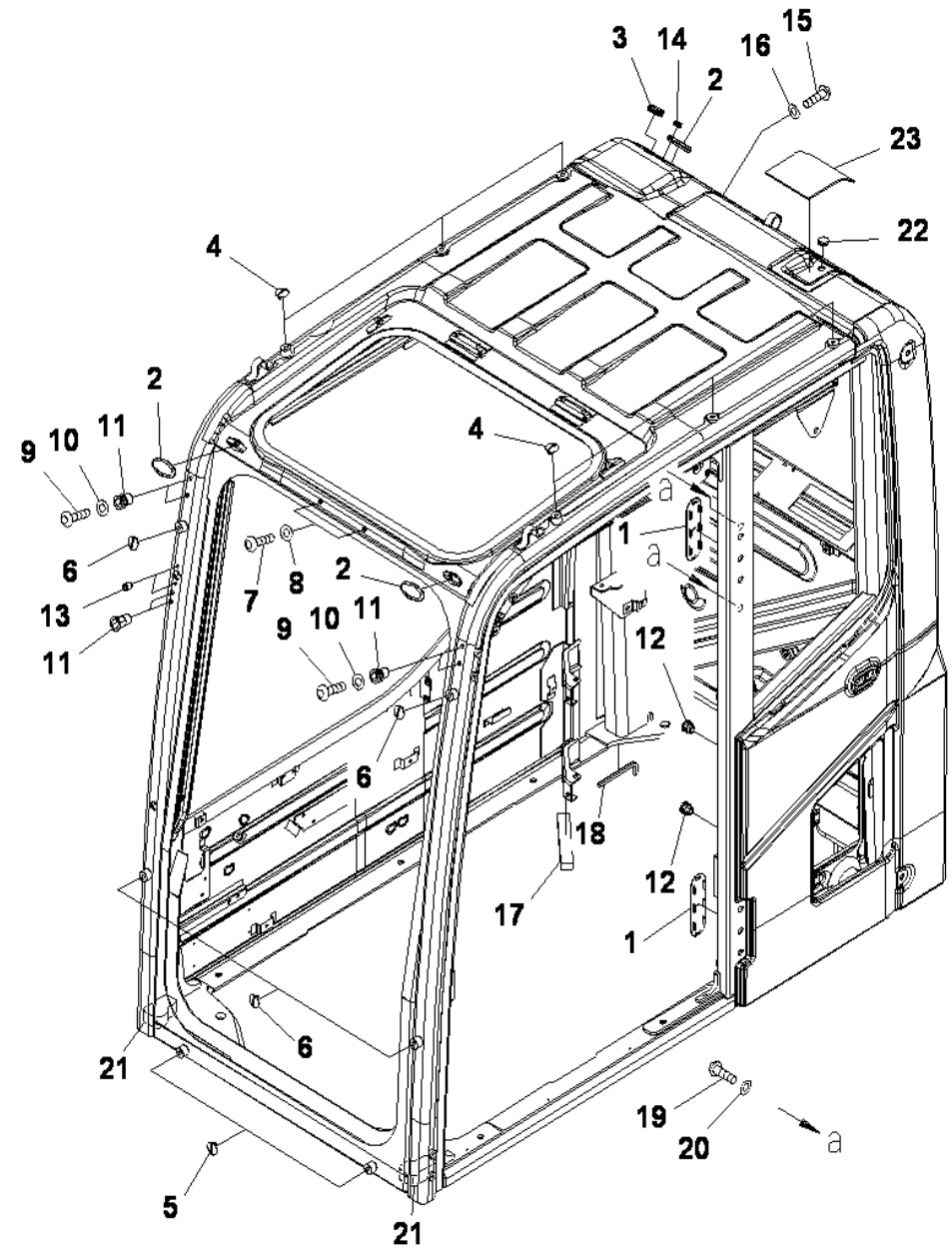

PC400-8 S/N J30001-UP

OPERATOR'S CAB (PLUG BOLT) (WITH RADIO AND KOMTRAX)

INDEX	CD	PART NO.	DESCRIPTION	QTY	SERIAL NO.
		(207-53-00120)	CAB ASS'Y (WITH KOMTRAX).....	1	J30001-UP
		(206-53-00063)	CAB ASS'Y.....	1	J30001-UP
		(207-53-00140)	CAB ASS'Y (KOMTRAX LESS).....	1	J30001-UP
1		20Y-53-12960	.COVER.....	2	J30001-UP
2		22B-54-17282	.CAP.....	3	J30001-UP
3		09415-02512	.CAP.....	1	J30001-UP
4		20Y-53-11390	.CAP.....	6	J30001-UP
5		20Y-53-11390	.CAP.....	2	J30001-UP
6		20Y-53-11380	.CAP.....	4	J30001-UP
7		01245-01016	.SCREW.....	2	J30001-UP
8		01643-71032	.WASHER.....	2	J30001-UP
9		01245-00616	.SCREW.....	4	J30001-UP
10		01643-70623	.WASHER.....	4	J30001-UP
11		20Y-53-12260	.NUT.....	6	J30001-UP
12		20Y-54-35451	.NUT.....	2	J30001-UP
13		20Y-53-12320	.NUT.....	2	J30001-UP
14		09415-01008	.CAP.....	1	J30001-UP
15		01245-01016	.SCREW.....	1	J30001-UP
16		01643-71032	.WASHER.....	1	J30001-UP
17		20Y-53-12580	.SEAL.....	1	J30001-UP
18		20Y-53-12740	.TRIM.....	1	J30001-UP
19		01245-00816	.SCREW.....	2	J30001-UP
20		01643-70823	.WASHER.....	2	J30001-UP
21		20Y-53-18880	.SEAL.....	2	J30001-UP
22		09415-01008	.CAP.....	1	J30001-UP
23		20Y-53-12951	.COVER.....	1	J30001-UP

Ref :K1110-13A8 Page :210350

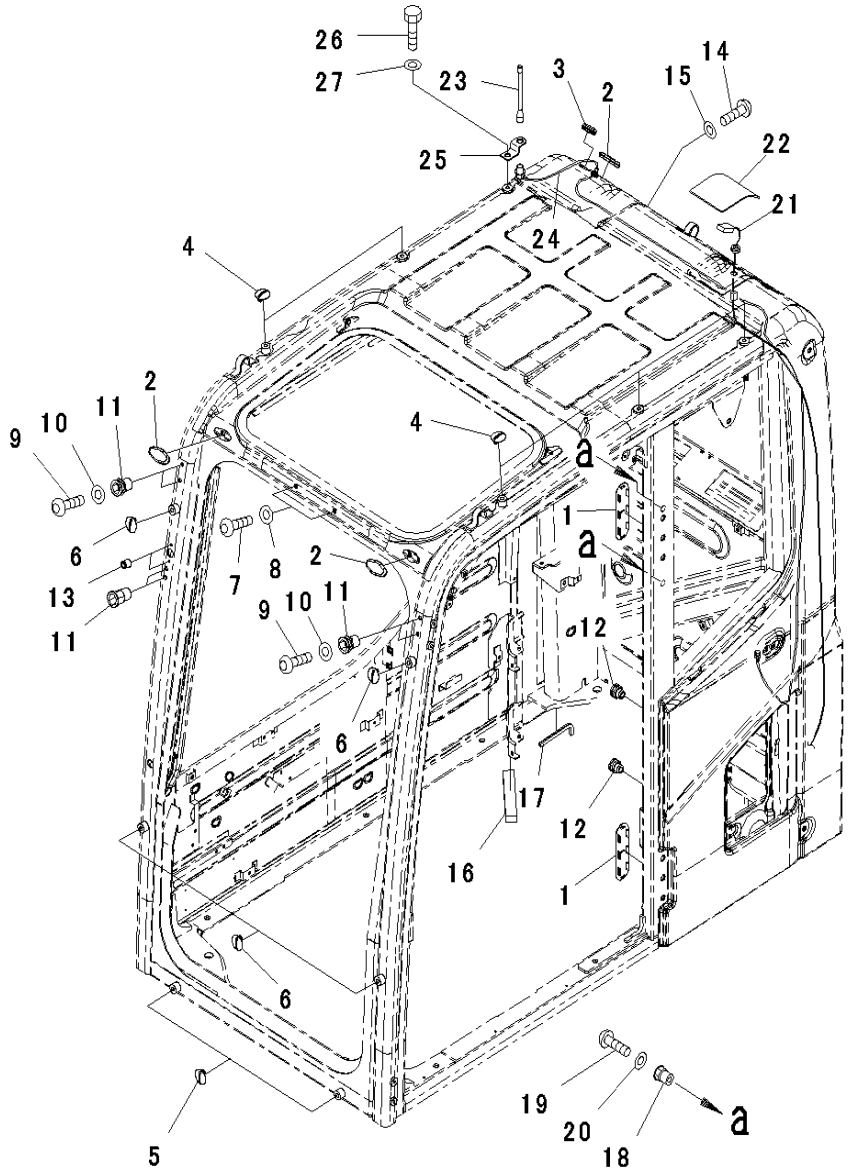

PC400-8 S/N J30001-UP

OPERATOR'S CAB (KOM. FILM ANTENA)(ORBCOM TYPE)(FOR VAND. PROTECTION)

INDEX	CD	PART NO.	DESCRIPTION	QTY	SERIAL NO.
		(207-53-00120)	CAB ASS'Y (WITH KOMTRAX).....	1	J30001-UP
		(206-53-00063)	CAB ASS'Y.....	1	J30001-UP
		(207-53-00140)	CAB ASS'Y (KOMTRAX LESS).....	1	J30001-UP
1		20Y-53-12960	.COVER.....	2	J30001-UP
2		22B-54-17282	.CAP.....	3	J30001-UP
3		09415-02512	.CAP.....	1	J30001-UP
4		20Y-53-11390	.CAP.....	6	J30001-UP
5		20Y-53-11390	.CAP.....	2	J30001-UP
6		20Y-53-11380	.CAP.....	4	J30001-UP
7		01245-01016	.SCREW.....	2	J30001-UP
8		01643-71032	.WASHER.....	2	J30001-UP
9		01245-00616	.SCREW.....	4	J30001-UP
10		01643-70623	.WASHER.....	4	J30001-UP
11		20Y-53-12260	.NUT.....	6	J30001-UP
12		20Y-54-35451	.NUT.....	2	J30001-UP
13		20Y-53-12320	.NUT.....	2	J30001-UP
14		01245-01016	.SCREW.....	1	J30001-UP
15		01643-71032	.WASHER.....	1	J30001-UP
16		20Y-53-12580	.SEAL.....	1	J30001-UP
17		20Y-53-12740	.TRIM.....	1	J30001-UP
18		01245-00816	.SCREW.....	2	J30001-UP
19		01643-70823	.WASHER.....	2	J30001-UP
20		20Y-53-18880	.SEAL.....	2	J30001-UP
21		8A1-31-04300	.ANTENNA.....	1	J30001-UP
22		20Y-53-12951	.COVER.....	1	J30001-UP
23		8A1-31-02100	.ANTENNA.....	1	J30001-UP
24		8A1-31-02200	.CABLE.....	1	J30001-UP
25		20Y-53-15140	.PLATE.....	1	J30001-UP
26		01010-D1225	.BOLT.....	1	J30001-UP
27		01643-71232	.WASHER.....	1	J30001-UP

Ref :K1110-13A9 Page :210360

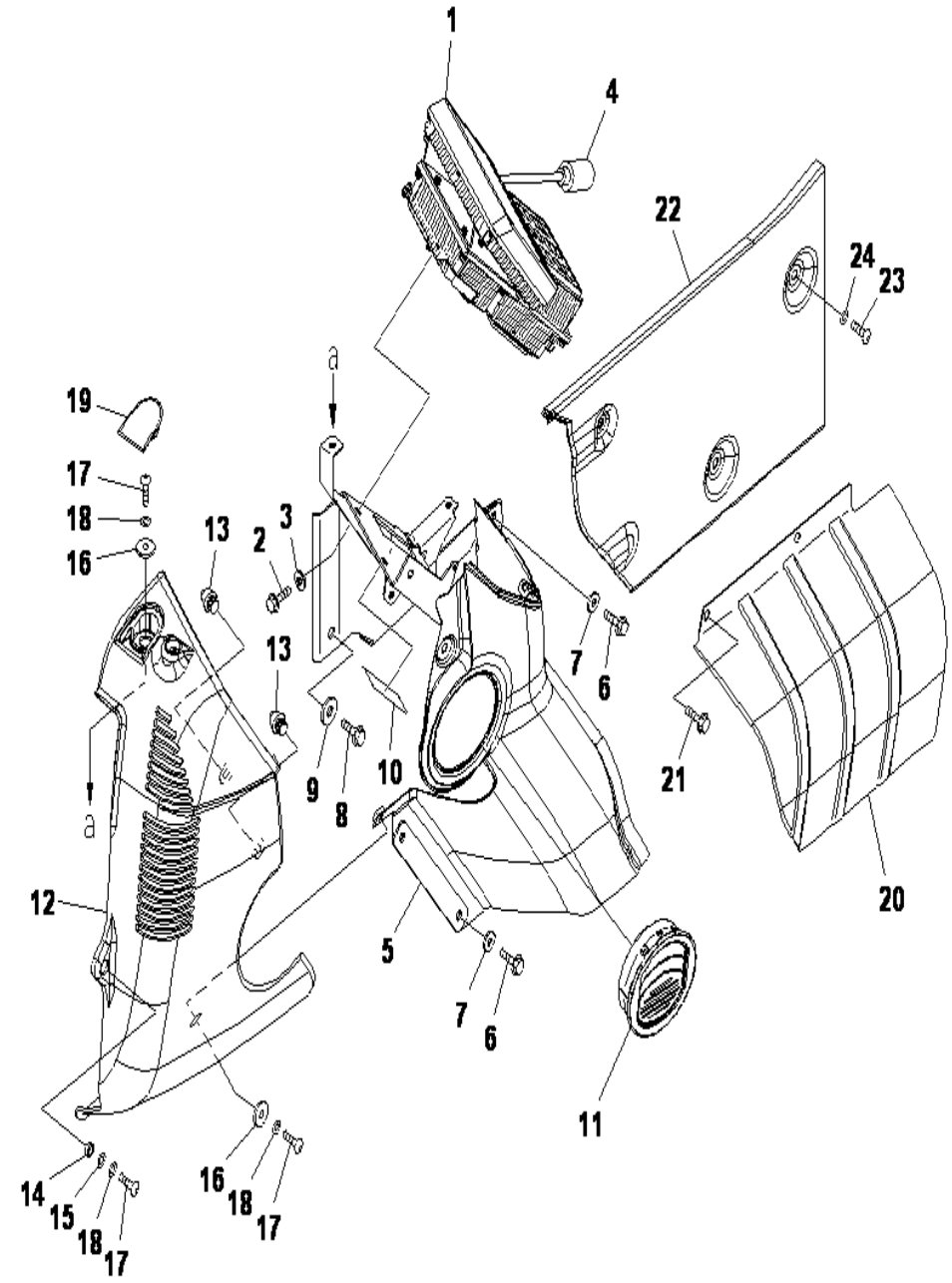

PC400-8 S/N J30001-UP

OPERATOR'S CAB (CAB IN PARTS) (MONITOR AND COVER)

INDEX	CD	PART NO.	DESCRIPTION	QTY	SERIAL NO.
1		7835-31-5007	MONITOR	1	J10078-UP
		7835-31-5005	MONITOR	1	J30058-J10077
		7835-31-5006	MONITOR	1	J30015-J30057
		7835-31-5004	MONITOR	1	J30002-J30014
		7835-31-5003	MONITOR	1	J30001-J30001
2		01435-00616	BOLT	4	J30001-UP
3		209-72-12230	WASHER	4	J30001-UP
4		20Y-53-12810	COVER	1	J30001-UP
5		20Y-53-12154	COVER	1	J30001-UP
6		01435-00616	BOLT	4	J30001-UP
7		209-72-12230	WASHER	4	J30001-UP
8		01435-00820	BOLT	1	J30001-UP
9		208-53-11330	WASHER	1	J30001-UP
10		20Y-00-41330	PLATE	1	J30001-UP
11		20Y-53-12172	GRILLE	1	J30001-UP
12		20Y-53-12122	COVER	1	J30001-UP
13		22U-54-25340	CLIP	2	J30001-UP
14		205-54-75240	COLLAR	1	J30001-UP
15		01643-70823	WASHER	1	J30001-UP
16		20Y-53-12310	COLLAR	2	J30001-UP
17		01245-00616	SCREW	3	J30001-UP
18		01643-70623	WASHER	3	J30001-UP
19		20Y-53-12291	CAP	1	J30001-UP
20		20Y-53-12161	COVER	1	J30001-UP
21		01435-00616	BOLT	2	J30001-UP
22		20Y-53-12483	COVER	1	J30001-UP
23		01245-00612	SCREW	3	J30001-UP
24		01643-70623	WASHER	3	J30001-UP

Ref :K1110-21A1 Page :210370

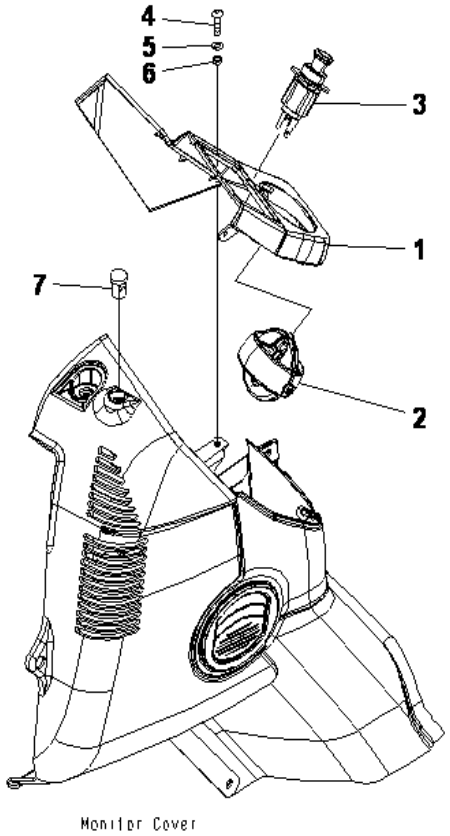

Monitor Cover

PC400-8 S/N J30001-UP

OPERATOR'S CAB (CAB IN PARTS) (MONITOR COVER)

INDEX	CD	PART NO.	DESCRIPTION	QTY	SERIAL NO.
1		20Y-53-12111	COVER	1	J30001-UP
2		20Y-53-12240	LOUVER	1	J30001-UP
3		20Y-06-23472	CIGARETTE LIGHT	1	J30001-UP
4		01245-00616	SCREW	1	J30001-UP
5		01643-70623	WASHER	1	J30001-UP
6		20Y-43-41290	COLLAR	1	J30001-UP
7		20Y-979-6161	SENSOR	1	J30001-UP

Ref :K1110-22A1 Page :210380

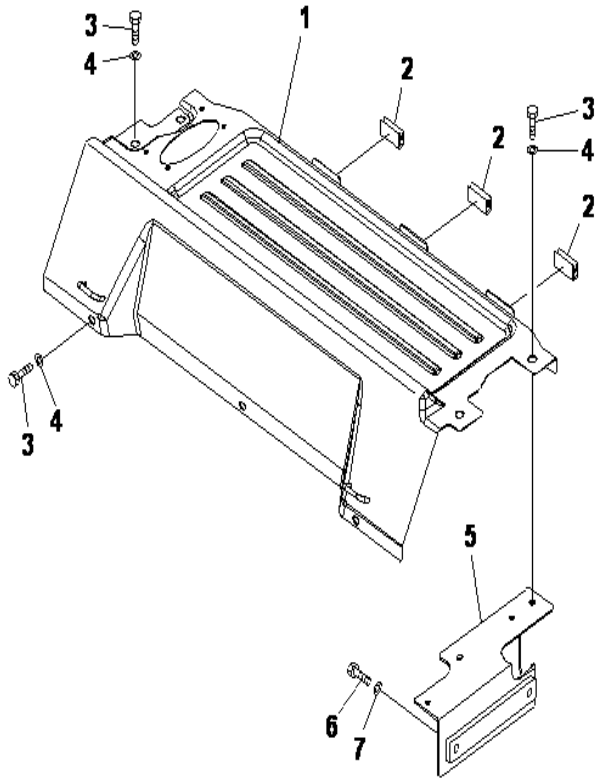

PC400-8 S/N J30001-UP

OPERATOR'S CAB (CAB IN PARTS) (LUGGAGE PLATE)

INDEX	CD	PART NO.	DESCRIPTION	QTY	SERIAL NO.
		20Y-53-13616	COVER ASS'Y	1	J30001-UP
1	C1	20Y-53-12256	.COVER	1	J30001-UP
2		208-53-12460	.SEAT	3	J30001-UP
3		01010-D0825	BOLT	7	J30001-UP
4		01643-70823	WASHER	7	J30001-UP
5		20Y-53-12771	PLATE	1	J30001-UP
6		01010-D0825	BOLT	2	J30001-UP
7		01643-70823	WASHER	2	J30001-UP

Ref :K1110-23A1 Page :210390

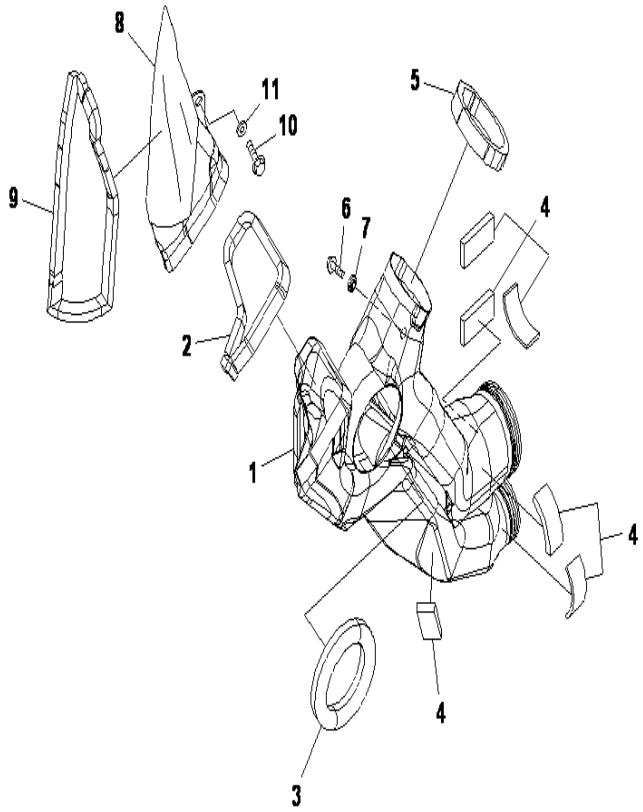

PC400-8 S/N J30001-UP

OPERATOR'S CAB (CAB IN PARTS) (MONITOR DUCT)

INDEX	CD	PART NO.	DESCRIPTION	QTY	SERIAL NO.
1		20Y-53-13371	DUCT	1	J30001-UP
2		20Y-53-13480	SEAL	1	J30001-UP
3		20Y-53-13280	SEAL	1	J30001-UP
4		208-53-12440	SEAL	6	J30001-UP
5		208-53-11941	SEAL	1	J30001-UP
6		01435-00612	BOLT	1	J30001-UP
7		20Y-53-12310	COLLAR	1	J30001-UP
8		20Y-53-13421	DUCT	1	J30001-UP
9		208-53-11920	SEAL	1	J30001-UP
10		01435-00612	BOLT	1	J30001-UP
11		20Y-53-12310	COLLAR	1	J30001-UP

Ref :K1110-24A1 Page :210420

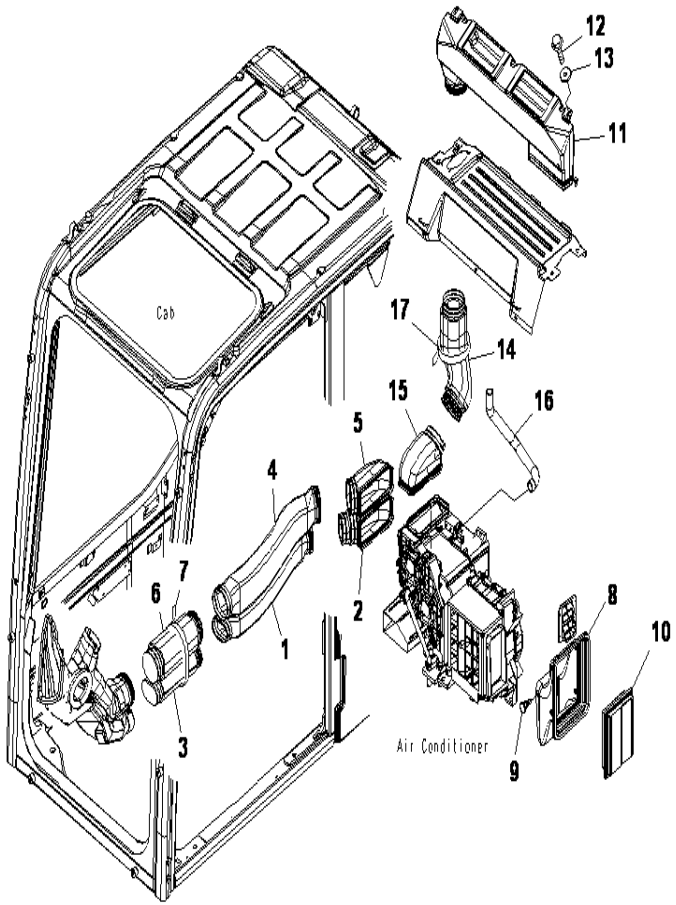

PC400-8 S/N J30001-UP

OPERATOR'S CAB (CAB IN PARTS) (AIR DUCT) (WITH AIR CONDITIONER)

INDEX	CD	PART NO.	DESCRIPTION	QTY	SERIAL NO.
1		20Y-53-13311	DUCT	1	J30001-UP
2		20Y-53-13331	DUCT	1	J30001-UP
3		20Y-53-13351	DUCT	1	J30001-UP
4		20Y-53-13321	DUCT	1	J30001-UP
5		20Y-53-13341	DUCT	1	J30001-UP
6		20Y-53-13361	DUCT	1	J30001-UP
7		08034-20876	BAND	1	J30001-UP
8		20Y-53-12522	DUCT	1	J30001-UP
9		208-53-12680	CLIP	1	J30001-UP
10		17M-91-13530	ELEMENT	1	J30001-UP
11		20Y-53-13451	DUCT	1	J30001-UP
12		01435-40616	BOLT	2	J30001-UP
13		20Y-53-12310	COLLAR	2	J30001-UP
14		20Y-53-13461	DUCT	1	J30001-UP
15		208-53-12120	DUCT	1	J30001-UP
16		208-53-12432	HOSE	1	J30001-UP
17		08034-20876	BAND	1	J30001-UP

Ref :K1110-25A1 Page :210430

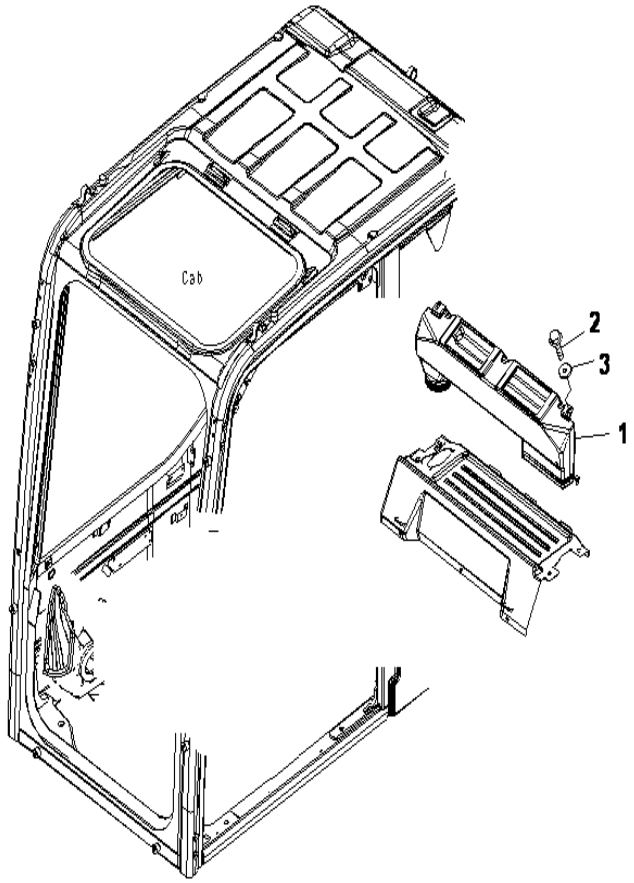

PC400-8 S/N J30001-UP

OPERATOR'S CAB (CAB IN PARTS) (AIR DUCT) (WITHOUT AIR CONDITIONER)

INDEX	CD	PART NO.	DESCRIPTION	QTY	SERIAL NO.
1		20Y-53-13451	DUCT	1	J30001-UP
2		01435-40616	BOLT	2	J30001-UP
3		20Y-53-12310	COLLAR	2	J30001-UP

Ref :K1110-25A2 Page :210440

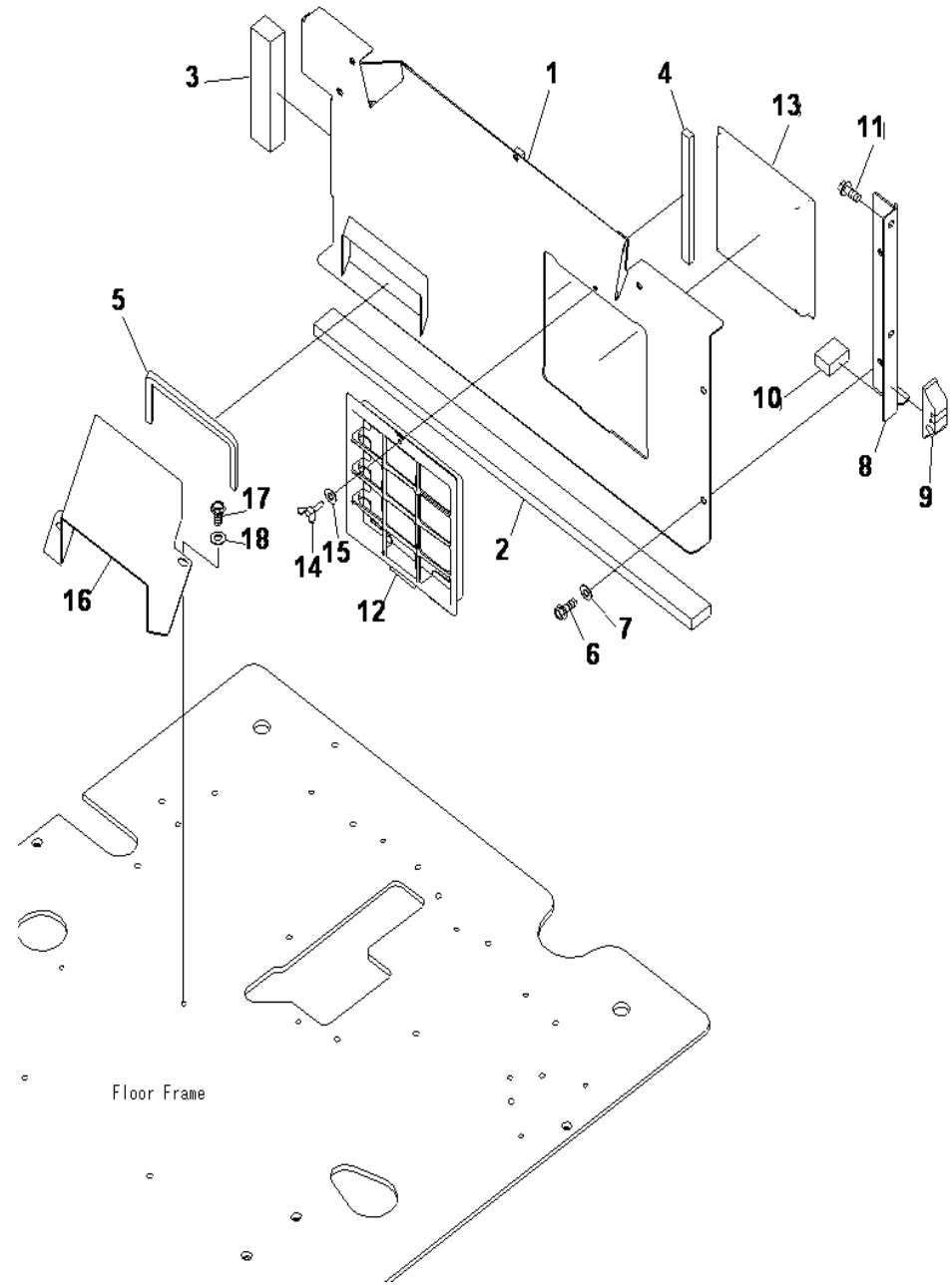

PC400-8 S/N J30001-UP

OPERATOR'S CAB (CAB IN PARTS) (PARTITION AND FILTER) (WITH AIR CONDITIONER)

INDEX	CD	PART NO.	DESCRIPTION	QTY	SERIAL NO.
1		20Y-53-12564	BRACKET ASS'Y	1	J30001-UP
2		20Y-53-11870	SEAL	1	J30001-UP
3		20Y-53-11880	SEAL	1	J30001-UP
4		208-53-11890	SEAL	1	J30001-UP
5		208-53-12230	SEAL	1	J30001-UP
6		01435-40820	BOLT	3	J30001-UP
7		418-54-35450	WASHER	3	J30001-UP
8		20Y-53-12781	PLATE	1	J30001-UP
9		20Y-53-12751	SEAL	1	J30001-UP
10		20Y-53-12760	SEAL	1	J30001-UP
11		01435-40820	BOLT	2	J30001-UP
12		208-979-7530	HOLDER	1	J30001-UP
13		208-979-7620	FILTER	1	J30001-UP
14		20Y-54-65790	BOLT	1	J30001-UP
15		20Y-54-65690	WASHER	1	J30001-UP
16		208-53-12551	DUCT	1	J30001-UP
17		01010-D0820	BOLT	2	J30001-UP
18		01643-70823	WASHER	2	J30001-UP

Ref :K1110-26A1 Page :210460

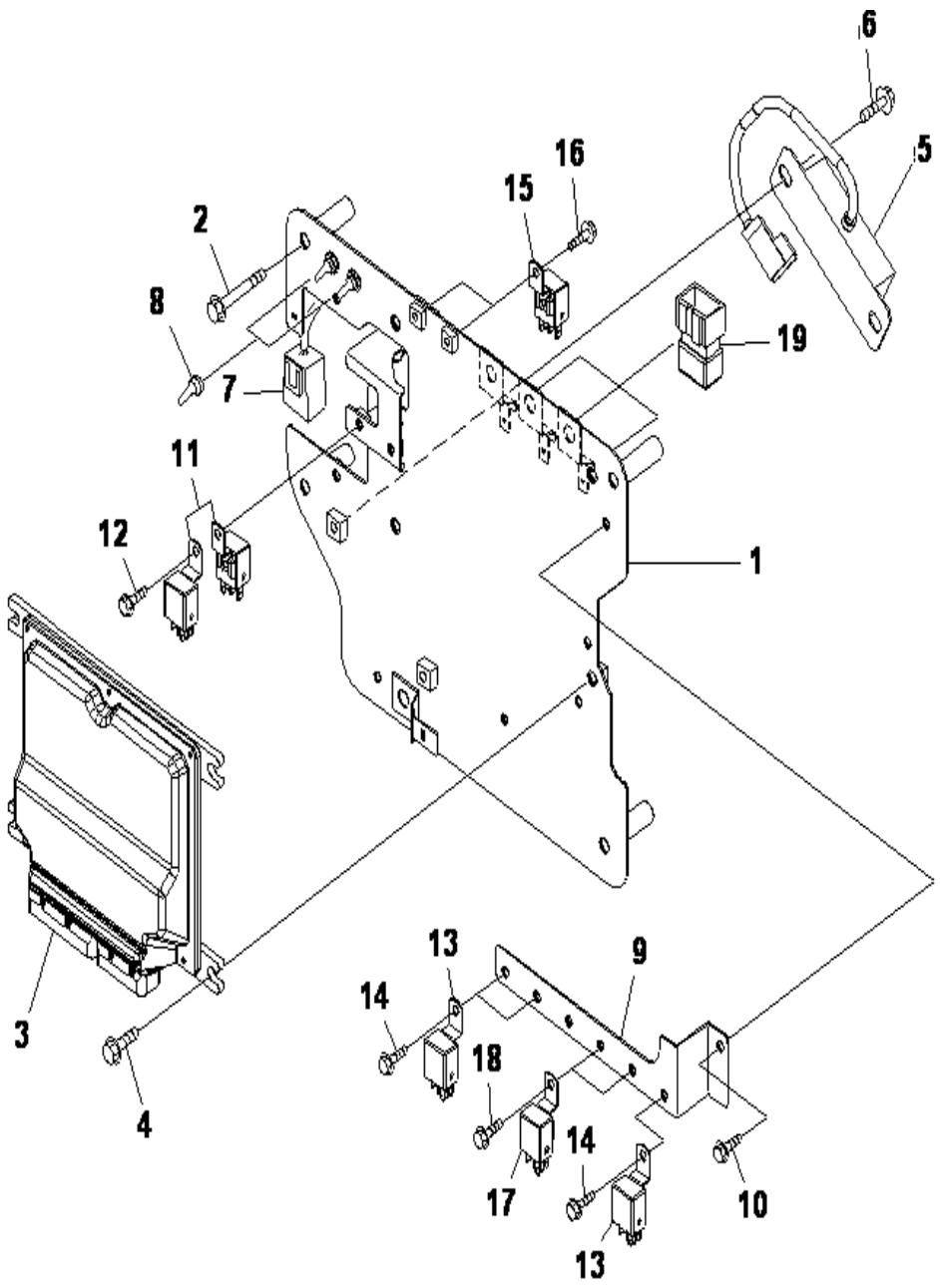

PC400-8 S/N J30001-UP

OPERATOR'S CAB (CAB IN PARTS) (SUB PLATE AND RELAY)

INDEX	CD	PART NO.	DESCRIPTION	QTY	SERIAL NO.
1		20Y-53-14812	BRACKET	1	J30001-UP
2		01435-00860	BOLT	4	J30001-UP
3		783-54-63003	CONTROLLER GP	1	J30001-UP
4		01435-00820	BOLT	4	J30001-UP
5		786-19-42000	RESISTOR	1	J30001-UP
6		01435-00820	BOLT	2	J30001-UP
7		20Y-06-41150	WIRING HARNESS	1	J30001-UP
8		208-43-71420	CAP	2	J30001-UP
9		20Y-53-18211	BRACKET	1	J30001-UP
10		01435-00610	BOLT	1	J30001-UP
11		786-17-45100	RELAY	2	J30001-UP
12		01435-00610	BOLT	1	J30001-UP
13		786-17-45100	RELAY	3	J30001-UP
14		01435-00610	BOLT	3	J30001-UP
15		786-17-45100	RELAY	2	J30001-UP
16		01435-00610	BOLT	2	J30001-UP
17		569-06-61960	RELAY	2	J30001-UP
18		01435-00610	BOLT	2	J30001-UP
19		823-30-63350	DIODE	3	J30001-UP

Ref :K1110-27A1 Page :210490

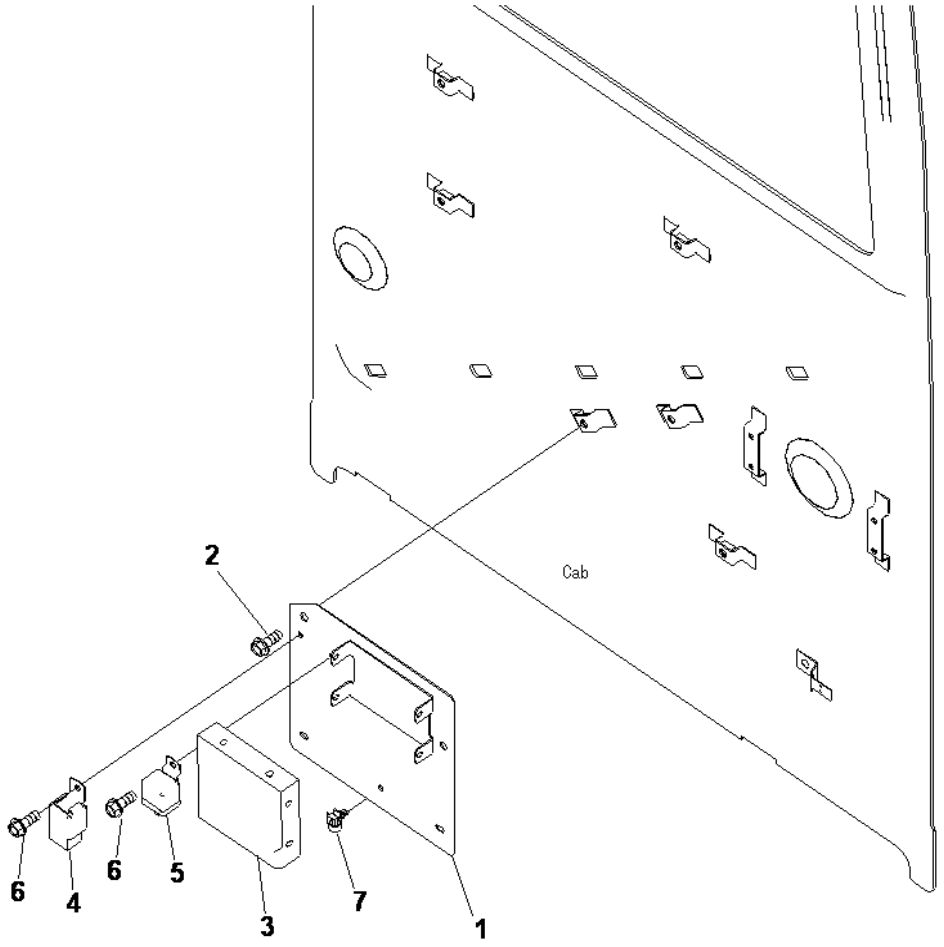

PC400-8 S/N J30001-UP

OPERATOR'S CAB (CAB IN PARTS) (AIR CONDITIONER CONTROLLER)

INDEX	CD	PART NO.	DESCRIPTION	QTY	SERIAL NO.
1		20Y-53-14820	PLATE	1	J30001-UP
2		01435-40812	BOLT	2	J30001-UP
3		17A-97-93180	CONTROLLER	1	J30002-UP
		20Y-810-1231	CONTROLLER	1	J30001-J30001
4		421-07-31270	RELAY	1	J30001-UP
5		20Y-979-6771	RELAY	1	J30001-UP
6		01435-00610	BOLT	2	J30001-UP
7		08059-00413	CLIP	1	J30001-UP

Ref :K1110-28A8 Page :210500

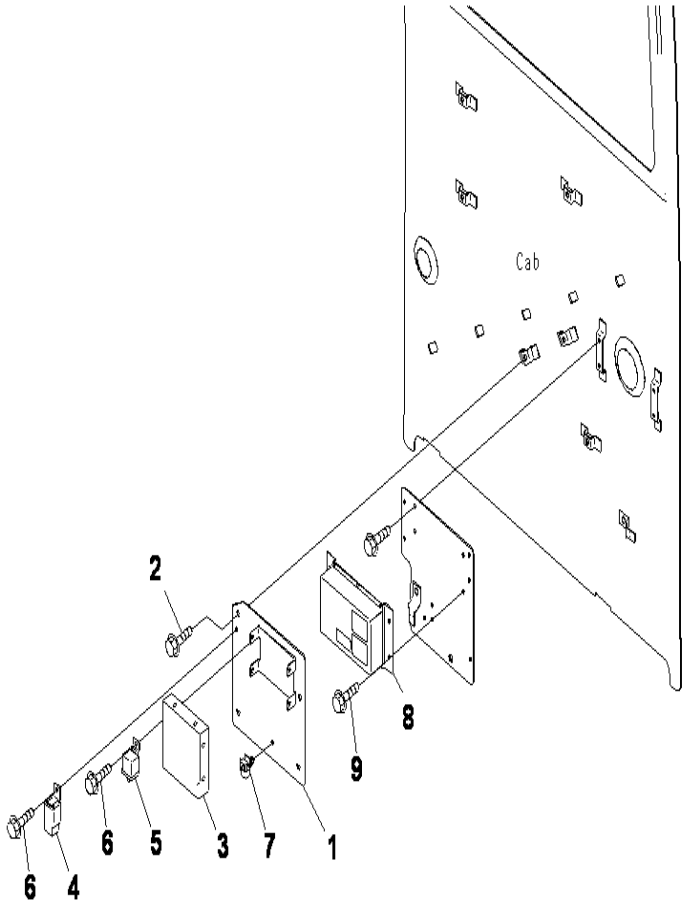

PC400-8 S/N J30001-UP

OPERATOR'S CAB (CAB IN PARTS)(AC CONT&KOM)(ORBCOM TYPE)

INDEX	CD	PART NO.	DESCRIPTION	QTY	SERIAL NO.
1		20Y-53-14820	PLATE	1	J30001-UP
2		01435-40812	BOLT	2	J30001-UP
3		17A-97-93180	CONTROLLER	1	J30002-UP
		20Y-810-1231	CONTROLLER	1	J30001-J30001
4		421-07-31270	RELAY	1	J30001-UP
5		20Y-979-6771	RELAY	1	J30001-UP
6		01435-00610	BOLT	2	J30001-UP
7		08059-00413	CLIP	1	J30001-UP
8		782-62-33011	UNIT	1	J30001-UP
9		01435-00612	BOLT	4	J30001-UP

Ref :K1110-28A9 Page :210520

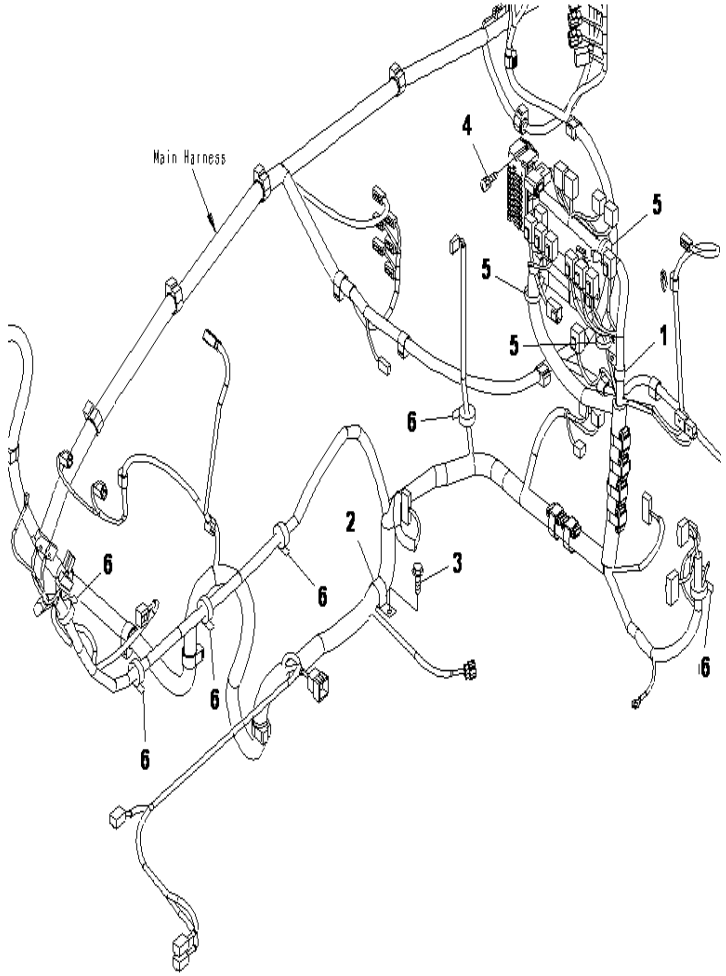

PC400-8 S/N J30001-UP

OPERATOR'S CAB (CAB IN PARTS) (MAIN HARNESS CLAMP)

INDEX	CD	PART NO.	DESCRIPTION	QTY	SERIAL NO.
1		04434-53411	CLIP	1	J30001-UP
2		04434-51708	CLIP	1	J30001-UP
3		01435-00816	BOLT	1	J30001-UP
4		01023-60620	SCREW	2	J30001-UP
5		08059-00515	CLIP	3	J30001-UP
6		08034-20414	BAND	6	J30001-UP

Ref :K1110-29A1 Page :210530

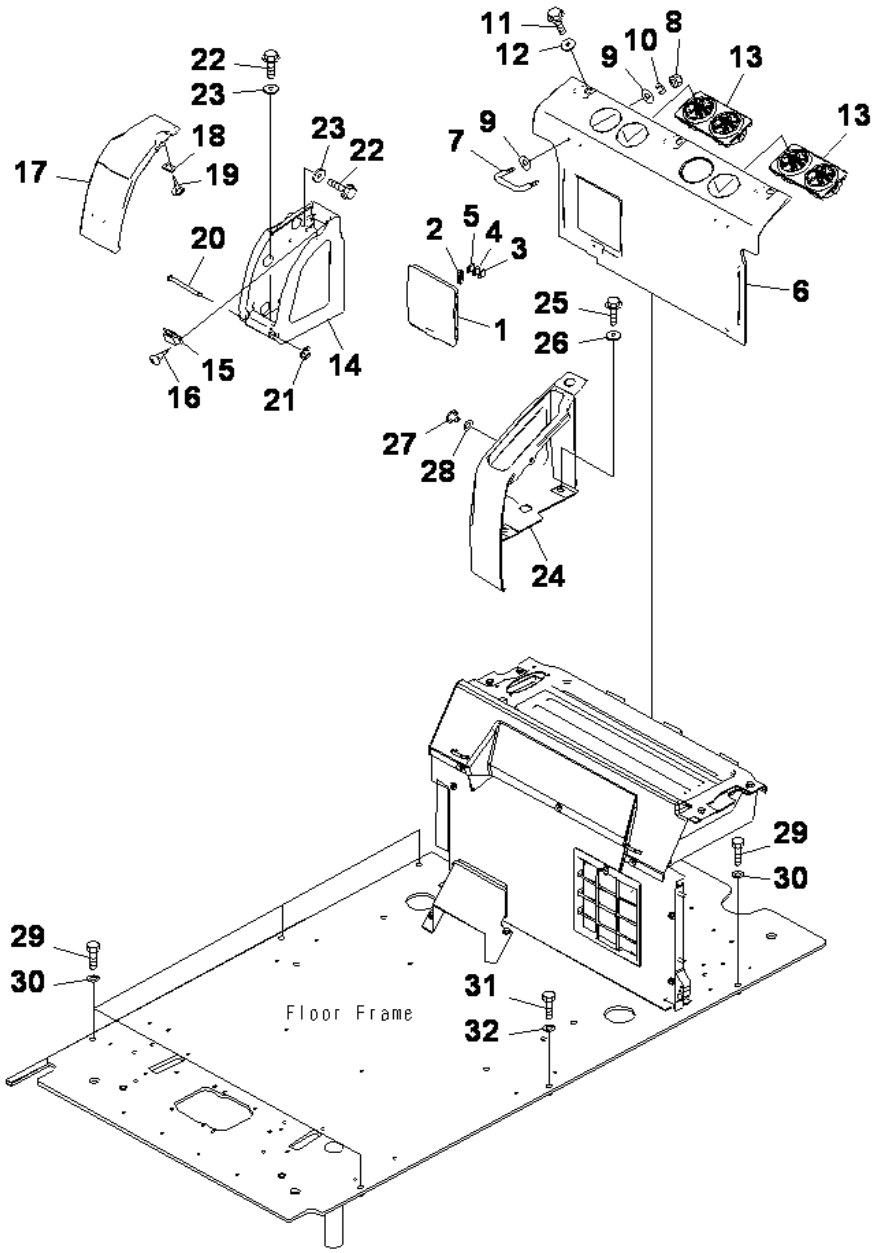

PC400-8 S/N J30001-UP

OPERATOR'S CAB (CAB IN PARTS) (REAR COVER)

INDEX	CD	PART NO.	DESCRIPTION	QTY	SERIAL NO.
		20Y-53-13631	COVER A	1	J30001-UP
1	C1	20Y-53-12361	.COVER	1	J30001-UP
2		22U-43-22340	.PULLER	1	J30001-UP
3		08041-01000	.FUSE, 10A	1	J30001-UP
4		08041-02000	.FUSE, 20A	1	J30001-UP
5		08041-03000	.FUSE, 30A	1	J30001-UP
6		20Y-53-12371	COVER	1	J30001-UP
7		208-53-12290	.HOOK	2	J30001-UP
8		01580-10403	.NUT	4	J30001-UP
9		01640-20408	.WASHER	8	J30001-UP
10		01601-20410	.WASHER	4	J30001-UP
11		01435-40616	BOLT	3	J30001-UP
12		20Y-53-12310	COLLAR	3	J30001-UP
13		208-979-7560	GRILLE	2	J30001-UP
14		20Y-53-12381	COVER	1	J30001-UP
15		09452-14503	CATCHER	1	J30001-UP
16		01370-10308	SCREW	2	J30001-UP
17		20Y-53-12391	COVER	1	J30001-UP
18		208-53-12410	PLATE	1	J30001-UP
19		01370-20308	SCREW	2	J30001-UP
20		208-53-12320	PIN	1	J30001-UP
21		208-53-12330	RING	1	J30001-UP
22		01435-40616	BOLT	5	J30001-UP
23		20Y-53-12310	COLLAR	5	J30001-UP
24		20Y-53-12731	COVER	1	J30001-UP
25		01435-40620	BOLT	2	J30001-UP
26		20Y-53-12310	COLLAR	2	J30001-UP
27		23D-95-04450	BUTTON	1	J30001-UP
28		20Y-53-12860	SPACER	1	J30001-UP
29		01010-81245	BOLT	5	J30001-UP
30		01643-31232	WASHER	5	J30001-UP
31		208-53-23221	BOLT	1	J30001-UP
32		01643-31232	WASHER	1	J30001-UP

Ref :K1110-30A1 Page :210540

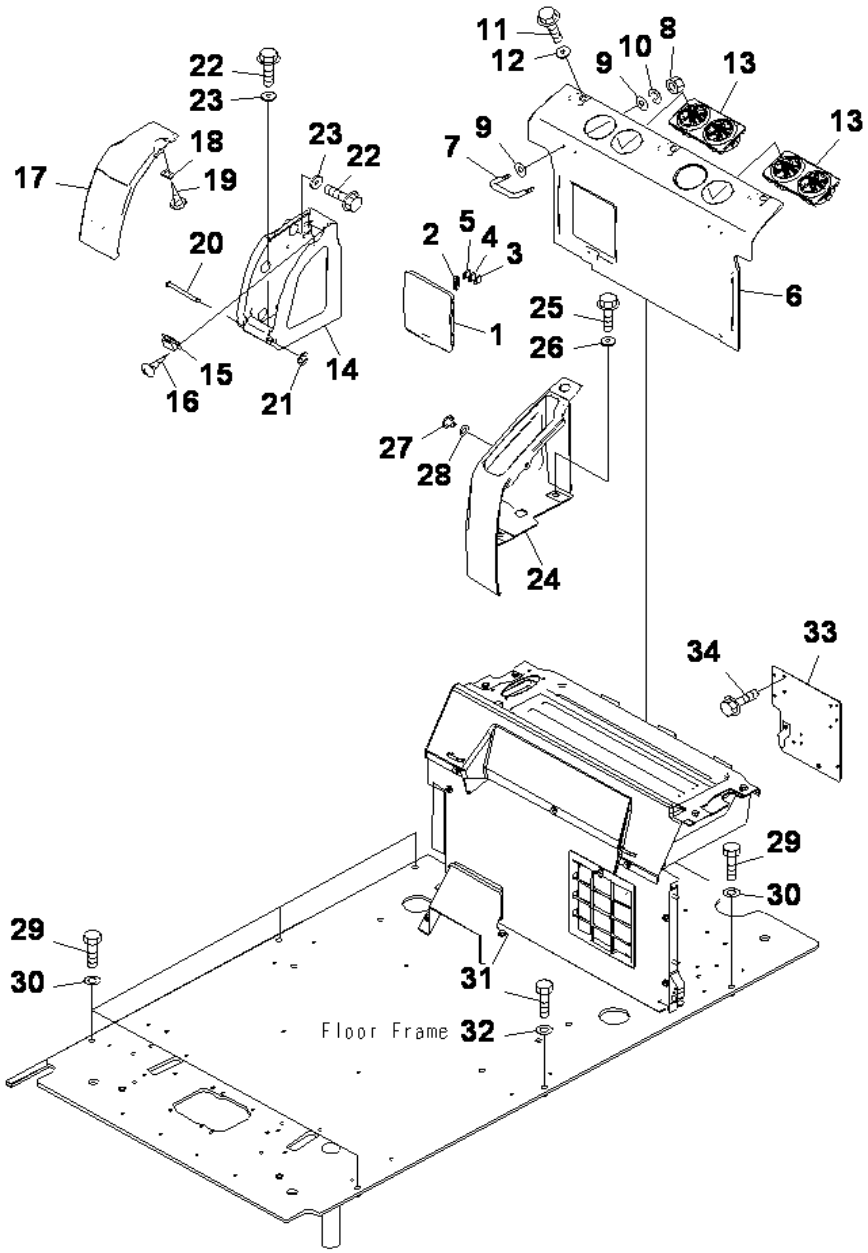

PC400-8 S/N J30001-UP

OPERATOR'S CAB (CAB IN PARTS) (REAR COVER) (WITH KOMTRAX)

INDEX	CD	PART NO.	DESCRIPTION	QTY	SERIAL NO.
		20Y-53-13631	COVER A	1	J30001-UP
1	C1	20Y-53-12361	.COVER	1	J30001-UP
2		22U-43-22340	.PULLER	1	J30001-UP
3		08041-01000	.FUSE, 10A	1	J30001-UP
4		08041-02000	.FUSE, 20A	1	J30001-UP
5		08041-03000	.FUSE, 30A	1	J30001-UP
6		20Y-53-12371	COVER	1	J30001-UP
7		208-53-12290	.HOOK	2	J30001-UP
8		01580-10403	.NUT	4	J30001-UP
9		01640-20408	.WASHER	8	J30001-UP
10		01601-20410	.WASHER	4	J30001-UP
11		01435-40616	BOLT	3	J30001-UP
12		20Y-53-12310	COLLAR	3	J30001-UP
13		208-979-7560	GRILLE	2	J30001-UP
14		20Y-53-12381	COVER	1	J30001-UP
15		09452-14503	CATCHER	1	J30001-UP
16		01370-10308	SCREW	2	J30001-UP
17		20Y-53-12391	COVER	1	J30001-UP
18		208-53-12410	PLATE	1	J30001-UP
19		01370-20308	SCREW	2	J30001-UP
20		208-53-12320	PIN	1	J30001-UP
21		208-53-12330	RING	1	J30001-UP
22		01435-40616	BOLT	5	J30001-UP
23		20Y-53-12310	COLLAR	5	J30001-UP
24		20Y-53-12731	COVER	1	J30001-UP
25		01435-40620	BOLT	2	J30001-UP
26		20Y-53-12310	COLLAR	2	J30001-UP
27		23D-95-04450	BUTTON	1	J30001-UP
28		20Y-53-12860	SPACER	1	J30001-UP
29		01010-81245	BOLT	5	J30001-UP
30		01643-31232	WASHER	5	J30001-UP
31		208-53-23221	BOLT	1	J30001-UP
32		01643-31232	WASHER	1	J30001-UP
33		20Y-53-18221	BRACKET	1	J30001-UP
34		01435-00612	BOLT	4	J30001-UP

Ref :K1110-30A9 Page :210550

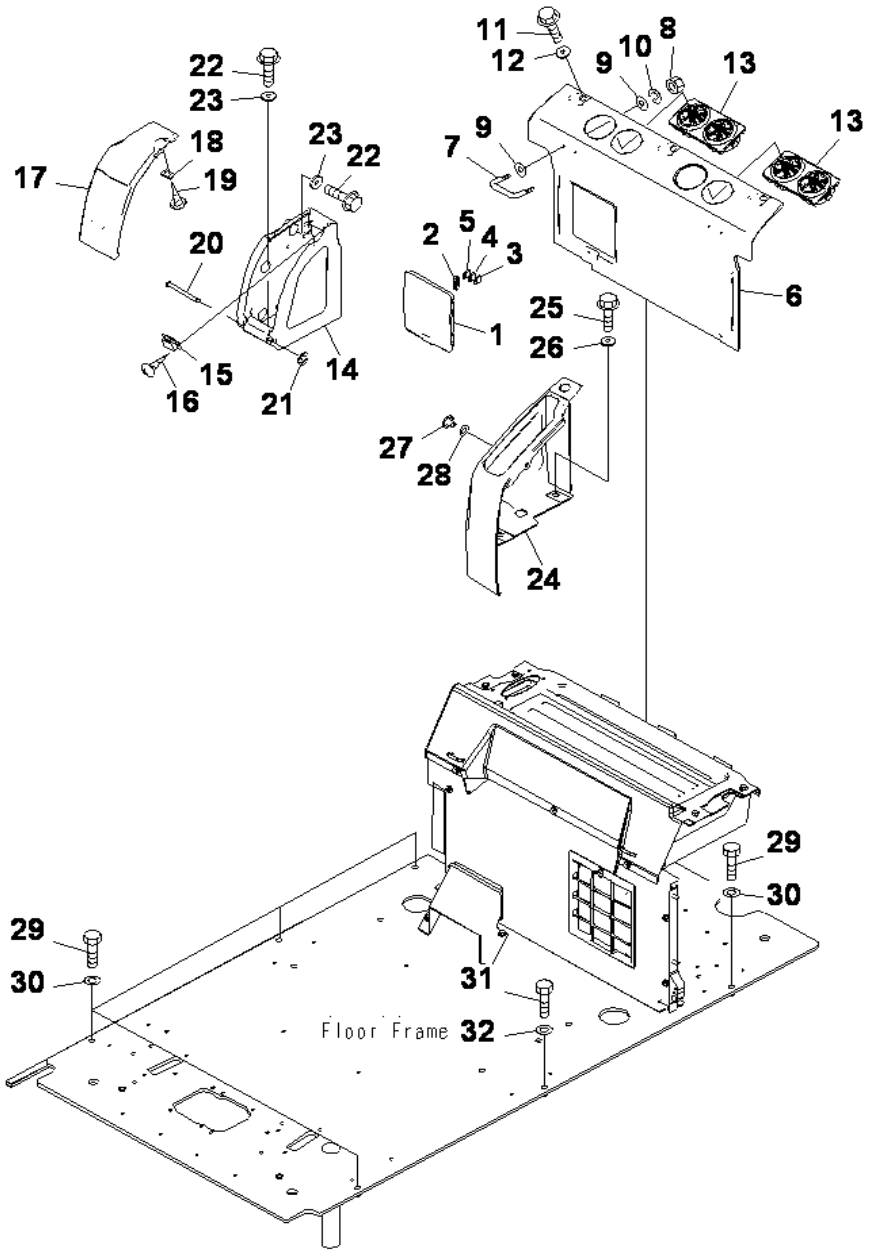

PC400-8 S/N J30001-UP

OPERATOR'S CAB (CAB IN PARTS) (REAR COVER) (WITHOUT KOMTRAX)

INDEX	CD	PART NO.	DESCRIPTION	QTY	SERIAL NO.
		20Y-53-13631	COVER A	1	J30001-UP
1	C1	20Y-53-12361	.COVER	1	J30001-UP
2		22U-43-22340	.PULLER	1	J30001-UP
3		08041-01000	.FUSE	1	J30001-UP
4.		08041-02000	.FUSE	1	J30001-UP
5		08041-03000	.FUSE	1	J30001-UP
6		20Y-53-12371	COVER	1	J30001-UP
7		208-53-12290	.HOOK	2	J30001-UP
8		01580-10403	.NUT	4	J30001-UP
9		01640-20408	.WASHER	8	J30001-UP
10		01601-20410	.WASHER	4	J30001-UP
11		01435-40616	BOLT	3	J30001-UP
12		20Y-53-12310	COLLAR	3	J30001-UP
13		208-979-7560	GRILLE	2	J30001-UP
14		20Y-53-12381	COVER	1	J30001-UP
15		09452-14503	CATCHER	1	J30001-UP
16		01370-10308	SCREW	2	J30001-UP
17		20Y-53-12391	COVER	1	J30001-UP
18		208-53-12410	PLATE	1	J30001-UP
19		01370-20308	SCREW	2	J30001-UP
20		208-53-12320	PIN	1	J30001-UP
21		208-53-12330	RING	1	J30001-UP
22		01435-40616	BOLT	5	J30001-UP
23		20Y-53-12310	COLLAR	5	J30001-UP
24		20Y-53-12731	COVER	1	J30001-UP
25		01435-40620	BOLT	2	J30001-UP
26		20Y-53-12310	COLLAR	2	J30001-UP
27		23D-95-04450	BUTTON	1	J30001-UP
28		20Y-53-12860	SPACER	1	J30001-UP
29		01010-81245	BOLT	5	J30001-UP
30		01643-31232	WASHER	5	J30001-UP
31		208-53-23221	BOLT	1	J30001-UP
32		01643-31232	WASHER	1	J30001-UP

Ref :K1110-30A10 Page :210560

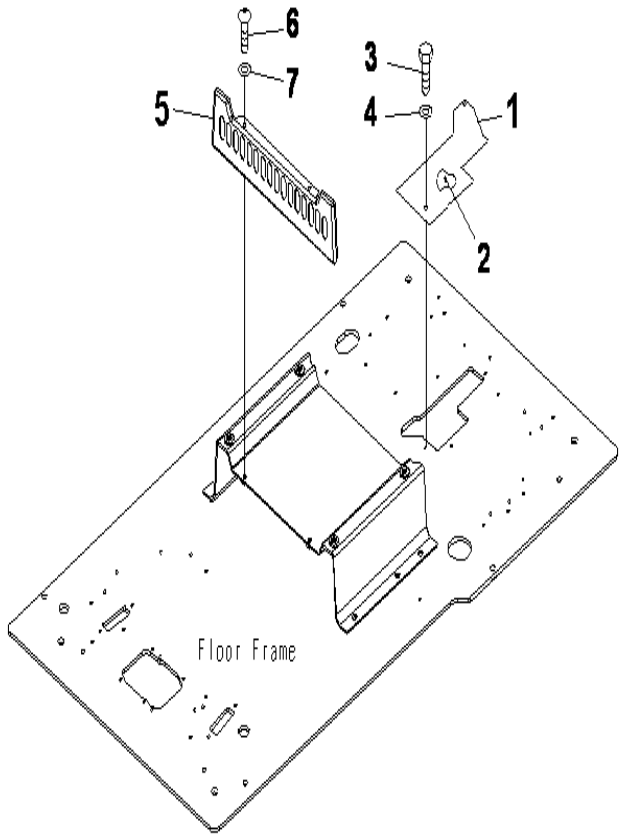

PC400-8 S/N J30001-UP

OPERATOR'S CAB (FOOT COVER) (WITHOUT AIR CONDITIONER)

INDEX	CD	PART NO.	DESCRIPTION	QTY	SERIAL NO.
1		208-53-15820	PLATE	1	J30001-UP
2		2085315830	SEAL	1	J30001-UP
3		01010-80816	BOLT	2	J30001-UP
4		01643-30823	WASHER	2	J30001-UP
5		20Y-43-41240	COVER	1	J30001-UP
6		01245-00820	SCREW	2	J30001-UP
7		01643-70823	WASHER	2	J30001-UP

Ref :K1110-31E2 Page :210570

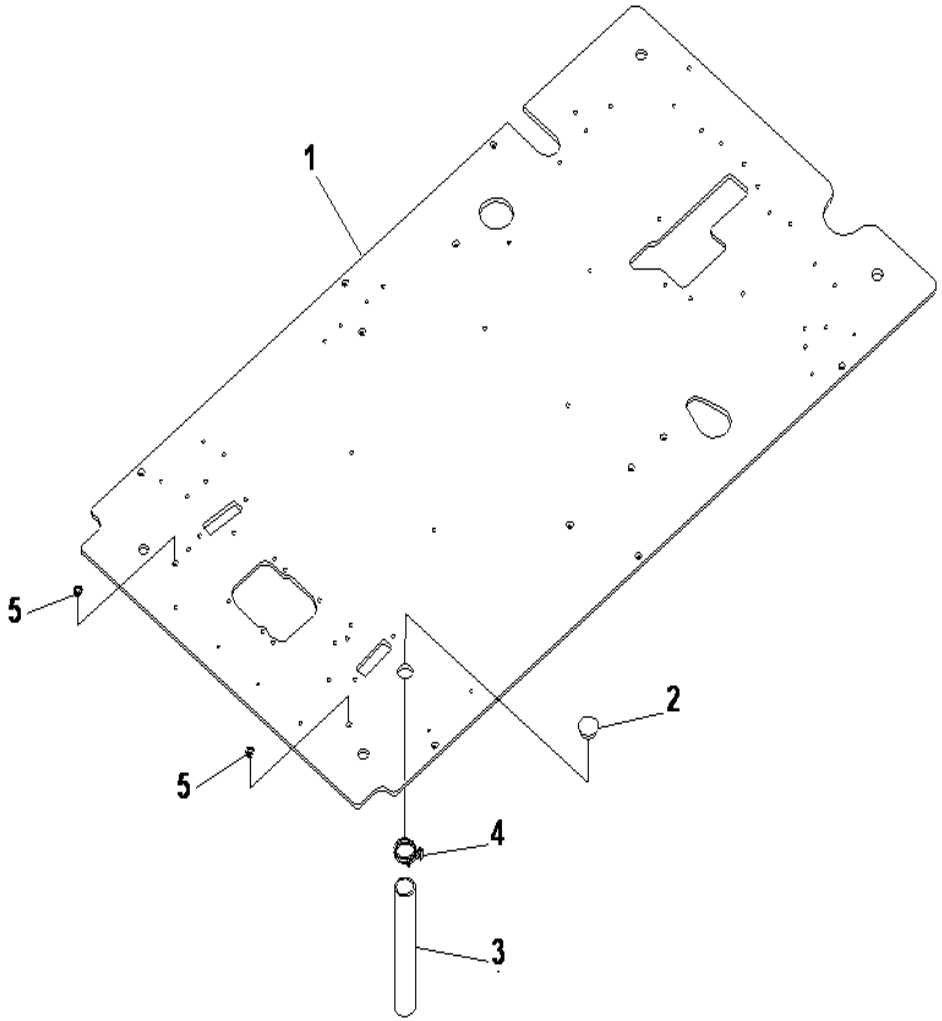

PC400-8 S/N J30001-UP

OPERATOR'S CAB (FLOOR) (FRAME)

INDEX	CD	PART NO.	DESCRIPTION	QTY	SERIAL NO.
1		207-53-14120	FLOOR FRAME	1	J30002-UP
		20Y-53-14114	FLOOR FRAME	1	J30001-J30001
2		22U-54-25581	GROMMET	1	J30001-UP
3		07286-03828	HOSE	1	J30001-UP
4		07280-04726	CLAMP	1	J30001-UP
5		07048-01310	PLUG	2	J30001-UP

Ref :K1110-41A1 Page :210580

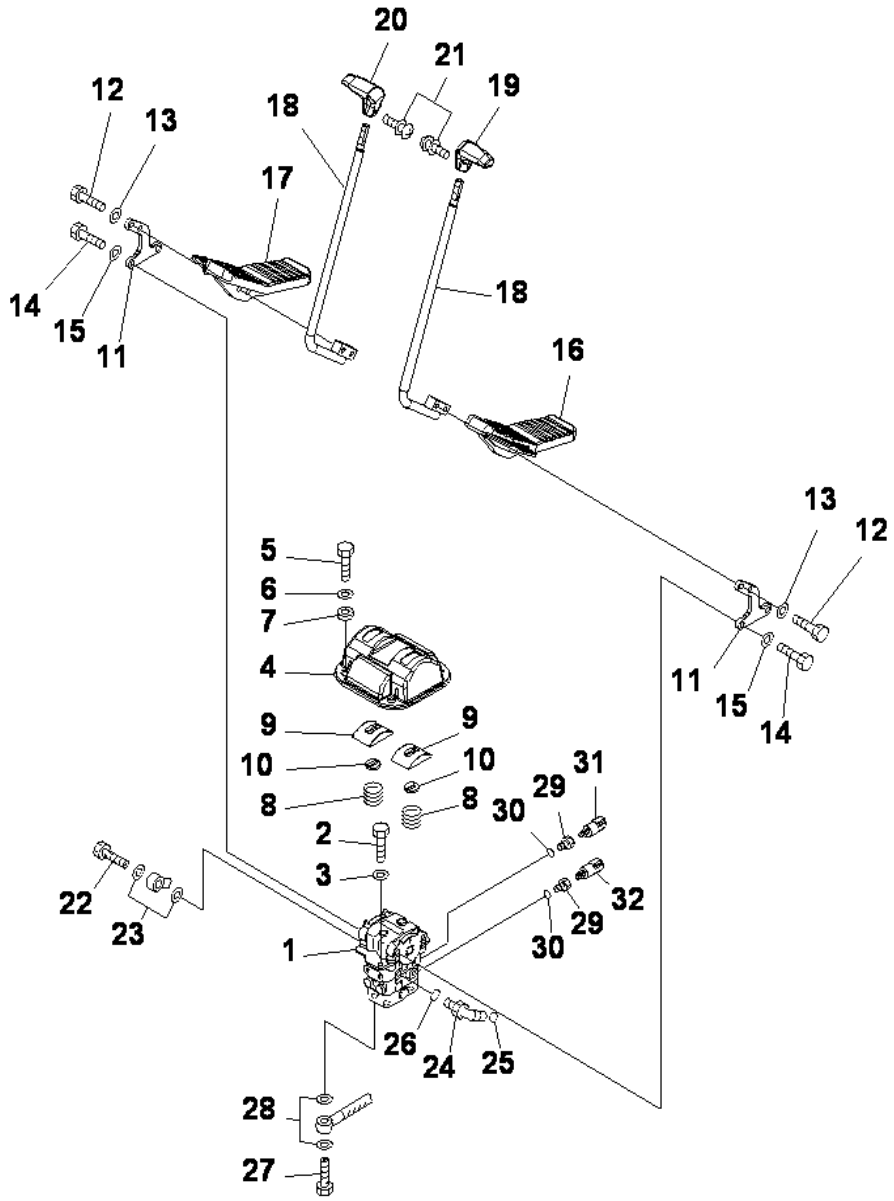

OPERATOR'S CAB (FLOOR) (TRAVEL CONTROL)

INDEX	CD	PART NO.	DESCRIPTION	QTY	SERIAL NO.
1		(702-16-04250)	PILOT VALVE	1	J30001-UP
2		01010-81020	BOLT	2	J30001-UP
3		01643-31032	WASHER	2	J30001-UP
4		20Y-43-41121	COVER	1	J30001-UP
5		01010-81020	BOLT	4	J30001-UP
6		01643-31032	WASHER	4	J30001-UP
7		20Y-43-41361	COLLAR	4	J30001-UP
8		203-43-51620	SPRING	2	J30001-UP
		22U-43-21350	COVER A	1	J30001-UP
9	C1	20Y-43-21140	.COVER	1	J30001-UP
10		22U-43-21360	.SEAL	1	J30001-UP
11		20Y-43-41111	LEVER	2	J30001-UP
12		01010-D1045	BOLT	4	J30001-UP
13		01643-71032	WASHER	4	J30001-UP
14		01010-81030	BOLT	4	J30001-UP
15		01643-31032	WASHER	4	J30001-UP
16		22U-43-21111	PEDAL(L.H)	1	J30001-UP
17		22U-43-21121	PEDAL(R.H)	1	J30001-UP
18		22U-43-21131	LEVER	2	J30001-UP
19		20Y-43-21231	KNOB(L.H)	1	J30001-UP
20		20Y-43-21241	KNOB(R.H)	1	J30001-UP
21		01023-20416	SCREW	2	J30001-UP
22		20Y-62-18910	EYE BOLT	1	J30001-UP
23		07000-12018	O-RING	2	J30001-UP
24		11Y-62-12160	ELBOW	1	J30001-UP
25		02896-11008	O-RING	1	J30001-UP
26		07002-11423	O-RING	1	J30001-UP
27		20Y-62-18890	JOINT BOLT	4	J30001-UP
28		07000-12015	O-RING	8	J30001-UP
29		20Y-62-41390	ADAPTER	2	J30001-UP
30		07002-11423	O-RING	2	J30001-UP
31		20Y-06-21710	SWITCH	1	J30001-UP
32		206-06-61130	SWITCH	1	J30001-UP

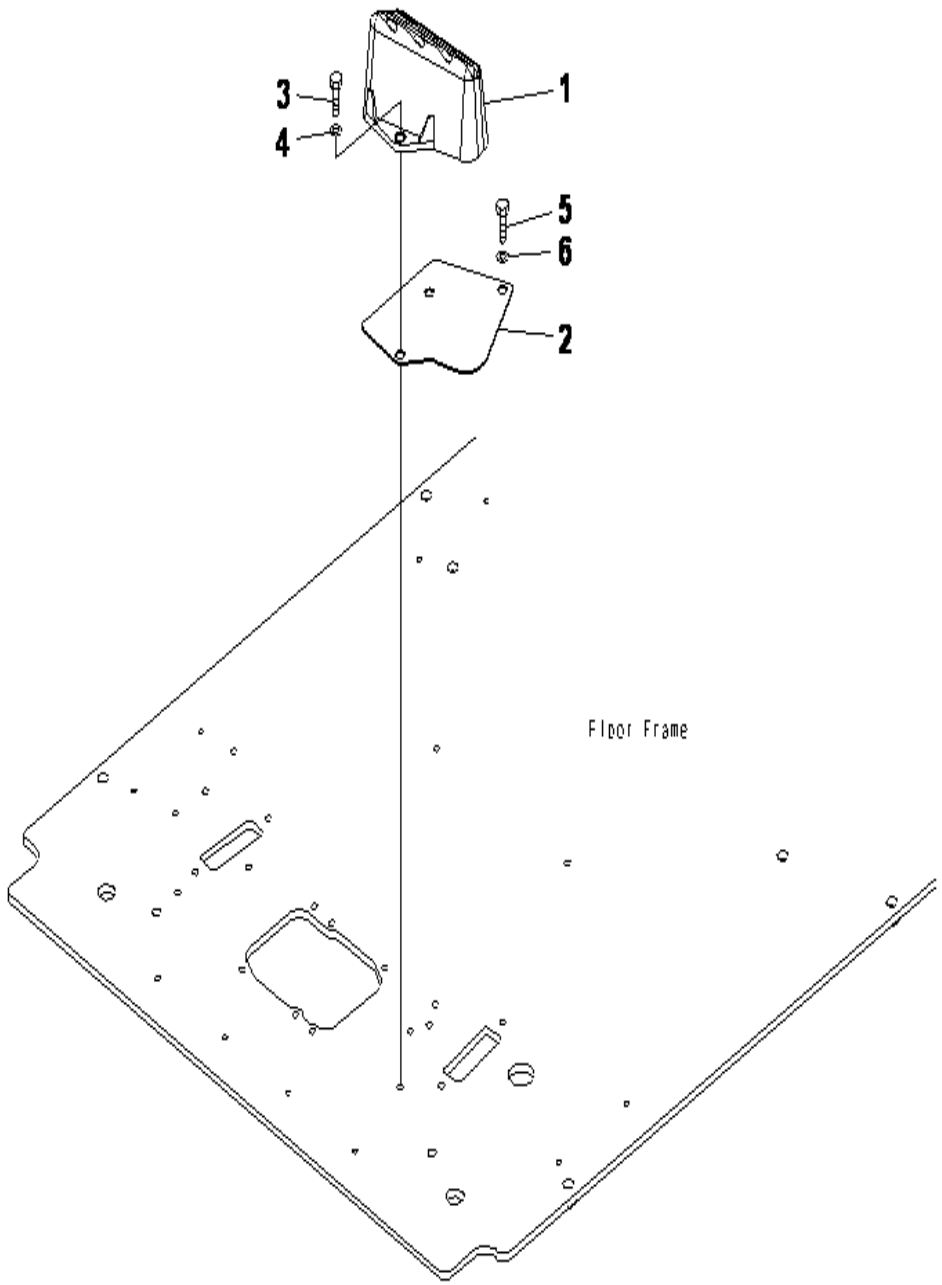

PC400-8 S/N J30001-UP

OPERATOR'S CAB (FLOOR) (FOOT REST L.H)

INDEX	CD	PART NO.	DESCRIPTION	QTY	SERIAL NO.
1		22U-54-25110	REST,FOOT	1	J30001-UP
2		22U-54-25521	PLATE	1	J30001-UP
3		01010-81025	BOLT	2	J30001-UP
4		01643-31032	WASHER	2	J30001-UP
5		01010-81020	BOLT	2	J30001-UP
6		01643-31032	WASHER	2	J30001-UP

Ref :K1110-43A1 Page :210600

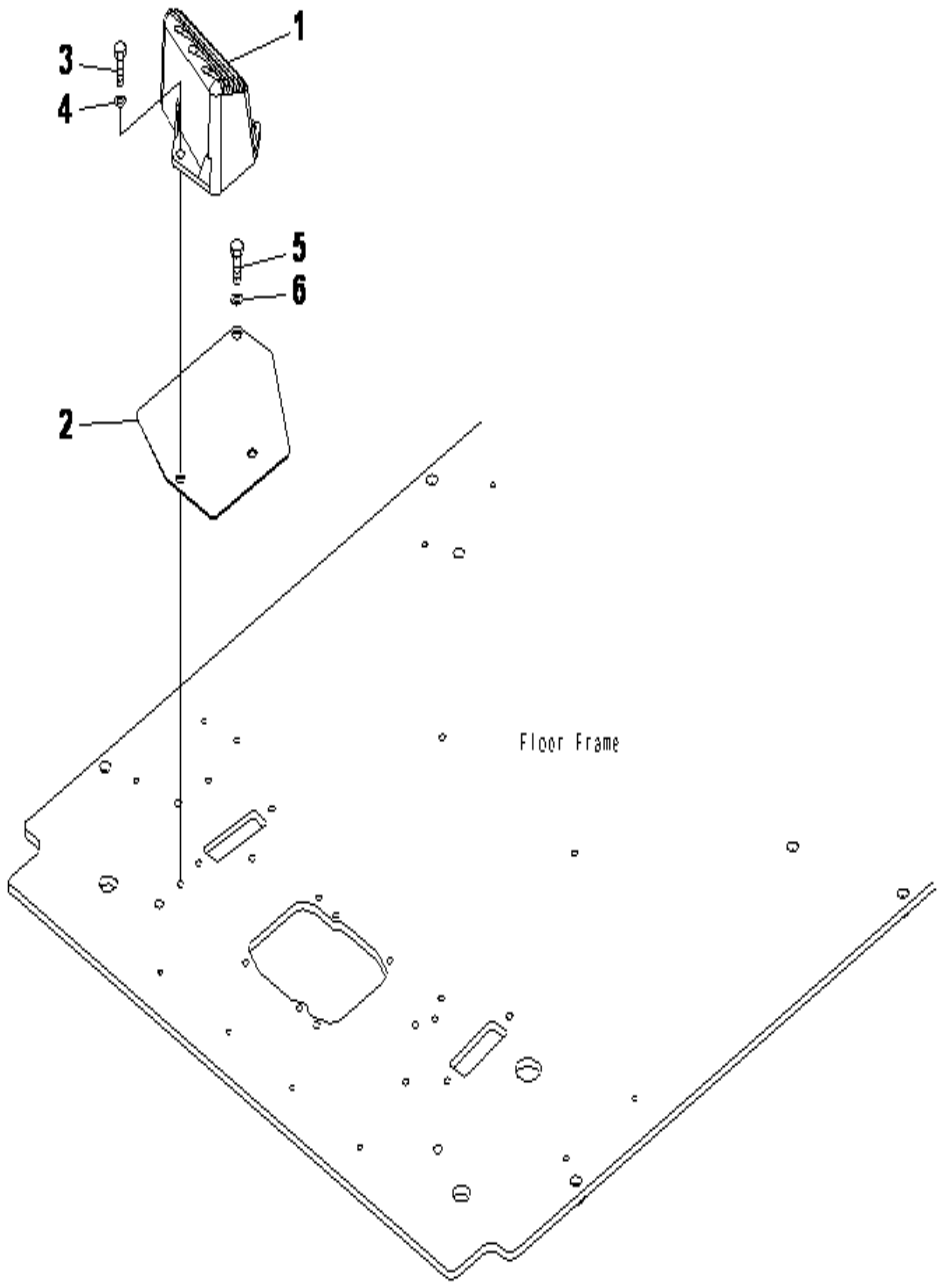

PC400-8 S/N J30001-UP

OPERATOR'S CAB (FLOOR) (FOOT REST R.H)

INDEX	CD	PART NO.	DESCRIPTION	QTY	SERIAL NO.
1		22U-54-25120	REST,FOOT	1	J30001-UP
2		22U-54-25531	PLATE	1	J30001-UP
3		01010-81025	BOLT	2	J30001-UP
4		01643-31032	WASHER	2	J30001-UP
5		01010-81020	BOLT	1	J30001-UP
6		01643-31032	WASHER	1	J30001-UP

Ref :K1110-44A1 Page :210610

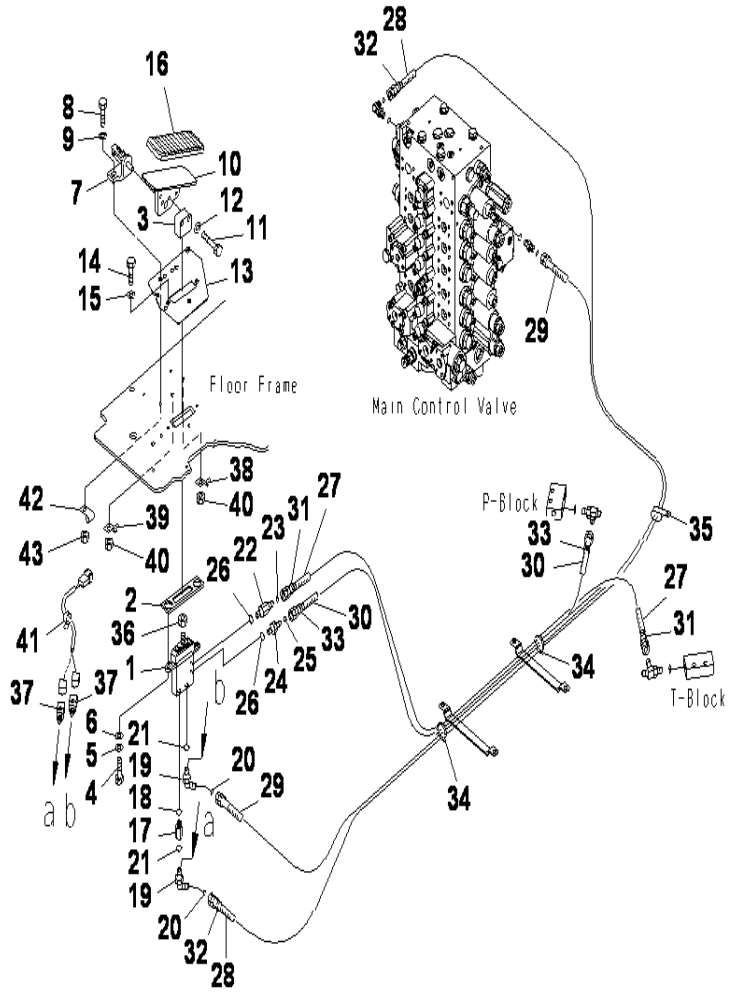

PC400-8 S/N J30001-UP

OPERATOR'S CAB (FLOOR) (1ST. ATTACHIMENT CONTROL)

INDEX	CD	PART NO.	DESCRIPTION	QTY	SERIAL NO.
1		(702-16-04290)	PILOT VALVE	1	J30001-UP
2		22U-54-25660	SEAL	1	J30001-UP
3		20Y-43-41760	SEAT	1	J30001-UP
4		01010-81025	BOLT	2	J30001-UP
5		01643-31032	WASHER	2	J30001-UP
6		01643-31032	WASHER	2	J30001-UP
7		20Y-62-25360	BRACKET	1	J30001-UP
8		01010-D1035	BOLT	2	J30001-UP
9		01643-71032	WASHER	2	J30001-UP
10		20Y-53-14220	PEDAL	1	J30001-UP
11		01010-D1045	BOLT	2	J30001-UP
12		01643-71032	WASHER	2	J30001-UP
13		22U-54-25541	PLATE	1	J30001-UP
14		01010-81025	BOLT	3	J30001-UP
15		01643-31032	WASHER	3	J30001-UP
16		207-43-81240	CAP	1	J30001-UP
17		20T-910-8660	NIPPLE	1	J30001-UP
18		07000-12011	O-RING	1	J30001-UP
19		20Y-62-52160	ELBOW	2	J30001-UP
20		02896-11008	O-RING	2	J30001-UP
21		07000-12011	O-RING	2	J30001-UP
22		20Y-62-43470	NIPPLE	1	J30001-UP
23		02896-11008	O-RING	1	J30001-UP
24		11Y-62-12140	NIPPLE	1	J30001-UP
25		02896-11008	O-RING	1	J30001-UP
26		07000-12011	O-RING	2	J30001-UP
27		02760-00209	HOSE	1	J30001-UP
28		02760-00211	HOSE	1	J30001-UP
29		207-62-76470	HOSE	1	J30001-UP
30		208-62-76570	HOSE	1	J30001-UP
31		20Y-62-22790	BAND (RED)	2	J30001-UP
32		20Y-62-22810	BAND (YELLOW)	2	J30001-UP
33		20Y-62-22820	BAND (BLUE)	2	J30001-UP
34		08034-20519	BAND	2	J30001-UP
35		04435-51210	CLIP	1	J30001-UP
36		01583-11408	NUT	1	J30001-UP
37		206-06-61130	SWITCH	2	J30001-UP
38		08193-21012	CLIP	1	J30001-UP
39		08053-01510	CLIP	1	J30001-UP
40		01580-01008	NUT	2	J30001-UP
41		08034-20536	BAND	1	J30001-UP
42		04434-50610	CLIP	1	J30001-UP
43		01580-01008	NUT	1	J30001-UP

Ref :K1110-44A2 Page :210620

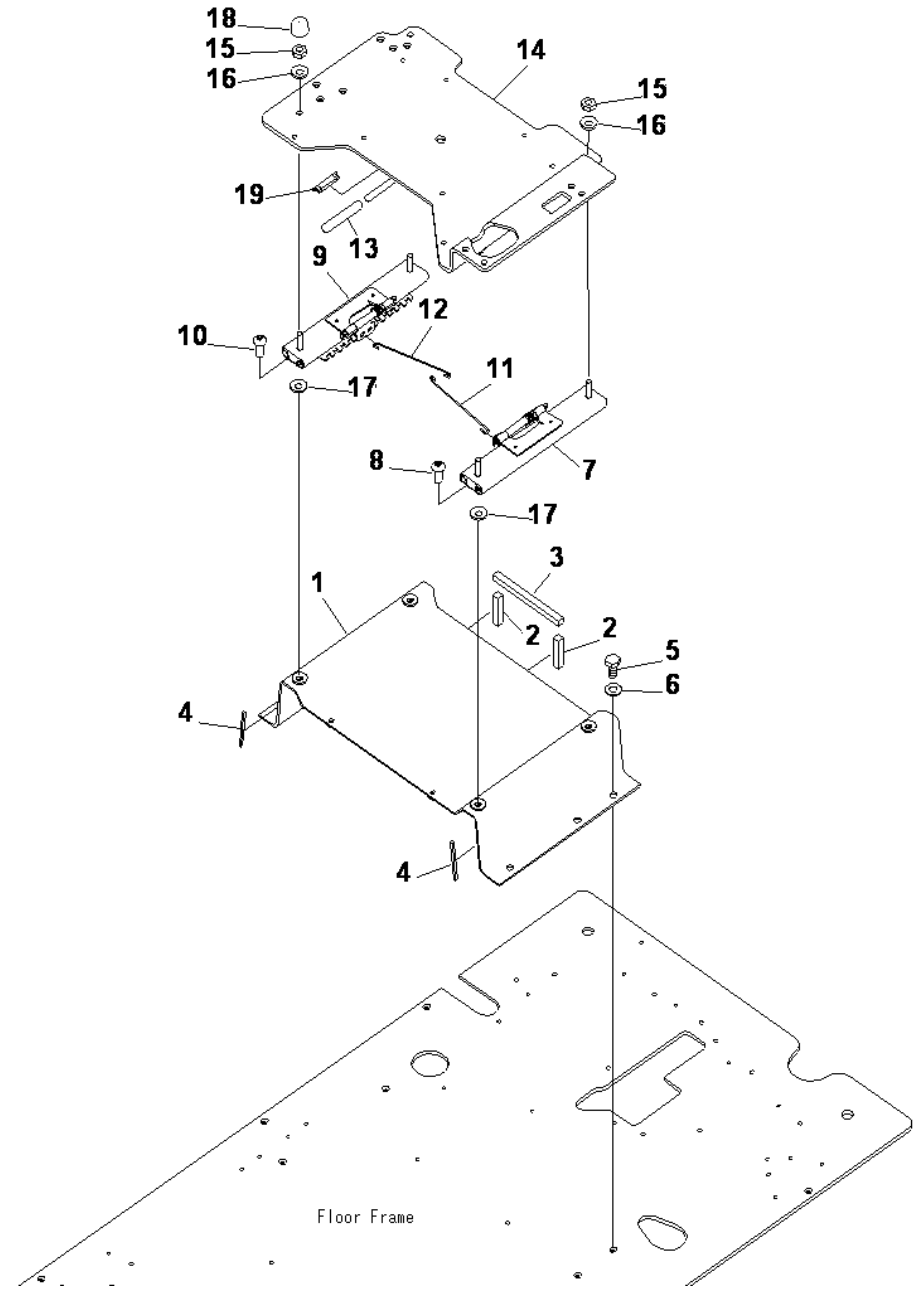

OPERATOR'S CAB (FLOOR) (BASE)

INDEX	CD	PART NO.	DESCRIPTION	QTY	SERIAL NO.
1		20Y-43-41230	FRAME	1	J30001-UP
2		208-43-71520	.SEAL	2	J30001-UP
3		208-43-71530	.SEAL	1	J30001-UP
4		208-43-71590	.SEAL	2	J30001-UP
5		01010-81230	BOLT	5	J30001-UP
6		01643-31232	WASHER	5	J30001-UP
7		20Y-43-41813	ADJUSTER (L.H)	1	J30002-UP
		20Y-43-41812	ADJUSTER (L.H)	1	J30001-J30001
8		01245-01025	SCREW	2	J30001-UP
9		20Y-43-41823	ADJUSTER (R.H)	1	J30002-UP
		20Y-43-41822	ADJUSTER (R.H)	1	J30001-J30001
10		01245-01025	SCREW	2	J30001-UP
11		20Y-43-41832	WIRE L.H	1	J30001-UP
12		20Y-43-41891	WIRE R.H	1	J30001-UP
13		22U-43-21390	CAP	1	J30001-UP
14		20Y-43-41252	FRAME	1	J30113-UP
		20Y-43-41251	FRAME	1	J30001-J30112
15		20Y-54-65340	NUT	4	J30001-UP
16		01643-71032	WASHER	4	J30001-UP
17		01640-21016	WASHER	4	J30001-UP
18		20Y-54-65540	CAP	2	J30001-UP
19		20Y-979-6630	CATCHER	1	J30001-UP

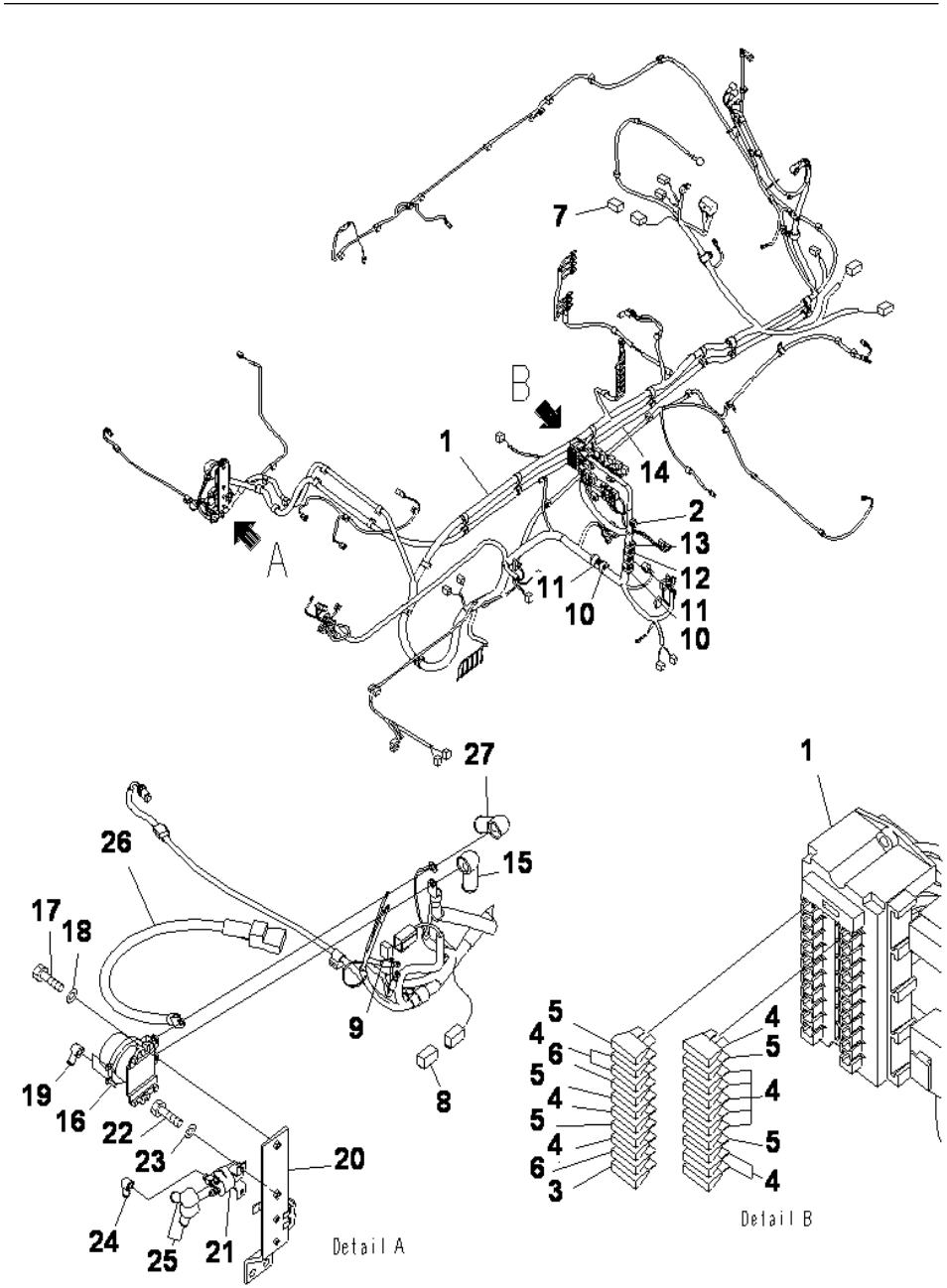

OPERATOR'S CAB (FLOOR) (HARNESS)

INDEX	CD	PART NO.	DESCRIPTION	QTY	SERIAL NO.
1		208-06-76113	WIRING HARNESS	1	J30002-UP
		208-06-76110	WIRING HARNESS	1	J30001-J30001
2		08020-20000	.DIODE	2	J30001-UP
3		08041-00500	.FUSE. 5A	1	J30001-UP
4		08041-01000	.FUSE. 10A	12	J30001-UP
5		08041-02000	.FUSE. 20A	5	J30001-UP
6		08041-03000	.FUSE. 30A	2	J30001-UP
7		19M-06-31720	.RESISTOR	1	J30001-UP
8		20Y-06-31660	.FUSIBLE LINK. 30A	1	J30001-UP
9		22U-06-11270	.FUSIBLE LINK. 65A	1	J30001-UP
10		HM6400-0012	.F-CONNECTOR. BLACK	2	J30001-UP
		HM6409-0071	.M-CONNECTOR. BLACK	2	J30001-UP
11		HM6400-0013	.F-CONNECTOR. GREEN	2	J30001-UP
		HM6409-0072	.M-CONNECTOR. GREEN	2	J30001-UP
12		HM6440-0129	.F-CONNECTOR. PINK	1	J30001-UP
		HM6440-0128	.M-CONNECTOR. PINK	1	J30001-UP
13		HM6400-0016	.F-CONNECTOR. ORANGE	1	J30001-UP
		HM6409-0075	.M-CONNECTOR. ORANGE	1	J30001-UP
14		208-06-75130	CABLE	1	J30001-UP
15		08038-00035	CAP	1	J30001-UP
16		08088-30000	SWITCH	1	J30001-UP
17		01010-80830	BOLT	2	J30001-UP
18		01643-30823	WASHER	2	J30001-UP
19		08038-00519	CAP	2	J30001-UP
20		207-06-75122	BRACKET	1	J30001-UP
21		600-815-2170	SWITCH, HEATER	1	J30001-UP
22		01010-80616	BOLT	2	J30001-UP
23		01643-30623	WASHER	2	J30001-UP
24		08038-00519	CAP	1	J30001-UP
25		08038-02027	CAP	2	J30001-UP
26		08028-CD065	CABLE	1	J30001-UP
27		08038-00035	CAP	1	J30001-UP

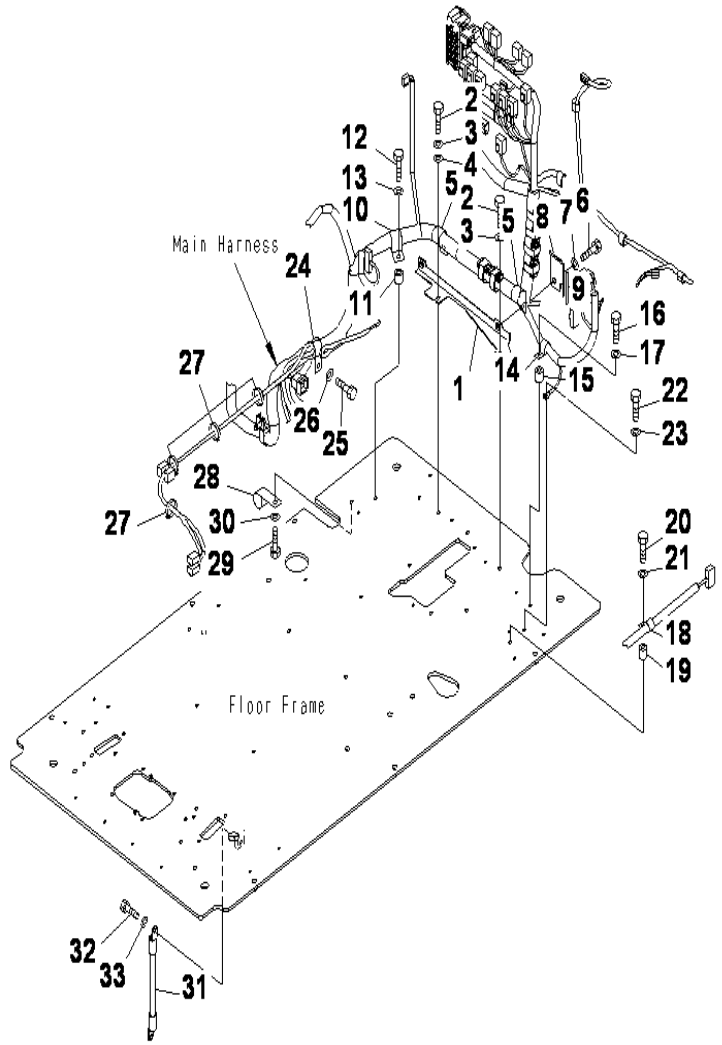

OPERATOR'S CAB (FLOOR) (HARNESS CLAMP AND EARTH)

INDEX	CD	PART NO.	DESCRIPTION	QTY	SERIAL NO.
1		20Y-53-14121	BRACKET	1	J30001-UP
2		01010-81016	BOLT	2	J30001-UP
3		01643-31032	WASHER	2	J30001-UP
4		01643-31032	WASHER	1	J30001-UP
5		04434-53411	CLIP	2	J30001-UP
6		01010-81025	BOLT	2	J30001-UP
7		01643-31032	WASHER	2	J30001-UP
		20Y-53-14150	PLATE A	1	J30001-UP
8	C1	20Y-53-14160	.PLATE	1	J30001-UP
9		20Y-53-14170	TRIM	1	J30001-UP
10		04434-53411	CLIP	1	J30001-UP
11		195-33-11220	SPACER	1	J30001-UP
12		01010-81040	BOLT	1	J30001-UP
13		01643-31032	WASHER	1	J30001-UP
14		04434-51910	CLIP	1	J30001-UP
15		195-33-11220	SPACER	1	J30001-UP
16		01010-81040	BOLT	1	J30001-UP
17		01643-31032	WASHER	1	J30001-UP
18		04434-51410	CLIP	1	J30001-UP
19		195-33-11220	SPACER	1	J30001-UP
20		01010-81040	BOLT	1	J30001-UP
21		01643-31032	WASHER	1	J30001-UP
22		01010-81020	BOLT	1	J30001-UP
23		01643-31032	WASHER	1	J30001-UP
24		04434-53411	CLIP	1	J30001-UP
25		01010-81020	BOLT	1	J30001-UP
26		01643-31032	WASHER	1	J30001-UP
27		08034-20519	BAND	4	J30001-UP
28		04434-51910	CLIP	1	J30001-UP
29		01010-81020	BOLT	1	J30001-UP
30		01643-31032	WASHER	1	J30001-UP
31		08028-43030	CABLE	1	J30001-UP
32		01010-81020	BOLT	1	J30001-UP
33		01643-31032	WASHER	1	J30001-UP

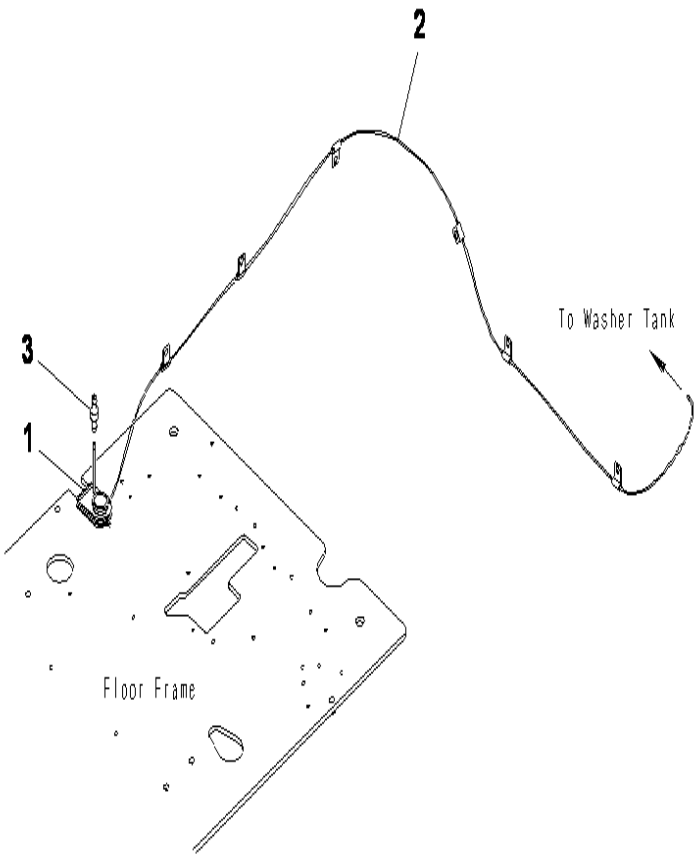

PC400-8 S/N J30001-UP

OPERATOR'S CAB (FLOOR) (WINDOW WASHER HOSE)

INDEX	CD	PART NO.	DESCRIPTION	QTY	SERIAL NO.
1		20Y-53-14991	GROMMET	1	J30001-UP
2		208-53-16740	HOSE	1	J30001-UP
3		207-06-61490	VALVE	1	J30001-UP

Ref :K1110-49A1 Page :210660

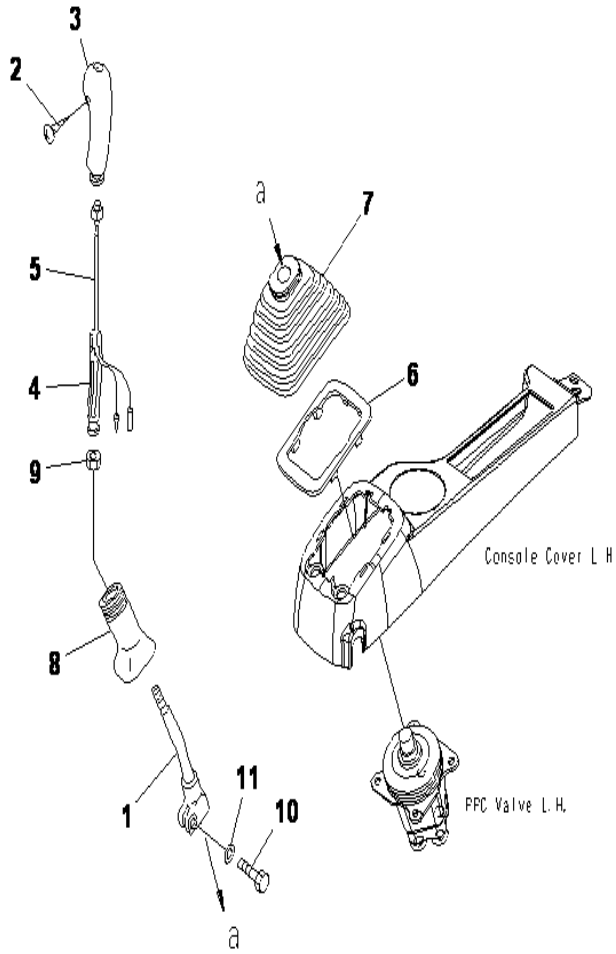

PC400-8 S/N J30001-UP

OPERATOR'S CAB (FLOOR) (LEVER L.H)

INDEX	CD	PART NO.	DESCRIPTION	QTY	SERIAL NO.
1		20Y-43-22211	LEVER	1	J30001-UP
		22U-43-21182	KNOB	1	J30001-UP
2	C1		.SCREW	1	J30001-UP
3		20Y-43-22381	.KNOB	1	J30001-UP
4		20Y-43-22421	.INSERT	1	J30001-UP
5		22U-43-21211	.SWITCH	1	J30001-UP
6		20Y-43-22250	PLATE	1	J30001-UP
7		20Y-43-22261	BOOT	1	J30001-UP
8		20Y-43-22370	BOOT	1	J30001-UP
9		600-411-1280	NUT	1	J30001-UP
10		01252-41025	BOLT	1	J30001-UP
11		01643-51032	WASHER	1	J30001-UP

Ref :K1110-50A1 Page :210670

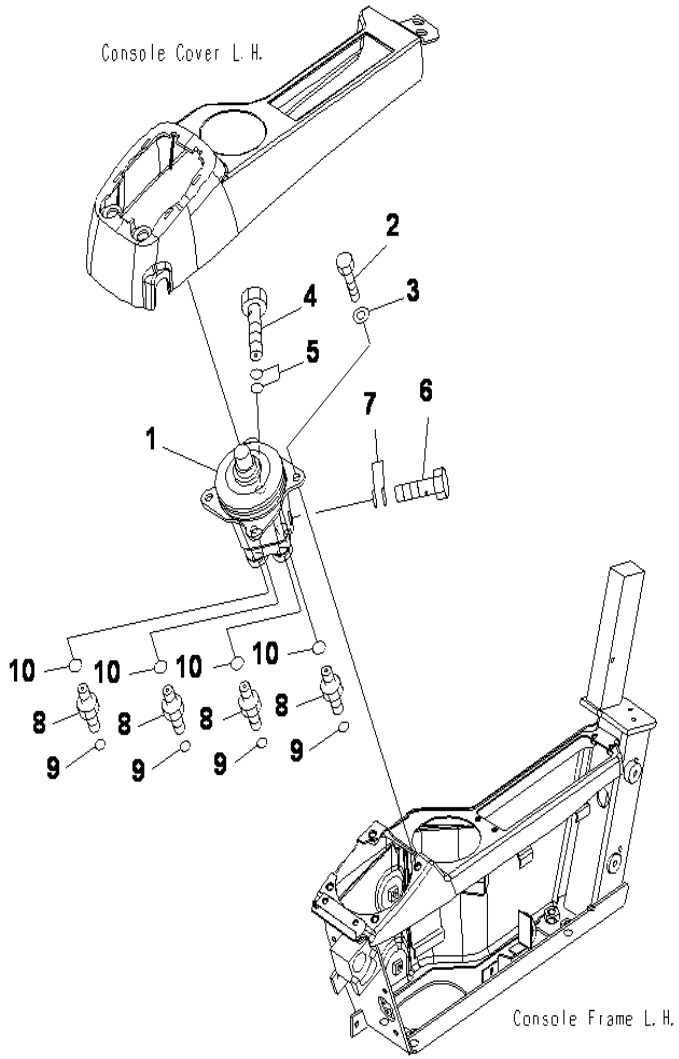

PC400-8 S/N J30001-UP

OPERATOR'S CAB (FLOOR) (VALVE L.H)

INDEX	CD	PART NO.	DESCRIPTION	QTY	SERIAL NO.
1		(702-16-03910)	PILOT VALVE	1	J30001-UP
2		01010-80820	BOLT	4	J30001-UP
3		01643-30823	WASHER	4	J30001-UP
4		20Y-62-18910	EYE BOLT	1	J30001-UP
5		07000-12018	O-RING	2	J30001-UP
6		20Y-62-18890	BOLT	1	J30001-UP
7		07000-12015	O-RING	2	J30001-UP
8		11Y-62-12520	UNION	4	J30001-UP
9		02896-11009	O-RING	4	J30001-UP
10		07002-11423	O-RING	4	J30001-UP

Ref :K1110-51A1 Page :210680

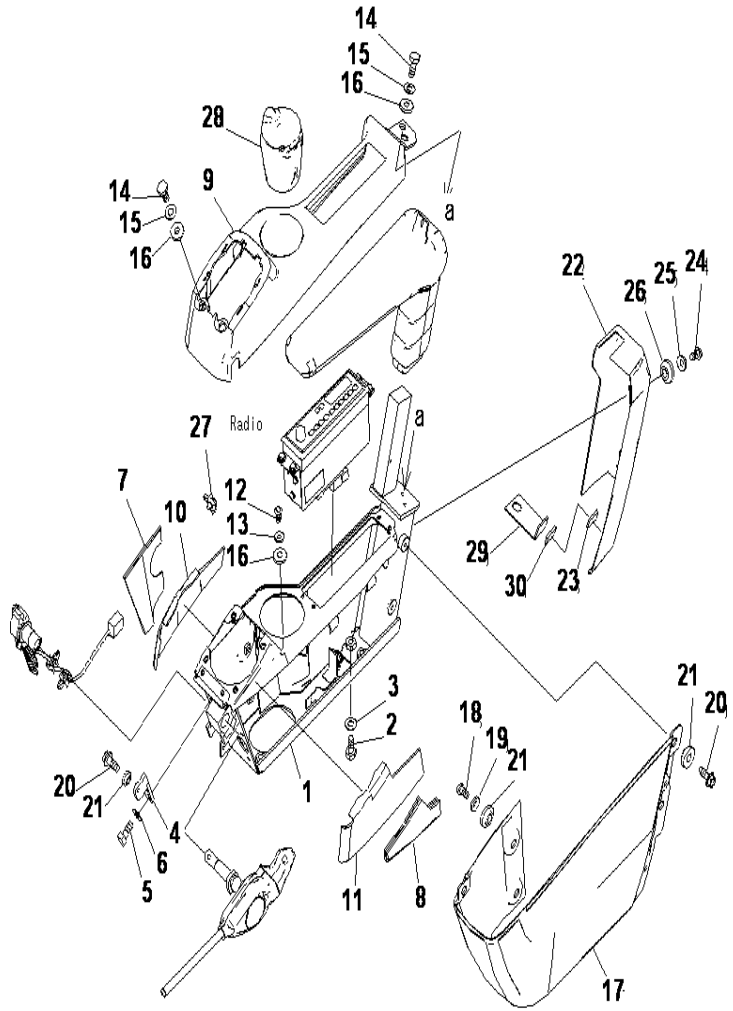

OPERATOR'S CAB (FLOOR) (CONSOL. L.H)

INDEX	CD	PART NO.	DESCRIPTION	QTY	SERIAL NO.
1		20Y-43-41415	FRAME	1	J30001-UP
2		01010-81030	BOLT	4	J30001-UP
3		01643-31032	WASHER	4	J30001-UP
4		20Y-43-41472	BRACKET	1	J30001-UP
5		01010-80616	BOLT	2	J30001-UP
6		01643-30623	WASHER	2	J30001-UP
7		20Y-43-41621	SHEET	1	J30001-UP
8		20Y-43-41641	SHEET	1	J30001-UP
9		20Y-43-41423	SHEET	1	J30001-UP
10		20Y-43-41651	SHEET	1	J30001-UP
11		20Y-43-41661	SHEET	1	J30001-UP
12		01245-00616	SCREW	1	J30001-UP
13		01643-70623	WASHER	1	J30001-UP
14		01010-80616	BOLT	4	J30001-UP
15		01643-30623	WASHER	4	J30001-UP
16		20Y-43-41290	COLLAR	5	J30001-UP
17		20Y-43-41442	COVER	1	J30001-UP
18		01245-00616	SCREW	2	J30001-UP
19		01643-70623	WASHER	2	J30001-UP
20		01435-00612	BOLT	3	J30001-UP
21		20Y-43-41290	COLLAR	5	J30001-UP
		20Y-43-42450	COVER	1	J30001-UP
22	C1	20Y-43-41453	.COVER	1	J30001-UP
23		20Y-43-42170	.TAPE	1	J30001-UP
24		01245-00616	SCREW	2	J30001-UP
25		01643-70623	WASHER	2	J30001-UP
26		20Y-43-41290	COLLAR	2	J30001-UP
27		22U-43-23260	CLIP	1	J30001-UP
28		20Y-43-41491	ASH TRAY	1	J30001-UP
29		20Y-43-41981	BRACKET	1	J30001-UP
30		20Y-43-42180	.TAPE	1	J30001-UP

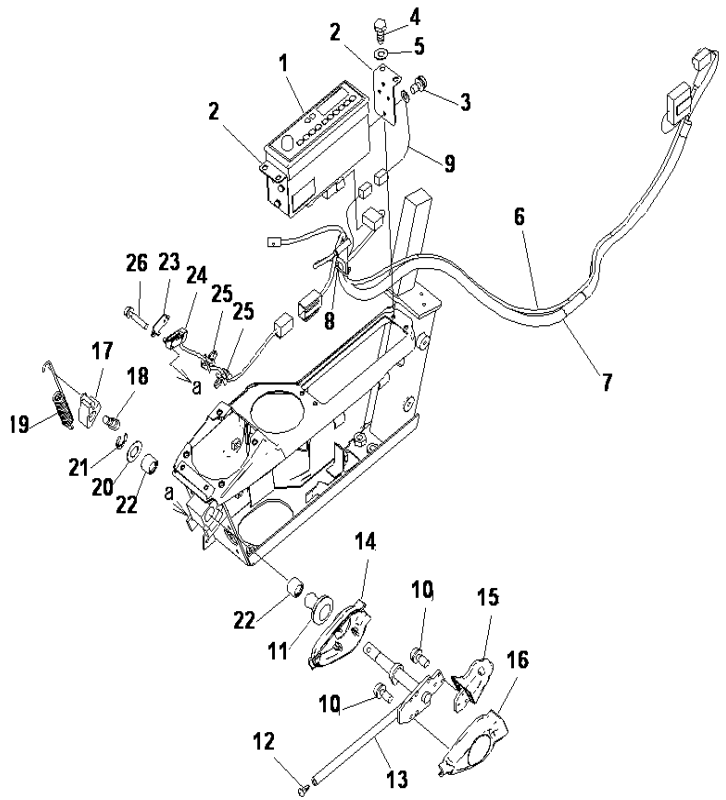

PC400-8 S/N J30001-UP

OPERATOR'S CAB (FLOOR) (P.P.C LOCK LEVER AND RADIO)

INDEX	CD	PART NO.	DESCRIPTION	QTY	SERIAL NO.
1		20Y-06-42430	RADIO, ASIA	1	J30113-UP
		20Y-06-41238	RADIO,ASIA	1	J30001-J30112
2		20Y-43-42130	PLATE	2	J30001-UP
3		01023-60510	BOLT	6	J30001-UP
4		01010-80616	BOLT	4	J30001-UP
5		01643-30623	WASHER	4	J30001-UP
6		08912-51600	ANTENNA	1	J30001-UP
7		21M-06-31170	WIRING HARNESS	1	J30113-UP
		20Y-06-41121	WIRING HARNESS	1	J30001-J30112
8		08034-20414	BAND	1	J30001-UP
9		20Y-06-41830	HARNESS	1	J30001-UP
10		01023-60410	SCREW	6	J30001-UP
11		08037-11425	GROMMET	1	J30001-UP
12		208-53-12280	CAP	1	J30001-UP
13		20Y-43-31513	LEVER	1	J30001-UP
14		20Y-43-31522	COVER	1	J30001-UP
15		20Y-43-31611	KNOB	1	J30001-UP
16		20Y-43-31621	COVER	1	J30001-UP
17		20Y-43-31432	CUM	1	J30001-UP
18		01252-70816	BOLT	1	J30001-UP
19		20Y-43-31421	SPRING	1	J30001-UP
20		20Y-43-31440	RING	1	J30001-UP
21		20Y-43-31450	RING	1	J30001-UP
22		06124-01616	BEARING	2	J30001-UP
23		22U-06-22490	PLATE	1	J30001-UP
24		22U-06-22360	SWITCH ASS'Y	1	J30001-UP
25		22U-43-23260	CLIP	2	J30001-UP
26		01023-60320	SCREW	2	J30002-UP
		01023-60316	SCREW	2	J30001-J30001

Ref :K1110-53B2 Page :210710

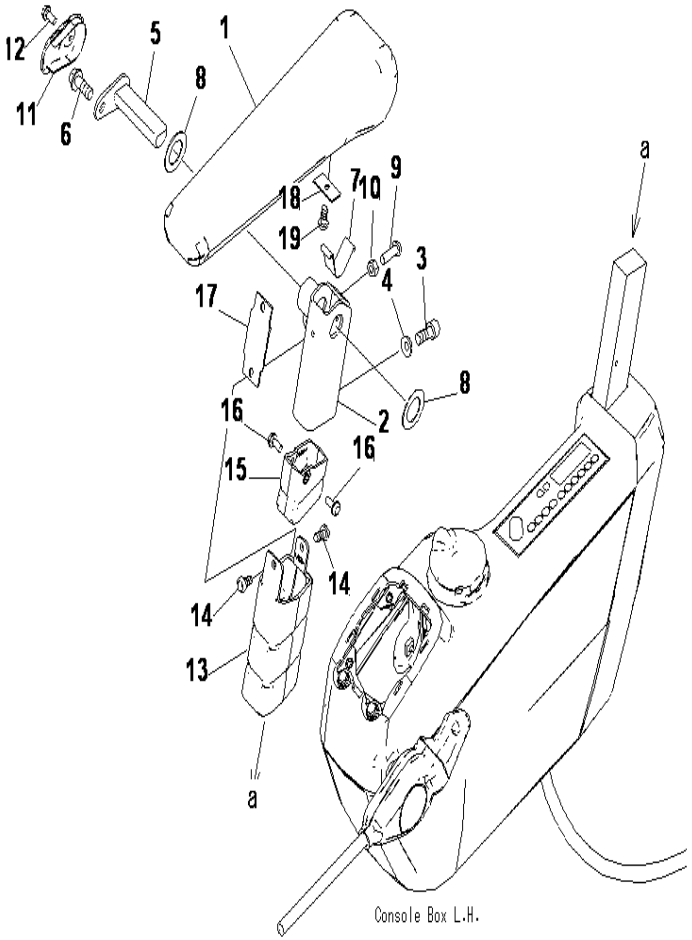

OPERATOR'S CAB (FLOOR) (ARM REST. L.H)

INDEX	CD	PART NO.	DESCRIPTION	QTY	SERIAL NO.
1		20Y-43-41143	ARM REST(L.H)	1	J30259-UP
		20Y-43-41142	ARM REST(L.H)	1	J30001-J30258
2		20Y-43-41173	BRACKET	1	J30001-UP
3		01252-80820	BOLT	2	J30001-UP
4		01643-70823	WASHER	2	J30001-UP
5		20Y-43-41162	PIN	1	J30001-UP
6		01435-40816	BOLT	1	J30001-UP
7		20Y-43-41152	SPRING	1	J30001-UP
8		437-40-26240	WASHER	2	J30001-UP
9		01245-00620	SCREW	1	J30001-UP
10		01580-40605	NUT	1	J30001-UP
11		20Y-43-41181	CAP	1	J30001-UP
12		01023-20512	SCREW	1	J30001-UP
13		20Y-43-41191	COVER(UPPER)	1	J30001-UP
14		01370-40510	COVER	2	J30001-UP
15		20Y-43-41591	COVER(LOWER)	1	J30001-UP
16		01023-20512	SCREW	2	J30001-UP
17		20Y-43-41281	RUBBER	1	J30001-UP
18		20Y-43-41461	PLATE	1	J30001-UP
19		01370-40610	SCREW	1	J30001-UP

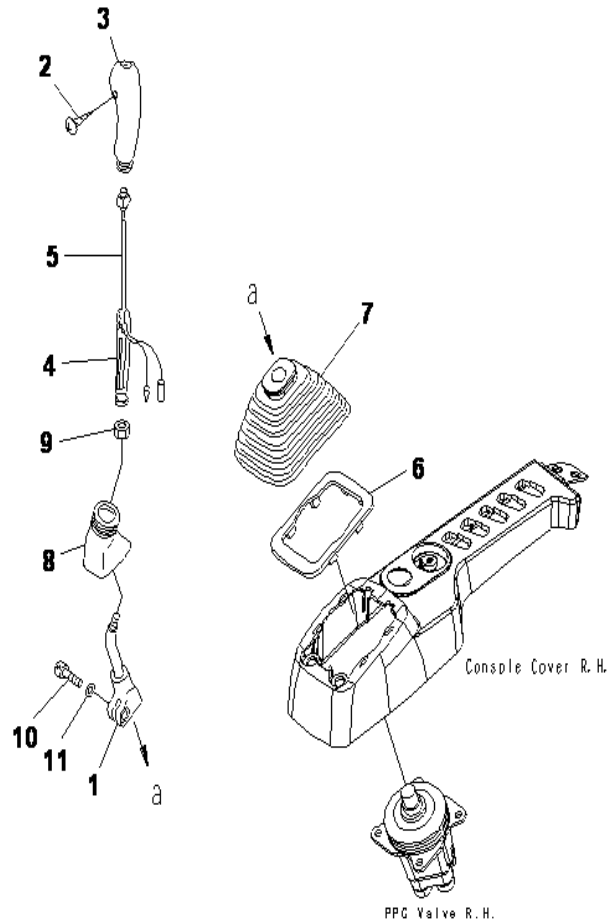

PC400-8 S/N J30001-UP

OPERATOR'S CAB (FLOOR) (LEVER. R.H)

INDEX	CD	PART NO.	DESCRIPTION	QTY	SERIAL NO.
1		20Y-43-22221	LEVER	1	J30001-UP
		22U-43-21192	KNOB	1	J30001-UP
2	C1		.SCREW	1	J30001-UP
3		20Y-43-22390	.KNOB	1	J30001-UP
4		20Y-43-22421	.INSERT	1	J30001-UP
5		22U-43-21211	.SWITCH	1	J30001-UP
6		20Y-43-22250	PLATE	1	J30001-UP
7		20Y-43-22261	BOOT	1	J30001-UP
8		20Y-43-22370	BOOT	1	J30001-UP
9		600-411-1280	NUT	1	J30001-UP
10		01252-41025	BOLT	1	J30001-UP
11		01643-51032	WASHER	1	J30001-UP

Ref :K1110-55A1 Page :210730

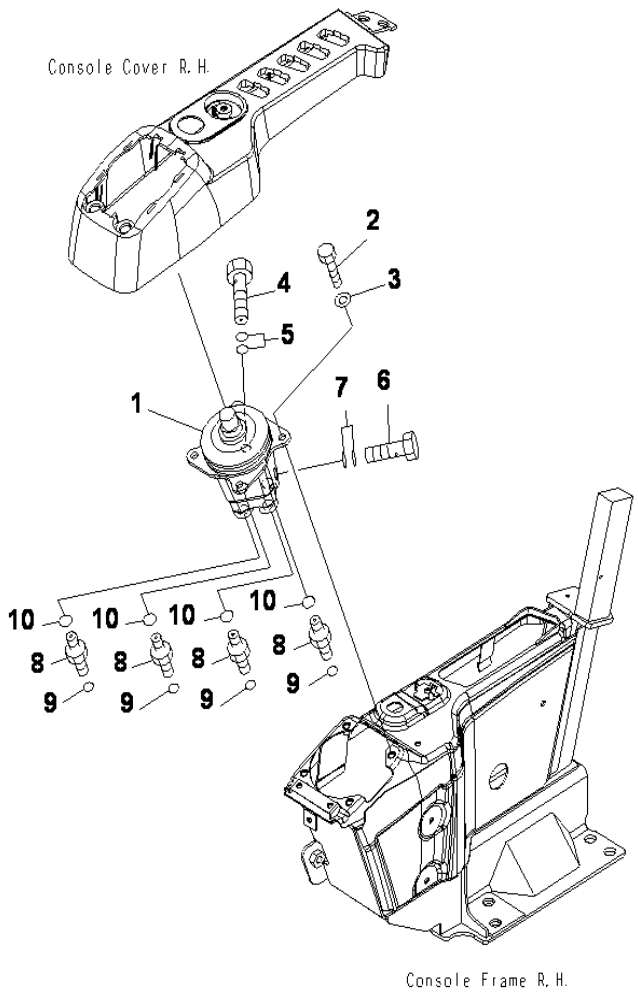

OPERATOR'S CAB (FLOOR) (VALVE. R.H)

INDEX	CD	PART NO.	DESCRIPTION	QTY	SERIAL NO.
1		(702-16-03910)	PILOT VALVE	1	J30001-UP
2		01010-80820	BOLT	4	J30001-UP
3		01643-30823	WASHER	4	J30001-UP
4		20Y-62-18910	EYE BOLT	1	J30001-UP
5		07000-12018	O-RING	2	J30001-UP
6		20Y-62-18890	BOLT	1	J30001-UP
7		07000-12015	O-RING	2	J30001-UP
8		11Y-62-12130	NIPPLE	4	J30001-UP
9		02896-11008	O-RING	4	J30001-UP
10		07002-11423	O-RING	4	J30001-UP

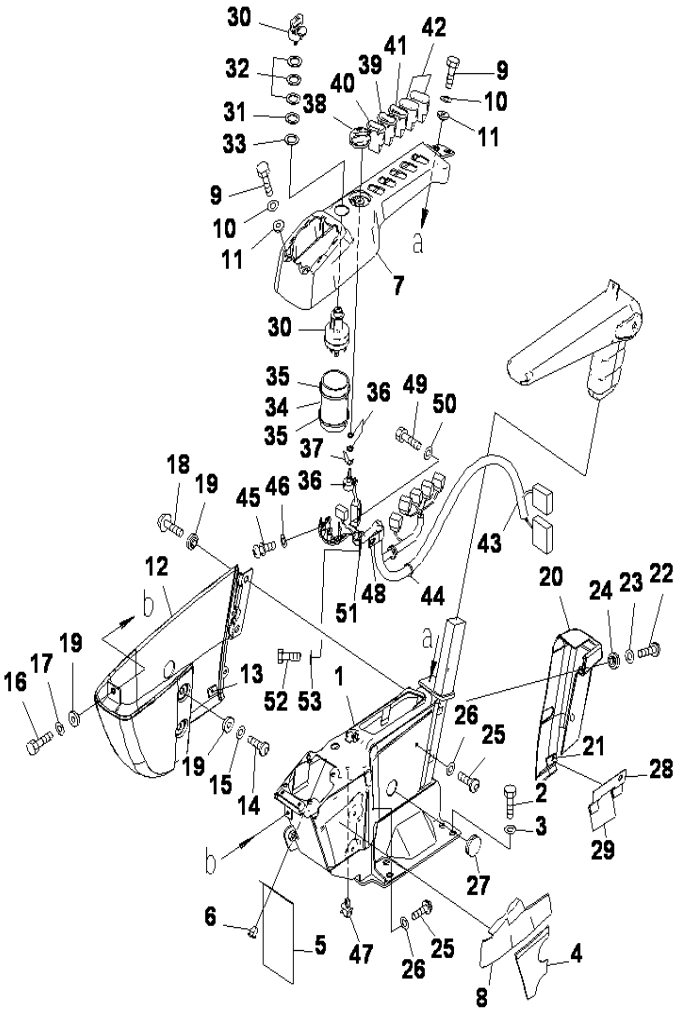

PC400-8 S/N J30001-UP

OPERATOR'S CAB (FLOOR) (CONSOL. R.H)

INDEX	CD	PART NO.	DESCRIPTION	QTY	SERIAL NO.
1		20Y-43-41313	FRAME RH	1	J30001-UP
2		01010-D1230	BOLT	4	J30001-UP
3		01643-71232	WASHER	4	J30001-UP
4		20Y-43-41631	SHEET	1	J30001-UP
5		22U-43-23251	SHEET	1	J30001-UP
6		22U-43-23290	CLIP	2	J30001-UP
7		20Y-43-41323	COVER	1	J30001-UP
8		20Y-43-41661	SHEET	1	J30001-UP
9		01010-80616	BOLT	4	J30001-UP
10		01643-30623	WASHER	4	J30001-UP
11		20Y-43-41290	COLLAR	4	J30001-UP
		20Y-43-42330	COVER	1	J30001-UP
12	C1	20Y-43-41332	.COVER	1	J30001-UP
13		20Y-43-42170	.TAPE	1	J30001-UP
14		01245-00616	SCREW	2	J30001-UP
15		01643-70623	WASHER	2	J30001-UP
16		01010-80616	BOLT	1	J30001-UP
17		01643-30623	WASHER	1	J30001-UP
18		01435-00612	BOLT	2	J30001-UP
19		20Y-43-41290	COLLAR	5	J30001-UP
		20Y-43-42350	COVER	1	J30001-UP
20	C1	20Y-43-41353	.COVER	1	J30001-UP
21		20Y-43-42170	.TAPE	1	J30001-UP
22		01245-00616	SCREW	2	J30001-UP
23		01643-70623	WASHER	2	J30001-UP
24		20Y-43-41290	COLLAR	2	J30001-UP
25		01245-00616	SCREW	3	J30001-UP
26		01643-70623	WASHER	3	J30001-UP
27		09415-02512	CAP	1	J30001-UP
28		20Y-43-41991	BRACKET	1	J30001-UP
29		20Y-43-42180	.TAPE	1	J30001-UP
30		08086-20000	SWITCH	1	J30001-UP
31		20Y-43-41740	PLATE	1	J30001-UP
32		20Y-43-41750	WASHER	3	J30001-UP
33		20Y-43-41790	WASHER	1	J30001-UP
34		20Y-43-41671	SHEET	1	J30001-UP
35		08034-20519	BAND	2	J30001-UP
36		22U-06-22380	POTENTIOMETER	1	J30001-UP
37		22U-06-22460	SPRING	1	J30001-UP
38		20Y-43-41780	KNOB	1	J30001-UP
39		20Y-06-42110	SWITCH, SWING LOCK	1	J30001-UP
40		20Y-06-42121	SWITCH, LIGHT	1	J30001-UP
41		21T-06-33760	SWITCH ASS'Y, MACHINE PUSH-UP	1	J30001-UP
42		20Y-06-42190	COVER	2	J30001-UP
43		207-06-76130	WIRING HARNESS	1	J30001-UP

Ref :K1110-57A1 Page :210750

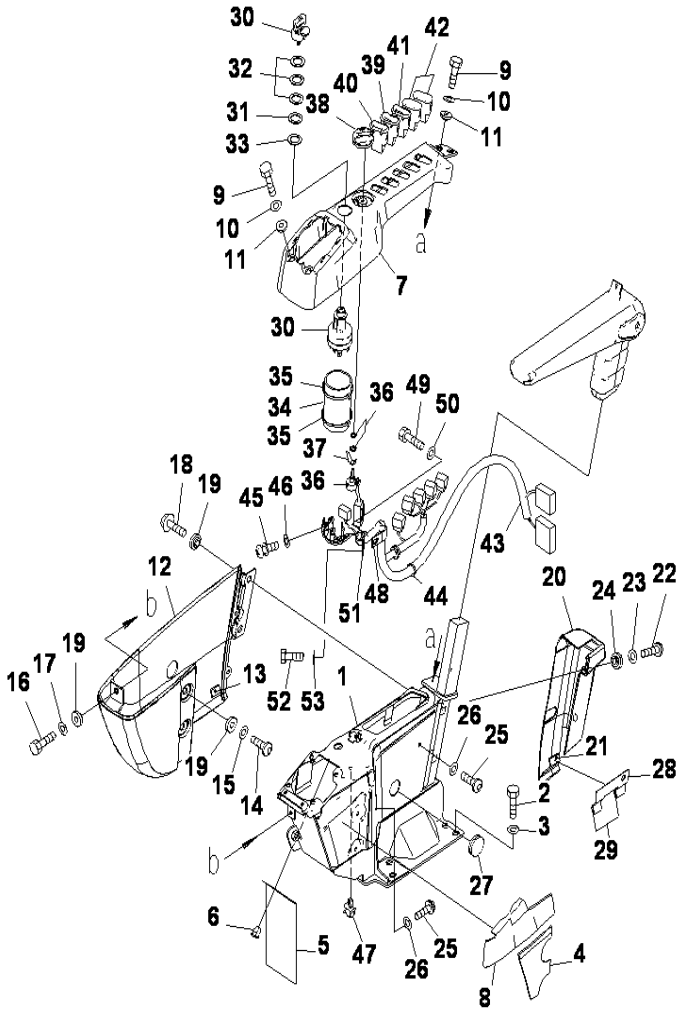

OPERATOR'S CAB (FLOOR) (CONSOL, R.H)

INDEX	CD	PART NO.	DESCRIPTION	QTY	SERIAL NO.
44		08034-20414	BAND	1	J30001-UP
45		01023-10508	SCREW	5	J30001-UP
46		01601-20513	WASHER	5	J30001-UP
47		22U-43-23260	CLIP	1	J30001-UP
48		04434-51710	CLIP	1	J30001-UP
49		01010-81016	BOLT	1	J30001-UP
50		01643-31032	WASHER	1	J30001-UP
51		04434-51410	CLIP	1	J30001-UP
52		01010-81016	BOLT	1	J30001-UP
53		01643-31032	WASHER	1	J30001-UP

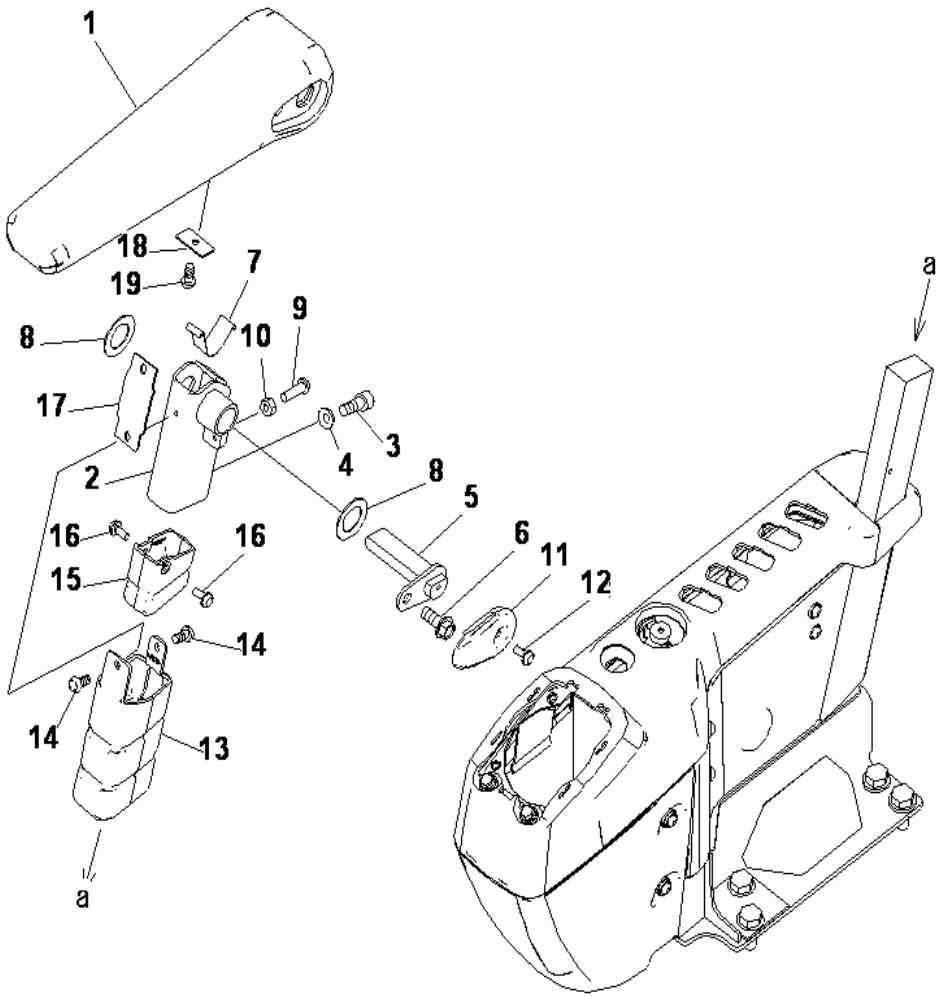

PC400-8 S/N J30001-UP

OPERATOR'S CAB (FLOOR) (ARM REST. R.H)

INDEX	CD	PART NO.	DESCRIPTION	QTY	SERIAL NO.
1		20Y-43-41343	ARM REST(R.H)	1	J30259-UP
		20Y-43-41342	ARM REST(R.H)	1	J30001-J30258
2		20Y-43-41533	BRACKET	1	J30001-UP
3		01252-80820	BOLT	2	J30001-UP
4		01643-70823	WASHER	2	J30001-UP
5		20Y-43-41850	PIN	1	J30001-UP
6		01435-40816	BOLT	1	J30001-UP
7		20Y-43-41152	SPRING	1	J30001-UP
8		437-40-26240	WASHER	2	J30001-UP
9		01245-00620	SCREW	1	J30001-UP
10		01580-40605	NUT	1	J30001-UP
11		20Y-43-41181	CAP	1	J30001-UP
12		01023-20512	SCREW	1	J30001-UP
13		20Y-43-41191	COVER	1	J30001-UP
14		01370-40510	SCREW	2	J30001-UP
15		20Y-43-41591	COVER	1	J30001-UP
16		01023-20512	SCREW	2	J30001-UP
17		20Y-43-41281	RUBBER	1	J30001-UP
18		20Y-43-41461	PLATE	1	J30001-UP
19		01370-40610	SCREW	1	J30001-UP

Ref :K1110-59A1 Page :210760

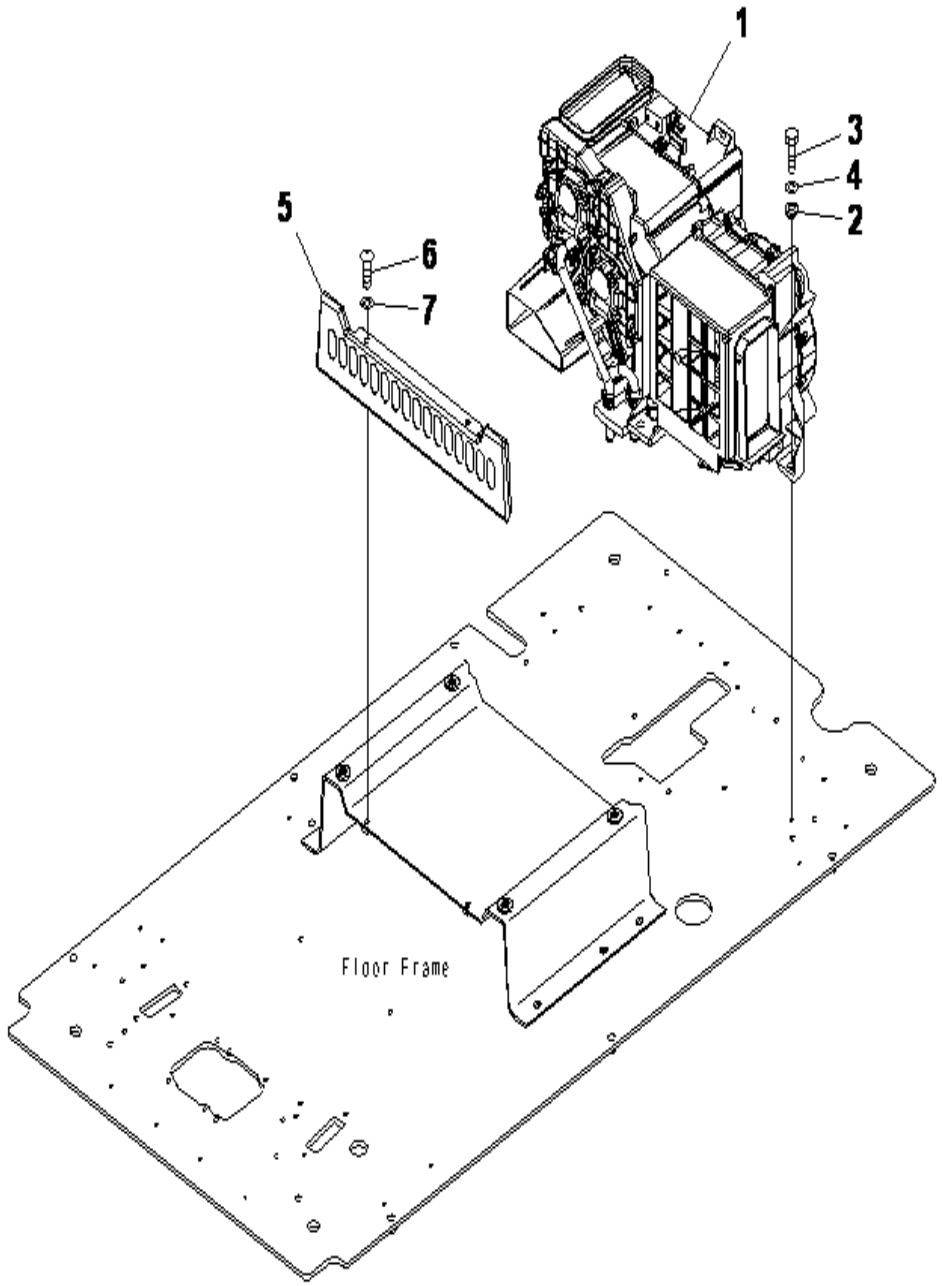

PC400-8 S/N J30001-UP

OPERATOR'S CAB (FLOOR) (AIR CONDITIONER UNIT)

INDEX	CD	PART NO.	DESCRIPTION	QTY	SERIAL NO.
1		(20Y-810-1211)	AIR CONDITIONER (SEE FIG.Y1979-11A0).....	1	J30001-UP
2		208-979-7540	COLLAR.....	7	J30001-UP
3		01010-80825	BOLT.....	7	J30001-UP
4		01643-30823	WASHER.....	7	J30001-UP
5		20Y-43-41240	COVER.....	1	J30001-UP
6		01245-00820	SCREW.....	2	J30001-UP
7		01643-70823	WASHER.....	2	J30001-UP

Ref :K1110-60A1 Page :210770

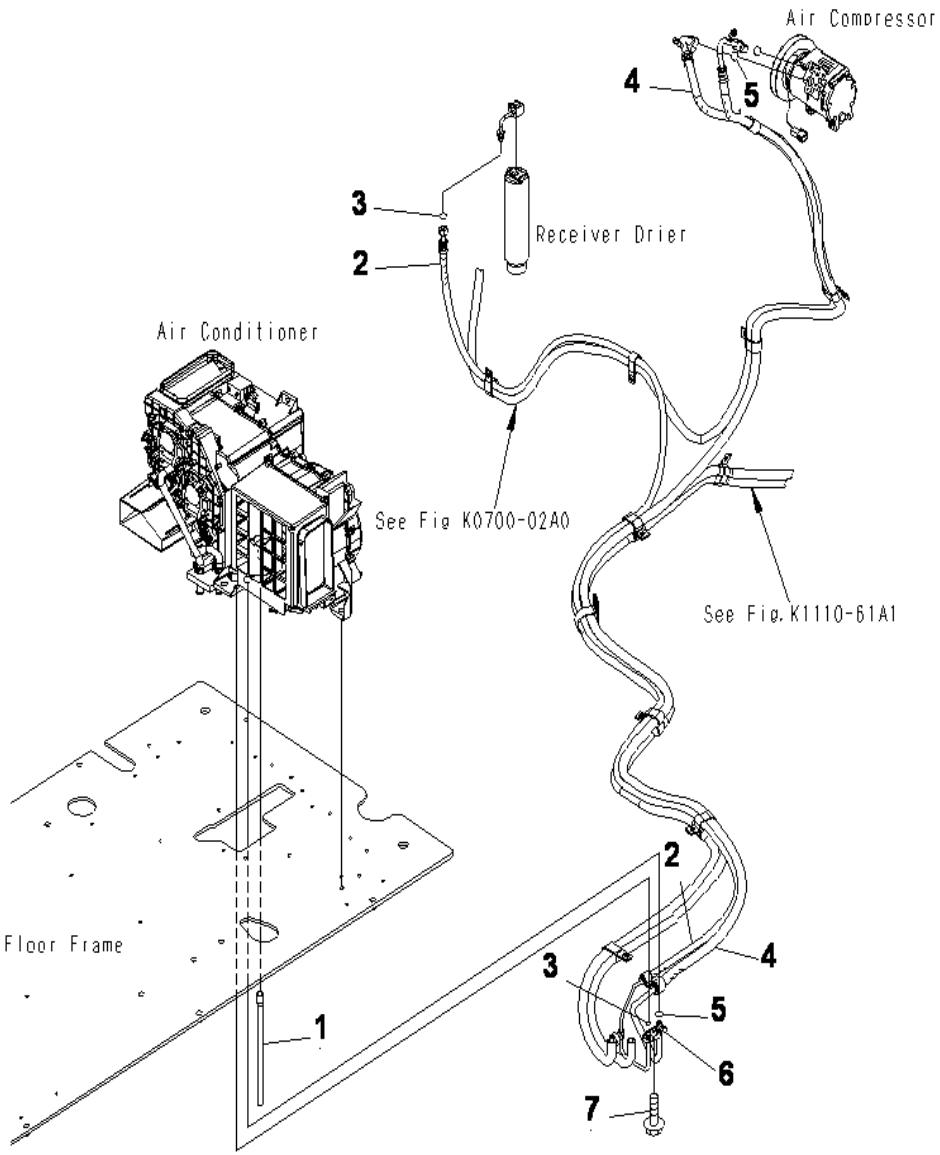

OPERATOR'S CAB (FLOOR) (AIR CONDITIONER HOSE)

INDEX	CD	PART NO.	DESCRIPTION	QTY	SERIAL NO.
1		208-979-7640	HOSE	1	J30001-UP
2		208-81-01311	HOSE	1	J30001-UP
3		20Y-979-3150	.O-RING	2	J30001-UP
4		208-81-01321	HOSE	1	J30001-UP
5		20Y-979-3130	.O-RING	2	J30001-UP
6		208-979-7650	CONNECTOR	1	J30001-UP
7		01435-40620	BOLT	1	J30001-UP

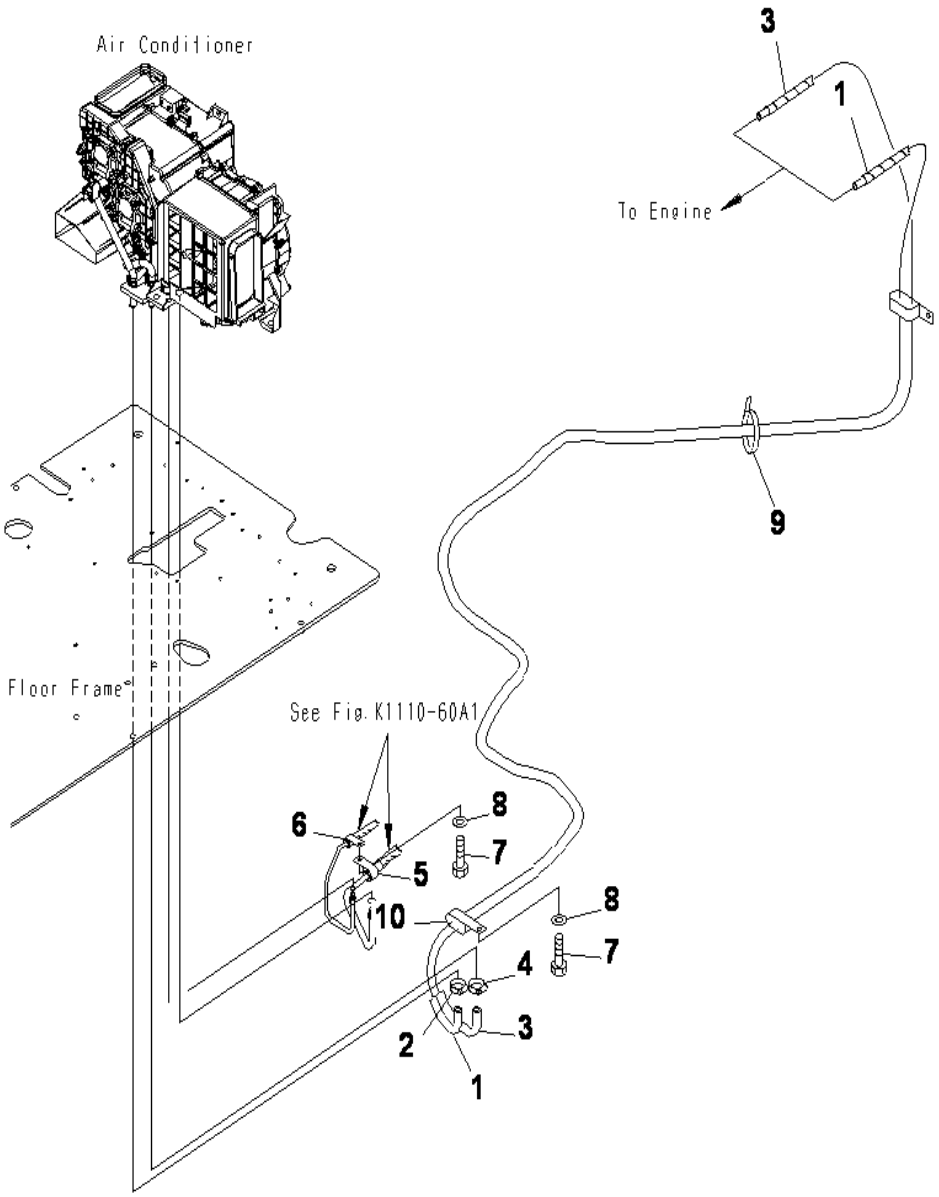

PC400-8 S/N J30001-UP

OPERATOR'S CAB (FLOOR) (HEATER HOSE)

INDEX	CD	PART NO.	DESCRIPTION	QTY	SERIAL NO.
1		208-810-1332	HOSE A	1	J30259-UP
		208-810-1331	HOSE A	1	J30001-J30258
2		09479-02400	CLAMP	1	J30001-UP
3		208-810-1342	HOSE A	1	J30259-UP
		208-810-1341	HOSE A	1	J30001-J30258
4		09479-02400	CLAMP	1	J30001-UP
5		04434-52110	CLIP	1	J30001-UP
6		04434-52511	CLIP	1	J30001-UP
7		01010-81020	BOLT	2	J30001-UP
8		01643-31032	WASHER	2	J30001-UP
9		08034-20536	BAND	1	J30001-UP
10		141-06-11220	CLIP	1	J30001-UP

Ref :K1110-62A1 Page :210790

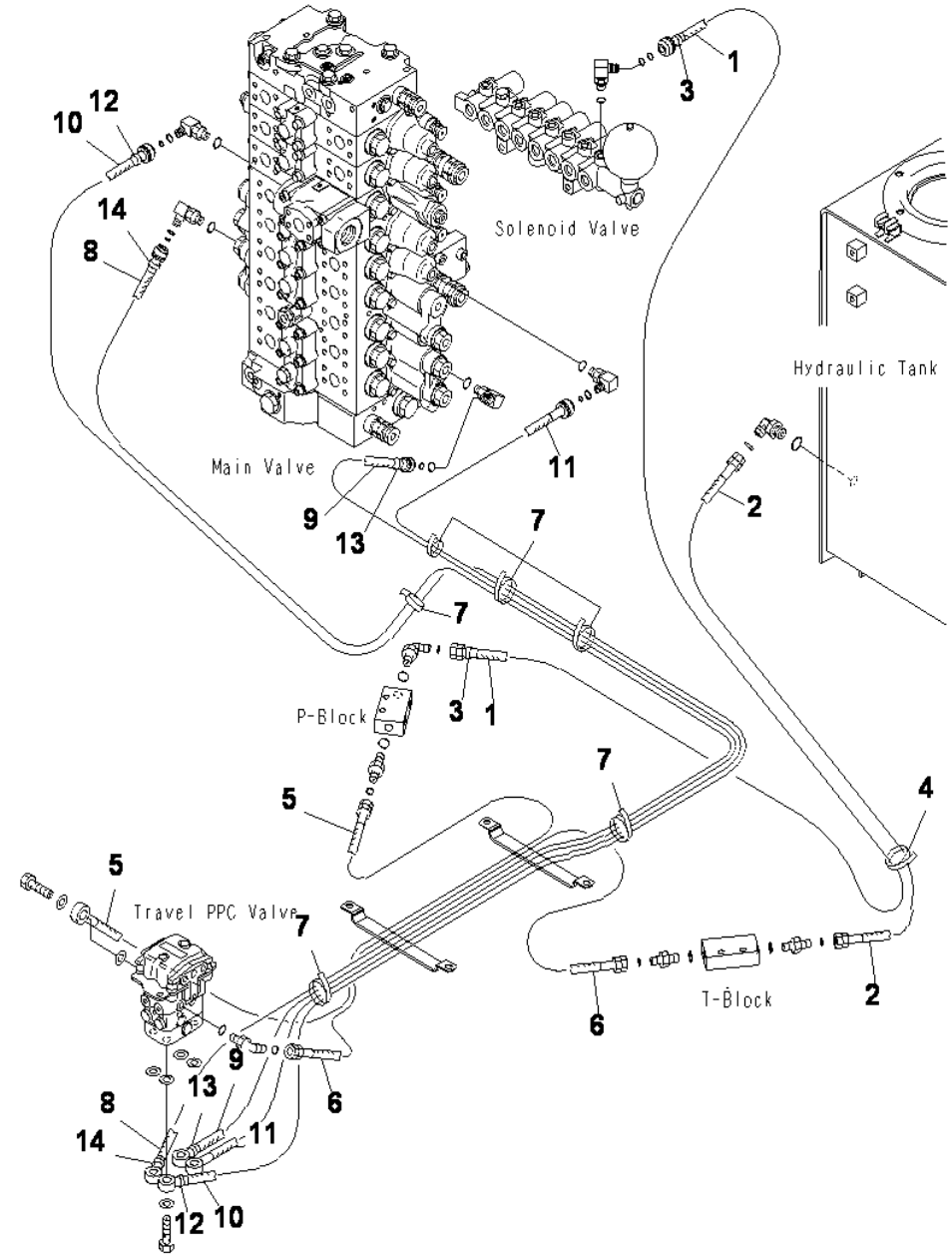

OPERATOR'S CAB (FLOOR) (P.P.C PIPING FOR TRAVEL VALVE)

INDEX	CD	PART NO.	DESCRIPTION	QTY	SERIAL NO.
1		02760-00312	HOSE, 1200MM.....	1	J30001-UP
2		02760-00326	HOSE,2600MM.....	1	J30001-UP
3		20Y-62-22790	BAND, RED.....	2	J30001-UP
4		08034-20519	BAND.....	1	J30001-UP
5		20Y-62-44630	HOSE, 950MM.....	1	J30001-UP
6		02760-002A9	HOSE, 950MM.....	1	J30001-UP
7		08034-20519	BAND.....	1	J30001-UP
8		208-62-76580	HOSE, 3550MM.....	1	J30001-UP
9		208-62-76590	HOSE, 3200MM.....	1	J30001-UP
10		208-62-76610	HOSE, 3600MM.....	1	J30001-UP
11		208-62-76620	HOSE, 3350MM.....	1	J30001-UP
12		20Y-62-22790	BAND, RED.....	2	J30001-UP
13		20Y-62-22820	BAND, BLUE.....	2	J30001-UP
14		20Y-62-22850	BAND, GREEN.....	2	J30001-UP

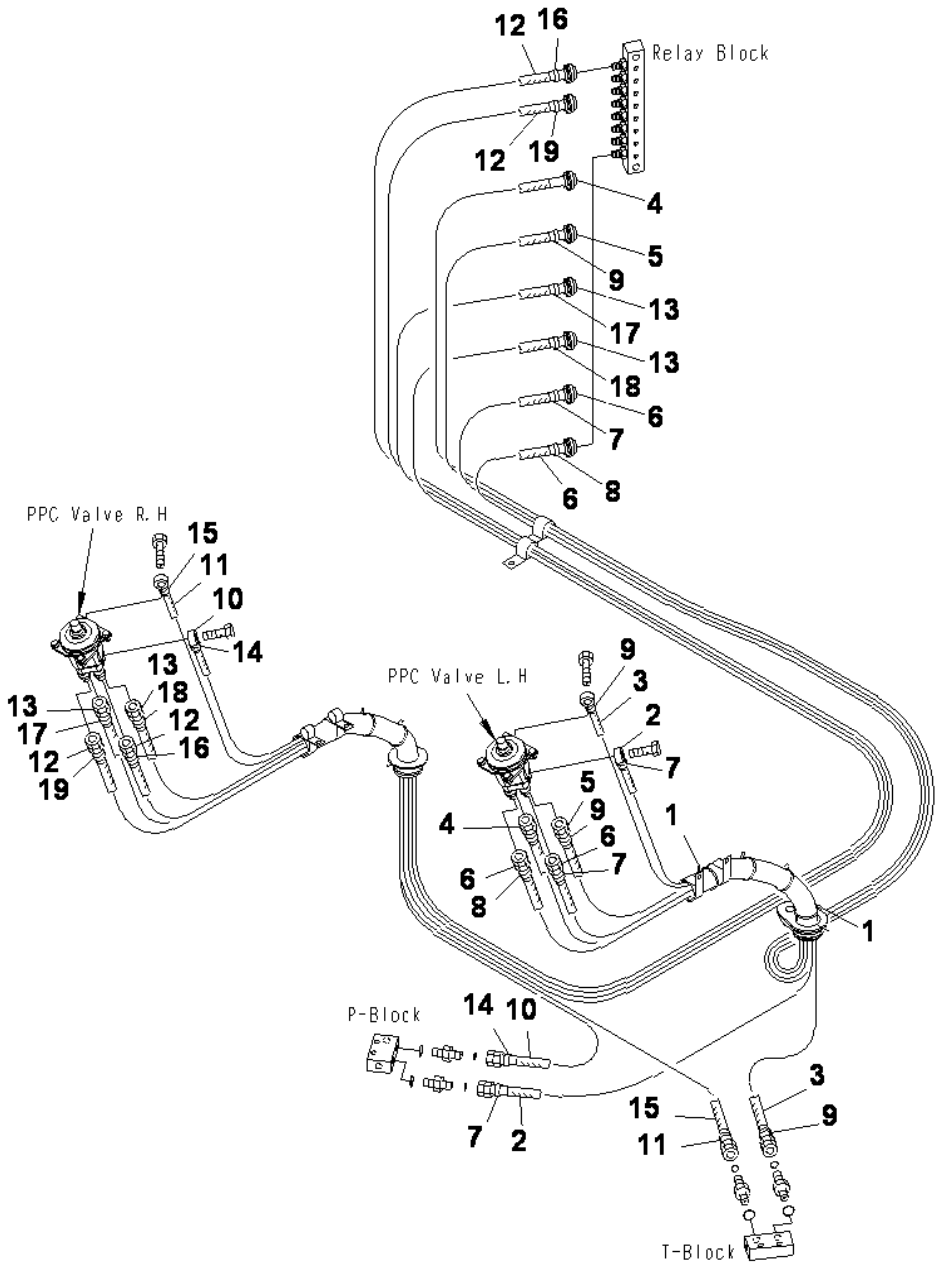

PC400-8 S/N J30001-UP

OPERATOR'S CAB (FLOOR) (P.P.C PIPING FOR PILOT VALVE)

INDEX	CD	PART NO.	DESCRIPTION	QTY	SERIAL NO.
1		08034-20536	BAND.....	2	J30001-UP
2		20Y-62-53410	HOSE, 1500MM.....	1	J30001-UP
3		20Y-62-53420	HOSE, 1350MM.....	1	J30001-UP
4		208-62-72470	HOSE, 3250MM.....	1	J30001-UP
5		21N-62-36790	HOSE, 3200MM.....	1	J30001-UP
6		21N-62-36780	HOSE, 3100MM.....	2	J30001-UP
7		20Y-62-22790	BAND, RED.....	4	J30001-UP
8		20Y-62-22810	BAND, YELLOW.....	2	J30001-UP
9		20Y-62-22820	BAND, BLUE.....	4	J30001-UP
10		20Y-62-42251	HOSE, 1250MM.....	1	J30001-UP
11		208-62-72870	HOSE, 1500MM.....	1	J30001-UP
12		20Y-62-52290	HOSE, 2800MM.....	2	J30001-UP
13		208-62-75820	HOSE.....	2	J30001-UP
14		20Y-62-22790	BAND, RED.....	2	J30001-UP
15		20Y-62-22820	BAND, BLUE.....	2	J30001-UP
16		20Y-62-22830	BAND, WHITE.....	2	J30001-UP
17		20Y-62-22840	BAND, BLACK.....	2	J30001-UP
18		20Y-62-22850	BAND, GREEN.....	2	J30001-UP
19		20Y-62-22860	BAND, BROWN.....	2	J30001-UP

Ref :K1110-64A1 Page :210810

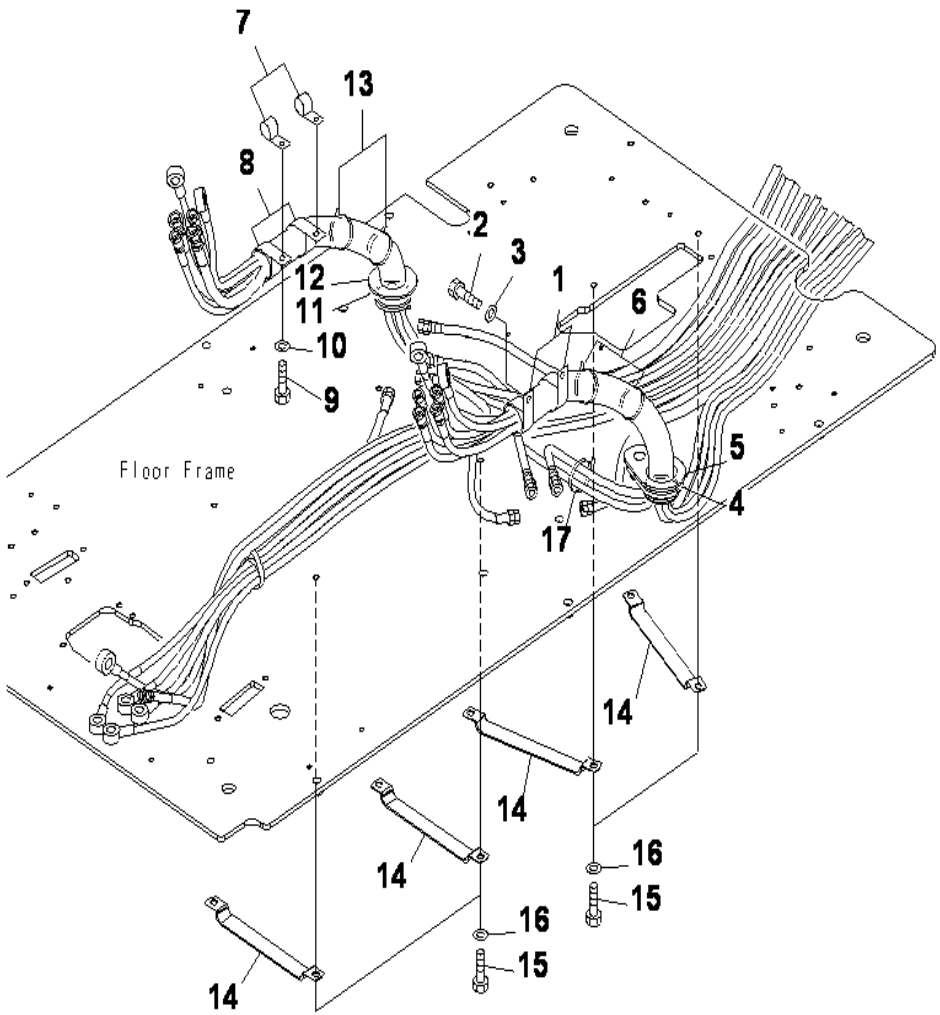

PC400-8 S/N J30001-UP

OPERATOR'S CAB (FLOOR) (P.P.C HOSE CLAMP)

INDEX	CD	PART NO.	DESCRIPTION	QTY	SERIAL NO.
1		208-06-19170	CLIP	2	J30001-UP
2		01010-81025	BOLT	2	J30001-UP
3		01643-31032	WASHER	2	J30001-UP
4		08034-20536	BAND	2	J30001-UP
5		207-53-14140	GROMMET	1	J30001-UP
6		08034-20536	BAND	2	J30001-UP
7		04435-51310	CLIP	2	J30001-UP
8		04434-53211	CLIP	2	J30001-UP
9		01010-81025	BOLT	2	J30001-UP
10		01643-31032	WASHER	2	J30001-UP
11		08034-20536	BAND	2	J30001-UP
12		20Y-54-65121	GROMMET	1	J30001-UP
13		08034-20536	BAND	2	J30001-UP
14		20Y-62-27770	CLAMP	4	J30001-UP
15		01010-81016	BOLT	8	J30001-UP
16		01643-31032	WASHER	8	J30001-UP
17		08034-20536	BAND	1	J30001-UP

Ref :K1110-65A1 Page :210820

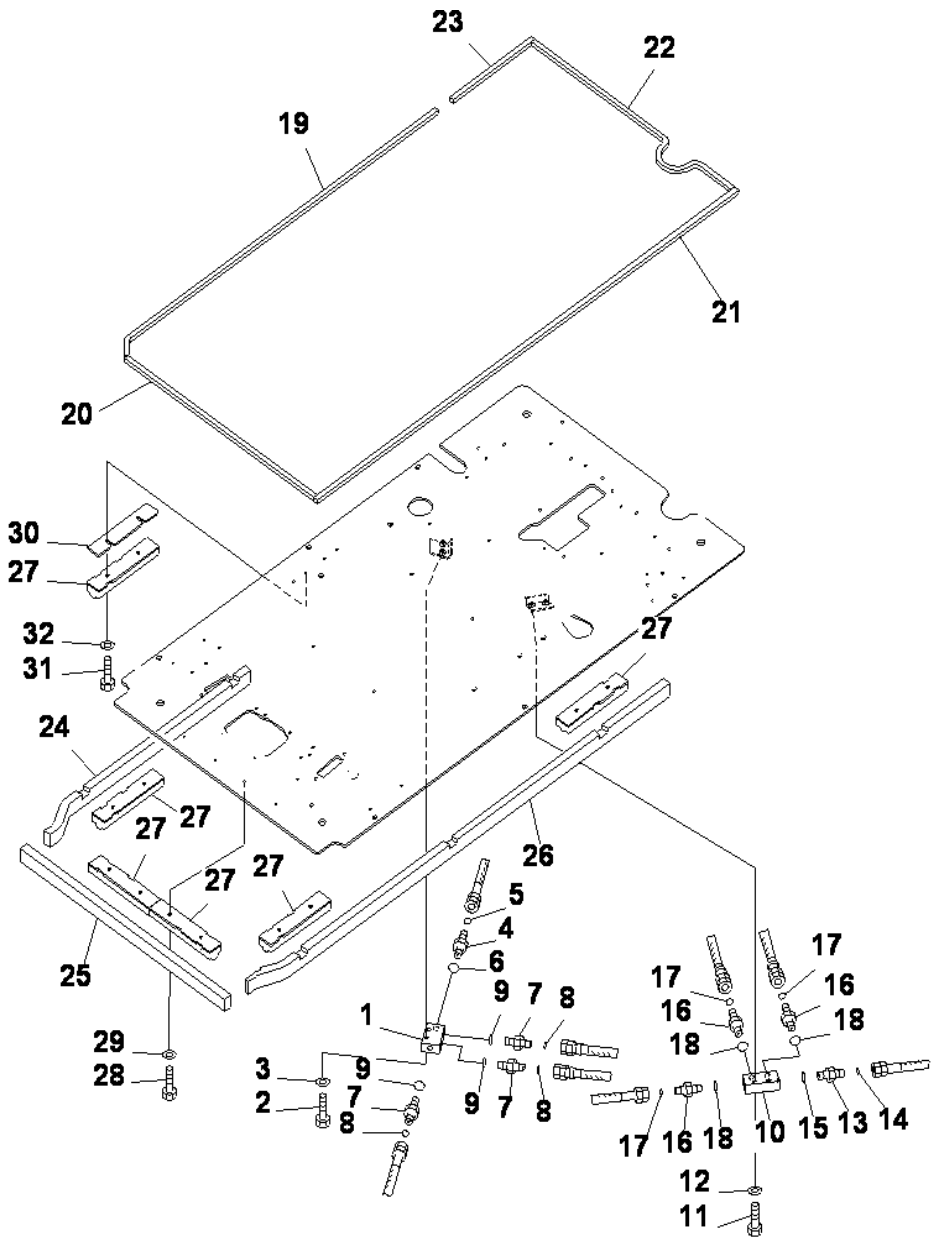

OPERATOR'S CAB (FLOOR) (P.T BLOCK AND SEAL)

INDEX	CD	PART NO.	DESCRIPTION	QTY	SERIAL NO.
1		20Y-62-15831	BLOCK	1	J30001-UP
2		01010-81045	BOLT	2	J30001-UP
3		01643-31032	WASHER	2	J30001-UP
4		02781-0031D	NIPPLE	1	J30001-UP
5		02896-11009	O-RING	1	J30001-UP
6		07002-11423	O-RING	1	J30001-UP
7		02781-0021D	UNION	3	J30001-UP
8		02896-11008	O-RING	3	J30001-UP
9		07002-11423	O-RING	3	J30001-UP
10		20Y-62-15831	BLOCK	1	J30001-UP
11		01010-81045	BOLT	2	J30001-UP
12		01643-31032	WASHER	2	J30001-UP
13		02781-0031D	NIPPLE	1	J30001-UP
14		02896-11009	O-RING	1	J30001-UP
15		07002-11423	O-RING	1	J30001-UP
16		02781-0021D	UNION	3	J30001-UP
17		02896-11008	O-RING	3	J30001-UP
18		07002-11423	O-RING	3	J30001-UP
19		20Y-53-14910	SEAL	1	J30001-UP
20		20Y-53-14920	SEAL	1	J30001-UP
21		20Y-53-14930	SEAL	1	J30001-UP
22		20Y-53-14940	SEAL	1	J30001-UP
23		20Y-53-14950	SEAL	1	J30001-UP
24		20Y-53-14963	SHEET	1	J30001-UP
25		20Y-53-14973	SHEET	1	J30001-UP
26		20Y-53-14983	SHEET	1	J30001-UP
27		20Y-53-14831	SHEET	6	J30001-UP
28		01010-80830	BOLT	10	J30001-UP
29		01643-30823	WASHER	10	J30001-UP
30		20Y-53-14841	PLATE	1	J30001-UP
31		01010-80840	BOLT	2	J30001-UP
32		01643-30823	WASHER	2	J30001-UP

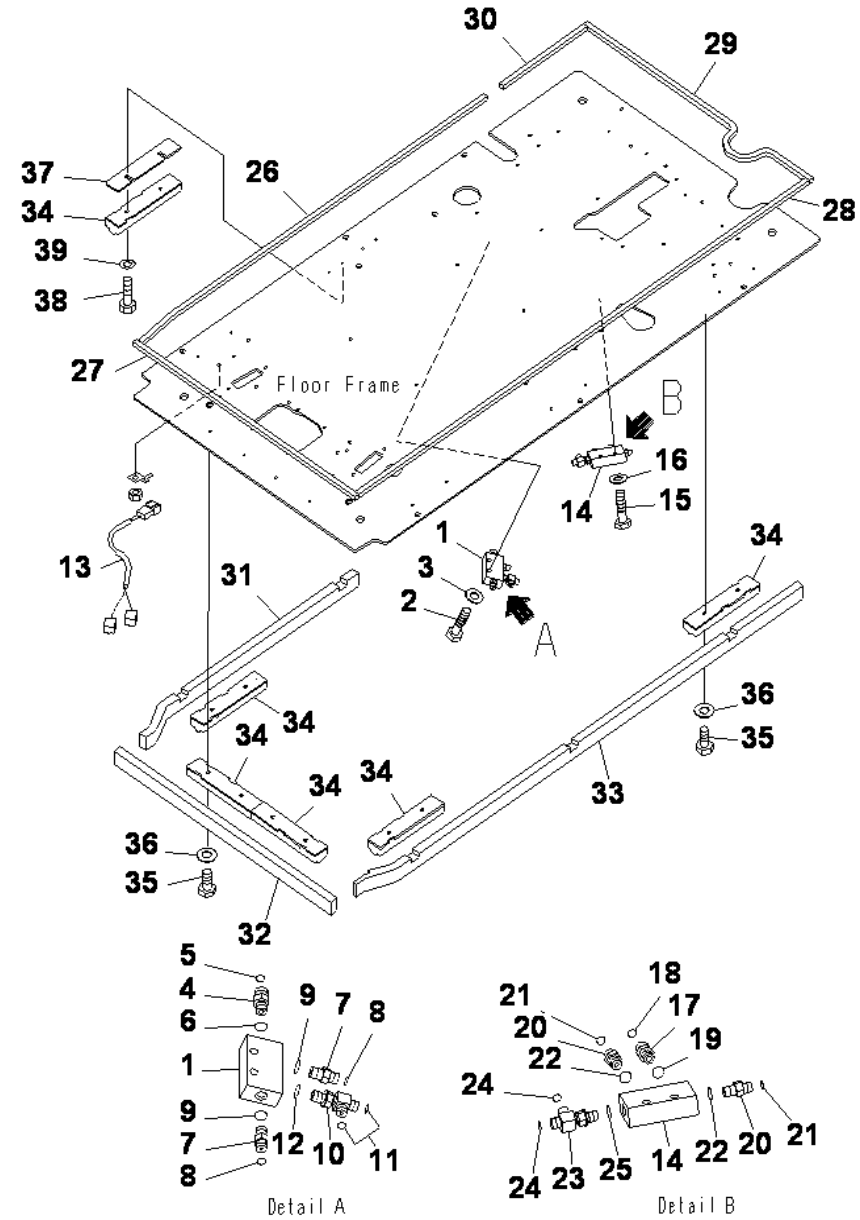

PC400-8 S/N J30001-UP

OPERATOR'S CAB (FLOOR) (P.T BLOCK AND SEAL) (1-ACTUATOR)

INDEX	CD	PART NO.	DESCRIPTION	QTY	SERIAL NO.
1		20Y-62-15831	BLOCK	1	J30001-UP
2		01010-81045	BOLT	2	J30001-UP
3		01643-31032	WASHER	2	J30001-UP
4		02781-0031D	NIPPLE	1	J30001-UP
5		02896-11009	O-RING	1	J30001-UP
6		07002-11423	O-RING	1	J30001-UP
7		02781-0021D	UNION	2	J30001-UP
8		02896-11008	O-RING	2	J30001-UP
9		07002-11423	O-RING	2	J30001-UP
10		11Y-62-12330	TEE	1	J30001-UP
11		02896-11008	O-RING	2	J30001-UP
12		07002-11423	O-RING	1	J30001-UP
13		20Y-06-41251	WIRING HARNESS	1	J30001-UP
14		20Y-62-15831	BLOCK	1	J30001-UP
15		01010-81045	BOLT	2	J30001-UP
16		01643-31032	WASHER	2	J30001-UP
17		02781-0031D	NIPPLE	1	J30001-UP
18		02896-11009	O-RING	1	J30001-UP
19		07002-11423	O-RING	1	J30001-UP
20		02781-0021D	UNION	2	J30001-UP
21		02896-11008	O-RING	2	J30001-UP
22		07002-11423	O-RING	2	J30001-UP
23		11Y-62-12330	TEE	1	J30001-UP
24		02896-11008	O-RING	2	J30001-UP
25		07002-11423	O-RING	1	J30001-UP
26		20Y-53-14910	SEAL	1	J30001-UP
27		20Y-53-14920	SEAL	1	J30001-UP
28		20Y-53-14930	SEAL	1	J30001-UP
29		20Y-53-14940	SEAL	1	J30001-UP
30		20Y-53-14950	SEAL	1	J30001-UP
31		20Y-53-14963	SHEET	1	J30001-UP
32		20Y-53-14973	SHEET	1	J30001-UP
33		20Y-53-14983	SHEET	1	J30001-UP
34		20Y-53-14831	SHEET	6	J30001-UP
35		01010-80830	BOLT	10	J30001-UP
36		01643-30823	WASHER	10	J30001-UP
37		20Y-53-14841	PLATE	1	J30001-UP
38		01010-80840	BOLT	2	J30001-UP
39		01643-30823	WASHER	2	J30001-UP

Ref :K1110-66A2 Page :210840

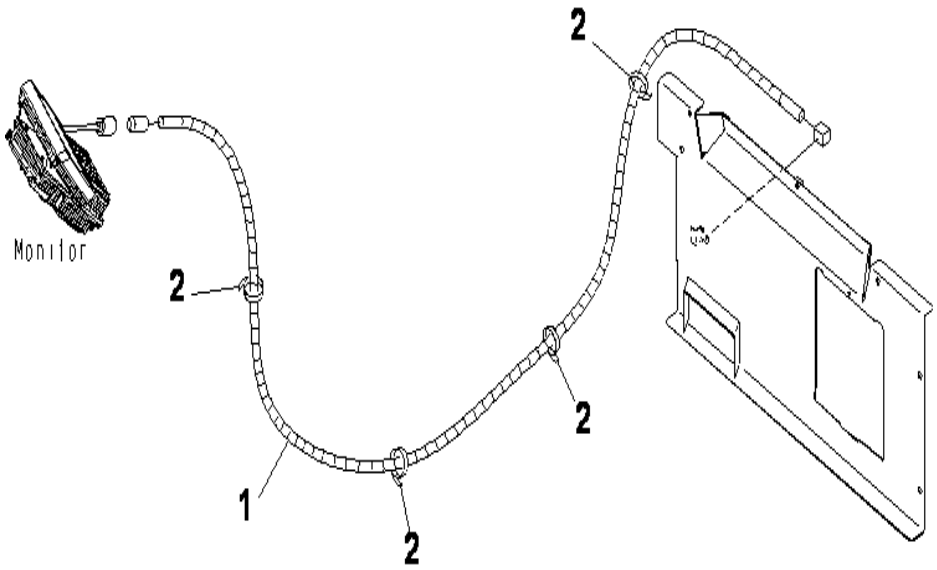

PC400-8 S/N J30001-UP

OPERATOR'S CAB (FLOOR) (REAR CAMERA CABLE)

INDEX	CD	PART NO.	DESCRIPTION	QTY	SERIAL NO.
1		20Y-06-42320	CABLE	1	J30001-UP
2		08034-20519	BAND	4	J30001-UP

Ref :K1110-67A1 Page :210850

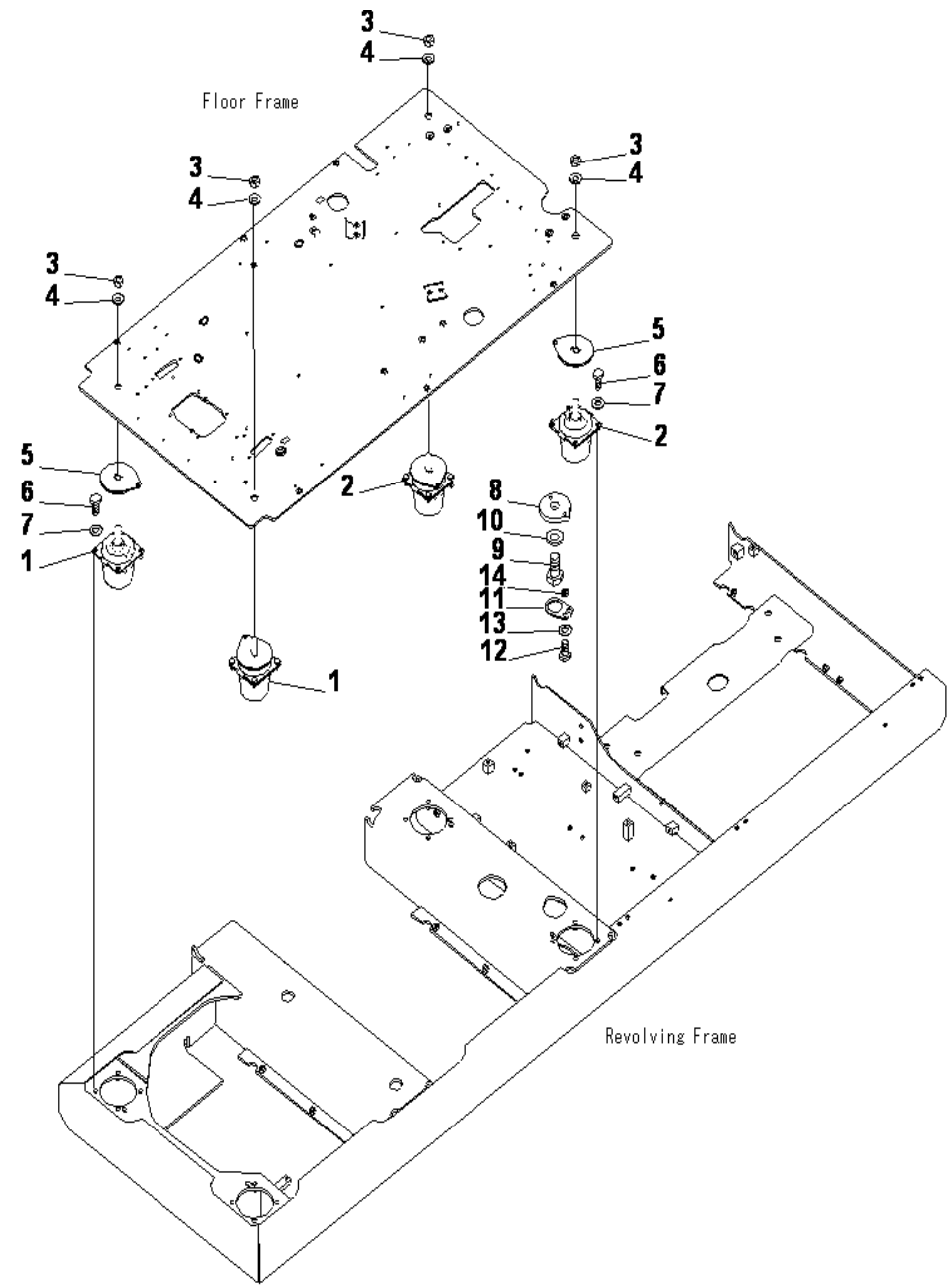

PC400-8 S/N J30001-UP

FLOOR MOUNTS

INDEX	CD	PART NO.	DESCRIPTION	QTY	SERIAL NO.
1		208-53-23210	CUSHION	2	J30001-UP
2		206-53-13121	CUSHION	2	J30001-UP
3		01580-12016	NUT	4	J30001-UP
4		01643-32060	WASHER	4	J30001-UP
5		20Y-53-13130	SPACER	4	J30001-UP
6		01010-81235	BOLT	16	J30001-UP
7		01643-31232	WASHER	16	J30001-UP
8		20Y-53-13141	PLATE	1	J30001-UP
9		01010-83075	BOLT	1	J30001-UP
10		01643-33080	WASHER	1	J30001-UP
11		20Y-53-13151	LOCK	1	J30001-UP
12		01010-81235	BOLT	1	J30001-UP
13		01643-31232	WASHER	1	J30001-UP
14		198-43-15310	COLLAR. 10MM	1	J30001-UP

Ref :K1120-01A0 Page :210860

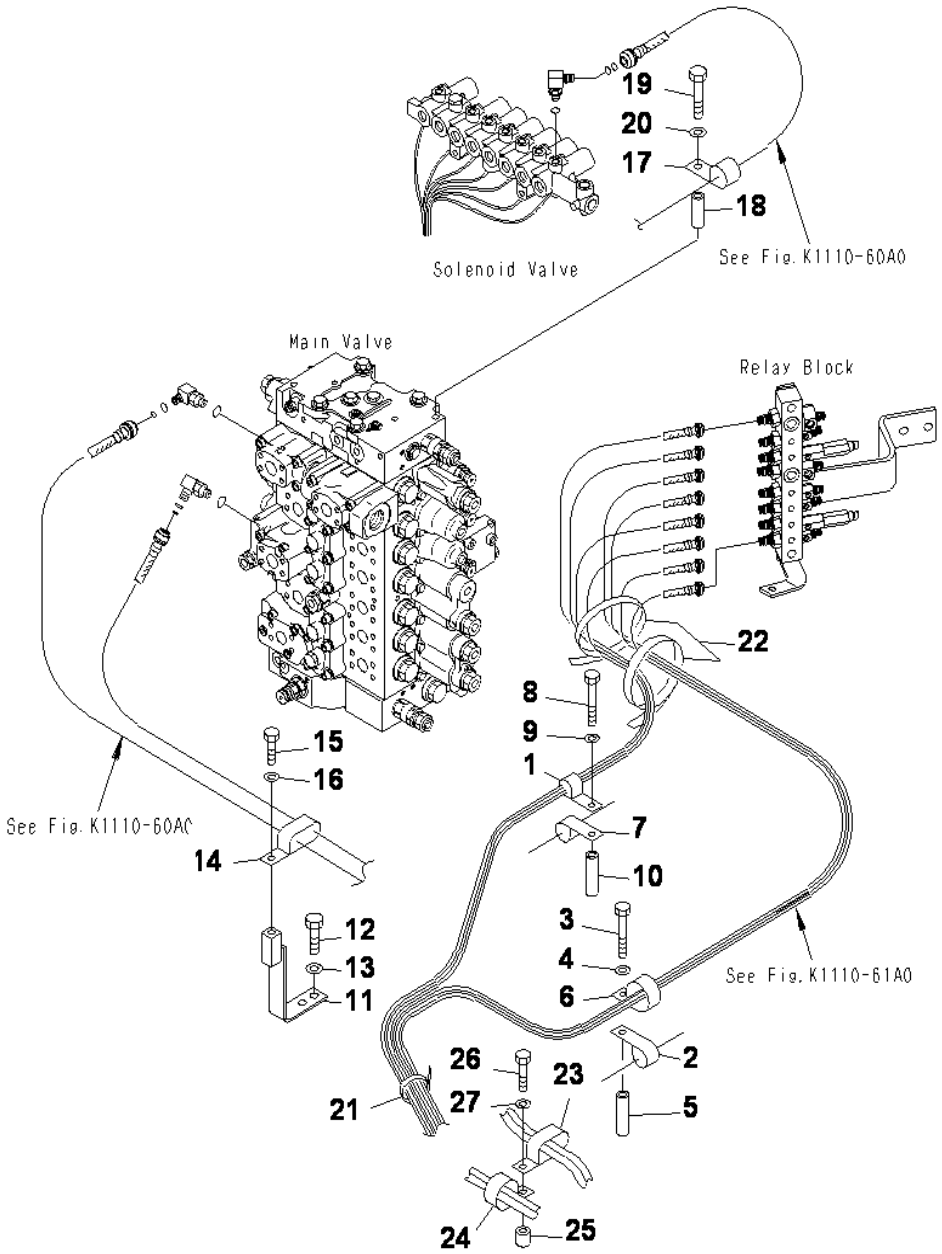

PPC WORK LINE CLAMP

INDEX	CD	PART NO.	DESCRIPTION	QTY	SERIAL NO.
1		04434-52712	CLIP	1	J30001-UP
2		04434-53412	CLIP	1	J30001-UP
3		01010-81280	BOLT	1	J30001-UP
4		01643-31232	WASHER	1	J30001-UP
5		154-97-91480	COLLAR	1	J30001-UP
6		20Y-62-15951	CLIP	1	J30001-UP
7		04434-51412	CLIP	1	J30001-UP
8		01011-81210	BOLT	1	J30001-UP
9		01643-31232	WASHER	1	J30001-UP
10		22S-62-26210	SPACER	1	J30001-UP
11		208-979-7120	BRACKET	1	J30001-UP
12		01010-81225	BOLT	2	J30001-UP
13		01643-31232	WASHER	2	J30001-UP
14		04435-51012	CLIP	1	J30001-UP
15		01010-81225	BOLT	1	J30001-UP
16		01643-31232	WASHER	1	J30001-UP
17		04434-51812	CLIP	1	J30001-UP
18		175-61-17240	COLLAR	1	J30001-UP
19		01010-81285	BOLT	1	J30001-UP
20		01643-31232	WASHER	1	J30001-UP
21		08034-20876	BAND	1	J30001-UP
22		08034-20536	BAND	2	J30001-UP
23		155-06-15180	CLAMP	1	J30001-UP
24		04435-51912	CLIP	1	J30001-UP
25		195-33-11220	SPACER	1	J30001-UP
26		01010-81260	BOLT	1	J30001-UP
27		01643-31232	WASHER	1	J30001-UP

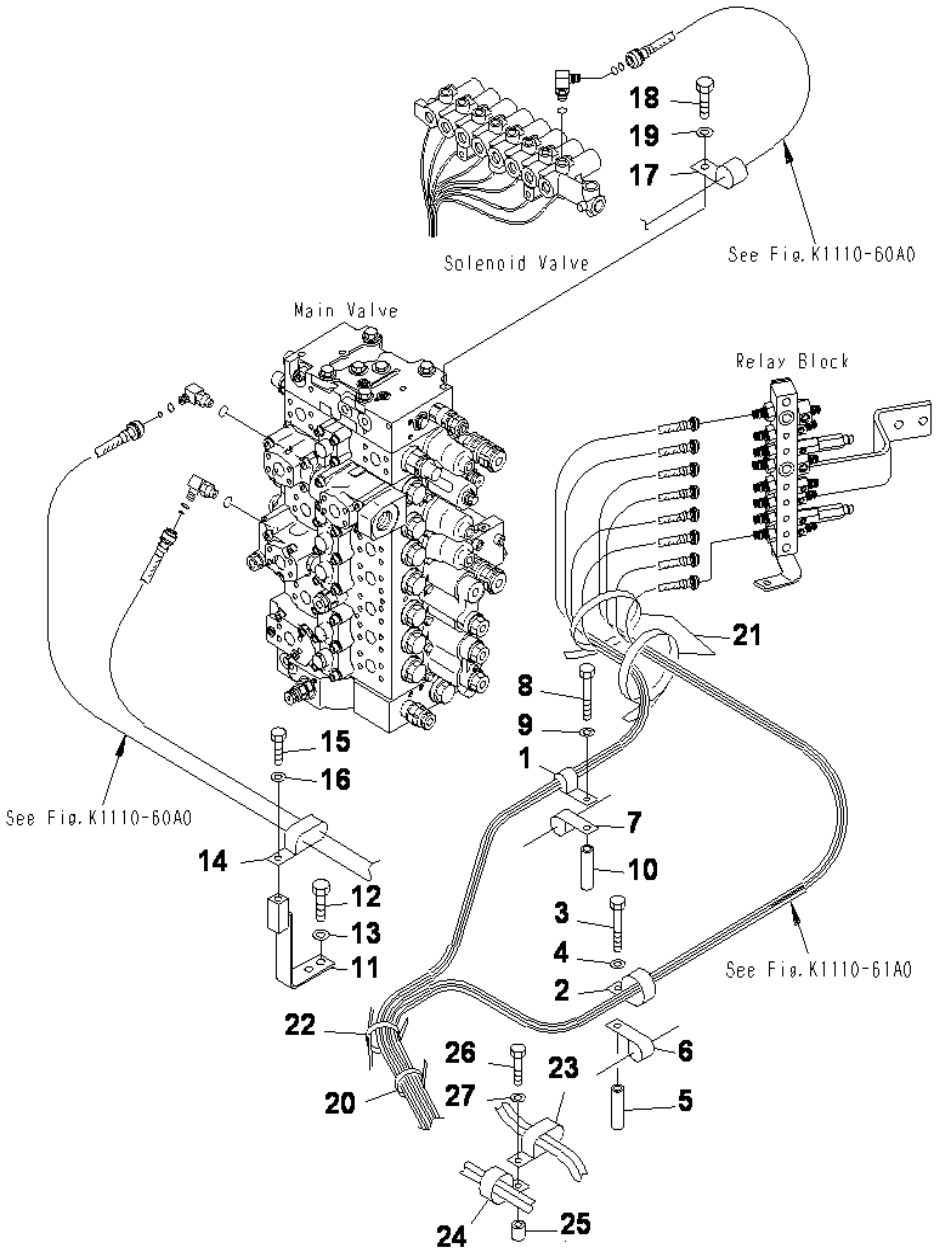

PPC WORK LINE CLAMP (1 ACTUATOR)

INDEX	CD	PART NO.	DESCRIPTION	QTY	SERIAL NO.
1		04434-52712	CLIP	1	J30001-UP
2		04434-53412	CLIP	1	J30001-UP
3		01010-81280	BOLT	1	J30001-UP
4		01643-31232	WASHER	1	J30001-UP
5		154-97-91480	COLLAR	1	J30001-UP
6		20Y-62-15951	CLIP	1	J30001-UP
7		04434-52312	CLIP	1	J30001-UP
8		01011-81210	BOLT	1	J30001-UP
9		01643-31232	WASHER	1	J30001-UP
10		22S-62-26210	SPACER	1	J30001-UP
11		208-979-7120	BRACKET	1	J30001-UP
12		01010-81225	BOLT	2	J30001-UP
13		01643-31232	WASHER	2	J30001-UP
14		04435-51012	CLIP	1	J30001-UP
15		01010-81225	BOLT	1	J30001-UP
16		01643-31232	WASHER	1	J30001-UP
17		04434-51812	CLIP	1	J30001-UP
18		01010-81225	BOLT	1	J30001-UP
19		01643-31232	WASHER	1	J30001-UP
20		08034-20876	BAND	1	J30001-UP
21		08034-20536	BAND	2	J30001-UP
22		08034-20876	BAND	1	J30001-UP
23		155-06-15180	CLAMP	1	J30001-UP
24		208-06-19170	CLIP	1	J30001-UP
25		195-33-11220	SPACER	1	J30001-UP
26		01010-81260	BOLT	1	J30001-UP
27		01643-31232	WASHER	1	J30001-UP

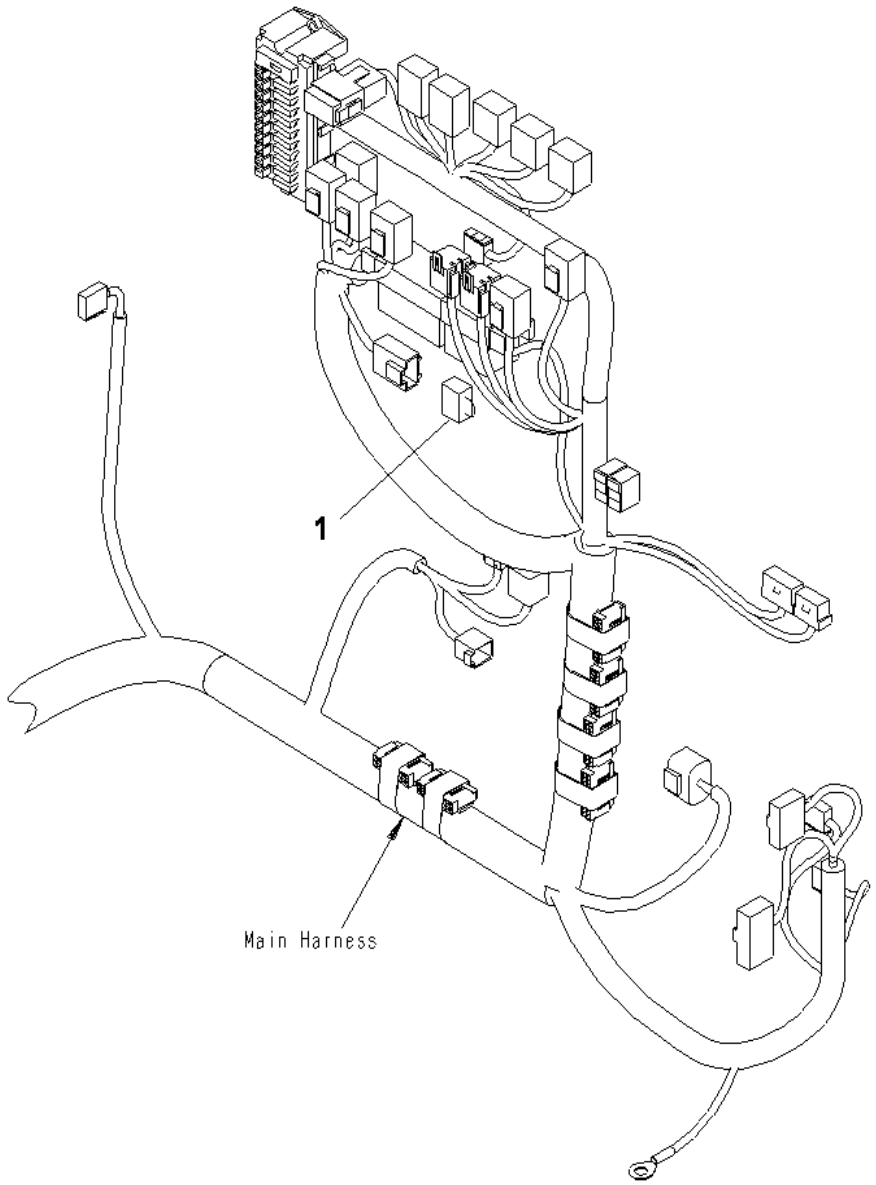

PC400-8 S/N J30001-UP

SWITCH (MODEL SELECTION CONNECTOR)

INDEX	CD	PART NO.	DESCRIPTION	QTY	SERIAL NO.
1		208-06-61410	SWITCH.....	1	J30001-UP

Ref :K1730-01A0 Page :210890

GUARD

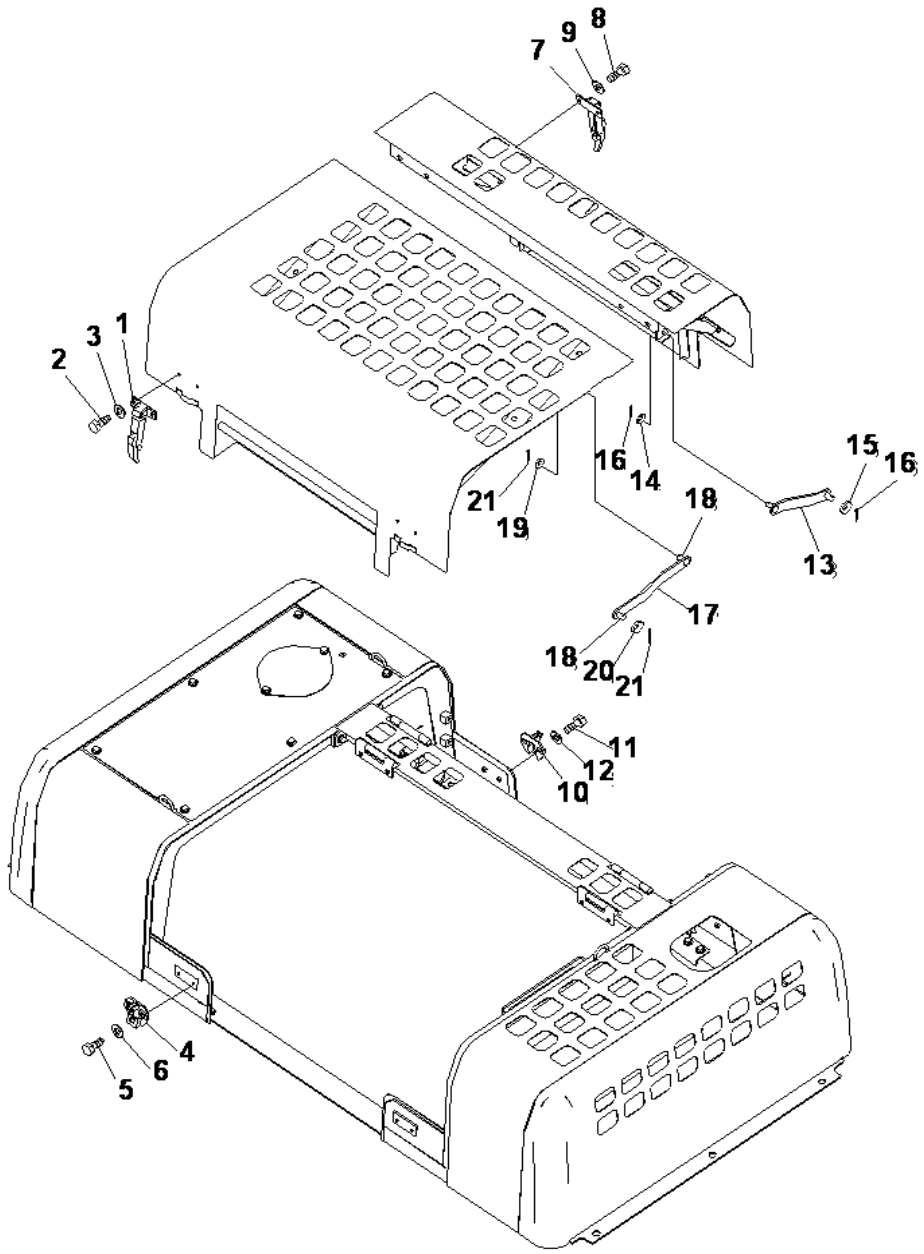

PC400-8 S/N J30001-UP

HOOD (1/4)

INDEX	CD	PART NO.	DESCRIPTION	QTY	SERIAL NO.
1		205-54-76260	CATCHER	2	J30001-UP
		205-54-76280	.ROTOR ASS'Y	2	J30001-UP
2		01010-80825	BOLT	4	J30001-UP
3		01643-30823	WASHER	4	J30001-UP
4		205-54-67660	SUPPORT	2	J30001-UP
5		01010-80825	BOLT	4	J30001-UP
6		01643-30823	WASHER	4	J30001-UP
7		205-54-76530	CATCHER	2	J30001-UP
8		01010-80825	BOLT	4	J30001-UP
9		01643-30823	WASHER	4	J30001-UP
10		205-54-67660	SUPPORT	2	J30001-UP
11		01010-80825	BOLT	4	J30001-UP
12		01643-30823	WASHER	4	J30001-UP
13		209-54-77190	STAY	1	J30001-UP
14		01643-31645	WASHER	1	J30001-UP
15		21T-54-16150	WASHER	1	J30001-UP
16		04050-14028	PIN	2	J30001-UP
17		209-54-53151	STAY	1	J30001-UP
18		04205-01632	.PIN	2	J30001-UP
19		01643-31645	WASHER	1	J30001-UP
20		21T-54-16150	WASHER	1	J30001-UP
21		04050-14028	PIN	2	J30001-UP

Ref :M1110-01A1 Page :240010

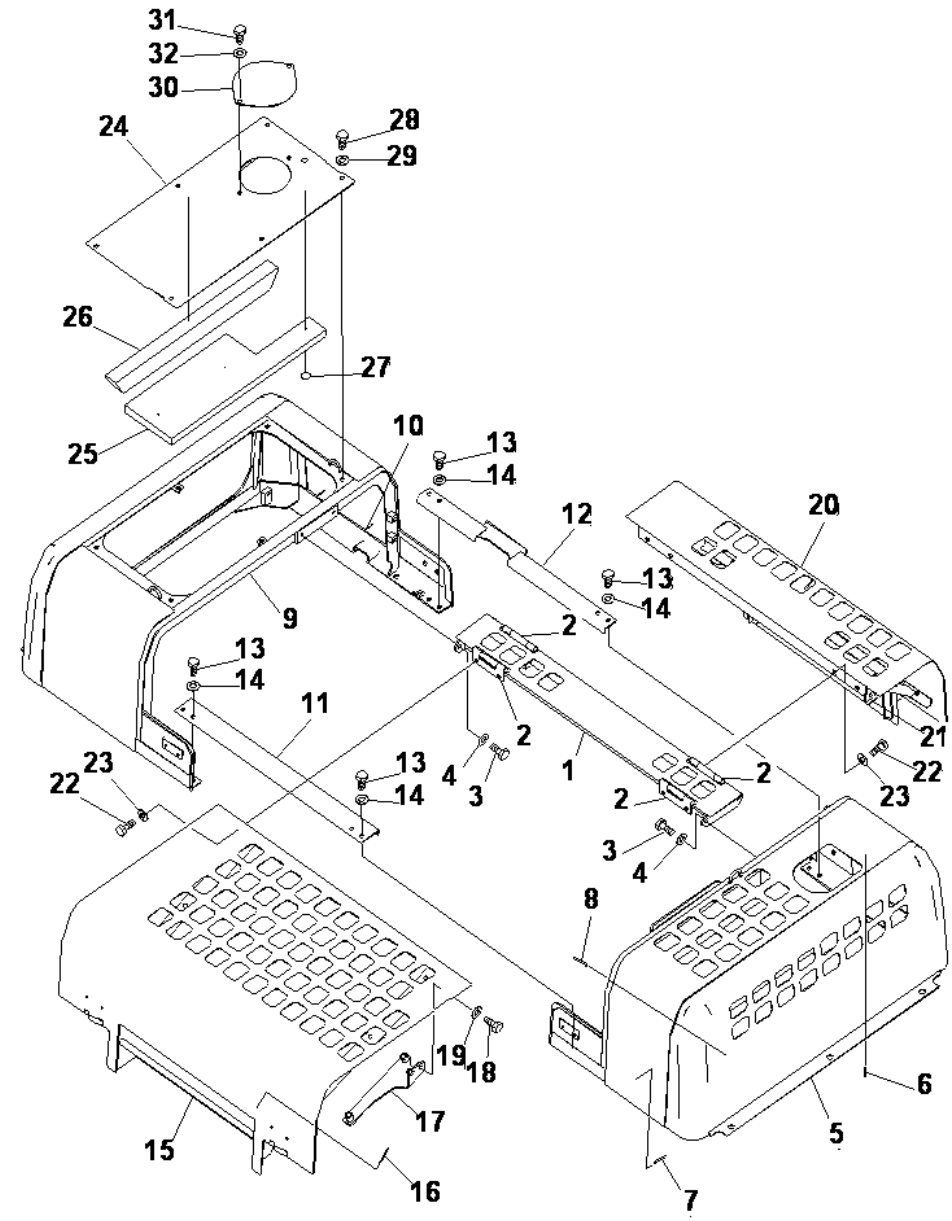

HOOD (2/4)

INDEX	CD	PART NO.	DESCRIPTION	QTY	SERIAL NO.
1		208-54-75111	FRAME	1	J30001-UP
2		20Y-54-28161	.HINGE, (WELDED)	4	J30001-UP
3		01010-81225	BOLT	4	J30001-UP
4		01643-31232	WASHER	4	J30001-UP
5		208-54-79510	COVER	1	J30001-UP
6		124-A6-21910	.STUD, (WELDED)	4	J30001-UP
7		20Y-54-71460	.STUD, (WELDED)	2	J30001-UP
8		21M-54-23210	.STUD, (WELDED)	18	J30001-UP
9		208-54-75132	COVER	1	J30001-UP
10		20Y-54-71460	.STUD, (WELDED)	8	J30001-UP
11		208-54-79520	FRAME	1	J30001-UP
12		208-54-75170	FRAME	1	J30001-UP
13		01010-81225	BOLT	8	J30001-UP
14		01643-31232	WASHER	8	J30001-UP
15		208-54-75313	COVER	1	J30001-UP
16		20Y-54-71460	.STUD, (WELDED)	9	J30001-UP
17		208-54-76110	BRACKET	1	J30001-UP
18		01010-81230	BOLT	2	J30001-UP
19		01643-31232	WASHER	2	J30001-UP
20		208-54-75381	COVER	1	J30001-UP
21		20Y-54-71460	.STUD, (WELDED)	9	J30001-UP
22		01010-81225	BOLT	8	J30001-UP
23		01643-31232	WASHER	8	J30001-UP
		208-54-75180	COVER ASS'Y	1	J30001-UP
24	C1	208-54-76230	.COVER	1	J30001-UP
25		208-54-75360	.SHEET	1	J30001-UP
26		208-54-75330	.SEAL	1	J30001-UP
27		124-A6-21920	.CAP	3	J30001-UP
28		01010-81225	BOLT	6	J30001-UP
29		01643-31232	WASHER	6	J30001-UP
30		207-54-51440	PLATE	1	J30001-UP
31		01010-81225	BOLT	2	J30001-UP
32		01643-31232	WASHER	2	J30001-UP

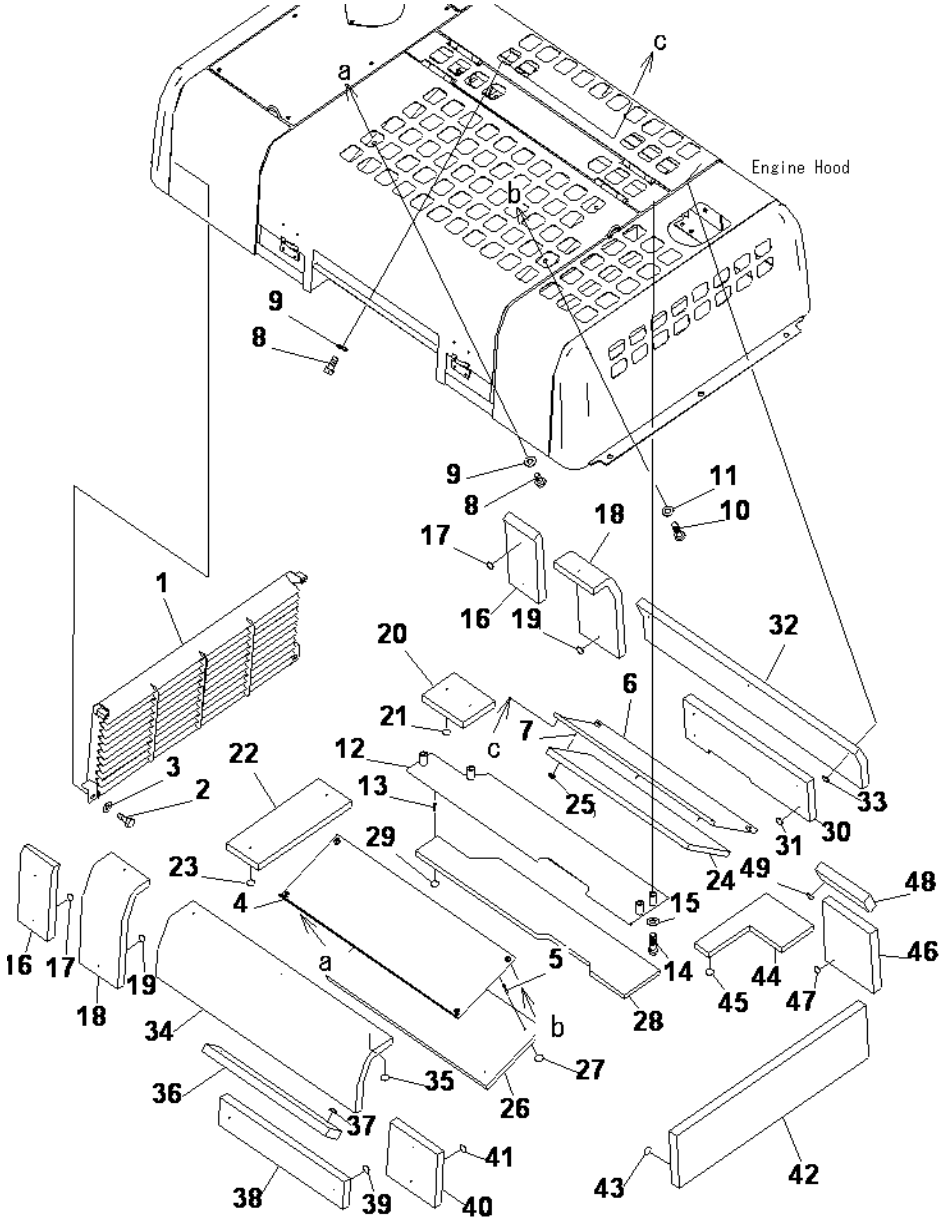

HOOD (3/4)

INDEX	CD	PART NO.	DESCRIPTION	QTY	SERIAL NO.
1		208-54-76860	LOUVER	1	J30001-UP
2		01010-81225	BOLT	4	J30001-UP
3		01643-31232	WASHER	4	J30001-UP
4		208-54-75440	PLATE	1	J30001-UP
5		20Y-54-71460	.STUD, (WELDED)	4	J30001-UP
6		208-54-75450	PLATE	1	J30001-UP
7		124-A6-21910	.STUD, (WELDED)	6	J30001-UP
8		01010-81225	BOLT	6	J30001-UP
9		01643-31232	WASHER	6	J30001-UP
10		01010-81255	BOLT	2	J30001-UP
11		01643-31232	WASHER	2	J30001-UP
12		208-54-75570	PLATE	1	J30001-UP
13		124-A6-21910	.STUD, (WELDED)	7	J30001-UP
14		01010-81270	BOLT	4	J30001-UP
15		01643-31232	WASHER	4	J30001-UP
16		208-54-75960	SHEET	2	J30001-UP
17		124-A6-21920	CAP	4	J30001-UP
18		208-54-75220	SHEET	2	J30001-UP
19		124-A6-21920	CAP	4	J30001-UP
20		208-54-75760	SHEET	1	J30001-UP
21		124-A6-21920	CAP	2	J30001-UP
22		208-54-75750	SHEET	1	J30001-UP
23		124-A6-21920	CAP	2	J30001-UP
24		208-54-75471	SHEET	1	J30002-UP
		208-54-75470	SHEET	1	J30001-J30001
25		124-A6-21920	CAP	6	J30001-UP
26		208-54-75460	SHEET	1	J30001-UP
27		124-A6-21920	CAP	4	J30001-UP
28		208-54-75581	SHEET	1	J30002-UP
		208-54-75580	SHEET	1	J30001-J30001
29		124-A6-21920	CAP	7	J30001-UP
30		208-54-75250	SHEET	1	J30001-UP
31		124-A6-21920	CAP	4	J30001-UP
32		208-54-75240	SHEET	1	J30001-UP
33		124-A6-21920	CAP	3	J30001-UP
34		208-54-75232	SHEET	1	J30001-UP
35		124-A6-21920	CAP	3	J30001-UP
36		208-54-75680	SHEET	1	J30001-UP
37		124-A6-21920	CAP	2	J30001-UP
38		208-54-75691	SHEET	1	J30001-UP
39		124-A6-21920	CAP	2	J30001-UP
40		208-54-75950	SHEET	1	J30001-UP
41		124-A6-21920	CAP	2	J30001-UP
42		208-54-79321	SHEET	1	J30002-UP
		208-54-79320	SHEET	1	J30001-J30001

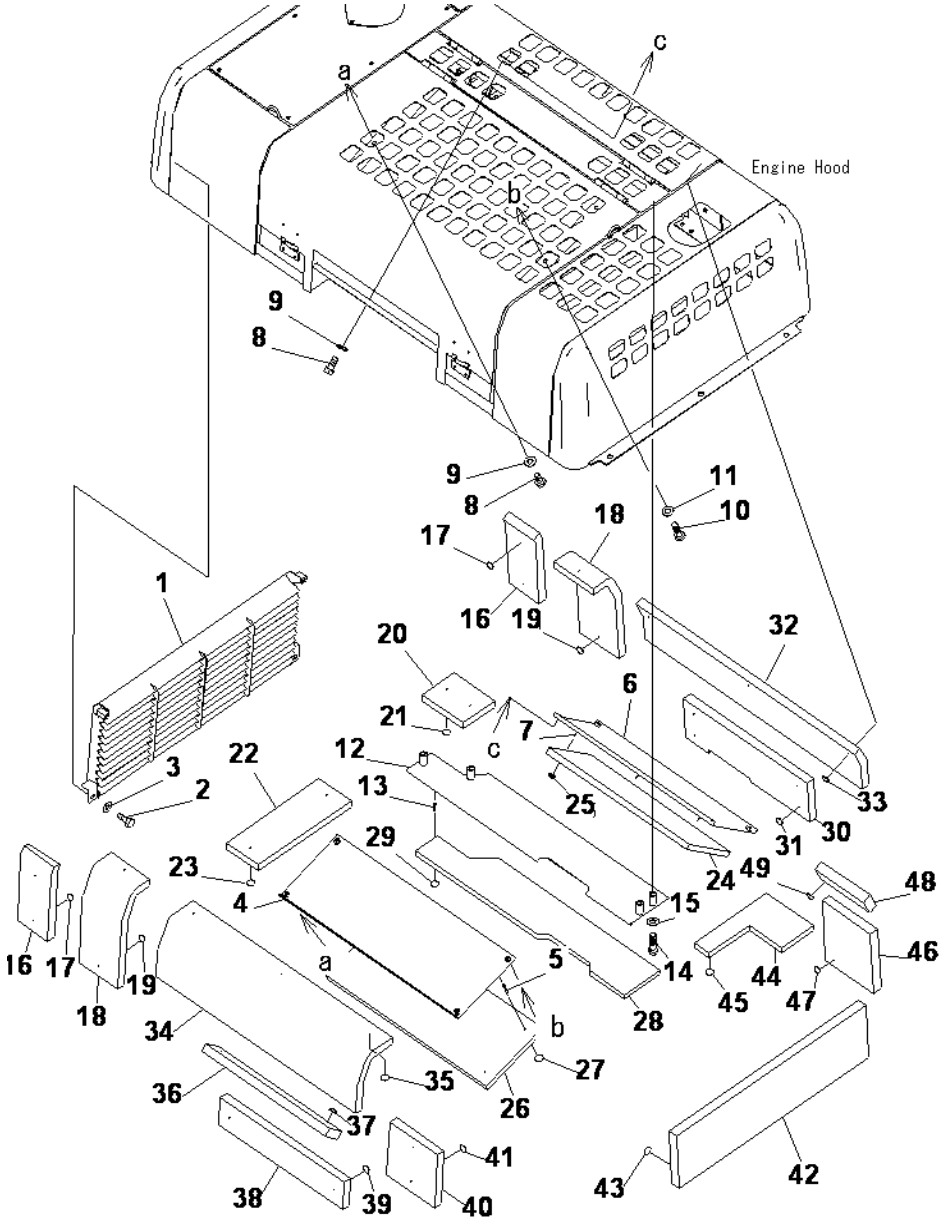

HOOD (3/4)

INDEX	CD	PART NO.	DESCRIPTION	QTY	SERIAL NO.
43		124-A6-21920	CAP	6	J30001-UP
44		208-54-75591	SHEET	1	J30002-UP
		208-54-75590	SHEET	1	J30001-J30001
45		124-A6-21920	CAP	4	J30001-UP
46		208-54-79331	SHEET	1	J30001-UP
		208-54-79330	SHEET	1	J30001-UP
47		124-A6-21920	CAP	4	J30001-UP
48		208-54-79341	SHEET	1	J30002-UP
		208-54-79340	SHEET	1	J30001-J30001
49		124-A6-21920	CAP	2	J30001-UP

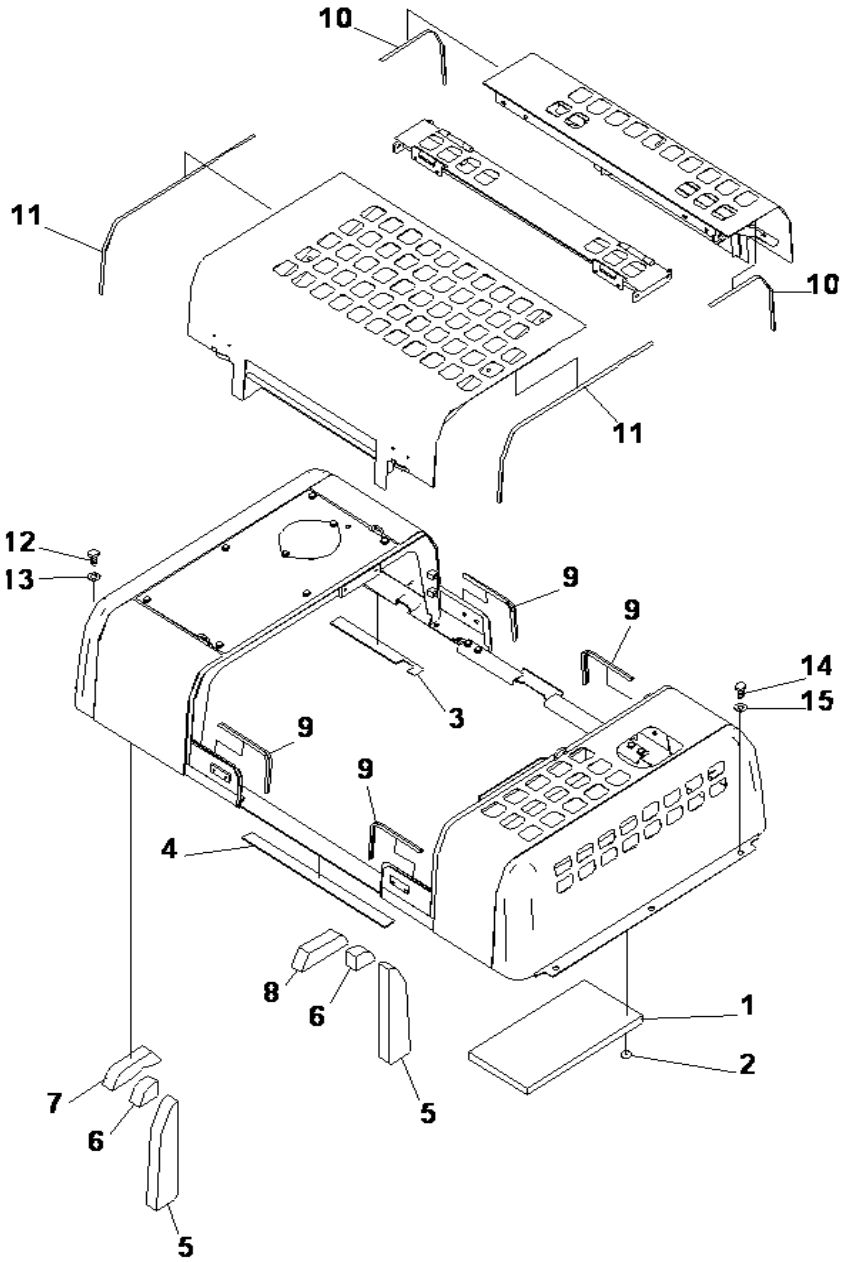

PC400-8 S/N J30001-UP

HOOD (4/4)

INDEX	CD	PART NO.	DESCRIPTION	QTY	SERIAL NO.
1		208-54-73192	SHEET	1	J30002-UP
		208-54-73191	SHEET	1	J30001-J30001
2		124-A6-21920	CAP	6	J30001-UP
3		208-54-75390	SHEET	1	J30001-UP
4		208-54-75990	SHEET	1	J30001-UP
5		208-54-75260	SEAL	2	J30001-UP
6		208-54-75270	SEAL	2	J30001-UP
7		208-54-75280	SEAL	1	J30001-UP
8		208-54-75290	SEAL	1	J30001-UP
9		208-54-75910	SEAL	4	J30001-UP
10		208-54-76160	SHEET	2	J30001-UP
11		208-54-76170	SHEET	2	J30001-UP
12		01010-81230	BOLT	7	J30001-UP
13		01643-31232	WASHER	7	J30001-UP
14		01010-81230	BOLT	3	J30001-UP
15		175-54-34170	WASHER	3	J30001-UP

Ref :M1110-04A1 Page :240040

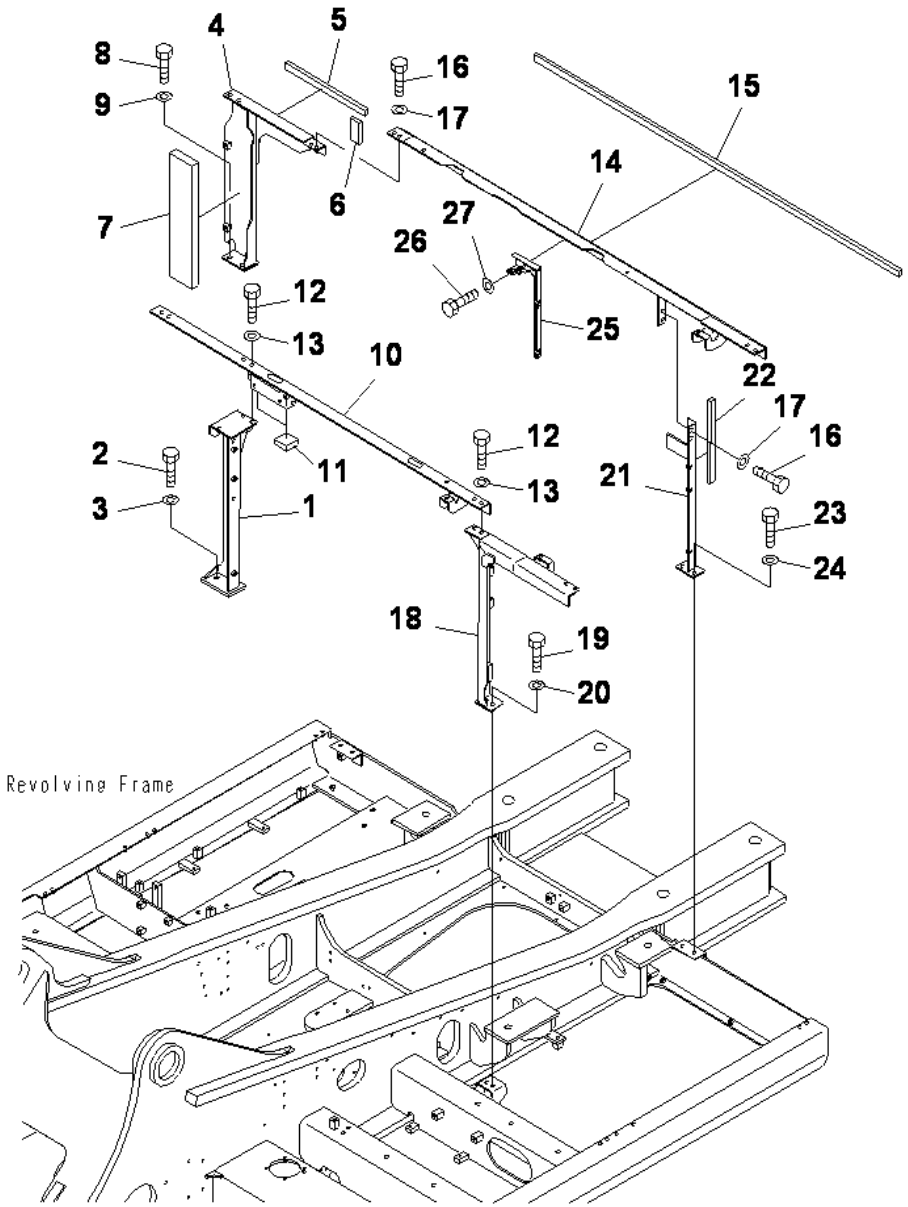

PC400-8 S/N J30001-UP

FRAME (MACHINE CAB)

INDEX	CD	PART NO.	DESCRIPTION	QTY	SERIAL NO.
1		208-54-76440	PLATE	1	J30001-UP
2		01010-81240	BOLT	2	J30001-UP
3		01643-31232	WASHER	2	J30001-UP
4		208-54-76450	FRAME	1	J30001-UP
5		208-54-73170	.SHEET	1	J30001-UP
6		208-54-76560	.SHEET	1	J30001-UP
7		208-54-74630	.SHEET	1	J30001-UP
8		01010-81230	BOLT	2	J30001-UP
9		01643-31232	WASHER	2	J30001-UP
10		208-54-79310	FRAME	1	J30001-UP
11		208-54-76730	.SHEET	2	J30001-UP
12		01010-81230	BOLT	3	J30001-UP
13		01643-31232	WASHER	3	J30001-UP
14		208-54-77840	FRAME	1	J30001-UP
15		208-54-73210	.SHEET	1	J30001-UP
16		01010-81230	BOLT	5	J30001-UP
17		01643-31232	WASHER	5	J30001-UP
18		208-54-76430	FRAME	1	J30001-UP
19		01010-81230	BOLT	3	J30001-UP
20		01643-31232	WASHER	3	J30001-UP
21		207-54-76480	FRAME	1	J30001-UP
22		207-54-76491	.SHEET	1	J30001-UP
23		01010-81230	BOLT	2	J30001-UP
24		01643-31232	WASHER	2	J30001-UP
25		208-54-77830	BRACKET	1	J30001-UP
26		01010-81225	BOLT	2	J30001-UP
27		01643-31232	WASHER	2	J30001-UP

Ref :M1120-01A1 Page :240050

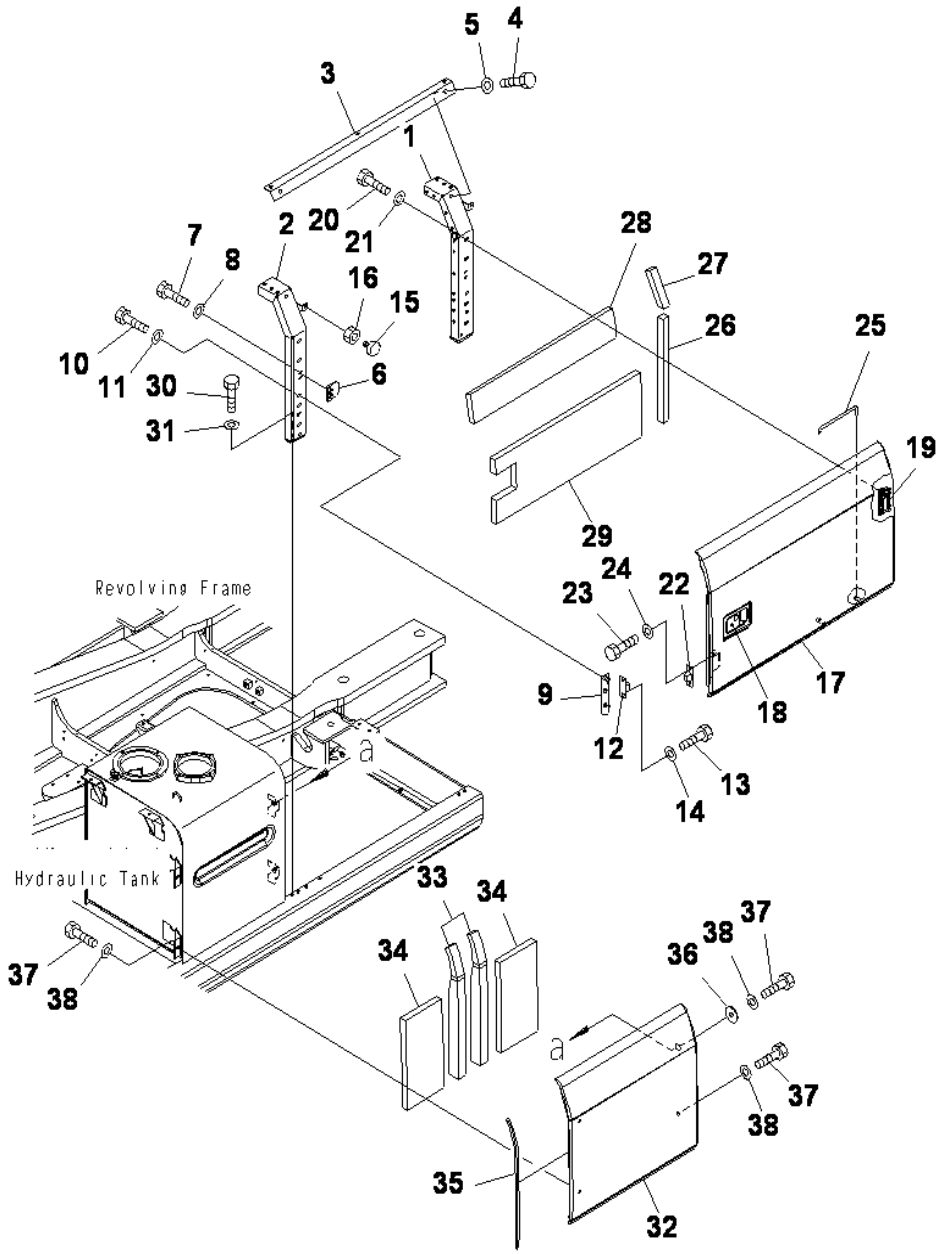

LEFT SIDE DOOR (MACHINE CAB)

INDEX	CD	PART NO.	DESCRIPTION	QTY	SERIAL NO.
1		208-54-78640	FRAME	1	J30001-UP
2		208-54-77851	FRAME	1	J30001-UP
3		208-54-71380	FRAME	1	J30001-UP
4		01010-81225	BOLT	2	J30001-UP
5		01643-31232	WASHER	2	J30001-UP
6		20Y-54-61470	PLATE	1	J30001-UP
7		01010-81225	BOLT	2	J30001-UP
8		01643-31232	WASHER	2	J30001-UP
9		20Y-54-28170	BRACKET	1	J30001-UP
10		01010-81225	BOLT	2	J30001-UP
11		01643-31232	WASHER	2	J30001-UP
12		205-54-51970	DOVE TAIL	1	J30001-UP
13		01010-80616	BOLT	2	J30001-UP
14		01643-30623	WASHER	2	J30001-UP
15		20Y-54-11611	STOPPER	1	J30001-UP
16		01580-11008	NUT	1	J30001-UP
17		207-54-78810	COVER	1	J30001-UP
18		20Y-54-71372	.LOCK, (WELDED)	1	J30001-UP
19		20Y-54-63414	.HINGE, (WELDED)	2	J30001-UP
20		01010-81225	BOLT	4	J30001-UP
21		01643-31232	WASHER	4	J30001-UP
22		205-54-53550	DOVE TAIL	1	J30001-UP
23		01010-80612	BOLT	2	J30001-UP
24		01643-30623	WASHER	2	J30001-UP
25		20Y-54-29232	BAR	1	J30001-UP
26		208-54-73710	SHEET	1	J30001-UP
27		208-54-73720	SHEET	1	J30001-UP
28		208-54-73821	SHEET	1	J30001-UP
29		208-54-73830	SHEET	1	J30001-UP
30		01010-81230	BOLT	4	J30001-UP
31		01643-31232	WASHER	4	J30001-UP
32		208-54-71240	COVER	1	J30001-UP
33		208-54-73131	SHEET	2	J30001-UP
34		208-54-73960	SHEET	2	J30001-UP
35		207-54-78851	SEAL	1	J30001-UP
36		203-54-62670	COLLAR	1	J30001-UP
37		01010-81230	BOLT	4	J30001-UP
38		01643-31232	WASHER	4	J30001-UP

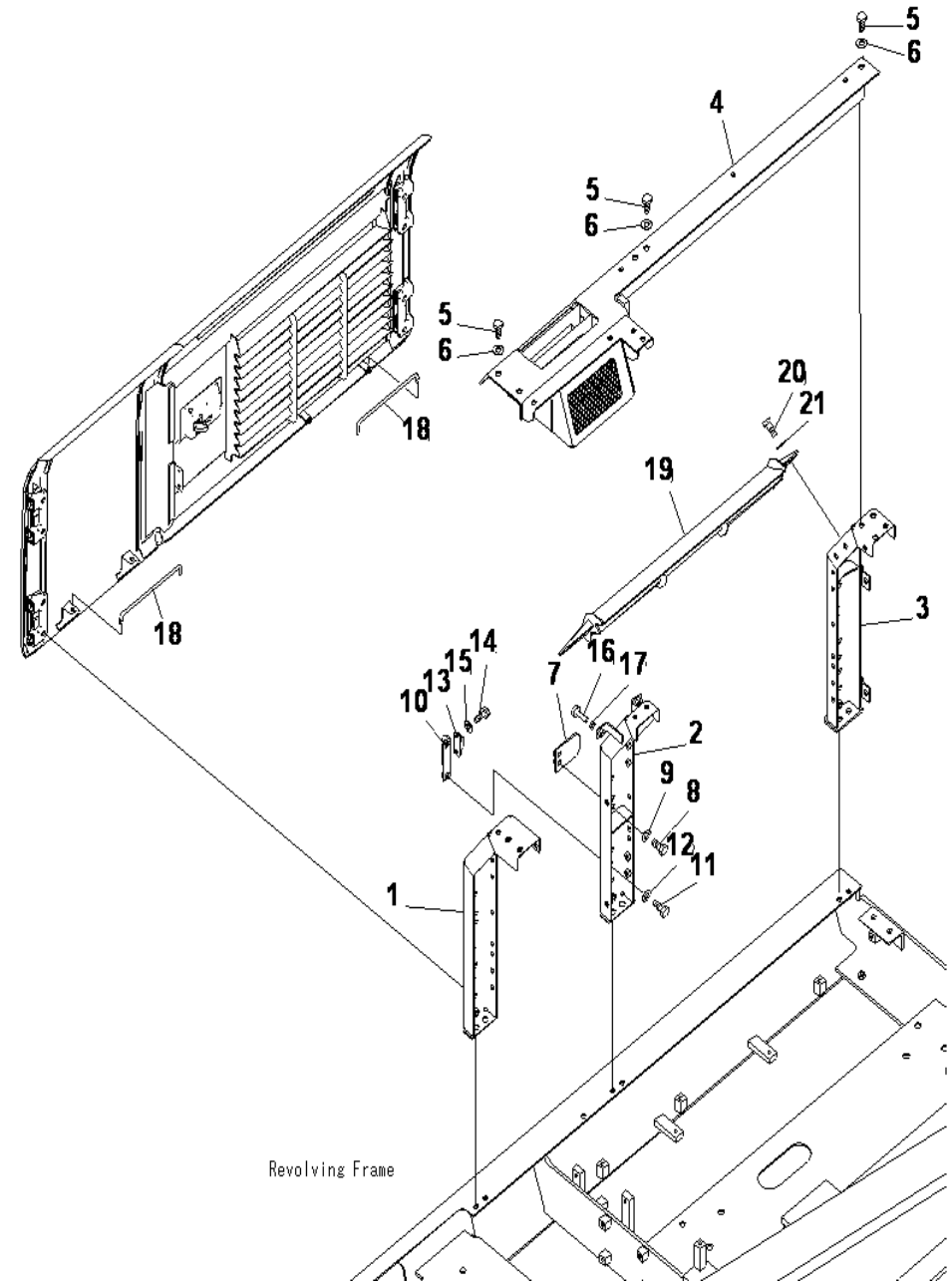

PC400-8 S/N J30001-UP

RIGHT SIDE DOOR (MACHINE CAB) (1/3)

INDEX	CD	PART NO.	DESCRIPTION	QTY	SERIAL NO.
1		208-54-71312	FRAME	1	J30001-UP
2		208-54-77860	FRAME	1	J30001-UP
3		208-54-76470	FRAME	1	J30001-UP
4		208-54-76712	FRAME	1	J30001-UP
5		01010-81230	BOLT	8	J30001-UP
6		01643-31232	WASHER	8	J30001-UP
7		208-54-71930	PLATE	1	J30001-UP
8		01010-81230	BOLT	2	J30001-UP
9		01643-31232	WASHER	2	J30001-UP
10		208-54-71940	BRACKET	1	J30001-UP
11		01010-81230	BOLT	2	J30001-UP
12		01643-31232	WASHER	2	J30001-UP
13		205-54-51970	DOVE TAIL	1	J30001-UP
14		01010-80616	BOLT	2	J30001-UP
15		01643-30623	WASHER	2	J30001-UP
16		20Y-54-11611	STOPPER	2	J30001-UP
17		01580-11008	NUT	2	J30001-UP
18		20Y-54-29232	BAR	2	J30001-UP
19		208-54-76881	LOUVER	1	J30001-UP
20		01010-81230	BOLT	2	J30001-UP
21		01643-31232	WASHER	2	J30001-UP

Ref :M1140-01A1 Page :240070

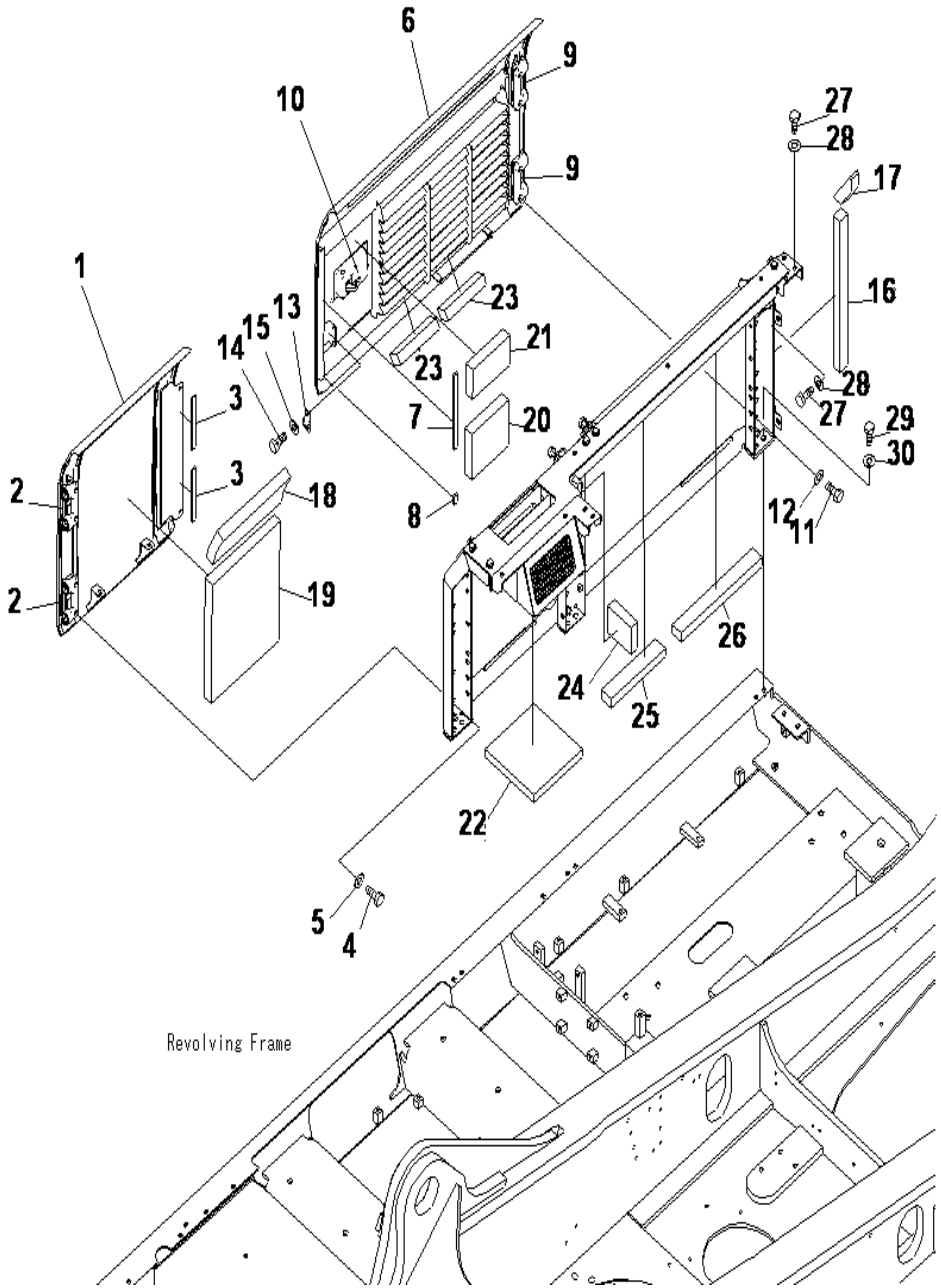

PC400-8 S/N J30001-UP

RIGHT SIDE DOOR (MACHINE CAB) (2/3)

INDEX	CD	PART NO.	DESCRIPTION	QTY	SERIAL NO.
1		207-54-78830	COVER	1	J30001-UP
2		20Y-54-63414	.HINGE, (WELDED)	2	J30001-UP
3		20Y-54-63390	.SHEET	2	J30001-UP
4		01010-81225	BOLT	4	J30001-UP
5		01643-31232	WASHER	4	J30001-UP
6		208-54-77910	COVER	1	J30001-UP
7		207-54-76330	.SHEET	1	J30001-UP
8		207-54-76360	.SHEET	1	J30001-UP
9		20Y-54-63414	.HINGE, (WELDED)	2	J30001-UP
10		20Y-54-71491	.LOCK, (WELDED)	1	J30001-UP
11		01010-81225	BOLT	4	J30001-UP
12		01643-31232	WASHER	4	J30001-UP
13		205-54-53550	DOVE TAIL	1	J30001-UP
14		01010-80612	BOLT	2	J30001-UP
15		01643-30623	WASHER	2	J30001-UP
16		208-54-73710	SHEET	1	J30001-UP
17		208-54-78660	SHEET	1	J30001-UP
18		208-54-73861	SHEET	1	J30001-UP
19		207-54-78930	SHEET	1	J30001-UP
20		208-54-74590	SHEET	1	J30001-UP
21		208-54-74610	SHEET	1	J30001-UP
22		208-54-74621	SHEET	1	J30001-UP
23		208-54-74671	SHEET	2	J30001-UP
24		208-54-74640	SHEET	1	J30001-UP
25		208-54-74650	SHEET	1	J30001-UP
26		208-54-74660	SHEET	1	J30001-UP
27		01010-81230	BOLT	10	J30001-UP
28		01643-31232	WASHER	10	J30001-UP
29		01010-81240	BOLT	2	J30001-UP
30		01643-31232	WASHER	2	J30001-UP

Ref :M1140-02A1 Page :240080

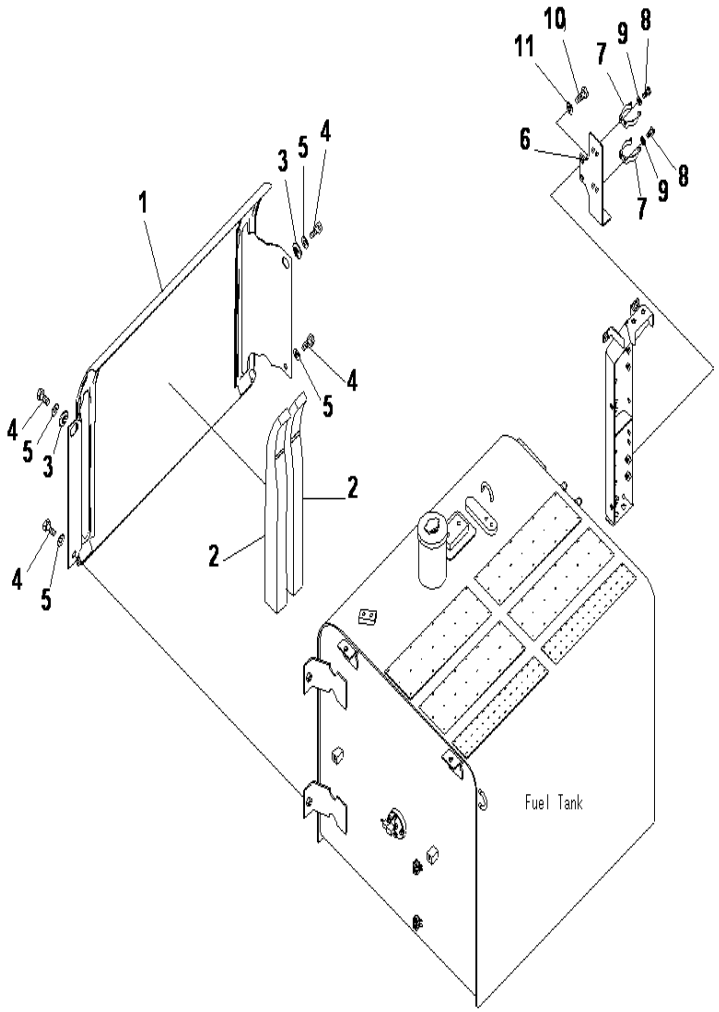

RIGHT SIDE DOOR (MACHINE CAB) (3/3)

INDEX	CD	PART NO.	DESCRIPTION	QTY	SERIAL NO.
1		208-54-71252	COVER	1	J30001-UP
2		208-54-73131	.SHEET	2	J30001-UP
3		203-54-62670	COLLAR	2	J30001-UP
4		01010-81230	BOLT	4	J30001-UP
5		01643-31232	WASHER	4	J30001-UP
6		207-54-78890	BRACKET	1	J30001-UP
7		203-54-63230	CLAMP	2	J30001-UP
8		01220-40612	SCREW	4	J30001-UP
9		01641-20608	WASHER	4	J30001-UP
10		01010-81230	BOLT	2	J30001-UP
11		01643-31232	WASHER	2	J30001-UP

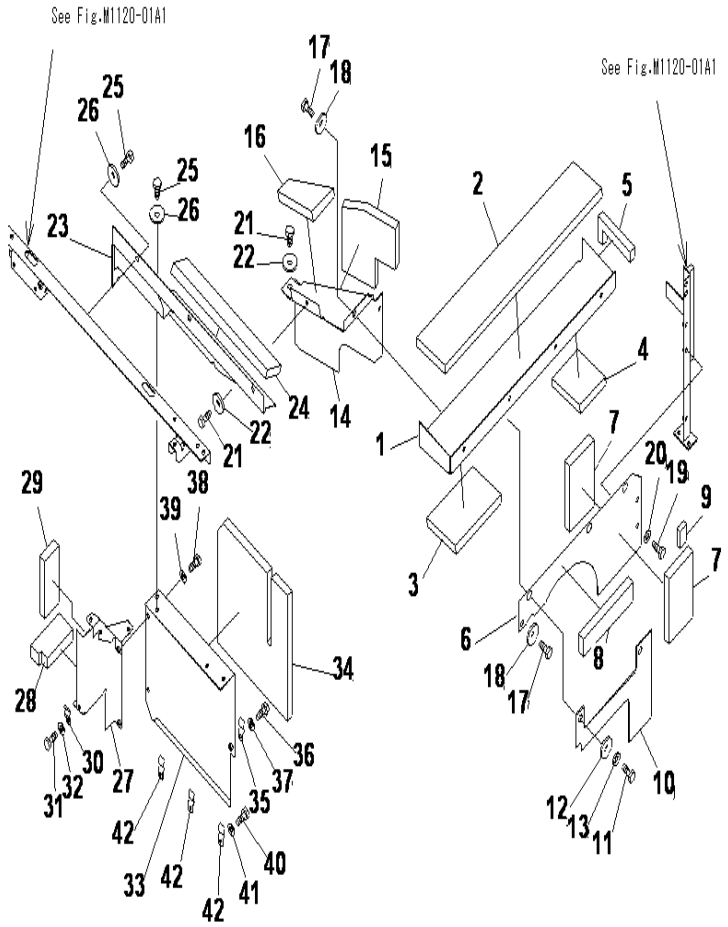

PARTITION (MACHINE CAB) (1/2)

INDEX	CD	PART NO.	DESCRIPTION	QTY	SERIAL NO.
		208-54-77221	COVER	1	J30001-UP
1	C1	208-54-76570	.PLATE	1	J30001-UP
2		208-54-74520	.SHEET	1	J30001-UP
3		208-54-74551	.SHEET	1	J30001-UP
4		208-54-74570	.SHEET	1	J30001-UP
5		208-54-76340	.SHEET	1	J30001-UP
		208-54-77250	COVER	1	J30001-UP
6	C1	208-54-71721	.COVER	1	J30001-UP
7		208-54-73410	.SHEET	2	J30001-UP
8		208-54-74560	.SHEET	1	J30001-UP
9		208-54-76350	.SHEET	1	J30001-UP
10		208-54-76330	SHEET	1	J30001-UP
11		01010-81230	BOLT	3	J30001-UP
12		175-54-34170	WASHER	3	J30001-UP
13		01643-51232	WASHER	2	J30001-UP
		208-54-77240	COVER	1	J30001-UP
14	C1	208-54-71751	.COVER	1	J30001-UP
15		208-54-73440	.SHEET	1	J30001-UP
16		208-54-74530	.SHEET	1	J30001-UP
17		01010-81230	BOLT	2	J30001-UP
18		175-54-34170	WASHER	2	J30001-UP
19		01010-81230	BOLT	2	J30001-UP
20		01643-31232	WASHER	2	J30001-UP
21		01010-81230	BOLT	2	J30001-UP
22		175-54-34170	WASHER	2	J30001-UP
		208-54-78670	COVER	1	J30001-UP
23	C1	208-54-78680	.COVER	1	J30001-UP
24		208-54-74510	.SHEET	1	J30001-UP
25		01010-81230	BOLT	6	J30001-UP
26		175-54-34170	WASHER	6	J30001-UP
		208-54-78410	COVER	1	J30001-UP
27	C1	2085478420	.COVER	1	J30001-UP
28		208-54-73391	.SHEET	1	J30001-UP
29		208-54-73461	.SHEET	1	J30001-UP
30		20Y-54-27761	.CATCH	1	J30001-UP
31		01010-81220	BOLT	1	J30001-UP
32		01643-31232	WASHER	1	J30001-UP
		208-54-77270	COVER	1	J30001-UP
33	C1	208-54-71761	.COVER	1	J30001-UP
34		208-54-73452	.SHEET	1	J30001-UP
35		20Y-54-27761	.CATCH	1	J30001-UP
36		01010-81220	BOLT	1	J30001-UP
37		01643-31232	WASHER	1	J30001-UP
38		01010-81220	BOLT	3	J30001-UP
39		01643-31232	WASHER	3	J30001-UP

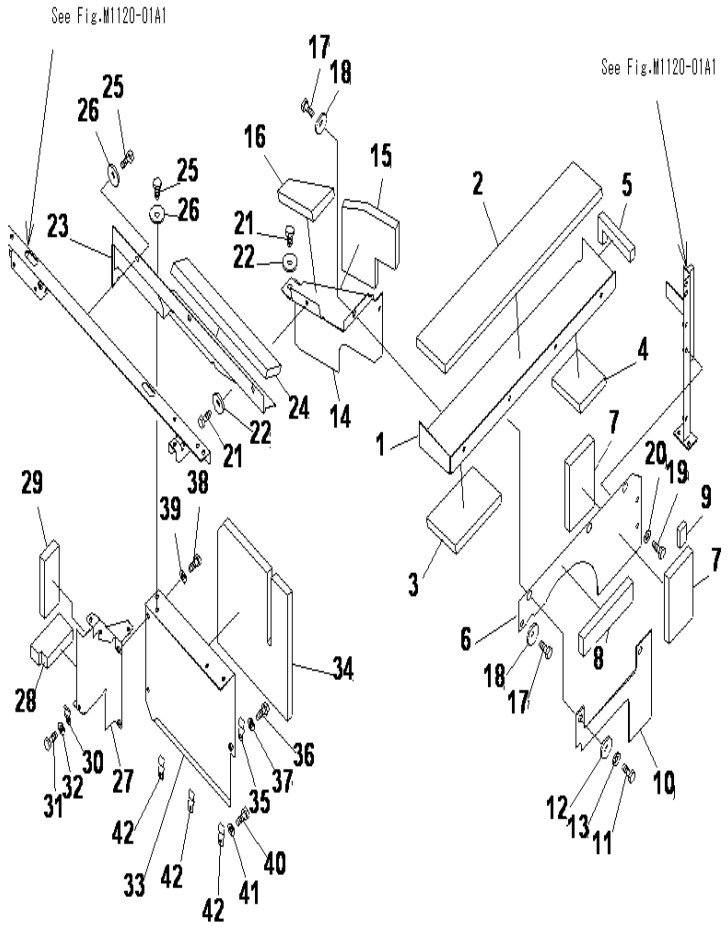

PARTITION (MACHINE CAB)(1/2)

INDEX	CD	PART NO.	DESCRIPTION	QTY	SERIAL NO.
40		01010-81230	BOLT	3	J30001-UP
41		01643-31232	WASHER	3	J30001-UP
42		20Y-54-27761	CATCH	3	J30001-UP

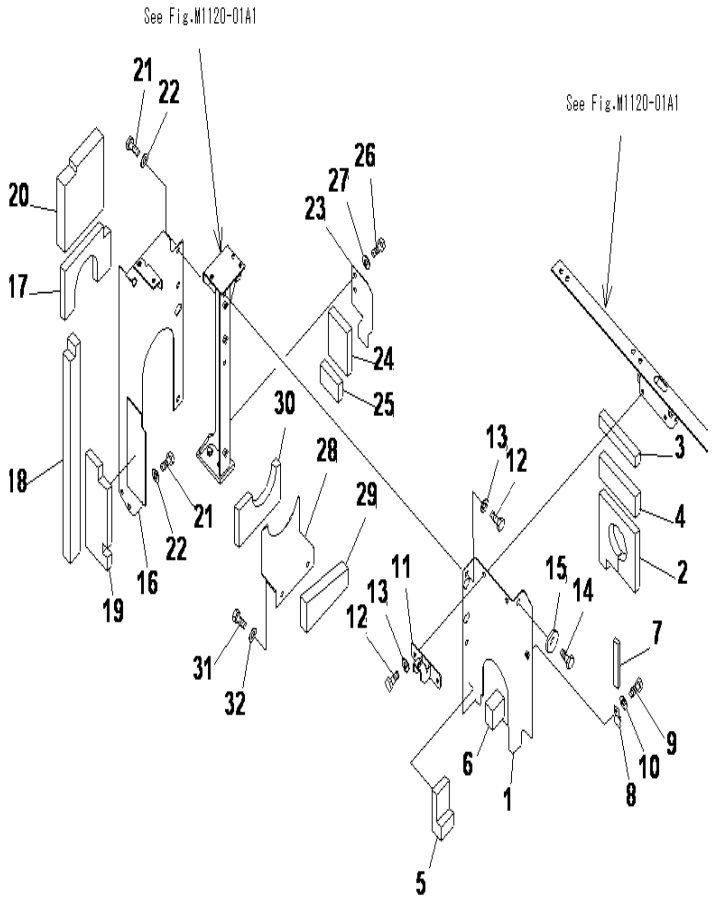

PARTITION (MACHINE CAB) (2/2)

INDEX	CD	PART NO.	DESCRIPTION	QTY	SERIAL NO.
		208-54-77980	COVER	1	J30001-UP
1	C1	208-54-71772	.COVER	1	J30001-UP
2		208-54-73331	.SHEET	1	J30001-UP
3		208-54-77990	.SHEET	1	J30001-UP
4		208-54-73482	.SHEET	1	J30001-UP
5		208-54-73540	.SHEET	1	J30001-UP
6		208-54-73810	.SHEET	1	J30001-UP
7		208-54-76360	.SHEET	1	J30001-UP
8		20Y-54-27761	.CATCH	1	J30001-UP
9		01010-81220	BOLT	1	J30001-UP
10		01643-31232	WASHER	1	J30001-UP
11		208-54-77110	BRACKET	1	J30001-UP
12		01010-81230	BOLT	4	J30001-UP
13		01643-31232	WASHER	4	J30001-UP
14		01010-81230	BOLT	1	J30001-UP
15		175-54-34170	WASHER	1	J30001-UP
		208-54-77210	COVER	1	J30001-UP
16	C1	208-54-71781	.COVER	1	J30001-UP
17		208-54-73341	.SHEET	1	J30001-UP
18		208-54-73351	.SHEET	1	J30001-UP
19		208-54-73560	.SHEET	1	J30001-UP
20		208-54-76380	.SHEET	1	J30001-UP
21		01010-81230	BOLT	5	J30001-UP
22		01643-31232	WASHER	5	J30001-UP
		208-54-71891	COVER	1	J30001-UP
23	C1	208-54-71791	.PLATE	1	J30001-UP
24		208-54-73371	.SHEET	1	J30001-UP
25		208-54-73380	.SHEET	1	J30001-UP
26		01010-81230	BOLT	2	J30001-UP
27		01643-31232	WASHER	2	J30001-UP
		208-54-71840	COVER	1	J30001-UP
28	C1	208-54-71740	.COVER	1	J30001-UP
29		208-54-73361	.SHEET	1	J30001-UP
30		208-54-73550	.SHEET	1	J30001-UP
31		01010-81230	BOLT	2	J30001-UP
32		01643-31232	WASHER	2	J30001-UP

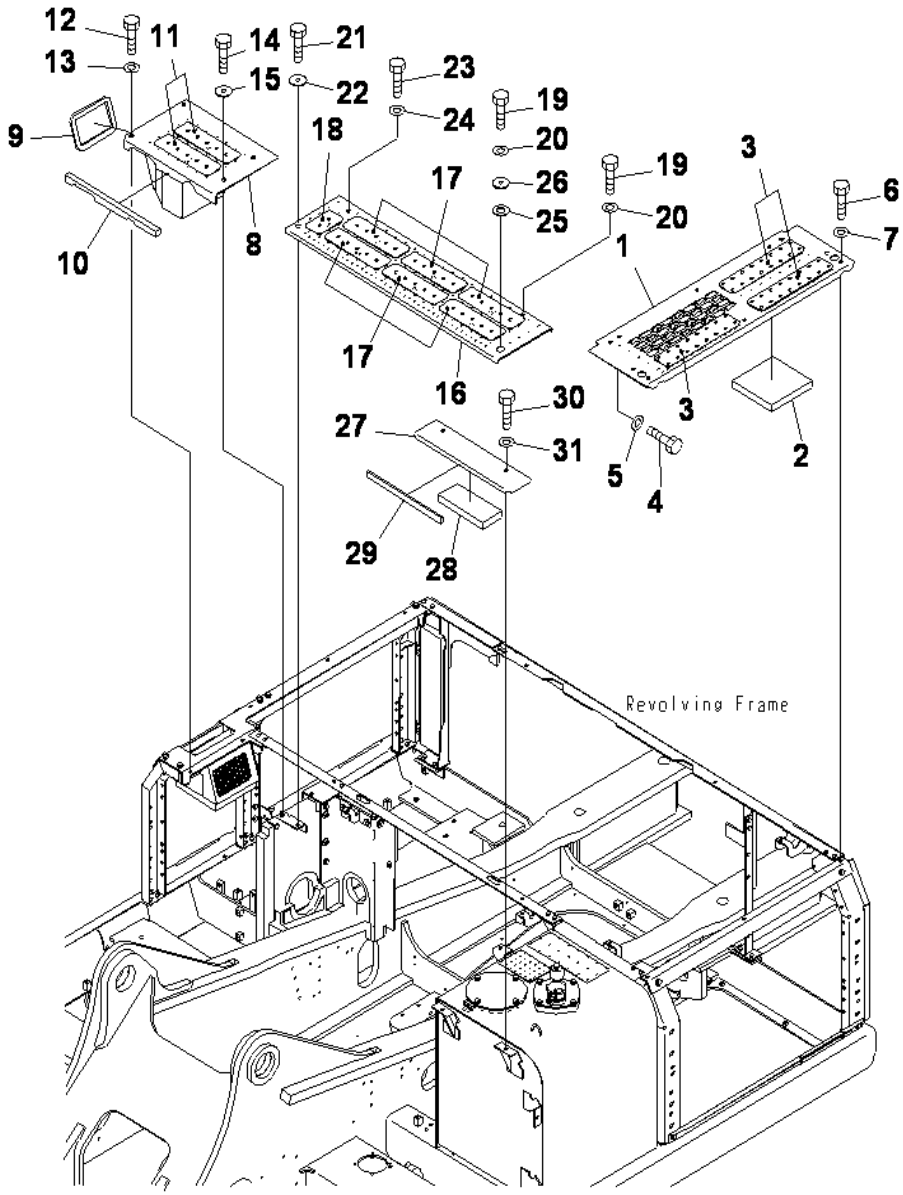

COVER (MACHINE CAB)

INDEX	CD	PART NO.	DESCRIPTION	QTY	SERIAL NO.
1		208-54-76530	COVER	1	J30001-UP
2		208-54-74580	.SHEET	1	J30001-UP
3		208-00-76310	PLATE	3	J30001-UP
4		01010-81225	BOLT	4	J30001-UP
5		01643-31232	WASHER	4	J30001-UP
6		01010-81230	BOLT	7	J30001-UP
7		01643-31232	WASHER	7	J30001-UP
8		208-54-76520	COVER	1	J30001-UP
9		208-54-76310	.SHEET	1	J30001-UP
10		208-54-73112	.SHEET	1	J30001-UP
11		20Y-00-42110	PLATE	2	J30001-UP
12		01010-81230	BOLT	2	J30001-UP
13		01643-31232	WASHER	2	J30001-UP
14		01010-81230	BOLT	2	J30001-UP
15		175-54-34170	WASHER	2	J30001-UP
16		208-54-76512	COVER	1	J30114-UP
		208-54-76511	COVER	1	J30001-J30113
17		20Y-00-42110	PLATE	6	J30001-UP
18		22U-00-28120	PLATE	1	J30001-UP
19		01010-81230	BOLT	2	J30001-UP
20		01643-31232	WASHER	2	J30001-UP
21		01010-81230	BOLT	1	J30001-UP
22		175-54-34170	WASHER	1	J30001-UP
23		01010-81230	BOLT	1	J30001-UP
24		01643-31232	WASHER	1	J30001-UP
25		20Y-54-19920	PLATE	1	J30001-UP
26		20Y-54-19930	COLLAR	1	J30001-UP
		208-54-78260	COVER	1	J30001-UP
27	C1	208-54-78270	.COVER	1	J30001-UP
28		208-54-73890	.SHEET	1	J30001-UP
29		208-54-78280	.SHEET	1	J30001-UP
30		01010-81230	BOLT	2	J30001-UP
31		01643-31232	WASHER	2	J30001-UP

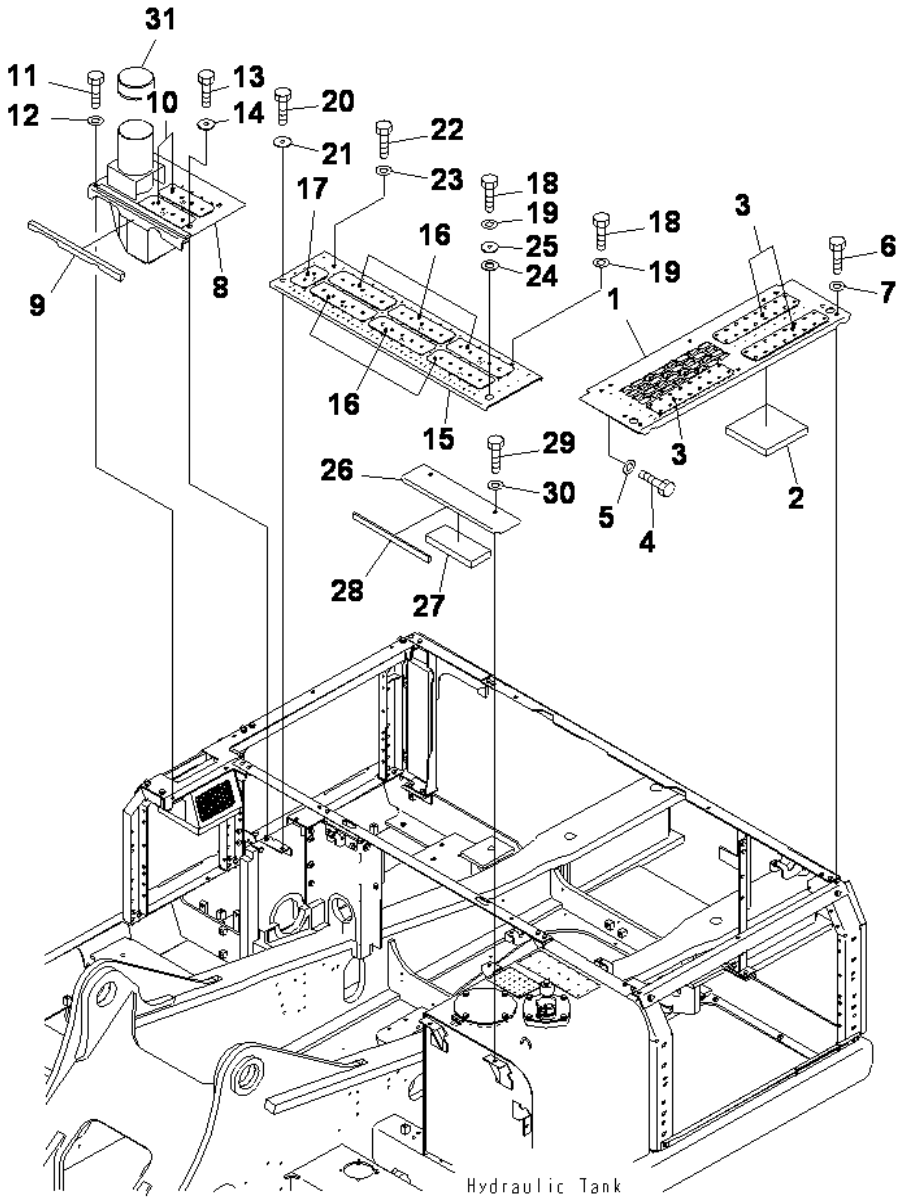

COVER (MACHINE CAB) (WITH PRE-CLEANER)

INDEX	CD	PART NO.	DESCRIPTION	QTY	SERIAL NO.
1		208-54-76530	COVER	1	J30001-UP
2		208-54-74580	.SHEET	1	J30001-UP
3		208-00-76310	PLATE	3	J30001-UP
4		01010-81225	BOLT	4	J30001-UP
5		01643-31232	WASHER	4	J30001-UP
6		01010-81230	BOLT	7	J30001-UP
7		01643-31232	WASHER	7	J30001-UP
8		208-54-76550	COVER	1	J30001-UP
9		208-54-73112	.SHEET	1	J30001-UP
10		20Y-00-42210	PLATE	1	J30001-UP
11		01010-81230	BOLT	2	J30001-UP
12		01643-31232	WASHER	2	J30001-UP
13		01010-81230	BOLT	2	J30001-UP
14		175-54-34170	WASHER	2	J30001-UP
15		208-54-76511	COVER	1	J30001-UP
16		20Y-00-42110	PLATE	6	J30001-UP
17		22U-00-28120	PLATE	1	J30001-UP
18		01010-81230	BOLT	2	J30001-UP
19		01643-31232	WASHER	2	J30001-UP
20		01010-81230	BOLT	1	J30001-UP
21		175-54-34170	WASHER	1	J30001-UP
22		01010-81230	BOLT	1	J30001-UP
23		01643-31232	WASHER	1	J30001-UP
24		20Y-54-19920	PLATE	1	J30001-UP
25		20Y-54-19930	COLLAR	1	J30001-UP
		208-54-78260	COVER	1	J30001-UP
26	C1	208-54-78270	.COVER	1	J30001-UP
27		208-54-73890	.SHEET	1	J30001-UP
28		208-54-78280	.SHEET	1	J30001-UP
29		01010-81230	BOLT	2	J30001-UP
30		01643-31232	WASHER	2	J30001-UP
31		(421-U1-23100)	PRECLEANER	1	J30001-UP

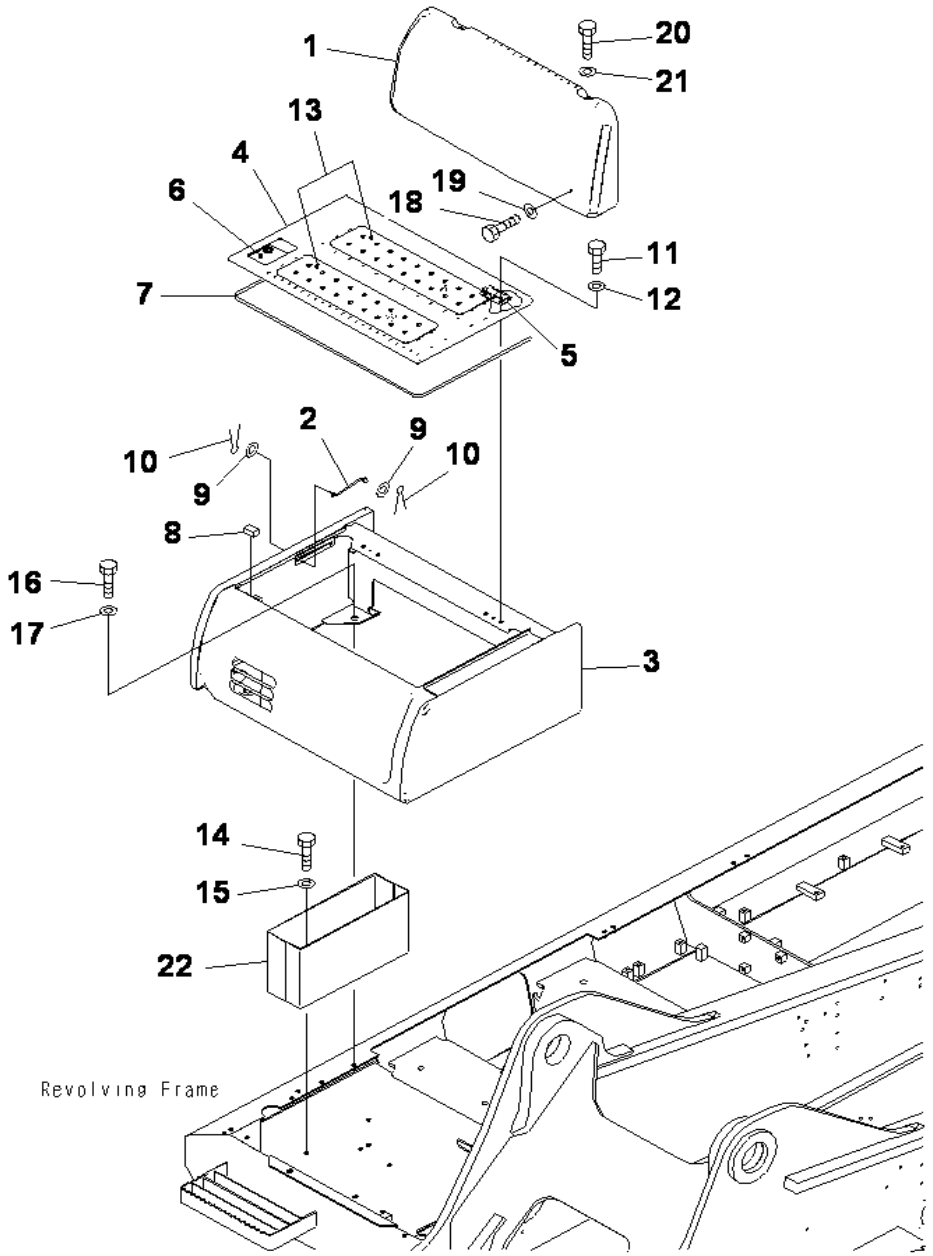

PC400-8 S/N J30001-UP

BATTERY CASE

INDEX	CD	PART NO.	DESCRIPTION	QTY	SERIAL NO.
1		207-54-77451	COVER	1	J30001-UP
2		203-54-56630	ROD	1	J30001-UP
3		207-54-77421	COVER	1	J30009-UP
		207-54-77420	COVER	1	J30001-J30008
4		2075478820	COVER	1	J30001-UP
5		20Y-54-74161	.HINGE, (WELDED)	2	J30001-UP
6		20Y-54-74172	.LOCK, (WELDED)	1	J30001-UP
7		208-54-71470	SEAL	1	J30001-UP
8		20Y-54-29680	SHEET	1	J30001-UP
9		01643-30623	WASHER	2	J30001-UP
10		04050-11612	PIN, COTTER	2	J30001-UP
11		01010-81020	BOLT	4	J30001-UP
12		01643-31032	WASHER	4	J30001-UP
13		209-00-41550	PLATE	2	J30001-UP
14		01010-81230	BOLT	2	J30001-UP
15		01643-31232	WASHER	2	J30001-UP
16		01010-81230	BOLT	4	J30001-UP
17		175-54-34170	WASHER	4	J30001-UP
18		01010-81230	BOLT	2	J30001-UP
19		175-54-34170	WASHER	2	J30001-UP
20		01010-81230	BOLT	2	J30001-UP
21		01643-31232	WASHER	2	J30001-UP
22		207-54-77441	TOOL BOX	1	J30001-UP

Ref :M1220-01A1 Page :240140

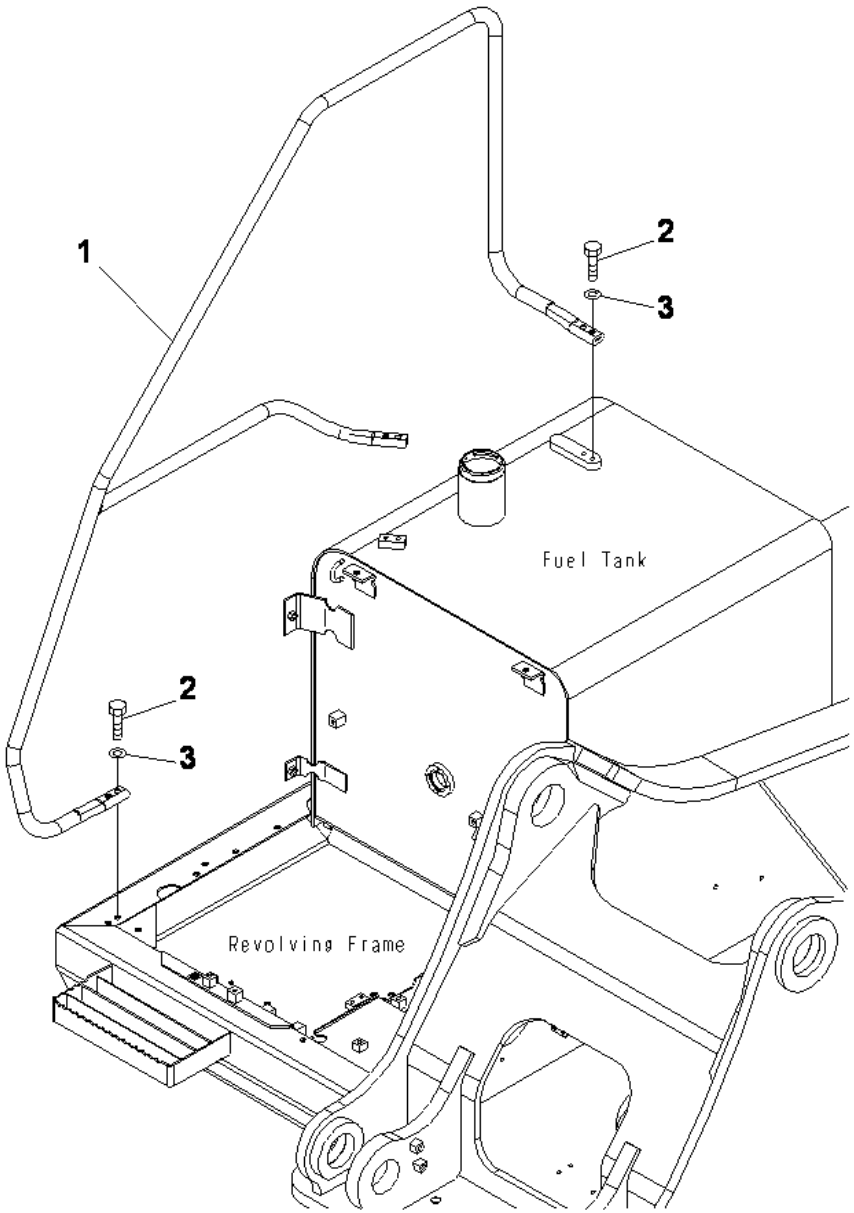

PC400-8 S/N J30001-UP

HAND RAIL

INDEX	CD	PART NO.	DESCRIPTION	QTY	SERIAL NO.
1		207-54-75220	HAND RAIL.....	1	J30001-UP
2		01010-81240	BOLT.....	6	J30001-UP
3		01643-31232	WASHER.....	6	J30001-UP

Ref :M1310-01A0 Page :240150

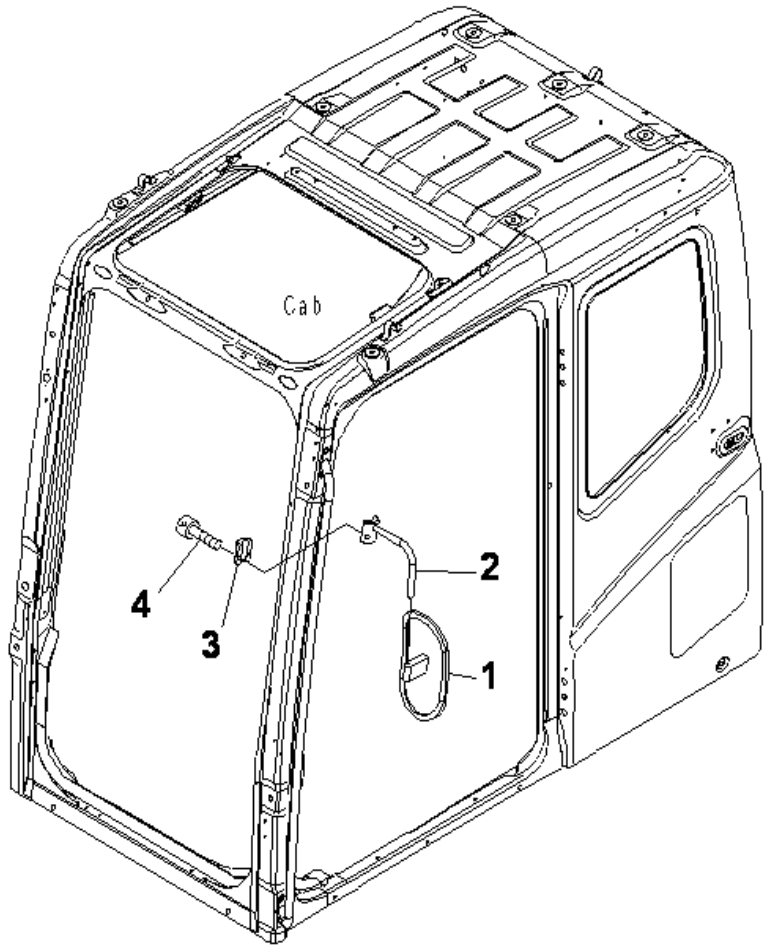

PC400-8 S/N J30001-UP

REAR VIEW MIRROR. L.H (SINGLE)

INDEX	CD	PART NO.	DESCRIPTION	QTY	SERIAL NO.
1		08174-13118	MIRROR	1	J30001-UP
2		20Y-54-35420	SUPPORT	1	J30001-UP
3		20Y-54-35430	CLAMP	1	J30001-UP
4		01252-41030	BOLT	2	J30001-UP

Ref :M1410-01A0 Page :240160

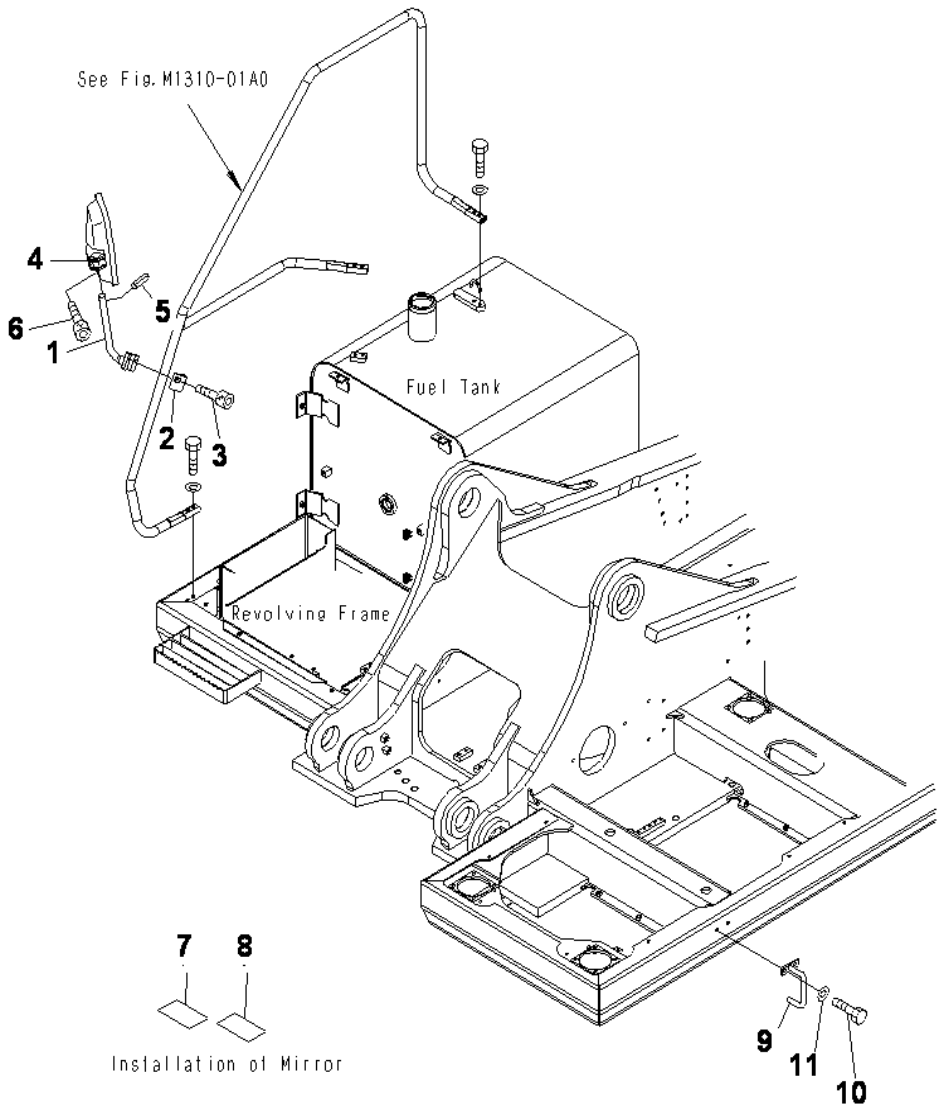

PC400-8 S/N J30001-UP

REAR VIEW MIRROR. R.H

INDEX	CD	PART NO.	DESCRIPTION	QTY	SERIAL NO.
1		207-54-71840	SUPPORT	1	J30001-UP
2		20Y-54-61630	CLAMP	1	J30001-UP
3		01252-71030	BOLT	2	J30001-UP
4		421-54-25610	MIRROR	1	J30001-UP
5		04025-00632	PIN	1	J30001-UP
6		01252-70545	BOLT	4	J30001-UP
7		208-987-5311	PLATE	1	J30001-UP
8		209-987-7220	PLATE	1	J30001-UP
9		207-54-66120	GRIP	1	J30001-UP
10		01010-81225	BOLT	2	J30001-UP
11		01643-31232	WASHER	2	J30001-UP

Ref :M1420-01A1 Page :240170

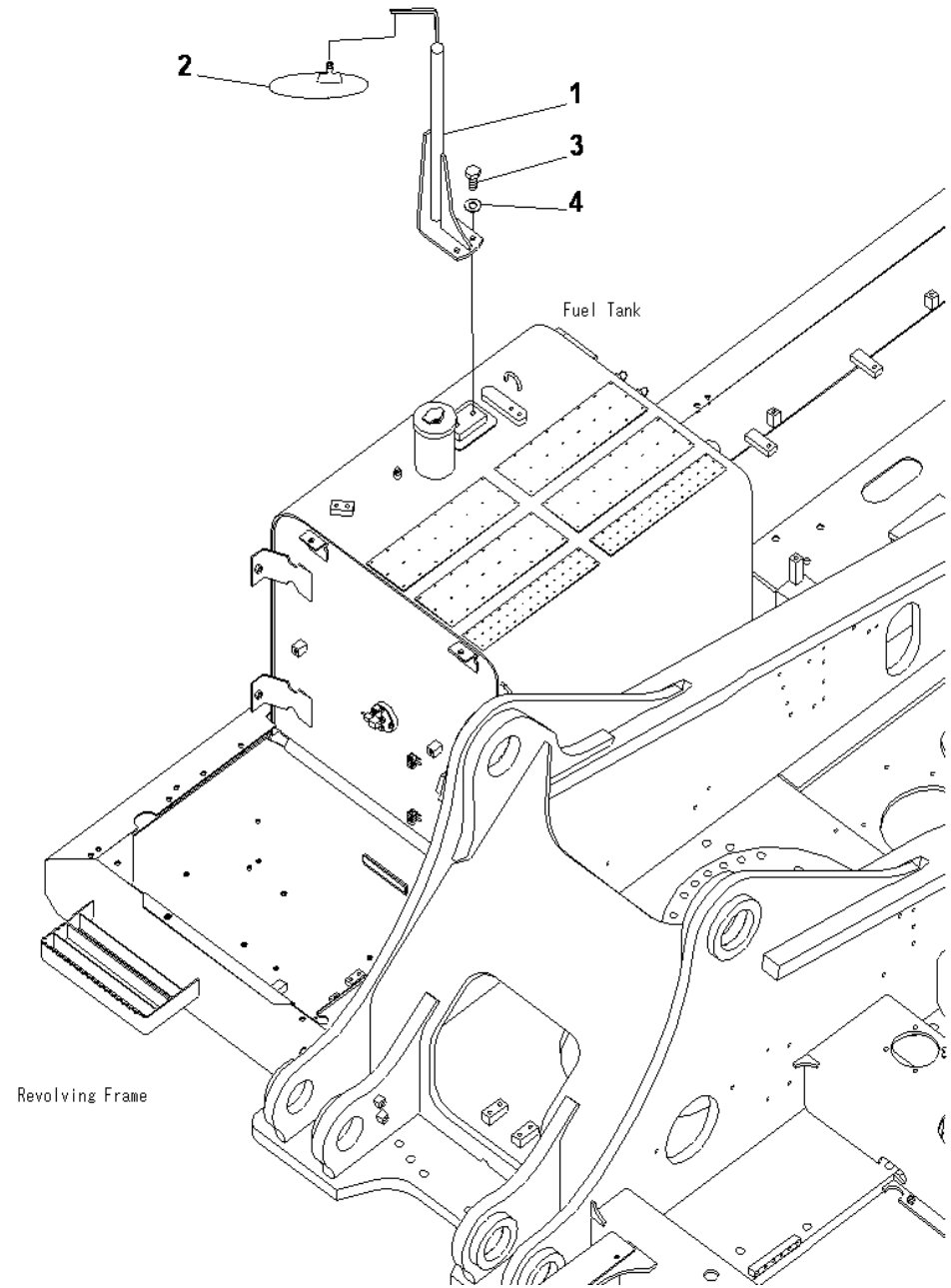

PC400-8 S/N J30001-UP

REAR VIEW MIRROR

INDEX	CD	PART NO.	DESCRIPTION	QTY	SERIAL NO.
1		207-54-77930	BRACKET	1	J30001-UP
2		207-54-75710	MIRROR	1	J30001-UP
3		01010-81230	BOLT	2	J30001-UP
4		01643-31232	WASHER	2	J30001-UP

Ref :M1430-01A0 Page :240180

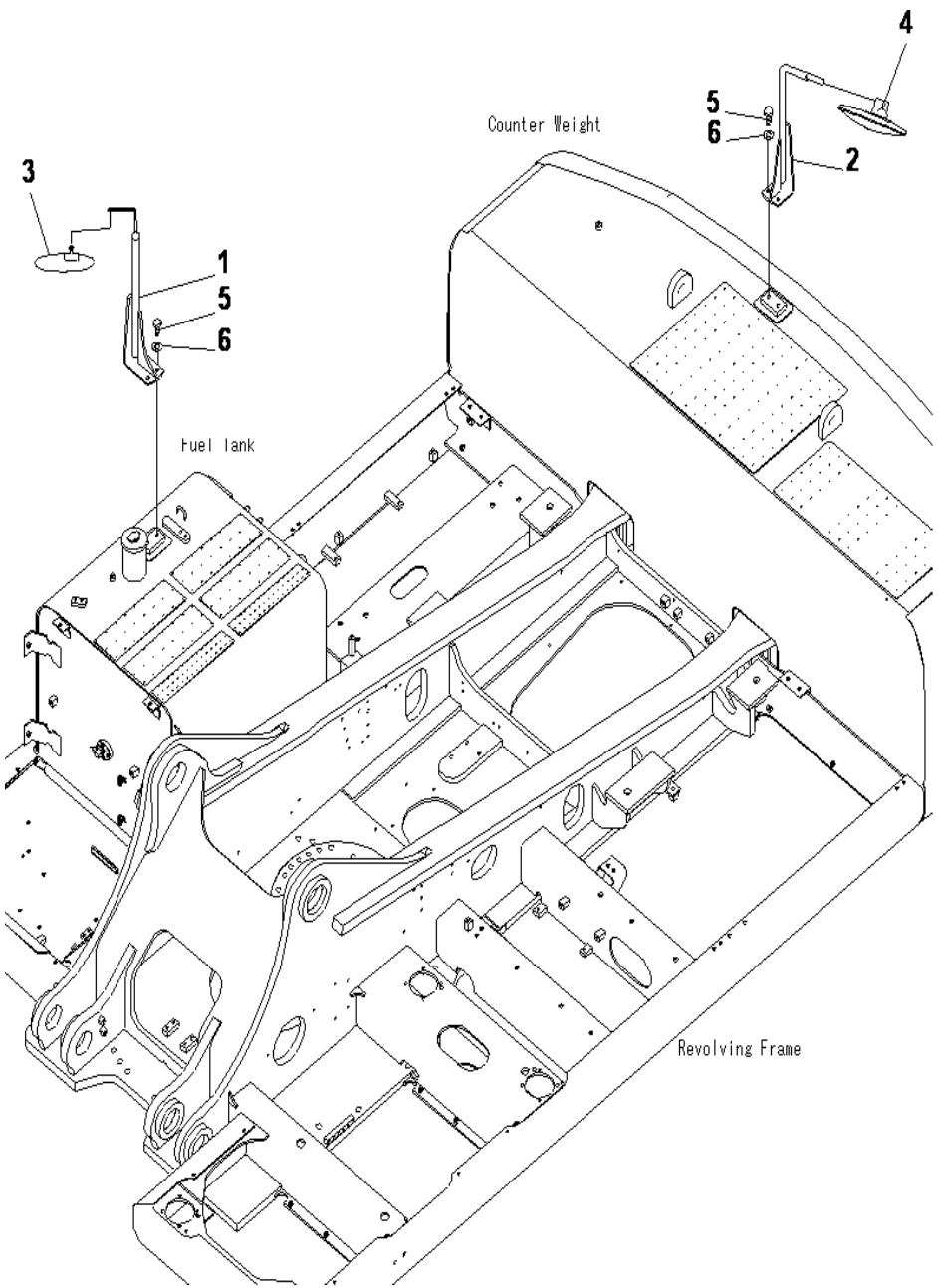

PC400-8 S/N J30001-UP

REAR VIEW MIRROR

INDEX	CD	PART NO.	DESCRIPTION	QTY	SERIAL NO.
1		207-54-77930	BRACKET	1	J30001-UP
2		208-54-77940	BRACKET	1	J30001-UP
3		207-54-75710	MIRROR	1	J30001-UP
4		207-54-77960	MIRROR	1	J30001-UP
5		01010-81230	BOLT	4	J30001-UP
6		01643-31232	WASHER	4	J30001-UP

Ref :M1430-01A1 Page :240190

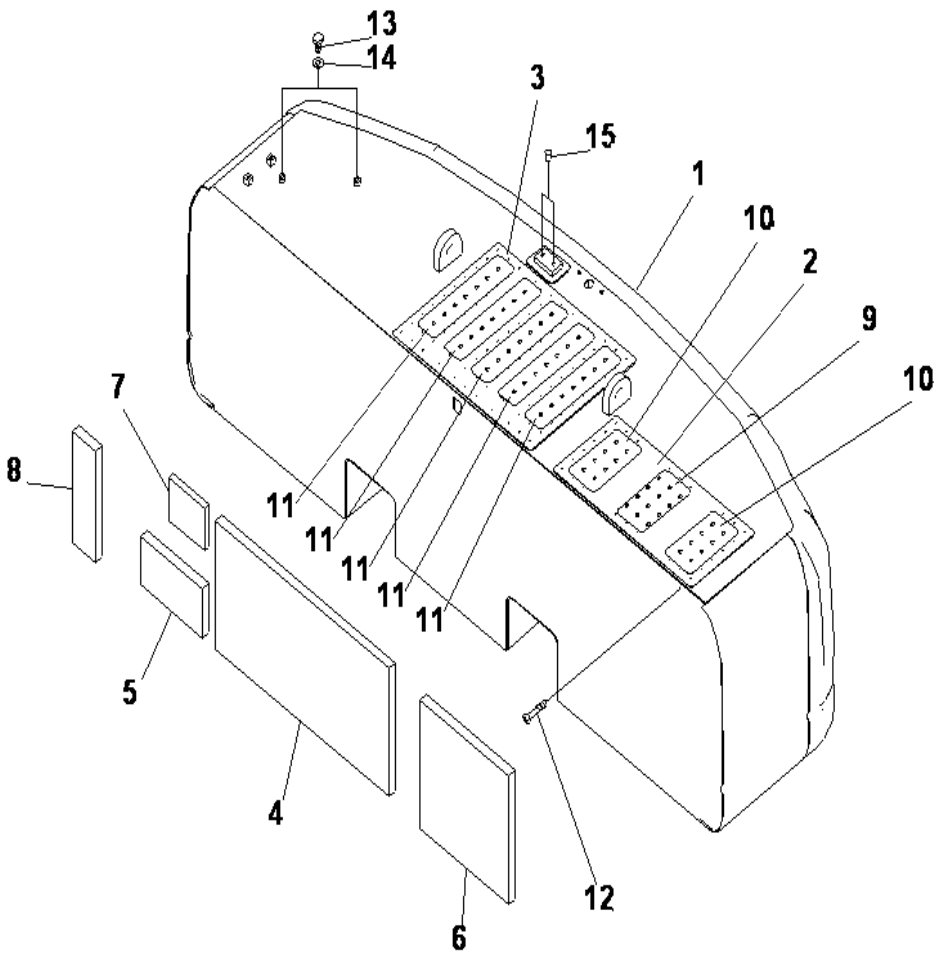

PC400-8 S/N J30001-UP

COUNTER WEIGHT (9220KG)

INDEX	CD	PART NO.	DESCRIPTION	QTY	SERIAL NO.
1		208-46-79412	WEIGHT	1	J30024-UP
		208-46-79411	WEIGHT	1	J30001-J30023
2		208-46-79120	.PLATE. (WELDED)	1	J30001-UP
3		208-46-79130	.PLATE. (WELDED)	1	J30001-UP
4		208-46-74170	SHEET	1	J30001-UP
5		208-46-74180	SHEET	1	J30001-UP
6		208-46-74150	SHEET	1	J30001-UP
7		208-46-74190	SHEET	1	J30001-UP
8		208-46-74270	SHEET	1	J30001-UP
9		20Y-00-42210	PLATE	1	J30001-UP
10		208-00-76240	PLATE	2	J30001-UP
11		22U-00-28140	PLATE	5	J30001-UP
12		01370-00508	SCREW	1	J30001-UP
13		01010-81220	BOLT	2	J30001-UP
14		01643-31232	WASHER	2	J30001-UP
15		07049-01215	PLUG	2	J30001-UP

Ref :M1510-01A0 Page :240200

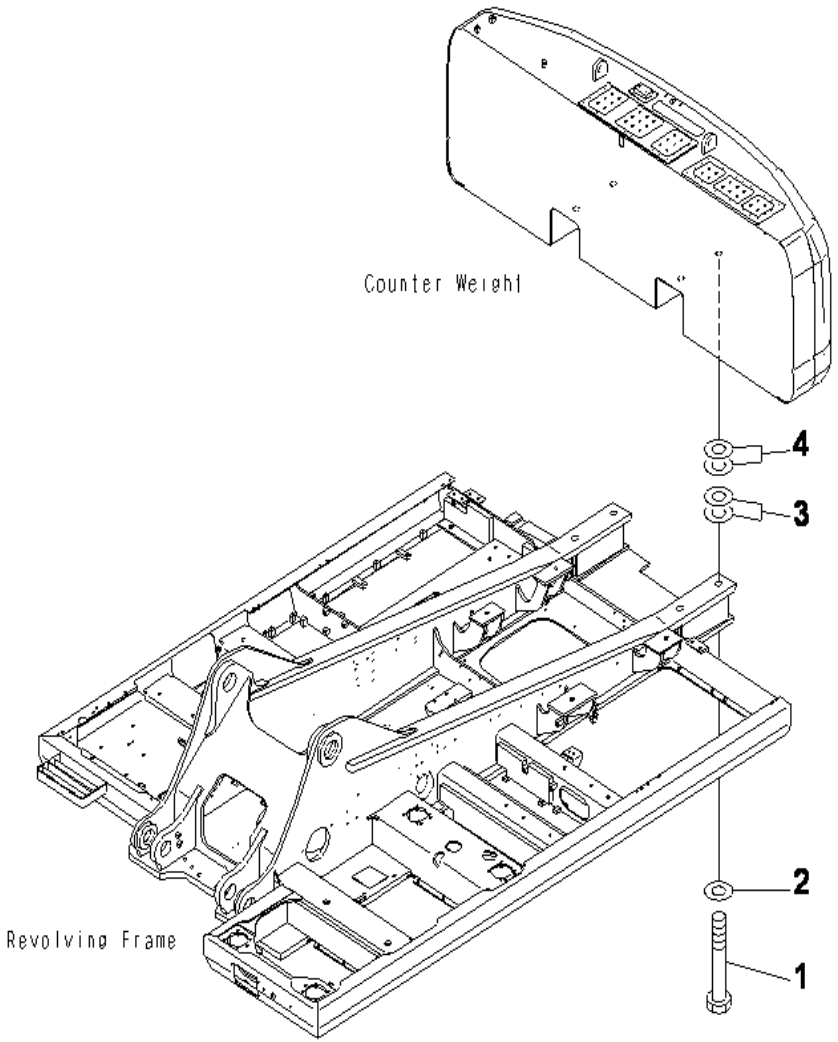

PC400-8 S/N J30001-UP

COUNTER WEIGHT MOUNTING

INDEX	CD	PART NO.	DESCRIPTION	QTY	SERIAL NO.
1		208-46-74121	BOLT.....	4	J30001-UP
2		01643-34212	WASHER.....	4	J30001-UP
3		208-46-52260	SHIM. 1.0MM.....	4	J30001-UP
4		208-46-52270	SHIM. 0.5MM.....	4	J30001-UP

Ref :M1520-01A0 Page :240210

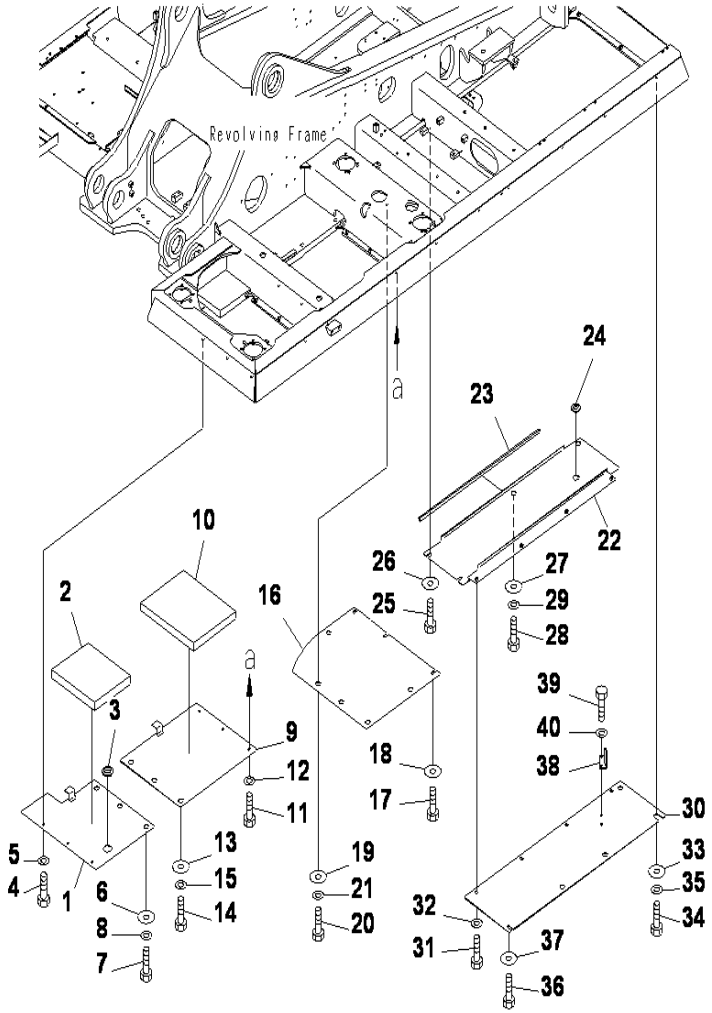

UNDER COVER (REVOLVING FRAME) (L.H) (HEAVY DUTY) (FOR FUEL REFILL PUMP)

INDEX	CD	PART NO.	DESCRIPTION	QTY	SERIAL NO.
1		208-54-78340	COVER	1	J30001-UP
2		208-54-73520	SHEET	1	J30001-UP
3		08037-05016	GROMMET	1	J30001-UP
4		01010-81230	BOLT	3	J30001-UP
5		01643-31232	WASHER	3	J30001-UP
6		208-54-57180	COLLAR	3	J30001-UP
7		01010-81230	BOLT	3	J30001-UP
8		01643-31232	WASHER	3	J30001-UP
9		207-54-78640	COVER	1	J30001-UP
10		208-54-73490	SHEET	1	J30001-UP
11		01010-81230	BOLT	3	J30001-UP
12		01643-31232	WASHER	3	J30001-UP
13		208-54-57180	COLLAR	3	J30001-UP
14		01010-81230	BOLT	3	J30001-UP
15		01643-31232	WASHER	3	J30001-UP
16		208-54-77620	COVER	1	J30001-UP
17		01010-81230	BOLT	3	J30001-UP
18		175-54-34170	WASHER	3	J30001-UP
19		208-54-57180	COLLAR	5	J30001-UP
20		01010-81230	BOLT	5	J30001-UP
21		01643-31232	WASHER	5	J30001-UP
22		208-54-77640	COVER	1	J30001-UP
23		208-54-76211	.SHEET	1	J30001-UP
24		08037-03614	GROMMET	1	J30001-UP
25		01010-81230	BOLT	2	J30001-UP
26		175-54-34170	WASHER	2	J30001-UP
27		208-54-57180	COLLAR	2	J30001-UP
28		01010-81230	BOLT	2	J30001-UP
29		01643-31232	WASHER	2	J30001-UP
30		208-54-72442	COVER	1	J30001-UP
31		01010-81230	BOLT	4	J30001-UP
32		01643-31232	WASHER	4	J30001-UP
33		208-54-57180	COLLAR	4	J30001-UP
34		01010-81230	BOLT	4	J30001-UP
35		01643-31232	WASHER	4	J30001-UP
36		01010-81230	BOLT	1	J30001-UP
37		175-54-34170	WASHER	1	J30001-UP
38		20Y-54-61670	BRACKET	1	J30001-UP
39		01010-81230	BOLT	2	J30001-UP
40		01643-31232	WASHER	2	J30001-UP

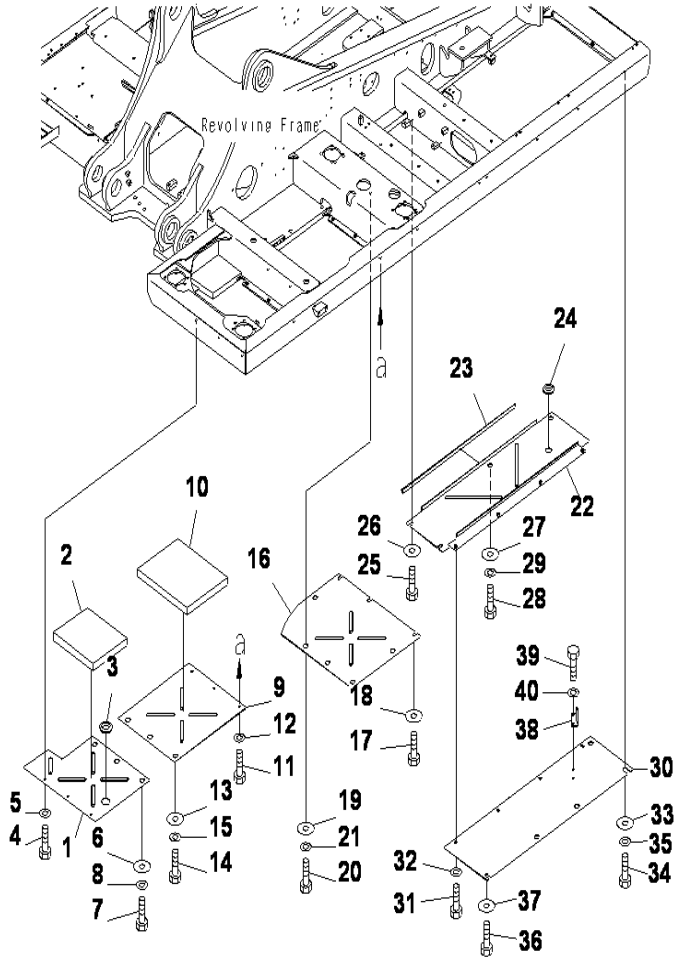

PC400-8 S/N J30001-UP

UNDER COVER (REVOLVING FRAME) (L.H) (FOR FUEL REFILL PUMP)

INDEX	CD	PART NO.	DESCRIPTION	QTY	SERIAL NO.
1		208-54-78320	COVER	1	J30001-UP
2		208-54-73520	SHEET	1	J30001-UP
3		08037-05016	GROMMET	1	J30001-UP
4		01010-81230	BOLT	3	J30001-UP
5		01643-31232	WASHER	3	J30001-UP
6		20Y-54-12550	COLLAR	3	J30001-UP
7		01010-81230	BOLT	3	J30001-UP
8		01643-31232	WASHER	3	J30001-UP
9		207-54-78620	COVER	1	J30001-UP
10		208-54-73490	SHEET	1	J30001-UP
11		01010-81230	BOLT	3	J30001-UP
12		01643-31232	WASHER	3	J30001-UP
13		20Y-54-12550	COLLAR	3	J30001-UP
14		01010-81230	BOLT	3	J30001-UP
15		01643-31232	WASHER	3	J30001-UP
16		208-54-77610	COVER	1	J30001-UP
17		01010-81230	BOLT	3	J30001-UP
18		175-54-34170	WASHER	3	J30001-UP
19		20Y-54-12550	COLLAR	5	J30001-UP
20		01010-81230	BOLT	5	J30001-UP
21		01643-31232	WASHER	5	J30001-UP
22		208-54-77630	COVER	1	J30001-UP
23		208-54-76211	.SHEET	1	J30001-UP
24		08037-03614	GROMMET	1	J30001-UP
25		01010-81230	BOLT	2	J30001-UP
26		175-54-34170	WASHER	2	J30001-UP
27		20Y-54-12550	COLLAR	2	J30001-UP
28		01010-81230	BOLT	2	J30001-UP
29		01643-31232	WASHER	2	J30001-UP
30		208-54-72442	COVER	1	J30001-UP
31		01010-81230	BOLT	4	J30001-UP
32		01643-31232	WASHER	4	J30001-UP
33		208-54-57180	COLLAR	4	J30001-UP
34		01010-81230	BOLT	4	J30001-UP
35		01643-31232	WASHER	4	J30001-UP
36		01010-81230	BOLT	1	J30001-UP
37		175-54-34170	WASHER	1	J30001-UP
38		20Y-54-61670	BRACKET	1	J30001-UP
39		01010-81230	BOLT	2	J30001-UP
40		01643-31232	WASHER	2	J30001-UP

Ref :M1810-01A2 Page :240230

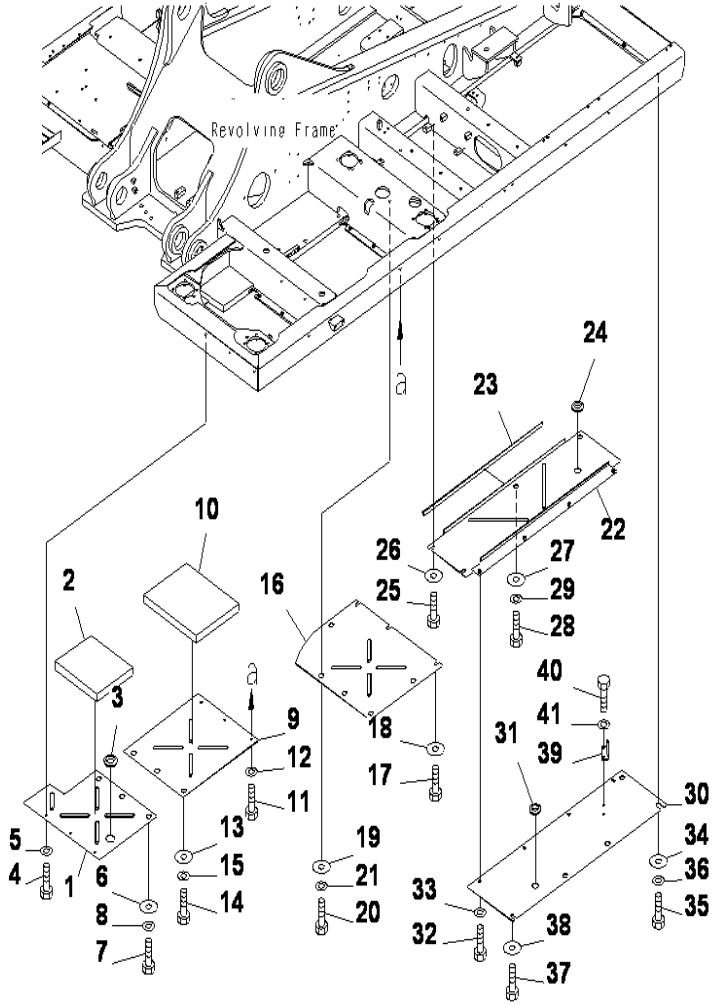

UNDER COVER (REVOLVING FRAME) (L.H)

INDEX	CD	PART NO.	DESCRIPTION	QTY	SERIAL NO.
1		208-54-78320	COVER	1	J30001-UP
2		208-54-73520	SHEET	1	J30001-UP
3		08037-05016	GROMMET	1	J30001-UP
4		01010-81230	BOLT	3	J30001-UP
5		01643-31232	WASHER	3	J30001-UP
6		20Y-54-12550	COLLAR	3	J30001-UP
7		01010-81230	BOLT	3	J30001-UP
8		01643-31232	WASHER	3	J30001-UP
9		2075478620	COVER	1	J30001-UP
10		208-54-73490	SHEET	1	J30001-UP
11		01010-81230	BOLT	3	J30001-UP
12		01643-31232	WASHER	3	J30001-UP
13		20Y-54-12550	COLLAR	3	J30001-UP
14		01010-81230	BOLT	3	J30001-UP
15		01643-31232	WASHER	3	J30001-UP
16		208-54-77610	COVER	1	J30001-UP
17		01010-81230	BOLT	3	J30001-UP
18		175-54-34170	WASHER	3	J30001-UP
19		20Y-54-12550	COLLAR	5	J30001-UP
20		01010-81230	BOLT	5	J30001-UP
21		01643-31232	WASHER	5	J30001-UP
22		208-54-77630	COVER	1	J30001-UP
23		208-54-76211	.SHEET	1	J30001-UP
24		08037-03614	GROMMET	1	J30001-UP
25		01010-81230	BOLT	2	J30001-UP
26		175-54-34170	WASHER	2	J30001-UP
27		20Y-54-12550	COLLAR	2	J30001-UP
28		01010-81230	BOLT	2	J30001-UP
29		01643-31232	WASHER	2	J30001-UP
30		208-54-78470	COVER	1	J30001-UP
31		08037-03614	GROMMET	1	J30001-UP
32		01010-81230	BOLT	4	J30001-UP
33		01643-31232	WASHER	4	J30001-UP
34		208-54-57180	COLLAR	4	J30001-UP
35		01010-81230	BOLT	4	J30001-UP
36		01643-31232	WASHER	4	J30001-UP
37		01010-81230	BOLT	1	J30001-UP
38		175-54-34170	WASHER	1	J30001-UP
39		20Y-54-61670	BRACKET	1	J30001-UP
40		01010-81230	BOLT	2	J30001-UP
41		01643-31232	WASHER	2	J30001-UP

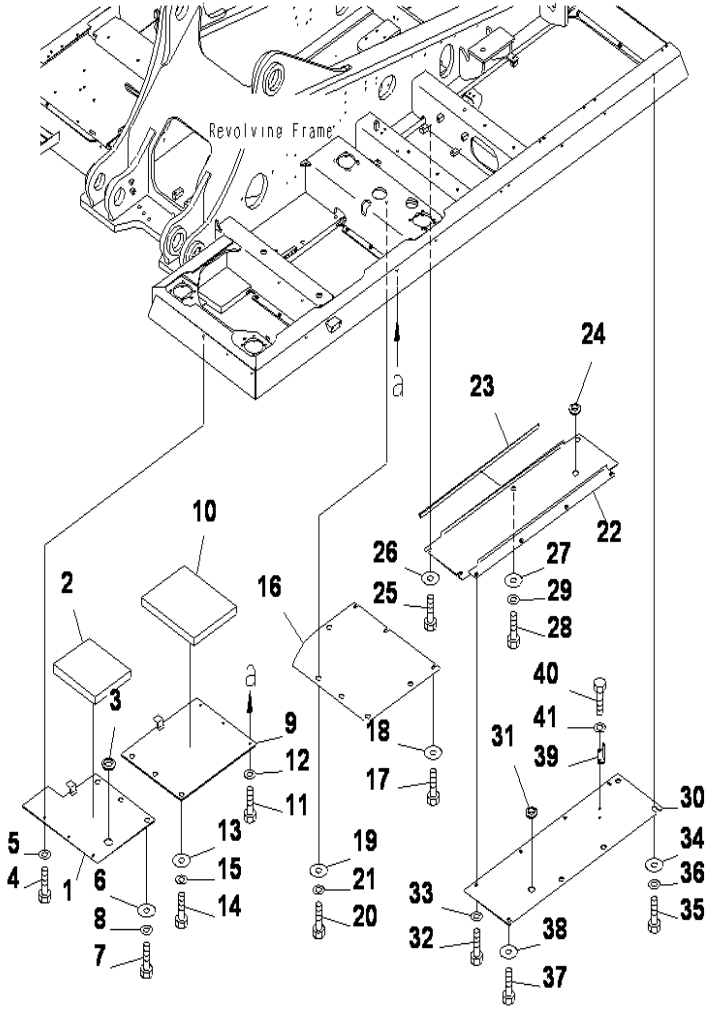

UNDER COVER (REVOLVING FRAME) (L.H) (HEAVY DUTY)

INDEX	CD	PART NO.	DESCRIPTION	QTY	SERIAL NO.
1		208-54-78340	COVER	1	J30001-UP
2		208-54-73520	SHEET	1	J30001-UP
3		08037-05016	GROMMET	1	J30001-UP
4		01010-81230	BOLT	3	J30001-UP
5		01643-31232	WASHER	3	J30001-UP
6		208-54-57180	COLLAR	3	J30001-UP
7		01010-81230	BOLT	3	J30001-UP
8		01643-31232	WASHER	3	J30001-UP
9		207-54-78640	COVER	1	J30001-UP
10		208-54-73490	SHEET	1	J30001-UP
11		01010-81230	BOLT	3	J30001-UP
12		01643-31232	WASHER	3	J30001-UP
13		208-54-57180	COLLAR	3	J30001-UP
14		01010-81230	BOLT	3	J30001-UP
15		01643-31232	WASHER	3	J30001-UP
16		208-54-77620	COVER	1	J30001-UP
17		01010-81230	BOLT	3	J30001-UP
18		175-54-34170	WASHER	3	J30001-UP
19		208-54-57180	COLLAR	5	J30001-UP
20		01010-81230	BOLT	5	J30001-UP
21		01643-31232	WASHER	5	J30001-UP
22		208-54-77640	COVER	1	J30001-UP
23		208-54-76211	.SHEET	1	J30001-UP
24		08037-03614	GROMMET	1	J30001-UP
25		01010-81230	BOLT	2	J30001-UP
26		175-54-34170	WASHER	2	J30001-UP
27		208-54-57180	COLLAR	2	J30001-UP
28		01010-81230	BOLT	2	J30001-UP
29		01643-31232	WASHER	2	J30001-UP
30		208-54-78470	COVER	1	J30001-UP
31		08037-03614	GROMMET	1	J30001-UP
32		01010-81230	BOLT	4	J30001-UP
33		01643-31232	WASHER	4	J30001-UP
34		208-54-57180	COLLAR	4	J30001-UP
35		01010-81230	BOLT	4	J30001-UP
36		01643-31232	WASHER	4	J30001-UP
37		01010-81230	BOLT	1	J30001-UP
38		175-54-34170	WASHER	1	J30001-UP
39		20Y-54-61670	BRACKET	1	J30001-UP
40		01010-81230	BOLT	2	J30001-UP
41		01643-31232	WASHER	2	J30001-UP

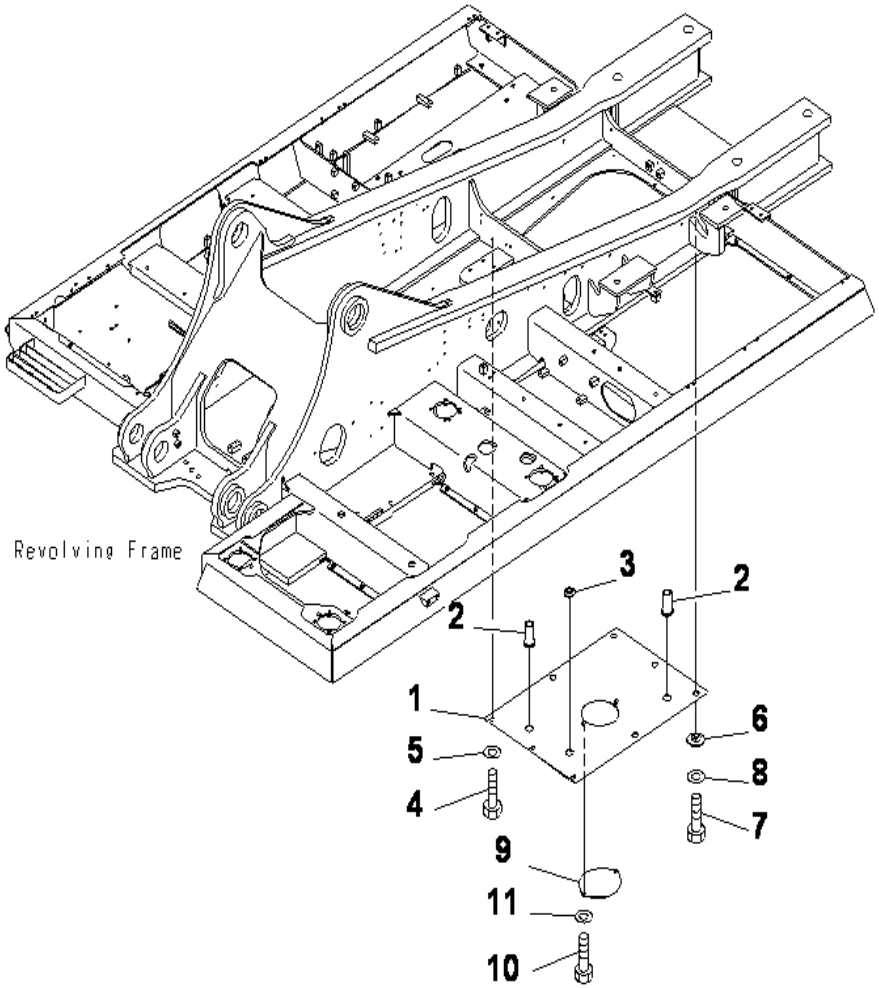

PC400-8 S/N J30001-UP

UNDER COVER (REVOLVING FRAME) (CENTER) (HEAVY DUTY) (FOR FUEL REFILL PUMP)

INDEX	CD	PART NO.	DESCRIPTION	QTY	SERIAL NO.
1		208-54-78360	COVER	1	J30001-UP
2		22U-54-24760	GROMMET	2	J30001-UP
3		08037-03614	GROMMET	1	J30001-UP
4		01010-81230	BOLT	3	J30001-UP
5		175-54-34170	WASHER	3	J30001-UP
6		208-54-57180	COLLAR	5	J30001-UP
7		01010-81230	BOLT	5	J30001-UP
8		01643-31232	WASHER	5	J30001-UP
9		207-54-51440	PLATE	1	J30001-UP
10		01010-81230	BOLT	2	J30001-UP
11		01643-31232	WASHER	2	J30001-UP

Ref :M1810-02A1 Page :240260

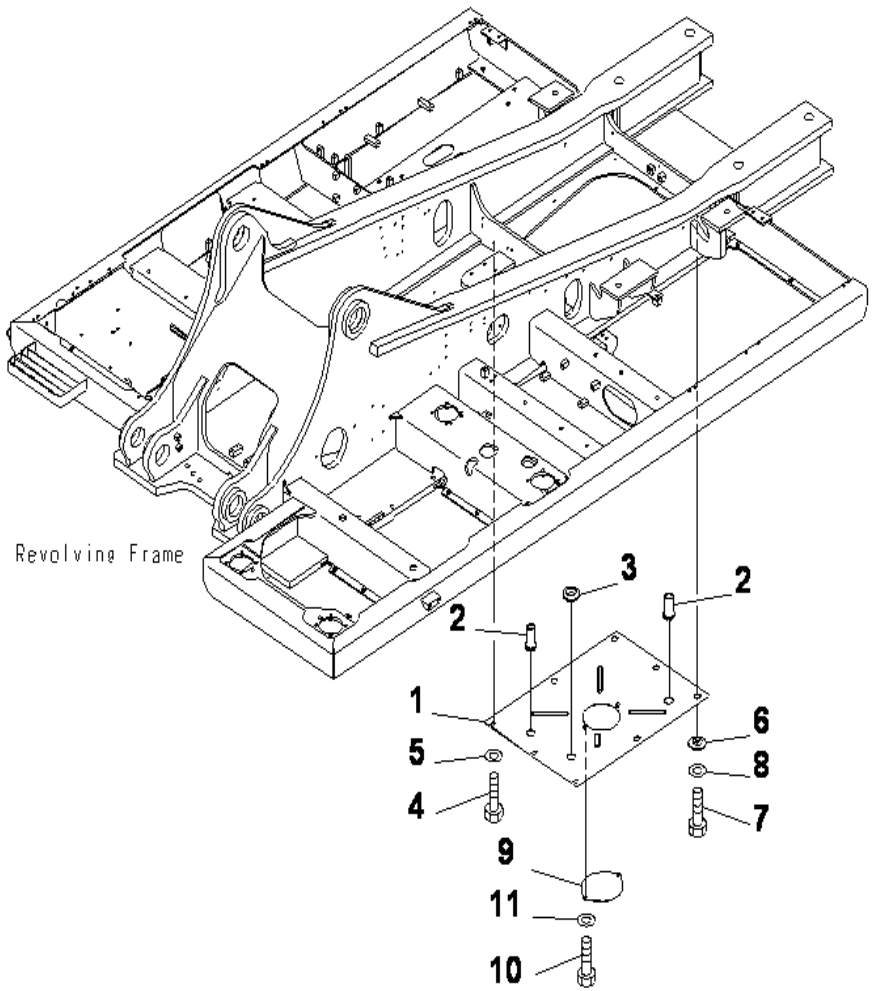

PC400-8 S/N J30001-UP

UNDER COVER (REVOLVING FRAME) (CENTER) (FOR FUEL REFILL PUMP)

INDEX	CD	PART NO.	DESCRIPTION	QTY	SERIAL NO.
1		2085478350	COVER	1	J30001-UP
2		22U-54-24760	GROMMET	2	J30001-UP
3		08037-03614	GROMMET	1	J30001-UP
4		01010-81230	BOLT	3	J30001-UP
5		175-54-34170	WASHER	3	J30001-UP
6		20Y-54-12550	COLLAR	5	J30001-UP
7		01010-81230	BOLT	5	J30001-UP
8		01643-31232	WASHER	5	J30001-UP
9		2075451440	PLATE	1	J30001-UP
10		01010-81230	BOLT	2	J30001-UP
11		01643-31232	WASHER	2	J30001-UP

Ref :M1810-02A2 Page :240270

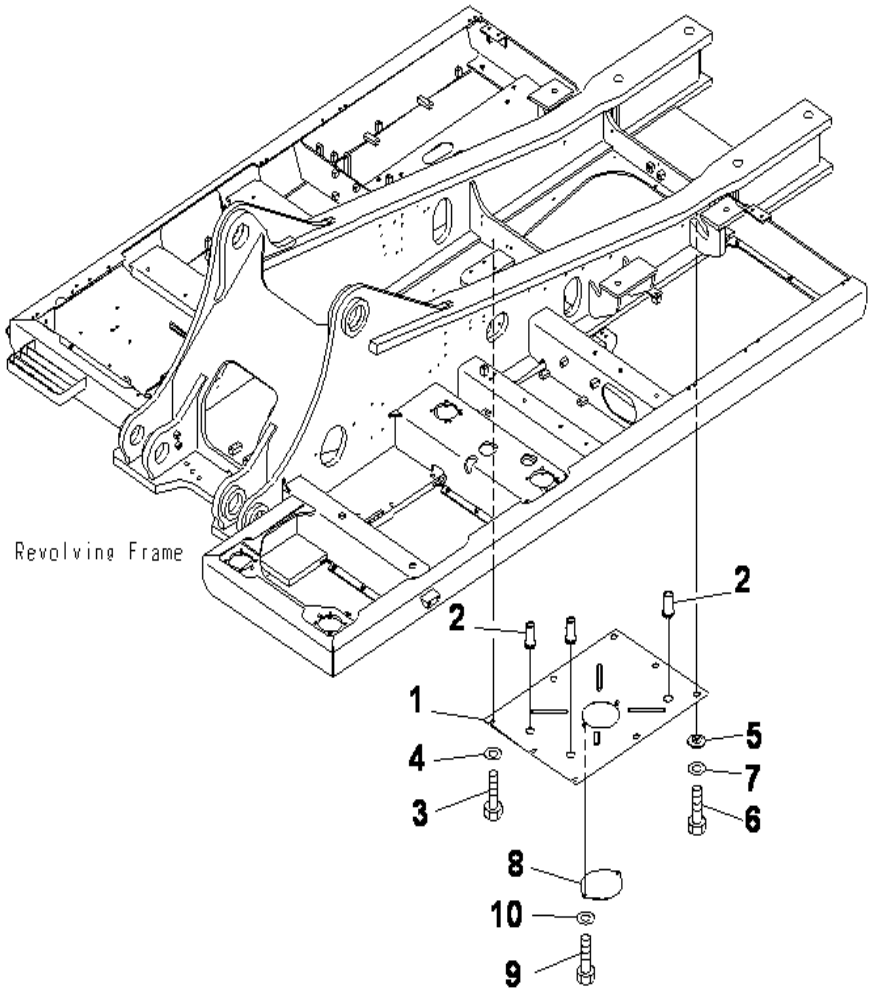

PC400-8 S/N J30001-UP

UNDER COVER (REVOLVING FRAME) (CENTER)

INDEX	CD	PART NO.	DESCRIPTION	QTY	SERIAL NO.
1		208-54-78350	COVER	1	J30001-UP
2		22U-54-24760	GROMMET	3	J30001-UP
3		01010-81230	BOLT	3	J30001-UP
4		175-54-34170	WASHER	3	J30001-UP
5		20Y-54-12550	COLLAR	5	J30001-UP
6		01010-81230	BOLT	5	J30001-UP
7		01643-31232	WASHER	5	J30001-UP
8		207-54-51440	PLATE	1	J30001-UP
9		01010-81230	BOLT	2	J30001-UP
10		01643-31232	WASHER	2	J30001-UP

Ref :M1810-02A3 Page :240280

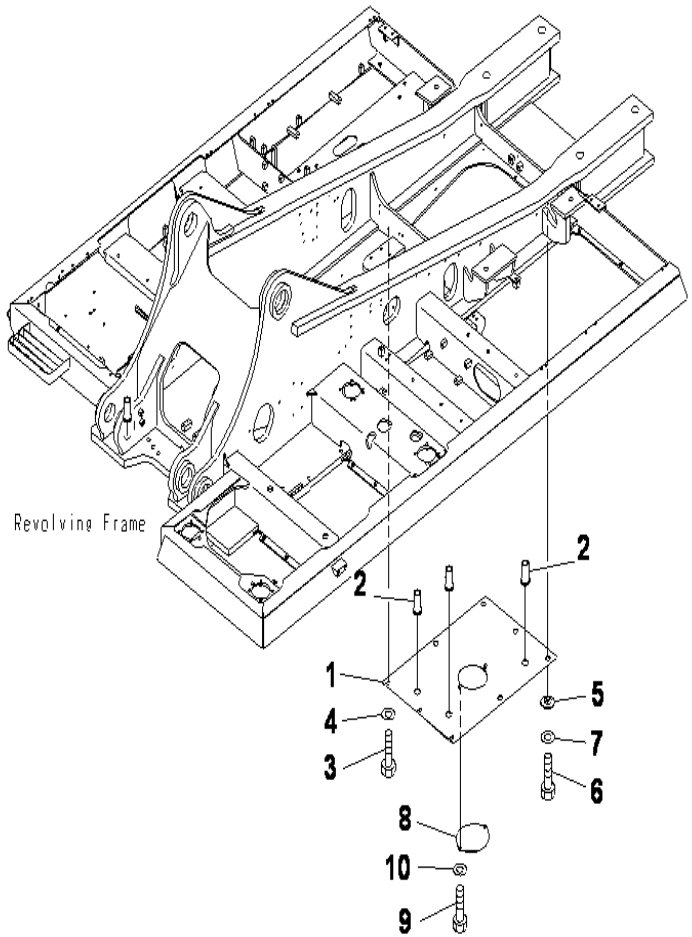

PC400-8 S/N J30001-UP

UNDER COVER (REVOLVING FRAME) (CENTER) (HEAVY DUTY)

INDEX	CD	PART NO.	DESCRIPTION	QTY	SERIAL NO.
1		208-54-78360	COVER	1	J30001-UP
2		22U-54-24760	GROMMET	3	J30001-UP
3		01010-81230	BOLT	3	J30001-UP
4		175-54-34170	WASHER	3	J30001-UP
5		208-54-57180	COLLAR	5	J30001-UP
6		01010-81230	BOLT	5	J30001-UP
7		01643-31232	WASHER	5	J30001-UP
8		207-54-51440	PLATE	1	J30001-UP
9		01010-81230	BOLT	2	J30001-UP
10		01643-31232	WASHER	2	J30001-UP

Ref :M1810-02A4 Page :240290

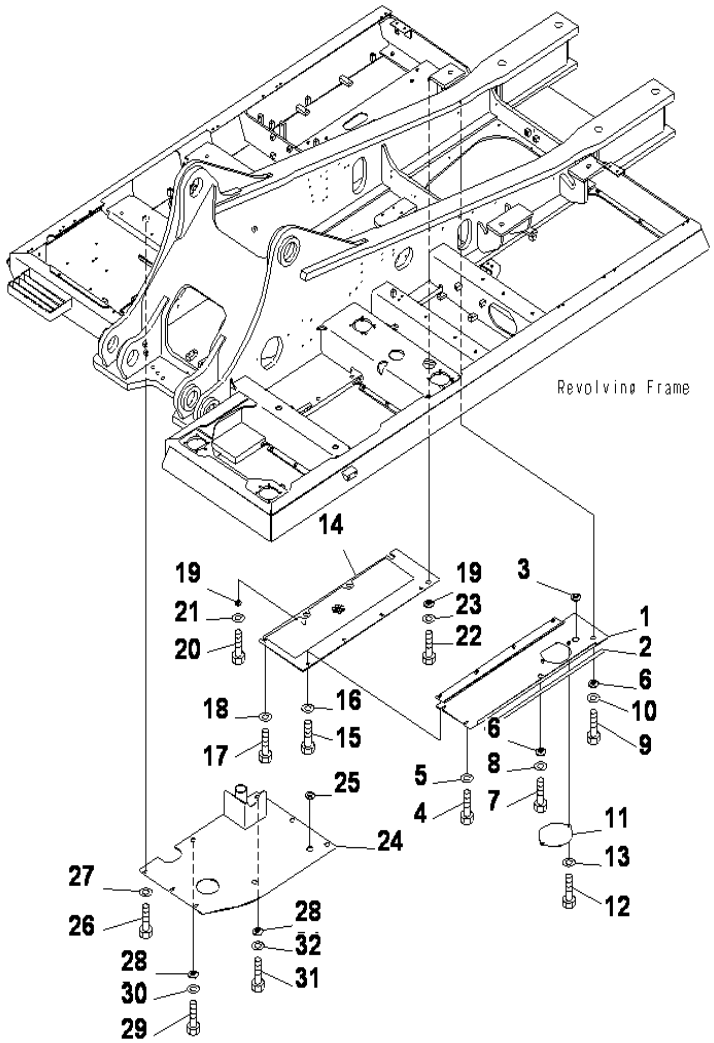

PC400-8 S/N J30001-UP

UNDER COVER (REVOLVING FRAME) (R.H) (HEAVY DUTY) (FOR FUEL REFILL PUMP)

INDEX	CD	PART NO.	DESCRIPTION	QTY	SERIAL NO.
1		208-54-78290	COVER	1	J30001-UP
2		208-54-76221	.SHEET	1	J30001-UP
3		08037-03614	GROMMET	1	J30001-UP
4		01010-81230	BOLT	2	J30001-UP
5		175-54-34170	WASHER	2	J30001-UP
6		208-54-57180	COLLAR	2	J30001-UP
7		01010-81230	BOLT	1	J30001-UP
8		01643-31232	WASHER	1	J30001-UP
9		01010-81240	BOLT	1	J30001-UP
10		01643-31232	WASHER	1	J30001-UP
11		207-54-51440	PLATE	1	J30001-UP
12		01010-81230	BOLT	2	J30001-UP
13		01643-31232	WASHER	2	J30001-UP
14		208-54-76281	COVER	1	J30001-UP
15		01010-81230	BOLT	4	J30001-UP
16		01643-31232	WASHER	4	J30001-UP
17		01010-81230	BOLT	1	J30001-UP
18		175-54-34170	WASHER	1	J30001-UP
19		208-54-57180	COLLAR	4	J30001-UP
20		01010-81230	BOLT	2	J30001-UP
21		01643-31232	WASHER	2	J30001-UP
22		01010-81240	BOLT	2	J30001-UP
23		01643-31232	WASHER	2	J30001-UP
24		208-54-78550	COVER	1	J30001-UP
25		08037-03614	GROMMET	1	J30001-UP
26		01010-81230	BOLT	3	J30001-UP
27		175-54-34170	WASHER	3	J30001-UP
28		208-54-57180	COLLAR	5	J30001-UP
29		01010-81230	BOLT	2	J30001-UP
30		01643-31232	WASHER	2	J30001-UP
31		01010-81240	BOLT	3	J30001-UP
32		01643-31232	WASHER	3	J30001-UP

Ref :M1810-03A1 Page :240300

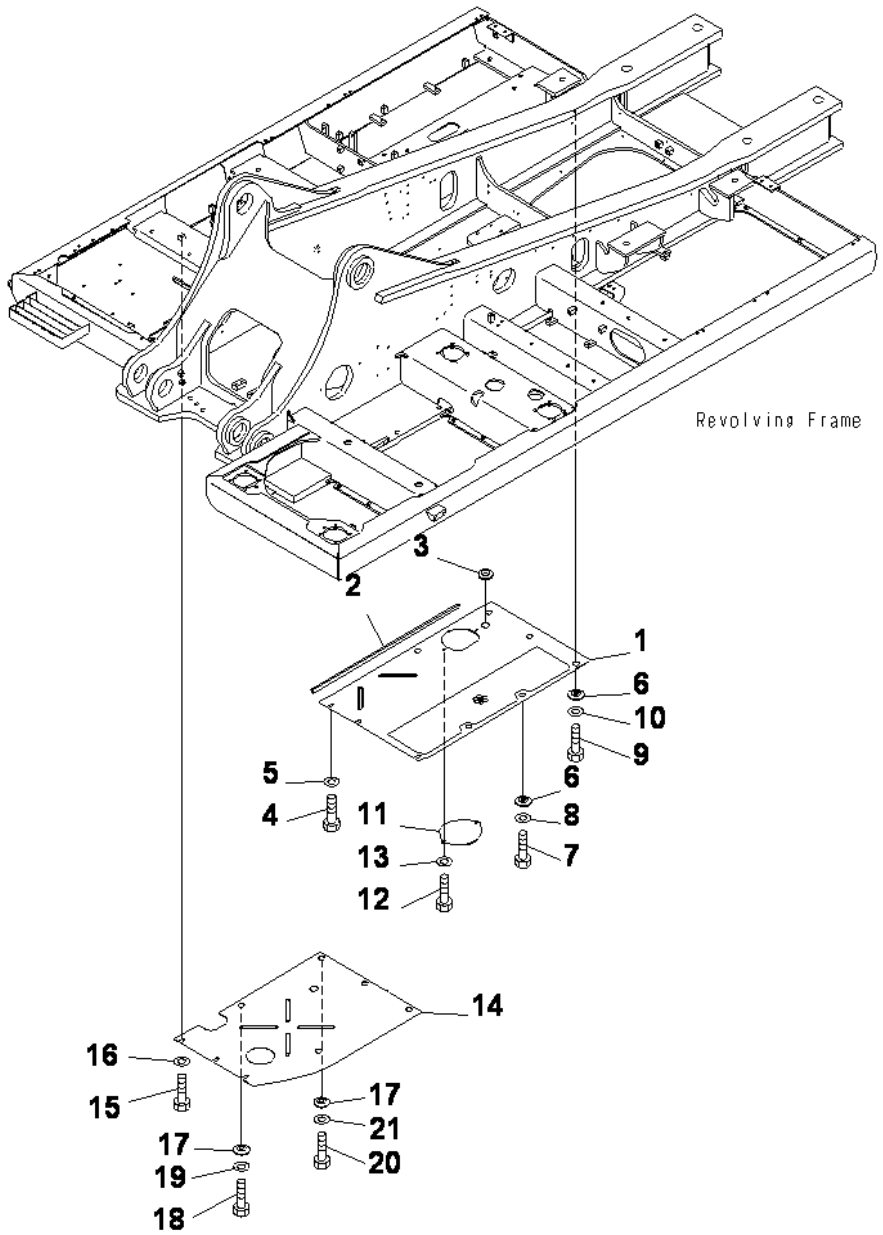

UNDER COVER (REVOLVING FRAME) (R.H) (FOR FUEL REFILL PUMP)

INDEX	CD	PART NO.	DESCRIPTION	QTY	SERIAL NO.
1		208-54-77961	COVER	1	J30001-UP
2		208-54-76221	.SHEET	1	J30001-UP
3		08037-03614	GROMMET	1	J30001-UP
4		01010-81230	BOLT	3	J30001-UP
5		175-54-34170	WASHER	3	J30001-UP
6		20Y-54-12550	COLLAR	6	J30001-UP
7		01010-81230	BOLT	3	J30001-UP
8		01643-31232	WASHER	3	J30001-UP
9		01010-81240	BOLT	3	J30001-UP
10		01643-31232	WASHER	3	J30001-UP
11		207-54-51440	PLATE	1	J30001-UP
12		01010-81230	BOLT	2	J30001-UP
13		01643-31232	WASHER	2	J30001-UP
14		208-54-78550	COVER	1	J30001-UP
15		01010-81230	BOLT	3	J30001-UP
16		175-54-34170	WASHER	3	J30001-UP
17		208-54-57180	COLLAR	5	J30001-UP
18		01010-81230	BOLT	2	J30001-UP
19		01643-31232	WASHER	2	J30001-UP
20		01010-81240	BOLT	3	J30001-UP
21		01643-31232	WASHER	3	J30001-UP

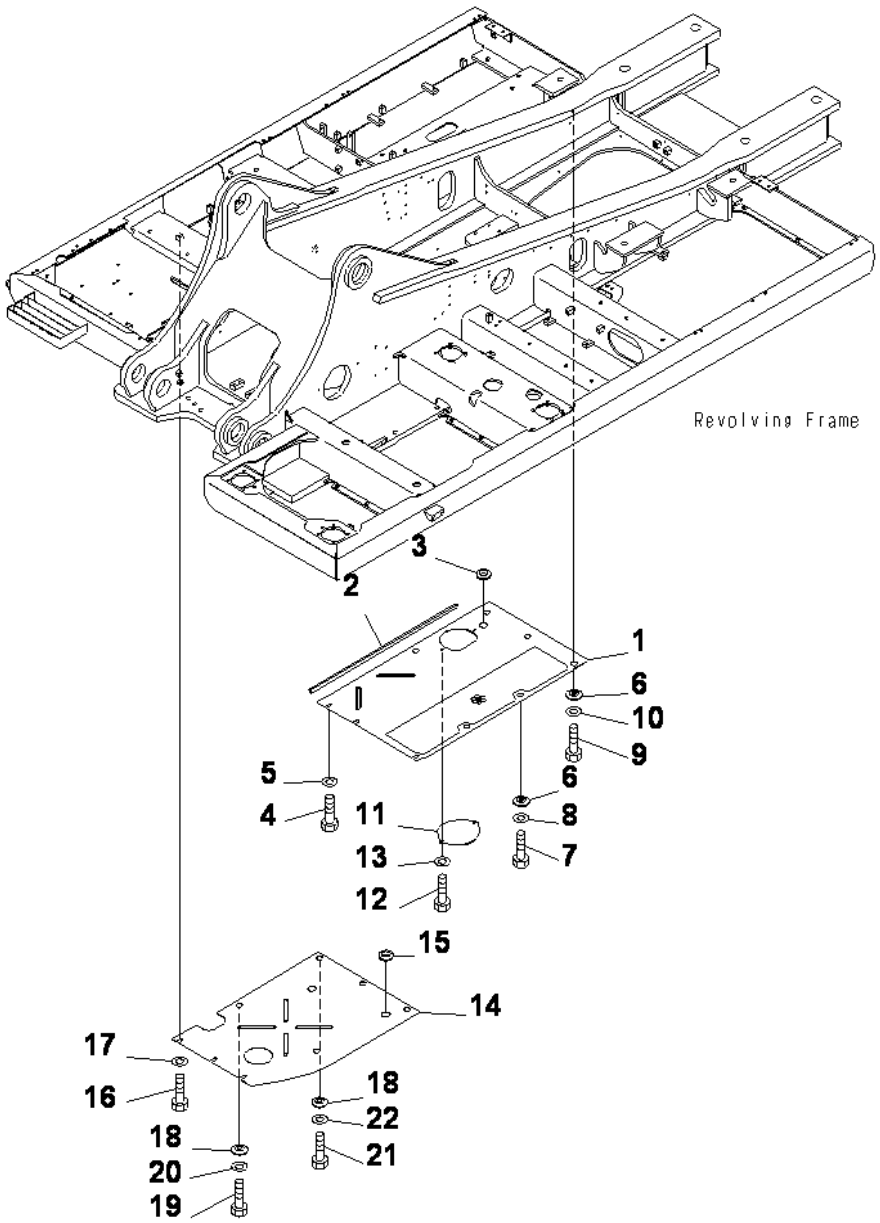

UNDER COVER (REVOLVING FRAME) (R.H)

INDEX	CD	PART NO.	DESCRIPTION	QTY	SERIAL NO.
1		208-54-77961	COVER	1	J30001-UP
2		208-54-76221	.SHEET	1	J30001-UP
3		08037-03614	GROMMET	1	J30001-UP
4		01010-81230	BOLT	3	J30001-UP
5		175-54-34170	WASHER	3	J30001-UP
6		20Y-54-12550	COLLAR	6	J30001-UP
7		01010-81230	BOLT	3	J30001-UP
8		01643-31232	WASHER	3	J30001-UP
9		01010-81240	BOLT	3	J30001-UP
10		01643-31232	WASHER	3	J30001-UP
11		207-54-51440	PLATE	1	J30001-UP
12		01010-81230	BOLT	2	J30001-UP
13		01643-31232	WASHER	2	J30001-UP
14		208-54-77921	COVER	1	J30001-UP
15		08037-03614	GROMMET	2	J30001-UP
16		01010-81230	BOLT	3	J30001-UP
17		175-54-34170	WASHER	3	J30001-UP
18		20Y-54-12550	COLLAR	5	J30001-UP
19		01010-81230	BOLT	2	J30001-UP
20		01643-31232	WASHER	2	J30001-UP
21		01010-81240	BOLT	3	J30001-UP
22		01643-31232	WASHER	3	J30001-UP

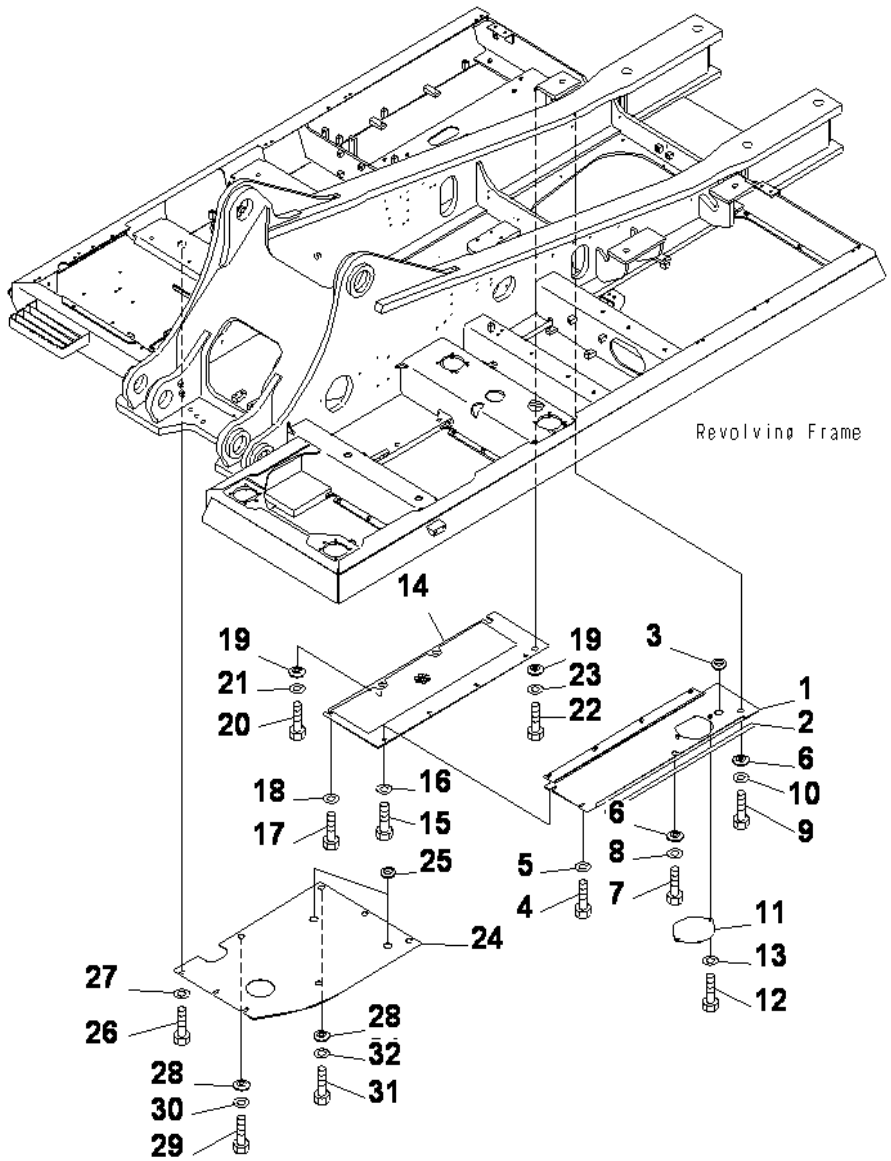

UNDER COVER (REVOLVING FRAME) (R.H) (HEAVY DUTY)

INDEX	CD	PART NO.	DESCRIPTION	QTY	SERIAL NO.
1		208-54-78290	COVER	1	J30001-UP
2		208-54-76221	.SHEET	1	J30001-UP
3		08037-03614	GROMMET	1	J30001-UP
4		01010-81230	BOLT	2	J30001-UP
5		175-54-34170	WASHER	2	J30001-UP
6		208-54-57180	COLLAR	2	J30001-UP
7		01010-81230	BOLT	1	J30001-UP
8		01643-31232	WASHER	1	J30001-UP
9		01010-81240	BOLT	1	J30001-UP
10		01643-31232	WASHER	1	J30001-UP
11		2075451440	PLATE	1	J30001-UP
12		01010-81230	BOLT	2	J30001-UP
13		01643-31232	WASHER	2	J30001-UP
14		208-54-76281	COVER	1	J30001-UP
15		01010-81230	BOLT	4	J30001-UP
16		01643-31232	WASHER	4	J30001-UP
17		01010-81230	BOLT	1	J30001-UP
18		175-54-34170	WASHER	1	J30001-UP
19		208-54-57180	COLLAR	4	J30001-UP
20		01010-81230	BOLT	2	J30001-UP
21		01643-31232	WASHER	2	J30001-UP
22		01010-81240	BOLT	2	J30001-UP
23		01643-31232	WASHER	2	J30001-UP
24		208-54-77931	COVER	1	J30001-UP
25		08037-03614	GROMMET	2	J30001-UP
26		01010-81230	BOLT	3	J30001-UP
27		175-54-34170	WASHER	3	J30001-UP
28		208-54-57180	COLLAR	5	J30001-UP
29		01010-81230	BOLT	2	J30001-UP
30		01643-31232	WASHER	2	J30001-UP
31		01010-81240	BOLT	3	J30001-UP
32		01643-31232	WASHER	3	J30001-UP

SWING CIRCLE AND RELATED PARTS

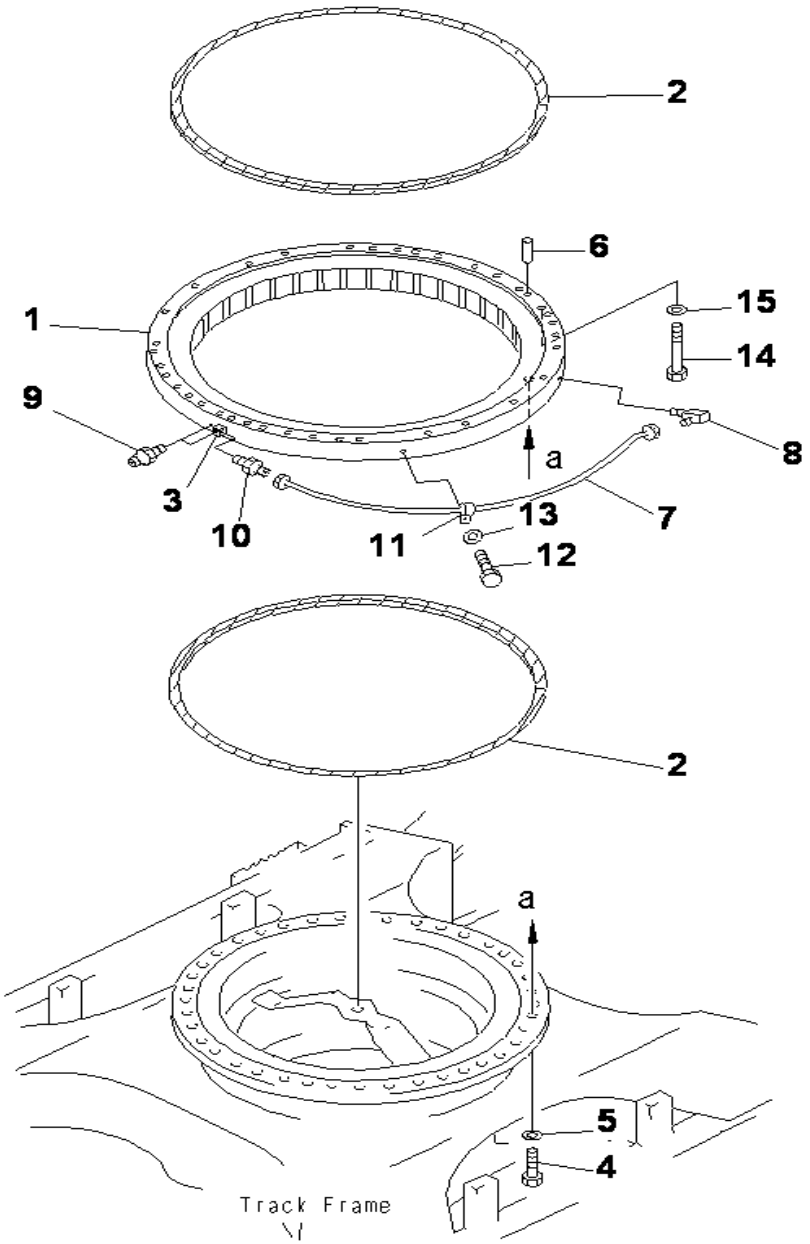

PC400-8 S/N J30001-UP

SWING CIRCLE

INDEX	CD	PART NO.	DESCRIPTION	QTY	SERIAL NO.
1		208-25-61100	SWING CIRCLE ASS'Y	1	J30001-UP
2		207-25-61160	.SEAL	2	J30001-UP
3		205-25-71280	.NIPPLE	1	J30001-UP
4		207-25-31180	BOLT	40	J30001-UP
5		01643-72460	WASHER	40	J30001-UP
6		04020-01842	PIN	2	J30001-UP
7		208-25-62110	TUBE	1	J30001-UP
8		20Y-25-11270	ELBOW	1	J30001-UP
9		07020-00000	FITTING	2	J30001-UP
10		07214-50813	CONNECTOR	1	J30001-UP
11		08036-00814	CLIP	1	J30001-UP
12		01010-81020	BOLT	1	J30001-UP
13		01643-31032	WASHER	1	J30001-UP
14		208-25-71230	BOLT	35	J30001-UP
15		01643-72780	WASHER	35	J30001-UP

Ref :N1110-01A0 Page :270010

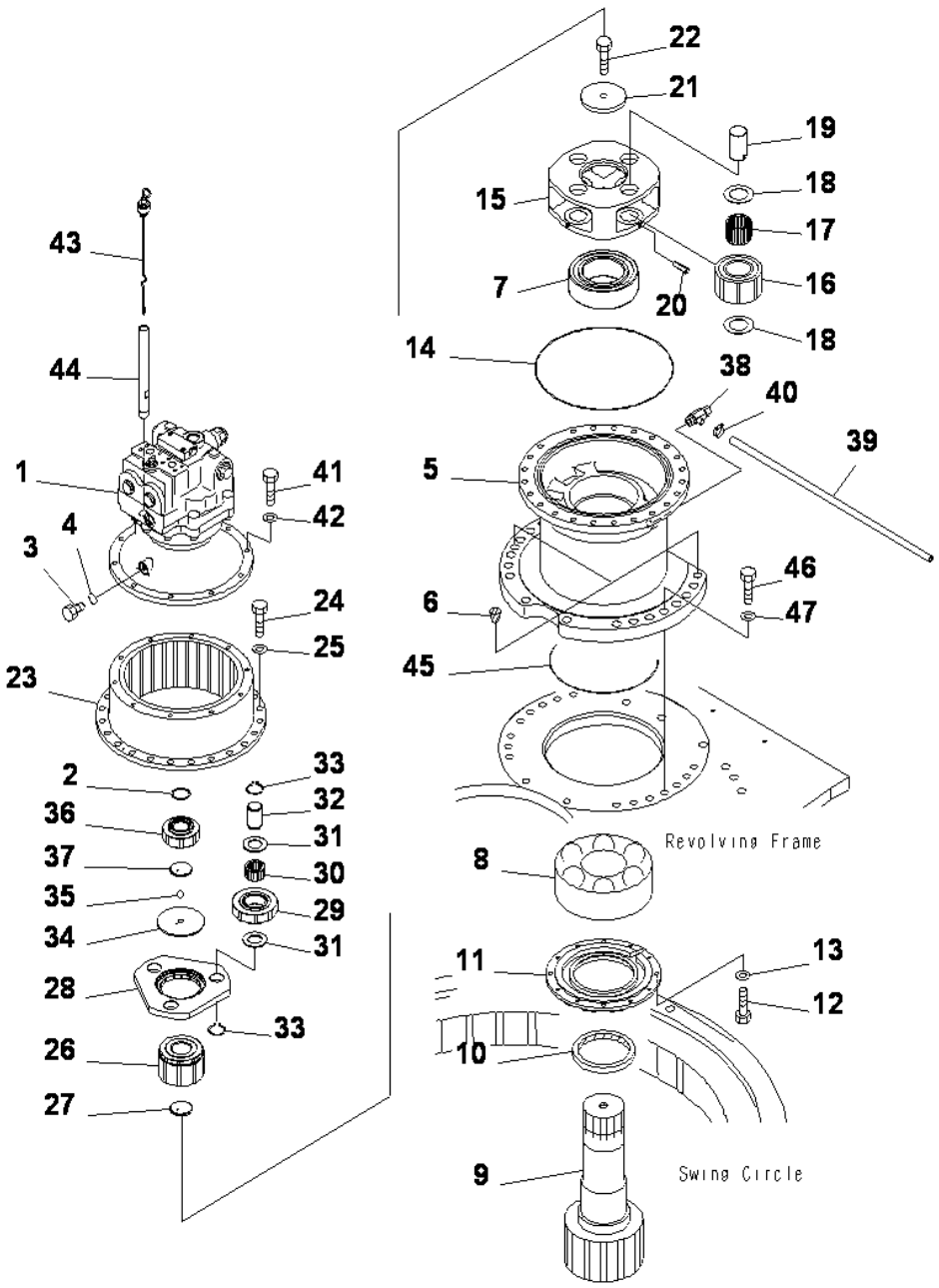

PC400-8 S/N J30001-UP

SWING MACHINERY

INDEX	CD	PART NO.	DESCRIPTION	QTY	SERIAL NO.
1		(706-7K-01160)	MOTOR ASS'Y. (SEE FIG. Y1640-01A0)	1	J30001-UP
2		207-26-71240	RING	1	J30001-UP
3		07040-11209	PLUG	1	J30001-UP
4		07002-11223	O-RING	1	J30001-UP
5		208-26-71190	CASE	1	J30001-UP
6		07049-02430	PLUG	2	J30001-UP
7		06000-23124	BEARING	1	J30001-UP
8		06000-22326	BEARING	1	J30001-UP
9		208-26-52242	SHAFT	1	J30001-UP
10		208-26-61290	OIL SEAL	1	J30001-UP
11		208-26-71360	COVER	1	J30001-UP
12		01010-81030	BOLT	12	J30001-UP
13		01643-31032	WASHER	12	J30001-UP
14		07000-15390	O-RING	1	J30001-UP
15		208-26-71181	CARRIER	1	J30001-UP
16		208-26-71140	GEAR	4	J30001-UP
17		207-27-61230	BEARING	4	J30001-UP
18		20Y-27-21250	WASHER	8	J30001-UP
19		207-27-61250	PIN	4	J30001-UP
20		20Y-27-21290	PIN	4	J30001-UP
21		208-26-71230	PLATE	1	J30001-UP
22		205-32-51211	BOLT	1	J30001-UP
23		208-26-71150	GEAR	1	J30001-UP
24		01010-81645	BOLT	24	J30001-UP
25		01643-31645	WASHER	24	J30001-UP
26		208-26-71130	GEAR	1	J30001-UP
27		208-26-71241	PLATE	1	J30001-UP
28		208-26-71170	CARRIER	1	J30001-UP
29		207-26-71520	GEAR	3	J30001-UP
30		22U-26-21320	BEARING	3	J30001-UP
31		22U-26-21240	WASHER	6	J30001-UP
32		207-26-71210	PIN	3	J30001-UP
33		04064-04018	SNAP RING	6	J30001-UP
34		208-26-71210	HOLDER	1	J30001-UP
35		04260-01270	BALL	1	J30001-UP
36		207-26-71510	GEAR	1	J30001-UP
37		207-26-71261	PLATE	1	J30001-UP
38		144-60-11151	VALVE	1	J30001-UP
39		07270-21590	TUBE	1	J30001-UP
40		07281-00197	CLAMP	1	J30001-UP
41		01010-81240	BOLT	10	J30001-UP
42		01643-31232	WASHER	10	J30001-UP
43		207-26-71410	GAUGE	1	J30001-UP
44		20Y-26-21350	FILLER	1	J30001-UP
45		07000-15335	O-RING	1	J30001-UP

Ref :N1210-01A0 Page :270020

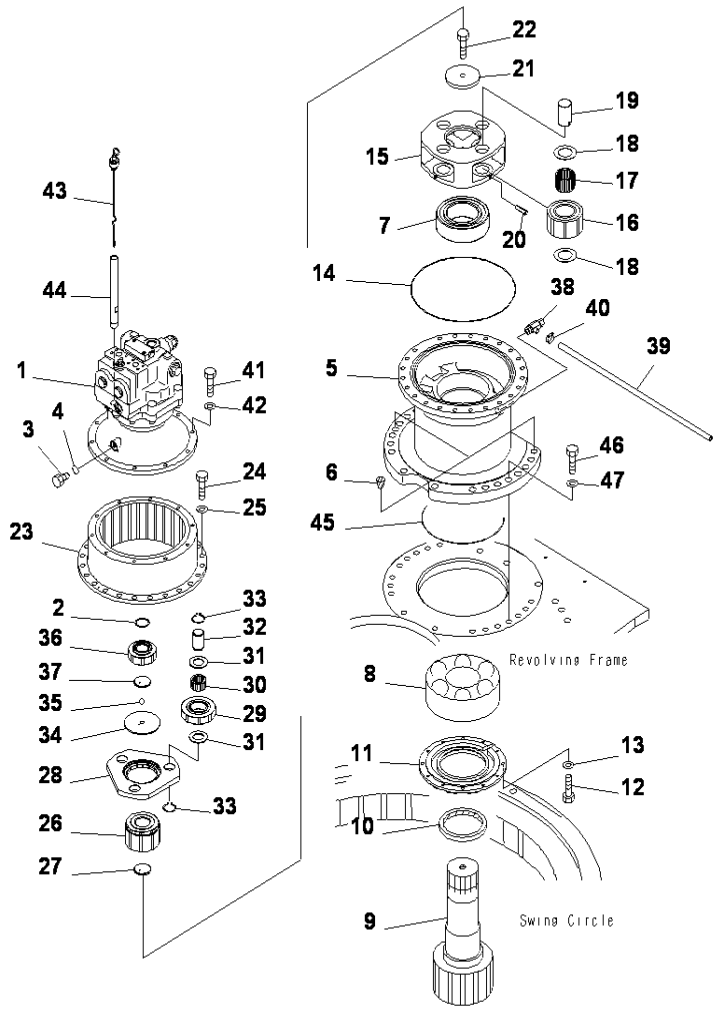

SWING MACHINERY

INDEX	CD	PART NO.	DESCRIPTION	QTY	SERIAL NO.
46		01010-82480	BOLT	17	J30001-UP
47		01643-32460	WASHER	17	J30001-UP

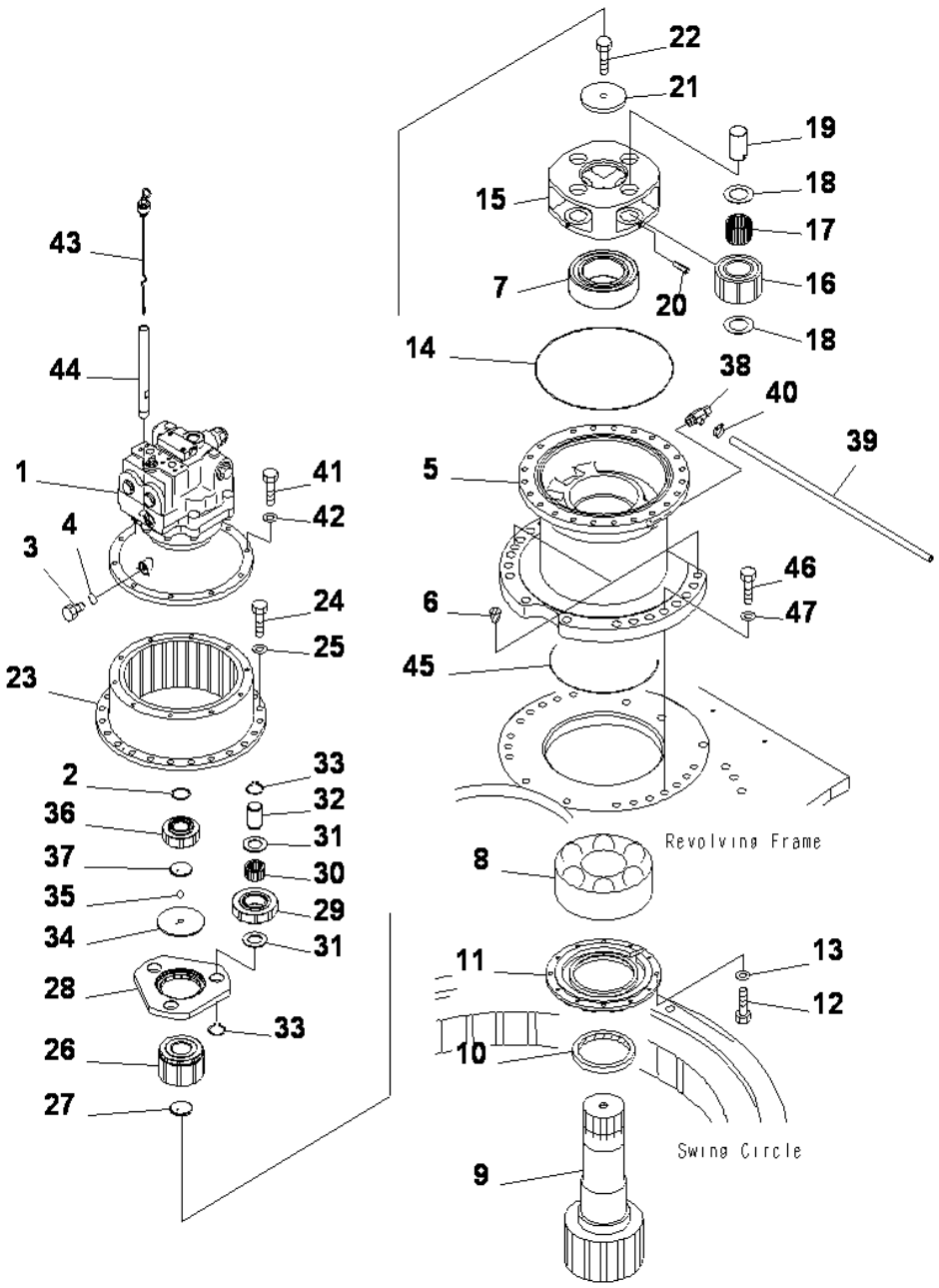

SWING MACHINERY (OPT)

INDEX	CD	PART NO.	DESCRIPTION	QTY	SERIAL NO.
1		(706-7K-01170)	MOTOR ASS'Y.(SEE FIG. Y1640-01A1).....	1	J30001-UP
2		207-26-71240	RING.....	1	J30001-UP
3		07040-11209	PLUG.....	1	J30001-UP
4		07002-11223	O-RING.....	1	J30001-UP
5		208-26-71190	CASE.....	1	J30001-UP
6		07049-02430	PLUG.....	2	J30001-UP
7		06000-23124	BEARING.....	1	J30001-UP
8		06000-22326	BEARING.....	1	J30001-UP
9		208-26-52242	SHAFT.....	1	J30001-UP
10		208-26-61290	OIL SEAL.....	1	J30001-UP
11		208-26-71360	COVER.....	1	J30001-UP
12		01010-81030	BOLT.....	12	J30001-UP
13		01643-31032	WASHER.....	12	J30001-UP
14		07000-15390	O-RING.....	1	J30001-UP
15		208-26-71181	CARRIER.....	1	J30001-UP
16		208-26-71140	GEAR.....	4	J30001-UP
17		207-27-61230	BEARING.....	4	J30001-UP
18		20Y-27-21250	WASHER.....	8	J30001-UP
19		207-27-61250	PIN.....	4	J30001-UP
20		20Y-27-21290	PIN.....	4	J30001-UP
21		208-26-71230	PLATE.....	1	J30001-UP
22		205-32-51211	BOLT.....	1	J30001-UP
23		208-26-71150	GEAR.....	1	J30001-UP
24		01010-81645	BOLT.....	24	J30001-UP
25		01643-31645	WASHER.....	24	J30001-UP
26		208-26-71130	GEAR.....	1	J30001-UP
27		208-26-71241	PLATE.....	1	J30001-UP
28		208-26-71170	CARRIER.....	1	J30001-UP
29		207-26-71520	GEAR.....	3	J30001-UP
30		22U-26-21320	BEARING.....	3	J30001-UP
31		22U-26-21240	WASHER.....	6	J30001-UP
32		207-26-71210	PIN.....	3	J30001-UP
33		04064-04018	RING.....	6	J30001-UP
34		208-26-71210	HOLDER.....	1	J30001-UP
35		04260-01270	BALL.....	1	J30001-UP
36		207-26-71510	GEAR.....	1	J30001-UP
37		207-26-71261	PLATE.....	1	J30001-UP
38		144-60-11151	VALVE.....	1	J30001-UP
39		07270-21590	TUBE.....	1	J30001-UP
40		07281-00197	CLAMP.....	1	J30001-UP
41		01010-81240	BOLT.....	10	J30001-UP
42		01643-31232	WASHER.....	10	J30001-UP
43		207-26-71410	GAUGE.....	1	J30001-UP
44		20Y-26-21350	FILLER.....	1	J30001-UP
45		07000-15335	O-RING.....	1	J30001-UP

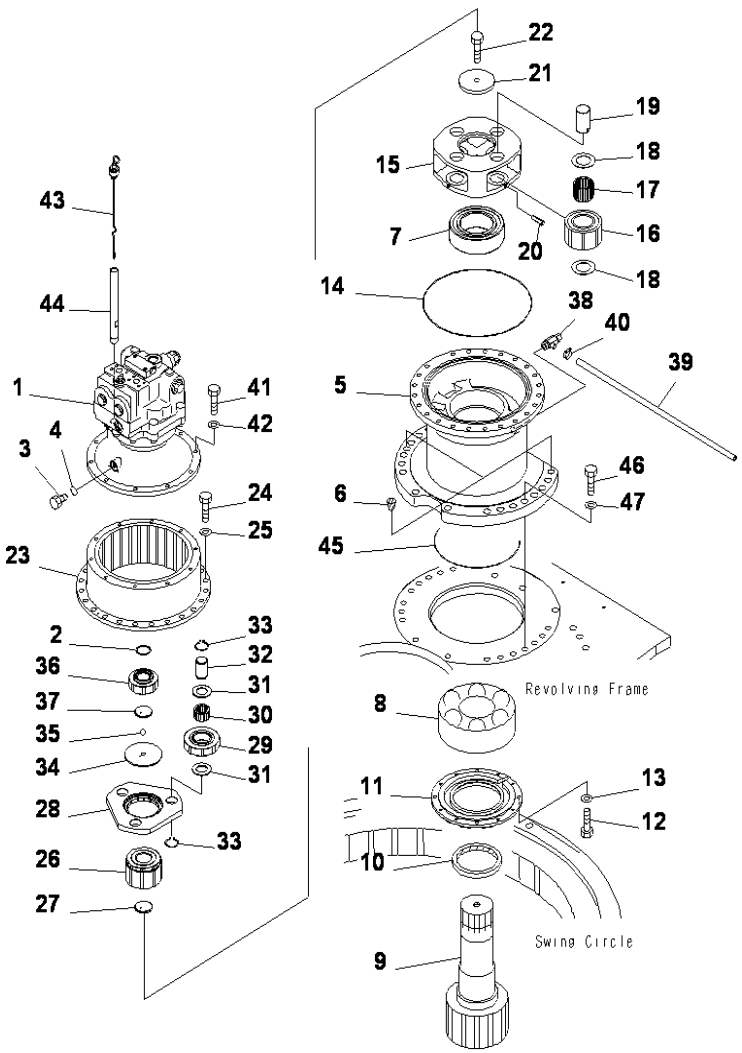

SWING MACHINERY (OPT)

INDEX	CD	PART NO.	DESCRIPTION	QTY	SERIAL NO.
46		01010-82480	BOLT	17	J30001-UP
47		01643-32460	WASHER	17	J30001-UP

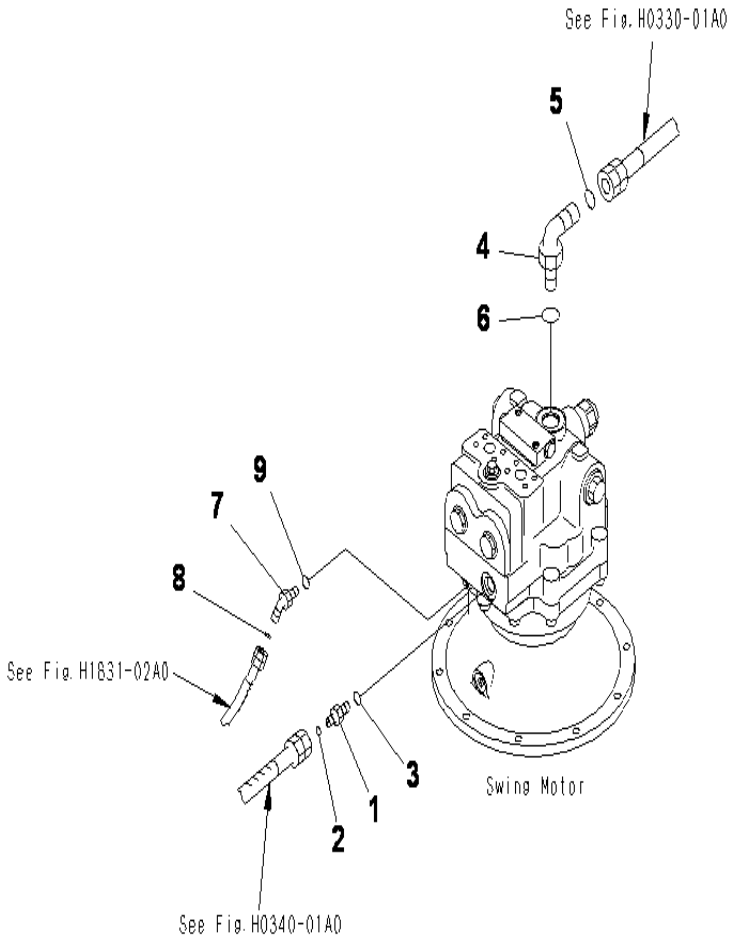

SWING MOTOR (CONNECTING PARTS)

INDEX	CD	PART NO.	DESCRIPTION	QTY	SERIAL NO.
1		02781-00522	UNION	1	J30001-UP
2		02896-11015	O-RING	1	J30001-UP
3		07002-12434	O-RING	1	J30001-UP
4		21W-62-42640	ELBOW	1	J30001-UP
5		207-62-64740	O-RING	1	J30001-UP
6		07002-13334	O-RING	1	J30001-UP
7		11Y-62-12510	ELBOW	1	J30001-UP
8		02896-11009	O-RING	1	J30001-UP
9		07002-11423	O-RING	1	J30001-UP

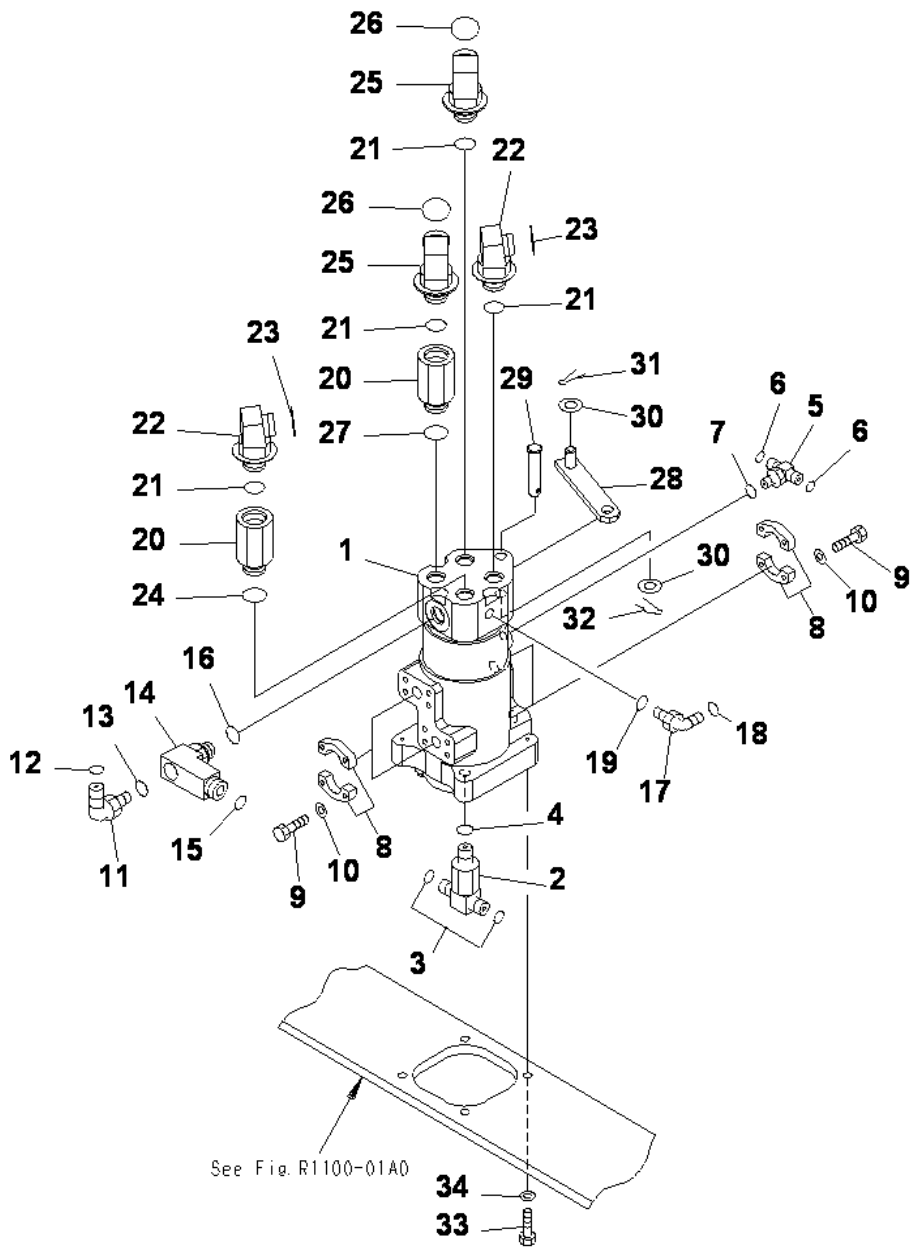

PC400-8 S/N J30001-UP

SWIVEL JOINT

INDEX	CD	PART NO.	DESCRIPTION	QTY	SERIAL NO.
1		(703-08-33651)	SWIVEL JOINT ASS'Y	1	J30001-UP
2		207-62-72151	TEE	1	J30001-UP
3		02896-11015	O-RING	2	J30001-UP
4		07002-12434	O-RING	1	J30001-UP
5		21W-62-42630	TEE	1	J30001-UP
6		02896-11009	O-RING	2	J30001-UP
7		07002-11423	O-RING	1	J30001-UP
8		07371-31049	FLANGE	8	J30001-UP
9		07372-21035	BOLT	16	J30001-UP
10		01643-51032	WASHER	16	J30001-UP
11		02782-10522	ELBOW	1	J30001-UP
12		02896-11015	O-RING	1	J30001-UP
13		07002-12434	O-RING	1	J30001-UP
14		207-62-72171	ELBOW	1	J30001-UP
15		02896-11018	O-RING	1	J30001-UP
16		07002-12434	O-RING	1	J30001-UP
17		21W-62-42490	ELBOW	1	J30001-UP
18		02896-11009	O-RING	1	J30001-UP
19		07002-11423	O-RING	1	J30001-UP
20		203-62-63740	JOINT	2	J30001-UP
21		07002-63334	O-RING	2	J30001-UP
22		207-62-71410	ELBOW	2	J30001-UP
23		11Y-62-11980	O-RING	2	J30001-UP
24		07002-63334	ORING	2	J30001-UP
25		21W-62-42640	ELBOW	2	J30001-UP
26		11Y-62-11980	O-RING	2	J30001-UP
27		07002-63334	ORING	2	J30001-UP
28		207-62-71420	PLATE	1	J30001-UP
29		22U-62-21870	PIN	1	J30001-UP
30		01641-21626	WASHER	1	J30001-UP
31		04050-14025	PIN	1	J30001-UP
32		22U-62-24420	PIN	1	J30001-UP
33		01010-81240	BOLT	4	J30001-UP
34		01643-31232	WASHER	4	J30001-UP

Ref :N1310-01A0 Page :270050

TRAVEL AND LOWER PIPING

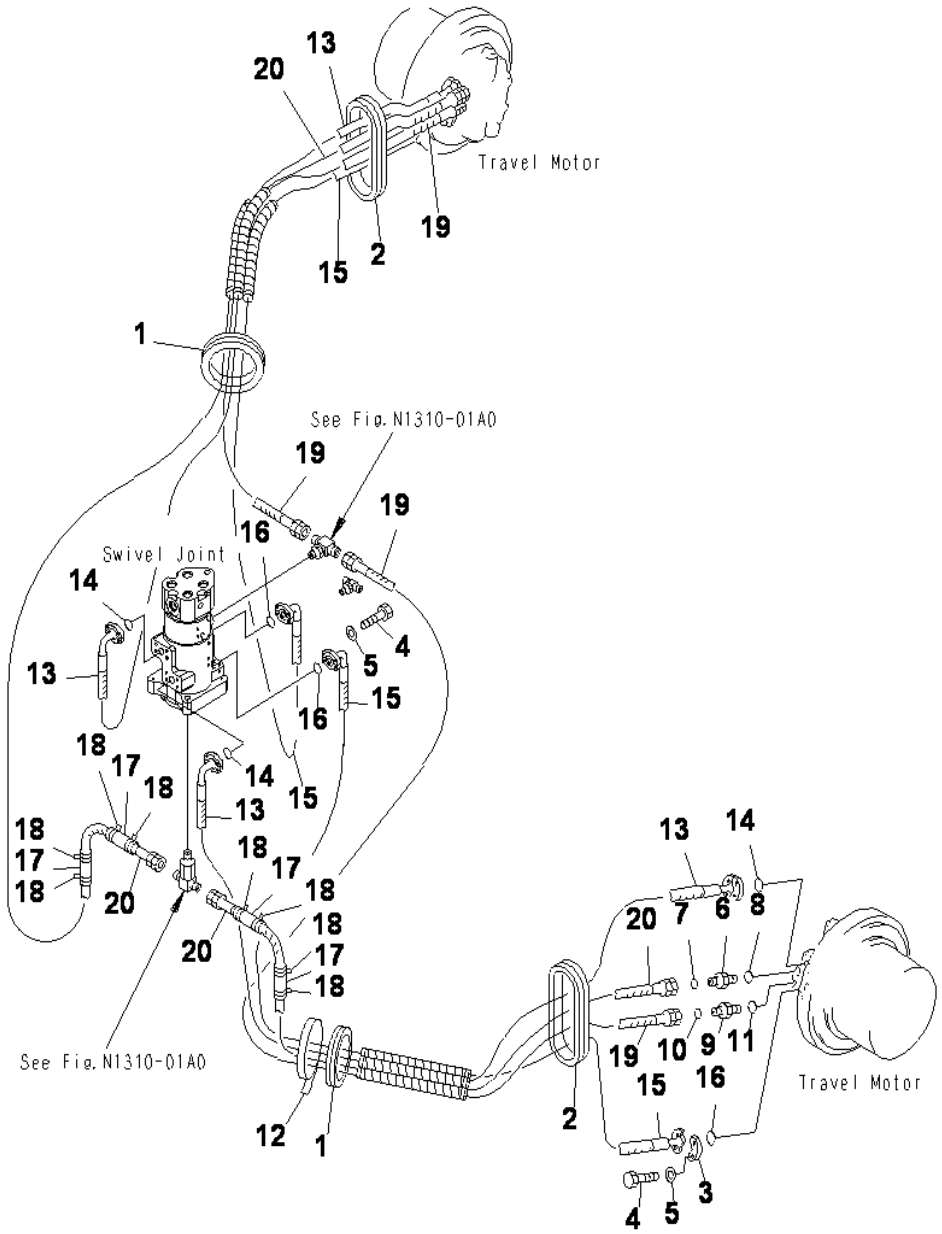

TRAVEL PIPING

INDEX	CD	PART NO.	DESCRIPTION	QTY	SERIAL NO.
1		20Y-62-12121	GROMMET	2	J30001-UP
2		208-62-53350	GROMMET	2	J30001-UP
3		07371-31049	FLANGE	8	J30001-UP
4		07372-21035	BOLT	16	J30001-UP
5		01643-51032	WASHER	16	J30001-UP
6		02781-00522	UNION	2	J30001-UP
7		02896-11015	O-RING	2	J30001-UP
8		07002-12434	O-RING	2	J30001-UP
9		02781-0031D	UNION	2	J30001-UP
10		02896-11009	O-RING	2	J30001-UP
11		07002-11423	O-RING	2	J30001-UP
12		08034-20536	BAND	2	J30001-UP
13		208-62-63340	HOSE ASS'Y. 2800MM	2	J30001-UP
14		07000-13032	.O-RING	2	J30001-UP
15		208-62-63320	HOSE ASS'Y. 2400MM	2	J30001-UP
16		07000-13032	.O-RING	2	J30001-UP
17		21T-06-17820	COVER	4	J30001-UP
18		08034-00536	BAND	8	J30001-UP
19		02762-00325	HOSE	2	J30001-UP
20		02762-00525	HOSE	2	J30001-UP

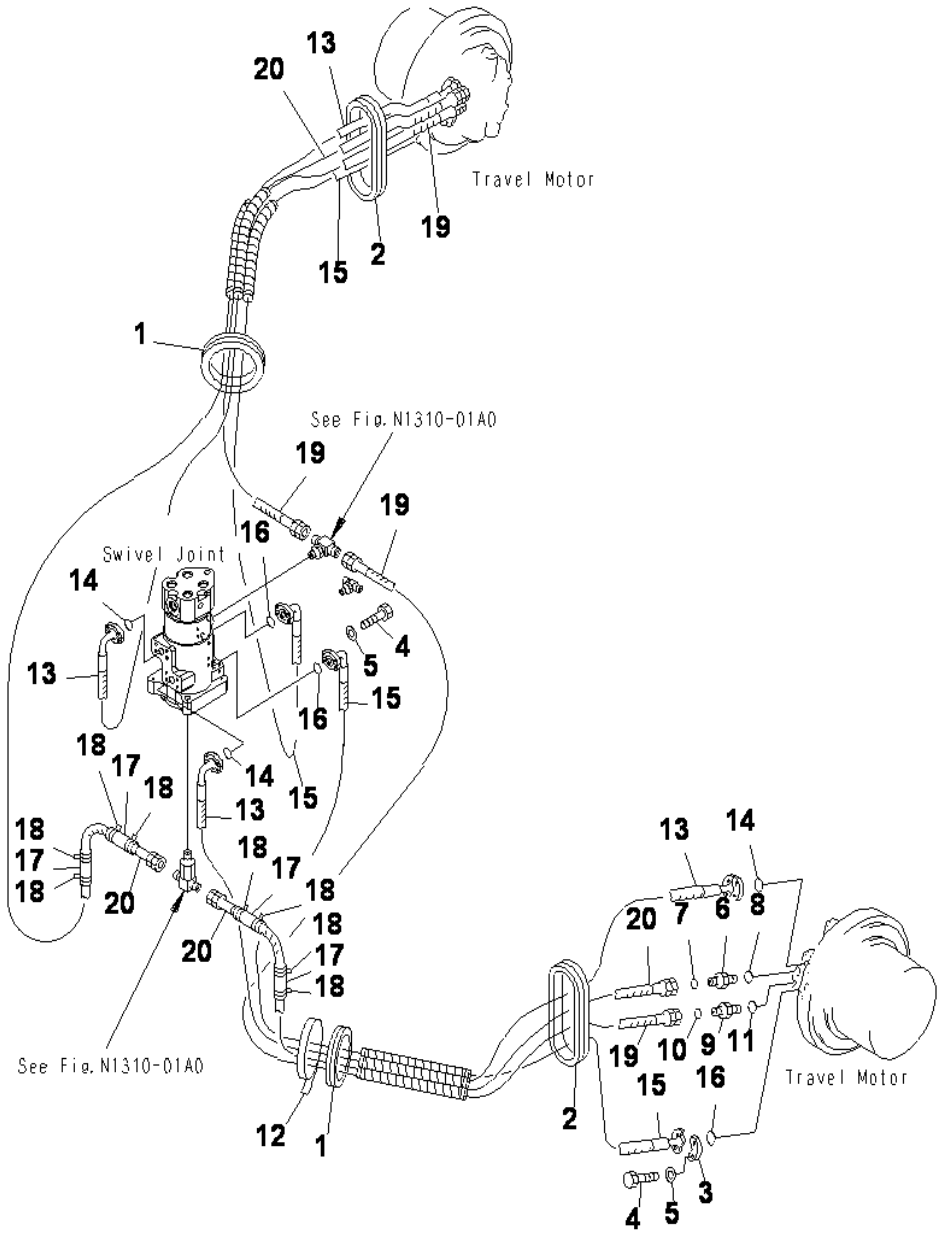

TRAVEL PIPING (FOR LC)

INDEX	CD	PART NO.	DESCRIPTION	QTY	SERIAL NO.
1		20Y-62-12121	GROMMET	2	J30001-UP
2		208-62-53350	GROMMET	2	J30001-UP
3		07371-31049	FLANGE	8	J30001-UP
4		07372-21035	BOLT	16	J30001-UP
5		01643-51032	WASHER	16	J30001-UP
6		02781-00522	UNION	2	J30001-UP
7		02896-11015	O-RING	2	J30001-UP
8		07002-12434	O-RING	2	J30001-UP
9		02781-0031D	NIPPLE	2	J30001-UP
10		02896-11009	O-RING	2	J30001-UP
11		07002-11423	O-RING	2	J30001-UP
12		08034-20536	BAND	2	J30001-UP
13		208-62-63410	HOSE ASS'Y, 3000MM	2	J30001-UP
14		07000-13032	O RING	4	J30001-UP
15		208-62-63350	HOSE ASS'Y, 2600MM	2	J30001-UP
16		07000-13032	.O-RING	2	J30001-UP
17		21T-06-17820	COVER	4	J30001-UP
18		08034-00536	BAND	8	J30001-UP
19		02762-00327	HOSE	2	J30001-UP
20		02762-00527	HOSE	2	J30001-UP

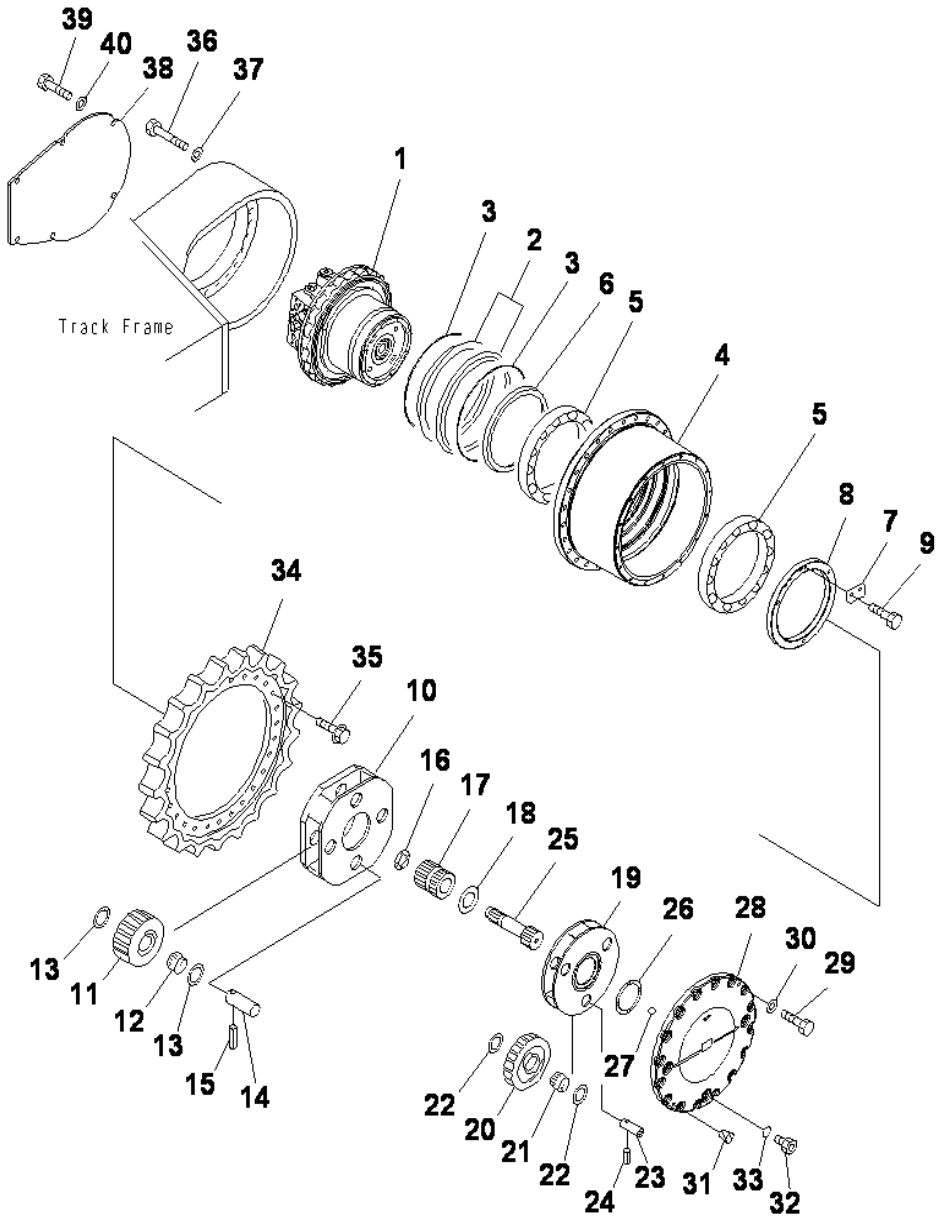

PC400-8 S/N J30001-UP

FINAL DRIVE

INDEX	CD	PART NO.	DESCRIPTION	QTY	SERIAL NO.
		208-27-00243	FINAL DRIVE ASS'Y	2	J30001-UP
1		(706-8J-01012)	.MOTOR ASS'Y	1	J30001-UP
		208-27-00210	.FLOATING SEAL ASS'Y	1	J30001-UP
2	C1	208-27-61320	..RING	2	J30001-UP
3		425-33-11650	..O-RING	2	J30001-UP
4		208-27-71151	.GEAR	1	J30001-UP
5		208-27-71210	.BEARING	2	J30001-UP
6		208-27-71310	.COLLAR	1	J30001-UP
7		208-27-71270	.LOCK	1	J30001-UP
8		208-27-71260	.LOCKNUT	1	J30001-UP
9		01010-81020	.BOLT	2	J30001-UP
10		208-27-71170	.CARRIER	1	J30001-UP
11		208-27-71140	.GEAR	4	J30001-UP
12		208-27-71230	.BEARING	4	J30001-UP
13		21M-27-11260	.THRUST WASHER	8	J30001-UP
14		208-27-71250	.PIN	4	J30001-UP
15		20Y-27-21290	.PIN	4	J30001-UP
16		207-27-52270	.SPACER	1	J30001-UP
17		208-27-71130	.GEAR	1	J30001-UP
18		208-27-71290	.SPACER	1	J30001-UP
19		208-27-71160	.CARRIER	1	J30001-UP
20		208-27-71120	.GEAR	3	J30001-UP
21		208-27-71220	.BEARING	3	J30001-UP
22		20Y-27-21250	.THRUST WASHER	6	J30001-UP
23		21M-27-11240	.PIN	3	J30001-UP
24		20Y-27-21280	.PIN	3	J30001-UP
25		208-27-71112	.SHAFT	1	J30001-UP
26		20Y-27-11250	.SPACER	1	J30001-UP
27		04260-01905	.BALL	1	J30001-UP
28		208-27-71183	.COVER	1	J30001-UP
29		01010-81235	.BOLT	16	J30001-UP
30		01643-31232	.WASHER	16	J30001-UP
31		07049-01215	.PLUG	2	J30001-UP
32		20Y-27-31190	.PLUG	3	J30001-UP
33		07002-12434	.O-RING	3	J30001-UP
34		208-27-61210	.SPROCKET	1	J30001-UP
35		207-27-51311	.BOLT	26	J30001-UP
36		01011-82000	BOLT	48	J30001-UP
37		01643-32060	WASHER	48	J30001-UP
38		208-30-71241	COVER	2	J30001-UP
39		01010-81640	BOLT	12	J30001-UP
40		01643-31645	WASHER	12	J30001-UP

Ref :P1210-01A0 Page :300030

UNDER CARRIAGE

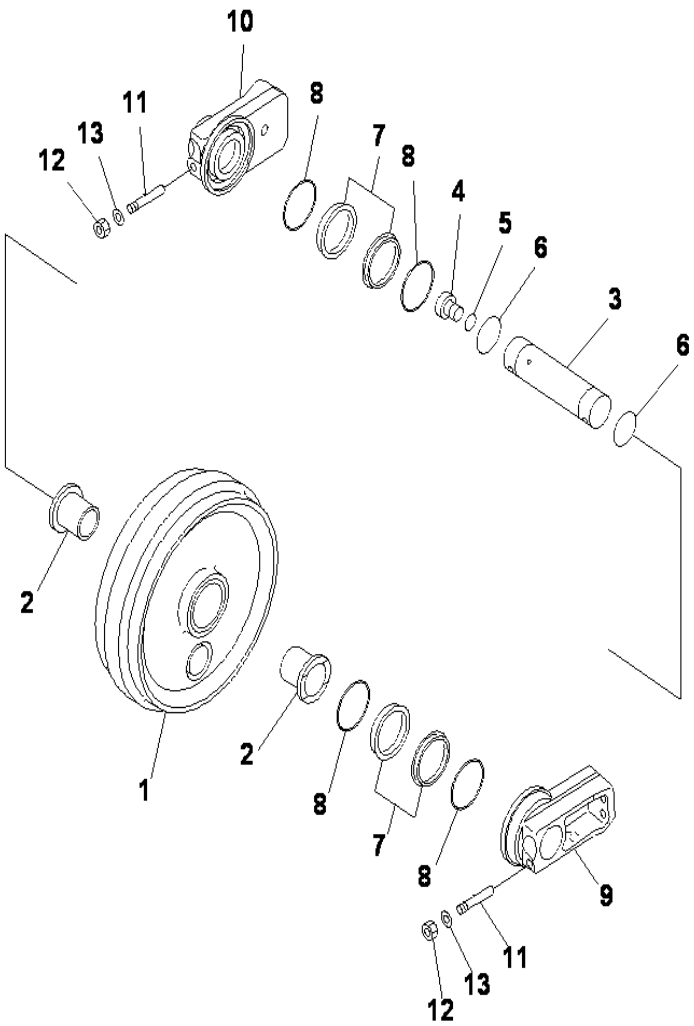

PC400-8 S/N J30001-UP

FRONT IDLER

INDEX	CD	PART NO.	DESCRIPTION	QTY	SERIAL NO.
		208-30-00202	FRONT IDLER A.....	2	J30001-UP
1		208-30-53114	.IDLER.....	1	J30001-UP
2		208-30-11560	.BUSHING.....	2	J30001-UP
3		208-30-53130	.SHAFT.....	1	J30001-UP
4		07040-13618	.PLUG.....	1	J30001-UP
5		07002-13634	.O-RING.....	1	J30001-UP
6		07000-12090	.O-RING.....	2	J30001-UP
		21T-30-00110	.FLOATING SEAL ASS'Y.....	2	J30001-UP
7	C1	175-27-00131	..RING.....	2	J30001-UP
8	C1	21T-30-00120	..O-RING.....	2	J30001-UP
9		208-30-53150	SUPPORT (L.H).....	1	J30001-UP
10		208-30-53160	SUPPORT (R.H).....	1	J30001-UP
11		170-30-13331	.BOLT.....	2	J30001-UP
12		01580-11613	.NUT.....	2	J30001-UP
13		01643-31645	.WASHER.....	2	J30001-UP

Ref :R0110-01A0 Page :330010

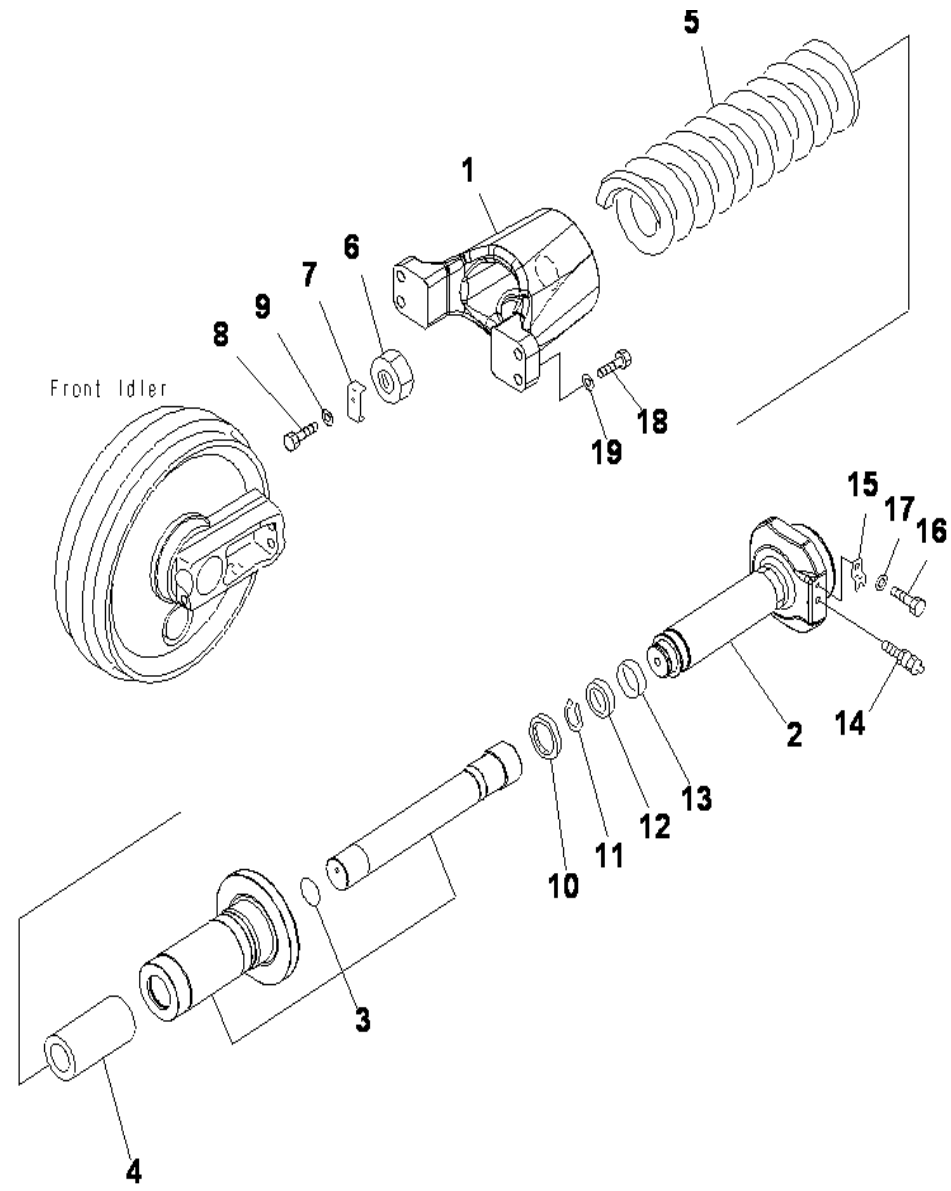

PC400-8 S/N J30001-UP

IDLER CUSHION

INDEX	CD	PART NO.	DESCRIPTION	QTY	SERIAL NO.
1		208-30-74110	YOKE	2	J30001-UP
2		208-30-74120	SHAFT	2	J30001-UP
3		208-30-71440	CYLINDER ASS'Y	2	J30001-UP
4		208-30-71430	PIPE	2	J30001-UP
5		208-30-74170	SPRING	2	J30001-UP
6		208-30-54160	NUT	2	J30001-UP
7		208-30-54170	LOCK	2	J30001-UP
8		01010-81225	BOLT	2	J30001-UP
9		01643-31232	WASHER	2	J30001-UP
10		208-30-54150	SEAL	2	J30001-UP
11		04064-07525	RING	2	J30001-UP
12		09370-00100	U-PACKING	2	J30001-UP
13		07155-01025	RING WEAR	2	J30001-UP
14		07959-20001	VALVE	2	J30001-UP
15		205-30-72170	PLATE	2	J30001-UP
16		01010-81225	BOLT	2	J30001-UP
17		01643-31232	WASHER	2	J30001-UP
18		01010-62490	BOLT	8	J30001-UP
19		01643-32460	WASHER	8	J30001-UP

Ref :R0110-02A0 Page :330030

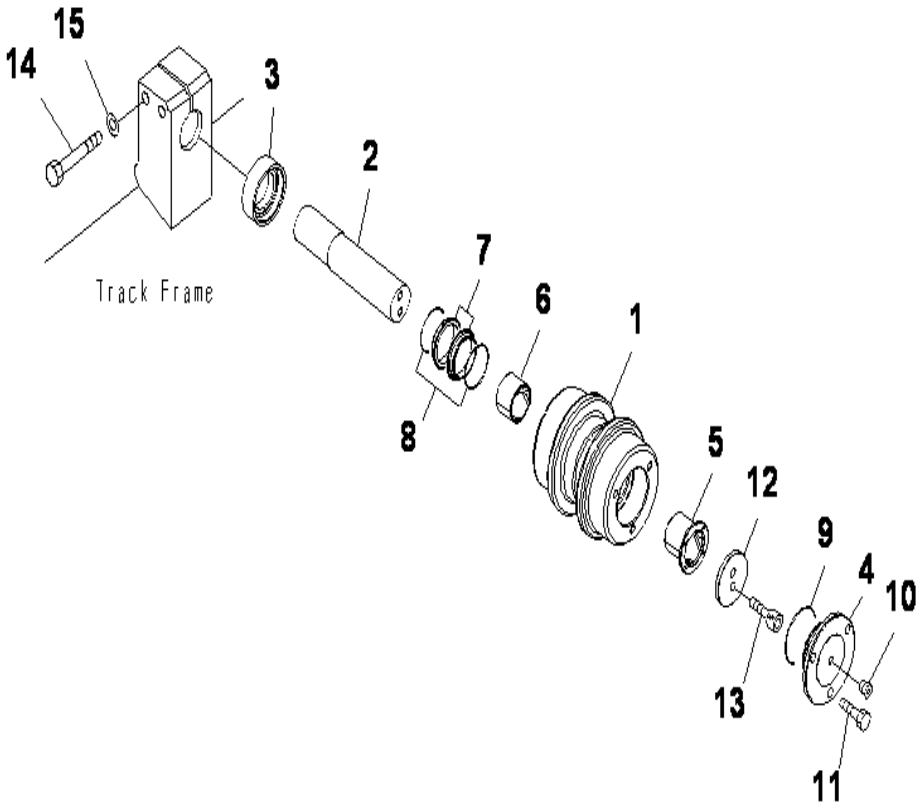

PC400-8 S/N J30001-UP

CARRIER ROLLER

INDEX	CD	PART NO.	DESCRIPTION	QTY	SERIAL NO.
		208-30-00511	CARRIER ROLLER ASS'Y	4	J30006-UP
		208-30-00510	CARRIER ROLLER ASS'Y	4	J30001-J30005
1		208-30-75810	.ROLLER	1	J30001-UP
2		207-30-75320	.SHAFT	1	J30001-UP
3		207-30-75330	.RING	1	J30001-UP
4		207-30-75341	.COVER	1	J30006-UP
		207-30-75340	.COVER	1	J30001-J30005
5		207-30-75360	.BUSHING	1	J30001-UP
6		207-30-75370	.BUSHING	1	J30001-UP
		140-30-00141	.SEAL RING ASS'Y	1	J30001-UP
7	C1	140-30-00401	..RING	2	J30001-UP
8	C1	140-30-00411	..O-RING	2	J30001-UP
9		07000-12080	.O-RING	1	J30001-UP
10		20Y-30-16330	.PLUG	1	J30001-UP
11		01010-81225	.BOLT	3	J30001-UP
12		207-30-75350	.PLATE	1	J30001-UP
13		01252-61230	.BOLT	2	J30001-UP
14		01010-82095	BOLT	8	J30001-UP
15		01643-32060	WASHER	8	J30001-UP

Ref :R0300-01A0 Page :330050

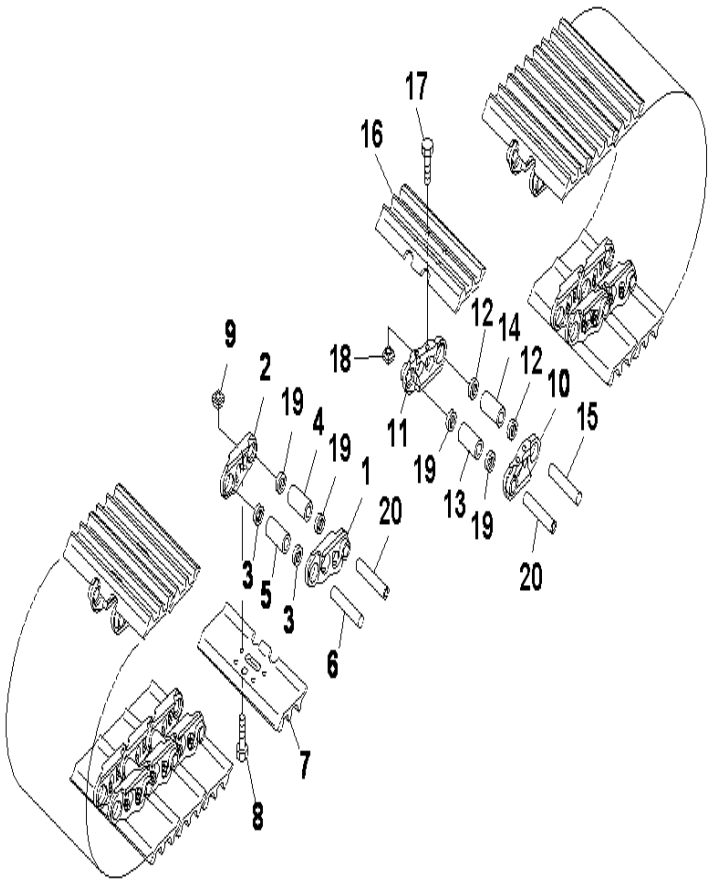

PC400-8 S/N J30001-UP

TRACK SHOE (TRIPLE GROUSER WITH HOLE) (600MM WIDE) (OPT)

INDEX	CD	PART NO.	DESCRIPTION	QTY	SERIAL NO.
		208-32-03301	TRACK SHOE ASS'Y.....	1	J30001-UP
1		208-32-61123	.LINK,(L.H).....	46	J30001-UP
2		208-32-61133	.LINK,(R.H).....	46	J30001-UP
3		154-32-11283	.SEAL.....	88	J30001-UP
4		208-32-61171	.BUSHING,M.....	2	J30001-UP
5		208-32-61141	.BUSHING.....	44	J30001-UP
6		208-32-61151	.PIN.....	44	J30001-UP
7		208-32-61110	.SHOE.....	46	J30001-UP
8		208-32-51210	.BOLT, SHOE (Y0320-K1).....	184	J30001-UP
9		208-32-71220	.NUT, SHOE (Y0320-K1).....	184	J30001-UP
10		208-32-61123	.LINK,(L.H).....	46	J30001-UP
11		208-32-61133	.LINK,(R.H).....	46	J30001-UP
12		154-32-11283	.SEAL.....	88	J30001-UP
13		208-32-61171	.BUSHING.....	2	J30001-UP
14		208-32-61141	.BUSHING.....	44	J30001-UP
15		208-32-61151	.PIN.....	44	J30001-UP
16		208-32-61110	.SHOE.....	46	J30001-UP
17		208-32-51210	.BOLT, SHOE (Y0320-K1).....	184	J30001-UP
18		208-32-71220	.NUT, SHOE (Y0320-K1).....	184	J30001-UP
19		208-32-61260	.SEAL.....	8	J30001-UP
20		208-32-51190	.PIN.....	4	J30001-UP

Ref :R0500-01A1 Page :330060

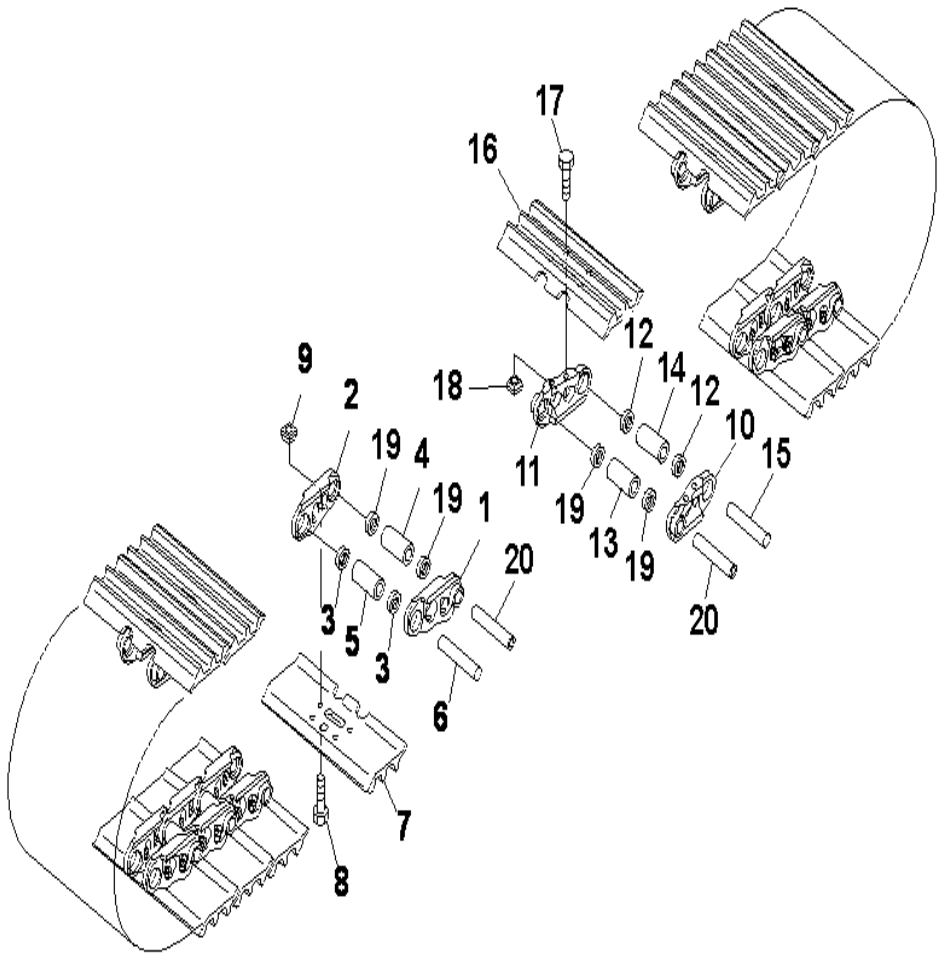

PC400-8 S/N J30001-UP

TRACK SHOE (TRIPLE GROUSER WITH HOLE) (800MM WIDE) (OPT)

INDEX	CD	PART NO.	DESCRIPTION	QTY	SERIAL NO.
		208-32-03370	TRACK SHOE ASS'Y.....	1	J30001-UP
1		208-32-61123	.LINK,(L.H).....	46	J30001-UP
2		208-32-61133	.LINK,(R.H).....	46	J30001-UP
3		154-32-11283	.SEAL.....	88	J30001-UP
4		208-32-61171	.BUSHING.....	2	J30001-UP
5		208-32-61141	.BUSHING.....	44	J30001-UP
6		208-32-61151	.PIN.....	44	J30001-UP
7		208-32-61320	.SHOE.....	46	J30001-UP
8		208-32-51210	.BOLT, SHOE (Y0320-K1).....	184	J30001-UP
9		208-32-71220	.NUT, SHOE (Y0320-K1).....	184	J30001-UP
10		208-32-61123	.LINK,(L.H).....	46	J30001-UP
11		208-32-61133	.LINK,(R.H).....	46	J30001-UP
12		154-32-11283	.SEAL.....	88	J30001-UP
13		208-32-61171	.BUSHING.....	2	J30001-UP
14		208-32-61141	.BUSHING.....	44	J30001-UP
15		208-32-61151	.PIN.....	44	J30001-UP
16		208-32-61320	.SHOE.....	46	J30001-UP
17		208-32-51210	.BOLT, SHOE (Y0320-K1).....	184	J30001-UP
18		208-32-71220	.NUT, SHOE (Y0320-K1).....	184	J30001-UP
19		208-32-61260	.SEAL.....	8	J30001-UP
20		208-32-51190	.PIN.....	4	J30001-UP

Ref :R0500-01A3 Page :330070

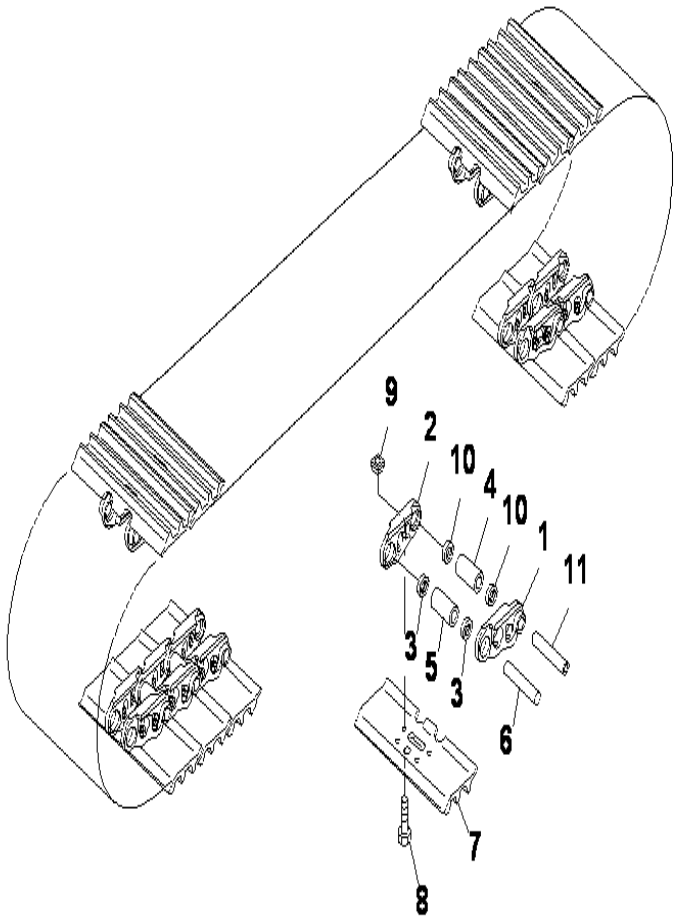

PC400-8 S/N J30001-UP

TRACK SHOE (TRIPLE GROUSER WITH HOLE) (600MM WIDE) (OPT)

INDEX	CD	PART NO.	DESCRIPTION	QTY	SERIAL NO.
		208-32-03460	TRACK SHOE ASS'Y.....	1	J30001-UP
1		208-32-61123	.LINK,(L.H).....	92	J30001-UP
2		208-32-61133	.LINK,(R.H).....	92	J30001-UP
3		154-32-11283	.SEAL.....	180	J30001-UP
4		208-32-61171	.BUSHING.....	2	J30001-UP
5		208-32-61141	.BUSHING.....	90	J30001-UP
6		208-32-61151	.PIN.....	90	J30001-UP
7		208-32-61110	.SHOE.....	92	J30001-UP
8		208-32-51210	.BOLT, SHOE (Y0320-K1).....	368	J30001-UP
9		208-32-71220	.NUT, SHOE (Y0320-K1).....	368	J30001-UP
10		208-32-61260	.SEAL.....	4	J30001-UP
11		208-32-51190	.PIN.....	2	J30001-UP

Ref :R0500-01A4 Page :330080

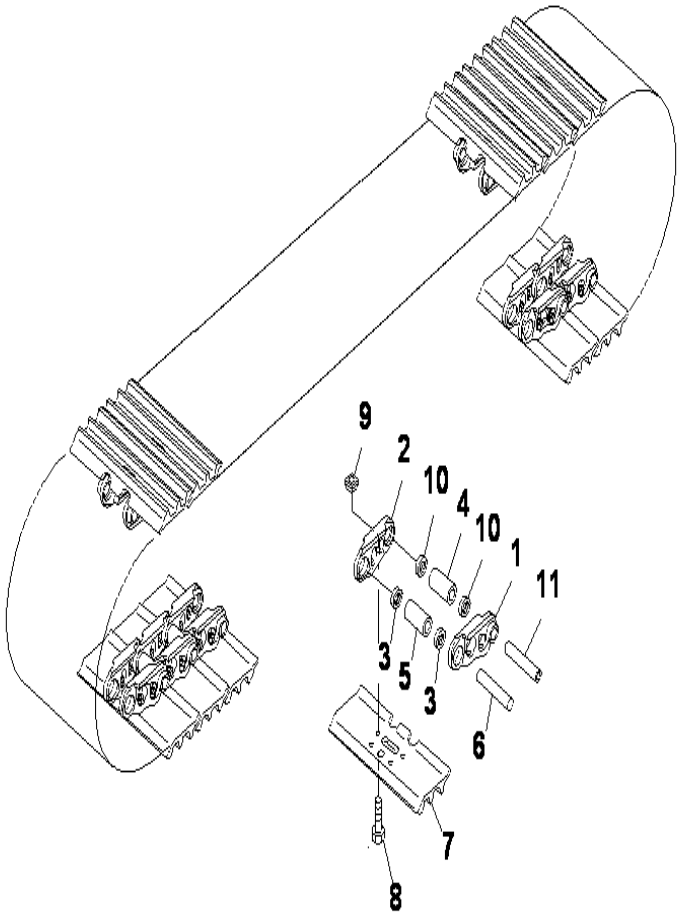

PC400-8 S/N J30001-UP

TRACK SHOE (TRIPLE GROUSER WITH HOLE) (800MM WIDE) (OPT)

INDEX	CD	PART NO.	DESCRIPTION	QTY	SERIAL NO.
		208-32-03480	TRACK SHOE ASS'Y.....	1	J30001-UP
1		208-32-61123	.LINK,(L.H).....	92	J30001-UP
2		208-32-61133	.LINK,(R.H).....	92	J30001-UP
3		154-32-11283	.SEAL.....	180	J30001-UP
4		208-32-61171	.BUSHING.....	2	J30001-UP
5		208-32-61141	.BUSHING.....	90	J30001-UP
6		208-32-61151	.PIN.....	90	J30001-UP
7		208-32-61320	.SHOE.....	92	J30001-UP
8		208-32-51210	.BOLT, SHOE (Y0320-K1).....	368	J30001-UP
9		208-32-71220	.NUT, SHOE (Y0320-K1).....	368	J30001-UP
10		208-32-61260	.SEAL.....	4	J30001-UP
11		208-32-51190	.PIN.....	2	J30001-UP

Ref :R0500-01A5 Page :330090

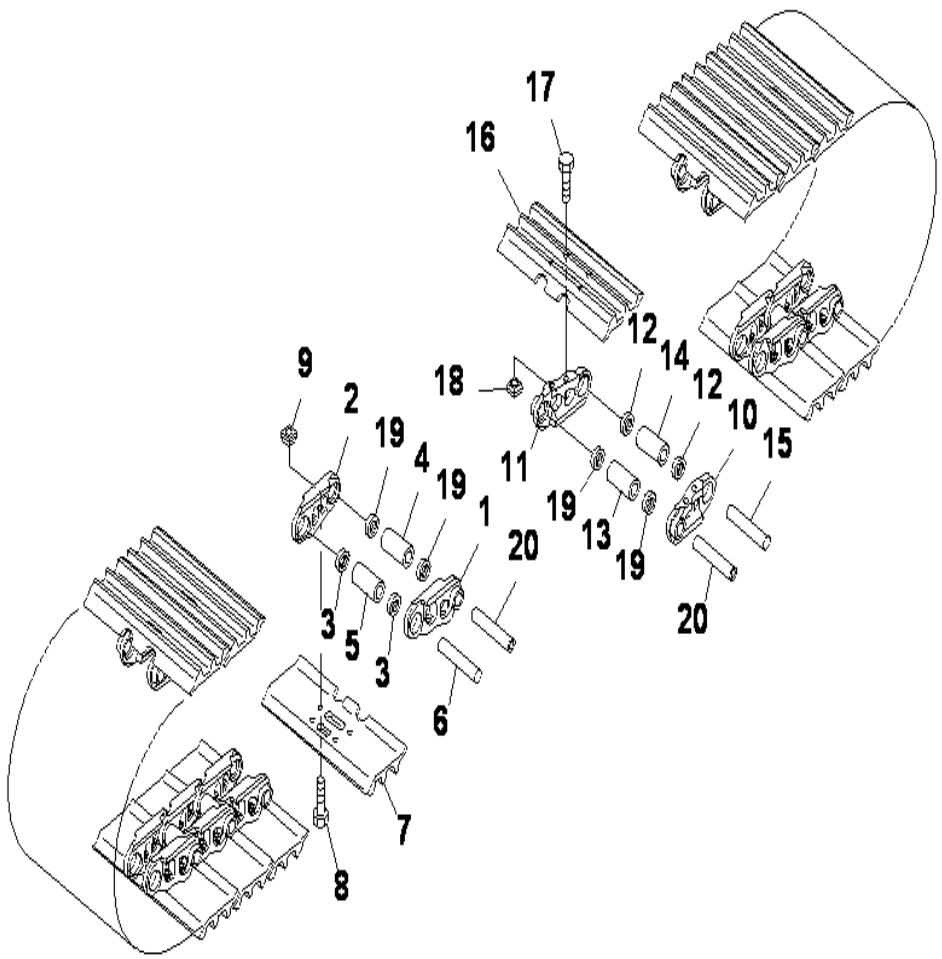

PC400-8 S/N J30001-UP

TRACK SHOE (TRIPLE GROUSER WITH HOLE) (600MM WIDE) (OPT)

INDEX	CD	PART NO.	DESCRIPTION	QTY	SERIAL NO.
		208-32-03321	TRACK SHOE ASS'Y.....	1	J30001-UP
1		208-32-61123	.LINK,(L.H).....	48	J30001-UP
2		208-32-61133	.LINK,(R.H).....	48	J30001-UP
3		154-32-11283	.SEAL.....	92	J30001-UP
4		208-32-61171	.BUSHING.....	2	J30001-UP
5		208-32-61141	.BUSHING.....	46	J30001-UP
6		208-32-61151	.PIN.....	46	J30001-UP
7		208-32-61110	.SHOE.....	48	J30001-UP
8		208-32-51210	.BOLT, SHOE.....	192	J30001-UP
9		208-32-71220	.NUT, SHOE.....	192	J30001-UP
10		208-32-61123	.LINK,(L.H).....	50	J30001-UP
11		208-32-61133	.LINK,(R.H).....	50	J30001-UP
12		154-32-11283	.SEAL.....	96	J30001-UP
13		208-32-61171	.BUSHING.....	2	J30001-UP
14		208-32-61141	.BUSHING.....	48	J30001-UP
15		208-32-61151	.PIN.....	48	J30001-UP
16		208-32-61110	.SHOE.....	50	J30001-UP
17		208-32-51210	.BOLT, SHOE.....	200	J30001-UP
18		208-32-71220	.NUT, SHOE.....	200	J30001-UP
19		208-32-61260	.SEAL.....	8	J30001-UP
20		208-32-51190	.PIN.....	4	J30001-UP

Ref :R0500-01A7 Page :330100

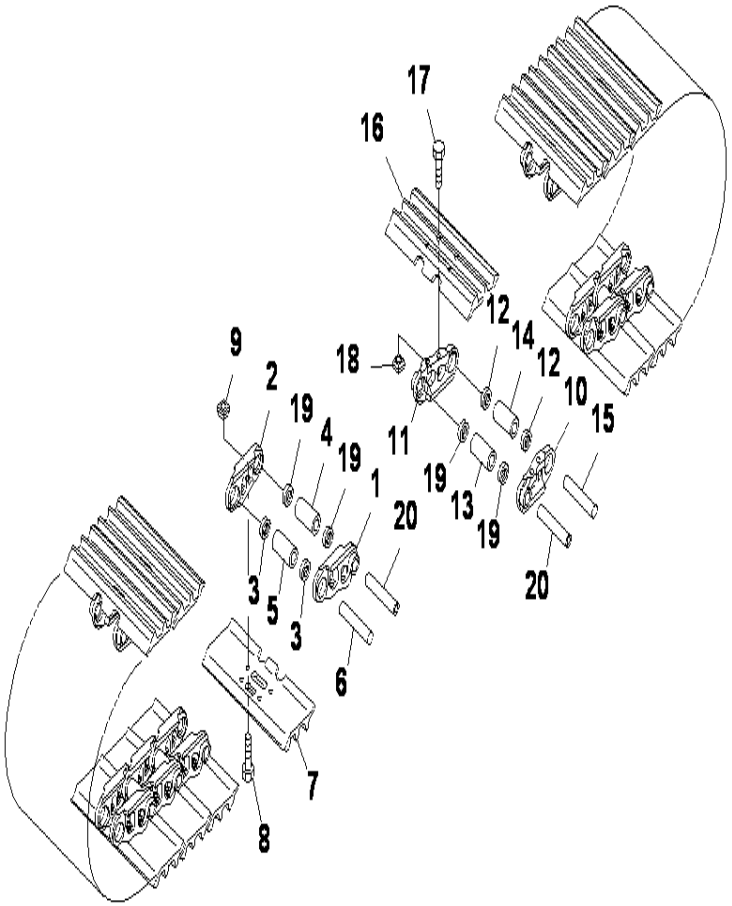

PC400-8 S/N J30001-UP

TRACK SHOE (TRIPLE GROUSER WITH HOLE) (800MM WIDE) (FOR LC)

INDEX	CD	PART NO.	DESCRIPTION	QTY	SERIAL NO.
1		208-32-03380	TRACK SHOE ASS'Y.....	1	J30001-UP
		208-32-61123	.LINK,(L.H).....	48	J30001-UP
2		208-32-61133	.LINK,(R.H).....	48	J30001-UP
3		154-32-11283	.SEAL.....	92	J30001-UP
4		208-32-61171	.BUSHING.....	2	J30001-UP
5		208-32-61141	.BUSHING.....	46	J30001-UP
6		208-32-61151	.PIN.....	46	J30001-UP
7		208-32-61320	.SHOE.....	48	J30001-UP
8		208-32-51210	.BOLT, SHOE (Y0320-K1).....	192	J30001-UP
9		208-32-71220	.NUT, SHOE (Y0320-K1).....	192	J30001-UP
10		208-32-61123	.LINK,(L.H).....	50	J30001-UP
11		208-32-61133	.LINK,(R.H).....	50	J30001-UP
12		154-32-11283	.SEAL.....	96	J30001-UP
13		208-32-61171	.BUSHING.....	2	J30001-UP
14		208-32-61141	.BUSHING.....	48	J30001-UP
15		208-32-61151	.PIN.....	48	J30001-UP
16		208-32-61320	.SHOE.....	50	J30001-UP
17		208-32-51210	.BOLT, SHOE (Y0320-K1).....	200	J30001-UP
18		208-32-71220	.NUT, SHOE (Y0320-K1).....	200	J30001-UP
19		208-32-61260	.SEAL.....	8	J30001-UP
20		208-32-51190	.PIN.....	4	J30001-UP

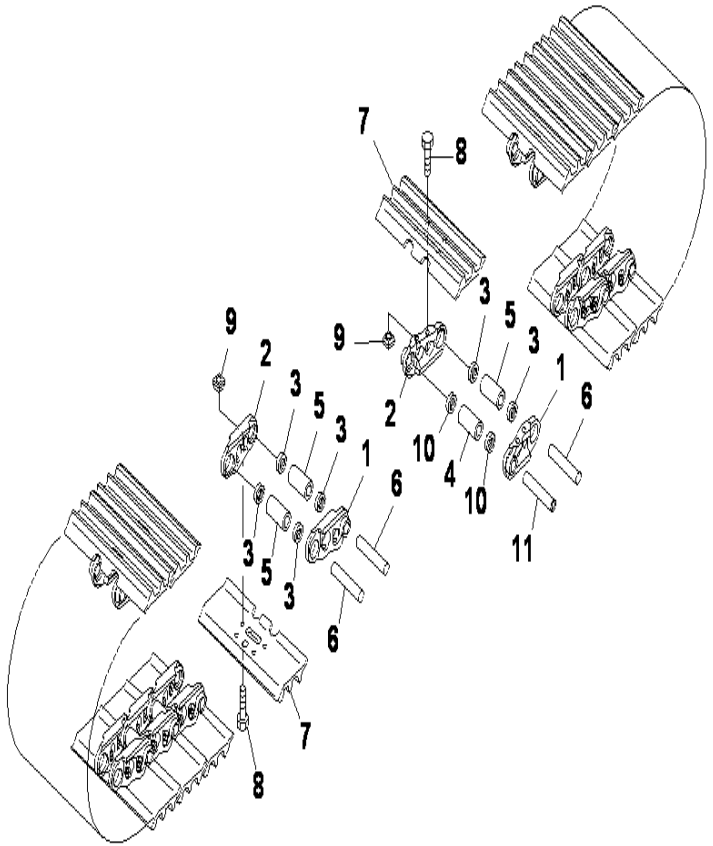

PC400-8 S/N J30001-UP

TRACK SHOE (TRIPLE GROUSER WITH HOLE) (600MM WIDE) (FOR LC)

INDEX	CD	PART NO.	DESCRIPTION	QTY	SERIAL NO.
		208-32-03400	TRACK SHOE ASS'Y. 700THG2P400L.....	1	J30001-UP
1		208-32-61123	.LINK,(L.H).....	98	J30001-UP
2		208-32-61133	.LINK,(R.H).....	98	J30001-UP
3		154-32-11283	.SEAL, REGULER.....	192	J30001-UP
4		208-32-61171	.BUSHING, MASTER.....	2	J30001-UP
5		208-32-61141	.BUSHING, REGULER.....	96	J30001-UP
6		208-32-61151	.PIN, REGULER.....	96	J30001-UP
7		208-32-61110	.SHOE, TRACK.....	98	J30001-UP
8		208-32-51210	.BOLT, SHOE (Y0320-K1).....	392	J30001-UP
9		208-32-71220	.NUT, SHOE (Y0320-K1).....	392	J30001-UP
10		208-32-61260	.SEAL, MASTER.....	4	J30001-UP
11		208-32-51190	.PIN, MASTER.....	2	J30001-UP

Ref :R0500-01A9 Page :330130

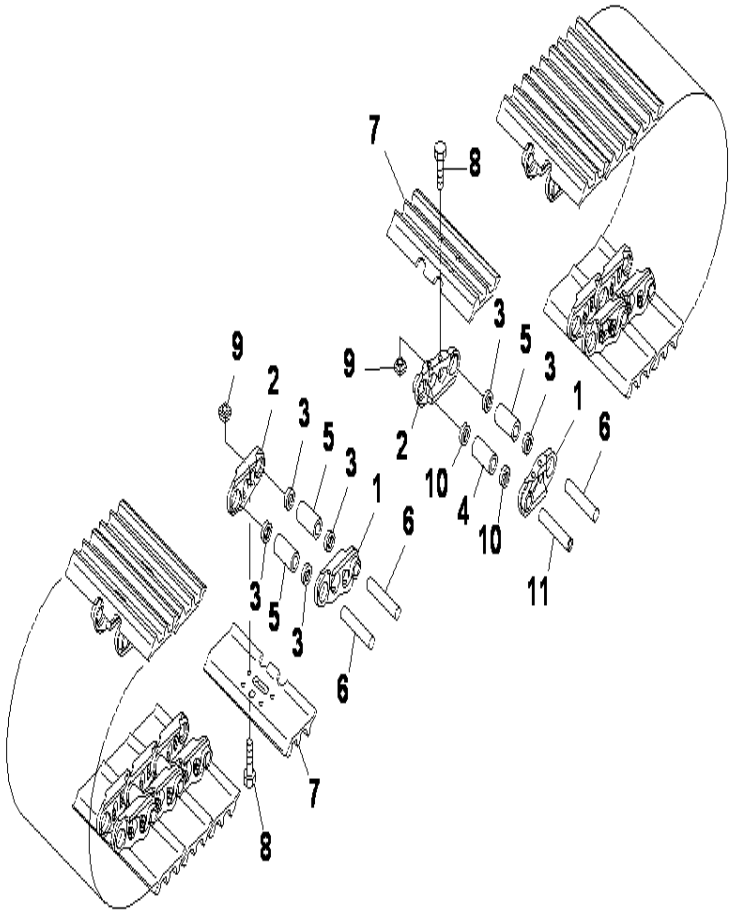

PC400-8 S/N J30001-UP

TRACK SHOE (TRIPLE GROUSER WITH HOLE) (800MM WIDE) (FOR LC) (STD)

INDEX	CD	PART NO.	DESCRIPTION	QTY	SERIAL NO.
		208-32-03420	TRACK SHOE ASS'Y.700THG2P400L.....	1	J30001-UP
1		208-32-61123	.LINK,(L.H).....	98	J30001-UP
2		208-32-61133	.LINK,(R.H).....	98	J30001-UP
3		154-32-11283	.SEAL, REGULER.....	192	J30001-UP
4		208-32-61171	.BUSHING, MASTER.....	2	J30001-UP
5		208-32-61141	.BUSHING, REGULER.....	96	J30001-UP
6		208-32-61151	.PIN.....	96	J30001-UP
7		208-32-61320	.SHOE, TRACK.....	98	J30001-UP
8		208-32-51210	.BOLT, SHOE (Y0320-K1).....	392	J30001-UP
9		208-32-71220	.NUT, SHOE (Y0320-K1).....	392	J30001-UP
10		208-32-61260	.SEAL, MASTER.....	4	J30001-UP
11		208-32-51190	.PIN, MASTER.....	2	J30001-UP

Ref :R0500-01A10 Page :330140

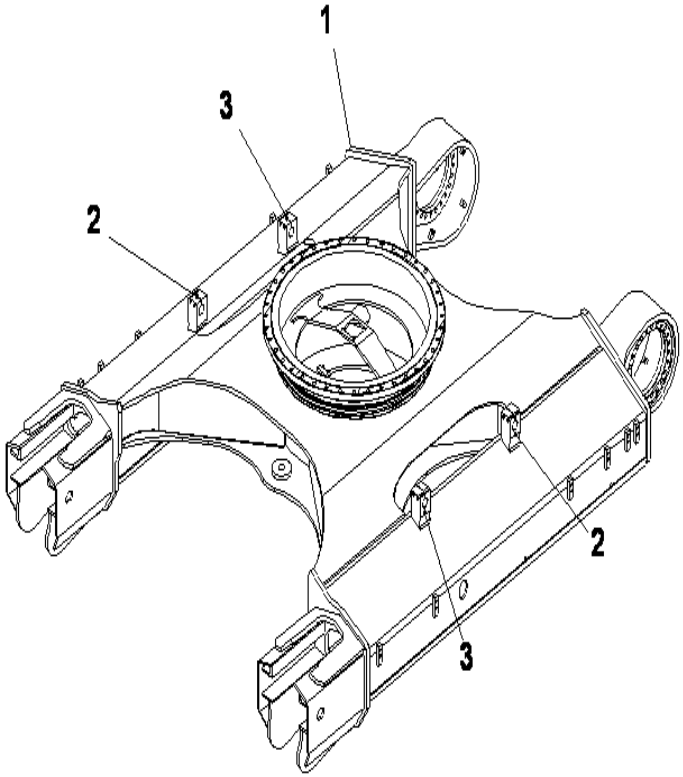

PC400-8 S/N J30001-UP

TRACK FRAME (FRAME)

INDEX	CD	PART NO.	DESCRIPTION	QTY	SERIAL NO.
1		208-30-71112	FRAME.....	1	J30001-UP
2		208-30-71F11	.BRACKET, (WELDED).....	2	J30001-UP
3		208-30-71F21	.BRACKET, (WELDED).....	2	J30001-UP

Ref :R1100-01A2 Page :330150

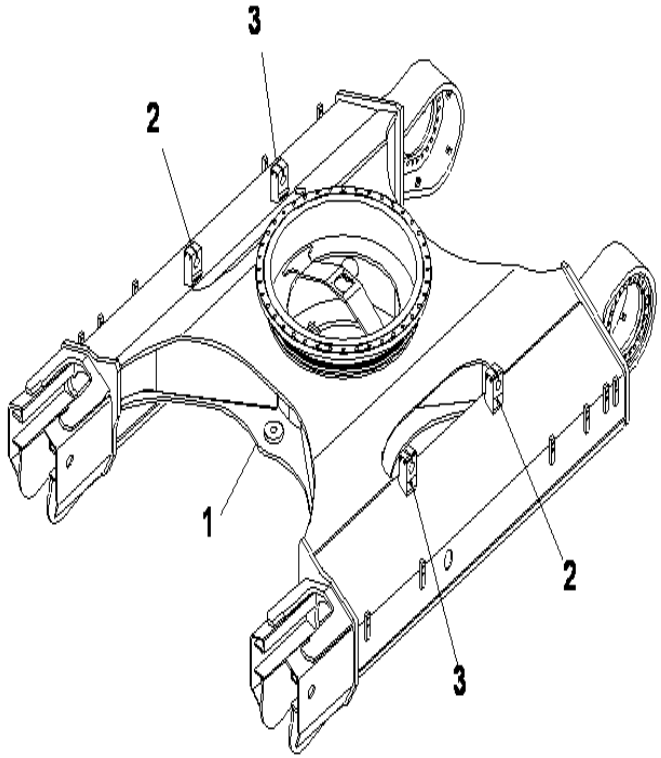

PC400-8 S/N J30001-UP

TRACK FRAME (FRAME) (WITH UNDER COVER)

INDEX	CD	PART NO.	DESCRIPTION	QTY	SERIAL NO.
1		208-30-72112	FRAME.....	1	J30001-UP
2		208-30-71F11	.BRACKET, (WELDED).....	2	J30001-UP
3		208-30-71F21	.BRACKET, (WELDED).....	2	J30001-UP

Ref :R1100-01A3 Page :330160

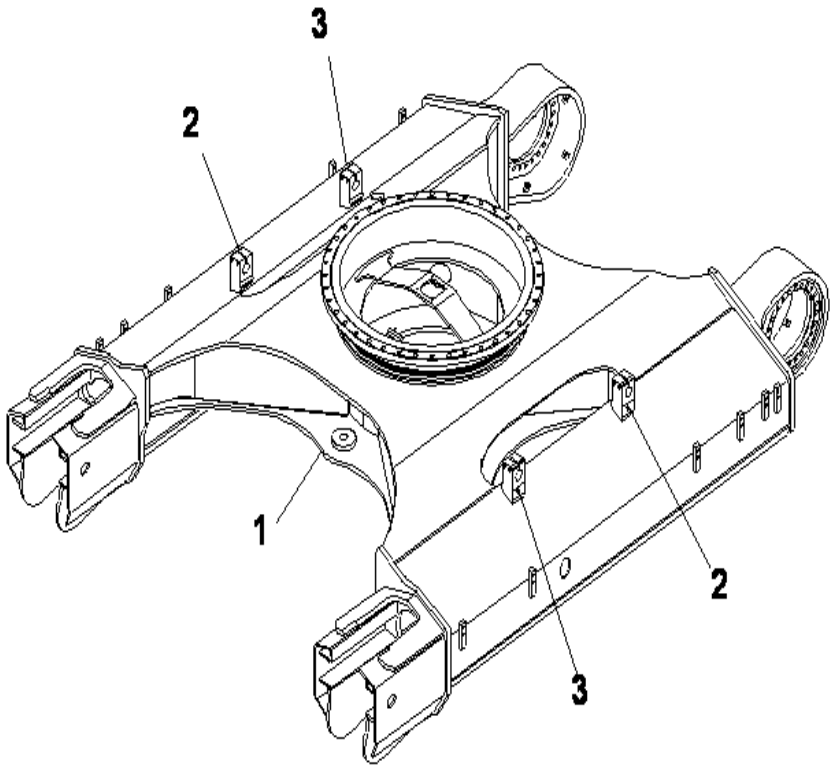

PC400-8 S/N J30001-UP

TRACK FRAME (FRAME) (FOR LC)

INDEX	CD	PART NO.	DESCRIPTION	QTY	SERIAL NO.
1		208-30-71311	FRAME.....	1	J30001-UP
2		208-30-71F11	.BRACKET, (WELDED).....	2	J30001-UP
3		208-30-71F21	.BRACKET, (WELDED).....	2	J30001-UP

Ref :R1100-01A6 Page :330170

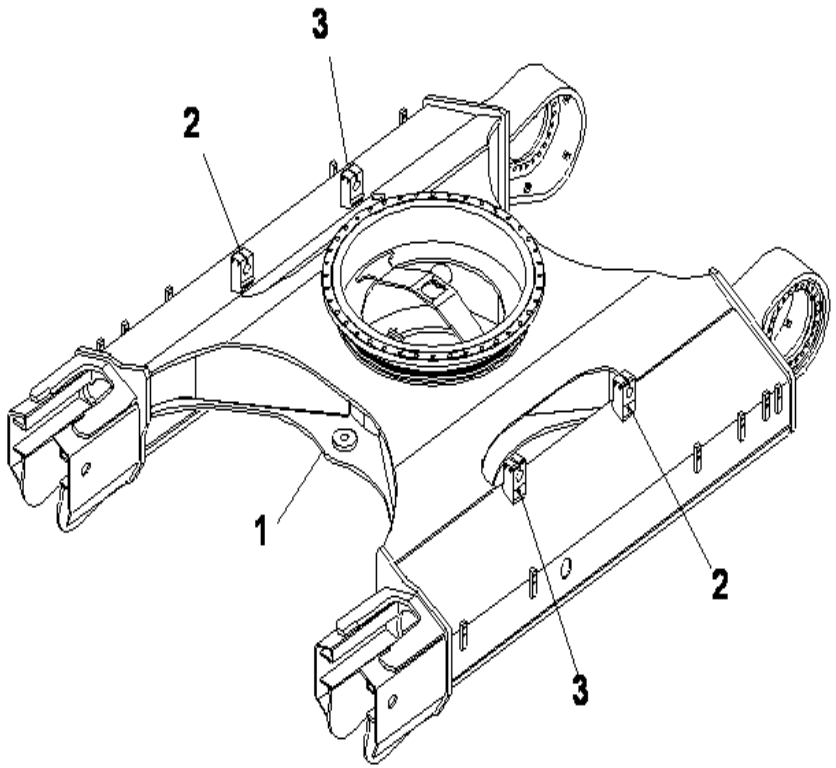

PC400-8 S/N J30001-UP

TRACK FRAME (FRAME) (WITH UNDER COVER) (FOR LC)

INDEX	CD	PART NO.	DESCRIPTION	QTY	SERIAL NO.
1		208-30-74410	FRAME.....	1	J30001-UP
2		208-30-72311	.FRAME, (WELDED).....	2	J30001-UP
3		208-30-71F30	.BRACKET, (WELDED).....	2	J30001-UP

Ref :R1100-01A7 Page :330180

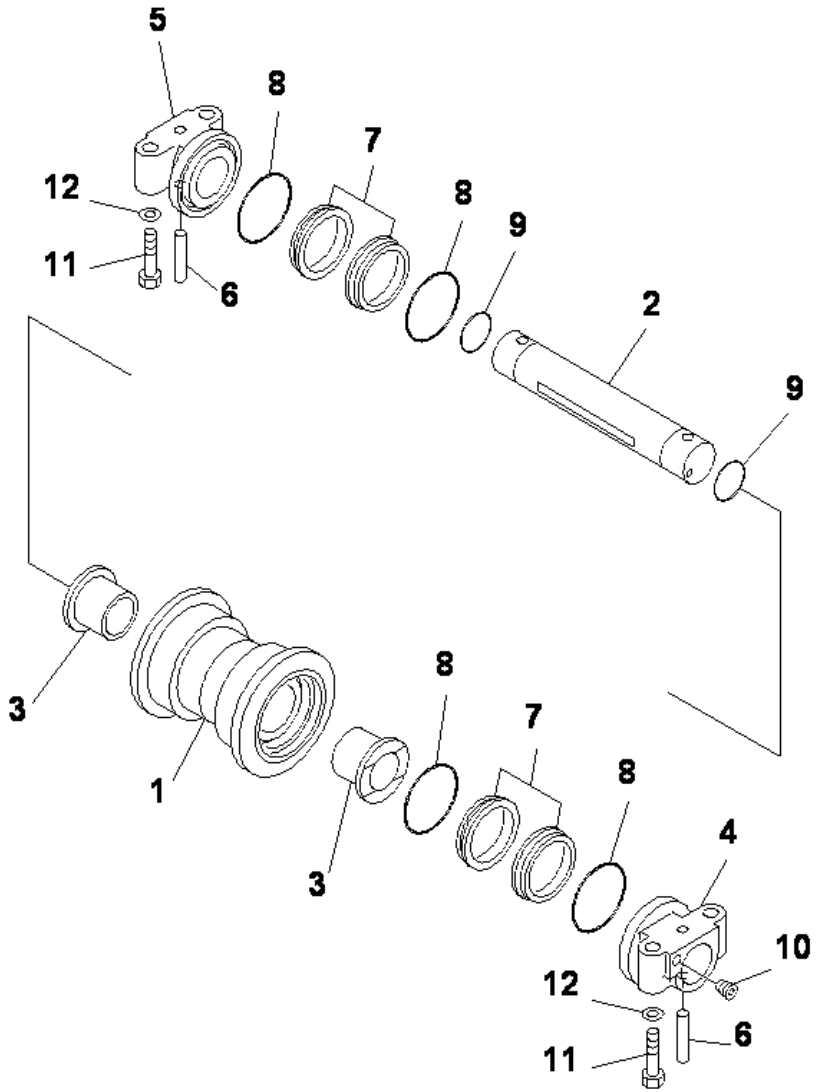

PC400-8 S/N J30001-UP

TRACK FRAME (TRACK ROLLER) (FOR LC)

INDEX	CD	PART NO.	DESCRIPTION	QTY	SERIAL NO.
1		208-30-00210	TRACK ROLLER A.....	16	J30001-UP
		208-30-56111	ROLLER.....	1	J30001-UP
2		208-30-56130	SHAFT.....	1	J30001-UP
3		207-30-53140	BUSHING.....	2	J30001-UP
4		208-30-56151	COLLAR.....	1	J30001-UP
5		208-30-56161	.COLLAR.....	1	J30001-UP
6		207-30-53160	.PIN.....	2	J30001-UP
7		207-30-00101	.FLOATING SEAL ASS'Y.....	2	J30001-UP
		207-30-53171	..SEAL.....	2	J30001-UP
8		207-30-53181	..O-RING.....	2	J30001-UP
9		208-30-56170	.O-RING.....	2	J30001-UP
10		20Y-30-16330	.PLUG.....	1	J30001-UP
11		208-30-56180	BOLT.....	64	J30001-UP
12		01643-32260	WASHER.....	64	J30001-UP

Ref :R1100-02A6 Page :330190

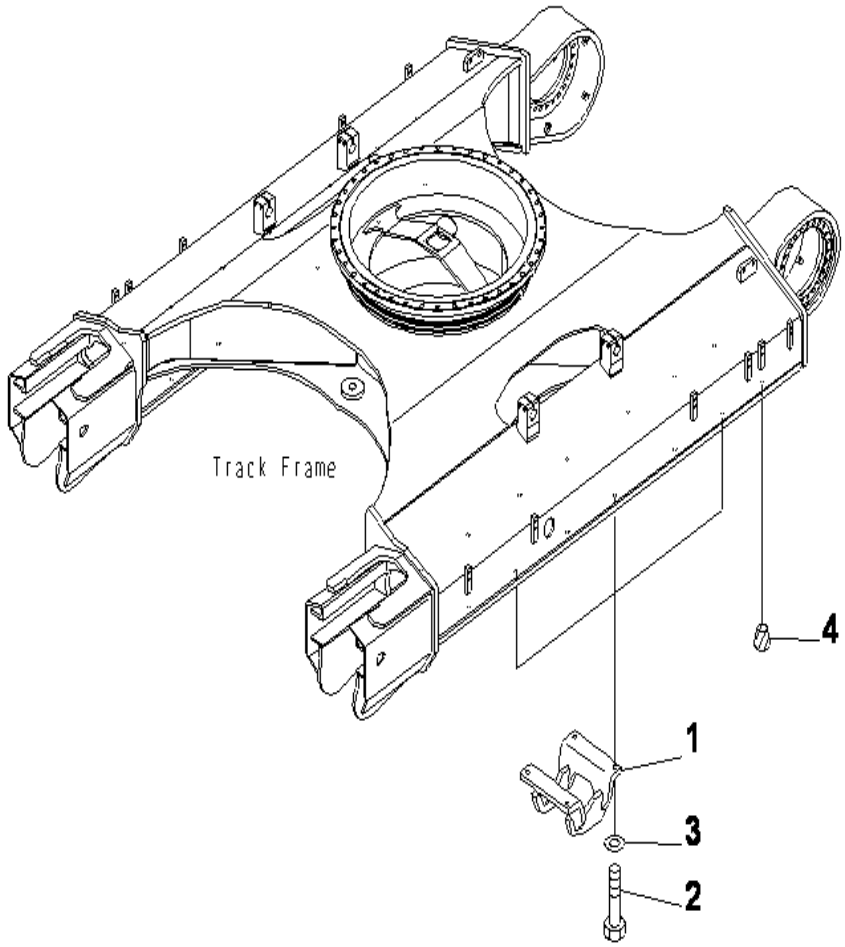

PC400-8 S/N J30001-UP

TRACK FRAME (CENTER GUARD) (FOR LC)

INDEX	CD	PART NO.	DESCRIPTION	QTY	SERIAL NO.
1		208-30-61190	GUARD	6	J30001-UP
2		01010-62460	BOLT	24	J30001-UP
3		01643-32460	WASHER	24	J30001-UP
4		07049-02430	PLUG	24	J30001-UP

Ref :R1100-03A6 Page :330200

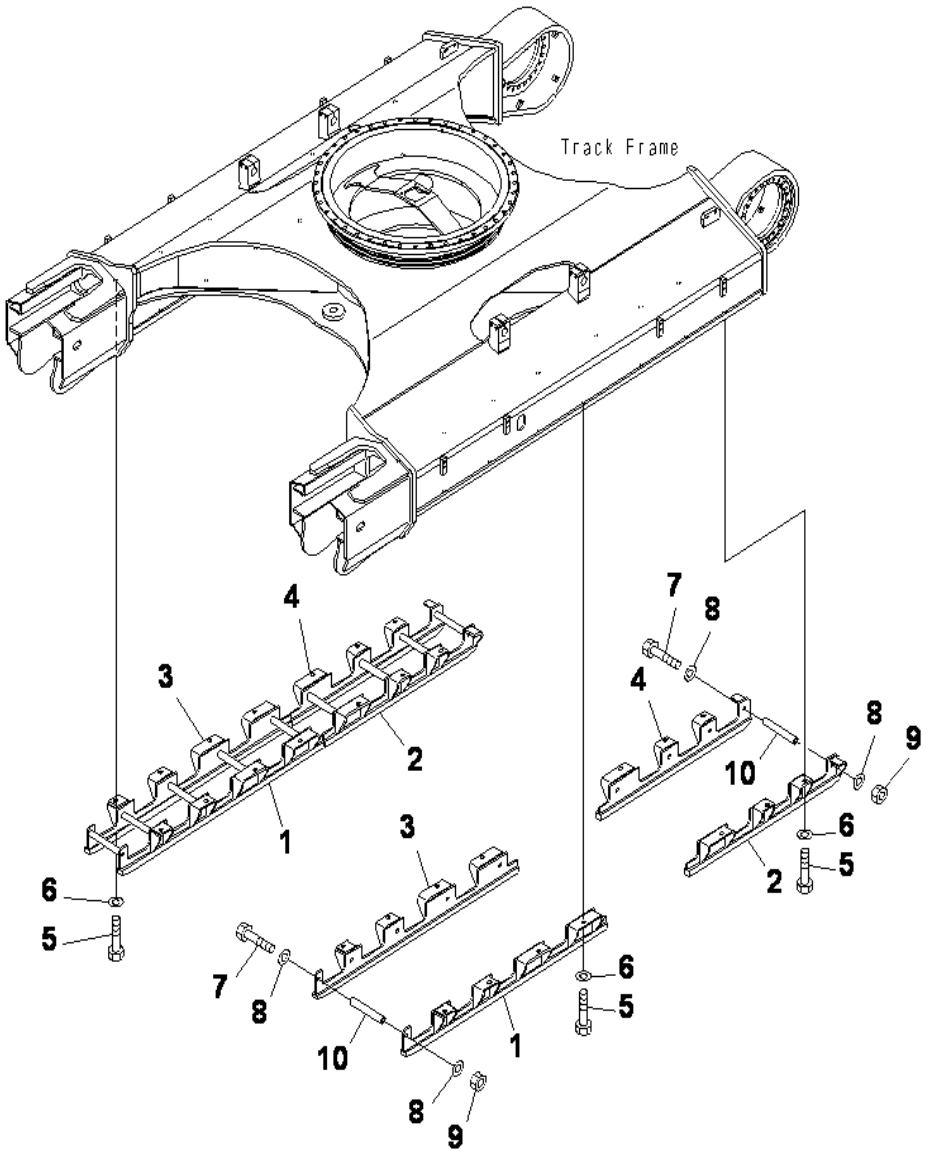

PC400-8 S/N J30001-UP

TRACK FRAME (FULL ROLLER GUARD) (FOR LC)

INDEX	CD	PART NO.	DESCRIPTION	QTY	SERIAL NO.
1		208-30-77210	GUARD, (L.H).....	2	J30001-UP
2		208-30-77220	GUARD, (L.H).....	2	J30001-UP
3		208-30-77230	GUARD, (R.H).....	2	J30001-UP
4		208-30-77240	GUARD, (R.H).....	2	J30001-UP
5		01010-82455	BOLT.....	28	J30001-UP
6		01643-32460	WASHER.....	28	J30001-UP
7		421-97-51230	BOLT.....	18	J30001-UP
8		01643-32460	WASHER.....	36	J30001-UP
9		01580-12419	NUT.....	18	J30001-UP
10		150-30-15553	SPACER.....	18	J30001-UP

Ref :R1100-03A8 Page :330210

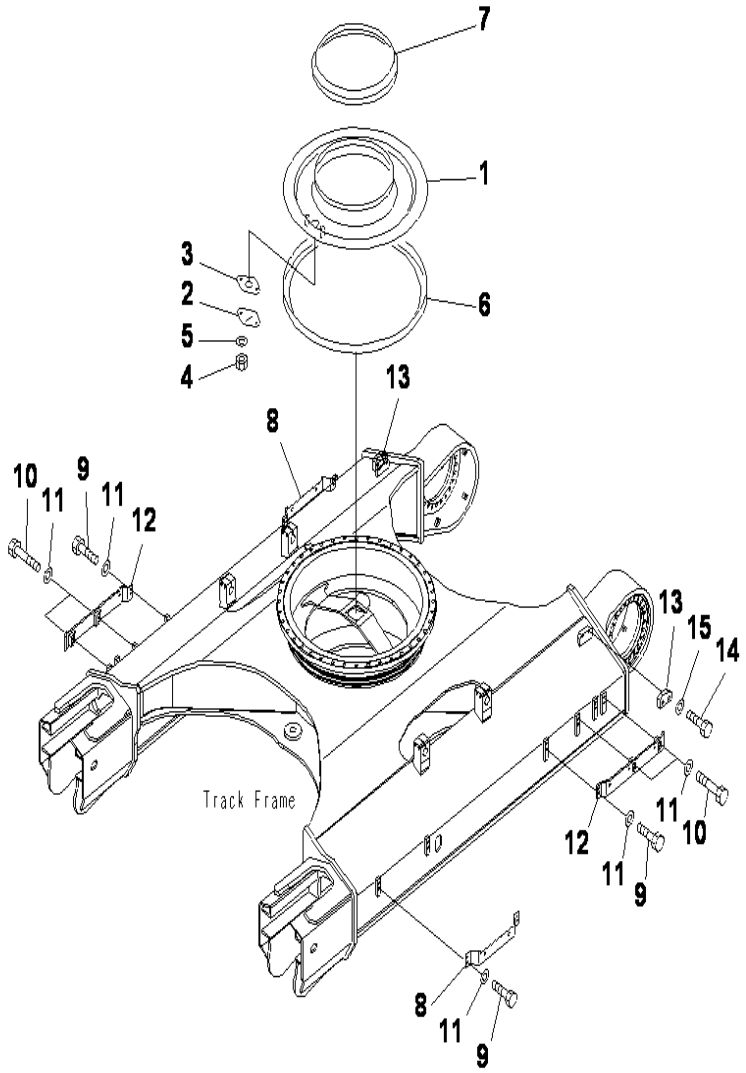

PC400-8 S/N J30001-UP

TRACK FRAME (GREASE BATH AND STEP) (FOR LC)

INDEX	CD	PART NO.	DESCRIPTION	QTY	SERIAL NO.
1		208-30-61220	COVER	1	J30001-UP
2		205-30-71181	COVER	1	J30001-UP
3		205-30-71191	GASKET	1	J30001-UP
4		01580-11008	NUT	2	J30001-UP
5		01643-31032	WASHER	2	J30001-UP
6		207-30-51260	SEAL	1	J30001-UP
7		205-30-71171	SEAL	1	J30001-UP
8		208-30-75710	BRACKET	2	J30001-UP
9		01010-81640	BOLT	12	J30001-UP
10		01010-81670	BOLT	8	J30001-UP
11		01643-31645	WASHER	20	J30001-UP
12		208-30-75840	STEP	2	J30001-UP
13		208-30-72120	PLATE	2	J30001-UP
14		01010-62070	BOLT	4	J30001-UP
15		01643-32060	WASHER	4	J30001-UP

Ref :R1100-04A6 Page :330220

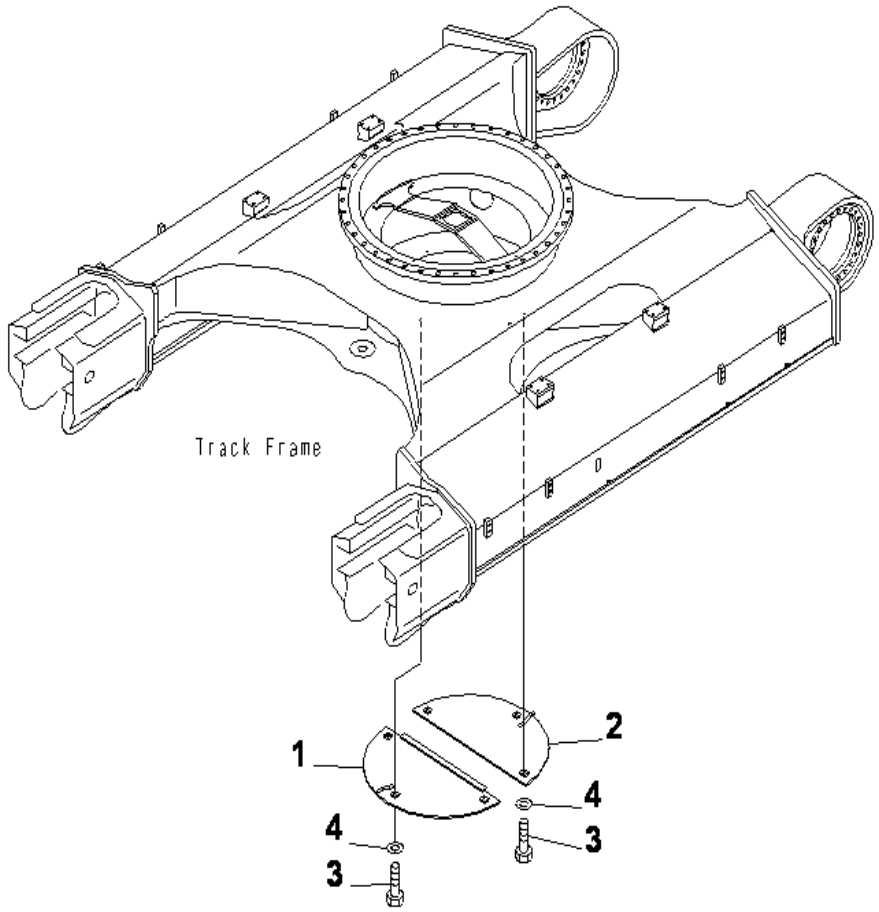

PC400-8 S/N J30001-UP

UNDER COVER (FOR TRACK FRAME)

INDEX	CD	PART NO.	DESCRIPTION	QTY	SERIAL NO.
1		20Y-97-32220	COVER	1	J30001-UP
2		20Y-97-32230	COVER	1	J30001-UP
3		01010-81235	BOLT	6	J30001-UP
4		01643-31232	WASHER	6	J30001-UP

Ref :R1140-01A0 Page :330230

WORK EQUIPMENT

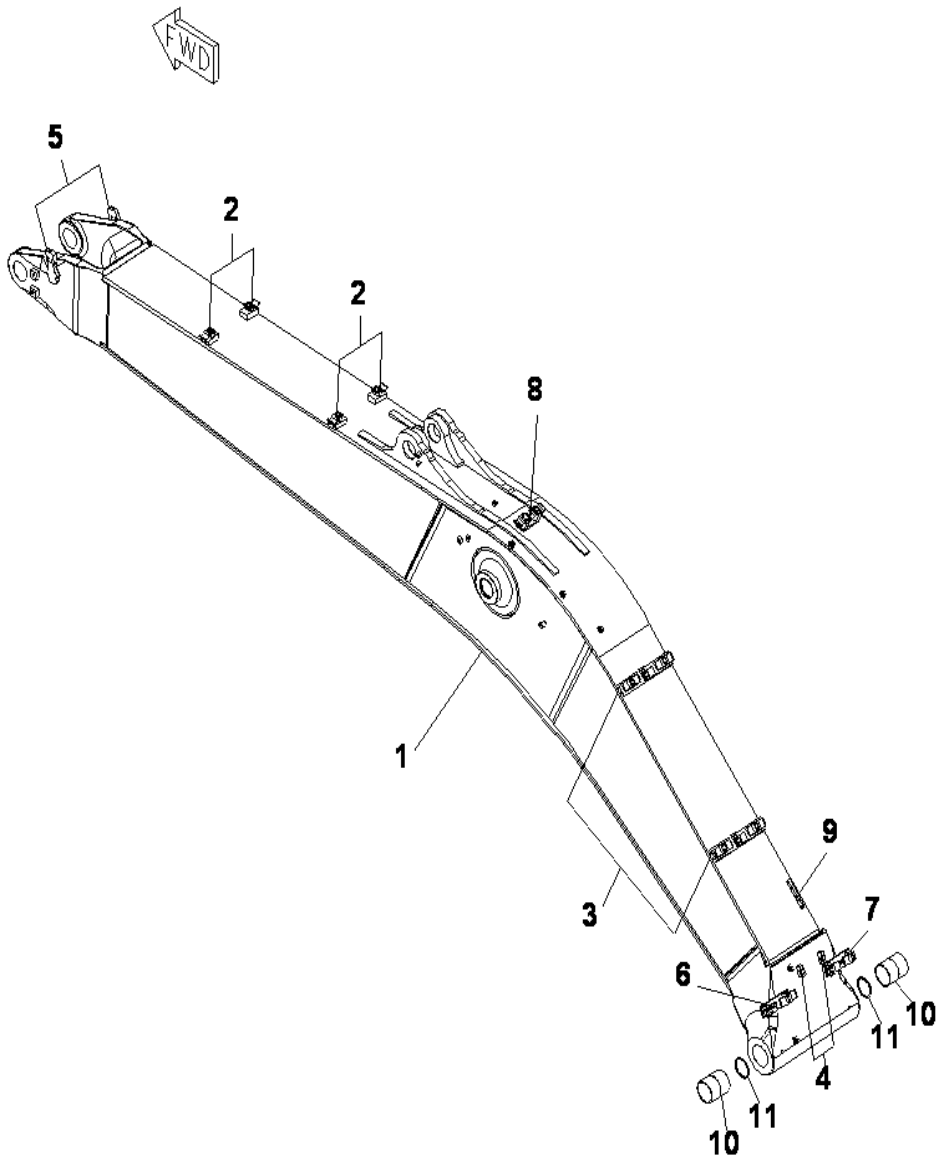

PC400-8 S/N J30001-UP

BOOM (7.0M BOOM) (500 HOURS GREASING TYPE) (OPT)

INDEX	CD	PART NO.	DESCRIPTION	QTY	SERIAL NO.
		208-70-00542	BOOM ASS'Y.....	1	J30001-UP
1	C1	208-70-71113	.BOOM.....	1	J30001-UP
2		207-62-74231	..BRACKET, (WELDED).....	4	J30001-UP
3		207-62-74371	..BRACKET, (WELDED).....	2	J30001-UP
4		208-62-74210	..SEAT, (WELDED).....	2	J30001-UP
5		208-62-74222	..BRACKET, (WELDED).....	2	J30001-UP
6		208-62-74241	..BRACKET, (WELDED).....	1	J30001-UP
7		208-62-74251	..BRACKET, (WELDED).....	1	J30001-UP
8		208-62-74440	..BRACKET, (WELDED).....	1	J30001-UP
9		20Y-70-11651	..SEAT, (WELDED).....	1	J30001-UP
10		208-70-71510	.BUSHING.....	2	J30001-UP
11		07145-00120	.SEAL.....	2	J30001-UP

Ref :T1110-01A2 Page :360010

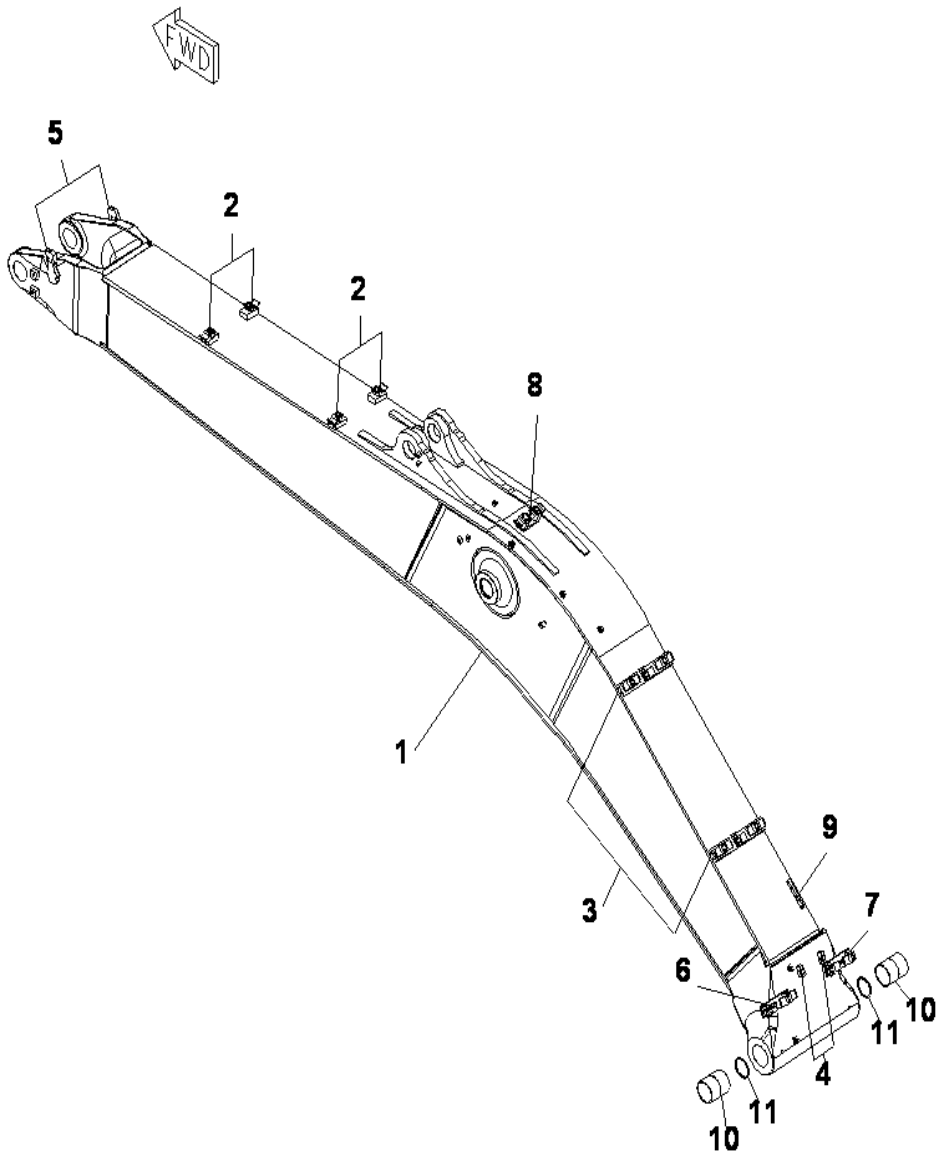

PC400-8 S/N J30001-UP

BOOM (7.0M BOOM) (100 HOURS GREASING TYPE) (STD)

INDEX	CD	PART NO.	DESCRIPTION	QTY	SERIAL NO.
		208-70-00790	BOOM ASS'Y.....	1	J30001-UP
1	C1	208-70-77170	.BOOM.....	1	J30001-UP
2		207-62-74231	..BRACKET, (WELDED).....	4	J30001-UP
3		207-62-74371	..BRACKET, (WELDED).....	2	J30001-UP
4		208-62-74210	..SEAT, (WELDED).....	2	J30001-UP
5		208-62-74222	..BRACKET, (WELDED).....	2	J30001-UP
6		208-62-74241	..BRACKET, (WELDED).....	1	J30001-UP
7		208-62-74251	..BRACKET, (WELDED).....	1	J30001-UP
8		208-62-74440	..BRACKET, (WELDED).....	1	J30001-UP
9		20Y-70-11651	..SEAT, (WELDED).....	1	J30001-UP
10		208-70-61610	.BUSHING.....	2	J30001-UP
11		07145-00120	.SEAL.....	2	J30001-UP

Ref :T1110-01A6 Page :360020

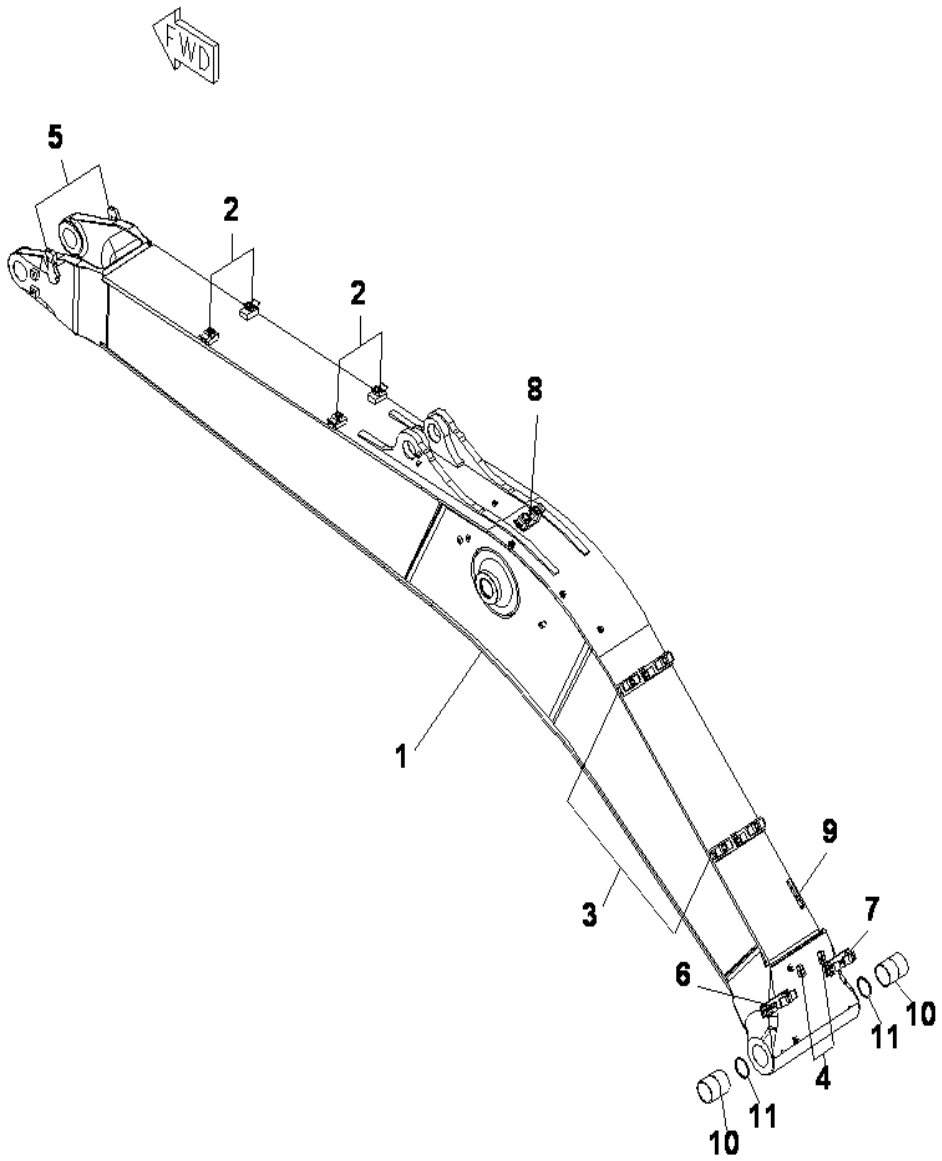

PC400-8 S/N J30001-UP

BOOM (7.0M BOOM) (100 HOURS GREASING TYPE) (OPT)

INDEX	CD	PART NO.	DESCRIPTION	QTY	SERIAL NO.
		208-70-00720	BOOM A.STD,100H.....	1	J30001-UP
1	C1	208-70-71113	.BOOM.....	1	J30001-UP
2		207-62-74231	..BRACKET, (WELDED).....	4	J30001-UP
3		207-62-74371	..BRACKET, (WELDED).....	2	J30001-UP
4		208-62-74210	..SEAT, (WELDED).....	2	J30001-UP
5		208-62-74222	..BRACKET, (WELDED).....	2	J30001-UP
6		208-62-74241	..BRACKET, (WELDED).....	1	J30001-UP
7		208-62-74251	..BRACKET, (WELDED).....	1	J30001-UP
8		208-62-74440	..BRACKET, (WELDED).....	1	J30001-UP
9		20Y-70-11651	..SEAT, (WELDED).....	1	J30001-UP
10		208-70-61610	.BUSHING.....	2	J30001-UP
11		07145-00120	.SEAL.....	2	J30001-UP

Ref :T1110-01A7 Page :360030

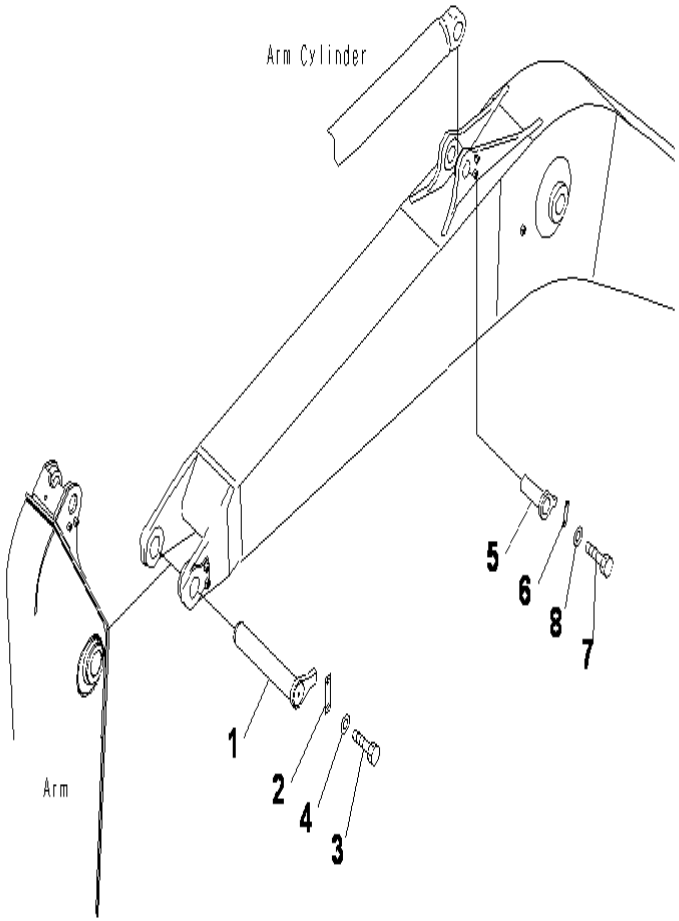

PC400-8 S/N J30001-UP

BOOM (500 HOURS GREASING TYPE) (TOP PIN AND BOTTOM PIN)

INDEX	CD	PART NO.	DESCRIPTION	QTY	SERIAL NO.
1		208-70-71580	PIN	1	J30001-UP
2		208-70-71670	PLATE	1	J30001-UP
3		01010-82045	BOLT	2	J30001-UP
4		01643-32060	WASHER	2	J30001-UP
5		208-70-61191	PIN	1	J30001-UP
6		205-70-66580	PLATE	1	J30001-UP
7		01010-81235	BOLT	2	J30001-UP
8		01643-31232	WASHER	2	J30001-UP

Ref :T1110-02A2 Page :360050

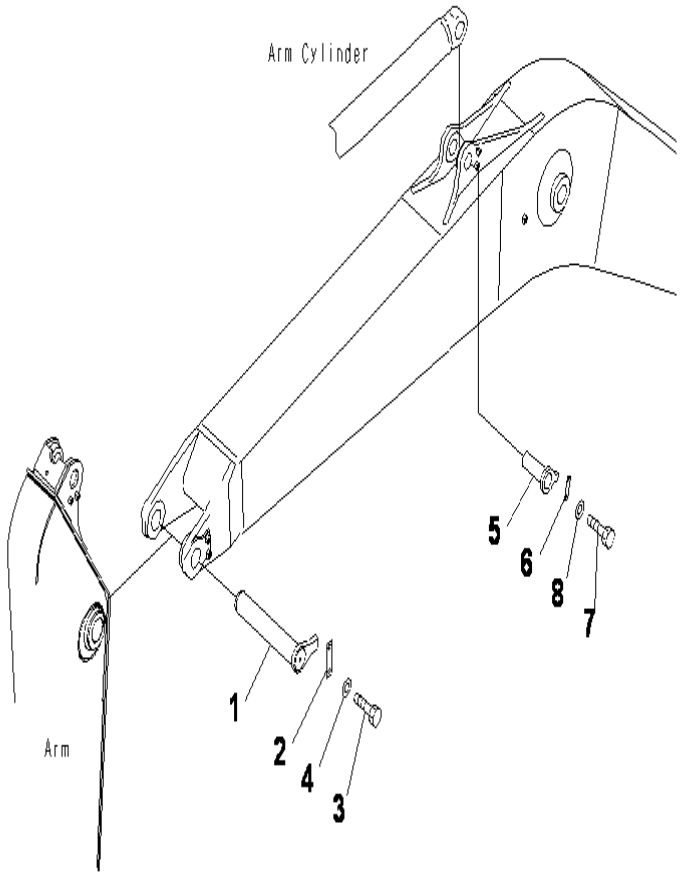

PC400-8 S/N J30001-UP

BOOM (100 HOURS GREASING TYPE) (TOP PIN AND BOTTOM PIN)

INDEX	CD	PART NO.	DESCRIPTION	QTY	SERIAL NO.
1		208-70-71680	PIN	1	J30001-UP
2		208-70-71670	PLATE	1	J30001-UP
3		01010-82045	BOLT	2	J30001-UP
4		01643-32060	WASHER	2	J30001-UP
5		208-70-61191	PIN	1	J30001-UP
6		205-70-66580	PLATE	1	J30001-UP
7		01010-81235	BOLT	2	J30001-UP
8		01643-31232	WASHER	2	J30001-UP

Ref :T1110-02A6 Page :360060

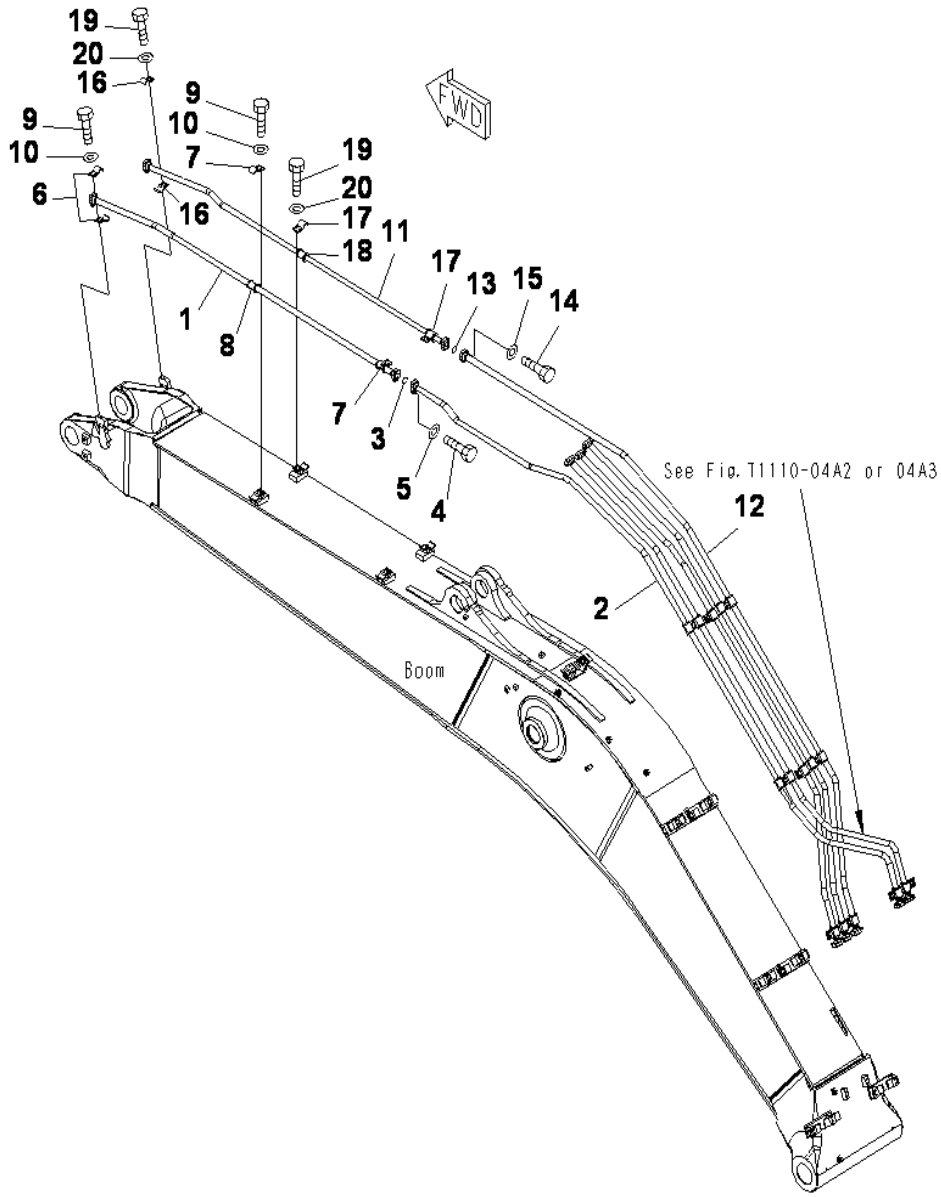

BOOM (BUCKET CYLINDER LINE)

INDEX	CD	PART NO.	DESCRIPTION	QTY	SERIAL NO.
1		208-62-74130	TUBE	1	J30001-UP
2		208-62-74151	TUBE	1	J30001-UP
3		07000-13035	O-RING	1	J30001-UP
4		07372-21040	BOLT	4	J30001-UP
5		01643-51032	WASHER	4	J30001-UP
6		207-62-31330	CLAMP	2	J30001-UP
7		207-62-52350	CLAMP	2	J30001-UP
8		205-62-73431	SEAT	2	J30001-UP
9		01010-81235	BOLT	6	J30001-UP
10		01643-31232	WASHER	6	J30001-UP
11		208-62-74120	TUBE	1	J30001-UP
12		208-62-74140	TUBE	1	J30001-UP
13		07000-13035	O-RING	1	J30001-UP
14		07372-21040	BOLT	4	J30001-UP
15		01643-51032	WASHER	4	J30001-UP
16		207-62-31330	CLAMP	2	J30001-UP
17		207-62-52350	CLAMP	2	J30001-UP
18		205-62-73431	SEAT	2	J30001-UP
19		01010-81235	BOLT	6	J30001-UP
20		01643-31232	WASHER	6	J30001-UP

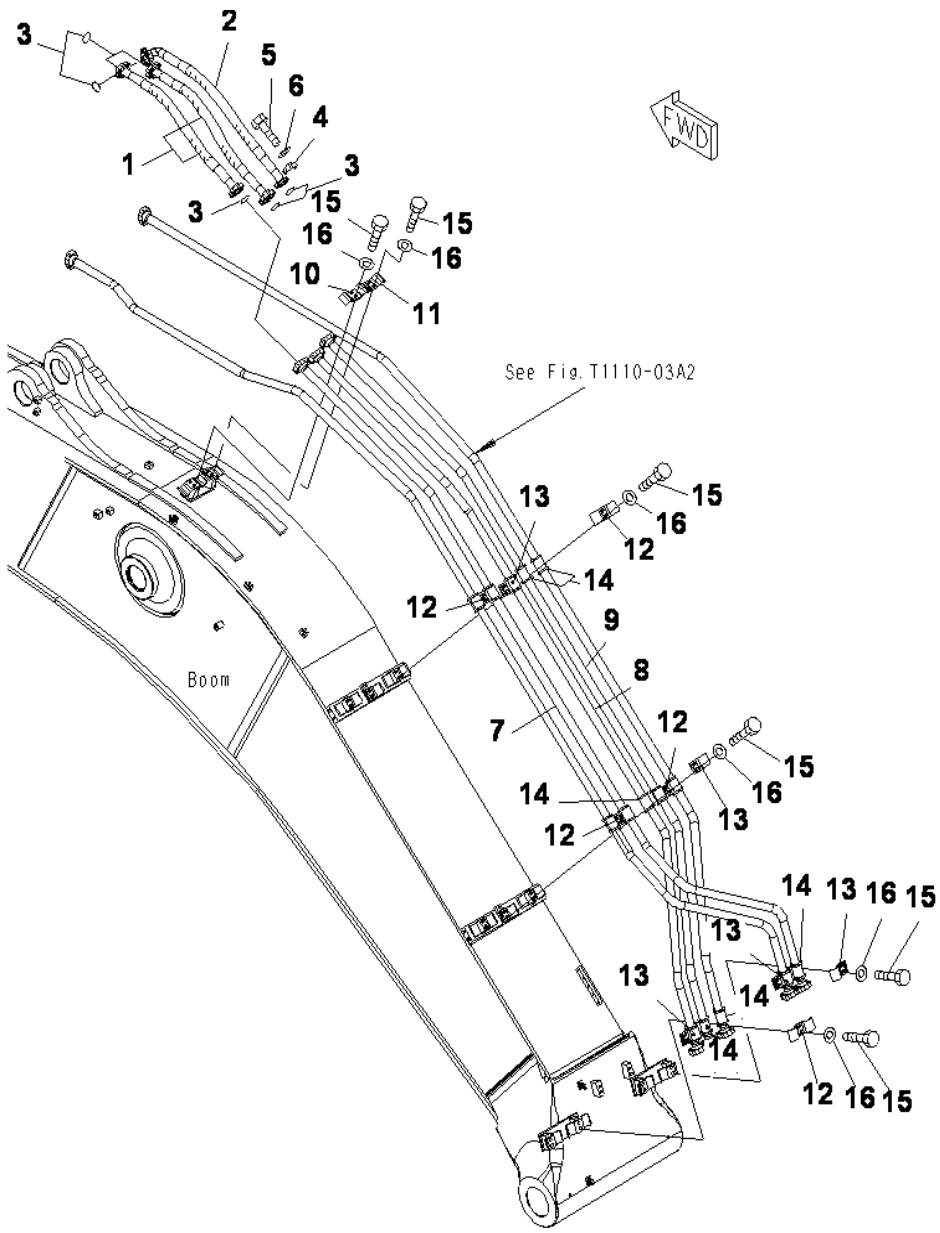

PC400-8 S/N J30001-UP

BOOM (ARM CYLINDER LINE)

INDEX	CD	PART NO.	DESCRIPTION	QTY	SERIAL NO.
1		07074-01009	HOSE	2	J30001-UP
2		07073-01AA9	HOSE	1	J30001-UP
3		07000-13032	O-RING	6	J30001-UP
4		07371-31049	FLANGE	12	J30001-UP
5		07372-21035	BOLT	24	J30001-UP
6		01643-51032	WASHER	24	J30001-UP
7		208-62-74410	TUBE	1	J30001-UP
8		208-62-74420	TUBE	1	J30001-UP
9		208-62-74430	TUBE	1	J30001-UP
10		207-62-54760	CLAMP	1	J30001-UP
11		207-62-31330	CLAMP	1	J30001-UP
12		207-62-54780	CLAMP	5	J30001-UP
13		207-62-52350	CLAMP	5	J30001-UP
14		205-62-73431	SEAT	15	J30001-UP
15		01010-81235	BOLT	24	J30001-UP
16		01643-31232	WASHER	24	J30001-UP

Ref :T1110-04A2 Page :360080

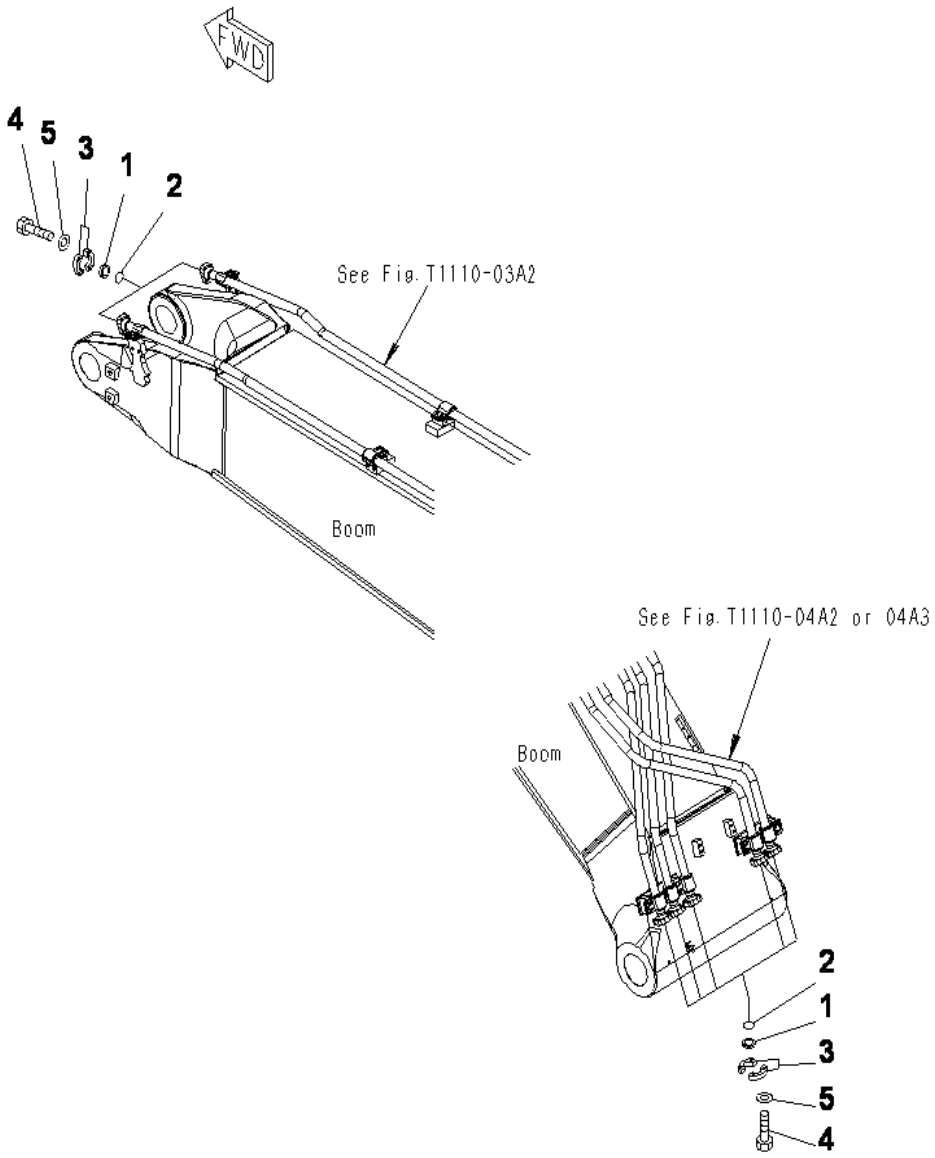

PC400-8 S/N J30001-UP

BOOM (BLIND PARTS)

INDEX	CD	PART NO.	DESCRIPTION	QTY	SERIAL NO.
1		07378-11000	HEAD	7	J30001-UP
2		07000-13032	O-RING	7	J30001-UP
3		07371-31049	FLANGE	14	J30001-UP
4		07372-21035	BOLT	28	J30001-UP
5		01643-51032	WASHER	28	J30001-UP

Ref :T1110-05A2 Page :360100

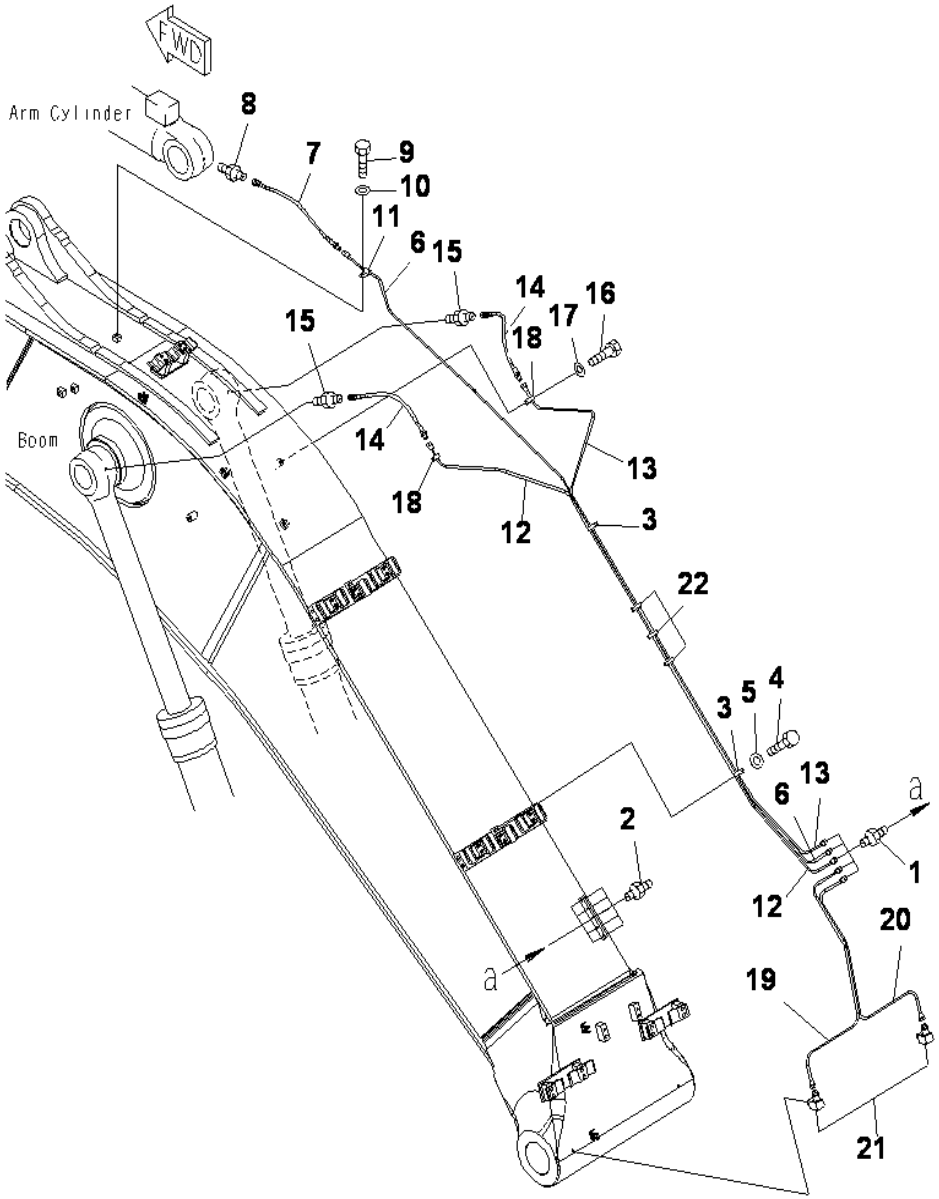

BOOM (LUBRICATING LINE)

INDEX	CD	PART NO.	DESCRIPTION	QTY	SERIAL NO.
1		20Y-70-11540	CONNECTOR	5	J30001-UP
2		07020-00000	FITTING	5	J30001-UP
3		04434-51912	CLIP	2	J30001-UP
4		01010-81220	BOLT	2	J30001-UP
5		01643-51232	WASHER	2	J30001-UP
6		208-70-71331	TUBE	1	J30001-UP
7		20Y-70-11520	HOSE, 440MM	1	J30001-UP
8		205-70-51390	NIPPLE	1	J30001-UP
9		01010-81220	BOLT	1	J30001-UP
10		01643-31232	WASHER	1	J30001-UP
11		04434-50812	CLIP	1	J30001-UP
12		208-70-77310	TUBE	1	J30001-UP
13		208-70-77320	TUBE	1	J30001-UP
14		20Y-70-11520	HOSE, 440MM	2	J30001-UP
15		205-70-51390	NIPPLE	2	J30001-UP
16		01010-81220	BOLT	2	J30001-UP
17		01643-31232	WASHER	2	J30001-UP
18		04434-50812	CLIP	2	J30001-UP
19		208-70-77340	TUBE	1	J30001-UP
20		208-70-77350	TUBE	1	J30001-UP
21		20Y-25-11270	ELBOW	2	J30001-UP
22		08034-20519	BAND	3	J30001-UP

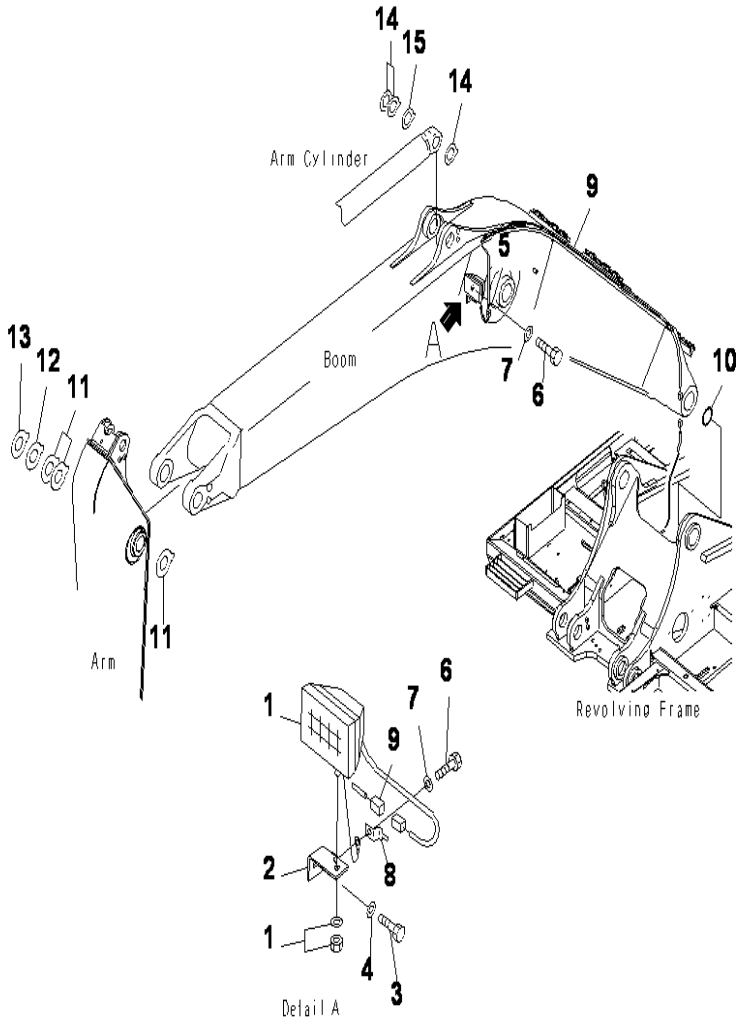

BOOM (500 HOURS GREASING TYPE) (WORKING LAMP AND SPACER)

INDEX	CD	PART NO.	DESCRIPTION	QTY	SERIAL NO.
1		21T-06-32810	WORK LAMP ASS'Y	1	J30001-UP
		421-06-23330	.BULB, 70W	1	J30001-UP
2		20Y-06-21551	BRACKET	1	J30001-UP
3		01010-81430	BOLT	1	J30001-UP
4		01643-31445	WASHER	1	J30001-UP
5		04434-51012	CLIP	1	J30001-UP
6		01010-81220	BOLT	2	J30001-UP
7		01643-31232	WASHER	2	J30001-UP
8		08193-20012	CLIP	1	J30001-UP
9		207-06-75161	WIRING HARNESS	1	J30001-UP
10		07145-00120	SEAL	2	J30001-UP
11		208-70-71531	SPACER. 2.0MM	3	J30001-UP
12		208-70-71541	SPACER. 2.5MM	1	J30001-UP
13		208-70-71551	SPACER. 3.0MM	1	J30001-UP
14		208-70-71651	SPACER	3	J30001-UP
15		208-70-71661	SPACER	1	J30001-UP

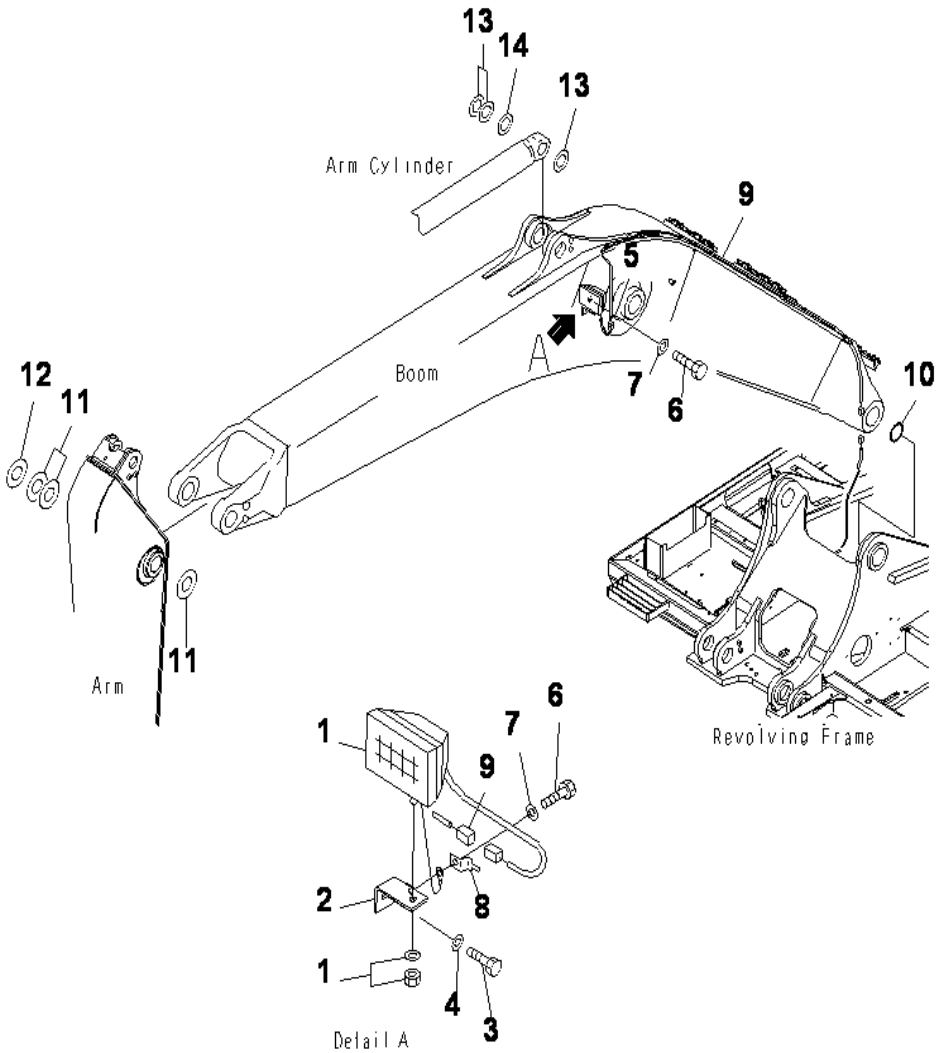

BOOM (100 HOURS GREASING TYPE) (WORKING LAMP AND SPACER)

INDEX	CD	PART NO.	DESCRIPTION	QTY	SERIAL NO.
1		21T-06-32810	WORK LAMP A.....	1	J30001-UP
		421-06-23330	.BULB, 70W.....	1	J30001-UP
2		20Y-06-21551	BRACKET.....	1	J30001-UP
3		01010-81430	BOLT.....	1	J30001-UP
4		01643-31445	WASHER.....	1	J30001-UP
5		04434-51012	CLIP.....	1	J30001-UP
6		01010-81220	BOLT.....	2	J30001-UP
7		01643-31232	WASHER.....	2	J30001-UP
8		08193-20012	CLIP.....	1	J30001-UP
9		207-06-75161	WIRING HARNESS.....	1	J30001-UP
10		07145-00120	SEAL.....	2	J30001-UP
11		421-70-11451	SHIM. 1.5MM.....	3	J30001-UP
12		208-70-31310	SPACER. 0.8MM.....	1	J30001-UP
13		207-70-11370	SPACER. 1.5MM.....	3	J30001-UP
14		207-70-11360	SPACER. 1.0MM.....	1	J30001-UP

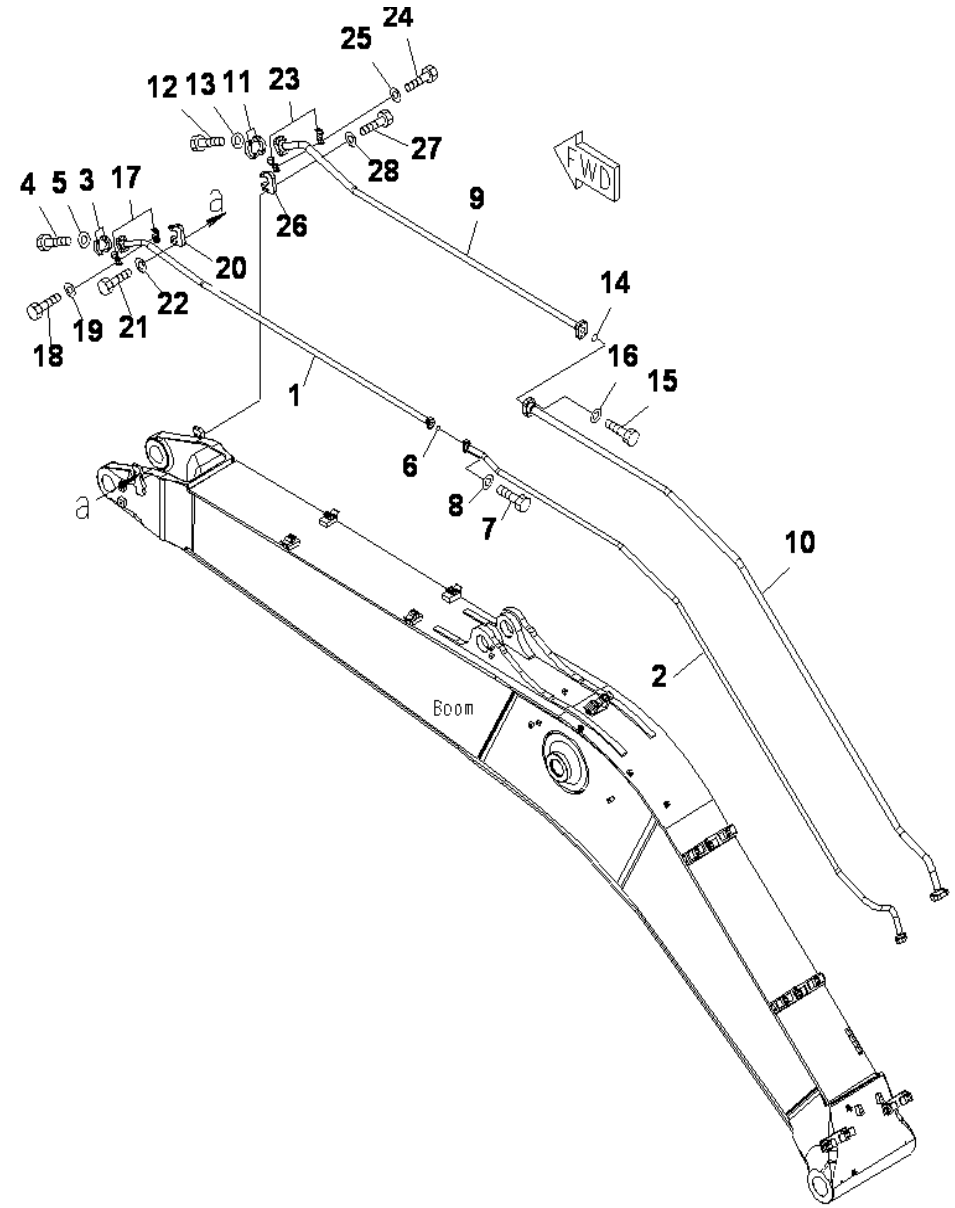

PC400-8 S/N J30001-UP

BOOM (ADDITIONAL LINE) (FOR ADDITIONAL PIPING)

INDEX	CD	PART NO.	DESCRIPTION	QTY	SERIAL NO.
1		208-97-07110	TUBE	1	J30001-UP
2		208-97-07131	TUBE	1	J30001-UP
3		07371-51260	FLANGE	2	J30001-UP
4		01010-81245	BOLT	4	J30001-UP
5		01643-31232	WASHER	4	J30001-UP
6		07000-13035	O-RING	1	J30001-UP
7		07372-21040	BOLT	4	J30001-UP
8		01643-51032	WASHER	4	J30001-UP
9		208-97-07120	TUBE	1	J30001-UP
10		208-97-07140	TUBE	1	J30001-UP
11		07371-51470	FLANGE	2	J30001-UP
12		01010-81455	BOLT	4	J30001-UP
13		01643-31445	WASHER	4	J30001-UP
14		07000-13048	O-RING	1	J30001-UP
15		01010-81455	BOLT	4	J30001-UP
16		01643-31445	WASHER	4	J30001-UP
17		208-970-7220	CLAMP	2	J30001-UP
18		01010-81235	BOLT	2	J30001-UP
19		01643-31232	WASHER	2	J30001-UP
20		207-970-7151	BRACKET	1	J30001-UP
21		01010-81655	BOLT	2	J30001-UP
22		01643-31645	WASHER	2	J30001-UP
23		208-970-7210	CLAMP	2	J30001-UP
24		01010-81235	BOLT	2	J30001-UP
25		01643-31232	WASHER	2	J30001-UP
26		207-970-7151	BRACKET	1	J30001-UP
27		01010-81655	BOLT	2	J30001-UP
28		01643-31645	WASHER	2	J30001-UP

Ref :T1110-08A4 Page :360150

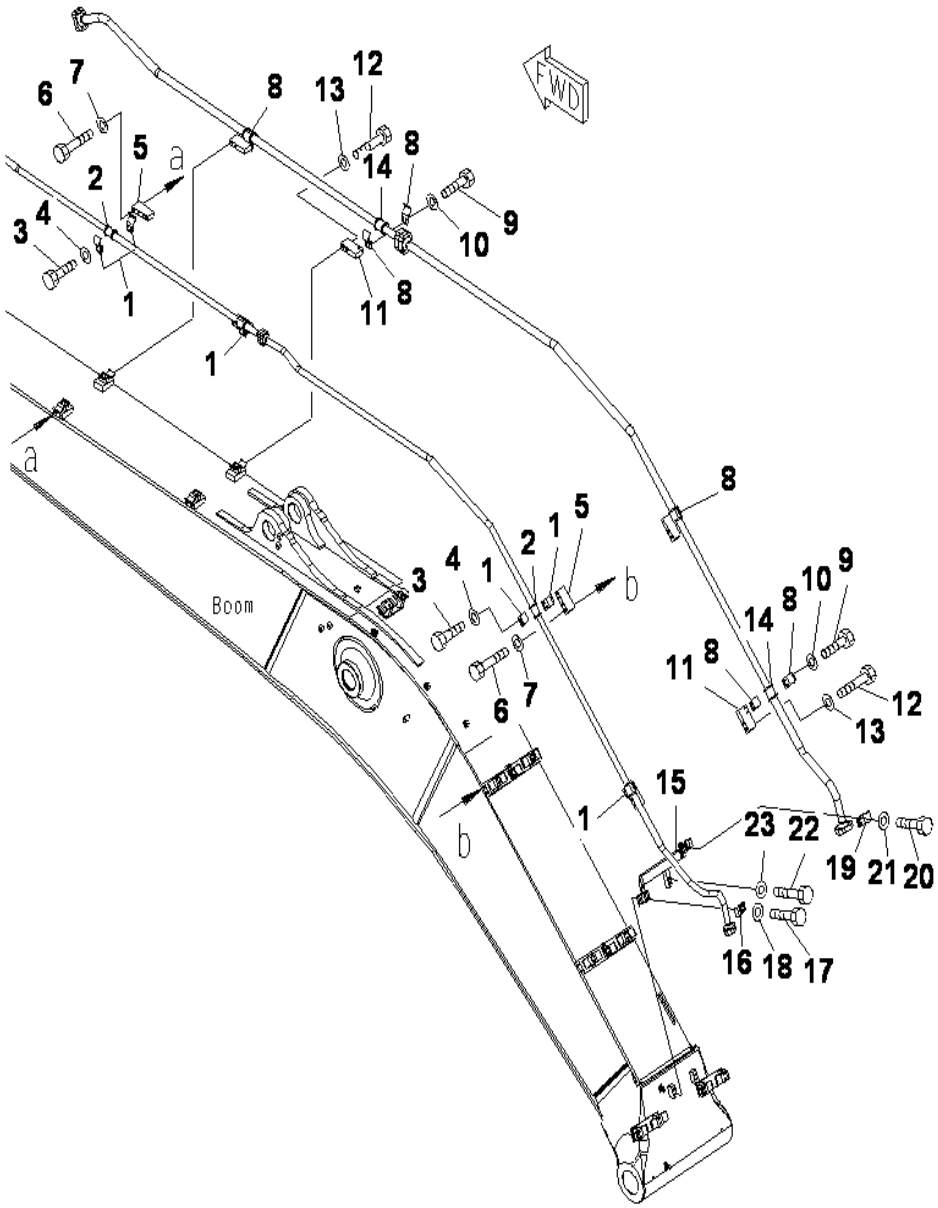

PC400-8 S/N J30001-UP

BOOM (ADDITIONAL LINE) (CLAMP) (FOR ADDITIONAL PIPING)

INDEX	CD	PART NO.	DESCRIPTION	QTY	SERIAL NO.
1		207-62-52350	CLAMP	8	J30001-UP
2		205-62-73431	SEAT	4	J30001-UP
3		01010-81235	BOLT	8	J30001-UP
4		01643-31232	WASHER	8	J30001-UP
5		207-97-07171	BRACKET	4	J30001-UP
6		01010-81685	BOLT	8	J30001-UP
7		01643-31645	WASHER	8	J30001-UP
8		207-97-07320	CLAMP	8	J30001-UP
9		01010-81235	BOLT	8	J30001-UP
10		01643-31232	WASHER	8	J30001-UP
11		207-97-07171	BRACKET	4	J30001-UP
12		01010-81685	BOLT	8	J30001-UP
13		01643-31645	WASHER	8	J30001-UP
14		207-97-07331	SEAT	4	J30001-UP
15		208-97-07161	BRACKET	1	J30001-UP
16		207-62-31330	CLAMP	1	J30001-UP
17		01010-81260	BOLT	2	J30001-UP
18		01643-31232	WASHER	2	J30001-UP
19		207-97-07310	CLAMP	1	J30001-UP
20		01010-81235	BOLT	2	J30001-UP
21		01643-31232	WASHER	2	J30001-UP
22		01010-81260	BOLT	2	J30001-UP
23		01643-31232	WASHER	2	J30001-UP

Ref :T1110-09A4 Page :360160

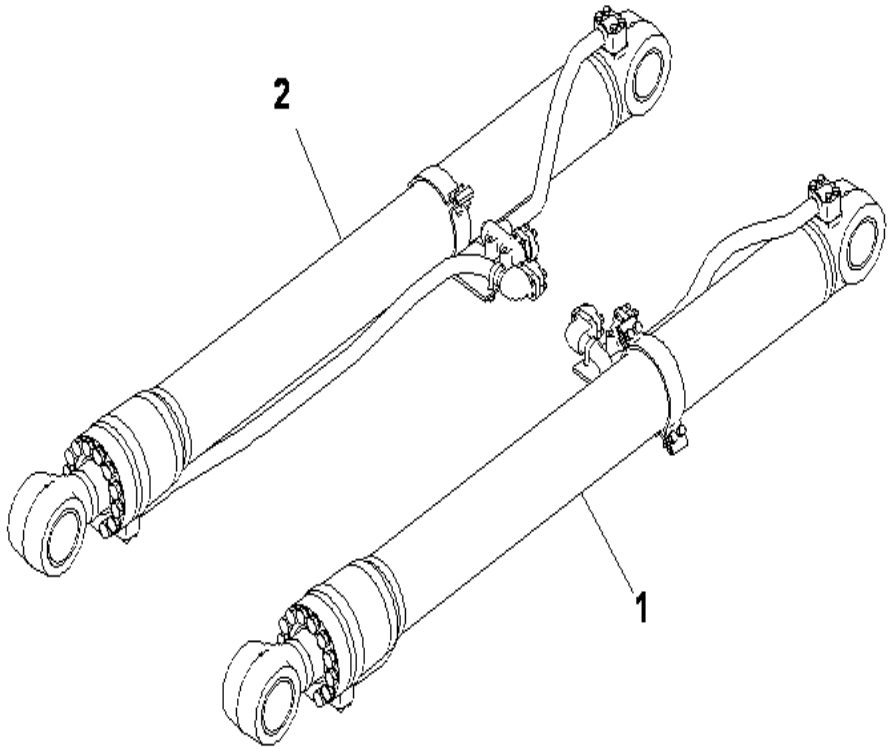

PC400-8 S/N J30001-UP

BOOM CYLINDER (100 HOURS) (STD)

INDEX	CD	PART NO.	DESCRIPTION	QTY	SERIAL NO.
1		(707-01-XM400)	CYLINDER GROUP (LH).....	1	J30001-UP
2		(707-01-XM410)	CYLINDER GROUP (RH).....	1	J30001-UP

Ref :T1120-01A2 Page :360200

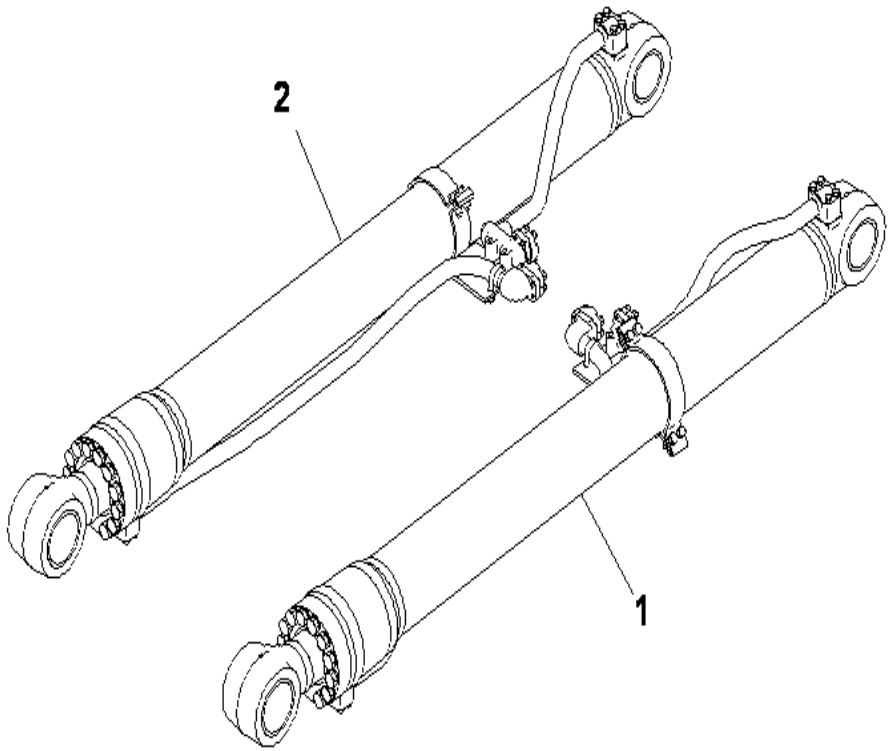

PC400-8 S/N J30001-UP

BOOM CYLINDER (500 HOURS) (OPTION)

INDEX	CD	PART NO.	DESCRIPTION	QTY	SERIAL NO.
1		(707-01-XT520)	CYLINDER GROUP (L.H).....	1	J30001-UP
2		(707-01-XT530)	CYLINDER GROUP (R.H).....	1	J30001-UP

Ref :T1120-01A7 Page :360220

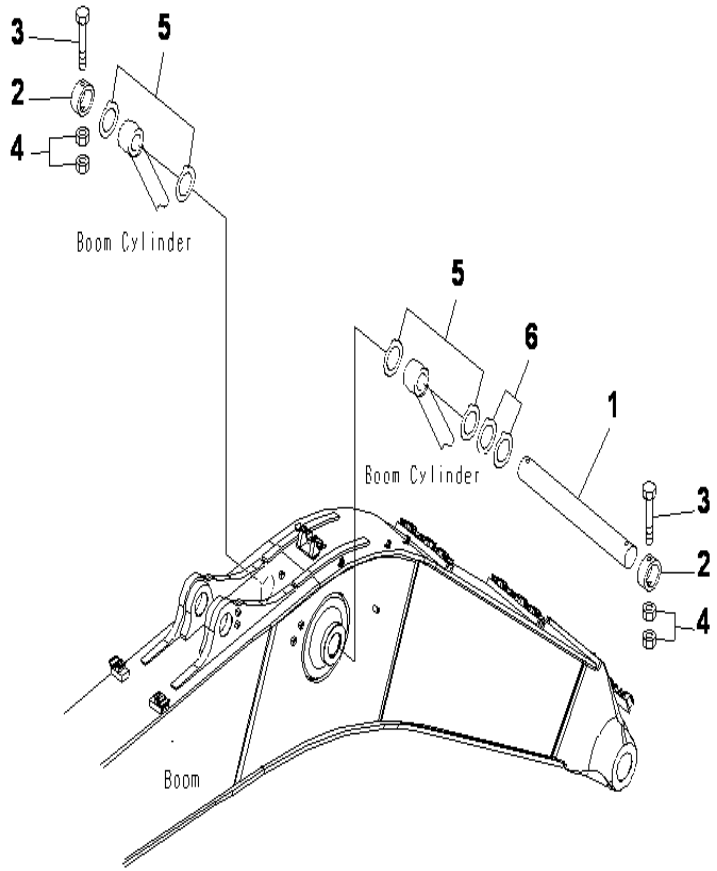

PC400-8 S/N J30001-UP

BOOM CYLINDER TOP PIN (500 HOURS GREASING BOOM TYPE)

INDEX	CD	PART NO.	DESCRIPTION	QTY	SERIAL NO.
1		208-70-61860	PIN.....	1	J30001-UP
2		2087031242	PLATE.....	2	J30001-UP
3		207-70-13340	BOLT.....	2	J30001-UP
4		01580-12419	NUT.....	4	J30001-UP
5		208-70-71561	SPACER. 1.0MM.....	4	J30001-UP
6		208-70-71571	SPACER. 2.0MM.....	2	J30001-UP

Ref :T1125-01A0 Page :360230

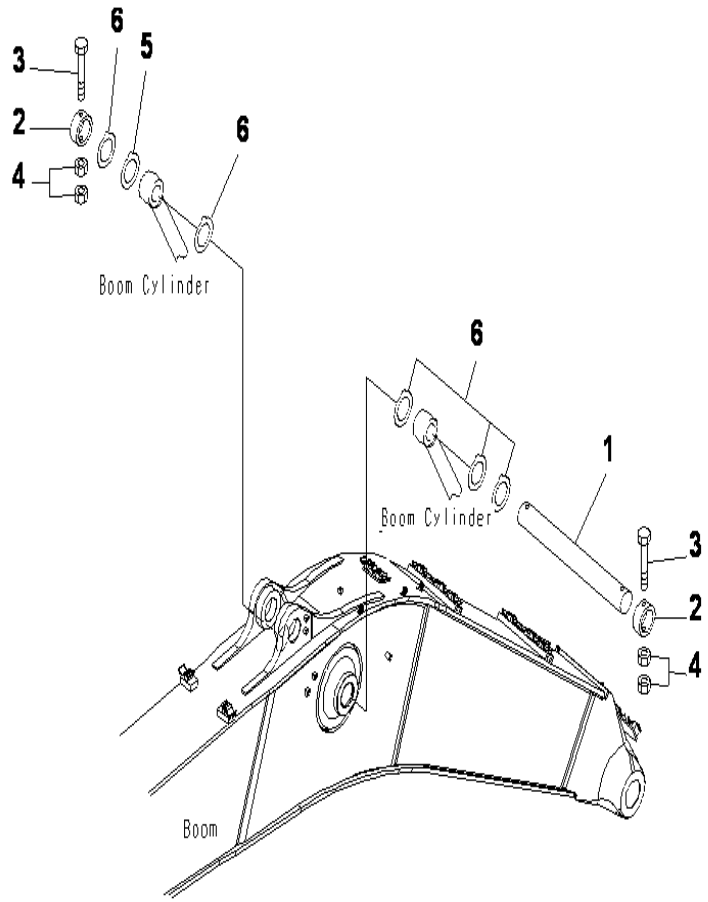

PC400-8 S/N J30001-UP

BOOM CYLINDER TOP PIN (100 HOURS GREASING BOOM TYPE)

INDEX	CD	PART NO.	DESCRIPTION	QTY	SERIAL NO.
1		208-70-61860	PIN.....	1	J30001-UP
2		208-70-31242	PLATE.....	2	J30001-UP
3		207-70-13340	BOLT.....	2	J30001-UP
4		01580-12419	NUT.....	4	J30001-UP
5		208-70-31340	SPACER. 0.8MM.....	1	J30001-UP
6		208-70-51320	SPACER. 1.5MM.....	5	J30001-UP

Ref :T1125-01A1 Page :360240

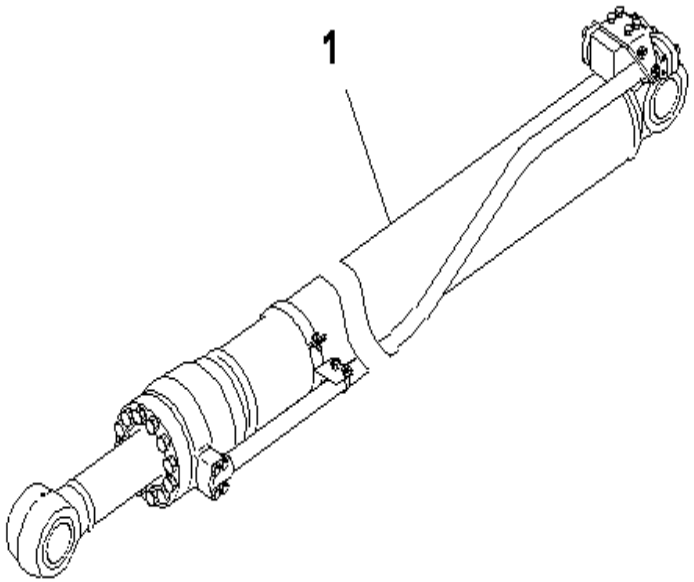

PC400-8 S/N J30001-UP

ARM CYLINDER WITH RESISTENT (500 HOURS) (OPT)

INDEX	CD	PART NO.	DESCRIPTION	QTY	SERIAL NO.
1		(707-01-XZC90)	ARM CYLINDER GROUP.....	1	J30001-UP

Ref :T1140-01A0 Page :360250

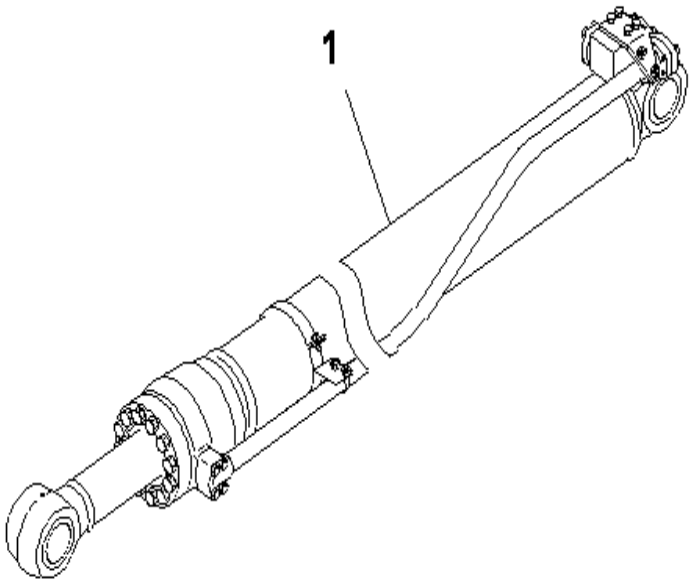

PC400-8 S/N J30001-UP

ARM CYLINDER (2.4M ARM) (100 HOURS) (STD)

INDEX	CD	PART NO.	DESCRIPTION	QTY	SERIAL NO.
1		(707-01-XM430)	ARM CYLINDER GROUP.....	1	J30001-UP

Ref :T1140-01A1 Page :360260

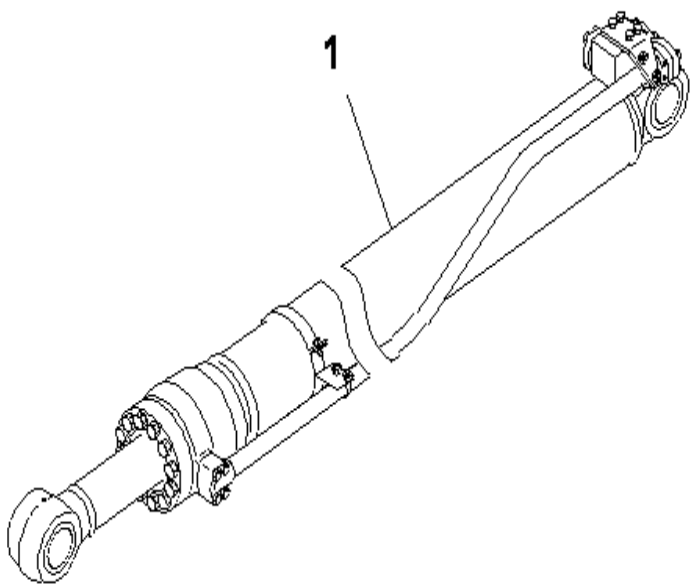

PC400-8 S/N J30001-UP

ARM CYLINDER (100 HOURS)

INDEX	CD	PART NO.	DESCRIPTION	QTY	SERIAL NO.
1		(707-01-XM420)	ARM CYLINDER GROUP.....	1	J30001-UP

Ref :T1140-01A2 Page :360270

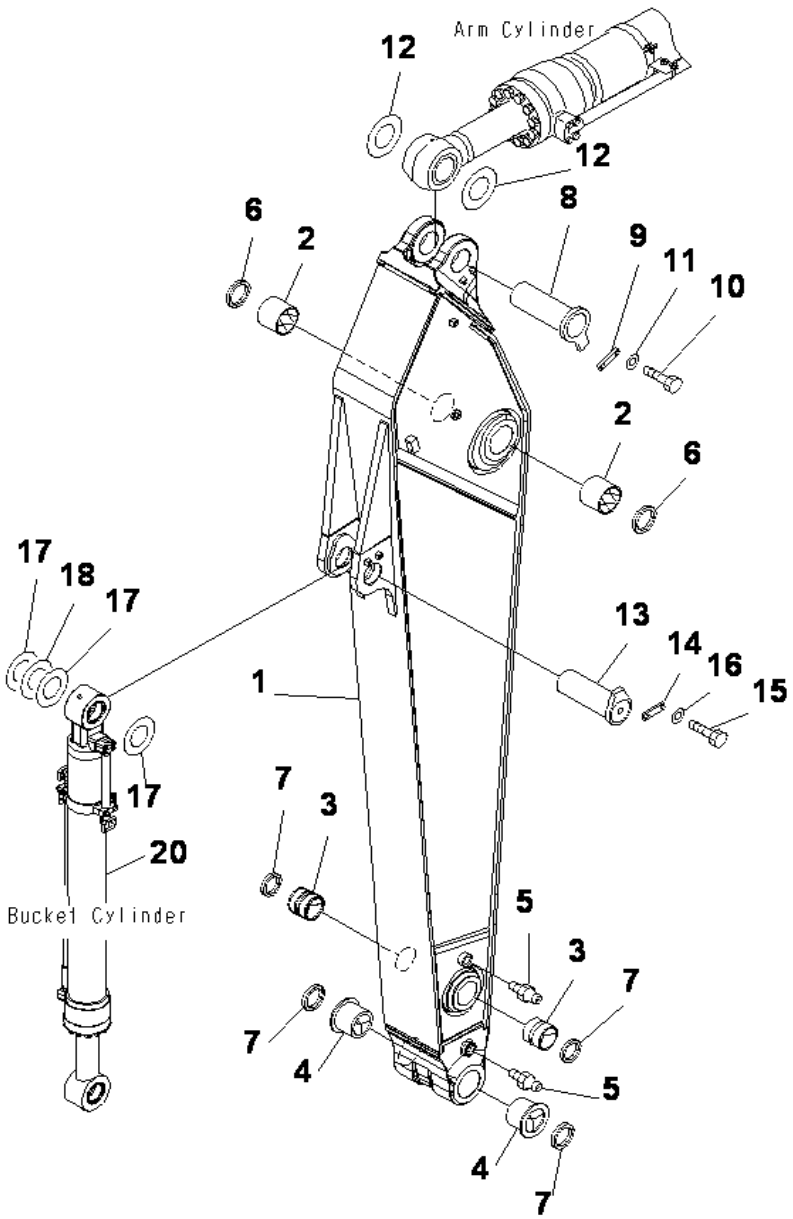

ARM (3.4M ARM) (500 HOURS GREASING TYPE) (OPT)

INDEX	CD	PART NO.	DESCRIPTION	QTY	SERIAL NO.
		208-70-00882	ARM ASS'Y	1	J30001-UP
1	C1	208-70-72111	.ARM	1	J30001-UP
2		208-70-72541	.BUSHING	2	J30001-UP
3		208-70-13141	.BUSHING	2	J30001-UP
4		208-70-72170	.BUSHING	2	J30001-UP
5		07020-00000	.FITTING	2	J30001-UP
6		07145-00120	SEAL	2	J30001-UP
7		208-70-73530	SEAL	4	J30001-UP
8		208-70-61220	PIN	1	J30001-UP
9		205-70-66580	PLATE	1	J30001-UP
10		01010-81235	BOLT	2	J30001-UP
11		01643-31232	WASHER	2	J30001-UP
12		208-70-71651	SPACER	2	J30001-UP
13		208-70-61241	PIN	1	J30001-UP
14		205-70-66581	PLATE	1	J30001-UP
15		01010-81235	BOLT	2	J30001-UP
16		01643-31232	WASHER	2	J30001-UP
17		207-70-72371	SPACER	3	J30001-UP
18		207-70-72381	SPACER	1	J30001-UP
20		707-01-XT552	BUCKET CYLINDER	1	J30001-UP

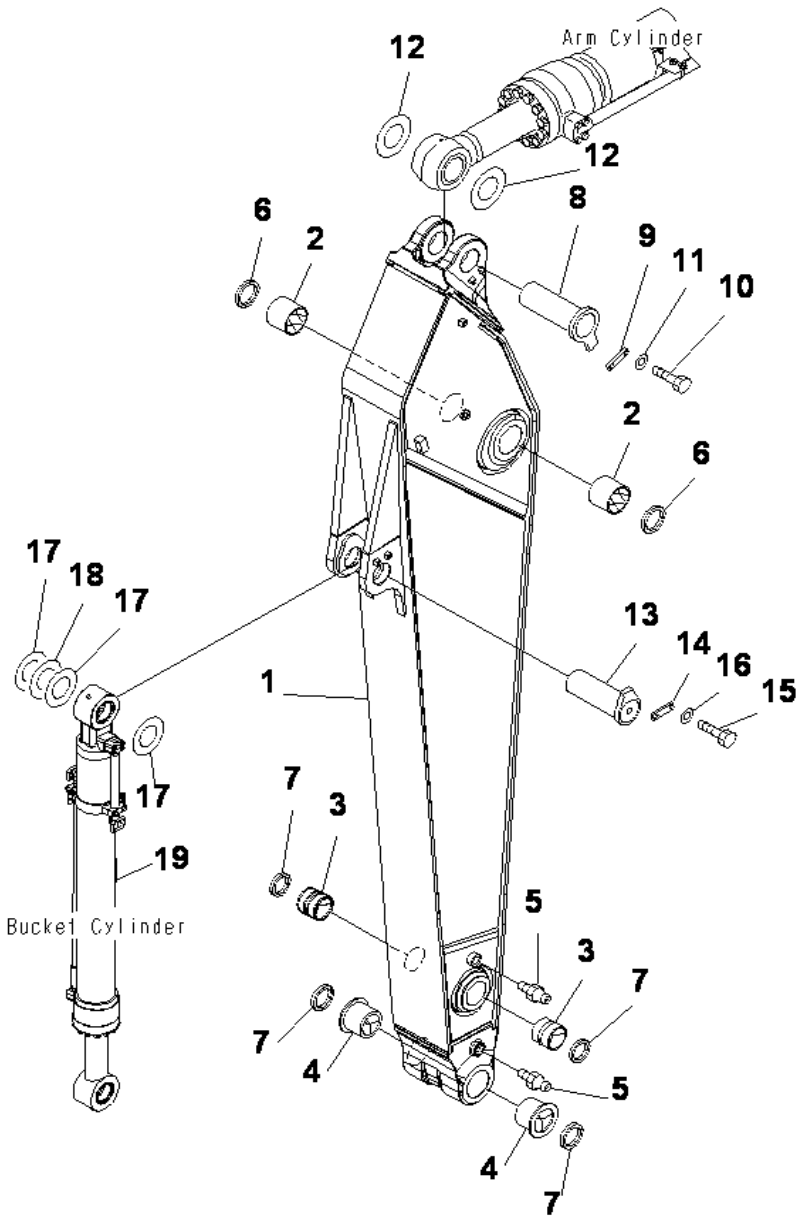

ARM (3.4M ARM) (100 HOURS GREASING TYPE) (OPT)

INDEX	CD	PART NO.	DESCRIPTION	QTY	SERIAL NO.
		208-70-00701	ARM ASS'Y	1	J30001-UP
1	C1	208-70-72111	.ARM	1	J30001-UP
2		208-70-61521	.BUSHING	2	J30001-UP
3		208-70-13141	.BUSHING	2	J30001-UP
4		208-70-72170	.BUSHING	2	J30001-UP
5		07020-00000	.FITTING	2	J30001-UP
6		07145-00120	SEAL	2	J30001-UP
7		208-70-73530	SEAL	4	J30001-UP
8		208-70-61220	PIN	1	J30001-UP
9		205-70-66580	PLATE	1	J30001-UP
10		01010-81235	BOLT	2	J30001-UP
11		01643-31232	WASHER	2	J30001-UP
12		207-70-11370	SPACER. 1.5MM	1	J30001-UP
13		208-70-61241	PIN	1	J30001-UP
14		205-70-66581	PLATE	1	J30001-UP
15		01010-81235	BOLT	2	J30001-UP
16		01643-31232	WASHER	2	J30001-UP
17		207-70-11350	SPACER. 1.5MM	3	J30001-UP
18		207-70-11340	SPACER. 0.8MM	1	J30001-UP
19		707-01-XM350	BUCKET CYLINDER	1	J30001-UP

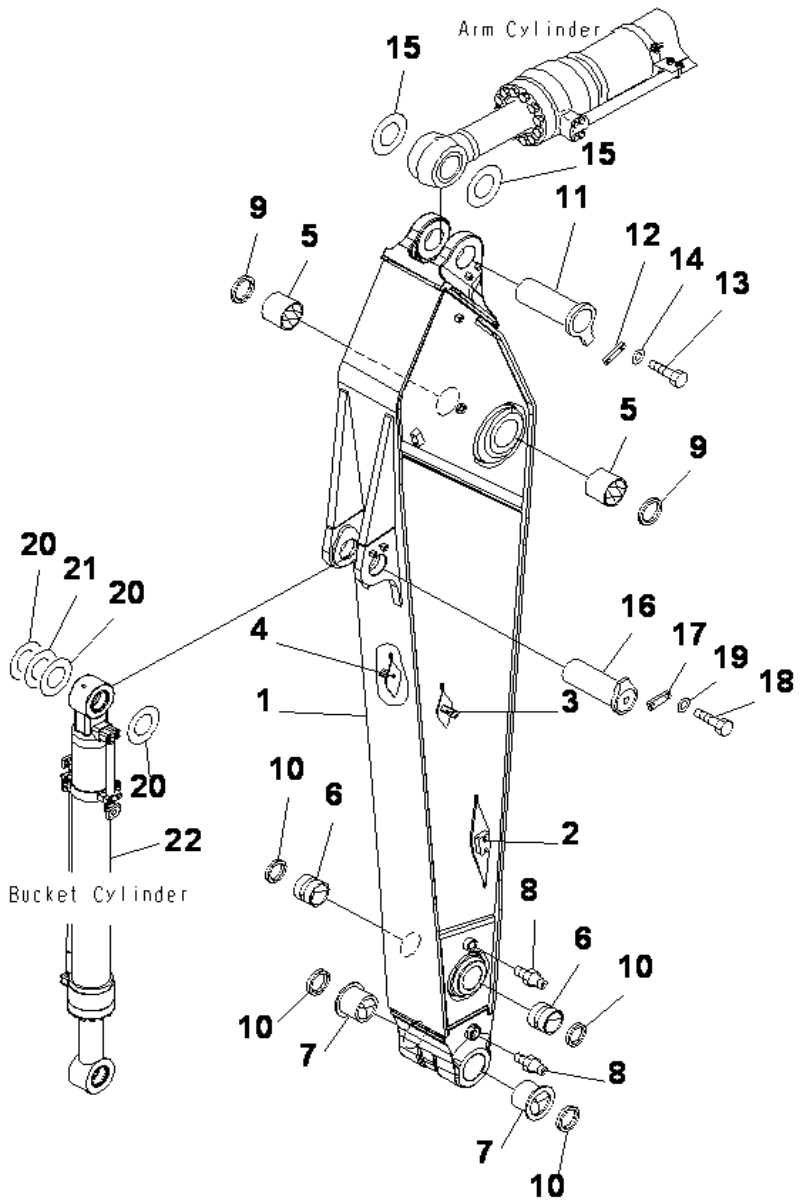

PC400-8 S/N J30001-UP

ARM (3.4M ARM) (500 HOURS GREASING TYPE) (FOR ADDITIONAL PIPING)

INDEX	CD	PART NO.	DESCRIPTION	QTY	SERIAL NO.
		208-70-00913	ARM ASS'Y	1	J30001-UP
	C1	208-70-72252	.ARM	1	J30001-UP
1	C1	208-70-72111	..ARM	1	J30001-UP
2		208-970-7171	..BRACKET.(WELDED)	2	J30001-UP
3		208-970-7180	..BRACKET. (WELDED)	1	J30001-UP
4		208-970-7190	..BRACKET. (WELDED)	1	J30001-UP
5		208-70-72541	.BUSHING	2	J30001-UP
6		208-70-13141	.BUSHING	2	J30001-UP
7		208-70-72170	.BUSHING	2	J30001-UP
8		07020-00000	.FITTING	2	J30001-UP
9		07145-00120	SEAL	2	J30001-UP
10		208-70-73530	SEAL	4	J30001-UP
11		208-70-61220	PIN	1	J30001-UP
12		205-70-66580	PLATE	1	J30001-UP
13		01010-81235	BOLT	2	J30001-UP
14		01643-31232	WASHER	2	J30001-UP
15		208-70-71651	SPACER	2	J30001-UP
16		208-70-61241	PIN	1	J30001-UP
17		205-70-66581	PLATE	1	J30001-UP
18		01010-81235	BOLT	2	J30001-UP
19		01643-31232	WASHER	2	J30001-UP
20		207-70-72371	SPACER	3	J30001-UP
21		207-70-72381	SPACER	1	J30001-UP
22		707-01-XT552	BUCKET CYLINDER	1	J30001-UP

Ref :T1200-01A9 Page :360350

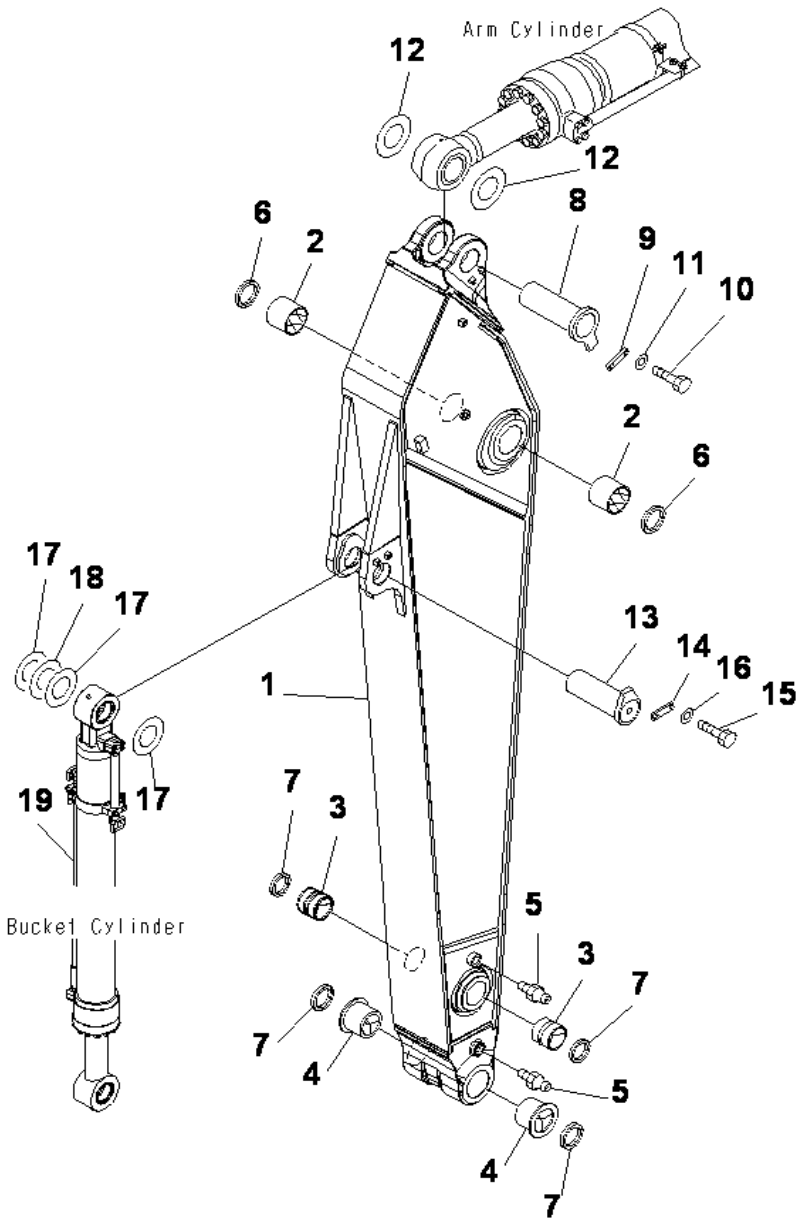

PC400-8 S/N J30001-UP

ARM (3.4 M) STD) (100 H GREASING TYPE) (OPT)

INDEX	CD	PART NO.	DESCRIPTION	QTY	SERIAL NO.
		208-70-00J01	ARM ASS'Y	1	J30001-UP
1		208-70-J1130	. ARM	1	J30001-UP
2		208-70-61521	.BUSHING	2	J30001-UP
3		208-70-13141	.BUSHING	2	J30001-UP
4		208-70-72170	.BUSHING	2	J30001-UP
5		07020-00000	.FITTING	2	J30001-UP
6		07145-00120	SEAL	2	J30001-UP
7		208-70-73530	SEAL	4	J30001-UP
8		208-70-61220	PIN	1	J30001-UP
9		205-70-66580	PLATE	1	J30001-UP
10		01010-81235	BOLT	2	J30001-UP
11		01643-31232	WASHER	2	J30001-UP
12		207-70-11370	SPACER, 1.5MM	1	J30001-UP
13		208-70-61241	PIN	1	J30001-UP
14		205-70-66581	PLATE	1	J30001-UP
15		01010-81235	BOLT	2	J30001-UP
16		01643-31232	WASHER	2	J30001-UP
17		207-70-11350	SPACER, 1.5MM	3	J30001-UP
18		207-70-11340	SPACER, 0.8MM	1	J30001-UP
19		707-01-XM350	BU CYL,CHI	1	J30001-UP

Ref :T1200-01A8 Page :360360

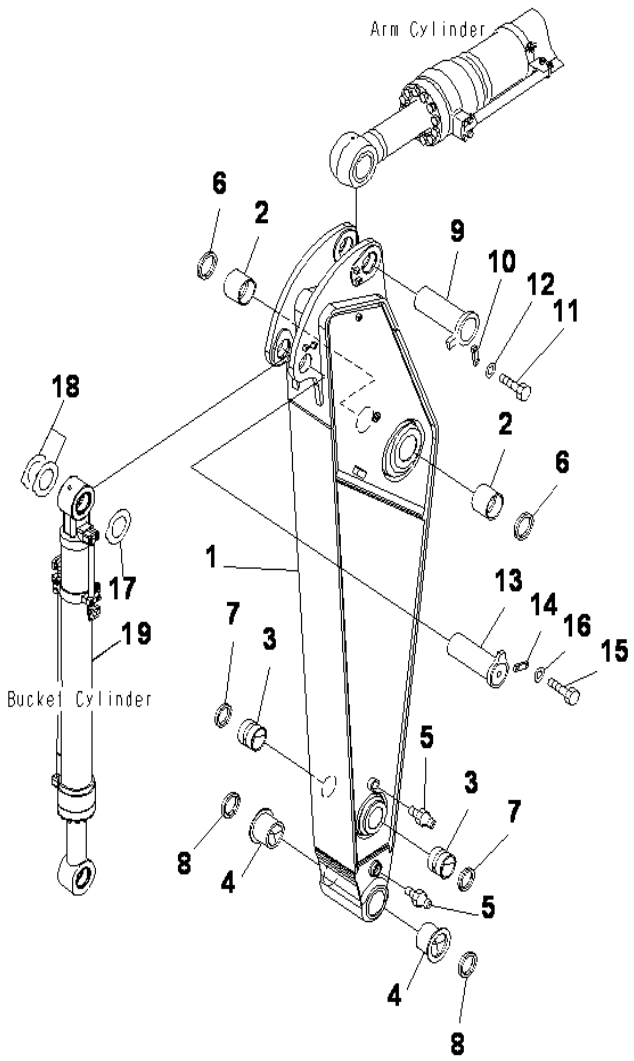

PC400-8 S/N J30001-UP

ARM (2.4M ARM) (STD)

INDEX	CD	PART NO.	DESCRIPTION	QTY	SERIAL NO.
		208-94-40040	ARM ASS'Y	1	J30001-UP
1	C1	208-94-47410	.ARM	1	J30001-UP
2		208-70-61521	.BUSHING	2	J30001-UP
3		208-70-13141	.BUSHING	2	J30001-UP
4		209-70-52141	.BUSHING	2	J30001-UP
5		07020-00000	.FITTING	2	J30001-UP
6		07145-00120	SEAL	2	J30001-UP
7		208-70-73530	SEAL	2	J30001-UP
8		209-70-52150	SEAL	2	J30001-UP
9		208-70-61220	PIN	1	J30001-UP
10		205-70-66580	PLATE	1	J30001-UP
11		01010-81235	BOLT	2	J30001-UP
12		01643-31232	WASHER	2	J30001-UP
13		208-70-61220	PIN	1	J30001-UP
14		205-70-66580	PLATE	1	J30001-UP
15		01010-81235	BOLT	2	J30001-UP
16		01643-31232	WASHER	2	J30001-UP
17		207-70-11360	SPACER	1	J30001-UP
18		207-70-11370	SPACER	2	J30001-UP
19		707-01-XM440	BUCKET CYLINDER	1	J30001-UP

Ref :T1200-01B1 Page :360370

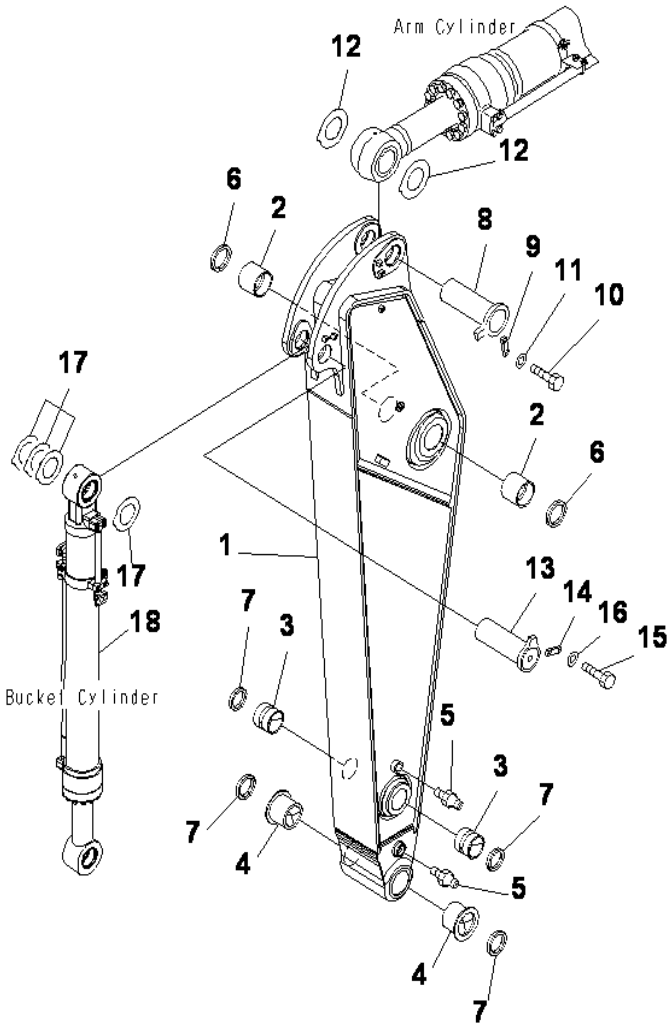

PC400-8 S/N J30001-UP

ARM (2.4M) (HEAVY DUTY) (100 HOURS GREASING TYPE)

INDEX	CD	PART NO.	DESCRIPTION	QTY	SERIAL NO.
		208-94-40411	ARM ASS'Y	1	J30001-UP
1	C1	208-94-47311	.ARM	1	J30001-UP
2		208-70-61521	.BUSHING	2	J30001-UP
3		208-70-13141	.BUSHING	2	J30001-UP
4		208-70-72170	.BUSHING	2	J30001-UP
5		07020-00000	.FITTING, GREASE	2	J30001-UP
6		07145-00120	SEAL	2	J30001-UP
7		208-70-73530	SEAL	4	J30001-UP
8		208-70-61220	PIN	1	J30001-UP
9		205-70-66580	PLATE	1	J30001-UP
10		01010-81235	BOLT	2	J30001-UP
11		01643-31232	WASHER	2	J30001-UP
12		207-70-11370	SPACER, 1.5MM	1	J30001-UP
13		208-70-61241	PIN	1	J30001-UP
14		205-70-66581	PLATE	1	J30001-UP
15		01010-81235	BOLT	2	J30001-UP
16		01643-31232	WASHER	2	J30001-UP
17		207-70-11350	SPACER, 1.5MM	3	J30001-UP
		207-70-11340	SPACER, 0.8MM	1	J30001-UP
18		707-01-XM350	BUCKET CYLINDER	1	J30001-UP

Ref :T1200-01B7 Page :360420

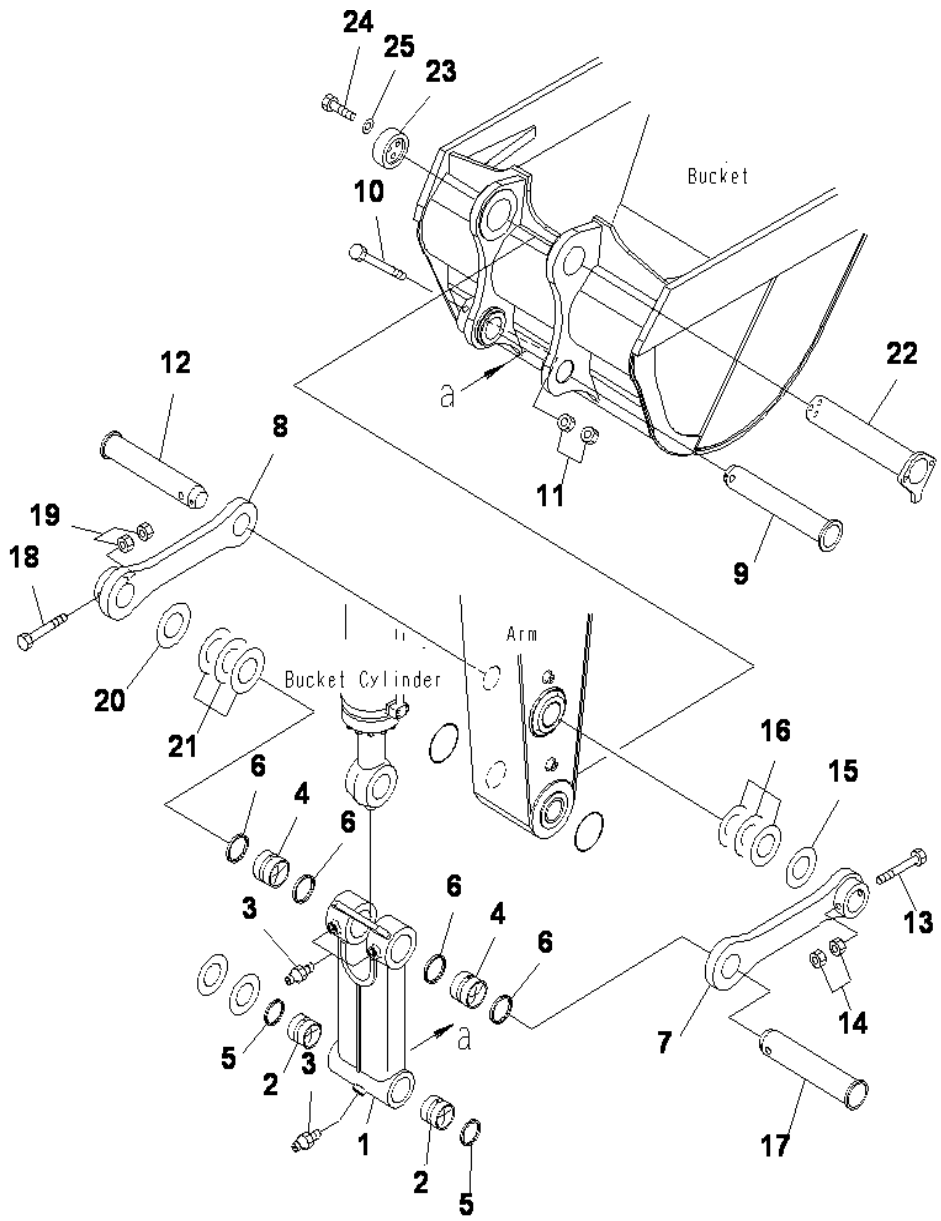

ARM (100 HOURS GREASING TYPE) (BUCKET LINK) (SE SPEC)

INDEX	CD	PART NO.	DESCRIPTION	QTY	SERIAL NO.
1		208-70-00252	LINK ASS'Y	1	J30002-UP
		208-70-00251	LINK ASS'Y	1	J30001-J30001
	C1	208-70-61412	.LINK	1	J30001-UP
2		208-70-13141	.BUSHING	2	J30001-UP
3		07020-00000	.FITTING	3	J30001-UP
4		208-70-61460	.BUSHING	2	J30002-UP
5		208-70-73530	.SEAL	2	J30001-J30001
6		07145-00110	.SEAL	4	J30001-J30001
7		208-70-73140	LINK	1	J30001-UP
8		208-70-73150	LINK	1	J30001-UP
9		208-70-73520	PIN	1	J30001-UP
10		208-70-73160	BOLT	1	J30001-UP
11		01580-12419	NUT	2	J30001-UP
12		208-70-73131	PIN	1	J30001-UP
13		208-70-73160	BOLT	1	J30001-UP
14		01580-12419	NUT	2	J30001-UP
15		207-70-11340	SPACER, 0.8MM	1	J30001-UP
16		207-70-11350	SPACER, 1.5MM	3	J30001-UP
17		208-70-61440	PIN	1	J30001-UP
18		208-70-73160	BOLT	1	J30001-UP
19		01580-12419	NUT	2	J30001-UP
20		207-70-11360	SPACER, 1.0MM	1	J30001-UP
21		207-70-11370	SPACER, 1.5MM	3	J30001-UP
22		208-70-61450	PIN	1	J30001-UP
23		209-70-53181	STOPPER	1	J30001-UP
24		01010-82460	BOLT	3	J30001-UP
25		01643-32460	WASHER	3	J30001-UP

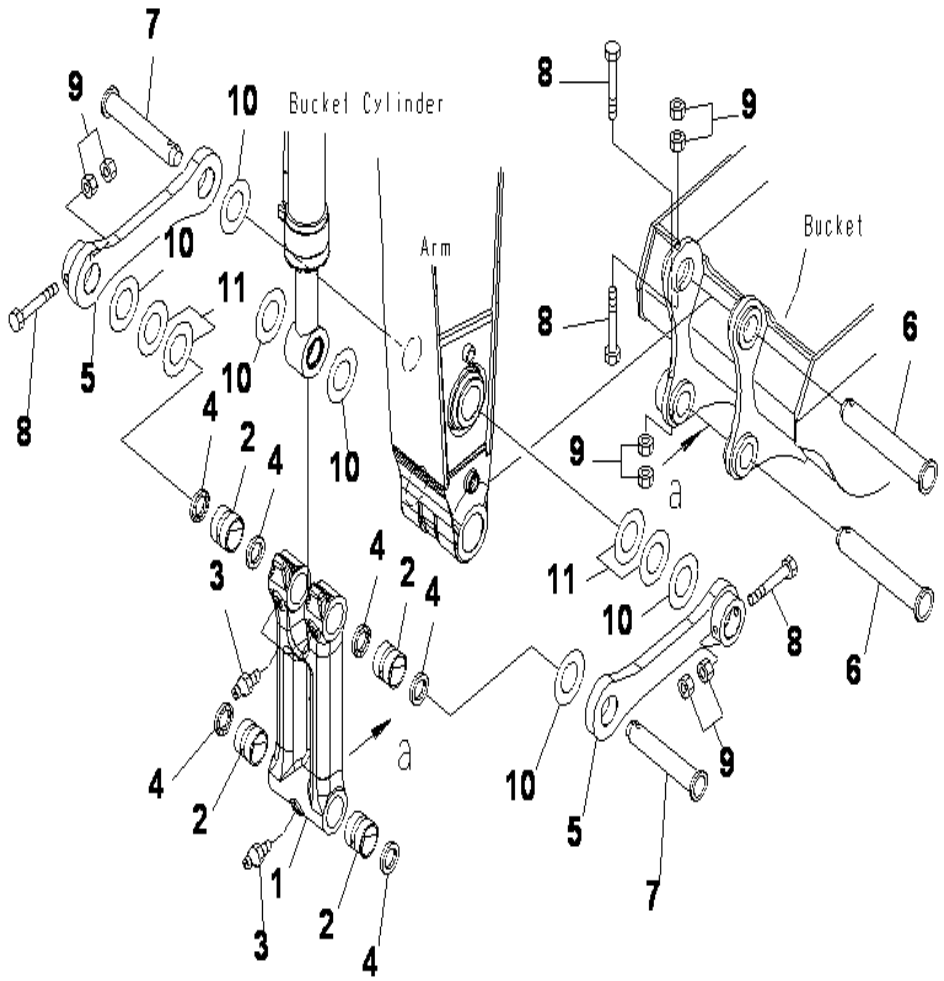

PC400-8 S/N J30001-UP

ARM (BUCKET LINK)

INDEX	CD	PART NO.	DESCRIPTION	QTY	SERIAL NO.
		208-70-00750	LINK ASSY.....	1	J30001-UP
1	C1	208-70-73111	.LINK.....	1	J30001-UP
2		208-70-13141	.BUSHING.....	4	J30001-UP
3		07020-00000	.FITTING.....	3	J30001-UP
4		208-70-73530	.SEAL.....	6	J30001-UP
5		208-70-73120	LINK.....	2	J30001-UP
6		208-70-73520	PIN.....	2	J30001-UP
7		208-70-73131	PIN.....	2	J30001-UP
8		208-70-73160	BOLT.....	4	J30001-UP
9		01580-12419	NUT.....	8	J30001-UP
10		207-70-11350	SPACER, 1.5MM.....	7	J30001-UP
11		207-70-11340	SPACER, 0.8MM.....	2	J30001-UP

Ref :T1200-03A1 Page :360470

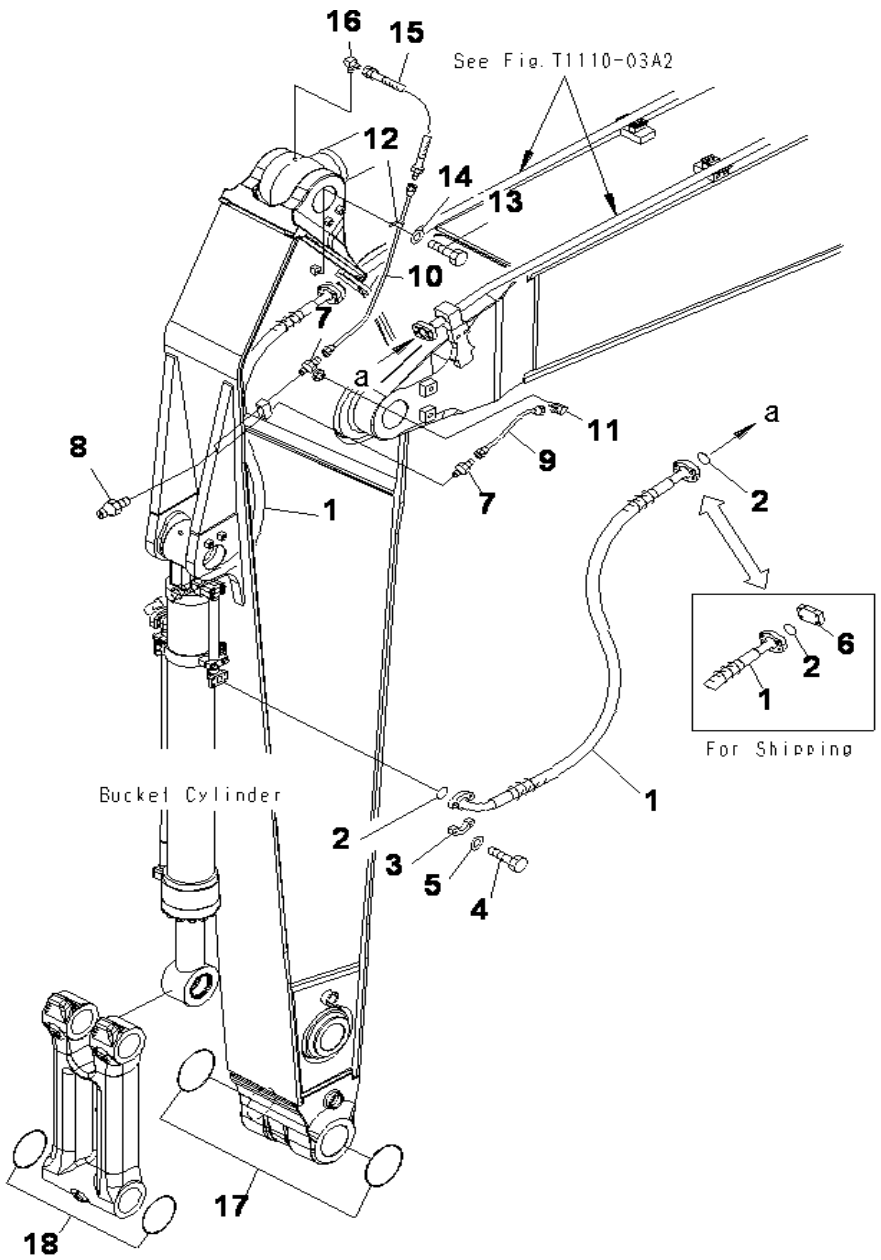

ARM (3.4M) (BUCKET CYLINDER HOSE AND LUBRICATING LINE)

INDEX	CD	PART NO.	DESCRIPTION	QTY	SERIAL NO.
1		207-62-54680	HOSE	2	J30001-UP
2		07000-13032	O-RING	4	J30001-UP
3		07371-31049	FLANGE	8	J30001-UP
4		07372-21035	BOLT	16	J30001-UP
5		01643-51032	WASHER	16	J30001-UP
6		07379-01044	FLANGE	2	J30001-UP
7		20Y-70-11540	CONNECTOR	2	J30001-UP
8		07020-00000	FITTING	2	J30001-UP
9		208-70-62161	TUBE	1	J30001-UP
10		208-70-62171	TUBE	1	J30001-UP
11		20Y-25-11270	ELBOW	1	J30001-UP
12		04434-50812	CLIP	1	J30001-UP
13		01010-81220	BOLT	1	J30001-UP
14		01643-31232	WASHER	1	J30001-UP
15		208-70-65770	HOSE, 540MM	1	J30001-UP
16		205-70-51380	ELBOW	1	J30001-UP
17		208-70-33181	O-RING	2	J30001-UP
18		207-70-33181	O-RING	2	J30001-UP

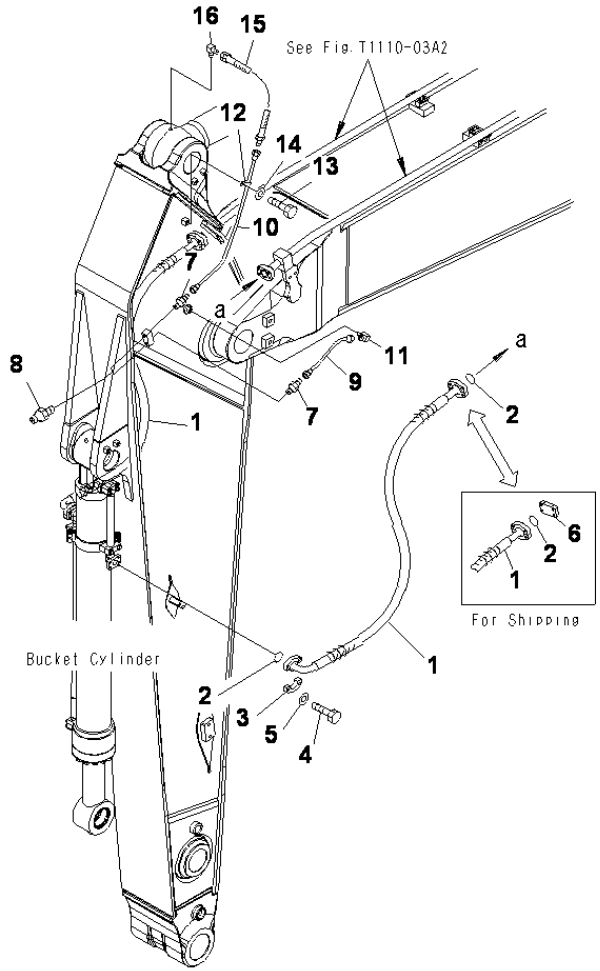

PC400-8 S/N J30001-UP

ARM 3.4M (BUCKET CYL. HOSE & LUB. LINE) (FOR ADD PIPING)

INDEX	CD	PART NO.	DESCRIPTION	QTY	SERIAL NO.
1		207-62-54680	HOSE	2	J30001-UP
2		07000-13032	O-RING	4	J30001-UP
3		07371-31049	FLANGE	8	J30001-UP
4		07372-21035	BOLT	16	J30001-UP
5		01643-51032	WASHER	16	J30001-UP
6		07379-01044	FLANGE	2	J30001-UP
7		20Y-70-11540	CONNECTOR	2	J30001-UP
8		07020-00000	FITTING	2	J30001-UP
9		208-70-62161	TUBE	1	J30001-UP
10		208-70-62171	TUBE	1	J30001-UP
11		20Y-25-11270	ELBOW	1	J30001-UP
12		04434-50812	CLIP	1	J30001-UP
13		01010-81220	BOLT	1	J30001-UP
14		01643-31232	WASHER	1	J30001-UP
15		208-70-65770	HOSE, 540MM	1	J30001-UP
16		205-70-51380	ELBOW	1	J30001-UP

Ref :T1200-04A5 Page :360500

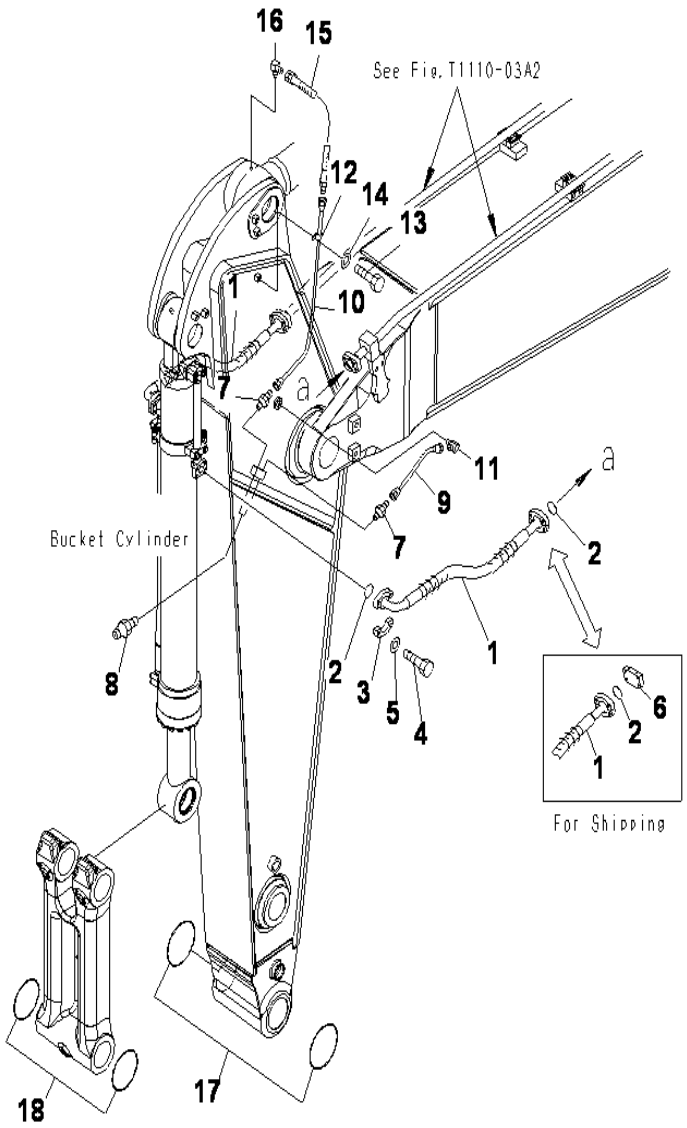

PC400-8 S/N J30001-UP

ARM (2.4M) (HEAVY DUTY) (BUCKET CYLINDER HOSE AND LUBRICATING LINE)

INDEX	CD	PART NO.	DESCRIPTION	QTY	SERIAL NO.
1		207-62-54680	HOSE	2	J30001-UP
2		07000-13032	O-RING	4	J30001-UP
3		07371-31049	FLANGE	8	J30001-UP
4		07372-21035	BOLT	16	J30001-UP
5		01643-51032	WASHER	16	J30001-UP
6		07379-01044	FLANGE	2	J30001-UP
7		20Y-70-11540	CONNECTOR	2	J30001-UP
8		07020-00000	FITTING	2	J30001-UP
9		208-70-62161	TUBE	1	J30001-UP
10		208-944-7220	TUBE	1	J30001-UP
11		20Y-25-11270	ELBOW	1	J30001-UP
12		04434-50812	CLIP	1	J30001-UP
13		01010-81220	BOLT	1	J30001-UP
14		01643-31232	WASHER	1	J30001-UP
15		208-70-65770	HOSE, 540MM	1	J30001-UP
16		20F-70-16190	ELBOW	1	J30001-UP
17		208-70-33181	O-RING	2	J30001-UP
18		207-70-33181	O-RING	2	J30001-UP

Ref :T1200-04B1 Page :360540

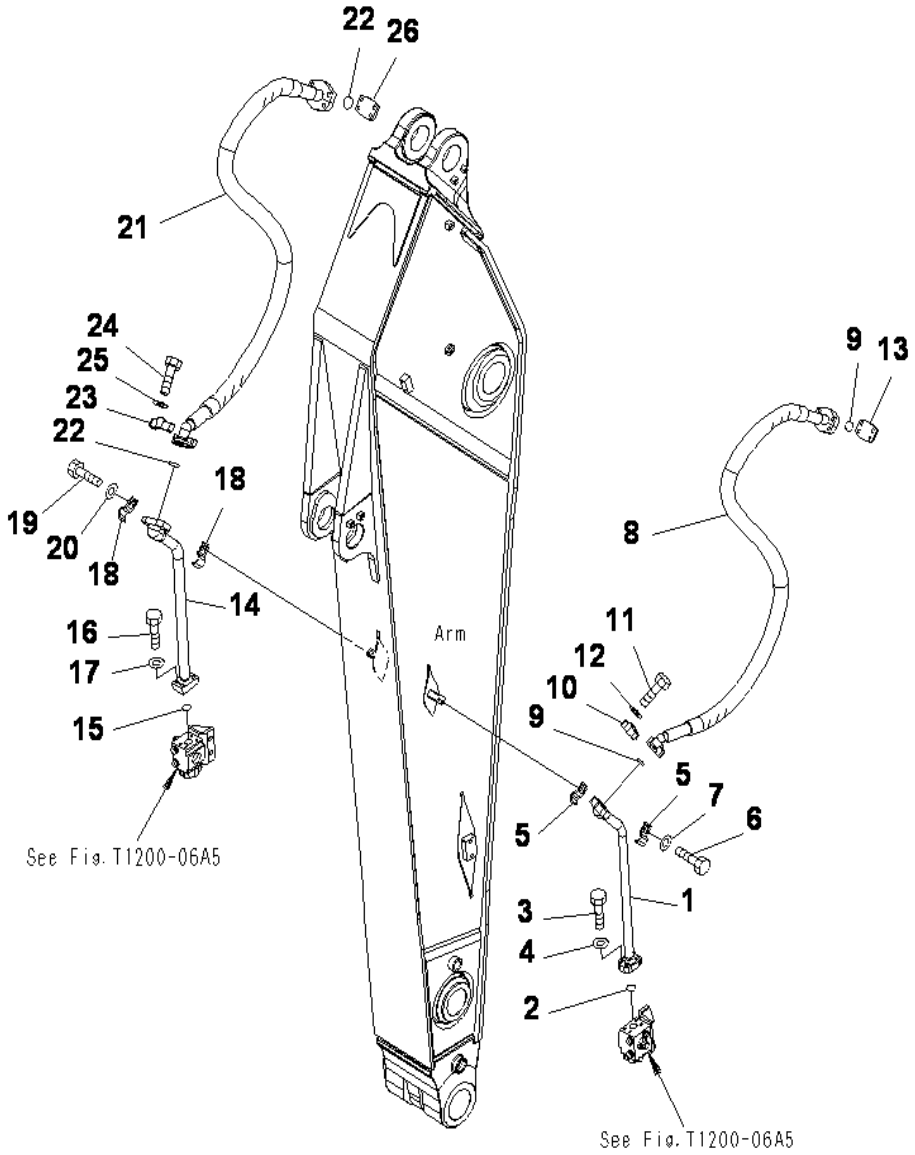

PC400-8 S/N J30001-UP

ARM (3.4M) (ADDITIONAL PIPING)

INDEX	CD	PART NO.	DESCRIPTION	QTY	SERIAL NO.
1		207-97-07210	TUBE	1	J30001-UP
2		07000-13038	O-RING	1	J30001-UP
3		01010-81245	BOLT	4	J30001-UP
4		01643-31232	WASHER	4	J30001-UP
5		207-62-31330	CLAMP	2	J30001-UP
6		01010-81235	BOLT	2	J30001-UP
7		01643-31232	WASHER	2	J30001-UP
8		07097-21222	HOSE	1	J30001-UP
9		07000-13038	O-RING	2	J30001-UP
10		07371-51260	FLANGE	4	J30001-UP
11		01010-81245	BOLT	8	J30001-UP
12		01643-31232	WASHER	8	J30001-UP
13		07379-01260	FLANGE	1	J30001-UP
14		207-97-07221	TUBE	1	J30001-UP
15		07000-13038	O-RING	1	J30001-UP
16		01010-81250	BOLT	4	J30001-UP
17		01643-31232	WASHER	4	J30001-UP
18		207-97-07310	CLAMP	2	J30001-UP
19		01010-81235	BOLT	2	J30001-UP
20		01643-31232	WASHER	2	J30001-UP
21		07097-21422	HOSE	1	J30001-UP
22		07000-13048	O-RING	2	J30001-UP
23		07371-51470	FLANGE	4	J30001-UP
24		01010-81455	BOLT	8	J30001-UP
25		01643-31445	WASHER	8	J30001-UP
26		07379-01470	FLANGE	1	J30001-UP

Ref :T1200-05A5 Page :360580

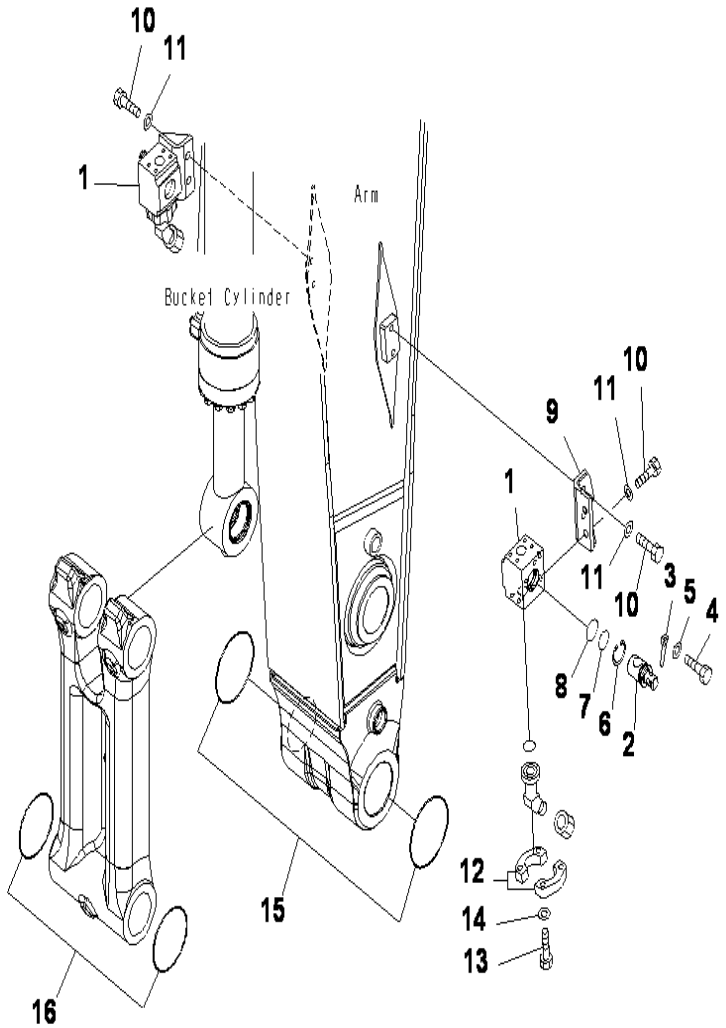

PC400-8 S/N J30001-UP

ARM (3.4M) (VALVE AND SPACER) (FOR ADDITIONAL PIPING)

INDEX	CD	PART NO.	DESCRIPTION	QTY	SERIAL NO.
		21M-97-01204	VALVE ASS'Y	1	J30001-UP
1	C1	21M-97-01213	.BLOCK	1	J30001-UP
2		21M-97-01223	.ROTER	1	J30001-UP
3		202-97-02210	.PIN	1	J30001-UP
4		01010-81230	.BOLT	1	J30001-UP
5		01643-31232	.WASHER	1	J30001-UP
6		04065-05820	.RING	1	J30001-UP
7		07000-12050	.O-RING	1	J30001-UP
8		07000-12055	.O-RING	1	J30001-UP
9		21M-97-01173	BRACKET	2	J30001-UP
10		01010-81640	BOLT	8	J30001-UP
11		01643-31645	WASHER	8	J30001-UP
12		07371-51260	FLANGE	4	J30001-UP
13		01010-81245	BOLT	8	J30001-UP
14		01643-31232	WASHER	8	J30001-UP
15		208-70-33181	O-RING	2	J30001-UP
16		207-70-33181	O-RING	2	J30001-UP

Ref :T1200-06A5 Page :360610

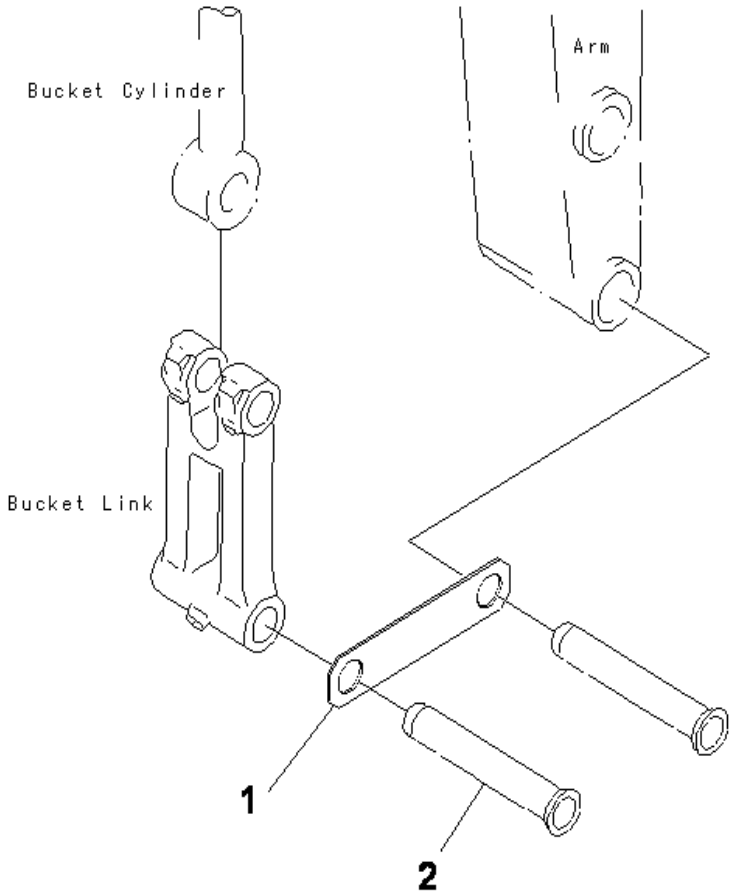

PC400-8 S/N J30001-UP

BUCKET LESS

INDEX	CD	PART NO.	DESCRIPTION	QTY	SERIAL NO.
1		208-70-33220	PLATE.....	1	J30001-UP
2		S207170003	COLLAR.....	4	J30001-UP

Ref :T1290-01A0 Page :360650

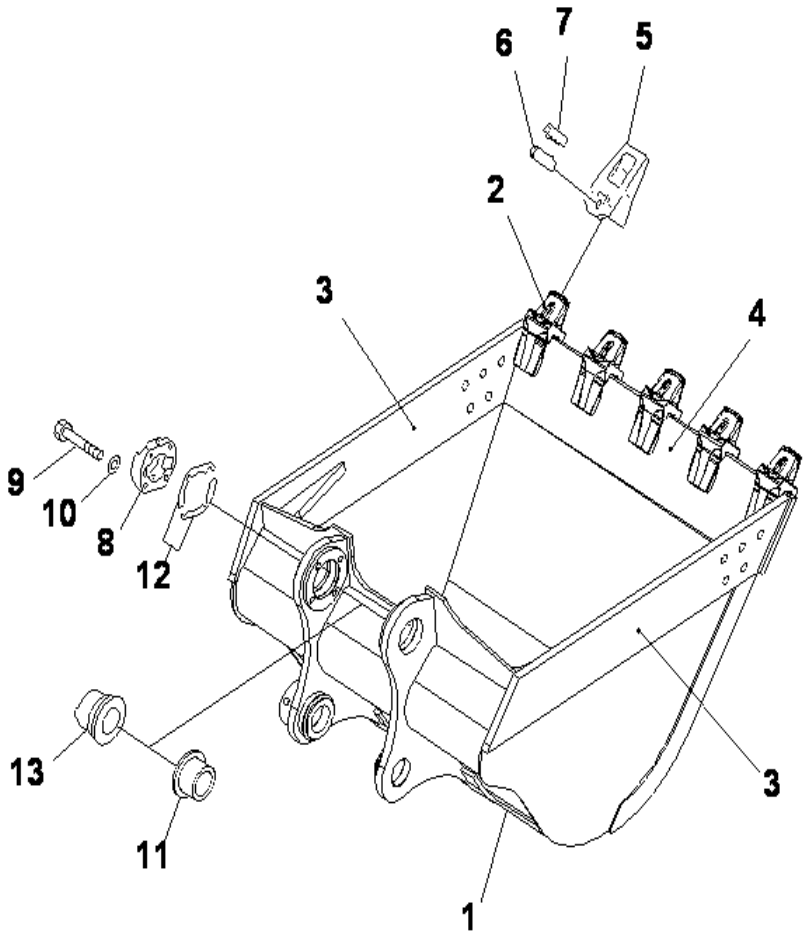

PC400-8 S/N J30001-UP

BUCKET 1.7M3 (VERTICAL PIN TYPE) (WITH ADJUSTING)

INDEX	CD	PART NO.	DESCRIPTION	QTY	SERIAL NO.
1		208-70-74110	BUCKET	1	J30001-UP
2		208-70-34150	.ADAPTER. (WELDED)	5	J30001-UP
3		208-70-74120	.PLATE. (WELDED)	2	J30001-UP
4		208-70-74140	.PLATE. (WELDED)	1	J30001-UP
5		208-70-34211	TOOTH	5	J30001-UP
6		208-70-34220	PIN	5	J30001-UP
7		208-70-34191	LOCK	5	J30001-UP
8		208-70-34240	COVER	1	J30001-UP
9		01010-62470	BOLT	4	J30001-UP
10		01643-32460	WASHER	4	J30001-UP
11		208-70-74170	BUSHING	1	J30001-UP
12		208-70-00081	SHIM ASS'Y	1	J30001-UP
	C1	208-70-34250	.SHIM, 1.0MM	18	J30001-UP
	C1	208-70-34260	.SHIM, 0.5MM	4	J30001-UP
13		208-70-34230	BUSHING	1	J30001-UP

Ref :T1510-01C3 Page :360740

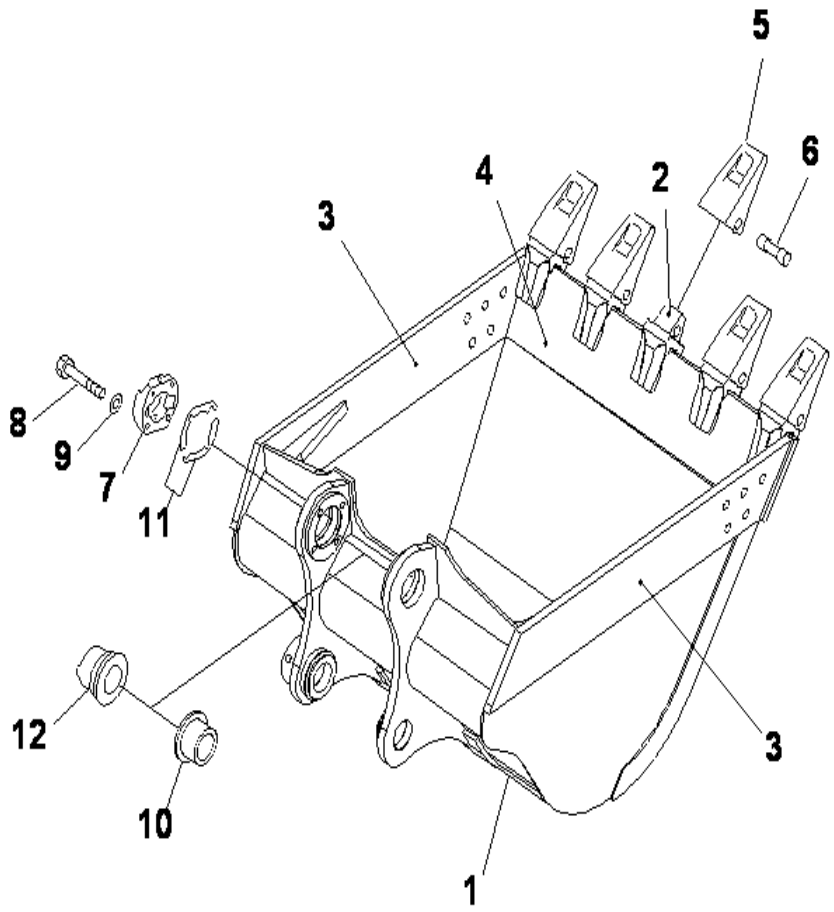

PC400-8 S/N J30001-UP

BUCKET 1.7M3 (HORIZONTAL PIN TYPE) (WITH ADJUSTING)

INDEX	CD	PART NO.	DESCRIPTION	QTY	SERIAL NO.
1		208-70-74150	BUCKET.....	1	J30001-UP
2		208-93-93120	.ADAPTER, (WELDED).....	5	J30001-UP
3		208-70-74120	.PLATE, (WELDED).....	2	J30001-UP
4		208-70-74140	.PLATE, (WELDED).....	1	J30001-UP
5		208-70-14152	TOOTH.....	5	J30001-UP
6		09244-03036	PIN.....	5	J30001-UP
7		208-70-34240	COVER.....	1	J30001-UP
8		01010-62470	BOLT.....	4	J30001-UP
9		01643-32460	WASHER.....	4	J30001-UP
10		208-70-74170	BUSHING.....	1	J30001-UP
11		208-70-00081	SHIM ASS'Y.....	1	J30001-UP
	C1	208-70-34250	.SHIM, 1.0MM.....	18	J30001-UP
	C1	208-70-34260	.SHIM, 0.5MM.....	4	J30001-UP
12		208-70-34230	BUSHING.....	1	J30001-UP

Ref :T1510-01C6 Page :360760

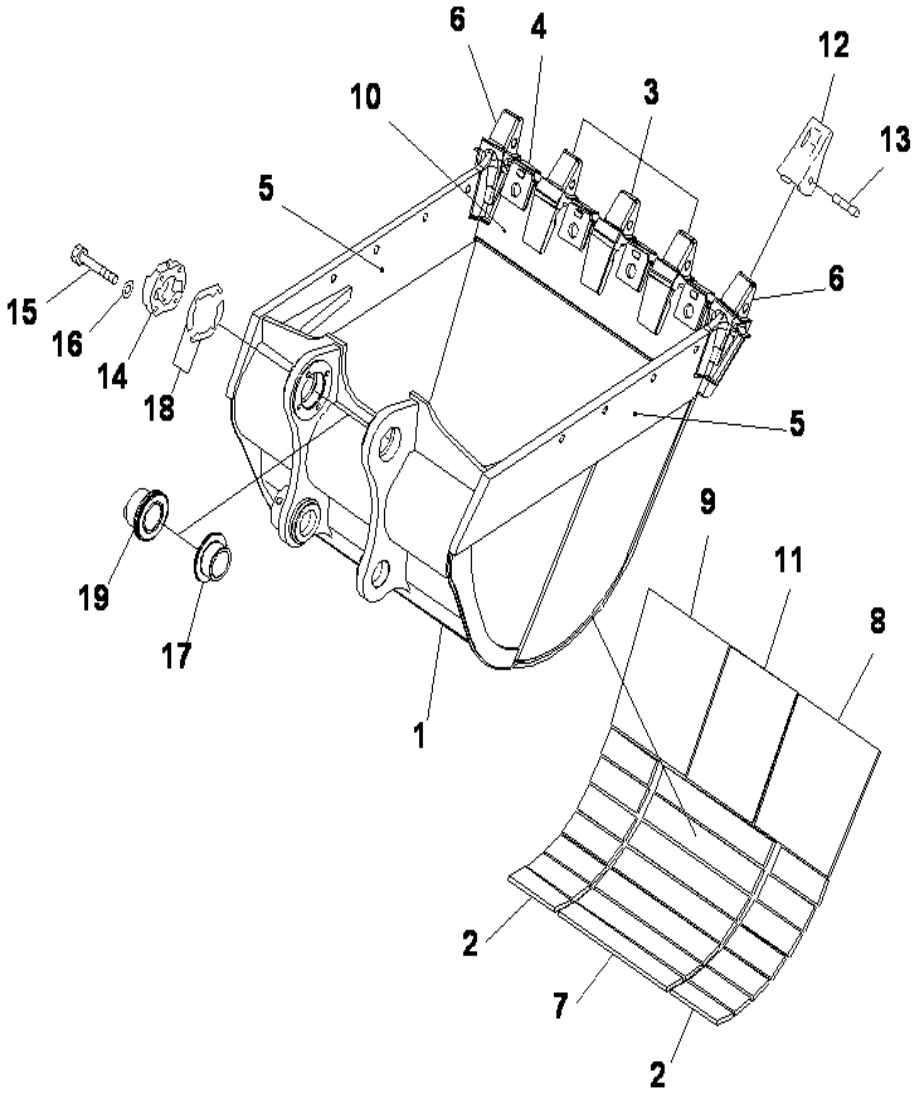

PC400-8 S/N J30001-UP

BUCKET (1.9M3) (HEAVY DUTY) (HORIZONTAL PIN TYPE) (WITH ADJUSTING) (50 HOURS)

INDEX	CD	PART NO.	DESCRIPTION	QTY	SERIAL NO.
1		208-93-47212	BUCKET	1	J30002-UP
		208-93-47211	BUCKET	1	J30001-J30001
2		207-934-6160	.PLATE, (WELDED)	14	J30001-UP
3		208-934-7120	.ADAPTER, (WELDED)	3	J30001-UP
4		209-939-5170	.SHROUD, (WELDED)	4	J30001-UP
5		208-934-7161	.PLATE, (WELDED)	2	J30001-UP
6		208-934-7180	.ADAPTER, (WELDED)	2	J30001-UP
7		208-934-7190	.PLATE, (WELDED)	7	J30001-UP
8		208-934-7230	.PLATE, (WELDED)	1	J30001-UP
9		208-934-7240	.PLATE, (WELDED)	1	J30001-UP
10		208-934-7251	.PLATE, (WELDED)	1	J30001-UP
11		208-934-7260	.PLATE, (WELDED)	1	J30001-UP
12		208-70-14152	TOOTH	5	J30001-UP
13		09244-03036	PIN	5	J30001-UP
14		208-70-34240	COVER	1	J30001-UP
15		01010-62470	BOLT	4	J30001-UP
16		01643-32460	WASHER	4	J30001-UP
17		208-70-74170	BUSHING	1	J30001-UP
18		208-70-00081	SHIM ASS'Y	1	J30001-UP
	C1	208-70-34250	.SHIM, 1.0MM	18	J30001-UP
	C1	208-70-34260	.SHIM, 0.5MM	4	J30001-UP
19		208-70-34230	BUSHING	1	J30001-UP

Ref :T1510-01C7 Page :360770

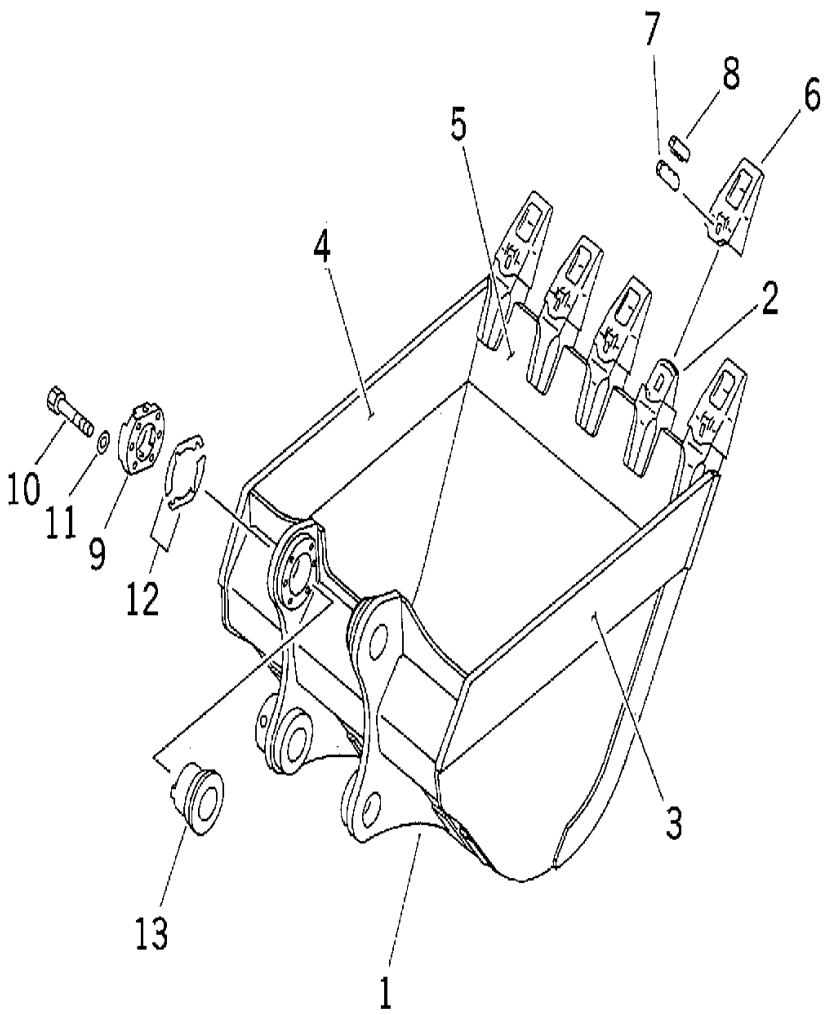

PC400-8 S/N J30001-UP

BUCKET (2.4M3 SE) (VERTICAL PIN TYPE) (WITH ADJUSTING)

INDEX	CD	PART NO.	DESCRIPTION	QTY	SERIAL NO.
1		208-920-7110	BUCKET	1	J30001-UP
2		208-70-34150	.ADAPTER, (WELDED)	5	J30001-UP
3		208-920-6A30	.PLATE, (WELDED)	1	J30001-UP
4		208-920-6A40	.PLATE, (WELDED)	1	J30001-UP
5		208-920-5120	.PLATE, (WELDED)	1	J30001-UP
6		208-70-34211	TOOTH	5	J30001-UP
7		208-70-34220	PIN	5	J30001-UP
8		208-70-34191	LOCK	5	J30001-UP
9		209-70-54171	COVER	1	J30001-UP
10		01010-82480	BOLT	6	J30001-UP
11		01643-32460	WASHER	6	J30001-UP
12		209-70-00082	SHIM ASS'Y	1	J30001-UP
	C1	209-70-54181	.SHIM, 1.0MM	16	J30001-UP
	C1	209-70-54191	.SHIM, 0.5MM	4	J30001-UP
13		208-70-61480	BUSHING	1	J30001-UP

Ref :T1510-01C8 Page :360780

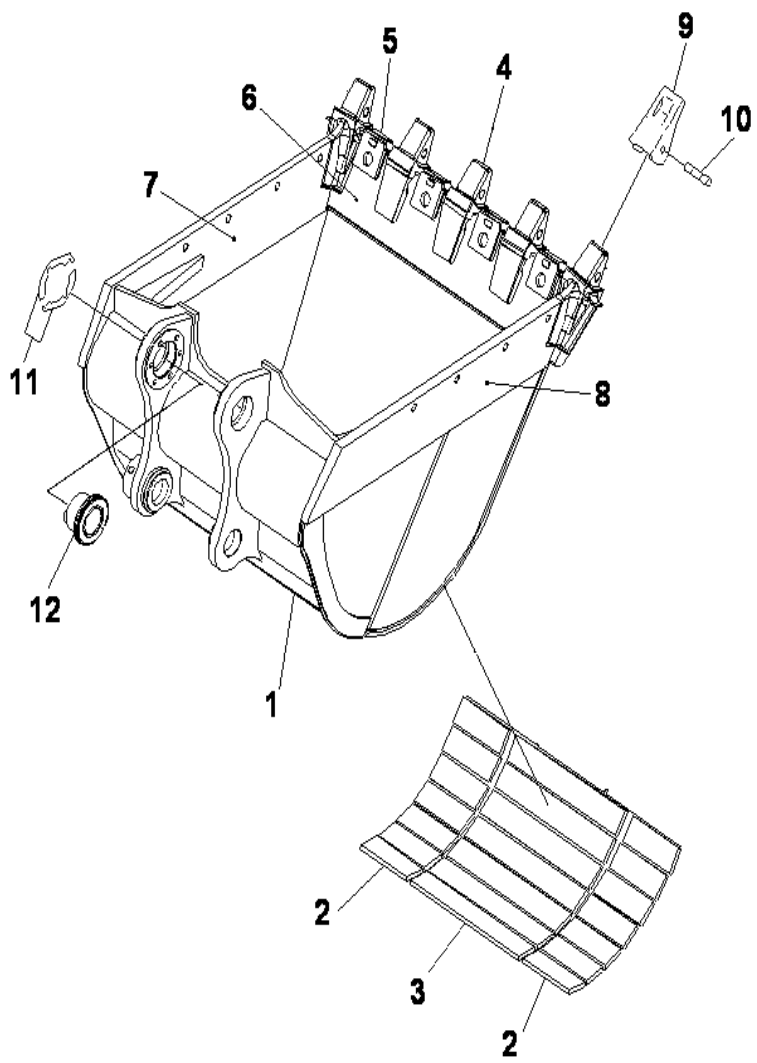

PC400-8 S/N J30001-UP

BUCKET (2.8M3 SE) (HORIZONTAL PIN TYPE)

INDEX	CD	PART NO.	DESCRIPTION	QTY	SERIAL NO.
1		208-920-J150	BUCKET.....	1	J30001-UP
2		207-920-JC60	.PLATE. (WELDED).....	20	J30001-UP
3		207-920-JC70	.PLATE. (WELDED).....	12	J30001-UP
4		208-934-5120	.ADAPTER. (WELDED).....	5	J30001-UP
5		208-934-5170	.SHROUD (WELDED).....	4	J30001-UP
6		208-934-5120	.PLATE. (WELDED).....	1	J30001-UP
7		208-920-6A30	.PLATE, (WELDED).....	1	J30001-UP
8		208-920-6A40	.PLATE, (WELDED).....	1	J30001-UP
9		208-70-14152	TOOTH.....	5	J30001-UP
10		09244-03036	PIN.....	5	J30001-UP
11		209-70-00082	SHIM ASSY.....	1	J30001-UP
	C1	209-70-54181	.SHIM, 1.0MM.....	16	J30001-UP
	C1	209-70-54191	.SHIM, 0.5MM.....	4	J30001-UP
12		208-70-61480	BUSHING.....	1	J30001-UP

Ref :T1510-01C9 Page :360790

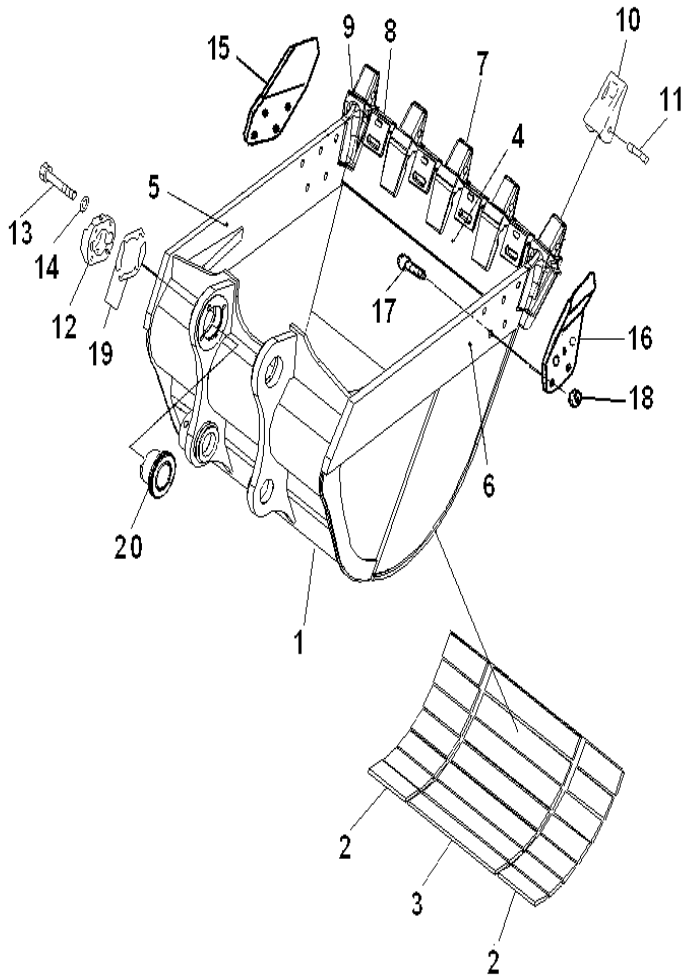

PC400-8 S/N J30001-UP

BUCKET 3.0M3 (HORIZONTAL PIN TYPE) (WITH ADJUSTING) (HEAVY DUTY)

INDEX	CD	PART NO.	DESCRIPTION	QTY	SERIAL NO.
1		208-934-J121	BUCKET	1	J30001-UP
2		208-920-JC30	. PLATE (WELDED)	14	J30001-UP
3		208-920-JC40	. PLATE (WELDED)	7	J30001-UP
4		208-934-JA41	. PLATE (WELDED)	1	J30001-UP
5		208-934-JA50	. PLATE (WELDED)	1	J30001-UP
6		208-934-JA60	. PLATE (WELDED)	1	J30001-UP
7		208-934-5120	.ADAPTER, (WELDED)	3	J30001-UP
8		208-934-5170	.SHROUD, (WELDED)	4	J30001-UP
9		208-934-7180	.ADAPTER, (WELDED)	2	J30001-UP
10		208-70-14152	TOOTH	5	J30001-UP
11		09244-03036	PIN	5	J30001-UP
12		209-70-54171	COVER	1	J30001-UP
13		01010-82480	BOLT	6	J30001-UP
14		01643-32460	WASHER	6	J30001-UP
15		208-70-34160	CUTTER (L.H)	1	J30001-UP
16		208-70-34170	CUTTER (R.H)	1	J30001-UP
17		208-934-5160	BOLT	10	J30001-UP
18		198-32-11221	NUT	10	J30001-UP
19		209-70-00082	SHIM ASSY	1	J30001-UP
	C1	209-70-54181	.SHIM, 1.0MM	16	J30001-UP
	C1	209-70-54191	.SHIM, 0.5MM	4	J30001-UP
20		208-70-61480	BUSHING	1	J30001-UP

Ref :T1510-01C10 Page :360800

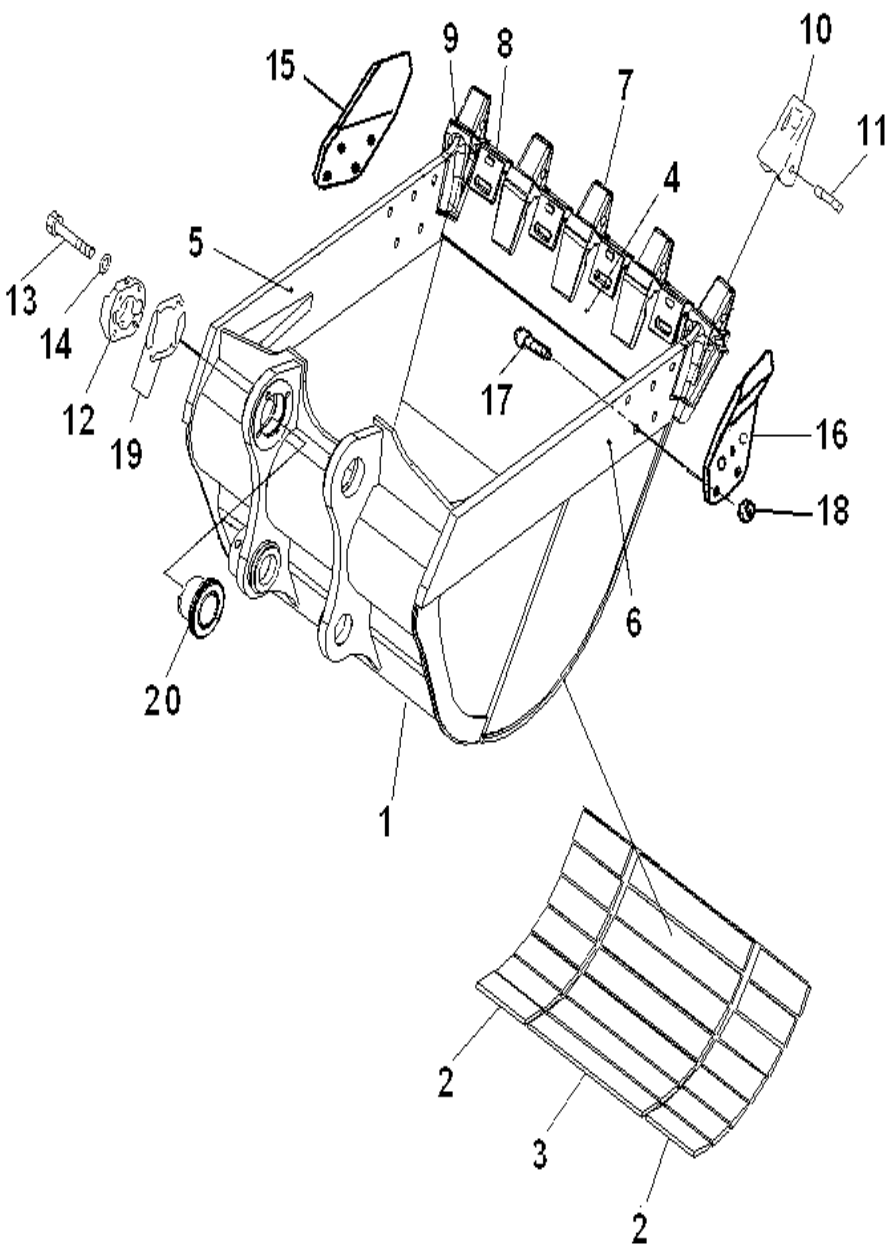

PC400-8 S/N J30001-UP

BUCKET 2.6M3 (HORIZONTAL PIN TYPE) (WITH ADJUSTING) (HEAVY DUTY)

INDEX	CD	PART NO.	DESCRIPTION	QTY	SERIAL NO.
1		208-934-J150	BUCKET	1	J30001-UP
2		208-934-JE10	. PLATE (WELDED)	14	J30001-UP
3		207-934-7630	. PLATE (WELDED)	7	J30001-UP
4		208-934-JD30	. PLATE (WELDED)	1	J30001-UP
5		207-934-7660	. PLATE (WELDED)	1	J30001-UP
6		207-934-7650	. PLATE (WELDED)	1	J30001-UP
7		207-934-7120	. ADAPTER (WELDED)	4	J30001-UP
8		208-934-5170	.SHROUD, (WELDED)	5	J30001-UP
9		207-934-7181	. ADAPTER (WELDED)	2	J30001-UP
10		207-70-14280	TOOTH	6	J30001-UP
11		09244-02516	PIN	6	J30001-UP
12		209-70-54171	COVER	1	J30001-UP
13		01010-82480	BOLT	6	J30001-UP
14		01643-32460	WASHER	6	J30001-UP
15		208-70-34160	CUTTER (L.H)	1	J30001-UP
16		208-70-34170	CUTTER (R.H)	1	J30001-UP
17		21N-32-11211	BOLT	10	J30001-UP
18		195-32-41220	NUT	10	J30001-UP
19		209-70-00082	SHIM ASSY	1	J30001-UP
	C1	209-70-54181	.SHIM, 1.0MM	16	J30001-UP
	C1	209-70-54191	.SHIM, 0.5MM	4	J30001-UP
20		208-70-61480	BUSHING	1	J30001-UP

Ref :T1510-01C11 Page :360810

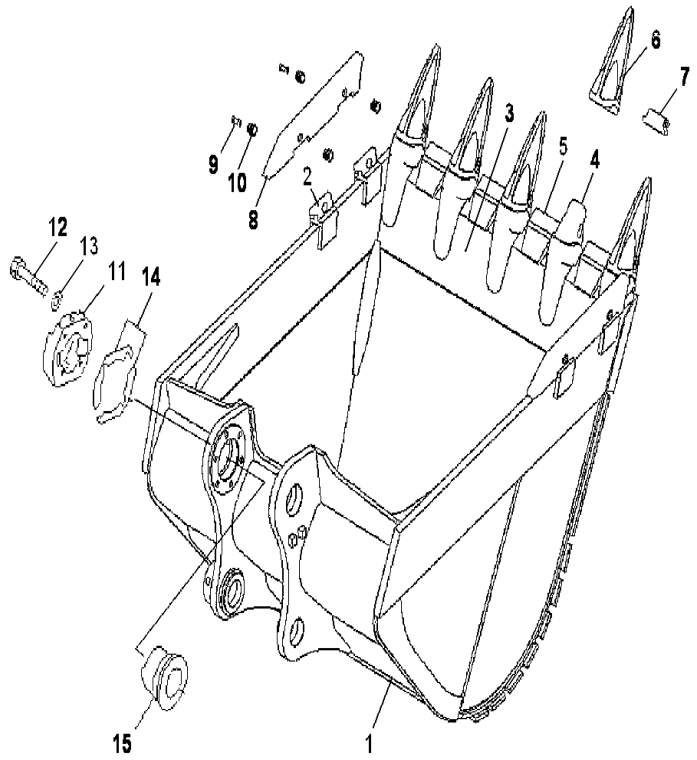

PC400-8 S/N J30001-UP

BUCKET 3.0M3 (HORIZONTAL PIN TYPE)(WITH ADJUSTING)(TIGER BUCKET) STD

INDEX	CD	PART NO.	DESCRIPTION	QTY	SERIAL NO.
1		208-934-J160	BUCKET	1	J30001-UP
2		207-934-J240	.PLATE (WELD)	4	J30001-UP
3		208-934-JE20	.PLATE (WELDED)	1	J30001-UP
4		208-934-JF40	.ADAPTER (WELDED)	5	J30001-UP
5		208-934-JF50	.SHROUD (WELDED)	4	J30001-UP
6		208-934-JF60	TOOTH	5	J30001-UP
7		208-934-JF70	TOOTH PIN	5	J30001-UP
8		207-934-J230	VERTICAL SHROUD	2	J30001-UP
9		207-934-J270	PIN SHROUD	4	J30001-UP
10		207-934-J280	RETAINER SHROUD	4	J30001-UP
11		209-70-54171	COVER	1	J30001-UP
12		01010-82480	BOLT	6	J30001-UP
13		01643-32460	WASHER	6	J30001-UP
14		209-70-00082	SHIM ASSY	1	J30001-UP
	C1	209-70-54181	.SHIM	16	J30001-UP
	C1	209-70-54191	.SHIM	4	J30001-UP
15		208-70-61480	BUSHING	1	J30001-UP

Ref :T1510-01C12 Page :360815

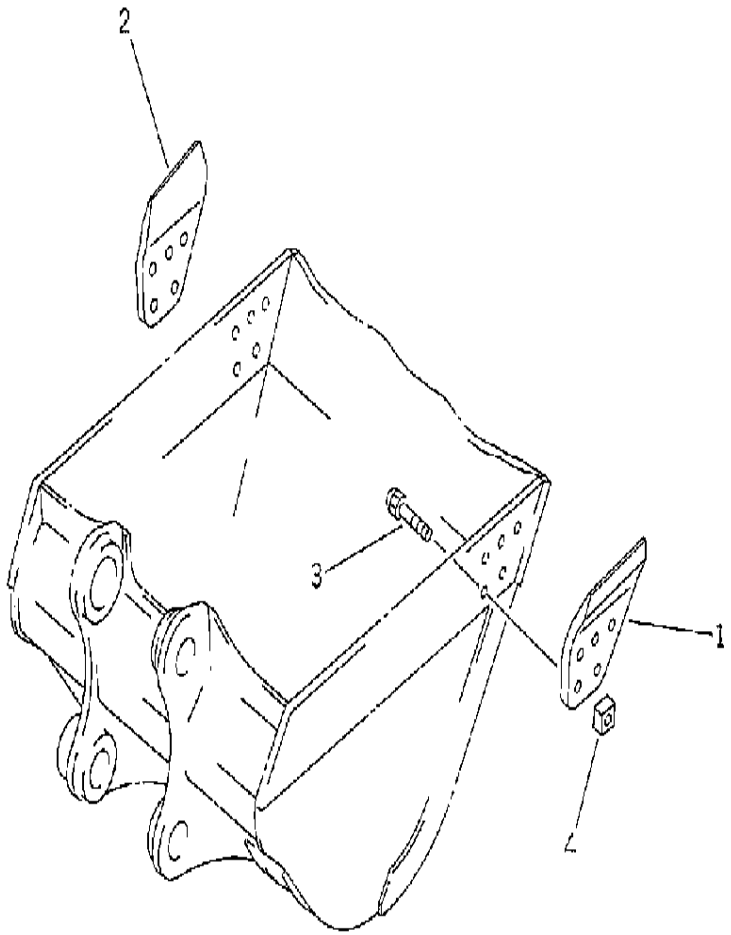

PC400-8 S/N J30001-UP

SIDE CUTTER

INDEX	CD	PART NO.	DESCRIPTION	QTY	SERIAL NO.
1		208-70-34160	CUTTER(L.H.)	1	J30001-UP
2		208-70-34170	CUTTER(R.H.)	1	J30001-UP
3		198-32-14210	BOLT	10	J30001-UP
4		198-32-11221	NUT	10	J30001-UP

Ref :T1510-02A2 Page :360820

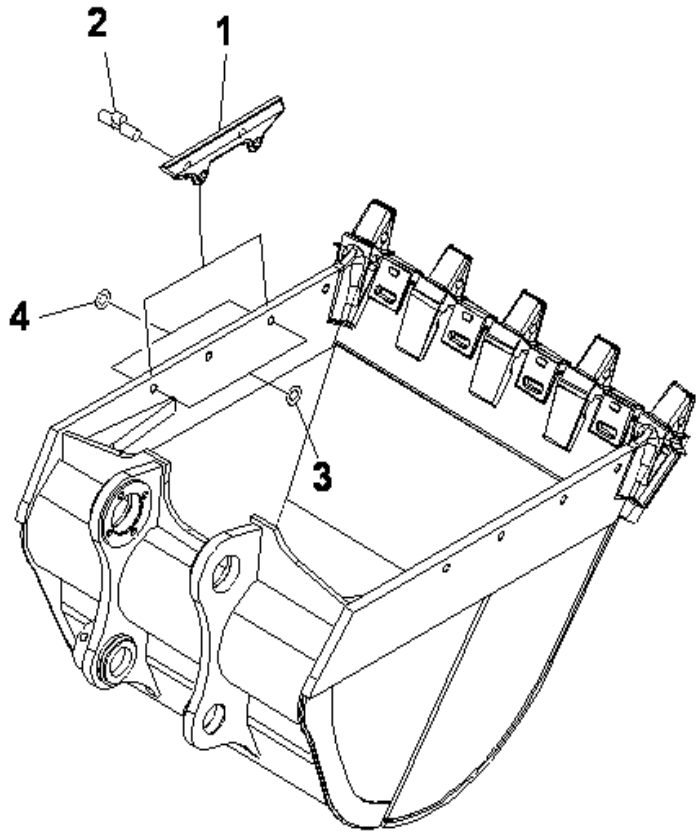

PC400-8 S/N J30001-UP

SIDE SHROUD (FOR HEAVY DUTY BUCKET)

INDEX	CD	PART NO.	DESCRIPTION	QTY	SERIAL NO.
1		208-934-7131	GUARD.....	4	J30001-UP
2		113-78-21170	PIN.....	8	J30001-UP
3		209-939-7110	SHIM. 1.0MM.....	16	J30001-UP
4		209-939-7120	SHIM. 0.5MM.....	8	J30001-UP

Ref :T1510-02C4 Page :360830

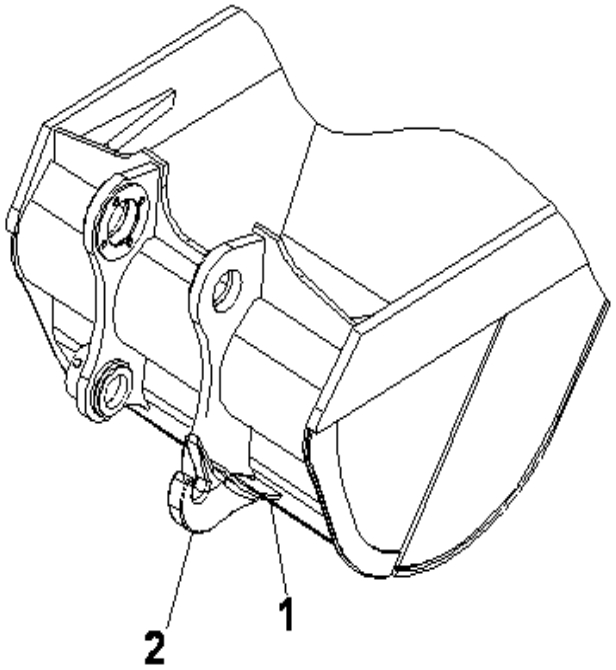

PC400-8 S/N J30001-UP

HOOK (FOR BUCKET) (FOR 1.9M3 BUCKET)

INDEX	CD	PART NO.	DESCRIPTION	QTY	SERIAL NO.
1		208-70-74180	PLATE. (WELDED).....	1	J30001-UP
2		208-70-34320	HOOK. (WELDED).....	1	J30001-UP

Ref :T1510-03D0 Page :360850

MARK AND PLATES

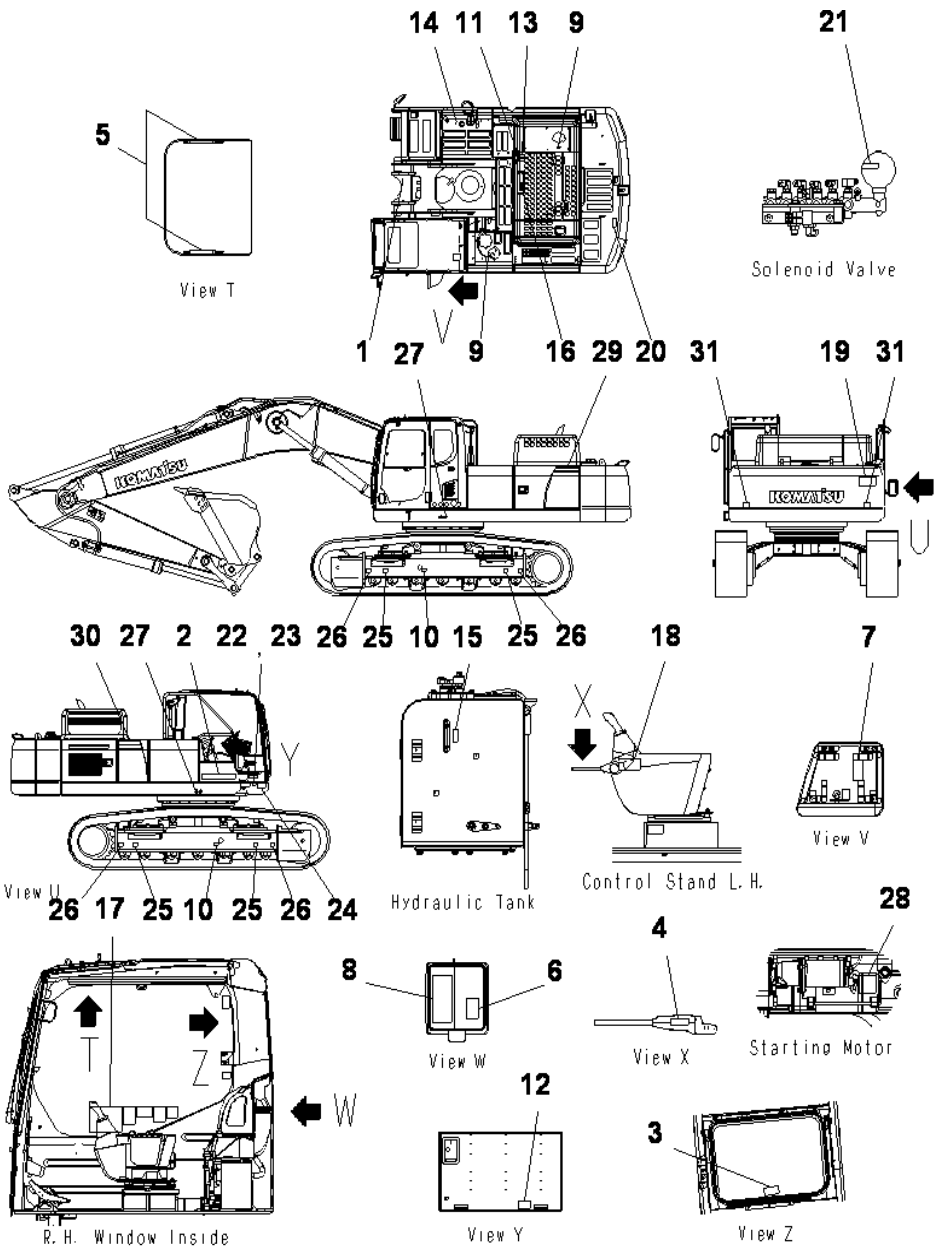

DECAL AND PLATE (ENGLISH)

INDEX	CD	PART NO.	DESCRIPTION	QTY	SERIAL NO.
1		09690-M0063	PLATE, MARK	1	J30001-UP
2		09690-P0630	PLATE, MARK	1	J30001-UP
3		09844-00050	PLATE	1	J30001-UP
4		09685-00002	PLATE, OPERATING	1	J30001-UP
5		09659-A057B	PLATE, SAFETY	2	J30001-UP
6		20Y-00-31330	PLATE	1	J30001-UP
7		208-00-71260	PLATE	1	J30001-UP
8		208-00-76720	PLATE	1	J30001-UP
9		09653-A0481	PLATE, SAFETY	2	J30001-UP
10		09657-A0881	PLATE, SAFETY	2	J30001-UP
11		09805-C0481	PLATE, SAFETY	1	J30001-UP
12		09808-A0881	PLATE, SAFETY	1	J30001-UP
13		09667-A0481	PLATE, SAFETY	1	J30001-UP
14		09669-0000E	PLATE, CAUTION	1	J30001-UP
15		205-00-73360	PLATE, OPERATING	1	J30001-UP
16		6217-71-6470	PLATE	1	J30001-UP
17		22U-00-21440	PLATE	1	J30001-UP
18		09963-03001	TAG	1	J30001-UP
19		09133-A3281	PLATE, SAFETY	1	J30001-UP
20		09805-A0881	PLATE, SAFETY	1	J30001-UP
21		09659-A057B	PLATE, SAFETY	1	J30001-UP
22		20Y-00-J1150	PLATE, NAME	1	J30001-UP
23		04418-13060	SCREW	4	J30001-UP
24		20Y-00-31840	PLATE	1	J30001-UP
25		09960-00801	MARK	4	J30001-UP
26		09960-00802	MARK	4	J30001-UP
27		21U-98-31160	PLATE, MARK	2	J30001-UP
28		09842-A0481	PLATE, CAUTION	1	J30001-UP
29		208-00-76510	MARK PLATE	1	J30001-UP
30		208-00-76520	MARK PLATE	1	J30001-UP
31		14X-98-35181	PLATE	2	J30001-UP

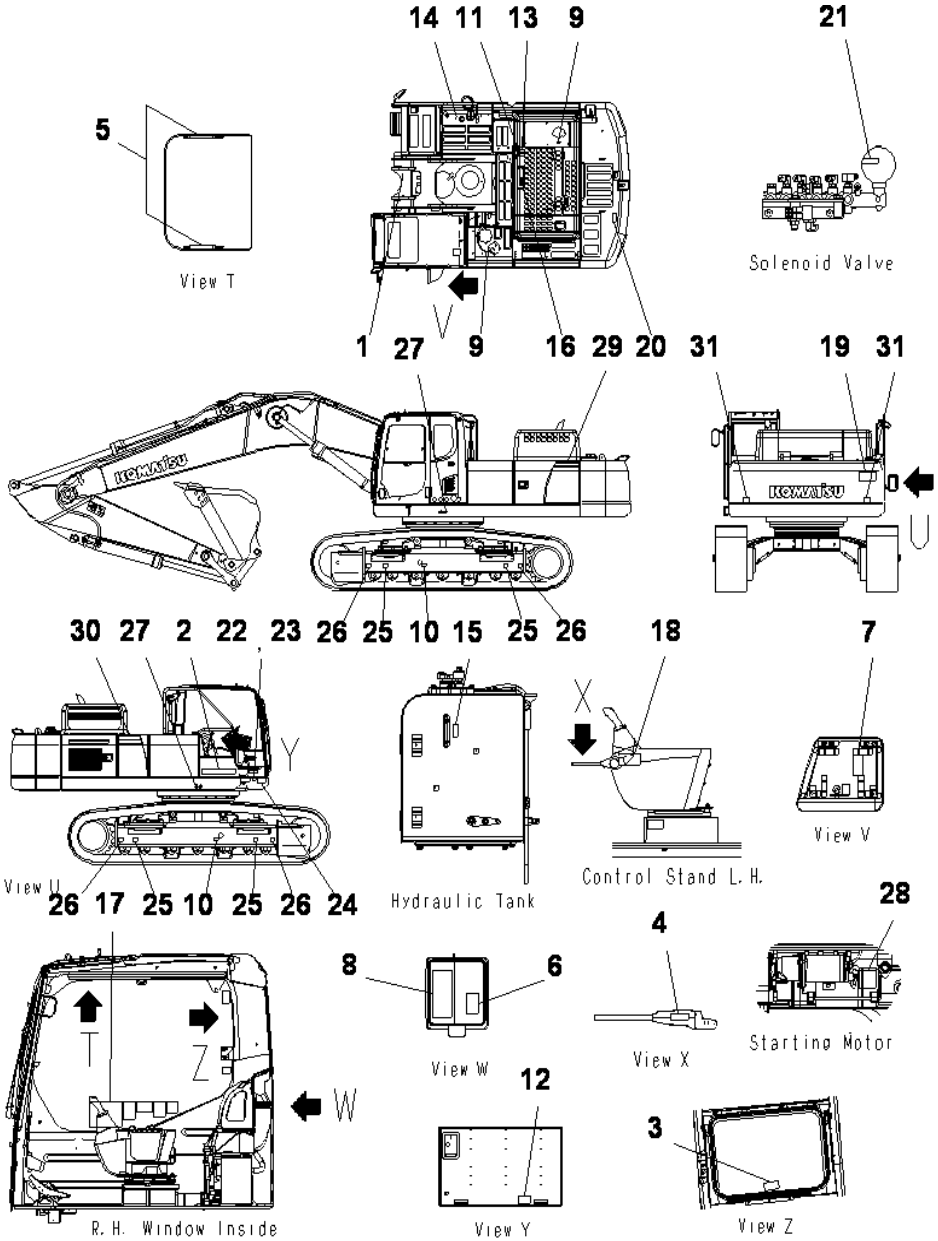

DECAL AND PLATE (ENGLISH) (STD)

INDEX	CD	PART NO.	DESCRIPTION	QTY	SERIAL NO.
1		09690-M0063	PLATE, MARK	1	J30001-UP
2		09690-P0630	PLATE, MARK	1	J30001-UP
3		09844-00050	PLATE	1	J30001-UP
4		09685-00002	PLATE, OPERATING	1	J30001-UP
5		09659-A057B	PLATE, SAFETY	2	J30001-UP
6		20Y-00-31450	PLATE	1	J30001-UP
7		208-00-71260	PLATE	1	J30001-UP
8		208-00-76470	PLATE	1	J30001-UP
9		09653-A0481	PLATE, SAFETY	2	J30001-UP
10		09657-A0881	PLATE, SAFETY	2	J30001-UP
11		09805-C0481	PLATE, SAFETY	1	J30001-UP
12		09808-A0881	PLATE, SAFETY	1	J30001-UP
13		09667-A0481	PLATE, SAFETY	1	J30001-UP
14		09669-0000E	PLATE, CAUTION	1	J30001-UP
15		205-00-73360	PLATE, OPERATING	1	J30001-UP
16		6217-71-6530	PLATE	1	J30001-UP
17		20Y-00-31490	PLATE	1	J30001-UP
18		09963-A1640	TAG	1	J30001-UP
19		09133-A3281	PLATE, SAFETY	1	J30001-UP
20		09805-A0881	PLATE, SAFETY	1	J30001-UP
21		09659-A057B	PLATE, SAFETY	1	J30001-UP
22		20Y-00-J1150	PLATE, NAME	1	J30001-UP
23		04418-13060	SCREW	4	J30001-UP
24		20Y-00-31840	PLATE	1	J30001-UP
25		09960-00801	MARK	4	J30001-UP
26		09960-00802	MARK	4	J30001-UP
27		21U-98-31160	PLATE, MARK	2	J30001-UP
28		09842-A0481	CAUTION PLATE	1	J30001-UP
29		208-00-76510	MARK PLATE	1	J30001-UP
30		208-00-76520	MARK PLATE	1	J30001-UP
31		14X-98-35181	PLATE	2	J30001-UP

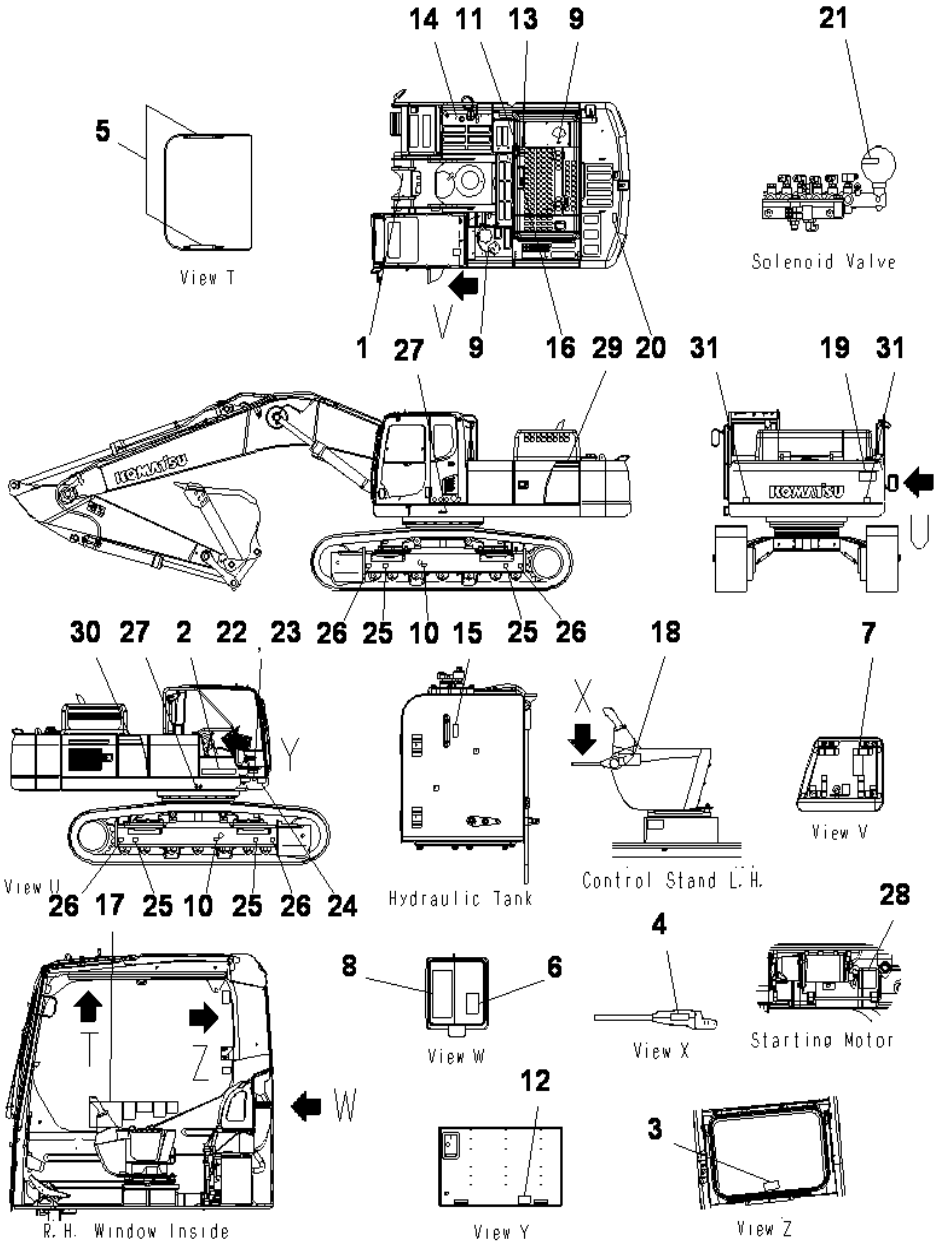

DECAL AND PLATE (ENGLISH) (FOR LC)

INDEX	CD	PART NO.	DESCRIPTION	QTY	SERIAL NO.
1		09690-M0063	PLATE, MARK	1	J30001-UP
2		09690-P0630	PLATE, MARK	1	J30001-UP
3		09844-00050	PLATE	1	J30001-UP
4		09685-00002	PLATE, OPERATING	1	J30001-UP
5		09659-A057B	PLATE, SAFETY	2	J30001-UP
6		20Y-00-31330	PLATE	1	J30001-UP
7		208-00-71260	PLATE	1	J30001-UP
8		208-00-76720	PLATE	1	J30001-UP
9		09653-A0481	PLATE,SAFETY	2	J30001-UP
10		09657-A0881	PLATE, SAFETY	2	J30001-UP
11		09805-C0481	PLATE,SAFETY	1	J30001-UP
12		09808-A0881	PLATE,SAFETY	1	J30001-UP
13		09667-A0481	PLATE,SAFETY	1	J30001-UP
14		09669-0000E	PLATE, CAUTION	1	J30001-UP
15		205-00-73360	PLATE, OPERATING	1	J30001-UP
16		6217-71-6470	PLATE	1	J30001-UP
17		22U-00-21440	PLATE	1	J30001-UP
18		09963-03001	TAG	1	J30001-UP
19		09133-A3281	PLATE, SAFETY	1	J30001-UP
20		09805-A0881	PLATE, SAFETY	1	J30001-UP
21		09659-A057B	PLATE, SAFETY	1	J30001-UP
22		20Y-00-J1150	PLATE, NAME	1	J30001-UP
23		04418-13060	SCREW	4	J30001-UP
24		20Y-00-31840	PLATE	1	J30001-UP
25		09960-00801	MARK	4	J30001-UP
26		09960-00802	MARK	4	J30001-UP
27		21U-98-31160	PLATE, MARK	2	J30001-UP
28		09842-A0481	PLATE, CAUTION	1	J30001-UP
29		208-00-76530	MARK PLATE	1	J30001-UP
30		208-00-76540	MARK PLATE	1	J30001-UP
31		14X-98-35181	PLATE	2	J30001-UP

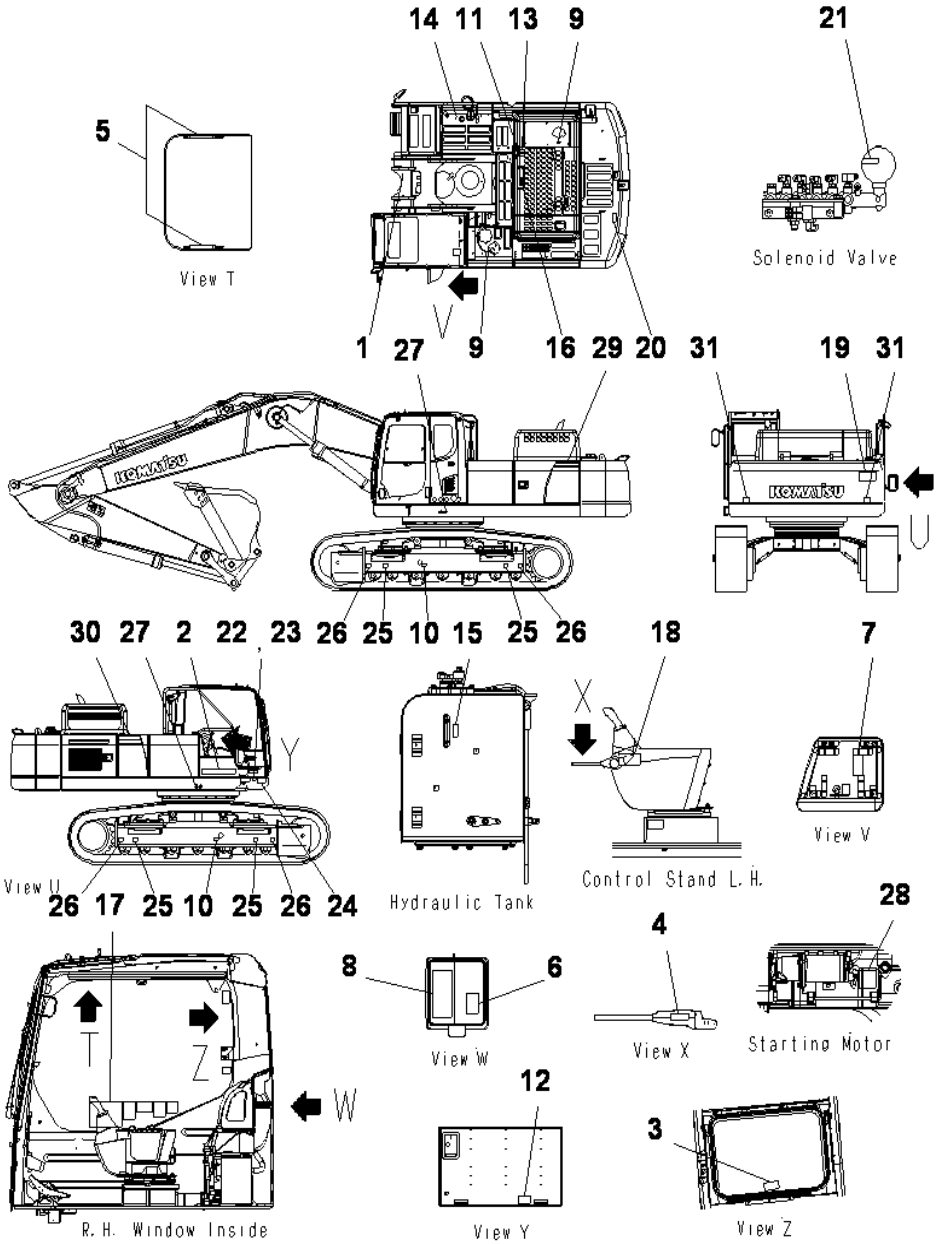

DECAL AND PLATE (ENGLISH) (FOR LC) (KI SPEC)

INDEX	CD	PART NO.	DESCRIPTION	QTY	SERIAL NO.
1		09690-M0063	PLATE, MARK	1	J30001-UP
2		09690-P0630	PLATE, MARK	1	J30001-UP
3		09844-00050	PLATE	1	J30001-UP
4		09685-00002	PLATE, OPERATING	1	J30001-UP
5		09659-A057B	PLATE, SAFETY	2	J30001-UP
6		20Y-00-31450	PLATE	1	J30001-UP
7		208-00-71270	PLATE	1	J30001-UP
8		208-00-76470	PLATE	1	J30001-UP
9		09653-A0481	PLATE, SAFETY	2	J30001-UP
10		09657-A0881	PLATE, SAFETY	2	J30001-UP
11		09805-C0481	PLATE, SAFETY	1	J30001-UP
12		09808-A0881	PLATE, SAFETY	1	J30001-UP
13		09667-A0481	PLATE, SAFETY	1	J30001-UP
14		09669-0000E	PLATE, CAUTION	1	J30001-UP
15		205-00-73360	PLATE, OPERATING	1	J30001-UP
16		6217-71-6530	PLATE	1	J30001-UP
17		20Y-00-31490	PLATE	1	J30001-UP
18		09963-A1640	TAG	1	J30001-UP
19		09133-A3281	PLATE, SAFETY	1	J30001-UP
20		09805-A0881	PLATE, SAFETY	1	J30001-UP
21		09659-A057B	PLATE, SAFETY	1	J30001-UP
22		20Y-00-J1150	PLATE, NAME	1	J30001-UP
23		04418-13060	SCREW	4	J30001-UP
24		20Y-00-31840	PLATE	1	J30001-UP
25		09960-00801	MARK	4	J30001-UP
26		09960-00802	MARK	4	J30001-UP
27		21U-98-31160	PLATE, MARK	2	J30001-UP
28		09842-A0481	PLATE, CAUTION	1	J30001-UP
29		208-00-76530	MARK PLATE	1	J30001-UP
30		208-00-76540	MARK PLATE	1	J30001-UP
31		14X-98-35181	PLATE	2	J30001-UP

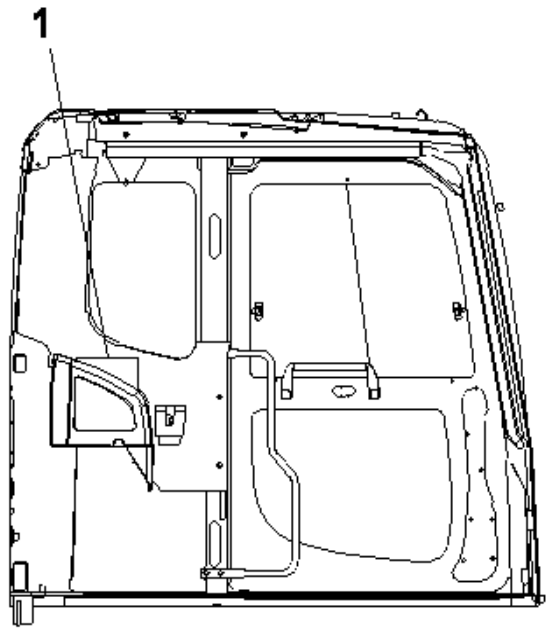

L. H. Door Inside

PC400-8 S/N J30001-UP

PLATE (LUBRICATION STANDARD CHART) (500 HOURS GREASING TYPE)

INDEX	CD	PART NO.	DESCRIPTION	QTY	SERIAL NO.
1		208-00-76182	PLATE	1	J30114-UP
		208-00-76181	PLATE	1	J30001-J30113

Ref :U0110-01A0 Page :390050

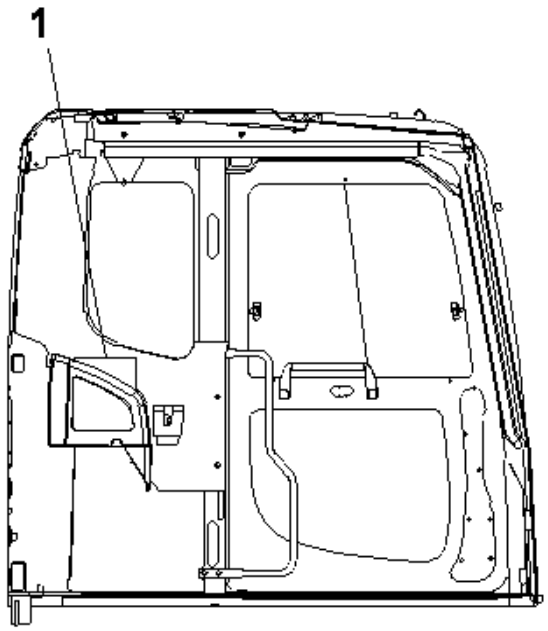

PC400-8 S/N J30001-UP

PLATE (LUBRICATION STANDARD CHART) (100 HOURS GREASING TYPE)

INDEX	CD	PART NO.	DESCRIPTION	QTY	SERIAL NO.
1		208-00-76192	PLATE	1	J30114-UP
		208-00-76191	PLATE	1	J30001-J30113

Ref :U0110-01A1 Page :390110

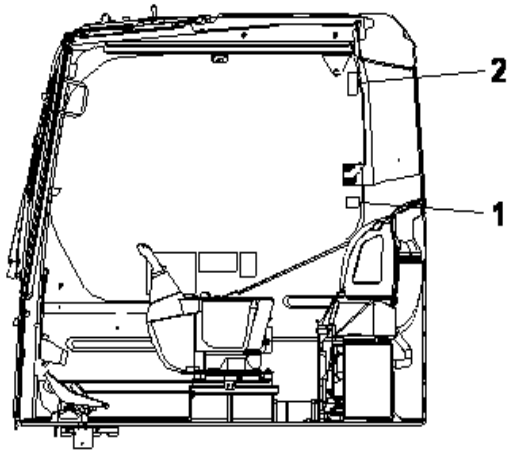

PC400-8 S/N J30001-UP

CAUTION PLATE (CAB WINDSHIELD LOCK OPERATION) (ENGLISH)

INDEX	CD	PART NO.	DESCRIPTION	QTY	SERIAL NO.
1		20Y-00-41460	PLATE	1	J30001-UP
2		09803-A0481	PLATE	1	J30001-UP

Ref :U0120-01A6 Page :390120

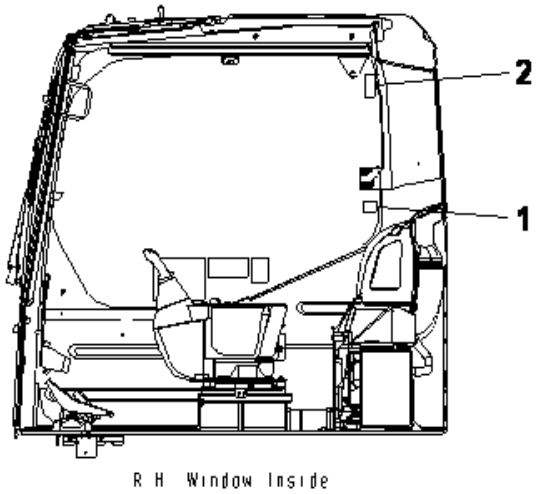

PC400-8 S/N J30001-UP

CAUTION PLATE (CAB WINDSHIELD LOCK OPERATION) (ENGLISH)

INDEX	CD	PART NO.	DESCRIPTION	QTY	SERIAL NO.
1		20Y-00-41660	PLATE	1	J30001-UP
2		09803-A0481	PLATE	1	J30001-UP

Ref :U0120-01A8 Page :390130

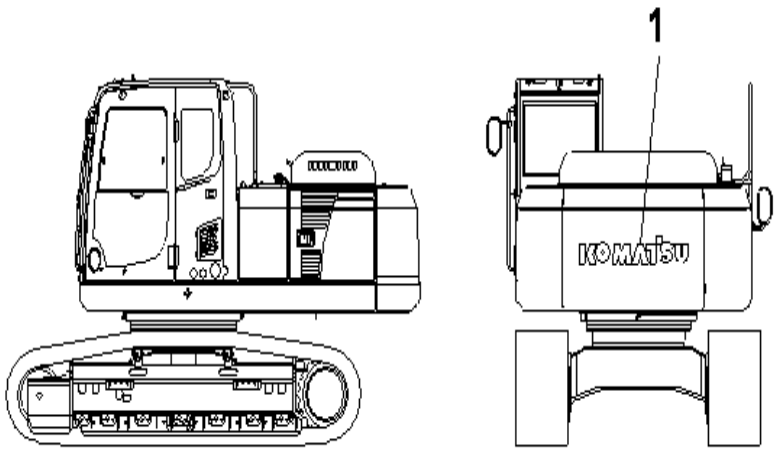

PC400-8 S/N J30001-UP

KOMATSU LOGO (COUNTER WEIGHT)

INDEX	CD	PART NO.	DESCRIPTION	QTY	SERIAL NO.
1		09690-P1400	PLATE. MARK.....	1	J30001-UP

Ref :U0150-01A0 Page :390140

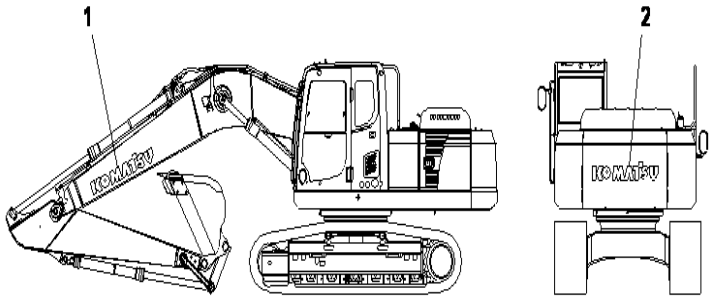

PC400-8 S/N J30001-UP

KOMATSU LOGO (BOOM AND COUNTER WEIGHT)

INDEX	CD	PART NO.	DESCRIPTION	QTY	SERIAL NO.
1		09690-P1400	MARK PLATE	1	J30001-UP
2		09690-P1400	MARK PLATE	1	J30001-UP

Ref :U0150-01A1 Page :390150

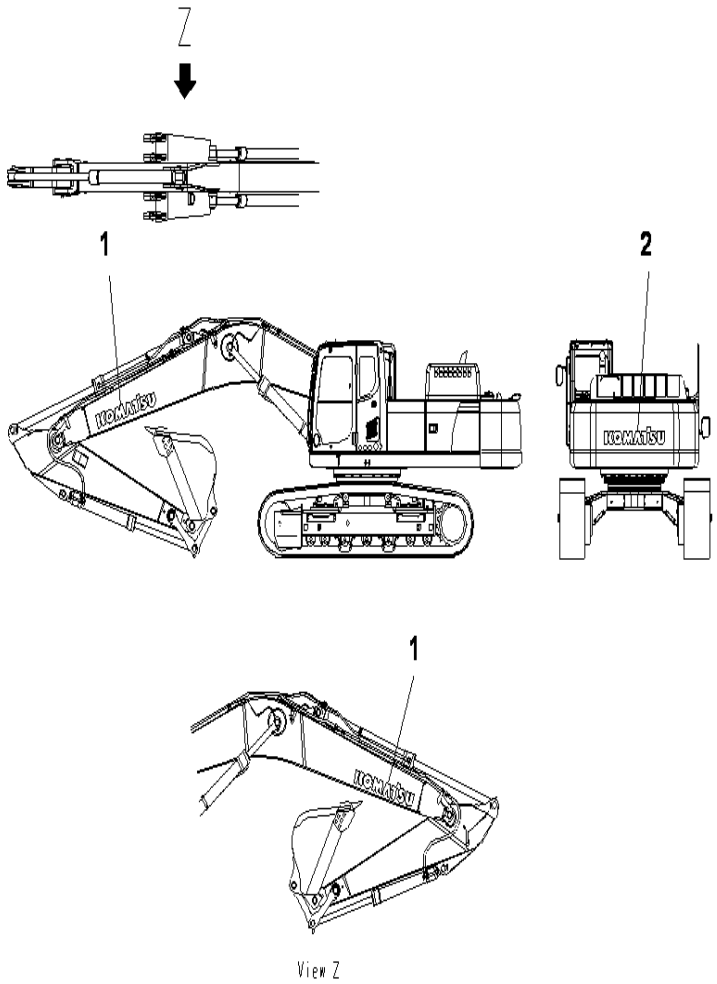

PC400-8 S/N J30001-UP

KOMATSU LOGO (BOOM AND COUNTER WEIGHT)

INDEX	CD	PART NO.	DESCRIPTION	QTY	SERIAL NO.
1		09690-P1400	MARK PLATE	2	J30001-UP
2		09690-P1400	MARK PLATE	1	J30001-UP

Ref :U0150-01A2 Page :390210

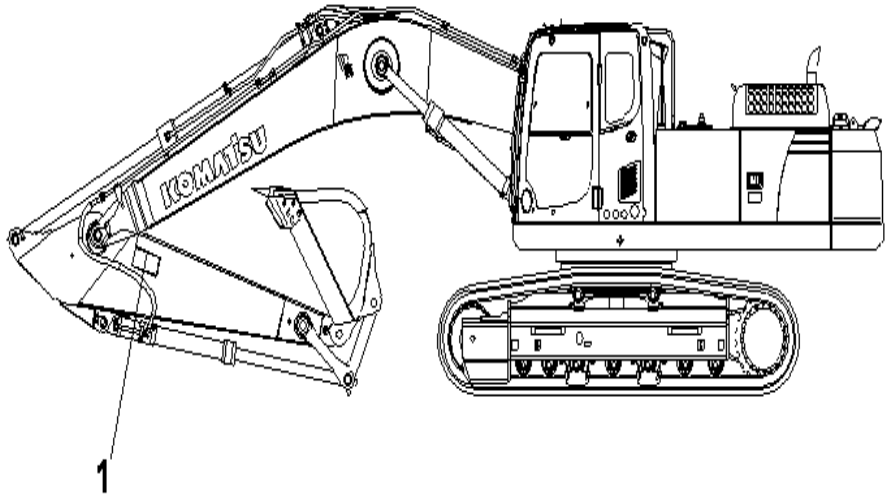

PC400-8 S/N J30001-UP

CAUTION PLATE (ARM)

INDEX	CD	PART NO.	DESCRIPTION	QTY	SERIAL NO.
1		09134-A1681	PLATE. CAUTION.....	2	J30001-UP

Ref :U0510-01A0 Page :390220

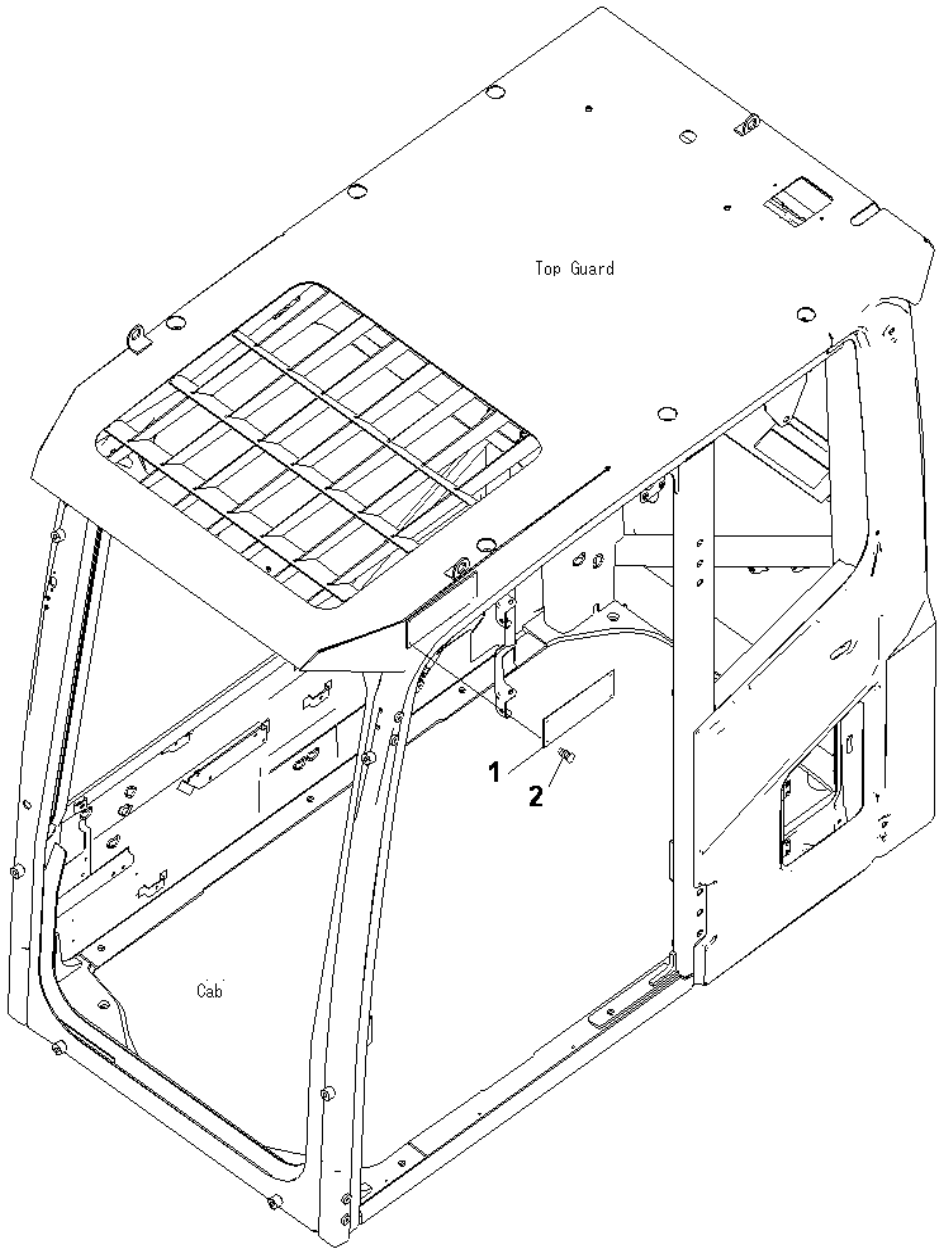

PC400-8 S/N J30001-UP

COUTION PLATE (TOP GUARD) (ENGLISH)

INDEX	CD	PART NO.	DESCRIPTION	QTY	SERIAL NO.
1	C2	(09620-D2000)	PLATE	1	J30001-UP
2		04418-13060	SCREW	4	J30001-UP

Ref :U0520-01A0 Page :390230

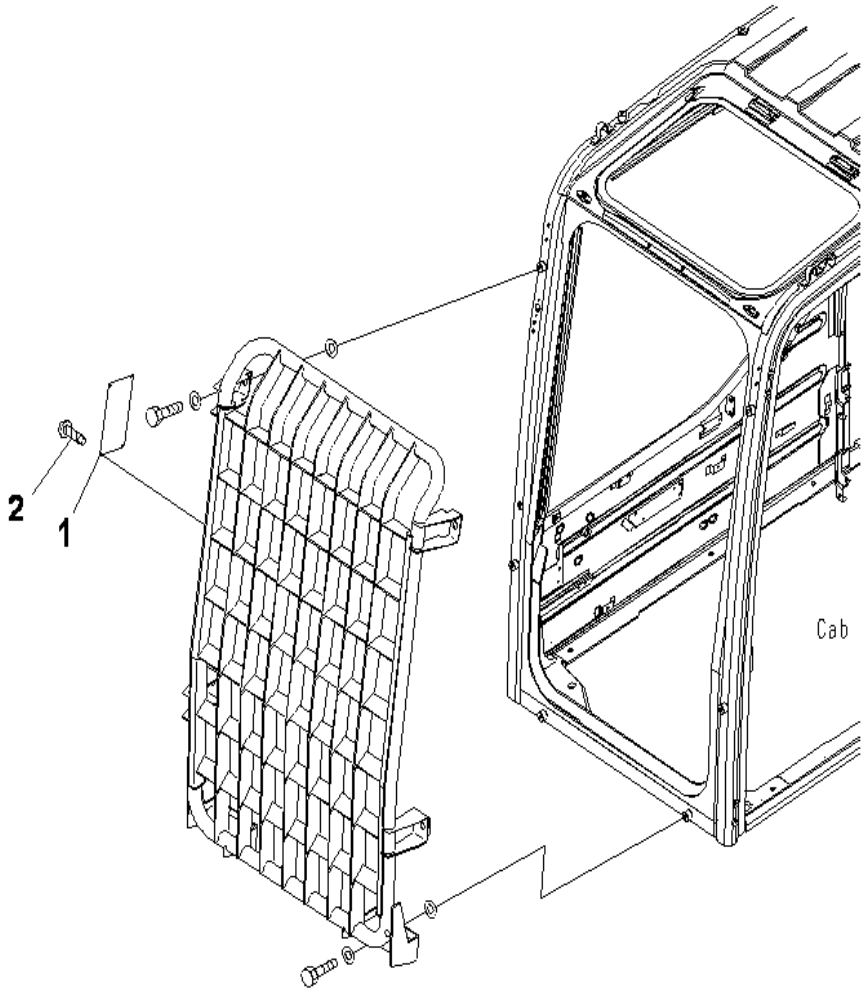

PC400-8 S/N J30001-UP

COUTION PLATE (FRONT GUARD) (ENGLISH)

INDEX	CD	PART NO.	DESCRIPTION	QTY	SERIAL NO.
1	C2	(09620-E2000)	PLATE	1	J30001-UP
2		04418-13060	SCREW	4	J30001-UP

Ref :U0520-01A1 Page :390240

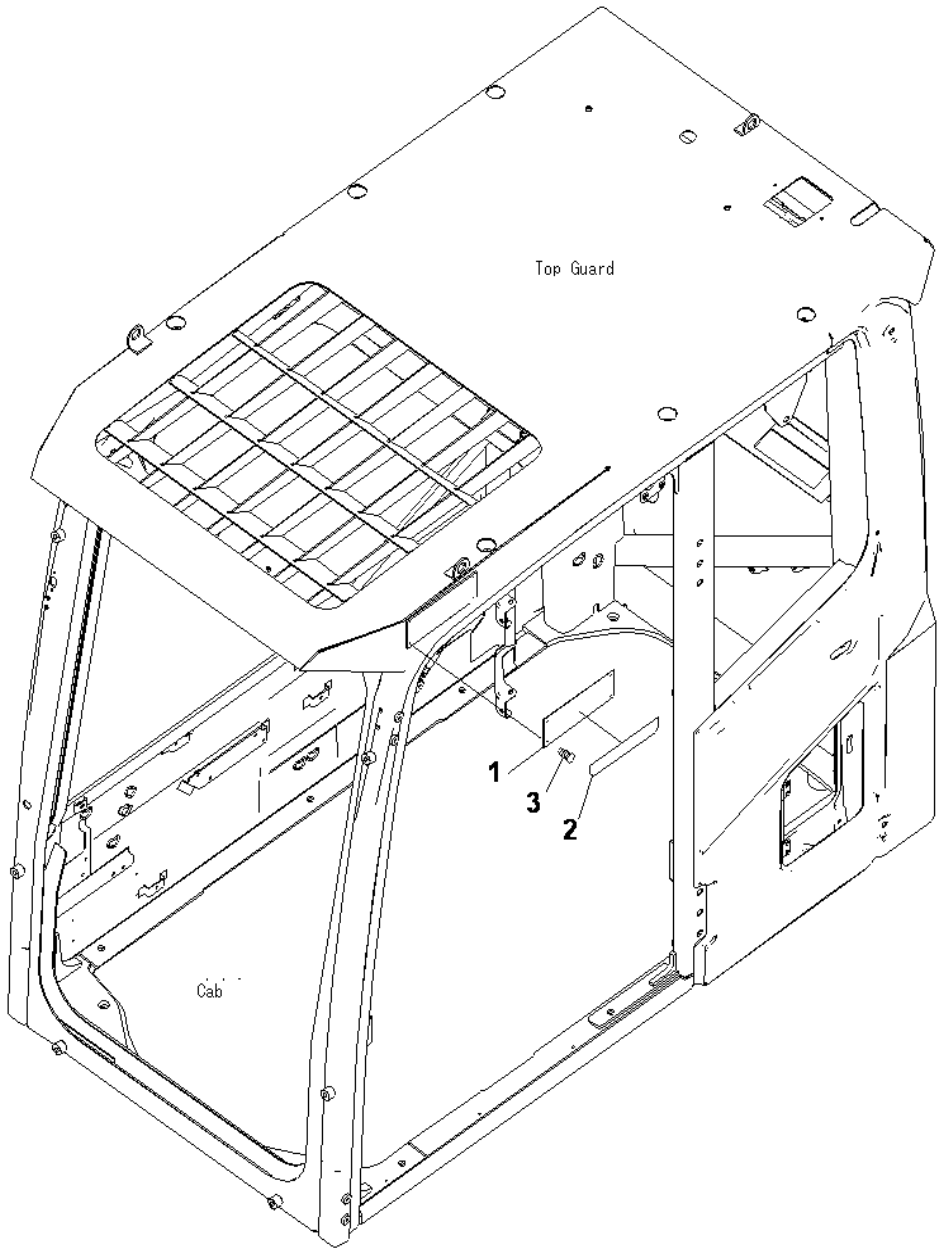

PC400-8 S/N J30001-UP

COUTION PLATE (TOP GUARD) (INDONESIAN)

INDEX	CD	PART NO.	DESCRIPTION	QTY	SERIAL NO.
1	C2	(09620-D2000)	PLATE	1	J30001-UP
2		09620-D2050	PLATE	1	J30001-UP
3		04418-13060	SCREW	4	J30001-UP

Ref :U0520-01A6 Page :390250

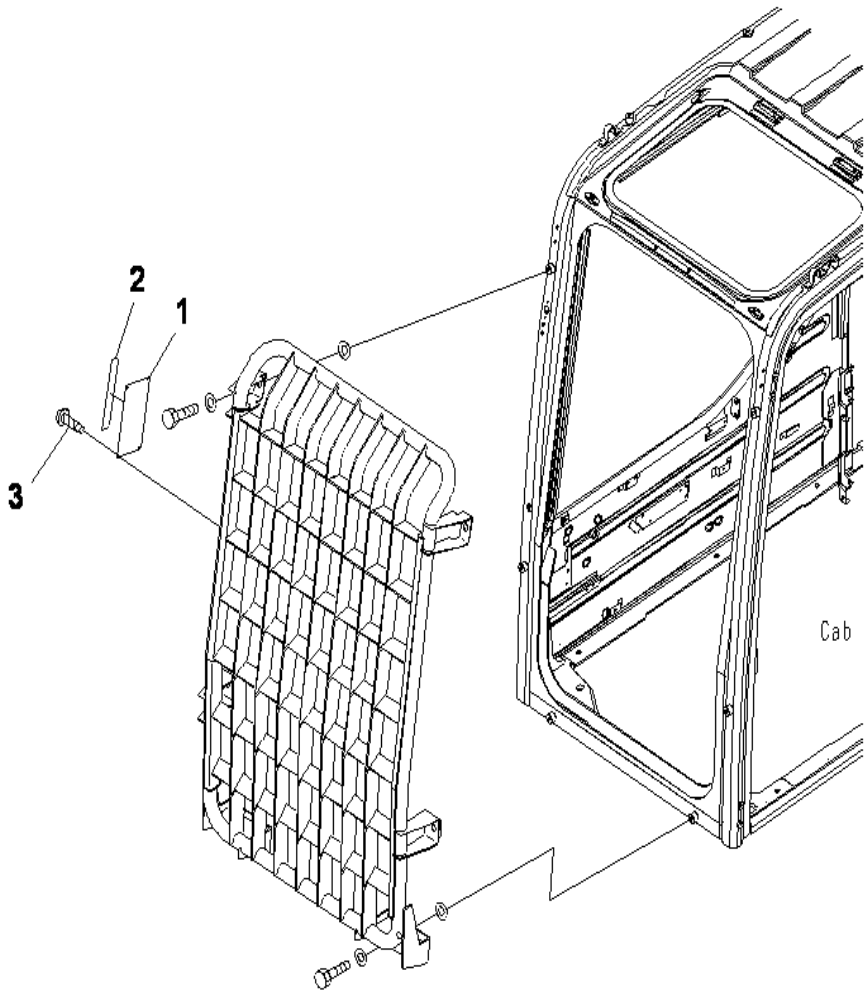

PC400-8 S/N J30001-UP

COUTION PLATE (FRONT GUARD) (INDONESIAN)

INDEX	CD	PART NO.	DESCRIPTION	QTY	SERIAL NO.
1	C2	(09620-E2000)	PLATE	1	J30001-UP
2		09620-D2050	PLATE	1	J30001-UP
3		04418-13060	SCREW	4	J30001-UP

Ref :U0520-01B3 Page :390260

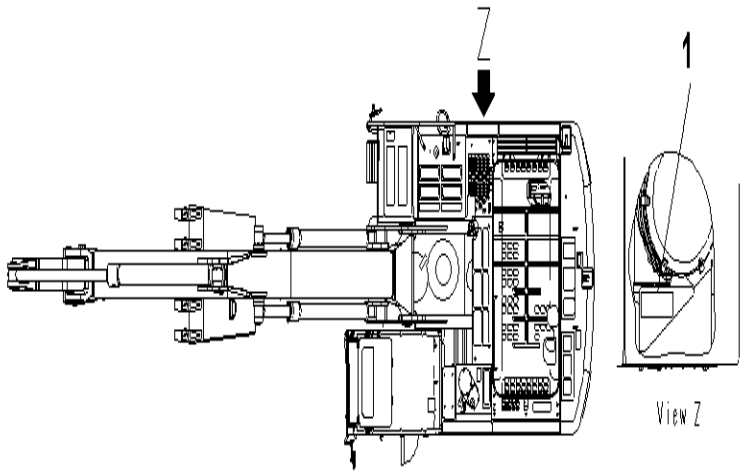

PC400-8 S/N J30001-UP

SERVICE INSTRUCTION (AIR CLEANER) (ENGLISH)

INDEX	CD	PART NO.	DESCRIPTION	QTY	SERIAL NO.
1		09637-30163	PLATE. INSTRUCTION.....	1	J30001-UP

Ref :U0550-01A4 Page :390270

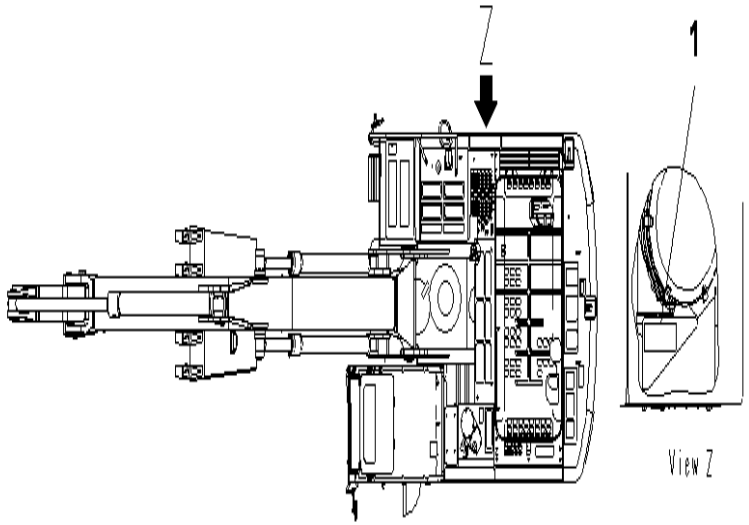

PC400-8 S/N J30001-UP

SERVICE INSTRUCTION (AIR CLEANER) (INDONESIAN)

INDEX	CD	PART NO.	DESCRIPTION	QTY	SERIAL NO.
1		09637-05163	PLATE. INSTRUCTION.....	1	J30001-UP

Ref :U0550-01A5 Page :390280

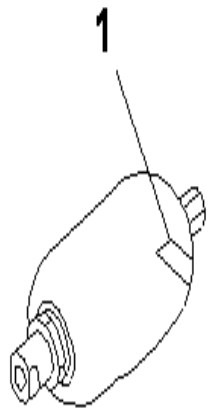

PC400-8 S/N J30001-UP

CAUTION PLATE (1-ACCUMULATOR)

INDEX	CD	PART NO.	DESCRIPTION	QTY	SERIAL NO.
1		09659-A057B	PLATE. SAFETY.....	1	J30001-UP

Ref :U0580-01A0 Page :390290

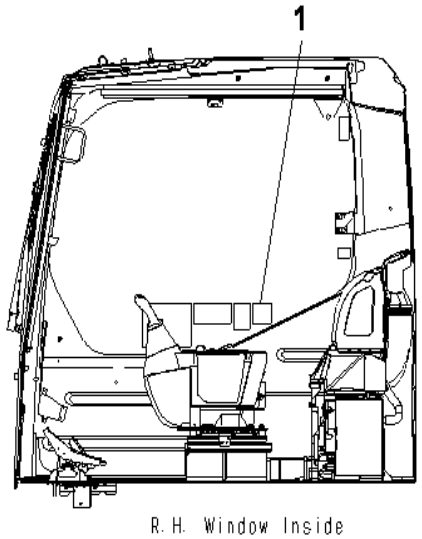

PC400-8 S/N J30001-UP

PLATE (SWING OR BACKING UP WARNING) (ENGLISH)

INDEX	CD	PART NO.	DESCRIPTION	QTY	SERIAL NO.
1		22B-00-21290	PLATE.....	1	J30001-UP

Ref :U0610-01A1 Page :390300

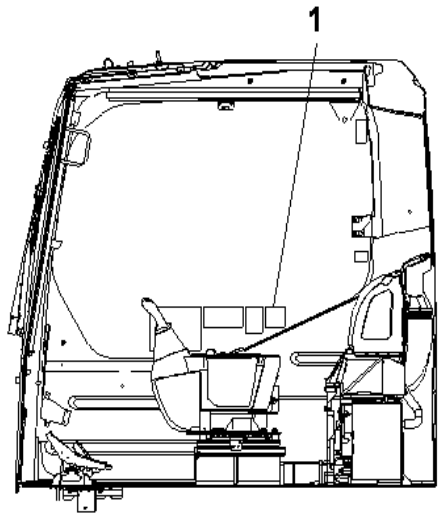

R.H. Window Inside

PC400-8 S/N J30001-UP

PLATE (SWING OR BACKING UP WARNING)

INDEX	CD	PART NO.	DESCRIPTION	QTY	SERIAL NO.
1		207-00-76430	PLATE	1	J30001-UP

Ref :U0610-01A2 Page :390310

ACCESSORY

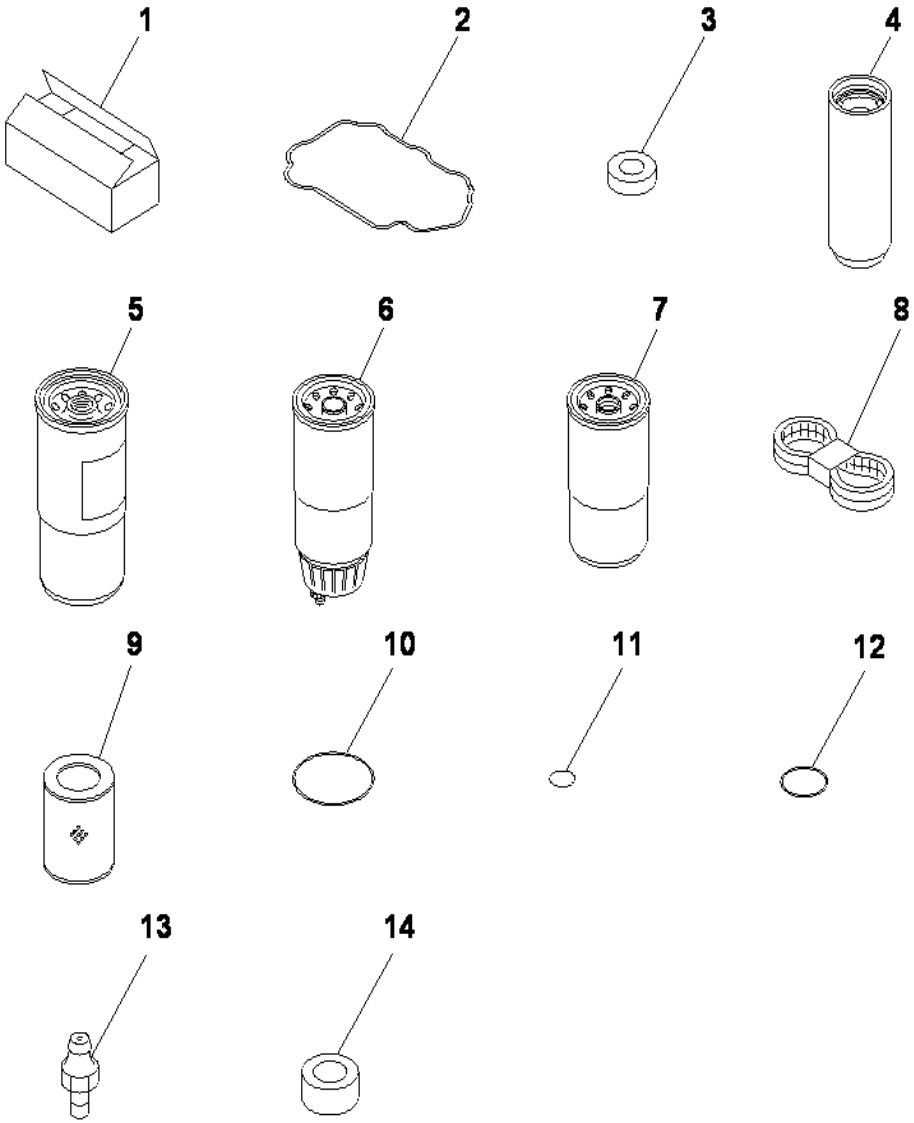

PC400-8 S/N J30001-UP

SPARE PARTS

INDEX	CD	PART NO.	DESCRIPTION	QTY	SERIAL NO.
1		09059-00800	SPARE PARTS BOX	1	J30001-UP
2		6156-11-8810	GASKET	6	J30001-UP
3		6150-11-8820	RUBBER SEAL	12	J30001-UP
4		600-211-1340	CARTRIDGE	1	J30001-UP
5		600-319-3550	CARTRIDGE (1-5/8)	1	J30001-UP
6		600-319-4500	CARTRIDGE ASS'Y	1	J30001-J30001
7		600-319-4540	FILTER ASS'Y	1	J30001-UP
8		04121-22264	V-BELT SET	1	J30001-UP
9		208-60-71123	ELEMENT	1	J30001-UP
10		07000-15210	O-RING	1	J30001-UP
11		07002-11223	O-RING	1	J30001-UP
12		07002-12434	O-RING	4	J30001-UP
13		07020-00000	FITTING	4	J30001-UP
14		20Y-60-21470	ELEMENT	1	J30001-UP

Ref :V0100-01A0 Page :420010

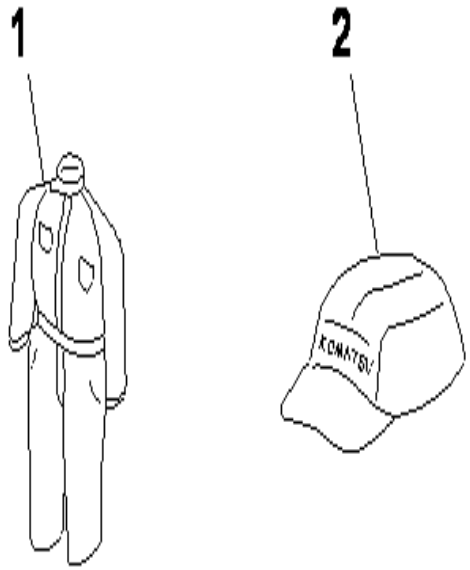

PC400-8 S/N J30001-UP

CAP AND OVERALL

INDEX	CD	PART NO.	DESCRIPTION	QTY	SERIAL NO.
		09980-92550	CAP AND OVERALL KIT.....	1	J30001-UP
1		09980-10550	OVERALL.....	1	J30001-UP
2		09982-20057	CAP.....	1	J30001-UP

Ref :V0200-01A0 Page :420020

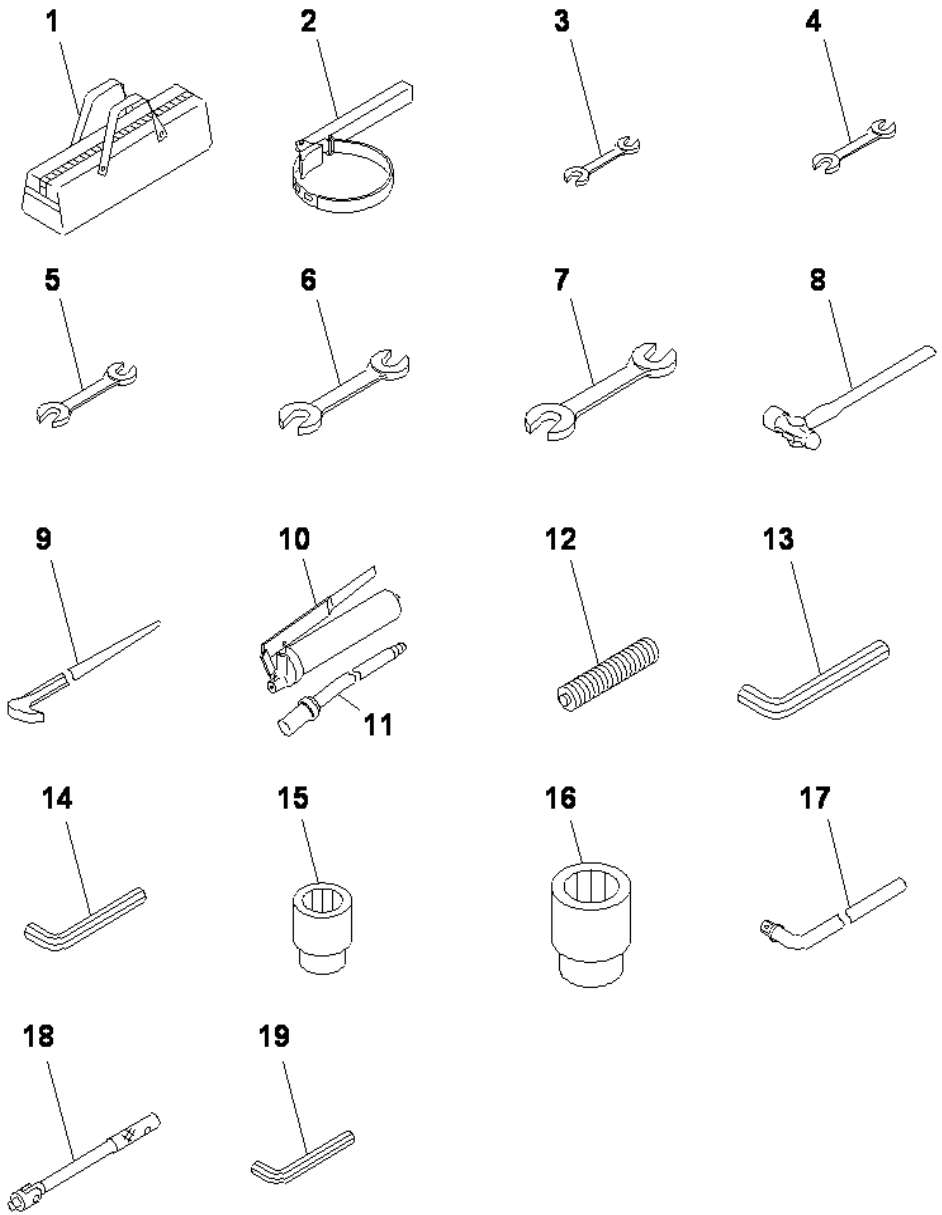

PC400-8 S/N J30001-UP

TOOL

INDEX	CD	PART NO.	DESCRIPTION	QTY	SERIAL NO.
1		09056-04613	BAG	1	J30001-UP
2		09019-28035	WRENCH	1	J30001-UP
3		09002-01012	WRENCH, 10X12	1	J30001-UP
4		09002-01417	WRENCH, 14X17	1	J30001-UP
5		09002-01922	WRENCH, 19X22	1	J30001-UP
6		09002-03032	WRENCH, 30X32	1	J30001-UP
7		09002-03641	WRENCH, 36X41	1	J30001-UP
8		09039-00150	HAMMER	1	J30001-UP
9		09055-10390	BAR	1	J30001-UP
		07952-70004	PUMP ASS'Y	1	J30001-UP
10		07950-10450	.PUMP	1	J30001-UP
11		07951-41017	.NOZZLE	1	J30001-UP
12		07950-90403	CARTRIDGE	1	J30001-UP
13		09007-00836	WRENCH, 8	1	J30001-UP
14		09007-00528	WRENCH, 5	1	J30001-UP
15		09021-03044	SOCKET, 30	1	J30001-UP
16		09021-03653	SOCKET, 36	1	J30001-UP
17		09024-00300	HANDLE	1	J30001-UP
18		09023-00300	HANDLE	1	J30001-UP
19		09007-00425	WRENCH, 4	1	J30001-UP

Ref :V0300-01A0 Page :420030

MISCELLANEOUS

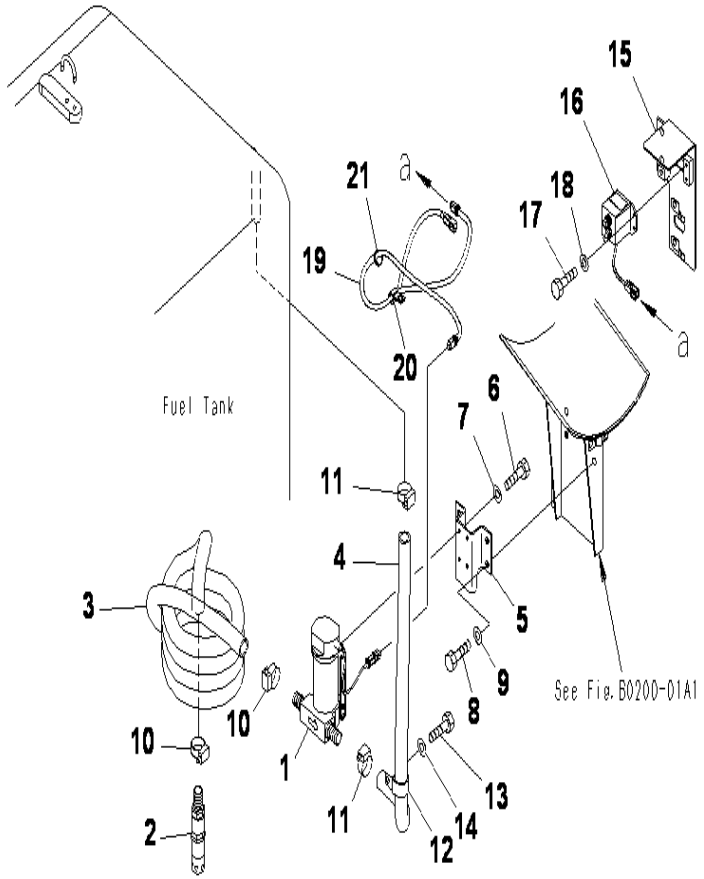

PC400-8 S/N J30001-UP

FUEL SELF SUPPLY PUMP

INDEX	CD	PART NO.	DESCRIPTION	QTY	SERIAL NO.
1		20Y-04-K2081	PUMP	1	J30001-UP
2		20Y-04-K2450	FOOT VALVE A	1	J30001-UP
3		20Y-04-K2351	HOSE	1	J30001-UP
4		208-04-K1550	HOSE	1	J30001-UP
5		208-04-71510	BRACKET	1	J30001-UP
6		01010-80620	BOLT	4	J30001-UP
7		01643-30623	WASHER	4	J30001-UP
8		01010-81225	BOLT	4	J30001-UP
9		01643-31232	WASHER	4	J30001-UP
10		07289-00035	CLAMP	2	J30001-UP
11		07289-00035	CLAMP	2	J30001-UP
12		113-89-97950	CLIP	1	J30001-UP
13		01010-81225	BOLT	1	J30001-UP
14		01643-31232	WASHER	1	J30001-UP
15		208-04-71520	BRACKET	1	J30001-UP
16		207-06-71540	SWITCH ASS'Y	1	J30001-UP
17		01010-80616	BOLT	2	J30001-UP
18		01643-30623	WASHER	2	J30001-UP
19		208-06-71550	WIRING HARNESS	1	J30001-UP
20		04434-51412	CLIP	1	J30001-UP
21		08034-20519	BAND	1	J30001-UP

Ref :W1113-01A0 Page :450010

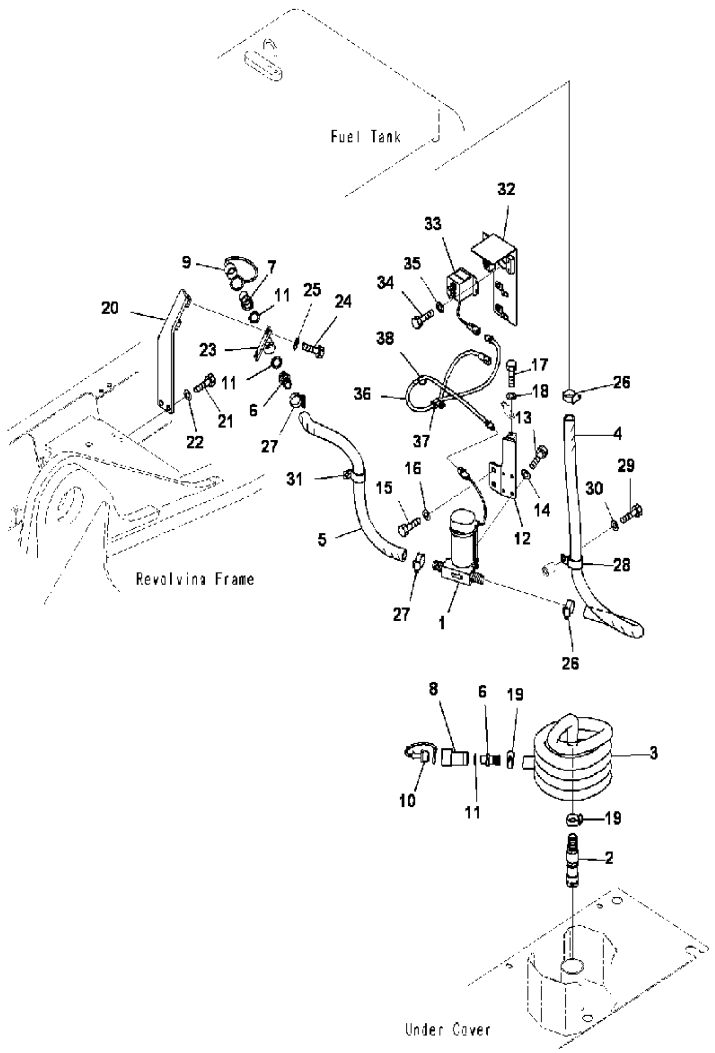

PC400-8 S/N J30001-UP

FUEL SELF CHARGE PUMP,EXT. BAD FUEL&POOR FUEL ARR. SPEC. WATER+DUST

INDEX	CD	PART NO.	DESCRIPTION	QTY	SERIAL NO.
1		20Y-04-K2082	PUMP	1	J30001-UP
2		20Y-04-K2450	VALVE ASSEMBLY	1	J30001-UP
3		20Y-04-K2351	HOSE	1	J30001-UP
4		208-04-75460	HOSE	1	J30001-UP
5		208-04-75450	HOSE	1	J30001-UP
6		22B-04-K1130	NIPPLE	2	J30001-UP
7		22B-04-K1140	COUPLER	1	J30001-UP
8		22B-04-K1150	COUPLER	1	J30001-UP
9		22B-04-K1160	PLUG	1	J30001-UP
10		22B-04-K1170	PLUG	1	J30001-UP
11		205-04-K1370	WASHER,SEAL	3	J30001-UP
12		208-04-75440	BRACKET	1	J30001-UP
13		01010-80616	BOLT	4	J30001-UP
14		01643-30623	WASHER	4	J30001-UP
15		01010-81225	BOLT	2	J30001-UP
16		01643-31232	WASHER	2	J30001-UP
17		01010-81225	BOLT	1	J30001-UP
18		01643-31232	WASHER	1	J30001-UP
19		07289-00035	CLAMP	2	J30001-UP
20		208-04-75430	BRACKET	1	J30001-UP
21		01010-81235	BOLT	2	J30001-UP
22		01643-31232	WASHER	2	J30001-UP
23		207-04-75410	BRACKET	1	J30001-UP
24		01010-81225	BOLT	2	J30001-UP
25		01643-31232	WASHER	2	J30001-UP
26		07289-00035	CLAMP	2	J30001-UP
27		07289-00035	CLAMP	2	J30001-UP
28		113-89-97950	CLIP	1	J30001-UP
29		01010-81260	BOLT	1	J30001-UP
30		01643-31232	WASHER	1	J30001-UP
31		113-89-97950	CLIP	1	J30001-UP
32		208-04-75410	BRACKET	1	J30001-UP
33		207-06-71540	SWITCH ASS'Y	1	J30001-UP
34		01010-80616	BOLT	2	J30001-UP
35		01643-30623	WASHER	2	J30001-UP
36		208-06-71550	WIRE HARNESS	1	J30001-UP
37		04434-51412	CLIP	1	J30001-UP
38		08034-20519	BAND	1	J30001-UP

Ref :W1113-01A1 Page :450020

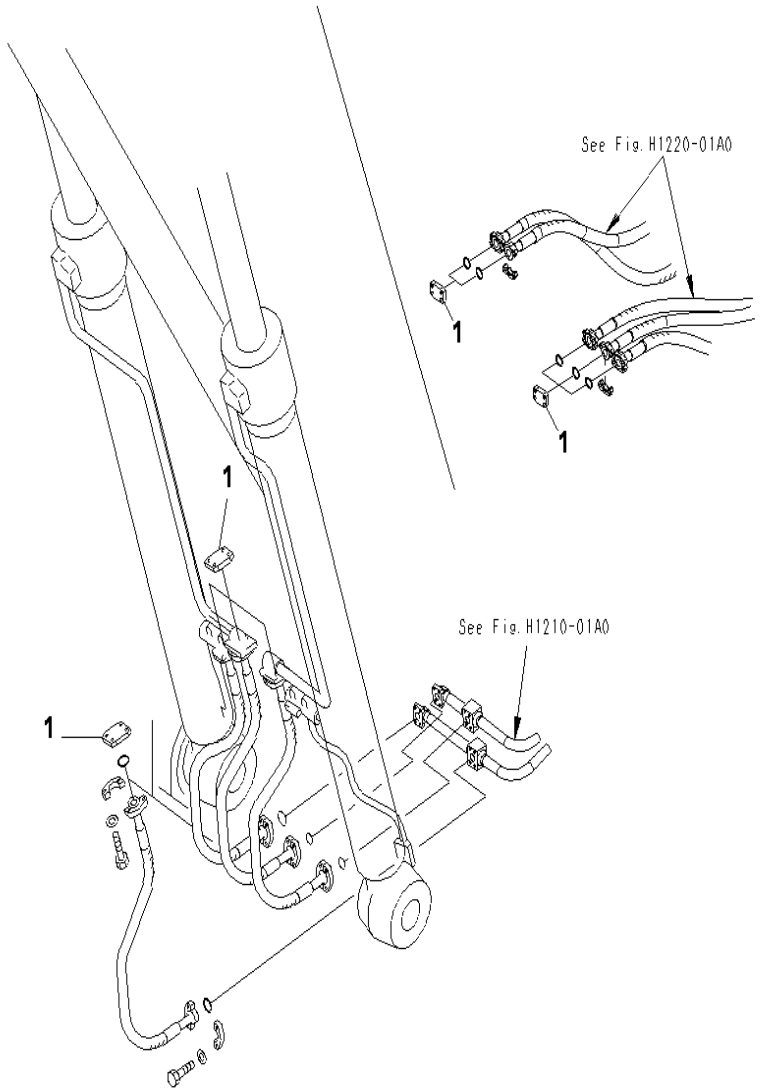

BLIND PARTS (BODY)

INDEX	CD	PART NO.	DESCRIPTION	QTY	SERIAL NO.
1		07379-01044	FLANGE.....	9	J30001-UP

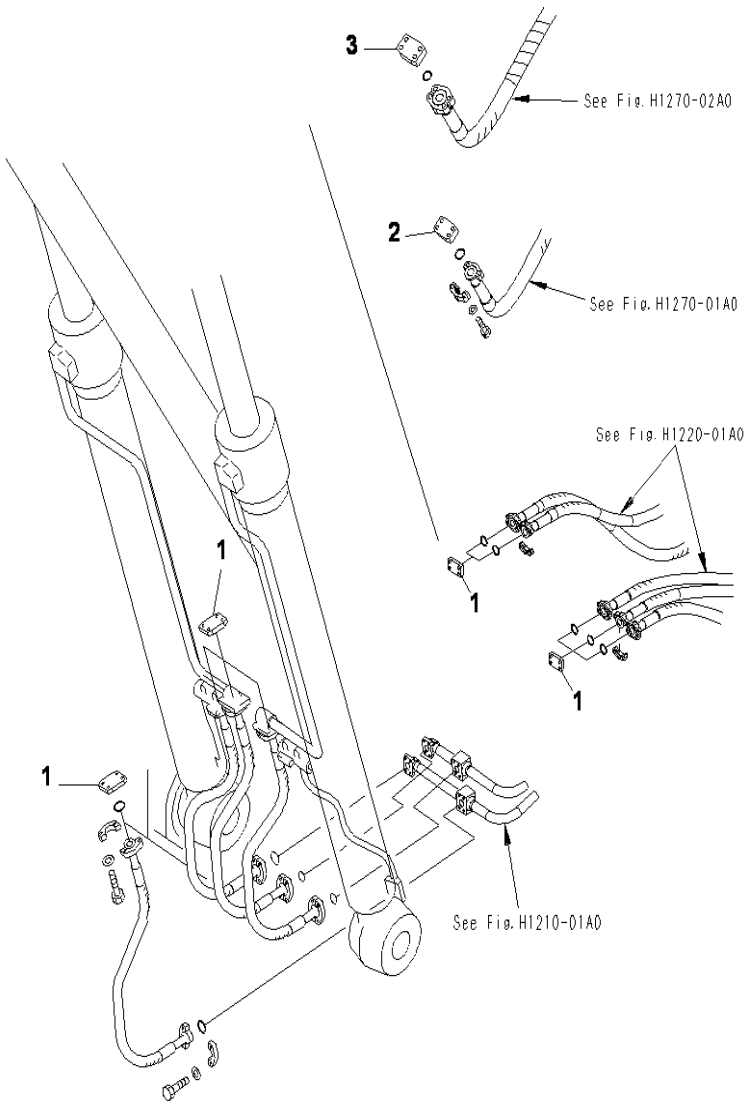

BLIND PARTS (BODY) (1 ACTUATOR)

INDEX	CD	PART NO.	DESCRIPTION	QTY	SERIAL NO.
1		07379-01044	FLANGE	9	J30001-UP
2		07379-01260	FLANGE	1	J30001-UP
3		07379-01470	FLANGE	1	J30001-UP

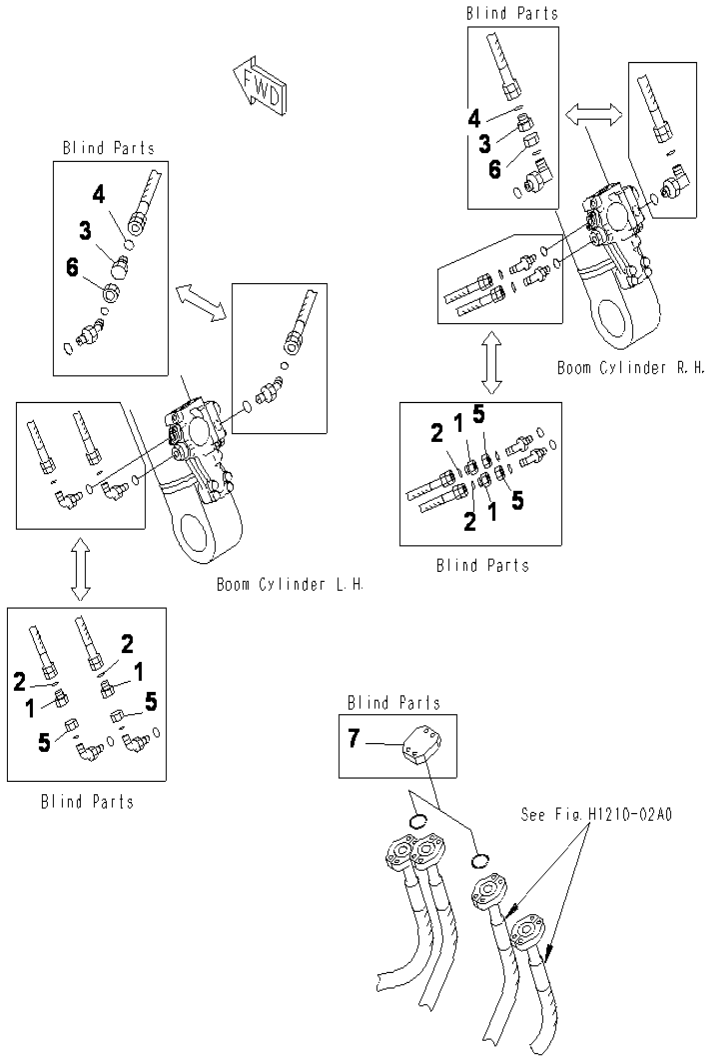

BLIND PARTS (FOR BRUST VALVE)

INDEX	CD	PART NO.	DESCRIPTION	QTY	SERIAL NO.
1		07376-70315	PLUG	4	J30001-UP
2		02896-11009	O-RING	4	J30001-UP
3		07376-70522	PLUG	2	J30001-UP
4		02896-11015	O-RING	2	J30001-UP
5		02789-00315	PLUG	4	J30001-UP
6		02789-00522	PLUG	2	J30001-UP
7		07379-00640	FLANGE	2	J30001-UP

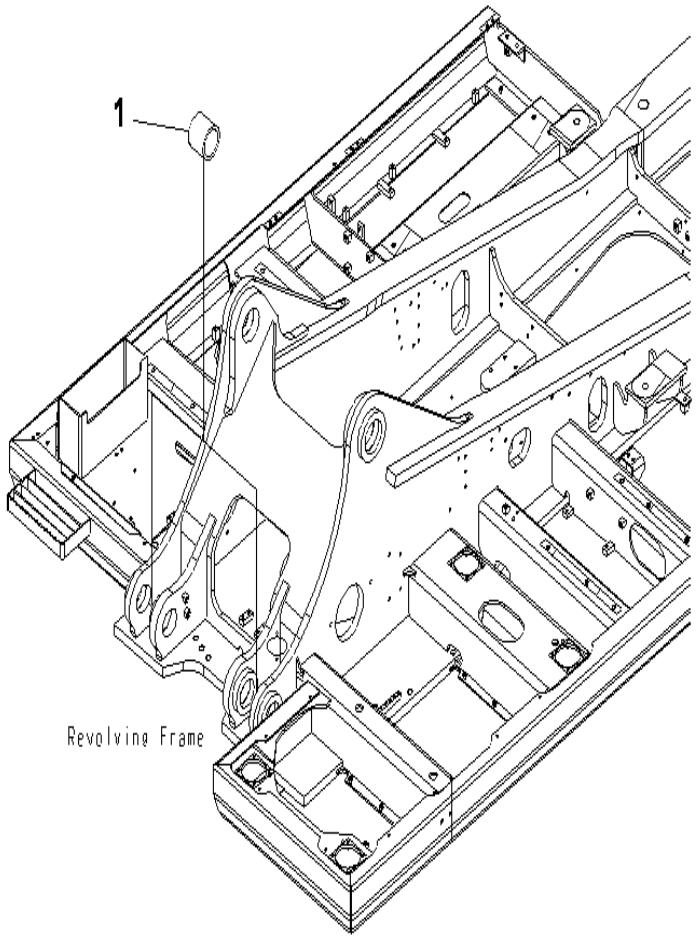

EXPORT TOOL

INDEX	CD	PART NO.	DESCRIPTION	QTY	SERIAL NO.
1		208-986-1210	SPACER	2	J30001-UP

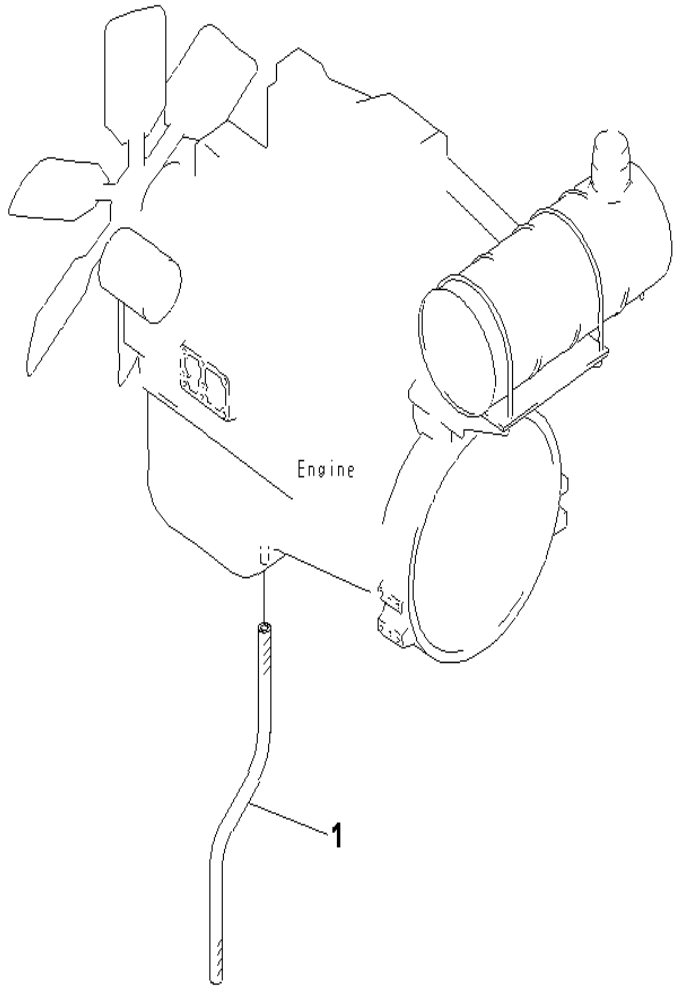

PC400-8 S/N J30001-UP

ENGINE DRAIN HOSE

INDEX	CD	PART NO.	DESCRIPTION	QTY	SERIAL NO.
1		07286-01690	HOSE	1	J30001-UP

Ref :W9960-01A0 Page :450070

SERVICES KIT

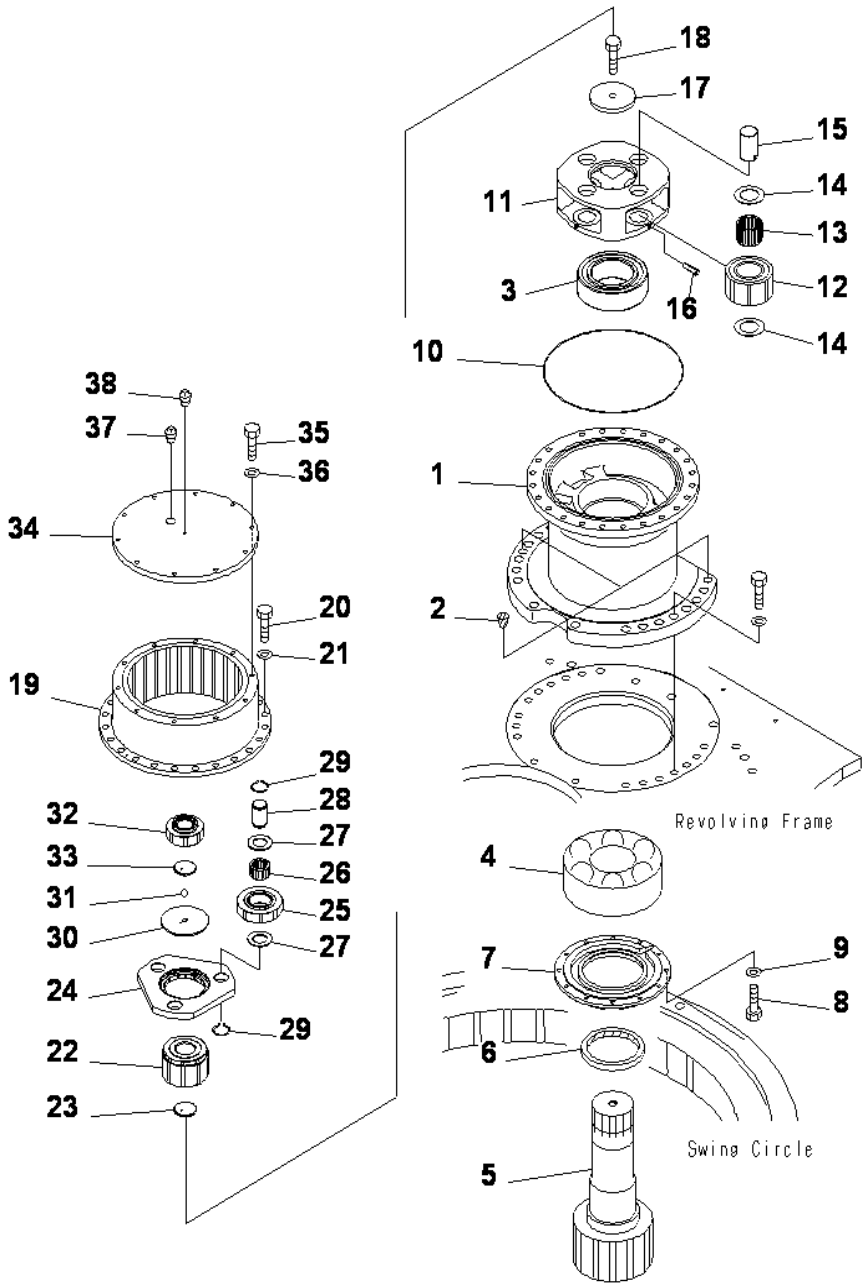

SWING MACHINERY ASS'Y (SUPPLY PARTS)

INDEX	CD	PART NO.	DESCRIPTION	QTY	SERIAL NO.
		208-26-00211	SWING MACHINERY.....	1	J30001-UP
1		2082671190	.CASE.....	1	J30001-UP
2		07049-02430	.PLUG.....	2	J30001-UP
3		06000-23124	.BEARING.....	1	J30001-UP
4		06000-22326	.BEARING.....	1	J30001-UP
5		208-26-52242	.SHAFT.....	1	J30001-UP
6		208-26-61290	.SEAL.....	1	J30001-UP
7		208-26-71360	.COVER.....	1	J30001-UP
8		01010-81030	.BOLT.....	12	J30001-UP
9		01643-31032	.WASHER.....	12	J30001-UP
10		07000-15390	.O-RING.....	1	J30001-UP
11		208-26-71180	.CARRIER.....	1	J30001-UP
12		208-26-71140	.GEAR.....	4	J30001-UP
13		207-27-61230	.BEARING.....	4	J30001-UP
14		20Y-27-21250	.WASHER.....	8	J30001-UP
15		207-27-61250	.PIN.....	4	J30001-UP
16		20Y-27-21290	.PIN.....	4	J30001-UP
17		208-26-71230	.PLATE.....	1	J30001-UP
18		205-32-51211	.BOLT.....	1	J30001-UP
19		208-26-71150	.GEAR.....	1	J30001-UP
20		01010-81645	.BOLT.....	24	J30001-UP
21		01643-31645	.WASHER.....	24	J30001-UP
22		208-26-71130	.GEAR.....	1	J30001-UP
23		208-26-71240	.PLATE.....	1	J30001-UP
24		208-26-71170	.CARRIER.....	1	J30001-UP
25		207-26-71520	.GEAR.....	3	J30001-UP
26		22U-26-21320	.BEARING.....	3	J30001-UP
27		22U-26-21240	.WASHER.....	6	J30001-UP
28		207-26-71210	.PIN.....	3	J30001-UP
29		04064-04018	.RING.....	6	J30001-UP
30		208-26-71210	.HOLDER.....	1	J30001-UP
31		04260-01270	.BALL.....	1	J30001-UP
32		207-26-71510	.GEAR.....	1	J30001-UP
33		207-26-71260	.PLATE.....	1	J30001-UP
34		207-26-71610	.COVER.....	1	J30001-UP
35		01010-81240	.BOLT.....	10	J30001-UP
36		01643-31232	.WASHER.....	10	J30001-UP
37		07042-30617	.PLUG.....	2	J30001-UP
38		07042-30108	.PLUG.....	1	J30001-UP

KIT See subsequent pages for details.

K01 208-32-05080 SHOE BOLT AND NUT SERVICE KIT

PC400-8 S/N J30001-UP

SHOE BOLT AND NUT SERVICE KIT

INDEX	CD	PART NO.	DESCRIPTION	QTY	SERIAL NO.
K01		208-32-05080	SHOE BOLT AND NUT K.....	1	J30001-UP
		208-32-51210	.BOLT, SHOE.....	30	J30001-UP
		208-32-71220	.NUT, SHOE.....	30	J30001-UP

Ref :Y0320-01A0 Page :480020

KIT See subsequent pages for details.

208-32-05110 SHOE BOLT AND NUT SERVICE KIT

PC400-8 S/N J30001-UP

SHOE BOLT AND NUT SERVICE KIT

INDEX	CD	PART NO.	DESCRIPTION	QTY	SERIAL NO.
K01		208-32-05110	SHOE BOLT AND NUT K.....	1	J30001-UP
		208-32-51231	.BOLT, SHOE.....	30	J30001-UP
		208-32-71220	.NUT, SHOE.....	30	J30001-UP

Ref :Y0320-01A1 Page :480030

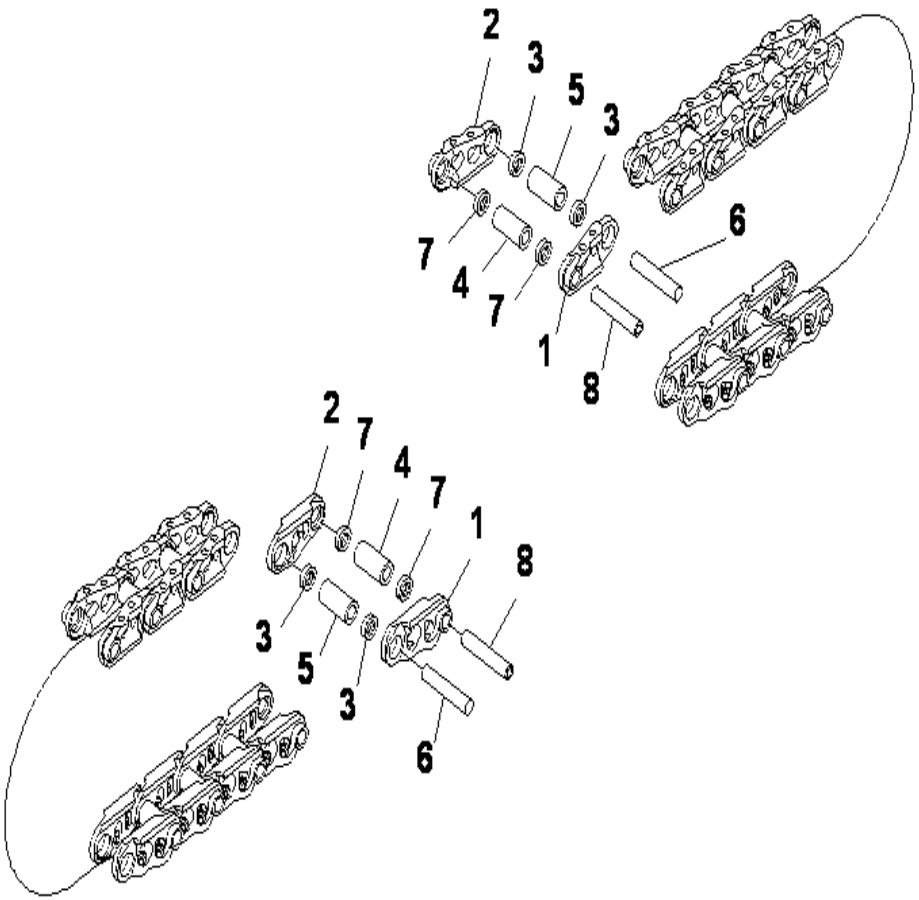

PC400-8 S/N J30001-UP

TRACK LINK (SUPPLY PARTS) (92 SET)

INDEX	CD	PART NO.	DESCRIPTION	QTY	SERIAL NO.
1		208-32-00500	TRACK LINK ASS'Y.....	1	J30001-UP
		208-32-61123	.LINK, L.H.....	92	J30001-UP
2		208-32-61133	.LINK, R.H.....	92	J30001-UP
3		154-32-11283	.SEAL.....	176	J30001-UP
4		208-32-61171	.BUSHING.....	4	J30001-UP
5		208-32-61141	.BUSHING.....	88	J30001-UP
6		208-32-61151	.PIN.....	88	J30001-UP
7		208-32-61260	.SEAL, M.....	8	J30001-UP
8		208-32-51190	.PIN.....	4	J30001-UP

Ref :Y0321-01A0 Page :480040

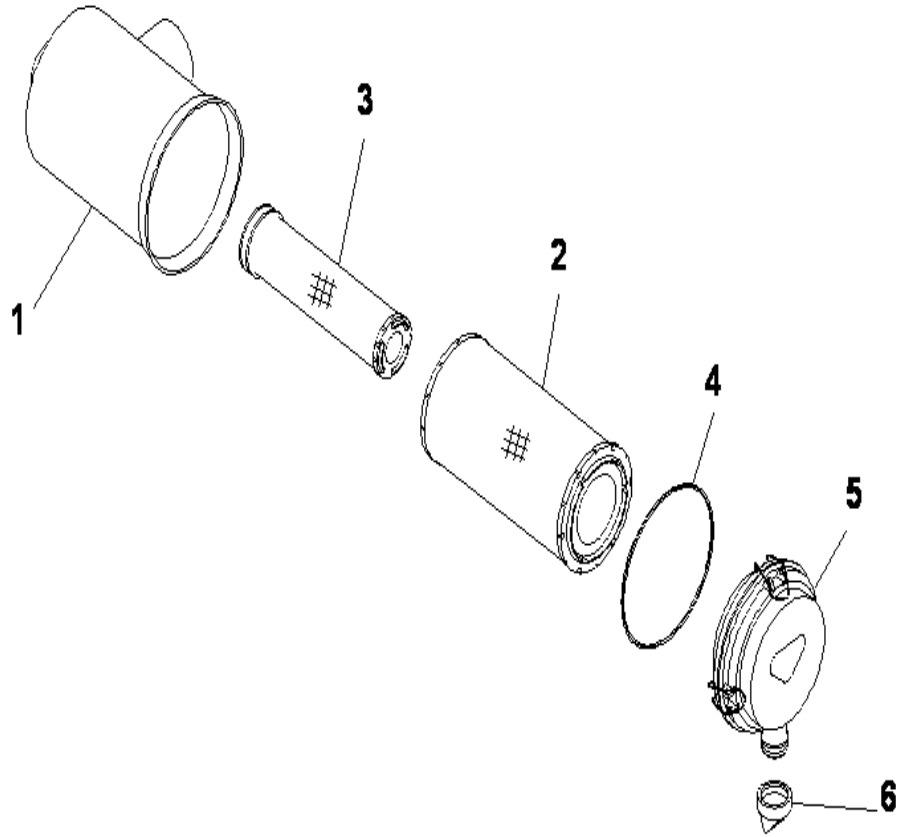

PC400-8 S/N J30001-UP

AIR CLEANER (INNER PARTS)

INDEX	CD	PART NO.	DESCRIPTION	QTY	SERIAL NO.
		6156-81-7201	AIR CLEANER ASS'Y.....	1	J30001-UP
1		6156-81-7210	.BODY.....	1	J30001-UP
		600-185-6100	.ELEMENT ASS'Y.....	1	J30001-UP
2		600-185-6110	..ELEMENT, OUTER.....	1	J30001-UP
3	C1	600-185-6120	..ELEMENT, INNER.....	1	J30001-UP
4		600-184-1671	..O-RING.....	1	J30001-UP
5		600-184-1611	.COVER ASS'Y.....	1	J30001-UP
		600-184-2810	..PLATE.....	1	J30001-UP
6		600-184-1350	.VALVE, VACUATOR.....	1	J30001-UP

Ref :Y1011-01A0 Page :480050

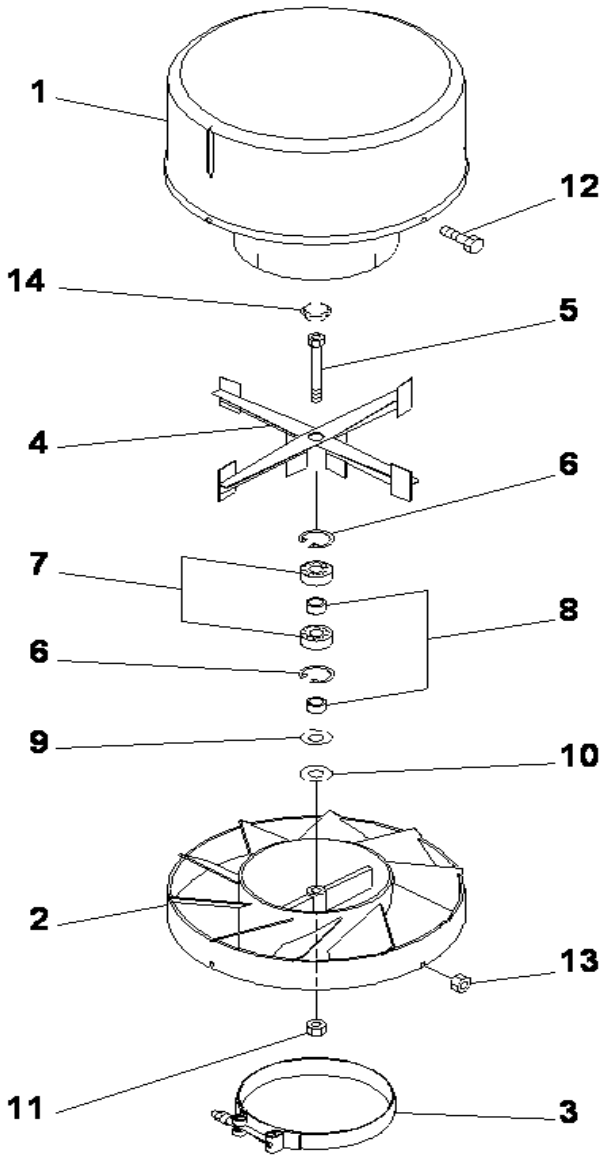

PC400-8 S/N J30001-UP

PRECLEANER (INNER PARTS)

INDEX	CD	PART NO.	DESCRIPTION	QTY	SERIAL NO.
		421-U1-23100	PRECLEANER.....	1	J30001-UP
1	C1	421-U12-3120	.HOOD, PRECLEANER.....	1	J30001-UP
2		421-U12-3130	.BODY, PRECLEANER.....	1	J30001-UP
3		421-U12-3140	.CLAMP.....	1	J30001-UP
4		421-U12-3150	.ROTOR.....	1	J30001-UP
5		421-U12-3160	.BOLT.....	1	J30001-UP
6		421-U12-3170	.RING, SNAP.....	2	J30001-UP
7		42-1U1-23180	.BEARING, BALL.....	2	J30001-UP
8		421-U12-3190	.BUSHING, SPACER.....	2	J30001-UP
9		421-U12-3210	.WASHER.....	1	J30001-UP
10		421-U12-3220	.WASHER.....	1	J30001-UP
11		421-U12-3230	.NUT.....	1	J30001-UP
12		421-U12-3240	.BOLT.....	4	J30001-UP
13		421-U12-3250	.NUT.....	4	J30001-UP
14		421-U12-3260	.PLUG.....	1	J30001-UP

Ref :Y1011-01A1 Page :480060

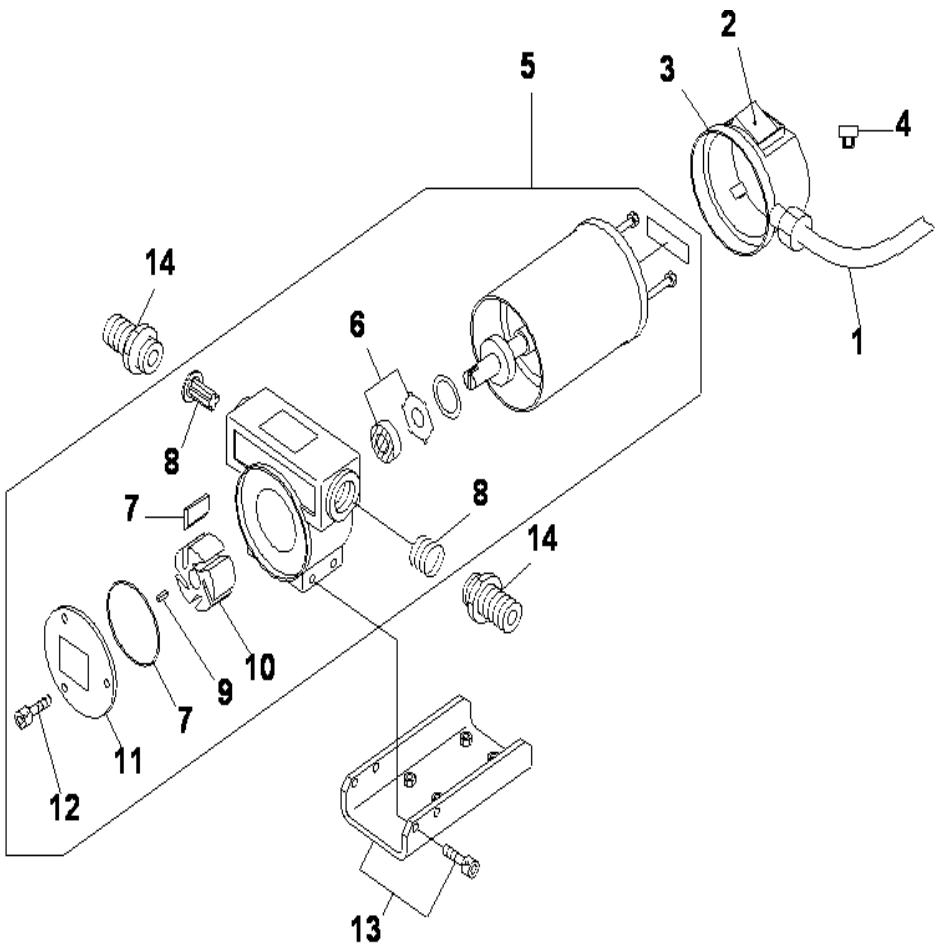

PC400-8 S/N J30001-UP

FUEL SELF CHARGER PUMP (INNER PARTS)

INDEX	CD	PART NO.	DESCRIPTION	QTY	SERIAL NO.
1		20Y-04-K2081	PUMP ASS'Y,REFUELLING.....	1	J30001-UP
		20Y-04-K2120	.CABLE KIT.....	1	J30001-UP
2		20Y-04-K2160	..SWITCH.....	1	J30001-UP
3		20Y-04-K2170	..BOX.....	1	J30001-UP
4		20Y-04-K2150	.FUSE, 15A.....	1	J30001-UP
5		20Y-04-K2180	.PUMP ASS'Y.....	1	J30001-UP
6		20Y-04-K2190	..SEAL KIT.....	1	J30001-UP
7		20Y-04-K2210	..VANE KIT.....	1	J30001-UP
8		20Y-04-K2220	..VALVE KIT, BYPASS.....	1	J30001-UP
9		20Y-04-K2230	..KEY.....	1	J30001-UP
10		20Y-04-K2240	..ROTOR.....	1	J30001-UP
11		20Y-04-K2250	..COVER.....	1	J30001-UP
12		20Y-04-K2260	..SCREW.....	1	J30001-UP
13		20Y-04-K2270	.BRACKET.....	1	J30001-UP
14		20Y-04-K2290	.ADAPTOR.....	1	J30001-UP

Ref :Y1040-01A0 Page :480070

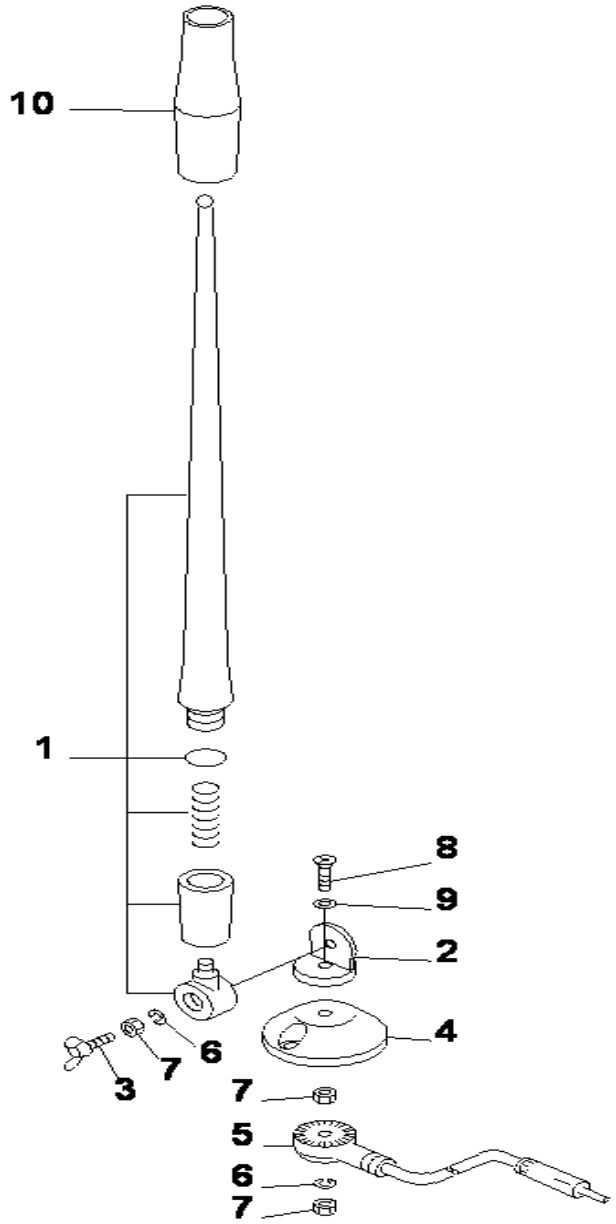

PC400-8 S/N J30001-UP

RUBBER ANTENNA

INDEX	CD	PART NO.	DESCRIPTION	QTY	SERIAL NO.
		198-Z1-14610	RUBBER ANTENNA.....	1	J30001-UP
1		EP72540901	.RUBBER ELEMENT ASS'Y.....	1	J30001-UP
2	C1		.HOLDER.....	1	J30001-UP
3		EP23141001	.WING BOLT.....	1	J30001-UP
4	C1		.BASE.....	1	J30001-UP
5	C1		.CODE ASS'Y.....	1	J30001-UP
6		EP23141003	.SPRING WASHER.....	2	J30001-UP
7		EP23141004	.NUT.....	3	J30001-UP
8	C1		.SCREW.....	1	J30001-UP
9	C1		.WASHER.....	1	J30001-UP
10	C1		.TUBE.....	1	J30001-UP

Ref :Y1062-01A0 Page :480080

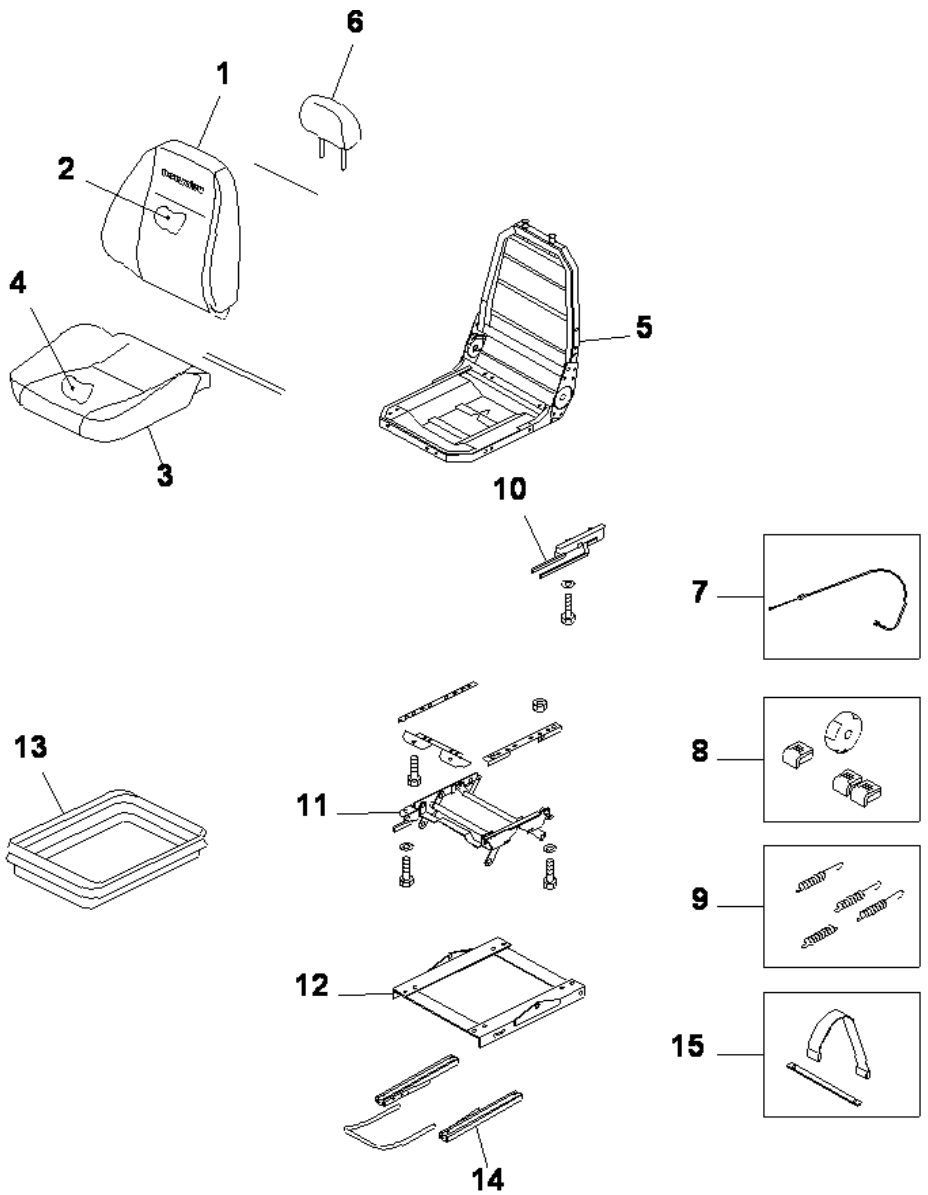

PC400-8 S/N J30001-UP

OPERATOR'S SEAT ASS'Y

INDEX	CD	PART NO.	DESCRIPTION	QTY	SERIAL NO.
1		20Y-57-41203	SEAT ASS'Y	1	J30001-UP
		AS195365	.UPPER ASS'Y	1	J30001-UP
		AS195367	..BACK COVER KIT	1	J30001-UP
2		AS195369	..BACK FOAM KIT	1	J30001-UP
3		AS195370	..SEAT COVER KIT	1	J30001-UP
4		AS195372	..SEAT FOAM KIT	1	J30001-UP
5		AS195373	..FRAME KIT	1	J30001-UP
6		AS195374	..HEAD REST KIT	1	J30001-UP
7		AS192161	.CABLE KIT	1	J30001-UP
8		AS186833	.HANDLE KIT	1	J30001-UP
9		AS160122	.HI RISER SPRING KIT	1	J30001-UP
10		AS195376	.HI RISER LATCH KIT	1	J30001-UP
11		AS195377	.HEIGHT RISER KIT	1	J30001-UP
12		AS195378	.PLINTH KIT	1	J30001-UP
13		AS195379	.HI RISER COVER KIT	1	J30001-UP
14		AS195380	.ADJUSTMENT KIT	1	J30001-UP
15		AS184718	.TETHER BELT KIT	1	J30001-UP

Ref :Y1570-01A1 Page :480100

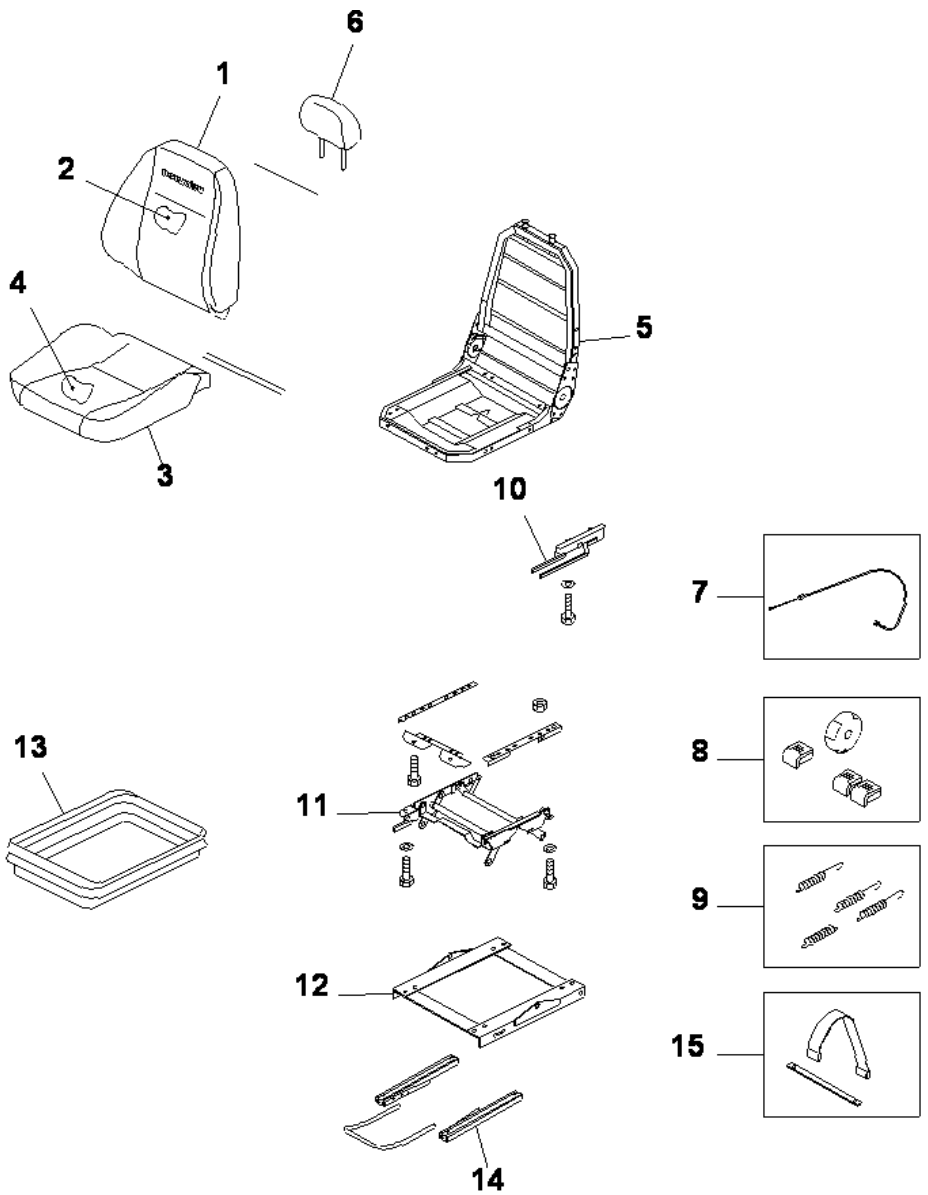

PC400-8 S/N J30001-UP

OPERATOR'S SEAT ASS'Y (PVC LEATHER)

INDEX	CD	PART NO.	DESCRIPTION	QTY	SERIAL NO.
1		20Y-57-41801	SEAT ASS'Y	1	J30001-UP
		AS195366	.UPPER ASS'Y	1	J30001-UP
		AS195368	..BACK COVER KIT	1	J30001-UP
2		AS195369	..BACK FOAM KIT	1	J30001-UP
3		AS195371	..SEAT COVER KIT	1	J30001-UP
4		AS195372	..SEAT FOAM KIT	1	J30001-UP
5		AS195373	..FRAME KIT	1	J30001-UP
6		AS195375	..HEAD REST KIT	1	J30001-UP
7		AS192161	.CABLE KIT	1	J30001-UP
8		AS186833	.HANDLE KIT	1	J30001-UP
9		AS160122	.HI RISER SPRING KIT	1	J30001-UP
10		AS195376	.HI RISER LATCH KIT	1	J30001-UP
11		AS195377	.HEIGHT RISER KIT	1	J30001-UP
12		AS195378	.PLINTH KIT	1	J30001-UP
13		AS195379	.HI RISER COVER KIT	1	J30001-UP
14		AS195380	.ADJUSTMENT KIT	1	J30001-UP
15		AS184718	.TETHER BELT KIT	1	J30001-UP

Ref :Y1570-01A3 Page :480120

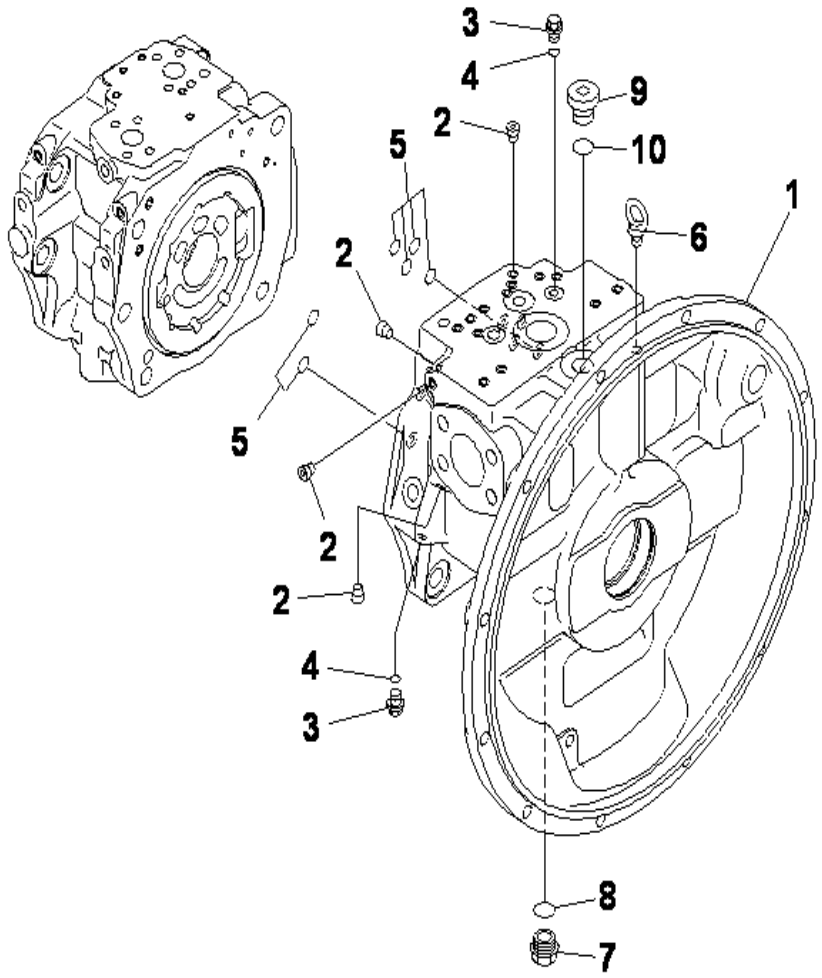

PC400-8 S/N J30001-UP

MAIN PUMP (1/12)

INDEX	CD	PART NO.	DESCRIPTION	QTY	SERIAL NO.
1		708-2H-00450	PUMP ASS'Y.....	1	J30001-UP
			THIS ASSEMBLY CONSISTS OF ALL PARTS.....		
			SHOWN IN FIGS.Y1600-01A0 T0 Y1600-12A0.....		
1		708-2H-01450	.PUMP SUB ASS'Y.....	1	J30001-UP
	C2	(708-2H-04670)	..CASE ASS'Y, FRONT.....	1	J30001-UP
	C1	708-2H-31170	...CASE, FRONT.....	1	J30001-UP
2	C1	708-21-12541	...PLUG.....	29	J30001-UP
3		708-8E-16150	..PLUG.....	3	J30001-UP
4		07002-61023	..O-RING.....	3	J30001-UP
5		07000-B2012	..O-RING.....	6	J30001-UP
6		04530-11222	..BOLT, EYE.....	1	J30001-UP
7		07044-12412	..PLUG.....	1	J30001-UP
8		07002-62434	..O-RING.....	1	J30001-UP
9		07040-12414	..PLUG.....	1	J30001-UP
10		07002-62434	..O-RING.....	1	J30001-UP

Ref :Y1600-01A0 Page :480130

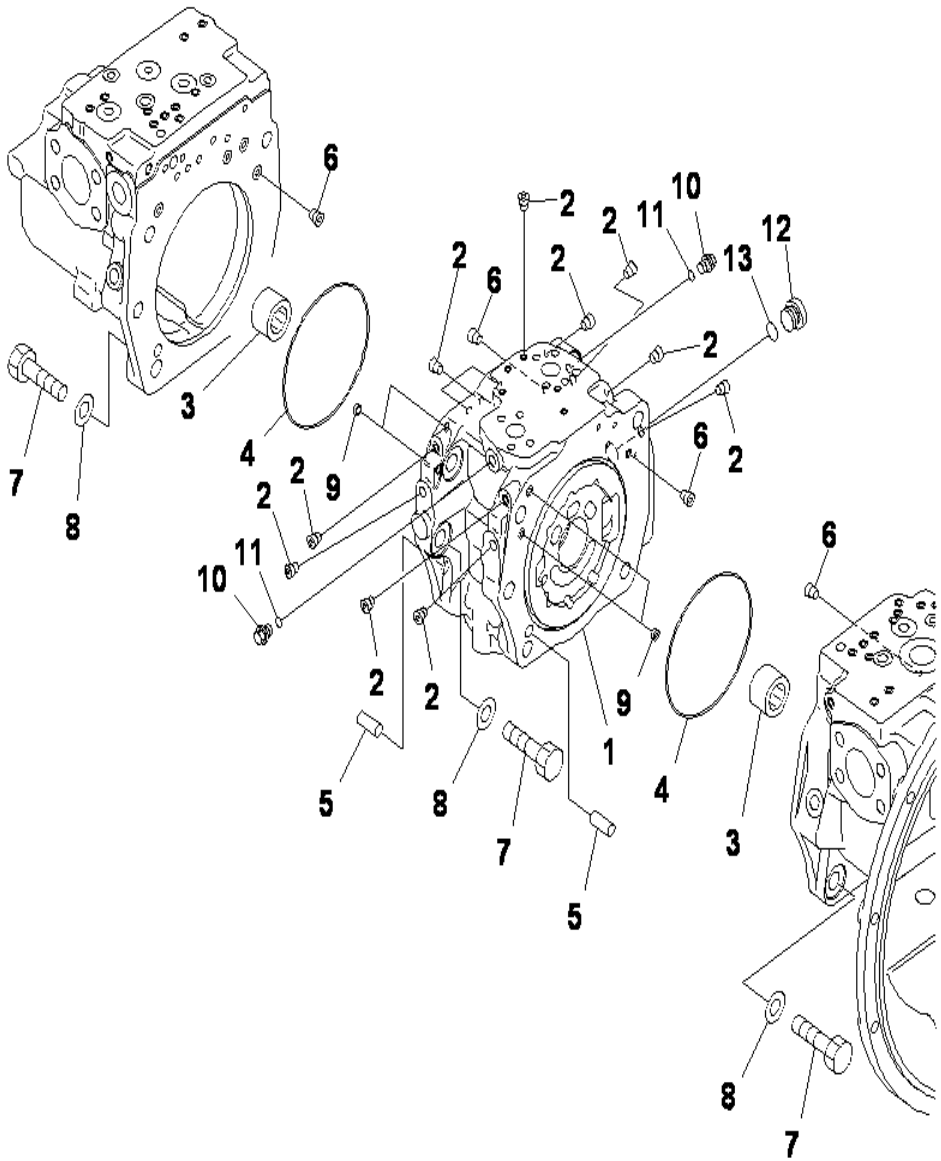

MAIN PUMP (2/12)

INDEX	CD	PART NO.	DESCRIPTION	QTY	SERIAL NO.
		(708-2H-00450)	PUMP ASS'Y.....	1	J30001-UP
			THIS ASSEMBLY CONSISTS OF ALL PARTS.....		
			SHOWN IN FIGS.Y1600-01A0 T0 Y1600-12A0.....		
		(708-2H-01450)	.PUMP SUB ASS'Y.....	1	J30001-UP
	C2	(708-2H-04440)	..CAP ASS'Y, END.....	1	J30001-UP
1	C1	708-2H-31540	...CAP, END.....	1	J30001-UP
2	C1	708-21-12541	...PLUG.....	17	J30001-UP
3	C2	(708-2H-12430)	..BEARING.....	2	J30001-UP
4	C2	(07000-A5190)	..O-RING.....	2	J30001-UP
5	C2	(04020-01434)	..PIN, DOWEL.....	2	J30001-UP
6	C2	(708-1L-29340)	..ORIFICE.....	4	J30001-UP
7	C2	(01010-61860)	..BOLT.....	10	J30001-UP
8	C2	(01643-31845)	..WASHER.....	10	J30001-UP
9	C2	(708-2L-25480)	..FILTER.....	4	J30001-UP
10		708-8E-16150	..PLUG.....	2	J30001-UP
11		07002-61023	..O-RING.....	2	J30001-UP
12		07040-12414	..PLUG.....	1	J30001-UP
13		07002-62434	..O-RING.....	1	J30001-UP

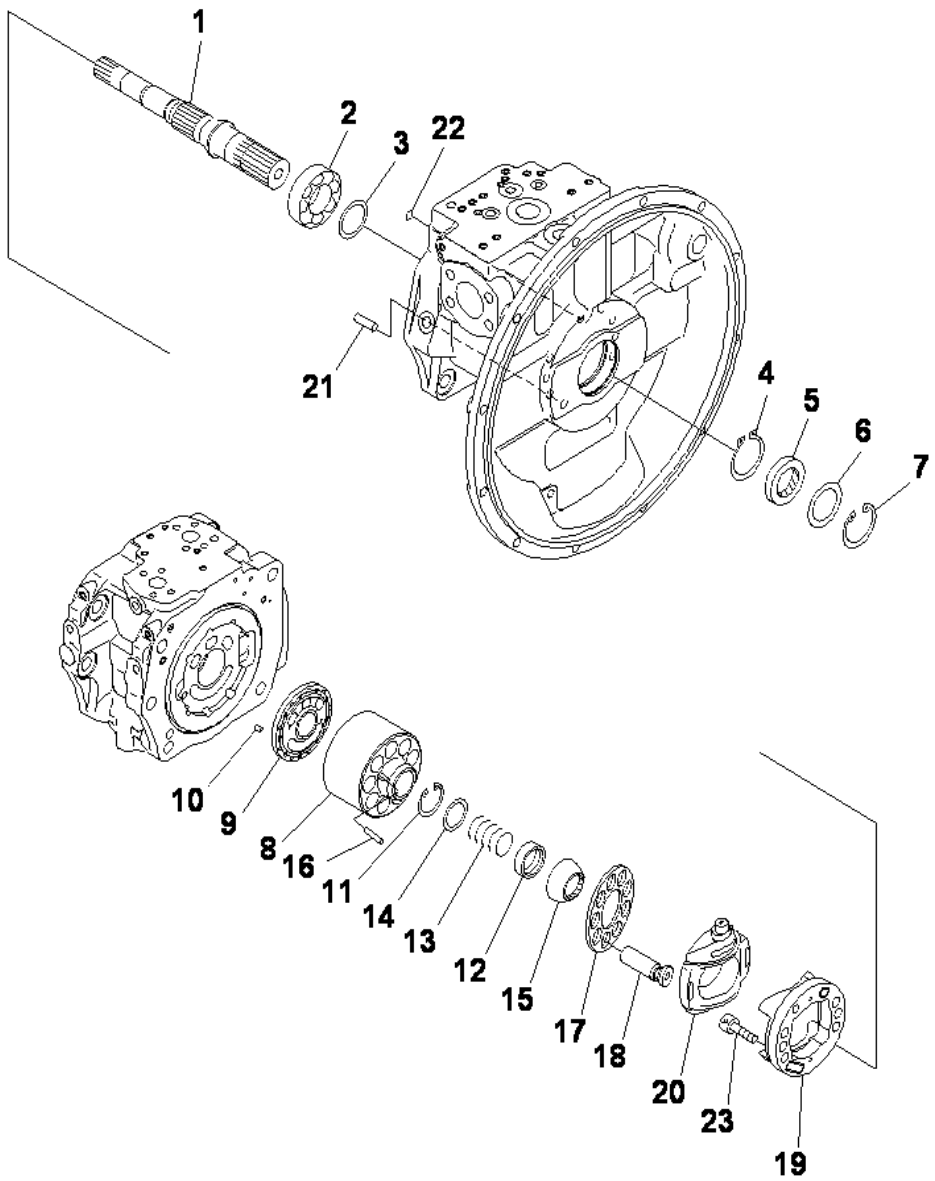

PC400-8 S/N J30001-UP

MAIN PUMP (3/12)

INDEX	CD	PART NO.	DESCRIPTION	QTY	SERIAL NO.
		(708-2H-00450)	PUMP ASS'Y	1	J30001-UP
			THIS ASSEMBLY CONSISTS OF ALL PARTS		
			SHOWN IN FIGS.Y1600-01A0 T0 Y1600-12A0		
		(708-2H-01450)	.PUMP SUB ASS'Y	1	J30001-UP
1	C2	(708-2H-32110)	..SHAFT	1	J30001-UP
2	C2	(708-1H-22150)	..BEARING	1	J30001-UP
3	C2	(708-17-05010)	..WASHER KIT	1	J30001-UP
	C1	708-17-12750	...WASHER, 3.0MM	1	J30001-UP
	C1	708-17-12760	...WASHER, 3.1MM	1	J30001-UP
	C1	708-17-12770	...WASHER, 3.2MM	1	J30001-UP
4	C2	(708-17-12780)	..RING,SNAP	1	J30001-UP
5		708-27-22811	..SEAL, OIL	1	J30001-UP
6		708-2H-22160	..SPACER	1	J30001-UP
7		04065-08225	..RING, SNAP	1	J30001-UP
	C2	(708-2H-04750)	..CYLINDER BLOCK ASS'Y	1	J30001-UP
8	C1	708-2H-33180	...BLOCK, CYLINDER	1	J30001-UP
9	C1	708-2H-33421	...PLATE, VALVE	1	J30001-UP
10	C2	(708-18-13230)	..PIN	1	J30001-UP
11	C2	(04065-05820)	..RING	1	J30001-UP
12	C2	(708-2H-33140)	..SEAT	1	J30001-UP
13	C2	(708-2H-33150)	..SPRING	1	J30001-UP
14	C2	(708-2H-23141)	..SEAT	1	J30001-UP
15	C2	(708-2H-23350)	..GUIDE, RETAINER	1	J30001-UP
16	C2	(708-2H-23360)	..PIN	3	J30001-UP
17	C2	(708-2H-33343)	..RETAINER, SHOE	1	J30001-UP
18	C2	(708-2H-33311)	..PISTON SUB ASS'Y	9	J30001-UP
	C2	(708-2H-04690)	..CRADLE SUB ASS'Y	1	J30001-UP
19	C1	708-2H-33511	...CRADLE	1	J30001-UP
20	C1	708-2H-33440	...CAM, ROCKER	1	J30001-UP
21	C2	(04020-01434)	..PIN, DOWEL	1	J30001-UP
22	C2	(07000-B1009)	..O-RING	1	J30001-UP
23	C2	(01252-61235)	..BOLT	6	J30001-UP

Ref :Y1600-03A0 Page :480150

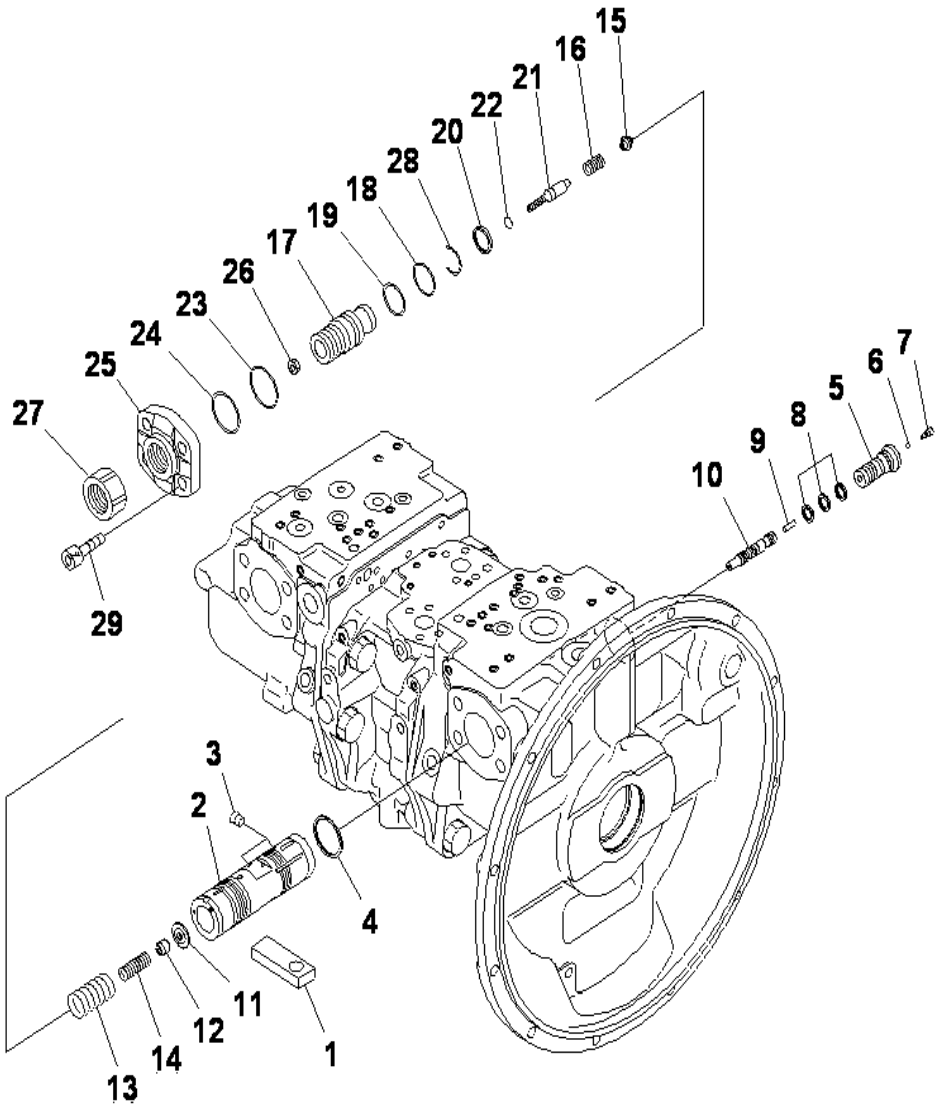

MAIN PUMP (4/12)

INDEX	CD	PART NO.	DESCRIPTION	QTY	SERIAL NO.
		(708-2H-00450)	PUMP ASS'Y	1	J30001-UP
			THIS ASSEMBLY CONSISTS OF ALL PARTS		
			SHOWN IN FIGS.Y1600-01A0 T0 Y1600-12A0		
		(708-2H-01450)	.PUMP SUB ASS'Y	1	J30001-UP
1	C2	(708-2H-34150)	..SLIDER	1	J30001-UP
	C2	(708-2H-03411)	..VALVE ASS'Y, PC	1	J30001-UP
	C2	(708-2H-03022)	...PISTON ASS'Y,SERVO	1	J30001-UP
2	C1	708-2H-14321	....PISTON,SERVO	1	J30001-UP
3	C1	702-16-54490	....SCREW	9	J30001-UP
4	C2	(708-2G-15320)	...SEAL	1	J30001-UP
5	C2	(708-2H-15310)	...PLUG	1	J30001-UP
6	C2	(708-2L-35760)	...BALL	1	J30001-UP
7	C2	(708-2L-35770)	...PLUG	1	J30001-UP
8	C2	(708-2L-35690)	...SEAL	3	J30001-UP
9	C2	(708-2L-35170)	...PIN	1	J30001-UP
10	C2	(708-3M-15670)	...SPOOL	1	J30001-UP
11	C2	(708-2G-15290)	...RETAINER	1	J30001-UP
12	C2	(708-2G-15140)	...SEAT	1	J30001-UP
13	C2	(708-2H-15330)	...SPRING	1	J30001-UP
14	C2	(708-2H-15320)	...SPRING	1	J30001-UP
15	C2	(708-2G-15151)	...SEAT	1	J30001-UP
16	C2	(708-2H-15340)	...SPRING	1	J30001-UP
17	C2	(708-2G-14340)	...SCREW	1	J30001-UP
18	C2	(07000-B3038)	...O-RING	1	J30001-UP
19	C2	(708-2G-15230)	...RING,BACK UP	1	J30001-UP
20	C2	(708-2G-15260)	...SEAL	1	J30001-UP
21	C2	(708-2G-15240)	...PLUG	1	J30001-UP
22	C2	(07000-B2012)	...O-RING	1	J30001-UP
23	C2	(07000-B2050)	...O-RING	1	J30001-UP
24	C2	(708-2G-15310)	...RING	1	J30001-UP
25	C2	(708-2L-44161)	...COVER	1	J30001-UP
26	C2	(01580-10806)	...NUT	1	J30001-UP
27	C2	(708-2L-35540)	...NUT	1	J30001-UP
28	C2	(708-2G-15330)	...RING,WIRE	1	J30001-UP
29	C2	(01252-61645)	..BOLT	4	J30001-UP

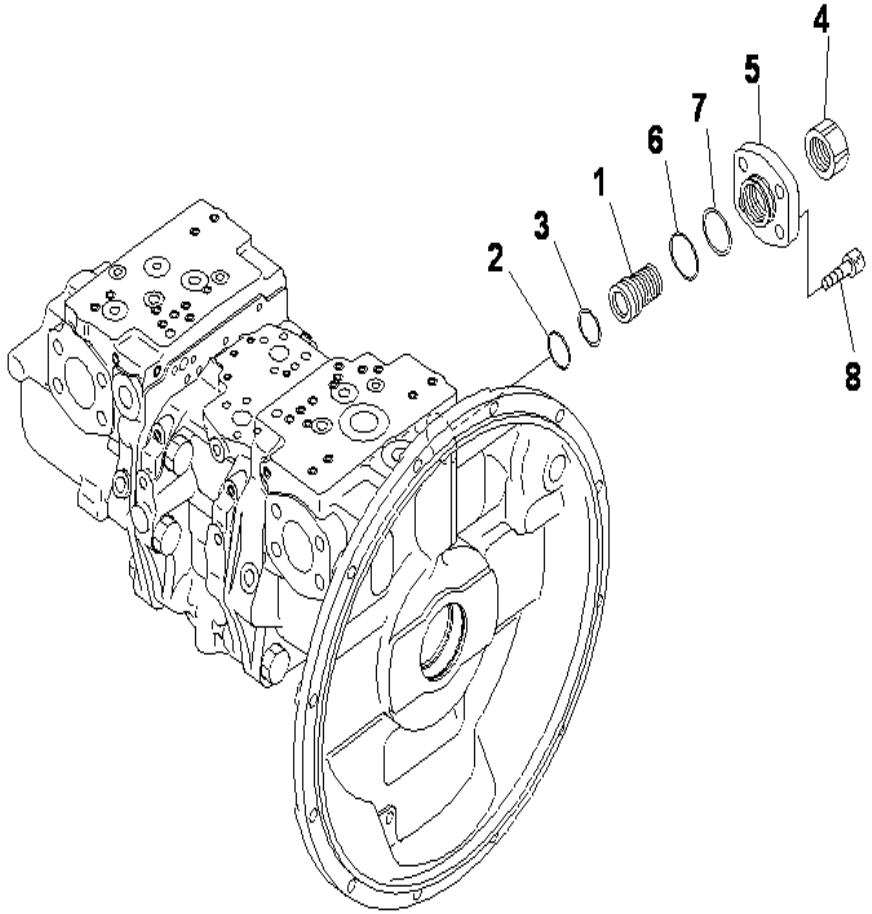

PC400-8 S/N J30001-UP

MAIN PUMP (5/12)

INDEX	CD	PART NO.	DESCRIPTION	QTY	SERIAL NO.
		(708-2H-00450)	PUMP ASS'Y.....	1	J30001-UP
			THIS ASSEMBLY CONSISTS OF ALL PARTS.....		
			SHOWN IN FIGS.Y1600-01A0 T0 Y1600-12A0.....		
		(708-2H-01450)	.PUMP SUB ASS'Y.....	1	J30001-UP
	C2	(708-2H-03510)	..COVER ASS'Y.....	1	J30001-UP
1	C2	(708-2G-14310)	...SCREW.....	1	J30001-UP
2	C2	(07000-B3038)	...O-RING.....	1	J30001-UP
3	C2	(708-2G-15230)	...RING,BACK UP.....	1	J30001-UP
4	C2	(708-2L-35540)	...NUT.....	1	J30001-UP
5	C2	(708-2L-44130)	...COVER.....	1	J30001-UP
6	C2	(07000-B2050)	...O-RING.....	1	J30001-UP
7	C2	(708-2G-15310)	...RING.....	1	J30001-UP
8	C2	(01252-61645)	..BOLT.....	4	J30001-UP

Ref :Y1600-05A0 Page :480170

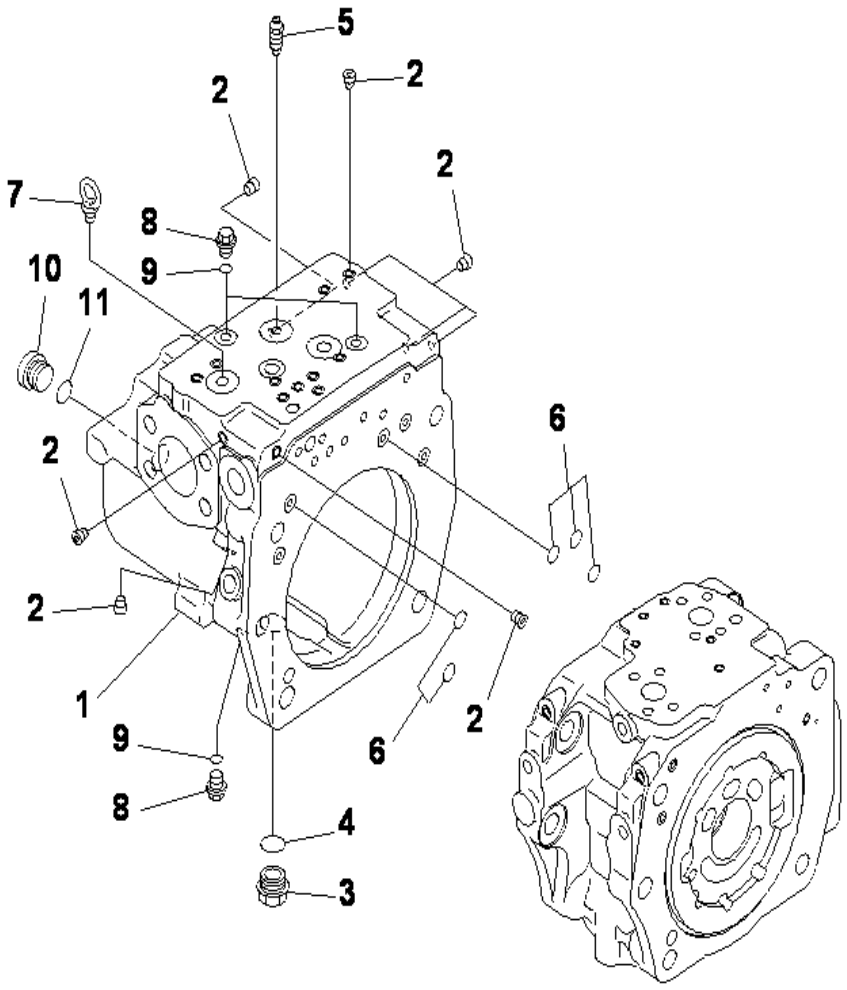

PC400-8 S/N J30001-UP

MAIN PUMP (6/12)

INDEX	CD	PART NO.	DESCRIPTION	QTY	SERIAL NO.
		(708-2H-00450)	PUMP ASS'Y.....	1	J30001-UP
			THIS ASSEMBLY CONSISTS OF ALL PARTS.....		
			SHOWN IN FIGS.Y1600-01A0 T0 Y1600-12A0.....		
		(708-2H-01450)	.PUMP SUB ASS'Y.....	1	J30001-UP
	C2	(708-2H-04680)	..CASE ASS'Y, REAR.....	1	J30001-UP
1	C1	708-2H-31180	...CASE, REAR.....	1	J30001-UP
2	C1	708-21-12541	...PLUG.....	29	J30001-UP
3		07044-12412	..PLUG.....	1	J30001-UP
4		07002-62434	..O-RING.....	1	J30001-UP
5		20B-27-11210	..BLEEDER.....	1	J30001-UP
6		07000-B2012	..O-RING.....	5	J30001-UP
7		04530-11222	..BOLT, EYE.....	1	J30001-UP
8		708-8E-16150	..PLUG.....	4	J30001-UP
9		07002-61023	..O-RING.....	4	J30001-UP
10		07040-12414	..PLUG.....	1	J30001-UP
11		07002-62434	..O-RING.....	1	J30001-UP

Ref :Y1600-06A0 Page :480180

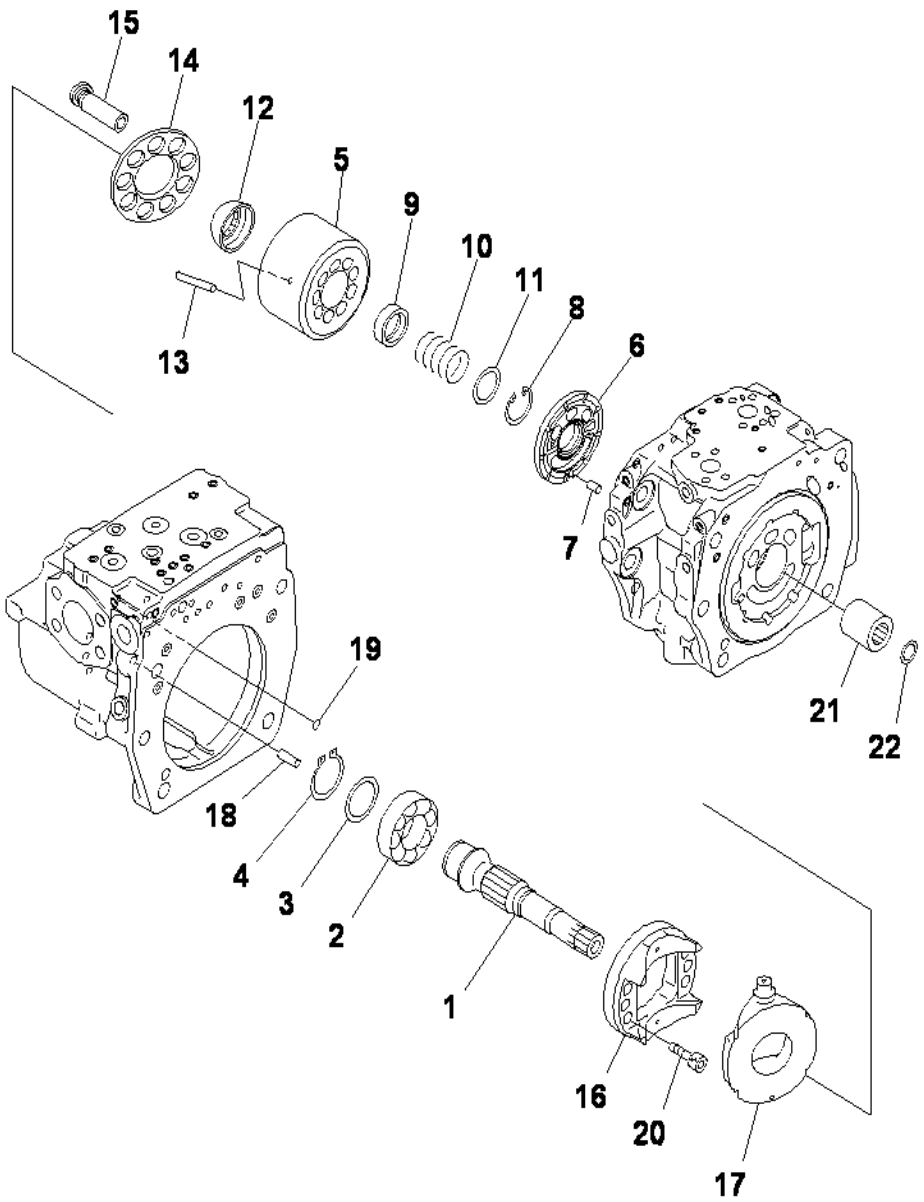

MAIN PUMP (7/12)

INDEX	CD	PART NO.	DESCRIPTION	QTY	SERIAL NO.
		(708-2H-00450)	PUMP ASS'Y.....	1	J30001-UP
			THIS ASSEMBLY CONSISTS OF ALL PARTS.....		
			SHOWN IN FIGS.Y1600-01A0 T0 Y1600-12A0.....		
		(708-2H-01450)	.PUMP SUB ASS'Y.....	1	J30001-UP
1	C2	(708-2H-32210)	..SHAFT.....	1	J30001-UP
2	C2	(708-1H-22150)	..BEARING.....	1	J30001-UP
3	C2	(708-17-05010)	..WASHER KIT.....	1	J30001-UP
	C1	708-17-12750	...WASHER, 3.0MM.....	1	J30001-UP
	C1	708-17-12760	...WASHER, 3.1MM.....	1	J30001-UP
	C1	708-17-12770	...WASHER, 3.2MM.....	1	J30001-UP
4	C2	(708-17-12780)	..RING, SNAP.....	1	J30001-UP
	C2	(708-2H-04760)	..BLOCK ASS'Y, REAR.....	1	J30001-UP
5	C1	708-2H-33180	...BLOCK, CYLINDER.....	1	J30001-UP
6	C1	708-2H-33431	...PLATE,VALVE.....	1	J30001-UP
7	C2	(708-18-13230)	..PIN.....	1	J30001-UP
8	C2	(04065-05820)	..RING.....	1	J30001-UP
9	C2	(708-2H-33140)	..SEAT.....	1	J30001-UP
10	C2	(708-2H-33150)	..SPRING.....	1	J30001-UP
11	C2	(708-2H-23141)	..SEAT.....	1	J30001-UP
12	C2	(708-2H-23350)	..GUIDE, RETAINER.....	1	J30001-UP
13	C2	(708-2H-23360)	..PIN.....	3	J30001-UP
14	C2	(708-2H-33343)	..RETAINER, SHOE.....	1	J30001-UP
15	C2	(708-2H-33311)	..PISTON SUB ASS'Y.....	9	J30001-UP
	C2	(708-2H-04690)	..CRADLE SUB ASS'Y.....	1	J30001-UP
16	C1	708-2H-33511	...CRADLE.....	1	J30001-UP
17	C1	708-2H-33440	...CAM, ROCKER.....	1	J30001-UP
18	C2	(04020-01434)	..PIN, DOWEL.....	1	J30001-UP
19	C2	(07000-B1009)	..O-RING.....	1	J30001-UP
20	C2	(01252-61235)	..BOLT.....	6	J30001-UP
21	C2	(708-2H-32130)	..COUPLING.....	1	J30001-UP
22	C2	(708-2H-12420)	..RING.....	1	J30001-UP

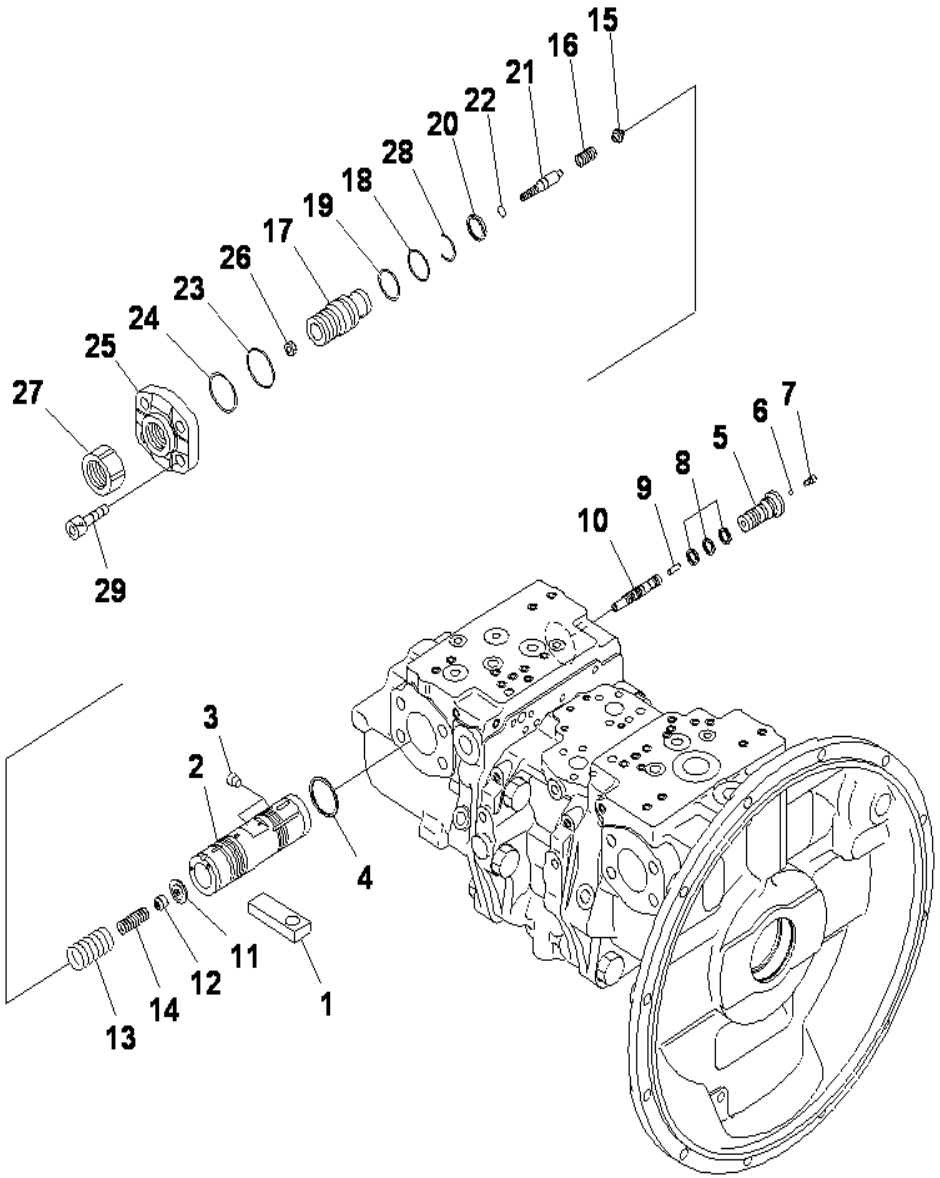

PC400-8 S/N J30001-UP

MAIN PUMP (8/12)

INDEX	CD	PART NO.	DESCRIPTION	QTY	SERIAL NO.
		(708-2H-00450)	PUMP ASS'Y	1	J30001-UP
			THIS ASSEMBLY CONSISTS OF ALL PARTS		
			SHOWN IN FIGS.Y1600-01A0 T0 Y1600-12A0		
		(708-2H-01450)	.PUMP SUB ASS'Y	1	J30001-UP
1	C2	(708-2H-34150)	..SLIDER	1	J30001-UP
	C2	(708-2H-03411)	..VALVE ASS'Y, PC	1	J30001-UP
	C2	(708-2H-03022)	...PISTON ASS'Y, SERVO	1	J30001-UP
2	C1	708-2H-14321	....PISTON, SERVO	1	J30001-UP
3	C1	702-16-54490	....SCREW	9	J30001-UP
4	C2	(708-2G-15320)	...SEAL	1	J30001-UP
5	C2	(708-2H-15310)	...PLUG	1	J30001-UP
6	C2	(708-2L-35760)	...BALL	1	J30001-UP
7	C2	(708-2L-35770)	...PLUG	1	J30001-UP
8	C2	(708-2L-35690)	...SEAL	3	J30001-UP
9	C2	(708-2L-35170)	...PIN	1	J30001-UP
10	C2	(708-3M-15670)	...SPOOL	1	J30001-UP
11	C2	(708-2G-15290)	...RETAINER	1	J30001-UP
12	C2	(708-2G-15140)	...SEAT	1	J30001-UP
13	C2	(708-2H-15330)	...SPRING	1	J30001-UP
14	C2	(708-2H-15320)	...SPRING	1	J30001-UP
15	C2	(708-2G-15151)	...SEAT	1	J30001-UP
16	C2	(708-2H-15340)	...SPRING	1	J30001-UP
17	C2	(708-2G-14340)	...SCREW	1	J30001-UP
18	C2	(07000-B3038)	...O-RING	1	J30001-UP
19	C2	(708-2G-15230)	...RING,BACK UP	1	J30001-UP
20	C2	(708-2G-15260)	...SEAL	1	J30001-UP
21	C2	(708-2G-15240)	...PLUG	1	J30001-UP
22	C2	(07000-B2012)	...O-RING	1	J30001-UP
23	C2	(07000-B2050)	...O-RING	1	J30001-UP
24	C2	(708-2G-15310)	...RING	1	J30001-UP
25	C2	(708-2L-44161)	...COVER	1	J30001-UP
26	C2	(01580-10806)	...NUT	1	J30001-UP
27	C2	(708-2L-35540)	...NUT	1	J30001-UP
28	C2	(708-2G-15330)	...RING,WIRE	1	J30001-UP
29	C2	(01252-61645)	..BOLT	4	J30001-UP

Ref :Y1600-08A0 Page :480200

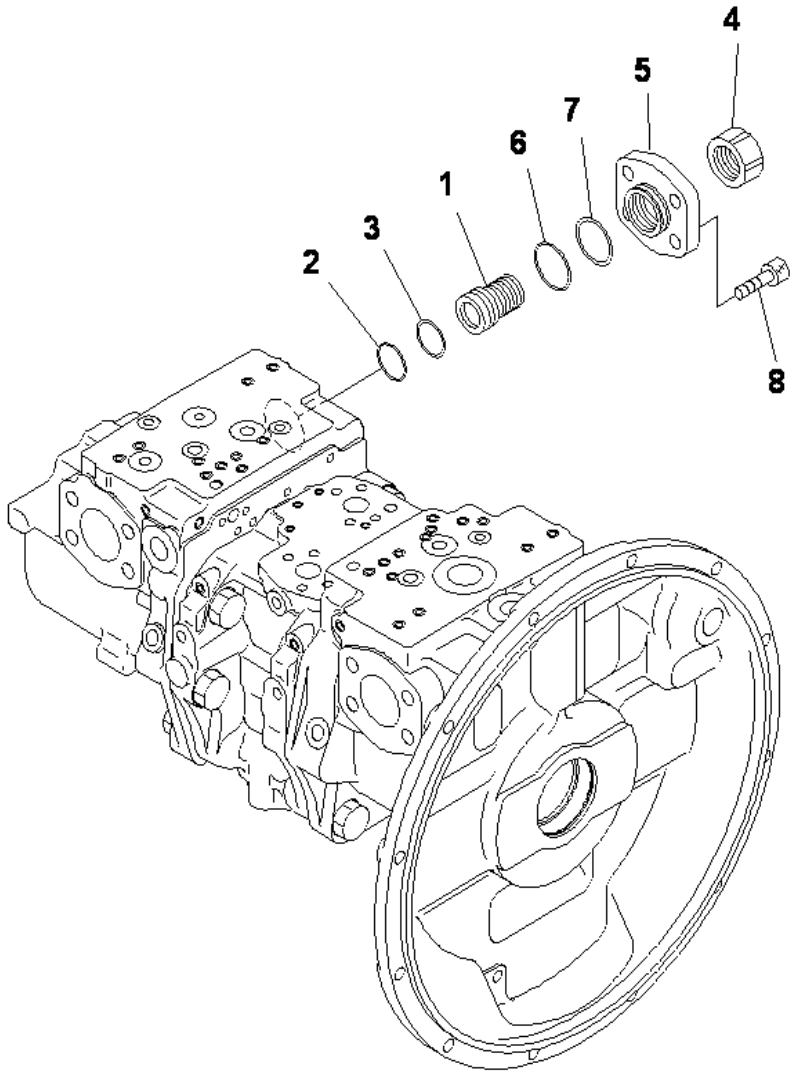

MAIN PUMP (9/12)

INDEX	CD	PART NO.	DESCRIPTION	QTY	SERIAL NO.
		(708-2H-00450)	PUMP ASS'Y.....	1	J30001-UP
			THIS ASSEMBLY CONSISTS OF ALL PARTS.....		
			SHOWN IN FIGS.Y1600-01A0 T0 Y1600-12A0.....		
		(708-2H-01450)	.PUMP SUB ASS'Y.....	1	J30001-UP
	C2	(708-2H-03510)	..COVER ASS'Y.....	1	J30001-UP
1	C2	(708-2G-14310)	...SCREW.....	1	J30001-UP
2	C2	(07000-B3038)	...O-RING.....	1	J30001-UP
3	C2	(708-2G-15230)	...RING, BACK UP.....	1	J30001-UP
4	C2	(708-2L-35540)	...NUT.....	1	J30001-UP
5	C2	(708-2L-44130)	...COVER.....	1	J30001-UP
6	C2	(07000-B2050)	...O-RING.....	1	J30001-UP
7	C2	(708-2G-15310)	...RING.....	1	J30001-UP
8	C2	(01252-61645)	..BOLT.....	4	J30001-UP

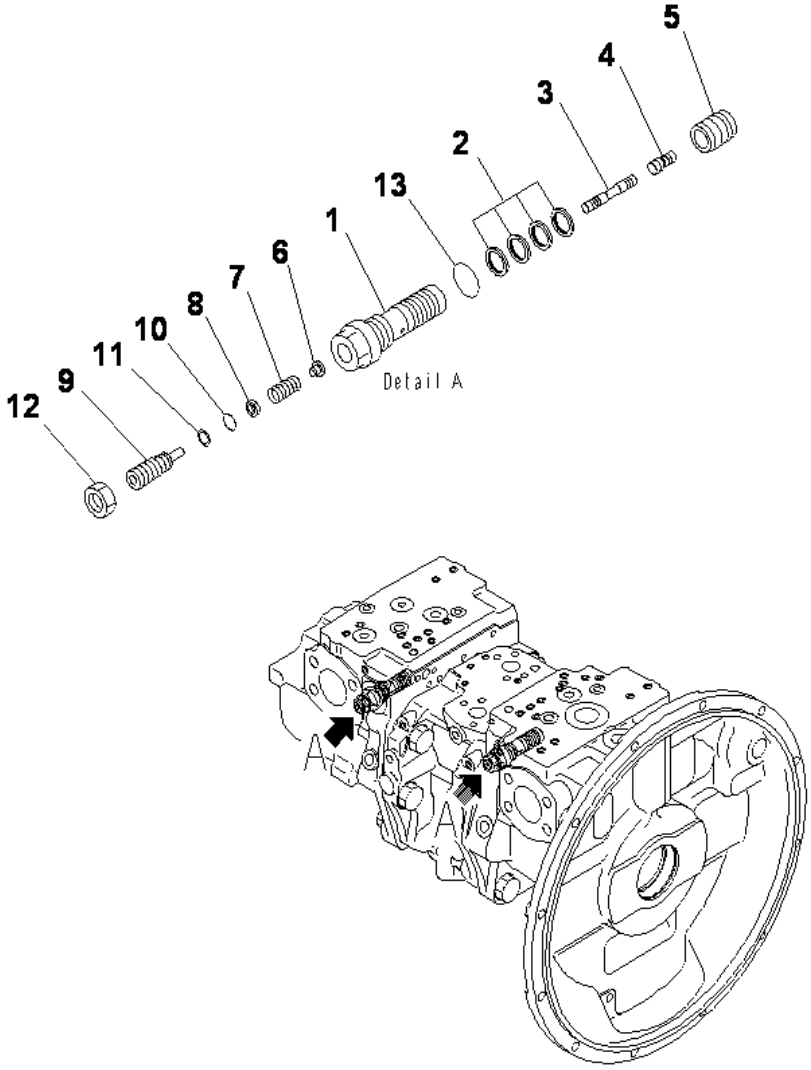

PC400-8 S/N J30001-UP

MAIN PUMP (10/12)

INDEX	CD	PART NO.	DESCRIPTION	QTY	SERIAL NO.
		(708-2H-00450)	PUMP ASS'Y	1	J30001-UP
			THIS ASSEMBLY CONSISTS OF ALL PARTS		
			SHOWN IN FIGS.Y1600-01A0 T0 Y1600-12A0		
		708-2H-03610	.VALVE ASS'Y, LS	2	J30001-UP
1	C2	(708-2L-35311)	..SLEEVE	1	J30001-UP
2		708-2L-24680	..SEAL	4	J30001-UP
3	C2	(708-2G-15412)	..SPOOL	1	J30001-UP
4	C2	(708-2L-28540)	..PISTON	1	J30001-UP
5	C2	(708-2L-35360)	..SLEEVE	1	J30001-UP
6	C2	(708-2L-35331)	..SEAT	1	J30001-UP
7	C2	(708-2L-35410)	..SPRING	1	J30001-UP
8	C2	(708-2L-35341)	..SEAT	1	J30001-UP
9	C2	(708-2L-35351)	..PLUG	1	J30001-UP
10	C2	(07000-B1009)	..O-RING	1	J30001-UP
11	C2	(07001-01009)	..RING, BACK-UP	1	J30001-UP
12		01583-11408	..NUT	1	J30001-UP
13		07002-62434	..O-RING	1	J30001-UP

Ref :Y1600-10A0 Page :480220

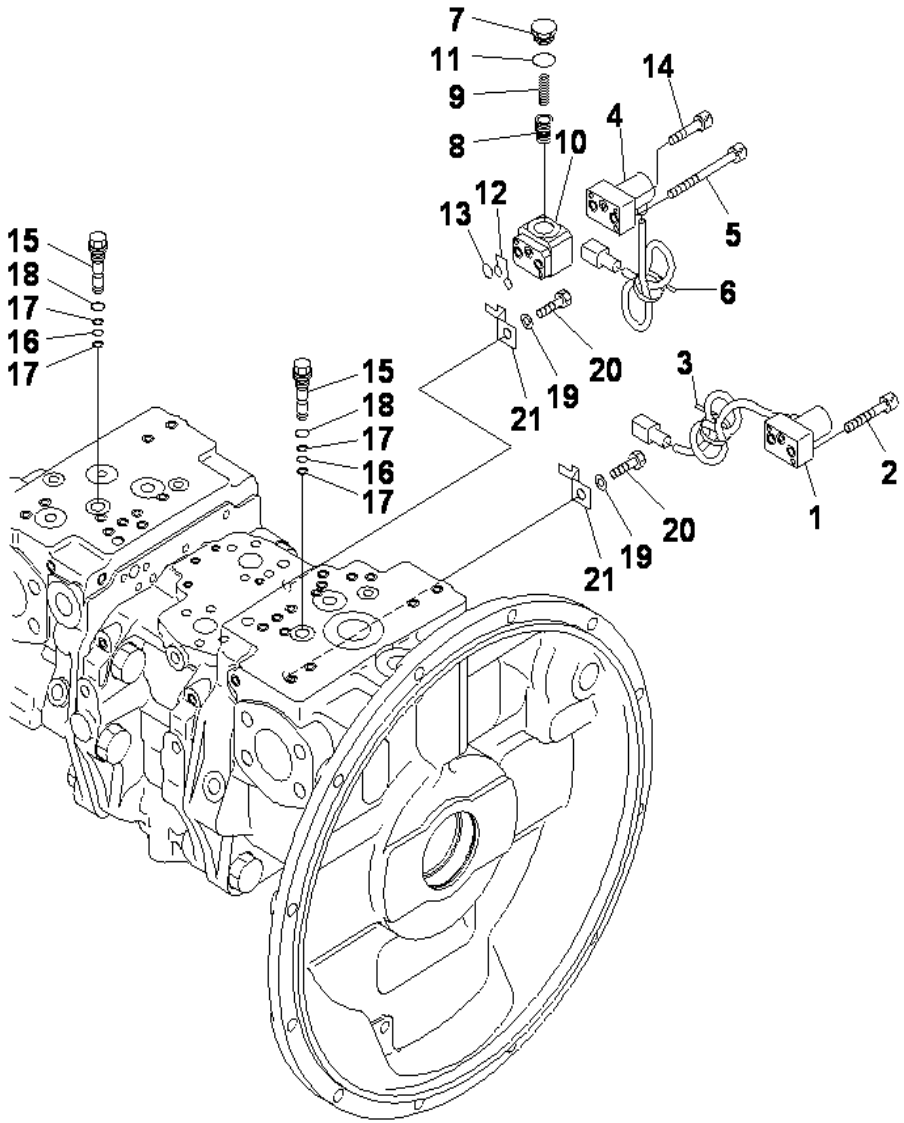

MAIN PUMP (11/12)

INDEX	CD	PART NO.	DESCRIPTION	QTY	SERIAL NO.
		(708-2H-00450)	PUMP ASS'Y	1	J30001-UP
			THIS ASSEMBLY CONSISTS OF ALL PARTS		
			SHOWN IN FIGS.Y1600-01A0 T0 Y1600-12A0		
1		702-21-57600	.PILOT VALVE	1	J30001-UP
2		01252-60635	.BOLT	2	J30001-UP
3		20Y-62-22790	.BAND, RED	1	J30001-UP
4		702-21-57500	.PILOT VALVE	1	J30001-UP
5		702-16-55260	.BOLT	2	J30001-UP
6		20Y-62-22830	.BAND, WHITE	1	J30001-UP
		702-21-55400	.VALVE ASS'Y	1	J30001-UP
7		702-21-55920	..PLUG	1	J30001-UP
8		702-21-55930	..PISTON	1	J30001-UP
9		702-21-55940	..SPRING	1	J30001-UP
10		702-21-55951	..BLOCK	1	J30001-UP
11		07002-12034	..O-RING	1	J30001-UP
12		07000-11008	.O-RING	2	J30001-UP
13		722-12-18240	.O-RING	1	J30001-UP
14		01252-60530	.BOLT	1	J30001-UP
15	C2	(708-2H-15531)	.PLUG	2	J30001-UP
16		07000-B1008	.O-RING	2	J30001-UP
17		07001-01008	.RING	4	J30001-UP
18		07002-61423	.O-RING	2	J30001-UP
19		01643-51232	.WASHER	2	J30001-UP
20		01010-81220	.BOLT	2	J30001-UP
21		08193-21012	.CLIP	2	J30001-UP

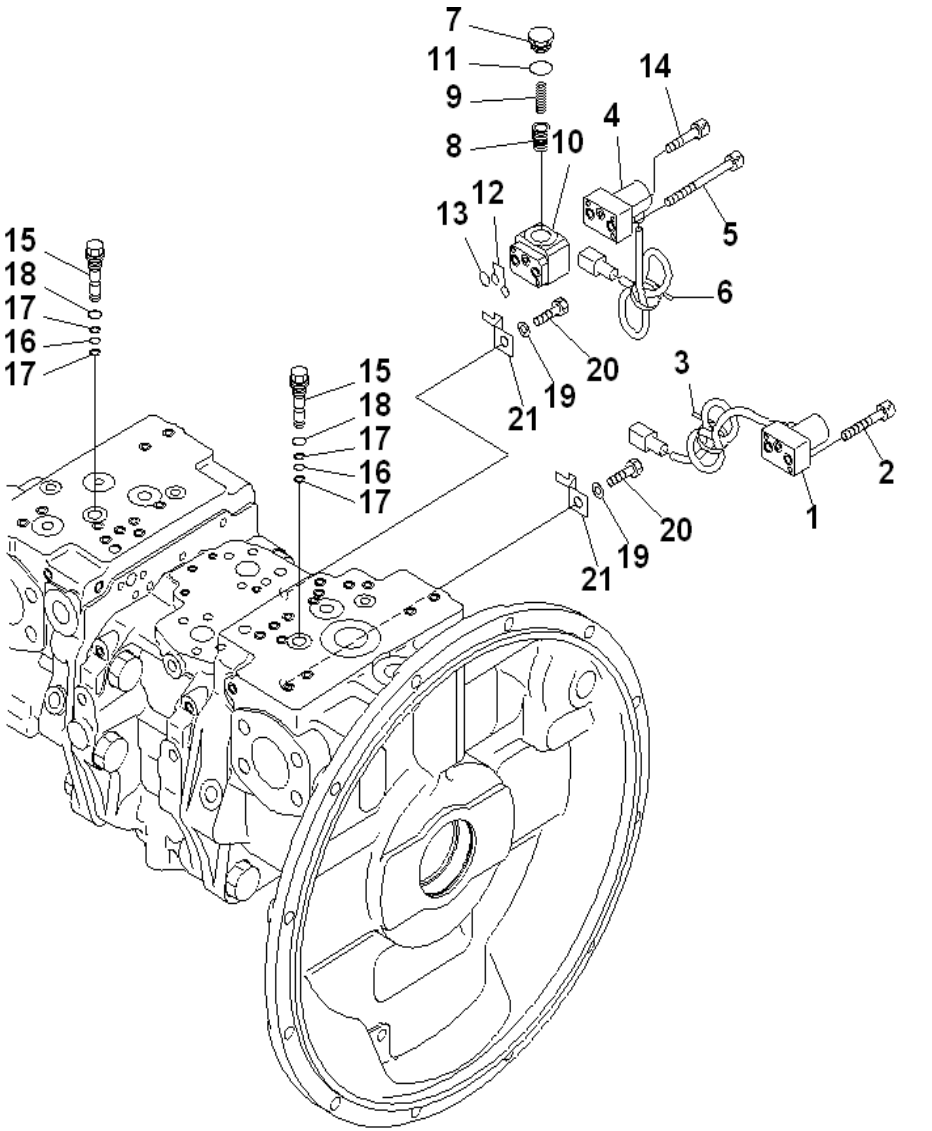

MAIN PUMP (12/12)

INDEX	CD	PART NO.	DESCRIPTION	QTY	SERIAL NO.
		(708-2H-00450)	PUMP ASS'Y	1	J30001-
			THIS ASSEMBLY CONSISTS OF ALL PARTS		
			SHOWN IN FIGS.Y1600-01A0 T0 Y1600-12A0		
1		702-21-57600	.PILOT VALVE	1	J30001-
2		01252-60635	.BOLT	2	J30001-
3		20Y-62-22790	.BAND, RED	1	J30001-
4		702-21-57500	.PILOT VALVE	1	J30001-
5		702-16-55260	.BOLT	2	J30001-
6		20Y-62-22830	.BAND, WHITE	1	J30001-
		702-21-55400	.VALVE ASS'Y	1	J30001-
7		702-21-55920	..PLUG	1	J30001-
8		702-21-55930	..PISTON	1	J30001-
9		702-21-55940	..SPRING	1	J30001-
10		702-21-55951	..BLOCK	1	J30001-
11		07002-12034	..O-RING	1	J30001-
12		07000-11008	.O-RING	2	J30001-
13		722-12-18240	.O-RING	1	J30001-
14	C2	(708-2H-15531)	..PLUG	2	J30001-
15		01252-60530	.BOLT	1	J30001-
16		07000-B1008	.O-RING	2	J30001-
17		07001-01008	.RING	4	J30001-
18		07002-61423	.O-RING	2	J30001-
19		01643-51232	.WASHER	2	J30001-
20		01010-81220	.BOLT	2	J30001-
21		08193-21012	.CLIP	2	J30001-

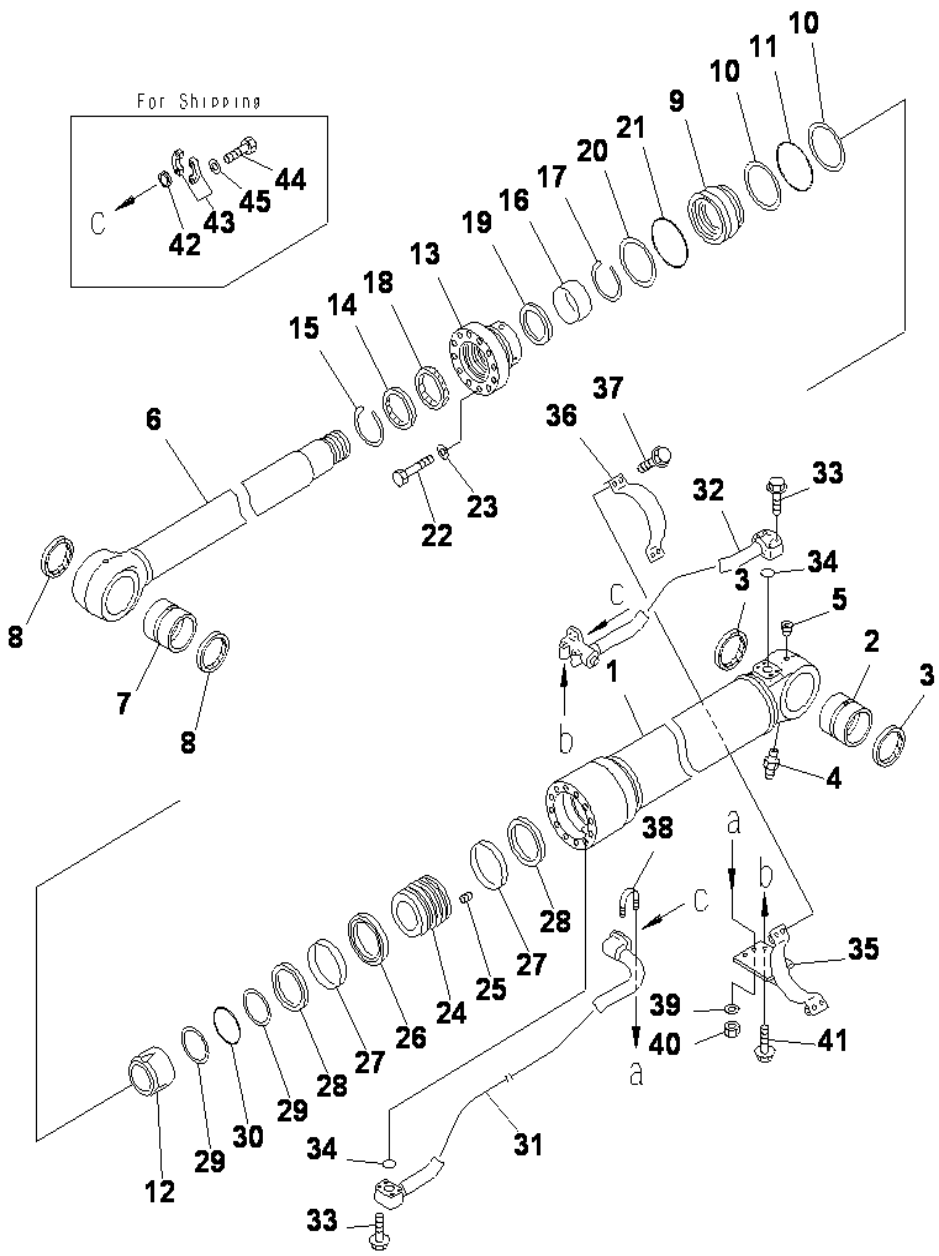

BOOM CYLINDER (FOR 100 HOURS LUBRICATING) (STD)

INDEX	CD	PART NO.	DESCRIPTION	QTY	SERIAL NO.
		(707-01-XM400)	CYLINDER GROUP,L.H (FINAL COATING).....	1	J30001-UP
		(707-01-XM410)	CYLINDER GROUP,R.H (FINAL COATING).....	1	J30001-UP
		==========	.....		
		707-01-XAG40	CYLINDER ASS'Y, L.H.....	1	J30001-UP
		707-01-XAG50	CYLINDER ASS'Y, R.H.....	1	J30001-UP
1		707-13-16860	.CYLINDER.....	1	J30001-UP
2		707-76-10270	.BUSHING.....	1	J30001-UP
3		07145-00100	.SEAL,DUST (KIT).....	2	J30001-UP
4		07020-00000	.FITTING, GREASE.....	1	J30001-UP
5		07043-00108	.PLUG.....	1	J30001-UP
6		707-58-11490	.ROD.....	1	J30001-UP
7		707-76-11130	.BUSHING.....	1	J30001-UP
8		07145-00110	.SEAL, DUST (KIT).....	2	J30001-UP
9		707-71-31670	.COLLAR.....	1	J30001-UP
10		707-35-91640	.RING,BACK-UP (KIT).....	2	J30001-UP
11		07000-15150	.O-RING (KIT).....	1	J30001-UP
12		707-71-61140	.PLUNGER.....	1	J30001-UP
13		707-27-16580	.HEAD.....	1	J30001-UP
14		198-63-94170	.SEAL,DUST (KIT).....	1	J30001-UP
15		07179-13126	.RING,SNAP.....	1	J30001-UP
16		707-52-90850	.BUSHING.....	1	J30001-UP
17		707-75-11040	.RING,SNAP.....	1	J30001-UP
18		707-51-11030	.PACKING,ROD (KIT).....	1	J30001-UP
19		707-51-11650	.RING,BUFFER (KIT).....	1	J30001-UP
20		707-35-91640	.RING,BACK-UP (KIT).....	1	J30001-UP
21		07000-15150	.O-RING (KIT).....	1	J30001-UP
22		01010-82085	.BOLT.....	12	J30001-UP
23		707-88-75310	.WASHER.....	12	J30001-UP
24		707-36-16580	.PISTON.....	1	J30001-UP
25		01310-01216	.SCREW.....	1	J30001-UP
26		707-44-16150	.RING,PISTON (KIT).....	1	J30001-UP
27		707-39-16120	.RING,WEAR (KIT).....	2	J30001-UP
28		707-44-16910	.RING.....	2	J30001-UP
29		07001-05100	.RING,BACK-UP (KIT).....	2	J30001-UP
30		07000-B5100	.O-RING (KIT).....	1	J30001-UP
31		707-86-12550	TUBE,L.H.....	1	J30001-UP
		707-86-12560	TUBE,R.H.....	1	J30001-UP
32		208-63-53181	TUBE,L.H.....	1	J30001-UP
		208-63-53281	TUBE,R.H.....	1	J30001-UP
33		07375-21060	BOLT.....	8	J30001-UP
34		07000-13035	O-RING (KIT).....	2	J30001-UP
35		707-88-25370	BRACKET,L.H.....	1	J30001-UP
		707-88-25380	BRACKET,R.H.....	1	J30001-UP
36		707-88-21660	BAND.....	1	J30001-UP
37		01435-01235	BOLT.....	4	J30001-UP

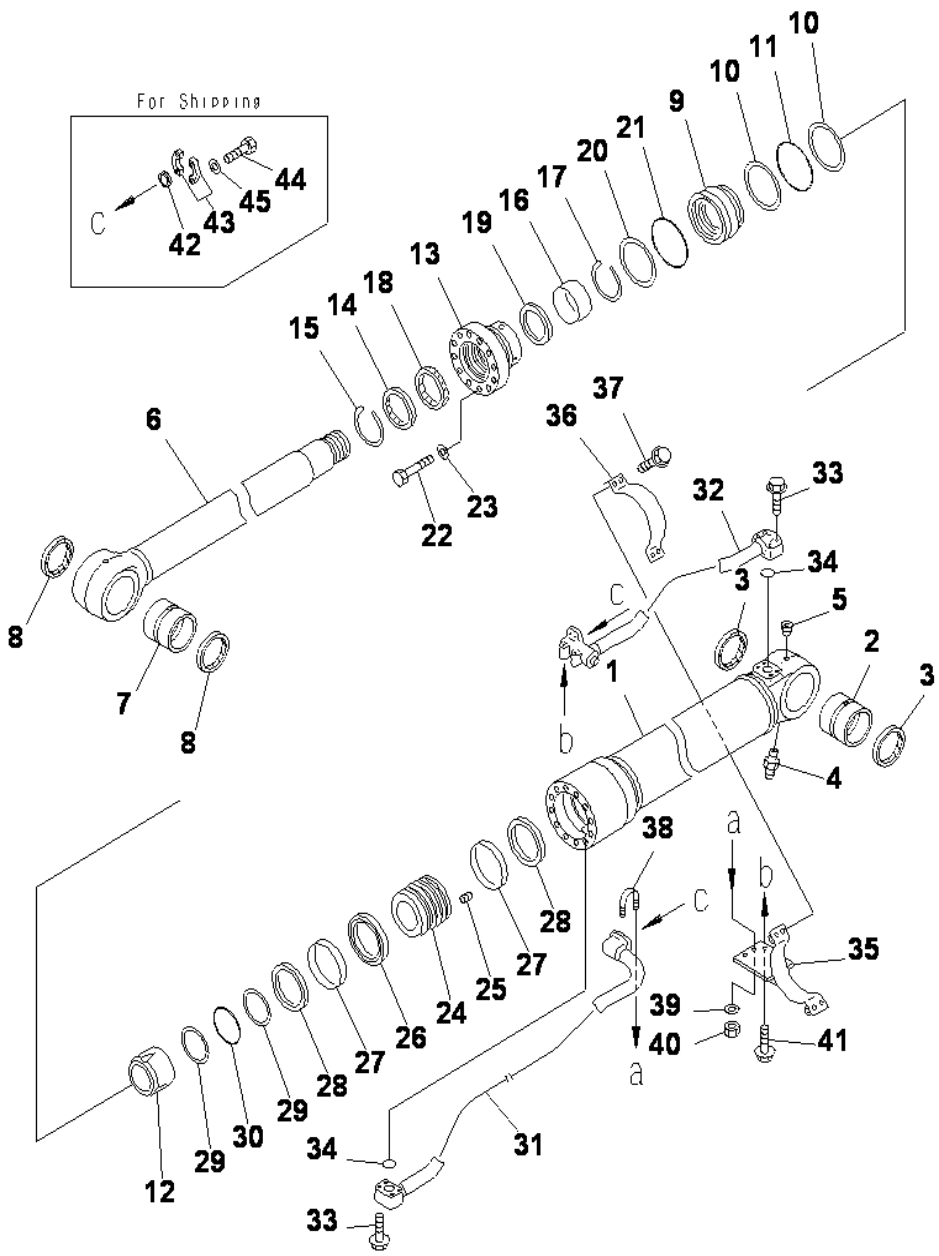

BOOM CYLINDER (FOR 100 HOURS LUBRICATING) (STD)

INDEX	CD	PART NO.	DESCRIPTION	QTY	SERIAL NO.
38		07283-33442	CLIP	1	J30001-UP
39		01643-31032	WASHER	2	J30001-UP
40		01597-01009	NUT	2	J30001-UP
41		01435-01025	BOLT	2	J30001-UP
42		707-88-33040	CAP	2	J30001-UP
43		07371-31049	FLANGE	4	J30001-UP
44		07372-21035	BOLT	8	J30001-UP
45		01643-51032	WASHER	8	J30001-UP
		=========			J30001-UP
		707-99-72130	SERVICE KIT	2	J30001-UP

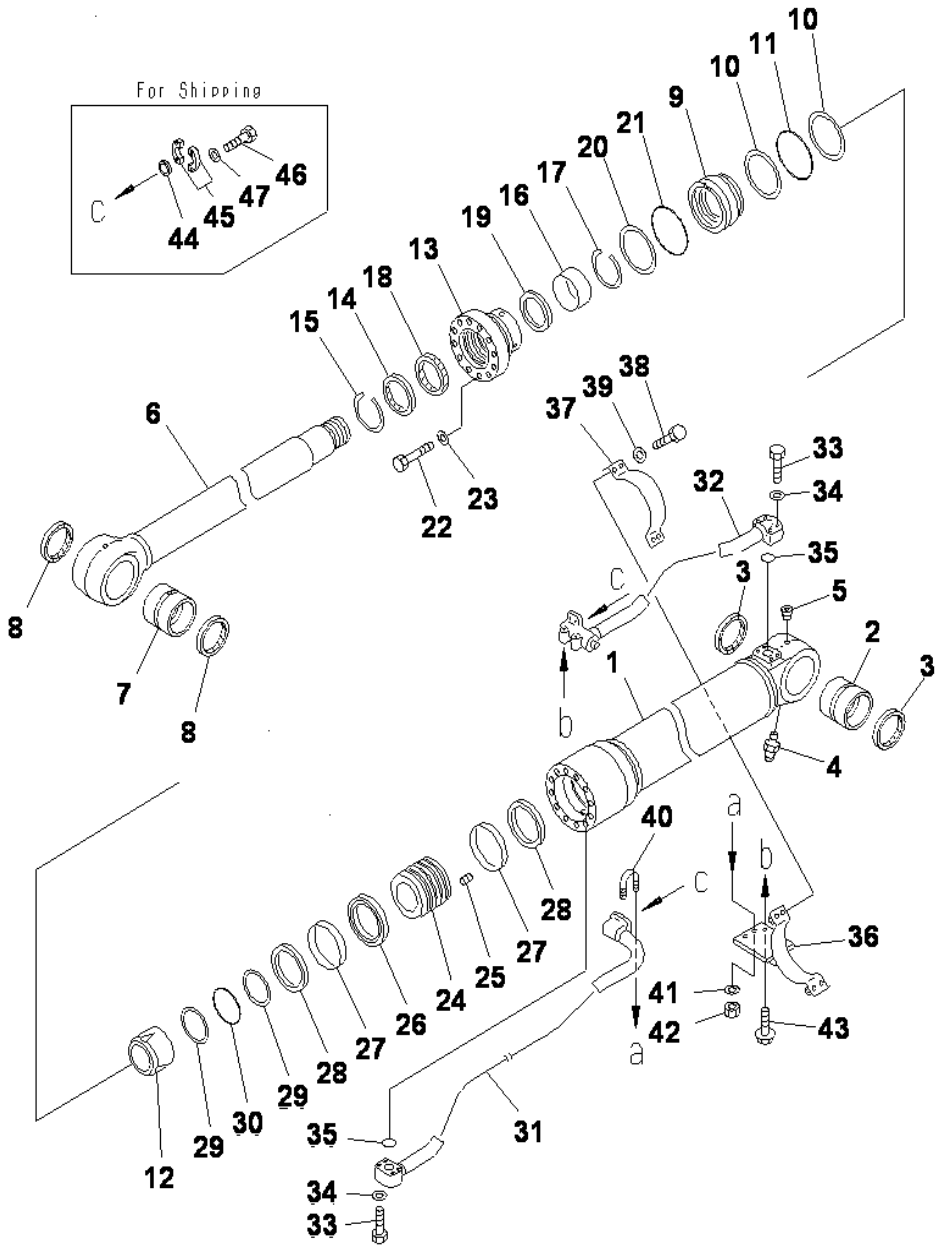

BOOM CYLINDER (FOR 500 HOURS LUBRICATING) (OPT)

INDEX	CD	PART NO.	DESCRIPTION	QTY	SERIAL NO.
		(707-01-XT520)	CYLINDER GROUP, L.H (FINAL COATING).....	1	J30001-UP
		(707-01-XT530)	CYLINDER GROUP, R.H (FINAL COATING).....	1	J30001-UP
		==========	.....		
		707-01-XG550	CYLINDER ASS'Y, L.H.....	1	J30001-UP
		707-01-XG560	CYLINDER ASS'Y, R.H.....	1	J30001-UP
1		707-13-16860	.CYLINDER.....	1	J30001-UP
2		707-76-10290	.BUSHING.....	1	J30001-UP
3		07145-00100	.SEAL,DUST (KIT).....	2	J30001-UP
4		07020-00000	.FITTING, GREASE.....	1	J30001-UP
5		07043-00108	.PLUG.....	1	J30001-UP
6		707-58-11490	.ROD.....	1	J30001-UP
7		707-76-11220	.BUSHING.....	1	J30001-UP
8		07145-00110	.SEAL, DUST (KIT).....	2	J30001-UP
9		707-71-31670	.COLLAR.....	1	J30001-UP
10		707-35-91640	.RING,BACK-UP (KIT).....	2	J30001-UP
11		07000-15150	.O-RING (KIT).....	1	J30001-UP
12		707-71-61140	.PLUNGER.....	1	J30001-UP
13		707-27-16580	.HEAD.....	1	J30001-UP
14		198-63-94170	.SEAL,DUST (KIT).....	1	J30001-UP
15		07179-13126	.RING,SNAP.....	1	J30001-UP
16		707-52-90850	.BUSHING.....	1	J30001-UP
17		707-75-11040	.RING,SNAP.....	1	J30001-UP
18		707-51-11030	.PACKING,ROD (KIT).....	1	J30001-UP
19		707-51-11640	.RING,BUFFER (KIT).....	1	J30001-UP
20		707-35-91640	.RING,BACK-UP (KIT).....	1	J30001-UP
21		07000-15150	.O-RING (KIT).....	1	J30001-UP
22		01010-82085	.BOLT.....	12	J30001-UP
23		707-88-75310	.WASHER.....	12	J30001-UP
24		707-36-16580	.PISTON.....	1	J30001-UP
25		01310-01216	.SCREW.....	1	J30001-UP
26		707-44-16190	.RING,PISTON (KIT).....	1	J30001-UP
27		707-39-16120	.RING,WEAR (KIT).....	2	J30001-UP
28		707-44-16910	.RING.....	2	J30001-UP
29		07001-05100	.RING,BACK-UP (KIT).....	2	J30001-UP
30		07000-B5100	.O-RING (KIT).....	1	J30001-UP
31		707-86-12550	TUBE,L.H.....	1	J30001-UP
		707-86-12560	TUBE,R.H.....	1	J30001-UP
32		208-63-53181	TUBE,L.H.....	1	J30001-UP
		208-63-53281	TUBE,R.H.....	1	J30001-UP
33		07372-21060	BOLT.....	8	J30001-UP
34		01643-51032	WASHER.....	8	J30001-UP
35		07000-13035	O-RING (KIT).....	2	J30001-UP
36		707-88-25370	BRACKET,L.H.....	1	J30001-UP
		707-88-25380	BRACKET,R.H.....	1	J30001-UP
37		707-88-21660	BAND.....	1	J30001-UP

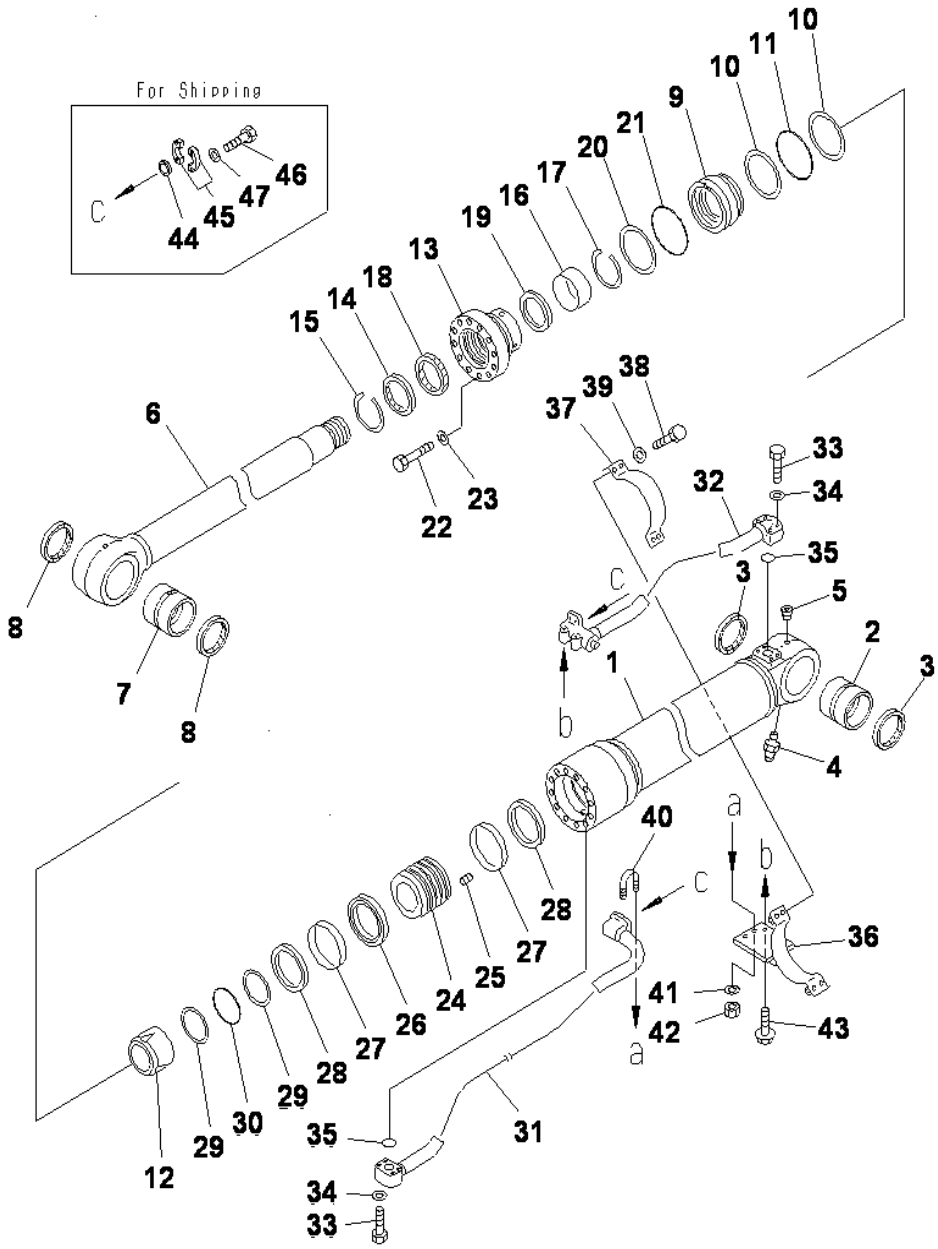

BOOM CYLINDER (FOR 500 HOURS LUBRICATING) (OPT)

INDEX	CD	PART NO.	DESCRIPTION	QTY	SERIAL NO.
38		07372-21240	BOLT	4	J30001-UP
39		01643-51232	WASHER	4	J30001-UP
40		07283-33442	CLIP	1	J30001-UP
41		01643-31032	WASHER	2	J30001-UP
42		01597-01009	NUT	2	J30001-UP
43		01435-01025	BOLT	2	J30001-UP
44		707-88-33040	CAP	2	J30001-UP
45		07371-31049	FLANGE, SPLIT	4	J30001-UP
46		07372-21035	BOLT	8	J30001-UP
47		01643-51032	WASHER	8	J30001-UP
		=========			J30001-UP
		707-99-67070	SERVICE KIT	2	J30001-UP

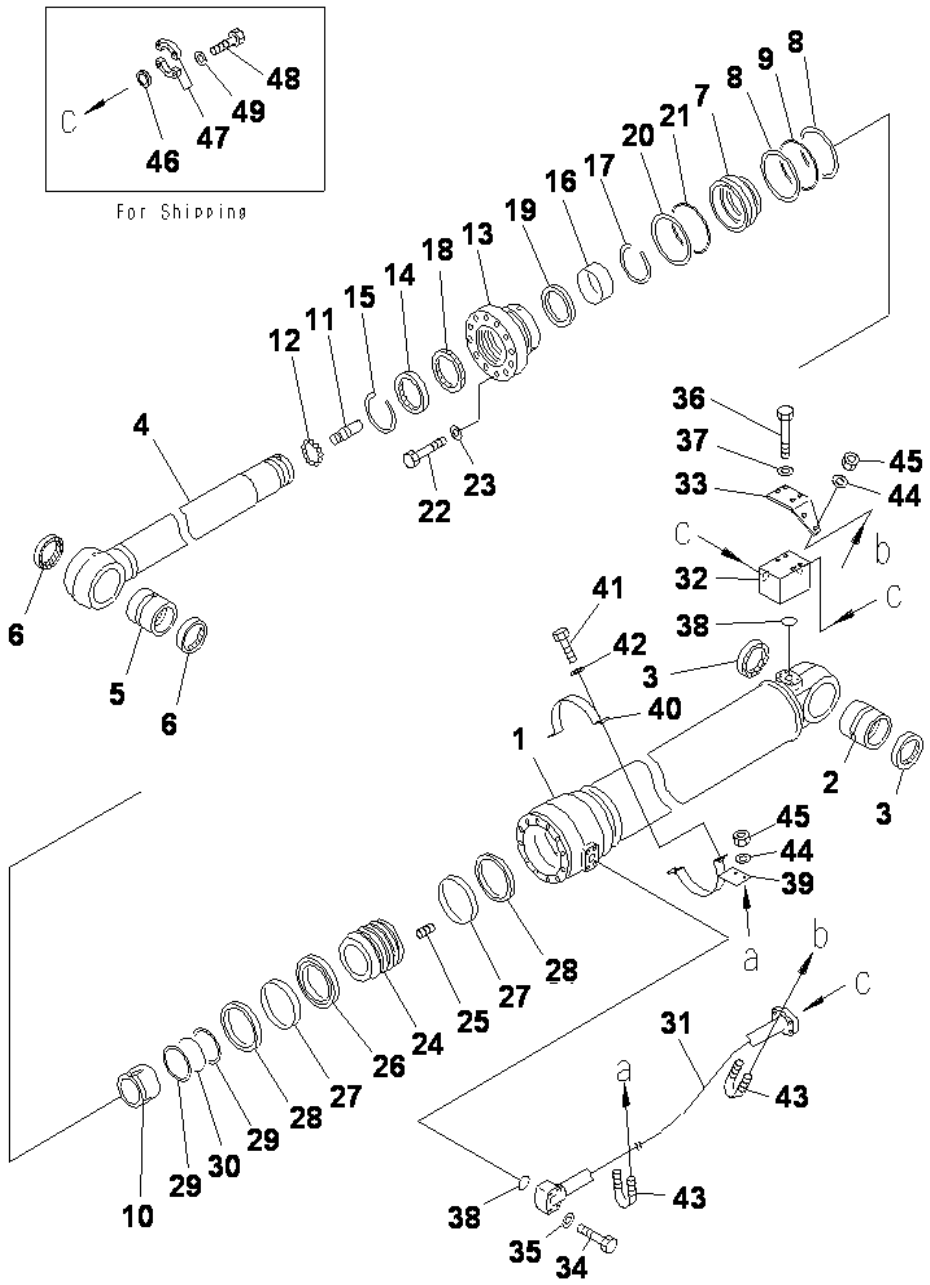

PC400-8 S/N J30001-UP

ARM CYLINDER WITH RESISTENT (500 HOURS) (OPT)

INDEX	CD	PART NO.	DESCRIPTION	QTY	SERIAL NO.
		(707-01-XZC90)	CYLINDER GROUP	1	J30001-UP
		==========			
1		707-01-XAH80	CYLINDER ASS'Y	1	J30001-UP
		707-13-18770	.CYLINDER	1	J30001-UP
2		707-76-11220	.BUSHING	1	J30001-UP
3		07145-00110	.SEAL, DUST (KIT)	2	J30001-UP
4		707-58-12530	.ROD	1	J30001-UP
5		707-76-11220	.BUSHING	1	J30001-UP
6		07145-00110	.SEAL, DUST (KIT)	2	J30001-UP
7		707-71-31690	.COLLAR	1	J30001-UP
8		707-35-91840	.RING,BACK-UP (KIT)	2	J30001-UP
9		07000-15175	.O-RING (KIT)	1	J30001-UP
10		707-71-61330	.PLUNGER	1	J30001-UP
11		707-71-70340	.PLUNGER	1	J30001-UP
12		04260-00952	.BALL	11	J30001-UP
13		707-27-18930	.HEAD	1	J30001-UP
14		195-63-93170	.SEAL,DUST (KIT)	1	J30001-UP
15		07179-13136	.RING,SNAP	1	J30001-UP
16		707-52-90980	.BUSHING	1	J30001-UP
17		07179-13126	.RING,SNAP	1	J30001-UP
18		707-51-12030	.PACKING,ROD (KIT)	1	J30001-UP
19		707-51-12650	.RING,BUFFER (KIT)	1	J30001-UP
20		707-35-91840	.RING,BACK-UP (KIT)	1	J30001-UP
21		07000-15175	.O-RING (KIT)	1	J30001-UP
22		01011-82400	.BOLT	12	J30001-UP
23		707-88-75410	.WASHER	12	J30001-UP
24		707-36-18520	.PISTON	1	J30001-UP
25		01310-01225	.SCREW	1	J30001-UP
26		707-44-18250	.RING,PISTON (KIT)	1	J30001-UP
27		707-39-18510	.RING,WEAR (KIT)	2	J30001-UP
28		707-44-18920	.RING	2	J30001-UP
29		07001-05110	.RING,BACK-UP (KIT)	2	J30001-UP
30		07000-B5110	.O-RING (KIT)	1	J30001-UP
31		707-86-12610	TUBE	1	J30001-UP
32		707-86-11610	BLOCK	1	J30001-UP
33		707-88-02960	PLATE	1	J30001-UP
34		07372-21060	BOLT	4	J30001-UP
35		01643-51032	WASHER	4	J30001-UP
36		01011-81005	BOLT	4	J30001-UP
37		01643-51032	WASHER	4	J30001-UP
38		07000-13035	O-RING (KIT)	2	J30001-UP
39		707-88-25450	BRACKET	1	J30001-UP
40		707-88-21880	BAND	1	J30001-UP
41		07372-21240	BOLT	2	J30001-UP
42		01643-51232	WASHER	2	J30001-UP

Ref :Y1620-01A8 Page :480270

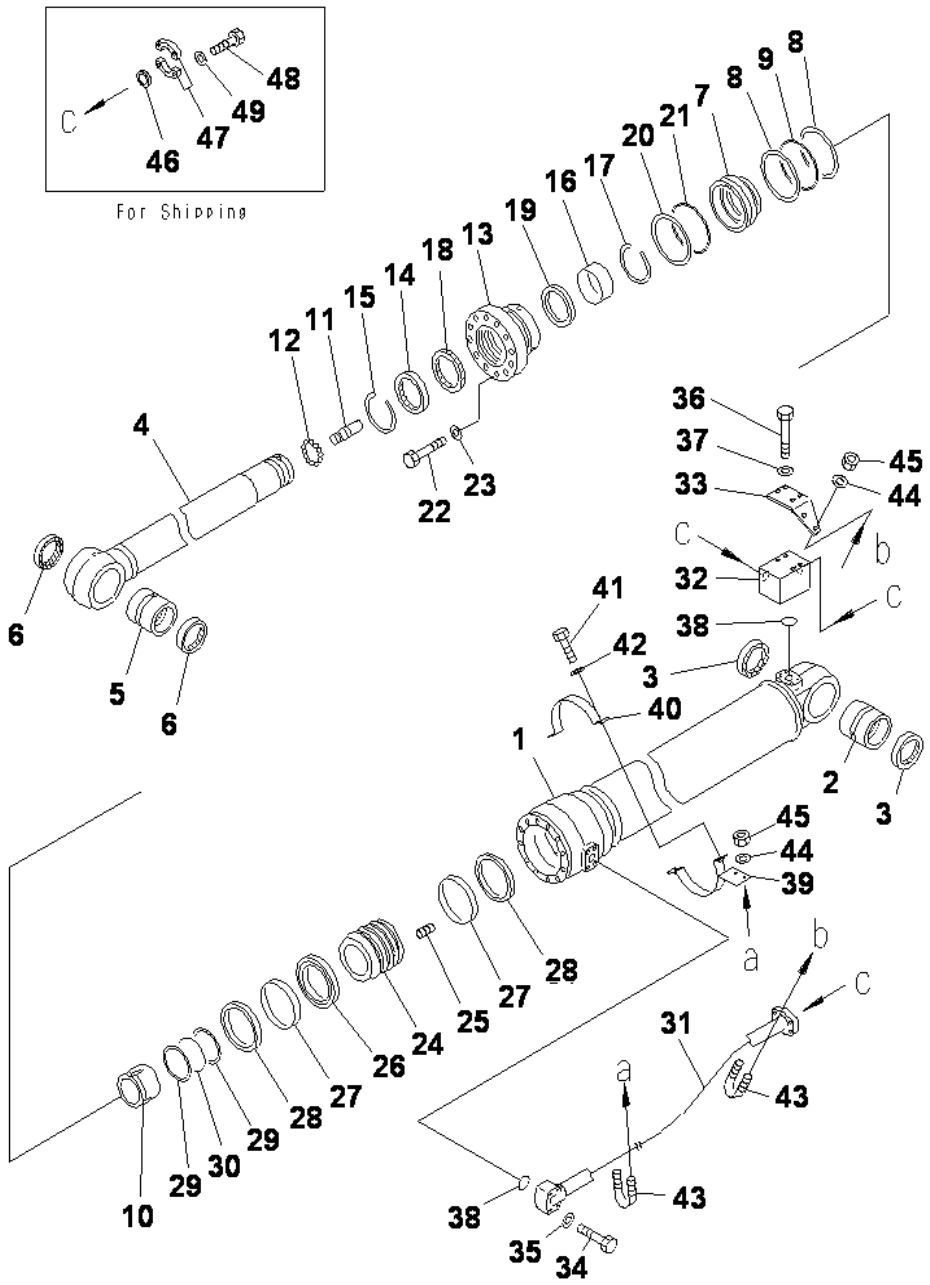

ARM CYLINDER WITH RESISTANT (500 HOURS) (OPT)

INDEX	CD	PART NO.	DESCRIPTION	QTY	SERIAL NO.
43		07283-33442	CLIP	2	J30001-UP
44		01643-31032	WASHER	4	J30001-UP
45		01597-01009	NUT	4	J30001-UP
46		7078833040	CAP	3	J30001-UP
47		07371-31049	FLANGE, SPLIT	6	J30001-UP
48		07372-21035	BOLT	12	J30001-UP
49		01643-51032	WASHER	12	J30001-UP
		==========			J30001-UP
		707-99-76190	SERVICE KIT	1	J30001-UP

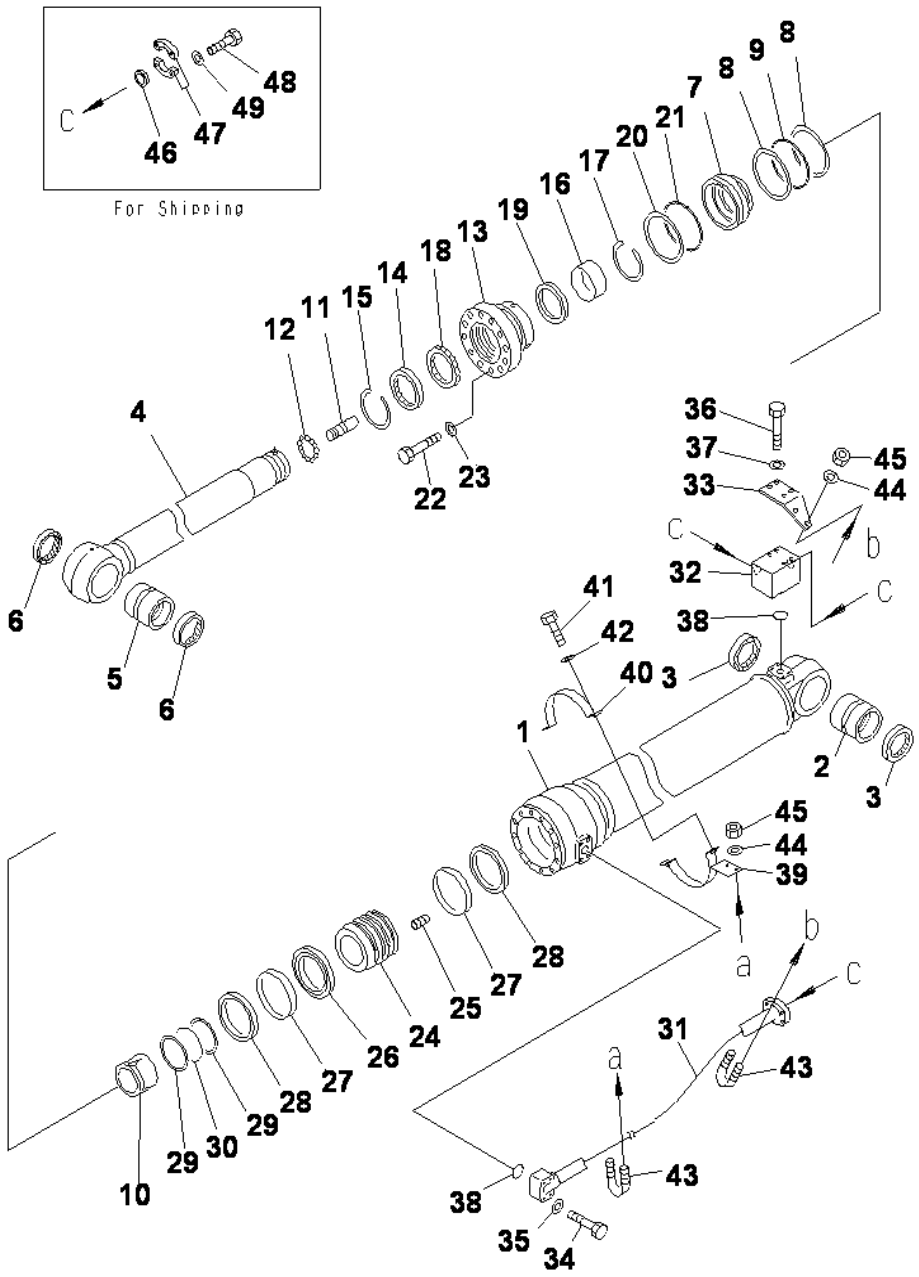

ARM CYLINDER (FOR 2.4M ARM) (100 HOURS) (STD)

INDEX	CD	PART NO.	DESCRIPTION	QTY	SERIAL NO.
		(707-01-XM430)	CYLINDER GROUP.....	1	J30001-UP
		==========	.....		
1		707-01-XAG70	CYLINDER ASS'Y.....	1	J30001-UP
		707-13-18780	.CYLINDER.....	1	J30001-UP
2		707-76-11130	.BUSHING.....	1	J30001-UP
3		07145-00110	.SEAL, DUST (KIT).....	2	J30001-UP
4		707-58-12540	.ROD.....	1	J30001-UP
5		707-76-11130	.BUSHING.....	1	J30001-UP
6		07145-00110	.SEAL, DUST (KIT).....	2	J30001-UP
7		707-71-31690	.COLLAR.....	1	J30001-UP
8		707-35-91840	.RING,BACK-UP (KIT).....	2	J30001-UP
9		07000-15175	.O-RING (KIT).....	1	J30001-UP
10		707-71-61330	.PLUNGER.....	1	J30001-UP
11		707-71-70340	.PLUNGER.....	1	J30001-UP
12		04260-00952	.BALL.....	11	J30001-UP
13		707-27-18930	.HEAD.....	1	J30001-UP
14		195-63-93170	.SEAL,DUST (KIT).....	1	J30001-UP
15		07179-13136	.RING,SNAP.....	1	J30001-UP
16		707-52-90980	.BUSHING.....	1	J30001-UP
17		07179-13126	RING,SNAP.....	1	J30001-UP
18		707-51-12030	P.ACKING,ROD (KIT).....	1	J30001-UP
19		707-51-12650	.RING,BUFFER (KIT).....	1	J30001-UP
20		707-35-91840	.RING,BACK-UP (KIT).....	1	J30001-UP
21		07000-15175	.O-RING (KIT).....	1	J30001-UP
22		01011-82400	.BOLT.....	12	J30001-UP
23		70788-75410	.WASHER.....	12	J30001-UP
24		707-36-18520	.PISTON.....	1	J30001-UP
25		01310-01225	.SCREW.....	1	J30001-UP
26		707-44-18280	.RING,PISTON (KIT).....	1	J30001-UP
27		707-39-18510	.RING,WEAR (KIT).....	2	J30001-UP
28		707-44-18920	.RING.....	2	J30001-UP
29		070-01-05110	.RING,BACK-UP (KIT).....	2	J30001-UP
30		07000-B5110	.O-RING (KIT).....	1	J30001-UP
31		707-86-12680	TUBE.....	1	J30001-UP
32		707-86-11610	BLOCK.....	1	J30001-UP
33		707-88-02960	PLATE.....	1	J30001-UP
34		07372-21060	BOLT.....	4	J30001-UP
35		01643-51032	WASHER.....	4	J30001-UP
36		01011-81005	BOLT.....	4	J30001-UP
37		01643-51032	WASHER.....	4	J30001-UP
38		07000-13035	O-RING (KIT).....	2	J30001-UP
39		707-88-25450	BRACKET.....	1	J30001-UP
40		707-88-21880	BAND.....	1	J30001-UP
41		07372-21240	BOLT.....	2	J30001-UP
42		01643-51232	WASHER.....	2	J30001-UP

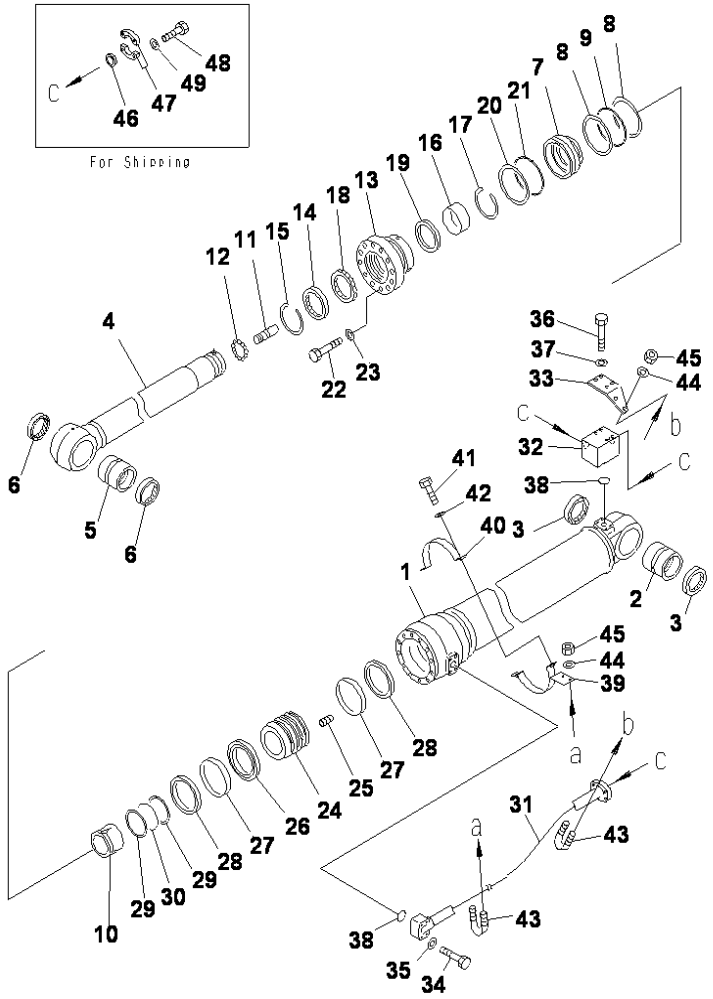

ARM CYLINDER (FOR 2.4M ARM) (100 HOURS) (STD)

INDEX	CD	PART NO.	DESCRIPTION	QTY	SERIAL NO.
43		07283-33442	CLIP	2	J30001-UP
44		01643-31032	WASHER	4	J30001-UP
45		01597-01009	NUT	4	J30001-UP
46		7078833040	CAP	3	J30001-UP
47		07371-31049	FLANGE, SPLIT	6	J30001-UP
48		07372-21035	BOLT	12	J30001-UP
49		01643-51032	WASHER	12	J30001-UP
		==========			J30001-UP
		707-99-76190	SERVICE KIT	1	J30001-UP

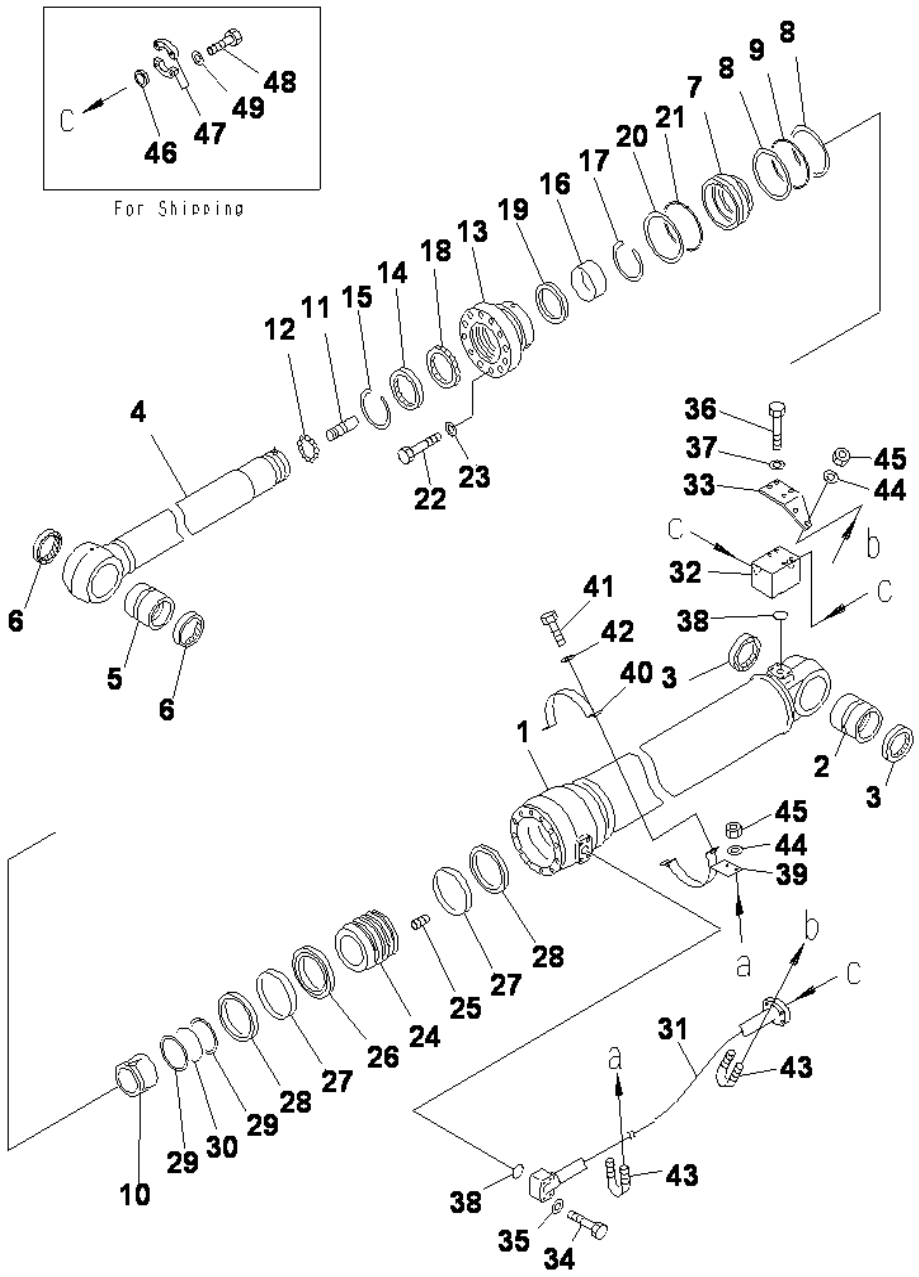

ARM CYLINDER (100 HOURS) (OPT)

INDEX	CD	PART NO.	DESCRIPTION	QTY	SERIAL NO.
		(707-01-XM420)	CYLINDER GROUP	1	J30001-UP
		==========			
1		707-01-XAG60	CYLINDER ASS'Y	1	J30001-UP
		707-13-18770	.CYLINDER	1	J30001-UP
2		707-76-11130	.BUSHING	1	J30001-UP
3		07145-00110	.SEAL, DUST (KIT)	2	J30001-UP
4		707-58-12530	.ROD	1	J30001-UP
5		707-76-11130	.BUSHING	1	J30001-UP
6		07145-00110	.SEAL, DUST (KIT)	2	J30001-UP
7		707-71-31690	.COLLAR	1	J30001-UP
8		707-35-91840	.RING, BACK-UP (KIT)	2	J30001-UP
9		07000-15175	.O-RING (KIT)	1	J30001-UP
10		707-71-61330	.PLUNGER	1	J30001-UP
11		707-71-70340	.PLUNGER	1	J30001-UP
12		04260-00952	.BALL	11	J30001-UP
13		707-27-18930	.HEAD	1	J30001-UP
14		195-63-93170	.SEAL, DUST (KIT)	1	J30001-UP
15		07179-13136	RING, SNAP	1	J30001-UP
16		707-52-90980	.BUSHING	1	J30001-UP
17		07179-13126	RING, SNAP	1	J30001-UP
18		707-51-12030	.PACKING, ROD (KIT)	1	J30001-UP
19		707-51-12650	.RING, BUFFER (KIT)	1	J30001-UP
20		707-35-91840	.RING, BACK-UP (KIT)	1	J30001-UP
21		07000-15175	.O-RING (KIT)	1	J30001-UP
22		01011-82400	.BOLT	12	J30001-UP
23		707-88-75410	.WASHER	12	J30001-UP
24		707-36-18520	.PISTON	1	J30001-UP
25		01310-01225	.SCREW	1	J30001-UP
26		707-44-18250	.RING, PISTON (KIT)	1	J30001-UP
27		707-39-18510	.RING, WEAR (KIT)	2	J30001-UP
28		707-44-18920	.RING	2	J30001-UP
29		07001-05110	.RING, BACK-UP (KIT)	2	J30001-UP
30		07000-B5110	.O-RING (KIT)	1	J30001-UP
31		707-86-12610	TUBE	1	J30001-UP
32		707-86-11610	BLOCK	1	J30001-UP
33		707-88-02960	PLATE	1	J30001-UP
34		07372-21060	BOLT	4	J30001-UP
35		01643-51032	WASHER	4	J30001-UP
36		01011-81005	BOLT	4	J30001-UP
37		01643-51032	WASHER	4	J30001-UP
38		07000-13035	O-RING (KIT)	2	J30001-UP
39		707-88-25450	BRACKET	1	J30001-UP
40		707-88-21880	BAND	1	J30001-UP
41		07372-21240	BOLT	2	J30001-UP
42		01643-51232	WASHER	2	J30001-UP

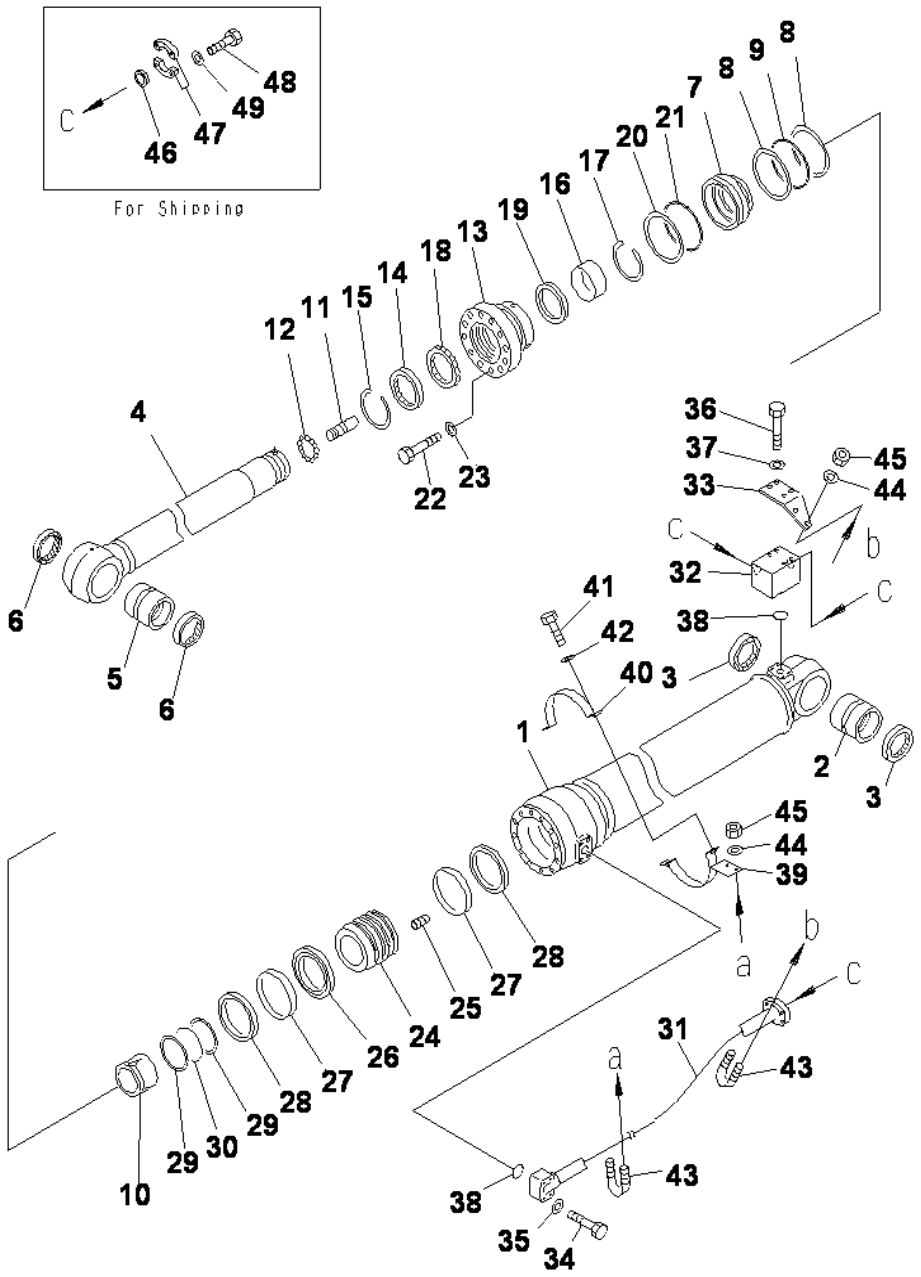

ARM CYLINDER (100 HOURS) (OPT)

INDEX	CD	PART NO.	DESCRIPTION	QTY	SERIAL NO.
43		07283-33442	CLIP	2	J30001-UP
44		01643-31032	WASHER	4	J30001-UP
45		01597-01009	NUT	4	J30001-UP
46		707-88-33040	CAP	3	J30001-UP
47		07371-31049	FLANGE, SPLIT	6	J30001-UP
48		07372-21035	BOLT	12	J30001-UP
49		01643-51032	WASHER	12	J30001-UP
		==========			J30001-UP
		707-99-76190	SERVICE KIT	1	J30001-UP

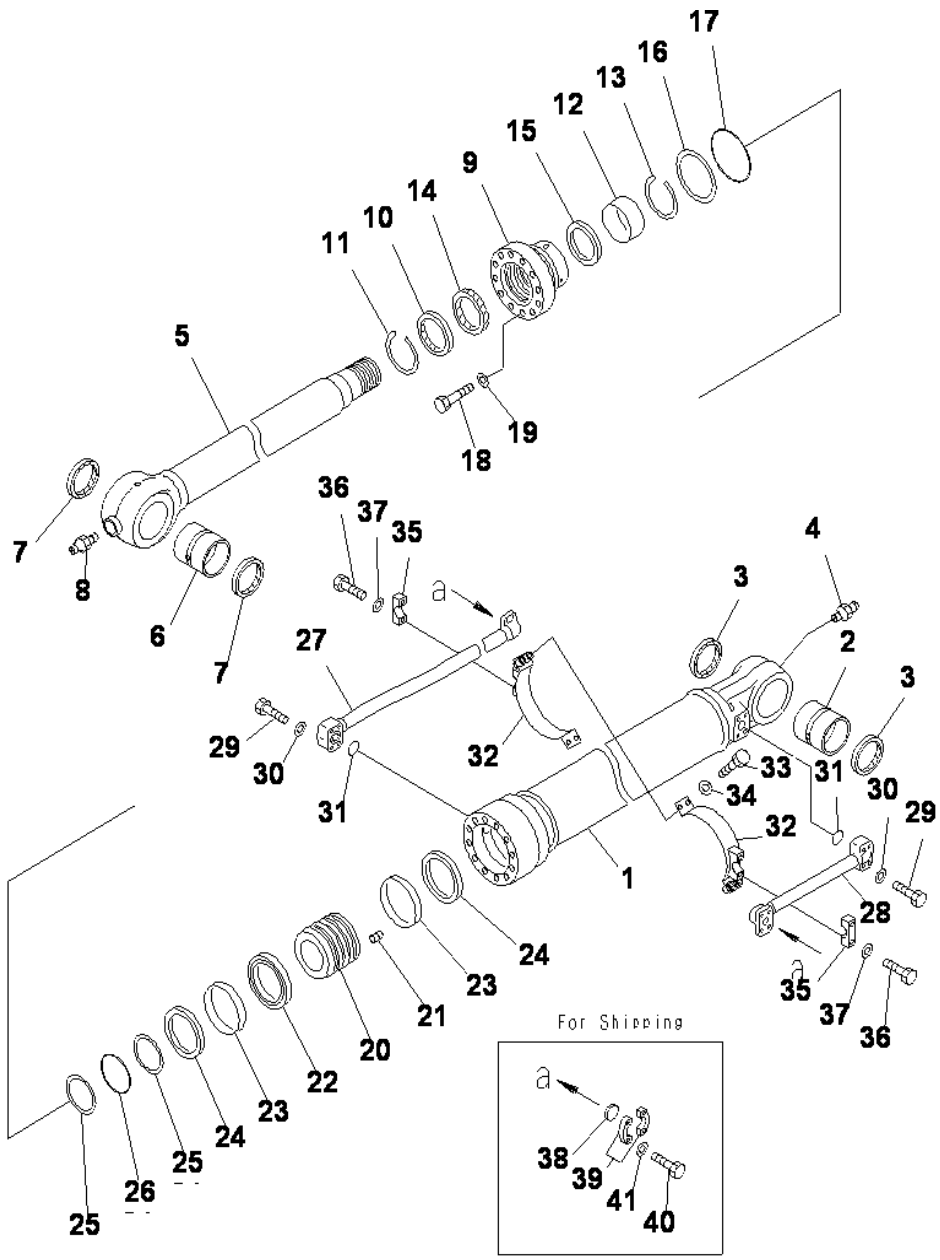

BUCKET CYLINDER (500 HOURS) (OPT)

INDEX	CD	PART NO.	DESCRIPTION	QTY	SERIAL NO.
		(707-01-XT552)	CYLINDER GROUP	1	J30001-UP
		==========			J30001-UP
1		707-01-XG585	CYLINDER ASS'Y	1	J30001-UP
		707-13-16870	.CYLINDER	1	J30001-UP
2		707-76-10290	.BUSHING	1	J30001-UP
3		07145-00100	.SEAL,DUST (KIT)	2	J30001-UP
4		07020-00000	.FITTING,GREASE	1	J30001-UP
5		707-58-11810	.ROD	1	J30001-UP
6		707-76-10140	.BUSHING	1	J30001-UP
7		208-70-73530	.SEAL,DUST (KIT)	2	J30001-UP
8		07020-00000	.FITTING,GREASE	1	J30001-UP
9		707-27-16580	.HEAD	1	J30001-UP
10		198-63-94170	.SEAL,DUST (KIT)	1	J30001-UP
11		07179-13126	.RING,SNAP	1	J30001-UP
12		707-52-90850	.BUSHING	1	J30001-UP
13		707-75-11040	.RING,SNAP	1	J30001-UP
14		707-51-11030	.PACKING,ROD (KIT)	1	J30001-UP
15		707-51-11640	.RING,BUFFER (KIT)	1	J30001-UP
16		707-35-91640	.RING,BACK-UP (KIT)	1	J30001-UP
17		07000-15150	.O-RING (KIT)	1	J30001-UP
18		01010-82085	BOLT	12	J30001-UP
19		707-88-75310	.WASHER	12	J30001-UP
20		707-36-16580	.PISTON	1	J30001-UP
21		01310-01216	.SCREW	1	J30001-UP
22		707-44-16190	.RING,PISTON (KIT)	1	J30001-UP
23		707-39-16120	.RING,WEAR (KIT)	2	J30001-UP
24		707-44-16910	.RING	2	J30001-UP
25		07001-05100	.RING,BACK-UP (KIT)	2	J30001-UP
26		07000-B5100	.O-RING (KIT)	1	J30001-UP
27		707-86-12580	TUBE	1	J30001-UP
28		707-86-12570	TUBE	1	J30001-UP
29		07372-21060	BOLT	8	J30001-UP
30		01643-51032	WASHER	8	J30001-UP
31		07000-13035	O-RING (KIT)	2	J30001-UP
32		707-88-25390	BRACKET	2	J30001-UP
33		07372-21240	BOLT	4	J30001-UP
34		01643-51232	WASHER	4	J30001-UP
35		707-88-10150	CLAMP	2	J30001-UP
36		01010-81245	BOLT	4	J30001-UP
37		01643-31232	WASHER	4	J30001-UP
38		707-88-33040	CAP	2	J30001-UP
39		07371-31049	FLANGE,SPLIT	4	J30001-UP
40		07372-21035	BOLT	8	J30001-UP
41		01643-51032	WASHER	8	J30001-UP

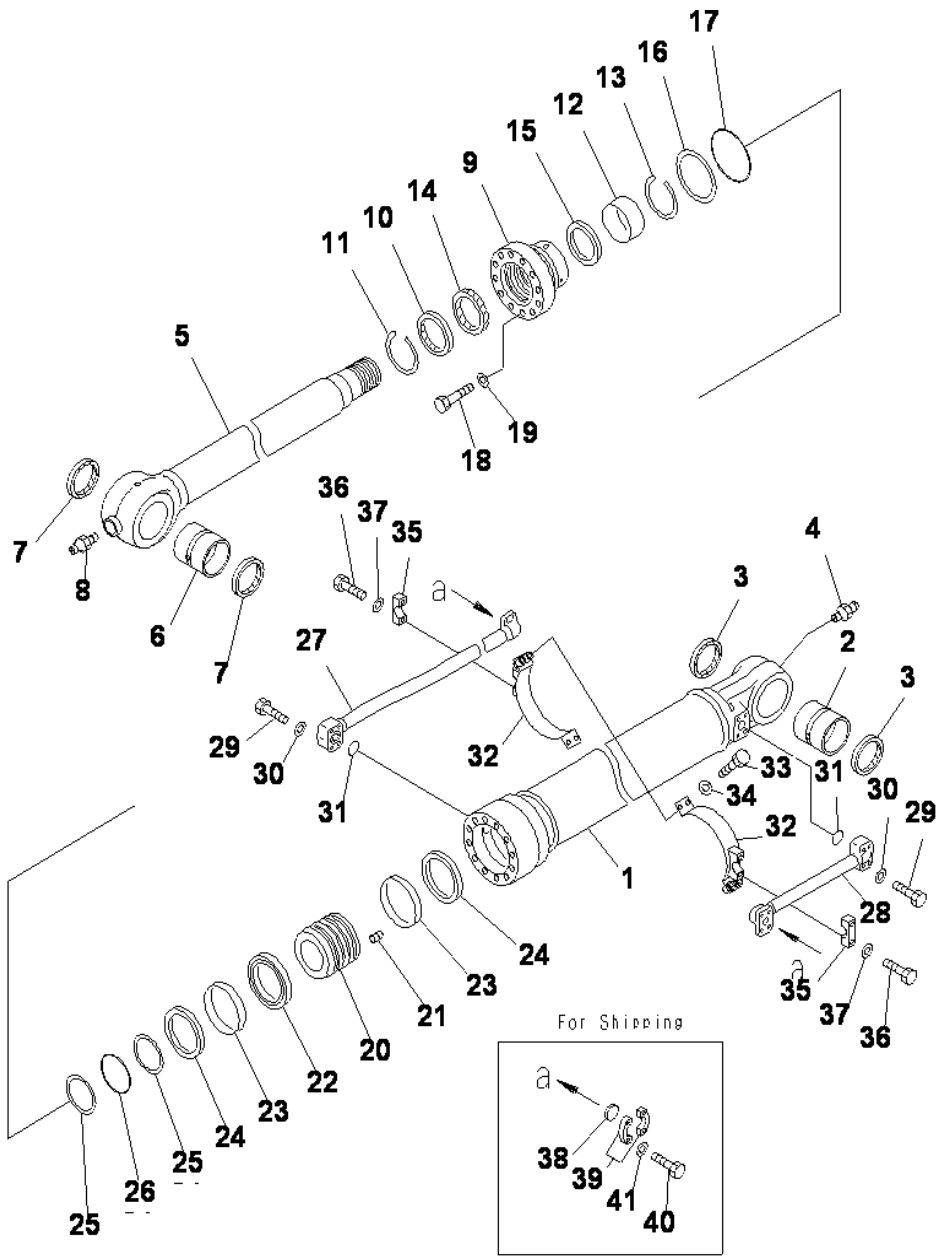

BUCKET CYLINDER (500 HOURS)(OPT)

INDEX	CD	PART NO.	DESCRIPTION	QTY	SERIAL NO.
		==========	.....		J30001-UP
	K	707-99-72240	SERVICE KIT.....	1	J30001-UP

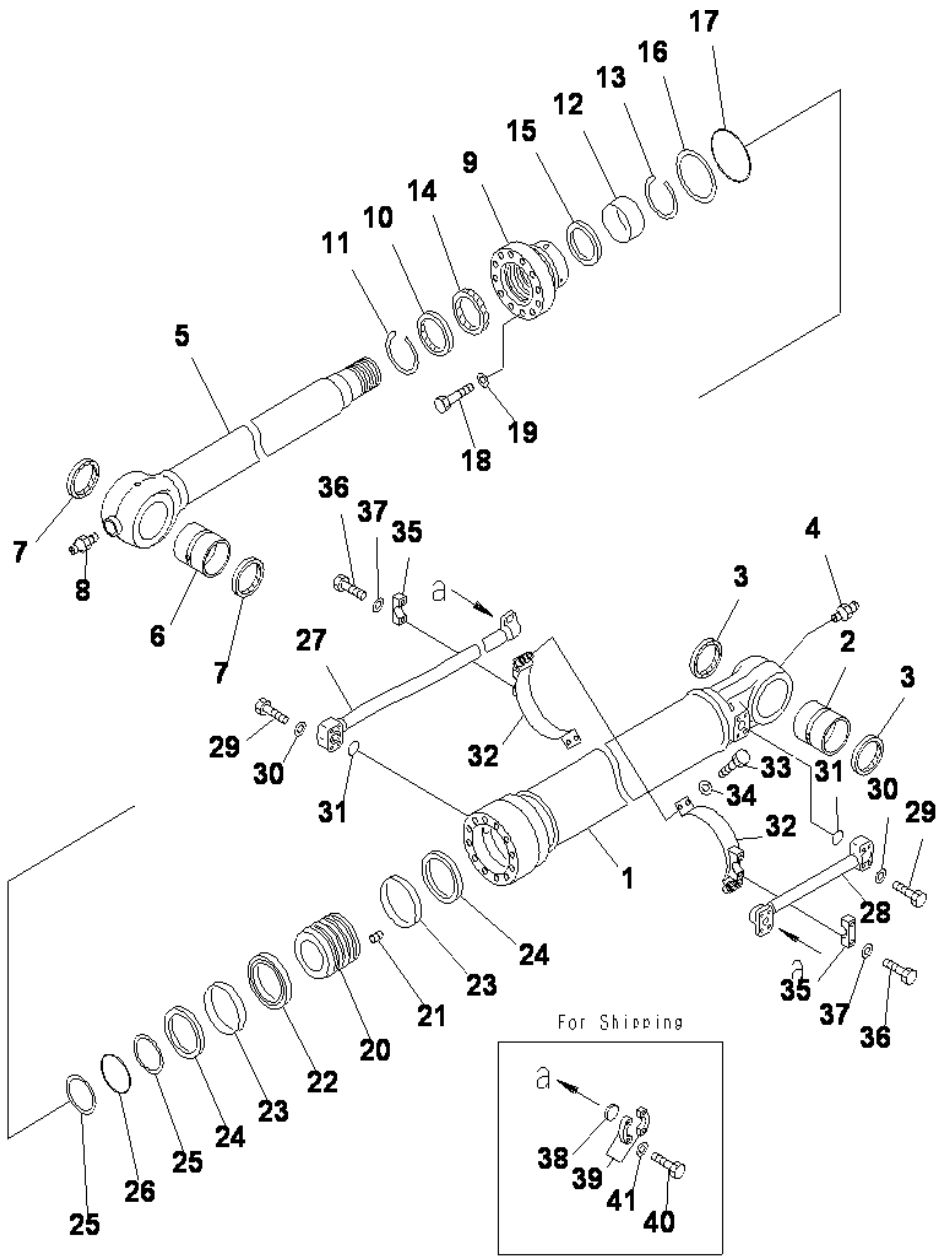

BUCKET CYLINDER (100 HOURS)

INDEX	CD	PART NO.	DESCRIPTION	QTY	SERIAL NO.
		(707-01-XM350)	CYLINDER GROUP	1	J30001-UP
		==========			
1		707-01-XAF90	CYLINDER ASS'Y	1	J30001-UP
		707-13-16870	.CYLINDER	1	J30001-UP
2		707-76-10130	.BUSHING	1	J30001-UP
3		07145-00100	.SEAL,DUST (KIT)	2	J30001-UP
4		07020-00000	.FITTING, GREASE	1	J30001-UP
5		707-58-11810	.ROD	1	J30001-UP
6		707-76-10140	.BUSHING	1	J30001-UP
7		208-70-73530	.SEAL, DUST (KIT)	2	J30001-UP
8		07020-00000	.FITTING, GREASE	1	J30001-UP
9		707-27-16580	.HEAD	1	J30001-UP
10		198-63-94170	.SEAL,DUST (KIT)	1	J30001-UP
11		07179-13126	.RING,SNAP	1	J30001-UP
12		707-52-90850	.BUSHING	1	J30001-UP
13		707-75-11040	.RING,SNAP	1	J30001-UP
14		707-51-11030	.PACKING,ROD (KIT)	1	J30001-UP
15		707-51-11650	.RING,BUFFER (KIT)	1	J30001-UP
16		707-35-91640	.RING,BACK-UP (KIT)	1	J30001-UP
17		07000-15150	.O-RING (KIT)	1	J30001-UP
18		01010-82085	.BOLT	12	J30001-UP
19		707-88-75310	.WASHER	12	J30001-UP
20		707-36-16580	.PISTON	1	J30001-UP
21		01310-01216	.SCREW	1	J30001-UP
22		707-44-16150	.RING,PISTON (KIT)	1	J30001-UP
23		707-39-16120	.RING,WEAR (KIT)	2	J30001-UP
24		707-44-16910	.RING	2	J30001-UP
25		07001-05100	.RING,BACK-UP (KIT)	2	J30001-UP
26		07000-B5100	.O-RING (KIT)	1	J30001-UP
27		707-86-12580	TUBE	1	J30001-UP
28		707-86-12570	TUBE	1	J30001-UP
29		07372-21240	BOLT	8	J30001-UP
30		01643-51032	WASHER	8	J30001-UP
31		07000-13035	O-RING (KIT)	2	J30001-UP
32		707-88-25390	BRACKET	2	J30001-UP
33		07372-21240	BOLT	4	J30001-UP
34		01643-51232	WASHER	4	J30001-UP
35		707-88-10150	CLAMP	2	J30001-UP
36		01010-81245	BOLT	4	J30001-UP
37		01643-31232	WASHER	4	J30001-UP
38		707-88-33040	CAP	2	J30001-UP
39		07371-31049	FLANGE, SPLIT	4	J30001-UP
40		07372-21035	BOLT	8	J30001-UP
41		01643-51032	WASHER	8	J30001-UP

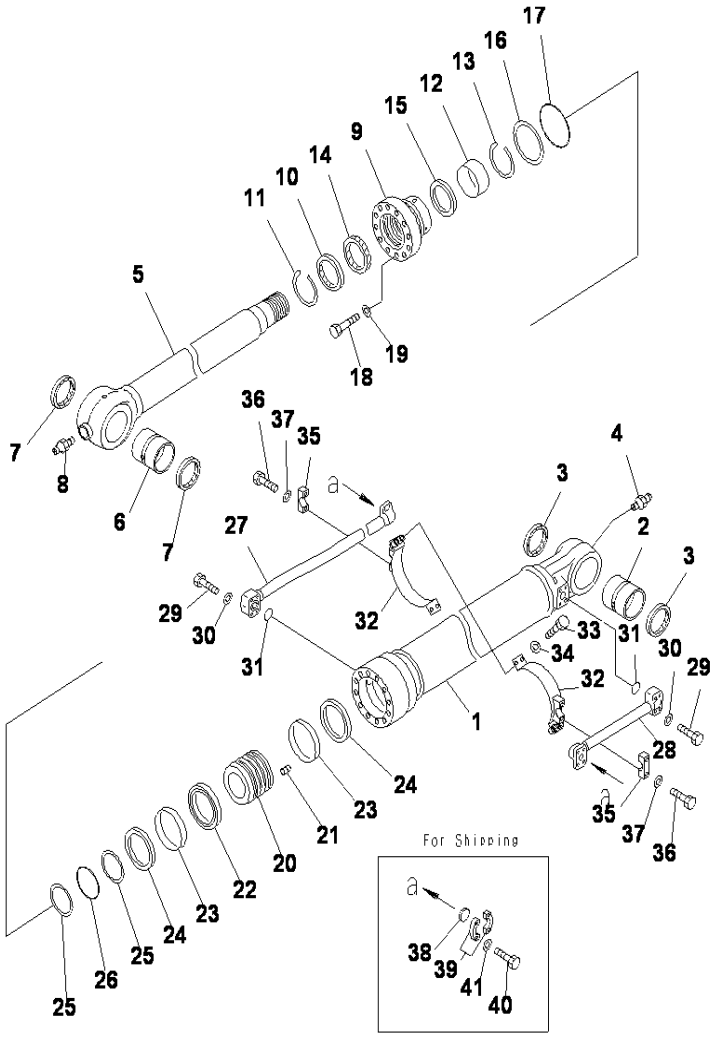

PC400-8 S/N J30001-UP

BUCKET CYLINDER (100 HOURS)

INDEX	CD	PART NO.	DESCRIPTION	QTY	SERIAL NO.
		==========	.....		J30001-UP
		707-99-72120	SERVICE KIT.....	1	J30001-UP

Ref :Y1620-41A1 Page :480311

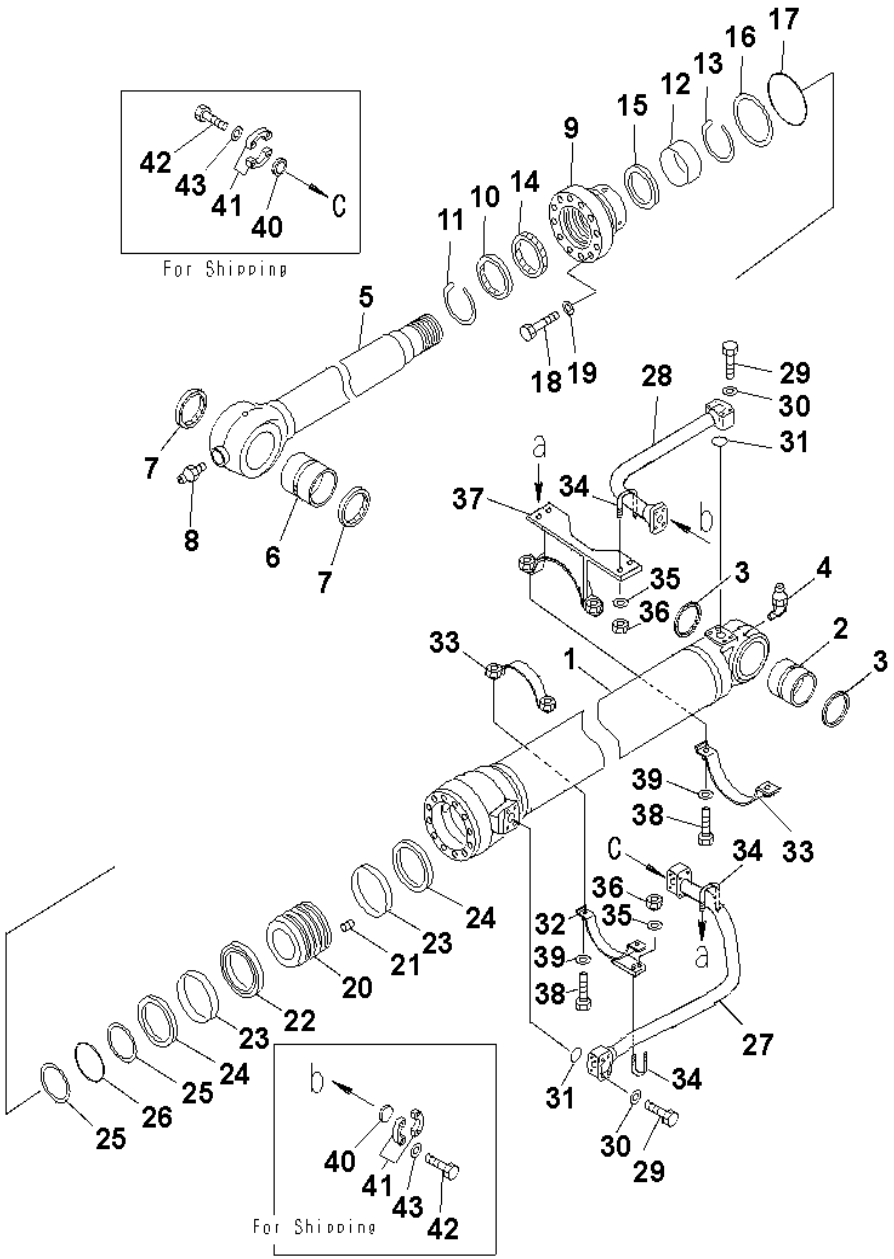

BUCKET CYLINDER (100 HOURS) (STD)

INDEX	CD	PART NO.	DESCRIPTION	QTY	SERIAL NO.
		(707-01-XM440)	CYLINDER GROUP	1	J30001-UP
		==========			J30001-UP
		707-01-XAG80	CYLINDER ASS'Y	1	J30001-UP
1		707-13-18920	.CYLINDER	1	J30001-UP
2		707-76-11130	.BUSHING	1	J30001-UP
3		07145-00110	.SEAL, DUST (KIT)	2	J30001-UP
4		07020-00675	.FITTING, GREASE	1	J30001-UP
5		707-58-12650	.ROD	1	J30001-UP
6		707-76-11130	.BUSHING	1	J30001-UP
7		07145-00110	.SEAL,DUST (KIT)	2	J30001-UP
8		07020-00000	.FITTING, GREASE	1	J30001-UP
9		707-27-18930	.HEAD	1	J30001-UP
10		195-63-93170	.SEAL,DUST (KIT)	1	J30001-UP
11		07179-13136	.RING,SNAP	1	J30001-UP
12		707-52-91980	.BUSHING	1	J30001-UP
13		07179-13126	.RING,SNAP	1	J30001-UP
14		707-51-12030	.PACKING,ROD (KIT)	1	J30001-UP
15		707-51-12650	.RING,BUFFER (KIT)	1	J30001-UP
16		707-35-91840	.RING,BACK-UP (KIT)	1	J30001-UP
17		07000-15175	.O-RING (KIT)	1	J30001-UP
18		01011-82400	.BOLT	12	J30001-UP
19		707-88-75410	.WASHER	12	J30001-UP
20		707-36-18520	.PISTON	1	J30001-UP
21		01310-01225	.SCREW	1	J30001-UP
22		707-44-18250	.RING,PISTON (KIT)	1	J30001-UP
23		707-39-18510	.RING,WEAR (KIT)	2	J30001-UP
24		707-44-18920	.RING	2	J30001-UP
25		07001-05110	.RING,BACK-UP (KIT)	2	J30001-UP
26		07000-B5110	.O-RING (KIT)	1	J30001-UP
27		707-86-13080	TUBE	1	J30001-UP
28		208-63-73580	TUBE	1	J30001-UP
29		07372-21060	BOLT	8	J30001-UP
30		01643-51032	WASHER	8	J30001-UP
31		07000-13035	O-RING	2	J30001-UP
32		707-88-28260	BRACKET	1	J30001-UP
33		707-88-26140	BRACKET	2	J30001-UP
34		07283-33442	CLAMP	3	J30001-UP
35		01643-31032	WASHER	6	J30001-UP
36		01597-01009	NUT	6	J30001-UP
37		707-88-28270	BRACKET	1	J30001-UP
38		07372-21240	BOLT	8	J30001-UP
39		01643-51232	WASHER	8	J30001-UP
40		707-88-33040	CAP	2	J30001-UP
41		07371-31049	FLANGE, SPLIT	8	J30001-UP
42		07372-21035	BOLT	8	J30001-UP

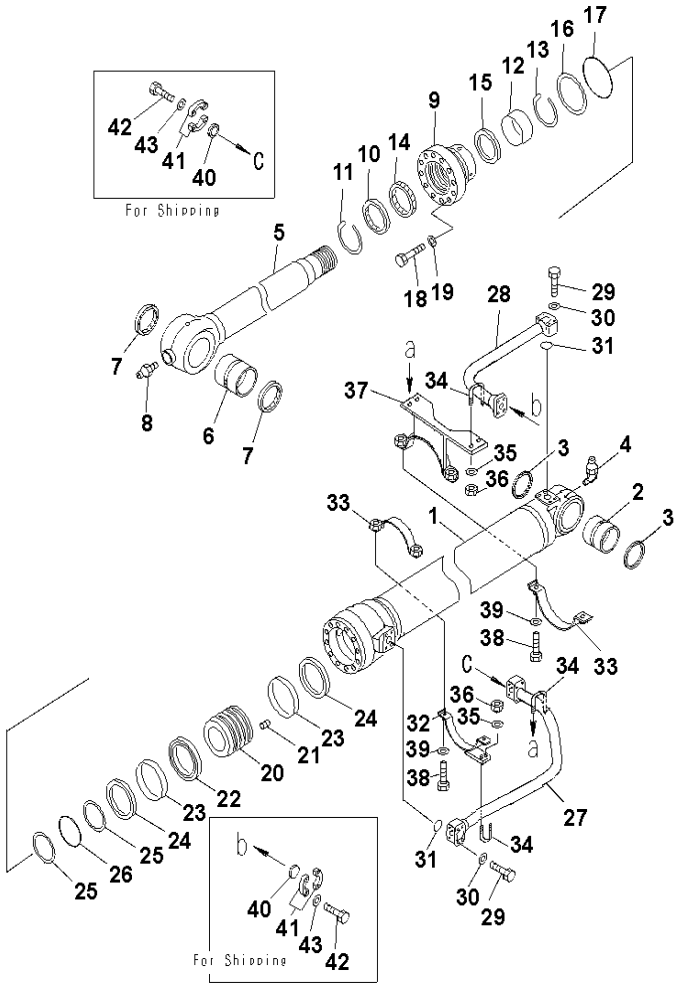

BUCKET CYLINDER (100 HOURS)(STD)

INDEX	CD	PART NO.	DESCRIPTION	QTY	SERIAL NO.
43		01643-51032	WASHER.....	8	J30001-UP
		==========	.....		J30001-UP
		707-99-75910	SERVICE KIT.....	1	J30001-UP

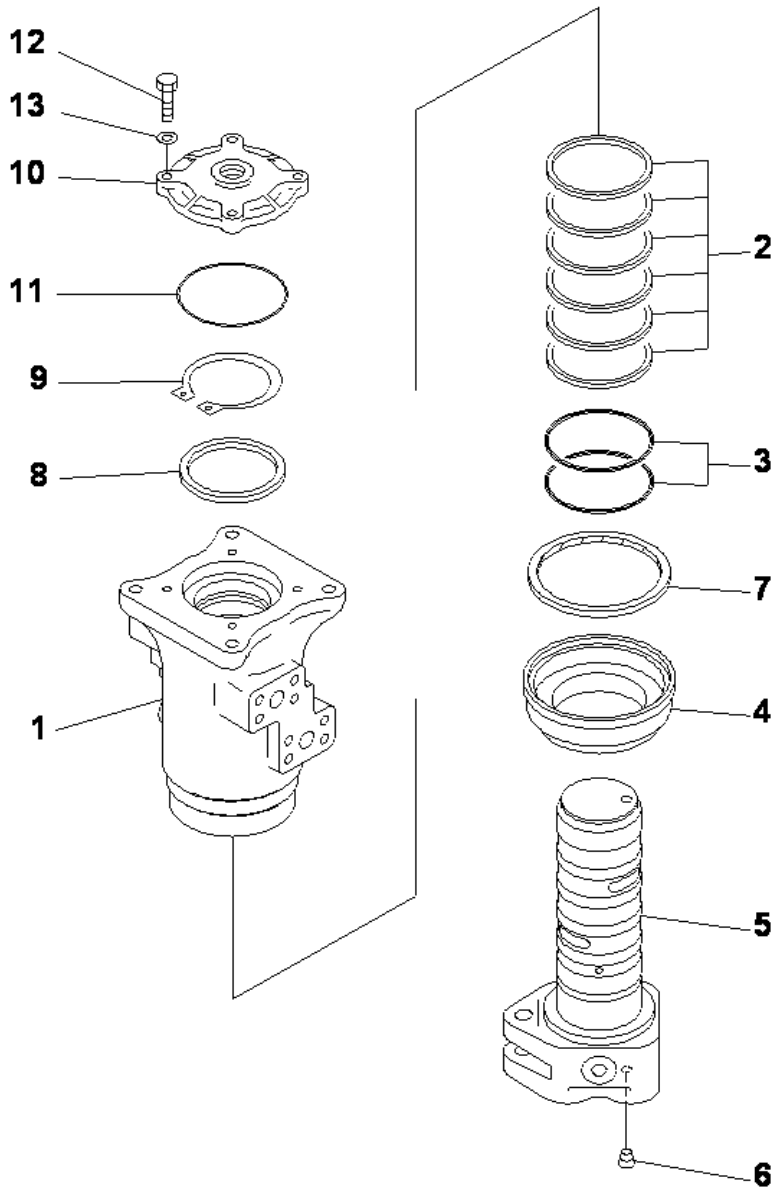

PC400-8 S/N J30001-UP

SWIVEL JOINT

INDEX	CD	PART NO.	DESCRIPTION	QTY	SERIAL NO.
1		703-08-33651	SWIVEL JOINT ASS'Y	1	J30001-UP
	C1	703-08-9121	.ROTOR	1	J30001-UP
2		703-08-95620	.SEAL	6	J30001-UP
3		07000-15080	.O-RING	2	J30001-UP
4		703-08-93771	.COVER	1	J30001-UP
5	C1	703-08-92211	.SHAFT	1	J30001-UP
6		703-08-98930	..PLUG	1	J30001-UP
7		703-08-95770	.SEAL,DUST	1	J30001-UP
8		703-08-94510	.RING	1	J30001-UP
9		04064-07525	.SNAP RING	1	J30001-UP
10		703-08-93170	.COVER	1	J30001-UP
11		07000-12105	.O-RING	1	J30001-UP
12		01010-80835	.BOLT	4	J30001-UP
13		01643-30823	.WASHER	4	J30001-UP

Ref :Y1627-01A0 Page :480330

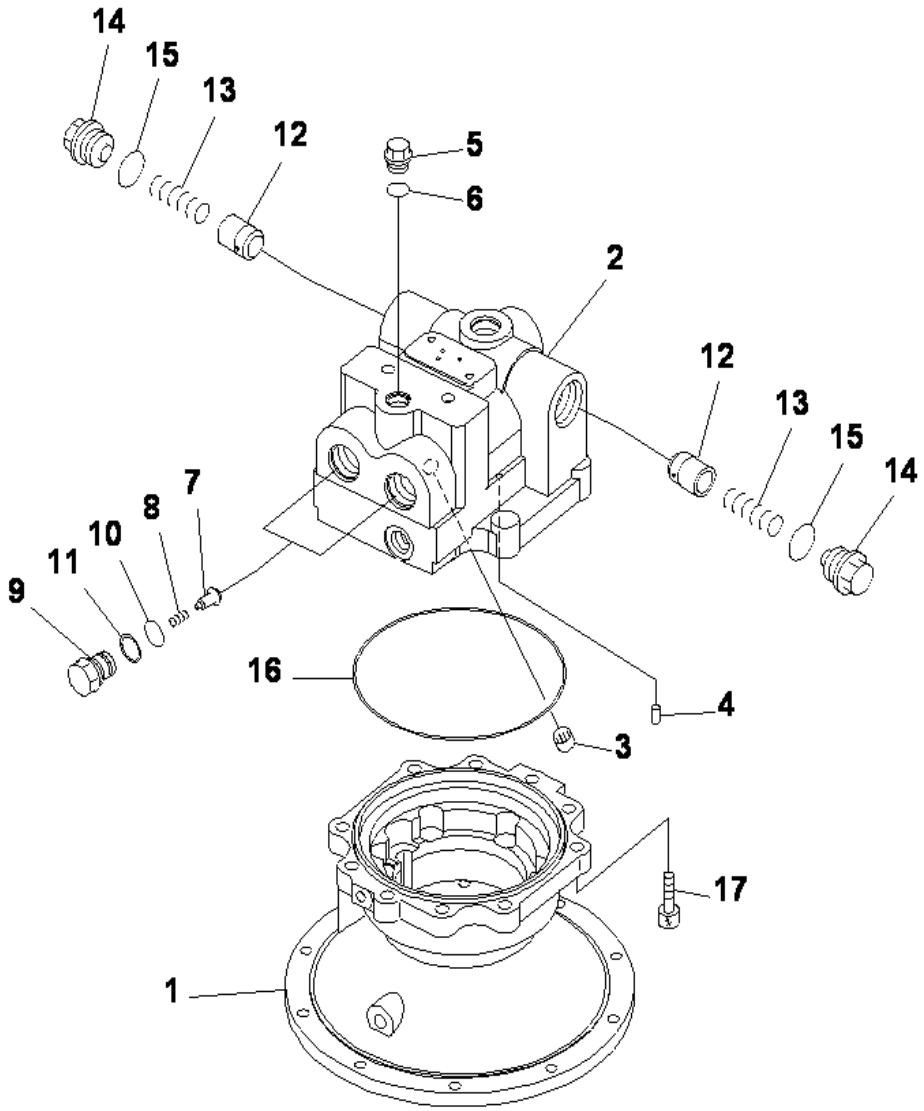

SWING MOTOR (1/3)

INDEX	CD	PART NO.	DESCRIPTION	QTY	SERIAL NO.
		706-7K-01160	MOTOR ASS'Y	1	J30001-UP
			THIS ASSEMBLY CONSISTS OF ALL PARTS		
			SHOWN IN FIGS.Y1640-01A0 TO Y1640-03A0		
		706-7K-03140	.MOTOR SUB ASS'Y	1	J30001-UP
1	C2	(706-7K-41150)	..CASE, MOTOR	1	J30001-UP
2	C2	(706-7K-71110)	..HOUSING	1	J30001-UP
3	C2	(706-7K-40010)	..BEARING	1	J30001-UP
4	C2	(706-75-42830)	..PIN, DOWEL	1	J30001-UP
5		706-77-72280	..PLUG	1	J30001-UP
6		07002-12034	..O-RING	1	J30001-UP
7		709-74-92810	..VALVE	2	J30001-UP
8		709-75-92220	..SPRING	2	J30001-UP
9		709-74-92821	..PLUG	2	J30001-UP
10		708-2L-23960	..O-RING	2	J30001-UP
11		700-93-11330	..RING, BACK-UP	2	J30001-UP
12		706-77-72130	..VALVE	2	J30001-UP
13		706-77-72140	..SPRING	2	J30001-UP
14		706-77-72150	..PLUG	2	J30001-UP
15		07002-14234	..O-RING	2	J30001-UP
16	C2	(706-7K-40040)	..O-RING	1	J30001-UP
17		012-52-61450	..BOLT	10	J30001-UP

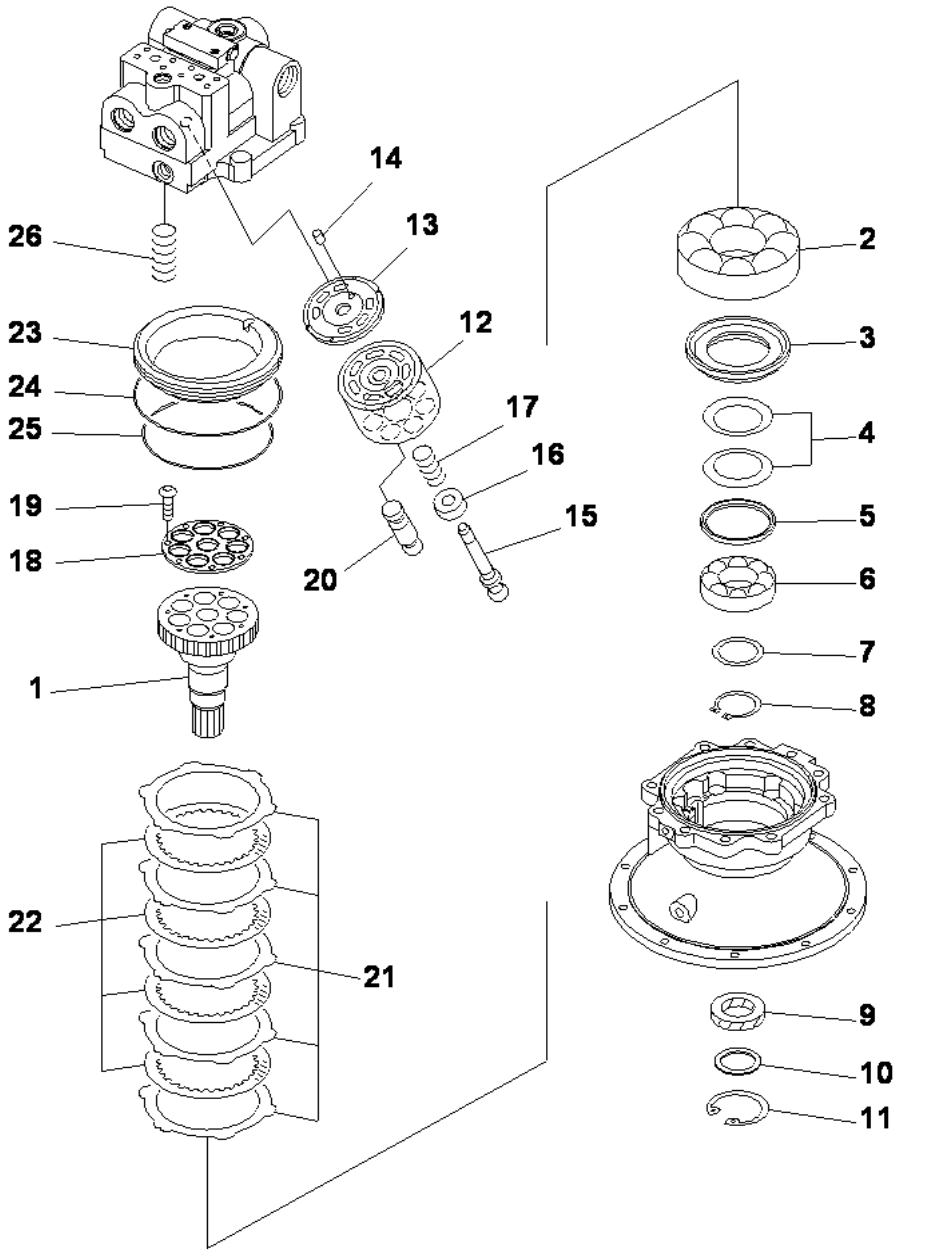

SWING MOTOR (2/3)

INDEX	CD	PART NO.	DESCRIPTION	QTY	SERIAL NO.
		(706-7K-01160)	MOTOR ASS'Y	1	J30001-UP
			THIS ASSEMBLY CONSISTS OF ALL PARTS		
			SHOWN IN FIGS.Y1640-01A0 TO Y1640-03A0		
		(706-7K-03140)	.MOTOR SUB ASS'Y	1	J30001-UP
1	C2	(706-7K-41610)	..SHAFT	1	J30001-UP
2	C2	(706-77-43880)	..BEARING	1	J30001-UP
3	C2	(706-7K-41810)	..SPACER	1	J30001-UP
4	C2	(706-77-42051)	..SPRING	2	J30001-UP
5	C2	(706-77-42041)	..SEAT	1	J30001-UP
6	C2	(706-77-42890)	..BEARING	1	J30001-UP
7	C2	(706-77-05010)	..SPACER KIT	1	J30001-UP
	C1	706-77-42440	...SPACER, 2.3MM	2	J30001-UP
	C1	706-77-42450	...SPACER, 2.5MM	2	J30001-UP
	C1	706-77-42460	...SPACER, 2.7MM	2	J30001-UP
8		04064-06525	..RING, SNAP	1	J30001-UP
9		706-8J-41420	..SEAL, OIL	1	J30001-UP
10		706-7K-41920	..SPACER	1	J30001-UP
11		04065-07525	..RING	1	J30001-UP
12	C2	(706-7K-41210)	..BLOCK, CYLINDER	1	J30001-UP
13	C2	(706-7K-41710)	..PLATE, VALVE	1	J30001-UP
14	C2	(708-18-13230)	..PIN	1	J30001-UP
15	C2	(706-7K-41120)	..SHAFT, CENTER	1	J30001-UP
16	C2	(706-77-42130)	..RING, CENTER	1	J30001-UP
17	C2	(706-7K-41140)	..SPRING	1	J30001-UP
	C2	(706-7K-05010)	..RETAINER KIT	1	J30001-UP
18	C1	706-7K-41260	...RETAINER	1	J30001-UP
19	C1	708-23-12350	...SCREW	7	J30001-UP
20	C2	(706-7K-41160)	..PISTON SUB ASS'Y	7	J30001-UP
21	C2	(706-7K-91340)	..PLATE	5	J30001-UP
22	C2	(706-7K-91350)	..DISC	4	J30001-UP
23	C2	(706-7K-91111)	..PISTON, BRAKE	1	J30001-UP
24	C2	(07000-B5230)	..O-RING	1	J30001-UP
25	C2	(708-86-90290)	..O-RING	1	J30001-UP
26	C2	(706-7K-91360)	..SPRING	6	J30001-UP

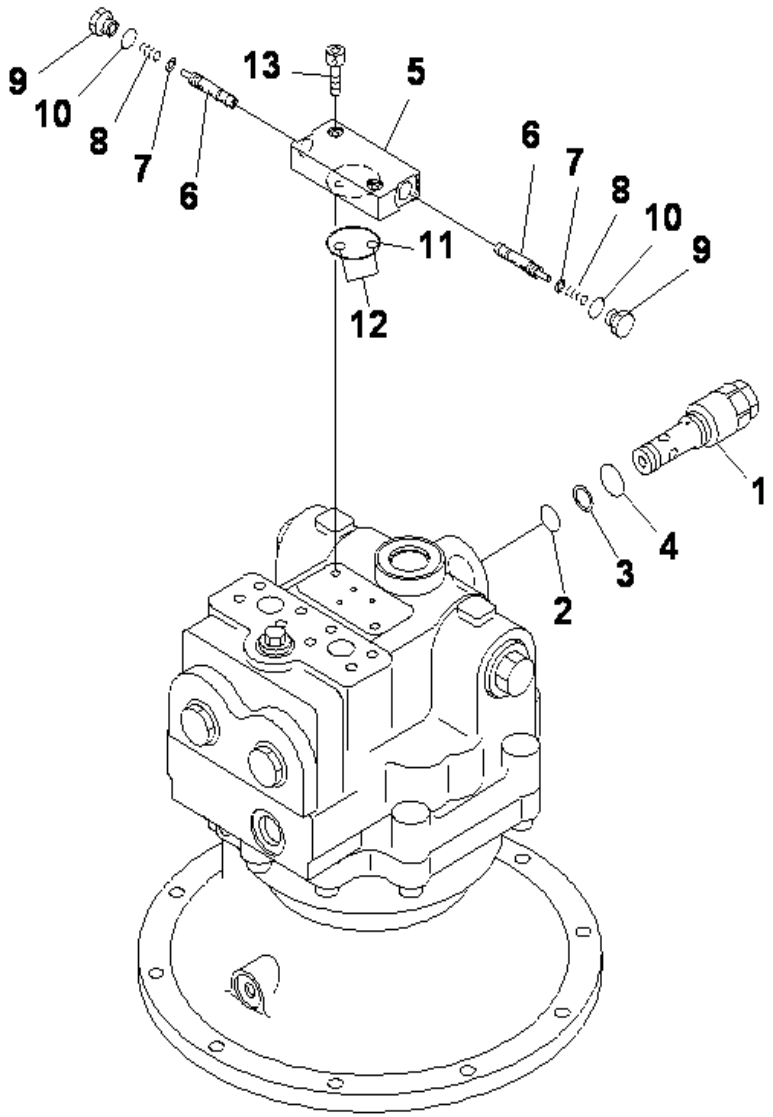

PC400-8 S/N J30001-UP

SWING MOTOR (3/3)

INDEX	CD	PART NO.	DESCRIPTION	QTY	SERIAL NO.
		(706-7K-01160)	MOTOR ASS'Y.....	1	J30001-UP
			THIS ASSEMBLY CONSISTS OF ALL PARTS.....		
			SHOWN IN FIGS.Y1640-01A0 TO Y1640-03A0.....		
1		702-77-02170	.VALVE ASS'Y, RELIEF.....	1	J30001-UP
2		07000-F3022	..O-RING.....	1	J30001-UP
3		0700103022	..RING, BACK-UP.....	1	J30001-UP
4		07002-13634	..O-RING.....	1	J30001-UP
		702-15-78000	.VALVE ASS'Y.....	1	J30001-UP
5	C1	702-15-71220	..BODY.....	1	J30001-UP
6	C1	702-15-71210	..SPOOL.....	2	J30001-UP
7		709-70-71610	..SEAL.....	2	J30001-UP
8		702-15-71130	..SPRING.....	2	J30001-UP
9		702-15-71140	..PLUG.....	2	J30001-UP
10		07002-01423	..O-RING.....	2	J30001-UP
11		07000-13042	.O-RING.....	1	J30001-UP
12		07000-11009	.O-RING.....	2	J30001-UP
13		01252-60825	.BOLT.....	2	J30001-UP

Ref :Y1640-03A0 Page :480360

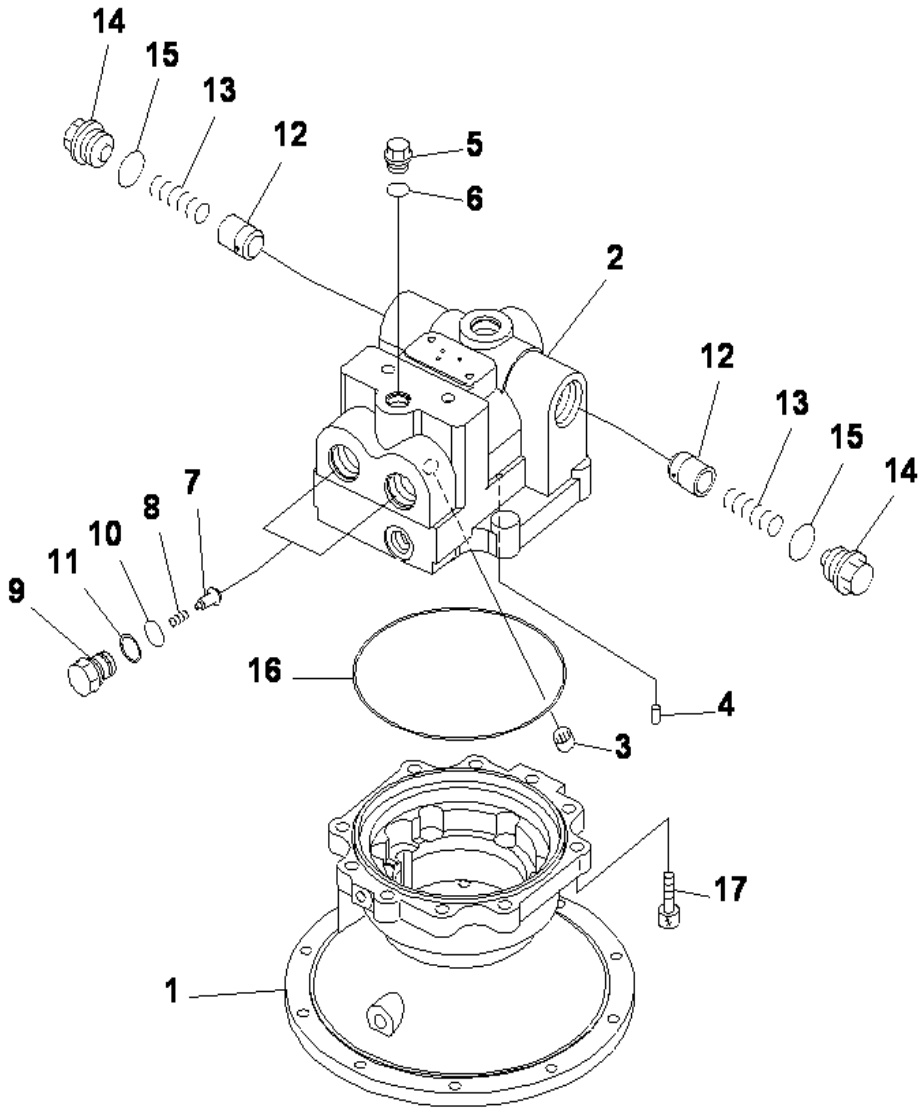

PC400-8 S/N J30001-UP

SWING MOTOR (1/3)

INDEX	CD	PART NO.	DESCRIPTION	QTY	SERIAL NO.
		706-7K-01170	MOTOR ASS'Y	1	J30001-UP
			THIS ASSEMBLY CONSISTS OF ALL PARTS		
			SHOWN IN FIGS.Y1640-01A1 TO Y1640-03A1		
		706-7K-03140	.MOTOR SUB ASS'Y	1	J30001-UP
1	C2	(706-7K-41150)	..CASE, MOTOR	1	J30001-UP
2	C2	(706-7K-71110)	..HOUSING	1	J30001-UP
3	C2	(706-7K-40010)	..BEARING	1	J30001-UP
4	C2	(706-75-42830)	..PIN, DOWEL	1	J30001-UP
5		706-77-72280	..PLUG	1	J30001-UP
6		07002-12034	..O-RING	1	J30001-UP
7		709-74-92810	..VALVE	2	J30001-UP
8		709-75-92220	..SPRING	2	J30001-UP
9		709-74-92821	..PLUG	2	J30001-UP
10		708-2L-23960	..O-RING	2	J30001-UP
11		700-93-11330	..RING, BACK-UP	2	J30001-UP
12		706-77-72130	..VALVE	2	J30001-UP
13		706-77-72140	..SPRING	2	J30001-UP
14		706-77-72150	..PLUG	2	J30001-UP
15		07002-14234	..O-RING	2	J30001-UP
16	C2	(706-7K-40040)	..O-RING	1	J30001-UP
17		01252-61450	..BOLT	10	J30001-UP

Ref :Y1640-01A1 Page :480370

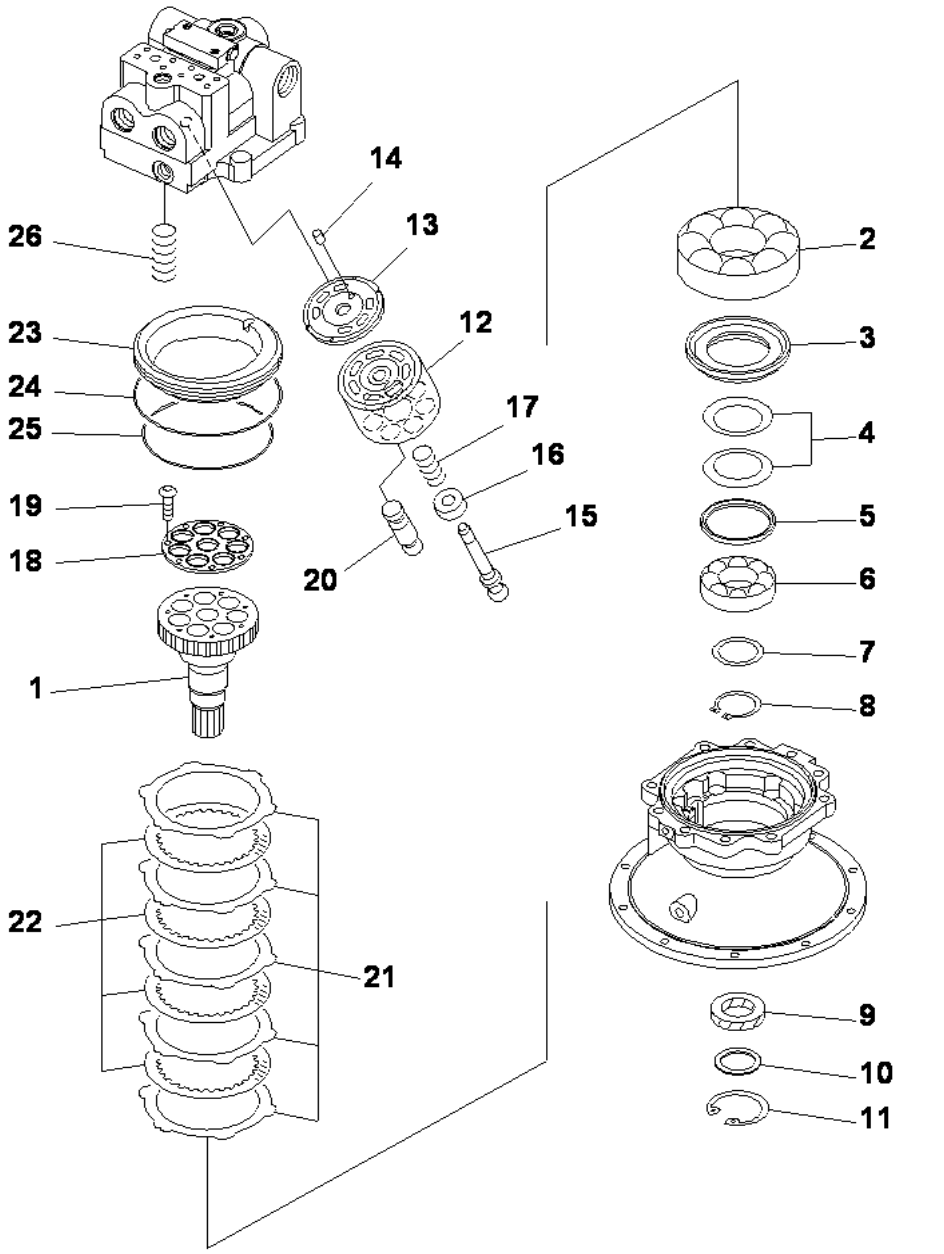

SWING MOTOR (2/3)

INDEX	CD	PART NO.	DESCRIPTION	QTY	SERIAL NO.
		(706-7K-01170)	MOTOR ASS'Y	1	J30001-UP
			THIS ASSEMBLY CONSISTS OF ALL PARTS		
			SHOWN IN FIGS.Y1640-01A1 TO Y1640-03A1		
		(706-7K-03140)	.MOTOR SUB ASS'Y	1	J30001-UP
1	C2	(706-7K-41610)	..SHAFT	1	J30001-UP
2	C2	(706-77-43890)	..BEARING	1	J30001-UP
3	C2	(706-7K-41810)	..SPACER	1	J30001-UP
4	C2	(706-77-42051)	..SPRING	2	J30001-UP
5	C2	(706-77-42041)	..SEAT	1	J30001-UP
6	C2	(706-77-42890)	..BEARING	1	J30001-UP
7	C2	(706-77-05010)	..SPACER KIT	1	J30001-UP
	C1	706-77-42440	...SPACER, 2.3MM	2	J30001-UP
	C1	706-77-42450	...SPACER, 2.5MM	2	J30001-UP
	C1	706-77-42460	...SPACER, 2.7MM	2	J30001-UP
8		04064-06525	..RING, SNAP	1	J30001-UP
9		706-8J-41420	..SEAL, OIL	1	J30001-UP
10		706-7K-41920	..SPACER	1	J30001-UP
11		04065-07525	..RING	1	J30001-UP
12	C2	(706-7K-41210)	..BLOCK, CYLINDER	1	J30001-UP
13	C2	(706-7K-41710)	..PLATE, VALVE	1	J30001-UP
14	C2	(708-18-13230)	..PIN	1	J30001-UP
15	C2	(706-7K-41120)	..SHAFT, CENTER	1	J30001-UP
16	C2	(706-77-42130)	..RING, CENTER	1	J30001-UP
17	C2	(706-7K-41140)	..SPRING	1	J30001-UP
	C2	(706-7K-05010)	..RETAINER KIT	1	J30001-UP
18	C1	706-7K-41260	...RETAINER	1	J30001-UP
19	C1	708-23-12350	...SCREW	7	J30001-UP
20	C2	(706-7K-41160)	..PISTON SUB ASS'Y	7	J30001-UP
21	C2	(706-7K-91340)	..PLATE	5	J30001-UP
22	C2	(706-7K-91350)	..DISC	4	J30001-UP
23	C2	(706-7K-91111)	..PISTON, BRAKE	1	J30001-UP
24	C2	(07000-B5230)	..O-RING	1	J30001-UP
25	C2	(708-8H-15220)	..O-RING	1	J30001-UP
26	C2	(706-86-90290)	..SPRING	6	J30001-UP

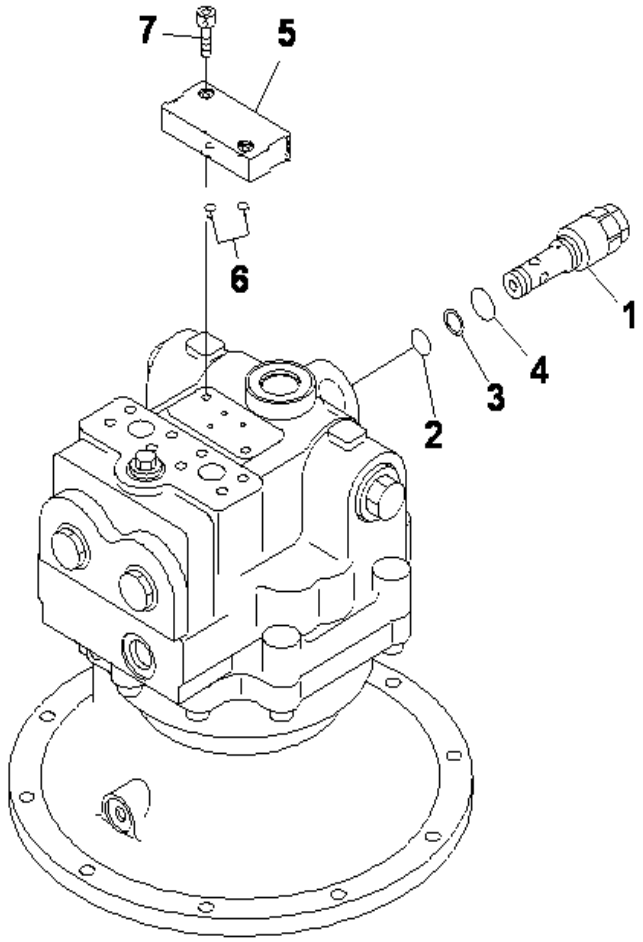

PC400-8 S/N J30001-UP

SWING MOTOR (3/3)

INDEX	CD	PART NO.	DESCRIPTION	QTY	SERIAL NO.
		(706-7K-01170)	MOTOR ASS'Y.....	1	J30001-UP
			THIS ASSEMBLY CONSISTS OF ALL PARTS.....		
			SHOWN IN FIGS.Y1640-01A1 TO Y1640-03A1.....		
1		702-77-02170	.VALVE ASS'Y, RELIEF.....	1	J30001-UP
2		07000-F3022	..O-RING.....	1	J30001-UP
3		07001-03022	..RING, BACK-UP.....	1	J30001-UP
4		07002-13634	..O-RING.....	1	J30001-UP
5		706-7G-71191	.PLATE.....	1	J30001-UP
6		07000-11009	.O-RING.....	2	J30001-UP
7		01252-60825	.BOLT.....	2	J30001-UP

Ref :Y1640-03A1 Page :480390

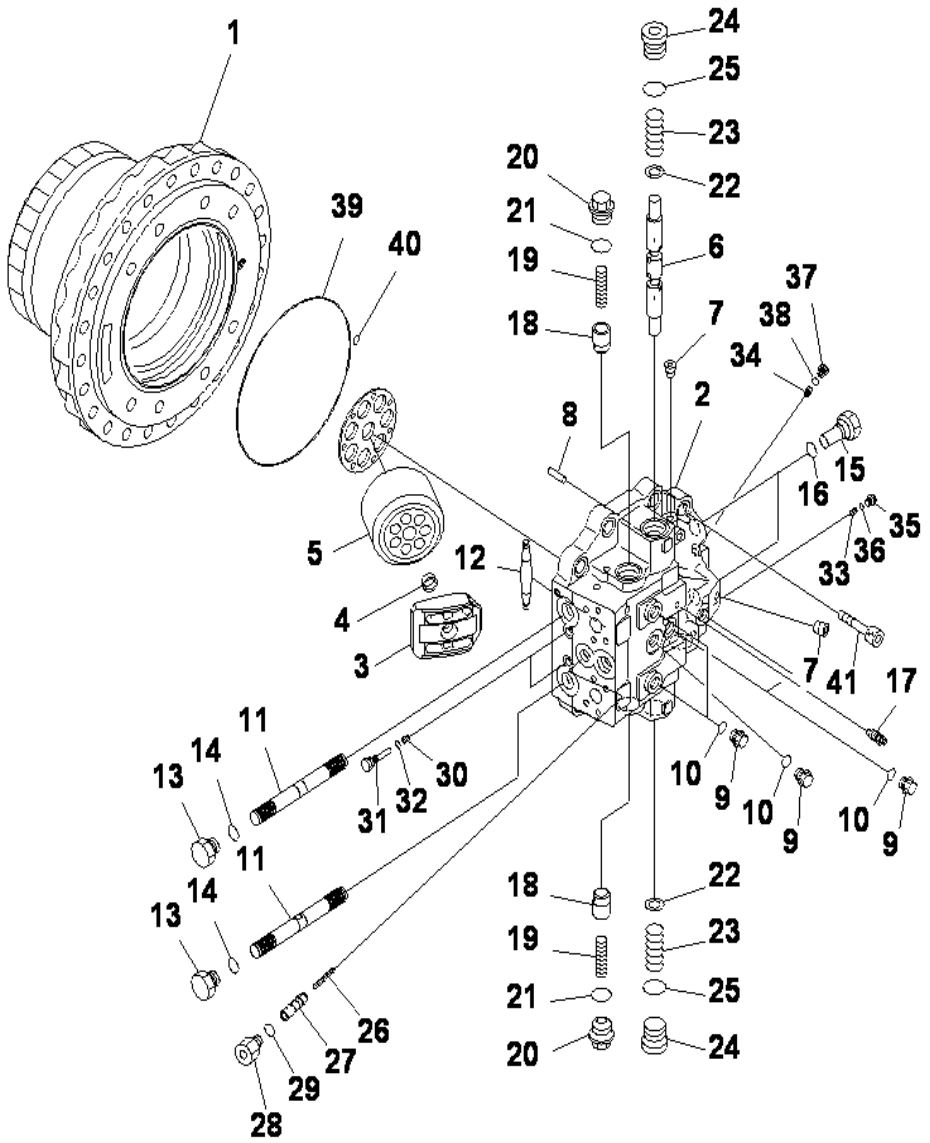

TRAVEL MOTOR (1/3)

INDEX	CD	PART NO.	DESCRIPTION	QTY	SERIAL NO.
		706-8J-01012	MOTOR ASS'Y	1	J30001-UP
			THIS ASSEMBLY CONSISTS OF ALL PARTS		
			SHOWN IN FIGS.Y1641-01A0 TO Y1641-03A0		
1	C2	(706-8J-41110)	.CASE, MOTOR	1	J30001-UP
	C2	(706-8J-00013)	.END COVER SUB ASS'Y	1	J30001-UP
2	C1	706-8J-71112	..COVER,END	1	J30001-UP
	C1	706-8J-41770	..PLATE ASS'Y, VALVE	1	J30001-UP
3	C1	706-8J-41710	...PLATE,VALVE	1	J30001-UP
4	C1	706-8J-41780	...BUSHING	1	J30001-UP
5	C1	706-8J-41211	..BLOCK,CYLINDER	1	J30001-UP
6	C1	706-8J-71120	..SPOOL	1	J30001-UP
7	C1	708-21-12541	..PLUG	16	J30001-UP
8	C2	(706-86-71310)	.PIN, DOWEL	1	J30001-UP
9		706-8E-14191	.PLUG	5	J30001-UP
10		07002-11823	.O-RING	5	J30001-UP
11	C2	(706-8J-71550)	.PISTON	2	J30001-UP
12	C2	(706-8J-71560)	.PIN	1	J30001-UP
13		706-8J-71130	.PLUG	2	J30001-UP
14		07002-12434	.O-RING	2	J30001-UP
15		706-8J-71140	.PLUG	2	J30001-UP
16		07002-12434	.O-RING	2	J30001-UP
17		20B-27-11210	.BLEEDER	1	J30001-UP
18		706-75-74540	.VALVE	2	J30001-UP
19		706-75-74550	.SPRING	2	J30001-UP
20		706-75-74850	.PLUG	2	J30001-UP
21		07002-13334	.O-RING	2	J30001-UP
22		708-8F-36120	.RING	2	J30001-UP
23		7067871280	.SPRING	2	J30001-UP
24		706-78-71230	.PLUG	2	J30001-UP
25		07002-13634	.O-RING	2	J30001-UP
26		706-8E-14170	.SPRING	1	J30001-UP
27		706-8J-71150	.SPOOL	1	J30001-UP
28		706-8J-71160	.PLUG	1	J30001-UP
29		07002-11823	.O-RING	1	J30001-UP
30		706-86-53410	.VALVE	2	J30001-UP
31		706-8J-71170	.PLUG	2	J30001-UP
32		07002-11023	.O-RING	2	J30001-UP
33		708-8E-16180	.VALVE	1	J30001-UP
34		706-8J-71181	.VALVE	1	J30001-UP
35		708-8E-16160	.PLUG	1	J30001-UP
36		07002-11023	.O-RING	1	J30001-UP
37		706-8J-71190	.PLUG	1	J30001-UP
38		07002-11223	.O-RING	1	J30001-UP
39	C2	(070-00-15270)	.O-RING	1	J30001-UP
40	C2	(07000-12012)	.O-RING	1	J30001-UP

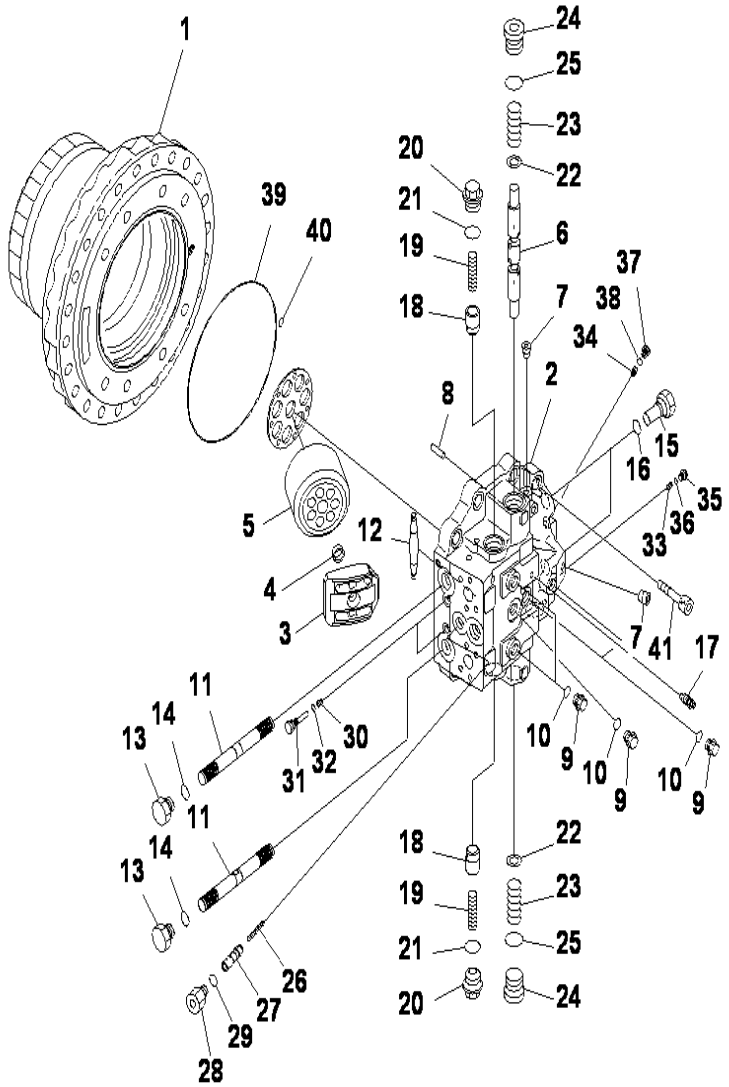

TRAVEL MOTOR (1/3)

INDEX	CD	PART NO.	DESCRIPTION	QTY	SERIAL NO.
41	C2	(01252-62060)	.BOLT.....	8	J30001-UP

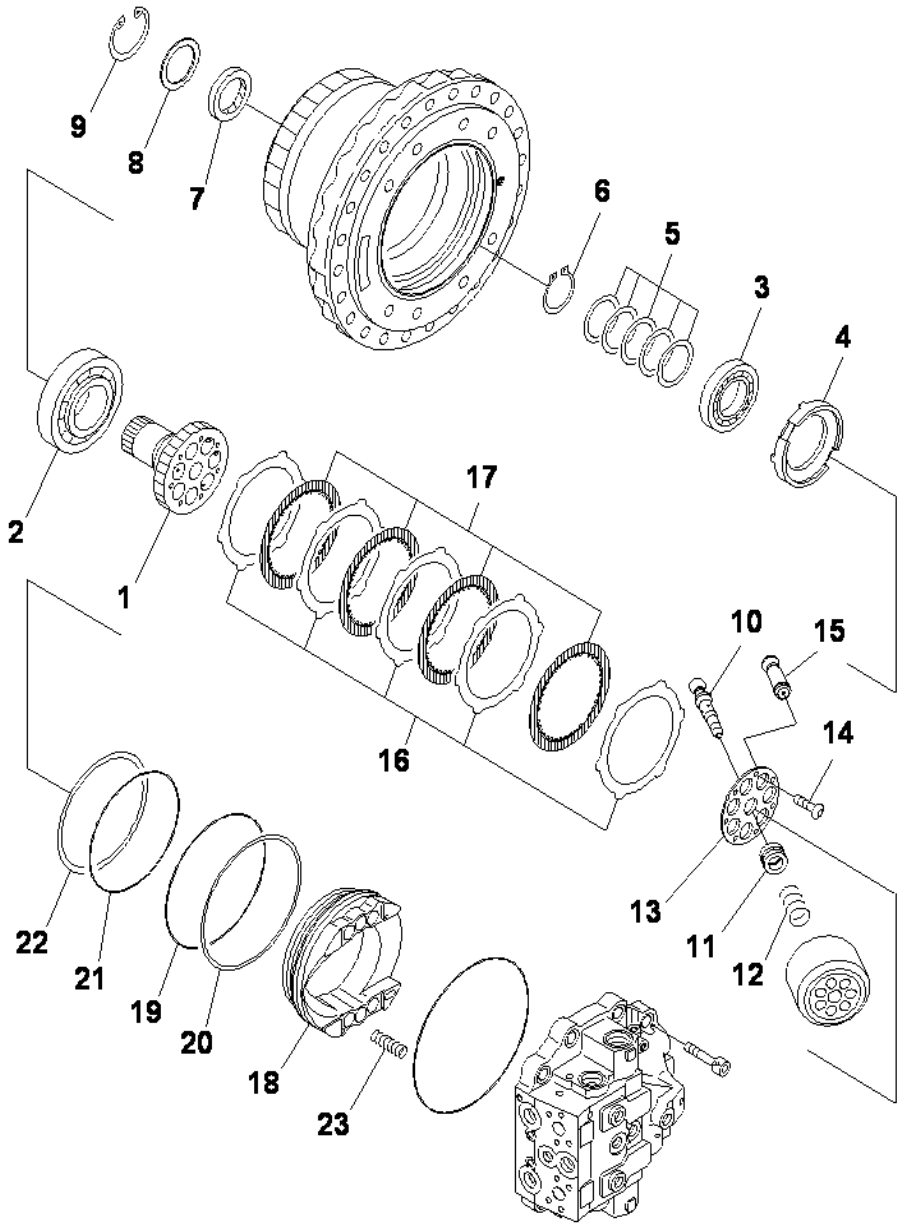

TRAVEL MOTOR (2/3)

INDEX	CD	PART NO.	DESCRIPTION	QTY	SERIAL NO.
		(706-8J-01012)	MOTOR ASS'Y.....	1	J30001-UP
			THIS ASSEMBLY CONSISTS OF ALL PARTS.....		
			SHOWN IN FIGS.Y1641-01A0 TO Y1641-03A0.....		
1	C2	(706-8J-41610)	.SHAFT, DRIVE.....	1	J30001-UP
2	C2	(706-8J-41010)	.BEARING.....	1	J30001-UP
3	C2	(706-77-42890)	.BEARING.....	1	J30001-UP
4	C2	(706-8J-41810)	.RETAINER.....	1	J30001-UP
5	C2	(706-8J-41660)	.SPACER KIT.....	1	J30001-UP
	C1	706-8J-41670	..SPACER, 2.1MM.....	1	J30001-UP
	C1	706-77-42440	..SPACER, 2.3MM.....	1	J30001-UP
	C1	706-77-42450	..SPACER, 2.5MM.....	1	J30001-UP
	C1	706-77-42460	..SPACER, 2.7MM.....	1	J30001-UP
	C1	70-68-J41680	..SPACER, 1.9MM.....	1	J30001-UP
6		04064-06525	.RING.....	1	J30001-UP
7		706-8J-41620	.SEAL, OIL.....	1	J30001-UP
8		706-8J-41820	.SPACER.....	1	J30001-UP
9	C2	(04065-09030)	.RING, SNAP.....	1	J30001-UP
10	C2	(706-8J-41280)	.SHAFT, CENTER.....	1	J30001-UP
11	C2	(706-8J-41270)	.RING, CENTER.....	1	J30001-UP
12	C2	(706-8J-41290)	.SPRING.....	1	J30001-UP
13	C2	(706-8J-41260)	.RETAINER.....	1	J30001-UP
14	C2	(708-23-12350)	.SCREW.....	7	J30001-UP
15	C2	(706-8J-41161)	.PISTON SUB ASS'Y.....	7	J30001-UP
16	C2	(706-7K-91340)	.PLATE.....	5	J30001-UP
17	C2	(706-7K-91350)	.DISC.....	4	J30001-UP
18	C2	(706-8J-91110)	.PISTON, BRAKE.....	1	J30001-UP
19	C2	(07000-15230)	.O-RING.....	1	J30001-UP
20	C2	(07001-05230)	.RING, BACK-UP.....	1	J30001-UP
21	C2	(708-8H-15220)	.O-RING.....	1	J30001-UP
22	C2	(706-8J-91120)	.RING, BACK-UP.....	1	J30001-UP
23	C2	(706-8J-91130)	.SPRING.....	6	J30001-UP

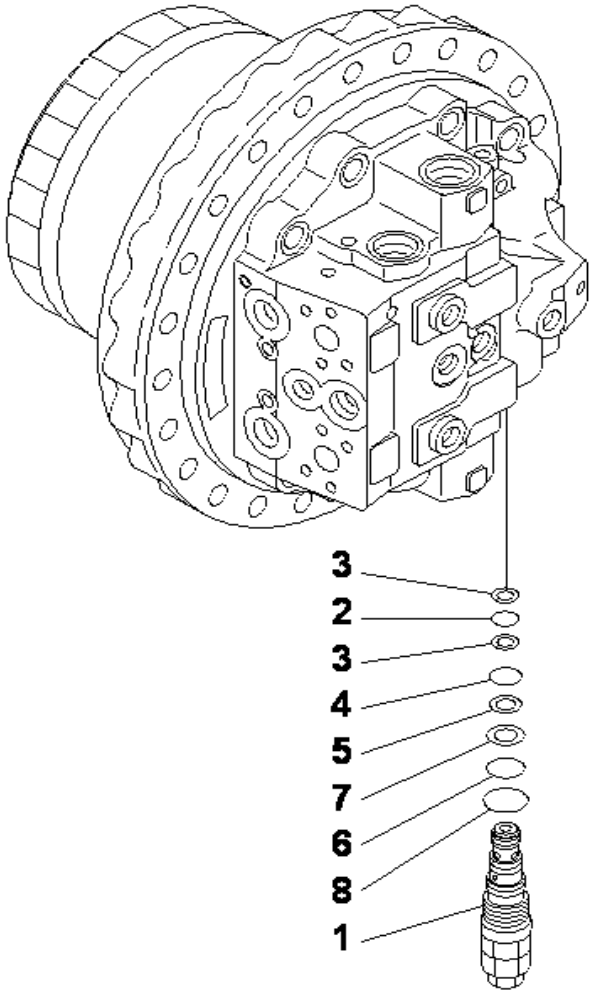

PC400-8 S/N J30001-UP

TRAVEL MOTOR (3/3)

INDEX	CD	PART NO.	DESCRIPTION	QTY	SERIAL NO.
		(706-8J-01012)	MOTOR ASS'Y.....	1	J30001-UP
			THIS ASSEMBLY CONSISTS OF ALL PARTS.....		
			SHOWN IN FIGS.Y1641-01A0 TO Y1641-03A0.....		
1		702-75-04601	.VALVE ASS'Y, RELIEF.....	1	J30078-UP
		702-75-04600	.VALVE ASS'Y, RELIEF.....	1	J30001-J30077
2		702-75-11830	..RING,BACK-UP.....	2	J30078-UP
		07000-22018	..O-RING.....	1	J30001-J30077
3		702-75-11830	..RING,BACK-UP.....	1	J30078-UP
		07001-02018	..RING, BACK-UP.....	2	J30001-J30077
4		702-75-11840	..O-RING.....	1	J30078-UP
		07000-12021	..O-RING.....	1	J30001-J30077
5		07001-02021	..RING, BACK-UP.....	1	J30001-UP
6		702-75-11520	..O-RING.....	1	J30001-UP
7		702-75-11850	..RING BACK-UP.....	1	J30078-UP
		702-75-11530	..RING, BACK-UP.....	1	J30001-J30077
8		07002-13634	..O-RING.....	1	J30001-UP

Ref :Y1641-03A0 Page :480420

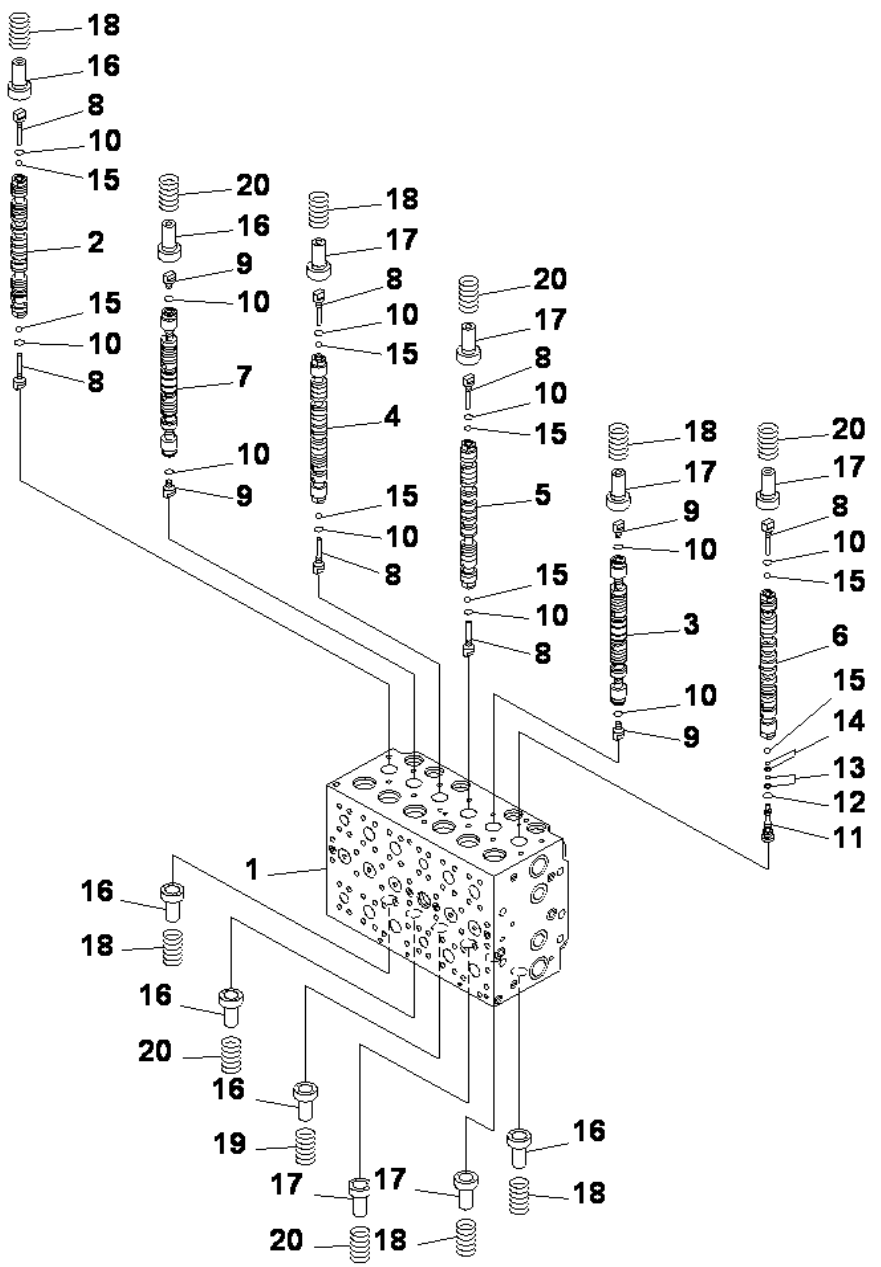

MAIN VALVE (1/20)

INDEX	CD	PART NO.	DESCRIPTION	QTY	SERIAL NO.
		723-47-27502	CONTROL VALVE.....	1	J30002-UP
		723-47-27501	CONTROL VALVE.....	1	J30001-J30001
			THIS ASSEMBLY CONSISTS OF ALL PARTS.....		J30001-UP
			SHOWN IN FIGS.Y1662-01A0 TO Y1662-20A0.....		J30001-UP
1	C1	723-46-09102	.BODY SUB ASS'Y.....	1	J30001-UP
	C1	723-46-11410	..BLOCK,VALVE.....	1	J30001-UP
2	C1	723-46-25112	..SPOOL.....	1	J30001-UP
3	C1	723-46-25211	..SPOOL.....	1	J30001-UP
4	C1	723-46-25311	..SPOOL.....	1	J30001-UP
5	C1	723-46-25410	..SPOOL.....	1	J30001-UP
6	C1	7234625512	..SPOOL.....	1	J30001-UP
7	C1	723-46-25710	..SPOOL.....	1	J30001-UP
8		723-46-15130	..PLUG.....	7	J30001-UP
9		72-34-615140	..PLUG.....	4	J30001-UP
10		07002-10823	..O-RING.....	11	J30001-UP
11	C1	723-46-16410	..PLUG.....	1	J30001-UP
12		07002-11423	..O-RING.....	1	J30001-UP
13	C1	709-70-71610	..SEAL.....	1	J30001-UP
14	C1	723-56-31870	..SEAL.....	1	J30001-UP
15		708-7T-16460	..BALL.....	8	J30001-UP
16		723-46-15120	..RETAINER.....	6	J30001-UP
17		723-46-15690	..RETAINER.....	6	J30001-UP
18		723-46-14110	..SPRING.....	6	J30001-UP
19		723-46-14170	..SPRING.....	1	J30001-UP
20		72-34-614131	..SPRING.....	5	J30001-UP

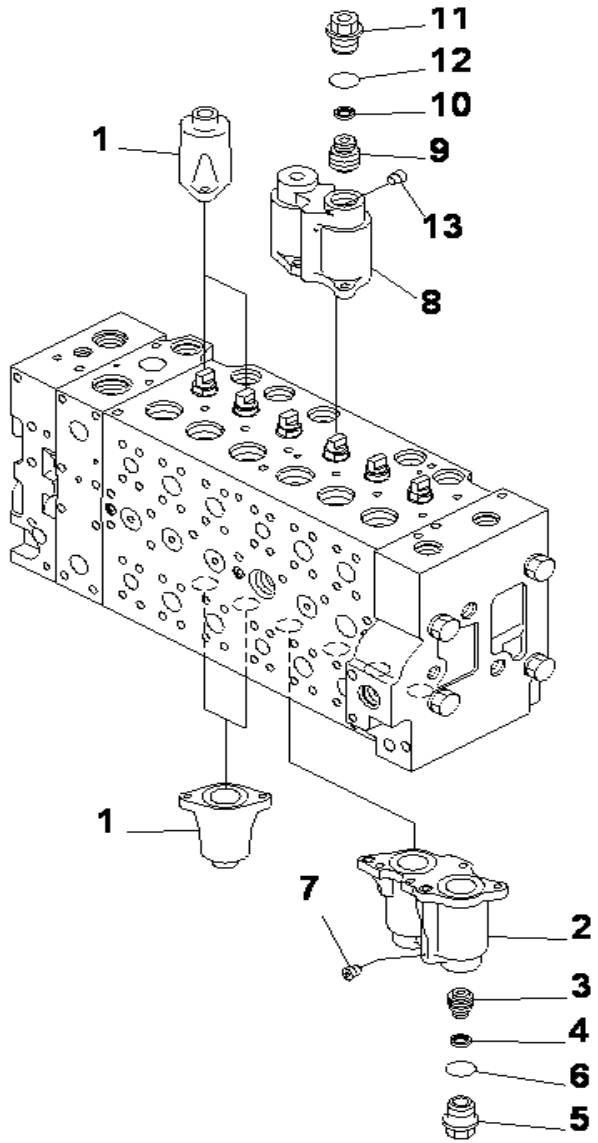

PC400-8 S/N J30001-UP

MAIN VALVE (2/20)

INDEX	CD	PART NO.	DESCRIPTION	QTY	SERIAL NO.
		(723-47-27502)	CONTROL VALVE.....	1	J30002-UP
		(723-47-27501)	CONTROL VALVE.....	1	J30001-J30001
			THIS ASSEMBLY CONSISTS OF ALL PARTS.....		
			SHOWN IN FIGS.Y1662-01A0 TO Y1662-20A0.....		
1	C1	723-46-09102	.BODY SUB ASS'Y.....	1	J30001-UP
		723-46-15111	..CASE.....	4	J30001-UP
		723-46-18140	..CASE SUB A.....	1	J30001-UP
2	C1	723-46-17171	...CASE.....	1	J30001-UP
3	C1	723-46-15640	...PISTON.....	1	J30001-UP
4	C1	702-73-11510	...SEAL.....	1	J30001-UP
5		723-46-15630	...PLUG.....	1	J30001-UP
6		07000-13024	...O-RING.....	1	J30001-UP
7	C1	702-16-54490	...SCREW.....	1	J30001-UP
		723-46-18240	..CASE SUB ASS'Y.....	1	J30001-UP
8	C1	723-46-17212	...CASE.....	1	J30001-UP
9	C1	7234615640	...PISTON.....	1	J30001-UP
10	C1	702-73-11510	...SEAL.....	1	J30001-UP
11		723-46-15630	...PLUG.....	1	J30001-UP
12		07000-13024	...O-RING.....	1	J30001-UP
13		(702-16-54490)	...SCREW.....	1	J30001-UP

Ref :Y1662-02A0 Page :480440

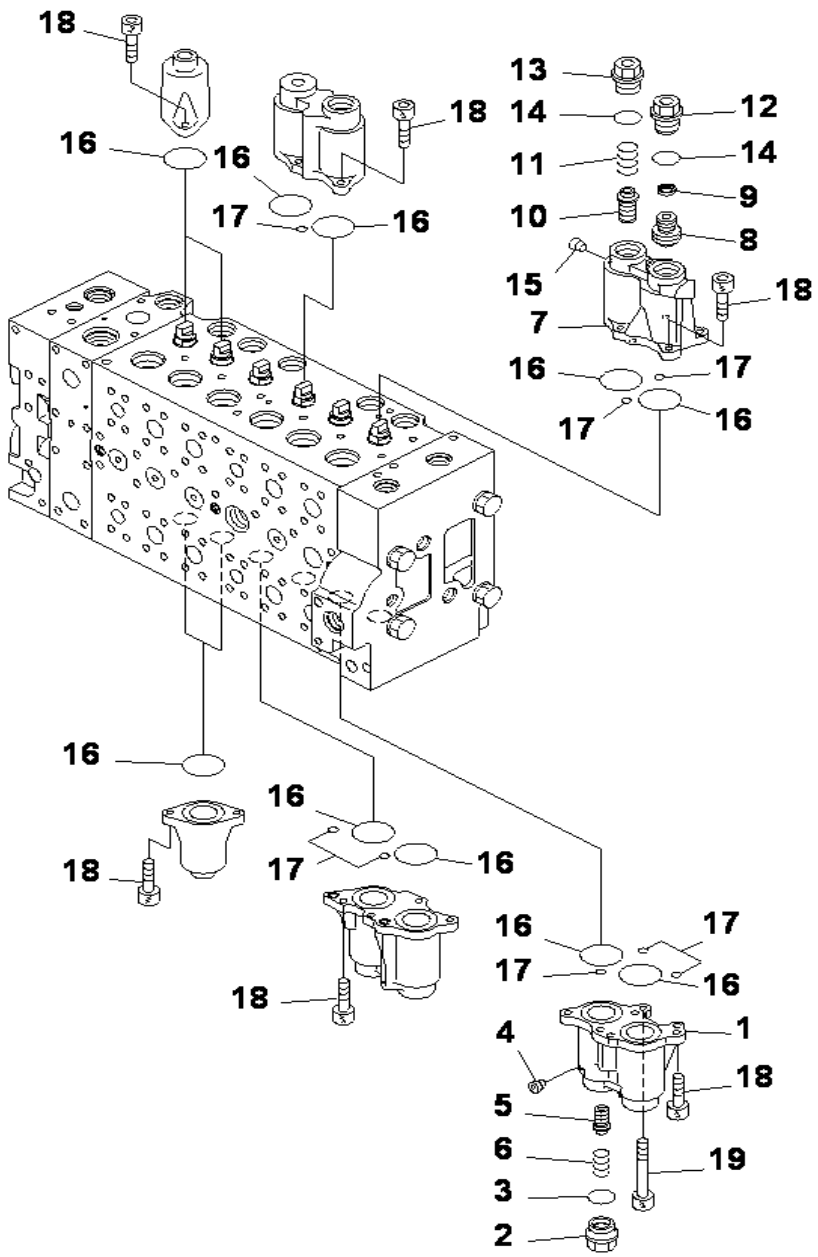

MAIN VALVE (3/20)

INDEX	CD	PART NO.	DESCRIPTION	QTY	SERIAL NO.
		(723-47-27502)	CONTROL VALVE.....	1	J30002-UP
		(723-47-27501)	CONTROL VALVE.....	1	J30001-J30001
			THIS ASSEMBLY CONSISTS OF ALL PARTS.....		
			SHOWN IN FIGS.Y1662-01A0 TO Y1662-20A0.....		
1	C1	723-46-09102	.BODY SUB ASS'Y.....	1	J30001-UP
		723-46-18330	..CASE SUB ASS'Y.....	1	J30001-UP
	C1	723-46-17370	...CASE.....	1	J30001-UP
2		723-46-17340	...PLUG.....	1	J30001-UP
3		07000-13024	...O-RING.....	1	J30001-UP
4	C1	702-16-54490	...SCREW.....	1	J30001-UP
5		723-46-17320	...SPOOL.....	1	J30001-UP
6		723-46-17330	...SPRING.....	1	J30001-UP
		723-46-18431	..CASE SUB ASS'Y.....	1	J30001-UP
7	C1	723-46-17471	...CASE.....	1	J30001-UP
8	C1	723-46-17590	...PISTON.....	1	J30001-UP
9	C1	702-73-1151	...SEAL.....	1	J30001-UP
10		723-46-17320	...SPOOL.....	1	J30001-UP
11		723-46-17330	...SPRING.....	1	J30001-UP
12		723-46-15630	...PLUG.....	1	J30001-UP
13		72-34-617340	...PLUG.....	1	J30001-UP
14		07000-13024	...O-RING.....	2	J30001-UP
15	C1	702-16-54490	...SCREW.....	3	J30001-UP
16		07430-71380	..O-RING.....	12	J30001-UP
17		702-16-53920	..O-RING.....	8	J30001-UP
18		01252-60820	..BOLT.....	23	J30001-UP
19		723-46-17350	..BOLT.....	1	J30001-UP

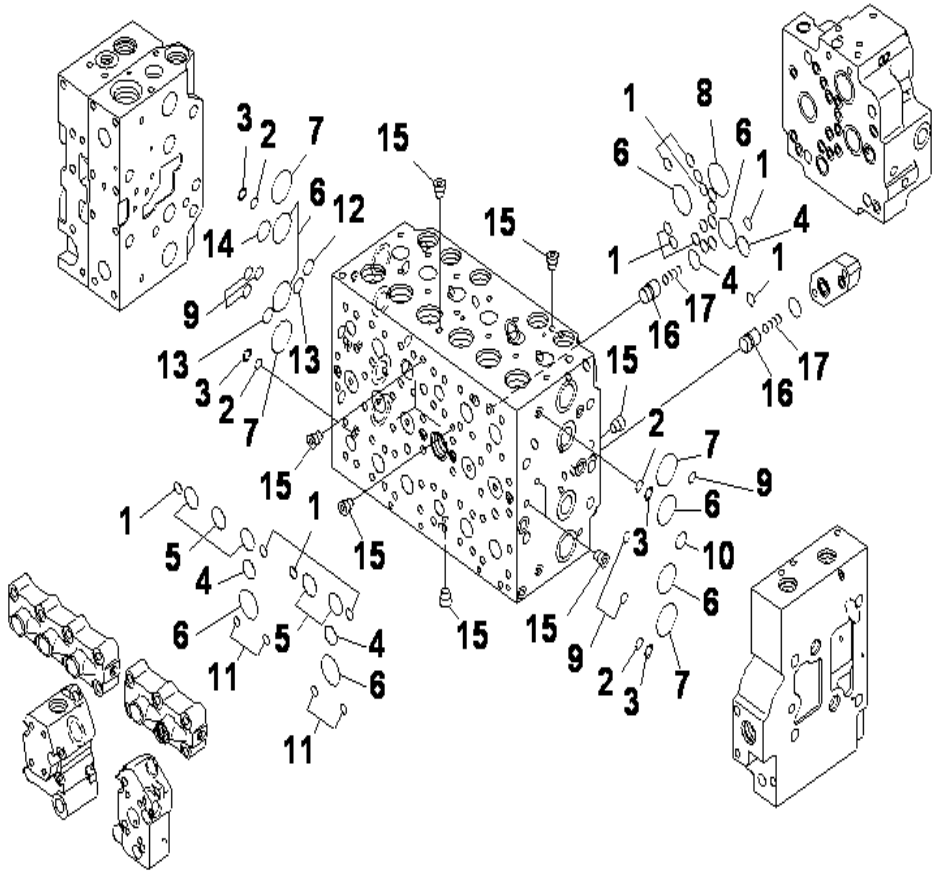

MAIN VALVE (4/20)

INDEX	CD	PART NO.	DESCRIPTION	QTY	SERIAL NO.
		(723-47-27502)	CONTROL VALVE.....	1	J30002-UP
		(723-47-27501)	CONTROL VALVE.....	1	J30001-J30001
			THIS ASSEMBLY CONSISTS OF ALL PARTS.....		
			SHOWN IN FIGS.Y1662-01A0 TO Y1662-20A0.....		
1	C1	723-46-09102	.BODY SUB ASS'Y.....	1	J30001-UP
		07000-12012	..O-RING.....	19	J30001-UP
2		723-11-19130	..O-RING.....	4	J30001-UP
3		723-46-17520	..RING, BACK-UP.....	4	J30001-UP
4		07000-12021	..O-RING.....	4	J30001-UP
5		07000-13028	..O-RING.....	5	J30001-UP
6		07000-13032	..O-RING.....	8	J30001-UP
7		723-46-17510	..O-RING.....	4	J30001-UP
8		07000-13036	..O-RING.....	1	J30001-UP
9		723-46-17530	..O-RING.....	11	J30001-UP
10		723-11-18150	..O-RING.....	2	J30001-UP
11		702-16-53920	..O-RING.....	4	J30001-UP
12		723-46-18710	..O-RING.....	1	J30001-UP
13		722-12-19070	..O-RING.....	2	J30001-UP
14		723-46-18720	..O-RING.....	1	J30001-UP
15	C1	708-21-12541	..PLUG.....	14	J30001-UP
16		723-46-17650	..VALVE.....	2	J30001-UP
17		723-46-14150	..SPRING.....	2	J30001-UP

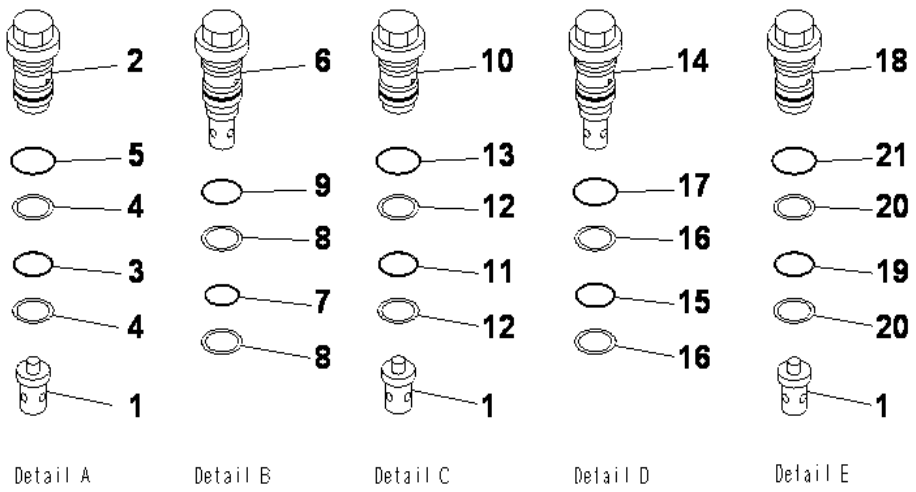

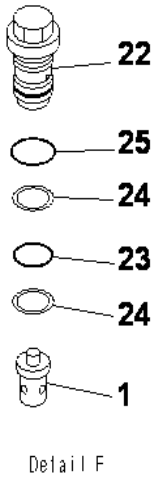

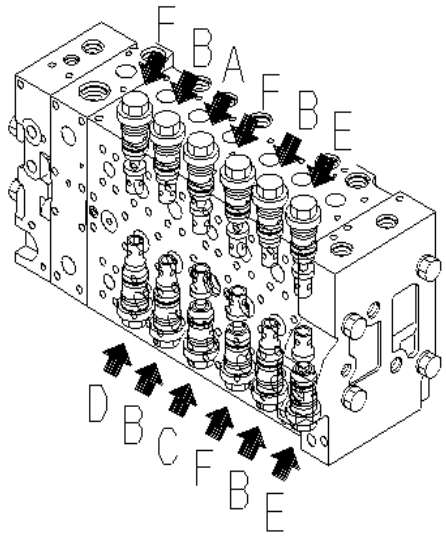

MAIN VALVE (5/20)

INDEX	CD	PART NO.	DESCRIPTION	QTY	SERIAL NO.
		(723-47-27502)	CONTROL VALVE.....	1	J30002-UP
		(723-47-27501)	CONTROL VALVE.....	1	J30001-J30001
			THIS ASSEMBLY CONSISTS OF ALL PARTS.....		
			SHOWN IN FIGS.Y1662-01A0 TO Y1662-20A0.....		
1	C1	723-46-09102	BODY SUB A.....	1	J30001-UP
		723-46-41210	..VALVE.....	7	J30001-UP
2		723-46-40100	..VALVE A.....	1	J30001-UP
3		700-93-11320	...O-RING.....	1	J30001-UP
4		723-46-41950	...RING.....	2	J30001-UP
5		07002-13634	...O-RING.....	1	J30001-UP
6		723-46-42800	..VALVE A.....	4	J30001-UP
7		700-93-11320	...O-RING.....	1	J30001-UP
8		723-46-41950	...RING.....	2	J30001-UP
9		07002-13634	...O-RING.....	1	J30001-UP
10		723-46-40601	..VALVE A.....	1	J30001-UP
11		700-93-11320	...O-RING.....	1	J30001-UP
12		723-46-41950	...RING.....	2	J30001-UP
13		07002-13634	...O-RING.....	1	J30001-UP
14		723-46-45500	..VALVE A.....	1	J30001-UP
15		700-93-11320	...O-RING.....	1	J30001-UP
16		723-46-41950	...RING.....	2	J30001-UP
17		07002-13634	...O-RING.....	1	J30001-UP
18		723-46-44100	..VALVE A.....	1	J30001-UP
19		700-93-11320	...O-RING.....	1	J30001-UP
20		723-46-41950	...RING.....	2	J30001-UP
21		07002-13634	...O-RING.....	1	J30001-UP
22		723-46-45100	..VALVE A.....	3	J30001-UP
23		700-93-11320	...O-RING.....	1	J30001-UP
24		723-46-41950	...RING.....	2	J30001-UP
25		07002-13634	...O-RING.....	1	J30001-UP

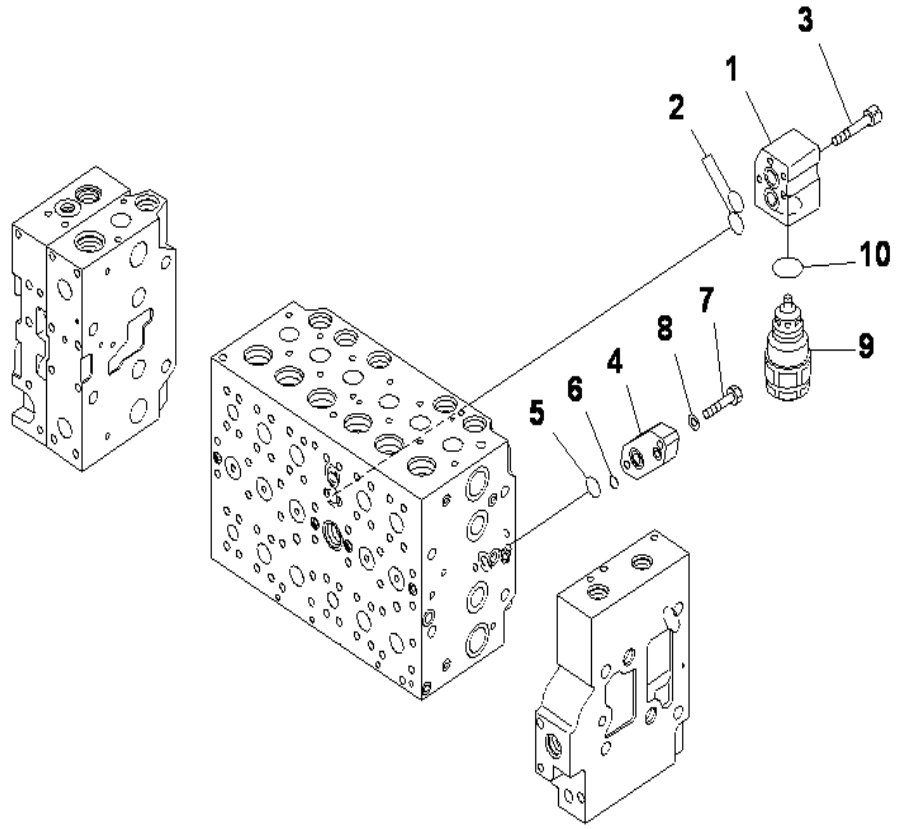

PC400-8 S/N J30001-UP

MAIN VALVE (6/20)

INDEX	CD	PART NO.	DESCRIPTION	QTY	SERIAL NO.
		(723-47-27502)	CONTROL VALVE.....	1	J30002-UP
		(723-47-27501)	CONTROL VALVE.....	1	J30001-J30001
			THIS ASSEMBLY CONSISTS OF ALL PARTS.....		
			SHOWN IN FIGS.Y1662-01A0 TO Y1662-20A0.....		
1	C1	723-46-09102	.BODY SUB A.....	1	J30001-UP
		723-46-11910	..BLOCK.....	1	J30001-UP
2		723-46-15510	..O-RING.....	2	J30001-UP
3		01252-60865	..BOLT.....	4	J30001-UP
4		723-46-18730	..PLATE.....	1	J30001-UP
5		07000-12021	..O-RING.....	1	J30001-UP
6		07000-12011	..O-RING.....	1	J30001-UP
7		01010-81040	..BOLT.....	2	J30001-UP
8		01643-51032	..WASHER.....	2	J30001-UP
9		723-90-69100	.VALVE ASS'Y, SUCTION AND SAFETY.....	1	J30001-UP
10		07002-13634	..O-RING.....	1	J30001-UP

Ref :Y1662-06A0 Page :480480

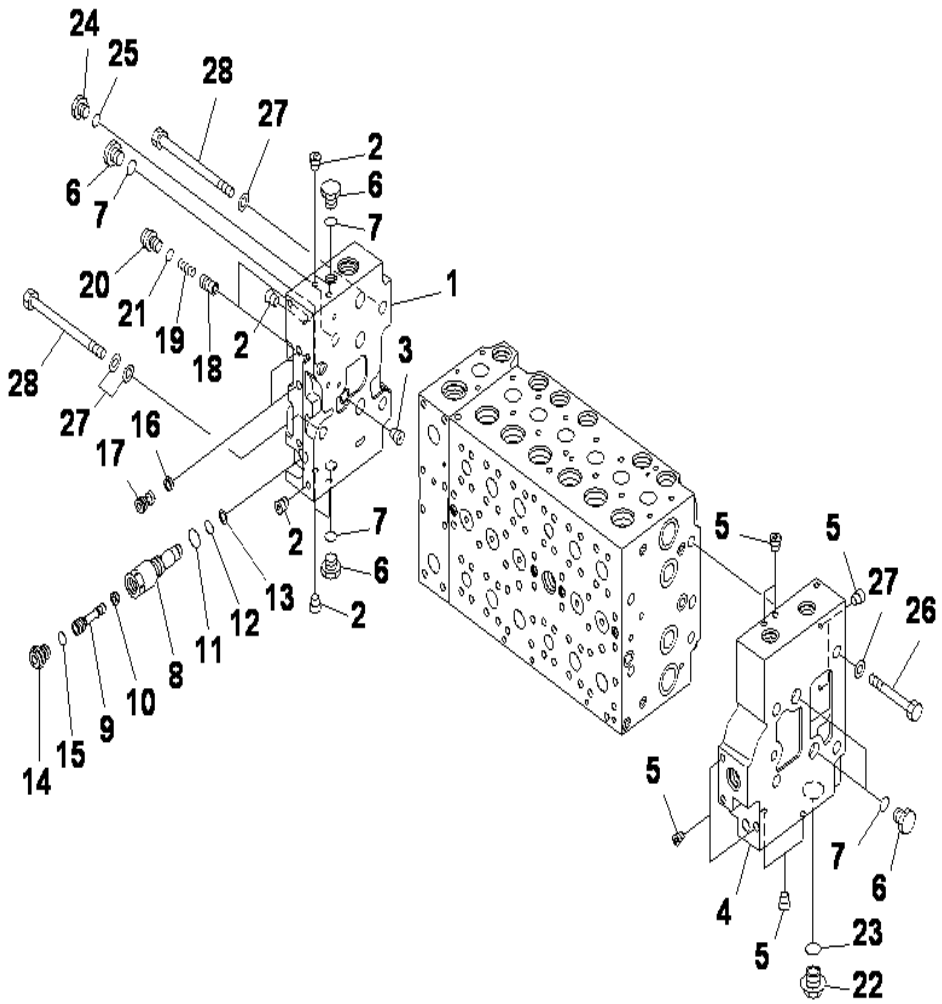

MAIN VALVE (7/20)

INDEX	CD	PART NO.	DESCRIPTION	QTY	SERIAL NO.
		(723-47-27502)	CONTROL VALVE.....	1	J30002-UP
		(723-47-27501)	CONTROL VALVE.....	1	J30001-J30001
			THIS ASSEMBLY CONSISTS OF ALL PARTS.....		
			SHOWN IN FIGS.Y1662-01A0 TO Y1662-20A0.....		
1		723-46-00760	.COVER ASS'Y.....	1	J30001-UP
	C1	723-46-11730	..COVER, A.....	1	J30001-UP
2	C1	708-21-12541	..PLUG.....	7	J30001-UP
3	C1	708-21-12531	..PLUG.....	1	J30001-UP
		723-46-00742	.COVER ASS'Y.....	1	J30001-UP
4	C1	723-46-11722	..COVER, B.....	1	J30001-UP
5	C1	708-21-12541	..PLUG.....	8	J30001-UP
6		708-8E-16250	.PLUG.....	5	J30001-UP
7		07002-11823	.O-RING.....	5	J30001-UP
		723-46-17600	.PLUG ASS'Y.....	1	J30001-UP
8		723-46-17610	..SLEEVE.....	1	J30001-UP
9		723-46-17640	..PLUG.....	1	J30001-UP
10		702-21-55760	..FILTER.....	1	J30001-UP
11		07002-11423	..O-RING.....	1	J30001-UP
12		07000-11007	..O-RING.....	1	J30001-UP
13		07001-01007	..RING, BACK-UP.....	1	J30001-UP
14		708-8E-16160	..PLUG.....	1	J30001-UP
15		07002-11023	..O-RING.....	1	J30001-UP
16		723-40-82220	.FILTER.....	2	J30001-UP
17		723-46-17550	.PLUG.....	2	J30001-UP
18		723-46-15190	.VALVE.....	2	J30001-UP
19		723-46-14140	.SPRING.....	2	J30001-UP
20		708-8E-16160	.PLUG.....	2	J30001-UP
21		07002-11023	.O-RING.....	2	J30001-UP
22		709-74-91860	.PLUG.....	1	J30001-UP
23		07002-12434	.O-RING.....	1	J30001-UP
24		708-8H-11530	.PLUG.....	1	J30001-UP
25		07002-11423	.O-RING.....	1	J30001-UP
26		01010-61490	.BOLT.....	4	J30001-UP
27		01643-31445	.WASHER.....	10	J30001-UP
28		01011-61455	.BOLT.....	4	J30001-UP

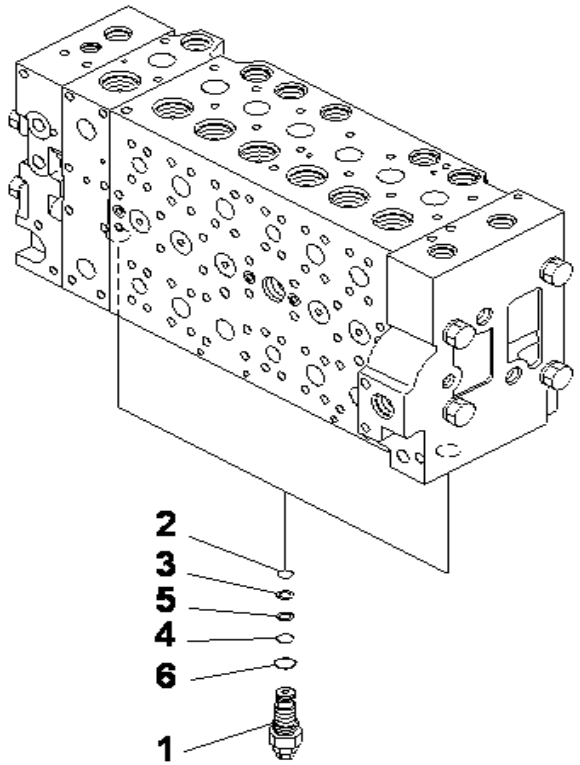

PC400-8 S/N J30001-UP

MAIN VALVE (8/20)

INDEX	CD	PART NO.	DESCRIPTION	QTY	SERIAL NO.
		(723-47-27502)	CONTROL VALVE.....	1	J30002-UP
		(723-47-27501)	CONTROL VALVE.....	1	J30001-J30001
			THIS ASSEMBLY CONSISTS OF ALL PARTS.....		
			SHOWN IN FIGS.Y1662-01A0 TO Y1662-20A0.....		
1		723-40-56800	.VALVE ASS'Y, UNLOAD.....	2	J30001-UP
2		07000-12014	..O-RING.....	1	J30001-UP
3		723-40-56350	..RING.....	1	J30001-UP
4		07000-12016	..O-RING.....	1	J30001-UP
5		723-60-22230	..RING,BACK UP.....	1	J30001-UP
6		07002-12434	..O-RING.....	1	J30001-UP

Ref :Y1662-08A0 Page :480500

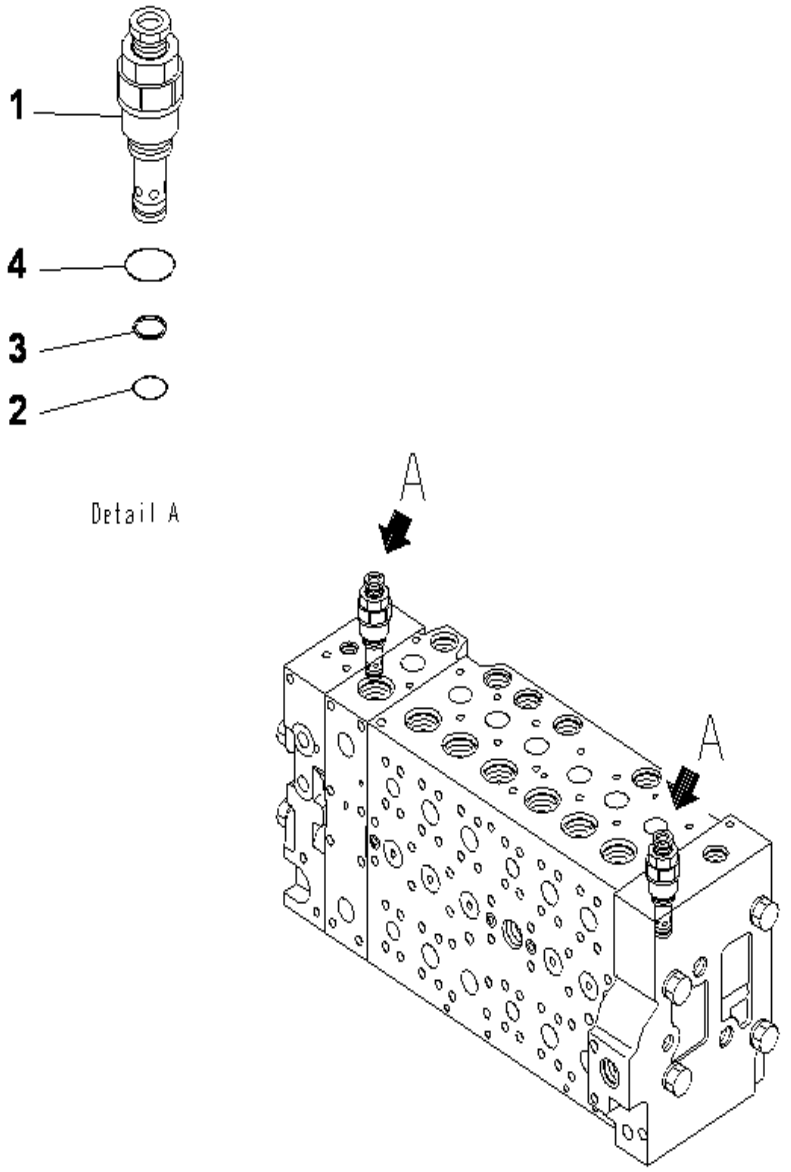

MAIN VALVE (9/20)

INDEX	CD	PART NO.	DESCRIPTION	QTY	SERIAL NO.
		(723-47-27502)	CONTROL VALVE.....	1	J30002-UP
		(723-47-27501)	CONTROL VALVE.....	1	J30001-J30001
			THIS ASSEMBLY CONSISTS OF ALL PARTS.....		
			SHOWN IN FIGS.Y1662-01A0 TO Y1662-20A0.....		
1		723-40-92403	.VALVE ASS'Y, RELIEF.....	2	J30001-UP
2		700-22-11410	..O-RING.....	1	J30001-UP
3		700-80-64220	..RING, BACK-UP.....	1	J30001-UP
4		07002-12434	..O-RING.....	1	J30001-UP

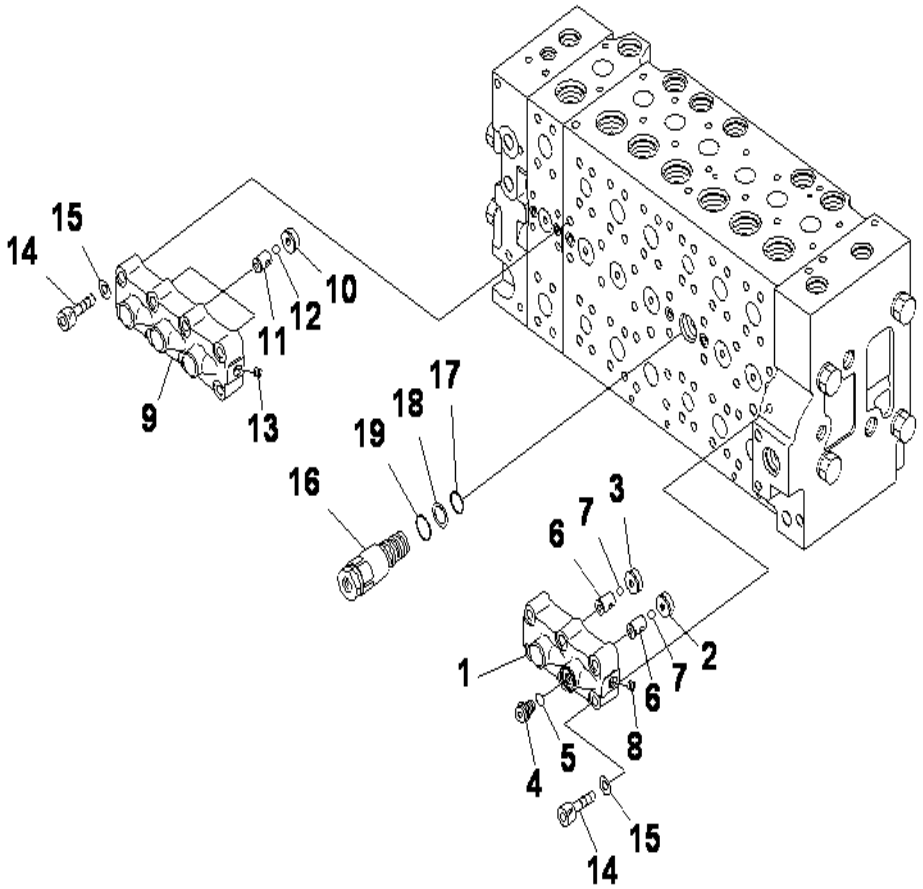

PC400-8 S/N J30001-UP

MAIN VALVE (10/20)

INDEX	CD	PART NO.	DESCRIPTION	QTY	SERIAL NO.
		(723-47-27502)	CONTROL VALVE.....	1	J30002-UP
		(723-47-27501)	CONTROL VALVE.....	1	J30001-J30001
			THIS ASSEMBLY CONSISTS OF ALL PARTS.....		
			SHOWN IN FIGS.Y1662-01A0 TO Y1662-20A0.....		
1		723-40-66701	.VALVE A.....	1	J30001-UP
	C1	723-40-66171	..CASE.....	1	J30001-UP
2	C1	723-40-66210	..SEAT.....	1	J30001-UP
3	C1	723-40-66240	..SEAT.....	1	J30001-UP
4		708-8H-11530	..PLUG.....	1	J30001-UP
5		07002-11423	..O-RING.....	1	J30001-UP
6	C1	723-40-66220	..SEAT.....	2	J30001-UP
7	C1	04260-00952	..BALL.....	2	J30001-UP
8	C1	708-21-12541	..PLUG.....	1	J30001-UP
9		723-40-66601	.VALVE ASS'Y.....	1	J30001-UP
	C1	723-40-66161	..CASE.....	1	J30001-UP
10	C1	723-40-66210	..SEAT.....	3	J30001-UP
11	C1	723-40-66220	..SEAT.....	3	J30001-UP
12	C1	04260-00952	..BALL.....	3	J30001-UP
13	C1	708-21-12541	..PLUG.....	1	J30001-UP
14		01252-61050	.BOLT.....	14	J30001-UP
15		01643-51032	.WASHER.....	14	J30001-UP
16		723-40-60101	.VALVE ASS'Y.....	1	J30001-UP
17		07000-12020	..O-RING.....	1	J30001-UP
18		07001-02020	..RING, BACK-UP.....	1	J30001-UP
19		709-25-11390	..O-RING.....	1	J30001-UP

Ref :Y1662-10A0 Page :480520

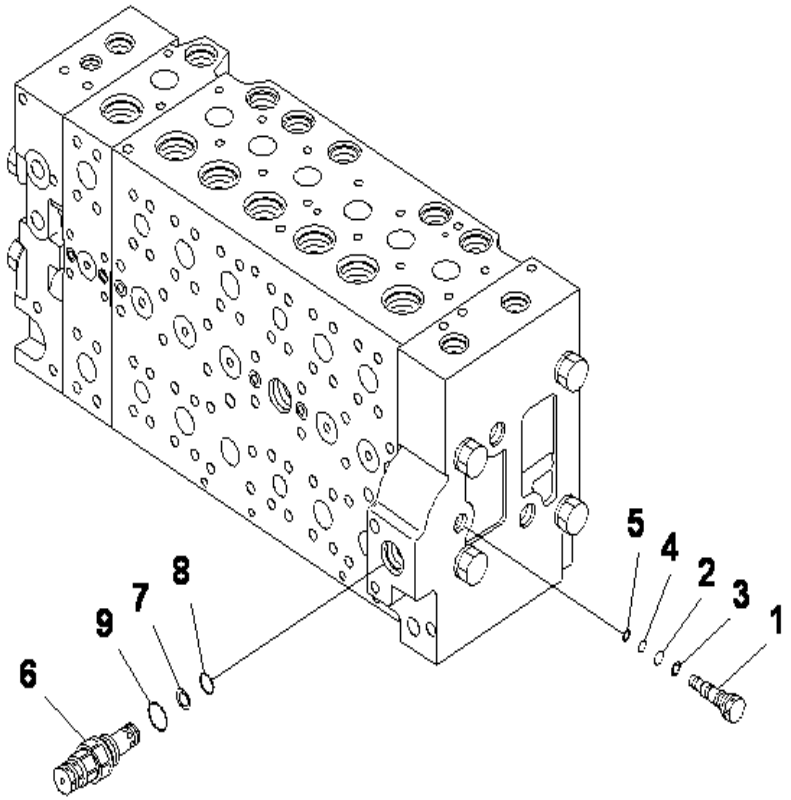

PC400-8 S/N J30001-UP

MAIN VALVE (11/20)

INDEX	CD	PART NO.	DESCRIPTION	QTY	SERIAL NO.
		(723-47-27502)	CONTROL VALVE.....	1	J30002-UP
		(723-47-27501)	CONTROL VALVE.....	1	J30001-J30001
			THIS ASSEMBLY CONSISTS OF ALL PARTS.....		
			SHOWN IN FIGS.Y1662-01A0 TO Y1662-20A0.....		
1		723-46-17701	.PLUG ASS'Y.....	1	J30001-UP
		723-46-17711	..PLUG.....	1	J30001-UP
2		07000-11009	..O-RING.....	1	J30001-UP
3		07001-01009	..RING, BACK-UP.....	1	J30001-UP
4		07000-11007	..O-RING.....	1	J30001-UP
5		07001-01007	..BACK UP RING.....	1	J30001-UP
6		723-40-91500	.VALVE ASS'Y, RELIEF.....	1	J30001-UP
7		700-80-64220	..RING.....	1	J30001-UP
8		700-22-11410	..O-RING.....	1	J30001-UP
9		709-25-11390	..O-RING.....	1	J30001-UP

Ref :Y1662-11A0 Page :480530

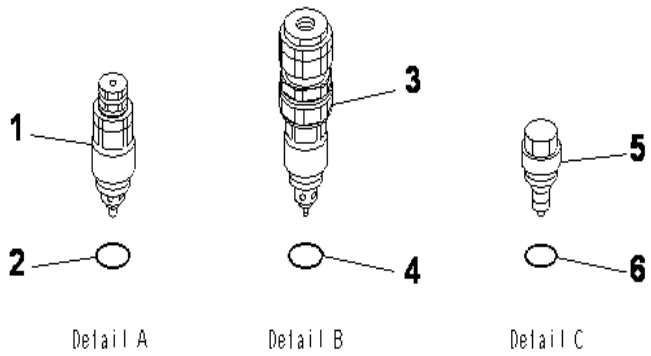

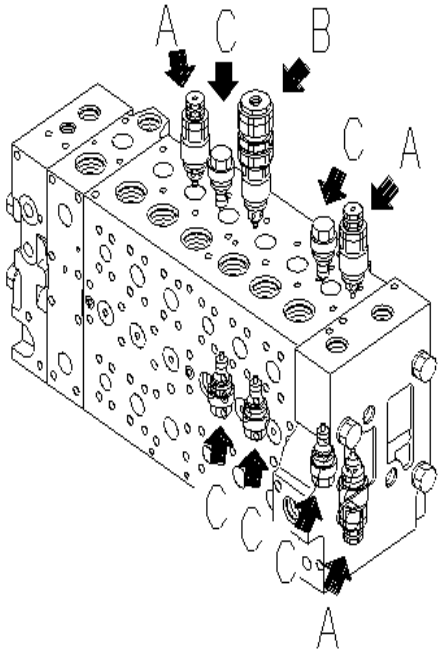

MAIN VALVE (12/20)

INDEX	CD	PART NO.	DESCRIPTION	QTY	SERIAL NO.
		(723-47-27502)	CONTROL VALVE.....	1	J30002-UP
		(723-47-27501)	CONTROL VALVE.....	1	J30001-J30001
			THIS ASSEMBLY CONSISTS OF ALL PARTS.....		
			SHOWN IN FIGS.Y1662-01A0 TO Y1662-20A0.....		
1		723-40-91200	.VALVE ASS'Y, SUCTION AND SAFETY.....	3	J30001-UP
2		709-25-11390	..O-RING.....	1	J30001-UP
3		723-90-76201	.VALVE ASS'Y, SUCTION AND SAFETY.....	1	J30001-UP
4		07000-13024	..O-RING.....	1	J30001-UP
5		723-40-85100	.VALVE ASS'Y, SUCTION.....	5	J30001-UP
6		709-25-11390	..O-RING.....	1	J30001-UP

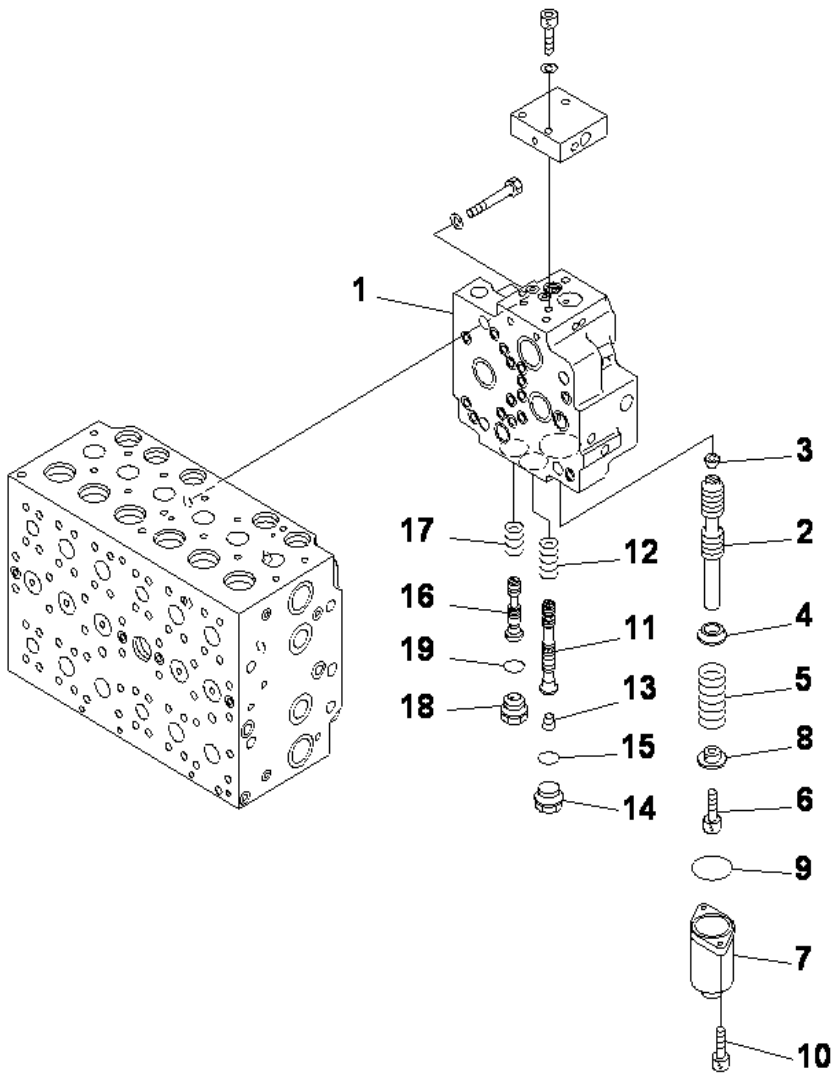

PC400-8 S/N J30001-UP

MAIN VALVE (13/20)

INDEX	CD	PART NO.	DESCRIPTION	QTY	SERIAL NO.
		(723-47-27502)	CONTROL VALVE.....	1	J30002-UP
		(723-47-27501)	CONTROL VALVE.....	1	J30001-J30001
			THIS ASSEMBLY CONSISTS OF ALL PARTS.....		
			SHOWN IN FIGS.Y1662-01A0 TO Y1662-20A0.....		
1		723-40-71201	.VALVE ASS'Y.....	1	J30001-UP
	C1	7234071511	..BODY, VALVE.....	1	J30001-UP
2	C1	723-40-71520	..SPOOL.....	1	J30001-UP
3	C1	708-21-12541	..PLUG.....	1	J30001-UP
4		723-40-71330	..RETAINER.....	1	J30001-UP
5		723-40-71340	..SPRING.....	1	J30001-UP
6		01252-60816	..BOLT.....	1	J30001-UP
7		723-46-15111	..CASE.....	1	J30001-UP
8		723-40-71350	..RETAINER.....	1	J30001-UP
9		07430-71380	..O-RING.....	1	J30001-UP
10		01252-60820	..BOLT.....	2	J30001-UP
11	C1	723-40-71362	..SPOOL.....	1	J30001-UP
12		723-40-71440	..SPRING.....	1	J30001-UP
13	C1	708-21-12541	..PLUG.....	1	J30001-UP
14		709-74-91860	..PLUG.....	1	J30001-UP
15		07002-12434	..O-RING.....	1	J30001-UP
16	C1	723-40-71380	..SPOOL.....	1	J30001-UP
17		723-40-71390	..SPRING.....	1	J30001-UP
18		723-40-61150	..PLUG.....	1	J30001-UP
19		07002-12434	..O-RING.....	1	J30001-UP

Ref :Y1662-13A0 Page :480550

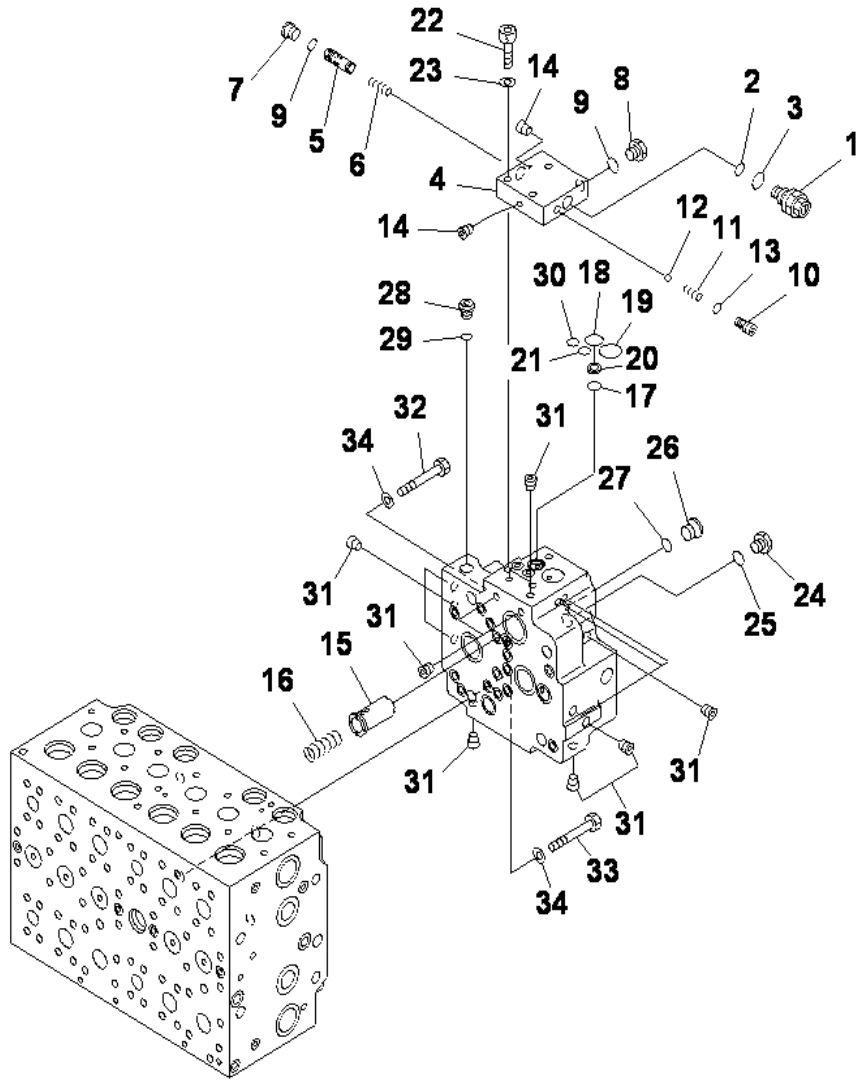

MAIN VALVE (14/20)

INDEX	CD	PART NO.	DESCRIPTION	QTY	SERIAL NO.
		(723-47-27502)	CONTROL VALVE.....	1	J30002-UP
		(723-47-27501)	CONTROL VALVE.....	1	J30001-J30001
			THIS ASSEMBLY CONSISTS OF ALL PARTS.....		
			SHOWN IN FIGS.Y1662-01A0 TO Y1662-20A0.....		
1		(723-40-71201)	.VALVE ASS'Y.....	1	J30001-UP
		723-40-71800	..VALVE ASS'Y.....	1	J30001-UP
		723-40-91600	...VALVE ASS'Y, RELIEF.....	1	J30001-UP
2		702-16-53920	....O-RING.....	1	J30001-UP
3		07002-11623	....O-RING.....	1	J30001-UP
4	C1	723-40-71411	...BLOCK.....	1	J30001-UP
5	C1	702-21-55511	...SPOOL.....	1	J30001-UP
6	C1	702-21-55640	...SPRING.....	1	J30001-UP
7		702-21-55620	...PLUG.....	1	J30001-UP
8		708-8H-11530	...PLUG.....	1	J30001-UP
9		07002-11423	...O-RING.....	2	J30001-UP
10		702-21-55710	...SEAT.....	1	J30001-UP
11		702-21-55720	...SPRING.....	1	J30001-UP
12		04260-00793	...BALL.....	1	J30001-UP
13		07000-11009	...O-RING.....	1	J30001-UP
14	C1	708-21-12541	...PLUG.....	2	J30001-UP
15		723-40-71430	..VALVE.....	1	J30001-UP
16		702-21-55460	..SPRING.....	1	J30001-UP
17		702-21-55420	..O-RING.....	1	J30001-UP
18		702-21-55520	..O-RING.....	1	J30001-UP
19		702-21-55440	..O-RING.....	1	J30001-UP
20		702-21-53120	..FILTER.....	1	J30001-UP
21		07000-12011	..O-RING.....	1	J30001-UP
22		01252-61040	..BOLT.....	3	J30001-UP
23		01643-51032	..WASHER.....	3	J30001-UP
24		708-8H-11530	..PLUG.....	1	J30001-UP
25		07002-11423	..O-RING.....	1	J30001-UP
26		702-21-55620	..PLUG.....	1	J30001-UP
27		07002-11423	..O-RING.....	1	J30001-UP
28		708-8E-16160	..PLUG.....	1	J30001-UP
29		07002-11023	..O-RING.....	1	J30001-UP
30		07000-12011	..O-RING.....	1	J30001-UP
31	C1	708-21-12541	..PLUG.....	17	J30001-UP
32		01010-61460	.BOLT.....	1	J30001-UP
33		01010-61470	.BOLT.....	3	J30001-UP
34		01643-31445	.WASHER.....	4	J30001-UP

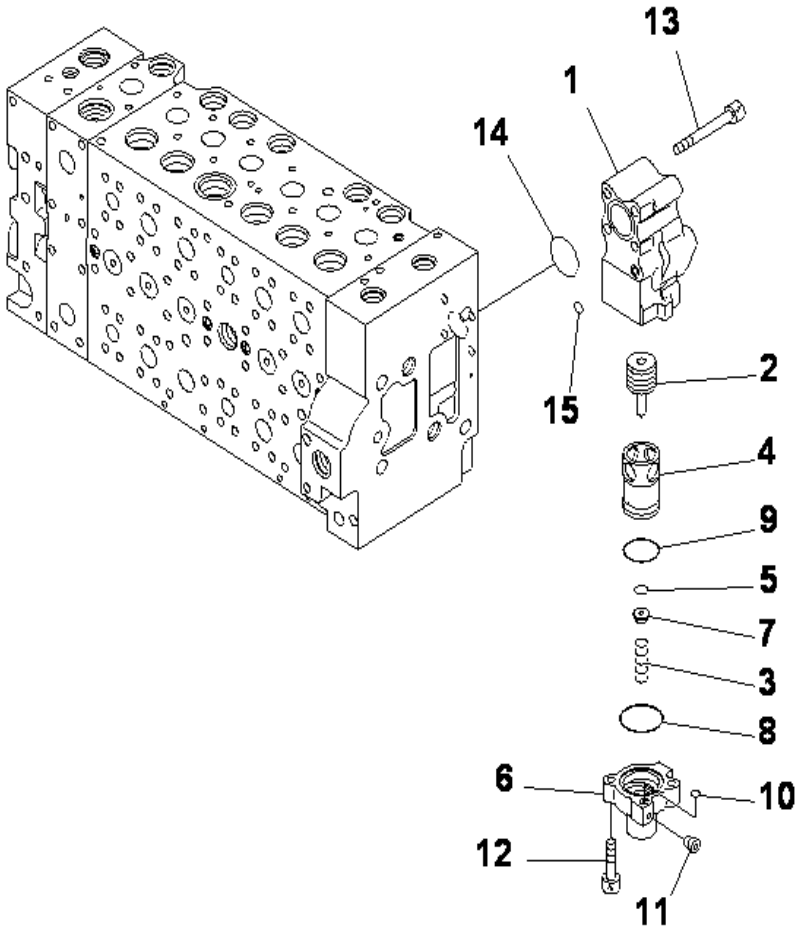

PC400-8 S/N J30001-UP

MAIN VALVE (15/20)

INDEX	CD	PART NO.	DESCRIPTION	QTY	SERIAL NO.
		(723-47-27502)	CONTROL VALVE.....	1	J30002-UP
		(723-47-27501)	CONTROL VALVE.....	1	J30001-J30001
			THIS ASSEMBLY CONSISTS OF ALL PARTS.....		
			SHOWN IN FIGS.Y1662-01A0 TO Y1662-20A0.....		
1		723-40-87400	.VALVE ASS'Y.....	1	J30001-UP
		723-40-87110	..BODY.....	1	J30001-UP
2		723-40-87440	..SPOOL.....	1	J30001-UP
3		723-40-87260	..SPRING.....	1	J30001-UP
4	C1	723-40-87220	..SLEEVE.....	1	J30001-UP
5	C1	723-40-87131	..SEAL.....	1	J30001-UP
6	C1	723-40-87180	..CASE.....	1	J30001-UP
7		723-40-87250	..RETAINER.....	1	J30001-UP
8		723-40-87170	..O-RING.....	1	J30001-UP
9		07000-13035	..O-RING.....	1	J30001-UP
10		07000-11007	..O RING.....	1	J30001-UP
11	C1	702-16-54490	..SCREW.....	1	J30001-UP
12		01252-60830	..BOLT.....	2	J30001-UP
13		01252-61075	.BOLT.....	4	J30001-UP
14		07000-13038	.O-RING.....	1	J30001-UP
15		07000-11010	.O-RING.....	1	J30001-UP

Ref :Y1662-15A0 Page :480570

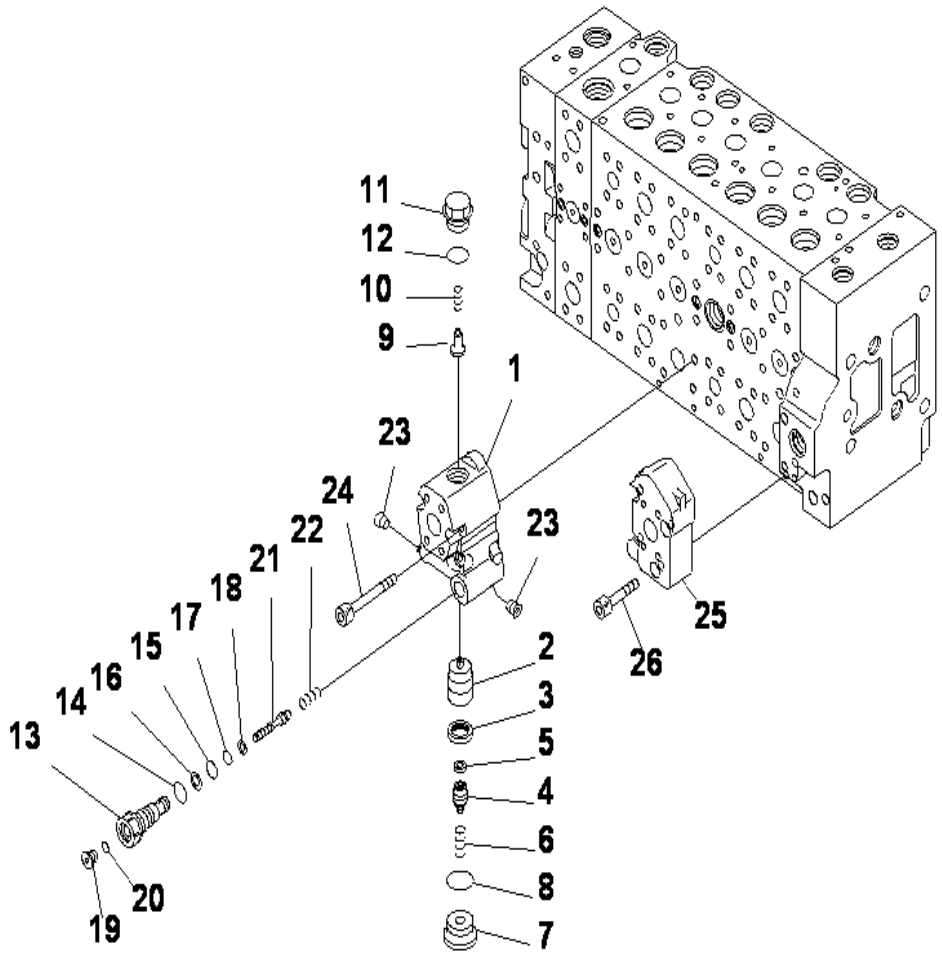

PC400-8 S/N J30001-UP

MAIN VALVE (16/20)

INDEX	CD	PART NO.	DESCRIPTION	QTY	SERIAL NO.
		(723-47-27502)	CONTROL VALVE.....	1	J30002-UP
		(723-47-27501)	CONTROL VALVE.....	1	J30001-J30001
			THIS ASSEMBLY CONSISTS OF ALL PARTS.....		
			SHOWN IN FIGS.Y1662-01A0 TO Y1662-20A0.....		
1		723-40-82401	.VALVE ASS'Y.....	1	J30001-UP
	C1	723-40-82410	..BODY.....	1	J30001-UP
2	C1	723-40-82120	..VALVE.....	1	J30001-UP
3	C1	723-40-82130	..SEAL.....	1	J30001-UP
4	C1	723-40-82210	..PLUG.....	1	J30001-UP
5	C1	723-40-82220	..FILTER.....	1	J30001-UP
6	C1	723-40-82140	..SPRING.....	1	J30001-UP
7	C1	723-40-82150	..PLUG.....	1	J30001-UP
8		07002-13334	..O-RING.....	1	J30001-UP
9		723-40-84420	..VALVE, CHECK.....	1	J30001-UP
10		723-40-84430	..SPRING.....	1	J30001-UP
11	C1	723-40-84440	..PLUG.....	1	J30001-UP
12		0700-013024	..O-RING.....	1	J30001-UP
13	C1	723-40-82310	..PLUG.....	1	J30001-UP
14		07002-11823	..O-RING.....	1	J30001-UP
15		07000-12011	..O-RING.....	1	J30001-UP
16		07001-02011	..RING.....	1	J30001-UP
17		07000-11010	..O-RING.....	1	J30001-UP
18		07001-01010	..RING.....	1	J30001-UP
19		723-11-18190	..PLUG.....	1	J30001-UP
20		07002-11023	..O-RING.....	1	J30001-UP
21	C1	723-40-82280	..PISTON.....	1	J30001-UP
22	C1	723-40-82290	..SPRING.....	1	J30001-UP
23	C1	702-16-54490	..SCREW.....	2	J30001-UP
24		01252-61075	.BOLT.....	4	J30001-UP
25		723-46-17570	.BLOCK.....	1	J30001-UP
26		01252-61045	.BOLT.....	4	J30001-UP

Ref :Y1662-16A0 Page :480580

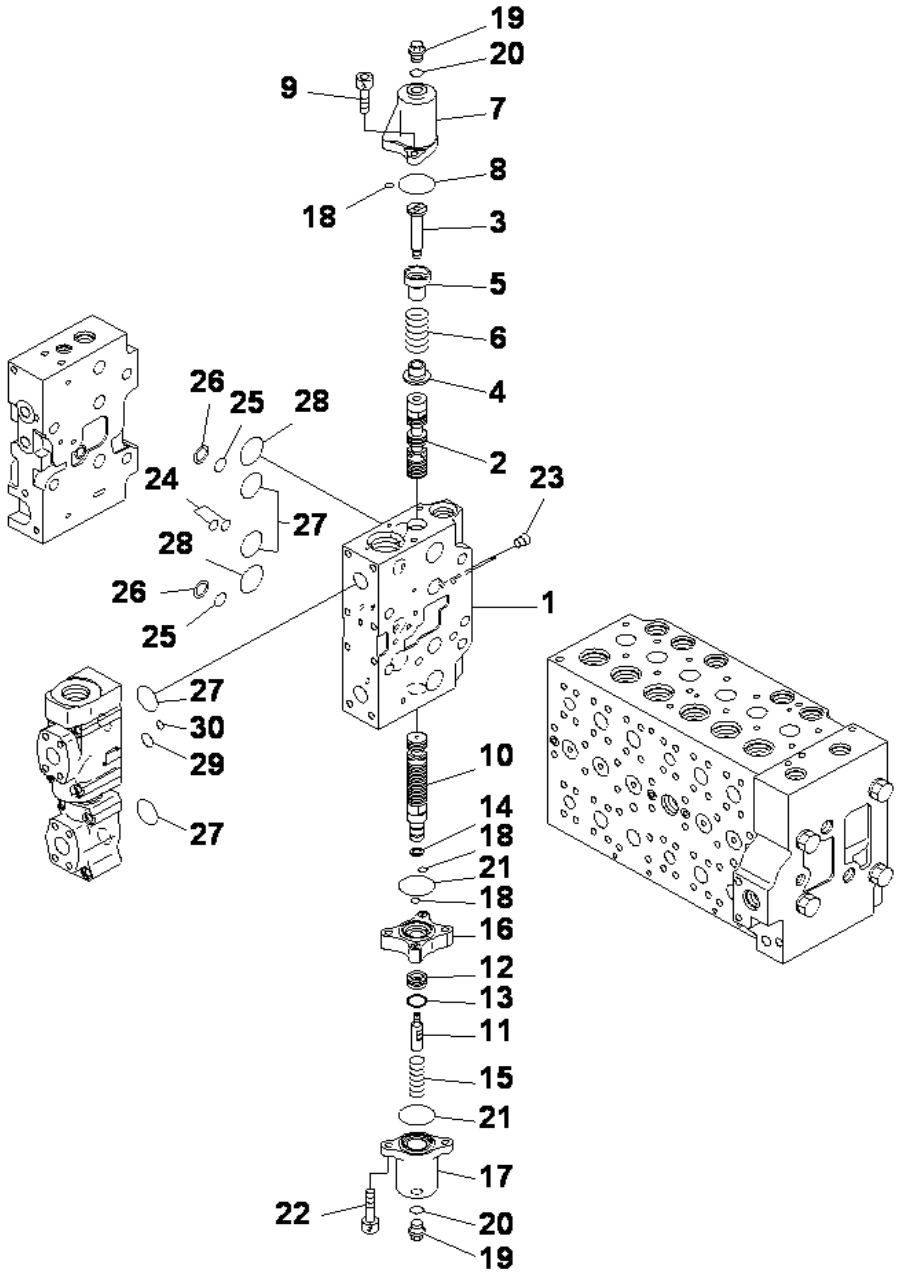

MAIN VALVE (17/20)

INDEX	CD	PART NO.	DESCRIPTION	QTY	SERIAL NO.
		(723-47-27502)	CONTROL VALVE.....	1	J30002-UP
		(723-47-27501)	CONTROL VALVE.....	1	J30001-J30001
			THIS ASSEMBLY CONSISTS OF ALL PARTS.....		
			SHOWN IN FIGS.Y1662-01A0 TO Y1662-20A0.....		
1	C1	723-41-11901	.BODY SUB ASS'Y.....	1	J30001-UP
	C1	723-41-11410	..BLOCK, VALVE.....	1	J30001-UP
2	C1	723-46-22753	..SPOOL.....	1	J30001-UP
3		723-46-15390	..PLUG.....	1	J30001-UP
4		723-46-15370	..RETAINER.....	1	J30001-UP
5		723-46-15380	..RETAINER.....	1	J30001-UP
6		723-46-14190	..SPRING.....	1	J30001-UP
7		723-46-17840	..CASE.....	1	J30001-UP
8		07430-71380	..O-RING.....	1	J30001-UP
9		01252-60820	..BOLT.....	2	J30001-UP
10		723-46-25610	..SPOOL.....	1	J30001-UP
11		723-46-15330	..BOLT.....	1	J30001-UP
12		723-46-15340	..PISTON.....	1	J30001-UP
13		723-46-15350	..SEAL.....	1	J30001-UP
14		700-20-71260	..SEAL.....	1	J30001-UP
15		723-46-14180	..SPRING.....	1	J30001-UP
16		723-46-17850	..CASE.....	1	J30001-UP
17		723-46-17860	..CASE.....	1	J30001-UP
18		723-11-19960	..O-RING.....	3	J30001-UP
19		706-73-71450	..PLUG.....	2	J30001-UP
20		07002-11423	..O-RING.....	2	J30001-UP
21		07430-71380	..O-RING.....	2	J30001-UP
22		01252-60845	..BOLT.....	2	J30001-UP
23	C1	708-21-12541	..PLUG.....	2	J30001-UP
24		723-46-17530	..O-RING.....	2	J30001-UP
25		723-11-19130	..O-RING.....	2	J30001-UP
26		723-46-17520	..RING, BACK-UP.....	2	J30001-UP
27		07000-13032	..O-RING.....	4	J30001-UP
28		723-46-17510	..O-RING.....	2	J30001-UP
29		07000-12016	..O-RING.....	1	J30001-UP
30		702-16-53920	..O-RING.....	1	J30001-UP

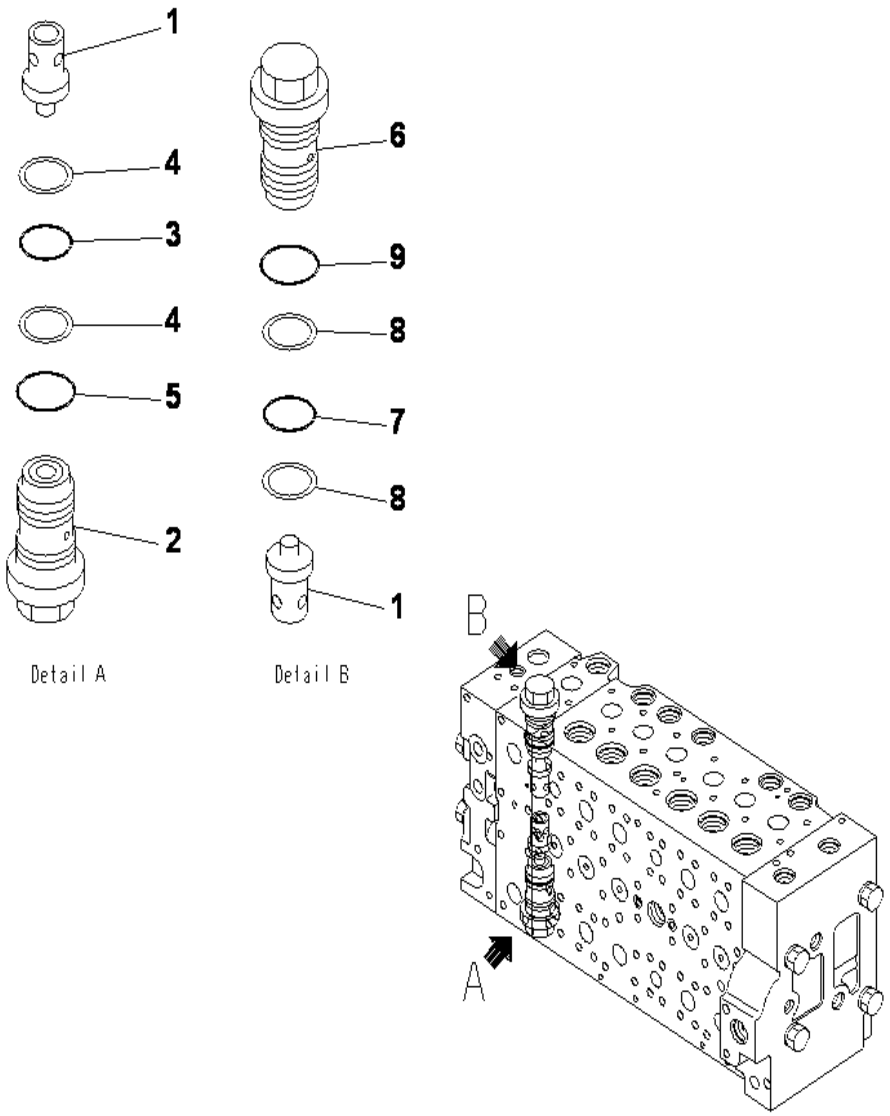

PC400-8 S/N J30001-UP

MAIN VALVE (18/20)

INDEX	CD	PART NO.	DESCRIPTION	QTY	SERIAL NO.
		(723-47-27502)	CONTROL VALVE.....	1	J30002-UP
		(723-47-27501)	CONTROL VALVE.....	1	J30001-J30001
			THIS ASSEMBLY CONSISTS OF ALL PARTS.....		J30001-UP
			SHOWN IN FIGS.Y1662-01A0 TO Y1662-20A0.....		J30001-UP
1	C1	723-41-11901	.BODY SUB ASS'Y.....	1	J30001-UP
		723-46-41210	..VALVE.....	1	J30001-UP
2		723-46-40601	..VALVE ASS'Y.....	1	J30001-UP
3		700-93-11320	...O-RING.....	1	J30001-UP
4		723-46-41950	...RING.....	2	J30001-UP
5		07002-13634	...O-RING.....	1	J30001-UP
6		723-46-43400	..VALVE ASS'Y.....	1	J30002-UP
		723-46-44100	..VALVE ASS'Y.....	1	J30001-J30001
7		700-93-11320	...O-RING.....	1	J30001-UP
8		723-46-41950	...RING.....	2	J30001-UP
9		07002-13634	...O-RING.....	1	J30001-UP

Ref :Y1662-18A0 Page :480600

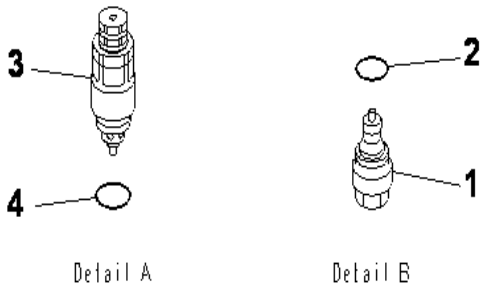

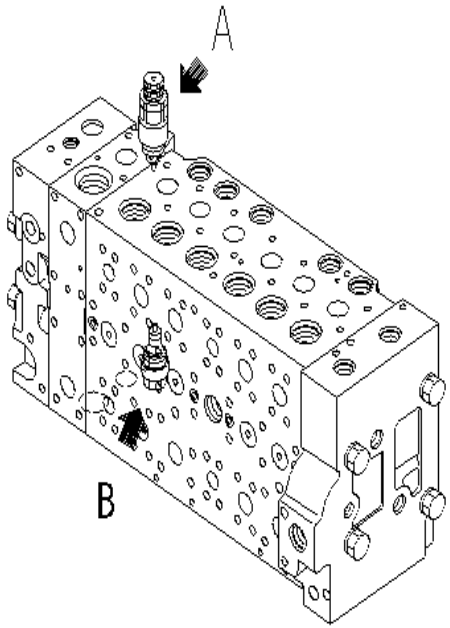

PC400-8 S/N J30001-UP

MAIN VALVE (19/20)

INDEX	CD	PART NO.	DESCRIPTION	QTY	SERIAL NO.
		(723-47-27502)	CONTROL VALVE.....	1	J30002-UP
		(723-47-27501)	CONTROL VALVE.....	1	J30001-J30001
			THIS ASSEMBLY CONSISTS OF ALL PARTS.....		
			SHOWN IN FIGS.Y1662-01A0 TO Y1662-20A0.....		
1		723-40-85100	.VALVE ASS'Y, SUCTION.....	1	J30001-UP
2		709-25-11390	..O-RING.....	1	J30001-UP
3		723-40-91200	.VALVE ASS'Y, SUCTION AND SAFETY.....	1	J30001-UP
4		709-25-11390	..O-RING.....	1	J30001-UP

Ref :Y1662-19A0 Page :480610

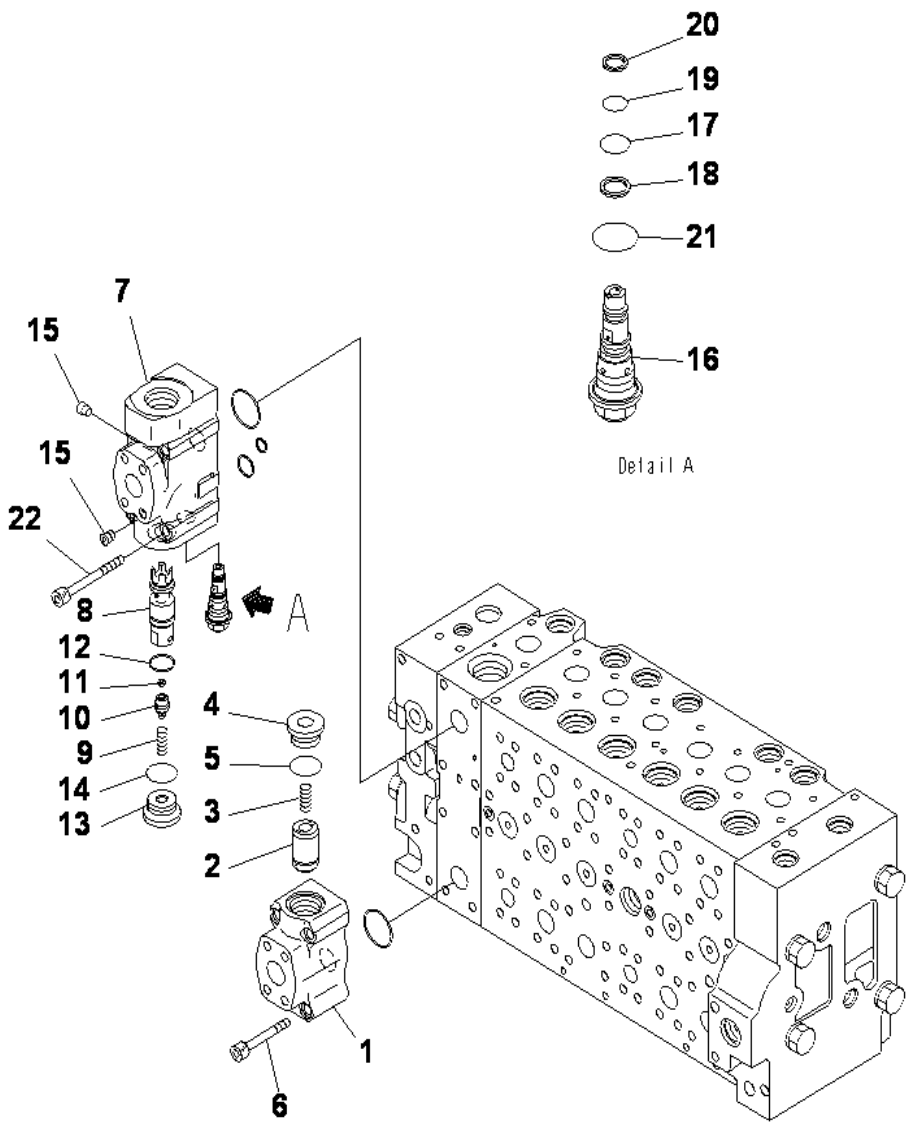

MAIN VALVE (20/20)

INDEX	CD	PART NO.	DESCRIPTION	QTY	SERIAL NO.
		(723-47-27502)	CONTROL VALVE.....	1	J30002-UP
		(723-47-27501)	CONTROL VALVE.....	1	J30001-J30001
			THIS ASSEMBLY CONSISTS OF ALL PARTS.....		
			SHOWN IN FIGS.Y1662-01A0 TO Y1662-20A0.....		
1		723-40-84100	.VALVE ASS'Y.....	1	J30001-UP
	C1	723-40-84110	..BODY.....	1	J30001-UP
2	C1	723-40-84120	..VALVE.....	1	J30001-UP
3		723-40-82140	..SPRING.....	1	J30001-UP
4		723-40-84130	..PLUG.....	1	J30001-UP
5		07002-13034	..O-RING.....	1	J30001-UP
6		01252-61065	.BOLT.....	4	J30001-UP
7		723-40-84200	.VALVE ASS'Y.....	1	J30001-UP
	C1	723-40-84210	..BODY.....	1	J30001-UP
8	C1	723-40-84220	..VALVE.....	1	J30001-UP
9		723-40-82140	..SPRING.....	1	J30001-UP
10		723-40-84230	..PLUG.....	1	J30001-UP
11		723-40-82220	..FILTER.....	1	J30001-UP
12		723-46-15350	..SEAL.....	1	J30001-UP
13		723-40-84130	..PLUG.....	1	J30001-UP
14		07002-13034	..O-RING.....	1	J30001-UP
15	C1	708-21-12541	..PLUG.....	2	J30001-UP
16		723-40-92900	..VALVE A.....	1	J30001-UP
17		07000-12012	...O-RING.....	1	J30001-UP
18		07001-02012	...RING, BACK UP.....	1	J30001-UP
19		07000-11010	...O-RING.....	1	J30001-UP
20		07001-01010	...RING.....	1	J30001-UP
21		07002-12034	...O-RING.....	1	J30001-UP
22		723-46-18770	.BOLT.....	4	J30001-UP

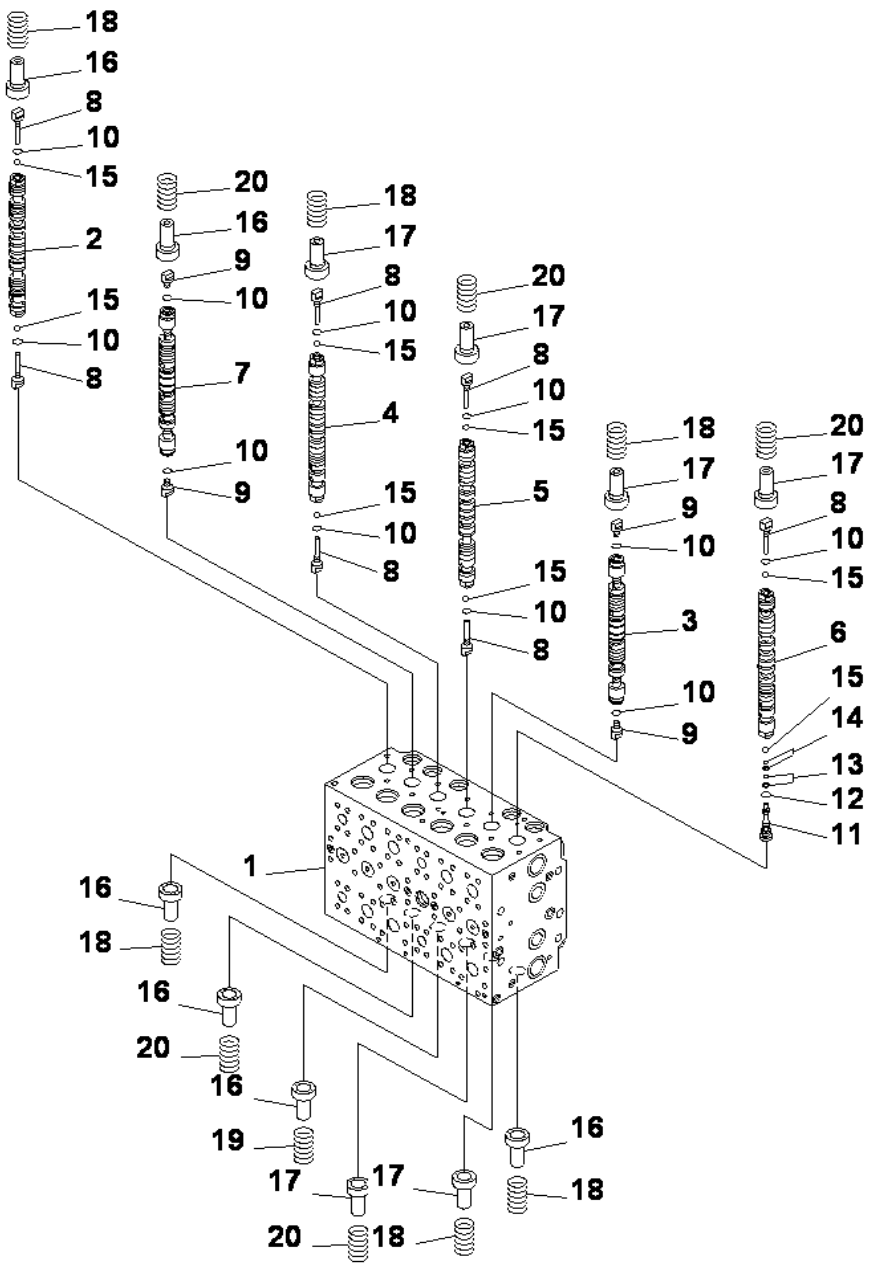

MAIN VALVE (1/23) (1ACTUATOR)

INDEX	CD	PART NO.	DESCRIPTION	QTY	SERIAL NO.
		(723-48-27502)	CONTROL VALVE.....	1	J30002-UP
		(723-48-27501)	CONTROL VALVE.....	1	J30001-J30001
			THIS ASSEMBLY CONSISTS OF ALL PARTS.....		
			SHOWN IN FIGS.Y1664-01A0 TO Y1664-23A0.....		
1	C1	723-46-09102	.BODY SUB ASS'Y.....	1	J30001-UP
	C1	723-46-11410	..BLOCK,VALVE.....	1	J30001-UP
2	C1	723-46-25112	..SPOOL.....	1	J30001-UP
3	C1	723-46-25211	..SPOOL.....	1	J30001-UP
4	C1	723-46-25311	..SPOOL.....	1	J30001-UP
5	C1	723-46-25410	..SPOOL.....	1	J30001-UP
6	C1	723-46-25512	..SPOOL.....	1	J30001-UP
7	C1	723-46-25710	..SPOOL.....	1	J30001-UP
8		723-46-15130	..PLUG.....	7	J30001-UP
9		723-46-15140	..PLUG.....	4	J30001-UP
10		07002-10823	..O-RING.....	11	J30001-UP
11	C1	723-46-16410	..PLUG.....	1	J30001-UP
12		07002-11423	..O-RING.....	1	J30001-UP
13	C1	709-70-71610	..SEAL.....	1	J30001-UP
14	C1	723-56-31870	..SEAL.....	1	J30001-UP
15		708-7T-16460	..BALL.....	8	J30001-UP
16		723-46-15120	..RETAINER.....	6	J30001-UP
17		723-46-15690	..RETAINER.....	6	J30001-UP
18		723-46-14110	..SPRING.....	6	J30001-UP
19		723-46-14170	..SPRING.....	1	J30001-UP
20		723-46-14131	..SPRING.....	5	J30001-UP

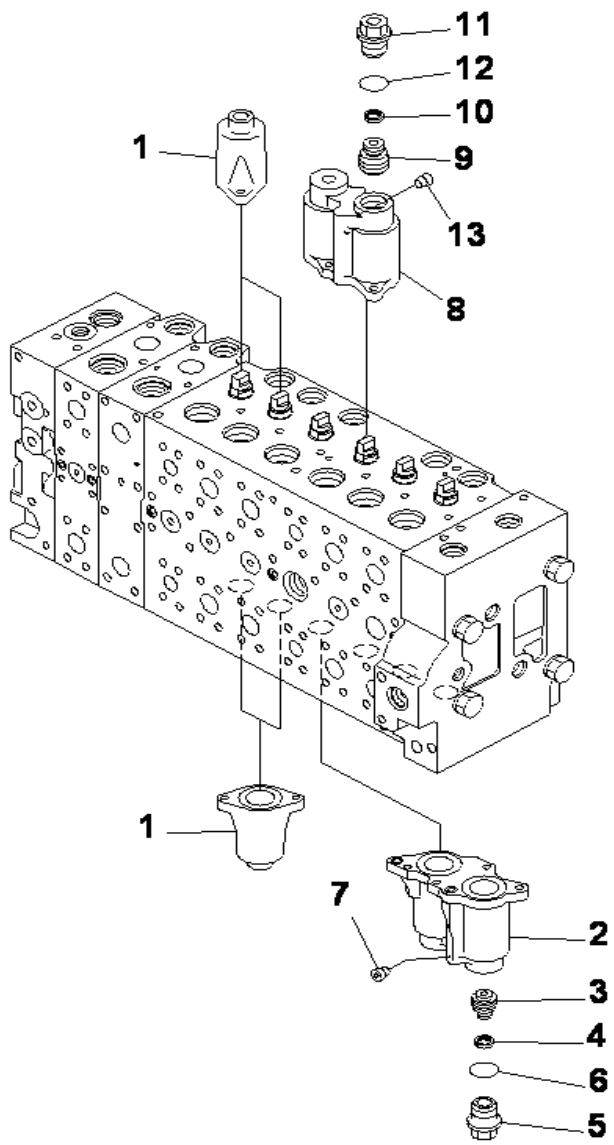

PC400-8 S/N J30001-UP

MAIN VALVE (2/23)

INDEX	CD	PART NO.	DESCRIPTION	QTY	SERIAL NO.
		(723-48-27502)	CONTROL VALVE.....	1	J30002-UP
		(723-48-27501)	CONTROL VALVE.....	1	J30001-J30001
			THIS ASSEMBLY CONSISTS OF ALL PARTS.....		
			SHOWN IN FIGS.Y1664-01A0 TO Y1664-23A0.....		
1	C1	723-46-09102	.BODY SUB ASS'Y.....	1	J30001-UP
		723-46-15111	..CASE.....	4	J30001-UP
		723-46-18140	..CASE SUB A.....	1	J30001-UP
2	C1	723-46-17171	...CASE.....	1	J30001-UP
3	C1	723-46-15640	...PISTON.....	1	J30001-UP
4	C1	702-73-11510	...SEAL.....	1	J30001-UP
5		723-46-15630	...PLUG.....	1	J30001-UP
6		07000-13024	...O-RING.....	1	J30001-UP
7	C1	702-16-54490	...SCREW.....	1	J30001-UP
		723-46-18240	..CASE SUB ASS'Y.....	1	J30001-UP
8	C1	723-46-17212	...CASE.....	1	J30001-UP
9	C1	723-46-15640	...PISTON.....	1	J30001-UP
10	C1	702-73-11510	...SEAL.....	1	J30001-UP
11		723-46-15630	...PLUG.....	1	J30001-UP
12		07000-13024	...O-RING.....	1	J30001-UP
13	C1	702-16-54490	...SCREW.....	1	J30001-UP

Ref :Y1664-02A0 Page :480640

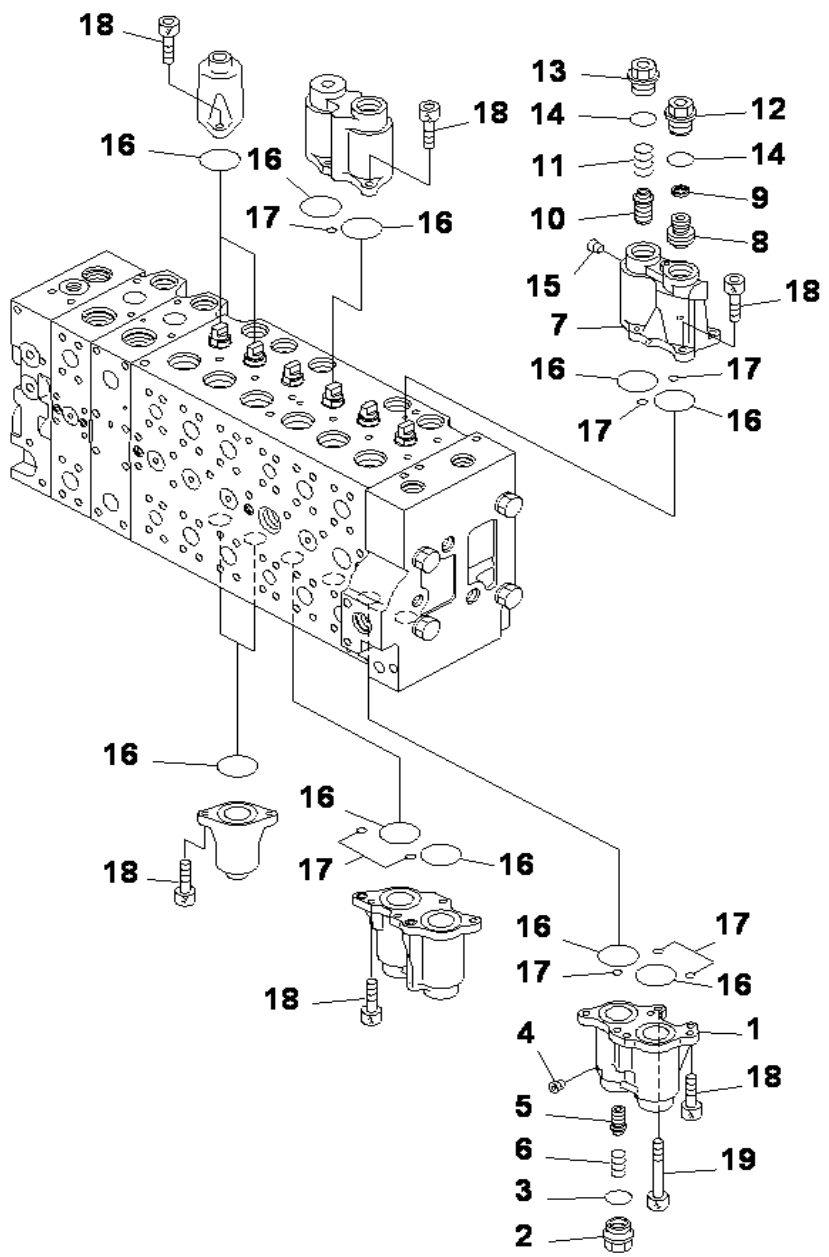

MAIN VALVE (3/23)

INDEX	CD	PART NO.	DESCRIPTION	QTY	SERIAL NO.
		(723-48-27502)	CONTROL VALVE.....	1	J30002-UP
		(723-48-27501)	CONTROL VALVE.....	1	J30001-J30001
			THIS ASSEMBLY CONSISTS OF ALL PARTS.....		
			SHOWN IN FIGS.Y1664-01A0 TO Y1664-23A0.....		
1	C1	723-46-09102	.BODY SUB ASS'Y.....	1	J30001-UP
		723-46-18330	..CASE SUB ASS'Y.....	1	J30001-UP
	C1	723-46-17370	...CASE.....	1	J30001-UP
2		723-46-17340	...PLUG.....	1	J30001-UP
3		07000-13024	...O-RING.....	1	J30001-UP
4	C1	702-16-54490	...SCREW.....	1	J30001-UP
5		723-46-17320	...SPOOL.....	1	J30001-UP
6		723-46-17330	...SPRING.....	1	J30001-UP
		723-46-18431	..CASE SUB ASS'Y.....	1	J30001-UP
7	C1	723-46-17471	...CASE.....	1	J30001-UP
8	C1	723-46-17590	...PISTON.....	1	J30001-UP
9	C1	702-73-11510	...SEAL.....	1	J30001-UP
10		723-46-17320	...SPOOL.....	1	J30001-UP
11		723-46-17330	...SPRING.....	1	J30001-UP
12		723-46-15630	...PLUG.....	1	J30001-UP
13		723-46-17340	...PLUG.....	1	J30001-UP
14		07000-13024	...O-RING.....	2	J30001-UP
15	C1	702-16-54490	...SCREW.....	3	J30001-UP
16		07430-71380	..O-RING.....	12	J30001-UP
17		702-16-53920	..O-RING.....	8	J30001-UP
18		01252-60820	..BOLT.....	23	J30001-UP
19		723-46-17350	..BOLT.....	1	J30001-UP

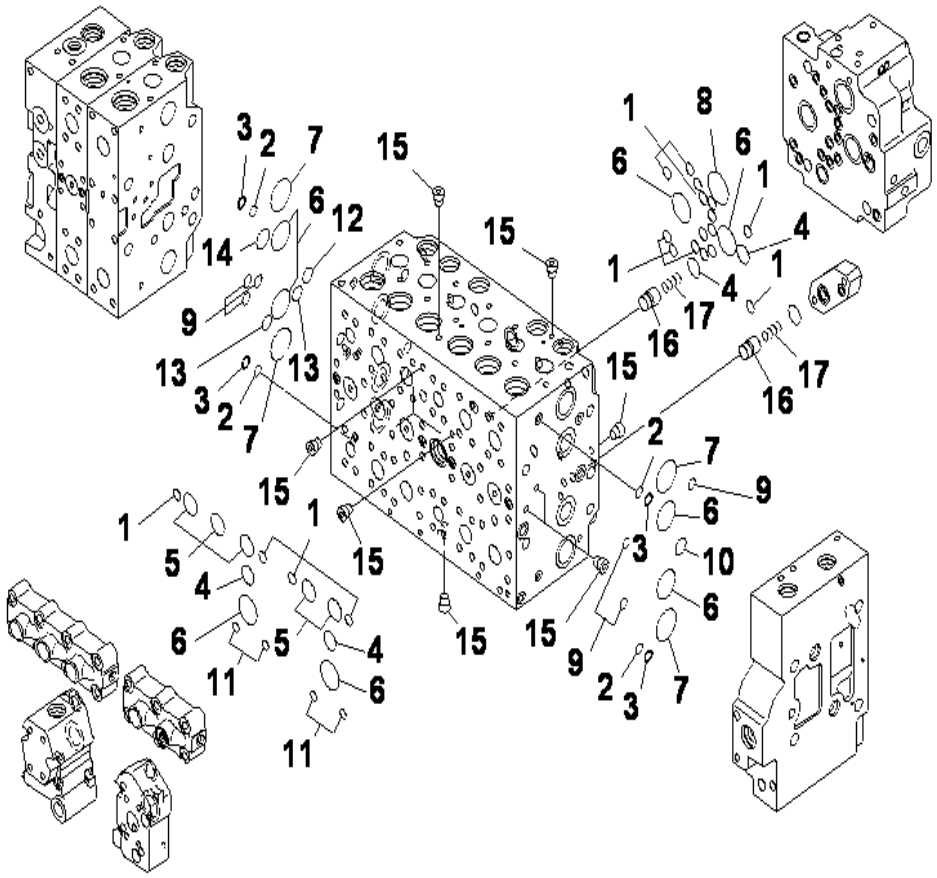

PC400-8 S/N J30001-UP

MAIN VALVE (4/23)

INDEX	CD	PART NO.	DESCRIPTION	QTY	SERIAL NO.
		(723-48-27502)	CONTROL VALVE.....	1	J30002-UP
		(723-48-27501)	CONTROL VALVE.....	1	J30001-J30001
			THIS ASSEMBLY CONSISTS OF ALL PARTS.....		
			SHOWN IN FIGS.Y1664-01A0 TO Y1664-23A0.....		
	C1	723-46-09102	.BODY SUB ASS'Y.....	1	J30001-UP
1		07000-12012	..O-RING.....	19	J30001-UP
2		723-11-19130	..O-RING.....	4	J30001-UP
3		723-46-17520	..RING, BACK-UP.....	4	J30001-UP
4		07000-12021	..O-RING.....	4	J30001-UP
5		07000-13028	..O-RING.....	5	J30001-UP
6		07000-13032	..O-RING.....	8	J30001-UP
7		723-46-17510	..O-RING.....	4	J30001-UP
8		07000-13036	..O-RING.....	1	J30001-UP
9		723-46-17530	..O-RING.....	11	J30001-UP
10		723-11-18150	..O-RING.....	2	J30001-UP
11		702-16-53920	..O-RING.....	4	J30001-UP
12		723-46-18710	..O-RING.....	1	J30001-UP
13		722-12-19070	..O-RING.....	2	J30001-UP
14		723-46-18720	..O-RING.....	1	J30001-UP
15	C1	708-21-12541	..PLUG.....	14	J30001-UP
16		723-46-17650	..VALVE.....	2	J30001-UP
17		723-46-14150	..SPRING.....	2	J30001-UP

Ref :Y1664-04A0 Page :480660

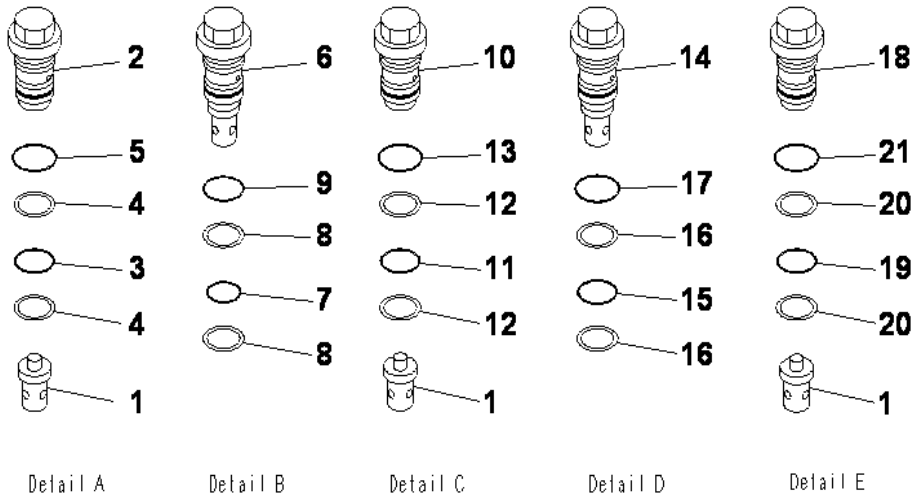

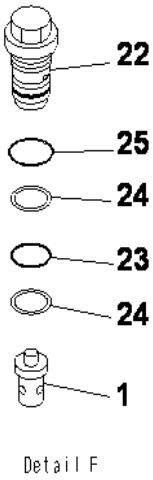

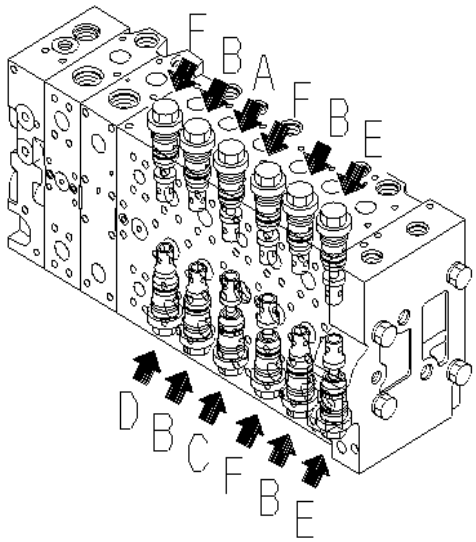

MAIN VALVE (5/23)

INDEX	CD	PART NO.	DESCRIPTION	QTY	SERIAL NO.
		(723-48-27502)	CONTROL VALVE.....	1	J30002-UP
		(723-48-27501)	CONTROL VALVE.....	1	J30001-J30001
			THIS ASSEMBLY CONSISTS OF ALL PARTS.....		
			SHOWN IN FIGS.Y1664-01A0 TO Y1664-23A0.....		
1	C1	723-46-09102	.BODY SUB ASS'Y.....	1	J30001-UP
		723-46-41210	..VALVE.....	7	J30001-UP
2		723-46-40100	..VALVE ASS'Y.....	1	J30001-UP
3		700-93-11320	...O-RING.....	1	J30001-UP
4		723-46-41950	...RING.....	2	J30001-UP
5		07002-13634	...O-RING.....	1	J30001-UP
6		723-46-42800	..VALVE ASS'Y.....	4	J30001-UP
7		700-93-11320	...O-RING.....	1	J30001-UP
8		723-46-41950	...RING.....	2	J30001-UP
9		07002-13634	...O-RING.....	1	J30001-UP
10		723-46-40601	..VALVE ASS'Y.....	1	J30001-UP
11		700-93-11320	...O-RING.....	1	J30001-UP
12		723-46-41950	...RING.....	2	J30001-UP
13		07002-13634	...O-RING.....	1	J30001-UP
14		723-46-45500	..VALVE ASS'Y.....	1	J30001-UP
15		700-93-11320	...O-RING.....	1	J30001-UP
16		723-46-41950	...RING.....	2	J30001-UP
17		07002-13634	...O-RING.....	1	J30001-UP
18		723-46-44100	..VALVE ASS'Y.....	2	J30001-UP
19		700-93-11320	...O-RING.....	1	J30001-UP
20		723-46-41950	...RING.....	2	J30001-UP
21		07002-13634	...O-RING.....	1	J30001-UP
22		723-46-45100	..VALVE ASS'Y.....	3	J30001-UP
23		700-93-11320	...O-RING.....	1	J30001-UP
24		723-46-41950	...RING.....	2	J30001-UP
25		07002-13634	...O-RING.....	1	J30001-UP

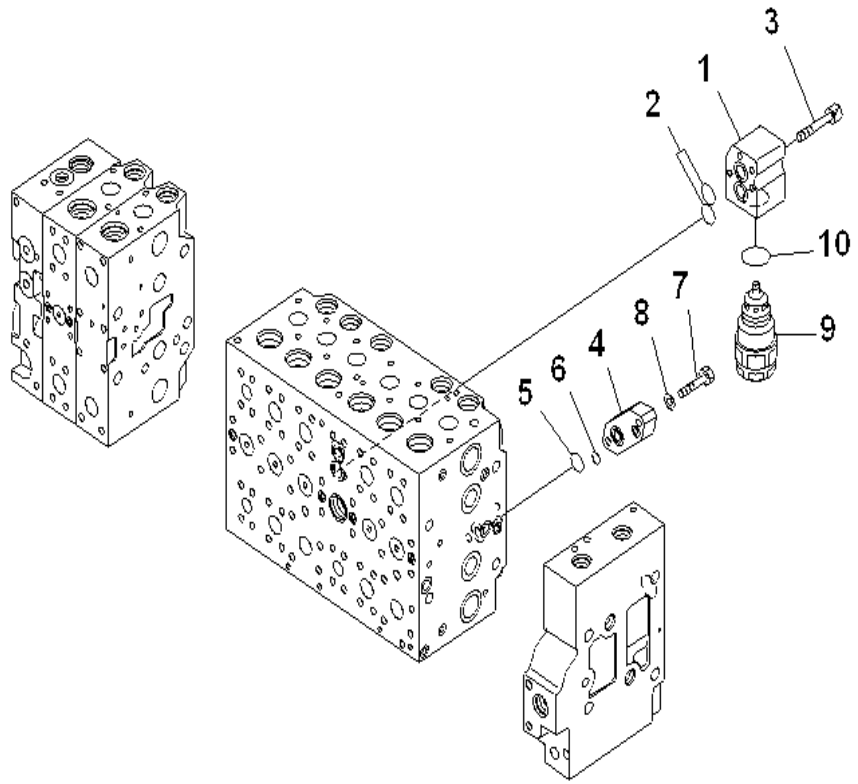

PC400-8 S/N J30001-UP

MAIN VALVE (6/23)

INDEX	CD	PART NO.	DESCRIPTION	QTY	SERIAL NO.
		(723-48-27502)	CONTROL VALVE.....	1	J30002-UP
		(723-48-27501)	CONTROL VALVE.....	1	J30001-J30001
			THIS ASSEMBLY CONSISTS OF ALL PARTS.....		
			SHOWN IN FIGS.Y1664-01A0 TO Y1664-23A0.....		
1	C1	723-46-09102	.BODY SUB ASS'Y.....	1	J30001-UP
		723-46-11910	..BLOCK.....	1	J30001-UP
2		723-46-15510	..O-RING.....	2	J30001-UP
3		01252-60865	..BOLT.....	4	J30001-UP
4		723-46-18730	..PLATE.....	1	J30001-UP
5		07000-12021	..O-RING.....	1	J30001-UP
6		07000-12011	..O-RING.....	1	J30001-UP
7		01010-81040	..BOLT.....	2	J30001-UP
8		01643-51032	..WASHER.....	2	J30001-UP
9		723-90-69100	.VALVE ASS'Y, SUCTION AND SAFETY.....	1	J30001-UP
10		07002-13634	..O-RING.....	1	J30001-UP

Ref :Y1664-06A0 Page :480680

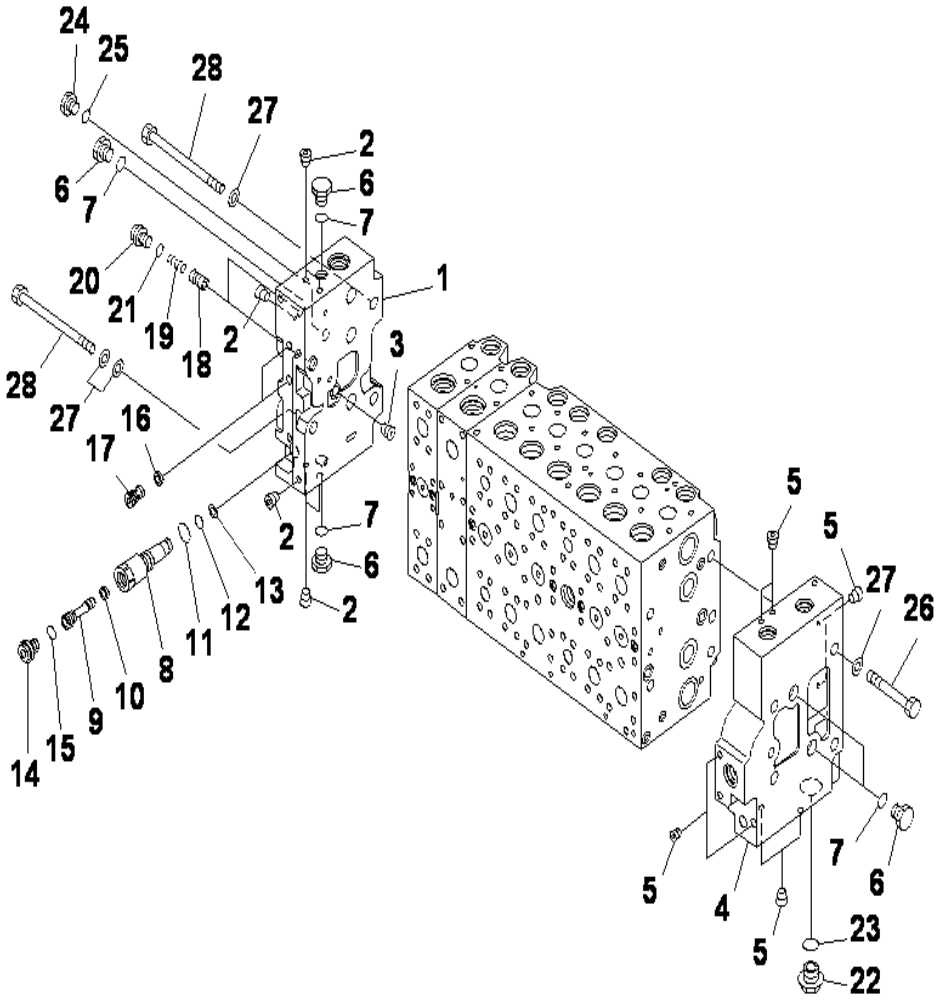

MAIN VALVE (7/23)

INDEX	CD	PART NO.	DESCRIPTION	QTY	SERIAL NO.
		(723-48-27502)	CONTROL VALVE	1	J30002-UP
		(723-48-27501)	CONTROL VALVE	1	J30001-J30001
			THIS ASSEMBLY CONSISTS OF ALL PARTS		
			SHOWN IN FIGS.Y1664-01A0 TO Y1664-23A0		
1		723-46-00760	.COVER ASS'Y	1	J30001-UP
	C1	723-46-11730	..COVER, A	1	J30001-UP
2	C1	708-21-12541	..PLUG	7	J30001-UP
3	C1	708-21-12531	..PLUG	1	J30001-UP
		723-46-00742	.COVER ASS'Y	1	J30001-UP
4	C1	723-46-11722	..COVER, B	1	J30001-UP
5	C1	708-21-12541	..PLUG	8	J30001-UP
6		708-8E-16250	.PLUG	5	J30001-UP
7		07002-11823	.O-RING	5	J30001-UP
		723-46-17600	.PLUG ASS'Y	1	J30001-UP
8		723-46-17610	..SLEEVE	1	J30001-UP
9		723-46-17640	..PLUG	1	J30001-UP
10		702-21-55760	..FILTER	1	J30001-UP
11		07002-11423	..O-RING	1	J30001-UP
12		07000-11007	..O-RING	1	J30001-UP
13		07001-01007	..RING, BACK-UP	1	J30001-UP
14		708-8E-16160	..PLUG	1	J30001-UP
15		07002-11023	..O-RING	1	J30001-UP
16		723-40-82220	.FILTER	2	J30001-UP
17		723-46-17550	.PLUG	2	J30001-UP
18		723-46-15190	.VALVE	2	J30001-UP
19		723-46-14140	.SPRING	2	J30001-UP
20		708-8E-16160	.PLUG	2	J30001-UP
21		07002-11023	.O-RING	2	J30001-UP
22		709-74-91860	.PLUG	1	J30001-UP
23		07002-12434	.O-RING	1	J30001-UP
24		708-8H-11530	.PLUG	1	J30001-UP
25		07002-11423	.O-RING	1	J30001-UP
26		01010-61490	.BOLT	4	J30001-UP
27		01643-31445	.WASHER	10	J30001-UP
28		723-46-15220	.BOLT	4	J30001-UP

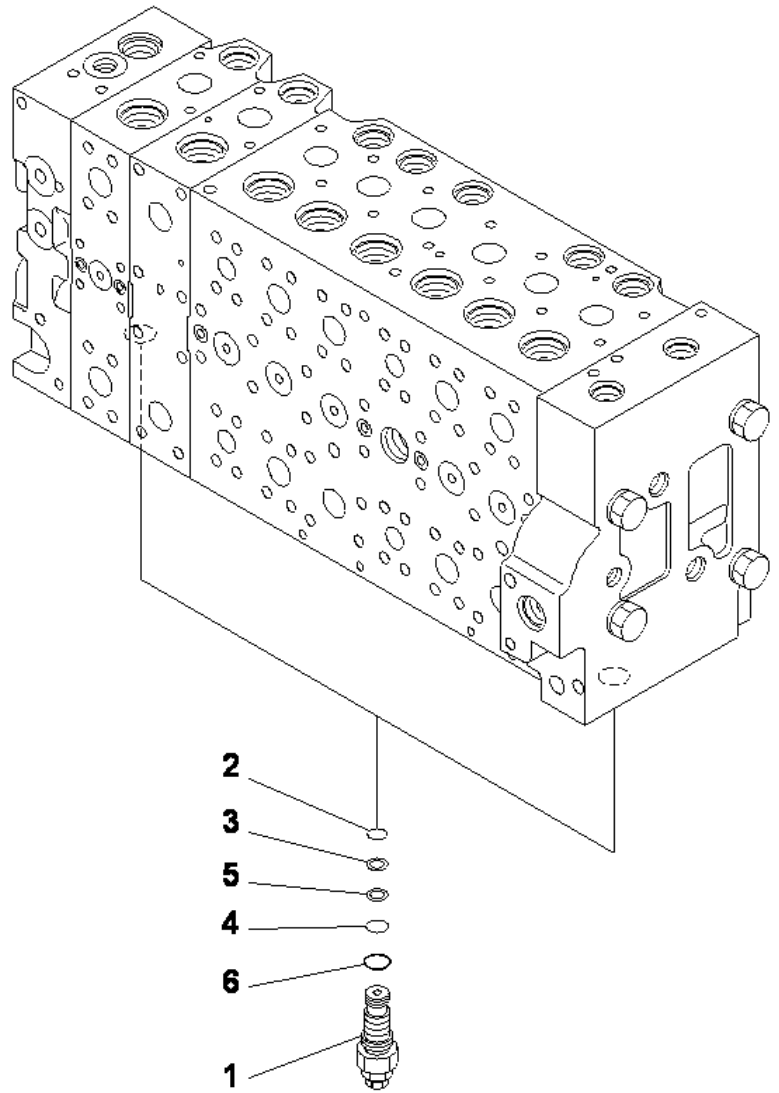

PC400-8 S/N J30001-UP

MAIN VALVE (8/23)

INDEX	CD	PART NO.	DESCRIPTION	QTY	SERIAL NO.
		(723-48-27502)	CONTROL VALVE.....	1	J30002-UP
		(723-48-27501)	CONTROL VALVE.....	1	J30001-J30001
			THIS ASSEMBLY CONSISTS OF ALL PARTS.....		
			SHOWN IN FIGS.Y1664-01A0 TO Y1664-23A0.....		
1		723-40-56800	.VALVE ASS'Y, UNLOAD.....	2	J30001-UP
2		07000-12014	..O-RING.....	1	J30001-UP
3		723-40-56350	..RING.....	1	J30001-UP
4		07000-12016	..O-RING.....	1	J30001-UP
5		723-60-22230	..RING,BACK UP.....	1	J30001-UP
6		07002-12434	..O-RING.....	1	J30001-UP

Ref :Y1664-08A0 Page :480700

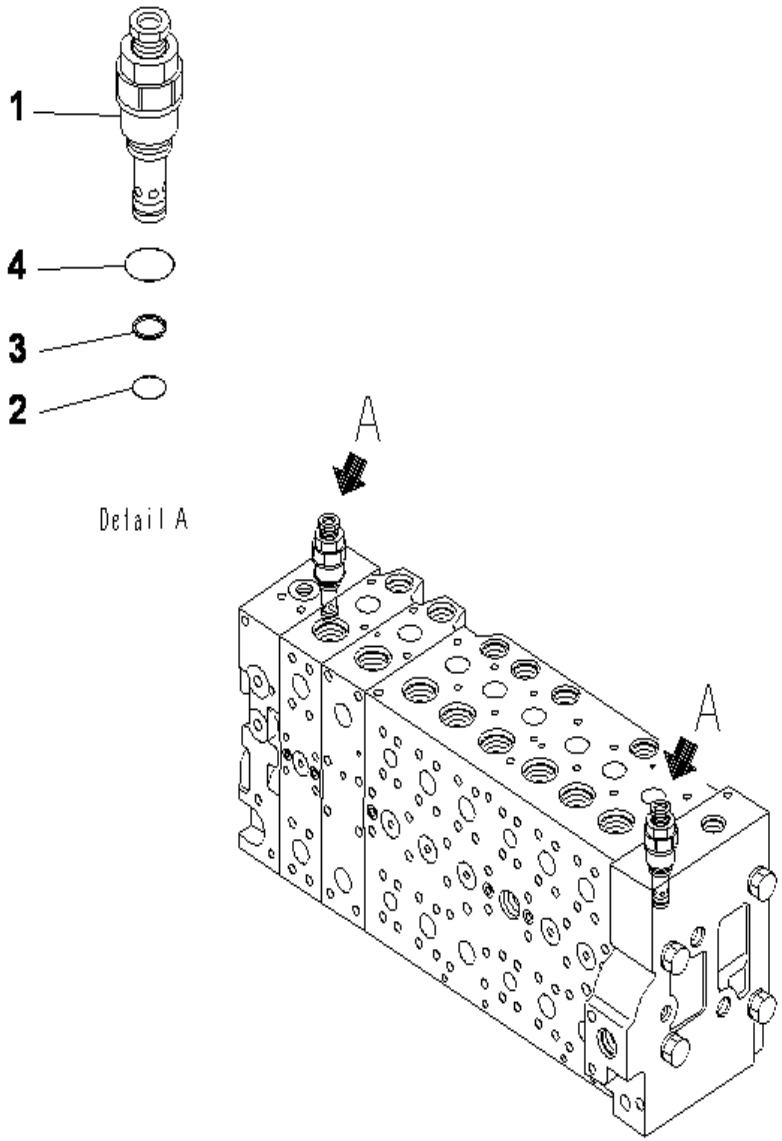

PC400-8 S/N J30001-UP

MAIN VALVE (9/23)

INDEX	CD	PART NO.	DESCRIPTION	QTY	SERIAL NO.
		(723-48-27502)	CONTROL VALVE.....	1	J30002-UP
		(723-48-27501)	CONTROL VALVE.....	1	J30001-J30001
			THIS ASSEMBLY CONSISTS OF ALL PARTS.....		
			SHOWN IN FIGS.Y1664-01A0 TO Y1664-23A0.....		
1		723-40-92403	.VALVE ASS'Y, RELIEF.....	2	J30001-UP
2		700-22-11410	..O-RING.....	1	J30001-UP
3		700-80-64220	..RING, BACK-UP.....	1	J30001-UP
4		07002-12434	..O-RING.....	1	J30001-UP

Ref :Y1664-09A0 Page :480710

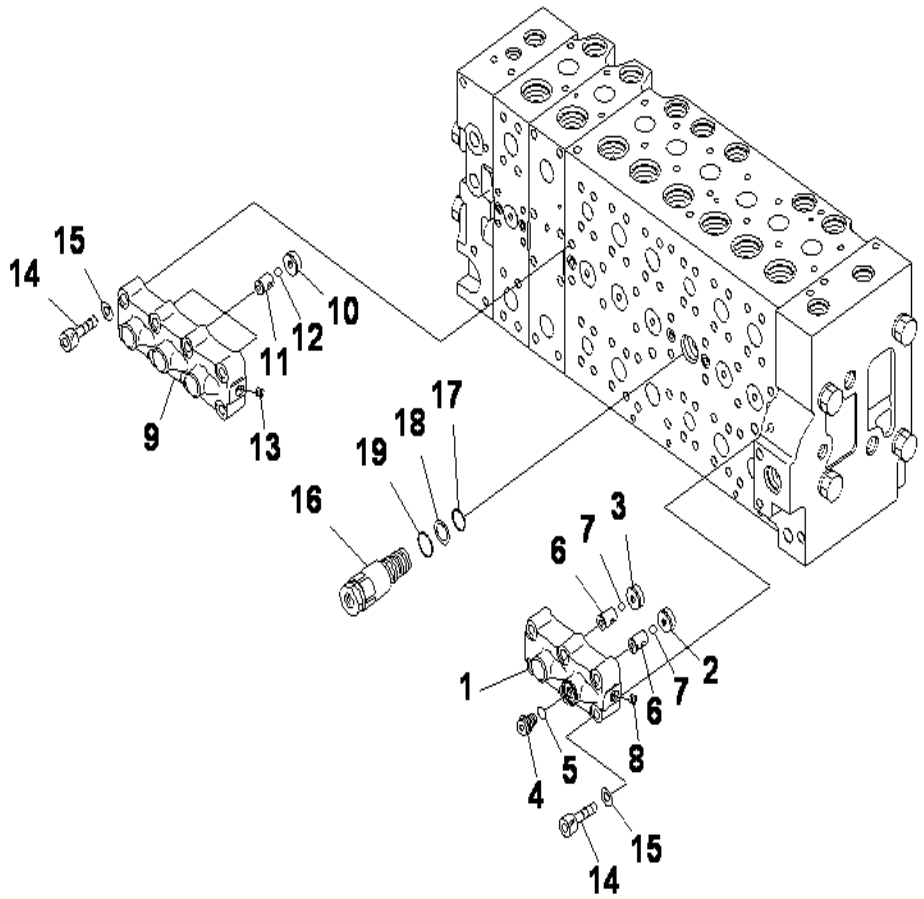

MAIN VALVE (10/23)

INDEX	CD	PART NO.	DESCRIPTION	QTY	SERIAL NO.
		(723-48-27502)	CONTROL VALVE.....	1	J30002-UP
		(723-48-27501)	CONTROL VALVE.....	1	J30001-J30001
			THIS ASSEMBLY CONSISTS OF ALL PARTS.....		
			SHOWN IN FIGS.Y1664-01A0 TO Y1664-23A0.....		
1		723-40-66701	.VALVE ASS'Y.....	1	J30001-UP
	C1	723-40-66171	..CASE.....	1	J30001-UP
2	C1	723-40-66210	..SEAT.....	1	J30001-UP
3	C1	723-40-66240	..SEAT.....	1	J30001-UP
4		708-8H-11530	..PLUG.....	1	J30001-UP
5		07002-11423	..O-RING.....	1	J30001-UP
6	C1	723-40-66220	..SEAT.....	2	J30001-UP
7	C1	04260-00952	..BALL.....	2	J30001-UP
8	C1	708-21-12541	..PLUG.....	1	J30001-UP
		723-40-66601	.VALVE ASS'Y.....	1	J30001-UP
9	C1	723-40-66161	..CASE.....	1	J30001-UP
10	C1	723-40-66210	..SEAT.....	3	J30001-UP
11	C1	723-40-66220	..SEAT.....	3	J30001-UP
12	C1	04260-00952	..BALL.....	3	J30001-UP
13	C1	708-21-12541	..PLUG.....	1	J30001-UP
14		01252-61050	.BOLT.....	14	J30001-UP
15		01643-51032	.WASHER.....	14	J30001-UP
16		723-40-60101	.VALVE ASS'Y.....	1	J30001-UP
17		07000-12020	..O-RING.....	1	J30001-UP
18		07001-02020	..RING, BACK-UP.....	1	J30001-UP
19		709-25-11390	..O-RING.....	1	J30001-UP

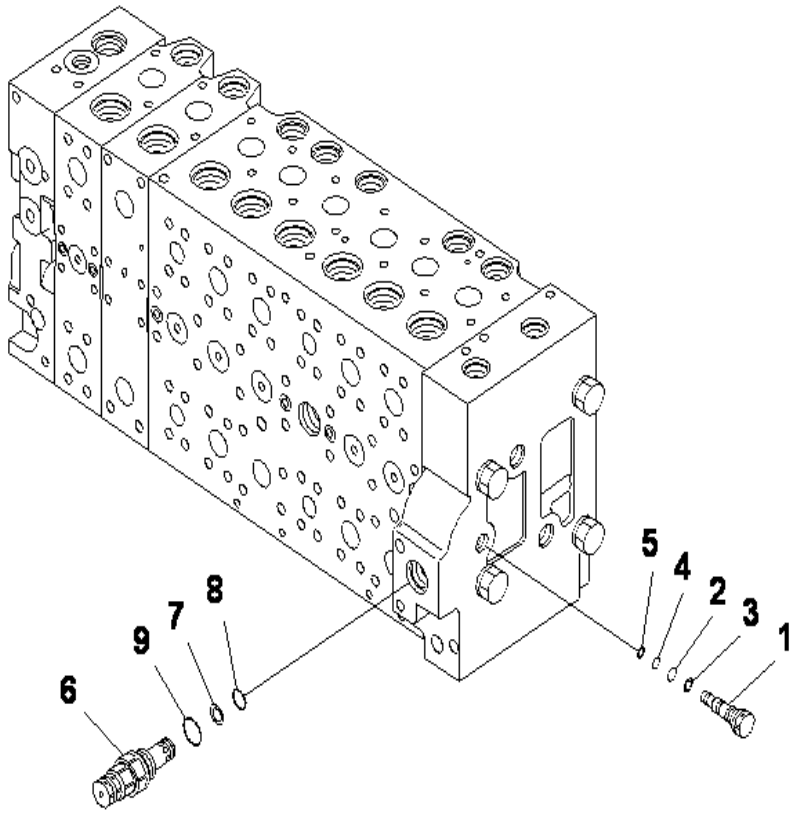

PC400-8 S/N J30001-UP

MAIN VALVE (11/23)

INDEX	CD	PART NO.	DESCRIPTION	QTY	SERIAL NO.
		(723-48-27502)	CONTROL VALVE.....	1	J30002-UP
		(723-48-27501)	CONTROL VALVE.....	1	J30001-J30001
			THIS ASSEMBLY CONSISTS OF ALL PARTS.....		
			SHOWN IN FIGS.Y1664-01A0 TO Y1664-23A0.....		
1		723-46-17701	.PLUG ASS'Y.....	1	J30001-UP
		723-46-17711	..PLUG.....	1	J30001-UP
2		07000-11009	..O-RING.....	1	J30001-UP
3		07001-01009	..RING, BACK-UP.....	1	J30001-UP
4		07000-11007	..O-RING.....	1	J30001-UP
5		07001-01007	..RING, BACK-UP.....	1	J30001-UP
6		723-40-91500	.VALVE ASS'Y, RELIEF.....	1	J30001-UP
7		700-80-64220	..RING.....	1	J30001-UP
8		700-22-11410	..O-RING.....	1	J30001-UP
9		709-25-11390	..O-RING.....	1	J30001-UP

Ref :Y1664-11A0 Page :480730

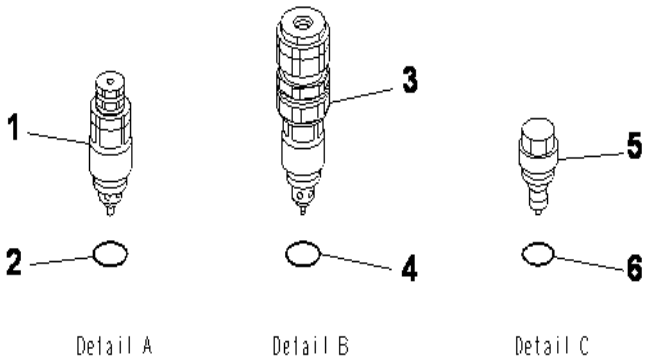

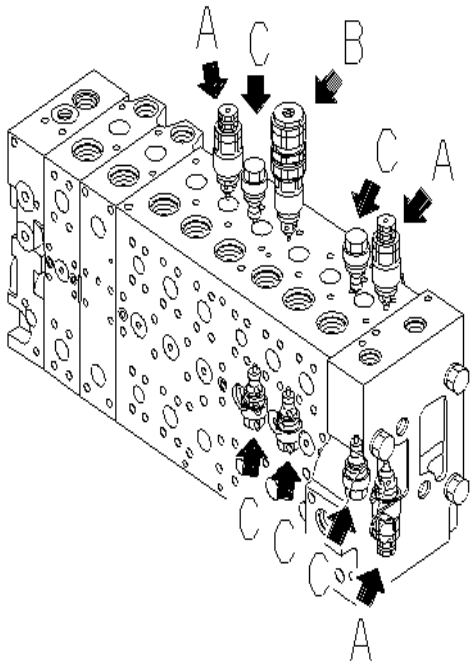

PC400-8 S/N J30001-UP

MAIN VALVE (12/23)

INDEX	CD	PART NO.	DESCRIPTION	QTY	SERIAL NO.
		(723-48-27502)	CONTROL VALVE.....	1	J30002-UP
		(723-48-27501)	CONTROL VALVE.....	1	J30001-J30001
			THIS ASSEMBLY CONSISTS OF ALL PARTS.....		
			SHOWN IN FIGS.Y1664-01A0 TO Y1664-23A0.....		
1		723-40-91200	.VALVE ASS'Y, SUCTION AND SAFETY.....	3	J30001-UP
2		709-25-11390	..O-RING.....	1	J30001-UP
3		723-90-76201	.VALVE ASS'Y, SUCTION AND SAFETY.....	1	J30001-UP
4		07000-13024	..O-RING.....	1	J30001-UP
5		723-40-85100	.VALVE ASS'Y, SUCTION.....	5	J30001-UP
6		709-25-11390	..O-RING.....	1	J30001-UP

Ref :Y1664-12A0 Page :480740

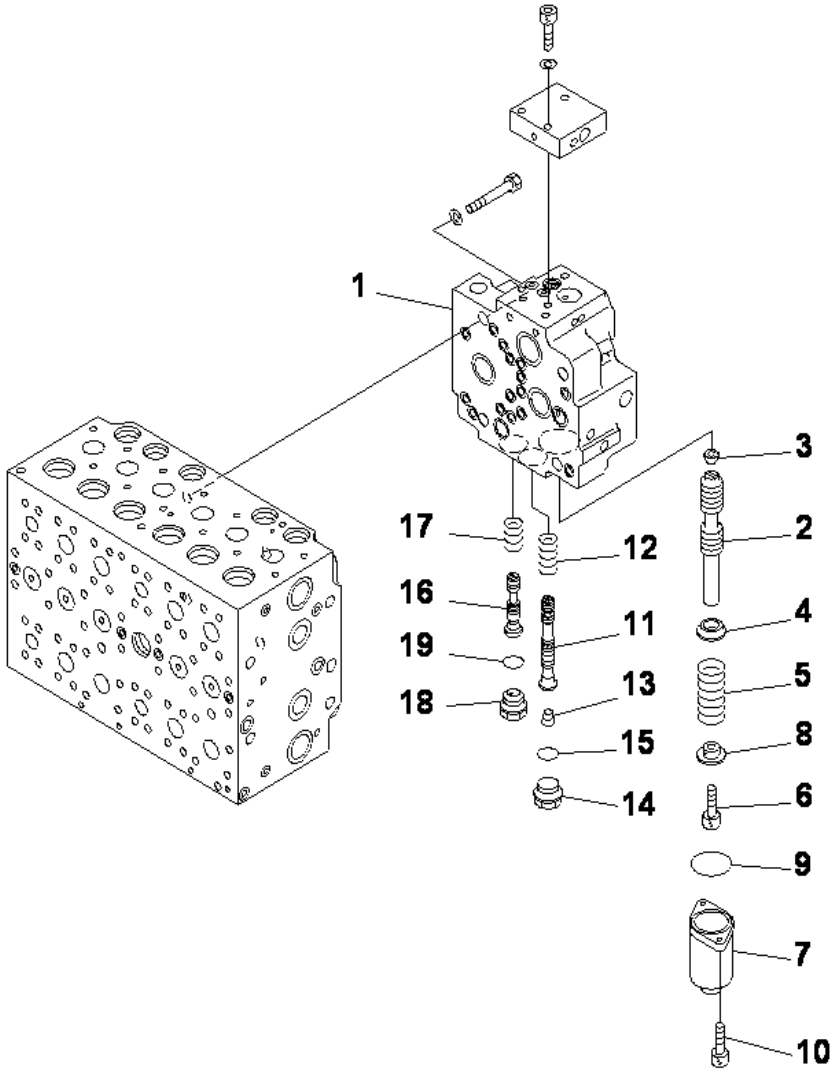

PC400-8 S/N J30001-UP

MAIN VALVE (13/23)

INDEX	CD	PART NO.	DESCRIPTION	QTY	SERIAL NO.
		(723-48-27502)	CONTROL VALVE.....	1	J30002-UP
		(723-48-27501)	CONTROL VALVE.....	1	J30001-J30001
			THIS ASSEMBLY CONSISTS OF ALL PARTS.....		
			SHOWN IN FIGS.Y1664-01A0 TO Y1664-23A0.....		
1		723-40-71201	.VALVE ASS'Y.....	1	J30001-UP
	C1	723-40-71510	..BODY, VALVE.....	1	J30001-UP
2	C1	723-40-71520	..SPOOL.....	1	J30001-UP
3	C1	708-21-12541	..PLUG.....	1	J30001-UP
4		723-40-71330	..RETAINER.....	1	J30001-UP
5		723-40-71340	..SPRING.....	1	J30001-UP
6		01252-60816	..BOLT.....	1	J30001-UP
7		723-46-15111	..CASE.....	1	J30001-UP
8		723-40-71350	..RETAINER.....	1	J30001-UP
9		07430-71380	..O-RING.....	1	J30001-UP
10		01252-60820	..BOLT.....	2	J30001-UP
11	C1	723-40-71362	..SPOOL.....	1	J30001-UP
12		723-40-71440	..SPRING.....	1	J30001-UP
13	C1	708-21-12541	..PLUG.....	1	J30001-UP
14		709-74-91860	..PLUG.....	1	J30001-UP
15		07002-12434	..O-RING.....	1	J30001-UP
16	C1	723-40-71380	..SPOOL.....	1	J30001-UP
17		723-40-71390	..SPRING.....	1	J30001-UP
18		723-40-61150	..PLUG.....	1	J30001-UP
19		07002-12434	..O-RING.....	1	J30001-UP

Ref :Y1664-13A0 Page :480750

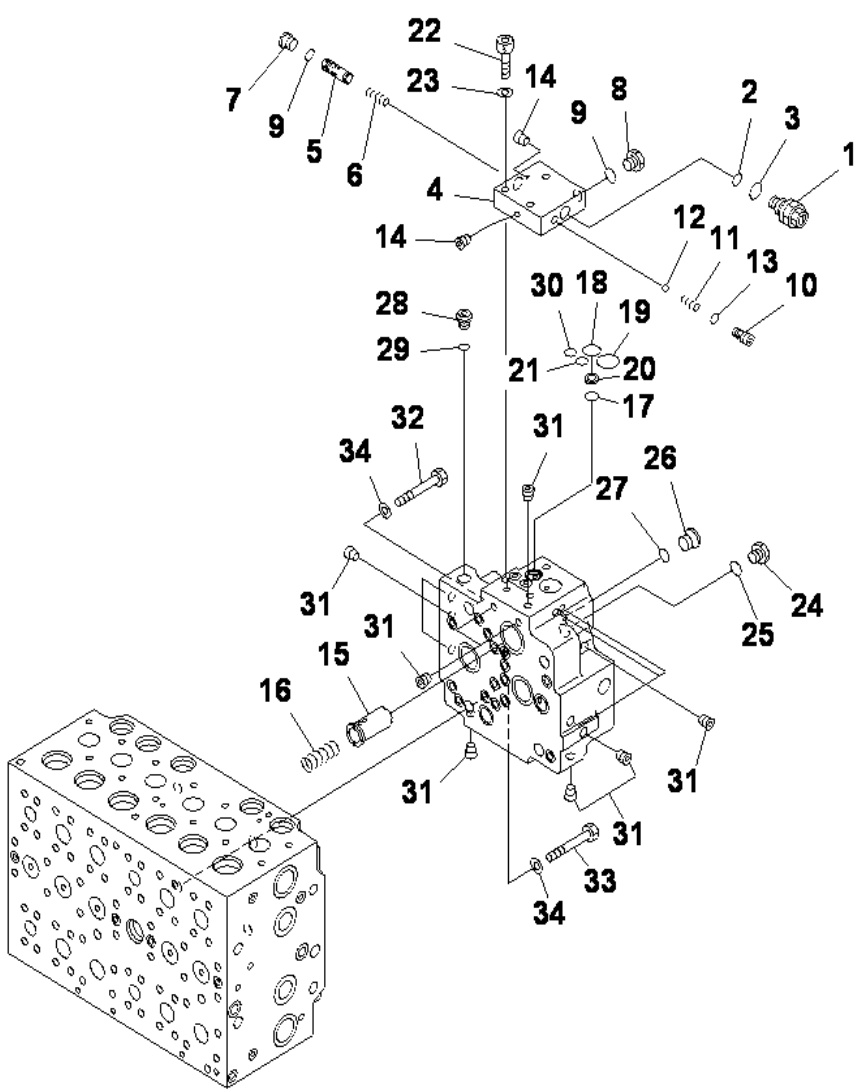

MAIN VALVE (14/23)

INDEX	CD	PART NO.	DESCRIPTION	QTY	SERIAL NO.
		(723-48-27502)	CONTROL VALVE.....	1	J30002-UP
		(723-48-27501)	CONTROL VALVE.....	1	J30001-J30001
			THIS ASSEMBLY CONSISTS OF ALL PARTS.....		
			SHOWN IN FIGS.Y1664-01A0 TO Y1664-23A0.....		
1		(723-40-71201)	.VALVE ASS'Y.....	1	J30001-UP
		723-40-71800	..VALVE ASS'Y.....	1	J30001-UP
		723-40-91600	...VALVE ASS'Y, RELIEF.....	1	J30001-UP
2		702-16-53920	....O-RING.....	1	J30001-UP
3		07002-11623	....O-RING.....	1	J30001-UP
4	C1	723-40-71411	...BLOCK.....	1	J30001-UP
5	C1	702-21-55511	...SPOOL.....	1	J30001-UP
6	C1	702-21-55640	...SPRING.....	1	J30001-UP
7		702-21-55620	...PLUG.....	1	J30001-UP
8		708-8H-11530	...PLUG.....	1	J30001-UP
9		07002-11423	...O-RING.....	2	J30001-UP
10		702-21-55710	...SEAT.....	1	J30001-UP
11		702-21-55720	...SPRING.....	1	J30001-UP
12		04260-00793	...BALL.....	1	J30001-UP
13		07000-11009	...O-RING.....	1	J30001-UP
14	C1	708-21-12541	...PLUG.....	2	J30001-UP
15		723-40-71430	..VALVE.....	1	J30001-UP
16		702-21-55460	..SPRING.....	1	J30001-UP
17		702-21-55420	..O-RING.....	1	J30001-UP
18		702-21-55520	..O-RING.....	1	J30001-UP
19		702-21-55440	..O-RING.....	1	J30001-UP
20		702-21-53120	..FILTER.....	1	J30001-UP
21		07000-12011	..O-RING.....	1	J30001-UP
22		01252-61040	..BOLT.....	3	J30001-UP
23		01643-51032	..WASHER.....	3	J30001-UP
24		708-8H-11530	..PLUG.....	1	J30001-UP
25		07002-11423	..O-RING.....	1	J30001-UP
26		702-21-55620	..PLUG.....	1	J30001-UP
27		07002-11423	..O-RING.....	1	J30001-UP
28		708-8E-16160	..PLUG.....	1	J30001-UP
29		07002-11023	..O-RING.....	1	J30001-UP
30		07000-12011	..O-RING.....	1	J30001-UP
31	C1	708-21-12541	..PLUG.....	17	J30001-UP
32		01010-61460	.BOLT.....	1	J30001-UP
33		01010-61470	.BOLT.....	3	J30001-UP
34		01643-31445	.WASHER.....	4	J30001-UP

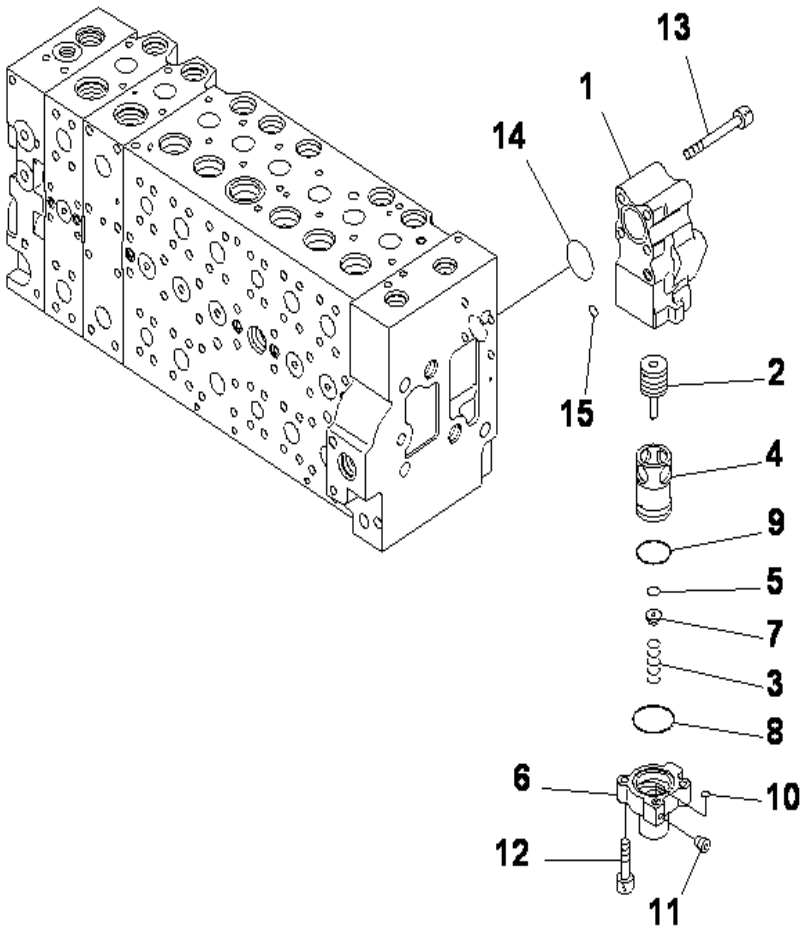

PC400-8 S/N J30001-UP

MAIN VALVE (15/23)

INDEX	CD	PART NO.	DESCRIPTION	QTY	SERIAL NO.
		(723-48-27502)	CONTROL VALVE.....	1	J30002-UP
		(723-48-27501)	CONTROL VALVE.....	1	J30001-J30001
			THIS ASSEMBLY CONSISTS OF ALL PARTS.....		
			SHOWN IN FIGS.Y1664-01A0 TO Y1664-23A0.....		
1		723-40-87400	.VALVE ASS'Y.....	1	J30001-UP
		723-40-87110	..BODY.....	1	J30001-UP
2		723-40-87440	..SPOOL.....	1	J30001-UP
3		723-40-87260	..SPRING.....	1	J30001-UP
4	C1	723-40-87220	..SLEEVE.....	1	J30001-UP
5	C1	723-40-87131	..SEAL.....	1	J30001-UP
6	C1	723-40-87180	..CASE.....	1	J30001-UP
7		723-40-87250	..RETAINER.....	1	J30001-UP
8		723-40-87170	..O-RING.....	1	J30001-UP
9		07000-13035	..O-RING.....	1	J30001-UP
10		07000-11007	..O-RING.....	1	J30001-UP
11	C1	702-16-54490	..SCREW.....	1	J30001-UP
12		01252-60830	..BOLT.....	2	J30001-UP
13		01252-61075	.BOLT.....	4	J30001-UP
14		07000-13038	.O-RING.....	1	J30001-UP
15		07000-11010	.O-RING.....	1	J30001-UP

Ref :Y1664-15A0 Page :480770

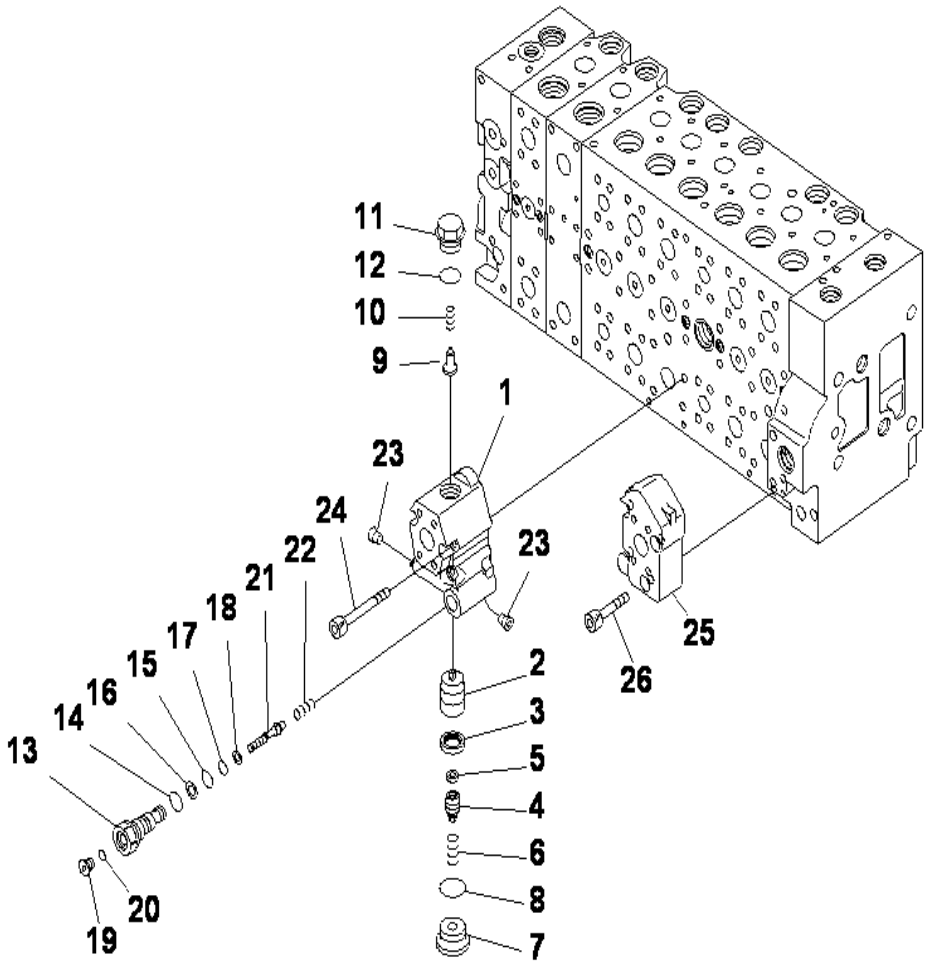

MAIN VALVE (16/23)

INDEX	CD	PART NO.	DESCRIPTION	QTY	SERIAL NO.
		(723-48-27502)	CONTROL VALVE.....	1	J30002-UP
		(723-48-27501)	CONTROL VALVE.....	1	J30001-J30001
			THIS ASSEMBLY CONSISTS OF ALL PARTS.....		
			SHOWN IN FIGS.Y1664-01A0 TO Y1664-23A0.....		
1		723-40-82401	.VALVE ASS'Y.....	1	J30001-UP
	C1	723-40-82410	..BODY.....	1	J30001-UP
2	C1	723-40-82120	..VALVE.....	1	J30001-UP
3	C1	723-40-82130	..SEAL.....	1	J30001-UP
4	C1	723-40-82210	..PLUG.....	1	J30001-UP
5	C1	723-40-82220	..FILTER.....	1	J30001-UP
6	C1	723-40-82140	..SPRING.....	1	J30001-UP
7	C1	723-40-82150	..PLUG.....	1	J30001-UP
8		07002-13334	..O-RING.....	1	J30001-UP
9		723-40-84420	..VALVE, CHECK.....	1	J30001-UP
10		723-40-84430	..SPRING.....	1	J30001-UP
11	C1	723-40-82161	..PLUG.....	1	J30001-UP
12		07000-13024	..O-RING.....	1	J30001-UP
13	C1	723-40-82310	..PLUG.....	1	J30001-UP
14		07002-11823	..O-RING.....	1	J30001-UP
15		07000-12011	..O-RING.....	1	J30001-UP
16		07001-02011	..RING.....	1	J30001-UP
17		07000-11010	..O-RING.....	1	J30001-UP
18		07001-01010	..RING.....	1	J30001-UP
19		723-11-18190	..PLUG.....	1	J30001-UP
20		07002-11023	..O-RING.....	1	J30001-UP
21	C1	723-40-82280	..PISTON.....	1	J30001-UP
22	C1	723-40-82290	..SPRING.....	1	J30001-UP
23	C1	702-16-54490	..SCREW.....	2	J30001-UP
24		01252-61075	.BOLT.....	4	J30001-UP
25		723-46-17570	.BLOCK.....	1	J30001-UP
26		01252-61045	.BOLT.....	4	J30001-UP

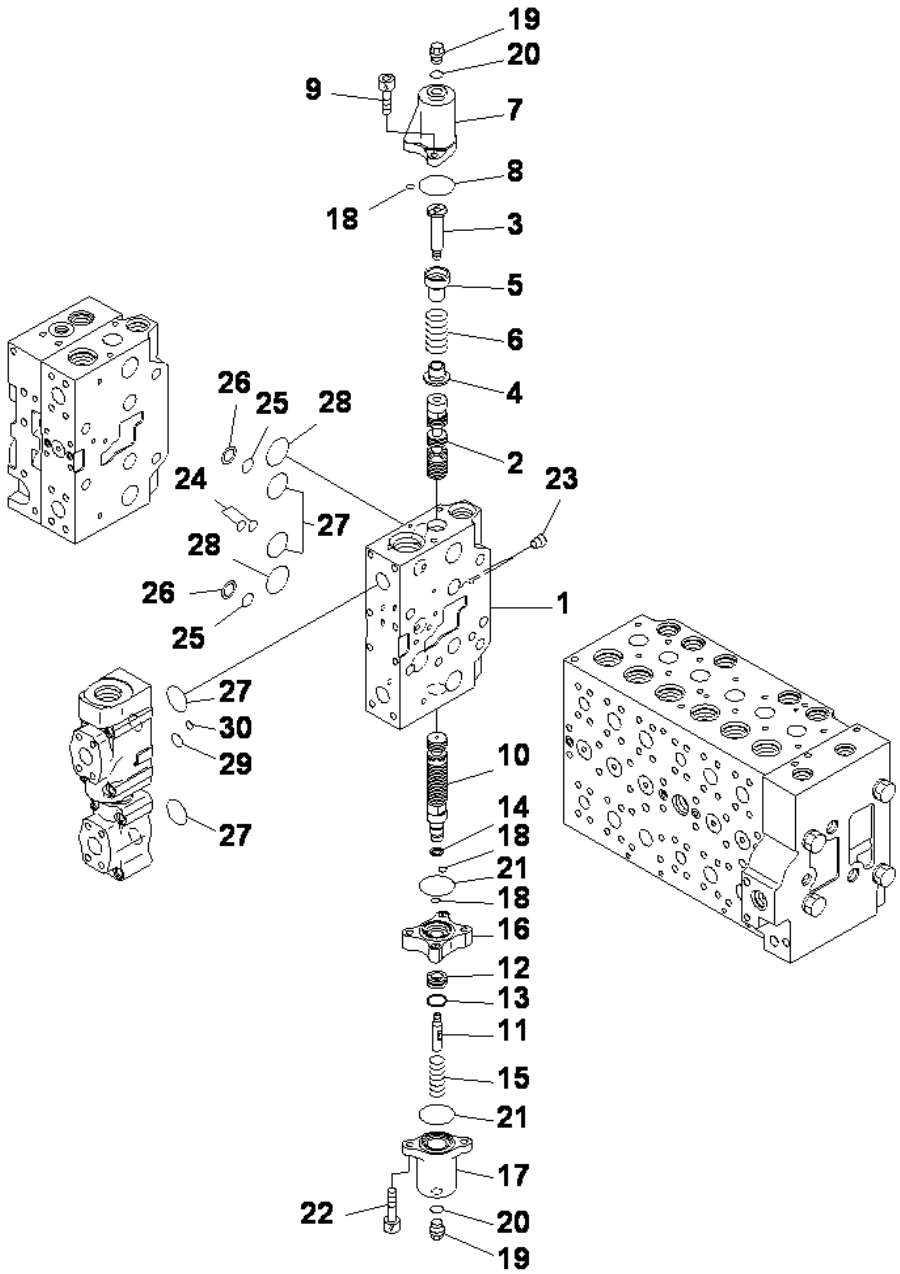

MAIN VALVE (17/23)

INDEX	CD	PART NO.	DESCRIPTION	QTY	SERIAL NO.
		(723-48-27502)	CONTROL VALVE.....	1	J30002-UP
		(723-48-27501)	CONTROL VALVE.....	1	J30001-J30001
			THIS ASSEMBLY CONSISTS OF ALL PARTS.....		
			SHOWN IN FIGS.Y1664-01A0 TO Y1664-23A0.....		
1	C1	723-41-11901	.BODY SUB A.....	1	J30001-UP
	C1	723-41-11410	..BLOCK,VALVE.....	1	J30001-UP
2	C1	723-46-22753	..SPOOL.....	1	J30001-UP
3		723-46-15390	..PLUG.....	1	J30001-UP
4		723-46-15370	..RETAINER.....	1	J30001-UP
5		723-46-15380	..RETAINER.....	1	J30001-UP
6		723-46-14190	..SPRING.....	1	J30001-UP
7		723-46-17840	..CASE.....	1	J30001-UP
8		07430-71380	..O-RING.....	1	J30001-UP
9		01252-60820	..BOLT.....	2	J30001-UP
10		723-46-25610	..SPOOL.....	1	J30001-UP
11		723-46-15330	..BOLT.....	1	J30001-UP
12		723-46-15340	..PISTON.....	1	J30001-UP
13		723-46-15350	..SEAL.....	1	J30001-UP
14		700-20-71260	..SEAL.....	1	J30001-UP
15		723-46-14180	..SPRING.....	1	J30001-UP
16		723-46-17850	..CASE.....	1	J30001-UP
17		723-46-17860	..CASE.....	1	J30001-UP
18		723-11-19960	..O-RING.....	3	J30001-UP
19		706-73-71450	..PLUG.....	2	J30001-UP
20		07002-11423	..O-RING.....	2	J30001-UP
21		07430-71380	..O-RING.....	2	J30001-UP
22		01252-60845	..BOLT.....	2	J30001-UP
23	C1	708-21-12541	..PLUG.....	2	J30001-UP
24		723-46-17530	..O-RING.....	2	J30001-UP
25		723-11-19130	..O-RING.....	2	J30001-UP
26		723-46-17520	.RING, BACK-UP.....	2	J30001-UP
27		07000-13032	..O-RING.....	4	J30001-UP
28		723-46-17510	..O-RING.....	2	J30001-UP
29		07000-12016	..O-RING.....	1	J30001-UP
30		702-16-53920	..O-RING.....	1	J30001-UP

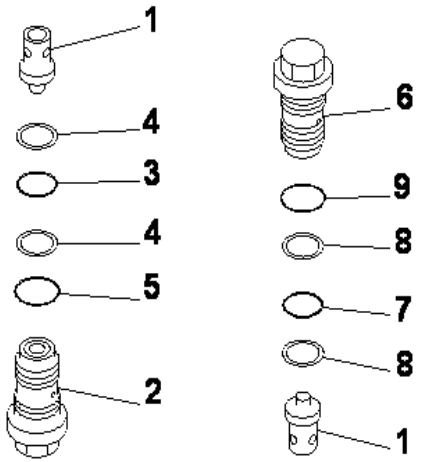

Detail A Detail B

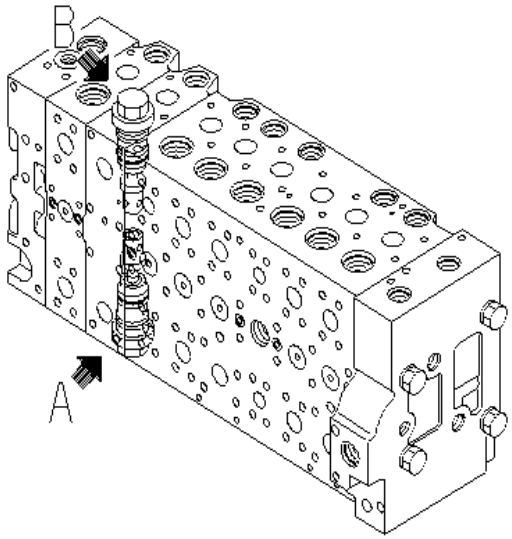

PC400-8 S/N J30001-UP

MAIN VALVE (18/23)

INDEX	CD	PART NO.	DESCRIPTION	QTY	SERIAL NO.
		(723-48-27502)	CONTROL VALVE.....	1	J30002-UP
		(723-48-27501)	CONTROL VALVE.....	1	J30001-J30001
			THIS ASSEMBLY CONSISTS OF ALL PARTS.....		
			SHOWN IN FIGS.Y1664-01A0 TO Y1664-23A0.....		
1	C1	7234111901	.BODY SUB ASS'Y.....	1	J30001-UP
		723-46-41210	..VALVE.....	1	J30001-UP
2		723-46-40601	..VALVE ASS,Y.....	1	J30001-UP
3		700-93-11320	...O-RING.....	1	J30001-UP
4		723-46-41950	...RING.....	2	J30001-UP
5		07002-13634	...O-RING.....	1	J30001-UP
6		723-46-43400	..VALVE ASS'Y.....	1	J30002-UP
		723-46-44100	..VALVE ASS'Y.....	1	J30001-J30001
7		700-93-11320	...O-RING.....	1	J30001-UP
8		723-46-41950	...RING.....	2	J30001-UP
9		07002-13634	...O-RING.....	1	J30001-UP

Ref :Y1664-18A0 Page :480800

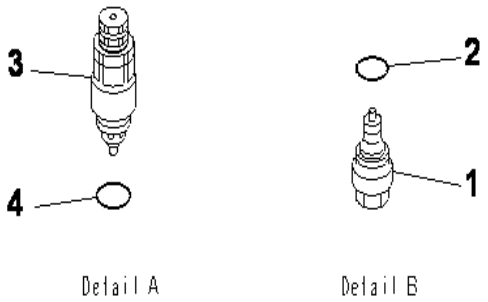

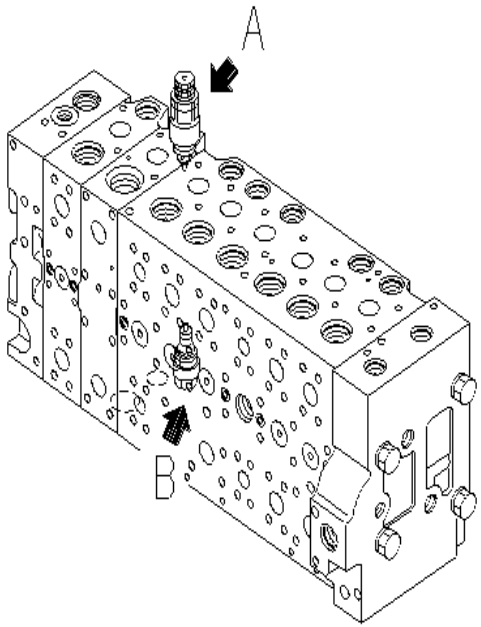

PC400-8 S/N J30001-UP

MAIN VALVE (19/23)

INDEX	CD	PART NO.	DESCRIPTION	QTY	SERIAL NO.
		(723-48-27502)	CONTROL VALVE.....	1	J30002-UP
		(723-48-27501)	CONTROL VALVE.....	1	J30001-J30001
			THIS ASSEMBLY CONSISTS OF ALL PARTS.....		
			SHOWN IN FIGS.Y1664-01A0 TO Y1664-23A0.....		
1		723-40-85100	.VALVE ASS'Y, SUCTION.....	1	J30001-UP
2		709-25-11390	..O-RING.....	1	J30001-UP
3		723-40-91200	.VALVE ASS'Y. SUCTION AND SAFETY.....	1	J30001-UP
4		709-25-11390	..O-RING.....	1	J30001-UP

Ref :Y1664-19A0 Page :480810

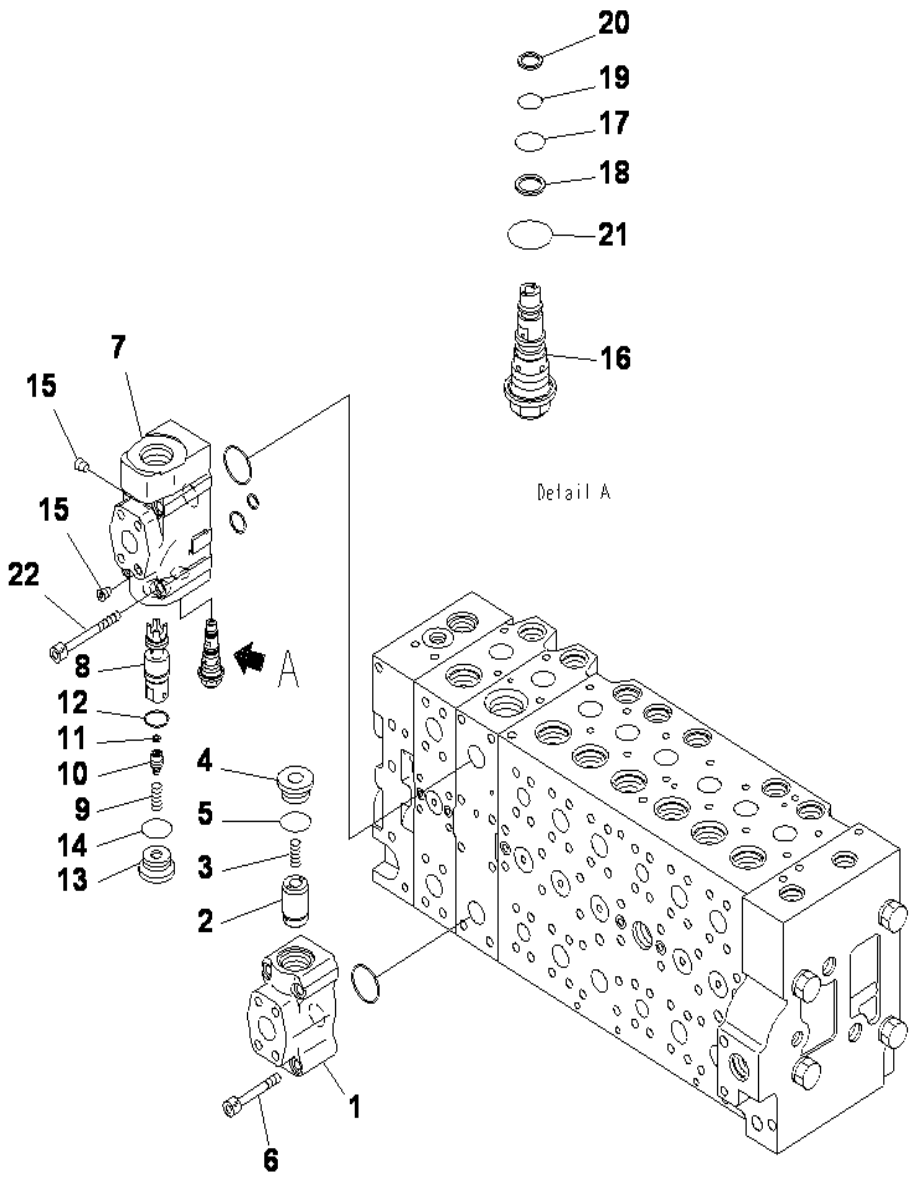

MAIN VALVE (20/23)

INDEX	CD	PART NO.	DESCRIPTION	QTY	SERIAL NO.
		(723-48-27502)	CONTROL VALVE.....	1	J30002-UP
		(723-48-27501)	CONTROL VALVE.....	1	J30001-J30001
			THIS ASSEMBLY CONSISTS OF ALL PARTS.....		
			SHOWN IN FIGS.Y1664-01A0 TO Y1664-23A0.....		
		723-40-84100	.VALVE ASS'Y.....	1	J30001-UP
1	C1	723-40-84110	..BODY.....	1	J30001-UP
2	C1	723-40-84120	..VALVE.....	1	J30001-UP
3		723-40-82140	..SPRING.....	1	J30001-UP
4		723-40-84130	..PLUG.....	1	J30001-UP
5		07002-13034	..O-RING.....	1	J30001-UP
6		01252-61065	..BOLT.....	4	J30001-UP
		723-40-84200	.VALVE ASS'Y.....	1	J30001-UP
7	C1	723-40-84210	..BODY.....	1	J30001-UP
8	C1	723-40-84220	..VALVE.....	1	J30001-UP
9		723-40-82140	..SPRING.....	1	J30001-UP
10		723-40-84230	..PLUG.....	1	J30001-UP
11		723-40-82220	..FILTER.....	1	J30001-UP
12		723-46-15350	..SEAL.....	1	J30001-UP
13		723-40-84130	..PLUG.....	1	J30001-UP
14		07002-13034	..O-RING.....	1	J30001-UP
15	C1	708-21-12541	..PLUG.....	2	J30001-UP
16		723-40-92900	..VALVE ASS'Y.....	1	J30001-UP
17		07000-12012	...O-RING.....	1	J30001-UP
18		07001-02012	...RING,BACK UP.....	1	J30001-UP
19		07000-11010	...O-RING.....	1	J30001-UP
20		07001-01010	...RING.....	1	J30001-UP
21		07002-12034	...O-RING.....	1	J30001-UP
22		723-46-18770	.BOLT.....	4	J30001-UP

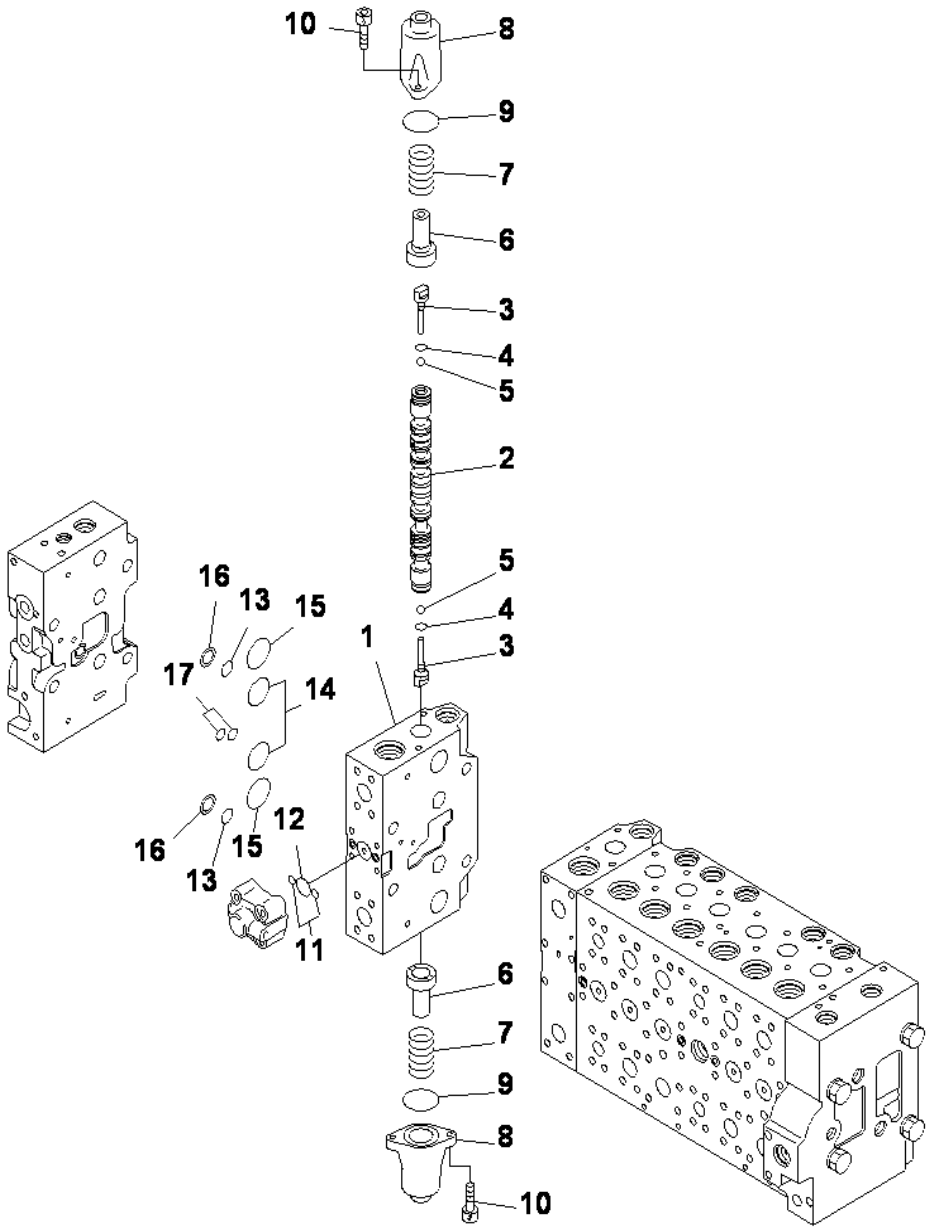

MAIN VALVE (21/23)

INDEX	CD	PART NO.	DESCRIPTION	QTY	SERIAL NO.
		(723-48-27502)	CONTROL VALVE P.....	1	J30002-UP
		(723-48-27501)	CONTROL VALVE.....	1	J30001-J30001
			THIS ASSEMBLY CONSISTS OF ALL PARTS.....		J30001-UP
			SHOWN IN FIGS.Y1664-01A0 TO Y1664-23A0.....		J30001-UP
1	C1	723-41-11200	.BODY SUB ASS'Y.....	1	J30001-UP
	C1	723-41-11420	..BLOCK,VALVE.....	1	J30001-UP
2	C1	723-46-22811	..SPOOL.....	1	J30001-UP
3		723-46-15130	..PLUG.....	2	J30001-UP
4		07002-10823	..O-RING.....	2	J30001-UP
5		708-7T-16460	..BALL.....	2	J30001-UP
6		723-46-15120	..RETAINER.....	2	J30001-UP
7		723-46-14110	..SPRING.....	2	J30001-UP
8		723-46-15111	..CASE.....	2	J30001-UP
9		07430-71380	..O-RING.....	2	J30001-UP
10		01252-60820	..BOLT.....	4	J30001-UP
11		07000-11009	..O-RING.....	2	J30001-UP
12		07000-12021	..O-RING.....	1	J30001-UP
13		723-11-19130	..O-RING.....	2	J30001-UP
14		07000-13032	..O-RING.....	2	J30001-UP
15		723-46-17510	..O-RING.....	2	J30001-UP
16		723-46-17520	..RING, BACK-UP.....	2	J30001-UP
17		723-46-17530	..O-RING.....	2	J30001-UP

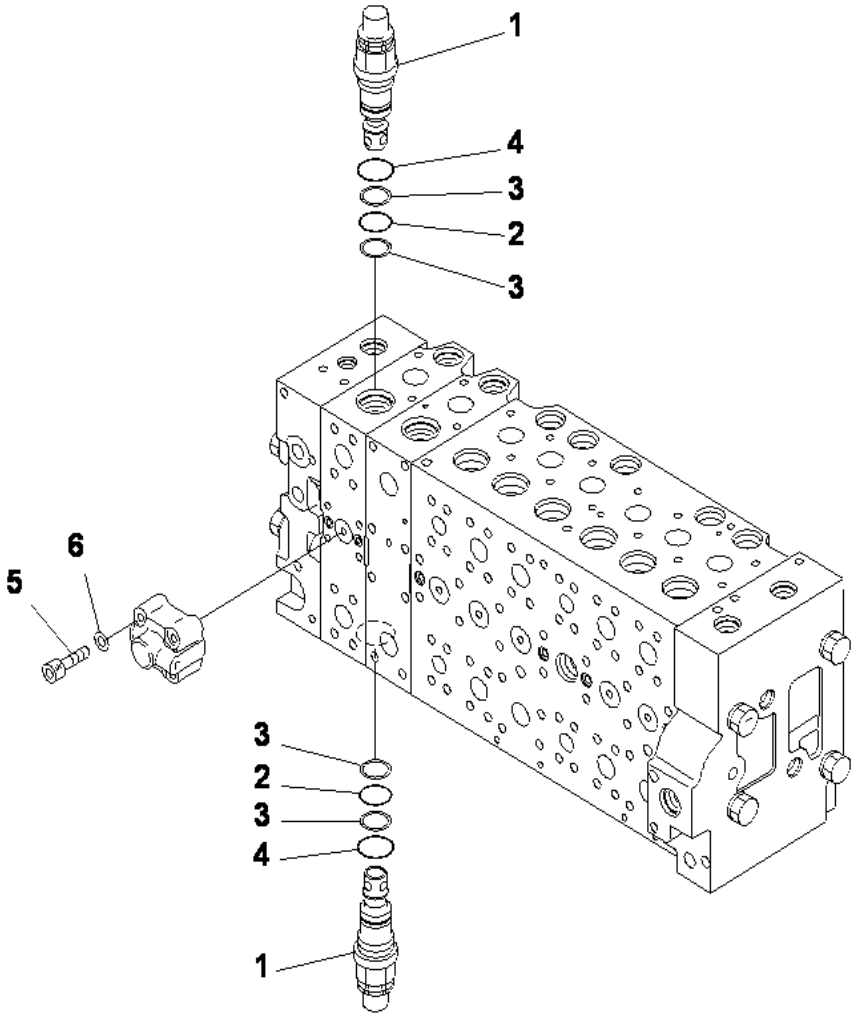

PC400-8 S/N J30001-UP

MAIN VALVE (22/23)

INDEX	CD	PART NO.	DESCRIPTION	QTY	SERIAL NO.
		(723-48-27502)	CONTROL VALVE.....	1	J30003-UP
		(723-48-27501)	CONTROL VALVE.....	1	J30001-J30002
			THIS ASSEMBLY CONSISTS OF ALL PARTS.....		
			SHOWN IN FIGS.Y1664-01A0 TO Y1664-23A0.....		
1	C1	723-41-11200	.BODY SUB A.....	1	J30001-UP
		723-46-48100	..VALVE A.....	2	J30001-UP
2		700-93-11320	...O RING.....	1	J30001-UP
3		723-46-41950	...RING.....	2	J30001-UP
4		07002-13634	...O-RING.....	1	J30001-UP
5		01252-60845	..BOLT.....	4	J30001-UP
6		01643-50823	..WASHER.....	4	J30001-UP

Ref :Y1664-22A0 Page :480840

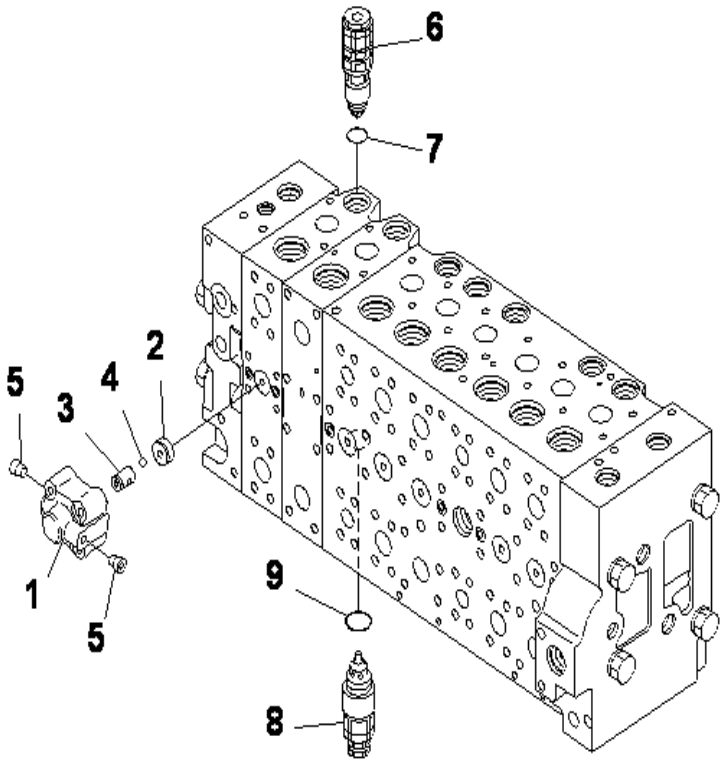

PC400-8 S/N J30001-UP

MAIN VALVE (23/23)

INDEX	CD	PART NO.	DESCRIPTION	QTY	SERIAL NO.
		(723-48-27502)	CONTROL VALVE.....	1	J30002-UP
		(723-48-27501)	CONTROL VALVE.....	1	J30001-J30001
			THIS ASSEMBLY CONSISTS OF ALL PARTS.....		
			SHOWN IN FIGS.Y1664-01A0 TO Y1664-23A0.....		
		723-40-66300	.VALVE ASS'Y.....	1	J30001-UP
1	C1	723-40-66130	..CASE.....	1	J30001-UP
2	C1	723-40-66230	..SEAT.....	1	J30001-UP
3	C1	723-40-66220	..SEAT.....	1	J30001-UP
4	C1	04260-00952	..BALL.....	1	J30001-UP
5	C1	708-21-12541	..PLUG.....	2	J30001-UP
6		723-90-76501	.VALVE ASS'Y. SUCTION AND SAFETY.....	1	J30001-UP
7		07000-13024	..O-RING.....	1	J30001-UP
8		723-90-61700	.VALVE ASS'Y. SUCTION AND SAFETY.....	1	J30001-UP
9		07000-13024	..O-RING.....	1	J30001-UP

Ref :Y1664-23A0 Page :480850

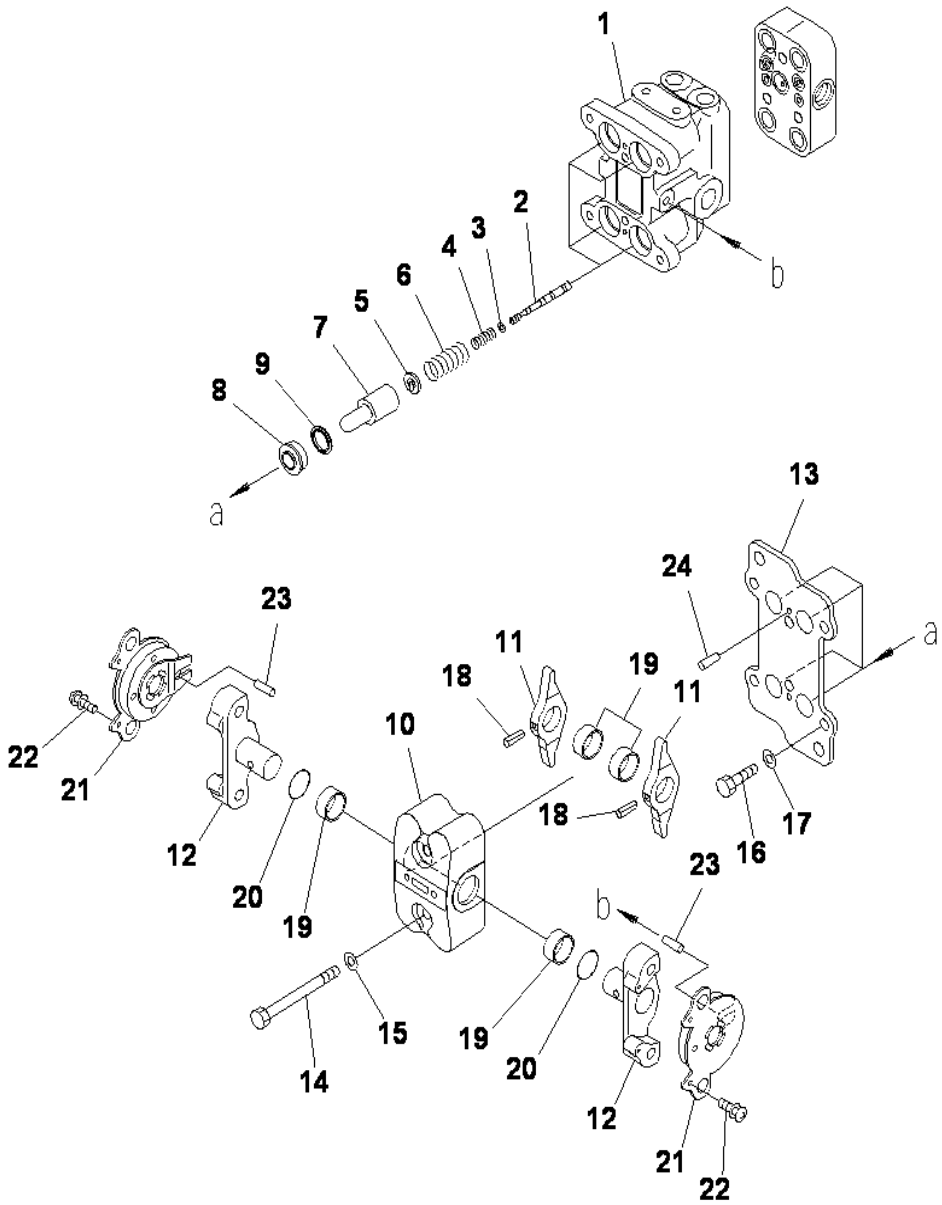

PPC VALVE (FOR TRAVEL) (1/2)

INDEX	CD	PART NO.	DESCRIPTION	QTY	SERIAL NO.
		702-16-04250	PILOT VALVE.....	1	J30001-UP
			THIS ASSEMBLY CONSISTS OF ALL PARTS.....		
			SHOWN IN FIGS.Y1670-01A0 AND Y1670-02A0.....		
1	C1	702-16-73660	.BODY,VALVE.....	1	J30001-UP
2	C1	702-16-53120	.VALVE.....	4	J30001-UP
3		702-16-51140	.SHIM.....	4	J30001-UP
4		702-16-53420	.SPRING.....	4	J30001-UP
5		702-16-53140	.RETAINER.....	4	J30001-UP
6		702-16-54420	.SPRING.....	4	J30001-UP
7		702-16-53170	.PISTON.....	4	J30001-UP
8		702-16-71150	.SEAL.....	4	J30001-UP
9		702-16-71160	.SEAT.....	4	J30001-UP
10		702-16-73630	.CASE.....	1	J30001-UP
11	C1	702-16-54121	.LEVER.....	2	J30001-UP
12	C1	702-16-73620	.SHAFT.....	2	J30001-UP
13	C1	702-16-73640	.PLATE.....	1	J30001-UP
14		01010-80855	.BOLT.....	2	J30001-UP
15		01643-30823	.WASHER.....	2	J30001-UP
16		01010-80816	.BOLT.....	4	J30001-UP
17		702-16-54331	.WASHER, 1.60MM.....	4	J30001-UP
		702-16-54341	.WASHER, 1.30MM.....	4	J30001-UP
		702-16-54351	.WASHER, 1.00MM.....	4	J30001-UP
		702-16-56380	.WASHER, 1.90MM.....	4	J30001-UP
		702-16-56390	.WASHER, 2.20MM.....	4	J30001-UP
18		04025-00432	.PIN, SPRING.....	2	J30001-UP
19		702-16-54430	.BUSHING.....	4	J30001-UP
20		07000-12018	.O-RING.....	2	J30001-UP
21	C2	(702-16-73610)	.DAMPER ASS'Y.....	2	J30001-UP
22		01023-10306	.SCREW.....	4	J30001-UP
23		702-16-73650	.PLATE.....	2	J30001-UP
24		04022-04016	.PIN, SPRING.....	2	J30001-UP

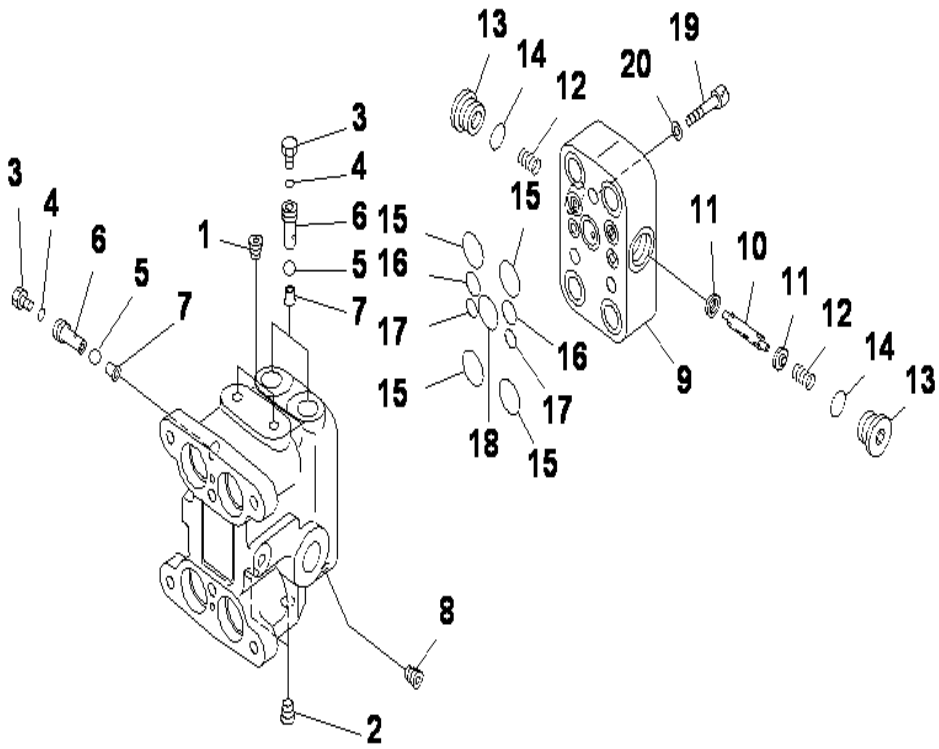

PC400-8 S/N J30001-UP

PPC VALVE (FOR TRAVEL) (2/2)

INDEX	CD	PART NO.	DESCRIPTION	QTY	SERIAL NO.
		(702-16-04250)	PILOT VALVE.....	1	J30001-UP
			THIS ASSEMBLY CONSISTS OF ALL PARTS.....		
			SHOWN IN FIGS.Y1670-01A0 AND Y1670-02A0.....		
1	C1	706-86-51180	.PLUG.....	2	J30001-UP
2	C1	708-18-12570	.PLUG.....	2	J30001-UP
3		07040-11209	.PLUG.....	3	J30001-UP
4		07002-11223	.O-RING.....	3	J30001-UP
5	C1	700-84-11730	.BALL.....	3	J30001-UP
6		702-16-55940	.PLUG.....	3	J30001-UP
7		702-16-55950	.SEAT.....	3	J30001-UP
8	C1	702-16-54490	.SCREW.....	2	J30001-UP
9	C1	702-16-57470	.BODY,VALVE.....	1	J30001-UP
10	C1	702-16-57460	.SPOOL.....	1	J30001-UP
11		702-16-57440	.RETAINER.....	2	J30001-UP
12		702-16-57450	.SPRING.....	2	J30001-UP
13		723-11-15110	.PLUG.....	2	J30001-UP
14		07002-11623	.O-RING.....	2	J30001-UP
15		07000-12015	.O-RING.....	4	J30001-UP
16		07000-11010	.O-RING.....	2	J30001-UP
17		07000-11007	.O-RING.....	2	J30001-UP
18		700-22-11410	.O-RING.....	1	J30001-UP
19		01252-60835	.BOLT.....	3	J30001-UP
20		01643-50823	.WASHER.....	3	J30001-UP

Ref :Y1670-02A0 Page :481100

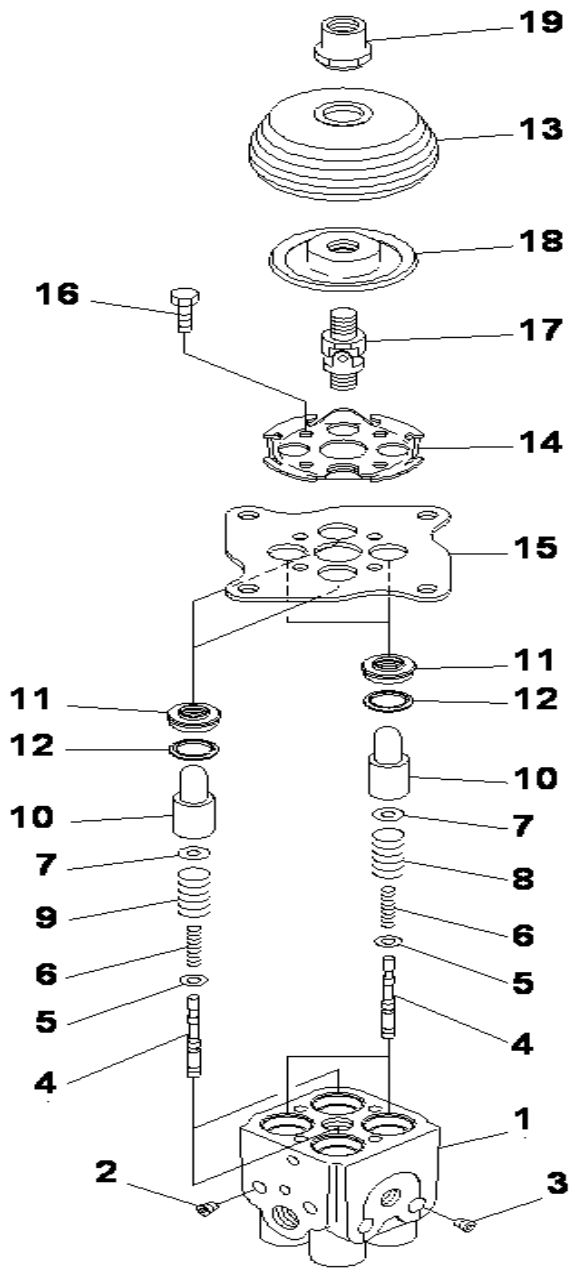

PC400-8 S/N J30001-UP

PPC VALVE (FOR WORK EQUIPMENT)

INDEX	CD	PART NO.	DESCRIPTION	QTY	SERIAL NO.
		702-16-03910	VALVE ASS'Y.....	1	J30001-UP
1	C1	702-16-71190	.BODY,VALVE.....	1	J30001-UP
2	C1	706-86-51180	.PLUG.....	2	J30001-UP
3	C1	708-18-12570	.PLUG.....	2	J30001-UP
4	C1	702-16-53120	.VALVE.....	4	J30001-UP
5		702-16-51140	.SHIM, 0.30MM.....	4	J30001-UP
6		702-16-53420	.SPRING.....	4	J30001-UP
7		702-16-53140	.RETAINER.....	4	J30001-UP
8		702-16-53470	.SPRING.....	2	J30001-UP
9		702-16-53590	.SPRING.....	2	J30001-UP
10		702-16-53170	.PISTON.....	4	J30001-UP
11		702-16-71210	.SEAL.....	4	J30001-UP
12		702-16-71160	.SEAT.....	4	J30001-UP
13		702-16-71280	.BOOT.....	1	J30001-UP
14		702-16-71131	.PLATE.....	1	J30001-UP
15		702-16-71141	.PLATE.....	1	J30001-UP
16		01010-80620	.BOLT.....	4	J30001-UP
17		702-16-51240	.UNIVERSAL JOINT.....	1	J30001-UP
18		702-16-71361	.DISC.....	1	J30001-UP
19		702-16-71441	.NUT.....	1	J30001-UP

Ref :Y1670-11A1 Page :481110

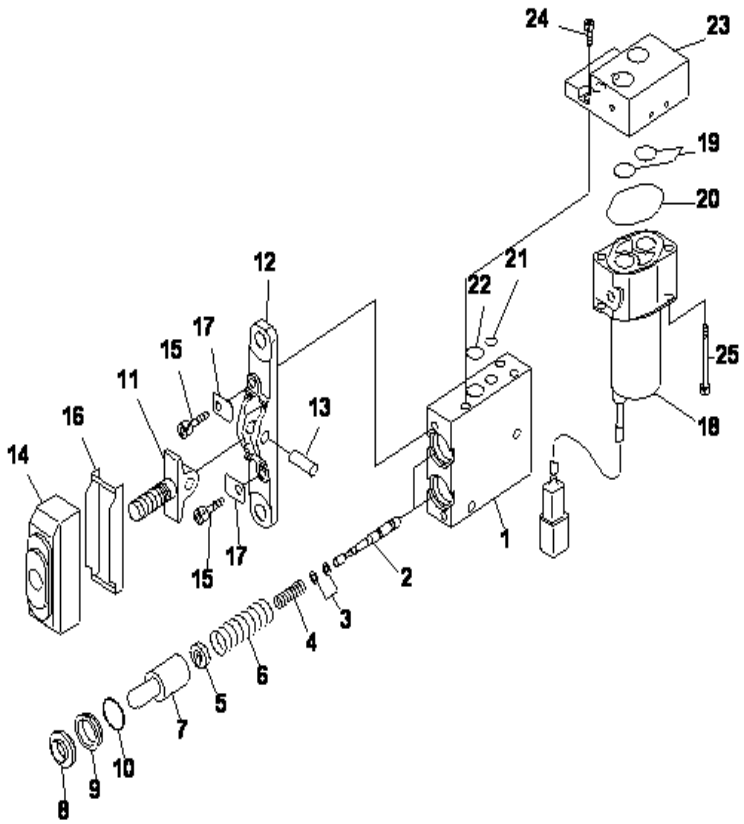

PC400-8 S/N J30001-UP

PPC VALVE (1 ATTACHMENT)

INDEX	CD	PART NO.	DESCRIPTION	QTY	SERIAL NO.
		702-16-04290	PILOT VALVE.....	1	J30001-UP
1	C1	702-16-62470	.BODY,VALVE.....	1	J30001-UP
2	C1	702-16-53120	.VALVE.....	2	J30001-UP
3		702-16-51140	.SHIM, 0.30MM.....	2	J30001-UP
		702-16-54670	.SHIM, 0.20MM.....	4	J30001-UP
4		702-16-54550	.SPRING.....	2	J30001-UP
5		702-16-54571	.RETAINER.....	2	J30001-UP
6		702-16-54560	.SPRING.....	2	J30001-UP
7		702-16-53170	.PISTON.....	2	J30001-UP
8		702-16-51270	.SEAL.....	2	J30001-UP
9		702-16-54580	.COLLAR.....	2	J30001-UP
10		702-16-54590	.O-RING.....	2	J30001-UP
11	C1	702-16-54610	.LEVER.....	1	J30001-UP
12	C1	702-16-54620	.PLATE.....	1	J30001-UP
13	C1	702-16-54630	.SHAFT.....	1	J30001-UP
14		702-16-54641	.BOOT.....	1	J30001-UP
15		01252-30625	.BOLT.....	2	J30001-UP
16		702-16-54660	.PLATE.....	1	J30001-UP
17		702-16-54650	.PLATE.....	2	J30001-UP
18		702-21-07610	.SOLENOID VALVE.....	1	J30001-UP
19		700-22-11410	.O-RING.....	2	J30001-UP
20		702-21-39450	.O-RING.....	1	J30001-UP
21		07000-11008	.O-RING.....	1	J30001-UP
22		07000-12012	.O-RING.....	1	J30001-UP
23	C1	702-16-62480	.BODY.....	1	J30001-UP
24		01252-60612	.BOLT.....	3	J30001-UP
25		203-60-62220	.BOLT.....	2	J30001-UP

Ref :Y1670-21A0 Page :481120

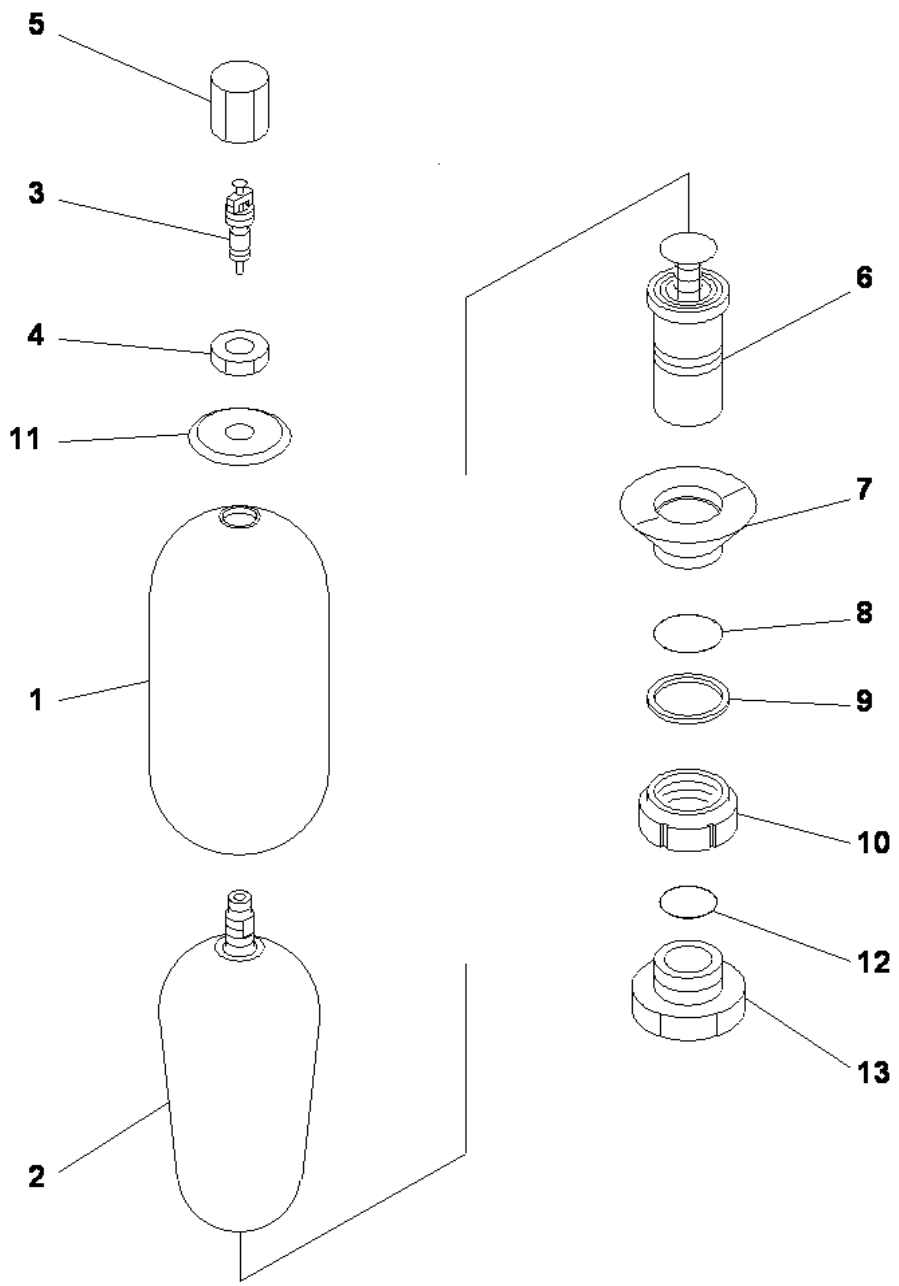

PC400-8 S/N J30001-UP

ACCUMULATOR (AL300-1) (INNER PARTS)

INDEX	CD	PART NO.	DESCRIPTION	QTY	SERIAL NO.
1		20Y-970-6450	ACCUMULATOR.....	1	J30001-UP
		NFEB3401 A1	.BLADDER ASS'Y.....	1	J30001-UP
2		NFEB3026 A1	..BLADDER.....	1	J30001-UP
3		NFEB4475 Z0	..CORE.....	1	J30001-UP
4	C1		.NUT.....	1	J30001-UP
5	C1		.CAP.....	1	J30001-UP
6		NFEB0427 Z0	.BODY ASS'Y.....	1	J30001-UP
7		NFEB4477 Z0	.RING.....	1	J30001-UP
8	C1		.O-RING. (K1).....	1	J30001-UP
9	C1		.BACK-UP RING. (K1).....	1	J30001-UP
10	C1		.RING.....	1	J30001-UP
11	C1		.PLATE.....	1	J30001-UP
12		205-970-5560	.O-RING, (K1).....	1	J30001-UP
13	C1		.BUSHING.....	1	J30001-UP
			SERVICE KIT.....	1	J30001-UP
K1		NFEB1601 P8	SEAL KIT.....	1	J30001-UP

Ref :Y1840-01A0 Page :481150

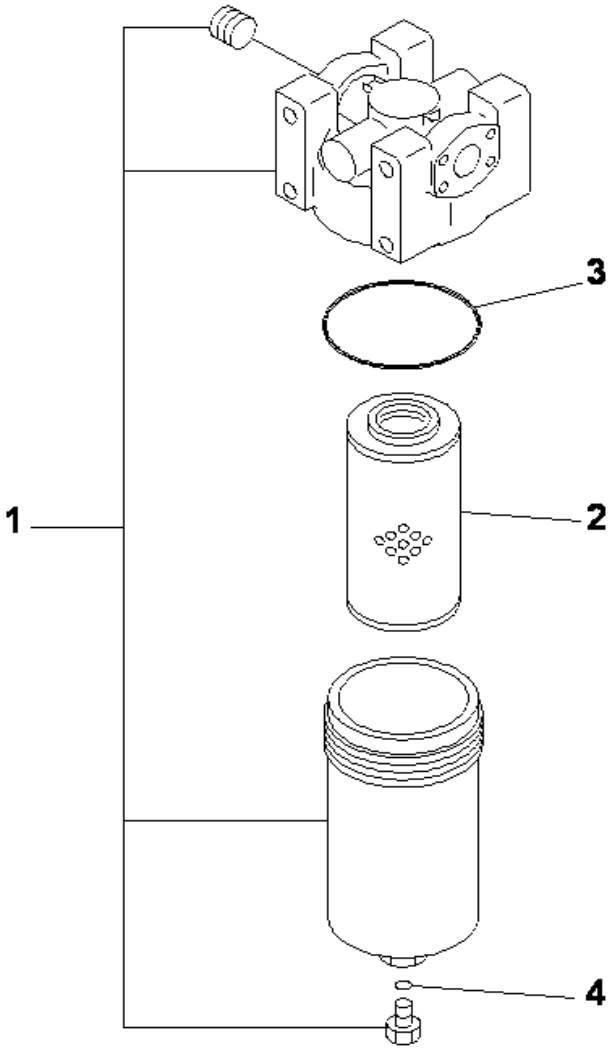

PC400-8 S/N J30001-UP

FILTER (INNER PARTS)

INDEX	CD	PART NO.	DESCRIPTION	QTY	SERIAL NO.
1		207-970-5111	FILTER A.....	1	J30001-UP
2		207-970-5121	.ELEMENT.....	1	J30001-UP
3		07000-12011	.O-RING.....	1	J30001-UP
4		07000-12125	.O-RING.....	1	J30001-UP

Ref :Y1850-01A0 Page :481160

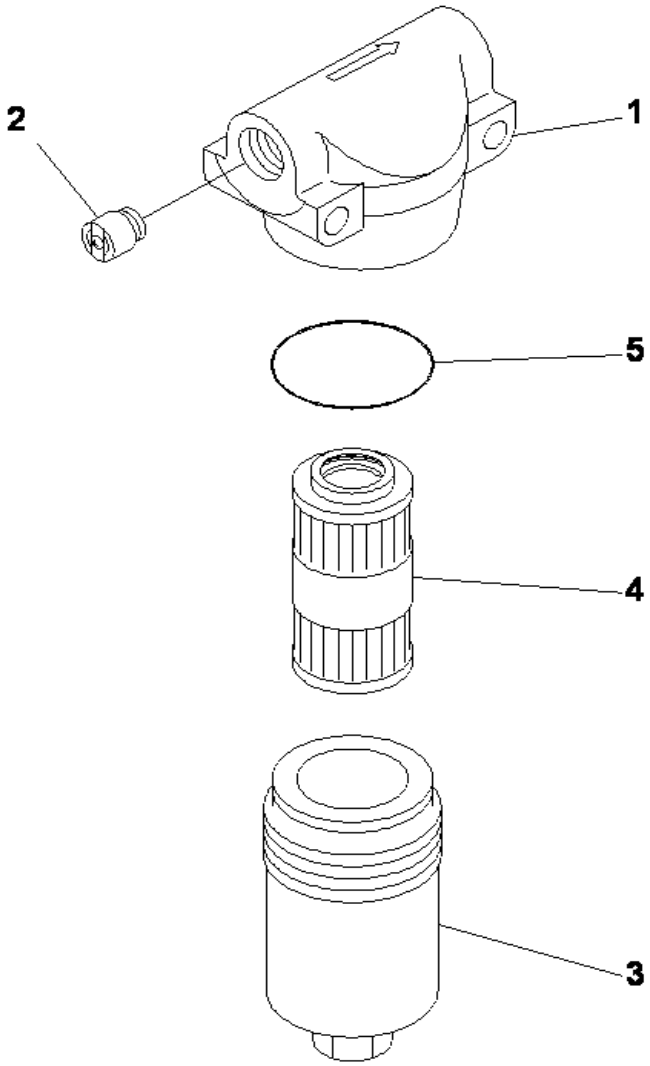

PC400-8 S/N J30001-UP

FILTER (INNER PARTS)

INDEX	CD	PART NO.	DESCRIPTION	QTY	SERIAL NO.
		20Y-62-51681	FILTER ASS'Y.....	1	J30001-UP
1	C1	20Y-62-5168101	.HEAD.....	1	J30001-UP
2	C1	20Y-62-5168102	.VALVE A.....	1	J30001-UP
3	C1	20Y-62-5168103	.CASE.....	1	J30001-UP
4		20Y-62-51691	.FILTER ELEMENT.....	1	J30001-UP
5		706-76-71390	.O-RING.....	1	J30001-UP

Ref :Y1851-01A0 Page :481170

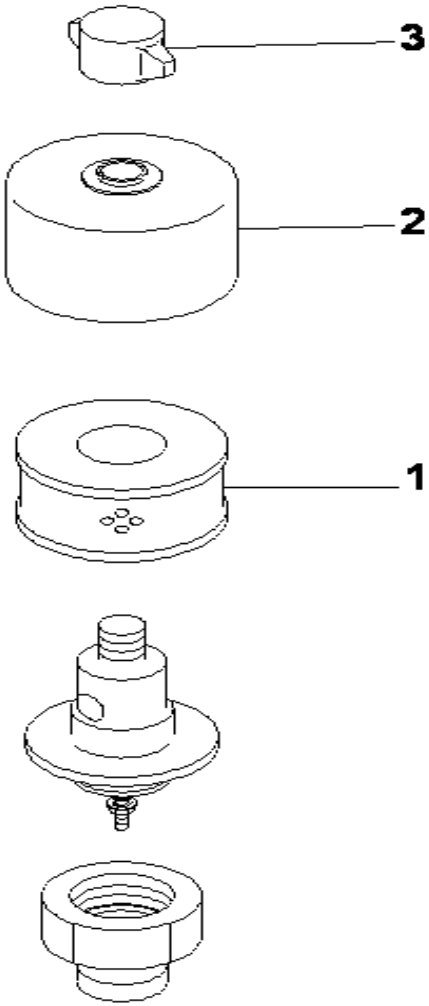

PC400-8 S/N J30001-UP

BREATHER (FOR HTDRAULIC TANK)

INDEX	CD	PART NO.	DESCRIPTION	QTY	SERIAL NO.
1		198-60-55510	BREATHER.....	1	J30001-UP
		421-60-35170	.ELEMENT.....	1	J30001-UP
2		421-60-35180	.COVER.....	1	J30001-UP
3		421-60-35190	.NUT.....	1	J30001-UP

Ref :Y1890-01A0 Page :481180

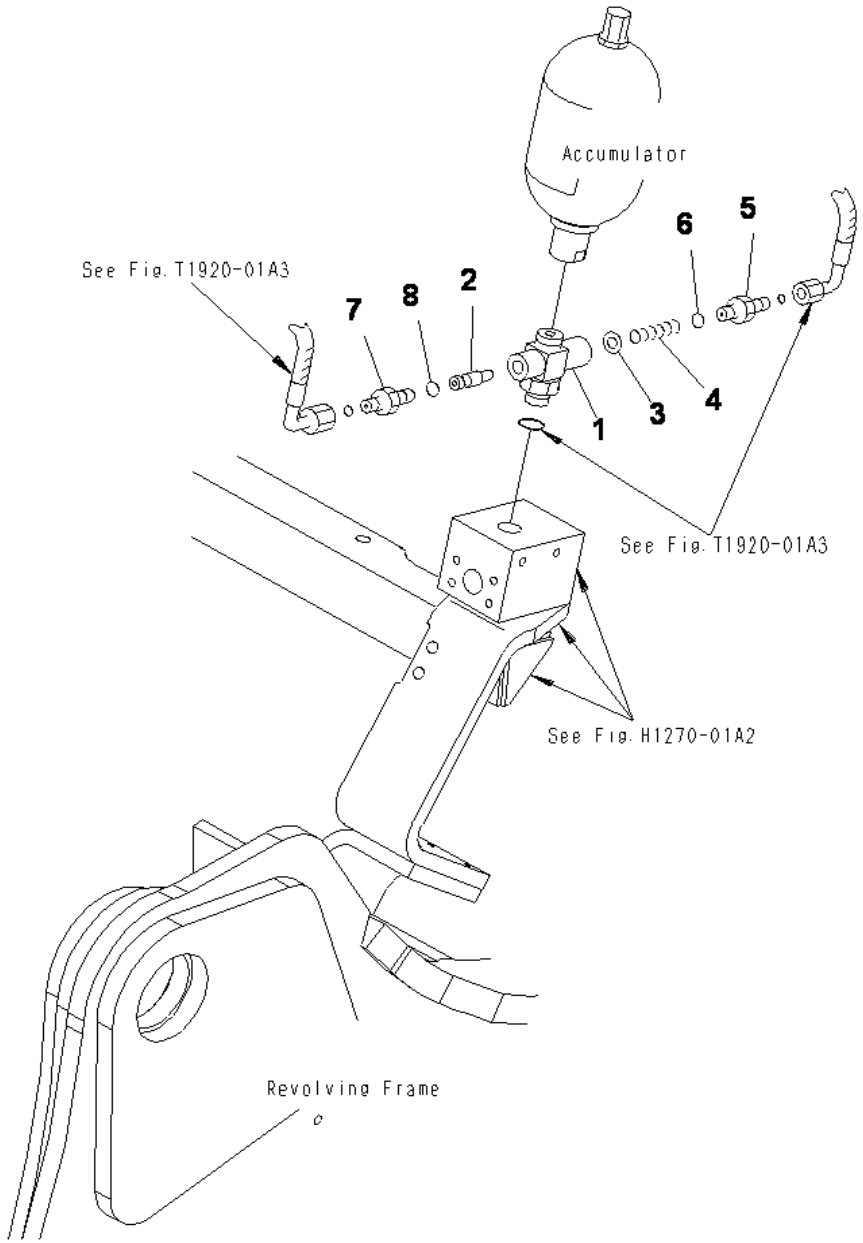

VALVE (FOR ACCUMULATOR)

INDEX	CD	PART NO.	DESCRIPTION	QTY	SERIAL NO.
		20Y-62-31300	VALVE	1	J30001-UP
1	C1	20Y-62-31310	.BODY	1	J30001-UP
2		20Y-62-31320	.SPOOL	1	J30001-UP
3		01643-51032	.WASHER	1	J30001-UP
4		723-26-14240	.SPRING	1	J30001-UP
5		20Y-62-31331	.NIPPLE	1	J30001-UP
6		07002-12034	.O-RING	1	J30001-UP
7		02781-00313	.UNION	1	J30001-UP
8		07002-11823	.O-RING	1	J30001-UP

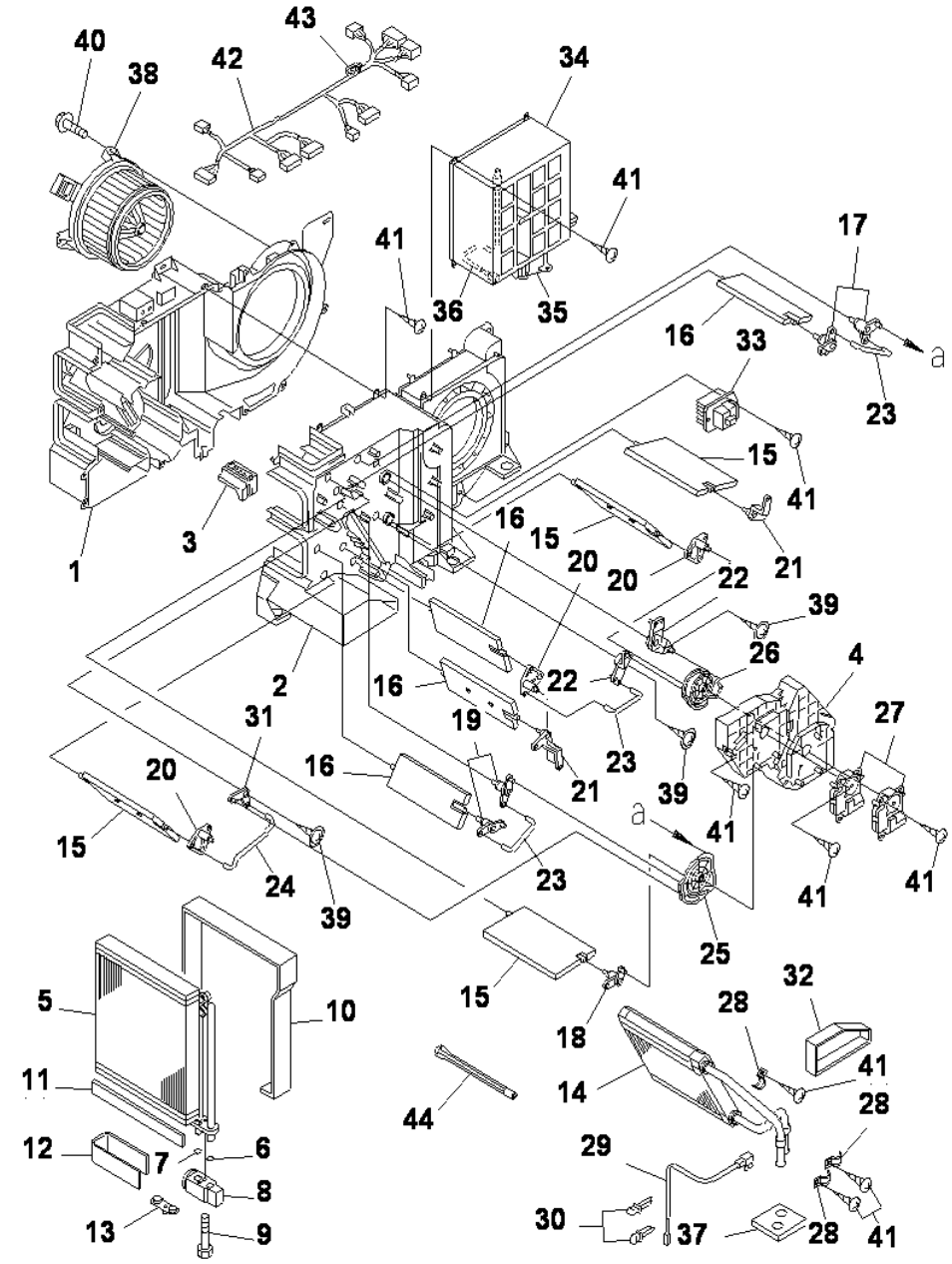

AIR CONDITIONER UNIT

INDEX	CD	PART NO.	DESCRIPTION	QTY	SERIAL NO.
		20Y-810-1211	AIR CONDITIONER	1	J30001-UP
1		ND245450-5831	.CASE, COOLING	1	J30001-UP
2		ND245450-5840	.CASE, COOLING	1	J30001-UP
3		ND116576-3810	.PLATE	1	J30001-UP
4		ND116576-3820	.PLATE	1	J30001-UP
		ND446010-3132	.EVAPORATOR, PART	1	J30001-UP
5		ND446600-0991	..EVAPORATOR ASS'Y	1	J30001-UP
6		ND949142-0020	..O-RING	1	J30001-UP
7		ND949142-0030	..O-RING	1	J30001-UP
8		ND447500-2750	..VALVE, EXPANSION	1	J30001-UP
9		ND949046-3100	..BOLT	2	J30001-UP
10		ND146657-8841	..PACKING	1	J30001-UP
11		ND146657-9811	..PACKING	3	J30001-UP
12		ND146657-8850	..PACKING	1	J30001-UP
13		ND445021-3941	..PLUG	1	J30001-UP
14		ND116140-0050	.CORE SUB ASS'Y, HEATER	1	J30001-UP
15		ND116660-7570	.DOOR SUB ASS'Y	4	J30001-UP
16		ND116650-6850	.DOOR SUB ASS'Y	4	J30001-UP
17		ND116780-2481	.LEVER SUB ASS'Y, LINK	2	J30001-UP
18		ND116780-2491	.LEVER SUB ASS'Y, LINK	1	J30001-UP
19		ND116780-2501	.LEVER SUB ASS'Y, LINK	2	J30001-UP
20		ND116780-2510	.LEVER SUB ASS'Y, LINK	3	J30001-UP
21		ND116781-3000	.LEVER	2	J30001-UP
22		ND116780-3130	.LEVER SUB ASS'Y, LINK	2	J30001-UP
23		ND116662-7670	.SHAFT	3	J30001-UP
24		ND116662-7681	.SHAFT	1	J30001-UP
25		ND116576-3852	.PLATE	1	J30001-UP
26		ND116576-3862	.PLATE	1	J30001-UP
27		ND063800-0300	.SERVO MOTOR ASS'Y	2	J30001-UP
28		ND017231-0700	.CLAMP	3	J30001-UP
29		ND077500-5890	.THERMISTOR ASS'Y	1	J30001-UP
30		ND246790-2060	.CLAMP	2	J30001-UP
31		ND116780-3920	.LEVER SUB ASS'Y, LINK	1	J30001-UP
32		ND146667-0440	.PACKING	1	J30001-UP
33		ND077800-0750	.POWER TRANSISTOR	1	J30001-UP
34		ND146340-0560	.BOX ASS'Y	1	J30001-UP
35		ND063600-4580	..SERVO MOTOR ASS'Y	1	J30001-UP
36		ND077500-5650	..THERMISTOR ASS'Y	1	J30001-UP
37		ND146657-8860	.PACKING	1	J30001-UP
38		ND116340-7350	.MOTOR ASS'Y, FAN	1	J30001-UP
39		ND949008-0460	.SCREW, TAPPING	3	J30001-UP
40		ND949008-0330	.SCREW, TAPPING	3	J30001-UP
41		ND949001-1730	.SCREW, TAPPING	32	J30001-UP
42		ND246470-4311	.HARNESS SUB ASS'Y, WIRE	1	J30001-UP
43		ND939500-5003	..FUSE	1	J30001-UP

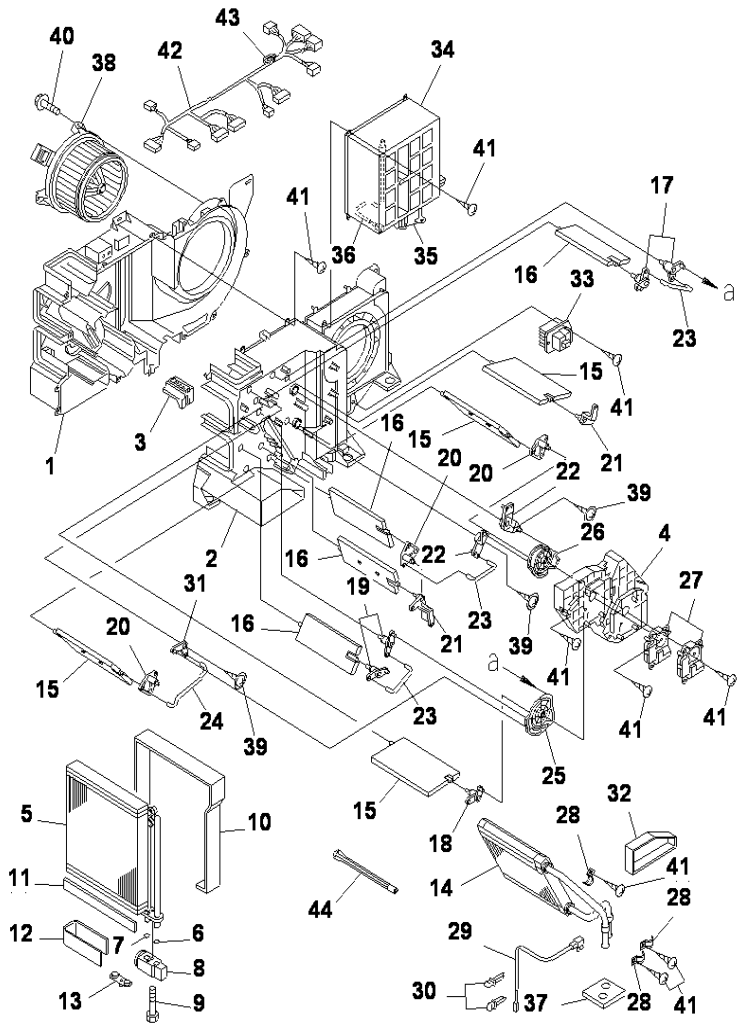

AIR CONDITIONER UNIT

INDEX	CD	PART NO.	DESCRIPTION	QTY	SERIAL NO.
44		ND116662-8320	.SHAFT.....	1	J30001-UP

INDEX

PART NO.	FIG.NO.	INDEX	PAGE
(01010-61860)	Y1600-02A0	7	480140
(01252-61235)	Y1600-03A0	23	480150
(01252-61235)	Y1600-07A0	20	480190
(01252-61645)	Y1600-04A0	29	480160
(01252-61645)	Y1600-05A0	8	480170
(01252-61645)	Y1600-08A0	29	480200
(01252-61645)	Y1600-09A0	8	480210
(01252-62060)	Y1641-01A0	41	480401
(01580-10806)	Y1600-04A0	26	480160
(01580-10806)	Y1600-08A0	26	480200
(01643-31845)	Y1600-02A0	8	480140
(04020-01434)	Y1600-02A0	5	480140
(04020-01434)	Y1600-03A0	21	480150
(04020-01434)	Y1600-07A0	18	480190
(04065-05820)	Y1600-03A0	11	480150
(04065-05820)	Y1600-07A0	8	480190
(04065-09030)	Y1641-02A0	9	480410
(070-00-15270)	Y1641-01A0	39	480400
(07000-12012)	Y1641-01A0	40	480400
(07000-15230)	Y1640-02A0	24	480350
(07000-15230)	Y1640-02A1	24	480380
(07000-15230)	Y1641-02A0	19	480410
(07000-A5190)	Y1600-02A0	4	480140
(07000-B1009)	Y1600-03A0	22	480150
(07000-B1009)	Y1600-07A0	19	480190
(07000-B1009)	Y1600-10A0	10	480220
(07000-B2012)	Y1600-04A0	22	480160
(07000-B2012)	Y1600-08A0	22	480200
(07000-B2050)	Y1600-04A0	23	480160
(07000-B2050)	Y1600-05A0	6	480170
(07000-B2050)	Y1600-08A0	23	480200
(07000-B2050)	Y1600-09A0	6	480210
(07000-B3038)	Y1600-04A0	18	480160
(07000-B3038)	Y1600-05A0	2	480170
(07000-B3038)	Y1600-08A0	18	480200
(07000-B3038)	Y1600-09A0	2	480210
(07001-01009)	Y1600-10A0	11	480220
(07001-05230)	Y1641-02A0	20	480410
(09620-D2000)	U0520-01A0	1	390230
(09620-D2000)	U0520-01A6	1	390250
(09620-E2000)	U0520-01A1	1	390240
(09620-E2000)	U0520-01B3	1	390260
(09920-00150)	A2210-A3L2	13	000200
(09920-00150)	A4010-B3Z1	27	000350
(198-60-55510)	H0110-01A1	37	150010
(206-53-00063)	K1110-02A8		210210
(206-53-00063)	K1110-03A8		210220
(206-53-00063)	K1110-03A9		210230
(206-53-00063)	K1110-04A8		210240
(206-53-00063)	K1110-04A9		210250

PART NO.	FIG.NO.	INDEX	PAGE
(206-53-00063)	K1110-05A9		210255
(206-53-00063)	K1110-06A9		210260
(206-53-00063)	K1110-07A9		210270
(206-53-00063)	K1110-08A9		210280
(206-53-00063)	K1110-09A9		210290
(206-53-00063)	K1110-11A9		210300
(206-53-00063)	K1110-12A10		210340
(206-53-00063)	K1110-12A9		210320
(206-53-00063)	K1110-13A8		210350
(206-53-00063)	K1110-13A9		210360
(207-53-00120)	K1110-02A8		210210
(207-53-00120)	K1110-03A8		210220
(207-53-00120)	K1110-03A9		210230
(207-53-00120)	K1110-04A8		210240
(207-53-00120)	K1110-04A9		210250
(207-53-00120)	K1110-05A9		210255
(207-53-00120)	K1110-06A9		210260
(207-53-00120)	K1110-07A9		210270
(207-53-00120)	K1110-08A9		210280
(207-53-00120)	K1110-09A9		210290
(207-53-00120)	K1110-11A9		210300
(207-53-00120)	K1110-12A10		210340
(207-53-00120)	K1110-12A9		210320
(207-53-00120)	K1110-13A8		210350
(207-53-00120)	K1110-13A9		210360
(207-53-00140)	K1110-02A8		210210
(207-53-00140)	K1110-03A8		210220
(207-53-00140)	K1110-03A9		210230
(207-53-00140)	K1110-04A8		210240
(207-53-00140)	K1110-04A9		210250
(207-53-00140)	K1110-05A9		210255
(207-53-00140)	K1110-06A9		210260
(207-53-00140)	K1110-07A9		210270
(207-53-00140)	K1110-08A9		210280
(207-53-00140)	K1110-09A9		210290
(207-53-00140)	K1110-11A9		210300
(207-53-00140)	K1110-12A10		210340
(207-53-00140)	K1110-12A9		210320
(207-53-00140)	K1110-13A8		210350
(207-53-00140)	K1110-13A9		210360
(207-60-71320)	H1831-01A1	1	150350
(207-970-5111)	H1270-03A0	1	150280
(20Y-064-1990)	K1110-09A9	1	210290
(20Y-57-41202)	K0110-01A2		210030
(20Y-57-41203)	K0110-01A2	1	210030
(20Y-57-41801)	K0110-01A3	1	210040
(20Y-62-51681)	H1270-05A0	4	150300
(20Y-810-1211)	K1110-60A1	1	210770
(20Y-810-1260)	K0700-01A0	1	210180
(20Y-970-6450)	H1270-04A0	1	150290

PART NO.	FIG.NO.	INDEX	PAGE
(421-U1-23100)	M1210-01A1	31	240130
(600-813-6632)	A6210-A3H5	1	000610
(600-813-9322)	A6210-A3H6	1	000620
(600-825-5150)	A6010-A3X5	1	000550
(600-825-5250)	A6010-A3Y1	1	000570
(600-825-6150)	A6010-A3X6	1	000560
(6150-61-8172)	B0920-01A0	1	030050
(6156-81-7201)	B0200-01A1	1	030030
(6156-81-7201)	B0200-01A2	1	030040
(6251-71-1120)	A4010-A3Z1	1	000340
(6261-71-1220)	A4010-A3Z1	7	000340
(6506-22-5030)	A1530-A3L9	1	000060
(702-16-03910)	K1110-51A1	1	210680
(702-16-03910)	K1110-56A1	1	210740
(702-16-04250)	K1110-42A1	1	210590
(702-16-04250)	Y1670-02A0		481100
(702-16-04290)	K1110-44A2	1	210620
(702-16-54490)	Y1662-02A0	13	480440
(702-16-73610)	Y1670-01A0	21	481090
(702-21-01920)	H1270-02A0	4	150270
(703-08-33651)	N1310-01A0	1	270050
(706-75-42830)	Y1640-01A0	4	480340
(706-75-42830)	Y1640-01A1	4	480370
(706-77-05010)	Y1640-02A0	7	480350
(706-77-05010)	Y1640-02A1	7	480380
(706-77-42041)	Y1640-02A0	5	480350
(706-77-42041)	Y1640-02A1	5	480380
(706-77-42051)	Y1640-02A0	4	480350
(706-77-42051)	Y1640-02A1	4	480380
(706-77-42130)	Y1640-02A0	16	480350
(706-77-42130)	Y1640-02A1	16	480380
(706-77-42890)	Y1640-02A0	6	480350
(706-77-42890)	Y1640-02A1	6	480380
(706-77-42890)	Y1641-02A0	3	480410
(706-77-43880)	Y1640-02A0	2	480350
(706-77-43880)	Y1640-02A1	2	480380
(706-7K-01040)	N1210-01A0	1	270020
(706-7K-01040)	Y1640-02A0		480350
(706-7K-01040)	Y1640-03A0		480360
(706-7K-01050)	N1210-01A1	1	270030
(706-7K-01050)	Y1640-02A1		480380
(706-7K-01050)	Y1640-03A1		480390
(706-7K-03030)	Y1640-02A0		480350
(706-7K-03030)	Y1640-02A1		480380
(706-7K-05010)	Y1640-02A0		480350
(706-7K-05010)	Y1640-02A1		480380
(706-7K-40010)	Y1640-01A0	3	480340
(706-7K-40010)	Y1640-01A1	3	480370
(706-7K-40020)	Y1640-01A0	16	480340
(706-7K-40020)	Y1640-01A1	16	480370

PART NO.	FIG.NO.	INDEX	PAGE
(706-7K-41120)	Y1640-02A0	15	480350
(706-7K-41120)	Y1640-02A1	15	480380
(706-7K-41140)	Y1640-02A0	17	480350
(706-7K-41140)	Y1640-02A1	17	480380
(706-7K-41150)	Y1640-01A0	1	480340
(706-7K-41150)	Y1640-01A1	1	480370
(706-7K-41160)	Y1640-02A0	20	480350
(706-7K-41160)	Y1640-02A1	20	480380
(706-7K-41210)	Y1640-02A0	12	480350
(706-7K-41210)	Y1640-02A1	12	480380
(706-7K-41610)	Y1640-02A0	1	480350
(706-7K-41610)	Y1640-02A1	1	480380
(706-7K-41710)	Y1640-02A0	13	480350
(706-7K-41710)	Y1640-02A1	13	480380
(706-7K-41810)	Y1640-02A0	3	480350
(706-7K-41810)	Y1640-02A1	3	480380
(706-7K-71110)	Y1640-01A0	2	480340
(706-7K-71110)	Y1640-01A1	2	480370
(706-7K-91111)	Y1640-02A0	23	480350
(706-7K-91111)	Y1640-02A1	23	480380
(706-7K-91340)	Y1640-02A0	21	480350
(706-7K-91340)	Y1640-02A1	21	480380
(706-7K-91340)	Y1641-02A0	16	480410
(706-7K-91350)	Y1640-02A0	22	480350
(706-7K-91350)	Y1640-02A1	22	480380
(706-7K-91350)	Y1641-02A0	17	480410
(706-7K-91360)	Y1640-02A0	26	480350
(706-7K-91360)	Y1640-02A1	26	480380
(706-86-71310)	Y1641-01A0	8	480400
(706-8J-00013)	Y1641-01A0		480400
(706-8J-01012)	P1210-01A0	1	300030
(706-8J-01012)	Y1641-02A0		480410
(706-8J-01012)	Y1641-03A0		480420
(706-8J-41010)	Y1641-02A0	2	480410
(706-8J-41110)	Y1641-01A0	1	480400
(706-8J-41161)	Y1641-02A0	15	480410
(706-8J-41260)	Y1641-02A0	13	480410
(706-8J-41270)	Y1641-02A0	11	480410
(706-8J-41280)	Y1641-02A0	10	480410
(706-8J-41290)	Y1641-02A0	12	480410
(706-8J-41610)	Y1641-02A0	1	480410
(706-8J-41660)	Y1641-02A0	5	480410
(706-8J-41810)	Y1641-02A0	4	480410
(706-8J-71550)	Y1641-01A0	11	480400
(706-8J-71560)	Y1641-01A0	12	480400
(706-8J-91110)	Y1641-02A0	18	480410
(706-8J-91120)	Y1641-02A0	22	480410
(706-8J-91130)	Y1641-02A0	23	480410
(707-01-XM350)	Y1620-41A1		480310
(707-01-XM400)	T1120-01A2	1	360200

PART NO.	FIG.NO.	INDEX	PAGE
(707-01-XM400)	Y1620-01A1		480250
(707-01-XM410)	T1120-01A2	2	360200
(707-01-XM410)	Y1620-01A1		480250
(707-01-XM420)	T1140-01A2	1	360270
(707-01-XM420)	Y1620-11A3		480290
(707-01-XM430)	T1140-01A1	1	360260
(707-01-XM430)	Y1620-11A2		480280
(707-01-XM440)	Y1620-41A2		480320
(707-01-XT520)	T1120-01A7	1	360220
(707-01-XT520)	Y1620-01A6		480260
(707-01-XT530)	T1120-01A7	2	360220
(707-01-XT530)	Y1620-01A6		480260
(707-01-XT552)	Y1620-41A0		480300
(707-01-XZC90)	T1140-01A0	1	360250
(707-01-XZC90)	Y1620-01A8		480270
(708-17-05010)	Y1600-03A0	3	480150
(708-17-05010)	Y1600-07A0	3	480190
(708-17-12780)	Y1600-03A0	4	480150
(708-17-12780)	Y1600-07A0	4	480190
(708-18-13230)	Y1600-03A0	10	480150
(708-18-13230)	Y1600-07A0	7	480190
(708-18-13230)	Y1640-02A0	14	480350
(708-18-13230)	Y1640-02A1	14	480380
(708-1H-22150)	Y1600-03A0	2	480150
(708-1H-22150)	Y1600-07A0	2	480190
(708-1L-29340)	Y1600-02A0	6	480140
(708-23-12350)	Y1641-02A0	14	480410
(708-2G-14310)	Y1600-05A0	1	480170
(708-2G-14310)	Y1600-09A0	1	480210
(708-2G-14340)	Y1600-04A0	17	480160
(708-2G-14340)	Y1600-08A0	17	480200
(708-2G-15140)	Y1600-04A0	12	480160
(708-2G-15140)	Y1600-08A0	12	480200
(708-2G-15151)	Y1600-04A0	15	480160
(708-2G-15151)	Y1600-08A0	15	480200
(708-2G-15230)	Y1600-04A0	19	480160
(708-2G-15230)	Y1600-05A0	3	480170
(708-2G-15230)	Y1600-08A0	19	480200
(708-2G-15230)	Y1600-09A0	3	480210
(708-2G-15240)	Y1600-04A0	21	480160
(708-2G-15240)	Y1600-08A0	21	480200
(708-2G-15260)	Y1600-04A0	20	480160
(708-2G-15260)	Y1600-08A0	20	480200
(708-2G-15290)	Y1600-04A0	11	480160
(708-2G-15290)	Y1600-08A0	11	480200
(708-2G-15310)	Y1600-04A0	24	480160
(708-2G-15310)	Y1600-05A0	7	480170
(708-2G-15310)	Y1600-08A0	24	480200
(708-2G-15310)	Y1600-09A0	7	480210
(708-2G-15320)	Y1600-04A0	4	480160

PART NO.	FIG.NO.	INDEX	PAGE
(708-2G-15320)	Y1600-08A0	4	480200
(708-2G-15330)	Y1600-04A0	28	480160
(708-2G-15330)	Y1600-08A0	28	480200
(708-2G-15412)	Y1600-10A0	3	480220
(708-2H-00450)	Y1600-02A0		480140
(708-2H-00450)	Y1600-03A0		480150
(708-2H-00450)	Y1600-04A0		480160
(708-2H-00450)	Y1600-05A0		480170
(708-2H-00450)	Y1600-06A0		480180
(708-2H-00450)	Y1600-07A0		480190
(708-2H-00450)	Y1600-08A0		480200
(708-2H-00450)	Y1600-09A0		480210
(708-2H-00450)	Y1600-10A0		480220
(708-2H-00450)	Y1600-11A0		480230
(708-2H-00450)	Y1600-12A0		480240
(708-2H-01450)	Y1600-02A0		480140
(708-2H-01450)	Y1600-03A0		480150
(708-2H-01450)	Y1600-04A0		480160
(708-2H-01450)	Y1600-05A0		480170
(708-2H-01450)	Y1600-06A0		480180
(708-2H-01450)	Y1600-07A0		480190
(708-2H-01450)	Y1600-08A0		480200
(708-2H-01450)	Y1600-09A0		480210
(708-2H-03022)	Y1600-04A0		480160
(708-2H-03022)	Y1600-08A0		480200
(708-2H-03411)	Y1600-04A0		480160
(708-2H-03411)	Y1600-08A0		480200
(708-2H-03510)	Y1600-05A0		480170
(708-2H-03510)	Y1600-09A0		480210
(708-2H-04440)	Y1600-02A0		480140
(708-2H-04670)	Y1600-01A0		480130
(708-2H-04680)	Y1600-06A0		480180
(708-2H-04690)	Y1600-03A0		480150
(708-2H-04690)	Y1600-07A0		480190
(708-2H-04750)	Y1600-03A0		480150
(708-2H-04760)	Y1600-07A0		480190
(708-2H-12420)	Y1600-07A0	22	480190
(708-2H-12430)	Y1600-02A0	3	480140
(708-2H-15310)	Y1600-04A0	5	480160
(708-2H-15310)	Y1600-08A0	5	480200
(708-2H-15320)	Y1600-04A0	14	480160
(708-2H-15320)	Y1600-08A0	14	480200
(708-2H-15330)	Y1600-04A0	13	480160
(708-2H-15330)	Y1600-08A0	13	480200
(708-2H-15340)	Y1600-04A0	16	480160
(708-2H-15340)	Y1600-08A0	16	480200
(708-2H-15531)	Y1600-11A0	15	480230
(708-2H-15531)	Y1600-12A0	14	480240
(708-2H-23141)	Y1600-03A0	14	480150
(708-2H-23141)	Y1600-07A0	11	480190

PART NO.	FIG.NO.	INDEX	PAGE
(708-2H-23350)	Y1600-03A0	15	480150
(708-2H-23350)	Y1600-07A0	12	480190
(708-2H-23360)	Y1600-03A0	16	480150
(708-2H-23360)	Y1600-07A0	13	480190
(708-2H-32110)	Y1600-03A0	1	480150
(708-2H-32130)	Y1600-07A0	21	480190
(708-2H-32210)	Y1600-07A0	1	480190
(708-2H-33140)	Y1600-03A0	12	480150
(708-2H-33140)	Y1600-07A0	9	480190
(708-2H-33150)	Y1600-03A0	13	480150
(708-2H-33150)	Y1600-07A0	10	480190
(708-2H-33311)	Y1600-03A0	18	480150
(708-2H-33311)	Y1600-07A0	15	480190
(708-2H-33343)	Y1600-03A0	17	480150
(708-2H-33343)	Y1600-07A0	14	480190
(708-2H-34150)	Y1600-04A0	1	480160
(708-2H-34150)	Y1600-08A0	1	480200
(708-2L-25480)	Y1600-02A0	9	480140
(708-2L-28540)	Y1600-10A0	4	480220
(708-2L-35170)	Y1600-04A0	9	480160
(708-2L-35170)	Y1600-08A0	9	480200
(708-2L-35311)	Y1600-10A0	1	480220
(708-2L-35331)	Y1600-10A0	6	480220
(708-2L-35341)	Y1600-10A0	8	480220
(708-2L-35351)	Y1600-10A0	9	480220
(708-2L-35360)	Y1600-10A0	5	480220
(708-2L-35410)	Y1600-10A0	7	480220
(708-2L-35540)	Y1600-04A0	27	480160
(708-2L-35540)	Y1600-05A0	4	480170
(708-2L-35540)	Y1600-08A0	27	480200
(708-2L-35540)	Y1600-09A0	4	480210
(708-2L-35690)	Y1600-04A0	8	480160
(708-2L-35690)	Y1600-08A0	8	480200
(708-2L-35760)	Y1600-04A0	6	480160
(708-2L-35760)	Y1600-08A0	6	480200
(708-2L-35770)	Y1600-04A0	7	480160
(708-2L-35770)	Y1600-08A0	7	480200
(708-2L-44130)	Y1600-05A0	5	480170
(708-2L-44130)	Y1600-09A0	5	480210
(708-2L-44161)	Y1600-04A0	25	480160
(708-2L-44161)	Y1600-08A0	25	480200
(708-3M-15670)	Y1600-04A0	10	480160
(708-3M-15670)	Y1600-08A0	10	480200
(708-8H-15220)	Y1640-02A0	25	480350
(708-8H-15220)	Y1640-02A1	25	480380
(708-8H-15220)	Y1641-02A0	21	480410
(723-40-71201)	Y1662-14A0	1	480560
(723-40-71201)	Y1664-14A0	1	480760
(723-40-82701)	H1240-01A0	1	150230
(723-47-27501)	H0120-01A4		150040

PART NO.	FIG.NO.	INDEX	PAGE
(723-47-27501)	Y1662-02A0		480440
(723-47-27501)	Y1662-03A0		480450
(723-47-27501)	Y1662-04A0		480460
(723-47-27501)	Y1662-05A0		480470
(723-47-27501)	Y1662-06A0		480480
(723-47-27501)	Y1662-07A0		480490
(723-47-27501)	Y1662-08A0		480500
(723-47-27501)	Y1662-09A0		480510
(723-47-27501)	Y1662-10A0		480520
(723-47-27501)	Y1662-11A0		480530
(723-47-27501)	Y1662-12A0		480540
(723-47-27501)	Y1662-13A0		480550
(723-47-27501)	Y1662-14A0		480560
(723-47-27501)	Y1662-15A0		480570
(723-47-27501)	Y1662-16A0		480580
(723-47-27501)	Y1662-17A0		480590
(723-47-27501)	Y1662-18A0		480600
(723-47-27501)	Y1662-19A0		480610
(723-47-27501)	Y1662-20A0		480620
(723-47-27502)	H0120-01A4	1	150040
(723-47-27502)	Y1662-02A0		480440
(723-47-27502)	Y1662-03A0		480450
(723-47-27502)	Y1662-04A0		480460
(723-47-27502)	Y1662-05A0		480470
(723-47-27502)	Y1662-06A0		480480
(723-47-27502)	Y1662-07A0		480490
(723-47-27502)	Y1662-08A0		480500
(723-47-27502)	Y1662-09A0		480510
(723-47-27502)	Y1662-10A0		480520
(723-47-27502)	Y1662-11A0		480530
(723-47-27502)	Y1662-12A0		480540
(723-47-27502)	Y1662-13A0		480550
(723-47-27502)	Y1662-14A0		480560
(723-47-27502)	Y1662-15A0		480570
(723-47-27502)	Y1662-16A0		480580
(723-47-27502)	Y1662-17A0		480590
(723-47-27502)	Y1662-18A0		480600
(723-47-27502)	Y1662-19A0		480610
(723-47-27502)	Y1662-20A0		480620
(723-48-27501)	H0120-01A1		150030
(723-48-27501)	Y1664-01A0		480630
(723-48-27501)	Y1664-02A0		480640
(723-48-27501)	Y1664-03A0		480650
(723-48-27501)	Y1664-04A0		480660
(723-48-27501)	Y1664-05A0		480670
(723-48-27501)	Y1664-06A0		480680
(723-48-27501)	Y1664-07A0		480690
(723-48-27501)	Y1664-08A0		480700
(723-48-27501)	Y1664-09A0		480710
(723-48-27501)	Y1664-10A0		480720

PART NO.	FIG.NO.	INDEX	PAGE
(723-48-27501)	Y1664-11A0		480730
(723-48-27501)	Y1664-12A0		480740
(723-48-27501)	Y1664-13A0		480750
(723-48-27501)	Y1664-14A0		480760
(723-48-27501)	Y1664-15A0		480770
(723-48-27501)	Y1664-16A0		480780
(723-48-27501)	Y1664-17A0		480790
(723-48-27501)	Y1664-18A0		480800
(723-48-27501)	Y1664-19A0		480810
(723-48-27501)	Y1664-20A0		480820
(723-48-27501)	Y1664-21A0		480830
(723-48-27501)	Y1664-22A0		480840
(723-48-27501)	Y1664-23A0		480850
(723-48-27502)	H0120-01A1	1	150030
(723-48-27502)	Y1664-01A0		480630
(723-48-27502)	Y1664-02A0		480640
(723-48-27502)	Y1664-03A0		480650
(723-48-27502)	Y1664-04A0		480660
(723-48-27502)	Y1664-05A0		480670
(723-48-27502)	Y1664-06A0		480680
(723-48-27502)	Y1664-07A0		480690
(723-48-27502)	Y1664-08A0		480700
(723-48-27502)	Y1664-09A0		480710
(723-48-27502)	Y1664-10A0		480720
(723-48-27502)	Y1664-11A0		480730
(723-48-27502)	Y1664-12A0		480740
(723-48-27502)	Y1664-13A0		480750
(723-48-27502)	Y1664-14A0		480760
(723-48-27502)	Y1664-15A0		480770
(723-48-27502)	Y1664-16A0		480780
(723-48-27502)	Y1664-17A0		480790
(723-48-27502)	Y1664-18A0		480800
(723-48-27502)	Y1664-19A0		480810
(723-48-27502)	Y1664-20A0		480820
(723-48-27502)	Y1664-21A0		480830
(723-48-27502)	Y1664-22A0		480840
(723-48-27502)	Y1664-23A0		480850
(723-90-61300)	H1270-01A1	1	150250
(723-90-61700)	H1270-01A1A	1	150260
(ND090317-0060)	A4010-E3Z1	16	000380
(ND092126-0010)	A4010-E3Z1	13	000380
(ND094040-0090)	A4010-D3Z1	3	000370
(ND094040-0270)	A4010-D3Z1	2	000370
(ND094082-0040)	A4010-E3Z1	7	000380
(ND094082-0200)	A4010-E3Z1	8	000380
(ND094086-0100)	A4010-D3Z1	6	000370
(ND094086-0110)	A4010-D3Z1	21	000370
(ND094086-0120)	A4010-D3Z1	17	000370
(ND094086-0130)	A4010-D3Z1	22	000370
(ND094087-0050)	A4010-E3Z1	9	000380

PART NO.	FIG.NO.	INDEX	PAGE
(ND094092-0010)	A4010-D3Z1	19	000370
(ND094093-0050)	A4010-D3Z1	23	000370
(ND094093-0060)	A4010-D3Z1		000370
(ND094093-0070)	A4010-D3Z1		000370
(ND094093-0080)	A4010-D3Z1		000370
(ND094095-0100)	A4010-D3Z1	18	000370
(ND094095-0130)	A4010-D3Z1		000370
(ND094095-0140)	A4010-D3Z1		000370
(ND094095-0150)	A4010-D3Z1		000370
(ND094095-0160)	A4010-D3Z1		000370
(ND094096-0050)	A4010-D3Z1	25	000370
(ND094096-0060)	A4010-D3Z1		000370
(ND094096-0070)	A4010-D3Z1		000370
(ND094096-0080)	A4010-D3Z1		000370
(ND094100-0460)	A4010-D3Z1		000370
(ND094104-0100)	A4010-D3Z1	15	000370
(ND094110-0210)	A4010-D3Z1	1	000370
(ND094132-0040)	A4010-D3Z1	9	000370
(ND094137-0010)	A4010-D3Z1	4	000370
(ND094140-0040)	A4010-D3Z1	5	000370
(ND094164-0010)	A4010-D3Z1	10	000370
(ND094165-0021)	A4010-D3Z1	11	000370
(ND094170-0100)	A4010-D3Z1	12	000370
(ND094191-0161)	A4010-D3Z1	13	000370
(ND094200-0390)	A4010-E3Z1		000380
(ND094205-0060)	A4010-E3Z1	10	000380
(ND094210-0070)	A4010-E3Z1	1	000380
(ND094230-0080)	A4010-E3Z1	3	000380
(ND094231-0060)	A4010-E3Z1	2	000380
(ND094241-0040)	A4010-E3Z1	4	000380
(ND094244-0040)	A4010-E3Z1	5	000380
(ND094251-0050)	A4010-E3Z1	6	000380
(ND901070-6161)	A4010-D3Z1	27	000370
(ND902000-6081)	A4010-D3Z1	26	000370
(ND921560-8081)	A4010-D3Z1	8	000370
(ND949013-5880)	A4010-D3Z1	7	000370
(ND949018-1500)	A4010-E3Z1	17	000380
(ND949044-3320)	A4010-D3Z1	20	000370
(ND949044-3320)	A4010-E3Z1	18	000380
(ND949044-3320)	A4010-E3Z1	23	000380
(ND949101-0230)	A4010-D3Z1	14	000370
(ND949140-6310)	A4010-D3Z1		000370
(ND949150-3030)	A4010-D3Z1	16	000370
(ND949979-1300)	A4010-D3Z1	24	000370
01010-61460	A2050-A3B1	5	000170
01010-61460	Y1662-14A0	32	480560
01010-61460	Y1664-14A0	32	480760
01010-61470	Y1662-14A0	33	480560
01010-61470	Y1664-14A0	33	480760
01010-61490	Y1662-07A0	26	480490

PART NO.	FIG.NO.	INDEX	PAGE
01010-61490	Y1664-07A0	26	480690
01010-61650	A2210-A3L2	3	000200
01010-61650	B0100-01A0	14	030020
01010-61660	A2210-A3L2	4	000200
01010-61665	A2210-A3L2	8	000200
01010-62070	R1100-04A6	14	330220
01010-62460	R1100-03A6	2	330200
01010-62470	T1510-01C3	9	360740
01010-62470	T1510-01C6	8	360760
01010-62470	T1510-01C7	15	360770
01010-62490	R0110-02A0	18	330030
01010-80612	D0100-01A1	11	090010
01010-80612	D0100-01A2	11	090020
01010-80612	M1130-01A1	23	240060
01010-80612	M1140-02A1	14	240080
01010-80616	C0100-03A1	39	060030
01010-80616	E0450-01A0	16	120150
01010-80616	E0450-01A1	20	120160
01010-80616	K0350-01A0	3	210170
01010-80616	K1110-47A1	22	210640
01010-80616	K1110-52A1	14	210690
01010-80616	K1110-52A1	5	210690
01010-80616	K1110-53B2	4	210710
01010-80616	K1110-57A1	16	210750
01010-80616	K1110-57A1	9	210750
01010-80616	M1130-01A1	13	240060
01010-80616	M1140-01A1	14	240070
01010-80616	W1113-01A0	17	450010
01010-80616	W1113-01A1	13	450020
01010-80616	W1113-01A1	34	450020
01010-80620	W1113-01A0	6	450010
01010-80620	Y1670-11A1	16	481110
01010-80816	E0200-05A2	21	120100
01010-80816	K0700-01A0	22	210180
01010-80816	K1110-31E2	3	210570
01010-80816	Y1670-01A0	16	481090
01010-80820	D0200-04A1	4	090060
01010-80820	K1110-06A9	16	210260
01010-80820	K1110-51A1	2	210680
01010-80820	K1110-56A1	2	210740
01010-80825	E0410-01A0	3	120130
01010-80825	K1110-60A1	3	210770
01010-80825	M1110-01A1	11	240010
01010-80825	M1110-01A1	2	240010
01010-80825	M1110-01A1	5	240010
01010-80825	M1110-01A1	8	240010
01010-80830	K1110-47A1	17	210640
01010-80830	K1110-66A1	28	210830
01010-80830	K1110-66A2	35	210840
01010-80835	E0450-01A0	12	120150

PART NO.	FIG.NO.	INDEX	PAGE
01010-80835	E0450-01A1	12	120160
01010-80835	Y1627-01A0	12	480330
01010-80840	K1110-66A1	31	210830
01010-80840	K1110-66A2	38	210840
01010-80855	Y1670-01A0	14	481090
01010-80875	K0700-01A0	17	210180
01010-81016	E0200-03A1	41	120060
01010-81016	E0200-05A1	14	120080
01010-81016	E0200-05A2	14	120100
01010-81016	E0450-01A0	20	120150
01010-81016	E0450-01A1	27	120160
01010-81016	K1110-48A1	2	210650
01010-81016	K1110-57A1	49	210751
01010-81016	K1110-57A1	52	210751
01010-81016	K1110-65A1	15	210820
01010-81020	A2110-A3R2	27	000190
01010-81020	C0100-01A1	24	060010
01010-81020	C0100-02A1	11	060020
01010-81020	C0100-02A1	27	060020
01010-81020	C0100-02A1	36	060020
01010-81020	C0100-03A1	11	060030
01010-81020	C0100-03A1	2	060030
01010-81020	C0100-03A1	42	060030
01010-81020	C0100-03A1	5	060030
01010-81020	C0100-03A1	8	060030
01010-81020	C0100-06A1	34	060060
01010-81020	E0200-01A1	39	120040
01010-81020	E0200-02A1	31	120050
01010-81020	E0200-04A1	16	120070
01010-81020	E0200-04A1	8	120070
01010-81020	E0420-01A0	6	120140
01010-81020	K1110-42A1	2	210590
01010-81020	K1110-42A1	5	210590
01010-81020	K1110-43A1	5	210600
01010-81020	K1110-44A1	5	210610
01010-81020	K1110-48A1	22	210650
01010-81020	K1110-48A1	25	210650
01010-81020	K1110-48A1	29	210650
01010-81020	K1110-48A1	32	210650
01010-81020	K1110-62A1	7	210790
01010-81020	M1220-01A1	11	240140
01010-81020	N1110-01A0	12	270010
01010-81020	P1210-01A0	9	300030
01010-81022	A2410-A3B8	5	000270
01010-81025	A2050-A3B1	9	000170
01010-81025	A2110-A3R2	29	000190
01010-81025	A3010-A3A8	4	000290
01010-81025	C0100-06A1	10	060060
01010-81025	E0200-02A1	25	120050
01010-81025	E0200-04A1	25	120070

PART NO.	FIG.NO.	INDEX	PAGE
01010-81025	E0200-05A1	4	120080
01010-81025	E0200-05A2	4	120100
01010-81025	K1110-43A1	3	210600
01010-81025	K1110-44A1	3	210610
01010-81025	K1110-44A2	14	210620
01010-81025	K1110-44A2	4	210620
01010-81025	K1110-48A1	6	210650
01010-81025	K1110-65A1	2	210820
01010-81025	K1110-65A1	9	210820
01010-81030	C0100-01A1	22	060010
01010-81030	C0100-02A1	29	060020
01010-81030	C0100-02A1	32	060020
01010-81030	C0100-03A1	17	060030
01010-81030	C0100-07A1	19	060070
01010-81030	D0200-03A1	5	090050
01010-81030	K1110-42A1	14	210590
01010-81030	K1110-52A1	2	210690
01010-81030	N1210-01A0	12	270020
01010-81030	N1210-01A1	12	270030
01010-81030	Y0260-01A0	8	480010
01010-81035	A2110-A3R2	24	000190
01010-81035	A3010-A3A8	5	000290
01010-81035	K0700-01A0	24	210180
01010-81040	C0100-02A1	17	060020
01010-81040	C0100-03A1	36	060030
01010-81040	H1270-02A0	11	150270
01010-81040	K1110-48A1	12	210650
01010-81040	K1110-48A1	16	210650
01010-81040	K1110-48A1	20	210650
01010-81040	Y1662-06A0	7	480480
01010-81040	Y1664-06A0	7	480680
01010-81045	K1110-66A1	11	210830
01010-81045	K1110-66A1	2	210830
01010-81045	K1110-66A2	15	210840
01010-81045	K1110-66A2	2	210840
01010-81050	A2210-A3L2	5	000200
01010-81050	C0100-01A1	12	060010
01010-81055	H1270-03A0	12	150280
01010-81055	H1270-03A0	6	150280
01010-81070	C0100-06A1	22	060060
01010-81070	D0200-02A1	29	090040
01010-81070	H1270-03A0	14	150280
01010-81070	H1270-03A0	8	150280
01010-81075	H1270-05A0	5	150300
01010-81085	B0100-01A0	2	030020
01010-81090	H1831-02A2	2	150370
01010-81090	H1831-02A3	2	150380
01010-81220	C0100-07A1	8	060070
01010-81220	D0200-04A1	25	090060
01010-81220	E0200-04A1	36	120070

PART NO.	FIG.NO.	INDEX	PAGE
01010-81220	E0200-05A1	10	120080
01010-81220	E0200-05A2	10	120100
01010-81220	E0450-01A1	25	120160
01010-81220	E0450-01A2	5	120170
01010-81220	H0340-01A0	11	150170
01010-81220	H0340-01A0	7	150170
01010-81220	H1810-01A0	15	150330
01010-81220	H1810-01A1	18	150340
01010-81220	H1831-02A2	37	150370
01010-81220	H1831-02A3	35	150380
01010-81220	M1150-01A1	31	240100
01010-81220	M1150-01A1	36	240100
01010-81220	M1150-01A1	38	240100
01010-81220	M1150-02A1	9	240110
01010-81220	M1510-01A0	13	240200
01010-81220	T1110-06A2	16	360110
01010-81220	T1110-06A2	4	360110
01010-81220	T1110-06A2	9	360110
01010-81220	T1110-07A2	6	360130
01010-81220	T1110-07A6	6	360140
01010-81220	T1200-04A1	13	360480
01010-81220	T1200-04A5	13	360500
01010-81220	T1200-04B1	13	360540
01010-81220	Y1600-11A0	20	480230
01010-81220	Y1600-12A0	20	480240
01010-81225	A2330-A3B9	2	000230
01010-81225	B0000-01A0	2	030010
01010-81225	B0200-01A1	5	030030
01010-81225	B0200-01A2	5	030040
01010-81225	B0920-01A0	10	030050
01010-81225	C0100-01A1	19	060010
01010-81225	C0100-01A1	37	060010
01010-81225	C0100-02A1	15	060020
01010-81225	C0100-03A1	14	060030
01010-81225	C0100-03A1	45	060030
01010-81225	C0100-04A1	12	060040
01010-81225	C0100-04A1	34	060040
01010-81225	C0100-04A1	7	060040
01010-81225	C0100-05A1	12	060050
01010-81225	C0100-05A1	16	060050
01010-81225	C0100-05A1	20	060050
01010-81225	C0100-05A1	24	060050
01010-81225	C0100-05A1	7	060050
01010-81225	C0100-06A1	18	060060
01010-81225	C0100-06A1	27	060060
01010-81225	C0100-06A1	38	060060
01010-81225	D0200-01A1	18	090030
01010-81225	D0200-02A1	11	090040
01010-81225	D0200-02A1	15	090040
01010-81225	D0200-02A1	21	090040

PART NO.	FIG.NO.	INDEX	PAGE
01010-81225	D0200-02A1	24	090040
01010-81225	D0200-02A1	34	090040
01010-81225	D0200-02A1	38	090040
01010-81225	D0200-02A1	8	090040
01010-81225	D0200-04A1	12	090060
01010-81225	D0200-04A1	15	090060
01010-81225	E0100-01A0	14	120010
01010-81225	E0100-01A0	4	120010
01010-81225	E0100-01A2	14	120030
01010-81225	E0100-01A2	4	120030
01010-81225	E0200-01A1	11	120040
01010-81225	E0200-01A1	14	120040
01010-81225	E0200-01A1	2	120040
01010-81225	E0200-01A1	25	120040
01010-81225	E0200-01A1	5	120040
01010-81225	E0200-01A1	8	120040
01010-81225	E0200-02A1	16	120050
01010-81225	E0200-02A1	19	120050
01010-81225	E0200-02A1	2	120050
01010-81225	E0200-02A1	23	120050
01010-81225	E0200-02A1	28	120050
01010-81225	E0200-02A1	34	120050
01010-81225	E0200-02A1	40	120050
01010-81225	E0200-02A1	5	120050
01010-81225	E0200-03A1	14	120060
01010-81225	E0200-03A1	17	120060
01010-81225	E0200-03A1	21	120060
01010-81225	E0200-03A1	25	120060
01010-81225	E0200-03A1	28	120060
01010-81225	E0200-03A1	3	120060
01010-81225	E0200-03A1	6	120060
01010-81225	E0200-04A1	23	120070
01010-81225	E0200-04A1	28	120070
01010-81225	E0200-04A1	31	120070
01010-81225	E0200-04A1	34	120070
01010-81225	E0200-04A1	38	120070
01010-81225	E0450-01A1	14	120160
01010-81225	H0110-01A1	27	150010
01010-81225	H0110-01A1	35	150010
01010-81225	H0320-01A1	14	150140
01010-81225	H1270-04A0	13	150290
01010-81225	H1810-01A0	20	150330
01010-81225	H1810-01A1	23	150340
01010-81225	H1831-02A2	22	150370
01010-81225	H1831-02A2	30	150370
01010-81225	H1831-02A3	23	150380
01010-81225	H1831-02A3	28	150380
01010-81225	H1831-02A3	38	150380
01010-81225	H1840-01A0	19	150400
01010-81225	H1840-01A0	22	150400

PART NO.	FIG.NO.	INDEX	PAGE
01010-81225	J1110-01A2	13	180010
01010-81225	K0350-01A0	5	210170
01010-81225	K0700-01A0	37	210180
01010-81225	K0700-02A0	12	210190
01010-81225	K0700-02A0	33	210190
01010-81225	K0700-02A0	36	210190
01010-81225	K0700-02A0	6	210190
01010-81225	K1520-01A0	12	210870
01010-81225	K1520-01A0	15	210870
01010-81225	K1520-01A1	12	210880
01010-81225	K1520-01A1	15	210880
01010-81225	K1520-01A1	18	210880
01010-81225	M1110-02A1	13	240020
01010-81225	M1110-02A1	22	240020
01010-81225	M1110-02A1	28	240020
01010-81225	M1110-02A1	3	240020
01010-81225	M1110-02A1	31	240020
01010-81225	M1110-03A1	2	240030
01010-81225	M1110-03A1	8	240030
01010-81225	M1120-01A1	26	240050
01010-81225	M1130-01A1	10	240060
01010-81225	M1130-01A1	20	240060
01010-81225	M1130-01A1	4	240060
01010-81225	M1130-01A1	7	240060
01010-81225	M1140-02A1	11	240080
01010-81225	M1140-02A1	4	240080
01010-81225	M1210-01A0	4	240120
01010-81225	M1210-01A1	4	240130
01010-81225	M1420-01A1	10	240170
01010-81225	R0110-02A0	16	330030
01010-81225	R0110-02A0	8	330030
01010-81225	R0300-01A0	11	330050
01010-81225	W1113-01A0	13	450010
01010-81225	W1113-01A0	8	450010
01010-81225	W1113-01A1	15	450020
01010-81225	W1113-01A1	17	450020
01010-81225	W1113-01A1	24	450020
01010-81230	C0100-04A1	23	060040
01010-81230	C0310-01A0	2	060080
01010-81230	C0310-01A0	5	060080
01010-81230	D0200-02A1	2	090040
01010-81230	D0200-02A1	5	090040
01010-81230	D0200-02A1	52	090041
01010-81230	D0200-03A1	13	090050
01010-81230	D0200-04A1	22	090060
01010-81230	E0200-05A1	8	120080
01010-81230	E0200-05A2	8	120100
01010-81230	E0450-01A0	14	120150
01010-81230	E0450-01A1	18	120160
01010-81230	H1210-01A0	20	150180

PART NO.	FIG.NO.	INDEX	PAGE
01010-81230	H1210-01A0	24	150180
01010-81230	H1210-01A0	28	150180
01010-81230	H1270-05A0	2	150300
01010-81230	H1831-02A2	43	150370
01010-81230	H1831-02A3	40	150380
01010-81230	J1110-01A2	4	180010
01010-81230	K1110-46A1	5	210630
01010-81230	M1110-02A1	18	240020
01010-81230	M1110-04A1	12	240040
01010-81230	M1110-04A1	14	240040
01010-81230	M1120-01A1	12	240050
01010-81230	M1120-01A1	16	240050
01010-81230	M1120-01A1	19	240050
01010-81230	M1120-01A1	23	240050
01010-81230	M1120-01A1	8	240050
01010-81230	M1130-01A1	30	240060
01010-81230	M1130-01A1	37	240060
01010-81230	M1140-01A1	11	240070
01010-81230	M1140-01A1	20	240070
01010-81230	M1140-01A1	5	240070
01010-81230	M1140-01A1	8	240070
01010-81230	M1140-02A1	27	240080
01010-81230	M1140-03A1	10	240090
01010-81230	M1140-03A1	4	240090
01010-81230	M1150-01A1	11	240100
01010-81230	M1150-01A1	17	240100
01010-81230	M1150-01A1	19	240100
01010-81230	M1150-01A1	21	240100
01010-81230	M1150-01A1	25	240100
01010-81230	M1150-01A1	40	240101
01010-81230	M1150-02A1	12	240110
01010-81230	M1150-02A1	14	240110
01010-81230	M1150-02A1	21	240110
01010-81230	M1150-02A1	26	240110
01010-81230	M1150-02A1	31	240110
01010-81230	M1210-01A0	12	240120
01010-81230	M1210-01A0	14	240120
01010-81230	M1210-01A0	19	240120
01010-81230	M1210-01A0	21	240120
01010-81230	M1210-01A0	23	240120
01010-81230	M1210-01A0	30	240120
01010-81230	M1210-01A0	6	240120
01010-81230	M1210-01A1	11	240130
01010-81230	M1210-01A1	13	240130
01010-81230	M1210-01A1	18	240130
01010-81230	M1210-01A1	20	240130
01010-81230	M1210-01A1	22	240130
01010-81230	M1210-01A1	29	240130
01010-81230	M1210-01A1	6	240130
01010-81230	M1220-01A1	14	240140

PART NO.	FIG.NO.	INDEX	PAGE
01010-81230	M1220-01A1	16	240140
01010-81230	M1220-01A1	18	240140
01010-81230	M1220-01A1	20	240140
01010-81230	M1430-01A0	3	240180
01010-81230	M1430-01A1	5	240190
01010-81230	M1810-01A1	11	240220
01010-81230	M1810-01A1	14	240220
01010-81230	M1810-01A1	17	240220
01010-81230	M1810-01A1	20	240220
01010-81230	M1810-01A1	25	240220
01010-81230	M1810-01A1	28	240220
01010-81230	M1810-01A1	31	240220
01010-81230	M1810-01A1	34	240220
01010-81230	M1810-01A1	36	240220
01010-81230	M1810-01A1	39	240220
01010-81230	M1810-01A1	4	240220
01010-81230	M1810-01A1	7	240220
01010-81230	M1810-01A2	11	240230
01010-81230	M1810-01A2	14	240230
01010-81230	M1810-01A2	17	240230
01010-81230	M1810-01A2	20	240230
01010-81230	M1810-01A2	25	240230
01010-81230	M1810-01A2	28	240230
01010-81230	M1810-01A2	31	240230
01010-81230	M1810-01A2	34	240230
01010-81230	M1810-01A2	36	240230
01010-81230	M1810-01A2	39	240230
01010-81230	M1810-01A2	4	240230
01010-81230	M1810-01A2	7	240230
01010-81230	M1810-01A2A	11	240240
01010-81230	M1810-01A2A	14	240240
01010-81230	M1810-01A2A	17	240240
01010-81230	M1810-01A2A	20	240240
01010-81230	M1810-01A2A	25	240240
01010-81230	M1810-01A2A	28	240240
01010-81230	M1810-01A2A	32	240240
01010-81230	M1810-01A2A	35	240240
01010-81230	M1810-01A2A	37	240240
01010-81230	M1810-01A2A	4	240240
01010-81230	M1810-01A2A	40	240240
01010-81230	M1810-01A2A	7	240240
01010-81230	M1810-01A3	11	240250
01010-81230	M1810-01A3	14	240250
01010-81230	M1810-01A3	17	240250
01010-81230	M1810-01A3	20	240250
01010-81230	M1810-01A3	25	240250
01010-81230	M1810-01A3	28	240250
01010-81230	M1810-01A3	32	240250
01010-81230	M1810-01A3	35	240250
01010-81230	M1810-01A3	37	240250

PART NO.	FIG.NO.	INDEX	PAGE
01010-81230	M1810-01A3	4	240250
01010-81230	M1810-01A3	40	240250
01010-81230	M1810-01A3	7	240250
01010-81230	M1810-02A1	10	240260
01010-81230	M1810-02A1	4	240260
01010-81230	M1810-02A1	7	240260
01010-81230	M1810-02A2	10	240270
01010-81230	M1810-02A2	4	240270
01010-81230	M1810-02A2	7	240270
01010-81230	M1810-02A3	3	240280
01010-81230	M1810-02A3	6	240280
01010-81230	M1810-02A3	9	240280
01010-81230	M1810-02A4	3	240290
01010-81230	M1810-02A4	6	240290
01010-81230	M1810-02A4	9	240290
01010-81230	M1810-03A1	12	240300
01010-81230	M1810-03A1	15	240300
01010-81230	M1810-03A1	17	240300
01010-81230	M1810-03A1	20	240300
01010-81230	M1810-03A1	26	240300
01010-81230	M1810-03A1	29	240300
01010-81230	M1810-03A1	4	240300
01010-81230	M1810-03A1	7	240300
01010-81230	M1810-03A2	12	240310
01010-81230	M1810-03A2	15	240310
01010-81230	M1810-03A2	18	240310
01010-81230	M1810-03A2	4	240310
01010-81230	M1810-03A2	7	240310
01010-81230	M1810-03A3	12	240320
01010-81230	M1810-03A3	16	240320
01010-81230	M1810-03A3	19	240320
01010-81230	M1810-03A3	4	240320
01010-81230	M1810-03A3	7	240320
01010-81230	M1810-03A4	12	240330
01010-81230	M1810-03A4	15	240330
01010-81230	M1810-03A4	17	240330
01010-81230	M1810-03A4	20	240330
01010-81230	M1810-03A4	26	240330
01010-81230	M1810-03A4	29	240330
01010-81230	M1810-03A4	4	240330
01010-81230	M1810-03A4	7	240330
01010-81230	T1200-06A5	4	360610
01010-81235	C0100-01A1	40	060010
01010-81235	C0100-03A1	23	060030
01010-81235	C0100-03A1	32	060030
01010-81235	D0200-02A1	18	090040
01010-81235	D0200-03A1	2	090050
01010-81235	H0330-01A0	19	150150
01010-81235	H0330-01A1	22	150160
01010-81235	H1210-01A0	16	150180

PART NO.	FIG.NO.	INDEX	PAGE
01010-81235	H1270-01A0	13	150240
01010-81235	H1270-01A0	20	150240
01010-81235	H1270-01A0	5	150240
01010-81235	H1833-01A0		150390
01010-81235	J1310-01A0	7	180040
01010-81235	J1310-01A1	7	180050
01010-81235	K1120-01A0	12	210860
01010-81235	K1120-01A0	6	210860
01010-81235	P1210-01A0	29	300030
01010-81235	R1140-01A0	3	330230
01010-81235	T1110-02A2	7	360050
01010-81235	T1110-02A6	7	360060
01010-81235	T1110-03A2	19	360070
01010-81235	T1110-03A2	9	360070
01010-81235	T1110-04A2	15	360080
01010-81235	T1110-08A4	18	360150
01010-81235	T1110-08A4	24	360150
01010-81235	T1110-09A4	20	360160
01010-81235	T1110-09A4	3	360160
01010-81235	T1110-09A4	9	360160
01010-81235	T1200-01A1	10	360280
01010-81235	T1200-01A1	15	360280
01010-81235	T1200-01A4	10	360310
01010-81235	T1200-01A4	15	360310
01010-81235	T1200-01A8	10	360360
01010-81235	T1200-01A8	15	360360
01010-81235	T1200-01A9	13	360350
01010-81235	T1200-01A9	18	360350
01010-81235	T1200-01B1	11	360370
01010-81235	T1200-01B1	15	360370
01010-81235	T1200-01B7	10	360420
01010-81235	T1200-01B7	15	360420
01010-81235	T1200-05A5	19	360580
01010-81235	T1200-05A5	6	360580
01010-81235	W1113-01A1	21	450020
01010-81240	B0000-01A0	4	030010
01010-81240	H0311-01A1	12	150110
01010-81240	H0311-01A1		150110
01010-81240	H0320-01A1	3	150140
01010-81240	H0320-01A1	7	150140
01010-81240	H0330-01A0	3	150150
01010-81240	H0330-01A1	6	150160
01010-81240	H1270-01A0	16	150240
01010-81240	H1270-03A0	21	150280
01010-81240	H1270-03A0	28	150280
01010-81240	H1270-04A0	10	150290
01010-81240	K0700-02A0	22	210190
01010-81240	M1120-01A1	2	240050
01010-81240	M1140-02A1	29	240080
01010-81240	M1310-01A0	2	240150

PART NO.	FIG.NO.	INDEX	PAGE
01010-81240	M1810-03A1	22	240300
01010-81240	M1810-03A1	31	240300
01010-81240	M1810-03A1	9	240300
01010-81240	M1810-03A2	20	240310
01010-81240	M1810-03A2	9	240310
01010-81240	M1810-03A3	21	240320
01010-81240	M1810-03A3	9	240320
01010-81240	M1810-03A4	22	240330
01010-81240	M1810-03A4	31	240330
01010-81240	M1810-03A4	9	240330
01010-81240	N1210-01A0	41	270020
01010-81240	N1210-01A1	41	270030
01010-81240	N1310-01A0	33	270050
01010-81240	Y0260-01A0	35	480010
01010-81245	D0200-02A1	43	090040
01010-81245	D0200-02A1	48	090041
01010-81245	D0200-04A1	19	090060
01010-81245	E0420-01A0	9	120140
01010-81245	H1270-01A0	18	150240
01010-81245	H1270-01A0	30	150240
01010-81245	H1833-01A0	16	150390
01010-81245	K1110-30A1	29	210540
01010-81245	K1110-30A10	29	210560
01010-81245	K1110-30A9	29	210550
01010-81245	T1110-08A4	4	360150
01010-81245	T1200-05A5	11	360580
01010-81245	T1200-05A5	3	360580
01010-81245	T1200-06A5	13	360610
01010-81245	Y1620-41A0	36	480300
01010-81245	Y1620-41A1	36	480310
01010-81250	D0200-01A1	15	090030
01010-81250	E0200-02A1	13	120050
01010-81250	E0200-02A1	37	120050
01010-81250	E0200-02A1	9	120050
01010-81250	H1270-04A0	7	150290
01010-81250	H1810-01A1	25	150340
01010-81250	T1200-05A5	16	360580
01010-81255	H0311-01A1	10	150110
01010-81255	M1110-03A1	10	240030
01010-81260	D0200-04A1	29	090060
01010-81260	E0200-05A1	17	120080
01010-81260	H1831-02A2	34	150370
01010-81260	H1831-02A3	32	150380
01010-81260	H1833-01A0	18	150390
01010-81260	K0700-01A0	13	210180
01010-81260	K0700-02A0	9	210190
01010-81260	K1520-01A0	26	210870
01010-81260	K1520-01A1	26	210880
01010-81260	T1110-09A4	17	360160
01010-81260	T1110-09A4	22	360160

PART NO.	FIG.NO.	INDEX	PAGE
01010-81260	W1113-01A1	29	450020
01010-81265	E0200-01A1	18	120040
01010-81265	E0450-01A1	16	120160
01010-81270	H1210-01A0	30	150180
01010-81270	M1110-03A1	14	240030
01010-81275	E0200-01A1	22	120040
01010-81280	K0220-01A0	3	210090
01010-81280	K1520-01A0	3	210870
01010-81280	K1520-01A1	3	210880
01010-81285	B0920-01A0	13	030050
01010-81285	H1270-03A0	32	150280
01010-81285	H1831-02A2	27	150370
01010-81285	K1520-01A0	19	210870
01010-81290	H0320-01A1	11	150140
01010-81290	H0330-01A0	22	150150
01010-81290	H0330-01A1	25	150160
01010-81290	H1810-01A1	34	150340
01010-81430	T1110-07A2	3	360130
01010-81430	T1110-07A6	3	360140
01010-81440	K0700-01A0	5	210180
01010-81455	H1270-02A0	15	150270
01010-81455	H1270-02A0	40	150270
01010-81455	K0700-01A0		210180
01010-81455	T1110-08A4	12	360150
01010-81455	T1110-08A4	15	360150
01010-81455	T1200-05A5	24	360580
01010-81460	K0700-01A0	8	210180
01010-81635	C0100-06A1	5	060060
01010-81635	D0100-01A1	23	090010
01010-81635	D0100-01A2	21	090020
01010-81635	H0110-01A1	52	150011
01010-81635	H1270-03A0	2	150280
01010-81640	A6210-A3H5	3	000610
01010-81640	A6210-A3H6	3	000620
01010-81640	C0100-05A1		060050
01010-81640	H0120-03A1	2	150080
01010-81640	P1210-01A0	39	300030
01010-81640	R1100-04A6	9	330220
01010-81640	T1200-06A5	10	360610
01010-81645	C0100-04A1		060040
01010-81645	C0100-06A1		060060
01010-81645	H0120-03A1	4	150080
01010-81645	N1210-01A0	24	270020
01010-81645	N1210-01A1	24	270030
01010-81645	Y0260-01A0	20	480010
01010-81650	C0100-04A1	2	060040
01010-81650	C0100-05A1	30	060050
01010-81650	C0100-06A1	1	060060
01010-81655	T1110-08A4	21	360150
01010-81655	T1110-08A4	27	360150

PART NO.	FIG.NO.	INDEX	PAGE
01010-81670	R1100-04A6	10	330220
01010-81685	T1110-09A4	12	360160
01010-81685	T1110-09A4	6	360160
01010-82045	J1310-01A0	3	180040
01010-82045	J1310-01A1	3	180050
01010-82045	T1110-02A2	3	360050
01010-82045	T1110-02A6	3	360060
01010-82085	Y1620-01A1	22	480250
01010-82085	Y1620-01A6	22	480260
01010-82085	Y1620-41A0	18	480300
01010-82085	Y1620-41A1	18	480310
01010-82095	R0300-01A0	14	330050
01010-82455	R1100-03A8	5	330210
01010-82460	T1200-03A0	24	360460
01010-82480	N1210-01A0	46	270021
01010-82480	N1210-01A1	46	270031
01010-82480	T1510-01C10	13	360800
01010-82480	T1510-01C11	13	360810
01010-82480	T1510-01C12	12	360815
01010-82480	T1510-01C8	10	360780
01010-83075	K1120-01A0	9	210860
01010-D0640	K0230-01A2	16	210120
01010-D0820	K0230-01A2	26	210120
01010-D0820	K1110-26A1	17	210460
01010-D0825	K0110-01A2	4	210030
01010-D0825	K0110-01A3	4	210040
01010-D0825	K1110-23A1	3	210390
01010-D0825	K1110-23A1	6	210390
01010-D1025	E0310-01A0	2	120110
01010-D1025	K0230-01A2	21	210120
01010-D1025	K1110-12A10	6	210340
01010-D1025	K1110-12A9	8	210320
01010-D1030	E0310-01A3	2	120120
01010-D1035	K1110-44A2	8	210620
01010-D1045	K1110-42A1	12	210590
01010-D1045	K1110-44A2	11	210620
01010-D1060	E0310-01A0	5	120110
01010-D1220	K0220-01A0	8	210090
01010-D1220	K0230-01A2	14	210120
01010-D1225	K0230-01A0	3	210100
01010-D1225	K1110-13A9	26	210360
01010-D1230	K1110-57A1	2	210750
01010-D1245	K0230-01A2	18	210120
01010-D1275	K0230-01A2	10	210120
01010-E1030	A1570-A3D1	12	000090
01010-E1035	A1510-A3H5	11	000050
01010-E1035	A1570-A3D1	4	000090
01010-E1040	A1610-A3Y3	8	000100
01010-E1045	A1610-A3Y3	14	000100
01010-E1080	A1510-A3H5	7	000050

PART NO.	FIG.NO.	INDEX	PAGE
01011-61455	Y1662-07A0	28	480490
01011-81005	B0100-01A0	5	030020
01011-81005	Y1620-01A8	36	480270
01011-81005	Y1620-11A2	36	480280
01011-81005	Y1620-11A3	36	480290
01011-81010	E0200-03A1	45	120060
01011-81015	A5060-A3J9	13	000530
01011-81015	A5060-A3J9	15	000530
01011-81015	E0420-01A0	4	120140
01011-81020	H0312-01A1	3	150130
01011-81040	E0200-01A1	36	120040
01011-81040	E0200-03A1	32	120060
01011-81040	E0200-03A1	37	120060
01011-81040	E0200-04A1	4	120070
01011-81070	H0312-01A0	6	150120
01011-81090	E0200-04A1	12	120070
01011-81095	A1530-A3L9	13	000060
01011-81200	E0200-01A1	31	120040
01011-81200	H1270-02A0	2	150270
01011-81205	C0100-02A1	10	060020
01011-81205	H1270-01A0	2	150240
01011-81205	K0700-02A0	18	210190
01011-81205	K0700-02A0	30	210190
01011-81210	H1270-02A0	26	150270
01011-81210	H1831-02A2	41	150370
01011-81210	K1520-01A0	8	210870
01011-81210	K1520-01A1	8	210880
01011-82000	P1210-01A0	36	300030
01011-82400	Y1620-01A8	22	480270
01011-82400	Y1620-11A2	22	480280
01011-82400	Y1620-11A3	22	480290
01011-82400	Y1620-41A2	18	480320
01011-D1245	K0230-01A1	3	210110
01011-D1245	K0230-01A2	4	210120
01011-D1245	K0230-01A2	7	210120
01020-01016	A1530-B3L9	19	000070
01023-10306	Y1670-01A0	22	481090
01023-10508	K1110-57A1	45	210751
01023-10612	K1110-06A9	4	210260
01023-10612	K1110-06A9	6	210260
01023-20412	K1110-09A9	3	210290
01023-20416	K1110-09A9	9	210290
01023-20416	K1110-42A1	21	210590
01023-20512	K1110-54A1	12	210720
01023-20512	K1110-54A1	16	210720
01023-20512	K1110-59A1	12	210760
01023-20512	K1110-59A1	16	210760
01023-20612	K0220-01A0	11	210090
01023-20612	K0320-01A0	6	210150
01023-20612	K1110-03A8	8	210220

PART NO.	FIG.NO.	INDEX	PAGE
01023-20612	K1110-03A9	10	210230
01023-20616	K0330-01A0	8	210160
01023-20616	K1110-03A8	14	210220
01023-20616	K1110-03A8	16	210220
01023-20616	K1110-03A9	16	210230
01023-20616	K1110-03A9	18	210230
01023-20616	K1110-11A9	29	210300
01023-20620	K1110-08A9	10	210280
01023-60316	K1110-53B2		210710
01023-60320	K1110-53B2	26	210710
01023-60410	K1110-53B2	10	210710
01023-60510	K1110-53B2	3	210710
01023-60512	K1110-12A10	2	210340
01023-60512	K1110-12A9	2	210320
01023-60620	K1110-29A1	4	210530
01023-70412	K1110-09A9	13	210290
01035-81230	D0200-03A1	15	090050
01035-81230	E0200-05A2	17	120100
01050-31645	A2230-A3F3	4	000210
01050-51225	A2041-A3H5	8	000160
01050-51260	A6010-A3X5	19	000550
01050-51260	A6010-A3X6	17	000560
01050-51260	A6010-A3Y1	19	000570
01051-51430	A2370-A3D8	4	000250
01051-51430	A2370-A3E1	4	000260
01051-51635	A2370-A3D8	3	000250
01051-51635	A2370-A3E1	3	000260
012-52-61450	Y1640-01A0	17	480340
01220-40612	M1140-03A1	8	240090
01240-00616	K1110-06A9	7	210260
01240-01025	K1110-07A9	16	210270
01245-00612	K1110-21A1	23	210370
01245-00616	K1110-02A8	16	210210
01245-00616	K1110-02A8	45	210211
01245-00616	K1110-04A8	9	210240
01245-00616	K1110-04A9	5	210250
01245-00616	K1110-11A9	16	210300
01245-00616	K1110-11A9	22	210300
01245-00616	K1110-13A8	9	210350
01245-00616	K1110-13A9	9	210360
01245-00616	K1110-21A1	17	210370
01245-00616	K1110-22A1	4	210380
01245-00616	K1110-52A1	12	210690
01245-00616	K1110-52A1	18	210690
01245-00616	K1110-52A1	24	210690
01245-00616	K1110-57A1	14	210750
01245-00616	K1110-57A1	22	210750
01245-00616	K1110-57A1	25	210750
01245-00620	K1110-04A8	21	210240
01245-00620	K1110-04A9	17	210250

PART NO.	FIG.NO.	INDEX	PAGE
01245-00620	K1110-54A1	9	210720
01245-00620	K1110-59A1	9	210760
01245-00816	K0330-01A0	9	210160
01245-00816	K1110-02A8	19	210210
01245-00816	K1110-02A8	26	210210
01245-00816	K1110-02A8	29	210210
01245-00816	K1110-13A8	19	210350
01245-00816	K1110-13A9	18	210360
01245-00820	K1110-04A8	18	210240
01245-00820	K1110-04A9	14	210250
01245-00820	K1110-31E2	6	210570
01245-00820	K1110-60A1	6	210770
01245-01016	K1110-13A8	15	210350
01245-01016	K1110-13A8	7	210350
01245-01016	K1110-13A9	14	210360
01245-01016	K1110-13A9	7	210360
01245-01025	K1110-46A1	10	210630
01245-01025	K1110-46A1	8	210630
01252-30625	Y1670-21A0	15	481120
01252-41025	K1110-50A1	10	210670
01252-41025	K1110-55A1	10	210730
01252-41030	M1410-01A0	4	240160
01252-60516	A6810-C3K5	5	000670
01252-60530	Y1600-11A0	14	480230
01252-60530	Y1600-12A0	15	480240
01252-60612	Y1670-21A0	24	481120
01252-60635	Y1600-11A0	2	480230
01252-60635	Y1600-12A0	2	480240
01252-60816	Y1662-13A0	6	480550
01252-60816	Y1664-13A0	6	480750
01252-60820	Y1662-03A0	18	480450
01252-60820	Y1662-17A0	9	480590
01252-60820	Y1664-03A0	18	480650
01252-60820	Y1664-13A0	10	480750
01252-60820	Y1664-17A0	9	480790
01252-60820	Y1664-21A0	10	480830
01252-60825	Y1640-03A0	13	480360
01252-60825	Y1640-03A1	7	480390
01252-60830	Y1662-15A0	12	480570
01252-60830	Y1664-15A0	12	480770
01252-60835	Y1670-02A0	19	481100
01252-60845	Y1662-17A0	22	480590
01252-60845	Y1664-17A0	22	480790
01252-60845	Y1664-22A0	5	480840
01252-60865	Y1662-06A0	3	480480
01252-60865	Y1664-06A0	3	480680
01252-61040	Y1662-14A0	22	480560
01252-61040	Y1664-14A0	22	480760
01252-61045	Y1662-16A0	26	480580
01252-61045	Y1664-16A0	26	480780

PART NO.	FIG.NO.	INDEX	PAGE
01252-61050	Y1662-10A0	14	480520
01252-61050	Y1664-10A0	14	480720
01252-61065	Y1662-20A0	6	480620
01252-61065	Y1664-20A0	6	480820
01252-61075	H1240-01A0	2	150230
01252-61075	Y1662-15A0	13	480570
01252-61075	Y1662-16A0	24	480580
01252-61075	Y1664-15A0	13	480770
01252-61075	Y1664-16A0	24	480780
01252-61230	R0300-01A0	13	330050
01252-61450	Y1640-01A1	17	480370
01252-70516	H0110-01A1	42	150010
01252-70545	M1420-01A1	6	240170
01252-70816	K1110-53B2	18	210710
01252-71030	M1420-01A1	3	240170
01252-71225	H1270-02A0	23	150270
01252-71295	H0330-01A1	3	150160
01252-80616	K0330-01A0	3	210160
01252-80616	K1110-02A8	23	210210
01252-80820	K1110-54A1	3	210720
01252-80820	K1110-59A1	3	210760
01252-80825	K0110-01A0	2	210010
01252-80825	K0110-01A2	2	210030
01252-80825	K0110-01A3	2	210040
01310-01216	Y1620-01A1	25	480250
01310-01216	Y1620-01A6	25	480260
01310-01216	Y1620-41A0	21	480300
01310-01216	Y1620-41A1	21	480310
01310-01225	Y1620-01A8	25	480270
01310-01225	Y1620-11A2	25	480280
01310-01225	Y1620-11A3	25	480290
01310-01225	Y1620-41A2	21	480320
01370-00420	K1110-08A9	12	210280
01370-00508	M1510-01A0	12	240200
01370-10308	K1110-30A1	16	210540
01370-10308	K1110-30A10	16	210560
01370-10308	K1110-30A9	16	210550
01370-20308	K1110-30A1	19	210540
01370-20308	K1110-30A10	19	210560
01370-20308	K1110-30A9	19	210550
01370-30416	K1110-11A9	26	210300
01370-40510	K1110-54A1	14	210720
01370-40510	K1110-59A1	14	210760
01370-40610	K1110-54A1	19	210720
01370-40610	K1110-59A1	19	210760
0143-80-1020	A1010-A3E2	23	000010
01434-10616	C0100-02A1	21	060020
01434-10616	C0100-02A1	24	060020
01435-00610	K1110-27A1	10	210490
01435-00610	K1110-27A1	12	210490

PART NO.	FIG.NO.	INDEX	PAGE
01435-00610	K1110-27A1	14	210490
01435-00610	K1110-27A1	16	210490
01435-00610	K1110-27A1	18	210490
01435-00610	K1110-28A8	6	210500
01435-00610	K1110-28A9	6	210520
01435-00612	A2110-A3R2	15	000190
01435-00612	A4110-B3S5	5	000430
01435-00612	K1110-02A8	35	210210
01435-00612	K1110-11A9	11	210300
01435-00612	K1110-11A9	18	210300
01435-00612	K1110-11A9	24	210300
01435-00612	K1110-11A9	7	210300
01435-00612	K1110-24A1	10	210420
01435-00612	K1110-24A1	6	210420
01435-00612	K1110-28A9	9	210520
01435-00612	K1110-30A9	34	210550
01435-00612	K1110-52A1	20	210690
01435-00612	K1110-57A1	18	210750
01435-00616	A1310-A3S9	9	000040
01435-00616	K1110-03A9	2	210230
01435-00616	K1110-08A9	2	210280
01435-00616	K1110-21A1	2	210370
01435-00616	K1110-21A1	21	210370
01435-00616	K1110-21A1	6	210370
01435-00625	A4030-A3F7	39	000390
01435-00625	K0700-01A0	33	210180
01435-00625	K0700-01A0	36	210180
01435-00625	K0700-02A0	3	210190
01435-00625	K0700-02A0	4	210190
01435-00630	A4010-B3Z1	11	000350
01435-00630	A4010-B3Z1	19	000350
01435-00630	A4010-B3Z1	23	000350
01435-00630	A4010-B3Z1	8	000350
01435-00630	A4030-A3F7	36	000390
01435-00630	K0700-02A0	14	210190
01435-00635	A4030-A3F7	26	000390
01435-00816	A2010-A3M3	33	000130
01435-00816	A5010-A3N6	14	000490
01435-00816	K1110-29A1	3	210530
01435-00820	A2210-A3L2	10	000200
01435-00820	A4710-A3H3	14	000480
01435-00820	K1110-21A1	8	210370
01435-00820	K1110-27A1	4	210490
01435-00820	K1110-27A1	6	210490
01435-00825	A3310-A3D3	14	000310
01435-00830	A1530-A3L9	8	000060
01435-00840	A4110-A3S5	50	000421
01435-00840	A4110-A3S5	67	000421
01435-00840	A4710-A3H3	2	000480
01435-00845	A4710-A3H3	13	000480

PART NO.	FIG.NO.	INDEX	PAGE
01435-00860	K1110-27A1	2	210490
01435-00870	A4210-A3K2	16	000460
01435-01016	A2041-A3H5	13	000160
01435-01016	A4110-B3S5	36	000430
01435-01016	A5210-A3G6	8	000540
01435-01016	A6810-A3K5	14	000650
01435-01020	A1530-A3L9	25	000060
01435-01020	A1550-A3A9	14	000080
01435-01020	A1550-A3A9	17	000080
01435-01020	A1570-A3D1	1	000090
01435-01020	A1570-A3D1	7	000090
01435-01020	A2011-A3K6	15	000140
01435-01020	A2011-A3K6	16	000140
01435-01020	A2011-A3K6	24	000140
01435-01020	A2110-A3R2	10	000190
01435-01020	A2110-A3R2	19	000190
01435-01020	A3110-A3K5	13	000300
01435-01020	A3110-A3K5	15	000300
01435-01020	A4030-A3F7	14	000390
01435-01020	A4030-A3F7	31	000390
01435-01020	A4110-B3S5	39	000430
01435-01020	A4110-C3S5	21	000440
01435-01020	A4110-C3S5	37	000440
01435-01020	A5010-A3N6	20	000490
01435-01020	A5210-A3G6	9	000540
01435-01020	A6210-A3H5	7	000610
01435-01020	A6210-A3H5	9	000610
01435-01020	A6210-A3H6	7	000620
01435-01020	A6210-A3H6	9	000620
01435-01020	A6810-A3K5	16	000650
01435-01020	A6810-A3K5	28	000650
01435-01020	A6810-A3K5	37	000650
01435-01020	A6810-B3K5	27	000660
01435-01020	A6810-B3K5	41	000660
01435-01020	A6810-B3K5	7	000660
01435-01025	A1111-A3C5	10	000000
01435-01025	A1111-A3C5	12	000000
01435-01025	A1310-A3S9	6	000040
01435-01025	A1530-A3L9	21	000060
01435-01025	A1530-A3L9	23	000060
01435-01025	A1530-A3L9	29	000060
01435-01025	A1550-A3A9	11	000080
01435-01025	A1550-A3A9	6	000080
01435-01025	A1730-A3K4	9	000110
01435-01025	A2011-A3K6	21	000140
01435-01025	A2110-A3R2	2	000190
01435-01025	A3110-A3K5	18	000300
01435-01025	A3110-A3K5	25	000300
01435-01025	A3110-A3K5	26	000300
01435-01025	A3110-A3K5	28	000300

PART NO.	FIG.NO.	INDEX	PAGE
01435-01025	A3110-A3K5	30	000300
01435-01025	A3311-A3B3	1	000320
01435-01025	A4010-B3Z1	16	000350
01435-01025	A4010-B3Z1	4	000350
01435-01025	A4010-B3Z1	6	000350
01435-01025	A4030-A3F7	33	000390
01435-01025	A4110-A3S5	37	000420
01435-01025	A4110-A3S5	54	000421
01435-01025	A4110-B3S5	2	000430
01435-01025	A5060-A3J9	20	000530
01435-01025	A6810-A3K5	11	000650
01435-01025	A6810-A3K5	19	000650
01435-01025	Y1620-01A1	41	480251
01435-01025	Y1620-01A6	43	480261
01435-01030	A1610-A3Y3	21	000100
01435-01030	A2110-A3R2	20	000190
01435-01030	A4030-A3F7	2	000390
01435-01030	A4110-A3S5	17	000420
01435-01030	A4110-A3S5	52	000421
01435-01030	A4230-A3M5	10	000470
01435-01030	A4230-A3M5	7	000470
01435-01030	A4710-A3H3	5	000480
01435-01030	A5010-A3N6	23	000490
01435-01030	A5030-A3K2	2	000500
01435-01030	A5060-A3J9	22	000530
01435-01030	A5060-A3J9	9	000530
01435-01030	A5210-A3G6	2	000540
01435-01030	A6010-A3X5	8	000550
01435-01030	A6010-A3X6	6	000560
01435-01030	A6010-A3Y1	8	000570
01435-01030	D0200-03A1	22	090050
01435-01035	A1310-A3S9	24	000040
01435-01035	A1550-A3A9	3	000080
01435-01035	A4010-A3Z1	2	000340
01435-01035	A4110-A3S5	4	000420
01435-01035	A4110-A3S5	6	000420
01435-01035	A4110-A3S5	8	000420
01435-01035	A4110-B3S5	33	000430
01435-01035	A4110-C3S5	30	000440
01435-01035	A5010-A3N6	24	000490
01435-01035	A5060-A3J9	21	000530
01435-01040	A1310-A3S9	21	000040
01435-01040	A4030-A3F7	3	000390
01435-01040	A4030-A3F7	8	000390
01435-01040	A4110-C3S5	11	000440
01435-01040	A4110-C3S5	19	000440
01435-01040	A4110-C3S5	4	000440
01435-01040	A5030-A3K2	4	000500
01435-01045	A1310-A3S9	29	000040
01435-01045	A1610-A3Y3	5	000100

PART NO.	FIG.NO.	INDEX	PAGE
01435-01045	A4010-B3Z1	21	000350
01435-01045	A4030-A3F7	5	000390
01435-01045	A4110-A3S5	60	000421
01435-01045	A6810-B3K5	11	000660
01435-01045	A6810-B3K5	14	000660
01435-01050	A4010-A3Z1	8	000340
01435-01050	A4030-A3F7	23	000390
01435-01050	A4030-A3F7	29	000390
01435-01050	A4110-A3S5	35	000420
01435-01050	A4110-C3S5	2	000440
01435-01050	A4710-A3H3	10	000480
01435-01050	A6810-B3K5	17	000660
01435-01050	A6810-B3K5	24	000660
01435-01050	A6810-B3K5	28	000660
01435-01050	A6810-B3K5	32	000660
01435-01050	A6810-C3K5	8	000670
01435-01055	A2110-A3R2	12	000190
01435-01055	A4110-B3S5	7	000430
01435-01055	A6810-A3K5	8	000650
01435-01055	A6810-B3K5	20	000660
01435-01055	A6810-B3K5	37	000660
01435-01060	A3110-A3K5	7	000300
01435-01060	A4110-A3S5	58	000421
01435-01060	A4110-C3S5	35	000440
01435-01060	A4710-A3H3	7	000480
01435-01065	A1530-A3L9	16	000060
01435-01065	A3311-A3B3	2	000320
01435-01065	A6010-A3X5	10	000550
01435-01065	A6010-A3X6	8	000560
01435-01065	A6010-A3Y1	10	000570
01435-01065	A6810-A3K5	24	000650
01435-01070	A1310-A3S9	14	000040
01435-01070	A2041-A3H5	2	000160
01435-01070	A4010-B3Z1	14	000350
01435-01070	A4110-B3S5	9	000430
01435-01075	A2041-A3H5	4	000160
01435-01080	A1310-A3S9	15	000040
01435-01080	A1310-A3S9	3	000040
01435-01080	A2041-A3H5	3	000160
01435-01080	A3110-A3K5	10	000300
01435-01080	A3311-A3B3	3	000320
01435-01080	A5010-A3N6	27	000490
01435-01085	A1530-A3L9	14	000060
01435-01085	A4110-A3S5	12	000420
01435-01085	A4710-A3H3	6	000480
01435-01090	A6810-A3K5	34	000650
01435-01095	A5060-A3J9	17	000530
01435-01220	A4030-A3F7	9	000390
01435-01220	K1110-05A9	16	210255
01435-01220	K1110-05A9	17	210255

PART NO.	FIG.NO.	INDEX	PAGE
01435-01235	Y1620-01A1	37	480250
01435-01255	A6010-A3X5	16	000550
01435-01255	A6010-A3X6	14	000560
01435-01255	A6010-A3Y1	16	000570
01435-01275	A3110-A3K5	33	000300
01435-40610	K1110-04A8	13	210240
01435-40610	K1110-04A9	9	210250
01435-40610	K1110-11A9	31	210300
01435-40612	K0310-01A0	5	210130
01435-40612	K0310-01A1	5	210140
01435-40616	K0310-01A0	2	210130
01435-40616	K0310-01A1	2	210140
01435-40616	K1110-03A8	12	210220
01435-40616	K1110-03A9	14	210230
01435-40616	K1110-07A9	5	210270
01435-40616	K1110-25A1	12	210430
01435-40616	K1110-25A2	2	210440
01435-40616	K1110-30A1	11	210540
01435-40616	K1110-30A1	22	210540
01435-40616	K1110-30A10	11	210560
01435-40616	K1110-30A10	22	210560
01435-40616	K1110-30A9	11	210550
01435-40616	K1110-30A9	22	210550
01435-40620	K0320-01A0	9	210150
01435-40620	K1110-30A1	25	210540
01435-40620	K1110-30A10	25	210560
01435-40620	K1110-30A9	25	210550
01435-40620	K1110-61A1	7	210780
01435-40812	K1110-02A8	11	210210
01435-40812	K1110-09A9	10	210290
01435-40812	K1110-28A8	2	210500
01435-40812	K1110-28A9	2	210520
01435-40816	K1110-54A1	6	210720
01435-40816	K1110-59A1	6	210760
01435-40820	K1110-26A1	11	210460
01435-40820	K1110-26A1	6	210460
01435-40825	K1110-07A9	2	210270
01435-40825	K1110-12A10	4	210340
01435-40825	K1110-12A9	6	210320
01436-01000	A4110-B3S5	42	000430
01436-01005	A4110-A3S5	27	000420
01436-01005	A4110-A3S5	65	000421
01436-01010	A3110-A3K5	8	000300
01436-01010	A4110-A3S5	18	000420
01436-01010	A6810-B3K5	3	000660
01436-01010	D0200-03A1	23	090050
01436-01015	A3110-A3K5	16	000300
01436-01015	A6810-A3K5	4	000650
01436-01025	A5010-A3N6	16	000490
01436-01025	A6810-A3K5	5	000650

PART NO.	FIG.NO.	INDEX	PAGE
01436-01030	A1310-A3S9	2	000040
01436-01035	A4110-A3S5	13	000420
01436-01045	A1310-A3S9	27	000040
01436-01060	A1310-A3S9	20	000040
01436-01070	A4110-A3S5	10	000420
01436-01075	A6810-C3K5	2	000670
01436-01085	A3110-A3K5	11	000300
01437-01065	A1730-A3K4	3	000110
01437-01075	A2041-A3H5	5	000160
01437-01075	A2410-B3B8	4	000280
01437-01075	A4210-A3K2	7	000460
01438-01085	A1111-A3C5	8	000000
01580-01008	A1610-A3Y3	13	000100
01580-01008	A2110-A3R2	30	000190
01580-01008	K1110-44A2	40	210620
01580-01008	K1110-44A2	43	210620
01580-01210	D0200-04A1	17	090060
01580-02419	B0100-01A0	11	030020
01580-02419	B0100-01A0	21	030020
01580-10403	K1110-30A1	8	210540
01580-10403	K1110-30A10	8	210560
01580-10403	K1110-30A9	8	210550
01580-10605	K0330-01A0	5	210160
01580-11008	K1110-02A8	37	210210
01580-11008	K1110-07A9	12	210270
01580-11008	M1130-01A1	16	240060
01580-11008	M1140-01A1	17	240070
01580-11008	R1100-04A6	4	330220
01580-11411	A6010-A3X5	14	000550
01580-11411	A6010-A3X6	12	000560
01580-11411	A6010-A3Y1	14	000570
01580-11411	K0700-01A0		210180
01580-11613	R0110-01A0	12	330010
01580-12016	K1120-01A0	3	210860
01580-12419	R1100-03A8	9	330210
01580-12419	T1125-01A0	4	360230
01580-12419	T1125-01A1	4	360240
01580-12419	T1200-03A0	11	360460
01580-12419	T1200-03A0	14	360460
01580-12419	T1200-03A0	19	360460
01580-12419	T1200-03A1	9	360470
01580-40605	K1110-54A1	10	210720
01580-40605	K1110-59A1	10	210760
01582-01008	A2410-B3B8	10	000280
01582-01008	A2410-B3B8	15	000280
01583-01811	A4210-A3C9	3	000410
01583-02414	A5060-A3J9	4	000530
01583-11408	K1110-44A2	36	210620
01583-11408	Y1600-10A0	12	480220
01583-11811	K0700-01A0	15	210180

PART NO.	FIG.NO.	INDEX	PAGE
01583-11811	K1110-02A8	32	210210
01584-01008	A1530-A3L9	28	000060
01584-01008	A2110-A3R2	13	000190
01584-01008	A4010-B3Z1	17	000350
01584-01008	A4110-A3S5	38	000420
01584-01008	A4110-A3S5	55	000421
01584-01008	A4110-A3S5	62	000421
01584-01008	A6810-B3K5	39	000660
01584-01008	K1110-06A9	13	210260
01584-01210	A3110-A3K5	34	000300
01584-01210	A6010-A3X5	17	000550
01584-01210	A6010-A3X6	15	000560
01584-01210	A6010-A3Y1	17	000570
01584-30806	K1110-04A8	3	210240
01584-30806	K1110-04A9	3	210250
01584-31008	K1110-02A8	39	210210
01594-01008	A1610-A3Y3	3	000100
01597-01009	C0100-03A1	26	060030
01597-01009	C0100-04A1	21	060040
01597-01009	C0100-04A1	32	060040
01597-01009	K0700-01A0	28	210180
01597-01009	Y1620-01A1	40	480251
01597-01009	Y1620-01A6	42	480261
01597-01009	Y1620-01A8	45	480271
01597-01009	Y1620-11A2	45	480281
01597-01009	Y1620-11A3	45	480291
01597-01009	Y1620-41A2	36	480320
01597-01211	B0200-01A1	14	030030
01597-01211	B0200-01A2	14	030040
01601-20410	K1110-30A1	10	210540
01601-20410	K1110-30A10	10	210560
01601-20410	K1110-30A9	10	210550
01601-20513	H0110-01A1	43	150010
01601-20513	K1110-57A1	46	210751
01640-20408	K1110-30A1	9	210540
01640-20408	K1110-30A10	9	210560
01640-20408	K1110-30A9	9	210550
01640-20610	A4210-A3K2	14	000460
01640-20610	K0330-01A0	6	210160
01640-21016	A1110-A3C8	10	000020
01640-21016	A1110-A3C8	5	000020
01640-21016	K1110-46A1	17	210630
01640-21323	A6010-A3X5	6	000550
01640-21323	A6010-A3X6	4	000560
01640-21323	A6010-A3Y1	6	000570
01641-20608	M1140-03A1	9	240090
01641-21626	N1310-01A0	30	270050
01643-11232	K0110-01A2	6	210030
01643-11232	K0110-01A3	6	210040
01643-11232	K0160-01A0	2	210050

PART NO.	FIG.NO.	INDEX	PAGE
01643-11232	K0160-01A1	4	210060
01643-30623	C0100-02A1	22	060020
01643-30623	C0100-02A1	25	060020
01643-30623	C0100-03A1	40	060030
01643-30623	D0100-01A1	12	090010
01643-30623	D0100-01A2	12	090020
01643-30623	E0450-01A0	17	120150
01643-30623	E0450-01A1	21	120160
01643-30623	K0350-01A0	4	210170
01643-30623	K1110-09A9	2	210290
01643-30623	K1110-47A1	23	210640
01643-30623	K1110-52A1	15	210690
01643-30623	K1110-52A1	6	210690
01643-30623	K1110-53B2	5	210710
01643-30623	K1110-57A1	10	210750
01643-30623	K1110-57A1	17	210750
01643-30623	M1130-01A1	14	240060
01643-30623	M1130-01A1	24	240060
01643-30623	M1140-01A1	15	240070
01643-30623	M1140-02A1	15	240080
01643-30623	M1220-01A1	9	240140
01643-30623	W1113-01A0	18	450010
01643-30623	W1113-01A0	7	450010
01643-30623	W1113-01A1	14	450020
01643-30623	W1113-01A1	35	450020
01643-30823	E0200-05A2	22	120100
01643-30823	E0410-01A0	4	120130
01643-30823	E0450-01A0	13	120150
01643-30823	E0450-01A1	13	120160
01643-30823	K0700-01A0	18	210180
01643-30823	K0700-01A0	23	210180
01643-30823	K1110-06A9	17	210260
01643-30823	K1110-31E2	4	210570
01643-30823	K1110-47A1	18	210640
01643-30823	K1110-51A1	3	210680
01643-30823	K1110-56A1	3	210740
01643-30823	K1110-60A1	4	210770
01643-30823	K1110-66A1	29	210830
01643-30823	K1110-66A1	32	210830
01643-30823	K1110-66A2	36	210840
01643-30823	K1110-66A2	39	210840
01643-30823	M1110-01A1	12	240010
01643-30823	M1110-01A1	3	240010
01643-30823	M1110-01A1	6	240010
01643-30823	M1110-01A1	9	240010
01643-30823	Y1627-01A0	13	480330
01643-30823	Y1670-01A0	15	481090
01643-31023	D0200-04A1	5	090060
01643-31032	A1310-A3S9	18	000040
01643-31032	A1510-A3H5	12	000050

PART NO.	FIG.NO.	INDEX	PAGE
01643-31032	A1530-A3L9	18	000060
01643-31032	A1530-A3L9	27	000060
01643-31032	A1610-A3Y3	12	000100
01643-31032	A1610-A3Y3	23	000100
01643-31032	A2110-A3R2	21	000190
01643-31032	A2110-A3R2	28	000190
01643-31032	A2110-A3R2	31	000190
01643-31032	A2410-B3B8	6	000280
01643-31032	A3010-A3A8	6	000290
01643-31032	A4030-A3F7	15	000390
01643-31032	A4110-A3S5	39	000420
01643-31032	A4110-A3S5	56	000421
01643-31032	A4110-A3S5	63	000421
01643-31032	A4110-B3S5	40	000430
01643-31032	A4110-C3S5	22	000440
01643-31032	A4110-C3S5	31	000440
01643-31032	A4110-C3S5	33	000440
01643-31032	A4110-C3S5	38	000440
01643-31032	A4230-A3M5	11	000470
01643-31032	A6210-A3H5	10	000610
01643-31032	A6210-A3H6	10	000620
01643-31032	A6810-A3K5	20	000650
01643-31032	A6810-A3K5	31	000650
01643-31032	A6810-A3K5	38	000650
01643-31032	A6810-A3K5	9	000650
01643-31032	A6810-B3K5	12	000660
01643-31032	A6810-B3K5	18	000660
01643-31032	A6810-B3K5	25	000660
01643-31032	A6810-B3K5	34	000660
01643-31032	A6810-B3K5	38	000660
01643-31032	A6810-B3K5	4	000660
01643-31032	A6810-B3K5	43	000660
01643-31032	A6810-B3K5	8	000660
01643-31032	B0100-01A0	3	030020
01643-31032	B0100-01A0	6	030020
01643-31032	C0100-01A1	13	060010
01643-31032	C0100-01A1	23	060010
01643-31032	C0100-01A1	25	060010
01643-31032	C0100-02A1	12	060020
01643-31032	C0100-02A1	18	060020
01643-31032	C0100-02A1	28	060020
01643-31032	C0100-02A1	30	060020
01643-31032	C0100-02A1	33	060020
01643-31032	C0100-02A1	37	060020
01643-31032	C0100-03A1	12	060030
01643-31032	C0100-03A1	18	060030
01643-31032	C0100-03A1	27	060030
01643-31032	C0100-03A1	3	060030
01643-31032	C0100-03A1	37	060030
01643-31032	C0100-03A1	43	060030

PART NO.	FIG.NO.	INDEX	PAGE
01643-31032	C0100-03A1	6	060030
01643-31032	C0100-03A1	9	060030
01643-31032	C0100-04A1	22	060040
01643-31032	C0100-04A1	33	060040
01643-31032	C0100-06A1	11	060060
01643-31032	C0100-06A1	23	060060
01643-31032	C0100-06A1	35	060060
01643-31032	C0100-07A1	20	060070
01643-31032	D0200-02A1	30	090040
01643-31032	D0200-03A1	6	090050
01643-31032	E0200-01A1	37	120040
01643-31032	E0200-01A1	40	120040
01643-31032	E0200-02A1	26	120050
01643-31032	E0200-02A1	32	120050
01643-31032	E0200-03A1	33	120060
01643-31032	E0200-03A1	38	120060
01643-31032	E0200-03A1	42	120060
01643-31032	E0200-03A1	46	120061
01643-31032	E0200-04A1	13	120070
01643-31032	E0200-04A1	17	120070
01643-31032	E0200-04A1	26	120070
01643-31032	E0200-04A1	5	120070
01643-31032	E0200-04A1	9	120070
01643-31032	E0200-05A1	15	120080
01643-31032	E0200-05A1	5	120080
01643-31032	E0200-05A2	15	120100
01643-31032	E0200-05A2	5	120100
01643-31032	E0420-01A0	5	120140
01643-31032	E0420-01A0	7	120140
01643-31032	E0450-01A0	21	120150
01643-31032	E0450-01A1	28	120160
01643-31032	H0312-01A0	7	150120
01643-31032	H0312-01A1	4	150130
01643-31032	H1270-02A0	12	150270
01643-31032	H1270-03A0	13	150280
01643-31032	H1270-03A0	15	150280
01643-31032	H1270-03A0	7	150280
01643-31032	H1270-03A0	9	150280
01643-31032	H1270-05A0	6	150300
01643-31032	H1831-02A2	3	150370
01643-31032	H1831-02A3	3	150380
01643-31032	K0700-01A0	25	210180
01643-31032	K0700-01A0	29	210180
01643-31032	K1110-07A9	13	210270
01643-31032	K1110-42A1	15	210590
01643-31032	K1110-42A1	3	210590
01643-31032	K1110-42A1	6	210590
01643-31032	K1110-43A1	4	210600
01643-31032	K1110-43A1	6	210600
01643-31032	K1110-44A1	4	210610

PART NO.	FIG.NO.	INDEX	PAGE
01643-31032	K1110-44A1	6	210610
01643-31032	K1110-44A2	15	210620
01643-31032	K1110-44A2	5	210620
01643-31032	K1110-44A2	6	210620
01643-31032	K1110-48A1	13	210650
01643-31032	K1110-48A1	17	210650
01643-31032	K1110-48A1	21	210650
01643-31032	K1110-48A1	23	210650
01643-31032	K1110-48A1	26	210650
01643-31032	K1110-48A1	3	210650
01643-31032	K1110-48A1	30	210650
01643-31032	K1110-48A1	33	210650
01643-31032	K1110-48A1	4	210650
01643-31032	K1110-48A1	7	210650
01643-31032	K1110-52A1	3	210690
01643-31032	K1110-57A1	50	210751
01643-31032	K1110-57A1	53	210751
01643-31032	K1110-62A1	8	210790
01643-31032	K1110-65A1	10	210820
01643-31032	K1110-65A1	16	210820
01643-31032	K1110-65A1	3	210820
01643-31032	K1110-66A1	12	210830
01643-31032	K1110-66A1	3	210830
01643-31032	K1110-66A2	16	210840
01643-31032	K1110-66A2	3	210840
01643-31032	M1220-01A1	12	240140
01643-31032	N1110-01A0	13	270010
01643-31032	N1210-01A0	13	270020
01643-31032	N1210-01A1	13	270030
01643-31032	R1100-04A6	5	330220
01643-31032	Y0260-01A0	9	480010
01643-31032	Y1620-01A1	39	480251
01643-31032	Y1620-01A6	41	480261
01643-31032	Y1620-01A8	44	480271
01643-31032	Y1620-11A2	44	480281
01643-31032	Y1620-11A3	44	480291
01643-31032	Y1620-41A2	35	480320
01643-31232	A3110-A3K5	35	000300
01643-31232	A5210-A3G6	10	000540
01643-31232	A6010-A3X5	18	000550
01643-31232	A6010-A3X5	20	000550
01643-31232	A6010-A3X6	16	000560
01643-31232	A6010-A3X6	18	000560
01643-31232	A6010-A3Y1	18	000570
01643-31232	A6010-A3Y1	20	000570
01643-31232	B0000-01A0	3	030010
01643-31232	B0000-01A0	5	030010
01643-31232	B0200-01A1	15	030030
01643-31232	B0200-01A1	6	030030
01643-31232	B0200-01A2	15	030040

PART NO.	FIG.NO.	INDEX	PAGE
01643-31232	B0200-01A2	6	030040
01643-31232	B0920-01A0	11	030050
01643-31232	B0920-01A0	14	030050
01643-31232	C0100-01A1	20	060010
01643-31232	C0100-01A1	38	060010
01643-31232	C0100-01A1	41	060010
01643-31232	C0100-02A1	13	060020
01643-31232	C0100-02A1	16	060020
01643-31232	C0100-03A1	15	060030
01643-31232	C0100-03A1	24	060030
01643-31232	C0100-03A1	33	060030
01643-31232	C0100-03A1	46	060031
01643-31232	C0100-04A1	13	060040
01643-31232	C0100-04A1	24	060040
01643-31232	C0100-04A1	35	060040
01643-31232	C0100-04A1	8	060040
01643-31232	C0100-05A1	13	060050
01643-31232	C0100-05A1	17	060050
01643-31232	C0100-05A1	21	060050
01643-31232	C0100-05A1	25	060050
01643-31232	C0100-05A1	8	060050
01643-31232	C0100-06A1	19	060060
01643-31232	C0100-06A1	28	060060
01643-31232	C0100-06A1	39	060060
01643-31232	C0100-07A1	9	060070
01643-31232	C0310-01A0	3	060080
01643-31232	C0310-01A0	6	060080
01643-31232	D0200-01A1	16	090030
01643-31232	D0200-01A1	19	090030
01643-31232	D0200-02A1	12	090040
01643-31232	D0200-02A1	16	090040
01643-31232	D0200-02A1	19	090040
01643-31232	D0200-02A1	22	090040
01643-31232	D0200-02A1	25	090040
01643-31232	D0200-02A1	3	090040
01643-31232	D0200-02A1	35	090040
01643-31232	D0200-02A1	39	090040
01643-31232	D0200-02A1	44	090040
01643-31232	D0200-02A1	6	090040
01643-31232	D0200-02A1	9	090040
01643-31232	D0200-02A1	49	090041
01643-31232	D0200-02A1	53	090041
01643-31232	D0200-03A1	14	090050
01643-31232	D0200-03A1	3	090050
01643-31232	D0200-04A1	13	090060
01643-31232	D0200-04A1	16	090060
01643-31232	D0200-04A1	20	090060
01643-31232	D0200-04A1	23	090060
01643-31232	D0200-04A1	26	090060
01643-31232	D0200-04A1	30	090060

PART NO.	FIG.NO.	INDEX	PAGE
01643-31232	E0100-01A0	5	120010
01643-31232	E0100-01A0	8	120010
01643-31232	E0100-01A2	5	120030
01643-31232	E0100-01A2	8	120030
01643-31232	E0200-01A1	12	120040
01643-31232	E0200-01A1	15	120040
01643-31232	E0200-01A1	19	120040
01643-31232	E0200-01A1	23	120040
01643-31232	E0200-01A1	26	120040
01643-31232	E0200-01A1	3	120040
01643-31232	E0200-01A1	32	120040
01643-31232	E0200-01A1	6	120040
01643-31232	E0200-01A1	9	120040
01643-31232	E0200-02A1	10	120050
01643-31232	E0200-02A1	14	120050
01643-31232	E0200-02A1	17	120050
01643-31232	E0200-02A1	20	120050
01643-31232	E0200-02A1	24	120050
01643-31232	E0200-02A1	29	120050
01643-31232	E0200-02A1	3	120050
01643-31232	E0200-02A1	35	120050
01643-31232	E0200-02A1	38	120050
01643-31232	E0200-02A1	41	120050
01643-31232	E0200-02A1	6	120050
01643-31232	E0200-03A1	15	120060
01643-31232	E0200-03A1	18	120060
01643-31232	E0200-03A1	22	120060
01643-31232	E0200-03A1	26	120060
01643-31232	E0200-03A1	29	120060
01643-31232	E0200-03A1	4	120060
01643-31232	E0200-03A1	7	120060
01643-31232	E0200-04A1	24	120070
01643-31232	E0200-04A1	29	120070
01643-31232	E0200-04A1	32	120070
01643-31232	E0200-04A1	35	120070
01643-31232	E0200-04A1	37	120070
01643-31232	E0200-04A1	39	120070
01643-31232	E0200-05A1	11	120080
01643-31232	E0200-05A1	18	120080
01643-31232	E0200-05A1	9	120080
01643-31232	E0200-05A2	11	120100
01643-31232	E0200-05A2	9	120100
01643-31232	E0420-01A0	10	120140
01643-31232	E0450-01A0	15	120150
01643-31232	E0450-01A1	15	120160
01643-31232	E0450-01A1	17	120160
01643-31232	E0450-01A1	19	120160
01643-31232	E0450-01A1	26	120160
01643-31232	E0450-01A2	6	120170
01643-31232	H0110-01A1	28	150010

PART NO.	FIG.NO.	INDEX	PAGE
01643-31232	H0110-01A1	36	150010
01643-31232	H0311-01A1	11	150110
01643-31232	H0311-01A1	13	150110
01643-31232	H0311-01A1		150110
01643-31232	H0320-01A1	12	150140
01643-31232	H0320-01A1	15	150140
01643-31232	H0320-01A1	4	150140
01643-31232	H0320-01A1	8	150140
01643-31232	H0330-01A0	20	150150
01643-31232	H0330-01A0	23	150150
01643-31232	H0330-01A0	4	150150
01643-31232	H0330-01A1	23	150160
01643-31232	H0330-01A1	26	150160
01643-31232	H0330-01A1	7	150160
01643-31232	H0340-01A0	12	150170
01643-31232	H0340-01A0	8	150170
01643-31232	H1210-01A0	17	150180
01643-31232	H1210-01A0	21	150180
01643-31232	H1210-01A0	25	150180
01643-31232	H1210-01A0	29	150180
01643-31232	H1210-01A0	31	150180
01643-31232	H1270-01A0	14	150240
01643-31232	H1270-01A0	17	150240
01643-31232	H1270-01A0	19	150240
01643-31232	H1270-01A0	21	150240
01643-31232	H1270-01A0	3	150240
01643-31232	H1270-01A0	31	150240
01643-31232	H1270-01A0	6	150240
01643-31232	H1270-02A0	27	150270
01643-31232	H1270-02A0	3	150270
01643-31232	H1270-03A0	22	150280
01643-31232	H1270-03A0	29	150280
01643-31232	H1270-03A0	33	150280
01643-31232	H1270-04A0	11	150290
01643-31232	H1270-04A0	14	150290
01643-31232	H1270-04A0	8	150290
01643-31232	H1270-05A0	3	150300
01643-31232	H1810-01A0	16	150330
01643-31232	H1810-01A0	21	150330
01643-31232	H1810-01A1	19	150340
01643-31232	H1810-01A1	24	150340
01643-31232	H1810-01A1	26	150340
01643-31232	H1810-01A1	35	150340
01643-31232	H1831-02A2	23	150370
01643-31232	H1831-02A2	28	150370
01643-31232	H1831-02A2	31	150370
01643-31232	H1831-02A2	35	150370
01643-31232	H1831-02A2	38	150370
01643-31232	H1831-02A2	40	150370
01643-31232	H1831-02A2	44	150370

PART NO.	FIG.NO.	INDEX	PAGE
01643-31232	H1831-02A3	24	150380
01643-31232	H1831-02A3	29	150380
01643-31232	H1831-02A3	33	150380
01643-31232	H1831-02A3	36	150380
01643-31232	H1831-02A3	39	150380
01643-31232	H1831-02A3	41	150380
01643-31232	H1833-01A0	17	150390
01643-31232	H1833-01A0	19	150390
01643-31232	H1840-01A0	20	150400
01643-31232	H1840-01A0	23	150400
01643-31232	J1110-01A2	14	180010
01643-31232	J1110-01A2	5	180010
01643-31232	J1310-01A0	8	180040
01643-31232	J1310-01A1	8	180050
01643-31232	K0220-01A0	4	210090
01643-31232	K0350-01A0	6	210170
01643-31232	K0700-01A0	38	210180
01643-31232	K0700-02A0	10	210190
01643-31232	K0700-02A0	13	210190
01643-31232	K0700-02A0	19	210190
01643-31232	K0700-02A0	23	210190
01643-31232	K0700-02A0	31	210190
01643-31232	K0700-02A0	34	210190
01643-31232	K0700-02A0	37	210190
01643-31232	K0700-02A0	7	210190
01643-31232	K1110-30A1	30	210540
01643-31232	K1110-30A1	32	210540
01643-31232	K1110-30A10	30	210560
01643-31232	K1110-30A10	32	210560
01643-31232	K1110-30A9	30	210550
01643-31232	K1110-30A9	32	210550
01643-31232	K1110-46A1	6	210630
01643-31232	K1120-01A0	13	210860
01643-31232	K1120-01A0	7	210860
01643-31232	K1520-01A0	13	210870
01643-31232	K1520-01A0	16	210870
01643-31232	K1520-01A0	20	210870
01643-31232	K1520-01A0	27	210870
01643-31232	K1520-01A0	4	210870
01643-31232	K1520-01A0	9	210870
01643-31232	K1520-01A1	13	210880
01643-31232	K1520-01A1	16	210880
01643-31232	K1520-01A1	19	210880
01643-31232	K1520-01A1	27	210880
01643-31232	K1520-01A1	4	210880
01643-31232	K1520-01A1	9	210880
01643-31232	M1110-02A1	14	240020
01643-31232	M1110-02A1	19	240020
01643-31232	M1110-02A1	23	240020
01643-31232	M1110-02A1	29	240020

PART NO.	FIG.NO.	INDEX	PAGE
01643-31232	M1110-02A1	32	240020
01643-31232	M1110-02A1	4	240020
01643-31232	M1110-03A1	11	240030
01643-31232	M1110-03A1	15	240030
01643-31232	M1110-03A1	3	240030
01643-31232	M1110-03A1	9	240030
01643-31232	M1110-04A1	13	240040
01643-31232	M1120-01A1	13	240050
01643-31232	M1120-01A1	17	240050
01643-31232	M1120-01A1	20	240050
01643-31232	M1120-01A1	24	240050
01643-31232	M1120-01A1	27	240050
01643-31232	M1120-01A1	3	240050
01643-31232	M1120-01A1	9	240050
01643-31232	M1130-01A1	11	240060
01643-31232	M1130-01A1	21	240060
01643-31232	M1130-01A1	31	240060
01643-31232	M1130-01A1	38	240060
01643-31232	M1130-01A1	5	240060
01643-31232	M1130-01A1	8	240060
01643-31232	M1140-01A1	12	240070
01643-31232	M1140-01A1	21	240070
01643-31232	M1140-01A1	6	240070
01643-31232	M1140-01A1	9	240070
01643-31232	M1140-02A1	12	240080
01643-31232	M1140-02A1	28	240080
01643-31232	M1140-02A1	30	240080
01643-31232	M1140-02A1	5	240080
01643-31232	M1140-03A1	11	240090
01643-31232	M1140-03A1	5	240090
01643-31232	M1150-01A1	20	240100
01643-31232	M1150-01A1	32	240100
01643-31232	M1150-01A1	37	240100
01643-31232	M1150-01A1	39	240100
01643-31232	M1150-01A1	41	240101
01643-31232	M1150-02A1	10	240110
01643-31232	M1150-02A1	13	240110
01643-31232	M1150-02A1	22	240110
01643-31232	M1150-02A1	27	240110
01643-31232	M1150-02A1	32	240110
01643-31232	M1210-01A0	13	240120
01643-31232	M1210-01A0	20	240120
01643-31232	M1210-01A0	24	240120
01643-31232	M1210-01A0	31	240120
01643-31232	M1210-01A0	5	240120
01643-31232	M1210-01A0	7	240120
01643-31232	M1210-01A1	12	240130
01643-31232	M1210-01A1	19	240130
01643-31232	M1210-01A1	23	240130
01643-31232	M1210-01A1	30	240130

PART NO.	FIG.NO.	INDEX	PAGE
01643-31232	M1210-01A1	5	240130
01643-31232	M1210-01A1	7	240130
01643-31232	M1220-01A1	15	240140
01643-31232	M1220-01A1	21	240140
01643-31232	M1310-01A0	3	240150
01643-31232	M1420-01A1	11	240170
01643-31232	M1430-01A0	4	240180
01643-31232	M1430-01A1	6	240190
01643-31232	M1510-01A0	14	240200
01643-31232	M1810-01A1	12	240220
01643-31232	M1810-01A1	15	240220
01643-31232	M1810-01A1	21	240220
01643-31232	M1810-01A1	29	240220
01643-31232	M1810-01A1	32	240220
01643-31232	M1810-01A1	35	240220
01643-31232	M1810-01A1	40	240220
01643-31232	M1810-01A1	5	240220
01643-31232	M1810-01A1	8	240220
01643-31232	M1810-01A2	12	240230
01643-31232	M1810-01A2	15	240230
01643-31232	M1810-01A2	21	240230
01643-31232	M1810-01A2	29	240230
01643-31232	M1810-01A2	32	240230
01643-31232	M1810-01A2	35	240230
01643-31232	M1810-01A2	40	240230
01643-31232	M1810-01A2	5	240230
01643-31232	M1810-01A2	8	240230
01643-31232	M1810-01A2A	12	240240
01643-31232	M1810-01A2A	15	240240
01643-31232	M1810-01A2A	21	240240
01643-31232	M1810-01A2A	29	240240
01643-31232	M1810-01A2A	33	240240
01643-31232	M1810-01A2A	36	240240
01643-31232	M1810-01A2A	41	240240
01643-31232	M1810-01A2A	5	240240
01643-31232	M1810-01A2A	8	240240
01643-31232	M1810-01A3	12	240250
01643-31232	M1810-01A3	15	240250
01643-31232	M1810-01A3	21	240250
01643-31232	M1810-01A3	29	240250
01643-31232	M1810-01A3	33	240250
01643-31232	M1810-01A3	36	240250
01643-31232	M1810-01A3	41	240250
01643-31232	M1810-01A3	5	240250
01643-31232	M1810-01A3	8	240250
01643-31232	M1810-02A1	11	240260
01643-31232	M1810-02A1	8	240260
01643-31232	M1810-02A2	11	240270
01643-31232	M1810-02A2	8	240270
01643-31232	M1810-02A3	10	240280

PART NO.	FIG.NO.	INDEX	PAGE
01643-31232	M1810-02A3	7	240280
01643-31232	M1810-02A4	10	240290
01643-31232	M1810-02A4	7	240290
01643-31232	M1810-03A1	10	240300
01643-31232	M1810-03A1	13	240300
01643-31232	M1810-03A1	16	240300
01643-31232	M1810-03A1	21	240300
01643-31232	M1810-03A1	23	240300
01643-31232	M1810-03A1	30	240300
01643-31232	M1810-03A1	32	240300
01643-31232	M1810-03A1	8	240300
01643-31232	M1810-03A2	10	240310
01643-31232	M1810-03A2	13	240310
01643-31232	M1810-03A2	19	240310
01643-31232	M1810-03A2	21	240310
01643-31232	M1810-03A2	8	240310
01643-31232	M1810-03A3	10	240320
01643-31232	M1810-03A3	13	240320
01643-31232	M1810-03A3	20	240320
01643-31232	M1810-03A3	22	240320
01643-31232	M1810-03A3	8	240320
01643-31232	M1810-03A4	10	240330
01643-31232	M1810-03A4	13	240330
01643-31232	M1810-03A4	16	240330
01643-31232	M1810-03A4	21	240330
01643-31232	M1810-03A4	23	240330
01643-31232	M1810-03A4	30	240330
01643-31232	M1810-03A4	32	240330
01643-31232	M1810-03A4	8	240330
01643-31232	N1210-01A0	42	270020
01643-31232	N1210-01A1	42	270030
01643-31232	N1310-01A0	34	270050
01643-31232	P1210-01A0	30	300030
01643-31232	R0110-02A0	17	330030
01643-31232	R0110-02A0	9	330030
01643-31232	R1140-01A0	4	330230
01643-31232	T1110-02A2	8	360050
01643-31232	T1110-02A6	8	360060
01643-31232	T1110-03A2	10	360070
01643-31232	T1110-03A2	20	360070
01643-31232	T1110-04A2	16	360080
01643-31232	T1110-06A2	10	360110
01643-31232	T1110-06A2	17	360110
01643-31232	T1110-07A2	7	360130
01643-31232	T1110-07A6	7	360140
01643-31232	T1110-08A4	19	360150
01643-31232	T1110-08A4	25	360150
01643-31232	T1110-08A4	5	360150
01643-31232	T1110-09A4	10	360160
01643-31232	T1110-09A4	18	360160

PART NO.	FIG.NO.	INDEX	PAGE
01643-31232	T1110-09A4	21	360160
01643-31232	T1110-09A4	23	360160
01643-31232	T1110-09A4	4	360160
01643-31232	T1200-01A1	11	360280
01643-31232	T1200-01A1	16	360280
01643-31232	T1200-01A4	11	360310
01643-31232	T1200-01A4	16	360310
01643-31232	T1200-01A8	11	360360
01643-31232	T1200-01A8	16	360360
01643-31232	T1200-01A9	14	360350
01643-31232	T1200-01A9	19	360350
01643-31232	T1200-01B1	12	360370
01643-31232	T1200-01B1	16	360370
01643-31232	T1200-01B7	11	360420
01643-31232	T1200-01B7	16	360420
01643-31232	T1200-04A1	14	360480
01643-31232	T1200-04A5	14	360500
01643-31232	T1200-04B1	14	360540
01643-31232	T1200-05A5	12	360580
01643-31232	T1200-05A5	17	360580
01643-31232	T1200-05A5	20	360580
01643-31232	T1200-05A5	4	360580
01643-31232	T1200-05A5	7	360580
01643-31232	T1200-06A5	14	360610
01643-31232	T1200-06A5	5	360610
01643-31232	W1113-01A0	14	450010
01643-31232	W1113-01A0	9	450010
01643-31232	W1113-01A1	16	450020
01643-31232	W1113-01A1	18	450020
01643-31232	W1113-01A1	22	450020
01643-31232	W1113-01A1	25	450020
01643-31232	W1113-01A1	30	450020
01643-31232	Y0260-01A0	36	480010
01643-31232	Y1620-41A0	37	480300
01643-31232	Y1620-41A1	37	480310
01643-31445	H1270-02A0	16	150270
01643-31445	H1270-02A0	41	150270
01643-31445	K0700-01A0	6	210180
01643-31445	K0700-01A0	9	210180
01643-31445	K0700-01A0		210180
01643-31445	T1110-07A2	4	360130
01643-31445	T1110-07A6	4	360140
01643-31445	T1110-08A4	13	360150
01643-31445	T1110-08A4	16	360150
01643-31445	T1200-05A5	25	360580
01643-31445	Y1662-07A0	27	480490
01643-31445	Y1662-14A0	34	480560
01643-31445	Y1664-07A0	27	480690
01643-31445	Y1664-14A0	34	480760
01643-31645	A2010-A3M3	7	000130

PART NO.	FIG.NO.	INDEX	PAGE
01643-31645	A2230-A3F3	5	000210
01643-31645	B0100-01A0	15	030020
01643-31645	C0100-04A1	3	060040
01643-31645	C0100-05A1	31	060050
01643-31645	C0100-06A1	2	060060
01643-31645	C0100-06A1	6	060060
01643-31645	D0100-01A1	24	090010
01643-31645	D0100-01A2	22	090020
01643-31645	H0110-01A1	53	150011
01643-31645	H0120-03A1	3	150080
01643-31645	H0120-03A1	5	150080
01643-31645	H1270-03A0	3	150280
01643-31645	M1110-01A1	14	240010
01643-31645	M1110-01A1	19	240010
01643-31645	N1210-01A0	25	270020
01643-31645	N1210-01A1	25	270030
01643-31645	P1210-01A0	40	300030
01643-31645	R0110-01A0	13	330010
01643-31645	R1100-04A6	11	330220
01643-31645	T1110-08A4	22	360150
01643-31645	T1110-08A4	28	360150
01643-31645	T1110-09A4	13	360160
01643-31645	T1110-09A4	7	360160
01643-31645	T1200-06A5	11	360610
01643-31645	Y0260-01A0	21	480010
01643-31845	A4210-A3C9	4	000410
01643-31845	K0700-01A0	16	210180
01643-32060	J1310-01A0	4	180040
01643-32060	J1310-01A1	4	180050
01643-32060	K1120-01A0	4	210860
01643-32060	P1210-01A0	37	300030
01643-32060	R0300-01A0	15	330050
01643-32060	R1100-04A6	15	330220
01643-32060	T1110-02A2	4	360050
01643-32060	T1110-02A6	4	360060
01643-32260	K0700-01A0	12	210180
01643-32260	R1100-02A6	12	330190
01643-32460	A5060-A3J9	5	000530
01643-32460	B0100-01A0	12	030020
01643-32460	B0100-01A0	22	030020
01643-32460	N1210-01A0	47	270021
01643-32460	N1210-01A1	47	270031
01643-32460	R0110-02A0	19	330030
01643-32460	R1100-03A6	3	330200
01643-32460	R1100-03A8	6	330210
01643-32460	R1100-03A8	8	330210
01643-32460	T1200-03A0	25	360460
01643-32460	T1510-01C10	14	360800
01643-32460	T1510-01C11	14	360810
01643-32460	T1510-01C12	13	360815

PART NO.	FIG.NO.	INDEX	PAGE
01643-32460	T1510-01C3	10	360740
01643-32460	T1510-01C6	9	360760
01643-32460	T1510-01C7	16	360770
01643-32460	T1510-01C8	11	360780
01643-33080	K1120-01A0	10	210860
01643-34212	M1520-01A0	2	240210
01643-50823	Y1664-22A0	6	480840
01643-50823	Y1670-02A0	20	481100
01643-51032	H0120-04A2	4	150090
01643-51032	H0312-01A0	10	150120
01643-51032	H0312-01A0	17	150120
01643-51032	H0312-01A1	14	150130
01643-51032	H0312-01A1	7	150130
01643-51032	H1210-01A0	10	150180
01643-51032	H1210-01A0	5	150180
01643-51032	H1210-02A0	7	150200
01643-51032	H1210-02A0	9	150200
01643-51032	H1220-01A1	11	150210
01643-51032	H1220-01A1	16	150210
01643-51032	H1220-01A1	20	150210
01643-51032	H1220-01A1	26	150210
01643-51032	H1220-01A1	29	150210
01643-51032	H1220-01A1	6	150210
01643-51032	H1220-01A2	11	150220
01643-51032	H1220-01A2	16	150220
01643-51032	H1220-01A2	20	150220
01643-51032	H1220-01A2	26	150220
01643-51032	H1220-01A2	29	150220
01643-51032	H1220-01A2	6	150220
01643-51032	H1270-01A0	26	150240
01643-51032	H1270-02A0	20	150270
01643-51032	H1270-02A0	31	150270
01643-51032	H1270-02A0	36	150270
01643-51032	H1310-01A0	11	150310
01643-51032	H1340-01A0	5	150320
01643-51032	K1110-50A1	11	210670
01643-51032	K1110-55A1	11	210730
01643-51032	N1310-01A0	10	270050
01643-51032	P1120-01A0	5	300010
01643-51032	P1120-01A1	5	300020
01643-51032	T1110-03A2	15	360070
01643-51032	T1110-03A2	5	360070
01643-51032	T1110-04A2	6	360080
01643-51032	T1110-05A2	5	360100
01643-51032	T1110-08A4	8	360150
01643-51032	T1200-04A1	5	360480
01643-51032	T1200-04A5	5	360500
01643-51032	T1200-04B1	5	360540
01643-51032	Y1620-01A1	45	480251
01643-51032	Y1620-01A6	34	480260

PART NO.	FIG.NO.	INDEX	PAGE
01643-51032	Y1620-01A6	47	480261
01643-51032	Y1620-01A8	35	480270
01643-51032	Y1620-01A8	37	480270
01643-51032	Y1620-01A8	49	480271
01643-51032	Y1620-11A2	35	480280
01643-51032	Y1620-11A2	37	480280
01643-51032	Y1620-11A2	49	480281
01643-51032	Y1620-11A3	35	480290
01643-51032	Y1620-11A3	37	480290
01643-51032	Y1620-11A3	49	480291
01643-51032	Y1620-41A0	30	480300
01643-51032	Y1620-41A0	41	480300
01643-51032	Y1620-41A1	30	480310
01643-51032	Y1620-41A1	41	480310
01643-51032	Y1620-41A2	30	480320
01643-51032	Y1620-41A2	43	480321
01643-51032	Y1662-06A0	8	480480
01643-51032	Y1662-10A0	15	480520
01643-51032	Y1662-14A0	23	480560
01643-51032	Y1664-06A0	8	480680
01643-51032	Y1664-10A0	15	480720
01643-51032	Y1664-14A0	23	480760
01643-51032	Y1970-01A1	3	481190
01643-51232	H1270-03A0	20	150280
01643-51232	H1270-03A0	27	150280
01643-51232	M1150-01A1	13	240100
01643-51232	T1110-06A2	5	360110
01643-51232	Y1600-11A0	19	480230
01643-51232	Y1600-12A0	19	480240
01643-51232	Y1620-01A6	39	480261
01643-51232	Y1620-01A8	42	480270
01643-51232	Y1620-11A2	42	480280
01643-51232	Y1620-11A3	42	480290
01643-51232	Y1620-41A0	34	480300
01643-51232	Y1620-41A1	34	480310
01643-51232	Y1620-41A2	39	480320
01643-70623	K0230-01A2	17	210120
01643-70623	K0330-01A0	4	210160
01643-70623	K1110-02A8	17	210210
01643-70623	K1110-02A8	24	210210
01643-70623	K1110-02A8	46	210211
01643-70623	K1110-04A8	10	210240
01643-70623	K1110-04A8	22	210240
01643-70623	K1110-04A9	18	210250
01643-70623	K1110-04A9	6	210250
01643-70623	K1110-11A9	17	210300
01643-70623	K1110-11A9	23	210300
01643-70623	K1110-13A8	10	210350
01643-70623	K1110-13A9	10	210360
01643-70623	K1110-21A1	18	210370

PART NO.	FIG.NO.	INDEX	PAGE
01643-70623	K1110-21A1	24	210370
01643-70623	K1110-22A1	5	210380
01643-70623	K1110-52A1	13	210690
01643-70623	K1110-52A1	19	210690
01643-70623	K1110-52A1	25	210690
01643-70623	K1110-57A1	15	210750
01643-70623	K1110-57A1	23	210750
01643-70623	K1110-57A1	26	210750
01643-70823	K0110-01A2	5	210030
01643-70823	K0110-01A3	5	210040
01643-70823	K0230-01A2	27	210120
01643-70823	K0230-01A2	29	210120
01643-70823	K0330-01A0	10	210160
01643-70823	K1110-02A8	20	210210
01643-70823	K1110-02A8	27	210210
01643-70823	K1110-02A8	30	210210
01643-70823	K1110-13A8	20	210350
01643-70823	K1110-13A9	19	210360
01643-70823	K1110-21A1	15	210370
01643-70823	K1110-23A1	4	210390
01643-70823	K1110-23A1	7	210390
01643-70823	K1110-26A1	18	210460
01643-70823	K1110-31E2	7	210570
01643-70823	K1110-54A1	4	210720
01643-70823	K1110-59A1	4	210760
01643-70823	K1110-60A1	7	210770
01643-71032	E0310-01A0	3	120110
01643-71032	E0310-01A0	6	120110
01643-71032	E0310-01A3	3	120120
01643-71032	K0230-01A2	22	210120
01643-71032	K0330-01A0	11	210160
01643-71032	K1110-02A8	40	210210
01643-71032	K1110-12A10	7	210340
01643-71032	K1110-12A9	9	210320
01643-71032	K1110-13A8	16	210350
01643-71032	K1110-13A8	8	210350
01643-71032	K1110-13A9	15	210360
01643-71032	K1110-13A9	8	210360
01643-71032	K1110-42A1	13	210590
01643-71032	K1110-44A2	12	210620
01643-71032	K1110-44A2	9	210620
01643-71032	K1110-46A1	16	210630
01643-71232	K0220-01A0	9	210090
01643-71232	K0230-01A0	4	210100
01643-71232	K0230-01A1	4	210110
01643-71232	K0230-01A2	11	210120
01643-71232	K0230-01A2	15	210120
01643-71232	K0230-01A2	19	210120
01643-71232	K0230-01A2	5	210120
01643-71232	K0230-01A2	8	210120

PART NO.	FIG.NO.	INDEX	PAGE
01643-71232	K1110-13A9	27	210360
01643-71232	K1110-57A1	3	210750
01643-72460	N1110-01A0	5	270010
01643-72780	N1110-01A0	15	270010
02010-70625	B0920-01A0	4	030050
02030-70751	K0160-01A1	2	210060
02400-10413	A2350-A3D8	11	000240
02720-20204	A1730-A3K4	4	000110
02760-00204	H1840-01A0	2A	150400
02760-00206	H1840-01A0	4	150400
02760-00207	H1831-02A2	10	150370
02760-00207	H1831-02A3	10	150380
02760-00208	H1270-02A0	42	150270
02760-00209	K1110-44A2	27	210620
02760-00211	K1110-44A2	28	210620
02760-00213	H0340-01A0	5	150170
02760-00227	H1810-01A0	7	150330
02760-002A4	H1831-02A3	20	150380
02760-002A5	H1840-01A0	17	150400
02760-002A9	K1110-63A1	6	210800
02760-00304	H1831-02A2	20	150370
02760-00307	H1840-01A0	3	150400
02760-00312	K1110-63A1	1	210800
02760-00321	H1810-01A1	8	150340
02760-00322	H1810-01A1	9	150340
02760-00324	H1831-02A2	6	150370
02760-00324	H1831-02A3	6	150380
02760-00325	H1831-02A2	5	150370
02760-00325	H1831-02A3	5	150380
02760-00326	K1110-63A1	2	210800
02761-00214	H1831-02A2	12	150370
02761-00214	H1831-02A3	12	150380
02761-00306	H1810-01A1	29	150340
02762-00324	D0200-01A1	6	090030
02762-00325	P1120-01A0	19	300010
02762-00327	P1120-01A1	19	300020
02762-00331	D0200-01A1	7	090030
02762-00521	D0200-01A1	1	090030
02762-00525	P1120-01A0	20	300010
02762-00527	P1120-01A1	20	300020
02762-00533	D0200-01A1	4	090030
02762-005A9	H0340-01A0	1	150170
02763-00414	H1810-01A0	8	150330
02763-00414	H1810-01A1	10	150340
02763-00516	D0200-01A1	2	090030
02763-00538	D0200-01A1		090030
02764-00207	H1831-02A3	21	150380
02764-00209	H1831-02A2	18	150370
02764-00209	H1831-02A3	18	150380
02764-002A8	H1831-02A2	17	150370

PART NO.	FIG.NO.	INDEX	PAGE
02764-002A8	H1831-02A3	17	150380
02777-00224	H1810-01A0	9	150330
02777-00225	H1810-01A1	11	150340
02778-00229	H1810-01A0	10	150330
02778-00229	H1810-01A1	12	150340
02781-0021D	K1110-66A1	16	210830
02781-0021D	K1110-66A1	7	210830
02781-0021D	K1110-66A2	20	210840
02781-0021D	K1110-66A2	7	210840
02781-00313	Y1970-01A1	7	481190
02781-0031D	K1110-66A1	13	210830
02781-0031D	K1110-66A1	4	210830
02781-0031D	K1110-66A2	17	210840
02781-0031D	K1110-66A2	4	210840
02781-0031D	P1120-01A0	9	300010
02781-0031D	P1120-01A1	9	300020
02781-00422	H1831-01A1	18	150350
02781-00422	H1831-01A2	14	150360
02781-00516	A4110-B3S5	10	000430
02781-00522	N1220-01A0	1	270040
02781-00522	P1120-01A0	6	300010
02781-00522	P1120-01A1	6	300020
02782-10315	D0100-01A1	5	090010
02782-10315	D0100-01A2	5	090020
02782-10315	H0110-01A1	9	150010
02782-10315	H1270-05A0	7	150300
02782-10422	A4110-B3S5	23	000430
02782-10422	H0110-01A1	15	150010
02782-10516	D0200-03A1	9	090050
02782-10518	D0200-03A1	28	090050
02782-10522	N1310-01A0	11	270050
02783-10210	H0110-01A1	18	150010
02783-10210	H1831-01A1	6	150350
02783-10210	H1831-01A2	5	150360
02783-10628	H0110-01A1	6	150010
02789-00210	H0120-04A2	5	150090
02789-00315	W1202-01A0	5	450050
02789-00522	W1202-01A0	6	450050
02893-05037	A5010-A3N6	18	000490
02896-11008	H0110-01A1	20	150010
02896-11008	H0120-01A1	11	150030
02896-11008	H0120-01A1	13	150030
02896-11008	H0120-01A1	25	150030
02896-11008	H0120-01A1	5	150030
02896-11008	H0120-01A1	7	150030
02896-11008	H0120-01A4	11	150040
02896-11008	H0120-01A4	13	150040
02896-11008	H0120-01A4	25	150040
02896-11008	H0120-01A4	5	150040
02896-11008	H0120-01A4	7	150040

PART NO.	FIG.NO.	INDEX	PAGE
02896-11008	H0120-02A1	11	150050
02896-11008	H0120-02A1	14	150050
02896-11008	H0120-02A1	17	150050
02896-11008	H0120-02A1	2	150050
02896-11008	H0120-02A1	20	150050
02896-11008	H0120-02A1	28	150050
02896-11008	H0120-02A1	31	150050
02896-11008	H0120-02A1	5	150050
02896-11008	H0120-02A1	8	150050
02896-11008	H0120-02A4	11	150060
02896-11008	H0120-02A4	14	150060
02896-11008	H0120-02A4	17	150060
02896-11008	H0120-02A4	2	150060
02896-11008	H0120-02A4	20	150060
02896-11008	H0120-02A4	26	150060
02896-11008	H0120-02A4	5	150060
02896-11008	H0120-02A4	8	150060
02896-11008	H0120-02A5	11	150070
02896-11008	H0120-02A5	14	150070
02896-11008	H0120-02A5	17	150070
02896-11008	H0120-02A5	2	150070
02896-11008	H0120-02A5	20	150070
02896-11008	H0120-02A5	23	150070
02896-11008	H0120-02A5	29	150070
02896-11008	H0120-02A5	32	150070
02896-11008	H0120-02A5	5	150070
02896-11008	H0120-02A5	8	150070
02896-11008	H1270-02A0	6	150270
02896-11008	H1270-02A0	9	150270
02896-11008	H1810-01A0	2	150330
02896-11008	H1810-01A0	5	150330
02896-11008	H1810-01A1	2	150340
02896-11008	H1831-01A1	11	150350
02896-11008	H1831-01A1	13	150350
02896-11008	H1831-01A1	16	150350
02896-11008	H1831-01A1	5	150350
02896-11008	H1831-01A1	7	150350
02896-11008	H1831-01A2	10	150360
02896-11008	H1831-01A2	12	150360
02896-11008	H1831-01A2	4	150360
02896-11008	H1831-01A2	6	150360
02896-11008	H1833-01A0	9	150390
02896-11008	K1110-42A1	25	210590
02896-11008	K1110-44A2	20	210620
02896-11008	K1110-44A2	23	210620
02896-11008	K1110-44A2	25	210620
02896-11008	K1110-56A1	9	210740
02896-11008	K1110-66A1	17	210830
02896-11008	K1110-66A1	8	210830
02896-11008	K1110-66A2	11	210840

PART NO.	FIG.NO.	INDEX	PAGE
02896-11008	K1110-66A2	21	210840
02896-11008	K1110-66A2	24	210840
02896-11008	K1110-66A2	8	210840
02896-11009	D0100-01A1	6	090010
02896-11009	D0100-01A2	6	090020
02896-11009	D0200-01A1	10	090030
02896-11009	H0110-01A1	11	150010
02896-11009	H0120-01A1	15	150030
02896-11009	H0120-01A1	9	150030
02896-11009	H0120-01A4	15	150040
02896-11009	H0120-01A4	9	150040
02896-11009	H0120-02A1	23	150050
02896-11009	H0120-02A4	21	150060
02896-11009	H0120-02A5	24	150070
02896-11009	H1810-01A1	30	150340
02896-11009	H1810-01A1	5	150340
02896-11009	H1831-01A1	24	150350
02896-11009	H1831-01A1	3	150350
02896-11009	H1831-01A1	9	150350
02896-11009	H1831-01A2	20	150360
02896-11009	H1831-01A2	8	150360
02896-11009	K1110-51A1	9	210680
02896-11009	K1110-66A1	14	210830
02896-11009	K1110-66A1	5	210830
02896-11009	K1110-66A2	18	210840
02896-11009	K1110-66A2	5	210840
02896-11009	N1220-01A0	8	270040
02896-11009	N1310-01A0	18	270050
02896-11009	N1310-01A0	6	270050
02896-11009	P1120-01A0	10	300010
02896-11009	P1120-01A1	10	300020
02896-11009	W1202-01A0	2	450050
02896-11012	A4110-B3S5	25	000430
02896-11012	A4710-A3H3	11	000480
02896-11012	H0110-01A1	17	150010
02896-11012	H1831-01A1	19	150350
02896-11012	H1831-01A2	15	150360
02896-11015	D0100-01A1	4	090010
02896-11015	D0100-01A2	4	090020
02896-11015	D0200-01A1	5	090030
02896-11015	D0200-03A1	10	090050
02896-11015	D0200-03A1	29	090050
02896-11015	N1220-01A0	2	270040
02896-11015	N1310-01A0	12	270050
02896-11015	N1310-01A0	3	270050
02896-11015	P1120-01A0	7	300010
02896-11015	P1120-01A1	7	300020
02896-11015	W1202-01A0	4	450050
02896-11018	H0110-01A1	8	150010
02896-11018	N1310-01A0	15	270050

PART NO.	FIG.NO.	INDEX	PAGE
04010-00519	A4210-A3C9	2	000410
04010-00725	A2410-A3B8	4	000270
04020-00514	A2010-A3M3	5	000130
04020-00616	A4110-A3S5	26	000420
04020-00820	A1010-A3E2	16	000010
04020-00820	A2010-A3M3	20	000130
04020-01228	A2041-A3H5	1	000160
04020-01228	A2370-A3D8	2	000250
04020-01228	A2370-A3E1	2	000260
04020-01228	B0100-01A0	16	030020
04020-01842	N1110-01A0	6	270010
04022-04016	Y1670-01A0	24	481090
04025-00408	A2010-A3M3	24	000130
04025-00432	Y1670-01A0	18	481090
04025-00512	A2010-A3M3	27	000130
04025-00632	M1420-01A1	5	240170
04050-11612	M1220-01A1	10	240140
04050-14025	N1310-01A0	31	270050
04050-14028	M1110-01A1	16	240010
04050-14028	M1110-01A1	21	240010
04052-10530	K1110-07A9	8	210270
04052-10833	K0230-01A2	28	210120
04052-10833	K1110-04A8	16	210240
04052-10833	K1110-04A9	12	210250
04064-02012	A2410-A3B8	12	000270
04064-04018	N1210-01A0	33	270020
04064-04018	N1210-01A1	33	270030
04064-04018	Y0260-01A0	29	480010
04064-06525	Y1640-02A0	8	480350
04064-06525	Y1640-02A1	8	480380
04064-06525	Y1641-02A0	6	480410
04064-07525	R0110-02A0	11	330030
04064-07525	Y1627-01A0	9	480330
04065-04718	H0110-01A1	47	150011
04065-04818	A2350-A3D8	3	000240
04065-05220	A5010-A3N6	6	000490
04065-05820	T1200-06A5	6	360610
04065-07525	Y1640-02A0	11	480350
04065-07525	Y1640-02A1	11	480380
04065-08025	A5060-A3J9	8	000530
04065-08225	Y1600-03A0	7	480150
04120-21760	K0700-02A0	39	210190
04121-22264	A5050-A3R3	2	000510
04121-22264	A5050-A3R5	2	000520
04121-22264	V0100-01A0	8	420010
04205-01632	M1110-01A1	18	240010
04205-10520	K1110-07A9	7	210270
04260-00793	A1010-A3E2	6	000010
04260-00793	Y1662-14A0	12	480560
04260-00793	Y1664-14A0	12	480760

PART NO.	FIG.NO.	INDEX	PAGE
04260-00952	Y1620-01A8	12	480270
04260-00952	Y1620-11A2	12	480280
04260-00952	Y1620-11A3	12	480290
04260-00952	Y1662-10A0	12	480520
04260-00952	Y1662-10A0	7	480520
04260-00952	Y1664-10A0	12	480720
04260-00952	Y1664-10A0	7	480720
04260-00952	Y1664-23A0	4	480850
04260-01270	N1210-01A0	35	270020
04260-01270	N1210-01A1	35	270030
04260-01270	Y0260-01A0	31	480010
04260-01905	P1210-01A0	27	300030
04418-02550	A1530-B3L9	23	000070
04418-02550	A9810-A373	2	000680
04418-13060	U0100-01A0	23	390010
04418-13060	U0100-01A1	23	390020
04418-13060	U0100-01A2	23	390030
04418-13060	U0100-01A3	23	390040
04418-13060	U0520-01A0	2	390230
04418-13060	U0520-01A1	2	390240
04418-13060	U0520-01A6	3	390250
04418-13060	U0520-01B3	3	390260
04434-50510	E0450-01A1	36	120160
04434-50610	K1110-44A2	42	210620
04434-50812	T1110-06A2	11	360110
04434-50812	T1110-06A2	18	360110
04434-50812	T1200-04A1	12	360480
04434-50812	T1200-04A5	12	360500
04434-50812	T1200-04B1	12	360540
04434-51012	E0200-02A1	30	120050
04434-51012	E0200-03A1	1	120060
04434-51012	E0450-01A1	37	120160
04434-51012	H0340-01A0	6	150170
04434-51012	H1831-02A2	36	150370
04434-51012	H1831-02A3	34	150380
04434-51012	T1110-07A2	5	360130
04434-51012	T1110-07A6	5	360140
04434-51310	A2110-A3R2	11	000190
04434-51312	D0200-01A1	13	090030
04434-51312	D0200-01A1	17	090030
04434-51410	K1110-48A1	18	210650
04434-51410	K1110-57A1	51	210751
04434-51412	E0200-03A1	27	120060
04434-51412	H1831-02A2	32	150370
04434-51412	H1831-02A3	30	150380
04434-51412	H1840-01A0	21	150400
04434-51412	K1520-01A0	7	210870
04434-51412	W1113-01A0	20	450010
04434-51412	W1113-01A1	37	450020
04434-51612	B0920-01A0	12	030050

PART NO.	FIG.NO.	INDEX	PAGE
04434-51612	B0920-01A0	9	030050
04434-51708	K1110-29A1	2	210530
04434-51710	C0100-06A1	21	060060
04434-51710	K1110-57A1	48	210751
04434-51712	C0100-04A1	6	060040
04434-51812	H1810-01A0	22	150330
04434-51812	H1810-01A1	27	150340
04434-51812	K1520-01A0	17	210870
04434-51812	K1520-01A1	17	210880
04434-51910	E0200-04A1	1	120070
04434-51910	K1110-48A1	14	210650
04434-51910	K1110-48A1	28	210650
04434-51912	E0200-04A1	27	120070
04434-51912	H1831-02A2		150370
04434-51912	T1110-06A2	3	360110
04434-52110	D0200-02A1	26	090040
04434-52110	K1110-62A1	5	210790
04434-52112	D0200-02A1	17	090040
04434-52112	D0200-02A1	20	090040
04434-52112	E0200-02A1	21	120050
04434-52112	H1831-02A3	22	150380
04434-52312	K1520-01A1	7	210880
04434-52511	K1110-62A1	6	210790
04434-52712	D0200-02A1	14	090040
04434-52712	D0200-02A1	36	090040
04434-52712	D0200-04A1	11	090060
04434-52712	D0200-04A1	28	090060
04434-52712	E0200-03A1	12	120060
04434-52712	E0200-03A1	9	120060
04434-52712	K0700-02A0	35	210190
04434-52712	K1520-01A0	1	210870
04434-52712	K1520-01A1	1	210880
04434-53211	E0200-01A1	34	120040
04434-53211	E0200-03A1	39	120060
04434-53211	E0450-01A0	18	120150
04434-53211	E0450-01A1	23	120160
04434-53211	K1110-65A1	8	210820
04434-53212	C0100-04A1	11	060040
04434-53212	C0100-06A1	26	060060
04434-53212	E0200-01A1	27	120040
04434-53212	E0450-01A1	22	120160
04434-53212	H0340-01A0	3	150170
04434-53411	K1110-29A1	1	210530
04434-53411	K1110-48A1	10	210650
04434-53411	K1110-48A1	24	210650
04434-53411	K1110-48A1	5	210650
04434-53412	D0200-02A1	40	090040
04434-53412	D0200-02A1	45	090040
04434-53412	D0200-02A1	50	090041
04434-53412	K1520-01A0	2	210870

PART NO.	FIG.NO.	INDEX	PAGE
04434-53412	K1520-01A1	2	210880
04435-51012	K1520-01A0	14	210870
04435-51012	K1520-01A1	14	210880
04435-51210	K1110-44A2	35	210620
04435-51310	K1110-65A1	7	210820
04435-51312	H1831-02A2	21	150370
04435-51312	H1831-02A2	39	150370
04435-51512	H1831-02A2	25	150370
04435-51512	H1831-02A2	29	150370
04435-51512	H1831-02A3	26	150380
04435-51512	H1831-02A3	27	150380
04435-51810	K0700-02A0	20	210190
04435-51812	D0200-02A1	23	090040
04435-51812	H1810-01A0	14	150330
04435-51812	H1810-01A1	17	150340
04435-51812	K0700-02A0	11	210190
04435-51912	H1831-02A2		150370
04435-51912	K1520-01A0	24	210870
04435-52112	H1810-01A0	24	150330
04435-52112	H1810-01A1	33	150340
04530-11222	Y1600-01A0	6	480130
04530-11222	Y1600-06A0	7	480180
06000-22326	N1210-01A0	8	270020
06000-22326	N1210-01A1	8	270030
06000-22326	Y0260-01A0	4	480010
06000-23124	N1210-01A0	7	270020
06000-23124	N1210-01A1	7	270030
06000-23124	Y0260-01A0	3	480010
06030-06004	A5010-A3N6	3	000490
06030-06304	A5010-A3N6	4	000490
06037-06206	A5060-A3J9	7	000530
06037-06307	A5060-A3J9	6	000530
06124-01616	K1110-53B2	22	210710
070-01-05110	Y1620-11A2	29	480280
07000-02021	A2011-A3K6	14	000140
07000-03030	A2011-A3K6	13	000140
07000-11007	C0100-01A1	6	060010
07000-11007	Y1662-07A0	12	480490
07000-11007	Y1662-11A0	4	480530
07000-11007	Y1662-15A0	10	480570
07000-11007	Y1664-07A0	12	480690
07000-11007	Y1664-11A0	4	480730
07000-11007	Y1664-15A0	10	480770
07000-11007	Y1670-02A0	17	481100
07000-11008	Y1600-11A0	12	480230
07000-11008	Y1600-12A0	12	480240
07000-11008	Y1670-21A0	21	481120
07000-11009	Y1640-03A0	12	480360
07000-11009	Y1640-03A1	6	480390
07000-11009	Y1662-11A0	2	480530

PART NO.	FIG.NO.	INDEX	PAGE
07000-11009	Y1662-14A0	13	480560
07000-11009	Y1664-11A0	2	480730
07000-11009	Y1664-14A0	13	480760
07000-11009	Y1664-21A0	11	480830
07000-11010	Y1662-15A0	15	480570
07000-11010	Y1662-16A0	17	480580
07000-11010	Y1662-20A0	19	480620
07000-11010	Y1664-15A0	15	480770
07000-11010	Y1664-16A0	17	480780
07000-11010	Y1664-20A0	19	480820
07000-11010	Y1670-02A0	16	481100
07000-12011	K1110-44A2	18	210620
07000-12011	K1110-44A2	21	210620
07000-12011	K1110-44A2	26	210620
07000-12011	Y1662-06A0	6	480480
07000-12011	Y1662-14A0	21	480560
07000-12011	Y1662-14A0	30	480560
07000-12011	Y1662-16A0	15	480580
07000-12011	Y1664-06A0	6	480680
07000-12011	Y1664-14A0	21	480760
07000-12011	Y1664-14A0	30	480760
07000-12011	Y1664-16A0	15	480780
07000-12011	Y1850-01A0	3	481160
07000-12012	Y1662-04A0		480460
07000-12012	Y1662-20A0	17	480620
07000-12012	Y1664-04A0	1	480660
07000-12012	Y1664-20A0	17	480820
07000-12012	Y1670-21A0	22	481120
07000-12014	Y1662-08A0	2	480500
07000-12014	Y1664-08A0	2	480700
07000-12015	K1110-42A1	28	210590
07000-12015	K1110-51A1	7	210680
07000-12015	K1110-56A1	7	210740
07000-12015	Y1670-02A0	15	481100
07000-12016	Y1662-08A0	4	480500
07000-12016	Y1662-17A0	29	480590
07000-12016	Y1664-08A0	4	480700
07000-12016	Y1664-17A0	29	480790
07000-12018	K1110-42A1	23	210590
07000-12018	K1110-51A1	5	210680
07000-12018	K1110-56A1	5	210740
07000-12018	Y1670-01A0	20	481090
07000-12020	Y1662-10A0	17	480520
07000-12020	Y1664-10A0	17	480720
07000-12021	H1240-01A0	4	150230
07000-12021	Y1641-03A0		480420
07000-12021	Y1662-04A0	4	480460
07000-12021	Y1662-06A0	5	480480
07000-12021	Y1664-04A0	4	480660
07000-12021	Y1664-06A0	5	480680

PART NO.	FIG.NO.	INDEX	PAGE
07000-12021	Y1664-21A0	12	480830
07000-12050	T1200-06A5	7	360610
07000-12055	T1200-06A5	8	360610
07000-12060	H0330-01A0	18	150150
07000-12060	H0330-01A0	21	150150
07000-12060	H0330-01A1	21	150160
07000-12060	H0330-01A1	24	150160
07000-12080	R0300-01A0	9	330050
07000-12090	R0110-01A0	6	330010
07000-12105	H0311-01A1	6	150110
07000-12105	H0311-01A1	8	150110
07000-12105	Y1627-01A0	11	480330
07000-12125	Y1850-01A0	4	481160
07000-13024	Y1662-02A0	12	480440
07000-13024	Y1662-02A0	6	480440
07000-13024	Y1662-03A0	14	480450
07000-13024	Y1662-03A0	3	480450
07000-13024	Y1662-12A0	4	480540
07000-13024	Y1664-02A0	12	480640
07000-13024	Y1664-02A0	6	480640
07000-13024	Y1664-03A0	14	480650
07000-13024	Y1664-03A0	3	480650
07000-13024	Y1664-12A0	4	480740
07000-13024	Y1664-16A0	12	480780
07000-13024	Y1664-23A0	7	480850
07000-13024	Y1664-23A0	9	480850
07000-13028	Y1662-04A0	5	480460
07000-13028	Y1664-04A0	5	480660
07000-13032	H0312-01A0	12	150120
07000-13032	H0312-01A0	14	150120
07000-13032	H0312-01A1	11	150130
07000-13032	H0312-01A1	9	150130
07000-13032	H1210-01A0	12	150180
07000-13032	H1210-02A0	2	150200
07000-13032	H1210-02A0	4	150200
07000-13032	H1220-01A1	13	150210
07000-13032	H1220-01A1	18	150210
07000-13032	H1220-01A1	22	150210
07000-13032	H1220-01A1	24	150210
07000-13032	H1220-01A2	13	150220
07000-13032	H1220-01A2	18	150220
07000-13032	H1220-01A2	22	150220
07000-13032	H1220-01A2	24	150220
07000-13032	H1240-01A0	3	150230
07000-13032	H1270-01A0	23	150240
07000-13032	H1270-02A0	33	150270
07000-13032	H1310-01A0	2	150310
07000-13032	H1310-01A0	4	150310
07000-13032	H1310-01A0	6	150310
07000-13032	H1310-01A0	8	150310

PART NO.	FIG.NO.	INDEX	PAGE
07000-13032	H1340-01A0	2	150320
07000-13032	P1120-01A0	14	300010
07000-13032	P1120-01A0	16	300010
07000-13032	P1120-01A1	14	300020
07000-13032	P1120-01A1	16	300020
07000-13032	T1110-04A2	3	360080
07000-13032	T1110-05A2	2	360100
07000-13032	T1200-04A1	2	360480
07000-13032	T1200-04A5	2	360500
07000-13032	T1200-04B1	2	360540
07000-13032	Y1662-04A0	6	480460
07000-13032	Y1662-17A0	27	480590
07000-13032	Y1664-04A0	6	480660
07000-13032	Y1664-17A0	27	480790
07000-13032	Y1664-21A0	14	480830
07000-13035	H0120-04A2	2	150090
07000-13035	H0312-01A0	5	150120
07000-13035	H0312-01A1	2	150130
07000-13035	H1210-01A0	13	150180
07000-13035	H1210-01A0	2	150180
07000-13035	H1210-01A0	7	150180
07000-13035	H1220-01A1	3	150210
07000-13035	H1220-01A1	8	150210
07000-13035	H1220-01A2	3	150220
07000-13035	H1220-01A2	8	150220
07000-13035	H1270-02A0	18	150270
07000-13035	H1270-02A0	29	150270
07000-13035	T1110-03A2	13	360070
07000-13035	T1110-03A2	3	360070
07000-13035	T1110-08A4	6	360150
07000-13035	Y1620-01A1	34	480250
07000-13035	Y1620-01A6	35	480260
07000-13035	Y1620-01A8	38	480270
07000-13035	Y1620-11A2	38	480280
07000-13035	Y1620-11A3	38	480290
07000-13035	Y1620-41A0	31	480300
07000-13035	Y1620-41A1	31	480310
07000-13035	Y1620-41A2	31	480320
07000-13035	Y1662-15A0	9	480570
07000-13035	Y1664-15A0	9	480770
07000-13036	Y1662-04A0	8	480460
07000-13036	Y1664-04A0	8	480660
07000-13038	H1270-01A0	28	150240
07000-13038	T1200-05A5	15	360580
07000-13038	T1200-05A5	2	360580
07000-13038	T1200-05A5	9	360580
07000-13038	Y1662-15A0	14	480570
07000-13038	Y1664-15A0	14	480770
07000-13040	H1270-03A0	11	150280
07000-13040	H1270-03A0	5	150280

PART NO.	FIG.NO.	INDEX	PAGE
07000-13042	Y1640-03A0	11	480360
07000-13045	C0100-02A1	14	060020
07000-13045	C0100-03A1	22	060030
07000-13045	C0100-03A1	29	060030
07000-13048	H0320-01A1	2	150140
07000-13048	H0320-01A1	6	150140
07000-13048	H0330-01A0	2	150150
07000-13048	H0330-01A1	2	150160
07000-13048	H0330-01A1	5	150160
07000-13048	H1270-02A0	14	150270
07000-13048	H1270-02A0	22	150270
07000-13048	H1270-02A0	25	150270
07000-13048	H1270-02A0	38	150270
07000-13048	H1270-03A0	17	150280
07000-13048	H1270-03A0	24	150280
07000-13048	T1110-08A4	14	360150
07000-13048	T1200-05A5	22	360580
07000-13050	D0100-01A1	10	090010
07000-13050	D0100-01A2	10	090020
07000-15080	Y1627-01A0	3	480330
07000-15150	Y1620-01A1	11	480250
07000-15150	Y1620-01A1	21	480250
07000-15150	Y1620-01A6	11	480260
07000-15150	Y1620-01A6	21	480260
07000-15150	Y1620-41A0	17	480300
07000-15150	Y1620-41A1	17	480310
07000-15175	Y1620-01A8	21	480270
07000-15175	Y1620-01A8	9	480270
07000-15175	Y1620-11A2	21	480280
07000-15175	Y1620-11A2	9	480280
07000-15175	Y1620-11A3	21	480290
07000-15175	Y1620-11A3	9	480290
07000-15175	Y1620-41A2	17	480320
07000-15180	H0110-01A1	34	150010
07000-15210	H0110-01A1	26	150010
07000-15210	V0100-01A0	10	420010
07000-15335	N1210-01A0	45	270020
07000-15335	N1210-01A1	45	270030
07000-15390	N1210-01A0	14	270020
07000-15390	N1210-01A1	14	270030
07000-15390	Y0260-01A0	10	480010
07000-22018	Y1641-03A0		480420
07000-63042	A3310-A3D3	8	000310
07000-72012	A1550-A3A9	9	000080
07000-72015	A1550-A3A9	10	000080
07000-72022	A2010-A3M3	18	000130
07000-72085	A1550-A3A9	8	000080
07000-72115	A5010-A3N6	15	000490
07000-73025	A3110-A3K5	24	000300
07000-73045	A2110-A3R2	23	000190

PART NO.	FIG.NO.	INDEX	PAGE
07000-A2021	A1550-A3A9	13	000080
07000-A3029	A1550-A3A9	16	000080
07000-B1008	Y1600-11A0	16	480230
07000-B1008	Y1600-12A0	16	480240
07000-B2012	Y1600-01A0	5	480130
07000-B2012	Y1600-06A0	6	480180
07000-B5100	Y1620-01A1	30	480250
07000-B5100	Y1620-01A6	30	480260
07000-B5100	Y1620-41A0	26	480300
07000-B5100	Y1620-41A1	26	480310
07000-B5110	Y1620-01A8	30	480270
07000-B5110	Y1620-11A2	30	480280
07000-B5110	Y1620-11A3	30	480290
07000-B5110	Y1620-41A2	26	480320
07000-E3024	A4210-A3K2	12	000460
07000-F3022	Y1640-03A0	2	480360
07000-F3022	Y1640-03A1	2	480390
07001-01007	Y1662-07A0	13	480490
07001-01007	Y1662-11A0	5	480530
07001-01007	Y1664-07A0	13	480690
07001-01007	Y1664-11A0	5	480730
07001-01008	Y1600-11A0	17	480230
07001-01008	Y1600-12A0	17	480240
07001-01009	Y1662-11A0	3	480530
07001-01009	Y1664-11A0	3	480730
07001-01010	Y1662-16A0	18	480580
07001-01010	Y1662-20A0	20	480620
07001-01010	Y1664-16A0	18	480780
07001-01010	Y1664-20A0	20	480820
07001-02011	Y1662-16A0	16	480580
07001-02011	Y1664-16A0	16	480780
07001-02012	Y1662-20A0	18	480620
07001-02012	Y1664-20A0	18	480820
07001-02018	Y1641-03A0		480420
07001-02020	Y1662-10A0	18	480520
07001-02020	Y1664-10A0	18	480720
07001-02021	Y1641-03A0	5	480420
07001-03022	Y1640-03A1	3	480390
07001-05100	Y1620-01A1	29	480250
07001-05100	Y1620-01A6	29	480260
07001-05100	Y1620-41A0	25	480300
07001-05100	Y1620-41A1	25	480310
07001-05110	Y1620-01A8	29	480270
07001-05110	Y1620-11A3	29	480290
07001-05110	Y1620-41A2	25	480320
07002-01423	Y1640-03A0	10	480360
07002-10823	Y1662-01A0	10	480430
07002-10823	Y1664-01A0	10	480630
07002-10823	Y1664-21A0	4	480830
07002-11023	H1270-01A0	9	150240

PART NO.	FIG.NO.	INDEX	PAGE
07002-11023	Y1641-01A0	32	480400
07002-11023	Y1641-01A0	36	480400
07002-11023	Y1662-07A0	15	480490
07002-11023	Y1662-07A0	21	480490
07002-11023	Y1662-14A0	29	480560
07002-11023	Y1662-16A0	20	480580
07002-11023	Y1664-07A0	15	480690
07002-11023	Y1664-07A0	21	480690
07002-11023	Y1664-14A0	29	480760
07002-11023	Y1664-16A0	20	480780
07002-11223	H0120-02A1	3	150050
07002-11223	H0120-02A4	3	150060
07002-11223	H0120-02A5	3	150070
07002-11223	H0210-01A0	6	150100
07002-11223	N1210-01A0	4	270020
07002-11223	N1210-01A1	4	270030
07002-11223	V0100-01A0	11	420010
07002-11223	Y1641-01A0	38	480400
07002-11223	Y1670-02A0	4	481100
07002-11423	A4110-C3S5	6	000440
07002-11423	C0100-03A1	20	060030
07002-11423	C0100-03A1	31	060030
07002-11423	H0110-01A1	19	150010
07002-11423	H0120-01A1	16	150030
07002-11423	H0120-01A1	19	150030
07002-11423	H0120-01A1	23	150030
07002-11423	H0120-01A1	26	150030
07002-11423	H0120-01A4	16	150040
07002-11423	H0120-01A4	19	150040
07002-11423	H0120-01A4	23	150040
07002-11423	H0120-01A4	26	150040
07002-11423	H0120-02A1	12	150050
07002-11423	H0120-02A1	15	150050
07002-11423	H0120-02A1	18	150050
07002-11423	H0120-02A1	21	150050
07002-11423	H0120-02A1	24	150050
07002-11423	H0120-02A1	26	150050
07002-11423	H0120-02A1	29	150050
07002-11423	H0120-02A1	32	150050
07002-11423	H0120-02A1	6	150050
07002-11423	H0120-02A1	9	150050
07002-11423	H0120-02A4	12	150060
07002-11423	H0120-02A4	15	150060
07002-11423	H0120-02A4	18	150060
07002-11423	H0120-02A4	22	150060
07002-11423	H0120-02A4	24	150060
07002-11423	H0120-02A4	27	150060
07002-11423	H0120-02A4	6	150060
07002-11423	H0120-02A4	9	150060
07002-11423	H0120-02A5	12	150070

PART NO.	FIG.NO.	INDEX	PAGE
07002-11423	H0120-02A5	15	150070
07002-11423	H0120-02A5	18	150070
07002-11423	H0120-02A5	21	150070
07002-11423	H0120-02A5	25	150070
07002-11423	H0120-02A5	27	150070
07002-11423	H0120-02A5	30	150070
07002-11423	H0120-02A5	33	150070
07002-11423	H0120-02A5	6	150070
07002-11423	H0120-02A5	9	150070
07002-11423	H1270-02A0	7	150270
07002-11423	H1810-01A0	3	150330
07002-11423	H1810-01A0	6	150330
07002-11423	H1810-01A1	3	150340
07002-11423	H1810-01A1	6	150340
07002-11423	H1831-01A1	17	150350
07002-11423	H1831-01A1	25	150350
07002-11423	H1831-01A2	13	150360
07002-11423	H1831-01A2	21	150360
07002-11423	H1833-01A0	10	150390
07002-11423	H1833-01A0	11	150390
07002-11423	H1833-01A0	4	150390
07002-11423	K1110-42A1	26	210590
07002-11423	K1110-42A1	30	210590
07002-11423	K1110-51A1	10	210680
07002-11423	K1110-56A1	10	210740
07002-11423	K1110-66A1	15	210830
07002-11423	K1110-66A1	18	210830
07002-11423	K1110-66A1	6	210830
07002-11423	K1110-66A1	9	210830
07002-11423	K1110-66A2	12	210840
07002-11423	K1110-66A2	19	210840
07002-11423	K1110-66A2	22	210840
07002-11423	K1110-66A2	25	210840
07002-11423	K1110-66A2	6	210840
07002-11423	K1110-66A2	9	210840
07002-11423	N1220-01A0	9	270040
07002-11423	N1310-01A0	19	270050
07002-11423	N1310-01A0	7	270050
07002-11423	P1120-01A0	11	300010
07002-11423	P1120-01A1	11	300020
07002-11423	Y1662-01A0	12	480430
07002-11423	Y1662-07A0	11	480490
07002-11423	Y1662-07A0	25	480490
07002-11423	Y1662-10A0	5	480520
07002-11423	Y1662-14A0	25	480560
07002-11423	Y1662-14A0	27	480560
07002-11423	Y1662-14A0	9	480560
07002-11423	Y1662-17A0	20	480590
07002-11423	Y1664-01A0	12	480630
07002-11423	Y1664-07A0	11	480690

PART NO.	FIG.NO.	INDEX	PAGE
07002-11423	Y1664-07A0	25	480690
07002-11423	Y1664-10A0	5	480720
07002-11423	Y1664-14A0	25	480760
07002-11423	Y1664-14A0	27	480760
07002-11423	Y1664-14A0	9	480760
07002-11423	Y1664-17A0	20	480790
07002-11623	Y1662-14A0	3	480560
07002-11623	Y1664-14A0	3	480760
07002-11623	Y1670-02A0	14	481100
07002-11823	Y1641-01A0	10	480400
07002-11823	Y1641-01A0	29	480400
07002-11823	Y1662-07A0	7	480490
07002-11823	Y1662-16A0	14	480580
07002-11823	Y1664-07A0	7	480690
07002-11823	Y1664-16A0	14	480780
07002-11823	Y1970-01A1	8	481190
07002-12034	A4110-B3S5	11	000430
07002-12034	A4110-B3S5	13	000430
07002-12034	A4110-B3S5	16	000430
07002-12034	A4110-B3S5	24	000430
07002-12034	D0100-01A1	7	090010
07002-12034	D0100-01A2	7	090020
07002-12034	D0200-03A1	11	090050
07002-12034	D0200-03A1	27	090050
07002-12034	D0200-03A1	30	090050
07002-12034	H0110-01A1	10	150010
07002-12034	H0110-01A1	16	150010
07002-12034	H1270-02A0	10	150270
07002-12034	H1270-05A0	8	150300
07002-12034	H1831-01A1	20	150350
07002-12034	H1831-01A1	22	150350
07002-12034	H1831-01A1	27	150350
07002-12034	H1831-01A2	16	150360
07002-12034	H1831-01A2	18	150360
07002-12034	H1831-01A2	23	150360
07002-12034	Y1600-11A0	11	480230
07002-12034	Y1600-12A0	11	480240
07002-12034	Y1640-01A0	6	480340
07002-12034	Y1640-01A1	6	480370
07002-12034	Y1662-20A0	21	480620
07002-12034	Y1664-20A0	21	480820
07002-12034	Y1970-01A1	6	481190
07002-12434	H0110-01A1	5	150010
07002-12434	H0110-01A1	7	150010
07002-12434	H0311-01A1	5	150110
07002-12434	H0330-01A0	8	150150
07002-12434	H0330-01A1	11	150160
07002-12434	H1270-01A0	11	150240
07002-12434	H1270-04A0	5	150290
07002-12434	N1220-01A0	3	270040

PART NO.	FIG.NO.	INDEX	PAGE
07002-12434	N1310-01A0	13	270050
07002-12434	N1310-01A0	16	270050
07002-12434	N1310-01A0	4	270050
07002-12434	P1120-01A0	8	300010
07002-12434	P1120-01A1	8	300020
07002-12434	P1210-01A0	33	300030
07002-12434	V0100-01A0	12	420010
07002-12434	Y1641-01A0	14	480400
07002-12434	Y1641-01A0	16	480400
07002-12434	Y1662-07A0	23	480490
07002-12434	Y1662-08A0	6	480500
07002-12434	Y1662-09A0	4	480510
07002-12434	Y1662-13A0	15	480550
07002-12434	Y1662-13A0	19	480550
07002-12434	Y1664-07A0	23	480690
07002-12434	Y1664-08A0	6	480700
07002-12434	Y1664-09A0	4	480710
07002-12434	Y1664-13A0	15	480750
07002-12434	Y1664-13A0	19	480750
07002-13034	Y1662-20A0	14	480620
07002-13034	Y1662-20A0	5	480620
07002-13034	Y1664-20A0	14	480820
07002-13034	Y1664-20A0	5	480820
07002-13334	H0110-01A1	13	150010
07002-13334	H0330-01A0	11	150150
07002-13334	H0330-01A1	14	150160
07002-13334	H0340-01A0	15	150170
07002-13334	N1220-01A0	6	270040
07002-13334	Y1641-01A0	21	480400
07002-13334	Y1662-16A0	8	480580
07002-13334	Y1664-16A0	8	480780
07002-13634	H0312-01A0	4	150120
07002-13634	R0110-01A0	5	330010
07002-13634	Y1640-03A0	4	480360
07002-13634	Y1640-03A1	4	480390
07002-13634	Y1641-01A0	25	480400
07002-13634	Y1641-03A0	8	480420
07002-13634	Y1662-05A0	13	480470
07002-13634	Y1662-05A0	17	480470
07002-13634	Y1662-05A0	21	480470
07002-13634	Y1662-05A0	25	480470
07002-13634	Y1662-05A0	5	480470
07002-13634	Y1662-05A0	9	480470
07002-13634	Y1662-06A0	10	480480
07002-13634	Y1662-18A0	5	480600
07002-13634	Y1662-18A0	9	480600
07002-13634	Y1664-05A0	13	480670
07002-13634	Y1664-05A0	17	480670
07002-13634	Y1664-05A0	21	480670
07002-13634	Y1664-05A0	25	480670

PART NO.	FIG.NO.	INDEX	PAGE
07002-13634	Y1664-05A0	5	480670
07002-13634	Y1664-05A0	9	480670
07002-13634	Y1664-06A0	10	480680
07002-13634	Y1664-18A0	5	480800
07002-13634	Y1664-18A0	9	480800
07002-13634	Y1664-22A0	4	480840
07002-14234	Y1640-01A0	15	480340
07002-14234	Y1640-01A1	15	480370
07002-22434	A2010-A3M3	14	000130
07002-22434	A2110-A3R2	4	000190
07002-23034	A2010-A3M3	13	000130
07002-61023	Y1600-01A0	4	480130
07002-61023	Y1600-02A0	11	480140
07002-61023	Y1600-06A0	9	480180
07002-61423	Y1600-11A0	18	480230
07002-61423	Y1600-12A0	18	480240
07002-62434	Y1600-01A0	10	480130
07002-62434	Y1600-01A0	8	480130
07002-62434	Y1600-02A0	13	480140
07002-62434	Y1600-06A0	11	480180
07002-62434	Y1600-06A0	4	480180
07002-62434	Y1600-10A0	13	480220
07002-63334	N1310-01A0	21	270050
07002-63334	N1310-01A0	24	270050
07002-63334	N1310-01A0	27	270050
07005-00812	A4110-C3S5	15	000440
07005-00812	A4110-C3S5	17	000440
07005-00812	B9999-A3W9	6	000710
07005-00812	D0200-03A1	20	090050
07005-01012	A4030-A3F7	12	000390
07005-01012	A4210-A3K2	10	000460
07005-01012	A4230-A3M5	3	000470
07005-01012	A5010-A3N6	30	000490
07005-01212	A1550-A3A9	19	000080
07005-01212	A4110-A3S5	16	000420
07005-01212	A4110-B3S5	18	000430
07005-01212	A4110-B3S5	21	000430
07005-01212	B9999-A3W9	4	000710
07005-01212	D0200-03A1	18	090050
07005-01412	A1550-A3A9	23	000080
07005-01412	A2011-A3K6	8	000140
07005-01412	A4010-B3Z1	26	000350
07005-01412	A4110-A3S5	22	000420
07005-01412	A4110-A3S5	30	000420
07005-01412	A4110-A3S5	33	000420
07005-01412	A4110-A3S5	43	000420
07005-01412	A4110-B3S5	28	000430
07005-01412	A4110-B3S5	30	000430
07005-01412	A4110-C3S5	25	000440
07005-01412	A4110-C3S5	27	000440

PART NO.	FIG.NO.	INDEX	PAGE
07005-01412	A4230-A3M5	5	000470
07005-01412	A5210-A3G6	5	000540
07005-02216	A2210-A3L2	12	000200
07005-03016	H0210-01A0	2	150100
07020-00000	N1110-01A0	9	270010
07020-00000	T1110-06A2	2	360110
07020-00000	T1200-01A1	5	360280
07020-00000	T1200-01A4	5	360310
07020-00000	T1200-01A8	5	360360
07020-00000	T1200-01A9	8	360350
07020-00000	T1200-01B1	5	360370
07020-00000	T1200-01B7	5	360420
07020-00000	T1200-03A0	3	360460
07020-00000	T1200-03A1	3	360470
07020-00000	T1200-04A1	8	360480
07020-00000	T1200-04A5	8	360500
07020-00000	T1200-04B1	8	360540
07020-00000	V0100-01A0	13	420010
07020-00000	Y1620-01A1	4	480250
07020-00000	Y1620-01A6	4	480260
07020-00000	Y1620-41A0	4	480300
07020-00000	Y1620-41A0	8	480300
07020-00000	Y1620-41A1	4	480310
07020-00000	Y1620-41A1	8	480310
07020-00000	Y1620-41A2	8	480320
07020-00675	Y1620-41A2	4	480320
07040-11007	H1270-01A0	8	150240
07040-11209	A1550-A3A9	18	000080
07040-11209	A4110-A3S5	15	000420
07040-11209	B9999-A3W9	3	000710
07040-11209	D0200-03A1	17	090050
07040-11209	H0210-01A0	5	150100
07040-11209	N1210-01A0	3	270020
07040-11209	N1210-01A1	3	270030
07040-11209	Y1670-02A0	3	481100
07040-11409	C0100-03A1	21	060030
07040-11409	C0100-03A1	30	060030
07040-12012	A4110-B3S5	12	000430
07040-12412	H1270-01A0	10	150240
07040-12414	A2010-A3M3	11	000130
07040-12414	H0311-01A1	4	150110
07040-12414	Y1600-01A0	9	480130
07040-12414	Y1600-02A0	12	480140
07040-12414	Y1600-06A0	10	480180
07040-13016	A2010-A3M3	12	000130
07040-13618	R0110-01A0	4	330010
07042-00312	C0100-06A1	12	060060
07042-30108	Y0260-01A0	38	480010
07042-30211	D0100-01A1	21	090010
07042-30617	Y0260-01A0	37	480010

PART NO.	FIG.NO.	INDEX	PAGE
07042-70312	A2011-A3K6	6	000140
07042-A0108	A1310-A3S9	16	000040
07042-A0415	A1790-A3H7	1	000120
07043-00108	Y1620-01A1	5	480250
07043-00108	Y1620-01A6	5	480260
07043-30108	A2410-B3B8	2	000280
07043-70108	A1010-A3E2	7	000010
07043-70108	A2010-A3M3	8	000130
07043-70108	A2011-A3K6	3	000140
07043-70108	A2040-A3J6	3	000150
07043-70108	A4110-A3S5	2	000420
07043-70211	A2010-A3M3	9	000130
07043-70211	A2040-A3J6	4	000150
07043-70617	A2010-A3M3	10	000130
07043-70617	A2210-A3L2	2	000200
07043-A0415	A2011-A3K6	20	000140
07044-12412	H0110-01A1	4	150010
07044-12412	Y1600-01A0	7	480130
07044-12412	Y1600-06A0	3	480180
07046-22010	A2011-A3K6	2	000140
07046-22816	A2011-A3K6	25	000140
07046-43016	A2010-A3M3	15	000130
07046-43516	A2010-A3M3	19	000130
07046-44016	A2010-A3M3	16	000130
07048-01310	K1110-41A1	5	210580
07049-01012	H0120-01A1	2	150030
07049-01012	H0120-01A4	2	150040
07049-01215	D0100-01A1	26	090010
07049-01215	D0100-01A2	24	090020
07049-01215	H0120-01A1	3	150030
07049-01215	H0120-01A4	3	150040
07049-01215	M1510-01A0	15	240200
07049-01215	P1210-01A0	31	300030
07049-02430	N1210-01A0	6	270020
07049-02430	N1210-01A1	6	270030
07049-02430	R1100-03A6	4	330200
07049-02430	Y0260-01A0	2	480010
07056-10045	H0110-01A1	46	150011
07056-18425	D0100-01A1	16	090010
07056-18425	D0100-01A2	16	090020
07069-25400	H0110-01A1	22	150010
07069-34075	H0110-01A1	24	150010
07073-01AA9	T1110-04A2	2	360080
07074-01009	T1110-04A2	1	360080
07094-11228	H1270-03A0	30	150280
07094-30518	A3110-A3K5	32	000300
07094-31228	H0320-01A1	9	150140
07095-00317	E0450-01A0	19	120150
07095-00317	E0450-01A1	24	120160
07095-01245	D0200-02A1	33	090040

PART NO.	FIG.NO.	INDEX	PAGE
07095-01245	H0320-01A1	10	150140
07095-01245	H1270-03A0	31	150280
07095-20314	D0200-02A1	27	090040
07095-20314	E0200-02A1	22	120050
07095-20418	E0200-03A1	10	120060
07095-20418	E0200-03A1	13	120060
07095-20523	E0200-01A1	28	120040
07095-20627	D0200-02A1	41	090040
07095-20627	D0200-02A1	46	090041
07095-20627	D0200-02A1	51	090041
07097-21222	T1200-05A5	8	360580
07097-21422	T1200-05A5	21	360580
07098-01011	H1340-01A0	1	150320
07145-00100	Y1620-01A1	3	480250
07145-00100	Y1620-01A6	3	480260
07145-00100	Y1620-41A0	3	480300
07145-00100	Y1620-41A1	3	480310
07145-00110	T1200-03A0	6	360460
07145-00110	Y1620-01A1	8	480250
07145-00110	Y1620-01A6	8	480260
07145-00110	Y1620-01A8	3	480270
07145-00110	Y1620-01A8	6	480270
07145-00110	Y1620-11A2	3	480280
07145-00110	Y1620-11A2	6	480280
07145-00110	Y1620-11A3	3	480290
07145-00110	Y1620-11A3	6	480290
07145-00110	Y1620-41A2	3	480320
07145-00110	Y1620-41A2	7	480320
07145-00120	T1110-01A2	11	360010
07145-00120	T1110-01A6	11	360020
07145-00120	T1110-01A7	11	360030
07145-00120	T1110-07A2	10	360130
07145-00120	T1110-07A6	10	360140
07145-00120	T1200-01A1	6	360280
07145-00120	T1200-01A4	6	360310
07145-00120	T1200-01A8	6	360360
07145-00120	T1200-01A9	9	360350
07145-00120	T1200-01B1	6	360370
07145-00120	T1200-01B7	6	360420
07155-01025	R0110-02A0	13	330030
07179-13126	Y1620-01A1	15	480250
07179-13126	Y1620-01A6	15	480260
07179-13126	Y1620-01A8	17	480270
07179-13126	Y1620-11A2	17	480280
07179-13126	Y1620-11A3	17	480290
07179-13126	Y1620-41A0	11	480300
07179-13126	Y1620-41A1	11	480310
07179-13126	Y1620-41A2	13	480320
07179-13136	Y1620-01A8	15	480270
07179-13136	Y1620-11A2	15	480280

PART NO.	FIG.NO.	INDEX	PAGE
07179-13136	Y1620-11A3	15	480290
07179-13136	Y1620-41A2	11	480320
07206-30710	A4030-A3F7	11	000390
07206-30710	A5010-A3N6	29	000490
07206-30812	A4110-B3S5	17	000430
07206-30812	A4110-B3S5	20	000430
07206-31014	A4010-B3Z1	25	000350
07206-31014	A4110-A3S5	21	000420
07206-31014	A4110-A3S5	29	000420
07206-31014	A4110-A3S5	32	000420
07206-31014	A4110-C3S5	24	000440
07206-31014	A4230-A3M5	4	000470
07206-31014	A5210-A3G6	6	000540
07214-50813	N1110-01A0	10	270010
07260-09936	H0311-01A1	1	150110
07260-20950	B0100-01A0	23	030020
07260-20950	B0920-01A0	5	030050
07260-20956	B0920-01A0	7	030050
07261-21431	H0110-01A1	45	150011
07261-22012	C0100-04A1	9	060040
07270-00815	D0200-03A1	7	090050
07270-00825	D0200-03A1	24	090050
07270-00835	D0200-04A1	6	090060
07270-21590	N1210-01A0	39	270020
07270-21590	N1210-01A1	39	270030
07270-61014	D0200-01A1	20	090030
07270-61431	H0110-01A1		150011
07271-61225	A4110-B3S5	14	000430
07280-04726	K1110-41A1	4	210580
07281-00197	B0920-01A0	6	030050
07281-00197	B0920-01A0	8	030050
07281-00197	N1210-01A0	40	270020
07281-00197	N1210-01A1	40	270030
07281-00359	C0100-04A1	10	060040
07281-00359	D0200-04A1	3	090060
07281-00709	A1111-A3C5	5	000000
07283-31185	B0200-01A1	13	030030
07283-31185	B0200-01A2	13	030040
07283-33442	Y1620-01A6	40	480261
07283-33442	Y1620-01A8	43	480271
07283-33442	Y1620-11A2	43	480281
07283-33442	Y1620-11A3	43	480291
07283-33442	Y1620-41A2	34	480320
07283-34949	C0100-03A1	25	060030
07283-36155	K0700-01A0	27	210180
07283-37663	C0100-04A1	20	060040
07283-37663	C0100-04A1	31	060040
07285-00100	D0200-03A1	25	090050
07285-00100	D0200-03A1	8	090050
07285-00100	D0200-04A1	7	090060

PART NO.	FIG.NO.	INDEX	PAGE
07285-00115	D0200-01A1	21	090030
07285-00155	B0100-01A0	24	030020
07285-00155	H0110-01A1		150011
07285-00200	H0110-01A1	44	150011
07285-00220	A2060-A3H4	9	000180
07286-00825	A3330-A3A8	2	000330
07286-01690	W9960-01A0	1	450070
07286-01985	A2060-A3H4	8	000180
07286-03828	K1110-41A1	3	210580
07288-01004	D0200-01A1	22	090030
07289-00035	W1113-01A0	10	450010
07289-00035	W1113-01A0	11	450010
07289-00035	W1113-01A1	19	450020
07289-00035	W1113-01A1	26	450020
07289-00035	W1113-01A1	27	450020
07289-00070	C0100-06A1	14	060060
07289-00070	C0100-06A1	16	060060
07299-00120	A1610-A3Y3	18	000100
07299-00130	B0200-01A1	11	030030
07299-00130	B0200-01A1	17	030030
07299-00130	B0200-01A2	11	030040
07299-00130	B0200-01A2	17	030040
07371-31049	H0312-01A0	15	150120
07371-31049	H0312-01A0	8	150120
07371-31049	H0312-01A1	12	150130
07371-31049	H0312-01A1	5	150130
07371-31049	H1210-01A0	3	150180
07371-31049	H1210-01A0	8	150180
07371-31049	H1210-02A0	5	150200
07371-31049	H1220-01A1	14	150210
07371-31049	H1220-01A1	27	150210
07371-31049	H1220-01A1	4	150210
07371-31049	H1220-01A1	9	150210
07371-31049	H1220-01A2	14	150220
07371-31049	H1220-01A2	27	150220
07371-31049	H1220-01A2	4	150220
07371-31049	H1220-01A2	9	150220
07371-31049	H1270-01A0	24	150240
07371-31049	H1270-02A0	34	150270
07371-31049	H1310-01A0	9	150310
07371-31049	H1340-01A0	3	150320
07371-31049	N1310-01A0	8	270050
07371-31049	P1120-01A0	3	300010
07371-31049	P1120-01A1	3	300020
07371-31049	T1110-04A2	4	360080
07371-31049	T1110-05A2	3	360100
07371-31049	T1200-04A1	3	360480
07371-31049	T1200-04A5	3	360500
07371-31049	T1200-04B1	3	360540
07371-31049	Y1620-01A1	43	480251

PART NO.	FIG.NO.	INDEX	PAGE
07371-31049	Y1620-01A6	45	480261
07371-31049	Y1620-01A8	47	480271
07371-31049	Y1620-11A2	47	480281
07371-31049	Y1620-11A3	47	480291
07371-31049	Y1620-41A0	39	480300
07371-31049	Y1620-41A1	39	480310
07371-31049	Y1620-41A2	41	480320
07371-31465	H1270-03A0	18	150280
07371-31465	H1270-03A0	25	150280
07371-51260	H1270-01A0	29	150240
07371-51260	T1110-08A4	3	360150
07371-51260	T1200-05A5	10	360580
07371-51260	T1200-06A5	12	360610
07371-51470	H1270-02A0	39	150270
07371-51470	T1110-08A4	11	360150
07371-51470	T1200-05A5	23	360580
07372-21035	H0312-01A0	16	150120
07372-21035	H0312-01A0	9	150120
07372-21035	H0312-01A1	13	150130
07372-21035	H0312-01A1	6	150130
07372-21035	H1210-01A0	4	150180
07372-21035	H1210-01A0	9	150180
07372-21035	H1210-02A0	6	150200
07372-21035	H1220-01A1	10	150210
07372-21035	H1220-01A1	15	150210
07372-21035	H1220-01A1	28	150210
07372-21035	H1220-01A1	5	150210
07372-21035	H1220-01A2	10	150220
07372-21035	H1220-01A2	15	150220
07372-21035	H1220-01A2	28	150220
07372-21035	H1220-01A2	5	150220
07372-21035	H1270-01A0	25	150240
07372-21035	H1270-02A0	35	150270
07372-21035	H1310-01A0	10	150310
07372-21035	H1340-01A0	4	150320
07372-21035	N1310-01A0	9	270050
07372-21035	P1120-01A0	4	300010
07372-21035	P1120-01A1	4	300020
07372-21035	T1110-04A2	5	360080
07372-21035	T1110-05A2	4	360100
07372-21035	T1200-04A1	4	360480
07372-21035	T1200-04A5	4	360500
07372-21035	T1200-04B1	4	360540
07372-21035	Y1620-01A1	44	480251
07372-21035	Y1620-01A6	46	480261
07372-21035	Y1620-01A8	48	480271
07372-21035	Y1620-11A2	48	480281
07372-21035	Y1620-11A3	48	480291
07372-21035	Y1620-41A0	40	480300
07372-21035	Y1620-41A1	40	480310

PART NO.	FIG.NO.	INDEX	PAGE
07372-21035	Y1620-41A2	42	480320
07372-21040	H0120-04A2	3	150090
07372-21040	H1210-02A0	8	150200
07372-21040	H1220-01A1	19	150210
07372-21040	H1220-01A1	25	150210
07372-21040	H1220-01A2	19	150220
07372-21040	H1220-01A2	25	150220
07372-21040	H1270-02A0	19	150270
07372-21040	H1270-02A0	30	150270
07372-21040	T1110-03A2	14	360070
07372-21040	T1110-03A2	4	360070
07372-21040	T1110-08A4	7	360150
07372-21060	Y1620-01A6	33	480260
07372-21060	Y1620-01A8	34	480270
07372-21060	Y1620-11A2	34	480280
07372-21060	Y1620-11A3	34	480290
07372-21060	Y1620-41A0	29	480300
07372-21060	Y1620-41A2	29	480320
07372-21240	H1270-03A0	19	150280
07372-21240	H1270-03A0	26	150280
07372-21240	Y1620-01A6	38	480261
07372-21240	Y1620-01A8	41	480270
07372-21240	Y1620-11A2	41	480280
07372-21240	Y1620-11A3	41	480290
07372-21240	Y1620-41A0	33	480300
07372-21240	Y1620-41A1	29	480310
07372-21240	Y1620-41A1	33	480310
07372-21240	Y1620-41A2	38	480320
07375-21060	Y1620-01A1	33	480250
07376-70315	W1202-01A0	1	450050
07376-70522	W1202-01A0	3	450050
07378-11000	T1110-05A2	1	360100
07379-00640	W1202-01A0	7	450050
07379-01044	T1200-04A1	6	360480
07379-01044	T1200-04A5	6	360500
07379-01044	T1200-04B1	6	360540
07379-01044	W1200-01A0	1	450030
07379-01044	W1200-01A1	1	450040
07379-01260	T1200-05A5	13	360580
07379-01260	W1200-01A1	2	450040
07379-01470	T1200-05A5	26	360580
07379-01470	W1200-01A1	3	450040
07430-71380	Y1662-03A0	16	480450
07430-71380	Y1662-13A0	9	480550
07430-71380	Y1662-17A0	21	480590
07430-71380	Y1662-17A0	8	480590
07430-71380	Y1664-03A0	16	480650
07430-71380	Y1664-13A0	9	480750
07430-71380	Y1664-17A0	21	480790
07430-71380	Y1664-17A0	8	480790

PART NO.	FIG.NO.	INDEX	PAGE
07430-71380	Y1664-21A0	9	480830
07700-40460	D0100-01A1	2	090010
07700-40460	D0100-01A2	2	090020
07700-50240	D0200-01A1	25	090030
07705-01400	A2110-A3R2	3	000190
07950-10450	V0300-01A0	10	420030
07950-90403	V0300-01A0	12	420030
07951-41017	V0300-01A0	11	420030
07952-70004	V0300-01A0		420030
07959-20001	R0110-02A0	14	330030
08013-01513	K0330-01A0	16	210160
08017-B0701	K1110-09A9	15	210290
08020-20000	K1110-47A1	2	210640
08028-43030	K1110-48A1	31	210650
08028-44035	E0200-01A1	38	120040
08028-44040	E0200-05A1	1	120080
08028-44040	E0200-05A2	1	120100
08028-64035	E0100-01A0	9	120010
08028-64035	E0100-01A2	9	120030
08028-CD065	K1110-47A1	26	210640
08031-20108	K0700-01A0	21	210180
08034-00536	P1120-01A0	18	300010
08034-00536	P1120-01A1	18	300020
08034-20414	K1110-07A9	9	210270
08034-20414	K1110-08A9	3	210280
08034-20414	K1110-09A9	16	210290
08034-20414	K1110-09A9	5	210290
08034-20414	K1110-29A1	6	210530
08034-20414	K1110-53B2	8	210710
08034-20414	K1110-57A1	44	210751
08034-20519	D0200-01A1	3	090030
08034-20519	D0200-04A1	10	090060
08034-20519	E0200-03A1	23	120060
08034-20519	E0200-03A1	44	120060
08034-20519	E0200-04A1	21	120070
08034-20519	H1831-02A2	16	150370
08034-20519	H1831-02A2	4	150370
08034-20519	H1831-02A3	16	150380
08034-20519	H1831-02A3	4	150380
08034-20519	K0700-02A0	15	210190
08034-20519	K1110-44A2	34	210620
08034-20519	K1110-48A1	27	210650
08034-20519	K1110-57A1	35	210750
08034-20519	K1110-63A1	4	210800
08034-20519	K1110-63A1	7	210800
08034-20519	K1110-67A1	2	210850
08034-20519	T1110-06A2	22	360110
08034-20519	W1113-01A0	21	450010
08034-20519	W1113-01A1	38	450020
08034-20536	D0200-02A1	31	090040

PART NO.	FIG.NO.	INDEX	PAGE
08034-20536	E0450-01A1	35	120160
08034-20536	H0340-01A0	4	150170
08034-20536	H1831-02A2	24	150370
08034-20536	H1831-02A2	9	150370
08034-20536	H1831-02A3	25	150380
08034-20536	H1831-02A3	9	150380
08034-20536	H1840-01A0	1	150400
08034-20536	H1840-01A0	9	150400
08034-20536	K0700-02A0	16	210190
08034-20536	K0700-02A0	38	210190
08034-20536	K1110-44A2	41	210620
08034-20536	K1110-62A1	9	210790
08034-20536	K1110-64A1	1	210810
08034-20536	K1110-65A1	11	210820
08034-20536	K1110-65A1	13	210820
08034-20536	K1110-65A1	17	210820
08034-20536	K1110-65A1	4	210820
08034-20536	K1110-65A1	6	210820
08034-20536	K1520-01A0	22	210870
08034-20536	K1520-01A1	21	210880
08034-20536	P1120-01A0	12	300010
08034-20536	P1120-01A1	12	300020
08034-20876	K1110-25A1	17	210430
08034-20876	K1110-25A1	7	210430
08034-20876	K1520-01A0	21	210870
08034-20876	K1520-01A1	20	210880
08034-20876	K1520-01A1	22	210880
08036-00814	N1110-01A0	11	270010
08036-10810	E0310-01A3	5	120120
08037-02512	K0220-01A0	7	210090
08037-02512	K1110-03A8	5	210220
08037-02512	K1110-03A9	7	210230
08037-03614	M1810-01A1	24	240220
08037-03614	M1810-01A2	24	240230
08037-03614	M1810-01A2A	24	240240
08037-03614	M1810-01A2A	31	240240
08037-03614	M1810-01A3	24	240250
08037-03614	M1810-01A3	31	240250
08037-03614	M1810-02A1	3	240260
08037-03614	M1810-02A2	3	240270
08037-03614	M1810-03A1	25	240300
08037-03614	M1810-03A1	3	240300
08037-03614	M1810-03A2	3	240310
08037-03614	M1810-03A3	15	240320
08037-03614	M1810-03A3	3	240320
08037-03614	M1810-03A4	25	240330
08037-03614	M1810-03A4	3	240330
08037-05016	M1810-01A1	3	240220
08037-05016	M1810-01A2	3	240230
08037-05016	M1810-01A2A	3	240240

PART NO.	FIG.NO.	INDEX	PAGE
08037-05016	M1810-01A3	3	240250
08037-11425	K1110-53B2	11	210710
08038-00035	K1110-47A1	15	210640
08038-00035	K1110-47A1	27	210640
08038-00519	E0200-04A1	15	120070
08038-00519	K1110-47A1	19	210640
08038-00519	K1110-47A1	24	210640
08038-02027	E0200-03A1	43	120060
08038-02027	E0200-04A1	14	120070
08038-02027	E0200-04A1	20	120070
08038-02027	K1110-47A1	25	210640
08038-10035	E0200-01A1	1	120040
08038-22511	E0200-05A1	2	120080
08038-22511	E0200-05A2	2	120100
08038-42511	E0100-01A0	10	120010
08038-42511	E0100-01A2	10	120030
08038-42511	E0200-05A1	3	120080
08038-42511	E0200-05A2	3	120100
08041-00500	K1110-47A1	3	210640
08041-01000	K1110-30A1	3	210540
08041-01000	K1110-30A10	3	210560
08041-01000	K1110-30A9	3	210550
08041-01000	K1110-47A1	4	210640
08041-02000	K1110-30A1	4	210540
08041-02000	K1110-30A10	4.	210560
08041-02000	K1110-30A9	4	210550
08041-02000	K1110-47A1	5	210640
08041-03000	K1110-30A1	5	210540
08041-03000	K1110-30A10	5	210560
08041-03000	K1110-30A9	5	210550
08041-03000	K1110-47A1	6	210640
08051-00801	K1110-09A9	11	210290
08053-01510	K0700-01A0	19	210180
08053-01510	K1110-44A2	39	210620
08055-00282	C0100-06A1	31	060060
08057-00810	E0200-04A1	10	120070
08057-00812	E0200-01A1	16	120040
08057-00812	E0200-03A1	8	120060
08057-12010	E0200-03A1	30	120060
08057-12010	E0200-03A1	34	120060
08057-12010	E0200-03A1	40	120060
08057-12010	E0200-04A1	19	120070
08057-12010	E0200-04A1	6	120070
08057-12012	E0200-01A1	24	120040
08057-12012	E0200-02A1	1	120050
08057-12012	E0200-02A1	11	120050
08057-12012	E0200-02A1	15	120050
08057-12012	E0200-02A1	27	120050
08057-12012	E0200-02A1	33	120050
08057-12012	E0200-02A1	39	120050

PART NO.	FIG.NO.	INDEX	PAGE
08057-12012	E0200-02A1	4	120050
08057-12012	E0200-02A1	7	120050
08057-12012	E0200-03A1	11	120060
08057-12012	E0200-03A1	16	120060
08057-12012	E0200-03A1	2	120060
08057-12012	E0200-03A1	20	120060
08057-12012	E0200-03A1	24	120060
08057-12012	E0200-04A1	22	120070
08057-12012	E0200-04A1	30	120070
08057-12012	E0200-04A1	33	120070
08057-12012	E0200-05A1	12	120080
08057-12012	E0200-05A2	12	120100
08057-14012	E0200-03A1	5	120060
08057-22012	E0200-01A1	10	120040
08057-22012	E0200-01A1	13	120040
08057-22012	E0200-01A1	20	120040
08057-22012	E0200-01A1	4	120040
08059-00310	E0450-01A0	23	120150
08059-00310	E0450-01A1	30	120160
08059-00413	K1110-07A9	10	210270
08059-00413	K1110-09A9	6	210290
08059-00413	K1110-28A8	7	210500
08059-00413	K1110-28A9	7	210520
08059-00515	K1110-29A1	5	210530
08086-20000	K1110-57A1	30	210750
08088-30000	K1110-47A1	16	210640
08116-02410	K1110-08A9		210280
08160-82400	E0410-01A0		120130
08174-13118	M1410-01A0	1	240160
08191-00770	E0450-01A2	3	120170
08192-14400	E0450-01A2	2	120170
08192-24200	E0450-01A2	1	120170
08193-20010	A2110-A3R2	17	000190
08193-20010	A4110-B3S5	31	000430
08193-20010	A4110-B3S5	35	000430
08193-20010	A6210-A3H5	6	000610
08193-20010	A6210-A3H6	6	000620
08193-20010	A6810-A3K5	13	000650
08193-20010	A6810-B3K5	5	000660
08193-20010	E0420-01A0	2	120140
08193-20012	E0200-02A1	18	120050
08193-20012	E0200-05A1	13	120080
08193-20012	E0200-05A1	16	120080
08193-20012	E0200-05A2	13	120100
08193-20012	T1110-07A2	8	360130
08193-20012	T1110-07A6	8	360140
08193-21012	K1110-44A2	38	210620
08193-21012	Y1600-11A0	21	480230
08193-21012	Y1600-12A0	21	480240
08211-00720	E0450-01A1	38	120160

PART NO.	FIG.NO.	INDEX	PAGE
08211-11020	E0200-03A1	35	120060
08211-11020	E0200-04A1	7	120070
08504-10000	E0200-05A2	20	120100
08912-51600	K1110-53B2	6	210710
09002-01012	V0300-01A0	3	420030
09002-01417	V0300-01A0	4	420030
09002-01922	V0300-01A0	5	420030
09002-03032	V0300-01A0	6	420030
09002-03641	V0300-01A0	7	420030
09007-00425	V0300-01A0	19	420030
09007-00528	V0300-01A0	14	420030
09007-00836	V0300-01A0	13	420030
09019-28035	V0300-01A0	2	420030
09021-03044	V0300-01A0	15	420030
09021-03653	V0300-01A0	16	420030
09023-00300	V0300-01A0	18	420030
09024-00300	V0300-01A0	17	420030
09039-00150	V0300-01A0	8	420030
09055-10390	V0300-01A0	9	420030
09056-04613	V0300-01A0	1	420030
09059-00800	V0100-01A0	1	420010
09133-A3281	U0100-01A0	19	390010
09133-A3281	U0100-01A1	19	390020
09133-A3281	U0100-01A2	19	390030
09133-A3281	U0100-01A3	19	390040
09134-A1681	U0510-01A0	1	390220
09244-02516	T1510-01C11	11	360810
09244-03036	T1510-01C10	11	360800
09244-03036	T1510-01C6	6	360760
09244-03036	T1510-01C7	13	360770
09244-03036	T1510-01C9	10	360790
09370-00100	R0110-02A0	12	330030
09409-00002	K0160-01A1	3	210060
09415-01008	K1110-13A8	14	210350
09415-01008	K1110-13A8	22	210350
09415-02512	K1110-13A8	3	210350
09415-02512	K1110-13A9	3	210360
09415-02512	K1110-57A1	27	210750
09416-10200	K1110-04A8	5	210240
09416-10200	K1110-11A9	10	210300
09416-10200	K1110-11A9	2	210300
09416-10200	K1110-11A9	4	210300
09452-14503	K1110-30A1	15	210540
09452-14503	K1110-30A10	15	210560
09452-14503	K1110-30A9	15	210550
09479-02400	K1110-62A1	2	210790
09479-02400	K1110-62A1	4	210790
09483-10308	C0100-04A1	4	060040
09620-D2050	U0520-01A6	2	390250
09620-D2050	U0520-01B3	2	390260

PART NO.	FIG.NO.	INDEX	PAGE
09637-05163	U0550-01A5	1	390280
09637-30163	U0550-01A4	1	390270
09653-A0481	U0100-01A0	9	390010
09653-A0481	U0100-01A1	9	390020
09653-A0481	U0100-01A2	9	390030
09653-A0481	U0100-01A3	9	390040
09657-A0881	U0100-01A0	10	390010
09657-A0881	U0100-01A1	10	390020
09657-A0881	U0100-01A2	10	390030
09657-A0881	U0100-01A3	10	390040
09659-A057B	U0100-01A0	21	390010
09659-A057B	U0100-01A0	5	390010
09659-A057B	U0100-01A1	21	390020
09659-A057B	U0100-01A1	5	390020
09659-A057B	U0100-01A2	21	390030
09659-A057B	U0100-01A2	5	390030
09659-A057B	U0100-01A3	21	390040
09659-A057B	U0100-01A3	5	390040
09659-A057B	U0580-01A0	1	390290
09667-A0481	U0100-01A0	13	390010
09667-A0481	U0100-01A1	13	390020
09667-A0481	U0100-01A2	13	390030
09667-A0481	U0100-01A3	13	390040
09669-0000E	U0100-01A0	14	390010
09669-0000E	U0100-01A1	14	390020
09669-0000E	U0100-01A2	14	390030
09669-0000E	U0100-01A3	14	390040
09685-00002	U0100-01A0	4	390010
09685-00002	U0100-01A1	4	390020
09685-00002	U0100-01A2	4	390030
09685-00002	U0100-01A3	4	390040
09690-M0063	U0100-01A0	1	390010
09690-M0063	U0100-01A1	1	390020
09690-M0063	U0100-01A2	1	390030
09690-M0063	U0100-01A3	1	390040
09690-P0630	U0100-01A0	2	390010
09690-P0630	U0100-01A1	2	390020
09690-P0630	U0100-01A2	2	390030
09690-P0630	U0100-01A3	2	390040
09690-P1400	U0150-01A0	1	390140
09690-P1400	U0150-01A1	1	390150
09690-P1400	U0150-01A1	2	390150
09690-P1400	U0150-01A2	1	390210
09690-P1400	U0150-01A2	2	390210
09803-A0481	U0120-01A6	2	390120
09803-A0481	U0120-01A8	2	390130
09805-A0881	U0100-01A0	20	390010
09805-A0881	U0100-01A1	20	390020
09805-A0881	U0100-01A2	20	390030
09805-A0881	U0100-01A3	20	390040

PART NO.	FIG.NO.	INDEX	PAGE
09805-C0481	U0100-01A0	11	390010
09805-C0481	U0100-01A1	11	390020
09805-C0481	U0100-01A2	11	390030
09805-C0481	U0100-01A3	11	390040
09808-A0881	U0100-01A0	12	390010
09808-A0881	U0100-01A1	12	390020
09808-A0881	U0100-01A2	12	390030
09808-A0881	U0100-01A3	12	390040
09842-A0481	U0100-01A0	28	390010
09842-A0481	U0100-01A1	28	390020
09842-A0481	U0100-01A2	28	390030
09842-A0481	U0100-01A3	28	390040
09844-00050	U0100-01A0	3	390010
09844-00050	U0100-01A1	3	390020
09844-00050	U0100-01A2	3	390030
09844-00050	U0100-01A3	3	390040
09920-00150	A2040-A3J6	5	000150
09920-00150	A2110-A3R2	32	000190
09960-00801	U0100-01A0	25	390010
09960-00801	U0100-01A1	25	390020
09960-00801	U0100-01A2	25	390030
09960-00801	U0100-01A3	25	390040
09960-00802	U0100-01A0	26	390010
09960-00802	U0100-01A1	26	390020
09960-00802	U0100-01A2	26	390030
09960-00802	U0100-01A3	26	390040
09963-03001	U0100-01A0	18	390010
09963-03001	U0100-01A2	18	390030
09963-A1640	U0100-01A1	18	390020
09963-A1640	U0100-01A3	18	390040
09980-10550	V0200-01A0	1	420020
09980-92550	V0200-01A0		420020
09982-20057	V0200-01A0	2	420020
113-78-21170	T1510-02C4	2	360830
113-89-97950	H0340-01A0	10	150170
113-89-97950	H1810-01A1	22	150340
113-89-97950	H1840-01A0	18	150400
113-89-97950	W1113-01A0	12	450010
113-89-97950	W1113-01A1	28	450020
113-89-97950	W1113-01A1	31	450020
113-899-7950	H1810-01A0	19	150330
11Y-01-11920	B0200-01A1	7	030030
11Y-01-11920	B0200-01A2	7	030040
11Y-09-11140	C0100-04A1	5	060040
11Y-09-11140	D0200-01A1	12	090030
11Y-09-11140	D0200-01A1	23	090030
11Y-09-11160	K0700-02A0	27	210190
11Y-62-11980	N1310-01A0	23	270050
11Y-62-11980	N1310-01A0	26	270050
11Y-62-12130	H0120-01A1	12	150030

PART NO.	FIG.NO.	INDEX	PAGE
11Y-62-12130	H0120-01A4	12	150040
11Y-62-12130	H0120-02A5	19	150070
11Y-62-12130	H1810-01A0	4	150330
11Y-62-12130	H1831-01A1	10	150350
11Y-62-12130	H1831-01A2	9	150360
11Y-62-12130	H1833-01A0	8	150390
11Y-62-12130	K1110-56A1	8	210740
11Y-62-12140	K1110-44A2	24	210620
11Y-62-12160	H0120-01A1	6	150030
11Y-62-12160	H0120-01A4	6	150040
11Y-62-12160	H0120-02A1	16	150050
11Y-62-12160	H0120-02A1	27	150050
11Y-62-12160	H0120-02A1	30	150050
11Y-62-12160	H0120-02A1	4	150050
11Y-62-12160	H0120-02A4	13	150060
11Y-62-12160	H0120-02A4	25	150060
11Y-62-12160	H0120-02A4	4	150060
11Y-62-12160	H0120-02A5	16	150070
11Y-62-12160	H0120-02A5	28	150070
11Y-62-12160	H0120-02A5	31	150070
11Y-62-12160	H0120-02A5	4	150070
11Y-62-12160	H0120-02A5	7	150070
11Y-62-12160	H1270-02A0	5	150270
11Y-62-12160	H1810-01A0	1	150330
11Y-62-12160	H1810-01A1	1	150340
11Y-62-12160	K1110-42A1	24	210590
11Y-62-12170	H1270-02A0	8	150270
11Y-62-12250	H0120-01A1	10	150030
11Y-62-12250	H0120-01A4	10	150040
11Y-62-12330	H1831-01A1	12	150350
11Y-62-12330	H1831-01A2	11	150360
11Y-62-12330	K1110-66A2	10	210840
11Y-62-12330	K1110-66A2	23	210840
11Y-62-12510	N1220-01A0	7	270040
11Y-62-12520	H0120-01A1	14	150030
11Y-62-12520	H0120-01A4	14	150040
11Y-62-12520	K1110-51A1	8	210680
11Y-62-12820	H0120-02A4	19	150060
11Y-62-12820	H0120-02A5	22	150070
11Y-62-29480	H1831-02A2	11	150370
11Y-62-29480	H1831-02A3	11	150380
124-54-26540	C0100-02A1	19	060020
124-A6-21910	M1110-02A1	6	240020
124-A6-21910	M1110-03A1	13	240030
124-A6-21910	M1110-03A1	7	240030
124-A6-21920	M1110-02A1	27	240020
124-A6-21920	M1110-03A1	17	240030
124-A6-21920	M1110-03A1	19	240030
124-A6-21920	M1110-03A1	21	240030
124-A6-21920	M1110-03A1	23	240030

PART NO.	FIG.NO.	INDEX	PAGE
124-A6-21920	M1110-03A1	25	240030
124-A6-21920	M1110-03A1	27	240030
124-A6-21920	M1110-03A1	29	240030
124-A6-21920	M1110-03A1	31	240030
124-A6-21920	M1110-03A1	33	240030
124-A6-21920	M1110-03A1	35	240030
124-A6-21920	M1110-03A1	37	240030
124-A6-21920	M1110-03A1	39	240030
124-A6-21920	M1110-03A1	41	240030
124-A6-21920	M1110-03A1	43	240031
124-A6-21920	M1110-03A1	45	240031
124-A6-21920	M1110-03A1	47	240031
124-A6-21920	M1110-03A1	49	240031
124-A6-21920	M1110-04A1	2	240040
12R-60-11230	H0110-01A1	30	150010
130-43-64260	K0220-01A0	5	210090
130-43-64260	K0230-01A0	2	210100
134-03-61410	C0100-06A1	24	060060
134-03-61410	E0200-03A1	19	120060
134-03-61410	H0110-01A1	55	150011
140-30-00141	R0300-01A0		330050
140-30-00401	R0300-01A0	7	330050
140-30-00411	R0300-01A0	8	330050
141-06-11220	K0700-02A0	28	210190
141-06-11220	K0700-02A0	5	210190
141-06-11220	K1110-62A1	10	210790
142-03-11160	E0200-05A1	19	120080
142-03-11160	H1831-02A2	33	150370
142-03-11160	H1831-02A3	31	150380
144-60-11151	N1210-01A0	38	270020
144-60-11151	N1210-01A1	38	270030
144-A7-41460	D0200-02A1	37	090040
145-Z7-96270	K1110-06A9	20	210260
14X-54-26640	E0200-01A1	21	120040
14X-91-11330	K0230-01A2	20	210120
14X-98-35181	U0100-01A0	31	390010
14X-98-35181	U0100-01A1	31	390020
14X-98-35181	U0100-01A2	31	390030
14X-98-35181	U0100-01A3	31	390040
150-30-15553	R1100-03A8	10	330210
154-32-11283	R0500-01A1	12	330060
154-32-11283	R0500-01A1	3	330060
154-32-11283	R0500-01A10	3	330140
154-32-11283	R0500-01A3	12	330070
154-32-11283	R0500-01A3	3	330070
154-32-11283	R0500-01A4	3	330080
154-32-11283	R0500-01A5	3	330090
154-32-11283	R0500-01A7	12	330100
154-32-11283	R0500-01A7	3	330100
154-32-11283	R0500-01A8	12	330120

PART NO.	FIG.NO.	INDEX	PAGE
154-32-11283	R0500-01A8	3	330120
154-32-11283	R0500-01A9	3	330130
154-32-11283	Y0321-01A0	3	480040
154-97-91480	K1520-01A0	5	210870
154-97-91480	K1520-01A1	5	210880
155-06-15180	K0700-02A0	29	210190
155-06-15180	K1520-01A0	23	210870
155-06-15180	K1520-01A1	23	210880
170-10-16361	E0200-04A1	11	120070
170-30-13331	R0110-01A0	11	330010
175-27-00131	R0110-01A0	7	330010
175-30-35180	A2041-A3H5	12	000160
175-54-34170	E0100-01A0	15	120010
175-54-34170	E0100-01A2	15	120030
175-54-34170	K0700-01A0	14	210180
175-54-34170	M1110-04A1	15	240040
175-54-34170	M1150-01A1	12	240100
175-54-34170	M1150-01A1	18	240100
175-54-34170	M1150-01A1	22	240100
175-54-34170	M1150-01A1	26	240100
175-54-34170	M1150-02A1	15	240110
175-54-34170	M1210-01A0	15	240120
175-54-34170	M1210-01A0	22	240120
175-54-34170	M1210-01A1	14	240130
175-54-34170	M1210-01A1	21	240130
175-54-34170	M1220-01A1	17	240140
175-54-34170	M1220-01A1	19	240140
175-54-34170	M1810-01A1	18	240220
175-54-34170	M1810-01A1	26	240220
175-54-34170	M1810-01A1	37	240220
175-54-34170	M1810-01A2	18	240230
175-54-34170	M1810-01A2	26	240230
175-54-34170	M1810-01A2	37	240230
175-54-34170	M1810-01A2A	18	240240
175-54-34170	M1810-01A2A	26	240240
175-54-34170	M1810-01A2A	38	240240
175-54-34170	M1810-01A3	18	240250
175-54-34170	M1810-01A3	26	240250
175-54-34170	M1810-01A3	38	240250
175-54-34170	M1810-02A1	5	240260
175-54-34170	M1810-02A2	5	240270
175-54-34170	M1810-02A3	4	240280
175-54-34170	M1810-02A4	4	240290
175-54-34170	M1810-03A1	18	240300
175-54-34170	M1810-03A1	27	240300
175-54-34170	M1810-03A1	5	240300
175-54-34170	M1810-03A2	16	240310
175-54-34170	M1810-03A2	5	240310
175-54-34170	M1810-03A3	17	240320
175-54-34170	M1810-03A3	5	240320

PART NO.	FIG.NO.	INDEX	PAGE
175-54-34170	M1810-03A4	18	240330
175-54-34170	M1810-03A4	27	240330
175-54-34170	M1810-03A4	5	240330
175-61-17240	B0920-01A0	15	030050
175-61-17240	K1520-01A0	18	210870
175-61-51750	H1270-04A0	12	150290
176-38-41350	H1831-02A2	26	150370
17A-03-14130	C0100-06A1	33	060060
17A-60-11310	H0110-01A1	38	150010
17A-97-93180	K1110-28A8	3	210500
17A-97-93180	K1110-28A9	3	210520
17M-91-13530	K1110-25A1	10	210430
195-01-16420	E0200-03A1	47	120061
195-01-16420	E0420-01A0	3	120140
195-03-11570	D0100-01A1	25	090010
195-03-11570	D0100-01A2	23	090020
195-03-11570	H0110-01A1	54	150011
195-03-41380	C0100-01A1	10	060010
195-32-41220	T1510-01C11	18	360810
195-33-11220	D0200-01A1	14	090030
195-33-11220	D0200-02A1	42	090040
195-33-11220	D0200-02A1	47	090041
195-33-11220	D0200-04A1	27	090060
195-33-11220	E0200-02A1	12	120050
195-33-11220	E0200-02A1	36	120050
195-33-11220	E0200-02A1	8	120050
195-33-11220	H1810-01A1	28	150340
195-33-11220	H1831-02A2	42	150370
195-33-11220	K1110-48A1	11	210650
195-33-11220	K1110-48A1	15	210650
195-33-11220	K1110-48A1	19	210650
195-33-11220	K1520-01A0	25	210870
195-33-11220	K1520-01A1	25	210880
195-63-93170	Y1620-01A8	14	480270
195-63-93170	Y1620-11A2	14	480280
195-63-93170	Y1620-11A3	14	480290
195-63-93170	Y1620-41A2	10	480320
195-97-93570	E0200-01A1	29	120040
195-97-93570	H1810-01A1	36	150340
195-97-97770	K1110-09A9	14	210290
195-Z1-11690	K1110-06A9	8	210260
195-Z1-12970	K0220-01A0	6	210090
198-06-53540	E0200-04A1	2	120070
198-06-53610	E0200-01A1	35	120040
198-06-53630	H1810-01A0	23	150330
198-06-53630	H1810-01A1	32	150340
198-32-11221	T1510-01C10	18	360800
198-32-11221	T1510-02A2	4	360820
198-32-14210	T1510-02A2	3	360820
198-33-12380	K0700-02A0	24	210190

PART NO.	FIG.NO.	INDEX	PAGE
198-38-12460	K0700-01A0		210180
198-43-15310	K1120-01A0	14	210860
198-60-55510	Y1890-01A0	1	481180
198-63-94170	Y1620-01A1	14	480250
198-63-94170	Y1620-01A6	14	480260
198-63-94170	Y1620-41A0	10	480300
198-63-94170	Y1620-41A1	10	480310
198-Z1-14610	Y1062-01A0		480080
19M-06-31720	K1110-47A1	7	210640
201-60-11390	H1833-01A0	2	150390
201-62-71810	H1270-04A0	2	150290
202-97-02210	T1200-06A5	3	360610
203-04-K1140	D0100-01A1	20	090010
203-43-51620	K1110-42A1	8	210590
203-54-56630	M1220-01A1	2	240140
203-54-62670	M1130-01A1	36	240060
203-54-62670	M1140-03A1	3	240090
203-54-63230	M1140-03A1	7	240090
203-60-31100	H0110-01A1	2	150010
203-60-31160	H0110-01A1	3	150010
203-60-62220	Y1670-21A0	25	481120
203-62-52210	J1110-02A2	41	180030
203-62-63740	N1310-01A0	20	270050
205-00-73360	U0100-01A0	15	390010
205-00-73360	U0100-01A1	15	390020
205-00-73360	U0100-01A2	15	390030
205-00-73360	U0100-01A3	15	390040
205-03-62660	C0100-01A1	5	060010
205-03-71230	C0100-01A1	3	060010
205-04-K1370	W1113-01A1	11	450020
205-25-71280	N1110-01A0	3	270010
205-30-71171	R1100-04A6	7	330220
205-30-71181	J1110-01A2	2	180010
205-30-71181	R1100-04A6	2	330220
205-30-71191	J1110-01A2	3	180010
205-30-71191	R1100-04A6	3	330220
205-30-72170	R0110-02A0	15	330030
205-32-51211	N1210-01A0	22	270020
205-32-51211	N1210-01A1	22	270030
205-32-51211	Y0260-01A0	18	480010
205-54-51250	K1110-11A9	25	210300
205-54-51720	K0320-01A0	4	210150
205-54-51730	K0320-01A0	5	210150
205-54-51970	M1130-01A1	12	240060
205-54-51970	M1140-01A1	13	240070
205-54-53550	M1130-01A1	22	240060
205-54-53550	M1140-02A1	13	240080
205-54-67660	M1110-01A1	10	240010
205-54-67660	M1110-01A1	4	240010
205-54-75240	K1110-21A1	14	210370
205-54-76260	M1110-01A1	1	240010
205-54-76280	M1110-01A1		240010
205-54-76530	M1110-01A1	7	240010
205-60-71230	H0330-01A0	14	150150
205-60-71230	H0330-01A1	17	150160
205-62-73430	H1210-01A0	15	150180
205-62-73430	H1210-01A0	19	150180
205-62-73430	H1210-01A0	23	150180
205-62-73430	H1210-01A0	27	150180
205-62-73431	T1110-03A2	18	360070
205-62-73431	T1110-03A2	8	360070
205-62-73431	T1110-04A2	14	360080
205-62-73431	T1110-09A4	2	360160
205-62-74690	A4110-C3S5	5	000440
205-70-51380	T1200-04A1	16	360480
205-70-51380	T1200-04A5	16	360500
205-70-51390	T1110-06A2	15	360110
205-70-51390	T1110-06A2	8	360110
205-70-61560	J1310-01A0	2	180040
205-70-61560	J1310-01A1	2	180050
205-70-66580	J1310-01A0	6	180040
205-70-66580	J1310-01A1	6	180050
205-70-66580	T1110-02A2	6	360050
205-70-66580	T1110-02A6	6	360060
205-70-66580	T1200-01A1	9	360280
205-70-66580	T1200-01A4	9	360310
205-70-66580	T1200-01A8	9	360360
205-70-66580	T1200-01A9	12	360350
205-70-66580	T1200-01B1	10	360370
205-70-66580	T1200-01B1	14	360370
205-70-66580	T1200-01B7	9	360420
205-70-66581	T1200-01A1	14	360280
205-70-66581	T1200-01A4	14	360310
205-70-66581	T1200-01A8	14	360360
205-70-66581	T1200-01A9	17	360350
205-70-66581	T1200-01B7	14	360420
205-970-5550	H1270-04A0	4	150290
205-970-5560	Y1840-01A0	12	481150
205-977-7310	D0200-01A1	11	090030
206-03-43340	C0100-05A1	27	060050
206-03-43340	C0100-06A1	37	060060
206-06-61130	H1833-01A0	12	150390
206-06-61130	K1110-42A1	32	210590
206-06-61130	K1110-44A2	37	210620
206-53-00063	K1110-01A8		210200
206-53-13121	K1120-01A0	2	210860
206-53-14711	K0310-01A0	1	210130
206-53-14721	K0310-01A1	1	210140
206-53-16314	K1110-01A8	1	210200
206-62-51650	H1210-02A0	3	150200

PART NO.	FIG.NO.	INDEX	PAGE
207-00-76430	U0610-01A2	1	390310
207-01-31141	H0210-01A0	1	150100
207-01-35140	B0100-01A0	17	030020
207-01-35140	B0100-01A0	7	030020
207-01-61170	B0100-01A0	18	030020
207-01-61170	B0100-01A0	8	030020
207-01-61311	B0000-01A0	1	030010
207-01-75340	C0100-04A1	15	060040
207-01-75340	C0100-04A1	17	060040
207-01-75340	C0100-04A1	26	060040
207-01-75340	C0100-04A1	28	060040
207-03-31271	C0100-06A1	9	060060
207-03-51530	C0100-06A1	17	060060
207-03-71211	C0100-06A1	4	060060
207-03-71680	C0100-01A1	39	060010
207-03-75590	C0100-01A1	11	060010
207-04-75410	W1113-01A1	23	450020
207-06-11370	E0100-01A0	7	120010
207-06-11370	E0100-01A2	7	120030
207-06-51330	E0100-01A0	13	120010
207-06-51330	E0100-01A2	13	120030
207-06-51461	E0100-01A0	11	120010
207-06-51461	E0100-01A2	11	120030
207-06-51470	E0100-01A0	6	120010
207-06-51470	E0100-01A2	6	120030
207-06-61280	E0100-01A0	1	120010
207-06-61461	E0100-01A0	12	120010
207-06-61461	E0100-01A2	12	120030
207-06-61490	K1110-49A1	3	210660
207-06-71132	K0350-01A0	2	210170
207-06-71540	W1113-01A0	16	450010
207-06-71540	W1113-01A1	33	450020
207-06-75122	K1110-47A1	20	210640
207-06-75161	T1110-07A2	9	360130
207-06-75161	T1110-07A6	9	360140
207-06-75310	E0100-01A0	2	120010
207-06-75310	E0100-01A2	2	120030
207-06-75321	E0100-01A0	3	120010
207-06-75321	E0100-01A2	3	120030
207-06-76130	K1110-57A1	43	210750
207-06-76270	E0450-01A2	4	120170
207-06-76310	E0450-01A0	25	120150
207-06-76310	E0450-01A1	33	120160
207-06-76340	E0450-01A1	32	120160
207-06-76420	E0450-01A0	7	120150
207-06-76420	E0450-01A1	7	120160
207-06-76431	E0450-01A0	8	120150
207-06-76431	E0450-01A1	8	120160
207-06-76440	E0450-01A0	9	120150
207-06-76440	E0450-01A1	9	120160

PART NO.	FIG.NO.	INDEX	PAGE
207-06-76451	E0450-01A0	22	120150
207-06-76451	E0450-01A1	29	120160
207-06-76460	E0450-01A0	10	120150
207-06-76460	E0450-01A1	10	120160
207-06-76490	E0450-01A0	24	120150
207-06-76490	E0450-01A1	31	120160
207-25-31180	N1110-01A0	4	270010
207-25-61160	N1110-01A0	2	270010
207-26-71210	N1210-01A0	32	270020
207-26-71210	N1210-01A1	32	270030
207-26-71210	Y0260-01A0	28	480010
207-26-71240	N1210-01A0	2	270020
207-26-71240	N1210-01A1	2	270030
207-26-71260	Y0260-01A0	33	480010
207-26-71261	N1210-01A0	37	270020
207-26-71261	N1210-01A1	37	270030
207-26-71410	N1210-01A0	43	270020
207-26-71410	N1210-01A1	43	270030
207-26-71510	N1210-01A0	36	270020
207-26-71510	N1210-01A1	36	270030
207-26-71510	Y0260-01A0	32	480010
207-26-71520	N1210-01A0	29	270020
207-26-71520	N1210-01A1	29	270030
207-26-71520	Y0260-01A0	25	480010
207-26-71610	Y0260-01A0	34	480010
207-27-51311	P1210-01A0	35	300030
207-27-52270	P1210-01A0	16	300030
207-27-61230	N1210-01A0	17	270020
207-27-61230	N1210-01A1	17	270030
207-27-61230	Y0260-01A0	13	480010
207-27-61250	N1210-01A0	19	270020
207-27-61250	N1210-01A1	19	270030
207-27-61250	Y0260-01A0	15	480010
207-30-00101	R1100-02A6	7	330190
207-30-51260	R1100-04A6	6	330220
207-30-53140	R1100-02A6	3	330190
207-30-53160	R1100-02A6	6	330190
207-30-53171	R1100-02A6		330190
207-30-53181	R1100-02A6	8	330190
207-30-75320	R0300-01A0	2	330050
207-30-75330	R0300-01A0	3	330050
207-30-75340	R0300-01A0		330050
207-30-75341	R0300-01A0	4	330050
207-30-75350	R0300-01A0	12	330050
207-30-75360	R0300-01A0	5	330050
207-30-75370	R0300-01A0	6	330050
207-43-81240	K1110-44A2	16	210620
207-46-71510	J1110-02A2	4	180030
207-53-00120	K1110-01A8		210200
207-53-00140	K1110-01A8		210200

PART NO.	FIG.NO.	INDEX	PAGE
207-53-14120	K1110-41A1	1	210580
207-53-14140	K1110-65A1	5	210820
207-54-51440	M1110-02A1	30	240020
207-54-51440	M1810-02A1	9	240260
207-54-51440	M1810-02A3	8	240280
207-54-51440	M1810-02A4	8	240290
207-54-51440	M1810-03A1	11	240300
207-54-51440	M1810-03A2	11	240310
207-54-51440	M1810-03A3	11	240320
207-54-66120	M1420-01A1	9	240170
207-54-71840	M1420-01A1	1	240170
207-54-75220	M1310-01A0	1	240150
207-54-75710	M1430-01A0	2	240180
207-54-75710	M1430-01A1	3	240190
207-54-76330	M1140-02A1	7	240080
207-54-76360	M1140-02A1	8	240080
207-54-76480	M1120-01A1	21	240050
207-54-76491	M1120-01A1	22	240050
207-54-77420	M1220-01A1		240140
207-54-77421	M1220-01A1	3	240140
207-54-77441	M1220-01A1	22	240140
207-54-77451	M1220-01A1	1	240140
207-54-77930	M1430-01A0	1	240180
207-54-77930	M1430-01A1	1	240190
207-54-77960	M1430-01A1	4	240190
207-54-78620	M1810-01A2	9	240230
207-54-78640	M1810-01A1	9	240220
207-54-78640	M1810-01A3	9	240250
207-54-78810	M1130-01A1	17	240060
207-54-78830	M1140-02A1	1	240080
207-54-78851	M1130-01A1	35	240060
207-54-78890	M1140-03A1	6	240090
207-54-78930	M1140-02A1	19	240080
207-60-51170	H0330-01A0	16	150150
207-60-51170	H0330-01A1	19	150160
207-60-61250	H0312-01A0	3	150120
207-60-71311	H1831-01A2	1	150360
207-60-71400	H1833-01A0		150390
207-62-31330	H1270-01A0	12	150240
207-62-31330	T1110-03A2	16	360070
207-62-31330	T1110-03A2	6	360070
207-62-31330	T1110-04A2	11	360080
207-62-31330	T1110-09A4	16	360160
207-62-31330	T1200-05A5	5	360580
207-62-52350	T1110-03A2	17	360070
207-62-52350	T1110-03A2	7	360070
207-62-52350	T1110-04A2	13	360080
207-62-52350	T1110-09A4	1	360160
207-62-52430	H1210-01A0	18	150180
207-62-52610	H1210-02A0	1	150200

PART NO.	FIG.NO.	INDEX	PAGE
207-62-54680	T1200-04A1	1	360480
207-62-54680	T1200-04A5	1	360500
207-62-54680	T1200-04B1	1	360540
207-62-54760	T1110-04A2	10	360080
207-62-54770	H1210-01A0	26	150180
207-62-54780	T1110-04A2	12	360080
207-62-56190	H0120-04A2	1	150090
207-62-64740	H0110-01A1	14	150010
207-62-64740	H0330-01A0	10	150150
207-62-64740	H0330-01A0	7	150150
207-62-64740	H0330-01A1	10	150160
207-62-64740	H0330-01A1	13	150160
207-62-64740	H0340-01A0	14	150170
207-62-64740	N1220-01A0	5	270040
207-62-71141	H0311-01A1	7	150110
207-62-71330	H1210-01A0	22	150180
207-62-71370	H1220-01A1	21	150210
207-62-71370	H1220-01A2	21	150220
207-62-71410	N1310-01A0	22	270050
207-62-71420	N1310-01A0	28	270050
207-62-71440	H1310-01A0	5	150310
207-62-71531	H0120-02A1	13	150050
207-62-71531	H0120-02A4	10	150060
207-62-71531	H0120-02A5	13	150070
207-62-71750	H0312-01A0	11	150120
207-62-71880	H0312-01A0	13	150120
207-62-71880	H0312-01A1	10	150130
207-62-72110	H0110-01A1	12	150010
207-62-72110	H0340-01A0	13	150170
207-62-72141	H0120-02A1	7	150050
207-62-72151	N1310-01A0	2	270050
207-62-72171	N1310-01A0	14	270050
207-62-73131	H1270-01A0	4	150240
207-62-73150	H1270-02A0	13	150270
207-62-73160	H1270-03A0	4	150280
207-62-73180	H1270-02A0	28	150270
207-62-73190	H1270-02A0	17	150270
207-62-73230	H1270-02A0	24	150270
207-62-73240	H1270-04A0	9	150290
207-62-73251	H1270-04A0	6	150290
207-62-73260	H1270-02A0	21	150270
207-62-73310	H1270-03A0	16	150280
207-62-73350	H1270-04A0	3	150290
207-62-74231	T1110-01A2	2	360010
207-62-74231	T1110-01A6	2	360020
207-62-74231	T1110-01A7	2	360030
207-62-74371	T1110-01A2	3	360010
207-62-74371	T1110-01A6	3	360020
207-62-74371	T1110-01A7	3	360030
207-62-74980	H1833-01A0	14	150390

PART NO.	FIG.NO.	INDEX	PAGE
207-62-76470	K1110-44A2	29	210620
207-70-11340	J1310-01A1	9	180050
207-70-11340	T1200-01A4	18	360310
207-70-11340	T1200-01A8	18	360360
207-70-11340	T1200-01B7		360420
207-70-11340	T1200-03A0	15	360460
207-70-11340	T1200-03A1	11	360470
207-70-11350	J1310-01A1	10	180050
207-70-11350	T1200-01A4	17	360310
207-70-11350	T1200-01A8	17	360360
207-70-11350	T1200-01B7	17	360420
207-70-11350	T1200-03A0	16	360460
207-70-11350	T1200-03A1	10	360470
207-70-11360	T1110-07A6	14	360140
207-70-11360	T1200-01B1	17	360370
207-70-11360	T1200-03A0	20	360460
207-70-11370	T1110-07A6	13	360140
207-70-11370	T1200-01A4	12	360310
207-70-11370	T1200-01A8	12	360360
207-70-11370	T1200-01B1	18	360370
207-70-11370	T1200-01B7	12	360420
207-70-11370	T1200-03A0	21	360460
207-70-13340	T1125-01A0	3	360230
207-70-13340	T1125-01A1	3	360240
207-70-14280	T1510-01C11	10	360810
207-70-33181	T1200-04A1	18	360480
207-70-33181	T1200-04B1	18	360540
207-70-33181	T1200-06A5	16	360610
207-70-71251	J1310-01A0	9	180040
207-70-71261	J1310-01A0	10	180040
207-70-72371	T1200-01A1	17	360280
207-70-72371	T1200-01A9	20	360350
207-70-72381	T1200-01A1	18	360280
207-70-72381	T1200-01A9	21	360350
207-920-JC60	T1510-01C9	2	360790
207-920-JC70	T1510-01C9	3	360790
207-934-6160	T1510-01C7	2	360770
207-934-7120	T1510-01C11	7	360810
207-934-7181	T1510-01C11	9	360810
207-934-7630	T1510-01C11	3	360810
207-934-7650	T1510-01C11	6	360810
207-934-7660	T1510-01C11	5	360810
207-934-J230	T1510-01C12	8	360815
207-934-J240	T1510-01C12	2	360815
207-934-J270	T1510-01C12	9	360815
207-934-J280	T1510-01C12	10	360815
207-97-07171	T1110-09A4	11	360160
207-97-07171	T1110-09A4	5	360160
207-97-07210	T1200-05A5	1	360580
207-97-07221	T1200-05A5	14	360580

PART NO.	FIG.NO.	INDEX	PAGE
207-97-07310	T1110-09A4	19	360160
207-97-07310	T1200-05A5	18	360580
207-97-07320	T1110-09A4	8	360160
207-97-07331	T1110-09A4	14	360160
207-970-5111	Y1850-01A0	1	481160
207-970-5121	Y1850-01A0	2	481160
207-970-7151	T1110-08A4	20	360150
207-970-7151	T1110-08A4	26	360150
207-977-5111	K0700-02A0	26	210190
207-979-6180	E0200-01A1	7	120040
208-00-71260	U0100-01A0	7	390010
208-00-71260	U0100-01A1	7	390020
208-00-71260	U0100-01A2	7	390030
208-00-71270	U0100-01A3	7	390040
208-00-76181	U0110-01A0		390050
208-00-76182	U0110-01A0	1	390050
208-00-76191	U0110-01A1		390110
208-00-76192	U0110-01A1	1	390110
208-00-76240	M1510-01A0	10	240200
208-00-76310	M1210-01A0	3	240120
208-00-76310	M1210-01A1	3	240130
208-00-76470	U0100-01A1	8	390020
208-00-76470	U0100-01A3	8	390040
208-00-76510	U0100-01A0	29	390010
208-00-76510	U0100-01A1	29	390020
208-00-76520	U0100-01A0	30	390010
208-00-76520	U0100-01A1	30	390020
208-00-76530	U0100-01A2	29	390030
208-00-76530	U0100-01A3	29	390040
208-00-76540	U0100-01A2	30	390030
208-00-76540	U0100-01A3	30	390040
208-00-76720	U0100-01A0	8	390010
208-00-76720	U0100-01A2	8	390030
208-00-76790	E0200-05A2	19	120100
208-01-11161	B0100-01A0	19	030020
208-01-11161	B0100-01A0	9	030020
208-01-11181	B0100-01A0	10	030020
208-01-11181	B0100-01A0	20	030020
208-01-71111	B0100-01A0	1	030020
208-01-71120	B0100-01A0	13	030020
208-01-71330	A1570-A3D1	8	000090
208-01-71350	H0210-01A0	3	150100
208-01-71370	A1570-A3D1	9	000090
208-01-71381	A1570-A3D1	10	000090
208-01-71510	B0920-01A0	3	030050
208-01-72111	B0200-01A1	9	030030
208-01-72111	B0200-01A2	9	030040
208-01-72151	B0200-01A1	12	030030
208-01-72151	B0200-01A2	12	030040
208-01-72161	B0200-01A1	16	030030

PART NO.	FIG.NO.	INDEX	PAGE
208-01-72161	B0200-01A2	16	030040
208-01-72180	B0200-01A1	10	030030
208-01-72180	B0200-01A2	10	030040
208-01-72220	B0200-01A2	4	030040
208-01-72310	B0200-01A1	8	030030
208-01-72310	B0200-01A2	8	030040
208-01-75210	H0210-01A0	4	150100
208-01-75220	B0200-01A1	4	030030
208-03-58310	C0100-05A1	26	060050
208-03-71380	C0100-01A1	27	060010
208-03-71580	C0100-05A1	2	060050
208-03-71610	C0100-05A1	3	060050
208-03-71670	C0100-05A1	4	060050
208-03-71711	J1110-01A2	9	180010
208-03-71821	C0100-01A1	32	060010
208-03-71840	C0100-01A1		060010
208-03-71860	C0100-02A1	1	060020
208-03-72110	C0100-07A1	1	060070
208-03-72120	C0100-07A1	2	060070
208-03-75110	C0100-01A1	1	060010
208-03-75140	C0100-02A1	2	060020
208-03-75150	C0100-02A1	3	060020
208-03-75160	C0100-02A1	4	060020
208-03-75283	C0100-03A1	7	060030
208-03-75292	C0100-03A1	10	060030
208-03-75370	C0100-06A1	32	060060
208-03-75380	C0100-06A1	25	060060
208-03-75390	C0100-06A1	8	060060
208-03-75410	C0100-03A1	19	060030
208-03-75420	C0100-03A1	28	060030
208-03-75440	C0100-02A1	23	060020
208-03-75450	C0100-02A1	20	060020
208-03-75460	C0100-04A1		060040
208-03-75461	C0100-04A1	1	060040
208-03-75470	C0100-06A1	13	060060
208-03-75481	C0100-06A1	15	060060
208-03-75491	C0100-04A1	16	060040
208-03-75510	C0100-04A1	18	060040
208-03-75550	C0100-04A1	29	060040
208-03-75580	C0100-01A1	14	060010
208-03-75590	C0100-01A1	15	060010
208-03-75640	C0100-05A1	5	060050
208-03-75670	C0100-02A1	5	060020
208-03-75680	C0100-01A1	34	060010
208-03-75690	C0100-01A1	35	060010
208-03-75711	C0100-05A1	14	060050
208-03-75721	C0100-05A1	15	060050
208-03-75751	C0100-05A1	22	060050
208-03-75761	C0100-05A1	23	060050
208-03-75772	C0100-03A1	44	060030

PART NO.	FIG.NO.	INDEX	PAGE
208-03-75811	C0310-01A0	1	060080
208-03-75821	C0310-01A0	4	060080
208-03-75830	C0100-06A1	36	060060
208-03-75840	C0100-05A1	10	060050
208-03-75870	C0100-02A1	6	060020
208-03-75920	C0100-01A1	33	060010
208-03-75930	C0100-01A1	7	060010
208-03-75940	C0100-01A1		060010
208-03-75970	C0100-02A1	40	060020
208-03-75980	C0100-02A1	41	060020
208-03-76120	C0100-02A1	7	060020
208-03-76170	C0100-07A1	3	060070
208-03-76180	C0100-07A1	4	060070
208-03-76212	C0100-07A1	5	060070
208-03-76220	C0100-07A1	6	060070
208-03-76232	C0100-07A1	7	060070
208-03-76240	C0100-07A1	10	060070
208-03-76250	C0100-07A1	11	060070
208-03-76260	C0100-07A1	12	060070
208-03-76280	C0100-07A1	16	060070
208-03-76290	C0100-07A1	15	060070
208-03-76340	C0100-07A1	17	060070
208-03-76350	C0100-07A1	18	060070
208-03-76370	C0100-01A1	36	060010
208-03-76380	C0100-02A1		060020
208-03-76381	C0100-02A1	31	060020
208-03-76430	C0100-03A1	41	060030
208-03-76630	C0100-04A1	14	060040
208-03-76640	C0100-01A1	18	060010
208-03-76650	C0100-04A1	27	060040
208-03-76660	C0100-04A1	25	060040
208-03-76670	C0100-04A1	30	060040
208-03-77110	C0100-01A1	16	060010
208-03-77120	C0100-01A1	17	060010
208-03-77130	C0100-04A1	19	060040
208-03-77140	C0100-02A1		060020
208-03-77141	C0100-02A1	35	060020
208-03-77150	C0100-03A1	13	060030
208-03-77160	C0100-05A1	1	060050
208-03-77170	C0100-05A1	6	060050
208-03-77180	C0100-05A1	9	060050
208-03-77190	C0100-05A1	11	060050
208-03-77210	C0100-05A1	18	060050
208-03-77220	C0100-05A1	19	060050
208-03-77230	C0100-03A1	1	060030
208-03-77240	C0100-03A1	4	060030
208-03-77250	C0100-02A1	38	060020
208-03-77260	C0100-03A1	16	060030
208-03-77270	C0100-01A1	29	060010
208-03-77280	C0100-02A1	8	060020

PART NO.	FIG.NO.	INDEX	PAGE
208-03-77290	C0100-01A1	30	060010
208-03-77310	C0100-01A1	9	060010
208-03-77320	C0100-02A1	9	060020
208-03-77330	C0100-01A1	31	060010
208-03-77340	C0100-01A1	8	060010
208-03-77350	C0100-02A1	39	060020
208-03-77360	C0100-02A1	34	060020
208-03-77370	C0100-01A1	28	060010
208-03-77380	C0100-01A1	21	060010
208-03-77390	C0100-02A1	26	060020
208-03-77410	C0100-07A1	13	060070
208-03-77420	C0100-07A1	14	060070
208-04-71231	D0100-01A1	18	090010
208-04-71231	D0100-01A2	18	090020
208-04-71241	D0100-01A1	19	090010
208-04-71241	D0100-01A2	19	090020
208-04-71510	W1113-01A0	5	450010
208-04-71520	W1113-01A0	15	450010
208-04-71740	D0100-01A1	3	090010
208-04-71740	D0100-01A2	3	090020
208-04-75112	D0100-01A2	1	090020
208-04-75312	D0100-01A1	1	090010
208-04-75410	W1113-01A1	32	450020
208-04-75430	W1113-01A1	20	450020
208-04-75440	W1113-01A1	12	450020
208-04-75450	W1113-01A1	5	450020
208-04-75460	W1113-01A1	4	450020
208-04-76170	D0200-03A1	1	090050
208-04-76180	D0200-03A1	12	090050
208-04-76210	D0100-01A2	17	090020
208-04-76251	D0200-02A1	1	090040
208-04-76271	D0200-02A1	4	090040
208-04-76280	D0100-01A1	17	090010
208-04-J1320	D0200-04A1	1	090060
208-04-J1331	D0200-04A1	8	090060
208-04-J1341	D0200-04A1	9	090060
208-04-J1350	D0200-04A1	14	090060
208-04-J1360	D0200-04A1	18	090060
208-04-J1370	D0200-04A1	21	090060
208-04-J1380	D0200-04A1	2	090060
208-04-K1550	W1113-01A0	4	450010
208-06-19170	K1110-65A1	1	210820
208-06-19170	K1520-01A1	24	210880
208-06-61410	K1730-01A0	1	210890
208-06-61460	E0100-01A2	1	120030
208-06-71380	E0410-01A0	2	120130
208-06-71390	E0410-01A0	1	120130
208-06-71550	W1113-01A0	19	450010
208-06-71550	W1113-01A1	36	450020
208-06-72110	E0450-01A1	34	120160

PART NO.	FIG.NO.	INDEX	PAGE
208-06-75122	E0200-04A1	18	120070
208-06-75130	K1110-47A1	14	210640
208-06-75140	K0700-01A0	20	210180
208-06-75180	E0200-01A1	17	120040
208-06-76110	K1110-47A1		210640
208-06-76113	K1110-47A1	1	210640
208-25-61100	N1110-01A0	1	270010
208-25-62110	N1110-01A0	7	270010
208-25-71230	N1110-01A0	14	270010
208-26-00210	Y0260-01A0		480010
208-26-52242	N1210-01A0	9	270020
208-26-52242	N1210-01A1	9	270030
208-26-52242	Y0260-01A0	5	480010
208-26-61290	N1210-01A0	10	270020
208-26-61290	N1210-01A1	10	270030
208-26-61290	Y0260-01A0	6	480010
208-26-71130	N1210-01A0	26	270020
208-26-71130	N1210-01A1	26	270030
208-26-71130	Y0260-01A0	22	480010
208-26-71140	N1210-01A0	16	270020
208-26-71140	N1210-01A1	16	270030
208-26-71140	Y0260-01A0	12	480010
208-26-71150	N1210-01A0	23	270020
208-26-71150	N1210-01A1	23	270030
208-26-71150	Y0260-01A0	19	480010
208-26-71170	N1210-01A0	28	270020
208-26-71170	N1210-01A1	28	270030
208-26-71170	Y0260-01A0	24	480010
208-26-71180	Y0260-01A0	11	480010
208-26-71181	N1210-01A0	15	270020
208-26-71181	N1210-01A1	15	270030
208-26-71190	N1210-01A0	5	270020
208-26-71190	N1210-01A1	5	270030
208-26-71210	N1210-01A0	34	270020
208-26-71210	N1210-01A1	34	270030
208-26-71210	Y0260-01A0	30	480010
208-26-71230	N1210-01A0	21	270020
208-26-71230	N1210-01A1	21	270030
208-26-71230	Y0260-01A0	17	480010
208-26-71240	Y0260-01A0	23	480010
208-26-71241	N1210-01A0	27	270020
208-26-71241	N1210-01A1	27	270030
208-26-71360	N1210-01A0	11	270020
208-26-71360	N1210-01A1	11	270030
208-26-71360	Y0260-01A0	7	480010
208-27-00210	P1210-01A0		300030
208-27-00243	P1210-01A0		300030
208-27-61210	P1210-01A0	34	300030
208-27-61320	P1210-01A0	2	300030
208-27-71112	P1210-01A0	25	300030

PART NO.	FIG.NO.	INDEX	PAGE
208-27-71120	P1210-01A0	20	300030
208-27-71130	P1210-01A0	17	300030
208-27-71140	P1210-01A0	11	300030
208-27-71151	P1210-01A0	4	300030
208-27-71160	P1210-01A0	19	300030
208-27-71170	P1210-01A0	10	300030
208-27-71183	P1210-01A0	28	300030
208-27-71210	P1210-01A0	5	300030
208-27-71220	P1210-01A0	21	300030
208-27-71230	P1210-01A0	12	300030
208-27-71250	P1210-01A0	14	300030
208-27-71260	P1210-01A0	8	300030
208-27-71270	P1210-01A0	7	300030
208-27-71290	P1210-01A0	18	300030
208-27-71310	P1210-01A0	6	300030
208-30-00202	R0110-01A0		330010
208-30-00210	R1100-02A6	1	330190
208-30-00510	R0300-01A0		330050
208-30-00511	R0300-01A0		330050
208-30-11560	R0110-01A0	2	330010
208-30-53114	R0110-01A0	1	330010
208-30-53130	R0110-01A0	3	330010
208-30-53150	R0110-01A0	9	330010
208-30-53160	R0110-01A0	10	330010
208-30-54150	R0110-02A0	10	330030
208-30-54160	R0110-02A0	6	330030
208-30-54170	R0110-02A0	7	330030
208-30-56111	R1100-02A6		330190
208-30-56130	R1100-02A6	2	330190
208-30-56151	R1100-02A6	4	330190
208-30-56161	R1100-02A6	5	330190
208-30-56170	R1100-02A6	9	330190
208-30-56180	R1100-02A6	11	330190
208-30-61190	R1100-03A6	1	330200
208-30-61220	R1100-04A6	1	330220
208-30-71112	R1100-01A2	1	330150
208-30-71241	P1210-01A0	38	300030
208-30-71311	R1100-01A6	1	330170
208-30-71430	R0110-02A0	4	330030
208-30-71440	R0110-02A0	3	330030
208-30-71F11	R1100-01A2	2	330150
208-30-71F11	R1100-01A3	2	330160
208-30-71F11	R1100-01A6	2	330170
208-30-71F21	R1100-01A2	3	330150
208-30-71F21	R1100-01A3	3	330160
208-30-71F21	R1100-01A6	3	330170
208-30-71F30	R1100-01A7	3	330180
208-30-72112	R1100-01A3	1	330160
208-30-72120	R1100-04A6	13	330220
208-30-72311	R1100-01A7	2	330180

PART NO.	FIG.NO.	INDEX	PAGE
208-30-74110	R0110-02A0	1	330030
208-30-74120	R0110-02A0	2	330030
208-30-74170	R0110-02A0	5	330030
208-30-74410	R1100-01A7	1	330180
208-30-75710	R1100-04A6	8	330220
208-30-75810	R0300-01A0	1	330050
208-30-75840	R1100-04A6	12	330220
208-30-77210	R1100-03A8	1	330210
208-30-77220	R1100-03A8	2	330210
208-30-77230	R1100-03A8	3	330210
208-30-77240	R1100-03A8	4	330210
208-32-00500	Y0321-01A0	1	480040
208-32-03301	R0500-01A1		330060
208-32-03321	R0500-01A7		330100
208-32-03370	R0500-01A3		330070
208-32-03380	R0500-01A8	1	330120
208-32-03400	R0500-01A9		330130
208-32-03420	R0500-01A10		330140
208-32-03460	R0500-01A4		330080
208-32-03480	R0500-01A5		330090
208-32-05080	Y0320-01A0	K01	480020
208-32-05110	Y0320-01A1	K01	480030
208-32-51190	R0500-01A1	20	330060
208-32-51190	R0500-01A10	11	330140
208-32-51190	R0500-01A3	20	330070
208-32-51190	R0500-01A4	11	330080
208-32-51190	R0500-01A5	11	330090
208-32-51190	R0500-01A7	20	330100
208-32-51190	R0500-01A8	20	330120
208-32-51190	R0500-01A9	11	330130
208-32-51190	Y0321-01A0	8	480040
208-32-51210	R0500-01A1	17	330060
208-32-51210	R0500-01A1	8	330060
208-32-51210	R0500-01A10	8	330140
208-32-51210	R0500-01A3	17	330070
208-32-51210	R0500-01A3	8	330070
208-32-51210	R0500-01A4	8	330080
208-32-51210	R0500-01A5	8	330090
208-32-51210	R0500-01A7	17	330100
208-32-51210	R0500-01A7	8	330100
208-32-51210	R0500-01A8	17	330120
208-32-51210	R0500-01A8	8	330120
208-32-51210	R0500-01A9	8	330130
208-32-51210	Y0320-01A0		480020
208-32-51231	Y0320-01A1		480030
208-32-61110	R0500-01A1	16	330060
208-32-61110	R0500-01A1	7	330060
208-32-61110	R0500-01A4	7	330080
208-32-61110	R0500-01A7	16	330100
208-32-61110	R0500-01A7	7	330100

PART NO.	FIG.NO.	INDEX	PAGE
208-32-61110	R0500-01A9	7	330130
208-32-61123	R0500-01A1	1	330060
208-32-61123	R0500-01A1	10	330060
208-32-61123	R0500-01A10	1	330140
208-32-61123	R0500-01A3	1	330070
208-32-61123	R0500-01A3	10	330070
208-32-61123	R0500-01A4	1	330080
208-32-61123	R0500-01A5	1	330090
208-32-61123	R0500-01A7	1	330100
208-32-61123	R0500-01A7	10	330100
208-32-61123	R0500-01A8	10	330120
208-32-61123	R0500-01A8		330120
208-32-61123	R0500-01A9	1	330130
208-32-61123	Y0321-01A0		480040
208-32-61133	R0500-01A1	11	330060
208-32-61133	R0500-01A1	2	330060
208-32-61133	R0500-01A10	2	330140
208-32-61133	R0500-01A3	11	330070
208-32-61133	R0500-01A3	2	330070
208-32-61133	R0500-01A4	2	330080
208-32-61133	R0500-01A5	2	330090
208-32-61133	R0500-01A7	11	330100
208-32-61133	R0500-01A7	2	330100
208-32-61133	R0500-01A8	11	330120
208-32-61133	R0500-01A8	2	330120
208-32-61133	R0500-01A9	2	330130
208-32-61133	Y0321-01A0	2	480040
208-32-61141	R0500-01A1	14	330060
208-32-61141	R0500-01A1	5	330060
208-32-61141	R0500-01A10	5	330140
208-32-61141	R0500-01A3	14	330070
208-32-61141	R0500-01A3	5	330070
208-32-61141	R0500-01A4	5	330080
208-32-61141	R0500-01A5	5	330090
208-32-61141	R0500-01A7	14	330100
208-32-61141	R0500-01A7	5	330100
208-32-61141	R0500-01A8	14	330120
208-32-61141	R0500-01A8	5	330120
208-32-61141	R0500-01A9	5	330130
208-32-61141	Y0321-01A0	5	480040
208-32-61151	R0500-01A1	15	330060
208-32-61151	R0500-01A1	6	330060
208-32-61151	R0500-01A10	6	330140
208-32-61151	R0500-01A3	15	330070
208-32-61151	R0500-01A3	6	330070
208-32-61151	R0500-01A4	6	330080
208-32-61151	R0500-01A5	6	330090
208-32-61151	R0500-01A7	15	330100
208-32-61151	R0500-01A7	6	330100
208-32-61151	R0500-01A8	15	330120

PART NO.	FIG.NO.	INDEX	PAGE
208-32-61151	R0500-01A8	6	330120
208-32-61151	R0500-01A9	6	330130
208-32-61151	Y0321-01A0	6	480040
208-32-61171	R0500-01A1	13	330060
208-32-61171	R0500-01A1	4	330060
208-32-61171	R0500-01A10	4	330140
208-32-61171	R0500-01A3	13	330070
208-32-61171	R0500-01A3	4	330070
208-32-61171	R0500-01A4	4	330080
208-32-61171	R0500-01A5	4	330090
208-32-61171	R0500-01A7	13	330100
208-32-61171	R0500-01A7	4	330100
208-32-61171	R0500-01A8	13	330120
208-32-61171	R0500-01A8	4	330120
208-32-61171	R0500-01A9	4	330130
208-32-61171	Y0321-01A0	4	480040
208-32-61260	R0500-01A1	19	330060
208-32-61260	R0500-01A10	10	330140
208-32-61260	R0500-01A3	19	330070
208-32-61260	R0500-01A4	10	330080
208-32-61260	R0500-01A5	10	330090
208-32-61260	R0500-01A7	19	330100
208-32-61260	R0500-01A8	19	330120
208-32-61260	R0500-01A9	10	330130
208-32-61260	Y0321-01A0	7	480040
208-32-61320	R0500-01A10	7	330140
208-32-61320	R0500-01A3	16	330070
208-32-61320	R0500-01A3	7	330070
208-32-61320	R0500-01A5	7	330090
208-32-61320	R0500-01A8	16	330120
208-32-61320	R0500-01A8	7	330120
208-32-71220	R0500-01A1	18	330060
208-32-71220	R0500-01A1	9	330060
208-32-71220	R0500-01A10	9	330140
208-32-71220	R0500-01A3	18	330070
208-32-71220	R0500-01A3	9	330070
208-32-71220	R0500-01A4	9	330080
208-32-71220	R0500-01A5	9	330090
208-32-71220	R0500-01A7	18	330100
208-32-71220	R0500-01A7	9	330100
208-32-71220	R0500-01A8	18	330120
208-32-71220	R0500-01A8	9	330120
208-32-71220	R0500-01A9	9	330130
208-32-71220	Y0320-01A0		480020
208-32-71220	Y0320-01A1		480030
208-43-71420	K1110-27A1	8	210490
208-43-71520	K1110-46A1	2	210630
208-43-71530	K1110-46A1	3	210630
208-43-71590	K1110-46A1	4	210630
208-46-52260	M1520-01A0	3	240210

PART NO.	FIG.NO.	INDEX	PAGE
208-46-52270	M1520-01A0	4	240210
208-46-71410	J1110-01A2	11	180010
208-46-71420	J1110-01A2	12	180010
208-46-72410	J1110-01A2	15	180010
208-46-73310	J1110-01A2	10	180010
208-46-73720	C0100-05A1	28	060050
208-46-73730	C0100-05A1	29	060050
208-46-74121	M1520-01A0	1	240210
208-46-74150	M1510-01A0	6	240200
208-46-74170	M1510-01A0	4	240200
208-46-74180	M1510-01A0	5	240200
208-46-74190	M1510-01A0	7	240200
208-46-74270	M1510-01A0	8	240200
208-46-75110	J1110-02A2	28	180030
208-46-75130	J1110-02A2	22	180030
208-46-75140	J1110-02A2	29	180030
208-46-75180	J1110-02A2	30	180030
208-46-75190	J1110-02A2	31	180030
208-46-75280	J1110-02A2	15	180030
208-46-75640	J1110-02A2	8	180030
208-46-75650	J1110-02A2	7	180030
208-46-75670	J1110-01A2	7	180010
208-46-75680	J1110-01A2	8	180010
208-46-75690	J1110-01A2	6	180010
208-46-75710	J1110-02A2	25	180030
208-46-75720	J1110-02A2	26	180030
208-46-75730	J1110-02A2	32	180030
208-46-75740	J1110-02A2	33	180030
208-46-75750	J1110-02A2	34	180030
208-46-75760	J1110-02A2	35	180030
208-46-75770	J1110-02A2	23	180030
208-46-75780	J1110-02A2	24	180030
208-46-75790	J1110-02A2	16	180030
208-46-75810	J1110-02A2	17	180030
208-46-75820	J1110-02A2	18	180030
208-46-75840	J1110-02A2	19	180030
208-46-75850	J1110-02A2	20	180030
208-46-75860	J1110-02A2	21	180030
208-46-75872	J1110-02A2	14	180030
208-46-75880	J1110-02A2	9	180030
208-46-75890	J1110-02A2	10	180030
208-46-75910	J1110-02A2	11	180030
208-46-75950	J1110-02A2	27	180030
208-46-75960	J1110-02A2	36	180030
208-46-75970	J1110-02A2	37	180030
208-46-75990	J1110-02A2	13	180030
208-46-76102	J1110-01A2		180010
208-46-76103	J1110-01A2	1	180010
208-46-76150	J1110-02A2	12	180030
208-46-79120	M1510-01A0	2	240200

PART NO.	FIG.NO.	INDEX	PAGE
208-46-79130	M1510-01A0	3	240200
208-46-79411	M1510-01A0		240200
208-46-79412	M1510-01A0	1	240200
208-53-11330	K1110-21A1	9	210370
208-53-11860	K1110-03A8	6	210220
208-53-11860	K1110-03A9	8	210230
208-53-11890	K1110-26A1	4	210460
208-53-11920	K1110-24A1	9	210420
208-53-11941	K1110-24A1	5	210420
208-53-12120	K1110-25A1	15	210430
208-53-12230	K1110-26A1	5	210460
208-53-12280	K1110-53B2	12	210710
208-53-12290	K1110-30A1	7	210540
208-53-12290	K1110-30A10	7	210560
208-53-12290	K1110-30A9	7	210550
208-53-12320	K1110-30A1	20	210540
208-53-12320	K1110-30A10	20	210560
208-53-12320	K1110-30A9	20	210550
208-53-12330	K1110-30A1	21	210540
208-53-12330	K1110-30A10	21	210560
208-53-12330	K1110-30A9	21	210550
208-53-12410	K1110-30A1	18	210540
208-53-12410	K1110-30A10	18	210560
208-53-12410	K1110-30A9	18	210550
208-53-12432	K1110-25A1	16	210430
208-53-12440	K1110-24A1	4	210420
208-53-12460	K1110-23A1	2	210390
208-53-12551	K1110-26A1	16	210460
208-53-12680	K1110-25A1	9	210430
208-53-12980	K1110-11A9	28	210300
208-53-12991	K1110-11A9	27	210300
208-53-13270	K1110-11A9	6	210300
208-53-13720	K0190-01A0	1	210070
208-53-14540	K1110-07A9	4	210270
208-53-15820	K1110-31E2	1	210570
208-53-16740	K1110-49A1	2	210660
208-53-23210	K1120-01A0	1	210860
208-53-23221	K1110-30A1	31	210540
208-53-23221	K1110-30A10	31	210560
208-53-23221	K1110-30A9	31	210550
208-54-57180	M1810-01A1	13	240220
208-54-57180	M1810-01A1	19	240220
208-54-57180	M1810-01A1	27	240220
208-54-57180	M1810-01A1	33	240220
208-54-57180	M1810-01A1	6	240220
208-54-57180	M1810-01A2	33	240230
208-54-57180	M1810-01A2A	34	240240
208-54-57180	M1810-01A3	13	240250
208-54-57180	M1810-01A3	19	240250
208-54-57180	M1810-01A3	27	240250

PART NO.	FIG.NO.	INDEX	PAGE
208-54-57180	M1810-01A3	34	240250
208-54-57180	M1810-01A3	6	240250
208-54-57180	M1810-02A1	6	240260
208-54-57180	M1810-02A4	5	240290
208-54-57180	M1810-03A1	19	240300
208-54-57180	M1810-03A1	28	240300
208-54-57180	M1810-03A1	6	240300
208-54-57180	M1810-03A2	17	240310
208-54-57180	M1810-03A4	19	240330
208-54-57180	M1810-03A4	28	240330
208-54-57180	M1810-03A4	6	240330
208-54-71240	M1130-01A1	32	240060
208-54-71252	M1140-03A1	1	240090
208-54-71312	M1140-01A1	1	240070
208-54-71380	M1130-01A1	3	240060
208-54-71470	M1220-01A1	7	240140
208-54-71721	M1150-01A1	6	240100
208-54-71740	M1150-02A1	28	240110
208-54-71751	M1150-01A1	14	240100
208-54-71761	M1150-01A1	33	240100
208-54-71772	M1150-02A1	1	240110
208-54-71781	M1150-02A1	16	240110
208-54-71791	M1150-02A1	23	240110
208-54-71840	M1150-02A1		240110
208-54-71891	M1150-02A1		240110
208-54-71930	M1140-01A1	7	240070
208-54-71940	M1140-01A1	10	240070
208-54-72442	M1810-01A1	30	240220
208-54-72442	M1810-01A2	30	240230
208-54-73112	M1210-01A0	10	240120
208-54-73112	M1210-01A1	9	240130
208-54-73131	M1130-01A1	33	240060
208-54-73131	M1140-03A1	2	240090
208-54-73170	M1120-01A1	5	240050
208-54-73191	M1110-04A1		240040
208-54-73192	M1110-04A1	1	240040
208-54-73210	M1120-01A1	15	240050
208-54-73331	M1150-02A1	2	240110
208-54-73341	M1150-02A1	17	240110
208-54-73351	M1150-02A1	18	240110
208-54-73361	M1150-02A1	29	240110
208-54-73371	M1150-02A1	24	240110
208-54-73380	M1150-02A1	25	240110
208-54-73391	M1150-01A1	28	240100
208-54-73410	M1150-01A1	7	240100
208-54-73440	M1150-01A1	15	240100
208-54-73452	M1150-01A1	34	240100
208-54-73461	M1150-01A1	29	240100
208-54-73482	M1150-02A1	4	240110
208-54-73490	M1810-01A1	10	240220

PART NO.	FIG.NO.	INDEX	PAGE
208-54-73490	M1810-01A2	10	240230
208-54-73490	M1810-01A2A	10	240240
208-54-73490	M1810-01A3	10	240250
208-54-73520	M1810-01A1	2	240220
208-54-73520	M1810-01A2	2	240230
208-54-73520	M1810-01A2A	2	240240
208-54-73520	M1810-01A3	2	240250
208-54-73540	M1150-02A1	5	240110
208-54-73550	M1150-02A1	30	240110
208-54-73560	M1150-02A1	19	240110
208-54-73710	M1130-01A1	26	240060
208-54-73710	M1140-02A1	16	240080
208-54-73720	M1130-01A1	27	240060
208-54-73810	M1150-02A1	6	240110
208-54-73821	M1130-01A1	28	240060
208-54-73830	M1130-01A1	29	240060
208-54-73861	M1140-02A1	18	240080
208-54-73890	M1210-01A0	28	240120
208-54-73890	M1210-01A1	27	240130
208-54-73960	M1130-01A1	34	240060
208-54-74510	M1150-01A1	24	240100
208-54-74520	M1150-01A1	2	240100
208-54-74530	M1150-01A1	16	240100
208-54-74551	M1150-01A1	3	240100
208-54-74560	M1150-01A1	8	240100
208-54-74570	M1150-01A1	4	240100
208-54-74580	M1210-01A0	2	240120
208-54-74580	M1210-01A1	2	240130
208-54-74590	M1140-02A1	20	240080
208-54-74610	M1140-02A1	21	240080
208-54-74621	M1140-02A1	22	240080
208-54-74630	M1120-01A1	7	240050
208-54-74640	M1140-02A1	24	240080
208-54-74650	M1140-02A1	25	240080
208-54-74660	M1140-02A1	26	240080
208-54-74671	M1140-02A1	23	240080
208-54-75111	M1110-02A1	1	240020
208-54-75132	M1110-02A1	9	240020
208-54-75170	M1110-02A1	12	240020
208-54-75180	M1110-02A1		240020
208-54-75220	M1110-03A1	18	240030
208-54-75232	M1110-03A1	34	240030
208-54-75240	M1110-03A1	32	240030
208-54-75250	M1110-03A1	30	240030
208-54-75260	M1110-04A1	5	240040
208-54-75270	M1110-04A1	6	240040
208-54-75280	M1110-04A1	7	240040
208-54-75290	M1110-04A1	8	240040
208-54-75313	M1110-02A1	15	240020
208-54-75330	M1110-02A1	26	240020

PART NO.	FIG.NO.	INDEX	PAGE
208-54-75360	M1110-02A1	25	240020
208-54-75381	M1110-02A1	20	240020
208-54-75390	M1110-04A1	3	240040
208-54-75440	M1110-03A1	4	240030
208-54-75450	M1110-03A1	6	240030
208-54-75460	M1110-03A1	26	240030
208-54-75470	M1110-03A1		240030
208-54-75471	M1110-03A1	24	240030
208-54-75570	M1110-03A1	12	240030
208-54-75580	M1110-03A1		240030
208-54-75581	M1110-03A1	28	240030
208-54-75590	M1110-03A1		240031
208-54-75591	M1110-03A1	44	240031
208-54-75680	M1110-03A1	36	240030
208-54-75691	M1110-03A1	38	240030
208-54-75750	M1110-03A1	22	240030
208-54-75760	M1110-03A1	20	240030
208-54-75910	M1110-04A1	9	240040
208-54-75950	M1110-03A1	40	240030
208-54-75960	M1110-03A1	16	240030
208-54-75990	M1110-04A1	4	240040
208-54-76110	M1110-02A1	17	240020
208-54-76160	M1110-04A1	10	240040
208-54-76170	M1110-04A1	11	240040
208-54-76211	M1810-01A1	23	240220
208-54-76211	M1810-01A2	23	240230
208-54-76211	M1810-01A2A	23	240240
208-54-76211	M1810-01A3	23	240250
208-54-76221	M1810-03A1	2	240300
208-54-76221	M1810-03A2	2	240310
208-54-76221	M1810-03A3	2	240320
208-54-76221	M1810-03A4	2	240330
208-54-76230	M1110-02A1	24	240020
208-54-76281	M1810-03A1	14	240300
208-54-76281	M1810-03A4	14	240330
208-54-76310	M1210-01A0	9	240120
208-54-76330	M1150-01A1	10	240100
208-54-76340	M1150-01A1	5	240100
208-54-76350	M1150-01A1	9	240100
208-54-76360	M1150-02A1	7	240110
208-54-76380	M1150-02A1	20	240110
208-54-76430	M1120-01A1	18	240050
208-54-76440	M1120-01A1	1	240050
208-54-76450	M1120-01A1	4	240050
208-54-76470	M1140-01A1	3	240070
208-54-76511	M1210-01A0		240120
208-54-76511	M1210-01A1	15	240130
208-54-76512	M1210-01A0	16	240120
208-54-76520	M1210-01A0	8	240120
208-54-76530	M1210-01A0	1	240120

PART NO.	FIG.NO.	INDEX	PAGE
208-54-76530	M1210-01A1	1	240130
208-54-76550	M1210-01A1	8	240130
208-54-76560	M1120-01A1	6	240050
208-54-76570	M1150-01A1	1	240100
208-54-76712	M1140-01A1	4	240070
208-54-76730	M1120-01A1	11	240050
208-54-76860	M1110-03A1	1	240030
208-54-76881	M1140-01A1	19	240070
208-54-77110	M1150-02A1	11	240110
208-54-77210	M1150-02A1		240110
208-54-77221	M1150-01A1		240100
208-54-77240	M1150-01A1		240100
208-54-77250	M1150-01A1		240100
208-54-77270	M1150-01A1		240100
208-54-77610	M1810-01A2	16	240230
208-54-77610	M1810-01A2A	16	240240
208-54-77620	M1810-01A1	16	240220
208-54-77620	M1810-01A3	16	240250
208-54-77630	M1810-01A2	22	240230
208-54-77630	M1810-01A2A	22	240240
208-54-77640	M1810-01A1	22	240220
208-54-77640	M1810-01A3	22	240250
208-54-77830	M1120-01A1	25	240050
208-54-77840	M1120-01A1	14	240050
208-54-77851	M1130-01A1	2	240060
208-54-77860	M1140-01A1	2	240070
208-54-77910	M1140-02A1	6	240080
208-54-77921	M1810-03A3	14	240320
208-54-77931	M1810-03A4	24	240330
208-54-77940	M1430-01A1	2	240190
208-54-77961	M1810-03A2	1	240310
208-54-77961	M1810-03A3	1	240320
208-54-77980	M1150-02A1		240110
208-54-77990	M1150-02A1	3	240110
208-54-78260	M1210-01A0		240120
208-54-78260	M1210-01A1		240130
208-54-78270	M1210-01A0	27	240120
208-54-78270	M1210-01A1	26	240130
208-54-78280	M1210-01A0	29	240120
208-54-78280	M1210-01A1	28	240130
208-54-78290	M1810-03A1	1	240300
208-54-78290	M1810-03A4	1	240330
208-54-78320	M1810-01A2	1	240230
208-54-78320	M1810-01A2A	1	240240
208-54-78340	M1810-01A1	1	240220
208-54-78340	M1810-01A3	1	240250
208-54-78350	M1810-02A3	1	240280
208-54-78360	M1810-02A1	1	240260
208-54-78360	M1810-02A4	1	240290
208-54-78410	M1150-01A1		240100

PART NO.	FIG.NO.	INDEX	PAGE
208-54-78470	M1810-01A2A	30	240240
208-54-78470	M1810-01A3	30	240250
208-54-78530	E0200-05A2		120100
208-54-78532	E0200-05A2	16	120100
208-54-78550	M1810-03A1	24	240300
208-54-78550	M1810-03A2	14	240310
208-54-78640	M1130-01A1	1	240060
208-54-78660	M1140-02A1	17	240080
208-54-78670	M1150-01A1		240100
208-54-78680	M1150-01A1	23	240100
208-54-79310	M1120-01A1	10	240050
208-54-79320	M1110-03A1		240030
208-54-79321	M1110-03A1	42	240030
208-54-79330	M1110-03A1		240031
208-54-79331	M1110-03A1	46	240031
208-54-79340	M1110-03A1		240031
208-54-79341	M1110-03A1	48	240031
208-54-79510	M1110-02A1	5	240020
208-54-79520	M1110-02A1	11	240020
208-60-61190	H0110-01A1	33	150010
208-60-71123	H0110-01A1	21	150010
208-60-71123	V0100-01A0	9	420010
208-60-71130	H0110-01A1	25	150010
208-60-71140	H0110-01A1		150010
208-60-71150	H0110-01A1	29	150010
208-60-71160	H0110-01A1	23	150010
208-60-71180	H0110-01A1		150010
208-60-71181	H0110-01A1	40	150010
208-60-71250	H0110-01A1	48	150011
208-60-75110	H0110-01A1		150010
208-60-75111	H0110-01A1	1	150010
208-60-75120	H0110-01A1	56	150011
208-60-75240	H0110-01A1	49	150011
208-62-53350	P1120-01A0	2	300010
208-62-53350	P1120-01A1	2	300020
208-62-61140	H0120-01A1	18	150030
208-62-61140	H0120-01A4	18	150040
208-62-63320	P1120-01A0	15	300010
208-62-63340	P1120-01A0	13	300010
208-62-63350	P1120-01A1	15	300020
208-62-63410	P1120-01A1	13	300020
208-62-71101	H0312-01A0		150120
208-62-71111	H0120-03A1	1	150080
208-62-71120	H1310-01A0	1	150310
208-62-71130	H1310-01A0	3	150310
208-62-71150	H1310-01A0	7	150310
208-62-71160	H1220-01A1	12	150210
208-62-71160	H1220-01A2	12	150220
208-62-71170	H1220-01A1	23	150210
208-62-71170	H1220-01A2	23	150220

PART NO.	FIG.NO.	INDEX	PAGE
208-62-71190	H1220-01A1	17	150210
208-62-71190	H1220-01A2	17	150220
208-62-71220	H0312-01A1	8	150130
208-62-71240	H0330-01A0	1	150150
208-62-71271	H1210-01A0	1	150180
208-62-71281	H1210-01A0	6	150180
208-62-71290	H1210-01A0	11	150180
208-62-71370	H0330-01A0	5	150150
208-62-71370	H0330-01A1	8	150160
208-62-71380	H0330-01A0	12	150150
208-62-71380	H0330-01A1	15	150160
208-62-71390	H0340-01A0	9	150170
208-62-71410	H0330-01A0	13	150150
208-62-71410	H0330-01A1	16	150160
208-62-71420	H0330-01A0	17	150150
208-62-71420	H0330-01A1	20	150160
208-62-71470	H0340-01A0	2	150170
208-62-71490	H0320-01A1	13	150140
208-62-71540	H0120-02A1	1	150050
208-62-71540	H0120-02A4	1	150060
208-62-71540	H0120-02A5	1	150070
208-62-71560	H1220-01A1	1	150210
208-62-71560	H1220-01A2	1	150220
208-62-71570	H1220-01A1	2	150210
208-62-71580	H1220-01A1	7	150210
208-62-71580	H1220-01A2	7	150220
208-62-71741	H1210-01A0	14	150180
208-62-71750	H1831-01A1	4	150350
208-62-71750	H1831-01A2	3	150360
208-62-71791	H1831-02A2	1	150370
208-62-71791	H1831-02A3	1	150380
208-62-71810	H0312-01A0	1	150120
208-62-71820	H0312-01A1	1	150130
208-62-71831	H0330-01A1	1	150160
208-62-71840	H1270-03A0	10	150280
208-62-71850	H1270-01A0	15	150240
208-62-71890	H1270-03A0	23	150280
208-62-71912	H1270-01A0	1	150240
208-62-71920	H1270-02A0	1	150270
208-62-71940	H1270-01A0	7	150240
208-62-72470	K1110-64A1	4	210810
208-62-72510	H1270-01A0	22	150240
208-62-72520	H1270-01A0	27	150240
208-62-72530	H1270-02A0	37	150270
208-62-72550	H0330-01A1	4	150160
208-62-72750	H1270-02A0	32	150270
208-62-72760	H1220-01A2	2	150220
208-62-72810	J1110-02A2	38	180030
208-62-72820	J1110-02A2	39	180030
208-62-72830	J1110-02A2	40	180030

PART NO.	FIG.NO.	INDEX	PAGE
208-62-72870	K1110-64A1	11	210810
208-62-73830	H1810-01A0	17	150330
208-62-73830	H1810-01A1	20	150340
208-62-73910	H0311-01A1	2	150110
208-62-74120	T1110-03A2	11	360070
208-62-74130	T1110-03A2	1	360070
208-62-74140	T1110-03A2	12	360070
208-62-74151	T1110-03A2	2	360070
208-62-74210	T1110-01A2	4	360010
208-62-74210	T1110-01A6	4	360020
208-62-74210	T1110-01A7	4	360030
208-62-74222	T1110-01A2	5	360010
208-62-74222	T1110-01A6	5	360020
208-62-74222	T1110-01A7	5	360030
208-62-74241	T1110-01A2	6	360010
208-62-74241	T1110-01A6	6	360020
208-62-74241	T1110-01A7	6	360030
208-62-74251	T1110-01A2	7	360010
208-62-74251	T1110-01A6	7	360020
208-62-74251	T1110-01A7	7	360030
208-62-74341	H1833-01A0		150390
208-62-74342	H1833-01A0	15	150390
208-62-74410	T1110-04A2	7	360080
208-62-74420	T1110-04A2	8	360080
208-62-74430	T1110-04A2	9	360080
208-62-74440	T1110-01A2	8	360010
208-62-74440	T1110-01A6	8	360020
208-62-74440	T1110-01A7	8	360030
208-62-74621	H0320-01A1	1	150140
208-62-74870	H0311-01A1	3	150110
208-62-75150	H1270-05A0	1	150300
208-62-75160	H0311-01A1		150110
208-62-75380	H0320-01A1	5	150140
208-62-75820	K1110-64A1	13	210810
208-62-75920	H1840-01A0	10	150400
208-62-75950	H1840-01A0	11	150400
208-62-75960	H1840-01A0	12	150400
208-62-75970	H1840-01A0	13	150400
208-62-76570	K1110-44A2	30	210620
208-62-76580	K1110-63A1	8	210800
208-62-76590	K1110-63A1	9	210800
208-62-76610	K1110-63A1	10	210800
208-62-76620	K1110-63A1	11	210800
208-63-53181	Y1620-01A1	32	480250
208-63-53181	Y1620-01A6	32	480260
208-63-53281	Y1620-01A1		480250
208-63-53281	Y1620-01A6		480260
208-63-73580	Y1620-41A2	28	480320
208-70-00081	T1510-01C3	12	360740
208-70-00081	T1510-01C6	11	360760

PART NO.	FIG.NO.	INDEX	PAGE
208-70-00081	T1510-01C7	18	360770
208-70-00251	T1200-03A0		360460
208-70-00252	T1200-03A0	1	360460
208-70-00542	T1110-01A2		360010
208-70-00701	T1200-01A4		360310
208-70-00720	T1110-01A7		360030
208-70-00750	T1200-03A1		360470
208-70-00790	T1110-01A6		360020
208-70-00882	T1200-01A1		360280
208-70-00913	T1200-01A9		360350
208-70-00J01	T1200-01A8		360360
208-70-13141	T1200-01A1	3	360280
208-70-13141	T1200-01A4	3	360310
208-70-13141	T1200-01A8	3	360360
208-70-13141	T1200-01A9	6	360350
208-70-13141	T1200-01B1	3	360370
208-70-13141	T1200-01B7	3	360420
208-70-13141	T1200-03A0	2	360460
208-70-13141	T1200-03A1	2	360470
208-70-14152	T1510-01C10	10	360800
208-70-14152	T1510-01C6	5	360760
208-70-14152	T1510-01C7	12	360770
208-70-14152	T1510-01C9	9	360790
208-70-31242	T1125-01A1	2	360240
208-70-31290	J1310-01A1	11	180050
208-70-31310	T1110-07A6	12	360140
208-70-31340	T1125-01A1	5	360240
208-70-33181	T1200-04A1	17	360480
208-70-33181	T1200-04B1	17	360540
208-70-33181	T1200-06A5	15	360610
208-70-33220	T1290-01A0	1	360650
208-70-34150	T1510-01C3	2	360740
208-70-34150	T1510-01C8	2	360780
208-70-34160	T1510-01C10	15	360800
208-70-34160	T1510-01C11	15	360810
208-70-34160	T1510-02A2	1	360820
208-70-34170	T1510-01C10	16	360800
208-70-34170	T1510-01C11	16	360810
208-70-34170	T1510-02A2	2	360820
208-70-34191	T1510-01C3	7	360740
208-70-34191	T1510-01C8	8	360780
208-70-34211	T1510-01C3	5	360740
208-70-34211	T1510-01C8	6	360780
208-70-34220	T1510-01C3	6	360740
208-70-34220	T1510-01C8	7	360780
208-70-34230	T1510-01C3	13	360740
208-70-34230	T1510-01C6	12	360760
208-70-34230	T1510-01C7	19	360770
208-70-34240	T1510-01C3	8	360740
208-70-34240	T1510-01C6	7	360760

PART NO.	FIG.NO.	INDEX	PAGE
208-70-34240	T1510-01C7	14	360770
208-70-34250	T1510-01C3		360740
208-70-34250	T1510-01C6		360760
208-70-34250	T1510-01C7		360770
208-70-34260	T1510-01C3		360740
208-70-34260	T1510-01C6		360760
208-70-34260	T1510-01C7		360770
208-70-34320	T1510-03D0	2	360850
208-70-51310	J1310-01A1	12	180050
208-70-51320	T1125-01A1	6	360240
208-70-61191	T1110-02A2	5	360050
208-70-61191	T1110-02A6	5	360060
208-70-61210	J1310-01A0	5	180040
208-70-61210	J1310-01A1	5	180050
208-70-61220	T1200-01A1	8	360280
208-70-61220	T1200-01A4	8	360310
208-70-61220	T1200-01A8	8	360360
208-70-61220	T1200-01A9	11	360350
208-70-61220	T1200-01B1	13	360370
208-70-61220	T1200-01B1	9	360370
208-70-61220	T1200-01B7	8	360420
208-70-61241	T1200-01A1	13	360280
208-70-61241	T1200-01A4	13	360310
208-70-61241	T1200-01A8	13	360360
208-70-61241	T1200-01A9	16	360350
208-70-61241	T1200-01B7	13	360420
208-70-61412	T1200-03A0		360460
208-70-61440	T1200-03A0	17	360460
208-70-61450	T1200-03A0	22	360460
208-70-61460	T1200-03A0	4	360460
208-70-61480	T1510-01C10	20	360800
208-70-61480	T1510-01C11	20	360810
208-70-61480	T1510-01C12	15	360815
208-70-61480	T1510-01C8	13	360780
208-70-61480	T1510-01C9	12	360790
208-70-61521	T1200-01A4	2	360310
208-70-61521	T1200-01A8	2	360360
208-70-61521	T1200-01B1	2	360370
208-70-61521	T1200-01B7	2	360420
208-70-61610	T1110-01A6	10	360020
208-70-61610	T1110-01A7	10	360030
208-70-61860	T1125-01A0	1	360230
208-70-61860	T1125-01A1	1	360240
208-70-62161	T1200-04A1	9	360480
208-70-62161	T1200-04A5	9	360500
208-70-62161	T1200-04B1	9	360540
208-70-62171	T1200-04A1	10	360480
208-70-62171	T1200-04A5	10	360500
208-70-65770	T1200-04A1	15	360480
208-70-65770	T1200-04A5	15	360500

PART NO.	FIG.NO.	INDEX	PAGE
208-70-65770	T1200-04B1	15	360540
208-70-71113	T1110-01A2	1	360010
208-70-71113	T1110-01A7	1	360030
208-70-71331	T1110-06A2	6	360110
208-70-71510	T1110-01A2	10	360010
208-70-71531	T1110-07A2	11	360130
208-70-71541	T1110-07A2	12	360130
208-70-71551	T1110-07A2	13	360130
208-70-71561	T1125-01A0	5	360230
208-70-71571	T1125-01A0	6	360230
208-70-71580	T1110-02A2	1	360050
208-70-71590	J1310-01A0	1	180040
208-70-71590	J1310-01A1	1	180050
208-70-71611	J1310-01A0	11	180040
208-70-71621	J1310-01A0	12	180040
208-70-71631	J1310-01A0	13	180040
208-70-71641	J1310-01A0	14	180040
208-70-71651	T1110-07A2	14	360130
208-70-71651	T1200-01A1	12	360280
208-70-71651	T1200-01A9	15	360350
208-70-71661	T1110-07A2	15	360130
208-70-71670	T1110-02A2	2	360050
208-70-71670	T1110-02A6	2	360060
208-70-71680	T1110-02A6	1	360060
208-70-72111	T1200-01A1	1	360280
208-70-72111	T1200-01A4	1	360310
208-70-72111	T1200-01A9	1	360350
208-70-72170	T1200-01A1	4	360280
208-70-72170	T1200-01A4	4	360310
208-70-72170	T1200-01A8	4	360360
208-70-72170	T1200-01A9	7	360350
208-70-72170	T1200-01B7	4	360420
208-70-72252	T1200-01A9		360350
208-70-72541	T1200-01A1	2	360280
208-70-72541	T1200-01A9	5	360350
208-70-73111	T1200-03A1	1	360470
208-70-73120	T1200-03A1	5	360470
208-70-73131	T1200-03A0	12	360460
208-70-73131	T1200-03A1	7	360470
208-70-73140	T1200-03A0	7	360460
208-70-73150	T1200-03A0	8	360460
208-70-73160	T1200-03A0	10	360460
208-70-73160	T1200-03A0	13	360460
208-70-73160	T1200-03A0	18	360460
208-70-73160	T1200-03A1	8	360470
208-70-73520	T1200-03A0	9	360460
208-70-73520	T1200-03A1	6	360470
208-70-73530	T1200-01A1	7	360280
208-70-73530	T1200-01A4	7	360310
208-70-73530	T1200-01A8	7	360360

PART NO.	FIG.NO.	INDEX	PAGE
208-70-73530	T1200-01A9	10	360350
208-70-73530	T1200-01B1	7	360370
208-70-73530	T1200-01B7	7	360420
208-70-73530	T1200-03A0	5	360460
208-70-73530	T1200-03A1	4	360470
208-70-73530	Y1620-41A0	7	480300
208-70-73530	Y1620-41A1	7	480310
208-70-74110	T1510-01C3	1	360740
208-70-74120	T1510-01C3	3	360740
208-70-74120	T1510-01C6	3	360760
208-70-74140	T1510-01C3	4	360740
208-70-74140	T1510-01C6	4	360760
208-70-74150	T1510-01C6	1	360760
208-70-74170	T1510-01C3	11	360740
208-70-74170	T1510-01C6	10	360760
208-70-74170	T1510-01C7	17	360770
208-70-74180	T1510-03D0	1	360850
208-70-77170	T1110-01A6	1	360020
208-70-77310	T1110-06A2	12	360110
208-70-77320	T1110-06A2	13	360110
208-70-77340	T1110-06A2	19	360110
208-70-77350	T1110-06A2	20	360110
208-70-J1130	T1200-01A8	1	360360
208-81-01311	K1110-61A1	2	210780
208-81-01321	K1110-61A1	4	210780
208-810-1331	K1110-62A1		210790
208-810-1332	K1110-62A1	1	210790
208-810-1341	K1110-62A1		210790
208-810-1342	K1110-62A1	3	210790
208-920-5120	T1510-01C8	5	360780
208-920-6A30	T1510-01C8	3	360780
208-920-6A30	T1510-01C9	7	360790
208-920-6A40	T1510-01C8	4	360780
208-920-6A40	T1510-01C9	8	360790
208-920-7110	T1510-01C8	1	360780
208-920-J150	T1510-01C9	1	360790
208-920-JC30	T1510-01C10	2	360800
208-920-JC40	T1510-01C10	3	360800
208-93-47211	T1510-01C7		360770
208-93-47212	T1510-01C7	1	360770
208-93-93120	T1510-01C6	2	360760
208-934-5120	T1510-01C10	7	360800
208-934-5120	T1510-01C9	4	360790
208-934-5120	T1510-01C9	6	360790
208-934-5160	T1510-01C10	17	360800
208-934-5170	T1510-01C10	8	360800
208-934-5170	T1510-01C11	8	360810
208-934-5170	T1510-01C9	5	360790
208-934-7120	T1510-01C7	3	360770
208-934-7131	T1510-02C4	1	360830

PART NO.	FIG.NO.	INDEX	PAGE
208-934-7161	T1510-01C7	5	360770
208-934-7180	T1510-01C10	9	360800
208-934-7180	T1510-01C7	6	360770
208-934-7190	T1510-01C7	7	360770
208-934-7230	T1510-01C7	8	360770
208-934-7240	T1510-01C7	9	360770
208-934-7251	T1510-01C7	10	360770
208-934-7260	T1510-01C7	11	360770
208-934-J121	T1510-01C10	1	360800
208-934-J150	T1510-01C11	1	360810
208-934-J160	T1510-01C12	1	360815
208-934-JA41	T1510-01C10	4	360800
208-934-JA50	T1510-01C10	5	360800
208-934-JA60	T1510-01C10	6	360800
208-934-JD30	T1510-01C11	4	360810
208-934-JE10	T1510-01C11	2	360810
208-934-JE20	T1510-01C12	3	360815
208-934-JF40	T1510-01C12	4	360815
208-934-JF50	T1510-01C12	5	360815
208-934-JF60	T1510-01C12	6	360815
208-934-JF70	T1510-01C12	7	360815
208-94-40040	T1200-01B1		360370
208-94-40411	T1200-01B7		360420
208-94-47311	T1200-01B7	1	360420
208-94-47410	T1200-01B1	1	360370
208-944-7220	T1200-04B1	10	360540
208-97-07110	T1110-08A4	1	360150
208-97-07120	T1110-08A4	9	360150
208-97-07131	T1110-08A4	2	360150
208-97-07140	T1110-08A4	10	360150
208-97-07161	T1110-09A4	15	360160
208-970-7171	T1200-01A9	2	360350
208-970-7180	T1200-01A9	3	360350
208-970-7190	T1200-01A9	4	360350
208-970-7210	T1110-08A4	23	360150
208-970-7220	T1110-08A4	17	360150
208-979-7120	K1520-01A0	11	210870
208-979-7120	K1520-01A1	11	210880
208-979-7451	D0200-02A1	7	090040
208-979-7472	D0200-02A1	10	090040
208-979-7520	C0100-03A1	38	060030
208-979-7530	K1110-26A1	12	210460
208-979-7540	K1110-60A1	2	210770
208-979-7560	K1110-30A1	13	210540
208-979-7560	K1110-30A10	13	210560
208-979-7560	K1110-30A9	13	210550
208-979-7620	K1110-26A1	13	210460
208-979-7640	K1110-61A1	1	210780
208-979-7650	K1110-61A1	6	210780
208-979-8410	K0700-01A0	30	210180

PART NO.	FIG.NO.	INDEX	PAGE
208-979-8421	K0700-02A0	1	210190
208-979-8430	K0700-01A0	34	210180
208-979-8440	K0700-01A0		210180
208-979-8441	K0700-01A0	3	210180
208-979-8450	K0700-01A0		210180
208-979-8451	K0700-01A0	2	210180
208-979-8460	K0700-01A0		210180
208-979-8461	K0700-01A0	7	210180
208-979-8520	K0700-01A0	4	210180
208-986-1210	W9950-01A1	1	450060
208-987-5311	M1420-01A1	7	240170
209-00-41550	M1220-01A1	13	240140
209-54-53151	M1110-01A1	17	240010
209-54-77190	M1110-01A1	13	240010
209-70-00082	T1510-01C10	19	360800
209-70-00082	T1510-01C11	19	360810
209-70-00082	T1510-01C12	14	360815
209-70-00082	T1510-01C8	12	360780
209-70-00082	T1510-01C9	11	360790
209-70-52141	T1200-01B1	4	360370
209-70-52150	T1200-01B1	8	360370
209-70-53181	T1200-03A0	23	360460
209-70-54171	T1510-01C10	12	360800
209-70-54171	T1510-01C11	12	360810
209-70-54171	T1510-01C12	11	360815
209-70-54171	T1510-01C8	9	360780
209-70-54181	T1510-01C10		360800
209-70-54181	T1510-01C11		360810
209-70-54181	T1510-01C12		360815
209-70-54181	T1510-01C8		360780
209-70-54181	T1510-01C9		360790
209-70-54191	T1510-01C10		360800
209-70-54191	T1510-01C11		360810
209-70-54191	T1510-01C12		360815
209-70-54191	T1510-01C8		360780
209-70-54191	T1510-01C9		360790
209-72-12230	K1110-21A1	3	210370
209-72-12230	K1110-21A1	7	210370
209-939-5170	T1510-01C7	4	360770
209-939-7110	T1510-02C4	3	360830
209-939-7120	T1510-02C4	4	360830
209-987-7220	M1420-01A1	8	240170
20B-27-11210	Y1600-06A0	5	480180
20B-27-11210	Y1641-01A0	17	480400
20F-70-16190	T1200-04B1	16	360540
20T-54-42510	K0700-02A0	25	210190
20T-910-8660	K1110-44A2	17	210620
20U-54-25140	K1110-03A8	17	210220
20U-54-25140	K1110-03A9	19	210230
20U-62-41810	H0330-01A0	6	150150

PART NO.	FIG.NO.	INDEX	PAGE
20U-62-41810	H0330-01A1	9	150160
20U-62-43720	H0120-02A1	10	150050
20U-62-43720	H0120-02A4	7	150060
20U-62-43720	H0120-02A5	10	150070
20Y-00-31330	U0100-01A0	6	390010
20Y-00-31330	U0100-01A2	6	390030
20Y-00-31450	U0100-01A1	6	390020
20Y-00-31450	U0100-01A3	6	390040
20Y-00-31490	U0100-01A1	17	390020
20Y-00-31490	U0100-01A3	17	390040
20Y-00-31840	U0100-01A0	24	390010
20Y-00-31840	U0100-01A1	24	390020
20Y-00-31840	U0100-01A2	24	390030
20Y-00-31840	U0100-01A3	24	390040
20Y-00-41330	K1110-21A1	10	210370
20Y-00-41460	U0120-01A6	1	390120
20Y-00-41660	U0120-01A8	1	390130
20Y-00-42110	H0110-01A1	50	150011
20Y-00-42110	M1210-01A0	11	240120
20Y-00-42110	M1210-01A0	17	240120
20Y-00-42110	M1210-01A1	16	240130
20Y-00-42120	D0100-01A1	22	090010
20Y-00-42120	D0100-01A2	20	090020
20Y-00-42210	M1210-01A1	10	240130
20Y-00-42210	M1510-01A0	9	240200
20Y-00-J1150	U0100-01A0	22	390010
20Y-00-J1150	U0100-01A1	22	390020
20Y-00-J1150	U0100-01A2	22	390030
20Y-00-J1150	U0100-01A3	22	390040
20Y-03-11220	H1210-01A0	32	150180
20Y-03-11220	K0700-02A0	8	210190
20Y-03-11330	C0100-01A1	4	060010
20Y-03-22110	C0100-01A1	2	060010
20Y-04-11161	D0100-01A1	8	090010
20Y-04-11161	D0100-01A2	8	090020
20Y-04-21580	D0100-01A1	14	090010
20Y-04-21580	D0100-01A2	14	090020
20Y-04-31170	D0200-01A1	24	090030
20Y-04-K2081	W1113-01A0	1	450010
20Y-04-K2081	Y1040-01A0	1	480070
20Y-04-K2082	W1113-01A1	1	450020
20Y-04-K2120	Y1040-01A0		480070
20Y-04-K2150	Y1040-01A0	4	480070
20Y-04-K2160	Y1040-01A0	2	480070
20Y-04-K2170	Y1040-01A0	3	480070
20Y-04-K2180	Y1040-01A0	5	480070
20Y-04-K2190	Y1040-01A0	6	480070
20Y-04-K2210	Y1040-01A0	7	480070
20Y-04-K2220	Y1040-01A0	8	480070
20Y-04-K2230	Y1040-01A0	9	480070

PART NO.	FIG.NO.	INDEX	PAGE
20Y-04-K2240	Y1040-01A0	10	480070
20Y-04-K2250	Y1040-01A0	11	480070
20Y-04-K2260	Y1040-01A0	12	480070
20Y-04-K2270	Y1040-01A0	13	480070
20Y-04-K2290	Y1040-01A0	14	480070
20Y-04-K2351	W1113-01A0	3	450010
20Y-04-K2351	W1113-01A1	3	450020
20Y-04-K2450	W1113-01A0	2	450010
20Y-04-K2450	W1113-01A1	2	450020
20Y-06-21551	T1110-07A2	2	360130
20Y-06-21551	T1110-07A6	2	360140
20Y-06-21710	K1110-42A1	31	210590
20Y-06-21770	E0420-01A0	8	120140
20Y-06-23472	K1110-22A1	3	210380
20Y-06-31660	K1110-47A1	8	210640
20Y-06-31680	E0200-05A1	7	120080
20Y-06-31680	E0200-05A2	7	120100
20Y-06-41121	K1110-53B2		210710
20Y-06-41141	K1110-09A9	4	210290
20Y-06-41150	K1110-27A1	7	210490
20Y-06-41238	K1110-53B2		210710
20Y-06-41251	K1110-66A2	13	210840
20Y-06-41812	E0420-01A0	1	120140
20Y-06-41830	K1110-53B2	9	210710
20Y-06-42110	K1110-57A1	39	210750
20Y-06-42121	K1110-57A1	40	210750
20Y-06-42180	K1110-09A9	7	210290
20Y-06-42190	K1110-57A1	42	210750
20Y-06-42320	K1110-67A1	1	210850
20Y-06-42430	K1110-53B2	1	210710
20Y-25-11270	N1110-01A0	8	270010
20Y-25-11270	T1110-06A2	21	360110
20Y-25-11270	T1200-04A1	11	360480
20Y-25-11270	T1200-04A5	11	360500
20Y-25-11270	T1200-04B1	11	360540
20Y-26-21350	N1210-01A0	44	270020
20Y-26-21350	N1210-01A1	44	270030
20Y-27-11250	P1210-01A0	26	300030
20Y-27-21250	N1210-01A0	18	270020
20Y-27-21250	N1210-01A1	18	270030
20Y-27-21250	P1210-01A0	22	300030
20Y-27-21250	Y0260-01A0	14	480010
20Y-27-21280	P1210-01A0	24	300030
20Y-27-21290	N1210-01A0	20	270020
20Y-27-21290	N1210-01A1	20	270030
20Y-27-21290	P1210-01A0	15	300030
20Y-27-21290	Y0260-01A0	16	480010
20Y-27-31190	P1210-01A0	32	300030
20Y-30-16330	R0300-01A0	10	330050
20Y-30-16330	R1100-02A6	10	330190

PART NO.	FIG.NO.	INDEX	PAGE
20Y-43-21140	K1110-42A1	9	210590
20Y-43-21231	K1110-42A1	19	210590
20Y-43-21241	K1110-42A1	20	210590
20Y-43-22211	K1110-50A1	1	210670
20Y-43-22221	K1110-55A1	1	210730
20Y-43-22250	K1110-50A1	6	210670
20Y-43-22250	K1110-55A1	6	210730
20Y-43-22261	K1110-50A1	7	210670
20Y-43-22261	K1110-55A1	7	210730
20Y-43-22370	K1110-50A1	8	210670
20Y-43-22370	K1110-55A1	8	210730
20Y-43-22381	K1110-50A1	3	210670
20Y-43-22390	K1110-55A1	3	210730
20Y-43-22421	K1110-50A1	4	210670
20Y-43-22421	K1110-55A1	4	210730
20Y-43-31421	K1110-53B2	19	210710
20Y-43-31432	K1110-53B2	17	210710
20Y-43-31440	K1110-53B2	20	210710
20Y-43-31450	K1110-53B2	21	210710
20Y-43-31513	K1110-53B2	13	210710
20Y-43-31522	K1110-53B2	14	210710
20Y-43-31611	K1110-53B2	15	210710
20Y-43-31621	K1110-53B2	16	210710
20Y-43-41111	K1110-42A1	11	210590
20Y-43-41121	K1110-42A1	4	210590
20Y-43-41142	K1110-54A1		210720
20Y-43-41143	K1110-54A1	1	210720
20Y-43-41152	K1110-54A1	7	210720
20Y-43-41152	K1110-59A1	7	210760
20Y-43-41162	K1110-54A1	5	210720
20Y-43-41173	K1110-54A1	2	210720
20Y-43-41181	K1110-54A1	11	210720
20Y-43-41181	K1110-59A1	11	210760
20Y-43-41191	K1110-54A1	13	210720
20Y-43-41191	K1110-59A1	13	210760
20Y-43-41230	K1110-46A1	1	210630
20Y-43-41240	K1110-31E2	5	210570
20Y-43-41240	K1110-60A1	5	210770
20Y-43-41251	K1110-46A1		210630
20Y-43-41252	K1110-46A1	14	210630
20Y-43-41281	K1110-54A1	17	210720
20Y-43-41281	K1110-59A1	17	210760
20Y-43-41290	K0310-01A0	3	210130
20Y-43-41290	K0310-01A1	3	210140
20Y-43-41290	K1110-22A1	6	210380
20Y-43-41290	K1110-52A1	16	210690
20Y-43-41290	K1110-52A1	21	210690
20Y-43-41290	K1110-52A1	26	210690
20Y-43-41290	K1110-57A1	11	210750
20Y-43-41290	K1110-57A1	19	210750

PART NO.	FIG.NO.	INDEX	PAGE
20Y-43-41290	K1110-57A1	24	210750
20Y-43-41313	K1110-57A1	1	210750
20Y-43-41323	K1110-57A1	7	210750
20Y-43-41332	K1110-57A1	12	210750
20Y-43-41342	K1110-59A1		210760
20Y-43-41343	K1110-59A1	1	210760
20Y-43-41353	K1110-57A1	20	210750
20Y-43-41361	K1110-42A1	7	210590
20Y-43-41415	K1110-52A1	1	210690
20Y-43-41423	K1110-52A1	9	210690
20Y-43-41442	K1110-52A1	17	210690
20Y-43-41453	K1110-52A1	22	210690
20Y-43-41461	K1110-54A1	18	210720
20Y-43-41461	K1110-59A1	18	210760
20Y-43-41472	K1110-52A1	4	210690
20Y-43-41491	K1110-52A1	28	210690
20Y-43-41533	K1110-59A1	2	210760
20Y-43-41591	K1110-54A1	15	210720
20Y-43-41591	K1110-59A1	15	210760
20Y-43-41621	K1110-52A1	7	210690
20Y-43-41631	K1110-57A1	4	210750
20Y-43-41641	K1110-52A1	8	210690
20Y-43-41651	K1110-52A1	10	210690
20Y-43-41661	K1110-52A1	11	210690
20Y-43-41661	K1110-57A1	8	210750
20Y-43-41671	K1110-57A1	34	210750
20Y-43-41740	K1110-57A1	31	210750
20Y-43-41750	K1110-57A1	32	210750
20Y-43-41760	K1110-44A2	3	210620
20Y-43-41780	K1110-57A1	38	210750
20Y-43-41790	K1110-57A1	33	210750
20Y-43-41812	K1110-46A1		210630
20Y-43-41813	K1110-46A1	7	210630
20Y-43-41822	K1110-46A1		210630
20Y-43-41823	K1110-46A1	9	210630
20Y-43-41832	K1110-46A1	11	210630
20Y-43-41850	K1110-59A1	5	210760
20Y-43-41891	K1110-46A1	12	210630
20Y-43-41981	K1110-52A1	29	210690
20Y-43-41991	K1110-57A1	28	210750
20Y-43-42130	K1110-53B2	2	210710
20Y-43-42170	K1110-52A1	23	210690
20Y-43-42170	K1110-57A1	13	210750
20Y-43-42170	K1110-57A1	21	210750
20Y-43-42180	K1110-52A1	30	210690
20Y-43-42180	K1110-57A1	29	210750
20Y-43-42330	K1110-57A1		210750
20Y-43-42350	K1110-57A1		210750
20Y-43-42450	K1110-52A1		210690
20Y-46-42310	J1110-02A2	1	180030

PART NO.	FIG.NO.	INDEX	PAGE
20Y-46-42320	J1110-02A2	2	180030
20Y-46-42330	J1110-02A2	5	180030
20Y-46-42340	J1110-02A2	3	180030
20Y-46-42340	J1110-02A2	6	180030
20Y-53-00031	K1110-02A8		210210
20Y-53-11241	K1110-01A8	2	210200
20Y-53-11250	K1110-01A8	7	210200
20Y-53-11260	K1110-01A8	3	210200
20Y-53-11271	K1110-01A8	6	210200
20Y-53-11312	K1110-05A9	1	210255
20Y-53-11320	K1110-06A9	11	210260
20Y-53-11332	K1110-05A9	14	210255
20Y-53-11332	K1110-05A9	15	210255
20Y-53-11380	K1110-13A8	6	210350
20Y-53-11380	K1110-13A9	6	210360
20Y-53-11390	K1110-13A8	4	210350
20Y-53-11390	K1110-13A8	5	210350
20Y-53-11390	K1110-13A9	4	210360
20Y-53-11390	K1110-13A9	5	210360
20Y-53-11402	K1110-05A9		210255
20Y-53-11411	K1110-05A9	18	210255
20Y-53-11421	K1110-05A9	19	210255
20Y-53-11441	K1110-06A9	18	210260
20Y-53-11451	K1110-05A9	11	210255
20Y-53-11460	K1110-05A9	12	210255
20Y-53-11470	K1110-05A9	10	210255
20Y-53-11484	K1110-05A9	13	210255
20Y-53-11511	K1110-02A8	1	210210
20Y-53-11520	K1110-02A8	2	210210
20Y-53-11540	K1110-02A8	41	210210
20Y-53-11551	K1110-02A8	4	210210
20Y-53-11561	K1110-02A8	25	210210
20Y-53-11581	K1110-02A8	33	210210
20Y-53-11591	K1110-03A9	1	210230
20Y-53-11601	K1110-03A8	1	210220
20Y-53-11601	K1110-03A9		210230
20Y-53-11611	K1110-03A8	2	210220
20Y-53-11611	K1110-03A9	4	210230
20Y-53-11641	K1110-02A8	34	210210
20Y-53-11661	K1110-02A8	28	210210
20Y-53-11712	K1110-04A8	1	210240
20Y-53-11721	K1110-04A8	11	210240
20Y-53-11721	K1110-04A9	7	210250
20Y-53-11741	K1110-04A8	6	210240
20Y-53-11752	K1110-11A9	30	210300
20Y-53-11761	K1110-11A9	32	210300
20Y-53-11771	K1110-04A8	17	210240
20Y-53-11771	K1110-04A9	13	210250
20Y-53-11781	K1110-04A8	12	210240
20Y-53-11781	K1110-04A9	8	210250

PART NO.	FIG.NO.	INDEX	PAGE
20Y-53-11790	K1110-04A8	7	210240
20Y-53-11810	K1110-07A9	14	210270
20Y-53-11821	K1110-12A10	3	210340
20Y-53-11821	K1110-12A9	5	210320
20Y-53-11831	K1110-12A10	5	210340
20Y-53-11831	K1110-12A9	7	210320
20Y-53-11841	K1110-01A8	4	210200
20Y-53-11850	K1110-01A8	5	210200
20Y-53-11861	K1110-04A8	20	210240
20Y-53-11861	K1110-04A9	16	210250
20Y-53-11870	K1110-26A1	2	210460
20Y-53-11880	K1110-26A1	3	210460
20Y-53-11890	K1110-07A9	15	210270
20Y-53-11921	K1110-04A8	4	210240
20Y-53-11931	K1110-04A8	14	210240
20Y-53-11931	K1110-04A9	10	210250
20Y-53-11940	K1110-03A8	7	210220
20Y-53-11940	K1110-03A9	9	210230
20Y-53-11953	K0310-01A0	4	210130
20Y-53-11953	K0310-01A1	4	210140
20Y-53-11961	K1110-12A10	1	210340
20Y-53-11961	K1110-12A9	1	210320
20Y-53-11973	K1110-03A8	9	210220
20Y-53-11973	K1110-03A9	11	210230
20Y-53-11981	K1110-07A9	1	210270
20Y-53-11990	K1110-07A9	6	210270
20Y-53-11H71	K1110-04A8	2	210240
20Y-53-11H71	K1110-04A9	2	210250
20Y-53-12111	K1110-22A1	1	210380
20Y-53-12122	K1110-21A1	12	210370
20Y-53-12154	K1110-21A1	5	210370
20Y-53-12161	K1110-21A1	20	210370
20Y-53-12172	K1110-21A1	11	210370
20Y-53-12201	K1110-06A9	1	210260
20Y-53-12221	K1110-09A9	8	210290
20Y-53-12232	K1110-08A9	9	210280
20Y-53-12240	K1110-22A1	2	210380
20Y-53-12256	K1110-23A1	1	210390
20Y-53-12260	K1110-13A8	11	210350
20Y-53-12260	K1110-13A9	11	210360
20Y-53-12280	K1110-07A9	3	210270
20Y-53-12291	K1110-21A1	19	210370
20Y-53-12310	K1110-02A8	44	210211
20Y-53-12310	K1110-11A9	15	210300
20Y-53-12310	K1110-11A9	21	210300
20Y-53-12310	K1110-21A1	16	210370
20Y-53-12310	K1110-24A1	11	210420
20Y-53-12310	K1110-24A1	7	210420
20Y-53-12310	K1110-25A1	13	210430
20Y-53-12310	K1110-25A2	3	210440

PART NO.	FIG.NO.	INDEX	PAGE
20Y-53-12310	K1110-30A1	12	210540
20Y-53-12310	K1110-30A1	23	210540
20Y-53-12310	K1110-30A1	26	210540
20Y-53-12310	K1110-30A10	12	210560
20Y-53-12310	K1110-30A10	23	210560
20Y-53-12310	K1110-30A10	26	210560
20Y-53-12310	K1110-30A9	12	210550
20Y-53-12310	K1110-30A9	23	210550
20Y-53-12310	K1110-30A9	26	210550
20Y-53-12320	K1110-13A8	13	210350
20Y-53-12320	K1110-13A9	13	210360
20Y-53-12330	K1110-02A8	14	210210
20Y-53-12361	K1110-30A1	1	210540
20Y-53-12361	K1110-30A10	1	210560
20Y-53-12361	K1110-30A9	1	210550
20Y-53-12371	K1110-30A1	6	210540
20Y-53-12371	K1110-30A10	6	210560
20Y-53-12371	K1110-30A9	6	210550
20Y-53-12381	K1110-30A1	14	210540
20Y-53-12381	K1110-30A10	14	210560
20Y-53-12381	K1110-30A9	14	210550
20Y-53-12391	K1110-30A1	17	210540
20Y-53-12391	K1110-30A10	17	210560
20Y-53-12391	K1110-30A9	17	210550
20Y-53-12412	K1110-11A9	1	210300
20Y-53-12421	K1110-11A9	3	210300
20Y-53-12431	K1110-11A9	5	210300
20Y-53-12441	K1110-11A9	9	210300
20Y-53-12463	K1110-11A9	14	210300
20Y-53-12472	K1110-11A9	20	210300
20Y-53-12483	K1110-21A1	22	210370
20Y-53-12522	K1110-25A1	8	210430
20Y-53-12531	K1110-02A8	43	210211
20Y-53-12552	K1110-11A9	13	210300
20Y-53-12564	K1110-26A1	1	210460
20Y-53-12580	K1110-13A8	17	210350
20Y-53-12580	K1110-13A9	16	210360
20Y-53-12591	K1110-12A9	4	210320
20Y-53-12611	K1110-03A8	13	210220
20Y-53-12611	K1110-03A9	15	210230
20Y-53-12631	K1110-03A8	15	210220
20Y-53-12631	K1110-03A9	17	210230
20Y-53-12661	K1110-06A9	14	210260
20Y-53-12710	K1110-11A9	12	210300
20Y-53-12710	K1110-11A9	8	210300
20Y-53-12731	K1110-30A1	24	210540
20Y-53-12731	K1110-30A10	24	210560
20Y-53-12731	K1110-30A9	24	210550
20Y-53-12740	K1110-13A8	18	210350
20Y-53-12740	K1110-13A9	17	210360

PART NO.	FIG.NO.	INDEX	PAGE
20Y-53-12751	K1110-26A1	9	210460
20Y-53-12760	K1110-26A1	10	210460
20Y-53-12771	K1110-23A1	5	210390
20Y-53-12781	K1110-26A1	8	210460
20Y-53-12790	K1110-08A9	11	210280
20Y-53-12810	K1110-21A1	4	210370
20Y-53-12821	K1110-05A9	2	210255
20Y-53-12830	K1110-02A8	18	210210
20Y-53-12840	K1110-05A9	3	210255
20Y-53-12850	K1110-05A9	4	210255
20Y-53-12860	K1110-30A1	28	210540
20Y-53-12860	K1110-30A10	28	210560
20Y-53-12860	K1110-30A9	28	210550
20Y-53-12870	K1110-05A9	6	210255
20Y-53-12880	K1110-05A9	7	210255
20Y-53-12892	K1110-03A8	10	210220
20Y-53-12892	K1110-03A9	12	210230
20Y-53-12940	K1110-06A9	12	210260
20Y-53-12951	K1110-13A8	23	210350
20Y-53-12951	K1110-13A9	22	210360
20Y-53-12960	K1110-13A8	1	210350
20Y-53-12960	K1110-13A9	1	210360
20Y-53-12971	K1110-05A9	9	210255
20Y-53-12991	K1110-06A9	5	210260
20Y-53-13130	K1120-01A0	5	210860
20Y-53-13141	K1120-01A0	8	210860
20Y-53-13151	K1120-01A0	11	210860
20Y-53-13280	K1110-24A1	3	210420
20Y-53-13311	K1110-25A1	1	210430
20Y-53-13321	K1110-25A1	4	210430
20Y-53-13331	K1110-25A1	2	210430
20Y-53-13341	K1110-25A1	5	210430
20Y-53-13351	K1110-25A1	3	210430
20Y-53-13361	K1110-25A1	6	210430
20Y-53-13371	K1110-24A1	1	210420
20Y-53-13421	K1110-24A1	8	210420
20Y-53-13451	K1110-25A1	11	210430
20Y-53-13451	K1110-25A2	1	210440
20Y-53-13461	K1110-25A1	14	210430
20Y-53-13480	K1110-24A1	2	210420
20Y-53-13490	K1110-12A9	3	210320
20Y-53-13616	K1110-23A1		210390
20Y-53-13631	K1110-30A1		210540
20Y-53-13631	K1110-30A10		210560
20Y-53-13631	K1110-30A9		210550
20Y-53-14114	K1110-41A1		210580
20Y-53-14121	K1110-48A1	1	210650
20Y-53-14150	K1110-48A1		210650
20Y-53-14160	K1110-48A1	8	210650
20Y-53-14170	K1110-48A1	9	210650

PART NO.	FIG.NO.	INDEX	PAGE
20Y-53-14220	K1110-44A2	10	210620
20Y-53-14812	K1110-27A1	1	210490
20Y-53-14820	K1110-28A8	1	210500
20Y-53-14820	K1110-28A9	1	210520
20Y-53-14831	K1110-66A1	27	210830
20Y-53-14831	K1110-66A2	34	210840
20Y-53-14841	K1110-66A1	30	210830
20Y-53-14841	K1110-66A2	37	210840
20Y-53-14910	K1110-66A1	19	210830
20Y-53-14910	K1110-66A2	26	210840
20Y-53-14920	K1110-66A1	20	210830
20Y-53-14920	K1110-66A2	27	210840
20Y-53-14930	K1110-66A1	21	210830
20Y-53-14930	K1110-66A2	28	210840
20Y-53-14940	K1110-66A1	22	210830
20Y-53-14940	K1110-66A2	29	210840
20Y-53-14950	K1110-66A1	23	210830
20Y-53-14950	K1110-66A2	30	210840
20Y-53-14963	K1110-66A1	24	210830
20Y-53-14963	K1110-66A2	31	210840
20Y-53-14973	K1110-66A1	25	210830
20Y-53-14973	K1110-66A2	32	210840
20Y-53-14983	K1110-66A1	26	210830
20Y-53-14983	K1110-66A2	33	210840
20Y-53-14991	K1110-49A1	1	210660
20Y-53-15140	K1110-13A9	25	210360
20Y-53-15150	E0310-01A0	4	120110
20Y-53-15210	E0310-01A0	1	120110
20Y-53-15220	E0310-01A3	1	120120
20Y-53-15710	K0320-01A0	1	210150
20Y-53-15750	K0320-01A0	2	210150
20Y-53-15780	K0320-01A0	7	210150
20Y-53-15790	K0320-01A0	8	210150
20Y-53-16321	K1110-05A9		210255
20Y-53-16321	K1110-06A9		210260
20Y-53-16741	K0330-01A0	1	210160
20Y-53-16812	K1110-04A9	1	210250
20Y-53-16910	K0330-01A0	2	210160
20Y-53-17411	K0330-01A0	7	210160
20Y-53-17420	K0330-01A0	12	210160
20Y-53-18211	K1110-27A1	9	210490
20Y-53-18221	K1110-30A9	33	210550
20Y-53-18880	K1110-13A8	21	210350
20Y-53-18880	K1110-13A9	20	210360
20Y-54-11611	K1110-02A8	36	210210
20Y-54-11611	K1110-07A9	11	210270
20Y-54-11611	M1130-01A1	15	240060
20Y-54-11611	M1140-01A1	16	240070
20Y-54-12550	M1810-01A2	13	240230
20Y-54-12550	M1810-01A2	19	240230

PART NO.	FIG.NO.	INDEX	PAGE
20Y-54-12550	M1810-01A2	27	240230
20Y-54-12550	M1810-01A2	6	240230
20Y-54-12550	M1810-01A2A	13	240240
20Y-54-12550	M1810-01A2A	19	240240
20Y-54-12550	M1810-01A2A	27	240240
20Y-54-12550	M1810-01A2A	6	240240
20Y-54-12550	M1810-02A2	6	240270
20Y-54-12550	M1810-02A3	5	240280
20Y-54-12550	M1810-03A2	6	240310
20Y-54-12550	M1810-03A3	18	240320
20Y-54-12550	M1810-03A3	6	240320
20Y-54-13322	K1110-05A9	8	210255
20Y-54-14590	K1110-02A8	15	210210
20Y-54-14590	K1110-04A8	8	210240
20Y-54-14590	K1110-04A9	4	210250
20Y-54-19920	M1210-01A0	25	240120
20Y-54-19920	M1210-01A1	24	240130
20Y-54-19930	M1210-01A0	26	240120
20Y-54-19930	M1210-01A1	25	240130
20Y-54-27761	M1150-01A1	30	240100
20Y-54-27761	M1150-01A1	35	240100
20Y-54-27761	M1150-01A1	42	240101
20Y-54-27761	M1150-02A1	8	240110
20Y-54-28161	M1110-02A1	2	240020
20Y-54-28170	M1130-01A1	9	240060
20Y-54-29232	M1130-01A1	25	240060
20Y-54-29232	M1140-01A1	18	240070
20Y-54-29680	M1220-01A1	8	240140
20Y-54-35420	M1410-01A0	2	240160
20Y-54-35430	M1410-01A0	3	240160
20Y-54-35451	K1110-13A8	12	210350
20Y-54-35451	K1110-13A9	12	210360
20Y-54-36342	K0230-01A2	23	210120
20Y-54-36342	K1110-04A8	15	210240
20Y-54-36342	K1110-04A9	11	210250
20Y-54-39450	K1110-08A9	5	210280
20Y-54-39460	K1110-08A9	6	210280
20Y-54-39480	K1110-08A9	7	210280
20Y-54-39511	K1110-09A9	12	210290
20Y-54-51393	K1110-06A9	15	210260
20Y-54-51420	K1110-02A8	42	210211
20Y-54-51531	K1110-02A8	3	210210
20Y-54-51621	K1110-02A8	38	210210
20Y-54-51640	K1110-03A9	3	210230
20Y-54-51670	K1110-02A8	21	210210
20Y-54-51680	K1110-02A8	22	210210
20Y-54-52211	K1110-08A9	1	210280
20Y-54-52221	K1110-08A9		210280
20Y-54-52300	K1110-06A9	2	210260
20Y-54-52350	K1110-08A9	4	210280

PART NO.	FIG.NO.	INDEX	PAGE
20Y-54-52530	K0320-01A0	3	210150
20Y-54-52621	K1110-02A8	12	210210
20Y-54-52651	K1110-04A8	19	210240
20Y-54-52651	K1110-04A8	23	210240
20Y-54-52651	K1110-04A9	15	210250
20Y-54-52651	K1110-04A9	19	210250
20Y-54-52681	K1110-02A8	13	210210
20Y-54-52820	K1110-06A9	9	210260
20Y-54-52860	K1110-05A9	5	210255
20Y-54-52961	K0330-01A0	13	210160
20Y-54-52970	K0330-01A0	14	210160
20Y-54-52980	K0330-01A0	15	210160
20Y-54-54480	E0310-01A3	6	120120
20Y-54-61470	M1130-01A1	6	240060
20Y-54-61630	M1420-01A1	2	240170
20Y-54-61670	M1810-01A1	38	240220
20Y-54-61670	M1810-01A2	38	240230
20Y-54-61670	M1810-01A2A	39	240240
20Y-54-61670	M1810-01A3	39	240250
20Y-54-63390	M1140-02A1	3	240080
20Y-54-63414	M1130-01A1	19	240060
20Y-54-63414	M1140-02A1	2	240080
20Y-54-63414	M1140-02A1	9	240080
20Y-54-65121	K1110-65A1	12	210820
20Y-54-65340	K1110-46A1	15	210630
20Y-54-65540	K1110-46A1	18	210630
20Y-54-65690	K1110-26A1	15	210460
20Y-54-65790	K1110-26A1	14	210460
20Y-54-71372	M1130-01A1	18	240060
20Y-54-71460	M1110-02A1	10	240020
20Y-54-71460	M1110-02A1	16	240020
20Y-54-71460	M1110-02A1	21	240020
20Y-54-71460	M1110-02A1	7	240020
20Y-54-71460	M1110-03A1	5	240030
20Y-54-71491	M1140-02A1	10	240080
20Y-54-74161	M1220-01A1	5	240140
20Y-54-74172	M1220-01A1	6	240140
20Y-57-41102	K0110-01A0		210010
20Y-57-41103	K0110-01A0	1	210010
20Y-57-41203	Y1570-01A1	1	480100
20Y-57-41211	K0110-01A2	3	210030
20Y-57-41211	K0110-01A3	3	210040
20Y-57-41801	Y1570-01A3	1	480120
20Y-57-41910	K0160-01A0	1	210050
20Y-60-11750	H1833-01A0	5	150390
20Y-60-21320	H0110-01A1	31	150010
20Y-60-21340	H0110-01A1	41	150010
20Y-60-21470	H0110-01A1	39	150010
20Y-60-21470	V0100-01A0	14	420010
20Y-60-22210	H0120-01A1	20	150030

PART NO.	FIG.NO.	INDEX	PAGE
20Y-60-22210	H0120-01A4	20	150040
20Y-60-22270	H0120-01A1	21	150030
20Y-60-22270	H0120-01A4	21	150040
20Y-60-22350	H1833-01A0	6	150390
20Y-60-22372	H0312-01A0	2	150120
20Y-62-12121	P1120-01A0	1	300010
20Y-62-12121	P1120-01A1	1	300020
20Y-62-15831	K1110-66A1	1	210830
20Y-62-15831	K1110-66A1	10	210830
20Y-62-15831	K1110-66A2	1	210840
20Y-62-15831	K1110-66A2	14	210840
20Y-62-15951	D0200-02A1	13	090040
20Y-62-15951	H1810-01A1	31	150340
20Y-62-15951	K1520-01A0	6	210870
20Y-62-15951	K1520-01A1	6	210880
20Y-62-16630	H1833-01A0	1	150390
20Y-62-18890	K1110-42A1	27	210590
20Y-62-18890	K1110-51A1	6	210680
20Y-62-18890	K1110-56A1	6	210740
20Y-62-18910	K1110-42A1	22	210590
20Y-62-18910	K1110-51A1	4	210680
20Y-62-18910	K1110-56A1	4	210740
20Y-62-19560	H1833-01A0	3	150390
20Y-62-21940	H1831-01A1	21	150350
20Y-62-21940	H1831-01A2	17	150360
20Y-62-22160	H0120-01A1	17	150030
20Y-62-22160	H0120-01A4	17	150040
20Y-62-22160	H0120-02A1	25	150050
20Y-62-22160	H0120-02A4	23	150060
20Y-62-22160	H0120-02A5	26	150070
20Y-62-22160	H1810-01A1	7	150340
20Y-62-22790	D0200-01A1	8	090030
20Y-62-22790	H1810-01A0	11	150330
20Y-62-22790	H1810-01A0	18	150330
20Y-62-22790	H1810-01A1	13	150340
20Y-62-22790	H1810-01A1	21	150340
20Y-62-22790	H1831-02A2	7	150370
20Y-62-22790	H1831-02A3	7	150380
20Y-62-22790	H1840-01A0	5	150400
20Y-62-22790	K1110-44A2	31	210620
20Y-62-22790	K1110-63A1	12	210800
20Y-62-22790	K1110-63A1	3	210800
20Y-62-22790	K1110-64A1	14	210810
20Y-62-22790	K1110-64A1	7	210810
20Y-62-22790	Y1600-11A0	3	480230
20Y-62-22790	Y1600-12A0	3	480240
20Y-62-22810	H1810-01A0	12	150330
20Y-62-22810	H1810-01A1	14	150340
20Y-62-22810	H1831-02A2	13	150370
20Y-62-22810	H1831-02A2	8	150370

PART NO.	FIG.NO.	INDEX	PAGE
20Y-62-22810	H1831-02A3	13	150380
20Y-62-22810	H1831-02A3	8	150380
20Y-62-22810	H1840-01A0	6	150400
20Y-62-22810	K1110-44A2	32	210620
20Y-62-22810	K1110-64A1	8	210810
20Y-62-22820	D0200-01A1	9	090030
20Y-62-22820	H1810-01A0	13	150330
20Y-62-22820	H1810-01A1	15	150340
20Y-62-22820	H1831-02A2	14	150370
20Y-62-22820	H1831-02A2	19	150370
20Y-62-22820	H1831-02A3	14	150380
20Y-62-22820	H1831-02A3	19	150380
20Y-62-22820	H1840-01A0	14	150400
20Y-62-22820	K1110-44A2	33	210620
20Y-62-22820	K1110-63A1	13	210800
20Y-62-22820	K1110-64A1	15	210810
20Y-62-22820	K1110-64A1	9	210810
20Y-62-22830	H1810-01A1	16	150340
20Y-62-22830	H1840-01A0	7	150400
20Y-62-22830	K1110-64A1	16	210810
20Y-62-22830	Y1600-11A0	6	480230
20Y-62-22830	Y1600-12A0	6	480240
20Y-62-22840	H1840-01A0	15	150400
20Y-62-22840	K1110-64A1	17	210810
20Y-62-22850	H1840-01A0	8	150400
20Y-62-22850	K1110-63A1	14	210800
20Y-62-22850	K1110-64A1	18	210810
20Y-62-22860	H1831-02A2	15	150370
20Y-62-22860	H1831-02A3	15	150380
20Y-62-22860	H1840-01A0	16	150400
20Y-62-22860	K1110-64A1	19	210810
20Y-62-25360	K1110-44A2	7	210620
20Y-62-27770	K1110-65A1	14	210820
20Y-62-31300	Y1970-01A1		481190
20Y-62-31310	Y1970-01A1	1	481190
20Y-62-31320	Y1970-01A1	2	481190
20Y-62-31331	Y1970-01A1	5	481190
20Y-62-41390	K1110-42A1	29	210590
20Y-62-41701	H0120-01A1		150030
20Y-62-41701	H0120-01A4		150040
20Y-62-41960	H1831-01A1	15	150350
20Y-62-42251	K1110-64A1	10	210810
20Y-62-43470	K1110-44A2	22	210620
20Y-62-44630	K1110-63A1	5	210800
20Y-62-45620	H0120-01A1	4	150030
20Y-62-45620	H0120-01A4	4	150040
20Y-62-47630	H0120-01A1	24	150030
20Y-62-47630	H0120-01A4	24	150040
20Y-62-51681	Y1851-01A0		481170
20Y-62-5168101	Y1851-01A0	1	481170

PART NO.	FIG.NO.	INDEX	PAGE
20Y-62-5168102	Y1851-01A0	2	481170
20Y-62-5168103	Y1851-01A0	3	481170
20Y-62-51691	Y1851-01A0	4	481170
20Y-62-52160	K1110-44A2	19	210620
20Y-62-52290	K1110-64A1	12	210810
20Y-62-53410	K1110-64A1	2	210810
20Y-62-53420	K1110-64A1	3	210810
20Y-70-11520	T1110-06A2	14	360110
20Y-70-11520	T1110-06A2	7	360110
20Y-70-11540	T1110-06A2	1	360110
20Y-70-11540	T1200-04A1	7	360480
20Y-70-11540	T1200-04A5	7	360500
20Y-70-11540	T1200-04B1	7	360540
20Y-70-11651	T1110-01A2	9	360010
20Y-70-11651	T1110-01A6	9	360020
20Y-70-11651	T1110-01A7	9	360030
20Y-810-1211	Y1979-11A0		481200
20Y-810-1231	K1110-28A8		210500
20Y-810-1231	K1110-28A9		210520
20Y-810-1240	E0450-01A0	11	120150
20Y-810-1240	E0450-01A1	11	120160
20Y-954-6111	K0230-01A0	1	210100
20Y-954-6122	K0220-01A0	1	210090
20Y-954-6132	K0230-01A1	1	210110
20Y-954-6132	K0230-01A2	1	210120
20Y-954-6142	K0230-01A2	9	210120
20Y-954-6151	K0230-01A2	12	210120
20Y-954-6161	K0230-01A2	13	210120
20Y-954-6171	K0230-01A2	2	210120
20Y-954-6181	K0230-01A2	3	210120
20Y-954-6192	K0230-01A1	2	210110
20Y-954-6192	K0230-01A2	6	210120
20Y-954-6241	K0220-01A0	2	210090
20Y-954-6250	K0220-01A0	10	210090
20Y-97-32220	R1140-01A0	1	330230
20Y-97-32230	R1140-01A0	2	330230
20Y-970-6450	Y1840-01A0	1	481150
20Y-979-3120	K0700-01A0	26	210180
20Y-979-3130	K1110-61A1	5	210780
20Y-979-3140	K0700-02A0	2	210190
20Y-979-3150	K0700-01A0	32	210180
20Y-979-3150	K0700-01A0	35	210180
20Y-979-3150	K1110-61A1	3	210780
20Y-979-6161	K1110-22A1	7	210380
20Y-979-6630	K1110-46A1	19	210630
20Y-979-6650	K0700-01A0	31	210180
20Y-979-6771	K1110-28A8	5	210500
20Y-979-6771	K1110-28A9	5	210520
21J-06-12440	K1110-02A8	31	210210
21M-00-21290	H0110-01A1	51	150011

PART NO.	FIG.NO.	INDEX	PAGE
21M-06-31170	K1110-53B2	7	210710
21M-27-11240	P1210-01A0	23	300030
21M-27-11260	P1210-01A0	13	300030
21M-54-23210	M1110-02A1	8	240020
21M-62-16350	H1831-01A1	14	150350
21M-97-01173	T1200-06A5	9	360610
21M-97-01204	T1200-06A5		360610
21M-97-01213	T1200-06A5	1	360610
21M-97-01223	T1200-06A5	2	360610
21N-32-11211	T1510-01C11	17	360810
21N-62-36780	K1110-64A1	6	210810
21N-62-36790	K1110-64A1	5	210810
21N-64-36680	H1810-01A1	4	150340
21T-06-11350	K0350-01A0	1	210170
21T-06-11950	K0700-02A0	21	210190
21T-06-17820	P1120-01A0	17	300010
21T-06-17820	P1120-01A1	17	300020
21T-06-32810	E0200-05A1	6	120080
21T-06-32810	E0200-05A2	6	120100
21T-06-32810	T1110-07A2	1	360130
21T-06-32810	T1110-07A6	1	360140
21T-06-33760	K1110-57A1	41	210750
21T-30-00110	R0110-01A0		330010
21T-30-00120	R0110-01A0	8	330010
21T-38-12270	K0350-01A0	7	210170
21T-54-16150	C0100-06A1	3	060060
21T-54-16150	C0100-06A1	7	060060
21T-54-16150	M1110-01A1	15	240010
21T-54-16150	M1110-01A1	20	240010
21T-62-76830	D0200-02A1	32	090040
21U-98-31160	U0100-01A0	27	390010
21U-98-31160	U0100-01A1	27	390020
21U-98-31160	U0100-01A2	27	390030
21U-98-31160	U0100-01A3	27	390040
21W-62-42490	H0120-01A1	8	150030
21W-62-42490	H0120-01A4	8	150040
21W-62-42490	H0120-02A1	22	150050
21W-62-42490	H1831-01A1	2	150350
21W-62-42490	H1831-01A1	23	150350
21W-62-42490	H1831-01A1	8	150350
21W-62-42490	H1831-01A2	19	150360
21W-62-42490	H1831-01A2	2	150360
21W-62-42490	H1831-01A2	7	150360
21W-62-42490	N1310-01A0	17	270050
21W-62-42630	N1310-01A0	5	270050
21W-62-42640	H0330-01A0	9	150150
21W-62-42640	H0330-01A1	12	150160
21W-62-42640	N1220-01A0	4	270040
21W-62-42640	N1310-01A0	25	270050
21W-62-43930	H1833-01A0	7	150390

PART NO.	FIG.NO.	INDEX	PAGE
21X-62-21140	D0200-03A1	26	090050
22B-00-21290	U0610-01A1	1	390300
22B-03-12590	C0100-01A1	26	060010
22B-04-K1130	W1113-01A1	6	450020
22B-04-K1140	W1113-01A1	7	450020
22B-04-K1150	W1113-01A1	8	450020
22B-04-K1160	W1113-01A1	9	450020
22B-04-K1170	W1113-01A1	10	450020
22B-54-15411	K1110-02A8	5	210210
22B-54-15421	K1110-02A8	8	210210
22B-54-15440	K1110-02A8	6	210210
22B-54-15450	K1110-02A8	9	210210
22B-54-15470	K1110-02A8	7	210210
22B-54-15480	K1110-02A8	10	210210
22B-54-15841	K1110-03A8	11	210220
22B-54-15841	K1110-03A9	13	210230
22B-54-15970	K1110-03A8	3	210220
22B-54-15970	K1110-03A9	5	210230
22B-54-15980	K1110-03A8	4	210220
22B-54-15980	K1110-03A9	6	210230
22B-54-16330	K1110-06A9	10	210260
22B-54-16340	K1110-06A9	3	210260
22B-54-16461	K1110-06A9	19	210260
22B-54-17282	K1110-13A8	2	210350
22B-54-17282	K1110-13A9	2	210360
22B-54-17380	K1110-11A9	19	210300
22B-57-11911	K0160-01A1	1	210060
22B-60-11160	H0110-01A1	32	150010
22B-62-18980	H1840-01A0	2	150400
22B-95-41660	K0230-01A2	25	210120
22B-95-41840	K0230-01A2	24	210120
22D-62-12120	E0200-01A1	30	120040
22L-62-22590	H0120-02A1	19	150050
22L-62-22590	H0120-02A4	16	150060
22S-62-26210	K0700-02A0	17	210190
22S-62-26210	K0700-02A0	32	210190
22S-62-26210	K1520-01A0	10	210870
22S-62-26210	K1520-01A1	10	210880
22U-00-21440	U0100-01A0	17	390010
22U-00-21440	U0100-01A2	17	390030
22U-00-28120	M1210-01A0	18	240120
22U-00-28120	M1210-01A1	17	240130
22U-00-28140	M1510-01A0	11	240200
22U-04-21200	D0100-01A1		090010
22U-04-21200	D0100-01A2		090020
22U-04-21210	D0100-01A1	13	090010
22U-04-21210	D0100-01A2	13	090020
22U-04-21220	D0100-01A1	15	090010
22U-04-21220	D0100-01A2	15	090020
22U-04-21241	D0100-01A1		090010

PART NO.	FIG.NO.	INDEX	PAGE
22U-04-21241	D0100-01A2		090020
22U-06-11270	K1110-47A1	9	210640
22U-06-22360	K1110-53B2	24	210710
22U-06-22380	K1110-57A1	36	210750
22U-06-22460	K1110-57A1	37	210750
22U-06-22490	K1110-53B2	23	210710
22U-26-21240	N1210-01A0	31	270020
22U-26-21240	N1210-01A1	31	270030
22U-26-21240	Y0260-01A0	27	480010
22U-26-21320	N1210-01A0	30	270020
22U-26-21320	N1210-01A1	30	270030
22U-26-21320	Y0260-01A0	26	480010
22U-43-21111	K1110-42A1	16	210590
22U-43-21121	K1110-42A1	17	210590
22U-43-21131	K1110-42A1	18	210590
22U-43-21182	K1110-50A1		210670
22U-43-21192	K1110-55A1		210730
22U-43-21211	K1110-50A1	5	210670
22U-43-21211	K1110-55A1	5	210730
22U-43-21350	K1110-42A1		210590
22U-43-21360	K1110-42A1	10	210590
22U-43-21390	K1110-46A1	13	210630
22U-43-22340	K1110-30A1	2	210540
22U-43-22340	K1110-30A10	2	210560
22U-43-22340	K1110-30A9	2	210550
22U-43-23251	K1110-57A1	5	210750
22U-43-23260	K1110-52A1	27	210690
22U-43-23260	K1110-53B2	25	210710
22U-43-23260	K1110-57A1	47	210751
22U-43-23290	K1110-57A1	6	210750
22U-54-24760	M1810-02A1	2	240260
22U-54-24760	M1810-02A2	2	240270
22U-54-24760	M1810-02A3	2	240280
22U-54-24760	M1810-02A4	2	240290
22U-54-25110	K1110-43A1	1	210600
22U-54-25120	K1110-44A1	1	210610
22U-54-25340	K1110-21A1	13	210370
22U-54-25521	K1110-43A1	2	210600
22U-54-25531	K1110-44A1	2	210610
22U-54-25541	K1110-44A2	13	210620
22U-54-25581	K1110-41A1	2	210580
22U-54-25660	K1110-44A2	2	210620
22U-60-21330	H1831-01A1	26	150350
22U-60-21330	H1831-01A2	22	150360
22U-62-21870	N1310-01A0	29	270050
22U-62-24420	N1310-01A0	32	270050
23D-95-04450	K1110-30A1	27	210540
23D-95-04450	K1110-30A10	27	210560
23D-95-04450	K1110-30A9	27	210550
418-54-35450	K1110-26A1	7	210460

PART NO.	FIG.NO.	INDEX	PAGE
419-03-21320	C0100-06A1	29	060060
421-03-22170	C0100-06A1	30	060060
421-06-23330	E0200-05A1		120080
421-06-23330	E0200-05A2		120100
421-06-23330	E0310-01A3		120120
421-06-23330	T1110-07A2		360130
421-06-23330	T1110-07A6		360140
421-07-31270	K1110-28A8	4	210500
421-07-31270	K1110-28A9	4	210520
421-54-25610	M1420-01A1	4	240170
421-60-35170	Y1890-01A0		481180
421-60-35180	Y1890-01A0	2	481180
421-60-35190	Y1890-01A0	3	481180
421-62-11940	A6210-A3H5	5	000610
421-62-11940	A6210-A3H6	5	000620
421-70-11451	T1110-07A6	11	360140
421-97-51230	R1100-03A8	7	330210
421-U1-23100	Y1011-01A1		480060
421-U12-3120	Y1011-01A1	1	480060
421-U12-3130	Y1011-01A1	2	480060
421-U12-3140	Y1011-01A1	3	480060
421-U12-3150	Y1011-01A1	4	480060
421-U12-3160	Y1011-01A1	5	480060
421-U12-3170	Y1011-01A1	6	480060
421-U12-3190	Y1011-01A1	8	480060
421-U12-3210	Y1011-01A1	9	480060
421-U12-3220	Y1011-01A1	10	480060
421-U12-3230	Y1011-01A1	11	480060
421-U12-3240	Y1011-01A1	12	480060
421-U12-3250	Y1011-01A1	13	480060
421-U12-3260	Y1011-01A1	14	480060
425-33-11650	P1210-01A0	3	300030
4260-11-1310	A2110-A3R2	16	000190
437-40-26240	K1110-54A1	8	210720
437-40-26240	K1110-59A1	8	210760
560-43-15220	E0310-01A3	4	120120
562-06-15180	D0200-04A1	24	090060
569-06-61960	K1110-27A1	17	210490
600-023-2340	A9810-A373	1	000680
600-051-2050	A6210-A3H5	8	000610
600-051-2050	A6210-A3H6	8	000620
600-051-2080	A4110-B3S5	38	000430
600-051-2080	A6810-B3K5	23	000660
600-051-2080	A6810-B3K5	33	000660
600-051-2080	A6810-B3K5	36	000660
600-051-2080	A6810-B3K5	42	000660
600-051-2140	A6810-B3K5	10	000660
600-051-2140	A6810-B3K5	2	000660
600-051-2180	A6810-A3K5	36	000650
600-051-2180	A6810-B3K5	16	000660

PART NO.	FIG.NO.	INDEX	PAGE
600-051-2180	A6810-B3K5	6	000660
600-051-2200	A6810-A3K5	30	000650
600-051-2280	A6810-A3K5	18	000650
600-051-2280	A6810-A3K5	7	000650
600-051-6080	A4030-A3F7	13	000390
600-051-6080	A4110-C3S5	29	000440
600-051-6080	A4110-C3S5	32	000440
600-051-6080	A4110-C3S5	36	000440
600-051-6080	A4230-A3M5	9	000470
600-051-6100	A1530-A3L9	17	000060
600-051-6100	A1610-A3Y3	20	000100
600-051-6100	A4110-A3S5	36	000420
600-051-6100	A4110-A3S5	53	000421
600-051-6100	A4110-A3S5	59	000421
600-051-6100	A5210-A3G6	7	000540
600-051-6190	A1530-A3L9	26	000060
600-184-1350	B9999-A3X4	6	000720
600-184-1350	Y1011-01A0	6	480050
600-184-1611	B9999-A3X4	5	000720
600-184-1611	Y1011-01A0	5	480050
600-184-1671	B9999-A3X4	4	000720
600-184-1671	Y1011-01A0	4	480050
600-184-2810	Y1011-01A0		480050
600-185-6100	B9999-A3X4		000720
600-185-6100	Y1011-01A0		480050
600-185-6110	B9999-A3X4	2	000720
600-185-6110	Y1011-01A0	2	480050
600-185-6120	B9999-A3X4	3	000720
600-185-6120	Y1011-01A0	3	480050
600-211-1340	A3110-A3K5	6	000300
600-211-1340	V0100-01A0	4	420010
600-211-1890	A3110-A3K5	2	000300
600-311-3220	B9999-A3W9	8	000710
600-311-3230	B9999-A3W9	9	000710
600-311-4500	B9999-A3W9		000710
600-311-4500	D0200-03A1	21	090050
600-311-9340	B9999-A3W9	10	000710
600-311-9340	D0200-03A1	4	090050
600-319-3550	A4119-A3A1	1	000450
600-319-3550	V0100-01A0	5	420010
600-319-4500	V0100-01A0	6	420010
600-319-4540	V0100-01A0	7	420010
600-411-1151	B9999-A3W6	2	000700
600-411-1280	K1110-50A1	9	210670
600-411-1280	K1110-55A1	9	210730
600-421-6630	A1730-A3K4	5	000110
600-461-2100	A4710-A3H3	1	000480
600-635-5870	A5030-A3K2	1	000500
600-813-6632	A6210-B3H5		000630
600-813-9322	A6210-B3H6		000640

PART NO.	FIG.NO.	INDEX	PAGE
600-815-2170	K1110-47A1	21	210640
600-815-3811	A1310-A3S9	13	000040
600-815-9471	B9999-A3W9	1	000710
600-815-9471	E0200-05A2	18	120100
600-815-9970	A6010-A3X5	3	000550
600-815-9970	A6010-A3Y1	3	000570
600-815-9980	A6010-A3X5	2	000550
600-815-9980	A6010-A3Y1	2	000570
600-825-5150	A6010-B3X5		000580
600-825-5250	A6010-B3Y1		000600
600-825-6150	A6010-B3X6		000590
6110-23-6490	A1570-A3D1	11	000090
6110-23-6490	A3110-A3K5	19	000300
6110-23-6490	A4110-A3S5	61	000421
6110-23-6490	C0100-03A1	35	060030
6110-53-5910	A1550-A3A9	22	000080
6110-53-5910	A2011-A3K6	7	000140
6110-53-5910	A4110-B3S5	29	000430
6110-73-6231	B9999-A3W9	5	000710
6110-73-6231	D0200-03A1	19	090050
6114-11-5590	A1530-A3L9	4	000060
6114-11-8910	A2210-A3L2	11	000200
6114-21-5190	A2060-A3H4	7	000180
6124-61-2181	A3110-A3K5	22	000300
6127-21-1260	A2050-A3B1	10	000170
6128-21-6780	A6010-A3X5	4	000550
6128-21-6780	A6010-A3X6	2	000560
6128-21-6780	A6010-A3Y1	4	000570
6128-81-4810	A4110-C3S5	7	000440
6130-12-8610	A1111-A3C5	1	000000
6130-12-8630	A1111-A3C5	4	000000
6130-32-1361	A2370-A3D8	6	000250
6130-32-1361	A2370-A3E1	6	000260
6134-11-5120	A1510-A3H5	6	000050
6134-12-5120	A6810-B3K5	15	000660
6134-12-5120	A6810-B3K5	22	000660
6134-12-5120	A6810-B3K5	35	000660
6134-12-5120	A6810-B3K5	9	000660
6136-42-4520	A1010-A3E2	12	000010
6140-61-6512	A3330-A3A8	1	000330
6142-22-4640	A5010-A3N6	26	000490
6144-11-5630	A6810-A3K5	22	000650
6144-11-5630	A6810-A3K5	6	000650
6144-11-5630	A6810-B3K5	29	000660
6144-11-5630	A6810-B3K5	31	000660
6144-11-5630	A6810-C3K5	7	000670
6144-61-6510	A3330-A3A8	3	000330
6150-11-1320	A1010-A3E2	2	000010
6150-11-1620	A1010-A3E2	21	000010
6150-11-1930	A1010-A3E2		000010

PART NO.	FIG.NO.	INDEX	PAGE
6150-11-1950	A1010-A3E2		000010
6150-11-1960	A1010-A3E2		000010
6150-11-1970	A1010-A3E2		000010
6150-11-8820	A1110-A3C8	3	000020
6150-11-8820	A1110-A3C8	8	000020
6150-11-8820	V0100-01A0	3	420010
6150-12-1370	A1010-A3E2	4	000010
6150-12-1960	A1010-A3E2		000010
6150-13-4810	A1310-A3S9	7	000040
6150-16-1320	A1010-A3E2		000010
6150-17-1320	A1010-A3E2		000010
6150-18-1320	A1010-A3E2		000010
6150-19-1320	A1010-A3E2		000010
6150-21-1170	A2010-A3M3	21	000130
6150-21-1180	A2011-A3K6	9	000140
6150-21-1190	A2011-A3K6	10	000140
6150-21-1210	A2010-A3M3	3	000130
6150-21-1250	A2010-A3M3	4	000130
6150-21-1490	A2010-A3M3	2	000130
6150-21-1710	A2010-A3M3	6	000130
6150-21-2230	A2010-A3M3	29	000130
6150-21-2250	A2010-A3M3	31	000130
6150-21-2411	A2050-A3B1	11	000170
6150-21-2421	A2050-A3B1	12	000170
6150-21-2431	A2050-A3B1	13	000170
6150-21-2510	A2050-A3B1	3	000170
6150-21-3230	A2040-A3J6	2	000150
6150-21-4770	A2010-A3M3	25	000130
6150-21-5650	A2110-A3R2	5	000190
6150-21-5910	A2011-A3K6	1	000140
6150-21-5920	A2110-A3R2	7	000190
6150-21-5930	A2110-A3R2	8	000190
6150-21-6391	A2060-A3H4	5	000180
6150-21-6710	A2060-A3H4	6	000180
6150-21-8010	A2310-A3A6		000220
6150-21-8050	A2310-A3A6	6	000220
6150-22-6110	A1550-A3A9	12	000080
6150-22-6110	A2011-A3K6	11	000140
6150-22-6120	A2011-A3K6	12	000140
6150-22-6430	A2060-A3H4	1	000180
6150-22-6490	A1730-A3K4	2	000110
6150-23-5181	A2110-A3R2	1	000190
6150-26-8010	A2310-A3A6		000220
6150-26-8050	A2310-A3A6	6	000220
6150-27-8010	A2310-A3A6		000220
6150-27-8050	A2310-A3A6		000220
6150-28-8010	A2310-A3A6		000220
6150-28-8050	A2310-A3A6		000220
6150-29-8010	A2310-A3A6		000220
6150-29-8050	A2310-A3A6	6	000220

PART NO.	FIG.NO.	INDEX	PAGE
6150-31-1130	A2310-A3A6	3	000220
6150-31-1351	A2230-A3F3	2	000210
6150-31-1810	A2370-A3D8	5	000250
6150-31-1810	A2370-A3E1	5	000260
6150-31-3310	A2350-A3D8	10	000240
6150-31-6100	A2050-A3B1		000170
6150-31-6120	A2050-A3B1	2	000170
6150-31-6220	A2050-A3B1	8	000170
6150-35-1120	A2310-A3A6	2	000220
6150-41-1012	A2410-A3B8		000270
6150-41-1120	A2410-A3B8	3	000270
6150-41-1130	A2410-A3B8	2	000270
6150-41-2302	A2410-A3B8		000270
6150-41-2401	A2410-A3B8		000270
6150-41-2430	A2010-A3M3	22	000130
6150-41-2430	A2010-A3M3	26	000130
6150-41-2440	A2010-A3M3	23	000130
6150-41-2450	A2410-A3B8	13	000270
6150-41-3111	A2410-A3B8	14	000270
6150-41-4430	A1010-A3E2	11	000010
6150-41-4510	A1010-A3E2	10	000010
6150-41-4570	A1010-A3E2	14	000010
6150-41-5400	A2410-B3B8		000280
6150-41-5420	A2410-B3B8	13	000280
6150-41-5420	A2410-B3B8	8	000280
6150-41-5541	A2410-B3B8	14	000280
6150-41-5541	A2410-B3B8	9	000280
6150-41-5621	A1010-A3E2	18	000010
6150-41-5630	A1010-A3E2	19	000010
6150-42-4110	A1010-A3E2	8	000010
6150-42-4210	A1010-A3E2	9	000010
6150-42-5300	A2410-B3B8		000280
6150-42-5600	A1010-A3E2		000010
6150-42-5610	A1010-A3E2	17	000010
6150-51-1710	A3010-A3A8	2	000290
6150-51-1720	A3010-A3A8	3	000290
6150-51-5480	H1831-02A3	37	150380
6150-51-6241	A2110-A3R2	26	000190
6150-51-6350	A2110-A3R2	22	000190
6150-61-1350	A5010-A3N6	5	000490
6150-61-1410	A5010-A3N6	11	000490
6150-61-1510	A5010-A3N6	2	000490
6150-61-1821	A5010-A3N6	19	000490
6150-61-1821	A5010-A3N6	22	000490
6150-61-2125	A3310-A3D3	2	000310
6150-61-2141	A3310-A3D3	11	000310
6150-61-2151	A3310-A3D3	12	000310
6150-61-2510	A3310-A3D3	3	000310
6150-61-2520	A3310-A3D3	4	000310
6150-61-2530	A3310-A3D3	6	000310

PART NO.	FIG.NO.	INDEX	PAGE
6150-61-2540	A3310-A3D3	10	000310
6150-61-2550	A3310-A3D3	15	000310
6150-61-2580	A3310-A3D3	5	000310
6150-61-2815	A3310-A3D3	16	000310
6150-61-8172	B9999-A3W6		000700
6150-61-8211	B9999-A3W6	1	000700
6150-61-8411	B0920-01A0	2	030050
6150-62-6510	A5010-A3N6	17	000490
6150-81-6920	A1530-A3L9	15	000060
6150-81-8420	A2410-A3B8	11	000270
6150-81-9130	A2041-A3H5	10	000160
6150-81-9370	A1110-A3C8	4	000020
6150-81-9370	A1110-A3C8	9	000020
6150-81-9370	A2110-A3R2	25	000190
6150-81-9370	A2410-B3B8	19	000280
6150-82-8610	A6010-A3X5	12	000550
6150-82-8610	A6010-A3X6	10	000560
6150-82-8610	A6010-A3Y1	12	000570
6150-82-8610	K0700-01A0	10	210180
6150-82-8650	A6010-A3X5	9	000550
6150-82-8650	A6010-A3X6	7	000560
6150-82-8650	A6010-A3Y1	9	000570
6150-82-8690	A6010-A3X5	13	000550
6150-82-8690	A6010-A3X6	11	000560
6150-82-8690	A6010-A3Y1	13	000570
6151-11-5110	A1510-A3H5	1	000050
6151-11-5120	A1510-A3H5	2	000050
6151-11-5280	A1610-A3Y3	15	000100
6151-11-9970	B0200-01A1	2	030030
6151-11-9970	B0200-01A2	2	030040
6151-21-4161	A2210-A3L2	6	000200
6151-31-2410	A2350-A3D8	2	000240
6151-31-3050	A2350-A3D8	12	000240
6151-31-8200	A2330-A3B9	1	000230
6151-35-1010	A2310-A3A6		000220
6151-36-3050	A2350-A3D8	12	000240
6151-37-3050	A2350-A3D8	12	000240
6151-38-3050	A2350-A3D8	12	000240
6151-39-3050	A2350-A3D8	12	000240
6151-51-5490	A1530-A3L9	12	000060
6151-51-5490	E0200-01A1	33	120040
6151-51-5490	E0200-03A1	31	120060
6151-51-5490	E0200-03A1	36	120060
6151-51-5490	E0200-04A1	3	120070
6151-51-8151	A1530-A3L9	20	000060
6151-51-8490	A4010-A3Z1	5	000340
6151-51-8490	A4110-A3S5	42	000420
6151-61-1162	A5010-A3N6	13	000490
6151-61-1360	A5010-A3N6	7	000490
6151-61-3120	A5060-A3J9	2	000530

PART NO.	FIG.NO.	INDEX	PAGE
6151-61-3152	A5060-A3J9	1	000530
6151-61-3170	A5060-A3J9	3	000530
6151-61-3201	A5060-A3J9		000530
6151-61-3970	A5060-A3J9	10	000530
6151-62-1310	A5010-A3N6	9	000490
6151-62-2130	A3310-A3D3	7	000310
6151-62-2180	A3310-A3D3	13	000310
6152-11-4820	A1111-A3C5	7	000000
6152-12-5110	A1610-A3Y3	17	000100
6152-12-5120	A1610-A3Y3	16	000100
6152-15-5830	A1510-A3H5	5	000050
6152-32-6110	A2050-A3B1	4	000170
6152-51-5520	A4010-B3Z1	13	000350
6152-51-5520	C0100-06A1	20	060060
6152-51-5520	D0200-02A1	28	090040
6152-62-2210	A3310-A3D3	1	000310
6154-21-1810	A2010-A3M3	32	000130
6154-21-1981	A2010-A3M3	17	000130
6154-21-2220	A2010-A3M3	28	000130
6154-31-6200	A2050-A3B1		000170
6154-31-6310	A2050-A3B1	6	000170
6154-41-5321	A2410-B3B8	18	000280
6154-41-5500	A2410-B3B8		000280
6154-51-5810	A3110-A3K5	23	000300
6154-51-8310	A1530-A3L9	22	000060
6154-61-1150	A5010-A3N6	12	000490
6156-11-3510	A1610-A3Y3	4	000100
6156-11-5160	A1530-A3L9	3	000060
6156-11-5170	A1510-A3H5	8	000050
6156-11-5510	A1610-A3Y3	19	000100
6156-11-8810	V0100-01A0	2	420010
6156-21-3430	A2041-A3H5	11	000160
6156-21-3920	A2210-A3L2	7	000200
6156-21-6121	A4030-A3F7	4	000390
6156-31-1550	A2370-A3D8	1	000250
6156-31-1560	A2370-A3E1	1	000260
6156-31-4610	A2230-A3F3	3	000210
6156-61-3720	A5030-A3K2	3	000500
6156-71-1161	A4210-A3K2	5	000460
6156-71-5281	A4010-B3Z1	3	000350
6156-71-5370	A4010-A3Z1	6	000340
6156-71-5611	A4030-A3F7	10	000390
6156-71-9730	A4030-B3F7	4	000400
6156-81-6210	A6210-A3H5	4	000610
6156-81-6371	A6010-A3X5	5	000550
6156-81-6371	A6010-A3X6	3	000560
6156-81-6371	A6010-A3Y1	5	000570
6156-81-6480	A6010-A3X5	7	000550
6156-81-6480	A6010-A3X6	5	000560
6156-81-6480	A6010-A3Y1	7	000570

PART NO.	FIG.NO.	INDEX	PAGE
6156-81-7201	B9999-A3X4		000720
6156-81-7201	Y1011-01A0		480050
6156-81-7210	B9999-A3X4	1	000720
6156-81-7210	Y1011-01A0	1	480050
6156-81-9110	A4210-A3K2	11	000460
6156-81-9130	A4210-A3K2	13	000460
6156-81-9150	A4210-A3K2	15	000460
6162-13-1150	A1010-A3E2	5	000010
6162-13-6440	A1730-A3K4	6	000110
6162-43-5340	A2410-B3B8	12	000280
6162-53-5430	A3110-A3K5	4	000300
6162-55-5230	A3110-A3K5	3	000300
6162-73-5940	A4030-A3F7	28	000390
6162-75-5820	A4010-B3Z1	22	000350
6162-75-5820	A4010-B3Z1	7	000350
6164-31-3330	A1010-A3E2	22	000010
6166-61-6341	A1550-A3A9	2	000080
6166-61-6341	A1550-A3A9	5	000080
6166-61-6341	A5060-A3J9	19	000530
6166-75-6820	A4110-A3S5	66	000421
6167-21-5910	B0100-01A0	4	030020
6206-11-4490	A6010-A3X5	11	000550
6206-11-4490	A6010-A3X6	9	000560
6206-11-4490	A6010-A3Y1	11	000570
6206-21-6871	A2011-A3K6	23	000140
6207-11-5970	A1111-A3C5	6	000000
6210-11-1140	A1010-A3E2	15	000010
6210-11-5820	A1310-A3S9	30	000040
6210-21-1390	A4110-B3S5		000430
6210-21-1971	A2011-A3K6	19	000140
6210-21-6471	A2060-A3H4	4	000180
6210-61-6441	A1730-A3K4	8	000110
6211-61-1533	A5010-A3N6	8	000490
6213-11-4770	A4110-A3S5	34	000420
6215-11-5920	A1510-A3H5	4	000050
6215-11-6560	A4230-A3M5	2	000470
6215-71-6190	A6810-B3K5	1	000660
6215-71-6190	A6810-B3K5	45	000660
6215-81-6150	A6010-A3X5	15	000550
6215-81-6150	A6010-A3X6	13	000560
6215-81-6150	A6010-A3Y1	15	000570
6215-81-6150	K0700-01A0	11	210180
6215-81-9520	A1550-A3A9	20	000080
6215-81-9520	A1550-A3A9	24	000080
6215-81-9520	A1550-A3A9	25	000080
6215-81-9520	A2011-A3K6	4	000140
6216-84-9740	A1790-A3H7		000120
6217-51-5102	A3110-A3K5		000300
6217-51-5111	A3110-A3K5	1	000300
6217-51-5660	A3110-A3K5	5	000300

PART NO.	FIG.NO.	INDEX	PAGE
6217-71-1140	A4210-A3K2	6	000460
6217-71-1910	A4010-A3Z1	4	000340
6217-71-5170	A4010-B3Z1	10	000350
6217-71-5210	A4010-B3Z1	18	000350
6217-71-5210	A4010-B3Z1	9	000350
6217-71-5260	A4030-A3F7	24	000390
6217-71-5760	A4030-A3F7	25	000390
6217-71-5770	A4030-B3F7	3	000400
6217-71-5910	A4010-A3Z1	3	000340
6217-71-6112	A4210-A3K2	2	000460
6217-71-6470	U0100-01A0	16	390010
6217-71-6470	U0100-01A2	16	390030
6217-71-6530	U0100-01A1	16	390020
6217-71-6530	U0100-01A3	16	390040
6217-71-7310	A4110-A3S5	1	000420
6217-71-9331	A9810-A373	3	000680
6217-71-9780	A4030-B3F7	1	000400
6217-71-9791	A4030-B3F7	2	000400
6217-81-6110	A6210-A3H6	4	000620
6218-81-8440	A6810-A3K5	10	000650
6218-81-8440	A6810-A3K5	17	000650
6218-81-8440	A6810-A3K5	23	000650
6218-81-8440	A6810-A3K5	29	000650
6218-81-8440	A6810-A3K5	35	000650
6218-81-8470	A4110-B3S5	34	000430
6218-81-8470	A6210-A3H5	11	000610
6218-81-8490	A6810-A3K5	12	000650
6218-81-8490	A6810-A3K5	21	000650
6218-81-8490	A6810-A3K5	25	000650
6218-81-8490	A6810-A3K5	26	000650
6218-81-8490	A6810-A3K5	32	000650
6218-81-8490	A6810-A3K5	39	000650
6218-81-8490	A6810-B3K5	21	000660
6218-81-8490	A6810-B3K5	30	000660
6219-71-1150	A4210-A3K2	3	000460
6219-71-1160	A4210-A3K2	4	000460
6219-71-6710	A4110-A3S5	14	000420
6219-71-8600	A4110-B3S5	1	000430
6219-71-8610	A4110-B3S5		000430
6219-81-1961	A2011-A3K6	17	000140
6219-81-1990	A2011-A3K6		000140
6219-81-1991	A2011-A3K6		000140
6219-81-2040	A2011-A3K6		000140
6221-51-8160	A1530-A3L9	7	000060
6221-81-6810	A6210-A3H5	2	000610
6221-81-6810	A6210-A3H6	2	000620
6222-11-5940	A1610-A3Y3	2	000100
6240-71-6530	A4110-C3S5	9	000440
6240-71-6540	A4110-C3S5	10	000440
6240-81-4431	A2110-A3R2	18	000190

PART NO.	FIG.NO.	INDEX	PAGE
6245-71-5680	A4110-B3S5	4	000430
6245-71-5950	A4110-C3S5	20	000440
6245-71-5960	A4110-C3S5	14	000440
6245-71-6180	A4110-C3S5	8	000440
6245-71-8110	A4110-B3S5	3	000430
6245-81-5820	A6810-C3K5	6	000670
6245-81-9420	A4110-C3S5	39	000440
6251-11-1200	A1010-A3E2		000010
6251-11-1380	A1010-A3E2	3	000010
6251-11-1810	A1010-A3E2	20	000010
6251-11-3100	A4210-A3K2	1	000460
6251-11-4110	A1310-A3S9	1	000040
6251-11-4210	A1510-A3H5	9	000050
6251-11-4220	A1550-A3A9	1	000080
6251-11-4220	A1550-A3A9	4	000080
6251-11-4250	A1310-A3S9	4	000040
6251-11-4260	A1310-A3S9	5	000040
6251-11-4320	A1310-A3S9	11	000040
6251-11-4410	A1310-A3S9	26	000040
6251-11-4410	A1310-A3S9	28	000040
6251-11-4710	A1570-A3D1	2	000090
6251-11-4820	A1310-A3S9	25	000040
6251-11-4830	A1310-A3S9	12	000040
6251-11-5130	A1510-A3H5	3	000050
6251-11-5180	A1530-A3L9	5	000060
6251-11-5420	A1570-A3D1	6	000090
6251-11-5440	A1610-A3Y3	1	000100
6251-11-5450	A1570-A3D1	5	000090
6251-11-5510	A1610-A3Y3	6	000100
6251-11-5521	A1610-A3Y3	7	000100
6251-11-5530	A1610-A3Y3	11	000100
6251-11-5830	A1530-A3L9	2	000060
6251-11-6460	A5010-A3N6	28	000490
6251-11-7100	A2410-B3B8		000280
6251-11-7110	A2410-B3B8	1	000280
6251-11-7210	A1310-A3S9	19	000040
6251-11-7220	A2410-B3B8	3	000280
6251-11-7410	A1310-A3S9	22	000040
6251-11-7450	A1310-A3S9	23	000040
6251-11-8110	A1110-A3C8	1	000020
6251-11-8150	A1110-A3C8	6	000020
6251-11-8810	A1110-A3C8	2	000020
6251-11-8810	A1110-A3C8	7	000020
6251-11-8830	A2410-B3B8	20	000280
6251-11-8840	A2410-B3B8	21	000280
6251-16-1380	A1010-A3E2		000010
6251-18-1380	A1010-A3E2		000010
6251-19-1380	A1010-A3E2		000010
6251-21-1100	A2010-A3M3		000130
6251-21-1970	A2011-A3K6	18	000140

PART NO.	FIG.NO.	INDEX	PAGE
6251-21-2240	A2010-A3M3	30	000130
6251-21-3120	A2040-A3J6	1	000150
6251-21-3211	A2041-A3H5	6	000160
6251-21-3231	A2041-A3H5	7	000160
6251-21-3250	A2041-A3H5	9	000160
6251-21-3950	A5060-A3J9	18	000530
6251-21-4170	A2210-A3L2	1	000200
6251-21-5440	A2110-A3R2	6	000190
6251-21-5490	A1530-A3L9	24	000060
6251-21-6110	A4030-A3F7	1	000390
6251-21-6130	A4030-A3F7	6	000390
6251-21-6220	A4710-A3H3	4	000480
6251-21-6231	A4710-A3H3	3	000480
6251-21-6410	A1730-A3K4	1	000110
6251-21-6450	A2060-A3H4	3	000180
6251-21-6521	A1111-A3C5	2	000000
6251-21-6541	A1111-A3C5	3	000000
6251-21-6550	A1111-A3C5	9	000000
6251-21-6560	A1111-A3C5	11	000000
6251-21-6700	A2060-A3H4	2	000180
6251-31-1630	A2230-A3F3		000210
6251-31-2030	A2350-A3D8		000240
6251-31-2510	A2350-A3D8	1	000240
6251-31-3100	A2350-A3D8		000240
6251-31-3130	A2350-A3D8	9	000240
6251-41-4450	A1010-A3E2	13	000010
6251-51-1001	A3010-A3A8	1	000290
6251-51-5110	A3110-A3K5	9	000300
6251-51-5150	A3110-A3K5	29	000300
6251-51-5170	A3110-A3K5	27	000300
6251-51-5180	A3110-A3K5	31	000300
6251-51-5380	A3110-A3K5	17	000300
6251-51-5480	A3110-A3K5	12	000300
6251-51-5490	A3110-A3K5	14	000300
6251-51-5650	A3110-A3K5	20	000300
6251-51-5660	A3110-A3K5	21	000300
6251-51-7170	A2110-A3R2	9	000190
6251-51-8230	A1530-A3L9	6	000060
6251-51-8330	A1530-A3L9	19	000060
6251-51-9240	A1550-A3A9	7	000080
6251-51-9810	A4230-A3M5	12	000470
6251-51-9850	A1530-A3L9	10	000060
6251-51-9880	A1530-A3L9	9	000060
6251-51-9890	A1530-A3L9	11	000060
6251-51-9890	A1550-A3A9	21	000080
6251-51-9890	A1550-A3A9	26	000080
6251-51-9890	A2011-A3K6	5	000140
6251-51-9910	A4230-A3M5	13	000470
6251-61-1101	A5010-A3N6		000490
6251-61-1210	A5010-A3N6	10	000490

PART NO.	FIG.NO.	INDEX	PAGE
6251-61-2610	A3310-A3D3	9	000310
6251-61-3210	A5050-A3R3	1	000510
6251-61-3260	A5050-A3R5	1	000520
6251-61-3520	A5060-A3J9	14	000530
6251-61-3530	A5060-A3J9	11	000530
6251-61-3820	A5060-A3J9	16	000530
6251-61-5110	B9999-A3W5	1	000690
6251-61-5110	C0100-03A1	34	060030
6251-61-6270	A1730-A3K4	7	000110
6251-61-6310	A5010-A3N6	21	000490
6251-61-7420	A1550-A3A9	15	000080
6251-61-8230	A5210-A3G6	3	000540
6251-61-8240	A5210-A3G6	4	000540
6251-61-8430	A5210-A3G6	1	000540
6251-71-1120	A4010-D3Z1		000370
6251-71-1120	A4010-E3Z1		000380
6251-71-1170	A2410-B3B8	5	000280
6251-71-3230	A4210-A3C9	1	000410
6251-71-4110	A4010-B3Z1	1	000350
6251-71-4120	A4010-B3Z1	2	000350
6251-71-5110	A4030-A3F7	16	000390
6251-71-5120	A4030-A3F7	17	000390
6251-71-5130	A4030-A3F7	18	000390
6251-71-5140	A4030-A3F7	19	000390
6251-71-5150	A4030-A3F7	20	000390
6251-71-5160	A4030-A3F7	21	000390
6251-71-5210	A4030-A3F7	27	000390
6251-71-5220	A4030-A3F7	32	000390
6251-71-5230	A4030-A3F7	30	000390
6251-71-5240	A4030-A3F7	22	000390
6251-71-5340	A4210-A3K2	8	000460
6251-71-5450	A4010-B3Z1	24	000350
6251-71-5490	A4230-A3M5	1	000470
6251-71-5660	A4230-A3M5	6	000470
6251-71-5710	A4110-A3S5	23	000420
6251-71-5720	A4110-A3S5	24	000420
6251-71-5730	A4110-A3S5	20	000420
6251-71-5740	A4110-A3S5	25	000420
6251-71-5810	A4010-B3Z1	20	000350
6251-71-5830	A4010-B3Z1	5	000350
6251-71-5840	A4030-A3F7	37	000390
6251-71-5850	A4030-A3F7	38	000390
6251-71-5860	A4010-B3Z1	12	000350
6251-71-6110	A4110-A3S5		000420
6251-71-6200	A4110-A3S5		000420
6251-71-6350	A4110-A3S5	57	000421
6251-71-6420	A4110-A3S5	5	000420
6251-71-6430	A4110-A3S5	7	000420
6251-71-6550	A4110-A3S5	9	000420
6251-71-6560	A4110-A3S5	11	000420

PART NO.	FIG.NO.	INDEX	PAGE
6251-71-6690	A4110-A3S5	51	000421
6251-71-6980	A4110-A3S5	40	000420
6251-71-6990	A4110-A3S5	64	000421
6251-71-7100	B9999-A3W9		000710
6251-71-7100	D0200-03A1	16	090050
6251-71-7110	B9999-A3W9	2	000710
6251-71-7110	D0200-03A1		090050
6251-71-7210	A4110-B3S5	6	000430
6251-71-7230	A4110-B3S5	8	000430
6251-71-7250	A4110-B3S5	15	000430
6251-71-7260	A4110-B3S5	19	000430
6251-71-7270	A4110-B3S5	22	000430
6251-71-7280	A4110-B3S5	26	000430
6251-71-7290	A4110-B3S5	37	000430
6251-71-7310	A4110-C3S5	1	000440
6251-71-7320	A4110-C3S5	3	000440
6251-71-7330	A4110-C3S5	12	000440
6251-71-7340	A4110-C3S5	23	000440
6251-71-7350	A4110-C3S5	13	000440
6251-71-7360	A4110-C3S5	18	000440
6251-71-7470	A4110-B3S5	41	000430
6251-71-7550	A4110-C3S5	16	000440
6251-71-9710	A4030-B3F7	5	000400
6251-81-4520	A1310-A3S9	17	000040
6251-81-7210	A4710-A3H3	9	000480
6251-81-9270	A6810-A3K5	27	000650
6251-81-9330	A6810-B3K5	13	000660
6251-81-9350	A6810-B3K5	19	000660
6251-81-9640	A6810-B3K5	40	000660
6251-81-9650	A6810-C3K5	1	000670
6251-81-9660	A6810-A3K5	33	000650
6251-81-9670	A6810-A3K5	15	000650
6251-81-9680	A6810-C3K5	4	000670
6251-81-9720	A6810-B3K5	44	000660
6251-81-9730	A6810-A3K5	3	000650
6251-81-9870	A6810-C3K5	9	000670
6251-81-9880	A6810-C3K5	10	000670
6251-81-9930	A6810-A3K5	1	000650
6251-81-9940	A6810-A3K5	2	000650
6251-81-9950	A6810-B3K5	26	000660
6261-11-9520	A1510-A3H5	10	000050
6261-51-9480	A4110-A3S5	49	000421
6261-71-1220	A4010-C3Z1	1	000360
6261-71-6660	A4030-A3F7	34	000390
6261-71-6670	A4030-A3F7	35	000390
6261-81-2600	A6810-C3K5	3	000670
6261-81-2700	A1310-A3S9	8	000040
6261-81-2710	A1310-A3S9		000040
6261-81-2720	A1310-A3S9		000040
6261-81-2901	A2210-A3L2	9	000200

PART NO.	FIG.NO.	INDEX	PAGE
6261-81-6900	A4230-A3M5	8	000470
6261-81-6901	A1790-A3H7	2	000120
6261-81-6910	A1790-A3H7		000120
6261-81-6910	A4230-A3M5		000470
6261-81-7100	A4710-A3H3	8	000480
6261-81-7330	A4710-A3H3	12	000480
6261-84-9740	A4230-A3M5		000470
6306-21-4710	A2011-A3K6	22	000140
6501-11-1721	A1530-B3L9	21	000070
6505-11-0520	A1530-B3L9	18	000070
6505-99-9011	A1530-B3L9	22	000070
6506-22-2020	A1530-B3L9	20	000070
6506-22-4230	A1530-B3L9	17	000070
6506-22-5030	A1530-B3L9		000070
6506-22-5910	A1530-B3L9		000070
6560-61-7300	A1310-A3S9	10	000040
6560-61-7310	A1310-A3S9		000040
6631-11-5630	A1570-A3D1	3	000090
6631-11-5630	A1610-A3Y3	10	000100
6631-11-5630	A1610-A3Y3	9	000100
6631-11-5630	A4030-A3F7	7	000390
6631-11-5630	A4110-B3S5	32	000430
6631-11-5630	A4110-C3S5	28	000440
6631-11-5630	A5060-A3J9	12	000530
6631-11-6390	A1610-A3Y3	22	000100
6643-11-4641	B0200-01A1	3	030030
6643-11-4641	B0200-01A2	3	030040
6710-41-5340	A2410-B3B8	17	000280
6735-21-1930	A1310-A3S9		000040
6741-81-9220	A2110-A3R2	14	000190
6934-71-5850	A4110-C3S5	34	000440
6934-71-5860	A5010-A3N6	25	000490
6934-72-7190	A4210-A3K2	9	000460
700-20-71260	Y1662-17A0	14	480590
700-20-71260	Y1664-17A0	14	480790
700-22-11410	Y1662-09A0	2	480510
700-22-11410	Y1662-11A0	8	480530
700-22-11410	Y1664-09A0	2	480710
700-22-11410	Y1664-11A0	8	480730
700-22-11410	Y1670-02A0	18	481100
700-22-11410	Y1670-21A0	19	481120
700-80-64220	Y1662-09A0	3	480510
700-80-64220	Y1662-11A0	7	480530
700-80-64220	Y1664-09A0	3	480710
700-80-64220	Y1664-11A0	7	480730
700-84-11730	Y1670-02A0	5	481100
700-93-11320	Y1640-01A0	10	480340
700-93-11320	Y1640-01A1	10	480370
700-93-11320	Y1662-05A0	11	480470
700-93-11320	Y1662-05A0	15	480470

PART NO.	FIG.NO.	INDEX	PAGE
700-93-11320	Y1662-05A0	19	480470
700-93-11320	Y1662-05A0	23	480470
700-93-11320	Y1662-05A0	3	480470
700-93-11320	Y1662-05A0	7	480470
700-93-11320	Y1662-18A0	3	480600
700-93-11320	Y1662-18A0	7	480600
700-93-11320	Y1664-05A0	11	480670
700-93-11320	Y1664-05A0	15	480670
700-93-11320	Y1664-05A0	19	480670
700-93-11320	Y1664-05A0	23	480670
700-93-11320	Y1664-05A0	3	480670
700-93-11320	Y1664-05A0	7	480670
700-93-11320	Y1664-18A0	3	480800
700-93-11320	Y1664-18A0	7	480800
700-93-11320	Y1664-22A0	2	480840
700-93-11330	Y1640-01A0	11	480340
700-93-11330	Y1640-01A1	11	480370
701-20-61230	H0120-01A1	22	150030
701-20-61230	H0120-01A4	22	150040
702-15-71130	Y1640-03A0	8	480360
702-15-71140	Y1640-03A0	9	480360
702-15-71210	Y1640-03A0	6	480360
702-15-71220	Y1640-03A0	5	480360
702-15-78000	Y1640-03A0		480360
702-16-03910	Y1670-11A1		481110
702-16-04250	Y1670-01A0		481090
702-16-04290	Y1670-21A0		481120
702-16-51140	Y1670-01A0	3	481090
702-16-51140	Y1670-11A1	5	481110
702-16-51140	Y1670-21A0	3	481120
702-16-51240	Y1670-11A1	17	481110
702-16-51270	Y1670-21A0	8	481120
702-16-53120	Y1670-01A0	2	481090
702-16-53120	Y1670-11A1	4	481110
702-16-53120	Y1670-21A0	2	481120
702-16-53140	Y1670-01A0	5	481090
702-16-53140	Y1670-11A1	7	481110
702-16-53170	Y1670-01A0	7	481090
702-16-53170	Y1670-11A1	10	481110
702-16-53170	Y1670-21A0	7	481120
702-16-53420	Y1670-01A0	4	481090
702-16-53420	Y1670-11A1	6	481110
702-16-53470	Y1670-11A1	8	481110
702-16-53590	Y1670-11A1	9	481110
702-16-53920	H1240-01A0	5	150230
702-16-53920	Y1662-03A0	17	480450
702-16-53920	Y1662-04A0	11	480460
702-16-53920	Y1662-14A0	2	480560
702-16-53920	Y1662-17A0	30	480590
702-16-53920	Y1664-03A0	17	480650

PART NO.	FIG.NO.	INDEX	PAGE
702-16-53920	Y1664-04A0	11	480660
702-16-53920	Y1664-14A0	2	480760
702-16-53920	Y1664-17A0	30	480790
702-16-54121	Y1670-01A0	11	481090
702-16-54331	Y1670-01A0	17	481090
702-16-54341	Y1670-01A0		481090
702-16-54351	Y1670-01A0		481090
702-16-54420	Y1670-01A0	6	481090
702-16-54430	Y1670-01A0	19	481090
702-16-54490	Y1600-04A0	3	480160
702-16-54490	Y1600-08A0	3	480200
702-16-54490	Y1662-02A0	7	480440
702-16-54490	Y1662-03A0	15	480450
702-16-54490	Y1662-03A0	4	480450
702-16-54490	Y1662-15A0	11	480570
702-16-54490	Y1662-16A0	23	480580
702-16-54490	Y1664-02A0	13	480640
702-16-54490	Y1664-02A0	7	480640
702-16-54490	Y1664-03A0	15	480650
702-16-54490	Y1664-03A0	4	480650
702-16-54490	Y1664-15A0	11	480770
702-16-54490	Y1664-16A0	23	480780
702-16-54490	Y1670-02A0	8	481100
702-16-54550	Y1670-21A0	4	481120
702-16-54560	Y1670-21A0	6	481120
702-16-54571	Y1670-21A0	5	481120
702-16-54580	Y1670-21A0	9	481120
702-16-54590	Y1670-21A0	10	481120
702-16-54610	Y1670-21A0	11	481120
702-16-54620	Y1670-21A0	12	481120
702-16-54630	Y1670-21A0	13	481120
702-16-54641	Y1670-21A0	14	481120
702-16-54650	Y1670-21A0	17	481120
702-16-54660	Y1670-21A0	16	481120
702-16-54670	Y1670-21A0		481120
702-16-55260	Y1600-11A0	5	480230
702-16-55260	Y1600-12A0	5	480240
702-16-55940	Y1670-02A0	6	481100
702-16-55950	Y1670-02A0	7	481100
702-16-56380	Y1670-01A0		481090
702-16-56390	Y1670-01A0		481090
702-16-57440	Y1670-02A0	11	481100
702-16-57450	Y1670-02A0	12	481100
702-16-57460	Y1670-02A0	10	481100
702-16-57470	Y1670-02A0	9	481100
702-16-62470	Y1670-21A0	1	481120
702-16-62480	Y1670-21A0	23	481120
702-16-71131	Y1670-11A1	14	481110
702-16-71141	Y1670-11A1	15	481110
702-16-71150	Y1670-01A0	8	481090

PART NO.	FIG.NO.	INDEX	PAGE
702-16-71160	Y1670-01A0	9	481090
702-16-71160	Y1670-11A1	12	481110
702-16-71190	Y1670-11A1	1	481110
702-16-71210	Y1670-11A1	11	481110
702-16-71280	Y1670-11A1	13	481110
702-16-71361	Y1670-11A1	18	481110
702-16-71441	Y1670-11A1	19	481110
702-16-73620	Y1670-01A0	12	481090
702-16-73630	Y1670-01A0	10	481090
702-16-73640	Y1670-01A0	13	481090
702-16-73650	Y1670-01A0	23	481090
702-16-73660	Y1670-01A0	1	481090
702-21-07610	Y1670-21A0	18	481120
702-21-39450	Y1670-21A0	20	481120
702-21-53120	Y1662-14A0	20	480560
702-21-53120	Y1664-14A0	20	480760
702-21-55400	Y1600-11A0		480230
702-21-55400	Y1600-12A0		480240
702-21-55420	Y1662-14A0	17	480560
702-21-55420	Y1664-14A0	17	480760
702-21-55440	Y1662-14A0	19	480560
702-21-55440	Y1664-14A0	19	480760
702-21-55460	Y1662-14A0	16	480560
702-21-55460	Y1664-14A0	16	480760
702-21-55511	Y1662-14A0	5	480560
702-21-55511	Y1664-14A0	5	480760
702-21-55520	Y1662-14A0	18	480560
702-21-55520	Y1664-14A0	18	480760
702-21-55620	Y1662-14A0	26	480560
702-21-55620	Y1662-14A0	7	480560
702-21-55620	Y1664-14A0	26	480760
702-21-55620	Y1664-14A0	7	480760
702-21-55640	Y1662-14A0	6	480560
702-21-55640	Y1664-14A0	6	480760
702-21-55710	Y1662-14A0	10	480560
702-21-55710	Y1664-14A0	10	480760
702-21-55720	Y1662-14A0	11	480560
702-21-55720	Y1664-14A0	11	480760
702-21-55760	Y1662-07A0	10	480490
702-21-55760	Y1664-07A0	10	480690
702-21-55920	Y1600-11A0	7	480230
702-21-55920	Y1600-12A0	7	480240
702-21-55930	Y1600-11A0	8	480230
702-21-55930	Y1600-12A0	8	480240
702-21-55940	Y1600-11A0	9	480230
702-21-55940	Y1600-12A0	9	480240
702-21-55951	Y1600-11A0	10	480230
702-21-55951	Y1600-12A0	10	480240
702-21-57500	Y1600-11A0	4	480230
702-21-57500	Y1600-12A0	4	480240

PART NO.	FIG.NO.	INDEX	PAGE
702-21-57600	Y1600-11A0	1	480230
702-21-57600	Y1600-12A0	1	480240
702-73-1151	Y1662-03A0	9	480450
702-73-11510	Y1662-02A0	10	480440
702-73-11510	Y1662-02A0	4	480440
702-73-11510	Y1664-02A0	10	480640
702-73-11510	Y1664-02A0	4	480640
702-73-11510	Y1664-03A0	9	480650
702-75-04600	Y1641-03A0		480420
702-75-04601	Y1641-03A0	1	480420
702-75-11520	Y1641-03A0	6	480420
702-75-11530	Y1641-03A0		480420
702-75-11830	Y1641-03A0	2	480420
702-75-11830	Y1641-03A0	3	480420
702-75-11840	Y1641-03A0	4	480420
702-75-11850	Y1641-03A0	7	480420
702-77-02120	Y1640-03A0	1	480360
702-77-02120	Y1640-03A1	1	480390
703-08-33651	Y1627-01A0	1	480330
703-08-9121	Y1627-01A0		480330
703-08-92211	Y1627-01A0	5	480330
703-08-93170	Y1627-01A0	10	480330
703-08-93771	Y1627-01A0	4	480330
703-08-94510	Y1627-01A0	8	480330
703-08-95620	Y1627-01A0	2	480330
703-08-95770	Y1627-01A0	7	480330
703-08-98930	Y1627-01A0	6	480330
706-73-71450	Y1662-17A0	19	480590
706-73-71450	Y1664-17A0	19	480790
706-75-74540	Y1641-01A0	18	480400
706-75-74550	Y1641-01A0	19	480400
706-75-74850	Y1641-01A0	20	480400
706-76-71190	H0330-01A0	15	150150
706-76-71190	H0330-01A1	18	150160
706-76-71390	Y1851-01A0	5	481170
706-77-42440	Y1640-02A0		480350
706-77-42440	Y1640-02A1		480380
706-77-42440	Y1641-02A0		480410
706-77-42450	Y1640-02A0		480350
706-77-42450	Y1640-02A1		480380
706-77-42450	Y1641-02A0		480410
706-77-42460	Y1640-02A0		480350
706-77-42460	Y1640-02A1		480380
706-77-42460	Y1641-02A0		480410
706-77-72130	Y1640-01A0	12	480340
706-77-72130	Y1640-01A1	12	480370
706-77-72140	Y1640-01A0	13	480340
706-77-72140	Y1640-01A1	13	480370
706-77-72150	Y1640-01A0	14	480340
706-77-72150	Y1640-01A1	14	480370

PART NO.	FIG.NO.	INDEX	PAGE
706-77-72280	Y1640-01A0	5	480340
706-77-72280	Y1640-01A1	5	480370
706-78-71230	Y1641-01A0	24	480400
706-7G-71191	Y1640-03A1	5	480390
706-7K-01040	Y1640-01A0		480340
706-7K-01050	Y1640-01A1		480370
706-7K-03030	Y1640-01A0		480340
706-7K-03030	Y1640-01A1		480370
706-7K-41260	Y1640-02A0	18	480350
706-7K-41260	Y1640-02A1	18	480380
706-7K-41650	Y1640-02A0	9	480350
706-7K-41650	Y1640-02A1	9	480380
706-7K-41920	Y1640-02A0	10	480350
706-7K-41920	Y1640-02A1	10	480380
706-86-51180	Y1670-02A0	1	481100
706-86-51180	Y1670-11A1	2	481110
706-86-53410	Y1641-01A0	30	480400
706-8E-14170	Y1641-01A0	26	480400
706-8E-14191	Y1641-01A0	9	480400
706-8J-01012	Y1641-01A0		480400
706-8J-41211	Y1641-01A0	5	480400
706-8J-41620	Y1641-02A0	7	480410
706-8J-41670	Y1641-02A0		480410
706-8J-41710	Y1641-01A0	3	480400
706-8J-41770	Y1641-01A0		480400
706-8J-41780	Y1641-01A0	4	480400
706-8J-41820	Y1641-02A0	8	480410
706-8J-71112	Y1641-01A0	2	480400
706-8J-71120	Y1641-01A0	6	480400
706-8J-71130	Y1641-01A0	13	480400
706-8J-71140	Y1641-01A0	15	480400
706-8J-71150	Y1641-01A0	27	480400
706-8J-71160	Y1641-01A0	28	480400
706-8J-71170	Y1641-01A0	31	480400
706-8J-71181	Y1641-01A0	34	480400
706-8J-71190	Y1641-01A0	37	480400
707-01-XAF90	Y1620-41A1	1	480310
707-01-XAG40	Y1620-01A1		480250
707-01-XAG50	Y1620-01A1		480250
707-01-XAG60	Y1620-11A3	1	480290
707-01-XAG70	Y1620-11A2	1	480280
707-01-XAG80	Y1620-41A2		480320
707-01-XAH80	Y1620-01A8	1	480270
707-01-XG550	Y1620-01A6		480260
707-01-XG560	Y1620-01A6		480260
707-01-XG585	Y1620-41A0	1	480300
707-01-XM350	T1200-01A4	19	360310
707-01-XM350	T1200-01A8	19	360360
707-01-XM350	T1200-01B7	18	360420
707-01-XM440	T1200-01B1	19	360370

PART NO.	FIG.NO.	INDEX	PAGE
707-01-XT552	T1200-01A1	20	360280
707-01-XT552	T1200-01A9	22	360350
707-13-16860	Y1620-01A1	1	480250
707-13-16860	Y1620-01A6	1	480260
707-13-16870	Y1620-41A0		480300
707-13-16870	Y1620-41A1		480310
707-13-18770	Y1620-01A8		480270
707-13-18770	Y1620-11A3		480290
707-13-18780	Y1620-11A2		480280
707-13-18920	Y1620-41A2	1	480320
707-27-16580	Y1620-01A1	13	480250
707-27-16580	Y1620-01A6	13	480260
707-27-16580	Y1620-41A0	9	480300
707-27-16580	Y1620-41A1	9	480310
707-27-18930	Y1620-01A8	13	480270
707-27-18930	Y1620-11A2	13	480280
707-27-18930	Y1620-11A3	13	480290
707-27-18930	Y1620-41A2	9	480320
707-35-91640	Y1620-01A1	10	480250
707-35-91640	Y1620-01A1	20	480250
707-35-91640	Y1620-01A6	10	480260
707-35-91640	Y1620-01A6	20	480260
707-35-91640	Y1620-41A0	16	480300
707-35-91640	Y1620-41A1	16	480310
707-35-91840	Y1620-01A8	20	480270
707-35-91840	Y1620-01A8	8	480270
707-35-91840	Y1620-11A2	20	480280
707-35-91840	Y1620-11A2	8	480280
707-35-91840	Y1620-11A3	20	480290
707-35-91840	Y1620-11A3	8	480290
707-35-91840	Y1620-41A2	16	480320
707-36-16580	Y1620-01A1	24	480250
707-36-16580	Y1620-01A6	24	480260
707-36-16580	Y1620-41A0	20	480300
707-36-16580	Y1620-41A1	20	480310
707-36-18520	Y1620-01A8	24	480270
707-36-18520	Y1620-11A2	24	480280
707-36-18520	Y1620-11A3	24	480290
707-36-18520	Y1620-41A2	20	480320
707-39-16120	Y1620-01A1	27	480250
707-39-16120	Y1620-01A6	27	480260
707-39-16120	Y1620-41A0	23	480300
707-39-16120	Y1620-41A1	23	480310
707-39-18510	Y1620-01A8	27	480270
707-39-18510	Y1620-11A2	27	480280
707-39-18510	Y1620-11A3	27	480290
707-39-18510	Y1620-41A2	23	480320
707-44-16150	Y1620-01A1	26	480250
707-44-16150	Y1620-41A1	22	480310
707-44-16190	Y1620-01A6	26	480260

PART NO.	FIG.NO.	INDEX	PAGE
707-44-16190	Y1620-41A0	22	480300
707-44-16910	Y1620-01A1	28	480250
707-44-16910	Y1620-01A6	28	480260
707-44-16910	Y1620-41A0	24	480300
707-44-16910	Y1620-41A1	24	480310
707-44-18250	Y1620-01A8	26	480270
707-44-18250	Y1620-11A3	26	480290
707-44-18250	Y1620-41A2	22	480320
707-44-18280	Y1620-11A2	26	480280
707-44-18920	Y1620-01A8	28	480270
707-44-18920	Y1620-11A2	28	480280
707-44-18920	Y1620-11A3	28	480290
707-44-18920	Y1620-41A2	24	480320
707-51-11030	Y1620-01A1	18	480250
707-51-11030	Y1620-01A6	18	480260
707-51-11030	Y1620-41A0	14	480300
707-51-11030	Y1620-41A1	14	480310
707-51-11640	Y1620-01A6	19	480260
707-51-11640	Y1620-41A0	15	480300
707-51-11650	Y1620-01A1	19	480250
707-51-11650	Y1620-41A1	15	480310
707-51-12030	Y1620-01A8	18	480270
707-51-12030	Y1620-11A2	18	480280
707-51-12030	Y1620-11A3	18	480290
707-51-12030	Y1620-41A2	14	480320
707-51-12650	Y1620-01A8	19	480270
707-51-12650	Y1620-11A2	19	480280
707-51-12650	Y1620-11A3	19	480290
707-51-12650	Y1620-41A2	15	480320
707-52-90850	Y1620-01A1	16	480250
707-52-90850	Y1620-01A6	16	480260
707-52-90850	Y1620-41A0	12	480300
707-52-90850	Y1620-41A1	12	480310
707-52-90980	Y1620-01A8	16	480270
707-52-90980	Y1620-11A2	16	480280
707-52-90980	Y1620-11A3	16	480290
707-52-91980	Y1620-41A2	12	480320
707-58-11490	Y1620-01A1	6	480250
707-58-11490	Y1620-01A6	6	480260
707-58-11810	Y1620-41A0	5	480300
707-58-11810	Y1620-41A1	5	480310
707-58-12530	Y1620-01A8	4	480270
707-58-12530	Y1620-11A3	4	480290
707-58-12540	Y1620-11A2	4	480280
707-58-12650	Y1620-41A2	5	480320
707-71-31670	Y1620-01A1	9	480250
707-71-31670	Y1620-01A6	9	480260
707-71-31690	Y1620-01A8	7	480270
707-71-31690	Y1620-11A2	7	480280
707-71-31690	Y1620-11A3	7	480290

PART NO.	FIG.NO.	INDEX	PAGE
707-71-61140	Y1620-01A1	12	480250
707-71-61140	Y1620-01A6	12	480260
707-71-61330	Y1620-01A8	10	480270
707-71-61330	Y1620-11A2	10	480280
707-71-61330	Y1620-11A3	10	480290
707-71-70340	Y1620-01A8	11	480270
707-71-70340	Y1620-11A2	11	480280
707-71-70340	Y1620-11A3	11	480290
707-75-11040	Y1620-01A1	17	480250
707-75-11040	Y1620-01A6	17	480260
707-75-11040	Y1620-41A0	13	480300
707-75-11040	Y1620-41A1	13	480310
707-76-10130	Y1620-41A1	2	480310
707-76-10140	Y1620-41A0	6	480300
707-76-10140	Y1620-41A1	6	480310
707-76-10270	Y1620-01A1	2	480250
707-76-10290	Y1620-01A6	2	480260
707-76-10290	Y1620-41A0	2	480300
707-76-11130	Y1620-01A1	7	480250
707-76-11130	Y1620-11A2	2	480280
707-76-11130	Y1620-11A2	5	480280
707-76-11130	Y1620-11A3	2	480290
707-76-11130	Y1620-11A3	5	480290
707-76-11130	Y1620-41A2	2	480320
707-76-11130	Y1620-41A2	6	480320
707-76-11220	Y1620-01A6	7	480260
707-76-11220	Y1620-01A8	2	480270
707-76-11220	Y1620-01A8	5	480270
707-86-11610	Y1620-01A8	32	480270
707-86-11610	Y1620-11A2	32	480280
707-86-11610	Y1620-11A3	32	480290
707-86-12550	Y1620-01A1	31	480250
707-86-12550	Y1620-01A6	31	480260
707-86-12560	Y1620-01A1		480250
707-86-12560	Y1620-01A6		480260
707-86-12570	Y1620-41A0	28	480300
707-86-12570	Y1620-41A1	28	480310
707-86-12580	Y1620-41A0	27	480300
707-86-12580	Y1620-41A1	27	480310
707-86-12610	Y1620-01A8	31	480270
707-86-12610	Y1620-11A3	31	480290
707-86-12680	Y1620-11A2	31	480280
707-86-13080	Y1620-41A2	27	480320
707-88-02960	Y1620-01A8	33	480270
707-88-02960	Y1620-11A2	33	480280
707-88-02960	Y1620-11A3	33	480290
707-88-10150	Y1620-41A0	35	480300
707-88-10150	Y1620-41A1	35	480310
707-88-21660	Y1620-01A1	36	480250
707-88-21660	Y1620-01A6	37	480260

PART NO.	FIG.NO.	INDEX	PAGE
707-88-21880	Y1620-01A8	40	480270
707-88-21880	Y1620-11A2	40	480280
707-88-21880	Y1620-11A3	40	480290
707-88-25370	Y1620-01A1	35	480250
707-88-25370	Y1620-01A6	36	480260
707-88-25380	Y1620-01A1		480250
707-88-25380	Y1620-01A6		480260
707-88-25390	Y1620-41A0	32	480300
707-88-25390	Y1620-41A1	32	480310
707-88-25450	Y1620-01A8	39	480270
707-88-25450	Y1620-11A2	39	480280
707-88-25450	Y1620-11A3	39	480290
707-88-26140	Y1620-41A2	33	480320
707-88-28260	Y1620-41A2	32	480320
707-88-28270	Y1620-41A2	37	480320
707-88-33040	Y1620-01A1	42	480251
707-88-33040	Y1620-01A6	44	480261
707-88-33040	Y1620-11A3	46	480291
707-88-33040	Y1620-41A0	38	480300
707-88-33040	Y1620-41A1	38	480310
707-88-33040	Y1620-41A2	40	480320
707-88-75310	Y1620-01A1	23	480250
707-88-75310	Y1620-01A6	23	480260
707-88-75310	Y1620-41A0	19	480300
707-88-75310	Y1620-41A1	19	480310
707-88-75410	Y1620-01A8	23	480270
707-88-75410	Y1620-11A3	23	480290
707-88-75410	Y1620-41A2	19	480320
707-99-67070	Y1620-01A6		480261
707-99-76190	Y1620-01A8		480271
70788-75410	Y1620-11A2	23	480280
708-17-12750	Y1600-03A0		480150
708-17-12750	Y1600-07A0		480190
708-17-12760	Y1600-03A0		480150
708-17-12760	Y1600-07A0		480190
708-17-12770	Y1600-03A0		480150
708-17-12770	Y1600-07A0		480190
708-18-12570	Y1670-02A0	2	481100
708-18-12570	Y1670-11A1	3	481110
708-21-12531	Y1662-07A0	3	480490
708-21-12531	Y1664-07A0	3	480690
708-21-12541	Y1600-01A0	2	480130
708-21-12541	Y1600-02A0	2	480140
708-21-12541	Y1600-06A0	2	480180
708-21-12541	Y1641-01A0	7	480400
708-21-12541	Y1662-04A0	15	480460
708-21-12541	Y1662-07A0	2	480490
708-21-12541	Y1662-07A0	5	480490
708-21-12541	Y1662-10A0	13	480520
708-21-12541	Y1662-10A0	8	480520

PART NO.	FIG.NO.	INDEX	PAGE
708-21-12541	Y1662-13A0	13	480550
708-21-12541	Y1662-13A0	3	480550
708-21-12541	Y1662-14A0	14	480560
708-21-12541	Y1662-14A0	31	480560
708-21-12541	Y1662-17A0	23	480590
708-21-12541	Y1662-20A0	15	480620
708-21-12541	Y1664-04A0	15	480660
708-21-12541	Y1664-07A0	2	480690
708-21-12541	Y1664-07A0	5	480690
708-21-12541	Y1664-10A0	13	480720
708-21-12541	Y1664-10A0	8	480720
708-21-12541	Y1664-13A0	13	480750
708-21-12541	Y1664-13A0	3	480750
708-21-12541	Y1664-14A0	14	480760
708-21-12541	Y1664-14A0	31	480760
708-21-12541	Y1664-17A0	23	480790
708-21-12541	Y1664-20A0	15	480820
708-21-12541	Y1664-23A0	5	480850
708-23-12350	Y1640-02A0	19	480350
708-23-12350	Y1640-02A1	19	480380
708-27-22811	Y1600-03A0	5	480150
708-2H-00450	B0000-01A0	6	030010
708-2H-00450	Y1600-01A0	1	480130
708-2H-01450	Y1600-01A0	1	480130
708-2H-03610	Y1600-10A0		480220
708-2H-14321	Y1600-04A0	2	480160
708-2H-14321	Y1600-08A0	2	480200
708-2H-22160	Y1600-03A0	6	480150
708-2H-31170	Y1600-01A0		480130
708-2H-31180	Y1600-06A0	1	480180
708-2H-31540	Y1600-02A0	1	480140
708-2H-33180	Y1600-03A0	8	480150
708-2H-33180	Y1600-07A0	5	480190
708-2H-33421	Y1600-03A0	9	480150
708-2H-33431	Y1600-07A0	6	480190
708-2H-33440	Y1600-03A0	20	480150
708-2H-33440	Y1600-07A0	17	480190
708-2H-33511	Y1600-03A0	19	480150
708-2H-33511	Y1600-07A0	16	480190
708-2L-24680	Y1600-10A0	2	480220
708-7T-16460	Y1662-01A0	15	480430
708-7T-16460	Y1664-01A0	15	480630
708-7T-16460	Y1664-21A0	5	480830
708-8E-16150	Y1600-01A0	3	480130
708-8E-16150	Y1600-02A0	10	480140
708-8E-16150	Y1600-06A0	8	480180
708-8E-16160	Y1641-01A0	35	480400
708-8E-16160	Y1662-07A0	14	480490
708-8E-16160	Y1662-07A0	20	480490
708-8E-16160	Y1662-14A0	28	480560

PART NO.	FIG.NO.	INDEX	PAGE
708-8E-16160	Y1664-07A0	14	480690
708-8E-16160	Y1664-07A0	20	480690
708-8E-16160	Y1664-14A0	28	480760
708-8E-16180	Y1641-01A0	33	480400
708-8E-16250	Y1662-07A0	6	480490
708-8E-16250	Y1664-07A0	6	480690
708-8F-36120	Y1641-01A0	22	480400
708-8H-11530	Y1662-07A0	24	480490
708-8H-11530	Y1662-10A0	4	480520
708-8H-11530	Y1662-14A0	24	480560
708-8H-11530	Y1662-14A0	8	480560
708-8H-11530	Y1664-07A0	24	480690
708-8H-11530	Y1664-10A0	4	480720
708-8H-11530	Y1664-14A0	24	480760
708-8H-11530	Y1664-14A0	8	480760
709-25-11390	Y1662-10A0	19	480520
709-25-11390	Y1662-11A0	9	480530
709-25-11390	Y1662-12A0	2	480540
709-25-11390	Y1662-12A0	6	480540
709-25-11390	Y1662-19A0	2	480610
709-25-11390	Y1662-19A0	4	480610
709-25-11390	Y1664-10A0	19	480720
709-25-11390	Y1664-11A0	9	480730
709-25-11390	Y1664-12A0	2	480740
709-25-11390	Y1664-12A0	6	480740
709-25-11390	Y1664-19A0	2	480810
709-25-11390	Y1664-19A0	4	480810
709-70-71610	Y1640-03A0	7	480360
709-70-71610	Y1662-01A0	13	480430
709-70-71610	Y1664-01A0	13	480630
709-74-91860	Y1662-07A0	22	480490
709-74-91860	Y1662-13A0	14	480550
709-74-91860	Y1664-07A0	22	480690
709-74-91860	Y1664-13A0	14	480750
709-74-92810	Y1640-01A0	7	480340
709-74-92810	Y1640-01A1	7	480370
709-74-92821	Y1640-01A0	9	480340
709-74-92821	Y1640-01A1	9	480370
709-75-92220	Y1640-01A0	8	480340
709-75-92220	Y1640-01A1	8	480370
722-12-18240	Y1600-11A0	13	480230
722-12-18240	Y1600-12A0	13	480240
722-12-19070	Y1662-04A0	13	480460
722-12-19070	Y1664-04A0	13	480660
723-11-15110	Y1670-02A0	13	481100
723-11-18150	Y1662-04A0	10	480460
723-11-18150	Y1664-04A0	10	480660
723-11-18190	Y1662-16A0	19	480580
723-11-18190	Y1664-16A0	19	480780
723-11-19130	Y1662-04A0	2	480460

PART NO.	FIG.NO.	INDEX	PAGE
723-11-19130	Y1662-17A0	25	480590
723-11-19130	Y1664-04A0	2	480660
723-11-19130	Y1664-17A0	25	480790
723-11-19130	Y1664-21A0	13	480830
723-11-19960	Y1662-17A0	18	480590
723-11-19960	Y1664-17A0	18	480790
723-26-14240	Y1970-01A1	4	481190
723-40-56350	Y1662-08A0	3	480500
723-40-56350	Y1664-08A0	3	480700
723-40-56800	Y1662-08A0	1	480500
723-40-56800	Y1664-08A0	1	480700
723-40-60101	Y1662-10A0	16	480520
723-40-60101	Y1664-10A0	16	480720
723-40-61150	Y1662-13A0	18	480550
723-40-61150	Y1664-13A0	18	480750
723-40-66130	Y1664-23A0	1	480850
723-40-66161	Y1662-10A0		480520
723-40-66161	Y1664-10A0	9	480720
723-40-66171	Y1662-10A0		480520
723-40-66171	Y1664-10A0		480720
723-40-66210	Y1662-10A0	10	480520
723-40-66210	Y1662-10A0	2	480520
723-40-66210	Y1664-10A0	10	480720
723-40-66210	Y1664-10A0	2	480720
723-40-66220	Y1662-10A0	11	480520
723-40-66220	Y1662-10A0	6	480520
723-40-66220	Y1664-10A0	11	480720
723-40-66220	Y1664-10A0	6	480720
723-40-66220	Y1664-23A0	3	480850
723-40-66230	Y1664-23A0	2	480850
723-40-66240	Y1662-10A0	3	480520
723-40-66240	Y1664-10A0	3	480720
723-40-66300	Y1664-23A0		480850
723-40-66601	Y1662-10A0	9	480520
723-40-66601	Y1664-10A0		480720
723-40-66701	Y1662-10A0	1	480520
723-40-66701	Y1664-10A0	1	480720
723-40-71201	Y1662-13A0	1	480550
723-40-71201	Y1664-13A0	1	480750
723-40-71330	Y1662-13A0	4	480550
723-40-71330	Y1664-13A0	4	480750
723-40-71340	Y1662-13A0	5	480550
723-40-71340	Y1664-13A0	5	480750
723-40-71350	Y1662-13A0	8	480550
723-40-71350	Y1664-13A0	8	480750
723-40-71362	Y1662-13A0	11	480550
723-40-71362	Y1664-13A0	11	480750
723-40-71380	Y1662-13A0	16	480550
723-40-71380	Y1664-13A0	16	480750
723-40-71390	Y1662-13A0	17	480550

PART NO.	FIG.NO.	INDEX	PAGE
723-40-71390	Y1664-13A0	17	480750
723-40-71411	Y1662-14A0	4	480560
723-40-71411	Y1664-14A0	4	480760
723-40-71430	Y1662-14A0	15	480560
723-40-71430	Y1664-14A0	15	480760
723-40-71440	Y1662-13A0	12	480550
723-40-71440	Y1664-13A0	12	480750
723-40-71510	Y1664-13A0		480750
723-40-71520	Y1662-13A0	2	480550
723-40-71520	Y1664-13A0	2	480750
723-40-71800	Y1662-14A0		480560
723-40-71800	Y1664-14A0		480760
723-40-82120	Y1662-16A0	2	480580
723-40-82120	Y1664-16A0	2	480780
723-40-82130	Y1662-16A0	3	480580
723-40-82130	Y1664-16A0	3	480780
723-40-82140	Y1662-16A0	6	480580
723-40-82140	Y1662-20A0	3	480620
723-40-82140	Y1662-20A0	9	480620
723-40-82140	Y1664-16A0	6	480780
723-40-82140	Y1664-20A0	3	480820
723-40-82140	Y1664-20A0	9	480820
723-40-82150	Y1662-16A0	7	480580
723-40-82150	Y1664-16A0	7	480780
723-40-82161	Y1664-16A0	11	480780
723-40-82210	Y1662-16A0	4	480580
723-40-82210	Y1664-16A0	4	480780
723-40-82220	Y1662-07A0	16	480490
723-40-82220	Y1662-16A0	5	480580
723-40-82220	Y1662-20A0	11	480620
723-40-82220	Y1664-07A0	16	480690
723-40-82220	Y1664-16A0	5	480780
723-40-82220	Y1664-20A0	11	480820
723-40-82280	Y1662-16A0	21	480580
723-40-82280	Y1664-16A0	21	480780
723-40-82290	Y1662-16A0	22	480580
723-40-82290	Y1664-16A0	22	480780
723-40-82310	Y1662-16A0	13	480580
723-40-82310	Y1664-16A0	13	480780
723-40-82401	Y1662-16A0	1	480580
723-40-82401	Y1664-16A0	1	480780
723-40-82410	Y1662-16A0		480580
723-40-82410	Y1664-16A0		480780
723-40-84100	Y1662-20A0	1	480620
723-40-84100	Y1664-20A0		480820
723-40-84110	Y1662-20A0		480620
723-40-84110	Y1664-20A0	1	480820
723-40-84120	Y1662-20A0	2	480620
723-40-84120	Y1664-20A0	2	480820
723-40-84130	Y1662-20A0	13	480620

PART NO.	FIG.NO.	INDEX	PAGE
723-40-84130	Y1662-20A0	4	480620
723-40-84130	Y1664-20A0	13	480820
723-40-84130	Y1664-20A0	4	480820
723-40-84200	Y1662-20A0	7	480620
723-40-84200	Y1664-20A0		480820
723-40-84210	Y1662-20A0		480620
723-40-84210	Y1664-20A0	7	480820
723-40-84220	Y1662-20A0	8	480620
723-40-84220	Y1664-20A0	8	480820
723-40-84230	Y1662-20A0	10	480620
723-40-84230	Y1664-20A0	10	480820
723-40-84420	Y1662-16A0	9	480580
723-40-84420	Y1664-16A0	9	480780
723-40-84430	Y1662-16A0	10	480580
723-40-84430	Y1664-16A0	10	480780
723-40-84440	Y1662-16A0	11	480580
723-40-85100	Y1662-12A0	5	480540
723-40-85100	Y1662-19A0	1	480610
723-40-85100	Y1664-12A0	5	480740
723-40-85100	Y1664-19A0	1	480810
723-40-87110	Y1662-15A0		480570
723-40-87110	Y1664-15A0		480770
723-40-87131	Y1662-15A0	5	480570
723-40-87131	Y1664-15A0	5	480770
723-40-87170	Y1662-15A0	8	480570
723-40-87170	Y1664-15A0	8	480770
723-40-87180	Y1662-15A0	6	480570
723-40-87180	Y1664-15A0	6	480770
723-40-87220	Y1662-15A0	4	480570
723-40-87220	Y1664-15A0	4	480770
723-40-87250	Y1662-15A0	7	480570
723-40-87250	Y1664-15A0	7	480770
723-40-87260	Y1662-15A0	3	480570
723-40-87260	Y1664-15A0	3	480770
723-40-87400	Y1662-15A0	1	480570
723-40-87400	Y1664-15A0	1	480770
723-40-87440	Y1662-15A0	2	480570
723-40-87440	Y1664-15A0	2	480770
723-40-91200	Y1662-12A0	1	480540
723-40-91200	Y1662-19A0	3	480610
723-40-91200	Y1664-12A0	1	480740
723-40-91200	Y1664-19A0	3	480810
723-40-91500	Y1662-11A0	6	480530
723-40-91500	Y1664-11A0	6	480730
723-40-91600	Y1662-14A0		480560
723-40-91600	Y1664-14A0		480760
723-40-92403	Y1662-09A0	1	480510
723-40-92403	Y1664-09A0	1	480710
723-40-92900	Y1662-20A0	16	480620
723-40-92900	Y1664-20A0	16	480820

PART NO.	FIG.NO.	INDEX	PAGE
723-41-11200	Y1664-21A0	1	480830
723-41-11200	Y1664-22A0	1	480840
723-41-11410	Y1662-17A0		480590
723-41-11410	Y1664-17A0		480790
723-41-11420	Y1664-21A0		480830
723-41-11901	Y1662-17A0	1	480590
723-41-11901	Y1662-18A0	1	480600
723-41-11901	Y1664-17A0	1	480790
723-46-00742	Y1662-07A0		480490
723-46-00742	Y1664-07A0		480690
723-46-00760	Y1662-07A0	1	480490
723-46-00760	Y1664-07A0	1	480690
723-46-09102	Y1662-01A0	1	480430
723-46-09102	Y1662-02A0	1	480440
723-46-09102	Y1662-03A0	1	480450
723-46-09102	Y1662-04A0	1	480460
723-46-09102	Y1662-05A0	1	480470
723-46-09102	Y1662-06A0	1	480480
723-46-09102	Y1664-01A0	1	480630
723-46-09102	Y1664-02A0	1	480640
723-46-09102	Y1664-03A0	1	480650
723-46-09102	Y1664-04A0		480660
723-46-09102	Y1664-05A0	1	480670
723-46-09102	Y1664-06A0	1	480680
723-46-11410	Y1662-01A0		480430
723-46-11410	Y1664-01A0		480630
723-46-11722	Y1662-07A0	4	480490
723-46-11722	Y1664-07A0	4	480690
723-46-11730	Y1662-07A0		480490
723-46-11730	Y1664-07A0		480690
723-46-11910	Y1662-06A0		480480
723-46-11910	Y1664-06A0		480680
723-46-14110	Y1662-01A0	18	480430
723-46-14110	Y1664-01A0	18	480630
723-46-14110	Y1664-21A0	7	480830
723-46-14131	Y1664-01A0	20	480630
723-46-14140	Y1662-07A0	19	480490
723-46-14140	Y1664-07A0	19	480690
723-46-14150	Y1662-04A0	17	480460
723-46-14150	Y1664-04A0	17	480660
723-46-14170	Y1662-01A0	19	480430
723-46-14170	Y1664-01A0	19	480630
723-46-14180	Y1662-17A0	15	480590
723-46-14180	Y1664-17A0	15	480790
723-46-14190	Y1662-17A0	6	480590
723-46-14190	Y1664-17A0	6	480790
723-46-15111	Y1662-02A0		480440
723-46-15111	Y1662-13A0	7	480550
723-46-15111	Y1664-02A0		480640
723-46-15111	Y1664-13A0	7	480750

PART NO.	FIG.NO.	INDEX	PAGE
723-46-15111	Y1664-21A0	8	480830
723-46-15120	Y1662-01A0	16	480430
723-46-15120	Y1664-01A0	16	480630
723-46-15120	Y1664-21A0	6	480830
723-46-15130	Y1662-01A0	8	480430
723-46-15130	Y1664-01A0	8	480630
723-46-15130	Y1664-21A0	3	480830
723-46-15140	Y1664-01A0	9	480630
723-46-15190	Y1662-07A0	18	480490
723-46-15190	Y1664-07A0	18	480690
723-46-15220	Y1664-07A0	28	480690
723-46-15330	Y1662-17A0	11	480590
723-46-15330	Y1664-17A0	11	480790
723-46-15340	Y1662-17A0	12	480590
723-46-15340	Y1664-17A0	12	480790
723-46-15350	Y1662-17A0	13	480590
723-46-15350	Y1662-20A0	12	480620
723-46-15350	Y1664-17A0	13	480790
723-46-15350	Y1664-20A0	12	480820
723-46-15370	Y1662-17A0	4	480590
723-46-15370	Y1664-17A0	4	480790
723-46-15380	Y1662-17A0	5	480590
723-46-15380	Y1664-17A0	5	480790
723-46-15390	Y1662-17A0	3	480590
723-46-15390	Y1664-17A0	3	480790
723-46-15510	Y1662-06A0	2	480480
723-46-15510	Y1664-06A0	2	480680
723-46-15630	Y1662-02A0	11	480440
723-46-15630	Y1662-02A0	5	480440
723-46-15630	Y1662-03A0	12	480450
723-46-15630	Y1664-02A0	11	480640
723-46-15630	Y1664-02A0	5	480640
723-46-15630	Y1664-03A0	12	480650
723-46-15640	Y1662-02A0	3	480440
723-46-15640	Y1664-02A0	3	480640
723-46-15640	Y1664-02A0	9	480640
723-46-15690	Y1662-01A0	17	480430
723-46-15690	Y1664-01A0	17	480630
723-46-16410	Y1662-01A0	11	480430
723-46-16410	Y1664-01A0	11	480630
723-46-17171	Y1662-02A0	2	480440
723-46-17171	Y1664-02A0	2	480640
723-46-17212	Y1662-02A0	8	480440
723-46-17212	Y1664-02A0	8	480640
723-46-17320	Y1662-03A0	10	480450
723-46-17320	Y1662-03A0	5	480450
723-46-17320	Y1664-03A0	10	480650
723-46-17320	Y1664-03A0	5	480650
723-46-17330	Y1662-03A0	11	480450
723-46-17330	Y1662-03A0	6	480450

PART NO.	FIG.NO.	INDEX	PAGE
723-46-17330	Y1664-03A0	11	480650
723-46-17330	Y1664-03A0	6	480650
723-46-17340	Y1662-03A0	2	480450
723-46-17340	Y1664-03A0	13	480650
723-46-17340	Y1664-03A0	2	480650
723-46-17350	Y1662-03A0	19	480450
723-46-17350	Y1664-03A0	19	480650
723-46-17370	Y1662-03A0		480450
723-46-17370	Y1664-03A0		480650
723-46-17471	Y1662-03A0	7	480450
723-46-17471	Y1664-03A0	7	480650
723-46-17510	Y1662-04A0	7	480460
723-46-17510	Y1662-17A0	28	480590
723-46-17510	Y1664-04A0	7	480660
723-46-17510	Y1664-17A0	28	480790
723-46-17510	Y1664-21A0	15	480830
723-46-17520	Y1662-04A0	3	480460
723-46-17520	Y1662-17A0	26	480590
723-46-17520	Y1664-04A0	3	480660
723-46-17520	Y1664-17A0	26	480790
723-46-17520	Y1664-21A0	16	480830
723-46-17530	Y1662-04A0	9	480460
723-46-17530	Y1662-17A0	24	480590
723-46-17530	Y1664-04A0	9	480660
723-46-17530	Y1664-17A0	24	480790
723-46-17530	Y1664-21A0	17	480830
723-46-17550	Y1662-07A0	17	480490
723-46-17550	Y1664-07A0	17	480690
723-46-17570	Y1662-16A0	25	480580
723-46-17570	Y1664-16A0	25	480780
723-46-17590	Y1662-03A0	8	480450
723-46-17590	Y1664-03A0	8	480650
723-46-17600	Y1662-07A0		480490
723-46-17600	Y1664-07A0		480690
723-46-17610	Y1662-07A0	8	480490
723-46-17610	Y1664-07A0	8	480690
723-46-17640	Y1662-07A0	9	480490
723-46-17640	Y1664-07A0	9	480690
723-46-17650	Y1662-04A0	16	480460
723-46-17650	Y1664-04A0	16	480660
723-46-17701	Y1662-11A0	1	480530
723-46-17701	Y1664-11A0	1	480730
723-46-17711	Y1662-11A0		480530
723-46-17711	Y1664-11A0		480730
723-46-17840	Y1662-17A0	7	480590
723-46-17840	Y1664-17A0	7	480790
723-46-17850	Y1662-17A0	16	480590
723-46-17850	Y1664-17A0	16	480790
723-46-17860	Y1662-17A0	17	480590
723-46-17860	Y1664-17A0	17	480790

PART NO.	FIG.NO.	INDEX	PAGE
723-46-18140	Y1662-02A0		480440
723-46-18140	Y1664-02A0		480640
723-46-18240	Y1662-02A0		480440
723-46-18240	Y1664-02A0		480640
723-46-18330	Y1662-03A0		480450
723-46-18330	Y1664-03A0		480650
723-46-18431	Y1662-03A0		480450
723-46-18431	Y1664-03A0		480650
723-46-18710	Y1662-04A0	12	480460
723-46-18710	Y1664-04A0	12	480660
723-46-18720	Y1662-04A0	14	480460
723-46-18720	Y1664-04A0	14	480660
723-46-18730	Y1662-06A0	4	480480
723-46-18730	Y1664-06A0	4	480680
723-46-18770	Y1662-20A0	22	480620
723-46-18770	Y1664-20A0	22	480820
723-46-22753	Y1662-17A0	2	480590
723-46-22753	Y1664-17A0	2	480790
723-46-22811	Y1664-21A0	2	480830
723-46-25112	Y1662-01A0	2	480430
723-46-25112	Y1664-01A0	2	480630
723-46-25211	Y1662-01A0	3	480430
723-46-25211	Y1664-01A0	3	480630
723-46-25311	Y1662-01A0	4	480430
723-46-25311	Y1664-01A0	4	480630
723-46-25410	Y1662-01A0	5	480430
723-46-25410	Y1664-01A0	5	480630
723-46-25512	Y1664-01A0	6	480630
723-46-25610	Y1662-17A0	10	480590
723-46-25610	Y1664-17A0	10	480790
723-46-25710	Y1662-01A0	7	480430
723-46-25710	Y1664-01A0	7	480630
723-46-40100	Y1662-05A0	2	480470
723-46-40100	Y1664-05A0	2	480670
723-46-40601	Y1662-05A0	10	480470
723-46-40601	Y1662-18A0	2	480600
723-46-40601	Y1664-05A0	10	480670
723-46-40601	Y1664-18A0	2	480800
723-46-41210	Y1662-05A0		480470
723-46-41210	Y1662-18A0		480600
723-46-41210	Y1664-05A0		480670
723-46-41210	Y1664-18A0		480800
723-46-41950	Y1662-05A0	12	480470
723-46-41950	Y1662-05A0	16	480470
723-46-41950	Y1662-05A0	20	480470
723-46-41950	Y1662-05A0	24	480470
723-46-41950	Y1662-05A0	4	480470
723-46-41950	Y1662-05A0	8	480470
723-46-41950	Y1662-18A0	4	480600
723-46-41950	Y1662-18A0	8	480600

PART NO.	FIG.NO.	INDEX	PAGE
723-46-41950	Y1664-05A0	12	480670
723-46-41950	Y1664-05A0	16	480670
723-46-41950	Y1664-05A0	20	480670
723-46-41950	Y1664-05A0	24	480670
723-46-41950	Y1664-05A0	4	480670
723-46-41950	Y1664-05A0	8	480670
723-46-41950	Y1664-18A0	4	480800
723-46-41950	Y1664-18A0	8	480800
723-46-41950	Y1664-22A0	3	480840
723-46-42800	Y1662-05A0	6	480470
723-46-42800	Y1664-05A0	6	480670
723-46-43400	Y1662-18A0	6	480600
723-46-43400	Y1664-18A0	6	480800
723-46-44100	Y1662-05A0	18	480470
723-46-44100	Y1662-18A0		480600
723-46-44100	Y1664-05A0	18	480670
723-46-44100	Y1664-18A0		480800
723-46-45100	Y1662-05A0	22	480470
723-46-45100	Y1664-05A0	22	480670
723-46-45500	Y1662-05A0	14	480470
723-46-45500	Y1664-05A0	14	480670
723-46-48100	Y1664-22A0		480840
723-47-27501	Y1662-01A0		480430
723-47-27502	Y1662-01A0		480430
723-56-31870	Y1662-01A0	14	480430
723-56-31870	Y1664-01A0	14	480630
723-60-22230	Y1662-08A0	5	480500
723-60-22230	Y1664-08A0	5	480700
723-90-61700	Y1664-23A0	8	480850
723-90-69100	Y1662-06A0	9	480480
723-90-69100	Y1664-06A0	9	480680
723-90-76201	Y1662-12A0	3	480540
723-90-76201	Y1664-12A0	3	480740
723-90-76501	Y1664-23A0	6	480850
7700-45-1710	A4110-A3S5	28	000420
7700-45-1710	A4110-A3S5	41	000420
7700-45-1710	A4110-B3S5	27	000430
7700-45-1710	A4110-C3S5	26	000440
782-62-33011	K1110-28A9	8	210520
783-53-31100	E0450-01A0	1	120150
783-53-31100	E0450-01A1	1	120160
783-53-31201	E0450-01A0	2	120150
783-53-31201	E0450-01A1	2	120160
783-53-31310	E0450-01A0	3	120150
783-53-31310	E0450-01A1	3	120160
783-53-31320	E0450-01A0	4	120150
783-53-31320	E0450-01A1	4	120160
783-53-31330	E0450-01A0	5	120150
783-53-31330	E0450-01A1	5	120160
783-53-31340	E0450-01A0	6	120150

PART NO.	FIG.NO.	INDEX	PAGE
783-53-31340	E0450-01A1	6	120160
783-54-63003	K1110-27A1	3	210490
7835-31-5003	K1110-21A1		210370
7835-31-5004	K1110-21A1		210370
7835-31-5005	K1110-21A1		210370
7835-31-5006	K1110-21A1		210370
7835-31-5007	K1110-21A1	1	210370
786-17-45100	K1110-27A1	11	210490
786-17-45100	K1110-27A1	13	210490
786-17-45100	K1110-27A1	15	210490
786-19-31811	H0120-03A1		150080
786-19-31812	H0120-03A1	6	150080
786-19-42000	K1110-27A1	5	210490
7861-91-4220	A2110-A3R2		000190
7861-92-5810	D0100-01A1	9	090010
7861-92-5810	D0100-01A2	9	090020
7861-93-1420	B0200-01A2		030040
7861-93-1421	B0200-01A1	18	030030
7861-93-1421	B0200-01A2	18	030040
7861-93-1840	H1833-01A0	13	150390
7861-93-3320	H0311-01A1	9	150110
823-30-63350	K1110-27A1	19	210490
8A1-31-02100	K1110-13A9	23	210360
8A1-31-02200	K1110-13A9	24	210360
8A1-31-04300	K1110-13A9	21	210360
HM6400-0012	K1110-47A1	10	210640
HM6400-0013	K1110-47A1	11	210640
HM6400-0016	K1110-47A1	13	210640
HM6409-0071	K1110-47A1		210640
HM6409-0072	K1110-47A1		210640
HM6409-0075	K1110-47A1		210640
HM6440-0128	K1110-47A1		210640
HM6440-0129	K1110-47A1	12	210640
KD0-00200-5062	A6210-B3H6	39	000640
KD0-00550-5082	A6210-B3H5	48	000631
KD0-00550-5082	A6210-B3H6	37	000640
KD0-00550-5122	A6010-B3Y1	15	000600
KD0-00560-5302	A6010-B3Y1	14	000600
KD0-02700-6202	A6210-B3H6	15	000640
KD0-02700-6402	A6210-B3H5	43	000630
KD0-02700-6602	A6210-B3H6	43	000640
KD0-02740-5102	A6010-B3Y1	13	000600
KD0-02740-6202	A6210-B3H5	17	000630
KD0-02750-6802	A6010-B3X5	12	000580
KD0-02750-6802	A6010-B3X6	12	000590
KD0-02750-6802	A6010-B3Y1	12	000600
KD0-02760-8402	A6210-B3H6	32	000640
KD0-02801-6022	A6010-B3X5	17	000580
KD0-02801-6022	A6010-B3X6	17	000590
KD0-02801-6022	A6010-B3Y1	11	000600

PART NO.	FIG.NO.	INDEX	PAGE
KD0-09001-4380	A6210-B3H6	30	000640
KD0-09001-4580	A6210-B3H5	30	000630
KD0-09006-0660	A6210-B3H5	49	000631
KD0-09006-0660	A6210-B3H6	47	000641
KD0-09006-0670	A6210-B3H5	50	000631
KD0-09006-0670	A6210-B3H6	48	000641
KD0-09011-3140	A6210-B3H6	27	000640
KD0-09011-3540	A6010-B3Y1	16	000600
KD0-09057-0110	A6210-B3H6	33	000640
KD0-09057-0190	A6210-B3H6	38	000640
KD0-09057-0220	A6010-B3X6	29	000590
KD0-09170-2501	A6010-B3X5	21	000580
KD0-09170-2501	A6010-B3X6	21	000590
KD0-09201-0850	A6210-B3H6	12	000640
KD0-09201-0881	A6010-B3X5	7	000580
KD0-09201-0980	A6010-B3X5	4	000580
KD0-09201-0980	A6010-B3X6	4	000590
KD0-09201-0980	A6010-B3Y1	9	000600
KD0-09201-1140	A6010-B3X6	7	000590
KD0-09271-3620	A6210-B3H5	22	000630
KD0-09271-3620	A6210-B3H6	21	000640
KD0-09275-1430	A6210-B3H5	52	000631
KD0-09275-1430	A6210-B3H6	50	000641
KD0-23100-0251	A6210-B3H5	20	000630
KD0-23100-0430	A6210-B3H6	18	000640
KD0-23120-0180	A6210-B3H6	8	000640
KD0-23200-0331	A6210-B3H5	23	000630
KD0-23200-0671	A6210-B3H6	20	000640
KD0-23303-0020	A6210-B3H6	5	000640
KD0-23310-0860	A6210-B3H5	6	000630
KD0-23310-1670	A6210-B3H6	9	000640
KD0-23320-0220	A6210-B3H5	9	000630
KD0-23500-0410	A6210-B3H6	13	000640
KD0-23511-1101	A6210-B3H6	14	000640
KD0-23600-0430	A6210-B3H5	12	000630
KD0-23611-0690	A6210-B3H5	13	000630
KD0-23700-0130	A6210-B3H5	32	000630
KD0-23710-0221	A6210-B3H6	29	000640
KD0-23740-0250	A6210-B3H5	26	000630
KD0-23740-0351	A6210-B3H6	23	000640
KD0-23750-0250	A6210-B3H5	27	000630
KD0-23750-0490	A6210-B3H6	24	000640
KD0-23901-0170	A6210-B3H5	40	000630
KD0-23904-0070	A6210-B3H5	1	000630
KD0-23921-0230	A6210-B3H5	15	000630
KD0-23927-0071	A6210-B3H5	2	000630
KD0-23951-0301	A6210-B3H5	8	000630
KD0-23951-0331	A6210-B3H5	11	000630
KD0-25000-8332	A6210-B3H5	47	000631
KD0-25000-8332	A6210-B3H6	42	000640

PART NO.	FIG.NO.	INDEX	PAGE
KD0-35100-0300	A6010-B3X5	1	000580
KD0-35100-0300	A6010-B3X6	1	000590
KD0-35100-0300	A6010-B3Y1	1	000600
KD0-35120-0230	A6010-B3X5	18	000580
KD0-35120-0230	A6010-B3Y1	2	000600
KD0-35120-0290	A6010-B3X6	18	000590
KD0-35200-0440	A6010-B3X5	5	000580
KD0-35200-0440	A6010-B3Y1	3	000600
KD0-35200-0460	A6010-B3X6	5	000590
KD0-35300-0190	A6010-B3X5	6	000580
KD0-35300-0190	A6010-B3Y1	4	000600
KD0-35300-0350	A6010-B3X6	6	000590
KD0-35411-0180	A6010-B3Y1	19	000600
KD0-35411-0560	A6010-B3X5	13	000580
KD0-35411-0560	A6010-B3X6	13	000590
KD0-35421-0170	A6010-B3X5	14	000580
KD0-35421-0170	A6010-B3Y1	6	000600
KD0-35421-0240	A6010-B3X6	14	000590
KD0-35700-0820	A6010-B3Y1	5	000600
KD0-35700-0920	A6010-B3X6		000590
KD0-35710-1010	A6010-B3X5	19	000580
KD0-35710-1010	A6010-B3X6	19	000590
KD0-35719-0200	A6010-B3X5	29	000580
KD0-35719-0210	A6010-B3X6	30	000590
KD0-35730-0510	A6010-B3X5	20	000580
KD0-35730-0700	A6010-B3X6	20	000590
KD0-35761-0250	A6010-B3X5	30	000580
KD0-35761-0250	A6010-B3X6	31	000590
KD0-35761-0250	A6010-B3Y1	8	000600
KD0-35784-0210	A6010-B3X5	27	000580
KD0-35784-0210	A6010-B3X6	27	000590
KD0-35784-0290	A6010-B3X5	28	000580
KD0-35784-0290	A6010-B3X6	28	000590
KD0-35923-0130	A6010-B3X6	26	000590
KD0-35923-0160	A6010-B3X5	3	000580
KD0-35923-0160	A6010-B3X6	3	000590
KD0-35923-0170	A6010-B3X5	26	000580
KD0-35926-0070	A6010-B3X5	8	000580
KD0-35926-0070	A6010-B3X6	8	000590
KD0-35926-0090	A6010-B3X5	10	000580
KD0-35926-0090	A6010-B3X6	10	000590
KD0-35943-0130	A6010-B3X5	23	000580
KD0-35943-0140	A6010-B3X5	25	000580
KD0-35943-0140	A6010-B3X6	22	000590
KD0-35943-0150	A6010-B3X5	22	000580
KD0-35943-0150	A6010-B3X6	23	000590
KD0-35943-0160	A6010-B3X5	24	000580
KD0-35943-0160	A6010-B3X6	24	000590
KD0-35943-0170	A6010-B3X6	25	000590
KD0-35951-0060	A6010-B3X5	9	000580

PART NO.	FIG.NO.	INDEX	PAGE
KD0-35951-0060	A6010-B3X6	9	000590
KD0-47100-4651	A6210-B3H6	19	000640
KD0-47100-4800	A6210-B3H5	21	000630
KD0-47761-2671	A6210-B3H5	46	000631
KD0-47761-2671	A6210-B3H6	45	000641
KD0-47761-2681	A6210-B3H5	45	000631
KD0-47761-2681	A6210-B3H6	25	000640
KD0-47761-2691	A6210-B3H5	24	000630
KD0-47761-2691	A6210-B3H6	26	000640
KD0-47927-1390	A6210-B3H6	44	000640
KD1-02400-6305	A6210-B3H5	33	000630
KD1-02400-6305	A6210-B3H6	41	000640
KD1-02400-8405	A6210-B3H5	37	000630
KD1-03300-6012	A6210-B3H5	42	000630
KD1-03300-8022	A6210-B3H5	39	000630
KD1-03300-8022	A6210-B3H6	3	000640
KD1-03301-6012	A6010-B3X5	15	000580
KD1-03301-6012	A6010-B3X6	15	000590
KD1-03301-6012	A6010-B3Y1	18	000600
KD1-03350-6002	A6210-B3H5	41	000630
KD1-03350-8002	A6210-B3H5	38	000630
KD1-03350-8002	A6210-B3H6	2	000640
KD1-03351-6002	A6010-B3X5	16	000580
KD1-03351-6002	A6010-B3X6	16	000590
KD1-03351-6002	A6010-B3Y1	10	000600
KD1-03450-5001	A6210-B3H6	40	000640
KD1-03450-8001	A6210-B3H6	4	000640
KD1-04002-0100	A6210-B3H5	19	000630
KD1-04003-0100	A6210-B3H6	17	000640
KD1-04546-2007	A6210-B3H5	31	000630
KD1-04546-2047	A6210-B3H5	16	000630
KD1-04566-0067	A6210-B3H5	10	000630
KD1-05050-0601	A6210-B3H5	28	000630
KD1-09211-0081	A6210-B3H6	28	000640
KD1-09211-0980	A6210-B3H5	14	000630
KD1-09211-0981	A6210-B3H6	46	000641
KD1-09211-1120	A6210-B3H6	22	000640
KD1-09257-0050	A6210-B3H5	51	000631
KD1-09257-0050	A6210-B3H6	49	000641
KD1-09279-0090	A6210-B3H6	1	000640
KD1-23111-0160	A6210-B3H5	5	000630
KD1-23181-0020	A6210-B3H5	4	000630
KD1-23181-0020	A6210-B3H6	7	000640
KD1-23320-0290	A6210-B3H6	11	000640
KD1-23500-0170	A6210-B3H5	7	000630
KD1-23500-0970	A6210-B3H6	10	000640
KD1-23913-0040	A6210-B3H5	25	000630
KD1-23914-0020	A6210-B3H5	3	000630
KD1-23914-0020	A6210-B3H6	6	000640
KD1-23921-0130	A6210-B3H5	34	000630

PART NO.	FIG.NO.	INDEX	PAGE
KD1-23921-0130	A6210-B3H6	36	000640
KD1-23921-0140	A6210-B3H5	35	000630
KD1-23921-0140	A6210-B3H6	35	000640
KD1-23941-0040	A6210-B3H5	36	000630
KD1-23941-0040	A6210-B3H6	34	000640
KD1-23951-0020	A6210-B3H5	18	000630
KD1-23951-0051	A6210-B3H6	16	000640
KD1-33923-0790	A6010-B3X5	2	000580
KD1-33923-0790	A6010-B3X6	2	000590
KD1-33923-0790	A6010-B3Y1	7	000600
KD1-33926-0730	A6010-B3X5	11	000580
KD1-33926-0730	A6010-B3X6	11	000590
KD1-35923-0160	A6010-B3Y1	17	000600
KD1-47921-0790	A6210-B3H5	29	000630
KD1-47921-0790	A6210-B3H6	31	000640
KD1-47927-1250	A6210-B3H5	44	000630
ND017231-0700	Y1979-11A0	28	481200
ND063600-4580	Y1979-11A0	35	481200
ND063800-0300	Y1979-11A0	27	481200
ND077500-5650	Y1979-11A0	36	481200
ND077500-5890	Y1979-11A0	29	481200
ND077800-0750	Y1979-11A0	33	481200
ND090222-0070	A4010-D3Z1	29	000370
ND090222-0070	A4010-E3Z1	19	000380
ND090244-0010	A4010-D3Z1	36	000371
ND090310-0490	A4010-E3Z1	20	000380
ND090310-0500	A4010-D3Z1	28	000370
ND092124-0010	A4010-E3Z1	11	000380
ND092124-0011	A4010-E3Z1	12	000380
ND092125-0010	A4010-E3Z1	15	000380
ND092130-0360	A4010-E3Z1	14	000380
ND092220-0040	A4010-E3Z1	21	000380
ND092223-0042	A4010-E3Z1	22	000380
ND094086-0210	A4010-D3Z1	38	000371
ND095400-03	A4010-C3Z1	2	000360
ND095420-04	A4010-C3Z1	3	000360
ND095438-00	A4010-C3Z1	6	000360
ND095444-00	A4010-C3Z1	5	000360
ND096449-0070	A4010-E3Z1	24	000380
ND116140-0050	Y1979-11A0	14	481200
ND116340-7350	Y1979-11A0	38	481200
ND116576-3810	Y1979-11A0	3	481200
ND116576-3820	Y1979-11A0	4	481200
ND116576-3852	Y1979-11A0	25	481200
ND116576-3862	Y1979-11A0	26	481200
ND116650-6850	Y1979-11A0	16	481200
ND116660-7570	Y1979-11A0	15	481200
ND116662-7670	Y1979-11A0	23	481200
ND116662-7681	Y1979-11A0	24	481200
ND116662-8320	Y1979-11A0	44	481201

PART NO.	FIG.NO.	INDEX	PAGE
ND116780-2481	Y1979-11A0	17	481200
ND116780-2491	Y1979-11A0	18	481200
ND116780-2501	Y1979-11A0	19	481200
ND116780-2510	Y1979-11A0	20	481200
ND116780-3130	Y1979-11A0	22	481200
ND116780-3920	Y1979-11A0	31	481200
ND116781-3000	Y1979-11A0	21	481200
ND146340-0560	Y1979-11A0	34	481200
ND146657-8841	Y1979-11A0	10	481200
ND146657-8850	Y1979-11A0	12	481200
ND146657-8860	Y1979-11A0	37	481200
ND146657-9811	Y1979-11A0	11	481200
ND146667-0440	Y1979-11A0	32	481200
ND245450-5831	Y1979-11A0	1	481200
ND245450-5840	Y1979-11A0	2	481200
ND246470-4311	Y1979-11A0	42	481200
ND246790-2060	Y1979-11A0	30	481200
ND445021-3941	Y1979-11A0	13	481200
ND446010-3132	Y1979-11A0		481200
ND446600-0991	Y1979-11A0	5	481200
ND447500-2750	Y1979-11A0	8	481200
ND499000-61	A4010-C3Z1	4	000360
ND939500-5003	Y1979-11A0	43	481200
ND949001-1730	Y1979-11A0	41	481200
ND949008-0330	Y1979-11A0	40	481200
ND949008-0460	Y1979-11A0	39	481200
ND949010-25	A4010-C3Z1	7	000360
ND949010-3020	A4010-D3Z1	37	000371
ND949046-3100	Y1979-11A0	9	481200
ND949142-0020	Y1979-11A0	6	481200
ND949142-0030	Y1979-11A0	7	481200
ND949180-0310	A4010-D3Z1	30	000370
01252-60820	Y1662-13A0	10	480550
0700-013024	Y1662-16A0	12	480580
42-1U1-23180	Y1011-01A1	7	480060
70-68-J41680	Y1641-02A0		480410
72-34-614131	Y1662-01A0	20	480430
72-34-615140	Y1662-01A0	9	480430
72-34-617340	Y1662-03A0	13	480450

LEPBP40801



Published 08-Oct-2010
(c) 2010 KOMATSU