https://truckmanualshub.com/

零件手册
PARTS BOOK



PBCH650800

KOMATSU

RUTHZIL TRATOR COMERCIAL DE PEÇAS LTDA 11 97083-6812 ROLANDO

PC650LC-8R

液压挖掘机 KOMATSU
HYDRAULIC EXCAVATOR

车号：PC650LC-60001 及以上

SERIAL NUMBERS: PC650LC-60001 and up

小松（常州）工程机械有限公司
KOMATSU (CHANGZHOU) CONSTRUCTION MACHINERY CORP.

https://truckmanualshub.com/

PBCH650800

零件手册
PARTS BOOK

PC650LC-8R

车号：PC650LC-60001及以上

SERIAL NUMBERS:PC650LC-60001 and up

https://truckmanualshub.com/

前　言

订购零件时，请注明需要零件的货号、品名、数量以及使用机器的车辆编号、发动机型号和系列号、工作时数。

此零件明细表上不仅记载有标准装备零件，还记载有选购零件、附件零件。如果您需要订货，请与最近的小松代理店联系。

为了清楚明了，零件手册中有如下规定：

图形及清单	打开此零件图册后， 在左侧的页上（偶数页）找到一幅部件插图， 在图示上标有每个零件的索引号码。 在右侧的页上（奇数页）按照左侧图示上表示的零件索引号码列出零件清单。 表示零件号、零件名、数量、对应的机器系列号。
图号.	图号（FIG.）表示该页图的号码，它不是零件编号， 同时，此号码不一定是连续号码。
索引	与插图的索引号码一致，部品按索引号列出。
零件号	零件号列在PART NO.列中,零件号用于零件订购,在订购中,零件号码没有错误是很重要的。
描述	指零件号的零件名称 “.”标在组装件或部件的名称前,其下级部件列在其下面。 如果“.”标志的零件是分总成,则其下级部件标“..” 例如： ELEMENT ASSEMBLY, AIR CLEANER .ELEMENT ASSEMMBLY, OUTER ..ELEMENT, OUTER ..NUT, WING ..WASHER
数量	表示1台机器中需要使用的该零件数量。 但是，如果是组装零件和零件组的构成零件时，表示其组装件的件数。
系列号	发动机部分的表示的发动机系列号，在本体中表示该使用零件的车辆系列号。
符号和代码	PART NO.和DESCRIPTION栏中的符号和代码说明如下: □　　上一行的零件可取代此行零件来使用。

https://truckmanualshub.com/

代　　号（续）	
⊡	此行零件可代替紧接着的上一行零件使用。
◆	此行零件可与紧挨着的上一行零件互换使用。
■	如果将此行零件说明栏内的零件配套后，可取代此零件来使用。
☒	该行零件已停止供应，用上一行的零件代替使用。
▼	此行零件已停止供应，将此行零件说明栏内的零件配套后代替此零件供应。
☆	此行零件拟成套供应，不以单一零件供应。
★	此行零件拟成套供应，不以单一零件供应，但特定代理除外。
⊙	成组零件，一般不考虑成组供应。
----	用这种符号包括的零件是符号上一行指明成组件的零部件。
G-1,G-2	成组零件编号。
KIT	修理包，关于修理包构件详情，请参考技术服务修理包资料。
△	此行零件以半成品的形式供应，使用前必须再加工。
PAINT(1)	只涂底漆装船。
PAINT(2)	和本体不同颜色装船。
(A)	适用寒冷地区。（-30℃）
(B)	适用极寒冷地区。（-50℃）

https://truckmanualshub.com/

FOREWORD

When ordering a spare part,specify the part number,part name,and quantity required,and also specify your machine model code, machine serial number,engine serial number and the service meter reading.

This Parts Book describes not only standard items but also optional equipment and attachments. To order a part,please contact your nearest Komatsu distributor.

This Parts Book contains the information and special symbols as follows:

Figure and list	When you open this Parts Book, you will find an illustration on the left page (even-numbered page) for the spare parts group.Each individual part in the group is given an index number. On the right page, the component parts of the group are listed in the order of the index numbers shown on the illustration page. The part number, part name,and applicable machine serial number are given for each part.
FIG.No.	The FIG.No.is the number of the illustration shown on the page.It is not the spare part number.The numbers are not always continuous.
INDEX	This is the same as the index number in the illustration.The parts are listed in index number order.
PART No.	The number given in the PART No. column is the part number for the part shown. It is the code used when ordering that part. It is important that there be no mistake in this code number when ordering.
DESCRIP-TION	This gives the name of part that has the part number listed. The mark“ . ”is put in front of the part name of an assembly part and the item is entered following the assembly. If a part marked with “ . ” is a sub assembly, its components are marked with “..”. Example: ELEMENT ASSEMBLY，AIR CLEANER .ELEMENT ASSEMMBLY，OUTER ..ELEMENT，OUTER ..NUT，WING ..WASHER
Q'TY (Quantity)	This specifies the number of pieces used for one machine . However, if a part is included in the assembly and / or component, the quantity per such assembly and/or component is specified.
SERIAL No.	Applicable engine serial number is indicated for the engine volume. In the chassis volume, this indicates the machine serial number in which the part in used.
Symbols and codes	Symbols and codes are used in the PART No . and DESCRIPTION columns, and represent the following: □ The part specified in the line above can be used instead of this part.

https://truckmanualshub.com/

Symbols and codes (Cont'd)	
⊡	This part can be used instead of the part specified in the line immediately above.
◆	This part and the part specified in the line immediately above are interchangeable.
■	The part specified in the DESCRIPTION column can be used instead of this part if it is used as a set.
☒	This shows discontinued part. The part specified in the above line is supplied instead.
▼	This shows a discontinued part. The part specified in the DESCRIPTION column is supplied instead as a set.
☆	This part cannot be supplied as an individual part.It is supplied as an assembly.
★	This part cannot be supplied as an individual part.It is supplied as an assembly.However, it is supplied as an individual part by authorized distributors only.
⊙	This indicates a part group.The part marked with this symbol is not considered a supply part.
====	The part surrounded by this line are components of the part group specified in the above line.
G-1, G-2	These indicate categories of part groups.
KIT	This indicates kit parts. For kit parts, refer to the service kit tables provided in this Parts Book.
△	This indicates a part supplied as semi-finished. It requires additional work before installation.
PAINT(1)	This indicates parts shipped painted with undercoat.
PAINT(2)	This indicates parts supplied with different colors form the original color of your machine.
(A)	This code indicates special parts for cold weather "A" specification (-30℃)machines.
(B)	This indicates special parts for cold weather " B " specification (-50℃)machines.

https://truckmanualshub.com/

CONTENTS 目录

FOREWORD…… 前言 OF- 2

CONTENTS…… 目录 OC- 1

AA [ENGINE][发动机]

	FIG NO.	PAGE
CYLINDER HEAD……缸头	A1010-A4D2	AA- 2
CYLINDER HEAD COVER……缸头盖	A1110-A4A4	AA- 4
HEAD COVER MOUNTING BOLT…… 缸盖螺栓	A1111-A4A1	AA- 6
AIR INTAKE MANIFOLD AND CONNECTION…… 进气管和连接器	A1310-A4L4	AA- 8
AIR CONNECTION (AIR CLEANER REMOTE MOUNT SPEC.)……接头（空滤器远置安装规格）	A1410-A4L7	AA- 10
EXHAUST MANIFOLD…… 排气歧管	A1510-A4G2	AA- 12
TURBOCHARGER MOUNTING AND LUBRICATOR…… 涡轮增压器安装和润滑	A1530-A4L8	AA- 14
TURBOCHARGER (KTR110L-3H4E) (INNER PARTS)……涡轮增压器(内部件)	A1530-B4L8	AA- 16
COVER FOR EGR LESS……无EGR用盖板	A1550-A4B1	AA- 18
HEAT SHIELD……隔热板	A1570-A4G7	AA- 22
MUFFLER……消音器	A1610-A4L8	AA- 24
CYLINDER BLOCK…… 缸体	A2010-A4K5	AA- 28
CYLINDER BLOCK ACCESSORY (UNDER FRAME AND OIL FILLER)……缸体附件（下车架和油滤清器）	A2011-A4P2	AA- 30
FRONT COVER……前盖	A2040-A4H7	AA- 32
FRONT COVER ACCESSORY (POINTER AND BREATHER MOUNTING)……备用前盖（定位器和透气塞安装）	A2041-A4L2	AA- 34
IDLER GEAR…… 惰轮	A2050-A4A9	AA- 36
CAMFOLLOWER COVER……凸轮轴盖	A2060-A4C6	AA- 38
OIL PAN AND SUCTION TUBE…… 油底壳和吸油管	A2110-A4S1	AA- 40
FLYWHEEL HOUSING…… 飞轮壳	A2210-A4H7	AA- 42
FLYWHEEL…… 飞轮	A2230-A4E1	AA- 44
ENGINE FRONT SUPPORT…… 发动机前支架	A2250-A4G6	AA- 46
CRANKSHAFT…… 曲轴	A2310-A4B4A	AA- 48
VIBRATION DAMPER…… 减震器	A2330-A4B6	AA- 50
PISTON AND CONNECTING ROD……活塞和连接杆	A2350-A4C9	AA- 52
DAMPER FLANGE……减震器法兰	A2370-A4F8	AA- 54
CAMSHAFT…… 凸轮轴	A2410-A4A5	AA- 56
CAMFOLLOWER AND PUSH ROD…… 凸轮轴和推杆	A2411-A4B3	AA- 58
ROCKER ARM…… 摇臂	A2411-B4B3	AA- 60
FRONT POWER TAKE OFF…… 前动力输出	A2610-A4C7	AA- 62
FRONT POWER TAKE OFF (HARDENING PULLEY SPEC.)…… 前动力输出（硬化皮带轮）	A2610-A4C8	AA- 64
LUBRICATING OIL PUMP…… 润滑油泵	A3010-A4A8	AA- 66
OIL FILTER AND PIPING……油滤清器和油管	A3110-A4H1	AA- 68
OIL COOLER…… 冷却器	A3310-A4D7	AA- 70
FUEL SUPPLY PUMP AND COMMON RAIL MOUNTING…供油泵和相关线路安装	A4010-A4R4	AA- 72
COMMON RAIL (INNER PARTS)…… 共轨（内部品）	A4010-B4R4	AA- 74
FUEL SUPPLY PUMP BRACKET AND PIPING……供油泵支架和油管	A4030-A4C1	AA- 76
FUEL SUPPLY TUBE JOINT SUPPORT…… 供油硬管接头支撑	A4030-B4C1	AA- 78
FUEL SUPPLY PUMP LUBRICATOR……供油泵润滑	A4060-A4C4	AA- 80
FUEL FILTER (THREAD 1-5/8)……燃油滤清器(1-5/8线)	A4110-A4N2	AA- 82
FUEL PRIMING PUMP……燃油引液泵	A4110-B4N2	AA- 84
FUEL AIR VENT……燃油气孔	A4110-C4N2	AA- 86
FUEL FILTER CARTRIDGE (SERVICE ONLY)……燃油滤清器筒（仅保养时）	A4119-A4A1	AA- 88
FUEL INJECTOR AND SPILL TUBE…… 燃油气孔	A4210-A4G4	AA- 90
FUEL RETURN……燃油回路	A4230-A4G8	AA- 92
FUEL CONTROLLER……燃油控制	A4710-A4K1	AA- 94
THERMOSTAT AND AIR VENT……恒温器与通气孔	A5010-A4M4	AA- 96
WATER PUMP…… 水泵	A5010-B4M4	AA- 98
CORROSION RESISTOR…… 防腐器	A5210-A4J7	AA- 100
ALTERNATOR MOUNTING (90A)…… 发电机安装(90A)	A6010-A4L9	AA- 102
ALTERNATOR MOUNTING (90A) (WITH HARDENING PULLEY)…… 发电机安装（90A）(硬皮带轮)	A6010-A4M8	AA- 104
ALTERNATOR MOUNTING (60A) (SANDY AND DUSTY SPEC.)……发电机安装（60A）(沙尘地仕样)	A6010-A4N2	AA- 106
ALTERNATOR (90A) (INNER PARTS)……发电机（90A）(内部品)	A6010-B4L9	AA- 108
ALTERNATOR (90A) (WITH HARDENING PULLEY) (INNER PARTS)……发电机安装（90A）(带硬皮带轮)(内部品)	A6010-B4M8	AA- 110
ALTERNATOR (60A) (SANDY AND DUSTY SPEC.) (INNER PARTS)……发电机（60A）(沙尘地仕样)(内部品)	A6010-B4N2	AA- 112
STARTING MOTOR MOUNTING (11KW)…… 启动马达安装(11KW)	A6210-A4E4	AA- 114

https://truckmanualshub.com/

	FIG NO.	PAGE
STARTING MOTOR (11KW) (INNER PARTS)…… 启动马达(11KW)（内部品）	A6210-B4E4	AA- 116
ELECTRICAL WIRING (1/5)…… 电线(1/5)	A6810-A4M6	AA- 120
ELECTRICAL WIRING (2/5)…… 电线(2/5)	A6810-B4M6	AA- 122
ELECTRICAL WIRING (3/5)…… 电线(3/5)	A6810-C4M6	AA- 124
ELECTRICAL WIRING (4/5)…… 电线(4/5)	A6810-D4M6	AA- 126
ELECTRICAL WIRING (5/5)…… 电线(5/5)	A6810-E4M6	AA- 128
NAME PLATE AND CAUTION (ENGLISH)……铭牌和警示牌（英文）	A9810-A6Y2	AA- 130
AIR CLEANER (CHASSIS MOUNT)…… 空滤器（底盘安装）	B9999-A4M9	AA- 132

BO [ENGINE RELATED PARTS][发动机相关部品]

ENGINE MOUNTING……发动机安装	B0100-01A0	BO- 2
AIR CLEANER (CONNECTING PARTS)……空滤器（连接部分）	B0200-01A0	BO- 4
POWER TAKE OFF (P.T.O. ASS'Y)……动力切断（PTO总成）	B0600-01A0	BO- 6
POWER TAKE OFF (OIL CHECK GAUGE)……动力切断（油检查计）	B0600-02A0	BO- 8
POWER TAKE OFF (COUPLING)…… 动力切断（联轴节）	B0600-03A0	BO- 10
POWER TAKE OFF (P.T.O. PIPING) (LUBRICATION LINES)……动力切断（PTO管路）（润滑管路）	B0600-04A0	BO- 12
POWER TAKE OFF (P.T.O. PIPING) (SUCTION LINES)……动力切断（PTO管路）（吸油管路）	B0600-05A0	BO- 14
POWER TAKE OFF (P.T.O. PIPING) (DELIVERY LINES)……动力切断（PTO管路）（输油管路）	B0600-06A0	BO- 16

CO [COOLING SYSTEM][冷却系统]

COOLING (RADIATOR、OIL COOLER AND AFTER COOLER)…… 冷却(散热器、油冷却器和中冷器)	C0100-01A0	CO- 2
COOLING (CONDENSER FOR AIR CONDITIONER、OIL COOLER FOR FUEL)……冷却(冷凝器空调、燃油冷却器)	C0100-02A0	CO- 4
COOLING (SHROUD AND NET)……冷却(遮板网)	C0100-03A0	CO- 6
COOLING (SEAL AND SHEET)……冷却(密封垫和垫片)	C0100-04A0	CO- 8
COOLING (FAN MOUNT) (FAN AND MOTOR)…冷却(风扇安装)(风扇和马达)	C0100-05A0	CO- 10
COOLING (FAN MOUNT) (FAN MOTOR PIPING)…… 冷却(风扇安装)(风扇马达管路)	C0100-06A0	CO- 12
COOLING (RADIATOR PIPING)……冷却(散热器管路)	C0100-07A0	CO- 16
COOLING (RADIATOR MOUNTING)……冷却(散热器安装)	C0100-08A0	CO- 18
COOLING (COVER)……冷却(盖)	C0100-09A0	CO- 20
COOLING (STAY AND AIR PIPING)……冷却(支架和空气硬管)	C0100-10A0	CO- 24
COOLING (SENSOR AND OIL COOLER TUBE)… 冷却(传感器和油冷却器管)	C0100-11A0	CO- 26

DO [FUEL TANK AND RELATED PARTS][燃油箱和相关件]

FUEL TANK……燃油箱	D0100-01A0	DO- 2
FUEL LINE (FUEL HOSE)……燃油管路(燃油管)	D0200-01A0	DO- 4
FUEL LINE (WATER SEPARATOR)……燃油管路(油水分离器)	D0200-02A0	DO- 8
FUEL LINE (FILTER)…… 燃油管路(滤清器)	D0200-03A0	DO- 12
FUEL LINE (DRAIN PIPING)…… 燃油回路(放油管路)	D0200-04A0	DO- 14

EO [ELECTRICAL SYSTEM][电气系统]

BATTERY (WET) (C200) (LARGE CAPACITY)…电瓶(湿)(C200）（大容量）	E0100-01A0	EO- 2
BATTERY (WET) (NS200)……电瓶(湿)（NS200）	E0100-01A2	EO- 4
WIRING (STARTING HARNESS)……配线(启动线束)	E0200-01A0	EO- 6
WIRING (MAIN HARNESS)……配线(主线束)	E0200-02A0	EO- 8
WIRING (MAIN HARNESS) (CLIP) (ENGINE SIDE)……配线(主线束)（管夹）（发动机侧）	E0200-03A0	EO- 12
WIRING (MAIN HARNESS) (CLIP) (DECK、R.H.)……配线(主线束)（管夹）（右侧板）	E0200-04A0	EO- 14
WIRING (BATTERY CASE SIDE)…… 线束(电瓶箱侧)	E0200-05A0	EO- 16
WIRING (WORKING LAMP、FRONT)……线束(前工作灯)	E0200-06A0	EO- 18
WIRING (CIRCUIT BREAKER)…… 配线(制动回路)	E0200-07A0	EO- 20
WIRING (PUMP SWITCH)…… 配线(泵开关)	E0200-08A0	EO- 22
BEACON (WITH FOPS)…… 信号(防落物)	E0201-01A0	EO- 24
STEP LIGHT (WITH TOP GUARD)……左踏板(顶护罩)	E0310-01A1	EO- 26
ADDITIONAL WORK LAMP…… 附加工作灯	E0310-01A2	EO- 28
ADDITIONAL WORK LAMP AND STEP LIGHT (WITH TOP GUARD)……附加工作灯和左踏板（顶护罩）	E0310-01A4	EO- 30
ADDITIONAL WORK LAMP LESS……附加工作灯	E0310-01A5	EO- 32
ADDITIONAL WORK LAMP AND FLASH LIGHT…… 附加工作灯和闪烁灯	E0310-01A6	EO- 34
ADDITIONAL WORK LAMP、STEP LIGHT AND FLASH LIGHT (WITH TOP GUARD)… 附加工作灯、左踏板和闪烁灯（顶护罩）	E0310-01A8	EO- 36
FLASH LIGHT……闪烁灯	E0310-01A9	EO- 38

https://truckmanualshub.com/

	FIG NO.	PAGE
STEP LIGHT AND FLASH LIGHT (WITH TOP GUARD)…… 踏板灯和闪烁灯（带顶护板）	E0310-01B1	EO- 40
HORN…… 喇叭	E0410-01A0	EO- 42
TRAVEL ALARM…… 行走警报	E0420-01A0	EO- 44
HO [HYDRAULIC SYSTEM][液压系统]		
HYDRAULIC TANK (TANK AND FILTER)…… 工作油箱(水箱和滤清器)	H0110-01A0	HO- 2
HYDRAULIC TANK (RELIEF VALVE)……工作油箱(溢流阀)	H0110-02A0	HO- 6
HYDRAULIC TANK (OIL COOLER LINE AND DRAIN LINE)…… 工作油箱（油冷却回路和回油回路）	H0110-03A0	HO- 8
HYDRAULIC TANK (DOOR)…… 工作油箱（门）	H0110-04A0	HO- 10
MAIN VALVE (1/2)…… 主阀（1/2）	H0120-01A0	HO- 12
MAIN VALVE (2/2)…… 主阀（2/2）	H0120-02A0	HO- 16
MAIN VALVE (BRACKET AND STEP)…… 主阀（支架和踏板）	H0120-03A0	HO- 18
NO.1 PUMP…… 1号泵	H0210-01A0	HO- 20
NO.2 PUMP…… 2号泵	H0220-01A0	HO- 22
GEAR PUMP……齿轮	H0240-01A0	HO- 24
SUCTION LINES……吸油管路	H0311-01A0	HO- 26
DELIVERY LINES (PUMP TO FILTER)……输油管路(泵至滤清器)	H0312-01A0	HO- 28
DELIVERY LINES (HOSE AND BLOCK)……输油管路(软管和接头)	H0312-02A0	HO- 30
OIL COOLER LINES…… 油冷却回路	H0320-01A0	HO- 32
RETURN LINES…… 回油回路	H0330-01A0	HO- 34
DRAIN LINE…… 排油回路	H0340-01A0	HO- 36
BOOM LINES (1/2)…… 大臂油路	H1210-01A0	HO- 38
BOOM LINES (2/2)…… 大臂油路	H1210-02A0	HO- 42
ARM AND BUCKET LINES (VALVE LINE) (1/2)……小臂和铲斗(阀油路)	H1220-01A0	HO- 44
ARM AND BUCKET LINES (VALVE LINE) (2/2)……小臂和铲斗(阀油路)	H1220-02A0	HO- 46
ARM AND BUCKET LINES (BRACKET)…… 小臂和铲斗(支架)	H1220-03A0	HO- 48
DRIFT PREVENT LINES (LOCK VALVE) (FOR BOOM)……保持阀回路(锁阀)（大臂）	H1240-02A1	HO- 50
TRAVEL LINES…… 行走回路	H1310-01A0	HO- 52
SWING LINES……回转回路	H1340-01A0	HO- 54
FAN MOTOR LINES……风扇马达回路	H1350-01A0	HO- 56
O.L.S.S. LINE……OLSS回路	H1810-01A0	HO- 58
SOLENOID VALVE (SOLENOID AND EPC VALVE)……电磁阀（电磁和EPC阀）	H1831-01A0	HO- 60
SOLENOID VALVE (HOSE)…… 电磁阀（软管）	H1831-02A0	HO- 64
SHUTTLE VALVE (BRACKET AND VALVE)……梭阀(支架和阀)	H1833-01A0	HO- 66
SHUTTLE VALVE (VALVE)……梭阀(阀)	H1833-02A0	HO- 68
PPC MAIN LINE (HOSE)…… PPC主油路（软管）	H1840-01A0	HO- 70
PPC MAIN LINE (PPC LOCK SOLENOID VALVE)…… PPC主油路（PPC锁定电磁阀）	H1840-02A0	HO- 72
PPC MAIN LINE (HOSE) (1 ACTUATOR)……PPC主油路（软管）(1路执行机构)	H1840-03A2	HO- 74
JO [MAIN/REVOLVING FRAME AND RELATED PARTS][主/回转车架和相关件]		
REVOLVING FRAME (FRAME)…… 回转车架（车架）	J1110-01A0	JO- 2
REVOLVING FRAME (DECK SHEET AND FLOOR SHEET)…… 回转车架（护板垫片和底板垫片）	J1110-02A0	JO- 4
REVOLVING FRAME (DECK SHEET AND FLOOR SHEET)(OPTION)… 回转车架（护板垫片和底板垫片)(选购件）	J1110-02A1	JO- 6
REVOLVING FRAME (ENGINE ROOM SHEET)… 回转车架（发动机室内垫片）	J1110-03A0	JO- 8
BOOM FOOT PIN……动臂底部销	J1310-01A1	JO- 10
DECK GUARD (FOR REVOLVING FRAME)……防护板（回转车架用）	J1410-01A0	JO- 12
KO [OPERATOR'S COMPARTMENT AND CONTROL SYSTEM][驾驶室和操纵系统]		
OPERATOR'S SEAT(TILT)(SUSPENSION TYPE)…… 驾驶室座椅(倾斜)(弹性的)	K0160-01A0	KO- 2
SEAT BELT (48MM WIDE)……安全带(48MM宽)	K0160-01A0	KO- 4
SEAT REAR COVER (WITH AIR CONDITIONER)…… 座椅后盖(有空调)	K0180-01A0	KO- 6
FRONT GUARD (FULL) (LEVEL-2)…… 前护板（全）（2级）	K0230-01A0	KO- 8
FLOOR MAT……地毯	K0310-01A0	KO- 10
RAIN VISOR…… 遮雨板	K0320-01A0	KO- 12
WINDOW WASHER……洗窗器	K0350-01A0	KO- 14
TOP GUARD (LEVEL-2)……顶护板（2级）	K0600-01A0	KO- 16
AIR CONDITIONER (COMPRESSOR)……空调（压缩机）	K0700-01A0	KO- 18
AIR CONDITIONER (HEATER HOSE AND CLAMP)…… 空调（加热器软管和卡箍）	K0700-02A0	KO- 22
AIR CONDITIONER (CLAMP)…… 空调（卡箍）	K0700-03A0	KO- 24

https://truckmanualshub.com/

	FIG NO.	PAGE
AIR CONDITIONER (RECEIVER TANK)····· 空调（干燥器）	K0700-04A0	KO- 26
FIRE EXTINGUISHER (CHINESE)····· 灭火器（中文）	K0830-01A5	KO- 28
FLOOR FRAME (OPERATOR'S CAB) (CAB)·····底板架（驾驶室）（驾驶室）	K1110-01A0	KO- 30
FLOOR FRAME (OPERATOR'S CAB) (FRONT WINDOW)·····底板架（驾驶室）（前窗）	K1110-02A0	KO- 34
FLOOR FRAME (OPERATOR'S CAB)(FRONT LOWER WINDOW)·····底板架（驾驶室）（前下车窗）	K1110-03A0	KO- 36
FLOOR FRAME (OPERATOR'S CAB) (ROOF WINDOW)·····底板架（驾驶室）（顶窗）	K1110-04A0	KO- 38
FLOOR FRAME (OPERATOR'S CAB) (DOOR)····· 底板架（驾驶室）（门）	K1110-05A0	KO- 40
FLOOR FRAME (OPERATOR'S CAB) (DOOR LOCK)·····底板架（驾驶室）（顶窗）	K1110-06A0	KO- 42
FLOOR FRAME (OPERATOR'S CAB) (OPEN LOCK)·····底板架（驾驶室）（顶窗）	K1110-07A0	KO- 44
FLOOR FRAME (OPERATOR'S CAB) (ELECTRICAL)(WIPER AND ROOM LAMP)····· 底板架（驾驶室）（顶窗）(雨刮器和驾驶室灯)	K1110-08A0	KO- 46
FLOOR FRAME (OPERATOR'S CAB) (ELECTRICAL) (RADIO)·····底板架（驾驶室）（顶窗）(收音机）	K1110-09A0	KO- 48
FLOOR FRAME (OPERATOR'S CAB) (ACCESSORIES)····· 底板架（驾驶室）（附件）	K1110-10A0	KO- 50
FLOOR FRAME (OPERATOR'S CAB) (PLUG BOLT AND ANTENNA)····· 底板架（驾驶室）（螺塞和天线）	K1110-11A0	KO- 52
FLOOR FRAME (OPERATOR'S CAB) (CLAMP AND PLATE)····· 底板架（驾驶室）（顶窗）（管夹和板）	K1110-12A0	KO- 54
FLOOR FRAME (OPERATOR'S CAB) (MONITOR SYSTEM) (WITH MULTI MONITOR)····· 底板架（驾驶室）（监视器）（带多重监视器）	K1110-13A0	KO- 56
FLOOR FRAME (OPERATOR'S CAB) (PLATE AND DUCT)·····底板架（驾驶室）（板和通道）	K1110-14A0	KO- 58
FLOOR FRAME (OPERATOR'S CAB) (PARTITION AND FOOT DUCT)·····底板架（驾驶室）（隔离箱和底管）	K1110-15A0	KO- 60
FLOOR FRAME (OPERATOR'S CAB) (SUB PANEL)····· 底板架（驾驶室）（辅助仪表盘）	K1110-16A0	KO- 62
FLOOR FRAME (OPERATOR'S CAB) (CLAMP AND BOLT)·····底板架（驾驶室）（管夹和螺栓）	K1110-17A0	KO- 64
FLOOR FRAME (OPERATOR'S CAB) (FLOOR FRAME)····· 底板架（驾驶室）（地板架）	K1110-18A0	KO- 66
FLOOR FRAME (OPERATOR'S CAB) (TRAVEL CONTROL)····· 底板架（驾驶室）（行走控制）	K1110-19A0	KO- 68
FLOOR FRAME (OPERATOR'S CAB) (FOOT REST) (L.H.)····· 底板架（驾驶室）（休息脚瞪）（左）	K1110-20A0	KO- 70
FLOOR FRAME (OPERATOR'S CAB) (FOOT REST) (R.H.)····· 底板架（驾驶室）（休息脚瞪）（右）	K1110-21A0	KO- 72
FLOOR FRAME (OPERATOR'S CAB) (HARNESS)…底板架（驾驶室）（线束）	K1110-22A0	KO- 74
FLOOR FRAME (OPERATOR'S CAB) (WINDOW WASHER)·····底板架（驾驶室）（洗窗器）	K1110-23A0	KO- 76
FLOOR FRAME (OPERATOR'S CAB) (WINDOW WASHER)·····底板架（驾驶室）（洗窗器）	K1110-24A0	KO- 78
FLOOR FRAME (OPERATOR'S CAB) (LEVER AND VALVE) (L.H.)·····底板架（驾驶室）（杆和阀）（左）	K1110-25A0	KO- 80
FLOOR FRAME (OPERATOR'S CAB) (CONSOLE、L.H.)(UPPER) (WITH AIR CONDITIONER AND RADIO FOR ASIA)列····· 底板架（驾驶室）（操纵、左）（上）（带空调和收音机用于亚洲）	K1110-26A0	KO- 82
FLOOR FRAME (OPERATOR'S CAB) (CONSOLE、L.H.) (LOWER)····· 底板架（驾驶室）（操纵、左）（下）	K1110-27A0	KO- 84
FLOOR FRAME (OPERATOR'S CAB) (LEVER AND VALVE) (R.H.)·····底板架（驾驶室）（杆和阀）（右）	K1110-28A0	KO- 86
FLOOR FRAME (OPERATOR'S CAB) (CONSOLE、R.H.)·····底板架（驾驶室）（操纵、右）	K1110-29A0	KO- 88
FLOOR FRAME (OPERATOR'S CAB) (AIR CONDITIONER AND FOOT COVER)·····底板架（驾驶室）（空调和底盖）	K1110-30A0	KO- 90
FLOOR FRAME (OPERATOR'S CAB) (AIR CONDITIONER HOSE)·····底板架（驾驶室）（空调软管）	K1110-31A0	KO- 92
FLOOR FRAME (OPERATOR'S CAB) (HEATER HOSE AND CLAMP) (WITH AIR CONDITIONER) ·····底板架（驾驶室）（加热器软管和管夹）(带空调）	K1110-32A0	KO- 94
FLOOR FRAME (OPERATOR'S CAB) (PPC HOSE) (1/2)····· 底板架（驾驶室）（PPC软管）(1/2)	K1110-33A0	KO- 96
FLOOR FRAME (OPERATOR'S CAB) (PPC HOSE)		

https://truckmanualshub.com/

	FIG NO.	PAGE
(1/2)…… 底板架（驾驶室）（PPC软管）(2/2)	K1110-34A0	KO- 98
FLOOR FRAME (OPERATOR'S CAB) (PPC CLAMP)……底板架（驾驶室）（PPC管夹）	K1110-35A0	KO- 100
FLOOR FRAME (OPERATOR'S CAB) (P、T BLOCK AND SEAL)…… 底板架（驾驶室）(P、T块和密封垫)	K1110-36A0	KO- 102
FLOOR MOUNT……地板架安装	K1120-01A0	KO- 104
SWITCH (MODEL SELECTION CONNECTOR)…… 开关(模式选择接头)	K1730-01A0	KO- 106

MO [GUARD][护罩]

HOOD…… 护罩	M1110-01A0	MO- 2
FRAME (MACHINE CAB) (ADDITIONAL FILTER SPEC.) (FRAME)…… 支架(机罩)（附加滤清器仕样）（支架）	M1120-01A0	MO- 4
FRAME (MACHINE CAB) (ADDITIONAL FILTER SPEC.) (STEP AND COVER)…… 支架(机罩)（附加滤清器仕样）（踏板和盖）	M1120-02A0	MO- 8
LEFT SIDE COVER (MACHINE CAB)……左盖(机罩)	M1130-01A0	MO- 10
LEFT SIDE COVER (MACHINE CAB) (FOR ENGINE AIR PRE-CLEANER)……左盖(机罩)(发动机预空滤用)	M1130-01A1	MO- 14
RIGHT SIDE COVER (MACHINE CAB)…… 右盖(机罩)	M1140-01A0	MO- 16
PARTITION (1/2)…… 隔离箱(1/2)	M1150-01A0	MO- 18
PARTITION (2/2)…… 隔离箱(2/2)	M1150-02A0	MO- 20
PARTITION (CAB REAR)…… 隔离箱(驾驶室后)	M1160-01A0	MO- 22
COVER (MACHINE CAB)……盖(机罩)	M1210-01A1	MO- 24
COVER (MACHINE CAB) (FOR ENGINE AIR PRE-CLEANER)……盖(机罩)(发动机预空滤用)	M1210-01A2	MO- 26
COVER (MACHINE CAB) (ENGINE AIR PRE-CLEANER)…… 车架（机罩）（发动机预空滤）	M1210-02A2	MO- 28
RIGHT CASE…… 右箱	M1220-01A0	MO- 30
HANDRAIL…… 扶手	M1310-01A0	MO- 32
REAR VIEW MIRROR、L.H. (WITH TOP GUARD)…… 左后视镜(带顶护板)	M1410-01A0	MO- 34
REAR VIEW MIRROR、R.H.……右后视镜	M1420-01A0	MO- 36
COUNTER WEIGHT (10750KG)……配重(10750KG)	M1510-01A0	MO- 38
COUNTER WEIGHT MOUNTING……配重安装	M1520-01A0	MO- 40
UNDER COVER (HEAVY DUTY) (REVOLVING FRAME) (R.H.)…… 下盖(重载)(回转车架)（右）	M1810-01A0	MO- 42
UNDER COVER (HEAVY DUTY) (REVOLVING FRAME) (CENTER)……下盖(重载)(回转车架)(中央)	M1810-02A0	MO- 44
UNDER COVER (HEAVY DUTY) (REVOLVING FRAME) (L.H.)……下盖(重载)(回转车架)(左)	M1810-03A0	MO- 46

NO [SWING CIRCLE AND RELATED PARTS][回转支承和相关件]

SWING CIRCLE…… 回转支承	N1110-01A0	NO- 2
SWING MACHINERY(R.H.)……回转减速器(右)	N1210-01A0	NO- 4
SWING MACHINERY (BLOCK) (R.H.)…… 回转减速器(接头)(右)	N1210-02A0	NO- 8
SWING MACHINERY(L.H.)……回转减速器(左)	N1210-03A0	NO- 10
SWING MACHINERY (BLOCK) (L.H.)…… 回转减速器(接头)(左)	N1210-04A0	NO- 14
SWING MACHINERY (BRACKET AND FLANGE)……回转减速器（支架和法兰）	N1210-05A0	NO- 16
SWIVEL JOINT…… 回转接头	N1310-01A0	NO- 18

PO [TRAVEL AND LOWER PIPING][行走和管路]

TRAVEL PIPING (LC)……行走管路（加长履带）	P1120-01A1	PO- 2
TRAVEL PIPING (BLIND PARTS)…… 行走管路（盲堵部品）	P1120-02A0	PO- 4

RO [UNDER CARRIAGE][行走装置]

TRACK SHOE (TRIPLE GROUSER WITH HOLE) (600MM WIDE)…… …带孔双筋履带板（600MM宽）	RO500-01A3	RO- 2
CENTER FRAME…… 中央支架	R1110-01A0	RO- 4
TRACK FRAME (LC) (L.H.)…… 行走架（加长履带）（左）	R1120-01A3	RO- 6
TRACK FRAME (FRONT IDLER) (L.H.)……行走架（前惰轮）（左）	R1120-02A0	RO- 8
TRACK FRAME (IDLER CUSHION) (L.H.)……行走架（惰轮缓冲）（左）	R1120-03A0	RO- 10
TRACK FRAME (TRACK ROLLER) (LC) (L.H.)…… 行走架（支重轮）(加长履带)（左）	R1120-04A3	RO- 12
TRACK FRAME (CARRIER ROLLER) (L.H.)……行走架(托链轮)(左)	R1120-05A0	RO- 14
TRACK FRAME (TRACK ROLLER GUARD) (LC) (L.H.)…… 行走架（支重轮护板）(加长履带)（左）	R1120-06A3	RO- 16
TRACK FRAME (TRACK ROLLER FULL GUARD) (LC) (L.H.)…… 行走架（全护板支重轮）(加长履带)（左）	R1120-06A4	RO- 18
TRACK FRAME (FINAL DRIVE) (L.H.)……行走架（终传动）（左）	R1120-07A0	RO- 20
TRACK FRAME (TRAVEL PIPING) (L.H.)……行走架（行走管路）（左）	R1120-08A0	RO- 22
TRACK FRAME (LC) (R.H.)……行走架(加长履带)(右)	R1120-09A3	RO- 24

https://truckmanualshub.com/

	FIG NO.	PAGE
TRACK FRAME (FRONT IDLER) (R.H.)……行走架（前惰轮）（右）	R1120-10A0	RO- 26
TRACK FRAME (IDLER CUSHION) (R.H.)……行走架（惰轮缓冲）（右）	R1120-11A0	RO- 28
TRACK FRAME (TRACK ROLLER) (LC) (R.H.)…… 行走架（支重轮）(加长履带)（右）	R1120-12A3	RO- 30
TRACK FRAME (CARRIER ROLLER) (R.H.)……行走架(托链轮)(右)	R1120-13A0	RO- 32
TRACK FRAME (TRACK ROLLER GUARD) (LC) (R.H.)…… 行走架（支重轮护板）(加长履带)（右）	R1120-14A3	RO- 34
TRACK FRAME (TRACK ROLLER FULL GUARD) (LC) (R.H.)…… 行走架（全护板支重轮）(加长履带)（右）	R1120-14A4	RO- 36
TRACK FRAME (FINAL DRIVE) (R.H.)……行走架（终传动）（右）	R1120-15A0	RO- 38
TRACK FRAME (TRAVEL PIPING) (R.H.)……行走架（行走管路）（右）	R1120-16A0	RO- 40
UNDER COVER (FOR TRACK FRAME)……底护板(行走架)	R1140-01A0	RO- 42
TRAVEL PIPING GUARD……行走管路护板	R1150-01A0	RO- 44
STEP (TRACK FRAME SIDE)…… 踏板（行走架侧）	R1170-01A0	RO- 46

TO [WORK EQUIPMENT][工作装置]

	FIG NO.	PAGE
BOOM (6.6M) (BOOM AND TOP PIN)(SE SPEC.)……大臂(6.6M)(大臂和顶部销)(SE 仕样)	T1110-01A0	TO- 2
BOOM (7.3M) (BOOM AND TOP PIN) (HEAVY DUTY)…… 大臂(7.3M)(大臂和顶部销)(重载)	T1110-01A7	TO- 4
BOOM (6.6M) (ARM CYLINDER LINE)(SE SPEC.)……大臂(6.6M)(小臂油缸回路)(SE 仕样)	T1110-02A0	TO- 6
BOOM (7.3M) (ARM CYLINDER LINE)……大臂(7.3M)(小臂油缸回路)	T1110-02A5	TO- 8
BOOM (6.6M) (LUBRICATING LINE)(SE SPEC.)……大臂(6.6M)(润滑管路)(SE 仕样)	T1110-03A0	TO- 10
BOOM (7.3M) (LUBRICATING LINE)…… 大臂(7.3M)(润滑管路)	T1110-03A5	TO- 12
BOOM (6.6M) (BUCKET CYLINDER LINE)(SE SPEC.)……大臂(6.6M)(铲斗油缸回路)(SE 仕样)	T1110-04A0	TO- 14
BOOM (7.3M) (BUCKET CYLINDER LINE)…… 大臂(7.3M)(铲斗油缸回路)	T1110-04A5	TO- 18
BOOM (CYLINDER PIN)(SE SPEC.)……大臂(油缸销) (SE 仕样)	T1110-05A0	TO- 22
BOOM (CYLINDER PIN)……大臂(油缸销)	T1110-05A1	TO- 24
BOOM (WORK LAMP)(SE SPEC.)……大臂(工作灯)(SE 仕样)	T1110-09A0	TO- 26
BOOM (WORK LAMP)…… 大臂(工作灯)	T1110-09A1	TO- 28
BOOM CYLINDER……大臂油缸	T1120-01A0	TO- 30
BOOM CYLINDER HEAD PIN…… 大臂油缸头部销	T1125-01A0	TO- 32
ARM CYLINDER…… 小臂油缸	T1140-01A0	TO- 34
ARM (2.9M)(ARM AND BUCKET CYLINDER)(SE SPEC.)……小臂(2.9M)(小臂和大臂油缸)(SE 仕样)	T1200-01A0	TO- 36
ARM (3.5M) (HEAVY DUTY) (ARM AND BUCKET CYLINDER)…… 小臂(3.5M)(重载)(小臂和大臂油缸)	T1200-01A2	TO- 38
ARM (BUCKET LINK)(SE SPEC.)…… 小臂(铲斗连杆)(SE 仕样)	T1200-02A0	TO- 40
ARM (BUCKET LINK)……小臂(铲斗连杆)	T1200-02A1	TO- 42
ARM (3.5M) (BUCKET CYLINDER HOSE AND SPACER)…… 小臂(3.5M)(铲斗油缸软管和垫)	T1200-03A1	TO- 44
3.1M3 HORIZONTAL PIN TYPE BUCKET (HEAVY DUTY)……3.1M3横销铲斗(重载)	T1510-01A5	TO- 46
3.5M3 HORIZONTAL PIN TYPE BUCKET (SE)…… 3.5M3横销铲斗(SE)	T1510-01A6	TO- 48
SIDE SHROUD……侧遮板	T1510-02A4	TO- 50

UO [MARKS AND PLATES][标牌]

	FIG NO.	PAGE
DECAL AND PLATE (OPERATING AND CAUTION PLATE) (CHINESE)……警示标牌(作业警示牌)（中文）	UO100-01A2	UO- 2
DECAL AND PLATE (SEAT AND SYMBOL MARK) (CHINESE)……警示标牌（座和符号标记）（中文）	UO100-03A3	UO- 4
HANDLING MARK PLATE……操作标牌	UO400-01A0	UO- 6
BOOM MARK PLATE (ENGLISH)…… 大臂标牌（英国）	UO510-01A0	UO- 8
CAUTION PLATE (FOR LV2 GUARD) (ENGLISH)……警示牌（LV2护板用）(英文)	UO520-01A0	UO- 10
CAUTION PLATE (FOR LV2 GUARD) (ENGLISH)……警示牌（LV2护板用）(英文)	UO520-01A1	UO- 12
CAUTION PLATE (FOR LV2 GUARD) (CHINESE)……警示牌（LV2护板用）(中文)	UO520-01A9	UO- 14
CAUTION PLATE (FOR FRONT GUARD) (CHINESE)…… 警示牌（前护板用）(中文)	UO520-01B0	UO- 16
CAUTION PLATE (FOR LV2 GUARD AND FRONT GUARD) (CHINESE)……警示牌（LV2护板和前护板用）(中文)	UO520-01B1	UO- 18

PC650LC-8R

https://truckmanualshub.com/

	FIG NO.	PAGE
PLATE (AIR CLEANER、DOUBLE ELEMENT)		
(CHINESE)…… 标牌(空滤器,双滤芯)（中文）	U0550-01A3	UO- 20
VO [ACCESSORY][附件]		
SPARE PARTS……备件	V0100-01A0	VO- 2
CAP AND OVERALL……工作帽和工作服	V0200-01A0	VO- 4
TOOL…… 工具	V0300-01A0	VO- 6
TOOL (GREASE PUMP LESS)…… 工具（无润滑油泵）	V0300-01A1	VO- 8
WO [MISCELLANEOUS][其它]		
LEFT SIDE STEP (WITH TOP GUARD)…… 左踏板（带顶护板）	W1118-01A1	WO- 2
YO [SERVICE KIT AND COMPONENT PARTS][服务备件]		
SWING MACHINERY ASS'Y (SUPPLY PARTS)…… 回转减速机(配件)	Y0260-01A0	YO- 2
SHOE BOLT AND NUT SERVICE KIT……履带螺栓和螺母服务备件	Y0320-01A0	YO- 4
TRACK LINK (104SET) (SUPPLY PARTS)…… 链轨节(配件)	Y0321-01A1	YO- 6
MAIN PUMP (1/14) (NO.1 PUMP)…… 主泵(1/14) (1号泵)	Y1600-01A0	YO- 8
MAIN PUMP (2/14) (NO.1 PUMP)…… 主泵(2/14) (1号泵)	Y1600-02A0	YO- 10
MAIN PUMP (3/14) (NO.1 PUMP)…… 主泵(3/14) (1号泵)	Y1600-03A0	YO- 12
MAIN PUMP (4/14) (NO.1 PUMP)…… 主泵(4/14) (1号泵)	Y1600-04A0	YO- 14
MAIN PUMP (5/14) (NO.1 PUMP)…… 主泵(5/14) (1号泵)	Y1600-05A0	YO- 16
MAIN PUMP (6/14) (NO.1 PUMP)…… 主泵(6/14) (1号泵)	Y1600-06A0	YO- 18
MAIN PUMP (7/14) (NO.1 PUMP)…… 主泵(7/14) (1号泵)	Y1600-07A0	YO- 20
MAIN PUMP (8/14) (NO.1 PUMP)…… 主泵(8/14) (1号泵)	Y1600-08A0	YO- 22
MAIN PUMP (9/14) (NO.1 PUMP)…… 主泵(9/14) (1号泵)	Y1600-09A0	YO- 24
MAIN PUMP (10/14) (NO.1 PUMP)…… 主泵(10/14) (1号泵)	Y1600-10A0	YO- 26
MAIN PUMP (11/14) (NO.1 PUMP)…… 主泵(11/14) (1号泵)	Y1600-11A0	YO- 28
MAIN PUMP (12/14) (NO.1 PUMP)…… 主泵(12/14) (1号泵)	Y1600-12A0	YO- 30
MAIN PUMP (13/14) (NO.1 PUMP)…… 主泵(13/14) (1号泵)	Y1600-13A0	YO- 32
MAIN PUMP (14/14) (NO.1 PUMP)…… 主泵(14/14) (1号泵)	Y1600-14A0	YO- 34
MAIN PUMP (1/9) (NO.2 PUMP)…… 主泵(1/9) (2号泵)	Y1600-21A0	YO- 36
MAIN PUMP (2/9) (NO.2 PUMP)…… 主泵(2/9) (2号泵)	Y1600-22A0	YO- 38
MAIN PUMP (3/9) (NO.2 PUMP)…… 主泵(3/9) (2号泵)	Y1600-23A0	YO- 40
MAIN PUMP (4/9) (NO.2 PUMP)…… 主泵(4/9) (2号泵)	Y1600-24A0	YO- 42
MAIN PUMP (5/9) (NO.2 PUMP)…… 主泵(5/9) (2号泵)	Y1600-25A0	YO- 44
MAIN PUMP (6/9) (NO.2 PUMP)…… 主泵(6/9) (2号泵)	Y1600-26A0	YO- 46
MAIN PUMP (7/9) (NO.2 PUMP)…… 主泵(7/9) (2号泵)	Y1600-27A0	YO- 48
MAIN PUMP (8/9) (NO.2 PUMP)…… 主泵(8/9) (2号泵)	Y1600-28A0	YO- 52
MAIN PUMP (9/9) (NO.2 PUMP)…… 主泵(9/9) (2号泵)	Y1600-29A0	YO- 56
FAN PUMP (1/7)……风扇泵(1/7)	Y1600-31A0	YO- 58
FAN PUMP (2/7)……风扇泵(2/7)	Y1600-32A0	YO- 60
FAN PUMP (3/7)……风扇泵(3/7)	Y1600-33A0	YO- 62
FAN PUMP (4/7)……风扇泵(4/7)	Y1600-34A0	YO- 64
FAN PUMP (5/7)……风扇泵(5/7)	Y1600-35A0	YO- 66
FAN PUMP (6/7)……风扇泵(6/7)	Y1600-36A0	YO- 68
FAN PUMP (7/7)……风扇泵(7/7)	Y1600-37A0	YO- 70
BOOM CYLINDER L.H.…… 左大臂油缸	Y1620-01A0	YO- 72
BOOM CYLINDER R.H.…… 右大臂油缸	Y1620-02A0	YO- 76
ARM CYLINDER…… 小臂油缸	Y1620-11A0	YO- 80
BUCKET CYLINDER……铲斗油缸	Y1620-41A0	YO- 84
SWIVEL JOINT…… 回转接头	Y1627-01A0	YO- 88
SWING MOTOR (1/3)…… 回转马达(1/3)	Y1640-01A0	YO- 90
SWING MOTOR (2/3)…… 回转马达(2/3)	Y1640-02A0	YO- 92
SWING MOTOR (3/3)…… 回转马达(3/3)	Y1640-03A0	YO- 94
TRAVEL MOTOR (1/3)……行走马达(1/3)	Y1641-01A0	YO- 96
TRAVEL MOTOR (2/3)……行走马达(2/3)	Y1641-02A0	YO- 100
TRAVEL MOTOR (3/3)……行走马达(3/3)	Y1641-03A0	YO- 102
FAN MOTOR (1/3)…… 风扇马达(1/3)	Y1642-11A0	YO- 104
FAN MOTOR (2/3)…… 风扇马达(2/3)	Y1642-12A0	YO- 106
FAN MOTOR (3/3)…… 风扇马达(3/3)	Y1642-13A0	YO- 108
MAIN VALVE (1/8)……主阀(1/8)	Y1660-01A0	YO- 110
MAIN VALVE (2/8)……主阀(2/8)	Y1660-02A0	YO- 112
MAIN VALVE (3/8)……主阀(3/8)	Y1660-03A0	YO- 114
MAIN VALVE (4/8)……主阀(4/8)	Y1660-04A0	YO- 116
MAIN VALVE (5/8)……主阀(5/8)	Y1660-05A0	YO- 118
MAIN VALVE (6/8)……主阀(6/8)	Y1660-06A0	YO- 120
MAIN VALVE (7/8)……主阀(7/8)	Y1660-07A0	YO- 122
MAIN VALVE (8/8)……主阀(8/8)	Y1660-08A0	YO- 126

PC650LC-8R

https://truckmanualshub.com/

	FIG NO.	PAGE
PPC VALVE (FOR TRAVEL)……PPC阀(行走用)	Y1670-01A0	YO- 128
SAFETY VALVE…… 安全阀	Y1672-01A0	YO- 130
SHUTTLE VALVE……梭阀	Y1674-01A0	YO- 132
SHUTTLE VALVE……梭阀	Y1674-11A0	YO- 134
LOCK VALVE…… 锁阀	Y1675-01A0	YO- 136
LOCK VALVE (ARM)……锁阀（小臂）	Y1675-01A1	YO- 138
PILOT VALVE……先导阀	Y1679-01A0	YO- 140
SOLENOID VALVE (INNER PARTS)…… 电磁阀(内部件)	Y1860-01A0	YO- 142
SOLENOID VALVE (INNER PARTS)…… 电磁阀(内部件)	Y1861-01A0	YO- 144
BREATHER (FOR HYDRAULIC TANK)…… 透气塞（工作油箱用）	Y1890-01A0	YO- 146
COMPRESSOR ASS'Y (FOR AIR CONDITIONER)…… 压缩机(空调)	Y1979-01A0	YO- 148

[NUMERICAL INDEX][索引]

ENGINE
发动机

https://truckmanualshub.com/

https://truckmanualshub.com/

FIG.A1010-A4D2 CYLINDER HEAD

缸头

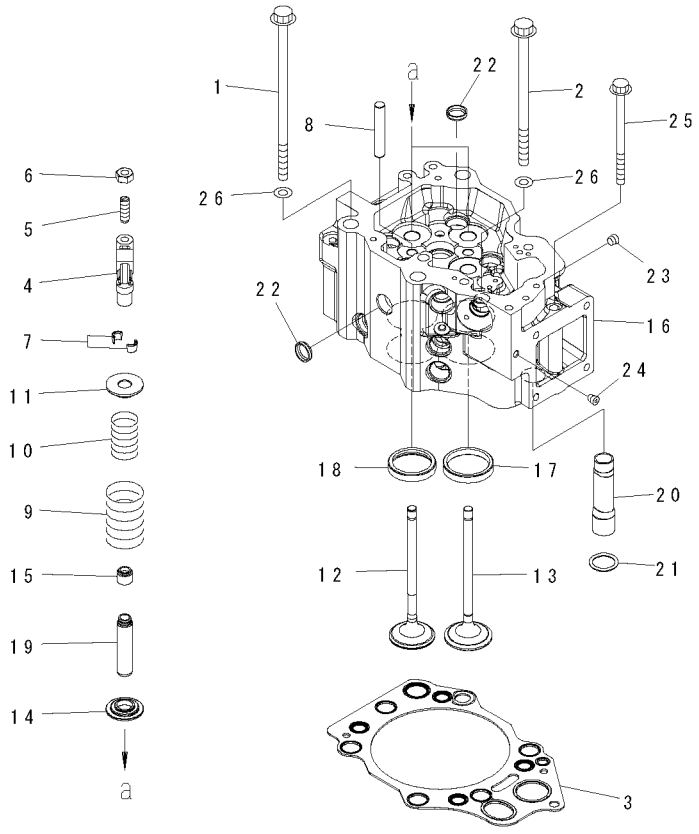

00041077

FIG NO. :A1010-A4D2

INDEX	PART NO.	DESCRIPTION	Q'TY	SERIAL NO.
1	6217-11-1610	BOLT,HEAD ……六角螺钉	18	630001-
2	6217-11-1620	BOLT,HEAD ……六角螺钉	18	630001-
3	6210-17-1814	GASKET,HEAD ……(K1)垫	6	630001-
	6210-11-1820	.GROMMET,OIL……油封	1	630001-
	6210-11-1831	.GROMMET,OIL……油封	1	630001-
	6210-11-1840	.GROMMET,OIL……油封	1	630001-
	6210-11-1962	.GROMMET,WATER……水密封圈	1	630001-
	6210-11-1952	.GROMMET,WATER……水密封圈	4	630001-
	6210-11-1940	.GROMMET,WATER……水密封圈	4	630001-
4	6210-41-5620	CROSSHEAD ……十字头销	12	630001-
5	6210-41-5641	SCREW ……螺钉	12	630001-
6	6162-43-5630	NUT,LOCK……锁紧螺母	12	630001-
7	6136-41-4520	COTTER,VALVE……锁夹	48	630001-
8	6210-11-1140	GUIDE,CROSSHEAD ……十字导杆	12	630001-
9	6210-41-4430	SPRING,OUTER……外侧弹簧	24	630001-
10	6210-41-4440	SPRING,INNER……内侧弹簧	24	630001-
11	6210-41-4510	SEAT,UPPER……座	24	630001-
12	6215-41-4220	VALVE,EXHAUST ……排气阀	12	630001-
13	6217-41-4110	VALVE,INTAKE……进气阀	12	630001-
14	6217-41-4531	SEAT,LOWER……座	24	630001-
15	6217-41-4540	SEAL,SEAL ……密封垫	24	630001-
	6261-11-1100	CYLINDER HEAD ASS'Y ……油缸头总成	6	630001-
16	☆	.HEAD,CYLINDER……缸头	1	630001-
17	6216-11-1330	.INSERT,INTAKE VALVE ……(STD)…进气阀座	2	630001-
	6216-19-1330	.INSERT,0.25MM,INTAKE VALVE…(OS) ……	2	630001-
		……0.25MM进气阀座		
	6216-18-1330	.INSERT,0.50MM,INTAKE VALVE…(OS) ……	2	630001-
		……0.50MM进气阀座		
	6216-17-1330	.INSERT,0.75MM,INTAKE VALVE…(OS) ……	2	630001-
		……0.75MM进气阀座		
	6216-16-1330	.INSERT,1.00MM,INTAKE VALVE…(OS) ……	2	630001-
		……1.00MM进气阀座		
18	6217-11-1321	.INSERT,EXHAUST VALVE……(STD)…排气阀座	2	630001-
	6217-19-1321	.INSERT,0.25MM,EXHAUST VALVE…(OS)……	2	630001-
		……0.25MM排气阀座		
	6217-18-1321	.INSERT,0.50MM,EXHAUST VALVE…(OS)……	2	630001-
		……0.50MM排气阀座		
	6217-17-1321	.INSERT,0.75MM,EXHAUST VALVE…(OS)……	2	630001-
		……0.75MM排气阀座		
	6217-16-1321	.INSERT,1.00MM,EXHAUST VALVE…(OS)……	2	630001-
		……1.00MM排气阀座		
19	6217-16-1441	.GUIDE,VALVE……阀导杆	4	630001-
20	6210-11-1150	.PIPE ……硬管	1	630001-
21	07000-73025	.O-RING……O形圈	1	630001-
22	6162-13-1150	.PLUG,EXPANSION ……膨胀堵头	13	630001-
23	07043-50108	.PLUG ……堵塞	1	630001-
24	708-21-12541	.PLUG ……堵塞	2	630001-

https://truckmanualshub.com/

FIG NO. :A1010-A4D2

INDEX	PART NO.	DESCRIPTION	Q'TY	SERIAL NO.
25	01438-01020	BOLT……螺栓	6	630001-
26	01643-51645	WASHER……垫圈	36	630001-

SAA6D140E-5R

https://truckmanualshub.com/

FIG.A1110-A4A4 CYLINDER HEAD COVER
缸头盖

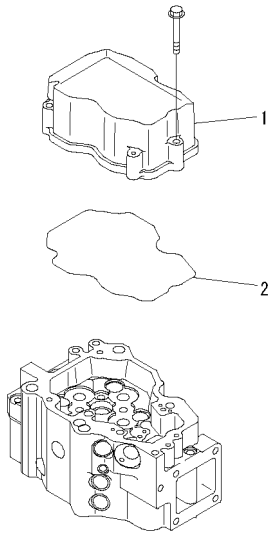

缸头
Cylinder Head

PV6B635

FIG NO. : A1110-A4A4

INDEX	PART NO.	DESCRIPTION	Q'TY	SERIAL NO.
1	6217-11-8110	COVER,CYLINDER HEAD ……缸头盖	6	630001-
2	6217-11-8830	GASKET……(K1)密封垫	6	630001-

https://truckmanualshub.com/

FIG.A1111-A4A1 HEAD COVER MOUNTING BOLT
缸盖螺栓

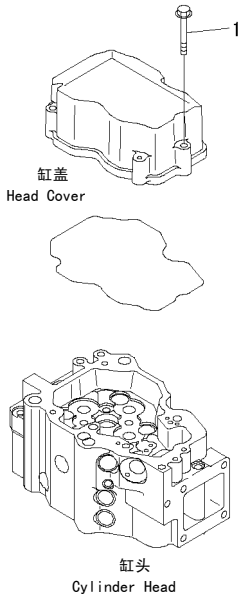

PV6B636

FIG NO. : A1111-A4A1

INDEX	PART NO.	DESCRIPTION	Q'TY	SERIAL NO.
1	01435-00855	BOLT……螺栓	18	630001-

https://truckmanualshub.com/

FIG.A1310-A4L4 AIR INTAKE MANIFOLD AND CONNECTION
进气管和连接器

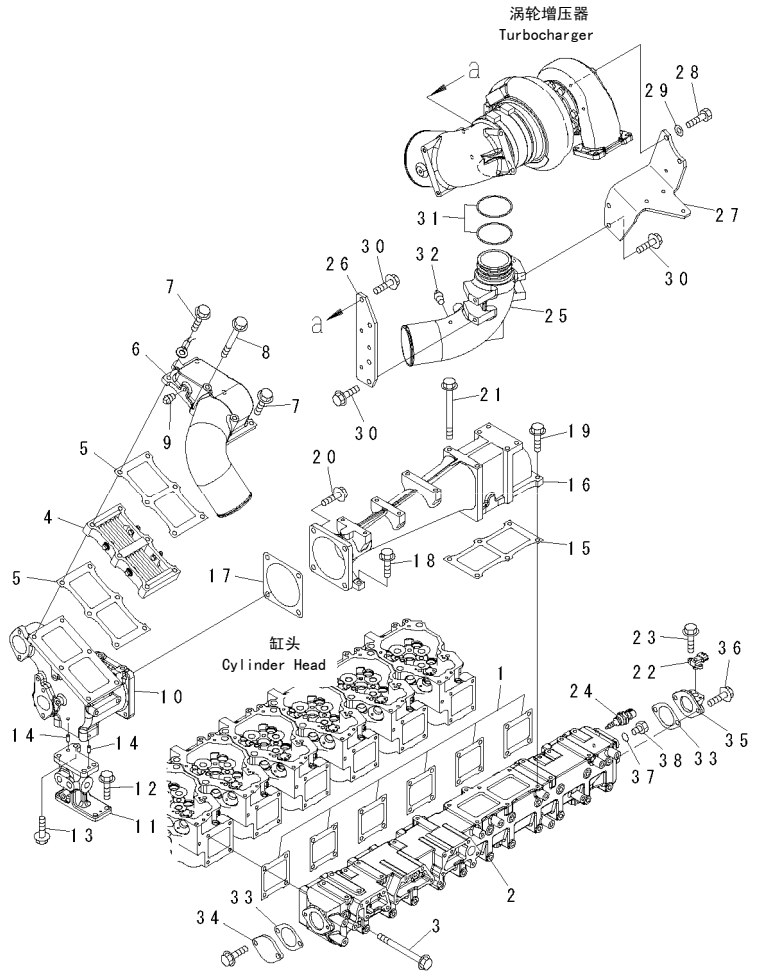

FIG NO. : A1310-A4L4

INDEX	PART NO.	DESCRIPTION	Q'TY	SERIAL NO.
1	6210-11-4811	GASKET……(K1)密封垫	6	630001-
2	6261-11-4110	MANIFOLD,AIR INTAKE ……进气岐管	1	630001-
3	01436-01070	BOLT……螺栓	24	630001-
4	600-815-4280	HEATER,RIBBON ……带状加热器	1	630001-
5	6211-11-4821	GASKET……(K1)密封垫	2	630001-
6	6261-11-4360	CONNECTOR ……接头	1	630001-
7	01435-01065	BOLT……螺栓	4	630001-
8	01436-01060	BOLT……螺栓	2	630001-
9	07042-A0108	PLUG……堵塞	1	630001-
10	6261-11-7210	HOUSING,JUNCTION……连接器壳体	1	630001-
11	6261-11-7220	BRACKET…… 支架	1	630001-
12	01435-01025	BOLT……螺栓	4	630001-
13	01435-01030	BOLT……螺栓	2	630001-
14	04020-00820	PIN,DOWEL ……定位销	2	630001-
15	6211-11-4821	GASKET……(K1)密封垫	1	630001-
16	6261-11-7410	CONNECTOR ……接头	1	630001-
17	6261-11-7450	GASKET……(K1)密封垫	1	630001-
18	01435-01030	BOLT……螺栓	2	630001-
19	01435-01035	BOLT……螺栓	2	630001-
20	01435-01235	BOLT……螺栓	4	630001-
21	01436-01080	BOLT……螺栓	4	630001-
22	6261-81-2700	SENSOR ASS'Y,BOOST PRESSURE ……	1	630001-
		……增压传感器总成		
	6261-81-2710	.SENSOR ……传感器	1	630001-
	6261-81-2720	.O-RING……O形圈	1	630001-
23	01435-00616	BOLT……螺栓	2	630001-
24	6560-61-7300	SENSOR ASS'Y,INTAKE AIR TEMPERATURE ……	1	630001-
		……进气温度传感器总成		
	6560-61-7310	.SENSOR…… 传感器	1	630001-
	6735-21-1930	O-RING…… O形圈	1	630001-
25	6261-11-4440	CONNECTOR ……接头	1	630001-
26	6261-11-4950	PLATE…… 板	1	630001-
27	6261-11-4941	BRACKET…… 支架	1	630001-
28	01020-11025	BOLT……螺栓	2	630001-
29	209-62-11810	SPACER……调整垫片	2	630001-
30	01435-01030	BOLT……螺栓	6	630001-
31	02895-77075	O-RING…… O形圈	2	630001-
32	07042-A0108	PLUG……堵塞	1	630001-
33	6212-61-6662	GASKET……(K1)密封垫	2	630001-
34	6215-61-6670	PLATE…… 板	1	630001-
35	6261-11-4160	BLOCK…… 接头	1	630001-
36	01435-01030	BOLT……螺栓	2	630001-
37	07002-21423	O-RING…… O形圈	1	630001-
38	07040-11409	PLUG……堵塞	1	630001-

https://truckmanualshub.com/

FIG.A1410-A4L7 AIR CONNECTION (AIR CLEANER REMOTE MOUNT SPEC.)

接头（空滤器远置安装规格）

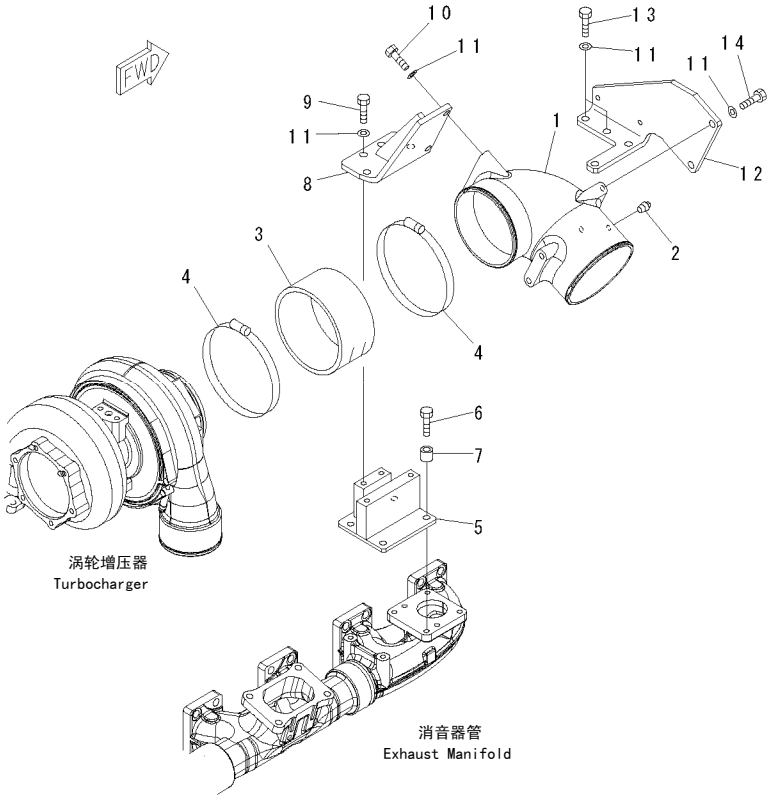

00057564

FIG NO. : A1410-A4L7

INDEX	PART NO.	DESCRIPTION	Q'TY	SERIAL NO.
1	6261-11-4370	CONNECTOR,AIR ……接管	1	630001-
2	07042-A0108	PLUG……堵塞	1	630001-
3	6218-11-4320	HOSE……软管	1	630001-
4	07289-00160	CLAMP…… 管夹	2	630001-
5	6261-11-4960	BRACKET…… 支架	1	630001-
6	01010-E1040	BOLT……螺栓	4	630001-
7	6631-11-5630	SPACER……垫块	4	630001-
8	6261-11-4930	BRACKET…… 支架	1	630001-
9	01010-E1025	BOLT……螺栓	4	630001-
10	01010-E1030	BOLT……螺栓	2	630001-
11	01643-31032	WASHER……垫圈	10	630001-
12	6261-11-4390	BRACKET…… 支架	1	630001-
13	01010-E1025	BOLT……螺栓	2	630001-
14	01010-E1030	BOLT……螺栓	2	630001-

https://truckmanualshub.com/

FIG.A151O-A4G2 EXHAUST MANIFOLD
排气歧管

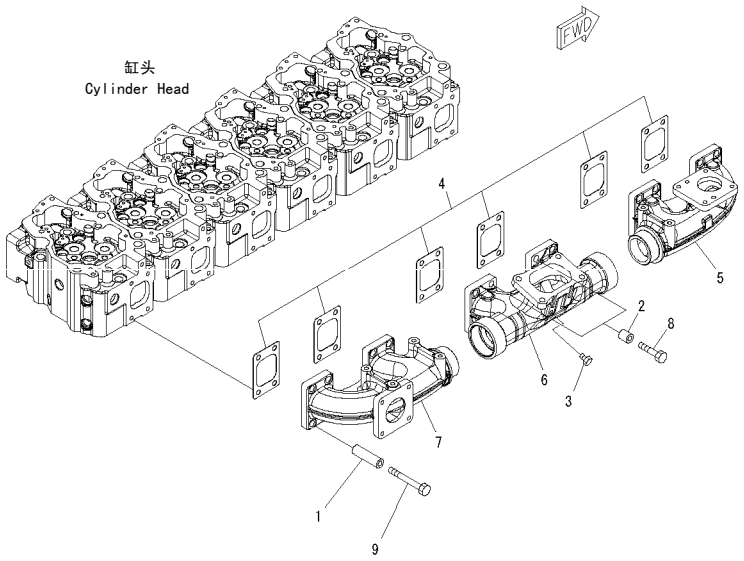

FIG NO. : A151O-A4G2

INDEX	PART NO.	DESCRIPTION	Q'TY	SERIAL NO.
1	6136-11-5120	SPACER……隔离套	22	630001-
2	6210-11-5820	SPACER……隔离套	2	630001-
3	6215-11-5920	PLUG……堵塞	1	630001-
4	6261-11-5880	GASKET……(K1)密封垫	6	630001-
5	6261-11-5110	MANIFOLD,FRONT……前管	1	630001-
6	6212-12-5250	MANIFOLD,CENTER…… 中管	1	630001-
7	6261-11-5130	MANIFOLD,REAR…… 后管	1	630001-
8	01010-E1055	BOLT……螺栓	2	630001-
9	01011-E1000	BOLT……螺栓	22	630001-

https://truckmanualshub.com/

FIG.A1530-A4L8 TURBOCHARGER MOUNTING AND LUBRICATOR
涡轮增压器安装和润滑

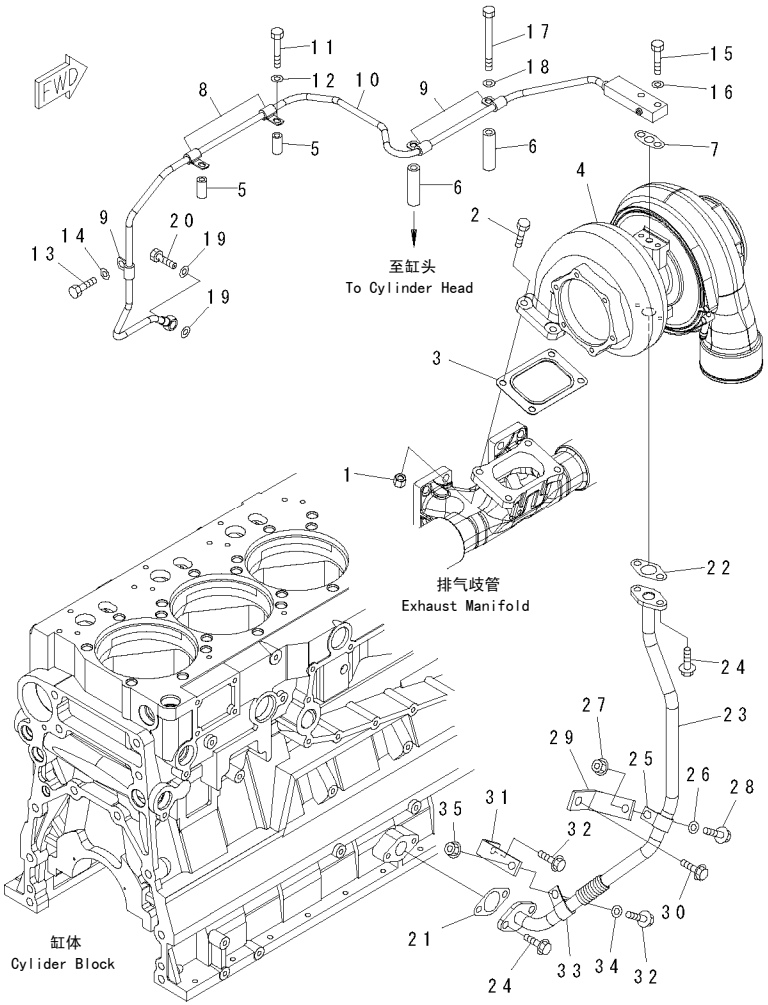

00057561

FIG NO. : A1530-A4L8

INDEX	PART NO.	DESCRIPTION	Q'TY	SERIAL NO.
1	6114-11-5590	NUT…… 螺母	4	630001-
2	6138-13-4510	BOLT……螺栓	4	630001-
3	6261-11-5850	GASKET……垫	1	630001-
4	(6505-68-5020)	TURBOCHARGER ASS'Y,(SEE FIG.A1530-B4L8). ……涡轮增压器总成	1	630001-
5	207-62-32890	COLLAR……接头	2	630001-
6	6136-11-5120	SPACER……隔离套	2	630001-
7	6151-51-8161	GASKET……垫	1	630001-
8	6215-71-4930	CLAMP…… 卡箍	2	630001-
9	6215-71-4940	CLAMP…… 卡箍	3	630001-
10	6261-51-8180	TUBE,SUPPLY…… 进油管	1	630001-
11	01010-80850	BOLT……螺栓	2	630001-
12	01643-30823	WASHER……垫圈	2	630001-
13	01010-81020	BOLT……螺栓	1	630001-
14	01643-31032	WASHER……垫圈	1	630001-
15	01010-81035	BOLT……螺栓	2	630001-
16	01643-31032	WASHER……垫圈	2	630001-
17	01010-81090	BOLT……螺栓	2	630001-
18	01643-31032	WASHER……垫圈	2	630001-
19	07005-01412	GASKET……垫	2	630001-
20	07206-31014	BOLT,JOINT……接头螺栓	1	630001-
21	6127-51-6822	GASKET……垫	1	630001-
22	6151-51-8151	GASKET……垫	1	630001-
23	6261-51-8120	TUBE,DRAIN……排放管	1	630001-
24	01435-01025	BOLT……螺栓	4	630001-
25	04434-51910	CLIP……管夹	1	630001-
26	01643-31032	WASHER……垫圈	1	630001-
27	01584-01008	NUT…… 螺母	1	630001-
28	01435-01025	BOLT……螺栓	1	630001-
29	6261-51-8290	BRACKET…… 支架	1	630001-
30	01435-01225	BOLT……螺栓	1	630001-
31	6261-51-8140	BRACKET…… 支架	1	630001-
32	01435-01025	BOLT……螺栓	2	630001-
33	04434-51910	CLIP……管夹	1	630001-
34	01643-31032	WASHER……垫圈	1	630001-
35	01584-01008	NUT…… 螺母	1	630001-

https://truckmanualshub.com/

FIG.A1530-B4L8 TURBOCHARGER (KTR110L-3H4E) (INNER PARTS)
涡轮增压器(内部件)

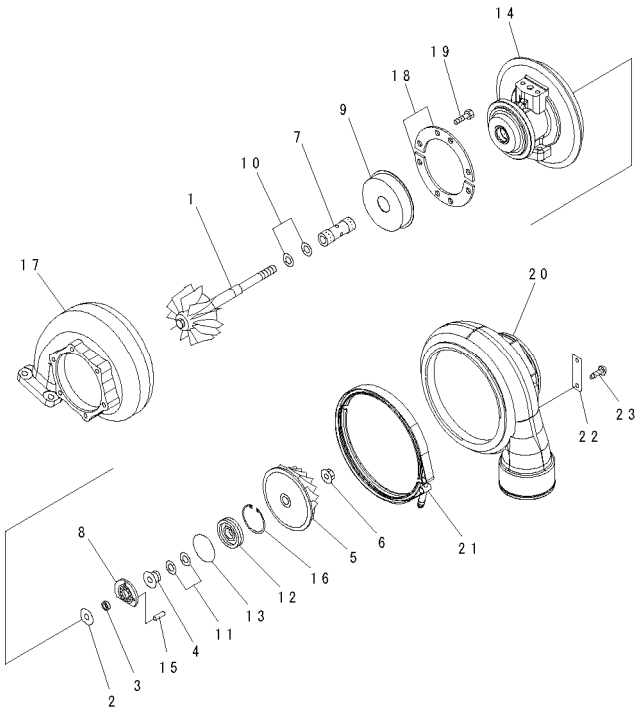

FIG NO. : A1530-B4L8

INDEX	PART NO.	DESCRIPTION	Q'TY	SERIAL NO.
	6505-68-5020	TURBOCHARGER ASS'Y,(KTR110L-3H4E) ·····	1	630001-
		·····涡轮增压器总成		
	6505-68-5910	.CORE ASS'Y····· 芯总成	1	630001-
1	(★6505-67-3070)	..ROTOR,TURBINE····· 涡轮转子	1	630001-
2	(★6505-71-0210)	..PLATE,THRUST·····止推板	1	630001-
3	(★6505-71-0230)	..SPACER,COLLAR····· 隔套接头	1	630001-
4	(★6505-51-0252)	..FLINGER····· 座	1	630001-
5	(★6505-68-1030)	..IMPELLER,BLOWER····· 风动叶轮	1	630001-
6	(★6505-11-0410)	..NUT,LOCK·····锁紧螺母	1	630001-
7	(★6505-71-0110)	..BEARING,JOURNAL····· 滑动轴承	1	630001-
8	(★6505-51-0151)	..BEARING,THRUST·····止推轴承	1	630001-
9	(★6505-71-0710)	..SHIELD,HEAT····· 壳体	1	630001-
10	(★6505-51-0310)	..RING,TURBINE·····涡轮环	2	630001-
11	(★6505-51-0351)	..RING,BLOWER····· 风机环	2	630001-
12	(★6505-71-0850)	..INSERT·····垫圈	1	630001-
13	(★07000-E2050)	..O-RING····· O形圈	1	630001-
14	(★6505-71-0010)	..HOUSING,CENTER·····壳体	1	630001-
15	(★04022-04008)	..PIN,DOWEL····· 定位销	1	630001-
16	(★6505-71-0480)	..RING,SNAP····· 卡簧	1	630001-
17	6505-61-4470	.HOUSING,TURBINE·····涡轮壳	1	630001-
18	6505-11-0520	.PLATE,LOCK····· 锁片	2	630001-
19	01020-01016	.BOLT····· 螺栓	8	630001-
20	6505-61-2030	.HOUSING,BLOWER····· 叶轮壳	1	630001-
21	6505-11-0450	.V-BAND·····V形绑带	1	630001-
22	6505-99-9011	.PLATE, NAME·····铭牌	1	630001-
23	04418-02550	.SCREW·····封条	2	630001-

https://truckmanualshub.com/

FIG.A155O-A4B1 COVER FOR EGR LESS
无EGR用盖板

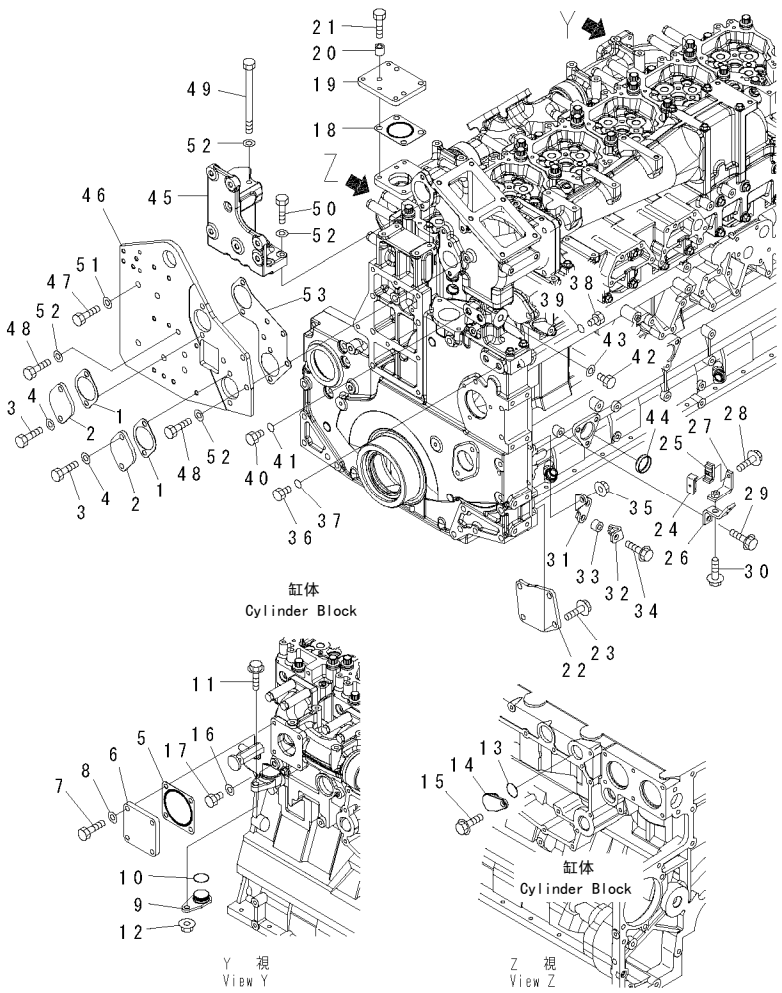

00059288

FIG NO. : A155O-A4B1

INDEX	PART NO.	DESCRIPTION	Q'TY	SERIAL NO.
1	6166-61-6341	GASKET……垫	2	630001-
2	6245-11-4220	PLATE…… 板	2	630001-
3	01010-81035	BOLT……螺栓	4	630001-
4	01643-31032	WASHER……垫圈	4	630001-
5	6138-13-4240	GASKET……垫	1	630001-
6	6261-11-9160	PLATE…… 板	1	630001-
7	01020-11030	BOLT……螺栓	4	630001-
8	01643-31032	WASHER……垫圈	4	630001-
9	6261-61-7280	COVER…… 盖	1	630001-
10	6261-61-7260	O-RING…… O形圈	1	630001-
11	01435-01035	BOLT……螺栓	1	630001-
12	01584-01008	NUT…… 螺母	1	630001-
13	6261-61-7260	O-RING…… O形圈	1	630001-
14	6261-61-7280	COVER…… 盖	1	630001-
15	01435-01020	BOLT……螺栓	1	630001-
16	07005-01212	GASKET……垫	1	630001-
17	07040-11209	PLUG……堵塞	1	630001-
18	6261-11-9520	GASKET……垫	1	630001-
19	6261-11-9240	PLATE…… 板	1	630001-
20	6631-11-5630	SPACER……隔套	4	630001-
21	01020-11045	BOLT……螺栓	4	630001-
22	6217-21-1860	COVER…… 盖	1	630001-
23	01435-01225	BOLT……螺栓	4	630001-
24	6217-71-6640	CLAMP…… 卡箍	1	630001-
25	6217-71-6650	CLAMP…… 卡箍	1	630001-
26	6261-71-6190	BRACKET…… 支架	1	630001-
27	6261-71-5430	BRACKET…… 支架	1	630001-
28	01435-00630	BOLT……螺栓	1	630001-
29	01435-01020	BOLT……螺栓	1	630001-
30	01435-01025	BOLT……螺栓	1	630001-
31	6261-51-9450	BRACKET…… 支架	1	630001-
32	6261-51-9460	BRACKET…… 支架	1	630001-
33	195-01-14540	COLLAR……衬套	1	630001-
34	01435-01040	BOLT……螺栓	1	630001-
35	01584-01008	NUT…… 螺母	1	630001-
36	07040-11409	PLUG……堵塞	2	630001-
37	07002-21423	O-RING…… O形圈	2	630001-
38	07040-11812	PLUG……堵塞	1	630001-
39	07002-21823	O-RING…… O形圈	1	630001-
40	07040-11409	PLUG……堵塞	2	630001-
41	07002-21423	O-RING…… O形圈	2	630001-
42	07040-11612	PLUG……堵塞	1	630001-
43	07005-01612	GASKET……垫	1	630001-
44	07046-44016	PLUG……堵塞	1	630001-
45	6261-61-3841	BRACKET…… 支架	1	630001-
46	6261-21-3920	PLATE…… 板	1	630001-
47	01010-81235	BOLT……螺栓	6	630001-
48	01010-81030	BOLT……螺栓	4	630001-

https://truckmanualshub.com/

FIG NO. : A155O-A4B1

INDEX	PART NO.	DESCRIPTION		SERIAL NO.
49	01011-81080	BOLT……螺栓	2	630001-
50	01010-81045	BOLT……螺栓	2	630001-
51	01643-31232	WASHER……垫圈	6	630001-
52	01643-31032	WASHER……垫圈	8	630001-
53	6261-21-3970	GASKET……垫	1	630001-

SAA6D140E-5R

https://truckmanualshub.com/

FIG.A157O-A4G7 HEAT SHIELD

隔热板

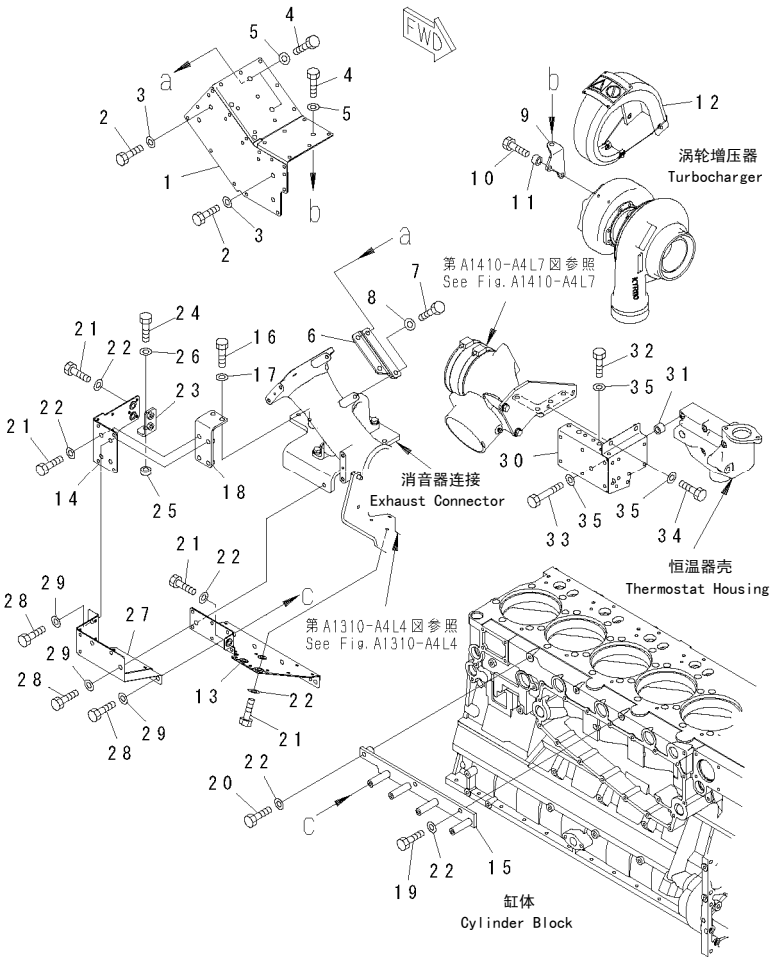

00059282

FIG NO. : A157O-A4G7

INDEX	PART NO.	DESCRIPTION	Q'TY	SERIAL NO.
1	6261-11-8440	COVER,HEAT SHIELD…… 端盖壳体	1	630001-
2	01010-E1025	BOLT……螺栓	6	630001-
3	01643-31032	WASHER……垫圈	6	630001-
4	01010-81025	BOLT……螺栓	3	630001-
5	01643-31032	WASHER……垫圈	3	630001-
6	6261-11-8370	BRACKET ……支架	1	630001-
7	01010-E1025	BOLT……螺栓	2	630001-
8	01643-31032	WASHER……垫圈	2	630001-
9	6261-11-8380	BRACKET…… 支架	1	630001-
10	01020-11030	BOLT……螺栓	2	630001-
11	6131-12-5920	SPACER……调整垫片	2	630001-
12	6261-11-8280	COVER,TURBOCHARGER……涡轮增压器端盖	1	630001-
13	6261-11-9670	COVER ……盖	1	630001-
14	6261-11-8880	COVER,HEAT SHIELD…… 端盖壳体	1	630001-
15	6261-11-8420	BRACKET…… 支架	1	630001-
16	01010-E1025	BOLT……螺栓	2	630001-
17	01643-31032	WASHER……垫圈	2	630001-
18	6261-11-8320	BRACKET…… 支架	1	630001-
19	01010-81025	BOLT……螺栓	2	630001-
20	01010-81045	BOLT……螺栓	1	630001-
21	01010-81025	BOLT……螺栓	11	630001-
22	01643-31032	WASHER……垫圈	14	630001-
23	6261-11-8490	BRACKET…… 支架	1	630001-
24	01010-81040	BOLT……螺栓	1	630001-
25	6132-21-4630	SPACER……调整垫片	1	630001-
26	01643-31032	WASHER……垫圈	1	630001-
27	6261-11-8160	COVER,HEAT SHIELD…… 端盖壳体	1	630001-
28	01010-81030	BOLT……螺栓	4	630001-
29	01643-31032	WASHER……垫圈	4	630001-
30	6261-11-8170	COVER,HEAT SHIELD…… 端盖壳体	1	630001-
31	6631-11-6390	SPACER……调整垫片	2	630001-
32	01010-E1030	BOLT……螺栓	2	630001-
33	01010-81085	BOLT……螺栓	2	630001-
34	01010-81020	BOLT……螺栓	2	630001-
35	01643-31032	WASHER……垫圈	6	630001-

https://truckmanualshub.com/

FIG.A1610-A4L8 MUFFLER
消音器

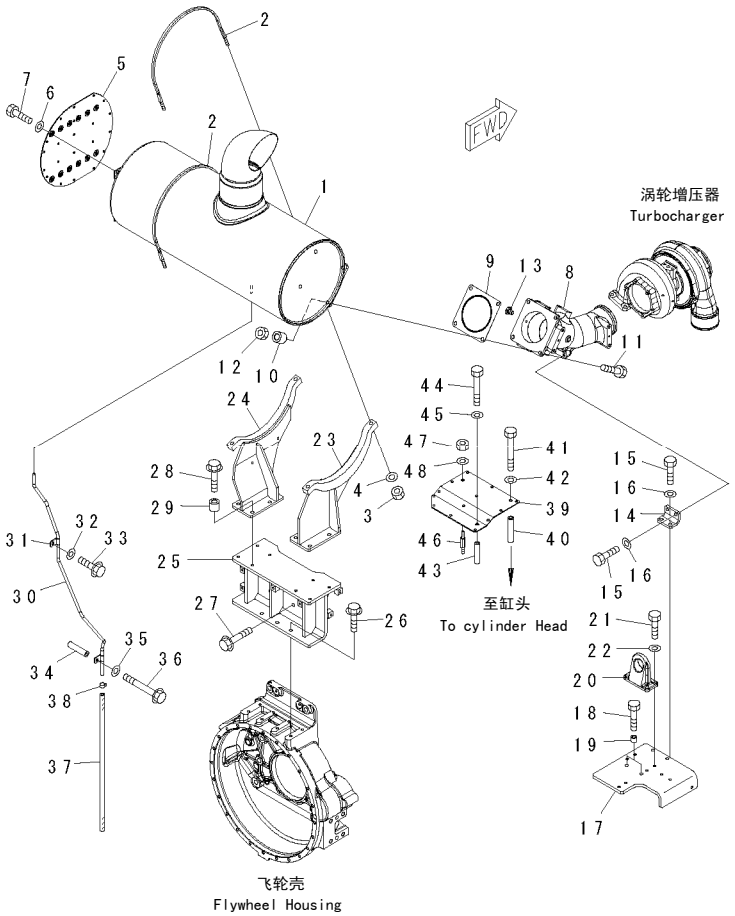

00049432

FIG NO. : A1610-A4L8

INDEX	PART NO.	DESCRIPTION	Q'TY	SERIAL NO.
1	6261-11-5610	MUFFLER ……消音器	1	630001-
2	6217-11-5750	BAND……绑带	2	630001-
3	6215-11-5740	NUT ……螺母	4	630001-
4	01643-31032	WASHER……垫圈	4	630001-
5	6261-11-5421	COVER ……盖	1	630001-
6	01643-30823	WASHER……垫圈	12	630001-
7	01010-80820	BOLT……螺栓	12	630001-
8	6261-11-5530	CONNECTOR ……接头	1	630001-
9	6211-11-5890	GASKET……垫	1	630001-
10	6631-11-5630	SPACER……调整垫片	4	630001-
11	01010-E1050	BOLT……螺栓	4	630001-
12	01580-11008	NUT ……螺母	4	630001-
13	6215-11-5920	PLUG……堵塞	1	630001-
14	6261-11-5590	PLATE ……摩擦片	1	630001-
15	01010-E1025	BOLT……螺栓	4	630001-
16	01643-31032	WASHER……垫圈	4	630001-
17	6261-11-8461	BRACKET ……支架	1	630001-
18	01010-E1045	BOLT……螺栓	4	630001-
19	6631-11-5630	SPACER……调整垫片	4	630001-
20	6210-21-3752	HANGER……挂衣钩	1	630001-
21	01010-E1030	BOLT……螺栓	4	630001-
22	01643-31032	WASHER……垫圈	4	630001-
23	6261-11-5811	BRACKET ……支架	1	630001-
24	6261-11-5821	BRACKET ……支架	1	630001-
25	6261-11-5830	BRACKET ……支架	1	630001-
26	01435-01025	BOLT……螺栓	3	630001-
27	01435-01045	BOLT……螺栓	2	630001-
28	01010-81045	BOLT……螺栓	8	630001-
29	6631-11-5630	SPACER……调整垫片	8	630001-
30	6261-11-5580	TUBE,DRAIN……排放管	1	630001-
31	6991-11-5990	CLAMP ……卡箍	2	630001-
32	01643-31032	WASHER……垫圈	1	630001-
33	01435-01020	BOLT……螺栓	1	630001-
34	195-01-16420	COLLAR……滚轮	1	630001-
35	01643-31032	WASHER……垫圈	1	630001-
36	01436-01015	BOLT……螺栓	1	630001-
37	07260-20950	HOSE……软管	1	630001-
38	07285-00150	CLIP……管夹	1	630001-
39	6261-11-9720	COVER ……盖	1	630001-
40	6124-61-5720	SPACER……调整垫片	1	630001-
41	01011-81025	BOLT……螺栓	1	630001-
42	01643-31032	WASHER……垫圈	1	630001-

https://truckmanualshub.com/

FIG.A1610-A4L8 MUFFLER
消音器

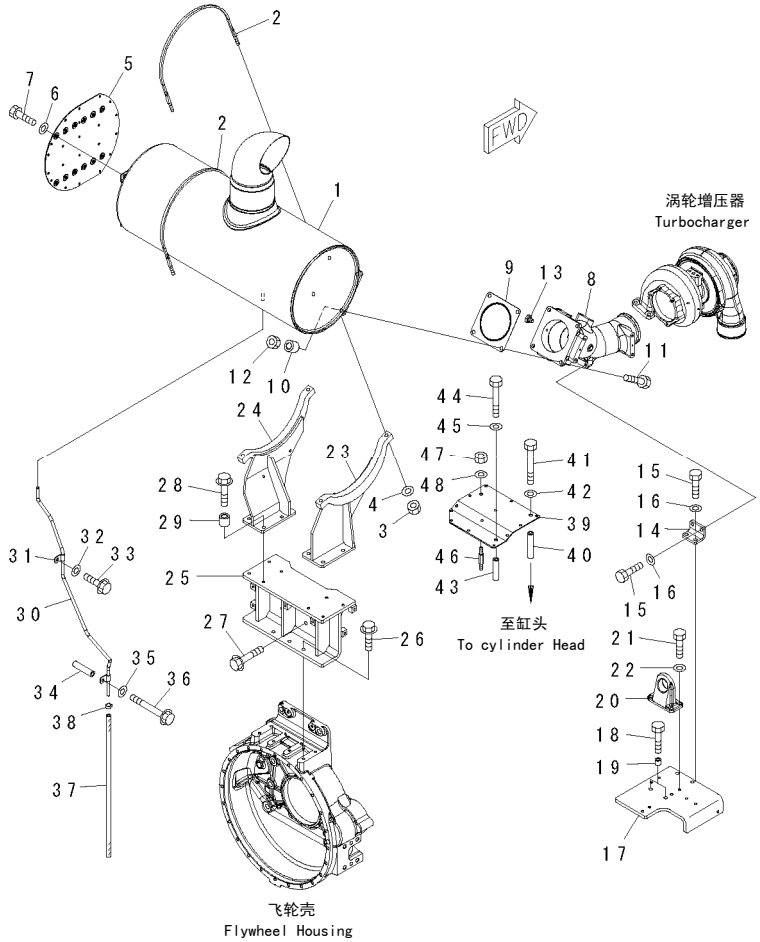

00049432

FIG NO. : A1610-A4L8

INDEX	PART NO.	DESCRIPTION	Q'TY	SERIAL NO.
43	6137-11-5120	SPACER……调整垫片	1	630001-
44	01011-81005	BOLT……螺栓	1	630001-
45	01643-31032	WASHER……垫圈	1	630001-
46	6217-11-9790	BOLT……螺栓	1	630001-
47	01580-00806	NUT ……螺母	1	630001-
48	01643-30823	WASHER……垫圈	1	630001-

https://truckmanualshub.com/

FIG.A2010-A4K5 CYLINDER BLOCK

缸体

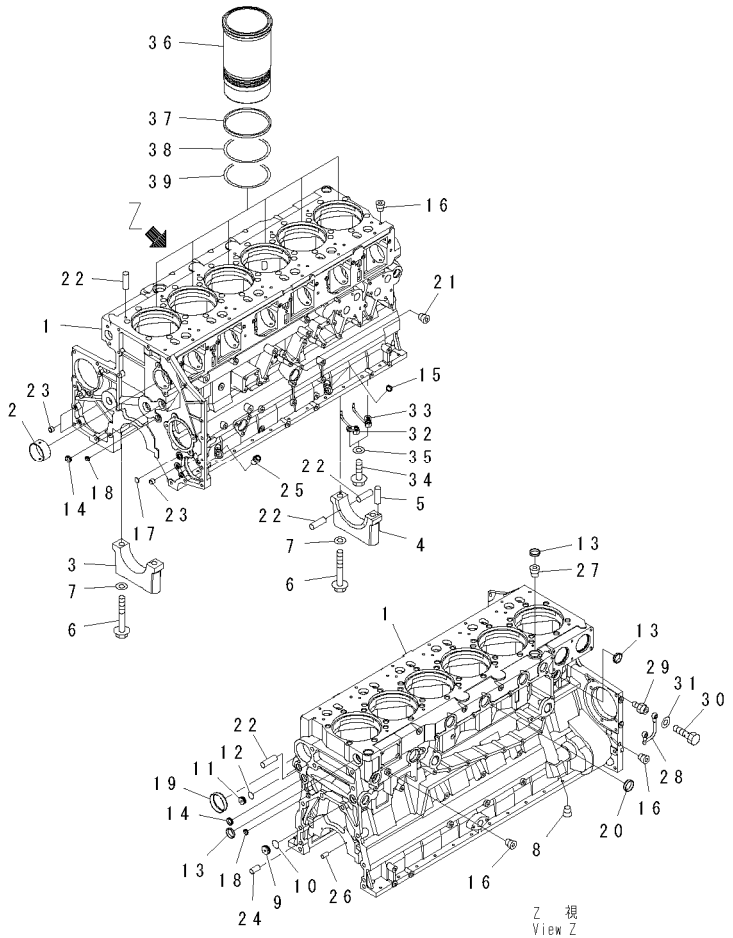

00041162

FIG NO. : A2010-A4K5

INDEX	PART NO.	DESCRIPTION	Q'TY	SERIAL NO.
	6261-21-1100	CYLINDER BLOCK ASS'Y……缸体总成	1	630001-
	☆	.BLOCK SUB ASS'Y……	1	630001-
1	☆	..BLOCK,CYLINDER……缸体	1	630001-
2	6210-21-1491	..BUSHING,CAMSHAFT……凸轮轴轴套	7	630001-
3	☆	..CAP,MAIN METAL, NO.1,2,3,4,5,6……		
		……第1、2、3、4、5、6主轴瓦	6	630001-
4	☆	..CAP,MAIN METAL, NO.7 ……第7主轴瓦盖	1	630001-
5	04020-00514	..PIN,DOWEL ……定位销	2	630001-
6	6217-21-1710	..BOLT……螺栓	14	630001-
7	01643-31845	..WASHER……垫圈	14	630001-
8	07043-01019	.PLUG ……堵塞	1	630001-
9	6217-21-1980	.PLUG ……堵塞	1	630001-
10	07000-72025	.O-RING……O形圈	1	630001-
11	6217-21-1990	.PLUG ……堵塞	1	630001-
12	07000-72021	.O-RING……O形圈	1	630001-
13	07046-43516	.PLUG ……堵塞	3	630001-
14	07046-42516	.PLUG ……堵塞	2	630001-
15	07046-42010	.PLUG ……堵塞	1	630001-
16	07043-70108	.PLUG ……堵塞	11	630001-
17	07046-11816	.PLUG,EXPANSION ……膨胀堵头	3	630001-
18	07046-41810	.PLUG ……堵塞	2	630001-
19	07046-47020	.PLUG ……堵塞	1	630001-
20	07046-44016	.PLUG ……堵塞	3	630001-
21	07043-70211	.PLUG ……堵塞	2	630001-
22	04020-00820	.PIN,DOWEL……定位销	12	630001-
23	6210-21-1910	.PIN,RING ……环销	3	630001-
24	6150-21-4770	.PIN,DOWEL……定位销	2	630001-
25	6150-21-5910	.BUSHING……衬套	1	630001-
26	6210-21-1390	.PIN……销	6	630001-
27	07043-00617	.PLUG ……堵塞	1	630001-
28	6261-21-1611	TUBE……管	1	630001-
29	6132-21-4620	NIPPLE……接头	2	630001-
30	6934-72-7190	BOLT……螺栓	2	630001-
31	07005-01012	GASKET……垫	4	630001-
32	6261-21-1910	NOZZLE,PISTON COOLING, FRONT……		
		……活塞冷却喷嘴（前）	6	630001-
33	6261-21-1920	NOZZLE,PISTON COOLING, REAR……		
		……活塞冷却喷嘴（后）	6	630001-
34	01437-01025	BOLT……螺栓	12	630001-
35	01643-51032	WASHER……垫圈	12	630001-
36	6211-22-2220	LINER,CYLINDER……缸衬	6	630001-
37	6210-21-2270	SEAL,CREVICE……(K2)密封环	6	630001-
38	6210-21-2240	O-RING,CENTER……中心O形圈	6	630001-
39	6210-21-2230	O-RING,LOWER ……下O形圈	6	630001-

https://truckmanualshub.com/

FIG.A2011-A4P2 CYLINDER BLOCK ACCESSORY (UNDER FRAME AND OIL FILLER)

缸体附件（下车架和油滤清器）

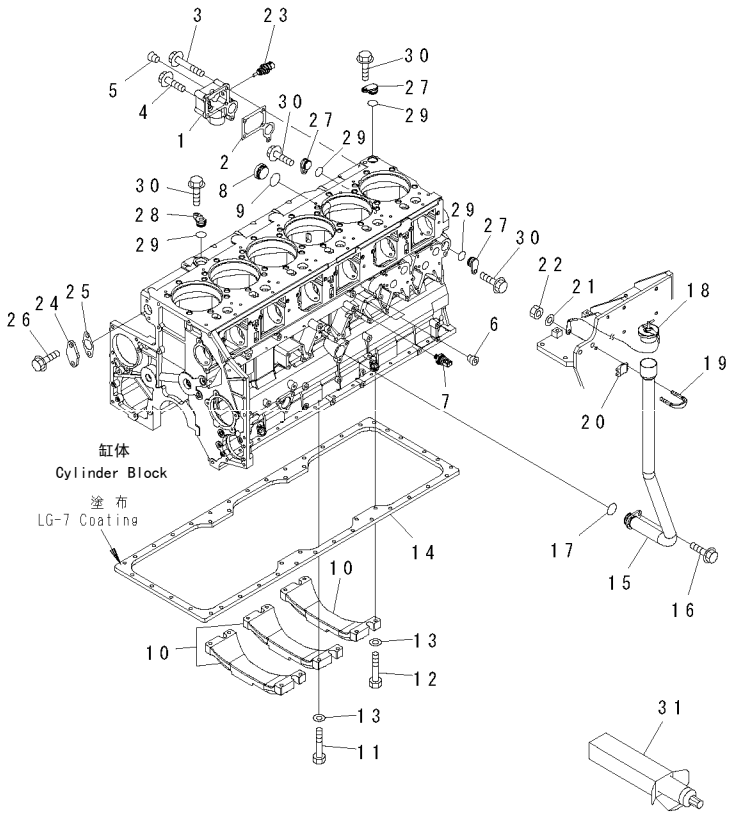

FIG NO. : A2011-A4P2

INDEX	PART NO.	DESCRIPTION	Q'TY	SERIAL NO.
1	6261-21-1990	COVER…… 盖	1	630001-
2	6261-21-1970	GASKET……垫	1	630001-
3	01435-01065	BOLT……螺栓	4	630001-
4	01435-01035	BOLT……螺栓	1	630001-
5	07043-A0415	PLUG……堵塞	1	630001-
6	07043-70108	PLUG……堵塞	2	630001-
7	6219-81-1961	SENSOR ASS'Y,OIL PRESSURE……		
		……油压传感器总成	1	630001-
	6219-81-1991	.O-RING……O形圈	1	630001-
8	6150-21-1180	PLUG……堵塞	1	630001-
9	6150-21-1190	O-RING…… O形圈	1	630001-
10	6217-21-1220	BRACKET…… 支架	3	630001-
11	01010-81050	BOLT……螺栓	4	630001-
12	01010-81060	BOLT……螺栓	8	630001-
13	01643-31032	WASHER……垫圈	12	630001-
14	6261-21-5830	PLATE…… 板	1	630001-
15	6261-21-7150	FILLER,OIL……滤清器	1	630001-
16	01435-01020	BOLT……螺栓	1	630001-
17	07000-73034	O-RING…… O形圈	1	630001-
18	07025-00100	CAP,OIL FILLER……滤清器盖	1	630001-
19	07283-34354	CLIP,PIPE…… 管夹硬管	1	630001-
20	07283-54353	SEAT……座	1	630001-
21	01643-31032	WASHER……垫圈	2	630001-
22	01597-01009	NUT…… 螺母	2	630001-
23	6261-81-6900	SENSOR,WATER TEMPERATURE……水温传感器	1	630001-
	6261-81-6910	.SENSOR…… 传感器	1	630001-
	6261-84-9740	.O-RING……O形圈	1	630001-
24	6210-21-1950	FLANGE……法兰	1	630001-
25	6696-61-9921	GASKET……垫	1	630001-
26	01435-01225	BOLT……螺栓	2	630001-
27	6217-21-1940	COVER…… 盖	3	630001-
28	6218-21-1940	COVER…… 盖	1	630001-
29	07000-73025	O-RING…… O形圈	4	630001-
30	01435-01020	BOLT……螺栓	4	630001-
31	09920-00150	LIQUID GASKET,LG-7, 150G……液体密封胶	AR	630001-

https://truckmanualshub.com/

FIG.A2040-A4H7 FRONT COVER
前盖

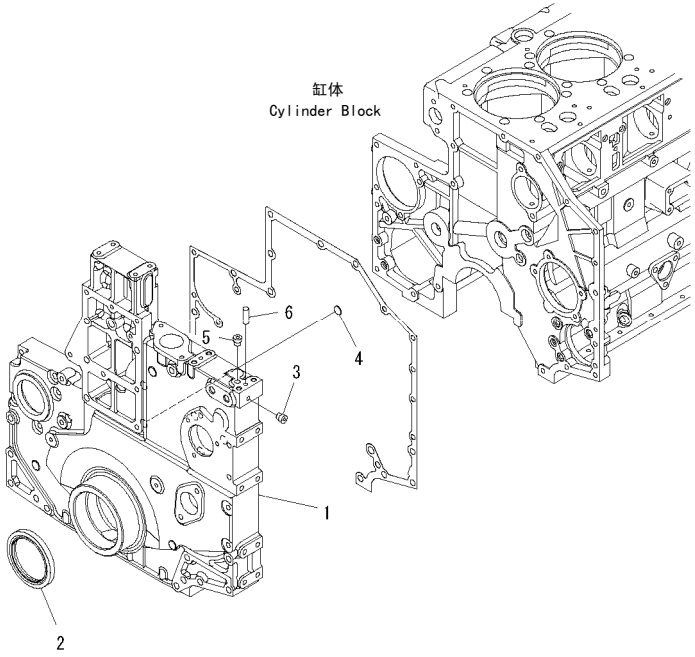

00041464

FIG NO. : A2040-A4H7

INDEX	PART NO.	DESCRIPTION	Q'TY	SERIAL NO.
1	6261-21-3240	COVER,FRONT ……前盖	1	630001-
2	6711-21-3521	SEAL, FRONT ……密封环	1	630001-
3	07043-70108	PLUG……堵塞	1	630001-
4	07046-11816	PLUG,EXPANSION……膨胀堵头	6	630001-
5	07043-70211	PLUG……堵塞	1	630001-
6	04020-00820	PIN,DOWEL ……定位销	2	630001-

https://truckmanualshub.com/

FIG.A2041-A4L2 FRONT COVER ACCESSORY (POINTER AND BREATHER MOUNTING)

备用前盖（定位器和透气塞安装）

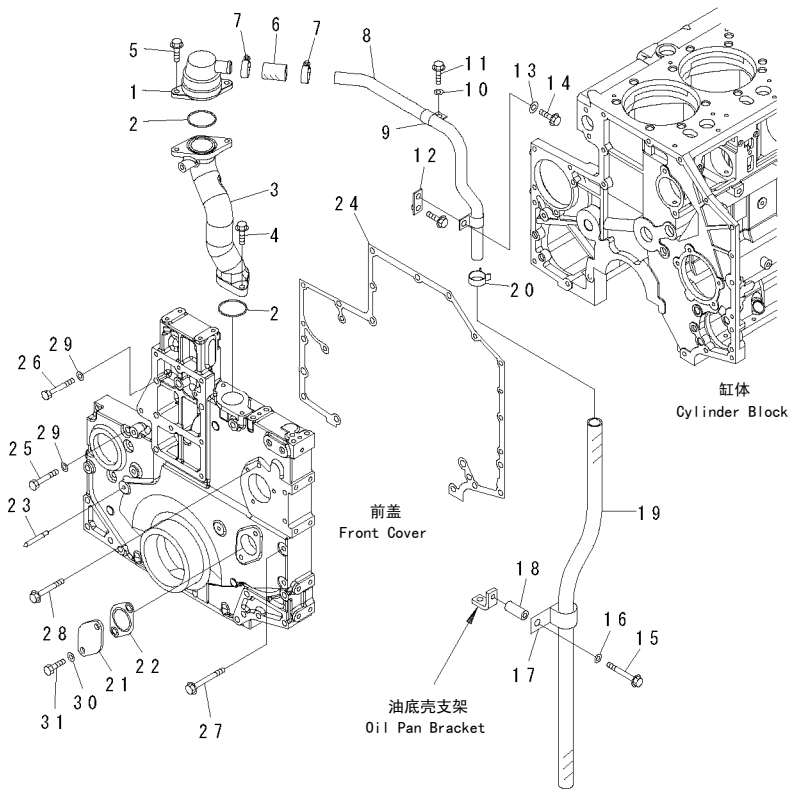

FIG NO. : A2041-A4L2

INDEX	PART NO.	DESCRIPTION	Q'TY	SERIAL NO.
1	6212-25-8710	BREATHER……透气塞	1	630001-
2	07000-72060	O-RING…… O形圈	2	630001-
3	6261-21-8610	CONNECTOR,BREATHER……透气塞接头	1	630001-
4	01435-01035	BOLT……螺栓	2	630001-
5	01435-01025	BOLT……螺栓	2	630001-
6	6141-64-7841	HOSE……软管	1	630001-
7	07281-00419	CLAMP…… 卡箍	2	630001-
8	6261-21-8820	TUBE,BREATHER…… 透气塞硬管	1	630001-
9	154-04-12420	CLAMP…… 卡箍	2	630001-
10	01643-31032	WASHER……垫圈	1	630001-
11	01435-01020	BOLT……螺栓	1	630001-
12	426-01-11310	BRACKET…… 支架	1	630001-
13	01643-31032	WASHER……垫圈	1	630001-
14	01435-01025	BOLT……螺栓	1	630001-
15	01435-01070	BOLT……螺栓	1	630001-
16	01643-31032	WASHER……垫圈	1	630001-
17	04434-53411	CLIP……管夹	1	630001-
18	6152-51-5520	SPACER……隔离套	1	630001-
19	07287-02610	HOSE……软管	1	630001-
20	07285-00280	CLIP……管夹	1	630001-
21	6251-21-3211	PLATE…… 摩擦片	1	630001-
22	6251-21-3231	GASKET……垫	1	630001-
23	6150-22-3360	POINTER…… 定位器	1	630001-
24	6217-21-3251	GASKET……垫	1	630001-
25	01010-81275	BOLT……螺栓	1	630001-
26	01010-81290	BOLT……螺栓	5	630001-
27	01436-01010	BOLT……螺栓	1	630001-
28	01435-01090	BOLT……螺栓	3	630001-
29	01640-21223	WASHER……垫圈	6	630001-
30	6251-21-3250	GASKET……垫	2	630001-
31	01050-51225	BOLT……螺栓	2	630001-

https://truckmanualshub.com/

FIG.A2050-A4A9 IDLER GEAR
惰轮

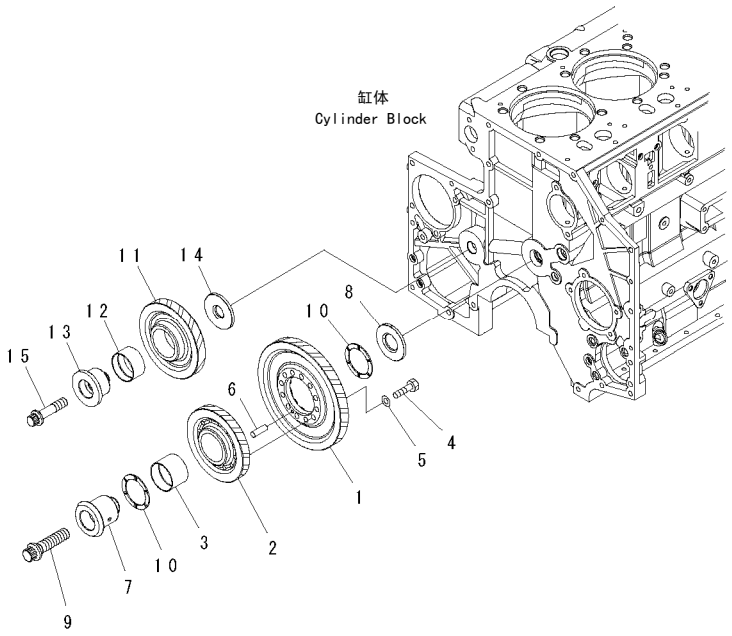

00041488

FIG NO. : A2050-A4A9

INDEX	PART NO.	DESCRIPTION	Q'TY	SERIAL NO.
1	6212-31-6440	GEAR……齿轮	1	630001-
	6212-31-6420	IDLER GEAR ASS'Y……惰轮总成	1	630001-
2	☆	.GEAR,IDLER…… 惰轮	1	630001-
3	6212-31-6130	.BUSHING……衬套	1	630001-
4	22X-22-12670	BOLT……螺栓	12	630001-
5	6212-31-6490	WASHER……垫圈	12	630001-
6	04020-00514	PIN,DOWEL…… 定位销	1	630001-
7	6210-22-2410	SHAFT…… 轴	1	630001-
8	6210-22-2420	PLATE…… 摩擦片	1	630001-
9	6162-33-5322	BOLT……螺栓	1	630001-
10	6212-31-6140	BEARING,THRUST……止推轴承	2	630001-
	6212-31-6100	IDLER GEAR ASS'Y……惰轮总成	1	630001-
11	☆	.GEAR,IDLER…… 惰轮	1	630001-
12	6212-31-6120	.BUSHING……衬套	1	630001-
13	6212-21-2511	SHAFT…… 轴	1	630001-
14	6210-21-2422	PLATE,THRUST……止推板	1	630001-
15	6212-21-2450	BOLT……螺栓	1	630001-

https://truckmanualshub.com/

FIG.A2060-A4C6 CAMFOLLOWER COVER
凸轮轴盖

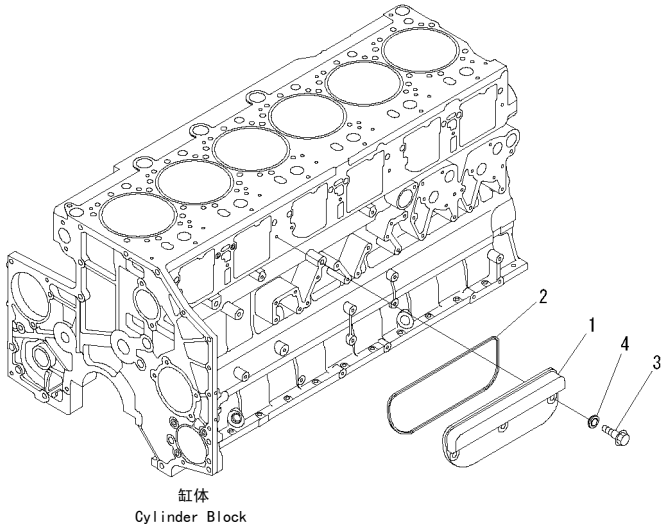

缸体
Cylinder Block

PV6B657

FIG NO. : A2060-A4C6

INDEX	PART NO.	DESCRIPTION	Q'TY	SERIAL NO.
1	6210-21-6410	COVER,CAMFOLLOWER····· 凸轮轴盖	3	630001-
2	6217-21-6880	O-RING····· O形圈	3	630001-
3	6210-21-6471	BOLT·····螺栓	9	630001-
4	6150-21-6391	PACKING····· 衬垫	9	630001-

https://truckmanualshub.com/

FIG.A2110-A4S1 OIL PAN AND SUCTION TUBE

油底壳和吸油管

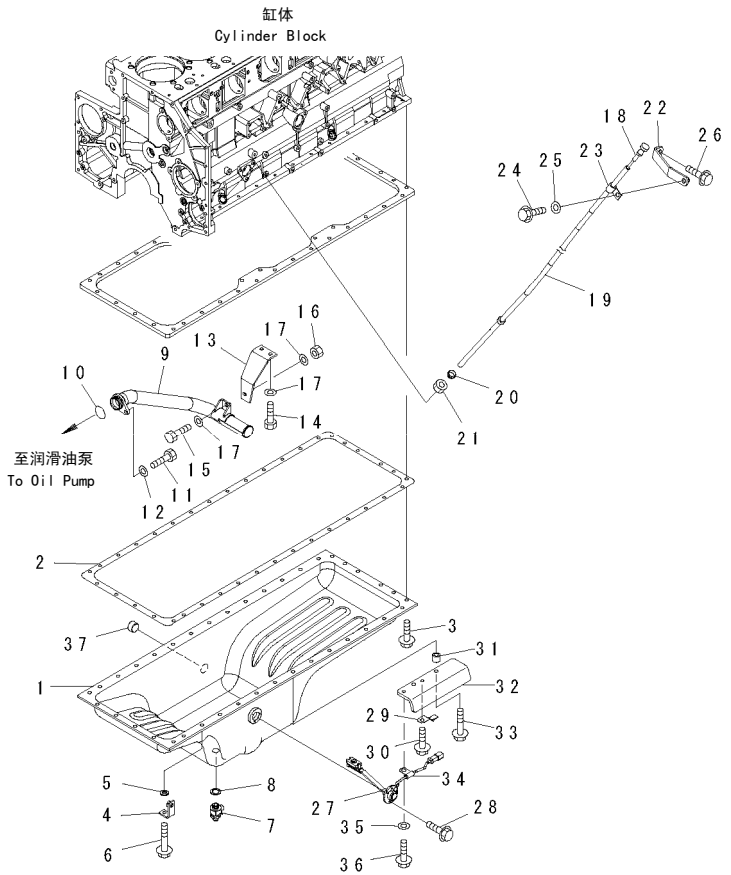

00059284

FIG NO. : A2110-A4S1

INDEX	PART NO.	DESCRIPTION	Q'TY	SERIAL NO.
1	6261-21-5250	PAN,OIL ……油底壳	1	630001-
2	6210-21-5820	GASKET……垫	1	630001-
3	01435-01035	BOLT……螺栓	36	630001-
4	6934-71-5860	BRACKET ……支架	1	630001-
5	6110-23-6490	SPACER……调整垫片	1	630001-
6	01435-01045	BOLT……螺栓	1	630001-
7	6217-21-5610	VALVE,DRAIN ……排泄阀	1	630001-
8	6217-21-5660	GASKET……垫	1	630001-
9	6261-51-6310	STRAINER……粗滤器	1	630001-
10	07000-73040	O-RING ……O形圈	1	630001-
11	01010-81025	BOLT……螺栓	1	630001-
12	01643-31032	WASHER……垫圈	1	630001-
13	6261-51-6320	BRACKET ……支架	1	630001-
14	01010-81025	BOLT……螺栓	2	630001-
15	01010-81030	BOLT……螺栓	1	630001-
16	01580-01008	NUT ……螺母	1	630001-
17	01643-31032	WASHER……垫圈	4	630001-
18	6261-21-5320	GAUGE,LEVEL ……水平油位计	1	630001-
19	6261-21-5450	GUIDE,OIL GAUGE ……油位计导管	1	630001-
20	6150-21-5920	COLLAR……衬套	1	630001-
21	6150-21-5930	NUT…… 螺母	1	630001-
22	6261-21-5460	BRACKET ……支架	1	630001-
23	04434-51310	CLIP……管夹	1	630001-
24	01435-01025	BOLT……螺栓	1	630001-
25	01643-31032	WASHER……垫圈	1	630001-
26	01435-01020	BOLT……螺栓	1	630001-
27	6741-81-9220	SENSOR,OIL LEVEL……油位传感器	1	630001-
	7861-91-4220	.O-RING……O形圈	1	630001-
28	01435-00612	BOLT……螺栓	3	630001-
29	08193-20010	CLIP……管夹	1	630001-
30	01435-01020	BOLT……螺栓	1	630001-
31	6631-11-5630	SPACER……调整垫片	2	630001-
32	6261-21-7180	BRACKET ……支架	1	630001-
33	01435-01065	BOLT……螺栓	2	630001-
34	600-051-2050	CLIP……管夹	1	630001-
35	01643-31032	WASHER……垫圈	1	630001-
36	01435-01020	BOLT……螺栓	1	630001-
37	02720-41616	PLUG……堵塞	1	630001-

https://truckmanualshub.com/

FIG.A2210-A4H7 FLYWHEEL HOUSING

飞轮壳

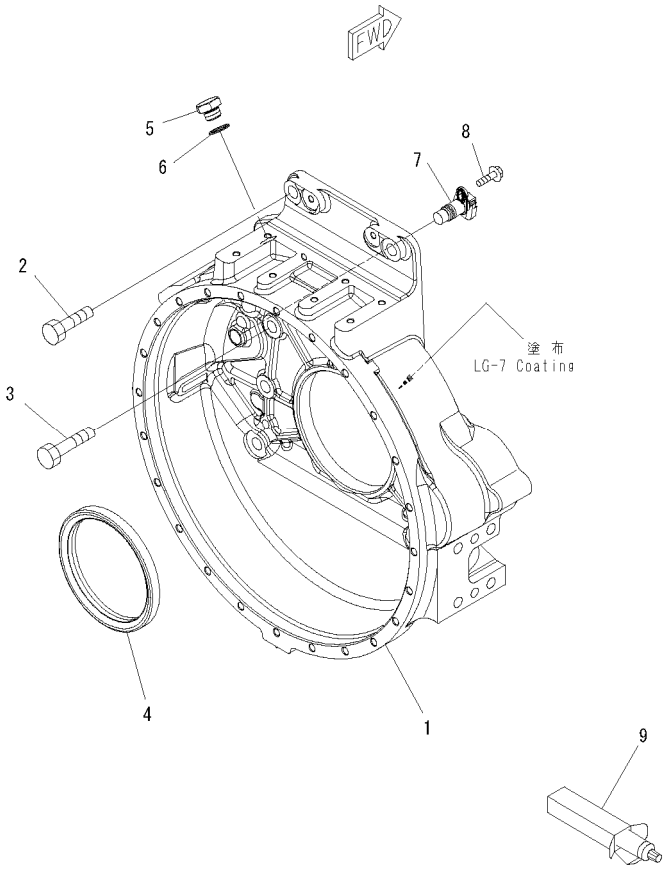

00057558

FIG NO. : A2210-A4H7

INDEX	PART NO.	DESCRIPTION	Q'TY	SERIAL NO.
1	6261-21-4761	HOUSING,FLYWHEEL……飞轮壳	1	630001-
2	01010-61650	BOLT……螺栓	8	630001-
3	01010-61665	BOLT……螺栓	2	630001-
4	6151-21-4150	SEAL, REAR……后油封	1	630001-
5	6114-11-8910	PLUG……堵塞	1	630001-
6	07005-02216	SEAL,WASHER ……密封垫	1	630001-
7	6261-81-2901	SENSOR,REVOLUTION…… 转速传感器	1	630001-
	6261-81-2911	.SENSOR ……油位传感器	1	630001-
	6271-81-9220	.O-RING……O形圈	1	630001-
8	01435-00816	BOLT……螺栓	1	630001-
9	（09920-00150）	LIQUID GASKET,LG-7,150G ……液体密封胶	AR	630001-

https://truckmanualshub.com/

FIG.A2230-A4E1 FLYWHEEL
飞轮

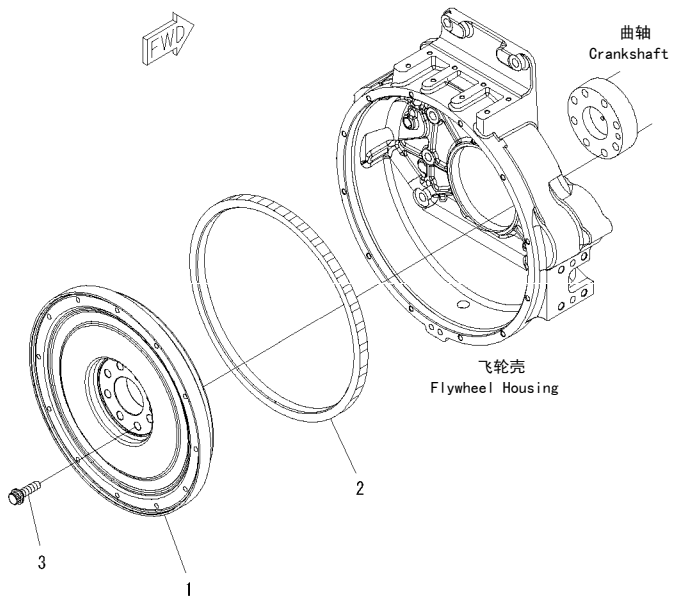

00041648

FIG NO. : A2230-A4E1

INDEX	PART NO.	DESCRIPTION	Q'TY	SERIAL NO.
	6261-31-4100	FLYWHEEL ASS'Y……飞轮总成	1	630001-
1	☆	.FLYWHEEL ……飞轮	1	630001-
2	6150-31-1351	.GEAR,RING……齿圈	1	630001-
3	6210-31-1350	BOLT……螺栓	8	630001-

https://truckmanualshub.com/

FIG.A2250-A4G6 ENGINE FRONT SUPPORT
发动机前支架

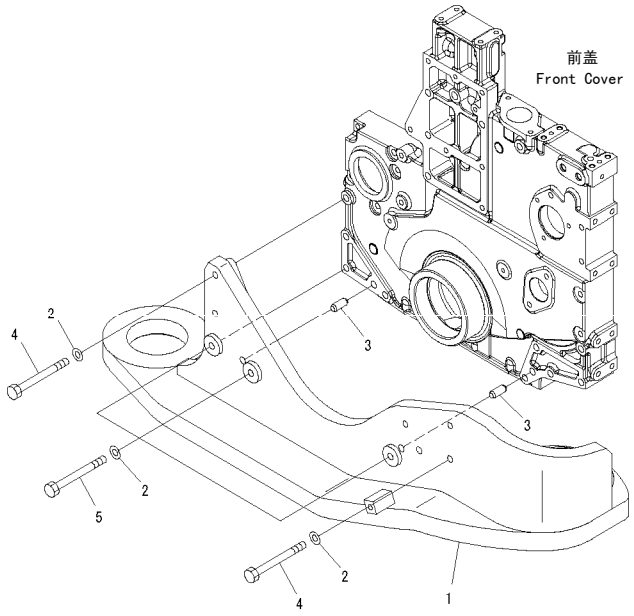

FIG NO. : A2250-A4G6

INDEX	PART NO.	DESCRIPTION	Q'TY	SERIAL NO.
1	21M-01-21212	BRACKET,FRONT ……前支架	1	630001-
2	01643-31232	WASHER……垫圈	9	630001-
3	04020-01434	PIN,DOWEL ……定位销	2	630001-
4	01011-81240	BOLT……螺栓	6	630001-
5	01011-81245	BOLT……螺栓	3	630001-

https://truckmanualshub.com/

FIG.A2310-A4B4A CRANKSHAFT

曲轴

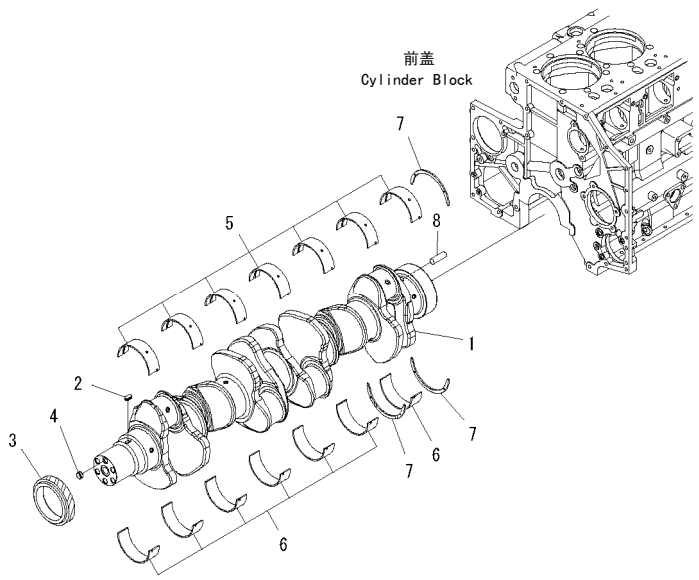

00041228

FIG NO. : A2310-A4B4A

INDEX	PART NO.	DESCRIPTION	Q'TY	SERIAL NO.
	6261-31-1200	CRANKSHAFT ASS'Y……曲轴总成	1	630001-
1	☆	.CRANKSHAFT ……曲轴	1	630001-
2	6150-31-1130	.KEY……键	1	630001-
3	6210-31-1120	.GEAR,CRANK ……曲轴齿轮	1	630001-
4	6211-31-1420	.PIN……销	1	630001-
		STANDARD……标准		
	6210-21-8000	METAL ASS'Y ……轴瓦总成	1	630001-
	6210-21-8010	.MAIN METAL ASS'Y ……主轴瓦总成	7	630001-
5	☆	..METAL,UPPER ……上环	1	630001-
6	☆	..METAL,LOWER ……下环	1	630001-
7	6210-21-8050	.THRUST METAL ASS'Y ……止动环总成	1	630001-
	☆	..METAL,THRUST……止动环	3	630001-
		UNDERSIZE 0.25MM……大尺寸0.25mm		
	6210-29-8010	MAIN METAL ASS'Y……主轴瓦总成	7	630001-
5	☆	.METAL,UPPER……上环	1	630001-
6	☆	.METAL,LOWER……下环	1	630001-
		UNDERSIZE 0.50MM……大尺寸0.50mm		
	6210-28-8010	MAIN METAL ASS'Y……主轴瓦总成	7	630001-
5	☆	.METAL,UPPER……上环	1	630001-
6	☆	.METAL,LOWER……下环	1	630001-
		UNDERSIZE 0.75MM……大尺寸0.75mm		
	6210-27-8010	MAIN METAL ASS'Y……主轴瓦总成	7	630001-
5	☆	.METAL,UPPER……上环	1	630001-
6	☆	.METAL,LOWER……下环	1	630001-
		UNDERSIZE 1.00MM……大尺寸1.00mm		
	6210-26-8010	MAIN METAL ASS'Y……主轴瓦总成	7	630001-
5	☆	.METAL,UPPER……上环	1	630001-
6	☆	.METAL,LOWER……下环	1	630001-
		OVERSIZE 0.25MM ……0.25mm以上		
7	6210-29-8050	THRUST METAL ASS'Y……止动环总成	1	630001-
	☆	.METAL,THRUST ……止动环	3	630001-
		OVERSIZE 0.50MM ……0.50mm以上		
7	6210-28-8050	THRUST METAL ASS'Y……止动环总成	1	630001-
	☆	.METAL,THRUST ……止动环	3	630001-
		OVERSIZE 0.75MM ……0.75mm以上		
7	6210-27-8050	THRUST METAL ASS'Y……止动环总成	1	630001-
	☆	.METAL,THRUST ……止动环	3	630001-
		OVERSIZE 1.00MM ……1.00mm以上		
7	6210-26-8050	THRUST METAL ASS'Y……止动环总成	1	630001-
	☆	.METAL,THRUST ……止动环	3	630001-
8	04020-01228	PIN,DOWEL ……定位销	1	630001-

https://truckmanualshub.com/

FIG.A2330-A4B6 VIBRATION DAMPER
减震器

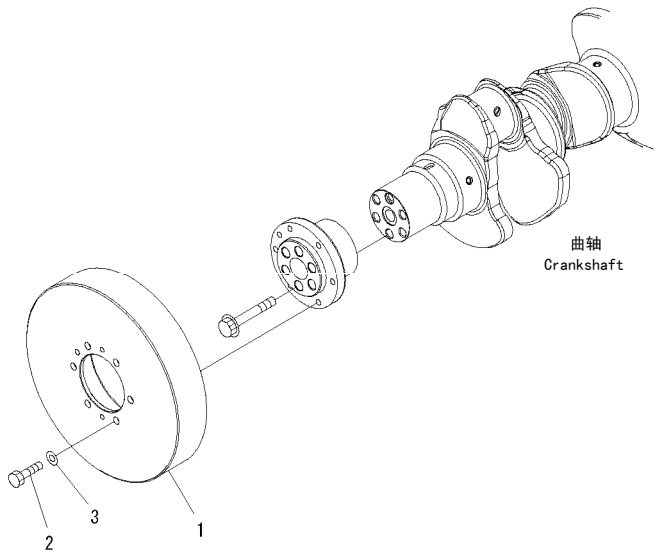

00041620

FIG NO. : A2330-A4B6

INDEX	PART NO.	DESCRIPTION	Q'TY	SERIAL NO.
1	6261-31-8300	DAMPER ASS'Y……减振器总成	1	630001-
2	01010-81230	BOLT……螺栓	6	630001-
3	01643-31232	WASHER……垫圈	6	630001-

https://truckmanualshub.com/

FIG.A2350-A4C9 PISTON AND CONNECTING ROD
活塞和连接杆

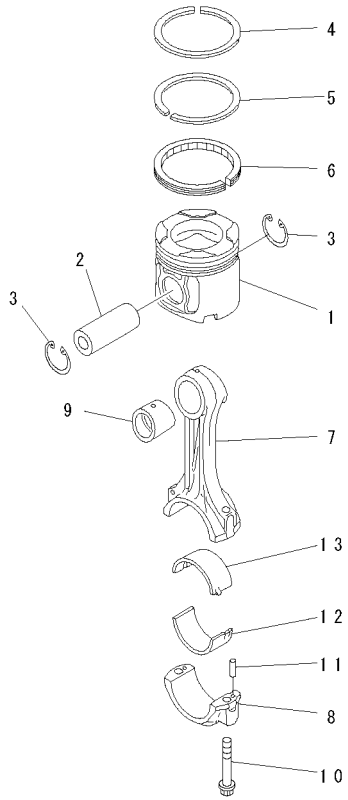

00041249

FIG NO. : A2350-A4C9

INDEX	PART NO.	DESCRIPTION	Q'TY	SERIAL NO.
1	6261-31-2130	PISTON……活塞	6	630001-
2	6211-31-2410	PIN,PISTON……活塞销	6	630001-
3	04065-05220	RING,SNAP ……卡簧	12	630001-
	6261-31-2030	PISTON RING ASS'Y,PER CYLINDER……		
		……活塞环总成，油缸	6	630001-
4	☆	.RING,TOP…… 第一道环	1	630001-
5	☆	.RING,SECOND……第二道环	1	630001-
6	☆	.RING,OIL ……油封环	1	630001-
	6261-31-3100	CONNECTING ROD……连接杆	6	630001-
7	☆	.ROD,CONNECTING ……连接杆	1	630001-
8	☆	.CAP,CONNECTING ROD ……连接杆盖	1	630001-
9	6261-31-3140	.BUSHING……衬套	1	630001-
10	6210-31-3310	.BOLT ……螺栓	2	630001-
11	02400-10413	.PIN,DOWEL……定位销	2	630001-
		STANDARD……标准		
	6210-32-3040	METAL ASS'Y ……轴瓦总成	6	630001-
12	☆	.METAL,LOWER……下环	1	630001-
13	☆	.METAL,UPPER……上环	1	630001-
		UNDERSIZE 0.25MM……大尺寸0.25mm		
	6210-39-3040	METAL ASS'Y ……轴瓦总成	6	630001-
12	☆	.METAL,LOWER……下环	1	630001-
13	☆	.METAL,UPPER……上环	1	630001-
		UNDERSIZE 0.50MM……大尺寸0.50mm		
	6210-38-3040	METAL ASS'Y ……轴瓦总成	6	630001-
12	☆	.METAL,LOWER……下环	1	630001-
13	☆	.METAL,UPPER……上环	1	630001-
		UNDERSIZE 0.75MM……大尺寸0.75mm		
	6210-37-3040	METAL ASS'Y ……轴瓦总成	6	630001-
12	☆	.METAL,LOWER……下环	1	630001-
13	☆	.METAL,UPPER……上环	1	630001-
		UNDERSIZE 1.00MM……大尺寸1.00mm		
	6210-36-3040	METAL ASS'Y ……轴瓦总成	6	630001-
12	☆	.METAL,LOWER……下环	1	630001-
13	☆	.METAL,UPPER……上环	1	630001-

https://truckmanualshub.com/

FIG.A2370-A4F8 DAMPER FLANGE
减震器法兰

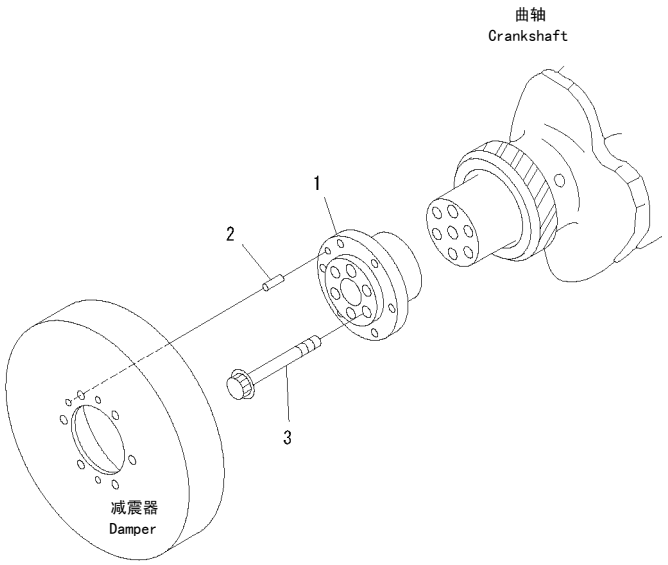

PJ6D822

FIG NO. : A2370-A4F8

INDEX	PART NO.	DESCRIPTION	Q'TY	SERIAL NO.
1	6218-31-1530	FLANGE……法兰	1	630001-
2	04020-01024	PIN,DOWEL ……定位销	6	630001-
3	6164-21-2490	BOLT……螺栓	6	630001-

https://truckmanualshub.com/

FIG.A2410-A4A5 CAMSHAFT
凸轮轴

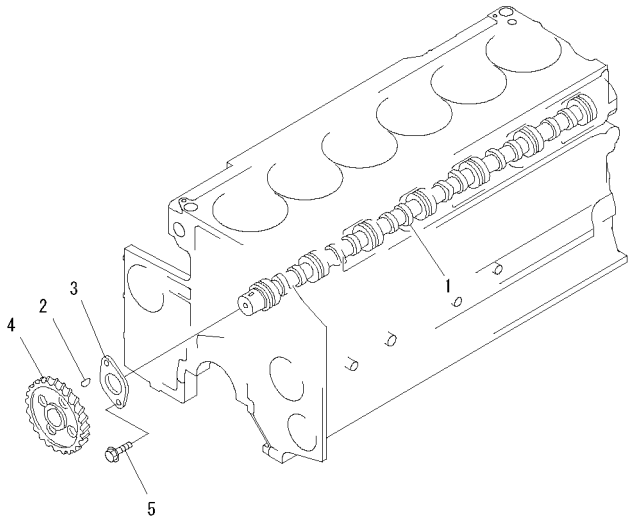

PV6B671

FIG NO. : A2410-A4A5

INDEX	PART NO.	DESCRIPTION	Q'TY	SERIAL NO.
	6210-41-1012	CAMSHAFT ASS'Y……凸轮轴总成	1	630001-
1	☆	.CAMSHAFT ……凸轮轴	1	630001-
2	04010-00725	.KEY……键	1	630001-
3	6210-41-1131	.PLATE,THRUST ……止推板	1	630001-
4	6210-41-1120	.GEAR,CAMSHAFT……凸轮轴齿轮	1	630001-
5	01437-01220	BOLT……螺栓	2	630001-

https://truckmanualshub.com/

FIG.A2411-A4B3 CAMFOLLOWER AND PUSH ROD
凸轮轴和推杆

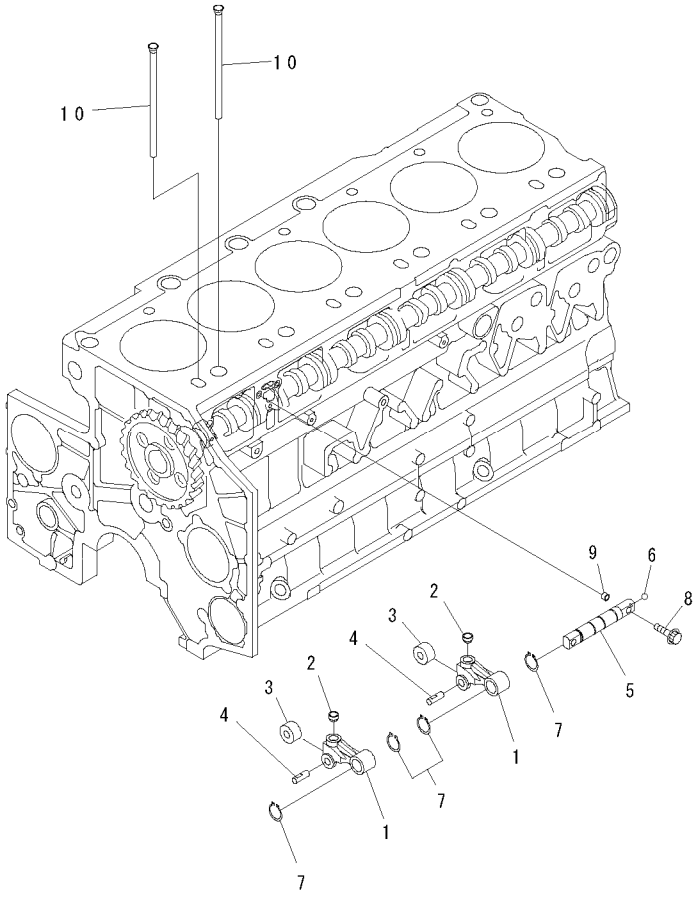

PV6B673

FIG NO. : A2411-A4B3

INDEX	PART NO.	DESCRIPTION	Q'TY	SERIAL NO.
	6210-41-2320	LEVER ASS'Y ……杆总成	12	630001-
1	☆	.LEVER,ROD……连杆	1	630001-
2	☆	.SOCKET ……套筒	1	630001-
3	☆	.ROLLER,CAM ……套	1	630001-
4	☆	.PIN……销	1	630001-
	6210-41-2400	SHAFT ASS'Y ……轴总成	6	630001-
5	☆	.SHAFT……轴	1	630001-
6	6150-81-8420	.BALL ……球	1	630001-
7	04064-02212	RING,SNAP ……挡圈	24	630001-
8	6210-41-2450	BOLT……螺栓	12	630001-
9	6150-41-2430	PIN ……销	12	630001-
10	6210-41-3120	ROD,PUSH……连杆	12	630001-

https://truckmanualshub.com/

FIG.A2411-B4B3 ROCKER ARM

摇臂

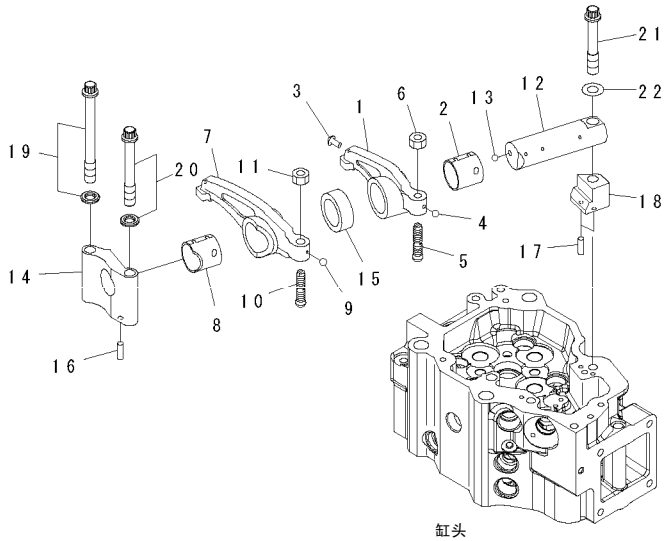

缸头
Cylinder Head

00041636

FIG NO. : A2411-B4B3

INDEX	PART NO.	DESCRIPTION	Q'TY	SERIAL NO.
	6261-41-5040	ROCKER ARM ASS'Y, INTAKE ……进气摇臂总成	6	630001-
	6261-41-5400	. ARM ASS'Y……小臂总成	1	630001-
1	☆	. . ARM, ROCKER……摇臂	1	630001-
2	6261-41-5420	. . BUSHING ……衬套	1	630001-
3	6162-43-5340	. . RIVET ……铆钉	1	630001-
4	04260-00317	. . BALL, STEEL……钢球	1	630001-
5	6217-41-5550	. SCREW……螺钉	1	630001-
6	01582-01008	. NUT……螺母	1	630001-
	6261-41-5050	ROCKER ARM ASS'Y, EXHAUST……排气摇臂总成	6	630001-
	6261-41-5500	. ARM ASS'Y……小臂总成	1	630001-
7	☆	. . ARM, ROCKER……摇臂	1	630001-
8	6261-41-5520	. . BUSHING ……衬套	1	630001-
9	04260-00317	. . BALL, STEEL……钢球	1	630001-
10	6217-41-5550	. SCREW……螺钉	1	630001-
11	01582-01008	. NUT……螺母	1	630001-
	6934-42-5300	ROCKER ARM SHAFT A……摇臂轴总成	6	630001-
12	☆	. SHAFT, ARM……臂轴	1	630001-
13	04260-00635	. BALL ……球	1	630001-
14	6261-41-5530	BRACKET ……支架	6	630001-
15	6210-41-5440	COLLAR……接头	6	630001-
16	04020-00514	PIN, DOWEL ……定位销	6	630001-
17	04020-00514	PIN, DOWEL ……定位销	12	630001-
18	6217-41-5540	SPACER……垫块	6	630001-
19	6217-41-5570	BOLT……螺栓	6	630001-
20	6217-41-5560	BOLT……螺栓	6	630001-
21	6217-81-8311	BOLT……螺栓	6	630001-
22	01643-51232	WASHER……垫圈	6	630001-

https://truckmanualshub.com/

FIG.A2610-A4C7 FRONT POWER TAKE OFF
前动力输出

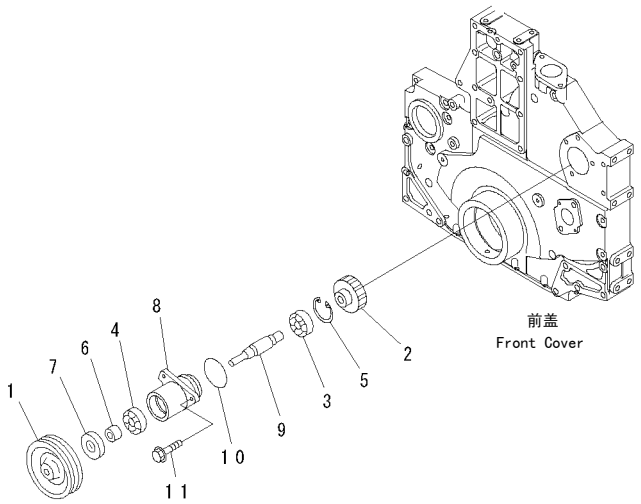

00050696

FIG NO. : A2610-A4C7

INDEX	PART NO.	DESCRIPTION	Q'TY	SERIAL NO.
	6217-21-3501	POWER TAKE OFF ASS'Y……动力输出总成	1	630001-
1	6218-21-3860	.PULLEY,NON HARDENING ……未硬化皮带轮	1	630001-
2	6217-21-3540	.GEAR ……齿轮	1	630001-
3	06340-06204	.BEARING,BALL ……滚珠轴承	1	630001-
4	06340-06304	.BEARING,BALL ……滚珠轴承	1	630001-
5	04065-04718	.RING,SNAP……卡簧	1	630001-
6	6218-21-3831	.SPACER ……垫块	1	630001-
7	07012-C0032	.SEAL,OIL ……油封	1	630001-
8	6218-21-3811	.HOUSING……壳体	1	630001-
9	6218-21-3820	.SHAFT……轴	1	630001-
10	07000-02060	O-RING ……O形圈	1	630001-
11	01435-01030	BOLT……螺栓	3	630001-

https://truckmanualshub.com/

FIG.A2610-A4C8 FRONT POWER TAKE OFF (HARDENING PULLEY SPEC.)

前动力输出（硬化皮带轮）

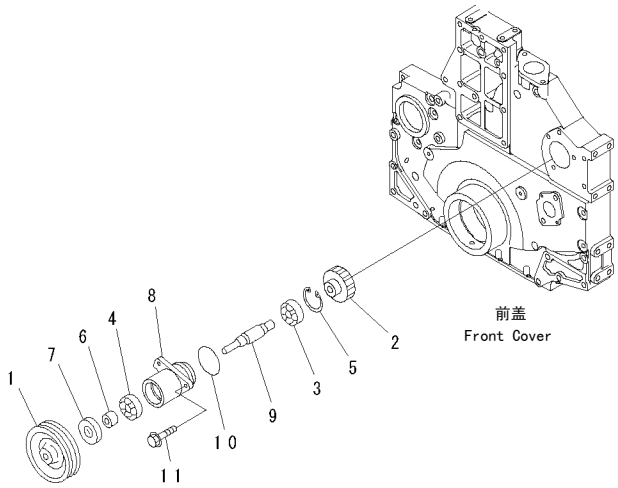

00050696

FIG NO. : A2610-A4C8

INDEX	PART NO.	DESCRIPTION	Q'TY	SERIAL NO.
	6217-21-3601	POWER TAKE OFF ASS'Y……动力输出总成	1	630001-
1	6218-21-3870	.PULLEY,HARDENING ……硬化皮带轮	1	630001-
2	6217-21-3540	.GEAR ……齿轮	1	630001-
3	06340-06204	.BEARING,BALL ……滚珠轴承	1	630001-
4	06340-06304	.BEARING,BALL ……滚珠轴承	1	630001-
5	04065-04718	.RING,SNAP……卡簧	1	630001-
6	6218-21-3831	.SPACER ……垫块	1	630001-
7	07012-C0032	.SEAL,OIL ……油封	1	630001-
8	6218-21-3811	.HOUSING……壳体	1	630001-
9	6218-21-3820	.SHAFT……轴	1	630001-
10	07000-02060	O-RING ……O形圈	1	630001-
11	01435-01030	BOLT……螺栓	3	630001-

https://truckmanualshub.com/

FIG.A3010-A4A8 LUBRICATING OIL PUMP
润滑油泵

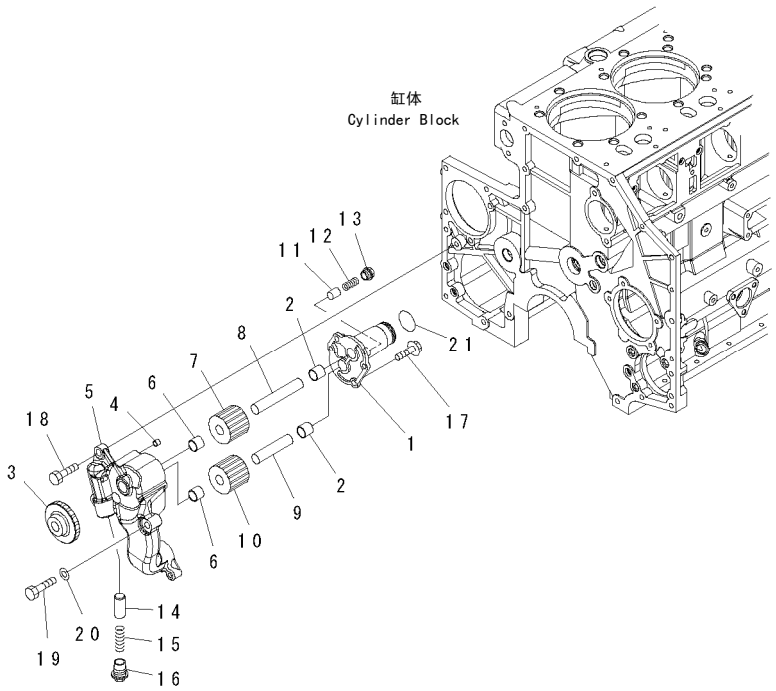

00041175

FIG NO. : A3010-A4A8

INDEX	PART NO.	DESCRIPTION	Q'TY	SERIAL NO.
	6261-51-2000	OIL PUMP ASS'Y……润滑油泵总成	1	630001-
	PML152-07110	.COVER ASS'Y……盖总成	1	630001-
1	☆	..COVER ……盖	1	630001-
2	PML130-03300	..BUSHING ……衬套	2	630001-
	PML160-11301	.GEAR ASS'Y,PUMP DRIVE…泵的传动齿轮总成	1	630001-
3	☆	..GEAR,MAIN DRIVE ……主传动齿轮	1	630001-
4	☆	..PIN ……销	2	630001-
	PML150-08501	..COVER ASS'Y ……盖总成	1	630001-
5	☆	...BODY ……壳	1	630001-
6	PML130-03300	...BUSHING……衬套	2	630001-
	PML154-09200	..SHAFT ASS'Y,DRIVE ……传动齿轮总成	1	630001-
7	☆	...GEAR,DRIVE ……传动齿轮	1	630001-
8	☆	...SHAFT……轴	1	630001-
	PML156-07400	.SHAFT ASS'Y,DRIVEN ……轴传动总成	1	630001-
9	☆	..SHAFT ……轴	1	630001-
10	☆	..GEAR,DRIVEN ……传动齿轮	1	630001-
11	PML136-00501	.VALVE……阀	1	630001-
12	PML137-05800	.SPRING,VALVE ……阀弹簧	1	630001-
13	PML139-01300	.PLUG ……堵塞	1	630001-
14	PML136-00201	.VALVE……阀	1	630001-
15	PML137-04800	.SPRING,VALVE ……阀弹簧	1	630001-
16	PML139-01520	.PLUG ……堵塞	1	630001-
17	PMMF14-0229	.BOLT ……螺栓	4	630001-
18	01010-81235	BOLT……螺栓	1	630001-
19	01010-81245	BOLT……螺栓	2	630001-
20	01643-31232	WASHER……垫圈	1	630001-
21	07000-73038	O-RING ……O形圈	1	630001-

https://truckmanualshub.com/

FIG.A3110-A4H1 OIL FILTER AND PIPING

油滤清器和油管

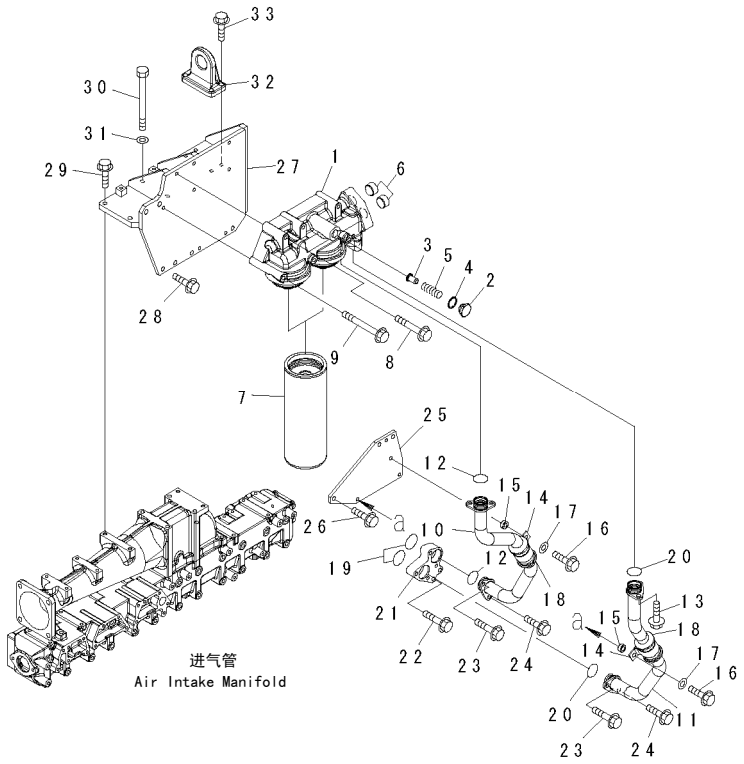

00059285

FIG NO. : A3110-A4H1

INDEX	PART NO.	DESCRIPTION	Q'TY	SERIAL NO.
	6261-51-6600	HEAD ASS'Y,OIL FILTER ……油滤清器头总成	1	630001-
1	6261-51-6610	.HEAD ……头	1	630001-
2	6217-51-5660	.CAP……盖	1	630001-
3	6162-55-5230	.VALVE……阀	1	630001-
4	6162-53-5430	.PACKING……衬垫	1	630001-
5	600-211-1890	.SPRING ……弹簧	1	630001-
6	6261-51-6620	.PLUG ……堵塞	2	630001-
7	600-211-1340	CARTRIDGE,OIL ……油滤筒	2	630001-
8	01435-01095	BOLT……螺栓	3	630001-
9	01436-01040	BOLT……螺栓	3	630001-
10	6261-51-6150	TUBE,INLET……入口管	1	630001-
11	6261-51-6160	TUBE,RETURN ……溢流管	1	630001-
12	07000-73034	O-RING ……O形圈	2	630001-
13	01435-01025	BOLT……螺栓	4	630001-
14	6165-61-6770	CLIP……管夹	2	630001-
15	6261-51-5751	CUSHION ……减振垫	2	630001-
16	01435-01035	BOLT……螺栓	2	630001-
17	01643-31032	WASHER……垫圈	2	630001-
18	6132-21-4630	SPACER……调整垫片	2	630001-
19	07000-73038	O-RING ……O形圈	2	630001-
20	07000-73034	O-RING ……O形圈	2	630001-
21	6261-51-5180	FLANGE……法兰	1	630001-
22	01435-01045	BOLT……螺栓	2	630001-
23	01435-01050	BOLT……螺栓	2	630001-
24	01435-01020	BOLT……螺栓	2	630001-
25	6261-51-6190	PLATE ……板	1	630001-
26	01435-01025	BOLT……螺栓	3	630001-
27	6261-51-5860	BRACKET ……支架	1	630001-
28	01435-01025	BOLT……螺栓	4	630001-
29	01435-01030	BOLT……螺栓	3	630001-
30	6164-61-7170	BOLT……螺栓	2	630001-
31	01643-31032	WASHER……垫圈	2	630001-
32	6210-21-3752	HANGER,ENGINE…… 发动机吊钩	1	630001-
33	01435-01030	BOLT……螺栓	4	630001-

https://truckmanualshub.com/

FIG.A3310-A4D7 OIL COOLER
冷却器

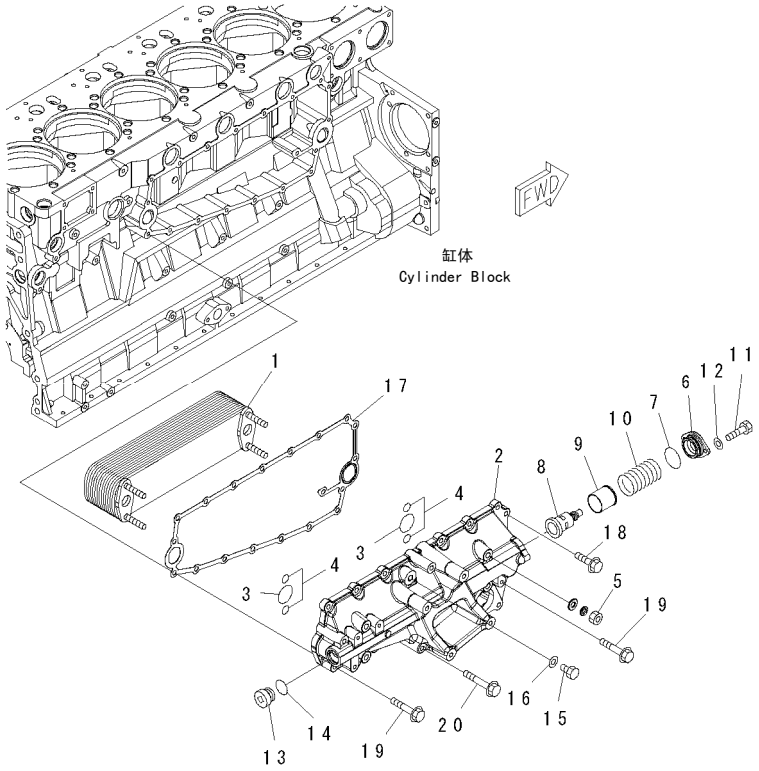

00041177

FIG NO. : A3310-A4D7

INDEX	PART NO.	DESCRIPTION	Q'TY	SERIAL NO.
1	6261-61-2110	ELEMENT,OIL COOLER……油冷却滤芯	1	630001-
2	6261-61-2120	COVER ……盖	1	630001-
3	6210-61-2520	O-RING ……O形圈	2	630001-
4	07000-A2016	O-RING ……O形圈	4	630001-
5	6215-61-2580	NUT ……螺母	4	630001-
6	6210-61-2130	COVER ……盖	1	630001-
7	07000-73042	O-RING ……O形圈	1	630001-
8	6261-61-2610	THERMOSTAT……恒温器	1	630001-
9	6218-61-2620	COLLAR……衬套	1	630001-
10	6210-61-2160	SPRING……弹簧	1	630001-
11	01010-80820	BOLT……螺栓	2	630001-
12	01640-20816	WASHER……垫圈	2	630001-
13	07040-13016	PLUG……堵塞	1	630001-
14	6210-61-2550	O-RING ……O形圈	1	630001-
15	07040-11409	PLUG……堵塞	1	630001-
16	07005-01412	GASKET……垫	1	630001-
17	6210-61-2811	GASKET……(K1)密封垫	1	630001-
18	01435-01030	BOLT……螺栓	10	630001-
19	01435-01060	BOLT……螺栓	3	630001-
20	01435-01090	BOLT……螺栓	3	630001-

https://truckmanualshub.com/

FIG.A4010-A4R4 FUEL SUPPLY PUMP AND COMMON RAIL MOUNTING

供油泵和相关线路安装

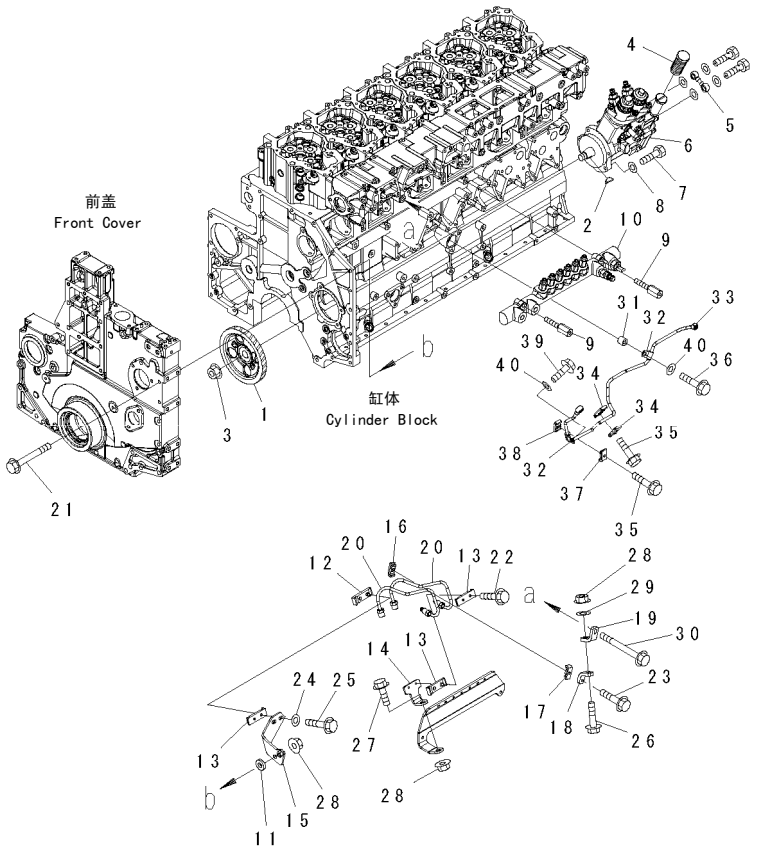

00060637

FIG NO. : A4010-A4R4

INDEX	PART NO.	DESCRIPTION	Q'TY	SERIAL NO.
1	6261-71-3220	GEAR,PUMP DRIVE ……齿轮	1	630001-
2	04010-00519	KEY,WOODRUFF……半月销	1	630001-
3	6219-71-3150	NUT ……螺母	1	630001-
4	6217-71-1910	COVER,PRIMING PUMP……起动泵盖	1	630001-
5	6217-71-5910	TUBE……管	1	630001-
6	6261-71-1110	SUPPLY PUMP ASS'Y ……供应泵总成	1	630001-
7	01010-81035	BOLT……螺栓	4	630001-
8	01643-31032	WASHER……垫圈	4	630001-
9	6217-71-5251	BOLT……螺栓	2	630001-
10	(6261-71-1220)	RAIL ASS'Y,(SEE FIG.A4010-B4R4) …… ……轨道总成	1	630001-
11	6110-23-6490	SPACER……调整垫片	1	630001-
12	6217-71-5170	CLAMP ……卡箍	1	630001-
13	6217-71-5210	CLAMP ……卡箍	3	630001-
14	6217-71-5281	BRACKET ……支架	1	630001-
15	6261-71-5910	BRACKET ……支架	1	630001-
16	6217-71-6640	CLAMP ……卡箍	1	630001-
17	6217-71-6650	CLAMP ……卡箍	1	630001-
18	6261-71-5670	BRACKET ……支架	1	630001-
19	6261-71-5690	BRACKET ……支架	1	630001-
20	6261-71-4110	TUBE,SUPPLY ……供应管	2	630001-
21	01436-01010	BOLT……螺栓	1	630001-
22	01435-00630	BOLT……螺栓	2	630001-
23	01435-00635	BOLT……螺栓	1	630001-
24	01643-30823	WASHER……垫圈	2	630001-
25	01435-00640	BOLT……螺栓	2	630001-
26	01435-01035	BOLT……螺栓	1	630001-
27	01435-01025	BOLT……螺栓	1	630001-
28	01584-01008	NUT ……螺母	3	630001-
29	01643-31032	WASHER……垫圈	1	630001-
30	01436-01080	BOLT……螺栓	1	630001-
31	175-79-83760	SPACER……垫块	1	630001-
32	6210-51-8320	CLIP……管夹	2	630001-
33	6261-71-5411	TUBE,OVER FLOW……溢流管	1	630001-
34	6162-75-5680	CLAMP ……卡箍	2	630001-
35	01435-00630	BOLT……螺栓	3	630001-
36	01435-01040	BOLT……螺栓	1	630001-
37	6217-71-6650	CLAMP ……卡箍	1	630001-
38	6217-71-6640	CLAMP ……卡箍	1	630001-
39	01435-01020	BOLT……螺栓	1	630001-
40	01643-31032	WASHER……垫圈	2	630001-

https://truckmanualshub.com/

FIG.A4010-B4R4 COMMON RAIL (INNER PARTS)
共轨（内部品）

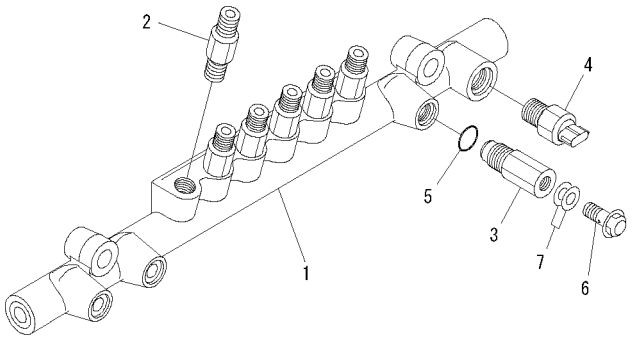

00053657

FIG NO. : A4010-B4R4

INDEX	PART NO.	DESCRIPTION	Q'TY	SERIAL NO.
1	6261-71-1220	RAIL ASS'Y,COMMON ……共轨总成	1	630001-
2	ND095400-0310	.LIMITER ASS'Y,FUEL FLOW……		
		……燃油流量限制器总成	6	630001-
3	ND095420-0440	.LIMITER ASS'Y,FUEL PRESSURE……		
		……燃料压力限位器总成	1	630001-
4	ND499000-6160	.SENSOR ASS'Y,FUEL PRESSURE ……		
		……燃料压力传感器总成	1	630001-
5	ND095444-0020	.PICCO RING…… 环	1	630001-
6	ND095438-0090	.BOLT,JOINT ……接头螺栓	1	630001-
7	ND949010-2530	.GASKET ……垫	2	630001-

https://truckmanualshub.com/

FIG.A4030-A4C1 FUEL SUPPLY PUMP BRACKET AND PIPING

供油泵支架和油管

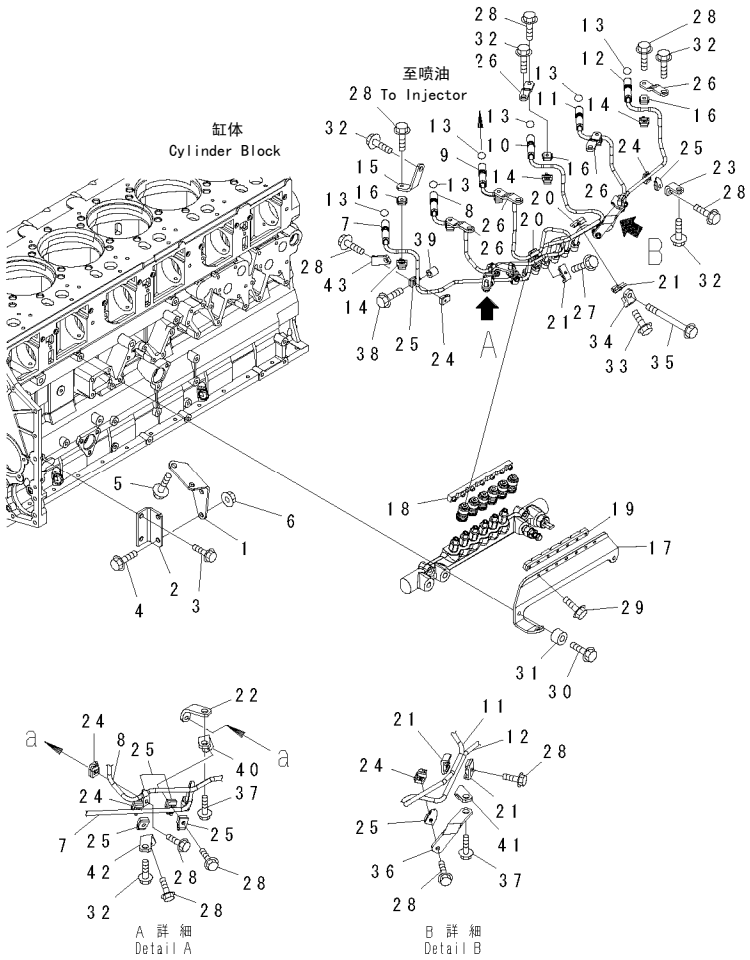

00041184

FIG NO. : A4030-A4C1

INDEX	PART NO.	DESCRIPTION	Q'TY	SERIAL NO.
1	6217-21-6110	BRACKET ……支架	1	630001-
2	6217-21-6120	BRACKET ……支架	1	630001-
3	01435-01020	BOLT……螺栓	2	630001-
4	01435-01025	BOLT……螺栓	2	630001-
5	01435-01220	BOLT……螺栓	2	630001-
6	01584-01008	NUT ……螺母	2	630001-
7	6261-71-5110	TUBE, INJECTION, NO.1……喷射管	1	630001-
8	6261-71-5120	TUBE, INJECTION, NO.2……喷射管	1	630001-
9	6261-71-5130	TUBE, INJECTION, NO.3……喷射管	1	630001-
10	6261-71-5140	TUBE, INJECTION, NO.4……喷射管	1	630001-
11	6261-71-5150	TUBE, INJECTION, NO.5……喷射管	1	630001-
12	6261-71-5160	TUBE, INJECTION, NO.6……喷射管	1	630001-
13	07000-E2015	O-RING ……O形圈	6	630001-
14	6261-71-6660	CLAMP ……卡箍	6	630001-
15	6261-71-5190	BRACKET ……支架	1	630001-
16	6261-71-6670	CLAMP ……卡箍	6	630001-
17	6217-71-5740	BRACKET ……支架	1	630001-
18	6217-71-5260	CLAMP ……卡箍	1	630001-
19	6217-71-5760	CLAMP ……卡箍	1	630001-
20	6217-71-6640	CLAMP ……卡箍	2	630001-
21	6217-71-6650	CLAMP ……卡箍	4	630001-
22	6261-71-5610	BRACKET ……支架	1	630001-
23	6261-71-5630	BRACKET ……支架	1	630001-
24	6217-71-6660	CLAMP ……卡箍	5	630001-
25	6217-71-6670	CLAMP ……卡箍	7	630001-
26	6261-71-5650	BRACKET ……支架	5	630001-
27	01435-00625	BOLT……螺栓	1	630001-
28	01435-00630	BOLT……螺栓	13	630001-
29	01435-00635	BOLT……螺栓	7	630001-
30	01010-80830	BOLT……螺栓	2	630001-
31	198-920-1530	COLLAR……滚轮	2	630001-
32	01435-01020	BOLT……螺栓	8	630001-
33	01435-00650	BOLT……螺栓	1	630001-
34	6261-71-5660	BRACKET ……支架	1	630001-
35	01436-01080	BOLT……螺栓	1	630001-
36	6261-71-5740	BRACKET ……支架	1	630001-
37	01435-01025	BOLT……螺栓	2	630001-
38	01435-01050	BOLT……螺栓	1	630001-
39	6210-11-5820	SPACER……垫块	1	630001-
40	6261-71-5750	BRACKET ……支架	1	630001-
41	6261-71-5760	BRACKET ……支架	1	630001-
42	6261-71-5720	BRACKET ……支架	1	630001-
43	6261-71-5710	BRACKET ……支架	1	630001-

https://truckmanualshub.com/

FIG.A4030-B4C1 FUEL SUPPLY TUBE JOINT SUPPORT
供油硬管接头支撑

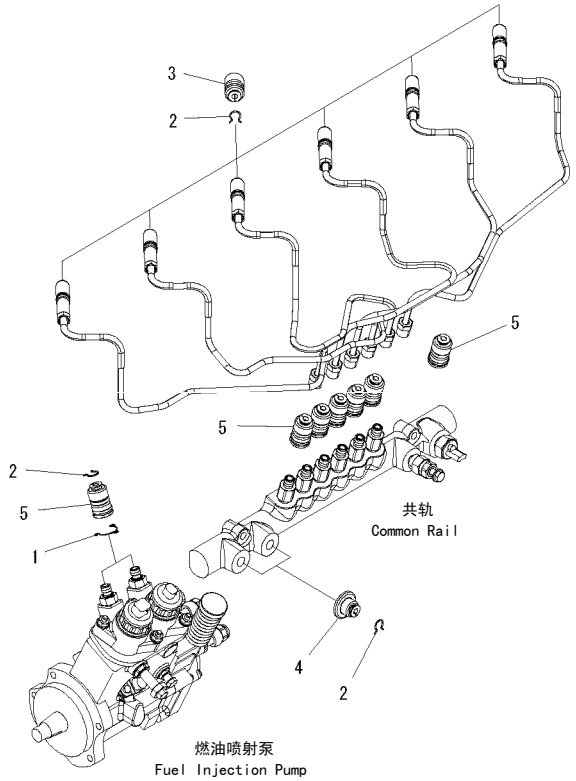

00041185

FIG NO. : A4030-B4C1

INDEX	PART NO.	DESCRIPTION	Q'TY	SERIAL NO.
1	6156-71-9730	CLIP……管夹	2	630001-
2	6217-71-5770	CLAMP ……卡箍	10	630001-
3	6217-71-9770	CAP ……盖	6	630001-
4	6217-71-9780	CAP ……盖	2	630001-
5	6217-71-9791	COVER ……盖	8	630001-

https://truckmanualshub.com/

FIG.A4060-A4C4 FUEL SUPPLY PUMP LUBRICATOR
供油泵润滑

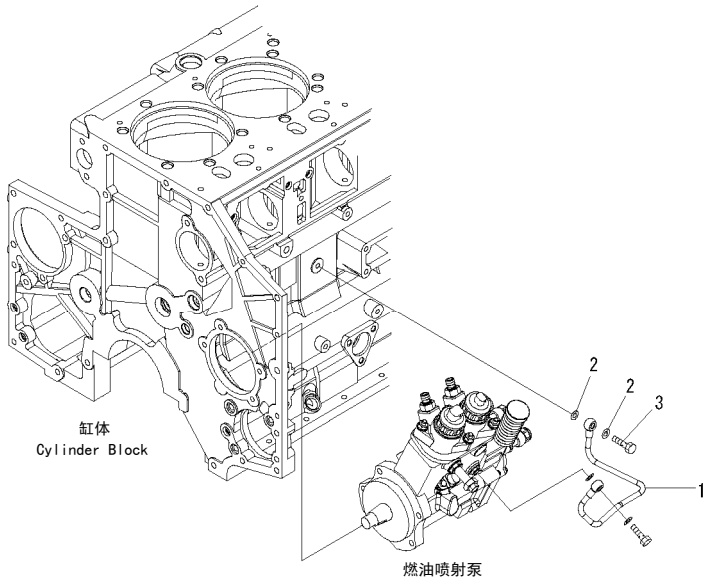

00060638

FIG NO. : A4060-A4C4

INDEX	PART NO.	DESCRIPTION	Q'TY	SERIAL NO.
1	6261-51-7110	TUBE,SUPPLY ……供油管	1	630001-
2	07005-01012	GASKET……垫	2	630001-
3	6934-72-7190	BOLT,JOINT……接头螺栓	1	630001-

https://truckmanualshub.com/

FIG.A4110-A4N2 FUEL FILTER (THREAD 1-5/8)

燃油滤清器(1-5/8线)

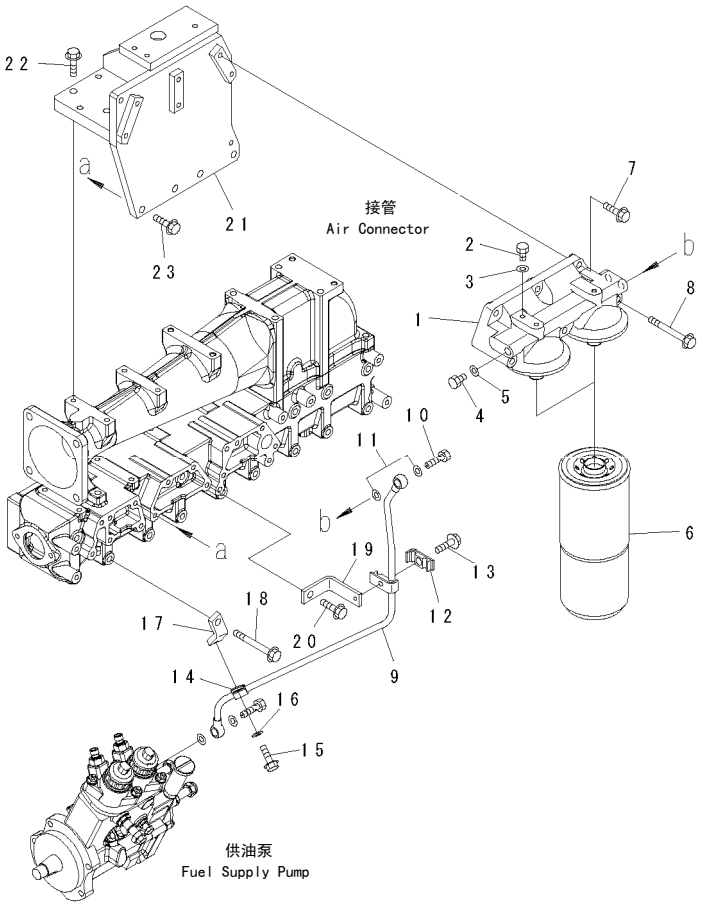

00059286

FIG NO. : A4110-A4N2

INDEX	PART NO.	DESCRIPTION	Q'TY	SERIAL NO.
	6261-71-6800	HEAD ASS'Y,FUEL FILTER…燃油滤清器头总成	1	630001-
1	6261-71-6810	.HEAD (1-5/8) ……头	1	630001-
2	6110-73-6231	.PLUG ……堵塞	3	630001-
3	07005-00812	.GASKET ……垫	3	630001-
4	07040-11409	.PLUG ……堵塞	1	630001-
5	07005-01412	.GASKET ……垫	1	630001-
6	600-311-3550	CARTRIDGE (1-5/8),(SEE FIG.A4119-A4A1)…		
		……滤筒	2	630001-
7	01435-01035	BOLT……螺栓	3	630001-
8	01436-01000	BOLT……螺栓	3	630001-
9	6261-71-5770	TUBE,RETURN ……回油管	1	630001-
10	07206-31014	BOLT,JOINT……接头螺栓	1	630001-
11	07005-01412	GASKET……垫	2	630001-
12	6166-75-6820	CLAMP ……卡箍	2	630001-
13	01435-00830	BOLT……螺栓	1	630001-
14	6215-71-4940	CLAMP ……卡箍	1	630001-
15	01435-01020	BOLT……螺栓	1	630001-
16	01643-31032	WASHER……垫圈	1	630001-
17	6261-71-6120	BRACKET ……支架	1	630001-
18	01436-01080	BOLT……螺栓	1	630001-
19	6261-71-5780	BRACKET ……支架	1	630001-
20	01435-01025	BOLT……螺栓	1	630001-
21	6261-71-6140	BRACKET ……支架	1	630001-
22	01435-01035	BOLT……螺栓	4	630001-
23	01435-01030	BOLT……螺栓	4	630001-

https://truckmanualshub.com/

FIG.A4110-B4N2 FUEL PRIMING PUMP
燃油引液泵

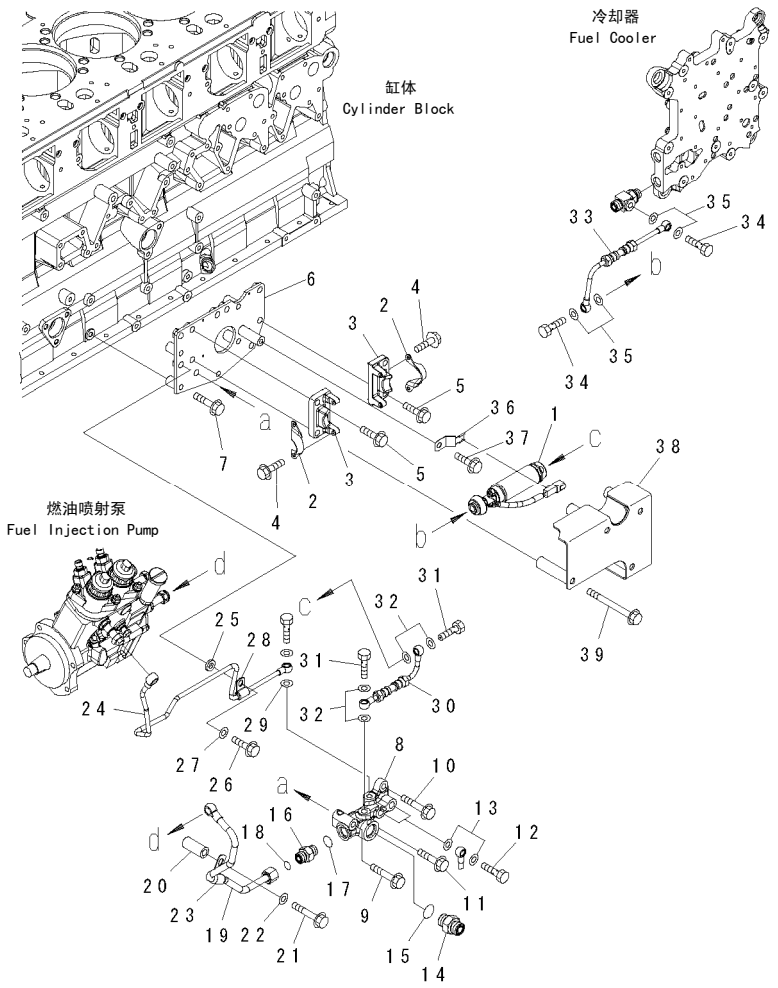

FIG NO. : A4110-B4N2

INDEX	PART NO.	DESCRIPTION	Q'TY	SERIAL NO.
1	6245-71-8110	PUMP ASS'Y,PRIMING……引液泵组件	1	630001-
2	6245-71-5680	BRACKET ……支架	2	630001-
3	6219-71-8600	BLOCK ……垫块	2	630001-
	6210-21-1390	.PIN……销	2	630001-
	6219-71-8610	.BLOCK……垫块	1	630001-
4	01435-00612	BOLT……螺栓	4	630001-
5	01435-01035	BOLT……螺栓	2	630001-
6	6261-71-7210	BRACKET ……支架	1	630001-
7	01435-01045	BOLT……螺栓	3	630001-
8	6261-71-7220	BLOCK ……垫块	1	630001-
9	01435-01065	BOLT……螺栓	1	630001-
10	01435-01060	BOLT……螺栓	1	630001-
11	01435-01055	BOLT……螺栓	1	630001-
12	07206-31014	BOLT,JOINT……接头螺栓	2	630001-
13	07005-01412	GASKET……垫	4	630001-
14	02781-00522	UNION ……接头	1	630001-
15	07002-22434	O-RING ……O形圈	1	630001-
16	02781-00422	UNION ……接头	1	630001-
17	07002-22034	O-RING ……O形圈	1	630001-
18	02896-21012	O-RING ……O形圈	1	630001-
19	6261-71-7110	TUBE……管	1	630001-
20	6112-23-6961	SPACER……调整垫片	1	630001-
21	01435-01070	BOLT……螺栓	1	630001-
22	01643-31032	WASHER……垫圈	1	630001-
23	6162-63-8820	CLIP……管夹	1	630001-
24	6261-71-7150	TUBE……管	1	630001-
25	6136-11-2980	SPACER……调整垫片	1	630001-
26	01435-01030	BOLT……螺栓	1	630001-
27	01643-31032	WASHER……垫圈	1	630001-
28	6210-51-8320	CLIP……管夹	1	630001-
29	07005-01212	GASKET……垫	1	630001-
30	6261-71-7120	HOSE……软管	1	630001-
31	07206-30812	BOLT,JOINT……接头螺栓	2	630001-
32	07005-01212	GASKET……垫	4	630001-
33	6261-71-7130	HOSE……软管	1	630001-
34	07206-30812	BOLT,JOINT……接头螺栓	2	630001-
35	07005-01212	GASKET……垫	4	630001-
36	08193-20010	CLIP……管夹	1	630001-
37	01435-01016	BOLT……螺栓	1	630001-
38	6261-71-7330	COVER ……盖	1	630001-
39	01436-01020	BOLT……螺栓	4	630001-

https://truckmanualshub.com/

FIG.A4110-C4N2 FUEL AIR VENT
燃油气孔

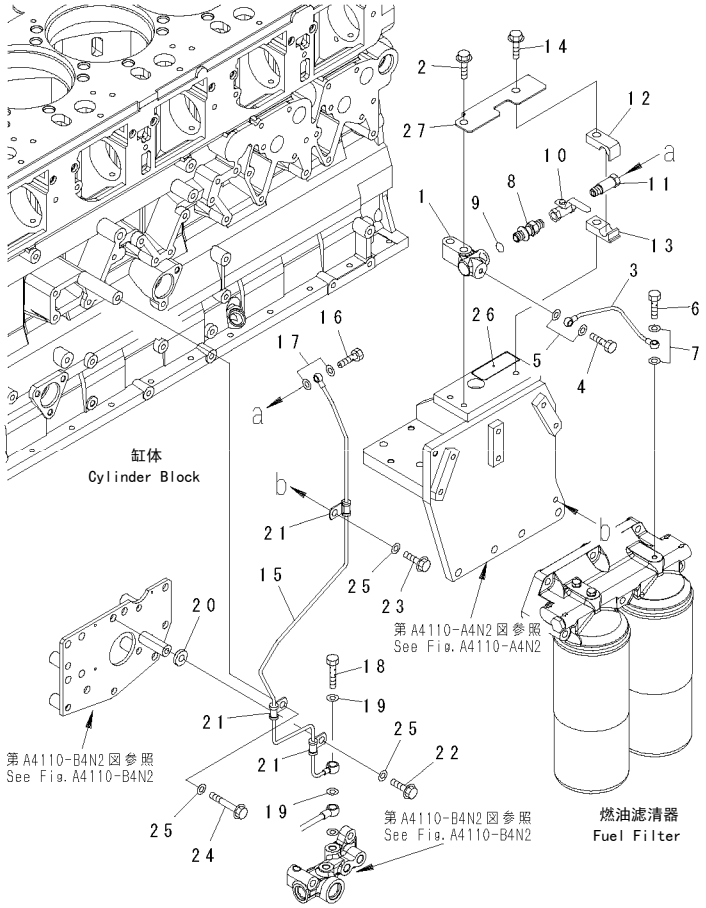

00061490

FIG NO. : A4110-C4N2

INDEX	PART NO.	DESCRIPTION	Q'TY	SERIAL NO.
1	6245-71-8110	BLOCK ……垫块	1	630001-
2	6245-71-5680	BOLT……螺栓	2	630001-
3	6219-71-8600	TUBE……管	1	630001-
4	6210-21-1390	BOLT,JOINT……接头螺栓	1	630001-
5	6219-71-8610	GASKET……垫	2	630001-
6	01435-00612	BOLT,JOINT……接头螺栓	1	630001-
7	01435-01035	GASKET……垫	2	630001-
8	6261-71-7210	NIPPLE……喷嘴	1	630001-
9	01435-01045	O-RING ……O形圈	1	630001-
10	6261-71-7220	VALVE ……阀	1	630001-
11	01435-01065	BOLT……螺栓	1	630001-
12	01435-01060	CLAMP ……卡箍	1	630001-
13	01435-01055	CLAMP ……卡箍	1	630001-
14	07206-31014	BOLT……螺栓	1	630001-
15	07005-01412	TUBE……管	1	630001-
16	02781-00522	BOLT,JOINT……接头螺栓	1	630001-
17	07002-22434	GASKET……垫	2	630001-
18	02781-00422	BOLT,JOINT……接头螺栓	1	630001-
19	07002-22034	GASKET……垫	2	630001-
20	02896-21012	SPACER……调整垫片	1	630001-
21	6261-71-7110	CLIP……管夹	3	630001-
22	6112-23-6961	BOLT……螺栓	1	630001-
23	01435-01070	BOLT……螺栓	1	630001-
24	01643-31032	BOLT……螺栓	1	630001-
25	6162-63-8820	WASHER……垫圈	3	630001-
26	6261-71-7150	PLATE ……板	1	630001-
27	6136-11-2980	COVER ……盖	1	630001-

https://truckmanualshub.com/

FIG.A4119-A4A1 FUEL FILTER CARTRIDGE(SERVICE ONLY)
燃油滤清器筒（仅保养时）

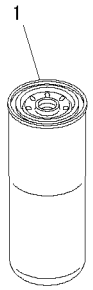

00042185

FIG NO. : A4119-A4A1

INDEX	PART NO.	DESCRIPTION	Q'TY	SERIAL NO.
1	600-319-3520	CARTRIDGE (1-5/8),FUEL FILTER……燃油滤清器滤筒	1	630001-

https://truckmanualshub.com/

FIG.A4210-A4G4 FUEL INJECTOR AND SPILL TUBE
燃油气孔

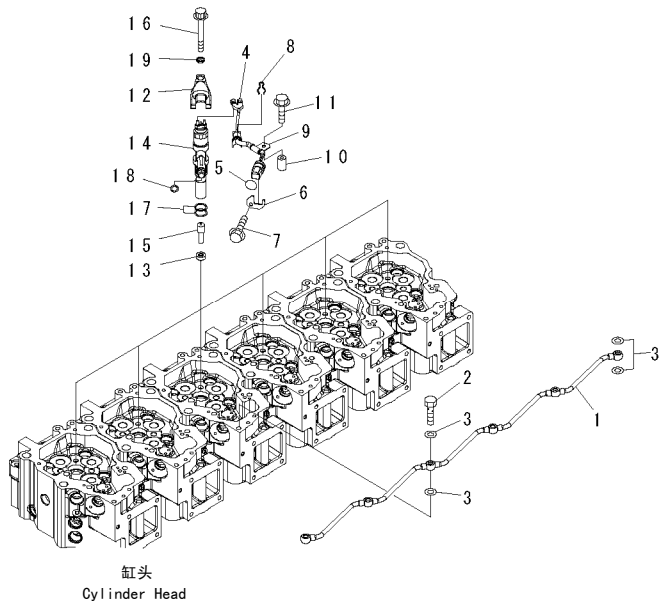

00041229

FIG NO. : A4210-A4G4

INDEX	PART NO.	DESCRIPTION	Q'TY	SERIAL NO.
1	6217-71-7110	TUBE,SPILL……回油管	1	630001-
2	6934-72-7190	BOLT,JOINT……接头螺栓	2	630001-
3	07005-01012	GASKET……垫	1	630001-
4	6217-81-9252	WIRING HARNESS……线束	1	630001-
5	07000-E2018	O-RING ……O形圈	2	630001-
6	6217-71-5320	PLATE ……板	1	630001-
7	01435-00610	BOLT……螺栓	2	630001-
8	6217-71-5340	CLAMP ……卡箍	1	630001-
9	6217-71-1150	CLAMP ……卡箍	1	630001-
10	6217-71-1170	SPACER……调整垫片	1	630001-
11	01435-00635	BOLT……螺栓	1	630001-
12	6217-71-1161	HOLDER……夹持器	1	630001-
13	6261-71-6150	GASKET……垫	1	630001-
	6261-11-3100	INJECTOR ASS'Y……喷油组件	1	630001-
14	☆	.HOLDER ……夹持器	1	630001-
15	☆	.NOZZLE ……喷嘴	1	630001-
16	01437-01070	BOLT……螺栓	2	630001-
17	6219-71-1150	GASKET……垫	1	630001-
18	6219-71-1160	GASKET……垫	2	630001-
19	6217-71-1140	WASHER……垫圈	1	630001-

https://truckmanualshub.com/

FIG.A4230-A4G8 FUEL RETURN

燃油回路

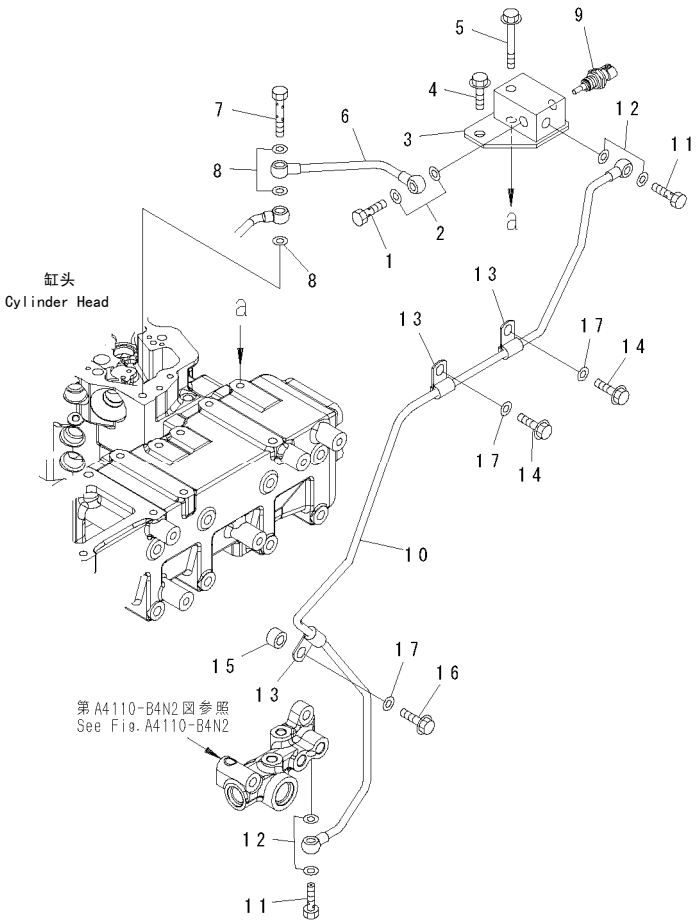

00061491

FIG NO. : A4230-A4G8

INDEX	PART NO.	DESCRIPTION	Q'TY	SERIAL NO.
1	07206-30812	BOLT,JOINT……接头螺栓	1	630001-
2	07005-01212	GASKET……垫	2	630001-
3	6261-71-8641	BLOCK ……垫块	1	630001-
4	01435-01025	BOLT……螺栓	1	630001-
5	01435-01055	BOLT……螺栓	1	630001-
6	6261-71-5810	TUBE……管	1	630001-
7	6215-11-6560	BOLT,JOINT……接头螺栓	1	630001-
8	07005-01012	GASKET……垫	3	630001-
9	6261-81-6900	SENSOR,FUEL TEMPERATURE …燃油温度传感器	1	630001-
	6261-81-6910	.SENSOR ……传感器	1	630001-
	6261-84-9740	.O-RING……O形圈	1	630001-
10	6261-71-5960	TUBE……管	1	630001-
11	07206-30812	BOLT,JOINT……接头螺栓	2	630001-
12	07005-01212	GASKET……垫	4	630001-
13	6210-51-8320	CLIP……管夹	3	630001-
14	01435-01020	BOLT……螺栓	2	630001-
15	6131-12-5920	SPACER……调整垫片	1	630001-
16	01435-01030	BOLT……螺栓	1	630001-
17	01643-01032	WASHER……垫圈	3	630001-

https://truckmanualshub.com/

FIG.A4710-A4K1 FUEL CONTROLLER
燃油控制

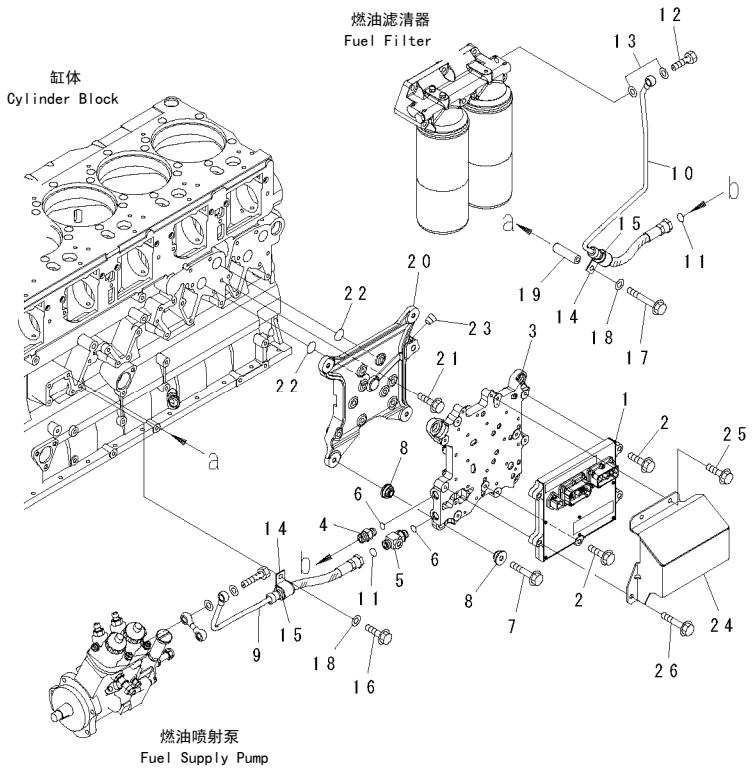

00061492

FIG NO. : A4710-A4K1

INDEX	PART NO.	DESCRIPTION	Q'TY	SERIAL NO.
1	600-462-1900	CONTROLLER ASS'Y……控制器总成	1	630001-
2	01435-00840	BOLT……螺栓	3	630001-
3	6219-81-7100	COOLER,FUEL…… 燃油冷却器	1	630001-
	6261-81-7120	.COVER……盖	1	630001-
	☆	.CASE ……壳体	1	630001-
	6261-81-7130	.O-RING……O形圈	1	630001-
	01435-00825	.BOLT ……螺栓	21	630001-
4	02781-00420	UNION ……接头	1	630001-
5	6261-71-7140	ELBOW ……接头	1	630001-
6	07002-21823	O-RING ……O形圈	2	630001-
7	01435-01045	BOLT……螺栓	4	630001-
8	6251-81-7210	CUSHION ……减振垫	8	630001-
9	6261-71-6180	HOSE……软管	1	630001-
10	6261-71-5790	HOSE……软管	1	630001-
11	02896-21012	O-RING ……O形圈	2	630001-
12	07206-31014	BOLT,JOINT……接头螺栓	1	630001-
13	07005-01412	GASKET……垫	2	630001-
14	04434-52511	CLIP……管夹	2	630001-
15	07095-30318	CUSHION ……减振垫	2	630001-
16	01435-01020	BOLT……螺栓	1	630001-
17	01435-01090	BOLT……螺栓	1	630001-
18	01643-31032	WASHER……垫圈	2	630001-
19	6136-11-5120	SPACER……调整垫片	1	630001-
20	6261-81-7310	BRACKET ……支架	1	630001-
21	01435-01045	BOLT……螺栓	9	630001-
22	07000-73038	O-RING ……O形圈	2	630001-
23	07043-70211	PLUG……堵塞	1	630001-
24	6261-81-7330	COVER ……盖	1	630001-
25	01435-00820	BOLT……螺栓	2	630001-
26	01435-00845	BOLT……螺栓	2	630001-

https://truckmanualshub.com/

FIG.A5010-A4M4 THERMOSTAT AND AIR VENT
恒温器与通气孔

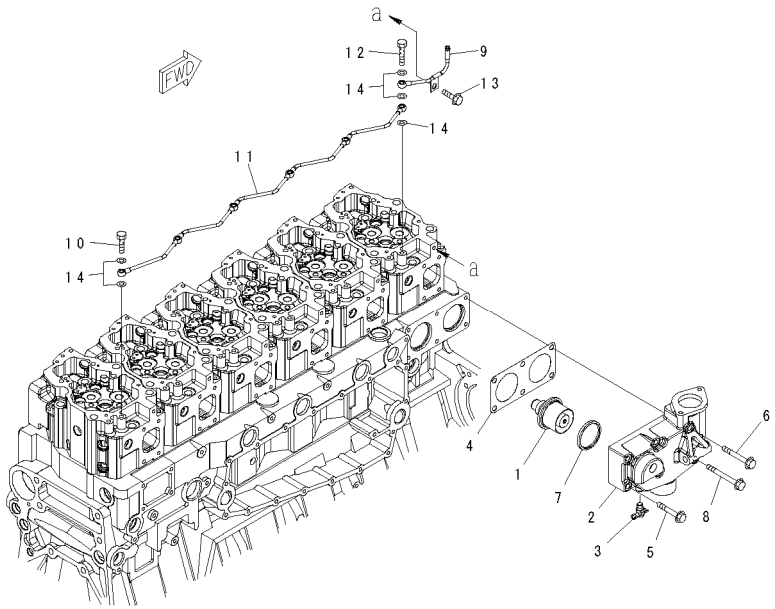

FIG NO. : A5010-A4M4

INDEX	PART NO.	DESCRIPTION	Q'TY	SERIAL NO.
1	600-421-6630	THERMOSTAT……恒温器	2	630001-
2	6217-61-6430	HOUSING,THERMOSTAT……恒温器壳体	1	630001-
3	07062-00000	VALVE ……阀	1	630001-
4	6210-61-6421	GASKET……垫	1	630001-
5	01437-01065	BOLT……螺栓	4	630001-
6	01437-01080	BOLT……螺栓	1	630001-
7	6162-13-6440	SEAL,THERMOSTAT ……恒温器密封	2	630001-
8	01437-01095	BOLT……螺栓	1	630001-
9	6261-11-6650	TUBE,JOINT……接头管	1	630001-
10	07206-30710	BOLT,JOINT……接头螺栓	5	630001-
11	6217-11-6520	TUBE,AIR VENT ……通气孔管	1	630001-
12	6215-11-6560	BOLT,JOINT……接头螺栓	1	630001-
13	01435-01016	BOLT……螺栓	1	630001-
14	07003-01015	GASKET……垫	13	630001-

https://truckmanualshub.com/

FIG.A5010-B4M4 WATER PUMP

水泵

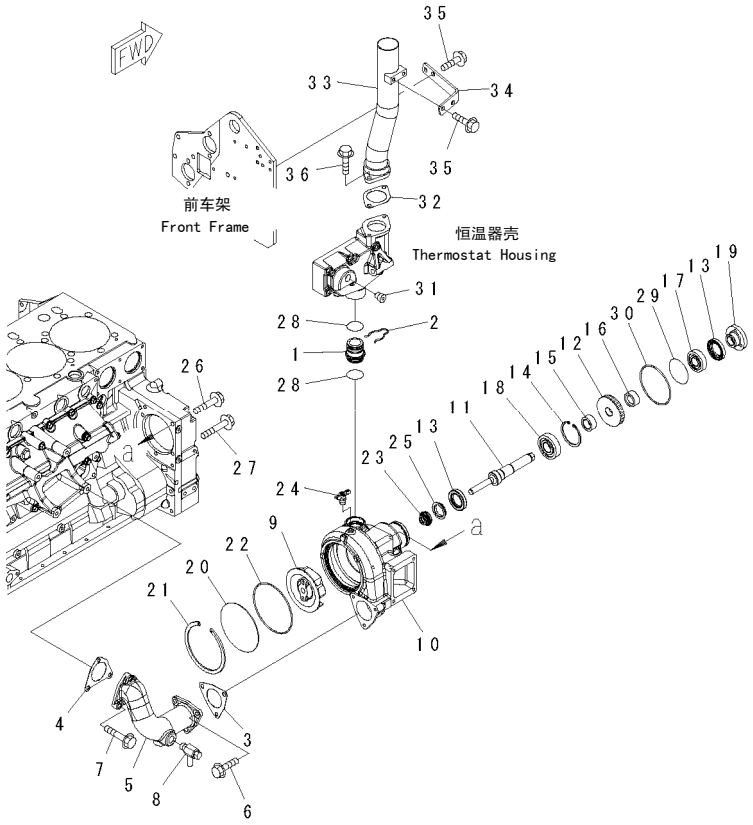

00060644

FIG NO. : A5010-B4M4

INDEX	PART NO.	DESCRIPTION	Q'TY	SERIAL NO.
1	6210-61-6511	TUBE,JOINT……接头管	1	630001-
2	6210-61-6520	SPRING……弹簧	1	630001-
3	6217-61-6330	GASKET……垫	1	630001-
4	6217-61-6340	GASKET……垫	1	630001-
5	6217-61-6350	ELBOW ……接头	1	630001-
6	01437-01025	BOLT……螺栓	3	630001-
7	01437-11080	BOLT……螺栓	3	630001-
8	07730-50004	VALVE,DRAIN ……排泄阀	1	630001-
	6261-61-1101	WATER PUMP ASS'Y……水泵总成	1	630001-
9	6261-61-1210	.IMPELLER ……叶轮	1	630001-
10	☆	.CASE ……壳体	1	630001-
11	6261-61-1310	.SHAFT……轴	1	630001-
12	6212-61-1410	.GEAR ……齿轮	1	630001-
13	6210-61-1520	.SEAL,OIL ……(K2)油封	2	630001-
14	04065-07225	.RING ……隔圈	1	630001-
15	6212-61-1370	.SPACER ……垫块	1	630001-
16	6212-61-1380	.SPACER ……垫块	1	630001-
17	06000-06305	.BEARING,BALL ……滚珠轴承	1	630001-
18	06030-06306	.BEARING,BALL ……滚珠轴承	1	630001-
19	6210-61-1350	.FLANGE ……法兰	1	630001-
20	6261-61-1150	.COVER……盖	1	630001-
21	6261-61-1190	.RING,SNAP……挡圈	1	630001-
22	6261-61-1170	.O-RING……O形圈	1	630001-
23	6211-61-1533	.SEAL, WATER……水封	1	630001-
24	07062-00000	.VALVE,AIR BLOW ……空气排出阀	1	630001-
25	6212-61-1330	.RING ……隔圈	1	630001-
26	01435-01075	BOLT……螺栓	1	630001-
27	01435-01095	BOLT……螺栓	3	630001-
28	02893-05037	O-RING ……O形圈	2	630001-
29	07000-72070	O-RING ……O形圈	1	630001-
30	07000-72115	O-RING ……O形圈	1	630001-
31	07043-A0415	PLUG……堵塞	1	630001-
32	6210-61-6441	GASKET……垫	1	630001-
33	6261-61-6260	TUBE,OUTLET ……进口油管	1	630001-
34	6261-61-6270	BRACKET ……支架	1	630001-
35	01435-01020	BOLT……螺栓	4	630001-
36	01435-01020	BOLT……螺栓	2	630001-

https://truckmanualshub.com/

FIG.A5210-A4J7 CORROSION RESISTOR
防腐器

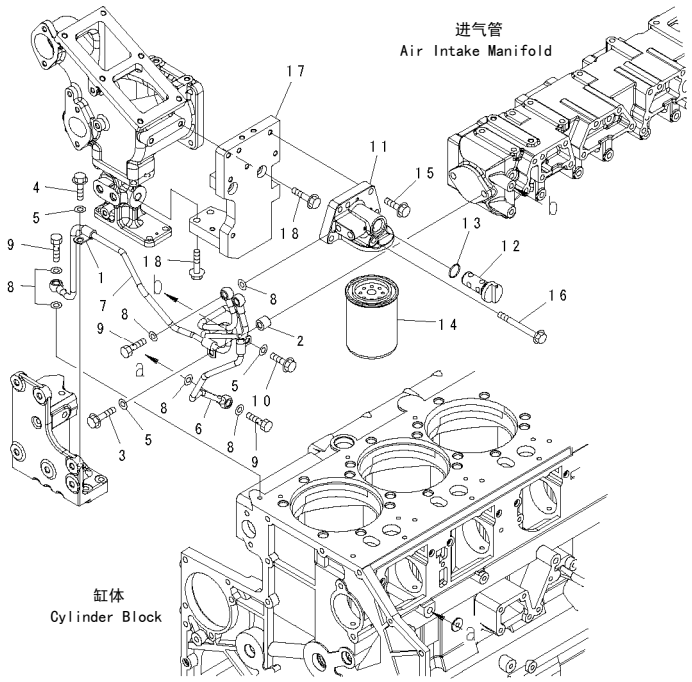

FIG NO. : A5210-A4J7

INDEX	PART NO.	DESCRIPTION	Q'TY	SERIAL NO.
1	6215-71-4940	CLAMP ……卡箍	3	630001-
2	6631-11-5630	SPACER……垫	1	630001-
3	01435-01045	BOLT……螺栓	1	630001-
4	01435-01020	BOLT……螺栓	1	630001-
5	01643-31032	WASHER……垫圈	3	630001-
6	6261-61-8440	TUBE,INLET……出油管	1	630001-
7	6261-61-8450	TUBE,RETURN ……回油管	1	630001-
8	07005-01412	GASKET……垫	8	630001-
9	07206-31014	BOLT,JOINT……接头螺栓	4	630001-
10	01435-01020	BOLT……螺栓	1	630001-
	6217-61-8150	RESISTOR ASS'Y……防腐器总成	1	630001-
	6217-61-8231	.HEAD ASS'Y ……头总成	1	630001-
11	6217-61-8211	..HEAD,CORROSION……防腐器头	1	630001-
12	6217-61-8221	..VALVE,CROSS ……十字头阀	1	630001-
13	07000-A2021	..O-RING ……O形圈	1	630001-
14	600-411-1151	.CARTRIDGE……滤筒	1	630001-
15	01435-01035	BOLT……螺栓	4	630001-
16	01436-01000	BOLT……螺栓	1	630001-
17	21M-01-21231	BRACKET ……支架	1	630001-
18	01435-01050	BOLT……螺栓	4	630001-

https://truckmanualshub.com/

FIG.A6010-A4L9 ALTERNATOR MOUNTING (90A)

发电机安装(90A)

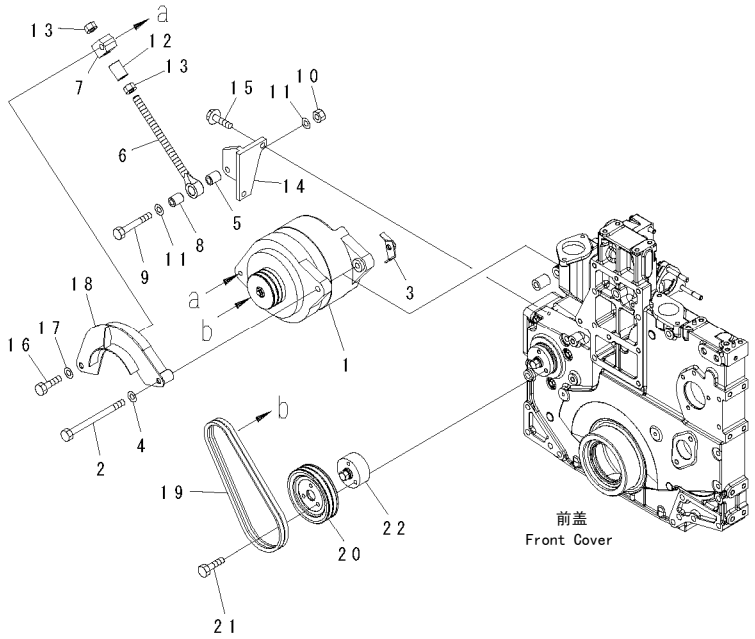

FIG NO. : A6010-A4L9

INDEX	PART NO.	DESCRIPTION	Q'TY	SERIAL NO.
1	(600-825-9110)	ALTERNATOR A. (90A),(SEE FIG.A6010-B4L9)		
		……交流发电机总成	1	630001-
2	6217-81-6840	BOLT……螺栓	1	630001-
3	6261-81-6890	BRACKET ……支架	1	630001-
4	01640-21323	WASHER……垫圈	1	630001-
5	205-30-62650	COLLAR……滚轮	1	630001-
6	6240-81-8611	ROD,ADJUSTING ……调整杆	1	630001-
7	6261-81-8340	PLATE ……板	1	630001-
8	6215-81-6150	PIN ……销	2	630001-
9	01010-81290	BOLT……螺栓	1	630001-
10	01580-11210	NUT ……螺母	1	630001-
11	01643-31232	WASHER……垫圈	2	630001-
12	6261-81-8350	SPACER……垫	1	630001-
13	01580-11613	NUT ……螺母	2	630001-
14	6210-82-6370	BRACKET ……支架	1	630001-
15	01435-01025	BOLT……螺栓	2	630001-
16	01050-51260	BOLT……螺栓	1	630001-
17	01643-31232	WASHER……垫圈	1	630001-
18	6210-82-6550	COVER ……盖	1	630001-
19	6210-81-6960	V-BELT SET ……V形皮带轮	1	630001-
20	6210-82-6850	PULLEY,(NON HARDENING)……未硬化皮带轮	1	630001-
21	01010-80850	BOLT……螺栓	3	630001-
22	6217-81-6880	FLANGE……法兰	1	630001-

https://truckmanualshub.com/

FIG.A6010-A4M8 ALTERNATOR MOUNTING (90A) (WITH HARDENING PULLEY)

发电机安装（90A）(硬皮带轮)

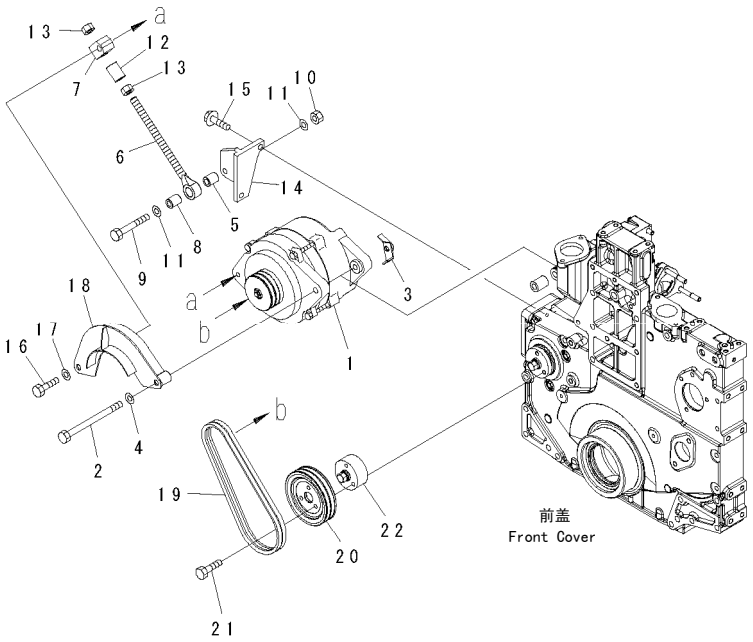

00050334

FIG NO. : A6010-A4M8

INDEX	PART NO.	DESCRIPTION	Q'TY	SERIAL NO.
1	(600-825-9310)	ALTERNATOR A. (90A),(SEE FIG.A6010-B4M8)		
		……交流发电机总成	1	630001-
2	6217-81-6840	BOLT……螺栓	1	630001-
3	6261-81-6890	BRACKET ……支架	1	630001-
4	01640-21323	WASHER……垫圈	1	630001-
5	205-30-62650	COLLAR……滚轮	1	630001-
6	6240-81-8611	ROD,ADJUSTING ……调整杆	1	630001-
7	6261-81-8340	PLATE ……板	1	630001-
8	6215-81-6150	PIN ……销	2	630001-
9	01010-81290	BOLT……螺栓	1	630001-
10	01580-11210	NUT ……螺母	1	630001-
11	01643-31232	WASHER……垫圈	2	630001-
12	6261-81-8350	SPACER……垫	1	630001-
13	01580-11613	NUT ……螺母	2	630001-
14	6210-82-6370	BRACKET ……支架	1	630001-
15	01435-01025	BOLT……螺栓	2	630001-
16	01050-51260	BOLT……螺栓	1	630001-
17	01643-31232	WASHER……垫圈	1	630001-
18	6210-82-6550	COVER ……盖	1	630001-
19	6210-81-6960	V-BELT SET,SET…… V形皮带轮	1	630001-
20	6210-82-6840	PULLEY,HARDENING……未硬化皮带轮	1	630001-
21	01010-80850	BOLT……螺栓	3	630001-
22	6217-81-6880	FLANGE……法兰	1	630001-

https://truckmanualshub.com/

FIG.A6010-A4N2 ALTERNATOR MOUNTING (60A) (SANDY AND DUSTY SPEC.)

发电机安装（60A）(沙尘地仕样)

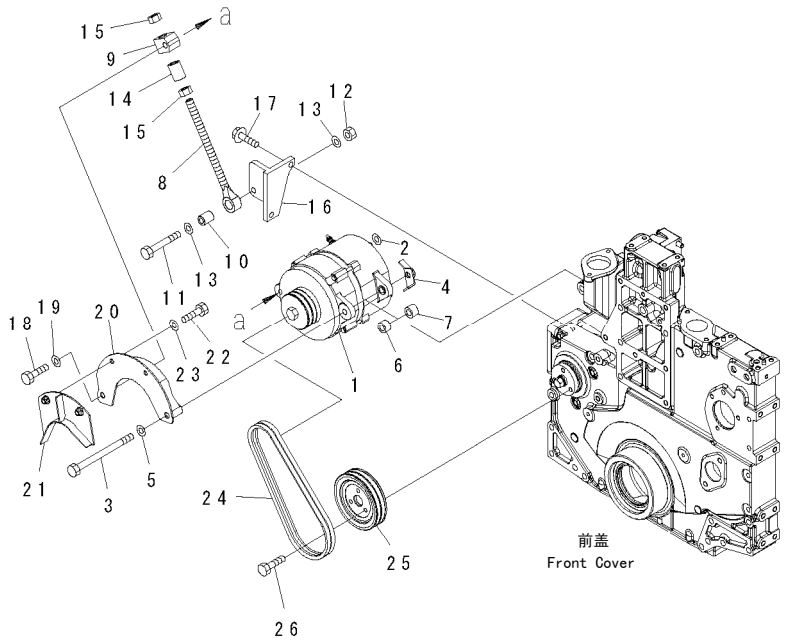

00051984

FIG NO. : A6010-A4N2

INDEX	PART NO.	DESCRIPTION	Q'TY	SERIAL NO.
1	(600-825-6270)	ALTERNATOR A. (60A),(SEE FIG.A6010-B4N2) ……交流发电机总成	1	630001-
2	600-815-9980	WASHER……垫圈	1	630001-
3	6732-81-6840	BOLT……螺栓	1	630001-
4	6261-81-6890	BRACKET ……支架	1	630001-
5	01640-21323	WASHER……垫圈	1	630001-
6	6210-81-6750	SPACER……垫	1	630001-
7	6217-81-6550	SPACER……垫	1	630001-
8	6240-81-8611	ROD,ADJUSTING ……调整杆	1	630001-
9	6261-81-8340	PLATE ……板	1	630001-
10	6215-81-6150	PIN ……销	1	630001-
11	01010-81260	BOLT……螺栓	1	630001-
12	01580-11210	NUT ……螺母	1	630001-
13	01643-31232	WASHER……垫圈	2	630001-
14	6261-81-8350	SPACER……垫	1	630001-
15	01580-11613	NUT ……螺母	2	630001-
16	6210-82-6570	BRACKET ……支架	1	630001-
17	01435-01025	BOLT……螺栓	2	630001-
18	01050-51260	BOLT……螺栓	1	630001-
19	01643-31232	WASHER……垫圈	1	630001-
20	6261-81-6460	COVER,SAFETY……安全盖	1	630001-
21	6210-81-6361	COVER,SAFETY……安全盖	1	630001-
22	01050-51020	BOLT……螺栓	2	630001-
23	01640-21016	WASHER……垫圈	2	630001-
24	6210-81-6960	V-BELT SET ……V形皮带轮	1	630001-
25	6210-82-6840	PULLEY,HARDENING……硬化皮带轮	1	630001-
26	01010-80820	BOLT……螺栓	3	630001-

https://truckmanualshub.com/

FIG.A6010-B4L9 ALTERNATOR (90A) (INNER PARTS)
发电机（90A）(内部品)

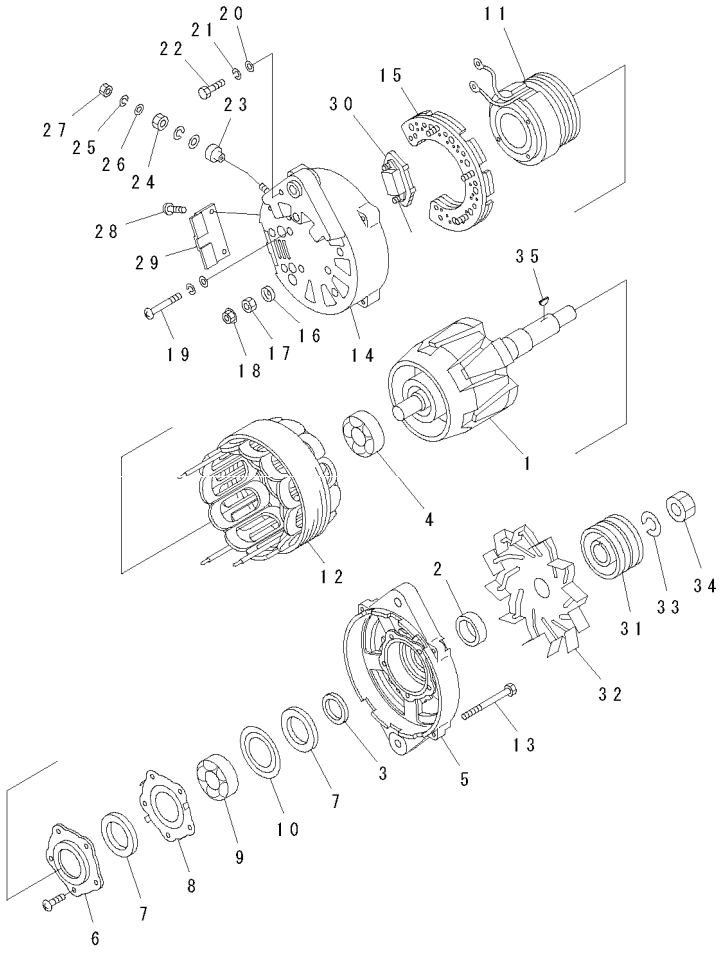

00036382

FIG NO. : A6010-B4L9

INDEX	PART NO.	DESCRIPTION	Q'TY	SERIAL NO.
	600-825-9110	ALTERNATOR A. (90A) ……交流发电机总成	1	630001-
1	KD0-35100-0230	.ROTOR ASS'Y……转子总成	1	630001-
2	KD1-33923-0890	.COLLAR ……衬套	1	630001-
3	KD1-35923-0030	.COLLAR ……衬套	1	630001-
4	KD0-09201-0770	.BEARING,BALL ……滚珠轴承	1	630001-
5	KD0-35300-0200	.BRACKET ASS'Y,FRONT……前支架总成	1	630001-
6	KD0-35926-0080	.RETAINER ……保持架	1	630001-
7	KD0-35951-0080	.PACKING……密封圈	2	630001-
8	KD1-33926-0660	.RETAINER ……保持架	1	630001-
9	KD0-09201-0760	.BEARING,BALL ……滚珠轴承	1	630001-
10	KD1-33926-0790	.RETAINER ……保持架	1	630001-
11	KD0-35120-0250	.FIELD COIL ASS'Y ……励磁线圈总成	1	630001-
12	KD0-35200-0320	.STATOR ASS'Y ……定子总成	1	630001-
13	KD0-0083-08802	.BOLT ……螺栓	4	630001-
	KD0-35700-0760	.BRACKET ASS'Y,REAR ……后支架总成	1	630001-
14	KD0-35710-0890	..BRACKET,REAR……后支架	1	630001-
15	KD0-35730-0162	..RECTIFIER ASS'Y ……整流器	1	630001-
16	KD0-35943-0210	..BUSHING,INSULATE……绝缘器衬套	1	630001-
17	KD0-33902-0090	..NUT ……螺母	1	630001-
18	KD0-33902-0080	..NUT ……螺母	6	630001-
19	KD1-0020-06452	..SCREW ……螺钉	4	630001-
20	KD1-0330-06012	..WASHER……垫圈	5	630001-
21	KD1-0335-06002	..WASHER,SPRING ……弹簧垫圈	5	630001-
22	KD0-0080-06142	..BOLT……螺栓	1	630001-
23	KD0-35943-0100	..BUSHING,INSULATE……绝缘器衬套	1	630001-
24	KD0-33902-0100	..NUT ……螺母	1	630001-
25	KD1-0335-08002	..WASHER,SPRING ……弹簧垫圈	2	630001-
26	KD1-0331-08020	..WASHER……垫圈	2	630001-
27	KD0-0291-08010	..NUT ……螺母	1	630001-
28	KD0-0055-05122	..SCREW ……螺钉	2	630001-
29	KD0-35761-0190	..COVER ……盖	1	630001-
30	KD0-35719-0180	..REGULATOR ASS'Y ……调节器总成	1	630001-
31	KD0-35411-0680	.PULLEY ……皮带轮	1	630001-
32	KD1-35421-0180	.FAN……风扇	1	630001-
33	KD1-0335-22002	.WASHER,SPRING……弹簧垫圈	1	630001-
34	KD0-0290-20022	.NUT……螺母	1	630001-
35	KD1-0416-04160	.KEY……键	1	630001-

https://truckmanualshub.com/

FIG.A6010-B4M8 ALTERNATOR (90A) (WITH HARDENING PULLEY)(INNER PARTS)

发电机（90A）(带硬皮带轮)(内部品)

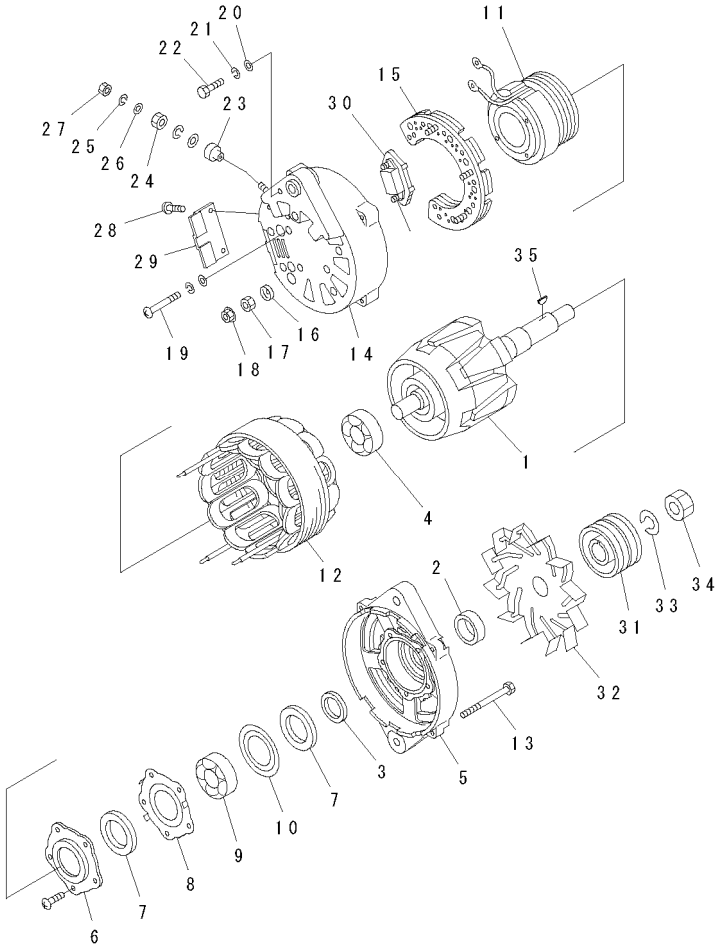

00036382

FIG NO. : A6010-B4M8

INDEX	PART NO.	DESCRIPTION	Q'TY	SERIAL NO.
	600-825-9310	ALTERNATOR A. (90A) ……交流发电机总成	1	630001-
1	KD0-35100-0230	.ROTOR ASS'Y……转子总成	1	630001-
2	KD1-33923-0890	.COLLAR ……衬套	1	630001-
3	KD1-35923-0030	.COLLAR ……衬套	1	630001-
4	KD0-09201-0770	.BEARING,BALL ……滚珠轴承	1	630001-
5	KD0-35300-0200	.BRACKET ASS'Y, FRONT ……前支架总成	1	630001-
6	KD0-35926-0080	.RETAINER ……保持架	1	630001-
7	KD0-35951-0080	.PACKING……密封圈	2	630001-
8	KD1-33926-0660	.RETAINER ……保持架	1	630001-
9	KD0-09201-0760	.BEARING,BALL ……滚珠轴承	1	630001-
10	KD1-33926-0790	.RETAINER ……保持架	1	630001-
11	KD0-35120-0250	.FIELD COIL ASS'Y ……励磁线圈总成	1	630001-
12	KD0-35200-0320	.STATOR ASS'Y ……定子总成	1	630001-
13	KD0-0083-08802	.BOLT ……螺栓	4	630001-
	KD0-35700-0760	.BRACKET ASS'Y,REAR…… 后支架总成	1	630001-
14	KD0-35710-0830	..BRACKET,REAR……后支架	1	630001-
15	KD0-35730-0162	..RECTIFIER ASS'Y ……整流器	1	630001-
16	KD0-35943-0210	..BUSHING,INSULATE……绝缘器衬套	1	630001-
17	KD0-33902-0090	..NUT ……螺母	1	630001-
18	KD0-33902-0080	..NUT ……螺母	6	630001-
19	KD1-0020-06452	..SCREW ……螺钉	4	630001-
20	KD1-0330-06012	..WASHER……垫圈	5	630001-
21	KD1-0335-06002	..WASHER,SPRING ……弹簧垫圈	5	630001-
22	KD0-0080-06142	..BOLT……螺栓	1	630001-
23	KD0-35943-0100	..BUSHING,INSULATE……绝缘器衬套	1	630001-
24	KD0-33902-0100	..NUT ……螺母	1	630001-
25	KD1-0335-08002	..WASHER,SPRING ……弹簧垫圈	2	630001-
26	KD1-0331-08020	..WASHER……垫圈	2	630001-
27	KD0-0291-08010	..NUT ……螺母	1	630001-
28	KD0-0055-05122	..SCREW ……螺钉	2	630001-
29	KD0-35761-0190	..COVER ……盖	1	630001-
30	KD0-35719-0180	..REGULATOR ASS'Y ……调节器总成	1	630001-
31	KD0-35411-0880	.PULLEY ……皮带轮	1	630001-
32	KD1-35421-0180	.FAN……风扇	1	630001-
33	KD1-0335-20002	.WASHER,SPRING……弹簧垫圈	1	630001-
34	KD0-0290-20022	.NUT……螺母	1	630001-
35	KD1-0416-04160	.KEY……键	1	630001-

https://truckmanualshub.com/

FIG.A6010-B4N2 ALTERNATOR (60A) (SANDY AND DUSTY SPEC.)(INNER PARTS)

发电机（60A）(沙尘地仕样)(内部品)

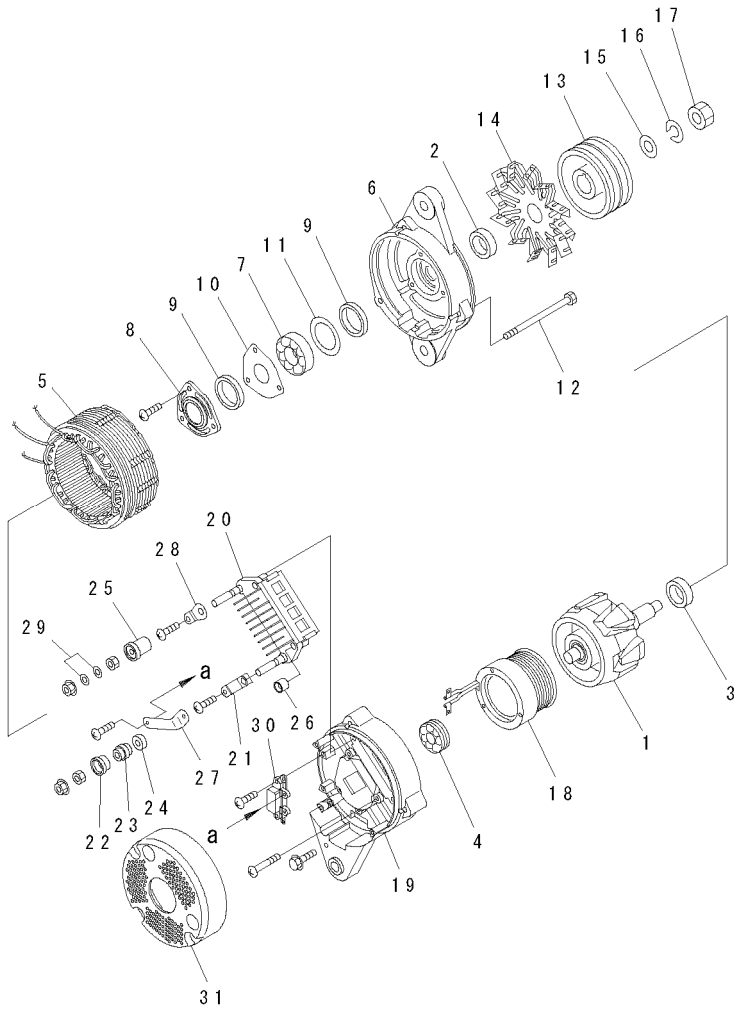

PJ6A337

FIG NO. : A6010-B4N2

INDEX	PART NO.	DESCRIPTION	Q'TY	SERIAL NO.
	600-825-6270	ALTERNATOR A. (60A) ……交流发电机总成	1	630001-
1	KD0-35100-0300	.ROTOR ASS'Y……转子总成	1	630001-
2	KD1-33923-0790	.COLLAR ……衬套	1	630001-
3	KD1-35923-0160	.COLLAR ……衬套	1	630001-
4	KD0-09201-0980	.BEARING,BALL ……滚珠轴承	1	630001-
5	KD0-35200-0460	.STATOR ASS'Y ……定子总成	1	630001-
6	KD0-35300-0350	.FRONT BRACKET ASS'Y……前支架总成	1	630001-
7	KD0-09201-1140	..BEARING,BALL……滚珠轴承	1	630001-
8	KD0-35926-0070	..RETAINER……保持架	1	630001-
9	KD0-35951-0060	..PACKING ……密封圈	2	630001-
10	KD0-35926-0090	..RETAINER……保持架	1	630001-
11	KD1-33926-0730	..RETAINER……保持架	1	630001-
12	KD0-0275-06802	.BOLT ……螺栓	3	630001-
13	KD0-35411-0700	.PULLEY HARDENING ……硬化皮带轮	1	630001-
14	KD0-35421-0230	.FAN……风扇	1	630001-
15	KD0-0330-16012	.WASHER,PLAIN…… 平垫圈	1	630001-
16	KD1-0335-16002	.WASHER,SPRING……弹簧垫圈	1	630001-
17	KD0-0280-16022	.NUT……螺母	1	630001-
18	KD0-35120-0290	.FIELD COIL ……励磁线圈	1	630001-
	KD0-35700-0920	.REAR BRACKET ASS'Y ……后支架总成	1	630001-
19	KD0-35710-1010	..BRACKET,REAR……后支架	1	630001-
20	KD0-35730-0700	..RECTIFIER ASS'Y ……整流器	1	630001-
21	KD0-09170-2501	..CONDENSER ……冷凝器	1	630001-
22	KD0-35943-0150	..BUSHING,INSULATE……绝缘器衬套	1	630001-
23	KD0-35923-0130	..COLLAR……衬套	1	630001-
24	KD0-35943-0160	..BUSHING,INSULATE……绝缘器衬套	1	630001-
25	KD0-35943-0140	..BUSHING,INSULATE……绝缘器衬套	1	630001-
26	KD0-35943-0170	..BUSHING,INSULATE……绝缘器衬套	2	630001-
27	KD0-35784-0210	..BAR,CONNECT ……联接杆	1	630001-
28	KD0-35784-0290	..BAR,PLATE…… 杆	1	630001-
29	KD0-09057-0220	..WASHER……垫圈	2	630001-
30	KD0-35719-0210	..REGULATOR ASS'Y ……调节器总成	1	630001-
31	KD0-35761-0250	.COVER……盖	1	630001-

https://truckmanualshub.com/

FIG.A6210-A4E4 STARTING MOTOR MOUNTING (11KW)
启动马达安装(11KW)

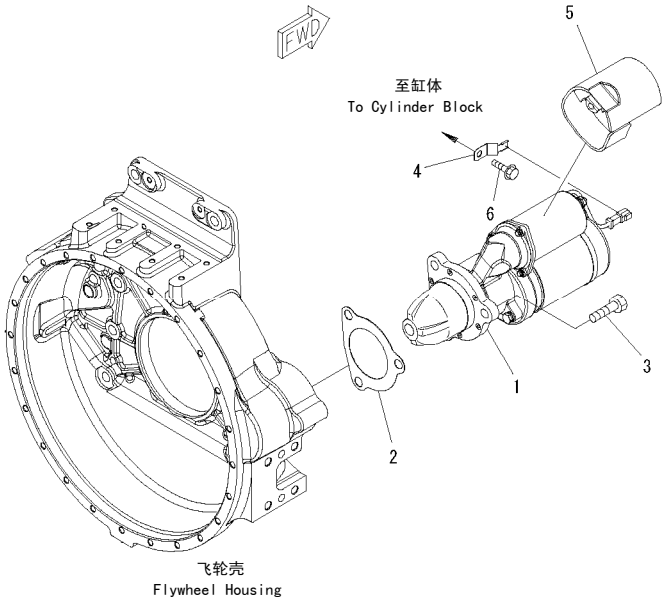

00061493

FIG NO. : A6210-A4E4

INDEX	PART NO.	DESCRIPTION	Q'TY	SERIAL NO.
1	(600-813-9322)	STARTING MOTOR ASS'Y……启动马达总成 (11KW) (SEE FIG.A6210-B4E4)	1	630001-
2	6221-81-6810	GASKET……垫	1	630001-
3	01010-61640	BOLT……螺栓	3	630001-
4	08193-20010	CLIP……管夹	1	630001-
5	6217-81-6110	COVER ……盖	1	630001-
6	01435-01050	BOLT……螺栓	1	630001-

https://truckmanualshub.com/

FIG.A6210-B4E4 STARTING MOTOR (11KW) (INNER PARTS)
启动马达(11KW)（内部品）

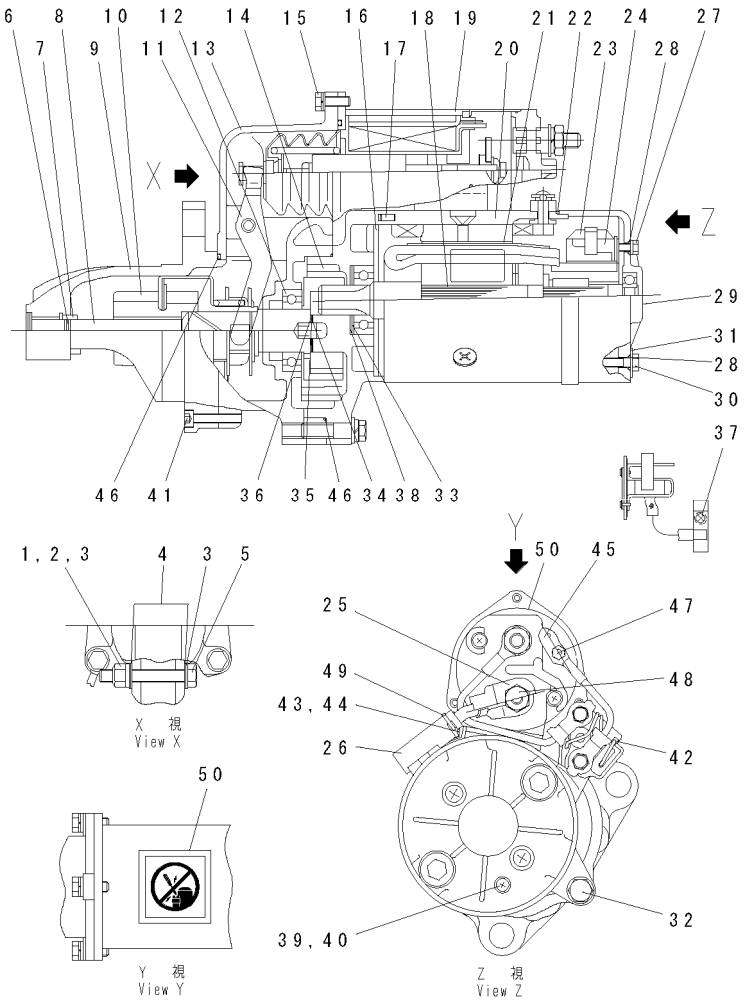

00024536

FIG NO. : A6210-B4E4

INDEX	PART NO.	DESCRIPTION	Q'TY	SERIAL NO.
	600-813-9322	STARTING MOTOR ASS'Y（11KW）启动马达总成	1	630001-
1	KD1-09279-0090	.NUT……螺母	1	630001-
2	KD1-0335-08002	.WASHER,SPRING……弹簧垫圈	4	630001-
3	KD1-0330-08022	.WASHER ……垫圈	5	630001-
4	KD1-0345-08001	.WASHER ……垫圈	2	630001-
5	KD0-23303-0020	.PIN,LEVER……圆柱销	1	630001-
6	KD1-23914-0020	.RING,CLIP……卡环	1	630001-
7	KD1-23181-0020	.STOPPER,PINION ……小齿轮止动器	1	630001-
8	KD0-23120-0180	.SHAFT ASS'Y……轴总成	1	630001-
9	KD0-23310-1670	.FRONT BRACKET ASS'Y……前支架总成	1	630001-
10	KD1-23500-0970	.CLUTCH ASS'Y,OVER RUNNING……超越离合器总成	1	630001-
11	KD1-23320-0290	.SHIFT LEVER ASS'Y……换档连杆总成	1	630001-
12	KD0-09201-0850	.BEARING,BALL ……滚珠轴承	1	630001-
13	KD0-23500-0410	.CENTER BRACKET A ……中心支架总成	1	630001-
14	KD0-23511-1101	.BRACKET,CENTER ……中心支架	1	630001-
15	KD0-0270-06202	.BOLT ……螺栓	3	630001-
16	KD1-23951-0051	.PACKING……密封圈	1	630001-
17	KD1-0400-30100	.PIN,STRAIGHT…… 直销	1	630001-
18	KD0-23100-0430	.ARMATURE ASS'Y ……电枢总成	1	630001-
19	KD0-47100-4651	.MAGNETIC SWITCH A……电磁开关总成	1	630001-
20	KD0-23200-0671	.YOKE ASS'Y ……联轴器总成	1	630001-
21	KD0-09271-3620	.NAME PLATE ……铭牌	1	630001-
22	KD1-09211-1120	.O-RING……O形圈	1	630001-
23	KD1-23740-0351	.BRUSH ASS'Y……刷子总成	2	630001-
24	KD0-23750-0490	.BRUSH HOLDER A ……电刷夹持器总成	1	630001-
25	KD0-47761-2681	.COVER……盖	1	630001-
26	KD0-47761-2691	.COVER……盖	1	630001-
27	KD0-09011-3140	.SCREW……螺钉	2	630001-
28	KD1-09211-0081	.O-RING……O形圈	2	630001-
29	KD0-23710-0221	.BRACKET,REAR ……后支架	1	630001-
30	KD0-09001-4380	.BOLT ……螺栓	2	630001-
31	KD1-47921-0790	.WASHER ……垫圈	2	630001-
32	KD0-0276-08402	.BOLT ……螺栓	3	630001-
33	KD0-09057-0110	.WASHER ……垫圈	1	630001-
34	KD1-23941-0040	.WASHER,INSULATE……绝缘垫圈	1	630001-
35	KD1-23921-0140	.WASHER ……垫圈	1	630001-
36	KD1-23921-0130	.WASHER ……垫圈	1	630001-
37	KD0-0055-05082	.SCREW,REAR…… 后螺钉	2	630001-
38	KD0-09057-0190	.WASHER ……垫圈	1	630001-
39	KD0-0020-05062	.SCREW……螺钉	1	630001-
40	KD1-0345-05001	.WASHER ……垫圈	1	630001-
41	KD1-0240-06305	.BOLT ……螺栓	6	630001-

https://truckmanualshub.com/

FIG NO. : A6210-B4E4

INDEX	PART NO.	DESCRIPTION		SERIAL NO.
42	KD0-25000-8332	.SWITCH ASS'Y ……开关总成	1	630001-
43	KD0-0270-06602	.BOLT ……螺栓	1	630001-
44	KD1-47927-1390	.HOLDER ……保持架	1	630001-
45	KD0-47761-2671	.COVER……盖	1	630001-
46	KD1-09211-0981	.O-RING……O形圈	2	630001-
47	KD0-09006-0660	.NUT……螺母	1	630001-
48	KD0-09006-0670	.NUT……螺母	1	630001-
49	KD1-09257-0050	.BAND ……绑带	1	630001-
50	KD0-09275-1430	.PLATE,CAUTION……铭牌	1	630001-

SAA6D140E-5R

https://truckmanualshub.com/

FIG.A6810-A4M6 ELECTRICAL WIRING (1/5)

电线(1/5)

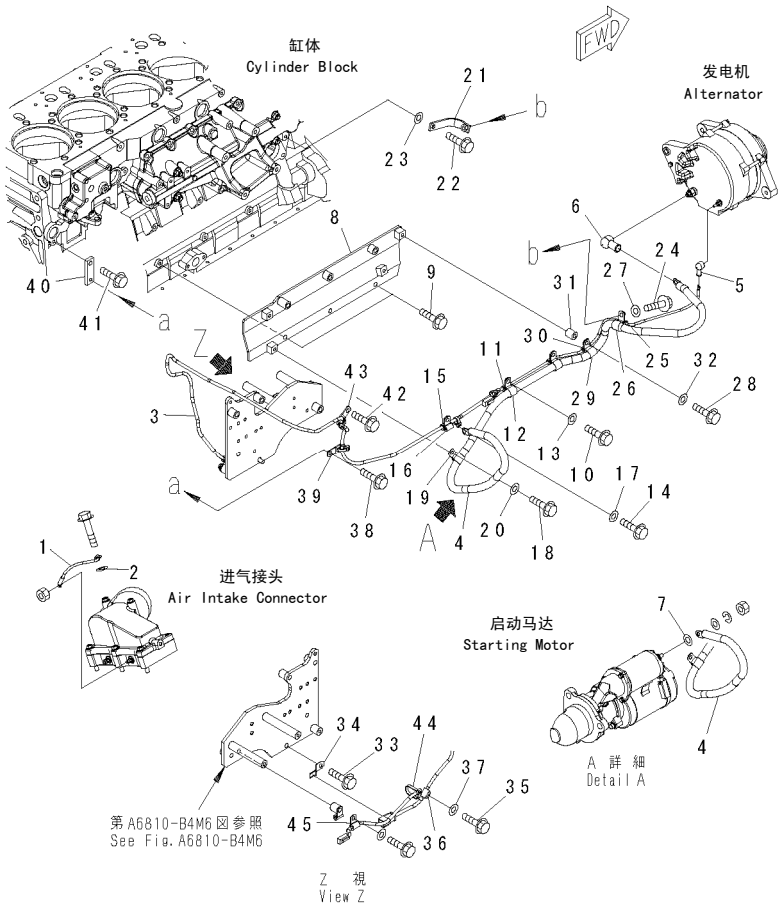

FIG NO. : A6810-A4M6

INDEX	PART NO.	DESCRIPTION	Q'TY	SERIAL NO.
1	6211-81-4280	WIRE,220MM ····· 电缆	1	630001-
2	01643-51032	WASHER·····垫圈	1	630001-
3	6261-81-6110	WIRING HARNESS·····线束	1	630001-
4	6261-81-8241	WIRING HARNESS·····线束	1	630001-
5	08038-00519	CAP ·····盖	1	630001-
6	6218-81-8160	CAP ·····盖	1	630001-
7	01643-31032	WASHER·····垫圈	1	630001-
8	6261-81-8540	COVER ·····盖	1	630001-
9	01435-01020	BOLT·····螺栓	2	630001-
10	01435-01045	BOLT·····螺栓	2	630001-
11	600-051-2060	CLIP·····管夹	2	630001-
12	600-051-2180	CLIP·····管夹	2	630001-
13	01643-31032	WASHER·····垫圈	2	630001-
14	01435-01020	BOLT·····螺栓	1	630001-
15	600-051-2080	CLIP·····管夹	1	630001-
16	600-051-2060	CLIP·····管夹	1	630001-
17	01643-31032	WASHER·····垫圈	1	630001-
18	01435-01020	BOLT·····螺栓	1	630001-
19	600-051-2180	CLIP·····管夹	1	630001-
20	01643-31032	WASHER·····垫圈	1	630001-
21	6204-21-5571	BRACKET ·····支架	1	630001-
22	01435-01020	BOLT·····螺栓	1	630001-
23	01643-31032	WASHER·····垫圈	1	630001-
24	01435-01025	BOLT·····螺栓	1	630001-
25	600-051-2060	CLIP·····管夹	1	630001-
26	600-051-2180	CLIP·····管夹	1	630001-
27	01643-31032	WASHER·····垫圈	1	630001-
28	01435-01045	BOLT·····螺栓	1	630001-
29	600-051-2180	CLIP·····管夹	1	630001-
30	600-051-2060	CLIP·····管夹	1	630001-
31	144-874-7470	BOSS·····座	1	630001-
32	01643-31032	WASHER·····垫圈	1	630001-
33	01435-01025	BOLT·····螺栓	1	630001-
34	08193-20010	CLIP·····管夹	1	630001-
35	01435-01020	BOLT·····螺栓	1	630001-
36	600-051-2080	CLIP·····管夹	1	630001-
37	01643-31032	WASHER·····垫圈	1	630001-
38	01435-01016	BOLT·····螺栓	1	630001-
39	6218-81-8430	CLAMP ·····卡箍	1	630001-
40	6261-81-8660	PLATE ·····板	1	630001-
41	01435-01030	BOLT·····螺栓	1	630001-
42	01435-01016	BOLT·····螺栓	1	630001-
43	6218-81-8430	CLAMP ·····卡箍	1	630001-
44	6218-81-8490	BAND·····绑带	5	630001-
45	600-051-2080	CLIP·····管夹	1	630001-

https://truckmanualshub.com/

FIG.A6810-B4M6 ELECTRICAL WIRING (2/5)

电线(2/5)

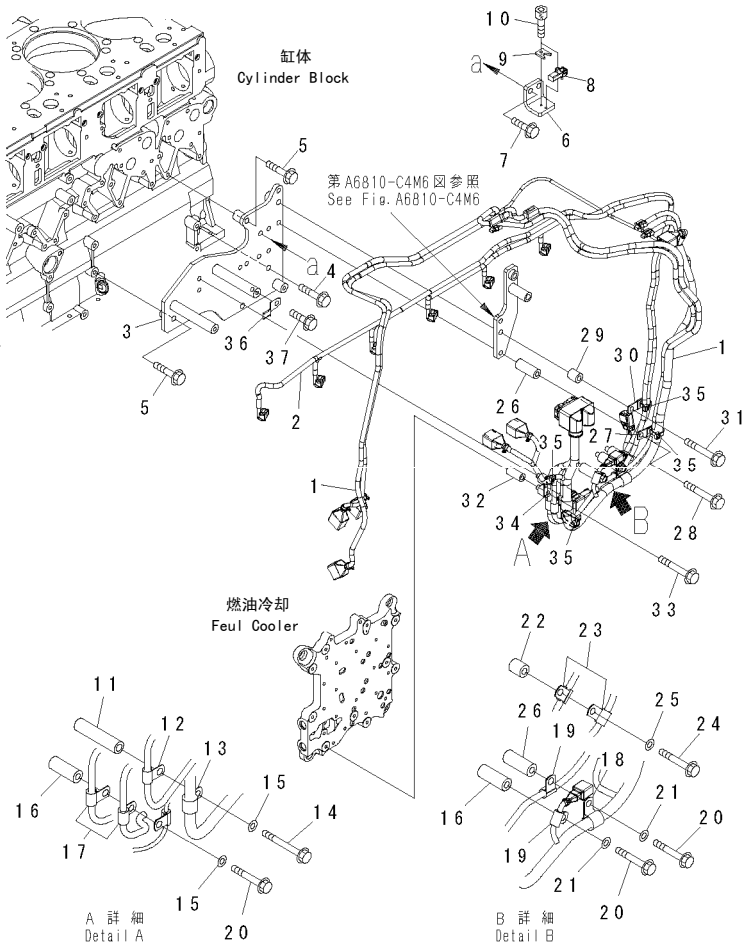

00061495

FIG NO. : A6810-B4M6

INDEX	PART NO.	DESCRIPTION	Q'TY	SERIAL NO.
1	6261-81-8910	WIRING HARNESS……线束	1	630001-
2	6261-81-6120	WIRE HARNESS……线束	1	630001-
3	6261-81-8431	BRACKET ……支架	1	630001-
4	01435-01025	BOLT……螺栓	1	630001-
5	01435-01045	BOLT……螺栓	2	630001-
6	6261-81-1380	BRACKET ……支架	1	630001-
7	01435-01020	BOLT……螺栓	2	630001-
8	6261-81-2600	SENSOR……传感器	1	630001-
9	6251-81-9680	PLATE ……板	1	630001-
10	01252-60516	BOLT……螺栓	2	630001-
11	195-01-16420	COLLAR……衬套	1	630001-
12	600-051-2080	CLIP……管夹	1	630001-
13	600-051-2180	CLIP……管夹	2	630001-
14	01436-01015	BOLT……螺栓	1	630001-
15	01643-31032	WASHER……垫圈	2	630001-
16	6150-81-6940	SPACER……隔离套	2	630001-
17	600-051-2100	CLIP……管夹	2	630001-
18	600-051-2180	CLIP……管夹	1	630001-
19	600-051-2080	CLIP……管夹	2	630001-
20	01435-01075	BOLT……螺栓	3	630001-
21	01643-31032	WASHER……垫圈	2	630001-
22	144-874-7470	BOSS……座	1	630001-
23	600-051-2100	CLIP……管夹	2	630001-
24	01435-01045	BOLT……螺栓	1	630001-
25	01643-31032	WASHER……垫圈	1	630001-
26	6150-81-6940	SPACER……隔离套	2	630001-
27	6218-81-8440	CLAMP ……卡箍	1	630001-
28	01435-01080	BOLT……螺栓	1	630001-
29	144-874-7470	BOSS……座	1	630001-
30	6218-81-8430	CLAMP ……卡箍	1	630001-
31	01435-01085	BOLT……螺栓	1	630001-
32	6137-71-3750	SPACER……隔离套	1	630001-
33	01435-00855	BOLT……螺栓	1	630001-
34	6218-81-8410	CLAMP ……卡箍	1	630001-
35	8218-81-8490	BAND……绑带	5	630001-
36	08193-20010	CLIP……管夹	1	630001-
37	01435-01016	BOLT……螺栓	1	630001-

https://truckmanualshub.com/

FIG.A6810-C4M6 ELECTRICAL WIRING (3/5)

电线(3/5)

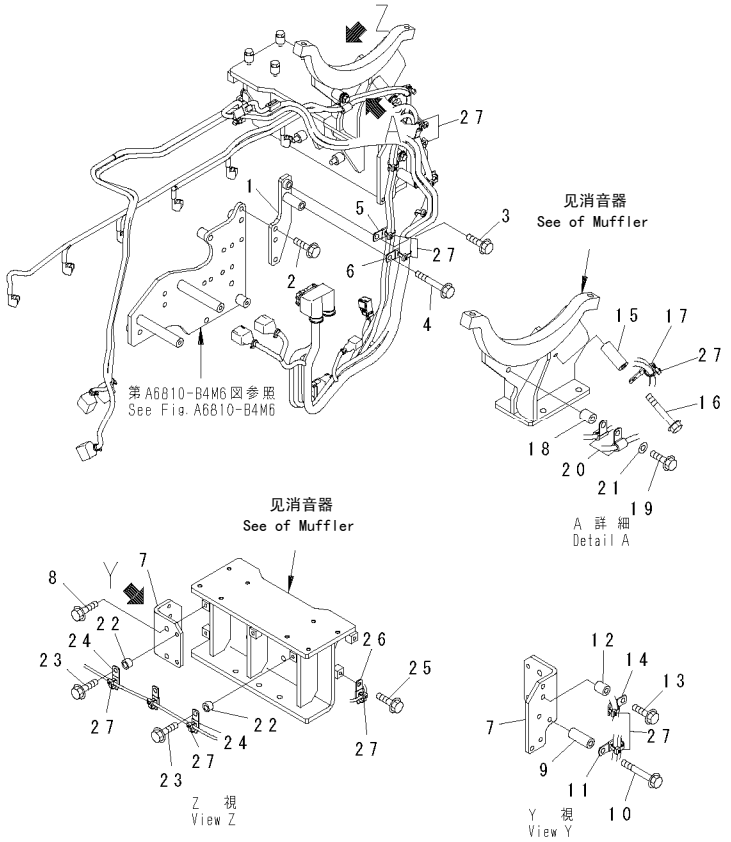

00061496

FIG NO. : A6810-C4M6

INDEX	PART NO.	DESCRIPTION	Q'TY	SERIAL NO.
1	6261-81-8210	BRACKET ……支架	1	630001-
2	01435-01020	BOLT……螺栓	1	630001-
3	01435-01025	BOLT……螺栓	1	630001-
4	01435-01065	BOLT……螺栓	1	630001-
5	6218-81-8430	CLAMP ……卡箍	1	630001-
6	6218-81-8440	CLAMP ……卡箍	1	630001-
7	6261-81-8840	BRACKET ……支架	1	630001-
8	01435-01025	BOLT……螺栓	2	630001-
9	6150-81-6940	SPACER……隔离套	1	630001-
10	01435-01070	BOLT……螺栓	1	630001-
11	6218-81-8430	CLAMP ……卡箍	1	630001-
12	144-874-7470	BOSS……座	1	630001-
13	01435-01040	BOLT……螺栓	1	630001-
14	6218-81-8430	CLAMP ……卡箍	1	630001-
15	6150-81-6940	SPACER……隔离套	1	630001-
16	01435-01070	BOLT……螺栓	1	630001-
17	6218-81-8430	CLAMP ……卡箍	1	630001-
18	144-874-7470	BOSS……座	1	630001-
19	01435-01050	BOLT……螺栓	1	630001-
20	600-051-2100	CLIP……管夹	2	630001-
21	01643-31032	WASHER……垫圈	1	630001-
22	6151-51-8490	SPACER……隔离套	3	630001-
23	01435-01030	BOLT……螺栓	3	630001-
24	6218-81-8430	CLAMP ……卡箍	3	630001-
25	01435-01016	BOLT……螺栓	1	630001-
26	6218-81-8430	CLAMP ……卡箍	1	630001-
27	6218-81-8490	BAND……绑带	12	630001-

https://truckmanualshub.com/

FIG.A6810-D4M6 ELECTRICAL WIRING (4/5)

电线(4/5)

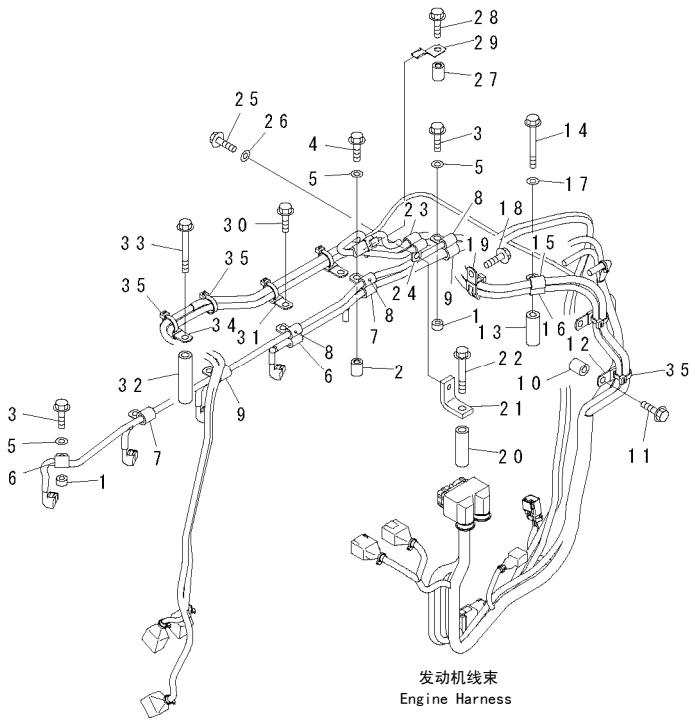

00061497

FIG NO. : A6810-D4M6

INDEX	PART NO.	DESCRIPTION	Q'TY	SERIAL NO.
1	6691-41-8230	SPACER,10MM ……隔离套	5	630001-
2	6162-13-8670	SPACER……隔离套	1	630001-
3	01435-00830	BOLT……螺栓	5	630001-
4	01435-00845	BOLT……螺栓	1	630001-
5	01643-30823	WASHER……垫圈	6	630001-
6	600-051-2120	CLIP……管夹	2	630001-
7	600-051-2140	CLIP……管夹	2	630001-
8	600-051-2100	CLIP……管夹	3	630001-
9	600-051-2160	CLIP……管夹	2	630001-
10	144-874-7470	BOSS……座	2	630001-
11	01435-01045	BOLT……螺栓	2	630001-
12	6218-81-8430	CLAMP ……卡箍	2	630001-
13	6150-81-6940	SPACER……隔离套	1	630001-
14	01435-01075	BOLT……螺栓	1	630001-
15	600-051-2120	CLIP……管夹	1	630001-
16	600-051-2080	CLIP……管夹	1	630001-
17	01643-31032	WASHER……垫圈	1	630001-
18	01435-01016	BOLT……螺栓	1	630001-
19	6218-81-8430	CLAMP ……卡箍	1	630001-
20	6211-11-9790	SPACER……隔离套	1	630001-
21	6222-83-6620	BRACKET ……支架	1	630001-
22	01435-01090	BOLT……螺栓	1	630001-
23	600-051-2120	CLIP……管夹	1	630001-
24	600-051-2080	CLIP……管夹	1	630001-
25	01435-01020	BOLT……螺栓	1	630001-
26	01643-31032	WASHER……垫圈	1	630001-
27	144-874-7470	BOSS……座	1	630001-
28	01435-01055	BOLT……螺栓	1	630001-
29	08193-20010	CLIP……管夹	1	630001-
30	01435-01016	BOLT……螺栓	2	630001-
31	6218-81-8430	CLAMP ……卡箍	2	630001-
32	195-01-16420	COLLAR……衬套	1	630001-
33	01436-01010	BOLT……螺栓	1	630001-
34	6218-81-8430	CLAMP ……卡箍	1	630001-
35	6218-81-8490	BAND……绑带	7	630001-

https://truckmanualshub.com/

FIG.A6810-E4M6 ELECTRICAL WIRING (5/5)

电线(5/5)

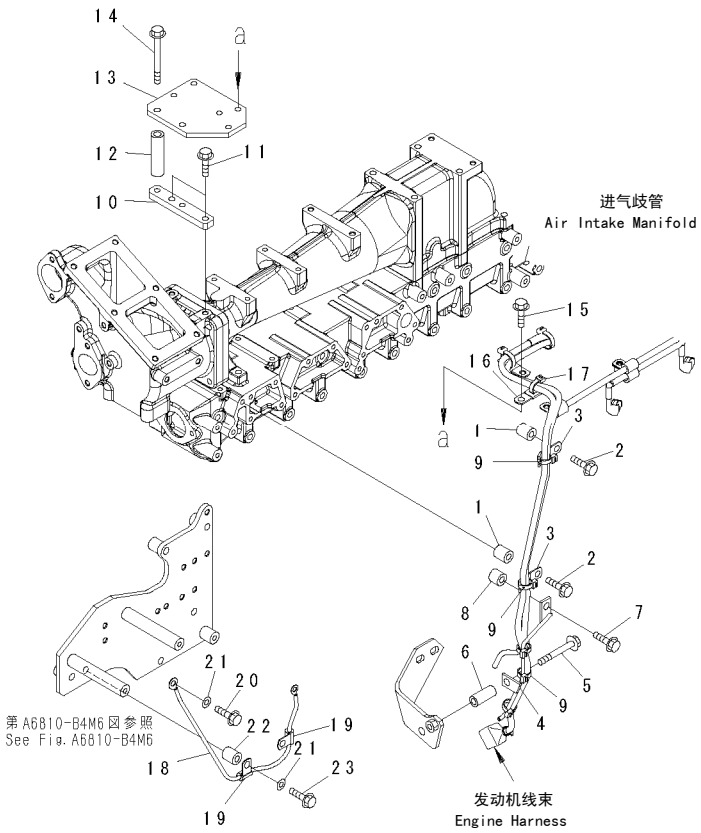

00061665

FIG NO. : A6810-E4M6

INDEX	PART NO.	DESCRIPTION	Q'TY	SERIAL NO.
1	144-874-7470	BOSS……座	2	630001-
2	01435-01040	BOLT……螺栓	2	630001-
3	6218-81-8430	CLAMP ……卡箍	2	630001-
4	6261-81-8680	BRACKET ……支架	1	630001-
5	01435-01065	BOLT……螺栓	1	630001-
6	6143-11-4290	SPACER……隔离套	1	630001-
7	01435-01040	BOLT……螺栓	1	630001-
8	175-79-83760	SPACER……隔离套	1	630001-
9	6218-81-8490	BAND……绑带	5	630001-
10	6261-81-8880	PLATE ……板	1	630001-
11	01435-01025	BOLT……螺栓	2	630001-
12	6240-21-7470	SPACER……隔离套	2	630001-
13	6261-81-8870	PLATE ……板	1	630001-
14	01436-01000	BOLT……螺栓	2	630001-
15	01435-01016	BOLT……螺栓	1	630001-
16	6218-81-8430	CLAMP ……卡箍	1	630001-
17	6218-81-8490	BAND……绑带	2	630001-
18	6261-81-8560	WIRING HARNESS……线束	1	630001-
19	600-051-2060	CLIP……管夹	2	630001-
20	01435-01020	BOLT……螺栓	1	630001-
21	01643-31032	WASHER……垫圈	2	630001-
22	144-874-7470	BOSS……座	1	630001-
23	01435-01040	BOLT……螺栓	1	630001-

https://truckmanualshub.com/

FIG.A981O-A6Y2 NAME PLATE AND CAUTION (ENGLISH)
铭牌和警示牌（英文）

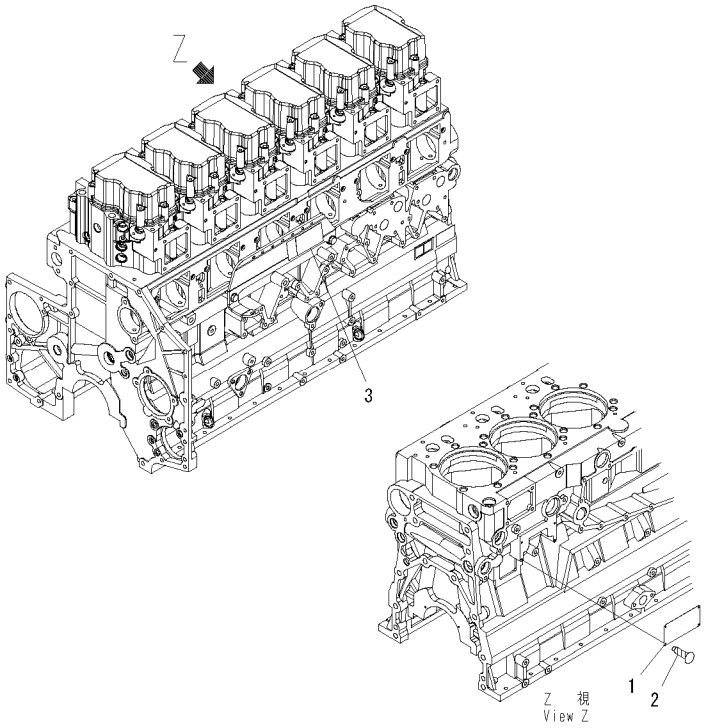

00060753

FIG NO. : A981O-A6Y2

INDEX	PART NO.	DESCRIPTION	Q'TY	SERIAL NO.
1	600-023-2340	PLATE, NAME,(LIMITED SUPPLY)……铭牌	1	630001-
2	04418-02550	SCREW ……螺钉	4	630001-
3	6217-71-9331	PLATE,WARNING ……警示牌	1	630001-

https://truckmanualshub.com/

FIG.B9999-A4M9 AIR CLEANER (CHASSIS MOUNT)
空滤器（底盘安装）

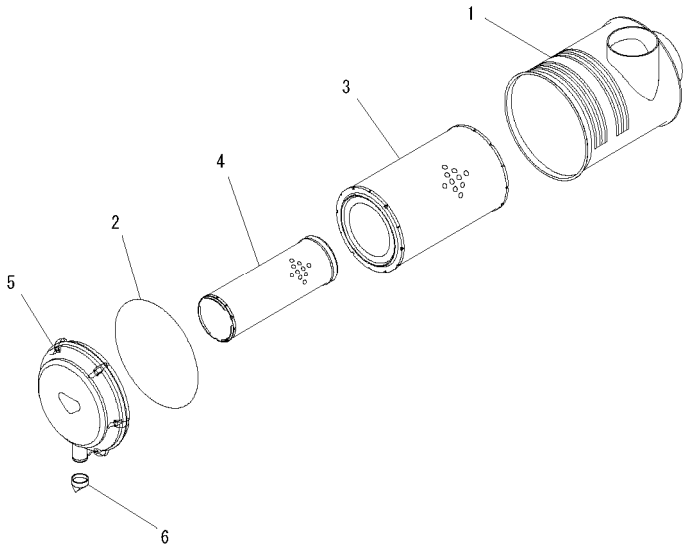

PV6B707

FIG NO. : B9999-A4M9

INDEX	PART NO.	DESCRIPTION	Q'TY	SERIAL NO.
1	6217-81-7212	BODY,AIR CLEANER……空滤器壳体	1	630001-
	600-185-6100	ELEMENT ASS'Y ……滤芯总成	1	630001-
2	600-184-1671	.O-RING……O形圈	1	630001-
3	600-185-6110	.ELEMENT,OUTER……外滤	1	630001-
4	☆	.ELEMENT,INNER……内滤芯	1	630001-
5	600-184-1611	COVER ASS'Y ……盖总成	1	630001-
6	600-184-1350	VALVE,VAQUATOR……阀	1	630001-

ENGINE RELATED PARTS
发动机相关部品

https://truckmanualshub.com/

https://truckmanualshub.com/

FIG.B0100-01A0 ENGINE MOUNTING

发动机安装

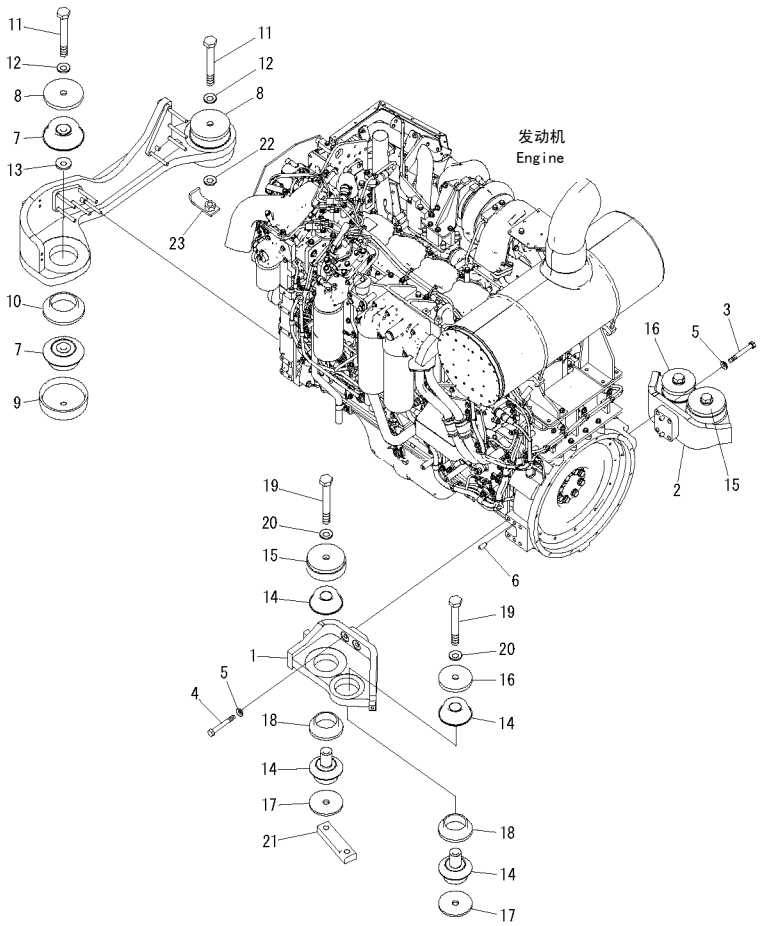

00062368-V

FIG NO. :B0100-01A0

INDEX	PART NO.	DESCRIPTION	Q'TY	SERIAL NO.
1	21M-01-21221	BRACKET ……支架	1	60001-
2	21M-01-21250	BRACKET ……支架	1	60001-
3	01010-81685	BOLT……螺栓	4	60001-
4	01010-81675	BOLT……螺栓	4	60001-
5	01643-31645	WASHER……垫圈	8	60001-
6	04020-01434	PIN…… 销	4	60001-
7	21N-01-11120	CUSHION…… 减振垫	4	60001-
8	21N-01-11150	WASHER……垫圈	2	60001-
9	209-01-51133	STOPPER…… 止动块	2	60001-
10	21T-01-11210	COLLAR……衬套	2	60001-
11	208-01-11181	BOLT……螺栓	2	60001-
12	01643-32460	WASHER……垫圈	2	60001-
13	21T-01-11220	COLLAR……衬套	2	60001-
14	207-01-35140	CUSHION…… 减振垫	8	60001-
15	21M-01-11360	STOPPER…… 止动块	2	60001-
16	208-01-11151	WASHER……垫圈	2	60001-
17	208-01-11161	WASHER……垫圈	4	60001-
18	208-01-11221	COLLAR……衬套	4	60001-
19	208-01-11181	BOLT……螺栓	4	60001-
20	01643-32460	WASHER……垫圈	4	60001-
21	208-01-11171	PLATE…… 摩擦片	2	60001-
22	01643-32460	WASHER……垫圈	1	60001-
23	21M-01-21261	PLATE…… 摩擦片	1	60001-

https://truckmanualshub.com/

FIG.B0200-01A0 AIR CLEANER (CONNECTING PARTS)
空滤器（连接部分）

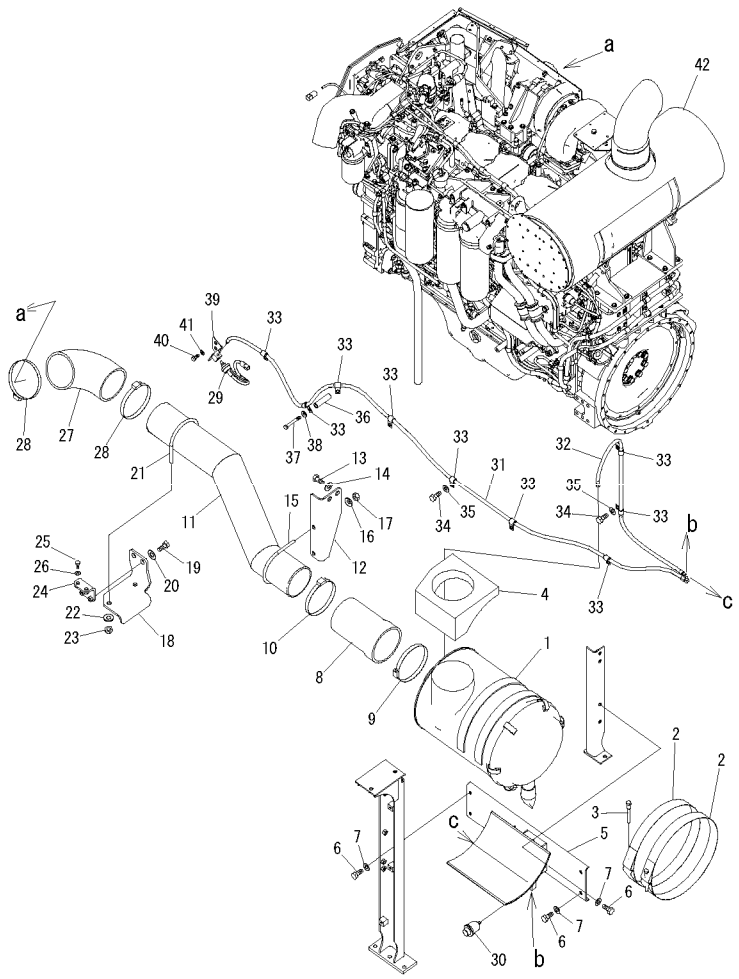

00062403-V

FIG NO. : B0200-01A0

INDEX	PART NO.	DESCRIPTION	Q'TY	SERIAL NO.
1	(6217-81-7203)	AIR CLEANER ASS'Y····· 空滤器总成	1	60001-
2	6151-11-9970	BAND ASS'Y·····绑带总成	2	60001-
3	6643-11-4641	BOLT·····螺栓	2	60001-
4	21M-01-21170	SEAL·····油封	1	60001-
5	21M-01-15211	BRACKET····· 支架	1	60001-
6	01010-81230	BOLT·····螺栓	6	60001-
7	01643-31232	WASHER·····垫圈	6	60001-
8	21M-01-21120	HOSE·····软管	1	60001-
9	07289-00170	CLAMP····· 卡箍	1	60001-
10	07289-00160	CLAMP····· 卡箍	1	60001-
11	21M-01-21110	TUBE·····硬管	1	60001-
12	21M-01-21130	BRACKET····· 支架	1	60001-
13	01010-81230	BOLT·····螺栓	2	60001-
14	175-54-34170	WASHER·····垫圈	2	60001-
15	428-62-14640	CLIP·····管夹	1	60001-
16	01643-31232	WASHER·····垫圈	2	60001-
17	01597-01211	NUT····· 螺母	2	60001-
18	21M-01-21140	BRACKET····· 支架	1	60001-
19	01010-81235	BOLT·····螺栓	2	60001-
20	175-54-34170	WASHER·····垫圈	2	60001-
21	428-62-14640	CLIP·····管夹	1	60001-
22	01643-31232	WASHER·····垫圈	2	60001-
23	01597-01211	NUT····· 螺母	2	60001-
24	21M-01-21150	BRACKET····· 支架	1	60001-
25	01010-81240	BOLT·····螺栓	2	60001-
26	01643-31232	WASHER·····垫圈	2	60001-
27	21M-01-21160	HOSE·····软管	1	60001-
28	07289-00160	CLAMP····· 卡箍	2	60001-
29	7861-93-1420	SENSOR·····传感器	1	60001-
30	08672-01000	INDICATOR····· 指示器	1	60001-
31	08671-50186	HOSE·····软管	1	60001-
32	08671-60140	HOSE·····软管	1	60001-
33	04434-51412	CLIP·····管夹	9	60001-
34	01010-81230	BOLT·····螺栓	3	60001-
35	01643-31232	WASHER·····垫圈	3	60001-
36	22S-62-26210	SPACER·····隔离套	1	60001-
37	01011-81200	BOLT·····螺栓	1	60001-
38	01643-31232	WASHER·····垫圈	1	60001-
39	208-01-62112	BRACKET····· 支架	1	60001-
40	01010-81220	BOLT·····螺栓	2	60001-
41	01643-31232	WASHER·····垫圈	2	60001-
42	21M-01-21950	COVER····· 盖	1	60001-

https://truckmanualshub.com/

FIG.BO600-01A0 POWER TAKE OFF (P.T.O. ASS'Y)

动力切断（PTO总成）

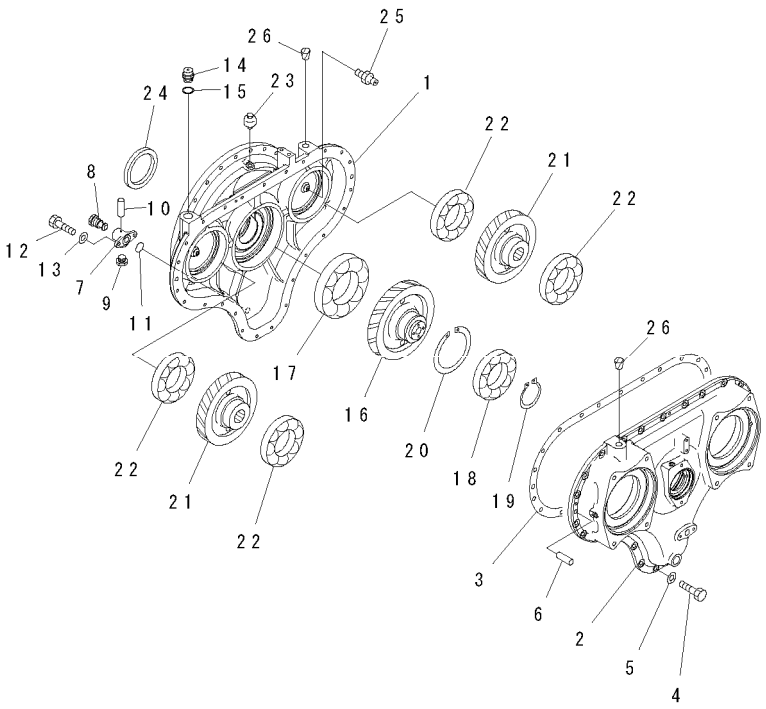

00038272

FIG NO. : BO600-01A0

INDEX	PART NO.	DESCRIPTION	Q'TY	SERIAL NO.
1	21M-38-21510	CASE……壳体	1	60001-
2	21M-38-21121	CASE……壳体	1	60001-
3	21M-38-11140	GASKET……垫	1	60001-
4	01010-81240	BOLT……螺栓	25	60001-
5	01643-31232	WASHER……垫圈	25	60001-
6	04020-01434	PIN…… 销	2	60001-
	6693-22-5600	VALVE ASS'Y…… 阀总成	1	60001-
7	☆	.BODY…… 壳	1	60001-
8	6693-22-5620	.VALVE……阀	1	60001-
9	07040-02412	.PLUG…… 堵塞	1	60001-
10	04020-00514	.PIN……销	1	60001-
11	07000-E3028	O-RING…… O形圈	1	60001-
12	01010-81030	BOLT……螺栓	2	60001-
13	01643-31032	WASHER……垫圈	2	60001-
14	07030-03034	BREATHER……透气塞	1	60001-
15	07005-03016	GASKET……垫	1	60001-
16	21M-38-21340	GEAR……齿轮	1	60001-
17	06030-06224	BEARING…… 轴承	1	60001-
18	21M-38-11570	BEARING…… 轴承	1	60001-
19	04064-09530	RING……隔圈	1	60001-
20	04071-00170	RING……隔圈	1	60001-
21	21M-38-11350	GEAR……齿轮	2	60001-
22	06030-06219	BEARING…… 轴承	4	60001-
23	07030-10252	BREATHER……透气塞	1	60001-
24	21M-38-11410	SEAL……密封垫	1	60001-
25	209-38-11270	NIPPLE……喷嘴	2	60001-
26	07049-02430	PLUG……堵塞	2	60001-

https://truckmanualshub.com/

FIG.B0600-02A0 POWER TAKE OFF (OIL CHECK GAUGE)

动力切断（油检查计）

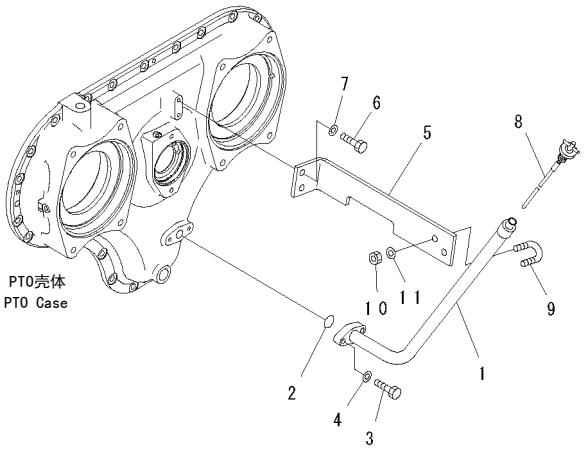

00038273

FIG NO. : B0600-02A0

INDEX	PART NO.	DESCRIPTION	Q'TY	SERIAL NO.
1	21M-38-21310	TUBE……硬管	1	60001-
2	07000-E3028	O-RING…… O形圈	1	60001-
3	01010-81030	BOLT……螺栓	2	60001-
4	01643-31032	WASHER……垫圈	2	60001-
5	21M-38-21320	BRACKET…… 支架	1	60001-
6	01010-81040	BOLT……螺栓	2	60001-
7	01643-31032	WASHER……垫圈	2	60001-
8	21M-38-11331	GAUGE…… 油位计	1	60001-
9	07283-22746	CLIP……管夹	1	60001-
10	01597-01009	NUT…… 螺母	2	60001-
11	01643-31032	WASHER……垫圈	2	60001-

https://truckmanualshub.com/

FIG.BO600-03A0 POWER TAKE OFF (COUPLING)

动力切断（联轴节）

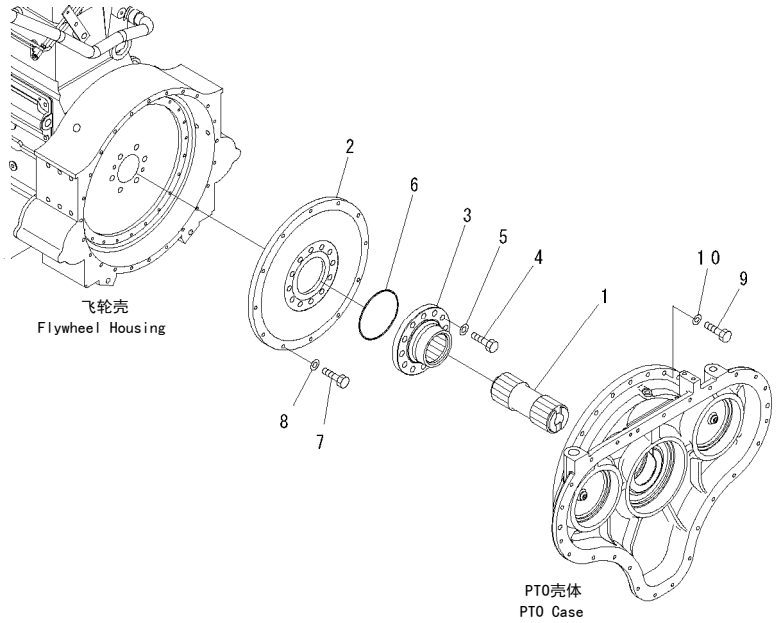

00008316

FIG NO. : BO600-03A0

INDEX	PART NO.	DESCRIPTION	Q'TY	SERIAL NO.
1	21M-38-21580	SHAFT…… 轴	1	60001-
	21M-38-21590	HUB ASS'Y…… 轮毂总成	1	60001-
2	☆	.PLATE……板	1	60001-
3	21M-38-21370	.COUPLING…… 联轴节	1	60001-
4	01010-81645	BOLT……螺栓	12	60001-
5	01643-31645	WASHER……垫圈	12	60001-
6	07000-E2145	O-RING…… O形圈	1	60001-
7	01010-81240	BOLT……螺栓	12	60001-
8	01643-31232	WASHER……垫圈	12	60001-
9	01010-81245	BOLT……螺栓	24	60001-
10	01643-31232	WASHER……垫圈	24	60001-

https://truckmanualshub.com/

FIG.BO600-04A0 POWER TAKE OFF (P.T.O. PIPING) (LUBRICATION LINES)

动力切断（PTO管路）（润滑管路）

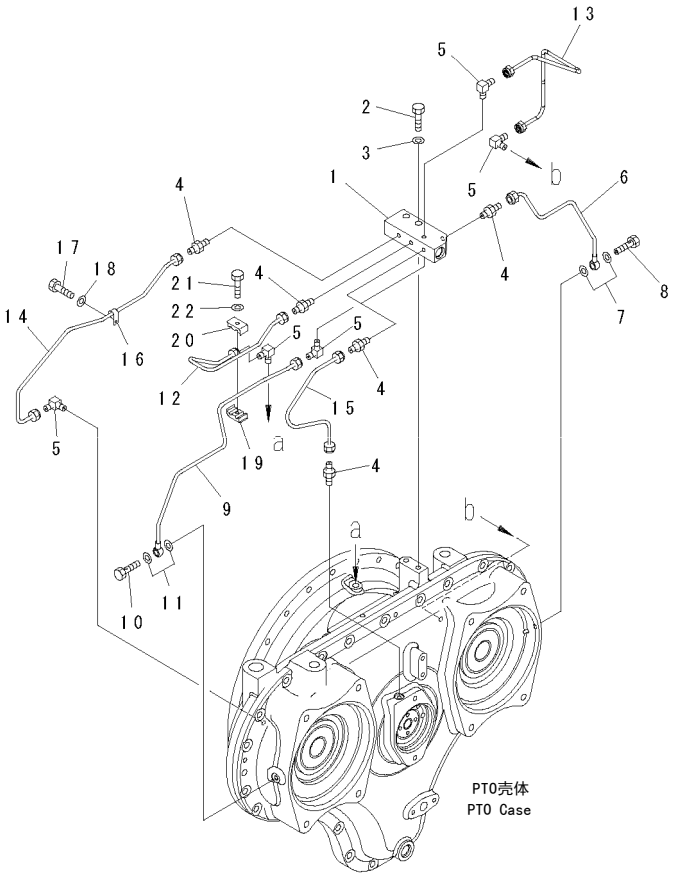

00008588

FIG NO. : BO600-04A0

INDEX	PART NO.	DESCRIPTION	Q'TY	SERIAL NO.
1	21M-38-11130	BLOCK…… 垫块	1	60001-
2	01010-81255	BOLT……螺栓	2	60001-
3	01643-31232	WASHER……垫圈	2	60001-
4	07213-50710	CONNECTOR…… 接头	5	60001-
5	176-43-41350	ELBOW…… 接头	5	60001-
6	21M-38-11270	TUBE……硬管	1	60001-
7	07005-01012	GASKET……垫	2	60001-
8	209-38-51440	JOINT…… 接头	1	60001-
9	21M-38-11290	TUBE……硬管	1	60001-
10	07005-01012	GASKET……垫	2	60001-
11	209-38-51440	JOINT…… 接头	1	60001-
12	21M-38-11230	TUBE……硬管	1	60001-
13	21M-38-11540	TUBE……硬管	1	60001-
14	21M-38-11251	TUBE……硬管	1	60001-
15	21M-38-11261	TUBE……硬管	1	60001-
16	21T-38-12270	CLIP……管夹	1	60001-
17	01010-81020	BOLT……螺栓	1	60001-
18	01643-31032	WASHER……垫圈	1	60001-
19	6162-73-5510	CLAMP, WITH THREAD……带螺纹管夹	1	60001-
20	6162-73-5520	CLAMP…… 卡箍	1	60001-
21	01010-80630	BOLT……螺栓	1	60001-
22	01602-20619	WASHER……垫圈	1	60001-

https://truckmanualshub.com/

FIG.BO600-05A0 POWER TAKE OFF (P.T.O. PIPING) (SUCTION LINES)

动力切断（PTO管路）（吸油管路）

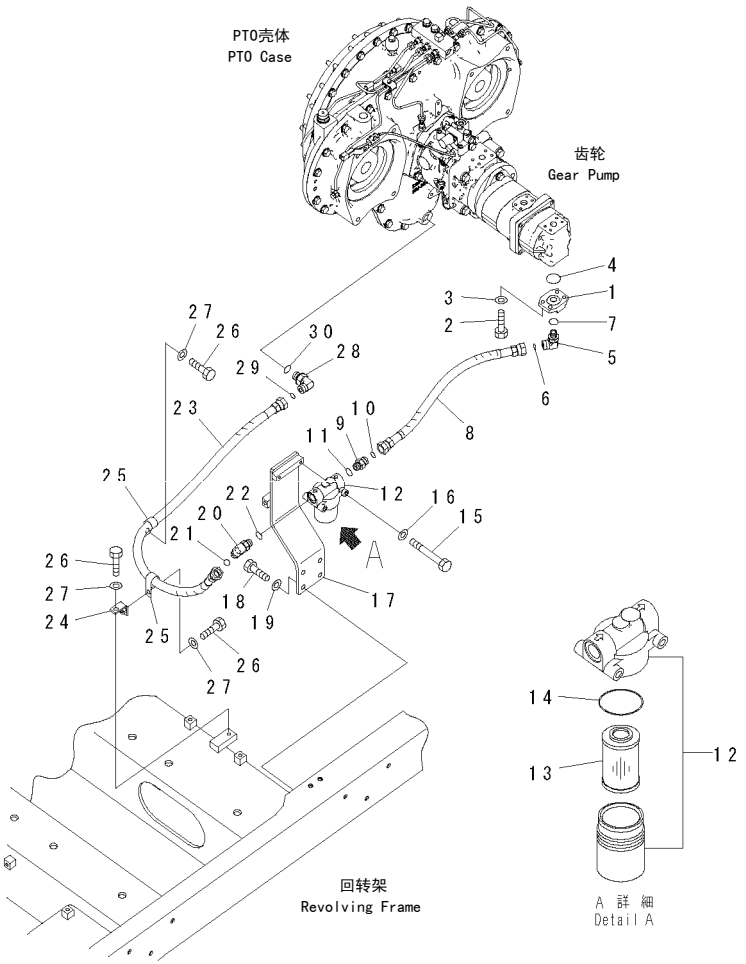

000061957

FIG NO. : BO600-05A0

INDEX	PART NO.	DESCRIPTION	Q'TY	SERIAL NO.
1	21M-38-21490	FLANGE……法兰	1	60001-
2	01010-81030	BOLT……螺栓	4	60001-
3	01643-31032	WASHER……垫圈	4	60001-
4	07000-E3038	O-RING…… O形圈	1	60001-
5	21M-38-21470	ELBOW…… 接头	1	60001-
6	02896-21015	O-RING…… O形圈	1	60001-
7	07002-22034	O-RING…… O形圈	1	60001-
8	02762-00503	HOSE……软管	1	60001-
9	21N-64-36620	NIPPLE……喷嘴	1	60001-
10	02896-21015	O-RING…… O形圈	1	60001-
11	07002-21823	O-RING…… O形圈	1	60001-
12	209-01-42251	FILTER ASS'Y……滤清器总成	1	60001-
13	209-01-42260	ELEMENT ASS'Y…… 滤芯总成	1	60001-
14	07000-F2065	O-RING…… O形圈	1	60001-
15	01011-81000	BOLT……螺栓	2	60001-
16	01643-31032	WASHER……垫圈	2	60001-
17	21M-38-21520	BRACKET…… 支架	1	60001-
18	01010-81230	BOLT……螺栓	4	60001-
19	01643-31232	WASHER……垫圈	4	60001-
20	418-18-32342	ELBOW…… 接头	1	60001-
21	02896-21015	O-RING…… O形圈	1	60001-
22	07002-21823	O-RING…… O形圈	1	60001-
23	02762-00513	HOSE……软管	1	60001-
24	17M-49-15260	BRACKET…… 支架	1	60001-
25	04434-52312	CLIP……管夹	2	60001-
26	01010-81225	BOLT……螺栓	3	60001-
27	01643-31232	WASHER……垫圈	3	60001-
28	02782-10522	ELBOW…… 接头	1	60001-
29	02896-21015	O-RING…… O形圈	1	60001-
30	07002-22434	O-RING…… O形圈	1	60001-

https://truckmanualshub.com/

FIG.BO600-06A0 POWER TAKE OFF (P.T.O. PIPING) (DELIVERY LINES)

动力切断（PTO管路）（输油管路）

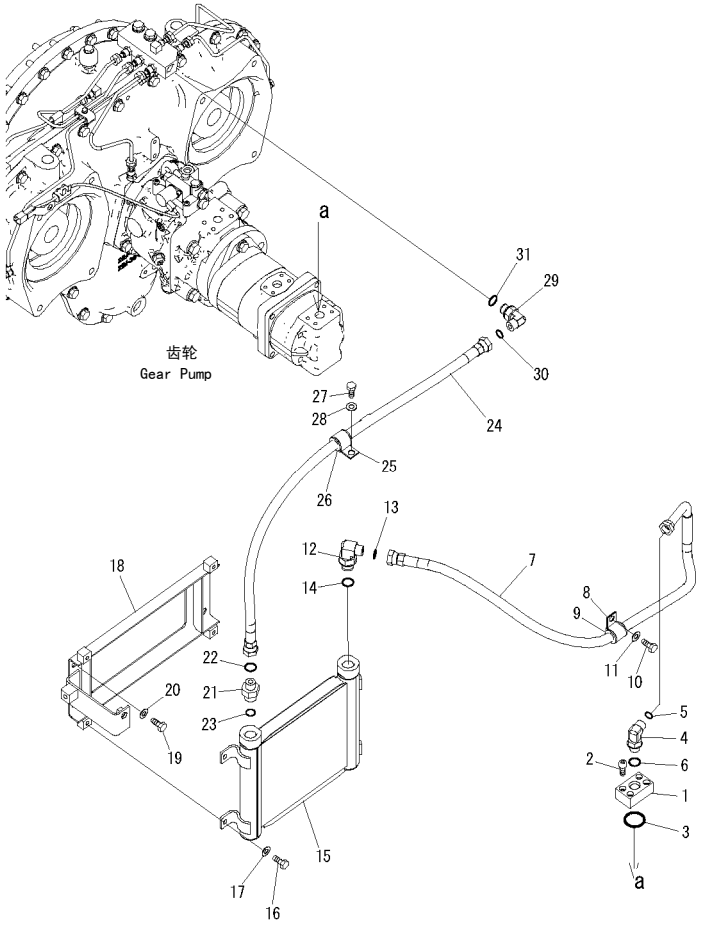

000061958-V

FIG NO. : BO600-06A0

INDEX	PART NO.	DESCRIPTION	Q'TY	SERIAL NO.
1	21M-38-21480	FLANGE……法兰	1	60001-
2	01252-70835	BOLT……螺栓	4	60001-
3	07000-E3030	O-RING…… O形圈	1	60001-
4	21M-38-21460	ELBOW…… 接头	1	60001-
5	02896-21012	O-RING…… O形圈	1	60001-
6	07002-22034	O-RING…… O形圈	1	60001-
7	21M-38-21451	HOSE……软管	1	60001-
8	04434-52512	CLIP……管夹	1	60001-
9	07095-20318	CUSHION…… 减振垫	1	60001-
10	01010-81225	BOLT……螺栓	1	60001-
11	01643-31232	WASHER……垫圈	1	60001-
12	02782-10425	ELBOW…… 接头	1	60001-
13	02896-21012	O-RING…… O形圈	1	60001-
14	07002-22434	O-RING…… O形圈	1	60001-
15	21M-38-21430	OIL COOLER……油冷却器	1	60001-
16	01010-81025	BOLT……螺栓	4	60001-
17	01643-31032	WASHER……垫圈	4	60001-
18	21M-38-21422	BRACKET…… 支架	1	60001-
19	01010-81225	BOLT……螺栓	4	60001-
20	01643-31232	WASHER……垫圈	4	60001-
21	02781-0042A	JOINT…… 接头	1	60001-
22	02896-21012	O-RING…… O形圈	1	60001-
23	07002-22434	O-RING…… O形圈	1	60001-
24	02762-00410	HOSE, 1000MM……1000MM软管	1	60001-
25	04434-52512	CLIP……管夹	1	60001-
26	07095-20318	CUSHION…… 减振垫	1	60001-
27	01010-81225	BOLT……螺栓	1	60001-
28	01643-31232	WASHER……垫圈	1	60001-
29	02782-10422	ELBOW…… 接头	1	60001-
30	02896-21012	O-RING…… O形圈	1	60001-
31	07002-22034	O-RING…… O形圈	1	60001-

COOLING SYSTEM
冷却系统

https://truckmanualshub.com/

https://truckmanualshub.com/

FIG.C0100-01A0 COOLING (RADIATOR 、OIL COOLER AND AFTER COOLER)
冷却(散热器、油冷却器和中冷器)

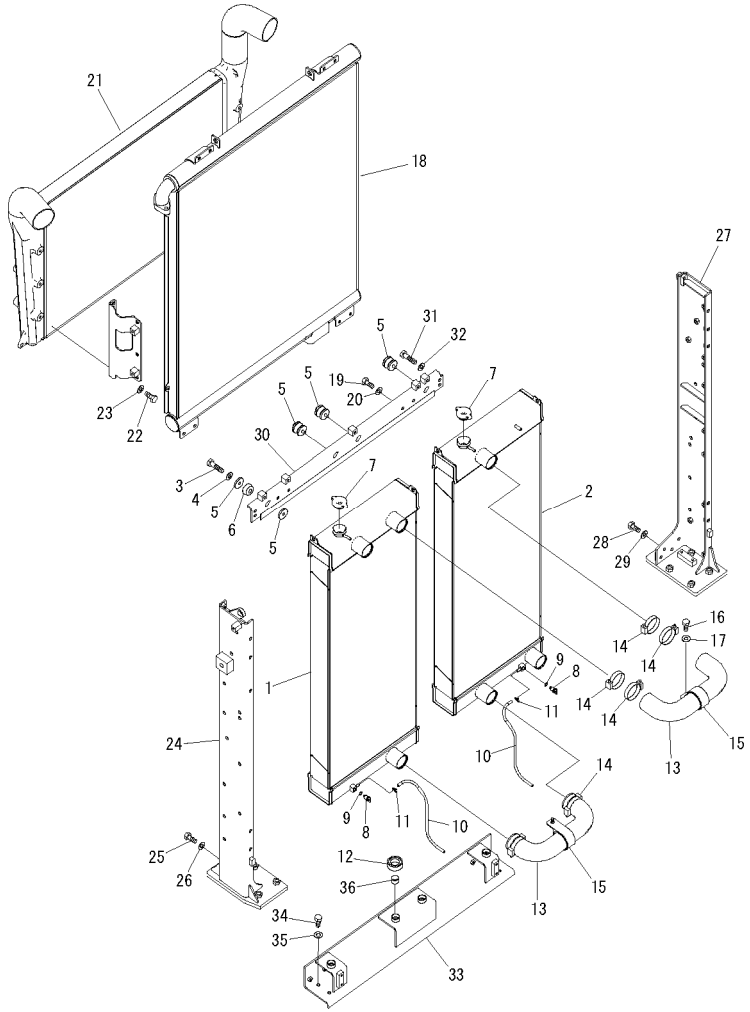

00038276

FIG NO. : C0100-01A0

INDEX	PART NO.	DESCRIPTION	Q'TY	SERIAL NO.
1	21M-03-21110	CORE ASS'Y……芯总成	1	60001-
2	21M-03-21120	CORE ASS'Y……芯总成	1	60001-
3	01010-81050	BOLT……螺栓	4	60001-
4	01643-31032	WASHER……垫圈	4	60001-
5	207-03-75590	PLATE…… 板	8	60001-
6	195-03-41380	CUSHION…… 减振垫	4	60001-
7	416-03-11170	CAP…… 盖	2	60001-
8	205-03-62660	PLUG……堵塞	2	60001-
9	07000-11007	.O-RING……O形圈	1	60001-
10	21M-03-21670	HOSE……软管	2	60001-
11	20Y-03-11330	CLIP……管夹	2	60001-
12	209-03-41280	CUSHION…… 减振垫	4	60001-
13	21M-03-21571	HOSE……软管	2	60001-
14	07289-00070	CLAMP…… 卡箍	8	60001-
15	14X-01-35650	CLIP……管夹	2	60001-
16	01010-81030	BOLT……螺栓	2	60001-
17	01643-31032	WASHER……垫圈	2	60001-
18	21M-03-21131	OIL COOLER……油冷却器	1	60001-
19	01010-81025	BOLT……螺栓	8	60001-
20	01643-31032	WASHER……垫圈	8	60001-
21	21M-03-21350	AFTER COOLER ASS'Y……中冷器总成	1	60001-
22	01010-81225	BOLT……螺栓	6	60001-
23	01643-31232	WASHER……垫圈	6	60001-
24	21M-03-21181	FRAME…… 车架	1	60001-
25	01010-81025	BOLT……螺栓	2	60001-
26	01643-31032	WASHER……垫圈	2	60001-
27	21M-03-21191	FRAME…… 车架	1	60001-
28	01010-81025	BOLT……螺栓	2	60001-
29	01643-31032	WASHER……垫圈	2	60001-
30	21M-03-21211	BRACKET…… 支架	1	60001-
31	01010-81040	BOLT……螺栓	4	60001-
32	01643-31032	WASHER……垫圈	4	60001-
33	21M-03-21221	BRACKET…… 支架	1	60001-
34	01010-81025	BOLT……螺栓	4	60001-
35	01643-31032	WASHER……垫圈	4	60001-
36	22B-03-12590	CUSHION…… 减振垫	4	60001-

https://truckmanualshub.com/

FIG.CO100-02A0 COOLING (CONDENSER FOR AIR CONDITIONER 、OIL COOLER FOR FUEL)
冷却(冷凝器空调、燃油冷却器)

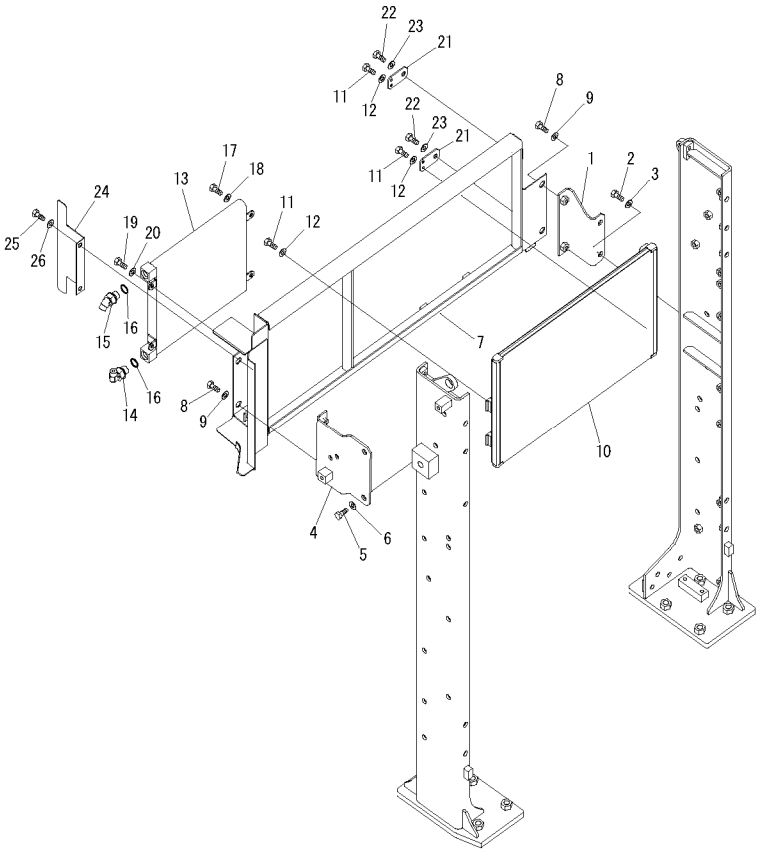

00038277

FIG NO. : CO100-02A0

INDEX	PART NO.	DESCRIPTION	Q'TY	SERIAL NO.
1	21M-03-21460	BRACKET…… 支架	1	60001-
2	01010-81225	BOLT……螺栓	2	60001-
3	01643-31232	WASHER……垫圈	2	60001-
4	21M-03-21450	BRACKET…… 支架	1	60001-
5	01010-81225	BOLT……螺栓	2	60001-
6	01643-31232	WASHER……垫圈	2	60001-
7	21M-03-21430	BRACKET…… 支架	1	60001-
8	01010-81225	BOLT……螺栓	4	60001-
9	01643-31232	WASHER……垫圈	4	60001-
10	208-979-7520	CONDENSER ASS'Y…… 冷凝器总成	1	60001-
11	01010-80616	BOLT……螺栓	8	60001-
12	01643-30623	WASHER……垫圈	8	60001-
13	209-03-41130	OIL COOLER……油冷却器	1	60001-
14	02782-10315	ELBOW…… 接头	1	60001-
15	02783-10315	ELBOW…… 接头	1	60001-
16	07002-12034	O-RING…… O形圈	2	60001-
17	01010-80825	BOLT……螺栓	2	60001-
18	01643-30823	WASHER……垫圈	2	60001-
19	01010-80820	BOLT……螺栓	2	60001-
20	01643-30823	WASHER……垫圈	2	60001-
21	21M-03-21440	PLATE…… 板	2	60001-
22	01010-81025	BOLT……螺栓	2	60001-
23	01643-31032	WASHER……垫圈	2	60001-
24	21M-03-21550	COVER…… 盖	1	60001-
25	01010-81020	BOLT……螺栓	2	60001-
26	01643-31032	WASHER……垫圈	2	60001-

https://truckmanualshub.com/

FIG.CO100-03A0 COOLING (SHROUD AND NET)
冷却(遮板网)

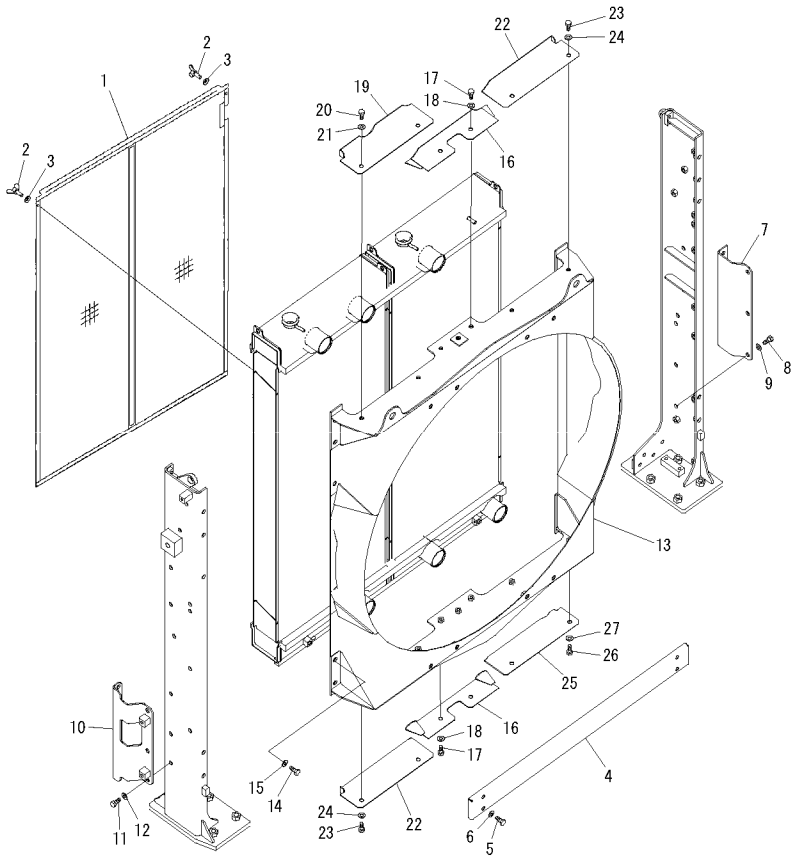

00040669

FIG NO. : CO100-03A0

INDEX	PART NO.	DESCRIPTION	Q'TY	SERIAL NO.
1	21M-03-22270	NET…… 网	1	60001-
2	01434-10616	BOLT, WING……翼形螺栓	2	60001-
3	01643-30623	WASHER……垫圈	2	60001-
4	21M-03-21680	COVER…… 盖	1	60001-
5	01010-81020	BOLT……螺栓	4	60001-
6	01643-31032	WASHER……垫圈	4	60001-
7	21M-03-21420	BRACKET…… 支架	1	60001-
8	01010-81225	BOLT……螺栓	3	60001-
9	01643-31232	WASHER……垫圈	3	60001-
10	21M-03-21951	BRACKET…… 支架	1	60001-
11	01010-81225	BOLT……螺栓	3	60001-
12	01643-31232	WASHER……垫圈	3	60001-
13	21M-03-21471	SHROUD……遮板	1	60001-
14	01010-81225	BOLT……螺栓	10	60001-
15	01643-31232	WASHER……垫圈	10	60001-
16	21M-03-21522	BRACKET…… 支架	1	60001-
17	01010-81020	BOLT……螺栓	4	60001-
18	01643-31032	WASHER……垫圈	4	60001-
19	21M-03-21562	COVER…… 盖	1	60001-
20	01010-81020	BOLT……螺栓	2	60001-
21	01643-31032	WASHER……垫圈	2	60001-
22	21M-03-21582	COVER…… 盖	1	60001-
23	01010-81020	BOLT……螺栓	4	60001-
24	01643-31032	WASHER……垫圈	4	60001-
25	21M-03-21592	COVER…… 盖	1	60001-
26	01010-81020	BOLT……螺栓	2	60001-
27	01643-31032	WASHER……垫圈	2	60001-

https://truckmanualshub.com/

FIG.C0100-04A0 COOLING (SEAL AND SHEET)
冷却(密封垫和垫片)

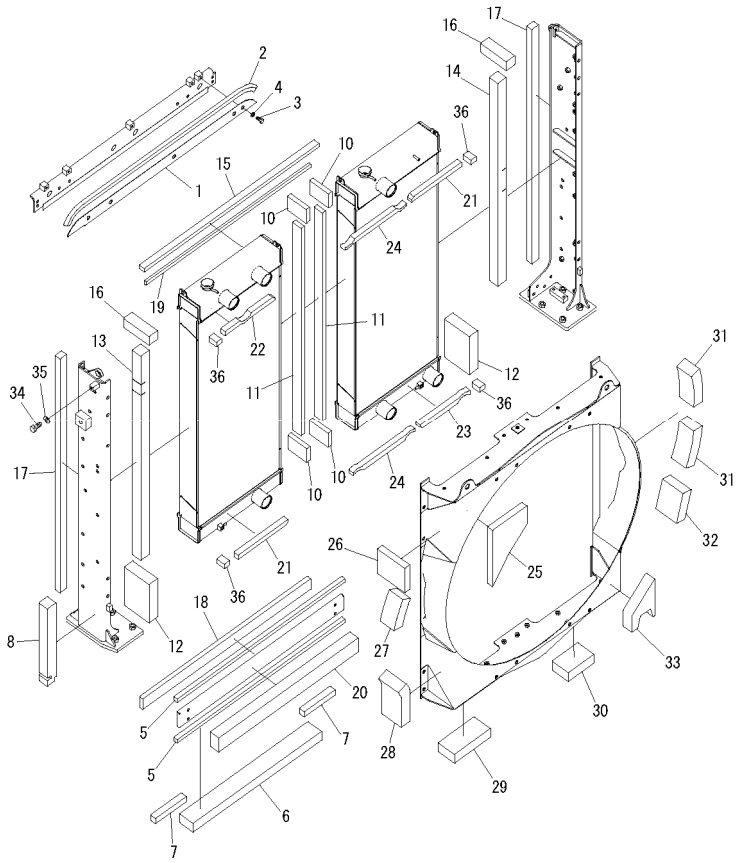

00062207-V

FIG NO. : C0100-04A0

INDEX	PART NO.	DESCRIPTION	Q'TY	SERIAL NO.
1	21M-03-21511	PLATE…… 板	1	60001-
2	21M-03-21970	SEAL……密封垫	1	60001-
3	01010-81230	BOLT……螺栓	5	60001-
4	01643-31232	WASHER……垫圈	5	60001-
5	21M-03-21870	SEAL……密封垫	2	60001-
6	21M-03-21880	SEAL……密封垫	1	60001-
7	21M-03-21890	SEAL……密封垫	2	60001-
8	21M-03-21930	SEAL……密封垫	1	60001-
10	21M-03-21771	SEAL……密封垫	4	60001-
11	21M-03-21781	SEAL……密封垫	2	60001-
12	21M-03-21690	SEAL……密封垫	2	60001-
13	21M-03-21710	SEAL……密封垫	1	60001-
14	21M-03-21720	SEAL……密封垫	1	60001-
15	21M-03-21750	SEAL……密封垫	1	60001-
16	21M-03-21760	SEAL……密封垫	2	60001-
17	21M-03-21840	SEAL……密封垫	2	60001-
18	21M-03-21850	SEAL……密封垫	1	60001-
19	21M-03-21860	SEAL……密封垫	1	60001-
20	21M-03-22731	SHEET…… 垫片	1	60001-
21	21M-03-21792	SEAL……密封垫	2	60001-
22	21M-03-21812	SEAL……密封垫	1	60001-
23	21M-03-21823	SEAL……密封垫	1	60001-
24	21M-03-21832	SEAL……密封垫	2	60001-
25	21M-03-22611	SHEET…… 垫片	1	60001-
26	21M-03-22691	SHEET…… 垫片	1	60001-
27	21M-03-22681	SHEET…… 垫片	1	60001-
28	21M-03-22650	SHEET…… 垫片	1	60001-
29	21M-03-22710	SHEET…… 垫片	1	60001-
30	21M-03-22720	SHEET…… 垫片	1	60001-
31	21M-03-22662	SHEET…… 垫片	2	60001-
32	21M-03-22670	SHEET…… 垫片	1	60001-
33	21M-03-22631	SHEET…… 垫片	1	60001-
34	01010-81035	BOLT……螺栓	1	60001-
35	01643-31032	WASHER……垫圈	1	60001-
36	21M-03-22740	SEAL……密封垫	4	60001-

https://truckmanualshub.com/

FIG.CO100-05A0 COOLING (FAN MOUNT) (FAN AND MOTOR)

冷却(风扇安装)(风扇和马达)

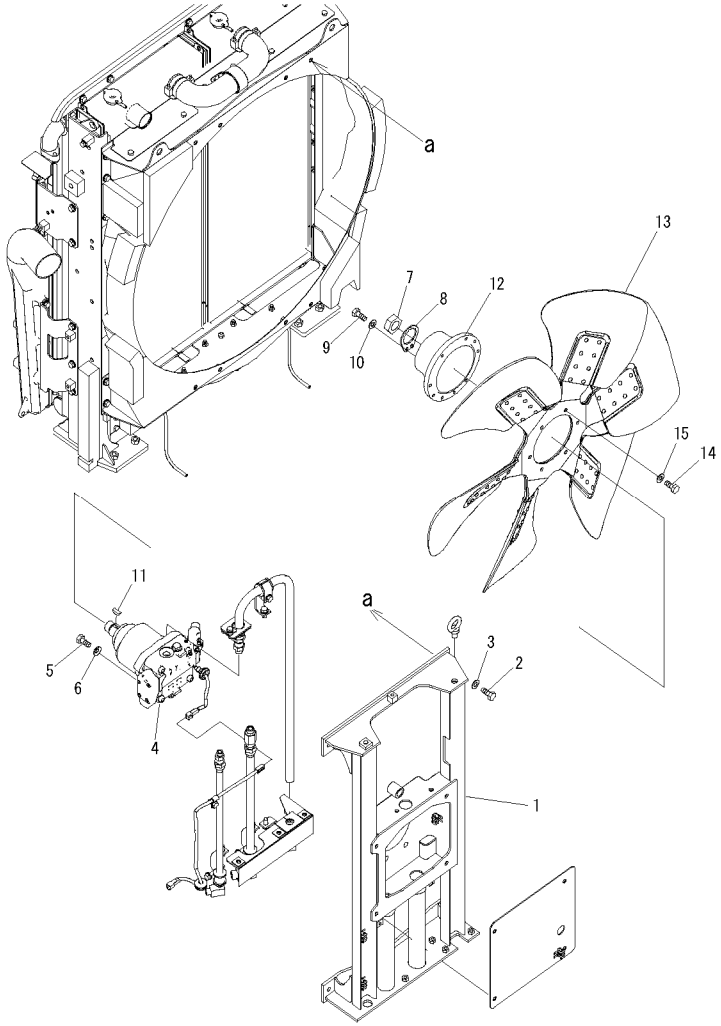

00038280

FIG NO. : CO100-05A0

INDEX	PART NO.	DESCRIPTION	Q'TY	SERIAL NO.
1	21M-03-22111	BRACKET…… 支架	1	60001-
2	01010-81235	BOLT……螺栓	8	60001-
3	01643-31232	WASHER……垫圈	8	60001-
4	(708-7W-00120)	MOTOR ASS'Y…… 马达总成	1	60001-
5	01010-81640	BOLT……螺栓	4	60001-
6	01643-31645	WASHER……垫圈	4	60001-
7	01583-13621	NUT…… 螺母	1	60001-
8	01660-03650	LOCK……锁	1	60001-
9	01010-81020	BOLT……螺栓	1	60001-
10	01643-31032	WASHER……垫圈	1	60001-
11	04010-01032	KEY…… 键	1	60001-
12	21M-03-22250	BOSS……座	1	60001-
13	600-645-7120	FAN…… 风扇	1	60001-
14	01010-81240	BOLT……螺栓	6	60001-
15	01643-31232	WASHER……垫圈	6	60001-

https://truckmanualshub.com/

FIG.CO100-06A0 COOLING (FAN MOUNT) (FAN MOTOR PIPING)

冷却(风扇安装)(风扇马达管路)

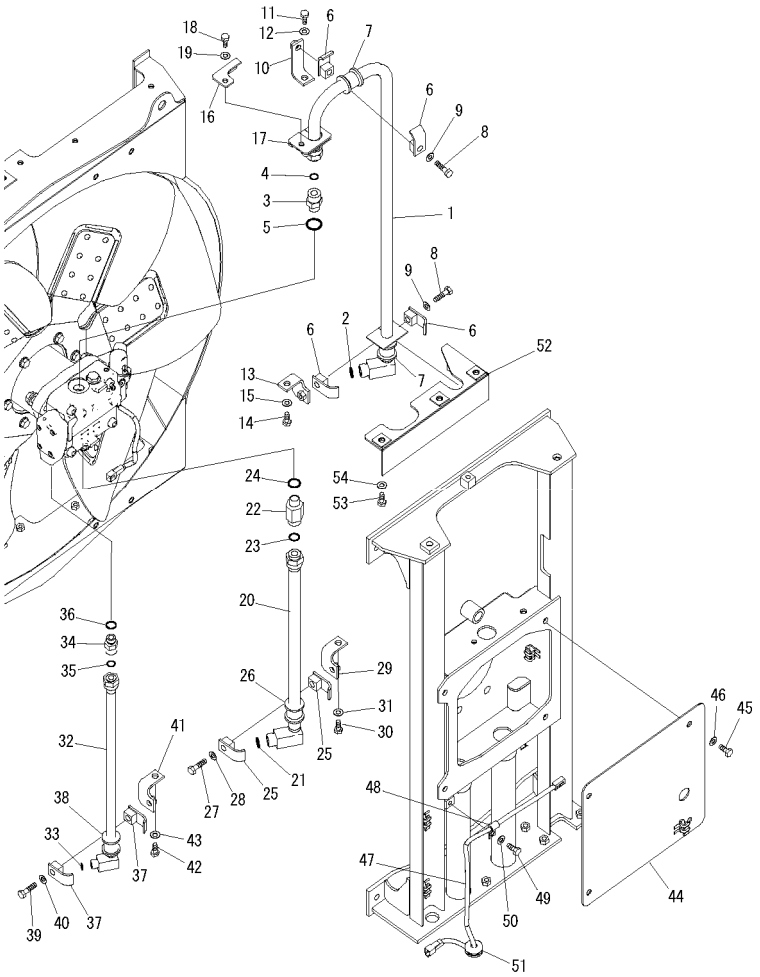

FIG NO. : CO100-06A0

INDEX	PART NO.	DESCRIPTION	Q'TY	SERIAL NO.
1	21M-03-22131	TUBE……硬管	1	60001-
2	02896-61018	O-RING…… O形圈	1	60001-
3	02781-00628	UNION…… 接头	1	60001-
4	02896-61018	O-RING…… O形圈	1	60001-
5	07002-62434	O-RING…… O形圈	1	60001-
6	07094-10518	CLAMP…… 卡箍	4	60001-
7	07095-00526	CUSHION…… 减振垫	2	60001-
8	01010-81270	BOLT……螺栓	2	60001-
9	01643-31232	WASHER……垫圈	2	60001-
10	21M-03-22160	BRACKET…… 支架	1	60001-
11	01010-81230	BOLT……螺栓	1	60001-
12	01643-31232	WASHER……垫圈	1	60001-
13	21M-03-22180	BRACKET…… 支架	1	60001-
14	01010-81230	BOLT……螺栓	1	60001-
15	01643-31232	WASHER……垫圈	1	60001-
16	209-03-41860	BRACKET…… 支架	1	60001-
17	209-03-41870	COVER…… 盖	1	60001-
18	01010-81035	BOLT……螺栓	1	60001-
19	01643-31032	WASHER……垫圈	1	60001-
20	21M-03-22140	TUBE……硬管	1	60001-
21	02896-61018	O-RING…… O形圈	1	60001-
22	22U-62-21480	NIPPLE……喷嘴	1	60001-
23	02896-61018	O-RING…… O形圈	1	60001-
24	07002-62434	O-RING…… O形圈	1	60001-
25	07094-10518	CLAMP…… 卡箍	2	60001-
26	07095-00526	CUSHION…… 减振垫	1	60001-
27	01010-81270	BOLT……螺栓	1	60001-
28	01643-31232	WASHER……垫圈	1	60001-
29	21M-03-22170	BRACKET…… 支架	1	60001-
30	01010-81230	BOLT……螺栓	1	60001-
31	01643-31232	WASHER……垫圈	1	60001-
32	21M-03-22150	TUBE……硬管	1	60001-
33	02896-61012	O-RING…… O形圈	1	60001-
34	02781-00516	UNION…… 接头	1	60001-
35	02896-61015	O-RING…… O形圈	1	60001-
36	07002-62034	O-RING…… O形圈	1	60001-
37	07094-10417	CLAMP…… 卡箍	2	60001-
38	07095-00420	CUSHION…… 减振垫	1	60001-
39	01010-81270	BOLT……螺栓	1	60001-
40	01643-31232	WASHER……垫圈	1	60001-
41	21M-03-22170	BRACKET…… 支架	1	60001-
42	01010-81230	BOLT……螺栓	1	60001-
43	01643-31232	WASHER……垫圈	1	60001-
44	21M-03-22120	COVER…… 盖	1	60001-
45	01010-81230	BOLT……螺栓	4	60001-
46	01643-31232	WASHER……垫圈	4	60001-
47	21M-06-21190	WIRING HARNESS……线束	1	60001-
48	04434-51012	CLIP……管夹	1	60001-

https://truckmanualshub.com/

FIG.CO100-06A0 COOLING (FAN MOUNT) (FAN MOTOR PIPING)
冷却(风扇安装)(风扇马达管路)

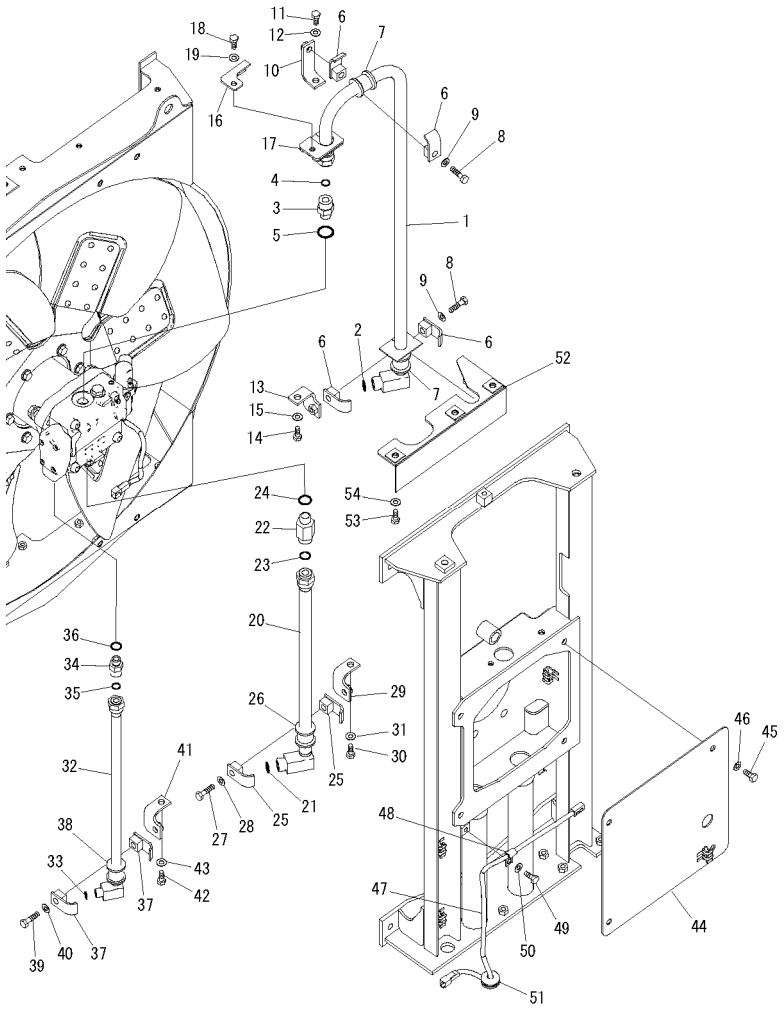

FIG NO. : CO100-06A0

INDEX	PART NO.	DESCRIPTION	Q'TY	SERIAL NO.
49	01010-81225	BOLT……螺栓	1	60001-
50	01643-31232	WASHER……垫圈	1	60001-
51	20Y-54-65180	GROMMET…… 保护套	1	60001-
52	21M-03-22191	COVER…… 盖	1	60001-
53	01010-81235	BOLT……螺栓	3	60001-
54	01643-31232	WASHER……垫圈	3	60001-

https://truckmanualshub.com/

FIG.C0100-07A0 COOLING (RADIATOR PIPING)
冷却(散热器管路)

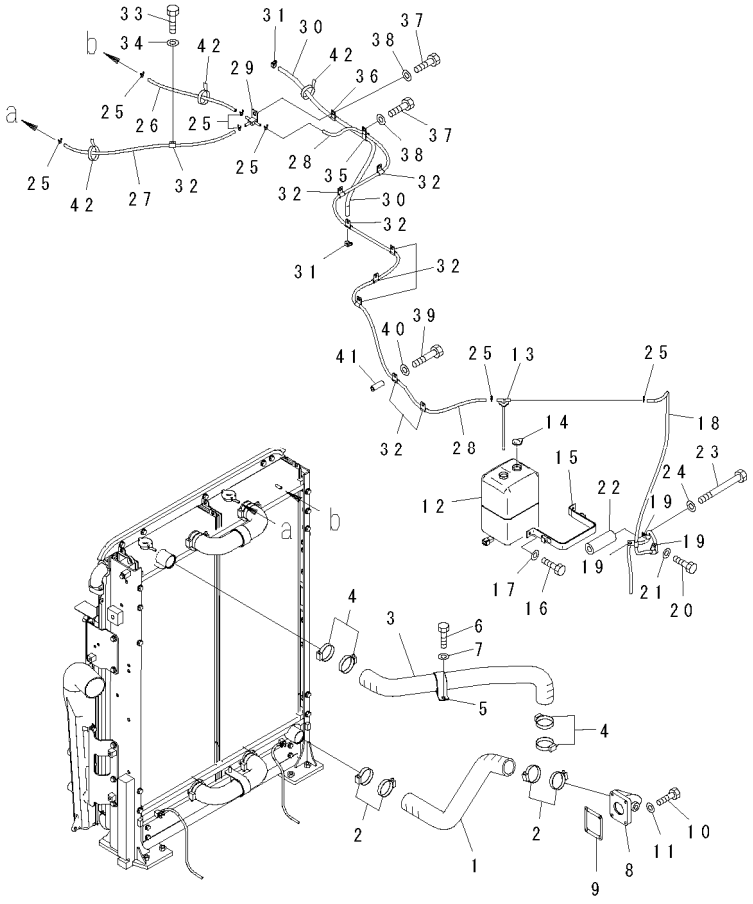

FIG NO. : C0100-07A0

INDEX	PART NO.	DESCRIPTION	Q'TY	SERIAL NO.
1	21M-03-21331	HOSE……软管	1	60001-
2	07289-00070	CLAMP…… 卡箍	4	60001-
3	21M-03-21340	HOSE……软管	1	60001-
4	07289-00070	CLAMP…… 卡箍	4	60001-
5	14X-01-35650	CLIP……管夹	1	60001-
6	01010-81245	BOLT……螺栓	1	60001-
7	01643-31232	WASHER……垫圈	1	60001-
8	21M-03-15142	TUBE……硬管	1	60001-
9	6212-61-6821	GASKET……密封垫	1	60001-
10	01010-81040	BOLT……螺栓	4	60001-
11	01643-31032	WASHER……垫圈	4	60001-
12	21N-03-31490	TANK……箱	1	60001-
13	21N-03-32360	.CAP ASS'Y……盖总成	1	60001-
	21N-03-32350	.CAP ASS'Y……盖总成	1	60001-
14	ND071900-1432	.SWITCH…… 开关	1	60001-
15	209-03-71331	BAND……绑带	1	60001-
16	01010-80820	BOLT……螺栓	2	60001-
17	01643-30823	WASHER……垫圈	2	60001-
18	21M-03-22240	HOSE……软管	1	60001-
19	04434-51212	CLIP……管夹	3	60001-
20	01010-81225	BOLT……螺栓	1	60001-
21	01643-31232	WASHER……垫圈	1	60001-
22	175-61-17240	COLLAR……滚轮	1	60001-
23	01010-81285	BOLT……螺栓	1	60001-
24	01643-31232	WASHER……垫圈	1	60001-
25	206-03-43340	CLIP……管夹	7	60001-
26	208-03-58290	HOSE……软管	1	60001-
27	20Y-03-18140	HOSE……软管	1	60001-
28	209-03-71290	HOSE……软管	1	60001-
29	21M-03-22260	JOINT…… 接头	1	60001-
30	07261-20911	HOSE……软管	1	60001-
31	07281-00197	CLAMP…… 卡箍	2	60001-
32	04434-51212	CLIP……管夹	9	60001-
33	01010-81225	BOLT……螺栓	7	60001-
34	01643-31232	WASHER……垫圈	7	60001-
35	04435-51512	CLIP……管夹	1	60001-
36	04434-51512	CLIP……管夹	1	60001-
37	01010-81225	BOLT……螺栓	2	60001-
38	01643-31232	WASHER……垫圈	2	60001-
39	01010-81285	BOLT……螺栓	1	60001-
40	01643-31232	WASHER……垫圈	1	60001-
41	175-61-17240	COLLAR……衬套	1	60001-
42	08034-20834	BAND……绑带	3	60001-

https://truckmanualshub.com/

FIG.C0100-08A0 COOLING (RADIATOR MOUNTING)
冷却(散热器安装)

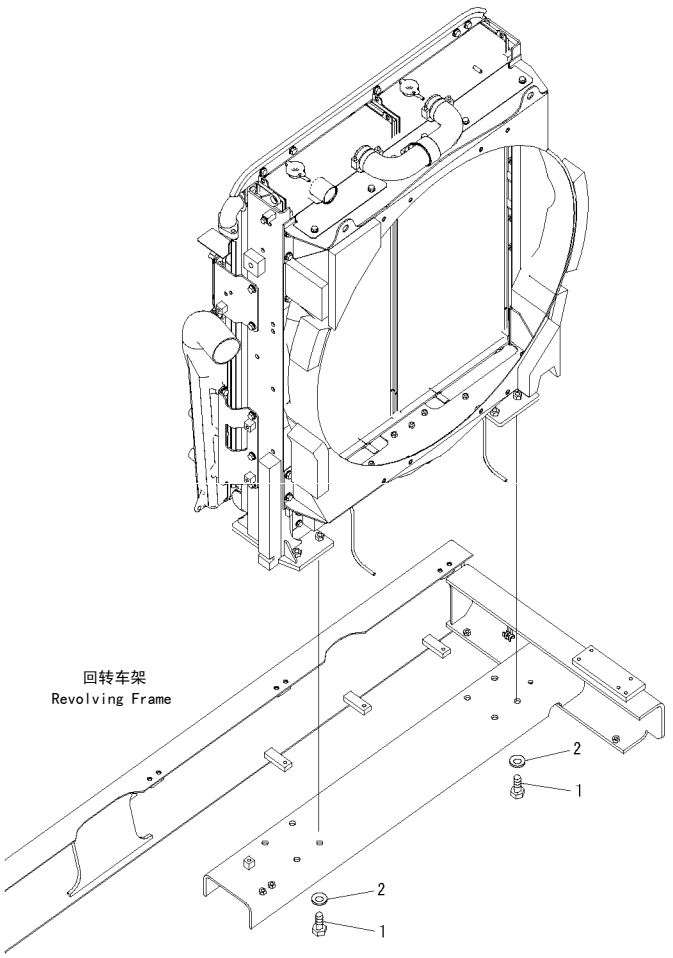

00038283

FIG NO. : C0100-08A0

INDEX	PART NO.	DESCRIPTION	Q'TY	SERIAL NO.
1	01010-81645	BOLT……螺栓	8	60001-
2	01643-31645	WASHER……垫圈	8	60001-

https://truckmanualshub.com/

FIG.C0100-09A0 COOLING (COVER)

冷却(盖)

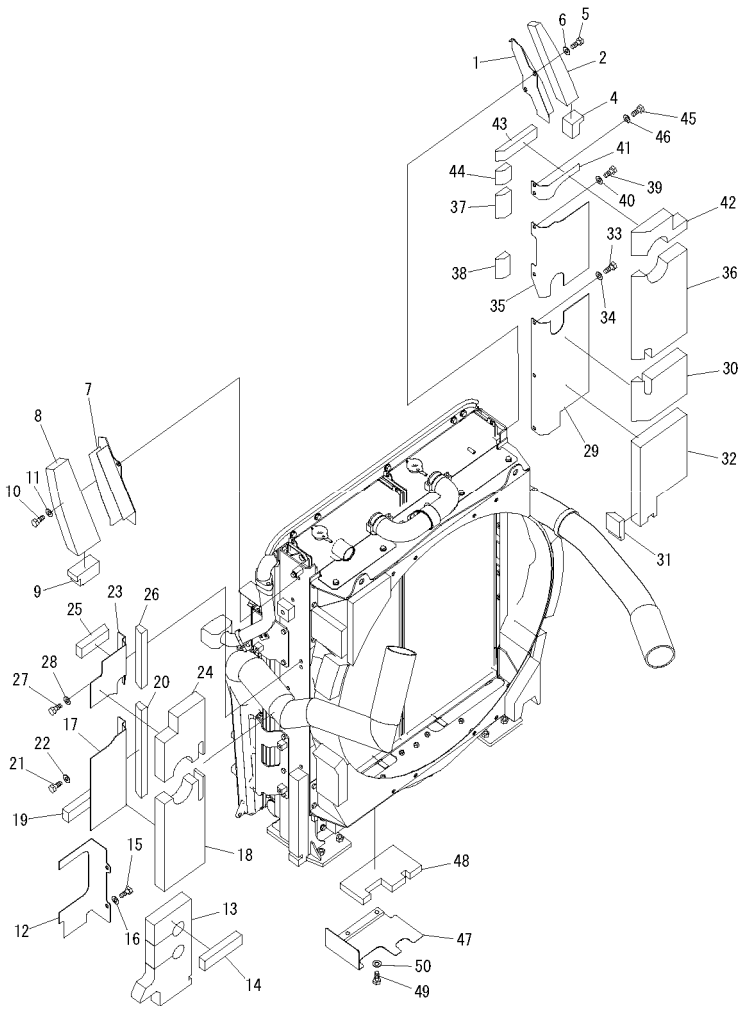

00038284

FIG NO. : C0100-09A0

INDEX	PART NO.	DESCRIPTION	Q'TY	SERIAL NO.
1	21M-03-21632	COVER…… 盖	1	60001-
2	21M-03-21652	.SEAL…… 密封垫	1	60001-
4	21M-03-22560	.SEAL…… 密封垫	1	60001-
5	01010-81225	BOLT……螺栓	2	60001-
6	01643-31232	WASHER……垫圈	2	60001-
7	21M-03-21641	COVER…… 盖	1	60001-
8	21M-03-21661	.SEAL…… 密封垫	1	60001-
9	21M-03-22570	.SEAL…… 密封垫	1	60001-
10	01010-81225	BOLT……螺栓	2	60001-
11	01643-31232	WASHER……垫圈	2	60001-
12	21M-03-22311	COVER…… 盖	1	60001-
13	21M-03-22371	.SEAL…… 密封垫	1	60001-
14	21M-03-22550	.SEAL…… 密封垫	1	60001-
15	01010-81225	BOLT……螺栓	2	60001-
16	01643-31232	WASHER……垫圈	2	60001-
17	21M-03-22321	COVER…… 盖	1	60001-
18	21M-03-22381	.SEAL…… 密封垫	1	60001-
19	21M-03-22391	.SEAL…… 密封垫	1	60001-
20	21M-03-22531	.SEAL…… 密封垫	1	60001-
21	01010-81225	BOLT……螺栓	2	60001-
22	01643-31232	WASHER……垫圈	2	60001-
23	21M-03-22331	COVER…… 盖	1	60001-
24	21M-03-22411	.SEAL…… 密封垫	1	60001-
25	21M-03-22421	.SEAL…… 密封垫	1	60001-
26	21M-03-22541	.SEAL…… 密封垫	1	60001-
27	01010-81225	BOLT……螺栓	2	60001-
28	01643-31232	WASHER……垫圈	2	60001-
29	21M-03-22341	COVER…… 盖	1	60001-
30	21M-03-22431	.SEAL…… 密封垫	1	60001-
31	21M-03-22440	.SEAL…… 密封垫	1	60001-
32	21M-03-22451	.SEAL…… 密封垫	1	60001-
33	01010-81225	BOLT……螺栓	3	60001-
34	01643-31232	WASHER……垫圈	3	60001-
35	21M-03-22351	COVER…… 盖	1	60001-
36	21M-03-22461	.SEAL…… 密封垫	1	60001-
37	21M-03-22470	.SEAL…… 密封垫	1	60001-
38	21M-03-22480	.SEAL…… 密封垫	1	60001-
39	01010-81225	BOLT……螺栓	2	60001-
40	01643-31232	WASHER……垫圈	2	60001-
41	21M-03-22361	COVER…… 盖	1	60001-
42	21M-03-22491	.SEAL…… 密封垫	1	60001-
43	21M-03-22510	.SEAL…… 密封垫	1	60001-
44	21M-03-22521	.SEAL…… 密封垫	1	60001-
45	01010-81225	BOLT……螺栓	2	60001-
46	01643-31232	WASHER……垫圈	2	60001-
47	21M-03-22211	COVER…… 盖	1	60001-
48	21M-03-22230	.SHEET……垫片	1	60001-
49	01010-81240	BOLT……螺栓	2	60001-

https://truckmanualshub.com/

FIG NO. : C0100-09A0

INDEX	PART NO.	DESCRIPTION	Q'TY	SERIAL NO.
50	01643-31232	WASHER……垫圈	2	60001-

PC650LC-8R

https://truckmanualshub.com/

FIG.CO100-10A0 COOLING (STAY AND AIR PIPING)
冷却(支架和空气硬管)

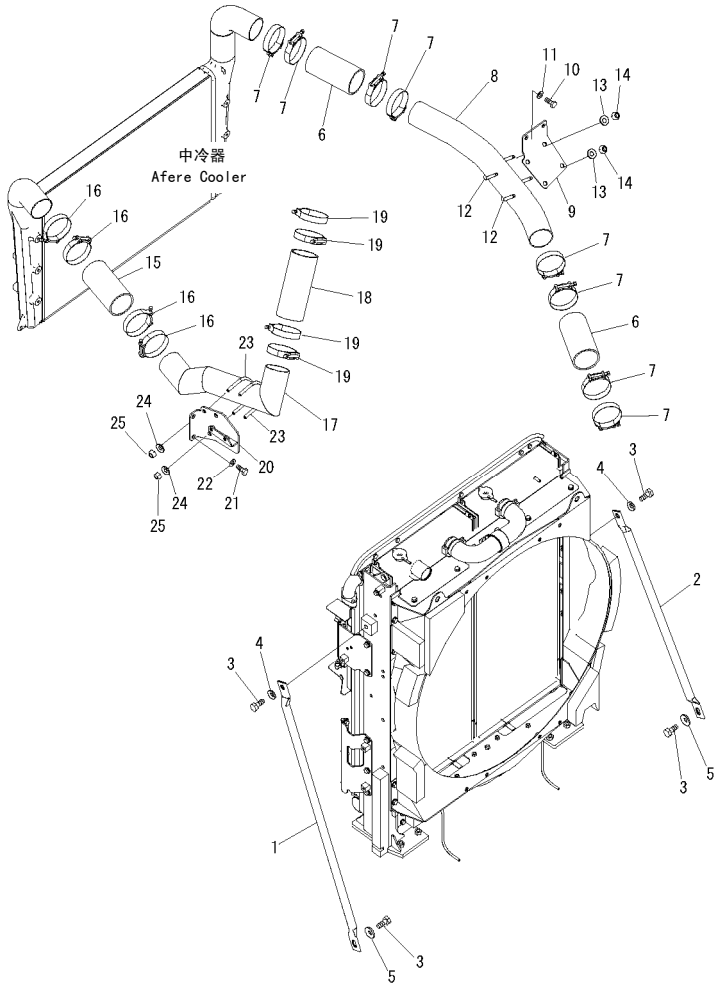

00038285

FIG NO. : CO100-10A0

INDEX	PART NO.	DESCRIPTION	Q'TY	SERIAL NO.
1	21M-03-21311	STAY……支架	1	60001-
2	21M-03-21321	STAY……支架	1	60001-
3	01010-82040	BOLT……螺栓	4	60001-
4	01643-32060	WASHER……垫圈	2	60001-
5	154-30-51460	WASHER……垫圈	2	60001-
6	21M-03-21261	HOSE……软管	2	60001-
7	14X-01-35570	CLAMP…… 卡箍	8	60001-
8	21M-03-21241	TUBE……硬管	1	60001-
9	21M-03-21282	BRACKET…… 支架	1	60001-
10	01010-81230	BOLT……螺栓	2	60001-
11	01643-31232	WASHER……垫圈	2	60001-
12	07283-31079	CLIP……管夹	2	60001-
13	01643-31232	WASHER……垫圈	4	60001-
14	01597-01211	NUT…… 螺母	4	60001-
15	21M-03-21231	HOSE……软管	1	60001-
16	14X-01-35570	CLAMP…… 卡箍	4	60001-
17	21M-03-21250	TUBE……硬管	1	60001-
18	21M-03-21271	HOSE……软管	1	60001-
19	14X-01-35570	CLAMP…… 卡箍	4	60001-
20	21M-03-21291	BRACKET…… 支架	1	60001-
21	01010-81235	BOLT……螺栓	2	60001-
22	01643-31232	WASHER……垫圈	2	60001-
23	07283-31079	CLIP……管夹	2	60001-
24	01643-31232	WASHER……垫圈	4	60001-
25	01597-01211	NUT…… 螺母	4	60001-

https://truckmanualshub.com/

FIG.C0100-11A0 COOLING (SENSOR AND OIL COOLER TUBE)
冷却(传感器和油冷却器管)

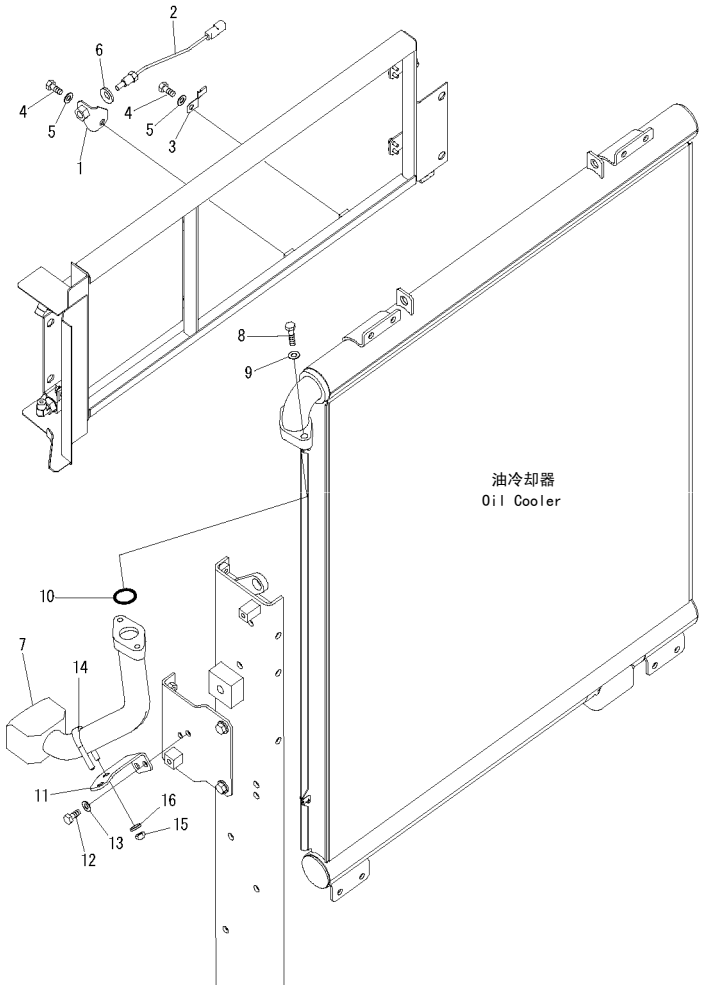

00038286

FIG NO. : C0100-11A0

INDEX	PART NO.	DESCRIPTION	Q'TY	SERIAL NO.
1	21M-03-21611	BRACKET…… 支架	1	60001-
2	7861-93-3510	SENSOR……传感器	1	60001-
3	08193-20010	CLIP……管夹	1	60001-
4	01010-81025	BOLT……螺栓	2	60001-
5	01643-31032	WASHER……垫圈	2	60001-
6	01643-31645	WASHER……垫圈	1	60001-
7	21M-03-21481	TUBE……硬管	1	60001-
8	01010-81245	BOLT……螺栓	2	60001-
9	01643-31232	WASHER……垫圈	2	60001-
10	07000-13045	O-RING…… O形圈	1	60001-
11	21M-03-21490	BRACKET…… 支架	1	60001-
12	01010-81025	BOLT……螺栓	2	60001-
13	01643-31032	WASHER……垫圈	2	60001-
14	07283-34949	CLIP……管夹	1	60001-
15	01597-01009	NUT…… 螺母	2	60001-
16	01643-31032	WASHER……垫圈	2	60001-

FUEL TANK AND RELATED PARTS
燃油箱和相关件

https://truckmanualshub.com/

https://truckmanualshub.com/

FIG.D0100-01A0 FUEL TANK

燃油箱

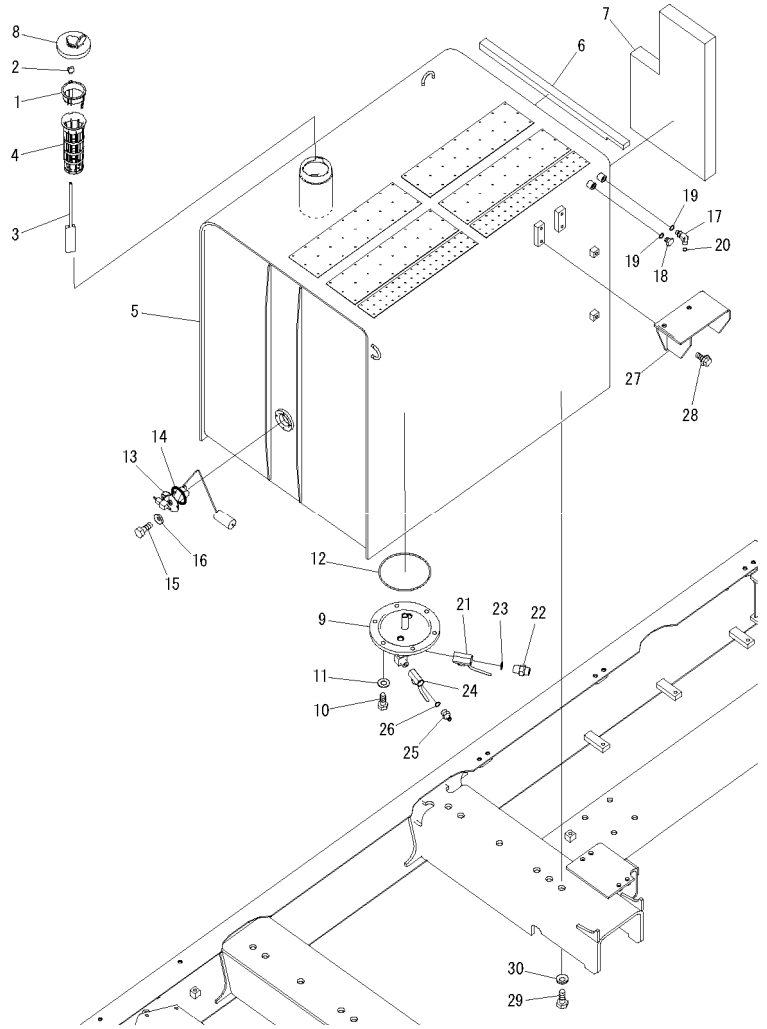

00061974-V

FIG NO. : D0100-01A0

INDEX	PART NO.	DESCRIPTION	Q'TY	SERIAL NO.
	22U-04-21241	STRAINER ASS'Y……定子总成	1	60001-
	22U-04-21200	FLOAT ASS'Y…… 转子总成	1	60001-
1	22U-04-21210	..GUIDE…… 导向套	1	60001-
2	20Y-04-21580	..CAP…… 盖	1	60001-
3	22U-04-21220	..FLOAT…… 旋转	1	60001-
4	07056-18425	STRAINER……定子	1	60001-
5	21M-04-21113	TANK……箱	1	60001-
6	21M-04-21130	SHEET…… 垫片	1	60001-
7	21M-04-21290	SHEET…… 垫片	1	60001-
8	20Y-04-11161	CAP…… 盖	1	60001-
	20Y-04-11240	PACKING…… 密封圈	1	60001-
9	21M-04-21312	FLANGE……法兰	1	60001-
10	01010-81235	BOLT……螺栓	6	60001-
11	01643-31232	WASHER……垫圈	6	60001-
12	07000-15170	O-RING…… O形圈	1	60001-
13	7861-93-5810	SENSOR……传感器	1	60001-
14	07000-13050	O-RING…… O形圈	1	60001-
15	01010-80612	BOLT……螺栓	4	60001-
16	01643-30623	WASHER……垫圈	4	60001-
17	02782-10311	ELBOW…… 接头	1	60001-
18	07040-11409	PLUG……堵塞	1	60001-
19	07002-11423	O-RING…… O形圈	2	60001-
20	02896-11009	O-RING…… O形圈	1	60001-
21	07700-40661	VALVE…… 阀	1	60001-
22	209-04-42150	UNION…… 接头	1	60001-
23	02896-11015	O-RING…… O形圈	1	60001-
24	07700-40460	VALVE…… 阀	1	60001-
25	154-04-12480	NIPPLE……接头	1	60001-
26	02896-11009	O-RING…… O形圈	1	60001-
27	21M-54-23460	BRACKET…… 支架	1	60001-
28	01034-81225	BOLT……螺栓	4	60001-
29	01010-82045	BOLT……螺栓	12	60001-
30	01643-32060	WASHER……垫圈	12	60001-

https://truckmanualshub.com/

FIG.D0200-01A0 FUEL LINE (FUEL HOSE)

燃油管路(燃油管)

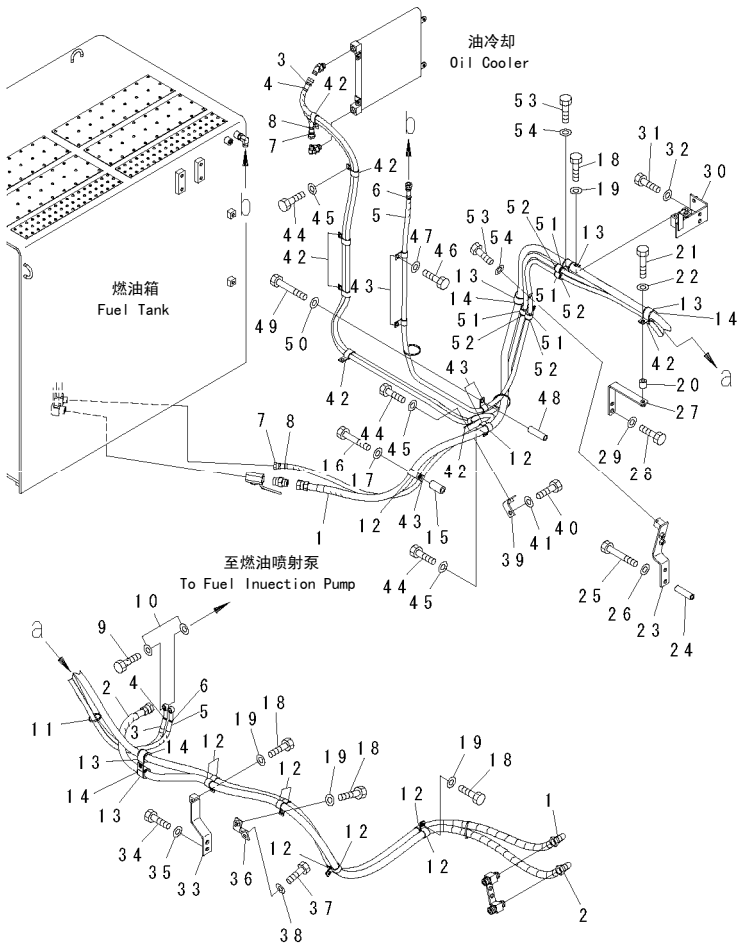

FIG NO. : D0200-01A0

INDEX	PART NO.	DESCRIPTION	Q'TY	SERIAL NO.
1	21M-04-21421	HOSE……软管	1	60001-
2	21M-04-21430	HOSE……软管	1	60001-
3	21M-04-21390	HOSE……软管	1	60001-
4	20Y-62-22790	.BAND, RED……红色绑带	2	60001-
5	21M-04-21410	HOSE……软管	1	60001-
6	20Y-62-22820	.BAND, BLUE…… 蓝色绑带	2	60001-
7	02760-00328	HOSE……软管	1	60001-
8	20Y-62-22850	BAND, GREEN…… 绿色绑带	2	60001-
9	07206-31014	BOLT……螺栓	2	60001-
10	07005-01412	GASKET……垫	4	60001-
11	08034-20519	BAND……绑带	1	60001-
12	04434-52312	CLIP……管夹	10	60001-
13	04434-53212	CLIP……管夹	5	60001-
14	198-06-53610	CUSHION…… 减振垫	5	60001-
15	206-62-41670	COLLAR……衬套	1	60001-
16	01010-81280	BOLT……螺栓	1	60001-
17	01643-31232	WASHER……垫圈	1	60001-
18	01010-81225	BOLT……螺栓	9	60001-
19	01643-31232	WASHER……垫圈	9	60001-
20	195-33-11220	SPACER……调整垫片	1	60001-
21	01010-81250	BOLT……螺栓	1	60001-
22	01643-31232	WASHER……垫圈	1	60001-
23	21M-04-21321	BRACKET…… 支架	1	60001-
24	22S-62-26210	SPACER……调整垫片	2	60001-
25	01011-81210	BOLT……螺栓	2	60001-
26	01643-31232	WASHER……垫圈	2	60001-
27	8287-70-5890	BRACKET…… 支架	1	60001-
28	01010-81225	BOLT……螺栓	2	60001-
29	01643-31232	WASHER……垫圈	2	60001-
30	21M-04-21330	BRACKET…… 支架	1	60001-
31	01010-81225	BOLT……螺栓	2	60001-
32	01643-31232	WASHER……垫圈	2	60001-
33	21M-04-21340	BRACKET…… 支架	1	60001-
34	01010-81225	BOLT……螺栓	2	60001-
35	01643-31232	WASHER……垫圈	2	60001-
36	21M-04-21350	BRACKET…… 支架	1	60001-
37	01010-81225	BOLT……螺栓	1	60001-
38	01643-31232	WASHER……垫圈	1	60001-
39	17M-49-15260	BRACKET…… 支架	1	60001-
40	01010-81225	BOLT……螺栓	1	60001-
41	01643-31232	WASHER……垫圈	1	60001-
42	04435-51512	CLIP……管夹	7	60001-
43	04434-51512	CLIP……管夹	5	60001-
44	01010-81225	BOLT……螺栓	6	60001-
45	01643-31232	WASHER……垫圈	6	60001-
46	01010-81220	BOLT……螺栓	2	60001-
47	01643-31232	WASHER……垫圈	2	60001-
48	22S-62-26210	SPACER……调整垫片	1	60001-

https://truckmanualshub.com/

FIG.DO200-01A0 FUEL LINE (FUEL HOSE)

燃油管路(燃油管)

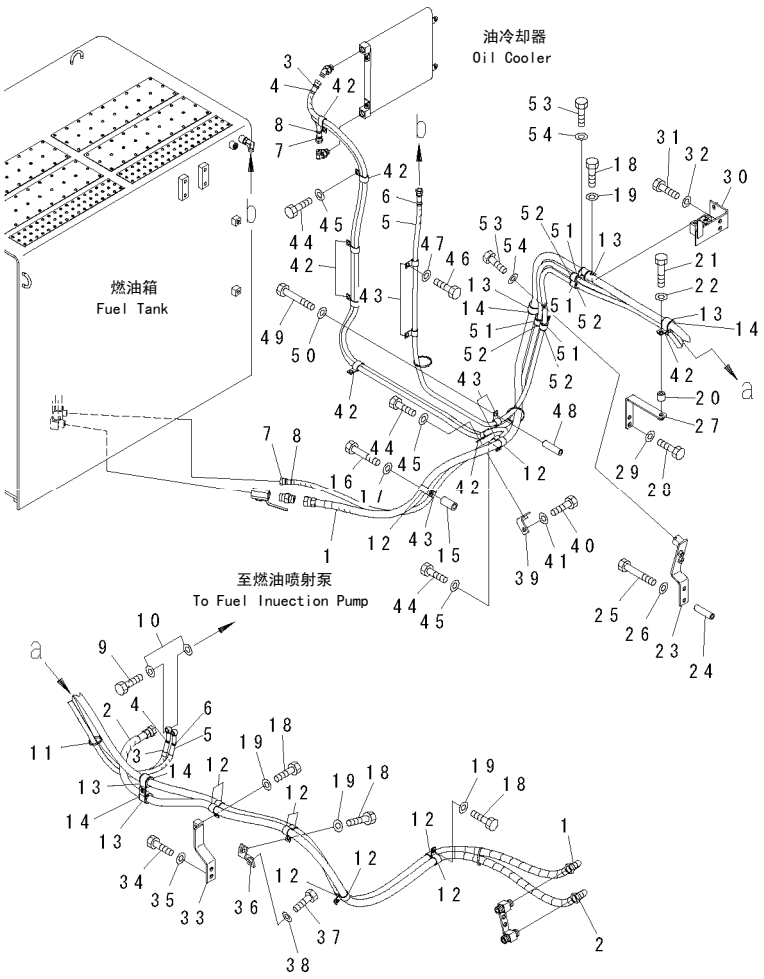

00062022

FIG NO. : DO200-01A0

INDEX	PART NO.	DESCRIPTION	Q'TY	SERIAL NO.
49	01011-81210	BOLT……螺栓	1	60001-
50	01643-31232	WASHER……垫圈	1	60001-
51	07095-20314	CUSHION…… 垫	4	60001-
52	04434-52112	CLIP……管夹	4	60001-
53	01010-81225	BOLT……螺栓	2	60001-
54	01643-31232	WASHER……垫圈	2	60001-

https://truckmanualshub.com/

FIG.D0200-02A0 FUEL LINE (WATER SEPARATOR)

燃油回路(油水分离器)

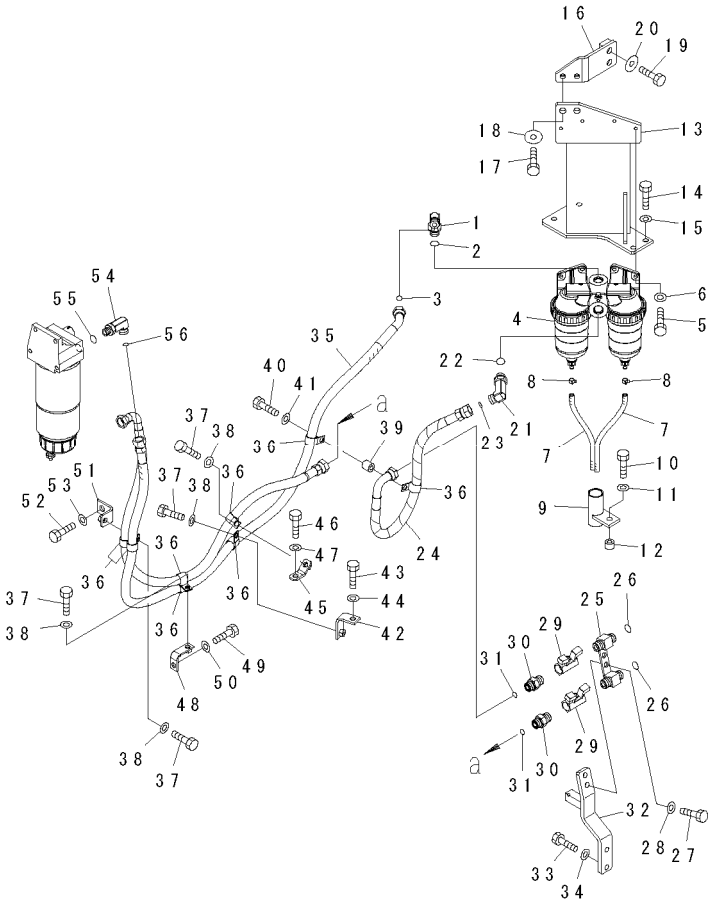

FIG NO. : D0200-02A0

INDEX	PART NO.	DESCRIPTION	Q'TY	SERIAL NO.
1	02782-10522	ELBOW····· 接头	1	60001-
2	07002-12434	O-RING····· O形圈	1	60001-
3	02896-11015	O-RING····· O形圈	1	60001-
4	600-311-9330	SEPARATOR ASS'Y····· 分离器总成	1	60001-
5	01010-81030	BOLT·····螺栓	4	60001-
6	01643-31032	WASHER·····垫圈	4	60001-
7	07286-00825	HOSE·····软管	2	60001-
8	07285-00125	CLIP·····管夹	2	60001-
9	21M-04-21530	PIPE·····硬管	1	60001-
10	01010-81245	BOLT·····螺栓	1	60001-
11	01643-31232	WASHER·····垫圈	1	60001-
12	144-947-3490	SPACER·····垫块	1	60001-
13	21M-04-21361	BRACKET····· 支架	1	60001-
14	01010-81230	BOLT·····螺栓	4	60001-
15	01643-31232	WASHER·····垫圈	4	60001-
16	21M-04-21490	BRACKET····· 支架	1	60001-
17	01010-81240	BOLT·····螺栓	2	60001-
18	175-54-34170	WASHER·····垫圈	2	60001-
19	01010-81250	BOLT·····螺栓	2	60001-
20	175-54-34170	WASHER·····垫圈	2	60001-
21	02782-10524	ELBOW····· 接头	1	60001-
22	07002-12434	O-RING····· O形圈	1	60001-
23	02896-11015	O-RING····· O形圈	1	60001-
24	21M-04-21560	HOSE·····软管	1	60001-
25	209-04-42141	BRACKET····· 支架	1	60001-
26	02896-11015	O-RING····· O形圈	2	60001-
27	01010-81235	BOLT·····螺栓	2	60001-
28	01643-31232	WASHER·····垫圈	2	60001-
29	07700-50661	VALVE····· 阀	2	60001-
30	209-04-42150	UNION····· 接头	2	60001-
31	02896-11015	O-RING····· O形圈	2	60001-
32	21M-04-21480	BRACKET····· 支架	1	60001-
33	01010-81230	BOLT·····螺栓	2	60001-
34	01643-31232	WASHER·····垫圈	2	60001-
35	21M-04-21550	HOSE·····软管	1	60001-
36	04434-52312	CLIP·····管夹	8	60001-
37	01010-81225	BOLT·····螺栓	4	60001-
38	01643-31232	WASHER·····垫圈	4	60001-
39	195-33-11220	SPACER·····调整垫片	1	60001-
40	01010-81250	BOLT·····螺栓	1	60001-
41	01643-31232	WASHER·····垫圈	1	60001-
42	21M-62-18530	BRACKET····· 支架	1	60001-
43	01010-81225	BOLT·····螺栓	1	60001-
44	01643-31232	WASHER·····垫圈	1	60001-
45	21M-04-21470	BRACKET····· 支架	1	60001-
46	01010-81225	BOLT·····螺栓	1	60001-
47	01643-31232	WASHER·····垫圈	1	60001-
48	207-62-51270	BRACKET····· 支架	1	60001-

https://truckmanualshub.com/

FIG.D0200-02A0 FUEL LINE (WATER SEPARATOR)

燃油回路(油水分离器)

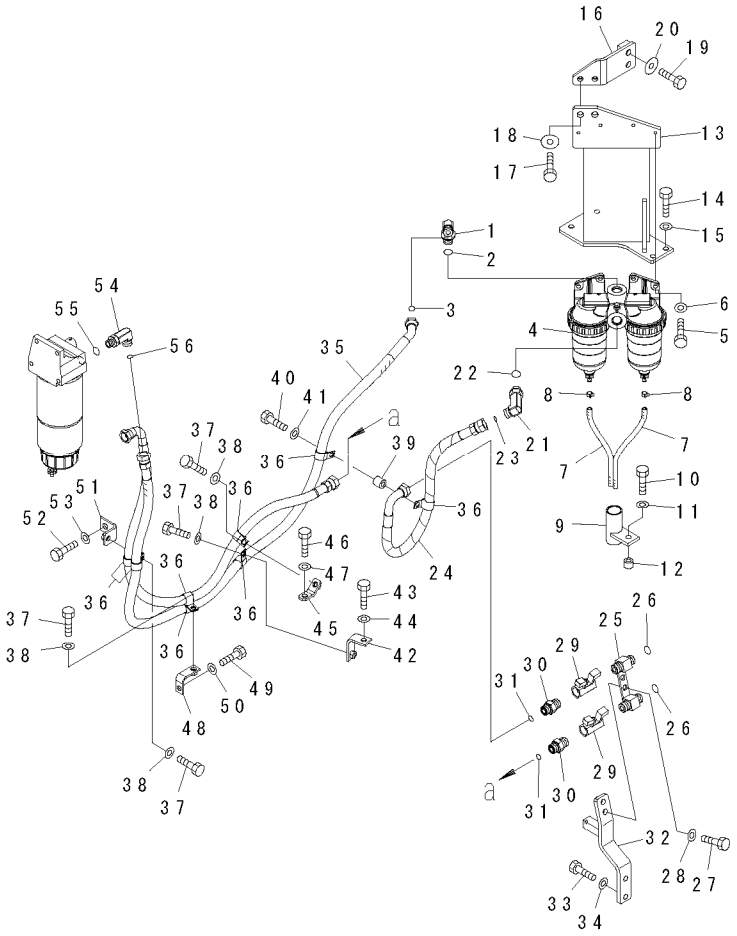

00062030

INDEX	PART NO.	DESCRIPTION	Q'TY	SERIAL NO.
49	01010-81230	BOLT……螺栓	1	60001-
50	01643-31232	WASHER……垫圈	1	60001-
51	21M-04-21510	BRACKET…… 支架	1	60001-
52	01010-81225	BOLT……螺栓	1	60001-
53	01643-31232	WASHER……垫圈	1	60001-
54	02782-10518	ELBOW…… 接头.	1	60001-
55	07002-12034	O-RING…… O形圈	1	60001-
56	02896-11015	O-RING…… O形圈	1	60001-

FIG NO. : D0200-02A0

https://truckmanualshub.com/

FIG.D0200-03A0 FUEL LINE (FILTER)
燃油回路(滤清器)

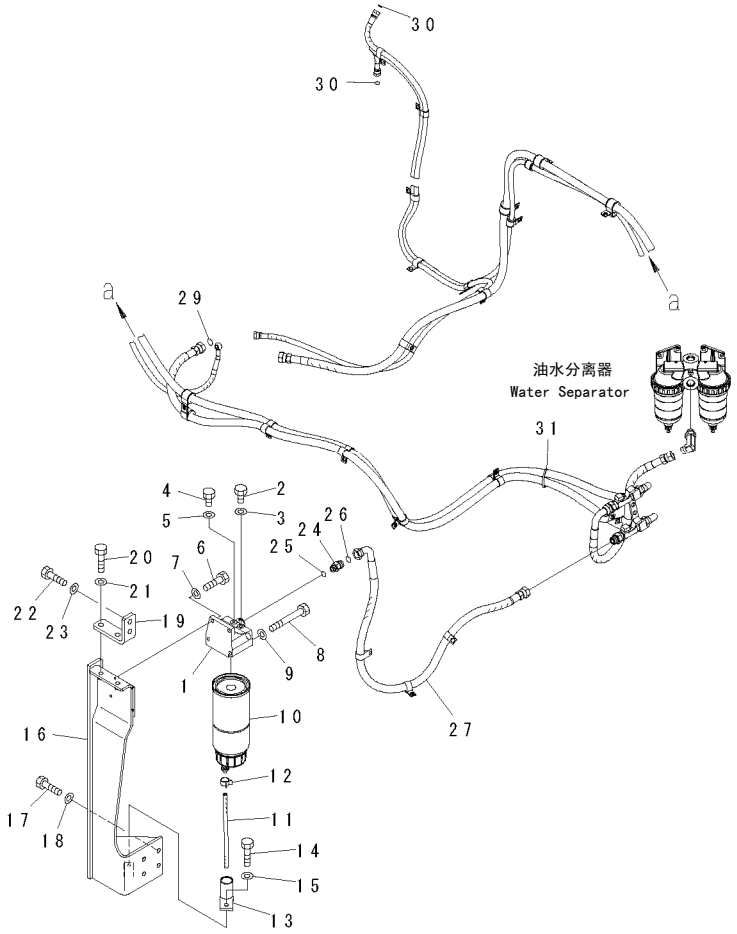

00062036

FIG NO. : D0200-03A0

INDEX	PART NO.	DESCRIPTION	Q'TY	SERIAL NO.
	6251-71-7100	HEAD ASS'Y……盖总成	1	60001-
1	☆	.HEAD…… 盖	1	60001-
2	07040-11209	.PLUG…… 堵塞	1	60001-
3	07005-01212	.GASKET…… 垫	1	60001-
4	6110-73-6231	.PLUG…… 堵塞	1	60001-
5	07005-00812	.GASKET…… 垫	1	60001-
6	01010-81035	BOLT……螺栓	2	60001-
7	01643-31032	WASHER……垫圈	2	60001-
8	01011-81015	BOLT……螺栓	2	60001-
9	01643-31032	WASHER……垫圈	2	60001-
10	600-311-4500	FILTER ASS'Y……滤清器总成	1	60001-
11	07286-00840	HOSE……软管	1	60001-
12	07285-00125	CLIP……管夹	1	60001-
13	21M-04-21530	PIPE……硬管	1	60001-
14	01010-81230	BOLT……螺栓	1	60001-
15	01643-31232	WASHER……垫圈	1	60001-
16	21M-04-21450	BRACKET…… 支架	1	60001-
17	01010-81230	BOLT……螺栓	4	60001-
18	01643-31232	WASHER……垫圈	4	60001-
19	21M-04-21460	PLATE…… 板	1	60001-
20	01010-81240	BOLT……螺栓	2	60001-
21	175-54-34170	WASHER……垫圈	2	60001-
22	01010-81235	BOLT……螺栓	2	60001-
23	175-54-34170	WASHER……垫圈	2	60001-
24	02781-00516	UNION…… 接头	1	60001-
25	07002-12034	O-RING…… O形圈	1	60001-
26	02896-11015	O-RING…… O形圈	1	60001-
27	21M-04-21540	HOSE……软管	1	60001-
29	02896-11015	O-RING…… O形圈	1	60001-
30	02896-11009	O-RING…… O形圈	2	60001-
31	08034-20536	BAND……绑带	1	60001-

https://truckmanualshub.com/

FIG.D0200-04A0 FUEL LINE (DRAIN PIPING)
燃油回路(放油管路)

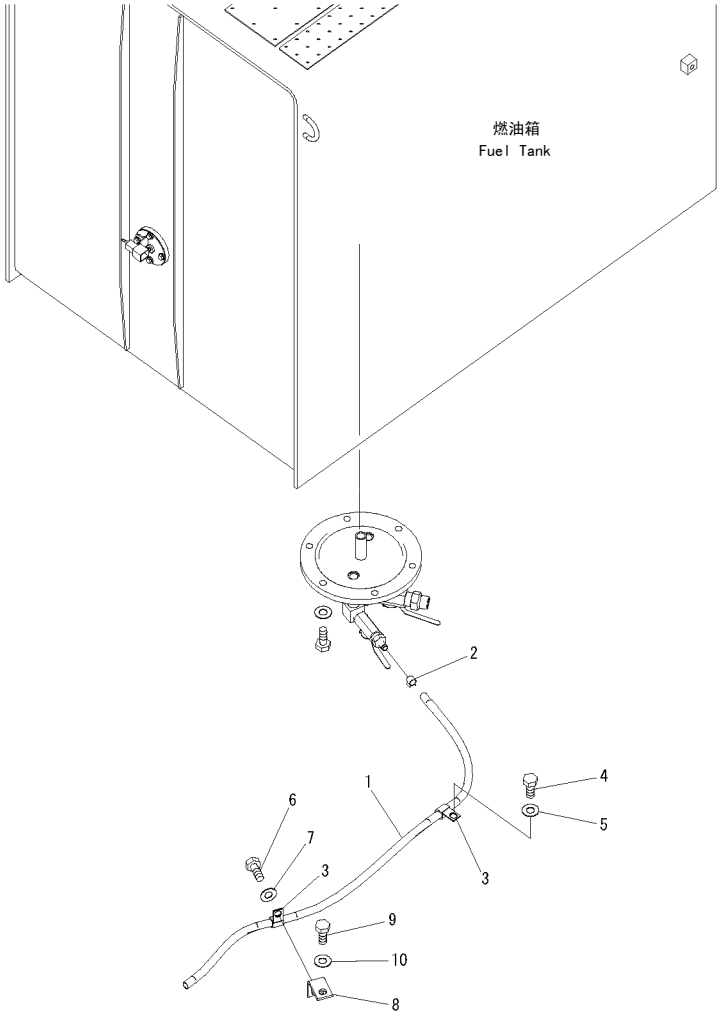

00062039-V

FIG NO. : D0200-04A0

INDEX	PART NO.	DESCRIPTION	Q'TY	SERIAL NO.
1	07270-01295	TUBE……硬管	1	60001-
2	07285-00130	CLIP……管夹	1	60001-
3	04434-51512	CLIP……管夹	2	60001-
4	01010-81220	BOLT……螺栓	1	60001-
5	01643-31232	WASHER……垫圈	1	60001-
6	01010-81225	BOLT……螺栓	1	60001-
7	01643-31232	WASHER……垫圈	1	60001-
8	17M-49-15260	BRACKET…… 支架	1	60001-
9	01010-81225	BOLT……螺栓	1	60001-
10	01643-31232	WASHER……垫圈	1	60001-

ELECTRICAL SYSTEM
电气系统

https://truckmanualshub.com/

https://truckmanualshub.com/

FIG.E0100-01A0 BATTERY (WET) (C200) (LARGE CAPACITY)

电瓶(湿)(C200）（大容量）

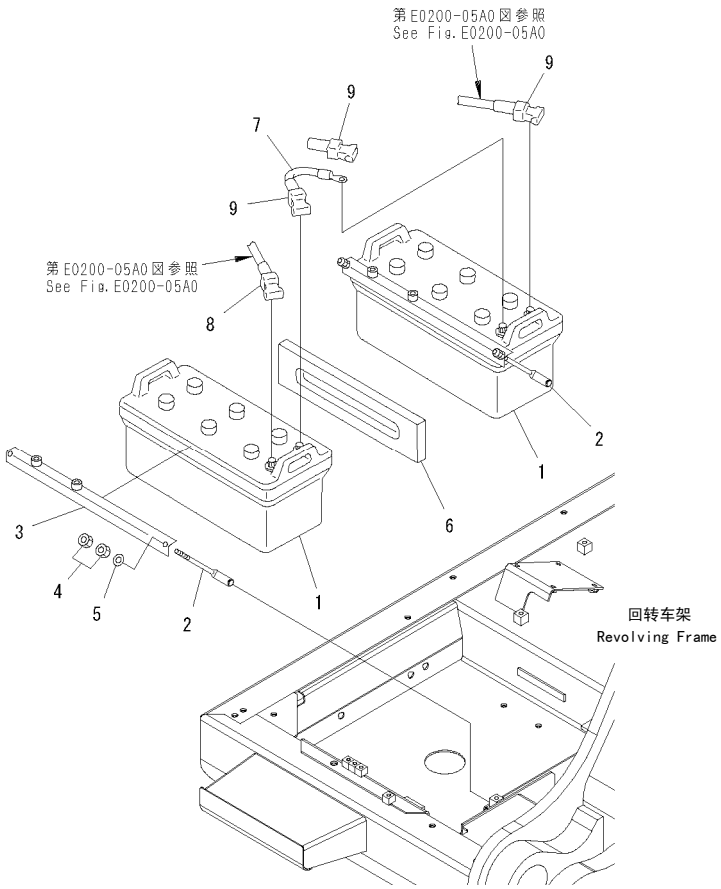

00038919

FIG NO. : E0100-01A0

INDEX	PART NO.	DESCRIPTION	Q'TY	SERIAL NO.
1	08000-02221	BATTERY, WET……蓄电池，湿	2	60001-
	08000-00000	TERMINAL, (+)…… 电极	2	60001-
	08000-00001	TERMINAL, (-)…… 电极	2	60001-
2	08006-40255	ROD…… 杆	4	60001-
3	08005-52056	HOLDER……夹持器	2	60001-
4	01580-11008	NUT…… 螺母	8	60001-
5	01640-21016	WASHER……垫圈	4	60001-
6	154-06-13262	SEAT……座	1	60001-
7	08028-65005	WIRE……线束	1	60001-
8	08038-22511	CAP…… 盖	1	60001-
9	08038-42511	CAP…… 盖	3	60001-

https://truckmanualshub.com/

FIG.E0100-01A2 BATTERY (WET) (NS200)

电瓶(湿)（NS200）

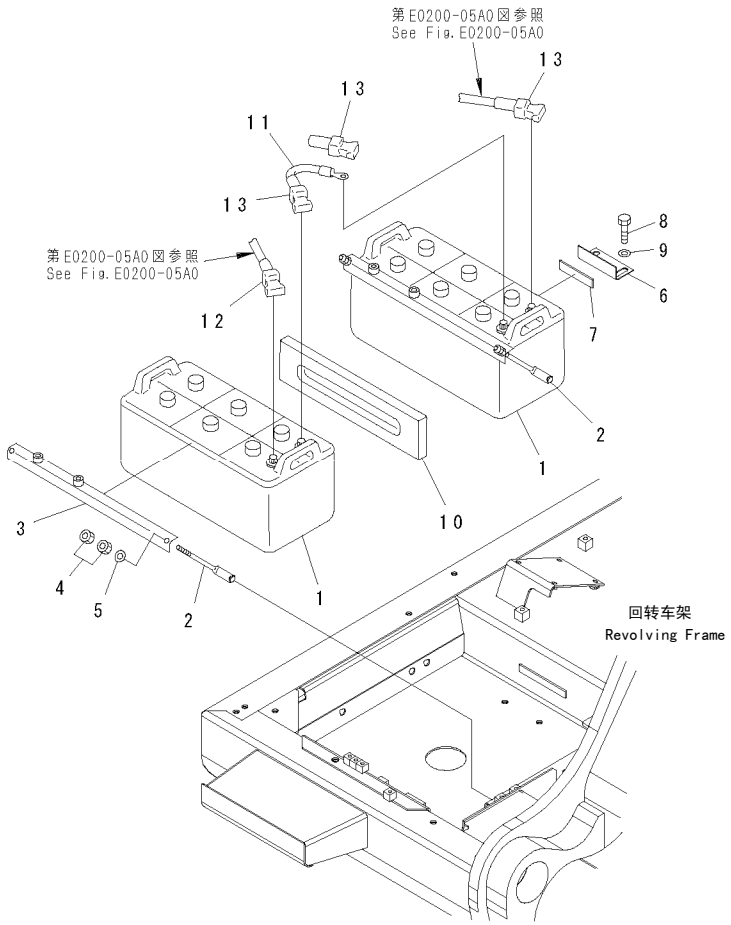

00038920

FIG NO. : E0100-01A2

INDEX	PART NO.	DESCRIPTION	Q'TY	SERIAL NO.
1	08000-32220	BATTERY, WET……蓄电池，湿	2	60001-
	08000-00000	TERMINAL, (+)…… 电极	2	60001-
	08000-00001	TERMINAL, (-)…… 电极	2	60001-
2	08006-40255	ROD…… 杆	4	60001-
3	08005-52056	HOLDER……夹持器	2	60001-
4	01580-11008	NUT…… 螺母	8	60001-
5	01640-21016	WASHER……垫圈	4	60001-
6	207-06-61461	BRACKET…… 支架	1	60001-
7	207-06-51330	.SHEET……垫片	1	60001-
8	01010-81225	BOLT……螺栓	2	60001-
9	175-54-34170	WASHER……垫圈	2	60001-
10	154-06-13262	SEAT……座	1	60001-
11	08028-65005	WIRE……线束	1	60001-
12	08038-22511	CAP…… 盖	1	60001-
13	08038-42511	CAP…… 盖	3	60001-

https://truckmanualshub.com/

FIG.E0200-01A0 WIRING (STARTING HARNESS)

配线(启动线束)

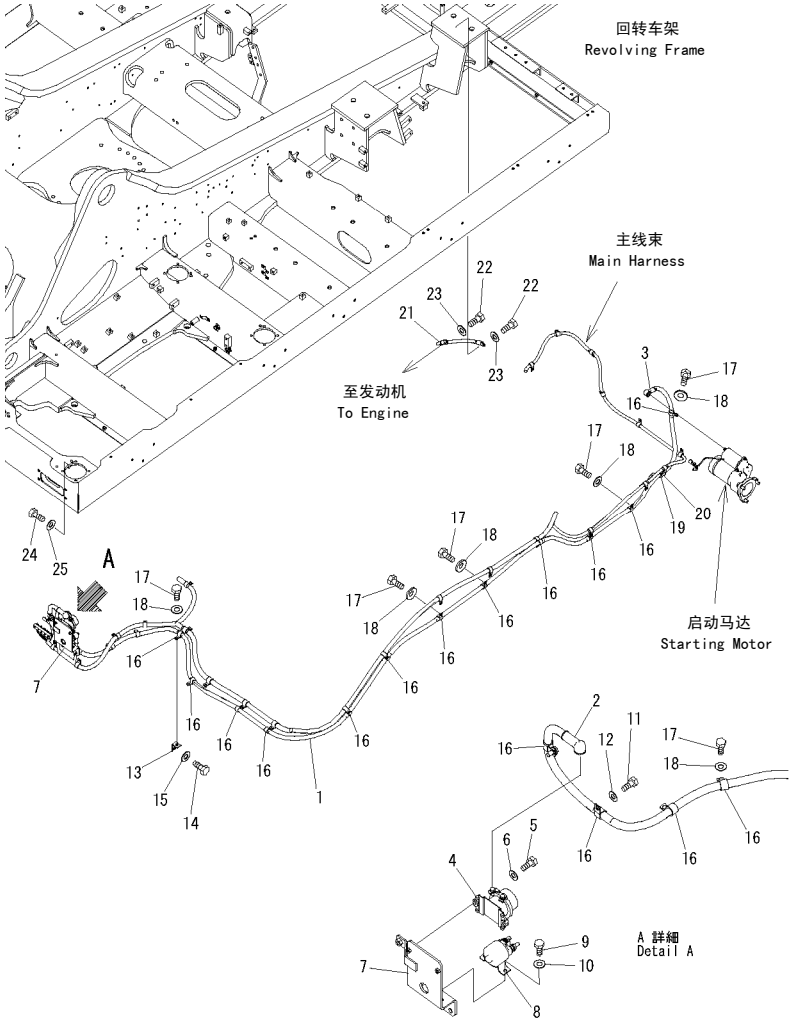

FIG NO. : E0200-01A0

INDEX	PART NO.	DESCRIPTION	Q'TY	SERIAL NO.
1	21M-06-21171	CABLE…… 线束	1	60001-
2	08038-00035	CAP…… 盖	1	60001-
3	08038-10035	CAP…… 盖	1	60001-
4	08088-40000	RELAY…… 继电器	1	60001-
5	01010-80830	BOLT……螺栓	2	60001-
6	01643-30823	WASHER……垫圈	2	60001-
7	21M-06-21141	BRACKET…… 支架	1	60001-
8	600-815-2690	SWITCH……开关	1	60001-
9	01010-80820	BOLT……螺栓	2	60001-
10	01643-30823	WASHER……垫圈	2	60001-
11	01010-81225	BOLT……螺栓	2	60001-
12	01643-31232	WASHER……垫圈	2	60001-
13	17M-49-15260	BRACKET…… 支架	1	60001-
14	01010-81225	BOLT……螺栓	1	60001-
15	01643-31232	WASHER……垫圈	1	60001-
16	04434-52312	CLIP……管夹	16	60001-
17	01010-81225	BOLT……螺栓	7	60001-
18	01643-31232	WASHER……垫圈	7	60001-
19	07095-20523	CUSHION…… 减振垫	1	60001-
20	04434-53212	CLIP……管夹	1	60001-
21	08028-55045	CABLE…… 线束	1	60001-
22	01010-81020	BOLT……螺栓	2	60001-
23	01643-31032	WASHER……垫圈	2	60001-
24	01010-81020	BOLT……螺栓	1	60001-
25	01643-31032	WASHER……垫圈	1	60001-

https://truckmanualshub.com/

FIG.E0200-02A0 WIRING (MAIN HARNESS)

配线(主线束)

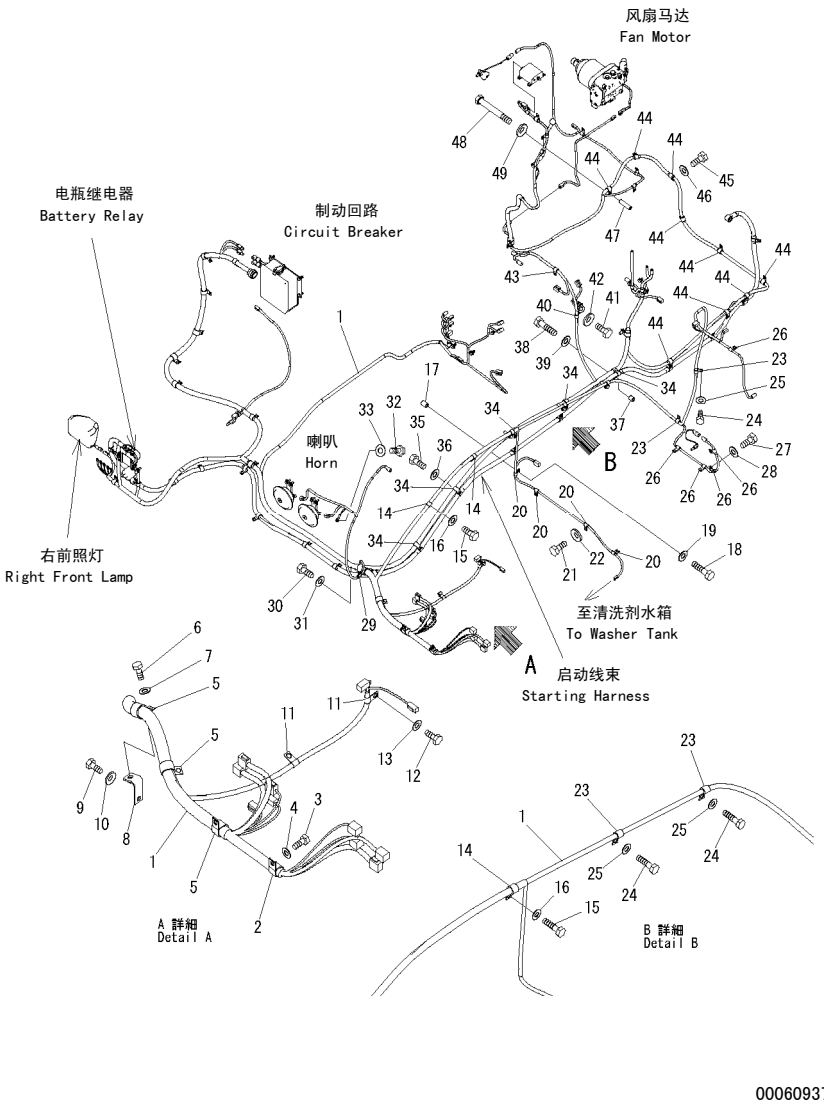

00060937-V

FIG NO. : E0200-02A0

INDEX	PART NO.	DESCRIPTION	Q'TY	SERIAL NO.
1	21M-06-21411	WIRING HARNESS……线束	1	60001-
	19M-06-31720	RESISTOR……防腐器	1	60001-
2	04434-52712	CLIP……管夹	1	60001-
3	01010-81225	BOLT……螺栓	1	60001-
4	01643-31232	WASHER……垫圈	1	60001-
5	04434-53412	CLIP……管夹	3	60001-
6	01010-81225	BOLT……螺栓	3	60001-
7	01643-31232	WASHER……垫圈	3	60001-
8	21M-06-14170	BRACKET…… 支架	1	60001-
9	01010-81225	BOLT……螺栓	1	60001-
10	01643-31232	WASHER……垫圈	1	60001-
11	04434-51412	CLIP……管夹	2	60001-
12	01010-81225	BOLT……螺栓	2	60001-
13	01643-31232	WASHER……垫圈	2	60001-
14	04434-51912	CLIP……管夹	3	60001-
15	01010-81225	BOLT……螺栓	3	60001-
16	01643-31232	WASHER……垫圈	3	60001-
17	20Y-03-11220	COLLAR……衬套	1	60001-
18	01010-81260	BOLT……螺栓	1	60001-
19	01643-31232	WASHER……垫圈	1	60001-
20	04434-51012	CLIP……管夹	4	60001-
21	01010-81225	BOLT……螺栓	3	60001-
22	01643-31232	WASHER……垫圈	3	60001-
23	04434-51412	CLIP……管夹	4	60001-
24	01010-81225	BOLT……螺栓	4	60001-
25	01643-31232	WASHER……垫圈	4	60001-
26	04434-51012	CLIP……管夹	5	60001-
27	01010-81225	BOLT……螺栓	4	60001-
28	01643-31232	WASHER……垫圈	4	60001-
29	04434-51012	CLIP……管夹	1	60001-
30	01010-81225	BOLT……螺栓	1	60001-
31	01643-31232	WASHER……垫圈	1	60001-
32	01010-81020	BOLT……螺栓	1	60001-
33	01643-31032	WASHER……垫圈	1	60001-
34	04434-52312	CLIP……管夹	5	60001-
35	01010-81225	BOLT……螺栓	4	60001-
36	01643-31232	WASHER……垫圈	4	60001-
37	195-33-11220	SPACER……隔离套	1	60001-
38	01010-81250	BOLT……螺栓	1	60001-
39	01643-31232	WASHER……垫圈	1	60001-
40	04434-51412	CLIP……管夹	1	60001-
41	01010-81225	BOLT……螺栓	1	60001-
42	01643-31232	WASHER……垫圈	1	60001-
43	04434-51408	CLIP……管夹	1	60001-
44	04434-51712	CLIP……管夹	9	60001-
45	01010-81225	BOLT……螺栓	6	60001-
46	01643-31232	WASHER……垫圈	6	60001-
47	22S-62-26210	SPACER……隔离套	3	60001-

https://truckmanualshub.com/

FIG.E0200-02A0 WIRING (MAIN HARNESS)
配线(主线束)

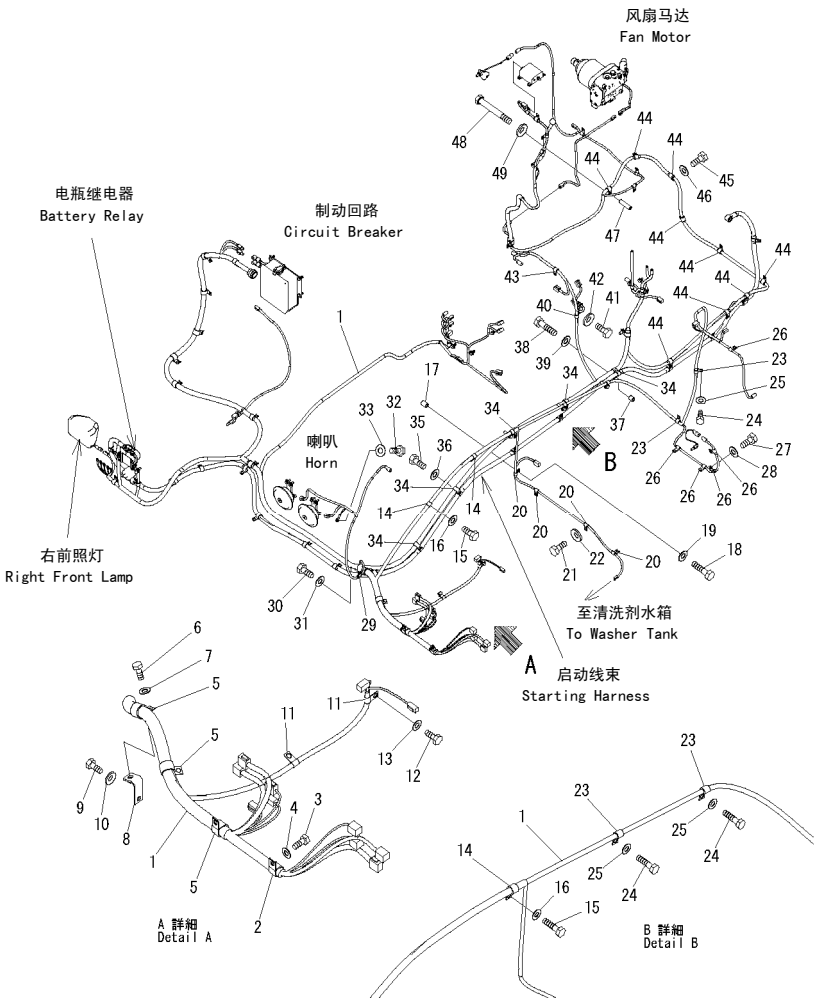

00060937-V

FIG NO. : E0200-02A0

INDEX	PART NO.	DESCRIPTION	Q'TY	SERIAL NO.
48	01011-81200	BOLT……螺栓	3	60001-
49	01643-31232	WASHER……垫圈	3	60001-

https://truckmanualshub.com/

FIG.E0200-03A0 WIRING (MAIN HARNESS) (CLIP) (ENGINE SIDE)
配线(主线束)（管夹）（发动机侧）

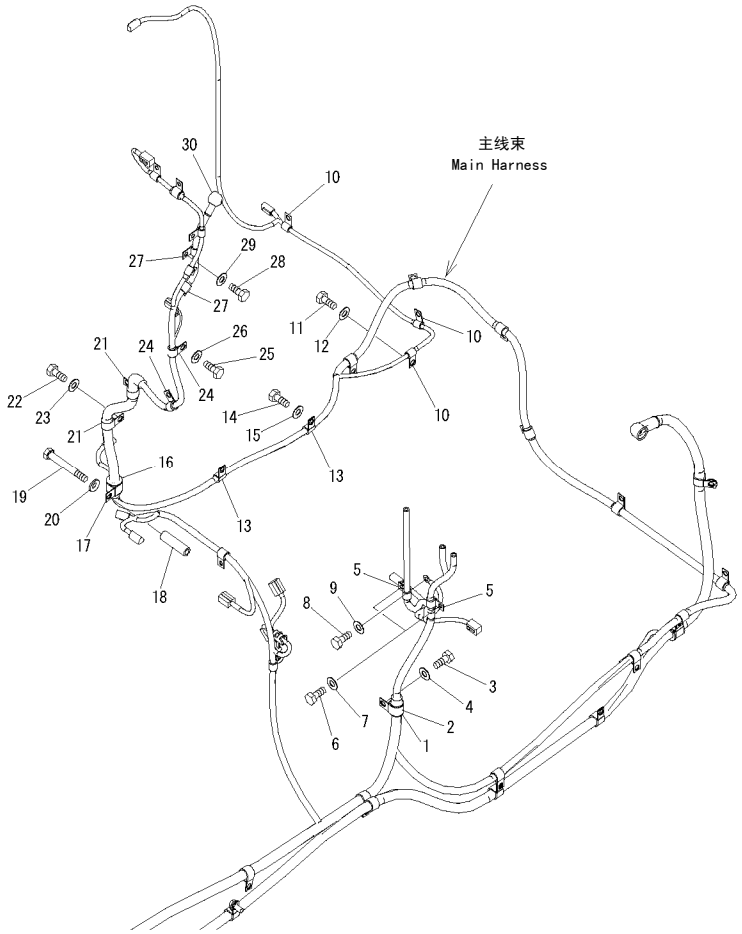

00060941-V

FIG NO. : E0200-03A0

INDEX	PART NO.	DESCRIPTION	Q'TY	SERIAL NO.
1	07095-20318	CUSHION ……减振垫	1	60001-
2	04434-52512	CLIP……管夹	1	60001-
3	01010-81225	BOLT……螺栓	1	60001-
4	01643-31232	WASHER……垫圈	1	60001-
5	04434-51410	CLIP……管夹	2	60001-
6	01010-81020	BOLT……螺栓	2	60001-
7	01643-31032	WASHER……垫圈	2	60001-
8	01010-81020	BOLT……螺栓	1	60001-
9	01643-31032	WASHER……垫圈	1	60001-
10	04434-51012	CLIP……管夹	3	60001-
11	01010-81225	BOLT……螺栓	3	60001-
12	01643-31232	WASHER……垫圈	3	60001-
13	04434-51412	CLIP……管夹	2	60001-
14	01010-81225	BOLT……螺栓	2	60001-
15	01643-31232	WASHER……垫圈	2	60001-
16	07095-20522	CUSHION ……减振垫	1	60001-
17	04434-53212	CLIP……管夹	1	60001-
18	22S-62-26210	SPACER……隔离套	1	60001-
19	01011-81200	BOLT……螺栓	1	60001-
20	01643-31232	WASHER……垫圈	1	60001-
21	04434-52112	CLIP……管夹	2	60001-
22	01010-81225	BOLT……螺栓	2	60001-
23	01643-31232	WASHER……垫圈	2	60001-
24	04434-51412	CLIP……管夹	2	60001-
25	01010-81225	BOLT……螺栓	2	60001-
26	01643-31232	WASHER……垫圈	2	60001-
27	04434-51410	CLIP……管夹	2	60001-
28	01010-81020	BOLT……螺栓	2	60001-
29	01643-31032	WASHER……垫圈	2	60001-
30	08038-02027	CAP ……盖	1	60001-

https://truckmanualshub.com/

FIG.E0200-04A0 WIRING (MAIN HARNESS) (CLIP) (DECK 、R.H.)

配线(主线束)（管夹）（右侧板）

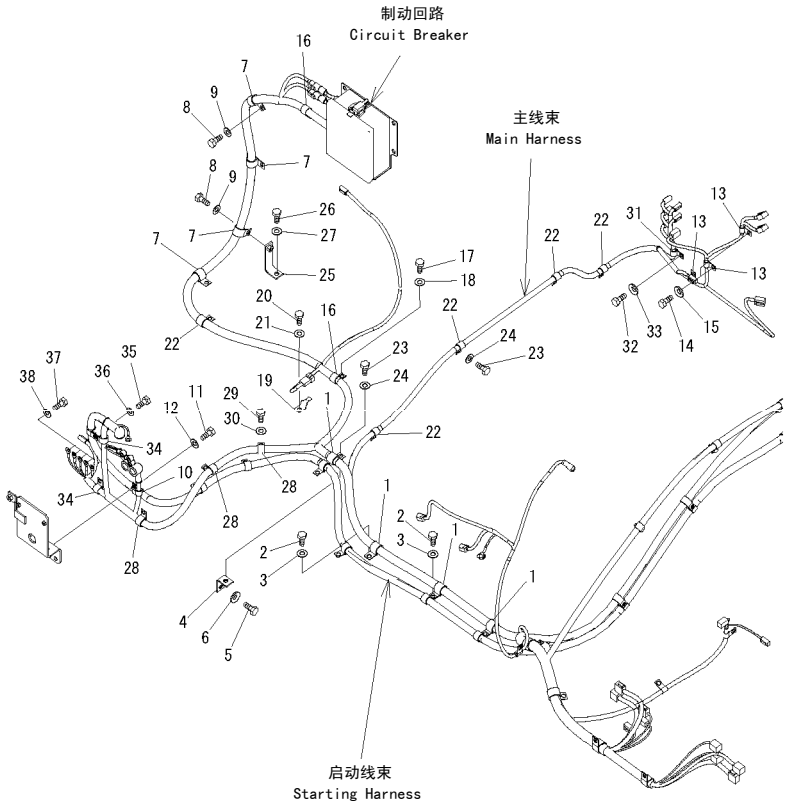

00038653

FIG NO. : E0200-04A0

INDEX	PART NO.	DESCRIPTION	Q'TY	SERIAL NO.
1	04434-52712	CLIP……管夹	4	60001-
2	01010-81225	BOLT……螺栓	4	60001-
3	01643-31232	WASHER……垫圈	4	60001-
4	17M-49-15260	BRACKET…… 支架	1	60001-
5	01010-81225	BOLT……螺栓	1	60001-
6	01643-31232	WASHER……垫圈	1	60001-
7	04434-51712	CLIP……管夹	4	60001-
8	01010-81225	BOLT……螺栓	4	60001-
9	01643-31232	WASHER……垫圈	4	60001-
10	04434-51412	CLIP……管夹	1	60001-
11	01010-81225	BOLT……螺栓	1	60001-
12	01643-31232	WASHER……垫圈	1	60001-
13	04434-51012	CLIP……管夹	3	60001-
14	01010-81225	BOLT……螺栓	2	60001-
15	01643-31232	WASHER……垫圈	2	60001-
16	04434-52312	CLIP……管夹	2	60001-
17	01010-81225	BOLT……螺栓	2	60001-
18	01643-31232	WASHER……垫圈	2	60001-
19	08053-01512	CLIP……管夹	1	60001-
20	01010-81225	BOLT……螺栓	1	60001-
21	01643-31232	WASHER……垫圈	1	60001-
22	04434-52712	CLIP……管夹	5	60001-
23	01010-81225	BOLT……螺栓	5	60001-
24	01643-31232	WASHER……垫圈	5	60001-
25	207-62-62770	BRACKET…… 支架	1	60001-
26	01010-81225	BOLT……螺栓	1	60001-
27	01643-31232	WASHER……垫圈	1	60001-
28	04434-52312	CLIP……管夹	3	60001-
29	01010-81225	BOLT……螺栓	3	60001-
30	01643-31232	WASHER……垫圈	3	60001-
31	04434-51412	CLIP……管夹	1	60001-
32	01010-81225	BOLT……螺栓	1	60001-
33	01643-31232	WASHER……垫圈	1	60001-
34	04434-51912	CLIP……管夹	2	60001-
35	01010-81225	BOLT……螺栓	2	60001-
36	01643-31232	WASHER……垫圈	2	60001-
37	01010-81016	BOLT……螺栓	5	60001-
38	01643-31032	WASHER……垫圈	5	60001-

https://truckmanualshub.com/

FIG.E0200-05A0 WIRING (BATTERY CASE SIDE)
线束(电瓶箱侧)

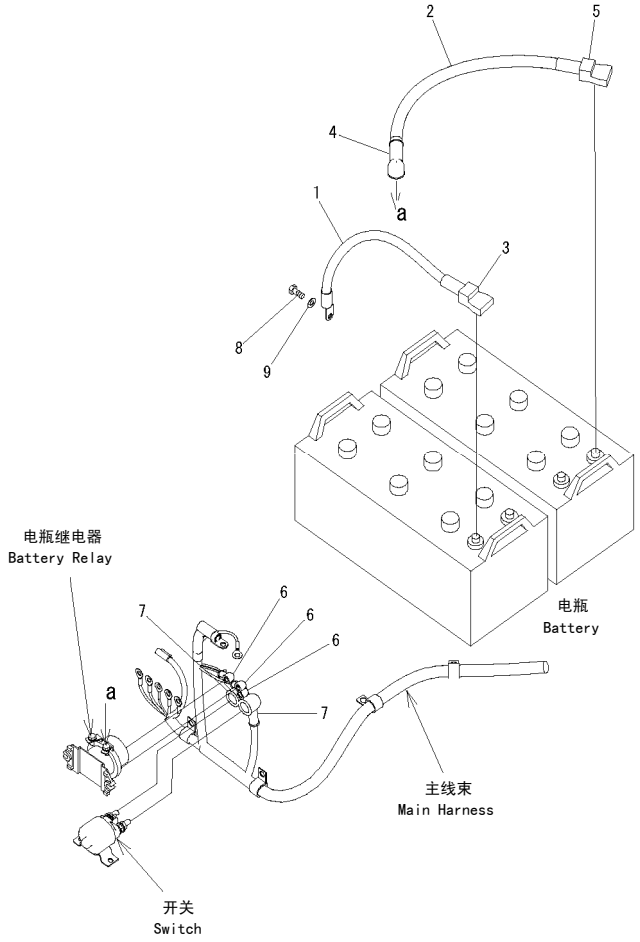

00038654

FIG NO. : E0200-05A0

INDEX	PART NO.	DESCRIPTION	Q'TY	SERIAL NO.
1	08028-45050	CABLE…… 线束	1	60001-
2	08028-GE075	CABLE…… 线束	1	60001-
3	08038-22511	CAP…… 盖	1	60001-
4	08038-00035	CAP…… 盖	1	60001-
5	08038-42511	CAP…… 盖	1	60001-
6	08038-00519	CAP…… 盖	3	60001-
7	08038-06037	CAP…… 盖	2	60001-
8	01010-81020	BOLT……螺栓	1	60001-
9	01643-31032	WASHER……垫圈	1	60001-

https://truckmanualshub.com/

FIG.E0200-06A0 WIRING (WORKING LAMP 、FRONT)

线束(前工作灯)

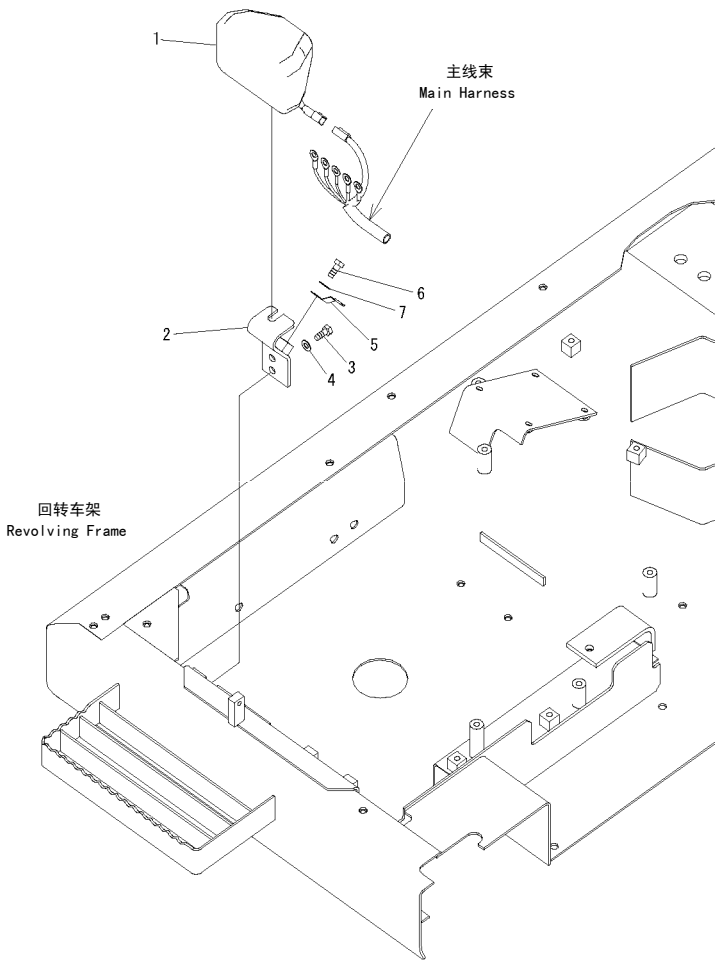

00038655

FIG NO. : E0200-06A0

INDEX	PART NO.	DESCRIPTION	Q'TY	SERIAL NO.
1	21T-06-32810	WORK LAMP ASS'Y…… 前工作灯	1	60001-
	421-06-23330	.BULB, 70W……灯泡	1	60001-
2	21M-06-21130	BRACKET…… 支架	1	60001-
3	01010-81225	BOLT……螺栓	2	60001-
4	01643-31232	WASHER……垫圈	2	60001-
5	08193-20012	CLIP……管夹	1	60001-
6	01010-81220	BOLT……螺栓	1	60001-
7	01643-31232	WASHER……垫圈	1	60001-

https://truckmanualshub.com/

FIG.E0200-07A0 WIRING (CIRCUIT BREAKER)
配线(制动回路)

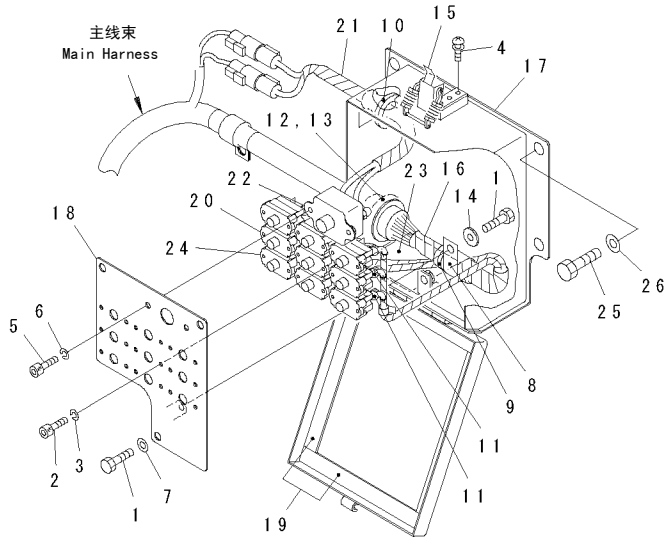

00060942

FIG NO. : E0200-07A0

INDEX	PART NO.	DESCRIPTION	Q'TY	SERIAL NO.
	209-06-41601	CASE ASS'Y.....箱体总成	1	60001-
1	01010-80816	.BOLT····· 螺栓	4	60001-
2	01252-70410	.BOLT····· 螺栓	18	60001-
3	01601-20410	.WASHER····· 垫圈	18	60001-
4	01023-10510	.SCREW·····螺钉	3	60001-
5	01252-70612	.BOLT····· 螺栓	2	60001-
6	01602-20619	.WASHER····· 垫圈	2	60001-
7	01643-30823	.WASHER····· 垫圈	3	60001-
8	04434-52310	.CLIP····· 管夹	1	60001-
9	08034-20519	.BAND····· 绑带	4	60001-
10	08037-11425	.GROMMET·····保护套	1	60001-
11	08038-00519	.CAP·····盖	20	60001-
12	08191-50808	.NUT·····螺母	1	60001-
13	08191-50809	.WASHER, LOCK····· 锁形垫圈	1	60001-
14	154-61-16570	.WASHER····· 垫圈	1	60001-
15	195-57-11530	.CATCH CLIP····· 磁铁夹	1	60001-
16	209-06-41421	.WIRING HARNESS····· 线束	1	60001-
17	☆	.CASE····· 壳体	1	60001-
18	209-06-77330	.PLATE·····板	1	60001-
19	209-06-77341	.SHEET·····垫片	4	60001-
20	209-06-77350	.CIRCUIT BREAKER·····制动回路	8	60001-
21	209-06-77360	.WIRING HARNESS····· 线束	1	60001-
22	21T-06-68290	.BREAKER·····破碎头	1	60001-
23	209-06-77420	.SHEET·····垫片	1	60001-
24	209-06-77460	.CIRCUIT BREAKER·····制动回路	1	60001-
25	01010-81225	BOLT·····螺栓	4	60001-
26	01643-31232	WASHER·····垫圈	4	60001-

https://truckmanualshub.com/

FIG.E0200-08A0 WIRING (PUMP SWITCH)
配线(泵开关)

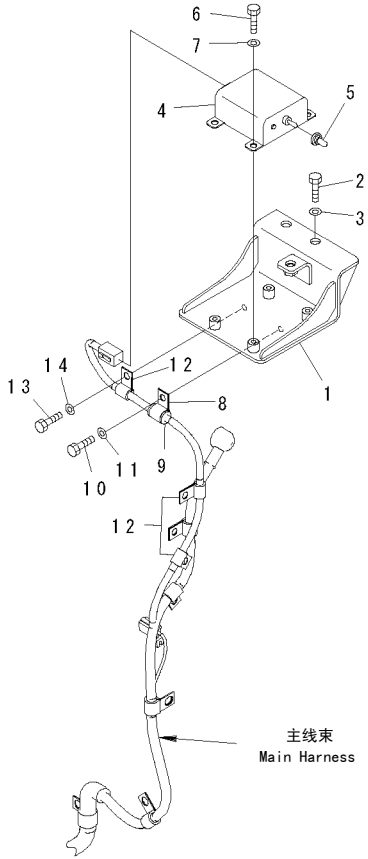

00060943

FIG NO. : E0200-08A0

INDEX	PART NO.	DESCRIPTION	Q'TY	SERIAL NO.
1	21M-06-21331	BRACKET…… 支架	1	60001-
2	01010-81230	BOLT……螺栓	2	60001-
3	01643-31232	WASHER……垫圈	2	60001-
4	600-815-9471	SWITCH……开关	1	60001-
5	08504-10000	CAP…… 盖	1	60001-
6	01010-80816	BOLT……螺栓	4	60001-
7	01643-30823	WASHER……垫圈	4	60001-
8	04434-51410	CLIP……管夹	1	60001-
9	198-06-53520	BUSHING…… 衬套	1	60001-
10	01010-81020	BOLT……螺栓	1	60001-
11	01643-31032	WASHER……垫圈	1	60001-
12	04434-51010	CLIP……管夹	3	60001-
13	01010-81020	BOLT……螺栓	3	60001-
14	01643-31032	WASHER……垫圈	3	60001-

https://truckmanualshub.com/

FIG.E0201-01A0 BEACON (WITH FOPS)
信号(防落物)

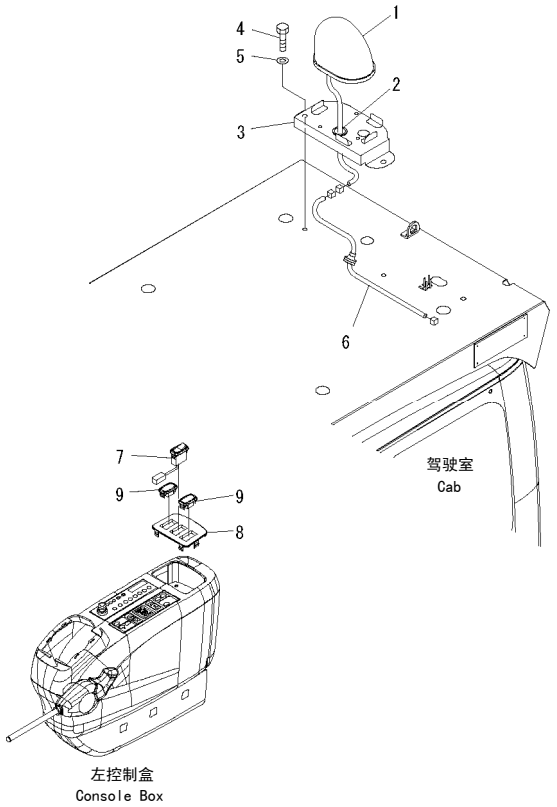

00008680

FIG NO. : E0201-01A0

INDEX	PART NO.	DESCRIPTION	Q'TY	SERIAL NO.
1	22B-54-17612	LAMP……灯	1	60001-
	22B-54-17660	.BULB…… 灯泡	1	60001-
2	08037-02512	GROMMET…… 保护套	1	60001-
3	20Y-54-51782	BRACKET…… 支架	1	60001-
4	01010-D1220	BOLT……螺栓	2	60001-
5	01643-71232	WASHER……垫圈	2	60001-
6	22B-54-17640	WIRING HARNESS……线束	1	60001-
7	22U-06-22310	SWITCH ASS'Y……开关总成	1	60001-
8	22U-43-22120	PANEL…… 面板	1	60001-
9	22U-06-22320	COVER…… 盖	2	60001-

https://truckmanualshub.com/

FIG.E0310-01A1 STEP LIGHT (WITH TOP GUARD)
左踏板(顶护罩)

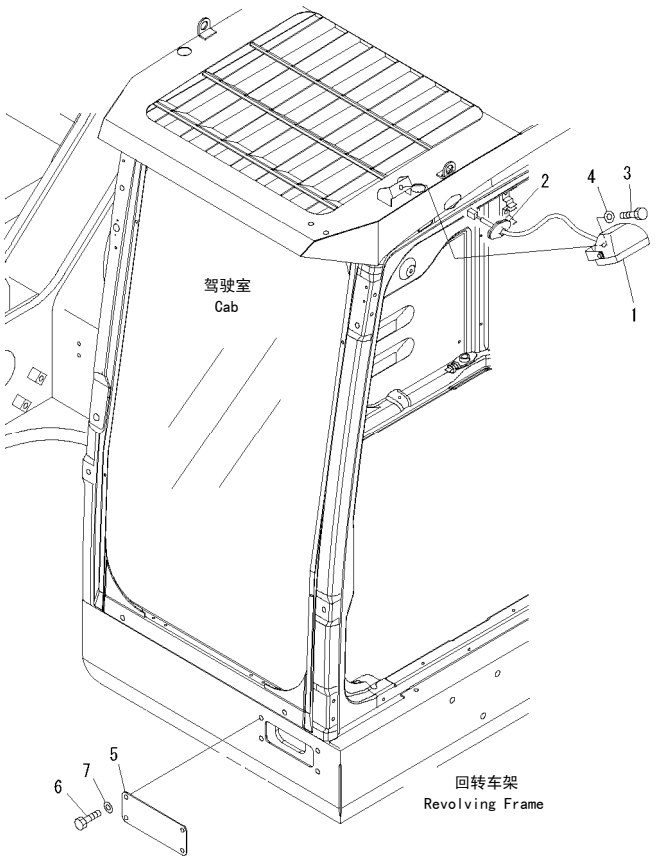

00038293

FIG NO. : E0310-01A1

INDEX	PART NO.	DESCRIPTION	Q'TY	SERIAL NO.
	209-53-14430	WORK LAMP ASS'Y····· 工作灯	1	60001-
1	22B-54-17271	.GROMMET·····保护套	1	60001-
2	421-06-23330	.BULB, 70W····· 70W灯泡	1	60001-
	01010-D1020	BOLT·····螺栓	1	60001-
3	01643-71032	WASHER·····垫圈	1	60001-
4	21M-06-15510	PLATE ·····板	1	60001-
5	01010-81230	BOLT·····螺栓	4	60001-
6	01643-31232	WASHER·····垫圈	4	60001-

https://truckmanualshub.com/

FIG.E0310-01A2 ADDITIONAL WORK LAMP
附加工作灯

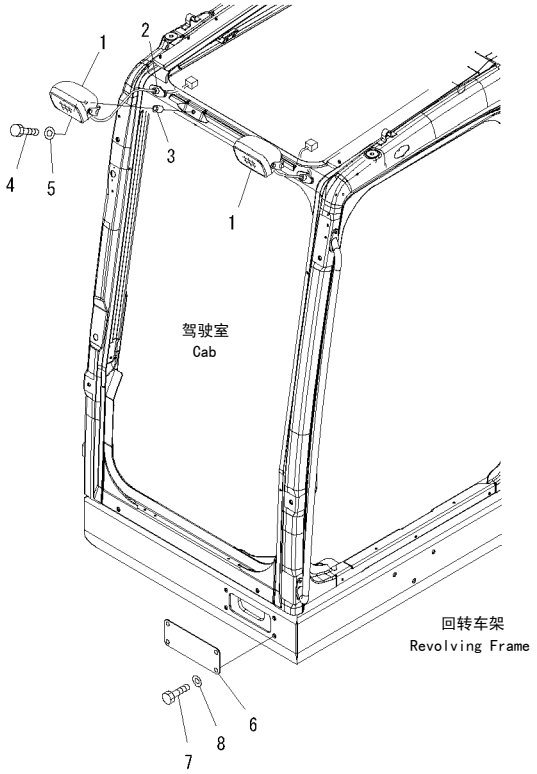

00038294

FIG NO. : E0310-01A2

INDEX	PART NO.	DESCRIPTION	Q'TY	SERIAL NO.
1	21N-54-38340	WORK LAMP ASS'Y····· 工作灯	2	60001-
2	22B-54-17271	.GROMMET·····保护套	1	60001-
	421-06-23330	.BULB, 70W····· 70W灯泡	1	60001-
3	205-970-2410	PIPE·····硬管	2	60001-
4	01010-D1050	BOLT·····螺栓	2	60001-
5	01643-71032	WASHER·····垫圈	2	60001-
6	21M-06-15510	PLATE····· 板	1	60001-
7	01010-81230	BOLT·····螺栓	4	60001-
8	01643-31232	WASHER·····垫圈	4	60001-

https://truckmanualshub.com/

FIG.E0310-01A4 ADDITIONAL WORK LAMP AND STEP LIGHT (WITH TOP GUARD)
附加工作灯和左踏板（顶护罩）

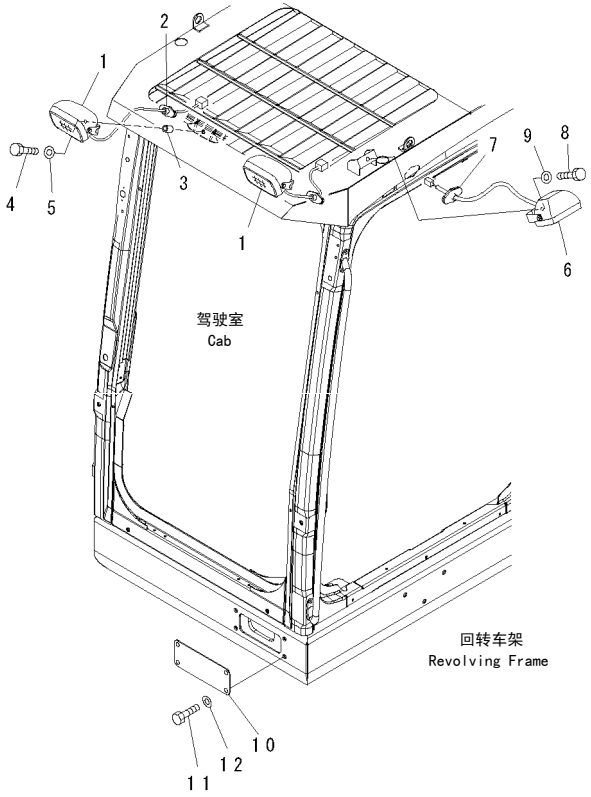

00038296

FIG NO. : E0310-01A4

	PART NO.	DESCRIPTION	Q'TY	SERIAL NO.
1	21N-54-38340	WORK LAMP ASS'Y····· 工作灯	2	60001-
2	22B-54-17271	.GROMMET·····保护套	1	60001-
	421-06-23330	.BULB, 70W····· 70W灯泡	1	60001-
3	205-970-2410	PIPE·····硬管	2	60001-
4	01010-D1050	BOLT·····螺栓	2	60001-
5	01643-71032	WASHER·····垫圈	2	60001-
6	209-53-14430	WORK LAMP ASS'Y····· 工作灯	1	60001-
7	22B-54-17271	.GROMMET·····保护套	1	60001-
	421-06-23330	.BULB, 70W····· 70W灯泡	1	60001-
8	01010-D1020	BOLT·····螺栓	1	60001-
9	01643-71032	WASHER·····垫圈	1	60001-
10	21M-06-15510	PLATE····· 板	1	60001-
11	01010-81230	BOLT·····螺栓	4	60001-
12	01643-31232	WASHER·····垫圈	4	60001-

https://truckmanualshub.com/

FIG.E0310-01A5 ADDITIONAL WORK LAMP LESS
附加工作灯

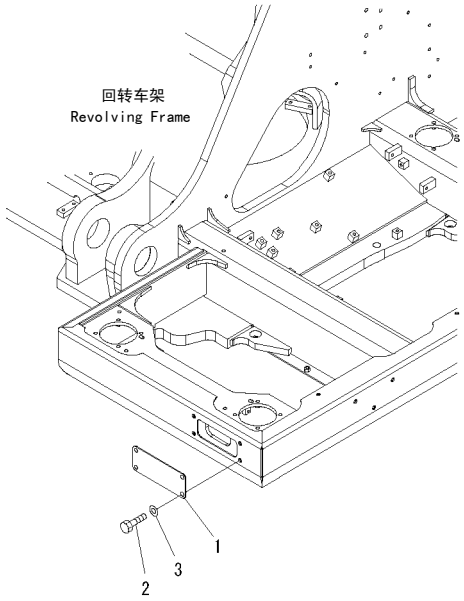

00008681

FIG NO. : E0310-01A5

INDEX	PART NO.	DESCRIPTION	Q'TY	SERIAL NO.
1	21M-06-15510	PLATE…… 板	1	60001-
2	01010-81230	BOLT……螺栓	4	60001-
3	01643-31232	WASHER……垫圈	4	60001-

https://truckmanualshub.com/

FIG.E0310-01A6 ADDITIONAL WORK LAMP AND FLASH LIGHT
附加工作灯和闪烁灯

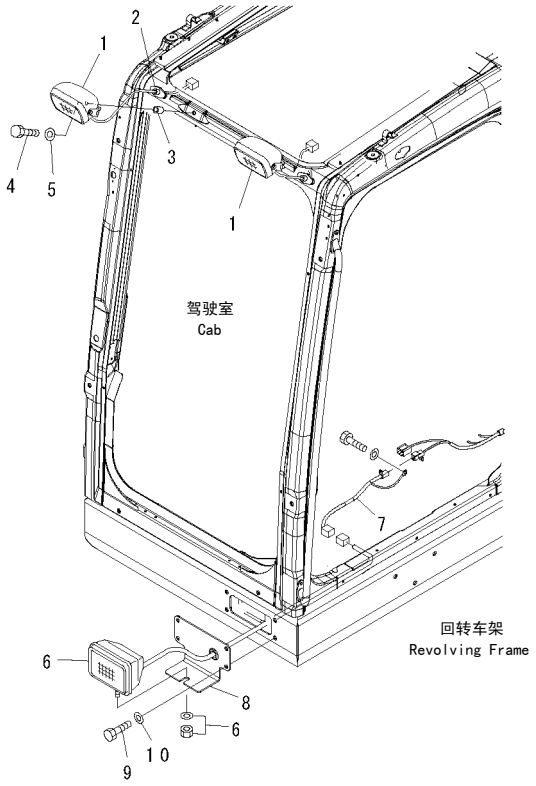

00038298

FIG NO. : E0310-01A5

INDEX	PART NO.	DESCRIPTION	Q'TY	SERIAL NO.
1	21N-54-38340	WORK LAMP ASS'Y····· 工作灯	2	60001-
2	22B-54-17271	.GROMMET·····保护套	1	60001-
	421-06-23330	.BULB, 70W····· 70W灯泡	1	60001-
3	205-970-2410	PIPE·····硬管	2	60001-
4	01010-D1050	BOLT·····螺栓	2	60001-
5	01643-71032	WASHER·····垫圈	2	60001-
6	21T-06-32810	WORK LAMP ASS'Y····· 工作灯	1	60001-
	421-06-23330	.BULB, 70W····· 70W灯泡	1	60001-
7	21M-06-21160	WIRING HARNESS·····线束	1	60001-
8	209-06-41320	BRACKET····· 支架	1	60001-
9	01010-81230	BOLT·····螺栓	4	60001-
10	01643-31232	WASHER·····垫圈	4	60001-

https://truckmanualshub.com/

FIG.E0310-01A8 ADDITIONAL WORK LAMP 、STEP LIGHT AND FLASH LIGHT(WITH TOP GUARD)
附加工作灯、左踏板和闪烁灯（顶护罩）

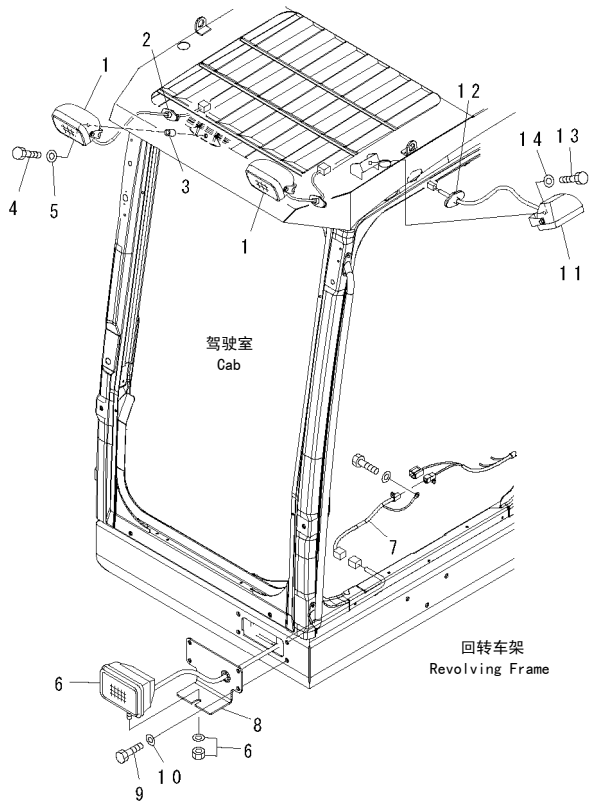

00038606

FIG NO. : E0310-01A8

INDEX	PART NO.	DESCRIPTION	Q'TY	SERIAL NO.
1	21N-54-38340	WORK LAMP ASS'Y····· 工作灯	2	60001-
2	22B-54-17271	.GROMMET·····保护套	1	60001-
	421-06-23330	.BULB, 70W····· 70W灯泡	1	60001-
3	205-970-2410	PIPE·····硬管	2	60001-
4	01010-D1050	BOLT·····螺栓	2	60001-
5	01643-71032	WASHER·····垫圈	2	60001-
6	21T-06-32810	WORK LAMP ASS'Y····· 工作灯	1	60001-
	421-06-23330	BULB, 70W·····70W灯泡	1	60001-
7	21M-06-21160	WIRING HARNESS·····线束	1	60001-
8	209-06-41320	BRACKET····· 支架	1	60001-
9	01010-81230	BOLT·····螺栓	4	60001-
10	01643-31232	WASHER·····垫圈	4	60001-
11	209-53-14430	WORK LAMP ASS'Y····· 工作灯	1	60001-
12	22B-54-17271	.GROMMET·····保护套	1	60001-
	421-06-23330	.BULB, 70W····· 70W灯泡	1	60001-
13	01010-D1020	BOLT·····螺栓	1	60001-
14	01643-71032	WASHER·····垫圈	1	60001-

https://truckmanualshub.com/

FIG.E0310-01A9 FLASH LIGHT
闪烁灯

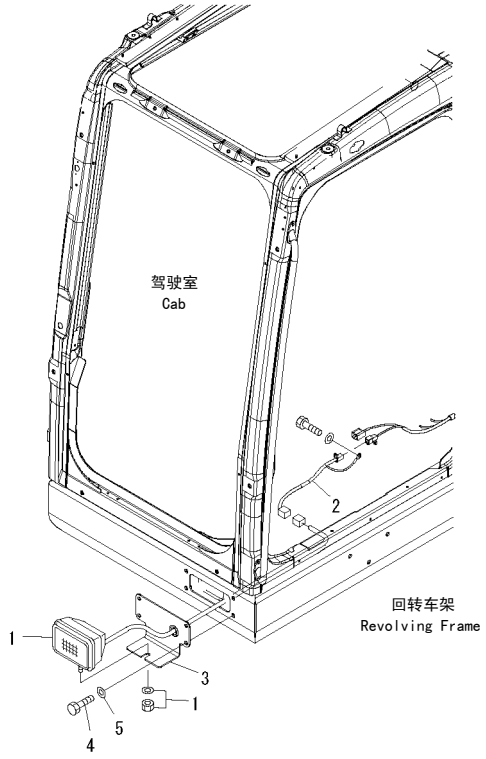

00038297

FIG NO. : E0310-01A9

INDEX	PART NO.	DESCRIPTION	Q'TY	SERIAL NO.
1	21T-06-32810	WORK LAMP ASS'Y····· 工作灯	1	60001-
	421-06-23330	.BULB, 70W····· 70W灯泡	1	60001-
2	21M-06-21160	WIRING HARNESS·····线束	1	60001-
3	209-06-41320	BRACKET····· 支架	1	60001-
4	01010-81230	BOLT·····螺栓	4	60001-
5	01643-31232	WASHER·····垫圈	4	60001-

https://truckmanualshub.com/

FIG.E0310-01B1 STEP LIGHT AND FLASH LIGHT (WITH TOP GUARD)
踏板灯和闪烁灯（带顶护板）

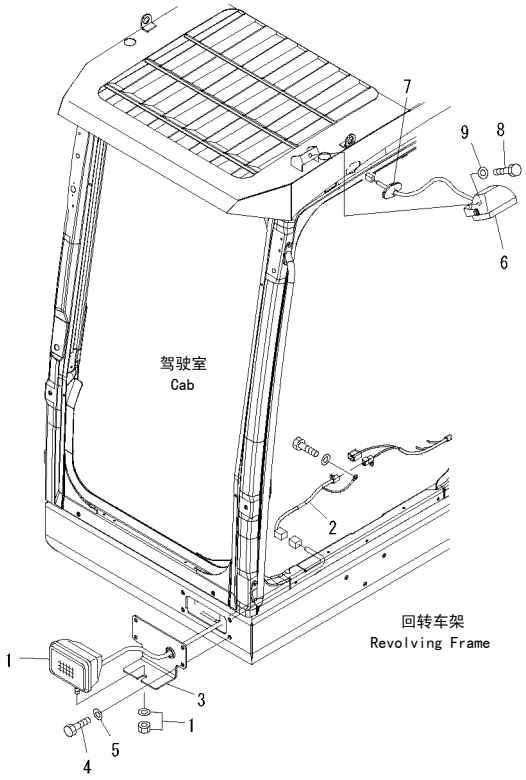

00038608

FIG NO. : E0310-01B1

INDEX	PART NO.	DESCRIPTION	Q'TY	SERIAL NO.
1	21T-06-32810	WORK LAMP ASS'Y····· 工作灯	1	60001-
	421-06-23330	.BULB, 70W····· 70W灯泡	1	60001-
2	21M-06-21160	.WIRING HARNESS····· 线束	1	60001-
3	209-06-41320	BRACKET····· 支架	1	60001-
4	01010-81230	BOLT·····螺栓	4	60001-
5	01643-31232	WASHER·····垫圈	4	60001-
6	209-53-14430	WORK LAMP ASS'Y····· 工作灯	1	60001-
7	22B-54-17271	.GROMMET·····保护套	1	60001-
	421-06-23330	.BULB, 70W····· 70W灯泡	1	60001-
8	01010-D1020	BOLT·····螺栓	1	60001-
9	01643-71032	WASHER·····垫圈	1	60001-

https://truckmanualshub.com/

FIG.E041O-01A0 HORN
喇叭

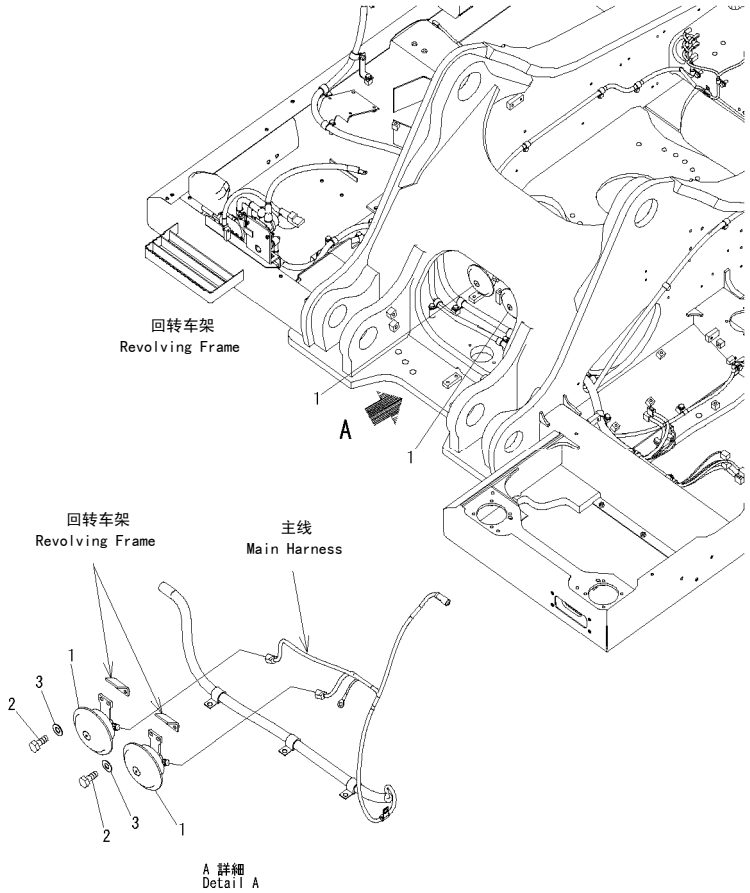

00038291

FIG NO. : E041O-01A0

INDEX	PART NO.	DESCRIPTION	Q'TY	SERIAL NO.
1	08160-82400	HORN……喇叭	1	60001-
2	01010-80825	BOLT……螺栓	4	60001-
3	01643-30823	WASHER……垫圈	4	60001-

https://truckmanualshub.com/

FIG.E0420-01A0 TRAVEL ALARM
行走警报

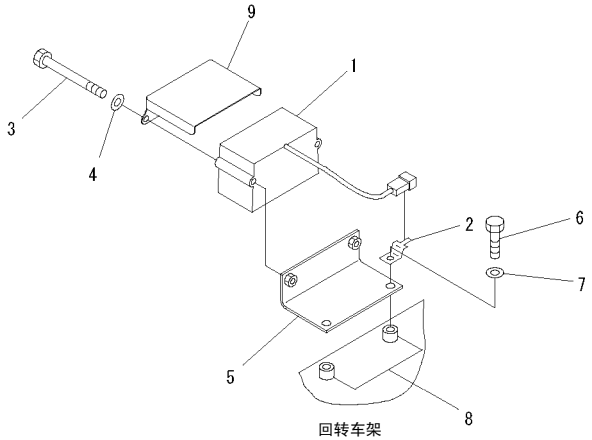

回转车架
Revolving Frame

PVL1734

FIG NO. : E0410-01A0

INDEX	PART NO.	DESCRIPTION	Q'TY	SERIAL NO.
1	08164-A1000	ALARM…… 警报	1	60001-
2	08193-20012	CLIP……管夹	1	60001-
3	01011-81005	BOLT……螺栓	2	60001-
4	01643-31032	WASHER……垫圈	2	60001-
5	209-06-71270	BRACKET…… 支架	1	60001-
6	01010-81240	BOLT……螺栓	2	60001-
7	01643-31232	WASHER……垫圈	2	60001-
8	144-947-3490	SPACER……调整垫片	2	60001-
9	209-06-71310	COVER…… 盖	1	60001-

HYDRAULIC SYSTEM
液压系统

https://truckmanualshub.com/

https://truckmanualshub.com/

FIG.H0110-01A0 HYDRAULIC TANK (TANK AND FILTER)

工作油箱(水箱和滤清器)

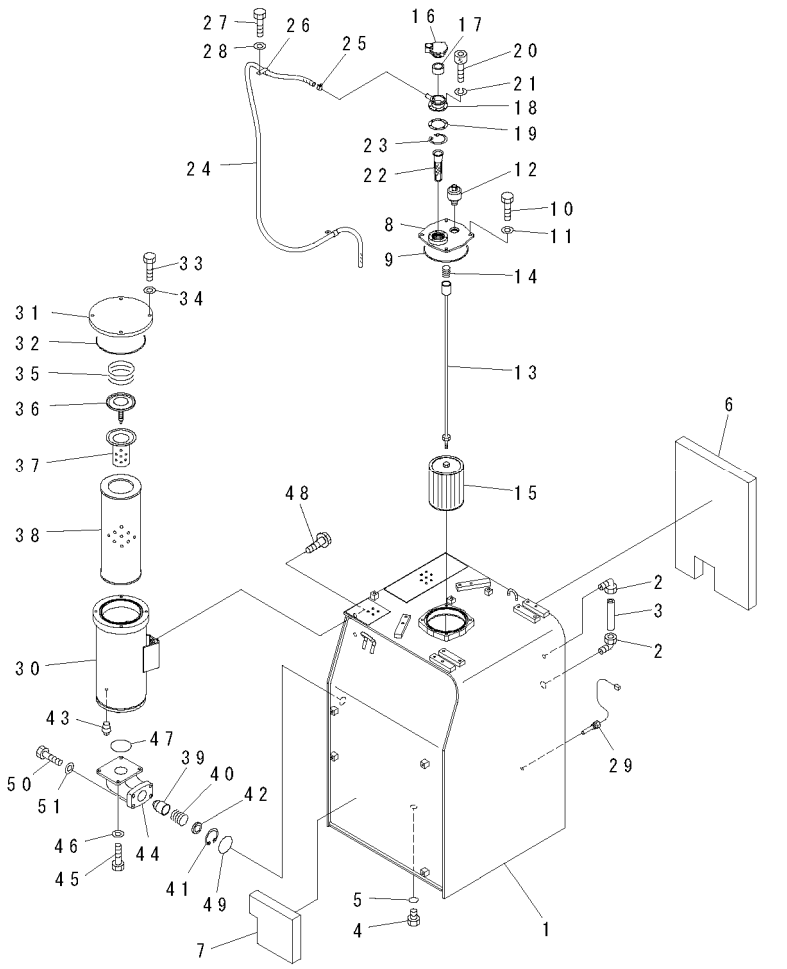

00049465

FIG NO. : H0110-01A0

INDEX	PART NO.	DESCRIPTION	Q'TY	SERIAL NO.
1	21M-60-21113	TANK……箱	1	60001-
2	203-60-31100	ELBOW ASS'Y…… 接头总成	2	60001-
3	203-60-31160	TUBE……硬管	1	60001-
4	07040-12412	PLUG……堵塞	1	60001-
5	07002-12434	O-RING…… O形圈	1	60001-
6	21M-60-21291	SHEET…… 垫片	1	60001-
7	21M-60-21280	SHEET…… 垫片	1	60001-
8	21M-60-21120	COVER…… 盖	1	60001-
9	07000-15180	O-RING…… O形圈	1	60001-
10	01010-81225	BOLT……螺栓	4	60001-
11	01643-31232	WASHER……垫圈	4	60001-
12	(198-60-55510)	BREATHER……透气塞	1	60001-
	21M-60-21190	STRAINER ASS'Y……过滤器总成	1	60001-
13	21M-60-11150	.ROD ASS'Y……杆总成	1	60001-
14	12R-60-11230	..SPRING……弹簧	1	60001-
15	21M-60-21140	.STRAINER…… 过滤器	1	60001-
16	17A-60-11310	CAP ASS'Y…… 盖总成	1	60001-
17	20Y-60-21470	.ELEMENT……滤芯	1	60001-
18	208-60-71180	FILLER NECK…… 滤清器连接件	1	60001-
19	20Y-60-21340	GASKET……垫	1	60001-
20	01252-70516	BOLT……螺栓	6	60001-
21	01601-20513	WASHER……垫圈	6	60001-
22	07056-10045	STRAINER……过滤器	1	60001-
23	04065-04718	RING……隔圈	1	60001-
24	07270-61421	TUBE……硬管	1	60001-
25	07285-00155	CLIP……管夹	1	60001-
26	04434-51812	CLIP……管夹	1	60001-
27	01010-81225	BOLT……螺栓	1	60001-
28	01643-31232	WASHER……垫圈	1	60001-
29	7861-93-3320	SENSOR……传感器	1	60001-
30	21M-60-11240	CASE……壳体	1	60001-
31	21M-60-21220	COVER…… 盖	1	60001-
32	07000-15180	O-RING…… O形圈	1	60001-
33	01010-81235	BOLT……螺栓	4	60001-
34	01643-31232	WASHER……垫圈	4	60001-
35	07069-34057	SPRING……弹簧	1	60001-
36	20Y-60-31131	VALVE ASS'Y…… 阀总成	1	60001-
37	20Y-60-31140	STRAINER……过滤器	1	60001-
38	209-60-77532	ELEMENT…… 滤芯	1	60001-
39	21N-60-31240	POPPET……提动阀芯	1	60001-
40	706-76-71190	SPRING……弹簧	1	60001-
41	04065-05020	RING……隔圈	1	60001-
42	21M-60-21160	SPACER……调整垫片	1	60001-
43	07042-30211	PLUG……堵塞	1	60001-
44	21M-60-21130	BRACKET…… 支架	1	60001-
45	01010-81025	BOLT……螺栓	4	60001-
46	01643-31032	WASHER……垫圈	4	60001-
47	07000-12095	O-RING…… O形圈	1	60001-

https://truckmanualshub.com/

FIG NO. : H0110-01A0

INDEX	PART NO.	DESCRIPTION		SERIAL NO.
48	01034-81230	BOLT……螺栓	2	60001-
49	07000-12060	O-RING…… O形圈	1	60001-
50	01010-81245	BOLT……螺栓	4	60001-
51	01643-31232	WASHER……垫圈	4	60001-

https://truckmanualshub.com/

FIG.H0110-02A0 HYDRAULIC TANK (RELIEF VALVE)

工作油箱(溢流阀)

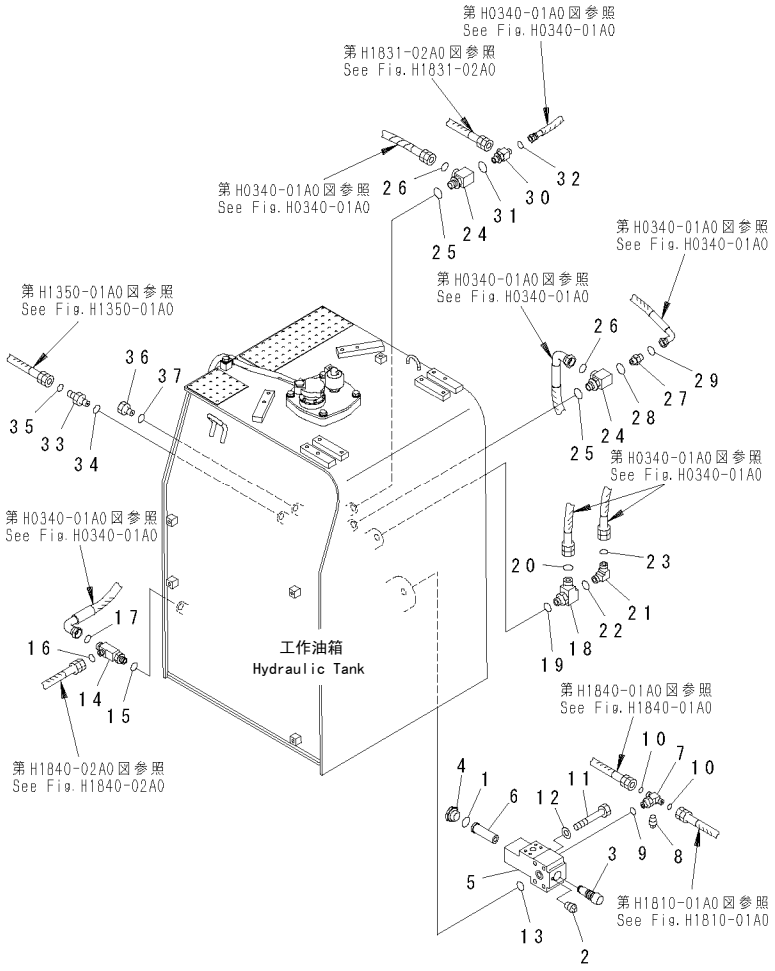

00061046

FIG NO. : H0110-02A0

INDEX	PART NO.	DESCRIPTION	Q'TY	SERIAL NO.
	21M-60-11202	VALVE ASS'Y…… 阀总成	1	60001-
1	07002-13334	O-RING…… O形圈	1	60001-
2	07043-30108	PLUG……堵塞	1	60001-
3	21M-60-11220	VALVE…… 阀	1	60001-
4	20X-62-21670	PLUG……堵塞	1	60001-
5	☆	BLOCK…… 接头	1	60001-
6	704-28-00751	STRAINER……过滤器	1	60001-
7	21M-62-14420	TEE……T形件	1	60001-
8	07042-30108	PLUG……堵塞	1	60001-
9	07002-12034	O-RING…… O形圈	1	60001-
10	02896-11009	O-RING…… O形圈	2	60001-
11	01010-81295	BOLT……螺栓	4	60001-
12	01643-31232	WASHER……垫圈	4	60001-
13	07000-13025	O-RING…… O形圈	1	60001-
14	21N-64-36710	TEE……T形件	1	60001-
15	07002-12034	O-RING…… O形圈	1	60001-
16	02896-11009	O-RING…… O形圈	1	60001-
17	02896-11015	O-RING…… O形圈	1	60001-
18	21M-62-14310	TEE……T形件	1	60001-
19	07002-12434	O-RING…… O形圈	1	60001-
20	02896-11018	O-RING…… O形圈	1	60001-
21	02782-10628	ELBOW…… 接头	1	60001-
22	07002-12434	O-RING…… O形圈	1	60001-
23	02896-11018	O-RING…… O形圈	1	60001-
24	21N-64-36550	ELBOW…… 接头	2	60001-
25	07002-12434	O-RING…… O形圈	2	60001-
26	02896-11018	O-RING…… O形圈	2	60001-
27	02781-00422	UNION…… 接头	1	60001-
28	07002-12034	O-RING…… O形圈	1	60001-
29	02896-11012	O-RING…… O形圈	1	60001-
30	19M-61-35140	TEE……T形件	1	60001-
31	07002-12034	O-RING…… O形圈	1	60001-
32	02896-21009	O-RING…… O形圈	2	60001-
33	02781-0042A	JOINT…… 接头	1	60001-
34	07002-12434	O-RING…… O形圈	1	60001-
35	02896-11012	O-RING…… O形圈	1	60001-
36	07040-12412	PLUG……堵塞	1	60001-
37	07002-12434	O-RING…… O形圈	1	60001-

https://truckmanualshub.com/

FIG.H0110-03A0 HYDRAULIC TANK (OIL COOLER LINE AND DRAIN LINE)
工作油箱（油冷却回路和回油回路）

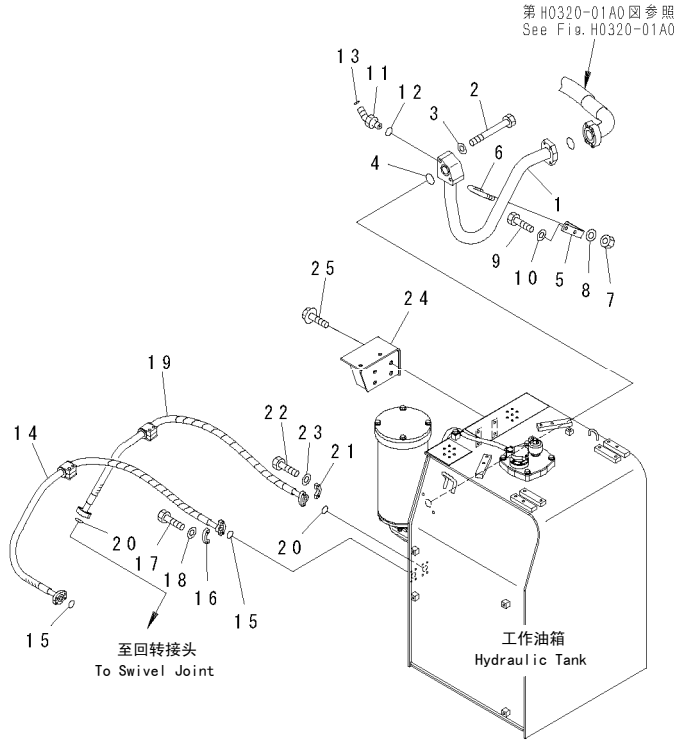

00038611

FIG NO. : H0110-03A0

INDEX	PART NO.	DESCRIPTION	Q'TY	SERIAL NO.
1	21M-62-16111	TUBE……硬管	1	60001-
2	01010-81290	BOLT……螺栓	2	60001-
3	01643-31232	WASHER……垫圈	2	60001-
4	07000-13045	RING……隔圈	1	60001-
5	198-61-32850	BRACKET…… 支架	1	60001-
6	07283-34949	CLIP……管夹	1	60001-
7	01597-01009	NUT…… 螺母	2	60001-
8	01643-31032	WASHER……垫圈	2	60001-
9	01010-81225	BOLT……螺栓	2	60001-
10	01643-31232	WASHER……垫圈	2	60001-
11	02783-10315	ELBOW…… 接头	1	60001-
12	07002-12034	RING……隔圈	1	60001-
13	02896-11009	RING……隔圈	1	60001-
14	07296-41019	HOSE……软管	1	60001-
15	07000-13032	RING……隔圈	2	60001-
16	07371-31049	FLANGE……法兰	2	60001-
17	07372-21035	BOLT……螺栓	4	60001-
18	01643-51032	WASHER……垫圈	4	60001-
19	21M-62-16270	HOSE……软管	1	60001-
20	07000-13032	RING……隔圈	2	60001-
21	07371-31049	FLANGE……法兰	2	60001-
22	07372-21035	BOLT……螺栓	4	60001-
23	01643-51032	WASHER……垫圈	4	60001-
24	21M-54-23510	BRACKET…… 支架	1	60001-
25	01034-81230	BOLT……螺栓	4	60001-

https://truckmanualshub.com/

FIG.H0110-04A0 HYDRAULIC TANK (DOOR)

工作油箱（门）

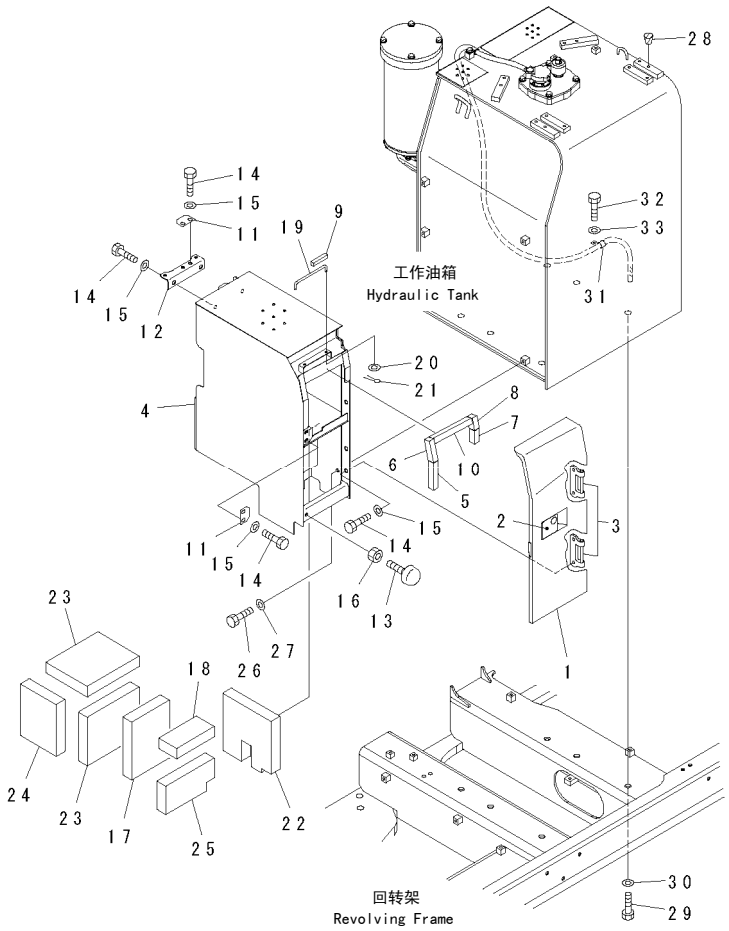

00049469

FIG NO. : H0110-04A0

INDEX	PART NO.	DESCRIPTION	Q'TY	SERIAL NO.
1	21M-54-21690	COVER…… 盖	1	60001-
2	198-54-41982	.LOCK ASS'Y…… (WELDED)…锁总成(焊接)	1	60001-
3	21M-54-11220	.HINGE…… (WELDED)… 铰链(焊接)	2	60001-
4	21M-54-21680	CASE……壳体	1	60001-
5	209-53-13540	.SHEET……垫片	1	60001-
6	209-53-13550	.SHEET……垫片	1	60001-
7	209-53-13560	.SHEET……垫片	1	60001-
8	209-53-13570	.SHEET……垫片	1	60001-
9	209-53-13580	.SHEET……垫片	1	60001-
10	21M-54-19450	.SHEET……垫片	1	60001-
11	21M-54-11771	PLATE…… 板	2	60001-
12	21M-54-21631	BRACKET…… 支架	1	60001-
13	20Y-54-11611	STOPPER…… 止动块	3	60001-
14	01010-81230	BOLT……螺栓	10	60001-
15	01643-31232	WASHER……垫圈	10	60001-
16	01580-11008	NUT…… 螺母	3	60001-
17	21M-54-13760	SHEET…… 垫片	1	60001-
18	21M-54-13770	SHEET…… 垫片	1	60001-
19	175-43-41261	ROD…… 连杆	1	60001-
20	01643-30623	WASHER……垫圈	1	60001-
21	04050-11612	PIN…… 销	1	60001-
22	21M-54-19250	SHEET…… 垫片	1	60001-
23	21M-54-19260	SHEET…… 垫片	2	60001-
24	21M-54-19270	SHEET…… 垫片	1	60001-
25	21M-54-23570	SHEET…… 垫片	1	60001-
26	01010-81230	BOLT……螺栓	4	60001-
27	01643-31232	WASHER……垫圈	4	60001-
28	07049-01418	PLUG……堵塞	14	60001-
29	01010-82045	BOLT……螺栓	6	60001-
30	01643-32060	WASHER……垫圈	6	60001-
31	04434-51812	CLIP……管夹	1	60001-
32	01010-81225	BOLT……螺栓	1	60001-
33	01643-31232	WASHER……垫圈	1	60001-

https://truckmanualshub.com/

FIG.H0120-01A0 MAIN VALVE (1/2)

主阀（1/2）

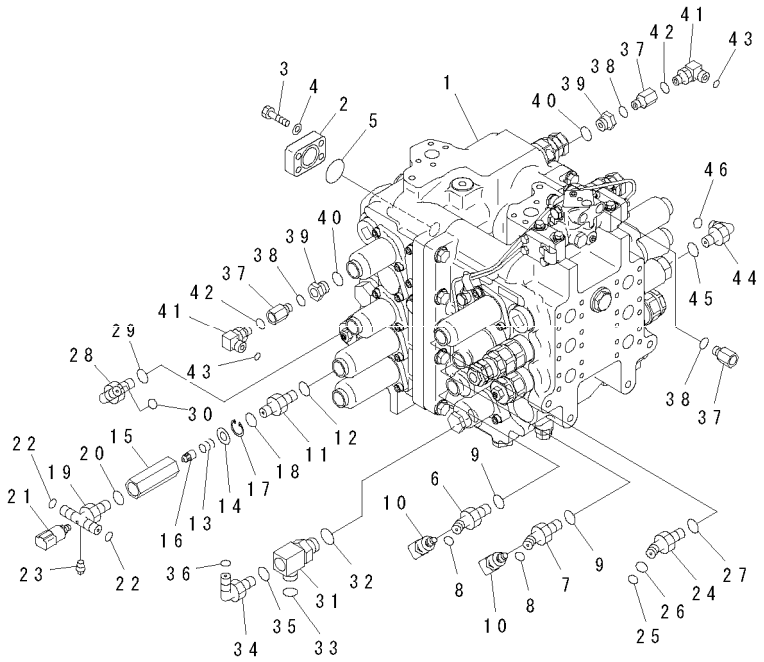

00038613

FIG NO. : H0120-01A0

INDEX	PART NO.	DESCRIPTION	Q'TY	SERIAL NO.
1	(709-99-15100)	MAIN VALVE……主阀	1	60001-
2	207-62-56190	FLANGE……法兰	1	60001-
3	01010-81040	BOLT……螺栓	4	60001-
4	01643-31032	WASHER……垫圈	4	60001-
5	07000-13035	O-RING…… O形圈	1	60001-
6	21M-62-14330	ELBOW…… 接头	1	60001-
7	21M-62-14340	ELBOW…… 接头	1	60001-
8	02896-11009	O-RING…… O形圈	2	60001-
9	07002-12034	O-RING…… O形圈	2	60001-
10	206-06-61130	SWITCH……开关	2	60001-
11	203-973-5610	UNION…… 接头	1	60001-
12	07002-12034	O-RING…… O形圈	1	60001-
	21M-60-11510	VALVE ASS'Y…… 阀总成	1	60001-
13	205-60-51410	.SPRING…… 弹簧	1	60001-
14	205-60-51420	.SEAT…… 座	1	60001-
15	205-60-64290	.BODY…… 壳	1	60001-
16	21M-60-11520	.POPPET…… 提动阀芯	1	60001-
17	04065-01410	.RING…… 隔圈	1	60001-
18	07002-12034	O-RING…… O形圈	1	60001-
19	21M-62-14411	TEE……T形件	1	60001-
20	07002-12034	O-RING…… O形圈	1	60001-
21	206-06-61130	SWITCH……开关	1	60001-
22	02896-11009	O-RING…… O形圈	2	60001-
23	07042-30108	PLUG……堵塞	1	60001-
24	21M-62-21740	ELBOW…… 接头	1	60001-
25	201-60-11390	.O-RING……O形圈	1	60001-
26	20Y-62-19560	.O-RING……O形圈	1	60001-
27	07002-12034	O-RING…… O形圈	1	60001-
28	02782-10315	ELBOW…… 接头	1	60001-
29	07002-12034	O-RING…… O形圈	1	60001-
30	02896-11009	O-RING…… O形圈	1	60001-
31	21M-62-22510	ELBOW…… 接头	1	60001-
32	07002-12434	O-RING…… O形圈	1	60001-
33	02896-11015	O-RING…… O形圈	1	60001-
34	02782-10315	ELBOW…… 接头	1	60001-
35	07002-12034	O-RING…… O形圈	1	60001-
36	02896-11009	O-RING…… O形圈	1	60001-
37	21M-62-16670	ADAPTER…… 接头	3	60001-
38	07002-11423	O-RING…… O形圈	3	60001-
39	20Y-62-21940	FILTER ASS'Y……滤清器总成	2	60001-
40	07002-12034	O-RING…… O形圈	2	60001-
41	8296-62-2160	ELBOW…… 接头	2	60001-

https://truckmanualshub.com/

FIG NO. : H0120-01A0

INDEX	PART NO.	DESCRIPTION		SERIAL NO.
42	07002-11423	O-RING…… O形圈	2	60001-
43	02896-11009	O-RING…… O形圈	2	60001-
44	02782-10316	ELBOW…… 接头	1	60001-
45	07002-12034	O-RING…… O形圈	1	60001-
46	02896-11009	O-RING…… O形圈	1	60001-

PC650LC-8R

https://truckmanualshub.com/

FIG.H0120-02A0 MAIN VALVE (2/2)

主阀（2/2）

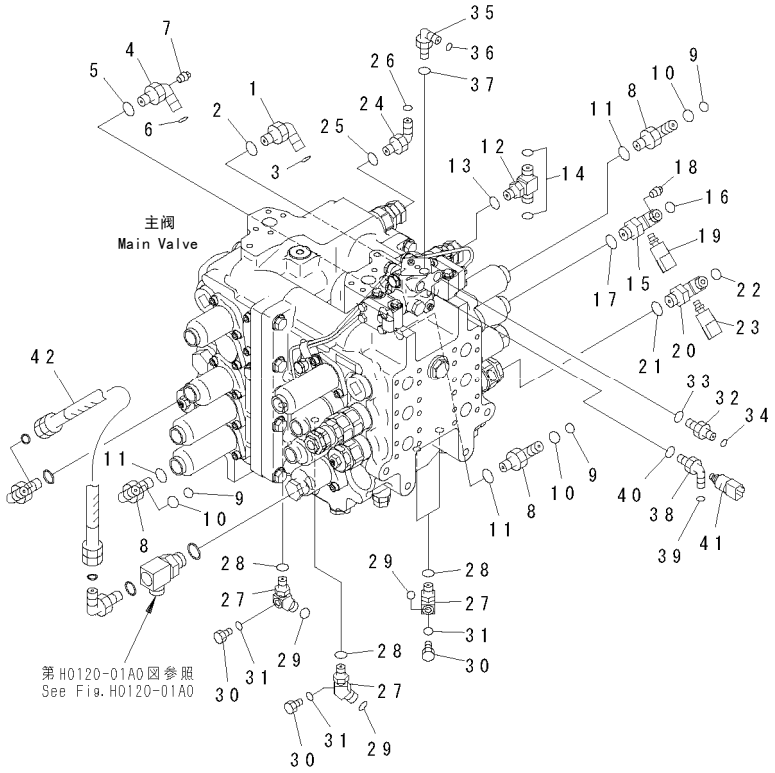

FIG NO. : H0120-02A0

INDEX	PART NO.	DESCRIPTION	Q'TY	SERIAL NO.
1	21M-62-14370	ELBOW…… 接头	1	60001-
2	07002-12034	O-RING…… O形圈	1	60001-
3	02896-11009	O-RING…… O形圈	1	60001-
4	21M-62-14350	ELBOW…… 接头	1	60001-
5	07002-12034	O-RING…… O形圈	1	60001-
6	02896-11009	O-RING…… O形圈	1	60001-
7	07042-30108	PLUG……堵塞	1	60001-
8	21M-62-21750	ELBOW…… 接头	3	60001-
9	201-60-11390	.O-RING……O形圈	1	60001-
10	20Y-62-19560	.O-RING……O形圈	1	60001-
11	07002-12034	O-RING…… O形圈	3	60001-
12	21M-62-14391	TEE……T形件	1	60001-
13	07002-11623	O-RING…… O形圈	1	60001-
14	02896-11009	O-RING…… O形圈	2	60001-
15	21M-62-14411	TEE……T形件	1	60001-
16	02896-11009	O-RING…… O形圈	2	60001-
17	07002-12034	O-RING…… O形圈	1	60001-
18	07042-30108	PLUG……堵塞	1	60001-
19	206-06-61130	SWITCH……开关	1	60001-
20	21M-62-14420	TEE……T形件	1	60001-
21	07002-12034	O-RING…… O形圈	1	60001-
22	02896-11009	O-RING…… O形圈	2	60001-
23	206-06-61130	SWITCH……开关	1	60001-
24	21M-62-14431	ELBOW…… 接头	1	60001-
25	07002-11623	O-RING…… O形圈	1	60001-
26	02896-11009	O-RING…… O形圈	1	60001-
27	21M-62-21520	ELBOW…… 接头	4	60001-
28	07002-11423	O-RING…… O形圈	4	60001-
29	02896-11009	O-RING…… O形圈	4	60001-
30	07040-11007	PLUG……堵塞	4	60001-
31	07002-11023	O-RING…… O形圈	4	60001-
32	02781-0031D	UNION…… 接头	1	60001-
33	07002-11423	O-RING…… O形圈	1	60001-
34	02896-11009	O-RING…… O形圈	1	60001-
35	02782-10311	ELBOW…… 接头	1	60001-
36	02896-11009	O-RING…… O形圈	1	60001-
37	07002-11423	O-RING…… O形圈	1	60001-
38	21M-62-14450	ELBOW…… 接头	1	60001-
39	02896-11009	O-RING…… O形圈	1	60001-
40	07002-11423	O-RING…… O形圈	1	60001-
41	206-06-61130	SWITCH……开关	1	60001-
42	02760-00303	HOSE……软管	1	60001-

https://truckmanualshub.com/

FIG.H0120-03A0 MAIN VALVE (BRACKET AND STEP)

主阀（支架和踏板）

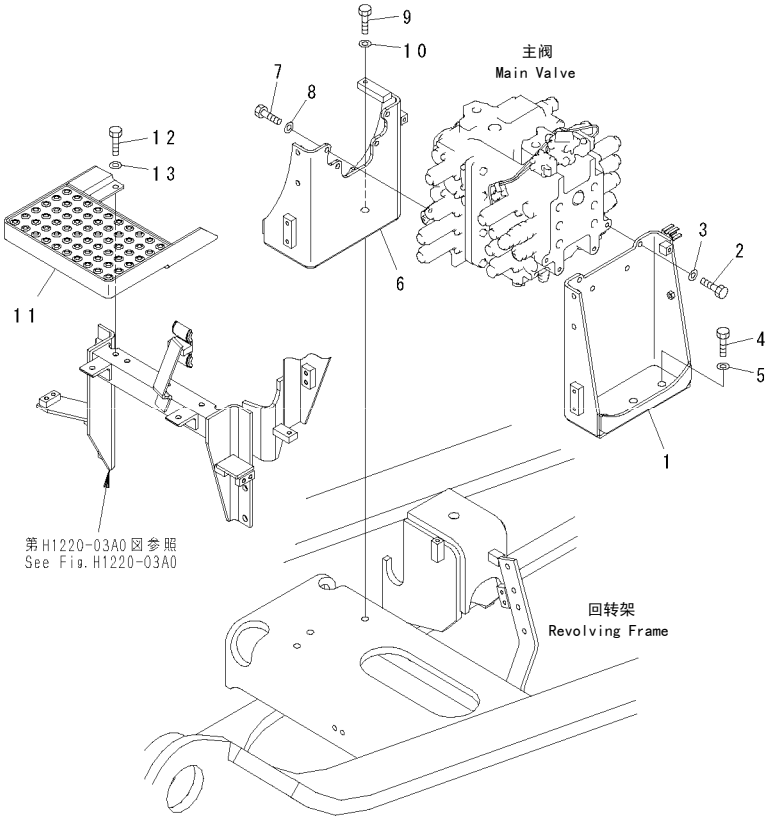

00038615

FIG NO. : H0120-03A0

INDEX	PART NO.	DESCRIPTION	Q'TY	SERIAL NO.
1	21M-62-11252	BRACKET, L.H…… 左支架	1	60001-
2	01010-81440	BOLT……螺栓	4	60001-
3	207-62-56250	WASHER……垫圈	4	60001-
4	01010-81655	BOLT……螺栓	3	60001-
5	01643-31645	WASHER……垫圈	3	60001-
6	21M-62-21460	BRACKET, R.H…… 右支架	1	60001-
7	01010-81440	BOLT……螺栓	4	60001-
8	207-62-56250	WASHER……垫圈	4	60001-
9	01010-81655	BOLT……螺栓	3	60001-
10	01643-31645	WASHER……垫圈	3	60001-
11	21M-62-11430	STEP……踏板	1	60001-
12	01010-81235	BOLT……螺栓	4	60001-
13	01643-31232	WASHER……垫圈	4	60001-

https://truckmanualshub.com/

FIG.H0210-01A0 NO.1 PUMP

1号泵

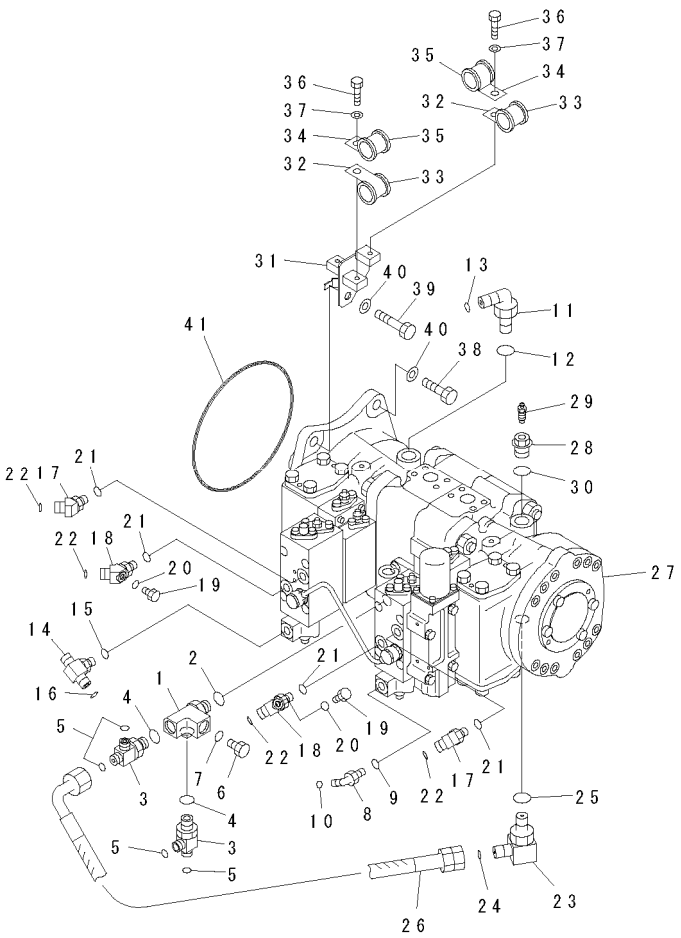

00038616

FIG NO. : H0210-01A0

INDEX	PART NO.	DESCRIPTION	Q'TY	SERIAL NO.
1	20Y-62-15660	ADAPTER…… 接头	1	60001-
2	07002-12034	O-RING…… O形圈	1	60001-
3	19M-61-35140	TEE……T形件	2	60001-
4	07002-12034	O-RING…… O形圈	2	60001-
5	02896-11009	O-RING…… O形圈	4	60001-
6	07040-12012	PLUG……堵塞	1	60001-
7	07002-12034	O-RING…… O形圈	1	60001-
8	02782-10311	ELBOW…… 接头	1	60001-
9	07002-11423	O-RING…… O形圈	1	60001-
10	02896-11009	O-RING…… O形圈	1	60001-
11	02782-10628	ELBOW…… 接头	1	60001-
12	07002-12434	O-RING…… O形圈	1	60001-
13	02896-11018	O-RING…… O形圈	1	60001-
14	21W-62-42630	TEE……T形件	1	60001-
15	07002-11423	O-RING…… O形圈	1	60001-
16	02896-11009	O-RING…… O形圈	2	60001-
17	11Y-62-12510	ELBOW…… 接头	2	60001-
18	21M-62-21520	ELBOW…… 接头	2	60001-
19	07040-11007	PLUG……堵塞	2	60001-
20	07002-11023	O-RING…… O形圈	2	60001-
21	07002-11423	O-RING…… O形圈	4	60001-
22	02896-11009	O-RING…… O形圈	4	60001-
23	209-64-16910	ELBOW…… 接头	1	60001-
24	02896-11009	O-RING…… O形圈	1	60001-
25	07002-12434	O-RING…… O形圈	1	60001-
26	02761-003A4	HOSE……软管	1	60001-
27	(708-2L-00770)	PUMP ASS'Y……泵组件	1	60001-
28	706-87-40150	PLUG……堵塞	1	60001-
29	20B-27-11210	BLEEDER…… 排放装置	1	60001-
30	07002-12434	O-RING…… O形圈	1	60001-
31	21M-62-21362	BRACKET…… 支架	1	60001-
32	04434-53412	CLIP……管夹	2	60001-
33	07095-20627	CUSHION…… 减振垫	2	60001-
34	04434-52112	CLIP……管夹	2	60001-
35	07095-20314	CUSHION…… 减振垫	2	60001-
36	01010-81225	BOLT……螺栓	2	60001-
37	01643-31232	WASHER……垫圈	2	60001-
38	01010-81650	BOLT……螺栓	3	60001-
39	01010-81665	BOLT……螺栓	1	60001-
40	01643-31645	WASHER……垫圈	4	60001-
41	07000-15230	O-RING…… O形圈	1	60001-

https://truckmanualshub.com/

FIG.HO220-01A0 NO.2 PUMP

2号泵

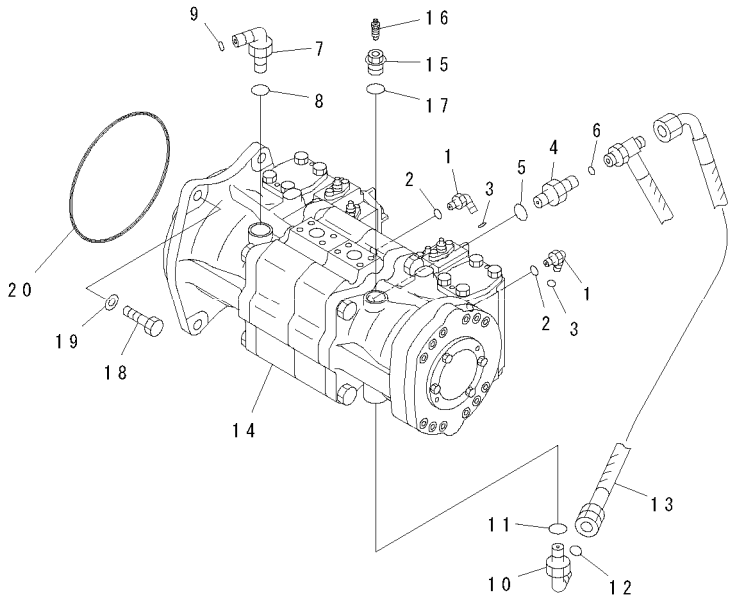

00008773

FIG NO. : HO220-01A0

INDEX	PART NO.	DESCRIPTION	Q'TY	SERIAL NO.
1	02782-10311	ELBOW…… 接头	2	60001-
2	07002-11423	O-RING…… O形圈	2	60001-
3	02896-11009	O-RING…… O形圈	2	60001-
4	02781-00315	UNION…… 接头	1	60001-
5	07002-12034	O-RING…… O形圈	1	60001-
6	02896-11009	O-RING…… O形圈	1	60001-
7	02782-10628	ELBOW…… 接头	1	60001-
8	07002-12434	O-RING…… O形圈	1	60001-
9	02896-11018	O-RING…… O形圈	1	60001-
10	209-64-16910	ELBOW…… 接头	1	60001-
11	07002-12434	O-RING…… O形圈	1	60001-
12	02896-11009	O-RING…… O形圈	1	60001-
13	22M-62-16380	HOSE……软管	1	60001-
14	(708-2L-90721)	PUMP ASS'Y……泵组件	1	60001-
15	706-87-40150	PLUG……堵塞	1	60001-
16	20B-27-11210	BLEEDER…… 排放装置	1	60001-
17	07002-12434	O-RING…… O形圈	1	60001-
18	01010-81650	BOLT……螺栓	4	60001-
19	01643-31645	WASHER……垫圈	4	60001-
20	07000-15230	O-RING…… O形圈	1	60001-

https://truckmanualshub.com/

FIG.H0240-01A0 GEAR PUMP
齿轮

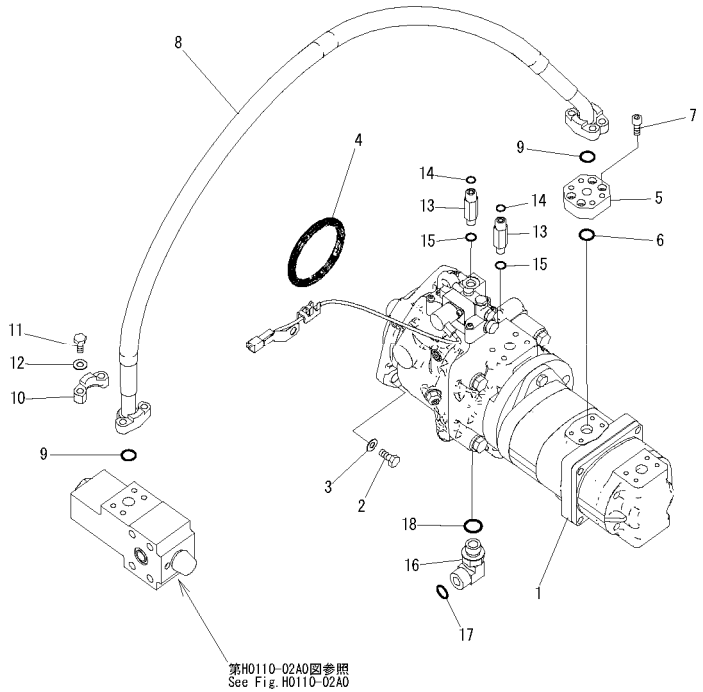

00038617

FIG NO. : H0240-01A0

INDEX	PART NO.	DESCRIPTION	Q'TY	SERIAL NO.
1	(708-1U-00200)	GEAR PUMP ASS'Y…… 齿轮总成	1	60001-
2	01010-81235	BOLT……螺栓	4	60001-
3	01643-31232	WASHER……垫圈	4	60001-
4	07000-A2130	O-RING…… O形圈	1	60001-
5	21M-62-16722	BLOCK…… 接头	1	60001-
6	07000-13025	O-RING…… O形圈	1	60001-
7	01252-70830	BOLT……螺栓	4	60001-
8	07297-00613	HOSE……软管	1	60001-
9	07000-13025	O-RING…… O形圈	2	60001-
10	07371-30640	FLANGE……法兰	4	60001-
11	07372-21035	BOLT……螺栓	8	60001-
12	01643-51032	WASHER……垫圈	8	60001-
13	20U-62-41710	NIPPLE……喷嘴	2	60001-
14	02896-11009	O-RING…… O形圈	2	60001-
15	07002-11423	O-RING…… O形圈	2	60001-
16	02782-10628	ELBOW…… 接头	1	60001-
17	02896-11018	O-RING…… O形圈	1	60001-
18	07002-12434	O-RING…… O形圈	1	60001-

https://truckmanualshub.com/

FIG.H0311-01A0 SUCTION LINES

吸油管路

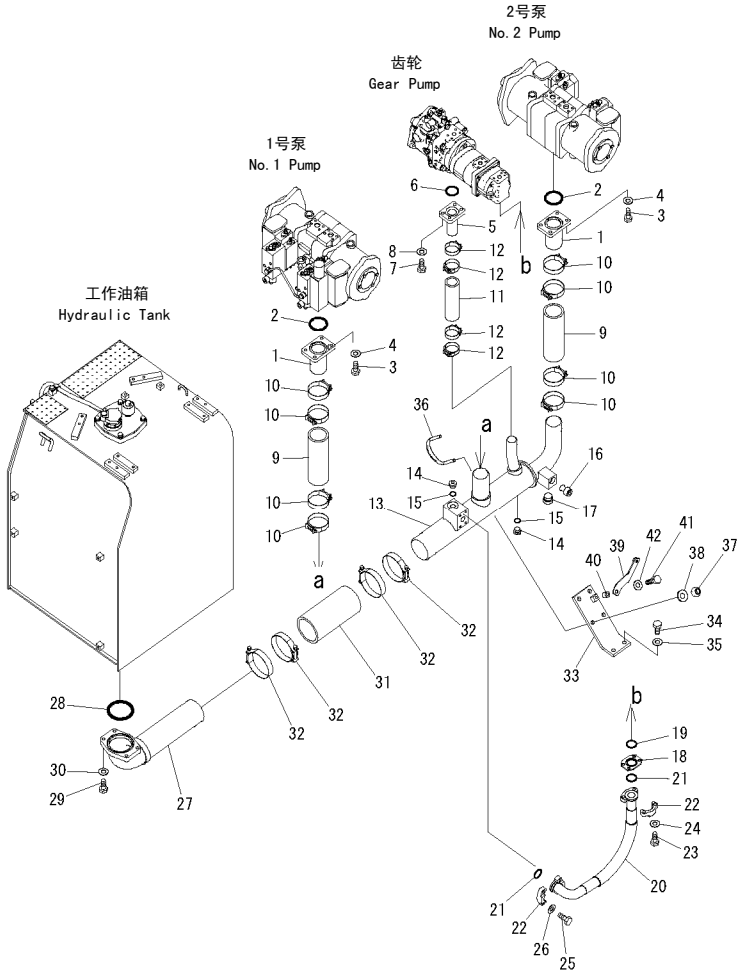

00038618

FIG NO. : H0311-01A0

INDEX	PART NO.	DESCRIPTION	Q'TY	SERIAL NO.
1	21M-62-21131	TUBE……硬管	2	60001-
2	07000-12080	O-RING…… O形圈	2	60001-
3	07372-21240	BOLT……螺栓	8	60001-
4	01643-51232	WASHER……垫圈	8	60001-
5	21M-62-21141	TUBE……硬管	1	60001-
6	07000-12060	O-RING…… O形圈	1	60001-
7	07372-21240	BOLT……螺栓	4	60001-
8	01643-51232	WASHER……垫圈	4	60001-
9	07260-07428	HOSE……软管	2	60001-
10	21N-62-37921	CLAMP…… 卡箍	8	60001-
11	07260-04722	HOSE……软管	1	60001-
12	21M-62-21550	CLAMP…… 卡箍	4	60001-
13	21M-62-21122	TUBE……硬管	1	60001-
14	07040-12412	PLUG……堵塞	2	60001-
15	07002-12434	O-RING…… O形圈	2	60001-
16	198-60-19820	VALVE…… 阀	1	60001-
17	07040-13618	PLUG……堵塞	1	60001-
18	07373-31400	SPACER……垫块	1	60001-
19	07000-13048	O-RING…… O形圈	1	60001-
20	07298-01407	HOSE……软管	1	60001-
21	07000-13048	O-RING…… O形圈	2	60001-
22	07371-31465	FLANGE……法兰	4	60001-
23	07372-21245	BOLT……螺栓	4	60001-
24	01643-51232	WASHER……垫圈	4	60001-
25	07372-21240	BOLT……螺栓	4	60001-
26	01643-51232	WASHER……垫圈	4	60001-
27	21M-62-21110	TUBE……硬管	1	60001-
28	07000-12120	O-RING…… O形圈	1	60001-
29	01010-81245	BOLT……螺栓	4	60001-
30	01643-31232	WASHER……垫圈	4	60001-
31	209-62-41150	HOSE……软管	1	60001-
32	209-62-41341	CLAMP…… 卡箍	4	60001-
33	21M-62-21150	BRACKET…… 支架	1	60001-
34	01010-81235	BOLT……螺栓	2	60001-
35	01643-31232	WASHER……垫圈	2	60001-
36	07283-31193	CLIP……管夹	2	60001-
37	01597-01211	NUT…… 螺母	4	60001-
38	01643-31232	WASHER……垫圈	4	60001-
39	21M-62-21160	BRACKET…… 支架	1	60001-
40	195-33-11220	SPACER……垫块	1	60001-
41	01010-81250	BOLT……螺栓	1	60001-
42	01643-31232	WASHER……垫圈	1	60001-

https://truckmanualshub.com/

FIG.H0312-01A0 DELIVERY LINES (PUMP TO FILTER)

输油管路(泵至滤清器)

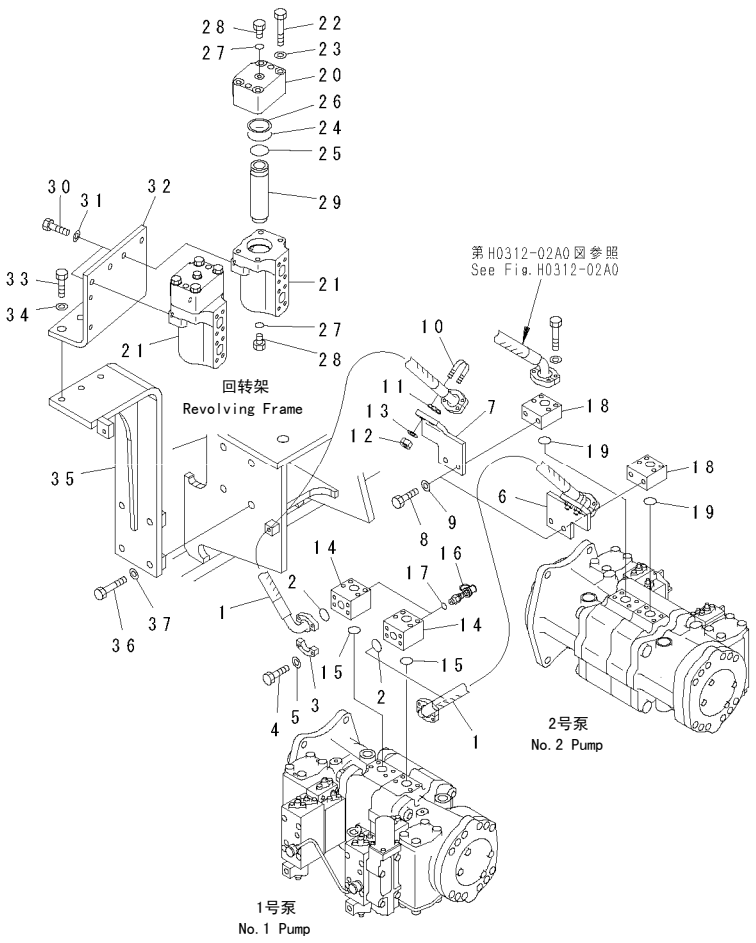

00038619

FIG NO. : H0312-01A0

INDEX	PART NO.	DESCRIPTION	Q'TY	SERIAL NO.
1	21M-62-11750	HOSE……软管	2	60001-
2	07000-B3025	O-RING…… O形圈	2	60001-
3	07371-30640	FLANGE……法兰	4	60001-
4	07372-21035	BOLT……螺栓	8	60001-
5	01643-51032	WASHER……垫圈	8	60001-
6	21M-62-11731	BRACKET…… 支架	1	60001-
7	21M-62-11741	BRACKET…… 支架	1	60001-
8	01010-81230	BOLT……螺栓	4	60001-
9	01643-31232	WASHER……垫圈	4	60001-
10	07283-32244	CLIP……管夹	2	60001-
11	07283-52232	SEAT……座	2	60001-
12	01597-01009	NUT…… 螺母	4	60001-
13	01643-31032	WASHER……垫圈	4	60001-
14	21M-62-11121	BLOCK…… 接头	2	60001-
15	07000-B3032	O-RING…… O形圈	2	60001-
16	209-62-61310	NIPPLE ASS'Y……接头总成	2	60001-
17	209-62-61330	.O-RING……O形圈	1	60001-
18	21M-62-11110	BLOCK…… 接头	2	60001-
19	07000-B3032	O-RING…… O形圈	2	60001-
	21M-60-11301	FILTER ASS'Y……滤清器总成	2	60001-
20	21M-60-11311	.CASE…… 壳体	1	60001-
21	☆	.CASE…… 壳体	1	60001-
22	01010-81285	.BOLT…… 螺栓	4	60001-
23	01643-51232	.WASHER…… 垫圈	4	60001-
24	07000-12055	.O-RING……O形圈	1	60001-
25	07000-13038	.O-RING……O形圈	1	60001-
26	07001-02055	.RING…… 隔圈	1	60001-
27	07002-11023	.O-RING……O形圈	2	60001-
28	07040-11007	.PLUG…… 堵塞	2	60001-
29	07063-21200	.ELEMENT……滤芯	1	60001-
30	01010-81235	BOLT……螺栓	4	60001-
31	01643-31232	WASHER……垫圈	4	60001-
32	21M-62-11621	BRACKET…… 支架	1	60001-
33	01010-81250	BOLT……螺栓	3	60001-
34	175-54-34170	WASHER……垫圈	3	60001-
35	21M-62-21470	BRACKET…… 支架	1	60001-
36	01010-81680	BOLT……螺栓	4	60001-
37	01643-31645	WASHER……垫圈	4	60001-

https://truckmanualshub.com/

FIG.H0312-02A0 DELIVERY LINES (HOSE AND BLOCK)

输油管路(软管和接头)

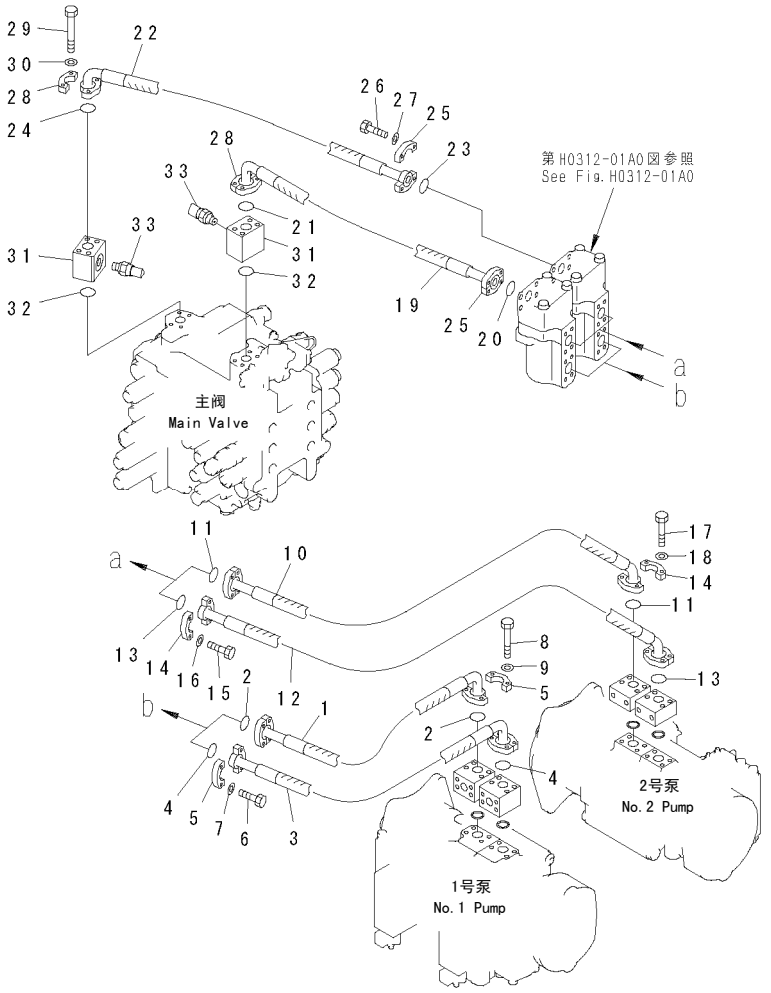

FIG NO. : H0312-02A0

INDEX	PART NO.	DESCRIPTION	Q'TY	SERIAL NO.
1	07084-01AA6	HOSE……软管	1	60001-
2	07000-B3032	O-RING…… O形圈	2	60001-
3	07084-01A08	HOSE……软管	1	60001-
4	07000-B3032	O-RING…… O形圈	2	60001-
5	07371-31049	FLANGE……法兰	8	60001-
6	07372-21035	BOLT……螺栓	8	60001-
7	01643-51032	WASHER……垫圈	8	60001-
8	130-62-61390	BOLT……螺栓	8	60001-
9	01643-51032	WASHER……垫圈	8	60001-
10	07083-01012	HOSE……软管	1	60001-
11	07000-B3032	O-RING…… O形圈	2	60001-
12	21M-62-11670	HOSE……软管	1	60001-
13	07000-B3032	O-RING…… O形圈	2	60001-
14	07371-31049	FLANGE……法兰	8	60001-
15	07372-21035	BOLT……螺栓	8	60001-
16	01643-51032	WASHER……垫圈	8	60001-
17	195-78-63210	BOLT……螺栓	8	60001-
18	01643-51032	WASHER……垫圈	8	60001-
19	21M-62-11650	HOSE……软管	1	60001-
20	07000-B3038	O-RING…… O形圈	1	60001-
21	07000-B3032	O-RING…… O形圈	1	60001-
22	21M-62-11660	HOSE……软管	1	60001-
23	07000-B3038	O-RING…… O形圈	1	60001-
24	07000-B3032	O-RING…… O形圈	1	60001-
25	07371-51260	FLANGE……法兰	4	60001-
26	01010-81245	BOLT……螺栓	8	60001-
27	01643-31232	WASHER……垫圈	8	60001-
28	07371-31049	FLANGE……法兰	4	60001-
29	207-62-51420	BOLT……螺栓	8	60001-
30	01643-51032	WASHER……垫圈	8	60001-
31	21M-62-11590	BLOCK…… 接头	2	60001-
32	07000-B3032	O-RING…… O形圈	2	60001-
33	7861-93-1811	SENSOR……传感器	2	60001-
	07002-11823	.O-RING……O形圈	1	60001-

https://truckmanualshub.com/

FIG.H0320-01A0 OIL COOLER LINES

油冷却回路

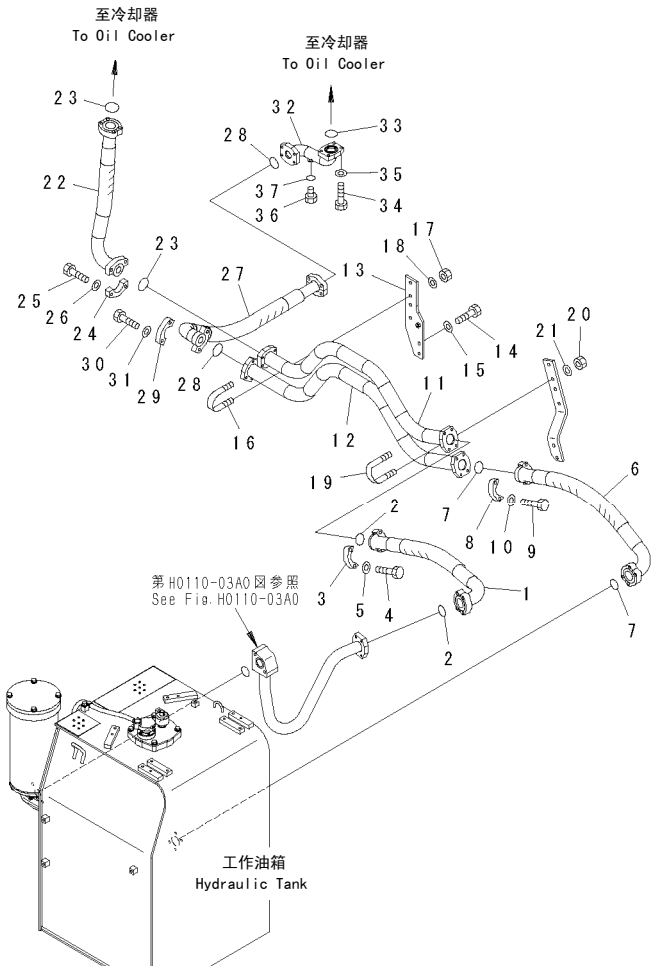

00038620

FIG NO. : H0320-01A0

INDEX	PART NO.	DESCRIPTION	Q'TY	SERIAL NO.
1	07298-02008	HOSE……软管	1	60001-
2	07000-12060	O-RING…… O形圈	2	60001-
3	07371-32076	FLANGE……法兰	4	60001-
4	07372-21240	BOLT……螺栓	8	60001-
5	01643-51232	WASHER……垫圈	8	60001-
6	07298-02009	HOSE……软管	1	60001-
7	07000-12060	O-RING…… O形圈	2	60001-
8	07371-32076	FLANGE……法兰	4	60001-
9	07372-21240	BOLT……螺栓	8	60001-
10	01643-51232	WASHER……垫圈	8	60001-
11	21M-62-21310	TUBE……硬管	1	60001-
12	21M-62-21320	TUBE……硬管	1	60001-
13	21M-62-21341	BRACKET…… 支架	1	60001-
14	01010-81240	BOLT……螺栓	2	60001-
15	01643-31232	WASHER……垫圈	2	60001-
16	07283-36163	CLIP……管夹	2	60001-
17	01597-01009	NUT…… 螺母	4	60001-
18	01643-31032	WASHER……垫圈	4	60001-
19	07283-36163	CLIP……管夹	2	60001-
20	01597-01009	NUT…… 螺母	4	60001-
21	01643-31032	WASHER……垫圈	4	60001-
22	07298-02007	HOSE……软管	1	60001-
23	07000-12060	O-RING…… O形圈	2	60001-
24	07371-32076	FLANGE……法兰	4	60001-
25	07372-21240	BOLT……螺栓	8	60001-
26	01643-51232	WASHER……垫圈	8	60001-
27	07298-02009	HOSE……软管	1	60001-
28	07000-12060	O-RING…… O形圈	2	60001-
29	07371-32076	FLANGE……法兰	4	60001-
30	07372-21240	BOLT……螺栓	8	60001-
31	01643-51232	WASHER……垫圈	8	60001-
32	21M-62-21330	TUBE……硬管	1	60001-
33	07000-12055	O-RING…… O形圈	1	60001-
34	01010-81040	BOLT……螺栓	4	60001-
35	01643-31032	WASHER……垫圈	4	60001-
36	07040-11409	PLUG……堵塞	1	60001-
37	07002-11423	O-RING…… O形圈	1	60001-

https://truckmanualshub.com/

FIG.H0330-01A0 RETURN LINES
回油回路

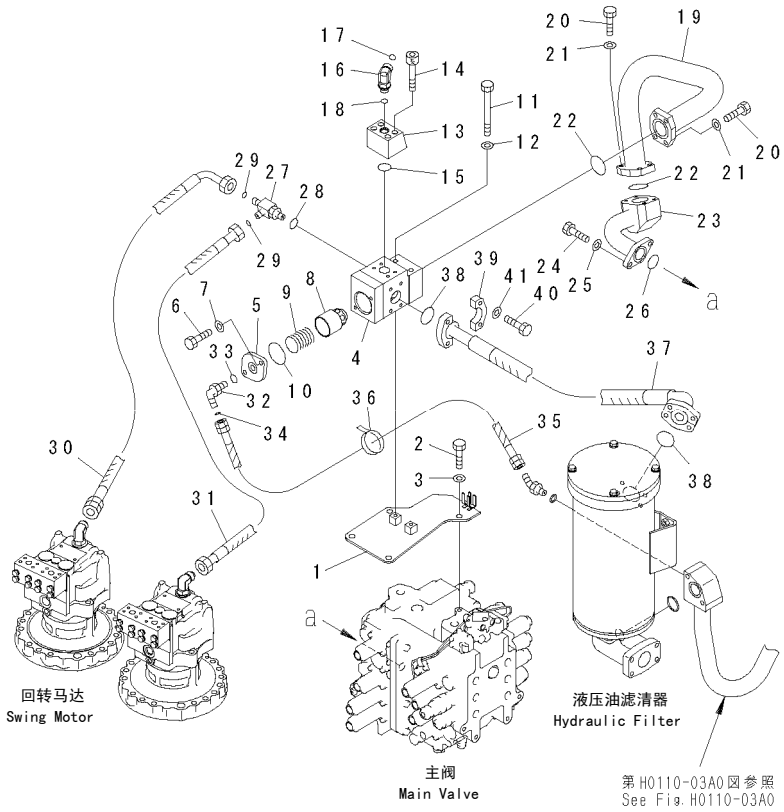

00038621

FIG NO. : H0330-01A0

INDEX	PART NO.	DESCRIPTION	Q'TY	SERIAL NO.
1	21M-62-16182	BRACKET…… 支架	1	60001-
2	01010-81230	BOLT……螺栓	4	60001-
3	01643-31232	WASHER……垫圈	4	60001-
	21M-60-21200	VALVE A……阀A	1	60001-
4	☆	.BODY…… 壳	1	60001-
5	21M-60-11420	.FLANGE…… 法兰	1	60001-
6	01010-81230	.BOLT…… 螺栓	2	60001-
7	01643-31232	.WASHER…… 垫圈	2	60001-
8	207-60-51460	.POPPET…… 提动阀芯	1	60001-
9	209-60-52320	.SPRING…… 弹簧	1	60001-
10	07000-12060	.O-RING……O形圈	1	60001-
11	01011-81225	BOLT……螺栓	2	60001-
12	01643-31232	WASHER……垫圈	2	60001-
13	21M-62-21220	BLOCK…… 接头	1	60001-
14	01252-71070	BOLT……螺栓	4	60001-
15	07000-B3038	O-RING…… O形圈	1	60001-
16	02782-10628	ELBOW…… 接头	1	60001-
17	02896-11018	O-RING…… O形圈	1	60001-
18	07002-12434	O-RING…… O形圈	1	60001-
19	21M-62-16151	TUBE……硬管	1	60001-
20	07372-21245	BOLT……螺栓	8	60001-
21	01643-51232	WASHER……垫圈	8	60001-
22	07000-B2060	O-RING…… O形圈	2	60001-
23	21M-62-16141	TUBE……硬管	1	60001-
24	01010-81240	BOLT……螺栓	2	60001-
25	01643-31232	WASHER……垫圈	2	60001-
26	07000-B3045	O-RING…… O形圈	1	60001-
27	21M-62-14460	TEE……T形件	1	60001-
28	07002-13334	O-RING…… O形圈	1	60001-
29	207-62-64740	O-RING…… O形圈	2	60001-
30	21M-62-14470	HOSE……软管	1	60001-
31	23B-16-31760	HOSE……软管	1	60001-
32	02782-10317	ELBOW…… 接头	1	60001-
33	07002-12034	O-RING…… O形圈	1	60001-
34	02896-11009	O-RING…… O形圈	1	60001-
35	21M-62-14480	HOSE……软管	1	60001-
36	08034-20536	BAND……绑带	1	60001-
37	07297-02008	HOSE……软管	1	60001-
38	07000-B2060	O-RING…… O形圈	2	60001-
39	07371-32076	FLANGE……法兰	4	60001-
40	07372-21240	BOLT……螺栓	8	60001-
41	01643-51232	WASHER……垫圈	8	60001-

https://truckmanualshub.com/

FIG.H0340-01A0 DRAIN LINE
排油回路

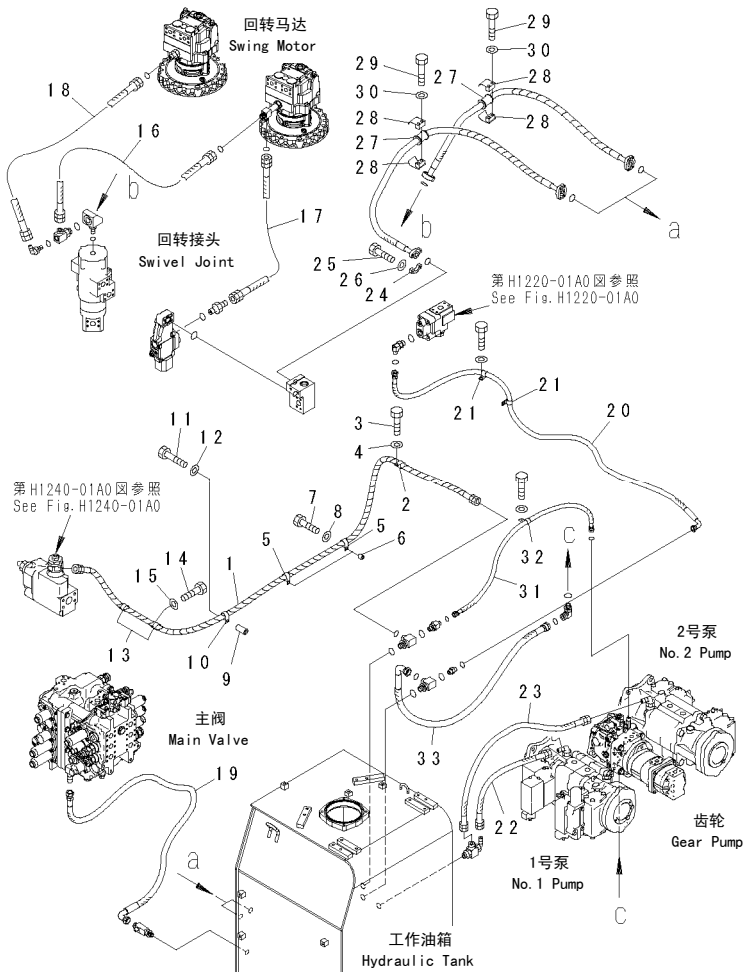

FIG NO. : H0340-01A0

INDEX	PART NO.	DESCRIPTION	Q'TY	SERIAL NO.
1	21M-62-14490	HOSE ASS'Y……软管总成	1	60001-
2	04434-53212	CLIP……管夹	1	60001-
3	01010-81230	BOLT……螺栓	1	60001-
4	01643-31232	WASHER……垫圈	1	60001-
5	04434-53212	CLIP……管夹	2	60001-
6	195-33-11220	SPACER……垫块	2	60001-
7	01010-81250	BOLT……螺栓	2	60001-
8	01643-31232	WASHER……垫圈	2	60001-
9	206-62-41670	COLLAR……衬套	1	60001-
10	04434-53212	CLIP……管夹	1	60001-
11	01010-81275	BOLT……螺栓	1	60001-
12	01643-31232	WASHER……垫圈	1	60001-
13	04434-53212	CLIP……管夹	2	60001-
14	01010-81225	BOLT……螺栓	2	60001-
15	01643-31232	WASHER……垫圈	2	60001-
16	02762-00506	HOSE……软管	1	60001-
17	02762-005A7	HOSE……软管	1	60001-
18	02762-005A7	HOSE……软管	1	60001-
19	02763-00519	HOSE……软管	1	60001-
20	02763-00422	HOSE……软管	1	60001-
21	04434-51912	CLIP……管夹	2	60001-
22	02762-00607	HOSE……软管	1	60001-
23	02762-00612	HOSE……软管	1	60001-
24	07371-31049	FLANGE……法兰	4	60001-
25	07372-21035	BOLT……螺栓	8	60001-
26	01643-51032	WASHER……垫圈	8	60001-
27	07095-01037	CUSHION…… 减振垫	2	60001-
28	07094-11024	CLAMP…… 卡箍	4	60001-
29	01010-81280	BOLT……螺栓	4	60001-
30	01643-31232	WASHER……垫圈	4	60001-
31	02763-00612	HOSE……软管	1	60001-
32	04434-52712	CLIP……管夹	1	60001-
33	02762-00311	HOSE……软管	1	60001-

https://truckmanualshub.com/

FIG.H1210-01A0 BOOM LINES (1/2)

大臂油路

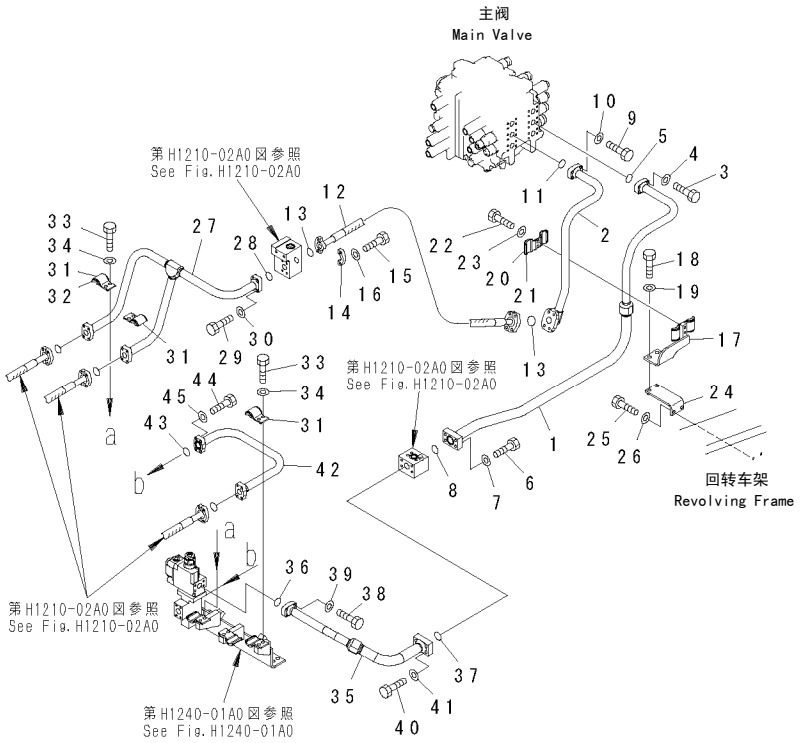

00009017

FIG NO. : H1210-01A0

INDEX	PART NO.	DESCRIPTION	Q'TY	SERIAL NO.
1	21M-62-11171	TUBE……硬管	1	60001-
2	21M-62-11181	TUBE……硬管	1	60001-
3	07372-21040	BOLT……螺栓	4	60001-
4	01643-51032	WASHER……垫圈	4	60001-
5	07000-B3035	O-RING…… 0形圈	1	60001-
6	01010-81250	BOLT……螺栓	4	60001-
7	01643-31232	WASHER……垫圈	4	60001-
8	07000-B3038	O-RING…… 0形圈	1	60001-
9	07372-21040	BOLT……螺栓	4	60001-
10	01643-51032	WASHER……垫圈	4	60001-
11	07000-B3035	O-RING…… 0形圈	1	60001-
12	07074-01209	HOSE……软管	1	60001-
13	07000-B3038	O-RING…… 0形圈	2	60001-
14	07371-51260	FLANGE……法兰	4	60001-
15	01010-81245	BOLT……螺栓	8	60001-
16	01643-31232	WASHER……垫圈	8	60001-
17	21M-62-11390	BRACKET…… 支架	1	60001-
18	01010-81235	BOLT……螺栓	2	60001-
19	175-54-34170	WASHER……垫圈	2	60001-
20	207-62-54770	CLAMP…… 卡箍	1	60001-
21	205-62-73430	.SEAT…… 座	2	60001-
22	01010-81230	BOLT……螺栓	2	60001-
23	01643-31232	WASHER……垫圈	2	60001-
24	22D-54-12610	BRACKET…… 支架	1	60001-
25	01010-81230	BOLT……螺栓	2	60001-
26	01643-31232	WASHER……垫圈	2	60001-
27	21M-62-11161	TUBE……硬管	1	60001-
28	07000-B3035	O-RING…… 0形圈	1	60001-
29	07372-21040	BOLT……螺栓	4	60001-
30	01643-51032	WASHER……垫圈	4	60001-
31	207-62-52430	CLAMP…… 卡箍	3	60001-
32	205-62-73430	.SEAT…… 座	1	60001-
33	01010-81230	BOLT……螺栓	6	60001-
34	01643-31232	WASHER……垫圈	6	60001-
35	21M-62-11781	TUBE……硬管	1	60001-
36	07000-B3035	O-RING…… 0形圈	1	60001-
37	07000-B3038	O-RING…… 0形圈	1	60001-
38	07372-21040	BOLT……螺栓	4	60001-
39	01643-51032	WASHER……垫圈	4	60001-
40	01010-81250	BOLT……螺栓	4	60001-
41	01643-31232	WASHER……垫圈	4	60001-
42	21M-62-11140	TUBE……硬管	1	60001-

https://truckmanualshub.com/

FIG NO. : H1210-01A0

INDEX	PART NO.	DESCRIPTION	Q'TY	SERIAL NO.
43	07000-B3035	O-RING…… O形圈	1	60001-
44	07372-21040	BOLT……螺栓	4	60001-
45	01643-51032	WASHER……垫圈	4	60001-

https://truckmanualshub.com/

FIG.H1210-02A0 BOOM LINES (2/2)

大臂油路

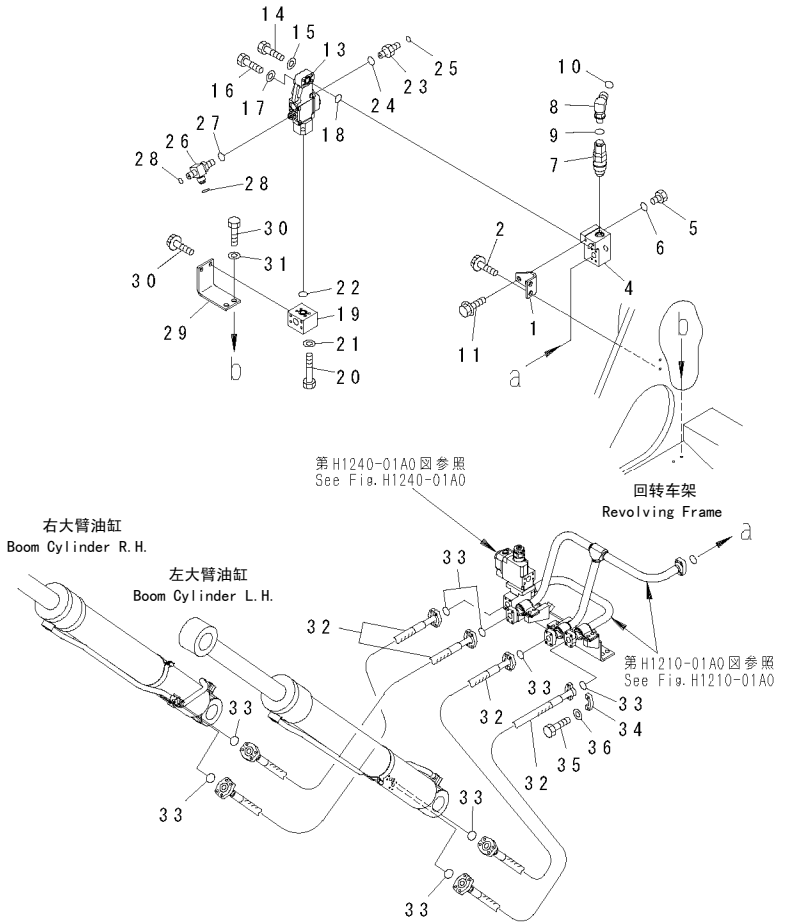

00009019

FIG NO. : H1210-01A0

INDEX	PART NO.	DESCRIPTION	Q'TY	SERIAL NO.
1	21M-62-11690	BRACKET…… 支架	1	60001-
2	01034-81230	BOLT……螺栓	2	60001-
4	21M-62-11221	BLOCK…… 接头	1	60001-
5	07040-11812	PLUG……堵塞	1	60001-
6	07002-11823	O-RING…… O形圈	1	60001-
7	(709-90-73400)	VALVE ASS'Y…… 阀总成	1	60001-
8	02782-10311	ELBOW…… 接头	1	60001-
9	07002-11423	O-RING…… O形圈	1	60001-
10	02896-11009	O-RING…… O形圈	1	60001-
11	01034-81230	BOLT……螺栓	2	60001-
13	(702-21-08250)	VALVE ASS'Y…… 阀总成	1	60001-
14	07372-21055	BOLT……螺栓	2	60001-
15	01643-51032	WASHER……垫圈	2	60001-
16	22D-62-18560	BOLT……螺栓	2	60001-
17	01643-51032	WASHER……垫圈	2	60001-
18	07000-B3035	O-RING…… O形圈	1	60001-
19	21M-62-11191	BLOCK…… 接头	1	60001-
20	130-62-61390	BOLT……螺栓	4	60001-
21	01643-51032	WASHER……垫圈	4	60001-
22	07000-B3032	O-RING…… O形圈	1	60001-
23	02781-00522	UNION…… 接头	1	60001-
24	07002-12434	O-RING…… O形圈	1	60001-
25	02896-11015	O-RING…… O形圈	1	60001-
26	21N-64-36680	TEE……T形件	1	60001-
27	07002-11423	O-RING…… O形圈	1	60001-
28	02896-11009	O-RING…… O形圈	2	60001-
29	21M-62-11721	BRACKET…… 支架	1	60001-
30	01034-81230	BOLT……螺栓	4	60001-
32	07074-01011	HOSE……软管	4	60001-
33	07000-13032	O-RING…… O形圈	8	60001-
34	07371-31049	FLANGE……法兰	16	60001-
35	07372-21035	BOLT……螺栓	32	60001-
36	01643-51032	WASHER……垫圈	32	60001-

https://truckmanualshub.com/

FIG.H1220-01A0 ARM AND BUCKET LINES (VALVE LINE) (1/2)
小臂和铲斗(阀油路)

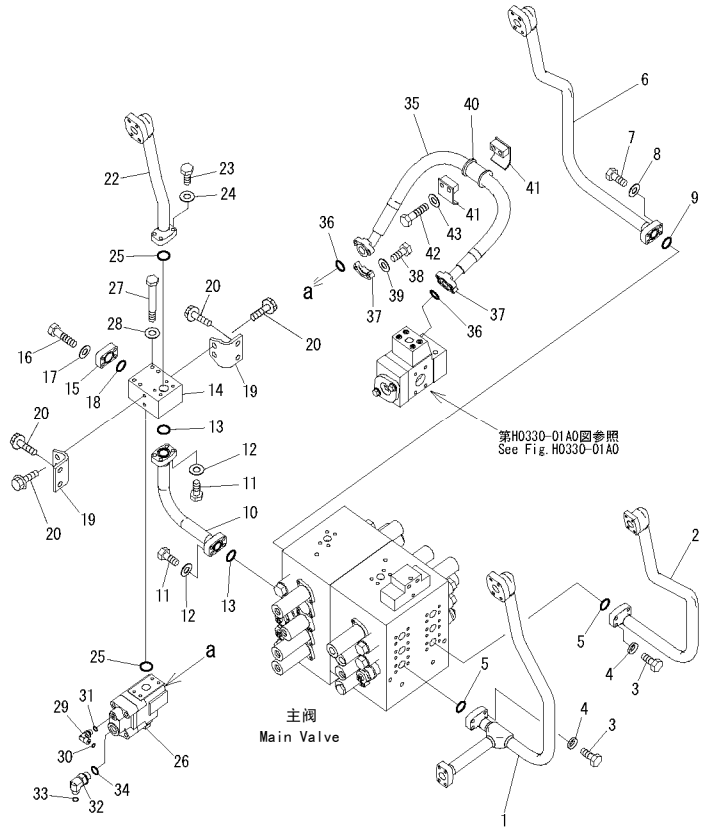

00038623

FIG NO. : H1220-01A0

INDEX	PART NO.	DESCRIPTION	Q'TY	SERIAL NO.
1	21M-62-11241	TUBE……硬管	1	60001-
2	21M-62-11230	TUBE……硬管	1	60001-
3	07372-21040	BOLT……螺栓	8	60001-
4	01643-51032	WASHER……垫圈	8	60001-
5	07000-B3035	O-RING…… O形圈	2	60001-
6	21M-62-21230	TUBE……硬管	1	60001-
7	07372-21040	BOLT……螺栓	4	60001-
8	01643-51032	WASHER……垫圈	4	60001-
9	07000-B3035	O-RING…… O形圈	1	60001-
10	21M-62-21240	TUBE……硬管	1	60001-
11	07372-21040	BOLT……螺栓	8	60001-
12	01643-51032	WASHER……垫圈	8	60001-
13	07000-B3035	O-RING…… O形圈	2	60001-
14	21M-62-21211	BLOCK…… 垫块	1	60001-
15	207-62-56190	FLANGE……法兰	1	60001-
16	01010-81040	BOLT……螺栓	4	60001-
17	01643-31032	WASHER……垫圈	4	60001-
18	07000-B3035	O-RING…… O形圈	1	60001-
19	21M-62-21260	BRACKET…… 支架	2	60001-
20	01034-81230	BOLT……螺栓	8	60001-
22	21M-62-21250	TUBE……硬管	1	60001-
23	07372-21040	BOLT……螺栓	4	60001-
24	01643-51032	WASHER……垫圈	4	60001-
25	07000-B3035	O-RING…… O形圈	2	60001-
26	(702-21-04800)	VALVE ASS'Y,QUICK RETURN…快速回油阀总成	1	60001-
27	01010-81095	BOLT……螺栓	4	60001-
28	01643-31032	WASHER……垫圈	4	60001-
29	02782-10311	ELBOW…… 接头	1	60001-
30	02896-11009	O-RING…… O形圈	1	60001-
31	07002-11423	O-RING…… O形圈	1	60001-
32	02782-10425	ELBOW…… 接头	1	60001-
33	02896-11012	O-RING…… O形圈	1	60001-
34	07002-12434	O-RING…… O形圈	1	60001-
35	07122-01011	HOSE……软管	1	60001-
36	07000-B3032	O-RING…… O形圈	2	60001-
37	07371-31049	FLANGE……法兰	4	60001-
38	07372-21035	BOLT……螺栓	8	60001-
39	01643-51032	WASHER……垫圈	8	60001-
40	07095-01034	CUSHION…… 减振垫	1	60001-
41	07094-11024	CLAMP…… 卡箍	2	60001-
42	01010-81275	BOLT……螺栓	2	60001-
43	01643-31232	WASHER……垫圈	2	60001-

https://truckmanualshub.com/

FIG.H1220-02A0 ARM AND BUCKET LINES (VALVE LINE) (2/2)

小臂和铲斗(阀油路)

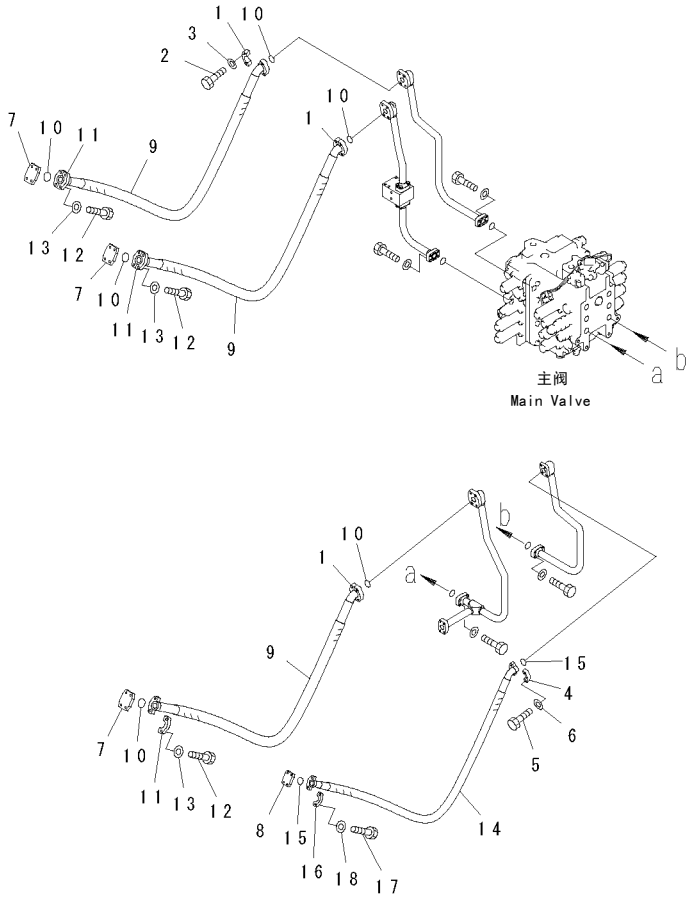

FIG NO. : H1220-02A0

INDEX	PART NO.	DESCRIPTION	Q'TY	SERIAL NO.
1	07371-51260	FLANGE……法兰	6	60001-
2	01010-81245	BOLT……螺栓	12	60001-
3	01643-31232	WASHER……垫圈	12	60001-
4	07371-31049	FLANGE……法兰	2	60001-
5	07372-21035	BOLT……螺栓	4	60001-
6	01643-51032	WASHER……垫圈	4	60001-
7	07379-01260	FLANGE……法兰	3	60001-
8	07379-01044	FLANGE……法兰	1	60001-
9	07072-01220	HOSE……软管	3	60001-
10	07000-13038	O-RING…… O形圈	6	60001-
11	07371-51260	FLANGE……法兰	6	60001-
12	01010-81245	BOLT……螺栓	12	60001-
13	01643-31232	WASHER……垫圈	12	60001-
14	07072-01020	HOSE……软管	1	60001-
15	07000-13032	O-RING…… O形圈	2	60001-
16	07371-31049	FLANGE……法兰	2	60001-
17	07372-21035	BOLT……螺栓	4	60001-
18	01643-51032	WASHER……垫圈	4	60001-

https://truckmanualshub.com/

FIG.H1220-03A0 ARM AND BUCKET LINES (BRACKET)
小臂和铲斗(支架)

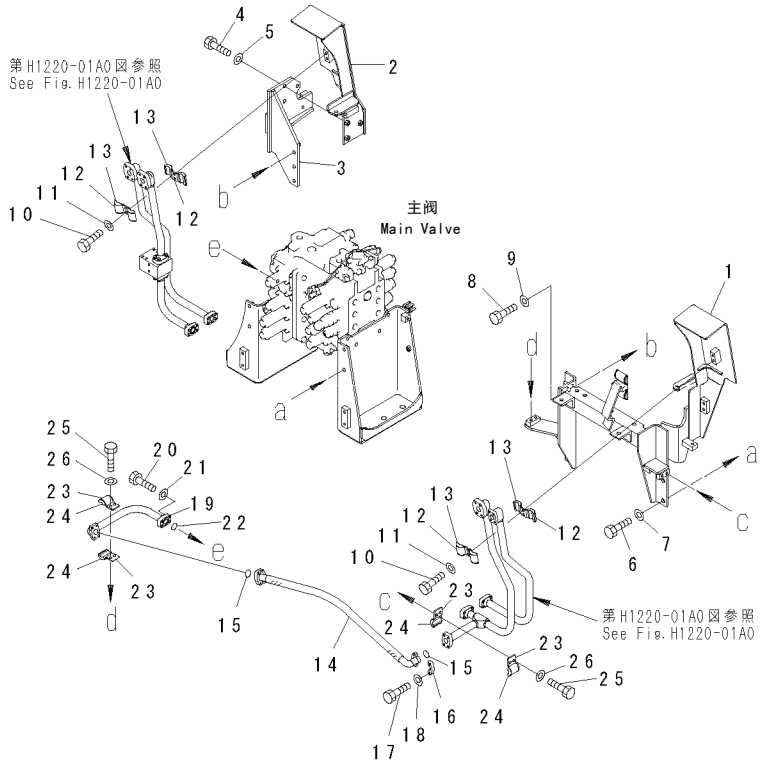

00038625

FIG NO. : H1220-03A0

INDEX	PART NO.	DESCRIPTION	Q'TY	SERIAL NO.
1	21M-62-21171	BRACKET…… 支架	1	60001-
2	21M-62-21181	BRACKET…… 支架	1	60001-
3	21M-62-21190	BRACKET…… 支架	1	60001-
4	01010-81235	BOLT……螺栓	3	60001-
5	01643-31232	WASHER……垫圈	3	60001-
6	01010-81235	BOLT……螺栓	4	60001-
7	01643-31232	WASHER……垫圈	4	60001-
8	01010-81240	BOLT……螺栓	3	60001-
9	01643-31232	WASHER……垫圈	3	60001-
10	01010-81230	BOLT……螺栓	4	60001-
11	01643-31232	WASHER……垫圈	4	60001-
12	207-62-54770	CLAMP…… 卡箍	4	60001-
13	205-62-73430	.SEAT…… 座	2	60001-
14	207-62-52423	HOSE……软管	1	60001-
15	07000-B3032	O-RING…… O形圈	2	60001-
16	07371-31049	FLANGE……法兰	4	60001-
17	07372-21035	BOLT……螺栓	8	60001-
18	01643-51032	WASHER……垫圈	8	60001-
19	21M-62-11821	TUBE……硬管	1	60001-
20	07372-21040	BOLT……螺栓	4	60001-
21	01643-51032	WASHER……垫圈	4	60001-
22	07000-B3035	O-RING…… O形圈	1	60001-
23	207-62-52430	CLAMP…… 卡箍	4	60001-
24	205-62-73430	.SEAT…… 座	1	60001-
25	01010-81230	BOLT……螺栓	4	60001-
26	01643-31232	WASHER……垫圈	4	60001-

https://truckmanualshub.com/

FIG.H1240-02A1 DRIFT PREVENT LINES (LOCK VALVE) (FOR BOOM)
保持阀回路(锁阀)（大臂）

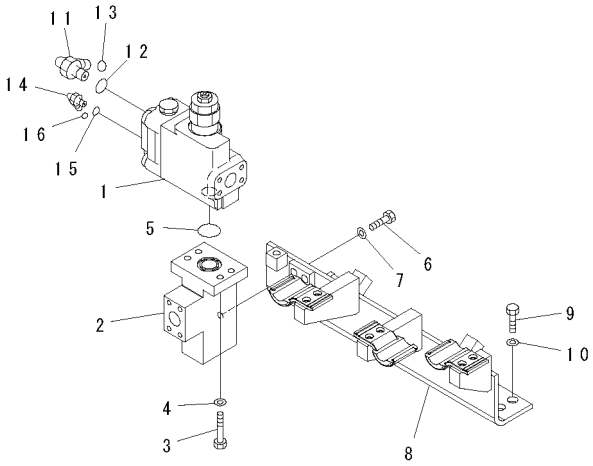

00038627

FIG NO. : H1240-02A1

INDEX	PART NO.	DESCRIPTION	Q'TY	SERIAL NO.
1	(702-21-04900)	LOCK VALVE ASS'Y……锁阀总成	1	60001-
2	207-62-52211	BLOCK…… 垫块	1	60001-
3	07372-21040	BOLT……螺栓	4	60001-
4	01643-51032	WASHER……垫圈	4	60001-
5	07000-13035	O-RING…… O形圈	1	60001-
6	01010-81240	BOLT……螺栓	4	60001-
7	01643-31232	WASHER……垫圈	4	60001-
8	21M-62-11211	BRACKET…… 支架	1	60001-
9	01010-81230	BOLT……螺栓	4	60001-
10	01643-31232	WASHER……垫圈	4	60001-
11	02782-10628	ELBOW…… 接头	1	60001-
12	07002-12434	O-RING…… O形圈	1	60001-
13	02896-11018	O-RING…… O形圈	1	60001-
14	02782-10311	ELBOW…… 接头	1	60001-
15	07002-11423	O-RING…… O形圈	1	60001-
16	02896-11009	O-RING…… O形圈	1	60001-

https://truckmanualshub.com/

FIG.H1310-01A0 TRAVEL LINES
行走回路

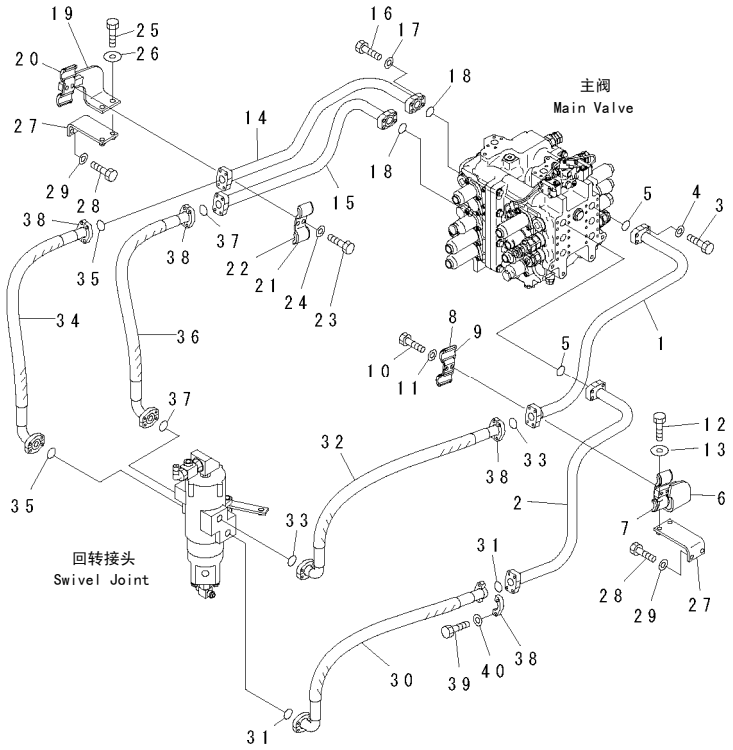

00009186

FIG NO. : H1310-01A0

INDEX	PART NO.	DESCRIPTION	Q'TY	SERIAL NO.
1	21M-62-11310	TUBE……硬管	1	60001-
2	21M-62-11320	TUBE……硬管	1	60001-
3	07372-21040	BOLT……螺栓	8	60001-
4	01643-51032	WASHER……垫圈	8	60001-
5	07000-B3035	O-RING…… O形圈	2	60001-
6	21M-62-11442	BRACKET…… 支架	1	60001-
7	205-62-73430	.SEAT…… 座	2	60001-
8	207-62-54770	CLAMP…… 卡箍	2	60001-
9	205-62-73430	.SEAT…… 座	2	60001-
10	01010-81230	BOLT……螺栓	2	60001-
11	01643-31232	WASHER……垫圈	2	60001-
12	01010-81235	BOLT……螺栓	2	60001-
13	175-54-34170	WASHER……垫圈	2	60001-
14	21M-62-11331	TUBE……硬管	1	60001-
15	21M-62-11341	TUBE……硬管	1	60001-
16	07372-21040	BOLT……螺栓	8	60001-
17	01643-51032	WASHER……垫圈	8	60001-
18	07000-B3035	O-RING…… O形圈	2	60001-
19	21M-62-11451	BRACKET…… 支架	1	60001-
20	205-62-73430	.SEAT…… 座	2	60001-
21	207-62-54770	CLAMP…… 卡箍	1	60001-
22	205-62-73430	.SEAT…… 座	2	60001-
23	01010-81230	BOLT……螺栓	2	60001-
24	01643-31232	WASHER……垫圈	2	60001-
25	01010-81235	BOLT……螺栓	2	60001-
26	175-54-34170	WASHER……垫圈	2	60001-
27	22D-54-12610	BRACKET…… 支架	2	60001-
28	01010-81230	BOLT……螺栓	4	60001-
29	01643-31232	WASHER……垫圈	4	60001-
30	207-62-61590	HOSE, 950MM ……软管	1	60001-
31	07000-13032	O-RING…… O形圈	2	60001-
32	07098-01010	HOSE……软管	1	60001-
33	07000-13032	O-RING…… O形圈	2	60001-
34	07098-01011	HOSE……软管	1	60001-
35	07000-13032	O-RING…… O形圈	2	60001-
36	207-62-52412	HOSE……软管	1	60001-
37	07000-13032	O-RING…… O形圈	2	60001-
38	07371-31049	FLANGE……法兰	8	60001-
39	07372-21035	BOLT……螺栓	16	60001-
40	01643-51032	WASHER……垫圈	16	60001-

https://truckmanualshub.com/

FIG.H1340-01A0 SWING LINES
回转回路

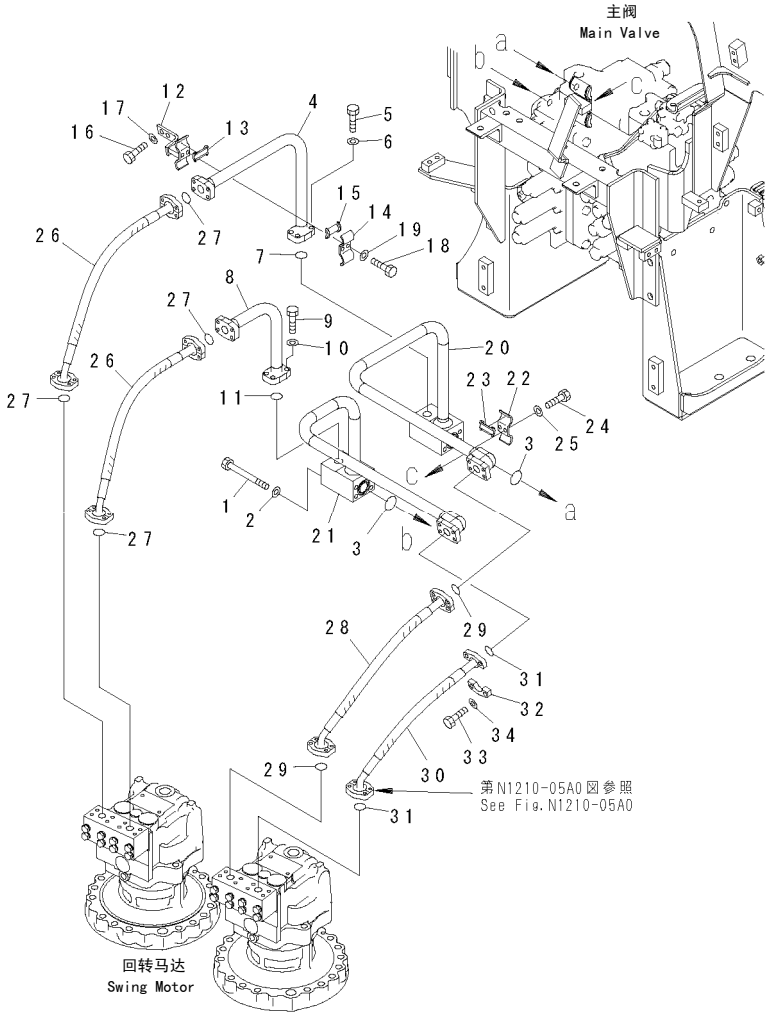

00038628

FIG NO. : H1340-01A0

INDEX	PART NO.	DESCRIPTION	Q'TY	SERIAL NO.
1	207-62-32720	BOLT……螺栓	8	60001-
2	01643-51032	WASHER……垫圈	8	60001-
3	07000-B3035	O-RING…… O形圈	2	60001-
4	21M-62-11461	TUBE……硬管	1	60001-
5	07372-21035	BOLT……螺栓	4	60001-
6	01643-51032	WASHER……垫圈	4	60001-
7	07000-B3030	O-RING…… O形圈	1	60001-
8	21M-62-11471	TUBE……硬管	1	60001-
9	07372-21035	BOLT……螺栓	4	60001-
10	01643-51032	WASHER……垫圈	4	60001-
11	07000-B3030	O-RING…… O形圈	1	60001-
12	21M-62-11421	BRACKET ……支架	1	60001-
13	20Y-62-13760	.SEAT…… 座	2	60001-
14	20Y-62-13230	CLAMP…… 卡箍	1	60001-
15	20Y-62-13760	.SEAT…… 座	2	60001-
16	01010-81230	BOLT……螺栓	2	60001-
17	01643-31232	WASHER……垫圈	2	60001-
18	01010-81230	BOLT……螺栓	2	60001-
19	01643-31232	WASHER……垫圈	2	60001-
20	21M-62-14821	TUBE……硬管	1	60001-
21	21M-62-14831	TUBE……硬管	1	60001-
22	20Y-62-13230	CLAMP…… 卡箍	1	60001-
23	20Y-62-13760	.SEAT…… 座	2	60001-
24	01010-81230	BOLT……螺栓	2	60001-
25	01643-31232	WASHER……垫圈	2	60001-
26	07097-00608	HOSE……软管	2	60001-
27	07000-13025	O-RING…… O形圈	4	60001-
28	07097-00607	HOSE……软管	1	60001-
29	07000-13025	O-RING…… O形圈	2	60001-
30	21M-62-11520	HOSE……软管	1	60001-
31	07000-13025	O-RING…… O形圈	2	60001-
32	07371-30640	FLANGE……法兰	8	60001-
33	07372-21035	BOLT……螺栓	16	60001-
34	01643-51032	WASHER……垫圈	16	60001-

https://truckmanualshub.com/

FIG.H135O-01AO FAN MOTOR LINES

风扇马达回路

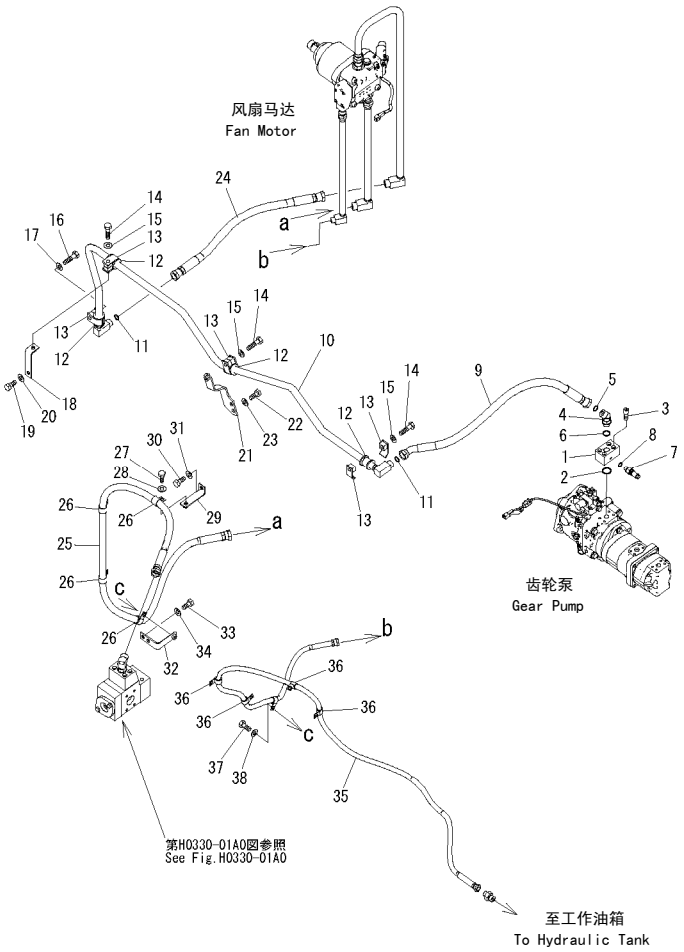

00038629

FIG NO. : H135O-01AO

INDEX	PART NO.	DESCRIPTION	Q'TY	SERIAL NO.
1	209-62-41410	BLOCK ……垫块	1	60001-
2	07000-B3032	O-RING…… O形圈	1	60001-
3	01252-71050	BOLT……螺栓	4	60001-
4	02783-10628	ELBOW ……接头	1	60001-
5	02896-61018	O-RING…… O形圈	1	60001-
6	07002-62434	O-RING…… O形圈	1	60001-
7	799-101-5220	NIPPLE……喷嘴	1	60001-
8	07002-61023	O-RING…… O形圈	1	60001-
9	02779-00609	HOSE……软管	1	60001-
10	21M-62-21271	TUBE……硬管	1	60001-
11	02896-61018	O-RING…… O形圈	2	60001-
12	07095-00526	CUSHION ……减振垫	4	60001-
13	07094-10518	CLAMP…… 卡箍	8	60001-
14	01010-81270	BOLT……螺栓	3	60001-
15	01643-31232	WASHER……垫圈	3	60001-
16	01010-81275	BOLT……螺栓	1	60001-
17	01643-31232	WASHER……垫圈	1	60001-
18	17A-61-13391	BRACKET ……支架	1	60001-
19	01010-81230	BOLT……螺栓	1	60001-
20	01643-31232	WASHER……垫圈	1	60001-
21	21M-62-21280	BRACKET ……支架	1	60001-
22	01010-81225	BOLT……螺栓	2	60001-
23	01643-31232	WASHER……垫圈	2	60001-
24	02777-006A7	HOSE……软管	1	60001-
25	21M-62-21530	HOSE……软管	1	60001-
26	04434-52712	CLIP……管夹	4	60001-
27	01010-81225	BOLT……螺栓	4	60001-
28	01643-31232	WASHER……垫圈	4	60001-
29	203-06-61730	BRACKET ……支架	1	60001-
30	01010-81225	BOLT……螺栓	1	60001-
31	01643-31232	WASHER……垫圈	1	60001-
32	21M-62-21290	BRACKET ……支架	1	60001-
33	01010-81225	BOLT……螺栓	2	60001-
34	01643-31232	WASHER……垫圈	2	60001-
35	21M-62-21540	HOSE……软管	1	60001-
36	04434-51912	CLIP……管夹	4	60001-
37	01010-81225	BOLT……螺栓	2	60001-
38	01643-31232	WASHER……垫圈	2	60001-

https://truckmanualshub.com/

FIG.H1810-01A0 O.L.S.S. LINE

OLSS回路

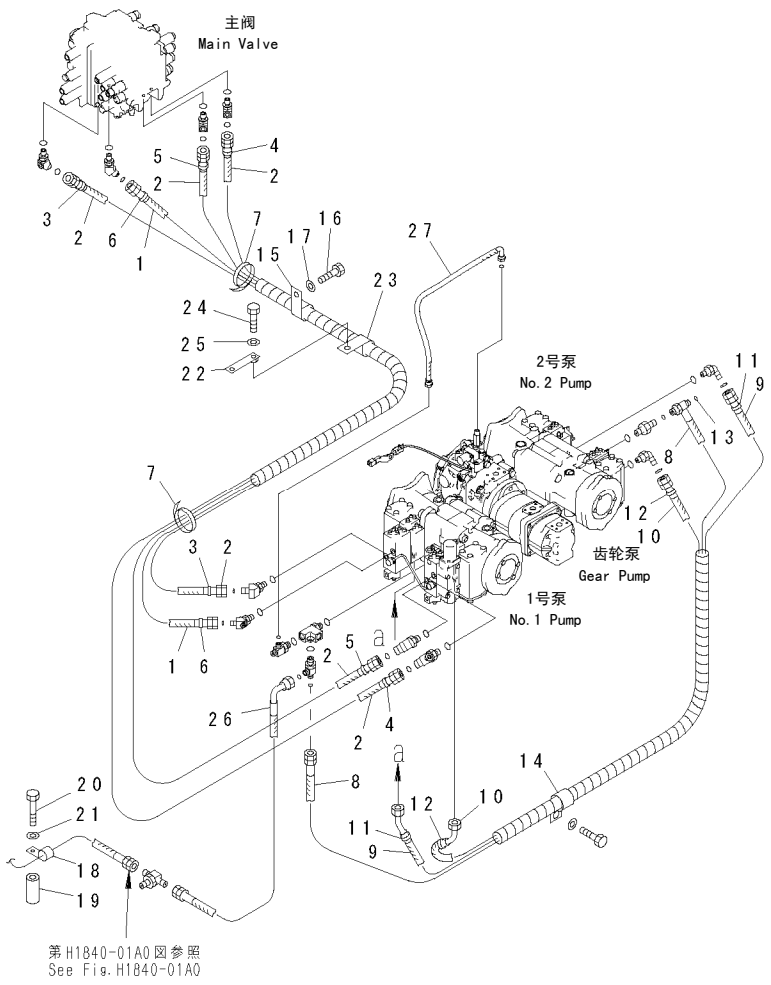

00062171

FIG NO. : H1810-01A0

INDEX	PART NO.	DESCRIPTION	Q'TY	SERIAL NO.
1	02753-00315	HOSE……软管	1	60001-
2	02753-00317	HOSE……软管	3	60001-
3	20Y-62-22790	BAND, RED ……红色绑带	2	60001-
4	20Y-62-22810	BAND, YELLOW……黄色绑带	2	60001-
5	20Y-62-22820	BAND, BLUE……色绑带	2	60001-
6	20Y-62-22830	BAND, WHITE ……白色绑带	2	60001-
7	08034-20536	BAND……绑带	2	60001-
8	21M-62-14840	HOSE……软管	1	60001-
9	02764-00312	HOSE……软管	1	60001-
10	21M-62-22150	HOSE……软管	1	60001-
11	20Y-62-22840	BAND, BLACK ……黑色绑带	2	60001-
12	20Y-62-22860	BAND, BROWN ……棕色绑带	2	60001-
13	02896-11009	O-RING…… O形圈	1	60001-
14	113-899-7950	CLIP……管夹	1	60001-
15	23T-62-12160	CLIP……管夹	1	60001-
16	01010-81230	BOLT……螺栓	1	60001-
17	01643-31232	WASHER……垫圈	1	60001-
18	04434-51512	CLIP……管夹	1	60001-
19	22S-62-26210	SPACER……垫块	1	60001-
20	01011-81205	BOLT……螺栓	1	60001-
21	01643-31232	WASHER……垫圈	1	60001-
22	20Y-06-21240	PLATE ……板	1	60001-
23	207-62-33690	CLIP……管夹	1	60001-
24	01010-81230	BOLT……螺栓	1	60001-
25	01643-31232	WASHER……垫圈	1	60001-
26	02763-003A7	HOSE……软管	1	60001-
27	02763-00305	HOSE……软管	1	60001-

https://truckmanualshub.com/

FIG.H1831-01A0 SOLENOID VALVE (SOLENOID AND EPC VALVE)

电磁阀（电磁和EPC阀）

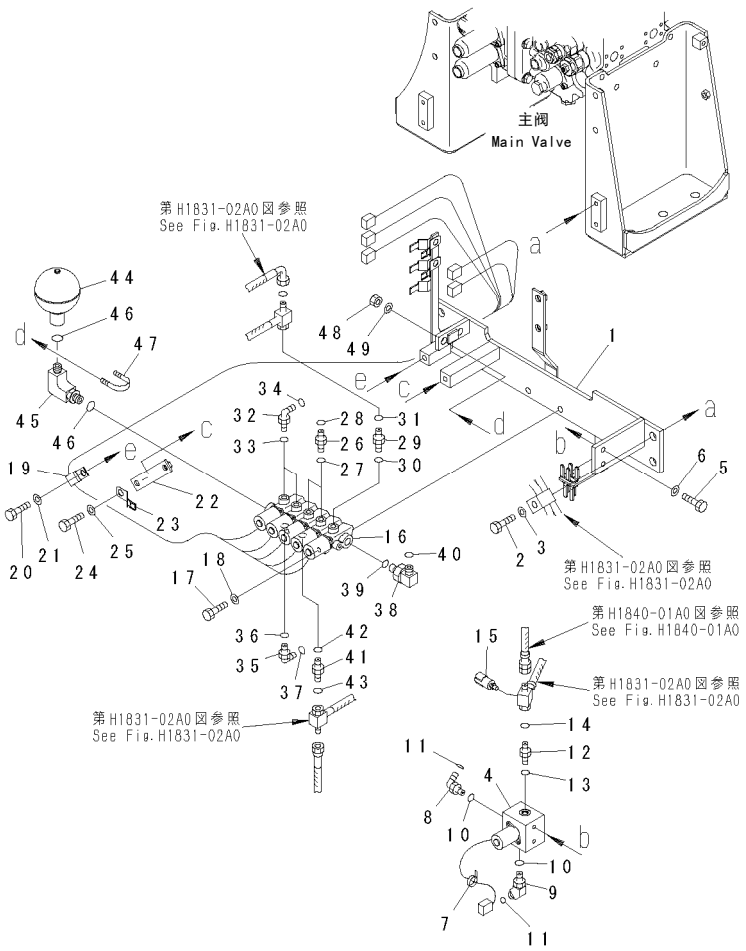

FIG NO. : H1831-01A0

INDEX	PART NO.	DESCRIPTION	Q'TY	SERIAL NO.
1	21M-62-21490	BRACKET ……支架	1	60001-
2	01010-81230	BOLT……螺栓	4	60001-
3	01643-31232	WASHER……垫圈	4	60001-
4	(209-60-77230)	VALVE ASS'Y ……阀总成	1	60001-
5	01010-80825	BOLT……螺栓	2	60001-
6	01643-30823	WASHER……垫圈	2	60001-
7	08034-20519	BAND……绑带	1	60001-
8	02782-10311	ELBOW ……接头	1	60001-
9	11Y-62-12510	ELBOW ……接头	1	60001-
10	07002-11423	O-RING…… O形圈	2	60001-
11	02896-11009	O-RING…… O形圈	2	60001-
12	11Y-62-12520	NIPPLE……喷嘴	1	60001-
13	07002-11423	O-RING…… O形圈	1	60001-
14	02896-11009	O-RING…… O形圈	1	60001-
15	206-06-61130	SWITCH……开关	1	60001-
16	(209-60-77240)	VALVE ASS'Y ……阀总成	1	60001-
17	01010-81095	BOLT……螺栓	2	60001-
18	01643-31032	WASHER……垫圈	2	60001-
19	04434-51512	CLIP……管夹	1	60001-
20	01010-81225	BOLT……螺栓	1	60001-
21	01643-31232	WASHER……垫圈	1	60001-
22	207-977-5120	BRACKET ……支架	1	60001-
23	08193-20012	CLIP……管夹	1	60001-
24	01010-81225	BOLT……螺栓	1	60001-
25	01643-31232	WASHER……垫圈	1	60001-
26	02781-0031D	UNION ……接头	2	60001-
27	07002-11423	O-RING…… O形圈	2	60001-
28	02896-11009	O-RING…… O形圈	2	60001-
29	11Y-62-12520	NIPPLE……喷嘴	1	60001-
30	07002-11423	O-RING…… O形圈	1	60001-
31	02896-11009	O-RING…… O形圈	1	60001-
32	02782-10311	ELBOW ……接头	2	60001-
33	07002-11423	O-RING…… O形圈	2	60001-
34	02896-11009	O-RING…… O形圈	2	60001-
35	02782-10315	ELBOW ……接头	1	60001-
36	07002-12034	O-RING…… O形圈	1	60001-
37	02896-11009	O-RING…… O形圈	1	60001-
38	21N-64-36450	ELBOW ……接头	1	60001-
39	07002-12034	O-RING…… O形圈	1	60001-
40	02896-11009	O-RING…… O形圈	1	60001-
41	02781-00315	UNION ……接头	1	60001-
42	07002-12034	O-RING…… O形圈	1	60001-

https://truckmanualshub.com/

FIG.H1831-01A0 SOLENOID VALVE (SOLENOID AND EPC VALVE)
电磁阀（电磁阀和EPC阀）

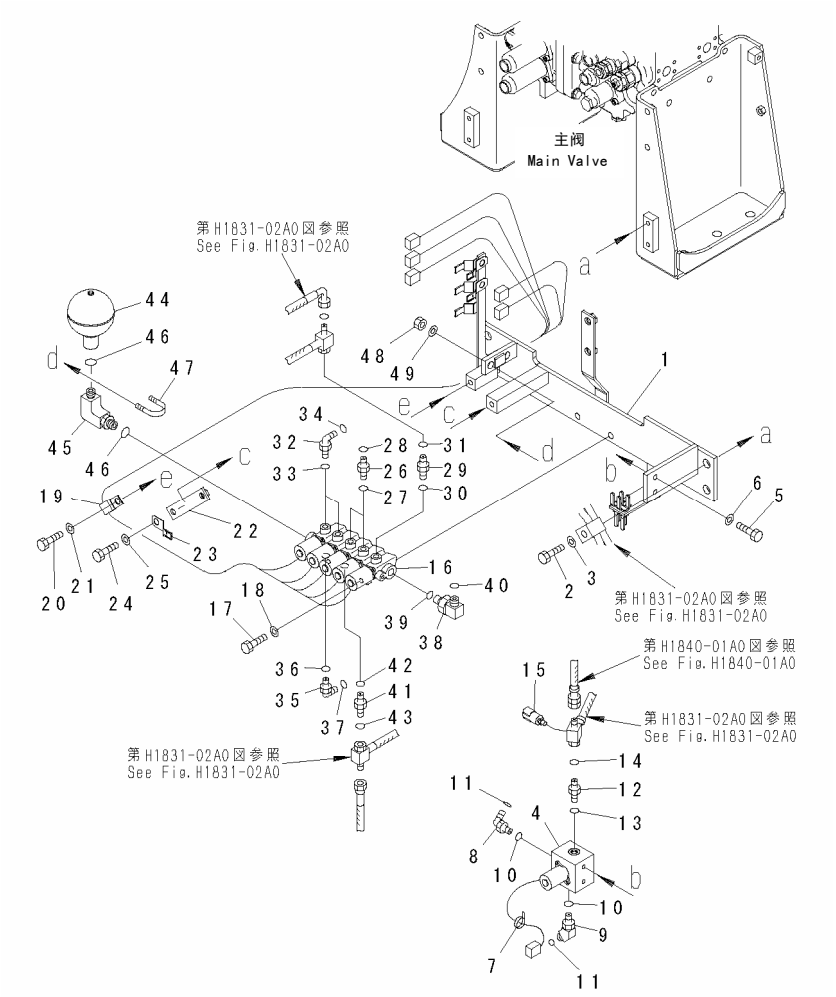

FIG NO. : H1831-01A0

INDEX	PART NO.	DESCRIPTION	Q'TY	SERIAL NO.
43	02896-11009	O-RING…… O形圈	1	60001-
44	20Y-60-11430	ACCUMULATOR ……蓄能器	1	60001-
45	203-62-65281	ELBOW ……接头	1	60001-
46	07002-12034	O-RING…… O形圈	2	60001-
47	07283-33450	CLIP……管夹	1	60001-
48	01597-01009	NUT ……螺母	2	60001-
49	01643-31032	WASHER……垫圈	2	60001-

https://truckmanualshub.com/

FIG.H1831-02A0 SOLENOID VALVE (HOSE)

电磁阀（软管）

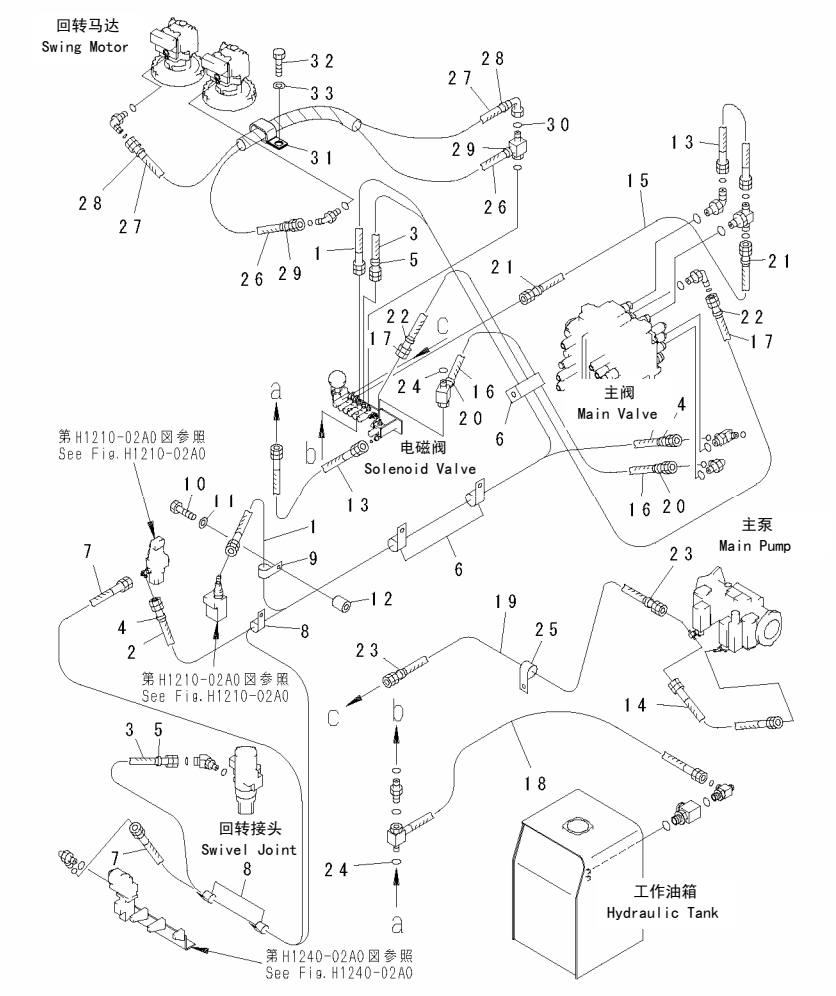

00049286

FIG NO. : H1831-02A0

INDEX	PART NO.	DESCRIPTION	Q'TY	SERIAL NO.
1	02760-00325	HOSE……软管	1	60001-
2	02760-00328	HOSE……软管	1	60001-
3	02760-00330	HOSE……软管	1	60001-
4	20Y-62-22790	BAND, RED ……红色绑带	2	60001-
5	20Y-62-22810	BAND, YELLOW……黄色绑带	2	60001-
6	04434-53412	CLIP……管夹	3	60001-
7	02760-00312	HOSE……软管	1	60001-
8	04435-51512	CLIP……管夹	3	60001-
9	04434-51512	CLIP……管夹	1	60001-
10	01010-81250	BOLT……螺栓	1	60001-
11	01643-31232	WASHER……垫圈	1	60001-
12	195-33-11220	SPACER……垫块	1	60001-
13	02760-00304	HOSE……软管	2	60001-
14	21N-62-36660	HOSE……软管	1	60001-
15	02760-003A8	HOSE, 850MM ……软管	1	60001-
16	21M-62-14870	HOSE……软管	1	60001-
17	02760-003A9	HOSE……软管	1	60001-
18	21M-62-14860	HOSE……软管	1	60001-
19	02760-00318	HOSE……软管	1	60001-
20	20Y-62-22810	BAND, YELLOW……黄色绑带	2	60001-
21	20Y-62-22830	BAND, WHITE ……白色绑带	2	60001-
22	20Y-62-22840	BAND, BLACK ……黑色绑带	2	60001-
23	20Y-62-22850	BAND, GREEN ……绿色绑带	2	60001-
24	02896-11009	O-RING…… O形圈	2	60001-
25	21T-06-11950	CLIP……管夹	1	60001-
26	21M-62-14850	HOSE……软管	1	60001-
27	02761-00308	HOSE……软管	1	60001-
28	20Y-62-22820	BAND, BLUE……兰色绑带	2	60001-
29	20Y-62-22840	BAND, BLACK ……黑色绑带	2	60001-
30	02896-11009	O-RING…… O形圈	1	60001-
31	04435-51812	CLIP……管夹	1	60001-
32	01010-81230	BOLT……螺栓	1	60001-
33	01643-31232	WASHER……垫圈	1	60001-

https://truckmanualshub.com/

FIG.H1833-01A0 SHUTTLE VALVE (BRACKET AND VALVE)

梭阀(支架和阀)

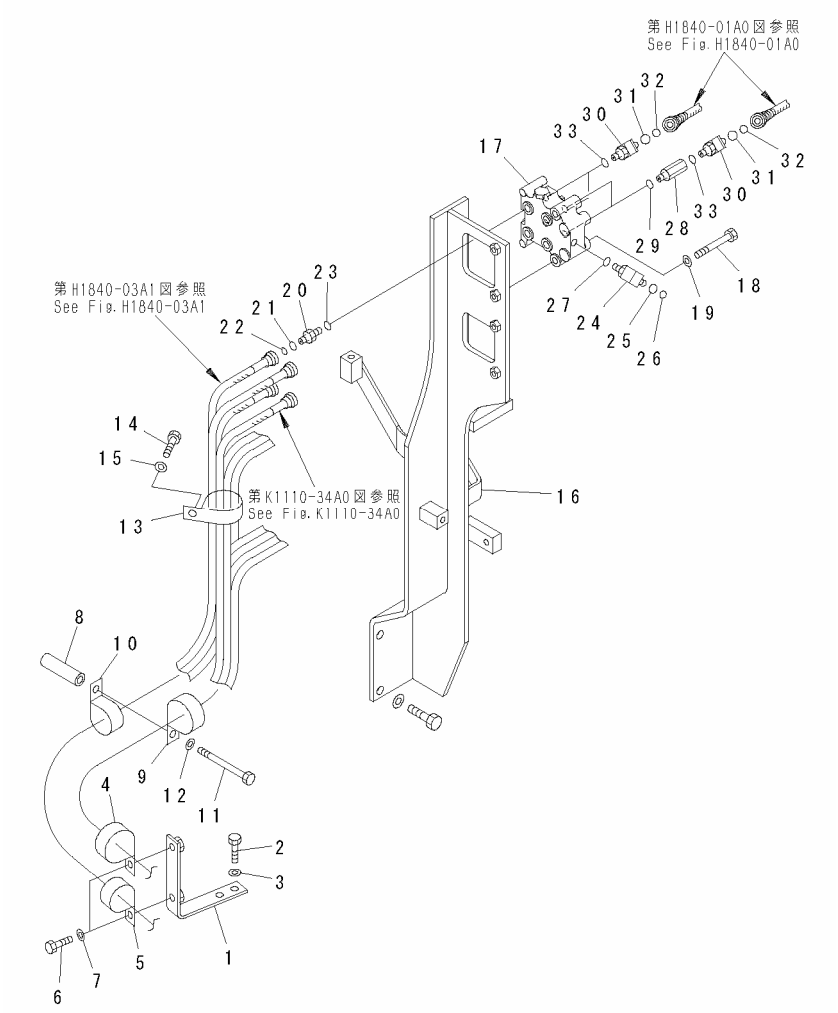

00062543

FIG NO. : H1833-01A0

INDEX	PART NO.	DESCRIPTION	Q'TY	SERIAL NO.
1	21T-62-87850	BRACKET ……支架	1	60001-
2	01010-81230	BOLT……螺栓	2	60001-
3	01643-31232	WASHER……垫圈	2	60001-
4	207-62-33690	CLIP……管夹	1	60001-
5	20Y-62-15951	CLIP……管夹	1	60001-
6	01010-81230	BOLT……螺栓	2	60001-
7	01643-31232	WASHER……垫圈	2	60001-
8	22S-62-26210	SPACER……垫块	1	60001-
9	207-62-33690	CLIP……管夹	1	60001-
10	20Y-62-15951	CLIP……管夹	1	60001-
11	01011-81205	BOLT……螺栓	1	60001-
12	01643-31232	WASHER……垫圈	1	60001-
13	207-62-33690	CLIP……管夹	1	60001-
14	01010-81225	BOLT……螺栓	1	60001-
15	01643-31232	WASHER……垫圈	1	60001-
16	21M-62-14770	BRACKET ……支架	1	60001-
17	(702-19-25000)	VALVE ASS'Y ……阀总成	1	60001-
18	01010-81075	BOLT……螺栓	2	60001-
19	01643-31032	WASHER……垫圈	2	60001-
20	20Y-62-16630	NIPPLE……喷嘴	4	60001-
21	201-60-11390	.O-RING……O形圈	1	60001-
22	20Y-62-19560	.O-RING……O形圈	1	60001-
23	07002-11423	O-RING…… O形圈	4	60001-
24	20Y-62-22271	ELBOW ……接头	1	60001-
25	201-60-11390	.O-RING……O形圈	1	60001-
26	20Y-62-19560	.O-RING……O形圈	1	60001-
27	07002-11423	O-RING…… O形圈	1	60001-
28	20Y-62-22160	ADAPTER ……齿根	2	60001-
29	07002-11423	O-RING…… O形圈	2	60001-
30	20Y-62-25720	ELBOW ……接头	4	60001-
31	201-60-11390	.O-RING……O形圈	1	60001-
32	20Y-62-19560	.O-RING……O形圈	1	60001-
33	07002-11423	O-RING…… O形圈	4	60001-

https://truckmanualshub.com/

FIG.H1833-02A0 SHUTTLE VALVE (VALVE)

梭阀(阀)

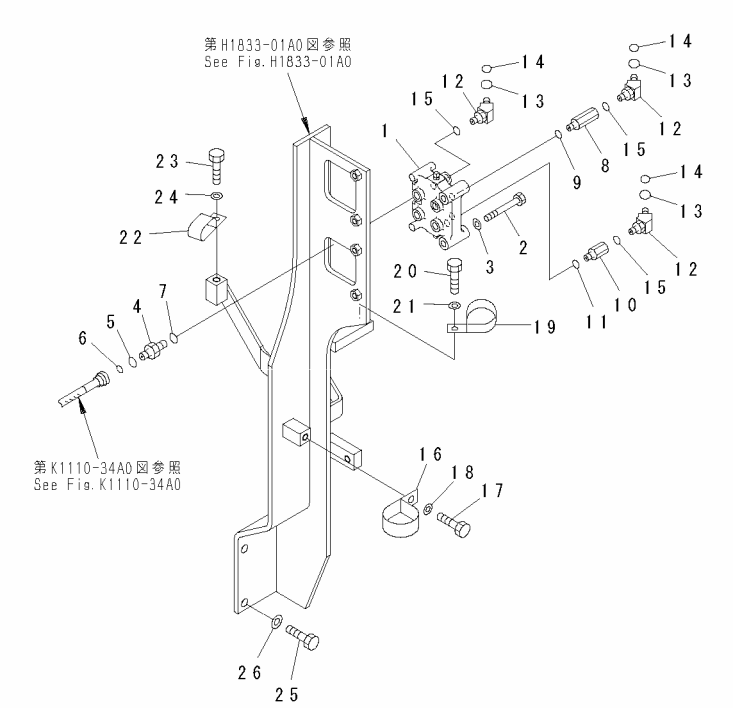

00062545

FIG NO. : H1833-02A0

INDEX	PART NO.	DESCRIPTION	Q'TY	SERIAL NO.
1	(702-19-23000)	VALVE ASS'Y ……阀总成	1	60001-
2	01010-81075	BOLT……螺栓	2	60001-
3	01643-31032	WASHER……垫圈	2	60001-
4	20Y-62-16630	NIPPLE……喷嘴	4	60001-
5	201-60-11390	.O-RING……O形圈	1	60001-
6	20Y-62-19560	.O-RING……O形圈	1	60001-
7	07002-11423	O-RING…… O形圈	4	60001-
8	20Y-62-22160	ADAPTER ……齿根	2	60001-
9	07002-11423	O-RING…… O形圈	2	60001-
10	21M-62-16350	ADAPTER ……齿根	2	60001-
11	07002-11423	O-RING…… O形圈	2	60001-
12	20Y-62-25720	ELBOW ……接头	6	60001-
13	201-60-11390	.O-RING……O形圈	1	60001-
14	20Y-62-19560	.O-RING……O形圈	1	60001-
15	07002-11423	O-RING…… O形圈	6	60001-
16	21T-06-11950	CLIP……管夹	1	60001-
17	01010-81230	BOLT……螺栓	1	60001-
18	01643-31232	WASHER……垫圈	1	60001-
19	208-62-38370	CLIP……管夹	1	60001-
20	01010-81230	BOLT……螺栓	1	60001-
21	01643-31232	WASHER……垫圈	1	60001-
22	04435-51812	CLIP……管夹	1	60001-
23	01010-81230	BOLT……螺栓	1	60001-
24	01643-31232	WASHER……垫圈	1	60001-
25	01010-81230	BOLT……螺栓	4	60001-
26	01643-31232	WASHER……垫圈	4	60001-

https://truckmanualshub.com/

FIG.H1840-01A0 PPC MAIN LINE (HOSE)

PPC主油路（软管）

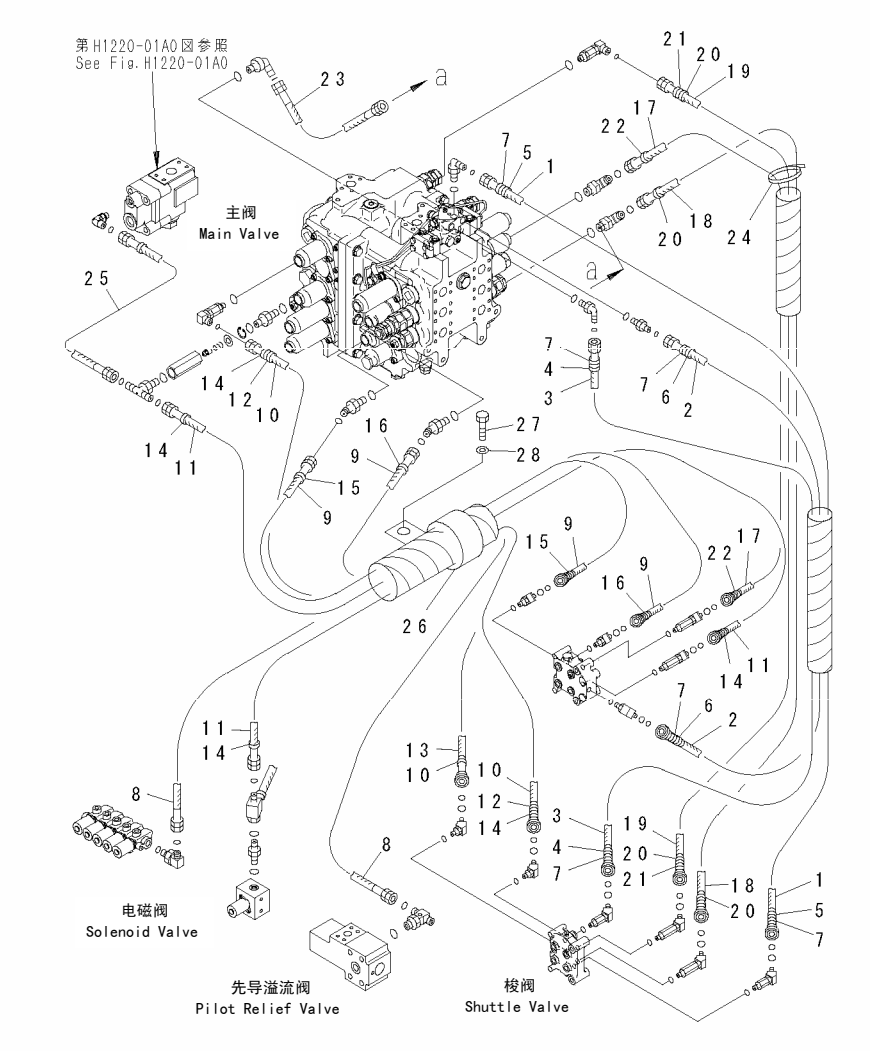

FIG NO. : H1840-01A0

INDEX	PART NO.	DESCRIPTION	Q'TY	SERIAL NO.
1	207-62-72620	HOSE, 600MM ……软管	1	60001-
2	21M-62-14570	HOSE……软管	1	60001-
3	21M-62-14580	HOSE……软管	1	60001-
4	20Y-62-22790	BAND, RED ……红色绑带	2	60001-
5	20Y-62-22810	BAND, YELLOW……黄色绑带	2	60001-
6	20Y-62-22820	BAND, BLUE……兰色绑带	2	60001-
7	20Y-62-22840	BAND, BLACK ……黑色绑带	6	60001-
8	02760-00326	HOSE……软管	1	60001-
9	209-04-77630	HOSE……软管	2	60001-
10	17M-61-42570	HOSE……软管	2	60001-
11	21M-62-14880	HOSE……软管	1	60001-
12	20Y-62-22790	BAND, RED ……红色绑带	2	60001-
13	20Y-62-22810	BAND, YELLOW……黄色绑带	2	60001-
14	20Y-62-22830	BAND, WHITE ……白色绑带	4	60001-
15	20Y-62-22840	BAND, BLACK ……黑色绑带	2	60001-
16	20Y-62-22850	BAND, GREEN ……绿色绑带	2	60001-
17	209-64-16440	HOSE, 850MM ……软管	1	60001-
18	21M-62-14570	HOSE……软管	1	60001-
19	21M-62-14620	HOSE……软管	1	60001-
20	20Y-62-22820	BAND, BLUE……兰色绑带	4	60001-
21	20Y-62-22830	BAND, WHITE ……白色绑带	2	60001-
22	20Y-62-22860	BAND, BROWN ……棕色绑带	2	60001-
23	02760-00303	HOSE……软管	1	60001-
24	08034-20536	BAND……绑带	3	60001-
25	02760-003A5	HOSE……软管	1	60001-
26	21T-06-11950	CLIP……管夹	1	60001-
27	01010-81230	BOLT……螺栓	1	60001-
28	01643-31232	WASHER……垫圈	1	60001-

https://truckmanualshub.com/

FIG.H1840-02A0 PPC MAIN LINE (PPC LOCK SOLENOID VALVE)

PPC主油路（PPC锁定电磁阀）

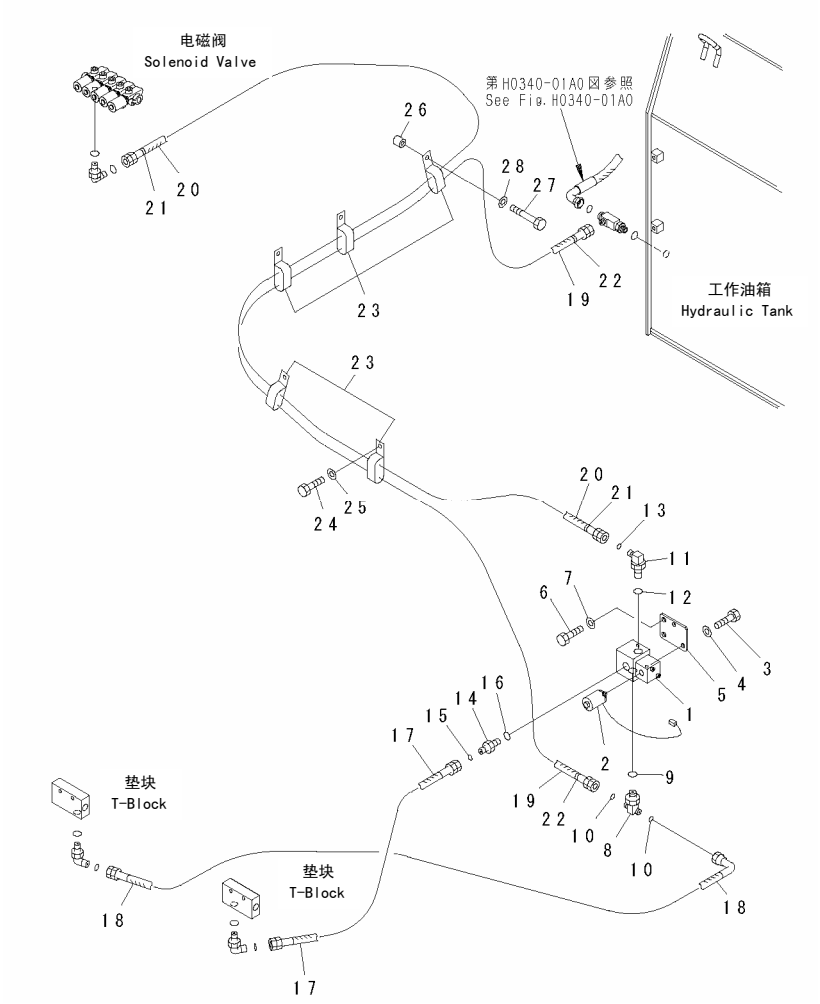

00049527

FIG NO. : H1840-02A0

INDEX	PART NO.	DESCRIPTION	Q'TY	SERIAL NO.
1	209-60-77220	VALVE ASS'Y ……阀总成	1	60001-
2	209-60-77250	.SOLENOID ASS'Y ……电磁阀总成	1	60001-
3	01010-81025	BOLT……螺栓	2	60001-
4	01643-31032	WASHER……垫圈	2	60001-
5	209-64-11410	PLATE ……板	1	60001-
6	01010-81225	BOLT……螺栓	2	60001-
7	01643-31232	WASHER……垫圈	2	60001-
8	209-64-16721	TEE……T形件	1	60001-
9	07002-12034	O-RING ……O形圈	1	60001-
10	02896-11009	O-RING ……O形圈	2	60001-
11	21N-64-36450	ELBOW ……接头	1	60001-
12	07002-12034	O-RING ……O形圈	1	60001-
13	02896-11009	O-RING ……O形圈	1	60001-
14	02781-00315	UNION ……接头	1	60001-
15	02896-11009	O-RING ……O形圈	1	60001-
16	07002-12034	O-RING ……O形圈	1	60001-
17	02760-003A3	HOSE……软管	1	60001-
18	02761-003A7	HOSE……软管	1	60001-
19	02760-00319	HOSE……软管	1	60001-
20	02760-00338	HOSE……软管	1	60001-
21	20Y-62-22790	BAND, RED ……红色绑带	2	60001-
22	20Y-62-22820	BAND, BLUE……兰色绑带	2	60001-
23	04435-51812	CLIP……管夹	5	60001-
24	01010-81225	BOLT……螺栓	2	60001-
25	01643-31232	WASHER……垫圈	2	60001-
26	195-33-11220	SPACER……垫块	3	60001-
27	01010-81250	BOLT……螺栓	3	60001-
28	01643-31232	WASHER……垫圈	3	60001-

https://truckmanualshub.com/

FIG.H1840-03A2 PPC MAIN LINE (HOSE) (1 ACTUATOR)

PPC主油路（软管）(1路执行机构)

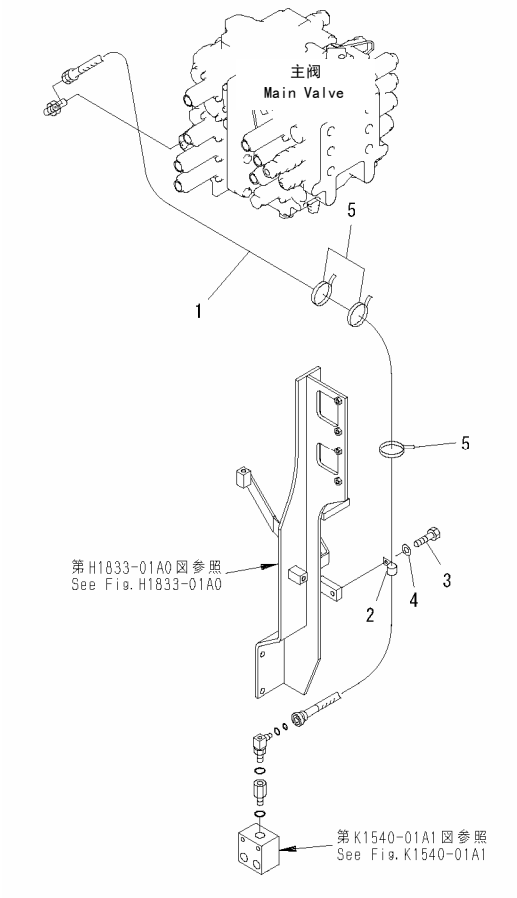

00024100

FIG NO. : H1840-03A2

INDEX	PART NO.	DESCRIPTION	Q'TY	SERIAL NO.
1	21M-62-17770	HOSE……软管	1	60001-
2	04434-51512	CLIP……管夹	1	60001-
3	01010-81225	BOLT……螺栓	1	60001-
4	01643-31232	WASHER……垫圈	1	60001-
5	08034-20536	BAND……绑带	3	60001-

MAIN/REVOLVING FRAME AND RELATED PARTS

主/回转车架和相关件

https://truckmanualshub.com/

https://truckmanualshub.com/

FIG.J1110-01A0 REVOLVING FRAME (FRAME)
回转车架（车架）

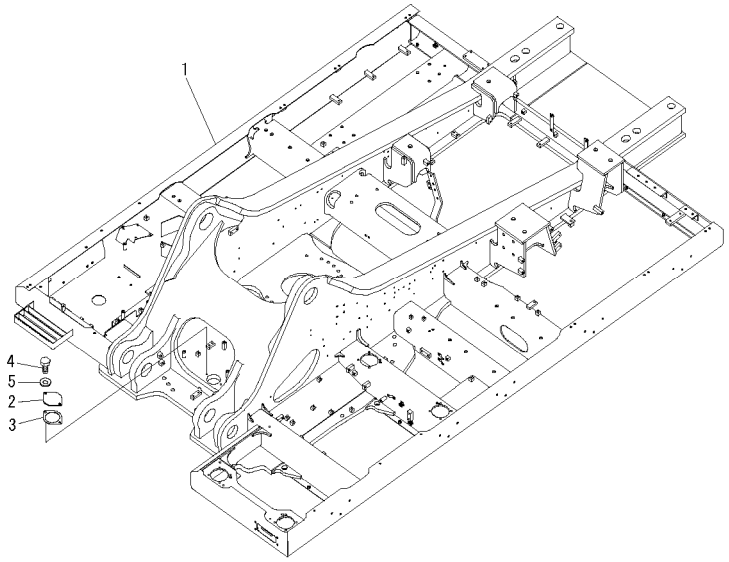

00062230-V

FIG NO. :J1110-01A0

INDEX	PART NO.	DESCRIPTION	Q'TY	SERIAL NO.
1	21M-46-21111	FRAME ……车架	1	60001-
2	205-30-71181	COVER ……盖	1	60001-
3	205-30-71191	GASKET……垫	1	60001-
4	01010-81230	BOLT……螺栓	2	60001-
5	01643-31232	WASHER……垫圈	2	60001-

https://truckmanualshub.com/

FIG.J1110-02A0 REVOLVING FRAME (DECK SHEET AND FLOOR SHEET)

回转车架（护板垫片和底板垫片）

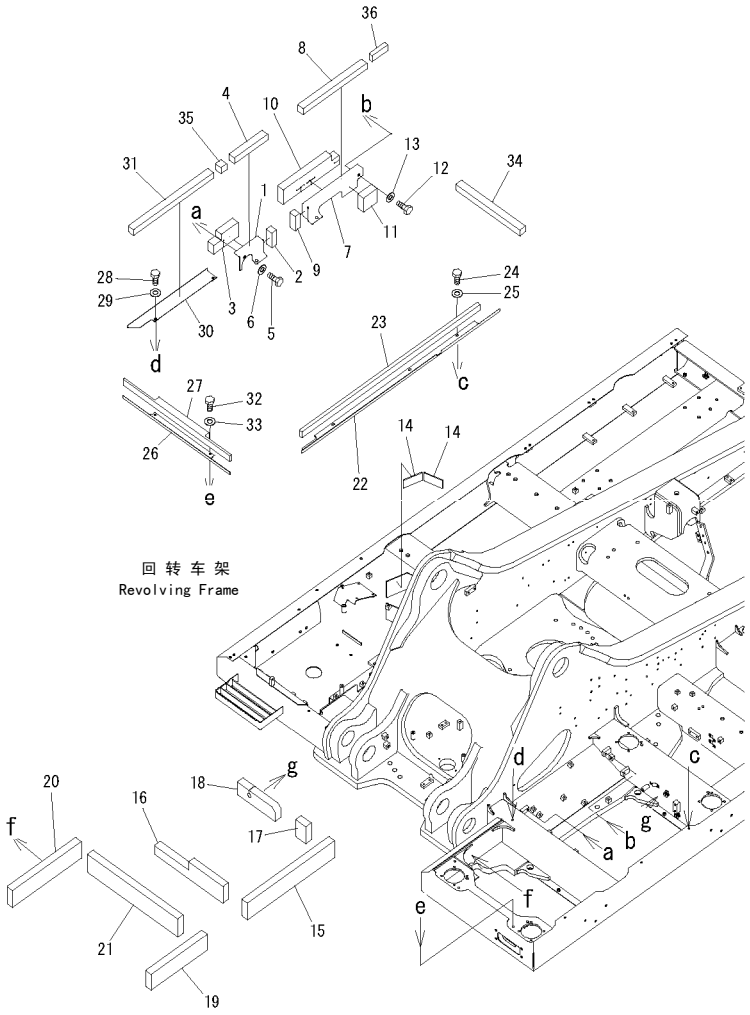

FIG NO. : J1110-02A0

INDEX	PART NO.	DESCRIPTION	Q'TY	SERIAL NO.
1	21M-54-23111	COVER…… 盖	1	60001-
2	21M-54-16950	.SHEET……垫片	1	60001-
3	21M-54-23131	.SHEET……垫片	1	60001-
4	21M-54-23160	.SEAL…… 密封垫	1	60001-
5	01010-81225	BOLT……螺栓	2	60001-
6	01643-31232	WASHER……垫圈	2	60001-
7	21M-54-23121	COVER…… 盖	1	60001-
8	21M-46-21710	.SEAL…… 密封垫	1	60001-
9	21M-54-16950	.SHEET……垫片	1	60001-
10	21M-54-23141	.SHEET……垫片	1	60001-
11	21M-54-23150	.SHEET……垫片	1	60001-
12	01010-81225	BOLT……螺栓	2	60001-
13	01643-31232	WASHER……垫圈	2	60001-
14	21M-46-24480	SHEET…… 垫片	2	60001-
15	21M-46-15610	SHEET…… 垫片	1	60001-
16	21M-46-15620	SHEET…… 垫片	1	60001-
17	21M-46-15640	SHEET…… 垫片	1	60001-
18	21M-46-15650	SHEET…… 垫片	1	60001-
19	21M-46-21840	SHEET…… 垫片	1	60001-
20	21M-46-21850	SHEET…… 垫片	1	60001-
21	21M-46-21860	SHEET…… 垫片	1	60001-
	209-46-41691	COVER…… 盖	1	60001-
22	☆	.COVER …… 盖	1	60001-
23	20Y-46-42253	.SEAL…… 密封垫	1	60001-
24	01010-81020	BOLT……螺栓	3	60001-
25	01643-31032	WASHER……垫圈	3	60001-
	207-46-71543	COVER…… 盖	1	60001-
26	☆	.COVER……盖	1	60001-
27	207-46-71561	.SEAL…… 密封垫	1	60001-
28	01010-81035	BOLT……螺栓	2	60001-
29	01643-31032	WASHER……垫圈	2	60001-
	21M-46-21810	COVER…… 盖	1	60001-
30	☆	.COVER……盖	1	60001-
31	21M-46-21830	.SEAL…… 密封垫	1	60001-
32	01010-81035	BOLT……螺栓	2	60001-
33	01643-31032	WASHER……垫圈	2	60001-
34	21M-46-21710	SEAL……密封垫	1	60001-
35	21M-46-21740	SEAL……密封垫	1	60001-
36	21M-46-21750	SEAL……密封垫	1	60001-

https://truckmanualshub.com/

FIG.J111O-02A1 REVOLVING FRAME (DECK SHEET AND FLOOR SHEET)(OPTION)

回转车架（护板垫片和底板垫片）（选购件）

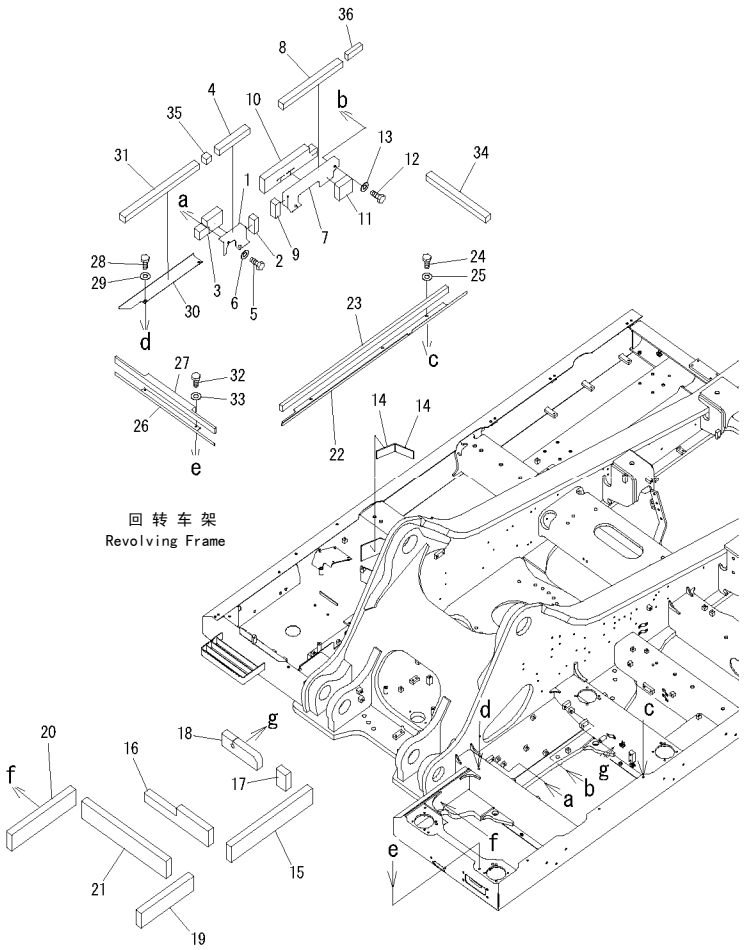

00062479-V

FIG NO. : J111O-02A1

INDEX	PART NO.	DESCRIPTION	Q'TY	SERIAL NO.
1	21M-54-23111	COVER…… 盖	1	60001-
2	21M-54-16950	.SHEET……垫片	1	60001-
3	21M-54-23131	.SHEET……垫片	1	60001-
4	21M-54-23160	.SEAL…… 密封垫	1	60001-
5	01010-81225	BOLT……螺栓	2	60001-
6	01643-31232	WASHER……垫圈	2	60001-
7	21M-54-23121	COVER…… 盖	1	60001-
8	21M-46-21710	.SEAL…… 密封垫	1	60001-
9	21M-54-16950	.SHEET……垫片	1	60001-
10	21M-54-23141	.SHEET……垫片	1	60001-
11	21M-54-23150	.SHEET……垫片	1	60001-
12	01010-81225	BOLT……螺栓	2	60001-
13	01643-31232	WASHER……垫圈	2	60001-
14	21M-46-24480	SHEET…… 垫片	2	60001-
15	21M-46-15610	SHEET…… 垫片	1	60001-
16	21M-46-15620	SHEET…… 垫片	1	60001-
17	21M-46-15640	SHEET…… 垫片	1	60001-
18	21M-46-15650	SHEET…… 垫片	1	60001-
19	21M-46-21840	SHEET…… 垫片	1	60001-
20	21M-46-21850	SHEET…… 垫片	1	60001-
21	21M-46-21860	SHEET…… 垫片	1	60001-
	209-46-41691	COVER…… 盖	1	60001-
22	☆	.COVER …… 盖	1	60001-
23	20Y-46-42253	.SEAL…… 密封垫	1	60001-
24	01010-81020	BOLT……螺栓	3	60001-
25	01643-31032	WASHER……垫圈	3	60001-
	207-46-71543	COVER…… 盖	1	60001-
26	☆	.COVER……盖	1	60001-
27	207-46-71561	.SEAL…… 密封垫	1	60001-
28	01010-81035	BOLT …… 螺栓	2	60001-
29	01643-31032	WASHER……垫圈	2	60001-
	21M-46-21810	COVER…… 盖	1	60001-
30	☆	.COVER……盖	1	60001-
31	21M-46-21830	.SEAL…… 密封垫	1	60001-
32	01010-81035	BOLT……螺栓	2	60001-
33	01643-31032	WASHER……垫圈	2	60001-
34	21M-46-21710	SEAL……密封垫	1	60001-
35	21M-46-21740	SEAL……密封垫	1	60001-
36	21M-46-21750	SEAL……密封垫	1	60001-

https://truckmanualshub.com/

FIG.J1110-03A0 REVOLVING FRAME (ENGINE ROOM SHEET)

回转车架（发动机室内垫片）

FIG NO. : J1110-03A0

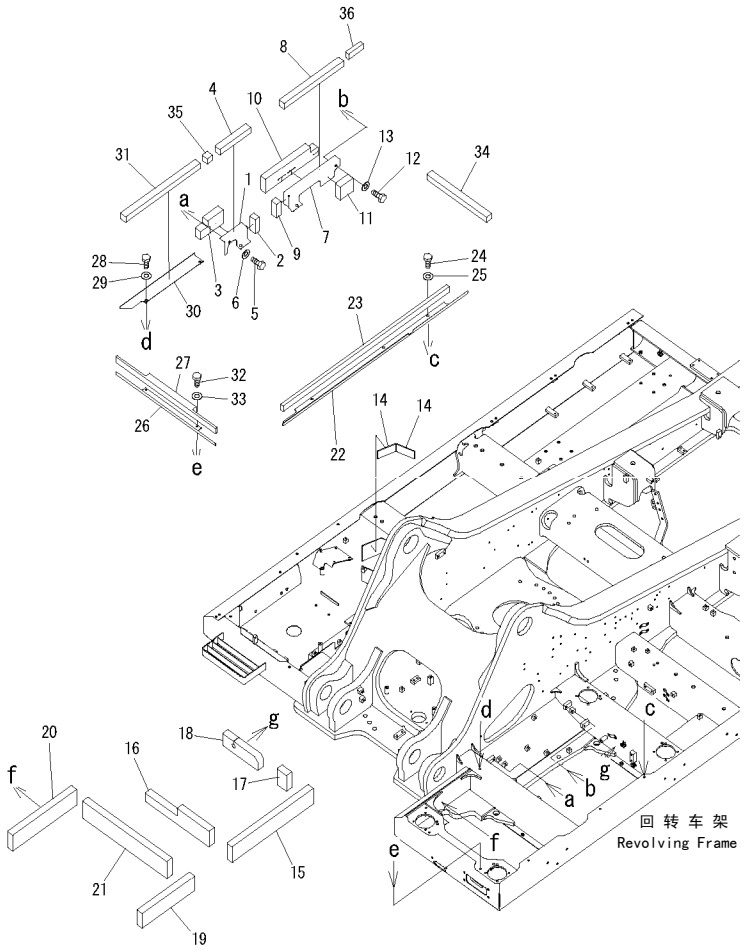

INDEX	PART NO.	DESCRIPTION	Q'TY	SERIAL NO.
1	21M-46-21410	SEAL……密封垫	1	60001-
2	21M-46-21421	SHEET…… 垫片	1	60001-
3	21M-46-21430	SHEET…… 垫片	1	60001-
4	21M-46-21671	SHEET…… 垫片	1	60001-
5	21M-46-21680	SHEET…… 垫片	1	60001-
6	21M-46-21760	SHEET…… 垫片	1	60001-
7	21M-46-21910	SEAL……密封垫	1	60001-
8	21M-46-21920	SEAL……密封垫	1	60001-
9	21M-46-21441	SHEET…… 垫片	1	60001-
10	21M-46-21820	SHEET…… 垫片	1	60001-
11	21M-46-21980	SHEET…… 垫片	1	60001-
12	21M-46-21481	SHEET…… 垫片	1	60001-
13	21M-46-21960	SHEET…… 垫片	1	60001-
14	21M-46-21510	SHEET…… 垫片	1	60001-
15	21M-46-21521	SHEET…… 垫片	1	60001-
16	21M-46-21531	SHEET…… 垫片	1	60001-
17	21M-46-21541	SHEET…… 垫片	1	60001-
18	21M-46-21550	SHEET…… 垫片	1	60001-
19	21M-46-21562	SHEET…… 垫片	1	60001-
20	21M-46-21570	SHEET…… 垫片	1	60001-
21	21M-46-21581	SHEET…… 垫片	1	60001-
22	21M-46-21590	SHEET…… 垫片	1	60001-
23	21M-46-21610	SHEET…… 垫片	1	60001-
24	21M-46-21622	SHEET…… 垫片	1	60001-
25	21M-46-21631	SHEET…… 垫片	1	60001-
26	21M-46-21641	SHEET…… 垫片	1	60001-
27	21M-46-21770	SHEET…… 垫片	1	60001-
28	21M-46-21990	SHEET…… 垫片	1	60001-
29	21M-46-21790	SHEET…… 垫片	1	60001-
30	21M-46-21880	SHEET…… 垫片	1	60001-
31	21M-46-21890	SHEET…… 垫片	1	60001-
32	21M-46-21930	SHEET…… 垫片	1	60001-
33	21M-46-21940	SHEET…… 垫片	1	60001-
34	21M-46-21950	SHEET…… 垫片	1	60001-
35	21M-46-21970	SHEET…… 垫片	1	60001-
36	07049-01215	PLUG……堵塞	16	60001-
37	07049-01620	PLUG……堵塞	4	60001-
38	21M-46-24470	BRACKET ……支架	1	60001-
39	01010-81240	BOLT……螺栓	2	60001-
40	01643-31232	WASHER …… 垫圈	2	60001-

https://truckmanualshub.com/

FIG.J1310-01A1 BOOM FOOT PIN

动臂底部销

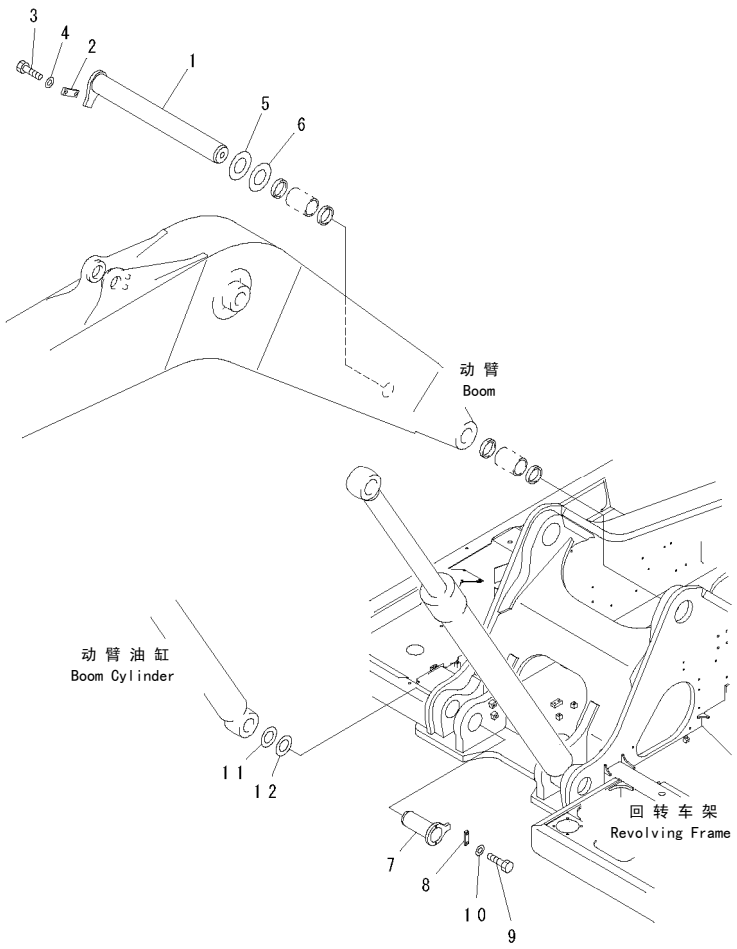

PWL1755

FIG NO. : J1310-01A1

INDEX	PART NO.	DESCRIPTION	Q'TY	SERIAL NO.
1	21M-70-11190	PIN ……销	1	60001-
2	21N-70-11230	PLATE ……板	1	60001-
3	01010-81640	BOLT……螺栓	2	60001-
4	01643-31645	WASHER……垫圈	2	60001-
5	209-72-11180	SHIM, 1.0MM……调整垫, 1.0MM	2	60001-
6	209-72-11190	SHIM, 1.5MM……调整垫, 1.5MM	2	60001-
7	21M-70-11210	PIN ……销	2	60001-
8	21N-70-11230	PLATE ……板	2	60001-
9	01010-81640	BOLT……螺栓	4	60001-
10	01643-31645	WASHER……垫圈	4	60001-
11	207-70-11360	SHIM, 1.0MM……调整垫, 1.0MM	4	60001-
12	207-70-11370	SHIM, 1.5MM……调整垫, 1.5MM	4	60001-

https://truckmanualshub.com/

FIG.J1410-01A0 DECK GUARD (FOR REVOLVING FRAME)
防护板（回转车架用）

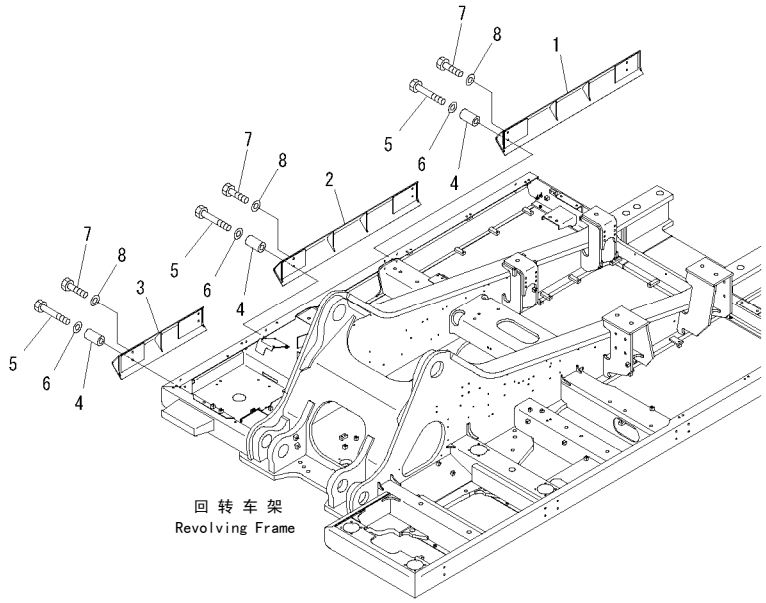

PW1F597

FIG NO. : J1410-01A0

INDEX	PART NO.	DESCRIPTION	Q'TY	SERIAL NO.
1	21M-46-15410	DECK GUARD……防护板	1	60001-
2	21M-46-15420	DECK GUARD……防护板	1	60001-
3	21M-46-15430	DECK GUARD……防护板	1	60001-
4	205-03-71331	COLLAR……衬套	6	60001-
5	01010-81280	BOLT……螺栓	6	60001-
6	01643-31232	WASHER……垫圈	6	60001-
7	01010-81235	BOLT……螺栓	6	60001-
8	01643-31232	WASHER……垫圈	6	60001-

OPERATOR'S COMPARTMENT AND CONTROL SYSTEM

驾驶室和操纵系统

https://truckmanualshub.com/

https://truckmanualshub.com/

FIG.KO110-01A1 OPERATOR'S SEAT(TILT)(SUSPENSION TYPE)
驾驶室座椅(倾斜)(弹性的)

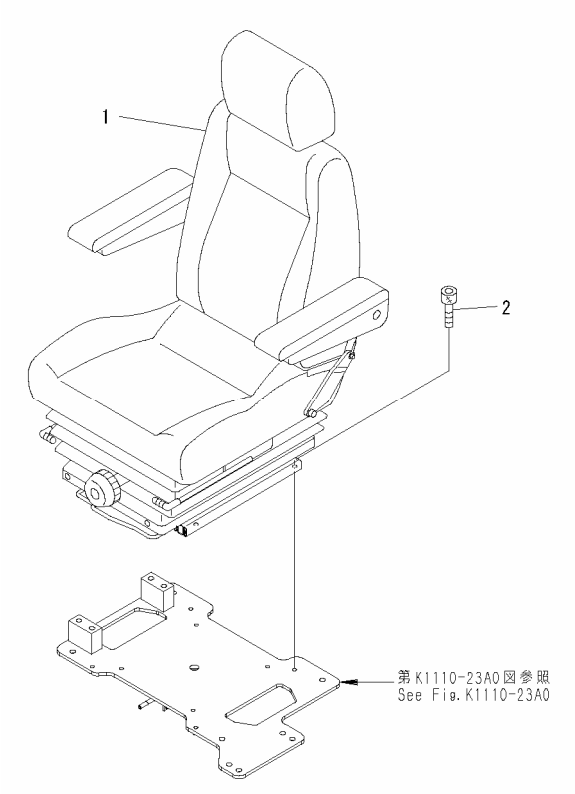

00038959

FIG NO. : KO110-01A1

INDEX	PART NO.	DESCRIPTION	Q'TY	SERIAL NO.
1	208-57-71101	SEAT ASS'Y……座椅总成	1	60001-
2	01252-80825	BOLT …… 螺栓	4	60001-

https://truckmanualshub.com/

FIG.KO160-01A0 SEAT BELT (48MM WIDE)
安全带(48MM宽)

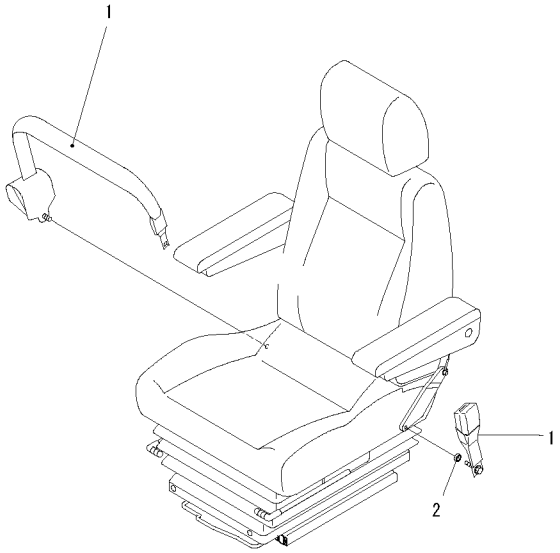

PW1B855

FIG NO. : KO160-01A0

INDEX	PART NO.	DESCRIPTION	Q'TY	SERIAL NO.
1	22B-57-11812	BELT, LAP ……安全带	1	60001-
2	22B-57-11830	SPACER …… 调整垫片	1	60001-

https://truckmanualshub.com/

FIG.KO180-01A0 SEAT REAR COVER (WITH AIR CONDITIONER)
座椅后盖(有空调)

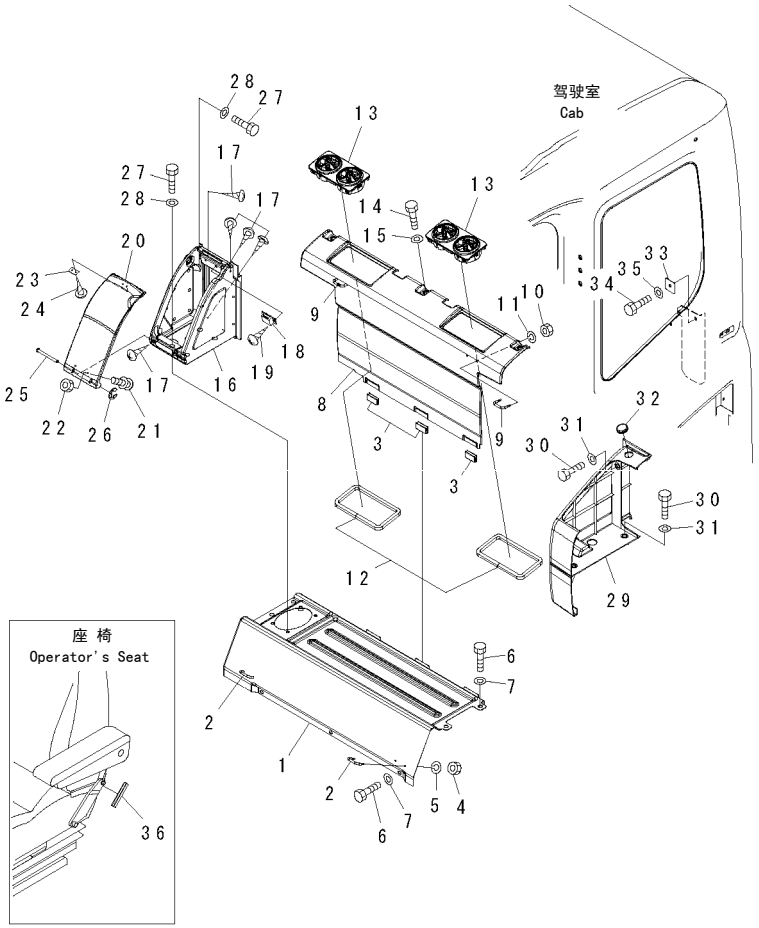

00022511

FIG NO. : KO180-01A0

INDEX	PART NO.	DESCRIPTION	Q'TY	SERIAL NO.
	208-53-13610	COVER ASS'Y ……盖总成	1	60001-
1	☆	.COVER……盖	1	60001-
2	208-53-12290	.HOOK ……钩子	2	60001-
3	208-53-12460	.SEAT ……座	3	60001-
4	01580-10403	.NUT …… 螺母	4	60001-
5	01601-20410	.WASHER ……垫圈	4	60001-
6	01010-D0820	BOLT …… 螺栓	7	60001-
7	01643-70823	WASHER……垫圈	7	60001-
	208-53-13620	COVER ……盖	1	60001-
8	☆	.COVER……盖	1	60001-
9	208-53-12290	..HOOK……钩子	2	60001-
10	01580-10403	..NUT…… 螺母	2	60001-
11	01601-20410	..WASHER……垫圈	2	60001-
12	208-53-13710	.SEAL…… 密封垫	2	60001-
13	208-979-7560	GRILLE …… 格栅	2	60001-
14	01010-D0820	BOLT …… 螺栓	3	60001-
15	01643-70823	WASHER……垫圈	3	60001-
	208-53-12350	COVER ASS'Y ……盖总成	1	60001-
16	☆	.COVER……盖	1	60001-
17	☆	..SCREW…… 螺钉	10	60001-
18	09452-14503	.CATCHER……卡头	1	60001-
19	01370-10308	.SCREW …… 螺钉	2	60001-
20	208-53-12390	.COVER……盖	1	60001-
21	01023-10406	..SCREW…… 螺钉	2	60001-
22	01580-00403	..NUT…… 螺母	2	60001-
23	208-53-12410	.PLATE……板	1	60001-
24	01370-20308	.SCREW …… 螺钉	2	60001-
25	208-53-12320	.PIN …… 销	1	60001-
26	208-53-12330	.RING…… 隔圈	1	60001-
27	01010-D0820	BOLT …… 螺栓	5	60001-
28	208-53-11330	WASHER……垫圈	5	60001-
29	208-53-12730	COVER ……盖	1	60001-
30	01010-D0820	BOLT …… 螺栓	3	60001-
31	208-53-11330	WASHER……垫圈	3	60001-
32	09415-02110	CAP ……盖	1	60001-
33	208-53-12750	PLATE ……板	1	60001-
34	01010-D0820	BOLT …… 螺栓	1	60001-
35	01643-70823	WASHER……垫圈	1	60001-
36	208-53-11780	TRIM……装饰条	2	60001-

https://truckmanualshub.com/

FIG.KO230-01A0 FRONT GUARD (FULL) (LEVEL-2)
前护板（全）（2级）

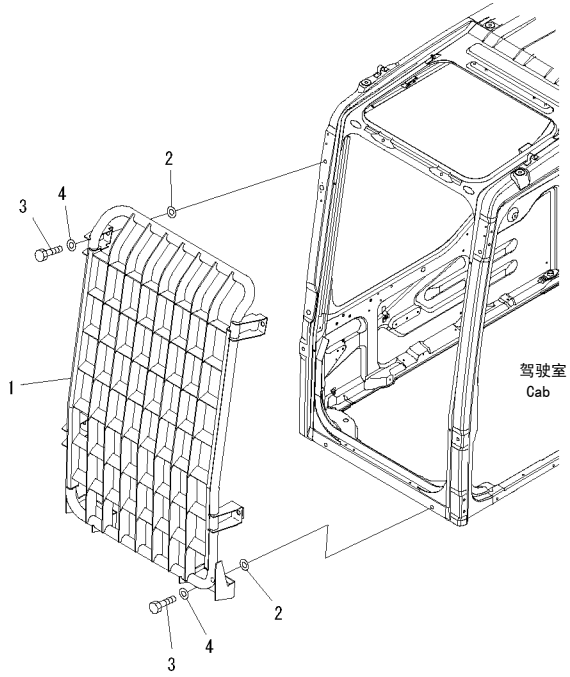

PW1B875

FIG NO. : KO230-01A0

INDEX	PART NO.	DESCRIPTION	Q'TY	SERIAL NO.
1	20Y-954-4310	GUARD…… 护罩	1	60001-
2	130-43-64260	COLLAR …… 衬套	6	60001-
3	01010-D1240	BOLT …… 螺栓	6	60001-
4	01643-71232	WASHER……垫圈	6	60001-

https://truckmanualshub.com/

FIG.KO31O-01AO FLOOR MAT
地毯

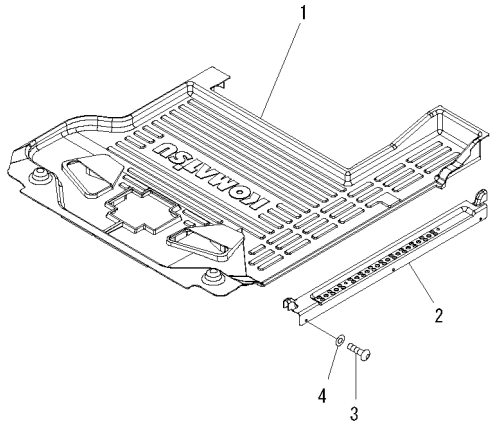

00011594

FIG NO. : KO31O-01AO

INDEX	PART NO.	DESCRIPTION	Q'TY	SERIAL NO.
1	208-53-12611	FLOOR MA ····· 地毯	1	60001-
2	20Y-54-51952	COVER····· 盖	1	60001-
3	01245-00616	SCREW····· 螺钉	5	60001-
4	01643-70623	WASHER·····垫圈	5	60001-

https://truckmanualshub.com/

FIG.KO320-01A0 RAIN VISOR
遮雨板

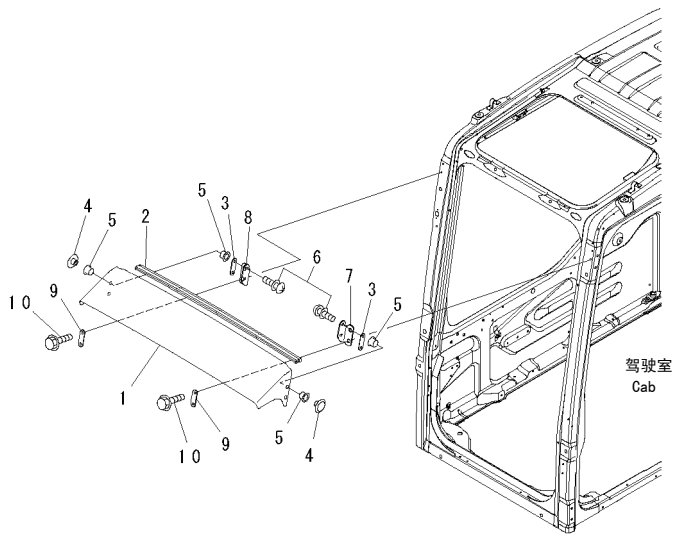

PW1C927

FIG NO. : KO320-01A0

INDEX	PART NO.	DESCRIPTION	Q'TY	SERIAL NO.
1	20Y-54-52552	VISOR ……遮板	1	60001-
2	20Y-54-52950	.SEAL…… 密封垫	1	60001-
3	20Y-54-52530	PLATE ……板	2	60001-
4	205-54-51720	RETAINER……固定座	4	60001-
5	205-54-51730	PACKING…… 衬垫	8	60001-
6	01023-20612	SCREW…… 螺钉	4	60001-
7	20Y-54-52562	PLATE,L.H…… 板(左)	1	60001-
8	20Y-54-52572	PLATE,R.H…… 板(右)	1	60001-
9	20Y-54-52530	PLATE ……板	2	60001-
10	01435-40616	BOLT …… 螺栓	4	60001-

https://truckmanualshub.com/

FIG.K0350-01A0 WINDOW WASHER
洗窗器

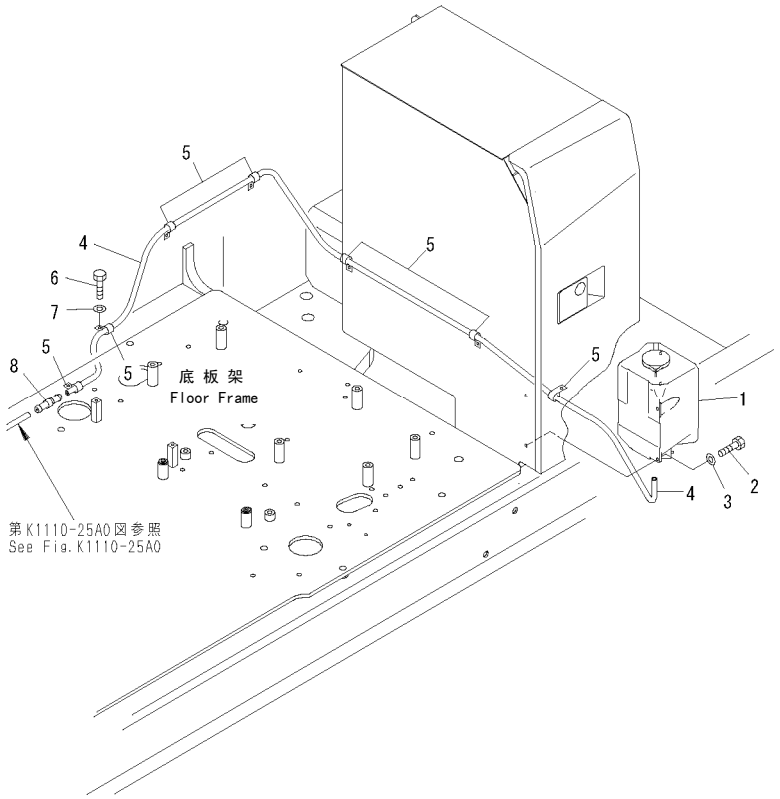

00038960

FIG NO. : K0350-01A0

INDEX	PART NO.	DESCRIPTION	Q'TY	SERIAL NO.
1	21T-06-11350	TANK ASS'Y……水箱总成	1	60001-
2	01010-80616	BOLT …… 螺栓	4	60001-
3	01643-30623	WASHER……垫圈	4	60001-
4	195-979-8570	HOSE …… 软管	1	60001-
5	21T-38-12270	CLIP……管夹	7	60001-
6	01010-81225	BOLT …… 螺栓	1	60001-
7	01643-31232	WASHER……垫圈	1	60001-
8	195-979-8590	VALVE ……阀	1	60001-

https://truckmanualshub.com/

FIG.K0600-01A0 TOP GUARD (LEVEL-2)
顶护板（2级）

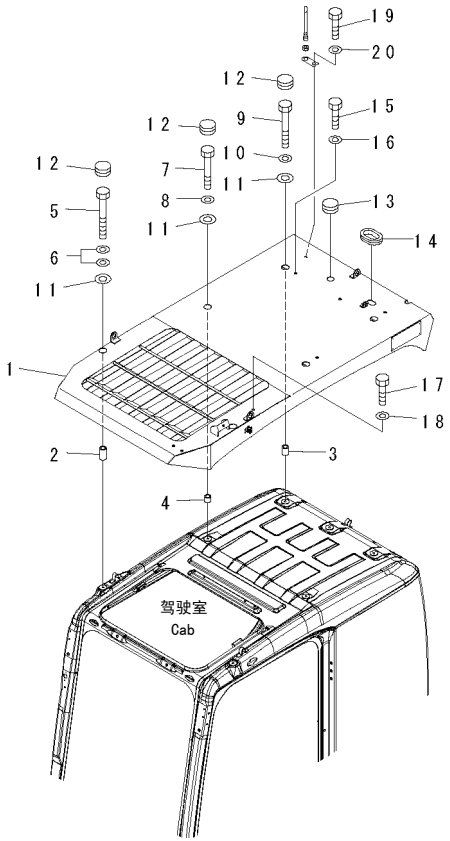

00059722

FIG NO. : K0600-01A0

INDEX	PART NO.	DESCRIPTION	Q'TY	SERIAL NO.
1	209-954-4213	GUARD ……护板	1	60001-
2	20Y-954-4220	PIPE …… 硬管	2	60001-
3	20Y-954-4230	PIPE …… 硬管	2	60001-
4	20Y-954-4240	PIPE …… 硬管	2	60001-
5	01011-81220	BOLT …… 螺栓	2	60001-
6	01643-31232	WASHER……垫圈	4	60001-
7	01010-81280	BOLT …… 螺栓	2	60001-
8	01643-31232	WASHER……垫圈	2	60001-
9	01010-81295	BOLT …… 螺栓	2	60001-
10	01643-31232	WASHER……垫圈	2	60001-
11	130-43-64260	COLLAR …… 衬套	6	60001-
12	195-Z11-2970	CAP ……盖	6	60001-
13	09415-02512	CAP ……盖	1	60001-
14	120-06-24110	GROMMET…… 保护套	1	60001-
15	01010-D1220	BOLT …… 螺栓	2	60001-
16	01643-71232	WASHER……垫圈	2	60001-
17	01010-D1016	BOLT …… 螺栓	1	60001-
18	01643-71032	WASHER……垫圈	1	60001-
19	01010-D1225	BOLT …… 螺栓	1	60001-
20	01643-71232	WASHER……垫圈	1	60001-

https://truckmanualshub.com/

FIG.KO700-01A0 AIR CONDITIONER (COMPRESSOR)
空调（压缩机）

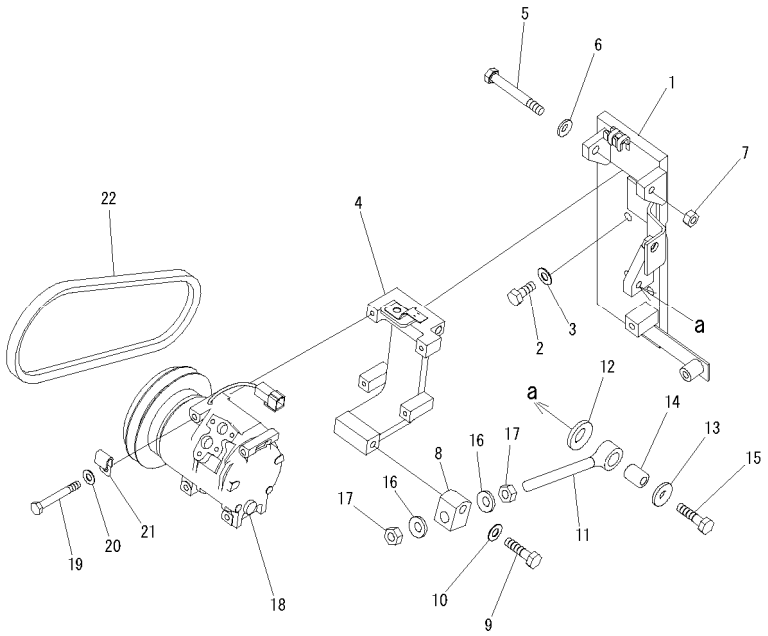

00038954

FIG NO. : KO700-01A0

INDEX	PART NO.	DESCRIPTION	Q'TY	SERIAL NO.
1	21M-979-2111	BRACKET…… 支架	1	60001-
2	01010-81235	BOLT …… 螺栓	4	60001-
3	01643-31232	WASHER……垫圈	4	60001-
4	21M-979-2120	BRACKET…… 支架	1	60001-
5	01019-31240	BOLT …… 螺栓	1	60001-
6	01643-31232	WASHER……垫圈	1	60001-
7	01580-11210	NUT…… 螺母	1	60001-
8	6150-82-8690	PLATE ……板	1	60001-
9	01010-81250	BOLT …… 螺栓	1	60001-
10	01643-31232	WASHER……垫圈	1	60001-
11	6240-81-8640	ROD ……杆	1	60001-
12	01643-32260	WASHER……垫圈	1	60001-
13	175-54-34170	WASHER……垫圈	1	60001-
14	6215-81-6150	PIN ……销	1	60001-
15	01010-81250	BOLT …… 螺栓	1	60001-
16	01643-31445	WASHER……垫圈	2	60001-
17	01580-11411	NUT…… 螺母	2	60001-
18	(20Y-979-6121)	COMPRESSOR ASS'Y …… 压缩机总成	1	60001-
19	01010-80875	BOLT …… 螺栓	4	60001-
20	01643-30823	WASHER……垫圈	4	60001-
21	08036-10810	CLIP……管夹	1	60001-
22	04120-21736	V-BELT ……V形皮带	1	60001-

https://truckmanualshub.com/

FIG.KO700-02A0 AIR CONDITIONER (HEATER HOSE AND CLAMP)
空调（加热器软管和卡箍）

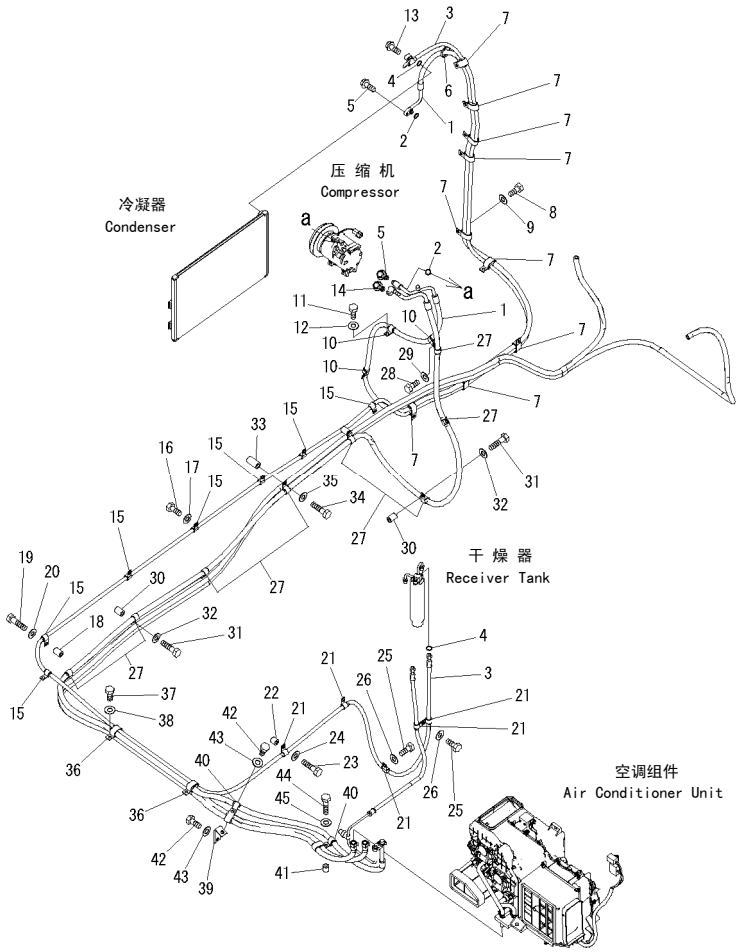

00038955

FIG NO. : KO700-02A0

INDEX	PART NO.	DESCRIPTION	Q'TY	SERIAL NO.
1	21M-979-2131	HOSE ····· 软管	1	60001-
2	20Y-979-3140	.O-RING·····O形圈	2	60001-
3	21M-979-2141	HOSE ····· 软管	1	60001-
4	20Y-979-3150	.O-RING·····O形圈	2	60001-
5	01435-00625	BOLT ····· 螺栓	2	60001-
6	08034-20823	BAND·····绑带	1	60001-
7	04435-51812	CLIP·····管夹	9	60001-
8	01010-81225	BOLT ····· 螺栓	9	60001-
9	01643-31232	WASHER·····垫圈	9	60001-
10	04434-51912	CLIP·····管夹	3	60001-
11	01010-81225	BOLT ····· 螺栓	2	60001-
12	01643-31232	WASHER·····垫圈	2	60001-
13	01435-00625	BOLT ····· 螺栓	1	60001-
14	01435-00630	BOLT ····· 螺栓	1	60001-
15	04434-51612	CLIP·····管夹	7	60001-
16	01010-81225	BOLT ····· 螺栓	5	60001-
17	01643-31232	WASHER·····垫圈	5	60001-
18	20Y-03-11220	COLLAR·····接头	1	60001-
19	01010-81260	BOLT ····· 螺栓	1	60001-
20	01643-31232	WASHER·····垫圈	1	60001-
21	04434-51612	CLIP·····管夹	5	60001-
22	195-33-11220	SPACER·····隔离套	2	60001-
23	01010-81250	BOLT ····· 螺栓	2	60001-
24	01643-31232	WASHER·····垫圈	2	60001-
25	01010-81225	BOLT ····· 螺栓	2	60001-
26	01643-31232	WASHER·····垫圈	2	60001-
27	04434-52112	CLIP·····管夹	8	60001-
28	01010-81225	BOLT ····· 螺栓	2	60001-
29	01643-31232	WASHER·····垫圈	2	60001-
30	20Y-03-11220	COLLAR·····接头	4	60001-
31	01010-81260	BOLT ····· 螺栓	4	60001-
32	01643-31232	WASHER·····垫圈	4	60001-
33	206-62-41670	COLLAR·····接头	2	60001-
34	01010-81280	BOLT ····· 螺栓	2	60001-
35	01643-31232	WASHER·····垫圈	2	60001-
36	04435-51812	CLIP·····管夹	2	60001-
37	01010-81225	BOLT ····· 螺栓	2	60001-
38	01643-31232	WASHER·····垫圈	2	60001-
39	21M-06-14170	BRACKET····· 支架	1	60001-
40	04434-52112	CLIP·····管夹	2	60001-
41	195-33-11220	SPACER·····隔离套	1	60001-
42	01010-81225	BOLT ····· 螺栓	2	60001-

https://truckmanualshub.com/

FIG.KO700-02A0　AIR CONDITIONER (HEATER HOSE AND CLAMP)
空调（加热器软管和卡箍）

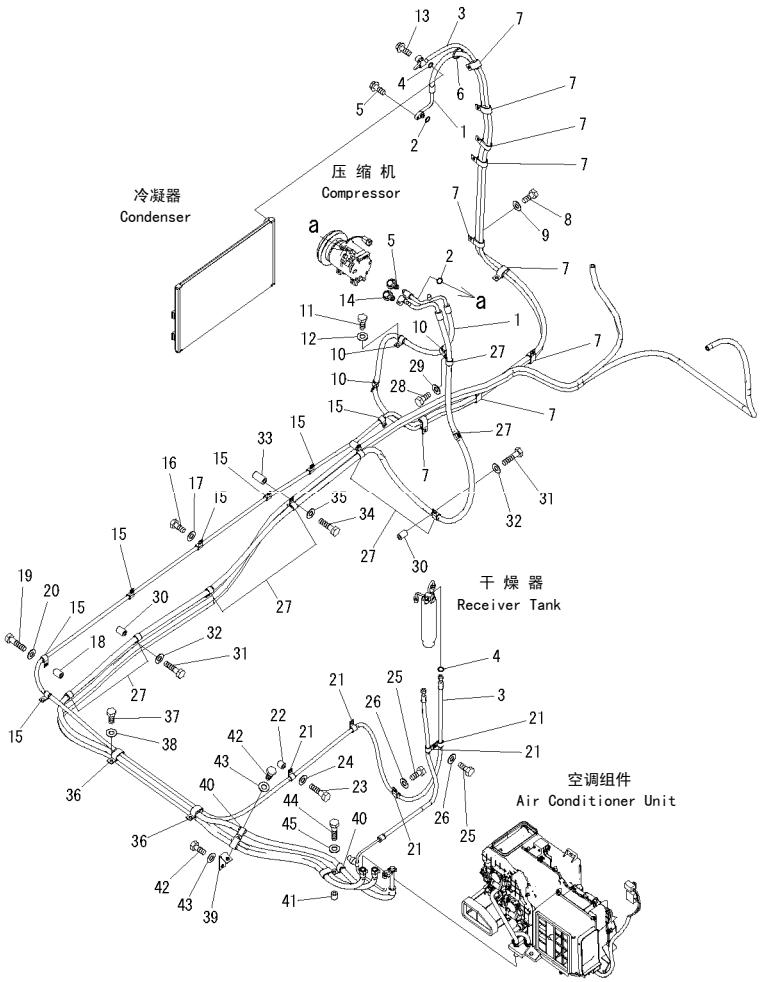

00038955

FIG NO. : KO700-02A0

INDEX	PART NO.	DESCRIPTION	Q'TY	SERIAL NO.
43	01643-31232	WASHER……垫圈	2	60001-
44	01010-81250	BOLT …… 螺栓	1	60001-
45	01643-31232	WASHER……垫圈	1	60001-

https://truckmanualshub.com/

FIG.KO700-03A0 AIR CONDITIONER (CLAMP)
空调（卡箍）

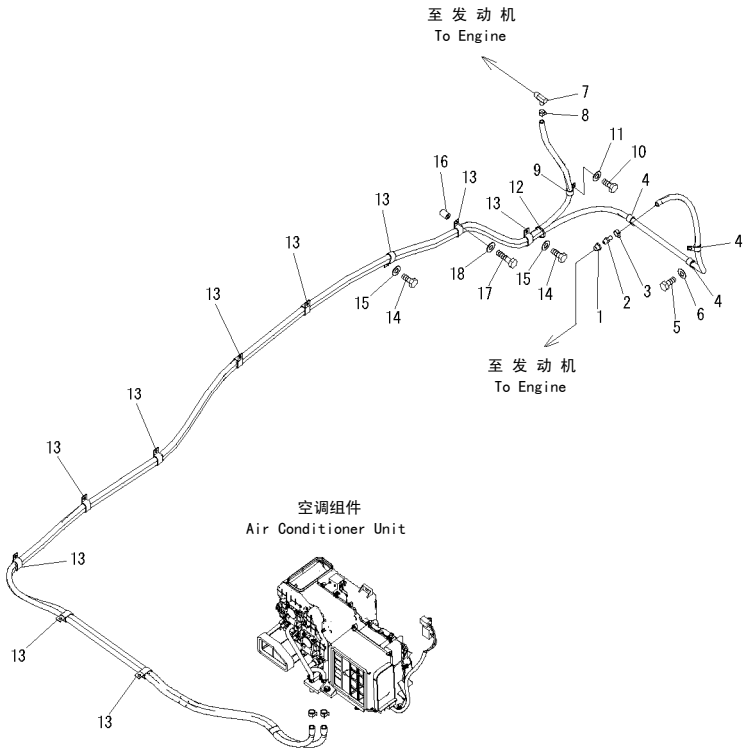

00043388

FIG NO. : KO700-03A0

INDEX	PART NO.	DESCRIPTION	Q'TY	SERIAL NO.
1	07326-10403	ADAPTER ……接头	1	60001-
2	20T-54-42510	NIPPLE …… 喷嘴	1	60001-
3	11Y-09-11160	CLIP……管夹	1	60001-
4	04434-52112	CLIP……管夹	3	60001-
5	01010-81225	BOLT …… 螺栓	2	60001-
6	01643-31232	WASHER……垫圈	2	60001-
7	202-98-11340	JOINT ……接头	1	60001-
8	11Y-09-11160	CLIP……管夹	1	60001-
9	04434-52112	CLIP……管夹	1	60001-
10	01010-81225	BOLT …… 螺栓	1	60001-
11	01643-31232	WASHER……垫圈	1	60001-
12	08034-20823	BAND……绑带	1	60001-
13	141-06-11220	CLIP……管夹	12	60001-
14	01010-81225	BOLT …… 螺栓	2	60001-
15	01643-31232	WASHER……垫圈	2	60001-
16	20Y-03-11220	COLLAR……接头	1	60001-
17	01010-81260	BOLT …… 螺栓	1	60001-
18	01643-31232	WASHER……垫圈	1	60001-

https://truckmanualshub.com/

FIG.KO700-04A0 AIR CONDITIONER (RECEIVER TANK)
空调（干燥器）

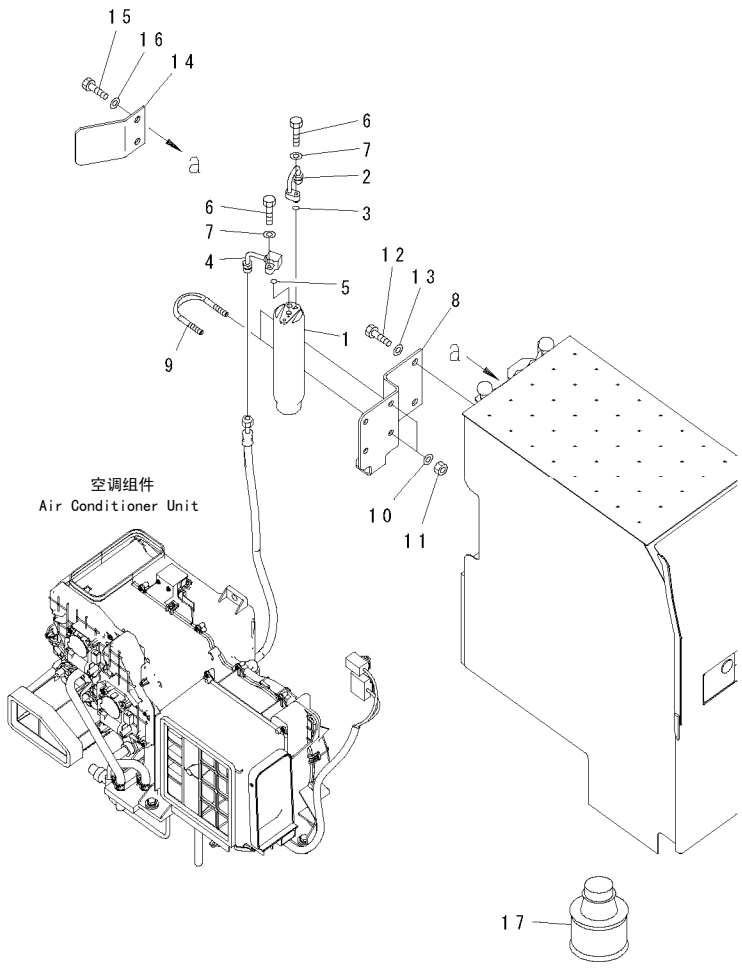

00038957

FIG NO. : KO700-04A0

INDEX	PART NO.	DESCRIPTION	Q'TY	SERIAL NO.
1	20Y-979-3120	TANK……箱	1	60001-
2	21M-979-2220	TUBE …… 硬管	1	60001-
3	20Y-979-3150	O-RING ……O形圈	1	60001-
4	20Y-979-6650	TUBE …… 硬管	1	60001-
5	20Y-979-3150	O-RING ……O形圈	1	60001-
6	01010-80625	BOLT …… 螺栓	2	60001-
7	01643-30623	WASHER……垫圈	2	60001-
8	21M-979-2192	BRACKET…… 支架	1	60001-
9	07283-36155	CLIP……管夹	2	60001-
10	01643-31032	WASHER……垫圈	4	60001-
11	01597-01009	NUT…… 螺母	4	60001-
12	01010-81225	BOLT …… 螺栓	2	60001-
13	01643-31232	WASHER……垫圈	2	60001-
14	21M-979-2211	PLATE ……板	1	60001-
15	01010-81225	BOLT …… 螺栓	2	60001-
16	01643-31232	WASHER……垫圈	2	60001-
17	21N-979-8160	OIL…… 油	1	60001-

https://truckmanualshub.com/

FIG.K0830-01A5 FIRE EXTINGUISHER (CHINESE)
灭火器（中文）

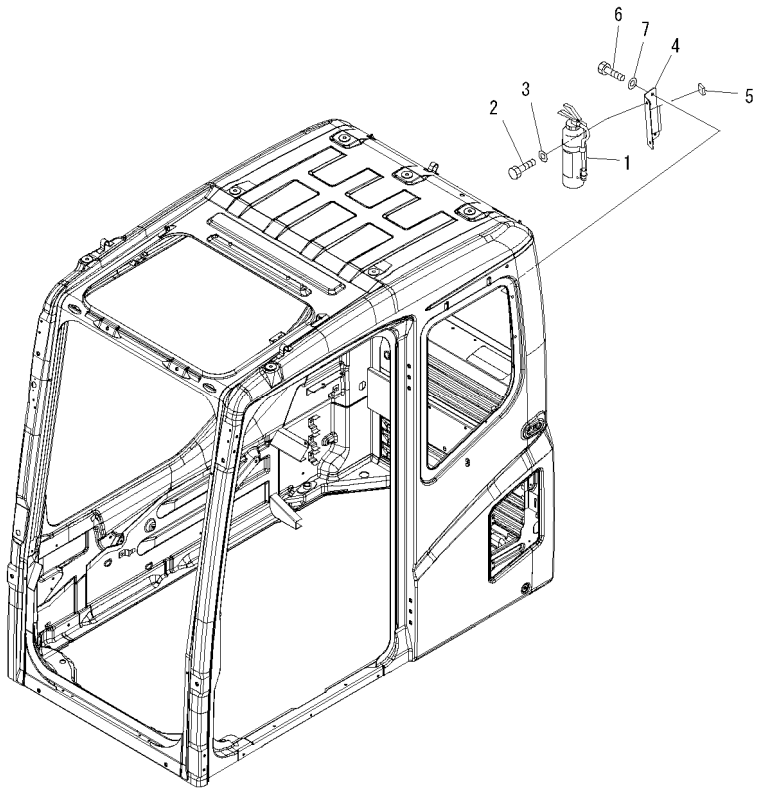

00012730

FIG NO. : K0830-01A5

INDEX	PART NO.	DESCRIPTION	Q'TY	SERIAL NO.
1	22B-98-11150	EXTINGUISHER……灭火器	1	60001-
2	01010-D0816	BOLT …… 螺栓	2	60001-
3	01643-70823	WASHER……垫圈	2	60001-
	208-53-11840	PLATE ……板	1	60001-
4	208-53-11730	.PLATE……板	1	60001-
5	208-53-11740	.SEAT ……座	2	60001-
6	01010-D0820	BOLT …… 螺栓	2	60001-
7	01643-70823	WASHER……垫圈	2	60001-

https://truckmanualshub.com/

FIG.K1110-01A0 FLOOR FRAME (OPERATOR'S CAB) (CAB)
底板架（驾驶室）（驾驶室）

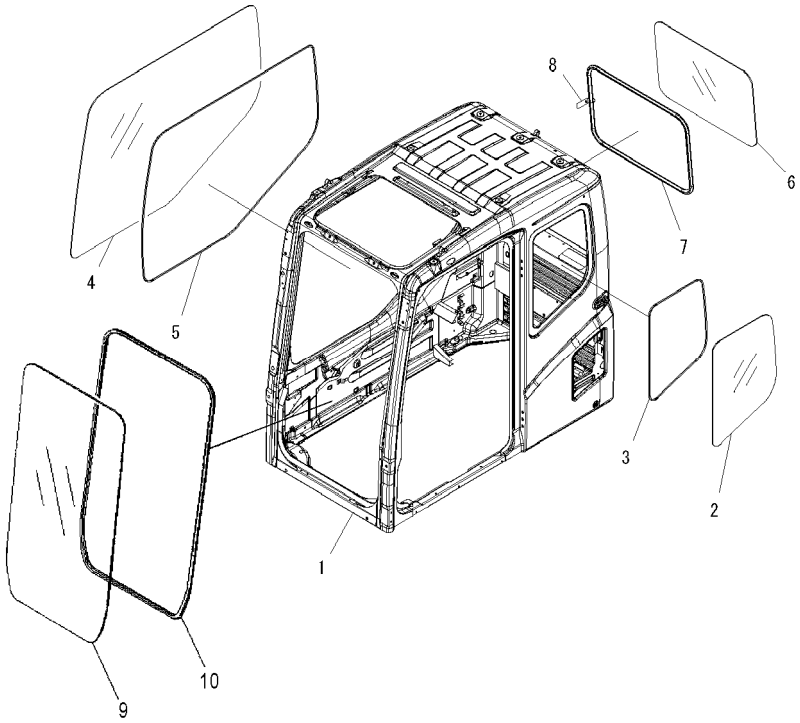

00040911

FIG NO. : K1110-01A0

INDEX	PART NO.	DESCRIPTION	Q'TY	SERIAL NO.
	21M-54-00630	CAB ASS'Y…… 驾驶室总成	1	60001-
1	☆	.CAB …… 驾驶室	1	60001-
2	20Y-54-51241	.GLASS …… 玻璃	1	60001-
3	20Y-54-51261	.SEAL…… 密封垫	1	60001-
4	20Y-54-51842	.GLASS …… 玻璃	1	60001-
5	20Y-54-51851	.DAM……橡皮障	1	60001-
6	208-53-11270	.GLASS …… 玻璃	1	60001-
7	20Y-54-51251	.WEATHER STRIP……密封条	1	60001-
8	20T-54-75250	.TAG……标签	1	60001-
9	208-53-13330	.GLASS …… 玻璃	1	60001-
10	20Y-54-53322	.WEATHER STRIP……密封条	1	60001-

https://truckmanualshub.com/

FIG.K111O-04A0 FLOOR FRAME (OPERATOR'S CAB) (ROOF WINDOW)
底板架（驾驶室）（顶窗）

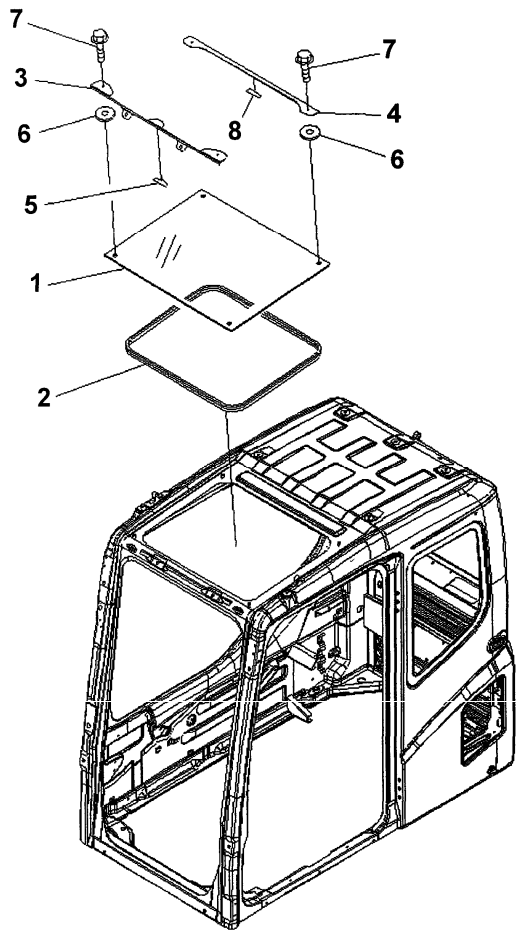

00011349

FIG NO. : K111O-04A0

INDEX	PART NO.	DESCRIPTION	Q'TY	SERIAL NO.
	(21M-54-00630)	CAB ASS'Y…… 驾驶室总成	1	60001-
1	208-53-13410	CLEAR PLATE ……清洁板	1	60001-
2	208-53-13441	TRIM……装饰条	1	60001-
3	208-53-13420	PLATE ……板	1	60001-
4	208-53-13430	PLATE ……板	1	60001-
5	21W-54-46920	SHEET ……垫片	1	60001-
6	20T-54-74880	GROMMET…… 保护套	4	60001-
7	01435-40612	BOLT……螺栓	4	60001-
8	208-53-13680	SHEET ……铆钉	1	60001-

https://truckmanualshub.com/

FIG.K1110-05A0 FLOOR FRAME (OPERATOR'S CAB) (DOOR)

底板架（驾驶室）（门）

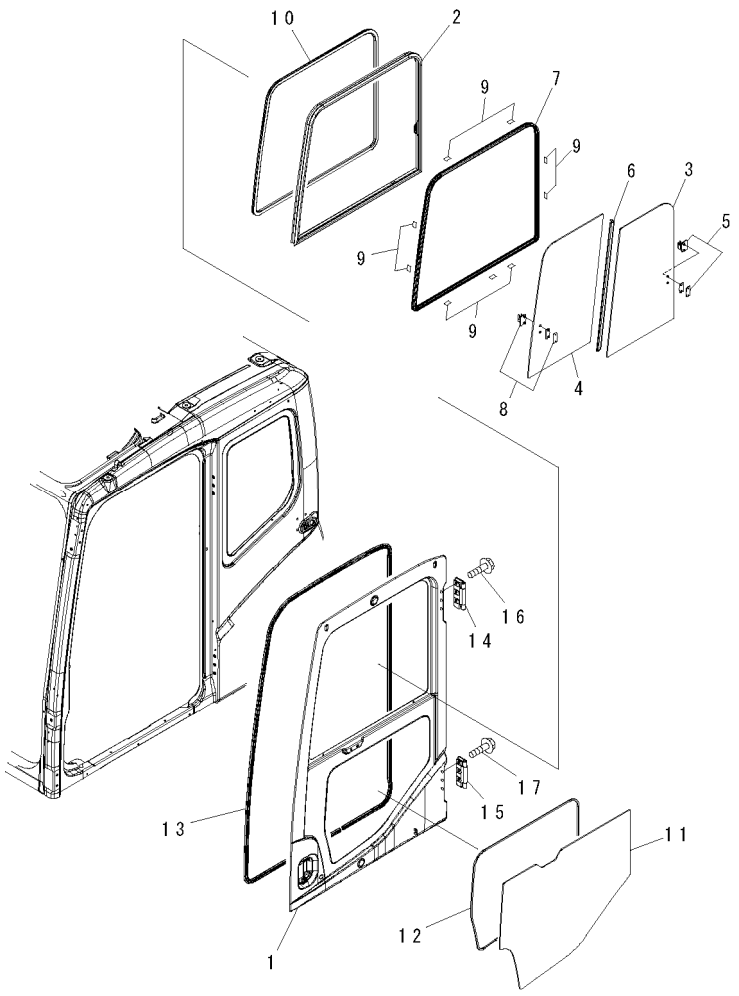

00013353

FIG NO. : K1110-05A0

INDEX	PART NO.	DESCRIPTION	Q'TY	SERIAL NO.
	(21M-54-00630)	CAB ASS'Y…… 驾驶室总成	1	60001-
1	☆	..DOOR……门	1	60001-
	20Y-54-51401	..SASH ASS'Y……框总成	1	60001-
2	20Y-54-52830	...SASH FRAME ……窗扇框架	1	60001-
3	20Y-54-52840	...GLASS……玻璃	1	60001-
4	20Y-54-52850	...GLASS……玻璃	1	60001-
5	20Y-54-52860	...LOCK ASS'Y ……锁总成	1	60001-
6	20Y-54-52870	...SEAL…… 密封垫	1	60001-
7	20Y-54-52880	...SEAL…… 密封垫	1	60001-
8	20Y-54-13322	...LOCK ……锁	1	60001-
9	20Y-54-13180	..SEAT……座	9	60001-
10	20Y-54-51470	..TRIM……装饰条	1	60001-
11	20Y-54-51451	..GLASS…… 玻璃	1	60001-
12	20Y-54-51461	..SEAL……密封垫	1	60001-
13	20Y-54-51482	..SEAL……密封垫	1	60001-
14	20Y-54-51330	..HINGE ……铰链	1	60001-
15	14X-911-1330	..HINGE ……铰链	1	60001-
16	01435-41225	..BOLT……螺栓	6	60001-
17	01435-01225	..BOLT……螺栓	6	60001-

https://truckmanualshub.com/

FIG.K111O-06A0 FLOOR FRAME (OPERATOR'S CAB) (DOOR LOCK)
底板架（驾驶室）（门锁）

FIG NO. : K111O-06A0

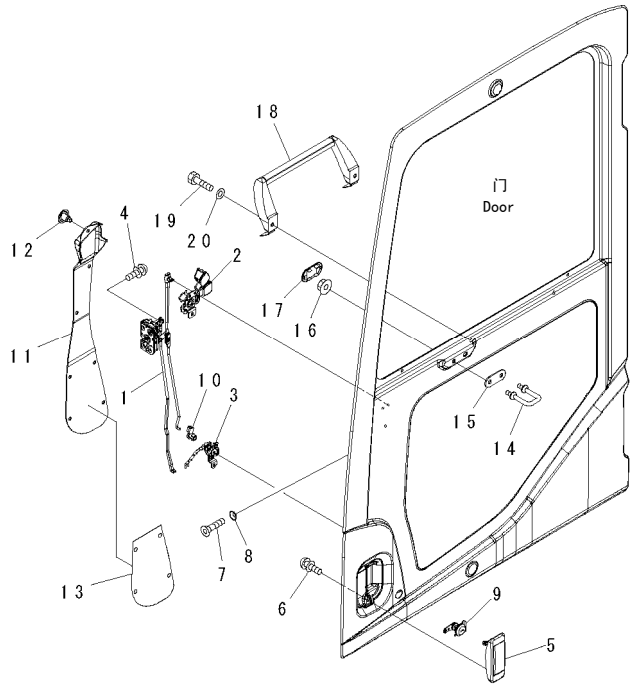

00011351

INDEX	PART NO.	DESCRIPTION	Q'TY	SERIAL NO.
	(21M-54-00630)	CAB ASS'Y…… 驾驶室总成	1	60001-
	(208-53-00070)	.DOOR ASS'Y…… 门总成	1	60001-
1	20Y-54-52200	..LATCH ASS'Y…… 闩总成	1	60001-
2	20Y-54-52300	..HANDLE ASS'Y……把手总成	1	60001-
3	20Y-54-52400	..BELLCRANK ASS'Y…… 摇臂总成	1	60001-
4	01023-10612	..SCREW…… 螺钉	5	60001-
5	20Y-54-52990	..HANDLE……把手	1	60001-
6	01023-10612	..SCREW…… 螺钉	2	60001-
7	01240-00616	..SCREW…… 螺钉	3	60001-
8	195-Z11-1690	..WASHER……垫圈	3	60001-
9	20Y-54-52820	..LOCK ASS'Y……锁总成	1	60001-
10	22B-54-16330	..SNAP……门锁碰头	1	60001-
11	20Y-54-51441	..COVER…… 盖	1	60001-
12	22B-54-16461	..RIVET…… 铆钉	7	60001-
13	208-53-11320	..SEAL……密封垫	1	60001-
14	20Y-54-51321	..STRIKER…… 锁杆	1	60001-
15	20Y-54-51341	..PLATE…… 板	1	60001-
16	01584-01008	..NUT…… 螺母	2	60001-
17	20Y-54-51490	..COVER…… 盖	1	60001-
18	20Y-54-51393	..GRIP……把手	1	60001-
19	01010-80820	..BOLT……螺栓	2	60001-
20	01643-30823	..WASHER……垫圈	2	60001-

https://truckmanualshub.com/

FIG.K1110-07A0 FLOOR FRAME (OPERATOR'S CAB) (OPEN LOCK)
底板架（驾驶室）（开锁）

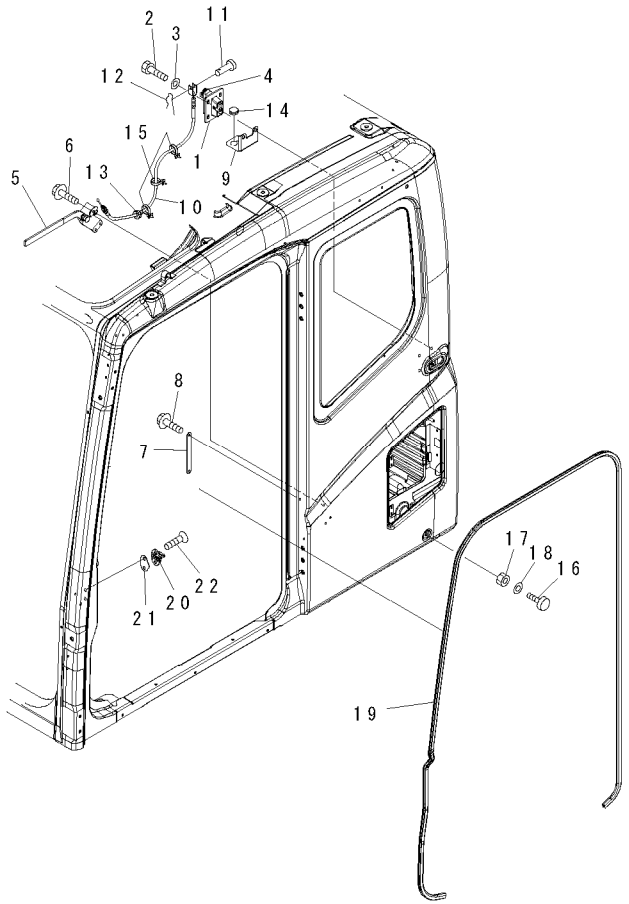

00011352

FIG NO. : K1110-07A0

INDEX	PART NO.	DESCRIPTION	Q'TY	SERIAL NO.
	(21M-54-00630)	CAB ASS'Y…… 驾驶室总成	1	60001-
1	20Y-54-36380	.LOCK…… 锁	1	60001-
2	01010-D0820	.BOLT…… 螺栓	4	60001-
3	01643-70823	.WASHER…… 垫圈	4	60001-
4	20Y-53-12280	.COVER……盖	1	60001-
5	208-53-14540	.LEVER ASS'Y……杆总成	1	60001-
6	01435-40616	.BOLT…… 螺栓	3	60001-
7	208-53-14720	.BRACKET……支架	1	60001-
8	01435-40616	.BOLT…… 螺栓	2	60001-
9	208-53-11980	.PLATE……板	1	60001-
10	208-53-11990	.CABLE……油门软轴	1	60001-
11	04205-10520	.PIN……销	1	60001-
12	04052-10530	.PIN……销	1	60001-
13	08037-01610	.GROMMET……保护套	1	60001-
14	09415-01610	.CAP……盖	1	60001-
15	08059-00413	.CLIP…… 管夹	3	60001-
16	20Y-54-11611	.STOPPER……止动块	2	60001-
17	01580-11008	.NUT……螺母	2	60001-
18	01643-31032	.WASHER…… 垫圈	2	60001-
19	20Y-54-51910	.TRIM…… 装饰条	1	60001-
20	20Y-54-35470	.STRIKER …… 锁杆	1	60001-
21	20Y-54-35480	.SHIM…… 调整垫	1	60001-
22	01240-01025	.SCREW……螺钉	2	60001-

https://truckmanualshub.com/

FIG.K1110-08A0 FLOOR FRAME (OPERATOR'S CAB) (ELECTRICAL)(WIPER AND ROOM LAMP)
底板架（驾驶室）（电器）(雨刮器和驾驶室灯)

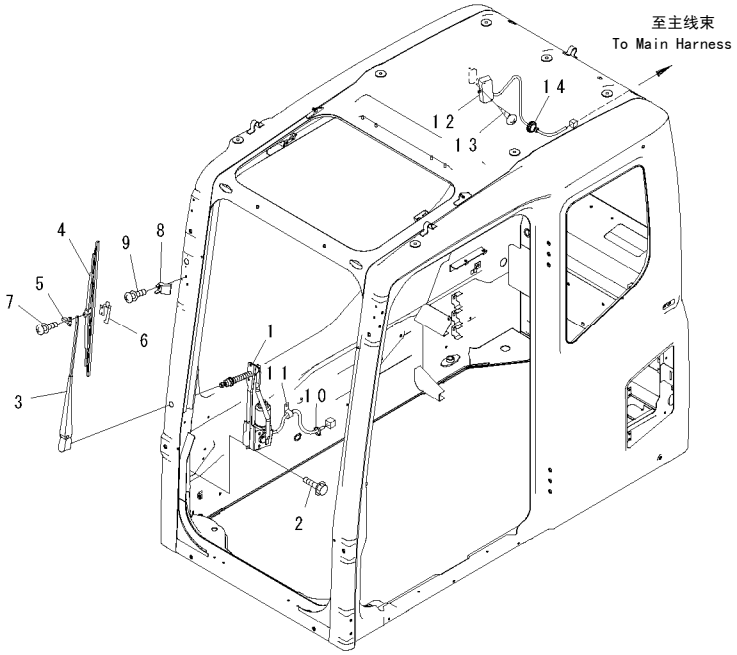

00011353

FIG NO. : K1110-08A0

INDEX	PART NO.	DESCRIPTION	Q'TY	SERIAL NO.
	(21M-54-00630)	CAB ASS'Y…… 驾驶室总成	1	60001-
1	208-53-12780	.WIPER MOTOR ASS'Y……雨刮器马达总成	1	60001-
2	01435-40616	.BOLT…… 螺栓	6	60001-
	20Y-54-53350	.WIPER ASS'Y……防尘圈总成	1	60001-
3	20Y-54-53360	..ARM…… 小臂	1	60001-
4	20Y-54-39450	..BLADE…… 刮条	1	60001-
5	20Y-54-39460	..SLIDER……滑块	1	60001-
6	20Y-54-39480	..PLATE…… 板	1	60001-
7	ND949007-2350	..SCREW AND WASHER……带垫圈螺钉	1	60001-
8	20Y-54-52231	.STOPPER……止动块	1	60001-
9	01023-20620	.SCREW……螺钉	1	60001-
10	08034-20414	.BAND…… 绑带	1	60001-
11	08059-00310	.CLIP…… 管夹	1	60001-
12	208-53-12790	.ROOM LAMP……室内灯	1	60001-
	08116-02410	..BULB, 10W……灯泡10W	1	60001-
13	01370-00420	.SCREW……螺钉	2	60001-
14	08037-11025	.GROMMET……保护套	1	60001-

https://truckmanualshub.com/

FIG.K1110-09A0 FLOOR FRAME (OPERATOR'S CAB) (ELECTRICAL)(RADIO)

底板架（驾驶室）（电器）(收音机）

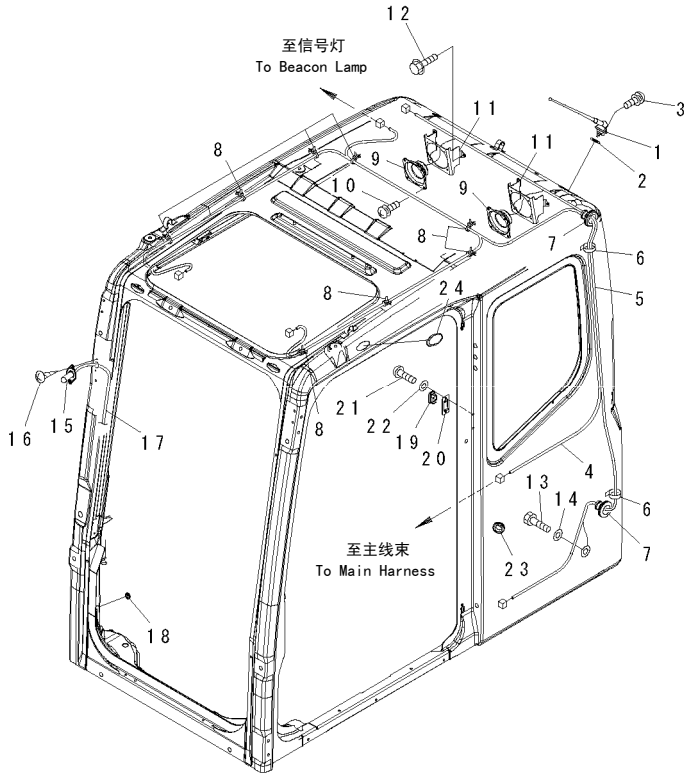

00047463

FIG NO. : K1110-09A0

INDEX	PART NO.	DESCRIPTION	Q'TY	SERIAL NO.
	(21M-54-00630)	CAB ASS'Y…… 驾驶室总成	1	60001-
1	20Y-06-41990	.RUBBER ANTENNA,(SEE FIG. Y1062-01A0)…… 橡胶天线	1	60001-
2	01643-30623	.WASHER…… 垫圈	1	60001-
3	01023-20412	.SCREW……螺钉	2	60001-
4	209-53-14450	.WIRING HARNESS…… 线束	1	60001-
5	20Y-54-52320	.WIRING HARNESS…… 线束	1	60001-
6	08034-20414	.BAND…… 绑带	2	60001-
7	08037-12536	.GROMMET……保护套	2	60001-
8	08059-00413	.CLIP…… 管夹	8	60001-
9	08910-10000	.SPEAKER……扬声器	2	60001-
10	01023-20412	.SCREW……螺钉	8	60001-
11	208-53-11480	.PLATE……板	2	60001-
12	01435-40616	.BOLT…… 螺栓	6	60001-
13	01010-81020	.BOLT…… 螺栓	1	60001-
14	01643-31032	.WASHER…… 垫圈	1	60001-
15	20Y-54-39511	.NOZZLE…… 喷嘴	1	60001-
16	01370-40412	.SCREW……螺钉	2	60001-
17	17M-911-2670	.HOSE…… 软管	1	60001-
18	08037-01610	.GROMMET……保护套	1	60001-
19	22U-06-22320	.COVER……盖	1	60001-
20	209-53-14440	.PLATE……板	1	60001-
21	01245-00612	.SCREW……螺钉	2	60001-
22	01643-70623	.WASHER…… 垫圈	2	60001-
23	09415-02512	.CAP……盖	1	60001-
24	22B-54-17282	.CAP……盖	1	60001-

https://truckmanualshub.com/

FIG.K111O-10A0 FLOOR FRAME (OPERATOR'S CAB) (ACCESSORIES)
底板架（驾驶室）（附件）

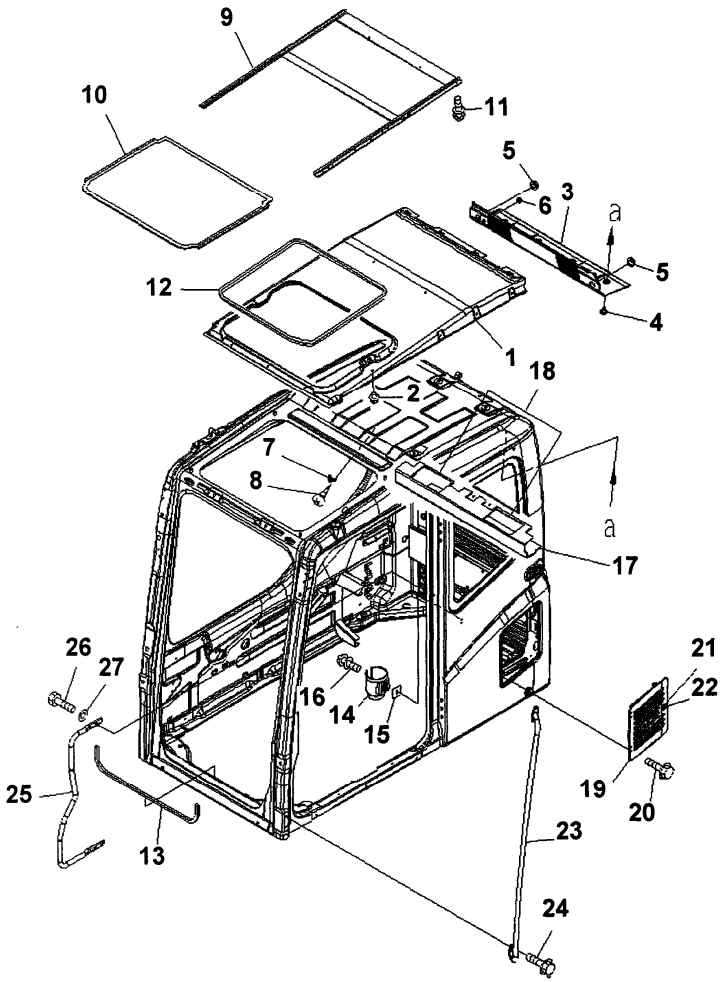

00011355

FIG NO. : K111O-10A0

INDEX	PART NO.	DESCRIPTION	Q'TY	SERIAL NO.
	(21M-54-00630)	CAB ASS'Y…… 驾驶室总成	1	60001-
1	20Y-54-53212	.COVER……盖	1	60001-
2	20Y-54-18690	.RIVET……铆钉	20	60001-
3	203-54-71390	.LINING…… 衬套	1	60001-
4	20Y-54-18690	.RIVET……铆钉	8	60001-
5	09415-02512	.CAP……帽	2	60001-
6	09415-01008	.CAP……帽	1	60001-
7	205-54-51250	.HANGER…… 挂衣钩	1	60001-
8	01370-30412	.SCREW……螺钉	2	60001-
9	20Y-53-13781	.RAIL…… 围栏	1	60001-
10	20Y-54-53244	.COVER……盖	1	60001-
11	01023-10410	.SCREW……螺钉	6	60001-
12	20Y-54-53250	.TRIM…… 装饰条	1	60001-
13	208-53-11910	.TRIM…… 装饰条	1	60001-
14	208-53-12991	.HOLDER…… 夹持器	1	60001-
15	208-53-12980	.PLATE……板	1	60001-
16	01023-20616	.SCREW……螺钉	2	60001-
17	208-53-12470	.SEAL…… 密封垫	1	60001-
18	208-53-12810	.SEAT…… 座	2	60001-
19	208-53-11750	.COVER……盖	1	60001-
20	01435-40610	.BOLT…… 螺栓	4	60001-
21	208-53-11760	.LOCK ASS'Y…… 锁总成	1	60001-
22	205-54-76280	..ROTOR ASS'Y…… 转子总成	1	60001-
23	20Y-54-51820	.GRIP…… 把手	1	60001-
24	01435-40820	.BOLT…… 螺栓	4	60001-
25	20Y-54-51832	.GRIP…… 把手	1	60001-
26	01010-D1025	.BOLT…… 螺栓	3	60001-
27	01643-71032	.WASHER…… 垫圈	3	60001-

https://truckmanualshub.com/

FIG.K1110-11A0 FLOOR FRAME (OPERATOR'S CAB) (PLUG BOLT AND ANTENNA)
底板架（驾驶室）（螺塞和天线）

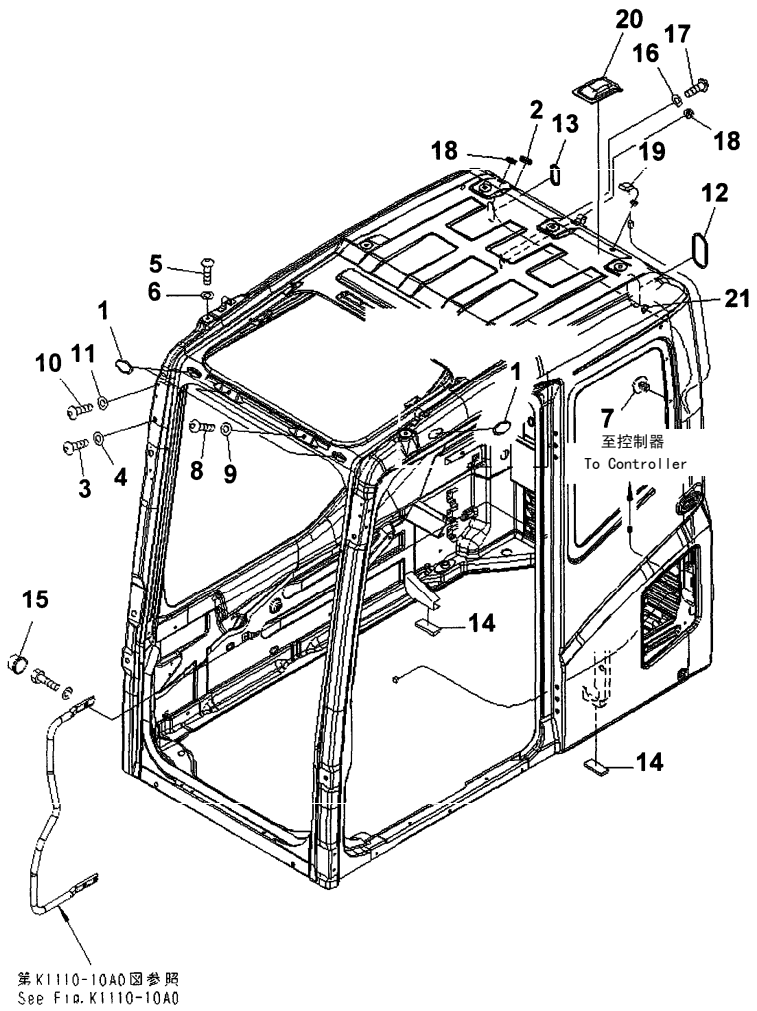

00062446

FIG NO. : K1110-11A0

INDEX	PART NO.	DESCRIPTION	Q'TY	SERIAL NO.
	21M-54-00630	CAB ASS'Y…… 驾驶室总成	1	60001-
1	22B-54-17282	.CAP……盖	2	60001-
2	09415-02512	.CAP……盖	1	60001-
3	01245-01220	.SCREW……螺钉	6	60001-
4	01643-71232	.WASHER…… 垫圈	6	60001-
5	01245-01220	.SCREW……螺钉	7	60001-
6	01643-71232	.WASHER…… 垫圈	7	60001-
7	208-53-13270	.RIVET……铆钉	2	60001-
8	01245-01016	.SCREW……螺钉	2	60001-
9	01643-71032	.WASHER…… 垫圈	2	60001-
10	01245-00612	.SCREW……螺钉	4	60001-
11	01643-70623	.WASHER…… 垫圈	4	60001-
12	20Y-54-52470	.GROMMET……保护套	1	60001-
13	20Y-54-36150	.GROMMET……保护套	1	60001-
14	208-53-12580	.SEAL…… 密封垫	2	60001-
15	20Y-54-52440	.CAP……盖	1	60001-
16	01641-50608	.WASHER…… 垫圈	2	60001-
17	01245-00616	.SCREW……螺钉	2	60001-
18	09415-01008	.CAP……盖	2	60001-
19	8A13-10-1310	.CAP……盖	2	60001-
20	20Y-54-53610	.COVER……盖板	1	60001-
21	08034-20414	.BAND…… 绑带	1	60001-

https://truckmanualshub.com/

FIG.K1110-12A0 FLOOR FRAME (OPERATOR'S CAB) (CLAMP AND PLATE)
底板架（驾驶室）（顶窗）（管夹和板）

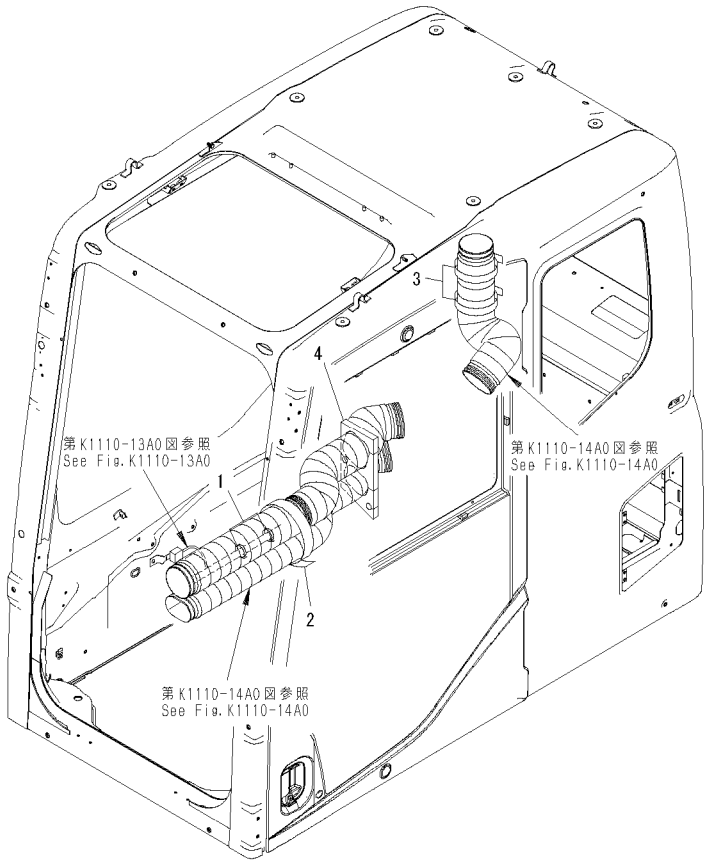

00038869

FIG NO. : K1110-12A0

INDEX	PART NO.	DESCRIPTION	Q'TY	SERIAL NO.
	21M-54-00630	CAB ASS'Y…… 驾驶室总成	1	60001-
1	08034-20414	.BAND…… 绑带	2	60001-
2	08034-20876	.BAND…… 绑带	1	60001-
3	08034-20876	.BAND…… 绑带	2	60001-
4	208-53-12620	.SEAL…… 密封垫	1	60001-

https://truckmanualshub.com/

FIG.K1110-13A0 FLOOR FRAME (OPERATOR'S CAB) (MONITOR SYSTEM) (WITH MULTI MONITOR)
底板架（驾驶室）（监视器）（带多重监视器）

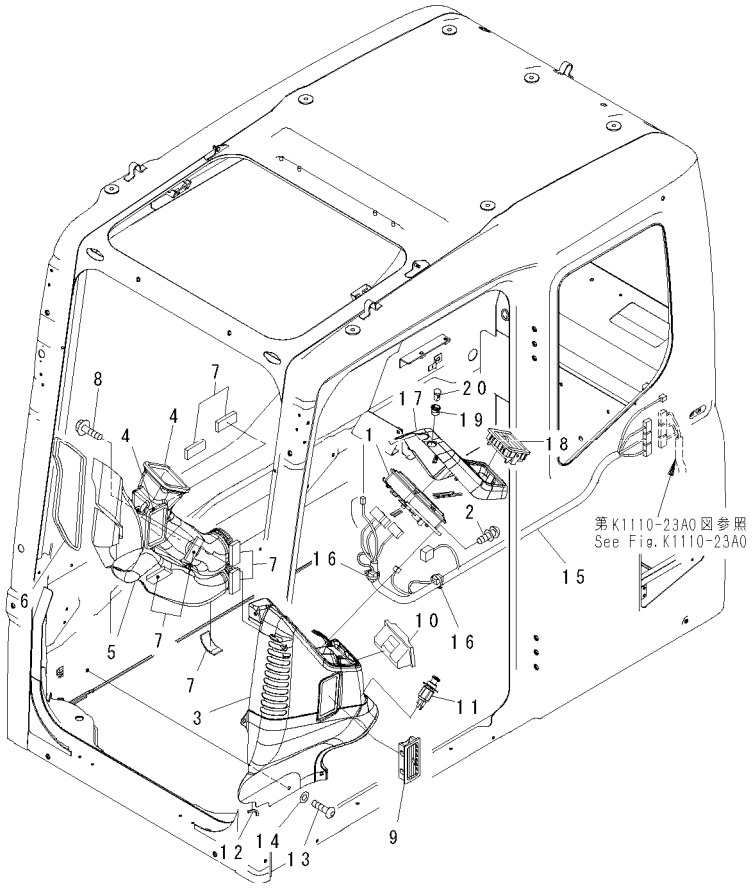

00062458

FIG NO. : K1110-13A0

INDEX	PART NO.	DESCRIPTION	Q'TY	SERIAL NO.
1	7835-16-2003	MONITOR…… 监控器	1	60001-
2	01023-10616	SCREW…… 螺钉	3	60001-
3	208-53-12152	COVER…… 盖	1	60001-
4	208-53-11941	SEAL……密封垫	2	60001-
5	208-53-12310	DUCT……风道	1	60001-
6	208-53-11920	SEAL……密封垫	1	60001-
7	208-53-12440	SEAL……密封垫	7	60001-
8	01435-00612	BOLT……螺栓	2	60001-
9	421-07-33870	GRILLE ASS'Y……格栅总成	1	60001-
10	22U-54-25371	ASHTRAY…… 烟灰缸	1	60001-
11	20Y-06-23472	LIGHTER…… 点烟器	1	60001-
12	208-53-11850	GROMMET…… 保护套	1	60001-
13	01245-00816	SCREW…… 螺钉	5	60001-
14	01643-70823	WASHER……垫圈	5	60001-
15	209-54-41840	WIRING HARNESS……线束	1	60001-
	19M-06-31720	.RESISTOR…… 防腐器	1	60001-
16	08034-20876	BAND……绑带	2	60001-
17	20Y-54-65580	COVER ASS'Y…… 盖总成	1	60001-
18	201-979-7820	GRILLE……格栅	1	60001-
19	20Y-54-65310	ADAPTER…… 接头	1	60001-
20	20Y-979-6161	SENSOR……温度传感器	1	60001-

https://truckmanualshub.com/

FIG.K1110-14A0 FLOOR FRAME (OPERATOR'S CAB) (PLATE AND DUCT)
底板架（驾驶室）（板和通道）

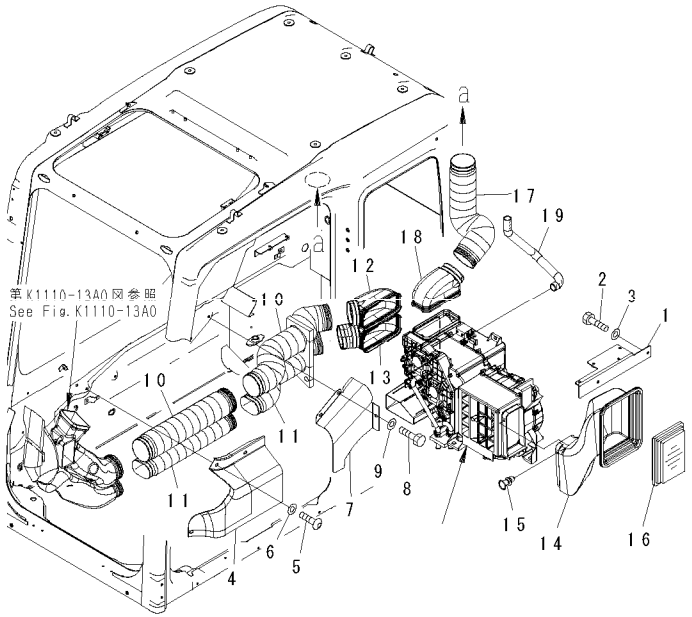

00038871

FIG NO. : K1110-14A0

INDEX	PART NO.	DESCRIPTION	Q'TY	SERIAL NO.
1	208-53-13770	PLATE…… 板	1	60001-
2	01010-D0820	BOLT……螺栓	2	60001-
3	01643-70823	WASHER……垫圈	2	60001-
4	208-53-12180	COVER…… 盖	1	60001-
5	01245-00816	SCREW…… 螺钉	3	60001-
6	01643-70823	WASHER……垫圈	3	60001-
7	208-53-12190	COVER…… 盖	1	60001-
8	01010-D0820	BOLT……螺栓	3	60001-
9	01643-70823	WASHER……垫圈	3	60001-
10	208-53-12220	DUCT……风道	2	60001-
11	208-53-12260	DUCT……风道	2	60001-
12	208-53-12120	DUCT……风道	1	60001-
13	208-53-12170	DUCT……风道	1	60001-
14	208-53-12520	DUCT……风道	1	60001-
15	208-53-12680	CLIP……管夹	1	60001-
16	17M-911-3530	ELEMENT…… 滤芯	1	60001-
17	208-53-12220	DUCT……风道	1	60001-
18	208-53-12120	DUCT……风道	1	60001-
19	208-53-12432	HOSE……软管	1	60001-

https://truckmanualshub.com/

FIG.K1110-15A0　FLOOR FRAME (OPERATOR'S CAB) (PARTITION AND FOOT DUCT)
底板架（驾驶室）（隔离箱和底管）

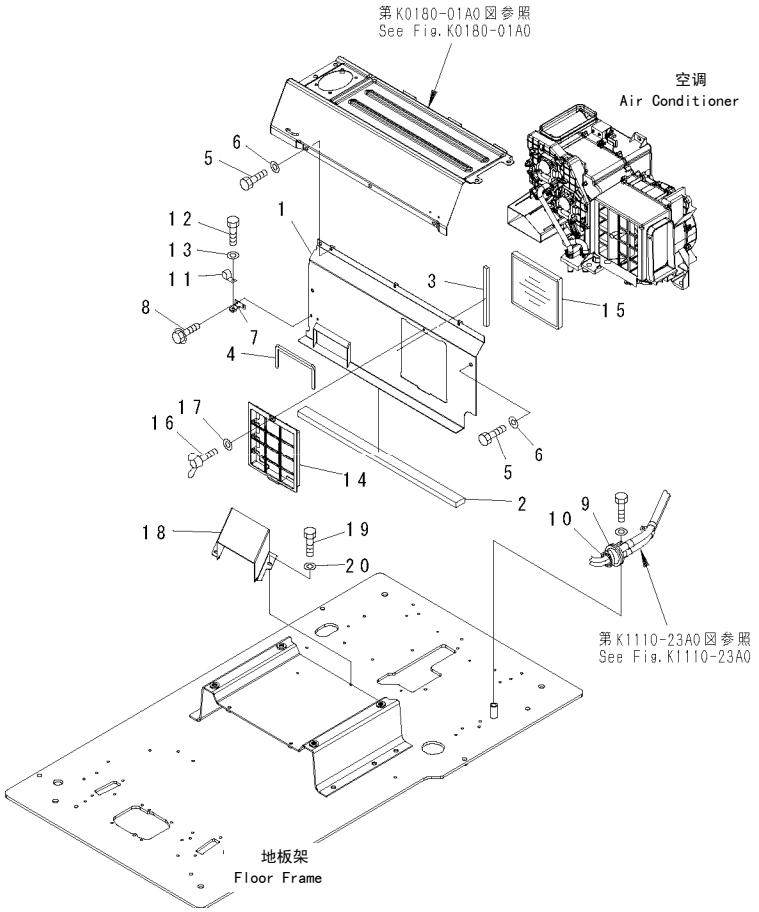

00062459

FIG NO. : K1110-15A0

INDEX	PART NO.	DESCRIPTION	Q'TY	SERIAL NO.
1	208-53-13650	BRACKET ASS'Y…… 支架总成	1	60001-
2	208-53-11871	.SEAL…… 密封垫	1	60001-
3	208-53-11890	.SEAL…… 密封垫	1	60001-
4	208-53-12230	.SEAL…… 密封垫	1	60001-
5	01010-D0820	BOLT……螺栓	2	60001-
6	01643-70823	WASHER……垫圈	2	60001-
7	208-53-11790	PLATE…… 板	1	60001-
8	01435-40616	BOLT……螺栓	2	60001-
9	21T-06-71870	GROMMET…… 保护套	1	60001-
10	08034-20519	BAND……绑带	1	60001-
11	04434-51908	CLIP……管夹	1	60001-
12	01010-D0820	BOLT……螺栓	1	60001-
13	01643-70823	WASHER……垫圈	1	60001-
14	208-979-7530	HOLDER……夹持器	1	60001-
15	208-979-7620	FILTER……滤清器	1	60001-
16	20Y-54-65790	BOLT……螺栓	1	60001-
17	20Y-54-65690	WASHER……垫圈	1	60001-
18	208-53-12551	DUCT……风道	1	60001-
19	01010-D0820	BOLT……螺栓	2	60001-
20	01643-70823	WASHER……垫圈	2	60001-

https://truckmanualshub.com/

FIG.K1110-16A0 FLOOR FRAME (OPERATOR'S CAB) (SUB PANEL)
底板架（驾驶室）（副仪表盘）

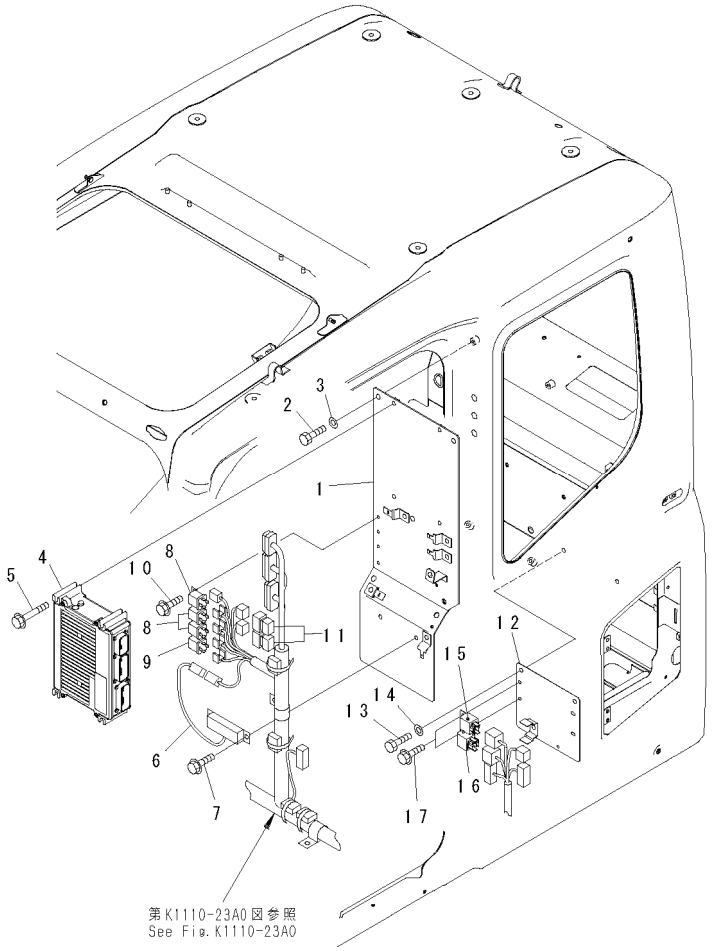

00062460

FIG NO. : K1110-16A0

INDEX	PART NO.	DESCRIPTION	Q'TY	SERIAL NO.
1	208-53-12860	PLATE…… 板	1	60001-
2	01010-80816	BOLT……螺栓	5	60001-
3	01643-30823	WASHER……垫圈	5	60001-
4	7835-27-2002	CONTROLLER……控制器	1	60001-
5	01435-00885	BOLT……螺栓	4	60001-
6	7861-94-2000	RESISTOR……防腐器	1	60001-
7	01435-00816	BOLT……螺栓	2	60001-
8	569-06-61960	RELAY…… 继电器	3	60001-
9	569-06-61970	RELAY…… 继电器	1	60001-
10	01435-00610	BOLT……螺栓	4	60001-
11	8233-06-3350	DIODE…… 二级管	2	60001-
12	208-53-12880	BRACKET…… 支架	1	60001-
13	01010-80816	BOLT……螺栓	2	60001-
14	01643-30823	WASHER……垫圈	2	60001-
15	198-911-9240	RELAY, 4-TERMINAL…… 继电器	1	60001-
16	20Y-979-6771	RELAY…… 继电器	1	60001-
17	01435-00610	BOLT……螺栓	2	60001-

https://truckmanualshub.com/

FIG.K1110-17A0 FLOOR FRAME (OPERATOR'S CAB) (CLAMP AND BOLT)
底板架（驾驶室）（管夹和螺栓）

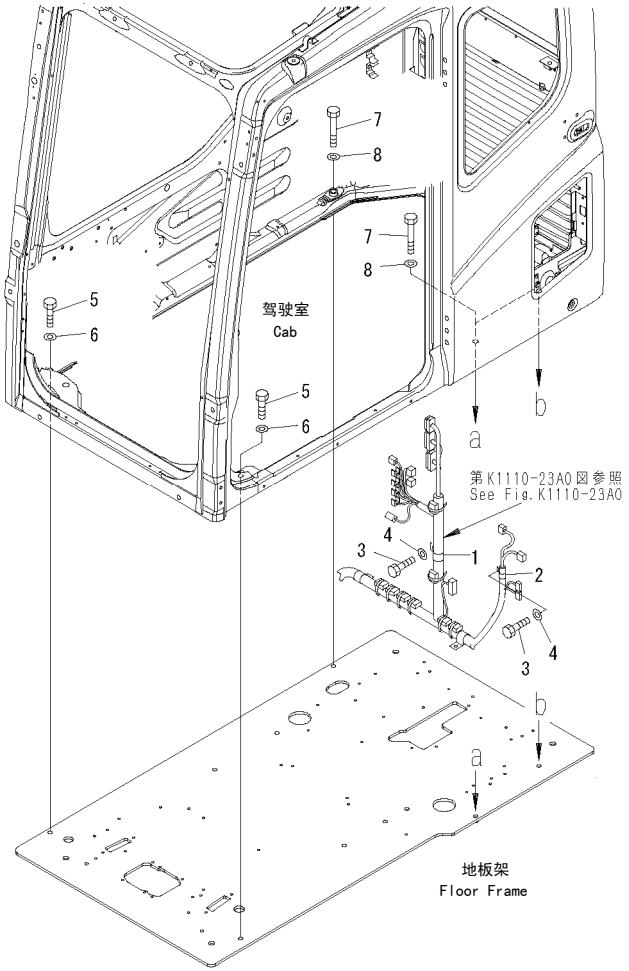

00062461

FIG NO. : K1110-17A0

INDEX	PART NO.	DESCRIPTION	Q'TY	SERIAL NO.
1	04434-52711	CLIP……管夹	1	60001-
2	04434-51710	CLIP……管夹	1	60001-
3	01010-81020	BOLT……螺栓	2	60001-
4	01643-31032	WASHER……垫圈	2	60001-
5	01010-81240	BOLT……螺栓	2	60001-
6	01643-31232	WASHER……垫圈	2	60001-
7	01010-81285	BOLT……螺栓	3	60001-
8	01643-31232	WASHER……垫圈	3	60001-

https://truckmanualshub.com/

FIG.K1110-18A0 FLOOR FRAME (OPERATOR'S CAB) (FLOOR FRAME)
底板架（驾驶室）（地板架）

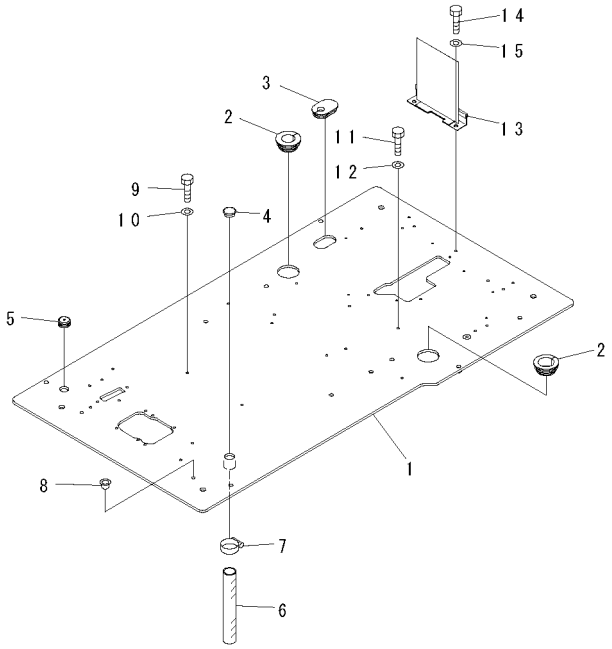

00038876

FIG NO. : K1110-18A0

INDEX	PART NO.	DESCRIPTION	Q'TY	SERIAL NO.
1	209-54-41811	FLOOR FRAME…… 底板架	1	60001-
2	207-54-71190	GROMMET…… 保护套	2	60001-
3	208-53-12970	GROMMET…… 保护套	1	60001-
4	22U-54-25581	GROMMET…… 保护套	1	60001-
5	22U-54-25590	GROMMET…… 保护套	1	60001-
6	07286-03828	HOSE……软管	1	60001-
7	07280-04726	CLAMP…… 卡箍	1	60001-
8	07048-01310	PLUG……堵塞	2	60001-
9	01010-81030	BOLT……螺栓	2	60001-
10	01643-31032	WASHER……垫圈	2	60001-
11	01010-81016	BOLT……螺栓	1	60001-
12	01643-31032	WASHER……垫圈	1	60001-
13	208-53-12891	BRACKET…… 支架	1	60001-
	22U-06-22261	.SHEET……垫片	1	60001-
14	01010-81020	BOLT……螺栓	2	60001-
15	01643-31032	WASHER……垫圈	2	60001-

https://truckmanualshub.com/

FIG.K111O-19AO FLOOR FRAME (OPERATOR'S CAB) (TRAVEL CONTROL)
底板架（驾驶室）（行走控制）

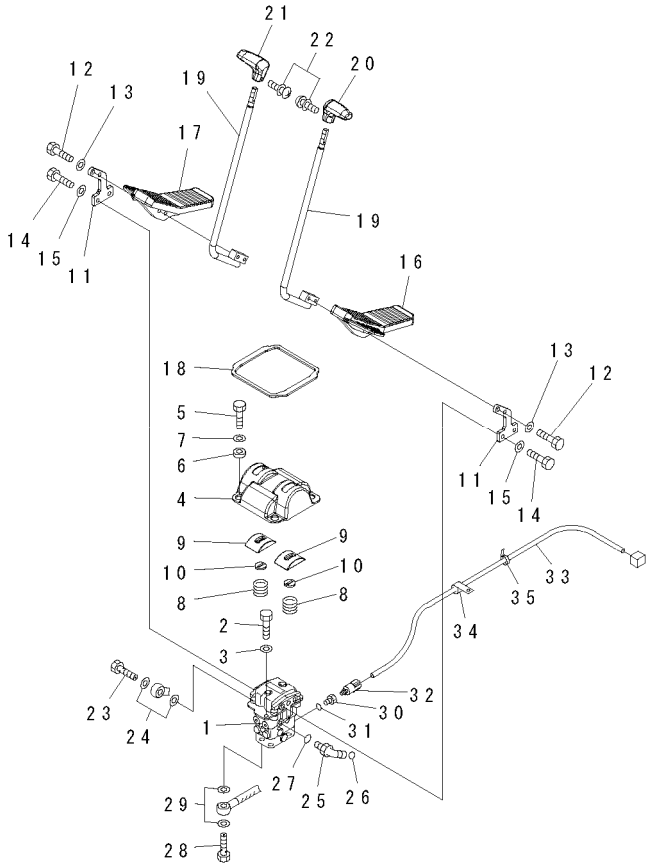

00038877

FIG NO. : K111O-19AO

INDEX	PART NO.	DESCRIPTION	Q'TY	SERIAL NO.
1	(702-16-01542)	PILOT VALVE…… 引导阀	1	60001-
2	01010-81020	BOLT……螺栓	2	60001-
3	01643-31032	WASHER……垫圈	2	60001-
4	20Y-43-21151	COVER…… 盖	1	60001-
5	01010-81020	BOLT……螺栓	4	60001-
6	20Y-43-21260	COLLAR……衬套	4	60001-
7	203-54-56970	WASHER……垫圈	4	60001-
8	203-43-51620	SPRING……弹簧	2	60001-
	22U-43-21350	COVER ASS'Y…… 盖总成	1	60001-
9	☆	.COVER……盖	1	60001-
10	22U-43-21360	.SEAL…… 密封垫	1	60001-
11	22U-43-21151	LEVER…… 杆	2	60001-
12	01010-D1045	BOLT……螺栓	4	60001-
13	01643-71032	WASHER……垫圈	4	60001-
14	01010-81030	BOLT……螺栓	4	60001-
15	01643-31032	WASHER……垫圈	4	60001-
16	22U-43-21111	PEDAL…… 踏板	1	60001-
17	22U-43-21121	PEDAL…… 踏板	1	60001-
18	22U-43-21380	SEAL……密封垫	1	60001-
19	22U-43-21131	LEVER…… 杆	2	60001-
20	20Y-43-21231	KNOB……手柄	1	60001-
21	20Y-43-21241	KNOB……手柄	1	60001-
22	01023-20416	SCREW…… 螺钉	2	60001-
23	702-16-53240	PLUG……堵塞	1	60001-
24	07000-12018	O-RING…… O形圈	2	60001-
25	02782-10311	ELBOW…… 接头	1	60001-
26	02896-11009	O-RING…… O形圈	1	60001-
27	07002-11423	O-RING…… O形圈	1	60001-
28	20Y-62-16170	BOLT……螺栓	4	60001-
29	07000-12015	O-RING…… O形圈	8	60001-
30	20Y-62-41390	ADAPTER…… 接头	1	60001-
31	07002-11423	O-RING…… O形圈	1	60001-
32	206-06-61130	SWITCH……开关	1	60001-
33	21M-06-21150	WIRING HARNESS……线束	1	60001-
34	04434-51010	CLIP……管夹	1	60001-
35	08034-20519	BAND……绑带	1	60001-

https://truckmanualshub.com/

FIG.K1110-20A0 FLOOR FRAME (OPERATOR'S CAB) (FOOT REST)(L.H.)
底板架（驾驶室）（休息脚瞪）（左）

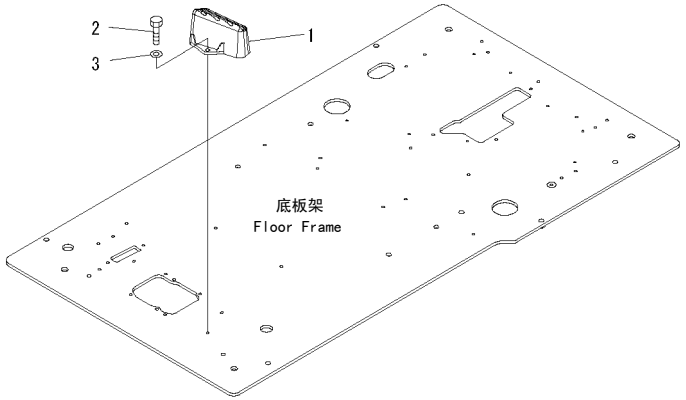

00038878

FIG NO. : K1110-20A0

INDEX	PART NO.	DESCRIPTION	Q'TY	SERIAL NO.
1	22U-54-25110	FOOT REST…… 休息脚瞪	1	60001-
2	01010-81025	BOLT……螺栓	2	60001-
3	01643-31032	WASHER……垫圈	2	60001-

https://truckmanualshub.com/

FIG.K1110-21A0　FLOOR FRAME (OPERATOR'S CAB) (FOOT REST)(R.H.)
底板架（驾驶室）（休息脚瞪）（右）

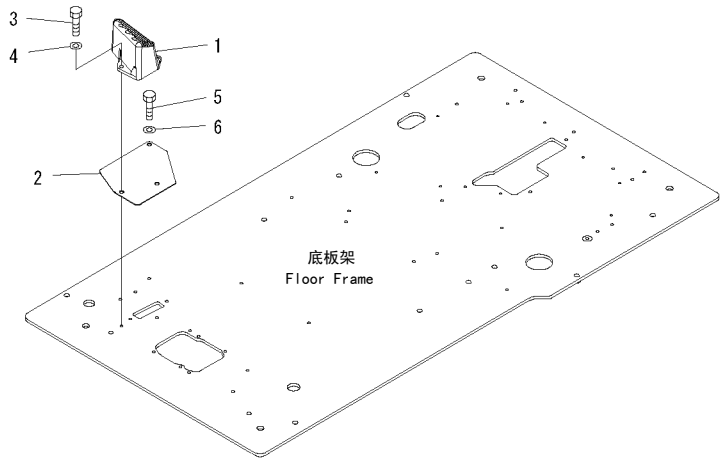

00038879

FIG NO. : K1110-21A0

INDEX	PART NO.	DESCRIPTION	Q'TY	SERIAL NO.
1	22U-54-25120	FOOT REST…… 休息脚瞪	1	60001-
2	22U-54-25531	PLATE…… 板	1	60001-
3	01010-81025	BOLT……螺栓	2	60001-
4	01643-31032	WASHER……垫圈	2	60001-
5	01010-81020	BOLT……螺栓	1	60001-
6	01643-31032	WASHER……垫圈	1	60001-

https://truckmanualshub.com/

FIG.K1110-22A0 FLOOR FRAME (OPERATOR'S CAB) (HARNESS)

底板架（驾驶室）（线束）

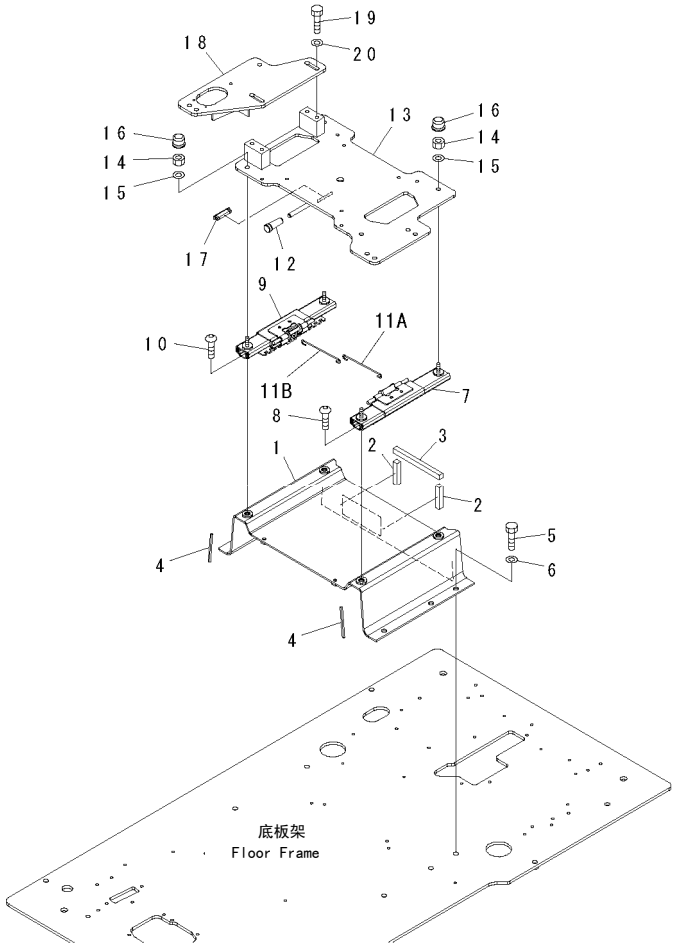

00018137

FIG NO. : K1110-22A0

INDEX	PART NO.	DESCRIPTION	Q'TY	SERIAL NO.
1	208-43-71512	FRAME…… 车架	1	60001-
2	208-43-71520	.SEAL…… 密封垫	1	60001-
3	208-43-71530	.SEAL…… 密封垫	1	60001-
4	208-43-71590	.SEAL…… 密封垫	1	60001-
5	01010-81230	BOLT……螺栓	5	60001-
6	01643-31232	WASHER……垫圈	5	60001-
7	208-43-71741	ADJUSTER……调整	1	60001-
8	01245-01025	SCREW…… 螺钉	2	60001-
9	208-43-71751	ADJUSTER……调整	1	60001-
10	01245-01025	SCREW…… 螺钉	2	60001-
11A	208-43-71731	WIRE……线束	1	60001-
11B	208-43-71762	WIRE……线束	1	60001-
12	22U-43-21390	CAP…… 盖	1	60001-
13	208-43-71561	FRAME…… 车架	1	60001-
14	20Y-54-65340	NUT…… 螺母	4	60001-
15	01643-71032	WASHER……垫圈	4	60001-
16	20Y-54-65540	CAP…… 盖	2	60001-
17	20Y-979-6630	CATCHER…… 卡头	1	60001-
18	208-43-71570	FRAME…… 车架	1	60001-
19	01010-D1230	BOLT……螺栓	4	60001-
20	22U-54-25170	WASHER……垫圈	4	60001-

https://truckmanualshub.com/

FIG.K1110-23A0 FLOOR FRAME (OPERATOR'S CAB) (WINDOW WASHER)

底板架（驾驶室）（洗窗器）

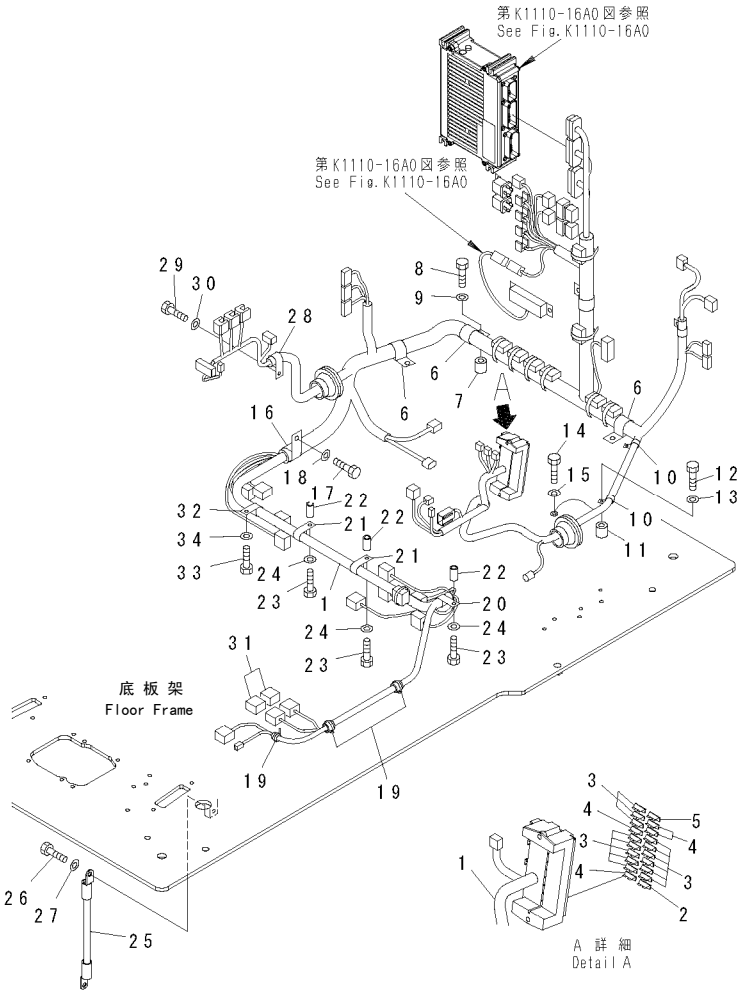

00062462

FIG NO. : K1110-23A0

INDEX	PART NO.	DESCRIPTION	Q'TY	SERIAL NO.
1	21M-06-21121	WIRING HARNESS……线束	1	60001-
2	08041-00500	.FUSE, 5A…… 保险丝	1	60001-
3	08041-01000	.FUSE, 10A……保险丝	14	60001-
4	08041-02000	.FUSE, 20A……保险丝	4	60001-
5	08041-02500	.FUSE, 25A……保险丝	1	60001-
6	04434-53411	CLIP……管夹	3	60001-
7	195-33-11220	SPACER……隔离套	3	60001-
8	01010-81040	BOLT……螺栓	3	60001-
9	01643-31032	WASHER……垫圈	3	60001-
10	04434-52310	CLIP……管夹	2	60001-
11	195-33-11220	SPACER……隔离套	2	60001-
12	01010-81040	BOLT……螺栓	2	60001-
13	01643-31032	WASHER……垫圈	2	60001-
14	01010-81016	BOLT……螺栓	1	60001-
15	01643-31032	WASHER……垫圈	1	60001-
16	04434-53211	CLIP……管夹	1	60001-
17	01010-81020	BOLT……螺栓	1	60001-
18	01643-31032	WASHER……垫圈	1	60001-
19	08034-20519	BAND. …… 绑带	4	60001-
20	04434-52310	CLIP……管夹	1	60001-
21	04434-52711	CLIP……管夹	2	60001-
22	195-33-11220	SPACER……隔离套	3	60001-
23	01010-81040	BOLT……螺栓	3	60001-
24	01643-31032	WASHER……垫圈	3	60001-
25	08028-43030	CABLE…… 油门软轴	1	60001-
26	01010-81020	BOLT……螺栓	1	60001-
27	01643-31032	WASHER……垫圈	1	60001-
28	04434-52310	CLIP……管夹	1	60001-
29	01010-81020	BOLT……螺栓	1	60001-
30	01643-31032	WASHER……垫圈	1	60001-
31	8233-06-3350	DIODE…… 二级管	2	60001-
32	04434-52711	CLIP……管夹	1	60001-
33	01010-81016	BOLT……螺栓	1	60001-
34	01643-31032	WASHER……垫圈	1	60001-

https://truckmanualshub.com/

FIG.K1110-24A0　FLOOR FRAME (OPERATOR'S CAB) (WINDOW WASHER)
底板架（驾驶室）（洗窗器）

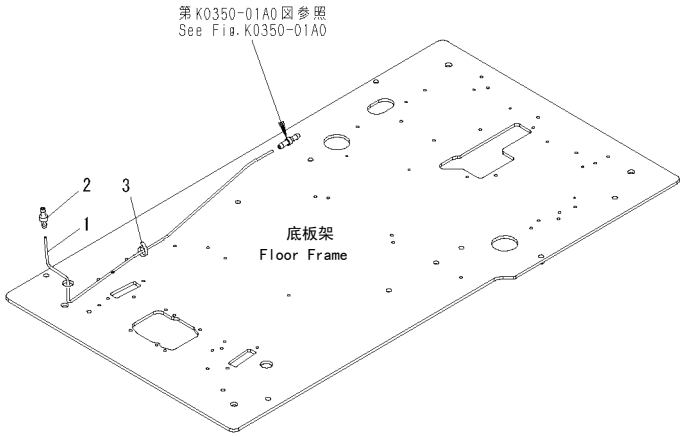

00038914

FIG NO. : K1110-24A0

INDEX	PART NO.	DESCRIPTION	Q'TY	SERIAL NO.
1	21T-06-71250	HOSE……软管	1	60001-
2	207-06-61490	VALVE…… 阀	1	60001-
3	08034-20519	BAND……绑带	1	60001-

https://truckmanualshub.com/

FIG.K1110-25A0 FLOOR FRAME (OPERATOR'S CAB) (LEVER AND VALVE) (L.H.)
底板架（驾驶室）（杆和阀）（左）

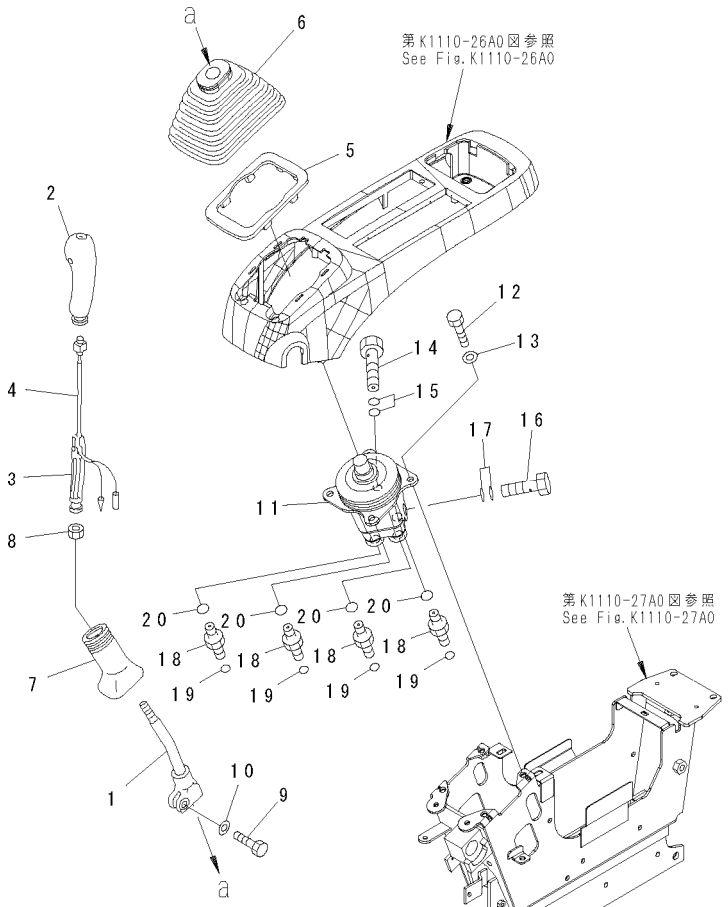

00062711

FIG NO. : K1110-25A0

INDEX	PART NO.	DESCRIPTION	Q'TY	SERIAL NO.
1	20Y-43-22211	LEVER…… 调节杆	1	60001-
	22U-43-21182	KNOB……手柄	1	60001-
2	20Y-43-22381	.KNOB…… 手柄	1	60001-
3	20Y-43-22421	.INSERT…… 垫圈	1	60001-
4	22U-43-21211	.SWITCH…… 开关	1	60001-
5	20Y-43-22250	PLATE…… 板	1	60001-
6	20Y-43-22261	BOOT……防尘罩	1	60001-
7	20Y-43-22370	BOOT……防尘罩	1	60001-
8	600-411-1280	NUT…… 螺母	1	60001-
9	01252-41025	BOLT……螺栓	1	60001-
10	01643-51032	WASHER……垫圈	1	60001-
11	(702-16-04920)	PILOT VALVE…… 引导阀	1	60001-
12	01010-80820	BOLT……螺栓	4	60001-
13	01643-30823	WASHER……垫圈	4	60001-
14	20Y-62-18910	BOLT……螺栓	1	60001-
15	07000-12018	O-RING…… O形圈	2	60001-
16	20Y-62-18890	BOLT……螺栓	1	60001-
17	07000-12015	O-RING…… O形圈	2	60001-
18	11Y-62-12520	NIPPLE……喷嘴	4	60001-
19	02896-11009	O-RING…… O形圈	4	60001-
20	07002-11423	O-RING…… O形圈	4	60001-

https://truckmanualshub.com/

FIG.K1110-26A0 FLOOR FRAME (OPERATOR'S CAB) (CONSOLE 、L.H.)
(UPPER) (WITH AIR CONDITIONER AND RADIO FOR ASIA)
底板架（驾驶室）（操纵、左）（上）（带空调和收音机用于亚洲）

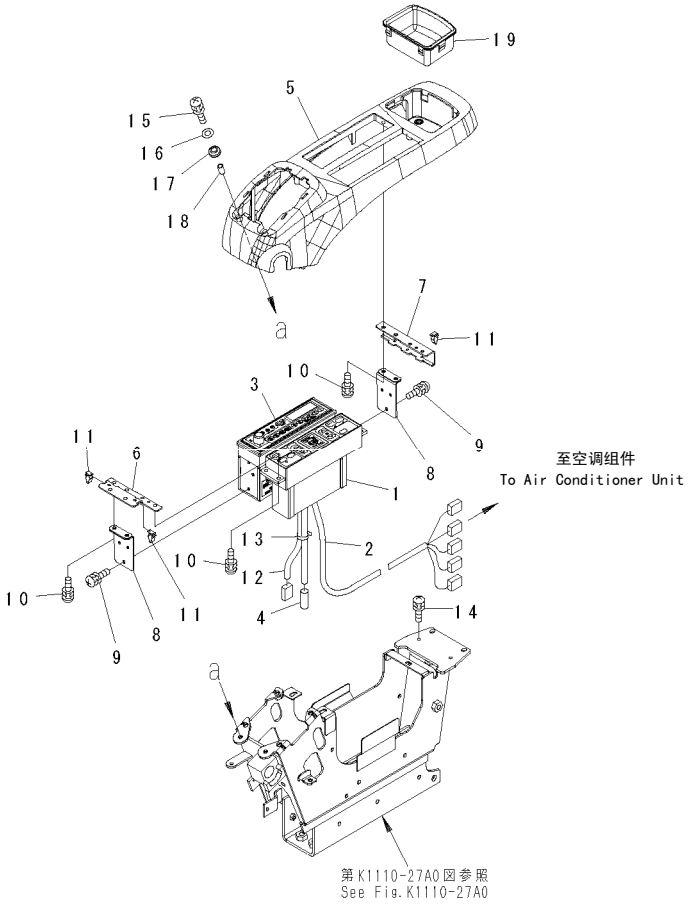

00062463

FIG NO. : K1110-26A0

INDEX	PART NO.	DESCRIPTION	Q'TY	SERIAL NO.
1	208-979-7630	PANEL ASS'Y…… 面板总成	1	60001-
2	208-979-7550	WIRING HARNESS……线束	1	60001-
3	20Y-06-41238	RADIO…… 收音机	1	60001-
4	08912-51600	CORD……绳	1	60001-
5	208-43-71680	COVER…… 盖	1	60001-
6	22U-43-22220	PLATE…… 板	1	60001-
7	22U-43-22230	STAY……支架	1	60001-
8	22U-06-22510	BRACKET…… 支架	2	60001-
9	01023-60510	SCREW…… 螺钉	4	60001-
10	01023-60516	SCREW…… 螺钉	10	60001-
11	20Y-06-23770	CLIP……管夹	3	60001-
12	22U-06-22350	WIRING HARNESS……线束	1	60001-
13	08034-00310	BAND……绑带	1	60001-
14	01023-60620	SCREW…… 螺钉	2	60001-
15	01023-60630	SCREW…… 螺钉	2	60001-
16	01640-20610	WASHER……垫圈	2	60001-
17	208-43-71610	CUSHION…… 减振垫	2	60001-
18	208-43-71620	PIPE……硬管	2	60001-
19	22U-43-22110	TRAY……盘	1	60001-

https://truckmanualshub.com/

FIG.K1110-27A0 FLOOR FRAME (OPERATOR'S CAB) (CONSOLE 、L.H.)(LOWER)

底板架（驾驶室）（操纵、左）（下）

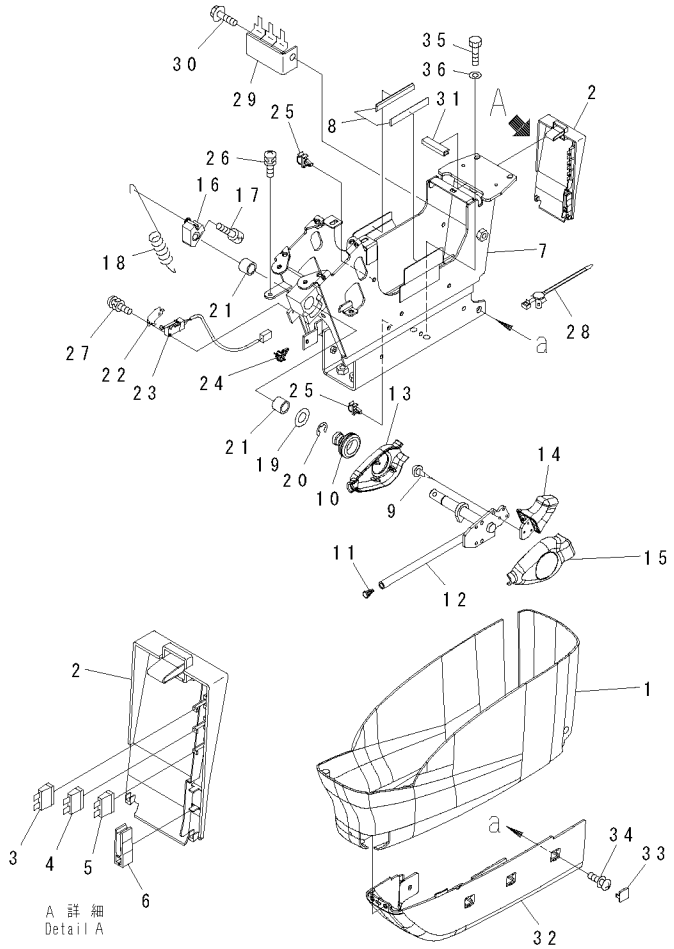

00038887

FIG NO. : K1110-27A0

INDEX	PART NO.	DESCRIPTION	Q'TY	SERIAL NO.
1	22U-43-22310	COVER…… 盖	1	60001-
	22U-43-22320	COVER ASS'Y…… 盖总成	1	60001-
2	☆	.COVER……盖	1	60001-
3	08041-01000	.FUSE, 10A……保险丝	1	60001-
4	08041-02000	.FUSE, 20A……保险丝	1	60001-
5	08041-02500	.FUSE, 25A……保险丝	1	60001-
6	22U-43-22340	.PULLER…… 卡子	1	60001-
7	20Y-43-31412	FRAME…… 车架	1	60001-
8	208-43-71410	.SHEET……垫片	2	60001-
9	01023-60410	SCREW…… 螺钉	6	60001-
10	08037-11425	GROMMET…… 保护套	1	60001-
11	208-53-12280	CAP…… 盖	1	60001-
12	20Y-43-31513	LEVER…… 调节杆	1	60001-
13	20Y-43-31522	COVER…… 盖	1	60001-
14	20Y-43-31611	KNOB……手柄	1	60001-
15	20Y-43-31621	COVER…… 盖	1	60001-
16	20Y-43-31432	CAM…… 凸轮	1	60001-
17	01252-70816	BOLT……螺栓	1	60001-
18	20Y-43-31421	SPRING……弹簧	1	60001-
19	20Y-43-31440	RING……隔圈	1	60001-
20	20Y-43-31450	RING……隔圈	1	60001-
21	06124-01616	BEARING…… 轴承	2	60001-
22	22U-06-22490	PLATE…… 板	1	60001-
23	22U-06-22360	SWITCH ASS'Y……开关总成	1	60001-
24	22U-43-22410	CLIP……管夹	1	60001-
25	22U-43-23260	CLIP……管夹	2	60001-
26	01023-60616	SCREW…… 螺钉	4	60001-
27	01023-60316	SCREW…… 螺钉	2	60001-
28	22U-43-22430	CLIP……管夹	1	60001-
29	22U-43-22451	BRACKET…… 支架	1	60001-
30	01435-01020	BOLT……螺栓	1	60001-
31	21M-43-21130	FINISHER……装饰条	1	60001-
32	20Y-43-31690	COVER…… 盖	1	60001-
33	22U-43-22830	CAP…… 盖	3	60001-
34	01023-20614	SCREW…… 螺钉	4	60001-
35	01010-81030	BOLT……螺栓	4	60001-
36	01643-31032	WASHER……垫圈	4	60001-

https://truckmanualshub.com/

FIG.K1110-28A0 FLOOR FRAME (OPERATOR'S CAB) (LEVER AND VALVE) (R.H.)
底板架（驾驶室）（杆和阀）（右）

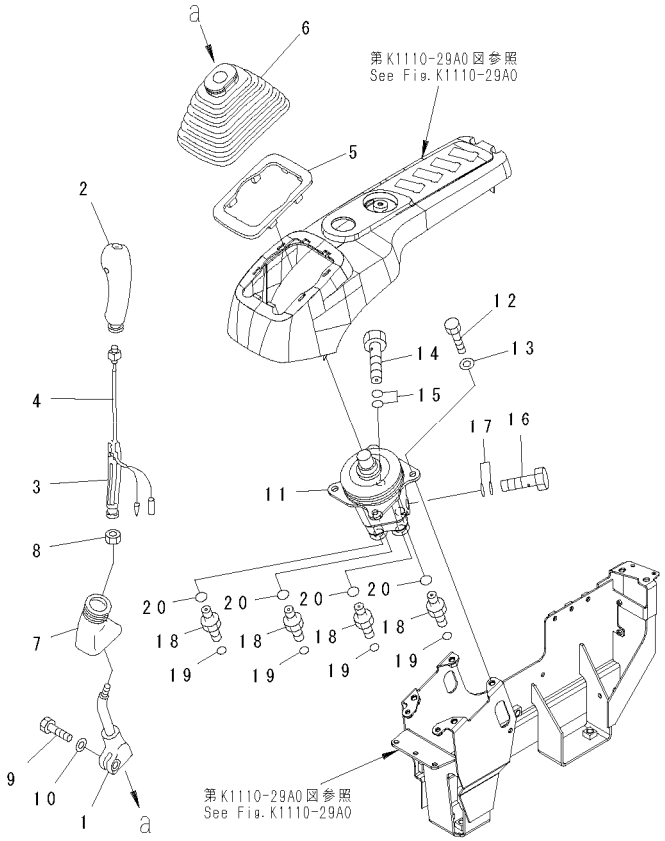

00062464

FIG NO. : K1110-28A0

INDEX	PART NO.	DESCRIPTION	Q'TY	SERIAL NO.
1	20Y-43-22221	LEVER…… 调节杆	1	60001-
	22U-43-21192	KNOB……手柄	1	60001-
2	20Y-43-22390	.KNOB…… 手柄	1	60001-
3	20Y-43-22421	.INSERT…… 垫圈	1	60001-
4	22U-43-21211	.SWITCH…… 开关	1	60001-
5	20Y-43-22250	PLATE…… 板	1	60001-
6	20Y-43-22261	BOOT……防尘罩	1	60001-
7	20Y-43-22370	BOOT……防尘罩	1	60001-
8	600-411-1280	NUT…… 螺母	1	60001-
9	01252-41025	BOLT……螺栓	1	60001-
10	01643-51032	WASHER……垫圈	1	60001-
11	(702-16-04920)	PILOT VALVE…… 引导阀	1	60001-
12	01010-80820	BOLT……螺栓	4	60001-
13	01643-30823	WASHER……垫圈	4	60001-
14	20Y-62-18910	BOLT……螺栓	1	60001-
15	07000-12018	O-RING…… O形圈	2	60001-
16	20Y-62-18890	BOLT……螺栓	1	60001-
17	07000-12015	O-RING…… O形圈	2	60001-
18	11Y-62-12520	NIPPLE……喷嘴	4	60001-
19	02896-11009	O-RING…… O形圈	4	60001-
20	07002-11423	O-RING…… O形圈	4	60001-

https://truckmanualshub.com/

FIG.K111O-29AO FLOOR FRAME (OPERATOR'S CAB) (CONSOLE 、R.H.)

底板架（驾驶室）（操纵、右）

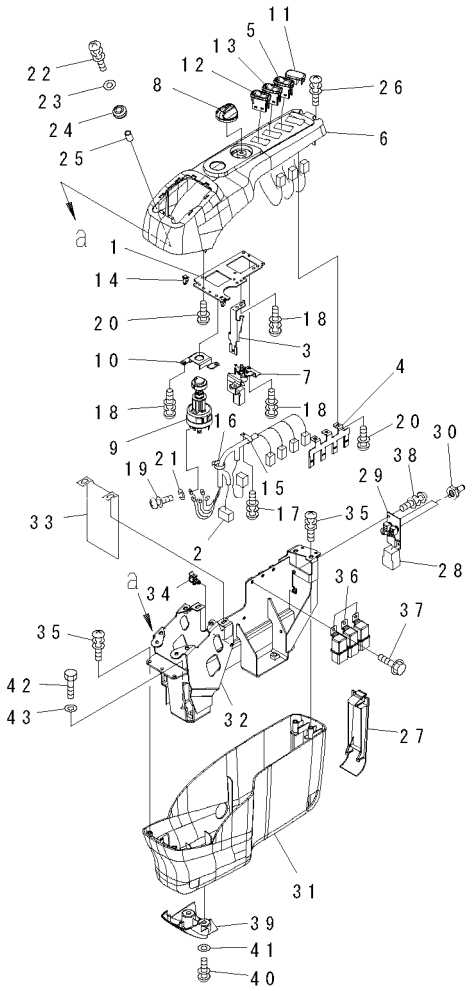

00040915

FIG NO. : K111O-29AO

INDEX	PART NO.	DESCRIPTION	Q'TY	SERIAL NO.
1	22U-43-23111	PLATE…… 板	1	60001-
2	209-06-41230	WIRING HARNESS……线束	1	60001-
3	22U-43-23120	BRACKET…… 支架	1	60001-
4	22U-43-23130	STAY……支架	1	60001-
5	207-06-71180	SWITCH……开关	1	60001-
6	208-43-71690	COVER…… 盖	1	60001-
7	22U-06-22420	POTENTIOMETER ASS'Y…… 电压计	1	60001-
8	22U-06-22470	KNOB……手柄	1	60001-
9	08086-20000	SWITCH……开关	1	60001-
10	22U-06-22480	PLATE…… 板	1	60001-
11	22U-06-22320	COVER…… 盖	1	60001-
12	22U-06-22290	SWITCH……开关	1	60001-
13	22U-06-22390	SWITCH……开关	1	60001-
14	20Y-06-23770	CLIP……管夹	2	60001-
15	20Y-06-23920	CLAMP…… 卡箍	1	60001-
16	08034-10414	BAND……绑带	2	60001-
17	01023-60408	SCREW…… 螺钉	1	60001-
18	01023-60512	SCREW…… 螺钉	6	60001-
19	01023-10508	SCREW…… 螺钉	5	60001-
20	01023-10512	SCREW…… 螺钉	6	60001-
21	01601-20513	WASHER……垫圈	5	60001-
22	01023-60630	SCREW…… 螺钉	2	60001-
23	01640-20610	WASHER……垫圈	2	60001-
24	208-43-71610	CUSHION…… 减振垫	2	60001-
25	208-43-71620	PIPE……硬管	2	60001-
26	01023-70514	SCREW…… 螺钉	2	60001-
27	22U-43-23210	COVER…… 盖	1	60001-
	20Y-06-31320	SWITCH ASS'Y……开关总成	1	60001-
28	20Y-06-31330	.WIRING HARNESS…… 线束	1	60001-
29	☆	.PLATE……板	1	60001-
30	208-43-71420	.CAP……盖	2	60001-
31	22U-43-23230	COVER…… 盖	1	60001-
32	208-43-71670	FRAME…… 车架	1	60001-
33	22U-43-23250	SHEET…… 垫片	1	60001-
34	22U-43-23260	CLIP……管夹	2	60001-
35	01023-60616	SCREW…… 螺钉	4	60001-
36	569-06-61960	RELAY…… 继电器	3	60001-
37	01435-00612	BOLT……螺栓	3	60001-
38	01023-60410	SCREW…… 螺钉	2	60001-
39	22U-43-23711	COVER…… 盖	1	60001-
40	01023-10614	SCREW…… 螺钉	2	60001-
41	01643-30623	WASHER……垫圈	2	60001-
42	01010-81030	BOLT……螺栓	4	60001-
43	01643-31032	WASHER……垫圈	4	60001-

https://truckmanualshub.com/

FIG.K1110-30A0 FLOOR FRAME (OPERATOR'S CAB) (AIR CONDITIONER AND FOOT COVER)
底板架（驾驶室）（空调和底盖）

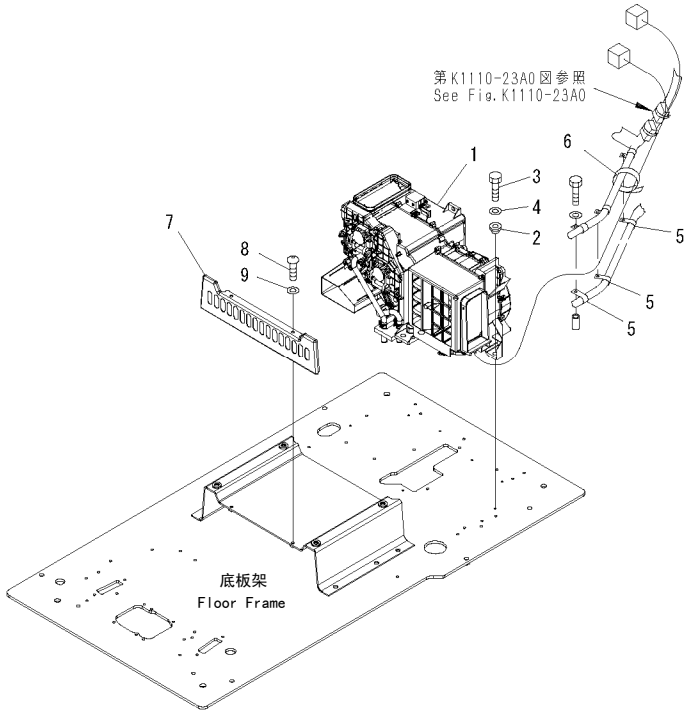

00062466

FIG NO. : K1110-30A0

INDEX	PART NO.	DESCRIPTION	Q'TY	SERIAL NO.
1	208-979-7610	AIR CONDITIONER····· 空调	1	60001-
2	208-979-7540	COLLAR·····接头	7	60001-
3	01010-80825	BOLT·····螺栓	7	60001-
4	01643-30823	WASHER·····垫圈	7	60001-
5	04434-51410	CLIP·····管夹	2	60001-
6	08034-20536	BAND·····绑带	1	60001-
7	208-43-71580	COVER····· 盖	1	60001-
8	01245-00820	SCREW····· 螺钉	2	60001-
9	01643-70823	WASHER·····垫圈	2	60001-

https://truckmanualshub.com/

FIG.K1110-31A0 FLOOR FRAME (OPERATOR'S CAB) (AIR CONDITIONER HOSE)
底板架（驾驶室）（空调软管）

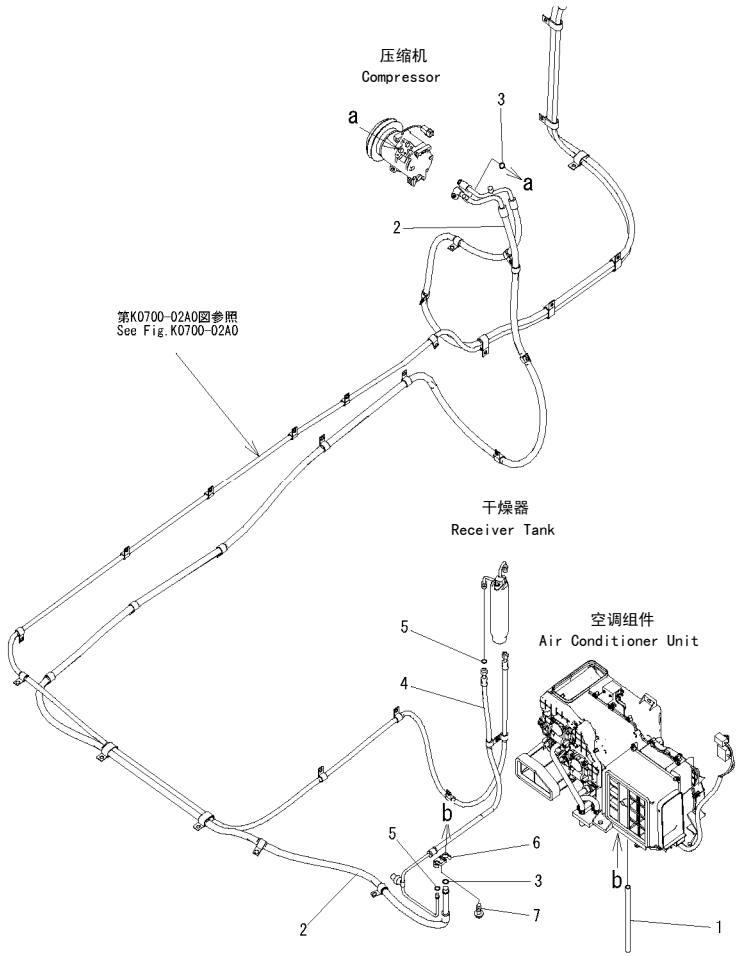

00038907

FIG NO. : K1110-31A0

INDEX	PART NO.	DESCRIPTION	Q'TY	SERIAL NO.
1	208-979-7640	HOSE……软管	1	60001-
2	21M-979-2161	HOSE……软管	1	60001-
3	20Y-979-3130	.O-RING……O形圈	2	60001-
4	21M-979-2151	HOSE……软管	1	60001-
5	20Y-979-3150	.O-RING……O形圈	2	60001-
6	208-979-7650	CONNECTOR…… 接头	1	60001-
7	01435-40620	BOLT……螺栓	1	60001-

https://truckmanualshub.com/

FIG.K1110-32A0 FLOOR FRAME (OPERATOR'S CAB) (HEATER HOSE AND CLAMP)
(WITH AIR CONDITIONER)

底板架（驾驶室）（加热器软管和管夹）（带空调）

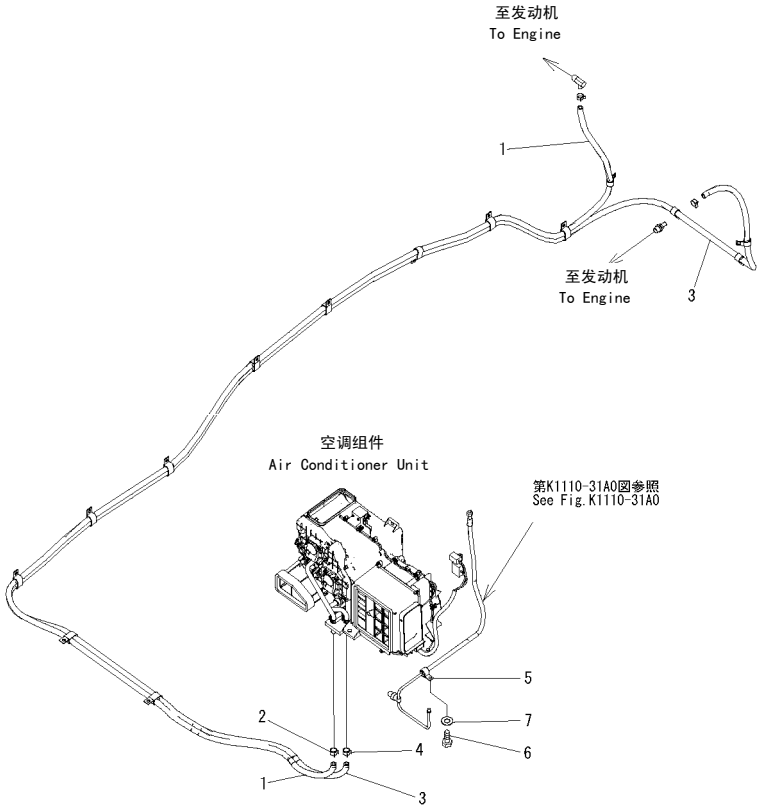

00062468-V

FIG NO. : K1110-32A0

INDEX	PART NO.	DESCRIPTION	Q'TY	SERIAL NO.
1	21M-979-2171	HOSE ASS'Y……管总成	1	60001-
2	09479-02400	CLAMP…… 卡箍	1	60001-
3	21M-979-2181	HOSE ASS'Y……管总成	1	60001-
4	09479-02400	CLAMP…… 卡箍	1	60001-
5	04434-51810	CLIP……管夹	1	60001-
6	01010-81020	BOLT……螺栓	1	60001-
7	01643-31032	WASHER……垫圈	1	60001-

https://truckmanualshub.com/

FIG.K1110-33A0 FLOOR FRAME (OPERATOR'S CAB) (PPC HOSE) (1/2)

底板架（驾驶室）（PPC软管）(1/2)

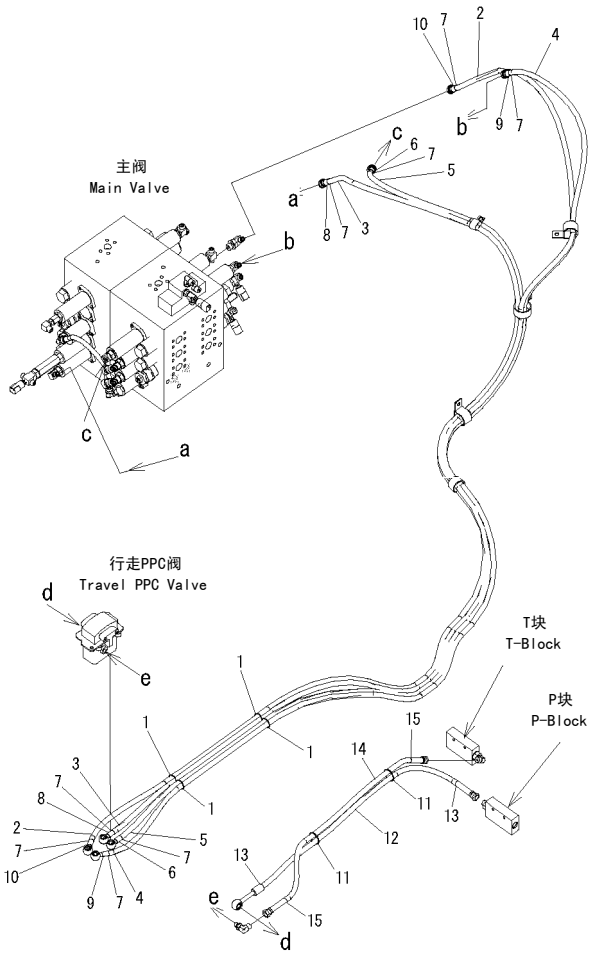

00038909

FIG NO. : K1110-33A0

INDEX	PART NO.	DESCRIPTION	Q'TY	SERIAL NO.
1	08034-20536	BAND……绑带	4	60001-
2	21M-62-21420	HOSE……软管	1	60001-
3	21M-62-21430	HOSE……软管	1	60001-
4	21M-62-21441	HOSE……软管	1	60001-
5	21M-62-21451	HOSE……软管	1	60001-
6	20Y-62-22810	BAND, YELLOW……黄色绑带	2	60001-
7	20Y-62-22830	BAND, WHITE…… 白色绑带	8	60001-
8	20Y-62-22840	BAND, BLACK…… 黑色绑带	2	60001-
9	20Y-62-22850	BAND, GREEN…… 绿色绑带	2	60001-
10	20Y-62-22860	BAND, BROWN…… 褐色绑带	2	60001-
11	08034-20536	BAND……绑带	2	60001-
12	209-62-42330	HOSE, 1100MM……软管	1	60001-
13	20Y-62-22790	BAND, RED…… 红色绑带	2	60001-
14	209-62-42340	HOSE, 950MM…… 软管	1	60001-
15	20Y-62-22820	BAND, BLUE……蓝色绑带	2	60001-

https://truckmanualshub.com/

FIG.K1110-34A0 FLOOR FRAME (OPERATOR'S CAB) (PPC HOSE) (2/2)
底板架（驾驶室）（PPC软管）(2/2)

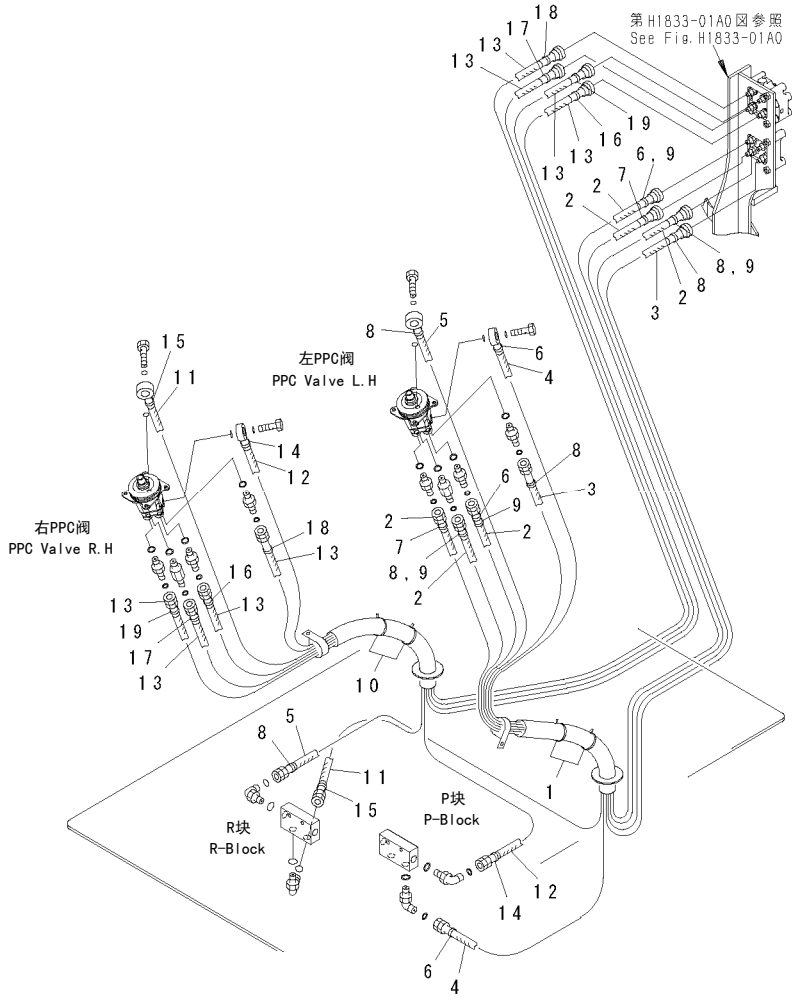

00049139

FIG NO. : K1110-34A0

INDEX	PART NO.	DESCRIPTION	Q'TY	SERIAL NO.
1	08034-20536	BAND……绑带	2	60001-
2	207-62-72680	HOSE, 3600MM……软管	3	60001-
3	20Y-62-42550	HOSE, 3500MM……软管	1	60001-
4	21M-62-14710	HOSE, 1150MM……软管	1	60001-
5	21M-62-14780	HOSE, 1800MM……软管	1	60001-
6	20Y-62-22790	BAND, RED…… 红色绑带	4	60001-
7	20Y-62-22810	BAND, YELLOW……黄色绑带	2	60001-
8	20Y-62-22820	BAND, BLUE……蓝色绑带	6	60001-
9	20Y-62-22830	BAND, WHITE…… 白色绑带	4	60001-
10	08034-20536	BAND……绑带	2	60001-
11	21M-62-14690	HOSE, 1250MM……软管	1	60001-
12	21M-62-14720	HOSE, 1800MM……软管	1	60001-
13	21M-62-14730	HOSE, 3900MM……软管	4	60001-
14	20Y-62-22790	BAND, RED…… 红色绑带	2	60001-
15	20Y-62-22820	BAND, BLUE……蓝色绑带	2	60001-
16	20Y-62-22830	BAND, WHITE…… 白色绑带	2	60001-
17	20Y-62-22840	BAND, BLACK…… 黑色绑带	2	60001-
18	20Y-62-22850	BAND, GREEN…… 绿色绑带	2	60001-
19	20Y-62-22860	BAND, BROWN…… 褐色绑带	2	60001-

https://truckmanualshub.com/

FIG.K1110-35A0 FLOOR FRAME (OPERATOR'S CAB) (PPC CLAMP)

底板架（驾驶室）（PPC管夹）

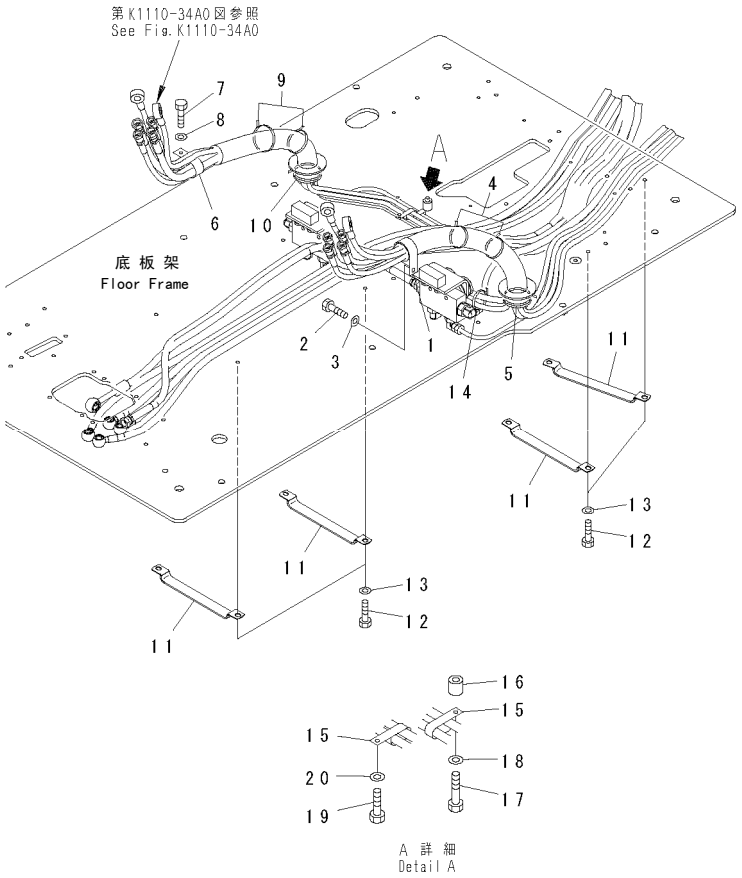

00062470

FIG NO. :K1110-35A0

INDEX	PART NO.	DESCRIPTION	Q'TY	SERIAL NO.
1	208-06-19170	CLIP……管夹	1	60001-
2	01010-81020	BOLT……螺栓	1	60001-
3	01643-31032	WASHER……垫圈	1	60001-
4	08034-20536	BAND……绑带	2	60001-
5	08034-20536	BAND……绑带	1	60001-
6	208-06-19170	CLIP……管夹	1	60001-
7	01010-81020	BOLT……螺栓	1	60001-
8	01643-31032	WASHER……垫圈	1	60001-
9	08034-20536	BAND……绑带	2	60001-
10	08034-20536	BAND……绑带	1	60001-
11	21M-62-16340	CLAMP…… 卡箍	4	60001-
12	01010-81016	BOLT……螺栓	8	60001-
13	01643-31032	WASHER……垫圈	8	60001-
14	08034-20536	BAND……绑带	1	60001-
15	04435-51510	CLIP……管夹	3	60001-
16	195-33-11220	SPACER……调整垫片	1	60001-
17	01010-81040	BOLT……螺栓	1	60001-
18	01643-31032	WASHER……垫圈	1	60001-
19	01010-81016	BOLT……螺栓	2	60001-
20	01643-31032	WASHER……垫圈	2	60001-

https://truckmanualshub.com/

FIG.K1110-36A0 FLOOR FRAME (OPERATOR'S CAB) (P 、T BLOCK AND SEAL)
底板架（驾驶室）（P、T块和密封垫）

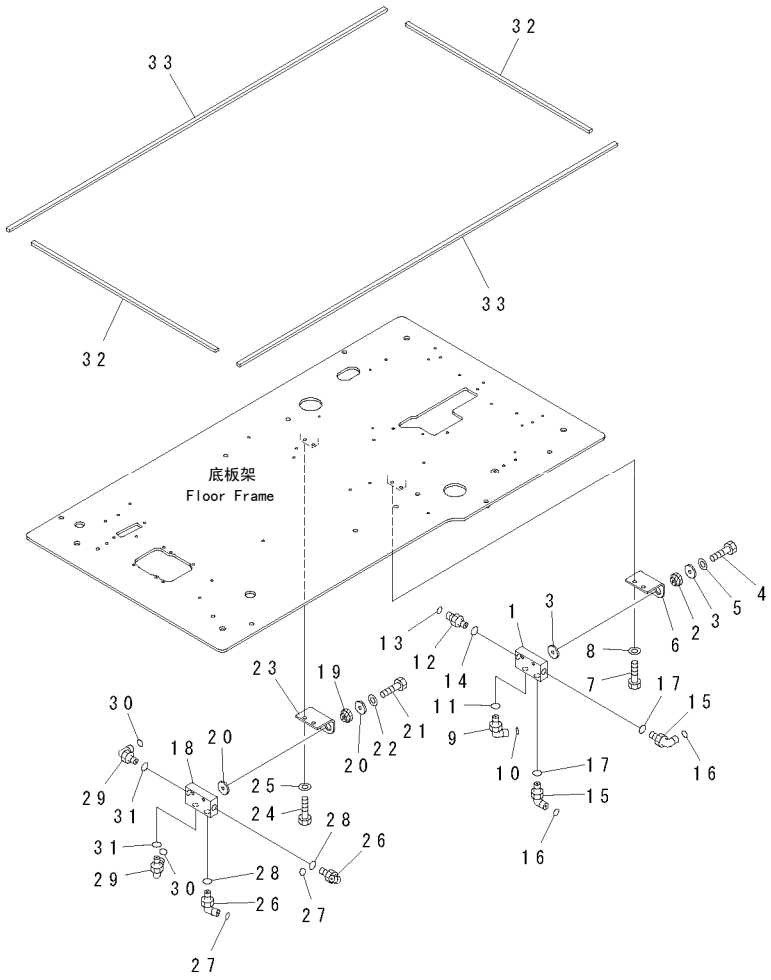

FIG NO. : K1110-36A0

INDEX	PART NO.	DESCRIPTION	Q'TY	SERIAL NO.
1	209-62-77181	BLOCK…… 接头	1	60001-
2	195-03-41380	CUSHION…… 减振垫	2	60001-
3	178-60-12250	COLLAR……衬套	4	60001-
4	01010-81050	BOLT……螺栓	2	60001-
5	01643-31032	WASHER……垫圈	2	60001-
6	21N-62-35140	BRACKET…… 支架	1	60001-
7	01010-81025	BOLT……螺栓	2	60001-
8	01643-31032	WASHER……垫圈	2	60001-
9	02782-10315	ELBOW…… 接头	1	60001-
10	02896-11009	O-RING…… O形圈	1	60001-
11	07002-12034	O-RING…… O形圈	1	60001-
12	02781-00315	UNION…… 接头	1	60001-
13	02896-11009	O-RING…… O形圈	1	60001-
14	07002-12034	O-RING…… O形圈	1	60001-
15	02782-10214	ELBOW…… 接头	2	60001-
16	02896-11008	O-RING…… O形圈	2	60001-
17	07002-12034	O-RING…… O形圈	2	60001-
18	209-62-77181	BLOCK…… 接头	1	60001-
19	195-03-41380	CUSHION…… 减振垫	2	60001-
20	178-60-12250	COLLAR……衬套	4	60001-
21	01010-81050	BOLT……螺栓	2	60001-
22	01643-31032	WASHER……垫圈	2	60001-
23	21N-62-35140	BRACKET…… 支架	1	60001-
24	01010-81025	BOLT……螺栓	2	60001-
25	01643-31032	WASHER……垫圈	2	60001-
26	02782-10315	ELBOW…… 接头	2	60001-
27	02896-11009	O-RING…… O形圈	2	60001-
28	07002-12034	O-RING…… O形圈	2	60001-
29	02782-10214	ELBOW…… 接头	2	60001-
30	02896-11008	O-RING…… O形圈	2	60001-
31	07002-12034	O-RING…… O形圈	2	60001-
32	208-53-11810	SEAL……密封垫	2	60001-
33	208-53-11820	SEAL……密封垫	2	60001-

https://truckmanualshub.com/

FIG.K1120-01A0 FLOOR MOUNT
地板架安装

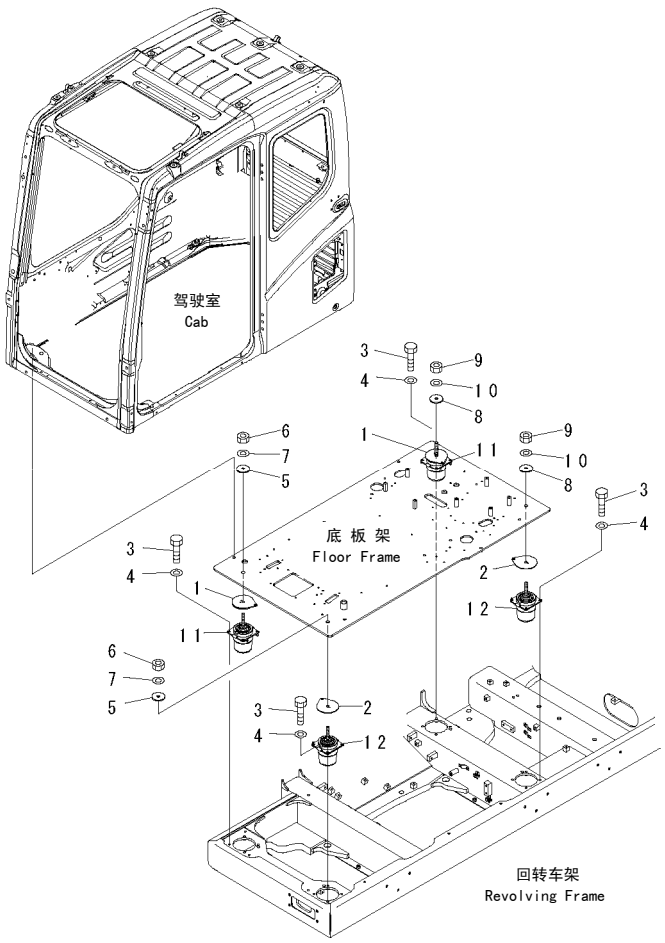

00038825

FIG NO. : K1120-01A0

INDEX	PART NO.	DESCRIPTION	Q'TY	SERIAL NO.
1	207-54-65132	SPACER……调整垫片	2	60001-
2	207-54-65260	SPACER……调整垫片	2	60001-
3	01010-81035	BOLT……螺栓	16	60001-
4	01643-31032	WASHER……垫圈	16	60001-
5	113-01-21120	WASHER……垫圈	2	60001-
6	01580-11613	NUT…… 螺母	2	60001-
7	01643-31645	WASHER……垫圈	2	60001-
8	21T-27-71220	HOLDER……夹持器	2	60001-
9	01580-11613	NUT…… 螺母	2	60001-
10	01643-31645	WASHER……垫圈	2	60001-
11	20Y-54-65811	CUSHION…… 减振垫	2	60001-
12	20Y-54-65821	CUSHION…… 减振垫	2	60001-

https://truckmanualshub.com/

FIG.K1730-01A0 SWITCH (MODEL SELECTION CONNECTOR)
开关(模式选择接头)

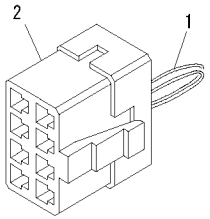

PJB1388

FIG NO. : K1730-01A0

INDEX	PART NO.	DESCRIPTION	Q'TY	SERIAL NO.
1	21M-06-14120	SWITCH……开关	1	60001-
2	08056-10881	.CONNECTOR……接头	1	60001-

GUARD
护罩

https://truckmanualshub.com/

https://truckmanualshub.com/

FIG.M1110-01A0 HOOD

护罩

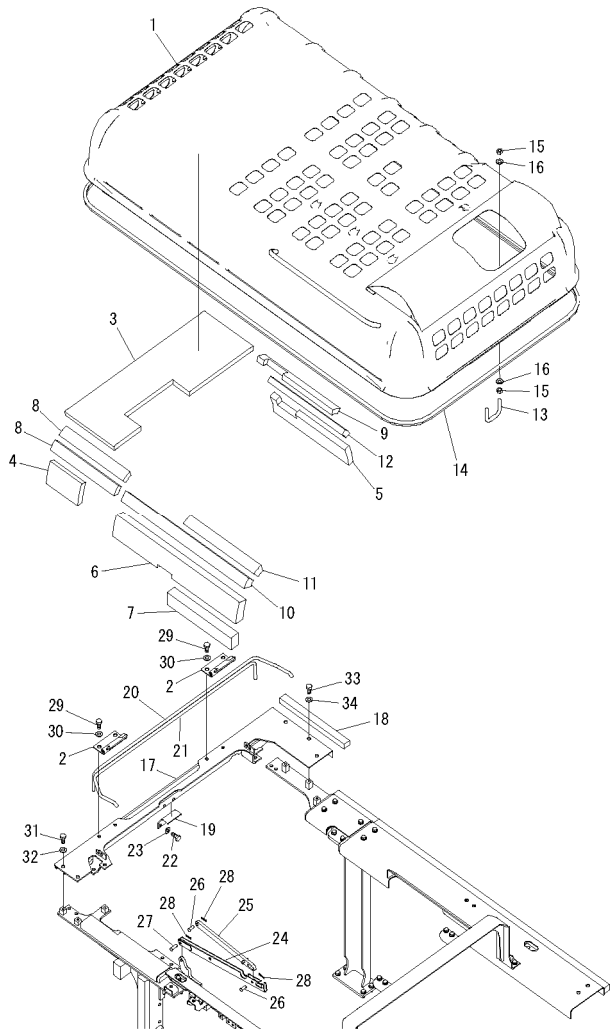

00038251

FIG NO. : M1110-01A0

INDEX	PART NO.	DESCRIPTION	Q'TY	SERIAL NO.
1	21M-54-21110	HOOD……护罩	1	60001-
2	20Y-54-27123	.HINGE……(WELDED)……铰链(焊接)	2	60001-
3	21M-54-22910	SHEET ……垫片	1	60001-
4	21M-54-22921	SHEET ……垫片	1	60001-
5	21M-54-22931	SHEET ……垫片	1	60001-
6	21M-54-22941	SHEET ……垫片	1	60001-
7	21M-54-22950	SHEET ……垫片	1	60001-
8	21M-54-23310	SHEET ……垫片	2	60001-
9	21M-54-23320	SHEET ……垫片	1	60001-
10	21M-54-23330	SHEET ……垫片	1	60001-
11	21M-54-23340	SHEET ……垫片	1	60001-
12	21M-54-23420	SHEET ……垫片	1	60001-
13	207-54-61270	U-BOLT……U-型螺栓	1	60001-
14	207-54-62131	SEAL……密封垫	1	60001-
15	01580-11613	NUT ……螺母	4	60001-
16	01643-31645	WASHER……垫圈	4	60001-
17	21M-54-21121	FRAME ……车架	1	60001-
18	21M-54-21130	.SHEET……垫片	1	60001-
19	20Y-54-27360	BRACKET ……支架	1	60001-
20	21M-54-18730	SPRING……弹簧	1	60001-
21	21M-54-18740	SPRING……弹簧	1	60001-
22	01010-81230	BOLT……螺栓	2	60001-
23	01643-31232	WASHER……垫圈	2	60001-
24	207-54-72150	STAY……支架	1	60001-
25	20Y-54-27290	STAY……支架	1	60001-
26	04205-31230	PIN ……销	2	60001-
27	04205-31238	PIN ……销	1	60001-
28	04052-01253	PIN ……销	3	60001-
29	01010-81230	BOLT……螺栓	4	60001-
30	01643-31232	WASHER……垫圈	4	60001-
31	01010-81230	BOLT……螺栓	3	60001-
32	01643-31232	WASHER……垫圈	3	60001-
33	01010-81230	BOLT……螺栓	3	60001-
34	01643-31232	WASHER……垫圈	3	60001-

https://truckmanualshub.com/

FIG.M1120-01A0 FRAME (MACHINE CAB) (ADDITIONAL FILTER SPEC.) (FRAME)

支架(机罩)（附加滤清器仕样）（支架）

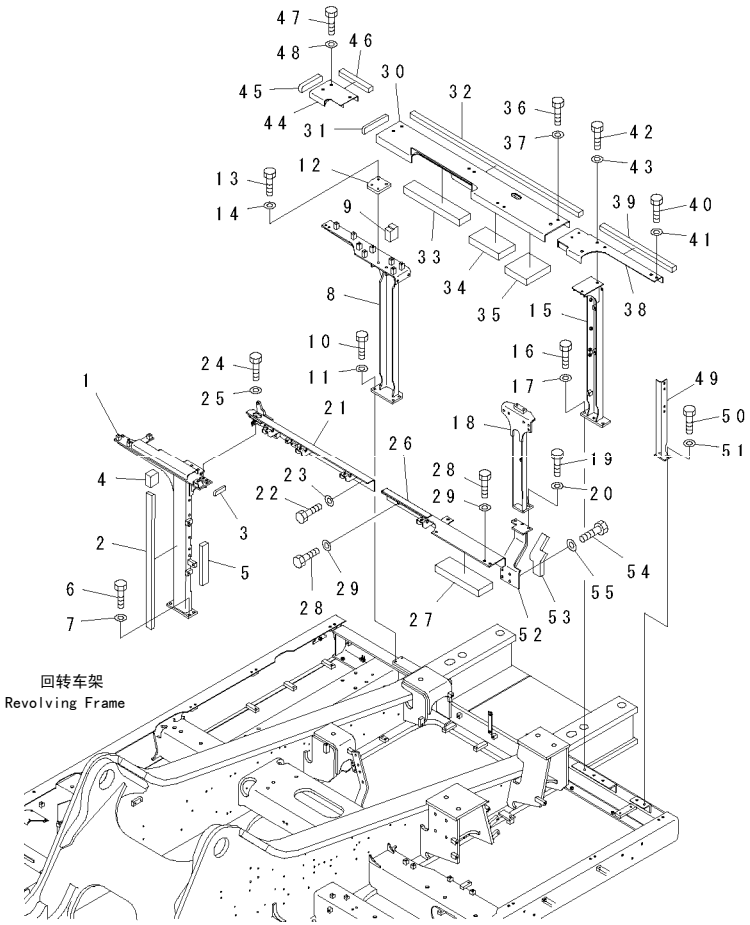

00062056

FIG NO. : M1120-01A0

INDEX	PART NO.	DESCRIPTION	Q'TY	SERIAL NO.
1	21M-54-21211	FRAME ……车架	1	60001-
2	21M-54-12450	. SHEET……垫片	1	60001-
3	21M-54-18850	. SHEET……垫片	1	60001-
4	21M-54-21661	. SHEET……垫片	1	60001-
5	21M-54-22240	. SHEET……垫片	1	60001-
6	01010-81240	BOLT……螺栓	4	60001-
7	01643-31232	WASHER……垫圈	4	60001-
8	21M-54-21221	FRAME ……车架	1	60001-
9	21M-54-22281	. SHEET……垫片	1	60001-
10	01010-81235	BOLT……螺栓	4	60001-
11	01643-31232	WASHER……垫圈	4	60001-
12	21M-54-21290	PLATE ……摩擦片	1	60001-
13	01010-81245	BOLT……螺栓	2	60001-
14	01643-31232	WASHER……垫圈	2	60001-
15	21M-54-21231	FRAME ……车架	1	60001-
16	01010-81240	BOLT……螺栓	3	60001-
17	01643-31232	WASHER……垫圈	3	60001-
18	21M-54-21261	FRAME ……车架	1	60001-
19	01010-81240	BOLT……螺栓	2	60001-
20	01643-31232	WASHER……垫圈	2	60001-
21	21M-54-21241	FRAME ……车架	1	60001-
22	01010-81235	BOLT……螺栓	2	60001-
23	01643-31232	WASHER……垫圈	2	60001-
24	01010-81245	BOLT……螺栓	2	60001-
25	01643-31232	WASHER……垫圈	2	60001-
26	21M-54-21271	COVER ……盖	1	60001-
27	21M-54-17460	. SHEET……垫片	1	60001-
28	01010-81235	BOLT……螺栓	4	60001-
29	01643-31232	WASHER……垫圈	4	60001-
30	21M-54-21251	FRAME ……车架	1	60001-
31	21M-54-21780	. SHEET……垫片	1	60001-
32	21M-54-21811	. SHEET……垫片	1	60001-
33	21M-54-22970	. SHEET……垫片	1	60001-
34	21M-54-22980	. SHEET……垫片	1	60001-
35	21M-54-22990	. SHEET……垫片	1	60001-
36	01010-81230	BOLT……螺栓	4	60001-
37	01643-31232	WASHER……垫圈	4	60001-
38	21M-54-21881	FRAME ……车架	1	60001-
39	21M-54-21890	. SHEET……垫片	1	60001-
40	01010-81235	BOLT……螺栓	1	60001-
41	01643-31232	WASHER……垫圈	1	60001-
42	01010-81230	BOLT……螺栓	2	60001-
43	01643-31232	WASHER……垫圈	2	60001-
44	21M-54-21281	COVER ……盖	1	60001-
45	21M-54-21830	. SHEET……垫片	1	60001-
46	21M-54-21841	. SHEET……垫片	1	60001-
47	01010-81230	BOLT……螺栓	3	60001-
48	01643-31232	WASHER……垫圈	3	60001-

https://truckmanualshub.com/

FIG.M1120-01A0 FRAME (MACHINE CAB) (ADDITIONAL FILTER SPEC.) (FRAME)
支架(机罩)（附加滤清器仕样）（支架）

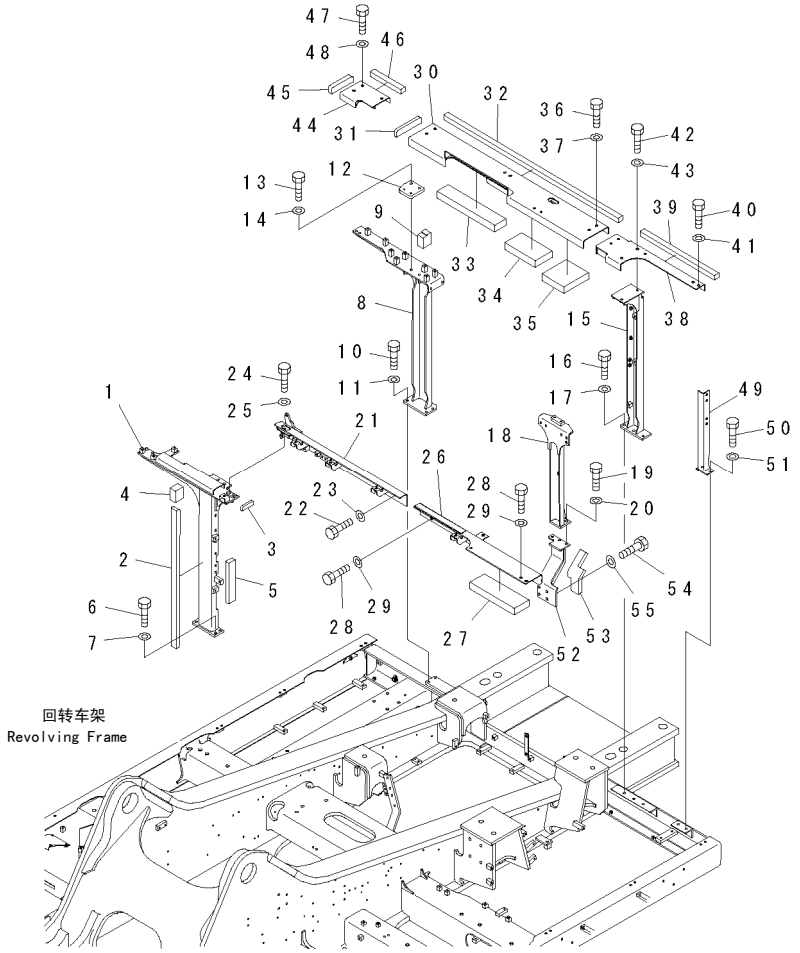

00062056

FIG NO. : M1120-01A0

INDEX	PART NO.	DESCRIPTION	Q'TY	SERIAL NO.
49	21M-54-23810	FRAME ……车架	1	60001-
50	01010-81230	BOLT……螺栓	2	60001-
51	01643-31232	WASHER……垫圈	2	60001-
52	21M-54-23710	BRACKET ……支架	1	60001-
53	21M-54-17980	.SHEET……垫片	1	60001-
54	01010-81230	BOLT……螺栓	4	60001-
55	01643-31232	WASHER……垫圈	4	60001-

https://truckmanualshub.com/

FIG.M1120-02A0 FRAME (MACHINE CAB) (ADDITIONAL FILTER SPEC.) (STEP AND COVER)
支架(机罩)（附加滤清器仕样）（踏板和盖）

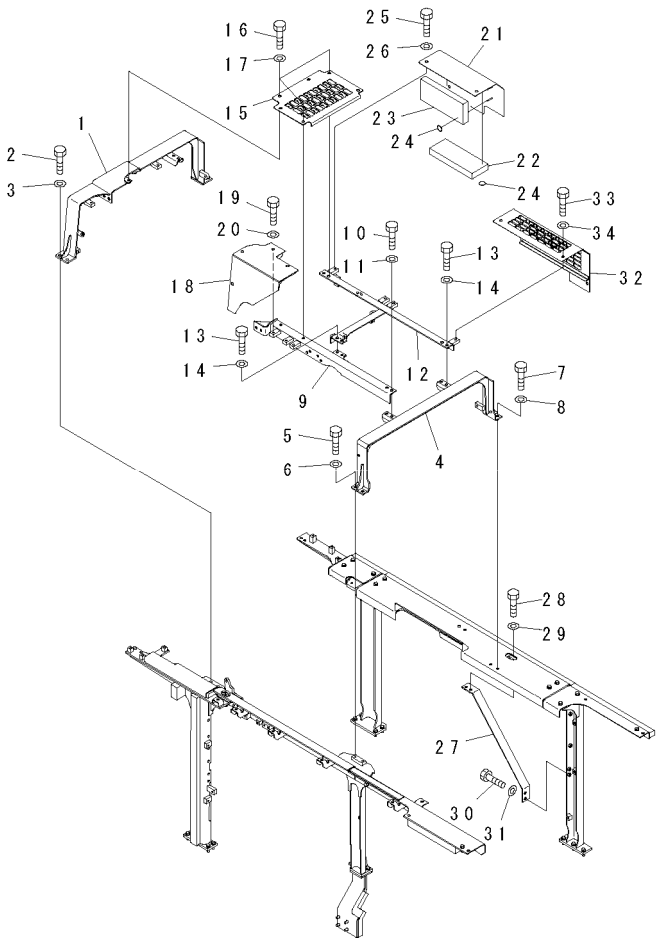

00062064

FIG NO. : M1120-02A0

INDEX	PART NO.	DESCRIPTION	Q'TY	SERIAL NO.
1	21M-54-21311	FRAME ……车架	1	60001-
2	01010-81230	BOLT……螺栓	4	60001-
3	01643-31232	WASHER……垫圈	4	60001-
4	21M-54-21322	FRAME ……车架	1	60001-
5	01010-81225	BOLT……螺栓	2	60001-
6	01643-31232	WASHER……垫圈	2	60001-
7	01010-81230	BOLT……螺栓	2	60001-
8	01643-31232	WASHER……垫圈	2	60001-
9	21M-54-21331	FRAME ……车架	1	60001-
10	01010-81230	BOLT……螺栓	4	60001-
11	01643-31232	WASHER……垫圈	4	60001-
12	21M-54-21342	FRAME ……车架	1	60001-
13	01010-81230	BOLT……螺栓	5	60001-
14	01643-31232	WASHER……垫圈	5	60001-
15	21M-54-21360	COVER ……盖	1	60001-
16	01010-81230	BOLT……螺栓	6	60001-
17	01643-31232	WASHER……垫圈	6	60001-
18	21M-54-23621	COVER ……盖	1	60001-
19	01010-81230	BOLT……螺栓	4	60001-
20	01643-31232	WASHER……垫圈	4	60001-
21	21M-54-21371	COVER ……盖	1	60001-
22	21M-54-22761	SHEET ……垫片	1	60001-
23	21M-54-22781	SHEET ……垫片	1	60001-
24	124-A62-1920	CAP ……盖	10	60001-
25	01010-81230	BOLT……螺栓	3	60001-
26	01643-31232	WASHER……垫圈	3	60001-
27	21M-54-21851	FRAME ……车架	1	60001-
28	01010-81255	BOLT……螺栓	2	60001-
29	01643-31232	WASHER……垫圈	2	60001-
30	01010-81230	BOLT……螺栓	2	60001-
31	01643-31232	WASHER……垫圈	2	60001-
32	21M-54-23610	COVER ……盖	1	60001-
33	01010-81230	BOLT……螺栓	3	60001-
34	01643-31232	WASHER……垫圈	3	60001-

https://truckmanualshub.com/

FIG.M1130-01A0 LEFT SIDE COVER (MACHINE CAB)

左盖(机罩)

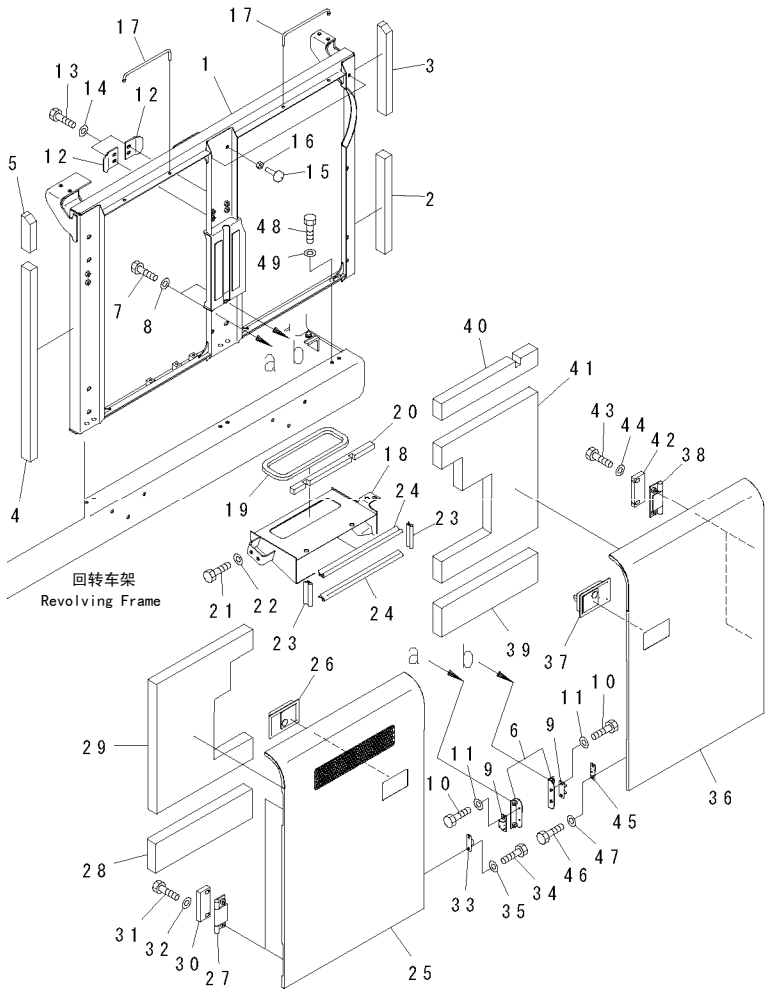

FIG NO. : M1130-01A0

INDEX	PART NO.	DESCRIPTION	Q'TY	SERIAL NO.
1	21M-54-21412	FRAME ……车架	1	60001-
2	21M-54-15590	.SEAL ……油封	1	60001-
3	21M-54-15610	.SEAL ……油封	1	60001-
4	21M-54-15620	.SEAL ……油封	1	60001-
5	21M-54-15630	.SEAL ……油封	1	60001-
6	20Y-54-28170	BRACKET ……支架	2	60001-
7	01010-81230	BOLT……螺栓	4	60001-
8	01643-31232	WASHER……垫圈	4	60001-
9	205-54-51970	DOVE TAIL ……燕尾槽	2	60001-
10	01010-80616	BOLT……螺栓	4	60001-
11	01643-30623	WASHER……垫圈	4	60001-
12	21M-54-11730	PLATE…… 摩擦片	2	60001-
13	01010-81230	BOLT……螺栓	4	60001-
14	01643-31232	WASHER……垫圈	4	60001-
15	20Y-54-11611	STOPPER ……止动块	3	60001-
16	01580-11008	NUT ……螺母	3	60001-
17	20Y-54-29232	BAR ……杆	2	60001-
18	21M-54-21442	DUCT……风道	1	60001-
19	21M-54-15550	.SHEET……垫片	1	60001-
20	21M-54-21670	.SHEET……垫片	1	60001-
21	01010-81230	BOLT……螺栓	4	60001-
22	01643-31232	WASHER……垫圈	4	60001-
23	21M-54-15570	SEAL……油封	2	60001-
24	21M-54-15580	SEAL……油封	2	60001-
25	21M-54-21431	COVER ……盖	1	60001-
26	198-54-41982	.LOCK ASS'Y ……(WELDED)…锁总成(焊接)	1	60001-
27	20Y-54-28161	.HINGE……(WELDED)……铰链(焊接)	2	60001-
28	21M-54-16512	.SHEET……垫片	1	60001-
29	21M-54-21460	.SHEET……垫片	1	60001-
30	21M-54-11760	PLATE…… 摩擦片	2	60001-
31	01010-81240	BOLT……螺栓	4	60001-
32	01643-31232	WASHER……垫圈	4	60001-
33	205-54-53550	DOVE TAIL ……燕尾槽	1	60001-
34	01010-80612	BOLT……螺栓	2	60001-
35	01643-30623	WASHER……垫圈	2	60001-
36	21M-54-21421	COVER ……盖	1	60001-
37	198-54-41982	.LOCK ASS'Y ……(WELDED)…锁总成(焊接)	1	60001-
38	20Y-54-28161	.HINGE……(WELDED)……铰链(焊接)	2	60001-
39	21M-54-16512	.SHEET……垫片	1	60001-
40	21M-54-23480	.SHEET……垫片	1	60001-
41	21M-54-21452	.SHEET……垫片	1	60001-
42	21M-54-11760	PLATE…… 摩擦片	2	60001-
43	01010-81240	BOLT……螺栓	4	60001-
44	01643-31232	WASHER……垫圈	4	60001-
45	205-54-53550	DOVE TAIL ……燕尾槽	1	60001-
46	01010-80612	BOLT……螺栓	2	60001-
47	01643-30623	WASHER……垫圈	2	60001-
48	01010-81230	BOLT……螺栓	6	60001-

https://truckmanualshub.com/

FIG NO. : M1130-01A0

INDEX	PART NO.	DESCRIPTION		SERIAL NO.
49	01643-31232	WASHER……垫圏	6	60001-

PC650LC-8R

https://truckmanualshub.com/

FIG.M1130-01A1 LEFT SIDE COVER (MACHINE CAB) (FOR ENGINE AIR PRE-CLEANER)
左盖(机罩)(发动机预空滤用)

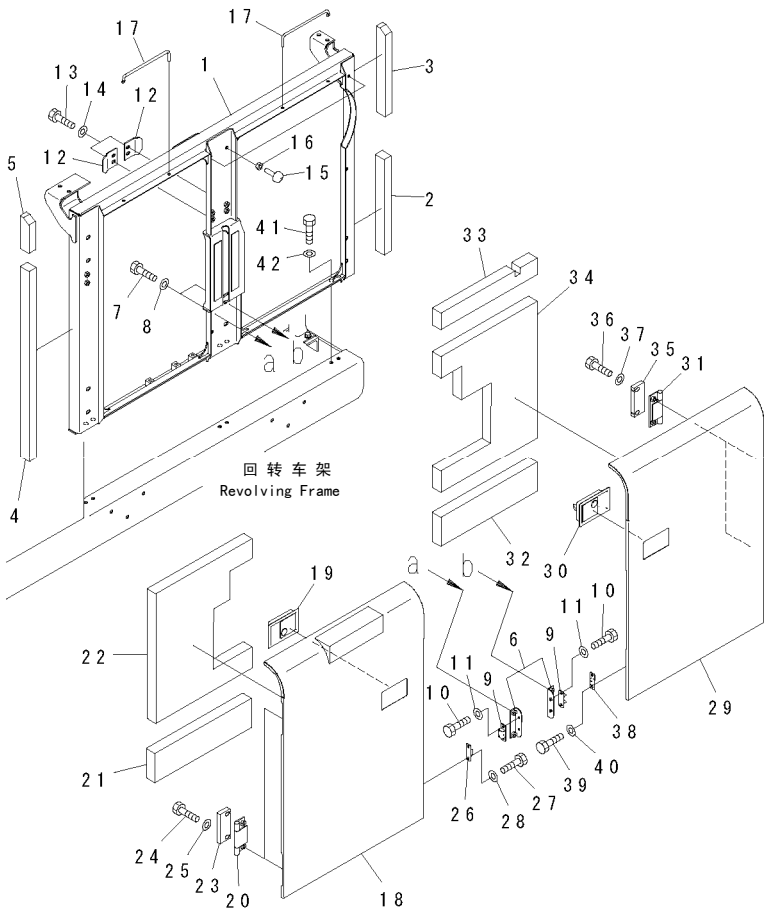

FIG NO. : M1130-01A1

INDEX	PART NO.	DESCRIPTION	Q'TY	SERIAL NO.
1	21M-54-24220	FRAME····· 车架	1	60001-
2	21M-54-15590	.SEAL····· 油封	1	60001-
3	21M-54-15610	.SEAL····· 油封	1	60001-
4	21M-54-15620	.SEAL····· 油封	1	60001-
5	21M-54-15630	.SEAL····· 油封	1	60001-
6	20Y-54-28170	BRACKET····· 支架	2	60001-
7	01010-81230	BOLT·····螺栓	4	60001-
8	01643-31232	WASHER·····垫圈	4	60001-
9	205-54-51970	DOVE TAIL ·····燕尾槽	2	60001-
10	01010-80616	BOLT·····螺栓	4	60001-
11	01643-30623	WASHER·····垫圈	4	60001-
12	21M-54-11730	PLATE····· 摩擦片	2	60001-
13	01010-81230	BOLT·····螺栓	4	60001-
14	01643-31232	WASHER·····垫圈	4	60001-
15	20Y-54-11611	STOPPER ·····止动块	3	60001-
16	01580-11008	NUT ·····螺母	3	60001-
17	20Y-54-29232	BAR ·····杆	2	60001-
18	21M-54-24211	COVER····· 盖	1	60001-
19	198-54-41982	.LOCK ASS'Y ·····(WELDED)…锁总成(焊接)	1	60001-
20	20Y-54-28161	.HINGE·····(WELDED)……铰链(焊接)	2	60001-
21	21M-54-16512	.SHEET·····垫片	1	60001-
22	21M-54-21460	.SHEET·····垫片	1	60001-
23	21M-54-11760	PLATE····· 摩擦片	2	60001-
24	01010-81240	BOLT·····螺栓	4	60001-
25	01643-31232	WASHER·····垫圈	4	60001-
26	205-54-53550	DOVE TAIL ·····燕尾槽	1	60001-
27	01010-80612	BOLT·····螺栓	2	60001-
28	01643-30623	WASHER·····垫圈	2	60001-
29	21M-54-21421	COVER ·····盖	1	60001-
30	198-54-41982	.LOCK ASS'Y ·····(WELDED)…锁总成(焊接)	1	60001-
31	20Y-54-28161	.HINGE·····(WELDED)……铰链(焊接)	2	60001-
32	21M-54-16512	.SHEET·····垫片	1	60001-
33	21M-54-23480	.SHEET·····垫片	1	60001-
34	21M-54-21452	.SHEET·····垫片	1	60001-
35	21M-54-11760	PLATE····· 摩擦片	2	60001-
36	01010-81240	BOLT·····螺栓	4	60001-
37	01643-31232	WASHER·····垫圈	4	60001-
38	205-54-53550	DOVE TAIL ·····燕尾槽	1	60001-
39	01010-80612	BOLT·····螺栓	2	60001-
40	01643-30623	WASHER·····垫圈	2	60001-
41	01010-81230	BOLT·····螺栓	6	60001-
42	01643-31232	WASHER·····垫圈	6	60001-

https://truckmanualshub.com/

FIG.M1140-01A0　RIGHT SIDE COVER (MACHINE CAB)
右盖(机罩)

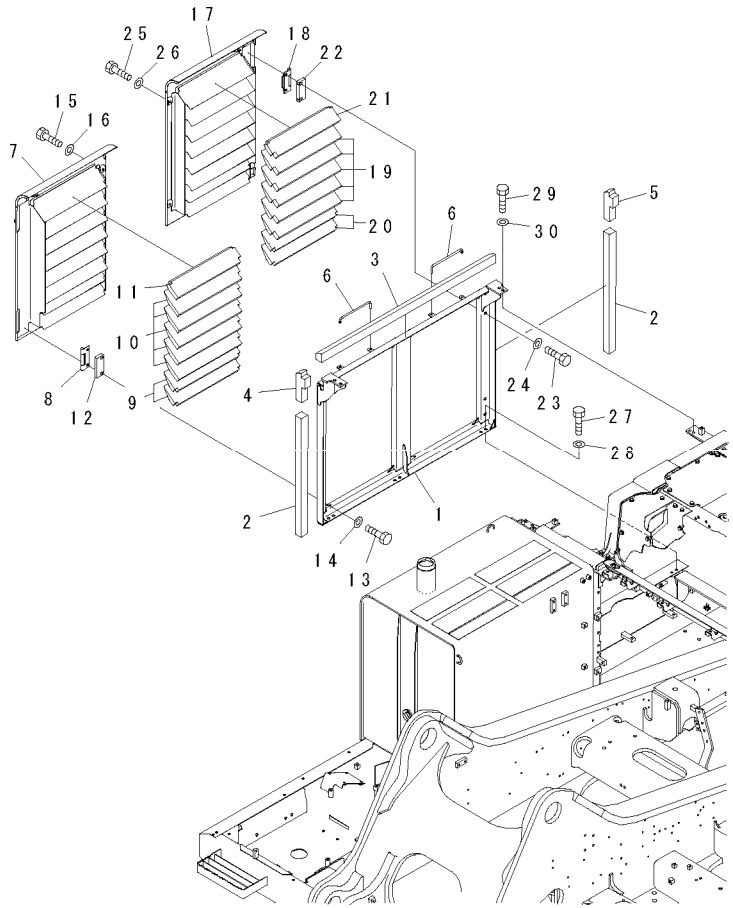

00038255

FIG NO. : M1140-01A0

INDEX	PART NO.	DESCRIPTION	Q'TY	SERIAL NO.
1	21M-54-21511	FRAME ……车架	1	60001-
2	21M-54-18930	.SEAL ……油封	2	60001-
3	21M-54-21480	.SHEET……垫片	1	60001-
4	21M-54-21490	.SHEET……垫片	1	60001-
5	21M-54-21590	.SHEET……垫片	1	60001-
6	20Y-54-29232	BAR ……杆	2	60001-
7	21M-54-21531	COVER ……盖	1	60001-
8	20Y-54-28161	.HINGE……(WELDED)……铰链(焊接)	2	60001-
9	21M-54-21550	.SHEET……垫片	2	60001-
10	21M-54-21570	.SHEET……垫片	5	60001-
11	21M-54-21580	.SHEET……垫片	1	60001-
12	21M-54-11760	PLATE…… 摩擦片	2	60001-
13	01010-81240	BOLT……螺栓	4	60001-
14	01643-31232	WASHER……垫圈	4	60001-
15	01010-81225	BOLT……螺栓	2	60001-
16	01643-31232	WASHER……垫圈	2	60001-
17	21M-54-21521	COVER ……盖	1	60001-
18	20Y-54-28161	.HINGE……(WELDED)……铰链(焊接)	2	60001-
19	21M-54-21540	.SHEET……垫片	5	60001-
20	21M-54-21550	.SHEET……垫片	2	60001-
21	21M-54-21560	.SHEET……垫片	1	60001-
22	21M-54-11760	PLATE…… 摩擦片	2	60001-
23	01010-81240	BOLT……螺栓	4	60001-
24	01643-31232	WASHER……垫圈	4	60001-
25	01010-81225	BOLT……螺栓	2	60001-
26	01643-31232	WASHER……垫圈	2	60001-
27	01010-81230	BOLT……螺栓	6	60001-
28	01643-31232	WASHER……垫圈	6	60001-
29	01010-81240	BOLT……螺栓	4	60001-
30	01643-31232	WASHER……垫圈	4	60001-

https://truckmanualshub.com/

FIG.M1150-01A0 PARTITION (1/2)

隔离箱(1/2)

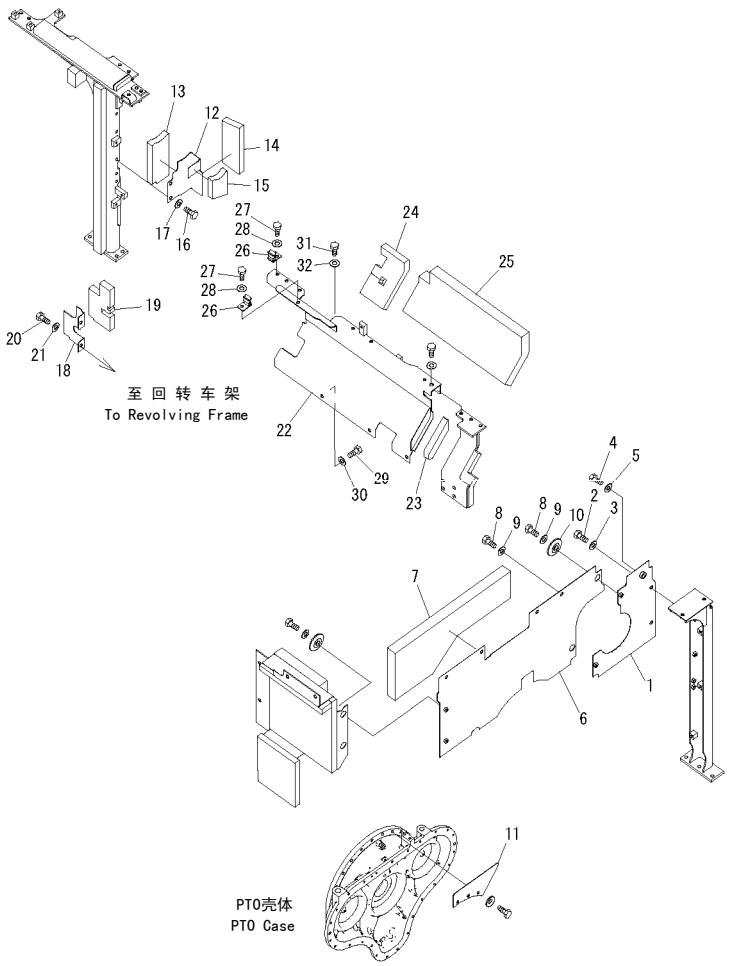

00062045-V

FIG NO. : M1150-01A0

INDEX	PART NO.	DESCRIPTION	Q'TY	SERIAL NO.
1	21M-54-22581	COVER ……盖	1	60001-
2	01010-81230	BOLT……螺栓	2	60001-
3	01643-31232	WASHER……垫圈	2	60001-
4	01010-81240	BOLT……螺栓	1	60001-
5	01643-31232	WASHER……垫圈	1	60001-
6	21M-54-21911	COVER ……盖	1	60001-
7	21M-54-21920	.SHEET……垫片	1	60001-
8	01010-81230	BOLT……螺栓	6	60001-
9	01643-31232	WASHER……垫圈	6	60001-
10	203-54-62670	COLLAR……衬套	2	60001-
11	21M-54-11670	COVER ……盖	1	60001-
12	21M-54-22152	COVER ……盖	1	60001-
13	21M-54-22181	.SHEET……垫片	1	60001-
14	21M-54-22192	.SHEET……垫片	1	60001-
15	21M-54-22461	.SHEET……垫片	1	60001-
16	01010-81230	BOLT……螺栓	2	60001-
17	01643-31232	WASHER……垫圈	2	60001-
18	21M-54-23780	COVER ……盖	1	60001-
19	21M-54-23790	.SHEET……垫片	1	60001-
20	01010-81230	BOLT……螺栓	2	60001-
21	01643-31232	WASHER……垫圈	2	60001-
22	21M-54-22112	COVER ……盖	1	60001-
23	21M-54-22130	.SHEET……垫片	1	60001-
24	21M-54-22141	.SHEET……垫片	1	60001-
25	21M-54-22290	.SHEET……垫片	1	60001-
26	20Y-54-12320	CATCH…… 磁铁	7	60001-
27	01010-81230	BOLT……螺栓	7	60001-
28	01643-31232	WASHER……垫圈	7	60001-
29	01010-81230	BOLT……螺栓	4	60001-
30	01643-31232	WASHER……垫圈	4	60001-
31	01010-81225	BOLT……螺栓	1	60001-
32	01643-31232	WASHER……垫圈	1	60001-

https://truckmanualshub.com/

FIG.M1150-02A0 PARTITION (2/2)

隔离箱(2/2)

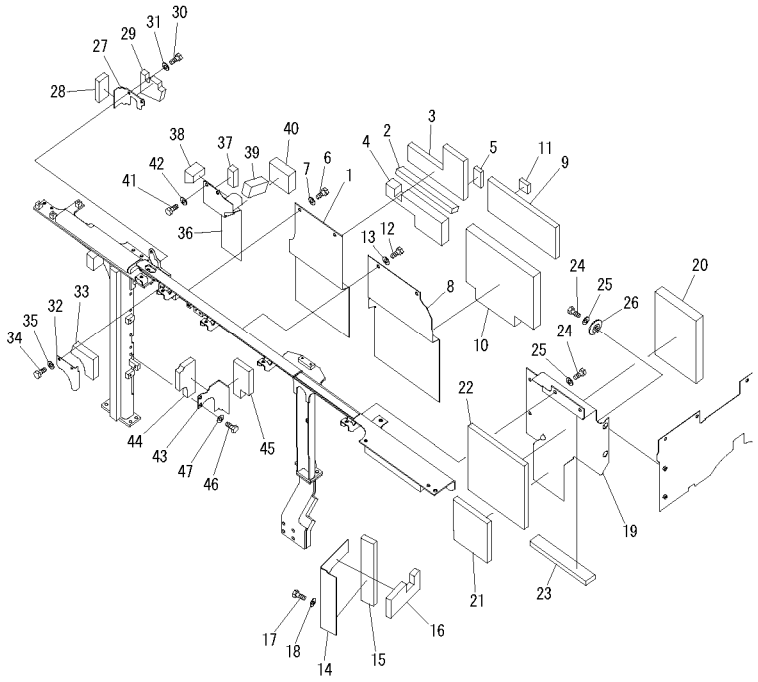

FIG NO. : M1150-02A0

INDEX	PART NO.	DESCRIPTION	Q'TY	SERIAL NO.
1	21M-54-21972	COVER ……盖	1	60001-
2	21M-54-23240	.SHEET……垫片	1	60001-
3	21M-54-23251	.SHEET……垫片	1	60001-
4	21M-54-23751	.SHEET……垫片	1	60001-
5	21M-54-23890	.SHEET……垫片	1	60001-
6	01010-81230	BOLT……螺栓	2	60001-
7	01643-31232	WASHER……垫圈	2	60001-
8	21M-54-21952	COVER ……盖	1	60001-
9	21M-54-21861	.SHEET……垫片	1	60001-
10	21M-54-21960	.SHEET……垫片	1	60001-
11	21M-54-23880	.SHEET……垫片	1	60001-
12	01010-81230	BOLT……螺栓	2	60001-
13	01643-31232	WASHER……垫圈	2	60001-
14	21M-54-21940	COVER ……盖	1	60001-
15	21M-54-12771	.SHEET……垫片	1	60001-
16	21M-54-22210	.SHEET……垫片	1	60001-
17	01010-81230	BOLT……螺栓	2	60001-
18	01643-31232	WASHER……垫圈	2	60001-
19	21M-54-21932	COVER ……盖	1	60001-
20	21M-54-17631	.SHEET……垫片	1	60001-
21	21M-54-17940	.SHEET……垫片	1	60001-
22	21M-54-23850	.SHEET……垫片	1	60001-
23	21M-54-23860	.SHEET……垫片	1	60001-
24	01010-81230	BOLT……螺栓	6	60001-
25	01643-31232	WASHER……垫圈	6	60001-
26	203-54-62670	COLLAR……衬套	2	60001-
27	21M-54-23641	COVER ……盖	1	60001-
28	21M-54-22260	.SHEET……垫片	1	60001-
29	21M-54-23631	.SHEET……垫片	1	60001-
30	01010-81225	BOLT……螺栓	2	60001-
31	01643-31232	WASHER……垫圈	2	60001-
32	21M-54-22740	COVER ……盖	1	60001-
33	21M-54-23220	.SHEET……垫片	1	60001-
34	01010-81230	BOLT……螺栓	2	60001-
35	01643-31232	WASHER……垫圈	2	60001-
36	21M-54-22371	COVER ……盖	1	60001-
37	21M-54-22360	.SHEET……垫片	1	60001-
38	21M-54-23230	.SHEET……垫片	1	60001-
39	21M-54-23280	.SHEET……垫片	1	60001-
40	21M-54-23770	.SHEET……垫片	1	60001-
41	01010-81230	BOLT……螺栓	2	60001-
42	01643-31232	WASHER……垫圈	2	60001-
43	21M-54-22472	COVER ……盖	1	60001-
44	21M-54-22481	.SHEET……垫片	1	60001-
45	21M-54-22491	.SHEET……垫片	1	60001-
46	01010-81230	BOLT……螺栓	2	60001-
47	01643-31232	WASHER……垫圈	2	60001-

https://truckmanualshub.com/

FIG.M1160-01A0 PARTITION (CAB REAR)
隔离箱(驾驶室后)

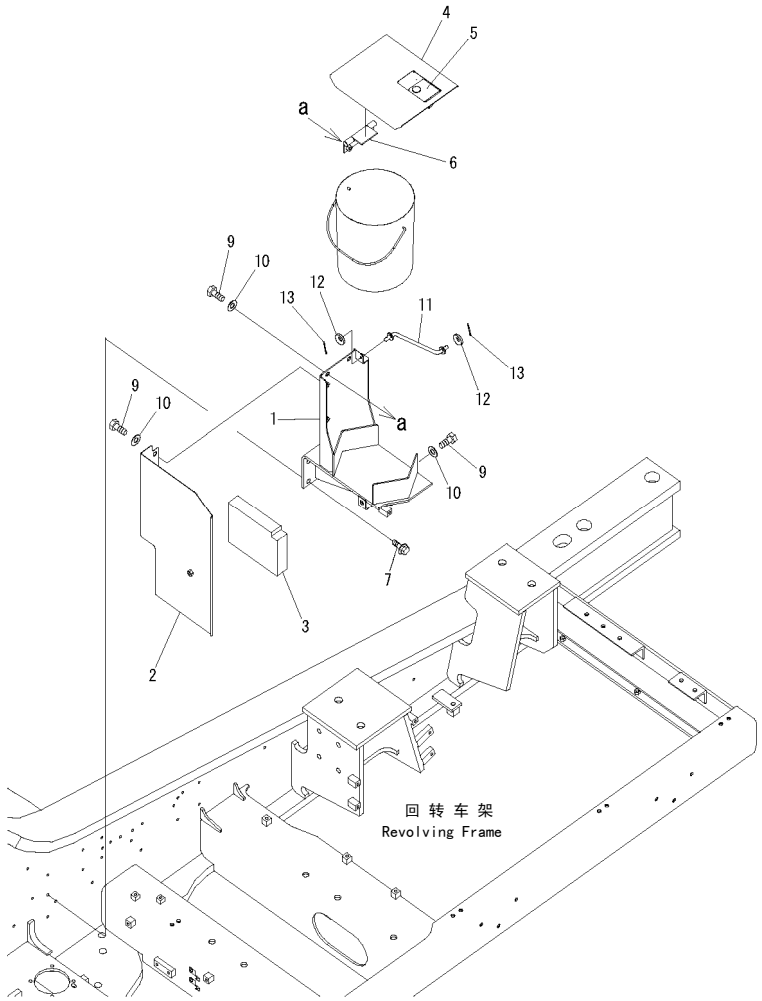

00038258

FIG NO. : M1160-01A0

INDEX	PART NO.	DESCRIPTION	Q'TY	SERIAL NO.
1	21M-54-21620	BRACKET…… 支架	1	60001-
2	21M-54-21640	COVER ……盖	1	60001-
3	21M-54-21651	.SHEET……垫片	1	60001-
4	21M-54-23430	COVER ……盖	1	60001-
5	198-54-41982	.LOCK ASS'Y ……(WELDED)…锁总成(焊接)	1	60001-
6	20Y-54-28161	.HINGE……(WELDED)……铰链(焊接)	1	60001-
7	01034-81230	BOLT……螺栓	4	60001-
9	01010-81225	BOLT……螺栓	5	60001-
10	01643-31232	WASHER……垫圈	5	60001-
11	203-54-56630	ROD…… 杆	1	60001-
12	01643-30623	WASHER……垫圈	2	60001-
13	04050-11612	PIN…… 销	2	60001-

https://truckmanualshub.com/

FIG.M1210-01A1 COVER (MACHINE CAB)
盖(机罩)

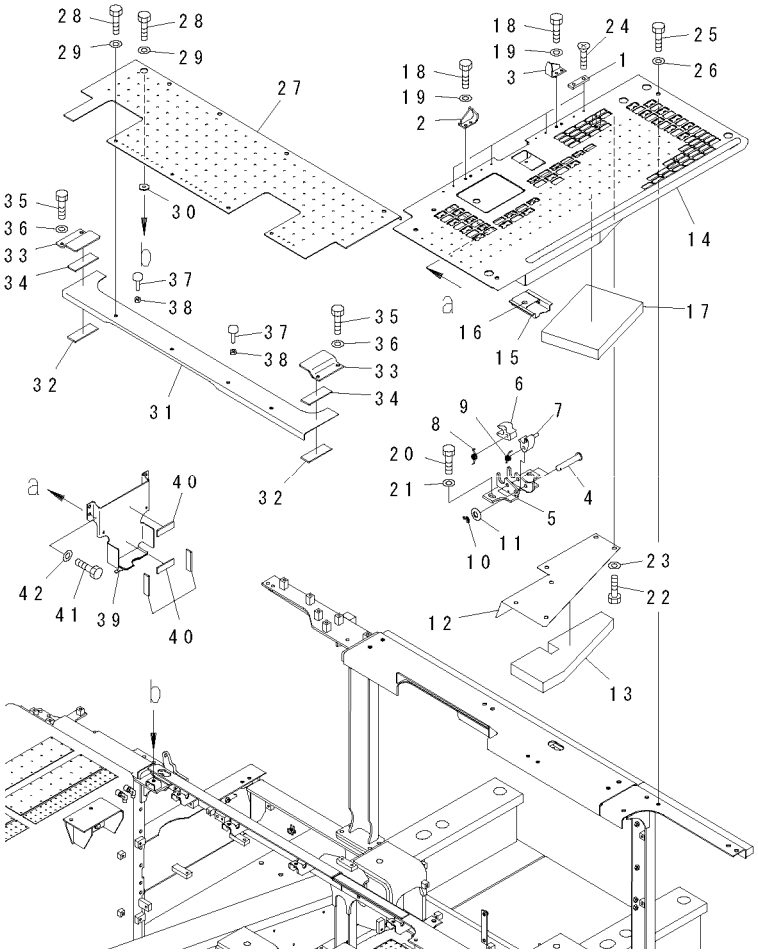

00038259

FIG NO. : M1210-01A1

INDEX	PART NO.	DESCRIPTION	Q'TY	SERIAL NO.
1	205-54-68440	PLATE····· 板	4	60001-
2	207-54-61441	BRACKET····· 支架	1	60001-
3	207-54-61450	BRACKET····· 支架	1	60001-
4	154-54-22520	PIN····· 销	2	60001-
5	208-54-71920	BRACKET····· 支架	1	60001-
6	208-54-71910	LEVER·····.调节杆.	1	60001-
7	207-54-72230	LEVER·····.调节杆	1	60001-
8	20X-54-21460	SPRING·····弹簧	1	60001-
9	21K-54-26351	SPRING·····弹簧	1	60001-
10	04050-13020	PIN····· 销	2	60001-
11	01640-21123	WASHER·····垫圈	2	60001-
12	21M-54-21991	COVER ·····盖	1	60001-
13	21M-54-22961	.SHEET·····垫片	1	60001-
14	21M-54-21712	COVER ·····盖	1	60001-
15	20Y-54-27531	.LOCK····· 锁片	1	60001-
16	20Y-54-27540	..LOCK ASS'Y·····锁总成	1	60001-
	205-54-76280	...ROTOR ASS'Y·····转子总成	1	60001-
17	21M-54-17320	.SHEET·····垫片	1	60001-
18	01010-81025	BOLT·····螺栓	4	60001-
19	01643-31032	WASHER·····垫圈	4	60001-
20	01010-81030	BOLT·····螺栓	2	60001-
21	01643-31032	WASHER·····垫圈	2	60001-
22	01010-81220	BOLT·····螺栓	6	60001-
23	01643-31232	WASHER·····垫圈	6	60001-
24	01224-40616	SCREW····· 螺钉	8	60001-
25	01010-81235	BOLT·····螺栓	5	60001-
26	01643-31232	WASHER·····垫圈	5	60001-
27	21M-54-21723	COVER ·····盖	1	60001-
28	01010-81230	BOLT·····螺栓	9	60001-
29	01643-31232	WASHER·····垫圈	9	60001-
30	208-54-57181	COLLAR·····衬套	1	60001-
31	21M-54-21731	FRAME····· 车架	1	60001-
32	21M-54-13360	.SHEET·····垫片	2	60001-
33	21M-54-23450	PLATE····· 板	2	60001-
34	21M-54-13360	.SHEET·····垫片	1	60001-
35	01010-81230	BOLT·····螺栓	4	60001-
36	01643-31232	WASHER·····垫圈	4	60001-
37	20Y-54-11611	STOPPER····· 止动块	2	60001-
38	01580-11008	NUT····· 螺母	2	60001-
39	21M-54-22121	BRACKET····· 支架	1	60001-
40	205-03-71440	.SHEET·····垫片	4	60001-
41	01010-81225	BOLT·····螺栓	4	60001-
42	01643-31232	WASHER·····垫圈	4	60001-

https://truckmanualshub.com/

FIG.M1210-01A2　COVER (MACHINE CAB) (FOR ENGINE AIR PRE-CLEANER)
盖(机罩)(发动机预空滤用)

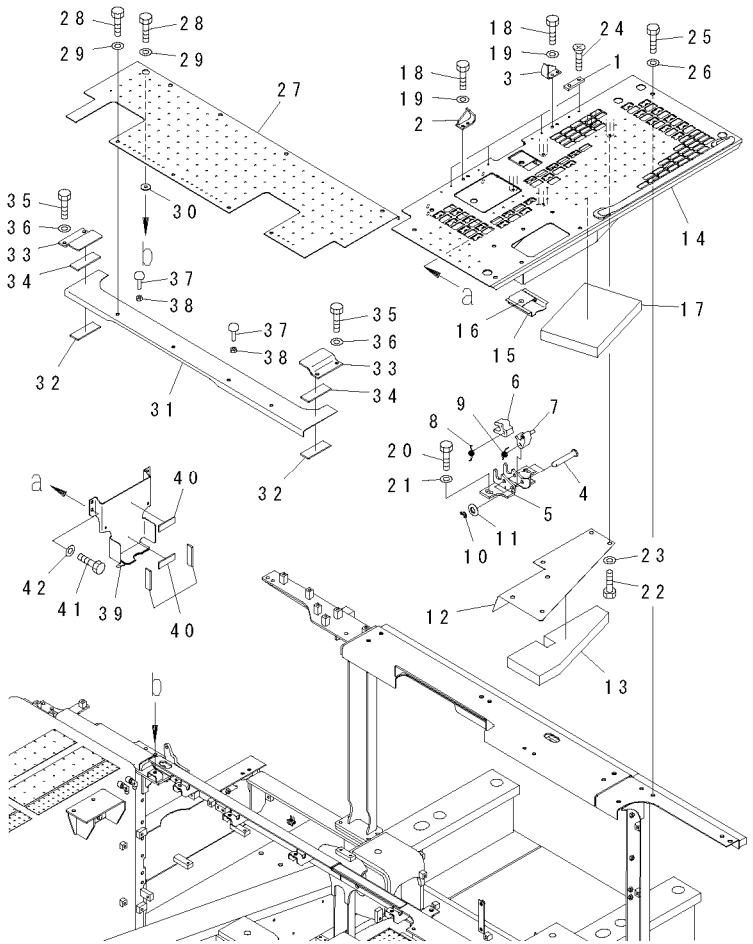

00062247

FIG NO. : M1210-01A2

INDEX	PART NO.	DESCRIPTION	Q'TY	SERIAL NO.
1	205-54-68440	PLATE 板	4	60001-
2	207-54-61441	BRACKET 支架	1	60001-
3	207-54-61450	BRACKET 支架	1	60001-
4	154-54-22520	PIN 销	2	60001-
5	208-54-71920	BRACKET 支架	1	60001-
6	208-54-71910	LEVER .调节杆	1	60001-
7	207-54-72230	LEVER .调节杆	1	60001-
8	20X-54-21460	SPRING 弹簧	1	60001-
9	21K-54-26351	SPRING 弹簧	1	60001-
10	04050-13020	PIN 销	2	60001-
11	01640-21123	WASHER 垫圈	2	60001-
12	21M-54-21991	COVER 盖	1	60001-
13	21M-54-22961	.SHEET 垫片	1	60001-
14	21M-54-24110	COVER 盖	1	60001-
15	20Y-54-27531	.LOCK 锁片	1	60001-
16	20Y-54-27540	..LOCK ASS'Y 锁总成	1	60001-
	205-54-76280	...ROTOR ASS'Y 转子总成	1	60001-
17	21M-54-17320	.SHEET 垫片	1	60001-
18	01010-81025	BOLT 螺栓	4	60001-
19	01643-31032	WASHER 垫圈	4	60001-
20	01010-81030	BOLT 螺栓	2	60001-
21	01643-31032	WASHER 垫圈	2	60001-
22	01010-81220	BOLT 螺栓	6	60001-
23	01643-31232	WASHER 垫圈	6	60001-
24	01224-40616	SCREW 螺钉	8	60001-
25	01010-81235	BOLT 螺栓	5	60001-
26	01643-31232	WASHER 垫圈	5	60001-
27	21M-54-21723	COVER 盖	1	60001-
28	01010-81230	BOLT 螺栓	9	60001-
29	01643-31232	WASHER 垫圈	9	60001-
30	208-54-57181	COLLAR 衬套	1	60001-
31	21M-54-21731	FRAME 车架	1	60001-
32	21M-54-13360	.SHEET 垫片	2	60001-
33	21M-54-23450	PLATE 板	2	60001-
34	21M-54-13360	.SHEET 垫片	2	60001-
35	01010-81230	BOLT 螺栓	4	60001-
36	01643-31232	WASHER 垫圈	4	60001-
37	20Y-54-11611	STOPPER 止动块	2	60001-
38	01580-11008	NUT 螺母	2	60001-
39	21M-54-22121	BRACKET 支架	1	60001-
40	205-03-71440	.SHEET 垫片	4	60001-
41	01010-81225	BOLT 螺栓	4	60001-
42	01643-31232	WASHER 垫圈	4	60001-

https://truckmanualshub.com/

FIG.M1210-02A2　COVER (MACHINE CAB) (ENGINE AIR PRE-CLEANER)
车架（机罩）（发动机预空滤）

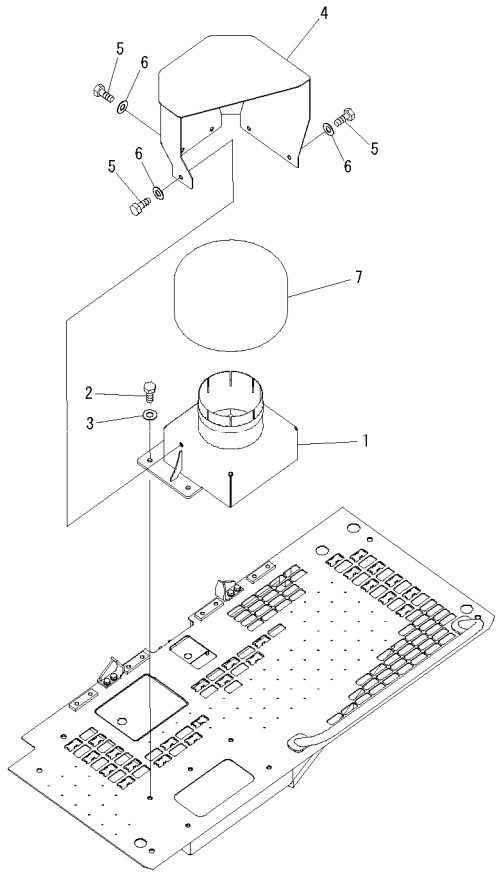

00062248-V

FIG NO. : M1210-02A2

INDEX	PART NO.	DESCRIPTION	Q'TY	SERIAL NO.
1	21M-54-24121	DUCT……风道	1	60001-
2	01010-81230	BOLT……螺栓	5	60001-
3	01643-31232	WASHER……垫圈	5	60001-
4	21M-54-24130	COVER ……盖	1	60001-
5	01010-81230	BOLT……螺栓	5	60001-
6	01643-31232	WASHER……垫圈	5	60001-
7	198-01-51310	PRECLEANER……预空滤器	1	60001-

https://truckmanualshub.com/

FIG.M1220-01A0 RIGHT CASE

右箱

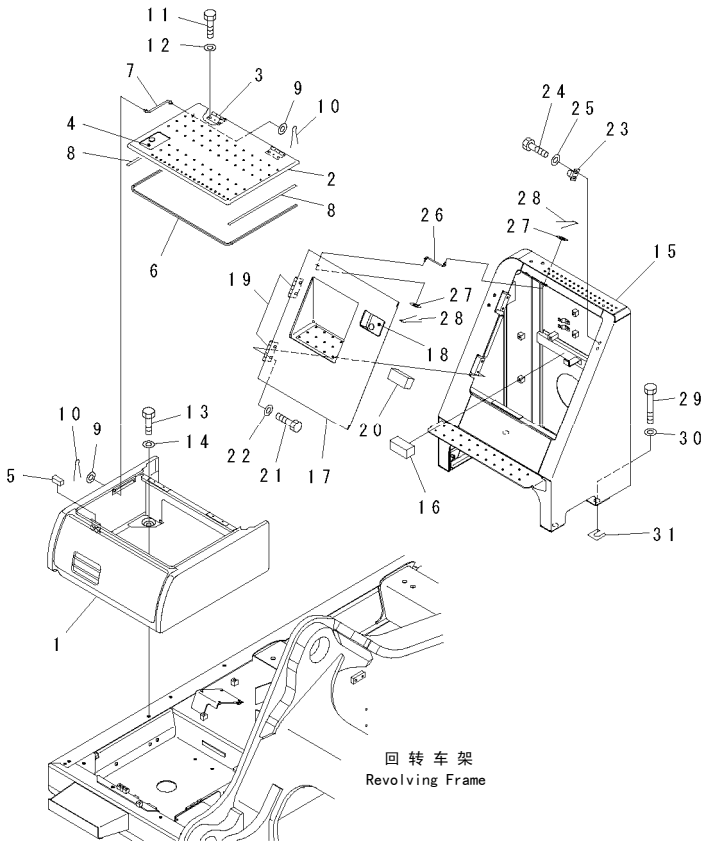

00062246

FIG NO. : M1220-01A0

INDEX	PART NO.	DESCRIPTION	Q'TY	SERIAL NO.
1	21M-54-22310	COVER ……盖	1	60001-
2	20Y-54-74132	COVER ……盖	1	60001-
3	20Y-54-74161	.HINGE……(WELDED)……铰链(焊接)	2	60001-
4	421-54-11372	.LOCK ASS'Y ……(WELDED)…锁总成(焊接)	1	60001-
5	20Y-54-29680	SHEET…… 垫片	1	60001-
6	20Y-54-29660	SEAL……油封	1	60001-
7	203-54-56630	ROD…… 杆	1	60001-
8	21M-54-14330	SHEET…… 垫片	2	60001-
9	01643-30623	WASHER……垫圈	2	60001-
10	04050-11612	PIN…… 销	2	60001-
11	01010-81020	BOLT……螺栓	4	60001-
12	01643-31032	WASHER……垫圈	4	60001-
13	01010-81230	BOLT……螺栓	4	60001-
14	175-54-34170	WASHER……垫圈	4	60001-
15	21M-54-22413	COVER ……盖	1	60001-
16	21M-54-16780	.SHEET……垫片	1	60001-
17	21M-54-22422	COVER ……盖	1	60001-
18	198-54-41982	.LOCK ASS'Y ……(WELDED)…锁总成(焊接)	1	60001-
19	205-46-63360	.HINGE……(WELDED)……铰链(焊接)	2	60001-
20	21M-54-16780	.SHEET……垫片	1	60001-
21	01010-81225	BOLT……螺栓	4	60001-
22	01643-31232	WASHER……垫圈	4	60001-
23	20Y-54-29651	BRACKET…… 支架	1	60001-
24	01010-81225	BOLT……螺栓	2	60001-
25	01643-31232	WASHER……垫圈	2	60001-
26	203-54-56630	ROD…… 杆	1	60001-
27	01643-30623	WASHER……垫圈	2	60001-
28	04050-11612	PIN…… 销	2	60001-
29	01010-81275	BOLT……螺栓	4	60001-
30	01643-31232	WASHER……垫圈	4	60001-
31	195-03-11570	SHIM, 1.0MM…… 调整垫	5	60001-

https://truckmanualshub.com/

FIG.M131O-01AO HANDRAIL
扶手

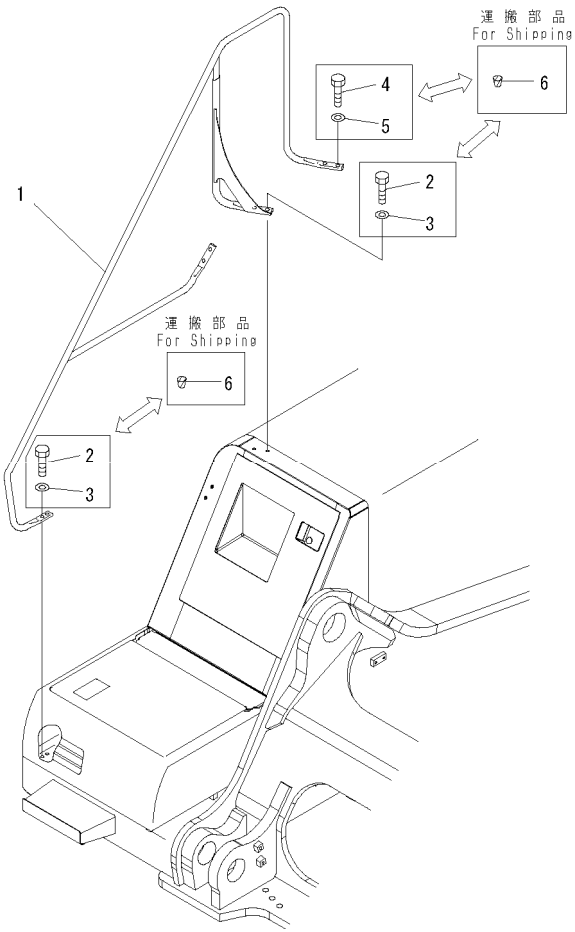

00008719

FIG NO. : M131O-01AO

INDEX	PART NO.	DESCRIPTION	Q'TY	SERIAL NO.
1	21M-54-19141	HANDRAIL……扶手	1	60001-
2	01010-81250	BOLT……螺栓	6	60001-
3	01643-31232	WASHER……垫圈	6	60001-
4	01010-81235	BOLT……螺栓	2	60001-
5	01643-31232	WASHER……垫圈	2	60001-
6	07049-01215	PLUG……堵塞	8	60001-

https://truckmanualshub.com/

FIG.M1410-01A0 REAR VIEW MIRROR 、L.H. (WITH TOP GUARD)
左后视镜(带顶护板)

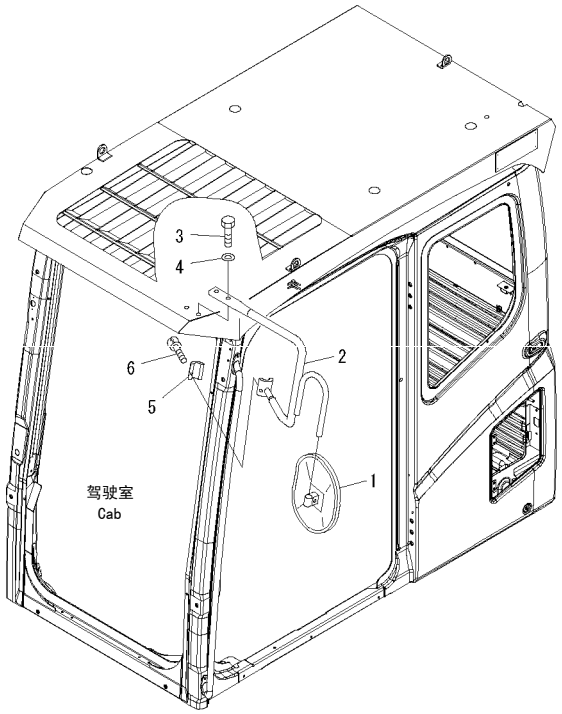

00008721

FIG NO. : M1410-01A0

INDEX	PART NO.	DESCRIPTION	Q'TY	SERIAL NO.
1	20Y-54-28911	MIRROR……反光镜	1	60001-
2	209-53-13630	STAY……支架	1	60001-
3	01010-D1235	BOLT……螺栓	2	60001-
4	01643-71232	WASHER……垫圈	2	60001-
5	20Y-54-35430	CLAMP…… 卡箍	1	60001-
6	01252-71025	BOLT……螺栓	2	60001-

https://truckmanualshub.com/

FIG.M1420-01A0 REAR VIEW MIRROR 、R.H.
右后视镜

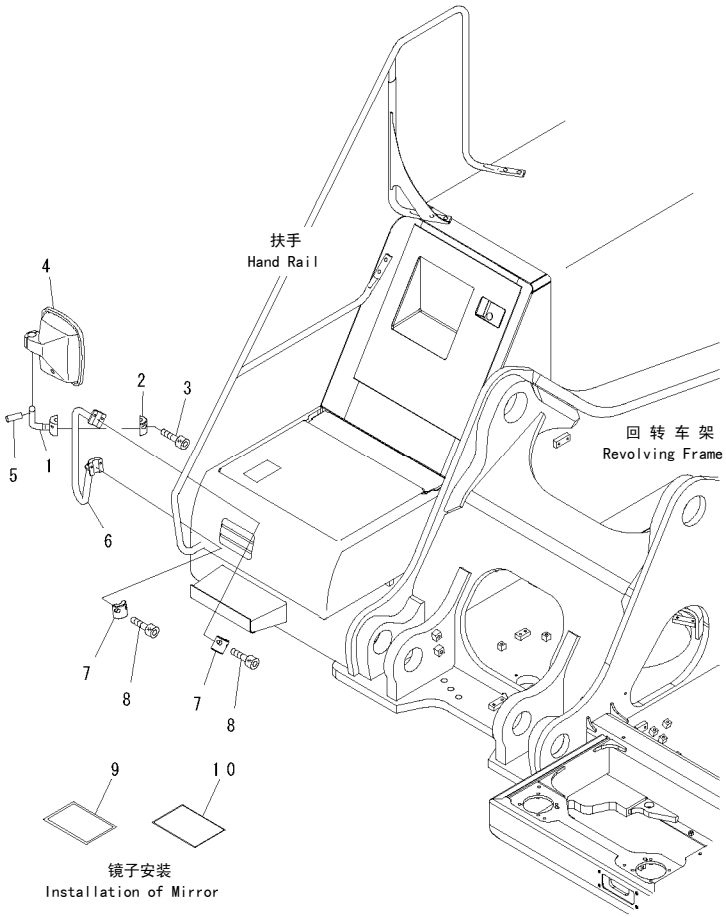

00043358

FIG NO. : M1420-01A0

INDEX	PART NO.	DESCRIPTION	Q'TY	SERIAL NO.
1	209-54-75350	SUPPORT…… 支撑	1	60001-
2	20Y-54-27991	CLAMP…… 卡箍	1	60001-
3	01252-71030	BOLT……螺栓	2	60001-
4	421-54-25610	MIRROR……反光镜	1	60001-
5	04025-00632	PIN…… 销	1	60001-
6	21M-54-11890	GRIP……把手	1	60001-
7	20Y-54-27991	CLAMP…… 卡箍	2	60001-
8	01252-71030	BOLT……螺栓	4	60001-
9	21M-98-21120	PLATE…… 板	1	60001-
10	209-98-77220	PLATE…… 板	1	60001-

https://truckmanualshub.com/

FIG.M151O-01A0 COUNTER WEIGHT (10750KG)
配重(10750KG)

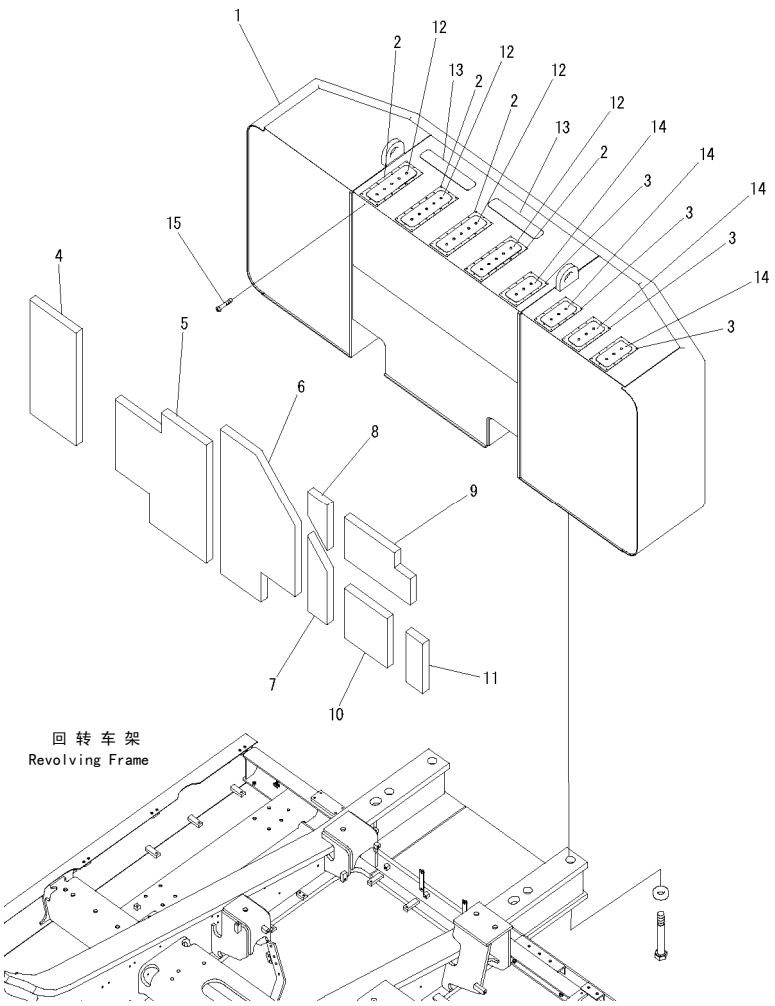

00062249-V

FIG NO. : M151O-01A0

INDEX	PART NO.	DESCRIPTION	Q'TY	SERIAL NO.
	21M-46-24112	WEIGHT……重量	1	60001-
1	☆	.WEIGHT…… 重量	1	60001-
2	21M-54-22330	..PLATE……(WELDED)…… 板(焊接件)	4	60001-
3	20Y-04-48190	..PLATE……(WELDED)…… 板(焊接件)	4	60001-
4	21M-54-22810	.SHEET……垫片	1	60001-
5	21M-54-22821	.SHEET……垫片	1	60001-
6	21M-54-22830	.SHEET……垫片	1	60001-
7	21M-54-22840	.SHEET……垫片	1	60001-
8	21M-54-22850	.SHEET……垫片	1	60001-
9	21M-54-22860	.SHEET……垫片	1	60001-
10	21M-54-23920	.SHEET……垫片	1	60001-
11	21M-54-23930	.SHEET……垫片	1	60001-
12	20Y-00-42110	.PLATE……板	4	60001-
13	20Y-00-42170	.PLATE……板	2	60001-
14	22U-00-28110	.PLATE……板	4	60001-
15	01370-00508	SCREW…… 螺钉	1	60001-

https://truckmanualshub.com/

FIG.M1520-01A0 COUNTER WEIGHT MOUNTING
配重安装

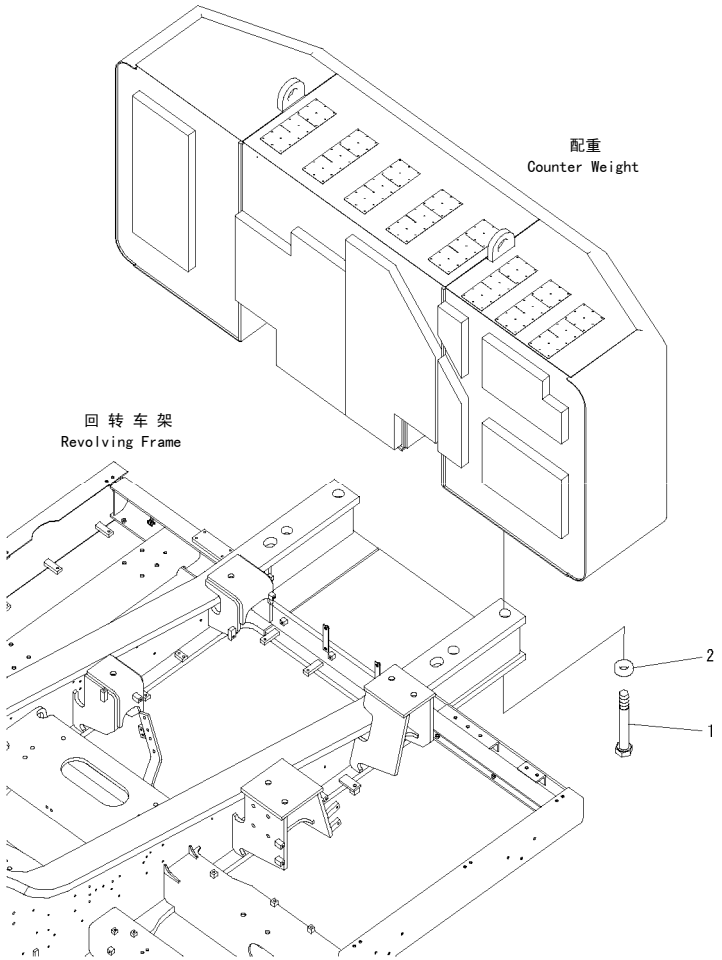

00038264

FIG NO. : M1520-01A0

INDEX	PART NO.	DESCRIPTION	Q'TY	SERIAL NO.
1	21M-46-24210	BOLT……螺栓	6	60001-
2	209-46-11210	SPACER……垫块	6	60001-

https://truckmanualshub.com/

FIG.M1810-01A0　UNDER COVER (HEAVY DUTY) (REVOLVING FRAME) (R.H.)

下盖(重载)(回转车架)（右）

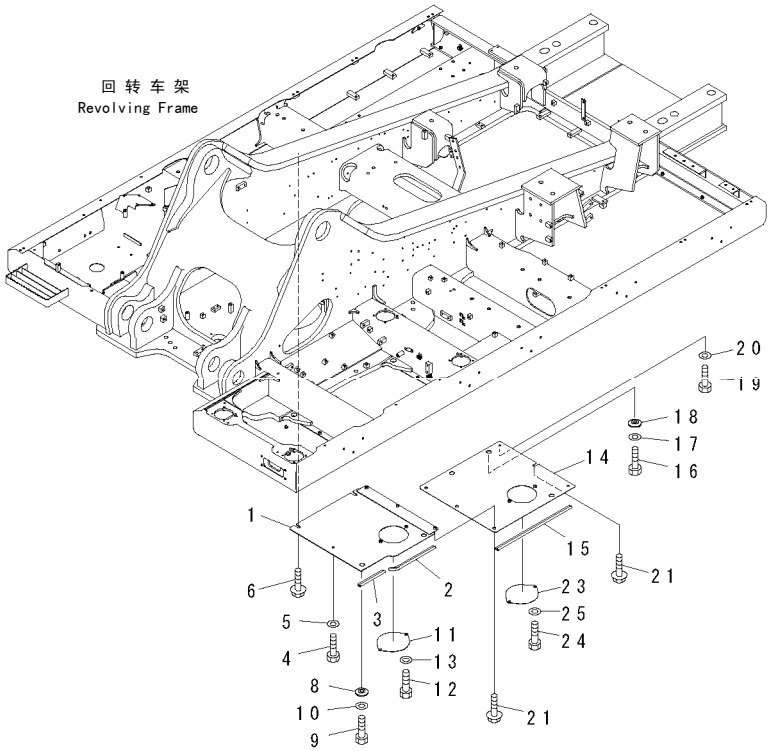

00038265

FIG NO. : M1810-01A0

INDEX	PART NO.	DESCRIPTION	Q'TY	SERIAL NO.
1	21M-54-22541	COVER…… 盖	1	60001-
2	21M-54-23380	.SEAL ……油封	1	60001-
3	21M-54-23391	.SEAL ……油封	1	60001-
4	01010-81230	BOLT……螺栓	1	60001-
5	01643-31232	WASHER……垫圈	1	60001-
6	01034-81230	BOLT……螺栓	2	60001-
8	208-54-57180	COLLAR……滚轮	2	60001-
9	01010-81230	BOLT……螺栓	2	60001-
10	01643-31232	WASHER……垫圈	2	60001-
11	207-54-51440	PLATE…… 板	1	60001-
12	01010-81230	BOLT……螺栓	2	60001-
13	01643-31232	WASHER……垫圈	2	60001-
14	21M-54-22531	COVER…… 盖	1	60001-
15	21M-54-23370	.SEAL ……油封	1	60001-
16	01010-81230	BOLT……螺栓	3	60001-
17	01643-31232	WASHER……垫圈	3	60001-
18	208-54-57180	COLLAR……滚轮	3	60001-
19	01010-81230	BOLT……螺栓	2	60001-
20	01643-31232	WASHER……垫圈	2	60001-
21	01034-81230	BOLT……螺栓	4	60001-
23	207-54-51440	PLATE…… 板	1	60001-
24	01010-81230	BOLT……螺栓	2	60001-
25	01643-31232	WASHER……垫圈	2	60001-

https://truckmanualshub.com/

FIG.M1810-02A0 UNDER COVER (HEAVY DUTY) (REVOLVING FRAME)(CENTER)
下盖(重载)(回转车架)(中央)

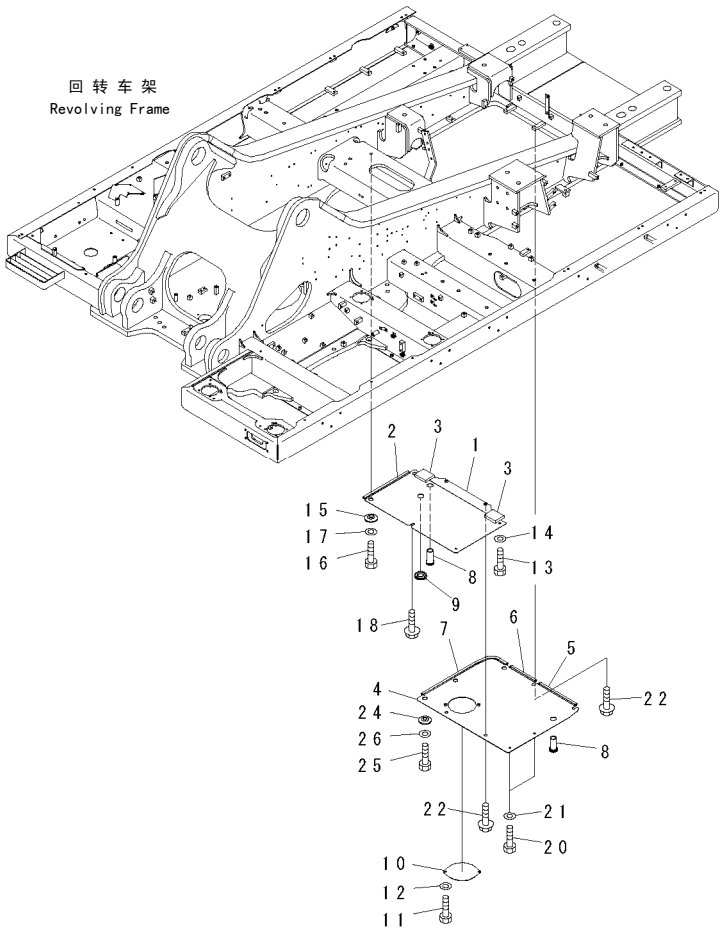

00062072

FIG NO. : M1810-02A0

INDEX	PART NO.	DESCRIPTION	Q'TY	SERIAL NO.
1	21M-54-22521	COVER…… 盖	1	60001-
2	21M-54-23550	.SEAL ……油封	1	60001-
3	21M-54-23560	.SHEET……垫片	1	60001-
4	21M-54-22572	COVER…… 盖	1	60001-
5	21M-54-23520	.SEAL ……油封	1	60001-
6	21M-54-23530	.SEAL ……油封	1	60001-
7	21M-54-23540	.SEAL ……油封	1	60001-
8	22U-54-24760	GROMMET…… 保护套	2	60001-
9	09415-03614	CAP…… 盖	1	60001-
10	207-54-51440	PLATE…… 板	1	60001-
11	01010-81230	BOLT……螺栓	2	60001-
12	01643-31232	WASHER……垫圈	2	60001-
13	01010-81230	BOLT……螺栓	2	60001-
14	01643-31232	WASHER……垫圈	2	60001-
15	208-54-57180	COLLAR……滚轮	2	60001-
16	01010-81230	BOLT……螺栓	2	60001-
17	01643-31232	WASHER……垫圈	2	60001-
18	01034-81230	BOLT……螺栓	1	60001-
20	01010-81230	BOLT……螺栓	2	60001-
21	01643-31232	BOLT……螺栓	2	60001-
22	01034-81230	WASHER……垫圈	4	60001-
24	208-54-57180	COLLAR……滚轮	3	60001-
25	01010-81230	BOLT……螺栓	3	60001-
26	01643-31232	WASHER……垫圈	3	60001-

https://truckmanualshub.com/

FIG.M1810-03A0　UNDER COVER (HEAVY DUTY) (REVOLVING FRAME) (L.H.)

下盖(重载)(回转车架)(左)

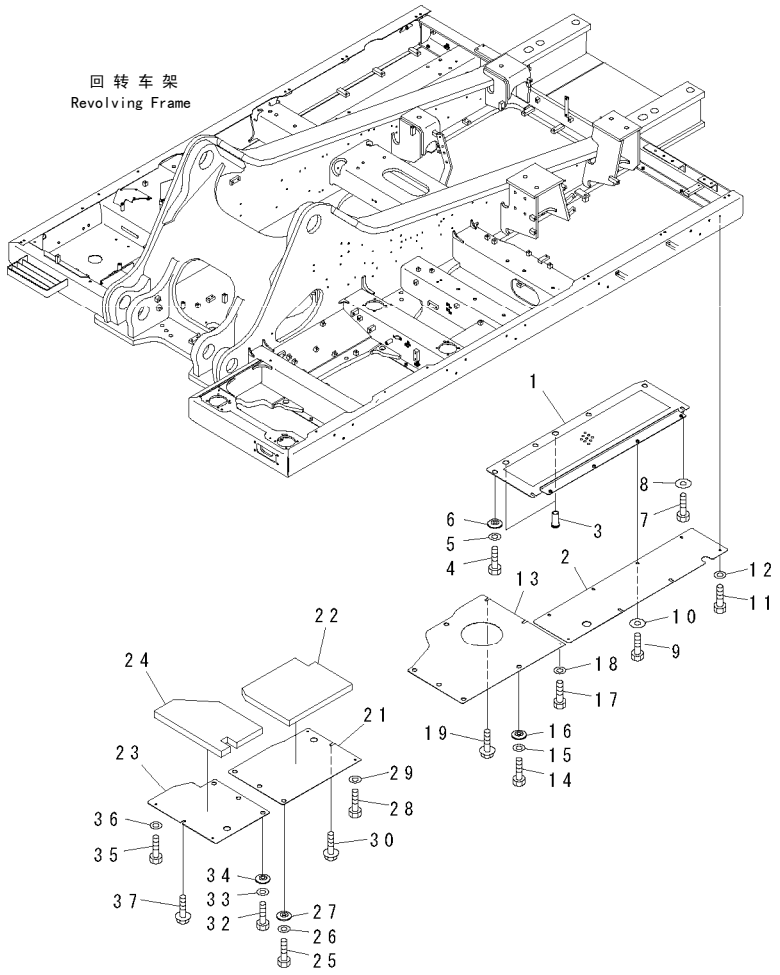

FIG NO. : M1810-03A0

INDEX	PART NO.	DESCRIPTION	Q'TY	SERIAL NO.
1	21M-54-22512	COVER…… 盖	1	60001-
2	21M-54-23821	COVER…… 盖	1	60001-
3	22U-54-24760	GROMMET…… 保护套	2	60001-
4	01010-81235	BOLT……螺栓	4	60001-
5	01643-31232	WASHER……垫圈	4	60001-
6	208-54-57180	COLLAR……滚轮	4	60001-
7	01010-81235	BOLT……螺栓	2	60001-
8	175-54-34170	WASHER……垫圈	2	60001-
9	01010-81235	BOLT……螺栓	6	60001-
10	175-54-34170	WASHER……垫圈	6	60001-
11	01010-81235	BOLT……螺栓	2	60001-
12	01643-31232	WASHER……垫圈	2	60001-
13	21M-54-19311	COVER…… 盖	1	60001-
14	01010-81230	BOLT……螺栓	5	60001-
15	01643-31232	WASHER……垫圈	5	60001-
16	208-54-57180	COLLAR……滚轮	5	60001-
17	01010-81230	BOLT……螺栓	1	60001-
18	01643-31232	WASHER……垫圈	1	60001-
19	01034-81230	BOLT……螺栓	2	60001-
21	21M-54-22750	COVER…… 盖	1	60001-
22	21M-54-19340	.SHEET……垫片	1	60001-
23	21M-54-19331	COVER…… 盖	1	60001-
24	21M-54-19350	.SHEET……垫片	1	60001-
25	01010-81230	BOLT……螺栓	3	60001-
26	01643-31232	WASHER……垫圈	3	60001-
27	208-54-57180	COLLAR……滚轮	3	60001-
28	01010-81230	BOLT……螺栓	2	60001-
29	01643-31232	WASHER……垫圈	2	60001-
30	01034-81230	BOLT……螺栓	1	60001-
32	01010-81230	BOLT……螺栓	3	60001-
33	01643-31232	WASHER……垫圈	3	60001-
34	208-54-57180	COLLAR……滚轮	3	60001-
35	01010-81230	BOLT……螺栓	2	60001-
36	01643-31232	WASHER……垫圈	2	60001-
37	01034-81230	BOLT……螺栓	1	60001-

SWING CIRCLE AND RELATED PARTS
回转支承和相关件

https://truckmanualshub.com/

https://truckmanualshub.com/

FIG.N111O-01AO SWING CIRCLE
回转支承

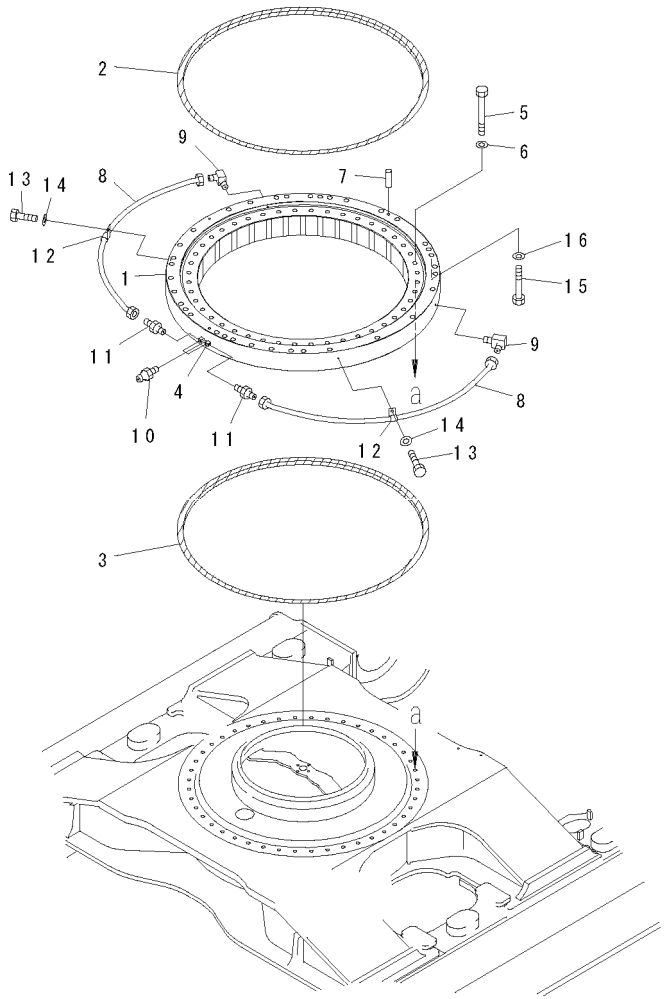

00038921

FIG NO. : N111O-01AO

INDEX	PART NO.	DESCRIPTION	Q'TY	SERIAL NO.
1	21M-25-11101	SWING CIRCLE ASS'Y……回转支承总成	1	60001-
2	21M-25-11260	.SEAL ……油封	1	60001-
3	21M-25-11270	.SEAL ……油封	1	60001-
4	205-25-71280	.NIPPLE…… 接头	2	60001-
5	21M-25-11170	BOLT……螺栓	44	60001-
6	01643-32780	WASHER……垫圈	44	60001-
7	04020-01842	PIN…… 销	2	60001-
8	21M-25-11210	TUBE……硬管	2	60001-
9	20Y-25-11270	ELBOW…… 接头	2	60001-
10	07020-00000	FITTING…… 黄油嘴	3	60001-
11	07214-50813	CONNECTOR…… 接头	2	60001-
12	08036-00814	CLIP……管夹	2	60001-
13	01010-81020	BOLT……螺栓	2	60001-
14	01643-31032	WASHER……垫圈	2	60001-
15	01011-83090	BOLT……螺栓	35	60001-
16	01643-33080	WASHER……垫圈	35	60001-

https://truckmanualshub.com/

FIG.N1210-01A0 SWING MACHINERY(R.H.)

回转减速器(右)

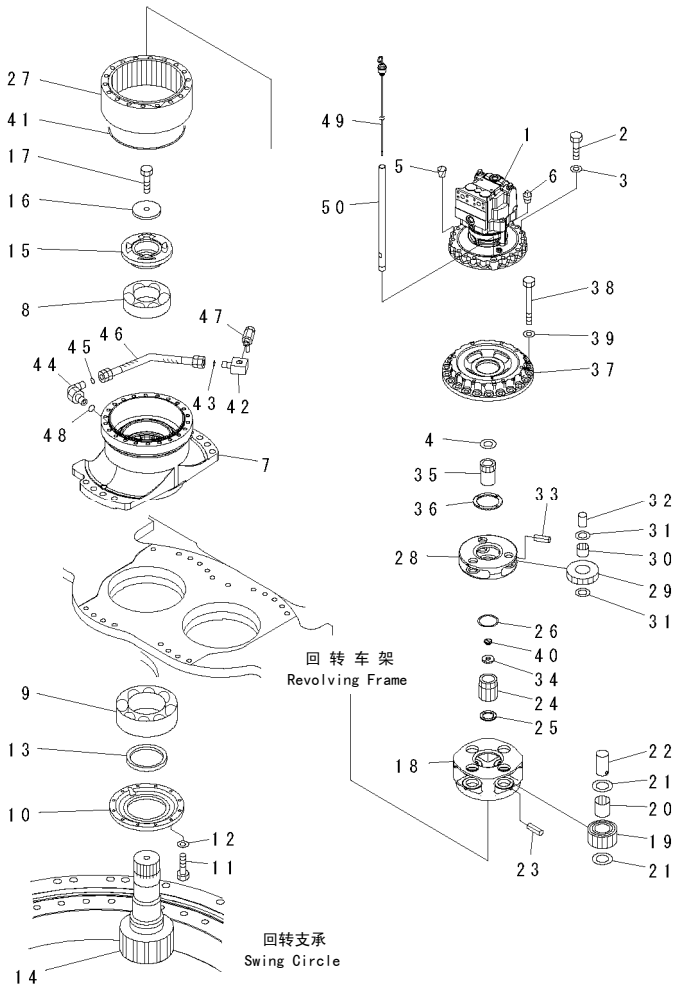

00038638

FIG NO. : N1210-01A0

INDEX	PART NO.	DESCRIPTION	Q'TY	SERIAL NO.
1	(706-75-01470)	MOTOR ASS'Y····· 马达总成	1	60001-
2	01010-81460	BOLT·····螺栓	8	60001-
3	01643-31445	WASHER·····垫圈	8	60001-
4	22U-26-21280	RING·····隔圈	1	60001-
5	07049-01822	PLUG·····堵塞	10	60001-
6	07042-30108	PLUG·····堵塞	1	60001-
7	21M-26-21170	CASE·····壳体	1	60001-
8	06000-22222	BEARING····· 轴承	1	60001-
9	06000-22324	BEARING····· 轴承	1	60001-
10	207-26-54263	COVER····· 盖	1	60001-
11	01010-81040	BOLT·····螺栓	12	60001-
12	01643-31032	WASHER·····垫圈	12	60001-
13	207-26-61210	SEAL·····油封	1	60001-
14	21M-26-11180	SHAFT····· 轴	1	60001-
15	207-26-62150	COUPLING·····联轴节	1	60001-
16	207-26-54230	PLATE····· 摩擦片	1	60001-
17	205-32-51211	BOLT·····螺栓	1	60001-
18	20Y-27-22170	CARRIER····· 行星架	1	60001-
19	20Y-27-22140	GEAR·····齿轮	4	60001-
20	20Y-27-22220	BEARING····· 轴承	4	60001-
21	20Y-27-21250	WASHER·····垫圈	8	60001-
22	20Y-27-21230	PIN····· 销	4	60001-
23	20Y-27-21290	PIN····· 销	4	60001-
24	207-26-62190	GEAR·····齿轮	1	60001-
25	20Y-27-13310	WASHER·····垫圈	1	60001-
26	20Y-27-22240	WASHER·····垫圈	1	60001-
27	21M-26-11260	GEAR·····齿轮	1	60001-
28	21M-26-11150	CARRIER····· 行星架	1	60001-
29	21M-26-11140	GEAR·····齿轮	3	60001-
30	20Y-27-22210	BEARING····· 轴承	3	60001-
31	20Y-27-21240	WASHER·····垫圈	6	60001-
32	20Y-27-21220	PIN····· 销	3	60001-
33	20Y-27-21280	PIN····· 销	3	60001-
34	21M-26-11190	PLATE····· 摩擦片	1	60001-
35	21M-26-21130	GEAR·····齿轮	1	60001-
36	20Y-27-21310	WASHER·····垫圈	1	60001-
37	21M-26-11161	COVER····· 盖	1	60001-
38	20Y-27-13281	BOLT·····螺栓	22	60001-
39	01643-31645	WASHER·····垫圈	22	60001-
40	208-27-61350	BUTTON·····按钮	1	60001-
41	20Y-27-22280	O-RING····· O形圈	1	60001-
42	21M-26-11270	ELBOW····· 接头	1	60001-
43	02896-11018	O-RING····· O形圈	1	60001-
44	02782-10628	ELBOW····· 接头	1	60001-
45	02896-11018	O-RING····· O形圈	1	60001-
46	02762-006A4	HOSE·····软管	1	60001-
47	07730-50004	VALVE····· 阀	1	60001-
48	07002-12434	O-RING····· O形圈	1	60001-

https://truckmanualshub.com/

FIG.N1210-01A0　SWING MACHINERY(R.H.)

回转减速器(右)

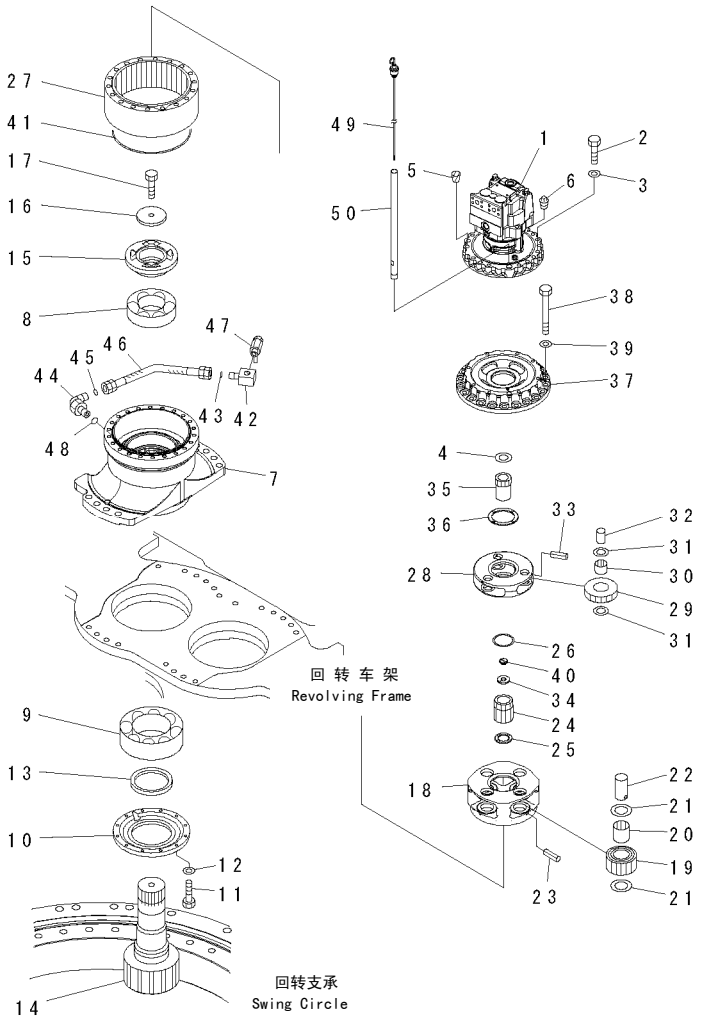

FIG NO. : N1210-01A0

INDEX	PART NO.	DESCRIPTION	Q'TY	SERIAL NO.
49	21M-26-21180	GAUGE…… 油位计	1	60001-
50	21M-26-21220	FILLER……滤清器	1	60001-

https://truckmanualshub.com/

FIG.N1210-02A0 SWING MACHINERY (BLOCK) (R.H.)

回转减速器(接头)(右)

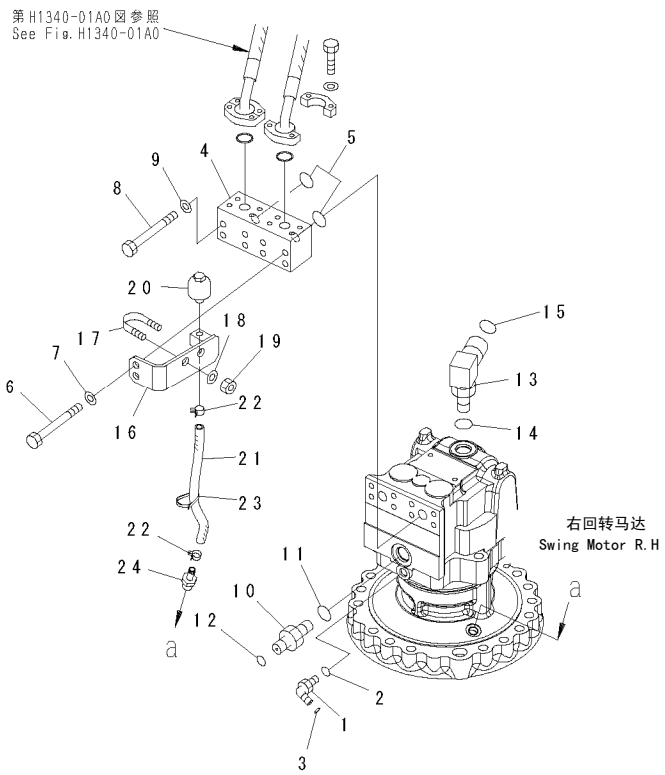

FIG NO. : N1210-02A0

INDEX	PART NO.	DESCRIPTION	Q'TY	SERIAL NO.
1	02782-10311	ELBOW····· 接头	1	60001-
2	07002-11423	O-RING····· O形圈	1	60001-
3	02896-11009	O-RING····· O形圈	1	60001-
4	20Y-62-21421	BLOCK····· 接头	1	60001-
5	07000-13030	O-RING····· O形圈	2	60001-
6	01010-81080	BOLT·····螺栓	2	60001-
7	01643-31032	WASHER·····垫圈	2	60001-
8	01010-81075	BOLT·····螺栓	6	60001-
9	01643-31032	WASHER·····垫圈	6	60001-
10	02781-00522	UNION····· 接头	1	60001-
11	07002-12434	O-RING····· O形圈	1	60001-
12	02896-11015	O-RING····· O形圈	1	60001-
13	207-62-72131	ELBOW····· 接头	1	60001-
14	07002-12434	O-RING····· O形圈	1	60001-
15	207-62-64740	O-RING····· O形圈	1	60001-
16	21M-26-21190	BRACKET····· 支架	1	60001-
17	07283-22738	CLIP·····管夹	1	60001-
18	01643-31032	WASHER·····垫圈	2	60001-
19	01597-01009	NUT····· 螺母	2	60001-
20	07030-00252	BREATHER·····透气塞	1	60001-
21	07286-01025	HOSE·····软管	1	60001-
22	07285-00130	CLIP·····管夹	2	60001-
23	08034-40521	BAND·····绑带	1	60001-
24	6138-55-7610	NIPPLE·····喷嘴	1	60001-

https://truckmanualshub.com/

FIG.N1210-03A0 SWING MACHINERY(L.H.)

回转减速器(左)

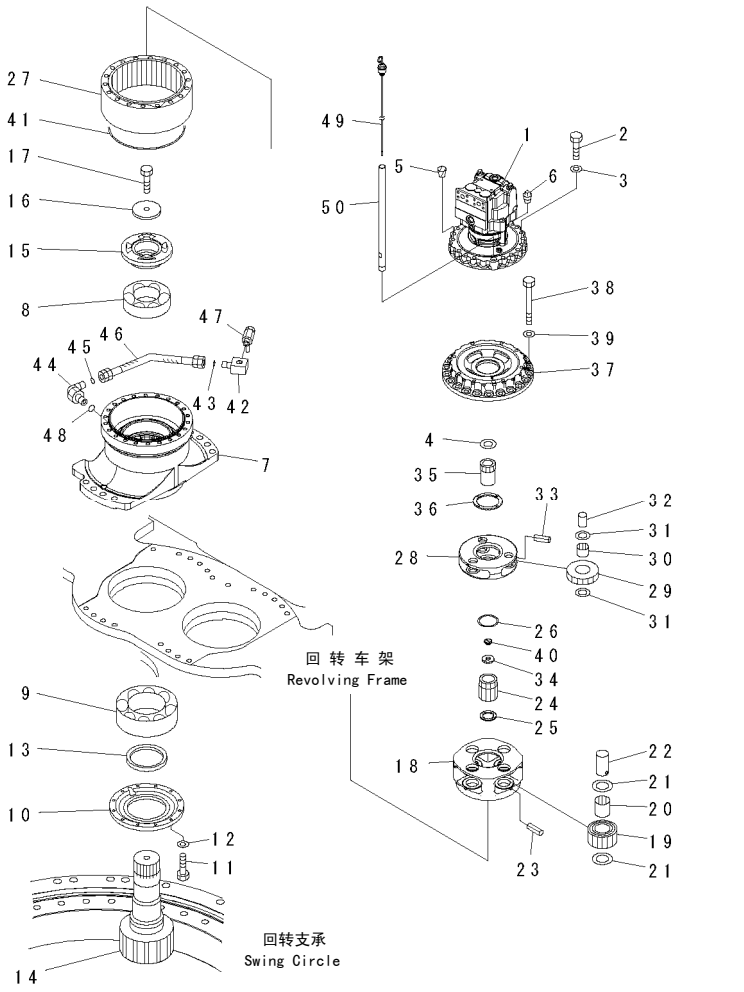

00038640

FIG NO. : N1210-03A0

INDEX	PART NO.	DESCRIPTION	Q'TY	SERIAL NO.
1	(706-75-01470)	MOTOR ASS'Y····· 马达总成	1	60001-
2	01010-81460	BOLT·····螺栓	8	60001-
3	01643-31445	WASHER·····垫圈	8	60001-
4	22U-26-21280	RING·····隔圈	1	60001-
5	07049-01822	PLUG·····堵塞	10	60001-
6	07042-30108	PLUG·····堵塞	1	60001-
7	21M-26-21170	CASE·····壳体	1	60001-
8	06000-22222	BEARING····· 轴承	1	60001-
9	06000-22324	BEARING····· 轴承	1	60001-
10	207-26-54263	COVER····· 盖	1	60001-
11	01010-81040	BOLT·····螺栓	12	60001-
12	01643-31032	WASHER·····垫圈	12	60001-
13	207-26-61210	SEAL·····油封	1	60001-
14	21M-26-11180	SHAFT····· 轴	1	60001-
15	207-26-62150	COUPLING·····联轴节	1	60001-
16	207-26-54230	PLATE····· 摩擦片	1	60001-
17	205-32-51211	BOLT·····螺栓	1	60001-
18	20Y-27-22170	CARRIER····· 行星架	1	60001-
19	20Y-27-22140	GEAR·····齿轮	4	60001-
20	20Y-27-22220	BEARING····· 轴承	4	60001-
21	20Y-27-21250	WASHER·····垫圈	8	60001-
22	20Y-27-21230	PIN····· 销	4	60001-
23	20Y-27-21290	PIN····· 销	4	60001-
24	207-26-62190	GEAR·····齿轮	1	60001-
25	20Y-27-13310	WASHER·····垫圈	1	60001-
26	20Y-27-22240	WASHER·····垫圈	1	60001-
27	21M-26-11260	GEAR·····齿轮	1	60001-
28	21M-26-11150	CARRIER····· 行星架	1	60001-
29	21M-26-11140	GEAR·····齿轮	3	60001-
30	20Y-27-22210	BEARING····· 轴承	3	60001-
31	20Y-27-21240	WASHER·····垫圈	6	60001-
32	20Y-27-21220	PIN····· 销	3	60001-
33	20Y-27-21280	PIN····· 销	3	60001-
34	21M-26-11190	PLATE····· 摩擦片	1	60001-
35	21M-26-21130	GEAR·····齿轮	1	60001-
36	20Y-27-21310	WASHER·····垫圈	1	60001-
37	21M-26-11161	COVER····· 盖	1	60001-
38	20Y-27-13281	BOLT·····螺栓	22	60001-
39	01643-31645	WASHER·····垫圈	22	60001-
40	208-27-61350	BUTTON·····按钮	1	60001-
41	20Y-27-22280	O-RING····· O形圈	1	60001-
42	21M-26-11270	ELBOW····· 接头	1	60001-
43	02896-11018	O-RING····· O形圈	1	60001-
44	02782-10628	ELBOW····· 接头	1	60001-
45	02896-11018	O-RING····· O形圈	1	60001-
46	02762-006A4	HOSE·····软管	1	60001-
47	07730-50004	VALVE····· 阀	1	60001-
48	07002-12434	O-RING····· O形圈	1	60001-

https://truckmanualshub.com/

FIG.N1210-03A0　SWING MACHINERY(L.H.)
回转减速器(左)

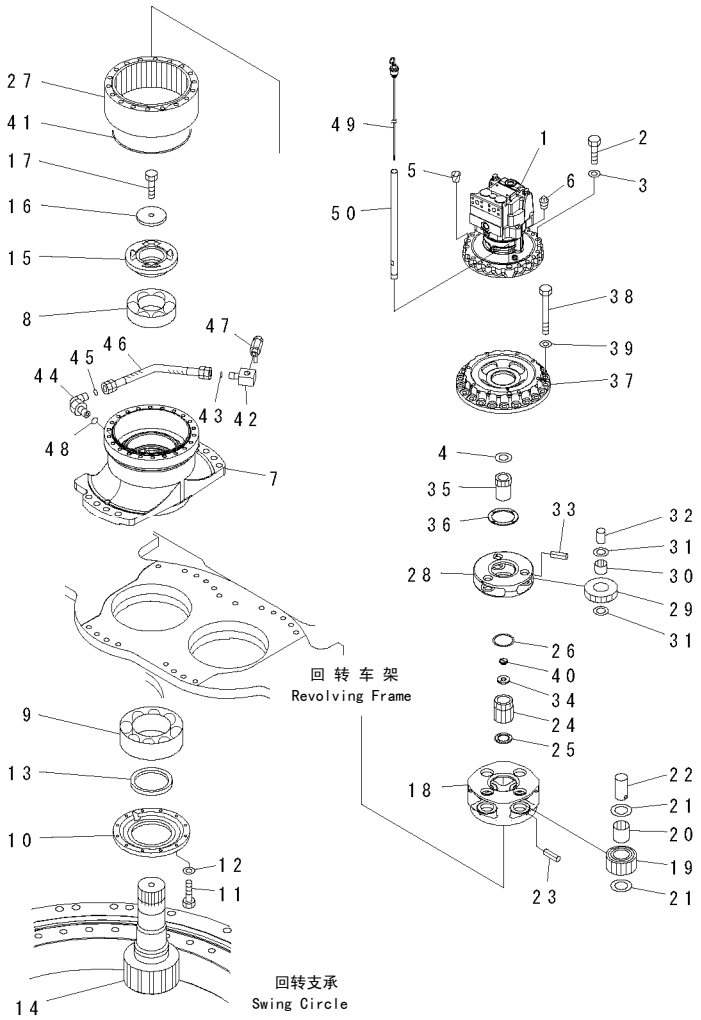

FIG NO. : N1210-03A0

INDEX	PART NO.	DESCRIPTION	Q'TY	SERIAL NO.
49	21M-26-21180	GAUGE…… 油位计	1	60001-
50	21M-26-21220	FILLER……滤清器	1	60001-

https://truckmanualshub.com/

FIG.N1210-04A0 SWING MACHINERY (BLOCK) (L.H.)
回转减速器(接头)(左)

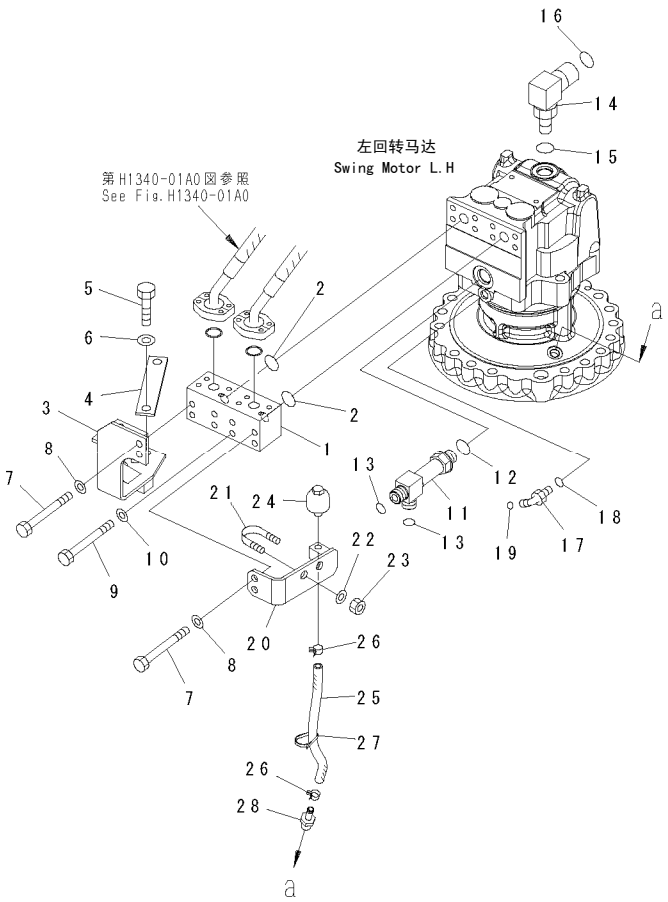

00038641

FIG NO. : N1210-04A0

INDEX	PART NO.	DESCRIPTION	Q'TY	SERIAL NO.
1	20Y-62-21421	BLOCK…… 接头	1	60001-
2	07000-13030	O-RING…… 0形圈	2	60001-
3	21M-62-16251	BRACKET…… 支架	1	60001-
4	207-977-5120	BRACKET…… 支架	1	60001-
5	01010-81230	BOLT……螺栓	1	60001-
6	01643-31232	WASHER……垫圈	1	60001-
7	01010-81080	BOLT……螺栓	4	60001-
8	01643-31032	WASHER……垫圈	4	60001-
9	01010-81075	BOLT……螺栓	4	60001-
10	01643-31032	WASHER……垫圈	4	60001-
11	20Y-62-41940	ELBOW…… 接头	1	60001-
12	07002-12434	O-RING…… 0形圈	1	60001-
13	02896-11015	O-RING…… 0形圈	2	60001-
14	207-62-72131	ELBOW…… 接头	1	60001-
15	07002-12434	O-RING…… 0形圈	1	60001-
16	207-62-64740	O-RING…… 0形圈	2	60001-
17	02782-10311	ELBOW…… 接头	1	60001-
18	07002-11423	O-RING…… 0形圈	1	60001-
19	02896-11009	O-RING…… 0形圈	1	60001-
20	21M-26-21190	BRACKET…… 支架	1	60001-
21	07283-22738	CLIP……管夹	1	60001-
22	01643-31032	WASHER……垫圈	2	60001-
23	01597-01009	NUT…… 螺母	2	60001-
24	07030-00252	BREATHER……透气塞	1	60001-
25	07286-01025	HOSE……软管	1	60001-
26	07285-00130	CLIP……管夹	2	60001-
27	08034-40521	BAND……绑带	1	60001-
28	6138-55-7610	NIPPLE……喷嘴	1	60001-

https://truckmanualshub.com/

FIG.N1210-05A0　SWING MACHINERY (BRACKET AND FLANGE)
回转减速器（支架和法兰）

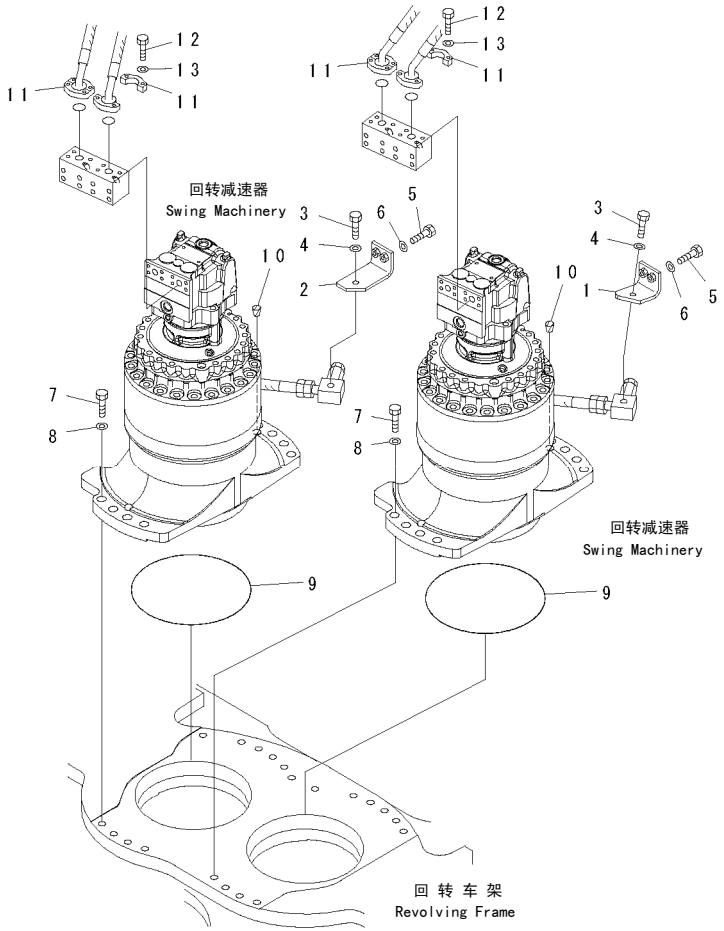

FIG NO. : N1210-05A0

INDEX	PART NO.	DESCRIPTION	Q'TY	SERIAL NO.
1	21M-26-11112	BRACKET…… 支架	1	60001-
2	21M-26-11122	BRACKET…… 支架	1	60001-
3	01010-81230	BOLT……螺栓	2	60001-
4	01643-31232	WASHER……垫圈	2	60001-
5	01010-81245	BOLT……螺栓	4	60001-
6	01643-31232	WASHER……垫圈	4	60001-
7	01010-82480	BOLT……螺栓	20	60001-
8	01643-32460	WASHER……垫圈	20	60001-
9	07000-15290	O-RING…… O形圈	2	60001-
10	07049-02430	PLUG……堵塞	4	60001-
11	07371-30640	FLANGE……法兰	8	60001-
12	07372-21035	BOLT……螺栓	16	60001-
13	01643-51032	WASHER……垫圈	16	60001-

https://truckmanualshub.com/

FIG.N1310-01A0 SWIVEL JOINT

回转接头

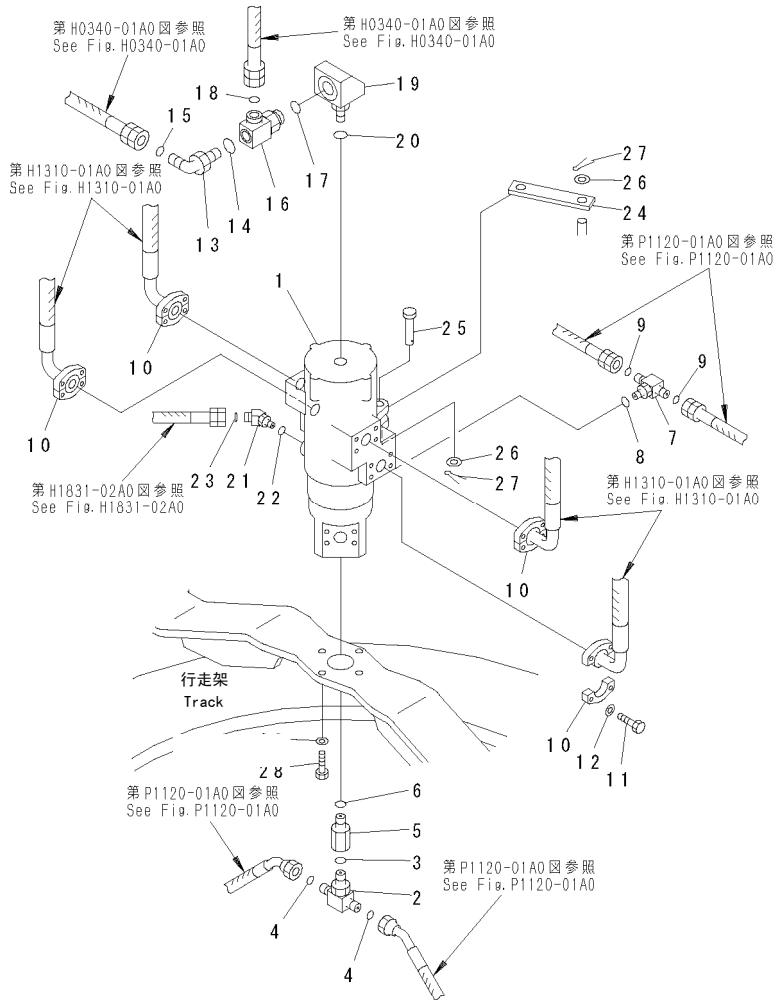

00038644

FIG NO. : N1310-01A0

INDEX	PART NO.	DESCRIPTION	Q'TY	SERIAL NO.
1	(703-09-00221)	SWIVEL JOINT ASS'Y……回转接头总成	1	60001-
2	21M-62-14631	TEE……T形件	1	60001-
3	07002-12434	O-RING…… O形圈	1	60001-
4	02896-11018	O-RING…… O形圈	2	60001-
5	201-62-71810	JOINT…… 接头	1	60001-
6	07002-12434	O-RING…… O形圈	1	60001-
7	21W-62-42630	TEE……T形件	1	60001-
8	07002-11423	O-RING…… O形圈	1	60001-
9	02896-11009	O-RING…… O形圈	2	60001-
10	07371-31049	FLANGE……法兰	8	60001-
11	07372-21035	BOLT……螺栓	16	60001-
12	01643-51032	WASHER……垫圈	16	60001-
13	02782-10516	ELBOW…… 接头	1	60001-
14	07002-12034	O-RING…… O形圈	1	60001-
15	02896-11015	O-RING…… O形圈	1	60001-
16	20U-62-46570	ELBOW…… 接头	1	60001-
17	07002-12434	O-RING…… O形圈	1	60001-
18	02896-11015	O-RING…… O形圈	1	60001-
19	21M-62-16290	ELBOW…… 接头	1	60001-
20	07002-12434	O-RING…… O形圈	1	60001-
21	11Y-62-12510	ELBOW…… 接头	1	60001-
22	07002-11423	O-RING…… O形圈	1	60001-
23	02896-11009	O-RING…… O形圈	1	60001-
24	209-62-14430	PLATE…… 板	1	60001-
25	201-60-11230	PIN…… 销	1	60001-
26	01641-21626	WASHER……垫圈	2	60001-
27	04050-14025	PIN…… 销	2	60001-
28	01010-81235	BOLT……螺栓	4	60001-
29	01643-31232	WASHER……垫圈	4	60001-

TRAVEL AND LOWER PIPING
行走和管路

https://truckmanualshub.com/

https://truckmanualshub.com/

FIG.P1120-01A1　TRAVEL PIPING (LC)
行走管路（加长履带）

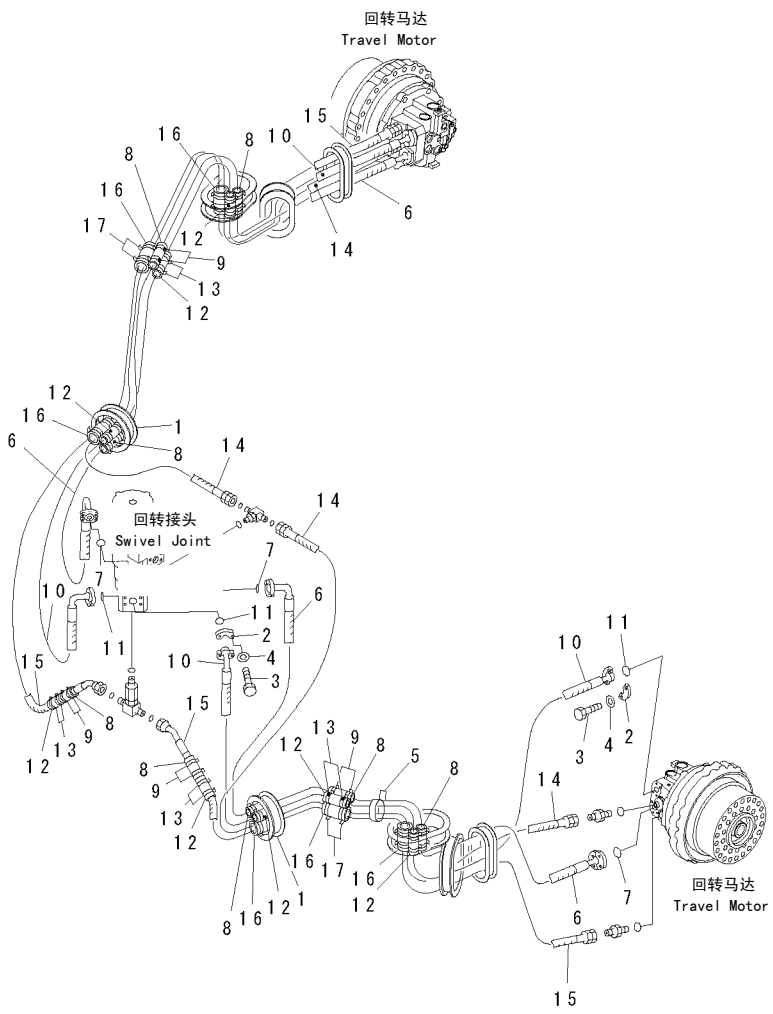

FIG NO. : P1120-01A1

INDEX	PART NO.	DESCRIPTION	Q'TY	SERIAL NO.
1	208-62-65110	GROMMET…… 保护套	2	60001-
2	07371-31049	FLANGE……法兰	16	60001-
3	07372-21035	BOLT……螺栓	32	60001-
4	01643-51032	WASHER……垫圈	32	60001-
5	08034-00834	BAND……绑带	6	60001-
6	07098-41032	HOSE……软管	2	60001-
7	07000-13032	O-RING…… O形圈	4	60001-
8	205-62-53780	COVER…… 盖	4	60001-
9	08034-00536	BAND……绑带	8	60001-
10	21M-62-21580	HOSE, 3300MM……软管	2	60001-
11	07000-13032	O-RING…… O形圈	4	60001-
12	205-62-53780	COVER…… 盖	4	60001-
13	08034-00536	BAND……绑带	8	60001-
14	02762-00332	HOSE……软管	2	60001-
15	02764-00632	HOSE……软管	2	60001-
16	205-62-53780	COVER…… 盖	4	60001-
17	08034-00536	BAND……绑带	8	60001-

https://truckmanualshub.com/

FIG.P1120-02A0　TRAVEL PIPING (BLIND PARTS)
行走管路（盲堵部品）

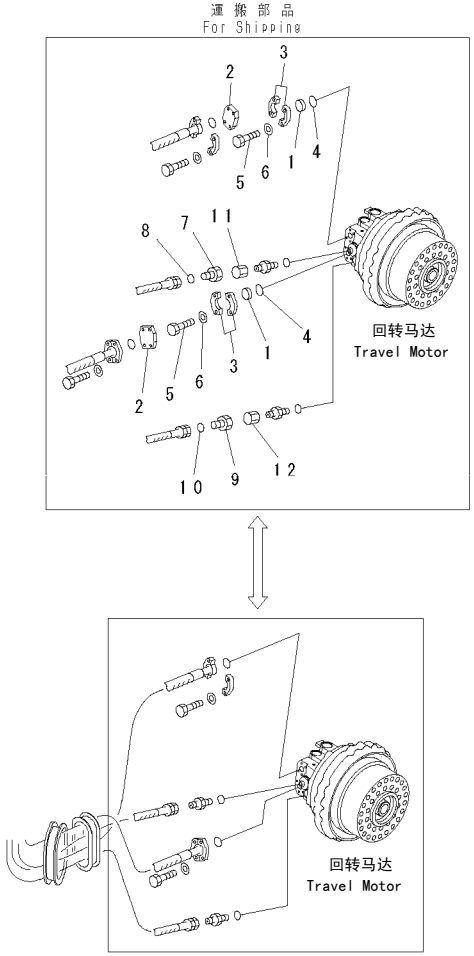

00038586

FIG NO. : P1120-02A0

INDEX	PART NO.	DESCRIPTION	Q'TY	SERIAL NO.
1	07378-11000	HEAD……盖	4	60001-
2	07379-01044	FLANGE……法兰	4	60001-
3	07371-31049	FLANGE……法兰	8	60001-
4	07000-13032	O-RING…… O形圈	8	60001-
5	07372-21035	BOLT……螺栓	16	60001-
6	01643-51032	WASHER……垫圈	16	60001-
7	07376-70315	PLUG……堵塞	2	60001-
8	02896-11009	O-RING…… O形圈	2	60001-
9	07376-70628	PLUG……堵塞	2	60001-
10	02896-11018	O-RING…… O形圈	2	60001-
11	02789-00315	NUT…… 螺母	2	60001-
12	02789-00628	NUT…… 螺母	2	60001-

UNDER CARRIAGE
行走装置

https://truckmanualshub.com/

https://truckmanualshub.com/

FIG.RO500-01A3　TRACK SHOE (TRIPLE GROUSER WITH HOLE) (600MM WIDE)
带孔双筋履带板（600MM宽）

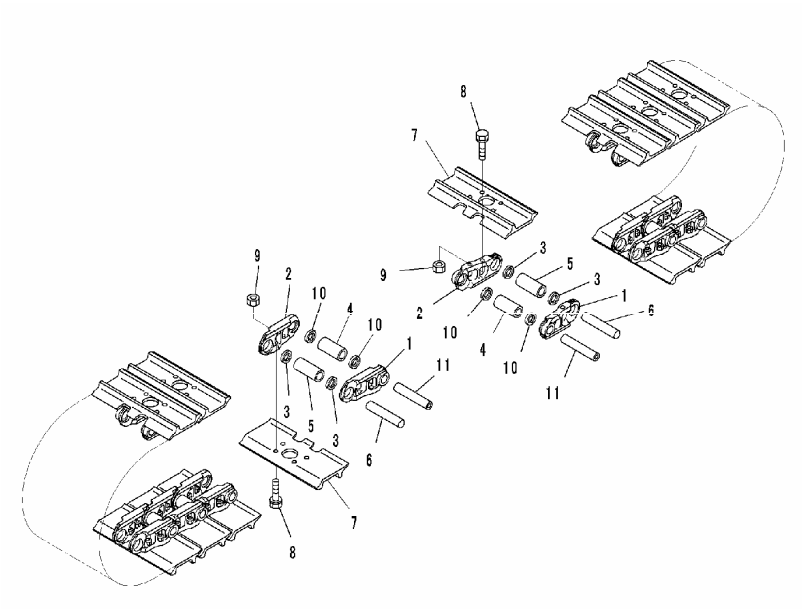

00011416

FIG NO. : RO500-01A3

INDEX	PART NO.	DESCRIPTION	Q'TY	SERIAL NO.
	21M-32-01132	TRACK SHOE ASS'Y……履带板总成	1	60001-
1	21M-32-11120	.LINK…… 连杆	104	60001-
2	21M-32-11130	.LINK…… 连杆	104	60001-
3	21M-32-11160	.SEAL…… 密封垫	200	60001-
4	21M-32-11141	.BUSHING, REGULAR…… 连接销和轴套	100	60001-
5	21M-32-11171	.BUSHING, MASTER……主轴套	4	60001-
6	21M-32-11150	.PIN……销	100	60001-
7	21M-32-11251	.SHOE…… 履带	104	60001-
8	21M-32-11260	.BOLT, SHOE…… 履带螺栓	416	60001-
9	21M-32-11220	.NUT, SHOE……履带螺母	416	60001-
10	21M-32-11180	.SEAL…… 密封垫	8	60001-
11	21M-32-11190	.PIN……销	4	60001-

https://truckmanualshub.com/

FIG.R1110-01A0 CENTER FRAME
中央支架

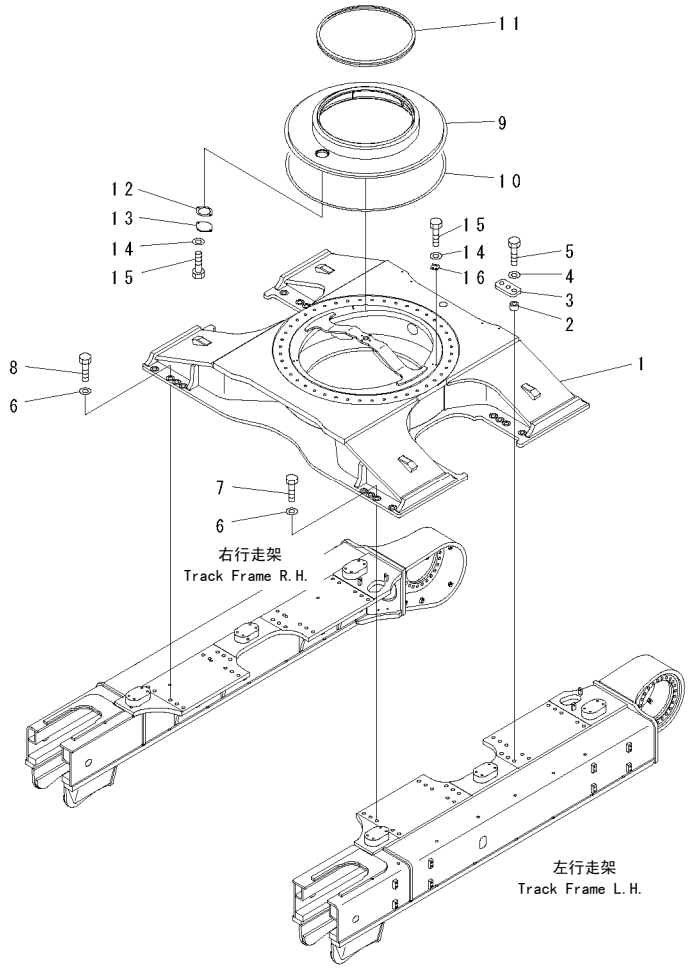

00038598

FIG NO. : R1110-01A0

INDEX	PART NO.	DESCRIPTION	Q'TY	SERIAL NO.
1	21M-30-11111	FRAME…… 车架	1	60001-
2	209-30-11330	SPACER……调整垫片	8	60001-
3	21M-30-12170	PLATE…… 板	4	60001-
4	01643-33690	WASHER……垫圈	8	60001-
5	01011-83630	BOLT……螺栓	8	60001-
6	01643-33380	WASHER……垫圈	32	60001-
7	15A-78-11270	BOLT……螺栓	16	60001-
8	15A-78-11270	BOLT……螺栓	16	60001-
9	21M-30-23110	COVER…… 盖	1	60001-
10	21M-30-13120	.SEAL…… 密封垫	1	60001-
11	21M-30-13140	SEAL……密封垫	1	60001-
12	205-30-71191	GASKET……垫	1	60001-
13	205-30-71181	COVER…… 盖	1	60001-
14	01643-31232	WASHER……垫圈	8	60001-
15	01010-81225	BOLT……螺栓	8	60001-
16	21M-30-13130	BRACKET…… 支架	3	60001-

https://truckmanualshub.com/

FIG.R1120-01A3 TRACK FRAME (LC) (L.H.)
行走架（加长履带）（左）

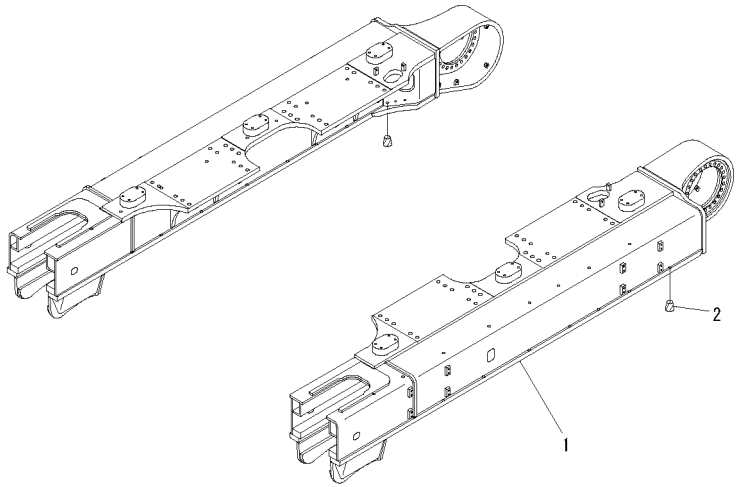

PW1A471

FIG NO. : R1120-01A3

INDEX	PART NO.	DESCRIPTION	Q'TY	SERIAL NO.
1	21M-30-12131	FRAME…… 车架	1	60001-
2	07049-02734	PLUG……堵塞	16	60001-

https://truckmanualshub.com/

FIG.R1120-02A0　TRACK FRAME (FRONT IDLER) (L.H.)
行走架（前惰轮）（左）

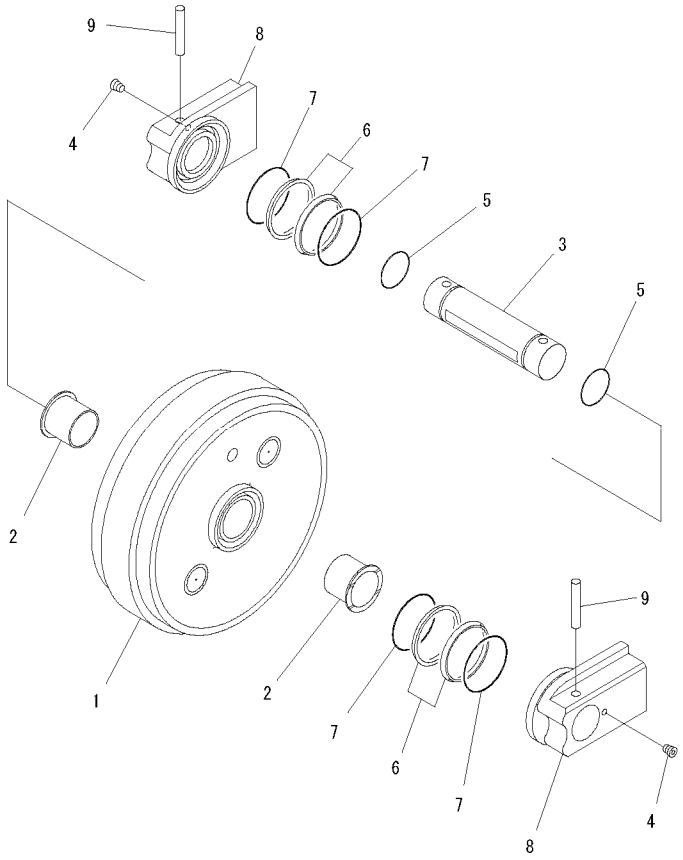

PWL1866

FIG NO. : R1120-02A0

INDEX	PART NO.	DESCRIPTION	Q'TY	SERIAL NO.
	21M-30-00301	FRONT IDLER ASS'Y…… 前惰轮总成	1	60001-
1	21M-30-17100	.IDLER……惰轮	1	60001-
2	21M-30-17110	.BUSHING……衬套	2	60001-
3	21M-30-17121	.SHAFT……轴	1	60001-
4	209-30-63150	.PLUG…… 堵塞	2	60001-
5	07000-15100	.O-RING……O形圈	2	60001-
	21T-30-00110	.FLOATING SEAL ASS'Y……旋转密封总成	2	60001-
6	☆	..RING……隔圈	2	60001-
7	☆	..O-RING…… O形圈	2	60001-
8	21M-30-17130	.SUPPORT……支撑	2	60001-
9	21M-30-17170	.PIN……销	2	60001-

https://truckmanualshub.com/

FIG.R1120-03A0　TRACK FRAME (IDLER CUSHION) (L.H.)
行走架（惰轮缓冲）（左）

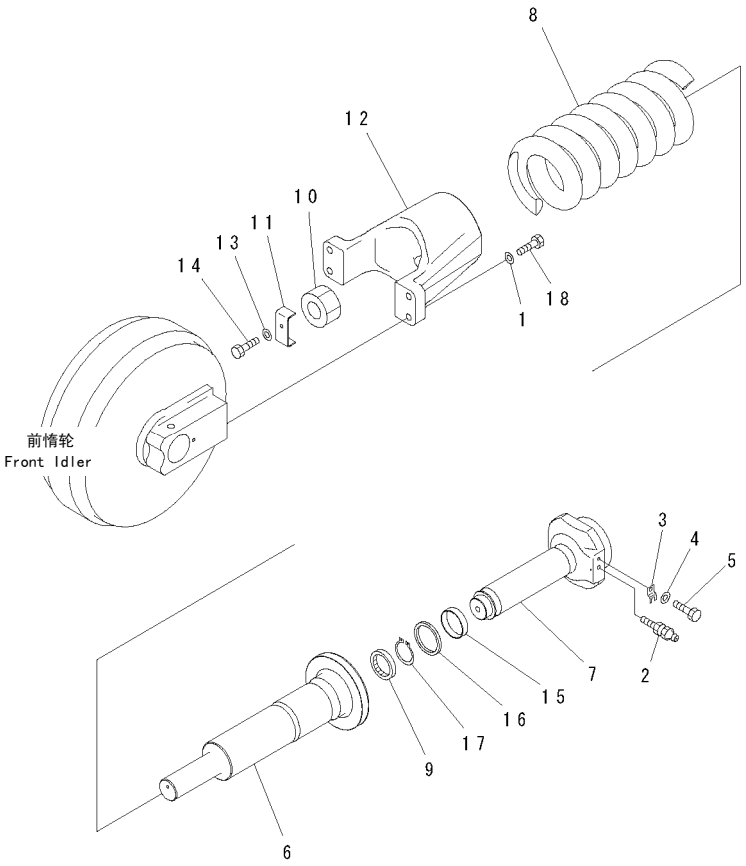

PWL1867

FIG NO. : R1120-03A0

INDEX	PART NO.	DESCRIPTION	Q'TY	SERIAL NO.
1	01643-32460	WASHER……垫圈	4	60001-
2	07959-20001	VALVE…… 阀	1	60001-
3	205-30-72170	PLATE…… 板	1	60001-
4	01643-31232	WASHER……垫圈	1	60001-
5	01010-81225	BOLT……螺栓	1	60001-
	21M-30-14200	CUSHION A……减振垫A	1	60001-
6	21M-30-14130	.CYLINDER…… 油缸	1	60001-
7	21M-30-14120	.SHAFT……轴	1	60001-
8	21M-30-14310	.SPRING…… 弹簧	1	60001-
9	21M-30-14150	.SEAL…… 密封垫	1	60001-
10	21M-30-14160	.NUT……螺母	1	60001-
11	21M-30-14170	.LOCK…… 锁	1	60001-
12	21M-30-14111	.YOKE…… 滑动叉	1	60001-
13	01643-31232	.WASHER…… 垫圈	1	60001-
14	01010-81225	.BOLT…… 螺栓	1	60001-
15	07155-01125	.RING…… 隔圈	1	60001-
16	195-30-18271	.PACKING……衬垫	1	60001-
17	04064-08530	.RING…… 隔圈	1	60001-
18	01010-82490	BOLT……螺栓	4	60001-

https://truckmanualshub.com/

FIG.R1120-04A3 TRACK FRAME (TRACK ROLLER) (LC) (L.H.)
行走架（支重轮）(加长履带)（左）

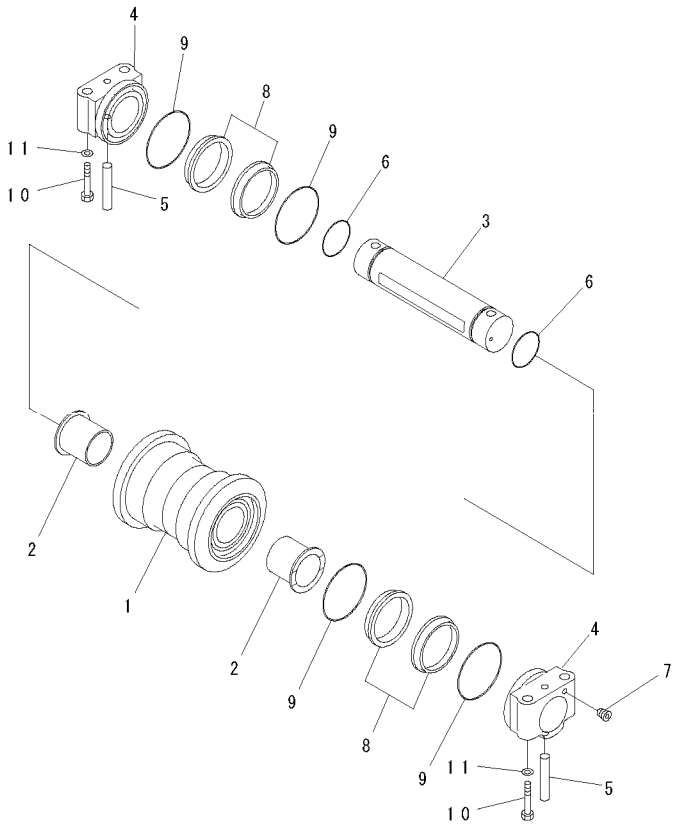

PJL1794

FIG NO. : R1120-04A3

INDEX	PART NO.	DESCRIPTION	Q'TY	SERIAL NO.
	21M-30-00100	TRACK ROLLER ASS'Y……支重轮总成	9	60001-
1	21M-30-15100	.ROLLER…… 滚轮	1	60001-
2	21M-30-15110	.BUSHING……衬套	2	60001-
3	21M-30-15120	.SHAFT……轴	1	60001-
4	21M-30-15130	.COLLAR…… 衬套	2	60001-
5	201-32-51150	.PIN……销	2	60001-
6	07000-15090	.O-RING……O形圈	2	60001-
7	209-30-63150	.PLUG…… 堵塞	2	60001-
	198-30-00073	.FLOATING SEAL ASS'Y……旋转密封总成	2	60001-
8	☆	..RING……隔圈	2	60001-
9	☆	..O-RING…… O形圈	2	60001-
10	21M-30-15190	BOLT……螺栓	36	60001-
11	20Y-25-11220	WASHER……垫圈	36	60001-

https://truckmanualshub.com/

FIG.R1120-05A0　TRACK FRAME (CARRIER ROLLER) (L.H.)
行走架(托链轮)(左)

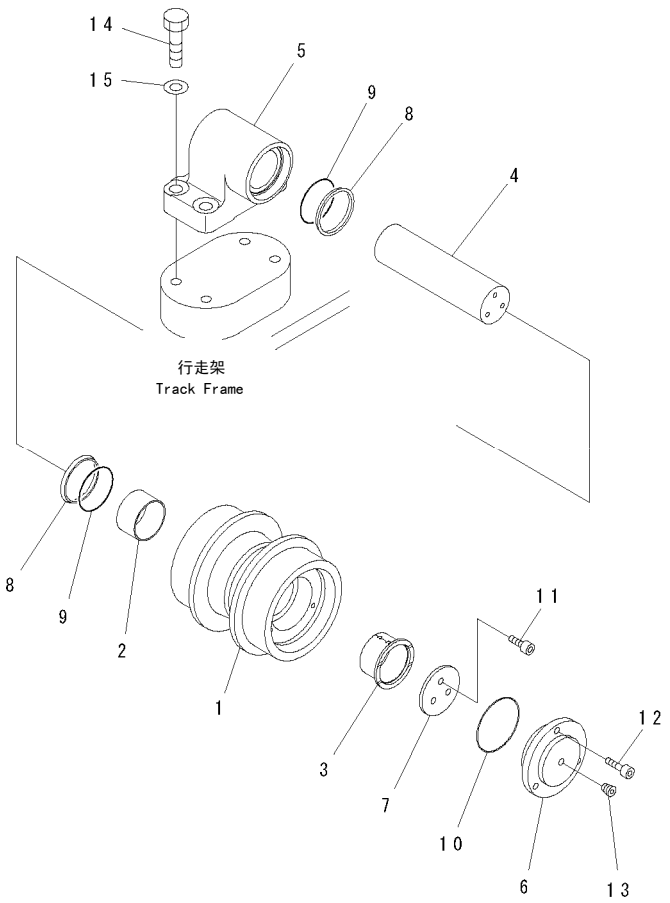

PJL1868

FIG NO. : R1120-05A0

INDEX	PART NO.	DESCRIPTION	Q'TY	SERIAL NO.
	21M-30-00202	CARRIER ROLLER……托链轮	3	60001-
1	21M-30-16101	.CARRIER ROLLER…… 托链轮	1	60001-
2	21M-30-16110	.BUSHING……衬套	1	60001-
3	21M-30-16120	.BUSHING……衬套	1	60001-
4	21M-30-16130	.SHAFT……轴	1	60001-
5	21M-30-16140	.SUPPORT……支撑	1	60001-
6	21M-30-16151	.COVER……盖	1	60001-
7	21M-30-16160	.PLATE……板	1	60001-
	21M-30-00060	.FLOATING SEAL ASS'Y……旋转密封总成	1	60001-
8	☆	..SEAL……密封垫	2	60001-
9	☆	..O-RING…… O形圈	2	60001-
10	21M-30-16190	.O-RING……O形圈	1	60001-
11	21M-30-16200	.BOLT…… 螺栓	3	60001-
12	21M-30-16210	.BOLT…… 螺栓	3	60001-
13	21M-30-15180	.PLUG…… 堵塞	1	60001-
14	01010-82070	BOLT……螺栓	12	60001-
15	01643-32060	WASHER……垫圈	12	60001-

https://truckmanualshub.com/

FIG.R1120-06A3 TRACK FRAME (TRACK ROLLER GUARD) (LC) (L.H.)
行走架（支重轮护板）(加长履带)（左）

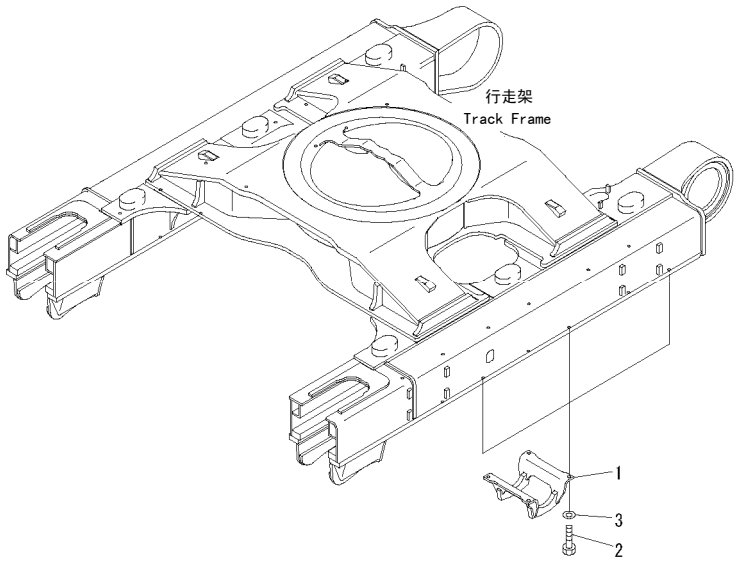

PWL1883

FIG NO. : R1120-06A3

INDEX	PART NO.	DESCRIPTION	Q'TY	SERIAL NO.
1	21M-30-12331	GUARD…… 护板	3	60001-
2	01010-82765	BOLT……螺栓	12	60001-
3	01643-32780	WASHER……垫圈	12	60001-

https://truckmanualshub.com/

FIG.R1120-06A4　TRACK FRAME (TRACK ROLLER FULL GUARD) (LC)(L.H.)
行走架（全护板支重轮）(加长履带)（左）

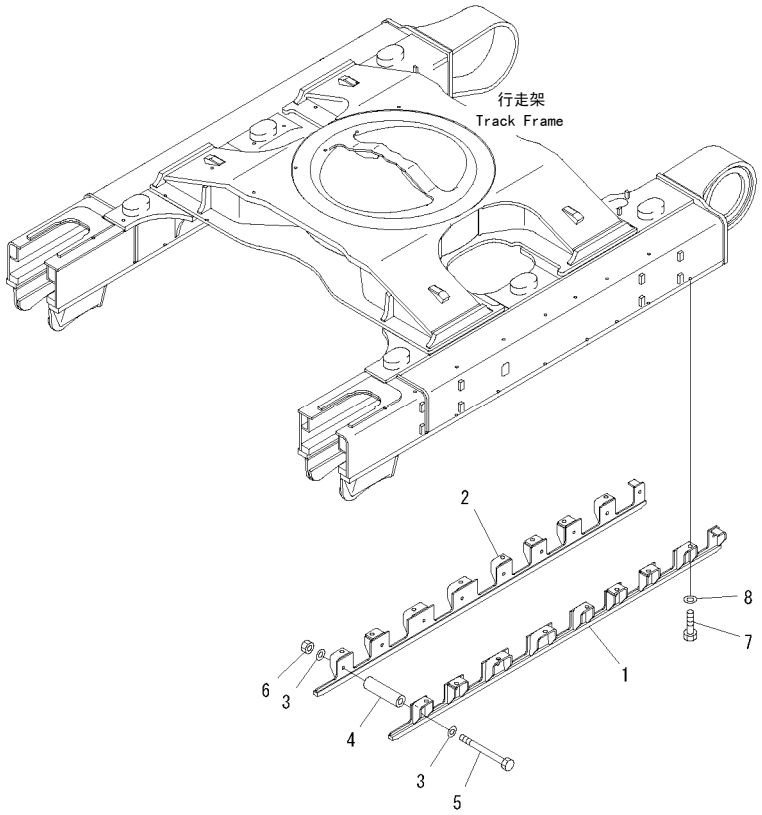

PW1A476

FIG NO. : R1120-06A4

INDEX	PART NO.	DESCRIPTION	Q'TY	SERIAL NO.
1	21M-30-12360	GUARD…… 护板	1	60001-
2	21M-30-12370	GUARD…… 护板	1	60001-
3	01643-32460	WASHER……垫圈	18	60001-
4	17M-30-11330	SPACER……隔离套	9	60001-
5	17M-30-11340	BOLT……螺栓	9	60001-
6	01580-12419	NUT…… 螺母	9	60001-
7	01010-82760	BOLT……螺栓	16	60001-
8	01643-32780	WASHER……垫圈	16	60001-

https://truckmanualshub.com/

FIG.R1120-07A0 TRACK FRAME (FINAL DRIVE) (L.H.)
行走架（终传动）（左）

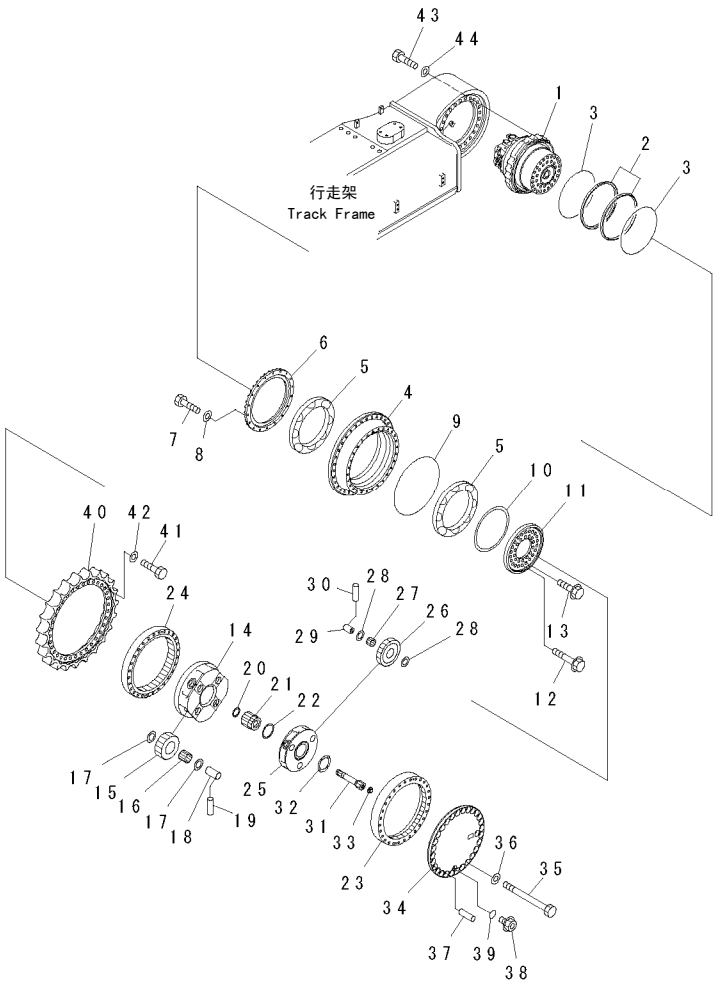

PW1A477

FIG NO. : R1120-07A0

INDEX	PART NO.	DESCRIPTION	Q'TY	SERIAL NO.
	21M-27-00050	FINAL DRIVE ASS'Y…… 终传动	1	60001-
1	(706-8L-01010)	.MOTOR ASS'Y……马达总成	1	60001-
	17M-27-00180	.FLOATING SEAL ASS'Y……旋转密封总成	1	60001-
2	☆	..RING……隔圈	2	60001-
3	☆	..O-RING…… 0形圈	2	60001-
4	21M-27-11210	.HUB……轮毂	1	60001-
5	208-27-62110	.BEARING……轴承	2	60001-
6	208-27-51212	.COVER……盖	1	60001-
7	01010-81240	.BOLT…… 螺栓	18	60001-
8	01643-31232	.WASHER…… 垫圈	18	60001-
9	21M-27-11280	.O-RING……0形圈	1	60001-
10	21M-27-00110	.SPACER ASS'Y…… 调整垫片总成	1	60001-
11	21M-27-11290	.RETAINER…… 固定座	1	60001-
12	208-27-52311	.BOLT…… 螺栓	22	60001-
13	21M-27-11380	.BOLT…… 螺栓	14	60001-
14	21M-27-11180	.CARRIER……托架	1	60001-
15	21M-27-11140	.GEAR…… 齿轮	4	60001-
16	21M-27-11230	.BEARING……轴承	4	60001-
17	21M-27-11260	.THRUST WASHER……止动垫圈	8	60001-
18	21M-27-11250	.PIN……销	4	60001-
19	20Y-27-21290	.PIN……销	4	60001-
20	207-27-52270	.SPACER…… 调整垫片	1	60001-
21	21M-27-11130	.GEAR…… 齿轮	1	60001-
22	21M-27-11270	.THRUST WASHER……止动垫圈	1	60001-
23	21M-27-11150	.GEAR…… 齿轮	1	60001-
24	21M-27-11160	.GEAR…… 齿轮	1	60001-
25	21M-27-11170	.CARRIER……托架	1	60001-
26	21M-27-11120	.GEAR…… 齿轮	3	60001-
27	21M-27-11411	.BEARING……轴承	3	60001-
28	20Y-27-21250	.WASHER…… 垫圈	6	60001-
29	21M-27-11240	.PIN……销	3	60001-
30	20Y-27-21280	.PIN……销	3	60001-
31	21M-27-11111	.SHAFT……轴	1	60001-
32	20Y-27-11250	.SPACER…… 隔离套	1	60001-
33	208-27-61350	.BUTTON…… 按钮	1	60001-
34	21M-27-11190	.COVER……盖	1	60001-
35	208-27-52341	.BOLT…… 螺栓	28	60001-
36	01643-31845	.WASHER…… 垫圈	28	60001-
37	07049-01215	.PLUG…… 堵塞	4	60001-
38	07044-12412	.PLUG…… 堵塞	2	60001-
39	07002-12434	.O-RING……0形圈	2	60001-
40	21M-27-11220	.SPROCKET…… 链齿轮	1	60001-
41	01010-82265	.BOLT…… 螺栓	34	60001-
42	01643-32260	.WASHER…… 垫圈	34	60001-
43	01010-62490	BOLT……螺栓	24	60001-
44	01643-32460	WASHER……垫圈	24	60001-

https://truckmanualshub.com/

FIG.R1120-08A0　TRACK FRAME (TRAVEL PIPING) (L.H.)
行走架（行走管路）（左）

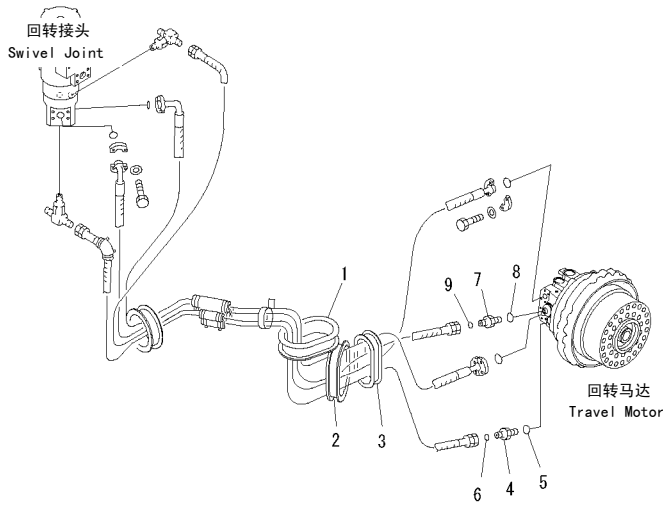

00008745

FIG NO. : R1120-08A0

INDEX	PART NO.	DESCRIPTION	Q'TY	SERIAL NO.
1	21M-62-14150	GROMMET…… 保护套	1	60001-
2	21M-62-14120	GROMMET…… 保护套	1	60001-
3	21M-62-14130	GROMMET…… 保护套	1	60001-
4	02781-00628	UNION…… 接头	1	60001-
5	07002-12434	O-RING…… O形圈	1	60001-
6	02896-11018	O-RING…… O形圈	1	60001-
7	11Y-62-12520	NIPPLE……喷嘴	1	60001-
8	07002-11423	O-RING…… O形圈	1	60001-
9	02896-11009	O-RING…… O形圈	1	60001-

https://truckmanualshub.com/

FIG.R1120-09A3 TRACK FRAME (LC) (R.H.)
行走架(加长履带)(右)

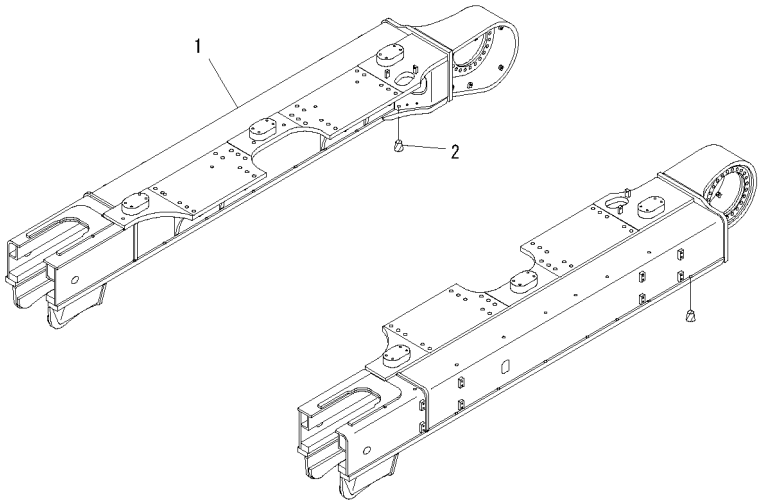

PW1A482

FIG NO. : R1120-09A3

INDEX	PART NO.	DESCRIPTION	Q'TY	SERIAL NO.
1	21M-30-12141	FRAME····· 支架	1	60001-
2	07049-02734	PLUG·····堵塞	16	60001-

https://truckmanualshub.com/

FIG.R1120-10A0　TRACK FRAME (FRONT IDLER) (R.H.)
行走架（前惰轮）（右）

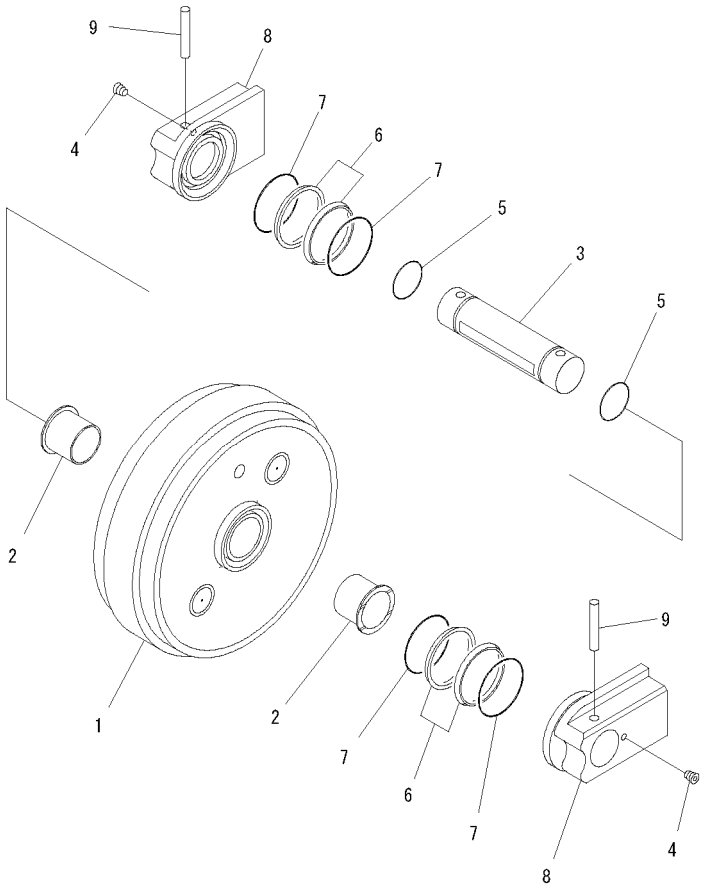

PWL1866

FIG NO. : R1120-10A0

INDEX	PART NO.	DESCRIPTION	Q'TY	SERIAL NO.
	21M-30-00301	FRONT IDLER ASS'Y…… 前惰轮总成	1	60001-
1	21M-30-17100	.IDLER……惰轮	1	60001-
2	21M-30-17110	.BUSHING……衬套	2	60001-
3	21M-30-17121	.SHAFT……轴	1	60001-
4	209-30-63150	.PLUG…… 堵塞	2	60001-
5	07000-15100	.O-RING……O形圈	2	60001-
	21T-30-00110	.FLOATING SEAL ASS'Y……旋转密封总成	2	60001-
6	☆	..RING……隔圈	2	60001-
7	☆	..O-RING…… O形圈	2	60001-
8	21M-30-17130	.SUPPORT……支撑	2	60001-
9	21M-30-17170	.PIN……销	2	60001-

https://truckmanualshub.com/

FIG.R1120-11A0　TRACK FRAME (IDLER CUSHION) (R.H.)
行走架（惰轮缓冲）（右）

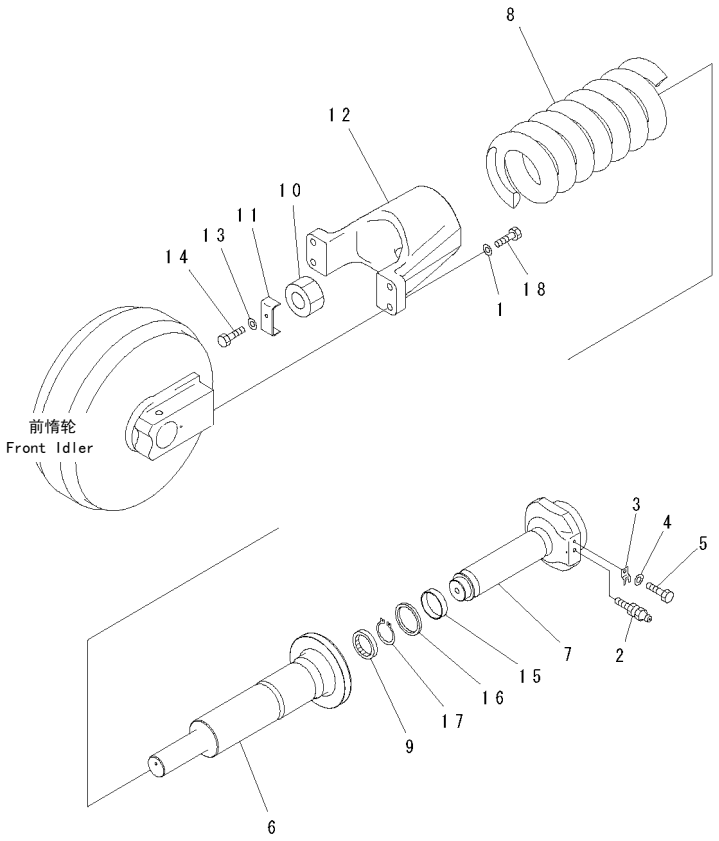

PWL1867

FIG NO. : R1120-11A0

INDEX	PART NO.	DESCRIPTION	Q'TY	SERIAL NO.
1	01643-32460	WASHER……垫圈	4	60001-
2	07959-20001	VALVE…… 阀	1	60001-
3	205-30-72170	PLATE…… 板	1	60001-
4	01643-31232	WASHER……垫圈	1	60001-
5	01010-81225	BOLT……螺栓	1	60001-
	21M-30-14200	CUSHION A……减振垫A	1	60001-
6	21M-30-14130	.CYLINDER…… 油缸	1	60001-
7	21M-30-14120	.SHAFT……轴	1	60001-
8	21M-30-14310	.SPRING…… 弹簧	1	60001-
9	21M-30-14150	.SEAL…… 密封垫	1	60001-
10	21M-30-14160	.NUT……螺母	1	60001-
11	21M-30-14170	.LOCK…… 锁	1	60001-
12	21M-30-14111	.YOKE…… 滑动叉	1	60001-
13	01643-31232	.WASHER…… 垫圈	1	60001-
14	01010-81225	.BOLT…… 螺栓	1	60001-
15	07155-01125	.RING…… 隔圈	1	60001-
16	195-30-18271	.PACKING……衬垫	1	60001-
17	04064-08530	.RING…… 隔圈	1	60001-
18	01010-82490	BOLT……螺栓	4	60001-

https://truckmanualshub.com/

FIG.R1120-12A3 TRACK FRAME (TRACK ROLLER) (LC) (R.H.)
行走架（支重轮）(加长履带)（右）

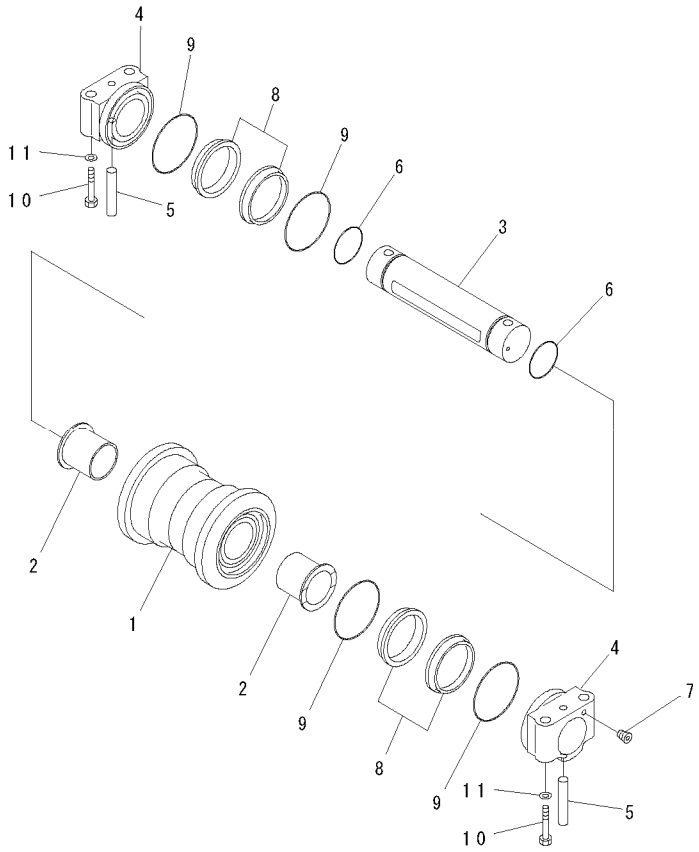

PJL1794

FIG NO. : R1120-12A3

INDEX	PART NO.	DESCRIPTION	Q'TY	SERIAL NO.
	21M-30-00100	TRACK ROLLER ASS'Y……支重轮总成	9	60001-
1	21M-30-15100	.ROLLER…… 滚轮	1	60001-
2	21M-30-15110	.BUSHING……衬套	2	60001-
3	21M-30-15120	.SHAFT……轴	1	60001-
4	21M-30-15130	.COLLAR…… 衬套	2	60001-
5	201-32-51150	.PIN……销	2	60001-
6	07000-15090	.O-RING……O形圈	2	60001-
7	209-30-63150	.PLUG…… 堵塞	2	60001-
	198-30-00073	.FLOATING SEAL ASS'Y……旋转密封总成	2	60001-
8	☆	..RING……隔圈	2	60001-
9	☆	..O-RING…… O形圈	2	60001-
10	21M-30-15190	BOLT……螺栓	36	60001-
11	20Y-25-11220	WASHER……垫圈	36	60001-

https://truckmanualshub.com/

FIG.R1120-13A0 TRACK FRAME (CARRIER ROLLER) (R.H.)
行走架(托链轮)(右)

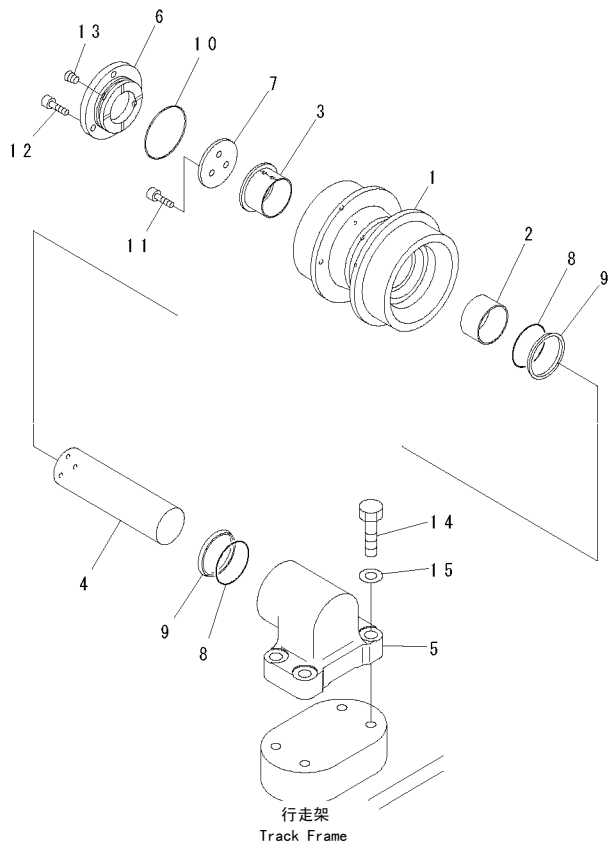

PW1A485

FIG NO. : R1120-13A0

INDEX	PART NO.	DESCRIPTION	Q'TY	SERIAL NO.
	21M-30-00202	CARRIER ROLLER……托链轮	3	60001-
1	21M-30-16101	.CARRIER ROLLER…… 托链轮	1	60001-
2	21M-30-16110	.BUSHING……衬套	1	60001-
3	21M-30-16120	.BUSHING……衬套	1	60001-
4	21M-30-16130	.SHAFT……轴	1	60001-
5	21M-30-16140	.SUPPORT……支撑	1	60001-
6	21M-30-16151	.COVER……盖	1	60001-
7	21M-30-16160	.PLATE……板	1	60001-
	21M-30-00060	.FLOATING SEAL ASS'Y……旋转密封总成	1	60001-
8	☆	..SEAL……密封垫	2	60001-
9	☆	..O-RING…… O形圈	2	60001-
10	21M-30-16190	.O-RING……O形圈	1	60001-
11	21M-30-16200	.BOLT…… 螺栓	3	60001-
12	21M-30-16211	.BOLT…… 螺栓	3	60001-
13	21M-30-15180	.PLUG…… 堵塞	1	60001-
14	01010-82070	BOLT……螺栓	12	60001-
15	01643-32060	WASHER……垫圈	12	60001-

https://truckmanualshub.com/

FIG.R1120-14A3 TRACK FRAME (TRACK ROLLER GUARD) (LC) (R.H.)
行走架（支重轮护板）(加长履带)（右）

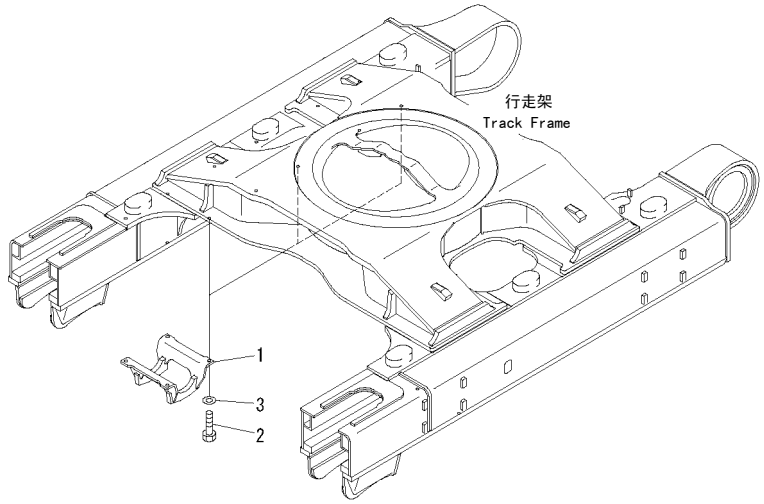

PW1A487

FIG NO. : R1120-14A3

INDEX	PART NO.	DESCRIPTION	Q'TY	SERIAL NO.
1	21M-30-12331	GUARD…… 护板	3	60001-
2	01010-82765	BOLT……螺栓	12	60001-
3	01643-32780	WASHER……垫圈	12	60001-

https://truckmanualshub.com/

FIG.R1120-14A4　TRACK FRAME (TRACK ROLLER FULL GUARD) (LC)(R.H.)
行走架（全护板支重轮）(加长履带)（右）

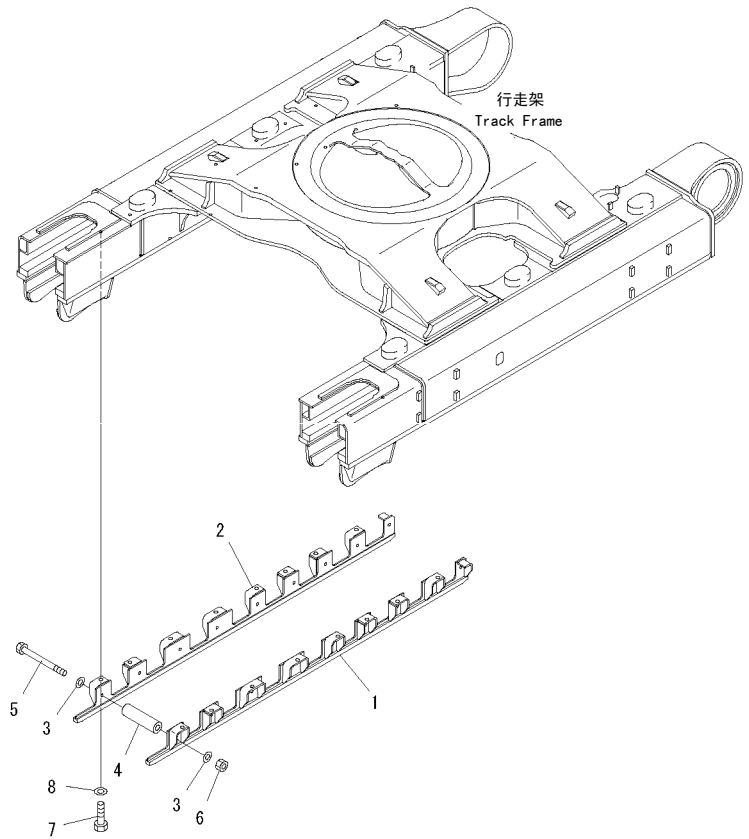

PW1A489

FIG NO. : R1120-14A4

INDEX	PART NO.	DESCRIPTION	Q'TY	SERIAL NO.
1	21M-30-12360	GUARD…… 护板	1	60001-
2	21M-30-12370	GUARD…… 护板	1	60001-
3	01643-32460	WASHER……垫圈	18	60001-
4	17M-30-11330	SPACER……隔离套	9	60001-
5	17M-30-11340	BOLT……螺栓	9	60001-
6	01580-12419	NUT…… 螺母	9	60001-
7	01010-82760	BOLT……螺栓	16	60001-
8	01643-32780	WASHER……垫圈	16	60001-

https://truckmanualshub.com/

FIG.R1120-15A0 TRACK FRAME (FINAL DRIVE) (R.H.)
行走架（终传动）（右）

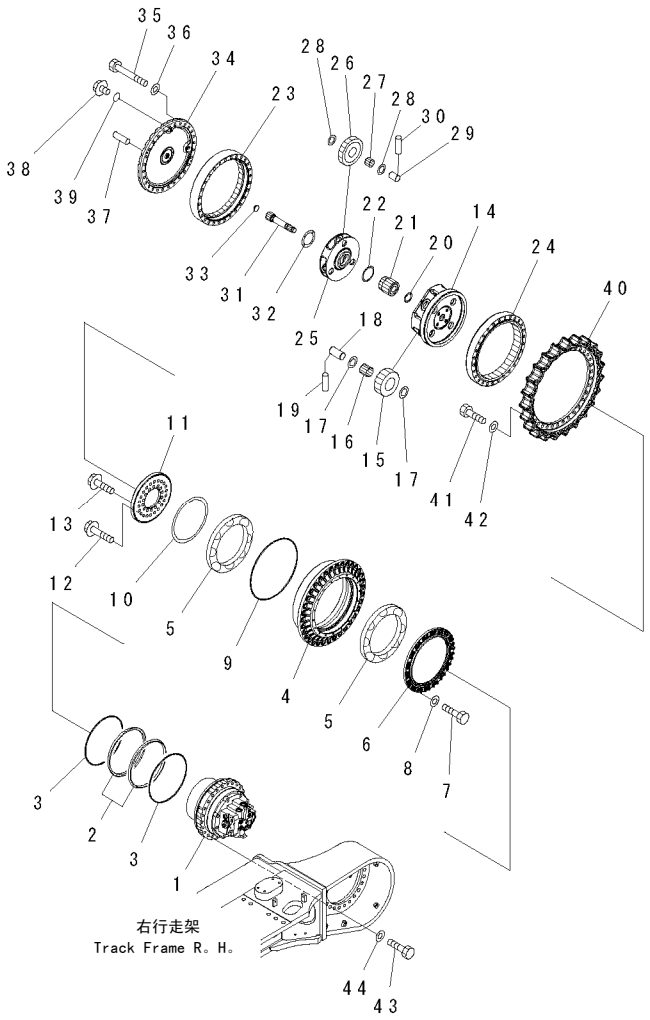

PW1A490

FIG NO. : R1120-15A0

INDEX	PART NO.	DESCRIPTION	Q'TY	SERIAL NO.
	21M-27-00050	FINAL DRIVE ASS'Y…… 终传动	1	60001-
1	(706-8L-01010)	.MOTOR ASS'Y……马达总成	1	60001-
	17M-27-00180	.FLOATING SEAL ASS'Y……旋转密封总成	1	60001-
2	☆	..RING……隔圈	2	60001-
3	☆	..O-RING…… 0形圈	2	60001-
4	21M-27-11210	.HUB……轮毂	1	60001-
5	208-27-62110	.BEARING……轴承	2	60001-
6	208-27-51212	.COVER……盖	1	60001-
7	01010-81240	.BOLT…… 螺栓	18	60001-
8	01643-31232	.WASHER…… 垫圈	18	60001-
9	21M-27-11280	.O-RING……0形圈	1	60001-
10	21M-27-00110	.SPACER ASS'Y…… 调整垫片总成	1	60001-
11	21M-27-11290	.RETAINER…… 固定座	1	60001-
12	208-27-52311	.BOLT…… 螺栓	22	60001-
13	21M-27-11380	.BOLT…… 螺栓	14	60001-
14	21M-27-11180	.CARRIER……托架	1	60001-
15	21M-27-11140	.GEAR…… 齿轮	4	60001-
16	21M-27-11230	.BEARING……轴承	4	60001-
17	21M-27-11260	.THRUST WASHER……止动垫圈	8	60001-
18	21M-27-11250	.PIN……销	4	60001-
19	20Y-27-21290	.PIN……销	4	60001-
20	207-27-52270	.SPACER…… 调整垫片	1	60001-
21	21M-27-11130	.GEAR…… 齿轮	1	60001-
22	21M-27-11270	.THRUST WASHER……止动垫圈	1	60001-
23	21M-27-11150	.GEAR…… 齿轮	1	60001-
24	21M-27-11160	.GEAR…… 齿轮	1	60001-
25	21M-27-11170	.CARRIER……托架	1	60001-
26	21M-27-11120	.GEAR…… 齿轮	3	60001-
27	21M-27-11411	.BEARING……轴承	3	60001-
28	20Y-27-21250	.WASHER…… 垫圈	6	60001-
29	21M-27-11240	.PIN……销	3	60001-
30	20Y-27-21280	.PIN……销	3	60001-
31	21M-27-11111	.SHAFT……轴	1	60001-
32	20Y-27-11250	.SPACER…… 隔离套	1	60001-
33	208-27-61350	.BUTTON…… 按钮	1	60001-
34	21M-27-11190	.COVER……盖	1	60001-
35	208-27-52341	.BOLT…… 螺栓	28	60001-
36	01643-31845	.WASHER…… 垫圈	28	60001-
37	07049-01215	.PLUG…… 堵塞	4	60001-
38	07044-12412	.PLUG…… 堵塞	2	60001-
39	07002-12434	.O-RING……0形圈	2	60001-
40	21M-27-11220	.SPROCKET…… 链齿轮	1	60001-
41	01010-82265	.BOLT…… 螺栓	34	60001-
42	01643-32260	.WASHER…… 垫圈	34	60001-
43	01010-62490	BOLT……螺栓	24	60001-
44	01643-32460	WASHER……垫圈	24	60001-

https://truckmanualshub.com/

FIG.R1120-16A0　TRACK FRAME (TRAVEL PIPING) (R.H.)
行走架（行走管路）（右）

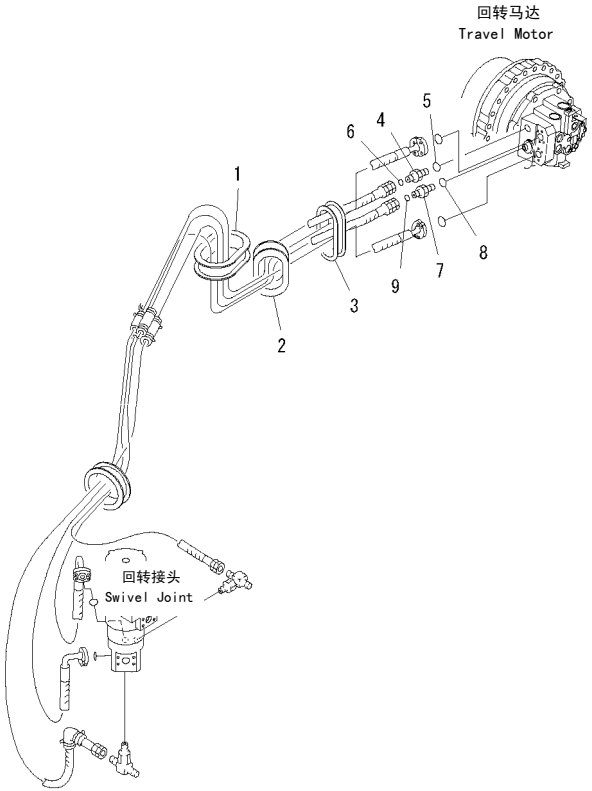

00008766

FIG NO. : R1120-16A0

INDEX	PART NO.	DESCRIPTION	Q'TY	SERIAL NO.
1	21M-62-14150	GROMMET…… 保护套	1	60001-
2	21M-62-14120	GROMMET…… 保护套	1	60001-
3	21M-62-14130	GROMMET…… 保护套	1	60001-
4	02781-00628	UNION…… 接头	1	60001-
5	07002-12434	O-RING…… O形圈	1	60001-
6	02896-11018	O-RING…… O形圈	1	60001-
7	11Y-62-12520	NIPPLE……喷嘴	1	60001-
8	07002-11423	O-RING…… O形圈	1	60001-
9	02896-11009	O-RING…… O形圈	1	60001-

https://truckmanualshub.com/

FIG.R1140-01A0 UNDER COVER (FOR TRACK FRAME)
底护板(行走架)

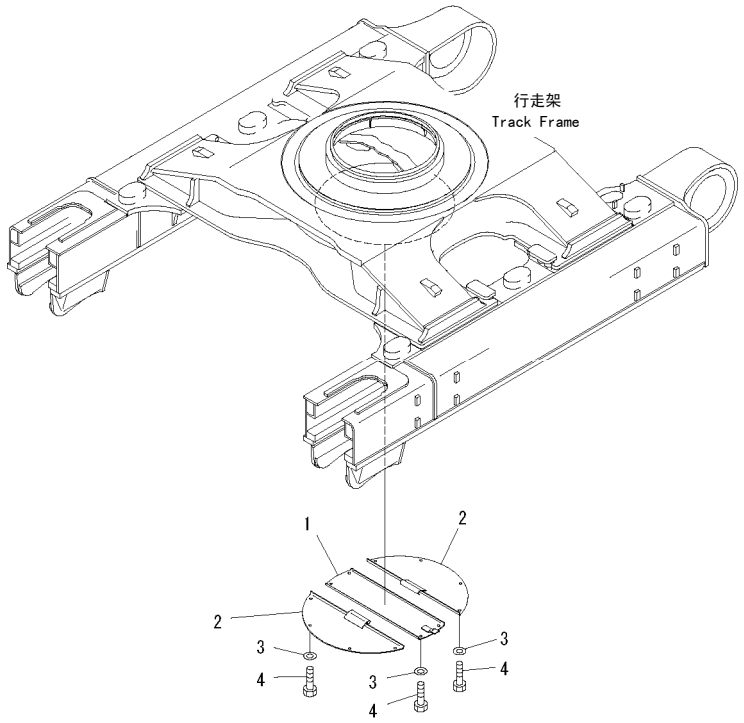

PWL1877

FIG NO. : R1140-01A0

INDEX	PART NO.	DESCRIPTION	Q'TY	SERIAL NO.
1	21M-30-12410	COVER…… 盖	1	60001-
2	21M-30-12420	COVER…… 盖	2	60001-
3	175-54-34170	WASHER……垫圈	12	60001-
4	01010-81230	BOLT……螺栓	12	60001-

https://truckmanualshub.com/

FIG.R1150-01A0 TRAVEL PIPING GUARD
行走管路护板

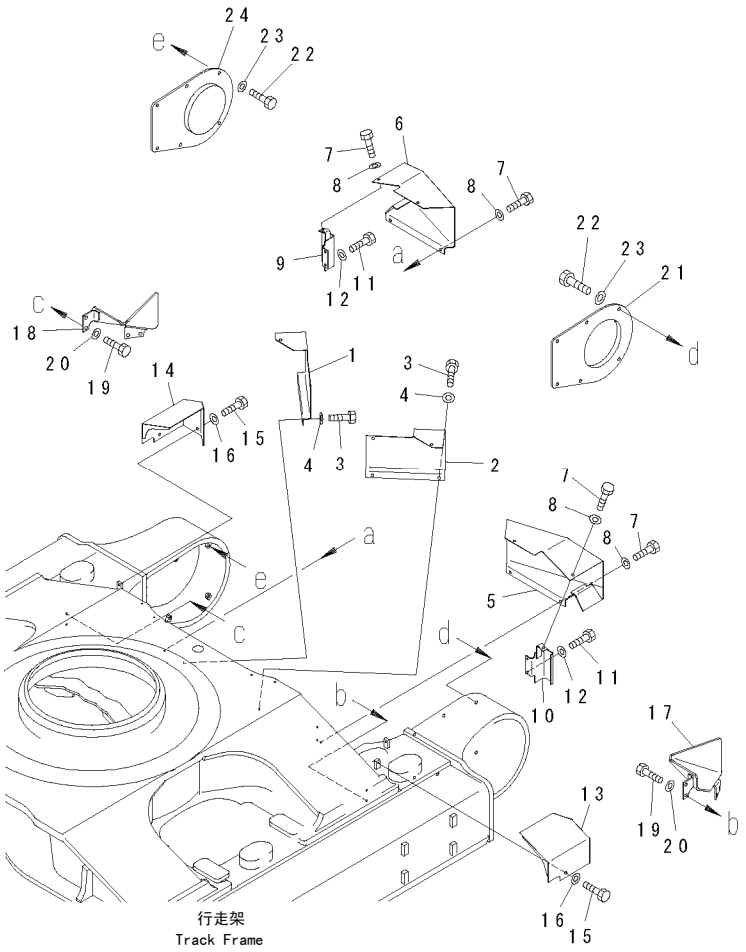

PWL1879

FIG NO. : R1150-01A0

INDEX	PART NO.	DESCRIPTION	Q'TY	SERIAL NO.
1	21M-30-28110	COVER…… 盖	1	60001-
2	21M-30-28170	COVER…… 盖	1	60001-
3	01010-81230	BOLT……螺栓	8	60001-
4	01643-31232	WASHER……垫圈	8	60001-
5	21M-30-28220	COVER…… 盖	1	60001-
6	21M-30-28230	COVER…… 盖	1	60001-
7	01010-81230	BOLT……螺栓	8	60001-
8	01643-31232	WASHER……垫圈	8	60001-
9	21M-30-28140	BRACKET…… 支架	1	60001-
10	21M-30-28150	BRACKET…… 支架	1	60001-
11	01010-81225	BOLT……螺栓	4	60001-
12	01643-31232	WASHER……垫圈	4	60001-
13	21M-30-28120	COVER…… 盖	1	60001-
14	21M-30-28160	COVER…… 盖	1	60001-
15	01010-81230	BOLT……螺栓	4	60001-
16	01643-31232	WASHER……垫圈	4	60001-
17	21M-30-18132	COVER…… 盖	1	60001-
18	21M-30-18182	COVER…… 盖	1	60001-
19	01010-81635	BOLT……螺栓	8	60001-
20	01643-31645	WASHER……垫圈	8	60001-
21	21M-30-12340	GUARD…… 护板	1	60001-
22	01643-31645	WASHER……垫圈	12	60001-
23	01010-81640	BOLT……螺栓	12	60001-
24	21M-30-12350	GUARD…… 护板	1	60001-

https://truckmanualshub.com/

FIG.R1170-01A0　STEP (TRACK FRAME SIDE)
踏板（行走架側）

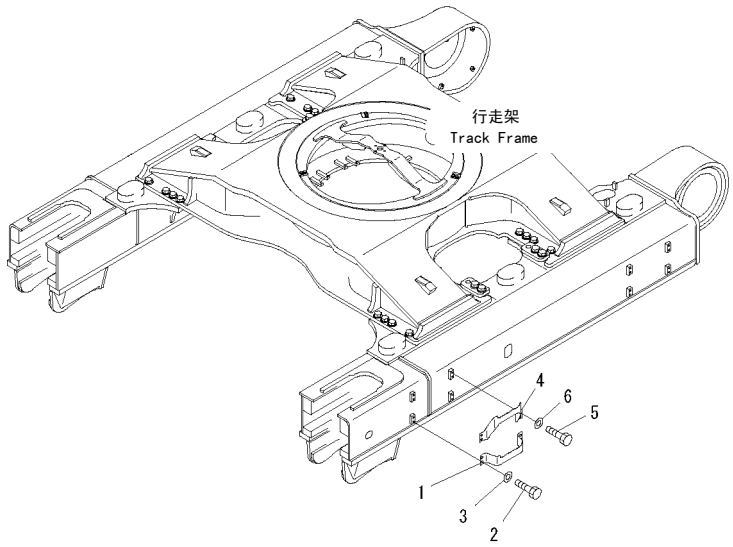

PWL3541

FIG NO. : R1170-01A0

INDEX	PART NO.	DESCRIPTION	Q'TY	SERIAL NO.
1	21M-30-12210	BRACKET…… 支架	4	60001-
2	01010-81640	BOLT……螺栓	16	60001-
3	01643-31645	WASHER……垫圈	16	60001-
4	21M-30-12260	BRACKET…… 支架	4	60001-
5	01010-81640	BOLT……螺栓	16	60001-
6	01643-31645	WASHER……垫圈	16	60001-

WORK EQUIPMENT
工作装置

https://truckmanualshub.com/

https://truckmanualshub.com/

FIG.T1110-01A0　BOOM (6.6M) (BOOM AND TOP PIN) (SE SPEC.)
大臂(6.6M)(大臂和顶部销)(SE 仕样)

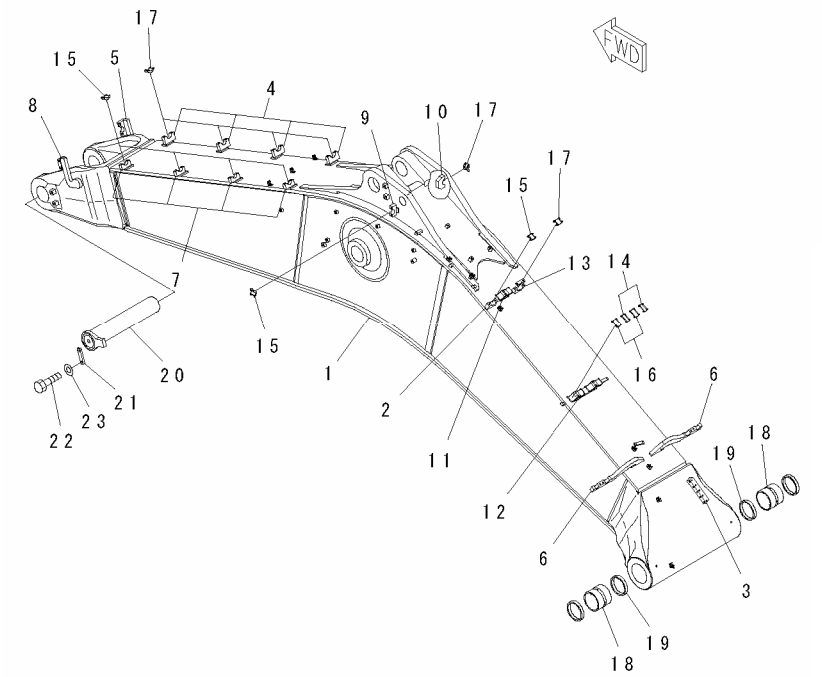

00049330

FIG NO. : T1110-01A0

INDEX	PART NO.	DESCRIPTION	Q'TY	SERIAL NO.
	21M-942-0220	BOOM A…… 动臂A	1	60001-
1	☆	..BOOM……动臂	1	60001-
2	21M-62-17270	..CLAMP……(WELDED)……卡箍(焊接件)	1	60001-
3	21M-70-21160	..SEAT…… (WELDED)……座(焊接件)	1	60001-
4	21M-62-17270	..BRACKET……(WELDED)……支架(焊接件)	4	60001-
5	209-62-53780	..BRACKET……(WELDED)……支架(焊接件)	1	60001-
6	21M-62-17291	..CLAMP……(WELDED)……卡箍(焊接件)	2	60001-
7	21M-62-17320	..BRACKET……(WELDED)……支架(焊接件)	4	60001-
8	207-62-34320	..BRACKET……(WELDED)……支架(焊接件)	1	60001-
9	21M-62-17370	..BRACKET……(WELDED)……支架(焊接件)	1	60001-
10	21M-62-17440	..CLAMP……(WELDED)……卡箍(焊接件)	1	60001-
11	21M-62-17480	..BRACKET……(WELDED)……支架(焊接件)	1	60001-
12	21M-62-17510	..BRACKET……(WELDED)……支架(焊接件)	1	60001-
13	21N-62-18570	..CLAMP……(WELDED)……卡箍(焊接件)	1	60001-
14	21M-62-17230	.SEAT…… 座	2	60001-
15	205-62-54622	.SEAT…… 座	6	60001-
16	205-62-73430	.SEAT…… 座	2	60001-
17	209-62-58520	.SEAT…… 座	6	60001-
18	21M-70-11271	.BUSHING…… 衬套	2	60001-
19	209-72-11261	.SEAT…… 座	2	60001-
20	21M-70-11240	PIN…… 销	1	60001-
21	20Y-70-11190	PLATE…… 板	1	60001-
22	01010-81645	BOLT……螺栓	2	60001-
23	01643-31645	WASHER……垫圈	2	60001-

https://truckmanualshub.com/

FIG.T1110-01A7　BOOM (7.3M) (BOOM AND TOP PIN) (HEAVY DUTY)
大臂(7.3M)(大臂和顶部销)(重载)

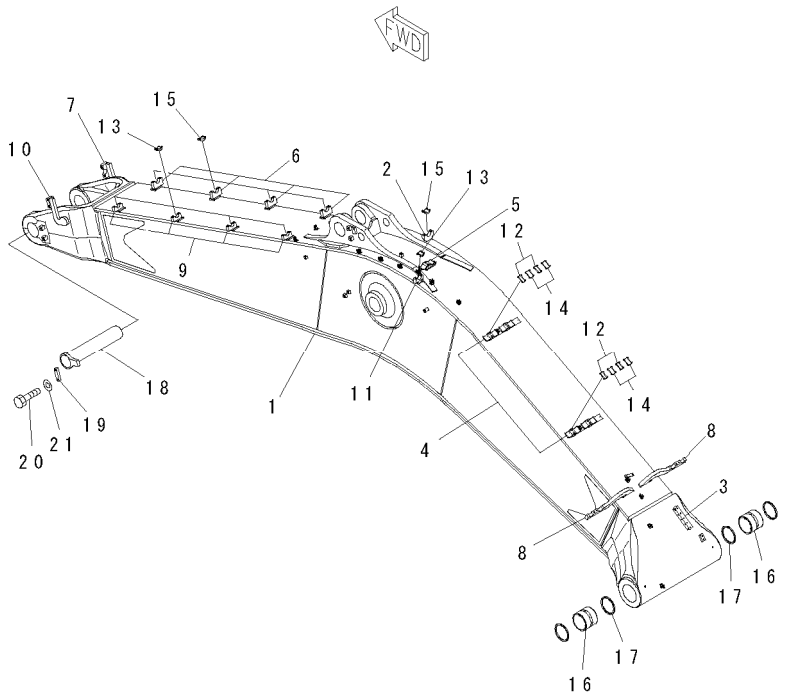

00049331

FIG NO. : T1110-01A7

INDEX	PART NO.	DESCRIPTION	Q'TY	SERIAL NO.
	21M-942-0240	BOOM A…… 动臂A	1	60001-
	21M-942-D170	.BOOM REWORK……追加动臂	1	60001-
1	☆	..BOOM……动臂	1	60001-
2	21M-62-17440	...CLAMP……(WELDED)……卡箍(焊接件)	1	60001-
3	209-70-57170	...SEAT…… (WELDED)……座(焊接件)	1	60001-
4	21M-62-17211	...BRACKET……(WELDED)……支架(焊接件)	2	60001-
5	21M-62-17221	...BRACKET……(WELDED)……支架(焊接件)	1	60001-
6	21M-62-17270	...BRACKET……(WELDED)……支架(焊接件)	4	60001-
7	209-62-53780	...BRACKET……(WELDED)……支架(焊接件)	1	60001-
8	21M-62-17291	...CLAMP……(WELDED)……卡箍(焊接件)	2	60001-
9	21M-62-17320	...BRACKET……(WELDED)……支架(焊接件)	4	60001-
10	207-62-34320	...BRACKET……(WELDED)……支架(焊接件)	1	60001-
11	21M-62-17370	...BRACKET……(WELDED)……支架(焊接件)	1	60001-
12	21M-62-17230	..SEAT……座	4	60001-
13	205-62-54622	..SEAT……座	5	60001-
14	205-62-73430	..SEAT……座	4	60001-
15	209-62-58520	..SEAT……座	5	60001-
16	21M-70-11271	..BUSHING…… 衬套	2	60001-
17	209-72-11261	..SEAT……座	2	60001-
18	21M-70-11240	PIN…… 销	1	60001-
19	20Y-70-11190	PLATE…… 板	1	60001-
20	01010-81645	BOLT……螺栓	2	60001-
21	01643-31645	WASHER……垫圈	2	60001-

https://truckmanualshub.com/

FIG.T1110-02A0　BOOM (6.6M) (ARM CYLINDER LINE)(SE SPEC.)
大臂(6.6M)(小臂油缸回路)(SE 仕样)

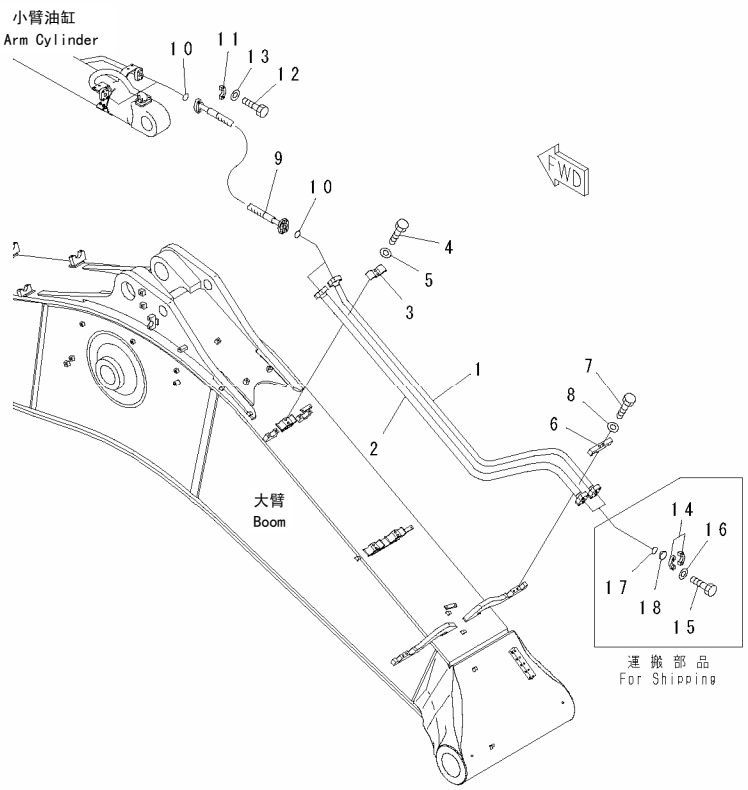

PWL3544

FIG NO. : T1110-02A0

INDEX	PART NO.	DESCRIPTION	Q'TY	SERIAL NO.
1	21M-62-17450	TUBE……硬管	1	60001-
2	21M-62-17190	TUBE……硬管	1	60001-
3	21M-62-17260	CLAMP…… 卡箍	1	60001-
4	01010-81235	BOLT……螺栓	2	60001-
5	01643-31232	WASHER……垫圈	2	60001-
6	21N-62-13690	CLAMP…… 卡箍	1	60001-
7	01010-81260	BOLT……螺栓	2	60001-
8	01643-31232	WASHER……垫圈	2	60001-
9	07084-01215	HOSE……软管	2	60001-
10	07000-13038	O-RING…… O形圈	4	60001-
11	07371-51260	FLANGE……法兰	8	60001-
12	01010-81245	BOLT……螺栓	16	60001-
13	01643-31232	WASHER……垫圈	16	60001-
14	07371-51260	FLANGE……法兰	4	60001-
15	01010-81245	BOLT……螺栓	8	60001-
16	01643-31232	WASHER……垫圈	8	60001-
17	07000-13038	O-RING…… O形圈	2	60001-
18	07378-11210	HEAD……盖	2	60001-

https://truckmanualshub.com/

FIG.T1110-02A5　BOOM (7.3M) (ARM CYLINDER LINE)
大臂(7.3M)(小臂油缸回路)

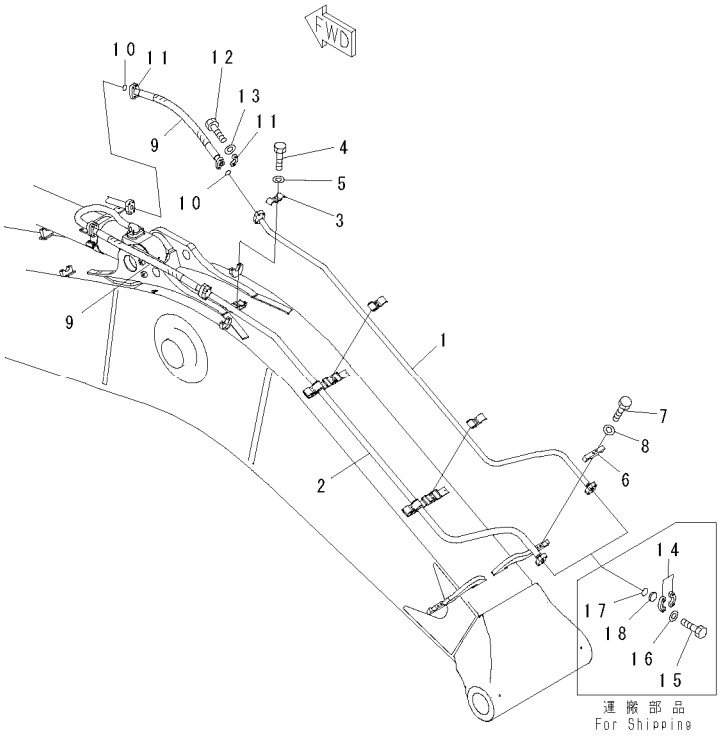

PWL1890

FIG NO. : T1110-02A5

INDEX	PART NO.	DESCRIPTION	Q'TY	SERIAL NO.
1	21M-62-17111	TUBE……硬管	1	60001-
2	21M-62-17121	TUBE……硬管	1	60001-
3	21M-62-17260	CLAMP…… 卡箍	1	60001-
4	01010-81235	BOLT……螺栓	2	60001-
5	01643-31232	WASHER……垫圈	2	60001-
6	21N-62-13690	CLAMP…… 卡箍	1	60001-
7	01010-81260	BOLT……螺栓	2	60001-
8	01643-31232	WASHER……垫圈	2	60001-
9	07084-012A9	HOSE……软管	2	60001-
10	07000-13038	O-RING…… O形圈	4	60001-
11	07371-51260	FLANGE……法兰	8	60001-
12	01010-81245	BOLT……螺栓	16	60001-
13	01643-31232	WASHER……垫圈	16	60001-
14	07371-51260	FLANGE……法兰	4	60001-
15	01010-81245	BOLT……螺栓	8	60001-
16	01643-31232	WASHER……垫圈	8	60001-
17	07000-13038	O-RING…… O形圈	2	60001-
18	07378-11210	HEAD……盖	2	60001-

https://truckmanualshub.com/

FIG.T111O-03AO　BOOM (6.6M) (LUBRICATING LINE)(SE SPEC.)
大臂(6.6M)(润滑管路)(SE 仕样)

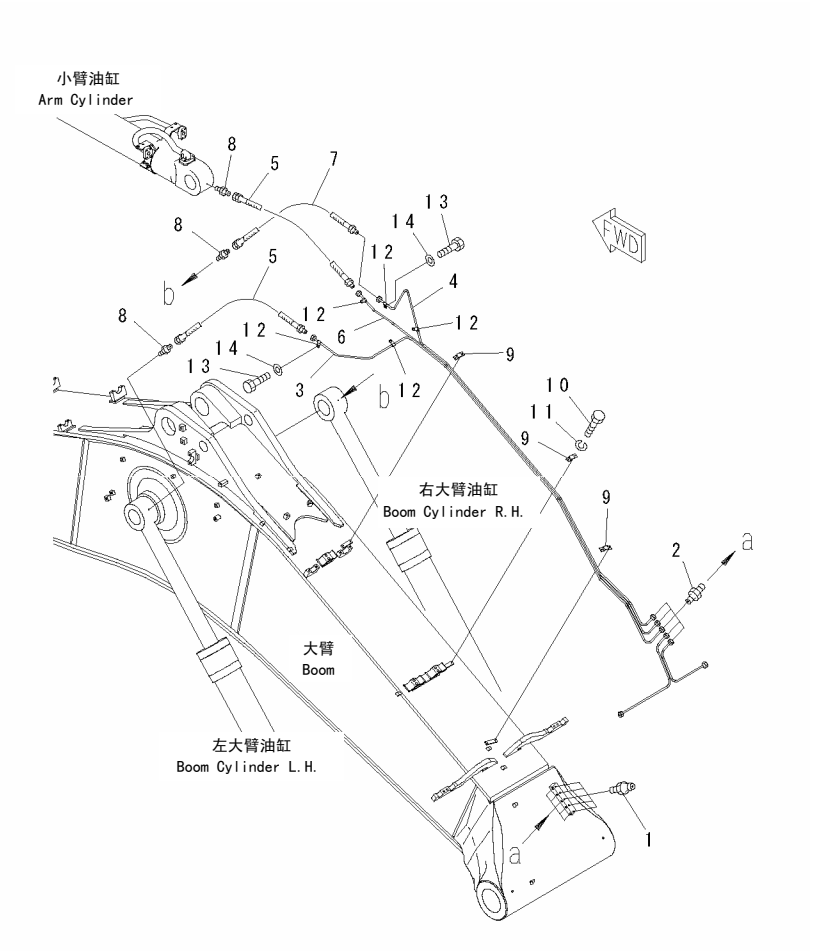

00038656

FIG NO. : T111O-03AO

INDEX	PART NO.	DESCRIPTION	Q'TY	SERIAL NO.
1	07020-00000	FITTING…… 黄油嘴	5	60001-
2	07214-51013	CONNECTOR…… 接头	5	60001-
3	21M-70-15131	TUBE……硬管	1	60001-
4	21M-70-15111	TUBE……硬管	1	60001-
5	208-70-62190	HOSE……软管	2	60001-
6	21M-70-15121	TUBE……硬管	1	60001-
7	208-70-62190	HOSE……软管	1	60001-
8	205-70-51390	NIPPLE……喷嘴	3	60001-
9	207-70-11770	CLIP……管夹	3	60001-
10	01010-80612	BOLT……螺栓	6	60001-
11	01643-30623	WASHER……垫圈	6	60001-
12	08036-01014	CLIP……管夹	5	60001-
13	01010-81220	BOLT……螺栓	5	60001-
14	01643-31232	WASHER……垫圈	5	60001-

https://truckmanualshub.com/

FIG.T1110-03A5 BOOM (7.3M) (LUBRICATING LINE)
大臂(7.3M)(润滑管路)

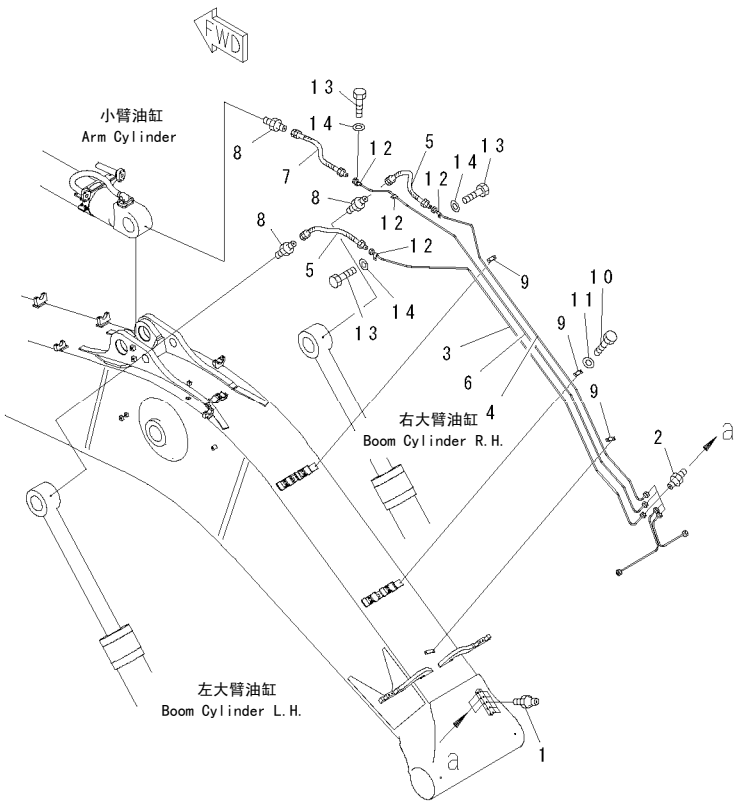

00038130

FIG NO. : T1110-03A5

INDEX	PART NO.	DESCRIPTION	Q'TY	SERIAL NO.
1	07020-00000	FITTING…… 黄油嘴	5	60001-
2	07214-51013	CONNECTOR…… 接头	5	60001-
3	21M-70-15131	TUBE……硬管	1	60001-
4	21M-70-15111	TUBE……硬管	1	60001-
5	208-70-62190	HOSE……软管	2	60001-
6	21M-70-15121	TUBE……硬管	1	60001-
7	208-70-62190	HOSE……软管	1	60001-
8	205-70-51390	NIPPLE……喷嘴	3	60001-
9	207-70-11770	CLIP……管夹	3	60001-
10	01010-80612	BOLT……螺栓	6	60001-
11	01643-30623	WASHER……垫圈	6	60001-
12	08036-01014	CLIP……管夹	4	60001-
13	01010-81220	BOLT……螺栓	4	60001-
14	01643-31232	WASHER……垫圈	4	60001-

https://truckmanualshub.com/

FIG.T1110-04A0　BOOM (6.6M) (BUCKET CYLINDER LINE)(SE SPEC.)

大臂(6.6M)(铲斗油缸回路)(SE 仕样)

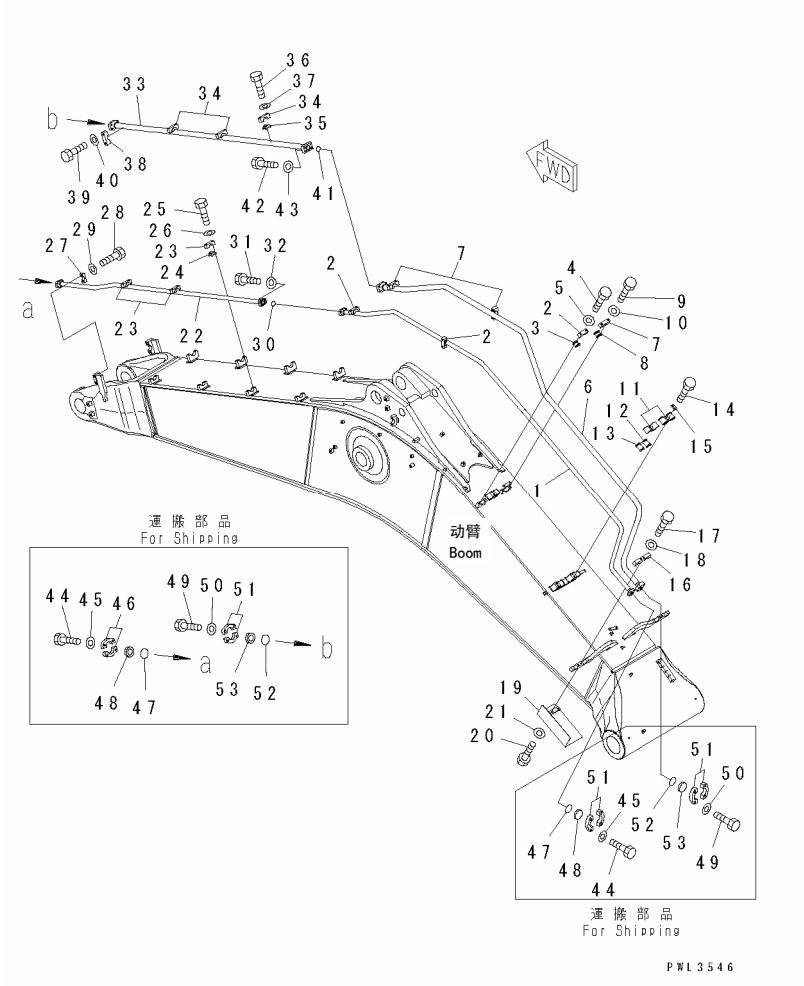

FIG NO. : T1110-04A0

INDEX	PART NO.	DESCRIPTION	Q'TY	SERIAL NO.
1	21M-62-17490	TUBE……硬管	1	60001-
2	21N-62-13490	CLAMP…… 卡箍	3	60001-
3	205-62-54622	.SEAT…… 座	1	60001-
4	01010-81250	BOLT……螺栓	6	60001-
5	01643-31232	WASHER……垫圈	6	60001-
6	21M-62-17180	TUBE……硬管	1	60001-
7	209-62-58370	CLAMP…… 卡箍	3	60001-
8	209-62-58520	.SEAT…… 座	1	60001-
9	01010-81255	BOLT……螺栓	6	60001-
10	01643-31232	WASHER……垫圈	6	60001-
11	21M-62-17250	CLAMP…… 卡箍	2	60001-
12	205-62-73430	.SEAT…… 座	1	60001-
13	21M-62-17230	.SEAT…… 座	1	60001-
14	01010-81235	BOLT……螺栓	4	60001-
15	20Y-62-13450	PLATE…… 板	2	60001-
16	21N-62-13690	CLAMP…… 卡箍	1	60001-
17	01010-81260	BOLT……螺栓	2	60001-
18	01643-31232	WASHER……垫圈	2	60001-
19	21M-62-17332	BRACKET…… 支架	1	60001-
20	01010-81245	BOLT……螺栓	4	60001-
21	01643-31232	WASHER……垫圈	4	60001-
22	21M-62-17170	TUBE……硬管	1	60001-
23	21N-62-13490	CLAMP…… 卡箍	3	60001-
24	205-62-54622	.SEAT…… 座	1	60001-
25	01010-81250	BOLT……螺栓	6	60001-
26	01643-31232	WASHER……垫圈	6	60001-
27	207-62-14580	CLAMP…… 卡箍	1	60001-
28	01010-81280	BOLT……螺栓	2	60001-
29	01643-31232	WASHER……垫圈	2	60001-
30	07000-13035	O-RING…… O形圈	1	60001-
31	07372-21040	BOLT……螺栓	4	60001-
32	01643-51032	WASHER……垫圈	4	60001-
33	21M-62-17520	TUBE……硬管	1	60001-
34	209-62-58370	CLAMP…… 卡箍	3	60001-
35	209-62-58520	.SEAT…… 座	1	60001-
36	01010-81255	BOLT……螺栓	6	60001-
37	01643-31232	WASHER……垫圈	6	60001-
38	209-62-53790	CLAMP…… 卡箍	1	60001-
39	01010-81690	BOLT……螺栓	2	60001-
40	01643-31645	WASHER……垫圈	2	60001-
41	07000-13038	O-RING…… O形圈	1	60001-
42	01010-81250	BOLT……螺栓	1	60001-
43	01643-31232	WASHER……垫圈	4	60001-
44	07372-21035	BOLT……螺栓	8	60001-
45	01643-51032	WASHER……垫圈	8	60001-
46	07371-31049	FLANGE……法兰	4	60001-
47	07000-13032	O-RING…… O形圈	2	60001-
48	07378-11000	HEAD……盖	2	60001-

https://truckmanualshub.com/

FIG.T1110-04A0　BOOM (6.6M) (BUCKET CYLINDER LINE)(SE SPEC.)
大臂(6.6M)(铲斗油缸回路)(SE 仕样)

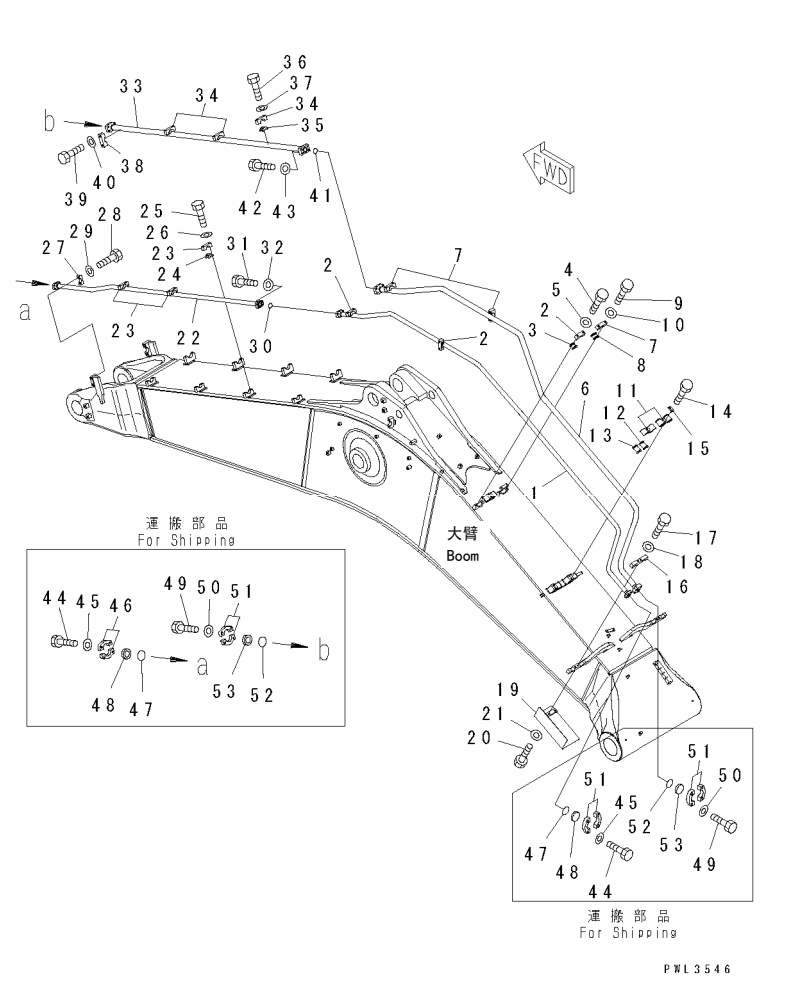

FIG NO. : T1110-04A0

INDEX	PART NO.	DESCRIPTION	Q'TY	SERIAL NO.
49	01010-81245	BOLT……螺栓	8	60001-
50	01643-31232	WASHER……垫圈	8	60001-
51	07371-51260	FLANGE……法兰	4	60001-
52	07000-13038	O-RING…… O形圈	2	60001-
53	07378-11210	HEAD……盖	2	60001-

https://truckmanualshub.com/

FIG.T1110-04A5　BOOM (7.3M) (BUCKET CYLINDER LINE)

大臂(7.3M)(铲斗油缸回路)

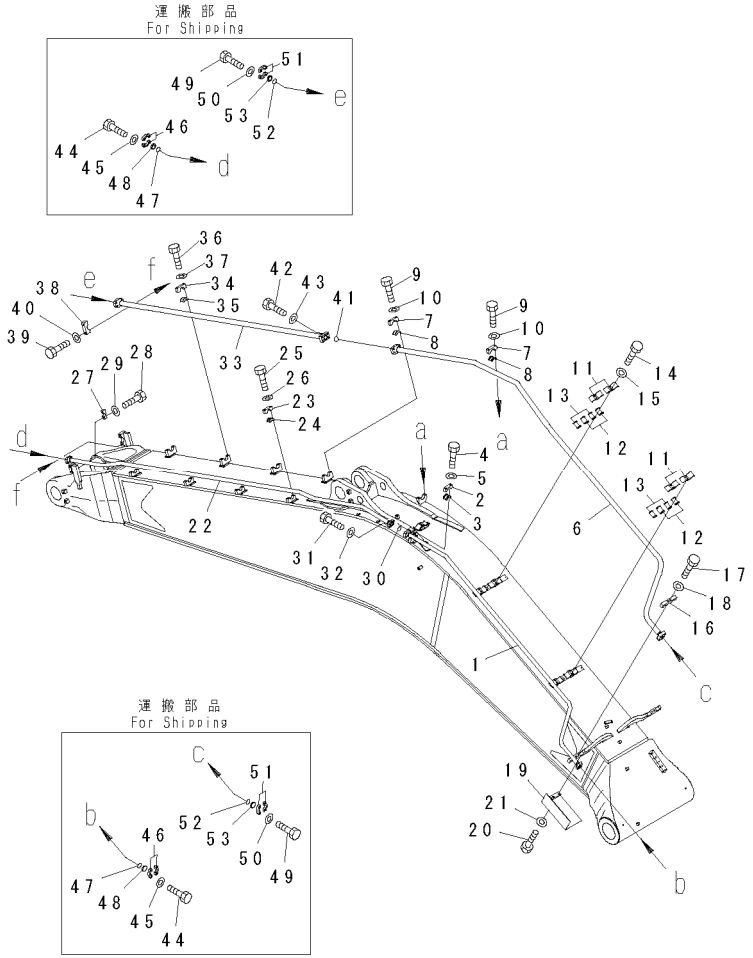

PWL1894

FIG NO. : T1110-04A5

INDEX	PART NO.	DESCRIPTION	Q'TY	SERIAL NO.
1	21M-62-17131	TUBE……硬管	1	60001-
2	21N-62-13490	CLAMP…… 卡箍	1	60001-
3	205-62-54622	.SEAT…… 座	1	60001-
4	01010-81250	BOLT……螺栓	2	60001-
5	01643-31232	WASHER……垫圈	2	60001-
6	21M-62-17141	TUBE……硬管	1	60001-
7	209-62-58370	CLAMP…… 卡箍	2	60001-
8	209-62-58520	.SEAT…… 座	1	60001-
9	01010-81255	BOLT……螺栓	4	60001-
10	01643-31232	WASHER……垫圈	4	60001-
11	21M-62-17250	CLAMP…… 卡箍	4	60001-
12	205-62-73430	.SEAT…… 座	1	60001-
13	21M-62-17230	.SEAT…… 座	1	60001-
14	01010-81235	BOLT……螺栓	8	60001-
15	20Y-62-13450	PLATE…… 板	4	60001-
16	21N-62-13690	CLAMP…… 卡箍	1	60001-
17	01010-81260	BOLT……螺栓	2	60001-
18	01643-31232	WASHER……垫圈	2	60001-
19	21M-62-17332	BRACKET…… 支架	1	60001-
20	01010-81245	BOLT……螺栓	4	60001-
21	01643-31232	WASHER……垫圈	4	60001-
22	21M-62-17151	TUBE……硬管	1	60001-
23	21N-62-13490	CLAMP…… 卡箍	4	60001-
24	205-62-54622	.SEAT…… 座	1	60001-
25	01010-81250	BOLT……螺栓	8	60001-
26	01643-31232	WASHER……垫圈	8	60001-
27	207-62-14580	CLAMP…… 卡箍	1	60001-
28	01010-81280	BOLT……螺栓	2	60001-
29	01643-31232	WASHER……垫圈	2	60001-
30	07000-13035	O-RING…… O形圈	1	60001-
31	07372-21040	BOLT……螺栓	4	60001-
32	01643-51032	WASHER……垫圈	4	60001-
33	21M-62-17162	TUBE……硬管	1	60001-
34	209-62-58370	CLAMP…… 卡箍	3	60001-
35	209-62-58520	.SEAT…… 座	1	60001-
36	01010-81255	BOLT……螺栓	6	60001-
37	01643-31232	WASHER……垫圈	6	60001-
38	209-62-53790	CLAMP…… 卡箍	1	60001-
39	01010-81690	BOLT……螺栓	2	60001-
40	01643-31645	WASHER……垫圈	2	60001-
41	07000-13038	O-RING…… O形圈	1	60001-
42	01010-81250	BOLT……螺栓	4	60001-
43	01643-31232	WASHER……垫圈	4	60001-
44	07372-21035	BOLT……螺栓	8	60001-
45	01643-51032	WASHER……垫圈	8	60001-
46	07371-31049	FLANGE……法兰	4	60001-
47	07000-13032	O-RING…… O形圈	2	60001-
48	07378-11000	HEAD……盖	2	60001-

https://truckmanualshub.com/

FIG.T1110-04A5　BOOM (7.3M) (BUCKET CYLINDER LINE)
大臂(7.3M)(铲斗油缸回路)

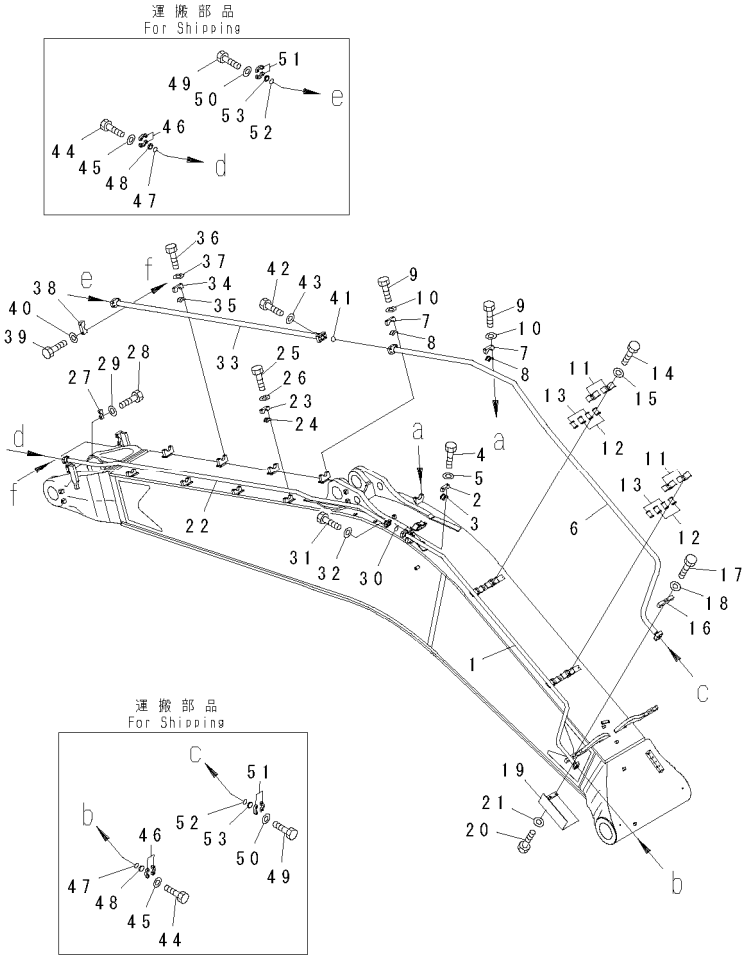

PWL1894

FIG NO. : T1110-04A5

INDEX	PART NO.	DESCRIPTION	Q'TY	SERIAL NO.
49	01010-81245	BOLT……螺栓	8	60001-
50	01643-31232	WASHER……垫圈	8	60001-
51	07371-51260	FLANGE……法兰	4	60001-
52	07000-13038	O-RING…… O形圈	2	60001-
53	07378-11210	HEAD……盖	2	60001-

https://truckmanualshub.com/

FIG.T1110-05A0 BOOM (CYLINDER PIN)(SE SPEC.)
大臂(油缸销)(SE 仕样)

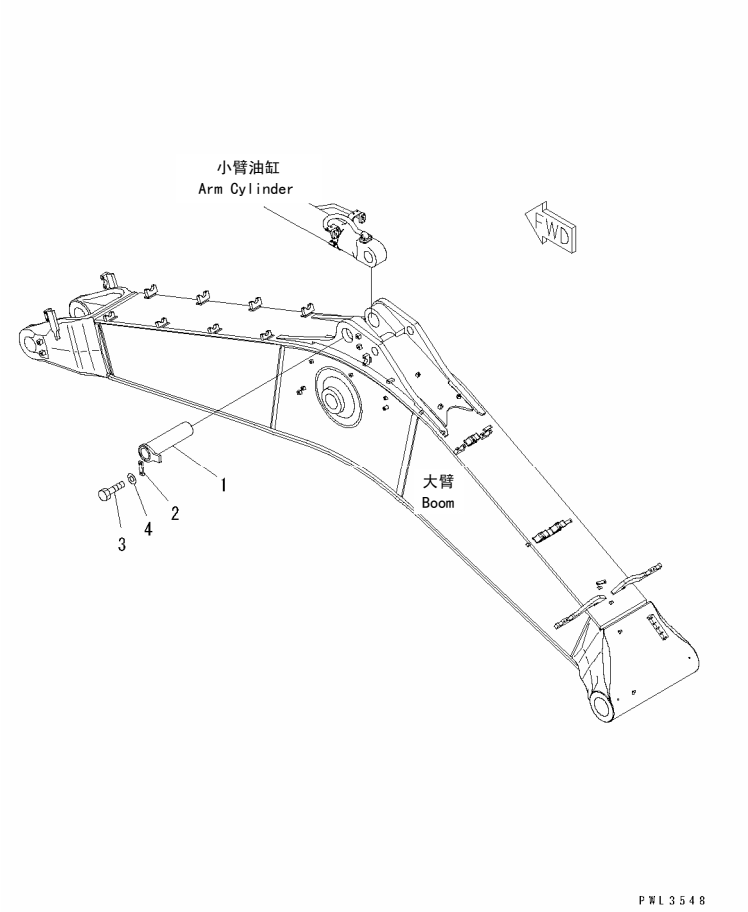

FIG NO. : T1110-05A0

INDEX	PART NO.	DESCRIPTION	Q'TY	SERIAL NO.
1	21M-70-11340	PIN…… 销	1	60001-
2	20Y-70-11190	PLATE…… 板	1	60001-
3	01010-81645	BOLT……螺栓	2	60001-
4	01643-31645	WASHER……垫圈	2	60001-

https://truckmanualshub.com/

FIG.T1110-05A1 BOOM (CYLINDER PIN)
大臂(油缸销)

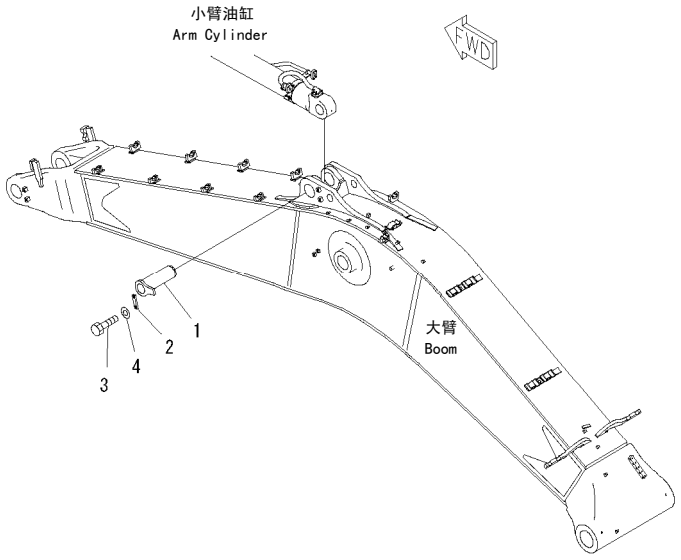

PWL3547

FIG NO. : T1110-05A1

INDEX	PART NO.	DESCRIPTION	Q'TY	SERIAL NO.
1	21M-70-11230	PIN…… 销	1	60001-
2	20Y-70-11190	PLATE…… 板	1	60001-
3	01010-81645	BOLT……螺栓	2	60001-
4	01643-31645	WASHER……垫圈	2	60001-

https://truckmanualshub.com/

FIG.T1110-09A0 BOOM (WORK LAMP)(SE SPEC.)
大臂(工作灯)(SE 仕样)

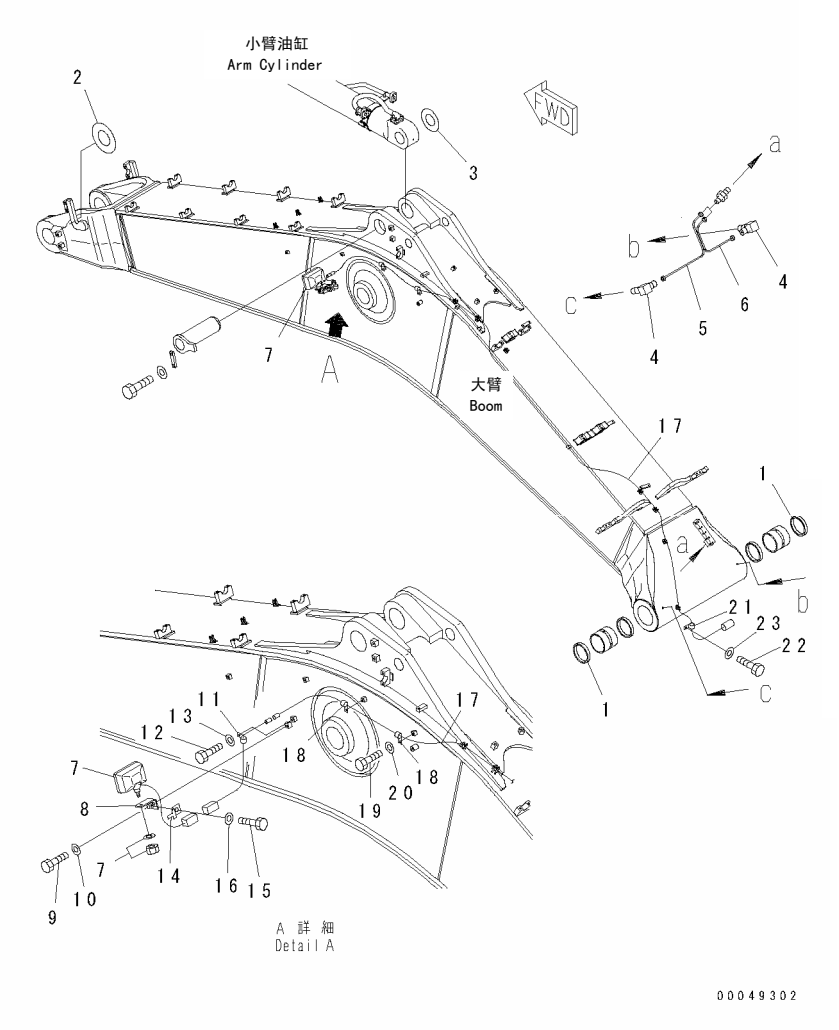

FIG NO. : T1110-09A0

INDEX	PART NO.	DESCRIPTION	Q'TY	SERIAL NO.
1	209-72-11261	SEAL……油封	2	60001-
2	209-72-51230	SHIM, 1.0MM……1.0MM调整垫	1	60001-
3	208-70-31310	SPACER, 0.8MM……0.8MM调整垫片	3	60001-
4	07217-51013	ELBOW…… 接头	2	60001-
5	21M-70-15140	TUBE……硬管	1	60001-
6	21M-70-15150	TUBE……硬管	1	60001-
7	21T-06-32810	WORK LAMP ASS'Y ……工作灯总成	1	60001-
	421-06-23330	.BULB, 70W ……70W灯泡	1	60001-
8	20Y-06-21551	BRACKET…… 支架	1	60001-
9	01010-81230	BOLT……螺栓	1	60001-
10	01643-31232	WASHER……垫圈	1	60001-
11	04434-51012	CLIP……管夹	1	60001-
12	01010-81220	BOLT……螺栓	1	60001-
13	01643-31232	WASHER……垫圈	1	60001-
14	08193-20012	CLIP……管夹	1	60001-
15	01010-81230	BOLT……螺栓	1	60001-
16	01643-31232	WASHER……垫圈	1	60001-
17	21M-06-21180	WIRING HARNESS …… 线束	1	60001-
18	04434-51010	CLIP……管夹	2	60001-
19	01010-81225	BOLT……螺栓	2	60001-
20	01643-31232	WASHER……垫圈	2	60001-
21	04434-51012	CLIP……管夹	1	60001-
22	01010-81225	BOLT……螺栓	1	60001-
23	01643-31232	WASHER……垫圈	1	60001-

https://truckmanualshub.com/

FIG.T1110-09A1 BOOM (WORK LAMP)
大臂(工作灯)

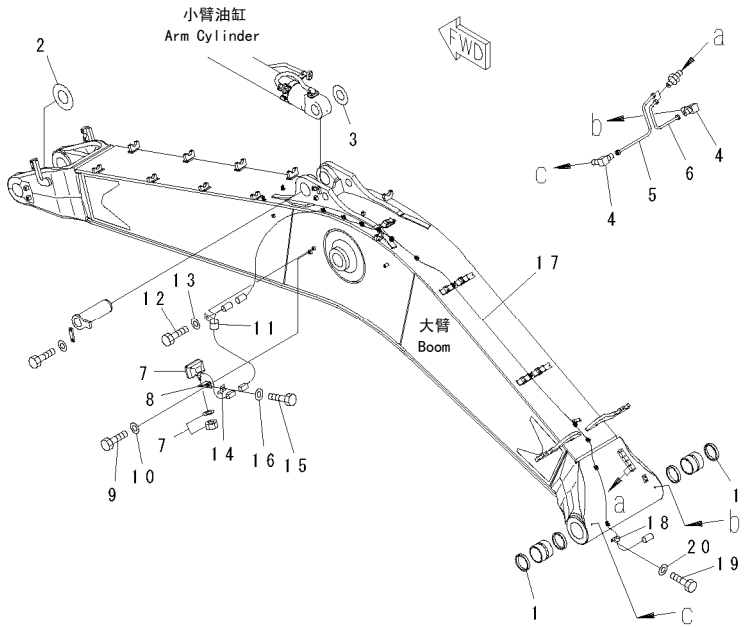

FIG NO. : T1110-09A1

INDEX	PART NO.	DESCRIPTION	Q'TY	SERIAL NO.
1	209-72-11261	SEAL……油封	2	60001-
2	209-72-51230	SHIM, 1.0MM……1.0MM调整垫	1	60001-
3	208-70-31310	SPACER, 0.8MM……0.8MM调整垫片	3	60001-
4	07217-51013	ELBOW…… 接头	2	60001-
5	21M-70-15140	TUBE……硬管	1	60001-
6	21M-70-15150	TUBE……硬管	1	60001-
7	21T-06-32810	WORK LAMP ASS'Y ……工作灯总成	1	60001-
	421-06-23330	.BULB, 70W ……70W灯泡	1	60001-
8	20Y-06-21551	BRACKET…… 支架	1	60001-
9	01010-81230	BOLT……螺栓	1	60001-
10	01643-31232	WASHER……垫圈	1	60001-
11	04434-51012	CLIP……管夹	1	60001-
12	01010-81220	BOLT……螺栓	1	60001-
13	01643-31232	WASHER……垫圈	1	60001-
14	08193-20012	CLIP……管夹	1	60001-
15	01010-81230	BOLT……螺栓	1	60001-
16	01643-31232	WASHER……垫圈	1	60001-
17	21M-06-21180	WIRING HARNESS …… 线束	1	60001-
18	04434-51012	CLIP……管夹	1	60001-
19	01010-81225	BOLT……螺栓	1	60001-
20	01643-31232	WASHER……垫圈	1	60001-

https://truckmanualshub.com/

FIG.T1120-01A0 BOOM CYLINDER
大臂油缸

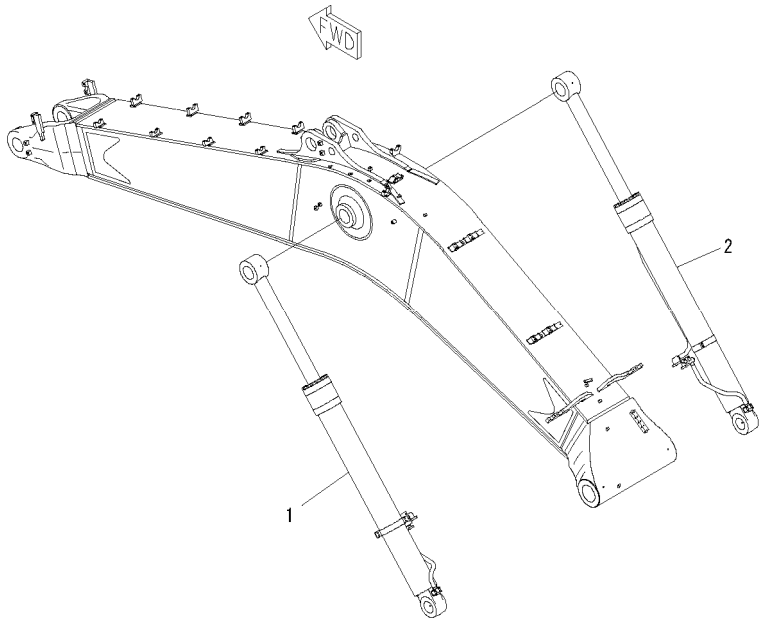

PWL1899

FIG NO. : T1120-01A0

INDEX	PART NO.	DESCRIPTION	Q'TY	SERIAL NO.
1	(⊙707-01-XR610)	CYLINDER GROUP……油缸组件	1	60001-
2	(⊙707-01-XR620)	CYLINDER GROUP……油缸组件	1	60001-

https://truckmanualshub.com/

FIG.T1125-01A0 BOOM CYLINDER HEAD PIN
大臂油缸头部销

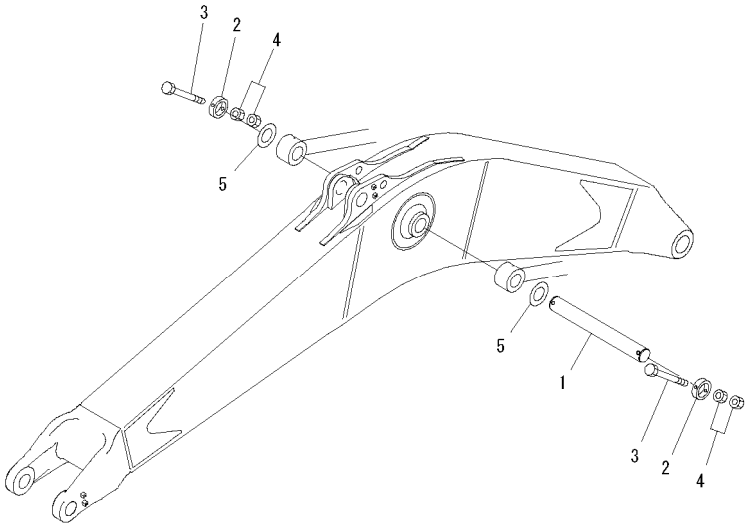

PWL1900

FIG NO. : T1125-01A0

INDEX	PART NO.	DESCRIPTION	Q'TY	SERIAL NO.
1	21M-70-11440	PIN…… 销	1	60001-
2	21M-70-11280	PLATE…… 板	2	60001-
3	21M-70-11290	BOLT……螺栓	2	60001-
4	01580-12419	NUT…… 螺母	4	60001-
5	426-70-11280	SHIM, 0.5MM……0.5MM调整垫	8	60001-

https://truckmanualshub.com/

FIG.T1140-01A0 ARM CYLINDER
小臂油缸

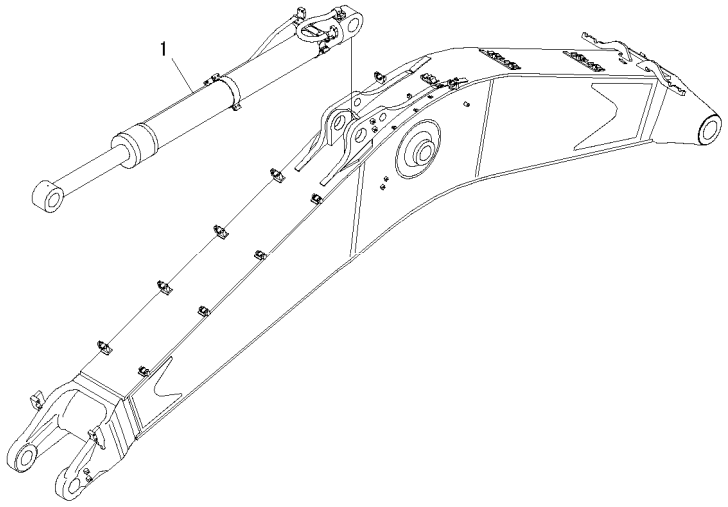

PWL1901

FIG NO. : T1140-01A0

INDEX	PART NO.	DESCRIPTION	Q'TY	SERIAL NO.
1	(⊙707-01-XR630)	CYLINDER GROUP……油缸组件	1	60001-

https://truckmanualshub.com/

FIG.T1200-01A0 ARM (2.9M)(ARM AND BUCKET CYLINDER)(SE SPEC.)
小臂(2.9M)(小臂和大臂油缸)(SE 仕样)

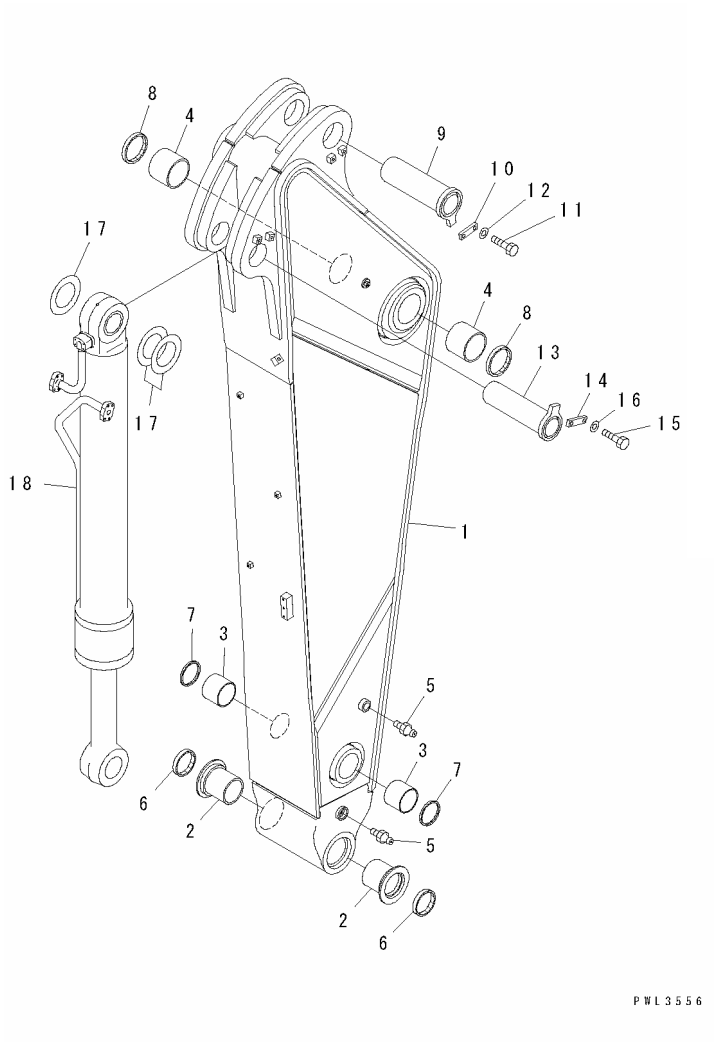

FIG NO. : T1200-01A0

INDEX	PART NO.	DESCRIPTION	Q'TY	SERIAL NO.
	21M-944-0102	ARM ASS'Y…… 小臂总成	1	60001-
1	☆	..ARM…… 小臂	1	60001-
2	209-70-52141	..BUSHING…… 衬套	2	60001-
3	207-70-61521	..BUSHING…… 衬套	2	60001-
4	21M-70-12160	..BUSHING…… 衬套	2	60001-
5	07020-00000	..FITTING…… 黄油嘴	2	60001-
6	209-70-52150	SEAL……密封垫	2	60001-
7	07145-00110	SEAL……密封垫	2	60001-
8	209-72-12171	SEAL……密封垫	2	60001-
9	21M-944-1330	PIN…… 销	1	60001-
10	207-70-11230	PLATE…… 板	1	60001-
11	01010-81640	BOLT……螺栓	2	60001-
12	01643-31645	WASHER……垫圈	2	60001-
13	21M-944-1340	PIN…… 销	1	60001-
14	21N-70-11230	PLATE…… 板	1	60001-
15	01010-81640	BOLT……螺栓	2	60001-
16	01643-31645	WASHER……垫圈	2	60001-
17	207-70-11360	SPACER, 1.0MM……1.0MM调整垫片	3	60001-
18	(⊙707-01-XR650)	CYLINDER GROUP……油缸组件	1	60001-

https://truckmanualshub.com/

FIG.T1200-01A2 ARM (3.5M) (HEAVY DUTY) (ARM AND BUCKET CYLINDER)
小臂(3.5M)(重载)(小臂和大臂油缸)

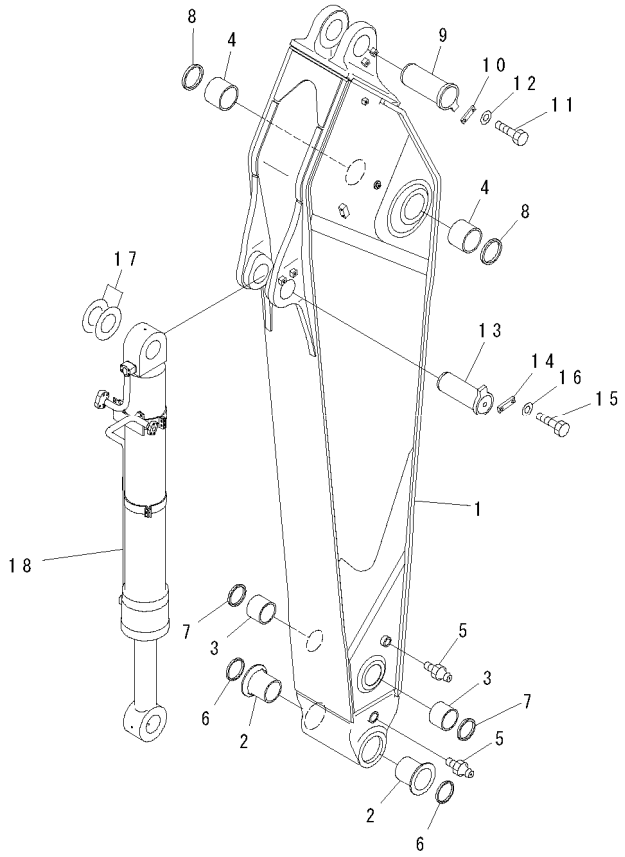

PWL1902

FIG NO. : T1200-01A2

INDEX	PART NO.	DESCRIPTION	Q'TY	SERIAL NO.
	21M-944-0102	ARM ASS'Y…… 小臂总成	1	60001-
	21M-944-D110	.ARM REWORK…… 追加工小臂	1	60001-
1	☆	..ARM…… 小臂	1	60001-
2	209-70-52141	..BUSHING…… 衬套	2	60001-
3	207-70-61521	..BUSHING…… 衬套	2	60001-
4	21M-70-12160	..BUSHING…… 衬套	2	60001-
5	07020-00000	..FITTING…… 黄油嘴	2	60001-
6	209-70-52150	SEAL……密封垫	2	60001-
7	07145-00110	SEAL……密封垫	2	60001-
8	209-72-12171	SEAL……密封垫	2	60001-
9	21M-70-11180	PIN…… 销	1	60001-
10	207-70-11230	PLATE…… 板	1	60001-
11	01010-81640	BOLT……螺栓	2	60001-
12	01643-31645	WASHER……垫圈	2	60001-
13	209-70-71330	PIN…… 销	1	60001-
14	21N-70-11230	PLATE…… 板	1	60001-
15	01010-81640	BOLT……螺栓	2	60001-
16	01643-31645	WASHER……垫圈	2	60001-
17	207-70-11360	SPACER, 1.0MM……1.0MM调整垫片	3	60001-
18	(⊙707-01-XR640)	CYLINDER GROUP……油缸组件	1	60001-

https://truckmanualshub.com/

FIG.T1200-02A0 ARM (BUCKET LINK)(SE SPEC.)
小臂(铲斗连杆)(SE 仕样)

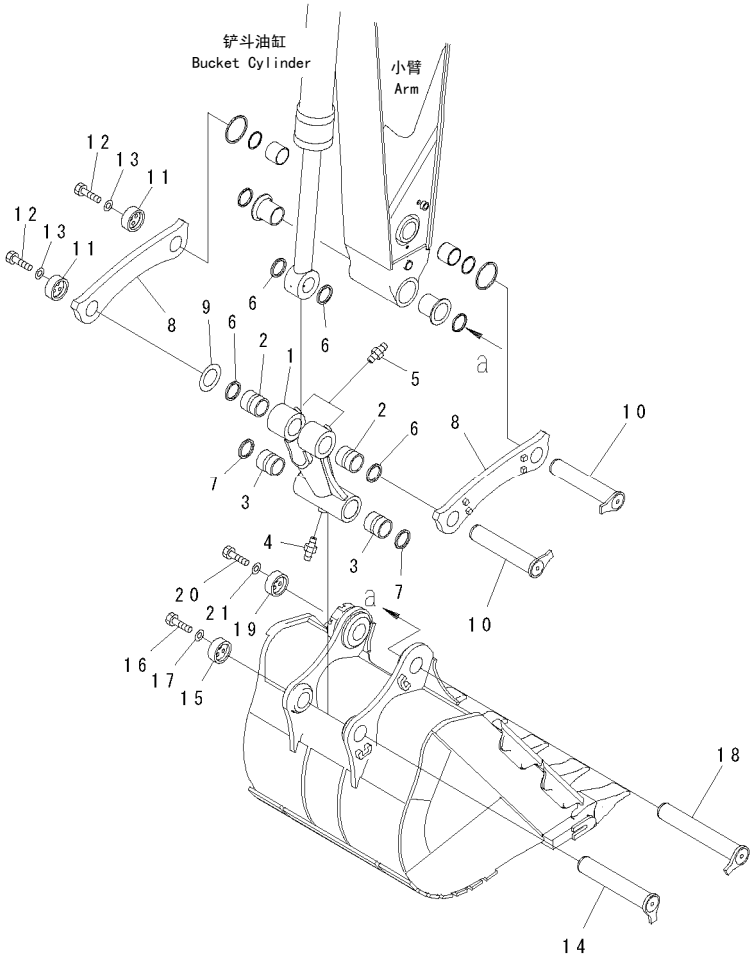

PWL1907

FIG NO. : T1200-02A0

INDEX	PART NO.	DESCRIPTION	Q'TY	SERIAL NO.
	21M-70-00210	LINK ASS'Y……连杆总成	1	60001-
1	☆	.LINK…… 连杆	1	60001-
2	207-70-31220	.BUSHING……衬套	2	60001-
3	209-72-53170	.BUSHING……衬套	2	60001-
4	07020-00000	.FITTING……黄油嘴	1	60001-
5	07020-00000	FITTING…… 黄油嘴	2	60001-
6	07145-00110	SEAL……密封垫	4	60001-
7	209-72-12211	SEAL……密封垫	2	60001-
8	21M-944-1320	LINK……连杆	2	60001-
9	207-70-11360	SPACER, 1.0MM……1.0MM调整垫片	12	60001-
10	21M-70-11171	PIN…… 销	2	60001-
11	209-70-53181	STOPPER…… 止动块	2	60001-
12	01010-82460	BOLT……螺栓	6	60001-
13	01643-32460	WASHER……垫圈	6	60001-
14	21M-70-11160	PIN…… 销	1	60001-
15	209-70-53181	STOPPER…… 止动块	1	60001-
16	01010-82460	BOLT……螺栓	3	60001-
17	01643-32460	WASHER……垫圈	3	60001-
18	21M-70-11260	PIN…… 销	1	60001-
19	209-70-53181	STOPPER…… 止动块	1	60001-
20	01010-82460	BOLT……螺栓	3	60001-
21	01643-32460	WASHER……垫圈	3	60001-

https://truckmanualshub.com/

FIG.T1200-02A1 ARM (BUCKET LINK)
小臂(铲斗连杆)

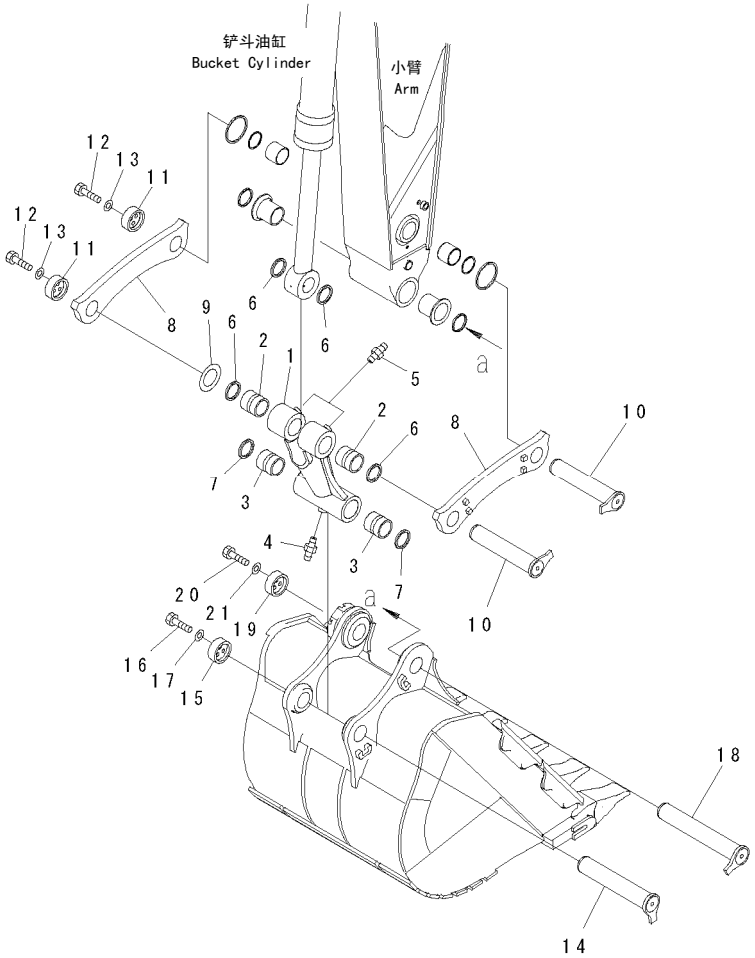

PWL1907

FIG NO. : T1200-02A1

INDEX	PART NO.	DESCRIPTION	Q'TY	SERIAL NO.
	21M-70-00210	LINK ASS'Y……连杆总成	1	60001-
1	☆	.LINK…… 连杆	1	60001-
2	207-70-31220	.BUSHING……衬套	2	60001-
3	209-72-53170	.BUSHING……衬套	2	60001-
4	07020-00000	.FITTING……黄油嘴	1	60001-
5	07020-00000	FITTING…… 黄油嘴	2	60001-
6	07145-00110	SEAL……密封垫	4	60001-
7	209-72-12211	SEAL……密封垫	2	60001-
8	21M-70-13130	LINK……连杆	2	60001-
9	207-70-11360	SPACER, 1.0MM……1.0MM调整垫片	12	60001-
10	21M-70-11171	PIN…… 销	2	60001-
11	209-70-53181	STOPPER…… 止动块	2	60001-
12	01010-82460	BOLT……螺栓	6	60001-
13	01643-32460	WASHER……垫圈	6	60001-
14	21M-70-11160	PIN…… 销	1	60001-
15	209-70-53181	STOPPER…… 止动块	1	60001-
16	01010-82460	BOLT……螺栓	3	60001-
17	01643-32460	WASHER……垫圈	3	60001-
18	21M-70-11260	PIN…… 销	1	60001-
19	209-70-53181	STOPPER…… 止动块	1	60001-
20	01010-82460	BOLT……螺栓	3	60001-
21	01643-32460	WASHER……垫圈	3	60001-

https://truckmanualshub.com/

FIG.T1200-03A1 ARM (3.5M) (BUCKET CYLINDER HOSE AND SPACER)
小臂(3.5M)(铲斗油缸软管和垫)

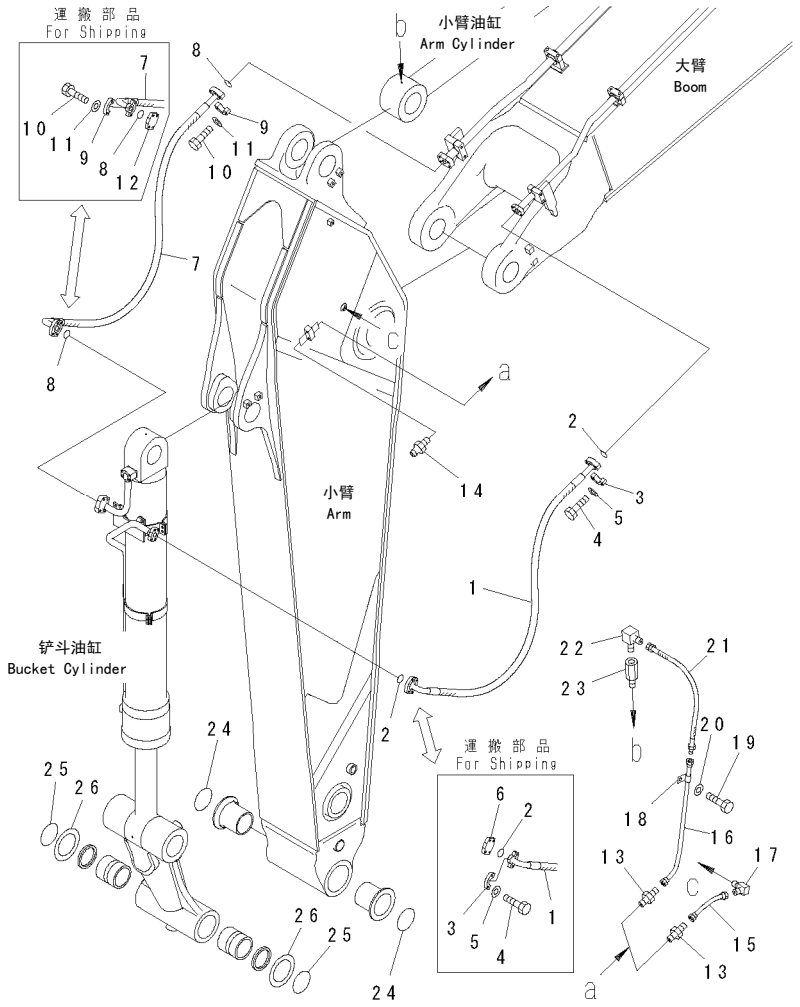

00038785

FIG NO. : T1200-03A1

INDEX	PART NO.	DESCRIPTION	Q'TY	SERIAL NO.
1	07084-21A19	HOSE……软管	1	60001-
2	07000-13032	O-RING…… O形圈	2	60001-
3	07371-31049	FLANGE……法兰	4	60001-
4	07372-21035	BOLT……螺栓	8	60001-
5	01643-51032	WASHER……垫圈	8	60001-
6	07379-01044	FLANGE……法兰	1	60001-
7	07084-21220	HOSE……软管	1	60001-
8	07000-13038	O-RING…… O形圈	2	60001-
9	07371-51260	FLANGE……法兰	4	60001-
10	01010-81245	BOLT……螺栓	8	60001-
11	01643-31232	WASHER……垫圈	8	60001-
12	07379-01260	FLANGE……法兰	1	60001-
13	20Y-70-11540	CONNECTOR…… 接头	2	60001-
14	07020-00000	FITTING…… 黄油嘴	2	60001-
15	208-70-62161	TUBE……硬管	1	60001-
16	21M-70-15160	TUBE……硬管	1	60001-
17	20Y-25-11270	ELBOW…… 接头	1	60001-
18	08036-00814	CLIP……管夹	1	60001-
19	01010-81220	BOLT……螺栓	1	60001-
20	01643-31232	WASHER……垫圈	1	60001-
21	208-70-65770	HOSE, 540MM……540MM软管	1	60001-
22	205-70-51380	ELBOW…… 接头	1	60001-
23	203-70-56570	NIPPLE……喷嘴	1	60001-
24	209-70-53150	O-RING…… O形圈	2	60001-
25	208-70-33181	O-RING…… O形圈	2	60001-
26	209-72-11220	SHIM, 1.0MM……1.0MM调整垫	1	60001-

https://truckmanualshub.com/

FIG.T1510-01A5　3.1M3 HORIZONTAL PIN TYPE BUCKET (HEAVY DUTY)

3.1M3横销铲斗(重载)

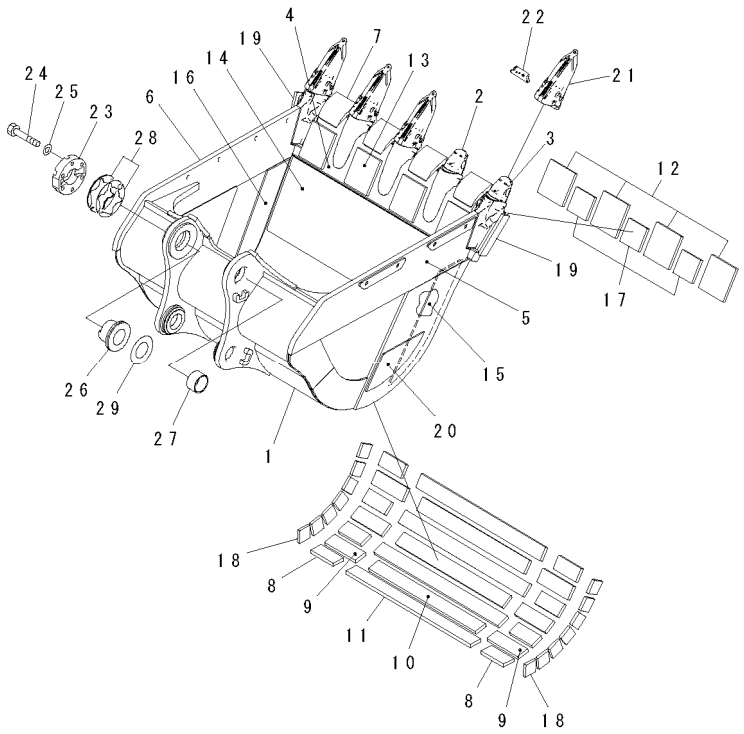

00050173

FIG NO. : T1510-01A5

INDEX	PART NO.	DESCRIPTION	Q'TY	SERIAL NO.
1	21M-939-2320	BUCKET……铲斗	1	60001-
2	21M-939-2261	.ADAPTER……(WELDED)……齿根(焊接件)	3	60001-
3	21M-939-2271	.ADAPTER……(WELDED)……齿根(焊接件)	2	60001-
4	21M-939-2330	.PLATE……(WELDED)……板(焊接件)	1	60001-
5	21M-939-2230	.PLATE……(WELDED)……板(焊接件)	1	60001-
6	21M-939-2240	.PLATE……(WELDED)……板(焊接件)	1	60001-
7	21M-939-2251	.SHROUD……(WELDED)…… 遮板(焊接件)	4	60001-
8	21M-939-2410	.PLATE……(WELDED)……板(焊接件)	8	60001-
9	21M-939-2420	.PLATE……(WELDED)……板(焊接件)	6	60001-
10	21M-939-2550	.PLATE……(WELDED)……板(焊接件)	3	60001-
11	21M-939-2560	.PLATE……(WELDED)……板(焊接件)	4	60001-
12	21M-939-2570	.PLATE……(WELDED)……板(焊接件)	4	60001-
13	21M-939-2580	.PLATE……(WELDED)……板(焊接件)	4	60001-
14	21M-939-2590	.PLATE……(WELDED)……板(焊接件)	1	60001-
15	21M-939-2510	.PLATE……(WELDED)……板(焊接件)	1	60001-
16	21M-939-2520	.PLATE……(WELDED)……板(焊接件)	1	60001-
17	21M-939-2470	.PLATE……(WELDED)……板(焊接件)	3	60001-
18	21M-939-2450	.PLATE……(WELDED)……板(焊接件)	14	60001-
19	21M-939-2530	.PLATE……(WELDED)……板(焊接件)	2	60001-
20	21M-939-2540	.PLATE……(WELDED)……板(焊接件)	2	60001-
21	21M-939-2281	TOOTH…… 齿	5	60001-
22	21M-939-2291	PIN ASS'Y…… 销总成	5	60001-
23	209-70-54171	COVER…… 盖	1	60001-
24	01010-82480	BOLT……螺栓	6	60001-
25	01643-32460	WASHER……垫圈	6	60001-
26	209-70-54160	BUSHING…… 衬套	1	60001-
27	209-72-54220	BUSHING…… 衬套	1	60001-
28	209-70-00082	SHIM ASS'Y……调整垫	1	60001-
	209-70-54181	.SHIM, 1.0MM…… 1.0MM调整垫	16	60001-
	209-70-54191	.SHIM, 0.5MM…… 0.5MM调整垫	4	60001-
29	209-72-11220	SHIM, 1.0MM……1.0MM调整垫	1	60001-

https://truckmanualshub.com/

FIG.T1510-01A6　3.5M3 HORIZONTAL PIN TYPE BUCKET (SE)

3.5M3横销铲斗(SE)

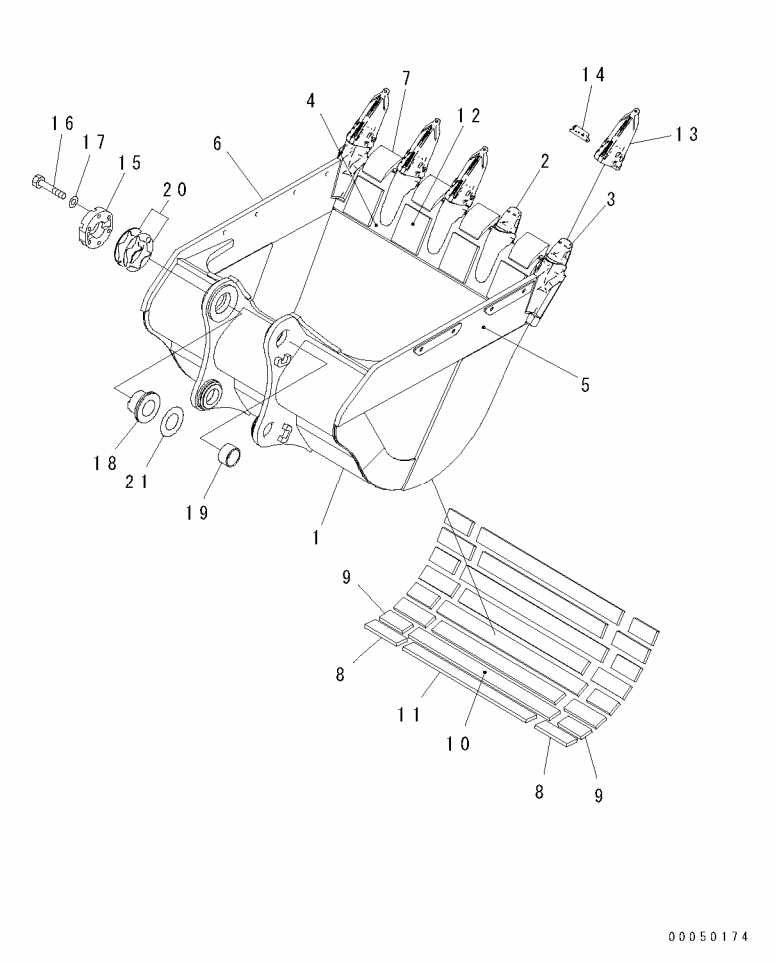

FIG NO. : T1510-01A6

INDEX	PART NO.	DESCRIPTION	Q'TY	SERIAL NO.
1	21M-939-2351	BUCKET……铲斗	1	60001-
2	21M-939-2261	.ADAPTER……(WELDED)……齿根(焊接件)	3	60001-
3	21M-939-2271	.ADAPTER……(WELDED)……齿根(焊接件)	2	60001-
4	21M-939-2360	.PLATE……(WELDED)……板(焊接件)	1	60001-
5	21M-939-2370	.PLATE……(WELDED)……板(焊接件)	1	60001-
6	21M-939-2380	.PLATE……(WELDED)……板(焊接件)	1	60001-
7	21M-939-2252	.SHROUD……(WELDED)…… 遮板(焊接件)	4	60001-
8	21M-939-2410	.PLATE……(WELDED)……板(焊接件)	8	60001-
9	21M-939-2420	.PLATE……(WELDED)……板(焊接件)	8	60001-
10	21M-939-2420	.PLATE……(WELDED)……板(焊接件)	4	60001-
11	21M-939-2620	.PLATE……(WELDED)……板(焊接件)	4	60001-
12	21M-939-2630	.PLATE……(WELDED)……板(焊接件)	4	60001-
13	21M-939-2281	TOOTH…… 齿	5	60001-
14	21M-939-2291	PIN ASS'Y…… 销总成	5	60001-
15	209-70-54171	COVER…… 盖	1	60001-
16	01010-82480	BOLT……螺栓	6	60001-
17	01643-32460	WASHER……垫圈	6	60001-
18	209-70-54160	BUSHING…… 衬套	1	60001-
19	209-72-54220	BUSHING…… 衬套	1	60001-
20	209-70-00082	SHIM ASS'Y……调整垫	1	60001-
	209-70-54181	.SHIM, 1.0MM…… 1.0MM调整垫	16	60001-
	209-70-54191	.SHIM, 0.5MM…… 0.5MM调整垫	4	60001-
21	209-72-11220	SHIM, 1.0MM……1.0MM调整垫	1	60001-

https://truckmanualshub.com/

FIG.T1510-02A4 SIDE SHROUD
侧遮板

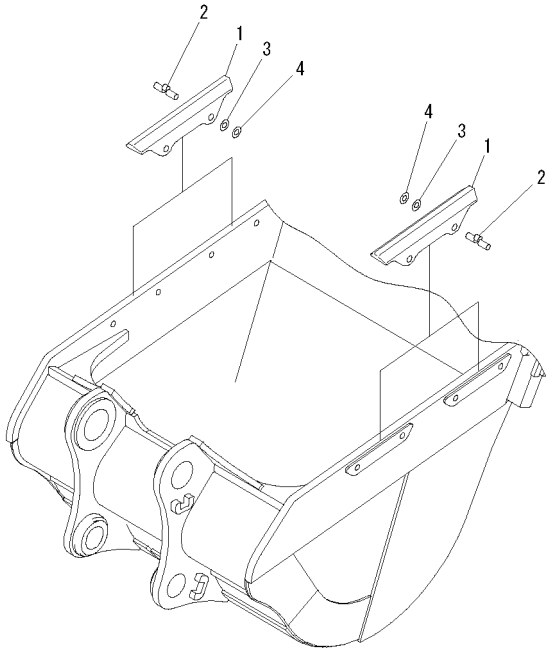

PWL1919

FIG NO. : T1510-02A4

INDEX	PART NO.	DESCRIPTION	Q'TY	SERIAL NO.
1	427-70-13611	GUARD…… 护板	4	60001-
2	21N-939-3330	PIN…… 销	8	60001-
3	209-939-7110	SHIM, 1.0MM……1.0MM调整垫	16	60001-
4	209-939-7120	SHIM, 0.5MM……0.5MM调整垫	8	60001-

MARKS AND PLATES
标牌

https://truckmanualshub.com/

https://truckmanualshub.com/

FIG.U0100-01A2 DECAL AND PLATE (OPERATING AND CAUTION PLATE) (CHINESE)
警示标牌(作业警示牌)（中文）

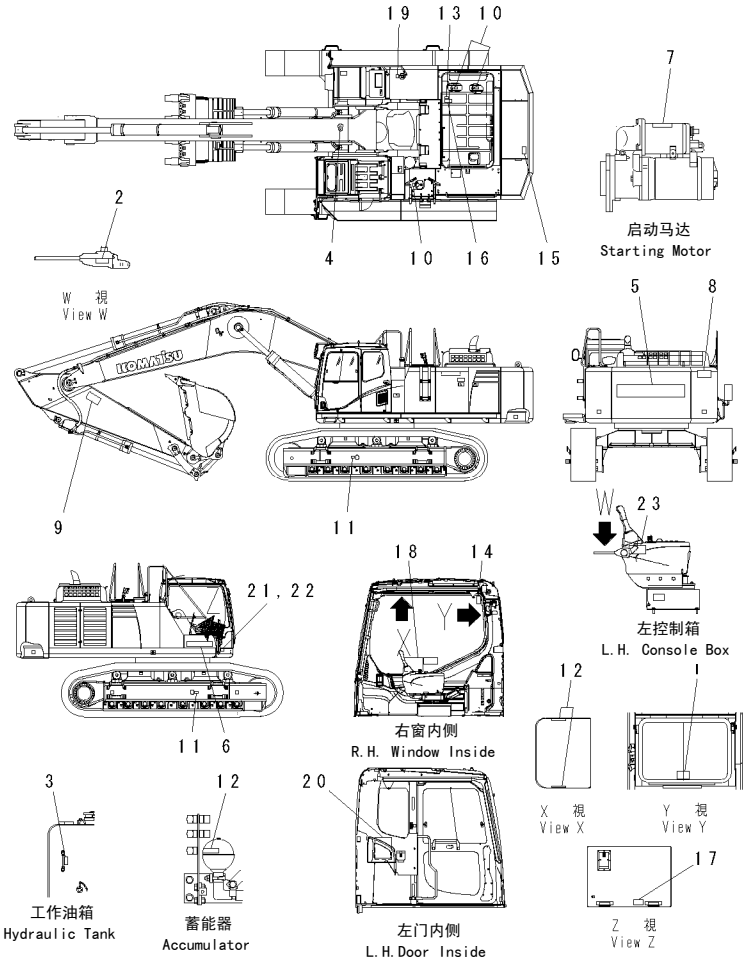

00040898

FIG NO. : U0100-01A2

INDEX	PART NO.	DESCRIPTION	Q'TY	SERIAL NO.
1	09844-00050	PLATE…… 板	1	60001-
2	09685-00002	PLATE, OPERATING……板	1	60001-
3	205-00-73360	PLATE, OPERATING……板	1	60001-
4	09690-M0063	PLATE, MARK…… 标贴	1	60001-
5	09690-P1600	PLATE, MARK…… 标贴	1	60001-
6	09690-P0630	PLATE, MARK…… 标贴	1	60001-
7	09842-A0481	PLATE, CAUTION……铭牌	1	60001-
8	09133-A3281	PLATE, SAFETY…… 安全标牌	1	60001-
9	09134-A1681	PLATE, CAUTION……铭牌	2	60001-
10	09653-A0481	PLATE, SAFETY…… 安全标牌	3	60001-
11	09657-A0881	PLATE, SAFETY…… 安全标牌	2	60001-
12	09659-A057B	PLATE, SAFETY…… 安全标牌	3	60001-
13	09667-A0481	PLATE, SAFETY…… 安全标牌	1	60001-
14	09803-A0481	PLATE, SAFETY…… 安全标牌	1	60001-
15	09805-A0881	PLATE, SAFETY…… 安全标牌	1	60001-
16	09805-C0481	PLATE, SAFETY…… 安全标牌	1	60001-
17	09808-A0881	PLATE, SAFETY…… 安全标牌	1	60001-
18	21M-00-22530	PLATE…… 板	1	60001-
19	09669-0000E	PLATE, CAUTION……铭牌	1	60001-
20	21M-00-22530	PLATE…… 板	1	60001-
21	(★09601-200B1)	PLATE, NAME…… 铭牌	1	60001-
22	04418-13060	SCREW…… 螺钉	4	60001-
23	09963-A1640	TAG…… 标签	1	60001-

https://truckmanualshub.com/

FIG.U0100-03A3 DECAL AND PLATE (SEAT AND SYMBOL MARK)(CHINESE)

警示标牌（座和符号标记）（中文）

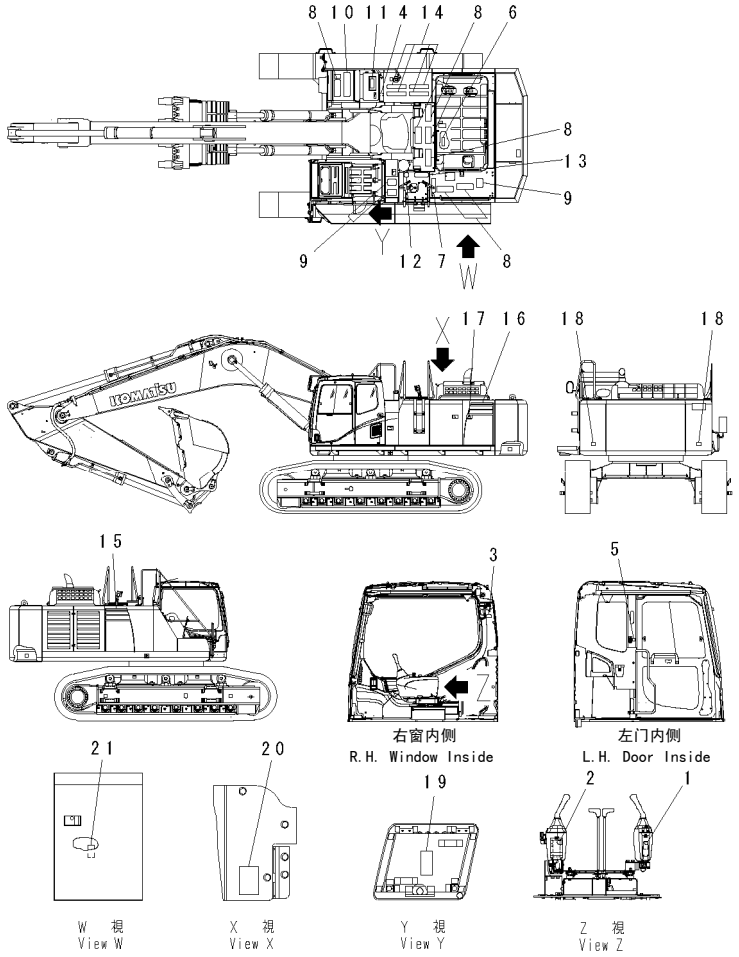

00062034

FIG NO. : U0100-03A3

INDEX	PART NO.	DESCRIPTION	Q'TY	SERIAL NO.
1	20Y-00-31870	PLATE…… 板	1	60001-
2	21M-00-25230	PLATE…… 板	1	60001-
3	20Y-00-31880	PLATE…… 板	1	60001-
4	21M-00-22540	PLATE…… 板	1	60001-
5	209-00-71940	PLATE…… 板	1	60001-
6	6217-71-6520	PLATE…… 板	2	60001-
7	20Y-00-42110	PLATE…… 板	1	60001-
8	20Y-00-42140	PLATE…… 板	7	60001-
9	207-00-76230	PLATE…… 板	3	60001-
10	209-00-41550	PLATE…… 板	1	60001-
11	209-00-41560	PLATE…… 板	1	60001-
12	21M-00-21280	PLATE…… 板	1	60001-
13	21M-00-21390	PLATE…… 板	1	60001-
14	22U-00-28140	PLATE…… 板	4	60001-
15	21M-00-21180	PLATE…… 板	1	60001-
16	21M-00-21170	PLATE…… 板	1	60001-
17	21M-00-21190	PLATE…… 板	1	60001-
18	14X-98-35181	PLATE…… 板	2	60001-
19	208-00-71440	PLATE…… 板	1	60001-
20	21M-00-22510	PLATE…… 板	1	60001-
21	21M-00-22520	PLATE…… 板	1	60001-

https://truckmanualshub.com/

FIG.U0400-01A0 HANDLING MARK PLATE
操作标牌

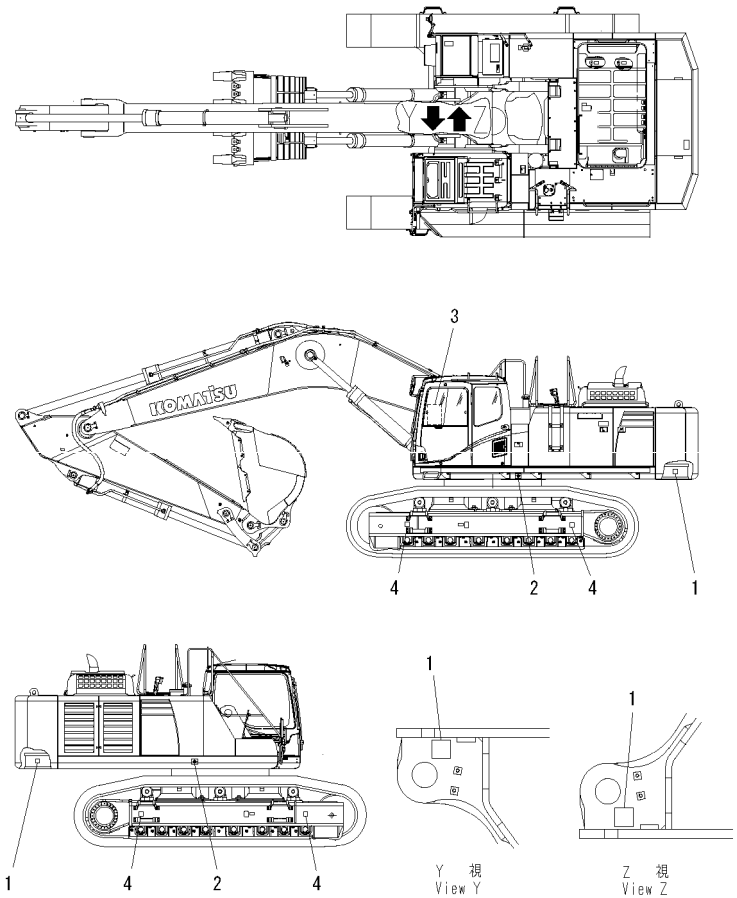

00039014

FIG NO. : U0400-01A0

INDEX	PART NO.	DESCRIPTION	Q'TY	SERIAL NO.
1	09960-00801	MARK……标志	4	60001-
2	09960-01012	PLATE, MARK…… 标牌	2	60001-
3	21M-00-14220	PLATE…… 板	1	60001-
4	09960-00802	MARK……标志	4	60001-

https://truckmanualshub.com/

FIG.U0510-01A0 BOOM MARK PLATE (ENGLISH)
大臂标牌（英文）

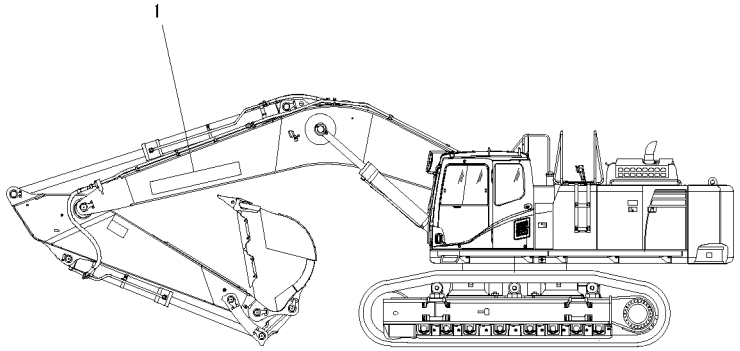

00039015

FIG NO. : U0510-01A0

INDEX	PART NO.	DESCRIPTION	Q'TY	SERIAL NO.
1	09690-P1600	PLATE, MARK····· 标牌	2	60001-

https://truckmanualshub.com/

FIG.U0520-01A0 CAUTION PLATE (FOR LV2 GUARD) (ENGLISH)
警示牌（LV2护板用）(英文)

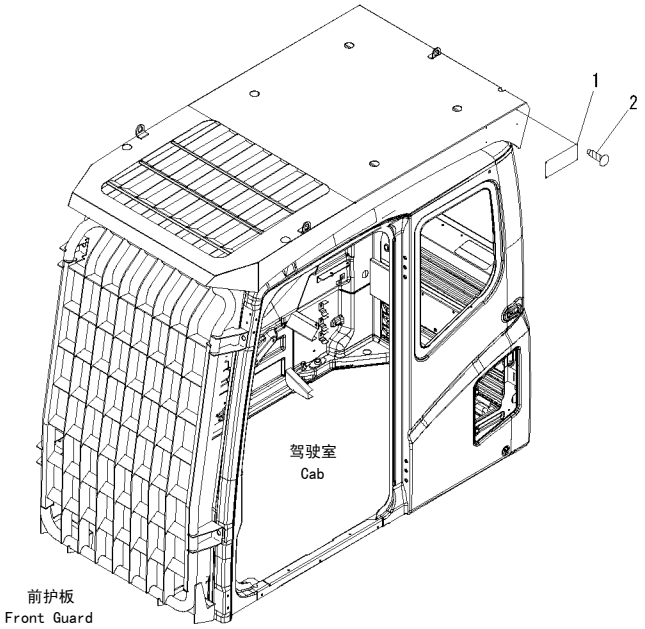

00013111

FIG NO. : U0520-01A0

INDEX	PART NO.	DESCRIPTION	Q'TY	SERIAL NO.
1	09620-D2000	PLATE····· 板	1	60001-
2	04418-13060	SCREW····· 螺钉	4	60001-

https://truckmanualshub.com/

FIG.U0520-01A1 CAUTION PLATE (FOR LV2 GUARD) (ENGLISH)
警示牌（LV2护板用）(英文)

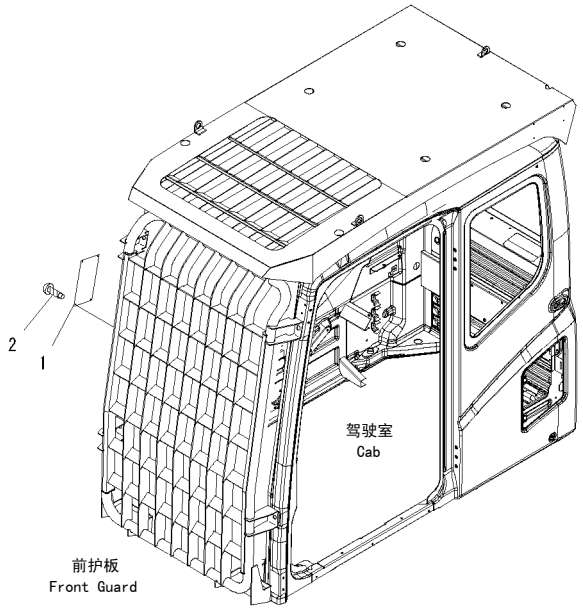

00020105

FIG NO. : U0520-01A1

INDEX	PART NO.	DESCRIPTION	Q'TY	SERIAL NO.
1	09620-E2000	PLATE····· 板	1	60001-
2	04418-13060	SCREW····· 螺钉	4	60001-

https://truckmanualshub.com/

FIG.U0520-01A9 CAUTION PLATE (FOR LV2 GUARD) (CHINESE)
警示牌（LV2护板用）（中文）

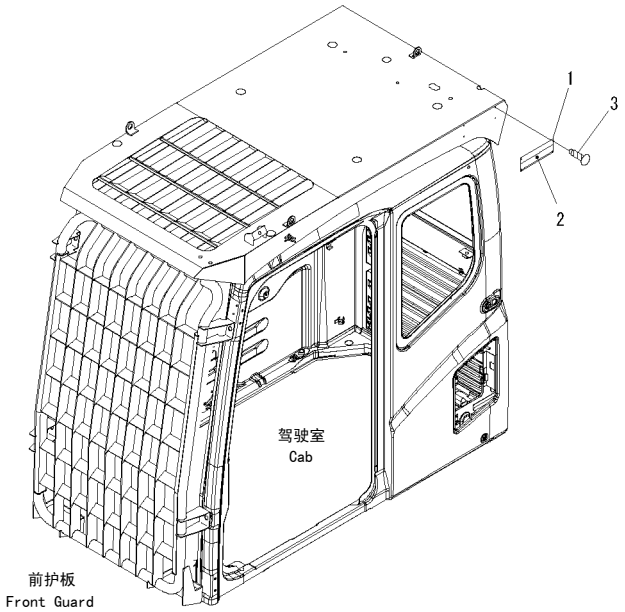

00009266

FIG NO. : U0520-01A9

INDEX	PART NO.	DESCRIPTION	Q'TY	SERIAL NO.
1	09620-D2000	PLATE····· 板	1	60001-
2	09620-D2140	PLATE····· 板	1	60001-
3	04418-13060	SCREW····· 螺钉	4	60001-

https://truckmanualshub.com/

FIG.U0520-01B0　CAUTION PLATE (FOR FRONT GUARD) (CHINESE)
警示牌（前护板用）(中文)

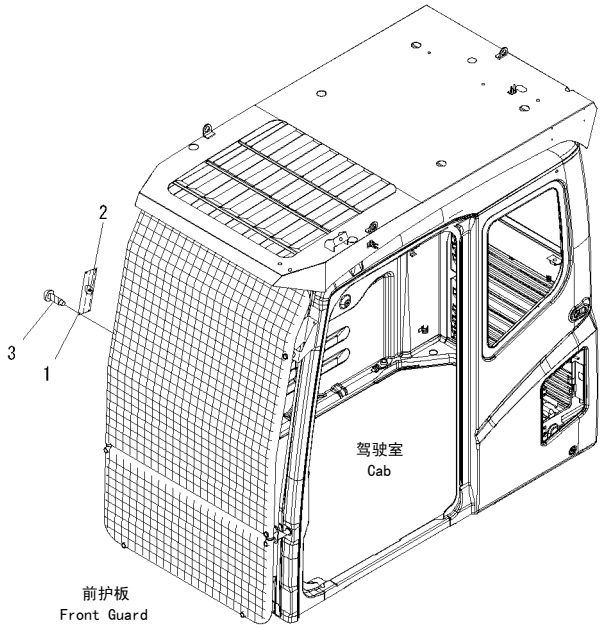

00009267

FIG NO. : U0520-01B0

INDEX	PART NO.	DESCRIPTION	Q'TY	SERIAL NO.
1	09620-E2000	PLATE…… 板	1	60001-
2	09620-D2140	PLATE…… 板	1	60001-
3	04418-13060	SCREW…… 螺钉	4	60001-

https://truckmanualshub.com/

FIG.U0520-01B1 CAUTION PLATE (FOR LV2 GUARD AND FRONT GUARD) (CHINESE)
警示牌（LV2护板和前护板用）(中文)

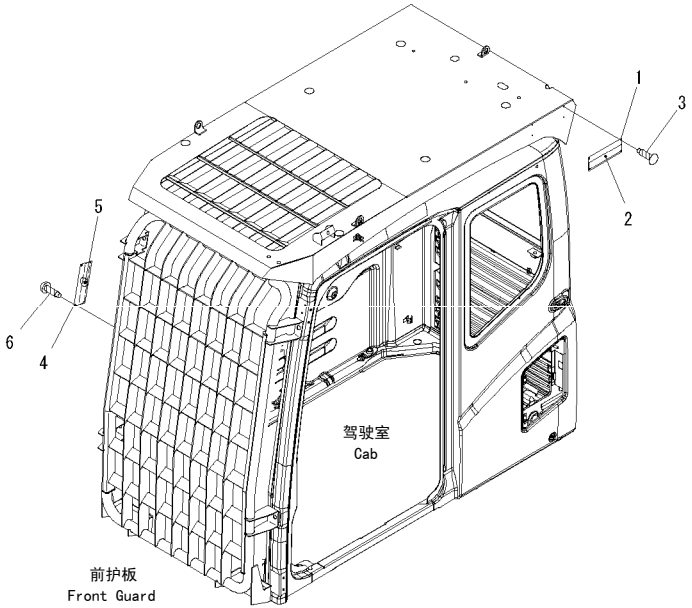

00009268

FIG NO. : U0520-01B1

INDEX	PART NO.	DESCRIPTION	Q'TY	SERIAL NO.
1	09620-D2000	PLATE····· 板	1	60001-
2	09620-D2140	PLATE····· 板	1	60001-
3	04418-13060	SCREW····· 螺钉	4	60001-
4	09620-E2000	PLATE····· 板	1	60001-
5	09620-D2140	PLATE····· 板	1	60001-
6	04418-13060	SCREW····· 螺钉	4	60001-

https://truckmanualshub.com/

FIG.U0550-01A3　PLATE (AIR CLEANER 、DOUBLE ELEMENT) (CHINESE)
标牌(空滤器,双滤芯)（中文）

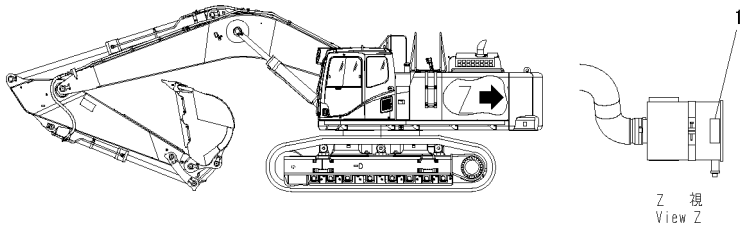

00039034

FIG NO. : U0550-01A3

INDEX	PART NO.	DESCRIPTION	Q'TY	SERIAL NO.
1	09637-90263	PLATE, INSTRUCTION……指示标牌	1	60001-

ACCESSORY
附件

https://truckmanualshub.com/

https://truckmanualshub.com/

FIG.V0100-01A0 SPARE PARTS
备件

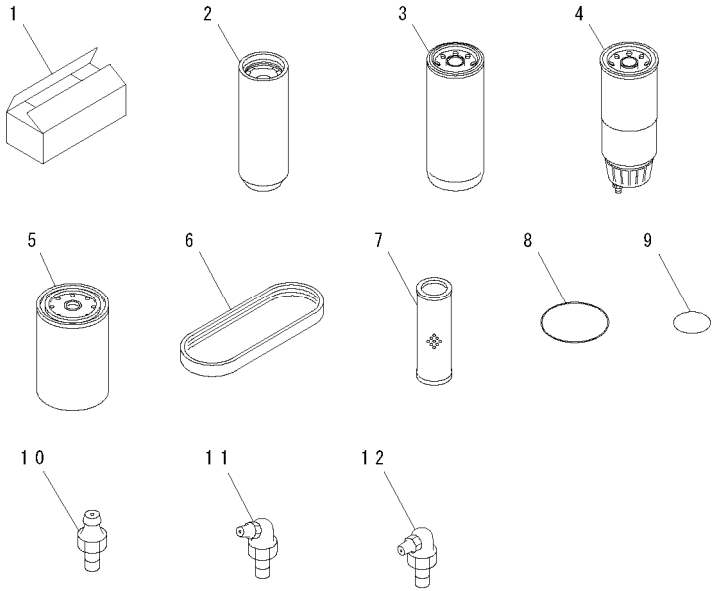

00038645

FIG NO. : V0100-01A0

INDEX	PART NO.	DESCRIPTION	Q'TY	SERIAL NO.
1	09059-00800	BOX…… 箱子	1	60001-
2	600-211-1340	CARTRIDGE…… 滤筒	2	60001-
3	600-319-3550	CARTRIDGE (1-5/8)…… 滤筒	2	60001-
4	600-319-4500	CARTRIDGE ASS'Y…… 滤筒总成	1	60001-
5	600-411-1151	CARTRIDGE…… 滤筒	1	60001-
6	6210-81-6960	V-BELT SET…… V形皮带轮	1	60001-
7	209-60-77532	ELEMENT…… 滤芯	1	60001-
8	07000-15180	O-RING…… O形圈	1	60001-
9	07002-12434	O-RING…… O形圈	4	60001-
10	07020-00000	FITTING…… 黄油嘴	4	60001-
11	07020-00675	FITTING…… 黄油嘴	4	60001-
12	07020-00900	FITTING…… 黄油嘴	4	60001-

https://truckmanualshub.com/

FIG.V0200-01A0 CAP AND OVERALL
工作帽和工作服

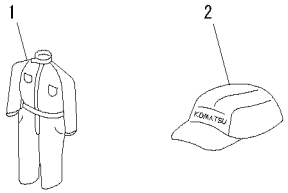

PEB0040

FIG NO. : V0200-01A0

INDEX	PART NO.	DESCRIPTION	Q'TY	SERIAL NO.
	09980-92550	CAP AND OVERALL KIT…… 工作帽和工作服	1	60001-
1	09980-10550	.OVERALL……工作服	1	60001-
2	09982-20057	.CAP……工作帽	1	60001-

https://truckmanualshub.com/

FIG.V0300-01A0 TOOL
工具

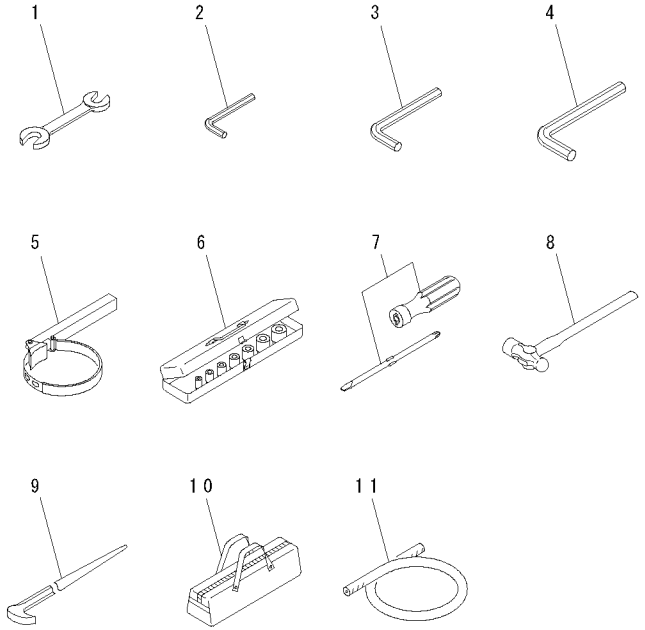

00059651

FIG NO. : V0300-01A0

INDEX	PART NO.	DESCRIPTION	Q'TY	SERIAL NO.
1	09002-01922	WRENCH, 19X22……19X22扳手	1	60001-
2	09007-00425	WRENCH, 4…… 扳手	1	60001-
3	09007-00836	WRENCH, 8…… 扳手	1	60001-
4	09007-01040	WRENCH, 10……扳手	1	60001-
5	09019-28036	WRENCH……扳手	1	60001-
6	209-98-77310	TOOL KIT……工具组件	1	60001-
	09021-01016	.SOCKET, 10…… 插座	1	60001-
	09021-01219	.SOCKET, 12…… 插座	1	60001-
	09021-01319	.SOCKET, 13…… 插座	1	60001-
	09021-01422	.SOCKET, 14…… 插座	1	60001-
	09021-01725	.SOCKET, 17…… 插座	1	60001-
	09021-01928	.SOCKET, 19…… 插座	1	60001-
	09021-02233	.SOCKET, 22…… 插座	1	60001-
	09021-02436	.SOCKET, 24…… 插座	1	60001-
	09021-02739	.SOCKET, 27…… 插座	1	60001-
	09021-03044	.SOCKET, 30…… 插座	1	60001-
	09021-03246	.SOCKET, 32…… 插座	1	60001-
	09021-03653	.SOCKET, 36…… 插座	1	60001-
	09022-00150	.EXTENSION……接杆	1	60001-
	09022-00250	.EXTENSION……接杆	1	60001-
	09023-00300	.HANDLE…… 把手	1	60001-
	09024-00300	.HANDLE…… 把手	1	60001-
	09026-00250	.HANDLE…… 把手	1	60001-
7	09033-00190	DRIVER……螺丝刀	1	60001-
8	09039-00150	HAMMER……榔头	1	60001-
9	09055-10390	BAR…… 杆	1	60001-
10	09056-04613	BAG…… 包	1	60001-
11	07286-01690	HOSE……软管	2	60001-

https://truckmanualshub.com/

FIG.V0300-01A1 TOOL (GREASE PUMP LESS)
工具（无润滑油泵）

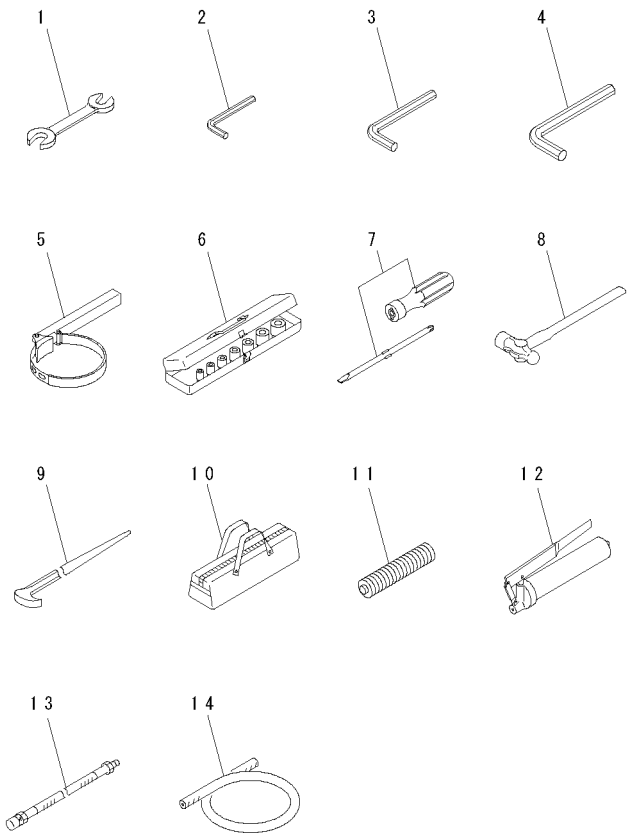

00059723

FIG NO. : V0300-01A1

INDEX	PART NO.	DESCRIPTION	Q'TY	SERIAL NO.
1	09002-01922	WRENCH, 19X22……19X22扳手	1	60001-
2	09007-00425	WRENCH, 4…… 扳手	1	60001-
3	09007-00836	WRENCH, 8…… 扳手	1	60001-
4	09007-01040	WRENCH, 10……扳手	1	60001-
5	09019-28036	WRENCH……扳手	1	60001-
6	209-98-77310	TOOL KIT……工具组件	1	60001-
	09021-01016	.SOCKET, 10…… 插座	1	60001-
	09021-01219	.SOCKET, 12…… 插座	1	60001-
	09021-01319	.SOCKET, 13…… 插座	1	60001-
	09021-01422	.SOCKET, 14…… 插座	1	60001-
	09021-01725	.SOCKET, 17…… 插座	1	60001-
	09021-01928	.SOCKET, 19…… 插座	1	60001-
	09021-02233	.SOCKET, 22…… 插座	1	60001-
	09021-02436	.SOCKET, 24…… 插座	1	60001-
	09021-02739	.SOCKET, 27…… 插座	1	60001-
	09021-03044	.SOCKET, 30…… 插座	1	60001-
	09021-03246	.SOCKET, 32…… 插座	1	60001-
	09021-03653	.SOCKET, 36…… 插座	1	60001-
	09022-00150	.EXTENSION……接杆	1	60001-
	09022-00250	.EXTENSION……接杆	1	60001-
	09023-00300	.HANDLE…… 把手	1	60001-
	09024-00300	.HANDLE…… 把手	1	60001-
	09026-00250	.HANDLE…… 把手	1	60001-
7	09033-00190	DRIVER……螺丝刀	1	60001-
8	09039-00150	HAMMER……榔头	1	60001-
9	09055-10390	BAR…… 杆	1	60001-
10	09056-04613	BAG…… 包	1	60001-
11	07950-90403	CARTRIDGE…… 滤筒	1	60001-
	07952-70004	GREASE PUMP ASS'Y…… 黄油枪总成	1	60001-
12	07950-10450	.PUMP…… 泵	1	60001-
13	07951-41017	.NOZZLE…… 喷嘴	1	60001-
14	07286-01690	HOSE……软管	2	60001-

MISCELLANEOUS
其它

https://truckmanualshub.com/

https://truckmanualshub.com/

FIG.W1118-01A1　LEFT SIDE STEP (WITH TOP GUARD)
左踏板（带顶护板）

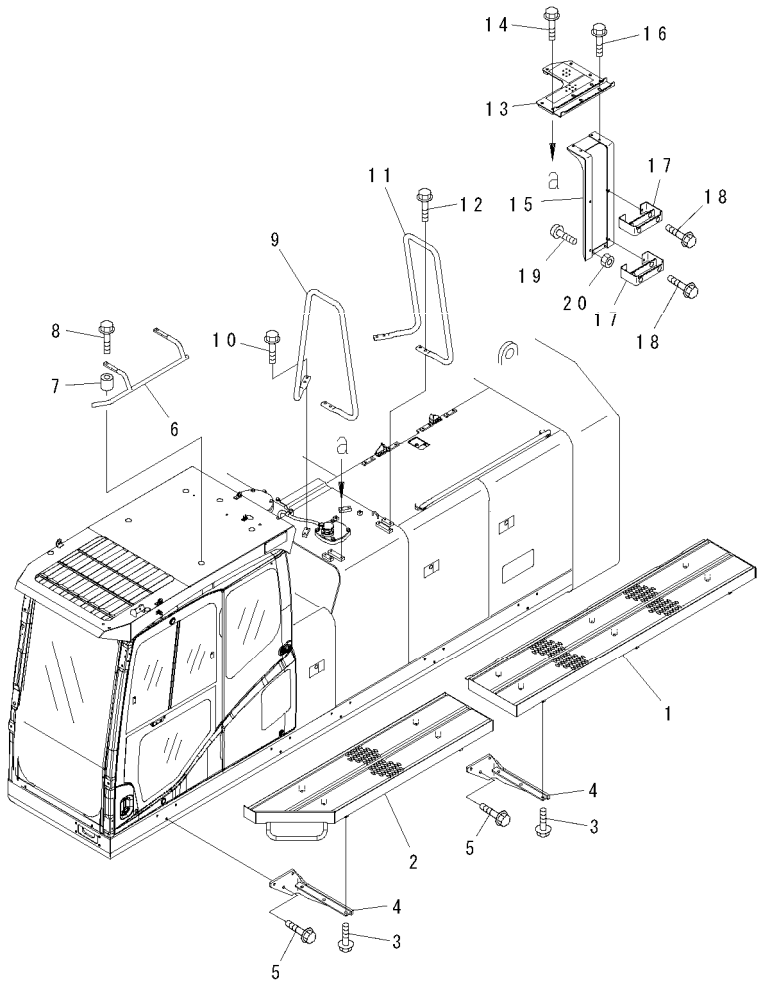

00038269

FIG NO. : W1118-01A1

INDEX	PART NO.	DESCRIPTION	Q'TY	SERIAL NO.
1	21M-54-22430	STEP……踏板	1	60001-
2	21M-54-22440	STEP……踏板	1	60001-
3	01024-81235	BOLT……螺栓	15	60001-
4	21M-54-14690	BRACKET…… 支架	5	60001-
5	01024-81245	BOLT……螺栓	15	60001-
6	209-53-13640	GRIP……把手	1	60001-
7	195-33-11220	SPACER……调整垫片	2	60001-
8	01024-D1260	BOLT……螺栓	2	60001-
9	21M-54-13611	HANDRAIL……扶手	1	60001-
10	01024-81240	BOLT……螺栓	4	60001-
11	21M-54-13621	HANDRAIL……扶手	1	60001-
12	01024-81240	BOLT……螺栓	4	60001-
13	21M-54-21160	BRACKET…… 支架	1	60001-
14	01024-81245	BOLT……螺栓	6	60001-
15	21M-54-12971	BRACKET…… 支架	1	60001-
16	01024-81240	BOLT……螺栓	4	60001-
17	209-54-63481	STEP……踏板	2	60001-
18	01024-81230	BOLT……螺栓	4	60001-
19	20Y-54-11611	STOPPER…… 止动块	2	60001-
20	01580-01008	NUT…… 螺母	2	60001-

SERVICE KIT AND COMPONENT PARTS
服务备件

https://truckmanualshub.com/

https://truckmanualshub.com/

FIG.YO260-01AO SWING MACHINERY ASS'Y (SUPPLY PARTS)

回转减速机(配件)

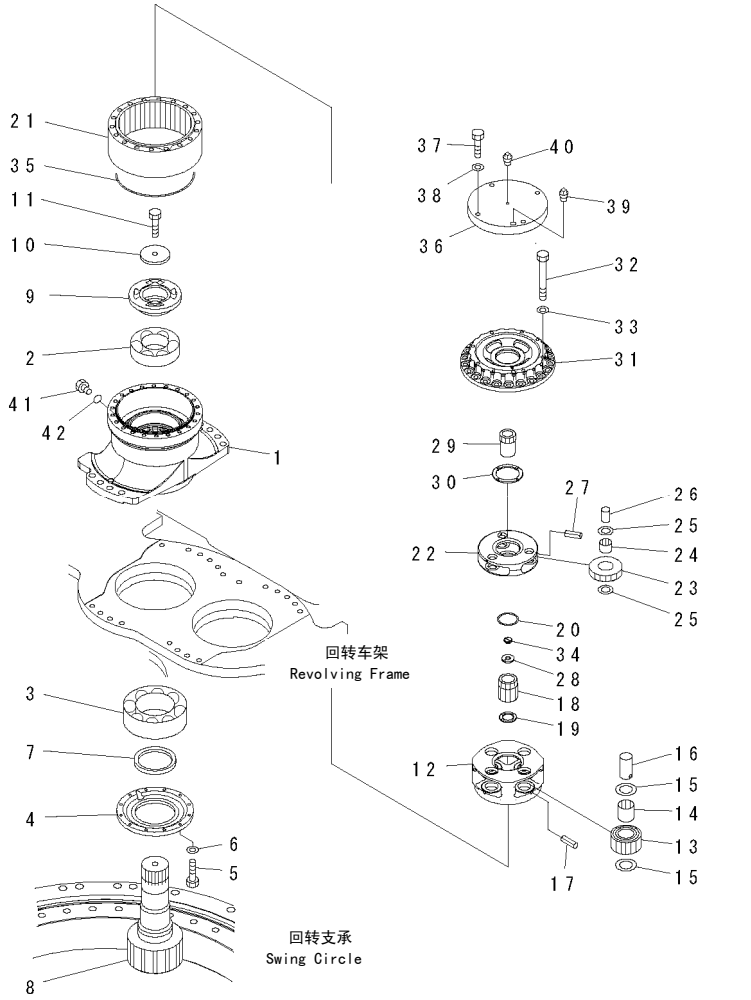

FIG NO. : YO260-01AO

INDEX	PART NO.	DESCRIPTION	Q'TY	SERIAL NO.
	21M-26-00030	SWING MACHINERY A ……回转减速机	1	60001-
1	21M-26-21170	.CASE ……壳体	1	60001-
2	06000-22222	.BEARING……轴承	1	60001-
3	06000-22324	.BEARING……轴承	1	60001-
4	207-26-54263	.COVER……盖	1	60001-
5	01010-81040	.BOLT ……螺栓	12	60001-
6	01643-31032	.WASHER ……垫圈	12	60001-
7	207-26-61210	.SEAL ……密封垫	1	60001-
8	21M-26-11180	.SHAFT……轴	1	60001-
9	207-26-62150	.COUPLING ……联轴节	1	60001-
10	207-26-54230	.PLATE……板	1	60001-
11	205-32-51211	.BOLT ……螺栓	1	60001-
12	20Y-27-22170	.CARRIER……行星架	1	60001-
13	20Y-27-22140	.GEAR ……齿轮	4	60001-
14	20Y-27-22220	.BEARING……轴承	4	60001-
15	20Y-27-21250	.WASHER ……垫圈	8	60001-
16	20Y-27-21230	.PIN……销	4	60001-
17	20Y-27-21290	.PIN……销	4	60001-
18	207-26-62190	.GEAR ……齿轮	1	60001-
19	20Y-27-13310	.WASHER ……垫圈	1	60001-
20	20Y-27-22240	.WASHER ……垫圈	1	60001-
21	21M-26-11260	.GEAR ……齿轮	1	60001-
22	21M-26-11150	.CARRIER……行星架	1	60001-
23	21M-26-11140	.GEAR ……齿轮	3	60001-
24	20Y-27-22210	.BEARING……轴承	3	60001-
25	20Y-27-21240	.WASHER ……垫圈	6	60001-
26	20Y-27-21220	.PIN……销	3	60001-
27	20Y-27-21280	.PIN……销	3	60001-
28	21M-26-11190	.PLATE……板	1	60001-
29	21M-26-21130	.GEAR ……齿轮	1	60001-
30	20Y-27-21310	.WASHER ……垫圈	1	60001-
31	21M-26-11161	.COVER……盖	1	60001-
32	20Y-27-13281	.BOLT ……螺栓	22	60001-
33	01643-31645	.WASHER ……垫圈	22	60001-
34	208-27-61350	.BUTTON ……按钮	1	60001-
35	20Y-27-22280	.O-RING……O形圈	1	60001-
36	20Y-26-22411	.COVER……盖	1	60001-
37	01010-81445	.BOLT ……螺栓	4	60001-
38	01643-31445	.WASHER ……垫圈	4	60001-
39	07042-30617	.PLUG ……堵塞	1	60001-
40	07042-30108	.PLUG ……堵塞	1	60001-
41	07040-12412	.PLUG ……堵塞	1	60001-
42	07002-12434	.O-RING……O形圈	1	60001-

https://truckmanualshub.com/

FIG.YO32O-O1AO SHOE BOLT AND NUT SERVICE KIT
履带螺栓和螺母备件

KIT 详细资料请参照后页。
See subsequent pages for details.

履带螺栓和螺母备件（双筋履带板用）
K1 21M-32-05020 SHOE BOLT AND NUT SERVICE KIT (FOR DOUBLE GROUSER SHOE)

履带螺栓和螺母备件（三筋履带板用）
K2 21M-32-05010 SHOE BOLT AND NUT SERVICE KIT (FOR DOUBLE GROUSER SHOE)

PJL1811

FIG NO. : YO32O-O1AO

INDEX	PART NO.	DESCRIPTION	Q'TY	SERIAL NO.
K1	21M-32-05020	SHOE BOLT AND NUT K …履带螺栓和螺母备件	1	60001-
	21M-32-11210	.BOLT, SHOE…… 履带螺栓	30	60001-
	21M-32-11220	.NUT, SHOE……履带螺母	30	60001-
K2	21M-32-05010	SHOE BOLT AND NUT K …履带螺栓和螺母备件	1	60001-
	21M-32-11260	.BOLT, SHOE…… 履带螺栓	30	60001-
	21M-32-11220	.NUT, SHOE……履带螺母	30	60001-

https://truckmanualshub.com/

FIG.YO321-01A1 TRACK LINK (104SET) (SUPPLY PARTS)
链轨节(配件)

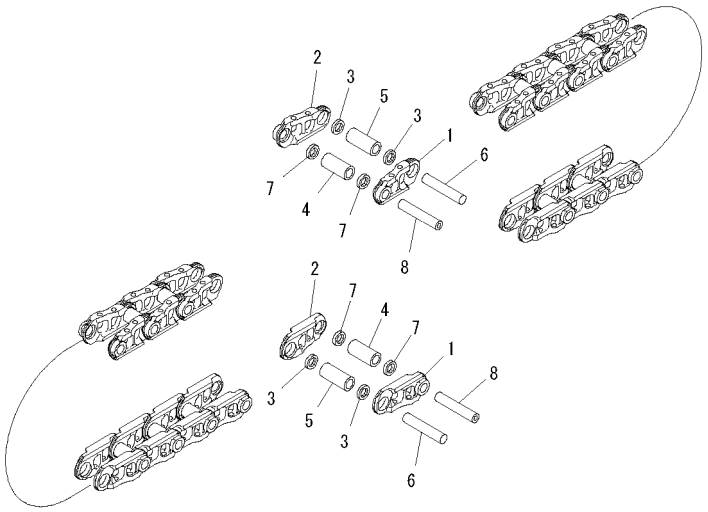

PWL0577

FIG NO. : YO321-01A1

INDEX	PART NO.	DESCRIPTION	Q'TY	SERIAL NO.
	21M-32-00201	TRACK LINK ASS'Y……链轨节总成	1	60001-
1	21M-32-11120	.LINK ……连杆	104	60001-
2	21M-32-11130	.LINK ……连杆	104	60001-
3	21M-32-11160	.SEAL ……密封垫	200	60001-
4	21M-32-11141	.BUSHING, REGULAR ……连接销	100	60001-
5	21M-32-11171	.BUSHING, MASTER……主轴套	4	60001-
6	21M-32-11150	.PIN……销	100	60001-
7	21M-32-11180	.SEAL ……密封垫	8	60001-
8	21M-32-11190	.PIN……销	4	60001-

https://truckmanualshub.com/

FIG.Y1600-01A0 MAIN PUMP (1/14) (NO.1 PUMP)
主泵(1/14) (1号泵)

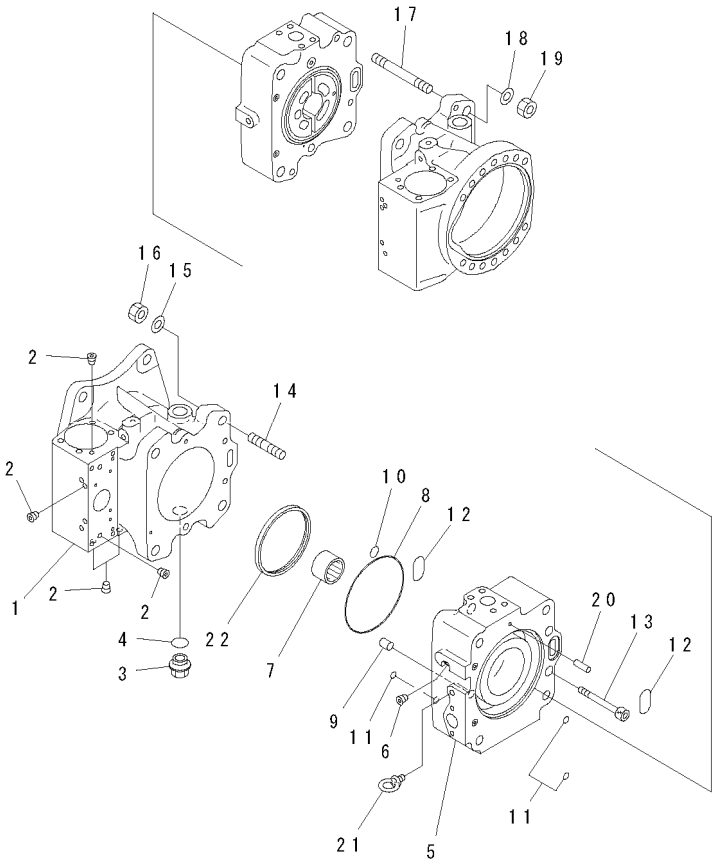

PW5A169

FIG NO. : Y1600-01A0

INDEX	PART NO.	DESCRIPTION	Q'TY	SERIAL NO.
	708-2L-00770	PUMP ASS'Y……泵组件 THIS ASSEMBLY CONSISTS OF ALL PARTS SHOWN IN FIGS.Y1600-01A0 TO Y1600-14A0. ……这个总成包含 FIGS Y1600-01A0到Y1600-14A0的所有零件	1	60001-
	708-2L-01632	.PUMP SUB ASS'Y ……泵子组件	1	60001-
	(★708-2L-04950)	..CASE ASS'Y,FRONT……前壳体总成	1	60001-
1	☆	...CASE,FRONT ……前壳体	1	60001-
2	☆	...PLUG ……堵塞	11	60001-
3	07044-12412	..PLUG……堵塞	1	60001-
4	07002-62434	..O-RING ……O形圈	1	60001-
	(★708-2L-04970)	..END CAP ASS'Y,FRONT ……前端盖总成	1	60001-
5	☆	...CAP,END……端盖	1	60001-
6	☆	...PLUG ……堵塞	1	60001-
7	(★708-2L-32260)	..BEARING ……轴承	1	60001-
8	(★07000-B2135)	..O-RING ……O形圈	1	60001-
9	(★6130-21-1910)	..PIN,DOWEL ……定位销	1	60001-
10	(★07000-B2015)	..O-RING ……O形圈	1	60001-
11	(★07000-B1009)	..O-RING ……O形圈	3	60001-
12	(★07000-B3032)	..O-RING ……O形圈	2	60001-
13	(★708-25-12530)	..BOLT……螺栓	2	60001-
14	(★01141-81620)	..STUD……双头螺栓	4	60001-
15	(★01643-31645)	..WASHER……垫圈	4	60001-
16	(★01582-01613)	..NUT ……螺母	4	60001-
17	(★01140-81645)	..STUD……双头螺栓	4	60001-
18	(★01643-31645)	..WASHER……垫圈	4	60001-
19	(★01582-01613)	..NUT ……螺母	4	60001-
20	(★720-68-19610)	..PIN ……销	1	60001-
21	04530-11018	..BOLT,EYE……吊环螺钉	1	60001-
22	(★708-25-13630)	..RING……隔圈	1	60001-

https://truckmanualshub.com/

FIG.Y1600-02A0 MAIN PUMP (2/14) (NO.1 PUMP)
主泵(2/14) (1号泵)

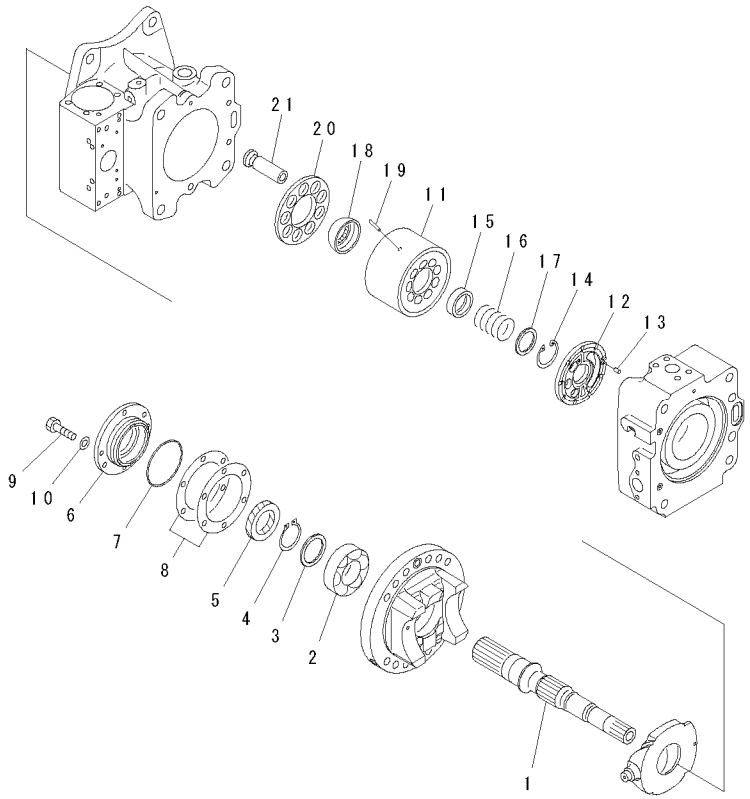

PDB6939

FIG NO. : Y1600-02A0

INDEX	PART NO.	DESCRIPTION	Q'TY	SERIAL NO.
	708-2L-00770	PUMP ASS'Y……泵组件 THIS ASSEMBLY CONSISTS OF ALL PARTS SHOWN IN FIGS.Y1600-01A0 TO Y1600-14A0. ……这个总成包含 FIGS Y1600-01A0到Y1600-14A0的所有零件	1	60001-
	708-2L-01632	.PUMP SUB ASS'Y ……泵子组件	1	60001-
1	(★708-2L-22430)	..SHAFT,FRONT ……前轴	1	60001-
2	(★708-2L-32150)	..BEARING ……轴承	1	60001-
3	(★708-2E-05040)	..WASHER KIT……垫圈套	1	60001-
4	(★708-25-12790)	..RING,SNAP ……卡簧	1	60001-
5	708-25-52861	..SEAL,OIL……油封	1	60001-
6	(★708-25-12812)	..HOUSING ……壳体	1	60001-
7	07000-A2080	..O-RING ……O形圈	1	60001-
8	(★708-25-05130)	..SHIM KIT……调整垫组件	1	60001-
9	01010-80820	..BOLT……螺栓	4	60001-
10	01643-30823	..WASHER……垫圈	4	60001-
	(★708-2L-04151)	..BLOCK ASS'Y,REAR……后接头总成	1	60001-
11	☆	...BLOCK,CYLINDER ……气缸体	1	60001-
12	☆	...PLATE,VALVE……板阀	1	60001-
13	(★720-68-19610)	..PIN ……销	1	60001-
14	(★04065-04818)	..RING,SNAP ……卡簧	1	60001-
15	(★708-2L-23131)	..SEAT……座	1	60001-
16	(★708-2L-33160)	..SPRING……弹簧	1	60001-
17	(★708-7L-13140)	..SEAT……座	1	60001-
18	(★708-2L-23351)	..GUIDE,RETAINER……导向器	1	60001-
19	(★708-2L-23360)	..PIN ……销	3	60001-
20	(★708-2L-33340)	..RETAINER,SHOE……保持器,导向板	1	60001-
21	(★708-2L-33310)	..PISTON SUB ASS'Y……活塞总成	9	60001-

https://truckmanualshub.com/

FIG.Y1600-03A0 MAIN PUMP (3/14) (NO.1 PUMP)
主泵(3/14) (1号泵)

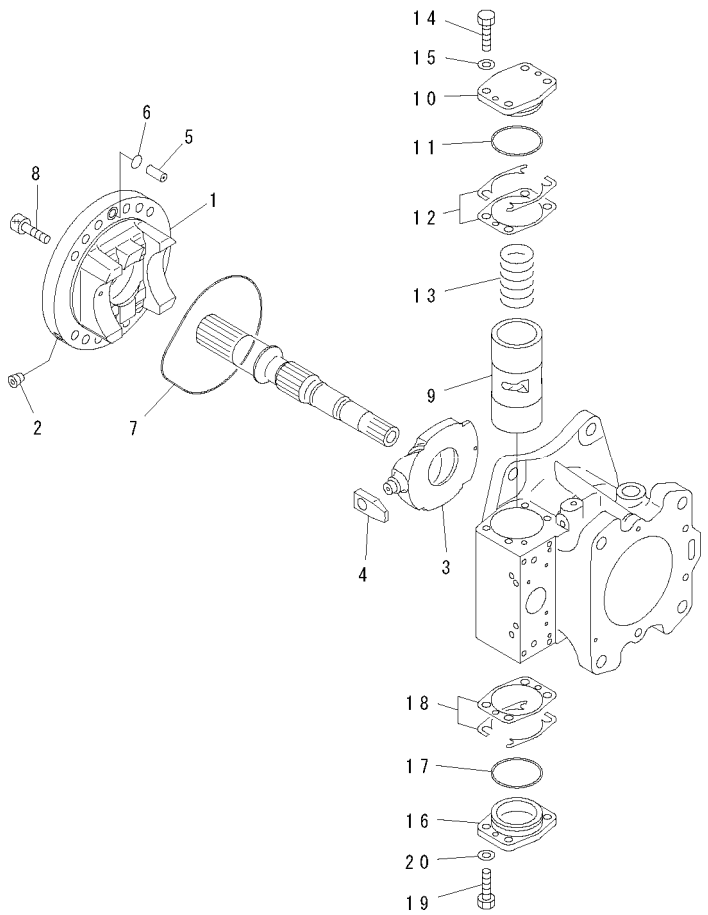

PDB6940

FIG NO. : Y1600-03A0

INDEX	PART NO.	DESCRIPTION	Q'TY	SERIAL NO.
	(708-2L-00770)	PUMP ASS'Y……泵组件 THIS ASSEMBLY CONSISTS OF ALL PARTS SHOWN IN FIGS.Y1600-01A0 TO Y1600-14A0. ……这个总成包含 FIGS Y1600-01A0到Y1600-14A0的所有零件	1	60001-
	(708-2L-01632)	.PUMP SUB ASS'Y ……泵子组件	1	60001-
	(★708-2L-04730)	..CRADLE ASS'Y,FRONT……前支架总成	1	60001-
	(★708-2L-04840)	...CRADLE SUB ASS'Y,FRONT… 前子支架总成	1	60001-
1	☆	....CRADLE,FRONT……前支架	1	60001-
2	☆	....PLUG……堵塞	1	60001-
3	☆	...CAM,ROCKER ……凸轮	1	60001-
4	(★708-2L-23730)	..SLIDER……滑块	1	60001-
5	(★708-25-12330)	..JOINT ……接头	1	60001-
6	(★07000-B2015)	..O-RING ……O形圈	1	60001-
7	(★708-25-62361)	..O-RING ……O形圈	1	60001-
8	(★708-25-12350)	..BOLT……螺栓	12	60001-
9	(★708-25-14211)	..PISTON……活塞	1	60001-
10	(★708-25-14140)	..CAP ……盖	1	60001-
11	07000-B2065	..O-RING ……O形圈	1	60001-
12	(★708-25-05050)	..SHIM KIT……调整垫组件	1	60001-
13	708-25-14130	..SPRING……弹簧	1	60001-
14	01016-51035	..BOLT……螺栓	4	60001-
15	01643-31032	..WASHER……垫圈	4	60001-
16	(★708-25-14150)	..CAP ……盖	1	60001-
17	07000-B2065	..O-RING ……O形圈	1	60001-
18	(★708-25-05050)	..SHIM KIT……调整垫组件	1	60001-
19	01016-51035	..BOLT……螺栓	4	60001-
20	01643-31032	..WASHER……垫圈	4	60001-

https://truckmanualshub.com/

FIG.Y1600-04A0 MAIN PUMP (4/14) (NO.1 PUMP)
主泵(4/14) (1号泵)

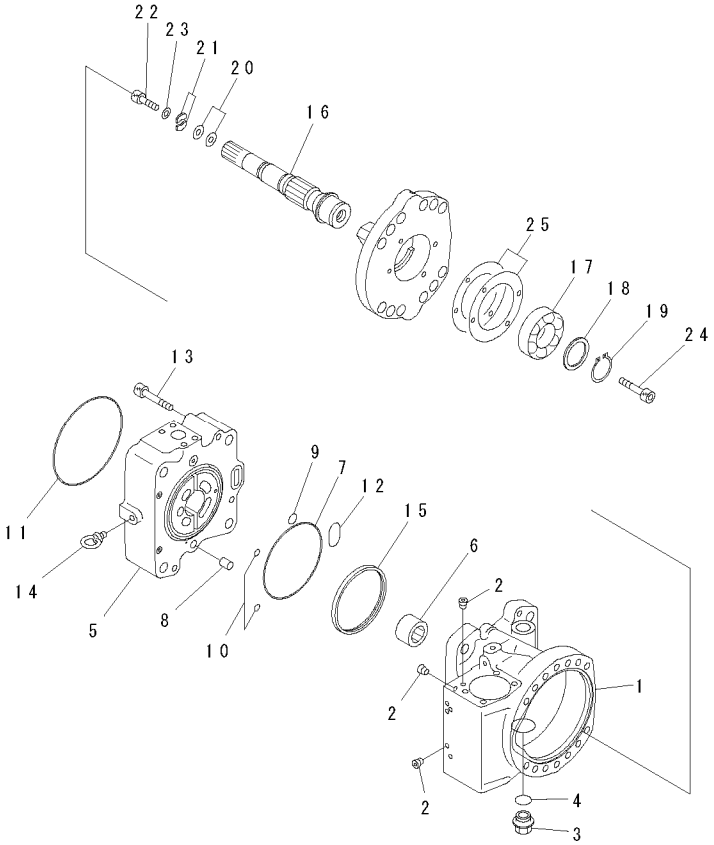

PDB6941

FIG NO. : Y1600-04A0

INDEX	PART NO.	DESCRIPTION	Q'TY	SERIAL NO.
	(708-2L-00770)	PUMP ASS'Y……泵组件 THIS ASSEMBLY CONSISTS OF ALL PARTS SHOWN IN FIGS.Y1600-01A0 TO Y1600-14A0. ……这个总成包含 FIGS Y1600-01A0到Y1600-14A0的所有零件	1	60001-
	(708-2L-01632)	.PUMP SUB ASS'Y ……泵子组件	1	60001-
	(★708-2L-04960)	..CASE ASS'Y,REAR…… 后壳体总成	1	60001-
1	☆	...CASE,REAR……后壳体	1	60001-
2	☆	...PLUG ……堵塞	12	60001-
3	07044-12412	..PLUG……堵塞	1	60001-
4	07002-62434	..O-RING ……0形圈	1	60001-
5	708-2L-21540	..CAP,END ……端盖	1	60001-
6	(★708-2L-32260)	..BEARING ……轴承	1	60001-
7	(★07000-B2135)	..O-RING ……0形圈	1	60001-
8	(★6130-21-1910)	..PIN,DOWEL ……定位销	1	60001-
9	(★07000-B2015)	..O-RING ……0形圈	1	60001-
10	(★07000-B1009)	..O-RING ……0形圈	2	60001-
11	(★07000-B5165)	..O-RING ……0形圈	1	60001-
12	(★07000-B3032)	..O-RING ……0形圈	1	60001-
13	(★708-25-12530)	..BOLT……螺栓	4	60001-
14	04530-11018	..BOLT,EYE……吊环螺钉	1	60001-
15	(★708-25-13630)	..RING……隔圈	1	60001-
16	(★708-2L-22440)	..SHAFT,REAR……后轴	1	60001-
17	(★708-2L-32150)	..BEARING ……轴承	1	60001-
18	(★708-2E-05040)	..WASHER KIT……垫圈套	1	60001-
19	(★708-25-12790)	..RING,SNAP ……卡簧	1	60001-
20	(★708-25-05021)	..SHIM KIT……调整垫组件	1	60001-
21	(★708-25-12950)	..PLATE ……板	2	60001-
22	(★706-74-40320)	..BOLT……螺栓	1	60001-
23	(★01643-31032)	..WASHER……垫圈	1	60001-
24	(★01252-31016)	..BOLT……螺栓	1	60001-
25	(★708-25-05130)	..SHIM KIT……调整垫组件	1	60001-

https://truckmanualshub.com/

FIG.Y1600-05A0 MAIN PUMP (5/14) (NO.1 PUMP)
主泵(5/14) (1号泵)

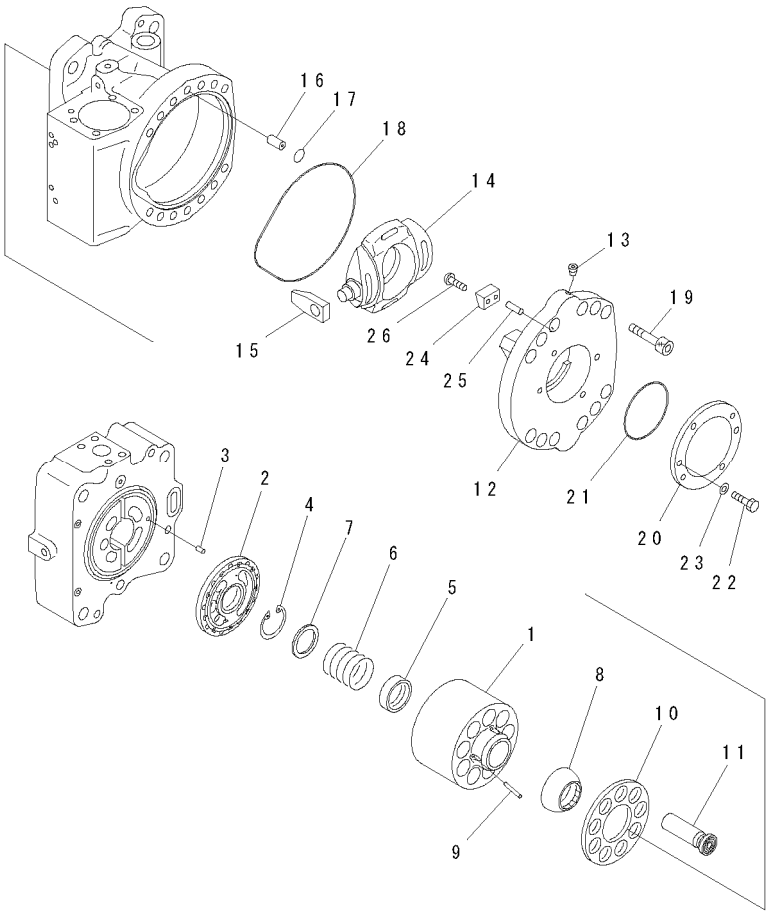

PDB6942

FIG NO. : Y1600-05A0

INDEX	PART NO.	DESCRIPTION	Q'TY	SERIAL NO.
	(708-2L-00770)	PUMP ASS'Y……泵组件 THIS ASSEMBLY CONSISTS OF ALL PARTS SHOWN IN FIGS.Y1600-01A0 TO Y1600-14A0. ……这个总成包含 FIGS Y1600-01A0到Y1600-14A0的所有零件	1	60001-
	(708-2L-01632)	.PUMP SUB ASS'Y ……泵子组件	1	60001-
	(★708-2L-04141)	..BLOCK ASS'Y,FRONT ……前接头总成	1	60001-
1	☆	...BLOCK,CYLINDER ……气缸体	1	60001-
2	☆	...PLATE,VALVE……板阀	1	60001-
3	(★720-68-19610)	..PIN ……销	1	60001-
4	(★04065-04818)	..RING,SNAP ……卡簧	1	60001-
5	(★708-2L-23131)	..SEAT……座	1	60001-
6	(★708-2L-33160)	..SPRING……弹簧	1	60001-
7	(★708-7L-13140)	..SEAT……座	1	60001-
8	(★708-2L-23351)	..GUIDE,RETAINER……导向器	1	60001-
9	(★708-2L-23360)	..PIN ……销	3	60001-
10	(★708-2L-33340)	..RETAINER,SHOE……保持器,导向板	1	60001-
11	(★708-2L-33310)	..PISTON SUB ASS'Y……活塞总成	9	60001-
	(★708-2L-04830)	..CRADLE ASS'Y,REAR ……后支架总成	1	60001-
	(★708-2L-04860)	...CRADLE SUB ASS'Y,REAR……后子支架总成	1	60001-
12	☆	....CRADLE,REAR ……后支架	1	60001-
13	☆	....PLUG……堵塞	1	60001-
14	☆	...CAM,ROCKER ……凸轮	1	60001-
15	(★708-2L-23730)	..SLIDER……滑块	1	60001-
16	(★708-25-12330)	..JOINT ……接头	1	60001-
17	(★07000-B2015)	..O-RING ……O形圈	1	60001-
18	(★708-25-62361)	..O-RING ……O形圈	1	60001-
19	(★708-25-12350)	..BOLT……螺栓	12	60001-
20	(★708-2L-23740)	..COVER…… 盖	1	60001-
21	07000-A2080	..O-RING ……O形圈	1	60001-
22	01010-80820	..BOLT……螺栓	4	60001-
23	01643-30823	..WASHER……垫圈	4	60001-
24	(★708-2L-23790)	..STOPPER ……止动块	1	60001-
25	(★04020-00616)	..PIN ……销	1	60001-
26	(★706-75-42270)	..SCREW ……螺钉	1	60001-

https://truckmanualshub.com/

FIG.Y1600-06A0 MAIN PUMP (6/14) (NO.1 PUMP)
主泵(6/14) (1号泵)

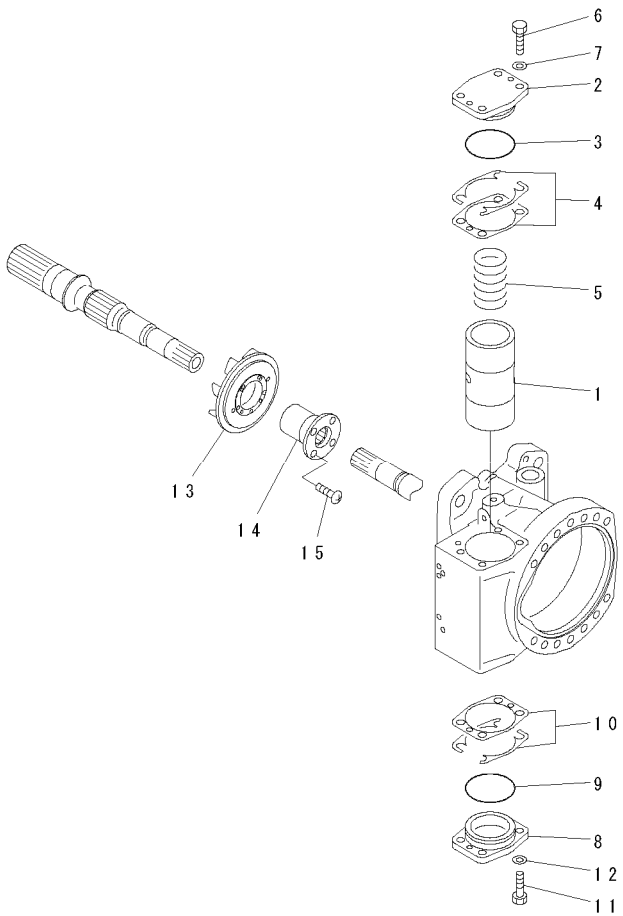

PDB6943

FIG NO. : Y1600-06A0

INDEX	PART NO.	DESCRIPTION	Q'TY	SERIAL NO.
	(708-2L-00770)	PUMP ASS'Y……泵组件 THIS ASSEMBLY CONSISTS OF ALL PARTS SHOWN IN FIGS.Y1600-01A0 TO Y1600-14A0. ……这个总成包含 FIGS Y1600-01A0到Y1600-14A0的所有零件	1	60001-
	(708-2L-01632)	.PUMP SUB ASS'Y ……泵子组件	1	60001-
1	(★708-25-14112)	..PISTON……活塞	1	60001-
2	(★708-25-14140)	..CAP ……盖	1	60001-
3	07000-B2065	..O-RING ……O形圈	1	60001-
4	(★708-25-05050)	..SHIM KIT……调整垫组件	1	60001-
5	708-25-14130	..SPRING……弹簧	1	60001-
6	01016-51035	..BOLT……螺栓	4	60001-
7	01643-31032	..WASHER……垫圈	4	60001-
8	(★708-25-14150)	..CAP ……盖	1	60001-
9	07000-B2065	..O-RING ……O形圈	1	60001-
10	(★708-25-05050)	..SHIM KIT……调整垫组件	1	60001-
11	01016-51035	..BOLT……螺栓	4	60001-
12	01643-31032	..WASHER……垫圈	4	60001-
13	(★708-25-12542)	..IMPELLER……叶轮	1	60001-
14	(★708-25-52550)	..COUPLING……联轴节	1	60001-
15	(★706-73-42270)	..SCREW ……螺钉	4	60001-

https://truckmanualshub.com/

FIG.Y1600-07A0 MAIN PUMP (7/14) (NO.1 PUMP)

主泵(7/14) (1号泵)

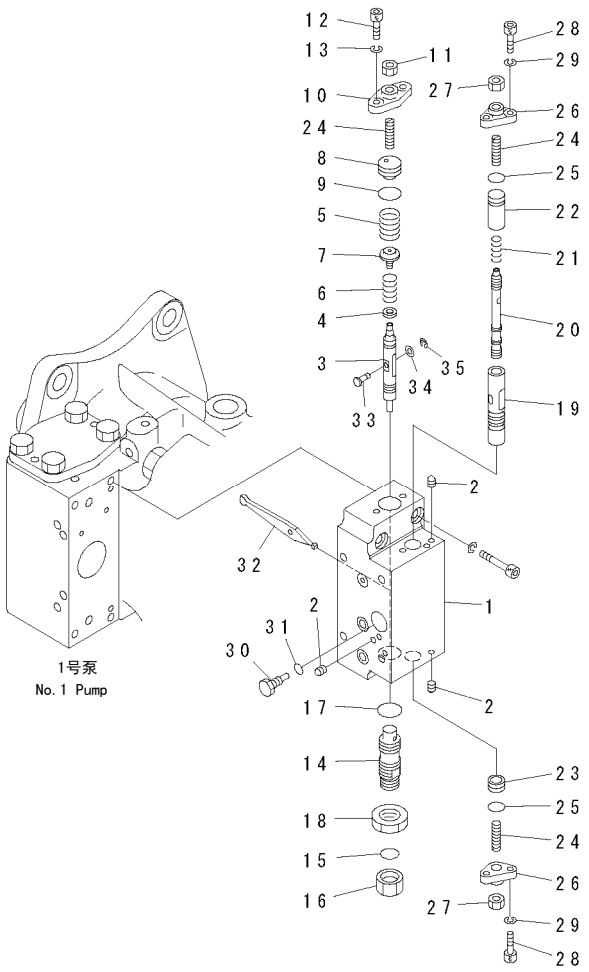

00008990

FIG NO. : Y1600-07A0

INDEX	PART NO.	DESCRIPTION	Q'TY	SERIAL NO.
	(708-2L-00770)	PUMP ASS'Y……泵总成 THIS ASSEMBLY CONSISTS OF ALL PARTS SHOWN IN FIGS.Y1600-01A0 TO Y1600-14A0. ……这个总成包含 FIGS Y1600-01A0到Y1600-14A0的所有零件	1	60001-
	708-25-85170	.SERVO VALVE ASS'Y,FRONT……前伺服阀总成	1	60001-
	708-25-85370	..SERVO VALVE SUB A.,FRONT……前伺服子阀	1	60001-
	(★708-23-00411)	...BODY ASS'Y ……壳总成	1	60001-
1	☆	....BODY,FRONT……前壳	1	60001-
2	☆	....EXPANDER……放大器	5	60001-
3	(★708-25-15120)	...PISTON ……活塞	1	60001-
4	(★708-25-15130)	...SEAT ……座	1	60001-
5	(★708-25-25130)	...SPRING ……弹簧	1	60001-
6	(★708-25-55250)	...SPRING ……弹簧	1	60001-
7	(★708-23-15120)	...SEAT ……座	1	60001-
8	(★708-23-15160)	...PLUG ……堵塞	1	60001-
9	(★07000-12018)	...O-RING……O形圈	1	60001-
10	(★708-25-15150)	...COVER……盖	1	60001-
11	(★01580-10806)	...NUT……螺母	1	60001-
12	(★01252-60616)	...BOLT ……螺栓	2	60001-
13	(★01602-20619)	...WASHER ……垫圈	2	60001-
14	(★708-25-55680)	...PLUG ……堵塞	1	60001-
15	(★02896-61009)	...O-RING……O形圈	1	60001-
16	(★02789-00315)	...NUT……螺母	1	60001-
17	(★07002-12034)	...O-RING……O形圈	1	60001-
18	(★07239-12009)	...NUT……螺母	1	60001-
19	(★708-25-15180)	...SLEEVE ……套筒	1	60001-
20	(★708-25-15280)	...SPOOL……阀芯	1	60001-
21	(★708-25-15310)	...SPRING ……弹簧	1	60001-
22	(★708-25-15330)	...SPACER ……调整垫片	1	60001-
23	(★708-25-15430)	...PLUG ……堵塞	1	60001-
24	(★708-25-15340)	...SCREW……螺钉	3	60001-
25	(★07000-12012)	...O-RING……O形圈	2	60001-
26	(★708-25-15250)	...COVER……盖	2	60001-
27	(★01580-10806)	...NUT……螺母	2	60001-
28	(★01252-60616)	...BOLT ……螺栓	4	60001-
29	(★01602-20619)	...WASHER ……垫圈	4	60001-
30	(★708-25-15260)	...PLUG ……堵塞	1	60001-
31	(★07002-10823)	...O-RING……O形圈	1	60001-
32	(★708-25-15270)	...ARM……小臂	1	60001-
33	(★708-25-15360)	...PIN……销	1	60001-
34	(★708-25-15370)	...WASHER ……垫圈	1	60001-
35	(★708-25-15380)	...E-RING ……开口垫圈	1	60001-

https://truckmanualshub.com/

FIG.Y1600-08A0 MAIN PUMP (8/14) (NO.1 PUMP)
主泵(8/14) (1号泵)

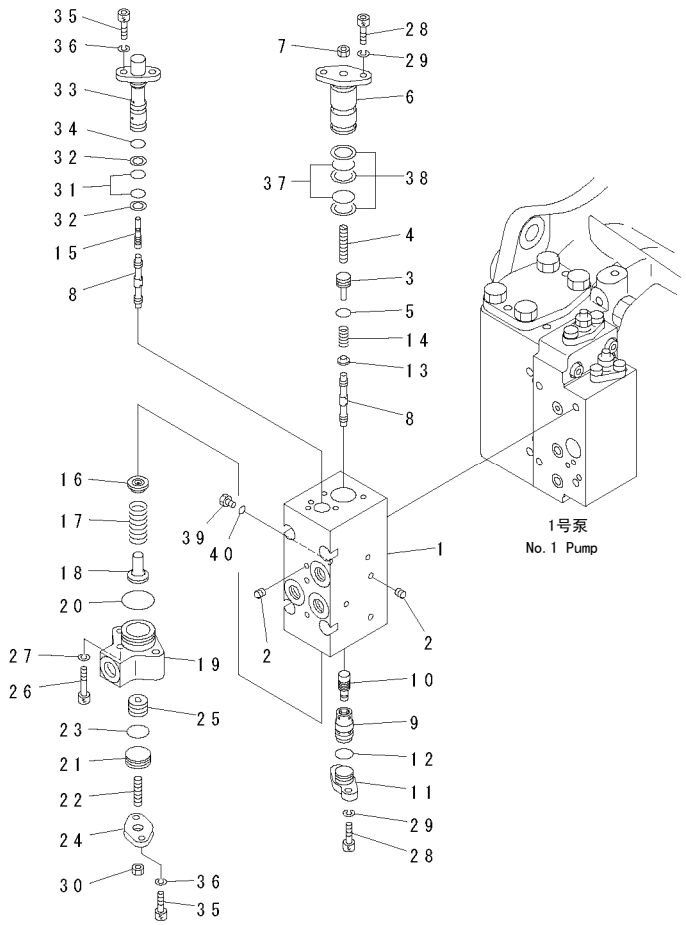

FIG NO. : Y1600-08A0

INDEX	PART NO.	DESCRIPTION	Q'TY	SERIAL NO.
	(708-2L-00770)	PUMP ASS'Y……泵总成 THIS ASSEMBLY CONSISTS OF ALL PARTS SHOWN IN FIGS.Y1600-01A0 TO Y1600-14A0. ……这个总成包含 FIGS Y1600-01A0到Y1600-14A0的所有零件	1	60001-
	(708-25-85170)	.SERVO VALVE ASS'Y,FRONT……前伺服阀总成	1	60001-
	708-25-08550	..VALVE ASS'Y,CO + NC…… 阀总成	1	60001-
	(★708-23-00430)	...BODY ASS'Y ……壳总成	1	60001-
1	☆	....BODY……壳	1	60001-
2	☆	....EXPANDER……放大器	16	60001-
3	(★708-25-17460)	...PLUG ……堵塞	1	60001-
4	(★708-25-17430)	...SCREW……螺钉	1	60001-
5	(★07000-12010)	...O-RING……0形圈	1	60001-
6	(★708-25-17131)	...COVER……盖	1	60001-
7	(★01580-10806)	...NUT……螺母	1	60001-
8	(★708-25-17141)	...SPOOL……阀芯	2	60001-
9	(★708-25-17150)	...SLEEVE ……套筒	1	60001-
10	(★708-25-17160)	...PISTON ……活塞	1	60001-
11	(★708-25-17170)	...COVER……盖	1	60001-
12	(★07000-12014)	...O-RING……0形圈	1	60001-
13	(★708-25-17180)	...SEAT ……座	1	60001-
14	(★708-25-17690)	...SPRING ……弹簧	1	60001-
15	(★708-25-17220)	...PISTON ……活塞	1	60001-
16	(★708-25-17370)	...SEAT ……座	1	60001-
17	(★708-25-17250)	...SPRING ……弹簧	1	60001-
18	(★708-25-17470)	...SEAT ……座	1	60001-
19	(★708-23-17290)	...COVER……盖	1	60001-
20	(★07000-13028)	...O-RING……0形圈	1	60001-
21	(★708-25-17380)	...PLUG ……堵塞	1	60001-
22	(★708-25-15340)	...SCREW……螺钉	1	60001-
23	(★07000-12021)	...O-RING……0形圈	1	60001-
24	(★708-23-17240)	...COVER……盖	1	60001-
25	(★708-25-17480)	...PISTON ……活塞	1	60001-
26	(★01252-60630)	...BOLT ……螺栓	2	60001-
27	(★01602-20619)	...WASHER ……垫圈	2	60001-
28	(★01252-60616)	...BOLT ……螺栓	4	60001-
29	(★01602-20619)	...WASHER ……垫圈	4	60001-
30	(★01580-10806)	...NUT……螺母	1	60001-
31	(★07000-12012)	...O-RING……0形圈	2	60001-
32	(★07001-02012)	...RING,BACK-UP ……隔环	2	60001-
33	(★708-25-17451)	...SLEEVE ……套筒	1	60001-
34	(★07000-12012)	...O-RING……0形圈	1	60001-
35	(★01252-60616)	...BOLT ……螺栓	4	60001-
36	(★01602-20619)	...WASHER ……垫圈	4	60001-
37	(★07000-12021)	...O-RING……0形圈	2	60001-
38	(★07001-02021)	...RING,BACK-UP ……隔环	3	60001-
39	07040-11007	...PLUG ……堵塞	1	60001-
40	07002-11023	...O-RING……0形圈	1	60001-

https://truckmanualshub.com/

FIG.Y1600-09A0 MAIN PUMP (9/14) (NO.1 PUMP)
主泵(9/14) (1号泵)

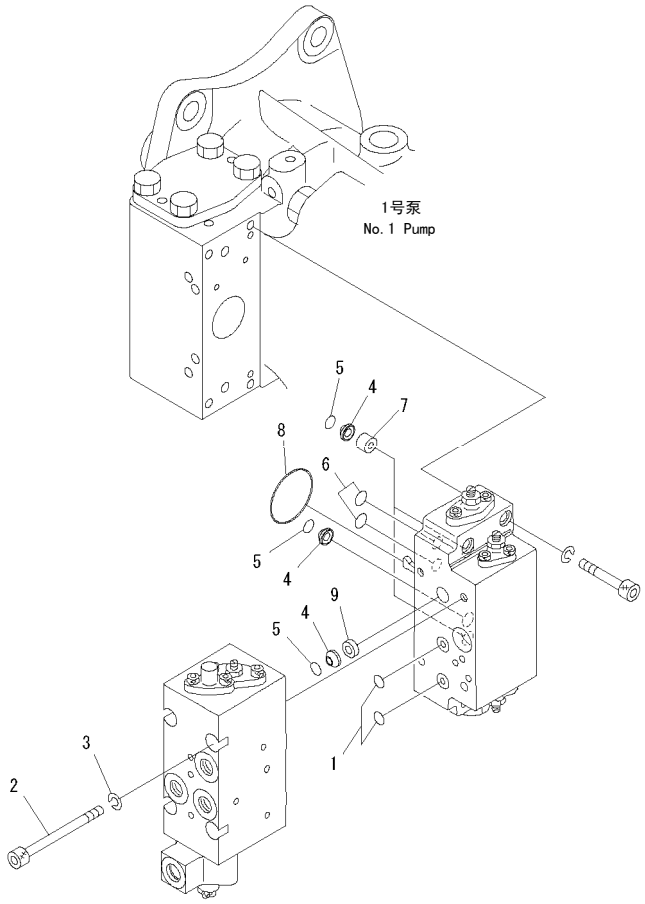

00008992

FIG NO. : Y1600-09A0

INDEX	PART NO.	DESCRIPTION	Q'TY	SERIAL NO.
	(708-2L-00770)	PUMP ASS'Y……泵组件 THIS ASSEMBLY CONSISTS OF ALL PARTS SHOWN IN FIGS.Y1600-01A0 TO Y1600-14A0. ……这个总成包含 FIGS Y1600-01A0到Y1600-14A0的所有零件	1	60001-
	(708-25-85170)	.SERVO VALVE ASS'Y,FRONT……前伺服阀总成	1	60001-
1	07000-12011	..O-RING ……O形圈	2	60001-
2	708-25-19160	..BOLT……螺栓	4	60001-
3	01602-20825	..WASHER……垫圈	4	60001-
4	720-68-11920	..FILTER……滤清器	4	60001-
5	07000-12010	..O-RING ……O形圈	4	60001-
6	07000-11009	..O-RING ……O形圈	2	60001-
7	708-25-19150	..ORIFICE ……测压口	2	60001-
8	07000-13048	..O-RING ……O形圈	1	60001-
9	708-25-19191	..ORIFICE ……测压口	1	60001-

https://truckmanualshub.com/

FIG.Y1600-10A0 MAIN PUMP (10/14) (NO.1 PUMP)
主泵(10/14) (1号泵)

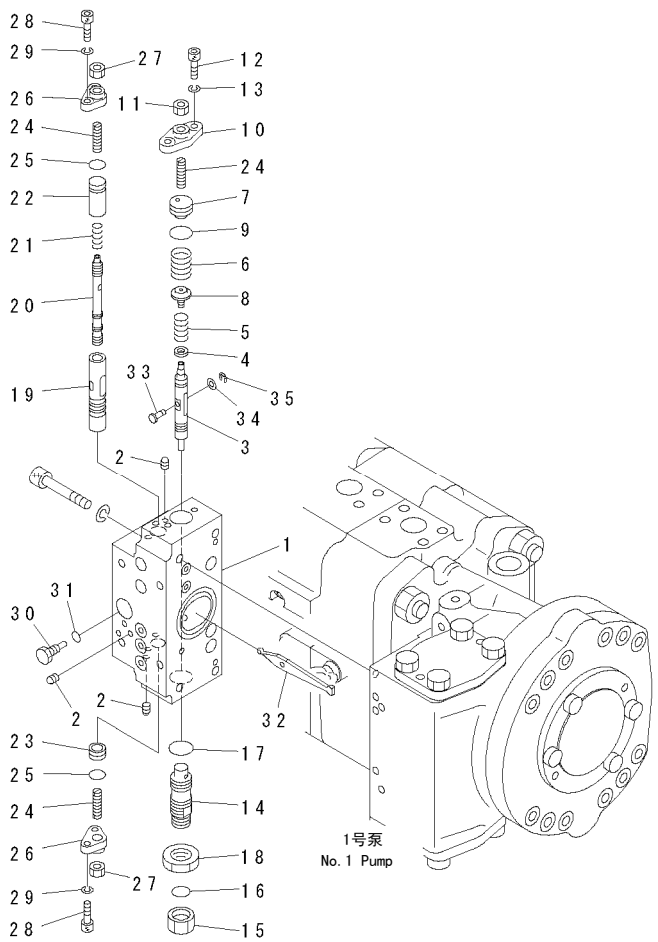

00008993

FIG NO. : Y1600-10A0

INDEX	PART NO.	DESCRIPTION	Q'TY	SERIAL NO.
	(708-2L-00770)	PUMP ASS'Y……泵组件 THIS ASSEMBLY CONSISTS OF ALL PARTS SHOWN IN FIGS.Y1600-01A0 TO Y1600-14A0. ……这个总成包含 FIGS Y1600-01A0到Y1600-14A0的所有零件	1	60001-
	708-25-85270	.SERVO VALVE ASS'Y,REAR ……后伺服阀总成	1	60001-
	708-25-85470	..SERVO VALVE SUB A.,REAR ……后伺服子阀	1	60001-
	(★708-23-00421)	...BODY ASS'Y ……壳总成	1	60001-
1	☆	....BODY……壳体	1	60001-
2	☆	....EXPANDER……放大器	7	60001-
3	(★708-25-15120)	...PISTON ……活塞	1	60001-
4	(★708-25-15130)	...SEAT ……座	1	60001-
5	(★708-25-55250)	...SPRING ……弹簧	1	60001-
6	(★708-25-25130)	...SPRING ……弹簧	1	60001-
7	(★708-23-15160)	...PLUG ……堵塞	1	60001-
8	(★708-23-15120)	...SEAT ……座	1	60001-
9	(★07000-12018)	...O-RING……O形圈	1	60001-
10	(★708-25-15150)	...COVER……盖	1	60001-
11	(★01580-10806)	...NUT……螺母	1	60001-
12	(★01252-60616)	...BOLT ……螺栓	2	60001-
13	(★01602-20619)	...WASHER ……垫圈	2	60001-
14	(★708-25-55680)	...PLUG ……堵塞	1	60001-
15	(★02789-00315)	...NUT……螺母	1	60001-
16	(★02896-61009)	...O-RING……O形圈	1	60001-
17	(★07002-12034)	...O-RING……O形圈	1	60001-
18	(★07239-12009)	...NUT……螺母	1	60001-
19	(★708-25-15180)	...SLEEVE ……套筒	1	60001-
20	(★708-25-15280)	...SPOOL……阀芯	1	60001-
21	(★708-25-15310)	...SPRING ……弹簧	1	60001-
22	(★708-25-15330)	...SPACER ……调整垫片	1	60001-
23	(★708-25-15430)	...PLUG ……堵塞	1	60001-
24	(★708-25-15340)	...SCREW……螺钉	3	60001-
25	(★07000-12012)	...O-RING……O形圈	2	60001-
26	(★708-25-15250)	...COVER……盖	2	60001-
27	(★01580-10806)	...NUT……螺母	2	60001-
28	(★01252-60616)	...BOLT ……螺栓	4	60001-
29	(★01602-20619)	...WASHER ……垫圈	4	60001-
30	(★708-25-15260)	...PLUG ……堵塞	1	60001-
31	(★07002-10823)	...O-RING……O形圈	1	60001-
32	(★708-25-15270)	...ARM……小臂	1	60001-
33	(★708-25-15360)	...PIN……销	1	60001-
34	(★708-25-15370)	...WASHER ……垫圈	1	60001-
35	(★708-25-15380)	...E-RING ……开口垫圈	1	60001-

https://truckmanualshub.com/

FIG.Y1600-11A0 MAIN PUMP (11/14) (NO.1 PUMP)
主泵(11/14) (1号泵)

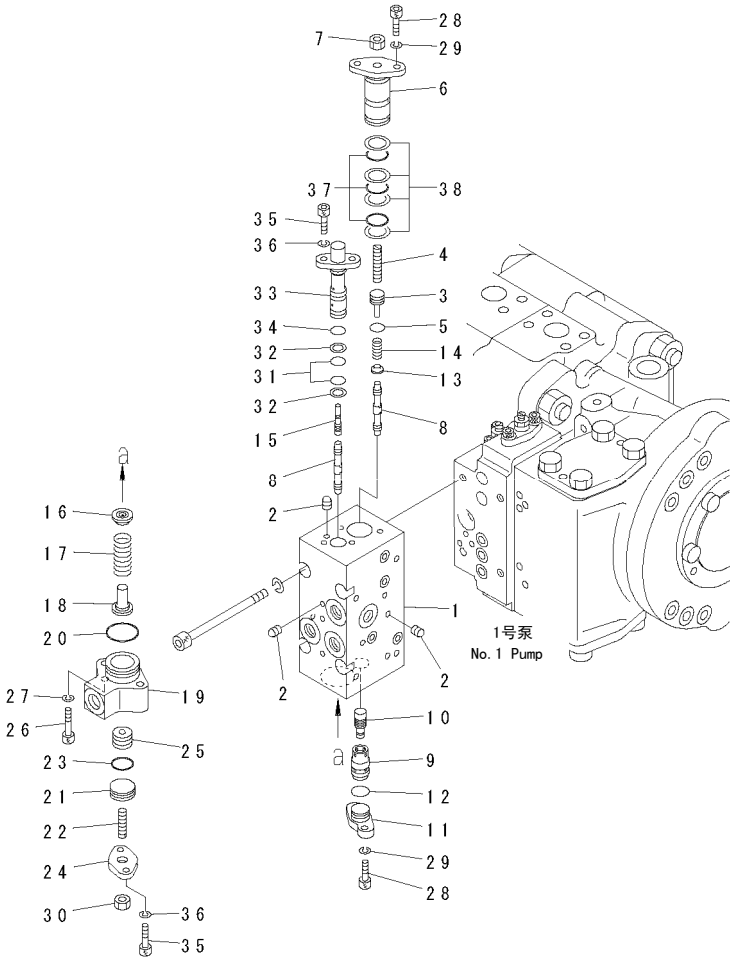

FIG NO. : Y1600-11A0

INDEX	PART NO.	DESCRIPTION	Q'TY	SERIAL NO.
	(708-2L-00770)	PUMP ASS'Y……泵组件 THIS ASSEMBLY CONSISTS OF ALL PARTS SHOWN IN FIGS.Y1600-01A0 TO Y1600-14A0. ……这个总成包含 FIGS Y1600-01A0到Y1600-14A0的所有零件	1	60001-
	708-25-85270	.SERVO VALVE ASS'Y,REAR ……后伺服阀总成	1	60001-
	708-25-85650	..VALVE ASS'Y,CO + NC…… 阀总成	1	60001-
	(★708-23-00441)	...BODY ASS'Y ……壳总成	1	60001-
1	☆	....BODY……壳	1	60001-
2	☆	....EXPANDER……放大器	15	60001-
3	(★708-25-17460)	...PLUG ……堵塞	1	60001-
4	(★708-25-17430)	...SCREW……螺钉	1	60001-
5	(★07000-12010)	...O-RING……O形圈	1	60001-
6	(★708-25-17131)	...COVER……盖	1	60001-
7	(★01580-10806)	...NUT……螺母	1	60001-
8	(★708-25-17141)	...SPOOL……阀芯	2	60001-
9	(★708-25-17150)	...SLEEVE ……套筒	1	60001-
10	(★708-25-17160)	...PISTON ……活塞	1	60001-
11	(★708-25-17170)	...COVER……盖	1	60001-
12	(★07000-12014)	...O-RING……O形圈	1	60001-
13	(★708-25-17180)	...SEAT ……座	1	60001-
14	(★708-25-17690)	...SPRING ……弹簧	1	60001-
15	(★708-25-17220)	...PISTON ……活塞	1	60001-
16	(★708-25-17370)	...SEAT ……座	1	60001-
17	(★708-25-17250)	...SPRING ……弹簧	1	60001-
18	(★708-25-17470)	...SEAT ……座	1	60001-
19	(★708-23-17290)	...COVER……盖	1	60001-
20	(★07000-13028)	...O-RING……O形圈	1	60001-
21	(★708-25-17380)	...PLUG ……堵塞	1	60001-
22	(★708-25-15340)	...SCREW……螺钉	1	60001-
23	(★07000-12021)	...O-RING……O形圈	1	60001-
24	(★708-23-17240)	...COVER……盖	1	60001-
25	(★708-25-17480)	...PISTON ……活塞	1	60001-
26	(★01252-60630)	...BOLT ……螺栓	2	60001-
27	(★01602-20619)	...WASHER ……垫圈	2	60001-
28	(★01252-60616)	...BOLT ……螺栓	4	60001-
29	(★01602-20619)	...WASHER ……垫圈	4	60001-
30	(★01580-10806)	...NUT……螺母	1	60001-
31	(★07000-12012)	...O-RING……O形圈	2	60001-
32	(★07001-02012)	...RING,BACK-UP ……隔环	2	60001-
33	(★708-25-17451)	...SLEEVE ……套筒	1	60001-
34	(★07000-12012)	...O-RING……O形圈	1	60001-
35	(★01252-60616)	...BOLT ……螺栓	4	60001-
36	(★01602-20619)	...WASHER ……垫圈	4	60001-
37	(★07000-12021)	...O-RING……O形圈	3	60001-
38	(★07001-02021)	...RING,BACK-UP ……隔环	4	60001-

https://truckmanualshub.com/

FIG.Y1600-12A0 MAIN PUMP (12/14) (NO.1 PUMP)

主泵(12/14) (1号泵)

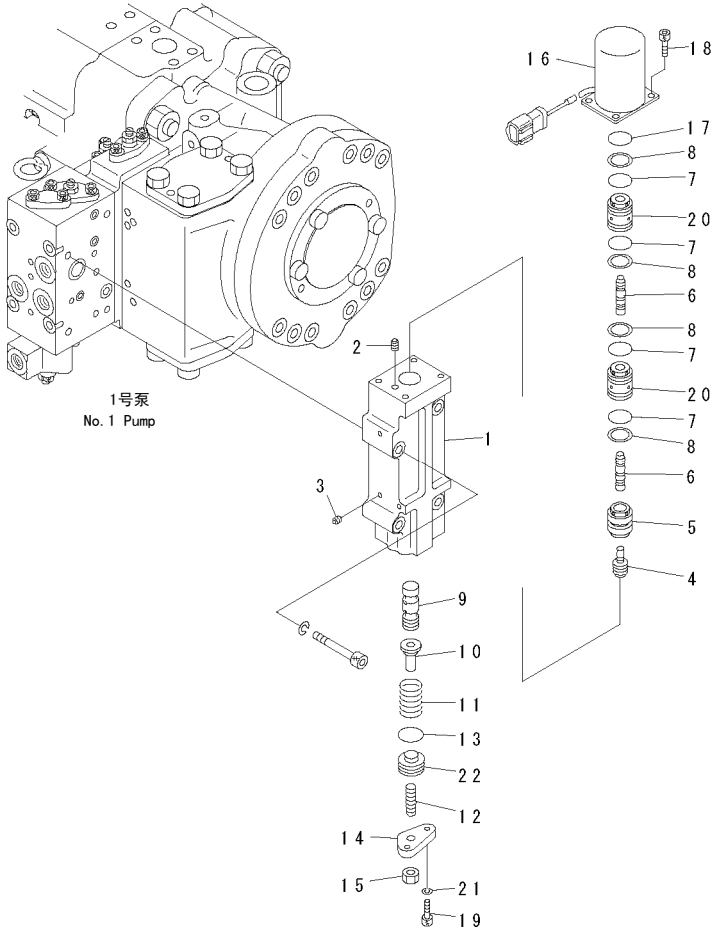

00008995

FIG NO. : Y1600-12A0

INDEX	PART NO.	DESCRIPTION	Q'TY	SERIAL NO.
	(708-2L-00770)	PUMP ASS'Y……泵组件 THIS ASSEMBLY CONSISTS OF ALL PARTS SHOWN IN FIGS.Y1600-01A0 TO Y1600-14A0. ……这个总成包含 FIGS Y1600-01A0到Y1600-14A0的所有零件	1	60001-
	708-25-85270	.SERVO VALVE ASS'Y,REAR ……后伺服阀总成	1	60001-
	708-25-08990	..TVC VALVE ASS'Y……TVC阀总成	1	60001-
	(★708-23-00451)	...BODY ASS'Y ……壳总成	1	60001-
1	☆	....BODY……壳	1	60001-
2	☆	....PLUG……堵塞	2	60001-
3	☆	....EXPANDER……放大器	12	60001-
4	(★708-27-18120)	...PISTON ……活塞	1	60001-
5	(★708-27-18130)	...SLEEVE ……套筒	1	60001-
6	(★708-27-18140)	...PISTON ……活塞	2	60001-
7	(★07000-12016)	...O-RING……O形圈	4	60001-
8	(★07001-02016)	...RING,BACK-UP ……隔环	4	60001-
9	(★708-23-18161)	...SPOOL……阀芯	1	60001-
10	(★708-23-18170)	...SEAT ……座	1	60001-
11	(★708-25-18180)	...SPRING ……弹簧	1	60001-
12	(★708-25-15340)	...SCREW……螺钉	1	60001-
13	(★07000-12018)	...O-RING……O形圈	1	60001-
14	(★708-23-18210)	...COVER……盖	1	60001-
15	(★01580-10806)	...NUT……螺母	1	60001-
16	(★708-2L-25190)	...SOLENOID ASS'Y ……电磁阀总成	1	60001-
17	(★07000-12016)	...O-RING……O形圈	1	60001-
18	(★708-23-18250)	...BOLT ……螺栓	4	60001-
19	(★01252-60616)	...BOLT ……螺栓	2	60001-
20	(★708-27-18150)	...SLEEVE ……套筒	2	60001-
21	(★01602-20619)	...WASHER ……垫圈	2	60001-
22	(★708-23-15160)	...PLUG ……堵塞	1	60001-

https://truckmanualshub.com/

FIG.Y1600-13A0 MAIN PUMP (13/14) (NO.1 PUMP)
主泵(13/14) (1号泵)

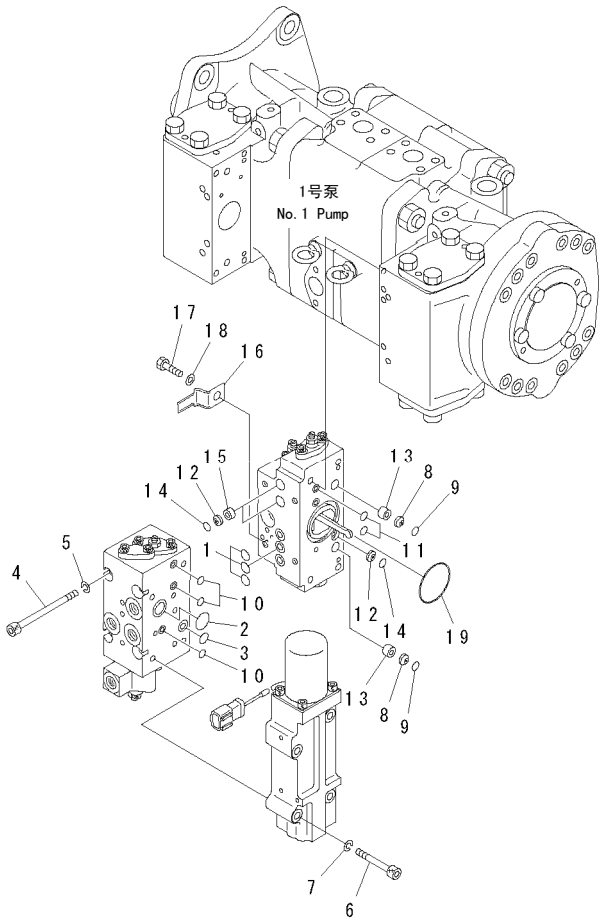

00008996

FIG NO. : Y1600-13A0

INDEX	PART NO.	DESCRIPTION	Q'TY	SERIAL NO.
	(708-2L-00770)	PUMP ASS'Y……泵组件 THIS ASSEMBLY CONSISTS OF ALL PARTS SHOWN IN FIGS.Y1600-01A0 TO Y1600-14A0. ……这个总成包含 FIGS Y1600-01A0到Y1600-14A0的所有零件	1	60001-
	708-25-85270	.SERVO VALVE ASS'Y,REAR ……后伺服阀总成	1	60001-
1	07000-12011	..O-RING ……0形圈	3	60001-
2	07000-12018	..O-RING ……0形圈	1	60001-
3	07000-12011	..O-RING ……0形圈	1	60001-
4	708-25-19160	..BOLT……螺栓	4	60001-
5	01602-20825	..WASHER……垫圈	4	60001-
6	01252-60855	..BOLT……螺栓	4	60001-
7	01602-20825	..WASHER……垫圈	4	60001-
8	720-68-11920	..FILTER……滤清器	2	60001-
9	07000-12010	..O-RING ……0形圈	2	60001-
10	07000-11009	..O-RING ……0形圈	3	60001-
11	07000-11009	..O-RING ……0形圈	2	60001-
12	720-68-11920	..FILTER……滤清器	3	60001-
13	708-25-19150	..ORIFICE ……测压口	2	60001-
14	07000-12010	..O-RING ……0形圈	3	60001-
15	708-25-19191	..ORIFICE ……测压口	2	60001-
16	08193-21012	..CLIP……管夹	1	60001-
17	01010-80812	..BOLT……螺栓	1	60001-
18	01643-30823	..WASHER……垫圈	1	60001-
19	07000-13048	..O-RING ……0形圈	1	60001-

https://truckmanualshub.com/

FIG.Y1600-14A0 MAIN PUMP (14/14) (NO.1 PUMP)
主泵(14/14) (1号泵)

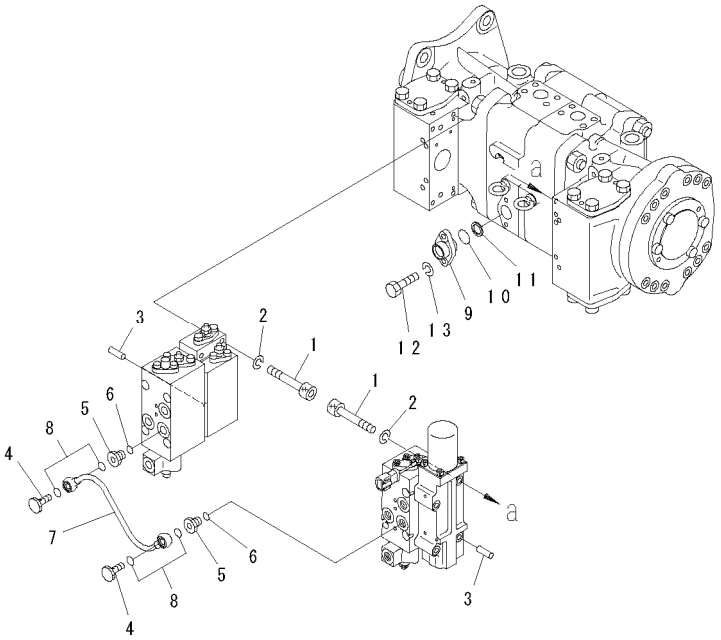

PJ5A171

FIG NO. : Y1600-14A0

INDEX	PART NO.	DESCRIPTION	Q'TY	SERIAL NO.
	(708-2L-00770)	PUMP ASS'Y……泵组件 THIS ASSEMBLY CONSISTS OF ALL PARTS SHOWN IN FIGS.Y1600-01A0 TO Y1600-14A0. ……这个总成包含 FIGS Y1600-01A0到Y1600-14A0的所有零件	1	60001-
1	01252-60850	.BOLT ……螺栓	8	60001-
2	01602-20825	.WASHER ……垫圈	8	60001-
3	04020-00616	.PIN……销	4	60001-
4	706-46-53180	.BOLT,EYE ……吊环螺钉	2	60001-
5	706-46-53260	.PLUG ……堵塞	2	60001-
6	07002-01423	.O-RING……O形圈	2	60001-
7	708-25-19140	.TUBE ……管	1	60001-
8	07000-02012	.O-RING……O形圈	4	60001-
9	708-25-19120	.FLANGE ……法兰	1	60001-
10	07000-02021	.O-RING……O形圈	1	60001-
11	720-68-15240	.FILTER ……滤清器	1	60001-
12	01010-80820	.BOLT ……螺栓	2	60001-
13	01602-20825	.WASHER ……垫圈	2	60001-

https://truckmanualshub.com/

FIG.Y1600-21A0 MAIN PUMP (1/9) (NO.2 PUMP)

主泵(1/9) (2号泵)

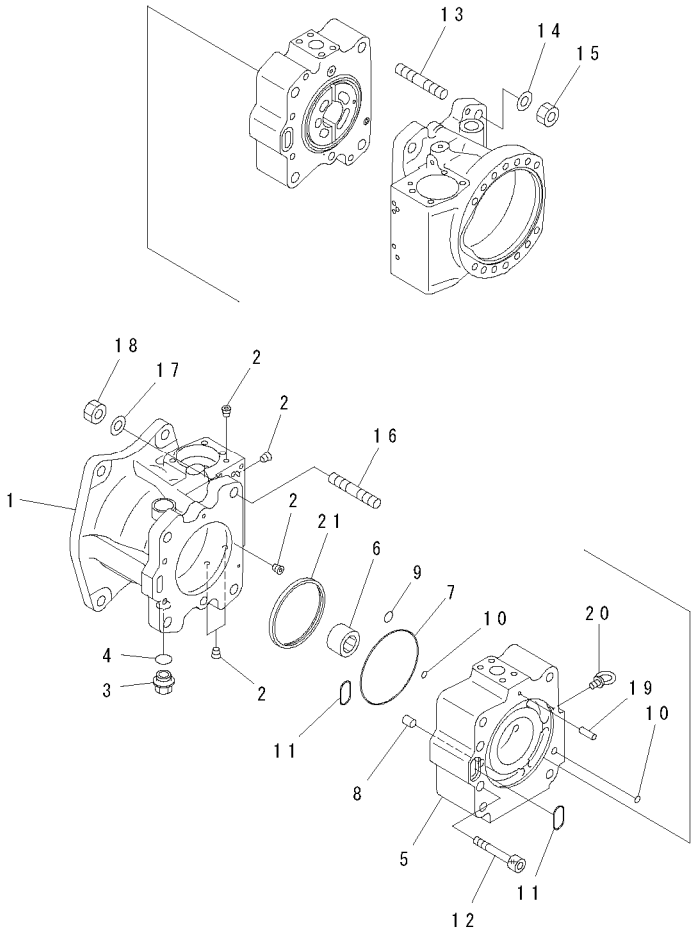

PW5A168

FIG NO. : Y1600-21A0

INDEX	PART NO.	DESCRIPTION	Q'TY	SERIAL NO.
	(708-2L-90721)	PUMP ASS'Y……泵组件 THIS ASSEMBLY CONSISTS OF ALL PARTS SHOWN IN FIGS.Y1600-21A0 TO Y1600-29A0. ……这个总成包含 FIGS Y1600-21A0到Y1600-29A0的所有零件	1	60001-
	708-2L-01622	.PUMP SUB ASS'Y ……泵子组件	1	60001-
	(★708-2L-04930)	..CASE ASS'Y,FRONT……前壳体总成	1	60001-
1	☆	...CASE,FRONT ……前壳体	1	60001-
2	☆	...PLUG ……堵塞	8	60001-
3	07044-12412	..PLUG……堵塞	1	60001-
4	07002-62434	..O-RING ……0形圈	1	60001-
5	(★708-2L-21721)	..CAP,END ……端盖	1	60001-
6	(★708-2L-32260)	..BEARING ……轴承	1	60001-
7	(★07000-B2135)	..O-RING ……0形圈	1	60001-
8	(★6130-21-1910)	..PIN,DOWEL ……定位销	1	60001-
9	(★07000-B2015)	..O-RING ……0形圈	1	60001-
10	(★07000-B1009)	..O-RING ……0形圈	2	60001-
11	(★07000-B3032)	..O-RING ……0形圈	2	60001-
12	(★708-25-12530)	..BOLT……螺栓	2	60001-
13	(★01141-81620)	..STUD……双头螺栓	4	60001-
14	(★01643-31645)	..WASHER……垫圈	4	60001-
15	(★01582-01613)	..NUT ……螺母	4	60001-
16	(★01140-81645)	..STUD……双头螺栓	4	60001-
17	(★01643-31645)	..WASHER……垫圈	4	60001-
18	(★01582-01613)	..NUT ……螺母	4	60001-
19	(★720-68-19610)	..PIN ……销	1	60001-
20	04530-11018	..BOLT,EYE……吊环螺钉	1	60001-
21	(★708-25-13630)	..RING……隔圈	1	60001-

https://truckmanualshub.com/

FIG.Y1600-22A0 MAIN PUMP (2/9) (NO.2 PUMP)
主泵(2/9) (2号泵)

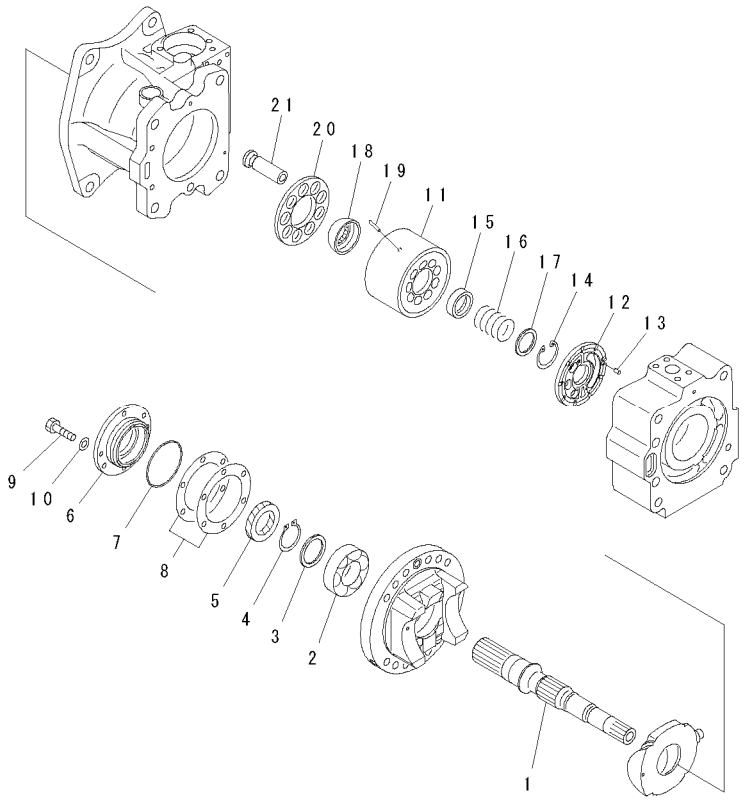

PDB6951

FIG NO. : Y1600-22A0

INDEX	PART NO.	DESCRIPTION	Q'TY	SERIAL NO.
	(708-2L-90721)	PUMP ASS'Y……泵组件 THIS ASSEMBLY CONSISTS OF ALL PARTS SHOWN IN FIGS.Y1600-21A0 TO Y1600-29A0. ……这个总成包含 FIGS Y1600-21A0到Y1600-29A0的所有零件	1	60001-
	(708-2L-01622)	.PUMP SUB ASS'Y ……泵子组件	1	60001-
1	(★708-2L-22430)	..SHAFT,FRONT ……前轴	1	60001-
2	(★708-2L-32150)	..BEARING ……轴承	1	60001-
3	(★708-2E-05040)	..WASHER KIT……垫圈套件	1	60001-
4	(★708-25-12790)	..RING,SNAP ……卡簧	1	60001-
5	708-25-52861	..SEAL,OIL……卡簧	1	60001-
6	(★708-25-12812)	..HOUSING ……壳体	1	60001-
7	07000-A2080	..O-RING ……O形圈	1	60001-
8	(★708-25-05130)	..SHIM KIT……调整垫套件	1	60001-
9	01010-80820	..BOLT……螺栓	4	60001-
10	01643-30823	..WASHER……垫圈	4	60001-
	(★708-2L-04151)	..BLOCK ASS'Y,REAR……后接头组件	1	60001-
11	☆	...BLOCK,CYLINDER ……气缸体	1	60001-
12	☆	...PLATE,VALVE……板阀	1	60001-
13	(★720-68-19610)	..PIN ……销	1	60001-
14	(★04065-04818)	..RING,SNAP ……卡簧	1	60001-
15	(★708-2L-23131)	..SEAT……座	1	60001-
16	(★708-2L-33160)	..SPRING……弹簧	1	60001-
17	(★708-7L-13140)	..SEAT……座	1	60001-
18	(★708-2L-23351)	..GUIDE,RETAINER……保持架	1	60001-
19	(★708-2L-23360)	..PIN ……销	3	60001-
20	(★708-2L-33340)	..RETAINER,SHOE……保持器,导向板	1	60001-
21	(★708-2L-33310)	..PISTON SUB ASS'Y……活塞子总成	9	60001-

https://truckmanualshub.com/

FIG.Y1600-23A0 MAIN PUMP (3/9) (NO.2 PUMP)

主泵(3/9) (2号泵)

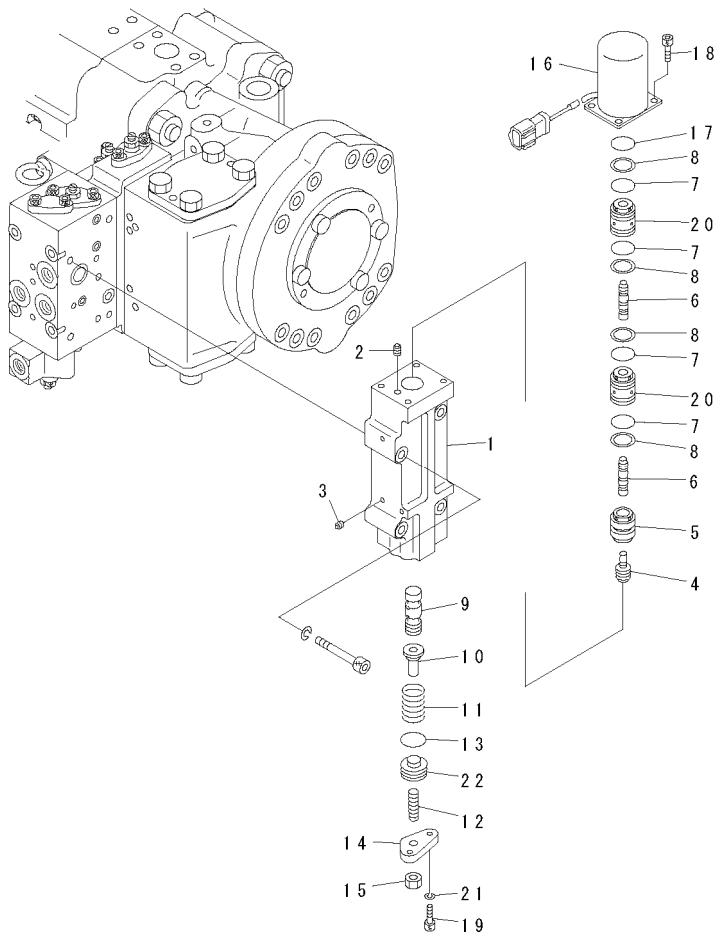

PDB6952

FIG NO. : Y1600-23A0

INDEX	PART NO.	DESCRIPTION	Q'TY	SERIAL NO.
	(708-2L-90721)	PUMP ASS'Y……泵组件 THIS ASSEMBLY CONSISTS OF ALL PARTS SHOWN IN FIGS.Y1600-21A0 TO Y1600-29A0. ……这个总成包含 FIGS Y1600-21A0到Y1600-29A0的所有零件	1	60001-
	(708-2L-01622)	.PUMP SUB ASS'Y ……泵子组件	1	60001-
	(★708-2L-04810)	..CRADLE ASS'Y,FRONT……前支架总成	1	60001-
	(★708-2L-04840)	...CRADLE SUB ASS'Y,FRONT… 前子支架总成	1	60001-
1	☆	....CRADLE,FRONT……前支架	1	60001-
2	☆	....PLUG……堵塞	1	60001-
3	☆	...CAM,ROCKER ……凸轮	1	60001-
4	(★708-2L-23730)	..SLIDER……滑块	1	60001-
5	(★708-25-12330)	..JOINT ……接头	1	60001-
6	(★07000-B2015)	..O-RING ……O形圈	1	60001-
7	(★708-25-62361)	..O-RING ……O形圈	1	60001-
8	(★708-25-12350)	..BOLT……螺栓	12	60001-
9	(★708-25-14211)	..PISTON……活塞	1	60001-
10	(★708-25-14140)	..CAP ……盖	1	60001-
11	07000-B2065	..O-RING ……O形圈	1	60001-
12	(★708-25-05050)	..SHIM KIT……调整垫套件	1	60001-
13	708-25-14130	..SPRING……弹簧	1	60001-
14	01016-51035	..BOLT……螺栓	4	60001-
15	01643-31032	..WASHER……垫圈	4	60001-
16	(★708-25-14150)	..CAP ……盖	1	60001-
17	07000-B2065	..O-RING ……O形圈	1	60001-
18	(★708-25-05050)	..SHIM KIT……调整垫套件	1	60001-
19	01016-51035	..BOLT……螺栓	4	60001-
20	01643-31032	..WASHER……垫圈	4	60001-

https://truckmanualshub.com/

FIG.Y1600-24A0 MAIN PUMP (4/9) (NO.2 PUMP)

主泵(4/9) (2号泵)

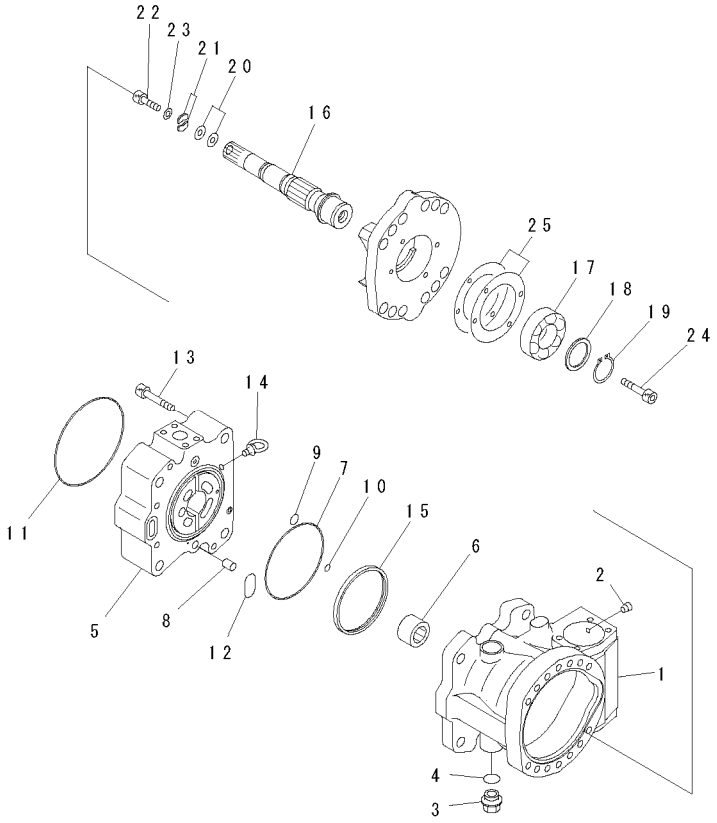

PDB6953

FIG NO. : Y1600-24A0

INDEX	PART NO.	DESCRIPTION	Q'TY	SERIAL NO.
	(708-2L-90721)	PUMP ASS'Y……泵组件 THIS ASSEMBLY CONSISTS OF ALL PARTS SHOWN IN FIGS.Y1600-21A0 TO Y1600-29A0. ……这个总成包含 FIGS Y1600-21A0到Y1600-29A0的所有零件	1	60001-
	(708-2L-01622)	.PUMP SUB ASS'Y ……泵子组件	1	60001-
	(★708-2L-04940)	..CASE ASS'Y,REAR ……后壳体总成	1	60001-
1	☆	...CASE,REAR……后壳体	1	60001-
2	☆	...PLUG ……堵塞	8	60001-
3	07044-12412	..PLUG……堵塞	1	60001-
4	07002-62434	..O-RING ……O形圈	1	60001-
5	(★708-2L-21711)	..CAP,END ……端盖	1	60001-
6	(★708-2L-32260)	..BEARING ……轴承	1	60001-
7	(★07000-B2135)	..O-RING ……O形圈	1	60001-
8	(★6130-21-1910)	..PIN,DOWEL ……定位销	1	60001-
9	(★07000-B2015)	..O-RING ……O形圈	1	60001-
10	(★07000-B1009)	..O-RING ……O形圈	1	60001-
11	(★07000-B5165)	..O-RING ……O形圈	1	60001-
12	(★07000-B3032)	..O-RING ……O形圈	1	60001-
13	(★708-25-12530)	..BOLT……螺栓	4	60001-
14	04530-11018	..BOLT,EYE……吊环螺钉	1	60001-
15	(★708-25-13630)	..RING……隔圈	1	60001-
16	(★708-2L-22440)	..SHAFT,REAR……后轴	1	60001-
17	(★708-2L-32150)	..BEARING ……轴承	1	60001-
18	(★708-2E-05040)	..WASHER KIT……垫圈套件	1	60001-
19	(★708-25-12790)	..RING,SNAP ……卡簧	1	60001-
20	(★708-25-05021)	..SHIM KIT……调整垫套件	1	60001-
21	(★708-25-12950)	..PLATE ……板	2	60001-
22	(★706-74-40320)	..BOLT……螺栓	1	60001-
23	(★01643-31032)	..WASHER……垫圈	1	60001-
24	(★01252-31016)	..BOLT……螺栓	1	60001-
25	(★708-25-05130)	..SHIM KIT……调整垫套件	1	60001-

https://truckmanualshub.com/

FIG.Y1600-25A0 MAIN PUMP (5/9) (NO.2 PUMP)

主泵(5/9) (2号泵)

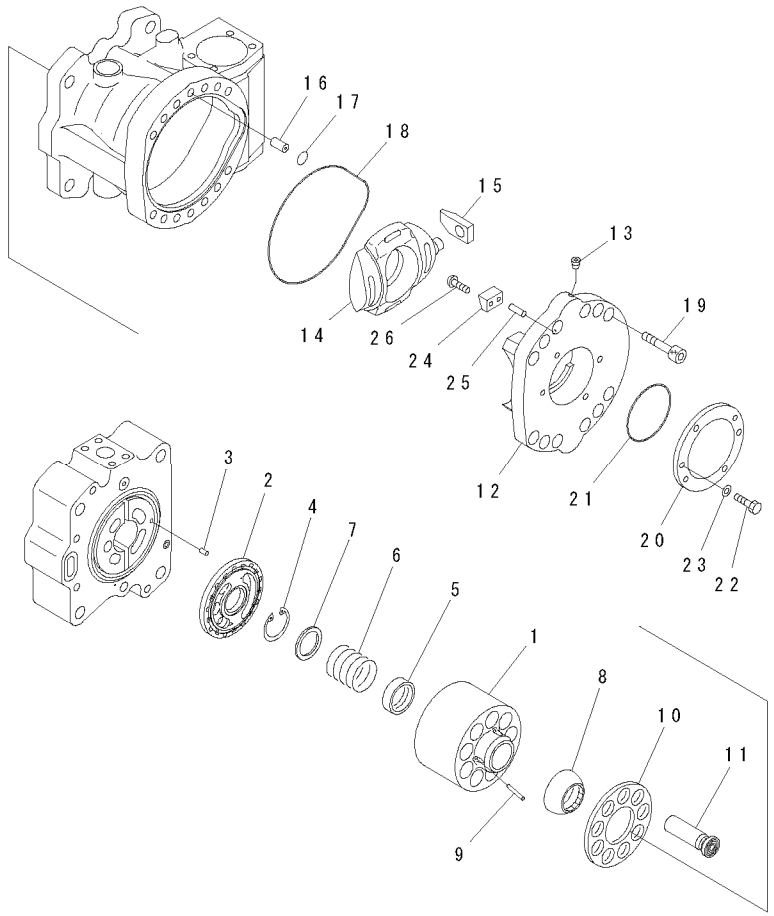

PDB6954

FIG NO. : Y1600-25A0

INDEX	PART NO.	DESCRIPTION	Q'TY	SERIAL NO.
	(708-2L-90721)	PUMP ASS'Y……泵组件 THIS ASSEMBLY CONSISTS OF ALL PARTS SHOWN IN FIGS.Y1600-21A0 TO Y1600-29A0. ……这个总成包含 FIGS Y1600-21A0到Y1600-29A0的所有零件	1	60001-
	(708-2L-01622)	.PUMP SUB ASS'Y ……泵子组件	1	60001-
	(★708-2L-04141)	..BLOCK ASS'Y,FRONT ……前接头组件	1	60001-
1	☆	...BLOCK,CYLINDER ……气缸体	1	60001-
2	☆	...PLATE,VALVE……板阀	1	60001-
3	(★720-68-19610)	..PIN ……销	1	60001-
4	(★04065-04818)	..RING,SNAP ……卡簧	1	60001-
5	(★708-2L-23131)	..SEAT……座	1	60001-
6	(★708-2L-33160)	..SPRING……弹簧	1	60001-
7	(★708-7L-13140)	..SEAT……座	1	60001-
8	(★708-2L-23351)	..GUIDE,RETAINER……保持架	1	60001-
9	(★708-2L-23360)	..PIN ……销	3	60001-
10	(★708-2L-33340)	..RETAINER,SHOE……保持器,导向板	1	60001-
11	(★708-2L-33310)	..PISTON SUB ASS'Y……活塞子总成	9	60001-
	(★708-2L-04820)	..CRADLE ASS'Y,REAR ……后支架总成	1	60001-
	(★708-2L-04850)	...CRADLE SUB ASS'Y,REAR……后子支架总成	1	60001-
12	☆	....CRADLE,REAR ……后支架	1	60001-
13	☆	....PLUG……堵塞	1	60001-
14	☆	...CAM,ROCKER ……凸轮	1	60001-
15	(★708-2L-23730)	..SLIDER……滑块	1	60001-
16	(★708-25-12330)	..JOINT ……接头	1	60001-
17	(★07000-B2015)	..O-RING ……0形圈	1	60001-
18	(★708-25-62361)	..O-RING ……0形圈	1	60001-
19	(★708-25-12350)	..BOLT……螺栓	12	60001-
20	(★708-2L-23740)	..COVER ……盖	1	60001-
21	07000-A2080	..O-RING ……0形圈	1	60001-
22	01010-80820	..BOLT……螺栓	4	60001-
23	01643-30823	..WASHER……垫圈	4	60001-
24	(★708-2L-23790)	..STOPPER ……止动块	1	60001-
25	(★04020-00616)	..PIN ……销	1	60001-
26	(★706-75-42270)	..SCREW ……螺钉	1	60001-

https://truckmanualshub.com/

FIG.Y1600-26A0 MAIN PUMP (6/9) (NO.2 PUMP)
主泵(6/9) (2号泵)

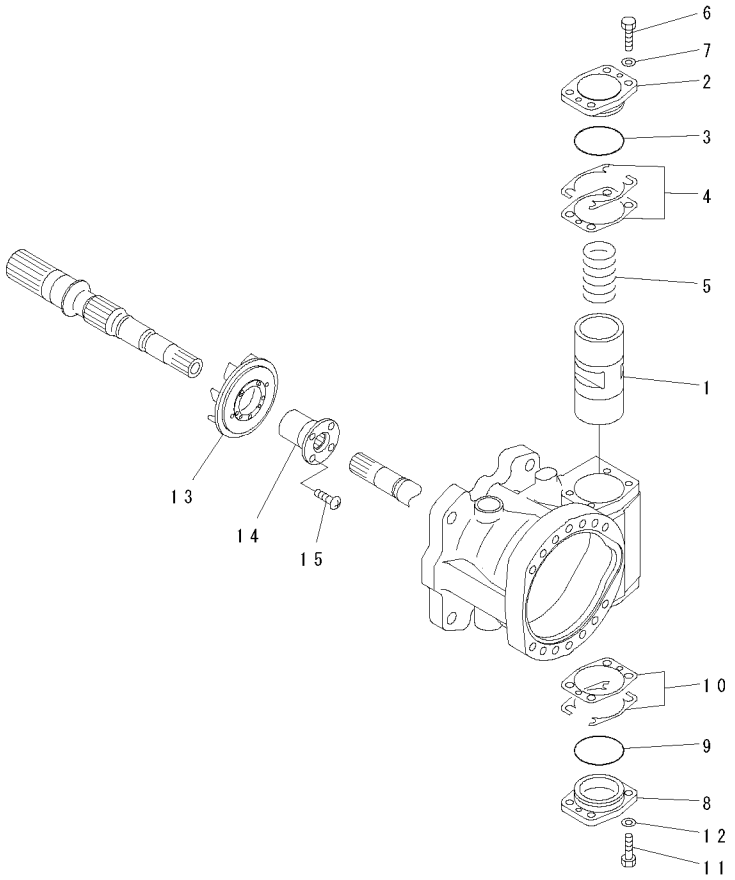

PDB6955

FIG NO. : Y1600-26A0

INDEX	PART NO.	DESCRIPTION	Q'TY	SERIAL NO.
	(708-2L-90721)	PUMP ASS'Y……泵组件 THIS ASSEMBLY CONSISTS OF ALL PARTS SHOWN IN FIGS.Y1600-21A0 TO Y1600-29A0. ……这个总成包含 FIGS Y1600-21A0到Y1600-29A0的所有零件	1	60001-
	(708-2L-01622)	.PUMP SUB ASS'Y ……泵子组件	1	60001-
1	(★708-25-14112)	..PISTON……活塞	1	60001-
2	(★708-25-14140)	..CAP ……盖	1	60001-
3	07000-B2065	..O-RING ……O形圈	1	60001-
4	(★708-25-05050)	..SHIM KIT……调整垫套件	1	60001-
5	708-25-14130	..SPRING……弹簧	1	60001-
6	01016-51035	..BOLT……螺栓	4	60001-
7	01643-31032	..WASHER……垫圈	4	60001-
8	(★708-25-14150)	..CAP ……盖	1	60001-
9	07000-B2065	..O-RING ……O形圈	1	60001-
10	(★708-25-05050)	..SHIM KIT……调整垫套件	1	60001-
11	01016-51035	..BOLT……螺栓	4	60001-
12	01643-31032	..WASHER……垫圈	4	60001-
13	(★708-25-12542)	..IMPELLER……叶轮	1	60001-
14	(★708-25-52550)	..COUPLING……联轴节	1	60001-
15	(★706-73-42270)	..SCREW ……螺钉	4	60001-

https://truckmanualshub.com/

FIG.Y1600-27A0 MAIN PUMP (7/9) (NO.2 PUMP)

主泵(7/9) (2号泵)

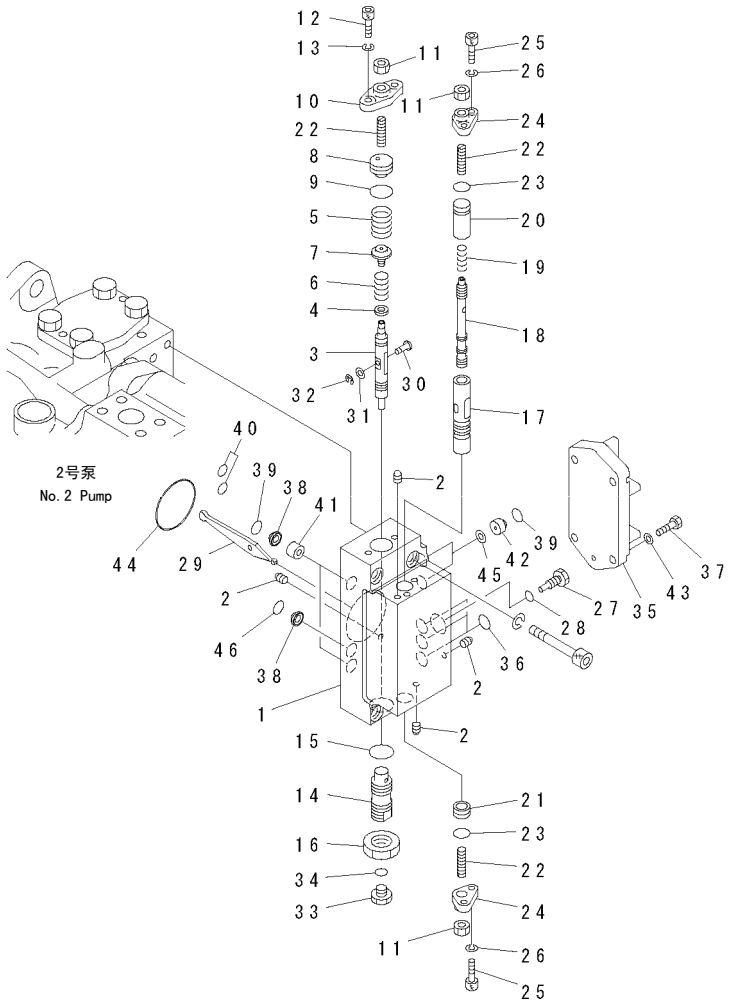

FIG NO. : Y1600-27A0

INDEX	PART NO.	DESCRIPTION	Q'TY	SERIAL NO.
	(708-2L-90721)	PUMP ASS'Y……泵组件 THIS ASSEMBLY CONSISTS OF ALL PARTS SHOWN IN FIGS.Y1600-21A0 TO Y1600-29A0. ……这个总成包含 FIGS Y1600-21A0到Y1600-29A0的所有零件	1	60001-
	708-25-08190	.SERVO VALVE ASS'Y,FRONT……前伺服阀总成	1	60001-
	(★708-23-00421)	..END CAP ASS'Y……	1	60001-
1	☆	...BODY…… 壳	1	60001-
2	☆	...EXPANDER…… 放大器	7	60001-
3	(★708-25-15120)	..PISTON……活塞	1	60001-
4	(★708-25-15130)	..SEAT……座	1	60001-
5	(★708-25-25130)	..SPRING……弹簧	1	60001-
6	(★708-25-55250)	..SPRING……弹簧	1	60001-
7	(★708-23-15120)	..SEAT……座	1	60001-
8	(★708-23-15160)	..PLUG……堵塞	1	60001-
9	(★07000-12018)	..O-RING…… O形圈	1	60001-
10	(★708-25-15150)	..COVER…… 盖	1	60001-
11	(★01580-10806)	..NUT…… 螺母	3	60001-
12	(★01252-60616)	..BOLT……螺栓	2	60001-
13	(★01602-20619)	..WASHER……垫圈	2	60001-
14	(★708-25-15171)	..PLUG……堵塞	1	60001-
15	(★07002-12034)	..O-RING…… O形圈	1	60001-
16	(★07239-12009)	..NUT…… 螺母	1	60001-
17	(★708-25-15180)	..SLEEVE……套筒	1	60001-
18	(★708-25-15280)	..SPOOL…… 阀杆	1	60001-
19	(★708-25-15310)	..SPRING……弹簧	1	60001-
20	(★708-25-15330)	..SPACER……隔离套	1	60001-
21	(★708-25-15430)	..PLUG……堵塞	1	60001-
22	(★708-25-15340)	..SCREW…… 螺钉	3	60001-
23	(★07000-12012)	..O-RING…… O形圈	2	60001-
24	(★708-25-15250)	..COVER…… 盖	2	60001-
25	(★01252-60616)	..BOLT……螺栓	4	60001-
26	(★01602-20619)	..WASHER……垫圈	4	60001-
27	(★708-25-15260)	..PLUG……堵塞	1	60001-
28	(★07002-10823)	..O-RING…… O形圈	1	60001-
29	(★708-25-15270)	..ARM…… 小臂	1	60001-
30	(★708-25-15360)	..PIN…… 销	1	60001-
31	(★708-25-15370)	..WASHER……垫圈	1	60001-
32	(★708-25-15380)	..E-RING……开口垫圈	1	60001-
33	(★07040-11007)	..PLUG……堵塞	1	60001-
34	(★07002-11023)	..O-RING…… O形圈	1	60001-
35	708-25-55110	..PLATE…… 板	1	60001-
36	07000-12011	..O-RING…… O形圈	3	60001-
37	01010-80825	..BOLT……螺栓	4	60001-
38	720-68-11920	..FILTER……滤清器	3	60001-
39	07000-12010	..O-RING…… O形圈	4	60001-
40	07000-11009	..O-RING…… O形圈	2	60001-
41	708-25-19150	..ORIFICE…… 孔	2	60001-

https://truckmanualshub.com/

FIG NO. : Y1600-27A0

INDEX	PART NO.	DESCRIPTION	Q'TY	SERIAL NO.
42	(★708-25-19290)	..PLUG……堵塞	2	60001-
43	01643-50823	..WASHER……垫圈	4	60001-
44	07000-13048	..O-RING…… O形圈	1	60001-
45	708-25-15460	..SHIM, 0.05MM……调整垫	2	60001-
	708-25-15470	..SHIM, 0.10MM……调整垫	2	60001-
46	07000-12010	..O-RING…… O形圈	1	60001-

PC650LC-8R

https://truckmanualshub.com/

FIG.Y1600-28A0 MAIN PUMP (8/9) (NO.2 PUMP)

主泵(8/9) (2号泵)

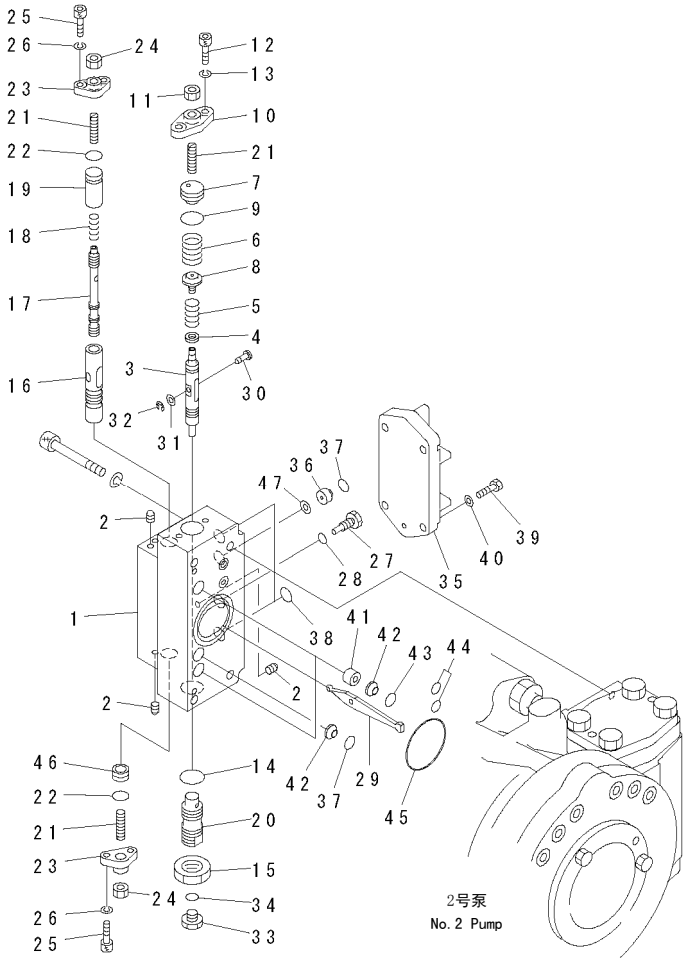

00008998

FIG NO. : Y1600-28A0

INDEX	PART NO.	DESCRIPTION	Q'TY	SERIAL NO.
	708-2L-90721)	PUMP ASS'Y……泵组件 THIS ASSEMBLY CONSISTS OF ALL PARTS SHOWN IN FIGS.Y1600-21A0 TO Y1600-29A0. ……这个总成包含 FIGS Y1600-21A0到Y1600-29A0的所有零件	1	60001-
	708-25-08291	.SERVO VALVE ASS'Y,REAR…… 后伺服阀总成	1	60001-
	(★708-23-00411)	..BODY ASS'Y……壳总成	1	60001-
1	☆	...BODY,FRONT…… 前壳	1	60001-
2	☆	...EXPANDER…… 放大器	5	60001-
3	(★708-25-15120)	..PISTON……活塞	1	60001-
4	(★708-25-15130)	..SEAT……座	1	60001-
5	(★708-25-55250)	..SPRING……弹簧	1	60001-
6	(★708-25-25130)	..SPRING……弹簧	1	60001-
7	(★708-23-15160)	..PLUG……堵塞	1	60001-
8	(★708-23-15120)	..SEAT……座	1	60001-
9	(★07000-12018)	..O-RING…… O形圈	1	60001-
10	(★708-25-15150)	..COVER…… 盖	1	60001-
11	(★01580-10806)	..NUT…… 螺母	1	60001-
12	(★01252-60616)	..BOLT……螺栓	2	60001-
13	(★01602-20619)	..WASHER……垫圈	2	60001-
14	(★07002-12034)	..O-RING…… O形圈	1	60001-
15	(★07239-12009)	..NUT…… 螺母	1	60001-
16	(★708-25-15180)	..SLEEVE……套筒	1	60001-
17	(★708-25-15280)	..SPOOL…… 阀杆	1	60001-
18	(★708-25-15310)	..SPRING……弹簧	1	60001-
19	(★708-25-15330)	..SPACER……隔离套	1	60001-
20	(★708-25-15171)	..PLUG……堵塞	1	60001-
21	(★708-25-15340)	..SCREW…… 螺钉	3	60001-
22	(★07000-12012)	..O-RING…… O形圈	2	60001-
23	(★708-25-15250)	..COVER…… 盖	2	60001-
24	(★01580-10806)	..NUT…… 螺母	2	60001-
25	(★01252-60616)	..BOLT……螺栓	4	60001-
26	(★01602-20619)	..WASHER……垫圈	4	60001-
27	(★708-25-15260)	..PLUG……堵塞	1	60001-
28	(★07002-10823)	..O-RING…… O形圈	1	60001-
29	(★708-25-15270)	..ARM…… 小臂	1	60001-
30	(★708-25-15360)	..PIN…… 销	1	60001-
31	(★708-25-15370)	..WASHER……垫圈	1	60001-
32	(★708-25-15380)	..E-RING……开口垫圈	1	60001-
33	(★07040-11007)	..PLUG……堵塞	1	60001-
34	(★07002-11023)	..O-RING…… O形圈	1	60001-
35	(★708-25-55110)	..PLATE…… 板	1	60001-
36	(★708-25-19290)	..PLUG……堵塞	1	60001-
37	07000-12010	..O-RING…… O形圈	2	60001-
38	07000-12011	O-RING…… O形圈	2	60001-
39	01010-80825	BOLT……螺栓	4	60001-
40	01643-50823	WASHER……垫圈	4	60001-
41	708-25-19150	ORIFICE…… 孔	2	60001-

https://truckmanualshub.com/

FIG NO. : Y160O-28A0

INDEX	PART NO.	DESCRIPTION	Q'TY	SERIAL NO.
42	720-68-11920	..FILTER……滤清器	3	60001-
43	07000-12010	..O-RING…… O形圈	2	60001-
44	07000-11009	..O-RING…… O形圈	2	60001-
45	07000-13048	..O-RING…… O形圈	1	60001-
46	(★708-25-15430)	..PLUG……堵塞	1	60001-
47	708-25-15460	..SHIM, 0.05MM……调整垫	1	60001-
	708-25-15470	..SHIM, 0.1OMM……调整垫	1	60001-

https://truckmanualshub.com/

FIG.Y1600-29A0 MAIN PUMP (9/9) (NO.2 PUMP)
主泵(9/9) (2号泵)

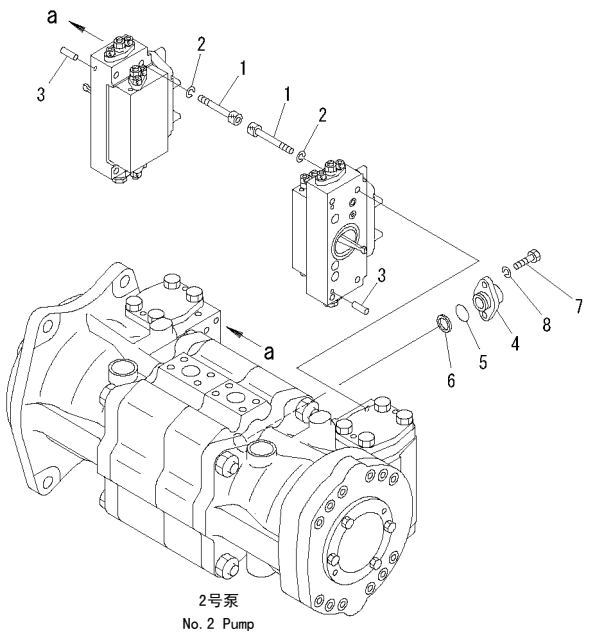

2号泵
No.2 Pump

00008999

FIG NO. : Y1600-29A0

INDEX	PART NO.	DESCRIPTION	Q'TY	SERIAL NO.
	(708-2L-90721)	PUMP ASS'Y……泵组件 THIS ASSEMBLY CONSISTS OF ALL PARTS SHOWN IN FIGS.Y1600-21A0 TO Y1600-29A0. ……这个总成包含 FIGS Y1600-21A0到Y1600-29A0的所有零件	1	60001-
1	01252-60850	.BOLT ……螺栓	8	60001-
2	01602-20825	.WASHER ……垫圈	8	60001-
3	04020-00616	.PIN……销	4	60001-
4	708-25-19120	.FLANGE ……法兰	1	60001-
5	07000-02021	.O-RING …… O形圈	1	60001-
6	720-68-15240	.FILTER ……滤清器	1	60001-
7	01010-80820	.BOLT ……螺栓	2	60001-
8	01602-20825	.WASHER ……垫圈	2	60001-

https://truckmanualshub.com/

FIG.Y1600-31A0 FAN PUMP (1/7)

风扇泵(1/7)

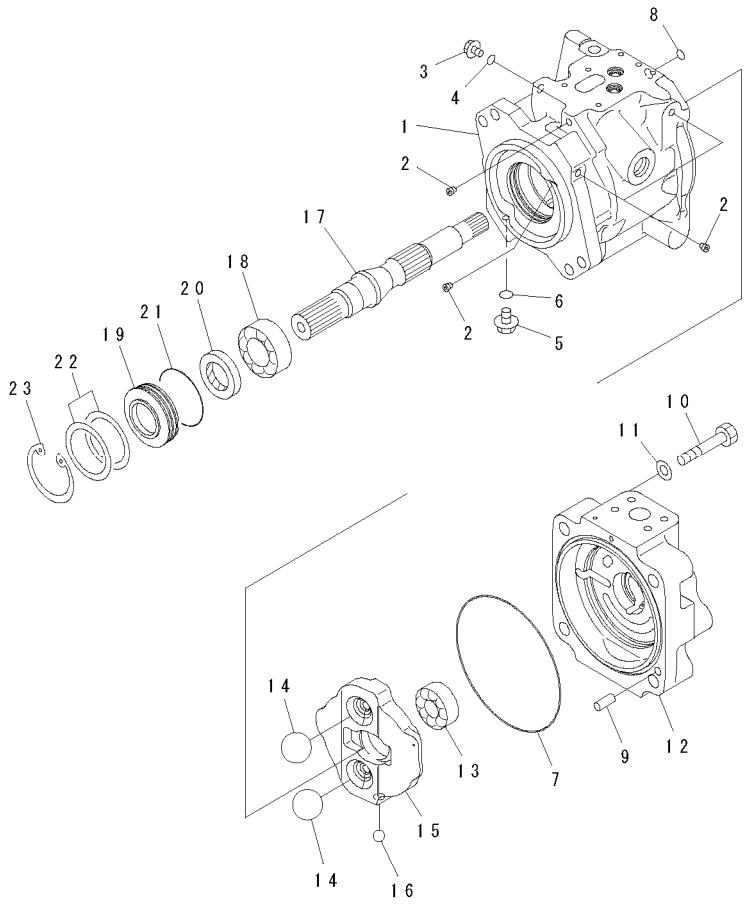

00039475

FIG NO. : Y1600-31A0

INDEX	PART NO.	DESCRIPTION	Q'TY	SERIAL NO.
	708-1U-00200	GEAR PUMP ASS'Y ……齿轮泵总成 THIS ASSEMBLY CONSISTS OF ALL PARTS SHOWN IN FIGS.Y1600-31A0 TO Y1600-37A0. ……这个总成包含 FIGS Y1600-31A0到Y1600-37A0的所有零件	1	60001-
	708-1U-00210	.PUMP ASS'Y ……泵组件	1	60001-
	708-1U-01214	..PUMP SUB ASS'Y……泵辅助组件	1	60001-
	(★708-1U-04142)	...CASE ASS'Y ……壳体总成	1	60001-
1	☆	....CASE,PUMP ……泵壳	1	60001-
2	☆	....PLUG……堵塞	4	60001-
3	708-8E-16160	...PLUG ……堵塞	2	60001-
4	07002-11023	...O-RING……O形圈	2	60001-
5	07040-12412	...PLUG ……堵塞	1	60001-
6	07002-12434	...O-RING……O形圈	1	60001-
7	706-73-42370	...O-RING……O形圈	1	60001-
8	07000-B1009	...O-RING……O形圈	1	60001-
9	04020-01024	...PIN……销	1	60001-
10	01010-61470	...BOLT ……螺栓	4	60001-
11	01643-31445	...WASHER ……垫圈	4	60001-
12	(★708-1U-11560)	...CAP,END……端盖	1	60001-
13	(★708-1W-42120)	...BEARING……轴承	1	60001-
14	(★708-3T-13420)	...BALL ……球	2	60001-
15	(★708-1U-13450)	...CAM,ROCKER ……凸轮	1	60001-
16	(★04260-01270)	...BALL ……球	1	60001-
17	(★708-1U-12120)	...SHAFT……轴	1	60001-
18	(★708-1W-42110)	...BEARING……轴承	1	60001-
19	708-1U-12320	...CASE,SEAL……密封壳体	1	60001-
20	708-1W-42130	...SEAL,OIL ……油封	1	60001-
21	07000-B2065	...O-RING……O形圈	1	60001-
22	(★708-1W-05810)	...SPACER KIT ……隔离套组件	1	60001-
23	04065-07225	...RING ……隔圈	1	60001-

https://truckmanualshub.com/

FIG.Y1600-32A0 FAN PUMP (2/7)

风扇泵(2/7)

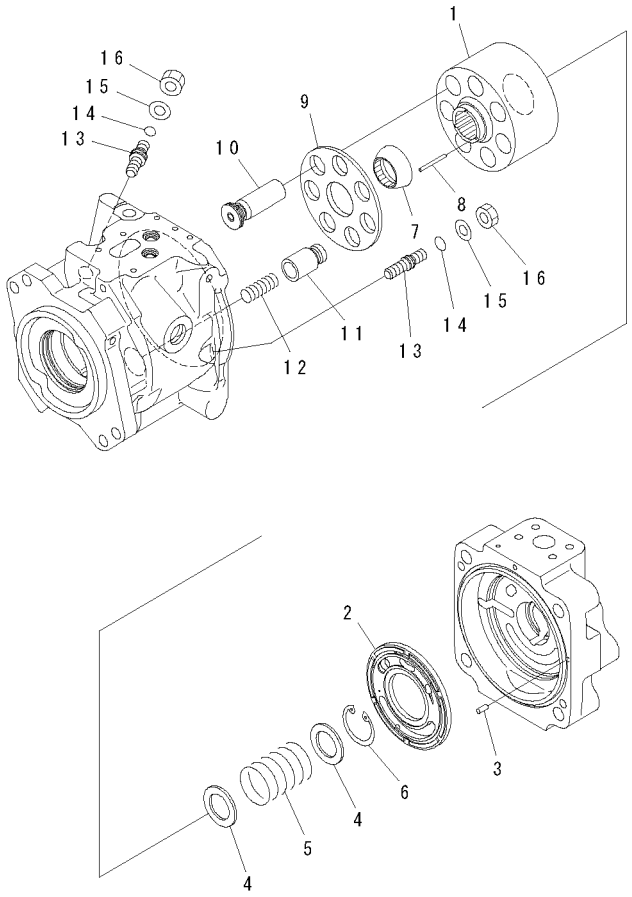

00039476

FIG NO. : Y1600-32A0

INDEX	PART NO.	DESCRIPTION	Q'TY	SERIAL NO.
	(708-1U-00200)	GEAR PUMP ASS'Y ……齿轮泵总成 THIS ASSEMBLY CONSISTS OF ALL PARTS SHOWN IN FIGS.Y1600-31A0 TO Y1600-37A0. ……这个总成包含 FIGS Y1600-31A0到Y1600-37A0的所有零件	1	60001-
	(708-1U-00210)	.PUMP ASS'Y ……泵组件	1	60001-
	(708-1U-01214)	..PUMP SUB ASS'Y……泵子组件	1	60001-
1	(★708-1U-13110)	...BLOCK,CYLINDER ……气缸体	1	60001-
2	(★708-1U-13211)	...PLATE,VALVE……板阀	1	60001-
3	(★720-68-19610)	...PIN……销	1	60001-
4	(★708-1W-43130)	...SEAT ……座	2	60001-
5	(★708-1W-43140)	...SPRING ……弹簧	1	60001-
6	(★04065-04818)	...RING ……隔圈	1	60001-
7	(★708-1W-43350)	...GUIDE,RETAINER……导向器,保持架	1	60001-
8	(★708-3T-13360)	...PIN……销	3	60001-
9	(★708-1U-13341)	...RETAINER,SHOE ……保持器,导向板	1	60001-
10	(★708-1U-13310)	...PISTON SUB ASS'Y ……活塞子总成	7	60001-
11	(★708-1W-44120)	...PISTON SUB ASS'Y ……活塞子总成	1	60001-
12	(★708-3T-14120)	...SPRING ……弹簧	1	60001-
13	(★708-1U-14240)	...SCREW …… 螺钉	2	60001-
14	07000-12011	...O-RING……O形圈	2	60001-
15	01643-31232	...WASHER ……垫圈	2	60001-
16	01582-11210	...NUT……螺母	2	60001-

https://truckmanualshub.com/

FIG.Y1600-33A0 FAN PUMP (3/7)

风扇泵(3/7)

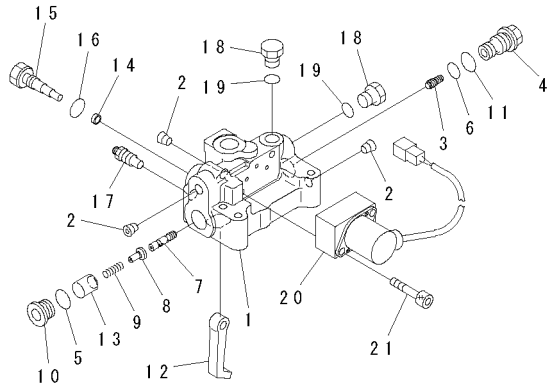

00039477

FIG NO. : Y1600-33A0

INDEX	PART NO.	DESCRIPTION	Q'TY	SERIAL NO.
	(708-1U-00200)	GEAR PUMP ASS'Y ……齿轮泵总成 THIS ASSEMBLY CONSISTS OF ALL PARTS SHOWN IN FIGS.Y1600-31A0 TO Y1600-37A0. ……这个总成包含 FIGS Y1600-31A0到Y1600-37A0的所有零件	1	60001-
	(708-1U-00210)	.PUMP ASS'Y ……泵组件	1	60001-
	(★708-1U-03340)	..VALVE ASS'Y ……阀总成	1	60001-
	☆	...BODY SUB ASS'Y…… 壳附件组成	1	60001-
1	☆	....BODY……壳	1	60001-
2	☆	....PLUG……堵塞	3	60001-
3	☆	...PISTON ……活塞	1	60001-
4	☆	...SLEEVE ……套筒	1	60001-
5	☆	...O-RING……0形圈	1	60001-
6	☆	...O-RING……0形圈	1	60001-
7	☆	...SPOOL……阀芯	1	60001-
8	☆	...SEAT ……座	1	60001-
9	☆	...SPRING ……弹簧	1	60001-
10	☆	...PLUG ……堵塞	1	60001-
11	☆	...O-RING……0形圈	1	60001-
12	☆	...LEVER……连杆	1	60001-
13	☆	...RETAINER ……固定座	1	60001-
14	☆	...SPACER ……调整垫片	1	60001-
15	☆	...PLUG ……堵塞	1	60001-
16	☆	...O-RING……0形圈	1	60001-
17	☆	...BLEEDER……排放装置	1	60001-
18	☆	...PLUG ……堵塞	2	60001-
19	☆	...O-RING……0形圈	2	60001-
20	702-21-57700	...PILOT VALVE……先导阀	1	60001-
21	01252-60635	...BOLT ……螺栓	2	60001-

https://truckmanualshub.com/

FIG.Y1600-34A0 FAN PUMP (4/7)
风扇泵(4/7)

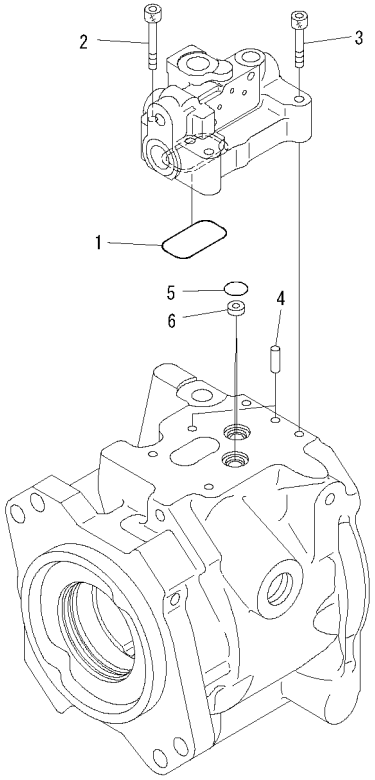

00039478

FIG NO. : Y1600-34A0

INDEX	PART NO.	DESCRIPTION	Q'TY	SERIAL NO.
	(708-1U-00200)	GEAR PUMP ASS'Y ……齿轮泵总成 THIS ASSEMBLY CONSISTS OF ALL PARTS SHOWN IN FIGS.Y1600-31A0 TO Y1600-37A0. ……这个总成包含 FIGS Y1600-31A0到Y1600-37A0的所有零件	1	60001-
	(708-1U-00210)	.PUMP ASS'Y ……泵组件	1	60001-
1	☆	..O-RING ……O形圈	1	60001-
2	☆	..BOLT……螺栓	1	60001-
3	☆	..BOLT……螺栓	3	60001-
4	☆	..PIN,DOWEL ……定位销	2	60001-
5	07000-B2014	..O-RING ……O形圈	2	60001-
6	☆	..FILTER……滤清器	2	60001-

https://truckmanualshub.com/

FIG.Y1600-35A0 FAN PUMP (5/7)

风扇泵(5/7)

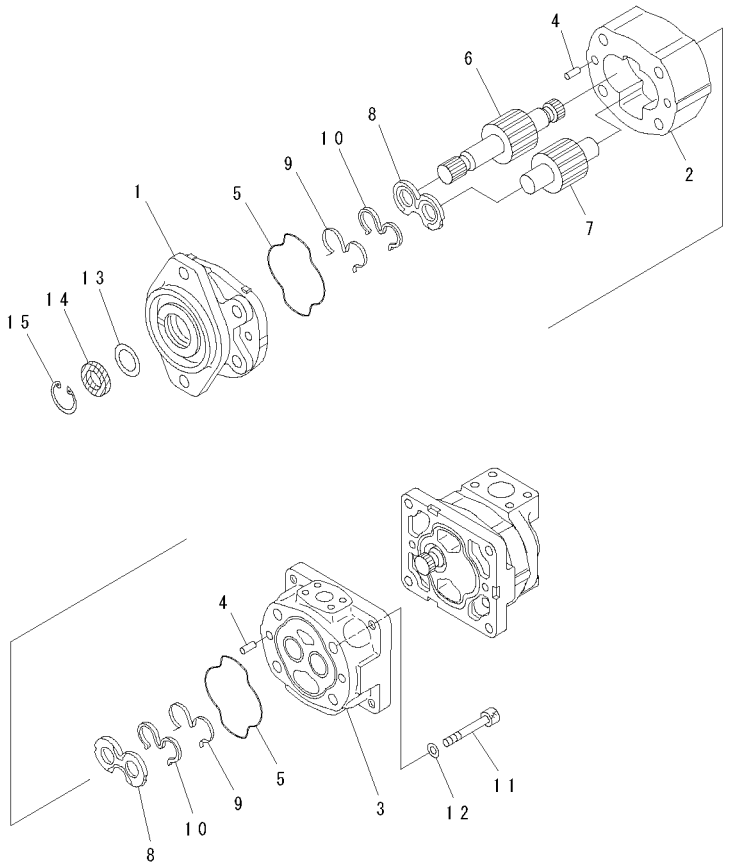

00039525

FIG NO. : Y1600-35A0

INDEX	PART NO.	DESCRIPTION	Q'TY	SERIAL NO.
	(708-1U-00200)	GEAR PUMP ASS'Y ……齿轮泵总成 THIS ASSEMBLY CONSISTS OF ALL PARTS SHOWN IN FIGS.Y1600-31A0 TO Y1600-37A0. ……这个总成包含 FIGS Y1600-31A0到Y1600-37A0的所有零件	1	60001-
	705-52-21190	.PUMP ASS'Y,SAR(2)56+8……泵总成 THIS ASSEMBLY CONSISTS OF ALL PARTS SHOWN IN FIGS.Y1600-35A0 AND Y1600-36A0. ……这个总成包含 FIGS Y1600-31A0到Y1600-36A0的所有零件	1	60001-
	705-22-35190	..PUMP ASS'Y,SAR(2)8……泵总成	1	60001-
1	(★705-18-02820)	...BRACKET ASS'Y……支架总成	1	60001-
	(★705-17-02353)	....BUSHING ……衬套	2	60001-
2	(★705-18-35120)	...CASE,GEAR……齿轮箱	1	60001-
3	(★705-18-02240)	...CARRIER ASS'Y.....行星架总成	1	60001-
	(★705-17-02353)	....BUSHING ……衬套	2	60001-
4	04020-01024	...PIN,DOWEL……定位销	4	60001-
5	705-17-02360	...O-RING……O形圈	2	60001-
6	(★705-18-35721)	...GEAR,DRIVE ……主动齿轮	1	60001-
7	(★705-18-35810)	...GEAR,DRIVEN……主动齿轮	1	60001-
8	705-17-02612	...PLATE,SIDE ……侧板	2	60001-
9	705-17-02430	...RING,BACK-UP ……支承环	2	60001-
10	705-17-02460	...RING,SEAL……密封圈	2	60001-
11	01253-61420	...BOLT ……螺栓	4	60001-
12	705-17-04980	...WASHER ……垫圈	4	60001-
13	705-17-02870	...PLATE……板	1	60001-
14	705-17-02960	...SEAL,OIL ……油封	1	60001-
15	04065-04018	...RING,SNAP……卡簧	1	60001-

https://truckmanualshub.com/

FIG.Y1600-36A0 FAN PUMP (6/7)

风扇泵(6/7)

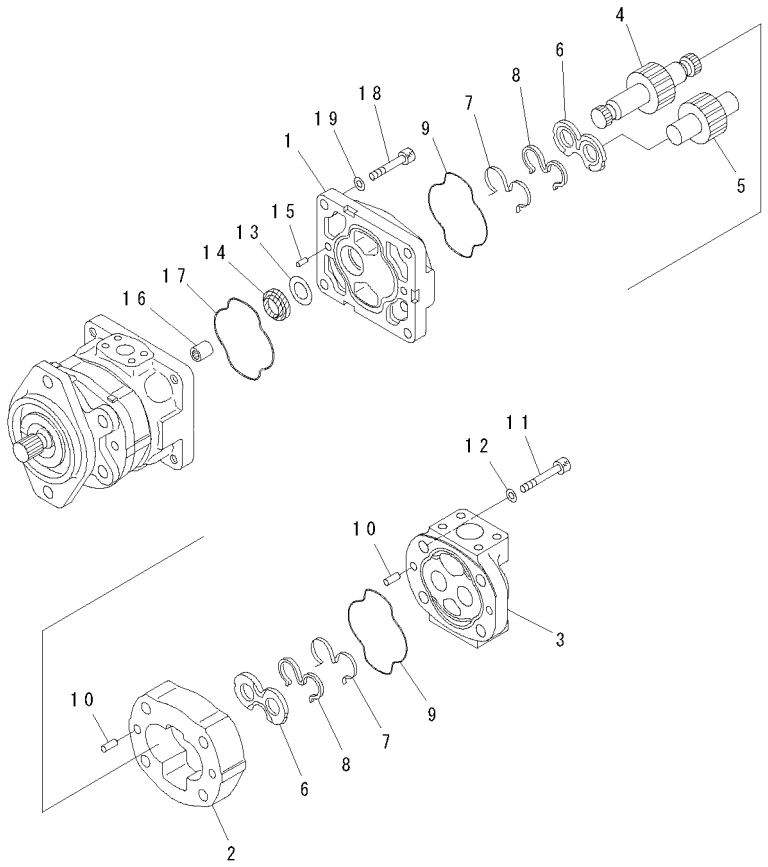

00039526

FIG NO. : Y1600-36A0

INDEX	PART NO.	DESCRIPTION	Q'TY	SERIAL NO.
	(708-1U-00200)	GEAR PUMP ASS'Y ……齿轮泵总成 THIS ASSEMBLY CONSISTS OF ALL PARTS SHOWN IN FIGS.Y1600-31A0 TO Y1600-37A0. ……这个总成包含 FIGS Y1600-31A0到Y1600-37A0的所有零件	1	60001-
	(705-52-21190)	.PUMP ASS'Y,SAR(2)56+8……泵总成 THIS ASSEMBLY CONSISTS OF ALL PARTS SHOWN IN FIGS.Y1600-35A0 AND Y1600-36A0. ……这个总成包含 FIGS Y1600-31A0到Y1600-36A0的所有零件	1	60001-
	705-22-20090	..PUMP ASS'Y,SAR(2)8……泵总成	1	60001-
1	(★705-17-02540)	...BRACKET ASS'Y……支架总成	1	60001-
	(★705-17-02353)	....BUSHING ……衬套	2	60001-
2	(★705-18-20010)	...CASE,GEAR……齿轮箱	1	60001-
3	(★705-17-02122)	...COVER ASS'Y……盖总成	1	60001-
	(★705-17-02353)	....BUSHING ……衬套	2	60001-
4	(★705-18-20450)	...GEAR,DRIVE ……主动齿轮	1	60001-
5	(★705-18-20510)	...GEAR,DRIVEN……主动齿轮	1	60001-
6	705-17-02612	...PLATE,SIDE ……侧板	2	60001-
7	705-17-02430	...RING,BACK-UP ……支承环	2	60001-
8	705-17-02460	...RING,SEAL……密封圈	2	60001-
9	705-17-02360	...O-RING……O形圈	2	60001-
10	705-17-02910	...PIN,DOWEL……定位销	4	60001-
11	01252-61270	...BOLT ……螺栓	4	60001-
12	01643-51032	...WASHER ……垫圈	4	60001-
13	705-17-02870	...PLATE……板	1	60001-
14	705-18-02940	...SEAL,OIL ……油封	1	60001-
15	04020-01024	...PIN……销	2	60001-
16	705-17-02330	..COUPLING ASS'Y……联轴节总成	1	60001-
17	705-17-02360	..O-RING ……O形圈	1	60001-
18	01252-61035	..BOLT……螺栓	4	60001-
19	01643-51032	..WASHER……垫圈	4	60001-

https://truckmanualshub.com/

FIG.Y1600-37A0 FAN PUMP (7/7)
风扇泵(7/7)

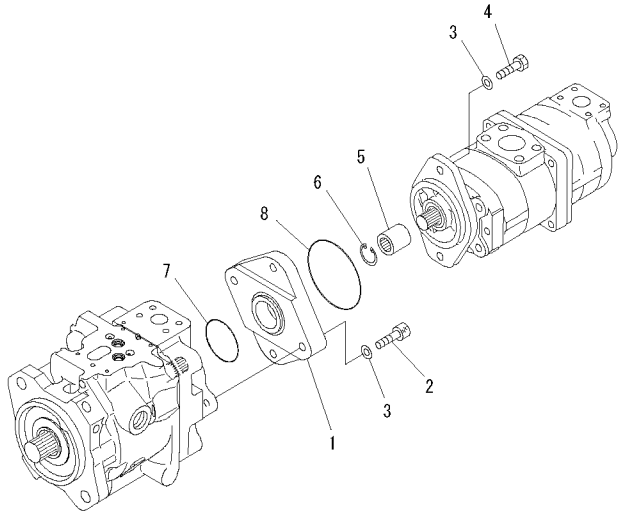

00039479

FIG NO. : Y1600-37A0

INDEX	PART NO.	DESCRIPTION	Q'TY	SERIAL NO.
	(708-1U-00200)	GEAR PUMP ASS'Y ……齿轮泵总成 THIS ASSEMBLY CONSISTS OF ALL PARTS SHOWN IN FIGS.Y1600-31A0 TO Y1600-37A0. ……这个总成包含 FIGS Y1600-31A0到Y1600-37A0的所有零件	1	60001-
1	708-1U-19120	.PLATE……板	1	60001-
2	01252-61235	.BOLT ……螺栓	2	60001-
3	01643-31232	.WASHER ……垫圈	4	60001-
4	07372-21235	.BOLT ……螺栓	2	60001-
5	708-1W-28150	.COUPLING,DOWEL…… 联轴节	1	60001-
6	04065-02012	.RING ……隔圈	1	60001-
7	07000-B2060	.O-RING……O形圈	1	60001-
8	07000-B2100	.O-RING……O形圈	1	60001-

https://truckmanualshub.com/

FIG.Y1620-01A0 BOOM CYLINDER L.H.

左大臂油缸

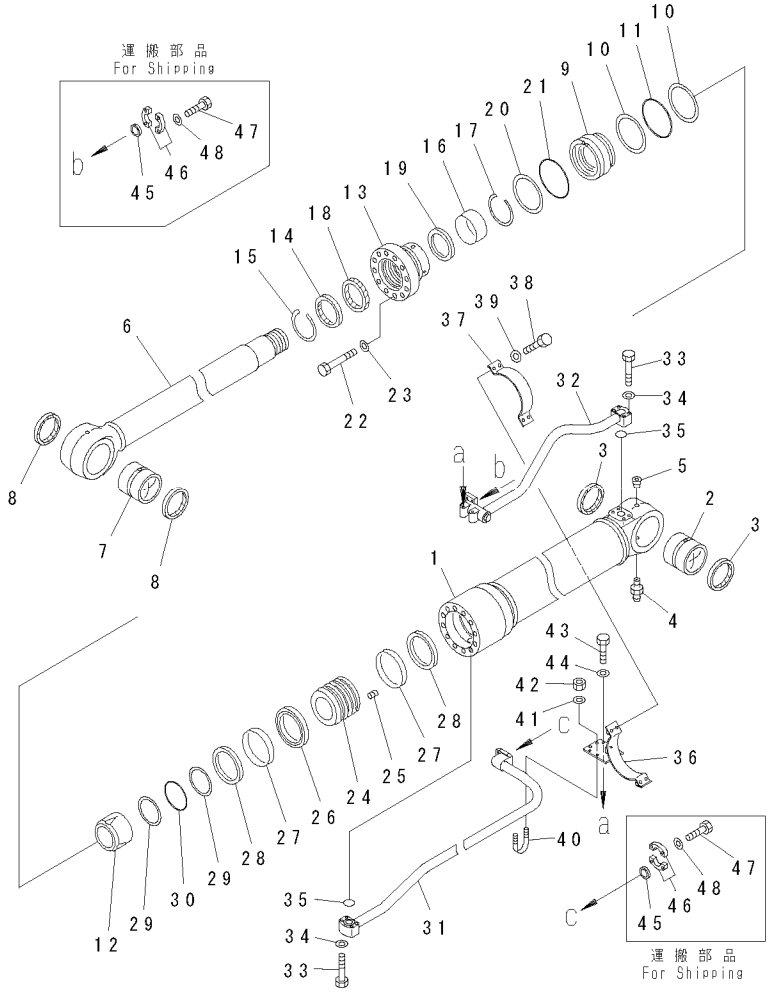

FIG NO. : Y1620-01A0

INDEX	PART NO.	DESCRIPTION	Q'TY	SERIAL NO.
G-1	(⊙707-01-XR610)	CYLINDER GROUP,L.H. (FINAL COATING)……左油缸组件(最后涂装)	1	60001-
	707-01-XJ630	BOOM CYLINDER ASS'Y ……大臂油缸总成	1	60001-
1	707-13-18950	.CYLINDER ……油缸	1	60001-
2	707-76-11160	.BUSHING……衬套	1	60001-
3	07145-00110	.SEAL,DUST ……(KIT)……防尘圈	2	60001-
4	07020-00000	.FITTING,GREASE ……黄油嘴	1	60001-
5	07043-00108	.PLUG ……堵塞	1	60001-
6	707-58-12660	.ROD……连杆	1	60001-
7	707-76-12530	.BUSHING……衬套	1	60001-
8	07145-00125	.SEAL,DUST ……(KIT)……防尘圈	2	60001-
9	707-71-32900	.COLLAR…… 衬套	1	60001-
10	707-35-91840	.RING,BACK-UP……(KIT)……支承环	2	60001-
11	07000-15175	.O-RING……(KIT)…… O形圈	1	60001-
12	707-71-61330	.PLUNGER……柱塞	1	60001-
13	707-27-18930	.HEAD ……头	1	60001-
14	195-63-93170	.SEAL,DUST ……(KIT)……防尘圈	1	60001-
15	07179-13136	.RING,SNAP……卡簧	1	60001-
16	707-52-90981	.BUSHING……衬套	1	60001-
17	07179-13126	.RING,SNAP……卡簧	1	60001-
18	707-51-12030	.PACKING,ROD ……(KIT)……杆用密封圈	1	60001-
19	707-51-12650	.RING,BUFFER ……(KIT)……缓冲环	1	60001-
20	707-35-91840	.RING,BACK-UP……(KIT)……支承环	1	60001-
21	07000-15175	.O-RING……(KIT)…… O形圈	1	60001-
22	01011-82400	.BOLT ……螺栓	12	60001-
23	707-88-75410	.WASHER ……垫圈	12	60001-
24	707-36-18520	.PISTON ……活塞	1	60001-
25	01310-01225	.SCREW……螺钉	1	60001-
26	707-44-18250	.RING,PISTON ……(KIT)……活塞环	1	60001-
27	707-39-18510	.RING,WEAR ……(KIT)……密封环	2	60001-
28	707-44-18920	.RING ……隔圈	2	60001-
29	07001-05110	.RING,BACK-UP……(KIT)……支承环	2	60001-
30	07000-15110	.O-RING……(KIT)…… O形圈	1	60001-
31	707-86-13250	TUBE,L.H……左管	1	60001-
32	21M-63-52280	TUBE,L.H……左管	1	60001-
33	07372-21060	BOLT……螺栓	8	60001-
34	01643-51032	WASHER……垫圈	8	60001-
35	07000-13035	O-RING…… (KIT)…… O形圈	2	60001-
36	707-88-28240	BRACKET ……支架	1	60001-
37	707-88-26120	BAND……绑带	1	60001-
38	07372-21240	BOLT……螺栓	4	60001-
39	01643-51232	WASHER……垫圈	4	60001-

https://truckmanualshub.com/

FIG NO. : Y162O-O1AO

INDEX	PART NO.	DESCRIPTION		SERIAL NO.
40	07283-33442	CLIP……管夹	1	60001-
41	01643-31032	WASHER……垫圈	2	60001-
42	01597-01009	NUT ……螺母	2	60001-
43	01010-81025	BOLT……螺栓	2	60001-
44	01643-31032	WASHER……垫圈	2	60001-
45	707-88-33040	CAP ……盖	2	60001-
46	07371-31049	FLANGE,SPLIT……分体法兰	4	60001-
47	07372-21035	BOLT……螺栓	8	60001-
48	01643-51032	WASHER……垫圈	8	60001-
		==========.....		
	707-99-76130	SERVICE KIT ……备件	1	60001-

PC650LC-8R

https://truckmanualshub.com/

FIG.Y1620-02A0 BOOM CYLINDER R.H.

右大臂油缸

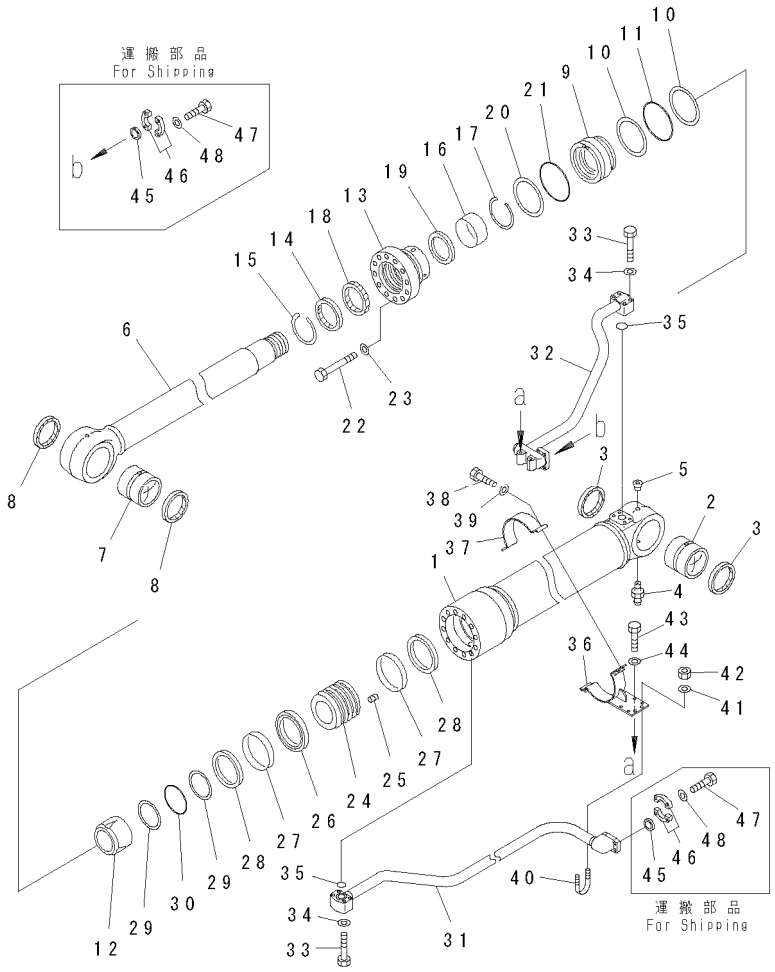

FIG NO. : Y1620-02A0

INDEX	PART NO.	DESCRIPTION	Q'TY	SERIAL NO.
G-2	(⊙707-01-XR620)	CYLINDER GROUP,R.H. (FINAL COATING)……左油缸组件(最后涂装)	1	60001-
	707-01-XJ640	BOOM CYLINDER ASS'Y ……大臂油缸总成	1	60001-
1	707-13-18950	.CYLINDER ……油缸	1	60001-
2	707-76-11160	.BUSHING……衬套	1	60001-
3	07145-00110	.SEAL,DUST ……(KIT)……防尘圈	2	60001-
4	07020-00000	.FITTING,GREASE ……黄油嘴	1	60001-
5	07043-00108	.PLUG ……堵塞	1	60001-
6	707-58-12660	.ROD……连杆	1	60001-
7	707-76-12530	.BUSHING……衬套	1	60001-
8	07145-00125	.SEAL,DUST ……(KIT)……防尘圈	2	60001-
9	707-71-32900	.COLLAR…… 衬套	1	60001-
10	707-35-91840	.RING,BACK-UP……(KIT)……支承环	2	60001-
11	07000-15175	.O-RING……(KIT)…… O形圈	1	60001-
12	707-71-61330	.PLUNGER……柱塞	1	60001-
13	707-27-18930	.HEAD ……头	1	60001-
14	195-63-93170	.SEAL,DUST ……(KIT)……防尘圈	1	60001-
15	07179-13136	.RING,SNAP……卡簧	1	60001-
16	707-52-90981	.BUSHING……衬套	1	60001-
17	07179-13126	.RING,SNAP……卡簧	1	60001-
18	707-51-12030	.PACKING,ROD ……(KIT)……杆用密封圈	1	60001-
19	707-51-12650	.RING,BUFFER ……(KIT)……缓冲环	1	60001-
20	707-35-91840	.RING,BACK-UP……(KIT)……支承环	1	60001-
21	07000-15175	.O-RING……(KIT)…… O形圈	1	60001-
22	01011-82400	.BOLT ……螺栓	12	60001-
23	707-88-75410	.WASHER ……垫圈	12	60001-
24	707-36-18520	.PISTON ……活塞	1	60001-
25	01310-01225	.SCREW……螺钉	1	60001-
26	707-44-18250	.RING,PISTON ……(KIT)……活塞环	1	60001-
27	707-39-18510	.RING,WEAR ……(KIT)……密封环	2	60001-
28	707-44-18920	.RING ……隔圈	2	60001-
29	07001-05110	.RING,BACK-UP……(KIT)……支承环	2	60001-
30	07000-15110	.O-RING……(KIT)…… O形圈	1	60001-
31	707-86-13250	TUBE,R.H……右管	1	60001-
32	21M-63-52280	TUBE,R.H……右管	1	60001-
33	07372-21060	BOLT……螺栓	8	60001-
34	01643-51032	WASHER……垫圈	8	60001-
35	07000-13035	O-RING…… (KIT)…… O形圈	2	60001-
36	707-88-28240	BRACKET ……支架	1	60001-
37	707-88-26120	BAND……绑带	1	60001-
38	07372-21240	BOLT……螺栓	4	60001-
39	01643-51232	WASHER……垫圈	4	60001-

https://truckmanualshub.com/

FIG NO. : Y162O-02A0

INDEX	PART NO.	DESCRIPTION		SERIAL NO.
40	07283-33442	CLIP……管夹	1	60001-
41	01643-31032	WASHER……垫圈	2	60001-
42	01597-01009	NUT ……螺母	2	60001-
43	01010-81025	BOLT……螺栓	2	60001-
44	01643-31032	WASHER……垫圈	2	60001-
45	707-88-33040	CAP ……盖	2	60001-
46	07371-31049	FLANGE,SPLIT……分体法兰	4	60001-
47	07372-21035	BOLT……螺栓	8	60001-
48	01643-51032	WASHER……垫圈	8	60001-
		==========.....		
	707-99-76130	SERVICE KIT ……备件	1	60001-

https://truckmanualshub.com/

FIG.Y1620-11A0 ARM CYLINDER

小臂油缸

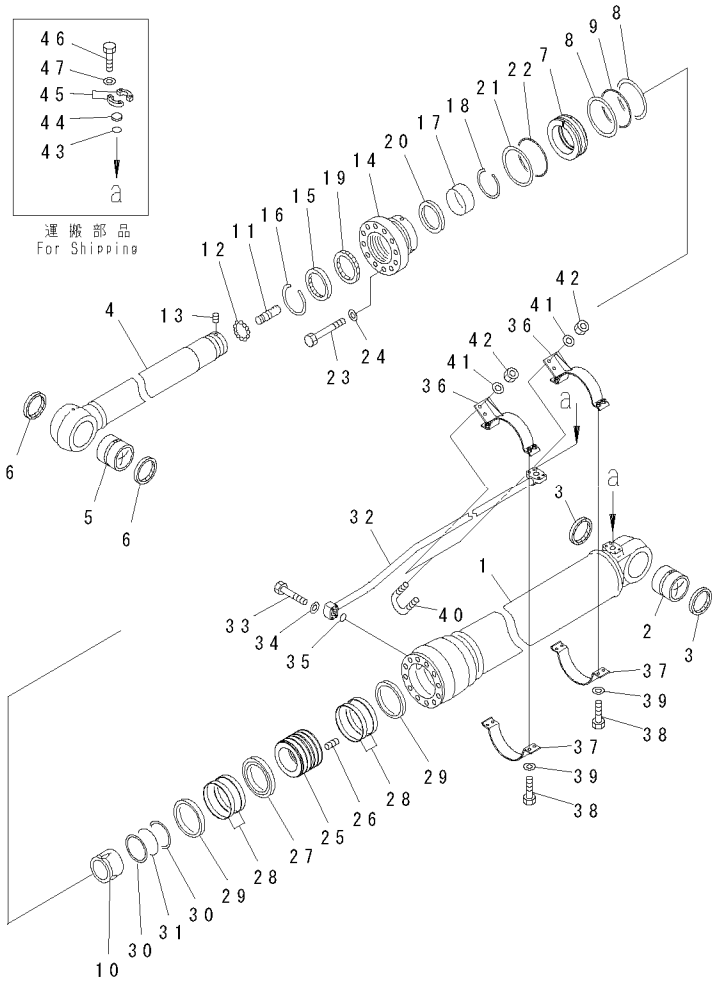

FIG NO. : Y1620-11A0

INDEX	PART NO.	DESCRIPTION	Q'TY	SERIAL NO.
G-1	(⊙707-01-XR630)	CYLINDER GROUP,(FINAL COATING)…… ……左油缸组件(最后涂装)	1	60001-
	707-01-XJ650	ARM CYLINDER ASS'Y……小臂油缸总成	1	60001-
1	707-13-20470	.CYLINDER ……油缸	1	60001-
2	707-76-12150	.BUSHING……衬套	1	60001-
3	07145-00120	.SEAL,DUST ……(KIT)……防尘圈	2	60001-
4	707-58-14330	.ROD……连杆	1	60001-
5	707-76-12520	.BUSHING……衬套	1	60001-
6	07145-00125	.SEAL,DUST ……(KIT)……防尘圈	2	60001-
7	707-71-32920	.COLLAR ……滚轮	1	60001-
8	707-35-92020	.RING,BACK-UP……(KIT)……支承环	2	60001-
9	07000-15190	.O-RING……(KIT)…… O形圈	1	60001-
10	707-71-61510	.PLUNGER……柱塞	1	60001-
11	707-71-70840	.PLUNGER……柱塞	1	60001-
12	04260-00952	.BALL ……球	11	60001-
13	707-71-91230	.CAP……盖	1	60001-
14	707-27-20590	.HEAD ……头	1	60001-
15	198-63-93170	.SEAL,DUST ……(KIT)……防尘圈	1	60001-
16	07179-14160	.RING,SNAP……卡簧	1	60001-
17	707-52-91171	.BUSHING……衬套	1	60001-
18	707-75-14110	.RING ……隔圈	1	60001-
19	707-51-14080	.PACKING,ROD ……(KIT)……杆用密封圈	1	60001-
20	707-51-14650	.RING,BUFFER ……(KIT)……缓冲环	1	60001-
21	707-35-92020	.RING,BACK-UP……(KIT)……支承环	1	60001-
22	07000-15190	.O-RING……(KIT)…… O形圈	1	60001-
23	01011-82705	.BOLT ……螺栓	12	60001-
24	01643-32780	.WASHER ……垫圈	12	60001-
25	707-36-20450	.PISTON ……活塞	1	60001-
26	01310-01232	.SCREW……螺钉	1	60001-
27	707-44-20150	.RING,PISTON ……(KIT)……活塞环	1	60001-
28	707-39-20020	.RING,WEAR ……(KIT)……密封环	4	60001-
29	707-44-20910	.RING ……隔圈	2	60001-
30	07001-05130	.RING,BACK-UP……(KIT)……支承环	2	60001-
31	07000-15130	.O-RING……(KIT)…… O形圈	1	60001-
32	707-86-13260	TUBE……管	1	60001-
33	07372-21060	BOLT……螺栓	4	60001-
34	01643-51032	WASHER……垫圈	4	60001-
35	07000-13035	O-RING ……(KIT)…… O形圈	1	60001-
36	707-88-28250	BRACKET ……支架	1	60001-
37	707-88-26130	BAND……绑带	1	60001-
38	07372-21240	BOLT……螺栓	4	60001-
39	01643-51232	WASHER……垫圈	4	60001-

https://truckmanualshub.com/

FIG NO. : Y162O-11AO

INDEX	PART NO.	DESCRIPTION		SERIAL NO.
40	07283-33442	CLIP……管夹	2	60001-
41	01643-31032	WASHER……垫圈	4	60001-
42	01597-01009	NUT ……螺母	4	60001-
43	07000-13038	O-RING ……O形圈	2	60001-
44	07378-11210	HEAD……头	2	60001-
45	07371-51260	FLANGE,SPLIT……分体法兰	4	60001-
46	01010-81245	BOLT……螺栓	8	60001-
47	01643-31232	WASHER……垫圈	8	60001-
		==========.....		
	707-99-76300	SERVICE KIT ……备件	1	60001-

PC650LC-8R

https://truckmanualshub.com/

FIG.Y1620-41A0 BUCKET CYLINDER
铲斗油缸

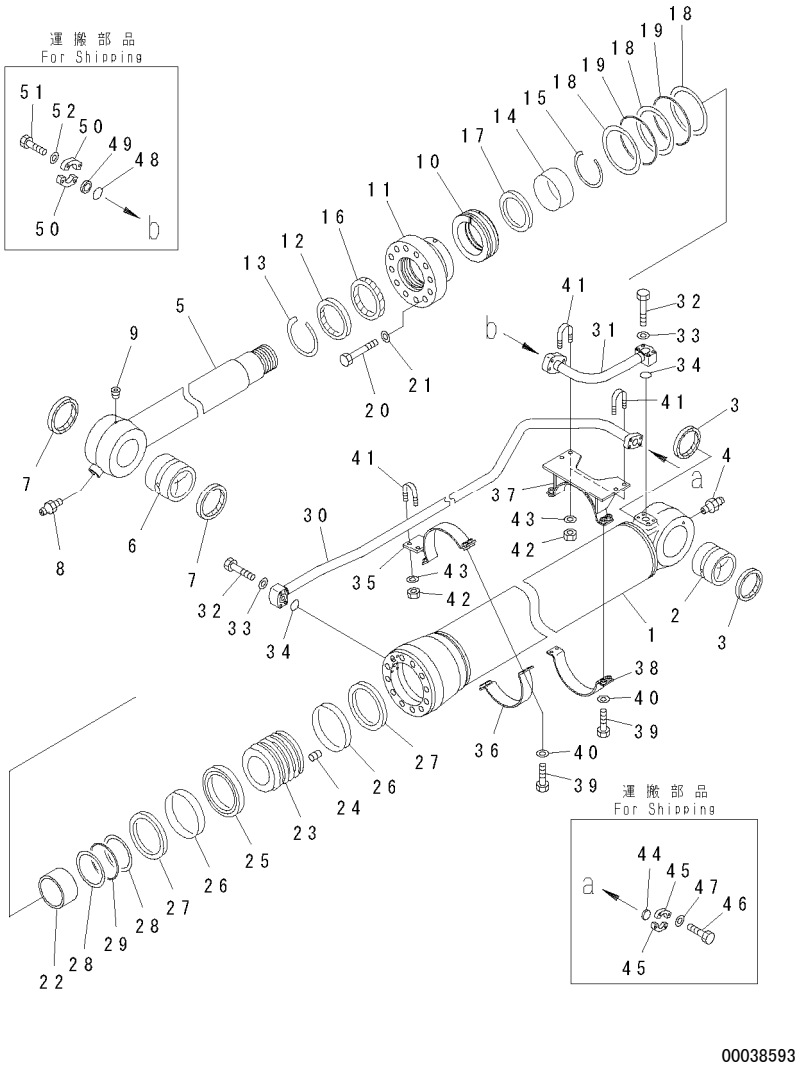

FIG NO. : Y1620-41A0

INDEX	PART NO.	DESCRIPTION	Q'TY	SERIAL NO.
G-1	(⊙707-01-XR640)	CYLINDER GROUP,(FINAL COATING)……左油缸组件(最后涂装)	1	60001-
	707-01-XJ660	BUCKET CYLINDER A ……小铲斗油缸总成	1	60001-
1	707-13-18960	.CYLINDER ……油缸	1	60001-
2	707-76-11130	.BUSHING……衬套	1	60001-
3	07145-00110	.SEAL,DUST ……(KIT)……防尘圈	2	60001-
4	07020-00000	.FITTING,GREASE ……黄油嘴	1	60001-
5	707-58-13250	.ROD……连杆	1	60001-
6	707-76-11130	.BUSHING……衬套	1	60001-
7	07145-00110	.SEAL,DUST ……(KIT)……防尘圈	2	60001-
8	07020-00000	.FITTING,GREASE ……黄油嘴	1	60001-
9	07043-00108	.PLUG ……堵塞	1	60001-
10	707-71-31760	.COLLAR ……滚轮	1	60001-
11	707-27-18180	.HEAD ……头	1	60001-
12	707-56-13520	.SEAL,DUST ……(KIT)……防尘圈	1	60001-
13	07179-14146	.RING,SNAP……卡簧	1	60001-
14	707-52-91071	.BUSHING……衬套	1	60001-
15	07179-13136	.RING ……隔圈	1	60001-
16	707-51-13030	.PACKING,ROD ……(KIT)……杆用密封圈	1	60001-
17	707-51-13650	.RING,BUFFER ……(KIT)……缓冲环	1	60001-
18	707-35-91840	.RING,BACK-UP……(KIT)……支承环	3	60001-
19	07000-15175	.O-RING……(KIT)…… O形圈	2	60001-
20	01011-82400	.BOLT ……螺栓	12	60001-
21	707-88-75410	.WASHER ……垫圈	12	60001-
22	707-71-61430	.PLUNGER……柱塞	1	60001-
23	707-36-18530	.PISTON ……活塞	1	60001-
24	01310-01225	.SCREW……螺钉	1	60001-
25	707-44-18250	.RING,PISTON ……(KIT)……活塞环	1	60001-
26	707-39-18510	.RING,WEAR ……(KIT)……密封环	2	60001-
27	707-44-18920	.RING ……隔圈	2	60001-
28	07001-05120	.RING,BACK-UP……(KIT)……支承环	2	60001-
29	07000-15120	.O-RING……(KIT)…… O形圈	1	60001-
30	707-86-13270	TUBE……管	1	60001-
31	21M-63-72181	TUBE……管	1	60001-
32	07372-21060	BOLT……螺栓	8	60001-
33	01643-51032	WASHER……垫圈	8	60001-
34	07000-13035	O-RING ……(KIT)…… O形圈	2	60001-
35	707-88-28260	BRACKET ……支架	1	60001-
36	707-88-26140	BAND……绑带	1	60001-
37	707-88-28270	BRACKET ……支架	1	60001-
38	707-88-26140	BAND……绑带	1	60001-
39	07372-21240	BOLT……螺栓	8	60001-

https://truckmanualshub.com/

FIG NO. : Y1620-41A0

INDEX	PART NO.	DESCRIPTION		SERIAL NO.
40	01643-51232	WASHER……垫圈	8	60001-
41	07283-33442	CLIP……管夹	3	60001-
42	01597-01009	NUT ……螺母	6	60001-
43	01643-31032	WASHER……垫圈	6	60001-
44	707-88-33040	CAP ……盖	1	60001-
45	07371-31049	FLANGE,SPLIT……分体法兰	2	60001-
46	07372-21035	BOLT……螺栓	4	60001-
47	01643-51032	WASHER……垫圈	4	60001-
48	07000-13038	O-RING ……O形圈	1	60001-
49	07378-11210	HEAD……头	1	60001-
50	07371-51260	FLANGE,SPLIT……分体法兰	2	60001-
51	01010-81245	BOLT……螺栓	4	60001-
52	01643-31232	WASHER……垫圈	4	60001-
		==========.....		
	707-99-69790	SERVICE KIT ……备件	1	60001-

https://truckmanualshub.com/

FIG.Y1627-01A0 SWIVEL JOINT
回转接头

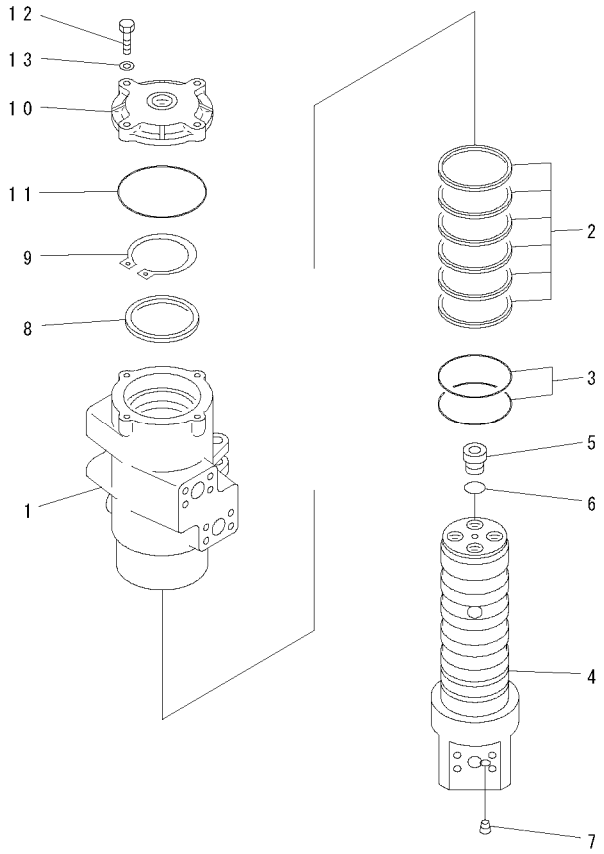

PDB1472

FIG NO. : Y1627-01A0

INDEX	PART NO.	DESCRIPTION	Q'TY	SERIAL NO.
	703-09-00221	SWIVEL JOINT ASS'Y,(FINAL COATING)……		
		……回转接头总成（最后涂装）	1	60001-
	703-09-43201	SWIVEL JOINT ASS'Y……回转接头	1	60001-
1	☆	.ROTOR……转子	1	60001-
2	703-09-95620	.SEAL ……密封垫	6	60001-
3	07000-15090	.O-RING……O形圈	2	60001-
4	☆	.SHAFT……轴	1	60001-
5	703-09-98610	.PLUG…… 堵塞	4	60001-
6	07002-12434	.O-RING……O形圈	4	60001-
7	703-13-98820	.PLUG…… 堵塞	1	60001-
8	703-09-98610	.RING…… 隔圈	1	60001-
9	04064-08530	.RING,SNAP……卡簧	1	60001-
10	703-09-93610	.COVER……盖	1	60001-
11	07000-12115	.O-RING……O形圈	1	60001-
12	01010-80835	.BOLT…… 螺栓	4	60001-
13	01643-30823	.WASHER…… 垫圈	4	60001-

https://truckmanualshub.com/

FIG.Y1640-01A0 SWING MOTOR (1/3)
回转马达(1/3)

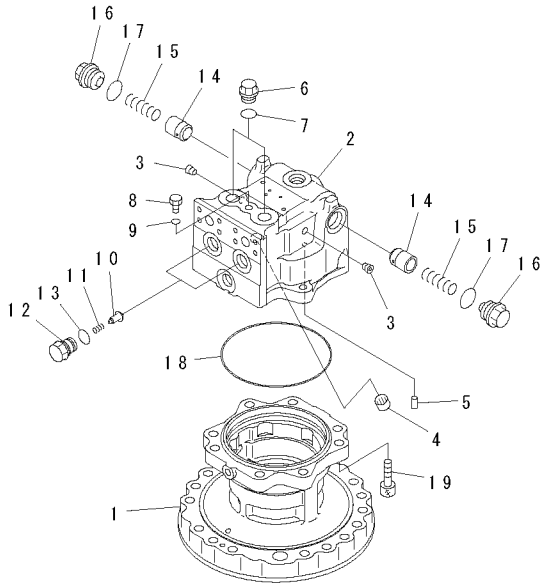

PWB9246

FIG NO. : Y1640-01A0

INDEX	PART NO.	DESCRIPTION	Q'TY	SERIAL NO.
	706-75-01470	MOTOR ASS'Y····· 马达总成 THIS ASSEMBLY CONSISTS OF ALL PARTS SHOWN IN FIGS.Y1640-01A0 TO Y1640-03A0. ·····这个总成包括FIGS.Y1640-01A0至Y1640-03A0的所有零件	1	60001-
	706-75-03460	.MOTOR SUB ASS'Y·····马达子总成	1	60001-
1	(★706-75-43220)	..CASE·····壳体	1	60001-
	(★706-75-00150)	..HOUSING SUB ASS'Y····· 壳体子总成	1	60001-
2	☆	...HOUSING·····壳体	1	60001-
3	☆	...PLUG····· 堵塞	2	60001-
4	(★706-75-40010)	..BEARING····· 轴承	1	60001-
5	(★706-75-42820)	..PIN,DOWEL····· 定位销	1	60001-
6	706-77-72170	..PLUG·····堵塞	2	60001-
7	07002-12434	..O-RING····· O形圈	2	60001-
8	708-8H-11530	..PLUG·····堵塞	1	60001-
9	07002-11423	..O-RING····· O形圈	1	60001-
10	709-25-11650	..VALVE,CHECK····· 单向阀	2	60001-
11	709-25-11361	..SPRING·····弹簧	2	60001-
12	709-25-11640	..PLUG·····堵塞	2	60001-
13	07000-12020	..O-RING····· O形圈	2	60001-
14	706-75-74540	..VALVE····· 阀门	2	60001-
15	706-75-74550	..SPRING·····弹簧	2	60001-
16	706-75-74850	..PLUG·····堵塞	2	60001-
17	07002-13334	..O-RING····· O形圈	2	60001-
18	(★706-75-42440)	..O-RING····· O形圈	1	60001-
19	01252-61445	..BOLT·····螺栓	8	60001-

https://truckmanualshub.com/

FIG.Y1640-02A0 SWING MOTOR (2/3)

回转马达(2/3)

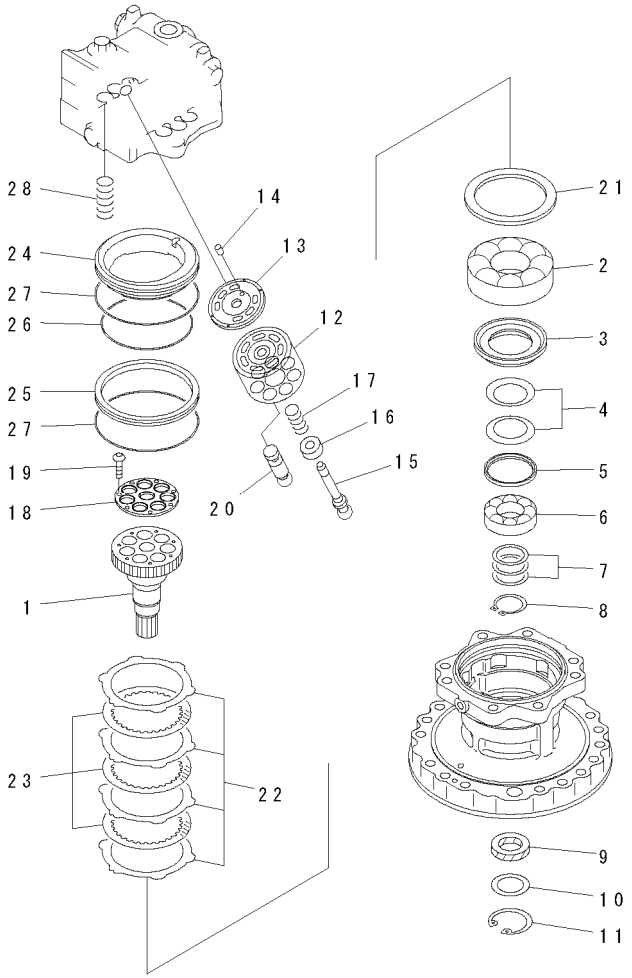

PDB5978

FIG NO. : Y1640-02A0

INDEX	PART NO.	DESCRIPTION	Q'TY	SERIAL NO.
	(706-75-01470)	MOTOR ASS'Y····· 马达总成 THIS ASSEMBLY CONSISTS OF ALL PARTS SHOWN IN FIGS.Y1640-01A0 TO Y1640-03A0. ·····这个总成包括FIGS.Y1640-01A0至Y1640-03A0的所有零件	1	60001-
	(706-75-03460)	.MOTOR SUB ASS'Y·····马达子总成	1	60001-
1	(★706-75-43680)	..SHAFT,DRIVE····· 轴传动	1	60001-
2	(★706-75-43880)	..BEARING····· 轴承	1	60001-
3	(★706-75-43810)	..SPACER·····调整垫片	1	60001-
4	(★706-7E-11260)	..SPRING·····弹簧	2	60001-
5	(★706-7E-11270)	..SEAT·····座	1	60001-
6	(★706-76-40890)	..BEARING····· 轴承	1	60001-
7	(★706-75-05040)	..SPACER KIT·····调整垫片	1	60001-
8	04064-04518	..RING,SNAP····· 卡簧	1	60001-
9	706-7E-11280	..SEAL·····油封	1	60001-
10	706-75-43720	..SPACER·····调整垫片	1	60001-
11	04065-06220	..RING·····隔圈	1	60001-
12	(★706-75-43190)	..BLOCK,CYLINDER·····气缸体	1	60001-
13	(★706-75-43841)	..PLATE,VALVE····· 摩擦阀片	1	60001-
14	(★706-75-43750)	..PIN,DOWEL····· 定位销	1	60001-
15	(★706-75-43120)	..SHAFT,CENTER·····中心轴	1	60001-
16	(★706-75-43130)	..RING,CENTER····· 中央轴承	1	60001-
17	(★706-75-43140)	..SPRING·····弹簧	1	60001-
	(★706-75-05020)	..RETAINER KIT·····保持架	1	60001-
18	☆	...RETAINER····· 保持架	1	60001-
19	☆	...SCREW·····螺钉	7	60001-
20	(★706-75-43160)	..PISTON SUB ASS'Y·····活塞子总成	7	60001-
21	(★706-75-92130)	..PLATE····· 摩擦片	1	60001-
22	(★706-75-92340)	..PLATE····· 摩擦片	4	60001-
23	(★706-75-92350)	..DISK·····主动摩擦片	3	60001-
24	(★706-75-92380)	..PISTON,BRAKE·····活塞(制动)	1	60001-
25	(★706-75-92390)	..RING,BRAKE·····制动环	1	60001-
26	(★07000-12145)	..O-RING····· O形圈	1	60001-
27	(★706-75-92310)	..O-RING····· O形圈	2	60001-
28	(★706-75-92360)	..SPRING·····弹簧	6	60001-

https://truckmanualshub.com/

FIG.Y1640-03A0 SWING MOTOR (3/3)

回转马达(3/3)

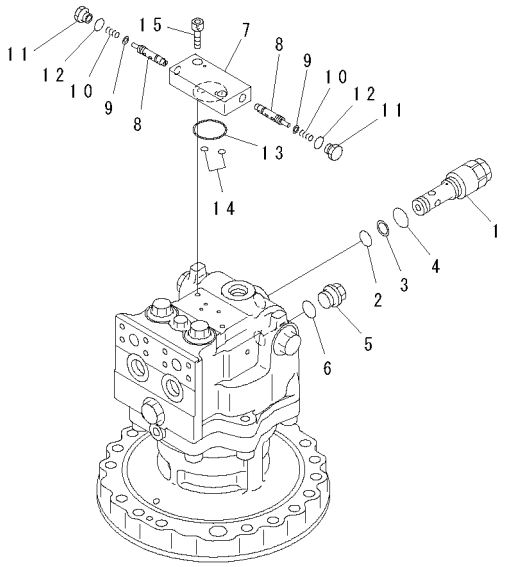

回转马达
Swing Motor

FIG NO. : Y1640-03A0

INDEX	PART NO.	DESCRIPTION	Q'TY	SERIAL NO.
	(706-75-01470)	MOTOR ASS'Y…… 马达总成 THIS ASSEMBLY CONSISTS OF ALL PARTS SHOWN IN FIGS.Y1640-01A0 TO Y1640-03A0. ……这个总成包括FIGS.Y1640-01A0至Y1640-03A0的所有零件	1	60001-
1	702-75-01220	.VALVE ASS'Y,RELIEF…… 溢流阀总成	1	60001-
2	07000-F2020	..O-RING…… O形圈	1	60001-
3	07001-02020	..RING,BACK-UP……隔环	1	60001-
4	07002-13034	..O-RING…… O形圈	1	60001-
5	706-77-72170	.PLUG…… 堵塞	1	60001-
6	07002-12434	.O-RING……O形圈	1	60001-
	702-15-72000	.VALVE ASS'Y……阀总成	1	60001-
7	☆	..BODY……壳	1	60001-
8	☆	..SPOOL…… 阀杆	2	60001-
9	709-70-71610	..SEAL……密封垫	2	60001-
10	702-15-71130	..SPRING……弹簧	2	60001-
11	702-15-71140	..PLUG……堵塞	2	60001-
12	07002-01423	..O-RING…… O形圈	2	60001-
13	07000-03042	.O-RING……O形圈	1	60001-
14	07000-11007	.O-RING……O形圈	2	60001-
15	01252-60825	.BOLT…… 螺栓	2	60001-

00009000

https://truckmanualshub.com/

FIG.Y1641-01A0 TRAVEL MOTOR (1/3)
行走马达(1/3)

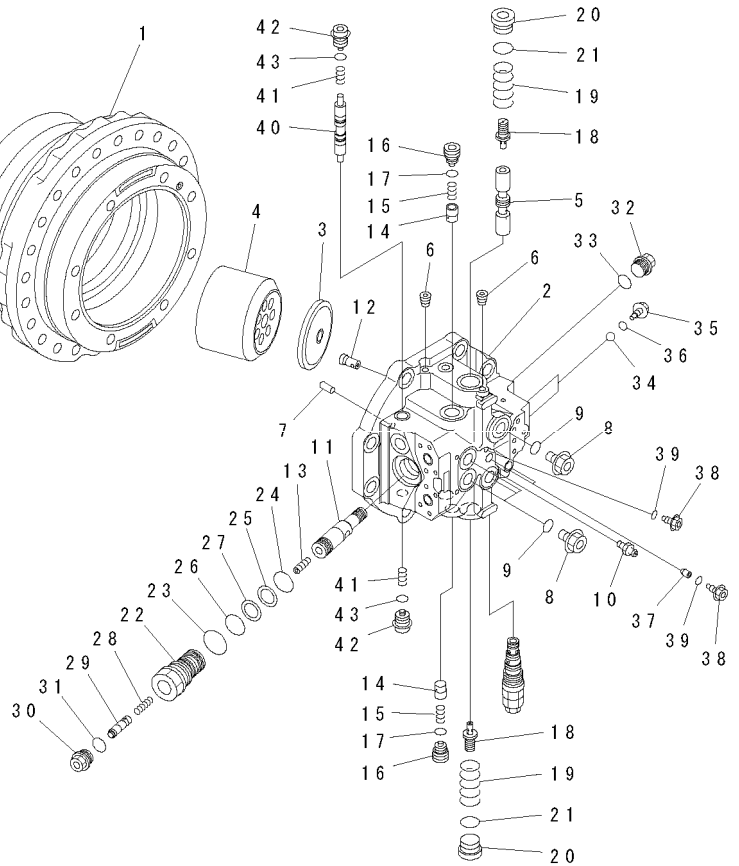

FIG NO. : Y1641-01A0

INDEX	PART NO.	DESCRIPTION	Q'TY	SERIAL NO.
	706-8L-01010	MOTOR ASS'Y…… 马达总成 THIS ASSEMBLY CONSISTS OF ALL PARTS SHOWN IN FIGS.Y1641-01A0 TO Y1641-03A0. ……这个总成包括FIGS.Y1641-01A0至Y1641-03A0的所有零件	1	60001-
1	(★706-88-40220)	.CASE,MOTOR ……壳体(马达)	1	60001-
	(★706-8L-00010)	.END COVER SUB ASS'Y……端盖总成	1	60001-
2	☆	..COVER,END ……端盖	1	60001-
3	☆	..PLATE ASS'Y,VALVE…… 阀板总成	1	60001-
4	☆	..BLOCK,CYLINDER……气缸体	1	60001-
5	☆	..SPOOL ……阀芯	1	60001-
6	☆	..PLUG……堵塞	20	60001-
7	(★708-8K-15190)	.PIN,DOWEL……定位销	1	60001-
8	706-77-72170	.PLUG ……堵塞	4	60001-
9	07002-12434	.O-RING……0形圈	4	60001-
10	20B-27-11210	.BLEEDER……排放装置	1	60001-
11	(★706-8L-51010)	.PISTON ……活塞	1	60001-
12	(★706-8L-51020)	.PIN……销	1	60001-
13	(★706-87-51120)	.SCREW……螺钉	1	60001-
14	706-7G-71710	.VALVE……阀	2	60001-
15	706-75-74550	.SPRING ……弹簧	2	60001-
16	706-75-74850	.PLUG ……堵塞	2	60001-
17	07002-13334	.O-RING……0形圈	2	60001-
18	706-78-71580	.PISTON ……活塞	2	60001-
19	706-78-71280	.SPRING ……弹簧	2	60001-
20	706-78-71230	.PLUG ……堵塞	2	60001-
21	07002-13634	.O-RING……0形圈	2	60001-
	706-88-00210	.SLEEVE ASS'Y ……套管总成	1	60001-
22	706-88-50250	..SLEEVE……套管	1	60001-
23	07002-15234	..O-RING ……0形圈	1	60001-
24	07000-13035	..O-RING ……0形圈	1	60001-
25	706-88-50310	..RING,BACK-UP……隔环	1	60001-
26	07000-13038	..O-RING ……0形圈	1	60001-
27	706-88-50320	..RING,BACK-UP……隔环	1	60001-
28	706-8E-14170	..SPRING……弹簧	1	60001-
29	706-88-50240	..SPOOL ……阀芯	1	60001-
30	706-88-50160	..PLUG……堵塞	1	60001-
31	07002-13034	..O-RING ……0形圈	1	60001-
32	706-77-71670	.PLUG ……堵塞	1	60001-
33	07002-13034	.O-RING……0形圈	1	60001-
34	04260-00793	.BALL ……球	2	60001-
35	708-8E-16160	.PLUG ……堵塞	2	60001-
36	07002-11023	.O-RING……0形圈	2	60001-
37	708-8E-16180	.VALVE……阀	2	60001-
38	708-8E-16160	.PLUG ……堵塞	3	60001-
39	07002-11023	.O-RING……0形圈	3	60001-
40	706-78-71430	.SPOOL……阀芯	1	60001-
41	706-78-71440	.SPRING ……弹簧	2	60001-

https://truckmanualshub.com/

FIG NO. : Y1641-01A0

INDEX	PART NO.	DESCRIPTION	Q'TY	SERIAL NO.
42	706-78-71260	.PLUG ……堵塞	2	60001-
43	07002-12034	.O-RING……O形圈	2	60001-

https://truckmanualshub.com/

FIG.Y1641-02A0 TRAVEL MOTOR (2/3)
行走马达(2/3)

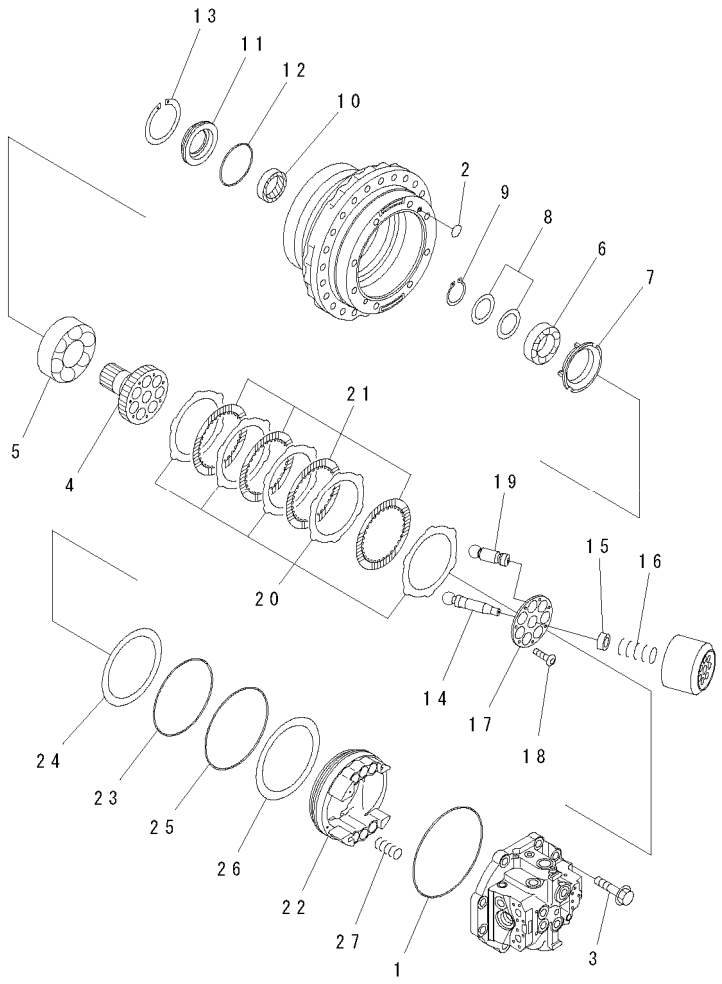

PW5S080

FIG NO. : Y1641-02A0

INDEX	PART NO.	DESCRIPTION	Q'TY	SERIAL NO.
	(706-8L-01010)	MOTOR ASS'Y ……马达总成 THIS ASSEMBLY CONSISTS OF ALL PARTS SHOWN IN FIGS.Y1641-01A0 TO Y1641-03A0. ……这个总成包含 FIGS Y1641-01A0到Y1641-03A0的所有零件	1	60001-
1	(★706-88-40380)	.O-RING……O形圈	1	60001-
2	(★07000-12012)	.O-RING……O形圈	1	60001-
3	(★706-88-40310)	.BOLT…… 螺栓	8	60001-
4	(★706-8L-41520)	.SHAFT,DRIVE……驱动轴	1	60001-
5	(★706-88-40870)	.BEARING……轴承	1	60001-
6	(★706-88-40890)	.BEARING……轴承	1	60001-
7	(★706-88-40820)	.RETAINER ……固定座	1	60001-
8	(★706-88-05010)	.SPACER KIT ……调整垫片	1	60001-
9	(★04064-07525)	.RING,SNAP……卡簧	1	60001-
10	708-8K-12141	.SEAL,OIL ……油封	1	60001-
11	706-88-40710	.HOUSING……壳体	1	60001-
12	07000-02135	.O-RING……O形圈	1	60001-
13	04071-00140	.RING,SNAP……卡簧	1	60001-
14	(★706-8L-41370)	.SHAFT,CENTER ……中心轴	1	60001-
15	(★706-8L-41270)	.RING,CENTER……中心环	1	60001-
16	(★706-8L-41380)	.SPRING ……弹簧	1	60001-
	(★706-8L-41260)	.RETAINER KIT ……保持架组件	1	60001-
17	☆	..RETAINER……保持架	1	60001-
18	☆	..SCREW ……螺钉	7	60001-
19	(★706-8L-41160)	.PISTON SUB ASS'Y ……活塞总成	7	60001-
20	(★706-88-90140)	.PLATE……板	5	60001-
21	(★706-88-90150)	.DISC ……从动磨擦片	4	60001-
22	(★706-8L-91010)	.PISTON,BRAKE ……活塞(制动)	1	60001-
23	(★07000-15240)	.O-RING……O形圈	1	60001-
24	(★706-88-90130)	.RING,BACK-UP ……隔环	1	60001-
25	(★07000-15270)	.O-RING……O形圈	1	60001-
26	(★07001-05270)	.RING,BACK-UP ……隔环	1	60001-
27	(★706-88-90420)	.SPRING ……弹簧	6	60001-

https://truckmanualshub.com/

FIG.Y1641-03A0 TRAVEL MOTOR (3/3)
行走马达(3/3)

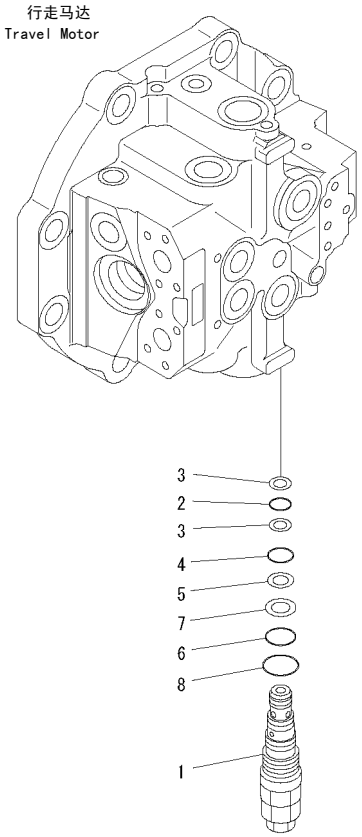

00009001

FIG NO. : Y1641-03A0

INDEX	PART NO.	DESCRIPTION	Q'TY	SERIAL NO.
	（706-8L-01010）	MOTOR ASS'Y ……马达总成 THIS ASSEMBLY CONSISTS OF ALL PARTS SHOWN IN FIGS.Y1641-01A0 TO Y1641-03A0. ……这个总成包含 FIGS Y1641-01A0到Y1641-03A0的所有零件	1	60001-
1	702-75-04800	.VALVE ASS'Y,RELIEF.....溢流阀总成	1	60001-
2	07000-22018	..O-RING ……O形圈	1	60001-
3	07001-02018	..RING,BACK-UP……隔环	2	60001-
4	07000-12021	..O-RING ……O形圈	1	60001-
5	07001-02021	..RING,BACK-UP……隔环	1	60001-
6	702-75-11520	..O-RING ……O形圈	1	60001-
7	702-75-11530	..RING,BACK-UP……隔环	1	60001-
8	07002-13634	..O-RING ……O形圈	1	60001-

https://truckmanualshub.com/

FIG.Y1642-11AO FAN MOTOR (1/3)
风扇马达(1/3)

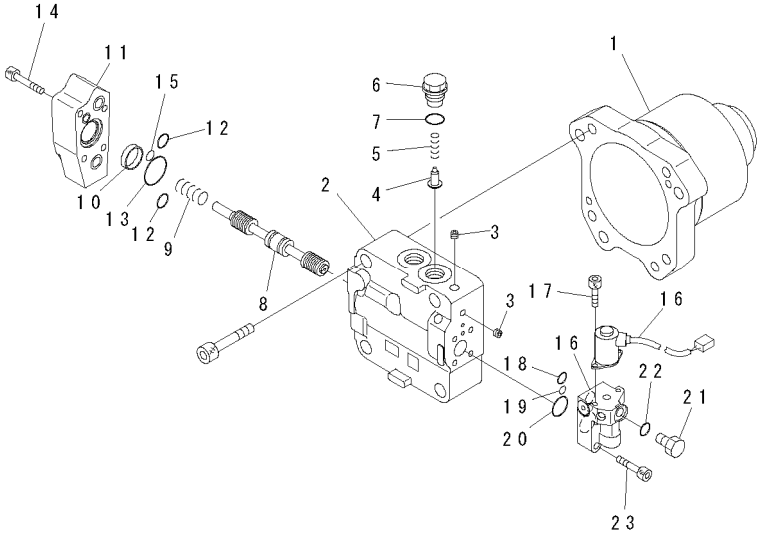

00039374

FIG NO. : Y1642-11AO

INDEX	PART NO.	DESCRIPTION	Q'TY	SERIAL NO.
	(708-7W-00120)	MOTOR ASS'Y ……马达总成 THIS ASSEMBLY CONSISTS OF ALL PARTS SHOWN IN FIGS.Y1642-11AO TO Y1642-13AO. ……这个总成包含 FIGS Y1642-11AO到Y1642-13AO的所有零件	1	60001-
1	(★708-7W-11170)	.CASE ……壳体	1	60001-
	(★708-7W-01050)	.COVER SUB ASS'Y……盖总成	1	60001-
2	☆	..COVER,END ……端盖	1	60001-
3	☆	..PLUG……堵塞	3	60001-
4	(★709-25-11650)	.VALVE,CHECK……单向阀	1	60001-
5	(★709-25-11361)	.SPRING ……弹簧	1	60001-
6	(★708-7S-21610)	.PLUG ……堵塞	1	60001-
7	07002-22434	.O-RING……O形圈	1	60001-
8	☆	.SPOOL……阀芯	1	60001-
9	(★708-7W-18150)	.SPRING ……弹簧	1	60001-
10	(★708-7W-18160)	.SPACER ……调整垫片	1	60001-
11	(★708-7W-18170)	.COVER……盖	1	60001-
12	07000-F2016	.O-RING……O形圈	2	60001-
13	07000-F2035	.O-RING……O形圈	1	60001-
14	01252-60845	.BOLT…… 螺栓	4	60001-
15	07000-F2010	.O-RING……O形圈	1	60001-
16	708-7W-01070	.PILOT VALVE ASS'Y……先导阀总成	1	60001-
17	01252-60612	..BOLT …… 螺栓	2	60001-
18	708-7S-18360	..O-RING ……O形圈	1	60001-
19	07000-F1008	..O-RING ……O形圈	1	60001-
20	708-7S-18230	..O-RING ……O形圈	1	60001-
21	07040-11007	..PLUG……堵塞	1	60001-
22	07002-21023	..O-RING ……O形圈	1	60001-
23	01252-60835	..BOLT …… 螺栓	4	60001-

https://truckmanualshub.com/

FIG.Y1642-12AO FAN MOTOR (2/3)
风扇马达(2/3)

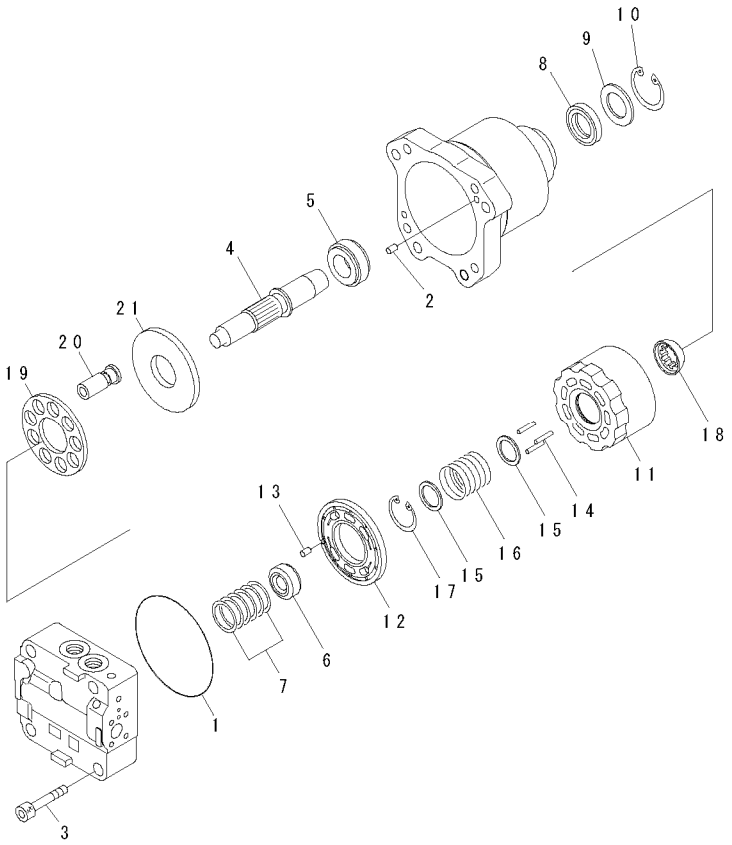

00039375

FIG NO. : Y1642-12AO

INDEX	PART NO.	DESCRIPTION	Q'TY	SERIAL NO.
	(708-7W-00120)	MOTOR ASS'Y……马达总成 THIS ASSEMBLY CONSISTS OF ALL PARTS SHOWN IN FIGS.Y1642-11AO TO Y1642-13AO. ……这个总成包含 FIGS Y1642-11AO到Y1642-13AO的所有零件	1	60001-
1	708-7W-11920	.O-RING……O形圈	1	60001-
2	04020-01024	.PIN……销	2	60001-
3	01252-61480	.BOLT…… 螺栓	4	60001-
4	(★708-7W-12130)	.SHAFT……轴	1	60001-
5	(★708-7W-12120)	.BEARING……轴承	1	60001-
6	(★708-7L-12140)	.BEARING……轴承	1	60001-
7	(★708-7L-05010)	.SPACER KIT ……调整垫片	1	60001-
8	(★708-25-52861)	.SEAL,OIL ……油封	1	60001-
9	(★708-2L-22160)	.SPACER ……调整垫片	1	60001-
10	04065-06825	.RING ……隔圈	1	60001-
11	(★708-8F-33121)	.BLOCK,CYLINDER ……气缸体	1	60001-
12	(★708-8F-33230)	.PLATE,VALVE……板阀	1	60001-
13	(★720-68-19610)	.PIN……销	1	60001-
14	(★708-8F-33360)	.PIN……销	3	60001-
15	(★708-7L-13140)	.SEAT ……座	2	60001-
16	(★708-8F-33160)	.SPRING ……弹簧	1	60001-
17	04065-04818	.RING ……隔圈	1	60001-
18	(★708-8F-33350)	.GUIDE,RETAINER……导向器,保持架	1	60001-
19	(★708-2L-33350)	.RETAINER,SHOE ……保持器,导向板	1	60001-
20	(★708-8F-33310)	.PISTON SUB ASS'Y ……活塞总成	9	60001-
21	(★708-7L-13410)	.PLATE,THRUST…… 止推板	1	60001-

https://truckmanualshub.com/

FIG.Y1642-13AO FAN MOTOR (3/3)

风扇马达(3/3)

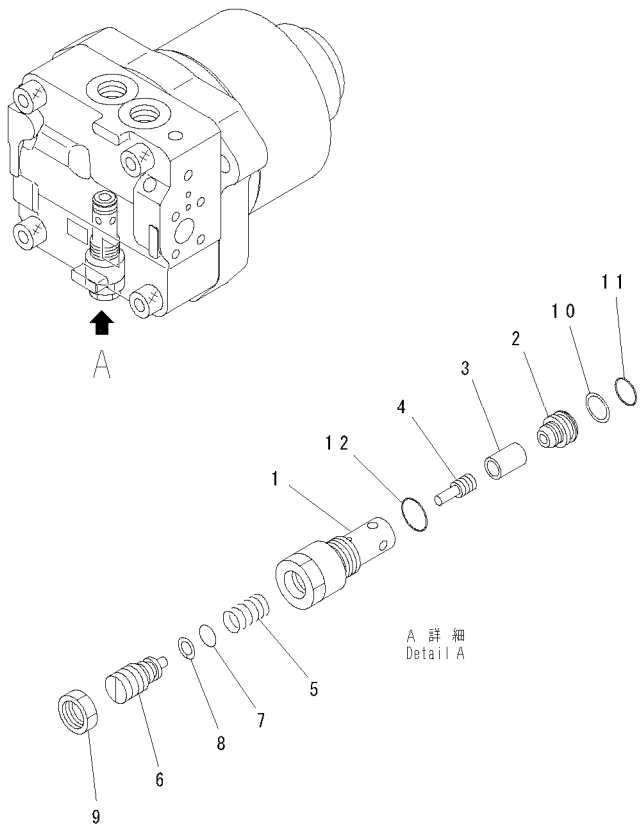

00039376

FIG NO. : Y1642-13AO

INDEX	PART NO.	DESCRIPTION	Q'TY	SERIAL NO.
	708-7W-00120	MOTOR ASS'Y ……马达总成 THIS ASSEMBLY CONSISTS OF ALL PARTS SHOWN IN FIGS.Y1642-11AO TO Y1642-13AO. ……这个总成包含 FIGS Y1642-11AO到Y1642-13AO的所有零件	1	60001-
	702-73-01640	.VALVE ASS'Y,RELIEF ……溢流阀总成	1	60001-
1	(★702-73-11810)	..SLEEVE……套筒	1	60001-
2	(★702-73-11820)	..SEAT,VALVE ……座,阀	1	60001-
3	(★702-73-11830)	..VALVE ……阀	1	60001-
4	(★706-75-75280)	..PISTON……活塞	1	60001-
5	(★702-73-11840)	..SPRING……弹簧	1	60001-
6	(★702-73-11850)	..SCREW ……螺钉	1	60001-
7	(★07000-22010)	..O-RING ……O形圈	1	60001-
8	(★07001-02010)	..RING……隔圈	1	60001-
9	(★702-73-11860)	..NUT ……螺母	1	60001-
10	723-60-22230	..RING,BACK-UP……隔环	1	60001-
11	07000-F2016	..O-RING ……O形圈	1	60001-
12	07002-22434	..O-RING ……O形圈	1	60001-

https://truckmanualshub.com/

FIG.Y1660-01A0 MAIN VALVE (1/8)
主阀(1/8)

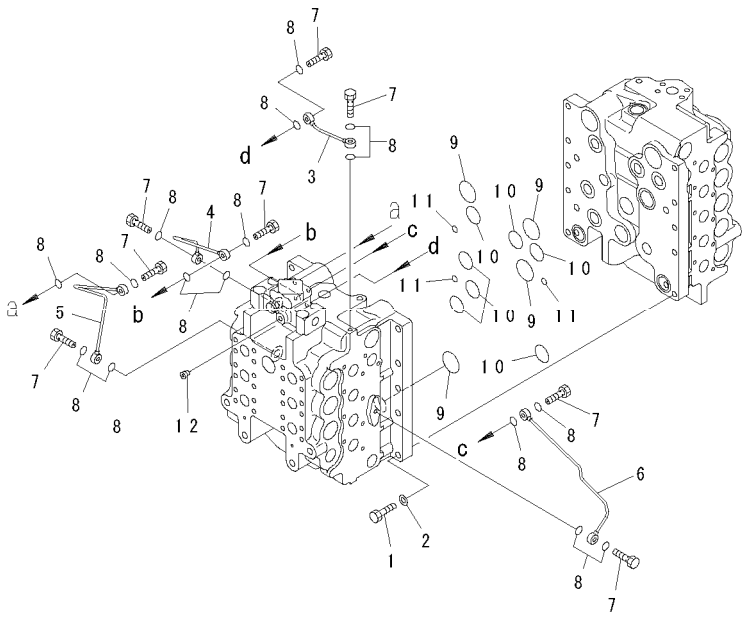

PWL1937

FIG NO. : Y1660-01A0

INDEX	PART NO.	DESCRIPTION	Q'TY	SERIAL NO.
	709-99-15100	MAIN VALVE……主阀 THIS ASSEMBLY CONSISTS OF ALL PARTS SHOWN IN FIGS.Y1660-01A0 TO Y1660-08A0. ……这个总成包含 FIGS Y1642-11A0到Y1642-13A0的所有零件	1	60001-
1	01010-81250	.BOLT…… 螺栓	10	60001-
2	01643-31232	.WASHER ……垫圈	10	60001-
3	709-99-11111	.TUBE…… 硬管	1	60001-
4	709-99-11121	.TUBE…… 硬管	1	60001-
5	709-99-11141	.TUBE…… 硬管	1	60001-
6	709-99-11132	.TUBE…… 硬管	1	60001-
7	709-79-11190	.BOLT…… 螺栓	8	60001-
8	07000-12011	.O-RING……O形圈	16	60001-
9	07000-13040	.O-RING……O形圈	4	60001-
10	07000-13032	.O-RING……O形圈	7	60001-
11	07000-12010	.O-RING……O形圈	3	60001-
12	07043-70108	.PLUG…… 堵塞	1	60001-

https://truckmanualshub.com/

FIG.Y1660-02A0 MAIN VALVE (2/8)

主阀(2/8)

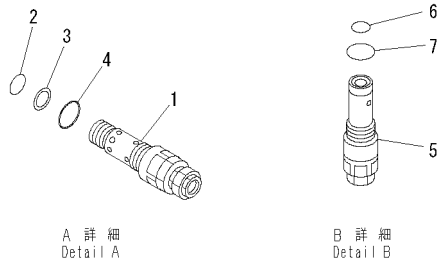

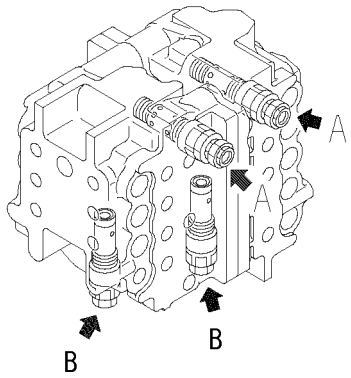

00009002

FIG NO. : Y1660-02A0

INDEX	PART NO.	DESCRIPTION	Q'TY	SERIAL NO.
	709-99-15100	MAIN VALVE……主阀 THIS ASSEMBLY CONSISTS OF ALL PARTS SHOWN IN FIGS.Y1660-01A0 TO Y1660-08A0. ……这个总成包含 FIGS Y1660-01A0到Y1660-08A0的所有零件	1	60001-
1	709-90-54902	.VALVE ASS'Y,RELIEF ……溢流阀总成	2	60001-
2	700-93-11320	..O-RING ……O形圈	1	60001-
3	700-93-11330	..RING,BACK-UP……隔环	1	60001-
4	07002-13634	..O-RING ……O形圈	1	60001-
5	709-90-59400	.VALVE ASS'Y,RELIEF ……溢流阀总成	2	60001-
6	700-22-11410	..O-RING ……O形圈	1	60001-
7	07002-02434	..O-RING ……O形圈	1	60001-

https://truckmanualshub.com/

FIG.Y1660-03A0 MAIN VALVE (3/8)

主阀(3/8)

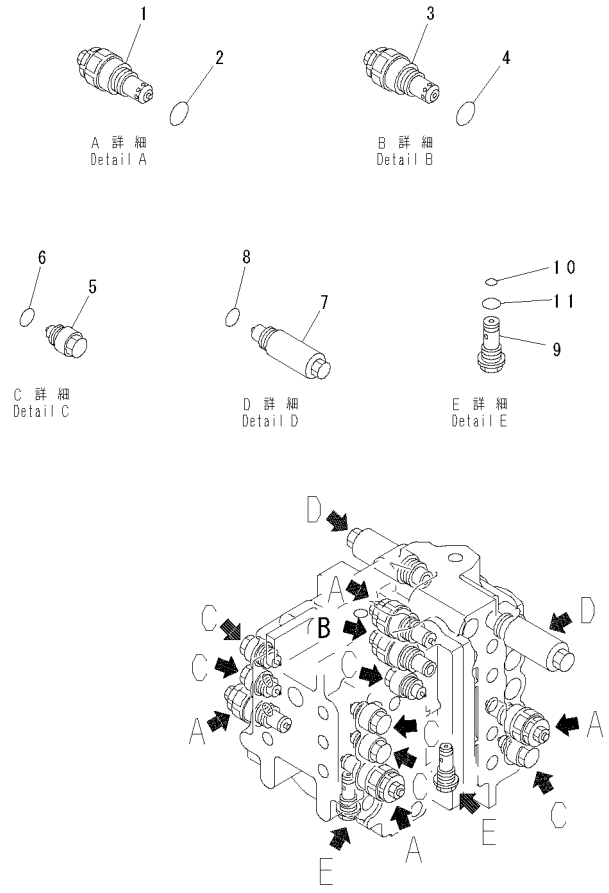

00009003

FIG NO. : Y1660-03A0

INDEX	PART NO.	DESCRIPTION	Q'TY	SERIAL NO.
	(709-99-15100)	MAIN VALVE……主阀 THIS ASSEMBLY CONSISTS OF ALL PARTS SHOWN IN FIGS.Y1660-01A0 TO Y1660-08A0. ……这个总成包含 FIGS Y1660-01A0到Y1660-08A0的所有零件	1	60001-
1	723-90-69100	.VALVE ASS'Y,SUCTION AND SAFETY…… ……阀总成,吸油和安全	4	60001-
2	07002-13634	..O-RING ……0形圈	1	60001-
3	709-90-74401	.VALVE ASS'Y,SUCTION AND SAFETY…… ……阀总成,吸油和安全	1	60001-
4	07002-13634	..O-RING ……0形圈	1	60001-
5	723-60-23800	.VALVE ASS'Y,SUCTION……补油阀总成	6	60001-
6	07002-13634	..O-RING ……0形圈	1	60001-
7	700-90-74001	.VALVE ASS'Y,SUCTION……补油阀总成	2	60001-
8	07002-03634	..O-RING ……0形圈	1	60001-
9	709-90-91300	.ORIFICE ASS'Y……测压口总成	2	60001-
10	07000-02014	..O-RING ……0形圈	1	60001-
11	07002-02434	..O-RING ……0形圈	1	60001-

https://truckmanualshub.com/

FIG.Y1660-04A0 MAIN VALVE (4/8)

主阀(4/8)

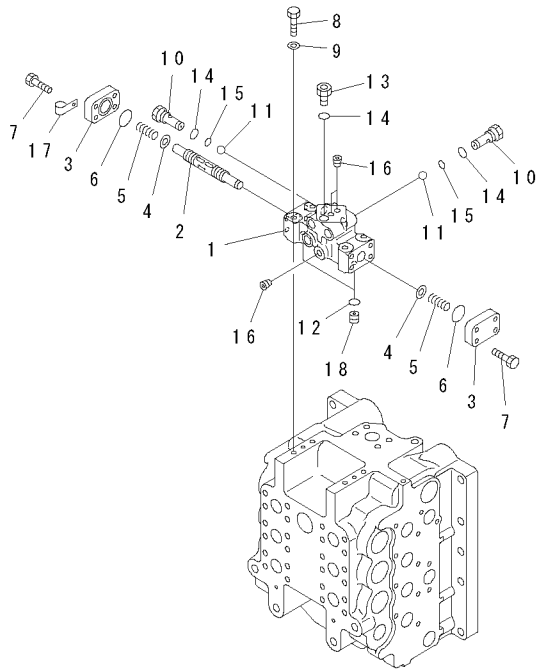

PWL1940

FIG NO. : Y1660-04A0

INDEX	PART NO.	DESCRIPTION	Q'TY	SERIAL NO.
	(709-99-15100)	MAIN VALVE……主阀 THIS ASSEMBLY CONSISTS OF ALL PARTS SHOWN IN FIGS.Y1660-01A0 TO Y1660-08A0. ……这个总成包含 FIGS Y1660-01A0到Y1660-08A0的所有零件	1	60001-
	709-94-92600	.SHUTTLE VALVE ASS'Y……梭阀总成	1	60001-
1	☆	..BLOCK ……垫块	1	60001-
2	☆	..SPOOL…… 阀杆	1	60001-
3	709-70-91150	..PLATE ……板	2	60001-
4	706-73-77140	..PLATE ……板	2	60001-
5	709-70-91240	..SPRING……弹簧	2	60001-
6	07000-13025	..O-RING ……O形圈	2	60001-
7	01010-80825	..BOLT……螺栓	8	60001-
8	01010-80855	..BOLT……螺栓	4	60001-
9	01643-30823	..WASHER……垫圈	4	60001-
10	☆	..PLUG……堵塞	2	60001-
11	☆	..BALL……球	2	60001-
12	☆	..O-RING ……O形圈	2	60001-
13	☆	..PLUG……堵塞	1	60001-
14	☆	..O-RING ……O形圈	3	60001-
15	☆	..O-RING ……O形圈	2	60001-
16	☆	..PLUG……堵塞	3	60001-
17	08036-30810	..CLIP……管夹	1	60001-
18	☆	..ORIFICE ……测压口	2	60001-

https://truckmanualshub.com/

FIG.Y1660-05A0 MAIN VALVE (5/8)

主阀(5/8)

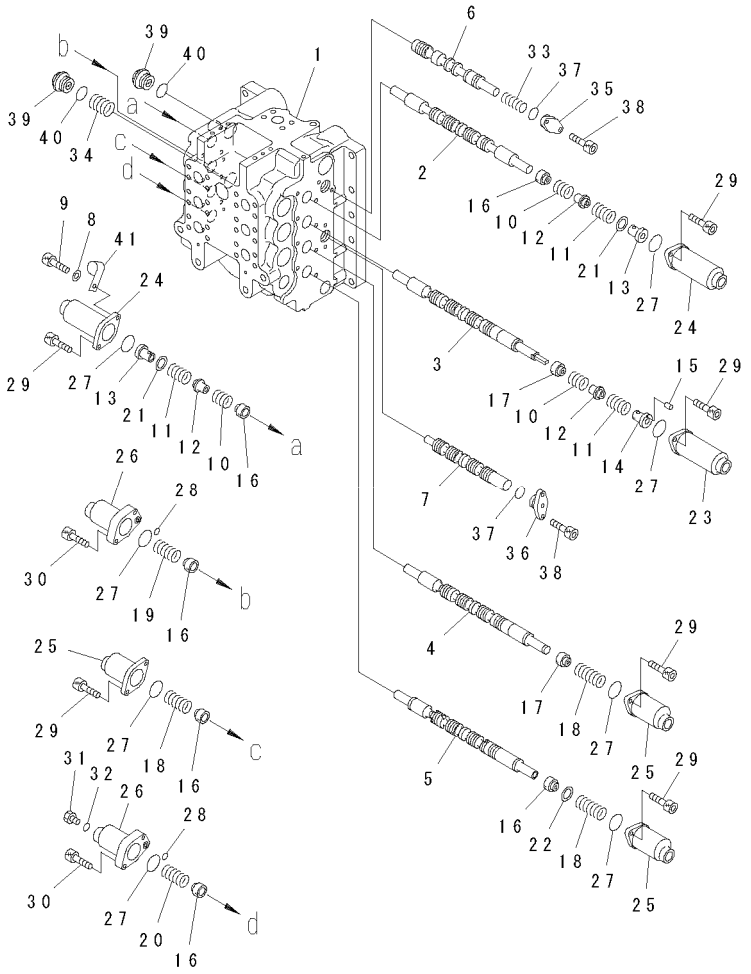

FIG NO. : Y1660-05A0

INDEX	PART NO.	DESCRIPTION	Q'TY	SERIAL NO.
	(709-99-15100)	MAIN VALVE……主阀 THIS ASSEMBLY CONSISTS OF ALL PARTS SHOWN IN FIGS.Y1660-01A0 TO Y1660-08A0. ……这个总成包含 FIGS Y1660-01A0到Y1660-08A0的所有零件	1	60001-
	☆	.BODY GROUP ……阀座	1	60001-
1	☆	..BODY,VALVE……阀体	1	60001-
2	☆	..SPOOL…… 阀杆	1	60001-
3	☆	..SPOOL SUB ASS'Y ……阀杆总成	1	60001-
4	☆	..SPOOL SUB ASS'Y ……阀杆总成	1	60001-
5	☆	..SPOOL…… 阀杆	1	60001-
6	☆	..SPOOL…… 阀杆	1	60001-
7	☆	..SPOOL…… 阀杆	1	60001-
8	01643-30823	..WASHER……垫圈	1	60001-
9	01252-60825	..BOLT……螺栓	1	60001-
10	709-94-92510	..SPRING……弹簧	3	60001-
11	709-94-92520	..SPRING……弹簧	3	60001-
12	709-94-92530	..RETAINER……固定座	3	60001-
13	709-94-92540	..RETAINER……固定座	2	60001-
14	709-94-92770	..RETAINER……固定座	1	60001-
15	04022-04008	..PIN,DOWEL…… 定位销	1	60001-
16	709-94-91130	..RETAINER……固定座	6	60001-
17	709-94-92890	..RETAINER……固定座	2	60001-
18	709-94-91120	..SPRING……弹簧	3	60001-
19	709-94-92940	..SPRING……弹簧	1	60001-
20	709-94-92920	..SPRING……弹簧	1	60001-
21	709-94-92550	..SPACER, 0.5MM……0.5MM调整垫片	2	60001-
22	709-94-91760	..SPACER, 1.0MM……1.0MM调整垫片	1	60001-
23	709-94-92610	..CASE……壳体	1	60001-
24	709-94-92560	..CASE……壳体	2	60001-
25	709-94-91210	..CASE……壳体	3	60001-
26	709-94-91220	..CASE……壳体	2	60001-
27	07430-71380	..O-RING ……O形圈	8	60001-
28	07000-12010	..O-RING ……O形圈	2	60001-
29	01252-60820	..BOLT……螺栓	11	60001-
30	01252-60830	..BOLT……螺栓	4	60001-
31	07040-12012	..PLUG……堵塞	1	60001-
32	07002-12034	..O-RING ……O形圈	1	60001-
33	709-94-92470	..SPRING……弹簧	1	60001-
34	709-94-92690	..SPRING……弹簧	1	60001-
35	709-94-91490	..PLATE ……板	1	60001-
36	709-94-91140	..PLATE ……板	1	60001-
37	07000-F2022	..O-RING ……O形圈	2	60001-
38	01252-60820	..BOLT……螺栓	4	60001-
39	709-74-92220	..PLUG……堵塞	2	60001-
40	07002-13034	..O-RING ……O形圈	2	60001-
41	08036-31210	..CLIP……管夹	1	60001-

https://truckmanualshub.com/

FIG.Y1660-06A0 MAIN VALVE (6/8)
主阀(6/8)

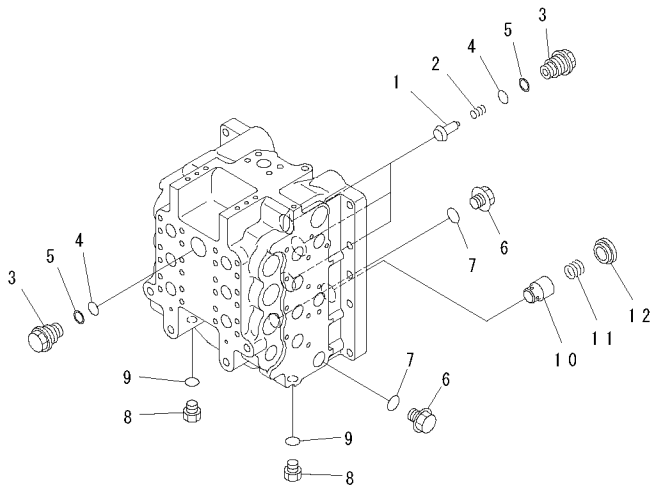

PWL1942

FIG NO. : Y1660-06A0

INDEX	PART NO.	DESCRIPTION	Q'TY	SERIAL NO.
	(709-99-15100)	MAIN VALVE……主阀 THIS ASSEMBLY CONSISTS OF ALL PARTS SHOWN IN FIGS.Y1660-01A0 TO Y1660-08A0. ……这个总成包含 FIGS Y1660-01A0到Y1660-08A0的所有零件	1	60001-
	☆	.BODY GROUP ……阀座	1	60001-
1	709-94-92811	..VALVE ……阀	3	60001-
2	709-94-91751	..SPRING……弹簧	3	60001-
3	709-74-92821	..PLUG……堵塞	4	60001-
4	700-93-11320	..O-RING ……O形圈	4	60001-
5	700-93-11330	..RING,BACK-UP……隔环	4	60001-
6	709-74-91860	..PLUG……堵塞	2	60001-
7	07002-12434	..O-RING ……O形圈	2	60001-
8	07040-11612	..PLUG……堵塞	2	60001-
9	07002-11623	..O-RING ……O形圈	2	60001-
10	709-94-91261	..VALVE ……阀	1	60001-
11	709-94-91270	..SPRING……弹簧	1	60001-
12	709-94-91280	..SEAT……座	1	60001-

https://truckmanualshub.com/

FIG.Y1660-07A0 MAIN VALVE (7/8)
主阀(7/8)

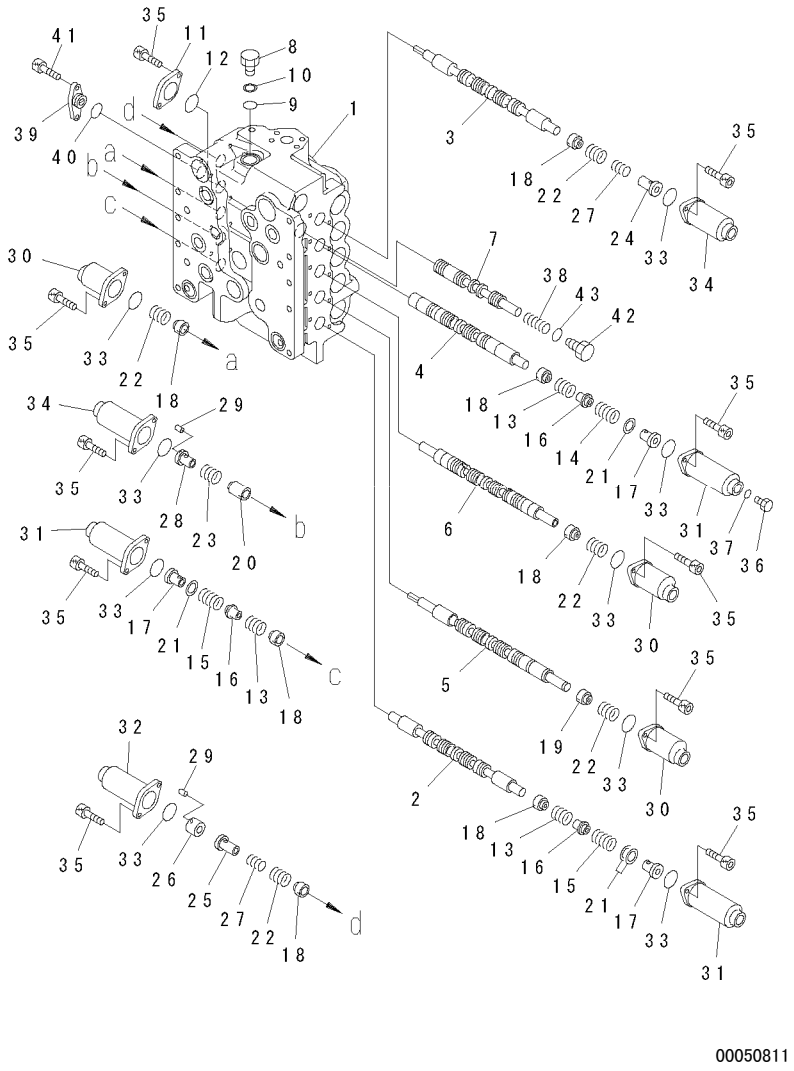

FIG NO. : Y1660-07A0

INDEX	PART NO.	DESCRIPTION	Q'TY	SERIAL NO.
	(709-99-15100)	MAIN VALVE……主阀 THIS ASSEMBLY CONSISTS OF ALL PARTS SHOWN IN FIGS.Y1660-01A0 TO Y1660-08A0. ……这个总成包含 FIGS Y1660-01A0到Y1660-08A0的所有零件	1	60001-
	☆	.BODY GROUP ……阀座	1	60001-
1	☆	..BODY,VALVE……阀体	1	60001-
2	☆	..SPOOL ……阀杆	1	60001-
3	☆	..SPOOL ……阀杆	1	60001-
4	☆	..SPOOL ……阀杆	1	60001-
5	☆	..SPOOL SUB ASS'Y ……阀杆总成	1	60001-
6	☆	..SPOOL ……阀杆	1	60001-
7	☆	..SPOOL ……阀杆	1	60001-
8	709-74-91850	..PLUG……堵塞	1	60001-
9	07000-12018	..O-RING ……0形圈	1	60001-
10	07001-02018	..RING,BACK-UP……隔环	1	60001-
11	709-74-92590	..PLATE ……板	1	60001-
12	709-74-92170	..O-RING ……0形圈	1	60001-
13	709-94-92510	..SPRING……弹簧	3	60001-
14	709-94-92520	..SPRING……弹簧	1	60001-
15	709-94-92590	..SPRING……弹簧	2	60001-
16	709-94-92530	..RETAINER……固定座	3	60001-
17	709-94-92540	..RETAINER……固定座	3	60001-
18	709-94-91130	..RETAINER……固定座	7	60001-
19	709-94-92890	..RETAINER……固定座	1	60001-
20	709-94-92630	..RETAINER……固定座	1	60001-
21	709-94-92550	..SPACER, 0.5MM……0.5MM调整垫片	4	60001-
22	709-94-91120	..SPRING……弹簧	5	60001-
23	709-94-92940	..SPRING……弹簧	1	60001-
24	709-94-91170	..RETAINER……固定座	1	60001-
25	709-94-92960	..RETAINER……固定座	1	60001-
26	709-94-92950	..SPACER……垫块	1	60001-
27	709-94-91180	..SPRING……弹簧	2	60001-
28	709-94-92770	..RETAINER……固定座	1	60001-
29	04022-04008	..PIN ……销	2	60001-
30	709-94-91210	..CASE……壳体	3	60001-
31	709-94-92560	..CASE……壳体	3	60001-
32	709-94-91720	..CASE……壳体	1	60001-
33	07430-71380	..O-RING ……0形圈	9	60001-
34	709-94-92610	..CASE……壳体	2	60001-
35	01252-60820	..BOLT……螺栓	20	60001-
36	07040-12012	..PLUG……堵塞	1	60001-
37	07002-12034	..O-RING ……0形圈	1	60001-
38	709-94-91160	..SPRING……弹簧	1	60001-

https://truckmanualshub.com/

FIG NO. : Y166O-07A0

INDEX	PART NO.	DESCRIPTION		SERIAL NO.
39	709-94-91240	..PLATE ……板	1	60001-
40	07000-F2022	..O-RING ……O形圈	1	60001-
41	01252-60820	..BOLT……螺栓	2	60001-
42	709-74-92230	..PLUG……堵塞	1	60001-
43	07002-13034	..O-RING…… O形圈	1	60001-

https://truckmanualshub.com/

FIG.Y1660-08A0 MAIN VALVE (8/8)
主阀(8/8)

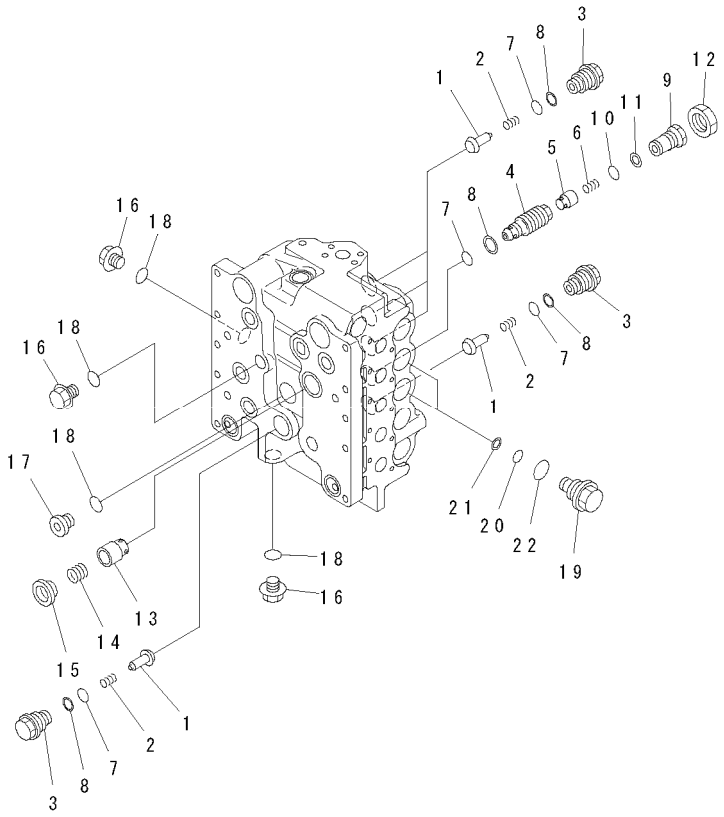

PWL1944

FIG NO. : Y1660-08A0

INDEX	PART NO.	DESCRIPTION	Q'TY	SERIAL NO.
	(709-99-15100)	MAIN VALVE……主阀 THIS ASSEMBLY CONSISTS OF ALL PARTS SHOWN IN FIGS.Y1660-01A0 TO Y1660-08A0. ……这个总成包含 FIGS Y1660-01A0到Y1660-08A0的所有零件	1	60001-
	☆	.BODY GROUP ……阀座	1	60001-
1	709-94-92811	..VALVE…… 阀	5	60001-
2	709-94-91751	..SPRING……弹簧	5	60001-
3	709-74-92821	..PLUG……堵塞	5	60001-
4	709-94-91770	..PLUG……堵塞	1	60001-
5	706-73-70140	..VALVE,CHECK…… 单向阀	1	60001-
6	706-73-70150	..SPRING……弹簧	1	60001-
7	700-93-11320	..O-RING ……0形圈	6	60001-
8	700-93-11330	..RING,BACK-UP……隔环	6	60001-
9	709-74-92450	..PLUG……堵塞	1	60001-
10	07000-12010	..O-RING ……0形圈	1	60001-
11	07001-02010	..RING,BACK-UP……隔环	1	60001-
12	709-74-92460	..NUT…… 螺母	1	60001-
13	709-94-91261	..VALVE…… 阀	1	60001-
14	709-94-91270	..SPRING……弹簧	1	60001-
15	709-94-91280	..SEAT……座	1	60001-
16	709-74-91860	..PLUG……堵塞	3	60001-
17	709-95-91150	..PLUG……堵塞	1	60001-
18	07002-12434	..O-RING ……0形圈	4	60001-
19	700-94-11260	..PLUG……堵塞	2	60001-
20	07000-12018	..O-RING ……0形圈	2	60001-
21	07001-02018	..RING,BACK-UP……隔环	2	60001-
22	07002-13634	..O-RING ……0形圈	2	60001-

https://truckmanualshub.com/

FIG.Y1670-01A0 PPC VALVE (FOR TRAVEL)

PPC阀(行走用)

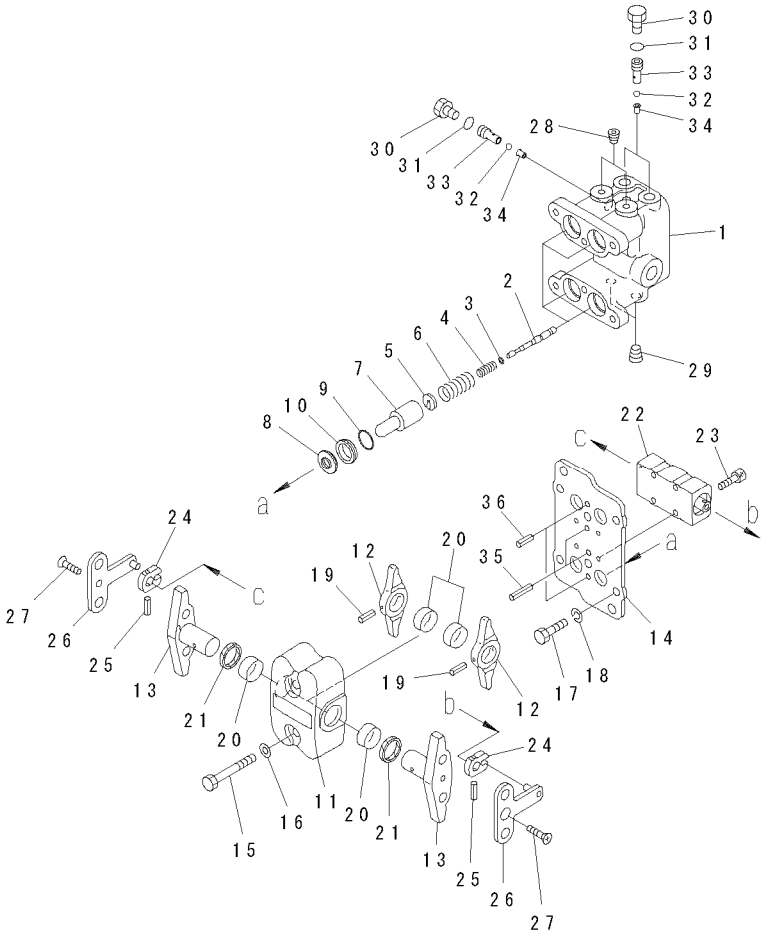

00009005

FIG NO. : Y1670-01A0

INDEX	PART NO.	DESCRIPTION	Q'TY	SERIAL NO.
	702-16-01542	PILOT VALVE…… 先导阀	1	60001-
1	☆	.BODY,VALVE…… 阀体	1	60001-
2	☆	.VALVE……阀	4	60001-
3	702-16-51140	.SHIM, 0.30MM…… 调整垫0.30MM	4	60001-
4	702-16-53420	.SPRING…… 弹簧	4	60001-
5	702-16-53140	.RETAINER…… 固定座	4	60001-
6	702-16-54420	.SPRING…… 弹簧	4	60001-
7	702-16-53170	.PISTON…… 活塞	4	60001-
8	702-16-51270	.SEAL…… 密封垫	4	60001-
9	07000-12020	.O-RING……O形圈	4	60001-
10	702-16-54170	.COLLAR…… 衬套	4	60001-
11	702-16-54311	.CASE…… 壳体	1	60001-
12	☆	.LEVER……杆	2	60001-
13	☆	.SHAFT……轴	2	60001-
14	☆	.PLATE……板	1	60001-
15	01010-80855	.BOLT…… 螺栓	2	60001-
16	01643-30823	.WASHER…… 垫圈	2	60001-
17	01010-80816	.BOLT…… 螺栓	4	60001-
18	702-16-54331	.WASHER, 1.60MM…… 垫圈	4	60001-
	702-16-54341	.WASHER, 1.30MM…… 垫圈	4	60001-
	702-16-54351	.WASHER, 1.00MM…… 垫圈	4	60001-
19	04025-00432	.PIN,SPRING…… 弹簧销	2	60001-
20	702-16-54430	.BUSHING……衬套	4	60001-
21	702-16-54280	.SEAL,DUST……防尘圈	2	60001-
22	702-16-54506	.DAMPER ASS'Y…… 减振器总成	1	60001-
23	01252-60525	.BOLT…… 螺栓	4	60001-
24	702-16-54511	.PLATE……板	2	60001-
25	04025-00420	.PIN,SPRING…… 弹簧销	2	60001-
26	☆	.LEVER……杆	2	60001-
27	01224-40612	.SCREW……螺钉	2	60001-
28	☆	.PLUG…… 堵塞	2	60001-
29	☆	.PLUG…… 堵塞	2	60001-
30	07040-11209	.PLUG…… 堵塞	3	60001-
31	07002-11223	.O-RING……O形圈	3	60001-
32	☆	.BALL…… 球	3	60001-
33	702-16-55940	.PLUG…… 堵塞	3	60001-
34	702-16-55950	.SEAT…… 座	3	60001-
35	04022-04016	.PIN,DOWEL……定位销	2	60001-
36	04022-04010	.PIN,DOWEL……定位销	2	60001-

https://truckmanualshub.com/

FIG.Y1672-01A0 SAFETY VALVE
安全阀

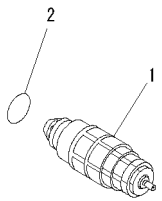

00009006

FIG NO. : Y1672-01A0

INDEX	PART NO.	DESCRIPTION	Q'TY	SERIAL NO.
1	709-90-73400	VALVE ASS'Y,SUCTION AND SAFETY…… ……阀总成,吸油和安全	1	60001-
2	07002-13634	.O-RING……O形圈	1	60001-

https://truckmanualshub.com/

FIG.Y1674-01A0 SHUTTLE VALVE
梭阀

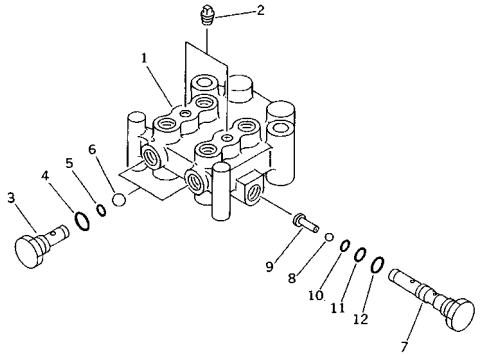

FIG NO. : Y1674-01A0

INDEX	PART NO.	DESCRIPTION	Q'TY	SERIAL NO.
	702-19-25000	VALVE ASS'Y,CHECK…… 单向阀总成	1	60001-
1	702-19-12320	.BLOCK……接头	1	60001-
2	07042-30108	.PLUG…… 堵塞	2	60001-
3	702-19-12120	.PLUG…… 堵塞	2	60001-
4	07002-11423	.O-RING……O形圈	2	60001-
5	07000-11007	.O-RING……O形圈	2	60001-
6	04260-00952	.BALL…… 球	2	60001-
	702-19-11000	.SHUTTLE VALVE ASS'Y……梭阀总成	1	60001-
7	☆	..PLUG……堵塞	1	60001-
8	☆	..BALL……球	1	60001-
9	☆	..SEAT……座	1	60001-
10	07000-11007	..O-RING…… O形圈	1	60001-
11	07000-11009	..O-RING…… O形圈	1	60001-
12	07002-11423	..O-RING…… O形圈	1	60001-

https://truckmanualshub.com/

FIG.Y1674-11A0 SHUTTLE VALVE
梭阀

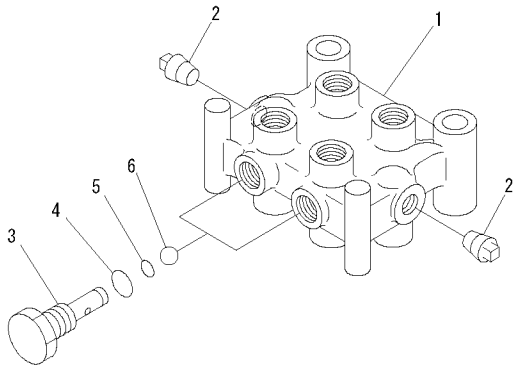

PW5X073

FIG NO. : Y1674-11A0

INDEX	PART NO.	DESCRIPTION	Q'TY	SERIAL NO.
	702-19-25000	VALVE ASS'Y,CHECK…… 单向阀总成	1	60001-
1	702-19-12320	.BLOCK……接头	1	60001-
2	07042-30108	.PLUG…… 堵塞	2	60001-
3	702-19-12120	.PLUG…… 堵塞	2	60001-
4	07002-11423	.O-RING……O形圈	2	60001-
5	07000-11007	.O-RING……O形圈	2	60001-
6	04260-00952	.BALL…… 球	2	60001-

https://truckmanualshub.com/

FIG.Y1675-01A0 LOCK VALVE
锁阀

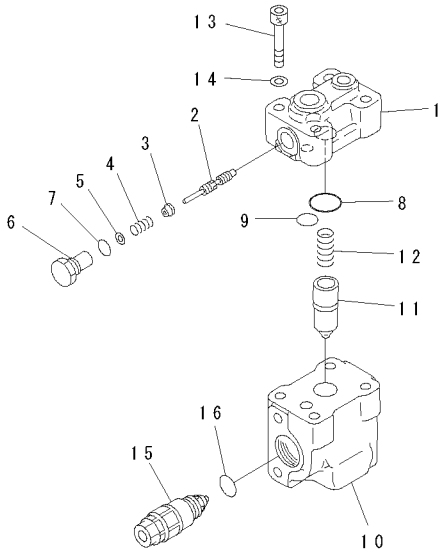

00009009

FIG NO. : Y1675-01A0

INDEX	PART NO.	DESCRIPTION	Q'TY	SERIAL NO.
	702-21-04900	LOCK VALVE ASS'Y……锁阀总成	1	60001-
1	☆	.BODY,B……阀体B	1	60001-
2	☆	.SPOOL……阀杆	1	60001-
3	702-21-31350	.SEAT…… 座	1	60001-
4	702-21-31231	.SPRING…… 弹簧	1	60001-
5	702-21-31360	.SPACER…… 调整垫片	1	60001-
6	702-21-36230	.PLUG…… 堵塞	1	60001-
7	07002-11823	.O-RING……O形圈	1	60001-
8	07000-13042	.O-RING……O形圈	1	60001-
9	07000-13028	.O-RING……O形圈	1	60001-
10	☆	.BODY,A……阀体A	1	60001-
11	702-21-36123	.VALVE,CHECK……单向阀	1	60001-
12	702-21-36131	.SPRING…… 弹簧	1	60001-
13	702-21-36310	.BOLT…… 螺栓	4	60001-
14	01643-51232	.WASHER…… 垫圈	4	60001-
15	723-90-69100	.VALVE ASS'Y,SUCTION AND SAFETY…… …… 阀总成,吸油和安全	1	60001-
16	07002-13634	..O-RING…… O形圈	1	60001-

https://truckmanualshub.com/

FIG.Y1675-01A1 LOCK VALVE (ARM)
锁阀（小臂）

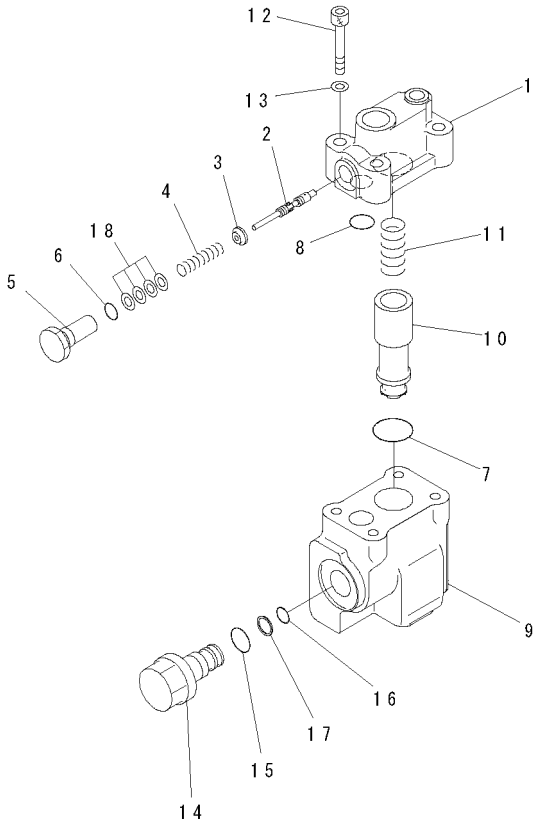

00039377

FIG NO. : Y1675-01A1

INDEX	PART NO.	DESCRIPTION	Q'TY	SERIAL NO.
	702-21-04800	VALVE ASS'Y…… 阀总成	1	60001-
1	☆	.BODY,B……阀体B	1	60001-
2	☆	.SPOOL……阀杆	1	60001-
3	702-21-36340	.SEAT…… 座	1	60001-
4	702-21-36350	.SPRING…… 弹簧	1	60001-
5	702-21-36360	.PLUG…… 堵塞.	1	60001-
6	07002-11823	.O-RING……O形圈	1	60001-
7	07000-13042	.O-RING……O形圈	1	60001-
8	07000-13028	.O-RING……O形圈	1	60001-
9	☆	.BODY,A……阀体A	1	60001-
10	702-21-36380	.VALVE,CHECK……单向阀	1	60001-
11	702-21-36131	.SPRING…… 弹簧	1	60001-
12	702-21-36310	.BOLT…… 螺栓	4	60001-
13	01643-51232	.WASHER…… 垫圈	4	60001-
14	700-94-11260	.PLUG…… 堵塞	1	60001-
15	07002-13634	.O-RING……O形圈	1	60001-
16	07000-12018	.O-RING……O形圈	1	60001-
17	07001-02018	.RING…… 隔圈	1	60001-
18	702-21-36390	.SPACER…… 调整垫片	4	60001-

https://truckmanualshub.com/

FIG.Y1679-01A0 PILOT VALVE
先导阀

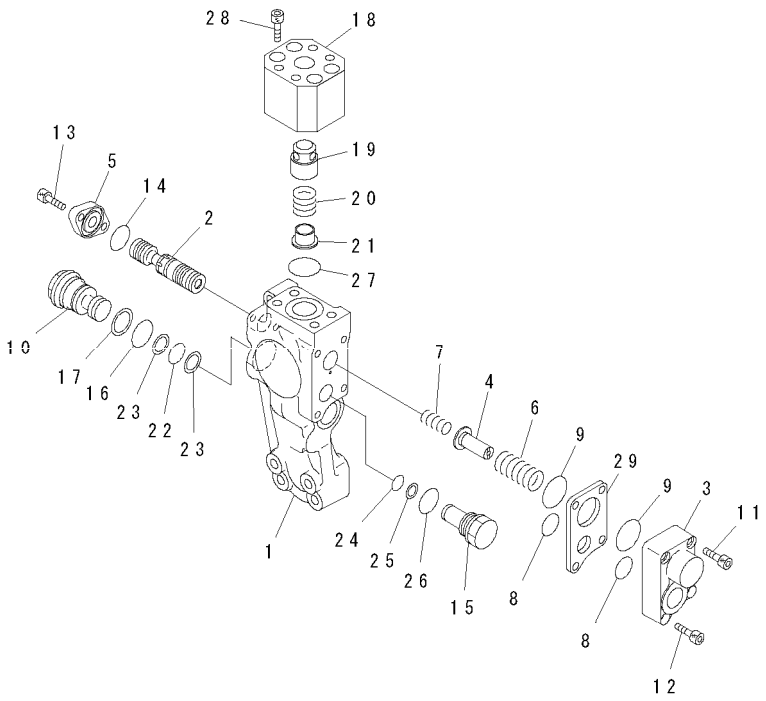

PVB8204

FIG NO. : Y1679-01A0

INDEX	PART NO.	DESCRIPTION	Q'TY	SERIAL NO.
	702-21-08250	VALVE ASS'Y…… 阀总成	1	60001-
1	☆	.BODY,VALVE ……阀体	1	60001-
2	☆	.SPOOL……阀杆	1	60001-
3	702-21-39410	.CASE ……壳体	1	60001-
4	702-21-39510	.RETAINER…… 固定座	1	60001-
5	702-21-39430	.FLANGE ……法兰	1	60001-
6	702-21-39520	.SPRING ……弹簧	1	60001-
7	702-21-39440	.SPRING ……弹簧	1	60001-
8	709-62-31280	.O-RING……O形圈	2	60001-
9	702-21-39450	.O-RING……O形圈	2	60001-
10	702-21-39530	.PLUG…… 堵塞	1	60001-
11	01252-60840	.BOLT ……螺栓	2	60001-
12	01252-60835	.BOLT ……螺栓	2	60001-
13	01252-60820	.BOLT ……螺栓	2	60001-
14	07000-13028	.O-RING……O形圈	1	60001-
15	702-21-39540	.PLUG…… 堵塞	1	60001-
16	700-93-11320	.O-RING……O形圈	1	60001-
17	700-93-11330	.RING,BACK-UP ……支承环	1	60001-
18	702-21-39550	.BODY ……壳体	1	60001-
19	702-21-39560	.POPPET ……提动阀芯	1	60001-
20	702-21-39570	.SPRING ……弹簧	1	60001-
21	702-21-39580	.RETAINER…… 固定座	1	60001-
22	07000-12021	.O-RING……O形圈	1	60001-
23	07001-02021	.RING,BACK-UP ……支承环	2	60001-
24	700-22-11410	.O-RING……O形圈	1	60001-
25	700-80-64220	.RING ……隔圈	1	60001-
26	709-25-11390	.O-RING……O形圈	1	60001-
27	07000-13035	.O-RING……O形圈	1	60001-
28	01252-61065	.BOLT ……螺栓	4	60001-
29	702-21-39590	.SPACER ……隔离套	1	60001-

https://truckmanualshub.com/

FIG.Y1860-01A0 SOLENOID VALVE (INNER PARTS)
电磁阀(内部件)

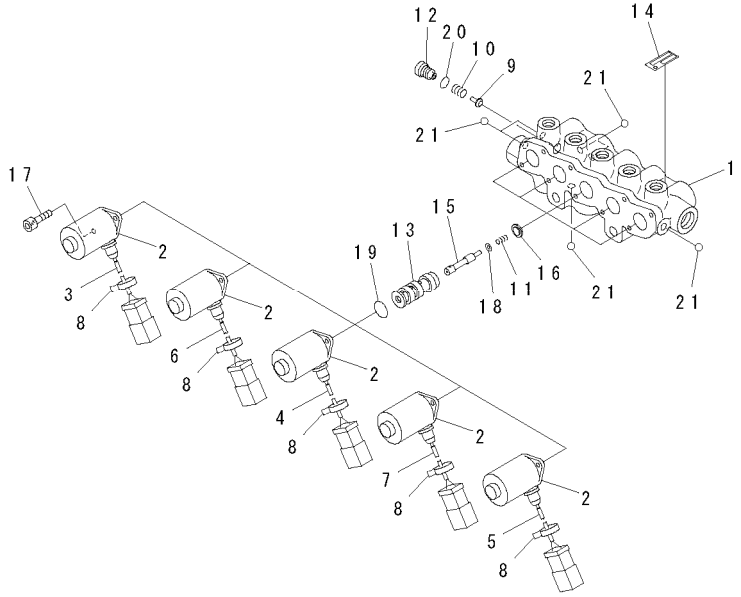

PWL5359

FIG NO. : Y1860-01A0

INDEX	PART NO.	DESCRIPTION	Q'TY	SERIAL NO.
	209-60-77240	VALVE ASS'Y…… 阀总成	1	60001-
1	☆	.BLOCK……接头	1	60001-
2	209-60-77250	.SOLENOID ASS'Y…… 电磁阀总成	5	60001-
3	NY07529-10200	.TUBE…… 硬管	1	60001-
4	NY07529-10300	.TUBE…… 硬管	1	60001-
5	NY07529-10400	.TUBE…… 硬管	1	60001-
6	NY07529-10500	.TUBE…… 硬管	1	60001-
7	NY07529-10600	.TUBE…… 硬管	1	60001-
8	NY89103-00090	.BAND ……绑带	5	60001-
9	NY05062-1170A	.PLUNGER……柱塞	1	60001-
10	NY05062-11800	.SPRING…… 弹簧	1	60001-
11	NY06040-10400	.SPRING…… 弹簧	5	60001-
12	NY06277-1320A	.PLUG…… 堵塞	1	60001-
13	NY07084-10210	.SLEEVE ……套筒	5	60001-
14	NY07529-10700	.PLATE……板	1	60001-
15	NY11076-1040A	.SPOOL …… 阀芯	5	60001-
16	NY11076-12600	.STOPPER……止动块	5	60001-
17	NY81416-05012	.BOLT…… 螺栓	10	60001-
18	NY83007-03040	.WASHER ……垫圈	5	60001-
19	07000-12016	.O-RING……O形圈	5	60001-
20	07000-11010	.O-RING……O形圈	1	60001-
21	NY87200-00011	.EXPANDER ……放大器	7	60001-

https://truckmanualshub.com/

FIG.Y1861-01A0 SOLENOID VALVE (INNER PARTS)
电磁阀(内部件)

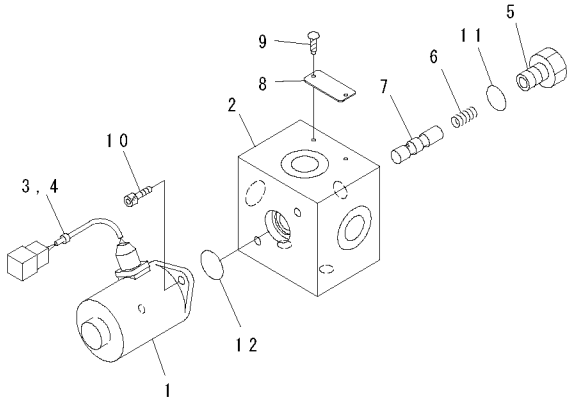

PW1B659

FIG NO. : Y1861-01A0

INDEX	PART NO.	DESCRIPTION	Q'TY	SERIAL NO.
	209-60-77230	VALVE ASS'Y…… 阀总成	1	60001-
1	209-60-77250	.SOLENOID ASS'Y…… 电磁阀总成	1	60001-
2	☆	.BLOCK……接头	1	60001-
3	NY07207-11800	.TUBE…… 硬管	1	60001-
4	NY89103-00090	.BAND ……绑带	1	60001-
5	NY06040-10300	.PLUG…… 堵塞	1	60001-
6	NY06339-10200	.SPRING…… 弹簧	1	60001-
7	NY06420-10100	.SPOOL …… 阀芯	1	60001-
8	NY09000-11400	.PLATE……板	1	60001-
9	NY84110-00264	.SCREW……螺钉	2	60001-
10	NY81446-05010	.BOLT…… 螺栓	2	60001-
11	07000-11010	.O-RING……O形圈	1	60001-
12	07000-12016	.O-RING……O形圈	1	60001-

https://truckmanualshub.com/

FIG.Y1890-01A0 BREATHER (FOR HYDRAULIC TANK)
透气塞（工作油箱用）

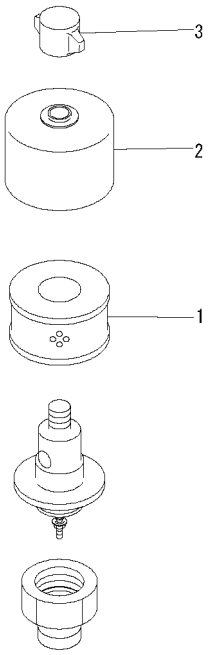

PW1E403

FIG NO. : Y1890-01A0

INDEX	PART NO.	DESCRIPTION	Q'TY	SERIAL NO.
	198-60-55510	BREATHER……透气塞	1	60001-
1	421-60-35170	.ELEMENT……滤芯	1	60001-
2	421-60-35180	.COVER……盖	1	60001-
3	421-60-35190	.NUT……螺母	1	60001-

https://truckmanualshub.com/

FIG.Y1979-01A0 COMPRESSOR ASS'Y (FOR AIR CONDITIONER)

压缩机(空调)

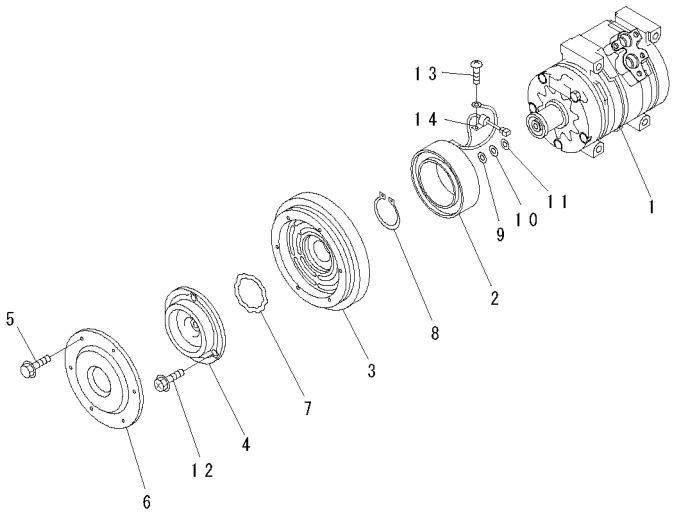

PW1D039

FIG NO. : Y1979-01A0

INDEX	PART NO.	DESCRIPTION	Q'TY	SERIAL NO.
	20Y-979-6121	COMPRESSOR ASS'Y……压缩机总成	1	60001-
1	ND447220-4051	.COMPRESSOR ASS'Y ……压缩机总成	1	60001-
	ND247300-0510	.CLUTCH ASS'Y,MAGNET……磁铁离合器总成	1	60001-
2	ND047310-7240	..STATOR,MAGNET CLUTCH……启动离合器	1	60001-
3	☆	..ROTOR,MAGNET CLUTCH ……转动离合器	1	60001-
4	ND047410-1570	..HUB,CLUTCH……半轴	1	60001-
	ND047410-1580	..HUB,CLUTCH……半轴	1	60001-
5	ND949047-2950	..BOLT,WASHER ……带垫圈螺栓	6	60001-
6	ND047372-0660	..COVER,DUST……防尘盖	1	60001-
7	ND949070-1360	.RING, SNAP ……卡簧	1	60001-
	ND949070-0640	.RING, SNAP ……卡簧	1	60001-
8	ND949070-1390	.RING, SNAP ……卡簧	1	60001-
9	ND949013-7480	.WASHER, 0.1MM,PLATE ……0.1MM垫圈片	1	60001-
10	ND949013-7500	.WASHER, 0.3MM,PLATE ……0.3MM垫圈片	1	60001-
11	ND949013-7510	.WASHER, 0.5MM,PLATE ……0.5MM垫圈片	1	60001-
12	ND949048-0430	.BOLT,WASHER HEAD……螺栓,垫圈	1	60001-
13	ND91310-05081	.SCREW,WASHER ……带垫圈螺钉	1	60001-
14	ND146691-4470	.CLAMP……卡箍	1	60001-

https://truckmanualshub.com/

NUMERICAL INDEX

索引

https://truckmanualshub.com/

PART NO.	FIG NO.	INDEX	PAGE
01010-61470	Y1600-31A0	10	YO-59
01010-61640	A6210-A4E4	3	AA-117
01010-61650	A2210-A4H7	2	AA-43
01010-61665	A2210-A4H7	3	AA-43
01010-62490	R1120-07A0	43	RO-21
01010-62490	R1120-15A0	43	RO-39
01010-80612	D0100-01A0	15	DO-3
01010-80612	M1130-01A0	34	MO-11
01010-80612	M1130-01A0	46	MO-11
01010-80612	M1130-01A1	27	MO-15
01010-80612	M1130-01A1	39	MO-15
01010-80612	T1110-03A0	10	TO-11
01010-80612	T1110-03A5	10	TO-13
01010-80616	C0100-02A0	11	CO-5
01010-80616	K0350-01A0	2	KO-15
01010-80616	M1130-01A0	10	MO-11
01010-80616	M1130-01A1	10	MO-15
01010-80625	K0700-04A0	6	KO-27
01010-80630	B0600-04A0	21	BO-13
01010-80812	Y1600-13A0	17	YO-33
01010-80816	E0200-07A0	1	EO-21
01010-80816	E0200-08A0	6	EO-23
01010-80816	K1110-16A0	2	KO-57
01010-80816	K1110-16A0	13	KO-57
01010-80816	Y1670-01A0	17	YO-129
01010-80820	A1610-A4L8	7	AA-25
01010-80820	A3310-A4D7	11	AA-71
01010-80820	A6010-A4N2	26	AA-109
01010-80820	C0100-02A0	19	CO-5
01010-80820	C0100-07A0	16	CO-17
01010-80820	E0200-01A0	9	EO-7
01010-80820	K1110-06A0	19	KO-37
01010-80820	K1110-25A0	12	KO-75
01010-80820	K1110-28A0	12	KO-81
01010-80820	Y1600-02A0	9	YO-11
01010-80820	Y1600-05A0	22	YO-17
01010-80820	Y1600-14A0	12	YO-35
01010-80820	Y1600-22A0	9	YO-39
01010-80820	Y1600-25A0	22	YO-45
01010-80820	Y1600-29A0	7	YO-57
01010-80825	C0100-02A0	17	CO-5
01010-80825	E0410-01A0	2	EO-43
01010-80825	H1831-01A0	5	HO-61
01010-80825	K1110-30A0	3	KO-85
01010-80825	Y1600-27A0	37	YO-49
01010-80825	Y1600-28A0	39	YO-53
01010-80825	Y1660-04A0	7	YO-117
01010-80830	A4030-A4C1	30	AA-77
01010-80830	E0200-01A0	5	EO-7
01010-80835	Y1627-01A0	12	YO-89
01010-80850	A1530-A4L8	11	AA-15
01010-80850	A6010-A4L9	21	AA-105
01010-80850	A6010-A4M8	21	AA-107
01010-80855	Y1660-04A0	8	YO-117
01010-80855	Y1670-01A0	15	YO-129
01010-80875	K0700-01A0	19	KO-19
01010-81016	E0200-04A0	37	EO-15
01010-81016	K1110-18A0	11	KO-61
01010-81016	K1110-23A0	14	KO-71
01010-81016	K1110-23A0	33	KO-71
01010-81016	K1110-35A0	12	KO-95
01010-81016	K1110-35A0	19	KO-95
01010-81020	A1530-A4L8	13	AA-15
01010-81020	A1570-A4G7	34	AA-23
01010-81020	B0600-04A0	17	BO-13
01010-81020	C0100-02A0	25	CO-5
01010-81020	C0100-03A0	5	CO-7
01010-81020	C0100-03A0	17	CO-7
01010-81020	C0100-03A0	20	CO-7
01010-81020	C0100-03A0	23	CO-7
01010-81020	C0100-03A0	26	CO-7
01010-81020	C0100-05A0	9	CO-11
01010-81020	E0200-01A0	22	EO-7
01010-81020	E0200-01A0	24	EO-7
01010-81020	E0200-02A0	32	EO-9
01010-81020	E0200-03A0	6	EO-13
01010-81020	E0200-03A0	8	EO-13
01010-81020	E0200-03A0	28	EO-13
01010-81020	E0200-05A0	8	EO-17
01010-81020	E0200-08A0	10	EO-23
01010-81020	E0200-08A0	13	EO-23
01010-81020	J1110-02A0	24	JO-5
01010-81020	J1110-02A1	24	JO-7
01010-81020	K1110-09A0	13	KO-43
01010-81020	K1110-17A0	3	KO-59
01010-81020	K1110-18A0	14	KO-61
01010-81020	K1110-19A0	2	KO-63
01010-81020	K1110-19A0	5	KO-63
01010-81020	K1110-21A0	5	KO-67
01010-81020	K1110-23A0	17	KO-71
01010-81020	K1110-23A0	26	KO-71
01010-81020	K1110-23A0	29	KO-71
01010-81020	K1110-32A0	6	KO-89
01010-81020	K1110-35A0	2	KO-95
01010-81020	K1110-35A0	7	KO-95
01010-81020	M1220-01A0	11	MO-31
01010-81020	N1110-01A0	13	NO-3
01010-81025	A1570-A4G7	4	AA-23
01010-81025	A1570-A4G7	19	AA-23
01010-81025	A1570-A4G7	21	AA-23
01010-81025	A2110-A4S1	11	AA-41
01010-81025	A2110-A4S1	14	AA-41
01010-81025	B0600-06A0	16	BO-17
01010-81025	C0100-01A0	19	CO-3
01010-81025	C0100-01A0	25	CO-3
01010-81025	C0100-01A0	28	CO-3
01010-81025	C0100-01A0	34	CO-3
01010-81025	C0100-02A0	22	CO-5
01010-81025	C0100-11A0	4	CO-27
01010-81025	C0100-11A0	12	CO-27
01010-81025	H0110-01A0	45	HO-3
01010-81025	H1840-02A0	3	HO-73
01010-81025	K1110-20A0	2	KO-65
01010-81025	K1110-21A0	3	KO-67
01010-81025	K1110-36A0	7	KO-97
01010-81025	K1110-36A0	24	KO-97
01010-81025	M1210-01A1	18	MO-25
01010-81025	M1210-01A2	18	MO-27
01010-81025	Y1620-01A0	43	YO-74
01010-81025	Y1620-02A0	43	YO-78
01010-81030	A1550-A4B1	48	AA-19
01010-81030	A1570-A4G7	28	AA-23
01010-81030	A2110-A4S1	15	AA-41
01010-81030	B0600-01A0	12	BO-7
01010-81030	B0600-02A0	3	BO-9
01010-81030	B0600-05A0	2	BO-15
01010-81030	C0100-01A0	16	CO-3
01010-81030	D0200-02A0	5	DO-9
01010-81030	K1110-18A0	9	KO-61
01010-81030	K1110-19A0	14	KO-63
01010-81030	K1110-27A0	35	KO-79
01010-81030	K1110-29A0	42	KO-83
01010-81030	M1210-01A1	20	MO-25
01010-81030	M1210-01A2	20	MO-27

https://truckmanualshub.com/

PART NO.	FIG NO.	INDEX	PAGE
01010-81035	A1530-A4L8	15	AA-15
01010-81035	A1550-A4B1	3	AA-19
01010-81035	A4010-A4R4	7	AA-73
01010-81035	C0100-04A0	34	CO-9
01010-81035	C0100-06A0	18	CO-13
01010-81035	D0200-03A0	6	DO-13
01010-81035	J1110-02A0	28	JO-5
01010-81035	J1110-02A0	32	JO-5
01010-81035	J1110-02A1	28	JO-7
01010-81035	J1110-02A1	32	JO-7
01010-81035	K1120-01A0	3	KO-99
01010-81040	A1570-A4G7	24	AA-23
01010-81040	B0600-02A0	6	BO-9
01010-81040	C0100-01A0	31	CO-3
01010-81040	C0100-07A0	10	CO-17
01010-81040	H0120-01A0	3	HO-13
01010-81040	H0320-01A0	34	HO-33
01010-81040	H1220-01A0	16	HO-45
01010-81040	K1110-23A0	8	KO-71
01010-81040	K1110-23A0	12	KO-71
01010-81040	K1110-23A0	23	KO-71
01010-81040	K1110-35A0	17	KO-95
01010-81040	N1210-01A0	11	NO-5
01010-81040	N1210-01A0	11	NO-11
01010-81040	Y0260-01A0	5	YO-3
01010-81045	A1550-A4B1	50	AA-20
01010-81045	A1570-A4G7	20	AA-23
01010-81045	A1610-A4L8	28	AA-25
01010-81050	A2011-A4P2	11	AA-31
01010-81050	C0100-01A0	3	CO-3
01010-81050	K1110-36A0	4	KO-97
01010-81050	K1110-36A0	21	KO-97
01010-81060	A2011-A4P2	12	AA-31
01010-81075	H1833-01A0	18	HO-67
01010-81075	H1833-02A0	2	HO-69
01010-81075	N1210-02A0	8	NO-9
01010-81075	N1210-04A0	9	NO-15
01010-81080	N1210-02A0	6	NO-9
01010-81080	N1210-04A0	7	NO-15
01010-81085	A1570-A4G7	33	AA-23
01010-81090	A1530-A4L8	17	AA-15
01010-81095	H1220-01A0	27	HO-45
01010-81095	H1831-01A0	17	HO-61
01010-81220	B0200-01A0	40	BO-5
01010-81220	D0200-01A0	46	DO-5
01010-81220	D0200-04A0	4	DO-15
01010-81220	E0200-06A0	6	EO-19
01010-81220	M1210-01A1	22	MO-25
01010-81220	M1210-01A2	22	MO-27
01010-81220	T1110-03A0	13	TO-11
01010-81220	T1110-03A5	13	TO-13
01010-81220	T1110-09A0	12	TO-27
01010-81220	T1110-09A1	12	TO-29
01010-81220	T1200-03A1	19	TO-45
01010-81225	B0600-05A0	26	BO-15
01010-81225	B0600-06A0	10	BO-17
01010-81225	B0600-06A0	19	BO-17
01010-81225	B0600-06A0	27	BO-17
01010-81225	C0100-01A0	22	CO-3
01010-81225	C0100-02A0	2	CO-5
01010-81225	C0100-02A0	5	CO-5
01010-81225	C0100-02A0	8	CO-5
01010-81225	C0100-03A0	8	CO-7
01010-81225	C0100-03A0	11	CO-7
01010-81225	C0100-03A0	14	CO-7
01010-81225	C0100-06A0	49	CO-15
01010-81225	C0100-07A0	20	CO-17
01010-81225	C0100-07A0	33	CO-17
01010-81225	C0100-07A0	37	CO-17
01010-81225	C0100-09A0	5	CO-21
01010-81225	C0100-09A0	10	CO-21
01010-81225	C0100-09A0	15	CO-21
01010-81225	C0100-09A0	21	CO-21
01010-81225	C0100-09A0	27	CO-21
01010-81225	C0100-09A0	33	CO-21
01010-81225	C0100-09A0	39	CO-21
01010-81225	C0100-09A0	45	CO-21
01010-81225	D0200-01A0	18	DO-5
01010-81225	D0200-01A0	28	DO-5
01010-81225	D0200-01A0	31	DO-5
01010-81225	D0200-01A0	34	DO-5
01010-81225	D0200-01A0	37	DO-5
01010-81225	D0200-01A0	40	DO-5
01010-81225	D0200-01A0	44	DO-5
01010-81225	D0200-01A0	53	DO-7
01010-81225	D0200-02A0	37	DO-9
01010-81225	D0200-02A0	43	DO-9
01010-81225	D0200-02A0	46	DO-9
01010-81225	D0200-02A0	52	DO-11
01010-81225	D0200-04A0	6	DO-15
01010-81225	D0200-04A0	9	DO-15
01010-81225	E0100-01A2	8	EO-5
01010-81225	E0200-01A0	11	EO-7
01010-81225	E0200-01A0	14	EO-7
01010-81225	E0200-01A0	17	EO-7
01010-81225	E0200-02A0	3	EO-9
01010-81225	E0200-02A0	6	EO-9
01010-81225	E0200-02A0	9	EO-9
01010-81225	E0200-02A0	12	EO-9
01010-81225	E0200-02A0	15	EO-9
01010-81225	E0200-02A0	21	EO-9
01010-81225	E0200-02A0	24	EO-9
01010-81225	E0200-02A0	27	EO-9
01010-81225	E0200-02A0	30	EO-9
01010-81225	E0200-02A0	35	EO-9
01010-81225	E0200-02A0	41	EO-9
01010-81225	E0200-02A0	45	EO-9
01010-81225	E0200-03A0	3	EO-13
01010-81225	E0200-03A0	11	EO-13
01010-81225	E0200-03A0	14	EO-13
01010-81225	E0200-03A0	22	EO-13
01010-81225	E0200-03A0	25	EO-13
01010-81225	E0200-04A0	2	EO-15
01010-81225	E0200-04A0	5	EO-15
01010-81225	E0200-04A0	8	EO-15
01010-81225	E0200-04A0	11	EO-15
01010-81225	E0200-04A0	14	EO-15
01010-81225	E0200-04A0	17	EO-15
01010-81225	E0200-04A0	20	EO-15
01010-81225	E0200-04A0	23	EO-15
01010-81225	E0200-04A0	26	EO-15
01010-81225	E0200-04A0	29	EO-15
01010-81225	E0200-04A0	32	EO-15
01010-81225	E0200-04A0	35	EO-15
01010-81225	E0200-06A0	3	EO-19
01010-81225	E0200-07A0	25	EO-21
01010-81225	H0110-01A0	10	HO-3
01010-81225	H0110-01A0	27	HO-3
01010-81225	H0110-03A0	9	HO-9
01010-81225	H0110-04A0	32	HO-11
01010-81225	H0210-01A0	36	HO-21
01010-81225	H0340-01A0	14	HO-37
01010-81225	H1350-01A0	22	HO-57
01010-81225	H1350-01A0	27	HO-57

https://truckmanualshub.com/

PART NO.	FIG NO.	INDEX	PAGE
01010-81225	H1350-01A0	30	HO-57
01010-81225	H1350-01A0	33	HO-57
01010-81225	H1350-01A0	37	HO-57
01010-81225	H1831-01A0	20	HO-61
01010-81225	H1831-01A0	24	HO-61
01010-81225	H1833-01A0	14	HO-67
01010-81225	H1840-02A0	6	HO-73
01010-81225	H1840-02A0	24	HO-73
01010-81225	H1840-03A2	3	HO-75
01010-81225	J1110-02A0	5	JO-5
01010-81225	J1110-02A0	12	JO-5
01010-81225	J1110-02A1	5	JO-7
01010-81225	J1110-02A1	12	JO-7
01010-81225	K0350-01A0	6	KO-15
01010-81225	K0700-02A0	8	KO-21
01010-81225	K0700-02A0	11	KO-21
01010-81225	K0700-02A0	16	KO-21
01010-81225	K0700-02A0	25	KO-21
01010-81225	K0700-02A0	28	KO-21
01010-81225	K0700-02A0	37	KO-21
01010-81225	K0700-02A0	42	KO-21
01010-81225	K0700-03A0	5	KO-25
01010-81225	K0700-03A0	10	KO-25
01010-81225	K0700-03A0	14	KO-25
01010-81225	K0700-04A0	12	KO-27
01010-81225	K0700-04A0	15	KO-27
01010-81225	M1120-02A0	5	MO-9
01010-81225	M1140-01A0	15	MO-17
01010-81225	M1140-01A0	25	MO-17
01010-81225	M1150-01A0	31	MO-19
01010-81225	M1150-02A0	30	MO-21
01010-81225	M1160-01A0	9	MO-23
01010-81225	M1210-01A1	41	MO-25
01010-81225	M1210-01A2	41	MO-27
01010-81225	M1220-01A0	21	MO-31
01010-81225	M1220-01A0	24	MO-31
01010-81225	R1110-01A0	15	RO-5
01010-81225	R1120-03A0	5	RO-11
01010-81225	R1120-03A0	14	RO-11
01010-81225	R1120-11A0	5	RO-29
01010-81225	R1120-11A0	14	RO-29
01010-81225	R1150-01A0	11	RO-45
01010-81225	T1110-09A0	19	TO-27
01010-81225	T1110-09A0	22	TO-27
01010-81225	T1110-09A1	19	TO-29
01010-81230	A2330-A4B6	2	AA-51
01010-81230	B0200-01A0	6	BO-5
01010-81230	B0200-01A0	13	BO-5
01010-81230	B0200-01A0	34	BO-5
01010-81230	B0600-05A0	18	BO-15
01010-81230	C0100-04A0	3	CO-9
01010-81230	C0100-06A0	11	CO-13
01010-81230	C0100-06A0	14	CO-13
01010-81230	C0100-06A0	30	CO-13
01010-81230	C0100-06A0	42	CO-13
01010-81230	C0100-06A0	45	CO-13
01010-81230	C0100-10A0	10	CO-25
01010-81230	D0200-02A0	14	DO-9
01010-81230	D0200-02A0	33	DO-9
01010-81230	D0200-02A0	49	DO-11
01010-81230	D0200-03A0	14	DO-13
01010-81230	D0200-03A0	17	DO-13
01010-81230	E0200-08A0	2	EO-23
01010-81230	E0310-01A1	5	EO-27
01010-81230	E0310-01A2	7	EO-29
01010-81230	E0310-01A4	11	EO-31
01010-81230	E0310-01A5	2	EO-33
01010-81230	E0310-01A6	9	EO-35
01010-81230	E0310-01A8	9	EO-37
01010-81230	E0310-01A9	4	EO-39
01010-81230	E0310-01B1	4	EO-41
01010-81230	H0110-04A0	14	HO-11
01010-81230	H0110-04A0	26	HO-11
01010-81230	H0312-01A0	8	HO-29
01010-81230	H0330-01A0	2	HO-35
01010-81230	H0330-01A0	6	HO-35
01010-81230	H0340-01A0	3	HO-37
01010-81230	H1210-01A0	22	HO-39
01010-81230	H1210-01A0	25	HO-39
01010-81230	H1210-01A0	33	HO-39
01010-81230	H1220-03A0	10	HO-49
01010-81230	H1220-03A0	25	HO-49
01010-81230	H1240-02A1	9	HO-51
01010-81230	H1310-01A0	10	HO-53
01010-81230	H1310-01A0	23	HO-53
01010-81230	H1310-01A0	28	HO-53
01010-81230	H1340-01A0	16	HO-55
01010-81230	H1340-01A0	18	HO-55
01010-81230	H1340-01A0	24	HO-55
01010-81230	H1350-01A0	19	HO-57
01010-81230	H1810-01A0	16	HO-59
01010-81230	H1810-01A0	24	HO-59
01010-81230	H1831-01A0	2	HO-61
01010-81230	H1831-02A0	32	HO-65
01010-81230	H1833-01A0	2	HO-67
01010-81230	H1833-01A0	6	HO-67
01010-81230	H1833-02A0	17	HO-69
01010-81230	H1833-02A0	20	HO-69
01010-81230	H1833-02A0	23	HO-69
01010-81230	H1833-02A0	25	HO-69
01010-81230	H1840-01A0	27	HO-71
01010-81230	J1110-01A0	4	JO-3
01010-81230	K1110-22A0	5	KO-69
01010-81230	M1110-01A0	22	MO-3
01010-81230	M1110-01A0	29	MO-3
01010-81230	M1110-01A0	31	MO-3
01010-81230	M1110-01A0	33	MO-3
01010-81230	M1120-01A0	36	MO-5
01010-81230	M1120-01A0	42	MO-5
01010-81230	M1120-01A0	47	MO-5
01010-81230	M1120-01A0	50	MO-7
01010-81230	M1120-01A0	54	MO-7
01010-81230	M1120-02A0	2	MO-9
01010-81230	M1120-02A0	7	MO-9
01010-81230	M1120-02A0	10	MO-9
01010-81230	M1120-02A0	13	MO-9
01010-81230	M1120-02A0	16	MO-9
01010-81230	M1120-02A0	19	MO-9
01010-81230	M1120-02A0	25	MO-9
01010-81230	M1120-02A0	30	MO-9
01010-81230	M1120-02A0	33	MO-9
01010-81230	M1130-01A0	7	MO-11
01010-81230	M1130-01A0	13	MO-11
01010-81230	M1130-01A0	21	MO-11
01010-81230	M1130-01A0	48	MO-11
01010-81230	M1130-01A1	7	MO-15
01010-81230	M1130-01A1	13	MO-15
01010-81230	M1130-01A1	41	MO-15
01010-81230	M1140-01A0	27	MO-17
01010-81230	M1150-01A0	2	MO-19
01010-81230	M1150-01A0	8	MO-19
01010-81230	M1150-01A0	16	MO-19
01010-81230	M1150-01A0	20	MO-19
01010-81230	M1150-01A0	27	MO-19

https://truckmanualshub.com/

PART NO.	FIG NO.	INDEX	PAGE
01010-81230	M1150-01A0	29	MO-19
01010-81230	M1150-02A0	6	MO-21
01010-81230	M1150-02A0	12	MO-21
01010-81230	M1150-02A0	17	MO-21
01010-81230	M1150-02A0	24	MO-21
01010-81230	M1150-02A0	34	MO-21
01010-81230	M1150-02A0	41	MO-21
01010-81230	M1150-02A0	46	MO-21
01010-81230	M1210-01A1	28	MO-25
01010-81230	M1210-01A1	35	MO-25
01010-81230	M1210-01A2	28	MO-27
01010-81230	M1210-01A2	35	MO-27
01010-81230	M1210-02A2	2	MO-29
01010-81230	M1210-02A2	5	MO-29
01010-81230	M1220-01A0	13	MO-31
01010-81230	M1810-01A0	4	MO-43
01010-81230	M1810-01A0	9	MO-43
01010-81230	M1810-01A0	12	MO-43
01010-81230	M1810-01A0	16	MO-43
01010-81230	M1810-01A0	19	MO-43
01010-81230	M1810-01A0	24	MO-43
01010-81230	M1810-02A0	11	MO-45
01010-81230	M1810-02A0	13	MO-45
01010-81230	M1810-02A0	16	MO-45
01010-81230	M1810-02A0	20	MO-45
01010-81230	M1810-02A0	25	MO-45
01010-81230	M1810-03A0	14	MO-47
01010-81230	M1810-03A0	17	MO-47
01010-81230	M1810-03A0	25	MO-47
01010-81230	M1810-03A0	28	MO-47
01010-81230	M1810-03A0	32	MO-47
01010-81230	M1810-03A0	35	MO-47
01010-81230	N1210-04A0	5	NO-15
01010-81230	N1210-05A0	3	NO-17
01010-81230	R1140-01A0	4	RO-43
01010-81230	R1150-01A0	3	RO-45
01010-81230	R1150-01A0	7	RO-45
01010-81230	R1150-01A0	15	RO-45
01010-81230	T1110-09A0	9	TO-27
01010-81230	T1110-09A0	15	TO-27
01010-81230	T1110-09A1	9	TO-29
01010-81230	T1110-09A1	15	TO-29
01010-81235	A1550-A4B1	47	AA-19
01010-81235	A3010-A4A8	18	AA-67
01010-81235	B0200-01A0	19	BO-5
01010-81235	C0100-05A0	2	CO-11
01010-81235	C0100-06A0	53	CO-15
01010-81235	C0100-10A0	21	CO-25
01010-81235	D0100-01A0	10	DO-3
01010-81235	D0200-02A0	27	DO-9
01010-81235	D0200-03A0	22	DO-13
01010-81235	H0110-01A0	33	HO-3
01010-81235	H0120-03A0	12	HO-19
01010-81235	H0240-01A0	2	HO-25
01010-81235	H0311-01A0	34	HO-27
01010-81235	H0312-01A0	30	HO-29
01010-81235	H1210-01A0	18	HO-39
01010-81235	H1220-03A0	4	HO-49
01010-81235	H1220-03A0	6	HO-49
01010-81235	H1310-01A0	12	HO-53
01010-81235	H1310-01A0	25	HO-53
01010-81235	J1410-01A0	7	JO-13
01010-81235	K0700-01A0	2	KO-19
01010-81235	M1120-01A0	10	MO-5
01010-81235	M1120-01A0	22	MO-5
01010-81235	M1120-01A0	28	MO-5
01010-81235	M1120-01A0	40	MO-5
01010-81235	M1210-01A1	25	MO-25
01010-81235	M1210-01A2	25	MO-27
01010-81235	M1310-01A0	4	MO-33
01010-81235	M1810-03A0	4	MO-47
01010-81235	M1810-03A0	7	MO-47
01010-81235	M1810-03A0	9	MO-47
01010-81235	M1810-03A0	11	MO-47
01010-81235	N1310-01A0	28	NO-19
01010-81235	T1110-02A0	4	TO-07
01010-81235	T1110-02A5	4	TO-09
01010-81235	T1110-04A0	14	TO-15
01010-81235	T1110-04A5	14	TO-19
01010-81240	B0200-01A0	25	BO-5
01010-81240	B0600-01A0	4	BO-7
01010-81240	B0600-03A0	7	BO-11
01010-81240	C0100-05A0	14	CO-11
01010-81240	C0100-09A0	49	CO-21
01010-81240	D0200-02A0	17	DO-9
01010-81240	D0200-03A0	20	DO-13
01010-81240	E0420-01A0	6	EO-45
01010-81240	H0320-01A0	14	HO-33
01010-81240	H0330-01A0	24	HO-35
01010-81240	H1220-03A0	8	HO-49
01010-81240	H1240-02A1	6	HO-51
01010-81240	J1110-03A0	39	JO-9
01010-81240	K1110-17A0	5	KO-59
01010-81240	M1120-01A0	6	MO-5
01010-81240	M1120-01A0	16	MO-5
01010-81240	M1120-01A0	19	MO-5
01010-81240	M1130-01A0	31	MO-11
01010-81240	M1130-01A0	43	MO-11
01010-81240	M1130-01A1	24	MO-15
01010-81240	M1130-01A1	36	MO-15
01010-81240	M1140-01A0	13	MO-17
01010-81240	M1140-01A0	23	MO-17
01010-81240	M1140-01A0	29	MO-17
01010-81240	M1150-01A0	4	MO-19
01010-81240	R1120-07A0	7	RO-21
01010-81240	R1120-15A0	7	RO-39
01010-81245	A3010-A4A8	19	AA-67
01010-81245	B0600-03A0	9	BO-11
01010-81245	C0100-07A0	6	CO-17
01010-81245	C0100-11A0	8	CO-27
01010-81245	D0200-02A0	10	DO-9
01010-81245	H0110-01A0	50	HO-4
01010-81245	H0311-01A0	29	HO-27
01010-81245	H0312-02A0	26	HO-31
01010-81245	H1210-01A0	15	HO-39
01010-81245	H1220-02A0	2	HO-47
01010-81245	H1220-02A0	12	HO-47
01010-81245	M1120-01A0	13	MO-5
01010-81245	M1120-01A0	24	MO-5
01010-81245	N1210-05A0	5	NO-17
01010-81245	T1110-02A0	12	TO-07
01010-81245	T1110-02A0	15	TO-07
01010-81245	T1110-02A5	12	TO-09
01010-81245	T1110-02A5	15	TO-09
01010-81245	T1110-04A0	20	TO-15
01010-81245	T1110-04A0	49	TO-17
01010-81245	T1110-04A5	20	TO-19
01010-81245	T1110-04A5	49	TO-21
01010-81245	T1200-03A1	10	TO-45
01010-81245	Y1620-11A0	46	YO-82
01010-81245	Y1620-41A0	51	YO-86
01010-81250	D0200-01A0	21	DO-5
01010-81250	D0200-02A0	19	DO-9
01010-81250	D0200-02A0	40	DO-9

https://truckmanualshub.com/

PART NO.	FIG NO.	INDEX	PAGE
01010-81250	E0200-02A0	38	E0-9
01010-81250	H0311-01A0	41	H0-27
01010-81250	H0312-01A0	33	H0-29
01010-81250	H0340-01A0	7	H0-37
01010-81250	H1210-01A0	6	H0-39
01010-81250	H1210-01A0	40	H0-39
01010-81250	H1831-02A0	10	H0-65
01010-81250	H1840-02A0	27	H0-73
01010-81250	K0700-01A0	9	K0-19
01010-81250	K0700-01A0	15	K0-19
01010-81250	K0700-02A0	23	K0-21
01010-81250	K0700-02A0	44	K0-23
01010-81250	M1310-01A0	2	M0-33
01010-81250	T1110-04A0	4	T0-15
01010-81250	T1110-04A0	25	T0-15
01010-81250	T1110-04A0	42	T0-15
01010-81250	T1110-04A5	4	T0-19
01010-81250	T1110-04A5	25	T0-19
01010-81250	T1110-04A5	42	T0-19
01010-81250	Y1660-01A0	1	Y0-111
01010-81255	B0600-04A0	2	B0-13
01010-81255	M1120-02A0	28	M0-9
01010-81255	T1110-04A0	9	T0-15
01010-81255	T1110-04A0	36	T0-15
01010-81255	T1110-04A5	9	T0-19
01010-81255	T1110-04A5	36	T0-19
01010-81260	A6010-A4N2	11	AA-109
01010-81260	E0200-02A0	18	E0-9
01010-81260	K0700-02A0	19	K0-21
01010-81260	K0700-02A0	31	K0-21
01010-81260	K0700-03A0	17	K0-25
01010-81260	T1110-02A0	7	T0-07
01010-81260	T1110-02A5	7	T0-09
01010-81260	T1110-04A0	17	T0-15
01010-81260	T1110-04A5	17	T0-19
01010-81270	C0100-06A0	8	C0-13
01010-81270	C0100-06A0	27	C0-13
01010-81270	C0100-06A0	39	C0-13
01010-81270	H1350-01A0	14	H0-57
01010-81275	A2041-A4L2	25	AA-35
01010-81275	H0340-01A0	11	H0-37
01010-81275	H1220-01A0	42	H0-45
01010-81275	H1350-01A0	16	H0-57
01010-81275	M1220-01A0	29	M0-31
01010-81280	D0200-01A0	16	D0-5
01010-81280	H0340-01A0	29	H0-37
01010-81280	J1410-01A0	5	J0-13
01010-81280	K0600-01A0	7	K0-17
01010-81280	K0700-02A0	34	K0-21
01010-81280	T1110-04A0	28	T0-15
01010-81280	T1110-04A5	28	T0-19
01010-81285	C0100-07A0	23	C0-17
01010-81285	C0100-07A0	39	C0-17
01010-81285	H0312-01A0	22	H0-29
01010-81285	K1110-17A0	7	K0-59
01010-81290	A2041-A4L2	26	AA-35
01010-81290	A6010-A4L9	9	AA-105
01010-81290	A6010-A4M8	9	AA-107
01010-81290	H0110-03A0	2	H0-9
01010-81295	H0110-02A0	11	H0-7
01010-81295	K0600-01A0	9	K0-17
01010-81440	H0120-03A0	2	H0-19
01010-81440	H0120-03A0	7	H0-19
01010-81445	Y0260-01A0	37	Y0-3
01010-81460	N1210-01A0	2	N0-5
01010-81460	N1210-01A0	2	N0-11
01010-81635	R1150-01A0	19	R0-45
01010-81640	C0100-05A0	5	C0-11
01010-81640	J1310-01A1	3	J0-11
01010-81640	J1310-01A1	9	J0-11
01010-81640	R1150-01A0	23	R0-45
01010-81640	R1170-01A0	2	R0-47
01010-81640	R1170-01A0	5	R0-47
01010-81640	T1200-01A0	11	T0-37
01010-81640	T1200-01A0	15	T0-37
01010-81640	T1200-01A2	11	T0-39
01010-81640	T1200-01A2	15	T0-39
01010-81645	B0600-03A0	4	B0-11
01010-81645	C0100-08A0	1	C0-19
01010-81645	T1110-01A0	22	T0-03
01010-81645	T1110-01A7	20	T0-05
01010-81645	T1110-05A0	3	T0-23
01010-81645	T1110-05A1	3	T0-25
01010-81650	H0210-01A0	38	H0-21
01010-81650	H0220-01A0	18	H0-23
01010-81655	H0120-03A0	4	H0-19
01010-81655	H0120-03A0	9	H0-19
01010-81665	H0210-01A0	39	H0-21
01010-81675	B0100-01A0	4	B0-3
01010-81680	H0312-01A0	36	H0-29
01010-81685	B0100-01A0	3	B0-3
01010-81690	T1110-04A0	39	T0-15
01010-81690	T1110-04A5	39	T0-19
01010-82040	C0100-10A0	3	C0-25
01010-82045	D0100-01A0	29	D0-3
01010-82045	H0110-04A0	29	H0-11
01010-82070	R1120-05A0	14	R0-15
01010-82070	R1120-13A0	14	R0-33
01010-82265	R1120-07A0	41	R0-21
01010-82265	R1120-15A0	41	R0-39
01010-82460	T1200-02A0	12	T0-41
01010-82460	T1200-02A0	16	T0-41
01010-82460	T1200-02A0	20	T0-41
01010-82460	T1200-02A1	12	T0-43
01010-82460	T1200-02A1	16	T0-43
01010-82460	T1200-02A1	20	T0-43
01010-82480	N1210-05A0	7	N0-17
01010-82480	T1510-01A5	24	T0-47
01010-82480	T1510-01A6	16	T0-49
01010-82490	R1120-03A0	18	R0-11
01010-82490	R1120-11A0	18	R0-29
01010-82760	R1120-06A4	7	R0-19
01010-82760	R1120-14A4	7	R0-37
01010-82765	R1120-06A3	2	R0-17
01010-82765	R1120-14A3	2	R0-35
01010-D0816	K0830-01A5	2	K0-29
01010-D0820	K0180-01A0	6	K0-7
01010-D0820	K0180-01A0	14	K0-7
01010-D0820	K0180-01A0	27	K0-7
01010-D0820	K0180-01A0	30	K0-7
01010-D0820	K0180-01A0	34	K0-7
01010-D0820	K0830-01A5	6	K0-29
01010-D0820	K1110-07A0	2	K0-39
01010-D0820	K1110-14A0	2	K0-53
01010-D0820	K1110-14A0	8	K0-53
01010-D0820	K1110-15A0	5	K0-55
01010-D0820	K1110-15A0	12	K0-55
01010-D0820	K1110-15A0	19	K0-55
01010-D1016	K0600-01A0	17	K0-17
01010-D1020	E0310-01A1		E0-27
01010-D1020	E0310-01A4	8	E0-31
01010-D1020	E0310-01A8	13	E0-37
01010-D1020	E0310-01B1	8	E0-41
01010-D1025	K1110-10A0	19	K0-45

https://truckmanualshub.com/

PART NO.	FIG NO.	INDEX	PAGE
01010-D1045	K1110-19A0	12	KO-63
01010-D1050	E0310-01A2	4	EO-29
01010-D1050	E0310-01A4	4	EO-31
01010-D1050	E0310-01A6	4	EO-35
01010-D1050	E0310-01A8	4	EO-37
01010-D1220	E0201-01A0	4	EO-25
01010-D1220	K0600-01A0	15	KO-17
01010-D1225	K0600-01A0	19	KO-17
01010-D1230	K1110-22A0	19	KO-69
01010-D1235	M1410-01A0	3	MO-35
01010-D1240	K0230-01A0	3	KO-9
01010-E1025	A1410-A4L7	9	AA-11
01010-E1025	A1410-A4L7	13	AA-11
01010-E1025	A1570-A4G7	2	AA-23
01010-E1025	A1570-A4G7	7	AA-23
01010-E1025	A1570-A4G7	16	AA-23
01010-E1025	A1610-A4L8	15	AA-25
01010-E1030	A1410-A4L7	10	AA-11
01010-E1030	A1410-A4L7	14	AA-11
01010-E1030	A1570-A4G7	32	AA-23
01010-E1030	A1610-A4L8	21	AA-25
01010-E1040	A1410-A4L7	6	AA-11
01010-E1045	A1610-A4L8	18	AA-25
01010-E1050	A1610-A4L8	11	AA-25
01010-E1055	A1510-A4G2	8	AA-13
01011-81000	B0600-05A0	15	BO-15
01011-81005	A1610-A4L8	44	AA-27
01011-81005	E0420-01A0	3	EO-45
01011-81015	D0200-03A0	8	DO-13
01011-81025	A1610-A4L8	41	AA-25
01011-81080	A1550-A4B1	49	AA-20
01011-81200	B0200-01A0	37	BO-5
01011-81200	E0200-02A0	48	EO-11
01011-81200	E0200-03A0	19	EO-13
01011-81205	H1810-01A0	20	HO-59
01011-81205	H1833-01A0	11	HO-67
01011-81210	D0200-01A0	25	DO-5
01011-81210	D0200-01A0	49	DO-7
01011-81220	K0600-01A0	5	KO-17
01011-81225	H0330-01A0	11	HO-35
01011-81240	A2250-A4G6	4	AA-47
01011-81245	A2250-A4G6	5	AA-47
01011-82400	Y1620-01A0	22	YO-73
01011-82400	Y1620-02A0	22	YO-77
01011-82400	Y1620-41A0	20	YO-85
01011-82705	Y1620-11A0	23	YO-81
01011-83090	N1110-01A0	15	NO-3
01011-83630	R1110-01A0	5	RO-5
01011-E1000	A1510-A4G2	9	AA-13
01016-51035	Y1600-03A0	14	YO-13
01016-51035	Y1600-03A0	19	YO-13
01016-51035	Y1600-06A0	6	YO-19
01016-51035	Y1600-06A0	11	YO-19
01016-51035	Y1600-23A0	14	YO-41
01016-51035	Y1600-23A0	19	YO-41
01016-51035	Y1600-26A0	6	YO-47
01016-51035	Y1600-26A0	11	YO-47
01019-31240	K0700-01A0	5	KO-19
01020-01016	A1530-B4L8	19	AA-17
01020-11025	A1310-A4L4	28	AA-9
01020-11030	A1550-A4B1	7	AA-19
01020-11030	A1570-A4G7	10	AA-23
01020-11045	A1550-A4B1	21	AA-19
01023-10406	K0180-01A0	21	KO-7
01023-10508	K1110-29A0	19	KO-83
01023-10510	E0200-07A0	4	EO-21
01023-10512	K1110-29A0	20	KO-83
01023-10612	K1110-06A0	4	KO-37
01023-10612	K1110-06A0	6	KO-37
01023-10614	K1110-29A0	40	KO-83
01023-10616	K1110-13A0	2	KO-51
01023-20412	K1110-09A0	3	KO-43
01023-20412	K1110-09A0	10	KO-43
01023-20416	K1110-19A0	22	KO-63
01023-20612	K0320-01A0	6	KO-13
01023-20614	K1110-27A0	34	KO-79
01023-20616	K1110-10A0	9	KO-45
01023-20620	K1110-08A0	9	KO-41
01023-60316	K1110-27A0	27	KO-79
01023-60408	K1110-29A0	17	KO-83
01023-60410	K1110-27A0	9	KO-79
01023-60410	K1110-29A0	38	KO-83
01023-60510	K1110-26A0	9	KO-77
01023-60512	K1110-29A0	18	KO-83
01023-60516	K1110-26A0	10	KO-77
01023-60616	K1110-27A0	26	KO-79
01023-60616	K1110-29A0	35	KO-83
01023-60620	K1110-26A0	14	KO-77
01023-60630	K1110-26A0	15	KO-77
01023-60630	K1110-29A0	22	KO-83
01023-70514	K1110-29A0	26	KO-83
01024-81230	W1118-01A1	18	WO-3
01024-81235	W1118-01A1	3	WO-3
01024-81240	W1118-01A1	10	WO-3
01024-81240	W1118-01A1	12	WO-3
01024-81240	W1118-01A1	16	WO-3
01024-81245	W1118-01A1	5	WO-3
01024-81245	W1118-01A1	14	WO-3
01024-D1260	W1118-01A1	8	WO-3
01034-81225	D0100-01A0	28	DO-3
01034-81230	H0110-01A0	48	HO-4
01034-81230	H0110-03A0	25	HO-9
01034-81230	H1210-02A0	2	HO-43
01034-81230	H1210-02A0	11	HO-43
01034-81230	H1210-02A0	30	HO-43
01034-81230	H1220-01A0	20	HO-45
01034-81230	M1160-01A0	7	MO-23
01034-81230	M1810-01A0	6	MO-43
01034-81230	M1810-01A0	21	MO-43
01034-81230	M1810-02A0	18	MO-45
01034-81230	M1810-02A0	22	MO-45
01034-81230	M1810-03A0	19	MO-47
01034-81230	M1810-03A0	30	MO-47
01034-81230	M1810-03A0	37	MO-47
01050-51020	A6010-A4N2	22	AA-109
01050-51225	A2041-A4L2	31	AA-35
01050-51260	A6010-A4L9	16	AA-105
01050-51260	A6010-A4M8	16	AA-107
01050-51260	A6010-A4N2	18	AA-109
01140-81645	Y1600-01A0	17	YO-9
01140-81645	Y1600-21A0	16	YO-37
01141-81620	Y1600-01A0	14	YO-9
01141-81620	Y1600-21A0	13	YO-37
01224-40612	Y1670-01A0	27	YO-129
01224-40616	M1210-01A1	24	MO-25
01224-40616	M1210-01A2	24	MO-27
01240-00616	K1110-06A0	7	KO-37
01240-01025	K1110-07A0	22	KO-39
01245-00612	K1110-09A0	21	KO-43
01245-00612	K1110-11A0	10	KO-47
01245-00616	K0310-01A0	3	KO-11
01245-00616	K1110-11A0	17	KO-47
01245-00816	K1110-13A0	13	KO-51
01245-00816	K1110-14A0	5	KO-53

https://truckmanualshub.com/

PART NO.	FIG NO.	INDEX	PAGE
01245-00820	K1110-30A0	8	KO-85
01245-01016	K1110-11A0	8	KO-47
01245-01025	K1110-22A0	8	KO-69
01245-01025	K1110-22A0	10	KO-69
01245-01220	K1110-11A0	3	KO-47
01245-01220	K1110-11A0	5	KO-47
01252-31016	Y1600-04A0	24	YO-15
01252-31016	Y1600-24A0	24	YO-43
01252-41025	K1110-25A0	9	KO-75
01252-41025	K1110-28A0	9	KO-81
01252-60516	A6810-B4M6	10	AA-127
01252-60525	Y1670-01A0	23	YO-129
01252-60612	Y1642-11A0	17	YO-105
01252-60616	Y1600-07A0	12	YO-21
01252-60616	Y1600-07A0	28	YO-21
01252-60616	Y1600-08A0	28	YO-23
01252-60616	Y1600-08A0	35	YO-23
01252-60616	Y1600-10A0	12	YO-27
01252-60616	Y1600-10A0	28	YO-27
01252-60616	Y1600-11A0	28	YO-29
01252-60616	Y1600-11A0	35	YO-29
01252-60616	Y1600-12A0	19	YO-31
01252-60616	Y1600-27A0	12	YO-49
01252-60616	Y1600-27A0	25	YO-49
01252-60616	Y1600-28A0	12	YO-53
01252-60616	Y1600-28A0	25	YO-53
01252-60630	Y1600-08A0	26	YO-23
01252-60630	Y1600-11A0	26	YO-29
01252-60635	Y1600-33A0	21	YO-63
01252-60820	Y1660-05A0	29	YO-119
01252-60820	Y1660-05A0	38	YO-119
01252-60820	Y1660-07A0	35	YO-123
01252-60820	Y1660-07A0	41	YO-124
01252-60820	Y1679-01A0	13	YO-141
01252-60825	Y1640-03A0	15	YO-95
01252-60825	Y1660-05A0	9	YO-119
01252-60830	Y1660-05A0	30	YO-119
01252-60835	Y1642-11A0	23	YO-105
01252-60835	Y1679-01A0	12	YO-141
01252-60840	Y1679-01A0	11	YO-141
01252-60845	Y1642-11A0	14	YO-105
01252-60850	Y1600-14A0	1	YO-35
01252-60850	Y1600-29A0	1	YO-57
01252-60855	Y1600-13A0	6	YO-33
01252-61035	Y1600-36A0	18	YO-69
01252-61065	Y1679-01A0	28	YO-141
01252-61235	Y1600-37A0	2	YO-71
01252-61270	Y1600-36A0	11	YO-69
01252-61445	Y1640-01A0	19	YO-91
01252-61480	Y1642-12A0	3	YO-107
01252-70410	E0200-07A0	2	EO-21
01252-70516	H0110-01A0	20	HO-3
01252-70612	E0200-07A0	5	EO-21
01252-70816	K1110-27A0	17	KO-79
01252-70830	H0240-01A0	7	HO-25
01252-70835	B0600-06A0	2	BO-17
01252-71025	M1410-01A0	6	MO-35
01252-71030	M1420-01A0	3	MO-37
01252-71030	M1420-01A0	8	MO-37
01252-71050	H1350-01A0	3	HO-57
01252-71070	H0330-01A0	14	HO-35
01252-80825	K0110-01A1	2	KO-3
01253-61420	Y1600-35A0	11	YO-67
01310-01225	Y1620-01A0	25	YO-73
01310-01225	Y1620-02A0	25	YO-77
01310-01225	Y1620-41A0	24	YO-85
01310-01232	Y1620-11A0	26	YO-81

PART NO.	FIG NO.	INDEX	PAGE
01370-00420	K1110-08A0	13	KO-41
01370-00508	M1510-01A0	15	MO-39
01370-10308	K0180-01A0	19	KO-7
01370-20308	K0180-01A0	24	KO-7
01370-30412	K1110-10A0	6	KO-45
01370-40412	K1110-09A0	16	KO-43
01434-10616	C0100-03A0	2	CO-7
01435-00610	A4210-A4G4	7	AA-93
01435-00610	K1110-16A0	10	KO-57
01435-00610	K1110-16A0	17	KO-57
01435-00612	A2110-A4S1	28	AA-41
01435-00612	A4110-B4N2	4	AA-87
01435-00612	A4110-C4N2	6	AA-89
01435-00612	K1110-13A0	8	KO-51
01435-00612	K1110-29A0	37	KO-83
01435-00616	A1310-A4L4	23	AA-9
01435-00625	A4030-A4C1	27	AA-77
01435-00625	K0700-02A0	5	KO-21
01435-00625	K0700-02A0	13	KO-21
01435-00630	A1550-A4B1	28	AA-19
01435-00630	A4010-A4R4	22	AA-73
01435-00630	A4010-A4R4	35	AA-73
01435-00630	A4030-A4C1	28	AA-77
01435-00630	K0700-02A0	14	KO-21
01435-00635	A4010-A4R4	23	AA-73
01435-00635	A4030-A4C1	29	AA-77
01435-00635	A4210-A4G4	11	AA-93
01435-00640	A4010-A4R4	25	AA-73
01435-00650	A4030-A4C1	33	AA-77
01435-00816	A2210-A4H7	8	AA-43
01435-00816	K1110-16A0	7	KO-57
01435-00820	A4710-A4K1	25	AA-97
01435-00825	A4710-A4K1		AA-97
01435-00830	A4110-A4N2	13	AA-85
01435-00830	A6810-D4M6	3	AA-131
01435-00840	A4710-A4K1	2	AA-97
01435-00845	A4710-A4K1	26	AA-97
01435-00845	A6810-D4M6	4	AA-131
01435-00855	A6810-B4M6	33	AA-127
01435-00855	A1111-A4A1	1	AA-7
01435-00885	K1110-16A0	5	KO-57
01435-01016	A4110-B4N2	37	AA-87
01435-01016	A5010-A4M4	13	AA-99
01435-01016	A6810-A4M6	38	AA-123
01435-01016	A6810-A4M6	42	AA-123
01435-01016	A6810-B4M6	37	AA-127
01435-01016	A6810-C4M6	25	AA-129
01435-01016	A6810-D4M6	18	AA-131
01435-01016	A6810-D4M6	30	AA-131
01435-01016	A6810-E4M6	15	AA-133
01435-01020	A1550-A4B1	15	AA-19
01435-01020	A1550-A4B1	29	AA-19
01435-01020	A1610-A4L8	33	AA-25
01435-01020	A2011-A4P2	16	AA-31
01435-01020	A2011-A4P2	30	AA-31
01435-01020	A2041-A4L2	11	AA-35
01435-01020	A2110-A4S1	26	AA-41
01435-01020	A2110-A4S1	30	AA-41
01435-01020	A2110-A4S1	36	AA-41
01435-01020	A3110-A4H1	24	AA-69
01435-01020	A4010-A4R4	39	AA-73
01435-01020	A4030-A4C1	3	AA-77
01435-01020	A4030-A4C1	32	AA-77
01435-01020	A4110-A4N2	15	AA-85
01435-01020	A4230-A4G8	14	AA-95
01435-01020	A4710-A4K1	16	AA-97
01435-01020	A5010-B4M4	35	AA-101

https://truckmanualshub.com/

PART NO.	FIG NO.	INDEX	PAGE
01435-01020	A5010-B4M4	36	AA-101
01435-01020	A5210-A4J7	4	AA-103
01435-01020	A5210-A4J7	10	AA-103
01435-01020	A6810-A4M6	9	AA-123
01435-01020	A6810-A4M6	14	AA-123
01435-01020	A6810-A4M6	18	AA-123
01435-01020	A6810-A4M6	22	AA-123
01435-01020	A6810-A4M6	35	AA-123
01435-01020	A6810-B4M6	7	AA-127
01435-01020	A6810-C4M6	2	AA-129
01435-01020	A6810-D4M6	25	AA-131
01435-01020	A6810-E4M6	20	AA-133
01435-01020	K1110-27A0	30	KO-79
01435-01025	A1310-A4L4	12	AA-9
01435-01025	A1530-A4L8	24	AA-15
01435-01025	A1530-A4L8	28	AA-15
01435-01025	A1530-A4L8	32	AA-15
01435-01025	A1550-A4B1	30	AA-19
01435-01025	A1610-A4L8	26	AA-25
01435-01025	A2041-A4L2	5	AA-35
01435-01025	A2041-A4L2	14	AA-35
01435-01025	A2110-A4S1	24	AA-41
01435-01025	A3110-A4H1	13	AA-69
01435-01025	A3110-A4H1	26	AA-69
01435-01025	A3110-A4H1	28	AA-69
01435-01025	A4010-A4R4	27	AA-73
01435-01025	A4030-A4C1	4	AA-77
01435-01025	A4030-A4C1	37	AA-77
01435-01025	A4110-A4N2	20	AA-85
01435-01025	A4230-A4G8	4	AA-95
01435-01025	A6010-A4L9	15	AA-105
01435-01025	A6010-A4M8	15	AA-107
01435-01025	A6010-A4N2	17	AA-109
01435-01025	A6810-A4M6	24	AA-123
01435-01025	A6810-A4M6	33	AA-123
01435-01025	A6810-B4M6	4	AA-127
01435-01025	A6810-C4M6	3	AA-129
01435-01025	A6810-C4M6	8	AA-129
01435-01025	A6810-E4M6	11	AA-133
01435-01030	A1310-A4L4	13	AA-9
01435-01030	A1310-A4L4	18	AA-9
01435-01030	A1310-A4L4	30	AA-9
01435-01030	A1310-A4L4	36	AA-9
01435-01030	A2610-A4C7	11	AA-63
01435-01030	A2610-A4C8	11	AA-65
01435-01030	A3110-A4H1	29	AA-69
01435-01030	A3110-A4H1	33	AA-69
01435-01030	A3310-A4D7	18	AA-71
01435-01030	A4110-A4N2	23	AA-85
01435-01030	A4110-B4N2	26	AA-87
01435-01030	A4230-A4G8	16	AA-95
01435-01030	A6810-A4M6	41	AA-123
01435-01030	A6810-C4M6	23	AA-129
01435-01035	A1310-A4L4	19	AA-9
01435-01035	A1550-A4B1	11	AA-19
01435-01035	A2011-A4P2	4	AA-31
01435-01035	A2041-A4L2	4	AA-35
01435-01035	A2110-A4S1	3	AA-41
01435-01035	A3110-A4H1	16	AA-69
01435-01035	A4010-A4R4	26	AA-73
01435-01035	A4110-A4N2	7	AA-85
01435-01035	A4110-A4N2	22	AA-85
01435-01035	A4110-B4N2	5	AA-87
01435-01035	A4110-C4N2	7	AA-89
01435-01035	A5210-A4J7	15	AA-103
01435-01040	A1550-A4B1	34	AA-19
01435-01040	A4010-A4R4	36	AA-73
01435-01040	A6810-C4M6	13	AA-129
01435-01040	A6810-E4M6	2	AA-133
01435-01040	A6810-E4M6	7	AA-133
01435-01040	A6810-E4M6	23	AA-133
01435-01045	A1610-A4L8	27	AA-25
01435-01045	A2110-A4S1	6	AA-41
01435-01045	A3110-A4H1	22	AA-69
01435-01045	A4110-B4N2	7	AA-87
01435-01045	A4110-C4N2	9	AA-89
01435-01045	A4710-A4K1	7	AA-97
01435-01045	A4710-A4K1	21	AA-97
01435-01045	A5210-A4J7	3	AA-103
01435-01045	A6810-A4M6	10	AA-123
01435-01045	A6810-A4M6	28	AA-123
01435-01045	A6810-B4M6	5	AA-127
01435-01045	A6810-B4M6	24	AA-127
01435-01045	A6810-D4M6	11	AA-131
01435-01050	A3110-A4H1	23	AA-69
01435-01050	A4030-A4C1	38	AA-77
01435-01050	A5210-A4J7	18	AA-103
01435-01050	A6210-A4E4	6	AA-117
01435-01050	A6810-C4M6	19	AA-129
01435-01055	A4110-B4N2	11	AA-87
01435-01055	A4110-C4N2	13	AA-89
01435-01055	A4230-A4G8	5	AA-95
01435-01055	A6810-D4M6	28	AA-131
01435-01060	A3310-A4D7	19	AA-71
01435-01060	A4110-B4N2	10	AA-87
01435-01060	A4110-C4N2	12	AA-89
01435-01065	A1310-A4L4	7	AA-9
01435-01065	A2011-A4P2	3	AA-31
01435-01065	A2110-A4S1	33	AA-41
01435-01065	A4110-B4N2	9	AA-87
01435-01065	A4110-C4N2	11	AA-89
01435-01065	A6810-C4M6	4	AA-129
01435-01065	A6810-E4M6	5	AA-133
01435-01070	A2041-A4L2	15	AA-35
01435-01070	A4110-B4N2	21	AA-87
01435-01070	A4110-C4N2	23	AA-89
01435-01070	A6810-C4M6	10	AA-129
01435-01070	A6810-C4M6	16	AA-129
01435-01075	A5010-B4M4	26	AA-101
01435-01075	A6810-B4M6	20	AA-127
01435-01075	A6810-D4M6	14	AA-131
01435-01080	A6810-B4M6	28	AA-127
01435-01085	A6810-B4M6	31	AA-127
01435-01090	A2041-A4L2	28	AA-35
01435-01090	A3310-A4D7	20	AA-71
01435-01090	A4710-A4K1	17	AA-97
01435-01090	A6810-D4M6	22	AA-131
01435-01095	A3110-A4H1	8	AA-69
01435-01095	A5010-B4M4	27	AA-101
01435-01220	A4030-A4C1	5	AA-77
01435-01225	A1530-A4L8	30	AA-15
01435-01225	A1550-A4B1	23	AA-19
01435-01225	A2011-A4P2	26	AA-31
01435-01225	K1110-05A0	17	KO-35
01435-01235	A1310-A4L4	20	AA-9
01435-40610	K1110-10A0	13	KO-45
01435-40612	K1110-04A0	7	KO-33
01435-40616	K0320-01A0	10	KO-13
01435-40616	K1110-07A0	6	KO-39
01435-40616	K1110-07A0	8	KO-39
01435-40616	K1110-08A0	2	KO-41
01435-40616	K1110-09A0	12	KO-43
01435-40616	K1110-15A0	8	KO-55
01435-40620	K1110-31A0	7	KO-87

https://truckmanualshub.com/

PART NO.	FIG NO.	INDEX	PAGE
01435-40820	K1110-10A0	17	KO-45
01435-41225	K1110-05A0	16	KO-35
01436-01000	A4110-A4N2	8	AA-85
01436-01000	A5210-A4J7	16	AA-103
01436-01000	A6810-E4M6	14	AA-133
01436-01010	A2041-A4L2	27	AA-35
01436-01010	A4010-A4R4	21	AA-73
01436-01010	A6810-D4M6	33	AA-131
01436-01015	A1610-A4L8	36	AA-25
01436-01015	A6810-B4M6	14	AA-127
01436-01020	A4110-B4N2	39	AA-87
01436-01040	A3110-A4H1	9	AA-69
01436-01060	A1310-A4L4	8	AA-9
01436-01070	A1310-A4L4	3	AA-9
01436-01080	A1310-A4L4	21	AA-9
01436-01080	A4010-A4R4	30	AA-73
01436-01080	A4030-A4C1	35	AA-77
01436-01080	A4110-A4N2	18	AA-85
01437-01025	A2010-A4K5	34	AA-29
01437-01025	A5010-B4M4	6	AA-101
01437-01065	A5010-A4M4	5	AA-99
01437-01070	A4210-A4G4	16	AA-93
01437-01080	A5010-A4M4	6	AA-99
01437-01095	A5010-A4M4	8	AA-99
01437-01220	A2410-A4A5	5	AA-57
01437-11080	A5010-B4M4	7	AA-101
01438-01020	A1010-A4D2	25	AA-2-1
01580-00403	K0180-01A0	22	KO-7
01580-00806	A1610-A4L8	47	AA-27
01580-01008	A2110-A4S1	16	AA-41
01580-01008	W1118-01A1	20	WO-3
01580-10403	K0180-01A0	4	KO-7
01580-10403	K0180-01A0	10	KO-7
01580-10806	Y1600-07A0	11	YO-21
01580-10806	Y1600-07A0	27	YO-21
01580-10806	Y1600-08A0	7	YO-23
01580-10806	Y1600-08A0	30	YO-23
01580-10806	Y1600-10A0	11	YO-27
01580-10806	Y1600-10A0	27	YO-27
01580-10806	Y1600-11A0	7	YO-29
01580-10806	Y1600-11A0	30	YO-29
01580-10806	Y1600-12A0	15	YO-31
01580-10806	Y1600-27A0	11	YO-49
01580-10806	Y1600-28A0	11	YO-53
01580-10806	Y1600-28A0	24	YO-53
01580-11008	A1610-A4L8	12	AA-25
01580-11008	E0100-01A0	4	EO-3
01580-11008	E0100-01A2	4	EO-5
01580-11008	H0110-04A0	16	HO-11
01580-11008	K1110-07A0	17	KO-39
01580-11008	M1130-01A0	16	MO-11
01580-11008	M1130-01A1	16	MO-15
01580-11008	M1210-01A1	38	MO-25
01580-11008	M1210-01A2	38	MO-27
01580-11210	A6010-A4L9	10	AA-105
01580-11210	A6010-A4M8	10	AA-107
01580-11210	A6010-A4N2	12	AA-109
01580-11210	K0700-01A0	7	KO-19
01580-11411	K0700-01A0	17	KO-19
01580-11613	A6010-A4L9	13	AA-105
01580-11613	A6010-A4M8	13	AA-107
01580-11613	A6010-A4N2	15	AA-109
01580-11613	K1120-01A0	6	KO-99
01580-11613	K1120-01A0	9	KO-99
01580-11613	M1110-01A0	15	MO-3
01580-12419	R1120-06A4	6	RO-19
01580-12419	R1120-14A4	6	RO-37
01580-12419	T1125-01A0	4	TO-33
01582-01008	A2411-B4B3	6	AA-61
01582-01008	A2411-B4B3	11	AA-61
01582-01613	Y1600-01A0	16	YO-9
01582-01613	Y1600-01A0	19	YO-9
01582-01613	Y1600-21A0	15	YO-37
01582-01613	Y1600-21A0	18	YO-37
01582-11210	Y1600-32A0	16	YO-61
01583-13621	C0100-05A0	7	CO-11
01584-01008	A1530-A4L8	27	AA-15
01584-01008	A1530-A4L8	35	AA-15
01584-01008	A1550-A4B1	12	AA-19
01584-01008	A1550-A4B1	35	AA-19
01584-01008	A4010-A4R4	28	AA-73
01584-01008	A4030-A4C1	6	AA-77
01584-01008	K1110-06A0	16	KO-37
01597-01009	A2011-A4P2	22	AA-31
01597-01009	B0600-02A0	10	BO-9
01597-01009	C0100-11A0	15	CO-27
01597-01009	H0110-03A0	7	HO-9
01597-01009	H0312-01A0	12	HO-29
01597-01009	H0320-01A0	17	HO-33
01597-01009	H0320-01A0	20	HO-33
01597-01009	H1831-01A0	48	HO-62
01597-01009	K0700-04A0	11	KO-27
01597-01009	N1210-02A0	19	NO-9
01597-01009	N1210-04A0	23	NO-15
01597-01009	Y1620-01A0	42	YO-74
01597-01009	Y1620-02A0	42	YO-78
01597-01009	Y1620-11A0	42	YO-82
01597-01009	Y1620-41A0	42	YO-86
01597-01211	B0200-01A0	17	BO-5
01597-01211	B0200-01A0	23	BO-5
01597-01211	C0100-10A0	14	CO-25
01597-01211	C0100-10A0	25	CO-25
01597-01211	H0311-01A0	37	HO-27
01601-20410	E0200-07A0	3	EO-21
01601-20410	K0180-01A0	5	KO-7
01601-20410	K0180-01A0	11	KO-7
01601-20513	H0110-01A0	21	HO-3
01601-20513	K1110-29A0	21	KO-83
01602-20619	Y1600-07A0	13	YO-21
01602-20619	Y1600-07A0	29	YO-21
01602-20619	Y1600-08A0	27	YO-23
01602-20619	Y1600-08A0	29	YO-23
01602-20619	Y1600-08A0	36	YO-23
01602-20619	Y1600-10A0	13	YO-27
01602-20619	Y1600-10A0	29	YO-27
01602-20619	Y1600-11A0	27	YO-29
01602-20619	Y1600-11A0	29	YO-29
01602-20619	Y1600-11A0	36	YO-29
01602-20619	Y1600-12A0	21	YO-31
01602-20619	Y1600-27A0	13	YO-49
01602-20619	Y1600-27A0	26	YO-49
01602-20619	Y1600-28A0	13	YO-53
01602-20619	Y1600-28A0	26	YO-53
01602-20619	B0600-04A0	22	BO-13
01602-20619	E0200-07A0	6	EO-21
01602-20825	Y1600-09A0	3	YO-25
01602-20825	Y1600-14A0	2	YO-35
01602-20825	Y1600-14A0	13	YO-35
01602-20825	Y1600-29A0	2	YO-57
01602-20825	Y1600-29A0	8	YO-57
01602-20825	Y1600-13A0	5	YO-33
01602-20825	Y1600-13A0	7	YO-33
01640-20610	K1110-26A0	16	KO-77
01640-20610	K1110-29A0	23	KO-83

https://truckmanualshub.com/

PART NO.	FIG NO.	INDEX	PAGE
01640-20816	A3310-A4D7	12	AA-71
01640-21016	A6010-A4N2	23	AA-109
01640-21016	E0100-01A0	5	EO-3
01640-21016	E0100-01A2	5	EO-5
01640-21123	M1210-01A1	11	MO-25
01640-21123	M1210-01A2	11	MO-27
01640-21223	A2041-A4L2	29	AA-35
01640-21323	A6010-A4L9	4	AA-105
01640-21323	A6010-A4M8	4	AA-107
01640-21323	A6010-A4N2	5	AA-109
01641-21626	N1310-01A0	26	NO-19
01641-50608	K1110-11A0	16	KO-47
01643-01032	A4230-A4G8	17	AA-95
01643-30623	C0100-02A0	12	CO-5
01643-30623	C0100-03A0	3	CO-7
01643-30623	D0100-01A0	16	DO-3
01643-30623	H0110-04A0	20	HO-11
01643-30623	K0350-01A0	3	KO-15
01643-30623	K0700-04A0	7	KO-27
01643-30623	K1110-09A0	2	KO-43
01643-30623	K1110-29A0	41	KO-83
01643-30623	M1130-01A0	11	MO-11
01643-30623	M1130-01A0	35	MO-11
01643-30623	M1130-01A0	47	MO-11
01643-30623	M1130-01A1	11	MO-15
01643-30623	M1130-01A1	28	MO-15
01643-30623	M1130-01A1	40	MO-15
01643-30623	M1160-01A0	12	MO-23
01643-30623	M1220-01A0	9	MO-31
01643-30623	M1220-01A0	27	MO-31
01643-30623	T1110-03A0	11	TO-11
01643-30623	T1110-03A5	11	TO-13
01643-30823	A1530-A4L8	12	AA-15
01643-30823	A1610-A4L8	6	AA-25
01643-30823	A1610-A4L8	48	AA-27
01643-30823	A4010-A4R4	24	AA-73
01643-30823	A6810-D4M6	5	AA-131
01643-30823	C0100-02A0	18	CO-5
01643-30823	C0100-02A0	20	CO-5
01643-30823	C0100-07A0	17	CO-17
01643-30823	E0200-01A0	6	EO-7
01643-30823	E0200-01A0	10	EO-7
01643-30823	E0200-07A0	7	EO-21
01643-30823	E0200-08A0	7	EO-23
01643-30823	E0410-01A0	3	EO-43
01643-30823	H1831-01A0	6	HO-61
01643-30823	K0700-01A0	20	KO-19
01643-30823	K1110-06A0	20	KO-37
01643-30823	K1110-16A0	3	KO-57
01643-30823	K1110-16A0	14	KO-57
01643-30823	K1110-25A0	13	KO-75
01643-30823	K1110-28A0	13	KO-81
01643-30823	K1110-30A0	4	KO-85
01643-30823	Y1600-02A0	10	YO-11
01643-30823	Y1600-05A0	23	YO-17
01643-30823	Y1600-22A0	10	YO-39
01643-30823	Y1600-25A0	23	YO-45
01643-30823	Y1627-01A0	13	YO-89
01643-30823	Y1660-04A0	9	YO-117
01643-30823	Y1660-05A0	8	YO-119
01643-30823	Y1670-01A0	16	YO-129
01643-30823	Y1600-13A0	18	YO-33
01643-31032	Y1600-04A0	23	YO-15
01643-31032	Y1600-24A0	23	YO-43
01643-31032	A1410-A4L7	11	AA-11
01643-31032	A1530-A4L8	14	AA-15
01643-31032	A1530-A4L8	16	AA-15
01643-31032	A1530-A4L8	18	AA-15
01643-31032	A1530-A4L8	26	AA-15
01643-31032	A1530-A4L8	34	AA-15
01643-31032	A1550-A4B1	4	AA-19
01643-31032	A1550-A4B1	8	AA-19
01643-31032	A1550-A4B1	52	AA-20
01643-31032	A1570-A4G7	3	AA-23
01643-31032	A1570-A4G7	5	AA-23
01643-31032	A1570-A4G7	8	AA-23
01643-31032	A1570-A4G7	17	AA-23
01643-31032	A1570-A4G7	22	AA-23
01643-31032	A1570-A4G7	26	AA-23
01643-31032	A1570-A4G7	29	AA-23
01643-31032	A1570-A4G7	35	AA-23
01643-31032	A1610-A4L8	4	AA-25
01643-31032	A1610-A4L8	16	AA-25
01643-31032	A1610-A4L8	22	AA-25
01643-31032	A1610-A4L8	32	AA-25
01643-31032	A1610-A4L8	35	AA-25
01643-31032	A1610-A4L8	42	AA-25
01643-31032	A1610-A4L8	45	AA-27
01643-31032	A2011-A4P2	13	AA-31
01643-31032	A2011-A4P2	21	AA-31
01643-31032	A2041-A4L2	10	AA-35
01643-31032	A2041-A4L2	13	AA-35
01643-31032	A2041-A4L2	16	AA-35
01643-31032	A2110-A4S1	12	AA-41
01643-31032	A2110-A4S1	17	AA-41
01643-31032	A2110-A4S1	25	AA-41
01643-31032	A2110-A4S1	35	AA-41
01643-31032	A3110-A4H1	17	AA-69
01643-31032	A3110-A4H1	31	AA-69
01643-31032	A4010-A4R4	8	AA-73
01643-31032	A4010-A4R4	29	AA-73
01643-31032	A4010-A4R4	40	AA-73
01643-31032	A4110-A4N2	16	AA-85
01643-31032	A4110-B4N2	22	AA-87
01643-31032	A4110-B4N2	27	AA-87
01643-31032	A4110-C4N2	24	AA-89
01643-31032	A4710-A4K1	18	AA-97
01643-31032	A5210-A4J7	5	AA-103
01643-31032	A6810-A4M6	7	AA-123
01643-31032	A6810-A4M6	13	AA-123
01643-31032	A6810-A4M6	17	AA-123
01643-31032	A6810-A4M6	20	AA-123
01643-31032	A6810-A4M6	23	AA-123
01643-31032	A6810-A4M6	27	AA-123
01643-31032	A6810-A4M6	32	AA-123
01643-31032	A6810-A4M6	37	AA-123
01643-31032	A6810-B4M6	15	AA-127
01643-31032	A6810-B4M6	21	AA-127
01643-31032	A6810-B4M6	25	AA-127
01643-31032	A6810-C4M6	21	AA-129
01643-31032	A6810-D4M6	17	AA-131
01643-31032	A6810-D4M6	26	AA-131
01643-31032	A6810-E4M6	21	AA-133
01643-31032	B0600-01A0	13	BO-7
01643-31032	B0600-02A0	4	BO-9
01643-31032	B0600-02A0	7	BO-9
01643-31032	B0600-02A0	11	BO-9
01643-31032	B0600-04A0	18	BO-13
01643-31032	B0600-05A0	3	BO-15
01643-31032	B0600-05A0	16	BO-15
01643-31032	B0600-06A0	17	BO-17
01643-31032	C0100-01A0	4	CO-3
01643-31032	C0100-01A0	17	CO-3
01643-31032	C0100-01A0	20	CO-3

https://truckmanualshub.com/

PART NO.	FIG NO.	INDEX	PAGE
01643-31032	C0100-01A0	26	CO-3
01643-31032	C0100-01A0	29	CO-3
01643-31032	C0100-01A0	32	CO-3
01643-31032	C0100-01A0	35	CO-3
01643-31032	C0100-02A0	23	CO-5
01643-31032	C0100-02A0	26	CO-5
01643-31032	C0100-03A0	6	CO-7
01643-31032	C0100-03A0	18	CO-7
01643-31032	C0100-03A0	21	CO-7
01643-31032	C0100-03A0	24	CO-7
01643-31032	C0100-03A0	27	CO-7
01643-31032	C0100-04A0	35	CO-9
01643-31032	C0100-05A0	10	CO-11
01643-31032	C0100-06A0	19	CO-13
01643-31032	C0100-07A0	11	CO-17
01643-31032	C0100-11A0	5	CO-27
01643-31032	C0100-11A0	13	CO-27
01643-31032	C0100-11A0	16	CO-27
01643-31032	D0200-02A0	6	DO-9
01643-31032	D0200-03A0	7	DO-13
01643-31032	D0200-03A0	9	DO-13
01643-31032	E0200-01A0	23	EO-7
01643-31032	E0200-01A0	25	EO-7
01643-31032	E0200-02A0	33	EO-9
01643-31032	E0200-03A0	7	EO-13
01643-31032	E0200-03A0	9	EO-13
01643-31032	E0200-03A0	29	EO-13
01643-31032	E0200-04A0	38	EO-15
01643-31032	E0200-05A0	9	EO-17
01643-31032	E0200-08A0	11	EO-23
01643-31032	E0200-08A0	14	EO-23
01643-31032	E0420-01A0	4	EO-45
01643-31032	H0110-01A0	46	HO-3
01643-31032	H0110-03A0	8	HO-9
01643-31032	H0120-01A0	4	HO-13
01643-31032	H0312-01A0	13	HO-29
01643-31032	H0320-01A0	18	HO-33
01643-31032	H0320-01A0	21	HO-33
01643-31032	H0320-01A0	35	HO-33
01643-31032	H1220-01A0	17	HO-45
01643-31032	H1220-01A0	28	HO-45
01643-31032	H1831-01A0	18	HO-61
01643-31032	H1831-01A0	49	HO-62
01643-31032	H1833-01A0	19	HO-67
01643-31032	H1833-02A0	3	HO-69
01643-31032	H1840-02A0	4	HO-73
01643-31032	J1110-02A0	25	JO-5
01643-31032	J1110-02A0	29	JO-5
01643-31032	J1110-02A0	33	JO-5
01643-31032	J1110-02A1	25	JO-7
01643-31032	J1110-02A1	29	JO-7
01643-31032	J1110-02A1	33	JO-7
01643-31032	K0700-04A0	10	KO-27
01643-31032	K1110-07A0	18	KO-39
01643-31032	K1110-09A0	14	KO-43
01643-31032	K1110-17A0	4	KO-59
01643-31032	K1110-18A0	10	KO-61
01643-31032	K1110-18A0	12	KO-61
01643-31032	K1110-18A0	15	KO-61
01643-31032	K1110-19A0	3	KO-63
01643-31032	K1110-19A0	15	KO-63
01643-31032	K1110-20A0	3	KO-65
01643-31032	K1110-21A0	4	KO-67
01643-31032	K1110-21A0	6	KO-67
01643-31032	K1110-23A0	9	KO-71
01643-31032	K1110-23A0	13	KO-71
01643-31032	K1110-23A0	15	KO-71

PART NO.	FIG NO.	INDEX	PAGE
01643-31032	K1110-23A0	18	KO-71
01643-31032	K1110-23A0	24	KO-71
01643-31032	K1110-23A0	27	KO-71
01643-31032	K1110-23A0	30	KO-71
01643-31032	K1110-23A0	34	KO-71
01643-31032	K1110-27A0	36	KO-79
01643-31032	K1110-29A0	43	KO-83
01643-31032	K1110-32A0	7	KO-89
01643-31032	K1110-35A0	3	KO-95
01643-31032	K1110-35A0	8	KO-95
01643-31032	K1110-35A0	13	KO-95
01643-31032	K1110-35A0	18	KO-95
01643-31032	K1110-35A0	20	KO-95
01643-31032	K1110-36A0	5	KO-97
01643-31032	K1110-36A0	8	KO-97
01643-31032	K1110-36A0	22	KO-97
01643-31032	K1110-36A0	25	KO-97
01643-31032	K1120-01A0	4	KO-99
01643-31032	M1210-01A1	19	MO-25
01643-31032	M1210-01A1	21	MO-25
01643-31032	M1210-01A2	19	MO-27
01643-31032	M1210-01A2	21	MO-27
01643-31032	M1220-01A0	12	MO-31
01643-31032	N1110-01A0	14	NO-3
01643-31032	N1210-01A0	12	NO-5
01643-31032	N1210-02A0	7	NO-9
01643-31032	N1210-02A0	9	NO-9
01643-31032	N1210-02A0	18	NO-9
01643-31032	N1210-01A0	12	NO-11
01643-31032	N1210-04A0	8	NO-15
01643-31032	N1210-04A0	10	NO-15
01643-31032	N1210-04A0	22	NO-15
01643-31032	Y0260-01A0	6	YO-3
01643-31032	Y1600-03A0	15	YO-13
01643-31032	Y1600-03A0	20	YO-13
01643-31032	Y1600-06A0	7	YO-19
01643-31032	Y1600-06A0	12	YO-19
01643-31032	Y1600-23A0	15	YO-41
01643-31032	Y1600-23A0	20	YO-41
01643-31032	Y1600-26A0	7	YO-47
01643-31032	Y1600-26A0	12	YO-47
01643-31032	Y1620-01A0	41	YO-74
01643-31032	Y1620-01A0	44	YO-74
01643-31032	Y1620-02A0	41	YO-78
01643-31032	Y1620-02A0	44	YO-78
01643-31032	Y1620-11A0	41	YO-82
01643-31032	Y1620-41A0	43	YO-86
01643-31232	A1550-A4B1	51	AA-20
01643-31232	A2250-A4G6	2	AA-47
01643-31232	A2330-A4B6	3	AA-51
01643-31232	A3010-A4A8	20	AA-67
01643-31232	A6010-A4L9	11	AA-105
01643-31232	A6010-A4L9	17	AA-105
01643-31232	A6010-A4M8	11	AA-107
01643-31232	A6010-A4M8	17	AA-107
01643-31232	A6010-A4N2	13	AA-109
01643-31232	A6010-A4N2	19	AA-109
01643-31232	B0200-01A0	7	BO-5
01643-31232	B0200-01A0	16	BO-5
01643-31232	B0200-01A0	22	BO-5
01643-31232	B0200-01A0	26	BO-5
01643-31232	B0200-01A0	35	BO-5
01643-31232	B0200-01A0	38	BO-5
01643-31232	B0200-01A0	41	BO-5
01643-31232	B0600-01A0	5	BO-7
01643-31232	B0600-03A0	8	BO-11
01643-31232	B0600-03A0	10	BO-11

https://truckmanualshub.com/

PART NO.	FIG NO.	INDEX	PAGE
01643-31232	B0600-04A0	3	B0-13
01643-31232	B0600-05A0	19	B0-15
01643-31232	B0600-05A0	27	B0-15
01643-31232	B0600-06A0	11	B0-17
01643-31232	B0600-06A0	20	B0-17
01643-31232	B0600-06A0	28	B0-17
01643-31232	C0100-01A0	23	C0-3
01643-31232	C0100-02A0	3	C0-5
01643-31232	C0100-02A0	6	C0-5
01643-31232	C0100-02A0	9	C0-5
01643-31232	C0100-03A0	9	C0-7
01643-31232	C0100-03A0	12	C0-7
01643-31232	C0100-03A0	15	C0-7
01643-31232	C0100-04A0	4	C0-9
01643-31232	C0100-05A0	3	C0-11
01643-31232	C0100-05A0	15	C0-11
01643-31232	C0100-06A0	9	C0-13
01643-31232	C0100-06A0	12	C0-13
01643-31232	C0100-06A0	15	C0-13
01643-31232	C0100-06A0	28	C0-13
01643-31232	C0100-06A0	31	C0-13
01643-31232	C0100-06A0	40	C0-13
01643-31232	C0100-06A0	43	C0-13
01643-31232	C0100-06A0	46	C0-13
01643-31232	C0100-06A0	50	C0-15
01643-31232	C0100-06A0	54	C0-15
01643-31232	C0100-07A0	7	C0-17
01643-31232	C0100-07A0	21	C0-17
01643-31232	C0100-07A0	24	C0-17
01643-31232	C0100-07A0	34	C0-17
01643-31232	C0100-07A0	38	C0-17
01643-31232	C0100-07A0	40	C0-17
01643-31232	C0100-09A0	6	C0-21
01643-31232	C0100-09A0	11	C0-21
01643-31232	C0100-09A0	16	C0-21
01643-31232	C0100-09A0	22	C0-21
01643-31232	C0100-09A0	28	C0-21
01643-31232	C0100-09A0	34	C0-21
01643-31232	C0100-09A0	40	C0-21
01643-31232	C0100-09A0	46	C0-21
01643-31232	C0100-09A1	50	C0-22
01643-31232	C0100-10A0	11	C0-25
01643-31232	C0100-10A0	13	C0-25
01643-31232	C0100-10A0	22	C0-25
01643-31232	C0100-10A0	24	C0-25
01643-31232	C0100-11A0	9	C0-27
01643-31232	D0100-01A0	11	D0-3
01643-31232	D0200-01A0	17	D0-5
01643-31232	D0200-01A0	19	D0-5
01643-31232	D0200-01A0	22	D0-5
01643-31232	D0200-01A0	26	D0-5
01643-31232	D0200-01A0	29	D0-5
01643-31232	D0200-01A0	32	D0-5
01643-31232	D0200-01A0	35	D0-5
01643-31232	D0200-01A0	38	D0-5
01643-31232	D0200-01A0	41	D0-5
01643-31232	D0200-01A0	45	D0-5
01643-31232	D0200-01A0	47	D0-5
01643-31232	D0200-01A0	50	D0-7
01643-31232	D0200-01A0	54	D0-7
01643-31232	D0200-02A0	11	D0-9
01643-31232	D0200-02A0	15	D0-9
01643-31232	D0200-02A0	28	D0-9
01643-31232	D0200-02A0	34	D0-9
01643-31232	D0200-02A0	38	D0-9
01643-31232	D0200-02A0	41	D0-9
01643-31232	D0200-02A0	44	D0-9

PART NO.	FIG NO.	INDEX	PAGE
01643-31232	D0200-02A0	47	D0-9
01643-31232	D0200-02A0	50	D0-11
01643-31232	D0200-02A0	53	D0-11
01643-31232	D0200-03A0	15	D0-13
01643-31232	D0200-03A0	18	D0-13
01643-31232	D0200-04A0	5	D0-15
01643-31232	D0200-04A0	7	D0-15
01643-31232	D0200-04A0	10	D0-15
01643-31232	E0200-01A0	12	E0-7
01643-31232	E0200-01A0	15	E0-7
01643-31232	E0200-01A0	18	E0-7
01643-31232	E0200-02A0	4	E0-9
01643-31232	E0200-02A0	7	E0-9
01643-31232	E0200-02A0	10	E0-9
01643-31232	E0200-02A0	13	E0-9
01643-31232	E0200-02A0	16	E0-9
01643-31232	E0200-02A0	19	E0-9
01643-31232	E0200-02A0	22	E0-9
01643-31232	E0200-02A0	25	E0-9
01643-31232	E0200-02A0	28	E0-9
01643-31232	E0200-02A0	31	E0-9
01643-31232	E0200-02A0	36	E0-9
01643-31232	E0200-02A0	39	E0-9
01643-31232	E0200-02A0	42	E0-9
01643-31232	E0200-02A0	46	E0-9
01643-31232	E0200-02A0	49	E0-11
01643-31232	E0200-03A0	4	E0-13
01643-31232	E0200-03A0	12	E0-13
01643-31232	E0200-03A0	15	E0-13
01643-31232	E0200-03A0	20	E0-13
01643-31232	E0200-03A0	23	E0-13
01643-31232	E0200-03A0	26	E0-13
01643-31232	E0200-04A0	3	E0-15
01643-31232	E0200-04A0	6	E0-15
01643-31232	E0200-04A0	9	E0-15
01643-31232	E0200-04A0	12	E0-15
01643-31232	E0200-04A0	15	E0-15
01643-31232	E0200-04A0	18	E0-15
01643-31232	E0200-04A0	21	E0-15
01643-31232	E0200-04A0	24	E0-15
01643-31232	E0200-04A0	27	E0-15
01643-31232	E0200-04A0	30	E0-15
01643-31232	E0200-04A0	33	E0-15
01643-31232	E0200-04A0	36	E0-15
01643-31232	E0200-06A0	4	E0-19
01643-31232	E0200-06A0	7	E0-19
01643-31232	E0200-07A0	26	E0-21
01643-31232	E0200-08A0	3	E0-23
01643-31232	E0310-01A1	6	E0-27
01643-31232	E0310-01A2	8	E0-29
01643-31232	E0310-01A4	12	E0-31
01643-31232	E0310-01A5	3	E0-33
01643-31232	E0310-01A6	10	E0-35
01643-31232	E0310-01A8	10	E0-37
01643-31232	E0310-01A9	5	E0-39
01643-31232	E0310-01B1	5	E0-41
01643-31232	E0420-01A0	7	E0-45
01643-31232	H0110-01A0	11	H0-3
01643-31232	H0110-01A0	28	H0-3
01643-31232	H0110-01A0	34	H0-3
01643-31232	H0110-01A0	51	H0-4
01643-31232	H0110-02A0	12	H0-7
01643-31232	H0110-03A0	3	H0-9
01643-31232	H0110-03A0	10	H0-9
01643-31232	H0110-04A0	15	H0-11
01643-31232	H0110-04A0	27	H0-11
01643-31232	H0110-04A0	33	H0-11

https://truckmanualshub.com/

PART NO.	FIG NO.	INDEX	PAGE
01643-31232	H0120-03A0	13	H0-19
01643-31232	H0210-01A0	37	H0-21
01643-31232	H0240-01A0	3	H0-25
01643-31232	H0311-01A0	30	H0-27
01643-31232	H0311-01A0	35	H0-27
01643-31232	H0311-01A0	38	H0-27
01643-31232	H0311-01A0	42	H0-27
01643-31232	H0312-01A0	9	H0-29
01643-31232	H0312-01A0	31	H0-29
01643-31232	H0312-02A0	27	H0-31
01643-31232	H0320-01A0	15	H0-33
01643-31232	H0330-01A0	3	H0-35
01643-31232	H0330-01A0	7	H0-35
01643-31232	H0330-01A0	12	H0-35
01643-31232	H0330-01A0	25	H0-35
01643-31232	H0340-01A0	4	H0-37
01643-31232	H0340-01A0	8	H0-37
01643-31232	H0340-01A0	12	H0-37
01643-31232	H0340-01A0	15	H0-37
01643-31232	H0340-01A0	30	H0-37
01643-31232	H1210-01A0	7	H0-39
01643-31232	H1210-01A0	16	H0-39
01643-31232	H1210-01A0	23	H0-39
01643-31232	H1210-01A0	26	H0-39
01643-31232	H1210-01A0	34	H0-39
01643-31232	H1210-01A0	41	H0-39
01643-31232	H1220-01A0	43	H0-45
01643-31232	H1220-02A0	3	H0-47
01643-31232	H1220-02A0	13	H0-47
01643-31232	H1220-03A0	5	H0-49
01643-31232	H1220-03A0	7	H0-49
01643-31232	H1220-03A0	9	H0-49
01643-31232	H1220-03A0	11	H0-49
01643-31232	H1220-03A0	26	H0-49
01643-31232	H1240-02A1	7	H0-51
01643-31232	H1240-02A1	10	H0-51
01643-31232	H1310-01A0	11	H0-53
01643-31232	H1310-01A0	24	H0-53
01643-31232	H1310-01A0	29	H0-53
01643-31232	H1340-01A0	17	H0-55
01643-31232	H1340-01A0	19	H0-55
01643-31232	H1340-01A0	25	H0-55
01643-31232	H1350-01A0	15	H0-57
01643-31232	H1350-01A0	17	H0-57
01643-31232	H1350-01A0	20	H0-57
01643-31232	H1350-01A0	23	H0-57
01643-31232	H1350-01A0	28	H0-57
01643-31232	H1350-01A0	31	H0-57
01643-31232	H1350-01A0	34	H0-57
01643-31232	H1350-01A0	38	H0-57
01643-31232	H1810-01A0	17	H0-59
01643-31232	H1810-01A0	21	H0-59
01643-31232	H1810-01A0	25	H0-59
01643-31232	H1831-01A0	3	H0-61
01643-31232	H1831-01A0	21	H0-61
01643-31232	H1831-01A0	25	H0-61
01643-31232	H1831-02A0	11	H0-65
01643-31232	H1831-02A0	33	H0-65
01643-31232	H1833-01A0	3	H0-67
01643-31232	H1833-01A0	7	H0-67
01643-31232	H1833-01A0	12	H0-67
01643-31232	H1833-01A0	15	H0-67
01643-31232	H1833-02A0	18	H0-69
01643-31232	H1833-02A0	21	H0-69
01643-31232	H1833-02A0	24	H0-69
01643-31232	H1833-02A0	26	H0-69
01643-31232	H1840-01A0	28	H0-71

PART NO.	FIG NO.	INDEX	PAGE
01643-31232	H1840-02A0	7	H0-73
01643-31232	H1840-02A0	25	H0-73
01643-31232	H1840-02A0	28	H0-73
01643-31232	H1840-03A2	4	H0-75
01643-31232	J1110-01A0	5	J0-3
01643-31232	J1110-02A0	6	J0-5
01643-31232	J1110-02A0	13	J0-5
01643-31232	J1110-02A1	6	J0-7
01643-31232	J1110-02A1	13	J0-7
01643-31232	J1110-03A0	40	J0-9
01643-31232	J1410-01A0	6	J0-13
01643-31232	J1410-01A0	8	J0-13
01643-31232	K0350-01A0	7	K0-15
01643-31232	K0600-01A0	6	K0-17
01643-31232	K0600-01A0	8	K0-17
01643-31232	K0600-01A0	10	K0-17
01643-31232	K0700-01A0	3	K0-19
01643-31232	K0700-01A0	6	K0-19
01643-31232	K0700-01A0	10	K0-19
01643-31232	K0700-02A0	9	K0-21
01643-31232	K0700-02A0	12	K0-21
01643-31232	K0700-02A0	17	K0-21
01643-31232	K0700-02A0	20	K0-21
01643-31232	K0700-02A0	24	K0-21
01643-31232	K0700-02A0	26	K0-21
01643-31232	K0700-02A0	29	K0-21
01643-31232	K0700-02A0	32	K0-21
01643-31232	K0700-02A0	35	K0-21
01643-31232	K0700-02A0	38	K0-21
01643-31232	K0700-02A0	43	K0-23
01643-31232	K0700-02A0	45	K0-23
01643-31232	K0700-03A0	6	K0-25
01643-31232	K0700-03A0	11	K0-25
01643-31232	K0700-03A0	15	K0-25
01643-31232	K0700-03A0	18	K0-25
01643-31232	K0700-04A0	13	K0-27
01643-31232	K0700-04A0	16	K0-27
01643-31232	K1110-17A0	6	K0-59
01643-31232	K1110-17A0	8	K0-59
01643-31232	K1110-22A0	6	K0-69
01643-31232	M1110-01A0	23	M0-3
01643-31232	M1110-01A0	30	M0-3
01643-31232	M1110-01A0	32	M0-3
01643-31232	M1110-01A0	34	M0-3
01643-31232	M1120-01A0	7	M0-5
01643-31232	M1120-01A0	11	M0-5
01643-31232	M1120-01A0	14	M0-5
01643-31232	M1120-01A0	17	M0-5
01643-31232	M1120-01A0	20	M0-5
01643-31232	M1120-01A0	23	M0-5
01643-31232	M1120-01A0	25	M0-5
01643-31232	M1120-01A0	29	M0-5
01643-31232	M1120-01A0	37	M0-5
01643-31232	M1120-01A0	41	M0-5
01643-31232	M1120-01A0	43	M0-5
01643-31232	M1120-01A0	48	M0-5
01643-31232	M1120-01A0	51	M0-7
01643-31232	M1120-01A0	55	M0-7
01643-31232	M1120-02A0	3	M0-9
01643-31232	M1120-02A0	6	M0-9
01643-31232	M1120-02A0	8	M0-9
01643-31232	M1120-02A0	11	M0-9
01643-31232	M1120-02A0	14	M0-9
01643-31232	M1120-02A0	17	M0-9
01643-31232	M1120-02A0	20	M0-9
01643-31232	M1120-02A0	26	M0-9
01643-31232	M1120-02A0	29	M0-9

https://truckmanualshub.com/

PART NO.	FIG NO.	INDEX	PAGE
01643-31232	M1120-02A0	31	MO-9
01643-31232	M1120-02A0	34	MO-9
01643-31232	M1130-01A0	8	MO-11
01643-31232	M1130-01A0	14	MO-11
01643-31232	M1130-01A0	22	MO-11
01643-31232	M1130-01A0	32	MO-11
01643-31232	M1130-01A0	44	MO-11
01643-31232	M1130-01A0	49	MO-12
01643-31232	M1130-01A1	8	MO-15
01643-31232	M1130-01A1	14	MO-15
01643-31232	M1130-01A1	25	MO-15
01643-31232	M1130-01A1	37	MO-15
01643-31232	M1130-01A1	42	MO-15
01643-31232	M1140-01A0	14	MO-17
01643-31232	M1140-01A0	16	MO-17
01643-31232	M1140-01A0	24	MO-17
01643-31232	M1140-01A0	26	MO-17
01643-31232	M1140-01A0	28	MO-17
01643-31232	M1140-01A0	30	MO-17
01643-31232	M1150-01A0	3	MO-19
01643-31232	M1150-01A0	5	MO-19
01643-31232	M1150-01A0	9	MO-19
01643-31232	M1150-01A0	17	MO-19
01643-31232	M1150-01A0	21	MO-19
01643-31232	M1150-01A0	28	MO-19
01643-31232	M1150-01A0	30	MO-19
01643-31232	M1150-01A0	32	MO-19
01643-31232	M1150-02A0	7	MO-21
01643-31232	M1150-02A0	13	MO-21
01643-31232	M1150-02A0	18	MO-21
01643-31232	M1150-02A0	25	MO-21
01643-31232	M1150-02A0	31	MO-21
01643-31232	M1150-02A0	35	MO-21
01643-31232	M1150-02A0	42	MO-21
01643-31232	M1150-02A0	47	MO-21
01643-31232	M1160-01A0	10	MO-23
01643-31232	M1210-01A1	23	MO-25
01643-31232	M1210-01A1	26	MO-25
01643-31232	M1210-01A1	29	MO-25
01643-31232	M1210-01A1	36	MO-25
01643-31232	M1210-01A1	42	MO-25
01643-31232	M1210-01A2	23	MO-27
01643-31232	M1210-01A2	26	MO-27
01643-31232	M1210-01A2	29	MO-27
01643-31232	M1210-01A2	36	MO-27
01643-31232	M1210-01A2	42	MO-27
01643-31232	M1210-02A2	3	MO-29
01643-31232	M1210-02A2	6	MO-29
01643-31232	M1220-01A0	22	MO-31
01643-31232	M1220-01A0	25	MO-31
01643-31232	M1220-01A0	30	MO-31
01643-31232	M1310-01A0	3	MO-33
01643-31232	M1310-01A0	5	MO-33
01643-31232	M1810-01A0	5	MO-43
01643-31232	M1810-01A0	10	MO-43
01643-31232	M1810-01A0	13	MO-43
01643-31232	M1810-01A0	17	MO-43
01643-31232	M1810-01A0	20	MO-43
01643-31232	M1810-01A0	25	MO-43
01643-31232	M1810-02A0	12	MO-45
01643-31232	M1810-02A0	14	MO-45
01643-31232	M1810-02A0	17	MO-45
01643-31232	M1810-02A0	21	MO-45
01643-31232	M1810-02A0	26	MO-45
01643-31232	M1810-03A0	5	MO-47
01643-31232	M1810-03A0	12	MO-47
01643-31232	M1810-03A0	15	MO-47
01643-31232	M1810-03A0	18	MO-47
01643-31232	M1810-03A0	26	MO-47
01643-31232	M1810-03A0	29	MO-47
01643-31232	M1810-03A0	33	MO-47
01643-31232	M1810-03A0	36	MO-47
01643-31232	N1210-04A0	6	NO-15
01643-31232	N1210-05A0	4	NO-17
01643-31232	N1210-05A0	6	NO-17
01643-31232	N1310-01A0	29	NO-19
01643-31232	R1110-01A0	14	RO-5
01643-31232	R1120-03A0	4	RO-11
01643-31232	R1120-03A0	13	RO-11
01643-31232	R1120-07A0	8	RO-21
01643-31232	R1120-11A0	4	RO-29
01643-31232	R1120-11A0	13	RO-29
01643-31232	R1120-15A0	8	RO-39
01643-31232	R1150-01A0	4	RO-45
01643-31232	R1150-01A0	8	RO-45
01643-31232	R1150-01A0	12	RO-45
01643-31232	R1150-01A0	16	RO-45
01643-31232	T1110-02A0	5	TO-07
01643-31232	T1110-02A0	8	TO-07
01643-31232	T1110-02A0	13	TO-07
01643-31232	T1110-02A0	16	TO-07
01643-31232	T1110-02A5	5	TO-09
01643-31232	T1110-02A5	8	TO-09
01643-31232	T1110-02A5	13	TO-09
01643-31232	T1110-02A5	16	TO-09
01643-31232	T1110-03A0	14	TO-11
01643-31232	T1110-03A5	14	TO-13
01643-31232	T1110-04A0	5	TO-15
01643-31232	T1110-04A0	10	TO-15
01643-31232	T1110-04A0	18	TO-15
01643-31232	T1110-04A0	21	TO-15
01643-31232	T1110-04A0	26	TO-15
01643-31232	T1110-04A0	29	TO-15
01643-31232	T1110-04A0	37	TO-15
01643-31232	T1110-04A0	43	TO-15
01643-31232	T1110-04A0	50	TO-17
01643-31232	T1110-04A5	5	TO-19
01643-31232	T1110-04A5	10	TO-19
01643-31232	T1110-04A5	18	TO-19
01643-31232	T1110-04A5	21	TO-19
01643-31232	T1110-04A5	26	TO-19
01643-31232	T1110-04A5	29	TO-19
01643-31232	T1110-04A5	37	TO-19
01643-31232	T1110-04A5	43	TO-19
01643-31232	T1110-04A5	50	TO-21
01643-31232	T1110-09A0	10	TO-27
01643-31232	T1110-09A0	13	TO-27
01643-31232	T1110-09A0	16	TO-27
01643-31232	T1110-09A0	20	TO-27
01643-31232	T1110-09A0	23	TO-27
01643-31232	T1110-09A1	10	TO-29
01643-31232	T1110-09A1	13	TO-29
01643-31232	T1110-09A1	16	TO-29
01643-31232	T1110-09A1	20	TO-29
01643-31232	T1200-03A1	11	TO-45
01643-31232	T1200-03A1	20	TO-45
01643-31232	Y1600-32A0	15	YO-61
01643-31232	Y1600-37A0	3	YO-71
01643-31232	Y1620-11A0	47	YO-82
01643-31232	Y1620-41A0	52	YO-86
01643-31232	Y1660-01A0	2	YO-111
01643-31445	K0700-01A0	16	KO-19
01643-31445	N1210-01A0	3	NO-5
01643-31445	N1210-01A0	3	NO-11

https://truckmanualshub.com/

PART NO.	FIG NO.	INDEX	PAGE
01643-31445	Y0260-01A0	38	YO-3
01643-31445	Y1600-31A0	11	YO-59
01643-31645	Y1600-01A0	15	YO-9
01643-31645	Y1600-01A0	18	YO-9
01643-31645	Y1600-21A0	14	YO-37
01643-31645	Y1600-21A0	17	YO-37
01643-31645	B0100-01A0	5	BO-3
01643-31645	B0600-03A0	5	BO-11
01643-31645	C0100-05A0	6	CO-11
01643-31645	C0100-08A0	2	CO-19
01643-31645	C0100-11A0	6	CO-27
01643-31645	H0120-03A0	5	HO-19
01643-31645	H0120-03A0	10	HO-19
01643-31645	H0210-01A0	40	HO-21
01643-31645	H0220-01A0	19	HO-23
01643-31645	H0312-01A0	37	HO-29
01643-31645	J1310-01A1	4	JO-11
01643-31645	J1310-01A1	10	JO-11
01643-31645	K1120-01A0	7	KO-99
01643-31645	K1120-01A0	10	KO-99
01643-31645	M1110-01A0	16	MO-3
01643-31645	N1210-01A0	39	NO-5
01643-31645	N1210-01A0	39	NO-11
01643-31645	R1150-01A0	20	RO-45
01643-31645	R1150-01A0	22	RO-45
01643-31645	R1170-01A0	3	RO-47
01643-31645	R1170-01A0	6	RO-47
01643-31645	T1110-01A0	23	TO-03
01643-31645	T1110-01A7	21	TO-05
01643-31645	T1110-04A0	40	TO-15
01643-31645	T1110-04A5	40	TO-19
01643-31645	T1110-05A0	4	TO-23
01643-31645	T1110-05A1	4	TO-25
01643-31645	T1200-01A0	12	TO-37
01643-31645	T1200-01A0	16	TO-37
01643-31645	T1200-01A2	12	TO-39
01643-31645	T1200-01A2	16	TO-39
01643-31645	Y0260-01A0	33	YO-3
01643-31845	A2010-A4K5	7	AA-29
01643-31845	R1120-07A0	36	RO-21
01643-31845	R1120-15A0	36	RO-39
01643-32060	C0100-10A0	4	CO-25
01643-32060	D0100-01A0	30	DO-3
01643-32060	H0110-04A0	30	HO-11
01643-32060	R1120-05A0	15	RO-15
01643-32060	R1120-13A0	15	RO-33
01643-32260	K0700-01A0	12	KO-19
01643-32260	R1120-07A0	42	RO-21
01643-32260	R1120-15A0	42	RO-39
01643-32460	B0100-01A0	12	BO-3
01643-32460	B0100-01A0	20	BO-3
01643-32460	B0100-01A0	22	BO-3
01643-32460	N1210-05A0	8	NO-17
01643-32460	R1120-03A0	1	RO-11
01643-32460	R1120-06A4	3	RO-19
01643-32460	R1120-07A0	44	RO-21
01643-32460	R1120-11A0	1	RO-29
01643-32460	R1120-14A4	3	RO-37
01643-32460	R1120-15A0	44	RO-39
01643-32460	T1200-02A0	13	TO-41
01643-32460	T1200-02A0	17	TO-41
01643-32460	T1200-02A0	21	TO-41
01643-32460	T1200-02A1	13	TO-43
01643-32460	T1200-02A1	17	TO-43
01643-32460	T1200-02A1	21	TO-43
01643-32460	T1510-01A5	25	TO-47
01643-32460	T1510-01A6	17	TO-49

PART NO.	FIG NO.	INDEX	PAGE
01643-32780	N1110-01A0	6	NO-3
01643-32780	R1120-06A3	3	RO-17
01643-32780	R1120-06A4	8	RO-19
01643-32780	R1120-14A3	3	RO-35
01643-32780	R1120-14A4	8	RO-37
01643-32780	Y1620-11A0	24	YO-81
01643-33080	N1110-01A0	16	NO-3
01643-33380	R1110-01A0	6	RO-5
01643-33690	R1110-01A0	4	RO-5
01643-50823	Y1600-27A0	43	YO-50
01643-50823	Y1600-28A0	40	YO-53
01643-51032	A2010-A4K5	35	AA-29
01643-51032	A6810-A4M6	2	AA-123
01643-51032	H0110-03A0	18	HO-9
01643-51032	H0110-03A0	23	HO-9
01643-51032	H0240-01A0	12	HO-25
01643-51032	H0312-01A0	5	HO-29
01643-51032	H0312-02A0	7	HO-31
01643-51032	H0312-02A0	9	HO-31
01643-51032	H0312-02A0	16	HO-31
01643-51032	H0312-02A0	18	HO-31
01643-51032	H0312-02A0	30	HO-31
01643-51032	H0340-01A0	26	HO-37
01643-51032	H1210-01A0	4	HO-39
01643-51032	H1210-01A0	10	HO-39
01643-51032	H1210-01A0	30	HO-39
01643-51032	H1210-01A0	39	HO-39
01643-51032	H1210-01A0	45	HO-40
01643-51032	H1210-02A0	15	HO-43
01643-51032	H1210-02A0	17	HO-43
01643-51032	H1210-02A0	21	HO-43
01643-51032	H1210-02A0	36	HO-43
01643-51032	H1220-01A0	4	HO-45
01643-51032	H1220-01A0	8	HO-45
01643-51032	H1220-01A0	12	HO-45
01643-51032	H1220-01A0	24	HO-45
01643-51032	H1220-01A0	39	HO-45
01643-51032	H1220-02A0	6	HO-47
01643-51032	H1220-02A0	18	HO-47
01643-51032	H1220-03A0	18	HO-49
01643-51032	H1220-03A0	21	HO-49
01643-51032	H1240-02A1	4	HO-51
01643-51032	H1310-01A0	4	HO-53
01643-51032	H1310-01A0	17	HO-53
01643-51032	H1310-01A0	40	HO-53
01643-51032	H1340-01A0	2	HO-55
01643-51032	H1340-01A0	6	HO-55
01643-51032	H1340-01A0	10	HO-55
01643-51032	H1340-01A0	34	HO-55
01643-51032	K1110-25A0	10	KO-75
01643-51032	K1110-28A0	10	KO-81
01643-51032	N1210-05A0	13	NO-17
01643-51032	N1310-01A0	12	NO-19
01643-51032	P1120-01A1	4	PO-3
01643-51032	P1120-02A0	6	PO-5
01643-51032	T1110-04A0	32	TO-15
01643-51032	T1110-04A0	45	TO-15
01643-51032	T1110-04A5	32	TO-19
01643-51032	T1110-04A5	45	TO-19
01643-51032	T1200-03A1	5	TO-45
01643-51032	Y1600-36A0	12	YO-69
01643-51032	Y1600-36A0	19	YO-69
01643-51032	Y1620-01A0	34	YO-73
01643-51032	Y1620-01A0	48	YO-74
01643-51032	Y1620-02A0	34	YO-77
01643-51032	Y1620-02A0	48	YO-78
01643-51032	Y1620-11A0	34	YO-81

https://truckmanualshub.com/

PART NO.	FIG NO.	INDEX	PAGE
01643-51032	Y1620-41A0	33	YO-85
01643-51032	Y1620-41A0	47	YO-86
01643-51232	A2411-B4B3	22	AA-61
01643-51232	H0311-01A0	4	HO-27
01643-51232	H0311-01A0	8	HO-27
01643-51232	H0311-01A0	24	HO-27
01643-51232	H0311-01A0	26	HO-27
01643-51232	H0312-01A0	23	HO-29
01643-51232	H0320-01A0	5	HO-33
01643-51232	H0320-01A0	10	HO-33
01643-51232	H0320-01A0	26	HO-33
01643-51232	H0320-01A0	31	HO-33
01643-51232	H0330-01A0	21	HO-35
01643-51232	H0330-01A0	41	HO-35
01643-51232	Y1620-01A0	39	YO-73
01643-51232	Y1620-02A0	39	YO-77
01643-51232	Y1620-11A0	39	YO-81
01643-51232	Y1620-41A0	40	YO-86
01643-51232	Y1675-01A0	14	YO-137
01643-51232	Y1675-01A1	13	YO-139
01643-51645	A1010-A4D2	26	AA-2-1
01643-70623	K0310-01A0	4	KO-11
01643-70623	K1110-09A0	22	KO-43
01643-70623	K1110-11A0	11	KO-47
01643-70823	K0180-01A0	7	KO-7
01643-70823	K0180-01A0	15	KO-7
01643-70823	K0180-01A0	35	KO-7
01643-70823	K0830-01A5	3	KO-29
01643-70823	K0830-01A5	7	KO-29
01643-70823	K1110-07A0	3	KO-39
01643-70823	K1110-13A0	14	KO-51
01643-70823	K1110-14A0	3	KO-53
01643-70823	K1110-14A0	6	KO-53
01643-70823	K1110-14A0	9	KO-53
01643-70823	K1110-15A0	6	KO-55
01643-70823	K1110-15A0	13	KO-55
01643-70823	K1110-15A0	20	KO-55
01643-70823	K1110-30A0	9	KO-85
01643-71032	E0310-01A1	3	EO-27
01643-71032	E0310-01A2	5	EO-29
01643-71032	E0310-01A4	5	EO-31
01643-71032	E0310-01A4	9	EO-31
01643-71032	E0310-01A6	5	EO-35
01643-71032	E0310-01A8	5	EO-37
01643-71032	E0310-01A8	14	EO-37
01643-71032	E0310-01B1	9	EO-41
01643-71032	K0600-01A0	18	KO-17
01643-71032	K1110-10A0	20	KO-45
01643-71032	K1110-11A0	9	KO-47
01643-71032	K1110-19A0	13	KO-63
01643-71032	K1110-22A0	15	KO-69
01643-71232	E0201-01A0	5	EO-25
01643-71232	K0230-01A0	4	KO-9
01643-71232	K0600-01A0	16	KO-17
01643-71232	K0600-01A0	20	KO-17
01643-71232	K1110-11A0	4	KO-47
01643-71232	K1110-11A0	6	KO-47
01643-71232	M1410-01A0	4	MO-35
01660-03650	C0100-05A0	8	CO-11
02400-10413	A2350-A4C9	11	AA-53
02720-41616	A2110-A4S1	37	AA-41
02753-00315	H1810-01A0	1	HO-59
02753-00317	H1810-01A0	2	HO-59
02760-00303	H0120-02A0	42	HO-17
02760-00303	H1840-01A0	23	HO-71
02760-00304	H1831-02A0	13	HO-65
02760-00312	H1831-02A0	7	HO-65
02760-00318	H1831-02A0	19	HO-65
02760-00319	H1840-02A0	19	HO-73
02760-00325	H1831-02A0	1	HO-65
02760-00326	H1840-01A0	8	HO-71
02760-00328	D0200-01A0	7	DO-5
02760-00328	H1831-02A0	2	HO-65
02760-00330	H1831-02A0	3	HO-65
02760-00338	H1840-02A0	20	HO-73
02760-003A3	H1840-02A0	17	HO-73
02760-003A5	H1840-01A0	25	HO-71
02760-003A8	H1831-02A0	15	HO-65
02760-003A9	H1831-02A0	17	HO-65
02761-00308	H1831-02A0	27	HO-65
02761-003A4	H0210-01A0	26	HO-21
02761-003A7	H1840-02A0	18	HO-73
02762-00311	H0340-01A0	33	HO-37
02762-00332	P1120-01A1	14	PO-3
02762-00410	B0600-06A0	24	BO-17
02762-00503	B0600-05A0	8	BO-15
02762-00506	H0340-01A0	16	HO-37
02762-00513	B0600-05A0	23	BO-15
02762-005A7	H0340-01A0	17	HO-37
02762-005A7	H0340-01A0	18	HO-37
02762-00607	H0340-01A0	22	HO-37
02762-00612	H0340-01A0	23	HO-37
02762-006A4	N1210-01A0	46	NO-5
02762-006A4	N1210-01A0	46	NO-11
02763-00305	H1810-01A0	27	HO-59
02763-003A7	H1810-01A0	26	HO-59
02763-00422	H0340-01A0	20	HO-37
02763-00519	H0340-01A0	19	HO-37
02763-00612	H0340-01A0	31	HO-37
02764-00312	H1810-01A0	9	HO-59
02764-00632	P1120-01A1	15	PO-3
02777-006A7	H1350-01A0	24	HO-57
02779-00609	H1350-01A0	9	HO-57
02781-00315	H0220-01A0	4	HO-23
02781-00315	H1831-01A0	41	HO-61
02781-00315	H1840-02A0	14	HO-73
02781-00315	K1110-36A0	12	KO-97
02781-0031D	H0120-02A0	32	HO-17
02781-0031D	H1831-01A0	26	HO-61
02781-00420	A4710-A4K1	4	AA-97
02781-00422	A4110-B4N2	16	AA-87
02781-00422	A4110-C4N2	18	AA-89
02781-00422	H0110-02A0	27	HO-7
02781-0042A	B0600-06A0	21	BO-17
02781-0042A	H0110-02A0	33	HO-7
02781-00516	C0100-06A0	34	CO-13
02781-00516	D0200-03A0	24	DO-13
02781-00522	A4110-B4N2	14	AA-87
02781-00522	A4110-C4N2	16	AA-89
02781-00522	H1210-02A0	23	HO-43
02781-00522	N1210-02A0	10	NO-9
02781-00628	C0100-06A0	3	CO-13
02781-00628	R1120-08A0	4	RO-23
02781-00628	R1120-16A0	4	RO-41
02782-10214	K1110-36A0	15	KO-97
02782-10214	K1110-36A0	29	KO-97
02782-10311	D0100-01A0	17	DO-3
02782-10311	H0120-02A0	35	HO-17
02782-10311	H0210-01A0	8	HO-21
02782-10311	H0220-01A0	1	HO-23
02782-10311	H1210-02A0	8	HO-43
02782-10311	H1220-01A0	29	HO-45
02782-10311	H1240-02A1	14	HO-51
02782-10311	H1831-01A0	8	HO-61

https://truckmanualshub.com/

PART NO.	FIG NO.	INDEX	PAGE
02782-10311	H1831-01A0	32	HO-61
02782-10311	K1110-19A0	25	KO-63
02782-10311	N1210-02A0	1	NO-9
02782-10311	N1210-04A0	17	NO-15
02782-10315	C0100-02A0	14	CO-5
02782-10315	H0120-01A0	28	HO-13
02782-10315	H0120-01A0	34	HO-13
02782-10315	H1831-01A0	35	HO-61
02782-10315	K1110-36A0	9	KO-97
02782-10315	K1110-36A0	26	KO-97
02782-10316	H0120-01A0	44	HO-14
02782-10317	H0330-01A0	32	HO-35
02782-10422	B0600-06A0	29	BO-17
02782-10425	B0600-06A0	12	BO-17
02782-10425	H1220-01A0	32	HO-45
02782-10516	N1310-01A0	13	NO-19
02782-10518	D0200-02A0	54	DO-11
02782-10522	B0600-05A0	28	BO-15
02782-10522	D0200-02A0	1	DO-9
02782-10524	D0200-02A0	21	DO-9
02782-10628	H0110-02A0	21	HO-7
02782-10628	H0210-01A0	11	HO-21
02782-10628	H0220-01A0	7	HO-23
02782-10628	H0240-01A0	16	HO-25
02782-10628	H0330-01A0	16	HO-35
02782-10628	H1240-02A1	11	HO-51
02782-10628	N1210-01A0	44	NO-5
02782-10628	N1210-01A0	44	NO-11
02783-10315	C0100-02A0	15	CO-5
02783-10315	H0110-03A0	11	HO-9
02783-10628	H1350-01A0	4	HO-57
02789-00315	Y1600-07A0	16	YO-21
02789-00315	Y1600-10A0	15	YO-27
02789-00315	P1120-02A0	11	PO-5
02789-00628	P1120-02A0	12	PO-5
02893-05037	A5010-B4M4	28	AA-101
02895-77075	A1310-A4L4	31	AA-9
02896-11008	K1110-36A0	16	KO-97
02896-11008	K1110-36A0	30	KO-97
02896-11009	D0100-01A0	20	DO-3
02896-11009	D0100-01A0	26	DO-3
02896-11009	D0200-03A0	30	DO-13
02896-11009	H0110-02A0	10	HO-7
02896-11009	H0110-02A0	16	HO-7
02896-11009	H0110-03A0	13	HO-9
02896-11009	H0120-01A0	8	HO-13
02896-11009	H0120-01A0	22	HO-13
02896-11009	H0120-01A0	30	HO-13
02896-11009	H0120-01A0	36	HO-13
02896-11009	H0120-01A0	43	HO-14
02896-11009	H0120-01A0	46	HO-14
02896-11009	H0120-02A0	3	HO-17
02896-11009	H0120-02A0	6	HO-17
02896-11009	H0120-02A0	14	HO-17
02896-11009	H0120-02A0	16	HO-17
02896-11009	H0120-02A0	22	HO-17
02896-11009	H0120-02A0	26	HO-17
02896-11009	H0120-02A0	29	HO-17
02896-11009	H0120-02A0	34	HO-17
02896-11009	H0120-02A0	36	HO-17
02896-11009	H0120-02A0	39	HO-17
02896-11009	H0210-01A0	5	HO-21
02896-11009	H0210-01A0	10	HO-21
02896-11009	H0210-01A0	16	HO-21
02896-11009	H0210-01A0	22	HO-21
02896-11009	H0210-01A0	24	HO-21
02896-11009	H0220-01A0	3	HO-23
02896-11009	H0220-01A0	6	HO-23
02896-11009	H0220-01A0	12	HO-23
02896-11009	H0240-01A0	14	HO-25
02896-11009	H0330-01A0	34	HO-35
02896-11009	H1210-02A0	10	HO-43
02896-11009	H1210-02A0	28	HO-43
02896-11009	H1220-01A0	30	HO-45
02896-11009	H1240-02A1	16	HO-51
02896-11009	H1810-01A0	13	HO-59
02896-11009	H1831-01A0	11	HO-61
02896-11009	H1831-01A0	14	HO-61
02896-11009	H1831-01A0	28	HO-61
02896-11009	H1831-01A0	31	HO-61
02896-11009	H1831-01A0	34	HO-61
02896-11009	H1831-01A0	37	HO-61
02896-11009	H1831-01A0	40	HO-61
02896-11009	H1831-01A0	43	HO-62
02896-11009	H1831-02A0	24	HO-65
02896-11009	H1831-02A0	30	HO-65
02896-11009	H1840-02A0	10	HO-73
02896-11009	H1840-02A0	13	HO-73
02896-11009	H1840-02A0	15	HO-73
02896-11009	K1110-19A0	26	KO-63
02896-11009	K1110-25A0	19	KO-75
02896-11009	K1110-28A0	19	KO-81
02896-11009	K1110-36A0	10	KO-97
02896-11009	K1110-36A0	13	KO-97
02896-11009	K1110-36A0	27	KO-97
02896-11009	N1210-02A0	3	NO-9
02896-11009	N1210-04A0	19	NO-15
02896-11009	N1310-01A0	9	NO-19
02896-11009	N1310-01A0	23	NO-19
02896-11009	P1120-02A0	8	PO-5
02896-11009	R1120-08A0	9	RO-23
02896-11009	R1120-16A0	9	RO-41
02896-11012	H0110-02A0	29	HO-7
02896-11012	H0110-02A0	35	HO-7
02896-11012	H1220-01A0	33	HO-45
02896-11015	D0100-01A0	23	DO-3
02896-11015	D0200-02A0	3	DO-9
02896-11015	D0200-02A0	23	DO-9
02896-11015	D0200-02A0	26	DO-9
02896-11015	D0200-02A0	31	DO-9
02896-11015	D0200-02A0	56	DO-11
02896-11015	D0200-03A0	26	DO-13
02896-11015	D0200-03A0	29	DO-13
02896-11015	H0110-02A0	17	HO-7
02896-11015	H0120-01A0	33	HO-13
02896-11015	H1210-02A0	25	HO-43
02896-11015	N1210-02A0	12	NO-9
02896-11015	N1210-04A0	13	NO-15
02896-11015	N1310-01A0	15	NO-19
02896-11015	N1310-01A0	18	NO-19
02896-11018	H0110-02A0	20	HO-7
02896-11018	H0110-02A0	23	HO-7
02896-11018	H0110-02A0	26	HO-7
02896-11018	H0210-01A0	13	HO-21
02896-11018	H0220-01A0	9	HO-23
02896-11018	H0240-01A0	17	HO-25
02896-11018	H0330-01A0	17	HO-35
02896-11018	H1240-02A1	13	HO-51
02896-11018	N1210-01A0	43	NO-5
02896-11018	N1210-01A0	45	NO-5
02896-11018	N1210-01A0	43	NO-11
02896-11018	N1210-01A0	45	NO-11
02896-11018	N1310-01A0	4	NO-19
02896-11018	P1120-02A0	10	PO-5

https://truckmanualshub.com/

PART NO.	FIG NO.	INDEX	PAGE
02896-11018	R1120-08A0	6	RO-23
02896-11018	R1120-16A0	6	RO-41
02896-21009	H0110-02A0	32	HO-7
02896-21012	A4110-B4N2	18	AA-87
02896-21012	A4110-C4N2	20	AA-89
02896-21012	A4710-A4K1	11	AA-97
02896-21012	B0600-06A0	5	BO-17
02896-21012	B0600-06A0	13	BO-17
02896-21012	B0600-06A0	22	BO-17
02896-21012	B0600-06A0	30	BO-17
02896-21015	B0600-05A0	6	BO-15
02896-21015	B0600-05A0	10	BO-15
02896-21015	B0600-05A0	21	BO-15
02896-21015	B0600-05A0	29	BO-15
02896-61009	Y1600-07A0	15	YO-21
02896-61009	Y1600-10A0	16	YO-27
02896-61012	C0100-06A0	33	CO-13
02896-61015	C0100-06A0	35	CO-13
02896-61018	C0100-06A0	2	CO-13
02896-61018	C0100-06A0	4	CO-13
02896-61018	C0100-06A0	21	CO-13
02896-61018	C0100-06A0	23	CO-13
02896-61018	H1350-01A0	5	HO-57
02896-61018	H1350-01A0	11	HO-57
04010-00519	A4010-A4R4	2	AA-73
04010-00725	A2410-A4A5	2	AA-57
04010-01032	C0100-05A0	11	CO-11
04020-00514	A2010-A4K5	5	AA-29
04020-00514	A2050-A4A9	6	AA-37
04020-00514	A2411-B4B3	16	AA-61
04020-00514	A2411-B4B3	17	AA-61
04020-00514	B0600-01A0	10	BO-7
04020-00616	Y1600-05A0	25	YO-17
04020-00616	Y1600-25A0	25	YO-45
04020-00616	Y1600-14A0	3	YO-35
04020-00616	Y1600-29A0	3	YO-57
04020-00820	A1310-A4L4	14	AA-9
04020-00820	A2010-A4K5	22	AA-29
04020-00820	A2040-A4H7	6	AA-33
04020-01024	A2370-A4F8	2	AA-55
04020-01024	Y1600-31A0	9	YO-59
04020-01024	Y1600-35A0	4	YO-67
04020-01024	Y1600-36A0	15	YO-69
04020-01024	Y1642-12A0	2	YO-107
04020-01228	A2310-A4B4A	8	AA-49
04020-01434	A2250-A4G6	3	AA-47
04020-01434	B0100-01A0	6	BO-3
04020-01434	B0600-01A0	6	BO-7
04020-01842	N1110-01A0	7	NO-3
04022-04008	A1530-B4L8	15	AA-17
04022-04008	Y1660-05A0	15	YO-119
04022-04008	Y1660-07A0	29	YO-123
04022-04010	Y1670-01A0	36	YO-129
04022-04016	Y1670-01A0	35	YO-129
04025-00420	Y1670-01A0	25	YO-129
04025-00432	Y1670-01A0	19	YO-129
04025-00632	M1420-01A0	5	MO-37
04050-11612	H0110-04A0	21	HO-11
04050-11612	M1160-01A0	13	MO-23
04050-11612	M1220-01A0	10	MO-31
04050-11612	M1220-01A0	28	MO-31
04050-13020	M1210-01A1	10	MO-25
04050-13020	M1210-01A2	10	MO-27
04050-14025	N1310-01A0	27	NO-19
04052-01253	M1110-01A0	28	MO-3
04052-10530	K1110-07A0	12	KO-39
04064-02212	A2411-A4B3	7	AA-59
04064-04518	Y1640-02A0	8	YO-93
04064-07525	Y1641-02A0	9	YO-101
04064-08530	R1120-03A0	17	RO-11
04064-08530	R1120-11A0	17	RO-29
04064-08530	Y1627-01A0	9	YO-89
04064-09530	B0600-01A0	19	BO-7
04065-01410	H0120-01A0	17	HO-13
04065-02012	Y1600-37A0	6	YO-71
04065-04018	Y1600-35A0	15	YO-67
04065-04718	A2610-A4C7	5	AA-63
04065-04718	A2610-A4C8	5	AA-65
04065-04718	H0110-01A0	23	HO-3
04065-04818	Y1600-02A0	14	YO-11
04065-04818	Y1600-05A0	4	YO-17
04065-04818	Y1600-22A0	14	YO-39
04065-04818	Y1600-25A0	4	YO-45
04065-04818	Y1600-32A0	6	YO-61
04065-04818	Y1642-12A0	17	YO-107
04065-05020	H0110-01A0	41	HO-3
04065-05220	A2350-A4C9	3	AA-53
04065-06220	Y1640-02A0	11	YO-93
04065-06825	Y1642-12A0	10	YO-107
04065-07225	A5010-B4M4	14	AA-101
04065-07225	Y1600-31A0	23	YO-59
04071-00140	Y1641-02A0	13	YO-101
04071-00170	B0600-01A0	20	BO-7
04120-21736	K0700-01A0	22	KO-19
04205-10520	K1110-07A0	11	KO-39
04205-31230	M1110-01A0	26	MO-3
04205-31238	M1110-01A0	27	MO-3
04260-00317	A2411-B4B3	4	AA-61
04260-00317	A2411-B4B3	9	AA-61
04260-00635	A2411-B4B3	13	AA-61
04260-00793	Y1641-01A0	34	YO-97
04260-00952	Y1620-11A0	12	YO-81
04260-00952	Y1674-01A0	6	YO-133
04260-00952	Y1674-11A0	6	YO-135
04260-01270	Y1600-31A0	16	YO-59
04418-02550	A1530-B4L8	23	AA-17
04418-02550	A9810-A6Y2	2	AA-135
04418-13060	U0100-01A2	22	UO-3
04418-13060	U0520-01A0	2	UO-11
04418-13060	U0520-01A1	2	UO-13
04418-13060	U0520-01A9	3	UO-15
04418-13060	U0520-01B0	3	UO-17
04418-13060	U0520-01B1	3	UO-19
04418-13060	U0520-01B1	6	UO-19
04434-51010	E0200-08A0	12	EO-23
04434-51010	K1110-19A0	34	KO-63
04434-51010	T1110-09A0	18	TO-27
04434-51012	C0100-06A0	48	CO-13
04434-51012	E0200-02A0	20	EO-9
04434-51012	E0200-02A0	26	EO-9
04434-51012	E0200-02A0	29	EO-9
04434-51012	E0200-03A0	10	EO-13
04434-51012	E0200-04A0	13	EO-15
04434-51012	T1110-09A0	11	TO-27
04434-51012	T1110-09A0	21	TO-27
04434-51012	T1110-09A1	11	TO-29
04434-51012	T1110-09A1	18	TO-29
04434-51212	C0100-07A0	19	CO-17
04434-51212	C0100-07A0	32	CO-17
04434-51310	A2110-A4S1	23	AA-41
04434-51408	E0200-02A0	43	EO-9
04434-51410	E0200-03A0	5	EO-13
04434-51410	E0200-03A0	27	EO-13
04434-51410	E0200-08A0	8	EO-23

https://truckmanualshub.com/

PART NO.	FIG NO.	INDEX	PAGE
04434-51410	K1110-30A0	5	KO-85
04434-51412	B0200-01A0	33	BO-5
04434-51412	E0200-02A0	11	EO-9
04434-51412	E0200-02A0	23	EO-9
04434-51412	E0200-02A0	40	EO-9
04434-51412	E0200-03A0	13	EO-13
04434-51412	E0200-03A0	24	EO-13
04434-51412	E0200-04A0	10	EO-15
04434-51412	E0200-04A0	31	EO-15
04434-51512	C0100-07A0	36	CO-17
04434-51512	D0200-01A0	43	DO-5
04434-51512	D0200-04A0	3	DO-15
04434-51512	H1810-01A0	18	HO-59
04434-51512	H1831-01A0	19	HO-61
04434-51512	H1831-02A0	9	HO-65
04434-51512	H1840-03A2	2	HO-75
04434-51612	K0700-02A0	15	KO-21
04434-51612	K0700-02A0	21	KO-21
04434-51710	K1110-17A0	2	KO-59
04434-51712	E0200-02A0	44	EO-9
04434-51712	E0200-04A0	7	EO-15
04434-51810	K1110-32A0	5	KO-89
04434-51812	H0110-01A0	26	HO-3
04434-51812	H0110-04A0	31	HO-11
04434-51908	K1110-15A0	11	KO-55
04434-51910	A1530-A4L8	25	AA-15
04434-51910	A1530-A4L8	33	AA-15
04434-51912	E0200-02A0	14	EO-9
04434-51912	E0200-04A0	34	EO-15
04434-51912	H0340-01A0	21	HO-37
04434-51912	H1350-01A0	36	HO-57
04434-51912	K0700-02A0	10	KO-21
04434-52112	D0200-01A0	52	DO-7
04434-52112	E0200-03A0	21	EO-13
04434-52112	H0210-01A0	34	HO-21
04434-52112	K0700-02A0	27	KO-21
04434-52112	K0700-02A0	40	KO-21
04434-52112	K0700-03A0	4	KO-25
04434-52112	K0700-03A0	9	KO-25
04434-52310	E0200-07A0	8	EO-21
04434-52310	K1110-23A0	10	KO-71
04434-52310	K1110-23A0	20	KO-71
04434-52310	K1110-23A0	28	KO-71
04434-52312	B0600-05A0	25	BO-15
04434-52312	D0200-01A0	12	DO-5
04434-52312	D0200-02A0	36	DO-9
04434-52312	E0200-01A0	16	EO-7
04434-52312	E0200-02A0	34	EO-9
04434-52312	E0200-04A0	16	EO-15
04434-52312	E0200-04A0	28	EO-15
04434-52511	A4710-A4K1	14	AA-97
04434-52512	B0600-06A0	8	BO-17
04434-52512	B0600-06A0	25	BO-17
04434-52512	E0200-03A0	2	EO-13
04434-52711	K1110-17A0	1	KO-59
04434-52711	K1110-23A0	21	KO-71
04434-52711	K1110-23A0	32	KO-71
04434-52712	E0200-02A0	2	EO-9
04434-52712	E0200-04A0	1	EO-15
04434-52712	E0200-04A0	22	EO-15
04434-52712	H0340-01A0	32	HO-37
04434-52712	H1350-01A0	26	HO-57
04434-53211	K1110-23A0	16	KO-71
04434-53212	D0200-01A0	13	DO-5
04434-53212	E0200-01A0	20	EO-7
04434-53212	E0200-03A0	17	EO-13
04434-53212	H0340-01A0	2	HO-37
04434-53212	H0340-01A0	5	HO-37
04434-53212	H0340-01A0	10	HO-37
04434-53212	H0340-01A0	13	HO-37
04434-53411	A2041-A4L2	17	AA-35
04434-53411	K1110-23A0	6	KO-71
04434-53412	E0200-02A0	5	EO-9
04434-53412	H0210-01A0	32	HO-21
04434-53412	H1831-02A0	6	HO-65
04435-51510	K1110-35A0	15	KO-95
04435-51512	C0100-07A0	35	CO-17
04435-51512	D0200-01A0	42	DO-5
04435-51512	H1831-02A0	8	HO-65
04435-51812	H1831-02A0	31	HO-65
04435-51812	H1833-02A0	22	HO-69
04435-51812	H1840-02A0	23	HO-73
04435-51812	K0700-02A0	7	KO-21
04435-51812	K0700-02A0	36	KO-21
04530-11018	Y1600-01A0	21	YO-9
04530-11018	Y1600-04A0	14	YO-15
04530-11018	Y1600-21A0	20	YO-37
04530-11018	Y1600-24A0	14	YO-43
051-2050	A2110-A4S1	34	AA-41
06000-06305	A5010-B4M4	17	AA-101
06000-22222	N1210-01A0	8	NO-5
06000-22222	N1210-01A0	8	NO-11
06000-22222	Y0260-01A0	2	YO-3
06000-22324	N1210-01A0	9	NO-5
06000-22324	N1210-01A0	9	NO-11
06000-22324	Y0260-01A0	3	YO-3
06030-06219	B0600-01A0	22	BO-7
06030-06224	B0600-01A0	17	BO-7
06030-06306	A5010-B4M4	18	AA-101
06124-01616	K1110-27A0	21	KO-79
06340-06204	A2610-A4C7	3	AA-63
06340-06204	A2610-A4C8	3	AA-65
06340-06304	A2610-A4C7	4	AA-63
06340-06304	A2610-A4C8	4	AA-65
07000-02012	Y1600-14A0	8	YO-35
07000-02014	Y1660-03A0	10	YO-115
07000-02021	Y1600-14A0	10	YO-35
07000-02021	Y1600-29A0	5	YO-57
07000-02060	A2610-A4C7	10	AA-63
07000-02060	A2610-A4C8	10	AA-65
07000-02135	Y1641-02A0	12	YO-101
07000-03042	Y1640-03A0	13	YO-95
07000-11007	C0100-01A0	9	CO-3
07000-11007	Y1640-03A0	14	YO-95
07000-11007	Y1674-01A0	5	YO-133
07000-11007	Y1674-01A0	10	YO-133
07000-11007	Y1674-11A0	5	YO-135
07000-11009	Y1600-09A0	6	YO-25
07000-11009	Y1600-27A0	40	YO-49
07000-11009	Y1600-28A0	44	YO-54
07000-11009	Y1674-01A0	11	YO-133
07000-11009	Y1600-13A0	10	YO-33
07000-11009	Y1600-13A0	11	YO-33
07000-11010	Y1860-01A0	20	YO-143
07000-11010	Y1861-01A0	11	YO-145
07000-12010	Y1600-08A0	5	YO-23
07000-12010	Y1600-11A0	5	YO-29
07000-12010	Y1600-09A0	5	YO-25
07000-12010	Y1600-27A0	39	YO-49
07000-12010	Y1600-27A0	46	YO-50
07000-12010	Y1600-28A0	37	YO-53
07000-12010	Y1600-28A0	43	YO-54
07000-12010	Y1660-01A0	11	YO-111
07000-12010	Y1660-05A0	28	YO-119

https://truckmanualshub.com/

PART NO.	FIG NO.	INDEX	PAGE
07000-12010	Y1660-08A0	10	YO-127
07000-12010	Y1600-13A0	9	YO-33
07000-12010	Y1600-13A0	14	YO-33
07000-12011	Y1600-09A0	1	YO-25
07000-12011	Y1600-27A0	36	YO-49
07000-12011	Y1600-28A0	38	YO-53
07000-12011	Y1600-32A0	14	YO-61
07000-12011	Y1660-01A0	8	YO-111
07000-12011	Y1600-13A0	1	YO-33
07000-12011	Y1600-13A0	3	YO-33
07000-12012	Y1600-07A0	25	YO-21
07000-12012	Y1600-08A0	31	YO-23
07000-12012	Y1600-08A0	34	YO-23
07000-12012	Y1600-10A0	25	YO-27
07000-12012	Y1600-11A0	31	YO-29
07000-12012	Y1600-11A0	34	YO-29
07000-12012	Y1600-27A0	23	YO-49
07000-12012	Y1600-28A0	22	YO-53
07000-12012	Y1641-02A0	2	YO-101
07000-12014	Y1600-08A0	12	YO-23
07000-12014	Y1600-11A0	12	YO-29
07000-12015	K1110-19A0	29	KO-63
07000-12015	K1110-25A0	17	KO-75
07000-12015	K1110-28A0	17	KO-81
07000-12016	Y1600-12A0	7	YO-31
07000-12016	Y1600-12A0	17	YO-31
07000-12016	Y1860-01A0	19	YO-143
07000-12016	Y1861-01A0	12	YO-145
07000-12018	Y1600-07A0	9	YO-21
07000-12018	Y1600-10A0	9	YO-27
07000-12018	Y1600-12A0	13	YO-31
07000-12018	Y1600-27A0	9	YO-49
07000-12018	Y1600-28A0	9	YO-53
07000-12018	K1110-19A0	24	KO-63
07000-12018	K1110-25A0	15	KO-75
07000-12018	K1110-28A0	15	KO-81
07000-12018	Y1660-07A0	9	YO-123
07000-12018	Y1660-08A0	20	YO-127
07000-12018	Y1675-01A1	16	YO-139
07000-12018	Y1600-13A0	2	YO-33
07000-12020	Y1640-01A0	13	YO-91
07000-12020	Y1670-01A0	9	YO-129
07000-12021	Y1600-08A0	23	YO-23
07000-12021	Y1600-08A0	37	YO-23
07000-12021	Y1600-11A0	23	YO-29
07000-12021	Y1600-11A0	37	YO-29
07000-12021	Y1641-03A0	4	YO-103
07000-12021	Y1679-01A0	22	YO-141
07000-12055	H0312-01A0	24	HO-29
07000-12055	H0320-01A0	33	HO-33
07000-12060	H0110-01A0	49	HO-4
07000-12060	H0311-01A0	6	HO-27
07000-12060	H0320-01A0	2	HO-33
07000-12060	H0320-01A0	7	HO-33
07000-12060	H0320-01A0	23	HO-33
07000-12060	H0320-01A0	28	HO-33
07000-12060	H0330-01A0	10	HO-35
07000-12080	H0311-01A0	2	HO-27
07000-12095	H0110-01A0	47	HO-3
07000-12115	Y1627-01A0	11	YO-89
07000-12120	H0311-01A0	28	HO-27
07000-12145	Y1640-02A0	26	YO-93
07000-13025	H0110-02A0	13	HO-7
07000-13025	H0240-01A0	6	HO-25
07000-13025	H0240-01A0	9	HO-25
07000-13025	H1340-01A0	27	HO-55
07000-13025	H1340-01A0	29	HO-55

PART NO.	FIG NO.	INDEX	PAGE
07000-13025	H1340-01A0	31	HO-55
07000-13025	Y1660-04A0	6	YO-117
07000-13028	Y1600-08A0	20	YO-23
07000-13028	Y1600-11A0	20	YO-29
07000-13028	Y1675-01A0	9	YO-137
07000-13028	Y1675-01A1	8	YO-139
07000-13028	Y1679-01A0	14	YO-141
07000-13030	N1210-02A0	5	NO-9
07000-13030	N1210-04A0	2	NO-15
07000-13032	H0110-03A0	15	HO-9
07000-13032	H0110-03A0	20	HO-9
07000-13032	H1210-02A0	33	HO-43
07000-13032	H1220-02A0	15	HO-47
07000-13032	H1310-01A0	31	HO-53
07000-13032	H1310-01A0	33	HO-53
07000-13032	H1310-01A0	35	HO-53
07000-13032	H1310-01A0	37	HO-53
07000-13032	P1120-01A1	7	PO-3
07000-13032	P1120-01A1	11	PO-3
07000-13032	P1120-02A0	4	PO-5
07000-13032	T1110-04A0	47	TO-15
07000-13032	T1110-04A5	47	TO-19
07000-13032	T1200-03A1	2	TO-45
07000-13032	Y1660-01A0	10	YO-111
07000-13035	H0120-01A0	5	HO-13
07000-13035	H1240-02A1	5	HO-51
07000-13035	T1110-04A0	30	TO-15
07000-13035	T1110-04A5	30	TO-19
07000-13035	Y1620-01A0	35	YO-73
07000-13035	Y1620-02A0	35	YO-77
07000-13035	Y1620-11A0	35	YO-81
07000-13035	Y1620-41A0	34	YO-85
07000-13035	Y1641-01A0	24	YO-97
07000-13035	Y1679-01A0	27	YO-141
07000-13038	H0312-01A0	25	HO-29
07000-13038	H1220-02A0	10	HO-47
07000-13038	T1110-02A0	10	TO-07
07000-13038	T1110-02A0	17	TO-07
07000-13038	T1110-02A5	10	TO-09
07000-13038	T1110-02A5	17	TO-09
07000-13038	T1110-04A0	41	TO-15
07000-13038	T1110-04A0	52	TO-17
07000-13038	T1110-04A5	41	TO-19
07000-13038	T1110-04A5	52	TO-21
07000-13038	T1200-03A1	8	TO-45
07000-13038	Y1620-11A0	43	YO-82
07000-13038	Y1620-41A0	48	YO-86
07000-13038	Y1641-01A0	26	YO-97
07000-13040	Y1660-01A0	9	YO-111
07000-13042	Y1675-01A0	8	YO-137
07000-13042	Y1675-01A1	7	YO-139
07000-13045	C0100-11A0	10	CO-27
07000-13045	H0110-03A0	4	HO-9
07000-13048	H0311-01A0	19	HO-27
07000-13048	H0311-01A0	21	HO-27
07000-13048	Y1600-09A0	8	YO-25
07000-13048	Y1600-27A0	44	YO-50
07000-13048	Y1600-28A0	45	YO-54
07000-13048	Y1600-13A0	19	YO-33
07000-13050	D0100-01A0	14	DO-3
07000-15090	R1120-04A3	6	RO-13
07000-15090	R1120-12A3	6	RO-31
07000-15090	Y1627-01A0	3	YO-89
07000-15100	R1120-02A0	5	RO-9
07000-15100	R1120-10A0	5	RO-27
07000-15110	Y1620-01A0	30	YO-73
07000-15110	Y1620-02A0	30	YO-77

https://truckmanualshub.com/

PART NO.	FIG NO.	INDEX	PAGE
07000-15120	Y1620-41A0	29	YO-85
07000-15130	Y1620-11A0	31	YO-81
07000-15170	D0100-01A0	12	DO-3
07000-15175	Y1620-01A0	11	YO-73
07000-15175	Y1620-01A0	21	YO-73
07000-15175	Y1620-02A0	11	YO-77
07000-15175	Y1620-02A0	21	YO-77
07000-15175	Y1620-41A0	19	YO-85
07000-15180	H0110-01A0	9	HO-3
07000-15180	H0110-01A0	32	HO-3
07000-15180	V0100-01A0	8	VO-3
07000-15190	Y1620-11A0	9	YO-81
07000-15190	Y1620-11A0	22	YO-81
07000-15230	H0210-01A0	41	HO-21
07000-15230	H0220-01A0	20	HO-23
07000-15240	Y1641-02A0	23	YO-101
07000-15270	Y1641-02A0	25	YO-101
07000-15290	N1210-05A0	9	NO-17
07000-22010	Y1642-13A0	7	YO-109
07000-22018	Y1641-03A0	2	YO-103
07000-72021	A2010-A4K5	12	AA-29
07000-72025	A2010-A4K5	10	AA-29
07000-72060	A2041-A4L2	2	AA-35
07000-72070	A5010-B4M4	29	AA-101
07000-72115	A5010-B4M4	30	AA-101
07000-73025	A2011-A4P2	29	AA-31
07000-73025	A1010-A4D2	21	AA-3
07000-73034	A2011-A4P2	17	AA-31
07000-73034	A3110-A4H1	12	AA-69
07000-73034	A3110-A4H1	20	AA-69
07000-73038	A3010-A4A8	21	AA-67
07000-73038	A3110-A4H1	19	AA-69
07000-73038	A4710-A4K1	22	AA-97
07000-73040	A2110-A4S1	10	AA-41
07000-73042	A3310-A4D7	7	AA-71
07000-A2016	A3310-A4D7	4	AA-71
07000-A2021	A5210-A4J7	13	AA-103
07000-A2080	Y1600-02A0	7	YO-11
07000-A2080	Y1600-05A0	21	YO-17
07000-A2080	Y1600-22A0	7	YO-39
07000-A2080	Y1600-25A0	21	YO-45
07000-A2130	H0240-01A0	4	HO-25
07000-B1009	Y1600-01A0	11	YO-9
07000-B1009	Y1600-04A0	10	YO-15
07000-B1009	Y1600-21A0	10	YO-37
07000-B1009	Y1600-24A0	10	YO-43
07000-B1009	Y1600-31A0	8	YO-59
07000-B2014	Y1600-34A0	5	YO-65
07000-B2015	Y1600-01A0	10	YO-9
07000-B2015	Y1600-03A0	6	YO-13
07000-B2015	Y1600-04A0	9	YO-15
07000-B2015	Y1600-05A0	17	YO-17
07000-B2015	Y1600-21A0	9	YO-37
07000-B2015	Y1600-23A0	6	YO-41
07000-B2015	Y1600-24A0	9	YO-43
07000-B2015	Y1600-25A0	17	YO-45
07000-B2060	H0330-01A0	22	HO-35
07000-B2060	H0330-01A0	38	HO-35
07000-B2060	Y1600-37A0	7	YO-71
07000-B2065	Y1600-03A0	11	YO-13
07000-B2065	Y1600-03A0	17	YO-13
07000-B2065	Y1600-06A0	3	YO-19
07000-B2065	Y1600-06A0	9	YO-19
07000-B2065	Y1600-23A0	11	YO-41
07000-B2065	Y1600-23A0	17	YO-41
07000-B2065	Y1600-26A0	3	YO-47
07000-B2065	Y1600-26A0	9	YO-47
07000-B2065	Y1600-31A0	21	YO-59
07000-B2100	Y1600-37A0	8	YO-71
07000-B2135	Y1600-01A0	8	YO-9
07000-B2135	Y1600-04A0	7	YO-15
07000-B2135	Y1600-21A0	7	YO-37
07000-B2135	Y1600-24A0	7	YO-43
07000-B3025	H0312-01A0	2	HO-29
07000-B3030	H1340-01A0	7	HO-55
07000-B3030	H1340-01A0	11	HO-55
07000-B3032	Y1600-01A0	12	YO-9
07000-B3032	Y1600-04A0	12	YO-15
07000-B3032	Y1600-21A0	11	YO-37
07000-B3032	Y1600-24A0	12	YO-43
07000-B3032	H0312-01A0	15	HO-29
07000-B3032	H0312-01A0	19	HO-29
07000-B3032	H0312-02A0	2	HO-31
07000-B3032	H0312-02A0	4	HO-31
07000-B3032	H0312-02A0	11	HO-31
07000-B3032	H0312-02A0	13	HO-31
07000-B3032	H0312-02A0	21	HO-31
07000-B3032	H0312-02A0	24	HO-31
07000-B3032	H0312-02A0	32	HO-31
07000-B3032	H1210-02A0	22	HO-43
07000-B3032	H1220-01A0	36	HO-45
07000-B3032	H1220-03A0	15	HO-49
07000-B3032	H1350-01A0	2	HO-57
07000-B3035	H1210-01A0	5	HO-39
07000-B3035	H1210-01A0	11	HO-39
07000-B3035	H1210-01A0	28	HO-39
07000-B3035	H1210-01A0	36	HO-39
07000-B3035	H1210-01A0	43	HO-40
07000-B3035	H1210-02A0	18	HO-43
07000-B3035	H1220-01A0	5	HO-45
07000-B3035	H1220-01A0	9	HO-45
07000-B3035	H1220-01A0	13	HO-45
07000-B3035	H1220-01A0	18	HO-45
07000-B3035	H1220-01A0	25	HO-45
07000-B3035	H1220-03A0	22	HO-49
07000-B3035	H1310-01A0	5	HO-53
07000-B3035	H1310-01A0	18	HO-53
07000-B3035	H1340-01A0	3	HO-55
07000-B3038	H0312-02A0	20	HO-31
07000-B3038	H0312-02A0	23	HO-31
07000-B3038	H0330-01A0	15	HO-35
07000-B3038	H1210-01A0	8	HO-39
07000-B3038	H1210-01A0	13	HO-39
07000-B3038	H1210-01A0	37	HO-39
07000-B3045	H0330-01A0	26	HO-35
07000-B5165	Y1600-04A0	11	YO-15
07000-B5165	Y1600-24A0	11	YO-43
07000-E2015	A4030-A4C1	13	AA-77
07000-E2018	A4210-A4G4	5	AA-93
07000-E2050	A1530-B4L8	13	AA-17
07000-E2145	B0600-03A0	6	BO-11
07000-E3028	B0600-01A0	11	BO-7
07000-E3028	B0600-02A0	2	BO-9
07000-E3030	B0600-06A0	3	BO-17
07000-E3038	B0600-05A0	4	BO-15
07000-F1008	Y1642-11A0	19	YO-105
07000-F2010	Y1642-11A0	15	YO-105
07000-F2016	Y1642-11A0	12	YO-105
07000-F2016	Y1642-13A0	11	YO-109
07000-F2020	Y1640-03A0	2	YO-95
07000-F2022	Y1660-05A0	37	YO-119
07000-F2022	Y1660-07A0	40	YO-124
07000-F2035	Y1642-11A0	13	YO-105
07000-F2065	B0600-05A0	14	BO-15

https://truckmanualshub.com/

PART NO.	FIG NO.	INDEX	PAGE
07001-02010	Y1642-13A0	8	YO-109
07001-02010	Y1660-08A0	11	YO-127
07001-02012	Y1600-08A0	32	YO-23
07001-02012	Y1600-11A0	32	YO-29
07001-02016	Y1600-12A0	8	YO-31
07001-02018	Y1641-03A0	3	YO-103
07001-02018	Y1660-07A0	10	YO-123
07001-02018	Y1660-08A0	21	YO-127
07001-02018	Y1675-01A1	17	YO-139
07001-02020	Y1640-03A0	3	YO-95
07001-02021	Y1600-08A0	38	YO-23
07001-02021	Y1600-11A0	38	YO-29
07001-02021	Y1641-03A0	5	YO-103
07001-02021	Y1679-01A0	23	YO-141
07001-02055	H0312-01A0	26	HO-29
07001-05110	Y1620-01A0	29	YO-73
07001-05110	Y1620-02A0	29	YO-77
07001-05120	Y1620-41A0	28	YO-85
07001-05130	Y1620-11A0	30	YO-81
07001-05270	Y1641-02A0	26	YO-101
07002-01423	Y1600-14A0	6	YO-35
07002-01423	Y1640-03A0	12	YO-95
07002-02434	Y1660-02A0	7	YO-113
07002-02434	Y1660-03A0	11	YO-115
07002-03634	Y1660-03A0	8	YO-115
07002-10823	Y1600-07A0	31	YO-21
07002-10823	Y1600-10A0	31	YO-27
07002-10823	Y1600-27A0	28	YO-49
07002-10823	Y1600-28A0	28	YO-53
07002-11023	Y1600-27A0	34	YO-49
07002-11023	Y1600-28A0	34	YO-53
07002-11023	H0120-02A0	31	HO-17
07002-11023	H0210-01A0	20	HO-21
07002-11023	H0312-01A0	27	HO-29
07002-11023	Y1600-08A0	40	YO-23
07002-11023	Y1600-31A0	4	YO-59
07002-11023	Y1641-01A0	36	YO-97
07002-11023	Y1641-01A0	39	YO-97
07002-11223	Y1670-01A0	31	YO-129
07002-11423	D0100-01A0	19	DO-3
07002-11423	H0120-01A0	38	HO-13
07002-11423	H0120-01A0	42	HO-14
07002-11423	H0120-02A0	28	HO-17
07002-11423	H0120-02A0	33	HO-17
07002-11423	H0120-02A0	37	HO-17
07002-11423	H0120-02A0	40	HO-17
07002-11423	H0210-01A0	9	HO-21
07002-11423	H0210-01A0	15	HO-21
07002-11423	H0210-01A0	21	HO-21
07002-11423	H0220-01A0	2	HO-23
07002-11423	H0240-01A0	15	HO-25
07002-11423	H0320-01A0	37	HO-33
07002-11423	H1210-02A0	9	HO-43
07002-11423	H1210-02A0	27	HO-43
07002-11423	H1220-01A0	31	HO-45
07002-11423	H1240-02A1	15	HO-51
07002-11423	H1831-01A0	10	HO-61
07002-11423	H1831-01A0	13	HO-61
07002-11423	H1831-01A0	27	HO-61
07002-11423	H1831-01A0	30	HO-61
07002-11423	H1831-01A0	33	HO-61
07002-11423	H1833-01A0	23	HO-67
07002-11423	H1833-01A0	27	HO-67
07002-11423	H1833-01A0	29	HO-67
07002-11423	H1833-01A0	33	HO-67
07002-11423	H1833-02A0	7	HO-69
07002-11423	H1833-02A0	9	HO-69
07002-11423	H1833-02A0	11	HO-69
07002-11423	H1833-02A0	15	HO-69
07002-11423	K1110-19A0	27	KO-63
07002-11423	K1110-19A0	31	KO-63
07002-11423	K1110-25A0	20	KO-75
07002-11423	K1110-28A0	20	KO-81
07002-11423	N1210-02A0	2	NO-9
07002-11423	N1210-04A0	18	NO-15
07002-11423	N1310-01A0	8	NO-19
07002-11423	N1310-01A0	22	NO-19
07002-11423	R1120-08A0	8	RO-23
07002-11423	R1120-16A0	8	RO-41
07002-11423	Y1640-01A0	9	YO-91
07002-11423	Y1674-01A0	4	YO-133
07002-11423	Y1674-01A0	12	YO-133
07002-11423	Y1674-11A0	4	YO-135
07002-11623	H0120-02A0	13	HO-17
07002-11623	H0120-02A0	25	HO-17
07002-11623	Y1660-06A0	9	YO-121
07002-11823	H0312-02A0		HO-31
07002-11823	H1210-02A0	6	HO-43
07002-11823	Y1675-01A0	7	YO-137
07002-11823	Y1675-01A1	6	YO-139
07002-12034	Y1600-07A0	17	YO-21
07002-12034	Y1600-10A0	17	YO-27
07002-12034	Y1600-27A0	15	YO-49
07002-12034	Y1600-28A0	14	YO-53
07002-12034	C0100-02A0	16	CO-5
07002-12034	D0200-02A0	55	DO-11
07002-12034	D0200-03A0	25	DO-13
07002-12034	H0110-02A0	9	HO-7
07002-12034	H0110-02A0	15	HO-7
07002-12034	H0110-02A0	28	HO-7
07002-12034	H0110-02A0	31	HO-7
07002-12034	H0110-03A0	12	HO-9
07002-12034	H0120-01A0	9	HO-13
07002-12034	H0120-01A0	12	HO-13
07002-12034	H0120-01A0	18	HO-13
07002-12034	H0120-01A0	20	HO-13
07002-12034	H0120-01A0	27	HO-13
07002-12034	H0120-01A0	29	HO-13
07002-12034	H0120-01A0	35	HO-13
07002-12034	H0120-01A0	40	HO-13
07002-12034	H0120-01A0	45	HO-14
07002-12034	H0120-02A0	2	HO-17
07002-12034	H0120-02A0	5	HO-17
07002-12034	H0120-02A0	11	HO-17
07002-12034	H0120-02A0	17	HO-17
07002-12034	H0120-02A0	21	HO-17
07002-12034	H0210-01A0	2	HO-21
07002-12034	H0210-01A0	4	HO-21
07002-12034	H0210-01A0	7	HO-21
07002-12034	H0220-01A0	5	HO-23
07002-12034	H0330-01A0	33	HO-35
07002-12034	H1831-01A0	36	HO-61
07002-12034	H1831-01A0	39	HO-61
07002-12034	H1831-01A0	42	HO-61
07002-12034	H1831-01A0	46	HO-62
07002-12034	H1840-02A0	9	HO-73
07002-12034	H1840-02A0	12	HO-73
07002-12034	H1840-02A0	16	HO-73
07002-12034	K1110-36A0	11	KO-97
07002-12034	K1110-36A0	14	KO-97
07002-12034	K1110-36A0	17	KO-97
07002-12034	K1110-36A0	28	KO-97
07002-12034	K1110-36A0	31	KO-97
07002-12034	N1310-01A0	14	NO-19

https://truckmanualshub.com/

PART NO.	FIG NO.	INDEX	PAGE
07002-12034	Y1641-01A0	43	YO-98
07002-12034	Y1660-05A0	32	YO-119
07002-12034	Y1660-07A0	37	YO-123
07002-12434	D0200-02A0	2	DO-9
07002-12434	D0200-02A0	22	DO-9
07002-12434	H0110-01A0	5	HO-3
07002-12434	H0110-02A0	19	HO-7
07002-12434	H0110-02A0	22	HO-7
07002-12434	H0110-02A0	25	HO-7
07002-12434	H0110-02A0	34	HO-7
07002-12434	H0110-02A0	37	HO-7
07002-12434	H0120-01A0	32	HO-13
07002-12434	H0210-01A0	12	HO-21
07002-12434	H0210-01A0	25	HO-21
07002-12434	H0210-01A0	30	HO-21
07002-12434	H0220-01A0	8	HO-23
07002-12434	H0220-01A0	11	HO-23
07002-12434	H0220-01A0	17	HO-23
07002-12434	H0240-01A0	18	HO-25
07002-12434	H0311-01A0	15	HO-27
07002-12434	H0330-01A0	18	HO-35
07002-12434	H1210-02A0	24	HO-43
07002-12434	H1220-01A0	34	HO-45
07002-12434	H1240-02A1	12	HO-51
07002-12434	N1210-01A0	48	NO-5
07002-12434	N1210-02A0	11	NO-9
07002-12434	N1210-02A0	14	NO-9
07002-12434	N1210-01A0	48	NO-11
07002-12434	N1210-04A0	12	NO-15
07002-12434	N1210-04A0	15	NO-15
07002-12434	N1310-01A0	3	NO-19
07002-12434	N1310-01A0	6	NO-19
07002-12434	N1310-01A0	17	NO-19
07002-12434	N1310-01A0	20	NO-19
07002-12434	R1120-07A0	39	RO-21
07002-12434	R1120-08A0	5	RO-23
07002-12434	R1120-15A0	39	RO-39
07002-12434	R1120-16A0	5	RO-41
07002-12434	V0100-01A0	9	VO-3
07002-12434	Y0260-01A0	42	YO-3
07002-12434	Y1600-31A0	6	YO-59
07002-12434	Y1627-01A0	6	YO-89
07002-12434	Y1640-01A0	7	YO-91
07002-12434	Y1640-03A0	6	YO-95
07002-12434	Y1641-01A0	9	YO-97
07002-12434	Y1660-06A0	7	YO-121
07002-12434	Y1660-08A0	18	YO-127
07002-13034	Y1640-03A0	4	YO-95
07002-13034	Y1641-01A0	31	YO-97
07002-13034	Y1641-01A0	33	YO-97
07002-13034	Y1660-05A0	40	YO-119
07002-13034	Y1660-07A0	43	YO-124
07002-13334	H0110-02A0	1	HO-7
07002-13334	H0330-01A0	28	HO-35
07002-13334	Y1640-01A0	17	YO-91
07002-13334	Y1641-01A0	17	YO-97
07002-13634	Y1641-01A0	21	YO-97
07002-13634	Y1641-03A0	8	YO-103
07002-13634	Y1660-02A0	4	YO-113
07002-13634	Y1660-03A0	2	YO-115
07002-13634	Y1660-03A0	4	YO-115
07002-13634	Y1660-03A0	6	YO-115
07002-13634	Y1660-08A0	22	YO-127
07002-13634	Y1672-01A0	2	YO-131
07002-13634	Y1675-01A0	16	YO-137
07002-13634	Y1675-01A1	15	YO-139
07002-15234	Y1641-01A0	23	YO-97

PART NO.	FIG NO.	INDEX	PAGE
07002-21023	Y1642-11A0	22	YO-105
07002-21423	A1310-A4L4	37	AA-9
07002-21423	A1550-A4B1	37	AA-19
07002-21423	A1550-A4B1	41	AA-19
07002-21823	A1550-A4B1	39	AA-19
07002-21823	A4710-A4K1	6	AA-97
07002-21823	B0600-05A0	11	BO-15
07002-21823	B0600-05A0	22	BO-15
07002-22034	A4110-B4N2	17	AA-87
07002-22034	A4110-C4N2	19	AA-89
07002-22034	B0600-05A0	7	BO-15
07002-22034	B0600-06A0	6	BO-17
07002-22034	B0600-06A0	31	BO-17
07002-22434	A4110-B4N2	15	AA-87
07002-22434	A4110-C4N2	17	AA-89
07002-22434	B0600-05A0	30	BO-15
07002-22434	B0600-06A0	14	BO-17
07002-22434	B0600-06A0	23	BO-17
07002-22434	Y1642-11A0	7	YO-105
07002-22434	Y1642-13A0	12	YO-109
07002-61023	H1350-01A0	8	HO-57
07002-62034	C0100-06A0	36	CO-13
07002-62434	C0100-06A0	5	CO-13
07002-62434	C0100-06A0	24	CO-13
07002-62434	H1350-01A0	6	HO-57
07002-62434	Y1600-01A0	4	YO-9
07002-62434	Y1600-04A0	4	YO-15
07002-62434	Y1600-21A0	4	YO-37
07002-62434	Y1600-24A0	4	YO-43
07003-01015	A5010-A4M4	14	AA-99
07005-00812	A4110-A4N2	3	AA-85
07005-00812	D0200-03A0	5	DO-13
07005-01012	A2010-A4K5	31	AA-29
07005-01012	A4060-A4C4	2	AA-83
07005-01012	A4210-A4G4	3	AA-93
07005-01012	A4230-A4G8	8	AA-95
07005-01012	B0600-04A0	7	BO-13
07005-01012	B0600-04A0	10	BO-13
07005-01212	A1550-A4B1	16	AA-19
07005-01212	A4110-B4N2	29	AA-87
07005-01212	A4110-B4N2	32	AA-87
07005-01212	A4110-B4N2	35	AA-87
07005-01212	A4230-A4G8	2	AA-95
07005-01212	A4230-A4G8	12	AA-95
07005-01212	D0200-03A0	3	DO-13
07005-01412	A1530-A4L8	19	AA-15
07005-01412	A3310-A4D7	16	AA-71
07005-01412	A4110-A4N2	5	AA-85
07005-01412	A4110-A4N2	11	AA-85
07005-01412	A4110-B4N2	13	AA-87
07005-01412	A4110-C4N2	15	AA-89
07005-01412	A4710-A4K1	13	AA-97
07005-01412	A5210-A4J7	8	AA-103
07005-01412	D0200-01A0	10	DO-5
07005-01612	A1550-A4B1	43	AA-19
07005-02216	A2210-A4H7	6	AA-43
07005-03016	B0600-01A0	15	BO-7
07012-C0032	A2610-A4C7	7	AA-63
07012-C0032	A2610-A4C8	7	AA-65
07020-00000	N1110-01A0	10	NO-3
07020-00000	T1110-03A0	1	TO-11
07020-00000	T1110-03A5	1	TO-13
07020-00000	T1200-01A0	5	TO-37
07020-00000	T1200-01A2	5	TO-39
07020-00000	T1200-02A0	4	TO-41
07020-00000	T1200-02A0	5	TO-41
07020-00000	T1200-02A1	4	TO-43

https://truckmanualshub.com/

PART NO.	FIG NO.	INDEX	PAGE
07020-00000	T1200-02A1	5	TO-43
07020-00000	T1200-03A1	14	TO-45
07020-00000	V0100-01A0	10	VO-3
07020-00000	Y1620-01A0	4	YO-73
07020-00000	Y1620-02A0	4	YO-77
07020-00000	Y1620-41A0	4	YO-85
07020-00000	Y1620-41A0	8	YO-85
07020-00675	V0100-01A0	11	VO-3
07020-00900	V0100-01A0	12	VO-3
07025-00100	A2011-A4P2	18	AA-31
07030-00252	N1210-02A0	20	NO-9
07030-00252	N1210-04A0	24	NO-15
07030-03034	B0600-01A0	14	BO-7
07030-10252	B0600-01A0	23	BO-7
07040-02412	B0600-01A0	9	BO-7
07040-11007	Y1600-27A0	33	YO-49
07040-11007	Y1600-28A0	33	YO-53
07040-11007	H0120-02A0	30	HO-17
07040-11007	H0210-01A0	19	HO-21
07040-11007	H0312-01A0	28	HO-29
07040-11007	Y1600-08A0	39	YO-23
07040-11007	Y1642-11A0	21	YO-105
07040-11209	A1550-A4B1	17	AA-19
07040-11209	D0200-03A0	2	DO-13
07040-11209	Y1670-01A0	30	YO-129
07040-11409	A1310-A4L4	38	AA-9
07040-11409	A1550-A4B1	36	AA-19
07040-11409	A1550-A4B1	40	AA-19
07040-11409	A3310-A4D7	15	AA-71
07040-11409	A4110-A4N2	4	AA-85
07040-11409	D0100-01A0	18	DO-3
07040-11409	H0320-01A0	36	HO-33
07040-11612	A1550-A4B1	42	AA-19
07040-11612	Y1660-06A0	8	YO-121
07040-11812	A1550-A4B1	38	AA-19
07040-11812	H1210-02A0	5	HO-43
07040-12012	H0210-01A0	6	HO-21
07040-12012	Y1660-05A0	31	YO-119
07040-12012	Y1660-07A0	36	YO-123
07040-12412	H0110-01A0	4	HO-3
07040-12412	H0110-02A0	36	HO-7
07040-12412	H0311-01A0	14	HO-27
07040-12412	Y0260-01A0	41	YO-3
07040-12412	Y1600-31A0	5	YO-59
07040-13016	A3310-A4D7	13	AA-71
07040-13618	H0311-01A0	17	HO-27
07042-30108	H0110-02A0	8	HO-7
07042-30108	H0120-01A0	23	HO-13
07042-30108	H0120-02A0	7	HO-17
07042-30108	H0120-02A0	18	HO-17
07042-30108	N1210-01A0	6	NO-5
07042-30108	N1210-01A0	6	NO-11
07042-30108	Y0260-01A0	40	YO-3
07042-30108	Y1674-01A0	2	YO-133
07042-30108	Y1674-11A0	2	YO-135
07042-30211	H0110-01A0	43	HO-3
07042-30617	Y0260-01A0	39	YO-3
07042-A0108	A1310-A4L4	9	AA-9
07042-A0108	A1310-A4L4	32	AA-9
07042-A0108	A1410-A4L7	2	AA-11
07043-00108	Y1620-01A0	5	YO-73
07043-00108	Y1620-02A0	5	YO-77
07043-00108	Y1620-41A0	9	YO-85
07043-00617	A2010-A4K5	27	AA-29
07043-01019	A2010-A4K5	8	AA-29
07043-30108	H0110-02A0	2	HO-7
07043-50108	A1010-A4D2	23	AA-3
07043-70108	A2010-A4K5	16	AA-29
07043-70108	A2011-A4P2	6	AA-31
07043-70108	A2040-A4H7	3	AA-33
07043-70108	Y1660-01A0	12	YO-111
07043-70211	A2010-A4K5	21	AA-29
07043-70211	A2040-A4H7	5	AA-33
07043-70211	A4710-A4K1	23	AA-97
07043-A0415	A2011-A4P2	5	AA-31
07043-A0415	A5010-B4M4	31	AA-101
07044-12412	R1120-07A0	38	RO-21
07044-12412	R1120-15A0	38	RO-39
07044-12412	Y1600-01A0	3	YO-9
07044-12412	Y1600-04A0	3	YO-15
07044-12412	Y1600-21A0	3	YO-37
07044-12412	Y1600-24A0	3	YO-43
07046-11816	A2010-A4K5	17	AA-29
07046-11816	A2040-A4H7	4	AA-33
07046-41810	A2010-A4K5	18	AA-29
07046-42010	A2010-A4K5	15	AA-29
07046-42516	A2010-A4K5	14	AA-29
07046-43516	A2010-A4K5	13	AA-29
07046-44016	A1550-A4B1	44	AA-19
07046-44016	A2010-A4K5	20	AA-29
07046-47020	A2010-A4K5	19	AA-29
07048-01310	K1110-18A0	8	KO-61
07049-01215	J1110-03A0	36	JO-9
07049-01215	M1310-01A0	6	MO-33
07049-01215	R1120-07A0	37	RO-21
07049-01215	R1120-15A0	37	RO-39
07049-01418	H0110-04A0	28	HO-11
07049-01620	J1110-03A0	37	JO-9
07049-01822	N1210-01A0	5	NO-5
07049-01822	N1210-01A0	5	NO-11
07049-02430	B0600-01A0	26	BO-7
07049-02430	N1210-05A0	10	NO-17
07049-02734	R1120-01A3	2	RO-7
07049-02734	R1120-09A3	2	RO-25
07056-10045	H0110-01A0	22	HO-3
07056-18425	D0100-01A0	4	DO-3
07062-00000	A5010-A4M4	3	AA-99
07062-00000	A5010-B4M4	24	AA-101
07063-21200	H0312-01A0	29	HO-29
07069-34057	H0110-01A0	35	HO-3
07072-01020	H1220-02A0	14	HO-47
07072-01220	H1220-02A0	9	HO-47
07074-01011	H1210-02A0	32	HO-43
07074-01209	H1210-01A0	12	HO-39
07083-01012	H0312-02A0	10	HO-31
07084-01215	T1110-02A0	9	TO-07
07084-012A9	T1110-02A5	9	TO-09
07084-01A08	H0312-02A0	3	HO-31
07084-01AA6	H0312-02A0	1	HO-31
07084-21220	T1200-03A1	7	TO-45
07084-21A19	T1200-03A1	1	TO-45
07094-10417	C0100-06A0	37	CO-13
07094-10518	C0100-06A0	6	CO-13
07094-10518	C0100-06A0	25	CO-13
07094-10518	H1350-01A0	13	HO-57
07094-11024	H0340-01A0	28	HO-37
07094-11024	H1220-01A0	41	HO-45
07095-00420	C0100-06A0	38	CO-13
07095-00526	C0100-06A0	7	CO-13
07095-00526	C0100-06A0	26	CO-13
07095-00526	H1350-01A0	12	HO-57
07095-01034	H1220-01A0	40	HO-45
07095-01037	H0340-01A0	27	HO-37
07095-20314	D0200-01A0	51	DO-7

https://truckmanualshub.com/

PART NO.	FIG NO.	INDEX	PAGE
07095-20314	H0210-01A0	35	H0-21
07095-20318	B0600-06A0	9	B0-17
07095-20318	B0600-06A0	26	B0-17
07095-20318	E0200-03A0	1	E0-13
07095-20522	E0200-03A0	16	E0-13
07095-20523	E0200-01A0	19	E0-7
07095-20627	H0210-01A0	33	H0-21
07095-30318	A4710-A4K1	15	AA-97
07097-00607	H1340-01A0	28	H0-55
07097-00608	H1340-01A0	26	H0-55
07098-01010	H1310-01A0	32	H0-53
07098-01011	H1310-01A0	34	H0-53
07098-41032	P1120-01A1	6	P0-3
07122-01011	H1220-01A0	35	H0-45
07145-00110	T1200-01A0	7	T0-37
07145-00110	T1200-01A2	7	T0-39
07145-00110	T1200-02A0	6	T0-41
07145-00110	T1200-02A1	6	T0-43
07145-00110	Y1620-01A0	3	Y0-73
07145-00110	Y1620-02A0	3	Y0-77
07145-00110	Y1620-41A0	3	Y0-85
07145-00110	Y1620-41A0	7	Y0-85
07145-00120	Y1620-11A0	3	Y0-81
07145-00125	Y1620-01A0	8	Y0-73
07145-00125	Y1620-02A0	8	Y0-77
07145-00125	Y1620-11A0	6	Y0-81
07155-01125	R1120-03A0	15	R0-11
07155-01125	R1120-11A0	15	R0-29
07179-13126	Y1620-01A0	17	Y0-73
07179-13126	Y1620-02A0	17	Y0-77
07179-13136	Y1620-01A0	15	Y0-73
07179-13136	Y1620-02A0	15	Y0-77
07179-13136	Y1620-41A0	15	Y0-85
07179-14146	Y1620-41A0	13	Y0-85
07179-14160	Y1620-11A0	16	Y0-81
07206-30710	A5010-A4M4	10	AA-99
07206-30812	A4110-B4N2	31	AA-87
07206-30812	A4110-B4N2	34	AA-87
07206-30812	A4230-A4G8	1	AA-95
07206-30812	A4230-A4G8	11	AA-95
07206-31014	A1530-A4L8	20	AA-15
07206-31014	A4110-A4N2	10	AA-85
07206-31014	A4110-B4N2	12	AA-87
07206-31014	A4110-C4N2	14	AA-89
07206-31014	A4710-A4K1	12	AA-97
07206-31014	A5210-A4J7	9	AA-103
07206-31014	D0200-01A0	9	D0-5
07213-50710	B0600-04A0	4	B0-13
07214-50813	N1110-01A0	11	N0-3
07214-51013	T1110-03A0	2	T0-11
07214-51013	T1110-03A5	2	T0-13
07217-51013	T1110-09A0	4	T0-27
07217-51013	T1110-09A1	4	T0-29
07239-12009	Y1600-07A0	18	Y0-21
07239-12009	Y1600-10A0	18	Y0-27
07239-12009	Y1600-27A0	16	Y0-49
07239-12009	Y1600-28A0	15	Y0-53
07260-04722	H0311-01A0	11	H0-27
07260-07428	H0311-01A0	9	H0-27
07260-20950	A1610-A4L8	37	AA-25
07261-20911	C0100-07A0	30	C0-17
07270-01295	D0200-04A0	1	D0-15
07270-61421	H0110-01A0	24	H0-3
07280-04726	K1110-18A0	7	K0-61
07281-00197	C0100-07A0	31	C0-17
07281-00419	A2041-A4L2	7	AA-35
07283-22738	N1210-02A0	17	N0-9
07283-22738	N1210-04A0	21	N0-15
07283-22746	B0600-02A0	9	B0-9
07283-31079	C0100-10A0	12	C0-25
07283-31079	C0100-10A0	23	C0-25
07283-31193	H0311-01A0	36	H0-27
07283-32244	H0312-01A0	10	H0-29
07283-33442	Y1620-01A0	40	Y0-74
07283-33442	Y1620-02A0	40	Y0-78
07283-33442	Y1620-11A0	40	Y0-82
07283-33442	Y1620-41A0	41	Y0-86
07283-33450	H1831-01A0	47	H0-62
07283-34354	A2011-A4P2	19	AA-31
07283-34949	C0100-11A0	14	C0-27
07283-34949	H0110-03A0	6	H0-9
07283-36155	K0700-04A0	9	K0-27
07283-36163	H0320-01A0	16	H0-33
07283-36163	H0320-01A0	19	H0-33
07283-52232	H0312-01A0	11	H0-29
07283-54353	A2011-A4P2	20	AA-31
07285-00125	D0200-02A0	8	D0-9
07285-00125	D0200-03A0	12	D0-13
07285-00130	D0200-04A0	2	D0-15
07285-00130	N1210-02A0	22	N0-9
07285-00130	N1210-04A0	26	N0-15
07285-00150	A1610-A4L8	38	AA-25
07285-00155	H0110-01A0	25	H0-3
07285-00280	A2041-A4L2	20	AA-35
07286-00825	D0200-02A0	7	D0-9
07286-00840	D0200-03A0	11	D0-13
07286-01025	N1210-02A0	21	N0-9
07286-01025	N1210-04A0	25	N0-15
07286-01690	V0300-01A0	11	V0-7
07286-01690	V0300-01A1	14	V0-9
07286-03828	K1110-18A0	6	K0-61
07287-02610	A2041-A4L2	19	AA-35
07289-00070	C0100-01A0	14	C0-3
07289-00070	C0100-07A0	2	C0-17
07289-00070	C0100-07A0	4	C0-17
07289-00160	A1410-A4L7	4	AA-11
07289-00160	B0200-01A0	10	B0-5
07289-00160	B0200-01A0	28	B0-5
07289-00170	B0200-01A0	9	B0-5
07296-41019	H0110-03A0	14	H0-9
07297-00613	H0240-01A0	8	H0-25
07297-02008	H0330-01A0	37	H0-35
07298-01407	H0311-01A0	20	H0-27
07298-02007	H0320-01A0	22	H0-33
07298-02008	H0320-01A0	1	H0-33
07298-02009	H0320-01A0	6	H0-33
07298-02009	H0320-01A0	27	H0-33
07326-10403	K0700-03A0	1	K0-25
07371-30640	H0240-01A0	10	H0-25
07371-30640	H0312-01A0	3	H0-29
07371-30640	H1340-01A0	32	H0-55
07371-30640	N1210-05A0	11	N0-17
07371-31049	H0110-03A0	16	H0-9
07371-31049	H0110-03A0	21	H0-9
07371-31049	H0312-02A0	5	H0-31
07371-31049	H0312-02A0	14	H0-31
07371-31049	H0312-02A0	28	H0-31
07371-31049	H0340-01A0	24	H0-37
07371-31049	H1210-02A0	34	H0-43
07371-31049	H1220-01A0	37	H0-45
07371-31049	H1220-02A0	4	H0-47
07371-31049	H1220-02A0	16	H0-47
07371-31049	H1220-03A0	16	H0-49
07371-31049	H1310-01A0	38	H0-53

https://truckmanualshub.com/

PART NO.	FIG NO.	INDEX	PAGE
07371-31049	N1310-01A0	10	NO-19
07371-31049	P1120-01A1	2	PO-3
07371-31049	P1120-02A0	3	PO-5
07371-31049	T1110-04A0	46	TO-15
07371-31049	T1110-04A5	46	TO-19
07371-31049	T1200-03A1	3	TO-45
07371-31049	Y1620-01A0	46	YO-74
07371-31049	Y1620-02A0	46	YO-78
07371-31049	Y1620-41A0	45	YO-86
07371-31465	H0311-01A0	22	HO-27
07371-32076	H0320-01A0	3	HO-33
07371-32076	H0320-01A0	8	HO-33
07371-32076	H0320-01A0	24	HO-33
07371-32076	H0320-01A0	29	HO-33
07371-32076	H0330-01A0	39	HO-35
07371-51260	H0312-02A0	25	HO-31
07371-51260	H1210-01A0	14	HO-39
07371-51260	H1220-02A0	1	HO-47
07371-51260	H1220-02A0	11	HO-47
07371-51260	T1110-02A0	11	TO-07
07371-51260	T1110-02A0	14	TO-07
07371-51260	T1110-02A5	11	TO-09
07371-51260	T1110-02A5	14	TO-09
07371-51260	T1110-04A0	51	TO-17
07371-51260	T1110-04A5	51	TO-21
07371-51260	T1200-03A1	9	TO-45
07371-51260	Y1620-11A0	45	YO-82
07371-51260	Y1620-41A0	50	YO-86
07372-21035	H0110-03A0	17	HO-9
07372-21035	H0110-03A0	22	HO-9
07372-21035	H0240-01A0	11	HO-25
07372-21035	H0312-01A0	4	HO-29
07372-21035	H0312-02A0	6	HO-31
07372-21035	H0312-02A0	15	HO-31
07372-21035	H0340-01A0	25	HO-37
07372-21035	H1210-02A0	35	HO-43
07372-21035	H1220-01A0	38	HO-45
07372-21035	H1220-02A0	5	HO-47
07372-21035	H1220-02A0	17	HO-47
07372-21035	H1220-03A0	17	HO-49
07372-21035	H1310-01A0	39	HO-53
07372-21035	H1340-01A0	5	HO-55
07372-21035	H1340-01A0	9	HO-55
07372-21035	H1340-01A0	33	HO-55
07372-21035	N1210-05A0	12	NO-17
07372-21035	N1310-01A0	11	NO-19
07372-21035	P1120-01A1	3	PO-3
07372-21035	P1120-02A0	5	PO-5
07372-21035	T1110-04A0	44	TO-15
07372-21035	T1110-04A5	44	TO-19
07372-21035	T1200-03A1	4	TO-45
07372-21035	Y1620-01A0	47	YO-74
07372-21035	Y1620-02A0	47	YO-78
07372-21035	Y1620-41A0	46	YO-86
07372-21040	H1210-01A0	3	HO-39
07372-21040	H1210-01A0	9	HO-39
07372-21040	H1210-01A0	29	HO-39
07372-21040	H1210-01A0	38	HO-39
07372-21040	H1210-01A0	44	HO-40
07372-21040	H1220-01A0	3	HO-45
07372-21040	H1220-01A0	7	HO-45
07372-21040	H1220-01A0	11	HO-45
07372-21040	H1220-01A0	23	HO-45
07372-21040	H1220-03A0	20	HO-49
07372-21040	H1240-02A1	3	HO-51
07372-21040	H1310-01A0	3	HO-53
07372-21040	H1310-01A0	16	HO-53
07372-21040	T1110-04A0	31	TO-15
07372-21040	T1110-04A5	31	TO-19
07372-21055	H1210-02A0	14	HO-43
07372-21060	Y1620-01A0	33	YO-73
07372-21060	Y1620-02A0	33	YO-77
07372-21060	Y1620-11A0	33	YO-81
07372-21060	Y1620-41A0	32	YO-85
07372-21235	Y1600-37A0	4	YO-71
07372-21240	H0311-01A0	3	HO-27
07372-21240	H0311-01A0	7	HO-27
07372-21240	H0311-01A0	25	HO-27
07372-21240	H0320-01A0	4	HO-33
07372-21240	H0320-01A0	9	HO-33
07372-21240	H0320-01A0	25	HO-33
07372-21240	H0320-01A0	30	HO-33
07372-21240	H0330-01A0	40	HO-35
07372-21240	Y1620-01A0	38	YO-73
07372-21240	Y1620-02A0	38	YO-77
07372-21240	Y1620-11A0	38	YO-81
07372-21240	Y1620-41A0	39	YO-85
07372-21245	H0311-01A0	23	HO-27
07372-21245	H0330-01A0	20	HO-35
07373-31400	H0311-01A0	18	HO-27
07376-70315	P1120-02A0	7	PO-5
07376-70628	P1120-02A0	9	PO-5
07378-11000	P1120-02A0	1	PO-5
07378-11000	T1110-04A0	48	TO-15
07378-11000	T1110-04A5	48	TO-19
07378-11210	T1110-02A0	18	TO-07
07378-11210	T1110-02A5	18	TO-09
07378-11210	T1110-04A0	53	TO-17
07378-11210	T1110-04A5	53	TO-21
07378-11210	Y1620-11A0	44	YO-82
07378-11210	Y1620-41A0	49	YO-86
07379-01044	H1220-02A0	8	HO-47
07379-01044	P1120-02A0	2	PO-5
07379-01044	T1200-03A1	6	TO-45
07379-01260	H1220-02A0	7	HO-47
07379-01260	T1200-03A1	12	TO-45
07430-71380	Y1660-05A0	27	YO-119
07430-71380	Y1660-07A0	33	YO-123
07700-40460	D0100-01A0	24	DO-3
07700-40661	D0100-01A0	21	DO-3
07700-50661	D0200-02A0	29	DO-9
07730-50004	A5010-B4M4	8	AA-101
07730-50004	N1210-01A0	47	NO-5
07730-50004	N1210-01A0	47	NO-11
07950-10450	V0300-01A1	12	VO-9
07950-90403	V0300-01A1	11	VO-9
07951-41017	V0300-01A1	13	VO-9
07952-70004	V0300-01A1		VO-9
07959-20001	R1120-03A0	2	RO-11
07959-20001	R1120-11A0	2	RO-29
08000-00000	E0100-01A0		EO-3
08000-00000	E0100-01A2		EO-5
08000-00001	E0100-01A0		EO-3
08000-00001	E0100-01A2		EO-5
08000-02221	E0100-01A0	1	EO-3
08000-32220	E0100-01A2	1	EO-5
08005-52056	E0100-01A0	3	EO-3
08005-52056	E0100-01A2	3	EO-5
08006-40255	E0100-01A0	2	EO-3
08006-40255	E0100-01A2	2	EO-5
08028-43030	K1110-23A0	25	KO-71
08028-45050	E0200-05A0	1	EO-17
08028-55045	E0200-01A0	21	EO-7
08028-65005	E0100-01A0	7	EO-3

https://truckmanualshub.com/

PART NO.	FIG NO.	INDEX	PAGE
08028-65005	E0100-01A2	11	E0-5
08028-GE075	E0200-05A0	2	E0-17
08034-00310	K1110-26A0	13	K0-77
08034-00536	P1120-01A1	9	P0-3
08034-00536	P1120-01A1	13	P0-3
08034-00536	P1120-01A1	17	P0-3
08034-00834	P1120-01A1	5	P0-3
08034-10414	K1110-29A0	16	K0-83
08034-20414	K1110-08A0	10	K0-41
08034-20414	K1110-09A0	6	K0-43
08034-20414	K1110-11A0	21	K0-47
08034-20414	K1110-12A0	1	K0-49
08034-20519	D0200-01A0	11	D0-5
08034-20519	E0200-07A0	9	E0-21
08034-20519	H1831-01A0	7	H0-61
08034-20519	K1110-15A0	10	K0-55
08034-20519	K1110-19A0	35	K0-63
08034-20519	K1110-23A0	19	K0-71
08034-20519	K1110-24A0	3	K0-73
08034-20536	D0200-03A0	31	D0-13
08034-20536	H0330-01A0	36	H0-35
08034-20536	H1810-01A0	7	H0-59
08034-20536	H1840-01A0	24	H0-71
08034-20536	H1840-03A2	5	H0-75
08034-20536	K1110-30A0	6	K0-85
08034-20536	K1110-33A0	1	K0-91
08034-20536	K1110-33A0	11	K0-91
08034-20536	K1110-34A0	1	K0-93
08034-20536	K1110-34A0	10	K0-93
08034-20536	K1110-35A0	4	K0-95
08034-20536	K1110-35A0	5	K0-95
08034-20536	K1110-35A0	9	K0-95
08034-20536	K1110-35A0	10	K0-95
08034-20536	K1110-35A0	14	K0-95
08034-20823	K0700-02A0	6	K0-21
08034-20823	K0700-03A0	12	K0-25
08034-20834	C0100-07A0	42	C0-17
08034-20876	K1110-12A0	2	K0-49
08034-20876	K1110-12A0	3	K0-49
08034-20876	K1110-13A0	16	K0-51
08034-40521	N1210-02A0	23	N0-9
08034-40521	N1210-04A0	27	N0-15
08036-00814	N1110-01A0	12	N0-3
08036-00814	T1200-03A1	18	T0-45
08036-01014	T1110-03A0	12	T0-11
08036-01014	T1110-03A5	12	T0-13
08036-10810	K0700-01A0	21	K0-19
08036-30810	Y1660-04A0	17	Y0-117
08036-31210	Y1660-05A0	41	Y0-119
08037-01610	K1110-07A0	13	K0-39
08037-01610	K1110-09A0	18	K0-43
08037-02512	E0201-01A0	2	E0-25
08037-11025	K1110-08A0	14	K0-41
08037-11425	E0200-07A0	10	E0-21
08037-11425	K1110-27A0	10	K0-79
08037-12536	K1110-09A0	7	K0-43
08038-00035	E0200-01A0	2	E0-7
08038-00035	E0200-05A0	4	E0-17
08038-00519	A6810-A4M6	5	AA-123
08038-00519	E0200-05A0	6	E0-17
08038-00519	E0200-07A0	11	E0-21
08038-02027	E0200-03A0	30	E0-13
08038-06037	E0200-05A0	7	E0-17
08038-10035	E0200-01A0	3	E0-7
08038-22511	E0100-01A0	8	E0-3
08038-22511	E0100-01A2	12	E0-5
08038-22511	E0200-05A0	3	E0-17
08038-42511	E0100-01A0	9	E0-3
08038-42511	E0100-01A2	13	E0-5
08038-42511	E0200-05A0	5	E0-17
08041-00500	K1110-23A0	2	K0-71
08041-01000	K1110-23A0	3	K0-71
08041-01000	K1110-27A0	3	K0-79
08041-02000	K1110-23A0	4	K0-71
08041-02000	K1110-27A0	4	K0-79
08041-02500	K1110-23A0	5	K0-71
08041-02500	K1110-27A0	5	K0-79
08053-01512	E0200-04A0	19	E0-15
08056-10881	K1730-01A0	2	K0-101
08059-00310	K1110-08A0	11	K0-41
08059-00413	K1110-07A0	15	K0-39
08059-00413	K1110-09A0	8	K0-43
08086-20000	K1110-29A0	9	K0-83
08088-40000	E0200-01A0	4	E0-7
08116-02410	K1110-08A0		K0-41
08160-82400	E0410-01A0	1	E0-43
08164-A1000	E0420-01A0	1	E0-45
08191-50808	E0200-07A0	12	E0-21
08191-50809	E0200-07A0	13	E0-21
08193-20010	A2110-A4S1	29	AA-41
08193-20010	A4110-B4N2	36	AA-87
08193-20010	A6210-A4E4	4	AA-117
08193-20010	A6810-A4M6	34	AA-123
08193-20010	A6810-B4M6	36	AA-127
08193-20010	A6810-D4M6	29	AA-131
08193-20010	C0100-11A0	3	C0-27
08193-20012	E0200-06A0	5	E0-19
08193-20012	E0420-01A0	2	E0-45
08193-20012	H1831-01A0	23	H0-61
08193-20012	T1110-09A0	14	T0-27
08193-20012	T1110-09A1	14	T0-29
08193-21012	Y1600-13A0	16	Y0-33
08504-10000	E0200-08A0	5	E0-23
08671-50186	B0200-01A0	31	B0-5
08671-60140	B0200-01A0	32	B0-5
08672-01000	B0200-01A0	30	B0-5
08910-10000	K1110-09A0	9	K0-43
08912-51600	K1110-26A0	4	K0-77
09002-01922	V0300-01A0	1	V0-7
09002-01922	V0300-01A1	1	V0-9
09007-00425	V0300-01A0	2	V0-7
09007-00425	V0300-01A1	2	V0-9
09007-00836	V0300-01A0	3	V0-7
09007-00836	V0300-01A1	3	V0-9
09007-01040	V0300-01A0	4	V0-7
09007-01040	V0300-01A1	4	V0-9
09019-28036	V0300-01A0	5	V0-7
09019-28036	V0300-01A1	5	V0-9
09021-01016	V0300-01A0		V0-7
09021-01016	V0300-01A1		V0-9
09021-01219	V0300-01A0		V0-7
09021-01219	V0300-01A1		V0-9
09021-01319	V0300-01A0		V0-7
09021-01319	V0300-01A1		V0-9
09021-01422	V0300-01A0		V0-7
09021-01422	V0300-01A1		V0-9
09021-01725	V0300-01A0		V0-7
09021-01725	V0300-01A1		V0-9
09021-01928	V0300-01A0		V0-7
09021-01928	V0300-01A1		V0-9
09021-02233	V0300-01A0		V0-7
09021-02233	V0300-01A1		V0-9
09021-02436	V0300-01A0		V0-7
09021-02436	V0300-01A1		V0-9

https://truckmanualshub.com/

PART NO.	FIG NO.	INDEX	PAGE
09021-02739	V0300-01A0		VO-7
09021-02739	V0300-01A1		VO-9
09021-03044	V0300-01A0		VO-7
09021-03044	V0300-01A1		VO-9
09021-03246	V0300-01A0		VO-7
09021-03246	V0300-01A1		VO-9
09021-03653	V0300-01A0		VO-7
09021-03653	V0300-01A1		VO-9
09022-00150	V0300-01A0		VO-7
09022-00150	V0300-01A1		VO-9
09022-00250	V0300-01A0		VO-7
09022-00250	V0300-01A1		VO-9
09023-00300	V0300-01A0		VO-7
09023-00300	V0300-01A1		VO-9
09024-00300	V0300-01A0		VO-7
09024-00300	V0300-01A1		VO-9
09026-00250	V0300-01A0		VO-7
09026-00250	V0300-01A1		VO-9
09033-00190	V0300-01A0	7	VO-7
09033-00190	V0300-01A1	7	VO-9
09039-00150	V0300-01A0	8	VO-7
09039-00150	V0300-01A1	8	VO-9
09055-10390	V0300-01A0	9	VO-7
09055-10390	V0300-01A1	9	VO-9
09056-04613	V0300-01A0	10	VO-7
09056-04613	V0300-01A1	10	VO-9
09059-00800	V0100-01A0	1	VO-3
09133-A3281	U0100-01A2	8	UO-3
09134-A1681	U0100-01A2	9	UO-3
09415-01008	K1110-11A0	18	KO-47
09415-01610	K1110-07A0	14	KO-39
09415-02110	K0180-01A0	32	KO-7
09415-02512	K0600-01A0	13	KO-17
09415-02512	K1110-09A0	23	KO-43
09415-02512	K1110-11A0	2	KO-47
09415-03614	M1810-02A0	9	MO-45
09452-14503	K0180-01A0	18	KO-7
09479-02400	K1110-32A0	2	KO-89
09479-02400	K1110-32A0	4	KO-89
09620-D2000	U0520-01A0	1	UO-11
09620-D2000	U0520-01A9	1	UO-15
09620-D2000	U0520-01B1	1	UO-19
09620-D2140	U0520-01A9	2	UO-15
09620-D2140	U0520-01B0	2	UO-17
09620-D2140	U0520-01B1	2	UO-19
09620-D2140	U0520-01B1	5	UO-19
09620-E2000	U0520-01A1	1	UO-13
09620-E2000	U0520-01B0	1	UO-17
09620-E2000	U0520-01B1	4	UO-19
09637-90263	U0550-01A3	1	UO-21
09653-A0481	U0100-01A2	10	UO-3
09657-A0881	U0100-01A2	11	UO-3
09659-A057B	U0100-01A2	12	UO-3
09667-A0481	U0100-01A2	13	UO-3
09669-0000E	U0100-01A2	19	UO-3
09685-00002	U0100-01A2	2	UO-3
09690-M0063	U0100-01A2	4	UO-3
09690-P0630	U0100-01A2	6	UO-3
09690-P1600	U0100-01A2	5	UO-3
09690-P1600	U0510-01A0	1	UO-9
09803-A0481	U0100-01A2	14	UO-3
09805-A0881	U0100-01A2	15	UO-3
09805-C0481	U0100-01A2	16	UO-3
09808-A0881	U0100-01A2	17	UO-3
09842-A0481	U0100-01A2	7	UO-3
09844-00050	U0100-01A2	1	UO-3
09920-00150	A2210-A4H7	9	AA-43
09920-00150	A2011-A4P2	31	AA-31
09960-00801	U0400-01A0	1	UO-7
09960-00802	U0400-01A0	4	UO-7
09960-01012	U0400-01A0	2	UO-7
09963-A1640	U0100-01A2	23	UO-3
09980-10550	V0200-01A0	1	VO-5
09980-92550	V0200-01A0		VO-5
09982-20057	V0200-01A0	2	VO-5
113-01-21120	K1120-01A0	5	KO-99
113-899-7950	H1810-01A0	14	HO-59
11Y-09-11160	K0700-03A0	3	KO-25
11Y-09-11160	K0700-03A0	8	KO-25
11Y-62-12510	H0210-01A0	17	HO-21
11Y-62-12510	H1831-01A0	9	HO-61
11Y-62-12510	N1310-01A0	21	NO-19
11Y-62-12520	H1831-01A0	12	HO-61
11Y-62-12520	H1831-01A0	29	HO-61
11Y-62-12520	K1110-25A0	18	KO-75
11Y-62-12520	K1110-28A0	18	KO-81
11Y-62-12520	R1120-08A0	7	RO-23
11Y-62-12520	R1120-16A0	7	RO-41
120-06-24110	K0600-01A0	14	KO-17
124-A62-1920	M1120-02A0	24	MO-9
12R-60-11230	H0110-01A0	14	HO-3
130-43-64260	K0230-01A0	2	KO-9
130-43-64260	K0600-01A0	11	KO-17
130-62-61390	H0312-02A0	8	HO-31
130-62-61390	H1210-02A0	20	HO-43
141-06-11220	K0700-03A0	13	KO-25
144-874-7470	A6810-A4M6	31	AA-123
144-874-7470	A6810-B4M6	22	AA-127
144-874-7470	A6810-B4M6	29	AA-127
144-874-7470	A6810-C4M6	12	AA-129
144-874-7470	A6810-C4M6	18	AA-129
144-874-7470	A6810-D4M6	10	AA-131
144-874-7470	A6810-D4M6	27	AA-131
144-874-7470	A6810-E4M6	1	AA-133
144-874-7470	A6810-E4M6	22	AA-133
144-947-3490	D0200-02A0	12	DO-9
144-947-3490	E0420-01A0	8	EO-45
14X-01-35570	C0100-10A0	7	CO-25
14X-01-35570	C0100-10A0	16	CO-25
14X-01-35570	C0100-10A0	19	CO-25
14X-01-35650	C0100-01A0	15	CO-3
14X-01-35650	C0100-07A0	5	CO-17
14X-911-1330	K1110-05A0	15	KO-35
14X-98-35181	U0100-03A3	18	UO-5
154-04-12420	A2041-A4L2	9	AA-35
154-04-12480	D0100-01A0	25	DO-3
154-06-13262	E0100-01A0	6	EO-3
154-06-13262	E0100-01A2	10	EO-5
154-30-51460	C0100-10A0	5	CO-25
154-54-22520	M1210-01A1	4	MO-25
154-54-22520	M1210-01A2	4	MO-27
154-61-16570	E0200-07A0	14	EO-21
15A-78-11270	R1110-01A0	7	RO-5
15A-78-11270	R1110-01A0	8	RO-5
175-43-41261	H0110-04A0	19	HO-11
175-54-34170	B0200-01A0	14	BO-5
175-54-34170	B0200-01A0	20	BO-5
175-54-34170	D0200-02A0	18	DO-9
175-54-34170	D0200-02A0	20	DO-9
175-54-34170	D0200-03A0	21	DO-13
175-54-34170	D0200-03A0	23	DO-13
175-54-34170	E0100-01A2	9	EO-5
175-54-34170	H0312-01A0	34	HO-29
175-54-34170	H1210-01A0	19	HO-39

https://truckmanualshub.com/

PART NO.	FIG NO.	INDEX	PAGE
175-54-34170	H1310-01A0	13	HO-53
175-54-34170	H1310-01A0	26	HO-53
175-54-34170	K0700-01A0	13	KO-19
175-54-34170	M1220-01A0	14	MO-31
175-54-34170	M1810-03A0	8	MO-47
175-54-34170	M1810-03A0	10	MO-47
175-54-34170	R1140-01A0	3	RO-43
175-61-17240	C0100-07A0	22	CO-17
175-61-17240	C0100-07A0	41	CO-17
175-79-83760	A4010-A4R4	31	AA-73
175-79-83760	A6810-E4M6	8	AA-133
176-43-41350	B0600-04A0	5	BO-13
178-60-12250	K1110-36A0	3	KO-97
178-60-12250	K1110-36A0	20	KO-97
17A-60-11310	H0110-01A0	16	HO-3
17A-61-13391	H1350-01A0	18	HO-57
17M-27-00180	R1120-07A0		RO-21
17M-27-00180	R1120-15A0		RO-39
17M-30-11330	R1120-06A4	4	RO-19
17M-30-11330	R1120-14A4	4	RO-37
17M-30-11340	R1120-06A4	5	RO-19
17M-30-11340	R1120-14A4	5	RO-37
17M-49-15260	B0600-05A0	24	BO-15
17M-49-15260	D0200-01A0	39	DO-5
17M-49-15260	D0200-04A0	8	DO-15
17M-49-15260	E0200-01A0	13	EO-7
17M-49-15260	E0200-04A0	4	EO-15
17M-61-42570	H1840-01A0	10	HO-71
17M-911-2670	K1110-09A0	17	KO-43
17M-911-3530	K1110-14A0	16	KO-53
195-01-14540	A1550-A4B1	33	AA-19
195-01-16420	A1610-A4L8	34	AA-25
195-01-16420	A6810-B4M6	11	AA-127
195-01-16420	A6810-D4M6	32	AA-131
195-03-11570	M1220-01A0	31	MO-31
195-03-41380	C0100-01A0	6	CO-3
195-03-41380	K1110-36A0	2	KO-97
195-03-41380	K1110-36A0	19	KO-97
195-30-18271	R1120-03A0	16	RO-11
195-30-18271	R1120-11A0	16	RO-29
195-33-11220	D0200-01A0	20	DO-5
195-33-11220	D0200-02A0	39	DO-9
195-33-11220	E0200-02A0	37	EO-9
195-33-11220	H0311-01A0	40	HO-27
195-33-11220	H0340-01A0	6	HO-37
195-33-11220	H1831-02A0	12	HO-65
195-33-11220	H1840-02A0	26	HO-73
195-33-11220	K0700-02A0	22	KO-21
195-33-11220	K0700-02A0	41	KO-21
195-33-11220	K1110-23A0	7	KO-71
195-33-11220	K1110-23A0	11	KO-71
195-33-11220	K1110-23A0	22	KO-71
195-33-11220	K1110-35A0	16	KO-95
195-33-11220	W1118-01A1	7	WO-3
195-57-11530	E0200-07A0	15	EO-21
195-63-93170	Y1620-01A0	14	YO-73
195-63-93170	Y1620-02A0	14	YO-77
195-78-63210	H0312-02A0	17	HO-31
195-979-8570	K0350-01A0	4	KO-15
195-979-8590	K0350-01A0	8	KO-15
195-Z11-1690	K1110-06A0	8	KO-37
195-Z11-2970	K0600-01A0	12	KO-17
198-01-51310	M1210-02A2	7	MO-29
198-06-53520	E0200-08A0	9	EO-23
198-06-53610	D0200-01A0	14	DO-5
198-30-00073	R1120-04A3		RO-13
198-30-00073	R1120-12A3		RO-31

PART NO.	FIG NO.	INDEX	PAGE
198-54-41982	H0110-04A0	2	HO-11
198-54-41982	M1130-01A0	26	MO-11
198-54-41982	M1130-01A0	37	MO-11
198-54-41982	M1130-01A1	19	MO-15
198-54-41982	M1130-01A1	30	MO-15
198-54-41982	M1160-01A0	5	MO-23
198-54-41982	M1220-01A0	18	MO-31
198-60-19820	H0311-01A0	16	HO-27
198-60-55510	H0110-01A0	12	HO-3
198-60-55510	Y1890-01A0		YO-147
198-61-32850	H0110-03A0	5	HO-9
198-63-93170	Y1620-11A0	15	YO-81
198-911-9240	K1110-16A0	15	KO-57
198-920-1530	A4030-A4C1	31	AA-77
19M-06-31720	E0200-02A0		EO-9
19M-06-31720	K1110-13A0		KO-51
19M-61-35140	H0110-02A0	30	HO-7
19M-61-35140	H0210-01A0	3	HO-21
201-32-51150	R1120-04A3	5	RO-13
201-32-51150	R1120-12A3	5	RO-31
201-60-11230	N1310-01A0	25	NO-19
201-60-11390	H0120-01A0	25	HO-13
201-60-11390	H0120-02A0	9	HO-17
201-60-11390	H1833-01A0	21	HO-67
201-60-11390	H1833-01A0	25	HO-67
201-60-11390	H1833-01A0	31	HO-67
201-60-11390	H1833-02A0	5	HO-69
201-60-11390	H1833-02A0	13	HO-69
201-62-71810	N1310-01A0	5	NO-19
201-979-7820	K1110-13A0	18	KO-51
202-98-11340	K0700-03A0	7	KO-25
203-06-61730	H1350-01A0	29	HO-57
203-43-51620	K1110-19A0	8	KO-63
203-54-56630	M1160-01A0	11	MO-23
203-54-56630	M1220-01A0	7	MO-31
203-54-56630	M1220-01A0	26	MO-31
203-54-56970	K1110-19A0	7	KO-63
203-54-62670	M1150-01A0	10	MO-19
203-54-62670	M1150-02A0	26	MO-21
203-54-71390	K1110-10A0	3	KO-45
203-60-31100	H0110-01A0	2	HO-3
203-60-31160	H0110-01A0	3	HO-3
203-62-65281	H1831-01A0	45	HO-62
203-70-56570	T1200-03A1	23	TO-45
203-973-5610	H0120-01A0	11	HO-13
205-00-73360	U0100-01A2	3	UO-3
205-03-62660	C0100-01A0	8	CO-3
205-03-71331	J1410-01A0	4	JO-13
205-03-71440	M1210-01A1	40	MO-25
205-03-71440	M1210-01A2	40	MO-27
205-25-71280	N1110-01A0	4	NO-3
205-30-62650	A6010-A4L9	5	AA-105
205-30-62650	A6010-A4M8	5	AA-107
205-30-71181	J1110-01A0	2	JO-3
205-30-71181	R1110-01A0	13	RO-5
205-30-71191	J1110-01A0	3	JO-3
205-30-71191	R1110-01A0	12	RO-5
205-30-72170	R1120-03A0	3	RO-11
205-30-72170	R1120-11A0	3	RO-29
205-32-51211	N1210-01A0	17	NO-5
205-32-51211	N1210-01A0	17	NO-11
205-32-51211	Y0260-01A0	11	YO-3
205-46-63360	M1220-01A0	19	MO-31
205-54-51250	K1110-10A0	5	KO-45
205-54-51720	K0320-01A0	4	KO-13
205-54-51730	K0320-01A0	5	KO-13
205-54-51970	M1130-01A0	9	MO-11

https://truckmanualshub.com/

PART NO.	FIG NO.	INDEX	PAGE
205-54-51970	M1130-01A1	9	MO-15
205-54-53550	M1130-01A0	33	MO-11
205-54-53550	M1130-01A0	45	MO-11
205-54-53550	M1130-01A1	26	MO-15
205-54-53550	M1130-01A1	38	MO-15
205-54-68440	M1210-01A1	1	MO-25
205-54-68440	M1210-01A2	1	MO-27
205-54-76280	K1110-10A0	15	KO-45
205-54-76280	M1210-01A1		MO-25
205-54-76280	M1210-01A2		MO-27
205-60-51410	H0120-01A0	13	HO-13
205-60-51420	H0120-01A0	14	HO-13
205-60-64290	H0120-01A0	15	HO-13
205-62-53780	P1120-01A1	8	PO-3
205-62-53780	P1120-01A1	12	PO-3
205-62-53780	P1120-01A1	16	PO-3
205-62-54622	T1110-01A0	15	TO-03
205-62-54622	T1110-01A7	13	TO-05
205-62-54622	T1110-04A0	3	TO-15
205-62-54622	T1110-04A0	24	TO-15
205-62-54622	T1110-04A5	3	TO-19
205-62-54622	T1110-04A5	24	TO-19
205-62-73430	H1210-01A0	21	HO-39
205-62-73430	H1210-01A0	32	HO-39
205-62-73430	H1220-03A0	13	HO-49
205-62-73430	H1220-03A0	24	HO-49
205-62-73430	H1310-01A0	7	HO-53
205-62-73430	H1310-01A0	9	HO-53
205-62-73430	H1310-01A0	20	HO-53
205-62-73430	H1310-01A0	22	HO-53
205-62-73430	T1110-01A0	16	TO-03
205-62-73430	T1110-01A7	14	TO-05
205-62-73430	T1110-04A0	12	TO-15
205-62-73430	T1110-04A5	12	TO-19
205-70-51380	T1200-03A1	22	TO-45
205-70-51390	T1110-03A0	8	TO-11
205-70-51390	T1110-03A5	8	TO-13
205-970-2410	E0310-01A2	3	EO-29
205-970-2410	E0310-01A4	3	EO-31
205-970-2410	E0310-01A6	3	EO-35
205-970-2410	E0310-01A8	3	EO-37
206-03-43340	C0100-07A0	25	CO-17
206-06-61130	H0120-01A0	10	HO-13
206-06-61130	H0120-01A0	21	HO-13
206-06-61130	H0120-02A0	19	HO-17
206-06-61130	H0120-02A0	23	HO-17
206-06-61130	H0120-02A0	41	HO-17
206-06-61130	H1831-01A0	15	HO-61
206-06-61130	K1110-19A0	32	KO-63
206-62-41670	D0200-01A0	15	DO-5
206-62-41670	H0340-01A0	9	HO-37
206-62-41670	K0700-02A0	33	KO-21
207-00-76230	U0100-03A3	9	UO-5
207-01-35140	B0100-01A0	14	BO-3
207-03-75590	C0100-01A0	5	CO-3
207-06-51330	E0100-01A2	7	EO-5
207-06-61461	E0100-01A2	6	EO-5
207-06-61490	K1110-24A0	2	KO-73
207-06-71180	K1110-29A0	5	KO-83
207-26-54230	N1210-01A0	16	NO-5
207-26-54230	N1210-01A0	16	NO-11
207-26-54230	Y0260-01A0	10	YO-3
207-26-54263	N1210-01A0	10	NO-5
207-26-54263	N1210-01A0	10	NO-11
207-26-54263	Y0260-01A0	4	YO-3
207-26-61210	N1210-01A0	13	NO-5
207-26-61210	N1210-01A0	13	NO-11

PART NO.	FIG NO.	INDEX	PAGE
207-26-61210	Y0260-01A0	7	YO-3
207-26-62150	N1210-01A0	15	NO-5
207-26-62150	N1210-01A0	15	NO-11
207-26-62150	Y0260-01A0	9	YO-3
207-26-62190	N1210-01A0	24	NO-5
207-26-62190	N1210-01A0	24	NO-11
207-26-62190	Y0260-01A0	18	YO-3
207-27-52270	R1120-07A0	20	RO-21
207-27-52270	R1120-15A0	20	RO-39
207-46-71543	J1110-02A0		JO-5
207-46-71543	J1110-02A1		JO-7
207-46-71561	J1110-02A0	27	JO-5
207-46-71561	J1110-02A1	27	JO-7
207-54-51440	M1810-01A0	11	MO-43
207-54-51440	M1810-01A0	23	MO-43
207-54-51440	M1810-02A0	10	MO-45
207-54-61270	M1110-01A0	13	MO-3
207-54-61441	M1210-01A1	2	MO-25
207-54-61441	M1210-01A2	2	MO-27
207-54-61450	M1210-01A1	3	MO-25
207-54-61450	M1210-01A2	3	MO-27
207-54-62131	M1110-01A0	14	MO-3
207-54-65132	K1120-01A0	1	KO-99
207-54-65260	K1120-01A0	2	KO-99
207-54-71190	K1110-18A0	2	KO-61
207-54-72150	M1110-01A0	24	MO-3
207-54-72230	M1210-01A1	7	MO-25
207-54-72230	M1210-01A2	7	MO-27
207-60-51460	H0330-01A0	8	HO-35
207-62-14580	T1110-04A0	27	TO-15
207-62-14580	T1110-04A5	27	TO-19
207-62-32720	H1340-01A0	1	HO-55
207-62-32890	A1530-A4L8	5	AA-15
207-62-33690	H1810-01A0	23	HO-59
207-62-33690	H1833-01A0	4	HO-67
207-62-33690	H1833-01A0	9	HO-67
207-62-33690	H1833-01A0	13	HO-67
207-62-34320	T1110-01A0	8	TO-03
207-62-34320	T1110-01A7	10	TO-05
207-62-51270	D0200-02A0	48	DO-9
207-62-51420	H0312-02A0	29	HO-31
207-62-52211	H1240-02A1	2	HO-51
207-62-52412	H1310-01A0	36	HO-53
207-62-52423	H1220-03A0	14	HO-49
207-62-52430	H1210-01A0	31	HO-39
207-62-52430	H1220-03A0	23	HO-49
207-62-54770	H1210-01A0	20	HO-39
207-62-54770	H1220-03A0	12	HO-49
207-62-54770	H1310-01A0	8	HO-53
207-62-54770	H1310-01A0	21	HO-53
207-62-56190	H0120-01A0	2	HO-13
207-62-56190	H1220-01A0	15	HO-45
207-62-56250	H0120-03A0	3	HO-19
207-62-56250	H0120-03A0	8	HO-19
207-62-61590	H1310-01A0	30	HO-53
207-62-62770	E0200-04A0	25	EO-15
207-62-64740	H0330-01A0	29	HO-35
207-62-64740	N1210-02A0	15	NO-9
207-62-64740	N1210-04A0	16	NO-15
207-62-72131	N1210-02A0	13	NO-9
207-62-72131	N1210-04A0	14	NO-15
207-62-72620	H1840-01A0	1	HO-71
207-62-72680	K1110-34A0	2	KO-93
207-70-11230	T1200-01A0	10	TO-37
207-70-11230	T1200-01A2	10	TO-39
207-70-11360	J1310-01A1	11	JO-11
207-70-11360	T1200-01A0	17	TO-37

https://truckmanualshub.com/

PART NO.	FIG NO.	INDEX	PAGE
207-70-11360	T1200-01A2	17	TO-39
207-70-11360	T1200-02A0	9	TO-41
207-70-11360	T1200-02A1	9	TO-43
207-70-11370	J1310-01A1	12	JO-11
207-70-11770	T1110-03A0	9	TO-11
207-70-11770	T1110-03A5	9	TO-13
207-70-31220	T1200-02A0	2	TO-41
207-70-31220	T1200-02A1	2	TO-43
207-70-61521	T1200-01A0	3	TO-37
207-70-61521	T1200-01A2	3	TO-39
207-977-5120	H1831-01A0	22	HO-61
207-977-5120	N1210-04A0	4	NO-15
207-GB-Z0015	U0100-01A2	21	UO-3
208-00-71440	U0100-03A3	19	UO-5
208-01-11151	B0100-01A0	16	BO-3
208-01-11161	B0100-01A0	17	BO-3
208-01-11171	B0100-01A0	21	BO-3
208-01-11181	B0100-01A0	11	BO-3
208-01-11181	B0100-01A0	19	BO-3
208-01-11221	B0100-01A0	18	BO-3
208-01-62112	B0200-01A0	39	BO-5
208-03-58290	C0100-07A0	26	CO-17
208-06-19170	K1110-35A0	1	KO-95
208-06-19170	K1110-35A0	6	KO-95
208-27-51212	R1120-07A0	6	RO-21
208-27-51212	R1120-15A0	6	RO-39
208-27-52311	R1120-07A0	12	RO-21
208-27-52311	R1120-15A0	12	RO-39
208-27-52341	R1120-07A0	35	RO-21
208-27-52341	R1120-15A0	35	RO-39
208-27-61350	N1210-01A0	40	NO-5
208-27-61350	N1210-01A0	40	NO-11
208-27-61350	R1120-07A0	33	RO-21
208-27-61350	R1120-15A0	33	RO-39
208-27-61350	Y0260-01A0	34	YO-3
208-27-62110	R1120-07A0	5	RO-21
208-27-62110	R1120-15A0	5	RO-39
208-43-71410	K1110-27A0	8	KO-79
208-43-71420	K1110-29A0	30	KO-83
208-43-71512	K1110-22A0	1	KO-69
208-43-71520	K1110-22A0	2	KO-69
208-43-71530	K1110-22A0	3	KO-69
208-43-71561	K1110-22A0	13	KO-69
208-43-71570	K1110-22A0	18	KO-69
208-43-71580	K1110-30A0	7	KO-85
208-43-71590	K1110-22A0	4	KO-69
208-43-71610	K1110-26A0	17	KO-77
208-43-71610	K1110-29A0	24	KO-83
208-43-71620	K1110-26A0	18	KO-77
208-43-71620	K1110-29A0	25	KO-83
208-43-71670	K1110-29A0	32	KO-83
208-43-71680	K1110-26A0	5	KO-77
208-43-71690	K1110-29A0	6	KO-83
208-43-71731	K1110-22A0	11A	KO-69
208-43-71741	K1110-22A0	7	KO-69
208-43-71751	K1110-22A0	9	KO-69
208-43-71762	K1110-22A0	11B	KO-69
208-53-00070	K1110-06A0		KO-37
208-53-11270	K1110-01A0	6	KO-31
208-53-11320	K1110-06A0	13	KO-37
208-53-11330	K0180-01A0	28	KO-7
208-53-11330	K0180-01A0	31	KO-7
208-53-11480	K1110-09A0	11	KO-43
208-53-11730	K0830-01A5	4	KO-29
208-53-11740	K0830-01A5	5	KO-29
208-53-11750	K1110-10A0	12	KO-45
208-53-11760	K1110-10A0	14	KO-45
208-53-11780	K0180-01A0	36	KO-7
208-53-11790	K1110-15A0	7	KO-55
208-53-11810	K1110-36A0	32	KO-97
208-53-11820	K1110-36A0	33	KO-97
208-53-11840	K0830-01A5		KO-29
208-53-11850	K1110-13A0	12	KO-51
208-53-11871	K1110-15A0	2	KO-55
208-53-11890	K1110-15A0	3	KO-55
208-53-11920	K1110-13A0	6	KO-51
208-53-11941	K1110-13A0	4	KO-51
208-53-11980	K1110-07A0	9	KO-39
208-53-11990	K1110-07A0	10	KO-39
208-53-12120	K1110-14A0	12	KO-53
208-53-12120	K1110-14A0	18	KO-53
208-53-12152	K1110-13A0	3	KO-51
208-53-12170	K1110-14A0	13	KO-53
208-53-12180	K1110-14A0	4	KO-53
208-53-12190	K1110-14A0	7	KO-53
208-53-12220	K1110-14A0	10	KO-53
208-53-12220	K1110-14A0	17	KO-53
208-53-12230	K1110-15A0	4	KO-55
208-53-12260	K1110-14A0	11	KO-53
208-53-12280	K1110-27A0	11	KO-79
208-53-12290	K0180-01A0	2	KO-7
208-53-12290	K0180-01A0	9	KO-7
208-53-12310	K1110-13A0	5	KO-51
208-53-12320	K0180-01A0	25	KO-7
208-53-12330	K0180-01A0	26	KO-7
208-53-12350	K0180-01A0		KO-7
208-53-12390	K0180-01A0	20	KO-7
208-53-12410	K0180-01A0	23	KO-7
208-53-12432	K1110-14A0	19	KO-53
208-53-12440	K1110-13A0	7	KO-51
208-53-12460	K0180-01A0	3	KO-7
208-53-12470	K1110-10A0	10	KO-45
208-53-12520	K1110-14A0	14	KO-53
208-53-12551	K1110-15A0	18	KO-55
208-53-12580	K1110-11A0	14	KO-47
208-53-12611	K0310-01A0	1	KO-11
208-53-12620	K1110-12A0	4	KO-49
208-53-12680	K1110-14A0	15	KO-53
208-53-12730	K0180-01A0	29	KO-7
208-53-12750	K0180-01A0	33	KO-7
208-53-12780	K1110-08A0	1	KO-41
208-53-12790	K1110-08A0	12	KO-41
208-53-12810	K1110-10A0	11	KO-45
208-53-12860	K1110-16A0	1	KO-57
208-53-12880	K1110-16A0	12	KO-57
208-53-12891	K1110-18A0	13	KO-61
208-53-12970	K1110-18A0	3	KO-61
208-53-12980	K1110-10A0	8	KO-45
208-53-12991	K1110-10A0	7	KO-45
208-53-13270	K1110-11A0	7	KO-47
208-53-13330	K1110-01A0	9	KO-31
208-53-13410	K1110-04A0	1	KO-33
208-53-13420	K1110-04A0	3	KO-33
208-53-13430	K1110-04A0	4	KO-33
208-53-13441	K1110-04A0	2	KO-33
208-53-13610	K0180-01A0		KO-7
208-53-13620	K0180-01A0		KO-7
208-53-13650	K1110-15A0	1	KO-55
208-53-13680	K1110-04A0	8	KO-33
208-53-13710	K0180-01A0	12	KO-7
208-53-13770	K1110-14A0	1	KO-53
208-53-14540	K1110-07A0	5	KO-39
208-53-14720	K1110-07A0	7	KO-39
208-54-57180	M1810-01A0	8	MO-43

https://truckmanualshub.com/

PART NO.	FIG NO.	INDEX	PAGE
208-54-57180	M1810-01A0	18	MO-43
208-54-57180	M1810-02A0	15	MO-45
208-54-57180	M1810-02A0	24	MO-45
208-54-57180	M1810-03A0	6	MO-47
208-54-57180	M1810-03A0	16	MO-47
208-54-57180	M1810-03A0	27	MO-47
208-54-57180	M1810-03A0	34	MO-47
208-54-57181	M1210-01A1	30	MO-25
208-54-57181	M1210-01A2	30	MO-27
208-54-71910	M1210-01A1	6	MO-25
208-54-71910	M1210-01A2	6	MO-27
208-54-71920	M1210-01A1	5	MO-25
208-54-71920	M1210-01A2	5	MO-27
208-57-71101	K0110-01A1	1	KO-3
208-60-71180	H0110-01A0	18	HO-3
208-62-38370	H1833-02A0	19	HO-69
208-62-65110	P1120-01A1	1	PO-3
208-70-31310	T1110-09A0	3	TO-27
208-70-31310	T1110-09A1	3	TO-29
208-70-33181	T1200-03A1	25	TO-45
208-70-62161	T1200-03A1	15	TO-45
208-70-62190	T1110-03A0	5	TO-11
208-70-62190	T1110-03A0	7	TO-11
208-70-62190	T1110-03A5	5	TO-13
208-70-62190	T1110-03A5	7	TO-13
208-70-65770	T1200-03A1	21	TO-45
208-979-7520	C0100-02A0	10	CO-5
208-979-7530	K1110-15A0	14	KO-55
208-979-7540	K1110-30A0	2	KO-85
208-979-7550	K1110-26A0	2	KO-77
208-979-7560	K0180-01A0	13	KO-7
208-979-7610	K1110-30A0	1	KO-85
208-979-7620	K1110-15A0	15	KO-55
208-979-7630	K1110-26A0	1	KO-77
208-979-7640	K1110-31A0	1	KO-87
208-979-7650	K1110-31A0	6	KO-87
209-00-41550	U0100-03A3	10	UO-5
209-00-41560	U0100-03A3	11	UO-5
209-00-71940	U0100-03A3	5	UO-5
209-01-42251	B0600-05A0	12	BO-15
209-01-42260	B0600-05A0	13	BO-15
209-01-51133	B0100-01A0	9	BO-3
209-03-41130	C0100-02A0	13	CO-5
209-03-41280	C0100-01A0	12	CO-3
209-03-41860	C0100-06A0	16	CO-13
209-03-41870	C0100-06A0	17	CO-13
209-03-71290	C0100-07A0	28	CO-17
209-03-71331	C0100-07A0	15	CO-17
209-04-42141	D0200-02A0	25	DO-9
209-04-42150	D0100-01A0	22	DO-3
209-04-42150	D0200-02A0	30	DO-9
209-04-77630	H1840-01A0	9	HO-71
209-06-41230	K1110-29A0	2	KO-83
209-06-41320	E0310-01A6	8	EO-35
209-06-41320	E0310-01A8	8	EO-37
209-06-41320	E0310-01A9	3	EO-39
209-06-41320	E0310-01B1	3	EO-41
209-06-41421	E0200-07A0	16	EO-21
209-06-41601	E0200-07A0		EO-21
209-06-71270	E0420-01A0	5	EO-45
209-06-71310	E0420-01A0	9	EO-45
209-06-77330	E0200-07A0	18	EO-21
209-06-77341	E0200-07A0	19	EO-21
209-06-77350	E0200-07A0	20	EO-21
209-06-77360	E0200-07A0	21	EO-21
209-06-77420	E0200-07A0	23	EO-21
209-06-77460	E0200-07A0	24	EO-21

PART NO.	FIG NO.	INDEX	PAGE
209-30-11330	R1110-01A0	2	RO-5
209-30-63150	R1120-02A0	4	RO-9
209-30-63150	R1120-04A3	7	RO-13
209-30-63150	R1120-10A0	4	RO-27
209-30-63150	R1120-12A3	7	RO-31
209-38-11270	B0600-01A0	25	BO-7
209-38-51440	B0600-04A0	8	BO-13
209-38-51440	B0600-04A0	11	BO-13
209-46-11210	M1520-01A0	2	MO-41
209-46-41691	J1110-02A0		JO-5
209-46-41691	J1110-02A1		JO-7
209-53-13540	H0110-04A0	5	HO-11
209-53-13550	H0110-04A0	6	HO-11
209-53-13560	H0110-04A0	7	HO-11
209-53-13570	H0110-04A0	8	HO-11
209-53-13580	H0110-04A0	9	HO-11
209-53-13630	M1410-01A0	2	MO-35
209-53-13640	W1118-01A1	6	WO-3
209-53-14430	E0310-01A1		EO-27
209-53-14430	E0310-01A4	6	EO-31
209-53-14430	E0310-01A8	11	EO-37
209-53-14430	E0310-01B1	6	EO-41
209-53-14440	K1110-09A0	20	KO-43
209-53-14450	K1110-09A0	4	KO-43
209-54-41811	K1110-18A0	1	KO-61
209-54-41840	K1110-13A0	15	KO-51
209-54-63481	W1118-01A1	17	WO-3
209-54-75350	M1420-01A0	1	MO-37
209-60-52320	H0330-01A0	9	HO-35
209-60-77220	H1840-02A0	1	HO-73
209-60-77230	H1831-01A0	4	HO-61
209-60-77230	Y1861-01A0		YO-145
209-60-77240	H1831-01A0	16	HO-61
209-60-77240	Y1860-01A0		YO-143
209-60-77250	H1840-02A0	2	HO-73
209-60-77250	Y1860-01A0	2	YO-143
209-60-77250	Y1861-01A0	1	YO-145
209-60-77532	H0110-01A0	38	HO-3
209-60-77532	V0100-01A0	7	VO-3
209-62-11810	A1310-A4L4	29	AA-9
209-62-14430	N1310-01A0	24	NO-19
209-62-41150	H0311-01A0	31	HO-27
209-62-41341	H0311-01A0	32	HO-27
209-62-41410	H1350-01A0	1	HO-57
209-62-42330	K1110-33A0	12	KO-91
209-62-42340	K1110-33A0	14	KO-91
209-62-53780	T1110-01A0	5	TO-03
209-62-53780	T1110-01A7	7	TO-05
209-62-53790	T1110-04A0	38	TO-15
209-62-53790	T1110-04A5	38	TO-19
209-62-58370	T1110-04A0	7	TO-15
209-62-58370	T1110-04A0	34	TO-15
209-62-58370	T1110-04A5	7	TO-19
209-62-58370	T1110-04A5	34	TO-19
209-62-58520	T1110-01A0	17	TO-03
209-62-58520	T1110-01A7	15	TO-05
209-62-58520	T1110-04A0	8	TO-15
209-62-58520	T1110-04A0	35	TO-15
209-62-58520	T1110-04A5	8	TO-19
209-62-58520	T1110-04A5	35	TO-19
209-62-61310	H0312-01A0	16	HO-29
209-62-61330	H0312-01A0	17	HO-29
209-62-77181	K1110-36A0	1	KO-97
209-62-77181	K1110-36A0	18	KO-97
209-64-11410	H1840-02A0	5	HO-73
209-64-16440	H1840-01A0	17	HO-71
209-64-16721	H1840-02A0	8	HO-73

https://truckmanualshub.com/

PART NO.	FIG NO.	INDEX	PAGE
209-64-16910	H0210-01A0	23	H0-21
209-64-16910	H0220-01A0	10	H0-23
209-70-00082	T1510-01A5	28	T0-47
209-70-00082	T1510-01A6	20	T0-49
209-70-52141	T1200-01A0	2	T0-37
209-70-52141	T1200-01A2	2	T0-39
209-70-52150	T1200-01A0	6	T0-37
209-70-52150	T1200-01A2	6	T0-39
209-70-53150	T1200-03A1	24	T0-45
209-70-53181	T1200-02A0	11	T0-41
209-70-53181	T1200-02A0	15	T0-41
209-70-53181	T1200-02A0	19	T0-41
209-70-53181	T1200-02A1	11	T0-43
209-70-53181	T1200-02A1	15	T0-43
209-70-53181	T1200-02A1	19	T0-43
209-70-54160	T1510-01A5	26	T0-47
209-70-54160	T1510-01A6	18	T0-49
209-70-54171	T1510-01A5	23	T0-47
209-70-54171	T1510-01A6	15	T0-49
209-70-54181	T1510-01A5		T0-47
209-70-54181	T1510-01A6		T0-49
209-70-54191	T1510-01A5		T0-47
209-70-54191	T1510-01A6		T0-49
209-70-57170	T1110-01A7	3	T0-05
209-70-71330	T1200-01A2	13	T0-39
209-72-11180	J1310-01A1	5	J0-11
209-72-11190	J1310-01A1	6	J0-11
209-72-11220	T1200-03A1	26	T0-45
209-72-11220	T1510-01A5	29	T0-47
209-72-11220	T1510-01A6	21	T0-49
209-72-11261	T1110-01A0	19	T0-03
209-72-11261	T1110-01A7	17	T0-05
209-72-11261	T1110-09A0	1	T0-27
209-72-11261	T1110-09A1	1	T0-29
209-72-12171	T1200-01A0	8	T0-37
209-72-12171	T1200-01A2	8	T0-39
209-72-12211	T1200-02A0	7	T0-41
209-72-12211	T1200-02A1	7	T0-43
209-72-51230	T1110-09A0	2	T0-27
209-72-51230	T1110-09A1	2	T0-29
209-72-53170	T1200-02A0	3	T0-41
209-72-53170	T1200-02A1	3	T0-43
209-72-54220	T1510-01A5	27	T0-47
209-72-54220	T1510-01A6	19	T0-49
209-939-7110	T1510-02A4	3	T0-51
209-939-7120	T1510-02A4	4	T0-51
209-954-4213	K0600-01A0	1	K0-17
209-98-77220	M1420-01A0	10	M0-37
209-98-77310	V0300-01A0	6	V0-7
209-98-77310	V0300-01A1	6	V0-9
20B-27-11210	H0210-01A0	29	H0-21
20B-27-11210	H0220-01A0	16	H0-23
20B-27-11210	Y1641-01A0	10	Y0-97
20T-54-42510	K0700-03A0	2	K0-25
20T-54-74880	K1110-04A0	6	K0-33
20T-54-75250	K1110-01A0	8	K0-31
20U-62-41710	H0240-01A0	13	H0-25
20U-62-46570	N1310-01A0	16	N0-19
20X-54-21460	M1210-01A1	8	M0-25
20X-54-21460	M1210-01A2	8	M0-27
20X-62-21670	H0110-02A0	4	H0-7
20Y-00-31870	U0100-03A3	1	U0-5
20Y-00-31880	U0100-03A3	3	U0-5
20Y-00-42110	M1510-01A0	12	M0-39
20Y-00-42110	U0100-03A3	7	U0-5
20Y-00-42140	U0100-03A3	8	U0-5
20Y-00-42170	M1510-01A0	13	M0-39
20Y-03-11220	E0200-02A0	17	E0-9
20Y-03-11220	K0700-02A0	18	K0-21
20Y-03-11220	K0700-02A0	30	K0-21
20Y-03-11220	K0700-03A0	16	K0-25
20Y-03-11330	C0100-01A0	11	C0-3
20Y-03-18140	C0100-07A0	27	C0-17
20Y-04-11161	D0100-01A0	8	D0-3
20Y-04-11240	D0100-01A0		D0-3
20Y-04-21580	D0100-01A0	2	D0-3
20Y-04-48190	M1510-01A0	3	M0-39
20Y-06-21240	H1810-01A0	22	H0-59
20Y-06-21551	T1110-09A0	8	T0-27
20Y-06-21551	T1110-09A1	8	T0-29
20Y-06-23472	K1110-13A0	11	K0-51
20Y-06-23770	K1110-26A0	11	K0-77
20Y-06-23770	K1110-29A0	14	K0-83
20Y-06-23920	K1110-29A0	15	K0-83
20Y-06-31320	K1110-29A0		K0-83
20Y-06-31330	K1110-29A0	28	K0-83
20Y-06-41238	K1110-26A0	3	K0-77
20Y-06-41990	K1110-09A0	1	K0-43
20Y-25-11220	R1120-04A3	11	R0-13
20Y-25-11220	R1120-12A3	11	R0-31
20Y-25-11270	N1110-01A0	9	N0-3
20Y-25-11270	T1200-03A1	17	T0-45
20Y-26-22411	Y0260-01A0	36	Y0-3
20Y-27-11250	R1120-07A0	32	R0-21
20Y-27-11250	R1120-15A0	32	R0-39
20Y-27-13281	N1210-01A0	38	N0-5
20Y-27-13281	N1210-01A0	38	N0-11
20Y-27-13281	Y0260-01A0	32	Y0-3
20Y-27-13310	N1210-01A0	25	N0-5
20Y-27-13310	N1210-01A0	25	N0-11
20Y-27-13310	Y0260-01A0	19	Y0-3
20Y-27-21220	N1210-01A0	32	N0-5
20Y-27-21220	N1210-01A0	32	N0-11
20Y-27-21220	Y0260-01A0	26	Y0-3
20Y-27-21230	N1210-01A0	22	N0-5
20Y-27-21230	N1210-01A0	22	N0-11
20Y-27-21230	Y0260-01A0	16	Y0-3
20Y-27-21240	N1210-01A0	31	N0-5
20Y-27-21240	N1210-01A0	31	N0-11
20Y-27-21240	Y0260-01A0	25	Y0-3
20Y-27-21250	N1210-01A0	21	N0-5
20Y-27-21250	N1210-01A0	21	N0-11
20Y-27-21250	R1120-07A0	28	R0-21
20Y-27-21250	R1120-15A0	28	R0-39
20Y-27-21250	Y0260-01A0	15	Y0-3
20Y-27-21280	N1210-01A0	33	N0-5
20Y-27-21280	N1210-01A0	33	N0-11
20Y-27-21280	R1120-07A0	30	R0-21
20Y-27-21280	R1120-15A0	30	R0-39
20Y-27-21280	Y0260-01A0	27	Y0-3
20Y-27-21290	N1210-01A0	23	N0-5
20Y-27-21290	N1210-01A0	23	N0-11
20Y-27-21290	R1120-07A0	19	R0-21
20Y-27-21290	R1120-15A0	19	R0-39
20Y-27-21290	Y0260-01A0	17	Y0-3
20Y-27-21310	N1210-01A0	36	N0-5
20Y-27-21310	N1210-01A0	36	N0-11
20Y-27-21310	Y0260-01A0	30	Y0-3
20Y-27-22140	N1210-01A0	19	N0-5
20Y-27-22140	N1210-01A0	19	N0-11
20Y-27-22140	Y0260-01A0	13	Y0-3
20Y-27-22170	N1210-01A0	18	N0-5
20Y-27-22170	N1210-01A0	18	N0-11
20Y-27-22170	Y0260-01A0	12	Y0-3

https://truckmanualshub.com/

PART NO.	FIG NO.	INDEX	PAGE
20Y-27-22210	N1210-01A0	30	NO-5
20Y-27-22210	N1210-01A0	30	NO-11
20Y-27-22210	YO260-01A0	24	YO-3
20Y-27-22220	N1210-01A0	20	NO-5
20Y-27-22220	N1210-01A0	20	NO-11
20Y-27-22220	YO260-01A0	14	YO-3
20Y-27-22240	N1210-01A0	26	NO-5
20Y-27-22240	N1210-01A0	26	NO-11
20Y-27-22240	YO260-01A0	20	YO-3
20Y-27-22280	N1210-01A0	41	NO-5
20Y-27-22280	N1210-01A0	41	NO-11
20Y-27-22280	YO260-01A0	35	YO-3
20Y-43-21151	K1110-19A0	4	KO-63
20Y-43-21231	K1110-19A0	20	KO-63
20Y-43-21241	K1110-19A0	21	KO-63
20Y-43-21260	K1110-19A0	6	KO-63
20Y-43-22211	K1110-25A0	1	KO-75
20Y-43-22221	K1110-28A0	1	KO-81
20Y-43-22250	K1110-25A0	5	KO-75
20Y-43-22250	K1110-28A0	5	KO-81
20Y-43-22261	K1110-25A0	6	KO-75
20Y-43-22261	K1110-28A0	6	KO-81
20Y-43-22370	K1110-25A0	7	KO-75
20Y-43-22370	K1110-28A0	7	KO-81
20Y-43-22381	K1110-25A0	2	KO-75
20Y-43-22390	K1110-28A0	2	KO-81
20Y-43-22421	K1110-25A0	3	KO-75
20Y-43-22421	K1110-28A0	3	KO-81
20Y-43-31412	K1110-27A0	7	KO-79
20Y-43-31421	K1110-27A0	18	KO-79
20Y-43-31432	K1110-27A0	16	KO-79
20Y-43-31440	K1110-27A0	19	KO-79
20Y-43-31450	K1110-27A0	20	KO-79
20Y-43-31513	K1110-27A0	12	KO-79
20Y-43-31522	K1110-27A0	13	KO-79
20Y-43-31611	K1110-27A0	14	KO-79
20Y-43-31621	K1110-27A0	15	KO-79
20Y-43-31690	K1110-27A0	32	KO-79
20Y-46-42253	J1110-02A0	23	JO-5
20Y-46-42253	J1110-02A1	23	JO-7
20Y-53-12280	K1110-07A0	4	KO-39
20Y-54-11611	H0110-04A0	13	HO-11
20Y-54-11611	K1110-07A0	16	KO-39
20Y-54-11611	M1130-01A0	15	MO-11
20Y-54-11611	M1130-01A1	15	MO-15
20Y-54-11611	M1210-01A1	37	MO-25
20Y-54-11611	M1210-01A2	37	MO-27
20Y-54-11611	W1118-01A1	19	WO-3
20Y-54-12320	M1150-01A0	26	MO-19
20Y-54-13180	K1110-05A0	9	KO-35
20Y-54-13322	K1110-05A0	8	KO-35
20Y-54-18690	K1110-10A0	2	KO-45
20Y-54-18690	K1110-10A0	4	KO-45
20Y-54-27123	M1110-01A0	2	MO-3
20Y-54-27290	M1110-01A0	25	MO-3
20Y-54-27360	M1110-01A0	19	MO-3
20Y-54-27531	M1210-01A1	15	MO-25
20Y-54-27531	M1210-01A2	15	MO-27
20Y-54-27540	M1210-01A1	16	MO-25
20Y-54-27540	M1210-01A2	16	MO-27
20Y-54-27991	M1420-01A0	2	MO-37
20Y-54-27991	M1420-01A0	7	MO-37
20Y-54-28161	M1130-01A0	27	MO-11
20Y-54-28161	M1130-01A0	38	MO-11
20Y-54-28161	M1130-01A1	20	MO-15
20Y-54-28161	M1130-01A1	31	MO-15
20Y-54-28161	M1140-01A0	8	MO-17
20Y-54-28161	M1140-01A0	18	MO-17
20Y-54-28161	M1160-01A0	6	MO-23
20Y-54-28170	M1130-01A0	6	MO-11
20Y-54-28170	M1130-01A1	6	MO-15
20Y-54-28911	M1410-01A0	1	MO-35
20Y-54-29232	M1130-01A0	17	MO-11
20Y-54-29232	M1130-01A1	17	MO-15
20Y-54-29232	M1140-01A0	6	MO-17
20Y-54-29651	M1220-01A0	23	MO-31
20Y-54-29660	M1220-01A0	6	MO-31
20Y-54-29680	M1220-01A0	5	MO-31
20Y-54-35430	M1410-01A0	5	MO-35
20Y-54-35470	K1110-07A0	20	KO-39
20Y-54-35480	K1110-07A0	21	KO-39
20Y-54-36150	K1110-11A0	13	KO-47
20Y-54-36380	K1110-07A0	1	KO-39
20Y-54-39450	K1110-08A0	4	KO-41
20Y-54-39460	K1110-08A0	5	KO-41
20Y-54-39480	K1110-08A0	6	KO-41
20Y-54-39511	K1110-09A0	15	KO-43
20Y-54-51241	K1110-01A0	2	KO-31
20Y-54-51251	K1110-01A0	7	KO-31
20Y-54-51261	K1110-01A0	3	KO-31
20Y-54-51321	K1110-06A0	14	KO-37
20Y-54-51330	K1110-05A0	14	KO-35
20Y-54-51341	K1110-06A0	15	KO-37
20Y-54-51393	K1110-06A0	18	KO-37
20Y-54-51401	K1110-05A0		KO-35
20Y-54-51441	K1110-06A0	11	KO-37
20Y-54-51451	K1110-05A0	11	KO-35
20Y-54-51461	K1110-05A0	12	KO-35
20Y-54-51470	K1110-05A0	10	KO-35
20Y-54-51482	K1110-05A0	13	KO-35
20Y-54-51490	K1110-06A0	17	KO-37
20Y-54-51782	E0201-01A0	3	EO-25
20Y-54-51820	K1110-10A0	16	KO-45
20Y-54-51832	K1110-10A0	18	KO-45
20Y-54-51842	K1110-01A0	4	KO-31
20Y-54-51851	K1110-01A0	5	KO-31
20Y-54-51910	K1110-07A0	19	KO-39
20Y-54-51952	K0310-01A0	2	KO-11
20Y-54-52200	K1110-06A0	1	KO-37
20Y-54-52231	K1110-08A0	8	KO-41
20Y-54-52300	K1110-06A0	2	KO-37
20Y-54-52320	K1110-09A0	5	KO-43
20Y-54-52400	K1110-06A0	3	KO-37
20Y-54-52440	K1110-11A0	15	KO-47
20Y-54-52470	K1110-11A0	12	KO-47
20Y-54-52530	K0320-01A0	3	KO-13
20Y-54-52530	K0320-01A0	9	KO-13
20Y-54-52552	K0320-01A0	1	KO-13
20Y-54-52562	K0320-01A0	7	KO-13
20Y-54-52572	K0320-01A0	8	KO-13
20Y-54-52820	K1110-06A0	9	KO-37
20Y-54-52830	K1110-05A0	2	KO-35
20Y-54-52840	K1110-05A0	3	KO-35
20Y-54-52850	K1110-05A0	4	KO-35
20Y-54-52860	K1110-05A0	5	KO-35
20Y-54-52870	K1110-05A0	6	KO-35
20Y-54-52880	K1110-05A0	7	KO-35
20Y-54-52950	K0320-01A0	2	KO-13
20Y-54-52990	K1110-06A0	5	KO-37
20Y-54-53212	K1110-10A0	1	KO-45
20Y-54-53322	K1110-01A0	10	KO-31
20Y-54-53350	K1110-08A0		KO-41
20Y-54-53360	K1110-08A0	3	KO-41
20Y-54-53610	K1110-11A0	20	KO-47

https://truckmanualshub.com/

PART NO.	FIG NO.	INDEX	PAGE
20Y-54-65180	C0100-06A0	51	CO-15
20Y-54-65310	K1110-13A0	19	KO-51
20Y-54-65340	K1110-22A0	14	KO-69
20Y-54-65540	K1110-22A0	16	KO-69
20Y-54-65580	K1110-13A0	17	KO-51
20Y-54-65690	K1110-15A0	17	KO-55
20Y-54-65790	K1110-15A0	16	KO-55
20Y-54-65811	K1120-01A0	11	KO-99
20Y-54-65821	K1120-01A0	12	KO-99
20Y-54-74132	M1220-01A0	2	MO-31
20Y-54-74161	M1220-01A0	3	MO-31
20Y-60-11430	H1831-01A0	44	HO-62
20Y-60-21340	H0110-01A0	19	HO-3
20Y-60-21470	H0110-01A0	17	HO-3
20Y-60-31131	H0110-01A0	36	HO-3
20Y-60-31140	H0110-01A0	37	HO-3
20Y-62-13230	H1340-01A0	14	HO-55
20Y-62-13230	H1340-01A0	22	HO-55
20Y-62-13450	T1110-04A0	15	TO-15
20Y-62-13450	T1110-04A5	15	TO-19
20Y-62-13760	H1340-01A0	13	HO-55
20Y-62-13760	H1340-01A0	15	HO-55
20Y-62-13760	H1340-01A0	23	HO-55
20Y-62-15660	H0210-01A0	1	HO-21
20Y-62-15951	H1833-01A0	5	HO-67
20Y-62-15951	H1833-01A0	10	HO-67
20Y-62-16170	K1110-19A0	28	KO-63
20Y-62-16630	H1833-01A0	20	HO-67
20Y-62-16630	H1833-02A0	4	HO-69
20Y-62-18890	K1110-25A0	16	KO-75
20Y-62-18890	K1110-28A0	16	KO-81
20Y-62-18910	K1110-25A0	14	KO-75
20Y-62-18910	K1110-28A0	14	KO-81
20Y-62-19560	H0120-01A0	26	HO-13
20Y-62-19560	H0120-02A0	10	HO-17
20Y-62-19560	H1833-01A0	22	HO-67
20Y-62-19560	H1833-01A0	26	HO-67
20Y-62-19560	H1833-01A0	32	HO-67
20Y-62-19560	H1833-02A0	6	HO-69
20Y-62-19560	H1833-02A0	14	HO-69
20Y-62-21421	N1210-02A0	4	NO-9
20Y-62-21421	N1210-04A0	1	NO-15
20Y-62-21940	H0120-01A0	39	HO-13
20Y-62-22160	H1833-01A0	28	HO-67
20Y-62-22160	H1833-02A0	8	HO-69
20Y-62-22271	H1833-01A0	24	HO-67
20Y-62-22790	D0200-01A0	4	DO-5
20Y-62-22790	H1810-01A0	3	HO-59
20Y-62-22790	H1831-02A0	4	HO-65
20Y-62-22790	H1840-01A0	4	HO-71
20Y-62-22790	H1840-01A0	12	HO-71
20Y-62-22790	H1840-02A0	21	HO-73
20Y-62-22790	K1110-33A0	13	KO-91
20Y-62-22790	K1110-34A0	6	KO-93
20Y-62-22790	K1110-34A0	14	KO-93
20Y-62-22810	H1810-01A0	4	HO-59
20Y-62-22810	H1831-02A0	5	HO-65
20Y-62-22810	H1831-02A0	20	HO-65
20Y-62-22810	H1840-01A0	5	HO-71
20Y-62-22810	H1840-01A0	13	HO-71
20Y-62-22810	K1110-33A0	6	KO-91
20Y-62-22810	K1110-34A0	7	KO-93
20Y-62-22820	D0200-01A0	6	DO-5
20Y-62-22820	H1810-01A0	5	HO-59
20Y-62-22820	H1831-02A0	28	HO-65
20Y-62-22820	H1840-01A0	6	HO-71
20Y-62-22820	H1840-01A0	20	HO-71
20Y-62-22820	H1840-02A0	22	HO-73
20Y-62-22820	K1110-33A0	15	KO-91
20Y-62-22820	K1110-34A0	8	KO-93
20Y-62-22820	K1110-34A0	15	KO-93
20Y-62-22830	H1810-01A0	6	HO-59
20Y-62-22830	H1831-02A0	21	HO-65
20Y-62-22830	H1840-01A0	14	HO-71
20Y-62-22830	H1840-01A0	21	HO-71
20Y-62-22830	K1110-33A0	7	KO-91
20Y-62-22830	K1110-34A0	9	KO-93
20Y-62-22830	K1110-34A0	16	KO-93
20Y-62-22840	H1810-01A0	11	HO-59
20Y-62-22840	H1831-02A0	22	HO-65
20Y-62-22840	H1831-02A0	29	HO-65
20Y-62-22840	H1840-01A0	7	HO-71
20Y-62-22840	H1840-01A0	15	HO-71
20Y-62-22840	K1110-33A0	8	KO-91
20Y-62-22840	K1110-34A0	17	KO-93
20Y-62-22850	D0200-01A0	8	DO-5
20Y-62-22850	H1831-02A0	23	HO-65
20Y-62-22850	H1840-01A0	16	HO-71
20Y-62-22850	K1110-33A0	9	KO-91
20Y-62-22850	K1110-34A0	18	KO-93
20Y-62-22860	H1810-01A0	12	HO-59
20Y-62-22860	H1840-01A0	22	HO-71
20Y-62-22860	K1110-33A0	10	KO-91
20Y-62-22860	K1110-34A0	19	KO-93
20Y-62-25720	H1833-01A0	30	HO-67
20Y-62-25720	H1833-02A0	12	HO-69
20Y-62-41390	K1110-19A0	30	KO-63
20Y-62-41940	N1210-04A0	11	NO-15
20Y-62-42550	K1110-34A0	3	KO-93
20Y-70-11190	T1110-01A0	21	TO-03
20Y-70-11190	T1110-01A7	19	TO-05
20Y-70-11190	T1110-05A0	2	TO-23
20Y-70-11190	T1110-05A1	2	TO-25
20Y-70-11540	T1200-03A1	13	TO-45
20Y-954-4220	K0600-01A0	2	KO-17
20Y-954-4230	K0600-01A0	3	KO-17
20Y-954-4240	K0600-01A0	4	KO-17
20Y-954-4310	K0230-01A0	1	KO-9
20Y-979-3120	K0700-04A0	1	KO-27
20Y-979-3130	K1110-31A0	3	KO-87
20Y-979-3140	K0700-02A0	2	KO-21
20Y-979-3150	K0700-02A0	4	KO-21
20Y-979-3150	K0700-04A0	3	KO-27
20Y-979-3150	K0700-04A0	5	KO-27
20Y-979-3150	K1110-31A0	5	KO-87
20Y-979-6121	K0700-01A0	18	KO-19
20Y-979-6121	Y1979-01A0		YO-149
20Y-979-6161	K1110-13A0	20	KO-51
20Y-979-6630	K1110-22A0	17	KO-69
20Y-979-6650	K0700-04A0	4	KO-27
20Y-979-6771	K1110-16A0	16	KO-57
21K-54-26351	M1210-01A1	9	MO-25
21K-54-26351	M1210-01A2	9	MO-27
21M-00-14220	U0400-01A0	3	UO-7
21M-00-21170	U0100-03A3	16	UO-5
21M-00-21180	U0100-03A3	15	UO-5
21M-00-21190	U0100-03A3	17	UO-5
21M-00-21280	U0100-03A3	12	UO-5
21M-00-21390	U0100-03A3	13	UO-5
21M-00-22510	U0100-03A3	20	UO-5
21M-00-22520	U0100-03A3	21	UO-5
21M-00-22530	U0100-01A2	18	UO-3
21M-00-22530	U0100-01A2	20	UO-3
21M-00-22540	U0100-03A3	4	UO-5

https://truckmanualshub.com/

PART NO.	FIG NO.	INDEX	PAGE
21M-00-25230	U0100-03A3	2	U0-5
21M-01-11360	B0100-01A0	15	B0-3
21M-01-15211	B0200-01A0	5	B0-5
21M-01-21110	B0200-01A0	11	B0-5
21M-01-21120	B0200-01A0	8	B0-5
21M-01-21130	B0200-01A0	12	B0-5
21M-01-21140	B0200-01A0	18	B0-5
21M-01-21150	B0200-01A0	24	B0-5
21M-01-21160	B0200-01A0	27	B0-5
21M-01-21170	B0200-01A0	4	B0-5
21M-01-21212	A2250-A4G6	1	AA-47
21M-01-21221	B0100-01A0	1	B0-3
21M-01-21231	A5210-A4J7	17	AA-103
21M-01-21250	B0100-01A0	2	B0-3
21M-01-21261	B0100-01A0	23	B0-3
21M-01-21950	B0200-01A0	42	B0-5
21M-03-15142	C0100-07A0	8	C0-17
21M-03-21110	C0100-01A0	1	C0-3
21M-03-21120	C0100-01A0	2	C0-3
21M-03-21131	C0100-01A0	18	C0-3
21M-03-21181	C0100-01A0	24	C0-3
21M-03-21191	C0100-01A0	27	C0-3
21M-03-21211	C0100-01A0	30	C0-3
21M-03-21221	C0100-01A0	33	C0-3
21M-03-21231	C0100-10A0	15	C0-25
21M-03-21241	C0100-10A0	8	C0-25
21M-03-21250	C0100-10A0	17	C0-25
21M-03-21261	C0100-10A0	6	C0-25
21M-03-21271	C0100-10A0	18	C0-25
21M-03-21282	C0100-10A0	9	C0-25
21M-03-21291	C0100-10A0	20	C0-25
21M-03-21311	C0100-10A0	1	C0-25
21M-03-21321	C0100-10A0	2	C0-25
21M-03-21331	C0100-07A0	1	C0-17
21M-03-21340	C0100-07A0	3	C0-17
21M-03-21350	C0100-01A0	21	C0-3
21M-03-21420	C0100-03A0	7	C0-7
21M-03-21430	C0100-02A0	7	C0-5
21M-03-21440	C0100-02A0	21	C0-5
21M-03-21450	C0100-02A0	4	C0-5
21M-03-21460	C0100-02A0	1	C0-5
21M-03-21471	C0100-03A0	13	C0-7
21M-03-21481	C0100-11A0	7	C0-27
21M-03-21490	C0100-11A0	11	C0-27
21M-03-21511	C0100-04A0	1	C0-9
21M-03-21522	C0100-03A0	16	C0-7
21M-03-21550	C0100-02A0	24	C0-5
21M-03-21562	C0100-03A0	19	C0-7
21M-03-21571	C0100-01A0	13	C0-3
21M-03-21582	C0100-03A0	22	C0-7
21M-03-21592	C0100-03A0	25	C0-7
21M-03-21611	C0100-11A0	1	C0-27
21M-03-21632	C0100-09A0	1	C0-21
21M-03-21641	C0100-09A0	7	C0-21
21M-03-21652	C0100-09A0	2	C0-21
21M-03-21661	C0100-09A0	8	C0-21
21M-03-21670	C0100-01A0	10	C0-3
21M-03-21680	C0100-03A0	4	C0-7
21M-03-21690	C0100-04A0	12	C0-9
21M-03-21710	C0100-04A0	13	C0-9
21M-03-21720	C0100-04A0	14	C0-9
21M-03-21750	C0100-04A0	15	C0-9
21M-03-21760	C0100-04A0	16	C0-9
21M-03-21771	C0100-04A0	10	C0-9
21M-03-21781	C0100-04A0	11	C0-9
21M-03-21792	C0100-04A0	21	C0-9
21M-03-21812	C0100-04A0	22	C0-9
21M-03-21823	C0100-04A0	23	C0-9
21M-03-21832	C0100-04A0	24	C0-9
21M-03-21840	C0100-04A0	17	C0-9
21M-03-21850	C0100-04A0	18	C0-9
21M-03-21860	C0100-04A0	19	C0-9
21M-03-21870	C0100-04A0	5	C0-9
21M-03-21880	C0100-04A0	6	C0-9
21M-03-21890	C0100-04A0	7	C0-9
21M-03-21930	C0100-04A0	8	C0-9
21M-03-21951	C0100-03A0	10	C0-7
21M-03-21970	C0100-04A0	2	C0-9
21M-03-22111	C0100-05A0	1	C0-11
21M-03-22120	C0100-06A0	44	C0-13
21M-03-22131	C0100-06A0	1	C0-13
21M-03-22140	C0100-06A0	20	C0-13
21M-03-22150	C0100-06A0	32	C0-13
21M-03-22160	C0100-06A0	10	C0-13
21M-03-22170	C0100-06A0	29	C0-13
21M-03-22170	C0100-06A0	41	C0-13
21M-03-22180	C0100-06A0	13	C0-13
21M-03-22191	C0100-06A0	52	C0-15
21M-03-22211	C0100-09A0	47	C0-21
21M-03-22230	C0100-09A0	48	C0-21
21M-03-22240	C0100-07A0	18	C0-17
21M-03-22250	C0100-05A0	12	C0-11
21M-03-22260	C0100-07A0	29	C0-17
21M-03-22270	C0100-03A0	1	C0-7
21M-03-22311	C0100-09A0	12	C0-21
21M-03-22321	C0100-09A0	17	C0-21
21M-03-22331	C0100-09A0	23	C0-21
21M-03-22341	C0100-09A0	29	C0-21
21M-03-22351	C0100-09A0	35	C0-21
21M-03-22361	C0100-09A0	41	C0-21
21M-03-22371	C0100-09A0	13	C0-21
21M-03-22381	C0100-09A0	18	C0-21
21M-03-22391	C0100-09A0	19	C0-21
21M-03-22411	C0100-09A0	24	C0-21
21M-03-22421	C0100-09A0	25	C0-21
21M-03-22431	C0100-09A0	30	C0-21
21M-03-22440	C0100-09A0	31	C0-21
21M-03-22451	C0100-09A0	32	C0-21
21M-03-22461	C0100-09A0	36	C0-21
21M-03-22470	C0100-09A0	37	C0-21
21M-03-22480	C0100-09A0	38	C0-21
21M-03-22491	C0100-09A0	42	C0-21
21M-03-22510	C0100-09A0	43	C0-21
21M-03-22521	C0100-09A0	44	C0-21
21M-03-22531	C0100-09A0	20	C0-21
21M-03-22541	C0100-09A0	26	C0-21
21M-03-22550	C0100-09A0	14	C0-21
21M-03-22560	C0100-09A0	4	C0-21
21M-03-22570	C0100-09A0	9	C0-21
21M-03-22611	C0100-04A0	25	C0-9
21M-03-22631	C0100-04A0	33	C0-9
21M-03-22650	C0100-04A0	28	C0-9
21M-03-22662	C0100-04A0	31	C0-9
21M-03-22670	C0100-04A0	32	C0-9
21M-03-22681	C0100-04A0	27	C0-9
21M-03-22691	C0100-04A0	26	C0-9
21M-03-22710	C0100-04A0	29	C0-9
21M-03-22720	C0100-04A0	30	C0-9
21M-03-22731	C0100-04A0	20	C0-9
21M-03-22740	C0100-04A0	36	C0-9
21M-04-21113	D0100-01A0	5	D0-3
21M-04-21130	D0100-01A0	6	D0-3
21M-04-21290	D0100-01A0	7	D0-3
21M-04-21312	D0100-01A0	9	D0-3

https://truckmanualshub.com/

PART NO.	FIG NO.	INDEX	PAGE
21M-04-21321	D0200-01A0	23	D0-5
21M-04-21330	D0200-01A0	30	D0-5
21M-04-21340	D0200-01A0	33	D0-5
21M-04-21350	D0200-01A0	36	D0-5
21M-04-21361	D0200-02A0	13	D0-9
21M-04-21390	D0200-01A0	3	D0-5
21M-04-21410	D0200-01A0	5	D0-5
21M-04-21421	D0200-01A0	1	D0-5
21M-04-21430	D0200-01A0	2	D0-5
21M-04-21450	D0200-03A0	16	D0-13
21M-04-21460	D0200-03A0	19	D0-13
21M-04-21470	D0200-02A0	45	D0-9
21M-04-21480	D0200-02A0	32	D0-9
21M-04-21490	D0200-02A0	16	D0-9
21M-04-21510	D0200-02A0	51	D0-11
21M-04-21530	D0200-02A0	9	D0-9
21M-04-21530	D0200-03A0	13	D0-13
21M-04-21540	D0200-03A0	27	D0-13
21M-04-21550	D0200-02A0	35	D0-9
21M-04-21560	D0200-02A0	24	D0-9
21M-06-14120	K1730-01A0	1	K0-101
21M-06-14170	E0200-02A0	8	E0-9
21M-06-14170	K0700-02A0	39	K0-21
21M-06-15510	E0310-01A1	4	E0-27
21M-06-15510	E0310-01A2	6	E0-29
21M-06-15510	E0310-01A4	10	E0-31
21M-06-15510	E0310-01A5	1	E0-33
21M-06-21121	K1110-23A0	1	K0-71
21M-06-21130	E0200-06A0	2	E0-19
21M-06-21141	E0200-01A0	7	E0-7
21M-06-21150	K1110-19A0	33	K0-63
21M-06-21160	E0310-01A6	7	E0-35
21M-06-21160	E0310-01A8	7	E0-37
21M-06-21160	E0310-01A9	2	E0-39
21M-06-21160	E0310-01B1	2	E0-41
21M-06-21171	E0200-01A0	1	E0-7
21M-06-21180	T1110-09A0	17	T0-27
21M-06-21180	T1110-09A1	17	T0-29
21M-06-21190	C0100-06A0	47	C0-13
21M-06-21331	E0200-08A0	1	E0-23
21M-06-21411	E0200-02A0	1	E0-9
21M-25-11101	N1110-01A0	1	N0-3
21M-25-11170	N1110-01A0	5	N0-3
21M-25-11210	N1110-01A0	8	N0-3
21M-25-11260	N1110-01A0	2	N0-3
21M-25-11270	N1110-01A0	3	N0-3
21M-26-00030	Y0260-01A0		Y0-3
21M-26-11112	N1210-05A0	1	N0-17
21M-26-11122	N1210-05A0	2	N0-17
21M-26-11140	N1210-01A0	29	N0-5
21M-26-11140	N1210-01A0	29	N0-11
21M-26-11140	Y0260-01A0	23	Y0-3
21M-26-11150	N1210-01A0	28	N0-5
21M-26-11150	N1210-01A0	28	N0-11
21M-26-11150	Y0260-01A0	22	Y0-3
21M-26-11161	N1210-01A0	37	N0-5
21M-26-11161	N1210-01A0	37	N0-11
21M-26-11161	Y0260-01A0	31	Y0-3
21M-26-11180	N1210-01A0	14	N0-5
21M-26-11180	N1210-01A0	14	N0-11
21M-26-11180	Y0260-01A0	8	Y0-3
21M-26-11190	N1210-01A0	34	N0-5
21M-26-11190	N1210-01A0	34	N0-11
21M-26-11190	Y0260-01A0	28	Y0-3
21M-26-11260	N1210-01A0	27	N0-5
21M-26-11260	N1210-01A0	27	N0-11
21M-26-11260	Y0260-01A0	21	Y0-3
21M-26-11270	N1210-01A0	42	N0-5
21M-26-11270	N1210-01A0	42	N0-11
21M-26-21130	N1210-01A0	35	N0-5
21M-26-21130	N1210-01A0	35	N0-11
21M-26-21130	Y0260-01A0	29	Y0-3
21M-26-21170	N1210-01A0	7	N0-5
21M-26-21170	N1210-01A0	7	N0-11
21M-26-21170	Y0260-01A0	1	Y0-3
21M-26-21180	N1210-01A0	49	N0-7
21M-26-21180	N1210-01A0	49	N0-13
21M-26-21190	N1210-02A0	16	N0-9
21M-26-21190	N1210-04A0	20	N0-15
21M-26-21220	N1210-01A0	50	N0-7
21M-26-21220	N1210-01A0	50	N0-13
21M-27-00050	R1120-07A0		R0-21
21M-27-00050	R1120-15A0		R0-39
21M-27-00110	R1120-07A0	10	R0-21
21M-27-00110	R1120-15A0	10	R0-39
21M-27-11111	R1120-07A0	31	R0-21
21M-27-11111	R1120-15A0	31	R0-39
21M-27-11120	R1120-07A0	26	R0-21
21M-27-11120	R1120-15A0	26	R0-39
21M-27-11130	R1120-07A0	21	R0-21
21M-27-11130	R1120-15A0	21	R0-39
21M-27-11140	R1120-07A0	15	R0-21
21M-27-11140	R1120-15A0	15	R0-39
21M-27-11150	R1120-07A0	23	R0-21
21M-27-11150	R1120-15A0	23	R0-39
21M-27-11160	R1120-07A0	24	R0-21
21M-27-11160	R1120-15A0	24	R0-39
21M-27-11170	R1120-07A0	25	R0-21
21M-27-11170	R1120-15A0	25	R0-39
21M-27-11180	R1120-07A0	14	R0-21
21M-27-11180	R1120-15A0	14	R0-39
21M-27-11190	R1120-07A0	34	R0-21
21M-27-11190	R1120-15A0	34	R0-39
21M-27-11210	R1120-07A0	4	R0-21
21M-27-11210	R1120-15A0	4	R0-39
21M-27-11220	R1120-07A0	40	R0-21
21M-27-11220	R1120-15A0	40	R0-39
21M-27-11230	R1120-07A0	16	R0-21
21M-27-11230	R1120-15A0	16	R0-39
21M-27-11240	R1120-07A0	29	R0-21
21M-27-11240	R1120-15A0	29	R0-39
21M-27-11250	R1120-07A0	18	R0-21
21M-27-11250	R1120-15A0	18	R0-39
21M-27-11260	R1120-07A0	17	R0-21
21M-27-11260	R1120-15A0	17	R0-39
21M-27-11270	R1120-07A0	22	R0-21
21M-27-11270	R1120-15A0	22	R0-39
21M-27-11280	R1120-07A0	9	R0-21
21M-27-11280	R1120-15A0	9	R0-39
21M-27-11290	R1120-07A0	11	R0-21
21M-27-11290	R1120-15A0	11	R0-39
21M-27-11380	R1120-07A0	13	R0-21
21M-27-11380	R1120-15A0	13	R0-39
21M-27-11411	R1120-07A0	27	R0-21
21M-27-11411	R1120-15A0	27	R0-39
21M-30-00060	R1120-05A0		R0-15
21M-30-00060	R1120-13A0		R0-33
21M-30-00100	R1120-04A3		R0-13
21M-30-00100	R1120-12A3		R0-31
21M-30-00202	R1120-05A0		R0-15
21M-30-00202	R1120-13A0		R0-33
21M-30-00301	R1120-02A0		R0-9
21M-30-00301	R1120-10A0		R0-27
21M-30-11111	R1110-01A0	1	R0-5

https://truckmanualshub.com/

PART NO.	FIG NO.	INDEX	PAGE
21M-30-12131	R1120-01A3	1	R0-7
21M-30-12141	R1120-09A3	1	R0-25
21M-30-12170	R1110-01A0	3	R0-5
21M-30-12210	R1170-01A0	1	R0-47
21M-30-12260	R1170-01A0	4	R0-47
21M-30-12331	R1120-06A3	1	R0-17
21M-30-12331	R1120-14A3	1	R0-35
21M-30-12340	R1150-01A0	21	R0-45
21M-30-12350	R1150-01A0	24	R0-45
21M-30-12360	R1120-06A4	1	R0-19
21M-30-12360	R1120-14A4	1	R0-37
21M-30-12370	R1120-06A4	2	R0-19
21M-30-12370	R1120-14A4	2	R0-37
21M-30-12410	R1140-01A0	1	R0-43
21M-30-12420	R1140-01A0	2	R0-43
21M-30-13120	R1110-01A0	10	R0-5
21M-30-13130	R1110-01A0	16	R0-5
21M-30-13140	R1110-01A0	11	R0-5
21M-30-14111	R1120-03A0	12	R0-11
21M-30-14111	R1120-11A0	12	R0-29
21M-30-14120	R1120-03A0	7	R0-11
21M-30-14120	R1120-11A0	7	R0-29
21M-30-14130	R1120-03A0	6	R0-11
21M-30-14130	R1120-11A0	6	R0-29
21M-30-14150	R1120-03A0	9	R0-11
21M-30-14150	R1120-11A0	9	R0-29
21M-30-14160	R1120-03A0	10	R0-11
21M-30-14160	R1120-11A0	10	R0-29
21M-30-14170	R1120-03A0	11	R0-11
21M-30-14170	R1120-11A0	11	R0-29
21M-30-14200	R1120-03A0		R0-11
21M-30-14200	R1120-11A0		R0-29
21M-30-14310	R1120-03A0	8	R0-11
21M-30-14310	R1120-11A0	8	R0-29
21M-30-15100	R1120-04A3	1	R0-13
21M-30-15100	R1120-12A3	1	R0-31
21M-30-15110	R1120-04A3	2	R0-13
21M-30-15110	R1120-12A3	2	R0-31
21M-30-15120	R1120-04A3	3	R0-13
21M-30-15120	R1120-12A3	3	R0-31
21M-30-15130	R1120-04A3	4	R0-13
21M-30-15130	R1120-12A3	4	R0-31
21M-30-15180	R1120-05A0	13	R0-15
21M-30-15180	R1120-13A0	13	R0-33
21M-30-15190	R1120-04A3	10	R0-13
21M-30-15190	R1120-12A3	10	R0-31
21M-30-16101	R1120-05A0	1	R0-15
21M-30-16101	R1120-13A0	1	R0-33
21M-30-16110	R1120-05A0	2	R0-15
21M-30-16110	R1120-13A0	2	R0-33
21M-30-16120	R1120-05A0	3	R0-15
21M-30-16120	R1120-13A0	3	R0-33
21M-30-16130	R1120-05A0	4	R0-15
21M-30-16130	R1120-13A0	4	R0-33
21M-30-16140	R1120-05A0	5	R0-15
21M-30-16140	R1120-13A0	5	R0-33
21M-30-16151	R1120-05A0	6	R0-15
21M-30-16151	R1120-13A0	6	R0-33
21M-30-16160	R1120-05A0	7	R0-15
21M-30-16160	R1120-13A0	7	R0-33
21M-30-16190	R1120-05A0	10	R0-15
21M-30-16190	R1120-13A0	10	R0-33
21M-30-16200	R1120-05A0	11	R0-15
21M-30-16200	R1120-13A0	11	R0-33
21M-30-16210	R1120-05A0	12	R0-15
21M-30-16211	R1120-13A0	12	R0-33
21M-30-17100	R1120-02A0	1	R0-9
21M-30-17100	R1120-10A0	1	R0-27
21M-30-17110	R1120-02A0	2	R0-9
21M-30-17110	R1120-10A0	2	R0-27
21M-30-17121	R1120-02A0	3	R0-9
21M-30-17121	R1120-10A0	3	R0-27
21M-30-17130	R1120-02A0	8	R0-9
21M-30-17130	R1120-10A0	8	R0-27
21M-30-17170	R1120-02A0	9	R0-9
21M-30-17170	R1120-10A0	9	R0-27
21M-30-18132	R1150-01A0	17	R0-45
21M-30-18182	R1150-01A0	18	R0-45
21M-30-23110	R1110-01A0	9	R0-5
21M-30-28110	R1150-01A0	1	R0-45
21M-30-28120	R1150-01A0	13	R0-45
21M-30-28140	R1150-01A0	9	R0-45
21M-30-28150	R1150-01A0	10	R0-45
21M-30-28160	R1150-01A0	14	R0-45
21M-30-28170	R1150-01A0	2	R0-45
21M-30-28220	R1150-01A0	5	R0-45
21M-30-28230	R1150-01A0	6	R0-45
21M-32-00201	Y0321-01A1		Y0-7
21M-32-01132	R0500-01A3		R0-3
21M-32-05010	Y0320-01A0	K2	Y0-5
21M-32-05020	Y0320-01A0	K1	Y0-5
21M-32-11120	R0500-01A3	1	R0-3
21M-32-11120	Y0321-01A1	1	Y0-7
21M-32-11130	R0500-01A3	2	R0-3
21M-32-11130	Y0321-01A1	2	Y0-7
21M-32-11141	R0500-01A3	4	R0-3
21M-32-11141	Y0321-01A1	4	Y0-7
21M-32-11150	R0500-01A3	6	R0-3
21M-32-11150	Y0321-01A1	6	Y0-7
21M-32-11160	R0500-01A3	3	R0-3
21M-32-11160	Y0321-01A1	3	Y0-7
21M-32-11171	R0500-01A3	5	R0-3
21M-32-11171	Y0321-01A1	5	Y0-7
21M-32-11180	R0500-01A3	10	R0-3
21M-32-11180	Y0321-01A1	7	Y0-7
21M-32-11190	R0500-01A3	11	R0-3
21M-32-11190	Y0321-01A1	8	Y0-7
21M-32-11210	Y0320-01A0		Y0-5
21M-32-11220	R0500-01A3	9	R0-3
21M-32-11220	Y0320-01A0		Y0-5
21M-32-11220	Y0320-01A0		Y0-5
21M-32-11251	R0500-01A3	7	R0-3
21M-32-11260	R0500-01A3	8	R0-3
21M-32-11260	Y0320-01A0		Y0-5
21M-38-11130	B0600-04A0	1	B0-13
21M-38-11140	B0600-01A0	3	B0-7
21M-38-11230	B0600-04A0	12	B0-13
21M-38-11251	B0600-04A0	14	B0-13
21M-38-11261	B0600-04A0	15	B0-13
21M-38-11270	B0600-04A0	6	B0-13
21M-38-11290	B0600-04A0	9	B0-13
21M-38-11331	B0600-02A0	8	B0-9
21M-38-11350	B0600-01A0	21	B0-7
21M-38-11410	B0600-01A0	24	B0-7
21M-38-11540	B0600-04A0	13	B0-13
21M-38-11570	B0600-01A0	18	B0-7
21M-38-21121	B0600-01A0	2	B0-7
21M-38-21310	B0600-02A0	1	B0-9
21M-38-21320	B0600-02A0	5	B0-9
21M-38-21340	B0600-01A0	16	B0-7
21M-38-21370	B0600-03A0	3	B0-11
21M-38-21422	B0600-06A0	18	B0-17
21M-38-21430	B0600-06A0	15	B0-17
21M-38-21451	B0600-06A0	7	B0-17

https://truckmanualshub.com/

PART NO.	FIG NO.	INDEX	PAGE
21M-38-21460	B0600-06A0	4	B0-17
21M-38-21470	B0600-05A0	5	B0-15
21M-38-21480	B0600-06A0	1	B0-17
21M-38-21490	B0600-05A0	1	B0-15
21M-38-21510	B0600-01A0	1	B0-7
21M-38-21520	B0600-05A0	17	B0-15
21M-38-21580	B0600-03A0	1	B0-11
21M-38-21590	B0600-03A0		B0-11
21M-43-21130	K1110-27A0	31	K0-79
21M-46-15410	J1410-01A0	1	J0-13
21M-46-15420	J1410-01A0	2	J0-13
21M-46-15430	J1410-01A0	3	J0-13
21M-46-15610	J1110-02A0	15	J0-5
21M-46-15610	J1110-02A1	15	J0-7
21M-46-15620	J1110-02A0	16	J0-5
21M-46-15620	J1110-02A1	16	J0-7
21M-46-15640	J1110-02A0	17	J0-5
21M-46-15640	J1110-02A1	17	J0-7
21M-46-15650	J1110-02A0	18	J0-5
21M-46-15650	J1110-02A1	18	J0-7
21M-46-21111	J1110-01A0	1	J0-3
21M-46-21410	J1110-03A0	1	J0-9
21M-46-21421	J1110-03A0	2	J0-9
21M-46-21430	J1110-03A0	3	J0-9
21M-46-21441	J1110-03A0	9	J0-9
21M-46-21481	J1110-03A0	12	J0-9
21M-46-21510	J1110-03A0	14	J0-9
21M-46-21521	J1110-03A0	15	J0-9
21M-46-21531	J1110-03A0	16	J0-9
21M-46-21541	J1110-03A0	17	J0-9
21M-46-21550	J1110-03A0	18	J0-9
21M-46-21562	J1110-03A0	19	J0-9
21M-46-21570	J1110-03A0	20	J0-9
21M-46-21581	J1110-03A0	21	J0-9
21M-46-21590	J1110-03A0	22	J0-9
21M-46-21610	J1110-03A0	23	J0-9
21M-46-21622	J1110-03A0	24	J0-9
21M-46-21631	J1110-03A0	25	J0-9
21M-46-21641	J1110-03A0	26	J0-9
21M-46-21671	J1110-03A0	4	J0-9
21M-46-21680	J1110-03A0	5	J0-9
21M-46-21710	J1110-02A0	8	J0-5
21M-46-21710	J1110-02A0	34	J0-5
21M-46-21710	J1110-02A1	8	J0-7
21M-46-21710	J1110-02A1	34	J0-7
21M-46-21740	J1110-02A0	35	J0-5
21M-46-21740	J1110-02A1	35	J0-7
21M-46-21750	J1110-02A0	36	J0-5
21M-46-21750	J1110-02A1	36	J0-7
21M-46-21760	J1110-03A0	6	J0-9
21M-46-21770	J1110-03A0	27	J0-9
21M-46-21790	J1110-03A0	29	J0-9
21M-46-21810	J1110-02A0		J0-5
21M-46-21810	J1110-02A1		J0-7
21M-46-21820	J1110-03A0	10	J0-9
21M-46-21830	J1110-02A0	31	J0-5
21M-46-21830	J1110-02A1	31	J0-7
21M-46-21840	J1110-02A0	19	J0-5
21M-46-21840	J1110-02A1	19	J0-7
21M-46-21850	J1110-02A0	20	J0-5
21M-46-21850	J1110-02A1	20	J0-7
21M-46-21860	J1110-02A0	21	J0-5
21M-46-21860	J1110-02A1	21	J0-7
21M-46-21880	J1110-03A0	30	J0-9
21M-46-21890	J1110-03A0	31	J0-9
21M-46-21910	J1110-03A0	7	J0-9
21M-46-21920	J1110-03A0	8	J0-9

PART NO.	FIG NO.	INDEX	PAGE
21M-46-21930	J1110-03A0	32	J0-9
21M-46-21940	J1110-03A0	33	J0-9
21M-46-21950	J1110-03A0	34	J0-9
21M-46-21960	J1110-03A0	13	J0-9
21M-46-21970	J1110-03A0	35	J0-9
21M-46-21980	J1110-03A0	11	J0-9
21M-46-21990	J1110-03A0	28	J0-9
21M-46-24112	M1510-01A0		M0-39
21M-46-24210	M1520-01A0	1	M0-41
21M-46-24470	J1110-03A0	38	J0-9
21M-46-24480	J1110-02A0	14	J0-5
21M-46-24480	J1110-02A1	14	J0-7
21M-54-00630	K1110-04A0		K0-33
21M-54-00630	K1110-05A0		K0-35
21M-54-00630	K1110-06A0		K0-37
21M-54-00630	K1110-07A0		K0-39
21M-54-00630	K1110-08A0		K0-41
21M-54-00630	K1110-09A0		K0-43
21M-54-00630	K1110-10A0		K0-45
21M-54-00630	K1110-01A0		K0-31
21M-54-00630	K1110-11A0		K0-47
21M-54-00630	K1110-12A0		K0-49
21M-54-11220	H0110-04A0	3	H0-11
21M-54-11670	M1150-01A0	11	M0-19
21M-54-11730	M1130-01A0	12	M0-11
21M-54-11730	M1130-01A1	12	M0-15
21M-54-11760	M1130-01A0	30	M0-11
21M-54-11760	M1130-01A0	42	M0-11
21M-54-11760	M1130-01A1	23	M0-15
21M-54-11760	M1130-01A1	35	M0-15
21M-54-11760	M1140-01A0	12	M0-17
21M-54-11760	M1140-01A0	22	M0-17
21M-54-11771	H0110-04A0	11	H0-11
21M-54-11890	M1420-01A0	6	M0-37
21M-54-12450	M1120-01A0	2	M0-5
21M-54-12771	M1150-02A0	15	M0-21
21M-54-12971	W1118-01A1	15	W0-3
21M-54-13360	M1210-01A1	32	M0-25
21M-54-13360	M1210-01A1	34	M0-25
21M-54-13360	M1210-01A2	32	M0-27
21M-54-13360	M1210-01A2	34	M0-27
21M-54-13611	W1118-01A1	9	W0-3
21M-54-13621	W1118-01A1	11	W0-3
21M-54-13760	H0110-04A0	17	H0-11
21M-54-13770	H0110-04A0	18	H0-11
21M-54-14330	M1220-01A0	8	M0-31
21M-54-14690	W1118-01A1	4	W0-3
21M-54-15550	M1130-01A0	19	M0-11
21M-54-15570	M1130-01A0	23	M0-11
21M-54-15580	M1130-01A0	24	M0-11
21M-54-15590	M1130-01A0	2	M0-11
21M-54-15590	M1130-01A1	2	M0-15
21M-54-15610	M1130-01A0	3	M0-11
21M-54-15610	M1130-01A1	3	M0-15
21M-54-15620	M1130-01A0	4	M0-11
21M-54-15620	M1130-01A1	4	M0-15
21M-54-15630	M1130-01A0	5	M0-11
21M-54-15630	M1130-01A1	5	M0-15
21M-54-16512	M1130-01A0	28	M0-11
21M-54-16512	M1130-01A0	39	M0-11
21M-54-16512	M1130-01A1	21	M0-15
21M-54-16512	M1130-01A1	32	M0-15
21M-54-16780	M1220-01A0	16	M0-31
21M-54-16780	M1220-01A0	20	M0-31
21M-54-16950	J1110-02A0	2	J0-5
21M-54-16950	J1110-02A0	9	J0-5
21M-54-16950	J1110-02A1	2	J0-7

https://truckmanualshub.com/

PART NO.	FIG NO.	INDEX	PAGE
21M-54-16950	J1110-02A1	9	JO-7
21M-54-17320	M1210-01A1	17	MO-25
21M-54-17320	M1210-01A2	17	MO-27
21M-54-17460	M1120-01A0	27	MO-5
21M-54-17631	M1150-02A0	20	MO-21
21M-54-17940	M1150-02A0	21	MO-21
21M-54-17980	M1120-01A0	53	MO-7
21M-54-18730	M1110-01A0	20	MO-3
21M-54-18740	M1110-01A0	21	MO-3
21M-54-18850	M1120-01A0	3	MO-5
21M-54-18930	M1140-01A0	2	MO-17
21M-54-19141	M1310-01A0	1	MO-33
21M-54-19250	H0110-04A0	22	HO-11
21M-54-19260	H0110-04A0	23	HO-11
21M-54-19270	H0110-04A0	24	HO-11
21M-54-19311	M1810-03A0	13	MO-47
21M-54-19331	M1810-03A0	23	MO-47
21M-54-19340	M1810-03A0	22	MO-47
21M-54-19350	M1810-03A0	24	MO-47
21M-54-19450	H0110-04A0	10	HO-11
21M-54-21110	M1110-01A0	1	MO-3
21M-54-21121	M1110-01A0	17	MO-3
21M-54-21130	M1110-01A0	18	MO-3
21M-54-21160	W1118-01A1	13	WO-3
21M-54-21211	M1120-01A0	1	MO-5
21M-54-21221	M1120-01A0	8	MO-5
21M-54-21231	M1120-01A0	15	MO-5
21M-54-21241	M1120-01A0	21	MO-5
21M-54-21251	M1120-01A0	30	MO-5
21M-54-21261	M1120-01A0	18	MO-5
21M-54-21271	M1120-01A0	26	MO-5
21M-54-21281	M1120-01A0	44	MO-5
21M-54-21290	M1120-01A0	12	MO-5
21M-54-21311	M1120-02A0	1	MO-9
21M-54-21322	M1120-02A0	4	MO-9
21M-54-21331	M1120-02A0	9	MO-9
21M-54-21342	M1120-02A0	12	MO-9
21M-54-21360	M1120-02A0	15	MO-9
21M-54-21371	M1120-02A0	21	MO-9
21M-54-21412	M1130-01A0	1	MO-11
21M-54-21421	M1130-01A0	36	MO-11
21M-54-21421	M1130-01A1	29	MO-15
21M-54-21431	M1130-01A0	25	MO-11
21M-54-21442	M1130-01A0	18	MO-11
21M-54-21452	M1130-01A0	41	MO-11
21M-54-21452	M1130-01A1	34	MO-15
21M-54-21460	M1130-01A0	29	MO-11
21M-54-21460	M1130-01A1	22	MO-15
21M-54-21480	M1140-01A0	3	MO-17
21M-54-21490	M1140-01A0	4	MO-17
21M-54-21511	M1140-01A0	1	MO-17
21M-54-21521	M1140-01A0	17	MO-17
21M-54-21531	M1140-01A0	7	MO-17
21M-54-21540	M1140-01A0	19	MO-17
21M-54-21550	M1140-01A0	9	MO-17
21M-54-21550	M1140-01A0	20	MO-17
21M-54-21560	M1140-01A0	21	MO-17
21M-54-21570	M1140-01A0	10	MO-17
21M-54-21580	M1140-01A0	11	MO-17
21M-54-21590	M1140-01A0	5	MO-17
21M-54-21620	M1160-01A0	1	MO-23
21M-54-21631	H0110-04A0	12	HO-11
21M-54-21640	M1160-01A0	2	MO-23
21M-54-21651	M1160-01A0	3	MO-23
21M-54-21661	M1120-01A0	4	MO-5
21M-54-21670	M1130-01A0	20	MO-11
21M-54-21680	H0110-04A0	4	HO-11
21M-54-21690	H0110-04A0	1	HO-11
21M-54-21712	M1210-01A1	14	MO-25
21M-54-21723	M1210-01A1	27	MO-25
21M-54-21723	M1210-01A2	27	MO-27
21M-54-21731	M1210-01A1	31	MO-25
21M-54-21731	M1210-01A2	31	MO-27
21M-54-21780	M1120-01A0	31	MO-5
21M-54-21811	M1120-01A0	32	MO-5
21M-54-21830	M1120-01A0	45	MO-5
21M-54-21841	M1120-01A0	46	MO-5
21M-54-21851	M1120-02A0	27	MO-9
21M-54-21861	M1150-02A0	9	MO-21
21M-54-21881	M1120-01A0	38	MO-5
21M-54-21890	M1120-01A0	39	MO-5
21M-54-21911	M1150-01A0	6	MO-19
21M-54-21920	M1150-01A0	7	MO-19
21M-54-21932	M1150-02A0	19	MO-21
21M-54-21940	M1150-02A0	14	MO-21
21M-54-21952	M1150-02A0	8	MO-21
21M-54-21960	M1150-02A0	10	MO-21
21M-54-21972	M1150-02A0	1	MO-21
21M-54-21991	M1210-01A1	12	MO-25
21M-54-21991	M1210-01A2	12	MO-27
21M-54-22112	M1150-01A0	22	MO-19
21M-54-22121	M1210-01A1	39	MO-25
21M-54-22121	M1210-01A2	39	MO-27
21M-54-22130	M1150-01A0	23	MO-19
21M-54-22141	M1150-01A0	24	MO-19
21M-54-22152	M1150-01A0	12	MO-19
21M-54-22181	M1150-01A0	13	MO-19
21M-54-22192	M1150-01A0	14	MO-19
21M-54-22210	M1150-02A0	16	MO-21
21M-54-22240	M1120-01A0	5	MO-5
21M-54-22260	M1150-02A0	28	MO-21
21M-54-22281	M1120-01A0	9	MO-5
21M-54-22290	M1150-01A0	25	MO-19
21M-54-22310	M1220-01A0	1	MO-31
21M-54-22330	M1510-01A0	2	MO-39
21M-54-22360	M1150-02A0	37	MO-21
21M-54-22371	M1150-02A0	36	MO-21
21M-54-22413	M1220-01A0	15	MO-31
21M-54-22422	M1220-01A0	17	MO-31
21M-54-22430	W1118-01A1	1	WO-3
21M-54-22440	W1118-01A1	2	WO-3
21M-54-22461	M1150-01A0	15	MO-19
21M-54-22472	M1150-02A0	43	MO-21
21M-54-22481	M1150-02A0	44	MO-21
21M-54-22491	M1150-02A0	45	MO-21
21M-54-22512	M1810-03A0	1	MO-47
21M-54-22521	M1810-02A0	1	MO-45
21M-54-22531	M1810-01A0	14	MO-43
21M-54-22541	M1810-01A0	1	MO-43
21M-54-22572	M1810-02A0	4	MO-45
21M-54-22581	M1150-01A0	1	MO-19
21M-54-22740	M1150-02A0	32	MO-21
21M-54-22750	M1810-03A0	21	MO-47
21M-54-22761	M1120-02A0	22	MO-9
21M-54-22781	M1120-02A0	23	MO-9
21M-54-22810	M1510-01A0	4	MO-39
21M-54-22821	M1510-01A0	5	MO-39
21M-54-22830	M1510-01A0	6	MO-39
21M-54-22840	M1510-01A0	7	MO-39
21M-54-22850	M1510-01A0	8	MO-39
21M-54-22860	M1510-01A0	9	MO-39
21M-54-22910	M1110-01A0	3	MO-3
21M-54-22921	M1110-01A0	4	MO-3
21M-54-22931	M1110-01A0	5	MO-3

https://truckmanualshub.com/

PART NO.	FIG NO.	INDEX	PAGE
21M-54-22941	M1110-01A0	6	MO-3
21M-54-22950	M1110-01A0	7	MO-3
21M-54-22961	M1210-01A1	13	MO-25
21M-54-22961	M1210-01A2	13	MO-27
21M-54-22970	M1120-01A0	33	MO-5
21M-54-22980	M1120-01A0	34	MO-5
21M-54-22990	M1120-01A0	35	MO-5
21M-54-23111	J1110-02A0	1	JO-5
21M-54-23111	J1110-02A1	1	JO-7
21M-54-23121	J1110-02A0	7	JO-5
21M-54-23121	J1110-02A1	7	JO-7
21M-54-23131	J1110-02A0	3	JO-5
21M-54-23131	J1110-02A1	3	JO-7
21M-54-23141	J1110-02A0	10	JO-5
21M-54-23141	J1110-02A1	10	JO-7
21M-54-23150	J1110-02A0	11	JO-5
21M-54-23150	J1110-02A1	11	JO-7
21M-54-23160	J1110-02A0	4	JO-5
21M-54-23160	J1110-02A1	4	JO-7
21M-54-23220	M1150-02A0	33	MO-21
21M-54-23230	M1150-02A0	38	MO-21
21M-54-23240	M1150-02A0	2	MO-21
21M-54-23251	M1150-02A0	3	MO-21
21M-54-23280	M1150-02A0	39	MO-21
21M-54-23310	M1110-01A0	8	MO-3
21M-54-23320	M1110-01A0	9	MO-3
21M-54-23330	M1110-01A0	10	MO-3
21M-54-23340	M1110-01A0	11	MO-3
21M-54-23370	M1810-01A0	15	MO-43
21M-54-23380	M1810-01A0	2	MO-43
21M-54-23391	M1810-01A0	3	MO-43
21M-54-23420	M1110-01A0	12	MO-3
21M-54-23430	M1160-01A0	4	MO-23
21M-54-23450	M1210-01A1	33	MO-25
21M-54-23450	M1210-01A2	33	MO-27
21M-54-23460	D0100-01A0	27	DO-3
21M-54-23480	M1130-01A0	40	MO-11
21M-54-23480	M1130-01A1	33	MO-15
21M-54-23510	H0110-03A0	24	HO-9
21M-54-23520	M1810-02A0	5	MO-45
21M-54-23530	M1810-02A0	6	MO-45
21M-54-23540	M1810-02A0	7	MO-45
21M-54-23550	M1810-02A0	2	MO-45
21M-54-23560	M1810-02A0	3	MO-45
21M-54-23570	H0110-04A0	25	HO-11
21M-54-23610	M1120-02A0	32	MO-9
21M-54-23621	M1120-02A0	18	MO-9
21M-54-23631	M1150-02A0	29	MO-21
21M-54-23641	M1150-02A0	27	MO-21
21M-54-23710	M1120-01A0	52	MO-7
21M-54-23751	M1150-02A0	4	MO-21
21M-54-23770	M1150-02A0	40	MO-21
21M-54-23780	M1150-01A0	18	MO-19
21M-54-23790	M1150-01A0	19	MO-19
21M-54-23810	M1120-01A0	49	MO-7
21M-54-23821	M1810-03A0	2	MO-47
21M-54-23850	M1150-02A0	22	MO-21
21M-54-23860	M1150-02A0	23	MO-21
21M-54-23880	M1150-02A0	11	MO-21
21M-54-23890	M1150-02A0	5	MO-21
21M-54-23920	M1510-01A0	10	MO-39
21M-54-23930	M1510-01A0	11	MO-39
21M-54-24110	M1210-01A2	14	MO-27
21M-54-24121	M1210-02A2	1	MO-29
21M-54-24130	M1210-02A2	4	MO-29
21M-54-24211	M1130-01A1	18	MO-15
21M-54-24220	M1130-01A1	1	MO-15

PART NO.	FIG NO.	INDEX	PAGE
21M-60-11150	H0110-01A0	13	HO-3
21M-60-11202	H0110-02A0		HO-7
21M-60-11220	H0110-02A0	3	HO-7
21M-60-11240	H0110-01A0	30	HO-3
21M-60-11301	H0312-01A0		HO-29
21M-60-11311	H0312-01A0	20	HO-29
21M-60-11420	H0330-01A0	5	HO-35
21M-60-11510	H0120-01A0		HO-13
21M-60-11520	H0120-01A0	16	HO-13
21M-60-21113	H0110-01A0	1	HO-3
21M-60-21120	H0110-01A0	8	HO-3
21M-60-21130	H0110-01A0	44	HO-3
21M-60-21140	H0110-01A0	15	HO-3
21M-60-21160	H0110-01A0	42	HO-3
21M-60-21190	H0110-01A0		HO-3
21M-60-21200	H0330-01A0		HO-35
21M-60-21220	H0110-01A0	31	HO-3
21M-60-21280	H0110-01A0	7	HO-3
21M-60-21291	H0110-01A0	6	HO-3
21M-62-11110	H0312-01A0	18	HO-29
21M-62-11121	H0312-01A0	14	HO-29
21M-62-11140	H1210-01A0	42	HO-39
21M-62-11161	H1210-01A0	27	HO-39
21M-62-11171	H1210-01A0	1	HO-39
21M-62-11181	H1210-01A0	2	HO-39
21M-62-11191	H1210-02A0	19	HO-43
21M-62-11211	H1240-02A1	8	HO-51
21M-62-11221	H1210-02A0	4	HO-43
21M-62-11230	H1220-01A0	2	HO-45
21M-62-11241	H1220-01A0	1	HO-45
21M-62-11252	H0120-03A0	1	HO-19
21M-62-11310	H1310-01A0	1	HO-53
21M-62-11320	H1310-01A0	2	HO-53
21M-62-11331	H1310-01A0	14	HO-53
21M-62-11341	H1310-01A0	15	HO-53
21M-62-11390	H1210-01A0	17	HO-39
21M-62-11421	H1340-01A0	12	HO-55
21M-62-11430	H0120-03A0	11	HO-19
21M-62-11442	H1310-01A0	6	HO-53
21M-62-11451	H1310-01A0	19	HO-53
21M-62-11461	H1340-01A0	4	HO-55
21M-62-11471	H1340-01A0	8	HO-55
21M-62-11520	H1340-01A0	30	HO-55
21M-62-11590	H0312-02A0	31	HO-31
21M-62-11621	H0312-01A0	32	HO-29
21M-62-11650	H0312-02A0	19	HO-31
21M-62-11660	H0312-02A0	22	HO-31
21M-62-11670	H0312-02A0	12	HO-31
21M-62-11690	H1210-02A0	1	HO-43
21M-62-11721	H1210-02A0	29	HO-43
21M-62-11731	H0312-01A0	6	HO-29
21M-62-11741	H0312-01A0	7	HO-29
21M-62-11750	H0312-01A0	1	HO-29
21M-62-11781	H1210-01A0	35	HO-39
21M-62-11821	H1220-03A0	19	HO-49
21M-62-14120	R1120-08A0	2	RO-23
21M-62-14120	R1120-16A0	2	RO-41
21M-62-14130	R1120-08A0	3	RO-23
21M-62-14130	R1120-16A0	3	RO-41
21M-62-14150	R1120-08A0	1	RO-23
21M-62-14150	R1120-16A0	1	RO-41
21M-62-14310	H0110-02A0	18	HO-7
21M-62-14330	H0120-01A0	6	HO-13
21M-62-14340	H0120-01A0	7	HO-13
21M-62-14350	H0120-02A0	4	HO-17
21M-62-14370	H0120-02A0	1	HO-17
21M-62-14391	H0120-02A0	12	HO-17

https://truckmanualshub.com/

PART NO.	FIG NO.	INDEX	PAGE
21M-62-14411	H0120-01A0	19	H0-13
21M-62-14411	H0120-02A0	15	H0-17
21M-62-14420	H0110-02A0	7	H0-7
21M-62-14420	H0120-02A0	20	H0-17
21M-62-14431	H0120-02A0	24	H0-17
21M-62-14450	H0120-02A0	38	H0-17
21M-62-14460	H0330-01A0	27	H0-35
21M-62-14470	H0330-01A0	30	H0-35
21M-62-14480	H0330-01A0	35	H0-35
21M-62-14490	H0340-01A0	1	H0-37
21M-62-14570	H1840-01A0	2	H0-71
21M-62-14570	H1840-01A0	18	H0-71
21M-62-14580	H1840-01A0	3	H0-71
21M-62-14620	H1840-01A0	19	H0-71
21M-62-14631	N1310-01A0	2	N0-19
21M-62-14690	K1110-34A0	11	K0-93
21M-62-14710	K1110-34A0	4	K0-93
21M-62-14720	K1110-34A0	12	K0-93
21M-62-14730	K1110-34A0	13	K0-93
21M-62-14770	H1833-01A0	16	H0-67
21M-62-14780	K1110-34A0	5	K0-93
21M-62-14821	H1340-01A0	20	H0-55
21M-62-14831	H1340-01A0	21	H0-55
21M-62-14840	H1810-01A0	8	H0-59
21M-62-14850	H1831-02A0	26	H0-65
21M-62-14860	H1831-02A0	18	H0-65
21M-62-14870	H1831-02A0	16	H0-65
21M-62-14880	H1840-01A0	11	H0-71
21M-62-16111	H0110-03A0	1	H0-9
21M-62-16141	H0330-01A0	23	H0-35
21M-62-16151	H0330-01A0	19	H0-35
21M-62-16182	H0330-01A0	1	H0-35
21M-62-16251	N1210-04A0	3	N0-15
21M-62-16270	H0110-03A0	19	H0-9
21M-62-16290	N1310-01A0	19	N0-19
21M-62-16340	K1110-35A0	11	K0-95
21M-62-16350	H1833-02A0	10	H0-69
21M-62-16670	H0120-01A0	37	H0-13
21M-62-16722	H0240-01A0	5	H0-25
21M-62-17111	T1110-02A5	1	T0-09
21M-62-17121	T1110-02A5	2	T0-09
21M-62-17131	T1110-04A5	1	T0-19
21M-62-17141	T1110-04A5	6	T0-19
21M-62-17151	T1110-04A5	22	T0-19
21M-62-17162	T1110-04A5	33	T0-19
21M-62-17170	T1110-04A0	22	T0-15
21M-62-17180	T1110-04A0	6	T0-15
21M-62-17190	T1110-02A0	2	T0-07
21M-62-17211	T1110-01A7	4	T0-05
21M-62-17221	T1110-01A7	5	T0-05
21M-62-17230	T1110-01A0	14	T0-03
21M-62-17230	T1110-01A7	12	T0-05
21M-62-17230	T1110-04A0	13	T0-15
21M-62-17230	T1110-04A5	13	T0-19
21M-62-17250	T1110-04A0	11	T0-15
21M-62-17250	T1110-04A5	11	T0-19
21M-62-17260	T1110-02A0	3	T0-07
21M-62-17260	T1110-02A5	3	T0-09
21M-62-17270	T1110-01A0	2	T0-03
21M-62-17270	T1110-01A0	4	T0-03
21M-62-17270	T1110-01A7	6	T0-05
21M-62-17291	T1110-01A0	6	T0-03
21M-62-17291	T1110-01A7	8	T0-05
21M-62-17320	T1110-01A0	7	T0-03
21M-62-17320	T1110-01A7	9	T0-05
21M-62-17332	T1110-04A0	19	T0-15
21M-62-17332	T1110-04A5	19	T0-19
21M-62-17370	T1110-01A0	9	T0-03
21M-62-17370	T1110-01A7	11	T0-05
21M-62-17440	T1110-01A0	10	T0-03
21M-62-17440	T1110-01A7	2	T0-05
21M-62-17450	T1110-02A0	1	T0-07
21M-62-17480	T1110-01A0	11	T0-03
21M-62-17490	T1110-04A0	1	T0-15
21M-62-17510	T1110-01A0	12	T0-03
21M-62-17520	T1110-04A0	33	T0-15
21M-62-17770	H1840-03A2	1	H0-75
21M-62-18530	D0200-02A0	42	D0-9
21M-62-21110	H0311-01A0	27	H0-27
21M-62-21122	H0311-01A0	13	H0-27
21M-62-21131	H0311-01A0	1	H0-27
21M-62-21141	H0311-01A0	5	H0-27
21M-62-21150	H0311-01A0	33	H0-27
21M-62-21160	H0311-01A0	39	H0-27
21M-62-21171	H1220-03A0	1	H0-49
21M-62-21181	H1220-03A0	2	H0-49
21M-62-21190	H1220-03A0	3	H0-49
21M-62-21211	H1220-01A0	14	H0-45
21M-62-21220	H0330-01A0	13	H0-35
21M-62-21230	H1220-01A0	6	H0-45
21M-62-21240	H1220-01A0	10	H0-45
21M-62-21250	H1220-01A0	22	H0-45
21M-62-21260	H1220-01A0	19	H0-45
21M-62-21271	H1350-01A0	10	H0-57
21M-62-21280	H1350-01A0	21	H0-57
21M-62-21290	H1350-01A0	32	H0-57
21M-62-21310	H0320-01A0	11	H0-33
21M-62-21320	H0320-01A0	12	H0-33
21M-62-21330	H0320-01A0	32	H0-33
21M-62-21341	H0320-01A0	13	H0-33
21M-62-21362	H0210-01A0	31	H0-21
21M-62-21420	K1110-33A0	2	K0-91
21M-62-21430	K1110-33A0	3	K0-91
21M-62-21441	K1110-33A0	4	K0-91
21M-62-21451	K1110-33A0	5	K0-91
21M-62-21460	H0120-03A0	6	H0-19
21M-62-21470	H0312-01A0	35	H0-29
21M-62-21490	H1831-01A0	1	H0-61
21M-62-21520	H0120-02A0	27	H0-17
21M-62-21520	H0210-01A0	18	H0-21
21M-62-21530	H1350-01A0	25	H0-57
21M-62-21540	H1350-01A0	35	H0-57
21M-62-21550	H0311-01A0	12	H0-27
21M-62-21580	P1120-01A1	10	P0-3
21M-62-21740	H0120-01A0	24	H0-13
21M-62-21750	H0120-02A0	8	H0-17
21M-62-22150	H1810-01A0	10	H0-59
21M-62-22510	H0120-01A0	31	H0-13
21M-63-52280	Y1620-01A0	32	Y0-73
21M-63-52280	Y1620-02A0	32	Y0-77
21M-63-72181	Y1620-41A0	31	Y0-85
21M-70-00210	T1200-02A0		T0-41
21M-70-00210	T1200-02A1		T0-43
21M-70-11160	T1200-02A0	14	T0-41
21M-70-11160	T1200-02A1	14	T0-43
21M-70-11171	T1200-02A0	10	T0-41
21M-70-11171	T1200-02A1	10	T0-43
21M-70-11180	T1200-01A2	9	T0-39
21M-70-11190	J1310-01A1	1	J0-11
21M-70-11210	J1310-01A1	7	J0-11
21M-70-11230	T1110-05A1	1	T0-25
21M-70-11240	T1110-01A0	20	T0-03
21M-70-11240	T1110-01A7	18	T0-05
21M-70-11260	T1200-02A0	18	T0-41

https://truckmanualshub.com/

PART NO.	FIG NO.	INDEX	PAGE
21M-70-11260	T1200-02A1	18	TO-43
21M-70-11271	T1110-01A0	18	TO-03
21M-70-11271	T1110-01A7	16	TO-05
21M-70-11280	T1125-01A0	2	TO-33
21M-70-11290	T1125-01A0	3	TO-33
21M-70-11340	T1110-05A0	1	TO-23
21M-70-11440	T1125-01A0	1	TO-33
21M-70-12160	T1200-01A0	4	TO-37
21M-70-12160	T1200-01A2	4	TO-39
21M-70-13130	T1200-02A1	8	TO-43
21M-70-15111	T1110-03A0	4	TO-11
21M-70-15111	T1110-03A5	4	TO-13
21M-70-15121	T1110-03A0	6	TO-11
21M-70-15121	T1110-03A5	6	TO-13
21M-70-15131	T1110-03A0	3	TO-11
21M-70-15131	T1110-03A5	3	TO-13
21M-70-15140	T1110-09A0	5	TO-27
21M-70-15140	T1110-09A1	5	TO-29
21M-70-15150	T1110-09A0	6	TO-27
21M-70-15150	T1110-09A1	6	TO-29
21M-70-15160	T1200-03A1	16	TO-45
21M-70-21160	T1110-01A0	3	TO-03
21M-939-2230	T1510-01A5	5	TO-47
21M-939-2240	T1510-01A5	6	TO-47
21M-939-2251	T1510-01A5	7	TO-47
21M-939-2252	T1510-01A6	7	TO-49
21M-939-2261	T1510-01A5	2	TO-47
21M-939-2261	T1510-01A6	2	TO-49
21M-939-2271	T1510-01A5	3	TO-47
21M-939-2271	T1510-01A6	3	TO-49
21M-939-2281	T1510-01A5	21	TO-47
21M-939-2281	T1510-01A6	13	TO-49
21M-939-2291	T1510-01A5	22	TO-47
21M-939-2291	T1510-01A6	14	TO-49
21M-939-2320	T1510-01A5	1	TO-47
21M-939-2330	T1510-01A5	4	TO-47
21M-939-2351	T1510-01A6	1	TO-49
21M-939-2360	T1510-01A6	4	TO-49
21M-939-2370	T1510-01A6	5	TO-49
21M-939-2380	T1510-01A6	6	TO-49
21M-939-2410	T1510-01A5	8	TO-47
21M-939-2410	T1510-01A6	8	TO-49
21M-939-2420	T1510-01A5	9	TO-47
21M-939-2420	T1510-01A6	9	TO-49
21M-939-2420	T1510-01A6	10	TO-49
21M-939-2450	T1510-01A5	18	TO-47
21M-939-2470	T1510-01A5	17	TO-47
21M-939-2510	T1510-01A5	15	TO-47
21M-939-2520	T1510-01A5	16	TO-47
21M-939-2530	T1510-01A5	19	TO-47
21M-939-2540	T1510-01A5	20	TO-47
21M-939-2550	T1510-01A5	10	TO-47
21M-939-2560	T1510-01A5	11	TO-47
21M-939-2570	T1510-01A5	12	TO-47
21M-939-2580	T1510-01A5	13	TO-47
21M-939-2590	T1510-01A5	14	TO-47
21M-939-2620	T1510-01A6	11	TO-49
21M-939-2630	T1510-01A6	12	TO-49
21M-942-0220	T1110-01A0		TO-03
21M-942-0240	T1110-01A7		TO-05
21M-942-D170	T1110-01A7		TO-05
21M-944-0102	T1200-01A0		TO-37
21M-944-0102	T1200-01A2		TO-39
21M-944-1320	T1200-02A0	8	TO-41
21M-944-1330	T1200-01A0	9	TO-37
21M-944-1340	T1200-01A0	13	TO-37
21M-944-D110	T1200-01A2		TO-39

PART NO.	FIG NO.	INDEX	PAGE
21M-979-2111	K0700-01A0	1	KO-19
21M-979-2120	K0700-01A0	4	KO-19
21M-979-2131	K0700-02A0	1	KO-21
21M-979-2141	K0700-02A0	3	KO-21
21M-979-2151	K1110-31A0	4	KO-87
21M-979-2161	K1110-31A0	2	KO-87
21M-979-2171	K1110-32A0	1	KO-89
21M-979-2181	K1110-32A0	3	KO-89
21M-979-2192	K0700-04A0	8	KO-27
21M-979-2211	K0700-04A0	14	KO-27
21M-979-2220	K0700-04A0	2	KO-27
21M-98-21120	M1420-01A0	9	MO-37
21N-01-11120	B0100-01A0	7	BO-3
21N-01-11150	B0100-01A0	8	BO-3
21N-03-31490	C0100-07A0	12	CO-17
21N-03-32350	C0100-07A0		CO-17
21N-03-32360	C0100-07A0	13	CO-17
21N-54-38340	E0310-01A2	1	EO-29
21N-54-38340	E0310-01A4	1	EO-31
21N-54-38340	E0310-01A6	1	EO-35
21N-54-38340	E0310-01A8	1	EO-37
21N-60-31240	H0110-01A0	39	HO-3
21N-62-13490	T1110-04A0	2	TO-15
21N-62-13490	T1110-04A0	23	TO-15
21N-62-13490	T1110-04A5	2	TO-19
21N-62-13490	T1110-04A5	23	TO-19
21N-62-13690	T1110-02A0	6	TO-07
21N-62-13690	T1110-02A5	6	TO-09
21N-62-13690	T1110-04A0	16	TO-15
21N-62-13690	T1110-04A5	16	TO-19
21N-62-18570	T1110-01A0	13	TO-03
21N-62-35140	K1110-36A0	6	KO-97
21N-62-35140	K1110-36A0	23	KO-97
21N-62-36660	H1831-02A0	14	HO-65
21N-62-37921	H0311-01A0	10	HO-27
21N-64-36450	H1831-01A0	38	HO-61
21N-64-36450	H1840-02A0	11	HO-73
21N-64-36550	H0110-02A0	24	HO-7
21N-64-36620	B0600-05A0	9	BO-15
21N-64-36680	H1210-02A0	26	HO-43
21N-64-36710	H0110-02A0	14	HO-7
21N-70-11230	J1310-01A1	2	JO-11
21N-70-11230	J1310-01A1	8	JO-11
21N-70-11230	T1200-01A0	14	TO-37
21N-70-11230	T1200-01A2	14	TO-39
21N-939-3330	T1510-02A4	2	TO-51
21N-979-8160	K0700-04A0	17	KO-27
21T-01-11210	B0100-01A0	10	BO-3
21T-01-11220	B0100-01A0	13	BO-3
21T-06-11350	K0350-01A0	1	KO-15
21T-06-11950	H1831-02A0	25	HO-65
21T-06-11950	H1833-02A0	16	HO-69
21T-06-11950	H1840-01A0	26	HO-71
21T-06-32810	E0200-06A0	1	EO-19
21T-06-32810	E0310-01A6	6	EO-35
21T-06-32810	E0310-01A8	6	EO-37
21T-06-32810	E0310-01A9	1	EO-39
21T-06-32810	E0310-01B1	1	EO-41
21T-06-32810	T1110-09A0	7	TO-27
21T-06-32810	T1110-09A1	7	TO-29
21T-06-68290	E0200-07A0	22	EO-21
21T-06-71250	K1110-24A0	1	KO-73
21T-06-71870	K1110-15A0	9	KO-55
21T-27-71220	K1120-01A0	8	KO-99
21T-30-00110	R1120-02A0		RO-9
21T-30-00110	R1120-10A0		RO-27
21T-38-12270	B0600-04A0	16	BO-13

https://truckmanualshub.com/

PART NO.	FIG NO.	INDEX	PAGE
21T-38-12270	K0350-01A0	5	K0-15
21T-62-87850	H1833-01A0	1	H0-67
21W-54-46920	K1110-04A0	5	K0-33
21W-62-42630	H0210-01A0	14	H0-21
21W-62-42630	N1310-01A0	7	N0-19
22B-03-12590	C0100-01A0	36	C0-3
22B-54-16330	K1110-06A0	10	K0-37
22B-54-16461	K1110-06A0	12	K0-37
22B-54-17271	E0310-01A1	1	E0-27
22B-54-17271	E0310-01A2	2	E0-29
22B-54-17271	E0310-01A4	2	E0-31
22B-54-17271	E0310-01A4	7	E0-31
22B-54-17271	E0310-01A6	2	E0-35
22B-54-17271	E0310-01A8	2	E0-37
22B-54-17271	E0310-01A8	12	E0-37
22B-54-17271	E0310-01B1	7	E0-41
22B-54-17282	K1110-09A0	24	K0-43
22B-54-17282	K1110-11A0	1	K0-47
22B-54-17612	E0201-01A0	1	E0-25
22B-54-17640	E0201-01A0	6	E0-25
22B-54-17660	E0201-01A0		E0-25
22B-57-11812	K0160-01A0	1	K0-5
22B-57-11830	K0160-01A0	2	K0-5
22B-98-11150	K0830-01A5	1	K0-29
22D-54-12610	H1210-01A0	24	H0-39
22D-54-12610	H1310-01A0	27	H0-53
22D-62-18560	H1210-02A0	16	H0-43
22M-62-16380	H0220-01A0	13	H0-23
22S-62-26210	B0200-01A0	36	B0-5
22S-62-26210	D0200-01A0	24	D0-5
22S-62-26210	D0200-01A0	48	D0-5
22S-62-26210	E0200-02A0	47	E0-9
22S-62-26210	E0200-03A0	18	E0-13
22S-62-26210	H1810-01A0	19	H0-59
22S-62-26210	H1833-01A0	8	H0-67
22U-00-28110	M1510-01A0	14	M0-39
22U-00-28140	U0100-03A3	14	U0-5
22U-04-21200	D0100-01A0		D0-3
22U-04-21210	D0100-01A0	1	D0-3
22U-04-21220	D0100-01A0	3	D0-3
22U-04-21241	D0100-01A0		D0-3
22U-06-22261	K1110-18A0		K0-61
22U-06-22290	K1110-29A0	12	K0-83
22U-06-22310	E0201-01A0	7	E0-25
22U-06-22320	E0201-01A0	9	E0-25
22U-06-22320	K1110-09A0	19	K0-43
22U-06-22320	K1110-29A0	11	K0-83
22U-06-22350	K1110-26A0	12	K0-77
22U-06-22360	K1110-27A0	23	K0-79
22U-06-22390	K1110-29A0	13	K0-83
22U-06-22420	K1110-29A0	7	K0-83
22U-06-22470	K1110-29A0	8	K0-83
22U-06-22480	K1110-29A0	10	K0-83
22U-06-22490	K1110-27A0	22	K0-79
22U-06-22510	K1110-26A0	8	K0-77
22U-26-21280	N1210-01A0	4	N0-5
22U-26-21280	N1210-01A0	4	N0-11
22U-43-21111	K1110-19A0	16	K0-63
22U-43-21121	K1110-19A0	17	K0-63
22U-43-21131	K1110-19A0	19	K0-63
22U-43-21151	K1110-19A0	11	K0-63
22U-43-21182	K1110-25A0		K0-75
22U-43-21192	K1110-28A0		K0-81
22U-43-21211	K1110-25A0	4	K0-75
22U-43-21211	K1110-28A0	4	K0-81
22U-43-21350	K1110-19A0		K0-63
22U-43-21360	K1110-19A0	10	K0-63
22U-43-21380	K1110-19A0	18	K0-63
22U-43-21390	K1110-22A0	12	K0-69
22U-43-22110	K1110-26A0	19	K0-77
22U-43-22120	E0201-01A0	8	E0-25
22U-43-22220	K1110-26A0	6	K0-77
22U-43-22230	K1110-26A0	7	K0-77
22U-43-22310	K1110-27A0	1	K0-79
22U-43-22320	K1110-27A0		K0-79
22U-43-22340	K1110-27A0	6	K0-79
22U-43-22410	K1110-27A0	24	K0-79
22U-43-22430	K1110-27A0	28	K0-79
22U-43-22451	K1110-27A0	29	K0-79
22U-43-22830	K1110-27A0	33	K0-79
22U-43-23111	K1110-29A0	1	K0-83
22U-43-23120	K1110-29A0	3	K0-83
22U-43-23130	K1110-29A0	4	K0-83
22U-43-23210	K1110-29A0	27	K0-83
22U-43-23230	K1110-29A0	31	K0-83
22U-43-23250	K1110-29A0	33	K0-83
22U-43-23260	K1110-27A0	25	K0-79
22U-43-23260	K1110-29A0	34	K0-83
22U-43-23711	K1110-29A0	39	K0-83
22U-54-24760	M1810-02A0	8	M0-45
22U-54-24760	M1810-03A0	3	M0-47
22U-54-25110	K1110-20A0	1	K0-65
22U-54-25120	K1110-21A0	1	K0-67
22U-54-25170	K1110-22A0	20	K0-69
22U-54-25371	K1110-13A0	10	K0-51
22U-54-25531	K1110-21A0	2	K0-67
22U-54-25581	K1110-18A0	4	K0-61
22U-54-25590	K1110-18A0	5	K0-61
22U-62-21480	C0100-06A0	22	C0-13
22X-22-12670	A2050-A4A9	4	AA-37
23B-16-31760	H0330-01A0	31	H0-35
23T-62-12160	H1810-01A0	15	H0-59
416-03-11170	C0100-01A0	7	C0-3
418-18-32342	B0600-05A0	20	B0-15
421-06-23330	E0200-06A0		E0-19
421-06-23330	E0310-01A1	2	E0-27
421-06-23330	E0310-01A2		E0-29
421-06-23330	E0310-01A4		E0-31
421-06-23330	E0310-01A4		E0-31
421-06-23330	E0310-01A6		E0-35
421-06-23330	E0310-01A6		E0-35
421-06-23330	E0310-01A8		E0-37
421-06-23330	E0310-01A8		E0-37
421-06-23330	E0310-01A8		E0-37
421-06-23330	E0310-01A9		E0-39
421-06-23330	E0310-01B1		E0-41
421-06-23330	E0310-01B1		E0-41
421-06-23330	T1110-09A0		T0-27
421-06-23330	T1110-09A1		T0-29
421-07-33870	K1110-13A0	9	K0-51
421-54-11372	M1220-01A0	4	M0-31
421-54-25610	M1420-01A0	4	M0-37
421-60-35170	Y1890-01A0	1	Y0-147
421-60-35180	Y1890-01A0	2	Y0-147
421-60-35190	Y1890-01A0	3	Y0-147
426-01-11310	A2041-A4L2	12	AA-35
426-70-11280	T1125-01A0	5	T0-33
427-70-13611	T1510-02A4	1	T0-51
428-62-14640	B0200-01A0	15	B0-5
428-62-14640	B0200-01A0	21	B0-5
569-06-61960	K1110-16A0	8	K0-57
569-06-61960	K1110-29A0	36	K0-83
569-06-61970	K1110-16A0	9	K0-57
600-023-2340	A9810-A6Y2	1	AA-135

https://truckmanualshub.com/

PART NO.	FIG NO.	INDEX	PAGE
600-051-2060	A6810-A4M6	11	AA-123
600-051-2060	A6810-A4M6	16	AA-123
600-051-2060	A6810-A4M6	25	AA-123
600-051-2060	A6810-A4M6	30	AA-123
600-051-2060	A6810-E4M6	19	AA-133
600-051-2080	A6810-A4M6	15	AA-123
600-051-2080	A6810-A4M6	36	AA-123
600-051-2080	A6810-A4M6	45	AA-124
600-051-2080	A6810-B4M6	12	AA-127
600-051-2080	A6810-B4M6	19	AA-127
600-051-2080	A6810-D4M6	16	AA-131
600-051-2080	A6810-D4M6	24	AA-131
600-051-2100	A6810-B4M6	17	AA-127
600-051-2100	A6810-B4M6	23	AA-127
600-051-2100	A6810-C4M6	20	AA-129
600-051-2100	A6810-D4M6	8	AA-131
600-051-2120	A6810-D4M6	6	AA-131
600-051-2120	A6810-D4M6	15	AA-131
600-051-2120	A6810-D4M6	23	AA-131
600-051-2140	A6810-D4M6	7	AA-131
600-051-2160	A6810-D4M6	9	AA-131
600-051-2180	A6810-A4M6	12	AA-123
600-051-2180	A6810-A4M6	19	AA-123
600-051-2180	A6810-A4M6	26	AA-123
600-051-2180	A6810-A4M6	29	AA-123
600-051-2180	A6810-B4M6	13	AA-127
600-051-2180	A6810-B4M6	18	AA-127
600-184-1350	B9999-A4M9	6	AA-137
600-184-1611	B9999-A4M9	5	AA-137
600-184-1671	B9999-A4M9	2	AA-137
600-185-6100	B9999-A4M9		AA-137
600-185-6110	B9999-A4M9	3	AA-137
600-211-1340	A3110-A4H1	7	AA-69
600-211-1340	V0100-01A0	2	VO-3
600-211-1890	A3110-A4H1	5	AA-69
600-311-3550	A4110-A4N2	6	AA-85
600-311-4500	D0200-03A0	10	DO-13
600-311-9330	D0200-02A0	4	DO-9
600-319-3520	A4119-A4A1	1	AA-91
600-319-3550	V0100-01A0	3	VO-3
600-319-4500	V0100-01A0	4	VO-3
600-411-1151	A5210-A4J7	14	AA-103
600-411-1151	V0100-01A0	5	VO-3
600-411-1280	K1110-25A0	8	KO-75
600-411-1280	K1110-28A0	8	KO-81
600-421-6630	A5010-A4M4	1	AA-99
600-462-1900	A4710-A4K1	1	AA-97
600-645-7120	C0100-05A0	13	CO-11
600-813-9322	A6210-A4E4	1	AA-117
600-813-9322	A6210-B4E4		AA-119
600-815-2690	E0200-01A0	8	EO-7
600-815-4280	A1310-A4L4	4	AA-9
600-815-9471	E0200-08A0	4	EO-23
600-815-9980	A6010-A4N2	2	AA-109
600-825-6270	A6010-A4N2	1	AA-109
600-825-6270	A6010-B4N2		AA-115
600-825-9110	A6010-A4L9	1	AA-105
600-825-9110	A6010-B4L9		AA-111
600-825-9310	A6010-A4M8	1	AA-107
600-825-9310	A6010-B4M8		AA-113
6110-23-6490	A2110-A4S1	5	AA-41
6110-23-6490	A4010-A4R4	11	AA-73
6110-73-6231	A4110-A4N2	2	AA-85
6110-73-6231	D0200-03A0	4	DO-13
6112-23-6961	A4110-B4N2	20	AA-87
6112-23-6961	A4110-C4N2	22	AA-89
6114-11-5590	A1530-A4L8	1	AA-15
6114-11-8910	A2210-A4H7	5	AA-43
6124-61-5720	A1610-A4L8	40	AA-25
6127-51-6822	A1530-A4L8	21	AA-15
6130-21-1910	Y1600-01A0	9	YO-9
6130-21-1910	Y1600-04A0	8	YO-15
6130-21-1910	Y1600-21A0	8	YO-37
6130-21-1910	Y1600-24A0	8	YO-43
6131-12-5920	A1570-A4G7	11	AA-23
6131-12-5920	A4230-A4G8	15	AA-95
6132-21-4620	A2010-A4K5	29	AA-29
6132-21-4630	A1570-A4G7	25	AA-23
6132-21-4630	A3110-A4H1	18	AA-69
6136-11-2980	A4110-B4N2	25	AA-87
6136-11-2980	A4110-C4N2	27	AA-89
6136-11-5120	A1510-A4G2	1	AA-13
6136-11-5120	A1530-A4L8	6	AA-15
6136-11-5120	A4710-A4K1	19	AA-97
6136-41-4520	A1010-A4D2	7	AA-3
6137-11-5120	A1610-A4L8	43	AA-27
6137-71-3750	A6810-B4M6	32	AA-127
6138-13-4240	A1550-A4B1	5	AA-19
6138-13-4510	A1530-A4L8	2	AA-15
6138-55-7610	N1210-02A0	24	NO-9
6138-55-7610	N1210-04A0	28	NO-15
6141-64-7841	A2041-A4L2	6	AA-35
6143-11-4290	A6810-E4M6	6	AA-133
6150-21-1180	A2011-A4P2	8	AA-31
6150-21-1190	A2011-A4P2	9	AA-31
6150-21-4770	A2010-A4K5	24	AA-29
6150-21-5910	A2010-A4K5	25	AA-29
6150-21-5920	A2110-A4S1	20	AA-41
6150-21-5930	A2110-A4S1	21	AA-41
6150-21-6391	A2060-A4C6	4	AA-39
6150-22-3360	A2041-A4L2	23	AA-35
6150-31-1130	A2310-A4B4A	2	AA-49
6150-31-1351	A2230-A4E1	2	AA-45
6150-41-2430	A2411-A4B3	9	AA-59
6150-81-6940	A6810-B4M6	16	AA-127
6150-81-6940	A6810-B4M6	26	AA-127
6150-81-6940	A6810-C4M6	9	AA-129
6150-81-6940	A6810-C4M6	15	AA-129
6150-81-6940	A6810-D4M6	13	AA-131
6150-81-8420	A2411-A4B3	6	AA-59
6150-82-8690	K0700-01A0	8	KO-19
6151-11-9970	B0200-01A0	2	BO-5
6151-21-4150	A2210-A4H7	4	AA-43
6151-51-8151	A1530-A4L8	22	AA-15
6151-51-8161	A1530-A4L8	7	AA-15
6151-51-8490	A6810-C4M6	22	AA-129
6152-51-5520	A2041-A4L2	18	AA-35
6156-71-9730	A4030-B4C1	1	AA-81
6162-13-1150	A1010-A4D2	22	AA-3
6162-13-6440	A5010-A4M4	7	AA-99
6162-13-8670	A6810-D4M6	2	AA-131
6162-33-5322	A2050-A4A9	9	AA-37
6162-43-5340	A2411-B4B3	3	AA-61
6162-43-5630	A1010-A4D2	6	AA-3
6162-53-5430	A3110-A4H1	4	AA-69
6162-55-5230	A3110-A4H1	3	AA-69
6162-63-8820	A4110-B4N2	23	AA-87
6162-63-8820	A4110-C4N2	25	AA-89
6162-73-5510	B0600-04A0	19	BO-13
6162-73-5520	B0600-04A0	20	BO-13
6162-75-5680	A4010-A4R4	34	AA-73
6164-21-2490	A2370-A4F8	3	AA-55
6164-61-7170	A3110-A4H1	30	AA-69
6165-61-6770	A3110-A4H1	14	AA-69

https://truckmanualshub.com/

PART NO.	FIG NO.	INDEX	PAGE
6166-61-6341	A1550-A4B1	1	AA-19
6166-75-6820	A4110-A4N2	12	AA-85
6204-21-5571	A6810-A4M6	21	AA-123
6210-11-1140	A1010-A4D2	8	AA-3
6210-11-1150	A1010-A4D2	20	AA-3
6210-11-1820	A1010-A4D2		AA-3
6210-11-1831	A1010-A4D2		AA-3
6210-11-1840	A1010-A4D2		AA-3
6210-11-1940	A1010-A4D2		AA-3
6210-11-1952	A1010-A4D2		AA-3
6210-11-1962	A1010-A4D2		AA-3
6210-11-4811	A1310-A4L4	1	AA-9
6210-11-5820	A1510-A4G2	2	AA-13
6210-11-5820	A4030-A4C1	39	AA-77
6210-17-1814	A1010-A4D2	3	AA-3
6210-21-1390	A2010-A4K5	26	AA-29
6210-21-1390	A4110-B4N2		AA-87
6210-21-1390	A4110-C4N2	4	AA-89
6210-21-1491	A2010-A4K5	2	AA-29
6210-21-1910	A2010-A4K5	23	AA-29
6210-21-1950	A2011-A4P2	24	AA-31
6210-21-2230	A2010-A4K5	39	AA-29
6210-21-2240	A2010-A4K5	38	AA-29
6210-21-2270	A2010-A4K5	37	AA-29
6210-21-2422	A2050-A4A9	14	AA-37
6210-21-3752	A1610-A4L8	20	AA-25
6210-21-3752	A3110-A4H1	32	AA-69
6210-21-5820	A2110-A4S1	2	AA-41
6210-21-6410	A2060-A4C6	1	AA-39
6210-21-6471	A2060-A4C6	3	AA-39
6210-21-8000	A2310-A4B4A		AA-49
6210-21-8010	A2310-A4B4A		AA-49
6210-21-8050	A2310-A4B4A	7	AA-49
6210-22-2410	A2050-A4A9	7	AA-37
6210-22-2420	A2050-A4A9	8	AA-37
6210-26-8010	A2310-A4B4A		AA-49
6210-26-8050	A2310-A4B4A	7	AA-49
6210-27-8010	A2310-A4B4A		AA-49
6210-27-8050	A2310-A4B4A	7	AA-49
6210-28-8010	A2310-A4B4A		AA-49
6210-28-8050	A2310-A4B4A	7	AA-49
6210-29-8010	A2310-A4B4A		AA-49
6210-29-8050	A2310-A4B4A	7	AA-49
6210-31-1120	A2310-A4B4A	3	AA-49
6210-31-1350	A2230-A4E1	3	AA-45
6210-31-3310	A2350-A4C9	10	AA-53
6210-32-3040	A2350-A4C9		AA-53
6210-36-3040	A2350-A4C9		AA-53
6210-37-3040	A2350-A4C9		AA-53
6210-38-3040	A2350-A4C9		AA-53
6210-39-3040	A2350-A4C9		AA-53
6210-41-1012	A2410-A4A5		AA-57
6210-41-1120	A2410-A4A5	4	AA-57
6210-41-1131	A2410-A4A5	3	AA-57
6210-41-2320	A2411-A4B3		AA-59
6210-41-2400	A2411-A4B3		AA-59
6210-41-2450	A2411-A4B3	8	AA-59
6210-41-3120	A2411-A4B3	10	AA-59
6210-41-4430	A1010-A4D2	9	AA-3
6210-41-4440	A1010-A4D2	10	AA-3
6210-41-4510	A1010-A4D2	11	AA-3
6210-41-5440	A2411-B4B3	15	AA-61
6210-41-5620	A1010-A4D2	4	AA-3
6210-41-5641	A1010-A4D2	5	AA-3
6210-51-8320	A4010-A4R4	32	AA-73
6210-51-8320	A4110-B4N2	28	AA-87
6210-51-8320	A4230-A4G8	13	AA-95
6210-61-1350	A5010-B4M4	19	AA-101
6210-61-1520	A5010-B4M4	13	AA-101
6210-61-2130	A3310-A4D7	6	AA-71
6210-61-2160	A3310-A4D7	10	AA-71
6210-61-2520	A3310-A4D7	3	AA-71
6210-61-2550	A3310-A4D7	14	AA-71
6210-61-2811	A3310-A4D7	17	AA-71
6210-61-6421	A5010-A4M4	4	AA-99
6210-61-6441	A5010-B4M4	32	AA-101
6210-61-6511	A5010-B4M4	1	AA-101
6210-61-6520	A5010-B4M4	2	AA-101
6210-81-6361	A6010-A4N2	21	AA-109
6210-81-6750	A6010-A4N2	6	AA-109
6210-81-6960	A6010-A4L9	19	AA-105
6210-81-6960	A6010-A4M8	19	AA-107
6210-81-6960	A6010-A4N2	24	AA-109
6210-81-6960	V0100-01A0	6	VO-3
6210-82-6370	A6010-A4L9	14	AA-105
6210-82-6370	A6010-A4M8	14	AA-107
6210-82-6550	A6010-A4L9	18	AA-105
6210-82-6550	A6010-A4M8	18	AA-107
6210-82-6570	A6010-A4N2	16	AA-109
6210-82-6840	A6010-A4M8	20	AA-107
6210-82-6840	A6010-A4N2	25	AA-109
6210-82-6850	A6010-A4L9	20	AA-105
6211-11-4821	A1310-A4L4	5	AA-9
6211-11-4821	A1310-A4L4	15	AA-9
6211-11-5890	A1610-A4L8	9	AA-25
6211-11-9790	A6810-D4M6	20	AA-131
6211-22-2220	A2010-A4K5	36	AA-29
6211-31-1420	A2310-A4B4A	4	AA-49
6211-31-2410	A2350-A4C9	2	AA-53
6211-61-1533	A5010-B4M4	23	AA-101
6211-81-4280	A6810-A4M6	1	AA-123
6212-12-5250	A1510-A4G2	6	AA-13
6212-21-2450	A2050-A4A9	15	AA-37
6212-21-2511	A2050-A4A9	13	AA-37
6212-25-8710	A2041-A4L2	1	AA-35
6212-31-6100	A2050-A4A9		AA-37
6212-31-6120	A2050-A4A9	12	AA-37
6212-31-6130	A2050-A4A9	3	AA-37
6212-31-6140	A2050-A4A9	10	AA-37
6212-31-6420	A2050-A4A9		AA-37
6212-31-6440	A2050-A4A9	1	AA-37
6212-31-6490	A2050-A4A9	5	AA-37
6212-61-1330	A5010-B4M4	25	AA-101
6212-61-1370	A5010-B4M4	15	AA-101
6212-61-1380	A5010-B4M4	16	AA-101
6212-61-1410	A5010-B4M4	12	AA-101
6212-61-6662	A1310-A4L4	33	AA-9
6212-61-6821	C0100-07A0	9	CO-17
6215-11-5740	A1610-A4L8	3	AA-25
6215-11-5920	A1510-A4G2	3	AA-13
6215-11-5920	A1610-A4L8	13	AA-25
6215-11-6560	A4230-A4G8	7	AA-95
6215-11-6560	A5010-A4M4	12	AA-99
6215-41-4220	A1010-A4D2	12	AA-3
6215-61-2580	A3310-A4D7	5	AA-71
6215-61-6670	A1310-A4L4	34	AA-9
6215-71-4930	A1530-A4L8	8	AA-15
6215-71-4940	A1530-A4L8	9	AA-15
6215-71-4940	A4110-A4N2	14	AA-85
6215-71-4940	A5210-A4J7	1	AA-103
6215-81-6150	A6010-A4L9	8	AA-105
6215-81-6150	A6010-A4M8	8	AA-107
6215-81-6150	A6010-A4N2	10	AA-109
6215-81-6150	K0700-01A0	14	KO-19

https://truckmanualshub.com/

PART NO.	FIG NO.	INDEX	PAGE
6216-11-1330	A1010-A4D2	17	AA-3
6216-16-1330	A1010-A4D2		AA-3
6216-17-1330	A1010-A4D2		AA-3
6216-18-1330	A1010-A4D2		AA-3
6216-19-1330	A1010-A4D2		AA-3
6217-11-1321	A1010-A4D2	18	AA-3
6217-11-1610	A1010-A4D2	1	AA-3
6217-11-1620	A1010-A4D2	2	AA-3
6217-11-5750	A1610-A4L8	2	AA-25
6217-11-6520	A5010-A4M4	11	AA-99
6217-11-8110	A1110-A4A4	1	AA-5
6217-11-8830	A1110-A4A4	2	AA-5
6217-11-9790	A1610-A4L8	46	AA-27
6217-16-1321	A1010-A4D2		AA-3
6217-16-1441	A1010-A4D2	19	AA-3
6217-17-1321	A1010-A4D2		AA-3
6217-18-1321	A1010-A4D2		AA-3
6217-19-1321	A1010-A4D2		AA-3
6217-21-1220	A2011-A4P2	10	AA-31
6217-21-1710	A2010-A4K5	6	AA-29
6217-21-1860	A1550-A4B1	22	AA-19
6217-21-1940	A2011-A4P2	27	AA-31
6217-21-1980	A2010-A4K5	9	AA-29
6217-21-1990	A2010-A4K5	11	AA-29
6217-21-3251	A2041-A4L2	24	AA-35
6217-21-3501	A2610-A4C7		AA-63
6217-21-3540	A2610-A4C7	2	AA-63
6217-21-3540	A2610-A4C8	2	AA-65
6217-21-3601	A2610-A4C8		AA-65
6217-21-5610	A2110-A4S1	7	AA-41
6217-21-5660	A2110-A4S1	8	AA-41
6217-21-6110	A4030-A4C1	1	AA-77
6217-21-6120	A4030-A4C1	2	AA-77
6217-21-6880	A2060-A4C6	2	AA-39
6217-41-4110	A1010-A4D2	13	AA-3
6217-41-4531	A1010-A4D2	14	AA-3
6217-41-4540	A1010-A4D2	15	AA-3
6217-41-5540	A2411-B4B3	18	AA-61
6217-41-5550	A2411-B4B3	5	AA-61
6217-41-5550	A2411-B4B3	10	AA-61
6217-41-5560	A2411-B4B3	20	AA-61
6217-41-5570	A2411-B4B3	19	AA-61
6217-51-5660	A3110-A4H1	2	AA-69
6217-61-6330	A5010-B4M4	3	AA-101
6217-61-6340	A5010-B4M4	4	AA-101
6217-61-6350	A5010-B4M4	5	AA-101
6217-61-6430	A5010-A4M4	2	AA-99
6217-61-8150	A5210-A4J7		AA-103
6217-61-8211	A5210-A4J7	11	AA-103
6217-61-8221	A5210-A4J7	12	AA-103
6217-61-8231	A5210-A4J7		AA-103
6217-71-1140	A4210-A4G4	19	AA-93
6217-71-1150	A4210-A4G4	9	AA-93
6217-71-1161	A4210-A4G4	12	AA-93
6217-71-1170	A4210-A4G4	10	AA-93
6217-71-1910	A4010-A4R4	4	AA-73
6217-71-5170	A4010-A4R4	12	AA-73
6217-71-5210	A4010-A4R4	13	AA-73
6217-71-5251	A4010-A4R4	9	AA-73
6217-71-5260	A4030-A4C1	18	AA-77
6217-71-5281	A4010-A4R4	14	AA-73
6217-71-5320	A4210-A4G4	6	AA-93
6217-71-5340	A4210-A4G4	8	AA-93
6217-71-5740	A4030-A4C1	17	AA-77
6217-71-5760	A4030-A4C1	19	AA-77
6217-71-5770	A4030-B4C1	2	AA-81
6217-71-5910	A4010-A4R4	5	AA-73

PART NO.	FIG NO.	INDEX	PAGE
6217-71-6520	U0100-03A3	6	U0-5
6217-71-6640	A1550-A4B1	24	AA-19
6217-71-6640	A4010-A4R4	16	AA-73
6217-71-6640	A4010-A4R4	38	AA-73
6217-71-6640	A4030-A4C1	20	AA-77
6217-71-6650	A1550-A4B1	25	AA-19
6217-71-6650	A4010-A4R4	17	AA-73
6217-71-6650	A4010-A4R4	37	AA-73
6217-71-6650	A4030-A4C1	21	AA-77
6217-71-6660	A4030-A4C1	24	AA-77
6217-71-6670	A4030-A4C1	25	AA-77
6217-71-7110	A4210-A4G4	1	AA-93
6217-71-9331	A9810-A6Y2	3	AA-135
6217-71-9770	A4030-B4C1	3	AA-81
6217-71-9780	A4030-B4C1	4	AA-81
6217-71-9791	A4030-B4C1	5	AA-81
6217-81-6110	A6210-A4E4	5	AA-117
6217-81-6550	A6010-A4N2	7	AA-109
6217-81-6840	A6010-A4L9	2	AA-105
6217-81-6840	A6010-A4M8	2	AA-107
6217-81-6880	A6010-A4L9	22	AA-105
6217-81-6880	A6010-A4M8	22	AA-107
6217-81-7203	B0200-01A0	1	B0-5
6217-81-7212	B9999-A4M9	1	AA-137
6217-81-8311	A2411-B4B3	21	AA-61
6217-81-9252	A4210-A4G4	4	AA-93
6218-11-4320	A1410-A4L7	3	AA-11
6218-21-1940	A2011-A4P2	28	AA-31
6218-21-3811	A2610-A4C7	8	AA-63
6218-21-3811	A2610-A4C8	8	AA-65
6218-21-3820	A2610-A4C7	9	AA-63
6218-21-3820	A2610-A4C8	9	AA-65
6218-21-3831	A2610-A4C7	6	AA-63
6218-21-3831	A2610-A4C8	6	AA-65
6218-21-3860	A2610-A4C7	1	AA-63
6218-21-3870	A2610-A4C8	1	AA-65
6218-31-1530	A2370-A4F8	1	AA-55
6218-61-2620	A3310-A4D7	9	AA-71
6218-81-8160	A6810-A4M6	6	AA-123
6218-81-8410	A6810-B4M6	34	AA-127
6218-81-8430	A6810-A4M6	39	AA-123
6218-81-8430	A6810-A4M6	43	AA-124
6218-81-8430	A6810-B4M6	30	AA-127
6218-81-8430	A6810-C4M6	5	AA-129
6218-81-8430	A6810-C4M6	11	AA-129
6218-81-8430	A6810-C4M6	14	AA-129
6218-81-8430	A6810-C4M6	17	AA-129
6218-81-8430	A6810-C4M6	24	AA-129
6218-81-8430	A6810-C4M6	26	AA-129
6218-81-8430	A6810-D4M6	12	AA-131
6218-81-8430	A6810-D4M6	19	AA-131
6218-81-8430	A6810-D4M6	31	AA-131
6218-81-8430	A6810-D4M6	34	AA-131
6218-81-8430	A6810-E4M6	3	AA-133
6218-81-8430	A6810-E4M6	16	AA-133
6218-81-8440	A6810-B4M6	27	AA-127
6218-81-8440	A6810-C4M6	6	AA-129
6218-81-8490	A6810-A4M6	44	AA-124
6218-81-8490	A6810-C4M6	27	AA-129
6218-81-8490	A6810-D4M6	35	AA-131
6218-81-8490	A6810-E4M6	9	AA-133
6218-81-8490	A6810-E4M6	17	AA-133
6219-71-1150	A4210-A4G4	17	AA-93
6219-71-1160	A4210-A4G4	18	AA-93
6219-71-3150	A4010-A4R4	3	AA-73
6219-71-8600	A4110-B4N2	3	AA-87
6219-71-8600	A4110-C4N2	3	AA-89

https://truckmanualshub.com/

PART NO.	FIG NO.	INDEX	PAGE
6219-71-8610	A4110-B4N2		AA-87
6219-71-8610	A4110-C4N2	5	AA-89
6219-81-1961	A2011-A4P2	7	AA-31
6219-81-1991	A2011-A4P2		AA-31
6219-81-7100	A4710-A4K1	3	AA-97
6221-81-6810	A6210-A4E4	2	AA-117
6222-83-6620	A6810-D4M6	21	AA-131
6240-21-7470	A6810-E4M6	12	AA-133
6240-81-8611	A6010-A4L9	6	AA-105
6240-81-8611	A6010-A4M8	6	AA-107
6240-81-8611	A6010-A4N2	8	AA-109
6240-81-8640	K0700-01A0	11	KO-19
6245-11-4220	A1550-A4B1	2	AA-19
6245-71-5680	A4110-B4N2	2	AA-87
6245-71-5680	A4110-C4N2	2	AA-89
6245-71-8110	A4110-B4N2	1	AA-87
6245-71-8110	A4110-C4N2	1	AA-89
6251-21-3211	A2041-A4L2	21	AA-35
6251-21-3231	A2041-A4L2	22	AA-35
6251-21-3250	A2041-A4L2	30	AA-35
6251-71-7100	D0200-03A0		DO-13
6251-81-7210	A4710-A4K1	8	AA-97
6251-81-9680	A6810-B4M6	9	AA-127
6261-11-1100	A1010-A4D2		AA-3
6261-11-3100	A4210-A4G4		AA-93
6261-11-4110	A1310-A4L4	2	AA-9
6261-11-4160	A1310-A4L4	35	AA-9
6261-11-4360	A1310-A4L4	6	AA-9
6261-11-4370	A1410-A4L7	1	AA-11
6261-11-4390	A1410-A4L7	12	AA-11
6261-11-4440	A1310-A4L4	25	AA-9
6261-11-4930	A1410-A4L7	8	AA-11
6261-11-4941	A1310-A4L4	27	AA-9
6261-11-4950	A1310-A4L4	26	AA-9
6261-11-4960	A1410-A4L7	5	AA-11
6261-11-5110	A1510-A4G2	5	AA-13
6261-11-5130	A1510-A4G2	7	AA-13
6261-11-5421	A1610-A4L8	5	AA-25
6261-11-5530	A1610-A4L8	8	AA-25
6261-11-5580	A1610-A4L8	30	AA-25
6261-11-5590	A1610-A4L8	14	AA-25
6261-11-5610	A1610-A4L8	1	AA-25
6261-11-5811	A1610-A4L8	23	AA-25
6261-11-5821	A1610-A4L8	24	AA-25
6261-11-5830	A1610-A4L8	25	AA-25
6261-11-5850	A1530-A4L8	3	AA-15
6261-11-5880	A1510-A4G2	4	AA-13
6261-11-6650	A5010-A4M4	9	AA-99
6261-11-7210	A1310-A4L4	10	AA-9
6261-11-7220	A1310-A4L4	11	AA-9
6261-11-7410	A1310-A4L4	16	AA-9
6261-11-7450	A1310-A4L4	17	AA-9
6261-11-8160	A1570-A4G7	27	AA-23
6261-11-8170	A1570-A4G7	30	AA-23
6261-11-8280	A1570-A4G7	12	AA-23
6261-11-8320	A1570-A4G7	18	AA-23
6261-11-8370	A1570-A4G7	6	AA-23
6261-11-8380	A1570-A4G7	9	AA-23
6261-11-8420	A1570-A4G7	15	AA-23
6261-11-8440	A1570-A4G7	1	AA-23
6261-11-8461	A1610-A4L8	17	AA-25
6261-11-8490	A1570-A4G7	23	AA-23
6261-11-8880	A1570-A4G7	14	AA-23
6261-11-9160	A1550-A4B1	6	AA-19
6261-11-9240	A1550-A4B1	19	AA-19
6261-11-9520	A1550-A4B1	18	AA-19
6261-11-9670	A1570-A4G7	13	AA-23
6261-11-9720	A1610-A4L8	39	AA-25
6261-21-1100	A2010-A4K5		AA-29
6261-21-1611	A2010-A4K5	28	AA-29
6261-21-1910	A2010-A4K5	32	AA-29
6261-21-1920	A2010-A4K5	33	AA-29
6261-21-1970	A2011-A4P2	2	AA-31
6261-21-1990	A2011-A4P2	1	AA-31
6261-21-3240	A2040-A4H7	1	AA-33
6261-21-3920	A1550-A4B1	46	AA-19
6261-21-3970	A1550-A4B1	53	AA-20
6261-21-4761	A2210-A4H7	1	AA-43
6261-21-5250	A2110-A4S1	1	AA-41
6261-21-5320	A2110-A4S1	18	AA-41
6261-21-5450	A2110-A4S1	19	AA-41
6261-21-5460	A2110-A4S1	22	AA-41
6261-21-5830	A2011-A4P2	14	AA-31
6261-21-7150	A2011-A4P2	15	AA-31
6261-21-7180	A2110-A4S1	32	AA-41
6261-21-8610	A2041-A4L2	3	AA-35
6261-21-8820	A2041-A4L2	8	AA-35
6261-31-1200	A2310-A4B4A		AA-49
6261-31-2030	A2350-A4C9		AA-53
6261-31-2130	A2350-A4C9	1	AA-53
6261-31-3100	A2350-A4C9		AA-53
6261-31-3140	A2350-A4C9	9	AA-53
6261-31-4100	A2230-A4E1		AA-45
6261-31-8300	A2330-A4B6	1	AA-51
6261-41-5040	A2411-B4B3		AA-61
6261-41-5050	A2411-B4B3		AA-61
6261-41-5400	A2411-B4B3		AA-61
6261-41-5420	A2411-B4B3	2	AA-61
6261-41-5500	A2411-B4B3		AA-61
6261-41-5520	A2411-B4B3	8	AA-61
6261-41-5530	A2411-B4B3	14	AA-61
6261-51-2000	A3010-A4A8		AA-67
6261-51-5180	A3110-A4H1	21	AA-69
6261-51-5751	A3110-A4H1	15	AA-69
6261-51-5860	A3110-A4H1	27	AA-69
6261-51-6150	A3110-A4H1	10	AA-69
6261-51-6160	A3110-A4H1	11	AA-69
6261-51-6190	A3110-A4H1	25	AA-69
6261-51-6310	A2110-A4S1	9	AA-41
6261-51-6320	A2110-A4S1	13	AA-41
6261-51-6600	A3110-A4H1		AA-69
6261-51-6610	A3110-A4H1	1	AA-69
6261-51-6620	A3110-A4H1	6	AA-69
6261-51-7110	A4060-A4C4	1	AA-83
6261-51-8120	A1530-A4L8	23	AA-15
6261-51-8140	A1530-A4L8	31	AA-15
6261-51-8180	A1530-A4L8	10	AA-15
6261-51-8290	A1530-A4L8	29	AA-15
6261-51-9450	A1550-A4B1	31	AA-19
6261-51-9460	A1550-A4B1	32	AA-19
6261-61-1101	A5010-B4M4		AA-101
6261-61-1150	A5010-B4M4	20	AA-101
6261-61-1170	A5010-B4M4	22	AA-101
6261-61-1190	A5010-B4M4	21	AA-101
6261-61-1210	A5010-B4M4	9	AA-101
6261-61-1310	A5010-B4M4	11	AA-101
6261-61-2110	A3310-A4D7	1	AA-71
6261-61-2120	A3310-A4D7	2	AA-71
6261-61-2610	A3310-A4D7	8	AA-71
6261-61-3841	A1550-A4B1	45	AA-19
6261-61-6260	A5010-B4M4	33	AA-101
6261-61-6270	A5010-B4M4	34	AA-101
6261-61-7260	A1550-A4B1	10	AA-19
6261-61-7260	A1550-A4B1	13	AA-19

https://truckmanualshub.com/

PART NO.	FIG NO.	INDEX	PAGE
6261-61-7280	A1550-A4B1	9	AA-19
6261-61-7280	A1550-A4B1	14	AA-19
6261-61-8440	A5210-A4J7	6	AA-103
6261-61-8450	A5210-A4J7	7	AA-103
6261-71-1110	A4010-A4R4	6	AA-73
6261-71-1220	A4010-A4R4	10	AA-73
6261-71-1220	A4010-B4R4	1	AA-75
6261-71-3220	A4010-A4R4	1	AA-73
6261-71-4110	A4010-A4R4	20	AA-73
6261-71-5110	A4030-A4C1	7	AA-77
6261-71-5120	A4030-A4C1	8	AA-77
6261-71-5130	A4030-A4C1	9	AA-77
6261-71-5140	A4030-A4C1	10	AA-77
6261-71-5150	A4030-A4C1	11	AA-77
6261-71-5160	A4030-A4C1	12	AA-77
6261-71-5190	A4030-A4C1	15	AA-77
6261-71-5411	A4010-A4R4	33	AA-73
6261-71-5430	A1550-A4B1	27	AA-19
6261-71-5610	A4030-A4C1	22	AA-77
6261-71-5630	A4030-A4C1	23	AA-77
6261-71-5650	A4030-A4C1	26	AA-77
6261-71-5660	A4030-A4C1	34	AA-77
6261-71-5670	A4010-A4R4	18	AA-73
6261-71-5690	A4010-A4R4	19	AA-73
6261-71-5710	A4030-A4C1	43	AA-79
6261-71-5720	A4030-A4C1	42	AA-77
6261-71-5740	A4030-A4C1	36	AA-77
6261-71-5750	A4030-A4C1	40	AA-77
6261-71-5760	A4030-A4C1	41	AA-77
6261-71-5770	A4110-A4N2	9	AA-85
6261-71-5780	A4110-A4N2	19	AA-85
6261-71-5790	A4710-A4K1	10	AA-97
6261-71-5810	A4230-A4G8	6	AA-95
6261-71-5910	A4010-A4R4	15	AA-73
6261-71-5960	A4230-A4G8	10	AA-95
6261-71-6120	A4110-A4N2	17	AA-85
6261-71-6140	A4110-A4N2	21	AA-85
6261-71-6150	A4210-A4G4	13	AA-93
6261-71-6180	A4710-A4K1	9	AA-97
6261-71-6190	A1550-A4B1	26	AA-19
6261-71-6660	A4030-A4C1	14	AA-77
6261-71-6670	A4030-A4C1	16	AA-77
6261-71-6800	A4110-A4N2		AA-85
6261-71-6810	A4110-A4N2	1	AA-85
6261-71-7110	A4110-B4N2	19	AA-87
6261-71-7110	A4110-C4N2	21	AA-89
6261-71-7120	A4110-B4N2	30	AA-87
6261-71-7130	A4110-B4N2	33	AA-87
6261-71-7140	A4710-A4K1	5	AA-97
6261-71-7150	A4110-B4N2	24	AA-87
6261-71-7150	A4110-C4N2	26	AA-89
6261-71-7210	A4110-B4N2	6	AA-87
6261-71-7210	A4110-C4N2	8	AA-89
6261-71-7220	A4110-B4N2	8	AA-87
6261-71-7220	A4110-C4N2	10	AA-89
6261-71-7330	A4110-B4N2	38	AA-87
6261-71-8641	A4230-A4G8	3	AA-95
6261-81-1380	A6810-B4M6	6	AA-127
6261-81-2600	A6810-B4M6	8	AA-127
6261-81-2700	A1310-A4L4	22	AA-9
6261-81-2710	A1310-A4L4		AA-9
6261-81-2720	A1310-A4L4		AA-9
6261-81-2901	A2210-A4H7	7	AA-43
6261-81-2911	A2210-A4H7		AA-43
6261-81-6110	A6810-A4M6	3	AA-123
6261-81-6120	A6810-B4M6	2	AA-127
6261-81-6460	A6010-A4N2	20	AA-109
6261-81-6890	A6010-A4L9	3	AA-105
6261-81-6890	A6010-A4M8	3	AA-107
6261-81-6890	A6010-A4N2	4	AA-109
6261-81-6900	A2011-A4P2	23	AA-31
6261-81-6900	A4230-A4G8	9	AA-95
6261-81-6910	A2011-A4P2		AA-31
6261-81-6910	A4230-A4G8		AA-95
6261-81-7120	A4710-A4K1		AA-97
6261-81-7130	A4710-A4K1		AA-97
6261-81-7310	A4710-A4K1	20	AA-97
6261-81-7330	A4710-A4K1	24	AA-97
6261-81-8210	A6810-C4M6	1	AA-129
6261-81-8241	A6810-A4M6	4	AA-123
6261-81-8340	A6010-A4L9	7	AA-105
6261-81-8340	A6010-A4M8	7	AA-107
6261-81-8340	A6010-A4N2	9	AA-109
6261-81-8350	A6010-A4L9	12	AA-105
6261-81-8350	A6010-A4M8	12	AA-107
6261-81-8350	A6010-A4N2	14	AA-109
6261-81-8431	A6810-B4M6	3	AA-127
6261-81-8540	A6810-A4M6	8	AA-123
6261-81-8560	A6810-E4M6	18	AA-133
6261-81-8660	A6810-A4M6	40	AA-123
6261-81-8680	A6810-E4M6	4	AA-133
6261-81-8840	A6810-C4M6	7	AA-129
6261-81-8870	A6810-E4M6	13	AA-133
6261-81-8880	A6810-E4M6	10	AA-133
6261-81-8910	A6810-B4M6	1	AA-127
6261-84-9740	A2011-A4P2		AA-31
6261-84-9740	A4230-A4G8		AA-95
6271-81-9220	A2210-A4H7		AA-43
6505-11-0410	A1530-B4L8	6	AA-17
6505-11-0450	A1530-B4L8	21	AA-17
6505-11-0520	A1530-B4L8	18	AA-17
6505-51-0151	A1530-B4L8	8	AA-17
6505-51-0252	A1530-B4L8	4	AA-17
6505-51-0310	A1530-B4L8	10	AA-17
6505-51-0351	A1530-B4L8	11	AA-17
6505-61-2030	A1530-B4L8	20	AA-17
6505-61-4470	A1530-B4L8	17	AA-17
6505-67-3070	A1530-B4L8	1	AA-17
6505-68-1030	A1530-B4L8	5	AA-17
6505-68-5020	A1530-A4L8	4	AA-15
6505-68-5020	A1530-B4L8		AA-17
6505-68-5910	A1530-B4L8		AA-17
6505-71-0010	A1530-B4L8	14	AA-17
6505-71-0110	A1530-B4L8	7	AA-17
6505-71-0210	A1530-B4L8	2	AA-17
6505-71-0230	A1530-B4L8	3	AA-17
6505-71-0480	A1530-B4L8	16	AA-17
6505-71-0710	A1530-B4L8	9	AA-17
6505-71-0850	A1530-B4L8	12	AA-17
6505-99-9011	A1530-B4L8	22	AA-17
6560-61-7300	A1310-A4L4	24	AA-9
6560-61-7310	A1310-A4L4		AA-9
6631-11-5630	A1410-A4L7	7	AA-11
6631-11-5630	A1550-A4B1	20	AA-19
6631-11-5630	A1610-A4L8	10	AA-25
6631-11-5630	A1610-A4L8	19	AA-25
6631-11-5630	A1610-A4L8	29	AA-25
6631-11-5630	A2110-A4S1	31	AA-41
6631-11-5630	A5210-A4J7	2	AA-103
6631-11-6390	A1570-A4G7	31	AA-23
6643-11-4641	B0200-01A0	3	B0-5
6691-41-8230	A6810-D4M6	1	AA-131
6693-22-5600	B0600-01A0		B0-7
6693-22-5620	B0600-01A0	8	B0-7

https://truckmanualshub.com/

PART NO.	FIG NO.	INDEX	PAGE
6696-61-9921	A2011-A4P2	25	AA-31
6711-21-3521	A2040-A4H7	2	AA-33
6732-81-6840	A6010-A4N2	3	AA-109
6735-21-1930	A1310-A4L4		AA-9
6741-81-9220	A2110-A4S1	27	AA-41
6934-42-5300	A2411-B4B3		AA-61
6934-71-5860	A2110-A4S1	4	AA-41
6934-72-7190	A2010-A4K5	30	AA-29
6934-72-7190	A4060-A4C4	3	AA-83
6934-72-7190	A4210-A4G4	2	AA-93
6991-11-5990	A1610-A4L8	31	AA-25
700-22-11410	Y1660-02A0	6	YO-113
700-22-11410	Y1679-01A0	24	YO-141
700-80-64220	Y1679-01A0	25	YO-141
700-90-74001	Y1660-03A0	7	YO-115
700-93-11320	Y1660-02A0	2	YO-113
700-93-11320	Y1660-06A0	4	YO-121
700-93-11320	Y1660-08A0	7	YO-127
700-93-11320	Y1679-01A0	16	YO-141
700-93-11330	Y1660-02A0	3	YO-113
700-93-11330	Y1660-06A0	5	YO-121
700-93-11330	Y1660-08A0	8	YO-127
700-93-11330	Y1679-01A0	17	YO-141
700-94-11260	Y1660-08A0	19	YO-127
700-94-11260	Y1675-01A1	14	YO-139
702-15-71130	Y1640-03A0	10	YO-95
702-15-71140	Y1640-03A0	11	YO-95
702-15-72000	Y1640-03A0		YO-95
702-16-01542	K1110-19A0	1	KO-63
702-16-01542	Y1670-01A0		YO-129
702-16-04920	K1110-25A0	11	KO-75
702-16-04920	K1110-28A0	11	KO-81
702-16-51140	Y1670-01A0	3	YO-129
702-16-51270	Y1670-01A0	8	YO-129
702-16-53140	Y1670-01A0	5	YO-129
702-16-53170	Y1670-01A0	7	YO-129
702-16-53240	K1110-19A0	23	KO-63
702-16-53420	Y1670-01A0	4	YO-129
702-16-54170	Y1670-01A0	10	YO-129
702-16-54280	Y1670-01A0	21	YO-129
702-16-54311	Y1670-01A0	11	YO-129
702-16-54331	Y1670-01A0	18	YO-129
702-16-54341	Y1670-01A0		YO-129
702-16-54351	Y1670-01A0		YO-129
702-16-54420	Y1670-01A0	6	YO-129
702-16-54430	Y1670-01A0	20	YO-129
702-16-54506	Y1670-01A0	22	YO-129
702-16-54511	Y1670-01A0	24	YO-129
702-16-55940	Y1670-01A0	33	YO-129
702-16-55950	Y1670-01A0	34	YO-129
702-19-11000	Y1674-01A0		YO-133
702-19-12120	Y1674-01A0	3	YO-133
702-19-12120	Y1674-11A0	3	YO-135
702-19-12320	Y1674-01A0	1	YO-133
702-19-12320	Y1674-11A0	1	YO-135
702-19-23000	H1833-02A0	1	HO-69
702-19-25000	H1833-01A0	17	HO-67
702-19-25000	Y1674-01A0		YO-133
702-19-25000	Y1674-11A0		YO-135
702-21-04800	H1220-01A0	26	HO-45
702-21-04800	Y1675-01A1		YO-139
702-21-04900	H1240-02A1	1	HO-51
702-21-04900	Y1675-01A0		YO-137
702-21-08250	H1210-02A0	13	HO-43
702-21-08250	Y1679-01A0		YO-141
702-21-31231	Y1675-01A0	4	YO-137
702-21-31350	Y1675-01A0	3	YO-137

PART NO.	FIG NO.	INDEX	PAGE
702-21-31360	Y1675-01A0	5	YO-137
702-21-36123	Y1675-01A0	11	YO-137
702-21-36131	Y1675-01A0	12	YO-137
702-21-36131	Y1675-01A1	11	YO-139
702-21-36230	Y1675-01A0	6	YO-137
702-21-36310	Y1675-01A0	13	YO-137
702-21-36310	Y1675-01A1	12	YO-139
702-21-36340	Y1675-01A1	3	YO-139
702-21-36350	Y1675-01A1	4	YO-139
702-21-36360	Y1675-01A1	5	YO-139
702-21-36380	Y1675-01A1	10	YO-139
702-21-36390	Y1675-01A1	18	YO-139
702-21-39410	Y1679-01A0	3	YO-141
702-21-39430	Y1679-01A0	5	YO-141
702-21-39440	Y1679-01A0	7	YO-141
702-21-39450	Y1679-01A0	9	YO-141
702-21-39510	Y1679-01A0	4	YO-141
702-21-39520	Y1679-01A0	6	YO-141
702-21-39530	Y1679-01A0	10	YO-141
702-21-39540	Y1679-01A0	15	YO-141
702-21-39550	Y1679-01A0	18	YO-141
702-21-39560	Y1679-01A0	19	YO-141
702-21-39570	Y1679-01A0	20	YO-141
702-21-39580	Y1679-01A0	21	YO-141
702-21-39590	Y1679-01A0	29	YO-141
702-21-57700	Y1600-33A0	20	YO-63
702-73-01640	Y1642-13A0		YO-109
702-73-11810	Y1642-13A0	1	YO-109
702-73-11820	Y1642-13A0	2	YO-109
702-73-11830	Y1642-13A0	3	YO-109
702-73-11840	Y1642-13A0	5	YO-109
702-73-11850	Y1642-13A0	6	YO-109
702-73-11860	Y1642-13A0	9	YO-109
702-75-01220	Y1640-03A0	1	YO-95
702-75-04800	Y1641-03A0	1	YO-103
702-75-11520	Y1641-03A0	6	YO-103
702-75-11530	Y1641-03A0	7	YO-103
703-09-00221	N1310-01A0	1	NO-19
703-09-00221	Y1627-01A0		YO-89
703-09-43201	Y1627-01A0		YO-89
703-09-93610	Y1627-01A0	10	YO-89
703-09-95620	Y1627-01A0	2	YO-89
703-09-98610	Y1627-01A0	5	YO-89
703-09-98610	Y1627-01A0	8	YO-89
703-13-98820	Y1627-01A0	7	YO-89
704-28-00751	H0110-02A0	6	HO-7
705-17-02122	Y1600-36A0	3	YO-69
705-17-02330	Y1600-36A0	16	YO-69
705-17-02353	Y1600-35A0		YO-67
705-17-02353	Y1600-35A0		YO-67
705-17-02353	Y1600-36A0		YO-69
705-17-02353	Y1600-36A0		YO-69
705-17-02360	Y1600-35A0	5	YO-67
705-17-02360	Y1600-36A0	9	YO-69
705-17-02360	Y1600-36A0	17	YO-69
705-17-02430	Y1600-35A0	9	YO-67
705-17-02430	Y1600-36A0	7	YO-69
705-17-02460	Y1600-35A0	10	YO-67
705-17-02460	Y1600-36A0	8	YO-69
705-17-02540	Y1600-36A0	1	YO-69
705-17-02612	Y1600-35A0	8	YO-67
705-17-02612	Y1600-36A0	6	YO-69
705-17-02870	Y1600-35A0	13	YO-67
705-17-02870	Y1600-36A0	13	YO-69
705-17-02910	Y1600-36A0	10	YO-69
705-17-02960	Y1600-35A0	14	YO-67
705-17-04980	Y1600-35A0	12	YO-67

https://truckmanualshub.com/

PART NO.	FIG NO.	INDEX	PAGE
705-18-02240	Y1600-35A0	3	YO-67
705-18-02820	Y1600-35A0	1	YO-67
705-18-02940	Y1600-36A0	14	YO-69
705-18-20010	Y1600-36A0	2	YO-69
705-18-20450	Y1600-36A0	4	YO-69
705-18-20510	Y1600-36A0	5	YO-69
705-18-35120	Y1600-35A0	2	YO-67
705-18-35721	Y1600-35A0	6	YO-67
705-18-35810	Y1600-35A0	7	YO-67
705-22-20090	Y1600-36A0		YO-69
705-22-35190	Y1600-35A0		YO-67
705-52-21190	Y1600-36A0		YO-69
705-52-21190	Y1600-35A0		YO-67
706-46-53180	Y1600-14A0	4	YO-35
706-46-53260	Y1600-14A0	5	YO-35
706-73-42270	Y1600-06A0	15	YO-19
706-73-42270	Y1600-26A0	15	YO-47
706-73-42370	Y1600-31A0	7	YO-59
706-73-70140	Y1660-08A0	5	YO-127
706-73-70150	Y1660-08A0	6	YO-127
706-73-77140	Y1660-04A0	4	YO-117
706-74-40320	Y1600-04A0	22	YO-15
706-74-40320	Y1600-24A0	22	YO-43
706-75-00150	Y1640-01A0		YO-91
706-75-01470	N1210-01A0	1	NO-5
706-75-01470	N1210-01A0	1	NO-11
706-75-01470	Y1640-02A0		YO-93
706-75-01470	Y1640-03A0		YO-95
706-75-01470	Y1640-01A0		YO-91
706-75-03460	Y1640-02A0		YO-93
706-75-03460	Y1640-01A0		YO-91
706-75-05020	Y1640-02A0		YO-93
706-75-05040	Y1640-02A0	7	YO-93
706-75-40010	Y1640-01A0	4	YO-91
706-75-42270	Y1600-05A0	26	YO-17
706-75-42270	Y1600-25A0	26	YO-45
706-75-42440	Y1640-01A0	18	YO-91
706-75-42820	Y1640-01A0	5	YO-91
706-75-43120	Y1640-02A0	15	YO-93
706-75-43130	Y1640-02A0	16	YO-93
706-75-43140	Y1640-02A0	17	YO-93
706-75-43160	Y1640-02A0	20	YO-93
706-75-43190	Y1640-02A0	12	YO-93
706-75-43220	Y1640-01A0	1	YO-91
706-75-43680	Y1640-02A0	1	YO-93
706-75-43720	Y1640-02A0	10	YO-93
706-75-43750	Y1640-02A0	14	YO-93
706-75-43810	Y1640-02A0	3	YO-93
706-75-43841	Y1640-02A0	13	YO-93
706-75-43880	Y1640-02A0	2	YO-93
706-75-74540	Y1640-01A0	14	YO-91
706-75-74550	Y1640-01A0	15	YO-91
706-75-74550	Y1641-01A0	15	YO-97
706-75-74850	Y1640-01A0	16	YO-91
706-75-74850	Y1641-01A0	16	YO-97
706-75-75280	Y1642-13A0	4	YO-109
706-75-92130	Y1640-02A0	21	YO-93
706-75-92310	Y1640-02A0	27	YO-93
706-75-92340	Y1640-02A0	22	YO-93
706-75-92350	Y1640-02A0	23	YO-93
706-75-92360	Y1640-02A0	28	YO-93
706-75-92380	Y1640-02A0	24	YO-93
706-75-92390	Y1640-02A0	25	YO-93
706-76-40890	Y1640-02A0	6	YO-93
706-76-71190	H0110-01A0	40	HO-3
706-77-71670	Y1641-01A0	32	YO-97
706-77-72170	Y1640-01A0	6	YO-91
706-77-72170	Y1640-03A0	5	YO-95
706-77-72170	Y1641-01A0	8	YO-97
706-78-71230	Y1641-01A0	20	YO-97
706-78-71260	Y1641-01A0	42	YO-98
706-78-71280	Y1641-01A0	19	YO-97
706-78-71430	Y1641-01A0	40	YO-97
706-78-71440	Y1641-01A0	41	YO-97
706-78-71580	Y1641-01A0	18	YO-97
706-7E-11260	Y1640-02A0	4	YO-93
706-7E-11270	Y1640-02A0	5	YO-93
706-7E-11280	Y1640-02A0	9	YO-93
706-7G-71710	Y1641-01A0	14	YO-97
706-87-40150	H0210-01A0	28	HO-21
706-87-40150	H0220-01A0	15	HO-23
706-87-51120	Y1641-01A0	13	YO-97
706-88-00210	Y1641-01A0		YO-97
706-88-05010	Y1641-02A0	8	YO-101
706-88-40220	Y1641-01A0	1	YO-97
706-88-40310	Y1641-02A0	3	YO-101
706-88-40380	Y1641-02A0	1	YO-101
706-88-40710	Y1641-02A0	11	YO-101
706-88-40820	Y1641-02A0	7	YO-101
706-88-40870	Y1641-02A0	5	YO-101
706-88-40890	Y1641-02A0	6	YO-101
706-88-50160	Y1641-01A0	30	YO-97
706-88-50240	Y1641-01A0	29	YO-97
706-88-50250	Y1641-01A0	22	YO-97
706-88-50310	Y1641-01A0	25	YO-97
706-88-50320	Y1641-01A0	27	YO-97
706-88-90130	Y1641-02A0	24	YO-101
706-88-90140	Y1641-02A0	20	YO-101
706-88-90150	Y1641-02A0	21	YO-101
706-88-90420	Y1641-02A0	27	YO-101
706-8E-14170	Y1641-01A0	28	YO-97
706-8L-00010	Y1641-01A0		YO-97
706-8L-01010	R1120-07A0	1	RO-21
706-8L-01010	R1120-15A0	1	RO-39
706-8L-01010	Y1641-02A0		YO-101
706-8L-01010	Y1641-03A0		YO-103
706-8L-01010	Y1641-01A0		YO-97
706-8L-41160	Y1641-02A0	19	YO-101
706-8L-41260	Y1641-02A0		YO-101
706-8L-41270	Y1641-02A0	15	YO-101
706-8L-41370	Y1641-02A0	14	YO-101
706-8L-41380	Y1641-02A0	16	YO-101
706-8L-41520	Y1641-02A0	4	YO-101
706-8L-51010	Y1641-01A0	11	YO-97
706-8L-51020	Y1641-01A0	12	YO-97
706-8L-91010	Y1641-02A0	22	YO-101
707-01-XJ630	Y1620-01A0		YO-73
707-01-XJ640	Y1620-02A0		YO-77
707-01-XJ650	Y1620-11A0		YO-81
707-01-XJ660	Y1620-41A0		YO-85
707-01-XR610	T1120-01A0	1	TO-31
707-01-XR610	Y1620-01A0	G-1	YO-73
707-01-XR620	T1120-01A0	2	TO-31
707-01-XR620	Y1620-02A0	G-2	YO-77
707-01-XR630	T1140-01A0	1	TO-35
707-01-XR630	Y1620-11A0	G-1	YO-81
707-01-XR640	T1200-01A2	18	TO-39
707-01-XR640	Y1620-41A0	G-1	YO-85
707-01-XR650	T1200-01A0	18	TO-37
707-13-18950	Y1620-01A0	1	YO-73
707-13-18950	Y1620-02A0	1	YO-77
707-13-18960	Y1620-41A0	1	YO-85
707-13-20470	Y1620-11A0	1	YO-81
707-27-18180	Y1620-41A0	11	YO-85

https://truckmanualshub.com/

PART NO.	FIG NO.	INDEX	PAGE
707-27-18930	Y1620-01A0	13	Y0-73
707-27-18930	Y1620-02A0	13	Y0-77
707-27-20590	Y1620-11A0	14	Y0-81
707-35-91840	Y1620-01A0	10	Y0-73
707-35-91840	Y1620-01A0	20	Y0-73
707-35-91840	Y1620-02A0	10	Y0-77
707-35-91840	Y1620-02A0	20	Y0-77
707-35-91840	Y1620-41A0	18	Y0-85
707-35-92020	Y1620-11A0	8	Y0-81
707-35-92020	Y1620-11A0	21	Y0-81
707-36-18520	Y1620-01A0	24	Y0-73
707-36-18520	Y1620-02A0	24	Y0-77
707-36-18530	Y1620-41A0	23	Y0-85
707-36-20450	Y1620-11A0	25	Y0-81
707-39-18510	Y1620-01A0	27	Y0-73
707-39-18510	Y1620-02A0	27	Y0-77
707-39-18510	Y1620-41A0	26	Y0-85
707-39-20020	Y1620-11A0	28	Y0-81
707-44-18250	Y1620-01A0	26	Y0-73
707-44-18250	Y1620-02A0	26	Y0-77
707-44-18250	Y1620-41A0	25	Y0-85
707-44-18920	Y1620-01A0	28	Y0-73
707-44-18920	Y1620-02A0	28	Y0-77
707-44-18920	Y1620-41A0	27	Y0-85
707-44-20150	Y1620-11A0	27	Y0-81
707-44-20910	Y1620-11A0	29	Y0-81
707-51-12030	Y1620-01A0	18	Y0-73
707-51-12030	Y1620-02A0	18	Y0-77
707-51-12650	Y1620-01A0	19	Y0-73
707-51-12650	Y1620-02A0	19	Y0-77
707-51-13030	Y1620-41A0	16	Y0-85
707-51-13650	Y1620-41A0	17	Y0-85
707-51-14080	Y1620-11A0	19	Y0-81
707-51-14650	Y1620-11A0	20	Y0-81
707-52-90981	Y1620-01A0	16	Y0-73
707-52-90981	Y1620-02A0	16	Y0-77
707-52-91071	Y1620-41A0	14	Y0-85
707-52-91171	Y1620-11A0	17	Y0-81
707-56-13520	Y1620-41A0	12	Y0-85
707-58-12660	Y1620-01A0	6	Y0-73
707-58-12660	Y1620-02A0	6	Y0-77
707-58-13250	Y1620-41A0	5	Y0-85
707-58-14330	Y1620-11A0	4	Y0-81
707-71-31760	Y1620-41A0	10	Y0-85
707-71-32900	Y1620-01A0	9	Y0-73
707-71-32900	Y1620-02A0	9	Y0-77
707-71-32920	Y1620-11A0	7	Y0-81
707-71-61330	Y1620-01A0	12	Y0-73
707-71-61330	Y1620-02A0	12	Y0-77
707-71-61430	Y1620-41A0	22	Y0-85
707-71-61510	Y1620-11A0	10	Y0-81
707-71-70840	Y1620-11A0	11	Y0-81
707-71-91230	Y1620-11A0	13	Y0-81
707-75-14110	Y1620-11A0	18	Y0-81
707-76-11130	Y1620-41A0	2	Y0-85
707-76-11130	Y1620-41A0	6	Y0-85
707-76-11160	Y1620-01A0	2	Y0-73
707-76-11160	Y1620-02A0	2	Y0-77
707-76-12150	Y1620-11A0	2	Y0-81
707-76-12520	Y1620-11A0	5	Y0-81
707-76-12530	Y1620-01A0	7	Y0-73
707-76-12530	Y1620-02A0	7	Y0-77
707-86-13250	Y1620-01A0	31	Y0-73
707-86-13250	Y1620-02A0	31	Y0-77
707-86-13260	Y1620-11A0	32	Y0-81
707-86-13270	Y1620-41A0	30	Y0-85
707-88-26120	Y1620-01A0	37	Y0-73
707-88-26120	Y1620-02A0	37	Y0-77
707-88-26130	Y1620-11A0	37	Y0-81
707-88-26140	Y1620-41A0	36	Y0-85
707-88-26140	Y1620-41A0	38	Y0-85
707-88-28240	Y1620-01A0	36	Y0-73
707-88-28240	Y1620-02A0	36	Y0-77
707-88-28250	Y1620-11A0	36	Y0-81
707-88-28260	Y1620-41A0	35	Y0-85
707-88-28270	Y1620-41A0	37	Y0-85
707-88-33040	Y1620-01A0	45	Y0-74
707-88-33040	Y1620-02A0	45	Y0-78
707-88-33040	Y1620-41A0	44	Y0-86
707-88-75410	Y1620-01A0	23	Y0-73
707-88-75410	Y1620-02A0	23	Y0-77
707-88-75410	Y1620-41A0	21	Y0-85
707-99-69790	Y1620-41A0		Y0-86
707-99-76130	Y1620-01A0		Y0-74
707-99-76130	Y1620-02A0		Y0-78
707-99-76300	Y1620-11A0		Y0-82
708-1U-00200	H0240-01A0	1	H0-25
708-1U-00200	Y1600-32A0		Y0-61
708-1U-00200	Y1600-33A0		Y0-63
708-1U-00200	Y1600-34A0		Y0-65
708-1U-00200	Y1600-35A0		Y0-67
708-1U-00200	Y1600-36A0		Y0-69
708-1U-00200	Y1600-37A0		Y0-71
708-1U-00200	Y1600-31A0		Y0-59
708-1U-00210	Y1600-32A0		Y0-61
708-1U-00210	Y1600-33A0		Y0-63
708-1U-00210	Y1600-34A0		Y0-65
708-1U-00210	Y1600-31A0		Y0-59
708-1U-01214	Y1600-32A0		Y0-61
708-1U-01214	Y1600-31A0		Y0-59
708-1U-03340	Y1600-33A0		Y0-63
708-1U-04142	Y1600-31A0		Y0-59
708-1U-11560	Y1600-31A0	12	Y0-59
708-1U-12120	Y1600-31A0	17	Y0-59
708-1U-12320	Y1600-31A0	19	Y0-59
708-1U-13110	Y1600-32A0	1	Y0-61
708-1U-13211	Y1600-32A0	2	Y0-61
708-1U-13310	Y1600-32A0	10	Y0-61
708-1U-13341	Y1600-32A0	9	Y0-61
708-1U-13450	Y1600-31A0	15	Y0-59
708-1U-14240	Y1600-32A0	13	Y0-61
708-1U-19120	Y1600-37A0	1	Y0-71
708-1W-05810	Y1600-31A0	22	Y0-59
708-1W-28150	Y1600-37A0	5	Y0-71
708-1W-42110	Y1600-31A0	18	Y0-59
708-1W-42120	Y1600-31A0	13	Y0-59
708-1W-42130	Y1600-31A0	20	Y0-59
708-1W-43130	Y1600-32A0	4	Y0-61
708-1W-43140	Y1600-32A0	5	Y0-61
708-1W-43350	Y1600-32A0	7	Y0-61
708-1W-44120	Y1600-32A0	11	Y0-61
708-21-12541	A1010-A4D2	24	AA-3
708-23-00411	Y1600-07A0		Y0-21
708-23-00411	Y1600-28A0		Y0-53
708-23-00421	Y1600-10A0		Y0-27
708-23-00421	Y1600-27A0		Y0-49
708-23-00430	Y1600-08A0		Y0-23
708-23-00441	Y1600-11A0		Y0-29
708-23-00451	Y1600-12A0		Y0-31
708-23-15120	Y1600-07A0	7	Y0-21
708-23-15120	Y1600-10A0	8	Y0-27
708-23-15120	Y1600-27A0	7	Y0-49
708-23-15120	Y1600-28A0	8	Y0-53
708-23-15160	Y1600-07A0	8	Y0-21

https://truckmanualshub.com/

PART NO.	FIG NO.	INDEX	PAGE
708-23-15160	Y1600-10A0	7	Y0-27
708-23-15160	Y1600-12A0	22	Y0-31
708-23-15160	Y1600-27A0	8	Y0-49
708-23-15160	Y1600-28A0	7	Y0-53
708-23-17240	Y1600-08A0	24	Y0-23
708-23-17240	Y1600-11A0	24	Y0-29
708-23-17290	Y1600-08A0	19	Y0-23
708-23-17290	Y1600-11A0	19	Y0-29
708-23-18161	Y1600-12A0	9	Y0-31
708-23-18170	Y1600-12A0	10	Y0-31
708-23-18210	Y1600-12A0	14	Y0-31
708-23-18250	Y1600-12A0	18	Y0-31
708-25-05021	Y1600-04A0	20	Y0-15
708-25-05021	Y1600-24A0	20	Y0-43
708-25-05050	Y1600-03A0	12	Y0-13
708-25-05050	Y1600-03A0	18	Y0-13
708-25-05050	Y1600-06A0	4	Y0-19
708-25-05050	Y1600-06A0	10	Y0-19
708-25-05050	Y1600-23A0	12	Y0-41
708-25-05050	Y1600-23A0	18	Y0-41
708-25-05050	Y1600-26A0	4	Y0-47
708-25-05050	Y1600-26A0	10	Y0-47
708-25-05130	Y1600-02A0	8	Y0-11
708-25-05130	Y1600-04A0	25	Y0-15
708-25-05130	Y1600-22A0	8	Y0-39
708-25-05130	Y1600-24A0	25	Y0-43
708-25-08190	Y1600-27A0		Y0-49
708-25-08291	Y1600-28A0		Y0-53
708-25-08550	Y1600-08A0		Y0-23
708-25-08990	Y1600-12A0		Y0-31
708-25-12330	Y1600-03A0	5	Y0-13
708-25-12330	Y1600-05A0	16	Y0-17
708-25-12330	Y1600-23A0	5	Y0-41
708-25-12330	Y1600-25A0	16	Y0-45
708-25-12350	Y1600-03A0	8	Y0-13
708-25-12350	Y1600-05A0	19	Y0-17
708-25-12350	Y1600-23A0	8	Y0-41
708-25-12350	Y1600-25A0	19	Y0-45
708-25-12530	Y1600-01A0	13	Y0-9
708-25-12530	Y1600-04A0	13	Y0-15
708-25-12530	Y1600-21A0	12	Y0-37
708-25-12530	Y1600-24A0	13	Y0-43
708-25-12542	Y1600-06A0	13	Y0-19
708-25-12542	Y1600-26A0	13	Y0-47
708-25-12790	Y1600-02A0	4	Y0-11
708-25-12790	Y1600-04A0	19	Y0-15
708-25-12790	Y1600-22A0	4	Y0-39
708-25-12790	Y1600-24A0	19	Y0-43
708-25-12812	Y1600-02A0	6	Y0-11
708-25-12812	Y1600-22A0	6	Y0-39
708-25-12950	Y1600-04A0	21	Y0-15
708-25-12950	Y1600-24A0	21	Y0-43
708-25-13630	Y1600-01A0	22	Y0-9
708-25-13630	Y1600-04A0	15	Y0-15
708-25-13630	Y1600-21A0	21	Y0-37
708-25-13630	Y1600-24A0	15	Y0-43
708-25-14112	Y1600-06A0	1	Y0-19
708-25-14112	Y1600-26A0	1	Y0-47
708-25-14130	Y1600-03A0	13	Y0-13
708-25-14130	Y1600-06A0	5	Y0-19
708-25-14130	Y1600-23A0	13	Y0-41
708-25-14130	Y1600-26A0	5	Y0-47
708-25-14140	Y1600-03A0	10	Y0-13
708-25-14140	Y1600-06A0	2	Y0-19
708-25-14140	Y1600-23A0	10	Y0-41
708-25-14140	Y1600-26A0	2	Y0-47
708-25-14150	Y1600-03A0	16	Y0-13
708-25-14150	Y1600-06A0	8	Y0-19
708-25-14150	Y1600-23A0	16	Y0-41
708-25-14150	Y1600-26A0	8	Y0-47
708-25-14211	Y1600-03A0	9	Y0-13
708-25-14211	Y1600-23A0	9	Y0-41
708-25-15120	Y1600-07A0	3	Y0-21
708-25-15120	Y1600-10A0	3	Y0-27
708-25-15120	Y1600-27A0	3	Y0-49
708-25-15120	Y1600-28A0	3	Y0-53
708-25-15130	Y1600-07A0	4	Y0-21
708-25-15130	Y1600-10A0	4	Y0-27
708-25-15130	Y1600-27A0	4	Y0-49
708-25-15130	Y1600-28A0	4	Y0-53
708-25-15150	Y1600-07A0	10	Y0-21
708-25-15150	Y1600-10A0	10	Y0-27
708-25-15150	Y1600-27A0	10	Y0-49
708-25-15150	Y1600-28A0	10	Y0-53
708-25-15171	Y1600-27A0	14	Y0-49
708-25-15171	Y1600-28A0	20	Y0-53
708-25-15180	Y1600-07A0	19	Y0-21
708-25-15180	Y1600-10A0	19	Y0-27
708-25-15180	Y1600-27A0	17	Y0-49
708-25-15180	Y1600-28A0	16	Y0-53
708-25-15250	Y1600-07A0	26	Y0-21
708-25-15250	Y1600-10A0	26	Y0-27
708-25-15250	Y1600-27A0	24	Y0-49
708-25-15250	Y1600-28A0	23	Y0-53
708-25-15260	Y1600-07A0	30	Y0-21
708-25-15260	Y1600-10A0	30	Y0-27
708-25-15260	Y1600-27A0	27	Y0-49
708-25-15260	Y1600-28A0	27	Y0-53
708-25-15270	Y1600-07A0	32	Y0-21
708-25-15270	Y1600-10A0	32	Y0-27
708-25-15270	Y1600-27A0	29	Y0-49
708-25-15270	Y1600-28A0	29	Y0-53
708-25-15280	Y1600-07A0	20	Y0-21
708-25-15280	Y1600-10A0	20	Y0-27
708-25-15280	Y1600-27A0	18	Y0-49
708-25-15280	Y1600-28A0	17	Y0-53
708-25-15310	Y1600-07A0	21	Y0-21
708-25-15310	Y1600-10A0	21	Y0-27
708-25-15310	Y1600-27A0	19	Y0-49
708-25-15310	Y1600-28A0	18	Y0-53
708-25-15330	Y1600-07A0	22	Y0-21
708-25-15330	Y1600-10A0	22	Y0-27
708-25-15330	Y1600-27A0	20	Y0-49
708-25-15330	Y1600-28A0	19	Y0-53
708-25-15340	Y1600-07A0	24	Y0-21
708-25-15340	Y1600-08A0	22	Y0-23
708-25-15340	Y1600-10A0	24	Y0-27
708-25-15340	Y1600-11A0	22	Y0-29
708-25-15340	Y1600-12A0	12	Y0-31
708-25-15340	Y1600-27A0	22	Y0-49
708-25-15340	Y1600-28A0	21	Y0-53
708-25-15360	Y1600-07A0	33	Y0-21
708-25-15360	Y1600-10A0	33	Y0-27
708-25-15360	Y1600-27A0	30	Y0-49
708-25-15360	Y1600-28A0	30	Y0-53
708-25-15370	Y1600-07A0	34	Y0-21
708-25-15370	Y1600-10A0	34	Y0-27
708-25-15370	Y1600-27A0	31	Y0-49
708-25-15370	Y1600-28A0	31	Y0-53
708-25-15380	Y1600-07A0	35	Y0-21
708-25-15380	Y1600-10A0	35	Y0-27
708-25-15380	Y1600-27A0	32	Y0-49
708-25-15380	Y1600-28A0	32	Y0-53
708-25-15430	Y1600-07A0	23	Y0-21

https://truckmanualshub.com/

PART NO.	FIG NO.	INDEX	PAGE
708-25-15430	Y1600-10A0	23	YO-27
708-25-15430	Y1600-27A0	21	YO-49
708-25-15430	Y1600-28A0	46	YO-54
708-25-15460	Y1600-27A0	45	YO-50
708-25-15460	Y1600-28A0	47	YO-54
708-25-15470	Y1600-27A0		YO-50
708-25-15470	Y1600-28A0		YO-54
708-25-17131	Y1600-08A0	6	YO-23
708-25-17131	Y1600-11A0	6	YO-29
708-25-17141	Y1600-08A0	8	YO-23
708-25-17141	Y1600-11A0	8	YO-29
708-25-17150	Y1600-08A0	9	YO-23
708-25-17150	Y1600-11A0	9	YO-29
708-25-17160	Y1600-08A0	10	YO-23
708-25-17160	Y1600-11A0	10	YO-29
708-25-17170	Y1600-08A0	11	YO-23
708-25-17170	Y1600-11A0	11	YO-29
708-25-17180	Y1600-08A0	13	YO-23
708-25-17180	Y1600-11A0	13	YO-29
708-25-17220	Y1600-08A0	15	YO-23
708-25-17220	Y1600-11A0	15	YO-29
708-25-17250	Y1600-08A0	17	YO-23
708-25-17250	Y1600-11A0	17	YO-29
708-25-17370	Y1600-08A0	16	YO-23
708-25-17370	Y1600-11A0	16	YO-29
708-25-17380	Y1600-08A0	21	YO-23
708-25-17380	Y1600-11A0	21	YO-29
708-25-17430	Y1600-08A0	4	YO-23
708-25-17430	Y1600-11A0	4	YO-29
708-25-17451	Y1600-08A0	33	YO-23
708-25-17451	Y1600-11A0	33	YO-29
708-25-17460	Y1600-08A0	3	YO-23
708-25-17460	Y1600-11A0	3	YO-29
708-25-17470	Y1600-08A0	18	YO-23
708-25-17470	Y1600-11A0	18	YO-29
708-25-17480	Y1600-08A0	25	YO-23
708-25-17480	Y1600-11A0	25	YO-29
708-25-17690	Y1600-08A0	14	YO-23
708-25-17690	Y1600-11A0	14	YO-29
708-25-18180	Y1600-12A0	11	YO-31
708-25-19120	Y1600-14A0	9	YO-35
708-25-19120	Y1600-29A0	4	YO-57
708-25-19140	Y1600-14A0	7	YO-35
708-25-19150	Y1600-09A0	7	YO-25
708-25-19150	Y1600-27A0	41	YO-49
708-25-19150	Y1600-28A0	41	YO-53
708-25-19150	Y1600-13A0	13	YO-33
708-25-19160	Y1600-09A0	2	YO-25
708-25-19160	Y1600-13A0	4	YO-33
708-25-19191	Y1600-09A0	9	YO-25
708-25-19191	Y1600-13A0	15	YO-33
708-25-19290	Y1600-27A0	42	YO-50
708-25-19290	Y1600-28A0	36	YO-53
708-25-25130	Y1600-07A0	5	YO-21
708-25-25130	Y1600-10A0	6	YO-27
708-25-25130	Y1600-27A0	5	YO-49
708-25-25130	Y1600-28A0	6	YO-53
708-25-52550	Y1600-06A0	14	YO-19
708-25-52550	Y1600-26A0	14	YO-47
708-25-52861	Y1642-12A0	8	YO-107
708-25-52861	Y1600-02A0	5	YO-11
708-25-52861	Y1600-22A0	5	YO-39
708-25-55110	Y1600-28A0	35	YO-53
708-25-55110	Y1600-27A0	35	YO-49
708-25-55250	Y1600-07A0	6	YO-21
708-25-55250	Y1600-10A0	5	YO-27
708-25-55250	Y1600-27A0	6	YO-49
708-25-55250	Y1600-28A0	5	YO-53
708-25-55680	Y1600-07A0	14	YO-21
708-25-55680	Y1600-10A0	14	YO-27
708-25-62361	Y1600-03A0	7	YO-13
708-25-62361	Y1600-05A0	18	YO-17
708-25-62361	Y1600-23A0	7	YO-41
708-25-62361	Y1600-25A0	18	YO-45
708-25-85170	Y1600-08A0		YO-23
708-25-85170	Y1600-09A0		YO-25
708-25-85170	Y1600-07A0		YO-21
708-25-85270	Y1600-10A0		YO-27
708-25-85270	Y1600-11A0		YO-29
708-25-85270	Y1600-12A0		YO-31
708-25-85270	Y1600-13A0		YO-33
708-25-85370	Y1600-07A0		YO-21
708-25-85470	Y1600-10A0		YO-27
708-25-85650	Y1600-11A0		YO-29
708-27-18120	Y1600-12A0	4	YO-31
708-27-18130	Y1600-12A0	5	YO-31
708-27-18140	Y1600-12A0	6	YO-31
708-27-18150	Y1600-12A0	20	YO-31
708-2E-05040	Y1600-02A0	3	YO-11
708-2E-05040	Y1600-04A0	18	YO-15
708-2E-05040	Y1600-22A0	3	YO-39
708-2E-05040	Y1600-24A0	18	YO-43
708-2L-00770	H0210-01A0	27	HO-21
708-2L-00770	Y1600-03A0		YO-13
708-2L-00770	Y1600-04A0		YO-15
708-2L-00770	Y1600-05A0		YO-17
708-2L-00770	Y1600-06A0		YO-19
708-2L-00770	Y1600-07A0		YO-21
708-2L-00770	Y1600-08A0		YO-23
708-2L-00770	Y1600-09A0		YO-25
708-2L-00770	Y1600-10A0		YO-27
708-2L-00770	Y1600-11A0		YO-29
708-2L-00770	Y1600-12A0		YO-31
708-2L-00770	Y1600-13A0		YO-33
708-2L-00770	Y1600-14A0		YO-35
708-2L-00770	Y1600-01A0		YO-9
708-2L-00770	Y1600-02A0		YO-11
708-2L-01622	Y1600-22A0		YO-39
708-2L-01622	Y1600-23A0		YO-41
708-2L-01622	Y1600-24A0		YO-43
708-2L-01622	Y1600-25A0		YO-45
708-2L-01622	Y1600-26A0		YO-47
708-2L-01622	Y1600-21A0		YO-37
708-2L-01632	Y1600-03A0		YO-13
708-2L-01632	Y1600-04A0		YO-15
708-2L-01632	Y1600-05A0		YO-17
708-2L-01632	Y1600-06A0		YO-19
708-2L-01632	Y1600-01A0		YO-9
708-2L-01632	Y1600-02A0		YO-11
708-2L-04141	Y1600-05A0		YO-17
708-2L-04141	Y1600-25A0		YO-45
708-2L-04151	Y1600-02A0		YO-11
708-2L-04151	Y1600-22A0		YO-39
708-2L-04730	Y1600-03A0		YO-13
708-2L-04810	Y1600-23A0		YO-41
708-2L-04820	Y1600-25A0		YO-45
708-2L-04830	Y1600-05A0		YO-17
708-2L-04840	Y1600-03A0		YO-13
708-2L-04840	Y1600-23A0		YO-41
708-2L-04850	Y1600-25A0		YO-45
708-2L-04860	Y1600-05A0		YO-17
708-2L-04930	Y1600-21A0		YO-37
708-2L-04940	Y1600-24A0		YO-43
708-2L-04950	Y1600-01A0		YO-9

https://truckmanualshub.com/

PART NO.	FIG NO.	INDEX	PAGE
708-2L-04960	Y1600-04A0		YO-15
708-2L-04970	Y1600-01A0		YO-9
708-2L-21540	Y1600-04A0	5	YO-15
708-2L-21711	Y1600-24A0	5	YO-43
708-2L-21721	Y1600-21A0	5	YO-37
708-2L-22160	Y1642-12A0	9	YO-107
708-2L-22430	Y1600-02A0	1	YO-11
708-2L-22430	Y1600-22A0	1	YO-39
708-2L-22440	Y1600-04A0	16	YO-15
708-2L-22440	Y1600-24A0	16	YO-43
708-2L-23131	Y1600-02A0	15	YO-11
708-2L-23131	Y1600-05A0	5	YO-17
708-2L-23131	Y1600-22A0	15	YO-39
708-2L-23131	Y1600-25A0	5	YO-45
708-2L-23351	Y1600-02A0	18	YO-11
708-2L-23351	Y1600-05A0	8	YO-17
708-2L-23351	Y1600-22A0	18	YO-39
708-2L-23351	Y1600-25A0	8	YO-45
708-2L-23360	Y1600-02A0	19	YO-11
708-2L-23360	Y1600-05A0	9	YO-17
708-2L-23360	Y1600-22A0	19	YO-39
708-2L-23360	Y1600-25A0	9	YO-45
708-2L-23730	Y1600-03A0	4	YO-13
708-2L-23730	Y1600-05A0	15	YO-17
708-2L-23730	Y1600-23A0	4	YO-41
708-2L-23730	Y1600-25A0	15	YO-45
708-2L-23740	Y1600-05A0	20	YO-17
708-2L-23740	Y1600-25A0	20	YO-45
708-2L-23790	Y1600-05A0	24	YO-17
708-2L-23790	Y1600-25A0	24	YO-45
708-2L-25190	Y1600-12A0	16	YO-31
708-2L-32150	Y1600-02A0	2	YO-11
708-2L-32150	Y1600-04A0	17	YO-15
708-2L-32150	Y1600-22A0	2	YO-39
708-2L-32150	Y1600-24A0	17	YO-43
708-2L-32260	Y1600-01A0	7	YO-9
708-2L-32260	Y1600-04A0	6	YO-15
708-2L-32260	Y1600-21A0	6	YO-37
708-2L-32260	Y1600-24A0	6	YO-43
708-2L-33160	Y1600-02A0	16	YO-11
708-2L-33160	Y1600-05A0	6	YO-17
708-2L-33160	Y1600-22A0	16	YO-39
708-2L-33160	Y1600-25A0	6	YO-45
708-2L-33310	Y1600-02A0	21	YO-11
708-2L-33310	Y1600-05A0	11	YO-17
708-2L-33310	Y1600-22A0	21	YO-39
708-2L-33310	Y1600-25A0	11	YO-45
708-2L-33340	Y1600-02A0	20	YO-11
708-2L-33340	Y1600-05A0	10	YO-17
708-2L-33340	Y1600-22A0	20	YO-39
708-2L-33340	Y1600-25A0	10	YO-45
708-2L-33350	Y1642-12A0	19	YO-107
708-2L-90721	H0220-01A0	14	HO-23
708-2L-90721	Y1600-21A0		YO-37
708-2L-90721	Y1600-22A0		YO-39
708-2L-90721	Y1600-23A0		YO-41
708-2L-90721	Y1600-24A0		YO-43
708-2L-90721	Y1600-25A0		YO-45
708-2L-90721	Y1600-26A0		YO-47
708-2L-90721	Y1600-27A0		YO-49
708-2L-90721	Y1600-29A0		YO-57
708-2L-90721	Y1600-28A0		YO-53
708-3T-13360	Y1600-32A0	8	YO-61
708-3T-13420	Y1600-31A0	14	YO-59
708-3T-14120	Y1600-32A0	12	YO-61
708-7L-05010	Y1642-12A0	7	YO-107
708-7L-12140	Y1642-12A0	6	YO-107

PART NO.	FIG NO.	INDEX	PAGE
708-7L-13140	Y1600-02A0	17	YO-11
708-7L-13140	Y1600-05A0	7	YO-17
708-7L-13140	Y1600-22A0	17	YO-39
708-7L-13140	Y1600-25A0	7	YO-45
708-7L-13140	Y1642-12A0	15	YO-107
708-7L-13410	Y1642-12A0	21	YO-107
708-7S-18230	Y1642-11A0	20	YO-105
708-7S-18360	Y1642-11A0	18	YO-105
708-7S-21610	Y1642-11A0	6	YO-105
708-7W-00120	C0100-05A0	4	CO-11
708-7W-00120	Y1642-11A0		YO-105
708-7W-00120	Y1642-12A0		YO-107
708-7W-00120	Y1642-13A0		YO-109
708-7W-01050	Y1642-11A0		YO-105
708-7W-01070	Y1642-11A0	16	YO-105
708-7W-11170	Y1642-11A0	1	YO-105
708-7W-11920	Y1642-12A0	1	YO-107
708-7W-12120	Y1642-12A0	5	YO-107
708-7W-12130	Y1642-12A0	4	YO-107
708-7W-18150	Y1642-11A0	9	YO-105
708-7W-18160	Y1642-11A0	10	YO-105
708-7W-18170	Y1642-11A0	11	YO-105
708-8E-16160	Y1600-31A0	3	YO-59
708-8E-16160	Y1641-01A0	35	YO-97
708-8E-16160	Y1641-01A0	38	YO-97
708-8E-16180	Y1641-01A0	37	YO-97
708-8F-33121	Y1642-12A0	11	YO-107
708-8F-33160	Y1642-12A0	16	YO-107
708-8F-33230	Y1642-12A0	12	YO-107
708-8F-33310	Y1642-12A0	20	YO-107
708-8F-33350	Y1642-12A0	18	YO-107
708-8F-33360	Y1642-12A0	14	YO-107
708-8H-11530	Y1640-01A0	8	YO-91
708-8K-12141	Y1641-02A0	10	YO-101
708-8K-15190	Y1641-01A0	7	YO-97
709-25-11361	Y1642-11A0	5	YO-105
709-25-11361	Y1640-01A0	11	YO-91
709-25-11390	Y1679-01A0	26	YO-141
709-25-11640	Y1640-01A0	12	YO-91
709-25-11650	Y1642-11A0	4	YO-105
709-25-11650	Y1640-01A0	10	YO-91
709-62-31280	Y1679-01A0	8	YO-141
709-70-71610	Y1640-03A0	9	YO-95
709-70-91150	Y1660-04A0	3	YO-117
709-70-91240	Y1660-04A0	5	YO-117
709-74-91850	Y1660-07A0	8	YO-123
709-74-91860	Y1660-06A0	6	YO-121
709-74-91860	Y1660-08A0	16	YO-127
709-74-92170	Y1660-07A0	12	YO-123
709-74-92220	Y1660-05A0	39	YO-119
709-74-92230	Y1660-07A0	42	YO-124
709-74-92450	Y1660-08A0	9	YO-127
709-74-92460	Y1660-08A0	12	YO-127
709-74-92590	Y1660-07A0	11	YO-123
709-74-92821	Y1660-06A0	3	YO-121
709-74-92821	Y1660-08A0	3	YO-127
709-79-11190	Y1660-01A0	7	YO-111
709-90-54902	Y1660-02A0	1	YO-113
709-90-59400	Y1660-02A0	5	YO-113
709-90-73400	H1210-02A0	7	HO-43
709-90-73400	Y1672-01A0	1	YO-131
709-90-74401	Y1660-03A0	3	YO-115
709-90-91300	Y1660-03A0	9	YO-115
709-94-91120	Y1660-05A0	18	YO-119
709-94-91120	Y1660-07A0	22	YO-123
709-94-91130	Y1660-05A0	16	YO-119
709-94-91130	Y1660-07A0	18	YO-123

https://truckmanualshub.com/

PART NO.	FIG NO.	INDEX	PAGE
709-94-91140	Y1660-05A0	36	YO-119
709-94-91160	Y1660-07A0	38	YO-123
709-94-91170	Y1660-07A0	24	YO-123
709-94-91180	Y1660-07A0	27	YO-123
709-94-91210	Y1660-05A0	25	YO-119
709-94-91210	Y1660-07A0	30	YO-123
709-94-91220	Y1660-05A0	26	YO-119
709-94-91240	Y1660-07A0	39	YO-124
709-94-91261	Y1660-06A0	10	YO-121
709-94-91261	Y1660-08A0	13	YO-127
709-94-91270	Y1660-06A0	11	YO-121
709-94-91270	Y1660-08A0	14	YO-127
709-94-91280	Y1660-06A0	12	YO-121
709-94-91280	Y1660-08A0	15	YO-127
709-94-91490	Y1660-05A0	35	YO-119
709-94-91720	Y1660-07A0	32	YO-123
709-94-91751	Y1660-06A0	2	YO-121
709-94-91751	Y1660-08A0	2	YO-127
709-94-91760	Y1660-05A0	22	YO-119
709-94-91770	Y1660-08A0	4	YO-127
709-94-92470	Y1660-05A0	33	YO-119
709-94-92510	Y1660-05A0	10	YO-119
709-94-92510	Y1660-07A0	13	YO-123
709-94-92520	Y1660-05A0	11	YO-119
709-94-92520	Y1660-07A0	14	YO-123
709-94-92530	Y1660-05A0	12	YO-119
709-94-92530	Y1660-07A0	16	YO-123
709-94-92540	Y1660-05A0	13	YO-119
709-94-92540	Y1660-07A0	17	YO-123
709-94-92550	Y1660-05A0	21	YO-119
709-94-92550	Y1660-07A0	21	YO-123
709-94-92560	Y1660-05A0	24	YO-119
709-94-92560	Y1660-07A0	31	YO-123
709-94-92590	Y1660-07A0	15	YO-123
709-94-92600	Y1660-04A0		YO-117
709-94-92610	Y1660-05A0	23	YO-119
709-94-92610	Y1660-07A0	34	YO-123
709-94-92630	Y1660-07A0	20	YO-123
709-94-92690	Y1660-05A0	34	YO-119
709-94-92770	Y1660-05A0	14	YO-119
709-94-92770	Y1660-07A0	28	YO-123
709-94-92811	Y1660-06A0	1	YO-121
709-94-92811	Y1660-08A0	1	YO-127
709-94-92890	Y1660-05A0	17	YO-119
709-94-92890	Y1660-07A0	19	YO-123
709-94-92920	Y1660-05A0	20	YO-119
709-94-92940	Y1660-05A0	19	YO-119
709-94-92940	Y1660-07A0	23	YO-123
709-94-92950	Y1660-07A0	26	YO-123
709-94-92960	Y1660-07A0	25	YO-123
709-95-91150	Y1660-08A0	17	YO-127
709-99-11111	Y1660-01A0	3	YO-111
709-99-11121	Y1660-01A0	4	YO-111
709-99-11132	Y1660-01A0	6	YO-111
709-99-11141	Y1660-01A0	5	YO-111
709-99-15100	H0120-01A0	1	HO-13
709-99-15100	Y1660-03A0		YO-115
709-99-15100	Y1660-04A0		YO-117
709-99-15100	Y1660-05A0		YO-119
709-99-15100	Y1660-06A0		YO-121
709-99-15100	Y1660-07A0		YO-123
709-99-15100	Y1660-08A0		YO-127
709-99-15100	Y1660-01A0		YO-111
709-99-15100	Y1660-02A0		YO-113
720-68-11920	Y1600-09A0	4	YO-25
720-68-11920	Y1600-27A0	38	YO-49
720-68-11920	Y1600-28A0	42	YO-54

PART NO.	FIG NO.	INDEX	PAGE
720-68-11920	Y1600-13A0	8	YO-33
720-68-11920	Y1600-13A0	12	YO-33
720-68-15240	Y1600-14A0	11	YO-35
720-68-15240	Y1600-29A0	6	YO-57
720-68-19610	Y1600-01A0	20	YO-9
720-68-19610	Y1600-02A0	13	YO-11
720-68-19610	Y1600-05A0	3	YO-17
720-68-19610	Y1600-21A0	19	YO-37
720-68-19610	Y1600-22A0	13	YO-39
720-68-19610	Y1600-25A0	3	YO-45
720-68-19610	Y1600-32A0	3	YO-61
720-68-19610	Y1642-12A0	13	YO-107
723-60-22230	Y1642-13A0	10	YO-109
723-60-23800	Y1660-03A0	5	YO-115
723-90-69100	Y1660-03A0	1	YO-115
723-90-69100	Y1675-01A0	15	YO-137
7835-16-2003	K1110-13A0	1	KO-51
7835-27-2002	K1110-16A0	4	KO-57
7861-91-4220	A2110-A4S1		AA-41
7861-93-1420	B0200-01A0	29	BO-5
7861-93-1811	H0312-02A0	33	HO-31
7861-93-3320	H0110-01A0	29	HO-3
7861-93-3510	C0100-11A0	2	CO-27
7861-93-5810	D0100-01A0	13	DO-3
7861-94-2000	K1110-16A0	6	KO-57
799-101-5220	H1350-01A0	7	HO-57
8218-81-8490	A6810-B4M6	35	AA-127
8233-06-3350	K1110-16A0	11	KO-57
8233-06-3350	K1110-23A0	31	KO-71
8287-70-5890	D0200-01A0	27	DO-5
8296-62-2160	H0120-01A0	41	HO-13
8A13-10-1310	K1110-11A0	19	KO-47
KD0-0020-05062	A6210-B4E4	39	AA-119
KD0-0055-05082	A6210-B4E4	37	AA-119
KD0-0055-05122	A6010-B4L9	28	AA-111
KD0-0055-05122	A6010-B4M8	28	AA-113
KD0-0080-06142	A6010-B4L9	22	AA-111
KD0-0080-06142	A6010-B4M8	22	AA-113
KD0-0083-08802	A6010-B4L9	13	AA-111
KD0-0083-08802	A6010-B4M8	13	AA-113
KD0-0270-06202	A6210-B4E4	15	AA-119
KD0-0270-06602	A6210-B4E4	43	AA-120
KD0-0275-06802	A6010-B4N2	12	AA-115
KD0-0276-08402	A6210-B4E4	32	AA-119
KD0-0280-16022	A6010-B4N2	17	AA-115
KD0-0290-20022	A6010-B4L9	34	AA-111
KD0-0290-20022	A6010-B4M8	34	AA-113
KD0-0291-08010	A6010-B4L9	27	AA-111
KD0-0291-08010	A6010-B4M8	27	AA-113
KD0-0330-16012	A6010-B4N2	15	AA-115
KD0-09001-4380	A6210-B4E4	30	AA-119
KD0-09006-0660	A6210-B4E4	47	AA-120
KD0-09006-0670	A6210-B4E4	48	AA-120
KD0-09011-3140	A6210-B4E4	27	AA-119
KD0-09057-0110	A6210-B4E4	33	AA-119
KD0-09057-0190	A6210-B4E4	38	AA-119
KD0-09057-0220	A6010-B4N2	29	AA-115
KD0-09170-2501	A6010-B4N2	21	AA-115
KD0-09201-0760	A6010-B4L9	9	AA-111
KD0-09201-0760	A6010-B4M8	9	AA-113
KD0-09201-0770	A6010-B4L9	4	AA-111
KD0-09201-0770	A6010-B4M8	4	AA-113
KD0-09201-0850	A6210-B4E4	12	AA-119
KD0-09201-0980	A6010-B4N2	4	AA-115
KD0-09201-1140	A6010-B4N2	7	AA-115
KD0-09271-3620	A6210-B4E4	21	AA-119
KD0-09275-1430	A6210-B4E4	50	AA-120

https://truckmanualshub.com/

PART NO.	FIG NO.	INDEX	PAGE
KD0-23100-0430	A6210-B4E4	18	AA-119
KD0-23120-0180	A6210-B4E4	8	AA-119
KD0-23200-0671	A6210-B4E4	20	AA-119
KD0-23303-0020	A6210-B4E4	5	AA-119
KD0-23310-1670	A6210-B4E4	9	AA-119
KD0-23500-0410	A6210-B4E4	13	AA-119
KD0-23511-1101	A6210-B4E4	14	AA-119
KD0-23710-0221	A6210-B4E4	29	AA-119
KD0-23750-0490	A6210-B4E4	24	AA-119
KD0-25000-8332	A6210-B4E4	42	AA-120
KD0-33902-0080	A6010-B4L9	18	AA-111
KD0-33902-0080	A6010-B4M8	18	AA-113
KD0-33902-0090	A6010-B4L9	17	AA-111
KD0-33902-0090	A6010-B4M8	17	AA-113
KD0-33902-0100	A6010-B4L9	24	AA-111
KD0-33902-0100	A6010-B4M8	24	AA-113
KD0-35100-0230	A6010-B4L9	1	AA-111
KD0-35100-0230	A6010-B4M8	1	AA-113
KD0-35100-0300	A6010-B4N2	1	AA-115
KD0-35120-0250	A6010-B4L9	11	AA-111
KD0-35120-0250	A6010-B4M8	11	AA-113
KD0-35120-0290	A6010-B4N2	18	AA-115
KD0-35200-0320	A6010-B4L9	12	AA-111
KD0-35200-0320	A6010-B4M8	12	AA-113
KD0-35200-0460	A6010-B4N2	5	AA-115
KD0-35300-0200	A6010-B4L9	5	AA-111
KD0-35300-0200	A6010-B4M8	5	AA-113
KD0-35300-0350	A6010-B4N2	6	AA-115
KD0-35411-0680	A6010-B4L9	31	AA-111
KD0-35411-0700	A6010-B4N2	13	AA-115
KD0-35411-0880	A6010-B4M8	31	AA-113
KD0-35421-0230	A6010-B4N2	14	AA-115
KD0-35700-0760	A6010-B4L9		AA-111
KD0-35700-0760	A6010-B4M8		AA-113
KD0-35700-0920	A6010-B4N2		AA-115
KD0-35710-0830	A6010-B4M8	14	AA-113
KD0-35710-0890	A6010-B4L9	14	AA-111
KD0-35710-1010	A6010-B4N2	19	AA-115
KD0-35719-0180	A6010-B4L9	30	AA-111
KD0-35719-0180	A6010-B4M8	30	AA-113
KD0-35719-0210	A6010-B4N2	30	AA-115
KD0-35730-0162	A6010-B4L9	15	AA-111
KD0-35730-0162	A6010-B4M8	15	AA-113
KD0-35730-0700	A6010-B4N2	20	AA-115
KD0-35761-0190	A6010-B4L9	29	AA-111
KD0-35761-0190	A6010-B4M8	29	AA-113
KD0-35761-0250	A6010-B4N2	31	AA-115
KD0-35784-0210	A6010-B4N2	27	AA-115
KD0-35784-0290	A6010-B4N2	28	AA-115
KD0-35923-0130	A6010-B4N2	23	AA-115
KD0-35926-0070	A6010-B4N2	8	AA-115
KD0-35926-0080	A6010-B4L9	6	AA-111
KD0-35926-0080	A6010-B4M8	6	AA-113
KD0-35926-0090	A6010-B4N2	10	AA-115
KD0-35943-0100	A6010-B4L9	23	AA-111
KD0-35943-0100	A6010-B4M8	23	AA-113
KD0-35943-0140	A6010-B4N2	25	AA-115
KD0-35943-0150	A6010-B4N2	22	AA-115
KD0-35943-0160	A6010-B4N2	24	AA-115
KD0-35943-0170	A6010-B4N2	26	AA-115
KD0-35943-0210	A6010-B4L9	16	AA-111
KD0-35943-0210	A6010-B4M8	16	AA-113
KD0-35951-0060	A6010-B4N2	9	AA-115
KD0-35951-0080	A6010-B4L9	7	AA-111
KD0-35951-0080	A6010-B4M8	7	AA-113
KD0-47100-4651	A6210-B4E4	19	AA-119
KD0-47761-2671	A6210-B4E4	45	AA-120
KD0-47761-2681	A6210-B4E4	25	AA-119
KD0-47761-2691	A6210-B4E4	26	AA-119
KD1-0020-06452	A6010-B4L9	19	AA-111
KD1-0020-06452	A6010-B4M8	19	AA-113
KD1-0240-06305	A6210-B4E4	41	AA-119
KD1-0330-06012	A6010-B4L9	20	AA-111
KD1-0330-06012	A6010-B4M8	20	AA-113
KD1-0330-08022	A6210-B4E4	3	AA-119
KD1-0331-08020	A6010-B4L9	26	AA-111
KD1-0331-08020	A6010-B4M8	26	AA-113
KD1-0335-06002	A6010-B4L9	21	AA-111
KD1-0335-06002	A6010-B4M8	21	AA-113
KD1-0335-08002	A6010-B4L9	25	AA-111
KD1-0335-08002	A6010-B4M8	25	AA-113
KD1-0335-08002	A6210-B4E4	2	AA-119
KD1-0335-16002	A6010-B4N2	16	AA-115
KD1-0335-20002	A6010-B4M8	33	AA-113
KD1-0335-22002	A6010-B4L9	33	AA-111
KD1-0345-05001	A6210-B4E4	40	AA-119
KD1-0345-08001	A6210-B4E4	4	AA-119
KD1-0400-30100	A6210-B4E4	17	AA-119
KD1-0416-04160	A6010-B4L9	35	AA-111
KD1-0416-04160	A6010-B4M8	35	AA-113
KD1-09211-0081	A6210-B4E4	28	AA-119
KD1-09211-0981	A6210-B4E4	46	AA-120
KD1-09211-1120	A6210-B4E4	22	AA-119
KD1-09257-0050	A6210-B4E4	49	AA-120
KD1-09279-0090	A6210-B4E4	1	AA-119
KD1-23181-0020	A6210-B4E4	7	AA-119
KD1-23320-0290	A6210-B4E4	11	AA-119
KD1-23500-0970	A6210-B4E4	10	AA-119
KD1-23740-0351	A6210-B4E4	23	AA-119
KD1-23914-0020	A6210-B4E4	6	AA-119
KD1-23921-0130	A6210-B4E4	36	AA-119
KD1-23921-0140	A6210-B4E4	35	AA-119
KD1-23941-0040	A6210-B4E4	34	AA-119
KD1-23951-0051	A6210-B4E4	16	AA-119
KD1-33923-0790	A6010-B4N2	2	AA-115
KD1-33923-0890	A6010-B4L9	2	AA-111
KD1-33923-0890	A6010-B4M8	2	AA-113
KD1-33926-0660	A6010-B4L9	8	AA-111
KD1-33926-0660	A6010-B4M8	8	AA-113
KD1-33926-0730	A6010-B4N2	11	AA-115
KD1-33926-0790	A6010-B4L9	10	AA-111
KD1-33926-0790	A6010-B4M8	10	AA-113
KD1-35421-0180	A6010-B4L9	32	AA-111
KD1-35421-0180	A6010-B4M8	32	AA-113
KD1-35923-0030	A6010-B4L9	3	AA-111
KD1-35923-0030	A6010-B4M8	3	AA-113
KD1-35923-0160	A6010-B4N2	3	AA-115
KD1-47921-0790	A6210-B4E4	31	AA-119
KD1-47927-1390	A6210-B4E4	44	AA-120
ND047310-7240	Y1979-01A0	2	YO-149
ND047372-0660	Y1979-01A0	6	YO-149
ND047410-1570	Y1979-01A0	4	YO-149
ND047410-1580	Y1979-01A0		YO-149
ND071900-1432	C0100-07A0	14	CO-17
ND095400-0310	A4010-B4R4	2	AA-75
ND095420-0440	A4010-B4R4	3	AA-75
ND095438-0090	A4010-B4R4	6	AA-75
ND095444-0020	A4010-B4R4	5	AA-75
ND146691-4470	Y1979-01A0	14	YO-149
ND247300-0510	Y1979-01A0		YO-149
ND447220-4051	Y1979-01A0	1	YO-149
ND499000-6160	A4010-B4R4	4	AA-75
ND91310-05081	Y1979-01A0	13	YO-149
ND949007-2350	K1110-08A0	7	KO-41

https://truckmanualshub.com/

PART NO.	FIG NO.	INDEX	PAGE
ND949010-2530	A4010-B4R4	7	AA-75
ND949013-7480	Y1979-01A0	9	YO-149
ND949013-7500	Y1979-01A0	10	YO-149
ND949013-7510	Y1979-01A0	11	YO-149
ND949047-2950	Y1979-01A0	5	YO-149
ND949048-0430	Y1979-01A0	12	YO-149
ND949070-0640	Y1979-01A0		YO-149
ND949070-1360	Y1979-01A0	7	YO-149
ND949070-1390	Y1979-01A0	8	YO-149
NY05062-1170A	Y1860-01A0	9	YO-143
NY05062-11800	Y1860-01A0	10	YO-143
NY06040-10300	Y1861-01A0	5	YO-145
NY06040-10400	Y1860-01A0	11	YO-143
NY06277-1320A	Y1860-01A0	12	YO-143
NY06339-10200	Y1861-01A0	6	YO-145
NY06420-10100	Y1861-01A0	7	YO-145
NY07084-10210	Y1860-01A0	13	YO-143
NY07207-11800	Y1861-01A0	3	YO-145
NY07529-10200	Y1860-01A0	3	YO-143
NY07529-10300	Y1860-01A0	4	YO-143
NY07529-10400	Y1860-01A0	5	YO-143
NY07529-10500	Y1860-01A0	6	YO-143
NY07529-10600	Y1860-01A0	7	YO-143
NY07529-10700	Y1860-01A0	14	YO-143
NY09000-11400	Y1861-01A0	8	YO-145
NY11076-1040A	Y1860-01A0	15	YO-143
NY11076-12600	Y1860-01A0	16	YO-143
NY81416-05012	Y1860-01A0	17	YO-143
NY81446-05010	Y1861-01A0	10	YO-145
NY83007-03040	Y1860-01A0	18	YO-143
NY84110-00264	Y1861-01A0	9	YO-145
NY87200-00011	Y1860-01A0	21	YO-143
NY89103-00090	Y1860-01A0	8	YO-143
NY89103-00090	Y1861-01A0	4	YO-145
PML130-03300	A3010-A4A8	2	AA-67
PML130-03300	A3010-A4A8	6	AA-67
PML136-00201	A3010-A4A8	14	AA-67
PML136-00501	A3010-A4A8	11	AA-67
PML137-04800	A3010-A4A8	15	AA-67
PML137-05800	A3010-A4A8	12	AA-67
PML139-01300	A3010-A4A8	13	AA-67
PML139-01520	A3010-A4A8	16	AA-67
PML150-08501	A3010-A4A8		AA-67
PML152-07110	A3010-A4A8		AA-67
PML154-09200	A3010-A4A8		AA-67
PML156-07400	A3010-A4A8		AA-67
PML160-11301	A3010-A4A8		AA-67
PMMF14-0229	A3010-A4A8	17	AA-67

PART NO.	FIG NO.	INDEX	PAGE

https://truckmanualshub.com/

PC650LC-8R

资料号码: PBCH650800

中国印刷