RUTHZIL TRATOR COMERCIAL DE PEÇAS LTDA 11 97083-6812 ROLANDO

FEN01601-00
(preliminar)

Parts Book

KOMATSU

HYDRAULIC
EXCAVATOR

PC70-8

SERIAL NUMBERS DJC00001 and up

KOMATSU

FEN01601-00

PARTS BOOK

PC70-8

Serial No.DJC00001 and up

ENGINE SAA4D95LE-5L-W

Engine No.511213 and up

FOREWORD

When ordering a spare part, specify the part number, part name, and quantity required, and also specify your machine model code, machine serial number, engine serial number and the service meter reading.

This Parts Book describes not only standard items but also optional equipment and attachments. To order a part, please contact your nearest Komatsu distributor.

This Parts Book contains the information and special symbols as follows:

Figure and list	When you open this Parts Book, you will find an illustration on the left page (even-numbered page) for the spare parts group. Each individual part in the group is given an index number. On the right page, the component parts of the group are listed in the order of the index numbers shown on the illustration page. The part number, part name, and applicable machine serial number are given for each part.
FIG. No.	The FIG. No. is the number of the illustration shown on the page. It is not the spare part number. The numbers are not always continuous.
INDEX	This is the same as the index number in the illustration. The parts are listed in index number order.
PART No.	The number given in the PART No. column is the part number for the part shown. It is the code used when ordering that part. It is important that there be no mistake in this code number when ordering.
DESCRIP-TION	This gives the name of part that has the part number listed. The mark "." is put in front of the part name of an assembly part and the item is entered following the assembly. If a part marked with "." is a sub assembly, its components are marked with "..". Example: ELEMENT ASSEMBLY, AIR CLEANER .ELEMENT ASSEMBLY, OUTER ..ELEMENT, OUTER ..NUT, WING ..WASHER
Q'TY (Quantity)	This specifies the number of pieces used for one machine. However, if a part is included in the assembly and/or component, the quantity per such assembly and/or component is specified.
SERIAL No.	Applicable engine serial number is indicated for the engine volume. In the chassis volume, this indicates the machine serial number in which the part is used.
Symbols and codes	Symbols and codes are used in the PART No. and DESCRIPTION columns, and represent the following: □ The part specified in the line above can be used instead of this part.

Symbols and codes (Cont'd)

⊡	This part can be used instead of the part specified in the line immediately above.
◆	This part and the part specified in the line immediately above are interchangeable.
■	The part specified in the DESCRIPTION column can be used instead of this part if it is used as a set.
☒	This shows discontinued part. The part specified in the above line is supplied instead.
▼	This shows a discontinued part. The part specified in the DESCRIPTION column is supplied instead as a set.
☆	This part cannot be supplied as an individual part. It is supplied as an assembly.
★	This part cannot be supplied as an individual part. It is supplied as an assembly. However, it is supplied as an individual part by authorized distributors only.
⊙	This indicates a part group. The part marked with this symbol is not considered a supply part.
====	The parts surrounded by this line are components of the part group specified in the above line.
G-1,G-2	These indicate categories of part groups.
KIT	This indicates kit parts. For kit parts, refer to the service kit tables provided in this Parts Book.
△	This indicates a part supplied as semi-finished. It requires additional work before installation.
PAINT(1)	This indicates parts shipped painted with undercoat.
PAINT(2)	This indicates parts supplied with different colors from the original color of your machine.
(A)	This code indicates special parts for cold weather "A" specification (-30°C) machines.
(B)	This indicates special parts for cold weather "B" specification (-50°C) machines.

AVANT-PROPOS

Lorsque vous passez une commande d'une ou plusieurs pièces détachées, vous êtes prié de spécifier, outre le ou les numéro(s), désignation(s) et quantité(s) des pièces commandée(s), le numéro de carrosserie, le numéro de série du moteur et la lecture du compteur de service du véhicule.
Sur le présent catalogue des pièces figurent non seulement les équipements standard, mais également les équipements et accessoires en option. Si vous désirez un équipement ou une pièce quelconque, vous êtes prié de prendre contact avec le concessionnaire Komatsu le plus proche.

Ce catalogue des pièces se présente de la manière suivante:

Figures et listes	Lorsque vous ouvrez le présent catalogue, vous trouvez: sur la page de gauche (numéro de page pair), les illustrations de toutes les pièces composant l'équipement en question avec les numéros de référence pour chacune des pièces, sur la page de droite (numéro de page impair), la liste des pièces dans l'ordre des numéro de référence des pièces avec indication du numéro des pièces, de la désignation des pièces, de la quantité utilisée et des numéros de série.
FIG. No. (Figure et liste)	Le numéro de figure (FIG. XX) correspond au numéro de la figure représentée sur cette page, mais ne correspond pas au numéro de la pièce détachée. Veuillez noter que les numéros de figure ne se suivent pas systématiquement.
INDEX (Numéros de référence)	Les numéros de référence correspondent aux numéros de référence notés sur la figure et sont énumérés dans l'ordre des numéros de référence.
PART No. (Numéros de pièce)	Les numéros indiqués dans cette colonne correspondent aux numéros des pièces représentées et constituent les codes à spécifier pour toute commande de pièce. Il est important de ne pas faire d'erreur avec ce code au moment de la commande.
DESCRIP-TION (Descript-ion)	Dans cette colonne est indiquée la désignation des différentes pièces. Dans le cas d'un ensemble constitué de pièces, la désignation de chacune de ces pièces est précédée d'un point "." et dans le cas d'un ensemble constitué de sous-ensembles eux-mêmes constitués de pièces, la désignation de chacune de ces pièces est précédée de deux points "..". Exemple: ELEMENT ASSEMBLY, AIR CLEANER .ELEMENT ASSEMBLY, OUTER ..ELEMENT, OUTER ..NUT, WING ..WASHER
Q'TY (Quantité)	Dans cette colonne est indiqué le nombre de pièces nécessaires pour l'équipement en question. S'il s'agit de pièces comprises dans un ensemble et/ou composant, et la quantité indiquée est le nombre de pièces nécessaires pour l'ensemble et/ou le composant en question.
SERIAL No. (Numéros de série)	S'il s'agit d'un élément du moteur, ces numéros sont les numéros de série des moteurs sur lesquels cette pièce est utilisée. S'il s'agit d'un élément de la carrosserie, ces numéros sont les numéros des carrosseries sur lesquelles la pièce en question est utilisée.

Codification

Les codes indiqués dans les colonnes "N° de pièce" et "Description" ont les significations suivantes:

□	Au lieu de la pièce affectée de ce code, il est possible d'utiliser la pièce qui figure juste au-dessus.
⊡	La pièce affectée de ce code peut être utilisée à la place de la pièce figurant juste au-dessus.
◆	La pièce affectée de ce code et la pièce figurant dans la ligne justeau-dessus sont interchangeables
⊠	Au lieu de la pièce affectée de ce code, il est possible d'utiliser la combinaison des pièces indiquées dans la colonne "Description".
■	Les pièces affectées de ce code ne sont plus fournies. Au lieu de cette pièce, c'est la pièce figurant dans la ligne justeau-dessus qui sera fournie.
▼	Les pièces affectées de ce code ne sont plus fournies. Au lieu de cette pièce, c'est la combinaison de pièces figurant dans la colonne "Description" qui sera fournie.
☆	Les pièces affectées de ce code ne seront pas fournies à l'unité mais par jeu de pièces.
★	Les pièces affectées de ce code ne seront pas fournies à l'unité mais par jeu de pièces, sauf dans le cas de certains concessionnaires Komatsu.
⊙	Ce code indique qu'il s'agit d'un groupe de pièces. Les pièces affectées de ce code ne sont pas fournies en tant que pièces détachées.
= = = =	Les pièces ainsi encadrées sont les pièces composantes du groupe de pièces indiqué dans la ligne d'au-dessus.
G-1, G-2	Indique le numéro du groupe de pièces
KIT	Indique qu'il s'agit d'un kit de pièces. Pour les pièces composantes des kits, veuillez vous reporter à la liste des kits de service.
△	Indique qu'il s'agit de pièces fournies à l'état semi-fini. Ces pièces devront être usinées avant l'installation.
PAINT(1)	Indique que sur les pièces fournies est appliquée uniquement une couche primaire.
PAINT(2)	Indique que la couleur de la peinture est différente de celle d'origine.
(A)	Indique qu'il s'agit de pièces pour spécifications artiques A (–30°C)
(B)	Indique qu'il s'agit de pièces pour spécifications artiques B (–50°C)

VORWORT

Bei der Bestellung von Teilen bitte die Teilenummer, die Teilebezeichnung und die Menge des jeweiligen Teils sowie die Modellnummer, die Seriennummer der Maschine, die Seriennummer des Motors und den Stand des Betriebsstundenzählers angeben.

In dieser Ersatzteilliste ist nicht nur das Standardzubehör aufgeführt, sondern auch als Sonderausstattung erhältliche Teile und Einrichtungen.

Bestellungen nimmt Ihr zuständiger Komatsu-Händler entgegen.

Die folgenden Angaben sind in der Ersatzteilliste aufgeführt.

Bild und Liste	Beim Aufschlagen des Ersatzteilkatalogs ist auf der linken Seite (d.h. der Seite mit der geraden Zahl) eine Darstellung der Bauteile der betreffenden Baugruppe zu finden. Jedes Einzelteil der Baugruppe ist mit einer Kennzahl versehen. Auf der rechten Seite (d.h. der Seite mit der ungeraden Zahl) sind die Bauteile der Baugruppe, geordnet nach den auf der linken Seite angegebenen Kennzahlen, aufgeführt. Jedes Einzelteil wird mit Teilenummer, Teilebezeichnung und entsprechender Seriennummer angegeben.
FIG. No. (Bildnummer)	Die Bildnummer entspricht der Nummer des auf der betreffenden Seite stehenden Bilds. Es handelt sich dabei nicht um die Nummer des Lieferteils. Es sei ferner erwähnt, daß die Bilder nicht fortlaufend numeriert sind.
INDEX (Kennzahl)	Dabei handelt es sich um die gleiche Zahl wie die Kennzahl im Bild. Die Teile sind geordnet nach der Kennzahl aufgeführt.
PART No. (Teilenummer)	Die in der Spalte "Teilenummer" aufgeführte Nummer entspricht der Teilenummer für das betreffende Teil. Diese Nummer dient zur Bestellung des Teils. Deshalb bei der Bestellung stets auf die genaue Angabe der Teilenummer achten.
DESCRIPTION (Beschreibung)	Hierunter wird die Bezeichnung des Teils mit der aufgeführten Teilenummer angegeben. Jedes Baugruppen-Bauteil ist mit dem vorangestellten Symbol "." gekennzeichnet und wird hinter der entsprechenden Baugruppe aufgeführt. Handelt es sich bei dem mit "." gekennzeichneten Bauteil um eine Baugruppe, sind die Bauteile dieser Baugruppe mit ".." gekennzeichnet. Beispiel: Element assembly, air cleaner . Element assembly, outer .. Element, outer .. Nut, wing .. Washer
Q'TY (Menge)	Hierunter wird die Anzahl der Bauteile für eine Maschine angegeben. Im Falle einer Baugruppe oder eines Aggregats wird allerdings die Anzahl der Teile pro Baugruppe angegeben.
SERIAL No. (Serienummer)	Im Ersatzteilkatalog für den Motor versteht man hierunter die Seriennummer des Motors, in den das betreffende Teil eingebaut ist. Im Ersatzteilkatalog für die Maschine versteht man hierunter die Seriennummer der Maschine, in die das entsprechende Teil eingebaut ist.
Kodes	Die in den Spalten "Teile-Nr." und "Beschreibung" verwendeten Kodes haben folgende Bedeutung: □ Anstelle dieses Teils kann das in der vorangegangenen Zeile aufgeführte Teil verwendet werden.

⊡	Dieses Teil kann anstelle des in der vorangegangenen Zeile aufgeführten Teils verwendet werden.
◆	Dieses Teil ist mit dem in der vorangegangenen Zeile aufgeführten Teil austauschbar.
■	Anstelle dieses Teils kann das in der Spalte "Beschreibung" aufgeführte Teil verwendet werden, wenn das Teil zusammen mit anderen Teilen als ein Bauteilsatz verwendet wird.
☒	Dieses Teil kann nicht mehr geliefert werden. Statt dessen wird das in der vorangegangenen Zeile aufgeführte Teil geliefert.
▼	Dieses Teil kann nicht mehr geliefert werden. Statt dessen wird das in der Spalte "Beschreibung" aufgeführte Teil als ein Bauteilsatz geliefert.
☆	Dieses Teil kann nicht als Einzelteil, sondern nur als Baugruppe geliefert werden.
★	Dieses Teil kann nicht als Einzelteil, sondern nur als Baugruppe geliefert werden. Nur bei bestimmten Händlern kann es als Einzelteil bezogen werden.
⊙	Hierdurch wird ein Aggregat gekennzeichnet. Es wird nicht zu den Lieferteilen gerechnet.
= = = =	Die Teile innerhalb dieser Markierung gehören zu dem oben aufgeführten Aggregat.
G-1, G-2	Hiermit wird die Kategorie eines Aggregats angegeben.
KIT	Hiermit werden Teile gekennzeichnet, die nur als Satz erhältlich sind. Siehe dazu die Tabelle der als Satz gelieferten Ersatzteile.
△	Hiermit werden Teile gekennzeichnet, die in vorbearbeitetem Zustand geliefert werden und für den Einbau nachbearbeitet werden müssen.
PAINT(1)	Hiermit werden Teile gekennzeichnet, die mit Grundierung geliefert werden.
PAINT(2)	Hiermit werden Teile gekennzeichnet, die in unterschiedlichen Farben geliefert werden.
(A)	Hiermit werden Teile gekennzeichnet, die speziell für kalte Witterung (A) (-30°C) ausgelegt sind.
(B)	Hiermit werden Teile gekennzeichnet, die speziell für kalte Witterung (B) (-50°C) ausgelegt sind.

PROLOGO

Cuando tenga que efectuar un pedido de repuestos, se ruega especificar el número, el nombre y la cantidad de piezas requeridas, indicando asimismo el número de modelo, el número de serie del motor y la lectura del contador de servicio.

Esta lista de piezas especifica no solamente accesorios estándar sino también piezas y accesorios opcionales. Para realizar un pedido, sírvase ponerse en contacto con su distribuidor Komatsu más cercano.

La lista de repuestos se compone de los elementos siguientes.

Figura y lista	Al abrir esta lista de repuestos, encontrará en la página izquierda (página de número impar) una ilustración de los componentes del conjunto. La figura de cada componente individual va provista de un número de índice. En la página derecha (página de número par), los componentes del conjunto están listados siguiendo el orden de los números de índice de la página izquierda.
FIG. NO. (Número de figura)	El número de figura es el número indicado en cada una de las respectivas figuras, y no es el número de la pieza. Los números de figura no son siempre continuos.
INDEX (Número de índice)	Coincide con el número de índice de cada figura, y aparecen en la lista en orden numérico.
PART NO. (Número de pieza)	El número indicado en la columna de "Número de piezas" es el número de pieza que aparece en la figura. Es sumamente importante debido a que se utiliza como código al efectuar el pedido de piezas.
DESCRIP-TION (Nombre de las piezas)	Indica la descripción correspondiente a cada número de pieza. Los componentes de un conjunto llevan la marca "." antes del nombre. Por otra parte, cuando se tratan de piezas armadas, llevan la marca ".." antes del nombre Ejemplo: ELEMENT ASSEMBLY, AIR CLEANER .ELEMENT ASSEMBLY, OUTER ..ELEMENT, OUTER ..NUT, WING ..WASHER
Q'ty (Cantidad)	Especifica el número de piezas utilizadas en cada máquina. Sin embargo, para un conjunto o componentes de un grupo de piezas, se especifica el número de piezas por conjunto.
SERIAL NO. (Número de serie)	En el manual de piezas del motor, indica el número de serie del motor en que se utiliza la pieza. En el manual de piezas de la máquina, indica el número de serie del vehículo en que se utiliza esa pieza.

Códigos

Los códigos y números de piezas especificados en las columnas "N°. de pieza" y "Nombre de la pieza" representan lo siguiente:

□	En lugar de esta pieza es posible utilizar la pieza indicada en el renglón de arriba.
⊡	Es posible utilizar esta pieza en lugar de la indicada en el renglón inmediatamente anterior.
◆	Esta pieza y la indicada en el renglón inmediatamente anterior son intercambiables.
■	Es posible utilizar la pieza especificada en la columna "Nombre de las piezas" si se utiliza como un conjunto.
☒	Esta pieza se ha dejado de suministrar. En su lugar, se suministra la pieza indicada en el renglón anterior.
▼	Esta pieza se ha dejado de suministrar. En su lugar, se suministra la pieza especificada en la columna "Nombre de las piezas" como un conjunto.
☆	Esta pieza no se suministra como pieza individual. Se suministra como un conjunto.
★	Esta pieza no se suministra como pieza individual. Se suministra como un conjunto. Sin embargo, es suministrada como pieza individual por ciertos distribuidores.
⊙	Indica grupo de piezas. Las piezas que llevan este código no son suministrables.
====	Las piezas rodeadas por esta línea son componentes del grupo de piezas especificado arriba.
G-1, G-2	Indica la clasificación del grupo de piezas.
KIT	Indica componentes de un juego. Para los componentes de un juego, refiérase a la tabla de los juegos de servicio.
Δ	Indica pieza suministrada como semiterminada. Debe ser reelaborada antes del uso.
PAINT(1)	Indica piezas despachadas con una primera mano de pintura.
PAINT(2)	Indica piezas despachadas con colores diferentes.
(A)	Indica piezas especiales (A) especificadas para climas fríos (-30°C).
(B)	Indica piezas especiales (B) especificadas para climas fríos (-50°C)

INTRODUÇÃO

Ao solicitar uma peça, informe o número, nome e quantidade da peça necessária, bem como o número da carroçaria, número do motor, e leitura do medidor de serviço.

Esta lista de peças não somente especifica os acessórios padrões mas também as peças opcionais e aditamentos. Para pedir uma peça, entre em contato com o revendedor Komatsu mais próximo.

Este livro de peças consiste nos seguintes itens.

Figura e lista	Ao abrir este livro de peças, você encontrará na página esquerda (a página com número par), uma ilustração das peças componentes do conjunto. Cada peça individual no conjunto tem um número de índice. Na página direita (a página com número ímpar), as peças componentes do conjunto são relacionadas na ordem dos números de índice mostrados na página esquerda. Cada peça é designada com um número, nome, e número de série aplicável.
FIG. NO. (Número da figura)	O número da figura é o número da figura mostrada em tal página. Ele não é um número para fornecimento da peça. Do mesmo modo, os números das figuras nem sempre são contínuos.
INDEX (Número de índice)	Este número é igual ao número de índice na figura. As peças são relacionadas na ordem dos números de índice.
PART NO. (Número de peça)	O número designado na coluna "Número da peça" é o número para a peça mostrada. Ele é o código usado para o pedido da peça. É importante que não haja equívoco com respeito a este número ao pedir uma peça.
DESCRIP-TION (Descrição)	Este item descreve o nome da peça que tem o número de peça relacionado. É colocado um "." na frente do nome de um componente de conjunto e o item é introduzido após o conjunto. Se uma peça marcada com "." é um conjunto, seus componentes são marcados com "..". Exemplo: ELEMENT ASSEMBLY, AIR CLEANER .ELEMENT ASSEMBLY, OUTER ..ELEMENT, OUTER ..NUT, WING ..WASHER
Q'ty (Quantidade)	Este item especifica o número de peças usadas para 1 máquina. No entanto, para o conjunto ou componentes de um grupo de peças, o número de peças por conjunto é especificado.
SERIAL NO. (Número de série)	No livro de peças do motor, esse número indica o número de série do motor no qual a peça é usada. No livro de peças da máquina, esse número indica o número de série da máquina na qual a peça é usada.
Códigos	Os códigos e número de peça especificados nas colunas "N.º de peça" e "Descrição" representam o seguinte: □ A peça especificada na linha acima pode ser usada no lugar desta peça.

⊡	Esta peça pode ser usada no lugar da peça especificada na linha imediatamente acima.
◆	Esta peça e a peça especificada na linha imediatamente acima são intercambiáveis.
■	A peça especificada na coluna “Descrição” pode ser usada no lugar desta peça se ela for usada como um jogo.
☒	Esta peça não é mais fornecida. A peça especificada na linha acima é fornecida em seu lugar.
▼	Esta peça não é mais fornecida. A peça especificada na coluna “Descrição” é fornecida em seu lugar como um jogo.
☆	Esta peça não pode ser fornecida como uma peça individual. Ela é fornecida como um conjunto.
★	Esta peça não pode ser fornecida como uma peça individual. Ela é fornecida como um conjunto. No entanto, ela é fornecida como uma peça individual somente por revendedores específicos.
⊙	Isso indica um grupo de peças. Esta peça não é considerada uma peça de fornecimento.
====	As peças envolvidas por esta linha são componentes do grupo de peças especificado acima.
G-1, G-2	Isso indica a categoria do grupo de peças.
KIT	Isso indica componentes de um kit. Para os componentes de um kit, refira-se à tabela de kits de serviço.
Δ	Isso indica uma peça fornecida como produto semi-acabado. Ela deve ser reformada antes do uso.
PAINT(1)	Isso indica peças embarcadas pintadas com uma primeira mão de fundo.
PAINT(2)	Isso indica peças embarcadas com cores diferentes.
(A)	Isso indica peças especiais para especificação (A) de tempo frio (-30°C).
(B)	Isso indica peças especiais para especificação (B) de tempo frio (-50°C).

الرموز

الرموز وارقام القطع المذكورة في عمود « رقم القطعة » وعمود « الوصف » تمثل كما يلى:

□ القطعة المذكورة في السطر السابق يمكن استعمالها بدلاً من هذه القطعة.

⊡ هذه القطعة يمكن استعمالها بدلاً من القطعة المذكورة في السطر السابق مباشرة.

◆ هذه القطعة والقطعة المذكورة في السطر السابق مباشرة يمكن لكل منهما ان تحل محل الاخرى.

■ القطعة المذكورة في عمود « الوصف » يمكن استعمالها بدلاً من هذه القطعة اذا استخدمت كطقم.

⊠ هذه القطعة توقف توريدها. يتم توريد القطعة المذكورة في السطر السابق بدلاً منها.

▼ هذه القطعة توقف توريدها. يتم توريد القطعة المذكورة في عمود « الوصف » بدلاً منها كطقم.

☆ هذه القطعة لا يمكن توريدها كقطعة منفردة. يتم توريدها كمجموعة.

★ هذه القطعة لا يمكن توريدها كقطعة منفردة. يتم توريدها كمجموعة. على انه يتم توريدها كقطعة منفردة من قبل موزعين معيّنين فقط.

⊙ هذا يشير الى مجموعة قطع.
هذه القطعة لا تعتبر قطعة للتوريد.

==== القطع المحاطة بهذا الخط هي مكونات لمجموعة القطع المذكورة اعلاه.

G-1,G-2 هذا يشير الى فئة مجموعة القطع.

KIT هذا يشير الى مكونات الاطقم التركيبية. بخصوص الاطقم التركيبية، يرجى مراجعة جدول الاطقم التركيبية للخدمة.

△ هذا يشير الى قطعة مورّدة شبه مكتملة التصنيع. تتطلب استكمال تصنيعها قبل الاستعمال.

PAINT(1) هذا يشير الى القطع المشحونة بعد طلائها بطبقة سفلية.

PAINT(2) هذا يشير الى القطع المشحونة بألوان مختلفة.

(A) هذا يشير الى قطع خاصة بمواصفات الطقس البارد من الفئة (A) (-٣٠°م).

(B) هذا يشير الى قطع خاصة بمواصفات الطقس البارد من الفئة (B) (-٥٠°م).

مقدمة

عند طلب القطع، يرجى تحديد رقم القطعة واسم القطعة والكمية المطلوبة من القطعة، مع تحديد رقم الموديل والرقم التسلسلي للمحرك وقراءة عداد الخدمة.

قائمة القطع هذه لا تقتصر على الكماليات القياسية فقط بل تشمل ايضاً القطع والملحقات الاختيارية. لطلب القطع، يرجى الاتصال بأقرب موزع لمنتجات كوماتسو.

قائمة القطع تتضمن البنود التالية.

الشكل والقائمة	عندما تفتح كتاب القطع، ستجد على الصفحة اليسرى (الصفحة ذات الرقم الزوجي) شكلاً توضيحياً للقطع المكونة للمجموعة. كل قطعة في مجموعة المكونات لها رقم فهرس. على الصفحة اليمنى (الصفحة ذات الرقم الفردي) تم إدراج قائمة بالقطع التي تتكون منها المجموعة مرتبة حسب ارقام الفهرس المبيّنة في الصفحة اليسرى. وقد اعطيت كل قطعة من القطع رقم قطعة واسم قطعة ورقم تسلسلي ينطبق عليها.
FIG. No. (رقم الشكل)	رقم الشكل هو الرقم الخاص بالشكل التوضيحي الذي يظهر في تلك الصفحة. وهو ليس رقم القطعة التي يتم توريدها. كما ان ارقام الاشكال ليست دائماً متتابعة.
INDEX (رقم الفهرس)	هذا الرقم هو نفس رقم الفهرس الوارد في الشكل التوضيحي. تدرج القطع في القائمة مرتبة تبعاً لارقام الفهرس.
PART No. (رقم القطعة)	الرقم الوارد في عمود « رقم القطعة » هو رقم القطعة الخاص بالقطعة المبيّنة. وهو الرمز المستخدم لطلب تلك القطعة. ومن الضروري عدم ارتكاب اي خطأ في تحديد هذا الرقم عند طلب القطع.
DESCRIPTION (الوصف)	يعطي اسم القطعة المدرج رقمها في القائمة. توضع العلامة " . " امام اسماء القطع المكونة للمجموعة ويدرج البند بعد المجموعة. اذا كانت القطعة المشار اليها بالعلامة " . " هي نفسها عبارة عن مجموعة مكونات فان كلاً من مكوناتها يشار اليها بالعلامة " . . ". مثال : ELEMENT ASSEMBLY, AIR CLEANER .ELEMENT ASSEMBLY, OUTER .. ELEMENT, OUTER ..NUT, WING ..WASHER
Q'ty (الكمية)	هذا هو عدد القطع المستخدمة لآلية واحدة. أما بالنسبة لمجموعات المكونات ومجموعات القطع فانه يتم تحديد عدد القطع لكل مجموعة.
SERIAL No. (الرقم التسلسلي)	في كتاب قطع المحرك، يشير هذا الرقم الى الرقم التسلسلي للمحرك الذي تستخدم فيه القطعة. في كتاب قطع الآلية، يشير هذا الرقم الى الرقم التسلسلي للآلية التي تستخدم فيها القطعة.

ПРЕДИСЛОВИЕ

При формировании заказа на детали, узлы и агрегаты, кроме их номера детали, наименования и количества, завод-изготовитель просит заказчиков информировать о серийном номере машины и двигателя, для которых делается заказ, а также показании счетчика мото-часов.

В Каталоге приведены не только стандартные агрегаты, но и дополнительные устройства и принадлежности, поставляемые по специальному заказу. При необходимости приобретении их обратиться к местному дилеру фирмы "Комацу".

Каталог деталей составлен, как ниже изложено:

Рисунки и таблицы деталей	При открытии Каталога на левой странице (чётной) приведен рисунок деталей устройства или агрегата. Каждая деталь обозначена номером позиции. На правой странице (нечётной) приведена таблица деталей, нарисованных на левой странице, с соответствующим номером детали, наименованием, количеством и серийными номерами машины, для которых предназначена данная деталь, в порядке возрастания номеров позиции.
FIG No. (№ рисунка)	Номер рисунка (фиг.) является собственным для данного рисунка и не является номером показанной детали. Номера рисунков (фиг.) могут быть непорядковыми.
INDEX (Указатель)	В указателе приведены номера позиции деталей на рисунке в порядке возрастания цифр.
PART No. (Номер детали)	При заказе на деталь, установленную на рисунке, следует указать номер, приведенный в данной колонне. Именно этот номер определяет каждую деталь.
DESCRIPTION (Наименование детали)	Приведено наименование детали, соответствующей выбранному номеру детали. Точка "." поставлена перед наименованием каждой составной части устройства. Если составная часть состоит из множества деталей, то эти детали обозначаются двумя точками "..". Например: ELEMENT ASSEMBLY, AIR CLEANER . ELEMENT ASSEMBLY, OUTER .. ELEMENT, OUTER .. NUT, WING .. WASHER
Q'TY (Количество)	Указано количество деталей, необходимое на единицу данного устройства. Для деталей составной части устройства, а также для группы деталей указано их количество на единицу составной части или на группу.
SERIAL No. (Серийные номера)	В части двигателя приведены серийные номера двигателей, а в части шасси — серийные номера машин, в которых применена данная деталь.
Условные обозначения	Условные обозначения, применяемые в колоннах "Номер детали" и "Наименование детали", характеризуют следующее: □ Вышеприведенная деталь может заменить настоящую деталь.

Условные обозначения

(Продолжение)

◙	Настоящая деталь может заменить деталь, приведенную на одну строчку выше.
◆	Настоящая деталь и деталь, приведенную на одну строчку выше, имеют взаимозаменяемость.
■	Взамен настоящей детали возможно использовать детали, приведенные в колонне “Наименование детали”, в комплекте.
□	Поставка этой детали прекращена. Взамен этой детали поставляется деталь, приведенная на одну строчку выше.
▼	Поставка этой детали прекращена. Взамен этой детали поставляются детали, приведенные в колонне “Наименование детали”, в комплекте.
☆	Настоящая деталь поставляется только в комплекте, а не в отдельности.
★	Настоящая деталь поставляется, как правило, только в комплекте, а не в отдельности. Ее можно достать только у отдельных дилеров фирмы “Комацу”.
◉	Группа деталей. Детали не подлежат дополнительной поставке.
------	Детали, ограниченные этой линией, составляют вышеприведенную группу деталей.
G-1, G-2	Обозначения, характеризующие отдельные группы деталей.
KIT	Составляющая комплекта. См. таблицы ремонтных комплектов.
△	Деталь, поставляемая в неготовом виде. Перед употреблением необходимо дополнительно обработать.
PAINT(1)	Детали, отгружаемые в загрунтованном виде.
PAINT(2)	Детали, отгружаемые в окрашенном в другой цвет виде.
(A)	Детали, рассчитанные на холодные районы (-30° C)
(B)	Детали, рассчитанные на особо холодные районы (-50° C)

前　言

订购零件时，请注明需要零件的货号、品名、数量以及使用机器的车辆编号、发动机型号和系列号、工作时数。

此零件明细表上不仅记载有标准装备零件，还记载有选购零件、附件零件。如果您需要订货，请与最近的小松代理店联系。

为了清楚明了，零件手册中有如下规定:

图　　表	打开此零件清单后， 在左侧的页上（偶数页）用图示表示按安装的装置上的零件。在图示上标有各种零件的索引号码。 在右侧的页上（奇数页）按照左侧图示上表示的零件索引号码以表格的形式 表示货号、品名、数量、适用机型。
FIG. No.	图号 (FIG.) 表示该页图的号码，它不时补充零件用的货号同时，此号码不一定是连续号码。
INDEX	与图的索引号码一致，按索引号码顺序编制为表格形式。
PART No.	此栏所示的货号是图示零件的货号，它是在订货时需要的标明的特定代号，是非常重要的。
DESCRIP-TION	它表示相当于货号的零件名称。 构成组装品的零件，在品名的前面有标记，记载在组装品之后。 另外，如果标记的零件是组装品，在该构成零件的品名前标有 .. 标记。 例如: ELEMENT ASSEMBLY, AIR CLEANER .ELEMENT ASSEMBLY, OUTER ..ELEMENT, OUTER ..NUT, WING ..WASHER
Q'TY	表示 1 台机器中需要使用的该零件数量。 但是，如果是组装零件和零件组的构成零件时，表示其组装件的件数。
SERIAL No.	发动机篇中表示该使用零件的发动机型号，在机体篇中表示该使用零件的车辆号码。
代　　号	货号栏和零件品名栏里的代号如下所示: □　　上一行的零件可取代此行零件来使用。

代　　号（续）	
⊡	此行零件可代替紧接着的上一行零件使用。
◆	此行零件可与紧挨着的上一行零件互换使用。
■	如果将此行零件说明栏内的零件配套后，可取代此零件来使用。
⊠	该行零件已停止供应，用上一行的零件代替使用。
▼	此行零件已停止供应，将此行零件说明栏内的零件配套后代替此零件供应。
☆	此行零件拟成套供应，不以单一零件供应。
★	此行零件拟成套供应，不以单一零件供应，但特定代理除外。
⊙	成组零件，一般不考虑成组供应。
====	用这种符号包括的零件是符号上一行指明成组件的零部件。
G-1,G-2	成组零件编号。
KIT	修理包，关于修理包构件详情，请参考技术服务修理包资料。
△	此行零件以半成品的形式供应，使用前必须再加工。
PAINT(1)	只涂底漆装船。
PAINT(2)	和本体不同颜色装船。
(A)	适用寒冷地区。（－30℃）
(B)	适用极寒冷地区。（－50℃）

CONTENTS

FOREWORD		0F- 2
CONTENTS		0C- 1

AA[ENGINE]	FIG NO.	PAGE
CYLINDER HEAD	A101P-01A2	AA- 2
LIFTING BRACKET(#511213-)	A105P-01B1	AA- 4
HEAD COVER(#511213-)	A111P-01C9	AA- 6
BREATHER(#511213-)	A111V-01A9	AA- 8
AIR INTAKE CONNECTOR(#511213-)	A131P-01B9	AA- 10
AIR INTAKE HEATER	A131R-01A6	AA- 12
AIR INTAKE CONNECTOR MOUNTING(#511213-)	A131V-01A5	AA- 14
EXHAUST MUFFLER MOUNTING	A151V-01B1	AA- 16
TURBOCHARGER(#511213-)	A153P-01A8	AA- 18
EXHAUST MANIFOLD	A153S-01C0	AA- 20
TURBOCHARGER OIL PIPING	A153T-01D8	AA- 22
AIR INTAKE	A153U-01A3	AA- 24
AIR TRANSFER CONNECTION(#511213-)	A153W-01A7	AA- 26
MUFFLER(#511213-)	A161O-01K7	AA- 28
MUFFLER PIPE(#511213-)	A167O-01A5	AA- 30
THERMOSTAT	A173R-01A7	AA- 32
WATER OUTLET CONNECTOR	A173S-01A5	AA- 34
CYLINDER BLOCK	A201S-01A4	AA- 36
FRONT GEAR	A204V-01A1	AA- 38
FRONT GEAR COVER	A204W-01A3	AA- 40
CYLINDER BLOCK BLIND PLUG	A207P-01B0	AA- 42
OIL FILLER(#511213-)	A207S-01A3	AA- 44
OIL PAN(#511213-)	A211P-01A9	AA- 46
OIL LEVEL GAUGE(#511213-)	A219P-01B8	AA- 48
FLYWHEEL HOUSING(#511213-)	A221P-01B1	AA- 50
FLYWHEEL(#511213-)	A223P-01D3	AA- 52
FLYWHEEL MOUNTING	A223R-01A1	AA- 54
DAMPER(#511213-)	A233P-01A7	AA- 56
PISTON	A235P-01A1	AA- 58
ROCKER ARM	A241S-01A3	AA- 62
CAMSHAFT	A241T-01A2	AA- 64
OIL PUMP	A301P-01B0	AA- 66
OIL FILTER(#511213-)	A311P-01B2	AA- 68
OIL COOLER(#511213-)	A331P-01C4	AA- 70
FUEL PUMP	A401P-01K6	AA- 72
FUEL FILTER(#511213-)	A411P-01C5	AA- 74
FUEL FILTER PIPING(#511213-)	A411R-01C4	AA- 76
FUEL FILTER PIPING(#511213-)	A411S-01D5	AA- 78
COMMON RAIL	A421P-01A2	AA- 80
INJECTOR	A421R-01A1	AA- 82
ENGINE CONTROLLER (CHASSIS MOUNT) (#511213-)	A471P-01A6	AA- 84
ENGINE CONTROL MODULE(#511213-)	A471P-02A6	AA- 86
FUEL CONTROLLER (BRACKET) (#511213-)	A471O-01A2	AA- 88
WATER PUMP(#511213-)	A501P-01A7	AA- 90
WATER PUMP ADAPTER(#511213-)	A501O-01A9	AA- 92
COOLING FAN DRIVE PULLEY(#511213-)	A502P-01E8	AA- 94
COOLING FAN MOUNTING(#511213-)	A502R-01A7	AA- 96
COOLING FAN(#511213-)	A503P-01A3	AA- 98
FAN SPACER(#511213-)	A504P-01A8	AA- 100
ALTERNATOR (35A)	A601P-01C2	AA- 102
ALTERNATOR (35A) (INNER PARTS)	A601P-02C2	AA- 104
ALTERNATOR MOUNTING (35A) (#511213-)	A601T-01C1	AA- 106
FAN BELT(#511213-)	A601U-01A5	AA- 108
STARTING MOTOR (4.5KW)	A621P-01B0	AA- 110
STARTING MOTOR (4.5KW) (INNER PARTS)	A621P-02B0	AA- 112
STARTING MOTOR MOUNTING (4.5KW)	A621S-01B7	AA- 116
WIRING HARNESS(#511213-)	A681P-01A8	AA- 118
REPAIR PARTS	A811O-01B4	AA- 120

	FIG NO.	PAGE
ENGINE NAME PLATE(#511213-)	A981P-01A4	AA- 124
APPROVAL CAUTION PLATE (EXCEPT JAPAN) (#511213-)	A985O-01A9	AA- 126
STARTER RELAY(#511213-)	B9999-A3S1	AA- 128
FUEL PRE-FILTER	B9999-01Y1	AA- 130
SPARE PARTS(#511213-)	B9999-01Y4	AA- 132
AIR CLEANER(#511213-)	B9999-01Y5	AA- 134
BO[ENGINE RELATED PARTS]		
ENGINE MOUNT	BO100-01A0	BO- 2
AIR CLEANER (DOUBLE ELEMENT TYPE)	BO200-01A0	BO- 4
DUMPER	BO600-01A0	BO- 6
CO[COOLING SYSTEM]		
COOLING (RADIATOR AND AFTER COOLER)	CO100-01A0	CO- 2
COOLING (OIL COOLER)	CO100-02A0	CO- 4
COOLING (FUEL COOLER)	CO100-03A0	CO- 6
COOLING (NET)	CO100-04A0	CO- 8
COOLING (SEAL PLATE)	CO100-05A0	CO- 10
COOLING (AIR CONDITIONER) (CONDENSER)	CO100-06A0	CO- 12
COOLING (AFTER COOLER PIPING)	CO100-07A0	CO- 14
COOLING (SUB TANK)	CO100-08A0	CO- 16
COOLING (FAN GUARD)	CO100-09A0	CO- 18
DO[FUEL TANK AND RELATED PARTS]		
FUEL TANK	DO100-01A0	DO- 2
FUEL LINE (SUCTION LINE)	DO200-01A0	DO- 4
FUEL LINE (RETURN LINE)	DO200-02A0	DO- 6
FUEL LINE (PRE-FILTER AND MOUNTING)	DO200-03A0	DO- 8
FUEL LINE (WATER SEPARATOR AND MOUNTING)	DO200-04A0	DO- 10
EO[ELECTRICAL SYSTEM]	FIG NO.	PAGE
BATTERY (BATTERY AND CABLE)	EO100-01A0	EO- 2
ELECTRIC WIRING (MAIN HARNESS)	EO200-01A0	EO- 4
ELECTRIC WIRING (ENGINE CONTROLLER)	EO200-02A0	EO- 6
ELECTRIC WIRING (ALTERNATOR)	EO200-03A0	EO- 8
ELECTRIC WIRING (MAIN HARNESS) (CLIP) (1/3)	EO200-04A0	EO- 10
ELECTRIC WIRING (MAIN HARNESS) (CLIP) (2/3)	EO200-05A0	EO- 12
ELECTRIC WIRING (MAIN HARNESS) (CLIP) (3/3)	EO200-06A0	EO- 14
ELECTRIC WIRING (FUSE HOLDER)	EO200-07A0	EO- 16
ELECTRIC WIRING (WIRING HARNESS CLAMP, BATTERY RELAY AND GROUND CABLE)	EO200-08A0	EO- 18
ELECTRIC WIRING (HORN)	EO200-09A0	EO- 20
ELECTRIC WIRING (WIRING HARNESS RELAY)	EO200-10A0	EO- 22
HO[HYDRAULIC SYSTEM]		
HYDRAULIC OIL TANK	HO110-01A0	HO- 2
MAIN CONTROL VALVE	HO120-01A0	HO- 4
MAIN CONTROL VALVE (BLADE SPEC.)	HO120-01A1	HO- 6
MAIN CONTROL VALVE (PROVISION FOR 1-ADDITIONAL ACTUATOR PIPING)	HO120-01A2	HO- 8
MAIN CONTROL VALVE (BLADE SPEC.) (PROVISION FOR 1-ADDITIONAL ACTUATOR PIPING)	HO120-01A3	HO- 10
MAIN PUMP	HO210-01A0	HO- 12
MAIN PUMP (BLADE SPEC.)	HO210-01A1	HO- 14
SUCTION LINE	HO311-01A0	HO- 16
SUCTION LINE (BLADE SPEC.)	HO311-01A1	HO- 18
DELIVERY PIPING	HO312-01A0	HO- 20
DELIVERY PIPING (BLADE SPEC.)	HO312-01A1	HO- 22
OIL COOLER PIPING (OIL COOLER TO MAIN VALVE)	HO320-01A0	HO- 26

	FIG NO.	PAGE
OIL COOLER PIPING (OIL COOLER TO MAIN VALVE) (PROVISION FOR 1-ADDITIONAL ACTUATOR PIPING)	H0320-01A1	H0- 28
OIL COOLER PIPING (OIL COOLER TO HYDRAULIC OIL TANK)	H0320-02A0	H0- 30
RETURN LINE	H0330-01A0	H0- 32
DRAIN LINES	H0340-01A0	H0- 34
BOOM DRIFT LINE	H1210-01A0	H0- 36
ARM AND BUCKET LINE	H1220-01A0	H0- 38
ATTACHMENT LINE (MAIN VALVE PIPING)	H1270-01A0	H0- 40
ATTACHMENT LINE (CONNECTING PART)	H1270-02A0	H0- 42
ATTACHMENT LINE (DIRECTIONAL VALVE) (1/2)	H1270-03A0	H0- 44
ATTACHMENT LINE (DIRECTIONAL VALVE) (2/2)	H1270-04A0	H0- 46
ATTACHMENT LINE (FILTER)	H1270-05A0	H0- 48
ATTACHMENT LINE (MOUNTING PART)	H1270-06A0	H0- 50
BLADE LINE	H1290-01A0	H0- 52
TRAVEL LINES	H1310-01A0	H0- 54
TRAVEL LINES (BLADE SPEC.)	H1310-01A1	H0- 56
SWING LINES	H1340-01A0	H0- 58
SOLENOID VALVE LINE (SOLENOID VALVE)	H1831-01A0	H0- 60
SOLENOID VALVE LINE (SOLENOID VALVE MOUNTING)	H1831-02A0	H0- 62
PPC PUMP LINE (HOSE)	H1840-01A0	H0- 64
PPC PUMP LINE (CONTROL VALVE RELATED PARTS)	H1840-02A0	H0- 66
PPC PUMP LINE (CONTROL VALVE RELATED PARTS) (BLADE SPEC.)	H1840-02A1	H0- 68

JO[MAIN/REVOLVING FRAME AND RELATED PARTS]

	FIG NO.	PAGE
REVOLVING FRAME	J1110-01A0	J0- 2
REVOLVING FRAME (STRENGTH TYPE)	J1110-01A1	J0- 4
BOOM FOOT PIN	J1310-01A0	J0- 6

KO[OPERATOR'S COMPARTMENT AND CONTROL SYSTEM]

	FIG NO.	PAGE
OPERATOR'S SEAT	K0110-01A0	K0- 2
OPERATOR'S CAB (WINDOW)	K0210-01A0	K0- 4
OPERATOR'S CAB (FRONT WINDOW)	K0210-02A0	K0- 6
OPERATOR'S CAB (FRONT LOWER GLASS)	K0210-03A0	K0- 8
OPERATOR'S CAB (DOOR)	K0210-04A0	K0- 10
OPERATOR'S CAB (DOOR LOCK)	K0210-05A0	K0- 12
OPERATOR'S CAB (DOOR OPEN LOCK)	K0210-06A0	K0- 14
OPERATOR'S CAB (ROOF VENTILATOR)	K0210-07A0	K0- 16
OPERATOR'S CAB (WIPER)	K0210-08A0	K0- 18
OPERATOR'S CAB (WINDOW WASHER)	K0210-09A0	K0- 20
OPERATOR'S CAB (CAB MOUNTING)	K0210-10A0	K0- 22
OPERATOR'S CAB (FLOOR) (BASE)	K0210-13A0	K0- 24
OPERATOR'S CAB (FLOOR) (TRAVEL CONTROL)	K0210-14A0	K0- 26
OPERATOR'S CAB (FLOOR) (ATTACHMENT CONTROL) (1/2)	K0210-15A0	K0- 28
OPERATOR'S CAB (FLOOR) (ATTACHMENT CONTROL) (2/2)	K0210-16A0	K0- 30
OPERATOR'S CAB (FLOOR) (ATTACHMENT CONTROL) (2/2) (BLADE SPEC.)	K0210-16A1	K0- 32
OPERATOR'S CAB (FLOOR) (ATTACHMENT CONTROL) (2/2) (PROVISION FOR 1-ADDITIONAL ACTUATOR PIPING)	K0210-16A2	K0- 34
OPERATOR'S CAB (FLOOR) (ATTACHMENT CONTROL) (2/2) (BLADE SPEC.) (PROVISION FOR 1-ACTUATORPIPING)	K0210-16A3	K0- 36
OPERATOR'S CAB (FLOOR) (LEVER, L.H.)	K0210-17A0	K0- 38
OPERATOR'S CAB (FLOOR) (CONSOLE, L.H.)	K0210-18A0	K0- 40
OPERATOR'S CAB (FLOOR) (P.P.C. LOCK LEVER)	K0210-19A0	K0- 42
OPERATOR'S CAB (FLOOR) (ARM REST, L.H.)	K0210-20A0	K0- 44
OPERATOR'S CAB (FLOOR) (LEVER, R.H.)	K0210-21A0	K0- 46

	FIG NO.	PAGE
OPERATOR'S CAB (FLOOR) (CONSOLE, R.H.)	K0210-22A0	KO- 48
OPERATOR'S CAB (FLOOR) (ARM REST, R.H.)	K0210-23A0	KO- 52
OPERATOR'S CAB (MONITOR PANEL)	K0210-30A0	KO- 54
OPERATOR'S CAB (FLOOR) (P.P.C. VALVE, L.H.)	K0210-31A0	KO- 56
OPERATOR'S CAB (FLOOR) (P.P.C. LINE)	K0210-32A0	KO- 58
OPERATOR'S CAB (FLOOR) (P.P.C. VALVE, R.H.)	K0210-33A0	KO- 60
OPERATOR'S CAB (FLOOR) (P.P.C. PIPING FOR PILOT VALVE, R.H.)	K0210-34A0	KO- 62
OPERATOR'S CAB (FLOOR) (WIRING HARNESS AND P.P.C.HOSE CLAMP)	K0210-35A0	KO- 64
OPERATOR'S CAB (CAB IN PARTS) (SUB PLATE)	K0210-36A0	KO- 66
OPERATOR'S CAB (BLADE CONTROL)	K0210-37A1	KO- 68
OPERATOR'S CAB (CAB IN PARTS) (ROOF AND REAR COVER)	K0210-38A0	KO- 70
OPERATOR'S CAB (CAB IN PARTS) (MONITOR COVER)	K0210-39A0	KO- 72
OPERATOR'S CAB (CAB IN PARTS) (LUGGAGE COVER)	K0210-40A0	KO- 74
OPERATOR'S CAB (FLOOR) (AIR DUCT SEAL)	K0210-41A0	KO- 76
OPERATOR'S CAB (CAB IN PARTS) (AIR CONDITIONER AND FOOT DUCT)	K0210-42A0	KO- 78
OPERATOR'S CAB (CAB IN PARTS) (MONITOR DUCT)	K0210-43A0	KO- 80
OPERATOR'S CAB (CAB IN PARTS) (AIR DUCT)	K0210-44A0	KO- 82
OPERATOR'S CAB (FLOOR) (FOOT REST)	K0210-45A0	KO- 84
OPERATOR'S CAB (FLOOR) (CONTROL PEDAL) (PROVISION FOR 1-ADDITIONAL ACTUATOR PIPING) (1/2)	K0210-45A2	KO- 86
OPERATOR'S CAB (FLOOR) (CONTROL PEDAL) (PROVISION FOR 1-ADDITIONAL ACTUATOR PIPING) (2/2)	K0210-46A2	KO- 88
OPERATOR'S CAB (KOMTRAX)	K0210-51A0	KO- 90
OPERATOR'S CAB (RADIO ANTENNA AND SPEAKER)	K0210-52A0	KO- 92
OPERATOR'S CAB (FLOOR) (RADIO)	K0210-53A0	KO- 94
OPERATOR'S CAB (CAB IN PARTS) (REAR COVER)	K0210-54A0	KO- 96
OPERATOR'S CAB (FLOOR) (BASE FRONT COVER)	K0210-55A0	KO- 98
FLOOR MAT	K0310-01A0	KO- 100
FLOOR MAT (PROVISION FOR 1-ADDITIONAL ACTUATOR PIPING)	K0310-01A1	KO- 102
WINDOW WASHER	K0350-01A0	KO- 104
AIR CONDITIONER (AIR CONDITIONER PIPING, 1/3)	K0700-01A0	KO- 106
AIR CONDITIONER (AIR CONDITIONER PIPING, 2/3)	K0700-02A0	KO- 108
AIR CONDITIONER (AIR CONDITIONER PIPING, 3/3)	K0700-03A0	KO- 110
AIR CONDITIONER (V-BELT)	K0700-04A0	KO- 112
FLOOR MOUNT	K1120-01A0	KO- 114
MODE SELECTION CONNECTORS	K1730-01A0	KO- 116
MO[GUARD]		
HOOD	M1110-01A0	MO- 2
SIDE COVER, L.H.	M1130-01A0	MO- 4
SIDE COVER, R.H.	M1140-01A0	MO- 6
PARTITION (FRAME)	M1150-01A0	MO- 8
PARTITION (COVER)	M1150-02A0	MO- 10
WORK LAMP AND CASE	M1220-01A0	MO- 12
HANDRAIL	M1310-01A0	MO- 14
REAR VIEW MIRROR	M1420-01A0	MO- 16
COUNTER WEIGHT	M1510-01A0	MO- 18
WEIGHT MOUNTING	M1520-01A0	MO- 20
UNDER COVER	M1810-01A0	MO- 22
NO[SWING CIRCLE AND RELATED PARTS]		
SWING CIRCLE	N1110-01A0	NO- 2
SWING MACHINERY AND MOTOR	N1210-01A0	NO- 4
SWING MACHINERY (MACHINERY)	N1210-51A0	NO- 6
SWING MACHINERY (RELATED PARTS)	N1210-52A0	NO- 8

	FIG NO.	PAGE
SWIVEL JOINT	N1310-01A0	NO- 10
SWIVEL JOINT (BLADE SPEC.)	N1310-01A1	NO- 12
PO[TRAVEL AND LOWER PIPING]		
TRAVEL PIPING	P1120-01A0	PO- 2
TRAVEL PIPING (BLADE SPEC.)	P1120-01A1	PO- 4
LOWER HYDRAULIC PIPING (BLADE LINE)	P1120-02A1	PO- 6
FINAL DRIVE	P1210-01A0	PO- 8
RO[UNDER CARRIAGE]		
FRONT IDLER	R0110-01A0	RO- 2
IDLER CUSHION	R0120-01A0	RO- 4
TRACK ROLLER	R0200-01A0	RO- 6
CARRIER ROLLER	R0300-01A0	RO- 8
TRACK SHOE	R0500-01A0	RO- 10
TRACK FRAME	R1100-01A0	RO- 12
TRACK FRAME (BLADE SPEC.)	R1100-01A1	RO- 14
TO[WORK EQUIPMENT]		
BOOM	T1110-01A0	TO- 2
BOOM (WORK LAMP)	T1110-02A0	TO- 4
BOOM (BOOM PIN)	T1110-03A0	TO- 6
BOOM (ARM AND BUCKET CYLINDER LINE)	T1110-04A0	TO- 8
BOOM (ARM AND BUCKET CYLINDER LINE) (PROVISION FOR 1-ADDITIONAL ACTUATOR PIPING)	T1110-04A1	TO- 10
BOOM (ADDITIONAL LINE) (PROVISION FOR 1-ADDITIONAL ACTUATOR PIPING)	T1110-05A1	TO- 12
BOOM CYLINDER	T1120-01A0	TO- 14
ARM CYLINDER	T1140-01A0	TO- 16
ARM	T1210-01A0	TO- 18
ARM (PROVISION FOR 1-ADDITIONAL ACTUATOR PIPING)	T1210-01A1	TO- 20
ARM (STRENGTH TYPE)	T1210-01A2	TO- 22
ARM (ADDITIONAL LINE) (PROVISION FOR 1-ADDITIONAL ACTUATOR PIPING)	T1210-02A1	TO- 24
BUCKET CYLINDER	T1220-01A0	TO- 26
BUCKET LINK	T1230-01A0	TO- 28
BUCKET 0.30M3 770MM	T1510-01A0	TO- 30
BUCKET 0.37M3 930MM (WIDTH)	T1510-01A1	TO- 32
BUCKET 0.37M3 800MM (STRENGTH TYPE)	T1510-01A2	TO- 34
BLADE	T1710-01A0	TO- 36
BLADE LIFT CYLINDER	T1720-01A0	TO- 38
UO[MARKS AND PLATES]		
MARKS AND PLATES (1/2)	U0100-01A0	UO- 2
MARKS AND PLATES (2/2)	U0100-02A0	UO- 4
MARKS AND PLATES (2/2) (BLADE SPEC.)	U0100-02A1	UO- 6
MARKS AND PLATES (2/2) (STRENGTH TYPE)	U0100-02A2	UO- 8
MARKS AND PLATES (2/2) (BLADE SPEC.) (STRENGTH TYPE)	U0100-02A3	UO- 10
VO[ACCESSORY]		
SPARE PARTS	V0100-01A0	VO- 2
TOOL	V0300-01A0	VO- 4
YO[SERVICE KIT AND COMPONENT PARTS]		
RUBBER ANTENNA	Y1062-01A0	YO- 2
MAIN PUMP (1/4) (WITHOUT BLADE)	Y1600-01A0	YO- 4
MAIN PUMP (2/4) (WITHOUT BLADE)	Y1600-02A0	YO- 6
MAIN PUMP (3/4) (WITHOUT BLADE)	Y1600-03A0	YO- 8
MAIN PUMP (4/4) (WITHOUT BLADE)	Y1600-04A0	YO- 12

	FIG NO.	PAGE
MAIN PUMP (1/4) (WITH BLADE)	Y1600-11A0	YO- 14
MAIN PUMP (2/4) (WITH BLADE)	Y1600-12A0	YO- 16
MAIN PUMP (3/4) (WITH BLADE)	Y1600-13A0	YO- 18
MAIN PUMP (4/4) (WITH BLADE)	Y1600-14A0	YO- 22
BOOM CYLINDER (INNER PARTS)	Y1620-01A0	YO- 24
ARM CYLINDER (INNER PARTS)	Y1620-11A0	YO- 26
BUCKET CYLINDER (INNER PARTS)	Y1620-41A0	YO- 28
BLADE CYLINDER (INNER PARTS)	Y1621-01A0	YO- 30
SWIVEL JOINT (INNER PARTS)	Y1627-01A0	YO- 32
SWIVEL JOINT (INNER PARTS) (WITH BLADE)	Y1627-01A1	YO- 34
SWING MOTOR (1/3)	Y1640-01A0	YO- 36
SWING MOTOR (2/3)	Y1640-02A0	YO- 38
SWING MOTOR (3/3)	Y1640-03A0	YO- 40
TRAVEL MOTOR (1/3)	Y1651-01A0	YO- 42
TRAVEL MOTOR (2/3)	Y1651-02A0	YO- 44
TRAVEL MOTOR (3/3)	Y1651-03A0	YO- 46
MAIN VALVE (6-VALVE) (1/16) (WITHOUT BLADE)	Y1660-01A0	YO- 48
MAIN VALVE (6-VALVE) (2/16) (WITHOUT BLADE)	Y1660-02A0	YO- 50
MAIN VALVE (6-VALVE) (3/16) (WITHOUT BLADE)	Y1660-03A0	YO- 52
MAIN VALVE (6-VALVE) (4/16) (WITHOUT BLADE)	Y1660-04A0	YO- 54
MAIN VALVE (6-VALVE) (5/16) (WITHOUT BLADE)	Y1660-05A0	YO- 56
MAIN VALVE (6-VALVE) (6/16) (WITHOUT BLADE)	Y1660-06A0	YO- 58
MAIN VALVE (6-VALVE) (7/16) (WITHOUT BLADE)	Y1660-07A0	YO- 62
MAIN VALVE (6-VALVE) (8/16) (WITHOUT BLADE)	Y1660-08A0	YO- 64
MAIN VALVE (6-VALVE) (9/16) (WITHOUT BLADE)	Y1660-09A0	YO- 66
MAIN VALVE (6-VALVE) (10/16) (WITHOUT BLADE)	Y1660-10A0	YO- 68
MAIN VALVE (6-VALVE) (11/16) (WITHOUT BLADE)	Y1660-11A0	YO- 70
MAIN VALVE (6-VALVE) (12/16) (WITHOUT BLADE)	Y1660-12A0	YO- 72
MAIN VALVE (6-VALVE) (13/16) (WITHOUT BLADE)	Y1660-13A0	YO- 74
MAIN VALVE (6-VALVE) (14/16) (WITHOUT BLADE)	Y1660-14A0	YO- 76
MAIN VALVE (6-VALVE) (15/16) (WITHOUT BLADE)	Y1660-15A0	YO- 78
MAIN VALVE (6-VALVE) (16/16) (WITHOUT BLADE)	Y1660-16A0	YO- 80
MAIN VALVE (7-VALVE) (1/18) (ATTACHMENT AND WITHOUT BLADE)	Y1662-01A0	YO- 82
MAIN VALVE (7-VALVE) (2/18) (ATTACHMENT AND WITHOUT BLADE)	Y1662-02A0	YO- 84
MAIN VALVE (7-VALVE) (3/18) (ATTACHMENT AND WITHOUT BLADE)	Y1662-03A0	YO- 86
MAIN VALVE (7-VALVE) (4/18) (ATTACHMENT AND WITHOUT BLADE)	Y1662-04A0	YO- 88
MAIN VALVE (7-VALVE) (5/18) (ATTACHMENT AND WITHOUT BLADE)	Y1662-05A0	YO- 90
MAIN VALVE (7-VALVE) (6/18) (ATTACHMENT AND WITHOUT BLADE)	Y1662-06A0	YO- 92
MAIN VALVE (7-VALVE) (7/18) (ATTACHMENT AND WITHOUT BLADE)	Y1662-07A0	YO- 96
MAIN VALVE (7-VALVE) (8/18) (ATTACHMENT AND WITHOUT BLADE)	Y1662-08A0	YO- 98
MAIN VALVE (7-VALVE) (9/18) (ATTACHMENT AND WITHOUT BLADE)	Y1662-09A0	YO- 100
MAIN VALVE (7-VALVE) (10/18) (ATTACHMENT AND WITHOUT BLADE)	Y1662-10A0	YO- 102
MAIN VALVE (7-VALVE) (11/18) (ATTACHMENT AND WITHOUT BLADE)	Y1662-11A0	YO- 104
MAIN VALVE (7-VALVE) (12/18) (ATTACHMENT AND WITHOUT BLADE)	Y1662-12A0	YO- 106
MAIN VALVE (7-VALVE) (13/18) (ATTACHMENT AND WITHOUT BLADE)	Y1662-13A0	YO- 108
MAIN VALVE (7-VALVE) (14/18) (ATTACHMENT AND WITHOUT BLADE)	Y1662-14A0	YO- 110
MAIN VALVE (7-VALVE) (15/18) (ATTACHMENT AND WITHOUT BLADE)	Y1662-15A0	YO- 112

	FIG NO.	PAGE
MAIN VALVE (7-VALVE) (16/18) (ATTACHMENT AND WITHOUT BLADE)	Y1662-16A0	YO- 114
MAIN VALVE (7-VALVE) (17/18) (ATTACHMENT AND WITHOUT BLADE)	Y1662-17A0	YO- 116
MAIN VALVE (7-VALVE) (18/18) (ATTACHMENT AND WITHOUT BLADE)	Y1662-18A0	YO- 118
MAIN VALVE (7-VALVE) (1/18) (WITH BLADE)	Y1662-21A0	YO- 120
MAIN VALVE (7-VALVE) (2/18) (WITH BLADE)	Y1662-22A0	YO- 122
MAIN VALVE (7-VALVE) (3/18) (WITH BLADE)	Y1662-23A0	YO- 124
MAIN VALVE (7-VALVE) (4/18) (WITH BLADE)	Y1662-24A0	YO- 126
MAIN VALVE (7-VALVE) (5/18) (WITH BLADE)	Y1662-25A0	YO- 128
MAIN VALVE (7-VALVE) (6/18) (WITH BLADE)	Y1662-26A0	YO- 130
MAIN VALVE (7-VALVE) (7/18) (WITH BLADE)	Y1662-27A0	YO- 132
MAIN VALVE (7-VALVE) (8/18) (WITH BLADE)	Y1662-28A0	YO- 134
MAIN VALVE (7-VALVE) (9/18) (WITH BLADE)	Y1662-29A0	YO- 136
MAIN VALVE (7-VALVE) (10/18) (WITH BLADE)	Y1662-30A0	YO- 138
MAIN VALVE (7-VALVE) (11/18) (WITH BLADE)	Y1662-31A0	YO- 140
MAIN VALVE (7-VALVE) (12/18) (WITH BLADE)	Y1662-32A0	YO- 142
MAIN VALVE (7-VALVE) (13/18) (WITH BLADE)	Y1662-33A0	YO- 144
MAIN VALVE (7-VALVE) (14/18) (WITH BLADE)	Y1662-34A0	YO- 146
MAIN VALVE (7-VALVE) (15/18) (WITH BLADE)	Y1662-35A0	YO- 148
MAIN VALVE (7-VALVE) (16/18) (WITH BLADE)	Y1662-36A0	YO- 150
MAIN VALVE (7-VALVE) (17/18) (WITH BLADE)	Y1662-37A0	YO- 152
MAIN VALVE (7-VALVE) (18/18) (WITH BLADE)	Y1662-38A0	YO- 154
MAIN VALVE (8-VALVE) (1/20) (ATTACHMENT AND WITH BLADE)	Y1664-01A0	YO- 156
MAIN VALVE (8-VALVE) (2/20) (ATTACHMENT AND WITH BLADE)	Y1664-02A0	YO- 158
MAIN VALVE (8-VALVE) (3/20) (ATTACHMENT AND WITH BLADE)	Y1664-03A0	YO- 160
MAIN VALVE (8-VALVE) (4/20) (ATTACHMENT AND WITH BLADE)	Y1664-04A0	YO- 162
MAIN VALVE (8-VALVE) (5/20) (ATTACHMENT AND WITH BLADE)	Y1664-05A0	YO- 164
MAIN VALVE (8-VALVE) (6/20) (ATTACHMENT AND WITH BLADE)	Y1664-06A0	YO- 166
MAIN VALVE (8-VALVE) (7/20) (ATTACHMENT AND WITH BLADE)	Y1664-07A0	YO- 168
MAIN VALVE (8-VALVE) (8/20) (ATTACHMENT AND WITH BLADE)	Y1664-08A0	YO- 170
MAIN VALVE (8-VALVE) (9/20) (ATTACHMENT AND WITH BLADE)	Y1664-09A0	YO- 172
MAIN VALVE (8-VALVE) (10/20) (ATTACHMENT AND WITH BLADE)	Y1664-10A0	YO- 174
MAIN VALVE (8-VALVE) (11/20) (ATTACHMENT AND WITH BLADE)	Y1664-11A0	YO- 176
MAIN VALVE (8-VALVE) (12/20) (ATTACHMENT AND WITH BLADE)	Y1664-12A0	YO- 178
MAIN VALVE (8-VALVE) (13/20) (ATTACHMENT AND WITH BLADE)	Y1664-13A0	YO- 180
MAIN VALVE (8-VALVE) (14/20) (ATTACHMENT AND WITH BLADE)	Y1664-14A0	YO- 182
MAIN VALVE (8-VALVE) (15/20) (ATTACHMENT AND WITH BLADE)	Y1664-15A0	YO- 184
MAIN VALVE (8-VALVE) (16/20) (ATTACHMENT AND WITH BLADE)	Y1664-16A0	YO- 186
MAIN VALVE (8-VALVE) (17/20) (ATTACHMENT AND WITH BLADE)	Y1664-17A0	YO- 188
MAIN VALVE (8-VALVE) (18/20) (ATTACHMENT AND WITH BLADE)	Y1664-18A0	YO- 190

	FIG NO.	PAGE
MAIN VALVE (8-VALVE) (19/20) (ATTACHMENT AND WITH BLADE)	Y1664-19A0	YO- 192
MAIN VALVE (8-VALVE) (20/20) (ATTACHMENT AND WITH BLADE)	Y1664-20A0	YO- 194
PPC VALVE (FOR TRAVEL)	Y1670-01A0	YO- 196
PPC VALVE (FOR WORK EQUIPMENT) (L.H. AND R.H.)	Y1670-11A0	YO- 198
PPC VALVE (FOR ATTACHMENT)	Y1670-21A0	YO- 200
PPC VALVE (FOR BLADE)	Y1670-51A0	YO- 202
SAFETY VALVE (FOR ATTACHMENT)	Y1672-01A0	YO- 204

ZZ[NUMERICAL INDEX] ZZ- 1

ENGINE

FIG.A101P-01A2 CYLINDER HEAD

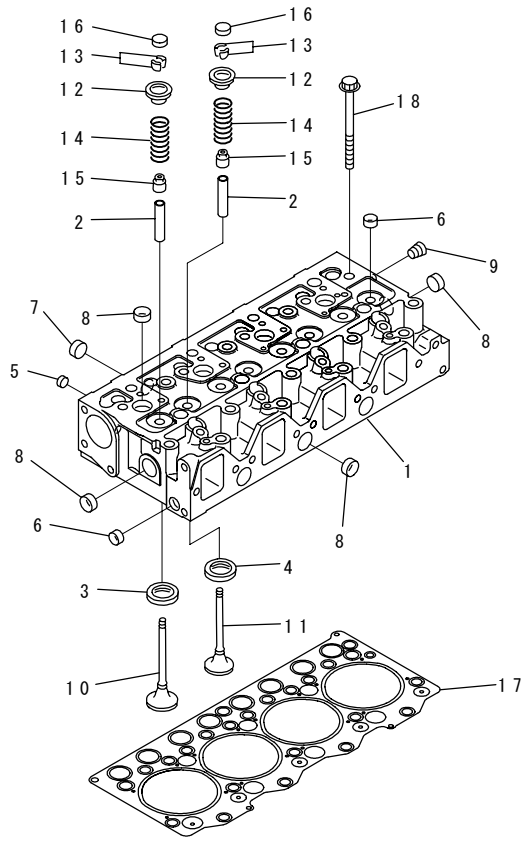

INDEX	PART NO.	DESCRIPTION	Q'TY	SERIAL NO.
	6271-11-1100	CYLINDER HEAD A.,VALVE LESS.	1	500001-
1	☆	.HEAD,CYLINDER.	1	500001-
2	6204-19-1310	.GUIDE,VALVE.	8	500001-
3	6207-11-1431	.SEAT,INTAKE VALVE.(STD)	4	500001-
	6207-19-1431	.SEAT, 0.25MM,INTAKE VALVE.(OS)	4	500001-
	6207-18-1431	.SEAT, 0.50MM,INTAKE VALVE.(OS)	4	500001-
4	6208-11-1440	.SEAT,EXHAUST VALVE.(STD)	4	500001-
	6208-19-1440	.SEAT, 0.25MM,EXHAUST VALVE.(OS)	4	500001-
	6208-18-1440	.SEAT, 0.50MM,EXHAUST VALVE.(OS)	4	500001-
5	07046-41008	.PLUG.	4	500001-
6	07046-41810	.PLUG.	9	500001-
7	07046-42216	.PLUG.	3	500001-
8	07046-42516	.PLUG.	11	500001-
9	02720-40104	.PLUG.	1	500001-
10	6207-41-4130	VALVE,INTAKE.	4	500001-
11	6209-41-4210	VALVE,EXHAUST.	4	500001-
12	6204-41-4510	SEAT.	8	500001-
13	6204-41-4520	COTTER.	16	500001-
14	6204-41-4410	SPRING,VALVE.	8	500001-
15	6204-41-4541	SEAL.	8	500001-
16	6204-41-4550	CAP.	8	500001-
17	6204-11-1840	GASKET.	1	500001-
18	6204-13-1610	BOLT.	17	500001-

FIG NO. : A105P-01B1

FIG.A105P-01B1 LIFTING BRACKET(#511213-)

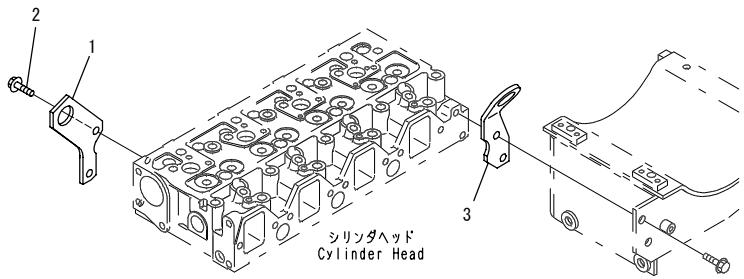

00091842

INDEX	PART NO.	DESCRIPTION	Q'TY	SERIAL NO.
1	6208-11-1910	HANGER,FRONT.....	1	511213-
2	01435-01020	BOLT.....	2	511213-
3	6271-11-1960	HANGER,REAR.....	1	511213-

FIG.A111P-01C9 HEAD COVER(#511213-)

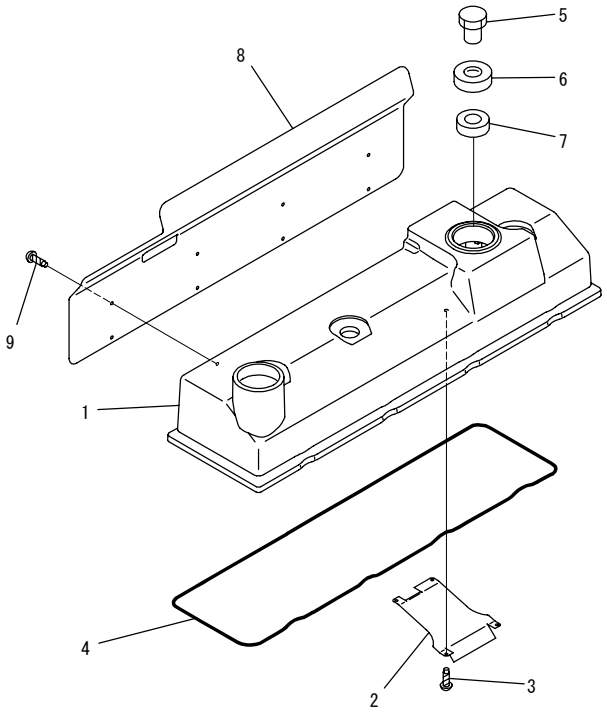

00091846

INDEX	PART NO.	DESCRIPTION	Q'TY	SERIAL NO.
	6271-11-8200	HEAD COVER ASS'Y	1	511213-
1	6271-11-8210	.COVER,HEAD	1	511213-
2	6207-11-8140	.PLATE	1	511213-
3	04418-02550	.SCREW	4	511213-
4	6204-11-8810	.O-RING	1	511213-
5	6136-11-8120	NUT	3	511213-
6	6136-11-8130	WASHER	3	511213-
7	6136-11-8142	PACKING	3	511213-
8	6271-11-9140	PLATE	1	511213-
9	04418-02550	SCREW	8	511213-

FIG NO. : A111V-01A9

FIG.A111V-01A9 BREATHER(#511213-)

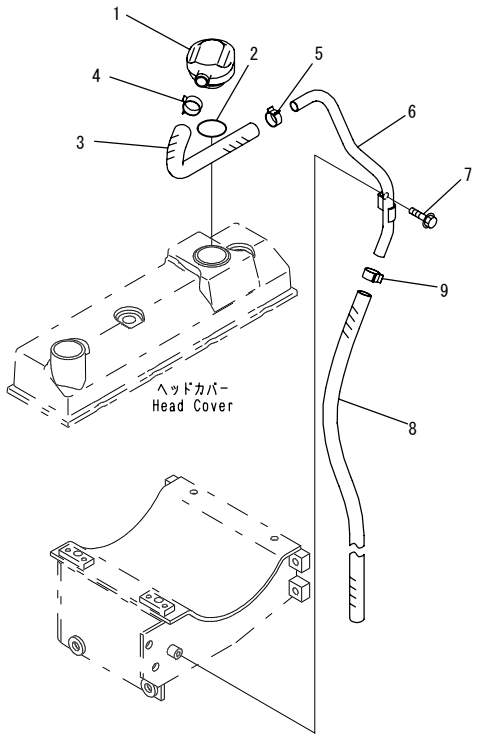

00091832

INDEX	PART NO.	DESCRIPTION	Q'TY	SERIAL NO.
1	6150-21-6750	BREATHER	1	511213-
2	6209-11-8210	O-RING	1	511213-
3	6271-11-8970	HOSE	1	511213-
4	07285-00220	CLIP	1	511213-
5	07285-00200	CLIP	1	511213-
6	6271-11-8930	TUBE,BREATHER	1	511213-
7	01435-00814	BOLT	1	511213-
8	07286-01656	HOSE	1	511213-
9	07285-00180	CLIP	1	511213-

FIG.A131P-01B9 AIR INTAKE CONNECTOR(#511213-)

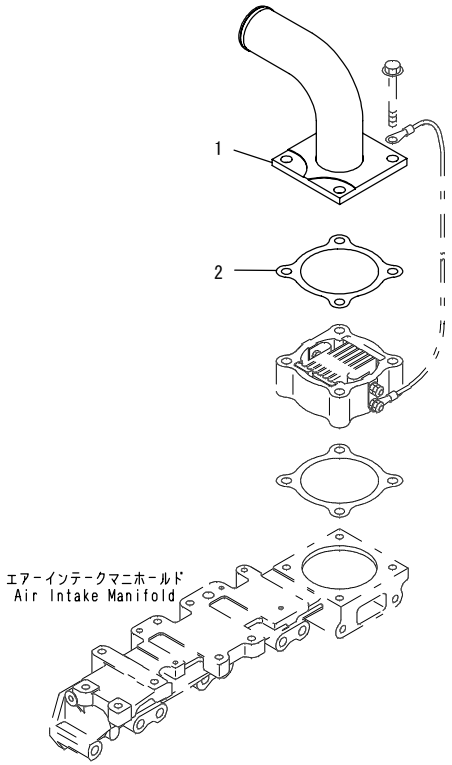

00091839

INDEX	PART NO.	DESCRIPTION	Q'TY	SERIAL NO.
1	6271-11-4440	CONNECTOR,AIR.	1	511213-
2	6204-11-4850	GASKET.	1	511213-

FIG.A131R-01A6 AIR INTAKE HEATER

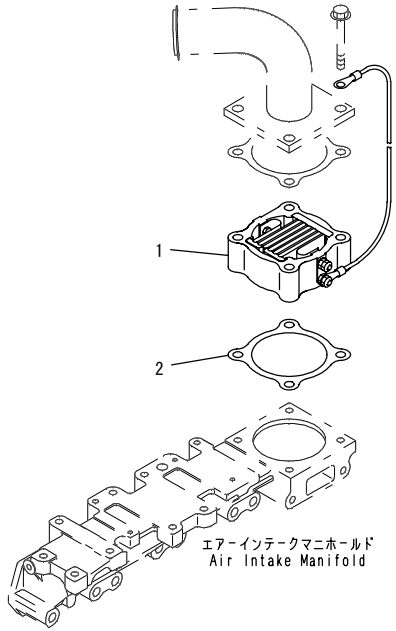

00058490

FIG NO. : A131R-01A6

INDEX	PART NO.	DESCRIPTION	Q'TY	SERIAL NO.
1	600-815-2341	HEATER,RIBBON.....	1	500001-
2	6204-11-4850	GASKET.....	1	500001-

FIG.A131V-01A5 AIR INTAKE CONNECTOR MOUNTING(#511213-)

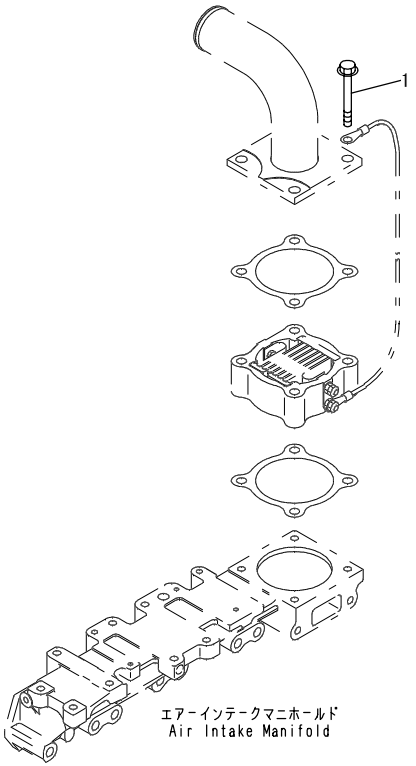

00091840

INDEX	PART NO.	DESCRIPTION	Q'TY	SERIAL NO.
1	01435-01070	BOLT.....	4	511213-

FIG.A151V-01B1 EXHAUST MUFFLER MOUNTING

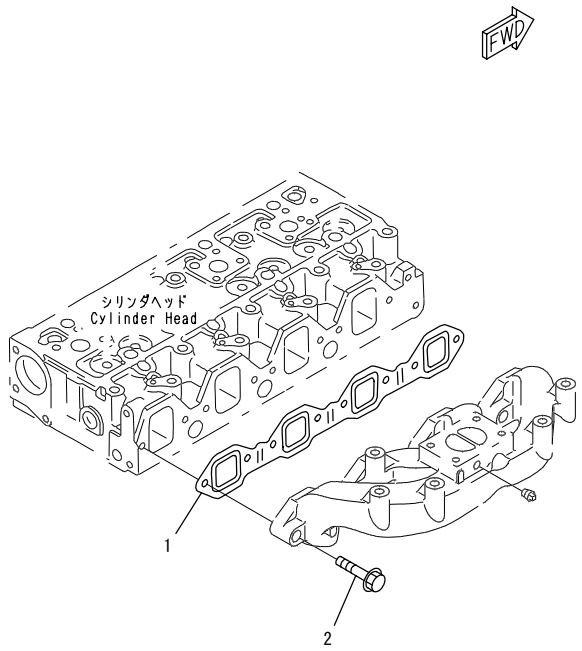

00058529

FIG NO. : A151V-01B1

INDEX	PART NO.	DESCRIPTION	Q'TY	SERIAL NO.
1	6205-11-5811	GASKET.....	1	500001-
2	01435-01045	BOLT.....	8	500001-

FIG.A153P-01A8 TURBOCHARGER(#511213-)

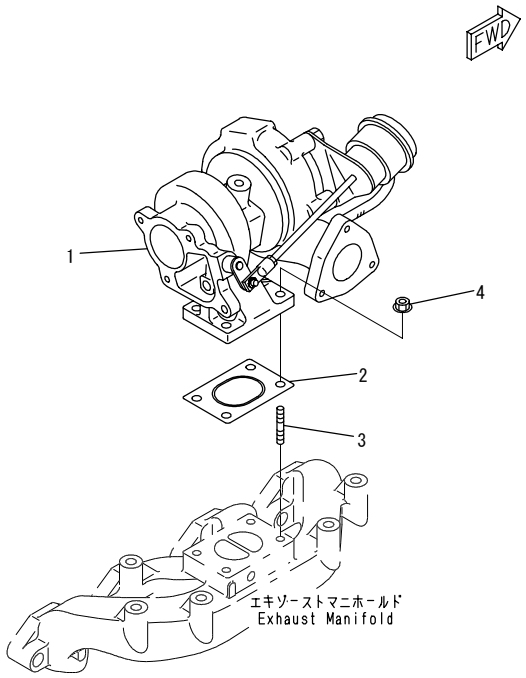

00017635

INDEX	PART NO.	DESCRIPTION	Q'TY	SERIAL NO.
1	6271-81-8500	TURBOCHARGER ASS'Y.....	1	511213-
2	6205-11-5580	GASKET.....	1	511213-
3	01124-60825	STUD.....	4	511213-
4	6201-11-5850	NUT.....	4	511213-

FIG.A153S-01C0 EXHAUST MANIFOLD

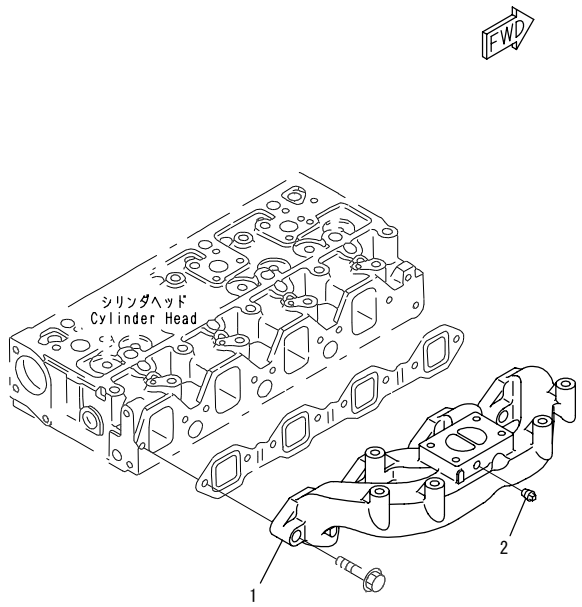

00058528

FIG NO. : A153S-01C0

INDEX	PART NO.	DESCRIPTION	Q'TY	SERIAL NO.
1	6271-11-5140	MANIFOLD,EXHAUST.....	1	500001-
2	07042-20108	PLUG.....	2	500001-

FIG.A153T-01D8 TURBOCHARGER OIL PIPING

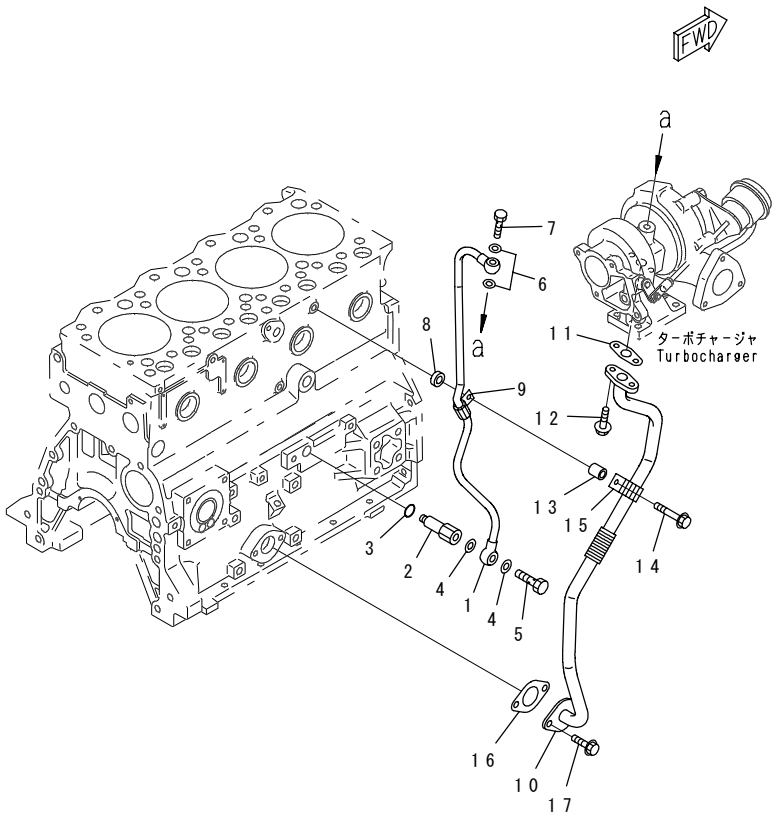

00058530

INDEX	PART NO.	DESCRIPTION	Q'TY	SERIAL NO.
1	6271-51-8540	TUBE,SUPPLY.	1	500001-
2	6271-51-8240	NIPPLE.	1	500001-
3	6215-81-9720	O-RING.	1	500001-
4	07005-01412	GASKET.	2	500001-
5	07206-31014	BOLT,JOINT.	1	500001-
6	07003-01015	GASKET.	2	500001-
7	6205-51-8251	BOLT.	1	500001-
8	6162-73-5940	SPACER.	1	500001-
9	6205-51-8560	CLIP.	1	500001-
10	6205-51-8530	TUBE,RETURN.	1	500001-
11	6205-51-7611	GASKET.	1	500001-
12	01435-00616	BOLT.	2	500001-
13	20D-62-17620	COLLAR.	1	500001-
14	01435-00840	BOLT.	1	500001-
15	600-051-5160	CLIP.	1	500001-
16	6204-21-6820	GASKET.	1	500001-
17	01435-00814	BOLT.	2	500001-

FIG.A153U-01A3 AIR INTAKE

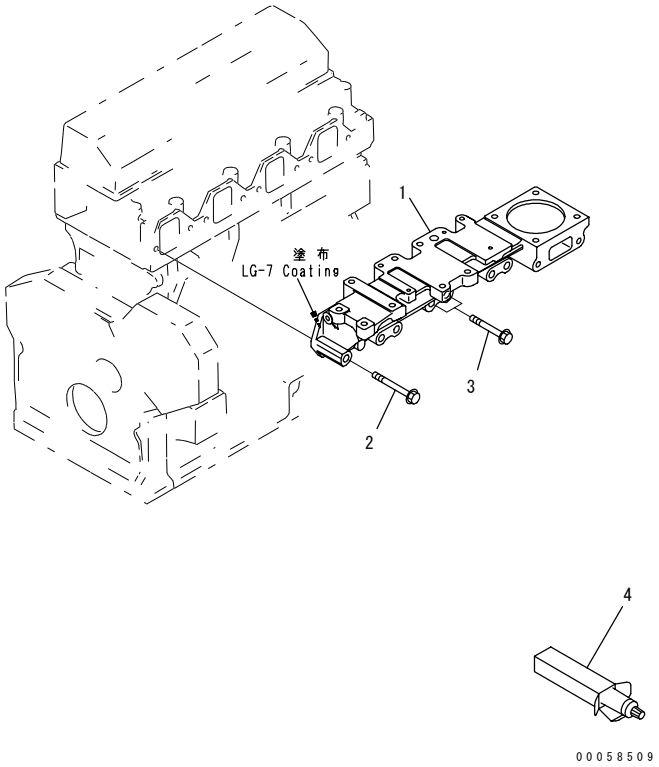

FIG NO. : A153U-01A3

INDEX	PART NO.	DESCRIPTION	Q'TY	SERIAL NO.
1	6271-11-4130	MANIFOLD,AIR INTAKE.....	1	500001-
2	01435-01075	BOLT.....	6	500001-
3	01435-01065	BOLT.....	2	500001-
4	09920-00150	LIQUID GASKET,LG-7, 150G.....	AR	500001-

FIG.A153W-01A7 AIR TRANSFER CONNECTION(#511213-)

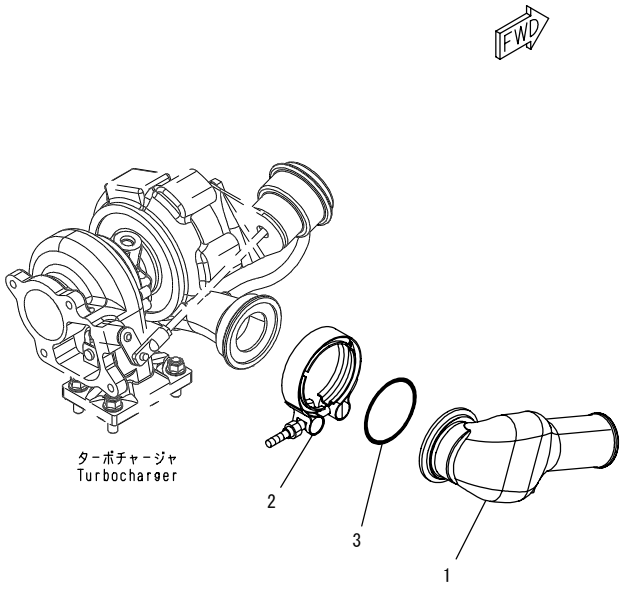

00091841

INDEX	PART NO.	DESCRIPTION	Q'TY	SERIAL NO.
1	22P-01-11140	CONNECTOR,AIR.....	1	511213-
2	6271-11-4930	CLAMP.....	1	511213-
3	6271-11-4920	SEAL.....	1	511213-

FIG NO. : A1610-01K7

FIG.A1610-01K7 MUFFLER(#511213-)

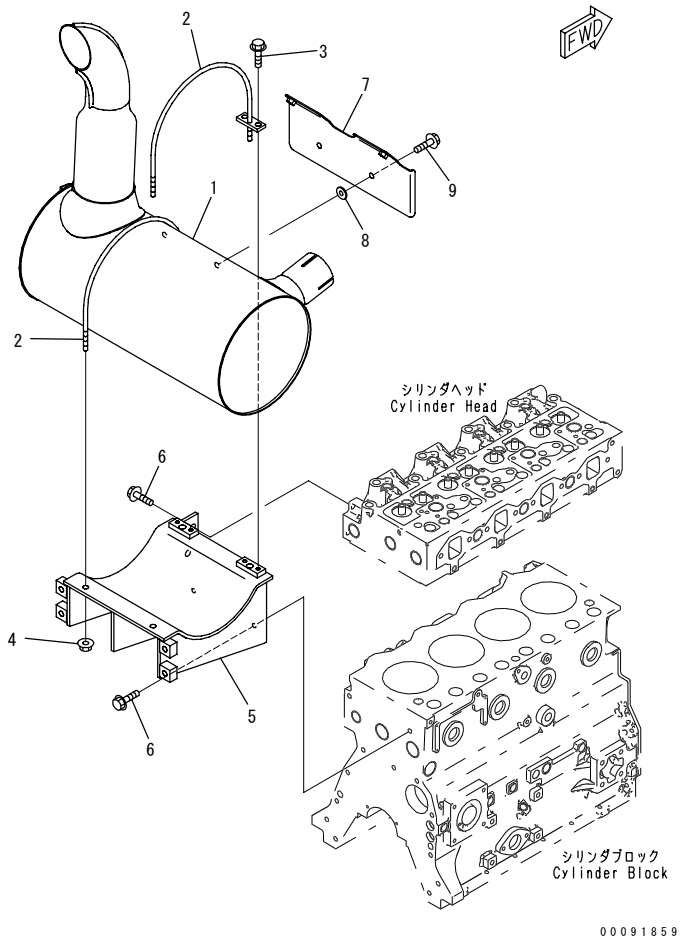

INDEX	PART NO.	DESCRIPTION	Q'TY	SERIAL NO.
1	6271-11-5260	MUFFLER	1	511213-
2	6204-11-5990	U-BOLT	2	511213-
3	01435-00820	BOLT	4	511213-
4	01584-00806	NUT	2	511213-
5	6271-11-5430	BRACKET	1	511213-
6	01435-01025	BOLT	4	511213-
7	6271-11-9150	PLATE	1	511213-
8	154-61-16570	WASHER	2	511213-
9	01435-00814	BOLT	2	511213-

FIG.A1670-01A5 MUFFLER PIPE(#511213-)

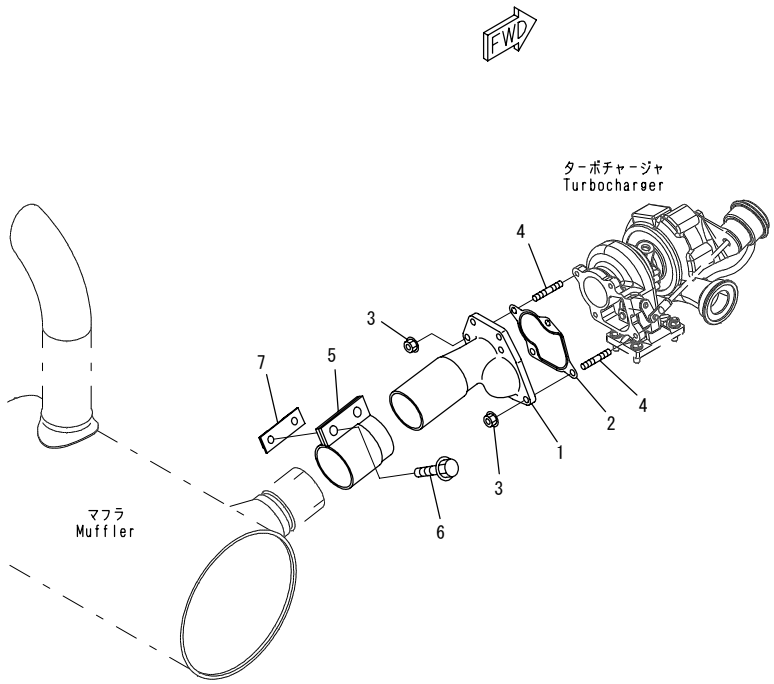

INDEX	PART NO.	DESCRIPTION	Q'TY	SERIAL NO.
1	6205-11-5691	CONNECTOR	1	511213-
2	6271-11-5850	GASKET	1	511213-
3	6201-11-5850	NUT	4	511213-
4	01124-60825	STUD	4	511213-
5	6206-11-5911	CLAMP	1	511213-
6	01435-01235	BOLT	2	511213-
7	6208-11-5850	PLATE	1	511213-

FIG.A173R-01A7 THERMOSTAT

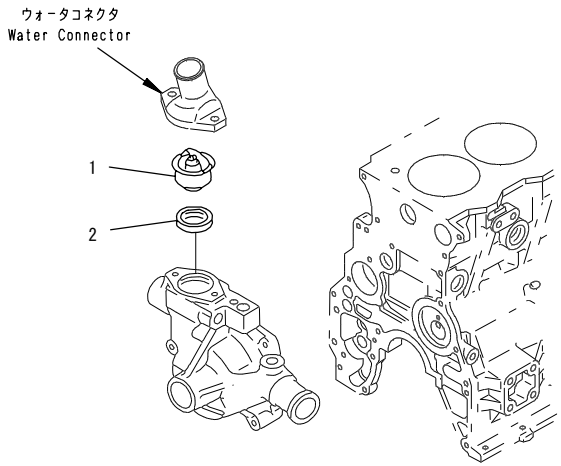

00058495

FIG NO. : A173R-01A7

INDEX	PART NO.	DESCRIPTION	Q'TY	SERIAL NO.
1	600-421-6240	THERMOSTAT.....	1	500001-
2	6140-11-6331	GASKET.....	1	500001-

FIG.A173S-01A5 WATER OUTLET CONNECTOR

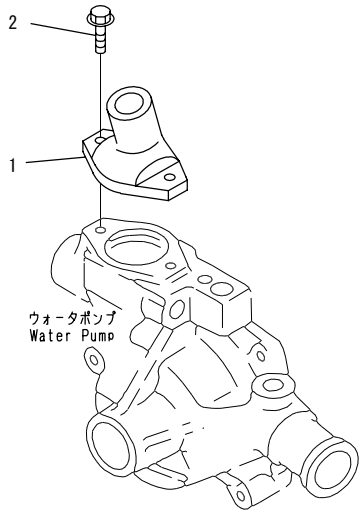

PJ6F372

INDEX	PART NO.	DESCRIPTION	Q'TY	SERIAL NO.
1	6204-11-6421	CONNECTOR.....	1	500001-
2	01435-00820	BOLT.....	2	500001-

FIG.A201S-01A4 CYLINDER BLOCK

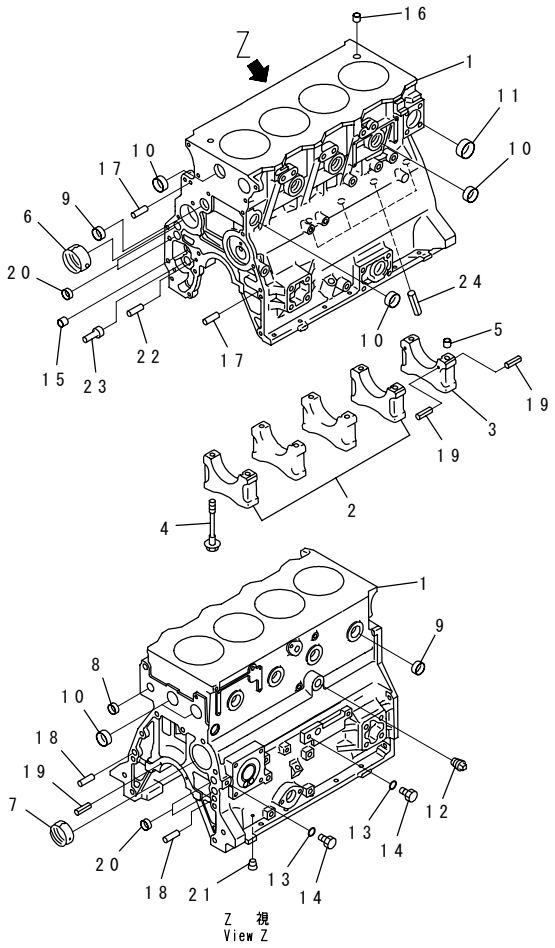

00058491

INDEX	PART NO.	DESCRIPTION	Q'TY	SERIAL NO.
	6271-21-1000	CYLINDER BLOCK ASS'Y	1	500001-
1	☆	.BLOCK,CYLINDER	1	500001-
2	△6204-29-1210	.CAP,MAIN METAL, NO.1,2,3,4	4	500001-
3	△6204-29-1220	.CAP,MAIN METAL, NO.5	1	500001-
4	6204-21-1610	.BOLT,MAIN CAP	10	500001-
5	6141-21-1530	.RING,DOWEL	2	500001-
6	6206-21-1430	.BUSHING,CAMSHAFT	1	500001-
7	6206-21-1420	.BUSHING,CAMSHAFT	2	500001-
8	07046-42216	.PLUG	1	500001-
9	07046-42516	.PLUG	5	500001-
10	07046-43016	.PLUG	7	500001-
11	07046-44016	.PLUG	1	500001-
12	07042-70312	.PLUG	1	500001-
13	6215-81-9710	.O-RING	2	504673-
	6215-81-9710	.O-RING	5	500001-504672
14	6215-81-9510	.PLUG	2	504673-
	6215-81-9510	.PLUG	5	500001-504672
15	6204-51-1711	.BUSHING,OIL PUMP	1	500001-
16	6140-21-1130	.BUSHING,DOWEL	2	500001-
17	04020-00820	.PIN,DOWEL	2	500001-
18	04020-01228	.PIN,DOWEL	2	500001-
19	04025-00408	.PIN,SPRING	6	500001-
20	07046-41810	.PLUG	4	500001-
21	07043-70108	.PLUG	1	500001-
22	6136-52-1620	.PIN,DOWEL, OIL PUMP	1	500001-
23	6204-51-1620	.SHAFT,OIL PUMP	1	500001-
24	6207-21-1190	.PIN	4	500001-

FIG.A204V-01A1 FRONT GEAR

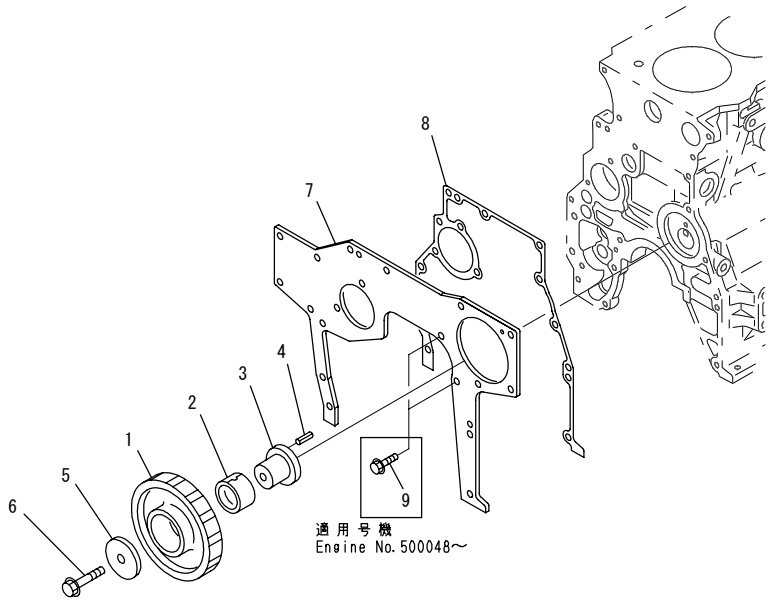

00080029

INDEX	PART NO.	DESCRIPTION	Q'TY	SERIAL NO.
	6271-31-6300	IDLER GEAR ASS'Y	1	500001-
1	☆	.GEAR,IDLER	1	500001-
2	6204-31-6341	.BUSHING	1	500001-
3	6204-31-6331	SHAFT	1	500001-
4	04025-00512	PIN,SPRING	1	500001-
5	6204-31-6350	WASHER	1	500001-
6	01435-01270	BOLT	1	500001-
7	6271-21-3210	PLATE	1	500001-
8	6206-21-3840	GASKET	1	500001-
9	01435-00816	BOLT	2	500048-

FIG NO. : A204W-01A3

FIG.A204W-01A3 FRONT GEAR COVER

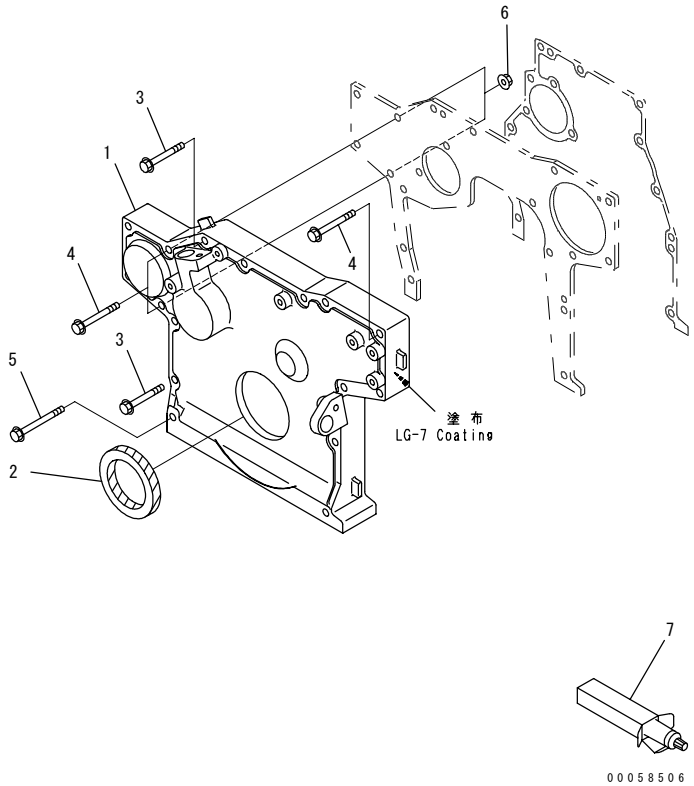

INDEX	PART NO.	DESCRIPTION	Q'TY	SERIAL NO.
1	6271-21-3110	COVER,FRONT.....	1	500001-
2	6204-21-3510	SEAL, FRONT.....	1	500001-
3	01435-00855	BOLT.....	6	500001-
4	01435-00860	BOLT.....	6	500001-
5	01435-00870	BOLT.....	2	500001-
6	01584-00806	NUT.....	2	500001-
7	(09920-00150)	LIQUID GASKET,LG-7, 150G.....	AR	500001-

FIG.A207P-01B0 CYLINDER BLOCK BLIND PLUG

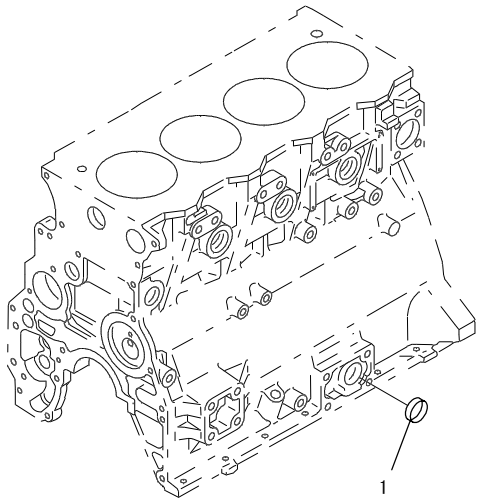

00058516

INDEX	PART NO.	DESCRIPTION	Q'TY	SERIAL NO.
1	07046-23016	PLUG.....	1	500001-

FIG NO. : A207S-01A3

FIG.A207S-01A3 OIL FILLER(#511213-)

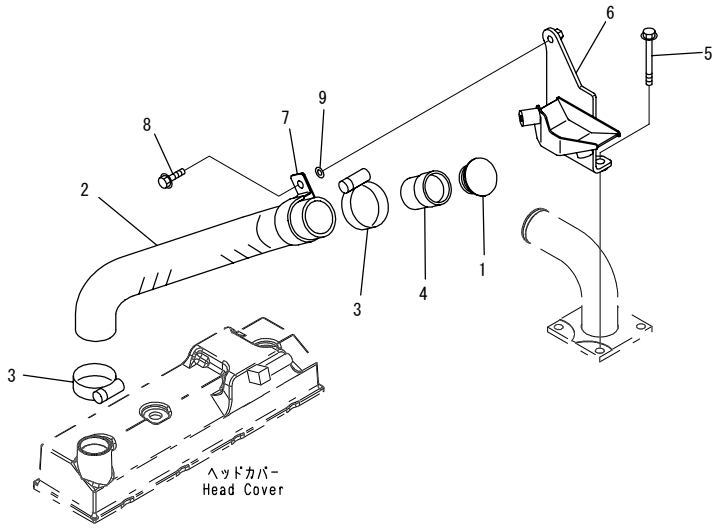

00091845

INDEX	PART NO.	DESCRIPTION	Q'TY	SERIAL NO.
1	6204-11-8610	CAP	1	511213-
2	22P-01-11421	HOSE	1	511213-
3	07281-00609	CLAMP	2	511213-
4	6271-11-8610	PIPE	1	511213-
5	01435-01080	BOLT	2	511213-
6	22P-01-11430	BRACKET	1	511213-
7	23S-56-21150	CLIP	1	511213-
8	01435-00825	BOLT	1	511213-
9	01640-21016	WASHER	1	511213-

FIG.A211P-01A9 OIL PAN(#511213-)

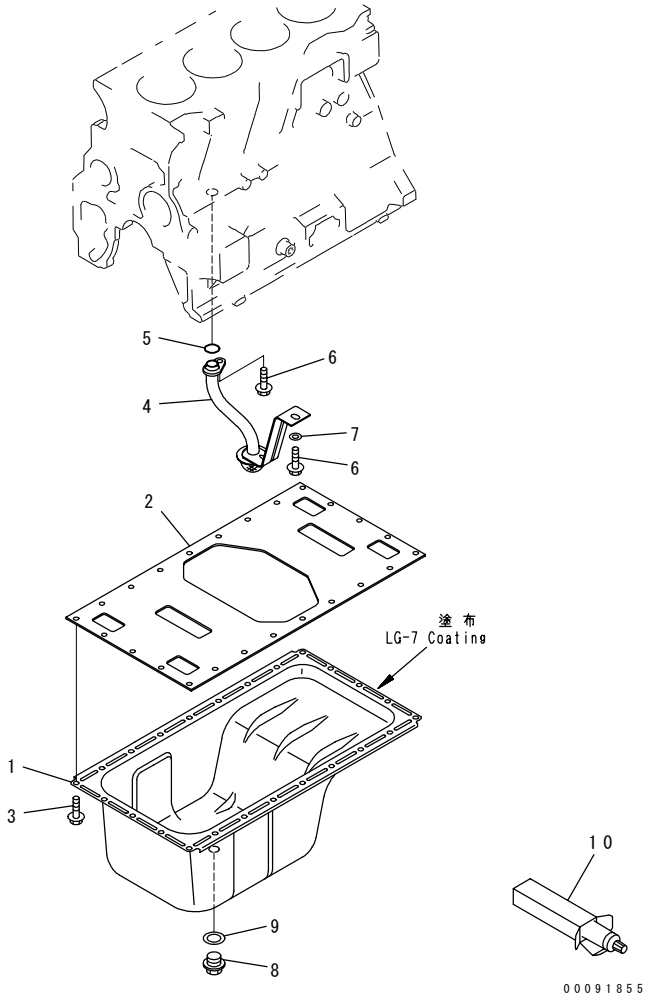

INDEX	PART NO.	DESCRIPTION	Q'TY	SERIAL NO.
1	6205-21-5152	PAN	1	511213-
2	6204-21-5150	PLATE	1	511213-
3	01435-00816	BOLT	24	511213-
4	6205-51-6120	TUBE,SUCTION	1	511213-
5	6204-51-6122	O-RING	1	511213-
6	01435-00816	BOLT	2	511213-
7	154-61-16570	WASHER	1	511213-
8	6204-21-5180	PLUG	1	511213-
9	07005-02216	GASKET	1	511213-
10	(09920-00150)	LIQUID GASKET	AR	511213-

FIG.A219P-01B8 OIL LEVEL GAUGE(#511213-)

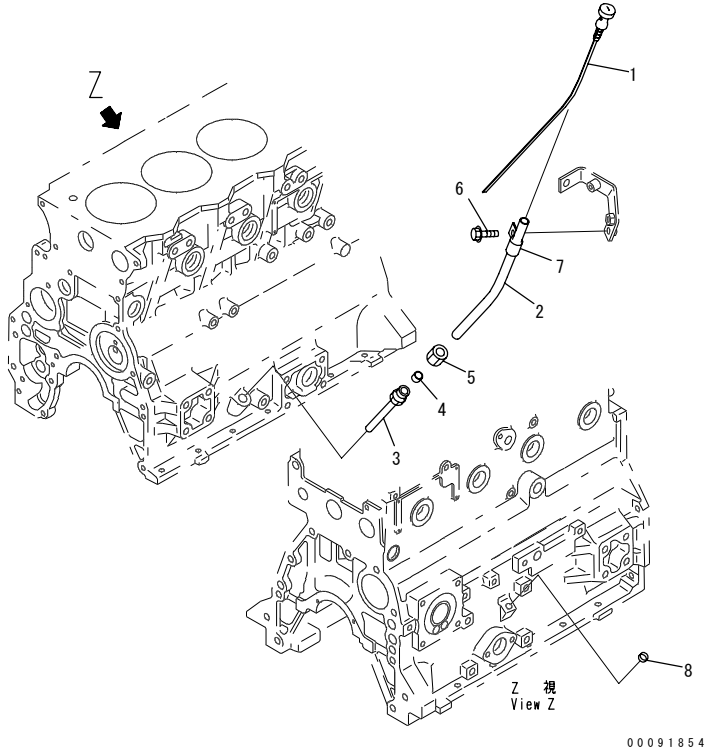

INDEX	PART NO.	DESCRIPTION	Q'TY	SERIAL NO.
1	6271-21-5460	GAUGE,OIL	1	511213-
2	6271-21-5470	GUIDE,OIL GAUGE	1	511213-
3	6204-21-5520	GUIDE	1	511213-
4	6150-21-5920	COLLAR	1	511213-
5	6150-21-5930	NUT	1	511213-
6	01435-00820	BOLT	1	511213-
7	04434-51208	CLIP	1	511213-
8	07046-21210	PLUG	1	511213-

FIG.A221P-01B1 FLYWHEEL HOUSING(#511213-)

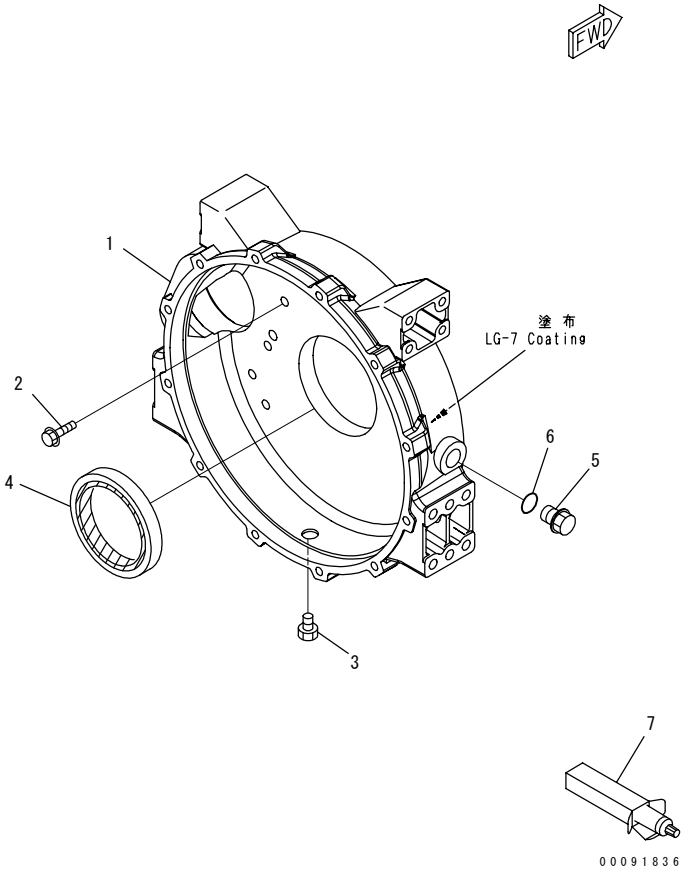

INDEX	PART NO.	DESCRIPTION	Q'TY	SERIAL NO.
1	6204-21-4230	HOUSING,FLYWHEEL	1	511213-
2	01435-01030	BOLT	11	511213-
3	07042-00415	PLUG	1	511213-
4	6141-21-1332	SEAL, REAR	1	511213-
5	6204-21-5180	PLUG	1	511213-
6	07005-02216	GASKET	1	511213-
7	(09920-00150)	LIQUID GASKET,LG-7, 150G	AR	511213-

FIG.A223P-01D3 FLYWHEEL(#511213-)

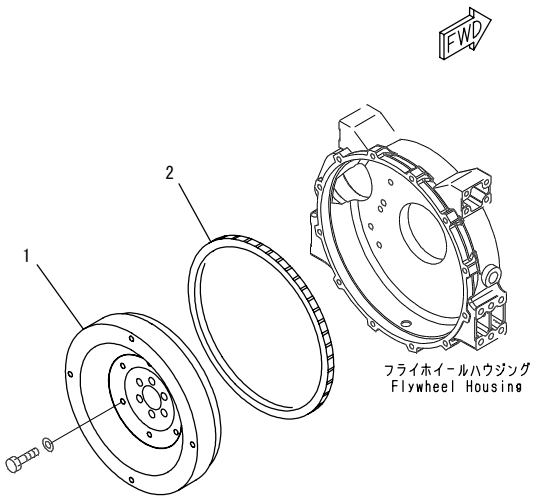

00091838

INDEX	PART NO.	DESCRIPTION	Q'TY	SERIAL NO.
	6204-31-4272	FLYWHEEL ASS'Y.....	1	511213-
1	☆	.FLYWHEEL.....	1	511213-
2	6204-31-4193	.GEAR,RING.....	1	511213-

FIG.A223R-01A1 FLYWHEEL MOUNTING

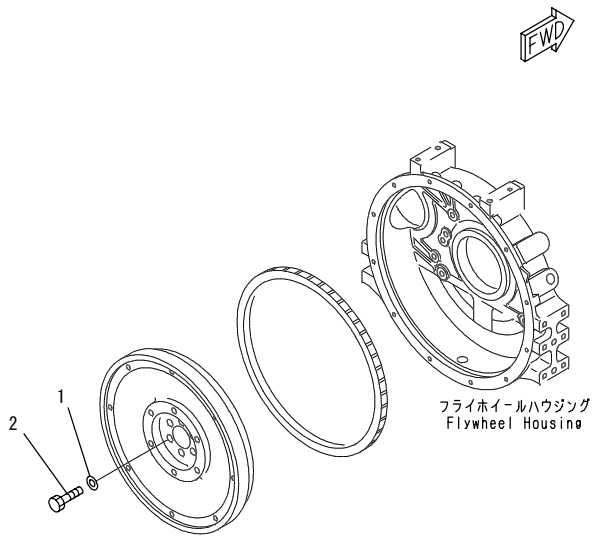

00058505

INDEX	PART NO.	DESCRIPTION	Q'TY	SERIAL NO.
1	6130-32-1361	WASHER.....	6	500001-
2	01050-31430	BOLT.....	6	500001-

FIG.A233P-01A7　DAMPER(#511213-)

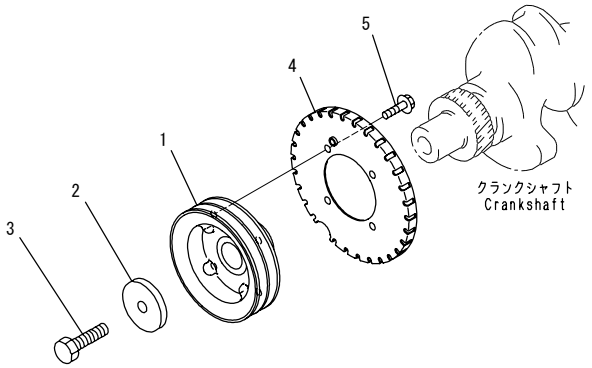

00091850

FIG NO. : A233P-01A7

INDEX	PART NO.	DESCRIPTION	Q'TY	SERIAL NO.
1	6271-31-1490	PULLEY,NON HARDENING.....	1	511213-
2	6136-31-1431	PLATE.....	1	511213-
3	01050-31845	BOLT.....	1	511213-
4	6271-31-1990	PLATE.....	1	511213-
5	01435-00812	BOLT.....	4	511213-

FIG.A235P-01A1 PISTON

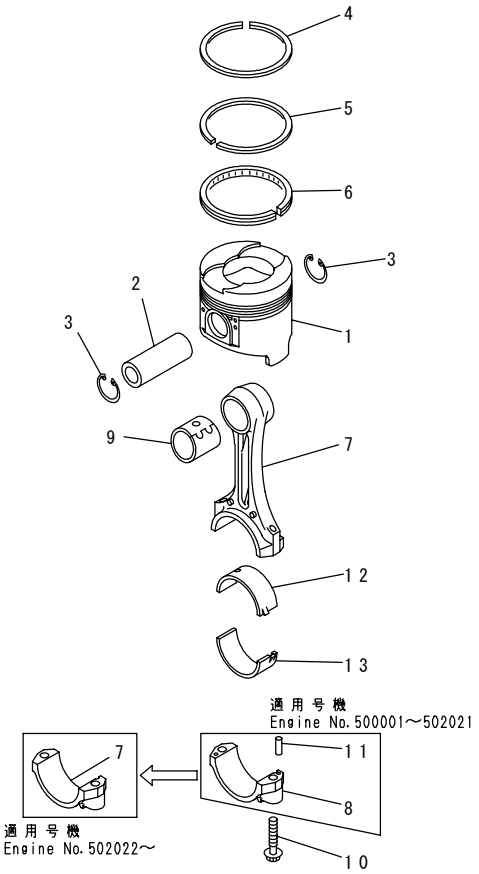

00083581

INDEX	PART NO.	DESCRIPTION	Q'TY	SERIAL NO.
		STANDARD		
1	6271-31-2110	PISTON	AR	500001-
		OVERSIZE 0.25MM		
1	6271-39-2110	PISTON	AR	500001-
		OVERSIZE 0.50MM		
1	6271-38-2110	PISTON	AR	500001-
2	6207-31-2420	PIN,PISTON	4	500001-
3	04065-03012	RING,SNAP	8	500001-
		STANDARD		
	6271-31-2100	PISTON RING ASS'Y	4	500001-
4	☆	.RING,TOP	1	500001-
5	☆	.RING,SECOND	1	500001-
6	☆	.RING,OIL	1	500001-
		OVERSIZE 0.25MM		
	6271-39-2100	PISTON RING ASS'Y	4	500001-
4	☆	.RING,TOP	1	500001-
5	☆	.RING,SECOND	1	500001-
6	☆	.RING,OIL	1	500001-
		OVERSIZE 0.50MM		
	6271-38-2100	PISTON RING ASS'Y	4	500001-
4	☆	.RING,TOP	1	500001-
5	☆	.RING,SECOND	1	500001-
6	☆	.RING,OIL	1	500001-
	6207-31-3800	CONNECTING ROD ASS'Y	4	502022-
	6207-31-3101	CONNECTING ROD ASS'Y	4	500001-502021
7	☆	.ROD,CONNECTING	1	502022-
	☆	.ROD,CONNECTING	1	500001-502021
8	☆	.CAP	1	500001-502021
9	6207-31-3130	.BUSHING	1	500001-
10	6204-31-3310	.BOLT	2	500001-
11	6207-31-3140	.PIN	2	500001-502021
		STANDARD		
	6208-31-3500	CRANK PIN METAL A	4	502022-
	6208-31-3400	CRANK PIN METAL A	4	500001-502021
12	☆	.METAL,UPPER	1	500001-
13	☆	.METAL,LOWER	1	502022-
	☆	.METAL,LOWER	1	500001-502021
		UNDERSIZE 0.25MM		
	6207-39-3900	CRANK PIN METAL A	4	502022-
	6207-39-3300	CRANK PIN METAL A	4	501655-502021
	6208-39-3400	CRANK PIN METAL A	4	500001-501654
12	☆	.METAL,UPPER	1	501655-

FIG NO. : A235P-01A1

INDEX	PART NO.	DESCRIPTION	Q'TY	SERIAL NO.
	☆	.METAL,UPPER.....	1	500001-501654
13	☆	.METAL,LOWER.....	1	502022-
	☆	.METAL,LOWER.....	1	501655-502021
	☆	.METAL,LOWER.....	1	500001-501654
		UNDERSIZE 0.50MM.....		
	6207-38-3900	CRANK PIN METAL A.....	4	502022-
	6207-38-3300	CRANK PIN METAL A.....	4	501655-502021
	6208-38-3400	CRANK PIN METAL A.....	4	500001-501654
12	☆	.METAL,UPPER.....	1	501655-
	☆	.METAL,UPPER.....	1	500001-501654
13	☆	.METAL,LOWER.....	1	502022-
	☆	.METAL,LOWER.....	1	501655-502021
	☆	.METAL,LOWER.....	1	500001-501654
		UNDERSIZE 0.75MM.....		
	6207-37-3900	CRANK PIN METAL A.....	4	502022-
	6207-37-3300	CRANK PIN METAL A.....	4	501655-502021
	6208-37-3400	CRANK PIN METAL A.....	4	500001-501654
12	☆	.METAL,UPPER.....	1	501655-
	☆	.METAL,UPPER.....	1	500001-501654
13	☆	.METAL,LOWER.....	1	502022-
	☆	.METAL,LOWER.....	1	501655-502021
	☆	.METAL,LOWER.....	1	500001-501654
		UNDERSIZE 1.00MM.....		
	6207-36-3900	CRANK PIN METAL A.....	4	502022-
	6207-36-3300	CRANK PIN METAL A.....	4	501655-502021
	6208-36-3400	CRANK PIN METAL A.....	4	500001-501654
12	☆	.METAL,UPPER.....	1	501655-
	☆	.METAL,UPPER.....	1	500001-501654
13	☆	.METAL,LOWER.....	1	502022-
	☆	.METAL,LOWER.....	1	501655-502021
	☆	.METAL,LOWER.....	1	500001-501654

FIG.A241S-01A3 ROCKER ARM

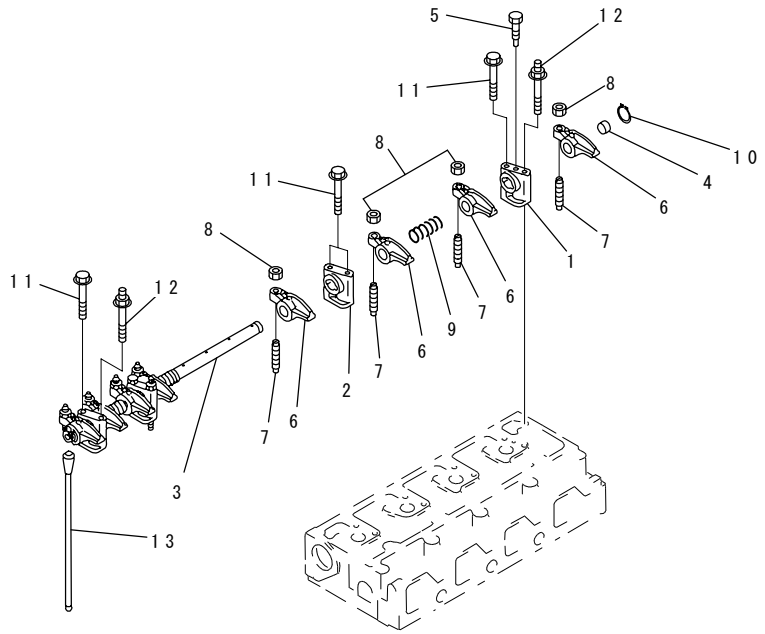

00058521

INDEX	PART NO.	DESCRIPTION	Q'TY	SERIAL NO.
1	6204-41-5110	BRACKET,ROCKER.	1	500001-
2	6204-41-5120	BRACKET,ROCKER.	3	500001-
	6205-43-5500	SHAFT ASS'Y.	1	500001-
3	☆	.SHAFT,ROCKER.	1	500001-
4	6221-41-5540	.PLUG.	2	500001-
5	6205-43-5310	BOLT.	1	500001-
6	6205-43-5410	ARM,ROCKER.	8	500001-
7	6221-41-5410	SCREW,ADJUST.	8	500001-
8	6221-41-5420	NUT.	8	500001-
9	6202-43-5320	SPRING.	3	500001-
10	6204-41-5620	CLIP.	2	500001-
11	01435-00865	BOLT.	5	500001-
12	6204-41-5710	BOLT.	3	500001-
13	6204-41-3110	ROD,PUSH.	8	500001-

FIG.A241T-01A2 CAMSHAFT

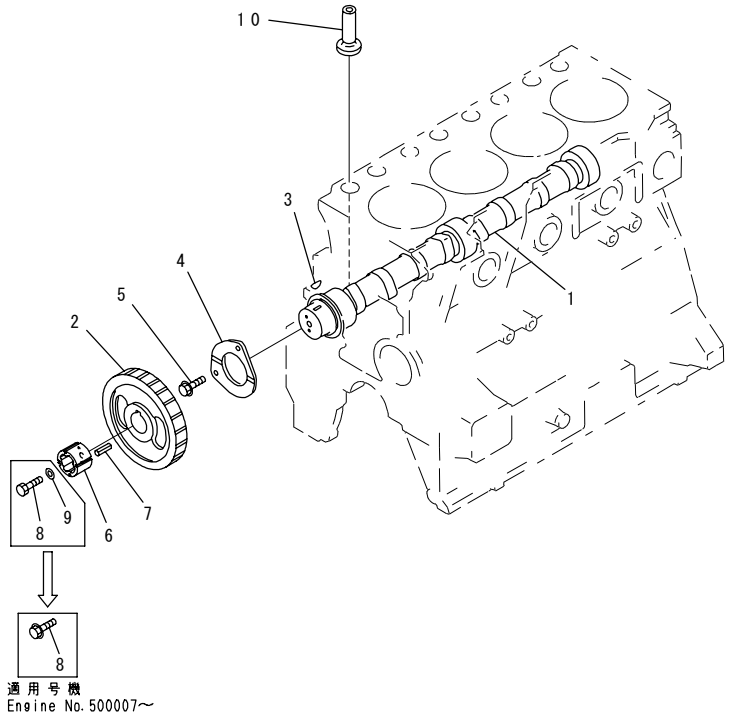

00086438

INDEX	PART NO.	DESCRIPTION	Q'TY	SERIAL NO.
	6271-41-1500	CAMSHAFT ASS'Y	1	500001-
1	☆	.CAMSHAFT	1	500001-
2	6271-41-1220	.GEAR, CAMSHAFT	1	500001-
3	04010-00516	.KEY	1	500001-
4	6204-41-1131	.PLATE, THRUST	1	500001-
5	01435-00820	BOLT	2	500001-
6	6271-41-1190	RING	1	500001-
7	04025-00312	PIN	2	500007-
8	01435-01025	BOLT	1	500007-
	01010-81025	BOLT	1	500001-500006
9	01643-11032	WASHER	1	500001-500006
10	6204-41-2110	TAPPET	8	500001-

FIG.A301P-01B0 OIL PUMP

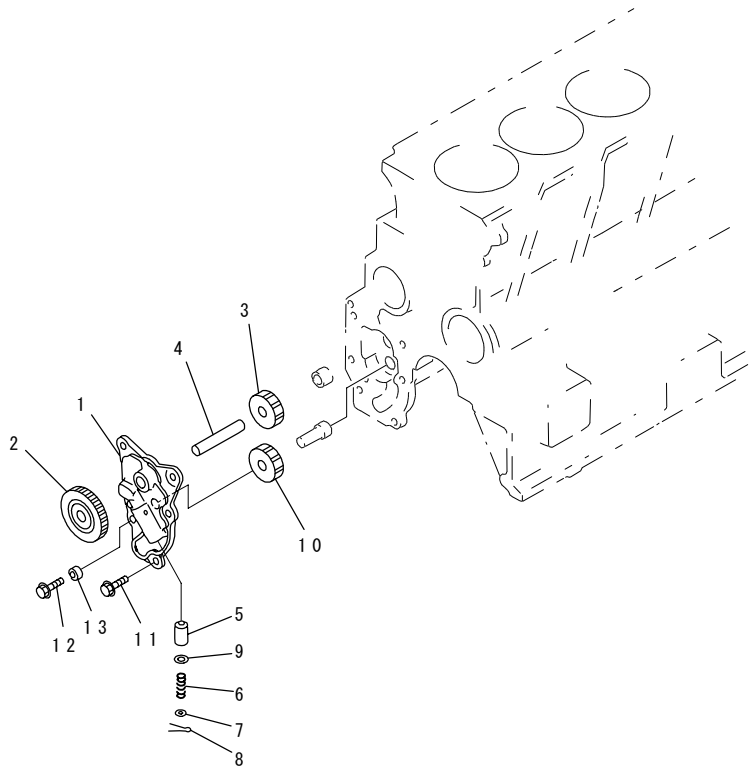

00058544

INDEX	PART NO.	DESCRIPTION	Q'TY	SERIAL NO.
	6271-51-1200	COVER ASS'Y	1	500001-
1	☆	.COVER	1	500001-
2	6271-51-1410	.GEAR	1	500001-
	6207-51-1400	.SHAFT ASS'Y	1	500001-
3	6207-51-1410	..GEAR,DRIVE	1	500001-
4	☆	..SHAFT	1	500001-
5	6204-51-1310	.VALVE	1	500001-
6	6206-51-1320	.SPRING	1	500001-
7	6204-51-1330	.WASHER	1	500001-
8	6204-51-1340	.PIN,COTTER	1	500001-
9	6204-51-1910	.SHIM	1	500001-
10	6207-51-1610	GEAR,DRIVEN	1	500001-
11	01435-00816	BOLT	4	500001-
12	01435-00825	BOLT	1	500001-
13	6691-41-8230	SPACER, 10MM	1	500001-

FIG.A311P-01B2 OIL FILTER(#511213-)

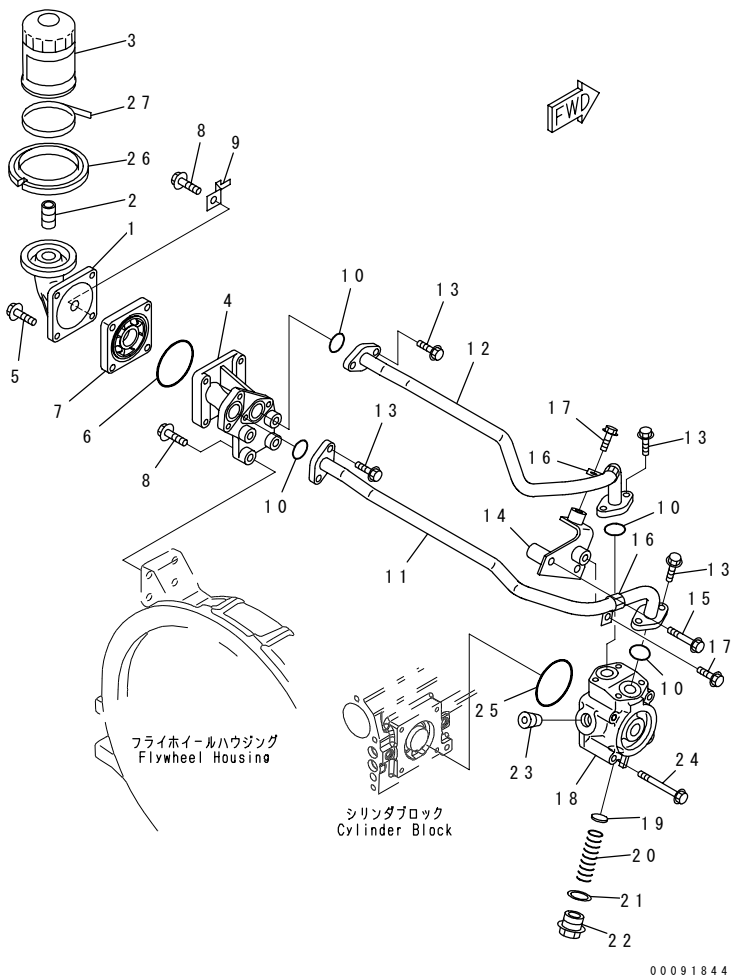

INDEX	PART NO.	DESCRIPTION	Q'TY	SERIAL NO.
1	6204-51-5730	HEAD	1	511213-
2	6201-51-5910	NIPPLE	1	511213-
3	600-211-2110	CARTRIDGE	1	511213-
4	6204-51-5421	ADAPTER	1	511213-
5	01435-00840	BOLT	4	511213-
6	07000-72070	O-RING	2	511213-
7	6271-51-5790	SPACER	1	511213-
8	01435-01040	BOLT	4	511213-
9	08193-21012	CLIP	1	511213-
10	07000-73025	O-RING	4	511213-
11	6205-51-5910	TUBE	1	511213-
12	6205-51-5920	TUBE	1	511213-
13	01435-00825	BOLT	8	511213-
14	6205-51-5950	BRACKET	1	511213-
15	01435-01055	BOLT	2	511213-
16	600-051-2180	CLIP	2	511213-
17	01435-01016	BOLT	2	511213-
	6205-51-5400	ADAPTER ASS'Y	1	511213-
18	6205-51-5411	.ADAPTER	1	511213-
19	6162-53-5450	.PACKING	1	511213-
20	600-211-1870	.SPRING	1	511213-
21	6162-53-5430	.PACKING	1	511213-
22	6162-53-5420	.CAP	1	511213-
23	07043-70415	.PLUG	1	511213-
24	01435-00880	BOLT	4	511213-
25	07000-72070	O-RING	1	511213-
26	6204-51-8190	PLATE	1	511213-
27	08034-20536	BAND	1	511213-

FIG.A331P-01C4 OIL COOLER(#511213-)

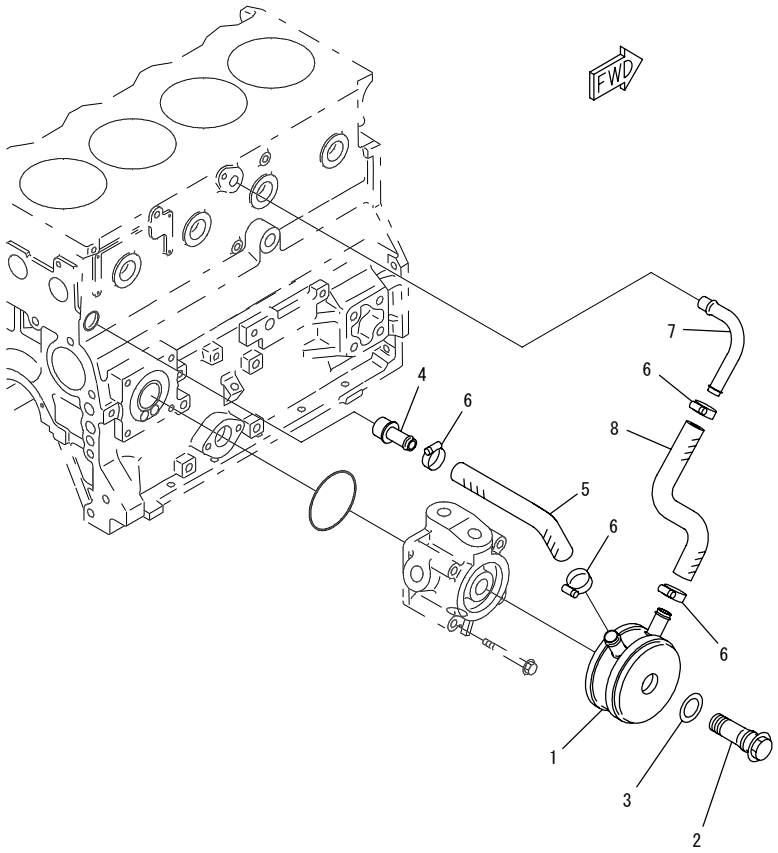

INDEX	PART NO.	DESCRIPTION	Q'TY	SERIAL NO.
1	6208-61-5400	OIL COOLER ASS'Y	1	511213-
	6205-61-5420	.O-RING	1	511213-
2	6208-61-5410	JOINT	1	511213-
3	6208-61-5420	GASKET	1	511213-
4	6205-61-5261	JOINT	1	511213-
5	6208-61-5210	HOSE	1	511213-
6	07281-00259	CLAMP	4	511213-
7	6205-61-5251	JOINT	1	511213-
8	6208-61-5220	HOSE	1	511213-

FIG NO. : A401P-01K6

FIG.A401P-01K6 FUEL PUMP

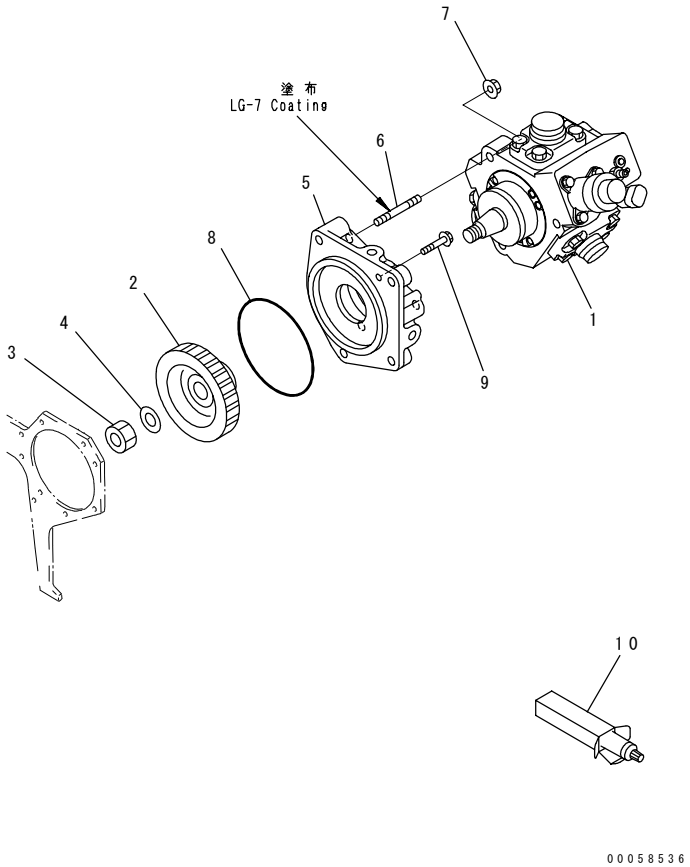

INDEX	PART NO.	DESCRIPTION	Q'TY	SERIAL NO.
1	6271-71-1110	PUMP	1	500001-
2	6271-71-3170	GEAR	1	500001-
3	01582-01411	NUT	1	500001-
4	6130-32-1361	WASHER	1	500001-
5	6271-71-3310	HOLDER	1	500001-
6	01164-50840	STUD	3	500001-
7	01584-00806	NUT	3	500001-
8	07000-12085	O-RING	1	500001-
9	6206-21-3930	BOLT	1	500001-
10	(09920-00150)	LIQUID GASKET,LG-7, 150G	AR	500001-

FIG.A411P-01C5 FUEL FILTER(#511213-)

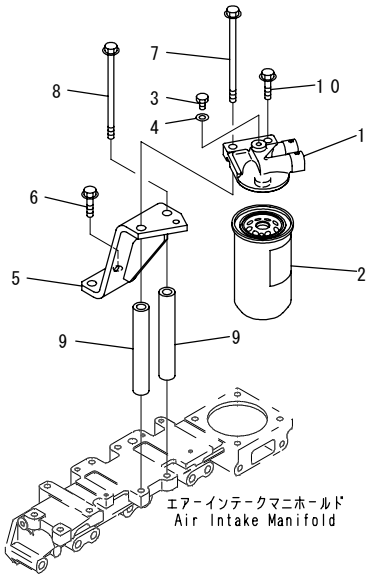

00091852

INDEX	PART NO.	DESCRIPTION	Q'TY	SERIAL NO.
	6271-71-6700	FUEL FILTER ASS'Y	1	511213-
1	6271-71-6710	.HEAD	1	511213-
2	600-311-3870	.CARTRIDGE	1	511213-
3	600-311-6720	.PLUG	1	511213-
4	07005-00812	.GASKET	1	511213-
5	6271-71-6580	BRACKET	1	511213-
6	01435-01025	BOLT	1	511213-
7	01436-01080	BOLT	1	511213-
8	01436-01065	BOLT	1	511213-
9	6152-11-9990	SPACER	2	511213-
10	01435-01025	BOLT	1	511213-

FIG NO. : A411R-01C4

FIG.A411R-01C4 FUEL FILTER PIPING(#511213-)

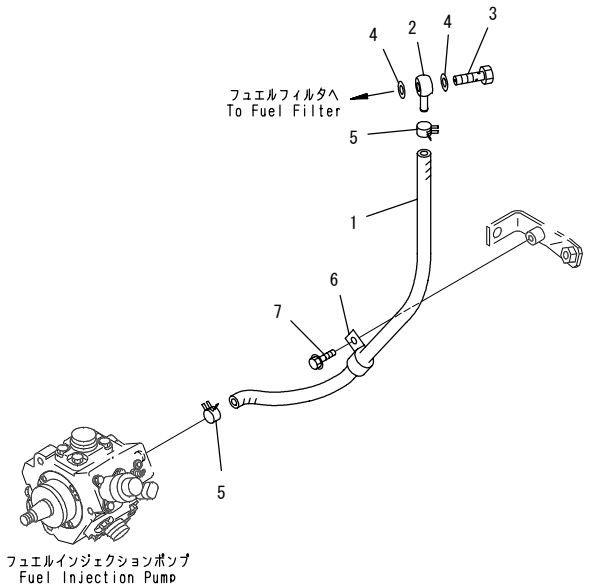

00091835

INDEX	PART NO.	DESCRIPTION	Q'TY	SERIAL NO.
1	6271-71-1720	HOSE	1	511213-
2	6206-71-5940	JOINT	1	511213-
3	07206-31014	BOLT,JOINT	1	511213-
4	07005-01412	GASKET	2	511213-
5	11Y-09-11170	CLIP	2	511213-
6	04434-51508	CLIP	1	511213-
7	01435-00814	BOLT	1	511213-

FIG.A411S-01D5 FUEL FILTER PIPING(#511213-)

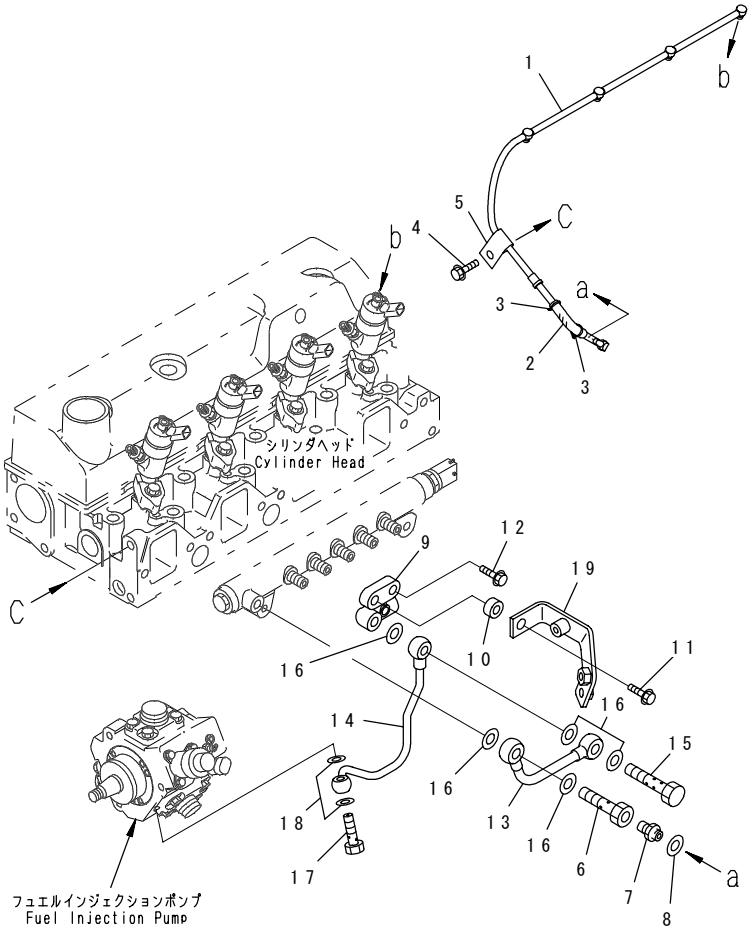

INDEX	PART NO.	DESCRIPTION	Q'TY	SERIAL NO.
1	6271-71-7800	HOSE ASS'Y	1	511213-
2	6271-71-9890	HOSE	1	511213-
3	08034-20414	BAND	2	511213-
4	01435-01014	BOLT	1	511213-
5	6204-51-8920	CLIP	1	511213-
6	6161-51-8990	JOINT	1	511213-
7	6271-71-7211	JOINT	1	511213-
8	6271-71-7990	PIN	1	511213-
9	6271-71-5520	ADAPTER	1	511213-
10	6131-12-5920	SPACER	1	511213-
11	01435-01045	BOLT	1	511213-
12	01435-01025	BOLT	1	511213-
13	6271-71-5510	TUBE	1	511213-
14	6271-71-5530	TUBE	1	511213-
15	6127-71-5710	BOLT	1	511213-
16	07005-01412	GASKET	5	511213-
17	07206-30812	BOLT	1	511213-
18	07005-01212	SEAL	2	511213-
19	6271-21-5850	BRACKET	1	511213-

FIG NO. : A421P-01A2

FIG.A421P-01A2 COMMON RAIL

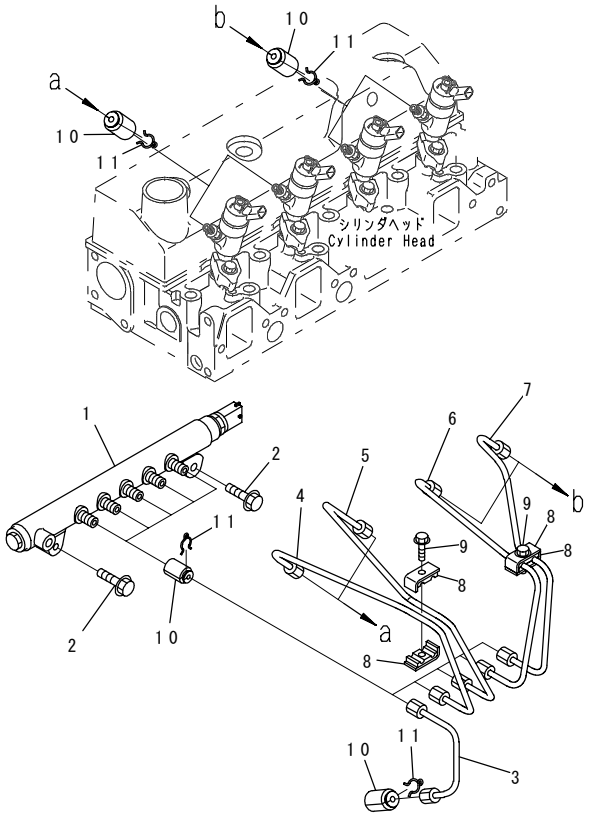

00058540

INDEX	PART NO.	DESCRIPTION	Q'TY	SERIAL NO.
1	6271-71-1210	RAIL,COMMON.	1	500001-
2	01435-01035	BOLT.	2	500001-
3	6271-71-5210	TUBE.	1	500001-
4	6271-71-5110	TUBE.	1	500001-
5	6271-71-5120	TUBE.	1	500001-
6	6271-71-5130	TUBE.	1	500001-
7	6271-71-5140	TUBE.	1	500001-
8	6215-71-5292	CLAMP.	4	500001-
9	01435-00625	BOLT.	2	500001-
10	6271-71-5890	COVER.	10	500001-
11	6217-71-5770	CLAMP.	10	500001-

FIG.A421R-01A1 INJECTOR

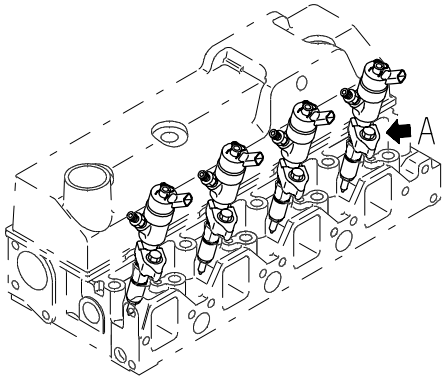

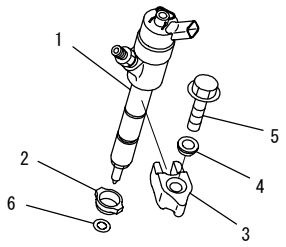

A 詳 細
Detail A

00058541

INDEX	PART NO.	DESCRIPTION	Q'TY	SERIAL NO.
1	6271-11-3100	INJECTOR	4	500001-
2	6271-11-3850	SEAL,DUST	4	500001-
3	6271-11-3811	HOLDER	4	500567-
	□6271-11-3810	HOLDER	4	500001-500566
4	6271-11-3830	WASHER	4	500001-
5	01435-00840	BOLT	4	500001-
6	6271-11-3880	GASKET	4	500001-

FIG.A471P-01A6 ENGINE CONTROLLER (CHASSIS MOUNT) (#511213-)

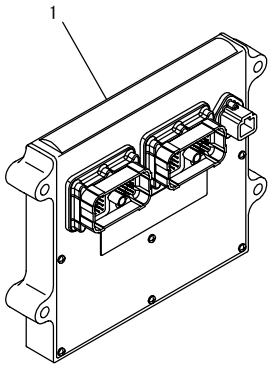

00070843

INDEX	PART NO.	DESCRIPTION	Q'TY	SERIAL NO.
1	600-475-3700	CONTROLLER ASS'Y.....	1	511213-

FIG.A471P-02A6 ENGINE CONTROL MODULE(#511213-)

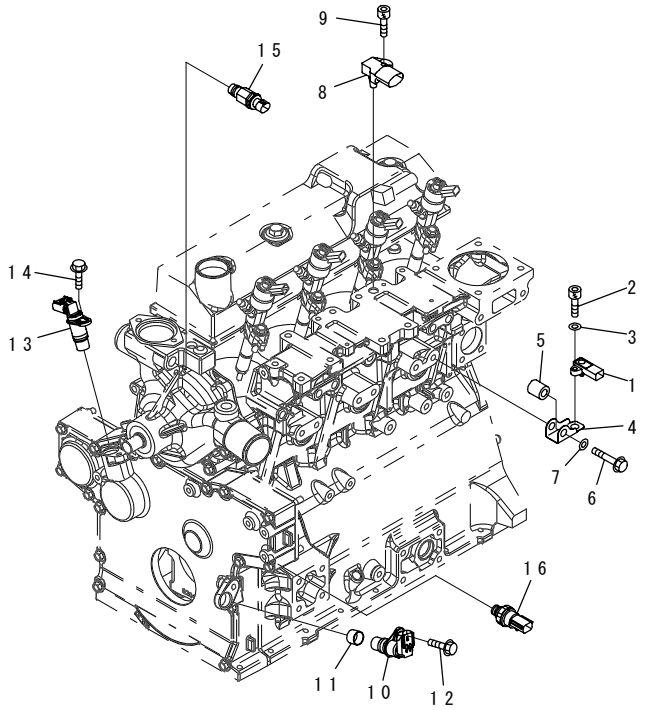

00091856

INDEX	PART NO.	DESCRIPTION	Q'TY	SERIAL NO.
1	6261-81-2600	SENSOR,ATMOSPHERE PRESSER	1	511213-
2	01252-60516	BOLT	1	511213-
3	01640-20508	WASHER	1	511213-
4	6271-81-9190	BRACKET	1	511213-
5	6210-11-5820	SPACER	1	511213-
6	01435-01045	BOLT	1	511213-
7	01643-31032	WASHER	1	511213-
8	6271-81-1910	SENSOR,BOOST PRESS & TEMP	1	511213-
	6271-81-1930	.O-RING	1	511213-
9	01252-60616	BOLT	1	511213-
10	6271-81-9201	SENSOR,SPEED	1	511213-
	6754-81-9410	.SENSOR ASS'Y	1	511213-
	6271-81-9220	.O-RING	1	511213-
11	6754-81-9480	CAP	1	511213-
12	01435-00820	BOLT	1	511213-
13	6261-81-2902	SENSOR ASS'Y,SPEED	1	511213-
	6261-81-2911	.SENSOR	1	511213-
	6271-81-9220	.O-RING	1	511213-
14	01435-00820	BOLT	1	511213-
15	6261-81-6901	SENSOR ASS'Y,WATER TEMP	1	511213-
	6216-84-9740	.SEAL	1	511213-
16	6271-81-1940	SWITCH,PRESSURE	1	511213-
	6271-81-1950	.SENSOR	1	511213-
	6219-81-1990	.O-RING	1	511213-

FIG.A4710-01A2 FUEL CONTROLLER (BRACKET) (#511213-)

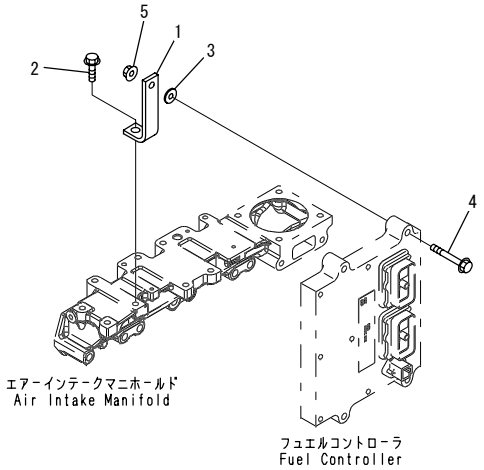

00091860

INDEX	PART NO.	DESCRIPTION	Q'TY	SERIAL NO.
1	6251-71-6530	BRACKET	1	511213-
2	01435-01020	BOLT	1	511213-
3	154-61-16570	WASHER	1	511213-
4	01435-00850	BOLT	1	511213-
5	01584-00806	NUT	1	511213-

FIG.A501P-01A7 WATER PUMP(#511213-)

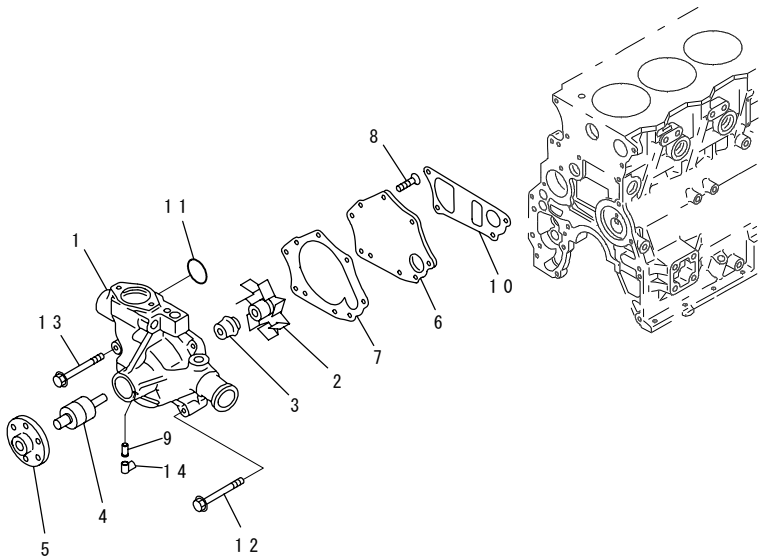

00091857

INDEX	PART NO.	DESCRIPTION	Q'TY	SERIAL NO.
	6205-61-1300	WATER PUMP ASS'Y	1	511213-
1	☆	.BODY	1	511213-
2	6204-61-1630	.IMPELLER	1	511213-
3	6221-61-1520	.SEAL, WATER	1	511213-
4	6204-61-1650	.SHAFT	1	511213-
5	6205-61-1210	.BOSS	1	511213-
6	6206-61-1121	.COVER	1	511213-
7	6204-61-1660	.GASKET	1	511213-
8	01236-40816	.SCREW	5	511213-
9	6205-61-8680	.TUBE	1	511213-
10	6206-61-1731	GASKET	1	511213-
11	07000-03040	O-RING	1	511213-
12	01435-00855	BOLT	3	511213-
13	01435-00850	BOLT	1	511213-
14	6205-61-8690	HOSE	1	511213-

FIG NO. : A5010-01A9

FIG.A5010-01A9 WATER PUMP ADAPTER(#511213-)

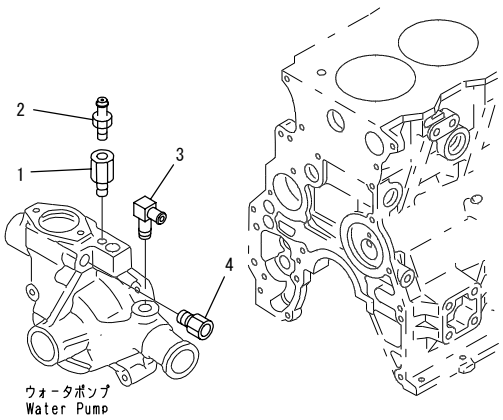

00091849

INDEX	PART NO.	DESCRIPTION	Q'TY	SERIAL NO.
1	21W-977-1120	NIPPLE	1	511213-
2	20T-54-42510	NIPPLE	1	511213-
3	20M-977-8130	ELBOW	1	511213-
4	6271-81-6990	ADAPTER	1	511213-

FIG.A502P-01E8 COOLING FAN DRIVE PULLEY(#511213-)

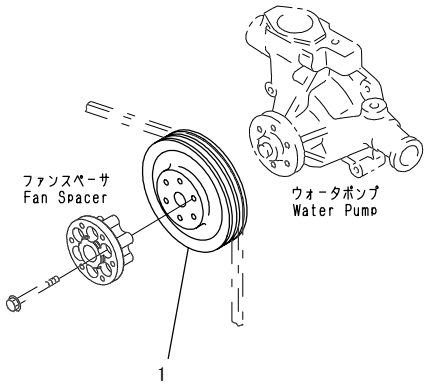

00091833

INDEX	PART NO.	DESCRIPTION	Q'TY	SERIAL NO.
1	6207-61-3261	PULLEY,NON HARDENING.....	1	511213-

FIG NO. : A502R-01A7

FIG.A502R-01A7 COOLING FAN MOUNTING(#511213-)

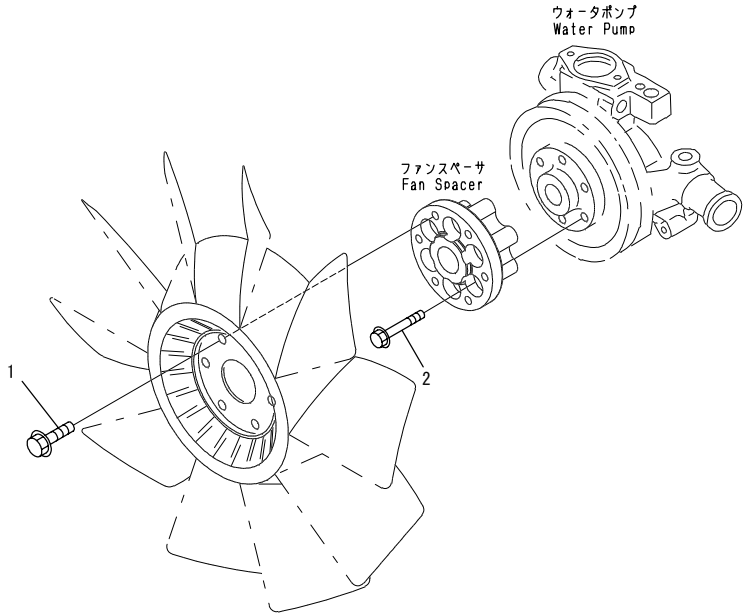

00091834

INDEX	PART NO.	DESCRIPTION	Q'TY	SERIAL NO.
1	01435-01020	BOLT.....	6	511213-
2	01435-00855	BOLT.....	6	511213-

FIG.A503P-01A3 COOLING FAN(#511213-)

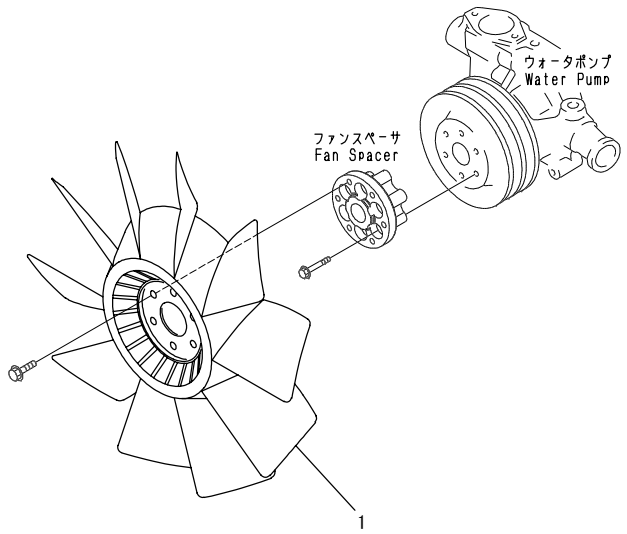

00091837

INDEX	PART NO.	DESCRIPTION	Q'TY	SERIAL NO.
1	600-625-7520	FAN,COOLING.....	1	511213-

FIG.A504P-01A8　FAN SPACER(#511213-)

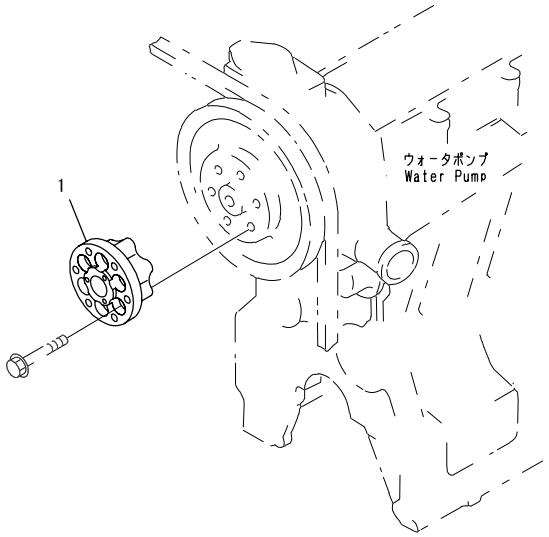

PJ6C206

FIG NO. : A504P-01A8

INDEX	PART NO.	DESCRIPTION	Q'TY	SERIAL NO.
1	6206-61-3850	SPACER.....	1	511213-

FIG.A601P-01C2 ALTERNATOR (35A)

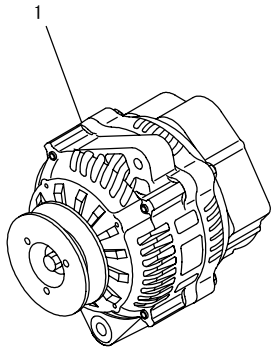

PJ6E271

INDEX	PART NO.	DESCRIPTION	Q'TY	SERIAL NO.
1	(600-861-3610)	ALTERNATOR A. (35A)..... (SEE FIG. A601P-02C2)	1	500001-

FIG.A601P-02C2 ALTERNATOR (35A) (INNER PARTS)

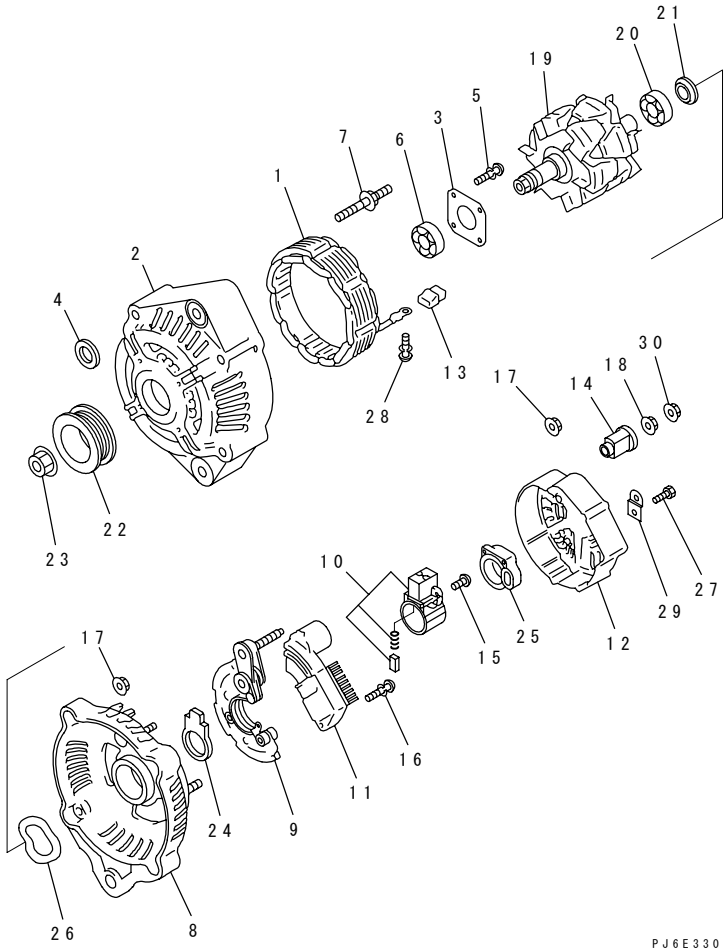

INDEX	PART NO.	DESCRIPTION	Q'TY	SERIAL NO.
	600-861-3610	ALTERNATOR A. (35A)	1	500001-
	ND121400-3950	.FRAME ASS'Y	1	500001-
1	ND021100-5060	..STATOR ASS'Y	1	500001-
2	ND021401-4900	..FRAME,FRONT	1	500001-
3	ND021411-0570	..PLATE	1	500001-
4	ND021045-0530	..COLLAR	1	500001-
5	ND949006-5590	..SCREW	4	500001-
6	ND949100-5010	..BEARING	1	500001-
7	ND949043-2000	..BOLT	4	500001-
8	ND021501-7640	.FRAME,REAR	1	500001-
9	ND021580-4670	.RECTIFIER ASS'Y	1	500001-
10	ND021620-2720	.BRUSH HOLDER ASS'Y	1	500001-
11	ND126000-3730	.REGULATOR ASS'Y	1	500001-
12	ND021551-2360	.COVER,REAR	1	500001-
13	ND021605-1970	.BUSHING	4	500001-
14	ND021605-2950	.BUSHING	1	500001-
15	ND949006-5460	.SCREW	3	500001-
16	ND949007-5110	.SCREW	2	500001-
	ND91310-04251	.SCREW	2	500001-
17	ND949056-2481	.NUT	7	500001-
18	ND949056-1001	.NUT	1	500001-
19	ND021200-8610	.ROTOR ASS'Y	1	500001-
20	ND949100-2790	..BEARING,BALL	1	500001-
	ND949100-3980	..BEARING,BALL	1	500001-
21	ND021506-0070	..COVER	1	500001-
22	ND121041-0270	.PULLEY	1	500001-
23	ND949056-2520	.NUT	1	500001-
24	ND021626-0190	.SEAL	1	500001-
25	ND021626-0250	.SEAL	1	500001-
26	ND021542-0160	.WASHER	1	500001-
27	ND949006-6401	.SCREW	1	500001-
28	ND949007-6280	.SCREW	4	500001-
29	ND021602-5230	.PLATE	1	500001-
30	ND92150-06061	.NUT	1	500001-

FIG.A601T-01C1 ALTERNATOR MOUNTING (35A) (#511213-)

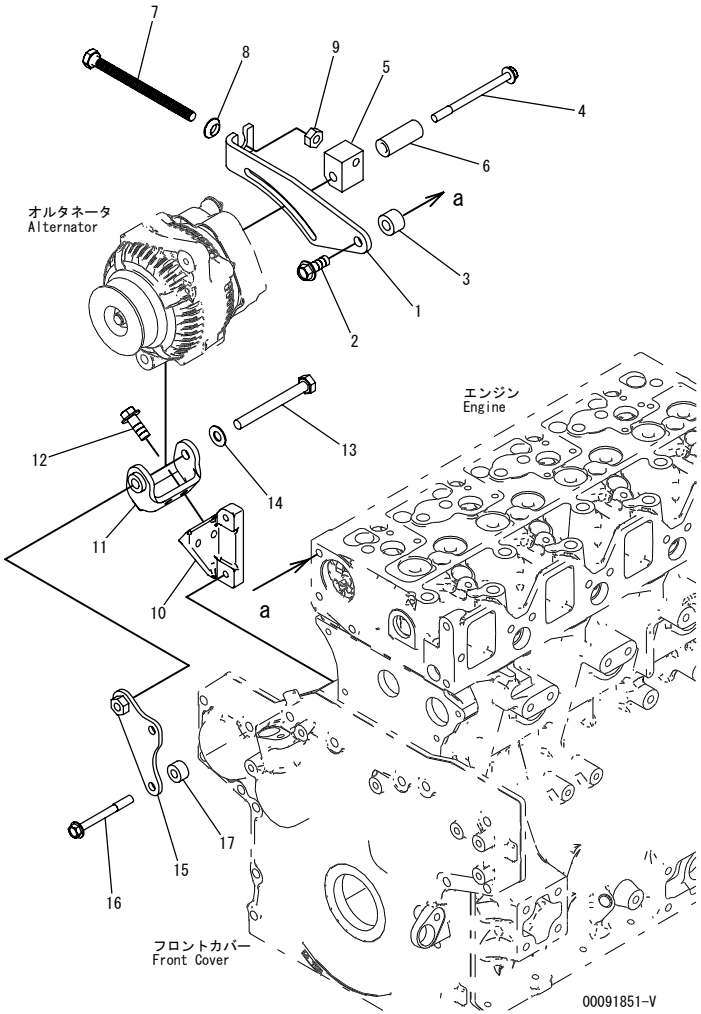

INDEX	PART NO.	DESCRIPTION	Q'TY	SERIAL NO.
1	6271-81-6450	BRACKET,ADJUST	1	511213-
2	01435-01035	BOLT	1	511213-
3	195-01-14540	COLLAR	1	511213-
4	01436-00805	BOLT	1	511213-
5	6271-81-6440	BLOCK	1	511213-
6	6161-61-6950	CLAMP	1	511213-
7	6208-81-6590	BOLT	1	511213-
8	6204-11-3830	WASHER	1	511213-
9	01580-11008	NUT	1	511213-
10	6271-81-6340	BRACKET	1	511213-
11	6204-81-6321	BRACKET	1	511213-
12	01435-00816	BOLT	2	511213-
13	01018-31095	BOLT	1	511213-
14	01640-21016	WASHER	1	511213-
15	6271-81-6380	PLATE	1	511213-
16	01435-00875	BOLT	2	511213-
17	6204-81-6740	SPACER	2	511213-

FIG.A601U-01A5 FAN BELT(#511213-)

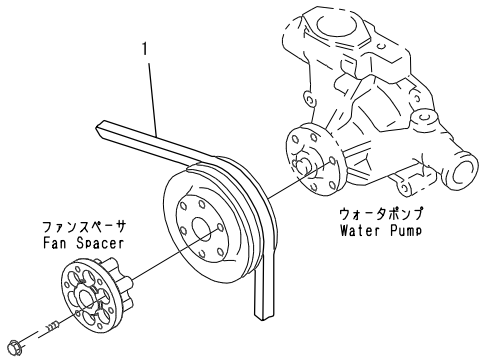

00091847

INDEX	PART NO.	DESCRIPTION	Q'TY	SERIAL NO.
1	6205-61-3500	V-BELT.....	1	511213-

FIG.A621P-01B0 STARTING MOTOR (4.5KW)

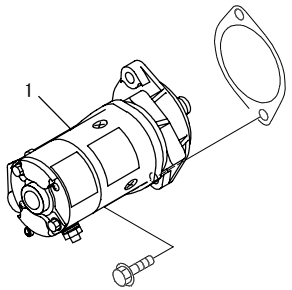

00058527

INDEX	PART NO.	DESCRIPTION	Q'TY	SERIAL NO.
1	600-813-4461	STARTING MOTOR ASS'Y..... (4.5KW) (SEE FIG.A621P-02B0)	1	500001-

FIG.A621P-02B0 STARTING MOTOR (4.5KW) (INNER PARTS)

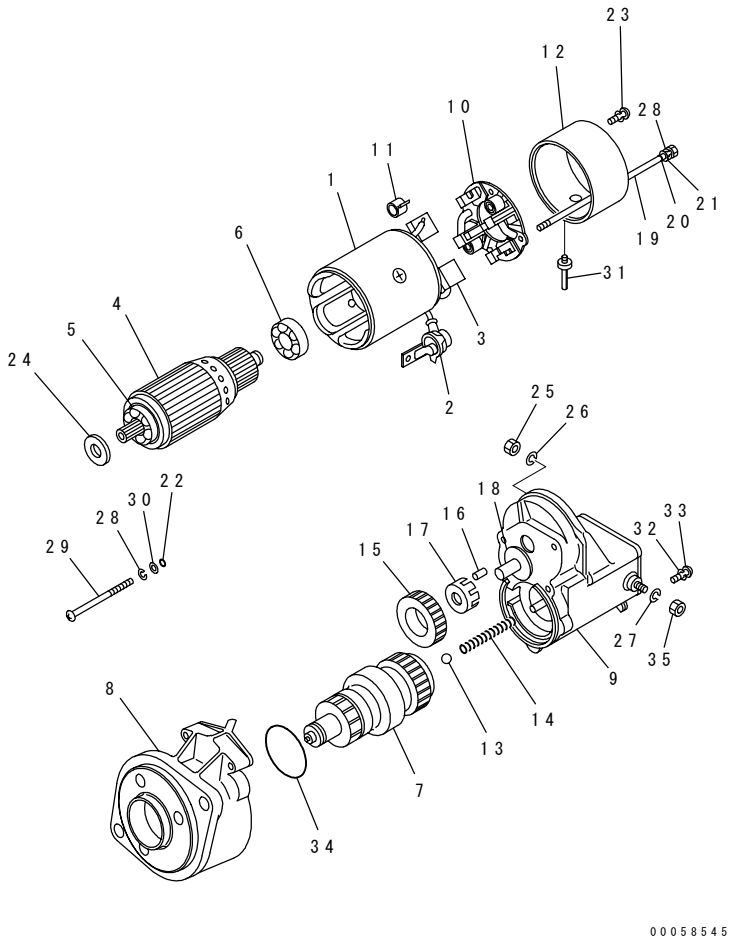

INDEX	PART NO.	DESCRIPTION	Q'TY	SERIAL NO.
	600-813-4461	STARTING MOTOR ASS'Y,(4.5KW).....	1	500001-
1	ND028100-2881	.YOKE ASS'Y.....	1	500001-
2	ND028062-0130	..COVER.....	1	500001-
3	ND028099-3570	..STARTER KIT.....	2	500001-
4	ND028200-1590	.ARMATURE ASS'Y.....	1	500001-
5	ND949100-1930	..BEARING,BALL.....	1	500001-
6	ND949100-1750	..BEARING,BALL.....	1	500001-
7	ND028300-5091	.CLUTCH ASS'Y.....	1	500001-
	ND028099-3310	..STARTER KIT.....	1	500001-
	ND028300-6750	..CLUTCH ASS'Y.....	1	500001-
	ND949100-4500	...BEARING,BALL, FRONT.....	1	500001-
	ND949100-1920	...BEARING,BALL, REAR.....	1	500001-
	ND949170-4040	..SPRING.....	1	500001-
	ND028381-0071	..SHAFT.....	1	500001-
8	ND228401-1440	.HOUSING ASS'Y.....	1	500001-
9	ND153400-2192	.MAGNETIC SWITCH A.....	1	500001-
	ND128099-5830	..STARTER KIT.....	1	500001-
	ND028099-3160	..STARTER KIT.....	1	500001-
	ND053660-0443	..PLUNGER.....	1	500001-
	ND053404-0240	..GASKET.....	1	500001-
	ND053505-0290	..COVER.....	1	500001-
	ND053480-7560	..BOLT ASS'Y.....	1	500001-
10	ND028510-5390	.BRUSH HOLDER ASS'Y.....	1	500001-
11	ND949173-0571	..SPRING.....	4	500001-
12	ND028501-7880	.FRAME.....	1	500001-
13	ND128961-0010	.BALL.....	1	500001-
14	ND949170-4070	.SPRING.....	1	500001-
15	ND028371-1500	.PINION.....	1	500001-
16	ND028306-0070	.ROLLER.....	5	500001-
17	ND028063-0030	.RETAINER.....	1	500001-
18	ND028327-0171	.RETAINER.....	1	500001-
19	ND949042-3741	.BOLT.....	2	500001-
20	ND90804-10050	.O-RING.....	2	500001-
21	ND949011-5700	.WASHER.....	2	500001-
22	ND90801-10050	.O-RING.....	3	500001-
23	ND949007-6530	.SCREW.....	2	500001-
24	ND949020-0600	.WASHER.....	1	500001-
25	ND90170-10061	.NUT.....	1	500001-
26	ND90258-10001	.WASHER.....	1	500001-
27	ND949017-1290	.WASHER.....	1	500001-
28	ND90258-06001	.WASHER.....	2	500001-
29	ND949006-6910	.SCREW.....	3	500001-

FIG.A621P-02B0 STARTING MOTOR (4.5KW) (INNER PARTS)

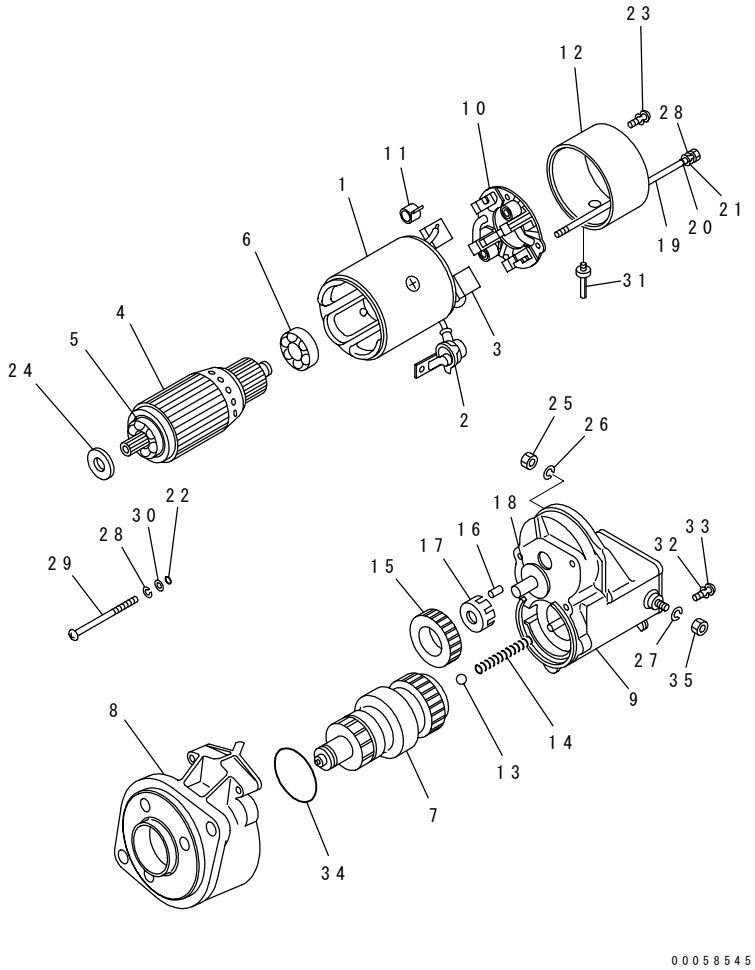

00058545

INDEX	PART NO.	DESCRIPTION	Q'TY	SERIAL NO.
30	ND90200-06241	.WASHER	3	500001-
31	ND028062-5790	.COVER	1	500001-
32	ND90260-00501	.WASHER	1	500001-
33	ND949007-6850	.SCREW	1	500001-
34	ND028901-5190	.SEAL	1	500001-
35	ND949056-4480	.NUT	1	500001-

FIG.A621S-01B7 STARTING MOTOR MOUNTING (4.5KW)

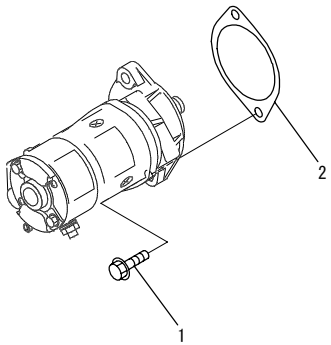

00058523

INDEX	PART NO.	DESCRIPTION	Q'TY	SERIAL NO.
1	01435-01235	BOLT.....	2	500001-
2	6202-21-4151	GASKET.....	1	500001-

FIG.A681P-01A8 WIRING HARNESS(#511213-)

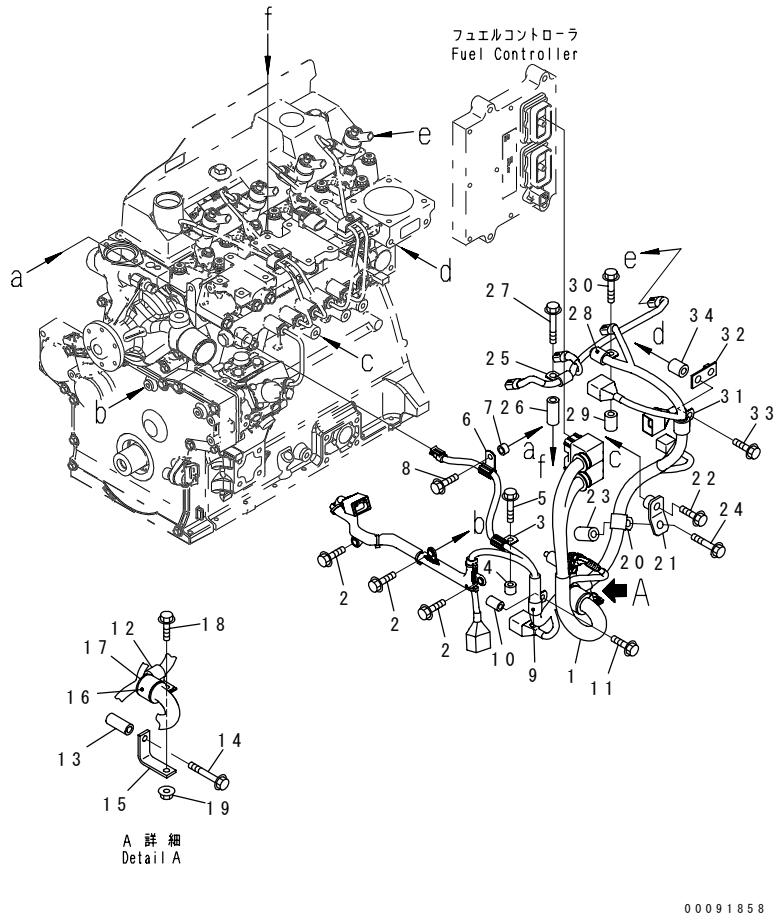

INDEX	PART NO.	DESCRIPTION	Q'TY	SERIAL NO.
1	6271-81-8240	WIRING HARNESS	1	511213-
2	01435-00816	BOLT	3	511213-
3	600-051-1100	CLIP	1	511213-
4	6141-64-2560	SPACER	1	511213-
5	01435-00825	BOLT	1	511213-
6	600-051-1100	CLIP	1	511213-
7	6167-11-6640	SPACER	1	511213-
8	01435-00820	BOLT	1	511213-
9	600-051-1140	CLIP	1	511213-
10	195-979-3510	COLLAR	1	511213-
11	01435-00835	BOLT	1	511213-
12	600-051-1180	CLIP	1	511213-
13	6143-11-4290	SPACER	1	511213-
14	01435-00860	BOLT	1	511213-
15	6271-81-8980	BRACKET	1	511213-
16	04434-53211	CLIP	1	511213-
17	07095-20523	CUSHION	1	511213-
18	01435-00820	BOLT	1	511213-
19	01584-00806	NUT	1	511213-
20	600-051-2180	CLIP	1	511213-
21	22P-01-11170	BRACKET	1	511213-
22	01435-01035	BOLT	1	511213-
23	6150-81-6920	SPACER	1	511213-
24	01435-01055	BOLT	1	511213-
25	600-051-2100	CLIP	1	511213-
26	6143-11-4290	SPACER	1	511213-
27	01435-01065	BOLT	1	511213-
28	600-051-1140	CLIP	1	511213-
29	6130-12-4581	SPACER	1	511213-
30	01435-00840	BOLT	1	511213-
31	600-051-2180	CLIP	1	511213-
32	426-01-11310	BRACKET	1	511213-
33	01435-01045	BOLT	1	511213-
34	144-874-7470	BOSS	1	511213-

FIG.A8110-01B4 REPAIR PARTS

リペア パーツ
REPAIR PARTS

詳細については次のページを参照して下さい。
See subsequent pages for details.

PMD0861

INDEX	PART NO.	DESCRIPTION	Q'TY	SERIAL NO.
1	6204-19-1310	GUIDE,VALVE	8	500001-
2	6207-19-1431	SEAT, 0.25MM,INTAKE VALVE....(OS)	4	500001-
	6207-18-1431	SEAT, 0.50MM,INTAKE VALVE....(OS)	4	500001-
3	6208-19-1440	SEAT, 0.25MM,EXHAUST VALVE....(OS)	4	500001-
	6208-18-1440	SEAT, 0.50MM,EXHAUST VALVE....(OS)	4	500001-
4	6207-21-2121	LINER	4	500001-
		UNDERSIZE 0.25MM		
	6204-29-8100	MAIN METAL ASS'Y	5	500001-
5	☆	.METAL,UPPER	1	500001-
6	☆	.METAL,LOWER	1	500001-
		UNDERSIZE 0.50MM		
	6204-28-8100	MAIN METAL ASS'Y	5	500001-
5	☆	.METAL,UPPER	1	500001-
6	☆	.METAL,LOWER	1	500001-
		UNDERSIZE 0.75MM		
	6204-27-8100	MAIN METAL ASS'Y	5	500001-
5	☆	.METAL,UPPER	1	500001-
6	☆	.METAL,LOWER	1	500001-
		UNDERSIZE 1.00MM		
	6204-26-8100	MAIN METAL ASS'Y	5	500001-
5	☆	.METAL,UPPER	1	500001-
6	☆	.METAL,LOWER	1	500001-
		OVERSIZE 0.25MM		
	6204-29-8600	THRUST METAL ASS'Y	1	500001-
7	☆	.METAL,THRUST	2	500001-
		OVERSIZE 0.50MM		
	6204-28-8600	THRUST METAL ASS'Y	1	500001-
7	☆	.METAL,THRUST	2	500001-
		OVERSIZE 0.75MM		
	6204-27-8600	THRUST METAL ASS'Y	1	500001-
7	☆	.METAL,THRUST	2	500001-
		OVERSIZE 1.00MM		
	6204-26-8600	THRUST METAL ASS'Y	1	500001-
7	☆	.METAL,THRUST	2	500001-
		UNDERSIZE 0.25MM		
	6207-39-3900	CRANK PIN METAL A	4	503176-
	6207-39-3300	CRANK PIN METAL A	4	501655-503175
	6208-39-3400	CRANK PIN METAL A	4	500001-501654
8	☆	.METAL,UPPER	1	501655-
	☆	.METAL,UPPER	1	500001-501654
9	☆	.METAL,LOWER	1	503176-
	☆	.METAL,LOWER	1	501655-503175

FIG.A8110-01B4 REPAIR PARTS

リペア パーツ
REPAIR PARTS

詳細については次のページを参照して下さい。
See subsequent pages for details.

PMD0861

INDEX	PART NO.	DESCRIPTION	Q'TY	SERIAL NO.
	☆	.METAL,LOWER	1	500001-501654
		UNDERSIZE 0.50MM		
	6207-38-3900	CRANK PIN METAL A	4	503176-
	6207-38-3300	CRANK PIN METAL A	4	501655-503175
	6208-38-3400	CRANK PIN METAL A	4	500001-501654
8	☆	.METAL,UPPER	1	501655-
	☆	.METAL,UPPER	1	500001-501654
9	☆	.METAL,LOWER	1	503176-
	☆	.METAL,LOWER	1	501655-503175
	☆	.METAL,LOWER	1	500001-501654
		UNDERSIZE 0.75MM		
	6207-37-3900	CRANK PIN METAL A	4	503176-
	6207-37-3300	CRANK PIN METAL A	4	501655-503175
	6208-37-3400	CRANK PIN METAL A	4	500001-501654
8	☆	.METAL,UPPER	1	501655-
	☆	.METAL,UPPER	1	500001-501654
9	☆	.METAL,LOWER	1	503176-
	☆	.METAL,LOWER	1	501655-503175
	☆	.METAL,LOWER	1	500001-501654
		UNDERSIZE 1.00MM		
	6207-36-3900	CRANK PIN METAL A	4	503176-
	6207-36-3300	CRANK PIN METAL A	4	501655-503175
	6208-36-3400	CRANK PIN METAL A	4	500001-501654
8	☆	.METAL,UPPER	1	501655-
	☆	.METAL,UPPER	1	500001-501654
9	☆	.METAL,LOWER	1	503176-
	☆	.METAL,LOWER	1	501655-503176
	☆	.METAL,LOWER	1	500001-501654
		OVERSIZE 0.25MM		
	6271-39-2100	PISTON RING ASS'Y	4	500001-
10	☆	.RING,TOP	1	500001-
11	☆	.RING,SECOND	1	500001-
12	☆	.RING,OIL	1	500001-
		OVERSIZE 0.50MM		
	6271-38-2100	PISTON RING ASS'Y	4	500001-
10	☆	.RING,TOP	1	500001-
11	☆	.RING,SECOND	1	500001-
12	☆	.RING,OIL	1	500001-
		OVERSIZE 0.25MM		
13	6271-39-2110	PISTON	4	500001-
		OVERSIZE 0.50MM		
	6271-38-2110	PISTON	4	500001-

FIG NO. : A981P-01A4

FIG.A981P-01A4 ENGINE NAME PLATE(#511213-)

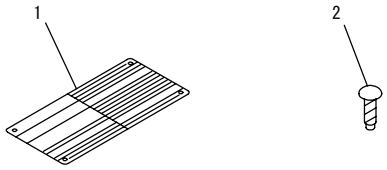

00019143

INDEX	PART NO.	DESCRIPTION	Q'TY	SERIAL NO.
1	6271-81-2440	PLATE,(LIMITED SUPPLY).....	1	511213-
2	04418-02550	SCREW.....	4	511213-

FIG.A9850-01A9 APPROVAL CAUTION PLATE (EXCEPT JAPAN)

(#511213-)

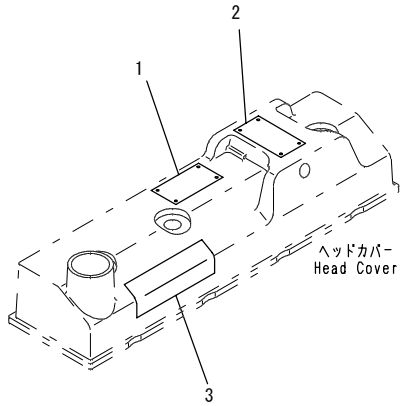

00058488

INDEX	PART NO.	DESCRIPTION	Q'TY	SERIAL NO.
1	6271-81-2990	PLATE.....	1	511213-

FIG.B9999-A3S1 STARTER RELAY(#511213-)

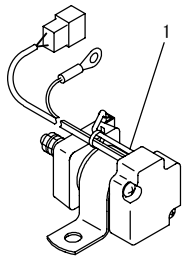

PJ6F066

INDEX	PART NO.	DESCRIPTION	Q'TY	SERIAL NO.
1	600-815-8941	RELAY.....	1	511213-

FIG.B9999-01Y1 FUEL PRE-FILTER

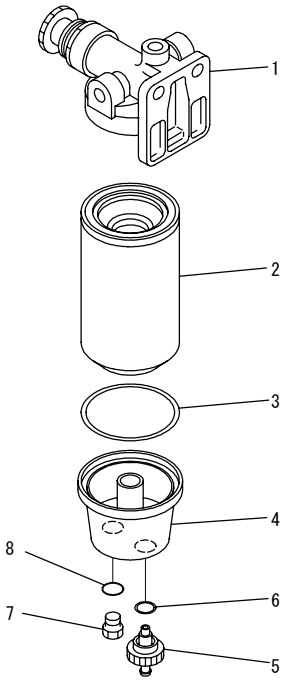

00058489

INDEX	PART NO.	DESCRIPTION	Q'TY	SERIAL NO.
	6271-71-6200	FILTER ASS'Y.	1	500001-
1	6271-71-6110	.HEAD.	1	500001-
	600-319-4200	.CARTRIDGE ASS'Y.	1	500001-
	600-319-4110	..CARTRIDGE AND SEAL.	1	500001-
2	☆	...CARTRIDGE.	1	500001-
3	600-311-3630	...SEAL.	1	500001-
4	600-311-3640	..BOWL.	1	500001-
	600-311-3660	..VALVE ASS'Y.	1	500001-
5	600-311-3710	...VALVE.	1	500001-
6	600-311-3670	...SEAL.	1	500001-
	600-311-4210	..PLUG ASS'Y.	1	500001-
7	600-311-4220	...PLUG.	1	500001-
8	600-311-3690	...O-RING.	1	500001-

FIG.B9999-01Y4 SPARE PARTS(#511213-)

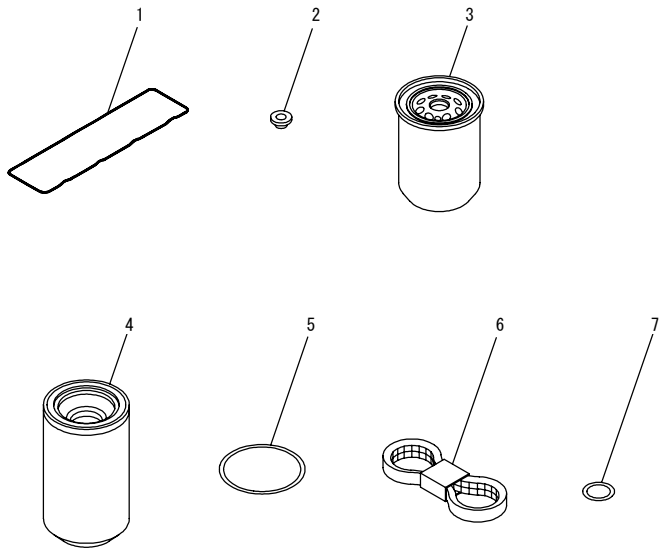

00091861

INDEX	PART NO.	DESCRIPTION	Q'TY	SERIAL NO.
1	6204-11-8810	O-RING	1	511213-
2	6136-11-8142	PACKING	3	511213-
3	600-211-2110	CARTRIDGE	1	511213-
	600-319-3870	CARTRIDGE	1	511213-
	600-319-4110	CARTRIDGE AND SEAL	1	511213-
4	☆	.CARTRIDGE	1	511213-
5	600-311-3630	.SEAL	1	511213-
6	6205-61-3500	V-BELT	1	511213-
7	07005-02216	GASKET	1	511213-

FIG.B9999-01Y5 AIR CLEANER(#511213-)

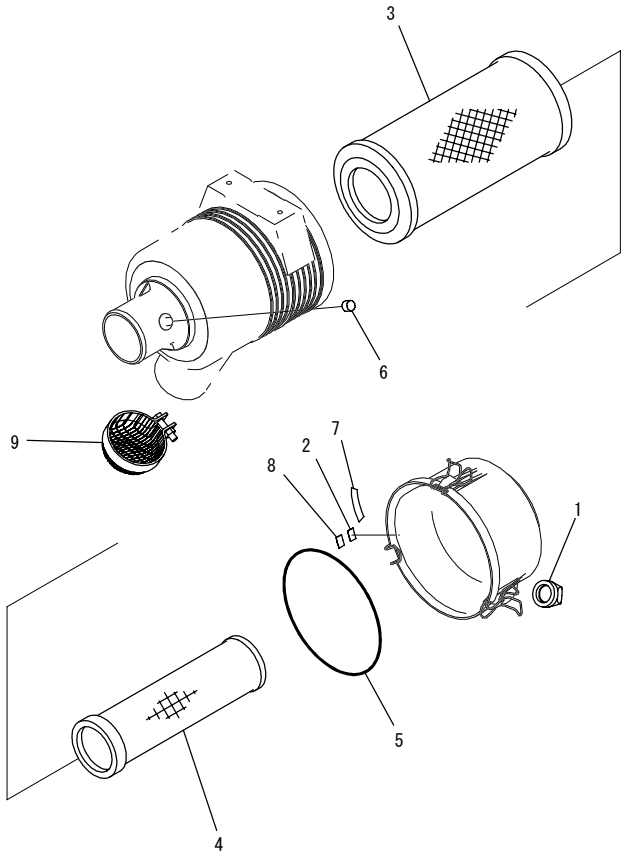

00091863

INDEX	PART NO.	DESCRIPTION	Q'TY	SERIAL NO.
	6271-81-7400	AIR CLEANER	1	511213-
	600-184-1160	.COVER ASS'Y	1	511213-
1	600-184-1350	..VALVE,VACUATOR	1	511213-
2	600-184-1260	..PLATE	1	511213-
	600-185-2200	.ELEMENT ASS'Y	1	511213-
3	600-185-2210	..ELEMENT,OUTER	1	511213-
4	☆	..ELEMENT,INNER	1	511213-
5	600-185-2230	..O-RING	1	511213-
6	561-02-12420	CAP	1	511213-
7	600-181-1930	PLATE, INSTRUCTION	1	511213-
8	600-184-1260	PLATE	1	511213-
9	600-181-9960	SCREEN	1	511213-

ENGINE RELATED PARTS

FIG.B0100-01A0 ENGINE MOUNT

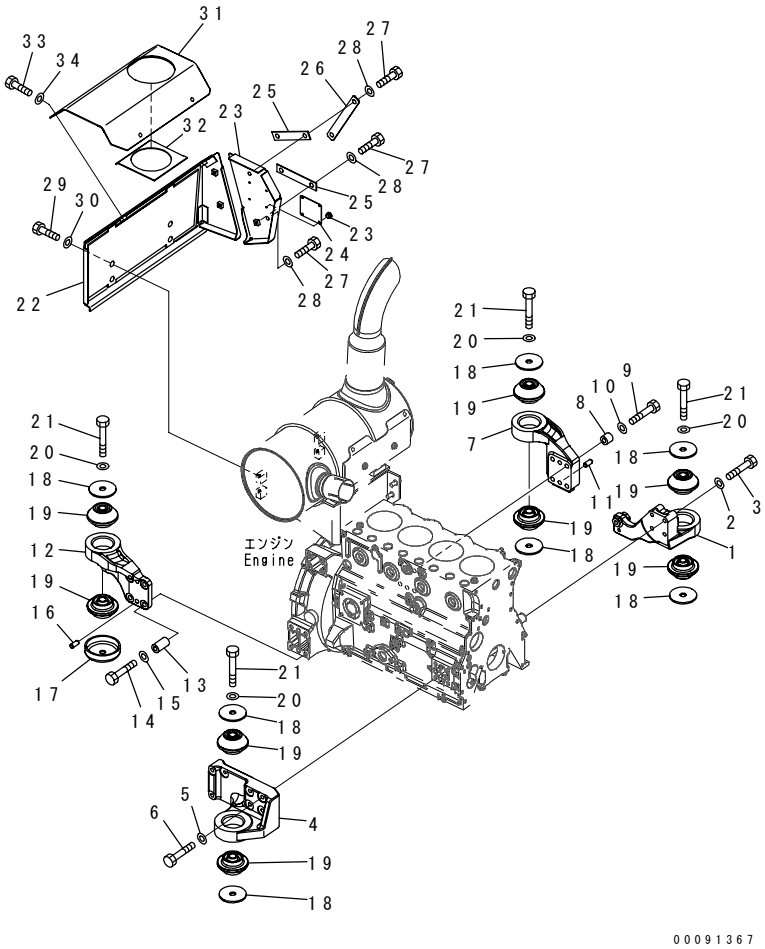

INDEX	PART NO.	DESCRIPTION	Q'TY	SERIAL NO.
1	22P-01-11260	BRACKET	1	DJC00001-
2	01643-31032	WASHER	5	DJC00001-
3	22B-01-21190	BOLT	5	DJC00001-
4	22P-01-11270	BRACKET	1	DJC00001-
5	01643-31032	WASHER	6	DJC00001-
6	22B-01-21190	BOLT	6	DJC00001-
7	21W-01-38190	BRACKET	1	DJC00001-
8	6144-81-6580	SPACER	4	DJC00001-
9	01010-81285	BOLT	4	DJC00001-
10	01643-31232	WASHER	4	DJC00001-
11	04020-01228	PIN,DOWEL	2	DJC00001-
12	21W-01-41180	BRACKET	1	DJC00001-
13	22P-01-11280	SPACER	4	DJC00001-
14	01010-81285	BOLT	4	DJC00001-
15	01643-31232	WASHER	4	DJC00001-
16	04020-01228	PIN,DOWEL	2	DJC00001-
17	201-01-71260	STOPPER	1	DJC00001-
18	203-01-67540	WASHER	7	DJC00001-
19	22B-01-21530	CUSHION	8	DJC00001-
20	01643-31645	WASHER	4	DJC00001-
21	01011-81630	BOLT	4	DJC00001-
22	22P-01-11320	COVER	1	DJC00001-
23	22P-01-11410	COVER	1	DJC00001-
24	09817-A0753	.PLATE, SAFETY	1	DJC00001-
25	142-62-14450	PLATE	2	DJC00001-
26	22P-01-11450	PLATE	1	DJC00001-
27	01010-80820	BOLT	5	DJC00001-
28	01643-30823	WASHER	5	DJC00001-
29	01010-81225	BOLT	4	DJC00001-
30	01643-31232	WASHER	4	DJC00001-
31	22P-01-11360	COVER	1	DJC00001-
32	22P-01-11350	.SHEET	1	DJC00001-
33	01010-80820	BOLT	4	DJC00001-
34	01643-30823	WASHER	4	DJC00001-

FIG NO. : B0200-01A0

FIG.B0200-01A0 AIR CLEANER (DOUBLE ELEMENT TYPE)

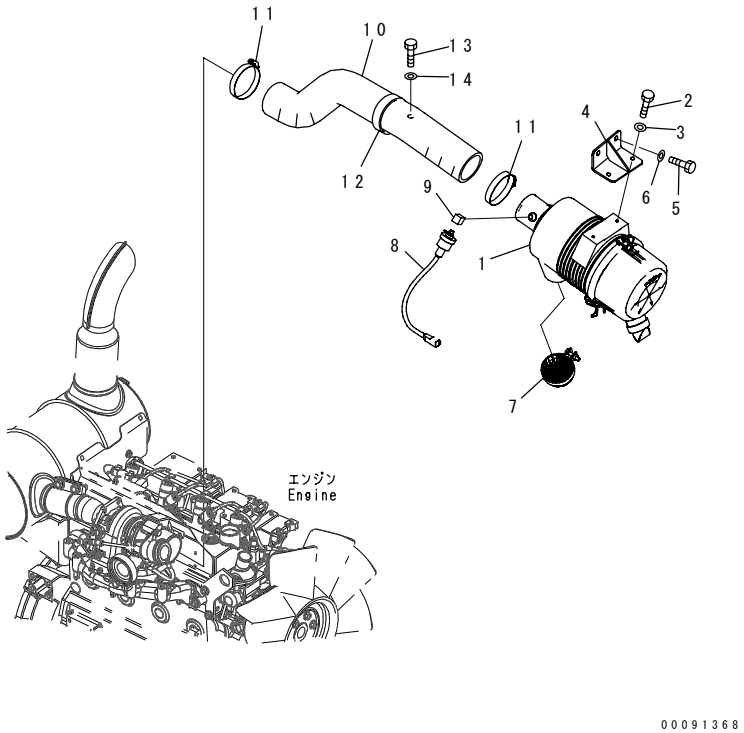

INDEX	PART NO.	DESCRIPTION	Q'TY	SERIAL NO.
1	6271-81-7400	AIR CLEANER	1	DJC00001-
2	01010-80820	BOLT	2	DJC00001-
3	01643-30823	WASHER	2	DJC00001-
4	201-01-81831	BRACKET	1	DJC00001-
5	01010-81025	BOLT	2	DJC00001-
6	01643-31032	WASHER	2	DJC00001-
7	600-181-9960	SCREEN	1	DJC00001-
8	7861-93-1421	SENSOR	1	DJC00001-
9	124-01-61130	ELBOW	1	DJC00001-
10	201-01-82111	HOSE	1	DJC00001-
11	07289-00095	CLAMP	2	DJC00001-
12	22P-01-12120	CLIP	1	DJC00001-
13	01010-81225	BOLT	1	DJC00001-
14	01643-31232	WASHER	1	DJC00001-

FIG.B0600-01A0 DUMPER

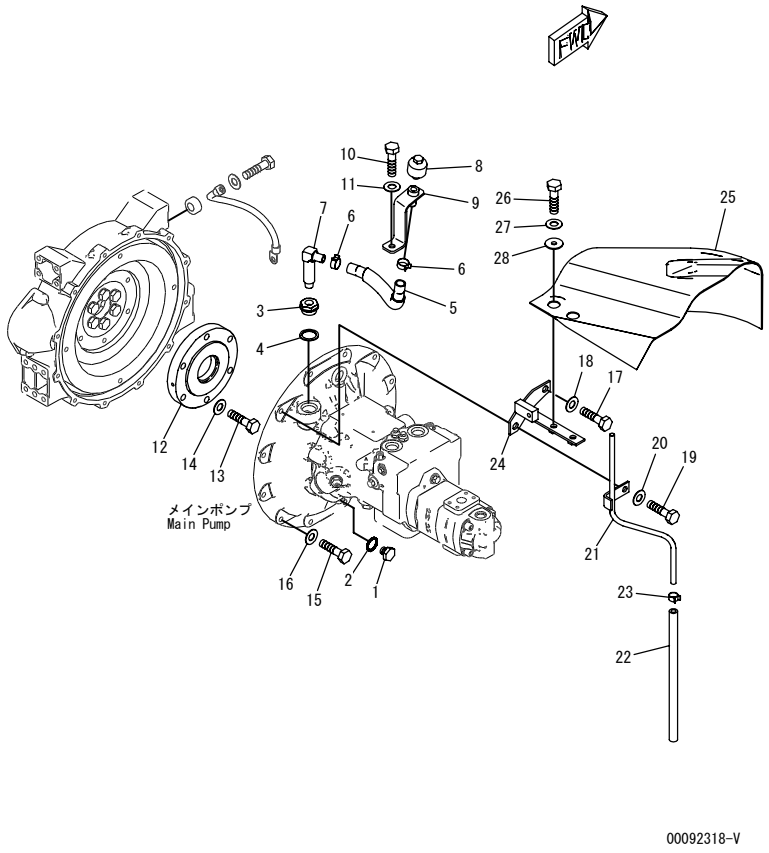

INDEX	PART NO.	DESCRIPTION	Q'TY	SERIAL NO.
1	07040-11209	PLUG	1	DJC00001-
2	07002-11223	O-RING	1	DJC00001-
3	21W-01-21150	NIPPLE	1	DJC00001-
4	07005-03016	GASKET	1	DJC00001-
5	201-01-81130	HOSE	1	DJC00001-
6	07285-00200	CLIP,HOSE	2	DJC00001-
7	21W-01-42190	ELBOW	1	DJC00001-
8	07030-00252	BREATHER	1	DJC00001-
9	201-01-81191	BRACKET	1	DJC00001-
10	01010-81020	BOLT	1	DJC00001-
11	01643-31032	WASHER	1	DJC00001-
12	708-3T-12190	COUPLING	1	DJC00001-
13	01010-81245	BOLT	6	DJC00001-
14	01643-31232	WASHER	6	DJC00001-
15	01010-81035	BOLT	10	DJC00001-
16	01643-31032	WASHER	10	DJC00001-
17	01010-81040	BOLT	1	DJC00001-
18	01643-31032	WASHER	1	DJC00001-
19	01010-81045	BOLT	1	DJC00001-
20	01643-31032	WASHER	1	DJC00001-
21	21W-01-41223	TUBE	1	DJC00001-
22	07260-20932	HOSE	1	DJC00001-
23	07285-00150	CLIP	1	DJC00001-
24	22P-01-11181	BRACKET	1	DJC00001-
25	201-01-81330	SHEET	1	DJC00001-
26	01010-81025	BOLT	2	DJC00001-
27	01643-31032	WASHER	2	DJC00001-
28	203-54-56960	COLLAR	2	DJC00001-

COOLING SYSTEM

FIG.C0100-01A0 COOLING (RADIATOR AND AFTER COOLER)

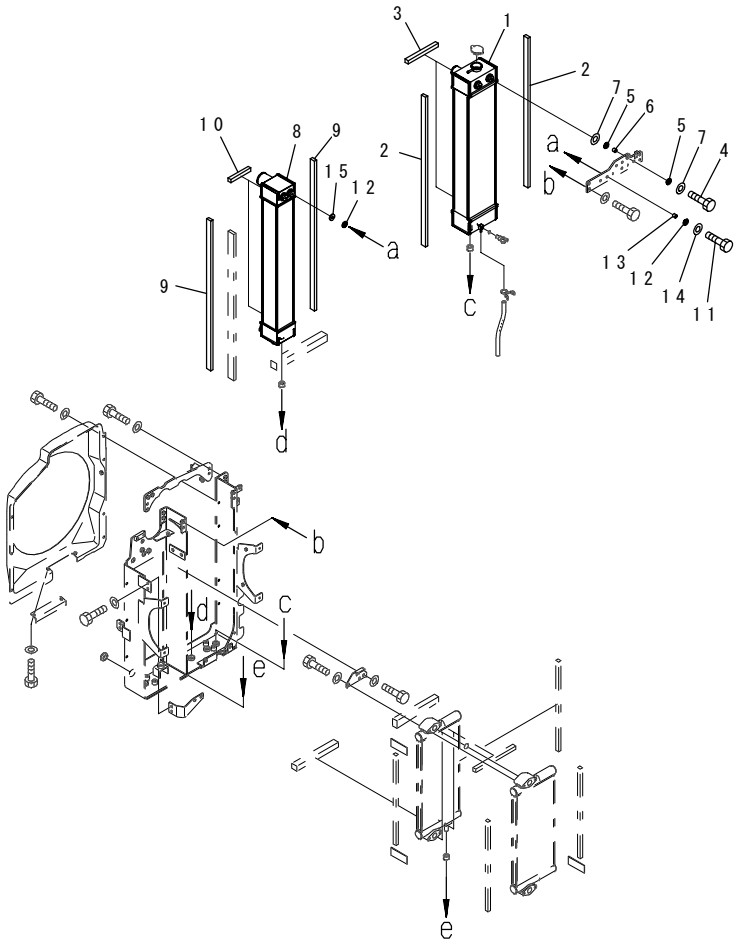

INDEX	PART NO.	DESCRIPTION	Q'TY	SERIAL NO.
	22P-03-11111	RADIATOR ASS'Y.	1	DJC00001-
1	☆	.RADIATOR ASS'Y.	1	DJC00001-
2	22P-03-11841	.SHEET.	2	DJC00001-
3	22P-03-11851	.SHEET.	2	DJC00001-
4	01010-81035	BOLT.	2	DJC00001-
5	201-03-81221	CUSHION.	4	DJC00001-
6	201-03-81191	SPACER.	2	DJC00001-
7	201-03-81650	WASHER.	4	DJC00001-
	22P-03-11121	AFTER COOLER ASS'Y.	1	DJC00001-
8	☆	.AFTER COOLER ASS'Y.	1	DJC00001-
9	22P-03-11861	.SHEET.	2	DJC00001-
10	22P-03-11870	.SHEET.	2	DJC00001-
11	01010-81035	BOLT.	2	DJC00001-
12	201-03-81221	CUSHION.	4	DJC00001-
13	201-03-81191	SPACER.	2	DJC00001-
14	201-03-81650	WASHER.	2	DJC00001-
15	201-03-81660	WASHER.	2	DJC00001-

FIG.C0100-02A0 COOLING (OIL COOLER)

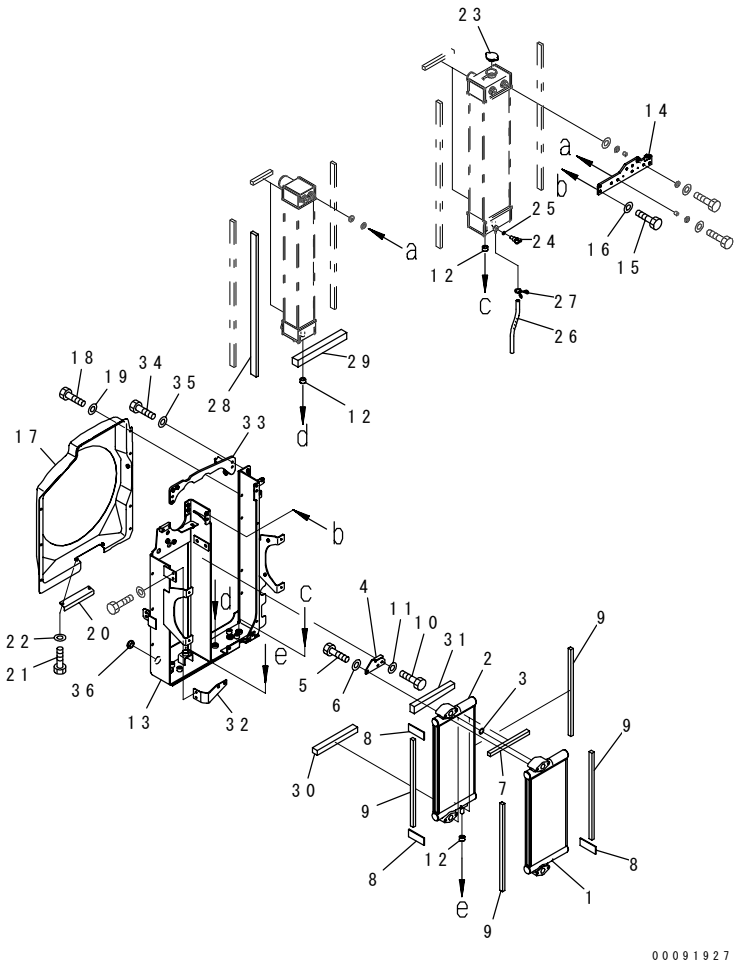

INDEX	PART NO.	DESCRIPTION	Q'TY	SERIAL NO.
	22P-03-11131	OIL COOLER ASS'Y	1	DJC00001-
1	22P-03-11541	.OIL COOLER ASS'Y	1	DJC00001-
2	22P-03-11551	.OIL COOLER ASS'Y	1	DJC00001-
3	07000-13035	.O-RING	2	DJC00001-
4	22P-03-11181	.PLATE	1	DJC00001-
5	01010-81025	.BOLT	4	DJC00001-
6	01643-81032	.WASHER	4	DJC00001-
7	22P-03-11811	.SHEET	2	DJC00001-
8	22P-03-11830	.SHEET	3	DJC00001-
9	22P-03-11880	.SHEET	4	DJC00001-
10	01010-81025	BOLT	4	DJC00001-
11	01643-81032	WASHER	4	DJC00001-
12	22B-03-12590	CUSHION	5	DJC00001-
13	201-03-81141	FRAME	1	DJC00001-
14	201-03-81151	PLATE	1	DJC00001-
15	01010-81030	BOLT	4	DJC00001-
16	01643-81032	WASHER	4	DJC00001-
17	201-03-81161	SHROUD	1	DJC00001-
18	01010-80820	BOLT	7	DJC00001-
19	01643-30823	WASHER	7	DJC00001-
20	201-03-81180	PLATE	1	DJC00001-
21	01010-80820	BOLT	2	DJC00001-
22	01643-30823	WASHER	2	DJC00001-
23	22B-03-11350	CAP	1	DJC00001-
24	205-03-62660	PLUG	1	DJC00001-
25	07000-11007	.O-RING	1	DJC00001-
26	201-03-81410	HOSE	1	DJC00001-
27	206-03-43340	CLIP	1	DJC00001-
28	22P-03-11751	SHEET	1	DJC00001-
29	22P-03-11781	SHEET	1	DJC00001-
30	22P-03-11821	SHEET	1	DJC00001-
31	22P-03-11891	SHEET	1	DJC00001-
	201-03-81951	COVER ASS'Y	1	DJC00001-
32	201-03-81771	.SHEET	1	DJC00001-
33	201-03-81911	.COVER	1	DJC00001-
34	01010-81030	BOLT	4	DJC00001-
35	01643-31032	WASHER	4	DJC00001-
36	08037-02512	GROMMET	1	DJC00001-

FIG.C0100-03A0 COOLING (FUEL COOLER)

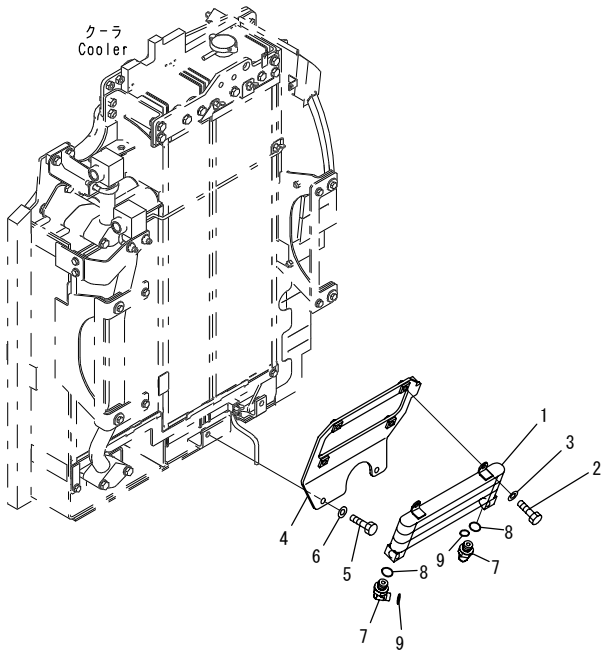

00091864

INDEX	PART NO.	DESCRIPTION	Q'TY	SERIAL NO.
1	208-03-71161	OIL COOLER	1	DJC00001-
2	01010-80825	BOLT	4	DJC00001-
3	01643-30823	WASHER	4	DJC00001-
4	201-03-81751	BRACKET	1	DJC00001-
5	01010-81025	BOLT	2	DJC00001-
6	01643-81032	WASHER	2	DJC00001-
7	02782-10315	ELBOW	2	DJC00001-
8	07002-12034	O-RING	2	DJC00001-
9	02896-11009	O-RING	2	DJC00001-

FIG NO. : C0100-04A0

FIG.C0100-04A0 COOLING (NET)

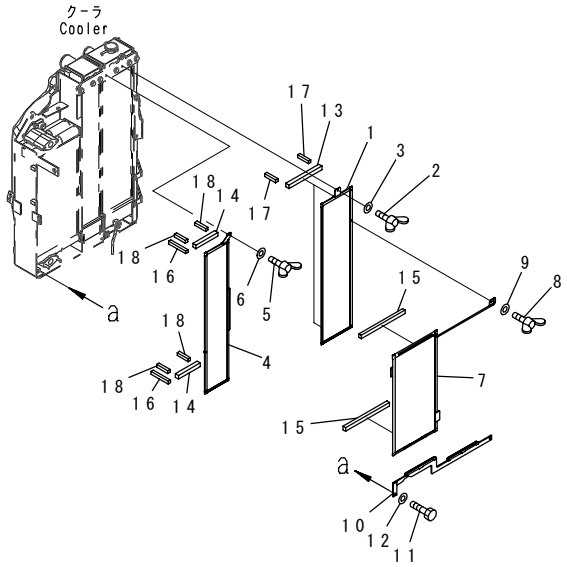

00091865

INDEX	PART NO.	DESCRIPTION	Q'TY	SERIAL NO.
1	201-03-81670	NET	1	DJC00001-
2	01434-10620	BOLT, WING	1	DJC00001-
3	01643-30623	WASHER	1	DJC00001-
4	201-03-81531	NET	1	DJC00001-
5	01434-10620	BOLT, WING	1	DJC00001-
6	01643-30623	WASHER	1	DJC00001-
7	201-03-81521	NET	1	DJC00001-
8	01434-10620	BOLT, WING	1	DJC00001-
9	01643-30623	WASHER	1	DJC00001-
10	201-03-81511	BRACKET	1	DJC00001-
11	01010-80820	BOLT	2	DJC00001-
12	01643-30823	WASHER	2	DJC00001-
13	22P-03-11851	SHEET	2	DJC00001-
14	22P-03-11870	SHEET	2	DJC00001-
15	22P-03-11811	SHEET	2	DJC00001-
16	22P-03-11741	SHEET	2	DJC00001-
17	22P-03-11630	SHEET	4	DJC00001-
18	22P-03-11640	SHEET	4	DJC00001-

FIG.C0100-05A0 COOLING (SEAL PLATE)

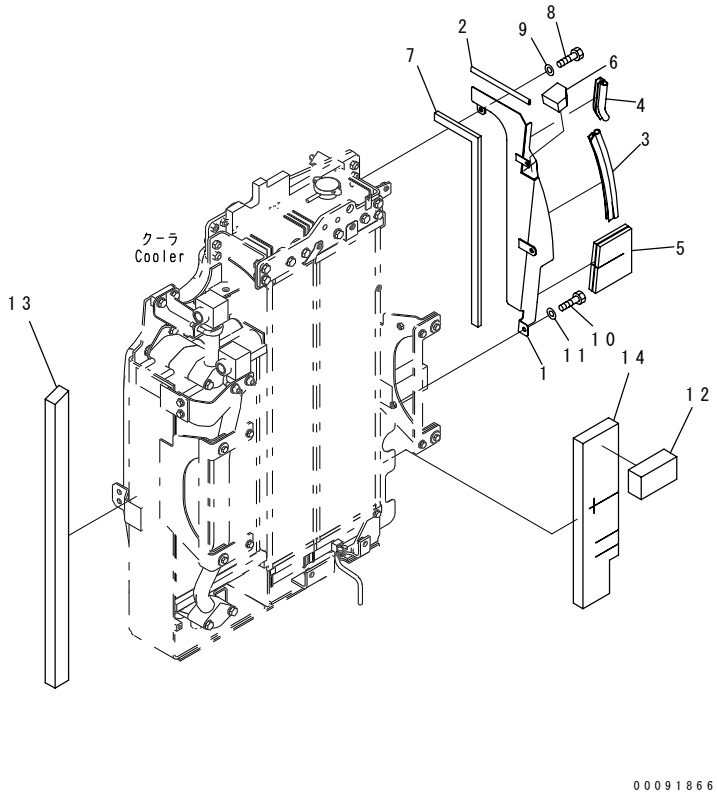

INDEX	PART NO.	DESCRIPTION	Q'TY	SERIAL NO.
1	201-03-81941	COVER	1	DJC00001-
2	201-03-81931	SEAL	1	DJC00001-
3	201-03-81861	SEAL	1	DJC00001-
4	201-03-81780	SHEET	1	DJC00001-
5	201-03-81881	SHEET	1	DJC00001-
6	201-03-81760	SHEET	1	DJC00001-
7	201-03-81871	SHEET	1	DJC00001-
8	01010-80816	BOLT	1	DJC00001-
9	01643-30823	WASHER	1	DJC00001-
10	01010-80820	BOLT	2	DJC00001-
11	01643-30823	WASHER	2	DJC00001-
12	201-03-81891	SHEET	1	DJC00001-
13	201-03-81960	SHEET	1	DJC00001-
14	201-03-81971	SHEET	1	DJC00001-

FIG.C0100-06A0 COOLING (AIR CONDITIONER) (CONDENSER)

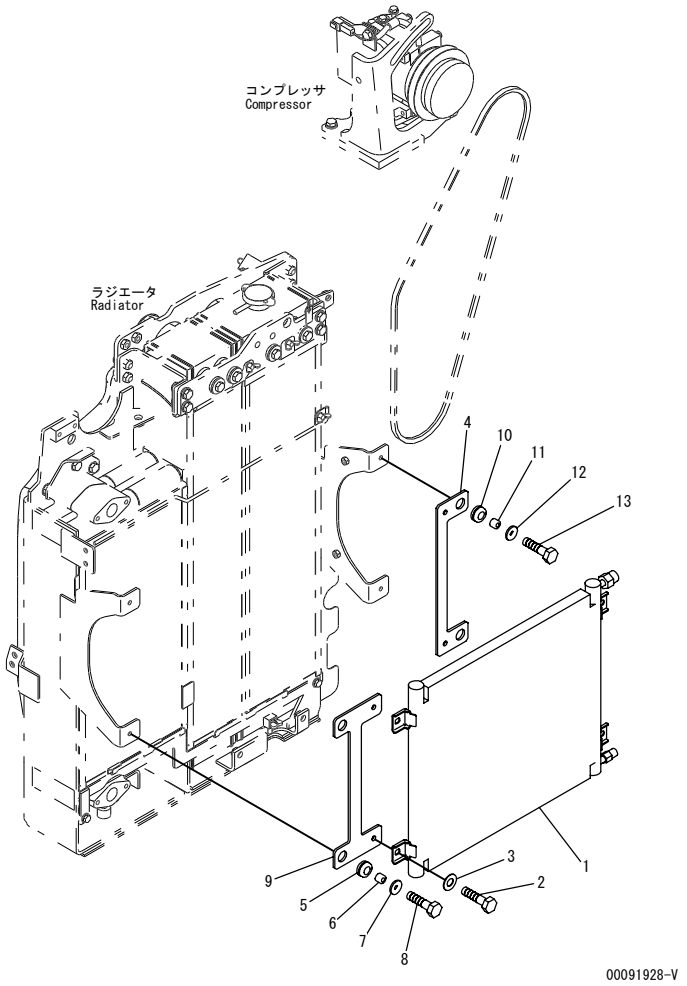

INDEX	PART NO.	DESCRIPTION	Q'TY	SERIAL NO.
1	201-979-8850	CONDENSER	1	DJC00001-
2	01010-80820	BOLT	4	DJC00001-
3	01643-30823	WASHER	4	DJC00001-
4	201-03-81841	PLATE	1	DJC00001-
5	112-86-01360	GROMMET	2	DJC00001-
6	201-03-81820	COLLAR	2	DJC00001-
7	175-61-23220	WASHER	2	DJC00001-
8	01010-80830	BOLT	2	DJC00001-
9	201-03-81851	PLATE	1	DJC00001-
10	112-86-01360	GROMMET	2	DJC00001-
11	201-03-81820	COLLAR	2	DJC00001-
12	175-61-23220	WASHER	2	DJC00001-
13	01010-80830	BOLT	2	DJC00001-

FIG.C0100-07A0 COOLING (AFTER COOLER PIPING)

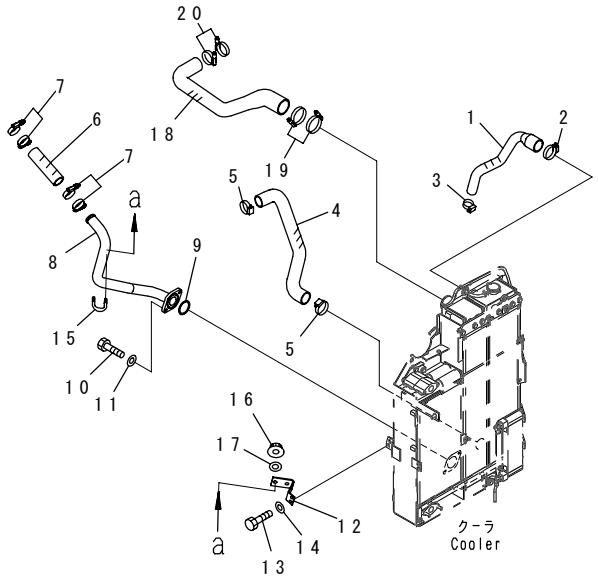

00091867

INDEX	PART NO.	DESCRIPTION	Q'TY	SERIAL NO.
1	22P-03-11211	HOSE	1	DJC00001-
2	07289-00055	CLAMP	1	DJC00001-
3	07289-00045	CLAMP,HOSE	1	DJC00001-
4	22P-03-11221	HOSE	1	DJC00001-
5	07289-00055	CLAMP	2	DJC00001-
6	22P-03-11311	HOSE	1	DJC00001-
7	07299-00055	CLAMP,HOSE	4	DJC00001-
8	201-03-81321	TUBE	1	DJC00001-
9	07000-E2065	O-RING	1	DJC00001-
10	01010-81035	BOLT	2	DJC00001-
11	01643-31032	WASHER	2	DJC00001-
12	201-03-81350	PLATE	1	DJC00001-
13	01010-81025	BOLT	2	DJC00001-
14	01643-81032	WASHER	2	DJC00001-
15	07283-34346	CLIP	1	DJC00001-
16	01597-01009	NUT	2	DJC00001-
17	01643-31032	WASHER	2	DJC00001-
18	22P-03-11331	HOSE	1	DJC00001-
19	07299-00070	CLAMP	2	DJC00001-
20	07299-00055	CLAMP,CLAMP	2	DJC00001-

FIG.C0100-08A0 COOLING (SUB TANK)

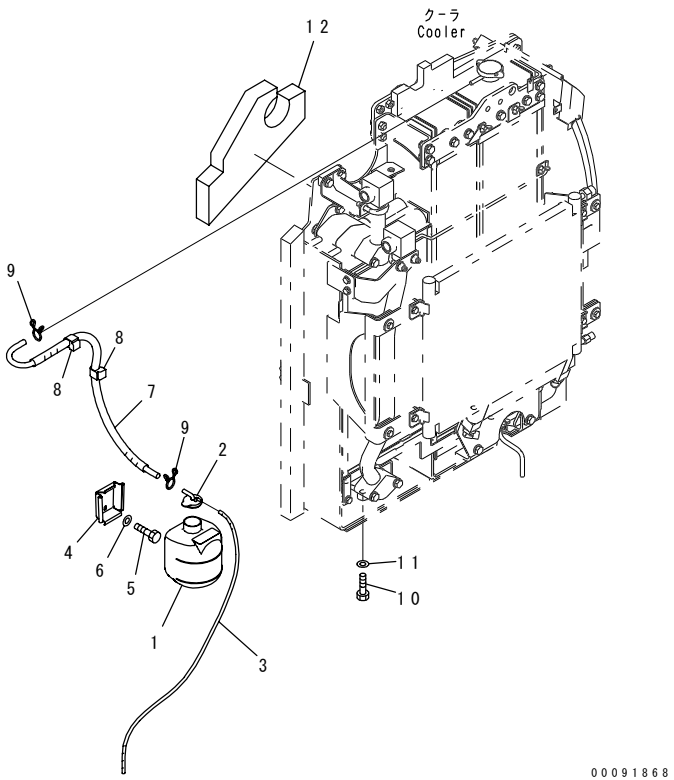

INDEX	PART NO.	DESCRIPTION	Q'TY	SERIAL NO.
1	201-03-71810	TANK	1	DJC00001-
2	417-03-21350	.CAP	1	DJC00001-
3	201-03-81421	HOSE	1	DJC00001-
4	362-03-14120	BRACKET	1	DJC00001-
5	01010-80616	BOLT	2	DJC00001-
6	01643-30623	WASHER	2	DJC00001-
7	201-03-81231	HOSE ASS'Y	1	DJC00001-
8	08211-11320	CLIP	2	DJC00001-
9	206-03-43340	CLIP	2	DJC00001-
10	01010-81235	BOLT	4	DJC00001-
11	01643-31232	WASHER	4	DJC00001-
12	201-03-81991	SHEET	1	DJC00001-

FIG.C0100-09A0 COOLING (FAN GUARD)

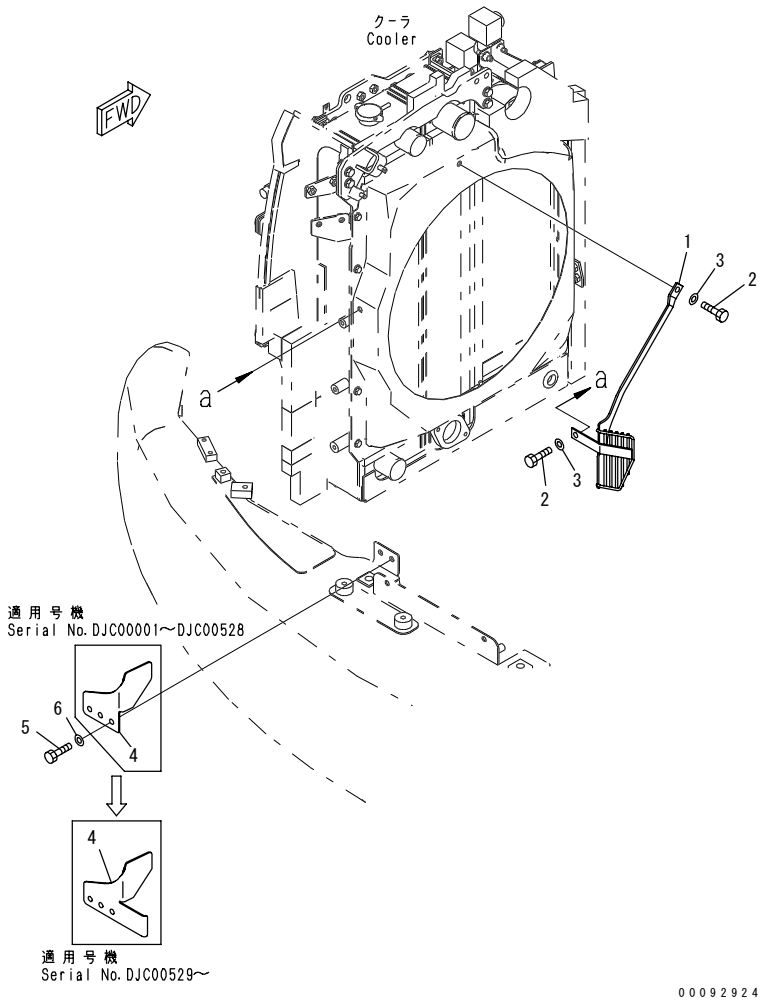

INDEX	PART NO.	DESCRIPTION	Q'TY	SERIAL NO.
1	201-03-81680	GUARD	1	DJC00001-
2	01010-81020	BOLT	2	DJC00001-
3	01643-31032	WASHER	2	DJC00001-
4	201-03-89961	BRACKET	1	DJC00529-
	201-03-89960	BRACKET	1	DJC00001-DJC00528
5	01010-81020	BOLT	2	DJC00001-
6	01643-31032	WASHER	2	DJC00001-

FUEL TANK AND RELATED PARTS

FIG.D0100-01A0 FUEL TANK

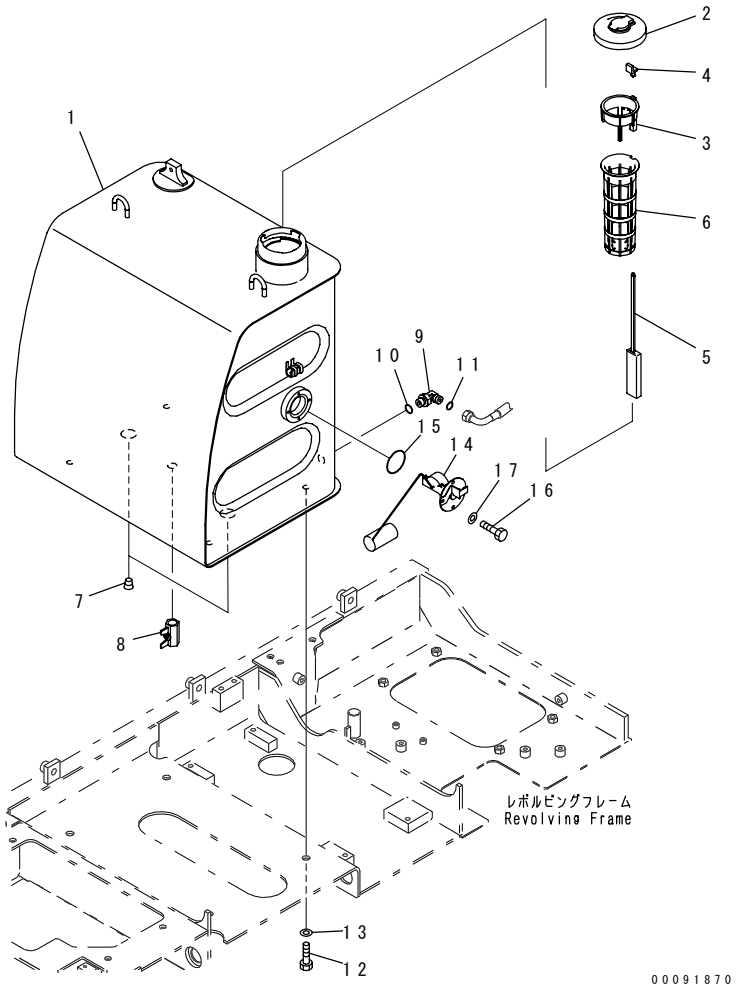

INDEX	PART NO.	DESCRIPTION	Q'TY	SERIAL NO.
1	201-04-81112	TANK	1	DJC00001-
2	20Y-04-11161	CAP	1	DJC00001-
	22U-04-21200	.FLOAT ASS'Y	1	DJC00001-
3	22U-04-21210	..GUIDE	1	DJC00001-
4	20Y-04-21580	..CAP	1	DJC00001-
5	22U-04-21220	..FLOAT	1	DJC00001-
6	07056-18425	.STRAINER	1	DJC00001-
7	07043-71019	PLUG	2	DJC00001-
8	07700-50455	VALVE	1	DJC00001-
9	02782-10313	ELBOW	1	DJC00001-
10	07002-11823	O-RING	1	DJC00001-
11	02896-11009	O-RING	2	DJC00001-
12	01010-81430	BOLT	4	DJC00001-
13	01643-31445	WASHER	4	DJC00001-
14	7861-92-5810	SENSOR	1	DJC00001-
15	07000-13050	O-RING	1	DJC00001-
16	01010-80612	BOLT	4	DJC00001-
17	01643-30623	WASHER	4	DJC00001-

FIG.D0200-01A0 FUEL LINE (SUCTION LINE)

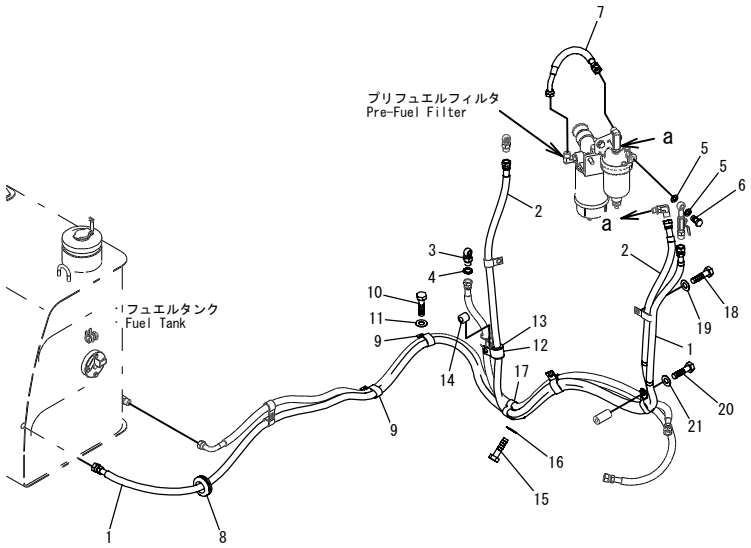

INDEX	PART NO.	DESCRIPTION	Q'TY	SERIAL NO.
1	201-04-81512	HOSE ASS'Y	1	DJC00001-
2	201-04-81522	HOSE ASS'Y	1	DJC00001-
3	201-04-81560	JOINT	1	DJC00001-
4	02896-11009	O-RING	1	DJC00001-
5	07005-01412	GASKET	2	DJC00001-
6	07206-31014	BOLT	1	DJC00001-
7	201-04-81380	HOSE ASS'Y	1	DJC00001-
8	08037-03620	GROMMET	1	DJC00001-
9	04434-51910	CLIP	2	DJC00001-
10	01010-81020	BOLT	2	DJC00001-
11	01643-31032	WASHER	2	DJC00001-
12	04434-52712	CLIP	1	DJC00001-
13	07095-20419	CUSHION	1	DJC00001-
14	21W-62-11620	SPACER	1	DJC00001-
15	01010-81045	BOLT	1	DJC00001-
16	01643-31032	WASHER	1	DJC00001-
17	04435-51910	CLIP	6	DJC00001-
18	01010-81020	BOLT	3	DJC00001-
19	01643-31032	WASHER	3	DJC00001-
20	01010-81025	BOLT	3	DJC00001-
21	01643-31032	WASHER	3	DJC00001-

FIG.D0200-02A0 FUEL LINE (RETURN LINE)

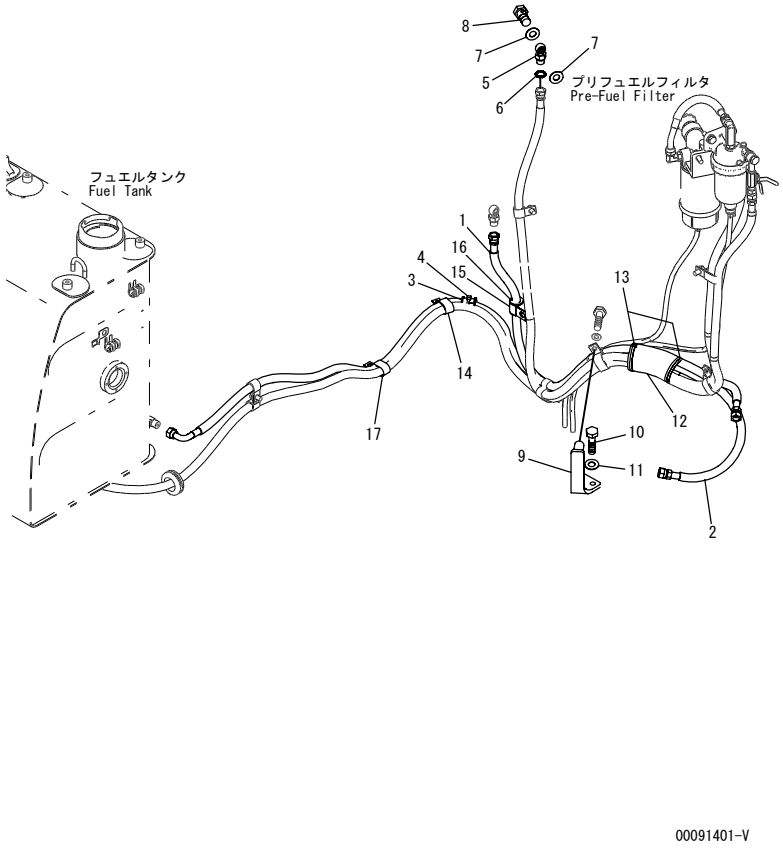

INDEX	PART NO.	DESCRIPTION	Q'TY	SERIAL NO.
1	201-04-81531	HOSE ASS'Y	1	DJC00001-
2	201-04-81540	HOSE ASS'Y	1	DJC00001-
3	07095-20419	CUSHION	1	DJC00001-
4	08034-20536	BAND	1	DJC00001-
5	201-04-81560	JOINT	1	DJC00001-
6	02896-11009	O-RING	1	DJC00001-
7	07005-01412	GASKET	2	DJC00001-
8	07206-31014	BOLT	1	DJC00001-
9	201-04-81551	BRACKET	1	DJC00001-
10	01010-81025	BOLT	2	DJC00001-
11	01643-31032	WASHER	2	DJC00001-
12	20N-62-72670	SHEET	1	DJC00001-
13	08034-20536	BAND	3	DJC00001-
14	04434-51910	CLIP	1	DJC00001-
15	04434-52712	CLIP	1	DJC00001-
16	07095-20419	CUSHION	1	DJC00001-
17	04435-51910	CLIP	3	DJC00001-

FIG.D0200-03A0 FUEL LINE (PRE-FILTER AND MOUNTING)

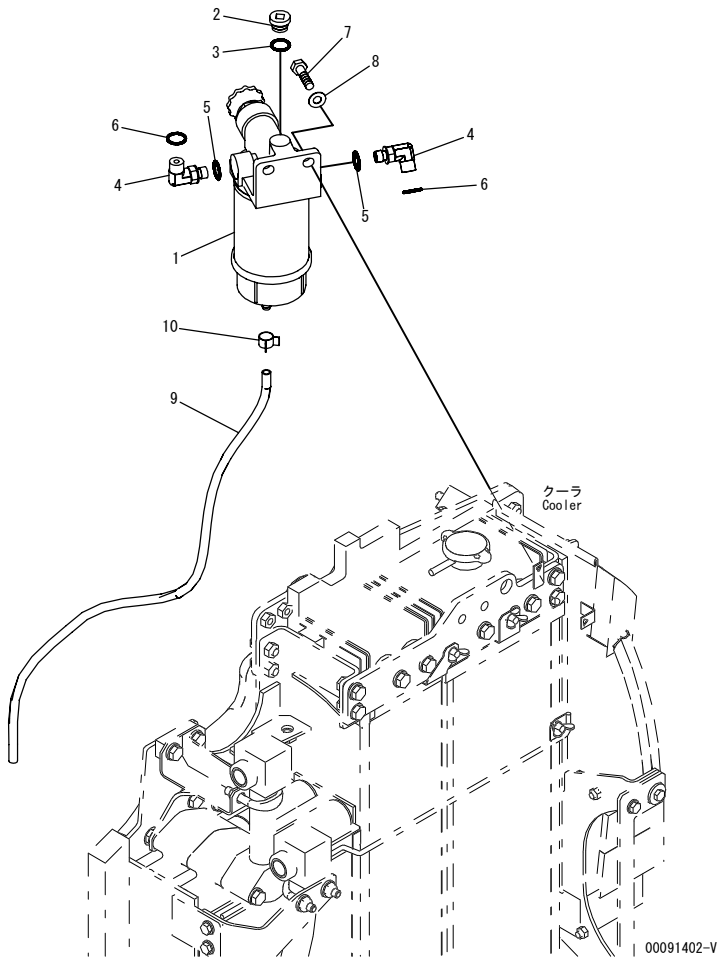

INDEX	PART NO.	DESCRIPTION	Q'TY	SERIAL NO.
1	6271-71-6200	FILTER ASS'Y	1	DJC00001-
2	07040-11409	PLUG	1	DJC00001-
3	07002-11423	O-RING	1	DJC00001-
4	02782-10311	ELBOW	2	DJC00001-
5	07002-11423	O-RING	2	DJC00001-
6	02896-11009	O-RING	2	DJC00001-
7	07372-21035	BOLT	1	DJC00001-
8	01643-51032	WASHER	1	DJC00001-
9	07270-00875	TUBE	1	DJC00001-
10	07285-00100	CLIP	1	DJC00001-

FIG.D0200-04A0 FUEL LINE (WATER SEPARATOR AND MOUNTING)

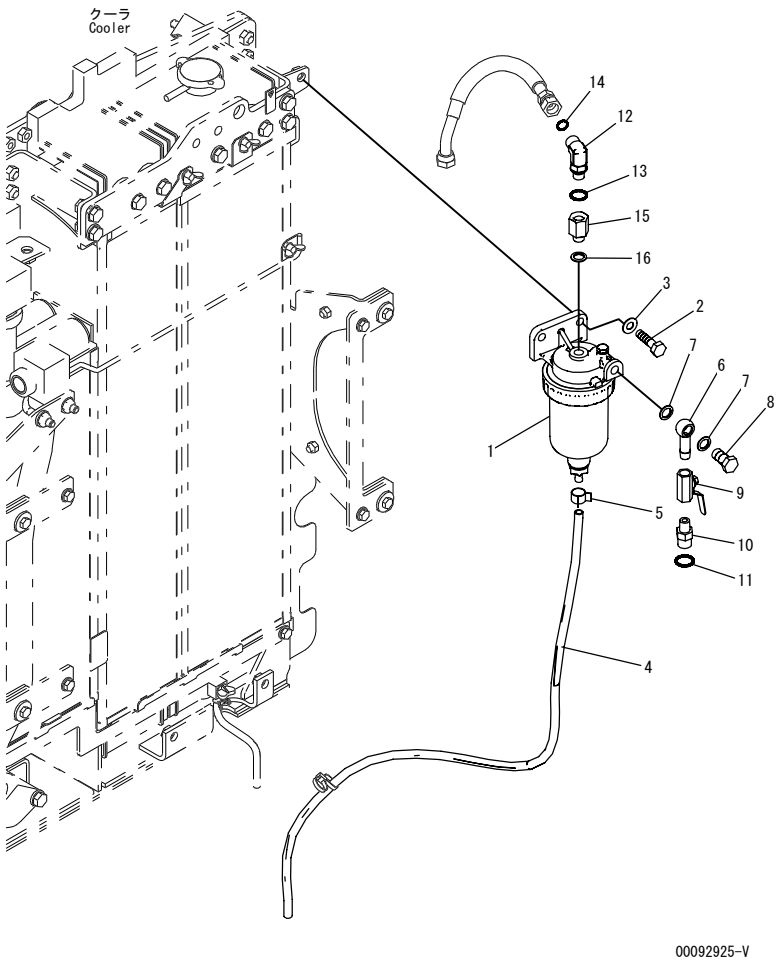

INDEX	PART NO.	DESCRIPTION	Q'TY	SERIAL NO.
1	600-311-9733	WATER SEPARATOR A.	1	DJC00229-
	600-311-9732	WATER SEPARATOR A.	1	DJC00001-DJC00228
2	01010-81030	BOLT.	2	DJC00001-
3	01643-31032	WASHER.	2	DJC00001-
4	07270-00865	TUBE.	1	DJC00001-
5	07285-00100	CLIP.	1	DJC00001-
6	205-04-62140	JOINT.	1	DJC00001-
7	07005-01412	GASKET.	2	DJC00001-
8	07206-31014	BOLT,JOINT.	1	DJC00001-
9	07700-40240	VALVE.	1	DJC00001-
10	20U-62-42230	CONNECTOR.	1	DJC00001-
11	02896-11009	O-RING.	1	DJC00001-
12	02782-10311	ELBOW.	1	DJC00001-
13	07002-11423	O-RING.	1	DJC00001-
14	02896-11009	O-RING.	1	DJC00001-
15	201-04-81650	ADAPTER.	1	DJC00201-
	6162-73-4690	NIPPLE.	1	DJC00001-DJC00200
16	07005-01412	GASKET.	1	DJC00001-

ELECTRICAL SYSTEM

FIG.E0100-01A0 BATTERY (BATTERY AND CABLE)

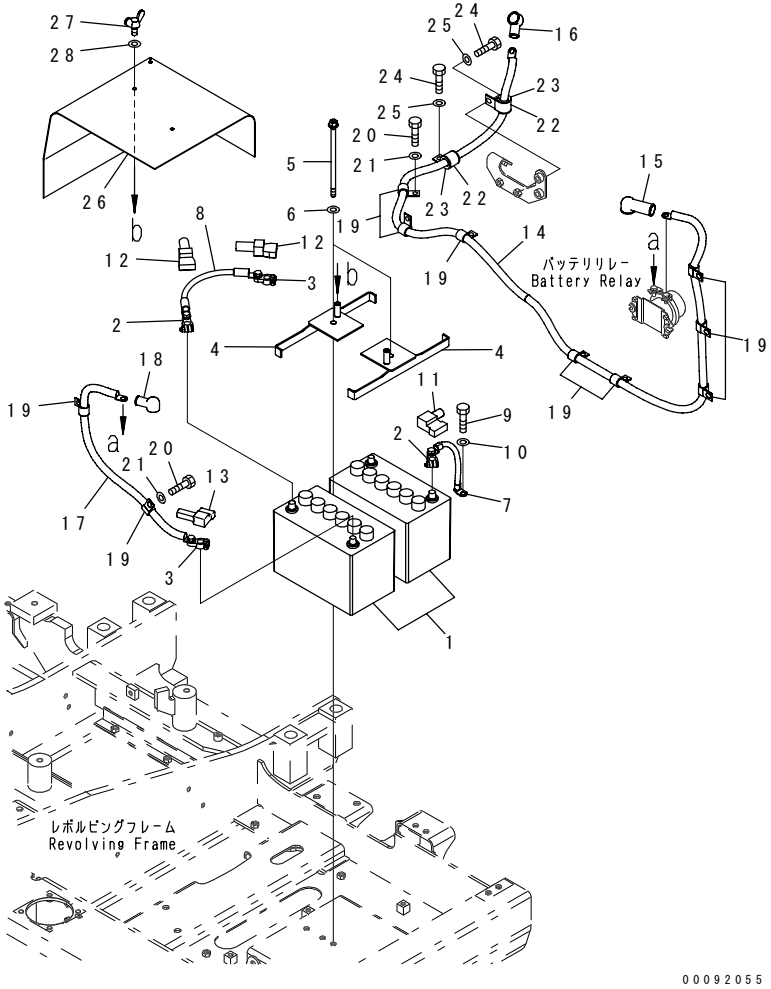

INDEX	PART NO.	DESCRIPTION	Q'TY	SERIAL NO.
1	201-06-81270	BATTERY, WET(80D26L)	2	DJC00001-
2	08000-00020	TERMINAL, (+)	1	DJC00001-
3	08000-00021	TERMINAL, (-)	1	DJC00001-
4	201-06-81440	BRACKET	2	DJC00001-
5	22U-06-21130	BOLT	2	DJC00001-
6	01643-31232	WASHER	2	DJC00001-
7	201-06-81250	CABLE	1	DJC00001-
8	08028-GH035	CABLE	1	DJC00001-
9	01010-81025	BOLT	1	DJC00001-
10	01643-31032	WASHER	1	DJC00001-
11	20S-06-13230	TERMINAL COVER	1	DJC00001-
12	08038-42009	CAP	2	DJC00001-
13	20U-06-21680	CAP	1	DJC00001-
14	201-06-83321	CABLE	1	DJC00001-
15	08038-00035	CAP	1	DJC00001-
16	08038-04030	CAP	1	DJC00001-
17	201-06-81231	CABLE	1	DJC00001-
18	08038-04030	CAP	1	DJC00001-
19	04434-51710	CLIP	10	DJC00001-
20	01010-81020	BOLT	9	DJC00001-
21	01643-31032	WASHER	9	DJC00001-
22	04434-52511	CLIP	2	DJC00001-
23	07095-20418	CUSHION	2	DJC00001-
24	01010-81020	BOLT	2	DJC00001-
25	01643-31032	WASHER	2	DJC00001-
26	201-06-83331	SHEET	1	DJC00001-
27	01434-00820	BOLT, WING	2	DJC00001-
28	01643-30823	WASHER	2	DJC00001-

FIG.E0200-01A0 ELECTRIC WIRING (MAIN HARNESS)

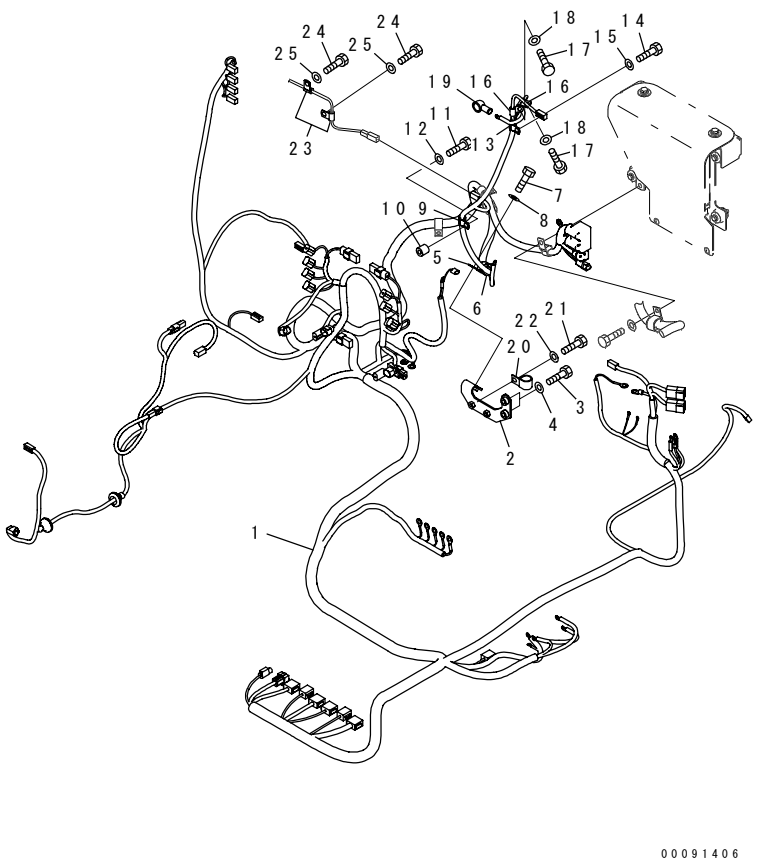

INDEX	PART NO.	DESCRIPTION	Q'TY	SERIAL NO.
1	201-06-81124	WIRING HARNESS	1	DJC00663-
	201-06-81123	WIRING HARNESS	1	DJC00001-DJC00662
	20T-06-31660	.FUSIBLE LINK,30A	2	DJC00001-
	20T-06-81230	.FUSIBLE LINK,45A	2	DJC00001-
	19M-06-31720	.RESISTOR	1	DJC00001-
2	201-06-81151	BRACKET	1	DJC00001-
3	01010-81030	BOLT	2	DJC00001-
4	01643-31032	WASHER	2	DJC00001-
5	04434-52711	CLIP	1	DJC00001-
6	07095-20420	CUSHION	1	DJC00001-
7	01010-81025	BOLT	1	DJC00001-
8	01643-31032	WASHER	1	DJC00001-
9	600-051-2140	CLIP	1	DJC00001-
10	195-33-11220	SPACER	1	DJC00001-
11	01010-81045	BOLT	1	DJC00001-
12	01643-31032	WASHER	1	DJC00001-
13	600-051-2140	CLIP	1	DJC00001-
14	01010-81020	BOLT	1	DJC00001-
15	01643-31032	WASHER	1	DJC00001-
16	600-051-2080	CLIP	2	DJC00001-
17	01010-81016	BOLT	2	DJC00001-
18	01643-31032	WASHER	2	DJC00001-
19	08038-12027	CAP	1	DJC00001-
20	04434-52511	CLIP	1	DJC00001-
21	01010-81020	BOLT	1	DJC00001-
22	01643-31032	WASHER	1	DJC00001-
23	600-051-2060	CLIP	2	DJC00001-
24	01010-81020	BOLT	2	DJC00001-
25	01643-31032	WASHER	2	DJC00001-

FIG.E0200-02A0 ELECTRIC WIRING (ENGINE CONTROLLER)

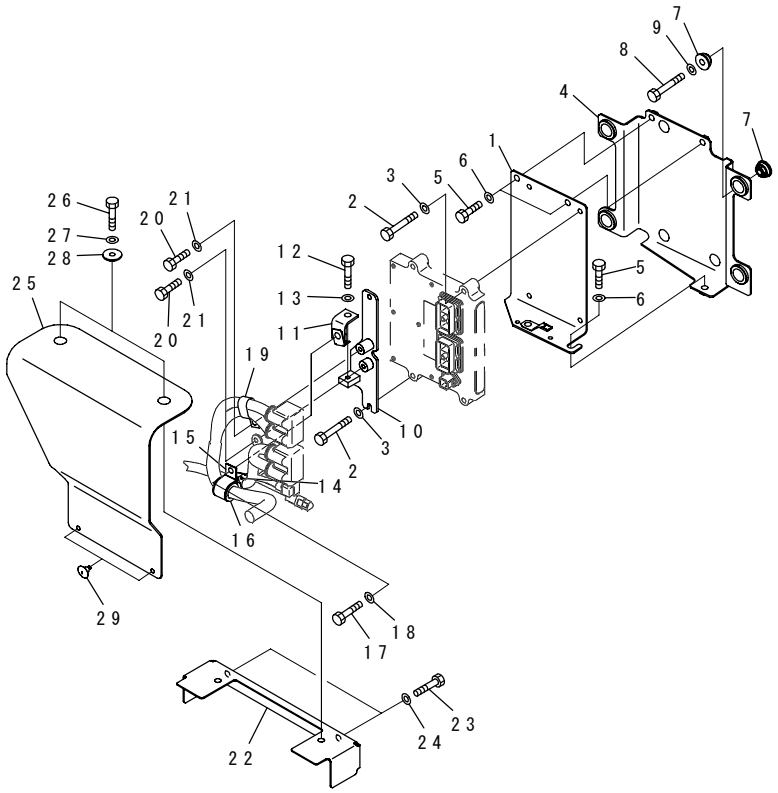

INDEX	PART NO.	DESCRIPTION	Q'TY	SERIAL NO.
1	22P-06-11152	BRACKET	1	DJC00001-
2	01010-80850	BOLT	4	DJC00001-
3	01643-30823	WASHER	4	DJC00001-
4	22P-06-11162	BRACKET	1	DJC00001-
5	01010-81020	BOLT	3	DJC00001-
6	01643-31032	WASHER	3	DJC00001-
7	6251-81-7210	CUSHION	8	DJC00001-
8	01010-80850	BOLT	4	DJC00001-
9	01643-30823	WASHER	4	DJC00001-
10	22P-06-11172	BRACKET	1	DJC00001-
11	22P-06-11830	BRACKET	1	DJC00001-
12	01010-81025	BOLT	1	DJC00001-
13	01643-31032	WASHER	1	DJC00001-
14	08211-11320	CLIP	1	DJC00001-
15	04434-53211	CLIP	1	DJC00001-
16	07095-20523	CUSHION	1	DJC00001-
17	01010-81025	BOLT	1	DJC00001-
18	01643-31032	WASHER	1	DJC00001-
19	04435-51910	CLIP	1	DJC00001-
20	01010-81016	BOLT	2	DJC00001-
21	01643-31032	WASHER	2	DJC00001-
22	201-06-81161	COVER	1	DJC00001-
23	01010-81020	BOLT	2	DJC00001-
24	01643-31032	WASHER	2	DJC00001-
25	201-06-81521	SHEET	1	DJC00001-
26	01010-81025	BOLT	2	DJC00001-
27	01643-31032	WASHER	2	DJC00001-
28	203-54-55660	COLLAR	2	DJC00001-
29	20T-54-74510	CAP	2	DJC00001-

FIG NO. : E0200-03A0

FIG.E0200-03A0 ELECTRIC WIRING (ALTERNATOR)

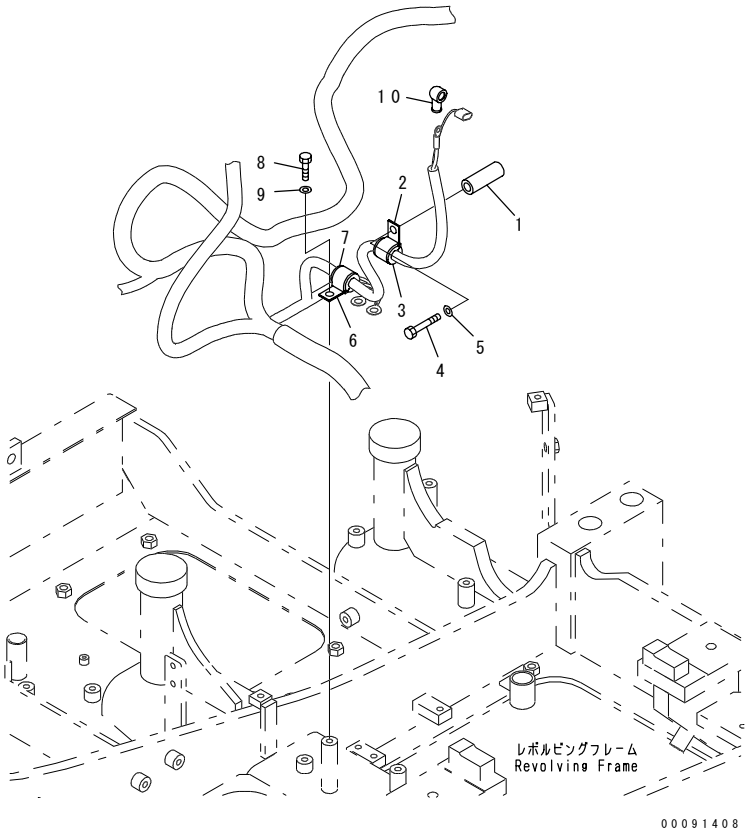

INDEX	PART NO.	DESCRIPTION	Q'TY	SERIAL NO.
1	175-61-17240	COLLAR	1	DJC00001-
2	04434-52110	CLIP	1	DJC00001-
3	07095-20314	CUSHION	1	DJC00001-
4	01010-81080	BOLT	1	DJC00001-
5	01643-31032	WASHER	1	DJC00001-
6	04434-52110	CLIP	1	DJC00001-
7	07095-20314	CUSHION	1	DJC00001-
8	01010-81020	BOLT	1	DJC00001-
9	01643-31032	WASHER	1	DJC00001-
10	08038-00525	CAP	1	DJC00001-

FIG.E0200-04A0 ELECTRIC WIRING (MAIN HARNESS) (CLIP) (1/3)

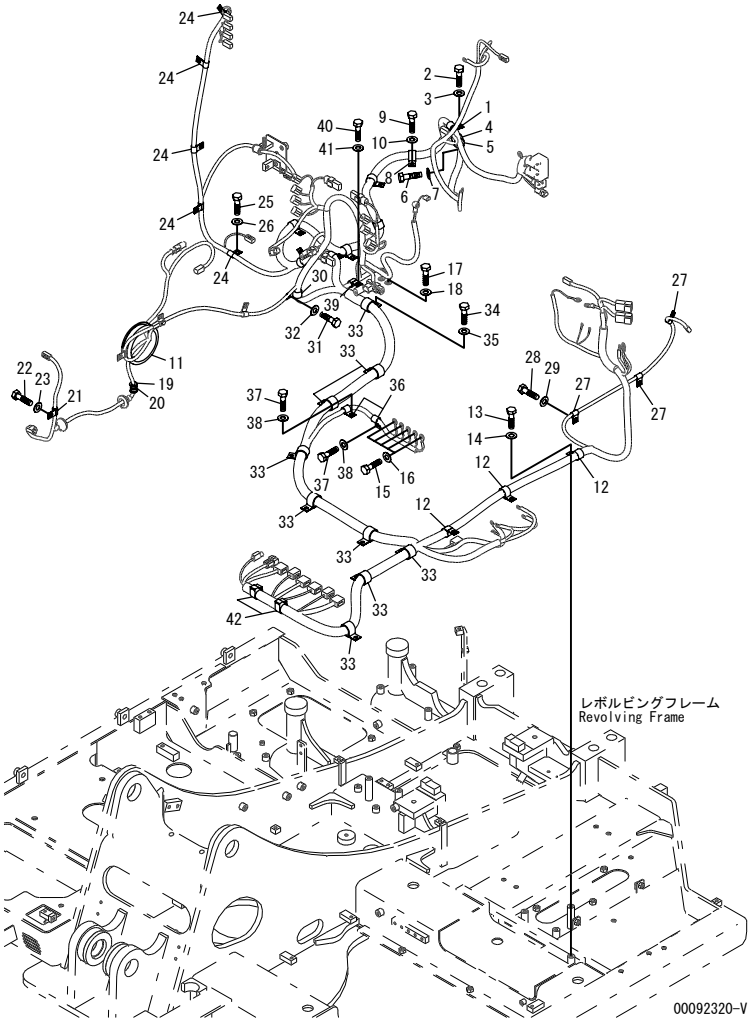

INDEX	PART NO.	DESCRIPTION	Q'TY	SERIAL NO.
1	04434-51710	CLIP	1	DJC00001-
2	01010-81020	BOLT	1	DJC00001-
3	01643-31032	WASHER	1	DJC00001-
4	04434-52711	CLIP	1	DJC00001-
5	07095-20420	CUSHION	1	DJC00001-
6	01010-81025	BOLT	1	DJC00001-
7	01643-31032	WASHER	1	DJC00001-
8	04434-52310	CLIP	7	DJC00001-
9	01010-81020	BOLT	7	DJC00001-
10	01643-31032	WASHER	7	DJC00001-
11	201-06-81170	GROMMET	1	DJC00001-
12	04434-52310	CLIP	3	DJC00001-
13	01010-81020	BOLT	3	DJC00001-
14	01643-31032	WASHER	3	DJC00001-
15	01010-81016	BOLT	5	DJC00001-
16	01643-31032	WASHER	5	DJC00001-
17	01010-81020	BOLT	2	DJC00001-
18	01643-31032	WASHER	2	DJC00001-
19	07095-20211	CUSHION	1	DJC00001-
20	08034-20519	BAND	1	DJC00001-
21	04434-51010	CLIP	1	DJC00001-
22	01010-81020	BOLT	1	DJC00001-
23	01643-31032	WASHER	1	DJC00001-
24	04434-51010	CLIP	5	DJC00001-
25	01010-81020	BOLT	5	DJC00001-
26	01643-31032	WASHER	5	DJC00001-
27	04434-50810	CLIP	3	DJC00001-
28	01010-81020	BOLT	3	DJC00001-
29	01643-31032	WASHER	3	DJC00001-
30	04434-51910	CLIP	1	DJC00001-
31	01010-81020	BOLT	1	DJC00001-
32	01643-31032	WASHER	1	DJC00001-
33	04434-52712	CLIP	9	DJC00001-
34	01010-81020	BOLT	9	DJC00001-
35	01643-31032	WASHER	9	DJC00001-
36	04434-51410	CLIP	2	DJC00001-
37	01010-81020	BOLT	2	DJC00001-
38	01643-31032	WASHER	2	DJC00001-
39	04434-51410	CLIP	1	DJC00001-
40	01010-81020	BOLT	1	DJC00001-
41	01643-31032	WASHER	1	DJC00001-
42	08211-01920	CLIP	1	DJC00001-

FIG.E0200-05A0 ELECTRIC WIRING (MAIN HARNESS) (CLIP) (2/3)

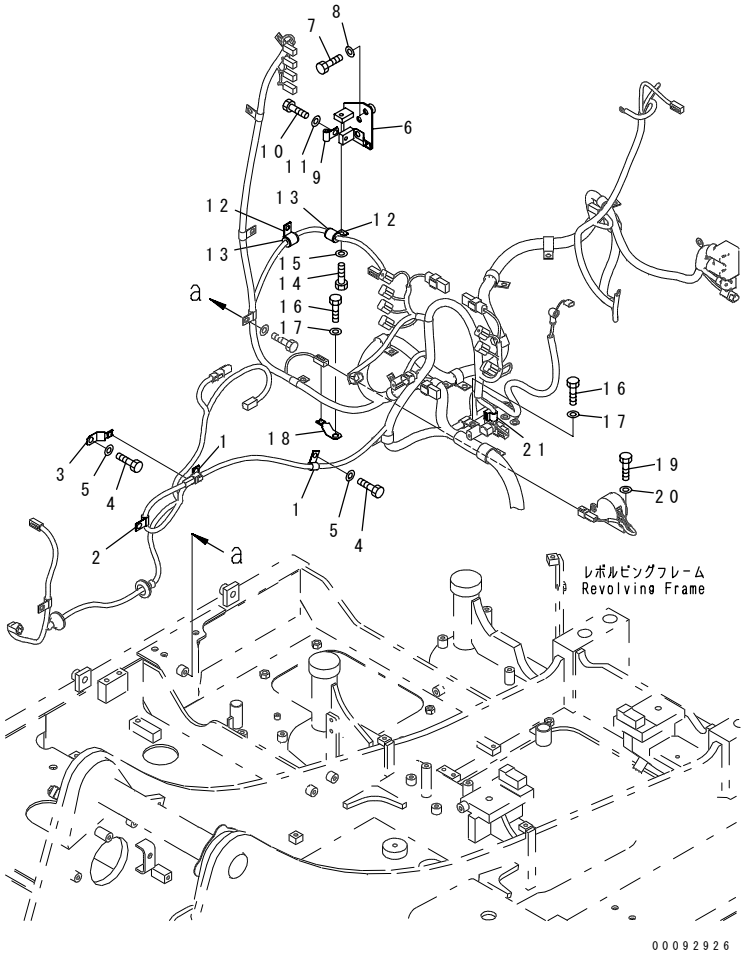

INDEX	PART NO.	DESCRIPTION	Q'TY	SERIAL NO.
1	04434-51410	CLIP	2	DJC00001-
2	04434-50810	CLIP	1	DJC00001-
3	08193-20012	CLIP	1	DJC00001-
4	01010-81020	BOLT	4	DJC00001-
5	01643-31032	WASHER	4	DJC00001-
6	201-06-81530	BRACKET	1	DJC00001-
7	01010-81040	BOLT	2	DJC00001-
8	01643-31032	WASHER	2	DJC00001-
9	600-051-2060	CLIP	1	DJC00001-
10	01010-81020	BOLT	1	DJC00001-
11	01643-31032	WASHER	1	DJC00001-
12	04434-51710	CLIP	2	DJC00001-
13	07095-20211	CUSHION	2	DJC00001-
14	01010-81020	BOLT	1	DJC00001-
15	01643-31032	WASHER	1	DJC00001-
16	01010-81016	BOLT	1	DJC00001-
17	01643-31032	WASHER	1	DJC00001-
18	08193-20012	CLIP	1	DJC00001-
19	01010-80610	BOLT	2	DJC00001-
20	01643-30623	WASHER	2	DJC00001-
21	08211-00720	CLIP	1	DJC00001-

FIG.E0200-06A0 ELECTRIC WIRING (MAIN HARNESS) (CLIP) (3/3)

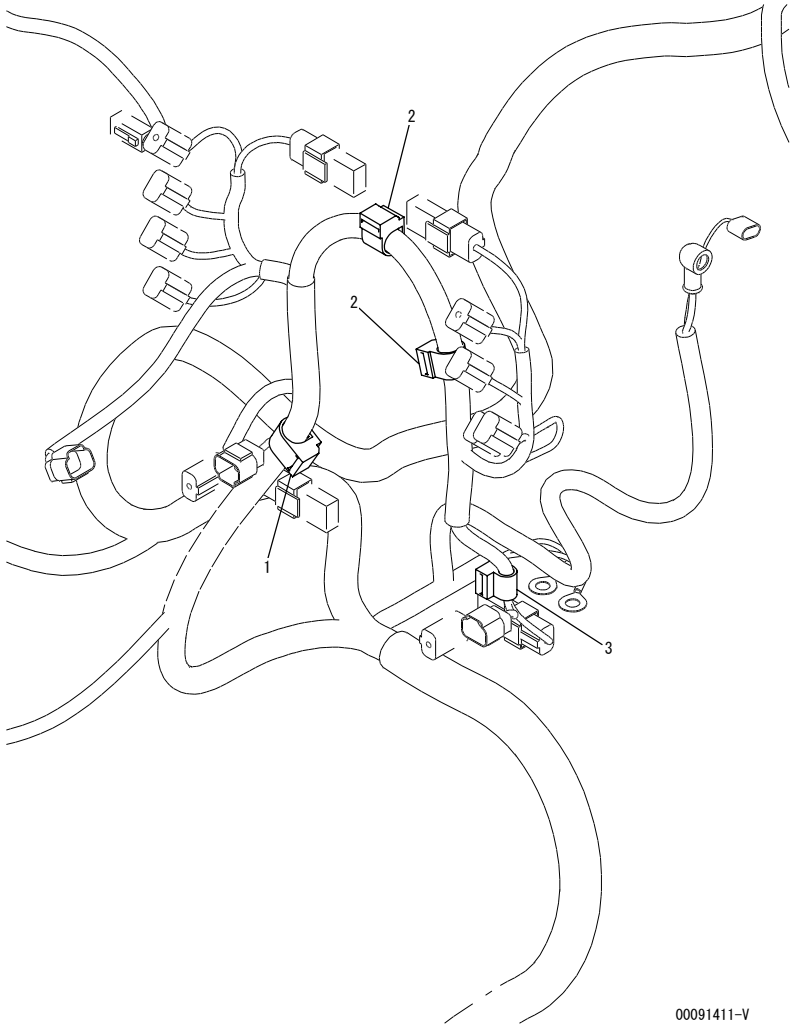

INDEX	PART NO.	DESCRIPTION	Q'TY	SERIAL NO.
1	08211-11520	CLIP.....	1	DJC00001-
2	08211-11320	CLIP.....	2	DJC00001-
3	08211-00720	CLIP.....	1	DJC00001-

FIG.E0200-07A0 ELECTRIC WIRING (FUSE HOLDER)

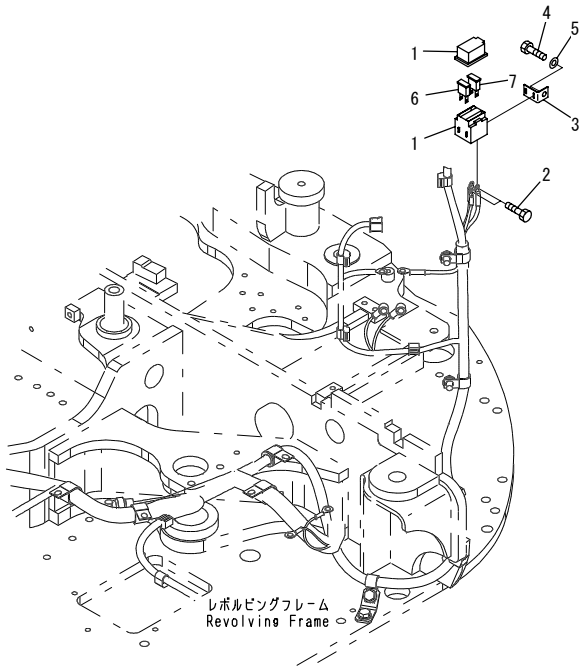

00091412

INDEX	PART NO.	DESCRIPTION	Q'TY	SERIAL NO.
1	421-06-22880	HOLDER	1	DJC00001-
2	421-06-22990	BOLT	4	DJC00001-
3	421-06-22910	BRACKET	1	DJC00001-
4	01010-80816	BOLT	1	DJC00001-
5	01643-30823	WASHER	1	DJC00001-
6	421-06-22830	FUSE, 120A	1	DJC00001-
7	417-06-22610	FUSE, 50A	1	DJC00001-

FIG.E0200-08A0 ELECTRIC WIRING (WIRING HARNESS CLAMP、BATTERY RELAY AND GROUND CABLE)

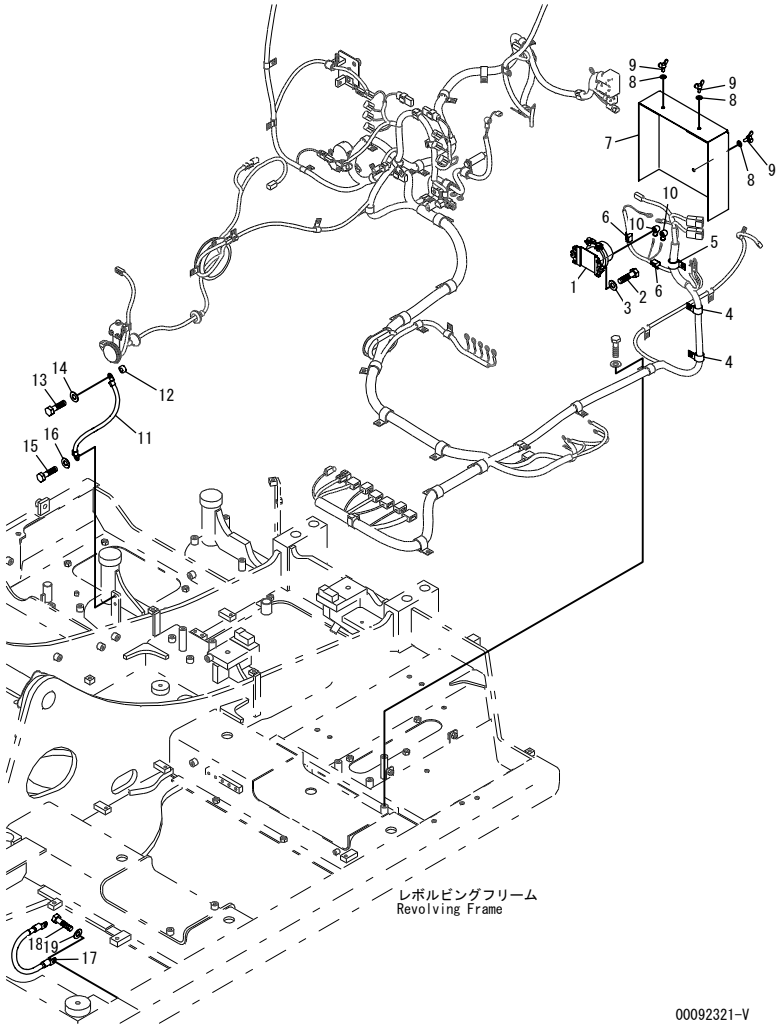

INDEX	PART NO.	DESCRIPTION	Q'TY	SERIAL NO.
1	08088-30000	SWITCH	1	DJC00001-
2	01010-80830	BOLT	2	DJC00001-
3	01643-30823	WASHER	2	DJC00001-
4	04434-51910	CLIP	2	DJC00001-
5	04434-52310	CLIP	1	DJC00001-
6	08211-00720	CLIP	2	DJC00001-
7	201-06-81261	SHEET	1	DJC00001-
8	01643-30823	WASHER	3	DJC00001-
9	01434-00820	BOLT, WING	3	DJC00001-
10	08038-00519	CAP	2	DJC00001-
11	08028-48035	CABLE, EARTH	1	DJC00001-
12	6205-81-9580	SPACER	1	DJC00001-
13	01010-81030	BOLT	1	DJC00001-
14	01643-31032	WASHER	1	DJC00001-
15	01010-81020	BOLT	1	DJC00001-
16	01643-31032	WASHER	1	DJC00001-
17	08028-43030	CABLE, EARTH	1	DJC00001-
18	01010-81020	BOLT	2	DJC00001-
19	01643-31032	WASHER	2	DJC00001-

FIG NO. : E0200-09A0

FIG.E0200-09A0 ELECTRIC WIRING (HORN)

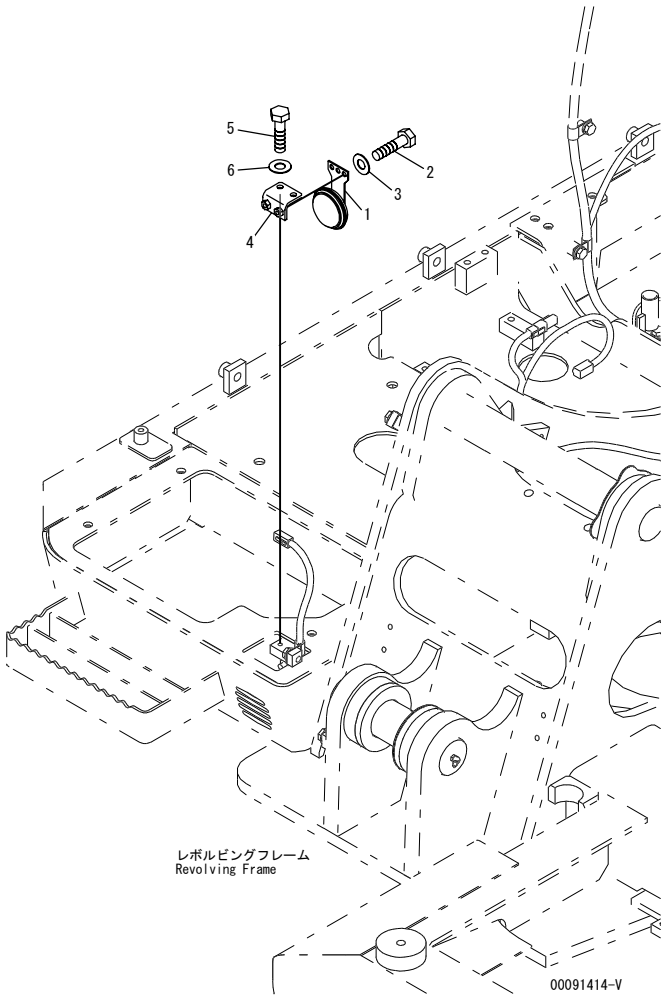

INDEX	PART NO.	DESCRIPTION	Q'TY	SERIAL NO.
1	08160-72400	HORN	1	DJC00001-
2	01010-80820	BOLT	2	DJC00001-
3	01643-30823	WASHER	2	DJC00001-
4	201-06-83531	BRACKET	1	DJC00001-
5	01010-80825	BOLT	2	DJC00001-
6	01643-30823	WASHER	2	DJC00001-

FIG.E0200-10A0 ELECTRIC WIRING (WIRING HARNESS RELAY)

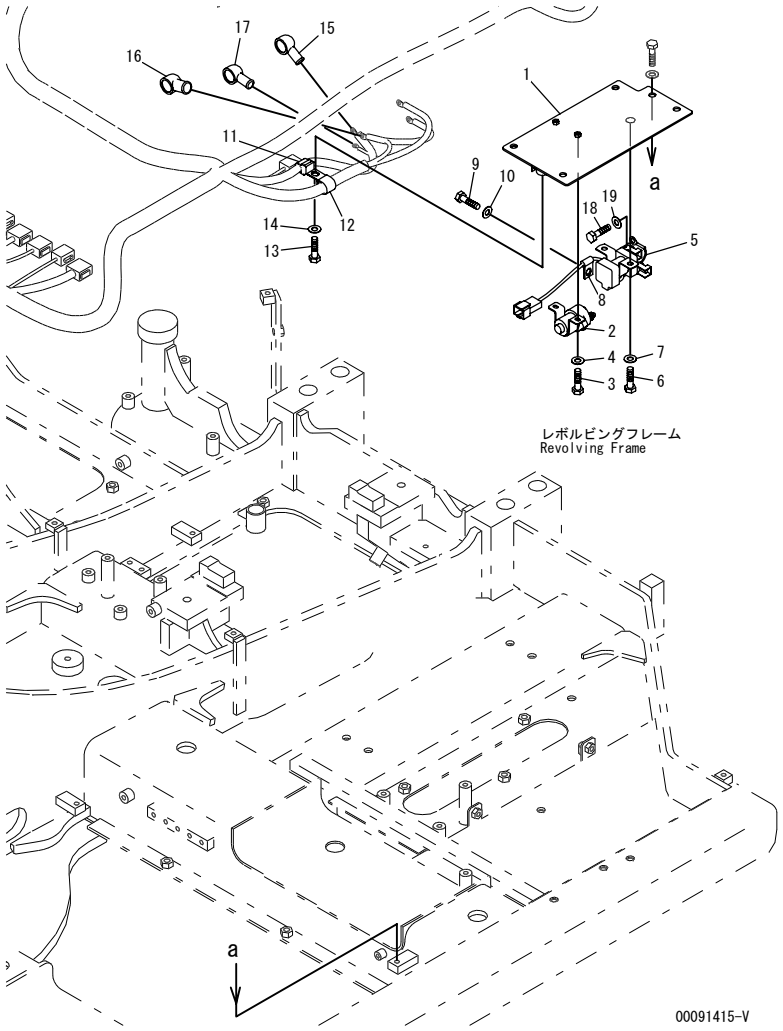

INDEX	PART NO.	DESCRIPTION	Q'TY	SERIAL NO.
1	201-06-81292	BRACKET	1	DJC00001-
2	600-815-2170	SWITCH	1	DJC00001-
3	01010-80616	BOLT	2	DJC00001-
4	01643-30623	WASHER	2	DJC00001-
5	600-815-8941	RELAY	1	DJC00001-
6	01010-80816	BOLT	2	DJC00001-
7	01643-30823	WASHER	2	DJC00001-
8	04434-50610	CLIP	1	DJC00001-
9	01010-81020	BOLT	1	DJC00001-
10	01643-31032	WASHER	1	DJC00001-
11	08211-01020	CLIP	1	DJC00001-
12	04434-52310	CLIP	1	DJC00001-
13	01010-81020	BOLT	1	DJC00001-
14	01643-31032	WASHER	1	DJC00001-
15	08038-02027	CAP	1	DJC00001-
16	08038-04030	CAP	1	DJC00001-
17	08038-00519	CAP	1	DJC00001-
18	01010-80812	BOLT	1	DJC00001-
19	01643-30823	WASHER	1	DJC00001-

HYDRAULIC SYSTEM

FIG.H0110-01A0 HYDRAULIC OIL TANK

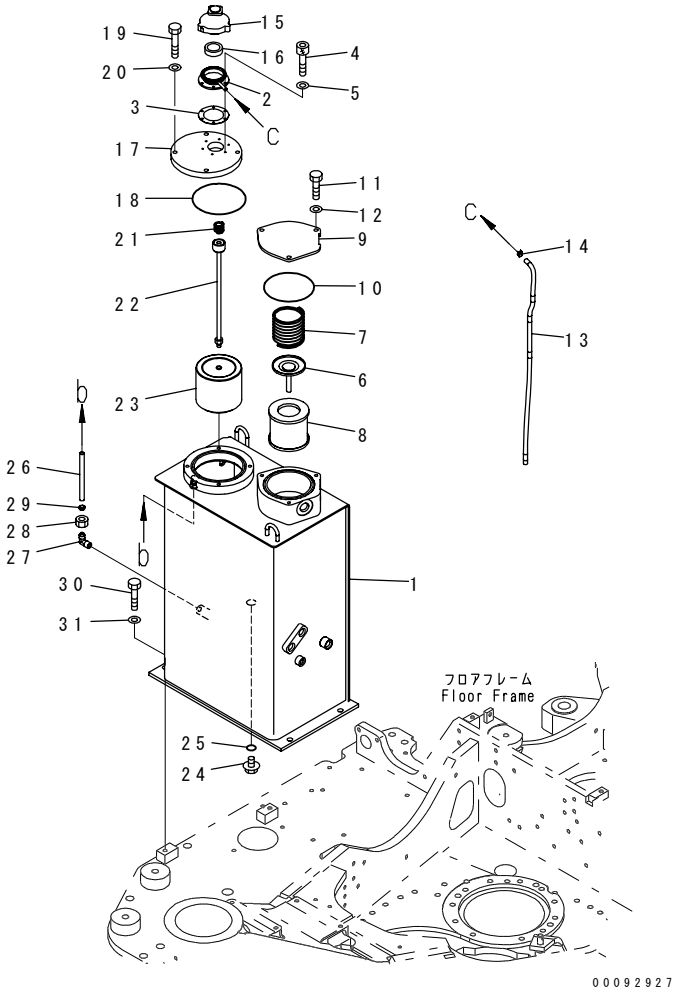

INDEX	PART NO.	DESCRIPTION	Q'TY	SERIAL NO.
1	201-60-81112	TANK	1	DJC00806-
	201-60-81111	TANK	1	DJC00001-DJC00805
2	201-60-12172	FILLER NECK	1	DJC00001-
3	20Y-60-21340	GASKET	1	DJC00001-
4	01252-70516	BOLT	6	DJC00001-
5	01601-20513	WASHER	6	DJC00001-
6	21W-60-41170	VALVE ASS'Y	1	DJC00001-
7	20X-60-22140	SPRING	1	DJC00001-
8	21W-60-41121	ELEMENT	1	DJC00001-
9	201-60-81160	COVER	1	DJC00001-
10	07000-12135	O-RING	1	DJC00001-
11	01010-81025	BOLT	3	DJC00001-
12	01643-31032	WASHER	3	DJC00001-
13	201-60-81170	HOSE	1	DJC00001-
14	07285-00125	CLIP	1	DJC00001-
15	14X-60-31130	CAP	1	DJC00001-
16	423-60-35460	.ELEMENT	1	DJC00001-
17	201-60-81141	COVER	1	DJC00001-
18	07000-12145	O-RING	1	DJC00001-
19	01010-81035	BOLT	4	DJC00001-
20	01643-31032	WASHER	4	DJC00001-
21	12R-60-11230	SPRING	1	DJC00001-
22	201-60-81121	ROD	1	DJC00001-
23	21W-60-41150	STRAINER ASS'Y	1	DJC00001-
24	07044-12412	PLUG	1	DJC00001-
25	07002-12434	O-RING	1	DJC00001-
26	201-60-65240	TUBE	1	DJC00001-
	203-60-31100	ELBOW ASS'Y	2	DJC00001-
27	203-60-31230	.ELBOW	2	DJC00001-
28	203-60-31240	.NUT	2	DJC00001-
29	203-60-31250	.SLEEVE	2	DJC00001-
30	01010-81230	BOLT	4	DJC00001-
31	01643-31232	WASHER	4	DJC00001-

FIG.H0120-01A0 MAIN CONTROL VALVE

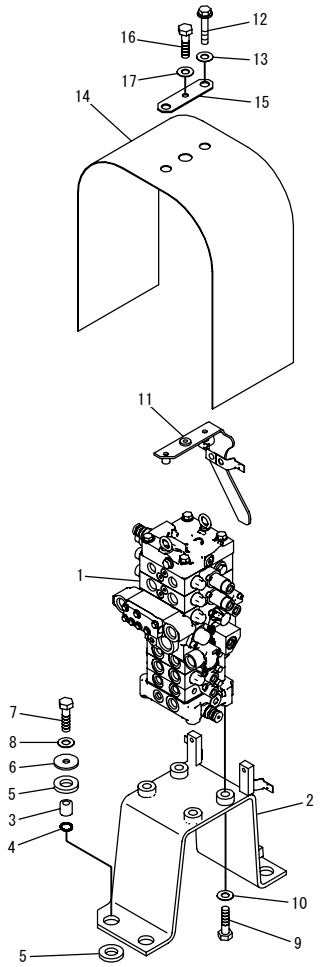

00092322-V

FIG NO. : H0120-01A0

INDEX	PART NO.	DESCRIPTION	Q'TY	SERIAL NO.
1	(723-26-50300)	CONTROL VALVE	1	DJC00001-
2	201-62-83412	BRACKET	1	DJC00001-
3	201-62-83430	SPACER	4	DJC00001-
4	07000-13025	O-RING	4	DJC00001-
5	203-62-42770	CUSHION	8	DJC00001-
6	566-35-42430	PLATE	4	DJC00001-
7	01010-81245	BOLT	4	DJC00001-
8	01643-31232	WASHER	4	DJC00001-
9	01010-81445	BOLT	4	DJC00001-
10	01643-31445	WASHER	4	DJC00001-
11	201-62-83441	BRACKET	1	DJC00001-
12	01010-80835	BOLT	2	DJC00001-
13	01643-30823	WASHER	2	DJC00001-
14	201-62-84281	SHEET	1	DJC00001-
15	201-62-84290	PLATE	1	DJC00001-
16	01010-81025	BOLT	1	DJC00001-
17	01643-31032	WASHER	1	DJC00001-

FIG.H0120-01A1 MAIN CONTROL VALVE (BLADE SPEC.)

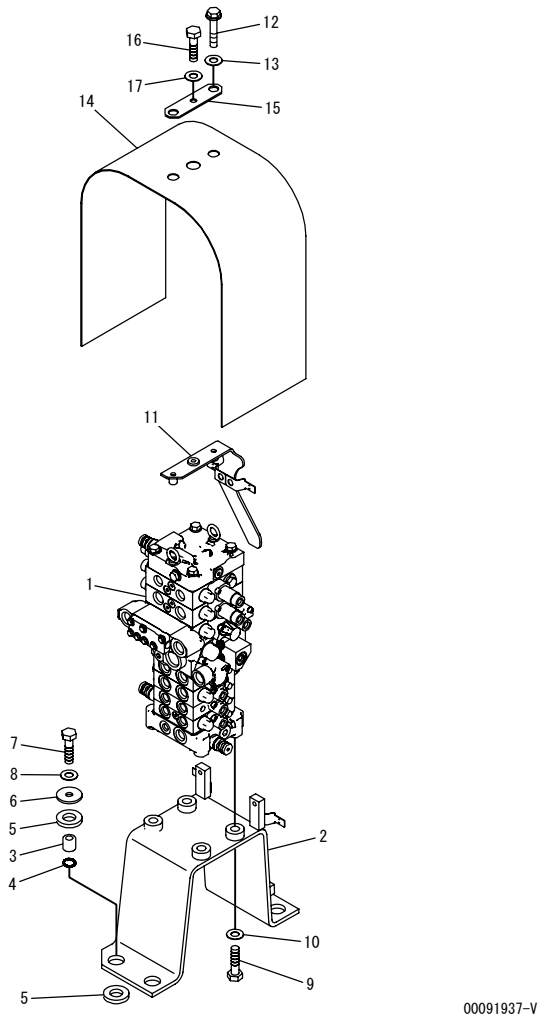

INDEX	PART NO.	DESCRIPTION	Q'TY	SERIAL NO.
1	(723-27-51100)	CONTROL VALVE	1	DJC00001-
2	201-62-83421	BRACKET	1	DJC00001-
3	201-62-83430	SPACER	4	DJC00001-
4	07000-13025	O-RING	4	DJC00001-
5	203-62-42770	CUSHION	8	DJC00001-
6	566-35-42430	PLATE	4	DJC00001-
7	01010-81245	BOLT	4	DJC00001-
8	01643-31232	WASHER	4	DJC00001-
9	01010-81445	BOLT	4	DJC00001-
10	01643-31445	WASHER	4	DJC00001-
11	201-62-83441	BRACKET	1	DJC00001-
12	01010-80835	BOLT	2	DJC00001-
13	01643-30823	WASHER	2	DJC00001-
14	201-62-84281	SHEET	1	DJC00001-
15	201-62-84290	PLATE	1	DJC00001-
16	01010-81025	BOLT	1	DJC00001-
17	01643-31032	WASHER	1	DJC00001-

FIG.H0120-01A2 MAIN CONTROL VALVE (PROVISION FOR 1-ADDITIONAL ACTUATOR PIPING)

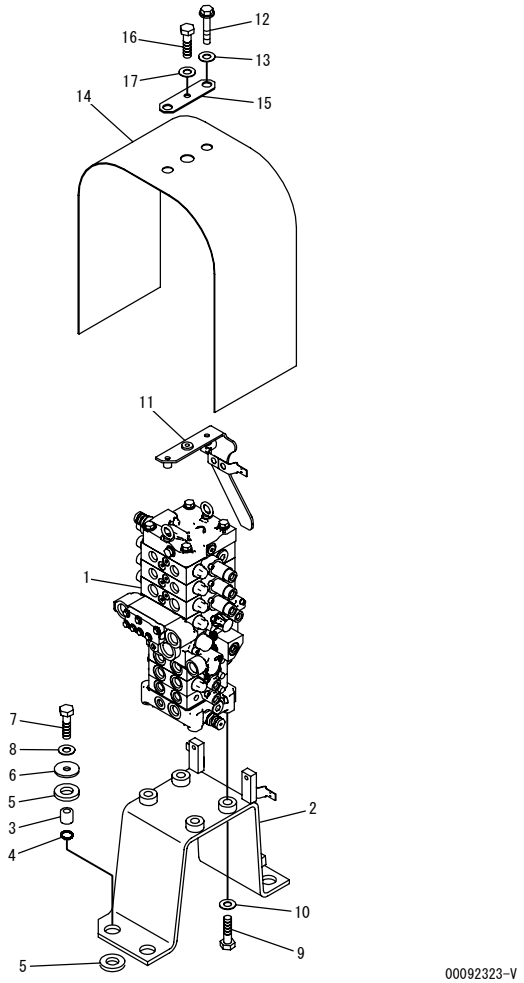

INDEX	PART NO.	DESCRIPTION	Q'TY	SERIAL NO.
1	(723-27-50900)	CONTROL VALVE	1	DJC00001-
2	201-62-83412	BRACKET	1	DJC00001-
3	201-62-83430	SPACER	4	DJC00001-
4	07000-13025	O-RING	4	DJC00001-
5	203-62-42770	CUSHION	8	DJC00001-
6	566-35-42430	PLATE	4	DJC00001-
7	01010-81245	BOLT	4	DJC00001-
8	01643-31232	WASHER	4	DJC00001-
9	01010-81445	BOLT	4	DJC00001-
10	01643-31445	WASHER	4	DJC00001-
11	201-62-83451	BRACKET	1	DJC00001-
12	01010-80835	BOLT	2	DJC00001-
13	01643-30823	WASHER	2	DJC00001-
14	201-62-84281	SHEET	1	DJC00001-
15	201-62-84290	PLATE	1	DJC00001-
16	01010-81025	BOLT	1	DJC00001-
17	01643-31032	WASHER	1	DJC00001-

FIG.H0120-01A3 MAIN CONTROL VALVE (BLADE SPEC.) (PROVISION FOR 1-ADDITIONAL ACTUATOR PIPING)

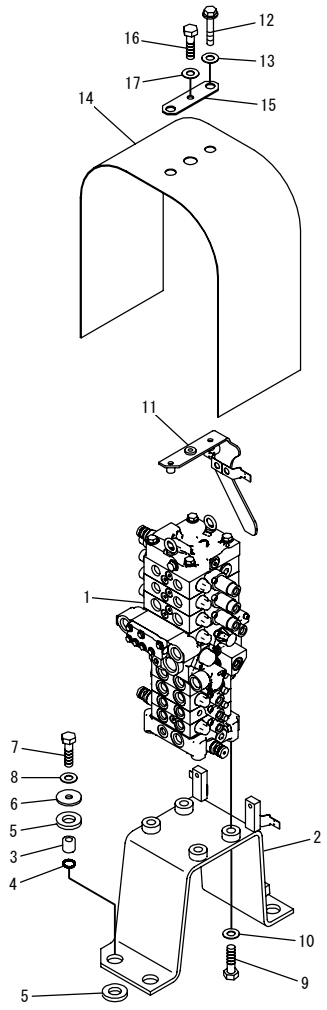

00092324-V

INDEX	PART NO.	DESCRIPTION	Q'TY	SERIAL NO.
1	(723-28-51500)	CONTROL VALVE	1	DJC00001-
2	201-62-83421	BRACKET	1	DJC00001-
3	201-62-83430	SPACER	4	DJC00001-
4	07000-13025	O-RING	4	DJC00001-
5	203-62-42770	CUSHION	8	DJC00001-
6	566-35-42430	PLATE	4	DJC00001-
7	01010-81245	BOLT	4	DJC00001-
8	01643-31232	WASHER	4	DJC00001-
9	01010-81445	BOLT	4	DJC00001-
10	01643-31445	WASHER	4	DJC00001-
11	201-62-83451	BRACKET	1	DJC00001-
12	01010-80835	BOLT	2	DJC00001-
13	01643-30823	WASHER	2	DJC00001-
14	201-62-84281	SHEET	1	DJC00001-
15	201-62-84290	PLATE	1	DJC00001-
16	01010-81025	BOLT	1	DJC00001-
17	01643-31032	WASHER	1	DJC00001-

FIG. H0210-01A0 MAIN PUMP

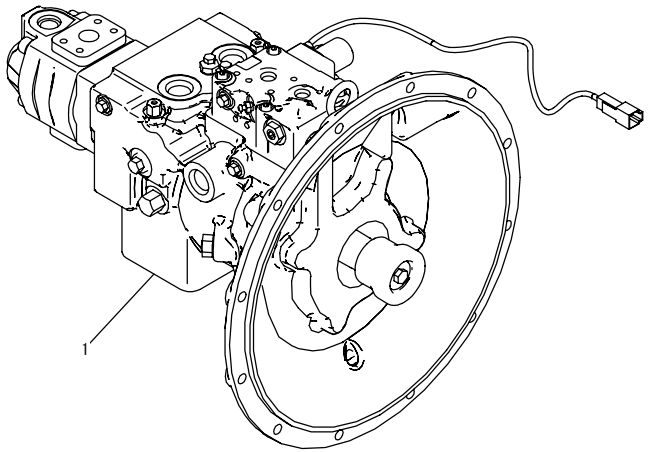

00091940-V

INDEX	PART NO.	DESCRIPTION	Q'TY	SERIAL NO.
1	(708-3T-00161)	PUMP ASS'Y.....	1	DJC00001-

FIG.H0210-01A1 MAIN PUMP (BLADE SPEC.)

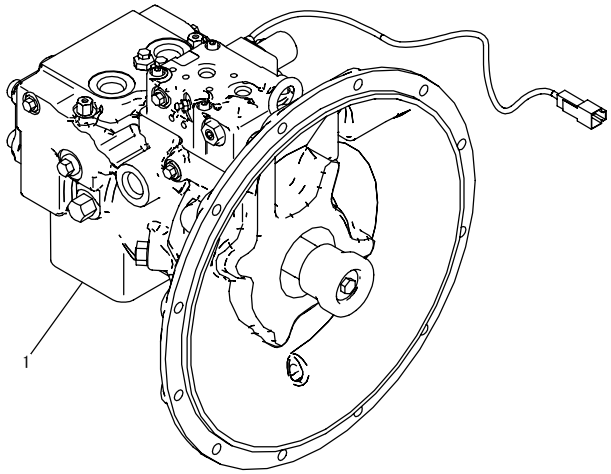

00091939-V

INDEX	PART NO.	DESCRIPTION	Q'TY	SERIAL NO.
1	(708-3T-00151)	PUMP ASS'Y.....	1	DJC00001-

FIG NO. : H0311-01A0

FIG.H0311-01A0 SUCTION LINE

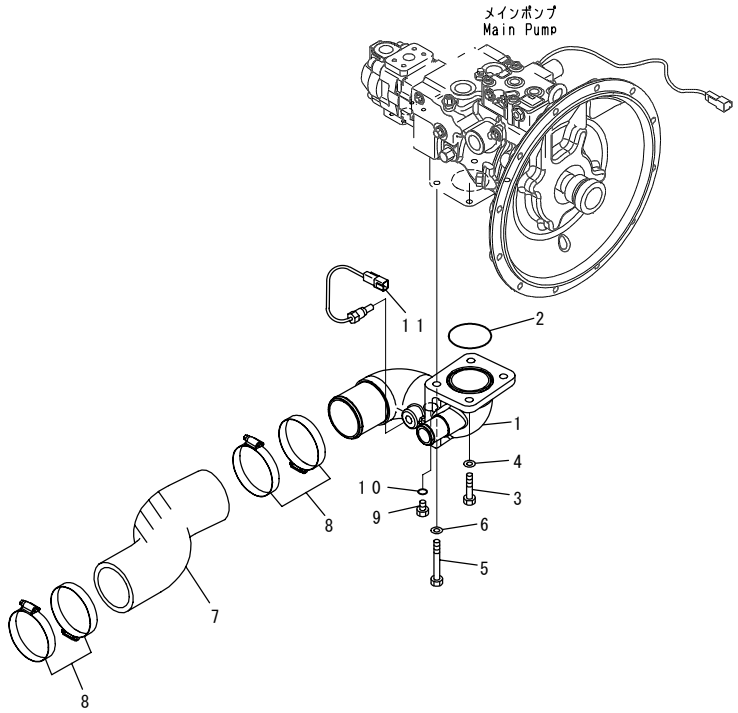

00091926

INDEX	PART NO.	DESCRIPTION	Q'TY	SERIAL NO.
1	21W-62-52311	ELBOW	1	DJC00001-
2	07000-12070	O-RING	1	DJC00001-
3	01010-81240	BOLT	2	DJC00001-
4	01643-31232	WASHER	2	DJC00001-
5	01011-81240	BOLT	2	DJC00001-
6	01643-31232	WASHER	2	DJC00001-
7	201-62-81311	HOSE	1	DJC00001-
8	07289-00095	CLAMP	4	DJC00001-
9	07040-12412	PLUG	1	DJC00001-
10	07002-12434	O-RING	1	DJC00001-
11	7861-93-3320	SENSOR	1	DJC00001-

FIG.H0311-01A1 SUCTION LINE (BLADE SPEC.)

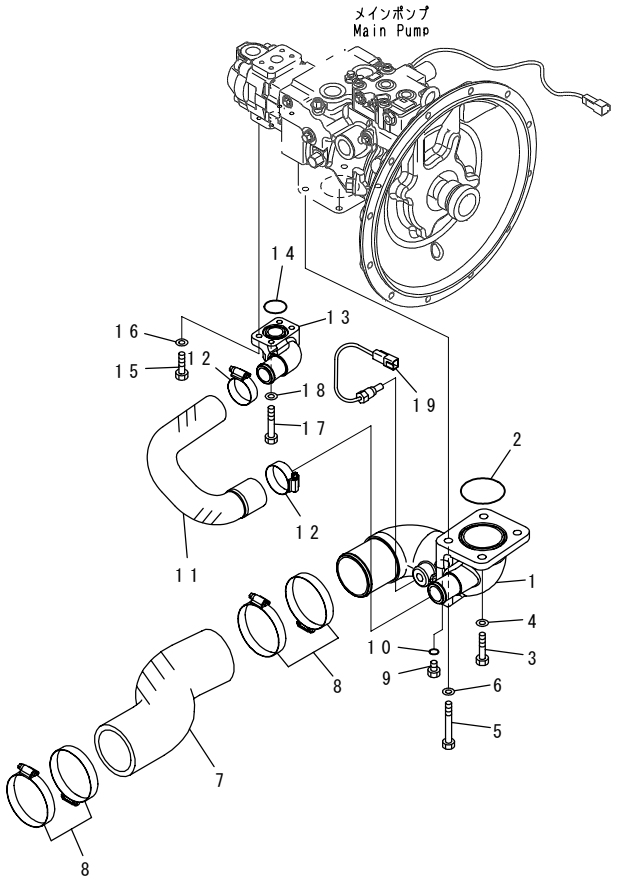

00091418

INDEX	PART NO.	DESCRIPTION	Q'TY	SERIAL NO.
1	21W-62-53311	ELBOW	1	DJC00001-
2	07000-12070	O-RING	1	DJC00001-
3	01010-81240	BOLT	2	DJC00001-
4	01643-31232	WASHER	2	DJC00001-
5	01011-81240	BOLT	2	DJC00001-
6	01643-31232	WASHER	2	DJC00001-
7	201-62-81311	HOSE	1	DJC00001-
8	07289-00095	CLAMP	4	DJC00001-
9	07040-12412	PLUG	1	DJC00001-
10	07002-12434	O-RING	1	DJC00001-
11	21W-62-53320	HOSE	1	DJC00001-
12	07289-00055	CLAMP	2	DJC00001-
13	21W-62-43260	ELBOW	1	DJC00001-
14	07000-13032	O-RING	1	DJC00001-
15	01010-80830	BOLT	2	DJC00001-
16	01643-30823	WASHER	2	DJC00001-
17	01010-80850	BOLT	2	DJC00001-
18	01643-30823	WASHER	2	DJC00001-
19	7861-93-3320	SENSOR	1	DJC00001-

FIG.H0312-01A0 DELIVERY PIPING

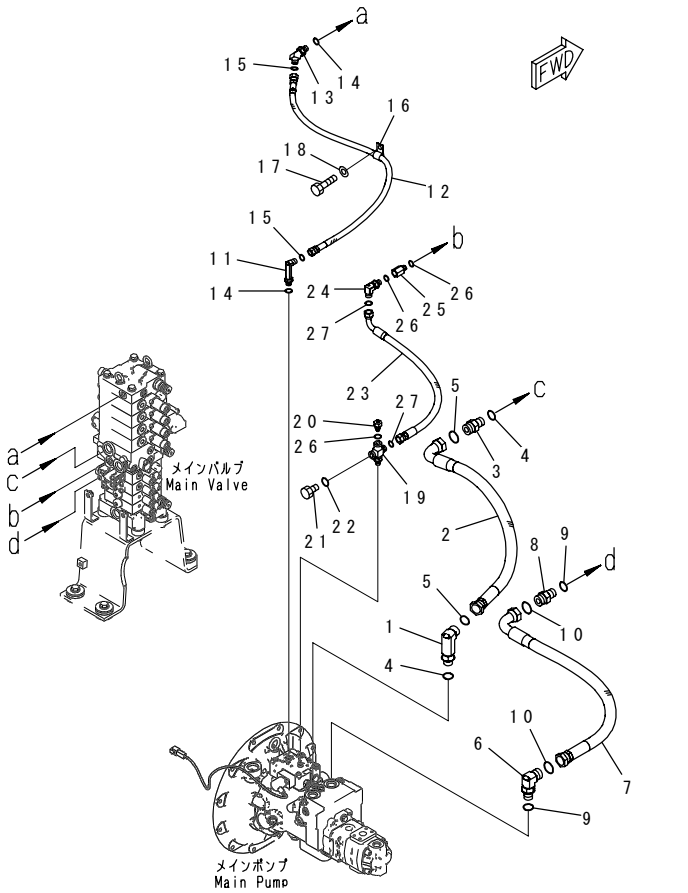

INDEX	PART NO.	DESCRIPTION	Q'TY	SERIAL NO.
1	02782-10628	ELBOW	1	DJC00001-
2	201-62-82111	HOSE	1	DJC00001-
3	02781-00628	UNION	1	DJC00001-
4	07002-12434	O-RING	2	DJC00001-
5	02896-11018	O-RING	2	DJC00001-
6	02782-10630	ELBOW	1	DJC00001-
7	201-62-82121	HOSE	1	DJC00001-
8	02781-00628	UNION	1	DJC00001-
9	07002-12434	O-RING	2	DJC00001-
10	02896-11018	O-RING	2	DJC00001-
11	02782-10212	ELBOW	1	DJC00001-
12	201-62-82141	HOSE,FACE SEAL TYPE	1	DJC00001-
	21U-62-34750	.BAND, BLUE	1	DJC00001-
13	201-62-83990	ELBOW	1	DJC00001-
14	07002-11423	O-RING	2	DJC00001-
15	02896-11008	O-RING	2	DJC00001-
16	04434-51310	CLIP	1	DJC00001-
17	01010-81016	BOLT	1	DJC00001-
18	01643-31032	WASHER	1	DJC00001-
19	201-62-83631	ELBOW	1	DJC00001-
20	21W-62-44920	BLEEDER	1	DJC00001-
21	07040-11007	PLUG	1	DJC00001-
22	07002-11023	O-RING	1	DJC00001-
23	201-62-82151	HOSE	1	DJC00001-
24	21W-62-43950	ELBOW ASS'Y	1	DJC00001-
25	203-62-58880	ADAPTER	1	DJC00001-
26	07002-11423	O-RING	4	DJC00001-
27	02896-11009	O-RING	2	DJC00001-

FIG.H0312-01A1 DELIVERY PIPING (BLADE SPEC.)

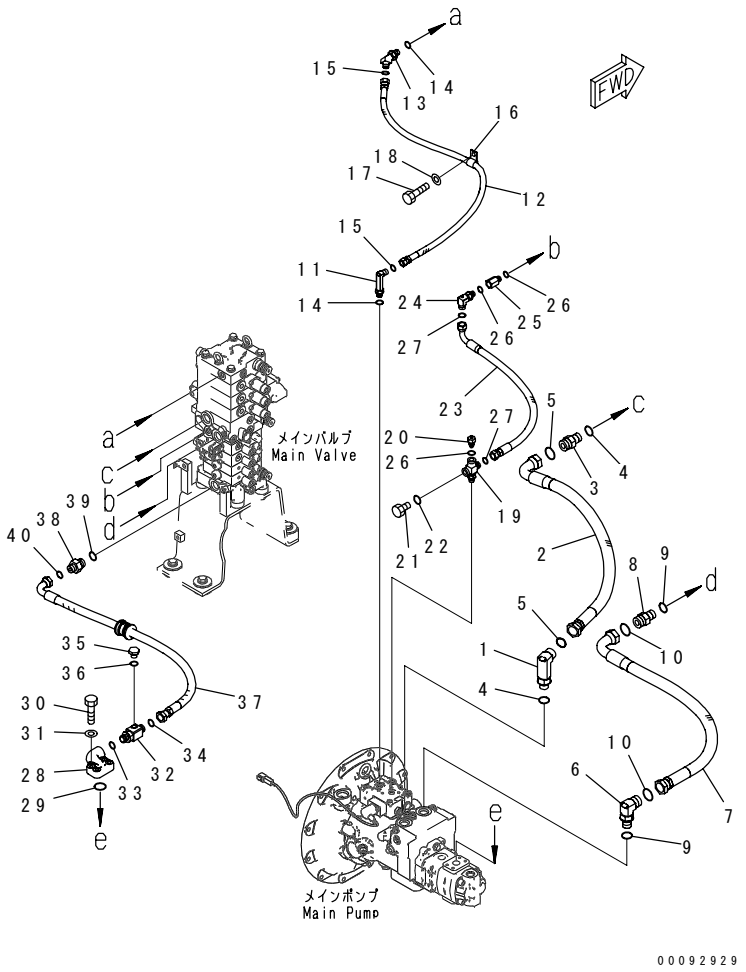

INDEX	PART NO.	DESCRIPTION	Q'TY	SERIAL NO.
1	02782-10628	ELBOW	1	DJC00001-
2	201-62-82111	HOSE	1	DJC00001-
3	02781-00628	UNION	1	DJC00001-
4	07002-12434	O-RING	2	DJC00001-
5	02896-11018	O-RING	2	DJC00001-
6	02782-10630	ELBOW	1	DJC00001-
7	201-62-82121	HOSE	1	DJC00001-
8	02781-00628	UNION	1	DJC00001-
9	07002-12434	O-RING	2	DJC00001-
10	02896-11018	O-RING	2	DJC00001-
11	02782-10212	ELBOW	1	DJC00001-
12	201-62-82141	HOSE,FACE SEAL TYPE	1	DJC00001-
	21U-62-34750	.BAND, BLUE	1	DJC00001-
13	201-62-83990	ELBOW	1	DJC00001-
14	07002-11423	O-RING	2	DJC00001-
15	02896-11008	O-RING	2	DJC00001-
16	04434-51310	CLIP	1	DJC00001-
17	01010-81016	BOLT	1	DJC00001-
18	01643-31032	WASHER	1	DJC00001-
19	201-62-83631	ELBOW	1	DJC00001-
20	21W-62-44920	BLEEDER	1	DJC00001-
21	07040-11007	PLUG	1	DJC00001-
22	07002-11023	O-RING	1	DJC00001-
23	201-62-82151	HOSE	1	DJC00001-
24	21W-62-43950	ELBOW ASS'Y	1	DJC00001-
25	203-62-58880	ADAPTER	1	DJC00001-
26	07002-11423	O-RING	4	DJC00001-
27	02896-11009	O-RING	2	DJC00001-
28	21W-62-43160	BLOCK	1	DJC00001-
29	07000-13030	O-RING	1	DJC00001-
30	01010-80835	BOLT	4	DJC00001-
31	01643-30823	WASHER	4	DJC00001-
32	201-62-84470	TEE	1	DJC00001-
33	07002-12034	O-RING	1	DJC00001-
34	02896-11012	O-RING	1	DJC00001-
35	07040-11007	PLUG	1	DJC00001-
36	07002-11023	O-RING	1	DJC00001-
37	201-62-84950	HOSE ASS'Y	1	DJC00001-
	201-62-82132	.HOSE	1	DJC00001-
	07095-00419	.CUSHION	1	DJC00001-
	08034-20536	.BAND	2	DJC00001-
38	02781-0042A	JOINT	1	DJC00001-

FIG NO. : H0312-01A1

INDEX	PART NO.	DESCRIPTION	Q'TY	SERIAL NO.
39	07002-12434	O-RING.....	1	DJC00001-
40	02896-11012	O-RING.....	1	DJC00001-

PC70-8

FIG.H0320-01A0 OIL COOLER PIPING (OIL COOLER TO MAIN VALVE)

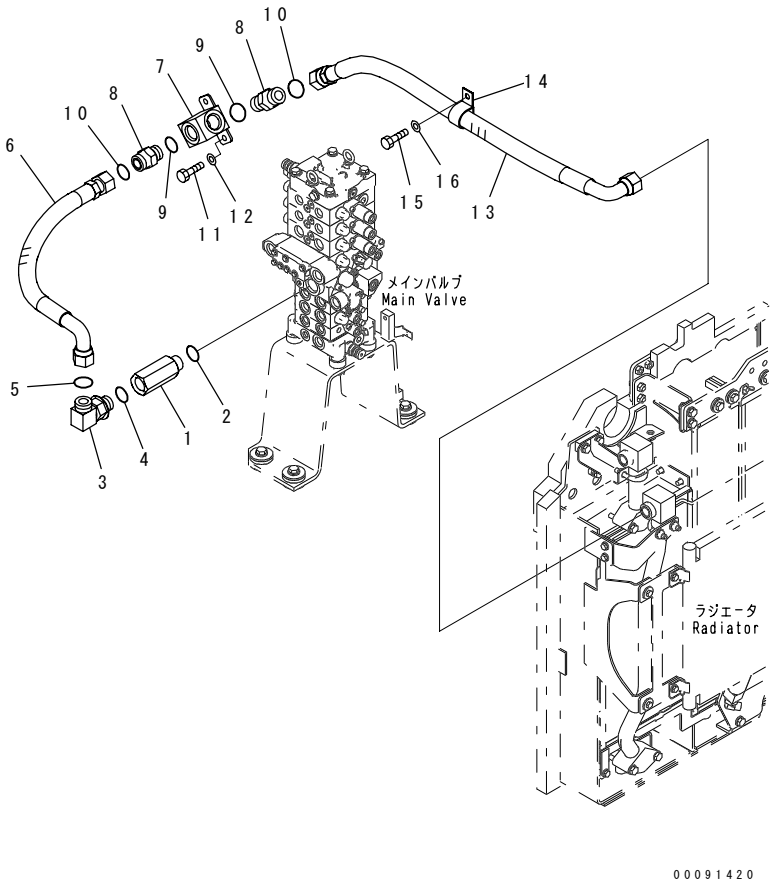

INDEX	PART NO.	DESCRIPTION	Q'TY	SERIAL NO.
1	201-62-82390	ADAPTER	1	DJC00001-
2	07002-13334	O-RING	1	DJC00001-
3	21W-62-42640	ELBOW	1	DJC00001-
4	07002-13334	O-RING	1	DJC00001-
5	207-62-64740	O-RING	1	DJC00001-
6	201-62-82611	HOSE	1	DJC00001-
7	201-62-84260	ELBOW	1	DJC00001-
8	207-62-72110	UNION	2	DJC00001-
9	07002-13334	O-RING	2	DJC00001-
10	207-62-64740	O-RING	2	DJC00001-
11	01010-81020	BOLT	2	DJC00001-
12	01643-31032	WASHER	2	DJC00001-
13	201-62-82161	HOSE	1	DJC00001-
14	23S-61-24870	CLIP	1	DJC00001-
15	01010-81020	BOLT	1	DJC00001-
16	01643-31032	WASHER	1	DJC00001-

FIG.H0320-01A1 OIL COOLER PIPING (OIL COOLER TO MAIN VALVE) (PROVISION FOR 1-ADDITIONAL ACTUATOR PIPING)

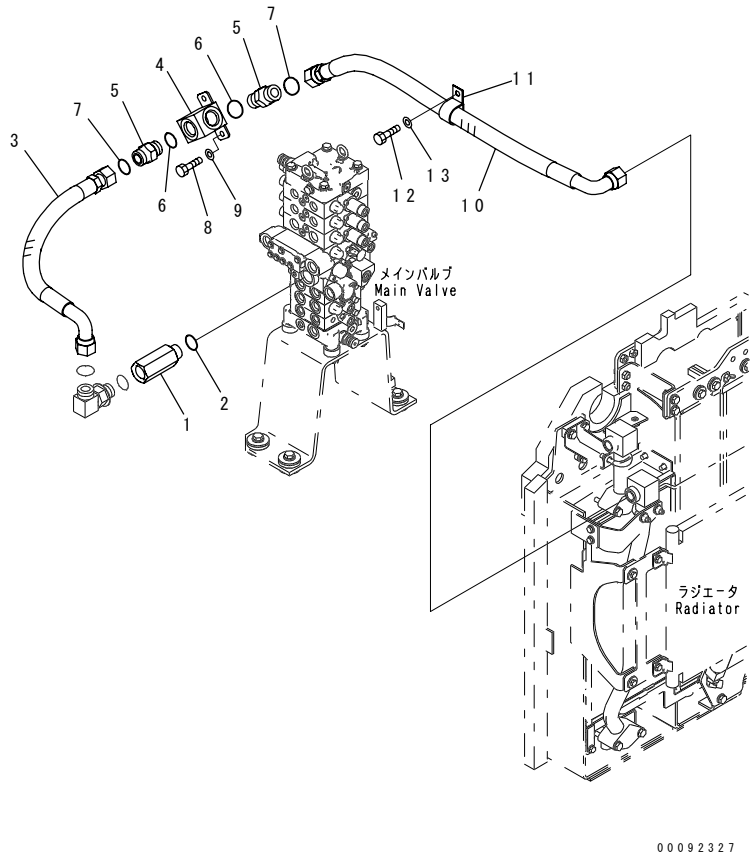

INDEX	PART NO.	DESCRIPTION	Q'TY	SERIAL NO.
1	201-62-82390	ADAPTER	1	DJC00001-
2	07002-13334	O-RING	1	DJC00001-
3	201-62-82611	HOSE	1	DJC00001-
4	201-62-84260	ELBOW	1	DJC00001-
5	207-62-72110	UNION	2	DJC00001-
6	07002-13334	O-RING	2	DJC00001-
7	207-62-64740	O-RING	2	DJC00001-
8	01010-81020	BOLT	2	DJC00001-
9	01643-31032	WASHER	2	DJC00001-
10	201-62-82161	HOSE	1	DJC00001-
11	23S-61-24870	CLIP	1	DJC00001-
12	01010-81020	BOLT	1	DJC00001-
13	01643-31032	WASHER	1	DJC00001-

FIG.H0320-02A0 OIL COOLER PIPING (OIL COOLER TO HYDRAULIC OIL TANK)

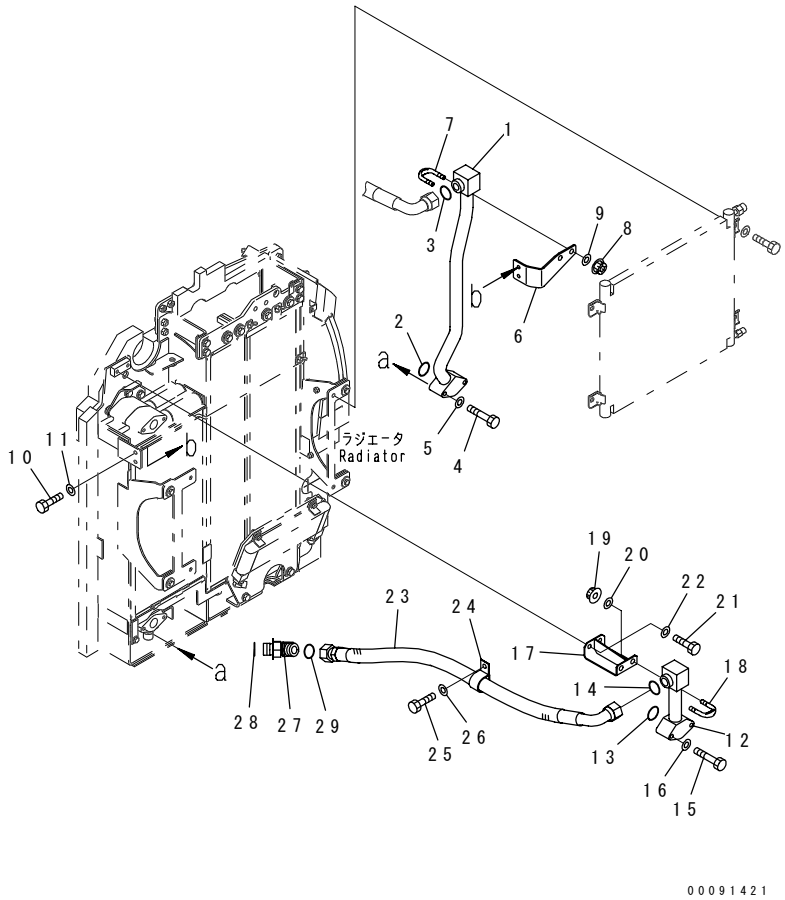

INDEX	PART NO.	DESCRIPTION	Q'TY	SERIAL NO.
1	201-62-82771	TUBE	1	DJC00001-
2	07000-13035	O-RING	1	DJC00001-
3	207-62-64740	O-RING	1	DJC00001-
4	01010-81070	BOLT	2	DJC00001-
5	01643-31032	WASHER	2	DJC00001-
6	201-03-81171	PLATE	1	DJC00001-
7	07283-33442	CLIP	1	DJC00001-
8	01597-01009	NUT	2	DJC00001-
9	01643-31032	WASHER	2	DJC00001-
10	01010-81020	BOLT	2	DJC00001-
11	01643-31032	WASHER	2	DJC00001-
12	201-62-82760	TUBE	1	DJC00001-
13	07000-13035	O-RING	1	DJC00001-
14	207-62-64740	O-RING	1	DJC00001-
15	01010-81070	BOLT	2	DJC00001-
16	01643-31032	WASHER	2	DJC00001-
17	201-62-82731	BRACKET	1	DJC00001-
18	07283-33442	CLIP	1	DJC00001-
19	01597-01009	NUT	2	DJC00001-
20	01643-31032	WASHER	2	DJC00001-
21	01010-80820	BOLT	2	DJC00001-
22	01643-30823	WASHER	2	DJC00001-
23	201-62-82691	HOSE	1	DJC00001-
24	23S-61-24870	CLIP	1	DJC00001-
25	01010-81020	BOLT	1	DJC00001-
26	01643-31032	WASHER	1	DJC00001-
27	201-62-81210	ELBOW	1	DJC00001-
28	07002-13334	O-RING	1	DJC00001-
29	207-62-64740	O-RING	1	DJC00001-

FIG NO. : H0330-01A0

FIG.H0330-01A0 RETURN LINE

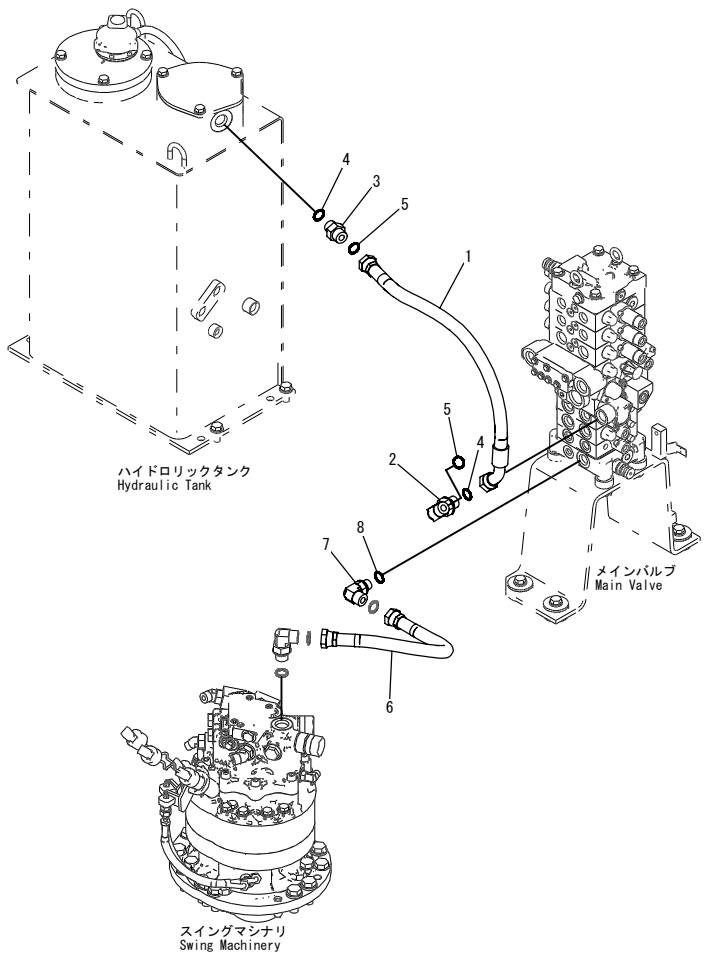

INDEX	PART NO.	DESCRIPTION	Q'TY	SERIAL NO.
1	201-62-82171	HOSE	1	DJC00001-
2	02782-10522	ELBOW	1	DJC00001-
3	02781-00522	UNION	1	DJC00001-
4	07002-12434	O-RING	2	DJC00001-
5	02896-11015	O-RING	2	DJC00001-
6	201-62-82180	HOSE	1	DJC00001-
7	02782-10516	ELBOW	1	DJC00001-
8	07002-12034	O-RING	1	DJC00001-

FIG.H0340-01A0 DRAIN LINES

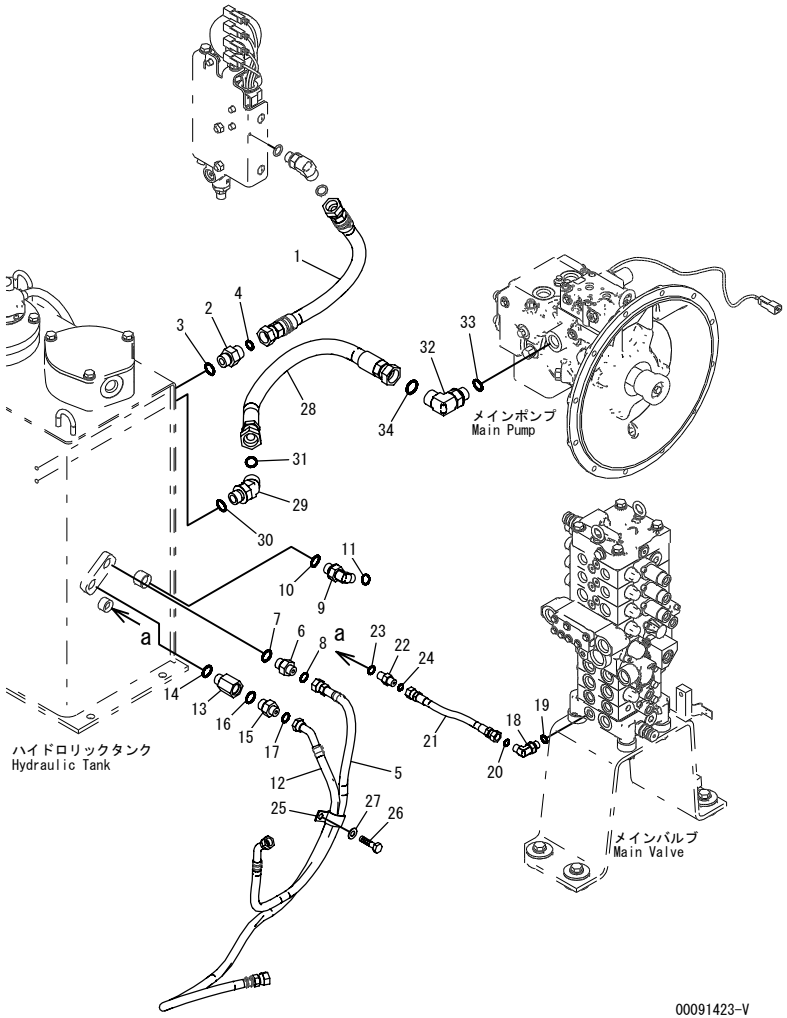

INDEX	PART NO.	DESCRIPTION	Q'TY	SERIAL NO.
1	02762-005A4	HOSE	1	DJC00001-
2	02781-00522	UNION	1	DJC00001-
3	07002-12434	O-RING	1	DJC00001-
4	02896-11015	O-RING	1	DJC00001-
5	201-62-82680	HOSE	1	DJC00001-
6	02781-00315	UNION	1	DJC00001-
7	07002-12034	O-RING	1	DJC00001-
8	02896-11009	O-RING	1	DJC00001-
9	02782-10315	ELBOW	1	DJC00001-
10	07002-12034	O-RING	1	DJC00001-
11	02896-11009	O-RING	1	DJC00001-
12	201-62-82670	HOSE	1	DJC00001-
13	124-49-51430	JOINT	1	DJC00001-
14	07002-12034	O-RING	1	DJC00001-
15	02781-00315	UNION	1	DJC00001-
16	07002-12034	O-RING	1	DJC00001-
17	02896-11009	O-RING	1	DJC00001-
18	02782-10210	ELBOW	1	DJC00001-
19	07002-11423	O-RING	1	DJC00001-
20	02896-11008	O-RING	1	DJC00001-
21	201-62-82190	HOSE	1	DJC00001-
22	02781-0021D	UNION	1	DJC00001-
23	07002-11423	O-RING	1	DJC00001-
24	02896-11008	O-RING	1	DJC00001-
25	04435-51610	CLIP	1	DJC00001-
26	01010-81016	BOLT	1	DJC00001-
27	01643-31032	WASHER	1	DJC00001-
28	201-62-82210	HOSE	1	DJC00001-
29	02783-10628	ELBOW	1	DJC00001-
30	07002-62434	O-RING	1	DJC00001-
31	02896-61018	O-RING	1	DJC00001-
32	02782-10628	ELBOW	1	DJC00001-
33	07002-62434	O-RING	1	DJC00001-
34	02896-61018	O-RING	1	DJC00001-

FIG.H1210-01A0 BOOM DRIFT LINE

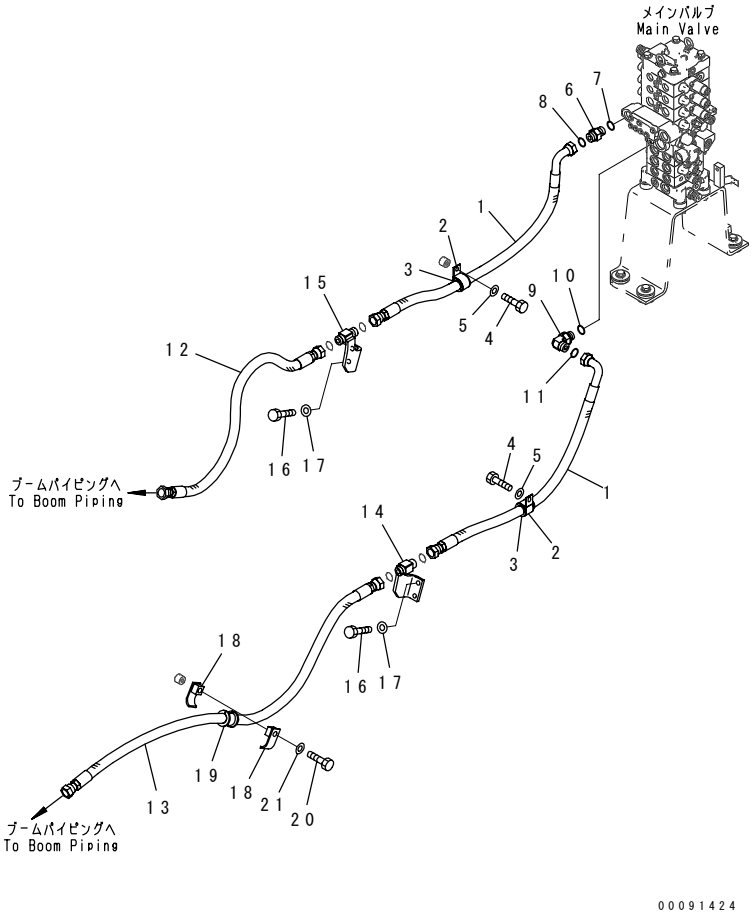

INDEX	PART NO.	DESCRIPTION	Q'TY	SERIAL NO.
1	201-62-82231	HOSE	2	DJC00001-
2	04434-53411	CLIP	2	DJC00001-
3	07095-20627	CUSHION	2	DJC00001-
4	01010-81020	BOLT	2	DJC00001-
5	01643-31032	WASHER	2	DJC00001-
6	02781-00522	UNION	1	DJC00001-
7	07002-12434	O-RING	1	DJC00001-
8	02896-11015	O-RING	1	DJC00001-
9	02782-10522	ELBOW	1	DJC00001-
10	07002-12434	O-RING	1	DJC00001-
11	02896-11015	O-RING	1	DJC00001-
12	201-62-82241	HOSE	1	DJC00001-
13	201-62-82631	HOSE	1	DJC00001-
14	201-62-82712	BRACKET	1	DJC00001-
15	201-62-82722	BRACKET	1	DJC00001-
16	01010-81025	BOLT	4	DJC00001-
17	01643-31032	WASHER	4	DJC00001-
18	07094-10518	CLAMP	2	DJC00001-
19	07095-00524	CUSHION	1	DJC00001-
20	01010-81265	BOLT	1	DJC00001-
21	01643-31232	WASHER	1	DJC00001-

FIG.H1220-01A0 ARM AND BUCKET LINE

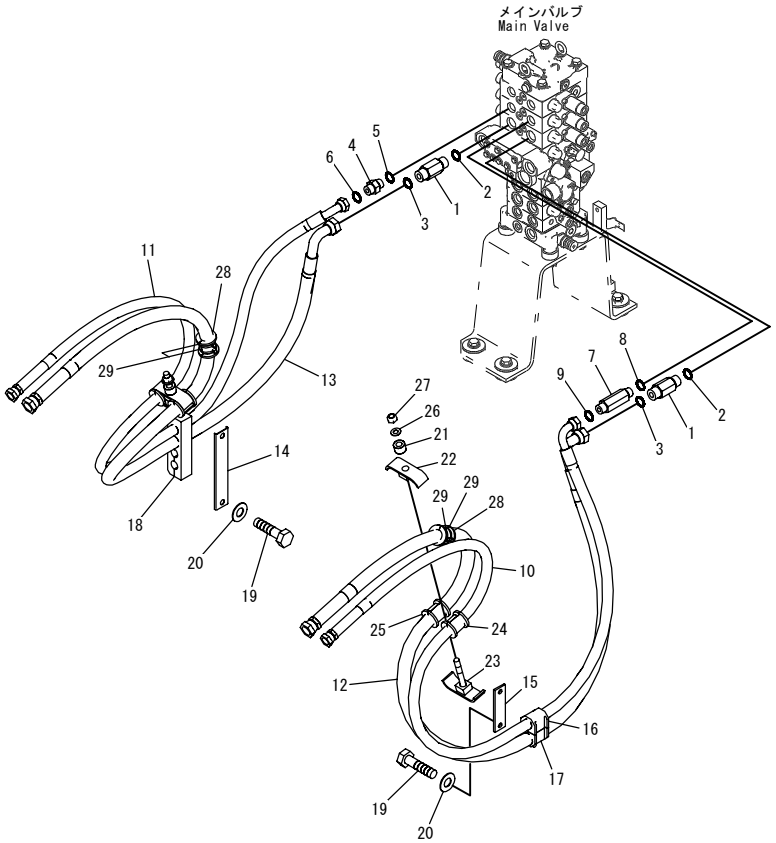

INDEX	PART NO.	DESCRIPTION	Q'TY	SERIAL NO.
1	21W-62-42481	NIPPLE	2	DJC00001-
2	07002-12434	O-RING	2	DJC00001-
3	02896-11015	O-RING	2	DJC00001-
4	02781-00422	UNION	1	DJC00001-
5	07002-12034	O-RING	1	DJC00001-
6	02896-11012	O-RING	1	DJC00001-
7	21W-62-42470	NIPPLE	1	DJC00001-
8	07002-12034	O-RING	1	DJC00001-
9	02896-11012	O-RING	1	DJC00001-
10	201-62-82261	HOSE	1	DJC00001-
11	201-62-82251	HOSE	1	DJC00001-
12	201-62-82281	HOSE	1	DJC00001-
13	201-62-82272	HOSE	1	DJC00001-
14	201-62-72840	PLATE	1	DJC00001-
15	201-62-71780	PLATE	1	DJC00001-
16	20T-62-71671	CUSHION	1	DJC00001-
17	201-62-77130	CUSHION	1	DJC00001-
18	201-62-84211	CUSHION	1	DJC00001-
19	01010-81025	BOLT	4	DJC00001-
20	01643-31032	WASHER	4	DJC00001-
21	203-937-7890	COLLAR	2	DJC00001-
22	07094-30417	CLAMP	2	DJC00001-
23	201-62-84241	CLAMP	2	DJC00001-
24	07095-00420	CUSHION	2	DJC00001-
25	07095-00526	CUSHION	2	DJC00001-
26	01643-31232	WASHER	2	DJC00001-
27	01580-11210	NUT	2	DJC00001-
28	07095-00525	CUSHION	2	DJC00001-
29	08034-20536	BAND	4	DJC00001-

FIG.H1270-01A0 ATTACHMENT LINE (MAIN VALVE PIPING)

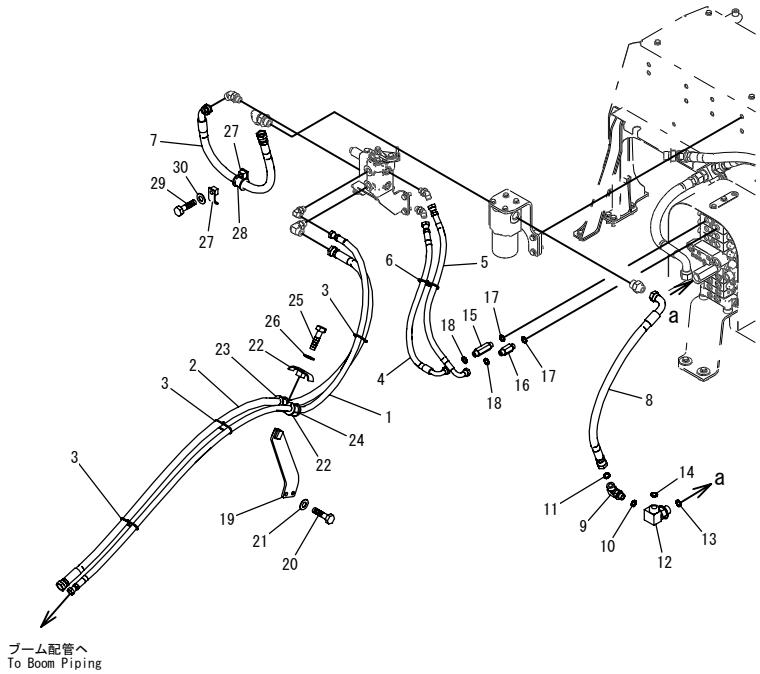

INDEX	PART NO.	DESCRIPTION	Q'TY	SERIAL NO.
1	201-973-8241	HOSE	1	DJC00001-
2	201-973-8231	HOSE	1	DJC00001-
3	08034-20519	BAND	3	DJC00001-
4	201-973-8420	HOSE	1	DJC00001-
5	201-973-8430	HOSE	1	DJC00001-
6	08034-20519	BAND	1	DJC00001-
7	201-973-8450	HOSE	1	DJC00001-
8	201-973-8440	HOSE	1	DJC00001-
9	02782-10628	ELBOW	1	DJC00001-
10	07002-12434	O-RING	1	DJC00001-
11	02896-11018	O-RING	1	DJC00001-
12	21W-973-4141	ELBOW	1	DJC00001-
13	07002-13334	O-RING	1	DJC00001-
14	207-62-64740	O-RING	1	DJC00001-
15	21W-62-42470	NIPPLE	1	DJC00001-
16	427-43-28660	UNION	1	DJC00001-
17	07002-12034	O-RING	2	DJC00001-
18	02896-11012	O-RING	2	DJC00001-
19	201-973-8191	BRACKET	1	DJC00001-
20	01010-81230	BOLT	2	DJC00001-
21	01643-31232	WASHER	2	DJC00001-
22	07094-30620	CLAMP	2	DJC00001-
23	07095-00627	CUSHION	1	DJC00001-
24	22B-62-12320	CUSHION	1	DJC00001-
25	01010-81270	BOLT	1	DJC00001-
26	01643-31232	WASHER	1	DJC00001-
27	07094-10620	CLAMP	2	DJC00001-
28	07095-00627	CUSHION	1	DJC00001-
29	01010-81270	BOLT	1	DJC00001-
30	01643-31232	WASHER	1	DJC00001-

FIG.H1270-02A0 ATTACHMENT LINE (CONNECTING PART)

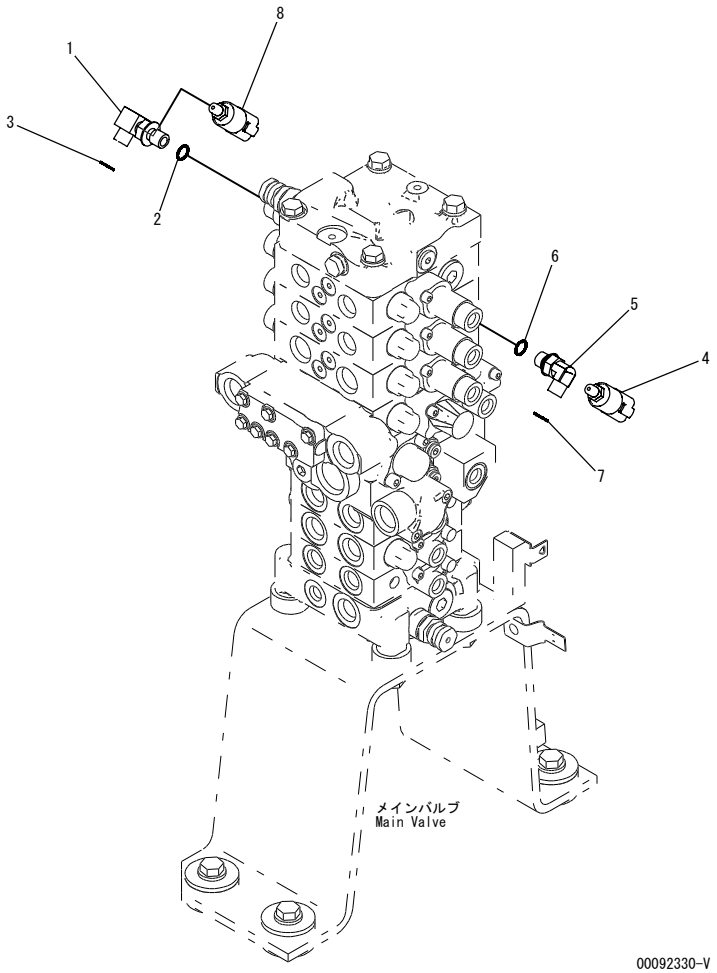

INDEX	PART NO.	DESCRIPTION	Q'TY	SERIAL NO.
1	21J-62-22110	ELBOW	1	DJC00001-
2	07002-11423	O-RING	1	DJC00001-
3	02896-11008	O-RING	1	DJC00001-
4	22F-06-33430	SWITCH	1	DJC00001-
5	20Y-62-58480	ELBOW	1	DJC00001-
6	07002-11423	O-RING	1	DJC00001-
7	02896-11008	O-RING	1	DJC00001-
8	22F-06-33430	SWITCH	1	DJC00001-

FIG.H1270-03A0 ATTACHMENT LINE (DIRECTIONAL VALVE) (1/2)

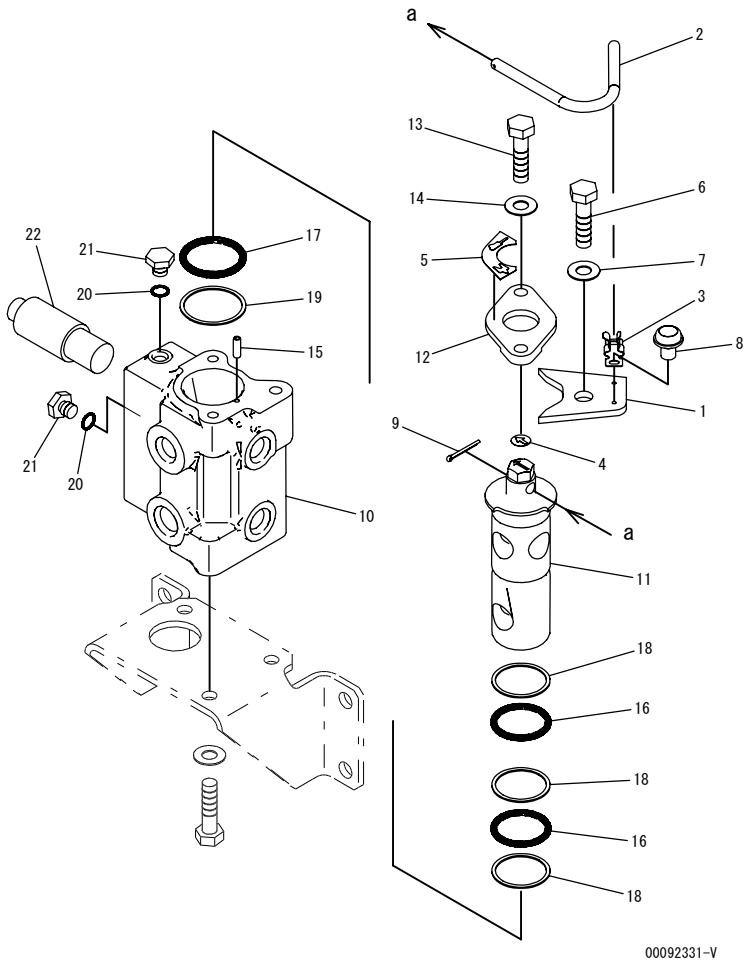

INDEX	PART NO.	DESCRIPTION	Q'TY	SERIAL NO.
	22P-62-13400	VALVE ASS'Y.	1	DJC00001-
1	203-62-65570	.PLATE.	1	DJC00001-
2	203-62-65580	.BAR.	1	DJC00001-
3	20B-54-12210	.SPRING.	1	DJC00001-
4	203-00-56640	.PLATE, MARK.	1	DJC00001-
5	203-62-65380	.PLATE, MARK.	1	DJC00001-
6	01010-81230	.BOLT.	1	DJC00001-
7	01643-31232	.WASHER.	1	DJC00001-
8	01023-10406	.SCREW.	2	DJC00001-
9	04050-12018	.PIN,COTTER.	1	DJC00001-
	22P-62-13410	.VALVE ASS'Y.	1	DJC00001-
10	22P-62-13420	..BLOCK.	1	DJC00001-
11	22P-62-13570	..ROTOR.	1	DJC00001-
12	20Y-970-3350	..FLANGE.	1	DJC00001-
13	01010-81025	..BOLT.	2	DJC00001-
14	01643-31032	..WASHER.	2	DJC00001-
15	04025-00412	..PIN,SPRING.	1	DJC00001-
16	07000-13042	..O-RING.	2	DJC00001-
17	07000-13048	..O-RING.	1	DJC00001-
18	07001-03042	..RING.	3	DJC00001-
19	07001-03048	..RING.	1	DJC00001-
20	07002-11223	..O-RING.	2	DJC00001-
21	07040-11209	..PLUG.	2	DJC00001-
22	(709-70-74700)	.VALVE ASS'Y.	1	DJC00001-

FIG.H1270-04A0 ATTACHMENT LINE (DIRECTIONAL VALVE) (2/2)

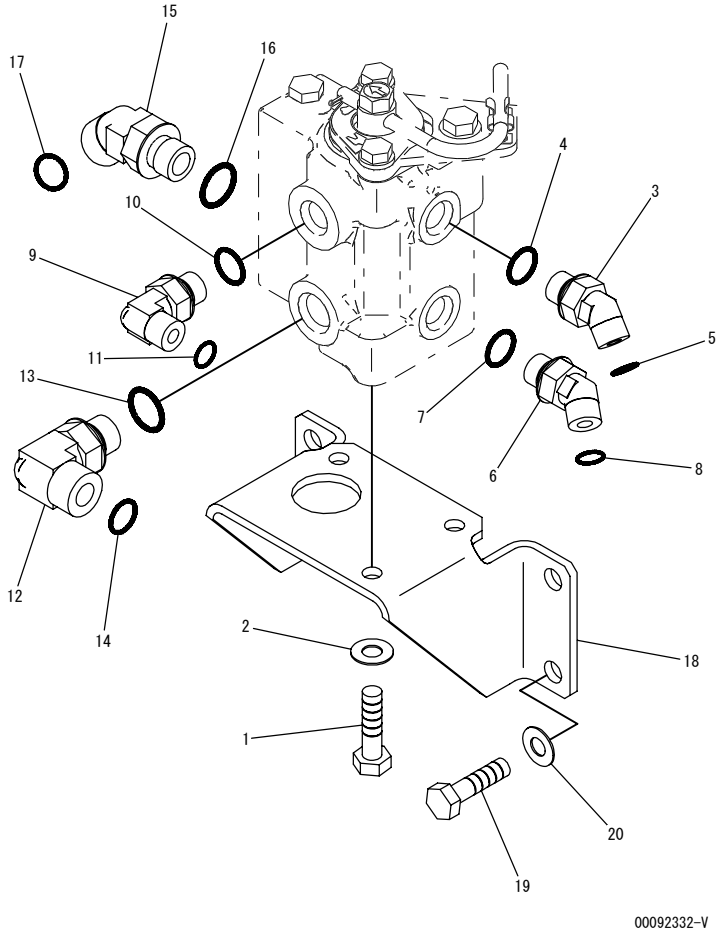

INDEX	PART NO.	DESCRIPTION	Q'TY	SERIAL NO.
1	01010-81030	BOLT	3	DJC00001-
2	01643-31032	WASHER	3	DJC00001-
3	02783-10422	ELBOW	1	DJC00001-
4	07002-12034	O-RING	1	DJC00001-
5	02896-11012	O-RING	1	DJC00001-
6	02783-10422	ELBOW	1	DJC00001-
7	07002-12034	O-RING	1	DJC00001-
8	02896-11012	O-RING	1	DJC00001-
9	02783-10422	ELBOW	1	DJC00001-
10	07002-12034	O-RING	1	DJC00001-
11	02896-11012	O-RING	1	DJC00001-
12	02782-10628	ELBOW	1	DJC00001-
13	07002-12434	O-RING	1	DJC00001-
14	02896-11018	O-RING	1	DJC00001-
15	02783-10628	ELBOW	1	DJC00001-
16	07002-12434	O-RING	1	DJC00001-
17	02896-11018	O-RING	1	DJC00001-
18	201-973-8121	BRACKET	1	DJC00001-
19	01010-81230	BOLT	4	DJC00001-
20	01643-31232	WASHER	4	DJC00001-

FIG NO. : H1270-05A0

FIG.H1270-05A0 ATTACHMENT LINE (FILTER)

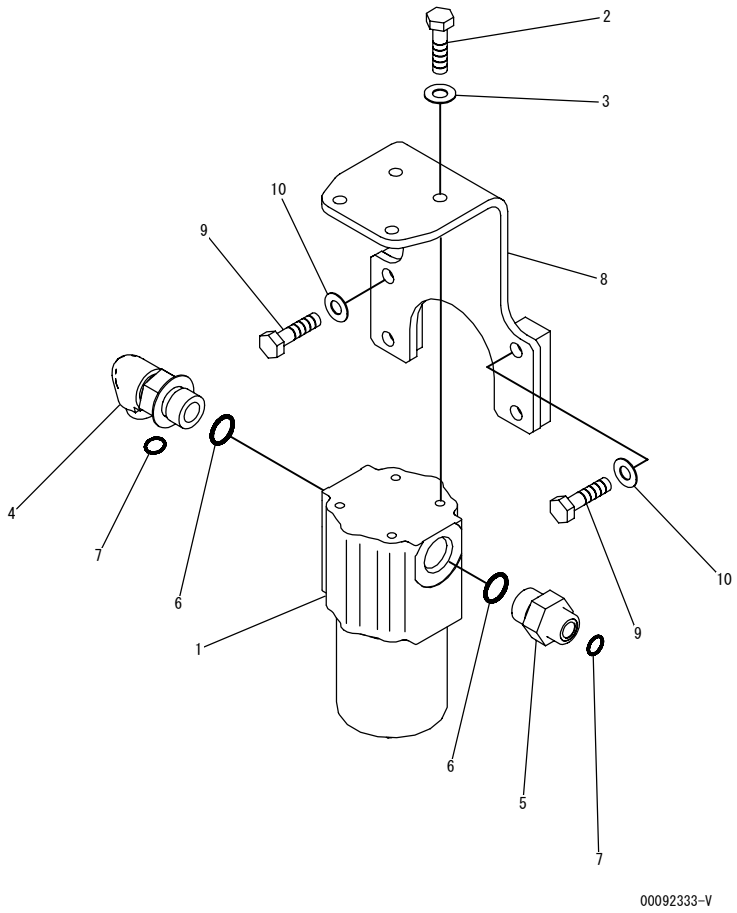

INDEX	PART NO.	DESCRIPTION	Q'TY	SERIAL NO.
1	22P-62-13310	FILTER	1	DJC00001-
2	01010-81035	BOLT	4	DJC00001-
3	01643-31032	WASHER	4	DJC00001-
4	11Y-62-12340	ELBOW	1	DJC00001-
5	21W-973-4560	NIPPLE	1	DJC00001-
6	07002-13334	O-RING	2	DJC00001-
7	02896-11018	O-RING	2	DJC00001-
8	201-973-8171	BRACKET	1	DJC00001-
9	01010-81250	BOLT	4	DJC00001-
10	01643-31232	WASHER	4	DJC00001-

FIG.H1270-06A0 ATTACHMENT LINE (MOUNTING PART)

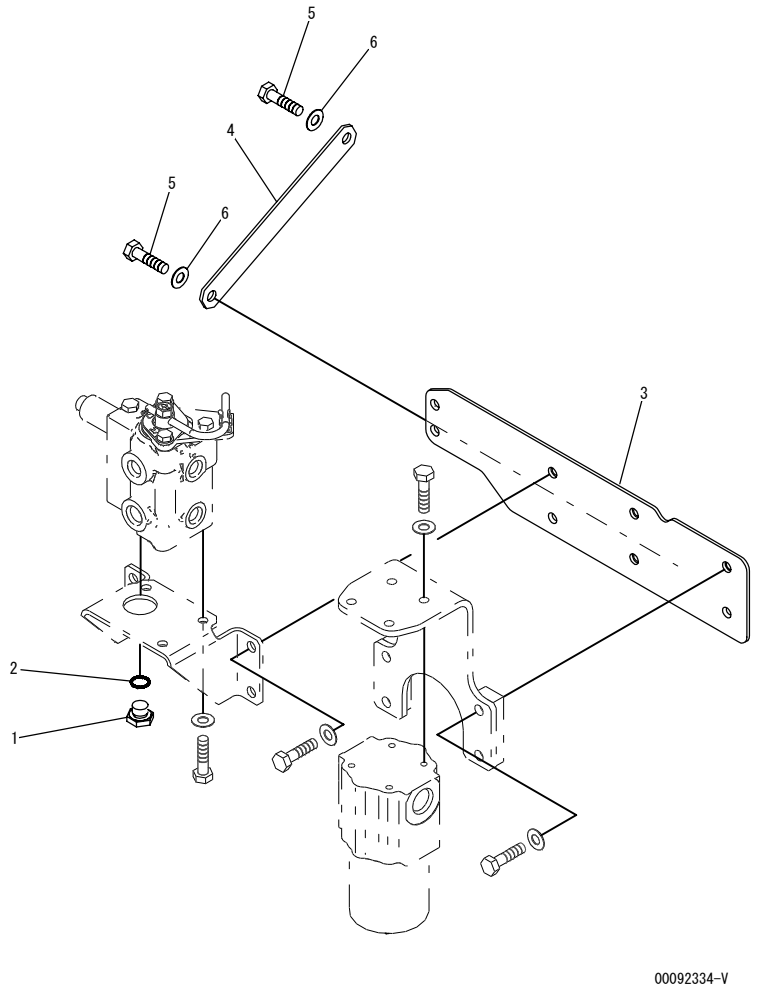

INDEX	PART NO.	DESCRIPTION	Q'TY	SERIAL NO.
1	07040-12012	PLUG	1	DJC00001-
2	07002-12034	O-RING	1	DJC00001-
3	201-973-8280	BRACKET	1	DJC00001-
4	201-973-8290	PLATE	1	DJC00001-
5	01010-81225	BOLT	2	DJC00001-
6	01643-31232	WASHER	2	DJC00001-

FIG.H1290-01A0 BLADE LINE

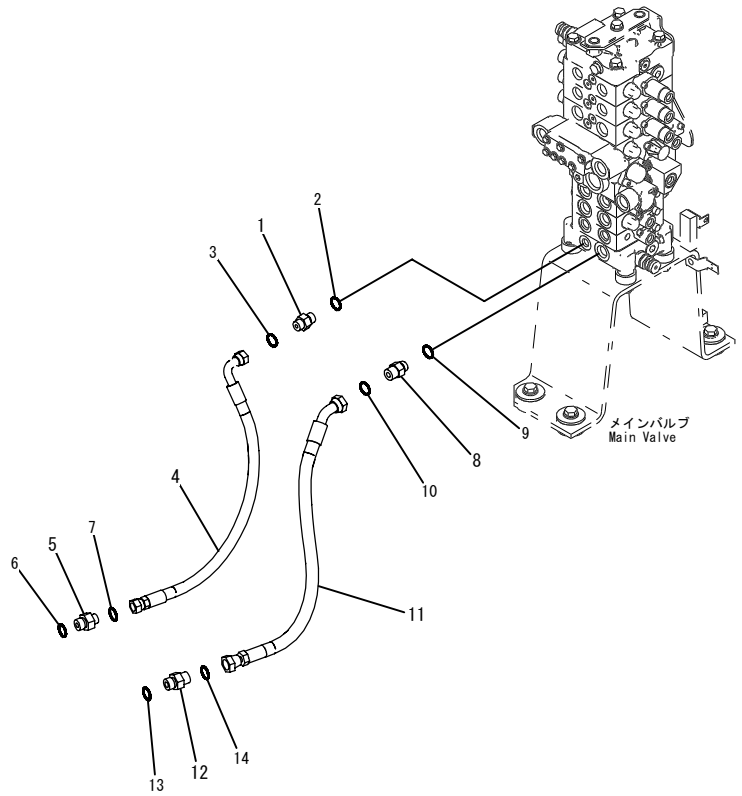

FIG NO. : H1290-01A0

INDEX	PART NO.	DESCRIPTION	Q'TY	SERIAL NO.
1	02781-00313	UNION	1	DJC00001-
2	07002-11823	O-RING	1	DJC00001-
3	02896-11009	O-RING	1	DJC00001-
4	201-62-82291	HOSE	1	DJC00001-
5	02781-00315	UNION	1	DJC00001-
6	07002-12034	O-RING	1	DJC00001-
7	02896-11009	O-RING	1	DJC00001-
8	11Y-62-12360	UNION	1	DJC00001-
9	07002-11823	O-RING	1	DJC00001-
10	02896-11012	O-RING	1	DJC00001-
11	201-62-82311	HOSE	1	DJC00001-
12	02781-00422	UNION	1	DJC00001-
13	07002-12034	O-RING	1	DJC00001-
14	02896-11012	O-RING	1	DJC00001-

FIG.H1310-01A0 TRAVEL LINES

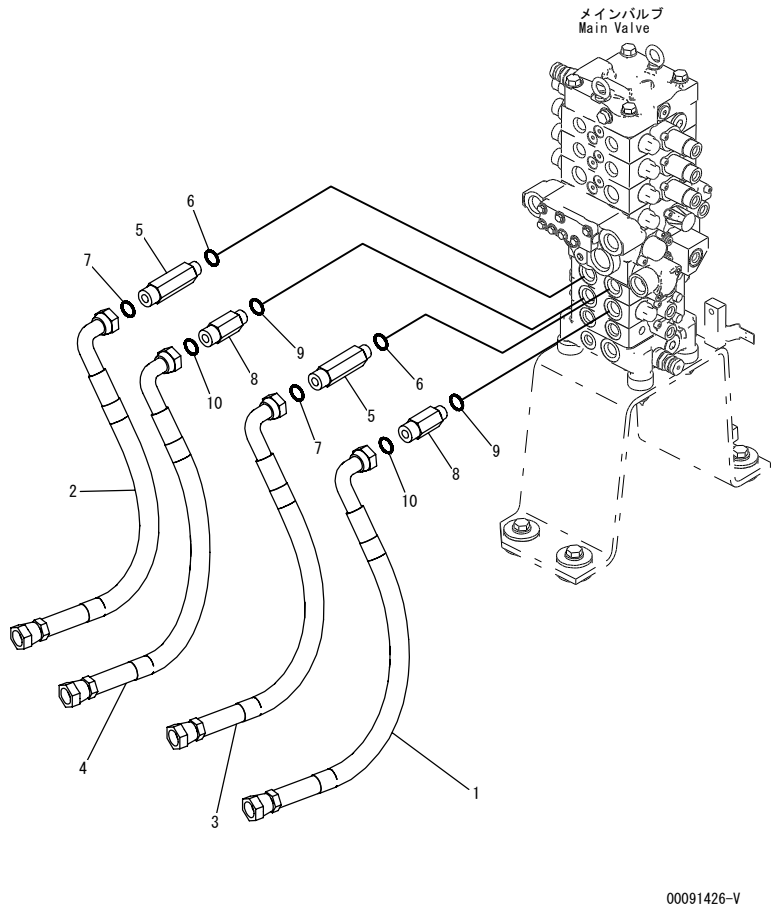

INDEX	PART NO.	DESCRIPTION	Q'TY	SERIAL NO.
1	201-62-83820	HOSE	1	DJC00001-
2	201-62-83830	HOSE	1	DJC00001-
3	201-62-83840	HOSE	1	DJC00001-
4	201-62-83850	HOSE	1	DJC00001-
5	21W-62-43131	NIPPLE	2	DJC00001-
6	07002-12034	O-RING	2	DJC00001-
7	02896-11015	O-RING	2	DJC00001-
8	21W-62-43121	NIPPLE	2	DJC00001-
9	07002-12034	O-RING	2	DJC00001-
10	02896-11015	O-RING	2	DJC00001-

FIG.H1310-01A1 TRAVEL LINES (BLADE SPEC.)

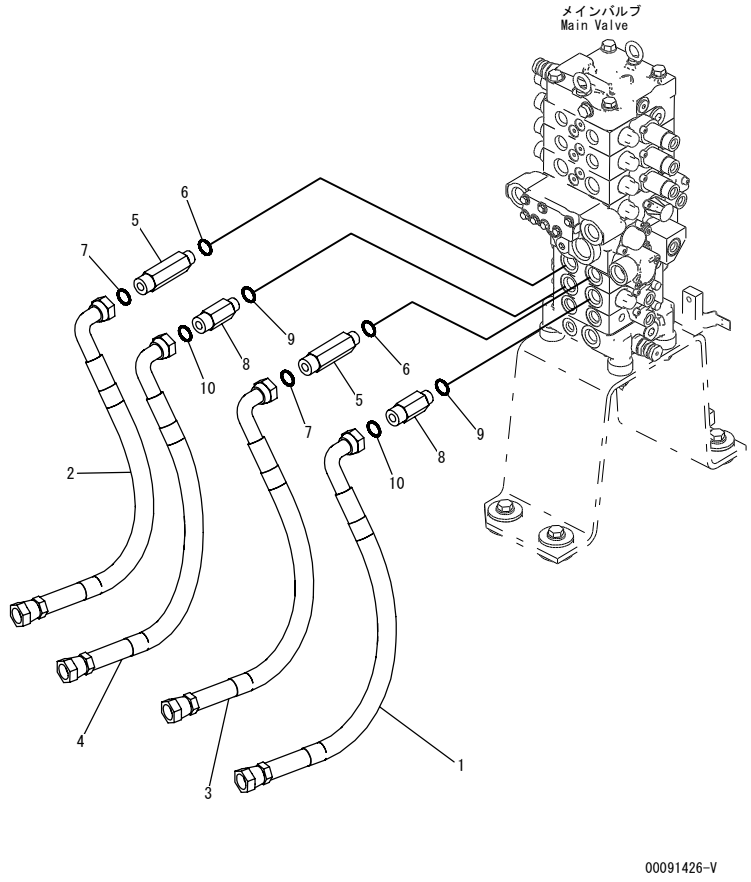

INDEX	PART NO.	DESCRIPTION	Q'TY	SERIAL NO.
1	201-62-83860	HOSE	1	DJC00001-
2	201-62-83870	HOSE	1	DJC00001-
3	201-62-83880	HOSE	1	DJC00001-
4	201-62-83890	HOSE	1	DJC00001-
5	21W-62-43131	NIPPLE	2	DJC00001-
6	07002-12034	O-RING	2	DJC00001-
7	02896-11015	O-RING	2	DJC00001-
8	21W-62-43121	NIPPLE	2	DJC00001-
9	07002-12034	O-RING	2	DJC00001-
10	02896-11015	O-RING	2	DJC00001-

FIG.H1340-01A0 SWING LINES

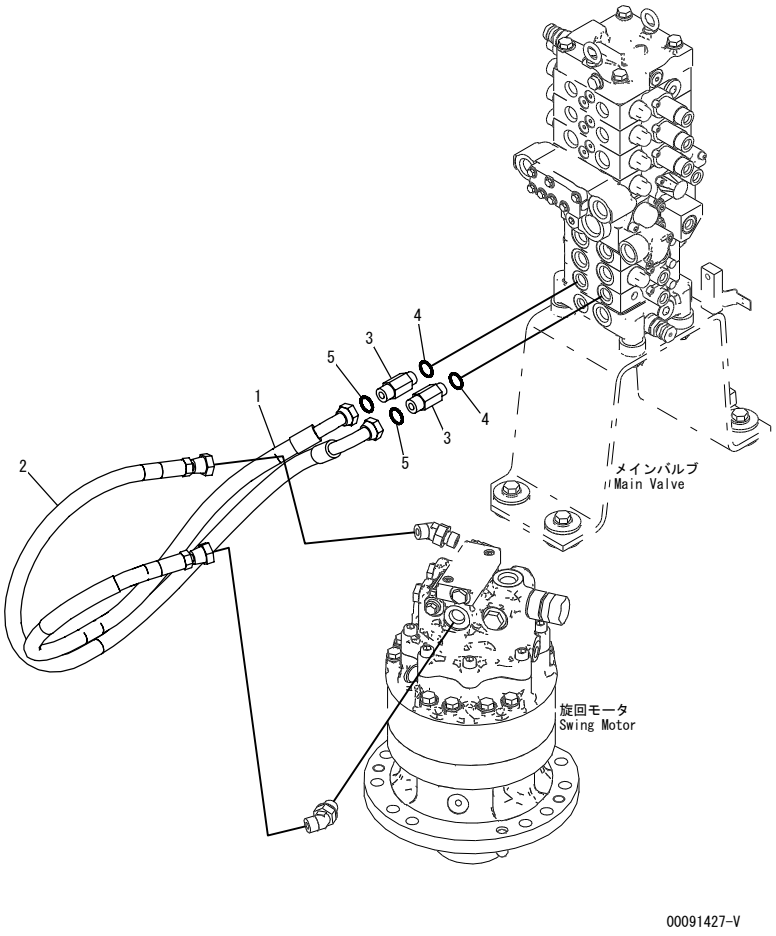

INDEX	PART NO.	DESCRIPTION	Q'TY	SERIAL NO.
1	201-62-82361	HOSE	1	DJC00001-
2	201-62-82371	HOSE	1	DJC00001-
3	21W-62-42460	NIPPLE	2	DJC00001-
4	07002-11823	O-RING	2	DJC00001-
5	02896-11012	O-RING	2	DJC00001-

FIG.H1831-01A0 SOLENOID VALVE LINE (SOLENOID VALVE)

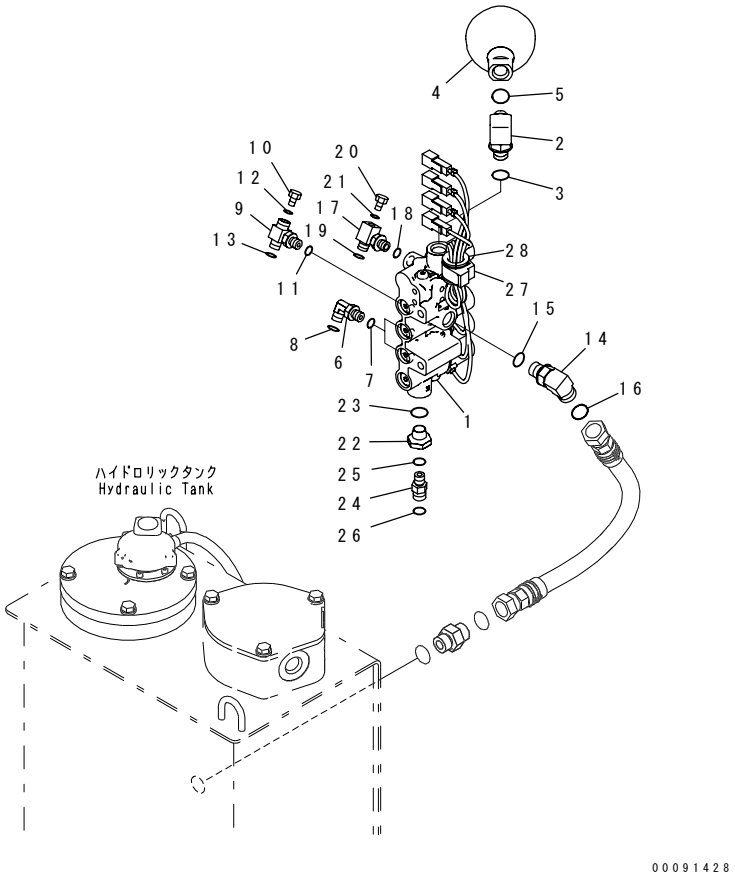

INDEX	PART NO.	DESCRIPTION	Q'TY	SERIAL NO.
1	22P-60-12112	VALVE ASS'Y	1	DJC00001-
2	20Y-62-22310	ELBOW	1	DJC00001-
3	07002-12034	O-RING	1	DJC00001-
4	20Y-60-11410	ACCUMULATOR	1	DJC00001-
5	07002-12034	O-RING	1	DJC00001-
6	02782-10210	ELBOW	2	DJC00001-
7	07002-11423	O-RING	2	DJC00001-
8	02896-11008	O-RING	2	DJC00001-
	21W-62-43900	TEE ASS'Y	1	DJC00001-
9	21W-62-42810	.TEE	1	DJC00001-
10	07040-11007	.PLUG	1	DJC00001-
11	07002-11023	.O-RING	1	DJC00001-
12	07002-11423	O-RING	1	DJC00001-
13	02896-11008	O-RING	1	DJC00001-
14	02782-10516	ELBOW	1	DJC00001-
15	07002-12034	O-RING	1	DJC00001-
16	02896-11015	O-RING	1	DJC00001-
17	201-62-82660	ELBOW	1	DJC00001-
18	07002-11423	O-RING	1	DJC00001-
19	02896-11008	O-RING	1	DJC00001-
20	07040-11007	PLUG	1	DJC00001-
21	07002-11023	O-RING	1	DJC00001-
22	20Y-62-21940	FILTER ASS'Y	1	DJC00001-
23	07002-12034	O-RING	1	DJC00001-
24	02781-0031D	UNION	1	DJC00001-
25	07002-11423	O-RING	1	DJC00001-
26	02896-11009	O-RING	1	DJC00001-
27	08211-02820	CLIP	1	DJC00001-
28	07095-20523	CUSHION	1	DJC00001-

FIG.H1831-02A0 SOLENOID VALVE LINE (SOLENOID VALVE MOUNTING)

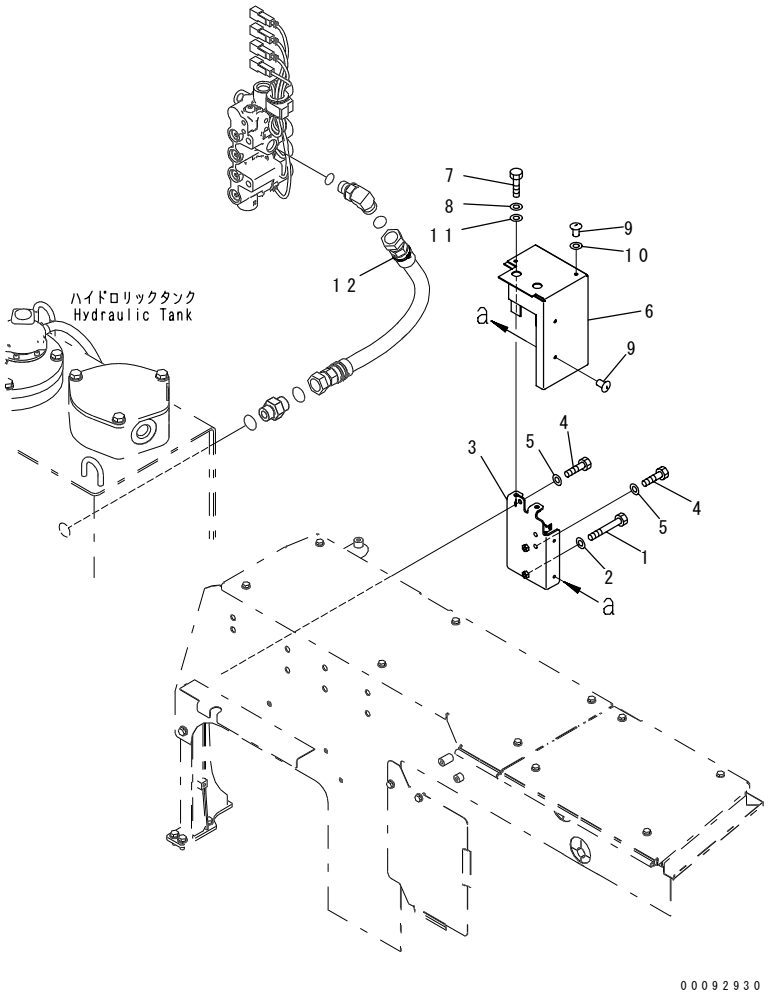

INDEX	PART NO.	DESCRIPTION	Q'TY	SERIAL NO.
1	01010-81090	BOLT	2	DJC00001-
2	01643-31032	WASHER	2	DJC00001-
3	201-62-82781	PLATE	1	DJC00001-
4	01010-81020	BOLT	3	DJC00001-
5	01643-31032	WASHER	3	DJC00001-
6	201-62-82793	SHEET	1	DJC00001-
7	01010-81025	BOLT	2	DJC00001-
8	01643-31032	WASHER	2	DJC00001-
9	21U-70-31390	CAP	4	DJC00001-
10	01640-20816	WASHER	2	DJC00001-
11	203-54-56960	COLLAR	2	DJC00001-
12	08034-40521	BAND	1	DJC00001-

FIG NO. : H1840-01A0

FIG.H1840-01A0 PPC PUMP LINE (HOSE)

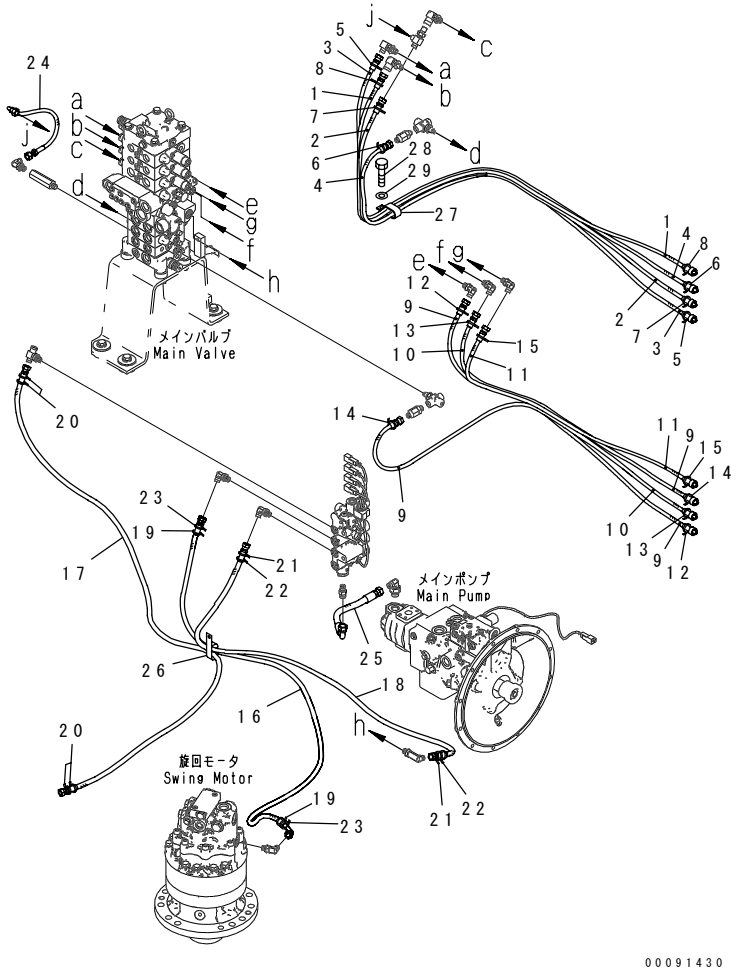

INDEX	PART NO.	DESCRIPTION	Q'TY	SERIAL NO.
	201-62-84401	HOSE ASS'Y	1	DJC00001-
1	201-62-82491	.HOSE	1	DJC00001-
2	201-62-82511	.HOSE	1	DJC00001-
3	201-62-82531	.HOSE	1	DJC00001-
4	201-62-82561	.HOSE	1	DJC00001-
5	20Y-62-22820	.BAND, BLUE	2	DJC00001-
6	20Y-62-22830	.BAND, WHITE	2	DJC00001-
7	20Y-62-22840	.BAND, BLACK	2	DJC00001-
8	20Y-62-22850	.BAND, GREEN	2	DJC00001-
	201-62-84501	HOSE ASS'Y	1	DJC00001-
9	201-62-82521	.HOSE	2	DJC00001-
10	201-62-82541	.HOSE	1	DJC00001-
11	201-62-82551	.HOSE	1	DJC00001-
12	20Y-62-22790	.BAND, RED	2	DJC00001-
13	20Y-62-22810	.BAND, YELLOW	2	DJC00001-
14	20Y-62-22860	.BAND, BROWN	2	DJC00001-
15	21U-62-34740	.BAND, ORANGE	2	DJC00001-
	201-62-84601	HOSE ASS'Y	1	DJC00001-
16	201-62-82830	.HOSE	1	DJC00001-
17	201-62-82840	.HOSE	1	DJC00001-
18	201-62-82850	.HOSE	1	DJC00001-
19	20Y-62-22790	.BAND, RED	2	DJC00001-
20	20Y-62-22810	.BAND, YELLOW	4	DJC00001-
21	20Y-62-22820	.BAND, BLUE	2	DJC00001-
22	20Y-62-22850	.BAND, GREEN	2	DJC00001-
23	20Y-62-22830	.BAND, WHITE	2	DJC00001-
24	02761-002A3	HOSE	1	DJC00001-
25	201-62-82811	HOSE	1	DJC00001-
26	08034-20536	BAND	1	DJC00001-
27	22M-97-71140	CLIP	1	DJC00001-
28	01010-81016	BOLT	1	DJC00001-
29	01643-31032	WASHER	1	DJC00001-

FIG.H1840-02A0 PPC PUMP LINE (CONTROL VALVE RELATED PARTS)

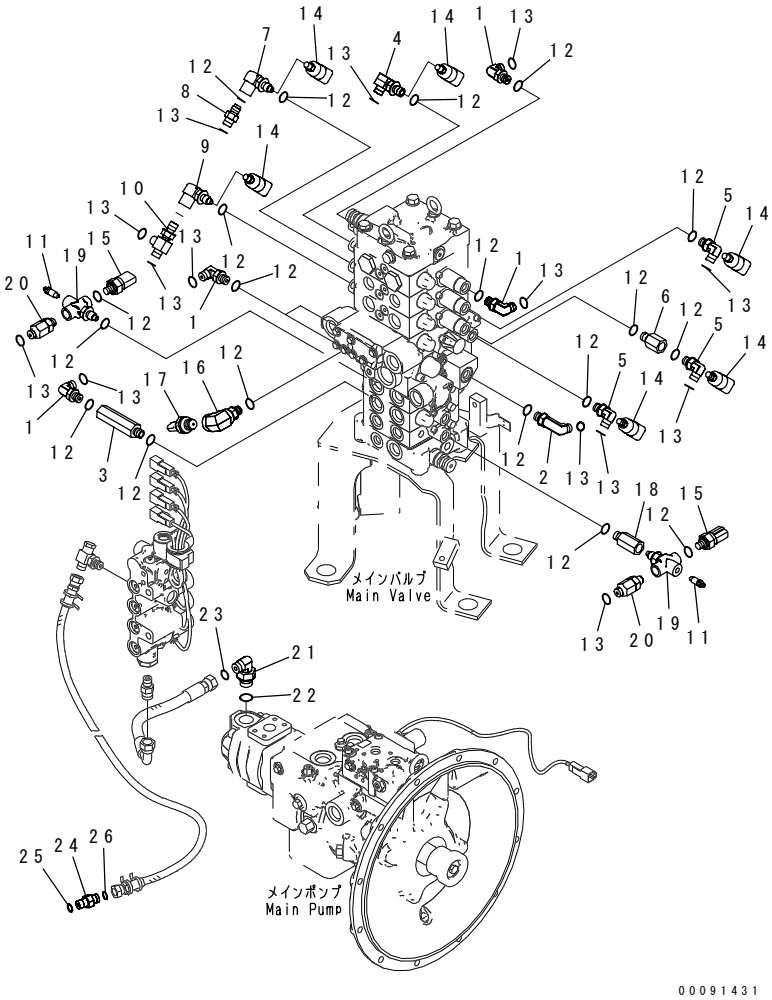

INDEX	PART NO.	DESCRIPTION	Q'TY	SERIAL NO.
1	02782-10210	ELBOW	5	DJC00001-
2	02782-1021A	ELBOW	1	DJC00001-
3	20Y-62-27680	ADAPTER	1	DJC00001-
4	21J-62-22110	ELBOW	1	DJC00001-
5	20Y-62-58480	ELBOW	3	DJC00001-
6	11Y-62-12490	SPACER	1	DJC00001-
7	21W-62-51820	VALVE ASS'Y	1	DJC00001-
8	21W-62-43930	NIPPLE	1	DJC00001-
9	201-62-84800	ELBOW	1	DJC00001-
10	201-62-83980	TEE	1	DJC00001-
11	20B-27-11210	BLEEDER	2	DJC00001-
12	07002-11423	O-RING	20	DJC00001-
13	02896-11008	O-RING	15	DJC00001-
14	206-06-33430	SWITCH	6	DJC00001-
15	7861-93-1840	SENSOR	2	DJC00001-
16	21W-62-45930	ELBOW	1	DJC00001-
17	7861-93-1812	SENSOR	1	DJC00001-
18	20Y-62-22160	ADAPTER	1	DJC00001-
19	201-62-84700	VALVE ASS'Y	2	DJC00001-
20	201-62-83800	VALVE ASS'Y	2	DJC00001-
21	02782-10313	ELBOW	1	DJC00001-
22	07002-11823	O-RING	1	DJC00001-
23	02896-11009	O-RING	1	DJC00001-
24	02781-0021D	UNION	1	DJC00001-
25	07002-11423	O-RING	1	DJC00001-
26	02896-11008	O-RING	1	DJC00001-

FIG.H1840-02A1 PPC PUMP LINE (CONTROL VALVE RELATED PARTS)

(BLADE SPEC.)

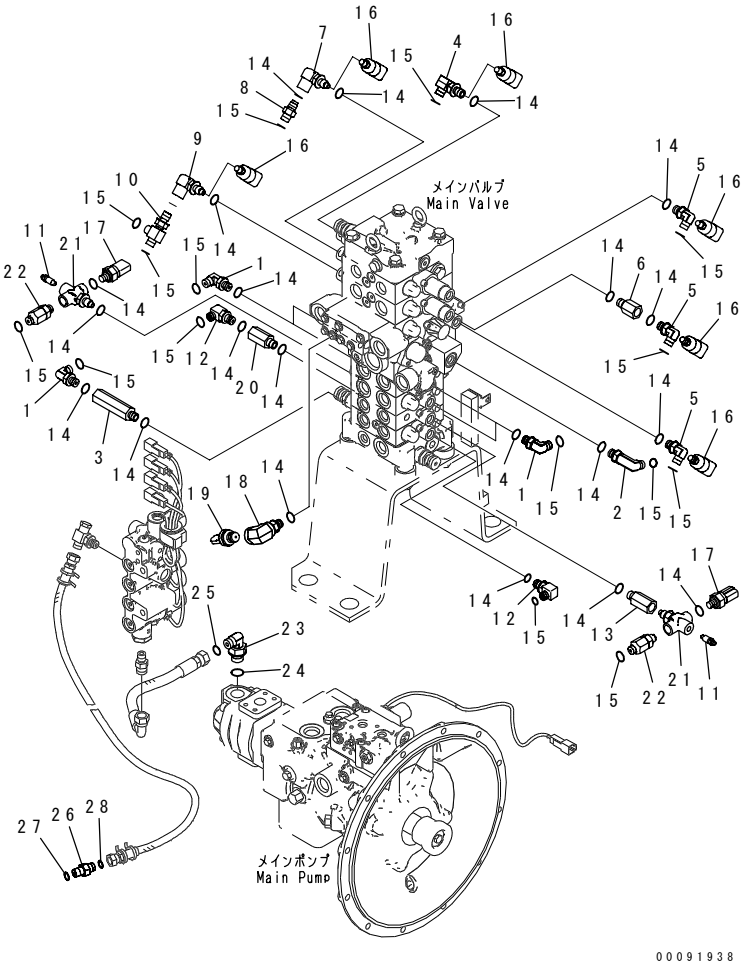

INDEX	PART NO.	DESCRIPTION	Q'TY	SERIAL NO.
1	02782-10210	ELBOW	5	DJC00001-
2	02782-1021A	ELBOW	1	DJC00001-
3	20Y-62-27680	ADAPTER	1	DJC00001-
4	21J-62-22110	ELBOW	1	DJC00001-
5	20Y-62-58480	ELBOW	3	DJC00001-
6	11Y-62-12490	SPACER	1	DJC00001-
7	21W-62-51820	VALVE ASS'Y	1	DJC00001-
8	21W-62-43930	NIPPLE	1	DJC00001-
9	201-62-84800	ELBOW	1	DJC00001-
10	201-62-83980	TEE	1	DJC00001-
11	20B-27-11210	BLEEDER	2	DJC00001-
12	22B-62-17450	ELBOW	2	DJC00001-
13	20Y-62-22160	ADAPTER	1	DJC00001-
14	07002-11423	O-RING	23	DJC00001-
15	02896-11008	O-RING	17	DJC00001-
16	22F-06-33430	SWITCH	8	DJC00001-
17	7861-93-1840	SENSOR	2	DJC00001-
18	21W-62-45930	ELBOW	1	DJC00001-
19	7861-93-1812	SENSOR	1	DJC00001-
20	20Y-62-22160	ADAPTER	1	DJC00001-
21	201-62-84700	VALVE ASS'Y	2	DJC00001-
22	201-62-83800	VALVE ASS'Y	2	DJC00001-
23	02782-10315	ELBOW	1	DJC00001-
24	07002-12034	O-RING	1	DJC00001-
25	02896-11009	O-RING	1	DJC00001-
26	02781-0021D	UNION	1	DJC00001-
27	07002-11423	O-RING	1	DJC00001-
28	02896-11008	O-RING	1	DJC00001-

MAIN/REVOLVING FRAME AND RELATED PARTS

FIG.J1110-01A0 REVOLVING FRAME

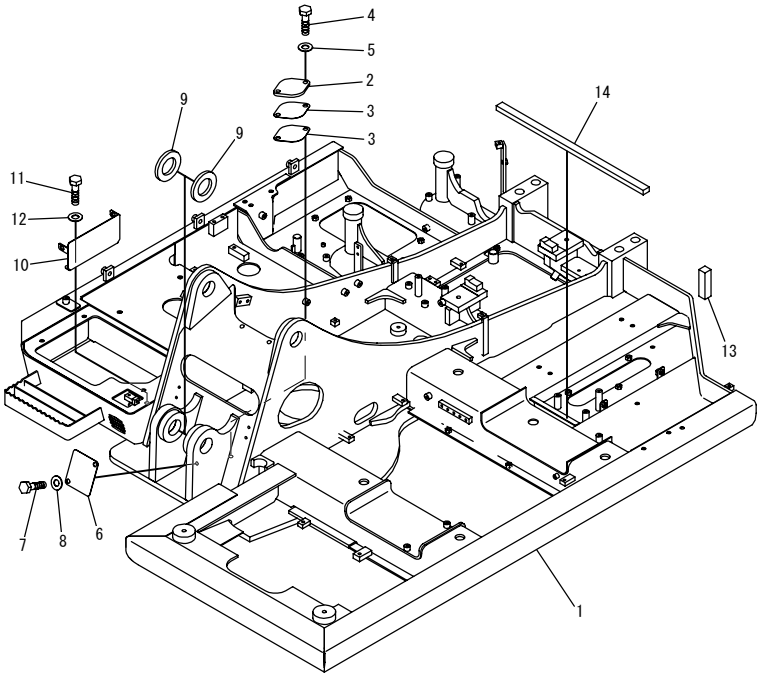

INDEX	PART NO.	DESCRIPTION	Q'TY	SERIAL NO.
1	☆	FRAME	1	DJC00001-
2	203-46-D6160	COVER	1	DJC00001-
3	203-46-31181	GASKET	2	DJC00001-
4	01010-81230	BOLT	2	DJC00001-
5	01643-31232	WASHER	2	DJC00001-
6	201-46-83220	PLATE	1	DJC00001-
7	01010-81225	BOLT	2	DJC00001-
8	01643-31232	WASHER	2	DJC00001-
9	201-46-73190	SPACER, 12MM	2	DJC00001-
10	201-46-83232	PLATE	1	DJC00001-
11	01010-81025	BOLT	4	DJC00001-
12	01643-31032	WASHER	4	DJC00001-
13	201-46-81121	SHEET	1	DJC00001-
14	201-46-81141	SHEET	1	DJC00001-

FIG NO. : J1110-01A1

FIG.J1110-01A1 REVOLVING FRAME (STRENGTH TYPE)

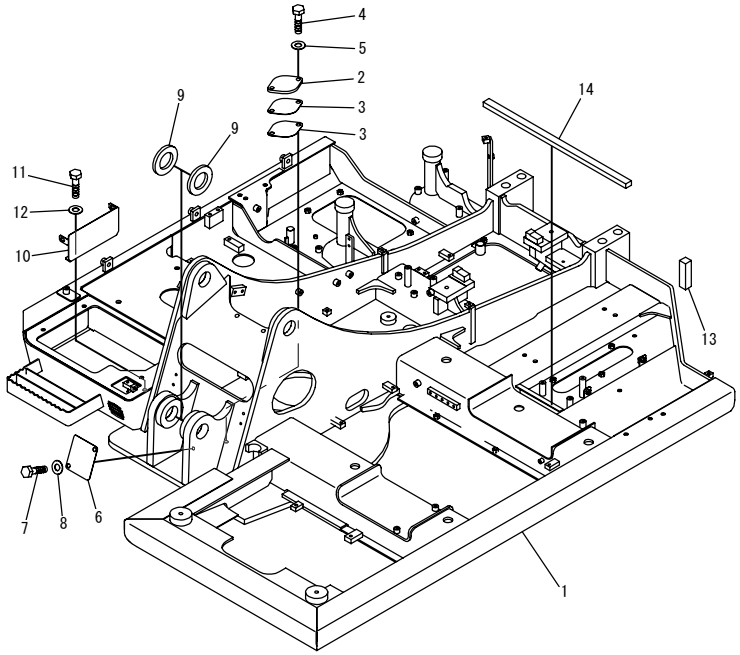

INDEX	PART NO.	DESCRIPTION	Q'TY	SERIAL NO.
1	☆	FRAME	1	DJC00005-
	☆	FRAME	1	DJC00001-DJC00004
2	203-46-D6160	COVER	1	DJC00001-
3	203-46-31181	GASKET	2	DJC00001-
4	01010-81230	BOLT	2	DJC00001-
5	01643-31232	WASHER	2	DJC00001-
6	201-46-83220	PLATE	1	DJC00001-
7	01010-81225	BOLT	2	DJC00001-
8	01643-31232	WASHER	2	DJC00001-
9	201-46-73190	SPACER, 12MM	2	DJC00001-
10	201-46-83232	PLATE	1	DJC00001-
11	01010-81025	BOLT	4	DJC00001-
12	01643-31032	WASHER	4	DJC00001-
13	201-46-81121	SHEET	1	DJC00001-
14	201-46-81141	SHEET	1	DJC00001-

FIG.J1310-01A0 BOOM FOOT PIN

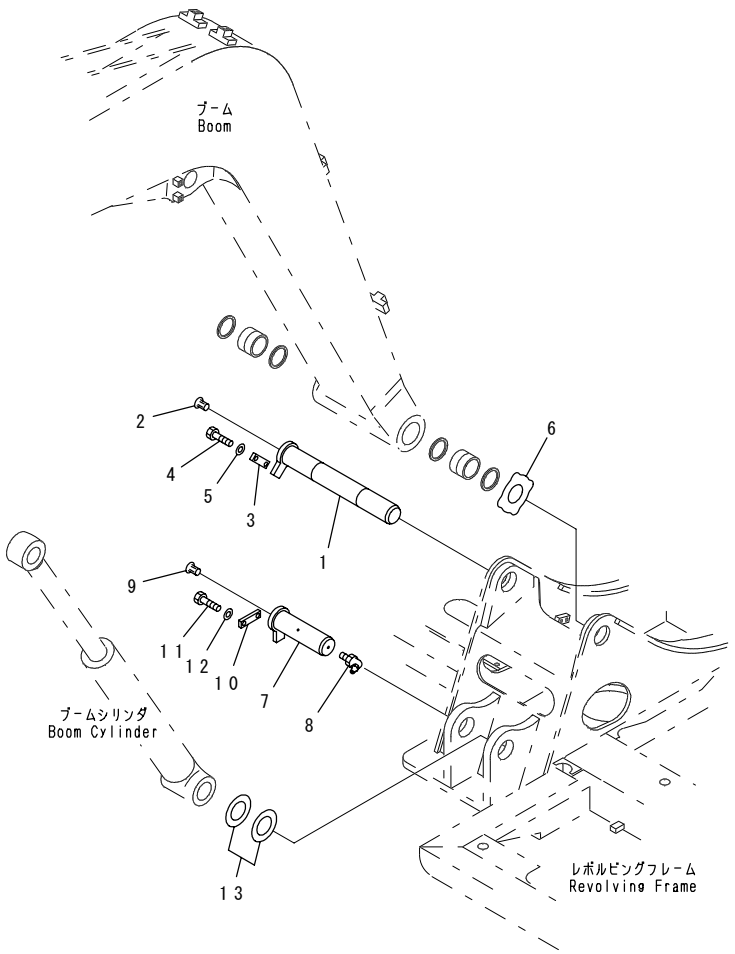

INDEX	PART NO.	DESCRIPTION	Q'TY	SERIAL NO.
1	201-70-71240	SHAFT	1	DJC00001-
2	22F-46-11240	CAP	1	DJC00001-
3	205-70-66580	PLATE	1	DJC00001-
4	01010-81230	BOLT	2	DJC00001-
5	01643-31232	WASHER	2	DJC00001-
6	21W-70-41930	SPACER, 1.0MM	2	DJC00001-
	21W-70-41940	SPACER, 1.5MM	1	DJC00001-
7	201-70-71290	SHAFT	1	DJC00001-
8	07020-00675	FITTING,GREASE	1	DJC00001-
9	22F-46-11240	CAP	1	DJC00001-
10	205-70-66580	PLATE	1	DJC00001-
11	01010-81230	BOLT	2	DJC00001-
12	01643-31232	WASHER	2	DJC00001-
13	21Y-70-14710	SPACER, 1.0MM	1	DJC00001-
	21Y-70-14850	SPACER, 2.0MM	1	DJC00001-

OPERATOR'S COMPARTMENT AND CONTROL SYSTEM

FIG NO. : K0110-01A0

FIG.K0110-01A0 OPERATOR'S SEAT

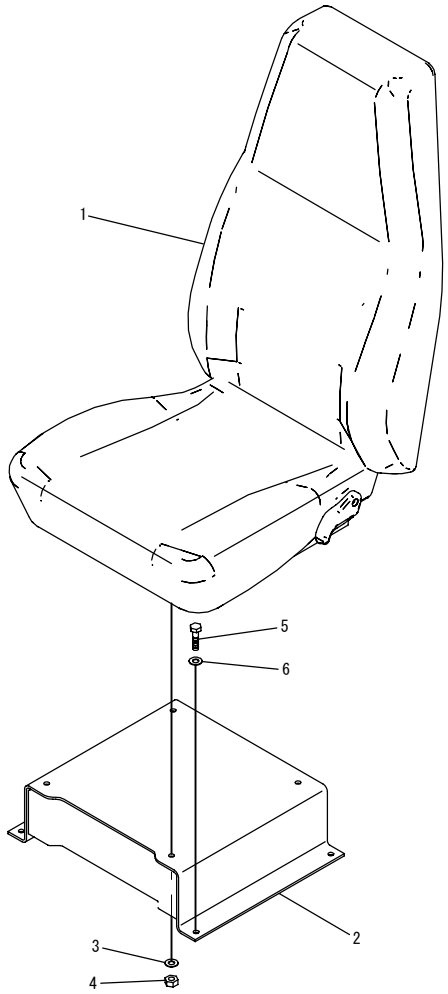

00092064-V

INDEX	PART NO.	DESCRIPTION	Q'TY	SERIAL NO.
1	201-57-81111	SEAT ASS'Y	1	DJC00001-
2	201-57-81121	BRACKET	1	DJC00001-
3	01643-30823	WASHER	4	DJC00001-
4	01580-10806	NUT	4	DJC00001-
5	01010-D0820	BOLT	4	DJC00001-
6	01643-70823	WASHER	4	DJC00001-

FIG NO. : K0210-01A0

FIG.K0210-01A0 OPERATOR'S CAB (WINDOW)

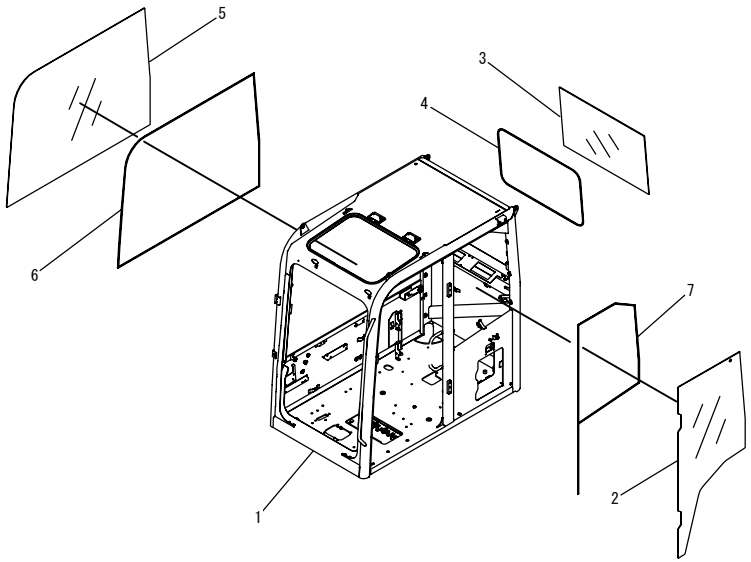

00091321-V

INDEX	PART NO.	DESCRIPTION	Q'TY	SERIAL NO.
	☆	CAB ASS'Y.	1	DJC00001-
1	201-54-84112	.CAB.	1	DJC00001-
2	201-54-85143	.GLASS.	1	DJC00001-
3	201-54-85121	.GLASS.	1	DJC00001-
4	201-54-85151	.DAM.	1	DJC00001-
5	201-54-85133	.GLASS.	1	DJC00001-
6	201-54-85161	.DAM.	1	DJC00001-
7	201-54-85171	.DAM.	1	DJC00001-

FIG.K0210-02A0 OPERATOR'S CAB (FRONT WINDOW)

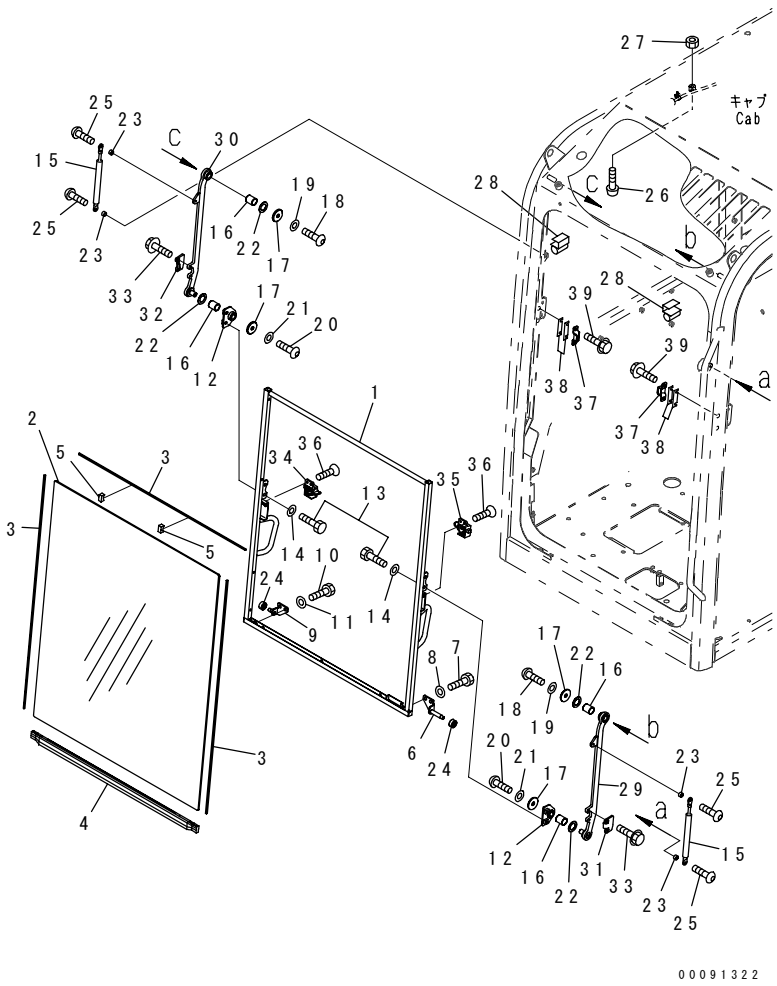

INDEX	PART NO.	DESCRIPTION	Q'TY	SERIAL NO.
	☆	CAB ASS'Y.	1	DJC00001-
	201-54-85301	.FRONT WINDOW ASS'Y.	1	DJC00001-
1	22H-54-15513	..FRAME,FRONT.	1	DJC00001-
2	201-54-85311	..GLASS.	1	DJC00001-
3	22M-54-25490	..SEAL,DAM.	3	DJC00001-
4	22H-54-15530	..SEAL.	1	DJC00001-
5	22H-54-15540	..SHEET.	3	DJC00001-
6	22H-54-15560	.BRACKET.	1	DJC00001-
7	01010-D0816	.BOLT.	2	DJC00001-
8	01643-70823	.WASHER.	2	DJC00001-
9	22M-54-24560	.BRACKET.	1	DJC00001-
10	01010-D0816	.BOLT.	2	DJC00001-
11	01643-70823	.WASHER.	2	DJC00001-
12	22M-54-24570	.BRACKET.	2	DJC00001-
13	01010-D0820	.BOLT.	4	DJC00001-
14	01643-70823	.WASHER.	4	DJC00001-
15	22H-54-15970	.GAS SPRING.	2	DJC00001-
16	22M-54-24620	.BUSHING.	4	DJC00001-
17	22M-54-24630	.WASHER.	4	DJC00001-
18	01010-D0816	.BOLT.	2	DJC00001-
19	01643-70823	.WASHER.	2	DJC00001-
20	01010-D0820	.BOLT.	2	DJC00001-
21	01643-70823	.WASHER.	2	DJC00001-
22	22M-54-24640	.WASHER.	6	DJC00001-
23	22M-54-24660	.BUSHING.	4	DJC00001-
24	20Y-54-52621	.ROLLER.	2	DJC00001-
25	01245-00612	.SCREW.	4	DJC00001-
26	20Y-54-11611	.STOPPER.	2	DJC00001-
27	20T-54-74550	.NUT.	2	DJC00001-
28	22M-54-26150	.SEAL.	2	DJC00001-
29	22M-54-24531	.PLATE,L.H.	1	DJC00001-
30	22M-54-24541	.PLATE,R.H.	1	DJC00001-
31	22M-54-24592	.STRIKER.	1	DJC00001-
32	22M-54-24970	.STRIKER.	1	DJC00001-
33	01435-40616	.BOLT.	4	DJC00001-
34	22M-54-25712	.LOCK ASS'Y,L.H.	1	DJC00001-
35	22M-54-25722	.LOCK ASS'Y,R.H.	1	DJC00001-
36	01240-00616	.SCREW.	4	DJC00001-
37	22M-54-24582	.STRIKER.	2	DJC00001-
38	22B-54-15580	.PLATE.	4	DJC00001-
39	01435-40612	.BOLT.	4	DJC00001-

FIG.K0210-03A0 OPERATOR'S CAB (FRONT LOWER GLASS)

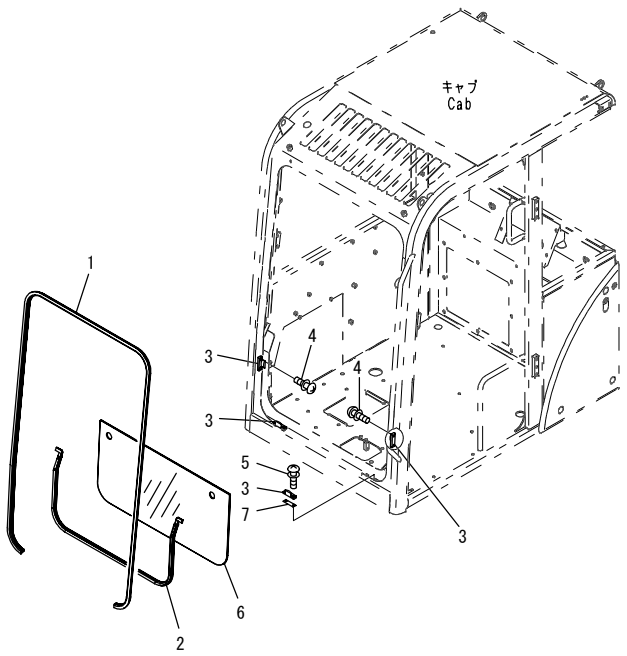

00081628

INDEX	PART NO.	DESCRIPTION	Q'TY	SERIAL NO.
	☆	CAB ASS'Y.	1	DJC00001-
1	201-54-85510	.SEAL.	1	DJC00001-
2	22H-54-15430	.TRIM.	1	DJC00001-
3	22B-54-15832	.SEAT.	4	DJC00001-
4	01023-70616	.SCREW.	4	DJC00001-
5	01023-70616	.SCREW.	4	DJC00001-
6	22H-54-15410	.GLASS.	1	DJC00001-
7	22B-54-15580	.PLATE.	2	DJC00001-

FIG.K0210-04A0 OPERATOR'S CAB (DOOR)

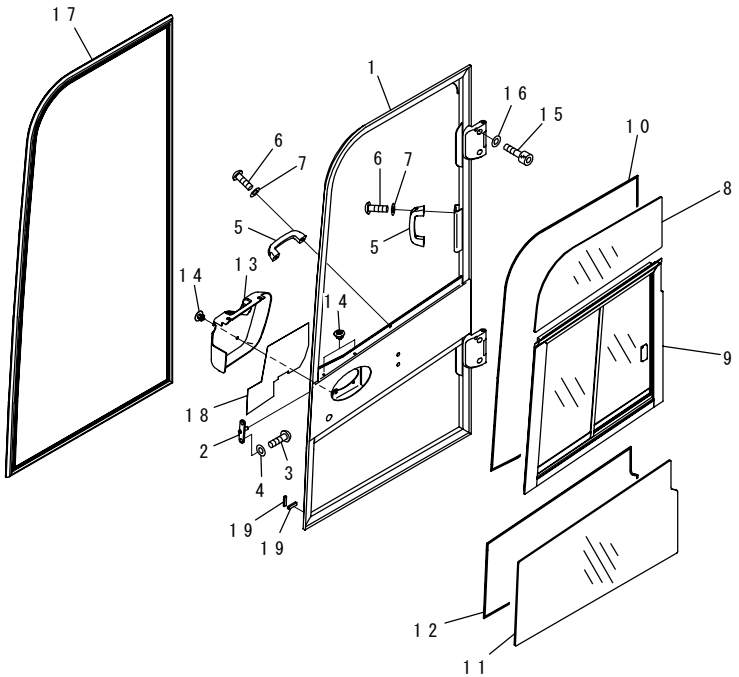

INDEX	PART NO.	DESCRIPTION	Q'TY	SERIAL NO.
	☆	CAB ASS'Y.	1	DJC00001-
	201-54-80052	.DOOR ASS'Y,GLASS.	1	DJC00001-
1	☆	..DOOR.	1	DJC00001-
	201-54-85461	...HINGE.	2	DJC00001-
2	201-54-85520	..STRIKER.	1	DJC00001-
3	01245-01020	..SCREW.	2	DJC00001-
4	201-54-85580	..WASHER.	2	DJC00001-
5	20Y-54-14590	..HANDLE.	2	DJC00001-
6	01245-00616	..SCREW.	4	DJC00001-
7	01643-70623	..WASHER.	4	DJC00001-
8	201-54-85421	..GLASS.	1	DJC00001-
9	201-54-85441	..SASH.	1	DJC00001-
10	22H-54-15480	..DAM.	1	DJC00001-
11	201-54-85451	..GLASS.	1	DJC00001-
12	22H-54-15490	..DAM.	1	DJC00001-
13	22H-54-15231	..COVER.	1	DJC00001-
14	22B-54-16461	..RIVET.	3	DJC00001-
15	01252-81020	..BOLT.	6	DJC00001-
16	01643-71032	..WASHER.	6	DJC00001-
17	22H-54-15450	..SEAL.	1	DJC00001-
18	201-54-85471	..SHEET.	1	DJC00001-
19	201-54-85560	..SEAL.	2	DJC00001-

FIG.K0210-05A0 OPERATOR'S CAB (DOOR LOCK)

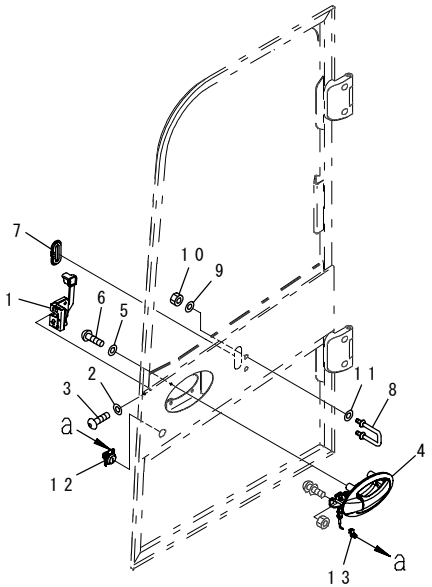

00092937

INDEX	PART NO.	DESCRIPTION	Q'TY	SERIAL NO.
	☆	CAB ASS'Y.	1	DJC00001-
	(201-54-80052)	.DOOR ASS'Y.	1	DJC00001-
1	22H-54-15272	..LOCK.	1	DJC00257-
	201-54-85570	..LOCK.	1	DJC00001-DJC00256
2	01643-70623	..WASHER.	2	DJC00001-
3	01245-00616	..SCREW.	2	DJC00001-
4	22H-54-15281	..HANDLE.	1	DJC00001-
5	01643-70623	..WASHER.	4	DJC00001-
6	01245-00616	..SCREW.	4	DJC00001-
7	20Y-53-12661	..COVER.	1	DJC00001-
8	22H-54-15290	..STRIKER.	1	DJC00001-
9	01643-31032	..WASHER.	2	DJC00001-
10	01580-11008	..NUT.	2	DJC00001-
11	01643-71032	..WASHER.	1	DJC00135-
12	20Y-54-52820	..LOCK ASS'Y.	1	DJC00001-
13	22B-54-16330	..SNAP.	1	DJC00001-

FIG.K0210-06A0 OPERATOR'S CAB (DOOR OPEN LOCK)

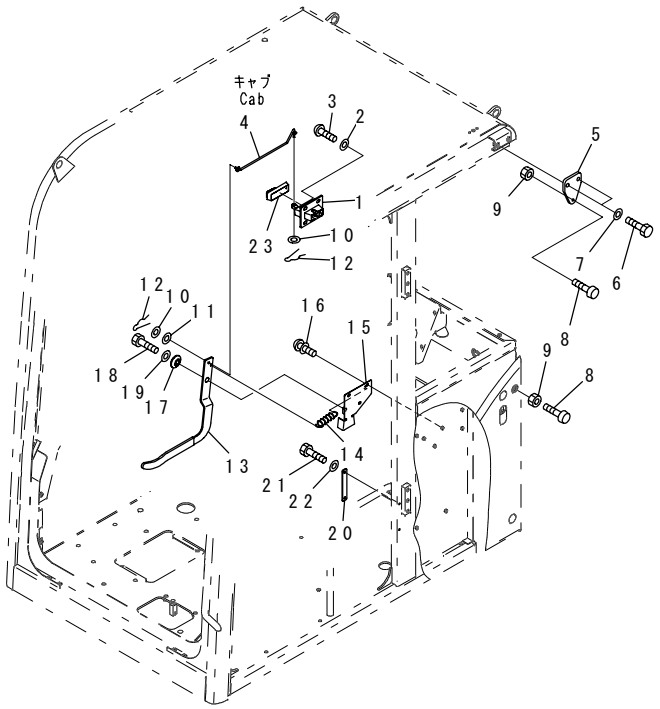

00092387

INDEX	PART NO.	DESCRIPTION	Q'TY	SERIAL NO.
	☆	CAB ASS'Y.	1	DJC00001-
1	20Y-54-36380	.LOCK.	1	DJC00001-
2	01643-70823	.WASHER.	4	DJC00001-
3	01245-00820	.SCREW.	4	DJC00001-
4	22H-54-15240	.ROD.	1	DJC00001-
5	201-54-85341	.PLATE.	1	DJC00001-
6	01010-D1025	.BOLT.	2	DJC00001-
7	01643-71032	.WASHER.	2	DJC00001-
8	20Y-54-11611	.STOPPER.	2	DJC00001-
9	01580-11008	.NUT.	2	DJC00001-
10	01640-20610	.WASHER.	2	DJC00001-
11	01643-30623	.WASHER.	1	DJC00001-
12	04052-20633	.PIN,SNAP.	2	DJC00001-
13	22H-54-15221	.LEVER.	1	DJC00001-
14	23S-54-18281	.SPRING.	1	DJC00001-
15	201-54-85481	.BRACKET.	1	DJC00001-
16	01023-20616	.SCREW.	3	DJC00001-
17	22H-54-15260	.COLLAR.	1	DJC00001-
18	01010-80820	.BOLT.	1	DJC00001-
19	01643-30823	.WASHER.	1	DJC00001-
20	22H-54-15310	.PLATE.	1	DJC00001-
21	01010-D0612	.BOLT.	2	DJC00001-
22	01643-70623	.WASHER.	2	DJC00001-
23	20Y-53-12280	.COVER.	1	DJC00001-

FIG.K0210-07A0 OPERATOR'S CAB (ROOF VENTILATOR)

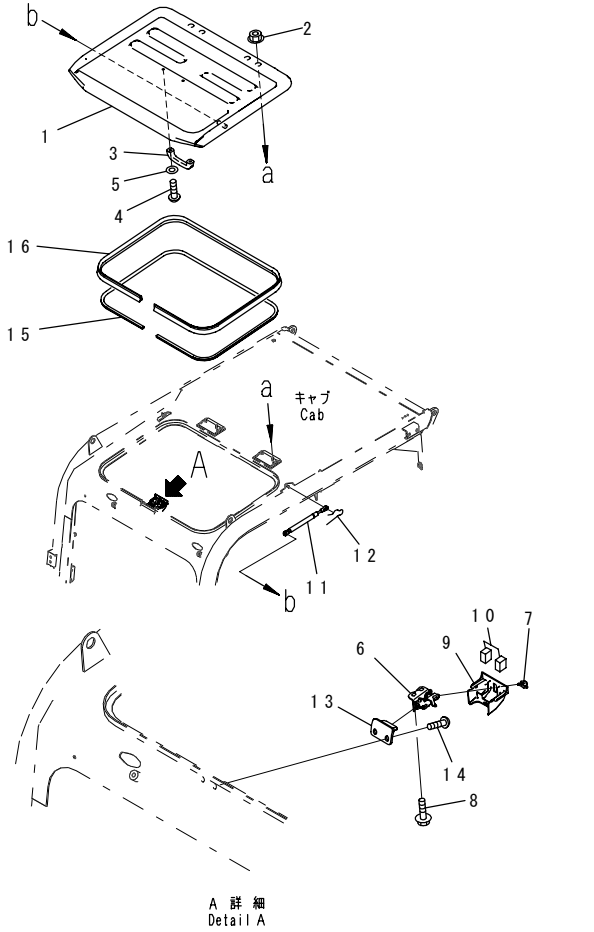

INDEX	PART NO.	DESCRIPTION	Q'TY	SERIAL NO.
	☆	CAB ASS'Y.	1	DJC00001-
1	201-54-83791	.ROOF.	1	DJC00001-
2	01584-30806	.NUT.	4	DJC00001-
3	20Y-54-14590	.HANDLE.	1	DJC00001-
4	01245-00616	.SCREW.	2	DJC00001-
5	01643-70623	.WASHER.	2	DJC00001-
6	20Y-53-11721	.LOCK.	1	DJC00001-
7	20Y-53-11781	.KNOB.	1	DJC00001-
8	01435-40610	.BOLT.	3	DJC00001-
9	20Y-53-11931	.COVER.	1	DJC00001-
10	201-54-83780	.SHEET.	2	DJC00001-
11	20Y-54-36342	.GAS SPRING ASS'Y.	2	DJC00001-
12	04050-12020	.PIN,COTTER.	4	DJC00001-
13	20Y-53-11771	.STRIKER.	1	DJC00001-
14	01245-00820	.SCREW.	2	DJC00001-
15	09412-10025	.SEAL.	1	DJC00001-
16	201-54-85223	.SEAL.	1	DJC00001-

FIG.K0210-08A0 OPERATOR'S CAB (WIPER)

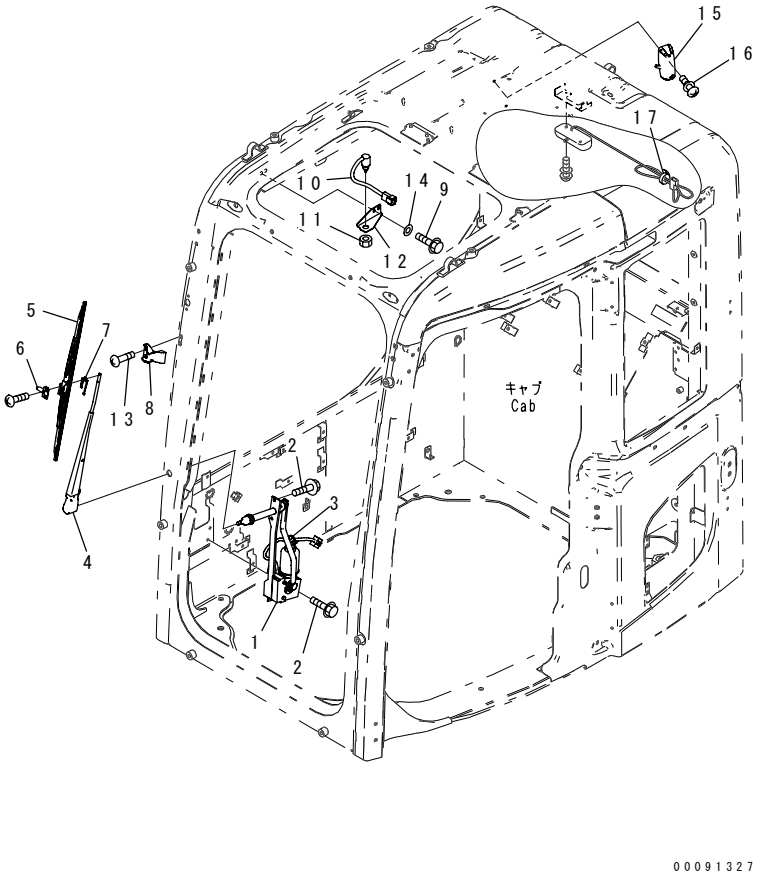

INDEX	PART NO.	DESCRIPTION	Q'TY	SERIAL NO.
	☆	CAB ASS'Y.	1	DJC00001-
1	20Y-54-52211	.WIPER MOTOR ASS'Y.	1	DJC00001-
2	01435-00616	.BOLT.	6	DJC00001-
3	08034-20414	.BAND.	1	DJC00001-
	22B-54-28710	.WIPER ASS'Y.	1	DJC00001-
4	22B-54-28720	..WIPER ARM.	1	DJC00001-
5	20Y-54-39450	..WIPER BLADE.	1	DJC00001-
6	20Y-54-39460	..SLIDER.	1	DJC00001-
7	20Y-54-39480	..PLATE.	1	DJC00001-
8	20Y-53-12232	.STOPPER.	1	DJC00001-
9	01435-40616	.BOLT.	2	DJC00001-
10	21J-06-12440	.SWITCH.	1	DJC00001-
11	01583-11811	.NUT.	1	DJC00001-
12	201-54-83311	.BRACKET.	1	DJC00001-
13	01245-00616	.SCREW.	2	DJC00001-
14	01643-70623	.WASHER.	2	DJC00001-
15	20Y-53-12790	.LIGHT.	1	DJC00001-
	08056-00271	..CONNECTOR.	1	DJC00001-
	08116-02410	..BULB, 10W.	1	DJC00001-
16	01023-70420	.SCREW.	2	DJC00001-
17	08034-20414	.BAND.	1	DJC00001-

FIG.K0210-09A0 OPERATOR'S CAB (WINDOW WASHER)

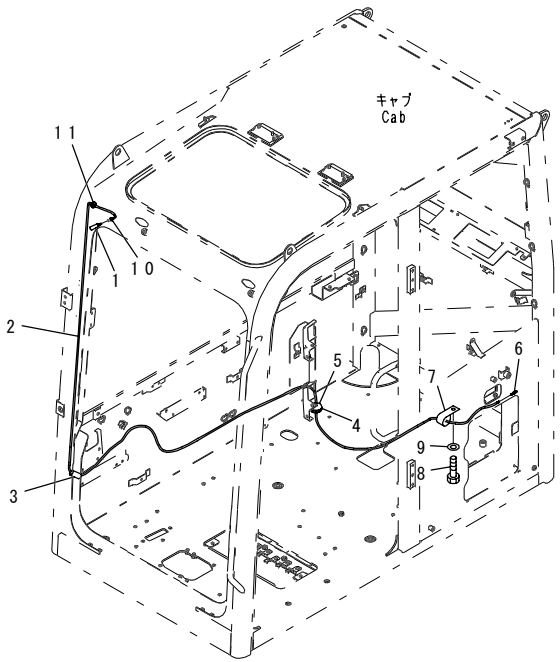

00092389

INDEX	PART NO.	DESCRIPTION	Q'TY	SERIAL NO.
	☆	CAB ASS'Y	1	DJC00001-
1	22H-54-15770	.NOZZLE	1	DJC00001-
2	201-54-83411	.HOSE	1	DJC00001-
3	08017-B0701	.CONDUIT	1	DJC00001-
4	08034-20414	.BAND	1	DJC00001-
5	22U-54-25590	.GROMMET	1	DJC00001-
6	207-06-61490	.VALVE	1	DJC00001-
7	04434-51010	.CLIP	1	DJC00001-
8	01010-81020	.BOLT	1	DJC00001-
9	01643-31032	.WASHER	1	DJC00001-
10	01580-10605	.NUT	1	DJC00001-
11	08037-01008	.GROMMET	1	DJC00001-

FIG.K0210-10A0 OPERATOR'S CAB (CAB MOUNTING)

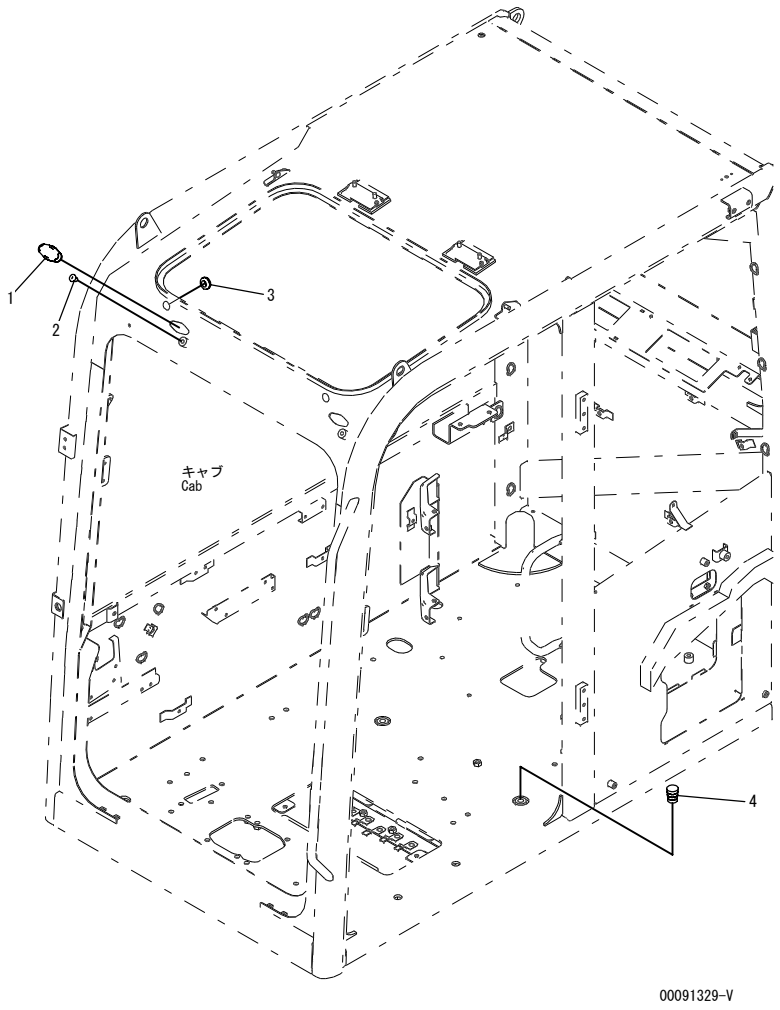

INDEX	PART NO.	DESCRIPTION	Q'TY	SERIAL NO.
	☆	CAB ASS'Y.	1	DJC00001-
1	22B-54-17282	.CAP.	2	DJC00001-
2	21U-70-31390	.CAP.	2	DJC00001-
3	08037-01610	.GROMMET.	2	DJC00001-
4	07049-01620	.PLUG.	1	DJC00001-

FIG NO. : K0210-13A0

FIG.K0210-13A0 OPERATOR'S CAB (FLOOR) (BASE)

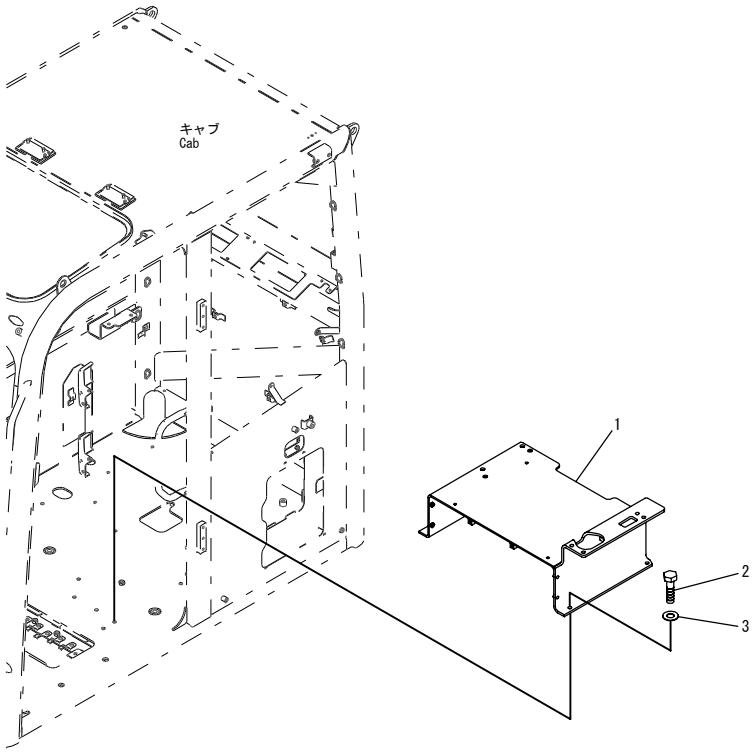

INDEX	PART NO.	DESCRIPTION	Q'TY	SERIAL NO.
1	201-54-83112	BRACKET.....	1	DJC00001-
2	01010-D1025	BOLT.....	4	DJC00001-
3	01643-71032	WASHER.....	4	DJC00001-

FIG.K0210-14A0 OPERATOR'S CAB (FLOOR) (TRAVEL CONTROL)

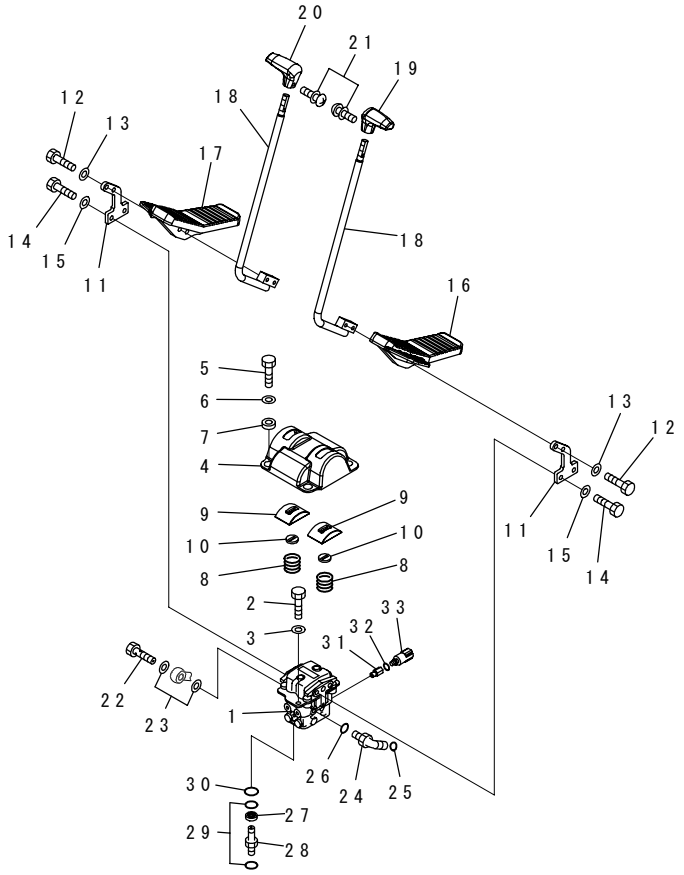

INDEX	PART NO.	DESCRIPTION	Q'TY	SERIAL NO.
1	(702-16-04270)	PILOT VALVE	1	DJC00001-
2	01010-81020	BOLT	2	DJC00001-
3	01643-31032	WASHER	2	DJC00001-
4	20Y-43-41121	COVER	1	DJC00001-
5	01010-81025	BOLT	4	DJC00001-
6	01643-31032	WASHER	4	DJC00001-
7	20Y-43-41361	COLLAR	4	DJC00001-
8	203-43-51620	SPRING	2	DJC00001-
	22U-43-21350	.COVER ASS'Y	2	DJC00001-
9	☆	.COVER	2	DJC00001-
10	22U-43-21360	SEAL	2	DJC00001-
11	20Y-43-41111	LEVER	2	DJC00001-
12	01010-D1045	BOLT	4	DJC00001-
13	01643-71032	WASHER	4	DJC00001-
14	01010-81030	BOLT	4	DJC00001-
15	01643-31032	WASHER	4	DJC00001-
16	22U-43-21111	PEDAL, L.H.	1	DJC00001-
17	22U-43-21121	PEDAL, R.H.	1	DJC00001-
18	22U-43-21131	LEVER, L.H.	2	DJC00001-
19	20Y-43-21231	KNOB, L.H.	1	DJC00001-
20	20Y-43-21241	KNOB, R.H.	1	DJC00001-
21	01023-20416	SCREW	2	DJC00001-
22	20Y-62-18910	BOLT	1	DJC00001-
23	07000-12018	O-RING	2	DJC00001-
24	11Y-62-12160	ELBOW	1	DJC00001-
25	02896-11008	O-RING	1	DJC00001-
26	07002-11423	O-RING	1	DJC00001-
27	21W-62-44640	JOINT	4	DJC00001-
28	21W-62-44650	UNION	4	DJC00001-
29	07000-12015	O-RING	8	DJC00001-
30	02896-11008	O-RING	4	DJC00001-
31	22P-62-15270	NIPPLE	1	DJC00001-
32	07002-11423	O-RING	1	DJC00001-
33	7861-93-1840	SENSOR	1	DJC00001-

FIG.K0210-15A0 OPERATOR'S CAB (FLOOR) (ATTACHMENT CONTROL)

(1/2)

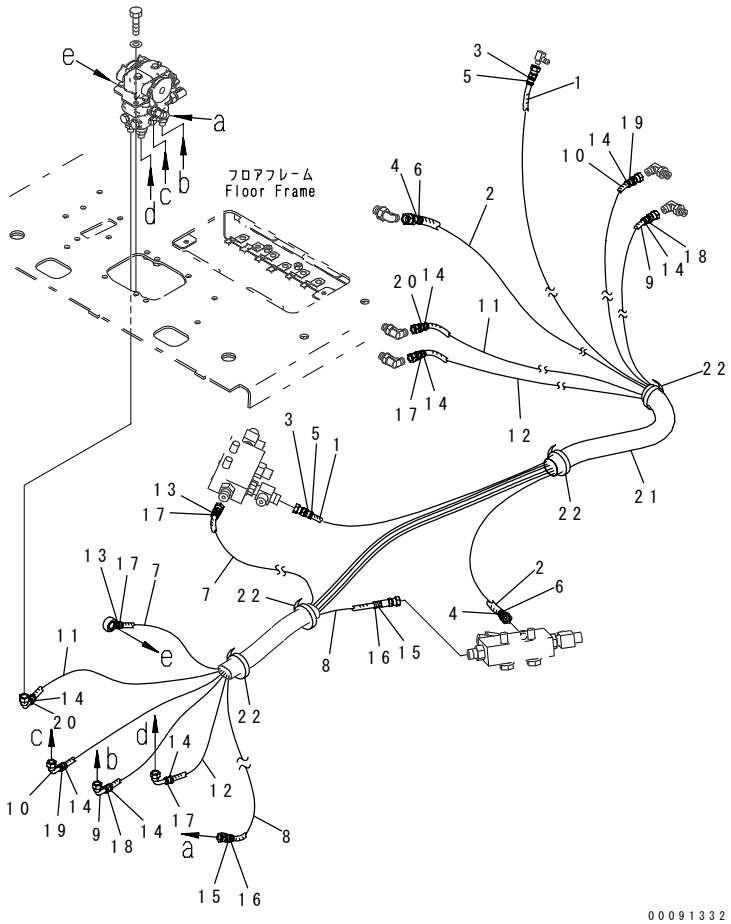

INDEX	PART NO.	DESCRIPTION	Q'TY	SERIAL NO.
1	201-62-82821	HOSE	1	DJC00001-
2	201-62-82221	HOSE	1	DJC00001-
3	20Y-62-22790	BAND, RED	2	DJC00001-
4	20Y-62-22820	BAND, BLUE	2	DJC00001-
5	20Y-62-22850	BAND, GREEN	2	DJC00001-
6	20Y-62-22830	BAND, WHITE	2	DJC00001-
7	201-62-83351	HOSE	1	DJC00001-
8	201-62-83361	HOSE	1	DJC00001-
9	201-62-82861	HOSE	1	DJC00001-
10	201-62-82881	HOSE	1	DJC00001-
11	201-62-82891	HOSE	1	DJC00001-
12	201-62-82871	HOSE	1	DJC00001-
13	20Y-62-22790	BAND, RED	2	DJC00001-
14	20Y-62-22810	BAND, YELLOW	8	DJC00001-
15	20Y-62-22820	BAND, BLUE	2	DJC00001-
16	20Y-62-22830	BAND, WHITE	2	DJC00001-
17	20Y-62-22850	BAND, GREEN	4	DJC00001-
18	20Y-62-22840	BAND, BLACK	2	DJC00001-
19	20Y-62-22860	BAND, BROWN	2	DJC00001-
20	21U-62-34740	BAND, ORANGE	2	DJC00001-
21	20M-62-82792	TUBE	1	DJC00001-
22	08034-20519	BAND	5	DJC00001-

FIG.KO210-16A0 OPERATOR'S CAB (FLOOR) (ATTACHMENT CONTROL)

(2/2)

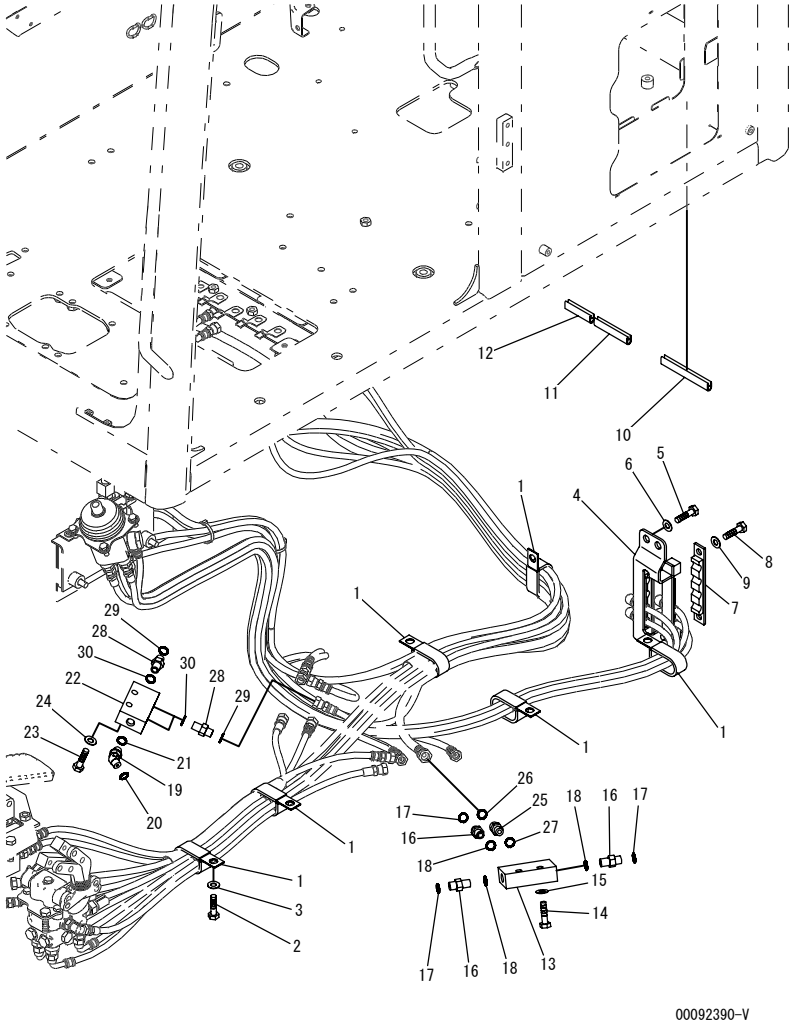

INDEX	PART NO.	DESCRIPTION	Q'TY	SERIAL NO.
1	22M-977-1140	CLIP	6	DJC00001-
2	01010-81020	BOLT	6	DJC00001-
3	01643-31032	WASHER	6	DJC00001-
4	201-54-83510	BRACKET	1	DJC00001-
5	01010-81225	BOLT	2	DJC00001-
6	01643-31232	WASHER	2	DJC00001-
7	20U-62-22320	PLATE	2	DJC00001-
8	01010-81020	BOLT	4	DJC00001-
9	01643-31032	WASHER	4	DJC00001-
10	201-54-83520	SEAL	1	DJC00001-
11	201-54-83530	SEAL	1	DJC00001-
12	201-54-83540	SEAL	1	DJC00001-
13	20Y-62-15831	BLOCK	1	DJC00001-
14	01010-81045	BOLT	2	DJC00001-
15	01643-31032	WASHER	2	DJC00001-
16	11Y-62-12130	NIPPLE	3	DJC00001-
17	02896-11008	O-RING	3	DJC00001-
18	07002-11423	O-RING	3	DJC00001-
19	02783-10210	ELBOW	1	DJC00001-
20	02896-11008	O-RING	1	DJC00001-
21	07002-11423	O-RING	1	DJC00001-
22	20Y-62-15831	BLOCK	1	DJC00001-
23	01010-81045	BOLT	2	DJC00001-
24	01643-31032	WASHER	2	DJC00001-
25	02781-0031D	UNION	1	DJC00001-
26	02896-11009	O-RING	1	DJC00001-
27	07002-11423	O-RING	1	DJC00001-
28	11Y-62-12130	NIPPLE	3	DJC00001-
29	02896-11008	O-RING	3	DJC00001-
30	07002-11423	O-RING	3	DJC00001-

FIG.K0210-16A1 OPERATOR'S CAB (FLOOR) (ATTACHMENT CONTROL)

(2/2) (BLADE SPEC.)

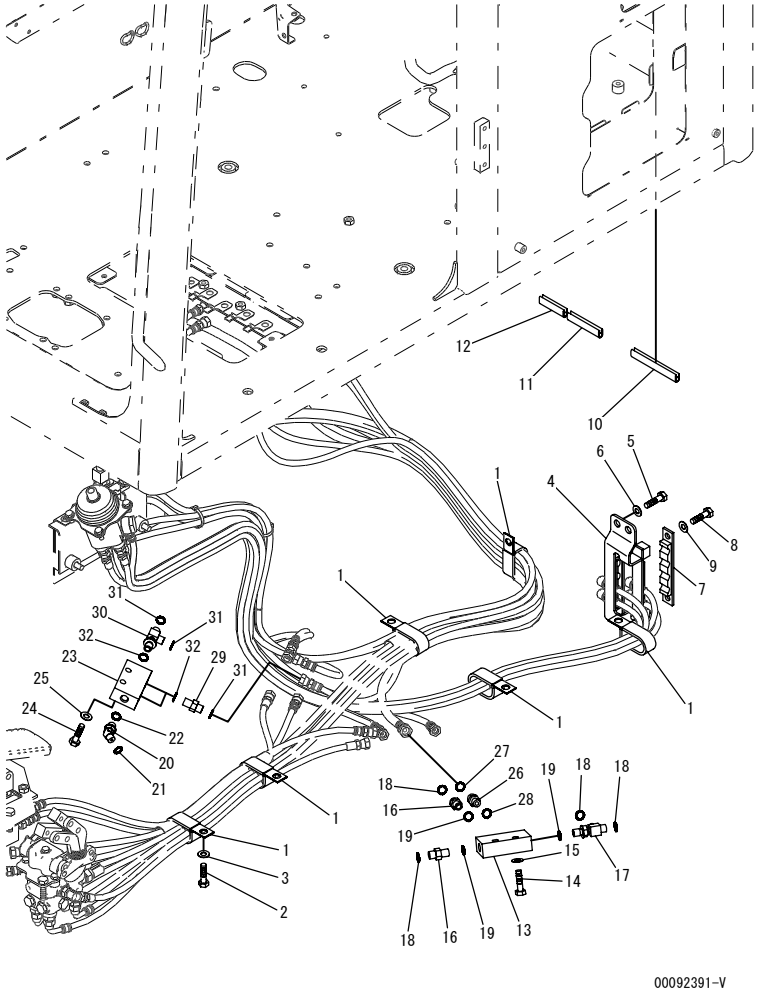

INDEX	PART NO.	DESCRIPTION	Q'TY	SERIAL NO.
1	22M-977-1140	CLIP	6	DJC00001-
2	01010-81020	BOLT	6	DJC00001-
3	01643-31032	WASHER	6	DJC00001-
4	201-54-83510	BRACKET	1	DJC00001-
5	01010-81225	BOLT	2	DJC00001-
6	01643-31232	WASHER	2	DJC00001-
7	20U-62-22320	PLATE	2	DJC00001-
8	01010-81020	BOLT	4	DJC00001-
9	01643-31032	WASHER	4	DJC00001-
10	201-54-83520	SEAL	1	DJC00001-
11	201-54-83530	SEAL	1	DJC00001-
12	201-54-83540	SEAL	1	DJC00001-
13	20Y-62-15831	BLOCK	1	DJC00001-
14	01010-81045	BOLT	2	DJC00001-
15	01643-31032	WASHER	2	DJC00001-
16	11Y-62-12130	NIPPLE	2	DJC00001-
17	11Y-62-12330	ELBOW	1	DJC00001-
18	02896-11008	O-RING	4	DJC00001-
19	07002-11423	O-RING	3	DJC00001-
20	02783-10210	ELBOW	1	DJC00001-
21	02896-11008	O-RING	1	DJC00001-
22	07002-11423	O-RING	1	DJC00001-
23	20Y-62-15831	BLOCK	1	DJC00001-
24	01010-81045	BOLT	2	DJC00001-
25	01643-31032	WASHER	2	DJC00001-
26	02781-0031D	UNION	1	DJC00001-
27	02896-11009	O-RING	1	DJC00001-
28	07002-11423	O-RING	1	DJC00001-
29	11Y-62-12130	NIPPLE	2	DJC00001-
30	11Y-62-12330	ELBOW	1	DJC00001-
31	02896-11008	O-RING	4	DJC00001-
32	07002-11423	O-RING	3	DJC00001-

FIG.KO210-16A2 OPERATOR'S CAB (FLOOR) (ATTACHMENT CONTROL) (2/2) (PROVISION FOR 1-ADDITIONAL ACTUATOR PIPING)

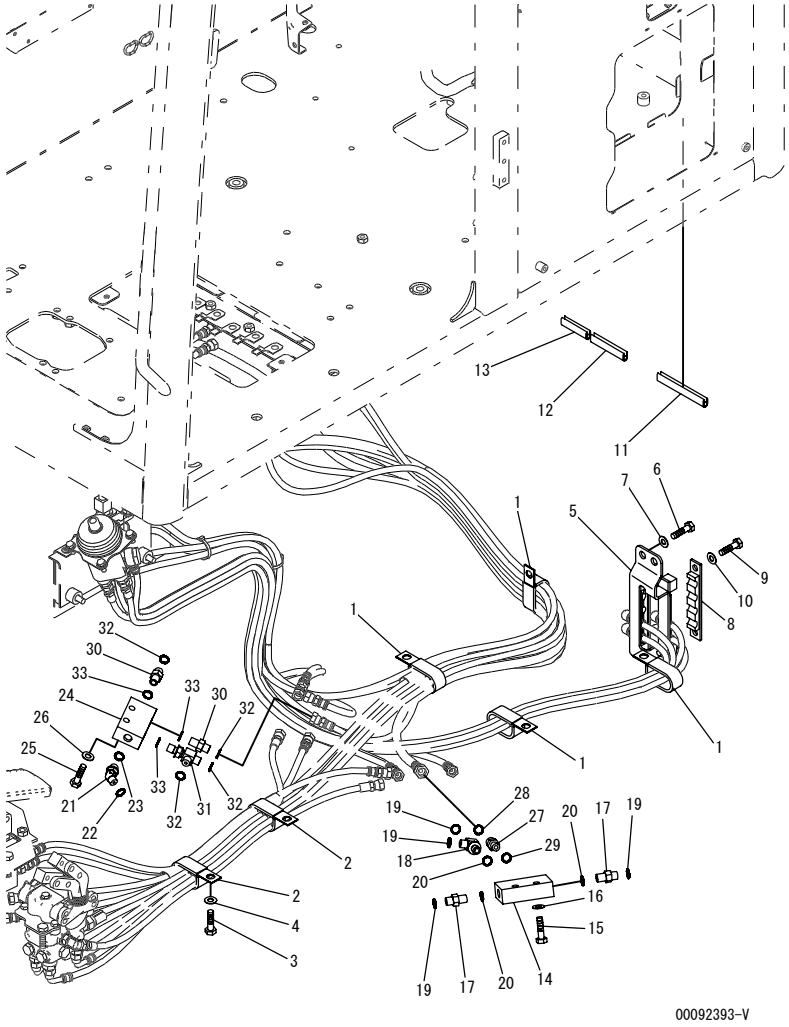

INDEX	PART NO.	DESCRIPTION	Q'TY	SERIAL NO.
1	22M-977-1140	CLIP	4	DJC00001-
2	431-12-16290	CLIP	2	DJC00001-
3	01010-81020	BOLT	6	DJC00001-
4	01643-31032	WASHER	6	DJC00001-
5	201-54-83510	BRACKET	1	DJC00001-
6	01010-81225	BOLT	2	DJC00001-
7	01643-31232	WASHER	2	DJC00001-
8	20U-62-22320	PLATE	2	DJC00001-
9	01010-81020	BOLT	4	DJC00001-
10	01643-31032	WASHER	4	DJC00001-
11	201-54-83520	SEAL	1	DJC00001-
12	201-54-83530	SEAL	1	DJC00001-
13	201-54-83540	SEAL	1	DJC00001-
14	20Y-62-15831	BLOCK	1	DJC00001-
15	01010-81045	BOLT	2	DJC00001-
16	01643-31032	WASHER	2	DJC00001-
17	11Y-62-12130	NIPPLE	2	DJC00001-
18	11Y-62-12330	ELBOW	1	DJC00001-
19	02896-11008	O-RING	4	DJC00001-
20	07002-11423	O-RING	3	DJC00001-
21	02783-10210	ELBOW	1	DJC00001-
22	02896-11008	O-RING	1	DJC00001-
23	07002-11423	O-RING	1	DJC00001-
24	20Y-62-15831	BLOCK	1	DJC00001-
25	01010-81045	BOLT	2	DJC00001-
26	01643-31032	WASHER	2	DJC00001-
27	02781-0031D	UNION	1	DJC00001-
28	02896-11009	O-RING	1	DJC00001-
29	07002-11423	O-RING	1	DJC00001-
30	11Y-62-12130	NIPPLE	2	DJC00001-
31	11Y-62-12330	ELBOW	1	DJC00001-
32	02896-11008	O-RING	4	DJC00001-
33	07002-11423	O-RING	3	DJC00001-

FIG.K0210-16A3 OPERATOR'S CAB (FLOOR) (ATTACHMENT CONTROL) (2/2) (BLADE SPEC.) (PROVISION FOR 1-ACTUATORPIPING)

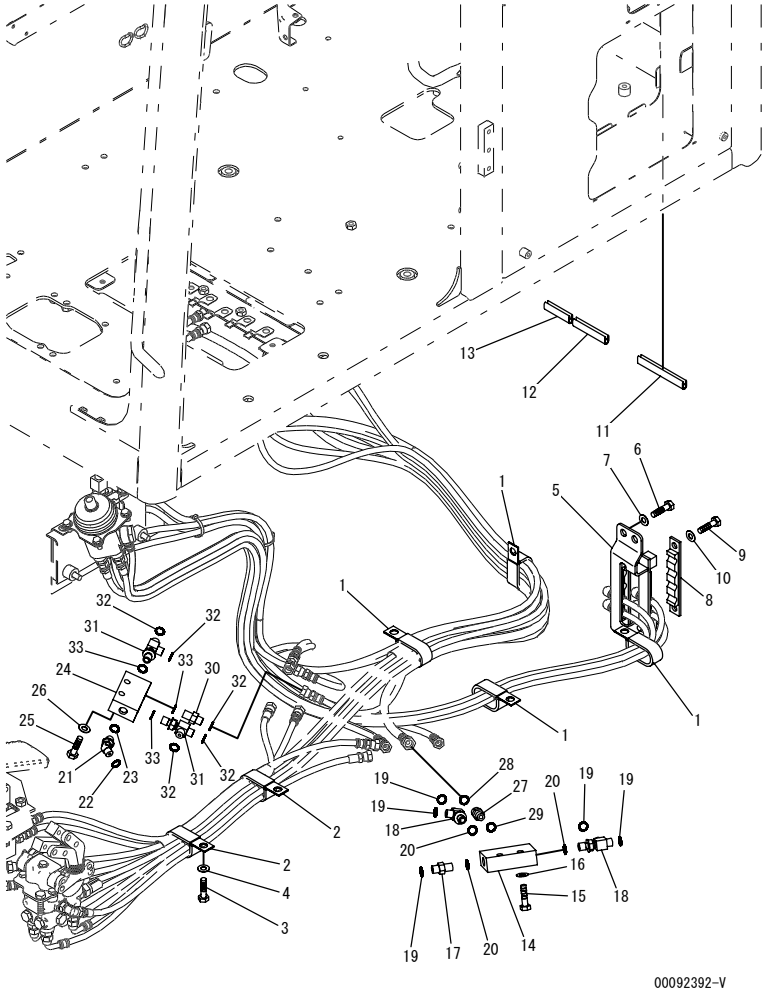

INDEX	PART NO.	DESCRIPTION	Q'TY	SERIAL NO.
1	22M-977-1140	CLIP	4	DJC00001-
2	431-12-16290	CLIP	2	DJC00001-
3	01010-81020	BOLT	6	DJC00001-
4	01643-31032	WASHER	6	DJC00001-
5	201-54-83510	BRACKET	1	DJC00001-
6	01010-81225	BOLT	2	DJC00001-
7	01643-31232	WASHER	2	DJC00001-
8	20U-62-22320	PLATE	2	DJC00001-
9	01010-81020	BOLT	4	DJC00001-
10	01643-31032	WASHER	4	DJC00001-
11	201-54-83520	SEAL	1	DJC00001-
12	201-54-83530	SEAL	1	DJC00001-
13	201-54-83540	SEAL	1	DJC00001-
14	20Y-62-15831	BLOCK	1	DJC00001-
15	01010-81045	BOLT	2	DJC00001-
16	01643-31032	WASHER	2	DJC00001-
17	11Y-62-12130	NIPPLE	1	DJC00001-
18	11Y-62-12330	ELBOW	2	DJC00001-
19	02896-11008	O-RING	5	DJC00001-
20	07002-11423	O-RING	3	DJC00001-
21	02783-10210	ELBOW	1	DJC00001-
22	02896-11008	O-RING	1	DJC00001-
23	07002-11423	O-RING	1	DJC00001-
24	20Y-62-15831	BLOCK	1	DJC00001-
25	01010-81045	BOLT	2	DJC00001-
26	01643-31032	WASHER	2	DJC00001-
27	02781-0031D	UNION	1	DJC00001-
28	02896-11009	O-RING	1	DJC00001-
29	07002-11423	O-RING	1	DJC00001-
30	11Y-62-12130	NIPPLE	1	DJC00001-
31	11Y-62-12330	ELBOW	2	DJC00001-
32	02896-11008	O-RING	5	DJC00001-
33	07002-11423	O-RING	3	DJC00001-

FIG.K0210-17A0 OPERATOR'S CAB (FLOOR) (LEVER、L.H.)

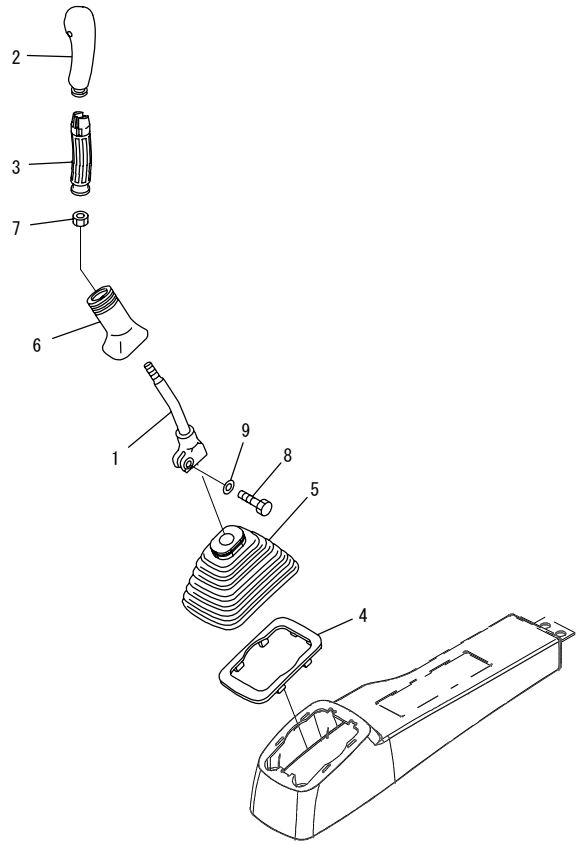

00091334

INDEX	PART NO.	DESCRIPTION	Q'TY	SERIAL NO.
	20Y-43-22611	LEVER ASS'Y,L.H.	1	DJC00001-
1	20Y-43-22211	.LEVER,L.H.	1	DJC00001-
	20Y-43-22621	.KNOB	1	DJC00001-
2	20Y-43-22630	..KNOB,L.H.	1	DJC00001-
3	20Y-43-22421	..INSERT	1	DJC00001-
4	20Y-43-22250	.PLATE	1	DJC00001-
5	20Y-43-22261	.BOOT	1	DJC00001-
6	20Y-43-22370	.BOOT	1	DJC00001-
7	600-411-1280	.NUT	1	DJC00001-
8	01252-41025	BOLT	1	DJC00001-
9	01643-51032	WASHER	1	DJC00001-

FIG.K0210-18A0 OPERATOR'S CAB (FLOOR) (CONSOLE、 L.H.)

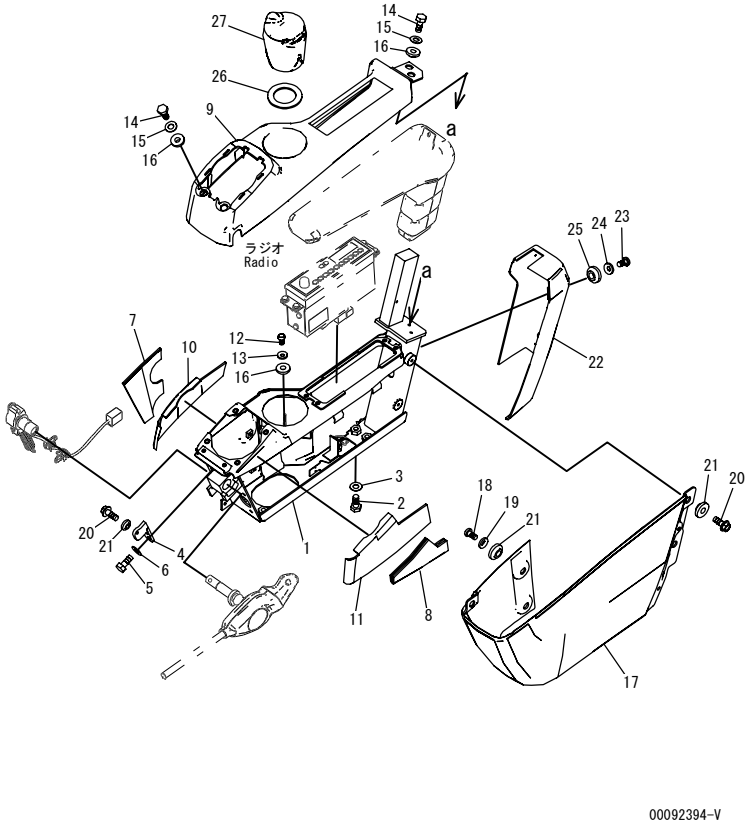

INDEX	PART NO.	DESCRIPTION	Q'TY	SERIAL NO.
1	20Y-43-41415	FRAME,L.H.	1	DJC00001-
2	01010-81025	BOLT	4	DJC00001-
3	01643-31032	WASHER	4	DJC00001-
4	20Y-43-41472	BRACKET	1	DJC00001-
5	01010-80616	BOLT	2	DJC00001-
6	01643-30623	WASHER	2	DJC00001-
7	20Y-43-41621	SHEET	1	DJC00001-
8	20Y-43-41641	SHEET	1	DJC00001-
9	20Y-43-41423	COVER,L.H., UPPER	1	DJC00001-
10	20Y-43-41651	SHEET	1	DJC00001-
11	20Y-43-41661	SHEET	1	DJC00001-
12	01245-00616	SCREW	1	DJC00001-
13	01643-70623	WASHER	1	DJC00001-
14	01010-80616	BOLT	4	DJC00001-
15	01643-30623	WASHER	4	DJC00001-
16	20Y-43-41290	COLLAR	5	DJC00001-
17	20Y-43-41442	COVER,L.H., FRONT	1	DJC00001-
18	01245-00616	SCREW	2	DJC00001-
19	01643-70623	WASHER	2	DJC00001-
20	01435-00612	BOLT	3	DJC00001-
21	20Y-43-41290	COLLAR	5	DJC00001-
22	20Y-43-41453	COVER,L.H., REAR	1	DJC00001-
23	01245-00616	SCREW	2	DJC00001-
24	01643-70623	WASHER	2	DJC00001-
25	20Y-43-41290	COLLAR	2	DJC00001-
26	20Y-43-41970	SHEET	1	DJC00001-
27	20Y-43-41491	ASHTRAY	1	DJC00001-

FIG.K0210-19A0 OPERATOR'S CAB (FLOOR) (P.P.C. LOCK LEVER)

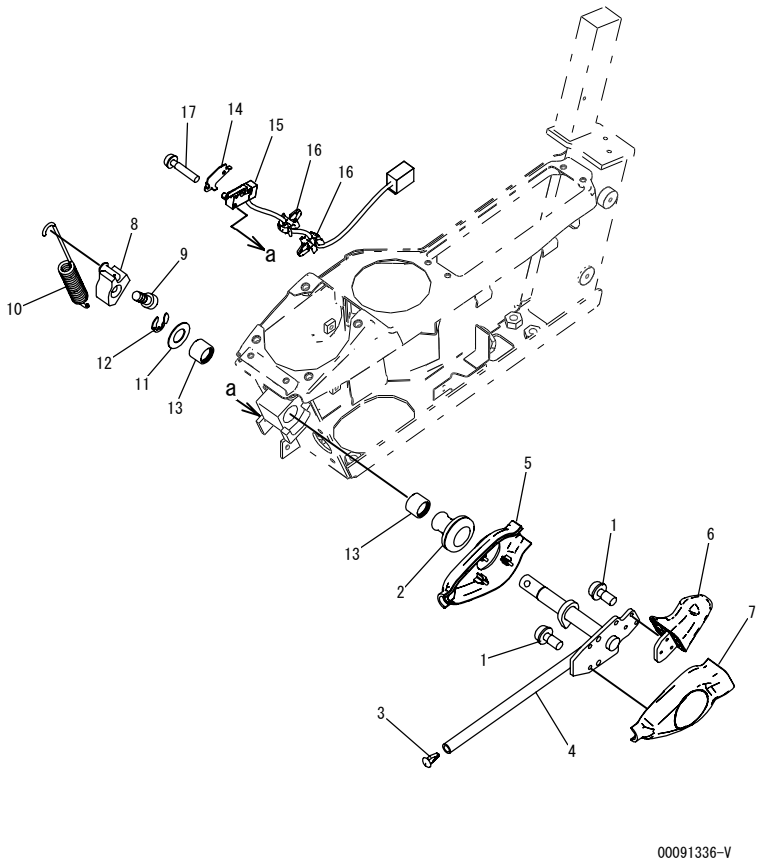

INDEX	PART NO.	DESCRIPTION	Q'TY	SERIAL NO.
	201-43-81501	LEVER ASS'Y.	1	DJC00001-
1	01023-60410	.SCREW.	6	DJC00001-
2	08037-11425	.GROMMET.	1	DJC00001-
3	208-53-12280	.CAP.	1	DJC00001-
4	201-43-81511	.LEVER.	1	DJC00001-
5	20Y-43-31522	.COVER.	1	DJC00001-
6	20Y-43-31611	.KNOB.	1	DJC00001-
7	20Y-43-31621	.COVER.	1	DJC00001-
8	20Y-43-31432	CAM.	1	DJC00001-
9	01252-70816	BOLT.	1	DJC00001-
10	20Y-43-31421	SPRING.	1	DJC00001-
11	20Y-43-31440	RING.	1	DJC00001-
12	20Y-43-31450	RING.	1	DJC00001-
13	06124-01616	BEARING.	2	DJC00001-
14	22U-06-22490	PLATE.	1	DJC00001-
15	22U-06-22360	SWITCH ASS'Y.	1	DJC00001-
16	22U-43-23260	CLIP.	2	DJC00001-
17	01023-60320	SCREW.	2	DJC00001-

FIG.K0210-20A0 OPERATOR'S CAB (FLOOR) (ARM REST、L.H.)

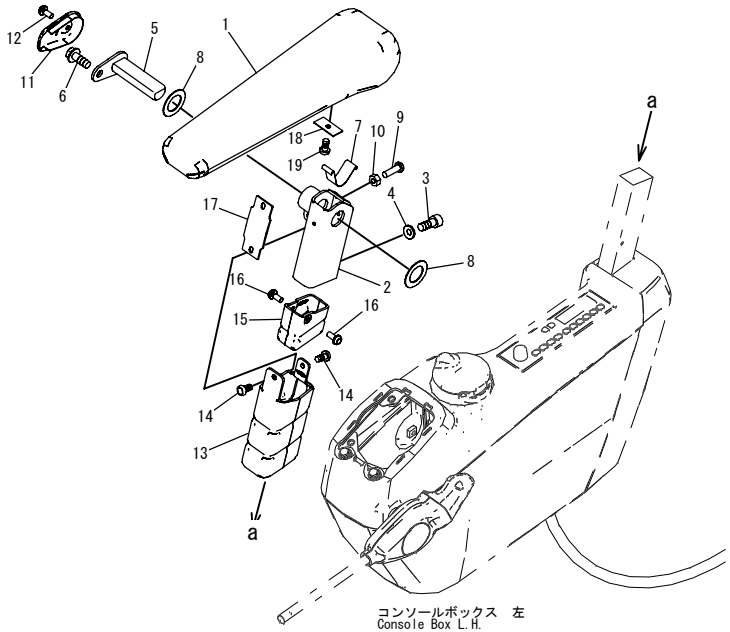

INDEX	PART NO.	DESCRIPTION	Q'TY	SERIAL NO.
1	20Y-43-41143	ARMREST, L.H.	1	DJC00001-
2	20Y-43-41173	BRACKET, L.H.	1	DJC00001-
3	01252-80820	BOLT	2	DJC00001-
4	01643-70823	WASHER	2	DJC00001-
5	20Y-43-41162	PIN, L.H.	1	DJC00001-
6	01435-40816	BOLT	1	DJC00001-
7	20Y-43-41152	SPRING	1	DJC00001-
8	437-40-26240	WASHER	2	DJC00001-
9	01245-00620	SCREW	1	DJC00001-
10	01580-40605	NUT	1	DJC00001-
11	20Y-43-41181	CAP	1	DJC00001-
12	01023-20512	SCREW	1	DJC00001-
13	20Y-43-41191	COVER, UPPER	1	DJC00001-
14	01370-40510	SCREW	2	DJC00001-
15	20Y-43-41591	COVER, LOWER	1	DJC00001-
16	01023-20512	SCREW	2	DJC00001-
17	20Y-43-41281	RUBBER	1	DJC00001-
18	20Y-43-41461	PLATE	1	DJC00001-
19	01370-40610	SCREW	1	DJC00001-

FIG.KO210-21AO OPERATOR'S CAB (FLOOR) (LEVER、R.H.)

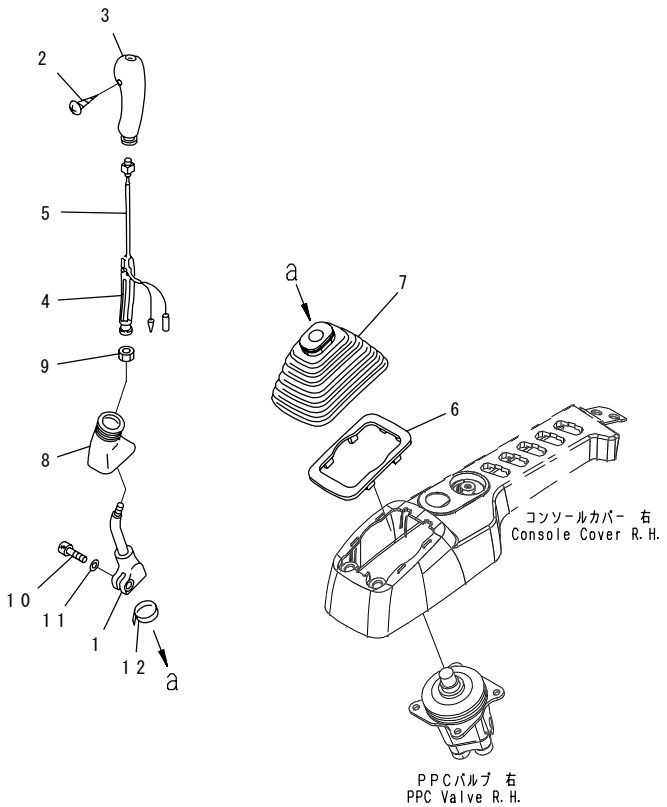

00091337

INDEX	PART NO.	DESCRIPTION	Q'TY	SERIAL NO.
	22U-43-21172	LEVER ASS'Y.	1	DJC00001-
1	20Y-43-22221	.LEVER,R.H.	1	DJC00001-
	22U-43-21192	.KNOB.	1	DJC00001-
2	☆	..SCREW.	1	DJC00001-
3	20Y-43-22390	..KNOB,R.H.	1	DJC00001-
4	20Y-43-22421	..INSERT.	1	DJC00001-
5	22U-43-21211	..SWITCH.	1	DJC00001-
6	20Y-43-22250	.PLATE.	1	DJC00001-
7	20Y-43-22261	.BOOT.	1	DJC00001-
8	20Y-43-22370	.BOOT.	1	DJC00001-
9	600-411-1280	.NUT.	1	DJC00001-
10	01252-41025	BOLT.	1	DJC00001-
11	01643-51032	WASHER.	1	DJC00001-
12	08034-40521	BAND.	1	DJC00001-

FIG.K0210-22A0 OPERATOR'S CAB (FLOOR) (CONSOLE、 R.H.)

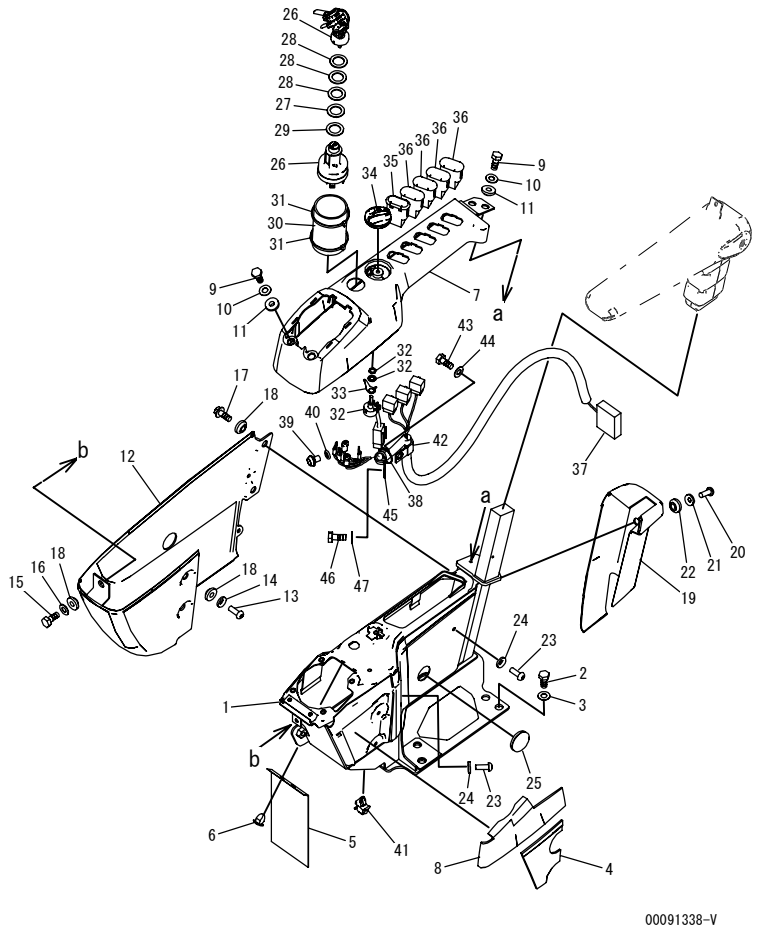

INDEX	PART NO.	DESCRIPTION	Q'TY	SERIAL NO.
1	20Y-43-41313	FRAME,R.H.	1	DJC00001-
2	01010-D1230	BOLT	4	DJC00001-
3	01643-71232	WASHER	4	DJC00001-
4	20Y-43-41631	SHEET	1	DJC00001-
5	22U-43-23251	SHEET	1	DJC00001-
6	22U-43-23290	CLIP	2	DJC00001-
7	20Y-43-41323	COVER,R.H., UPPER	1	DJC00001-
8	20Y-43-41661	SHEET	1	DJC00001-
9	01010-80616	BOLT	4	DJC00001-
10	01643-30623	WASHER	4	DJC00001-
11	20Y-43-41290	COLLAR	4	DJC00001-
12	20Y-43-41332	COVER,R.H., FRONT	1	DJC00001-
13	01245-00616	SCREW	2	DJC00001-
14	01643-70623	WASHER	2	DJC00001-
15	01010-80616	BOLT	1	DJC00001-
16	01643-30623	WASHER	1	DJC00001-
17	01435-00612	BOLT	2	DJC00001-
18	20Y-43-41290	COLLAR	5	DJC00001-
19	20Y-43-41353	COVER,R.H., REAR	1	DJC00001-
20	01245-00616	SCREW	2	DJC00001-
21	01643-70623	WASHER	2	DJC00001-
22	20Y-43-41290	COLLAR	2	DJC00001-
23	01245-00616	SCREW	3	DJC00001-
24	01643-70623	WASHER	3	DJC00001-
25	09415-02512	CAP	1	DJC00001-
26	22B-06-11910	SWITCH,STARTING	1	DJC00001-
27	20Y-43-41740	PLATE	1	DJC00001-
28	20Y-43-41750	WASHER	3	DJC00001-
29	20Y-43-41790	WASHER	1	DJC00001-
30	20Y-43-41671	SHEET	1	DJC00001-
31	08034-20519	BAND	2	DJC00001-
32	22U-06-22380	POTENTIOMETER	1	DJC00001-
33	22U-06-22460	SPRING	1	DJC00001-
34	20Y-43-41780	KNOB	1	DJC00001-
35	20Y-06-42121	SWITCH,LIGHT	1	DJC00001-
36	20Y-06-42190	COVER	4	DJC00001-
37	201-06-81321	WIRING HARNESS	1	DJC00135-
	201-06-81320	WIRING HARNESS	1	DJC00001-DJC00134
38	08034-20414	BAND	1	DJC00001-
39	01023-10508	SCREW	5	DJC00001-
40	01601-20513	WASHER	5	DJC00001-
41	22U-43-23260	CLIP	1	DJC00001-

FIG.K0210-22A0 OPERATOR'S CAB (FLOOR) (CONSOLE、 R.H.)

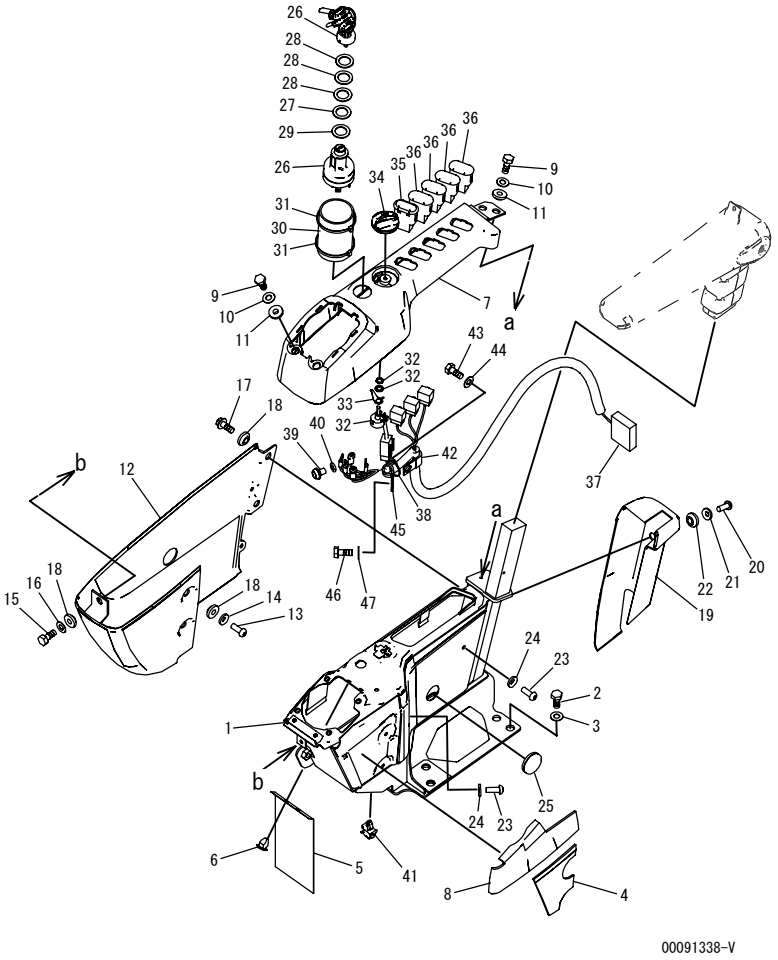

INDEX	PART NO.	DESCRIPTION	Q'TY	SERIAL NO.
42	04434-51710	CLIP	1	DJC00001-
43	01010-81016	BOLT	1	DJC00001-
44	01643-31032	WASHER	1	DJC00001-
45	04434-51410	CLIP	1	DJC00001-
46	01010-81016	BOLT	1	DJC00001-
47	01643-31032	WASHER	1	DJC00001-

FIG.K0210-23A0 OPERATOR'S CAB (FLOOR) (ARM REST、R.H.)

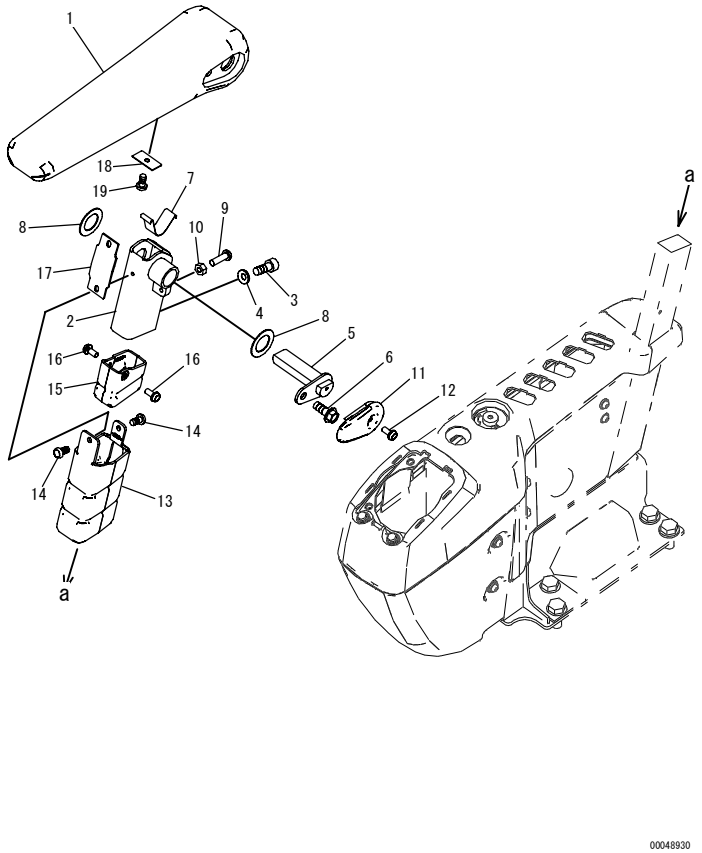

INDEX	PART NO.	DESCRIPTION	Q'TY	SERIAL NO.
1	20Y-43-41343	ARMREST, R. H.	1	DJC00001-
2	20Y-43-41533	BRACKET, R. H.	1	DJC00001-
3	01252-80820	BOLT	2	DJC00001-
4	01643-70823	WASHER	2	DJC00001-
5	20Y-43-41850	PIN, R. H.	1	DJC00001-
6	01435-40816	BOLT	1	DJC00001-
7	20Y-43-41152	SPRING	1	DJC00001-
8	437-40-26240	WASHER	2	DJC00001-
9	01245-00620	SCREW	1	DJC00001-
10	01580-40605	NUT	1	DJC00001-
11	20Y-43-41181	CAP	1	DJC00001-
12	01023-20512	SCREW	1	DJC00001-
13	20Y-43-41191	COVER, UPPER	1	DJC00001-
14	01370-40510	SCREW	2	DJC00001-
15	20Y-43-41591	COVER, LOWER	1	DJC00001-
16	01023-20512	SCREW	2	DJC00001-
17	20Y-43-41281	RUBBER	1	DJC00001-
18	20Y-43-41461	PLATE	1	DJC00001-
19	01370-40610	SCREW	1	DJC00001-

FIG.K0210-30A0 OPERATOR'S CAB (MONITOR PANEL)

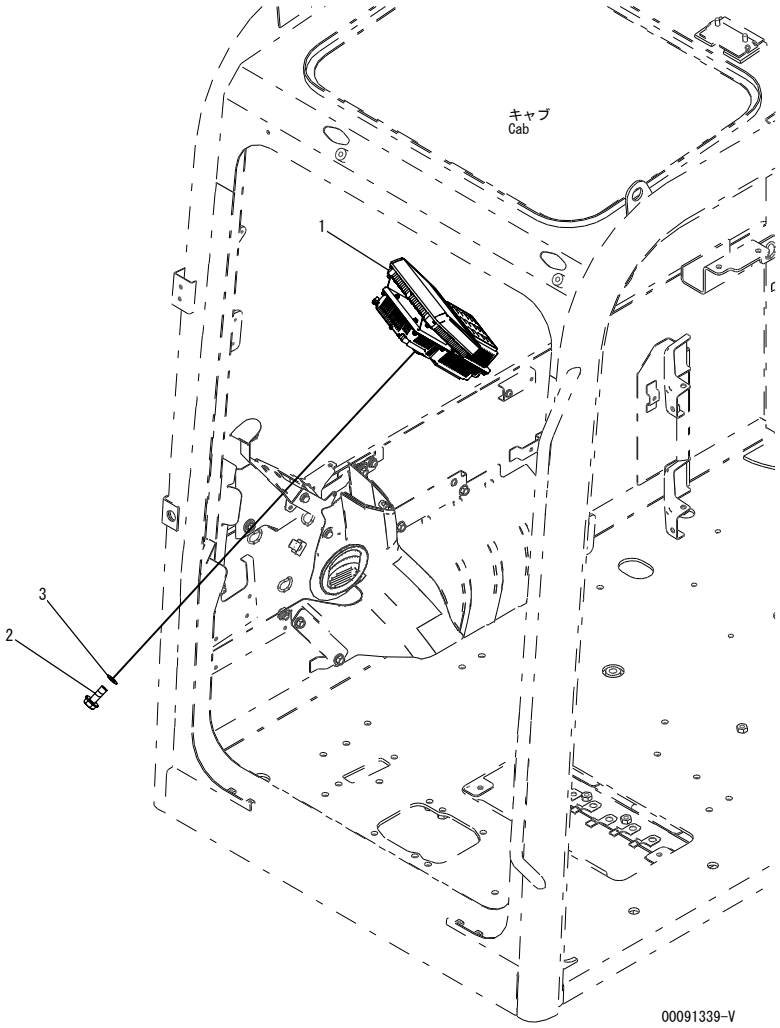

INDEX	PART NO.	DESCRIPTION	Q'TY	SERIAL NO.
1	7835-31-3401	MONITOR	1	DJC00001-
2	01435-00616	BOLT	4	DJC00001-
3	209-72-12230	WASHER	4	DJC00001-

FIG.K0210-31A0 OPERATOR'S CAB (FLOOR) (P.P.C. VALVE、L.H.)

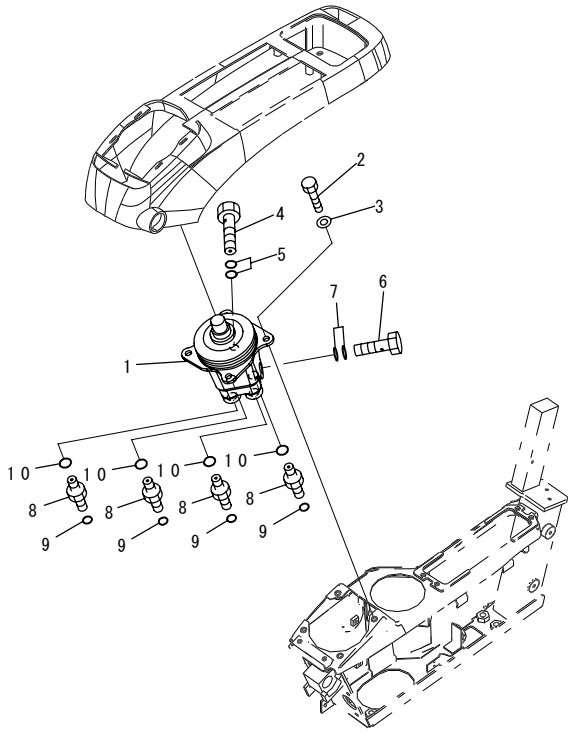

INDEX	PART NO.	DESCRIPTION	Q'TY	SERIAL NO.
1	(702-16-03910)	PILOT VALVE	1	DJC00001-
2	01010-80820	BOLT	4	DJC00001-
3	01643-30823	WASHER	4	DJC00001-
4	20Y-62-18910	BOLT	1	DJC00001-
5	07000-12018	O-RING	2	DJC00001-
6	20Y-62-18890	BOLT	1	DJC00001-
7	07000-12015	O-RING	2	DJC00001-
8	11Y-62-12130	NIPPLE	4	DJC00001-
9	02896-11008	O-RING	4	DJC00001-
10	07002-11423	O-RING	4	DJC00001-

FIG.KO210-32A0 OPERATOR'S CAB (FLOOR) (P.P.C. LINE)

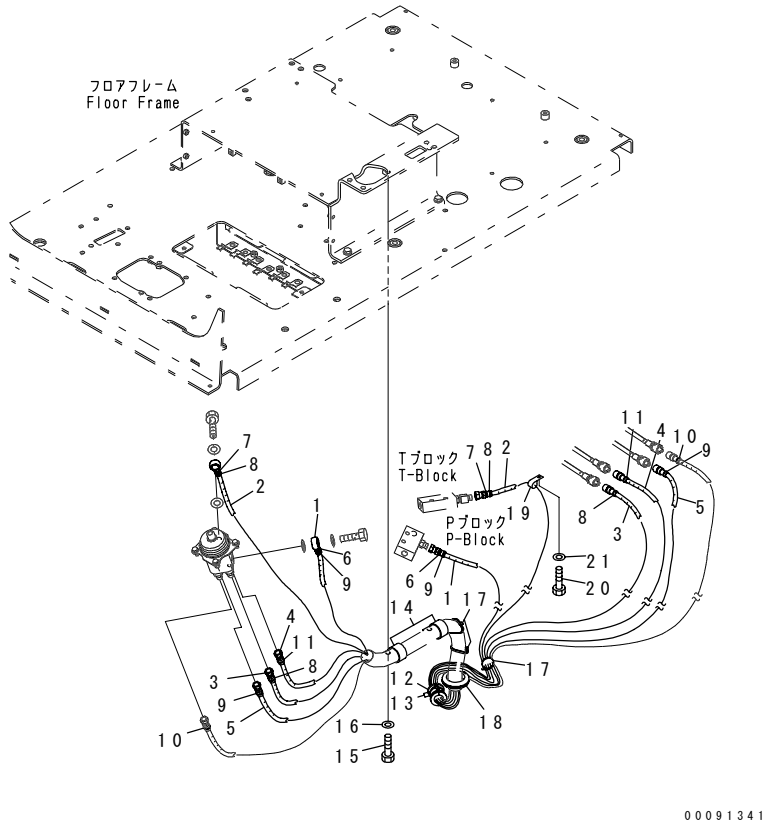

INDEX	PART NO.	DESCRIPTION	Q'TY	SERIAL NO.
1	201-62-83150	HOSE	1	DJC00001-
2	201-62-83171	HOSE	1	DJC00001-
3	201-62-83111	HOSE	2	DJC00001-
4	201-62-83121	HOSE	1	DJC00001-
5	201-62-83141	HOSE	1	DJC00001-
6	20Y-62-22790	BAND, RED	2	DJC00001-
7	20Y-62-22820	BAND, BLUE	2	DJC00001-
8	20Y-62-22830	BAND, WHITE	4	DJC00001-
9	20Y-62-22850	BAND, GREEN	4	DJC00001-
10	20Y-62-22860	BAND, BROWN	2	DJC00001-
11	21U-62-34740	BAND, ORANGE	2	DJC00001-
12	07095-00526	CUSHION	1	DJC00001-
13	08034-20536	BAND	2	DJC00001-
14	208-06-19170	CLIP	2	DJC00001-
15	01010-81020	BOLT	1	DJC00001-
16	01643-31032	WASHER	1	DJC00001-
17	08034-20536	BAND	3	DJC00001-
18	08037-05016	GROMMET	1	DJC00001-
19	04434-51210	CLIP	1	DJC00001-
20	01010-81020	BOLT	1	DJC00001-
21	01643-31032	WASHER	1	DJC00001-

FIG.K0210-33A0 OPERATOR'S CAB (FLOOR) (P.P.C. VALVE、R.H.)

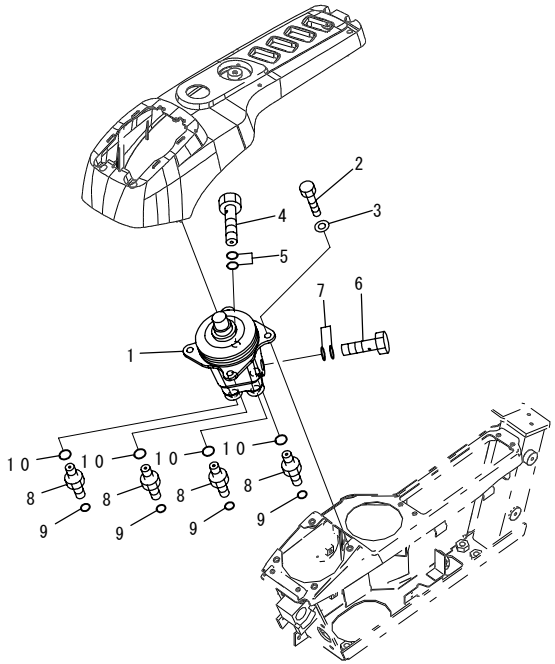

INDEX	PART NO.	DESCRIPTION	Q'TY	SERIAL NO.
1	(702-16-03910)	PILOT VALVE	1	DJC00001-
2	01010-80820	BOLT	4	DJC00001-
3	01643-30823	WASHER	4	DJC00001-
4	20Y-62-18910	BOLT	1	DJC00001-
5	07000-12018	O-RING	2	DJC00001-
6	20Y-62-18890	BOLT	1	DJC00001-
7	07000-12015	O-RING	2	DJC00001-
8	11Y-62-12130	NIPPLE	4	DJC00001-
9	02896-11008	O-RING	4	DJC00001-
10	07002-11423	O-RING	4	DJC00001-

FIG.KO210-34A0 OPERATOR'S CAB (FLOOR) (P.P.C. PIPING FOR PILOT VALVE、R.H.)

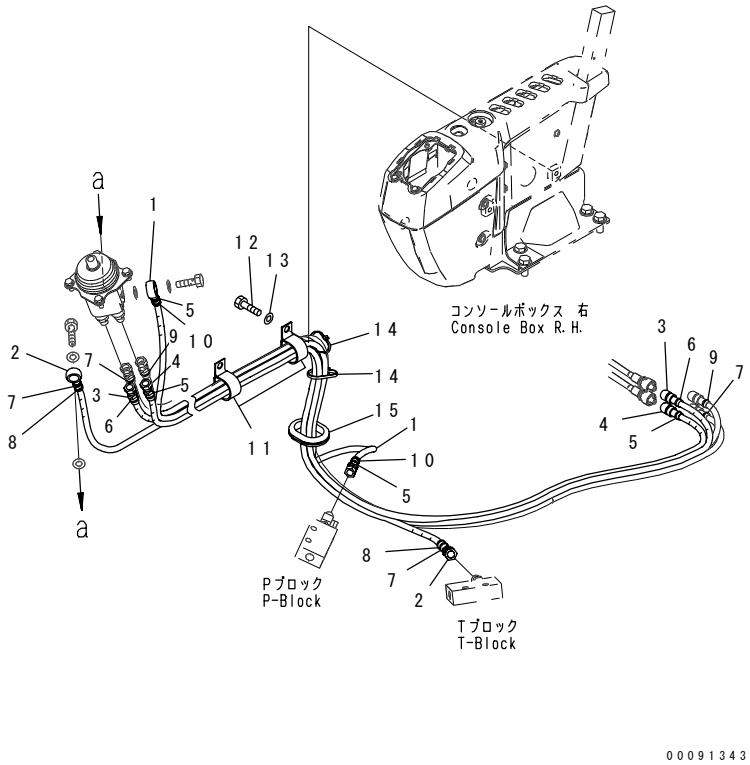

INDEX	PART NO.	DESCRIPTION	Q'TY	SERIAL NO.
1	201-62-83160	HOSE	1	DJC00001-
2	201-62-83261	HOSE	1	DJC00001-
3	201-62-83211	HOSE	3	DJC00001-
4	201-62-83231	HOSE	1	DJC00001-
5	20Y-62-22790	BAND, RED	4	DJC00001-
6	20Y-62-22810	BAND, YELLOW	2	DJC00001-
7	20Y-62-22820	BAND, BLUE	4	DJC00001-
8	20Y-62-22830	BAND, WHITE	2	DJC00001-
9	20Y-62-22840	BAND, BLACK	2	DJC00001-
10	20Y-62-22850	BAND, GREEN	2	DJC00001-
11	208-06-19170	CLIP	2	DJC00001-
12	01010-81020	BOLT	2	DJC00001-
13	01643-31032	WASHER	2	DJC00001-
14	08034-20536	BAND	3	DJC00001-
15	426-09-11230	GROMMET	1	DJC00001-

FIG.K0210-35A0 OPERATOR'S CAB (FLOOR) (WIRING HARNESS AND P.P.C.HOSE CLAMP)

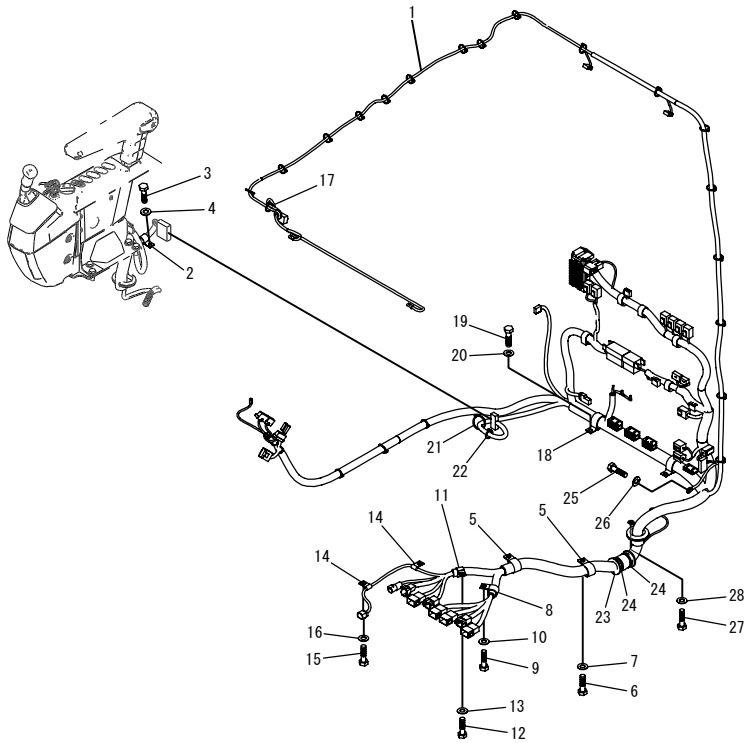

INDEX	PART NO.	DESCRIPTION	Q'TY	SERIAL NO.
1	201-06-81112	WIRING HARNESS	1	DJC00001-
2	04434-51708	CLIP	1	DJC00001-
3	01010-80816	BOLT	1	DJC00001-
4	01643-30823	WASHER	1	DJC00001-
5	04434-53211	CLIP	2	DJC00001-
6	01010-81020	BOLT	2	DJC00001-
7	01643-31032	WASHER	2	DJC00001-
8	04434-52711	CLIP	1	DJC00001-
9	01010-81020	BOLT	1	DJC00001-
10	01643-31032	WASHER	1	DJC00001-
11	04434-52310	CLIP	1	DJC00001-
12	01010-81020	BOLT	1	DJC00001-
13	01643-31032	WASHER	1	DJC00001-
14	04434-50810	CLIP	2	DJC00001-
15	01010-81020	BOLT	2	DJC00001-
16	01643-31032	WASHER	2	DJC00001-
17	08034-20414	BAND	22	DJC00001-
18	208-06-19170	CLIP	2	DJC00001-
19	01010-81020	BOLT	2	DJC00001-
20	01643-31032	WASHER	2	DJC00001-
21	08034-20519	BAND	1	DJC00001-
22	08034-20414	BAND	1	DJC00001-
23	07095-01034	CUSHION	1	DJC00001-
24	08034-20823	BAND	2	DJC00001-
25	01010-81016	BOLT	1	DJC00001-
26	01643-31032	WASHER	2	DJC00001-
27	01010-81016	BOLT	2	DJC00001-
28	01643-31032	WASHER	2	DJC00001-

FIG.KO210-36A0 OPERATOR'S CAB (CAB IN PARTS) (SUB PLATE)

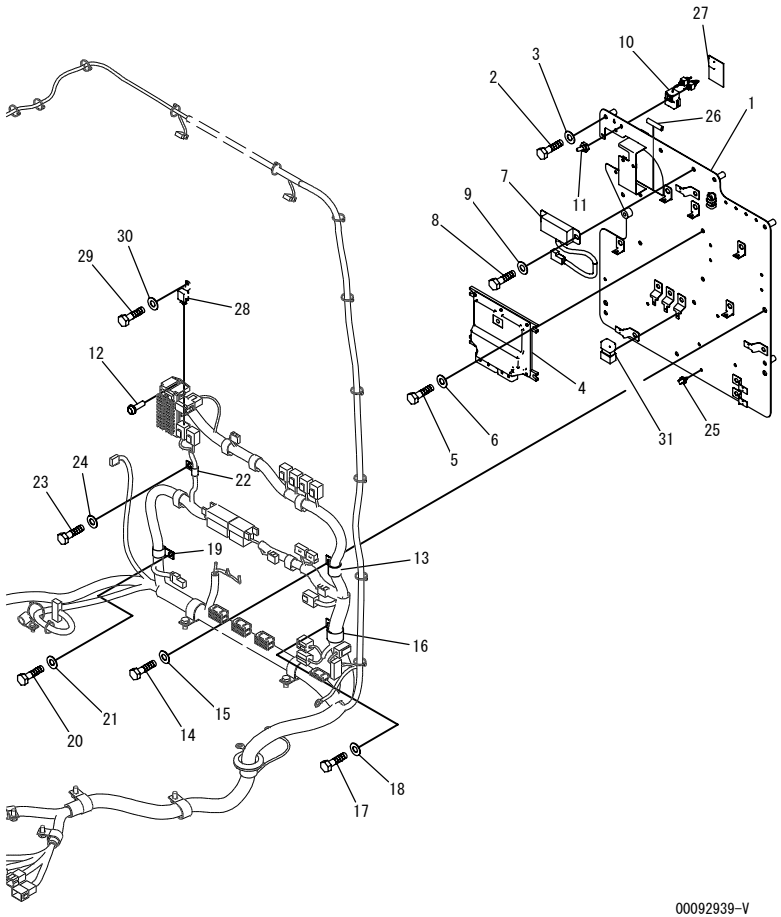

INDEX	PART NO.	DESCRIPTION	Q'TY	SERIAL NO.
1	201-54-83142	BRACKET	1	DJC00001-
2	01010-80845	BOLT	8	DJC00001-
3	01643-30823	WASHER	8	DJC00001-
4	7835-45-2001	CONTROLLER,PUMP	1	DJC00001-
5	01010-80820	BOLT	4	DJC00001-
6	01643-30823	WASHER	4	DJC00001-
7	7861-94-3000	RESISTOR	1	DJC00001-
8	01010-80816	BOLT	2	DJC00001-
9	01643-30823	WASHER	2	DJC00001-
10	22B-06-21430	WIRING HARNESS	1	DJC00001-
11	208-43-71420	CAP	2	DJC00001-
12	01023-10620	SCREW	2	DJC00001-
13	04434-52511	CLIP	1	DJC00001-
14	01010-81016	BOLT	1	DJC00001-
15	01643-31032	WASHER	1	DJC00001-
16	04434-53411	CLIP	1	DJC00001-
17	01010-81016	BOLT	1	DJC00001-
18	01643-31032	WASHER	1	DJC00001-
19	04434-52310	CLIP	1	DJC00001-
20	01010-81016	BOLT	1	DJC00001-
21	01643-31032	WASHER	1	DJC00001-
22	04434-51010	CLIP	1	DJC00001-
23	01010-81016	BOLT	1	DJC00001-
24	01643-31032	WASHER	1	DJC00001-
25	08059-00515	CLIP	1	DJC00001-
26	201-54-83430	SEAL	1	DJC00001-
27	201-54-83420	CUSHION	1	DJC00001-
28	7861-74-5100	RELAY	6	DJC00001-
29	01010-80612	BOLT	6	DJC00001-
30	01643-30623	WASHER	6	DJC00001-
31	8233-06-3350	DIODE	3	DJC00001-

FIG.K0210-37A1 OPERATOR'S CAB (BLADE CONTROL)

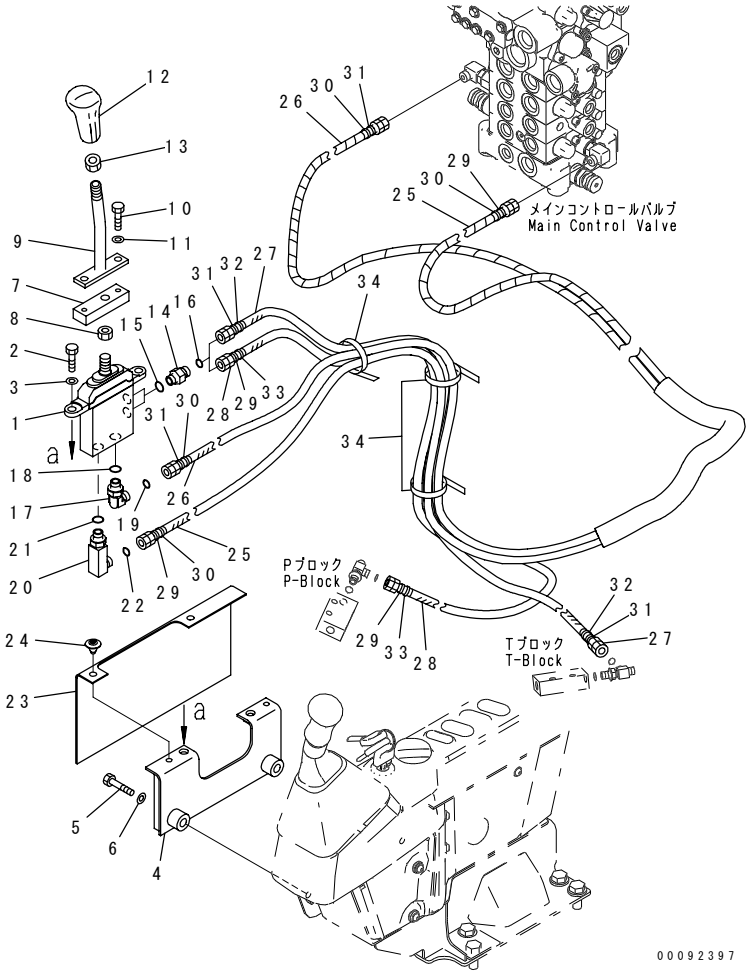

INDEX	PART NO.	DESCRIPTION	Q'TY	SERIAL NO.
1	(702-16-01270)	PILOT VALVE	1	DJC00001-
2	01010-D1025	BOLT	2	DJC00001-
3	01643-71032	WASHER	2	DJC00001-
4	22P-43-13310	BRACKET	1	DJC00001-
5	01010-81040	BOLT	2	DJC00001-
6	01643-31032	WASHER	2	DJC00001-
7	22U-43-21730	SEAT	1	DJC00001-
8	01583-11408	NUT	1	DJC00001-
9	201-43-81311	LEVER	1	DJC00001-
10	01010-D0825	BOLT	2	DJC00001-
11	01643-70823	WASHER	2	DJC00001-
12	20T-43-71110	KNOB	1	DJC00001-
13	20T-43-71190	NUT	1	DJC00001-
14	11Y-62-12140	NIPPLE	2	DJC00001-
15	07000-12011	O-RING	2	DJC00001-
16	02896-11008	O-RING	2	DJC00001-
17	21W-62-43980	ELBOW	1	DJC00001-
18	07000-12011	O-RING	1	DJC00001-
19	02896-11008	O-RING	1	DJC00001-
20	21W-62-43990	ELBOW	1	DJC00001-
21	07000-12011	O-RING	1	DJC00001-
22	02896-11008	O-RING	1	DJC00001-
23	22B-43-23580	SHEET	1	DJC00001-
24	22B-54-16461	RIVET	2	DJC00001-
25	201-62-83511	HOSE	1	DJC00001-
26	201-62-83521	HOSE	1	DJC00001-
27	201-62-83561	HOSE	1	DJC00001-
28	201-62-83551	HOSE	1	DJC00001-
29	20Y-62-22790	BAND, RED	4	DJC00001-
30	20Y-62-22810	BAND, YELLOW	4	DJC00001-
31	20Y-62-22820	BAND, BLUE	4	DJC00001-
32	20Y-62-22830	BAND, WHITE	2	DJC00001-
33	20Y-62-22850	BAND, GREEN	2	DJC00001-
34	08034-20536	BAND	3	DJC00001-

FIG.K0210-38A0 OPERATOR'S CAB (CAB IN PARTS) (ROOF AND REAR COVER)

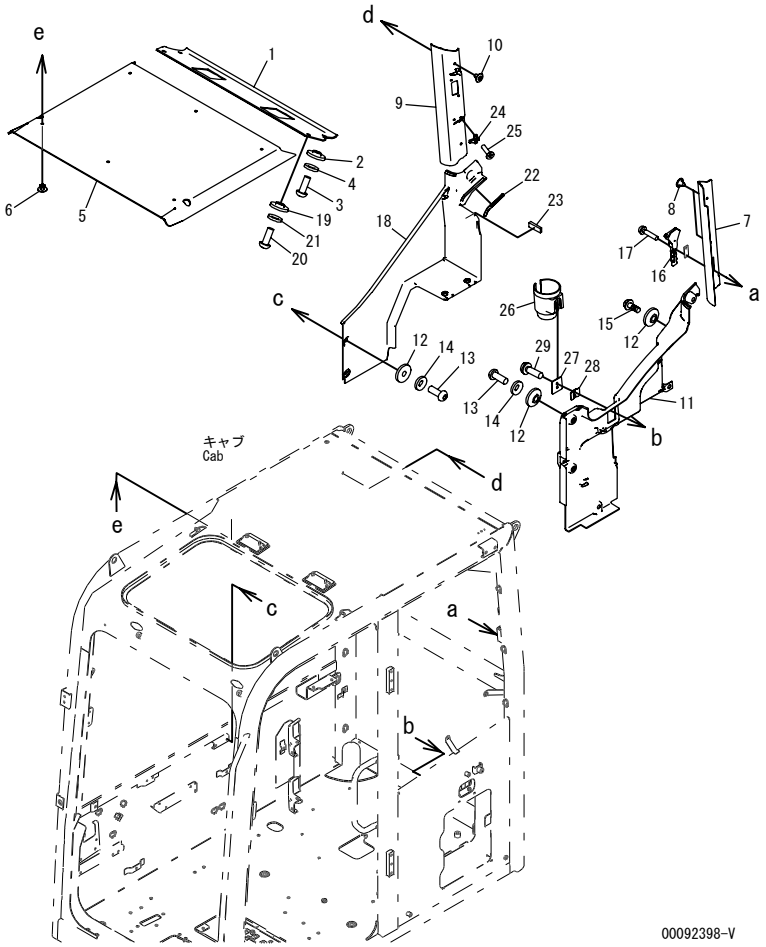

INDEX	PART NO.	DESCRIPTION	Q'TY	SERIAL NO.
1	201-54-83211	COVER,ROOF, REAR	1	DJC00001-
2	20Y-53-12310	COLLAR	4	DJC00001-
3	01245-00616	SCREW	4	DJC00001-
4	01643-70623	WASHER	4	DJC00001-
5	201-54-83282	LINING	1	DJC00001-
6	20Y-54-83290	RIVET	6	DJC00001-
7	201-54-83221	COVER,L.H.	1	DJC00001-
8	09416-10200	BUTTON	2	DJC00001-
9	201-54-83231	COVER,R.H.	1	DJC00001-
10	09416-10200	BUTTON	2	DJC00001-
11	201-54-83241	COVER,L.H.	1	DJC00001-
12	20Y-53-12310	COLLAR	4	DJC00001-
13	01245-00616	SCREW	2	DJC00001-
14	01643-70623	WASHER	2	DJC00001-
15	01435-00616	BOLT	2	DJC00135-
	01435-00612	BOLT	2	DJC00001-DJC00134
16	22H-54-15620	HAMMER	1	DJC00001-
17	01023-70420	SCREW	2	DJC00001-
18	201-54-83251	COVER,R.H.	1	DJC00001-
19	20Y-53-12310	COLLAR	5	DJC00001-
20	01245-00616	SCREW	5	DJC00001-
21	01643-70623	WASHER	5	DJC00001-
22	22M-910-2860	SEAL	1	DJC00001-
23	201-54-83370	SHEET	1	DJC00001-
24	205-54-51250	HANGER	1	DJC00001-
25	01225-70416	SCREW	2	DJC00001-
26	208-53-12991	HOLDER,CUP	1	DJC00001-
27	22P-53-12981	PLATE	1	DJC00001-
28	426-925-3890	PLATE	1	DJC00001-
29	01023-20616	SCREW	2	DJC00001-

FIG.K0210-39A0 OPERATOR'S CAB (CAB IN PARTS) (MONITOR COVER)

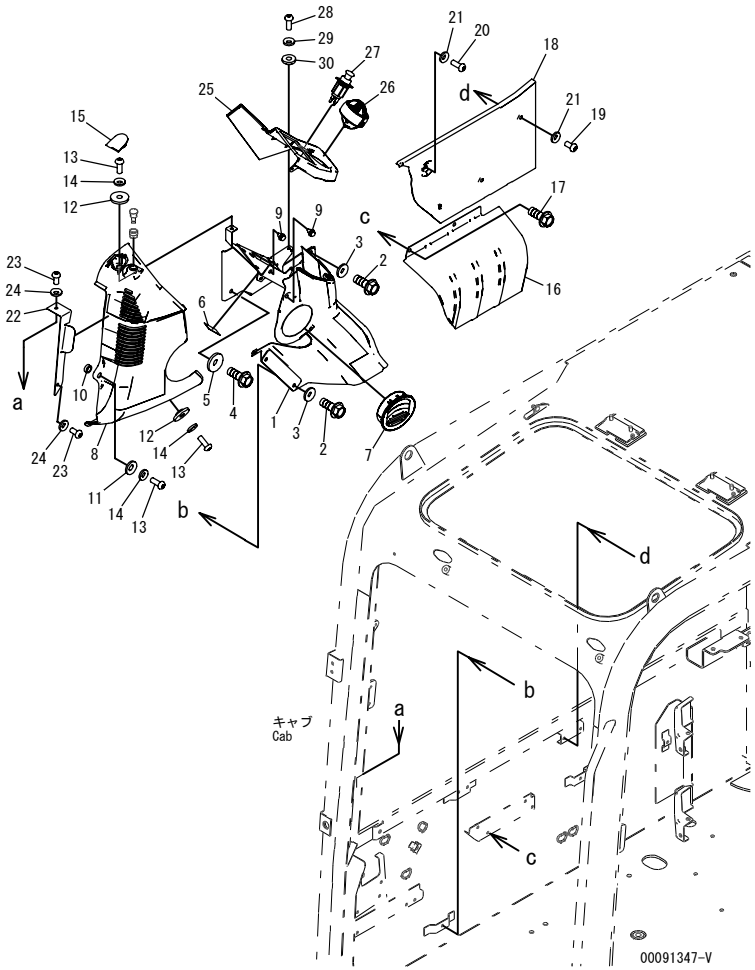

INDEX	PART NO.	DESCRIPTION	Q'TY	SERIAL NO.
1	20Y-53-12154	COVER	1	DJC00001-
2	01435-00616	BOLT	4	DJC00001-
3	209-72-12230	WASHER	4	DJC00001-
4	01435-00820	BOLT	1	DJC00001-
5	208-53-11330	WASHER	1	DJC00001-
6	20Y-00-41330	PLATE	1	DJC00001-
7	20Y-53-12172	GRILLE	1	DJC00001-
	201-54-83320	COVER	1	DJC00001-
8	☆	.COVER	1	DJC00001-
9	22U-54-25340	.CLIP	2	DJC00001-
10	205-54-75240	COLLAR	1	DJC00001-
11	01643-70823	WASHER	1	DJC00001-
12	20Y-53-12310	COLLAR	2	DJC00001-
13	01245-00616	SCREW	3	DJC00001-
14	01643-70623	WASHER	3	DJC00001-
15	20Y-53-12291	CAP	1	DJC00001-
16	20Y-53-12161	COVER	1	DJC00001-
17	01435-00616	BOLT	2	DJC00001-
18	20Y-53-12483	COVER	1	DJC00001-
19	01245-00612	SCREW	2	DJC00001-
20	01245-00616	SCREW	1	DJC00001-
21	01643-70623	WASHER	3	DJC00001-
22	201-54-83330	COVER	1	DJC00001-
23	01245-00612	SCREW	2	DJC00001-
24	01643-70623	WASHER	2	DJC00001-
25	20Y-53-12111	COVER	1	DJC00001-
26	20Y-53-12240	LOUVER	1	DJC00001-
27	20Y-06-23472	LIGHTER	1	DJC00001-
28	01245-00616	SCREW	1	DJC00001-
29	01643-70623	WASHER	1	DJC00001-
30	20Y-43-41290	COLLAR	1	DJC00001-

FIG.K0210-40A0 OPERATOR'S CAB (CAB IN PARTS) (LUGGAGE COVER)

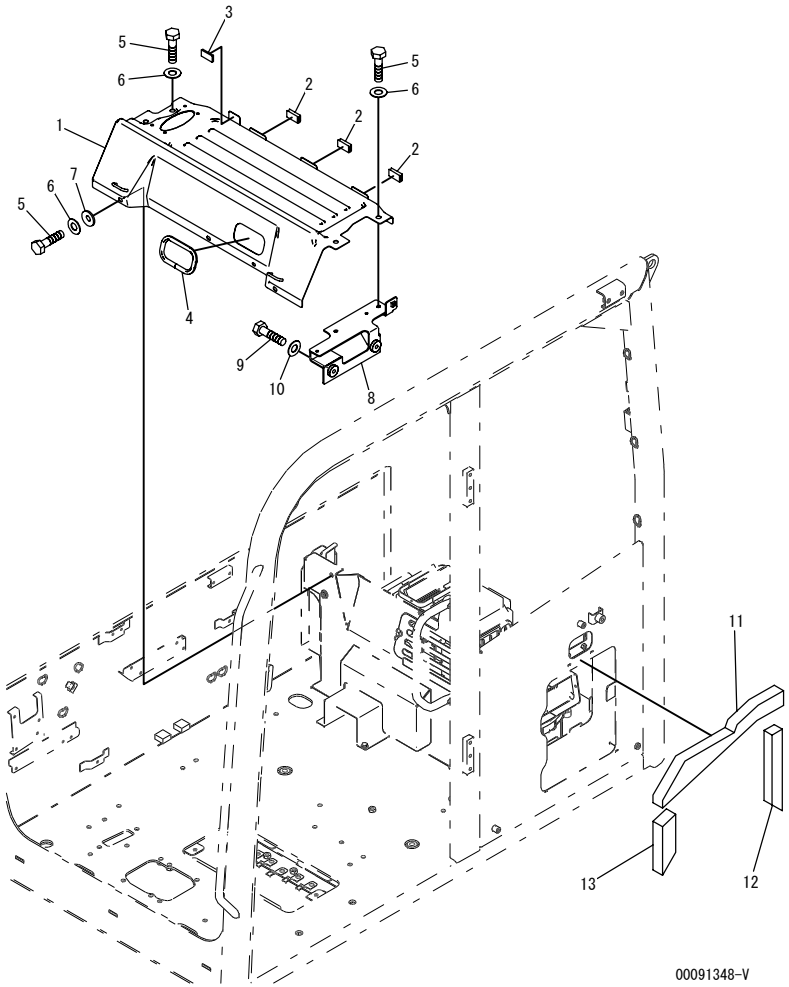

INDEX	PART NO.	DESCRIPTION	Q'TY	SERIAL NO.
	201-54-83341	COVER ASS'Y	1	DJC00001-
1	☆	.COVER	1	DJC00001-
2	208-53-12460	.SEAT	3	DJC00001-
3	201-54-83390	SHEET	1	DJC00001-
4	201-54-83380	SEAL	1	DJC00001-
5	01010-D0825	BOLT	7	DJC00001-
6	01643-70823	WASHER	7	DJC00001-
7	418-54-35450	WASHER	3	DJC00001-
8	201-54-83130	PLATE	1	DJC00001-
9	01010-D0825	BOLT	2	DJC00001-
10	01643-70823	WASHER	2	DJC00001-
11	201-54-82162	SHEET	1	DJC00001-
12	201-54-82182	SHEET	1	DJC00001-
13	201-54-82192	SHEET	1	DJC00001-

FIG.K0210-41A0 OPERATOR'S CAB (FLOOR) (AIR DUCT SEAL)

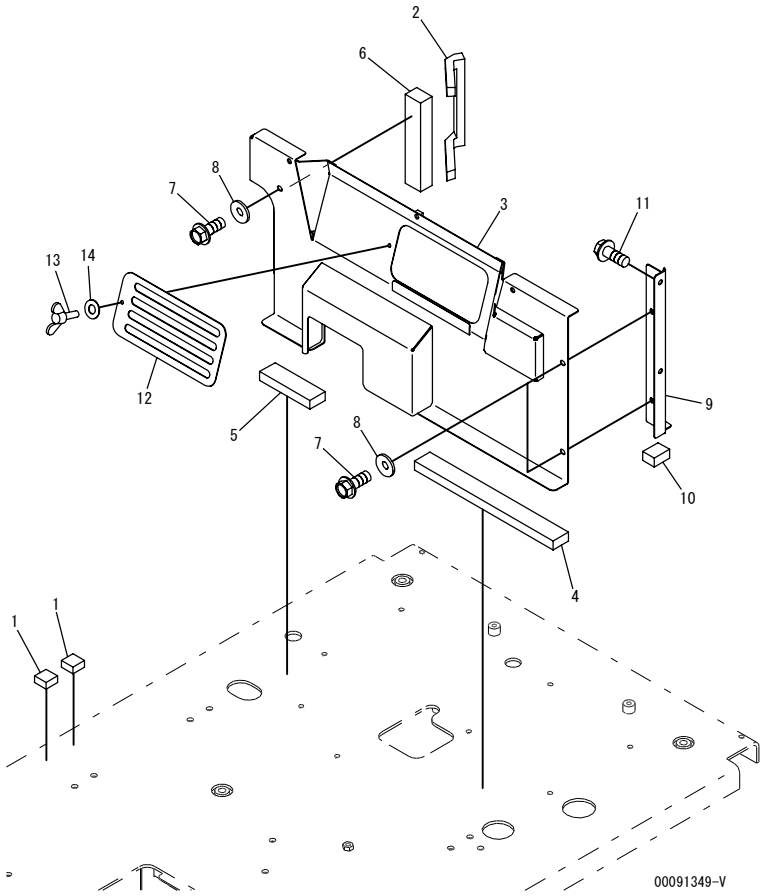

INDEX	PART NO.	DESCRIPTION	Q'TY	SERIAL NO.
1	20Y-53-13490	RUBBER	2	DJC00001-
2	20Y-53-12591	SEAL	1	DJC00001-
3	201-54-83611	BRACKET	1	DJC00001-
4	201-54-83630	SEAL	1	DJC00001-
5	201-54-83640	SEAL	1	DJC00001-
6	20Y-53-11880	SEAL	1	DJC00001-
7	01435-40820	BOLT	3	DJC00001-
8	418-54-35450	WASHER	3	DJC00001-
9	20Y-53-12781	PLATE	1	DJC00001-
10	20Y-53-12760	SEAL	1	DJC00001-
11	01435-40820	BOLT	2	DJC00001-
12	201-54-83621	PLATE	1	DJC00001-
13	20Y-54-65790	BOLT	1	DJC00001-
14	01643-70623	WASHER	1	DJC00001-

FIG.K0210-42A0 OPERATOR'S CAB (CAB IN PARTS) (AIR CONDITIONER AND FOOT DUCT)

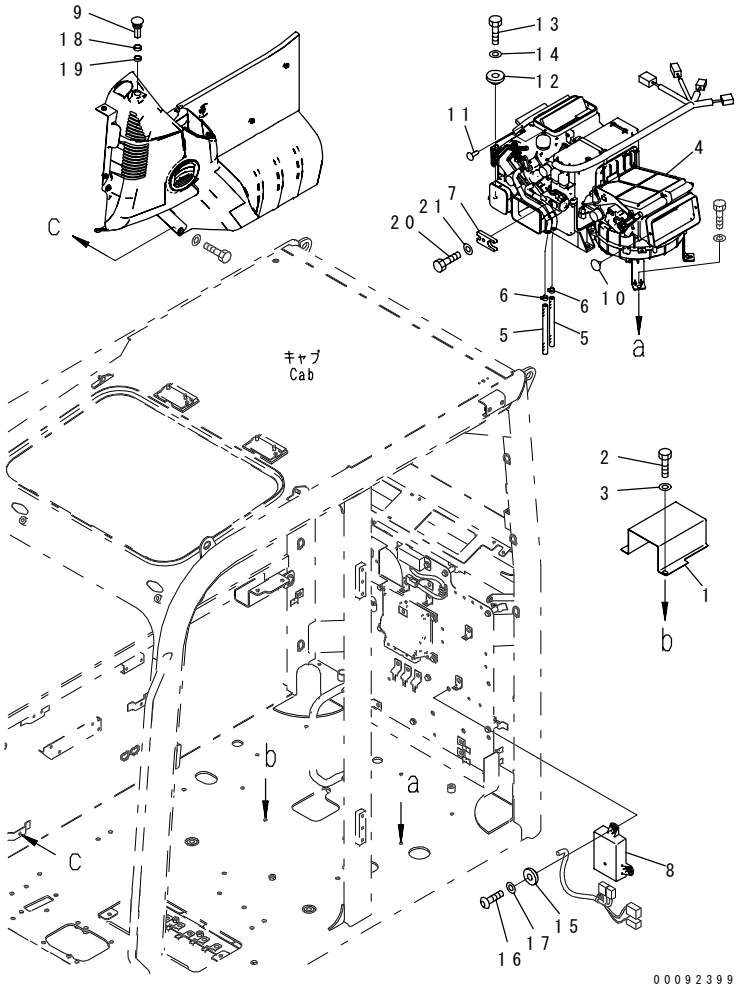

INDEX	PART NO.	DESCRIPTION	Q'TY	SERIAL NO.
1	201-54-83670	DUCT	1	DJC00001-
2	01010-D0820	BOLT	2	DJC00001-
3	01643-70823	WASHER	2	DJC00001-
	201-979-8902	AIR CONDITIONER KIT	1	DJC00001-
4	201-979-8951	.AIR CONDITIONER A	1	DJC00001-
5	201-979-8970	.HOSE	2	DJC00001-
6	201-979-8890	.BAND	2	DJC00001-
7	423-S62-3370	.PLATE	1	DJC00001-
8	201-979-8960	.CONTROLLER ASS'Y	1	DJC00001-
9	423-07-31771	.SENSOR	1	DJC00001-
10	201-979-8990	.CLIP	1	DJC00001-
11	201-979-8880	.CLIP	3	DJC00001-
12	201-979-8980	COLLAR	4	DJC00001-
13	01010-80830	BOLT	6	DJC00001-
14	01643-30823	WASHER	6	DJC00001-
15	20Y-43-41290	COLLAR	3	DJC00001-
16	01245-00616	SCREW	3	DJC00001-
17	01643-70623	WASHER	3	DJC00001-
18	201-979-8861	SPACER	1	DJC00001-
19	201-979-8870	SHEET	1	DJC00001-
20	01010-80620	BOLT	1	DJC00001-
21	01643-30623	WASHER	1	DJC00001-

FIG.K0210-43A0 OPERATOR'S CAB (CAB IN PARTS) (MONITOR DUCT)

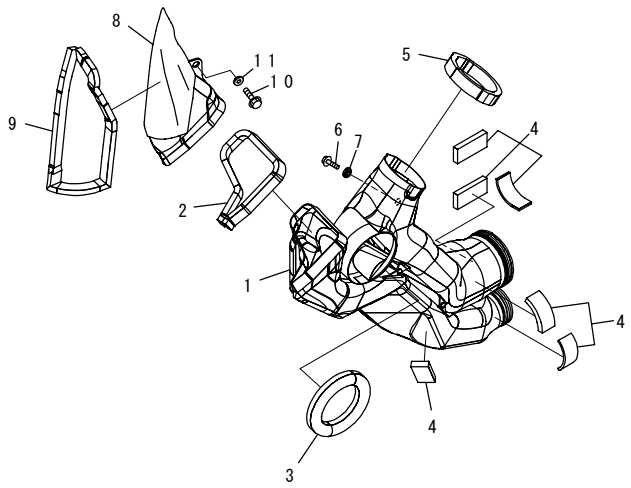

00045735

INDEX	PART NO.	DESCRIPTION	Q'TY	SERIAL NO.
1	20Y-53-13371	DUCT	1	DJC00001-
2	20Y-53-13480	SEAL	1	DJC00001-
3	20Y-53-13280	SEAL	1	DJC00001-
4	208-53-12440	SEAL	6	DJC00001-
5	208-53-11941	SEAL	1	DJC00001-
6	01435-00612	BOLT	1	DJC00001-
7	20Y-53-12310	COLLAR	1	DJC00001-
8	20Y-53-13421	DUCT	1	DJC00001-
9	208-53-11920	SEAL	1	DJC00001-
10	01435-00612	BOLT	1	DJC00001-
11	20Y-53-12310	COLLAR	1	DJC00001-

FIG.K0210-44A0 OPERATOR'S CAB (CAB IN PARTS) (AIR DUCT)

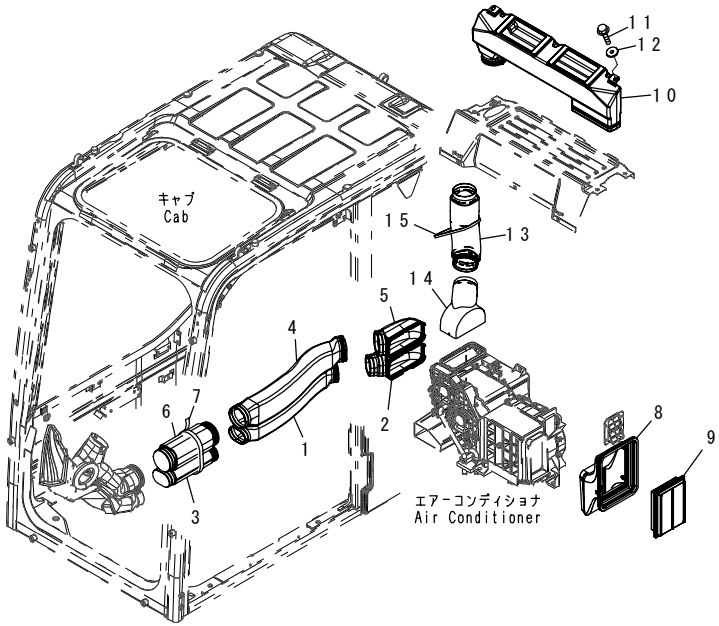

00091352

INDEX	PART NO.	DESCRIPTION	Q'TY	SERIAL NO.
1	201-54-83261	DUCT	1	DJC00001-
2	201-979-8940	DUCT	1	DJC00001-
3	20Y-53-13351	DUCT	1	DJC00001-
4	201-54-83271	DUCT	1	DJC00001-
5	201-979-8930	DUCT	1	DJC00001-
6	20Y-53-13361	DUCT	1	DJC00001-
7	08034-20876	BAND	1	DJC00001-
8	201-979-8910	DUCT	1	DJC00001-
9	17M-911-3530	ELEMENT	1	DJC00001-
10	20Y-53-13451	DUCT	1	DJC00001-
11	01435-40616	BOLT	2	DJC00001-
12	20Y-53-12310	COLLAR	2	DJC00001-
13	20Y-53-13461	DUCT	1	DJC00001-
14	201-979-8920	DUCT	1	DJC00001-
15	08034-20876	BAND	1	DJC00001-

FIG NO. : K0210-45A0

FIG.K0210-45A0 OPERATOR'S CAB (FLOOR) (FOOT REST)

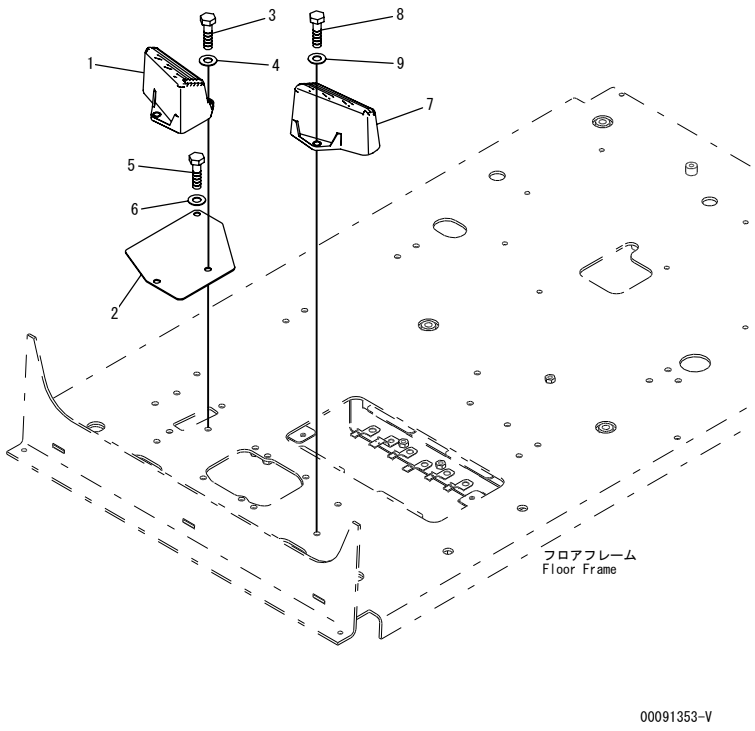

INDEX	PART NO.	DESCRIPTION	Q'TY	SERIAL NO.
1	22U-54-25120	FOOT REST,R.H.	1	DJC00001-
2	22U-54-25531	PLATE	1	DJC00001-
3	01010-81025	BOLT	2	DJC00001-
4	01643-31032	WASHER	2	DJC00001-
5	01010-81020	BOLT	1	DJC00001-
6	01643-31032	WASHER	1	DJC00001-
7	22U-54-25110	FOOT REST,L.H.	1	DJC00001-
8	01010-81025	BOLT	2	DJC00001-
9	01643-31032	WASHER	2	DJC00001-

FIG.K0210-45A2 OPERATOR'S CAB (FLOOR) (CONTROL PEDAL) (PROVISION FOR 1-ADDITIONAL ACTUATOR PIPING) (1/2)

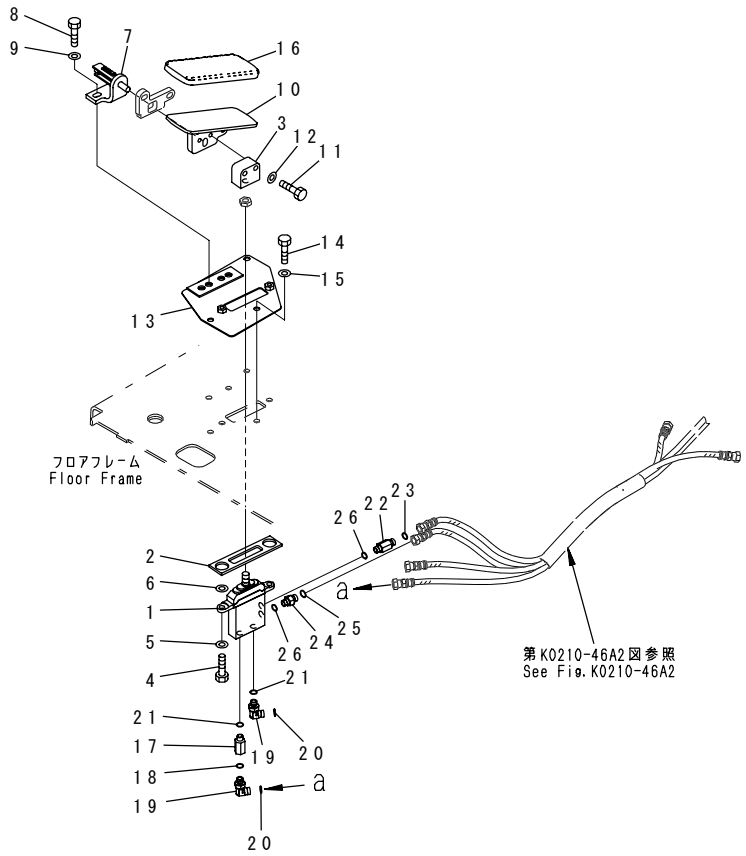

INDEX	PART NO.	DESCRIPTION	Q'TY	SERIAL NO.
1	(702-16-01270)	PILOT VALVE	1	DJC00001-
2	22U-54-25660	SEAL	1	DJC00001-
3	22U-43-21470	SEAT	1	DJC00001-
4	01010-81030	BOLT	2	DJC00001-
5	01643-31032	WASHER	2	DJC00001-
6	01643-31032	WASHER	2	DJC00001-
7	20Y-62-25360	BRACKET	1	DJC00001-
8	01010-81035	BOLT	2	DJC00001-
9	01643-31032	WASHER	2	DJC00001-
10	201-54-83560	PEDAL	1	DJC00001-
11	01010-D1045	BOLT	2	DJC00001-
12	01643-71032	WASHER	2	DJC00001-
13	201-54-83551	PLATE	1	DJC00001-
14	01010-81020	BOLT	3	DJC00001-
15	01643-31032	WASHER	3	DJC00001-
16	207-43-81240	CAP	1	DJC00001-
17	20T-910-8660	NIPPLE	1	DJC00001-
18	07000-12011	O-RING	1	DJC00001-
19	21W-62-43980	ELBOW	2	DJC00001-
20	02896-11008	O-RING	2	DJC00001-
21	07000-12011	O-RING	2	DJC00001-
22	21W-62-41780	NIPPLE	1	DJC00001-
23	02896-11008	O-RING	1	DJC00001-
24	11Y-62-12140	NIPPLE	1	DJC00001-
25	02896-11008	O-RING	1	DJC00001-
26	07000-12011	O-RING	2	DJC00001-

FIG.K0210-46A2 OPERATOR'S CAB (FLOOR) (CONTROL PEDAL) (PROVISION FOR 1-ADDITIONAL ACTUATOR PIPING) (2/2)

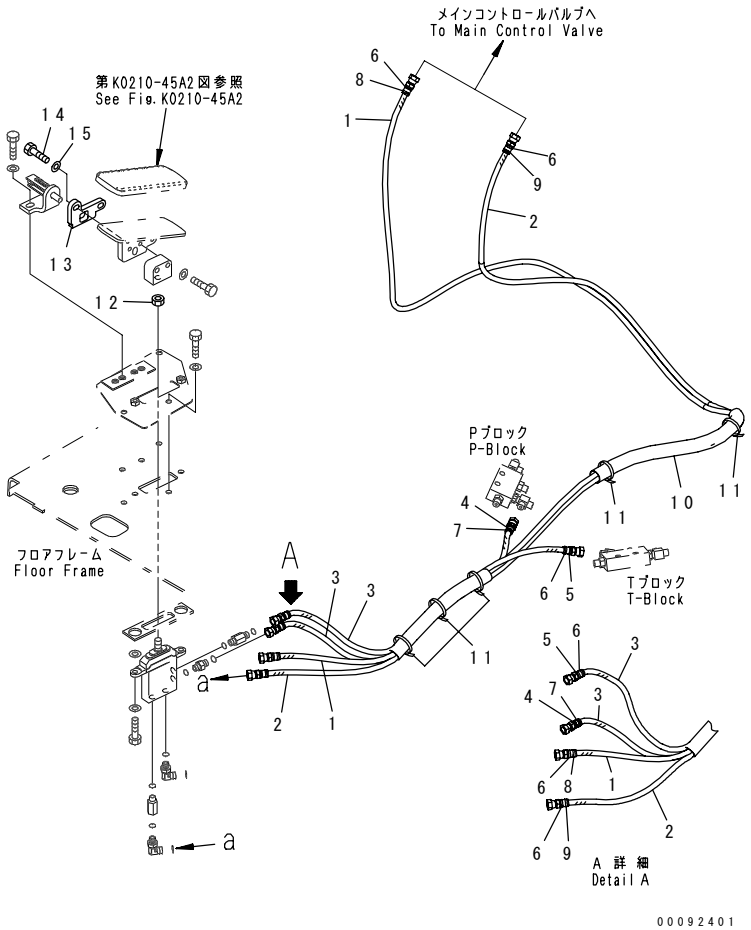

INDEX	PART NO.	DESCRIPTION	Q'TY	SERIAL NO.
1	201-62-83911	HOSE	1	DJC00001-
2	201-62-83921	HOSE	1	DJC00001-
3	201-62-83931	HOSE	2	DJC00001-
4	20Y-62-22790	BAND, RED	2	DJC00001-
5	20Y-62-22820	BAND, BLUE	2	DJC00001-
6	20Y-62-22830	BAND, WHITE	6	DJC00001-
7	20Y-62-22850	BAND, GREEN	2	DJC00001-
8	20Y-62-22860	BAND, BROWN	2	DJC00001-
9	21U-62-34740	BAND, ORANGE	2	DJC00001-
10	20M-62-82792	TUBE	1	DJC00001-
11	08034-20519	BAND	5	DJC00001-
12	01583-11408	NUT	1	DJC00001-
13	201-54-83570	PLATE	1	DJC00001-
14	01010-D1030	BOLT	1	DJC00001-
15	01643-71032	WASHER	1	DJC00001-

FIG.KO210-51AO OPERATOR'S CAB (KOMTRAX)

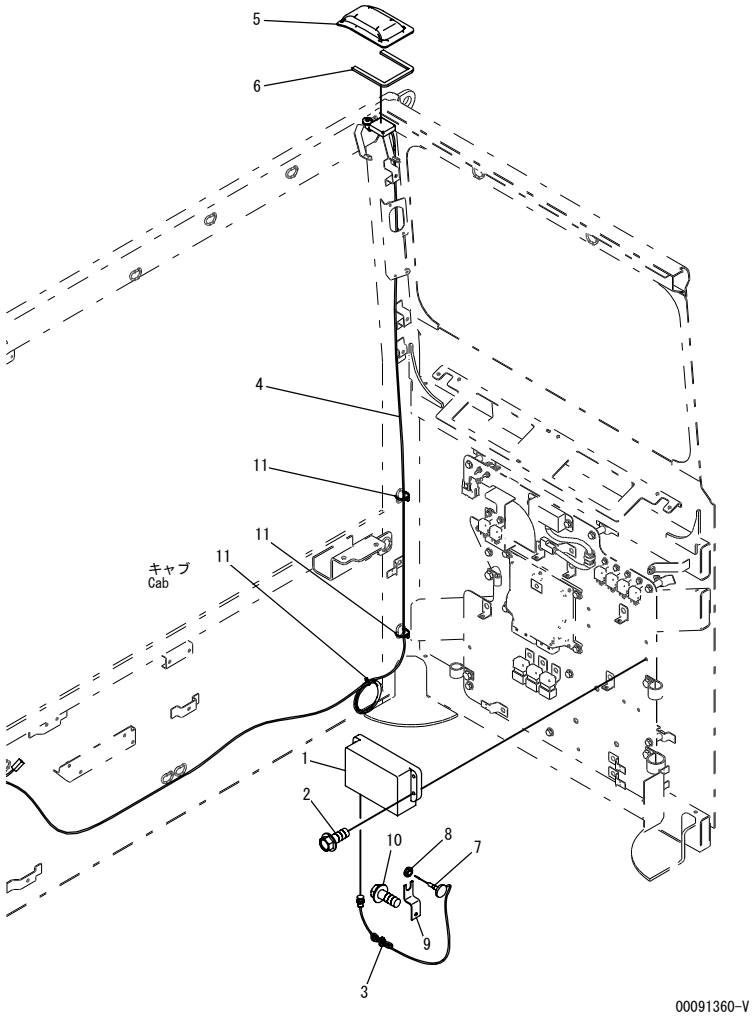

INDEX	PART NO.	DESCRIPTION	Q'TY	SERIAL NO.
1	7826-23-4002	CONTROLLER	1	DJC00389-
	7826-23-4001	CONTROLLER	1	DJC00001-DJC00388
2	01435-00625	BOLT	4	DJC00001-
3	08034-20414	BAND	1	DJC00001-
4	8A13-10-4320	ANTENNA	1	DJC00001-
5	22M-54-28480	COVER	1	DJC00001-
6	22H-54-14770	SHEET	1	DJC00001-
7	8A13-10-3100	ANTENNA	1	DJC00001-
8	175-06-81610	GROMMET	1	DJC00001-
9	20Y-53-13820	PLATE	1	DJC00001-
10	01435-00608	BOLT	1	DJC00001-
11	08034-20414	BAND	5	DJC00001-

FIG NO. : K0210-52A0

FIG.K0210-52A0 OPERATOR'S CAB (RADIO ANTENNA AND SPEAKER)

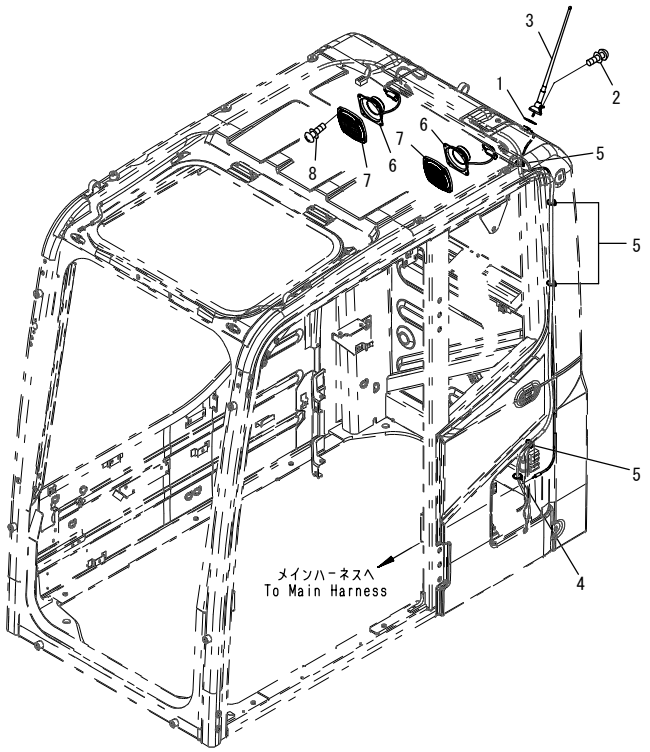

INDEX	PART NO.	DESCRIPTION	Q'TY	SERIAL NO.
1	22M-54-24961	PLATE	1	DJC00001-
2	01023-20416	SCREW	2	DJC00001-
3	(20Y-06-41990)	RUBBER ANTENNA	1	DJC00001-
4	08034-20414	BAND	1	DJC00001-
5	08034-20414	BAND	4	DJC00001-
6	20Y-06-42180	SPEAKER	2	DJC00001-
7	20Y-53-12221	COVER	2	DJC00001-
8	01023-20416	SCREW	8	DJC00001-

FIG.K0210-53A0 OPERATOR'S CAB (FLOOR) (RADIO)

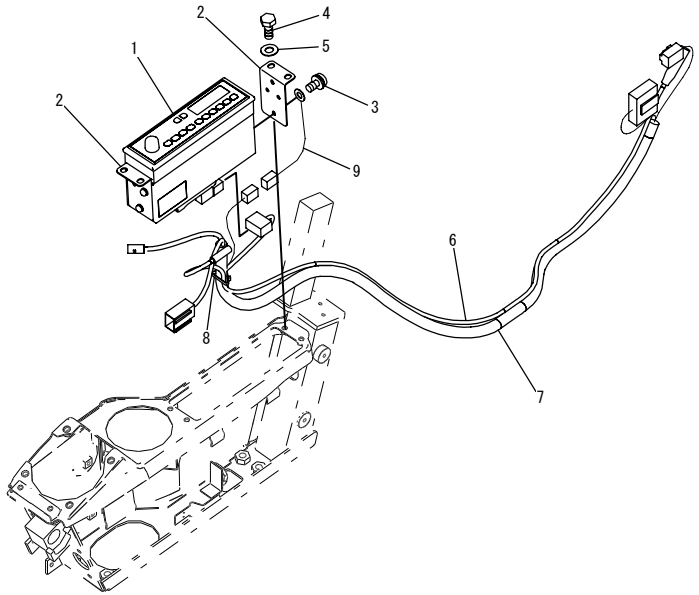

00091362-V

INDEX	PART NO.	DESCRIPTION	Q'TY	SERIAL NO.
1	20Y-06-42430	RADIO	1	DJC00001-
2	20Y-43-42130	PLATE	2	DJC00001-
3	01023-60510	SCREW	6	DJC00001-
4	01010-80616	BOLT	4	DJC00001-
5	01643-30623	WASHER	4	DJC00001-
6	08912-51600	CORD	1	DJC00001-
7	20Y-06-81310	DIAL	1	DJC00001-
8	08034-20414	BAND	1	DJC00001-
9	20Y-06-41830	HARNESS	1	DJC00001-

FIG.K0210-54A0 OPERATOR'S CAB (CAB IN PARTS) (REAR COVER)

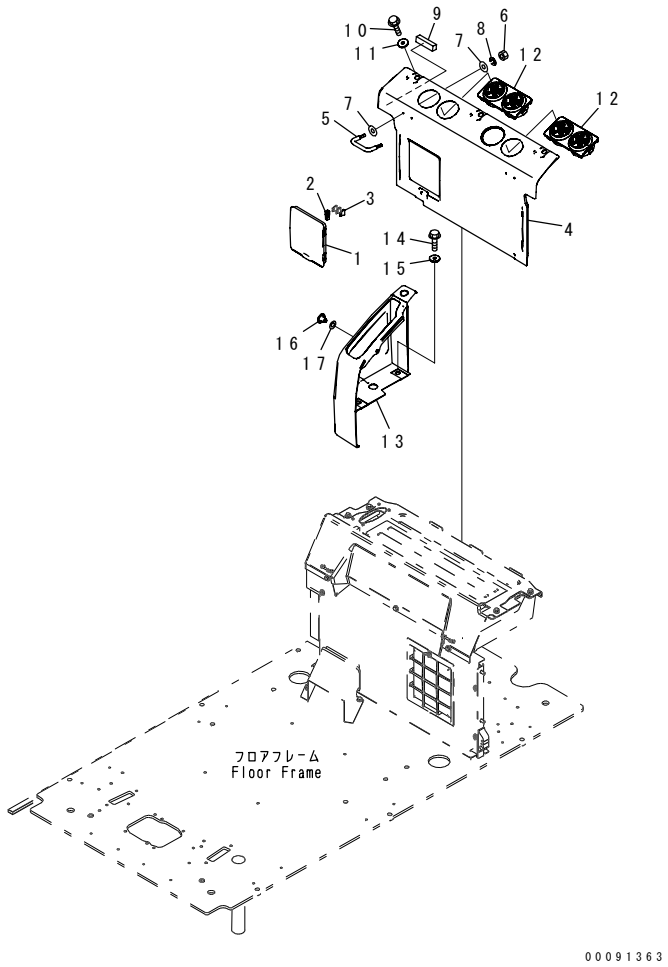

INDEX	PART NO.	DESCRIPTION	Q'TY	SERIAL NO.
	20Y-53-13631	COVER ASS'Y	1	DJC00001-
1	☆	.COVER	1	DJC00001-
2	22U-43-22340	.PULLER	1	DJC00001-
3	08041-01000	.FUSE, 10A	1	DJC00001-
	08041-02000	.FUSE, 20A	1	DJC00001-
	08041-03000	.FUSE, 30A	1	DJC00001-
4	20Y-53-12371	COVER	1	DJC00001-
5	208-53-12290	.HOOK	2	DJC00001-
6	01580-10403	.NUT	4	DJC00001-
7	01640-20408	.WASHER	8	DJC00001-
8	01601-20410	.WASHER	4	DJC00001-
9	201-54-83360	SHEET	1	DJC00001-
10	01435-40616	BOLT	3	DJC00001-
11	20Y-53-12310	COLLAR	3	DJC00001-
12	208-979-7560	GRILLE	2	DJC00001-
13	20Y-53-12731	COVER	1	DJC00001-
14	01435-40620	BOLT	2	DJC00001-
15	20Y-53-12310	COLLAR	2	DJC00001-
16	23D-950-4450	BUTTON	1	DJC00001-
17	20Y-53-12860	SPACER	1	DJC00001-

FIG.K0210-55A0 OPERATOR'S CAB (FLOOR) (BASE FRONT COVER)

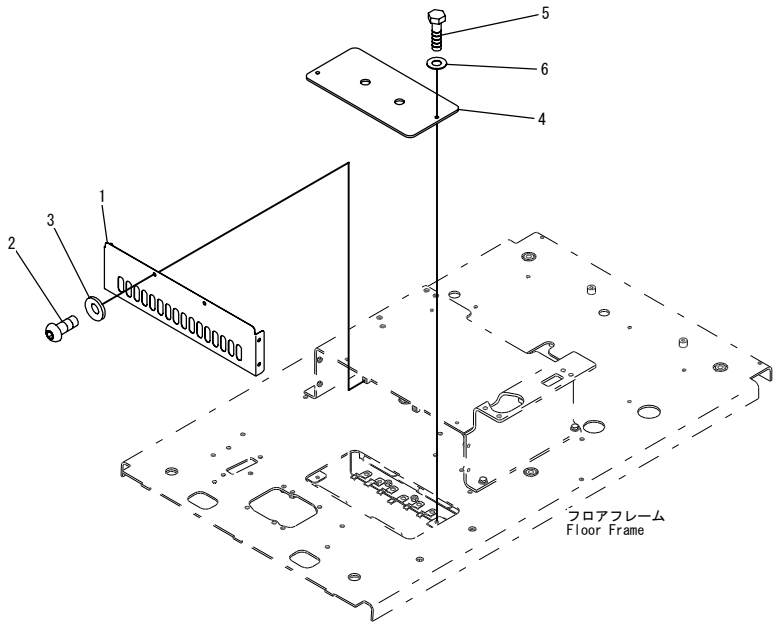

00091364-V

INDEX	PART NO.	DESCRIPTION	Q'TY	SERIAL NO.
1	201-54-83121	PLATE	1	DJC00001-
2	01245-00820	SCREW	6	DJC00001-
3	01643-70823	WASHER	6	DJC00001-
4	201-54-83151	PLATE	1	DJC00001-
5	01010-80825	BOLT	2	DJC00001-
6	01643-30823	WASHER	2	DJC00001-

FIG.K0310-01A0 FLOOR MAT

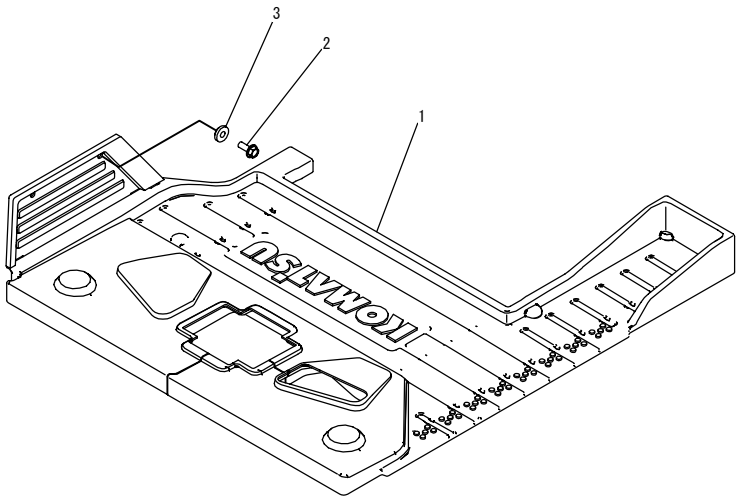

00092413-V

FIG NO. : K0310-01A0

INDEX	PART NO.	DESCRIPTION	Q'TY	SERIAL NO.
1	201-54-83711	FLOOR MAT.....	1	DJC00001-
2	01435-40616	BOLT.....	2	DJC00001-
3	20Y-43-41290	COLLAR.....	2	DJC00001-

FIG.K0310-01A1 FLOOR MAT (PROVISION FOR 1-ADDITIONAL ACTUATOR PIPING)

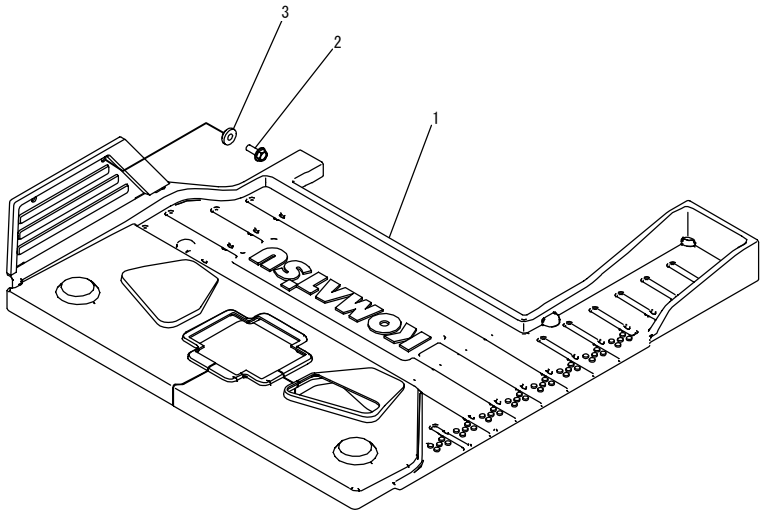

00092413-V

INDEX	PART NO.	DESCRIPTION	Q'TY	SERIAL NO.
1	201-54-83731	FLOOR MAT	1	DJC00001-
2	01435-40616	BOLT	2	DJC00001-
3	20Y-43-41290	COLLAR	2	DJC00001-

FIG NO. : K0350-01A0

FIG.K0350-01A0 WINDOW WASHER

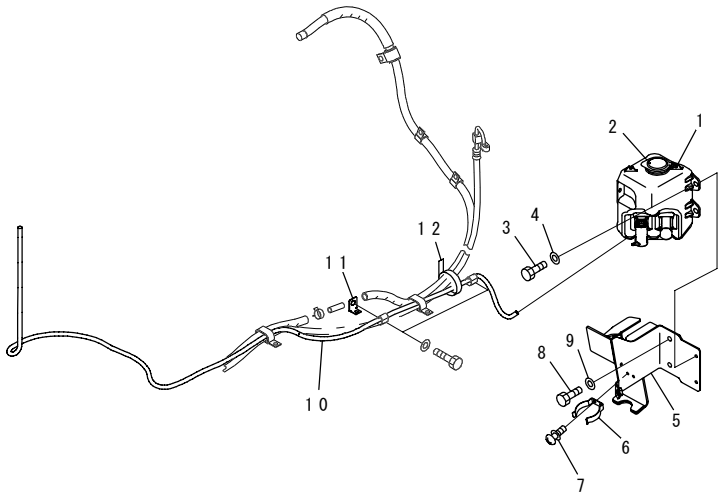

00091921

INDEX	PART NO.	DESCRIPTION	Q'TY	SERIAL NO.
1	21T-06-11351	TANK	1	DJC00001-
2	22B-54-13840	.CAP	1	DJC00001-
3	01010-80620	BOLT	3	DJC00001-
4	01643-30623	WASHER	3	DJC00001-
5	201-06-83511	BRACKET	1	DJC00001-
6	201-54-63230	CLAMP	1	DJC00001-
7	01023-60616	SCREW	2	DJC00001-
8	01010-81020	BOLT	2	DJC00001-
9	01643-31032	WASHER	2	DJC00001-
10	201-06-83521	HOSE	1	DJC00001-
11	04434-51010	CLIP	2	DJC00001-
12	08034-40521	BAND	1	DJC00001-

FIG.K0700-01A0 AIR CONDITIONER (AIR CONDITIONER PIPING、1/3)

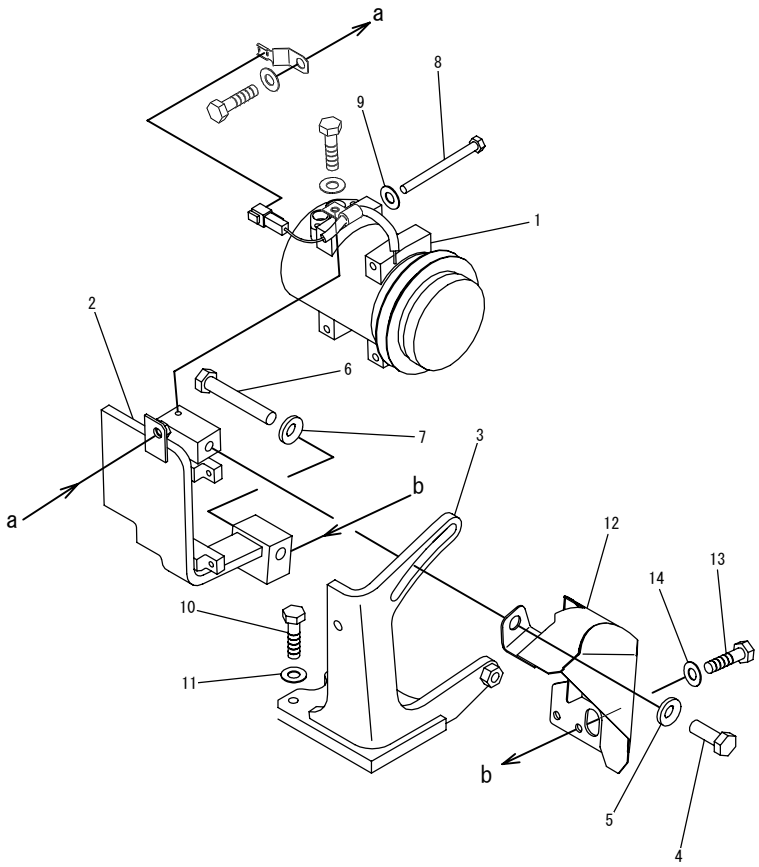

INDEX	PART NO.	DESCRIPTION	Q'TY	SERIAL NO.
1	423-S62-4330	COMPRESSOR ASS'Y.	1	DJC00001-
2	201-99-98821	BRACKET.	1	DJC00001-
3	201-979-8811	BRACKET.	1	DJC00001-
4	01010-81440	BOLT.	1	DJC00001-
5	01643-A1445	WASHER.	1	DJC00001-
6	01010-81490	BOLT.	1	DJC00001-
7	01643-31445	WASHER.	1	DJC00001-
8	01010-80895	BOLT.	4	DJC00001-
9	01643-30823	WASHER.	4	DJC00001-
10	01010-81035	BOLT.	4	DJC00001-
11	01643-31032	WASHER.	4	DJC00001-
12	201-979-8831	COVER.	1	DJC00001-
13	01010-80816	BOLT.	2	DJC00001-
14	01643-30823	WASHER.	2	DJC00001-

FIG.K0700-02A0 AIR CONDITIONER (AIR CONDITIONER PIPING、2/3)

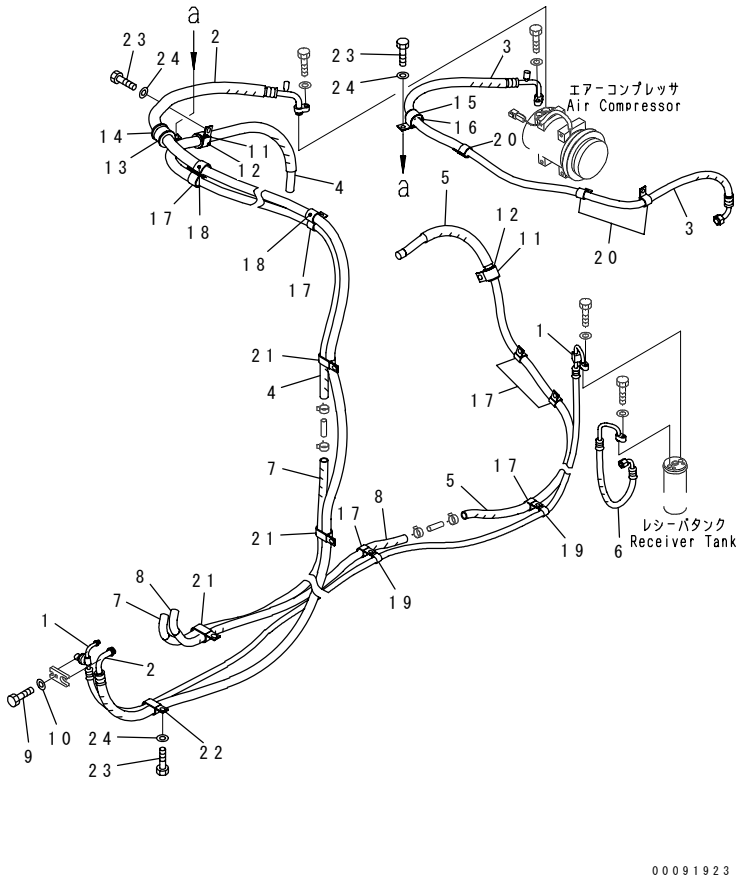

INDEX	PART NO.	DESCRIPTION	Q'TY	SERIAL NO.
1	201-979-8712	HOSE	1	DJC00001-
2	201-979-8721	HOSE	1	DJC00001-
3	201-979-8731	HOSE	1	DJC00001-
4	201-979-8741	HOSE	1	DJC00001-
5	201-979-8752	HOSE	1	DJC00001-
6	201-979-8761	HOSE	1	DJC00001-
7	201-979-8771	HOSE	1	DJC00001-
8	201-979-8781	HOSE	1	DJC00001-
9	01010-80620	BOLT	1	DJC00001-
10	01643-30623	WASHER	1	DJC00001-
11	04434-53411	CLIP	2	DJC00001-
12	07095-20627	CUSHION	2	DJC00001-
13	566-03-12620	CLAMP	1	DJC00001-
14	07095-00630	CUSHION	1	DJC00001-
15	04434-53211	CLIP	1	DJC00001-
16	07095-20523	CUSHION	1	DJC00001-
17	04434-52711	CLIP	6	DJC00001-
18	04434-53211	CLIP	2	DJC00001-
19	04434-51910	CLIP	2	DJC00001-
20	04434-52310	CLIP	2	DJC00001-
21	201-979-8660	CLIP	3	DJC00001-
22	22M-977-1140	CLIP	1	DJC00001-
23	01010-81020	BOLT	16	DJC00001-
24	01643-31032	WASHER	16	DJC00001-

FIG.K0700-03A0 AIR CONDITIONER (AIR CONDITIONER PIPING、3/3)

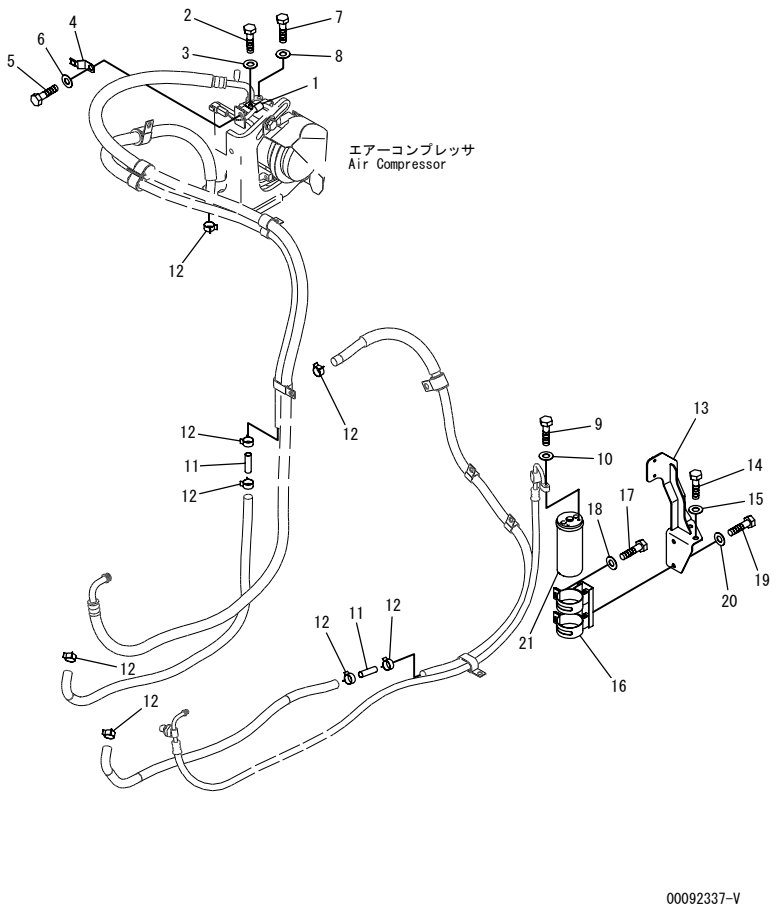

INDEX	PART NO.	DESCRIPTION	Q'TY	SERIAL NO.
1	600-051-2080	CLIP	1	DJC00001-
2	01010-80816	BOLT	1	DJC00001-
3	01643-30823	WASHER	1	DJC00001-
4	08193-20012	CLIP	1	DJC00001-
5	01010-81016	BOLT	1	DJC00001-
6	01643-31032	WASHER	1	DJC00001-
7	01010-80830	BOLT	2	DJC00001-
8	01643-30823	WASHER	2	DJC00001-
9	01010-80625	BOLT	2	DJC00001-
10	01643-30623	WASHER	2	DJC00001-
11	09484-00450	CONNECTOR	2	DJC00001-
12	11Y-09-11160	CLIP	8	DJC00001-
13	201-979-8841	PLATE	1	DJC00001-
14	01010-81020	BOLT	2	DJC00001-
15	01643-31032	WASHER	2	DJC00001-
16	22H-979-1440	BRACKET	1	DJC00001-
17	01010-80616	BOLT	2	DJC00001-
18	01643-30623	WASHER	2	DJC00001-
19	01010-80820	BOLT	2	DJC00001-
20	01643-30823	WASHER	2	DJC00001-
21	22L-979-2232	RECEIVER DRYER	1	DJC00001-

FIG.K0700-04A0 AIR CONDITIONER (V-BELT)

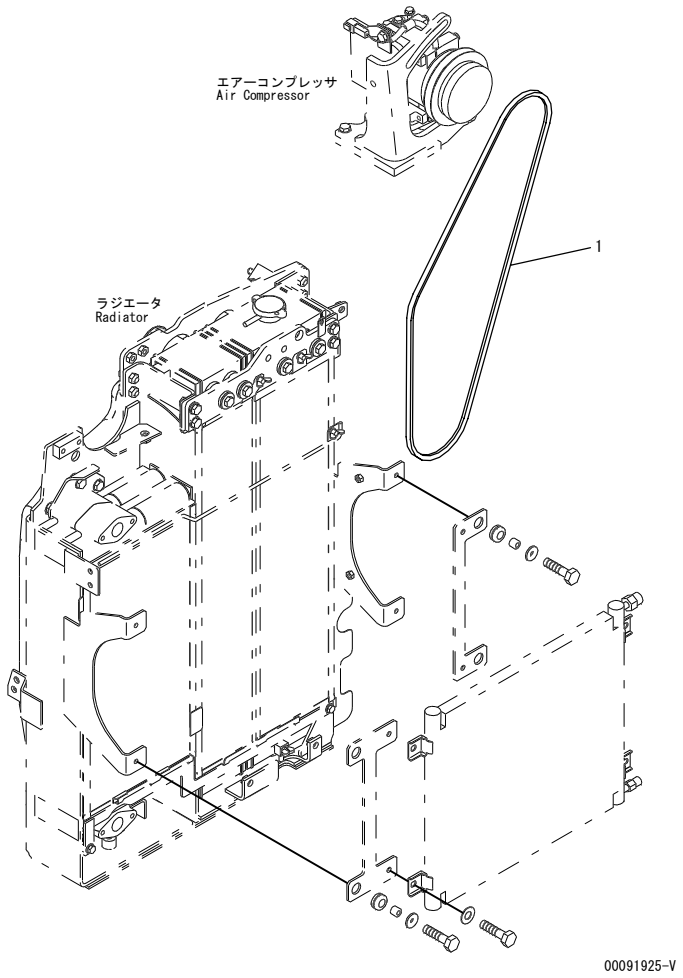

INDEX	PART NO.	DESCRIPTION	Q'TY	SERIAL NO.
1	04120-21767	V-BELT.....	1	DJC00001-

FIG.K1120-01A0 FLOOR MOUNT

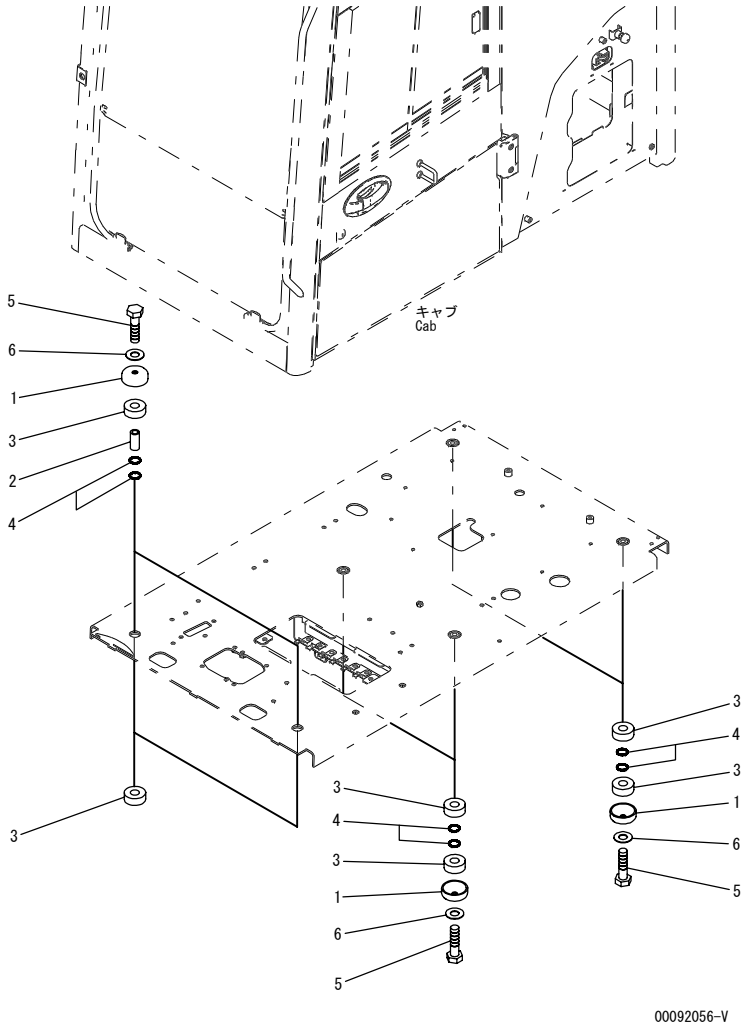

INDEX	PART NO.	DESCRIPTION	Q'TY	SERIAL NO.
1	201-54-81860	COLLAR	6	DJC00001-
2	195-43-22820	SPACER	2	DJC00001-
3	203-54-21110	CUSHION	12	DJC00001-
4	07000-13025	O-RING	12	DJC00001-
5	01010-81690	BOLT	6	DJC00001-
6	01643-31645	WASHER	6	DJC00001-

FIG.K1730-01A0 MODE SELECTION CONNECTORS

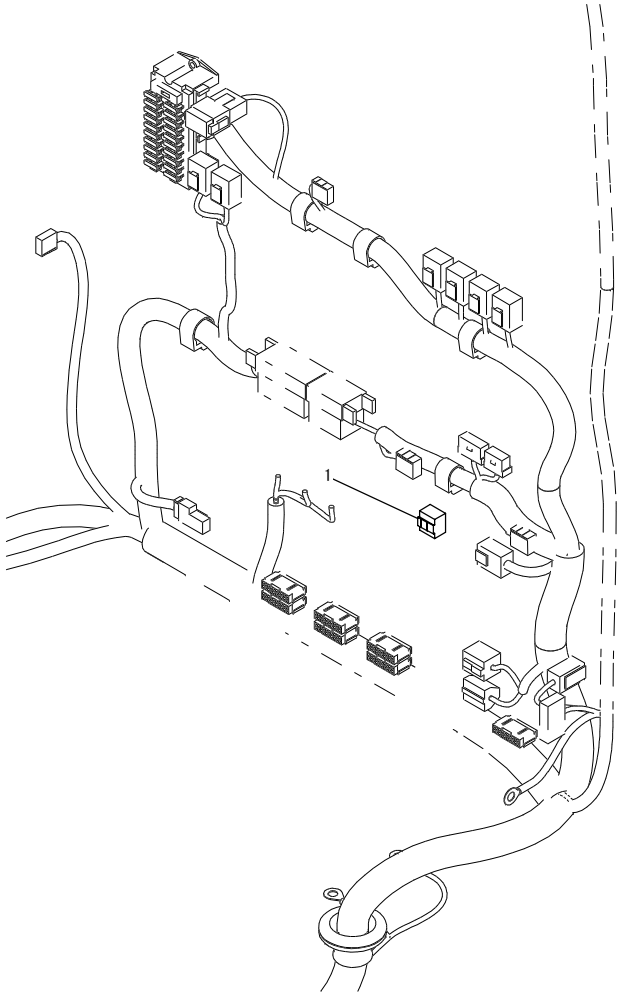

INDEX	PART NO.	DESCRIPTION	Q'TY	SERIAL NO.
1	201-06-81330	SWITCH.....	1	DJC00001-

GUARD

FIG.M1110-01A0 HOOD

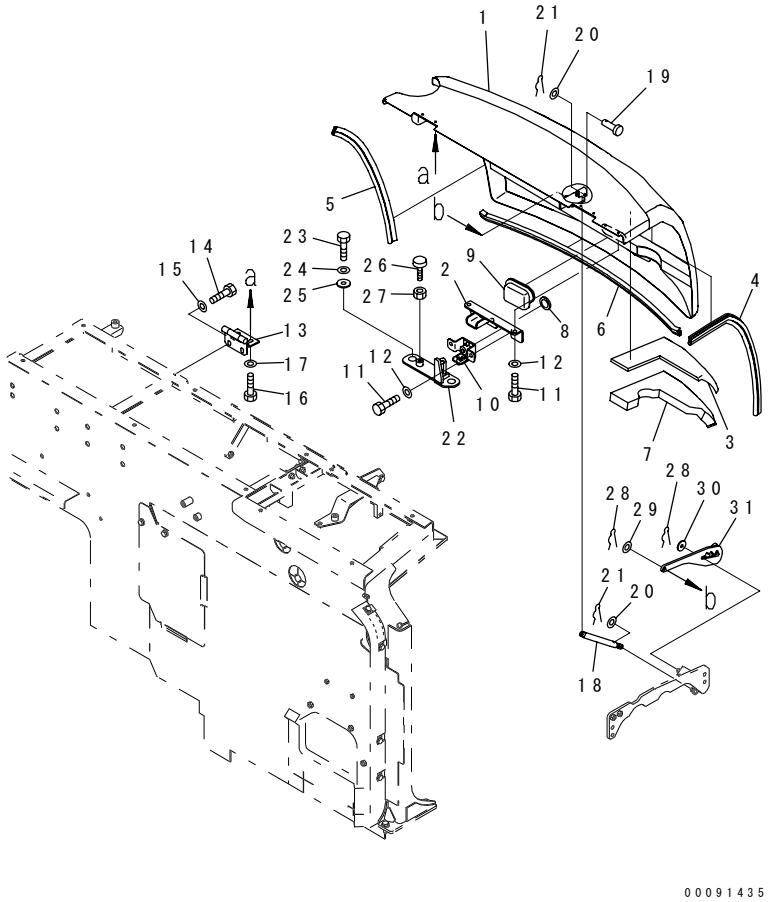

INDEX	PART NO.	DESCRIPTION	Q'TY	SERIAL NO.
	201-54-81101	HOOD ASS'Y.	1	DJC00001-
1	☆	.HOOD.	1	DJC00001-
2	201-54-81120	.BRACKET.	1	DJC00001-
3	201-54-81171	.SHEET.	1	DJC00001-
4	201-54-81180	.SEAL.	1	DJC00001-
5	201-54-81191	.SEAL.	1	DJC00001-
6	201-54-81290	.SEAL.	1	DJC00001-
7	201-54-81360	.SHEET.	1	DJC00001-
8	201-54-81380	.SHEET.	1	DJC00001-
9	21U-54-21260	.CATCH.	1	DJC00001-
10	201-54-81990	.LOCK ASS'Y.	1	DJC00001-
11	01010-81025	.BOLT.	4	DJC00001-
12	01643-31032	.WASHER.	4	DJC00001-
13	22H-54-11761	HINGE.	2	DJC00001-
14	01010-81020	BOLT.	4	DJC00001-
15	01643-31032	WASHER.	4	DJC00001-
16	01010-81020	BOLT.	4	DJC00001-
17	01643-31032	WASHER.	4	DJC00001-
18	22H-54-11680	DAMPER.	1	DJC00001-
19	04205-10825	PIN.	1	DJC00001-
20	01643-30823	WASHER.	2	DJC00001-
21	04052-20833	PIN,SNAP.	2	DJC00001-
22	201-54-81152	BRACKET.	1	DJC00001-
23	01010-81230	BOLT.	2	DJC00001-
24	01643-31232	WASHER.	2	DJC00001-
25	124-54-26540	WASHER.	2	DJC00001-
26	20Y-54-11611	STOPPER.	1	DJC00001-
27	01580-11008	NUT.	1	DJC00001-
28	04052-21038	PIN,SNAP.	2	DJC00001-
29	01643-31032	WASHER.	1	DJC00001-
30	417-43-16210	WASHER.	1	DJC00001-
31	201-54-81431	ROD.	1	DJC00001-

FIG NO. : M1130-01A0

FIG.M1130-01A0 SIDE COVER、L.H.

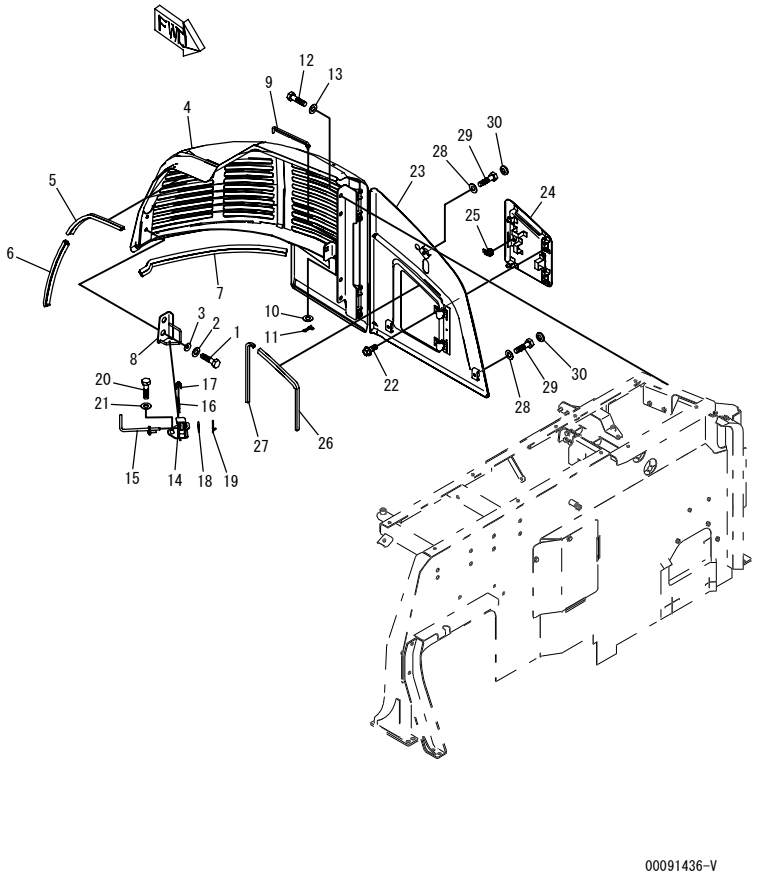

INDEX	PART NO.	DESCRIPTION	Q'TY	SERIAL NO.
	201-54-81201	COVER ASS'Y,L.H.	1	DJC00001-
1	01010-81230	.BOLT	2	DJC00001-
2	01643-31232	.WASHER	2	DJC00001-
3	124-54-26540	.WASHER	2	DJC00001-
4	201-54-81212	.COVER,L.H.	1	DJC00001-
	20Y-54-63414	..HINGE,(WELD)	2	DJC00001-
5	201-54-81370	.SEAL	1	DJC00001-
6	201-54-81241	.SEAL	1	DJC00001-
7	201-54-81251	.SEAL	1	DJC00001-
8	201-54-81270	.BRACKET	1	DJC00001-
9	201-54-87131	.ROD	1	DJC00001-
10	01643-30823	.WASHER	1	DJC00001-
11	04052-20833	.PIN,SNAP	1	DJC00001-
12	01010-81230	BOLT	4	DJC00001-
13	01643-31232	WASHER	4	DJC00001-
	201-54-81490	BRACKET ASS'Y	1	DJC00001-
14	201-54-81411	.BRACKET	1	DJC00001-
15	201-54-81480	.LEVER	1	DJC00001-
16	201-54-81470	.PLATE	1	DJC00001-
17	09461-00023	.SPRING	1	DJC00001-
18	01643-31032	.WASHER	1	DJC00001-
19	04052-21038	.PIN,SNAP	1	DJC00001-
20	01010-81225	BOLT	2	DJC00001-
21	130-43-64260	COLLAR	2	DJC00001-
	201-54-82102	COVER ASS'Y	1	DJC00001-
22	01435-40610	.BOLT	4	DJC00001-
23	201-54-82112	.COVER	1	DJC00001-
	20Y-53-11E91	..HINGE	2	DJC00001-
24	201-54-82151	.COVER	1	DJC00001-
25	20Y-53-11761	.LOCK ASS'Y	1	DJC00001-
26	201-54-82171	.SHEET	1	DJC00001-
27	201-54-82131	.SHEET	1	DJC00001-
28	01010-80816	BOLT	3	DJC00001-
29	01643-30823	WASHER	3	DJC00001-
30	11Y-54-13630	CAP	3	DJC00001-

FIG.M1140-01A0 SIDE COVER、R.H.

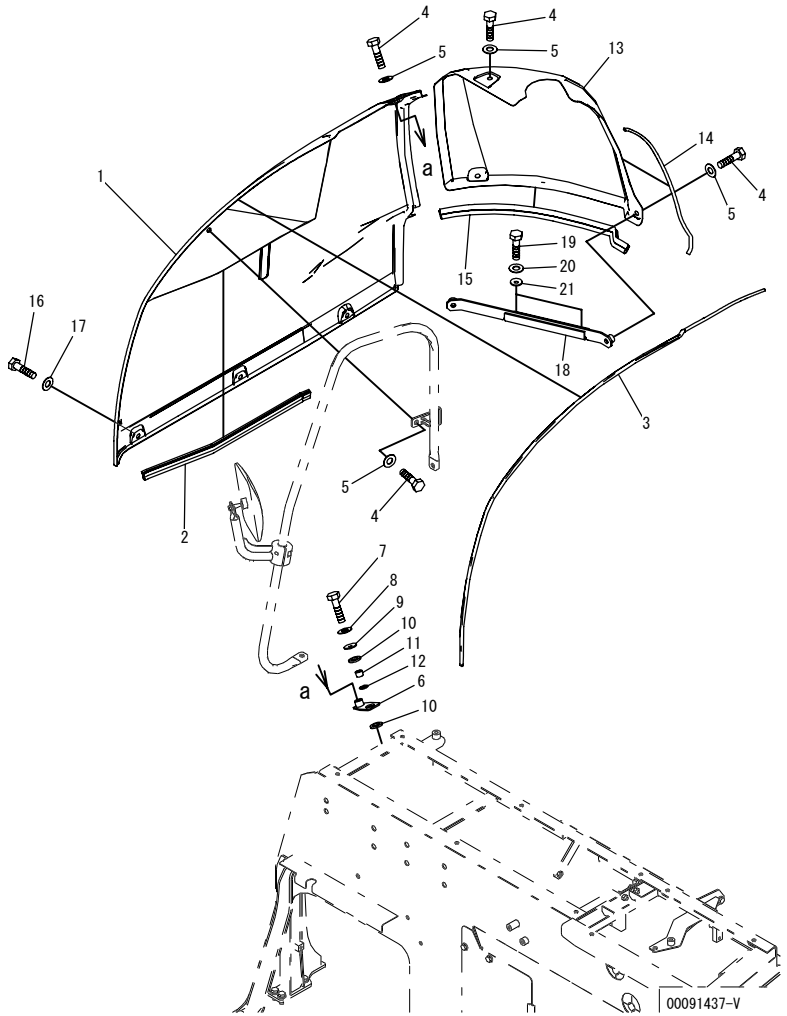

INDEX	PART NO.	DESCRIPTION	Q'TY	SERIAL NO.
	201-54-81501	COVER ASS'Y,R.H.	1	DJC00001-
1	201-54-81512	.COVER	1	DJC00001-
2	201-54-81540	.SEAL	1	DJC00001-
3	201-54-81551	.SEAL	1	DJC00001-
4	01010-81225	BOLT	5	DJC00001-
5	01643-31232	WASHER	5	DJC00001-
6	201-54-81331	BRACKET	1	DJC00001-
7	01010-81035	BOLT	1	DJC00001-
8	01643-31032	WASHER	1	DJC00001-
9	415-64-13120	WASHER	1	DJC00001-
10	201-910-6730	CUSHION	2	DJC00001-
11	201-54-81340	SPACER	1	DJC00001-
12	07002-12434	O-RING	1	DJC00001-
	201-54-81301	COVER ASS'Y,R.H.	1	DJC00001-
13	201-54-81311	.COVER	1	DJC00001-
14	201-54-81321	.SEAL	1	DJC00001-
15	201-54-81350	.SEAL	1	DJC00001-
16	01010-81220	BOLT	3	DJC00001-
17	01643-31232	WASHER	3	DJC00001-
18	201-54-81560	BRACKET	1	DJC00001-
19	01010-81230	BOLT	2	DJC00001-
20	01643-31232	WASHER	2	DJC00001-
21	124-54-26540	WASHER	2	DJC00001-

FIG NO. : M1150-01A0

FIG.M1150-01A0 PARTITION (FRAME)

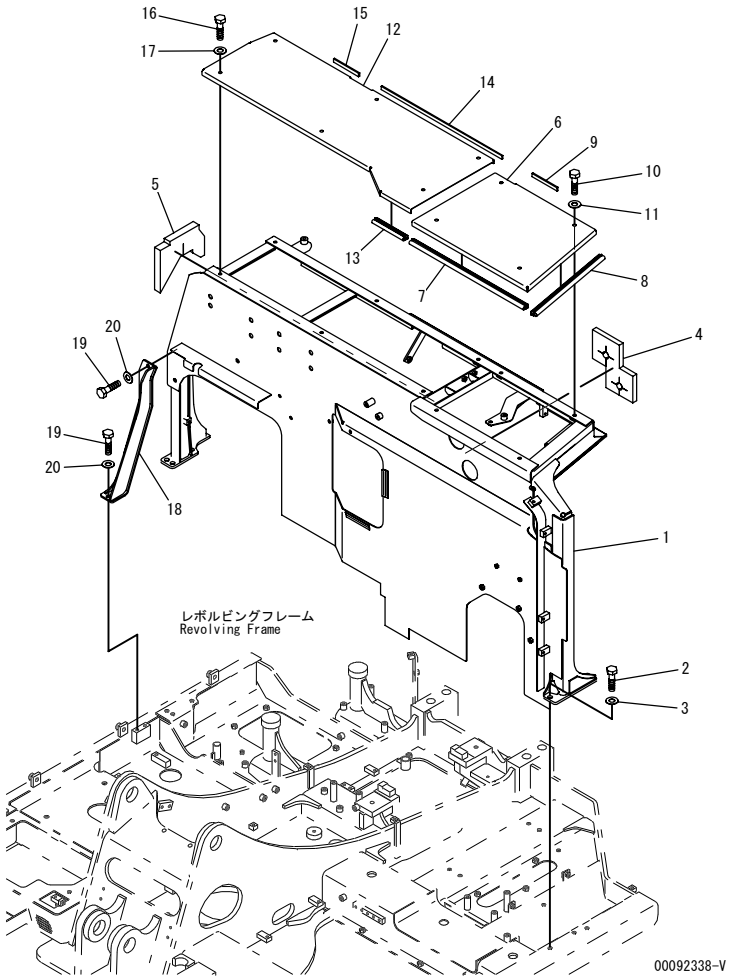

INDEX	PART NO.	DESCRIPTION	Q'TY	SERIAL NO.
1	201-54-87112	FRAME	1	DJC00001-
2	01010-81235	BOLT	6	DJC00001-
3	01643-31232	WASHER	6	DJC00001-
4	201-54-87280	SHEET	1	DJC00001-
5	201-54-87211	SHEET	1	DJC00001-
	201-54-81921	COVER ASS'Y	1	DJC00001-
6	☆	.COVER	1	DJC00001-
7	201-54-81940	.SEAL	1	DJC00001-
8	201-54-81960	.SEAL	1	DJC00001-
9	201-54-81630	.SHEET	1	DJC00001-
10	01010-81020	BOLT	4	DJC00001-
11	01643-31032	WASHER	4	DJC00001-
	201-54-81931	COVER ASS'Y	1	DJC00001-
12	☆	.COVER	1	DJC00001-
13	201-54-81950	.SEAL	1	DJC00001-
14	201-54-81620	.SHEET	1	DJC00001-
15	201-54-81630	.SHEET	1	DJC00001-
16	01010-81025	BOLT	6	DJC00001-
17	01643-31032	WASHER	6	DJC00001-
18	201-54-87141	BRACKET	1	DJC00001-
19	01010-81230	BOLT	4	DJC00001-
20	01643-31232	WASHER	4	DJC00001-

FIG.M1150-02A0 PARTITION (COVER)

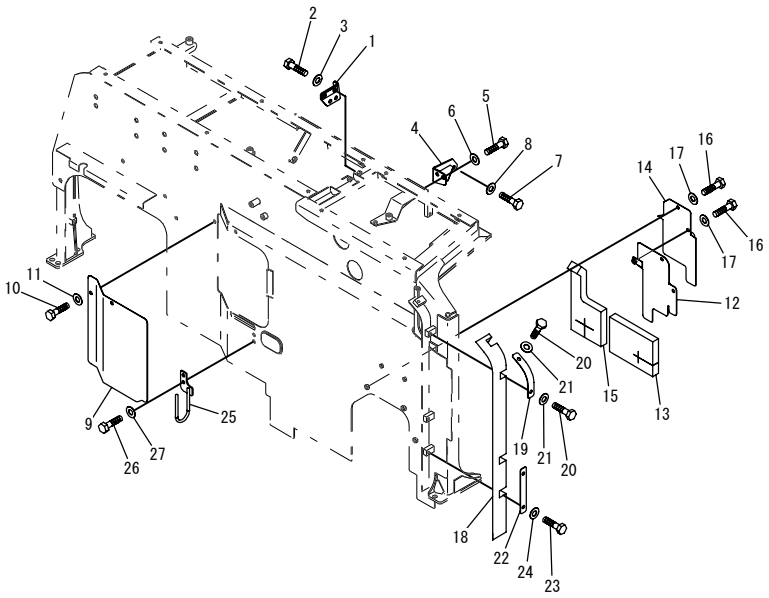

INDEX	PART NO.	DESCRIPTION	Q'TY	SERIAL NO.
1	201-54-87151	BRACKET	1	DJC00001-
2	01010-81030	BOLT	4	DJC00001-
3	01643-31032	WASHER	4	DJC00001-
4	201-03-81611	BRACKET	1	DJC00001-
5	01010-81020	BOLT	2	DJC00001-
6	01643-31032	WASHER	2	DJC00001-
7	01010-81035	BOLT	2	DJC00001-
8	01643-31032	WASHER	2	DJC00001-
9	201-54-87230	PLATE	1	DJC00001-
10	01010-81020	BOLT	2	DJC00001-
11	01643-51032	WASHER	2	DJC00001-
12	201-54-87240	PLATE	1	DJC00001-
13	201-54-87250	SHEET	1	DJC00001-
14	201-54-87260	COVER	1	DJC00001-
15	201-54-87270	SHEET	1	DJC00001-
16	01010-81020	BOLT	4	DJC00001-
17	01643-51032	WASHER	4	DJC00001-
18	201-54-87191	SHEET	1	DJC00001-
19	201-54-87181	BRACKET	1	DJC00001-
20	01010-81020	BOLT	2	DJC00001-
21	01643-31032	WASHER	2	DJC00001-
22	201-54-87171	BRACKET	1	DJC00001-
23	01010-81020	BOLT	2	DJC00001-
24	01643-31032	WASHER	2	DJC00001-
25	201-62-84311	BRACKET	1	DJC00001-
26	01010-81020	BOLT	2	DJC00001-
27	01643-31032	WASHER	2	DJC00001-

FIG.M1220-01A0 WORK LAMP AND CASE

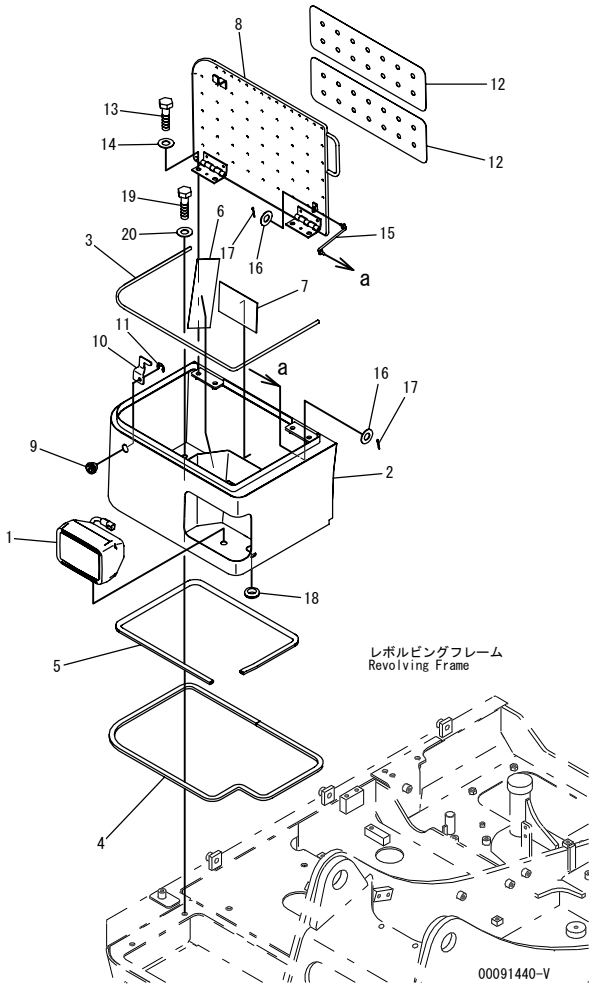

INDEX	PART NO.	DESCRIPTION	Q'TY	SERIAL NO.
1	21T-06-32810	WORK LAMP ASS'Y	1	DJC00001-
	421-06-23330	.BULB, 70W	1	DJC00001-
2	201-54-82513	COVER	1	DJC00243-
	201-54-82512	COVER	1	DJC00001-DJC00242
3	201-54-82540	SEAL	1	DJC00001-
4	201-54-82550	SHEET	1	DJC00001-
5	201-54-82580	SEAL	1	DJC00001-
6	201-54-82590	CUSHION	1	DJC00001-
7	201-54-82650	CUSHION	1	DJC00001-
8	201-54-82521	COVER	1	DJC00001-
9	421-54-11381	LOCK	1	DJC00001-
10	201-54-82531	PLATE	1	DJC00001-
11	22L-54-21250	RING	1	DJC00001-
12	201-54-82570	PLATE	2	DJC00001-
13	01010-81025	BOLT	4	DJC00001-
14	01643-31032	WASHER	4	DJC00001-
15	203-54-56630	ROD	1	DJC00001-
16	01643-30623	WASHER	2	DJC00001-
17	04050-11612	PIN,COTTER	2	DJC00001-
18	08037-02512	GROMMET	1	DJC00001-
19	01010-81235	BOLT	4	DJC00001-
20	01643-31232	WASHER	4	DJC00001-

FIG.M1310-01A0 HANDRAIL

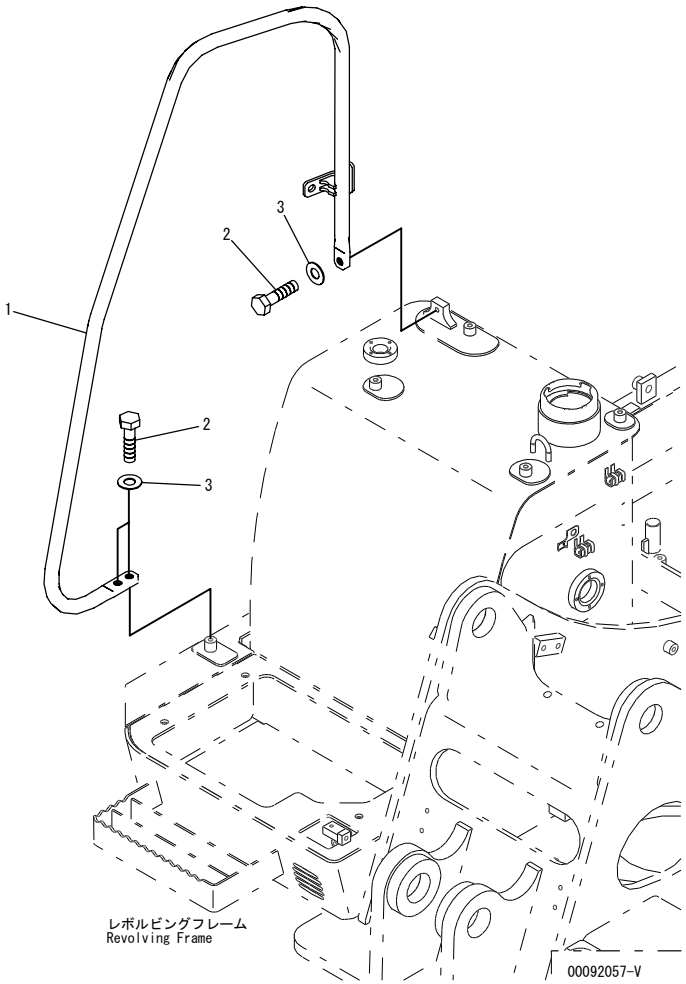

INDEX	PART NO.	DESCRIPTION	Q'TY	SERIAL NO.
1	201-54-81661	HAND RAIL.....	1	DJC00001-
2	01010-81230	BOLT.....	3	DJC00001-
3	01643-31232	WASHER.....	3	DJC00001-

FIG NO. : M1420-01A0

FIG.M1420-01A0 REAR VIEW MIRROR

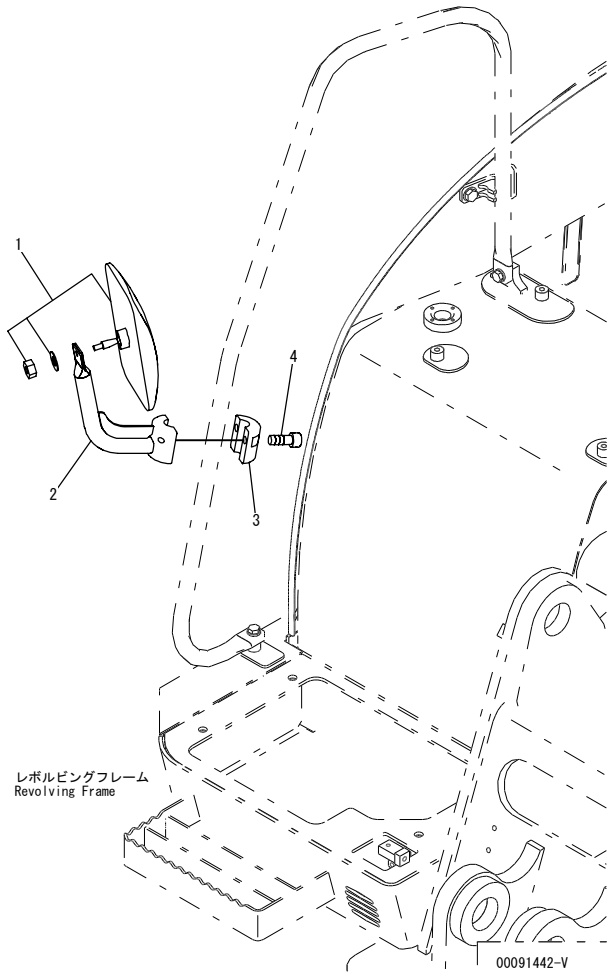

INDEX	PART NO.	DESCRIPTION	Q'TY	SERIAL NO.
1	419-06-27130	MIRROR.....	1	DJC00001-
2	201-54-82611	SUPPORT.....	1	DJC00001-
3	20Y-54-27991	CLAMP.....	1	DJC00001-
4	01252-41025	BOLT.....	2	DJC00001-

FIG.M1510-01A0 COUNTER WEIGHT

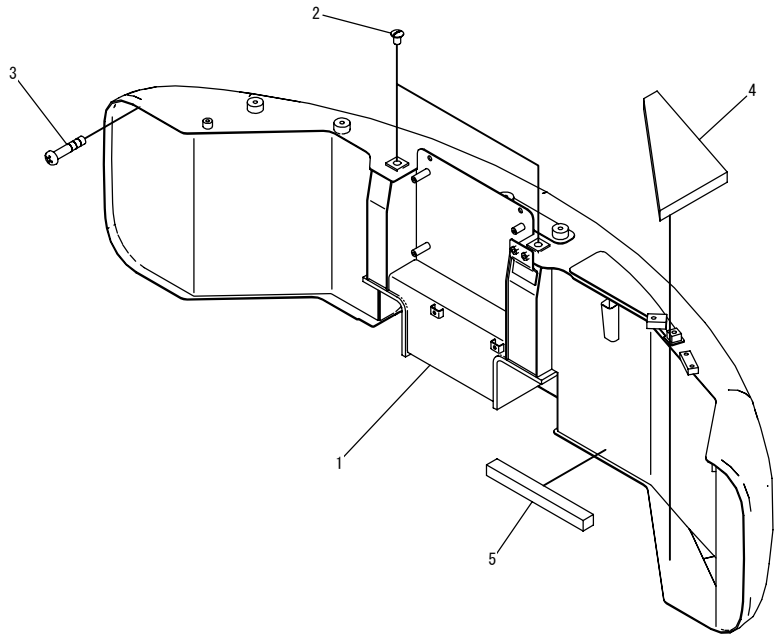

00091443-V

INDEX	PART NO.	DESCRIPTION	Q'TY	SERIAL NO.
1	201-46-84321	COUNTER WEIGHT	1	DJC00001-
2	21U-46-31220	CAP	2	DJC00001-
3	01370-00508	SCREW	1	DJC00001-
4	201-46-81150	SHEET	1	DJC00001-
5	201-46-81131	SHEET	1	DJC00001-

FIG.M1520-01A0 WEIGHT MOUNTING

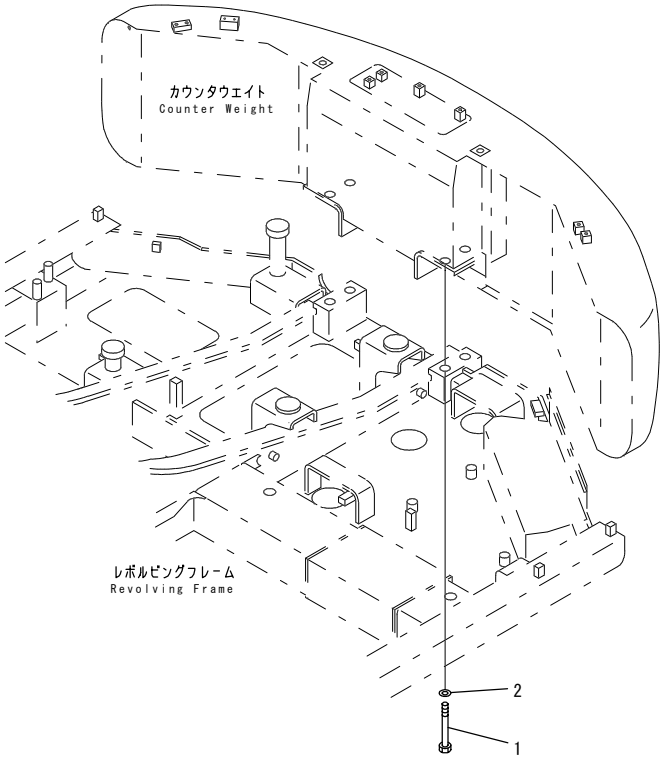

FIG NO. : M1520-01A0

INDEX	PART NO.	DESCRIPTION	Q'TY	SERIAL NO.
1	362-46-11210	BOLT.....	4	DJC00001-
2	154-30-51460	WASHER.....	4	DJC00001-

FIG.M1810-01A0 UNDER COVER

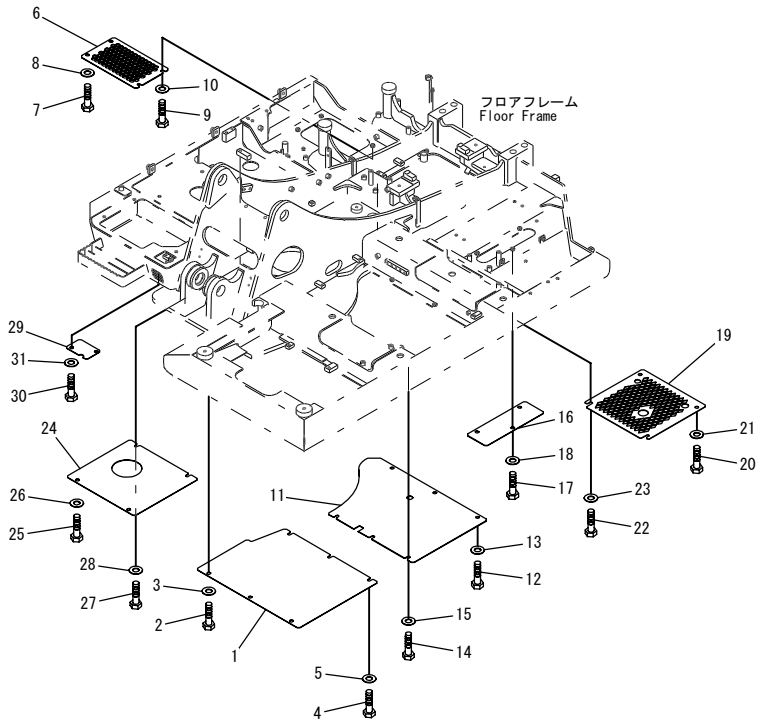

INDEX	PART NO.	DESCRIPTION	Q'TY	SERIAL NO.
1	201-54-81711	COVER	1	DJC00001-
2	01010-81225	BOLT	3	DJC00001-
3	01643-31232	WASHER	3	DJC00001-
4	01010-81225	BOLT	3	DJC00001-
5	175-54-34170	WASHER	3	DJC00001-
6	201-54-82321	COVER	1	DJC00001-
7	01010-81225	BOLT	2	DJC00001-
8	01643-31232	WASHER	2	DJC00001-
9	01010-81225	BOLT	2	DJC00001-
10	175-54-34170	WASHER	2	DJC00001-
11	201-54-82331	COVER	1	DJC00001-
12	01010-81225	BOLT	3	DJC00001-
13	01643-31232	WASHER	3	DJC00001-
14	01010-81225	BOLT	3	DJC00001-
15	175-54-34170	WASHER	3	DJC00001-
16	201-54-82341	COVER	1	DJC00001-
17	01010-81225	BOLT	3	DJC00001-
18	01643-31232	WASHER	3	DJC00001-
19	201-54-82351	COVER	1	DJC00001-
20	01010-81225	BOLT	2	DJC00001-
21	01643-31232	WASHER	2	DJC00001-
22	01010-81225	BOLT	2	DJC00001-
23	175-54-34170	WASHER	2	DJC00001-
24	201-54-82361	COVER	1	DJC00001-
25	01010-81225	BOLT	2	DJC00001-
26	01643-31232	WASHER	2	DJC00001-
27	01010-81225	BOLT	2	DJC00001-
28	175-54-34170	WASHER	2	DJC00001-
29	201-54-82380	COVER	1	DJC00001-
30	01010-81225	BOLT	2	DJC00001-
31	01643-31232	WASHER	2	DJC00001-

SWING CIRCLE AND RELATED PARTS

FIG.N1110-01A0 SWING CIRCLE

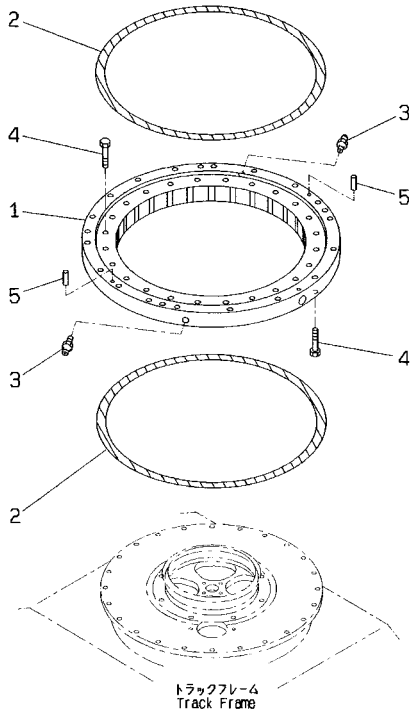

INDEX	PART NO.	DESCRIPTION	Q'TY	SERIAL NO.
1	201-25-72102	CIRCLE.....	1	DJC00001-
2	201-25-72110	.SEAL.....	2	DJC00001-
3	07020-00000	.FITTING,GREASE.....	2	DJC00001-
4	01010-81680	BOLT.....	46	DJC00001-
5	04020-01638	PIN,DOWEL.....	2	DJC00001-

FIG NO. : N1210-01A0

FIG.N1210-01A0 SWING MACHINERY AND MOTOR

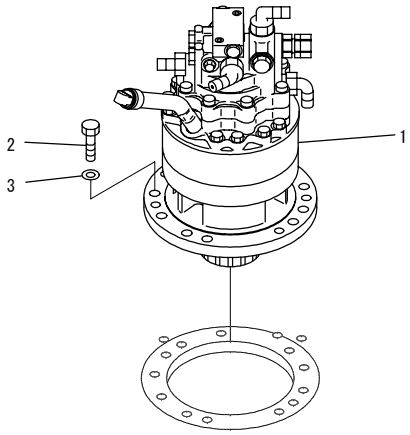

レボルビングフレーム
Revolving Frame

PW0D344

INDEX	PART NO.	DESCRIPTION	Q'TY	SERIAL NO.
1	(201-26-81000)	SWING MACHINERY A.	1	DJC00001-
2	01010-81645	BOLT.	9	DJC00001-
3	01643-31645	WASHER.	9	DJC00001-

FIG.N1210-51A0 SWING MACHINERY (MACHINERY)

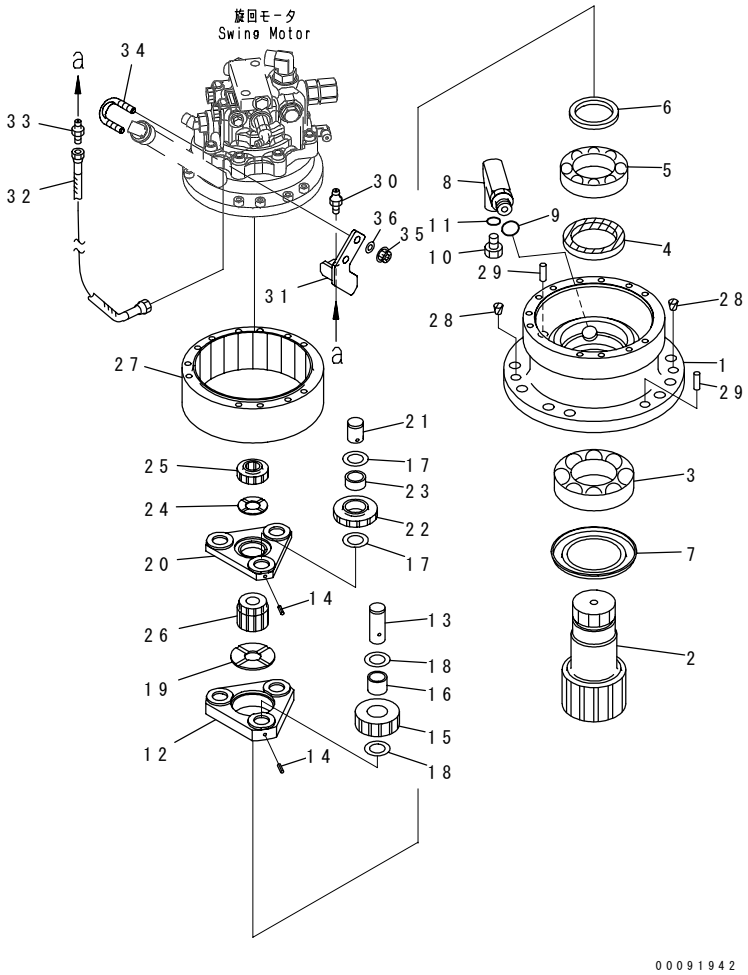

INDEX	PART NO.	DESCRIPTION	Q'TY	SERIAL NO.
	201-26-81000	SWING MACHINERY A.	1	DJC00001-
1	201-26-81120	.CASE.	1	DJC00001-
2	21W-26-41160	.SHAFT.	1	DJC00001-
3	21W-26-41240	.BEARING.	1	DJC00001-
4	07012-00075	.SEAL.	1	DJC00001-
5	21W-26-41230	.BEARING.	1	DJC00001-
6	21W-26-41281	.SPACER.	1	DJC00001-
7	21W-26-41290	.SEAL.	1	DJC00001-
8	21W-26-51140	.ELBOW.	1	DJC00001-
9	07002-12434	.O-RING.	1	DJC00001-
10	07040-11612	.PLUG.	1	DJC00001-
11	07002-11623	.O-RING.	1	DJC00001-
12	21W-26-41180	.CARRIER.	1	DJC00001-
13	21W-26-41250	.PIN.	3	DJC00001-
14	20S-26-71250	.PIN.	6	DJC00001-
15	21W-26-41140	.GEAR.	3	DJC00001-
16	09232-02525	.BEARING.	3	DJC00001-
17	201-26-71270	.WASHER.	12	DJC00001-
18	04064-02512	.RING,SNAP.	6	DJC00001-
19	21W-26-41270	.WASHER.	1	DJC00001-
20	21W-26-41170	.CARRIER.	1	DJC00001-
21	201-26-71220	.SHAFT.	3	DJC00001-
22	21W-26-41120	.GEAR.	3	DJC00001-
23	424-15-12580	.BEARING.	3	DJC00001-
24	21W-26-41260	.WASHER.	1	DJC00001-
25	21W-26-41111	.GEAR.	1	DJC00001-
26	21W-26-41130	.GEAR.	1	DJC00001-
27	21W-26-52610	.GEAR,RING.	1	DJC00001-
28	07049-01620	.PLUG.	2	DJC00001-
29	04020-01638	.PIN,DOWEL.	2	DJC00001-
30	07020-00000	.FITTING,GREASE.	1	DJC00001-
31	201-26-82130	.PLATE.	1	DJC00001-
32	21W-26-51370	.HOSE.	1	DJC00001-
33	07238-10208	.CONNECTOR.	2	DJC00001-
34	07283-32738	.CLIP.	1	DJC00001-
35	01597-01009	.NUT.	2	DJC00001-
36	01643-31032	.WASHER.	2	DJC00001-

FIG.N1210-52A0 SWING MACHINERY (RELATED PARTS)

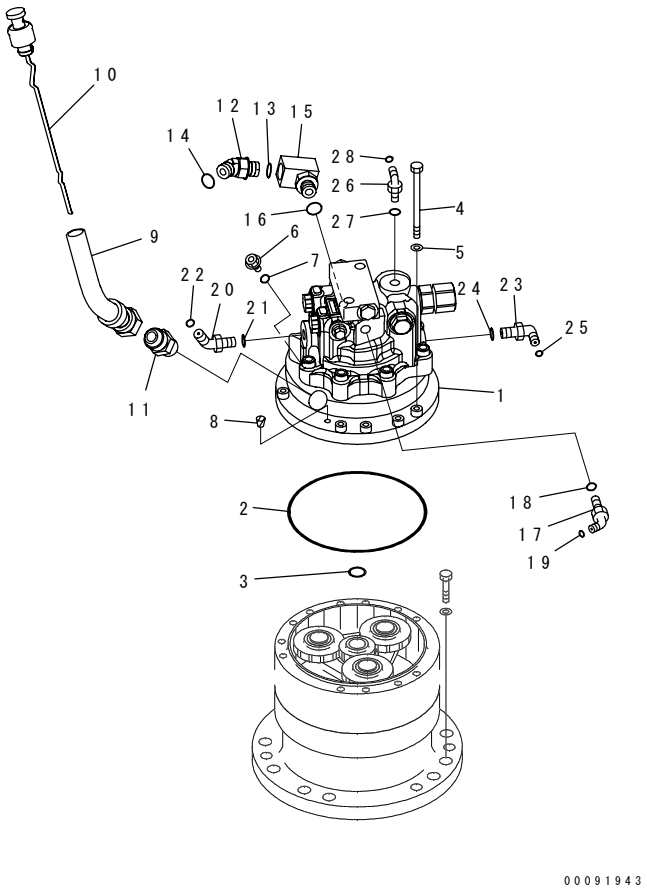

INDEX	PART NO.	DESCRIPTION	Q'TY	SERIAL NO.
	201-26-81000	SWING MACHINERY A.	1	DJC00001-
1	(708-7S-00151)	.MOTOR ASS'Y.	1	DJC00001-
2	708-8F-31610	.O-RING.	1	DJC00001-
3	21W-26-41320	.RING.	1	DJC00001-
4	01011-81010	.BOLT.	12	DJC00001-
5	01643-31032	.WASHER.	12	DJC00001-
6	708-8E-16150	.PLUG.	1	DJC00001-
7	07002-11023	.O-RING.	1	DJC00001-
8	07049-01012	.PLUG.	4	DJC00001-
9	201-26-82120	.TUBE.	1	DJC00001-
10	201-26-82111	.GAUGE.	1	DJC00001-
11	201-62-86110	.CONNECTOR.	1	DJC00001-
12	02783-10422	.ELBOW.	1	DJC00001-
13	07002-12034	.O-RING.	1	DJC00001-
14	02896-11012	.O-RING.	1	DJC00001-
15	415-15-14331	.ELBOW.	1	DJC00001-
16	07002-12034	.O-RING.	1	DJC00001-
17	02783-10422	.ELBOW.	1	DJC00001-
18	07002-12034	.O-RING.	1	DJC00001-
19	02896-11012	.O-RING.	1	DJC00001-
20	02783-10315	.ELBOW.	1	DJC00001-
21	07002-12034	.O-RING.	1	DJC00001-
22	02896-11009	.O-RING.	1	DJC00001-
23	02782-10210	.ELBOW.	1	DJC00001-
24	07002-11423	.O-RING.	1	DJC00001-
25	02896-11008	.O-RING.	1	DJC00001-
26	02782-10522	.ELBOW.	1	DJC00001-
27	07002-12434	.O-RING.	1	DJC00001-
28	02896-11015	.O-RING.	1	DJC00001-

FIG.N1310-01A0 SWIVEL JOINT

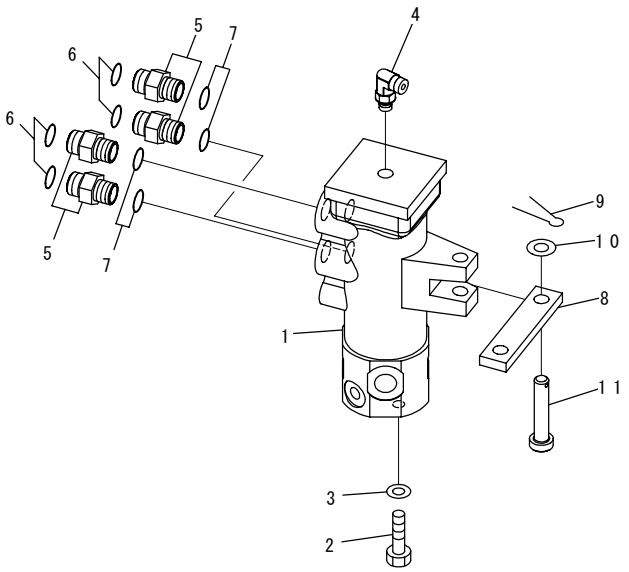

00091445

INDEX	PART NO.	DESCRIPTION	Q'TY	SERIAL NO.
1	(703-06-22270)	SWIVEL JOINT ASS'Y	1	DJC00001-
2	01010-81235	BOLT	4	DJC00001-
3	01643-31232	WASHER	4	DJC00001-
4	02782-10311	ELBOW	1	DJC00001-
5	02781-00522	UNION	4	DJC00001-
6	02896-11015	O-RING	4	DJC00001-
7	07002-12434	O-RING	4	DJC00001-
8	201-60-81610	LINK	1	DJC00001-
9	04050-14025	PIN,COTTER	2	DJC00001-
10	01640-21626	WASHER	2	DJC00001-
11	21X-60-11130	PIN	1	DJC00001-

FIG NO. : N1310-01A1

FIG.N1310-01A1 SWIVEL JOINT (BLADE SPEC.)

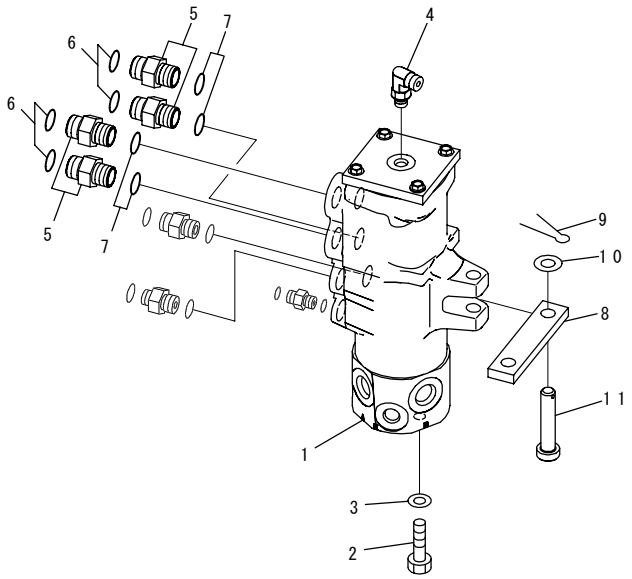

00092339

INDEX	PART NO.	DESCRIPTION	Q'TY	SERIAL NO.
1	(703-07-23230)	SWIVEL JOINT ASS'Y	1	DJC00001-
2	01010-81235	BOLT	4	DJC00001-
3	01643-31232	WASHER	4	DJC00001-
4	02782-10311	ELBOW	1	DJC00001-
5	02781-00522	UNION	4	DJC00001-
6	02896-11015	O-RING	4	DJC00001-
7	07002-12434	O-RING	4	DJC00001-
8	201-60-81610	LINK	1	DJC00001-
9	04050-14025	PIN,COTTER	2	DJC00001-
10	01640-21626	WASHER	2	DJC00001-
11	21X-60-11130	PIN	1	DJC00001-

TRAVEL AND LOWER PIPING

FIG.P1120-01A0 TRAVEL PIPING

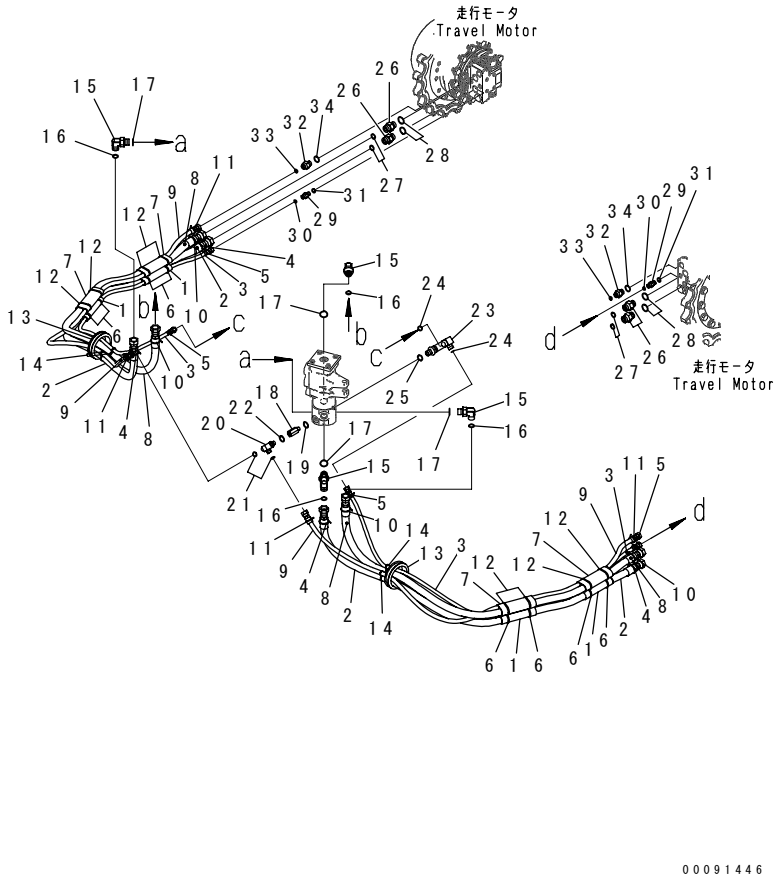

INDEX	PART NO.	DESCRIPTION	Q'TY	SERIAL NO.
1	203-62-41150	COVER	4	DJC00001-
2	201-62-83610	HOSE	2	DJC00001-
3	201-62-83620	HOSE	2	DJC00001-
4	21U-62-34750	BAND, BLUE	4	DJC00001-
5	21U-62-34760	BAND, RED	4	DJC00001-
6	08034-20823	BAND	8	DJC00001-
7	203-62-41150	COVER	4	DJC00001-
8	201-62-83710	HOSE	2	DJC00001-
9	201-62-83720	HOSE	2	DJC00001-
10	21U-62-34770	BAND, WHITE	4	DJC00001-
11	21U-62-34720	BAND, BLACK	4	DJC00001-
12	08034-20823	BAND	8	DJC00001-
13	201-62-66140	GROMMET	2	DJC00001-
14	08034-40521	BAND	4	DJC00001-
15	02782-10522	ELBOW	4	DJC00001-
16	02896-11015	O-RING	4	DJC00001-
17	07002-12434	O-RING	4	DJC00001-
18	20Y-62-22160	ADAPTER	1	DJC00001-
19	07002-21423	O-RING	1	DJC00001-
20	21W-62-45140	ELBOW	1	DJC00001-
21	02896-21009	O-RING	2	DJC00001-
22	07002-21423	O-RING	1	DJC00001-
23	201-62-83950	ELBOW	1	DJC00001-
24	02896-11008	O-RING	2	DJC00001-
25	07002-11423	O-RING	1	DJC00001-
26	02781-00522	UNION	4	DJC00001-
27	02896-11015	O-RING	4	DJC00001-
28	07002-12434	O-RING	4	DJC00001-
29	02781-0021D	UNION	2	DJC00001-
30	02896-11008	O-RING	2	DJC00001-
31	07002-11423	O-RING	2	DJC00001-
32	02781-00315	UNION	2	DJC00001-
33	02896-21009	O-RING	2	DJC00001-
34	07002-22034	O-RING	2	DJC00001-

FIG.P1120-01A1 TRAVEL PIPING (BLADE SPEC.)

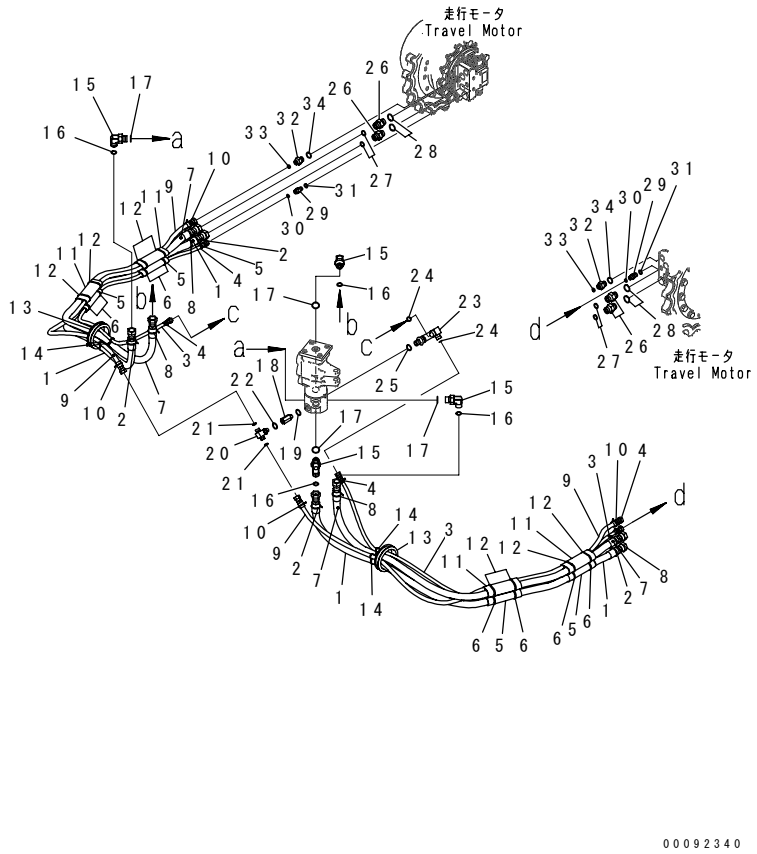

INDEX	PART NO.	DESCRIPTION	Q'TY	SERIAL NO.
1	201-62-83610	HOSE	2	DJC00001-
2	21U-62-34750	BAND, BLUE	4	DJC00001-
3	201-62-83620	HOSE	2	DJC00001-
4	21U-62-34760	BAND, RED	4	DJC00001-
5	203-62-41150	COVER	2	DJC00001-
6	08034-20823	BAND	8	DJC00001-
7	201-62-83710	HOSE	2	DJC00001-
8	21U-62-34770	BAND, WHITE	4	DJC00001-
9	201-62-83720	HOSE	2	DJC00001-
10	21U-62-34720	BAND, BLACK	4	DJC00001-
11	203-62-41150	COVER	4	DJC00001-
12	08034-20823	BAND	8	DJC00001-
13	201-62-66140	GROMMET	2	DJC00001-
14	08034-40521	BAND	4	DJC00001-
15	02782-10522	ELBOW	4	DJC00001-
16	02896-11015	O-RING	4	DJC00001-
17	07002-12434	O-RING	4	DJC00001-
18	20Y-62-22160	ADAPTER	1	DJC00001-
19	07002-21423	O-RING	1	DJC00001-
20	21W-62-42630	TEE	1	DJC00001-
21	02896-21009	O-RING	2	DJC00001-
22	07002-21423	O-RING	1	DJC00001-
23	201-62-83950	ELBOW	1	DJC00001-
24	02896-11008	O-RING	2	DJC00001-
25	07002-11423	O-RING	1	DJC00001-
26	02781-00522	UNION	4	DJC00001-
27	02896-11015	O-RING	4	DJC00001-
28	07002-12434	O-RING	4	DJC00001-
29	02781-0021D	UNION	2	DJC00001-
30	02896-11008	O-RING	2	DJC00001-
31	07002-11423	O-RING	2	DJC00001-
32	02781-00315	UNION	2	DJC00001-
33	02896-21009	O-RING	2	DJC00001-
34	07002-22034	O-RING	2	DJC00001-

FIG.P1120-02A1 LOWER HYDRAULIC PIPING (BLADE LINE)

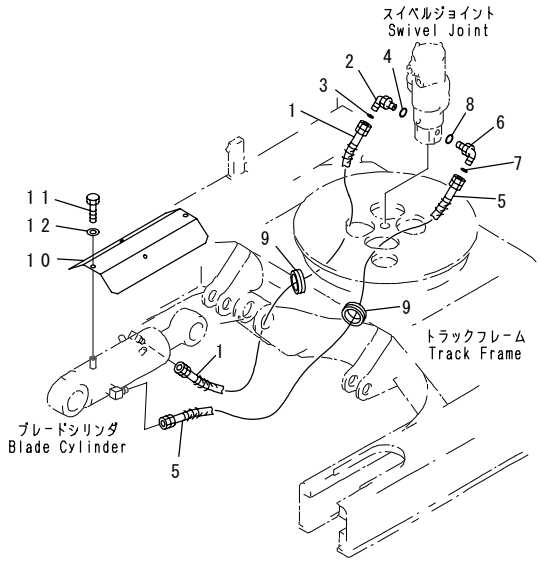

00091934

INDEX	PART NO.	DESCRIPTION	Q'TY	SERIAL NO.
1	21W-62-43860	HOSE	1	DJC00001-
2	02782-1031B	ELBOW	1	DJC00001-
3	02896-11009	O-RING	1	DJC00001-
4	07002-11823	O-RING	1	DJC00001-
5	201-62-83341	HOSE	1	DJC00001-
6	20U-62-41690	ELBOW	1	DJC00001-
7	02896-11012	O-RING	1	DJC00001-
8	07002-11823	O-RING	1	DJC00001-
9	20U-91-01450	GROMMET	2	DJC00001-
10	201-71-81110	COVER	1	DJC00001-
11	01010-81020	BOLT	3	DJC00001-
12	01643-31032	WASHER	3	DJC00001-

FIG NO. : P1210-01A0

FIG.P1210-01A0 FINAL DRIVE

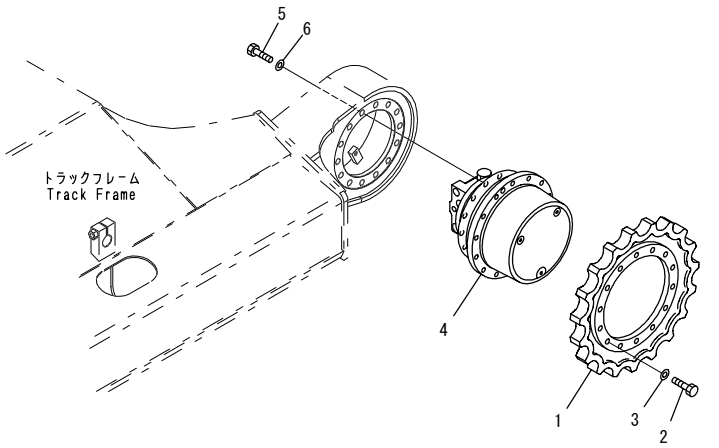

INDEX	PART NO.	DESCRIPTION	Q'TY	SERIAL NO.
1	201-27-D1110	SPROCKET	2	DJC00001-
2	201-27-61230	BOLT	24	DJC00001-
3	01643-31445	WASHER	24	DJC00001-
4	(201-60-81301)	MOTOR ASS'Y	2	DJC00001-
5	01010-81640	BOLT	24	DJC00001-
6	01643-31645	WASHER	24	DJC00001-

UNDER CARRIAGE

FIG.R0110-01A0 FRONT IDLER

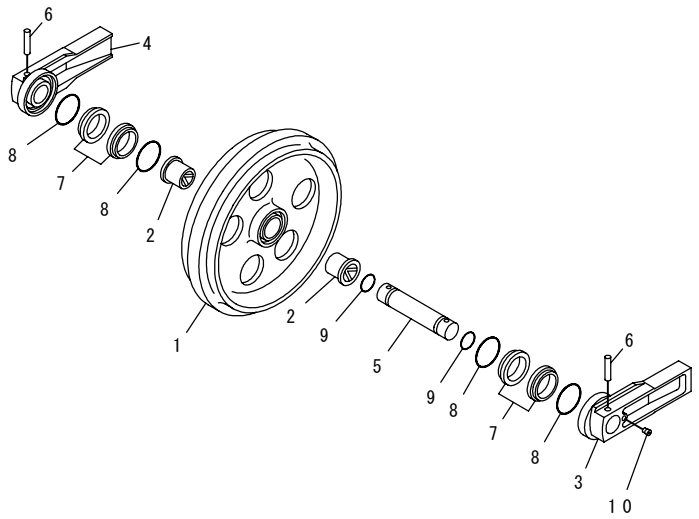

INDEX	PART NO.	DESCRIPTION	Q'TY	SERIAL NO.
	201-30-D1000	IDLER ASS'Y.	2	DJC00001-
1	201-30-D0110	.IDLER.	2	DJC00001-
2	21W-30-14540	.BUSHING.	4	DJC00001-
3	201-30-52131	.SUPPORT,OUTER.	2	DJC00001-
4	201-30-52141	.SUPPORT,INNER.	2	DJC00001-
5	201-30-52160	.SHAFT.	2	DJC00001-
6	201-30-52180	.PIN.	2	DJC00001-
	141-30-00616	.FLOATING SEAL ASS'Y.	2	DJC00001-
7	141-30-00623	..SEAL RING ASS'Y.	1	DJC00001-
	☆	...RING,SEAL.	2	DJC00001-
8	141-30-00630	..O-RING ASS'Y.	1	DJC00001-
	☆	...O-RING.	2	DJC00001-
9	07000-03038	.O-RING.	2	DJC00001-
10	07043-50108	.PLUG.	1	DJC00001-

FIG NO. : R0120-01A0

FIG.R0120-01A0 IDLER CUSHION

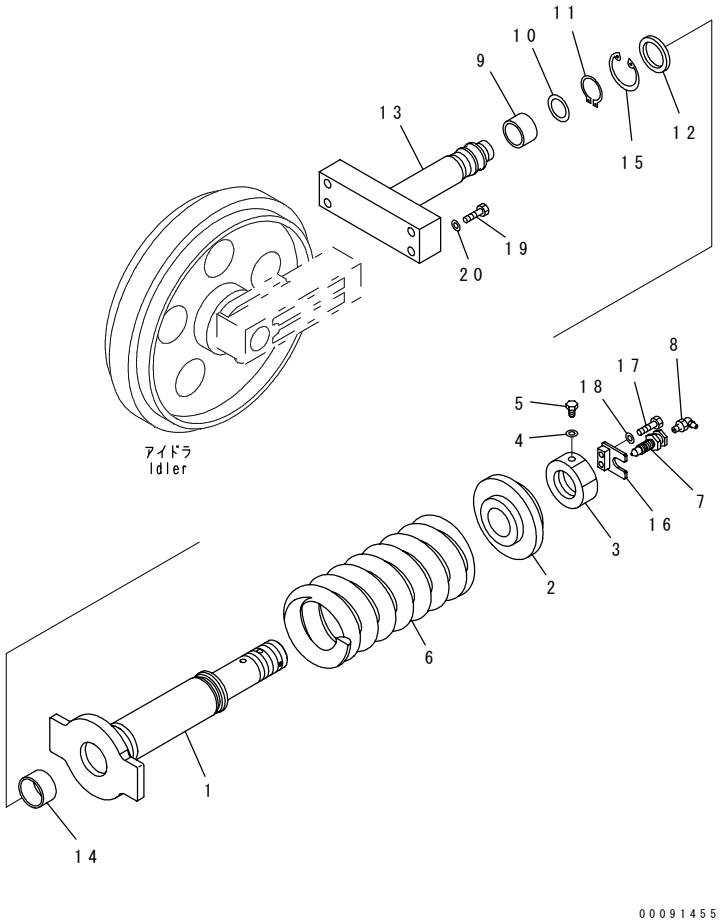

INDEX	PART NO.	DESCRIPTION	Q'TY	SERIAL NO.
1	21W-30-51222	CYLINDER	2	DJC00001-
2	201-30-75141	COLLAR	2	DJC00001-
3	21W-30-32620	NUT	2	DJC00001-
4	01643-31032	WASHER	2	DJC00001-
5	21W-30-32610	BOLT	2	DJC00001-
6	201-30-62312	SPRING	2	DJC00001-
7	203-30-42260	VALVE	2	DJC00001-
8	07020-00900	FITTING,GREASE	2	DJC00001-
9	07155-00515	RING	2	DJC00001-
10	09370-00050	U-PACKING	2	DJC00001-
11	04064-03515	RING,SNAP	2	DJC00001-
12	707-56-50540	SEAL	2	DJC00001-
13	201-30-75310	ROD	2	DJC00001-
14	07177-05030	BUSHING	2	DJC00001-
15	201-30-71310	RING	2	DJC00001-
16	21W-30-51120	PLATE	2	DJC00001-
17	01010-80830	BOLT	4	DJC00001-
18	01643-30823	WASHER	4	DJC00001-
19	01010-81475	BOLT	8	DJC00001-
20	01643-31445	WASHER	8	DJC00001-

FIG.R0200-01A0 TRACK ROLLER

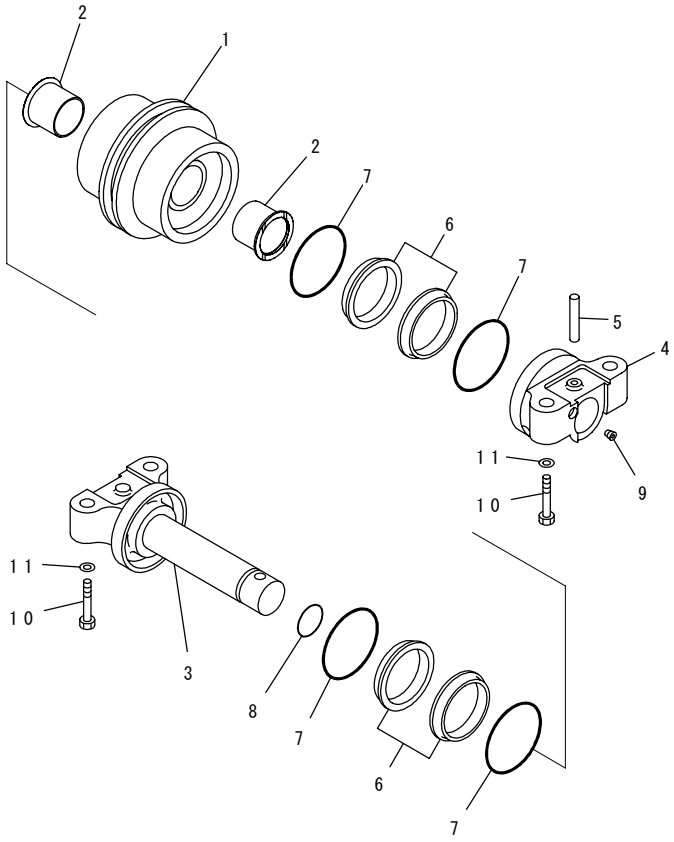

INDEX	PART NO.	DESCRIPTION	Q'TY	SERIAL NO.
	201-30-00313	TRACK ROLLER ASS'Y	10	DJC00001-
1	201-30-73312	.ROLLER	1	DJC00001-
2	201-30-76140	.BUSHING	2	DJC00001-
3	201-30-76121	.SHAFT ASS'Y	1	DJC00001-
4	201-30-76161	.COLLAR,OUTER	1	DJC00001-
5	201-30-73390	.PIN	1	DJC00001-
	201-30-00080	.FLOATING SEAL ASS'Y	2	DJC00001-
6	☆	..SEAL	2	DJC00001-
7	☆	..O-RING	2	DJC00001-
8	07000-12035	.O-RING	1	DJC00001-
9	20Y-30-16330	.PLUG	1	DJC00001-
10	01010-81465	BOLT	40	DJC00001-
11	01643-31445	WASHER	40	DJC00001-

FIG NO. : R0300-01A0

FIG.R0300-01A0 CARRIER ROLLER

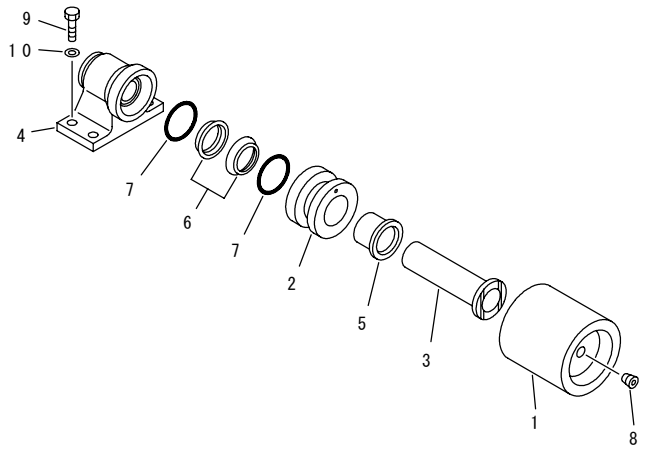

PMA2919

INDEX	PART NO.	DESCRIPTION	Q'TY	SERIAL NO.
	203-30-00231	CARRIER ROLLER	2	DJC00001-
1	203-30-53111	. ROLLER	1	DJC00001-
2	203-30-53120	. COLLAR	1	DJC00001-
3	203-30-53141	. SHAFT	1	DJC00001-
4	203-30-53150	. COLLAR	1	DJC00001-
5	203-30-53160	. BUSHING	1	DJC00001-
	110-30-00086	. FLOATING SEAL ASS'Y	1	DJC00001-
6	☆	.. RING	2	DJC00001-
7	☆	.. O-RING	2	DJC00001-
8	20Y-30-16330	. PLUG	1	DJC00001-
9	01010-81235	BOLT	8	DJC00001-
10	21W-01-31460	WASHER	8	DJC00001-

FIG.R0500-01A0 TRACK SHOE

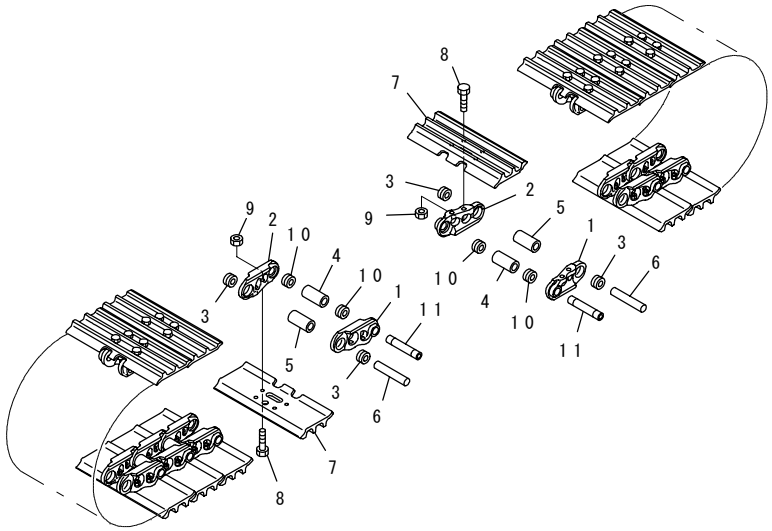

INDEX	PART NO.	DESCRIPTION	Q'TY	SERIAL NO.
	201-32-02201	TRACK SHOE ASS'Y,450THGPC60.....	1	DJC00001-
1	201-32-51120	.LINK,(L.H.).....	76	DJC00001-
2	201-32-51130	.LINK,(R.H.).....	76	DJC00001-
3	101-32-11271	.SEAL.....	144	DJC00001-
4	101-32-11173	.BUSHING.....	4	DJC00001-
5	201-32-51140	.BUSHING.....	72	DJC00001-
6	201-32-71150	.PIN.....	72	DJC00001-
7	201-32-71110	.SHOE, TRACK,450TH.....	76	DJC00001-
8	201-32-51240	.BOLT, SHOE.....(Y0320-K1)	304	DJC00001-
9	112-32-11221	.NUT.....(Y0320-K1)	304	DJC00001-
10	101-32-11281	.SEAL.....	8	DJC00001-
11	201-32-71190	.PIN,M.....	4	DJC00001-

FIG.R1100-01A0 TRACK FRAME

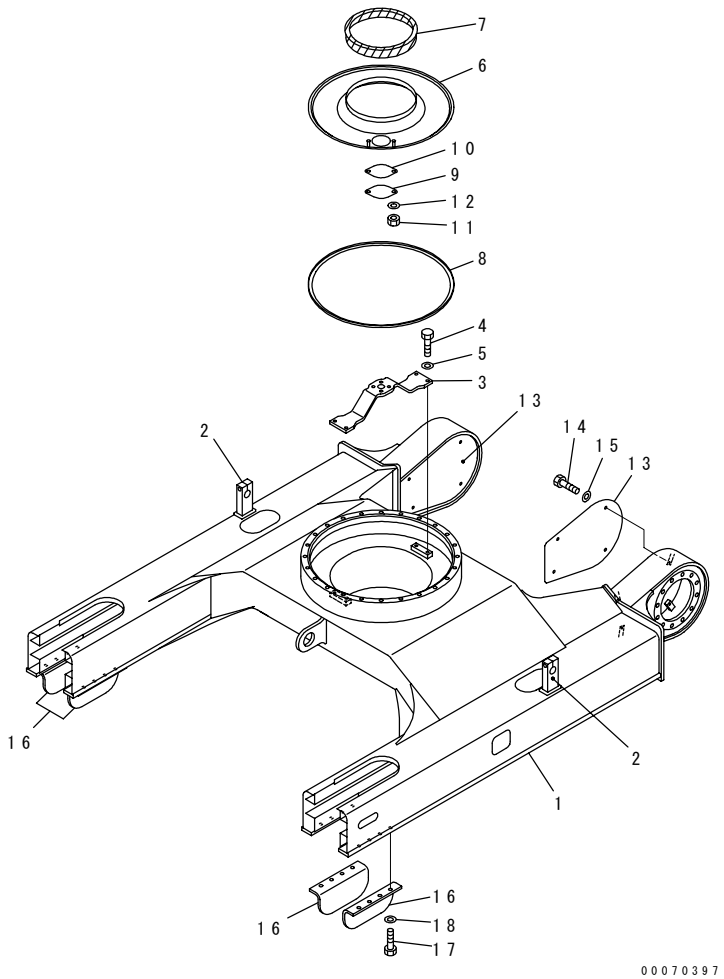

INDEX	PART NO.	DESCRIPTION	Q'TY	SERIAL NO.
1	201-30-81112	FRAME,TRACK	1	DJC00001-
2	201-30-74G20	.PLATE (WELDED)	2	DJC00001-
3	201-30-74210	BRACKET	1	DJC00001-
4	01010-81230	BOLT	4	DJC00001-
5	01643-31232	WASHER	4	DJC00001-
	201-30-74220	COVER ASS'Y	1	DJC00001-
6	☆	.COVER	1	DJC00001-
7	20X-30-21141	.SEAL	1	DJC00001-
8	201-30-74250	.SEAL	1	DJC00001-
9	203-46-D6160	COVER	1	DJC00001-
10	203-46-31181	GASKET	1	DJC00001-
11	01580-11008	NUT	2	DJC00001-
12	01643-31032	WASHER	2	DJC00001-
13	201-62-84510	COVER	2	DJC00001-
14	01010-81025	BOLT	8	DJC00001-
15	01643-31032	WASHER	8	DJC00001-
16	21W-30-34110	GUARD	4	DJC00001-
17	01010-81435	BOLT	16	DJC00001-
18	01643-31445	WASHER	16	DJC00001-

FIG.R1100-01A1 TRACK FRAME (BLADE SPEC.)

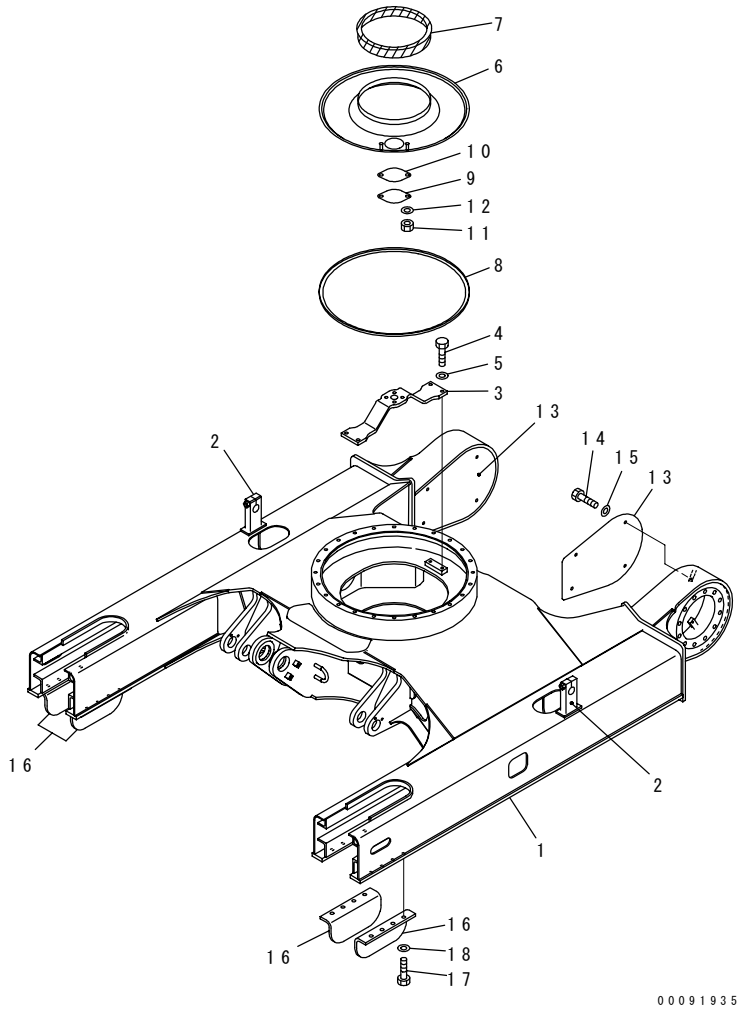

INDEX	PART NO.	DESCRIPTION	Q'TY	SERIAL NO.
1	201-910-8112	FRAME,TRACK	1	DJC00001-
2	201-30-74G20	.PLATE (WELDED)	2	DJC00001-
3	201-30-74210	BRACKET	1	DJC00001-
4	01010-81230	BOLT	4	DJC00001-
5	01643-31232	WASHER	4	DJC00001-
	201-30-74220	COVER ASS'Y	1	DJC00001-
6	☆	.COVER	1	DJC00001-
7	20X-30-21141	.SEAL	1	DJC00001-
8	201-30-74250	.SEAL	1	DJC00001-
9	203-46-D6160	COVER	1	DJC00001-
10	203-46-31181	GASKET	1	DJC00001-
11	01580-11008	NUT	2	DJC00001-
12	01643-31032	WASHER	2	DJC00001-
13	201-62-84510	COVER	2	DJC00001-
14	01010-81025	BOLT	8	DJC00001-
15	01643-31032	WASHER	8	DJC00001-
16	21W-30-34110	GUARD	4	DJC00001-
17	01010-81435	BOLT	16	DJC00001-
18	01643-31445	WASHER	16	DJC00001-

WORK EQUIPMENT

FIG.T1110-01A0 BOOM

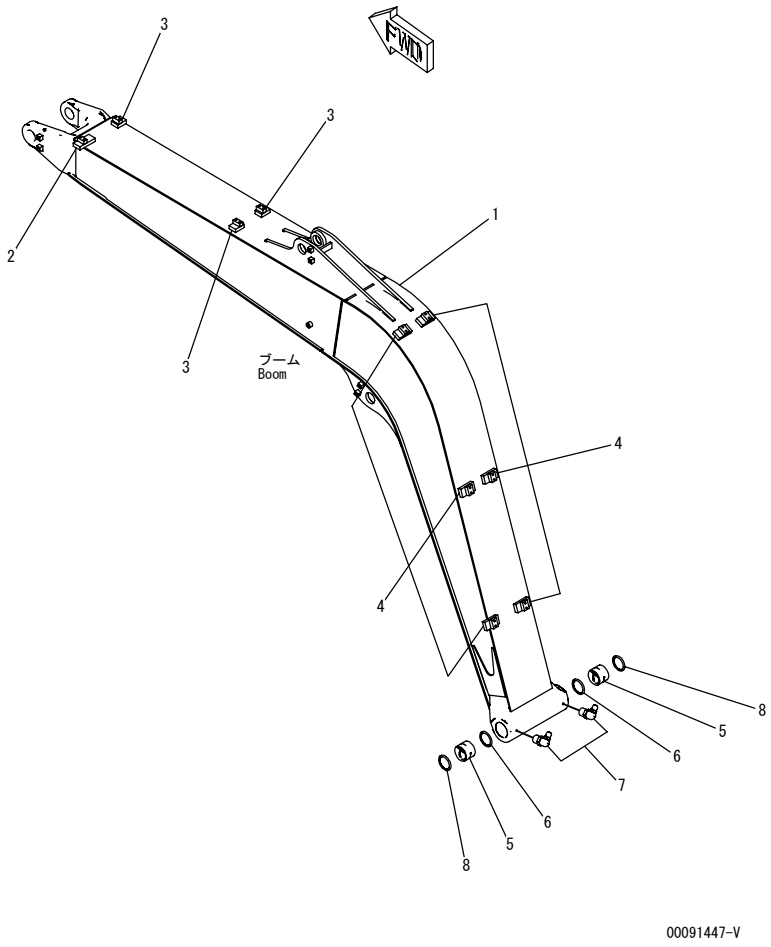

INDEX	PART NO.	DESCRIPTION	Q'TY	SERIAL NO.
1	201-70-84112	BOOM	1	DJC00001-
2	201-70-84A71	SEAT (WELDED)	1	DJC00001-
3	201-70-84B80	SEAT (WELDED)	3	DJC00001-
4	201-70-84B70	SEAT (WELDED)	6	DJC00001-
5	201-70-71230	BUSHING	2	DJC00001-
6	07145-00065	SEAL	2	DJC00001-
7	07020-00900	FITTING,GREASE	2	DJC00001-
8	07145-00065	SEAL	2	DJC00001-

FIG NO. : T1110-02A0

FIG.T1110-02A0 BOOM (WORK LAMP)

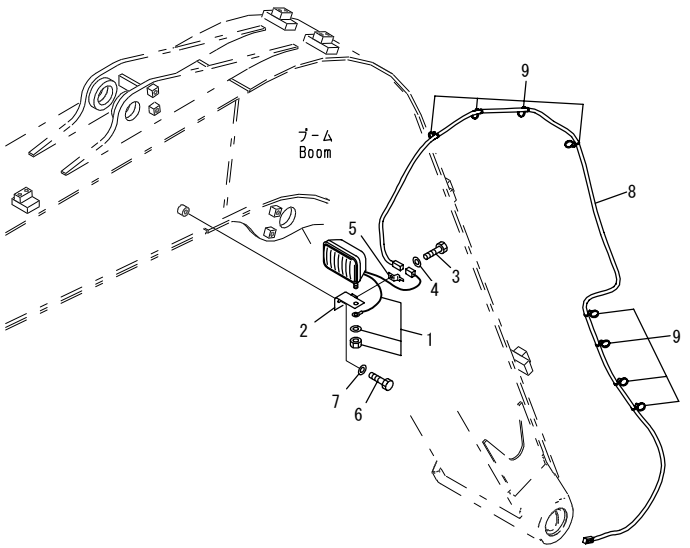

00091448

INDEX	PART NO.	DESCRIPTION	Q'TY	SERIAL NO.
1	21T-06-32810	WORK LAMP ASS'Y	1	DJC00001-
	421-06-23330	.BULB, 70W,24V	1	DJC00001-
2	20Y-06-21551	BRACKET	1	DJC00001-
3	01010-81225	BOLT	1	DJC00001-
4	01643-31232	WASHER	1	DJC00001-
5	08193-21012	CLIP	1	DJC00001-
6	01010-81220	BOLT	1	DJC00001-
7	01643-31232	WASHER	1	DJC00001-
8	201-06-81211	WIRING HARNESS	1	DJC00001-
9	08034-40521	BAND	15	DJC00001-

FIG.T1110-03A0 BOOM (BOOM PIN)

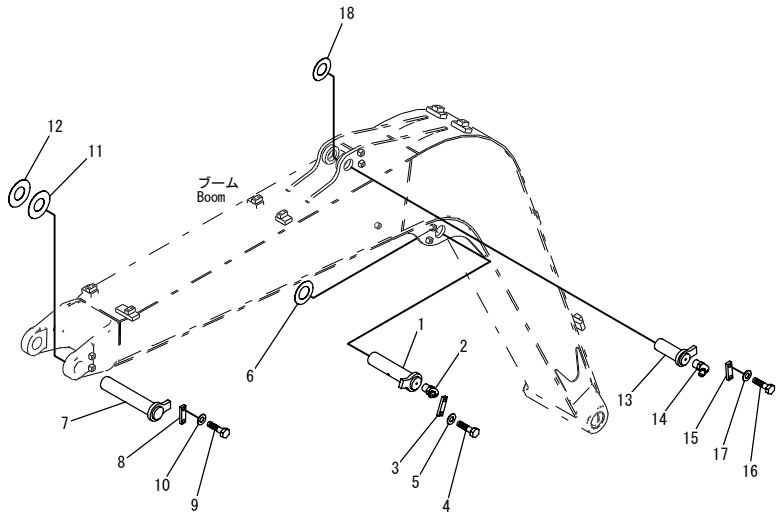

00091449-V

INDEX	PART NO.	DESCRIPTION	Q'TY	SERIAL NO.
1	201-70-71610	PIN	1	DJC00001-
2	07020-00675	FITTING,GREASE	1	DJC00001-
3	205-70-66580	PLATE	1	DJC00001-
4	01010-81230	BOLT	2	DJC00001-
5	01643-31232	WASHER	2	DJC00001-
6	21Y-70-14770	SPACER, 1.0MM	1	DJC00001-
7	201-70-71270	SHAFT	1	DJC00001-
8	205-70-66580	PLATE	1	DJC00001-
9	01010-81230	BOLT	2	DJC00001-
10	01643-31232	WASHER	2	DJC00001-
11	21W-70-32280	SPACER, 1.0MM	1	DJC00001-
12	20U-70-31310	SPACER, 0.5MM	1	DJC00001-
13	22P-70-11121	PIN	1	DJC00001-
14	07020-00675	FITTING,GREASE	1	DJC00001-
15	205-70-66580	PLATE	1	DJC00001-
16	01010-81230	BOLT	2	DJC00001-
17	01643-31232	WASHER	2	DJC00001-
18	201-70-71380	SPACER, 1.0MM	1	DJC00001-

FIG NO. : T1110-04A0

FIG.T1110-04A0 BOOM (ARM AND BUCKET CYLINDER LINE)

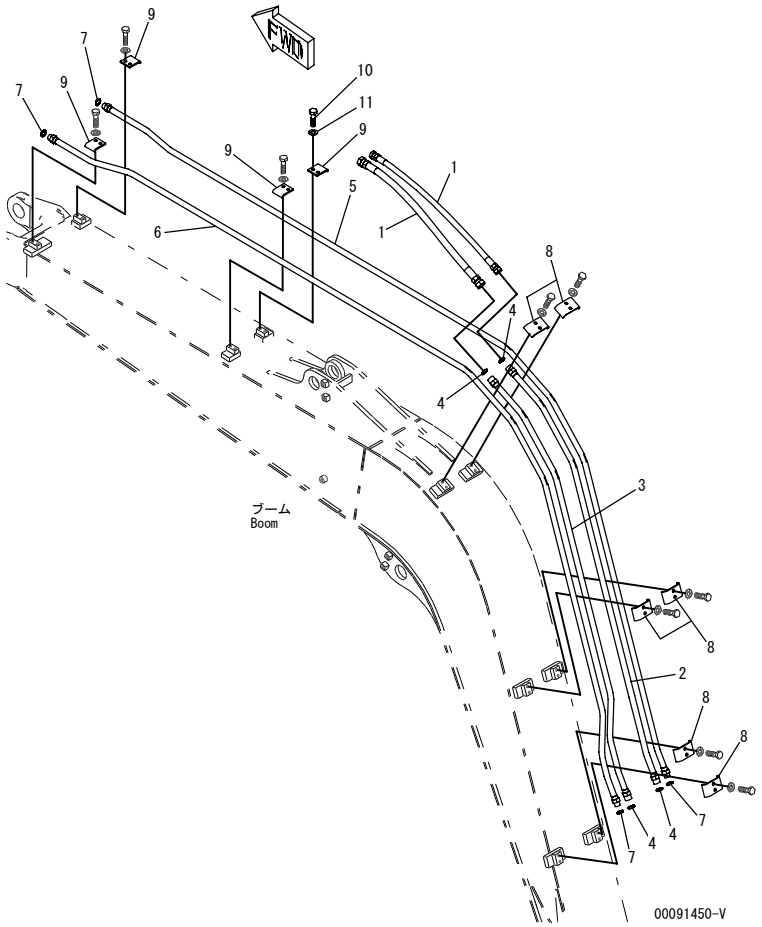

INDEX	PART NO.	DESCRIPTION	Q'TY	SERIAL NO.
1	02756-00507	HOSE	2	DJC00001-
2	201-62-84111	TUBE	1	DJC00001-
3	201-62-84121	TUBE	1	DJC00001-
4	02896-11015	O-RING	4	DJC00001-
5	201-62-84131	TUBE	1	DJC00001-
6	201-62-84141	TUBE	1	DJC00001-
7	02896-11012	O-RING	4	DJC00001-
8	203-70-53380	CLAMP	6	DJC00001-
9	203-70-53390	CLAMP	4	DJC00001-
10	01010-81025	BOLT	20	DJC00001-
11	01643-31032	WASHER	20	DJC00001-

FIG.T1110-04A1 BOOM (ARM AND BUCKET CYLINDER LINE) (PROVISION FOR 1-ADDITIONAL ACTUATOR PIPING)

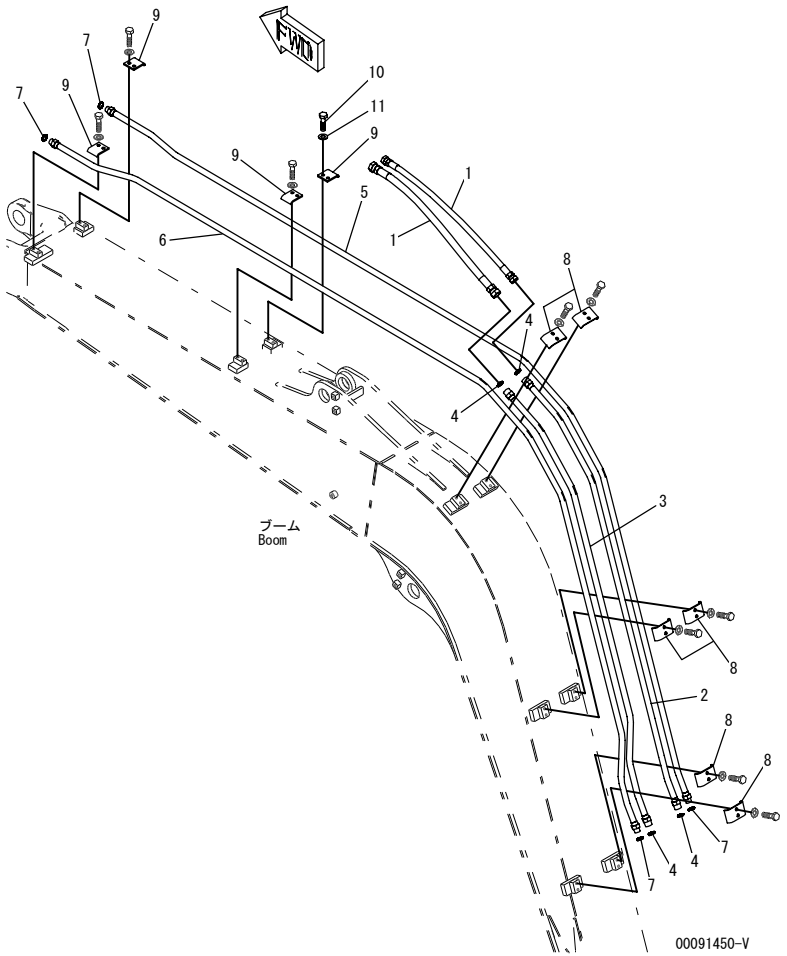

INDEX	PART NO.	DESCRIPTION	Q'TY	SERIAL NO.
1	02756-00507	HOSE	2	DJC00001-
2	201-62-84111	TUBE	1	DJC00001-
3	201-62-84121	TUBE	1	DJC00001-
4	02896-11015	O-RING	4	DJC00001-
5	201-62-84131	TUBE	1	DJC00001-
6	201-62-84141	TUBE	1	DJC00001-
7	02896-11012	O-RING	4	DJC00001-
8	203-70-53380	CLAMP	6	DJC00001-
9	203-70-53390	CLAMP	4	DJC00001-
10	01010-81025	BOLT	6	DJC00001-
11	01643-31032	WASHER	6	DJC00001-

FIG.T1110-05A1 BOOM (ADDITIONAL LINE) (PROVISION FOR 1-ADDITIONAL ACTUATOR PIPING)

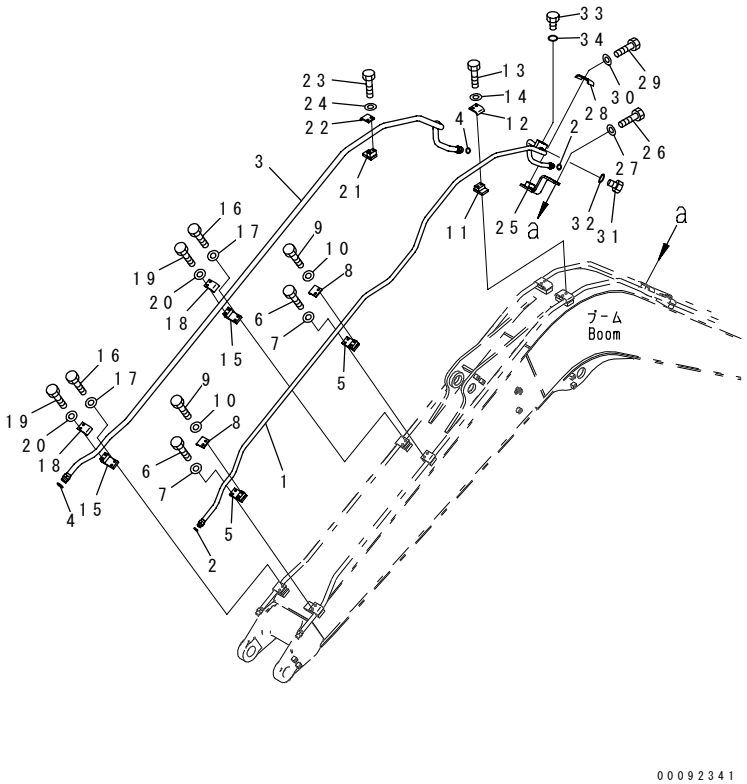

INDEX	PART NO.	DESCRIPTION	Q'TY	SERIAL NO.
1	201-973-8220	TUBE	1	DJC00001-
2	02896-11012	O-RING	2	DJC00001-
3	201-973-8210	TUBE	1	DJC00001-
4	02896-11018	O-RING	2	DJC00001-
5	201-973-7690	SEAT	2	DJC00001-
6	01010-81035	BOLT	4	DJC00001-
7	01643-31032	WASHER	4	DJC00001-
8	203-973-5660	CLAMP	2	DJC00001-
9	01010-81025	BOLT	4	DJC00001-
10	01643-31032	WASHER	4	DJC00001-
11	203-973-5690	SEAT	1	DJC00001-
12	203-973-5660	CLAMP	1	DJC00001-
13	01010-81065	BOLT	2	DJC00001-
14	01643-31032	WASHER	2	DJC00001-
15	201-973-7680	SEAT	2	DJC00001-
16	01010-81035	BOLT	4	DJC00001-
17	01643-31032	WASHER	4	DJC00001-
18	201-973-6730	CLAMP	2	DJC00001-
19	01010-81025	BOLT	4	DJC00001-
20	01643-31032	WASHER	4	DJC00001-
21	201-973-6740	SEAT	1	DJC00001-
22	201-973-6730	CLAMP	1	DJC00001-
23	01010-81065	BOLT	2	DJC00001-
24	01643-31032	WASHER	2	DJC00001-
25	201-973-8180	BRACKET	1	DJC00001-
26	01010-81035	BOLT	2	DJC00001-
27	01643-31032	WASHER	2	DJC00001-
28	201-973-7430	CLAMP	1	DJC00001-
29	01010-81025	BOLT	2	DJC00001-
30	01643-31032	WASHER	2	DJC00001-
31	07040-11007	PLUG	1	DJC00001-
32	07002-11023	O-RING	1	DJC00001-
33	07040-12012	PLUG	1	DJC00001-
34	07002-12034	O-RING	1	DJC00001-

FIG.T1120-01A0 BOOM CYLINDER

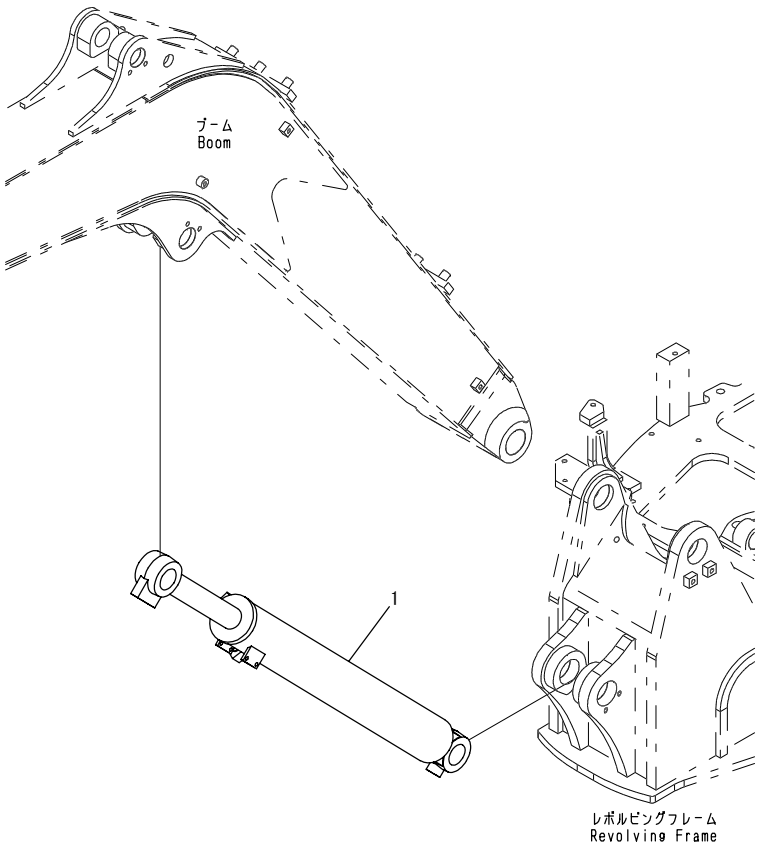

INDEX	PART NO.	DESCRIPTION	Q'TY	SERIAL NO.
1	(707-00-XT261)	CYLINDER GROUP.....	1	DJC00001-

FIG NO. : T1140-01A0

FIG.T1140-01A0 ARM CYLINDER

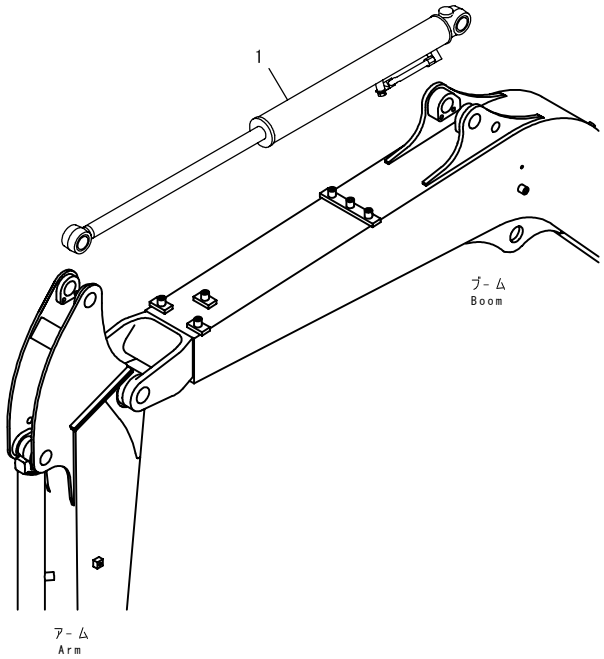

PTK6524

INDEX	PART NO.	DESCRIPTION	Q'TY	SERIAL NO.
1	(707-00-XT271)	CYLINDER GROUP.....	1	DJC00001-

FIG.T1210-01A0 ARM

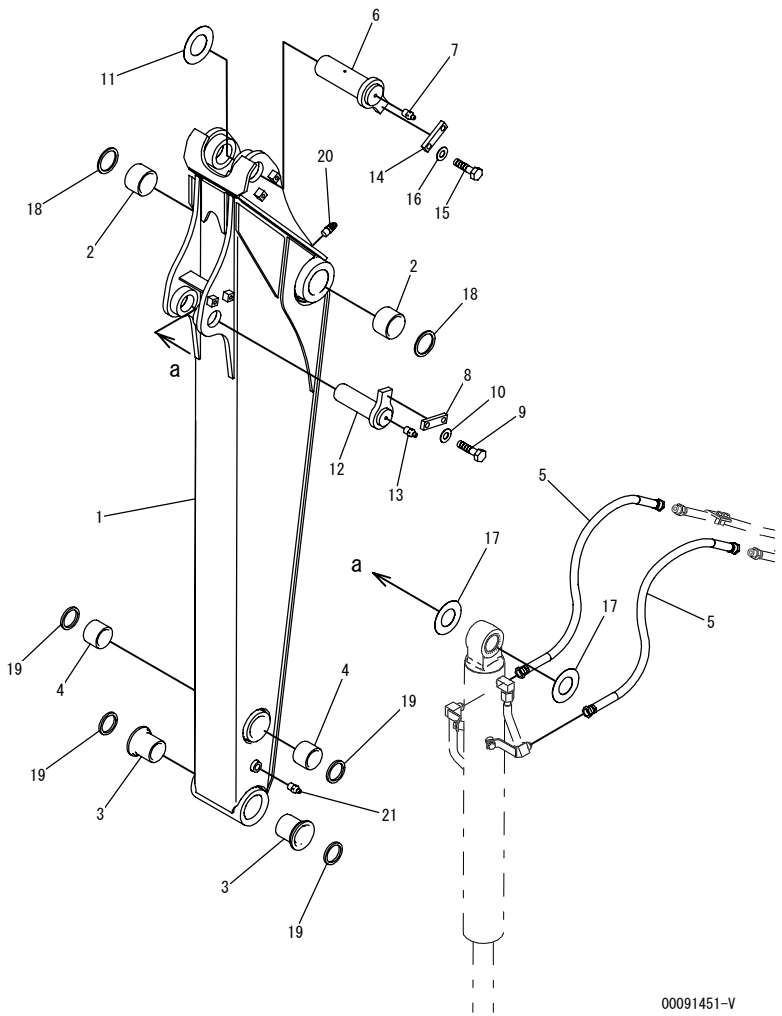

INDEX	PART NO.	DESCRIPTION	Q'TY	SERIAL NO.
1	201-70-83111	ARM	1	DJC00001-
2	201-70-72220	BUSHING	2	DJC00001-
3	20X-70-22140	BUSHING	2	DJC00001-
4	201-70-22141	BUSHING	2	DJC00001-
5	02756-20408	HOSE	2	DJC00001-
6	21W-70-44321	PIN	1	DJC00001-
7	07020-00000	FITTING,GREASE	1	DJC00001-
8	205-70-66580	PLATE	1	DJC00001-
9	01010-81230	BOLT	2	DJC00001-
10	01643-31232	WASHER	2	DJC00001-
11	21Y-70-14770	SPACER, 1.0MM	1	DJC00001-
12	22P-70-11311	PIN	1	DJC00001-
13	07020-00000	FITTING,GREASE	1	DJC00001-
14	205-70-66580	PLATE	1	DJC00001-
15	01010-81230	BOLT	2	DJC00001-
16	01643-31232	WASHER	2	DJC00001-
17	201-70-22150	SPACER, 1.0MM	2	DJC00001-
18	07145-00060	SEAL	2	DJC00001-
19	130-09-12931	SEAL	4	DJC00001-
20	07020-00900	FITTING,GREASE	1	DJC00001-
21	07020-00000	FITTING,GREASE	1	DJC00001-

FIG.T1210-01A1 ARM (PROVISION FOR 1-ADDITIONAL ACTUATOR PIPING)

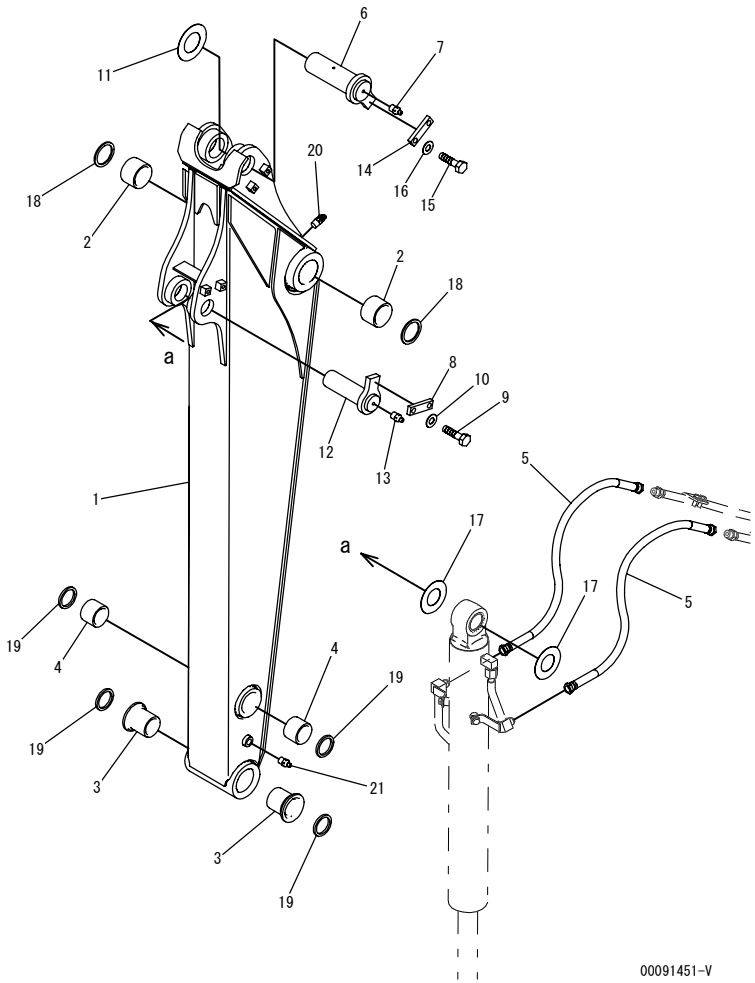

INDEX	PART NO.	DESCRIPTION	Q'TY	SERIAL NO.
1	201-97-38310	ARM	1	DJC00001-
2	201-70-72220	BUSHING	2	DJC00001-
3	20X-70-22140	BUSHING	2	DJC00001-
4	201-70-22141	BUSHING	2	DJC00001-
5	02756-20408	HOSE	2	DJC00001-
6	21W-70-44321	PIN	1	DJC00001-
7	07020-00000	FITTING,GREASE	1	DJC00001-
8	205-70-66580	PLATE	1	DJC00001-
9	01010-81230	BOLT	2	DJC00001-
10	01643-31232	WASHER	2	DJC00001-
11	21Y-70-14770	SPACER, 1.0MM	1	DJC00001-
12	22P-70-11311	PIN	1	DJC00001-
13	07020-00000	FITTING,GREASE	1	DJC00001-
14	205-70-66580	PLATE	1	DJC00001-
15	01010-81230	BOLT	2	DJC00001-
16	01643-31232	WASHER	2	DJC00001-
17	201-70-22150	SPACER, 1.0MM	2	DJC00001-
18	07145-00060	SEAL	2	DJC00001-
19	130-09-12931	SEAL	4	DJC00001-
20	07020-00900	FITTING,GREASE	1	DJC00001-
21	07020-00000	FITTING,GREASE	1	DJC00001-

FIG.T1210-01A2 ARM (STRENGTH TYPE)

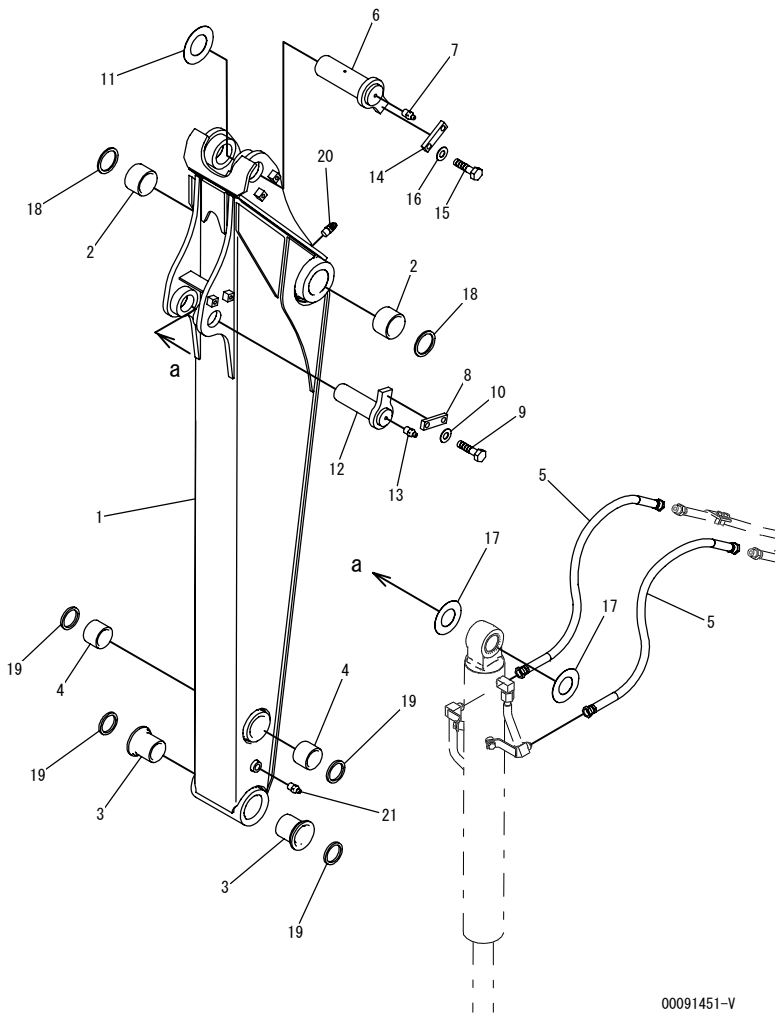

INDEX	PART NO.	DESCRIPTION	Q'TY	SERIAL NO.
1	201-70-83210	ARM	1	DJC00001-
2	201-70-72220	BUSHING	2	DJC00001-
3	20X-70-22140	BUSHING	2	DJC00001-
4	201-70-22141	BUSHING	2	DJC00001-
5	02756-20408	HOSE	2	DJC00001-
6	21W-70-44321	PIN	1	DJC00001-
7	07020-00000	FITTING,GREASE	1	DJC00001-
8	205-70-66580	PLATE	1	DJC00001-
9	01010-81230	BOLT	2	DJC00001-
10	01643-31232	WASHER	2	DJC00001-
11	21Y-70-14770	SPACER, 1.0MM	1	DJC00001-
12	22P-70-11311	PIN	1	DJC00001-
13	07020-00000	FITTING,GREASE	1	DJC00001-
14	205-70-66580	PLATE	1	DJC00001-
15	01010-81230	BOLT	2	DJC00001-
16	01643-31232	WASHER	2	DJC00001-
17	201-70-22150	SPACER, 1.0MM	2	DJC00001-
18	07145-00060	SEAL	2	DJC00001-
19	130-09-12931	SEAL	4	DJC00001-
20	07020-00900	FITTING,GREASE	1	DJC00001-
21	07020-00000	FITTING,GREASE	1	DJC00001-

FIG.T1210-02A1 ARM (ADDITIONAL LINE) (PROVISION FOR 1-ADDITIONAL ACTUATOR PIPING)

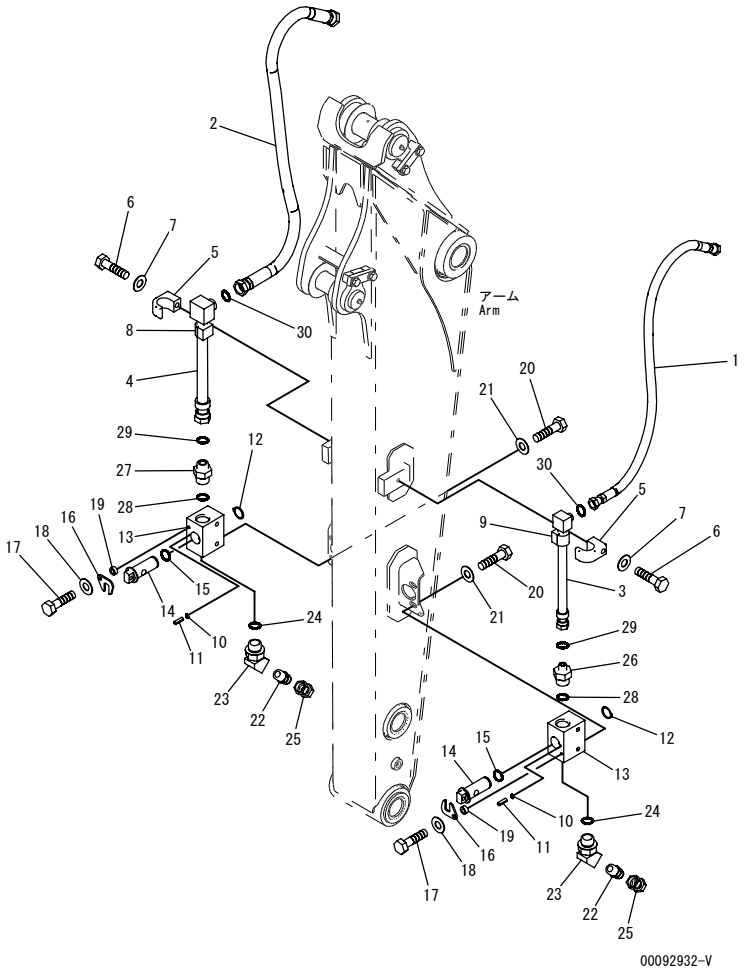

INDEX	PART NO.	DESCRIPTION	Q'TY	SERIAL NO.
1	21W-973-4640	HOSE	1	DJC00001-
2	21W-973-4630	HOSE	1	DJC00001-
3	21W-973-4471	TUBE	1	DJC00001-
4	21W-973-4491	TUBE	1	DJC00001-
5	22B-62-19410	CLAMP	2	DJC00001-
6	01010-81270	BOLT	2	DJC00001-
7	01643-31232	WASHER	2	DJC00001-
8	203-62-43380	CUSHION	1	DJC00001-
9	203-62-43390	CUSHION	1	DJC00001-
	203-973-5803	VALVE ASS'Y	2	DJC00001-
10	07000-13031	.O-RING	1	DJC00001-
11	04025-00412	.PIN,SPRING	1	DJC00001-
12	04064-03015	.RING	2	DJC00001-
13	☆	.BODY	1	DJC00001-
14	☆	.SHAFT	1	DJC00001-
15	07000-13025	.O-RING	1	DJC00001-
16	203-973-6610	.MAT	1	DJC00001-
17	01010-80825	.BOLT	1	DJC00001-
18	01643-30823	.WASHER	1	DJC00001-
19	21T-72-14930	.BOSS	1	DJC00001-
20	01010-81020	BOLT	4	DJC00001-
21	01643-31032	WASHER	4	DJC00001-
22	20D-973-3350	NIPPLE	2	DJC00001-
23	203-973-5730	ELBOW	2	DJC00001-
24	07002-13334	O-RING	2	DJC00001-
25	20D-973-3360	PLUG	2	DJC00001-
26	21W-973-4550	NIPPLE	1	DJC00001-
27	21W-973-4560	NIPPLE	1	DJC00001-
28	07002-13334	O-RING	2	DJC00001-
29	02896-11012	O-RING	2	DJC00001-
30	02896-11018	O-RING	2	DJC00001-

FIG.T1220-01A0 BUCKET CYLINDER

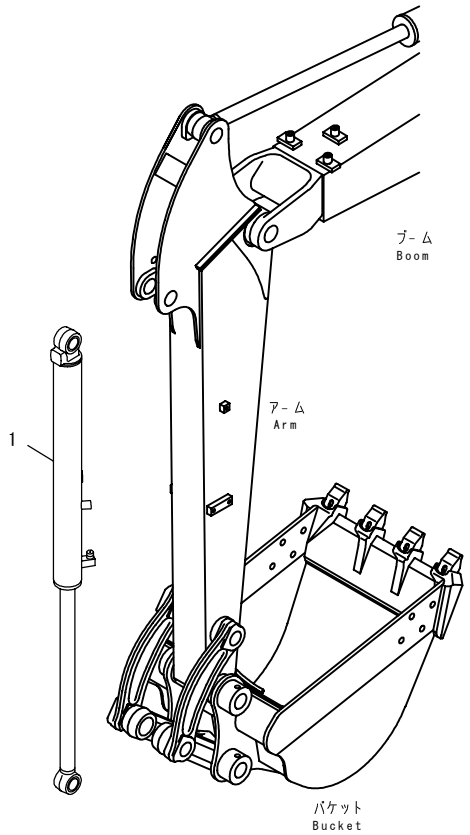

PTK6536

INDEX	PART NO.	DESCRIPTION	Q'TY	SERIAL NO.
1	(707-00-XT281)	CYLINDER GROUP.....	1	DJC00001-

FIG NO. : T1230-01A0

FIG.T1230-01A0 BUCKET LINK

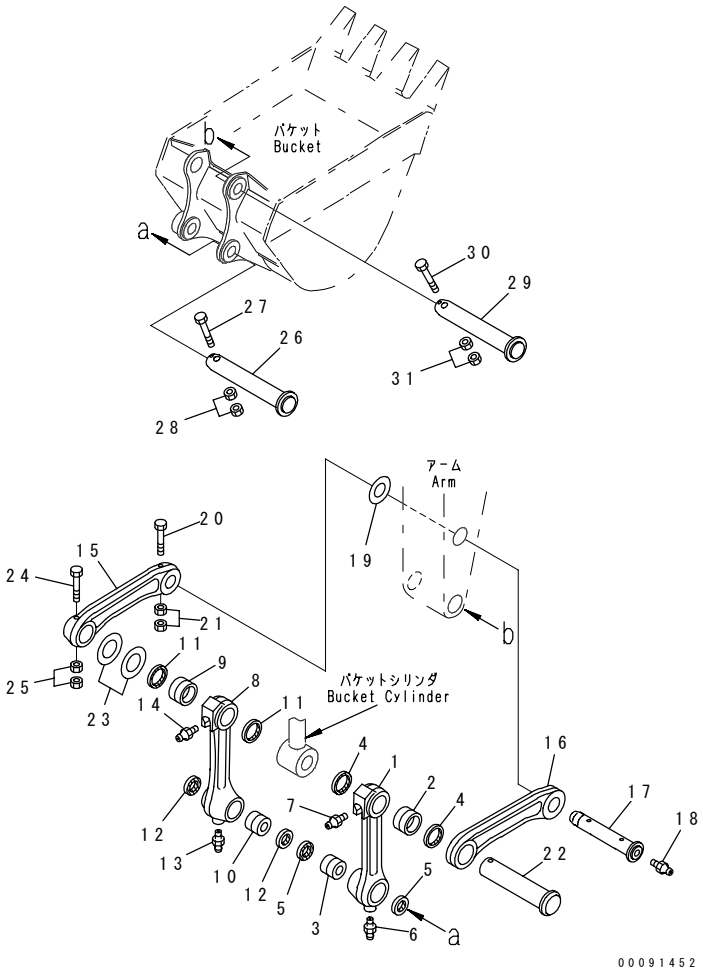

INDEX	PART NO.	DESCRIPTION	Q'TY	SERIAL NO.
1	201-70-D4160	LINK, L.H.	1	DJC00001-
2	20X-70-24150	BUSHING	1	DJC00001-
3	201-70-64270	BUSHING	1	DJC00001-
4	07145-00060	SEAL	2	DJC00001-
5	07145-00050	SEAL	2	DJC00001-
6	07020-00000	FITTING, GREASE	1	DJC00001-
7	07020-00900	FITTING, GREASE	1	DJC00001-
8	201-70-D4150	LINK, R.H.	1	DJC00001-
9	20X-70-24150	BUSHING	1	DJC00001-
10	201-70-64270	BUSHING	1	DJC00001-
11	07145-00060	SEAL	2	DJC00001-
12	07145-00050	SEAL	2	DJC00001-
13	07020-00000	FITTING, GREASE	1	DJC00001-
14	07020-00900	FITTING, GREASE	1	DJC00001-
15	201-70-D4170	LINK, R.H.	1	DJC00001-
16	201-70-D4180	LINK, L.H.	1	DJC00001-
17	21W-70-42180	SHAFT	1	DJC00001-
18	07020-00000	FITTING, GREASE	1	DJC00001-
19	201-70-22150	SPACER, 1.0MM	2	DJC00001-
20	01011-81620	BOLT	1	DJC00001-
21	01580-11613	NUT	2	DJC00001-
22	21W-70-42170	SHAFT	1	DJC00001-
23	21Y-70-14770	SPACER, 1.0MM	1	DJC00001-
	21Y-70-14780	SPACER, 2.0MM	1	DJC00001-
24	01011-81620	BOLT	1	DJC00001-
25	01580-11613	NUT	2	DJC00001-
26	201-70-64210	SHAFT	1	DJC00001-
27	01011-81630	BOLT	1	DJC00001-
28	01580-11613	NUT	2	DJC00001-
29	201-70-64210	SHAFT	1	DJC00001-
30	01011-81630	BOLT	1	DJC00001-
31	01580-11613	NUT	2	DJC00001-

FIG.T1510-01A0 BUCKET 0.30M3 770MM

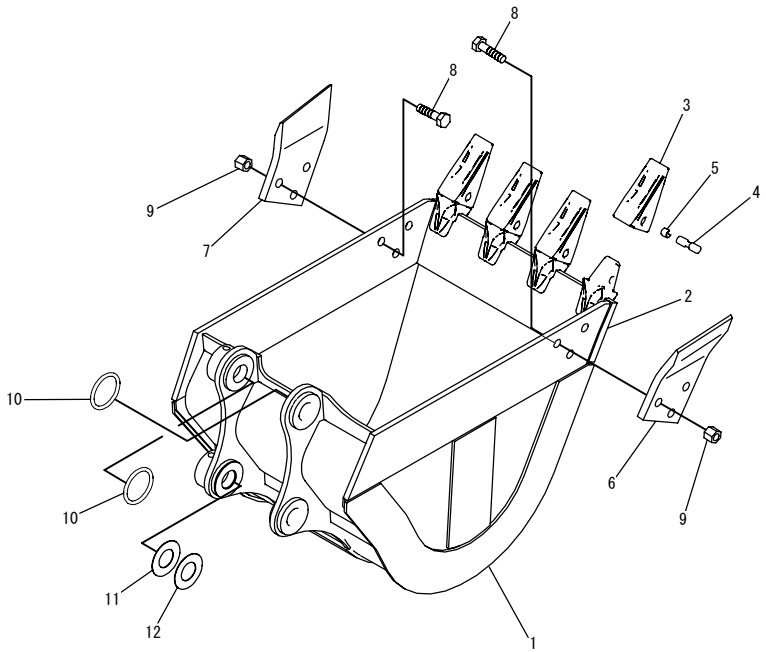

00091941-V

INDEX	PART NO.	DESCRIPTION	Q'TY	SERIAL NO.
1	201-70-81111	BUCKET	1	DJC00001-
	201-70-81B50	.PLATE	2	DJC00001-
	201-70-81B60	.PLATE,L.H.	1	DJC00001-
	201-70-81B70	.PLATE,R.H.	1	DJC00001-
	20X-70-14151	.ADAPTER	4	DJC00001-
2	201-70-81A50	PLATE	1	DJC00001-
3	20X-70-14160	TOOTH	4	DJC00001-
4	20X-70-14170	PIN	4	DJC00001-
5	20X-70-14180	SPRING	4	DJC00001-
6	201-70-74171	SIDE CUTTER	1	DJC00001-
7	201-70-74181	SIDE CUTTER	1	DJC00001-
8	21W-70-21810	BOLT	6	DJC00001-
9	01803-02228	NUT	6	DJC00001-
10	175-30-16210	O-RING	2	DJC00001-
11	135-70-13251	SPACER, 1.6MM	1	DJC00001-
12	201-70-22150	SPACER, 1.0MM	1	DJC00001-

FIG.T1510-01A1 BUCKET 0.37M3 930MM (WIDTH)

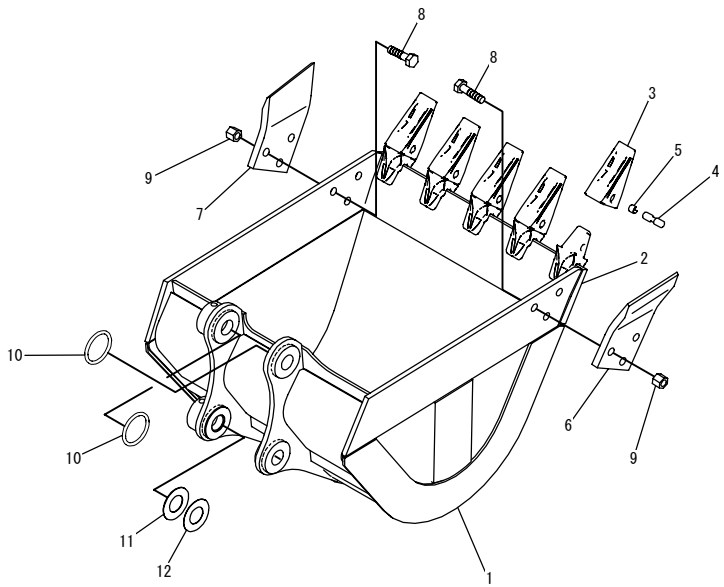

INDEX	PART NO.	DESCRIPTION	Q'TY	SERIAL NO.
1	201-920-8210	BUCKET	1	DJC00001-
	201-920-8D40	.PLATE	2	DJC00001-
	21W-70-24C10	.PLATE,L.H.	1	DJC00001-
	21W-70-24C20	.PLATE,R.H.	1	DJC00001-
	20X-70-14151	.ADAPTER	5	DJC00001-
2	201-70-81A50	PLATE	1	DJC00001-
3	20X-70-14160	TOOTH	5	DJC00001-
4	20X-70-14170	PIN	5	DJC00001-
5	20X-70-14180	SPRING	5	DJC00001-
6	201-70-74171	SIDE CUTTER	1	DJC00001-
7	201-70-74181	SIDE CUTTER	1	DJC00001-
8	21W-70-21810	BOLT	6	DJC00001-
9	01803-02228	NUT	6	DJC00001-
10	175-30-16210	O-RING	2	DJC00001-
11	135-70-13251	SPACER, 1.6MM	1	DJC00001-
12	201-70-22150	SPACER, 1.0MM	1	DJC00001-

FIG.T1510-01A2 BUCKET 0.37M3 800MM (STRENGTH TYPE)

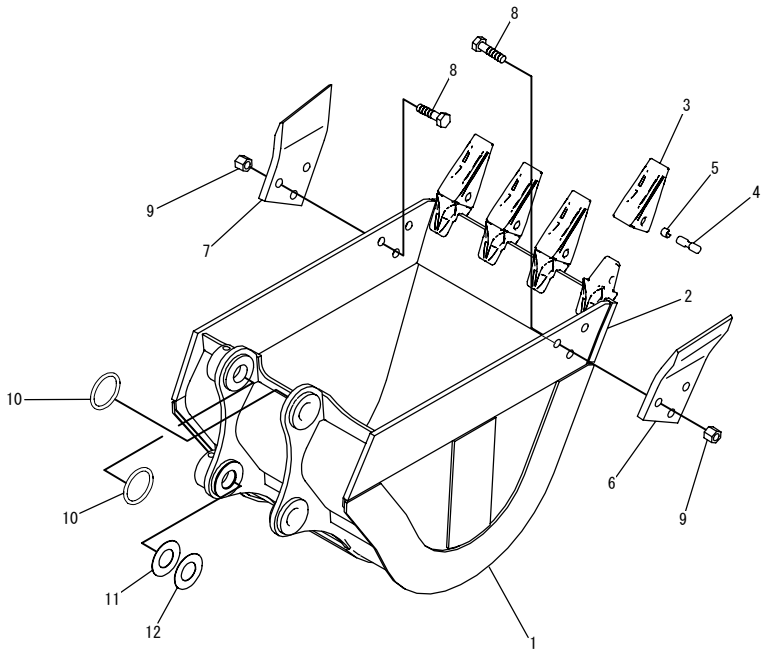

00091941-V

INDEX	PART NO.	DESCRIPTION	Q'TY	SERIAL NO.
1	201-920-8120	BUCKET	1	DJC00001-
	201-920-8B30	.PLATE	2	DJC00001-
	201-920-8B40	.PLATE,L.H.	1	DJC00001-
	201-920-8B50	.PLATE,R.H.	1	DJC00001-
	20X-70-14151	.ADAPTER	4	DJC00001-
2	201-920-8A80	PLATE	1	DJC00001-
3	20X-70-14160	TOOTH	4	DJC00001-
4	20X-70-14170	PIN	4	DJC00001-
5	20X-70-14180	SPRING	4	DJC00001-
6	201-70-74171	SIDE CUTTER	1	DJC00001-
7	201-70-74181	SIDE CUTTER	1	DJC00001-
8	21W-70-21810	BOLT	6	DJC00001-
9	01803-02228	NUT	6	DJC00001-
10	175-30-16210	O-RING	2	DJC00001-
11	135-70-13251	SPACER, 1.6MM	1	DJC00001-
12	201-70-22150	SPACER, 1.0MM	1	DJC00001-

FIG.T1710-01A0 BLADE

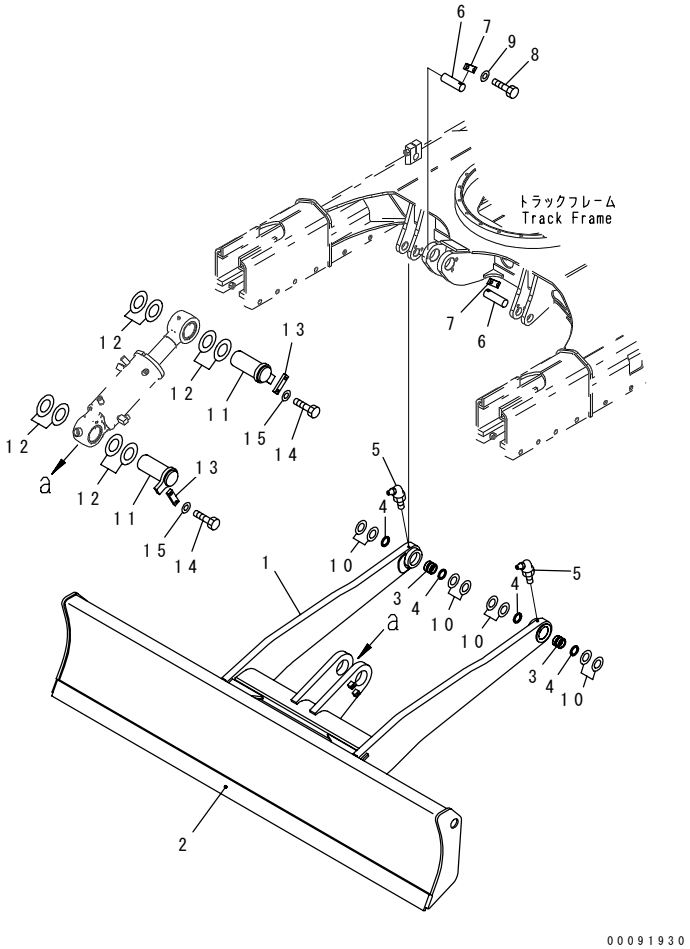

FIG NO. : T1710-01A0

INDEX	PART NO.	DESCRIPTION	Q'TY	SERIAL NO.
	201-91-08200	BLADE ASS'Y.	1	DJC00001-
1	201-910-8210	.BLADE.	1	DJC00001-
2	201-91-07190	..EDGE.....(WELDED)..	1	DJC00001-
3	07144-10505	.BUSHING.	2	DJC00001-
4	07145-00050	.SEAL.	4	DJC00001-
5	07020-00675	.FITTING,GREASE.	2	DJC00001-
6	21W-71-11141	PIN.	2	DJC00001-
7	04082-00212	LOCK.	2	DJC00001-
8	01010-81230	BOLT.	4	DJC00001-
9	01643-31232	WASHER.	4	DJC00001-
10	201-70-22150	SPACER, 1.0MM.	8	DJC00001-
11	21W-71-11131	PIN.	2	DJC00001-
12	21Y-70-14830	SPACER, 1.0MM.	8	DJC00001-
13	205-70-66580	PLATE.	2	DJC00001-
14	01010-81230	BOLT.	4	DJC00001-
15	01643-31232	WASHER.	4	DJC00001-

FIG.T1720-01A0 BLADE LIFT CYLINDER

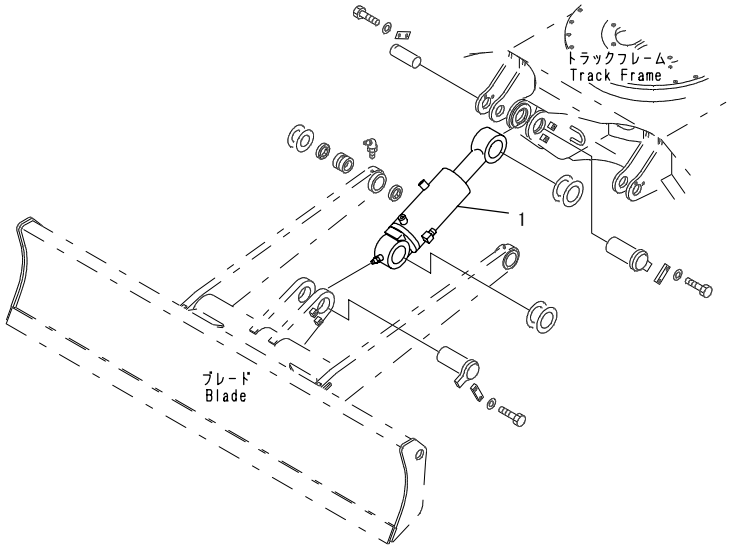

INDEX	PART NO.	DESCRIPTION	Q'TY	SERIAL NO.
1	(707-00-0T291)	CYLINDER GROUP.....	1	DJC00001-

MARKS AND PLATES

FIG.U0100-01A0 MARKS AND PLATES (1/2)

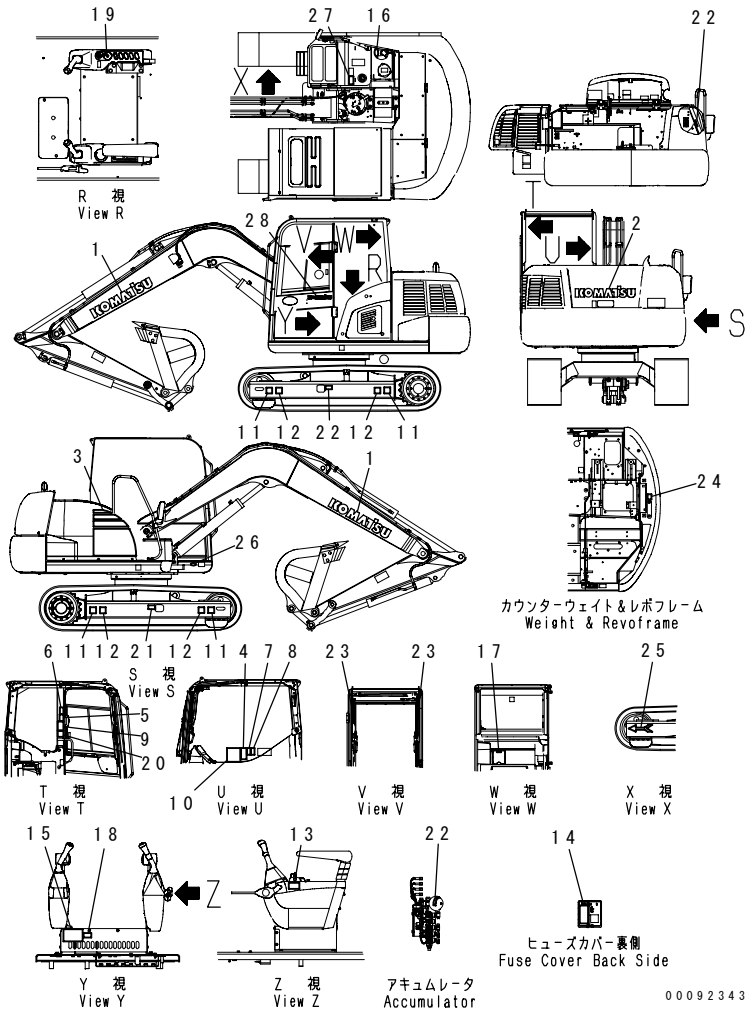

INDEX	PART NO.	DESCRIPTION	Q'TY	SERIAL NO.
1	09690-P0900	PLATE, MARK,KOMATSU.....	2	DJC00001-
2	09690-P0800	PLATE, MARK,KOMATSU.....	1	DJC00001-
3	201-00-81141	PLATE, MARK.....	1	DJC00001-
4	22H-98-11110	PLATE, SAFETY,BEFORE OPERATION.....	1	DJC00001-
5	09654-A0481	PLATE, SAFETY,LEAVING SEAT.....	1	DJC00001-
6	09803-A0481	PLATE, SAFETY..... WHEN OPENING WINDOW, LOCK IT	1	DJC00001-
7	09801-A0481	PLATE, SAFETY,HAZARDOUS VOLTAGE HAZARD..	1	DJC00001-
8	09651-A0481	PLATE, SAFETY,BEFORE OPERATION WARNING..	1	DJC00001-
9	09822-09000	PLATE, SAFETY,ISO PATTERN.....	1	DJC00001-
10	201-98-81022	OIL CHART.....	1	DJC00001-
11	09960-00801	MARK,SLING POSITION.....	4	DJC00001-
12	09960-00802	MARK,TIE DOWN POINT.....	4	DJC00001-
13	201-98-81030	PLATE,UNLOCK.....	1	DJC00001-
14	201-98-81072	PLATE,FUSE BOX.....	1	DJC00001-
15	201-98-81080	PLATE,MACHINE BODY LIFT POSTURE.....	1	DJC00001-
16	22H-98-11220	PLATE,HYDRAULIC OIL CHARGE.....	1	DJC00001-
17	22F-98-28380	PLATE,FUSE BOX.....	1	DJC00001-
18	22F-98-28130	PLATE,OPERATOR'S SEAT.....	1	DJC00001-
19	201-00-D1010	PLATE,FUEL DIAL.....	1	DJC00001-DJC00346
20	09839-09000	PLATE, SAFETY,WINDOW OPEN.....	1	DJC00001-
21	09657-A0881	PLATE, SAFETY,TRACK ADJUSTING.....	2	DJC00001-
22	09659-A057B	PLATE, SAFETY,ACCUMULATE.....	1	DJC00001-
23	09659-A057B	PLATE, SAFETY,GAS SPRING.....	2	DJC00001-
24	20Y-00-D1401	PLATE,FUEL FILLER.....	1	DJC00001-
25	20Y-00-D1520	PLATE,TRACK FRAME.....	2	DJC00001-
26	20Y-00-D1282	PLATE,PASSING.....	1	DJC00001-
27	20Y-00-D1960	PLATE,FUEL TANK.....	1	DJC00001-
28	09690-F0355	PLATE, MARK,KOMATSU.....	1	DJC00001-

FIG.U0100-02A0 MARKS AND PLATES (2/2)

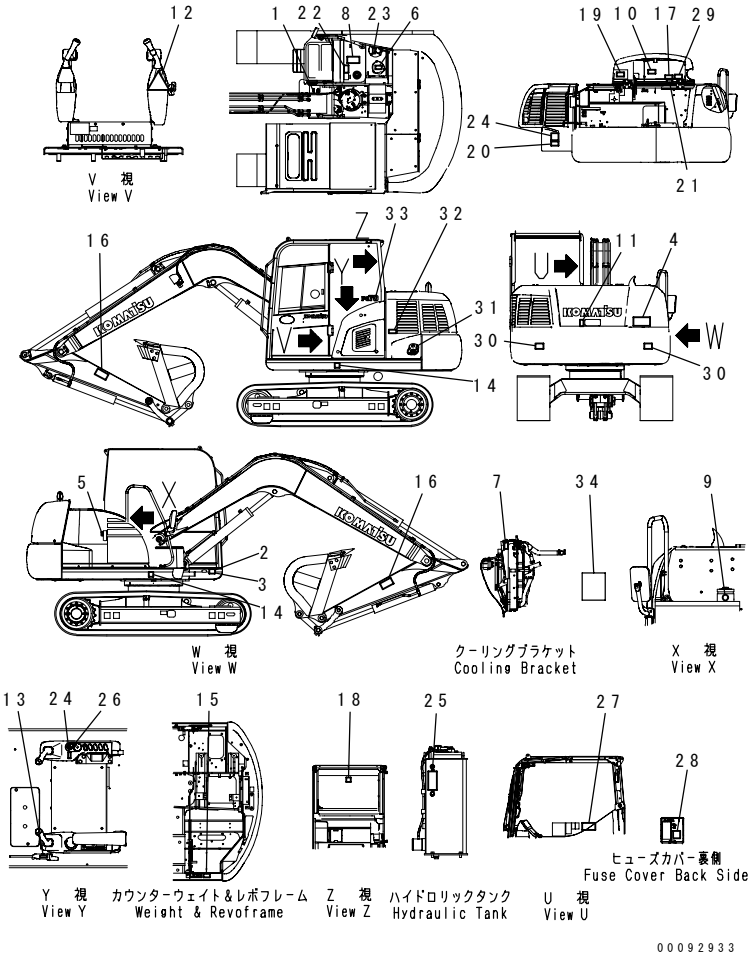

INDEX	PART NO.	DESCRIPTION	Q'TY	SERIAL NO.
1	09690-B0063	PLATE, MARK	1	DJC00001-
2	22F-98-D8430	PLATE,MACHINE SPEC	1	DJC00001-
3	04418-13060	SCREW	4	DJC00001-
4	09133-A2321	PLATE, SAFETY,KEEP OUT OF TURNING AREA	1	DJC00001-
5	203-00-31120	PLATE, INSTRUCTION,HYDRAULIC TANK	2	DJC00001-
6	09653-A0481	PLATE, SAFETY	1	DJC00001-
7	09653-A0481	PLATE, SAFETY,RADIATOR CAP	1	DJC00001-
8	09805-C0881	PLATE, SAFETY,DO NOT STEP ON COVER	1	DJC00001-
9	09669-0000E	PLATE, CAUTION,FUEL TANK	1	DJC00001-
10	09650-90104	PLATE, INSTRUCTION,WATER LEVEL CHECK	1	DJC00001-
11	09667-A0481	PLATE, SAFETY,ENGINE STARTING	1	DJC00001-
12	09963-A1640	TAG	1	DJC00001-
13	09685-00001	PLATE, OPERATING,SAFETY LOCK LEVER	1	DJC00001-
14	21U-98-31160	PLATE, MARK,CENTER OF GRAVITY	2	DJC00001-
15	09808-A0881	PLATE, SAFETY,BATTERY CABLE	1	DJC00001-
16	09134-A0881	PLATE, SAFETY,KEEP OUT OF WORKING AREA	2	DJC00001-
17	201-00-71960	PLATE,ENGINE OIL INLET	1	DJC00001-
18	22L-98-18270	PLATE,URGENT ESCAPE	1	DJC00001-
19	20Y-00-D1750	PLATE,COOLANT TEMPERATURE	1	DJC00001-
20	20Y-00-D1760	PLATE	1	DJC00001-
21	20Y-00-D1770	PLATE,ENGINE OIL TEMPERATURE	1	DJC00001-
22	20Y-00-D1780	PLATE,FUEL TEMPERATURE	1	DJC00001-
23	20Y-00-D1851	PLATE,HYDRAULIC TANK	1	DJC00347-
	20Y-00-D1850	PLATE,HYDRAULIC TANK	1	DJC00001-DJC00346
24	201-98-81090	PLATE, CAUTION,COVER COUTION	1	DJC00001-
25	201-98-81041	PLATE, MARK,HYDRAULIC TANK	1	DJC00001-
26	201-98-81110	PLATE, MARK	1	DJC00001-
27	09845-00480	PLATE, SAFETY,CAUTION-BLAST SITE	1	DJC00001-
28	201-98-81130	PLATE	1	DJC00001-
29	201-00-71840	PLATE	1	DJC00001-
30	14X-98-35181	PLATE,REFLECTOR	2	DJC00001-
31	20Y-00-D1940	PLATE, CAUTION	1	DJC00001-
32	11Y-98-31130	PLATE,ECOT 3	1	DJC00001-
33	201-98-89210	PLATE,PC70	1	DJC00001-
34	201-98-81150	CHECK LIST,FIRE PREVENTION	1	DJC00139-

FIG.U0100-02A1 MARKS AND PLATES (2/2) (BLADE SPEC.)

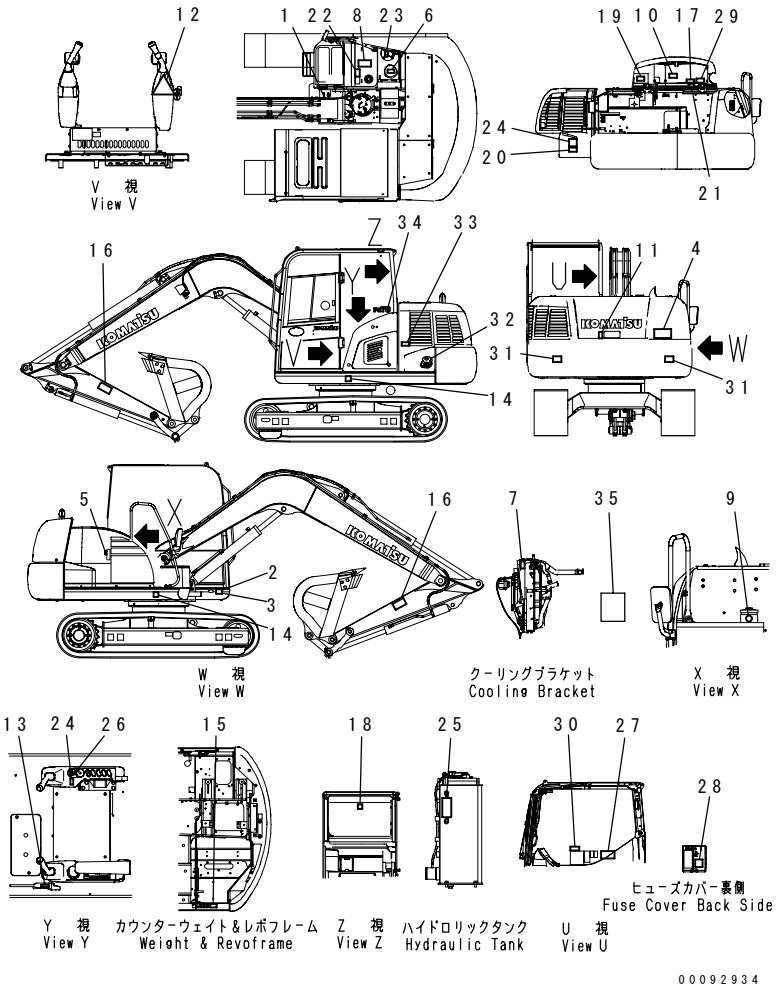

INDEX	PART NO.	DESCRIPTION	Q'TY	SERIAL NO.
1	09690-B0063	PLATE, MARK	1	DJC00001-
2	22F-98-D8430	PLATE,MACHINE SPEC	1	DJC00001-
3	04418-13060	SCREW	4	DJC00001-
4	09133-A2321	PLATE, SAFETY,KEEP OUT OF TURNING AREA	1	DJC00001-
5	203-00-31120	PLATE, INSTRUCTION,HYDRAULIC TANK	2	DJC00001-
6	09653-A0481	PLATE, SAFETY	1	DJC00001-
7	09653-A0481	PLATE, SAFETY,RADIATOR CAP	1	DJC00001-
8	09805-C0881	PLATE, SAFETY,DO NOT STEP ON COVER	1	DJC00001-
9	09669-0000E	PLATE, CAUTION,FUEL TANK	1	DJC00001-
10	09650-90104	PLATE, INSTRUCTION,WATER LEVEL CHECK	1	DJC00001-
11	09667-A0481	PLATE, SAFETY,ENGINE STARTING	1	DJC00001-
12	09963-A1640	TAG	1	DJC00001-
13	09685-00001	PLATE, OPERATING,SAFETY LOCK LEVER	1	DJC00001-
14	21U-98-31160	PLATE, MARK,CENTER OF GRAVITY	2	DJC00001-
15	09808-A0881	PLATE, SAFETY,BATTERY CABLE	1	DJC00001-
16	09134-A0881	PLATE, SAFETY,KEEP OUT OF WORKING AREA	2	DJC00001-
17	201-00-71960	PLATE,ENGINE OIL INLET	1	DJC00001-
18	22L-98-18270	PLATE,URGENT ESCAPE	1	DJC00001-
19	20Y-00-D1750	PLATE,COOLANT TEMPERATURE	1	DJC00001-
20	20Y-00-D1760	PLATE	1	DJC00001-
21	20Y-00-D1770	PLATE,ENGINE OIL TEMPERATURE	1	DJC00001-
22	20Y-00-D1780	PLATE,FUEL TEMPERATURE	1	DJC00001-
23	20Y-00-D1851	PLATE,HYDRAULIC TANK	1	DJC00347-
	20Y-00-D1850	PLATE,HYDRAULIC TANK	1	DJC00001-DJC00346
24	201-98-81090	PLATE, CAUTION,COVER COUTION	1	DJC00001-
25	201-98-81041	PLATE, MARK,HYDRAULIC TANK	1	DJC00001-
26	201-98-81110	PLATE, MARK	1	DJC00001-
27	09845-00480	PLATE, SAFETY,CAUTION-BLAST SITE	1	DJC00001-
28	201-98-81130	PLATE	1	DJC00001-
29	201-00-71840	PLATE	1	DJC00001-
30	201-00-61320	PLATE, OPERATING	1	DJC00001-
31	14X-98-35181	PLATE,REFLECTOR	2	DJC00001-
32	20Y-00-D1940	PLATE, CAUTION	1	DJC00001-
33	11Y-98-31130	PLATE,ECOT 3	1	DJC00001-
34	201-98-89210	PLATE,PC70	1	DJC00001-
35	201-98-81150	CHECK LIST,FIRE PREVENTION	1	DJC00139-

FIG.U0100-02A2 MARKS AND PLATES (2/2) (STRENGTH TYPE)

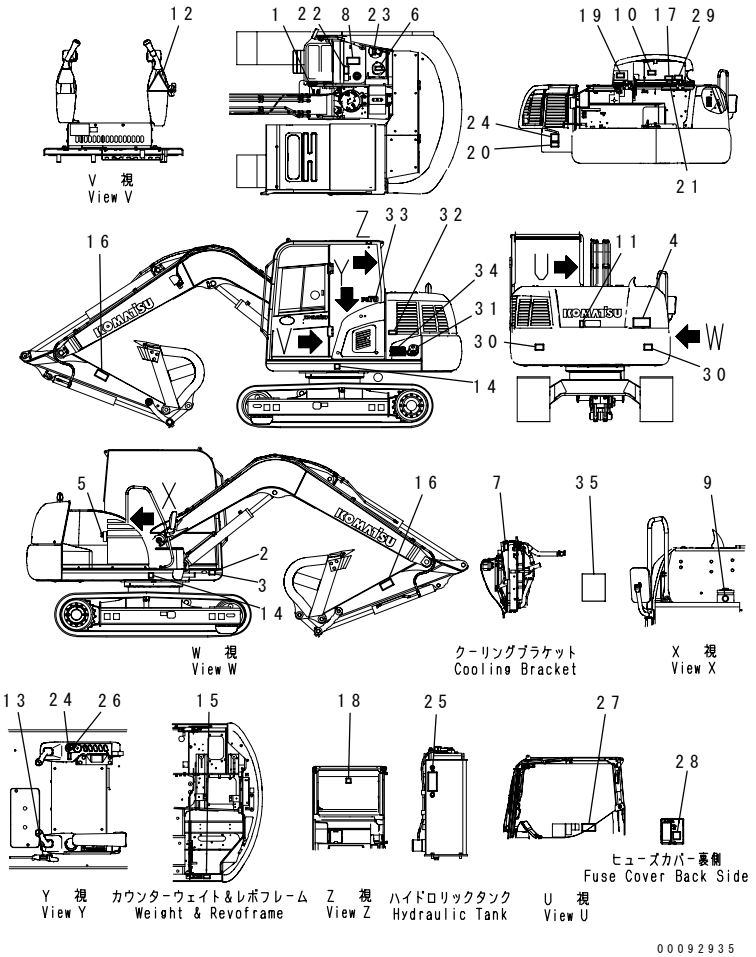

INDEX	PART NO.	DESCRIPTION	Q'TY	SERIAL NO.
1	09690-B0063	PLATE, MARK	1	DJC00001-
2	22F-98-D8430	PLATE,MACHINE SPEC	1	DJC00001-
3	04418-13060	SCREW	4	DJC00001-
4	09133-A2321	PLATE, SAFETY,KEEP OUT OF TURNING AREA	1	DJC00001-
5	203-00-31120	PLATE, INSTRUCTION,HYDRAULIC TANK	2	DJC00001-
6	09653-A0481	PLATE, SAFETY	1	DJC00001-
7	09653-A0481	PLATE, SAFETY,RADIATOR CAP	1	DJC00001-
8	09805-C0881	PLATE, SAFETY,DO NOT STEP ON COVER	1	DJC00001-
9	09669-0000E	PLATE, CAUTION,FUEL TANK	1	DJC00001-
10	09650-90104	PLATE, INSTRUCTION,WATER LEVEL CHECK	1	DJC00001-
11	09667-A0481	PLATE, SAFETY,ENGINE STARTING	1	DJC00001-
12	09963-A1640	TAG	1	DJC00001-
13	09685-00001	PLATE, OPERATING,SAFETY LOCK LEVER	1	DJC00001-
14	21U-98-31160	PLATE, MARK,CENTER OF GRAVITY	2	DJC00001-
15	09808-A0881	PLATE, SAFETY,BATTERY CABLE	1	DJC00001-
16	09134-A0881	PLATE, SAFETY,KEEP OUT OF WORKING AREA	2	DJC00001-
17	201-00-71960	PLATE,ENGINE OIL INLET	1	DJC00001-
18	22L-98-18270	PLATE,URGENT ESCAPE	1	DJC00001-
19	20Y-00-D1750	PLATE,COOLANT TEMPERATURE	1	DJC00001-
20	20Y-00-D1760	PLATE	1	DJC00001-
21	20Y-00-D1770	PLATE,ENGINE OIL TEMPERATURE	1	DJC00001-
22	20Y-00-D1780	PLATE,FUEL TEMPERATURE	1	DJC00001-
23	20Y-00-D1851	PLATE,HYDRAULIC TANK	1	DJC00347-
	20Y-00-D1850	PLATE,HYDRAULIC TANK	1	DJC00001-DJC00346
24	201-98-81090	PLATE, CAUTION,COVER COUTION	1	DJC00001-
25	201-98-81041	PLATE, MARK,HYDRAULIC TANK	1	DJC00001-
26	201-98-81110	PLATE, MARK	1	DJC00001-
27	09845-00480	PLATE, SAFETY,CAUTION-BLAST SITE	1	DJC00001-
28	201-98-81130	PLATE	1	DJC00001-
29	201-00-71840	PLATE	1	DJC00001-
30	14X-98-35181	PLATE,REFLECTOR	2	DJC00001-
31	20Y-00-D1940	PLATE, CAUTION	1	DJC00001-
32	11Y-98-31130	PLATE,ECOT 3	1	DJC00001-
33	201-98-89210	PLATE,PC70	1	DJC00001-
34	201-98-89230	PLATE,STRENGTHENED TYPE	1	DJC00001-
35	201-98-81150	CHECK LIST,FIRE PREVENTION	1	DJC00139-

FIG.U0100-02A3 MARKS AND PLATES (2/2) (BLADE SPEC.)

(STRENGTH TYPE)

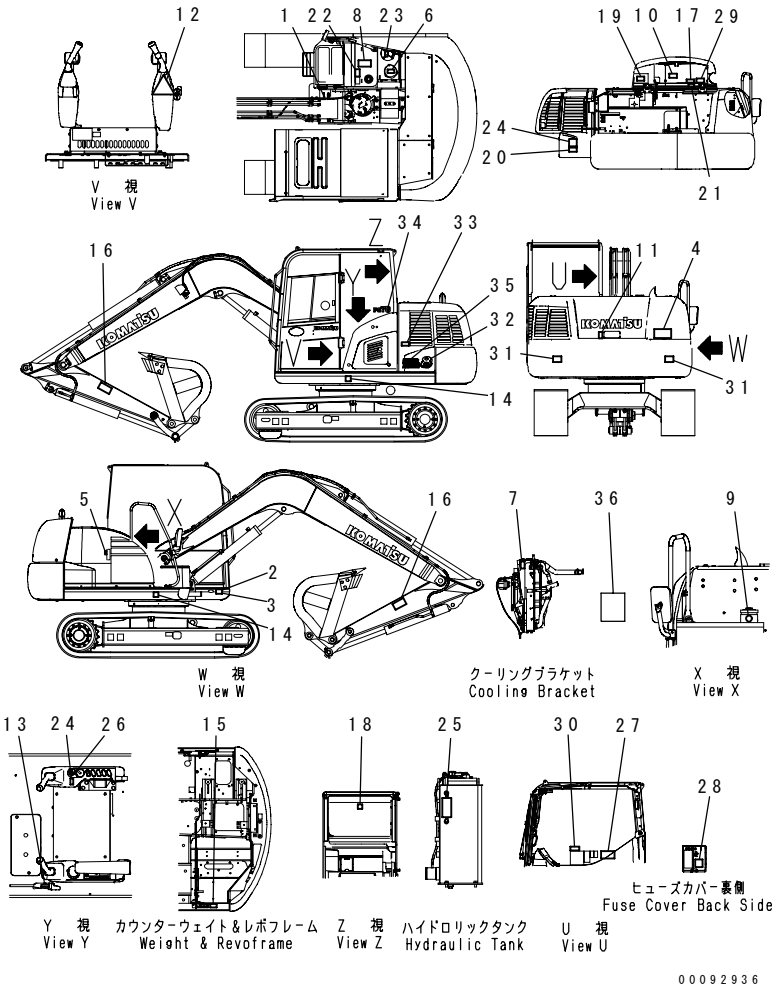

INDEX	PART NO.	DESCRIPTION	Q'TY	SERIAL NO.
1	09690-B0063	PLATE, MARK	1	DJC00001-
2	22F-98-D8430	PLATE,MACHINE SPEC	1	DJC00001-
3	04418-13060	SCREW	4	DJC00001-
4	09133-A2321	PLATE, SAFETY,KEEP OUT OF TURNING AREA	1	DJC00001-
5	203-00-31120	PLATE, INSTRUCTION,HYDRAULIC TANK	2	DJC00001-
6	09653-A0481	PLATE, SAFETY	1	DJC00001-
7	09653-A0481	PLATE, SAFETY,RADIATOR CAP	1	DJC00001-
8	09805-C0881	PLATE, SAFETY,DO NOT STEP ON COVER	1	DJC00001-
9	09669-0000E	PLATE, CAUTION,FUEL TANK	1	DJC00001-
10	09650-90104	PLATE, INSTRUCTION,WATER LEVEL CHECK	1	DJC00001-
11	09667-A0481	PLATE, SAFETY,ENGINE STARTING	1	DJC00001-
12	09963-A1640	TAG	1	DJC00001-
13	09685-00001	PLATE, OPERATING,SAFETY LOCK LEVER	1	DJC00001-
14	21U-98-31160	PLATE, MARK,CENTER OF GRAVITY	2	DJC00001-
15	09808-A0881	PLATE, SAFETY,BATTERY CABLE	1	DJC00001-
16	09134-A0881	PLATE, SAFETY,KEEP OUT OF WORKING AREA	2	DJC00001-
17	201-00-71960	PLATE,ENGINE OIL INLET	1	DJC00001-
18	22L-98-18270	PLATE,URGENT ESCAPE	1	DJC00001-
19	20Y-00-D1750	PLATE,COOLANT TEMPERATURE	1	DJC00001-
20	20Y-00-D1760	PLATE	1	DJC00001-
21	20Y-00-D1770	PLATE,ENGINE OIL TEMPERATURE	1	DJC00001-
22	20Y-00-D1780	PLATE,FUEL TEMPERATURE	1	DJC00001-
23	20Y-00-D1851	PLATE,HYDRAULIC TANK	1	DJC00347-
	20Y-00-D1850	PLATE,HYDRAULIC TANK	1	DJC00001-DJC00346
24	201-98-81090	PLATE, CAUTION,COVER COUTION	1	DJC00001-
25	201-98-81041	PLATE, MARK,HYDRAULIC TANK	1	DJC00001-
26	201-98-81110	PLATE, MARK	1	DJC00001-
27	09845-00480	PLATE, SAFETY,CAUTION-BLAST SITE	1	DJC00001-
28	201-98-81130	PLATE	1	DJC00001-
29	201-00-71840	PLATE	1	DJC00001-
30	201-00-61320	PLATE, OPERATING	1	DJC00001-
31	14X-98-35181	PLATE,REFLECTOR	2	DJC00001-
32	20Y-00-D1940	PLATE, CAUTION	1	DJC00001-
33	11Y-98-31130	PLATE,ECOT 3	1	DJC00001-
34	201-98-89210	PLATE,PC70	1	DJC00001-
35	201-98-89230	PLATE,STRENGTHENED TYPE	1	DJC00001-
36	201-98-81150	CHECK LIST,FIRE PREVENTION	1	DJC00139-

ACCESSORY

FIG.V0100-01A0 SPARE PARTS

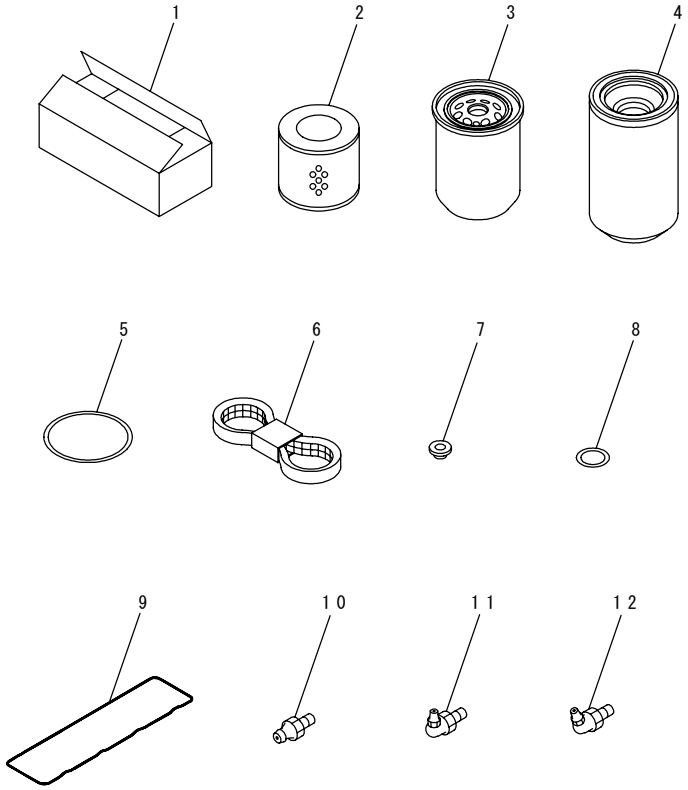

INDEX	PART NO.	DESCRIPTION	Q'TY	SERIAL NO.
1	20Y-00-D1332	BOX	1	DJC00001-
2	21W-60-41121	ELEMENT	1	DJC00001-
3	600-211-2110	CARTRIDGE	1	DJC00001-
	600-319-3870	CARTRIDGE	1	DJC00001-
	600-319-4110	CARTRIDGE AND SEAL	1	DJC00001-
4	☆	.CARTRIDGE	1	DJC00001-
5	600-311-3630	.SEAL	1	DJC00001-
6	6205-61-3500	V-BELT	1	DJC00001-
7	6136-11-8142	PACKING	3	DJC00001-
8	07005-02216	GASKET	1	DJC00001-
9	6204-11-8810	O-RING	1	DJC00001-
10	07020-00000	FITTING,GREASE	4	DJC00001-
11	07020-00900	FITTING,GREASE	4	DJC00001-
12	07020-00675	FITTING,GREASE	4	DJC00001-

FIG.V0300-01A0 TOOL

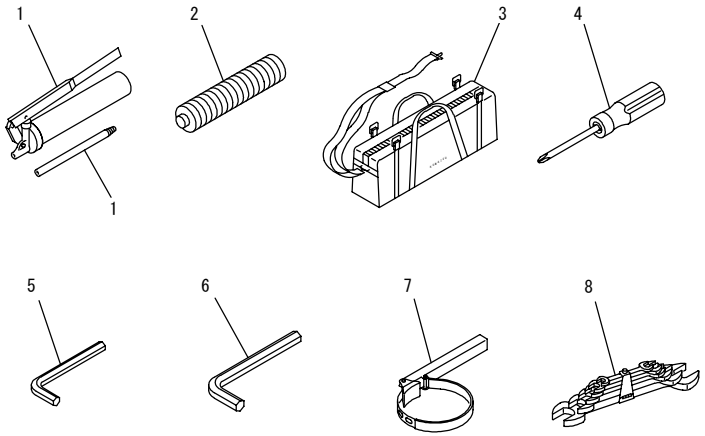

00092349

FIG NO. : V0300-01A0

INDEX	PART NO.	DESCRIPTION	Q'TY	SERIAL NO.
1	07952-70004	GREASE PUMP ASS'Y.	1	DJC00001-
	07950-10450	.PUMP	1	DJC00001-
	07951-41017	.NOZZLE	1	DJC00001-
2	07950-90403	CARTRIDGE,GREASE	1	DJC00001-
3	09056-04613	BAG	1	DJC00001-
4	09033-00190	DRIVER	1	DJC00001-
5	09007-00632	WRENCH, 6	1	DJC00001-
6	09007-00836	WRENCH, 8	1	DJC00001-
7	09019-28036	WRENCH,FILTER	1	DJC00001-
8	09002-00810	WRENCH, 8X10	1	DJC00001-
	09002-01214	WRENCH, 12X14	1	DJC00001-
	09002-01317	WRENCH, 13X17	1	DJC00001-
	09002-01922	WRENCH, 19X22	1	DJC00001-
	09002-02427	WRENCH, 24X27	1	DJC00001-
	09002-03032	WRENCH, 30X32	1	DJC00001-

SERVICE KIT AND COMPONENT PARTS

FIG.Y1062-01A0 RUBBER ANTENNA

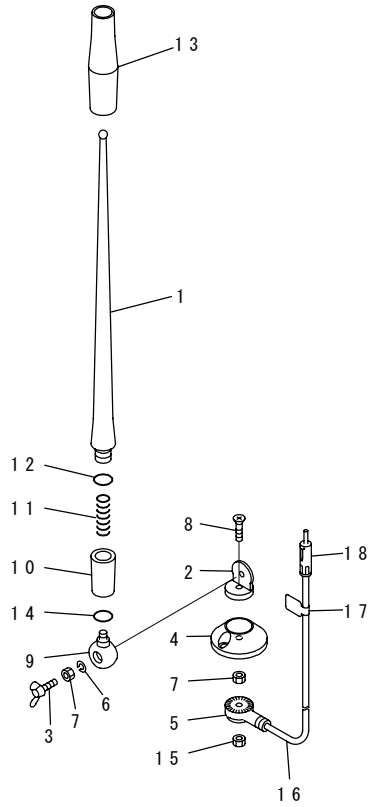

00084650

INDEX	PART NO.	DESCRIPTION	Q'TY	SERIAL NO.
	20Y-06-41990	.RUBBER ANTENNA	1	DJC00001-
1	RFU419B-418-A	.ROD	1	DJC00001-
2	☆	.HOLDER	1	DJC00001-
3	RFU419B-418-D	.BOLT, WING	1	DJC00001-
4	RFU419B-418-E	.BASE	1	DJC00001-
5	☆	.HOLDER	1	DJC00001-
6	RFU419B-418-B	.SPRING WASHER	1	DJC00001-
7	RFU419B-418-C	.NUT	2	DJC00001-
8	☆	.SCREW	1	DJC00001-
9	☆	.HOLDER	1	DJC00001-
10	☆	.HOLDER ASS'Y	1	DJC00001-
11	☆	.SPRING	1	DJC00001-
12	☆	.O-RING	1	DJC00001-
13	☆	.TUBE	1	DJC00001-
14	☆	.O-RING	1	DJC00001-
15	REU419B-418-C	.NUT	1	DJC00001-
16	RFU419B-418-F	.CABLE	1	DJC00001-
17	☆	.PLATE	1	DJC00001-
18	☆	.PLUG	1	DJC00001-

FIG.Y1600-01A0 MAIN PUMP (1/4) (WITHOUT BLADE)

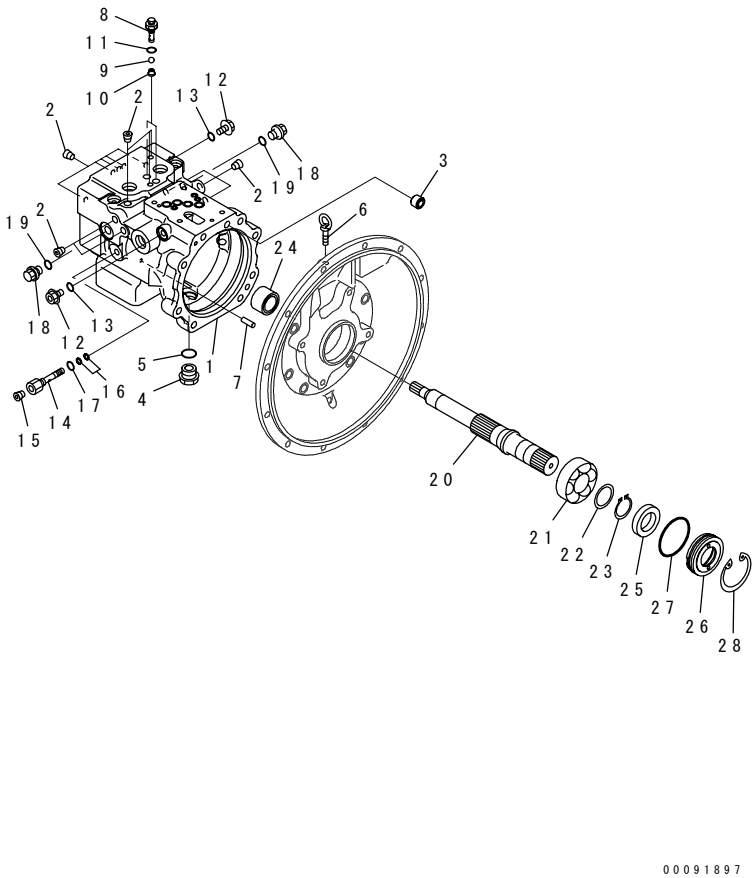

INDEX	PART NO.	DESCRIPTION	Q'TY	SERIAL NO.
	708-3T-00161	PUMP ASS'Y.	1	DJC00001-
		THIS ASSEMBLY CONSISTS OF ALL PARTS SHOWN IN FIGS.Y1600-01A0 TO Y1600-04A0.		
	708-3T-01161	.PUMP SUB ASS'Y.	1	DJC00001-
	708-3T-04250	..CASE ASS'Y.	1	DJC00001-
1	☆	...CASE,PUMP.	1	DJC00001-
2	☆	...PLUG.	13	DJC00001-
3	708-1L-29340	..ORIFICE.	1	DJC00001-
4	07044-12412	..PLUG.	1	DJC00001-
5	07002-62434	..O-RING.	1	DJC00001-
6	04530-11018	..BOLT,EYE.	1	DJC00001-
7	(★720-68-19610)	..PIN.	1	DJC00001-
8	(★708-3T-14151)	..PLUG.	2	DJC00001-
9	(★708-3T-14170)	..BALL.	2	DJC00001-
10	(★708-3T-14160)	..SEAT.	2	DJC00001-
11	07002-61023	..O-RING.	2	DJC00001-
12	708-8E-16150	..PLUG.	2	DJC00001-
13	07002-61023	..O-RING.	2	DJC00001-
	708-3T-04190	..PLUG SUB ASS'Y.	1	DJC00001-
14	☆	...PLUG.	1	DJC00001-
15	☆	...PLUG.	1	DJC00001-
16	☆	...SEAL.	2	DJC00001-
17	07002-11223	...O-RING.	1	DJC00001-
18	708-1L-25210	..PLUG.	2	DJC00001-
19	07002-11423	..O-RING.	2	DJC00001-
20	(★708-3T-12250)	..SHAFT.	1	DJC00001-
21	(★708-1W-22140)	..BEARING.	1	DJC00001-
22	(★708-23-05011)	..WASHER KIT.	1	DJC00001-
	☆	...WASHER, 2.60MM.	1	DJC00001-
	☆	...WASHER, 2.70MM.	1	DJC00001-
	☆	...WASHER, 2.80MM.	1	DJC00001-
	☆	...WASHER, 2.50MM.	1	DJC00001-
23	(★708-23-12840)	..RING,SNAP.	1	DJC00001-
24	(★708-1W-22320)	..BEARING.	1	DJC00001-
25	708-8D-12221	..SEAL,OIL.	1	DJC00001-
26	708-3T-12210	..CASE.	1	DJC00001-
27	07000-F2065	..O-RING.	1	DJC00001-
28	04065-07225	..RING,SNAP.	1	DJC00001-

FIG.Y1600-02A0 MAIN PUMP (2/4) (WITHOUT BLADE)

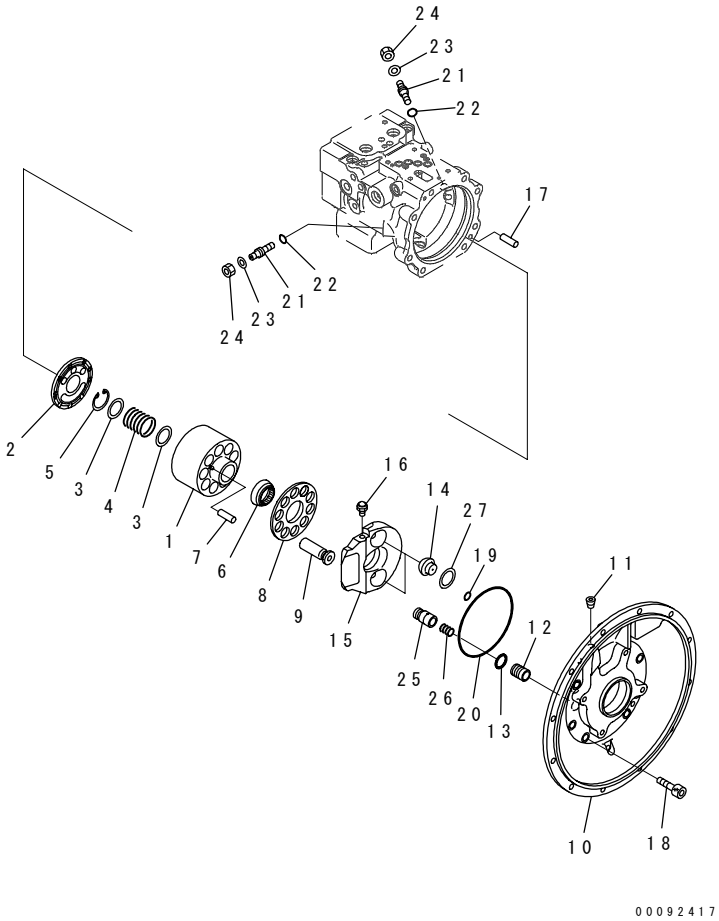

INDEX	PART NO.	DESCRIPTION	Q'TY	SERIAL NO.
	(708-3T-00161)	PUMP ASS'Y.	1	DJC00001-
		THIS ASSEMBLY CONSISTS OF ALL PARTS SHOWN IN FIGS.Y1600-01A0 TO Y1600-04A0.		
	(708-3T-01161)	.PUMP SUB ASS'Y.	1	DJC00001-
	708-3T-04210	..CYLINDER BLOCK ASS'Y.	1	DJC00001-
1	☆	...BLOCK,CYLINDER.	1	DJC00001-
2	☆	...PLATE,VALVE.	1	DJC00001-
3	(★708-1W-23130)	..SEAT.	2	DJC00001-
4	(★708-3T-13150)	..SPRING.	1	DJC00001-
5	(★04065-04218)	..RING,SNAP.	1	DJC00001-
6	(★708-3T-13351)	..GUIDE,RETAINER.	1	DJC00001-
7	(★708-3T-13360)	..PIN.	3	DJC00001-
8	(★708-3T-13340)	..RETAINER,SHOE.	1	DJC00001-
9	(★708-3T-13312)	..PISTON SUB ASS'Y.	10	DJC00001-
	708-3T-04270	..FLANGE ASS'Y.	1	DJC00001-
10	☆	...FLANGE.	1	DJC00001-
11	☆	...PLUG.	2	DJC00001-
12	☆	...SLEEVE.	1	DJC00001-
13	☆	...RING.	1	DJC00001-
14	(★708-1U-13461)	..BALL.	2	DJC00001-
15	(★708-3T-13412)	..CAM,ROCKER.	1	DJC00001-
16	(★708-3T-13451)	..STUD,BALL.	1	DJC00001-
17	(★04020-01024)	..PIN,DOWEL.	1	DJC00001-
18	01252-61235	..BOLT.	8	DJC00001-
19	07000-B2012	..O-RING.	1	DJC00001-
20	708-7T-51210	..O-RING.	1	DJC00001-
21	708-3T-14130	..PLUG.	2	DJC00001-
22	07000-12010	..O-RING.	2	DJC00001-
23	01643-51232	..WASHER.	2	DJC00001-
24	01582-11210	..NUT.	2	DJC00001-
25	(★708-3T-14190)	..PISTON.	2	DJC00001-
26	(★708-3T-14120)	..SPRING.	2	DJC00001-
27	☆	...PLATE.	1	DJC00001-

FIG.Y1600-03A0 MAIN PUMP (3/4) (WITHOUT BLADE)

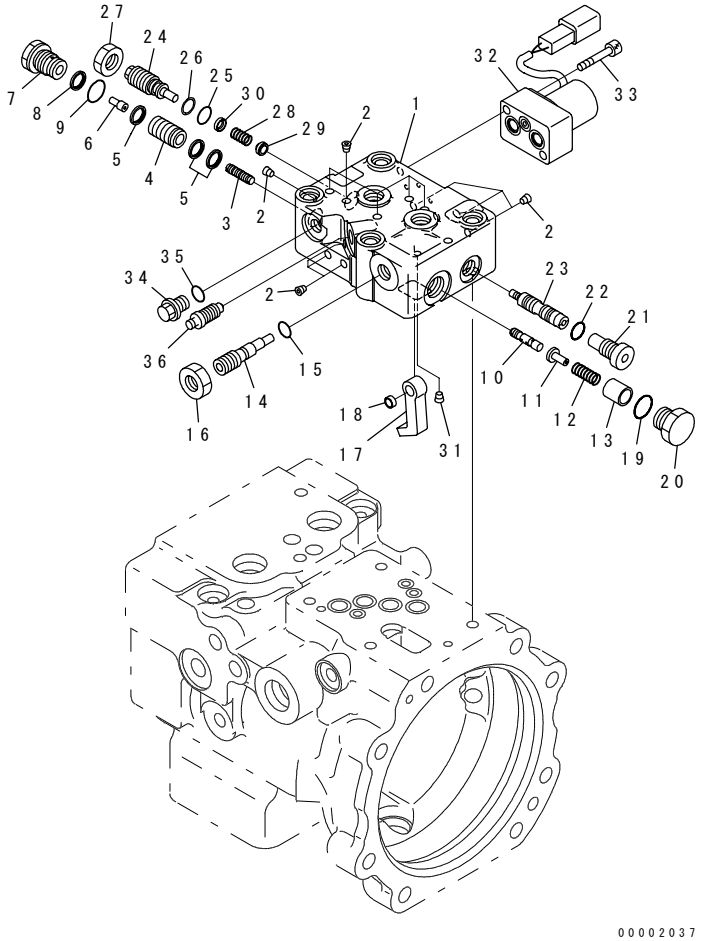

INDEX	PART NO.	DESCRIPTION	Q'TY	SERIAL NO.
	(708-3T-00161)	PUMP ASS'Y.	1	DJC00001-
		THIS ASSEMBLY CONSISTS OF ALL PARTS SHOWN IN FIGS.Y1600-01A0 TO Y1600-04A0.		
	(★708-3T-03281)	.VALVE ASS'Y.	1	DJC00001-
	708-3T-04360	..BODY ASS'Y.	1	DJC00001-
1	☆	...BODY.	1	DJC00001-
2	☆	...PLUG.	16	DJC00001-
	(★708-3T-04320)	..PISTON SUB ASS'Y.	1	DJC00001-
3	☆	...PISTON.	1	DJC00001-
4	☆	...SLEEVE.	1	DJC00001-
5	(★708-1S-15390)	...SEAL.	3	DJC00001-
	(★708-3T-04340)	..PISTON SUB ASS'Y.	1	DJC00001-
6	☆	...PISTON.	1	DJC00001-
7	☆	...PLUG.	1	DJC00001-
8	(★708-1S-15390)	...SEAL.	1	DJC00001-
9	(★07002-11623)	...O-RING.	1	DJC00001-
10	(★708-3T-15280)	..SPOOL.	1	DJC00001-
11	(★708-3T-15310)	..SEAT.	1	DJC00001-
12	(★708-3T-15420)	..SPRING.	1	DJC00001-
13	(★708-3T-15290)	..RETAINER.	1	DJC00001-
14	(★708-3T-15250)	..PLUG.	1	DJC00001-
15	(★07000-11006)	..O-RING.	1	DJC00001-
16	(★01583-11207)	..NUT.	1	DJC00001-
17	(★708-3T-15260)	..LEVER.	1	DJC00001-
18	(★708-1S-15280)	..SPACER.	1	DJC00001-
19	(★07002-11623)	..O-RING.	1	DJC00001-
20	(★708-1S-15290)	..PLUG.	1	DJC00001-
21	(★708-3T-15560)	..PLUG.	1	DJC00001-
22	(★07002-11223)	..O-RING.	1	DJC00001-
23	(★708-3T-03711)	..SPOOL SUB ASS'Y.	1	DJC00001-
24	(★708-3T-15521)	..PLUG.	1	DJC00001-
25	(★07000-11008)	..O-RING.	1	DJC00001-
26	(★07001-01008)	..RING.	1	DJC00001-
27	(★01583-51408)	..NUT.	1	DJC00001-
28	(★708-3T-15530)	..SPRING.	1	DJC00001-
29	(★708-1S-15350)	..SEAT.	1	DJC00001-
30	(★708-1S-15360)	..SEAT.	1	DJC00001-
31	(★708-3T-15811)	..ORIFICE.	1	DJC00001-
32	702-21-60700	..PILOT VALVE.	1	DJC00001-
33	01252-60635	..BOLT.	2	DJC00001-
34	708-8E-16150	..PLUG.	1	DJC00001-
35	07002-11023	..O-RING.	1	DJC00001-

FIG.Y1600-03A0 MAIN PUMP (3/4) (WITHOUT BLADE)

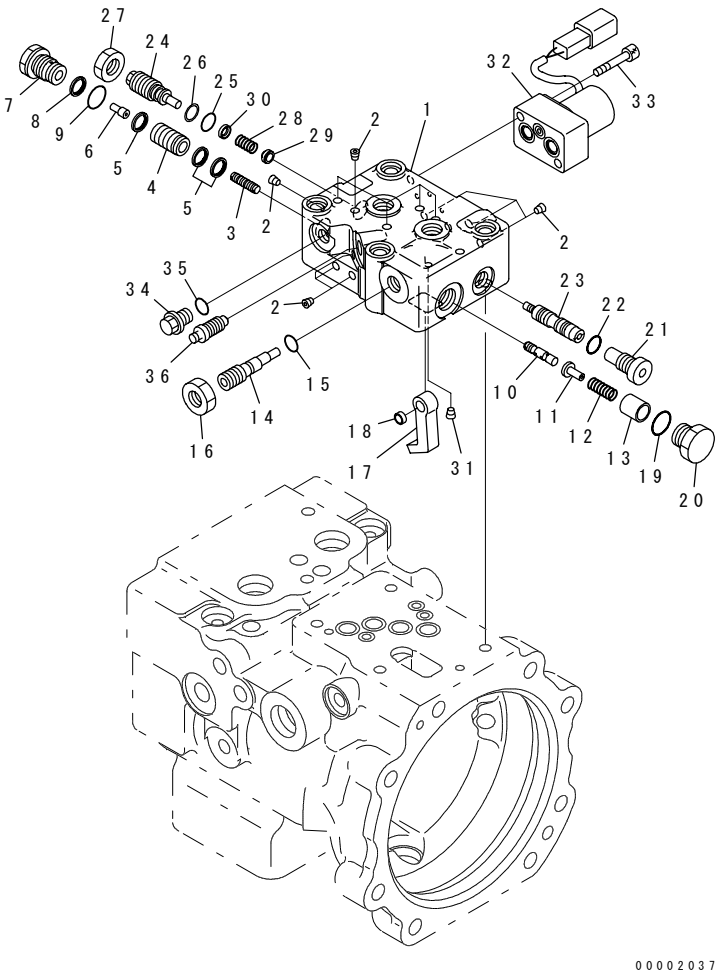

INDEX	PART NO.	DESCRIPTION	Q'TY	SERIAL NO.
36	20B-27-11210	..BLEEDER.....	1	DJC00001-

FIG.Y1600-04A0 MAIN PUMP (4/4) (WITHOUT BLADE)

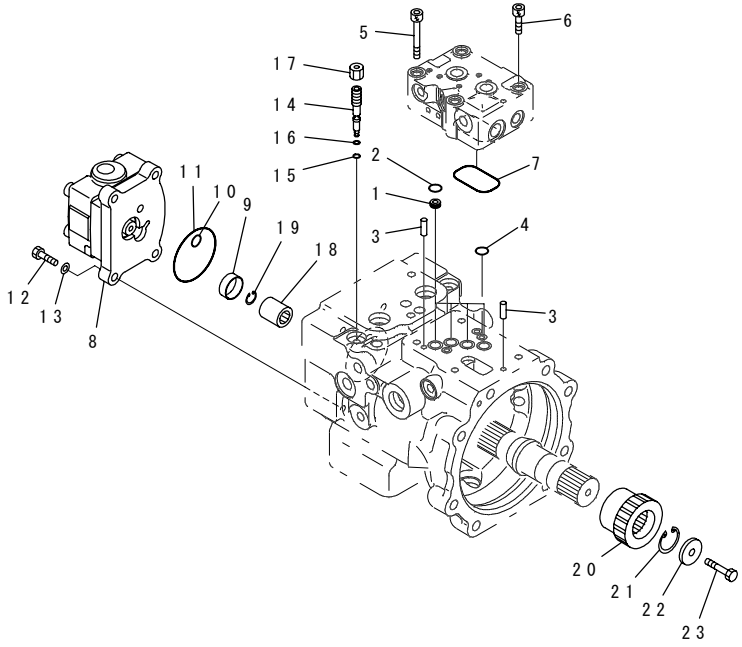

INDEX	PART NO.	DESCRIPTION	Q'TY	SERIAL NO.
	(708-3T-00161)	PUMP ASS'Y.	1	DJC00001-
		THIS ASSEMBLY CONSISTS OF ALL PARTS SHOWN IN FIGS.Y1600-01A0 TO Y1600-04A0.		
1	708-2L-25480	.FILTER.	4	DJC00001-
2	708-2L-25490	.O-RING.	4	DJC00001-
3	04020-00616	.PIN,DOWEL.	2	DJC00001-
4	07000-11008	.O-RING.	3	DJC00001-
5	01252-60855	.BOLT.	3	DJC00001-
6	01252-60840	.BOLT.	1	DJC00001-
7	07000-13042	.O-RING.	1	DJC00001-
8	708-3T-04520	.PUMP ASS'Y.	1	DJC00001-
9	708-1T-19230	.RING.	1	DJC00001-
10	07000-12014	.O-RING.	1	DJC00001-
11	07000-12060	.O-RING.	1	DJC00001-
12	01010-80830	.BOLT.	4	DJC00001-
13	01643-30823	.WASHER.	4	DJC00001-
	708-3T-04160	.PLUG ASS'Y.	2	DJC00001-
14	708-3S-15810	..PLUG.	1	DJC00001-
15	07000-11003	..O-RING.	1	DJC00001-
16	07001-01003	..RING,BACK-UP.	1	DJC00001-
17	708-3S-15820	.NUT.	2	DJC00001-
18	708-1T-19210	.COUPLING.	1	DJC00001-
19	700-30-63140	.RING,SNAP.	1	DJC00001-
20	708-3T-12170	.COUPLING.	1	DJC00001-
21	04065-03212	.RING,SNAP.	1	DJC00001-
22	708-3T-12180	.RETAINER.	1	DJC00001-
23	01010-80825	.BOLT.	1	DJC00001-

FIG.Y1600-11A0 MAIN PUMP (1/4) (WITH BLADE)

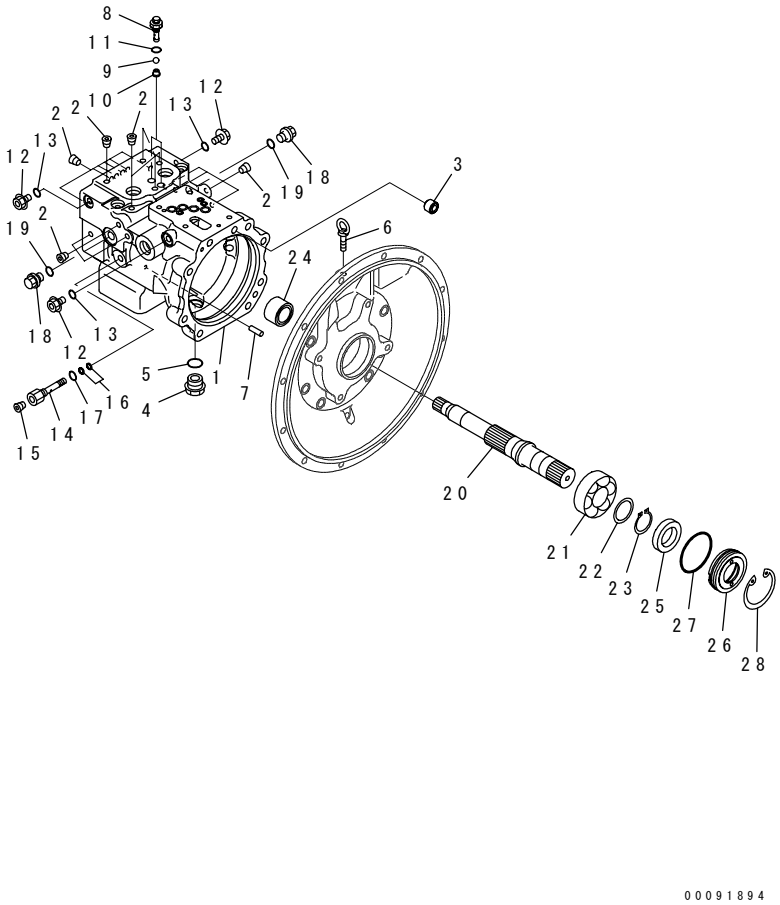

00091894

INDEX	PART NO.	DESCRIPTION	Q'TY	SERIAL NO.
	708-3T-00151	PUMP ASS'Y.	1	DJC00001-
		THIS ASSEMBLY CONSISTS OF ALL PARTS SHOWN IN FIGS.Y1600-11A0 TO Y1600-14A0.		
	708-3T-01151	.PUMP SUB ASS'Y.	1	DJC00001-
	708-3T-04240	..CASE ASS'Y.	1	DJC00001-
1	☆	...CASE,PUMP.	1	DJC00001-
2	☆	...PLUG.	19	DJC00001-
3	☆	..ORIFICE.	1	DJC00001-
4	07044-12412	..PLUG.	1	DJC00001-
5	07002-62434	..O-RING.	1	DJC00001-
6	04530-11018	..BOLT,EYE.	1	DJC00001-
7	(★720-68-19610)	..PIN.	1	DJC00001-
8	(★708-3T-14151)	..PLUG.	2	DJC00001-
9	(★708-3T-14170)	..BALL.	2	DJC00001-
10	(★708-3T-14160)	..SEAT.	2	DJC00001-
11	07002-61023	..O-RING.	2	DJC00001-
12	708-8E-16150	..PLUG.	3	DJC00001-
13	07002-61023	..O-RING.	3	DJC00001-
	708-3T-04190	..PLUG SUB ASS'Y.	1	DJC00001-
14	☆	...PLUG.	1	DJC00001-
15	☆	...PLUG.	1	DJC00001-
16	☆	...SEAL.	2	DJC00001-
17	07002-11223	...O-RING.	1	DJC00001-
18	708-1L-25210	..PLUG.	2	DJC00001-
19	07002-11423	..O-RING.	2	DJC00001-
20	(★708-3T-12240)	..SHAFT.	1	DJC00001-
21	(★708-1W-22140)	..BEARING.	1	DJC00001-
22	(★708-23-05011)	..WASHER KIT.	1	DJC00001-
	☆	...WASHER, 2.60MM.	1	DJC00001-
	☆	...WASHER, 2.70MM.	1	DJC00001-
	☆	...WASHER, 2.80MM.	1	DJC00001-
	☆	...WASHER, 2.50MM.	1	DJC00001-
23	(★708-23-12840)	..RING,SNAP.	1	DJC00001-
24	(★708-1W-22320)	..BEARING.	1	DJC00001-
25	708-8D-12221	..SEAL,OIL.	1	DJC00001-
26	708-3T-12210	..CASE.	1	DJC00001-
27	07000-F2065	..O-RING.	1	DJC00001-
28	04065-07225	..RING,SNAP.	1	DJC00001-

FIG.Y1600-12A0 MAIN PUMP (2/4) (WITH BLADE)

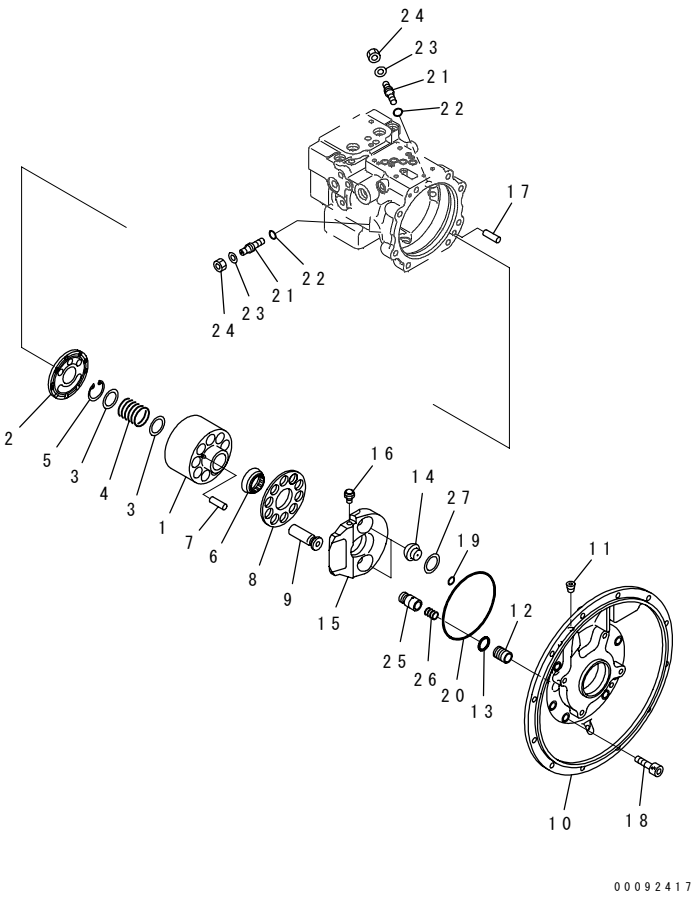

INDEX	PART NO.	DESCRIPTION	Q'TY	SERIAL NO.
	(708-3T-00151)	PUMP ASS'Y.	1	DJC00001-
		THIS ASSEMBLY CONSISTS OF ALL PARTS SHOWN IN FIGS.Y1600-11A0 TO Y1600-14A0.		
	(708-3T-01151)	.PUMP SUB ASS'Y.	1	DJC00001-
	708-3T-04210	..CYLINDER BLOCK ASS'Y.	1	DJC00001-
1	☆	...BLOCK,CYLINDER.	1	DJC00001-
2	☆	...PLATE,VALVE.	1	DJC00001-
3	(★708-1W-23130)	..SEAT.	2	DJC00001-
4	(★708-3T-13150)	..SPRING.	1	DJC00001-
5	(★04065-04218)	..RING,SNAP.	1	DJC00001-
6	(★708-3T-13351)	..GUIDE,RETAINER.	1	DJC00001-
7	(★708-3T-13360)	..PIN.	3	DJC00001-
8	(★708-3T-13340)	..RETAINER,SHOE.	1	DJC00001-
9	(★708-3T-13312)	..PISTON SUB ASS'Y.	10	DJC00001-
	708-3T-04270	..FLANGE ASS'Y.	1	DJC00001-
10	☆	...FLANGE.	1	DJC00001-
11	☆	...PLUG.	2	DJC00001-
12	☆	...SLEEVE.	1	DJC00001-
13	☆	...RING.	1	DJC00001-
14	(★708-1U-13461)	..BALL.	2	DJC00001-
15	(★708-3T-13412)	..CAM,ROCKER.	1	DJC00001-
16	(★708-3T-13451)	..STUD,BALL.	1	DJC00001-
17	(★04020-01024)	..PIN,DOWEL.	1	DJC00001-
18	01252-61235	..BOLT.	8	DJC00001-
19	07000-B2012	..O-RING.	1	DJC00001-
20	708-7T-51210	..O-RING.	1	DJC00001-
21	708-3T-14130	..PLUG.	2	DJC00001-
22	07000-12010	..O-RING.	2	DJC00001-
23	01643-51232	..WASHER.	2	DJC00001-
24	01582-11210	..NUT.	2	DJC00001-
25	(★708-3T-14190)	..PISTON.	2	DJC00001-
26	(★708-3T-14120)	..SPRING.	2	DJC00001-
27	☆	...PLATE.	1	DJC00001-

FIG.Y1600-13A0 MAIN PUMP (3/4) (WITH BLADE)

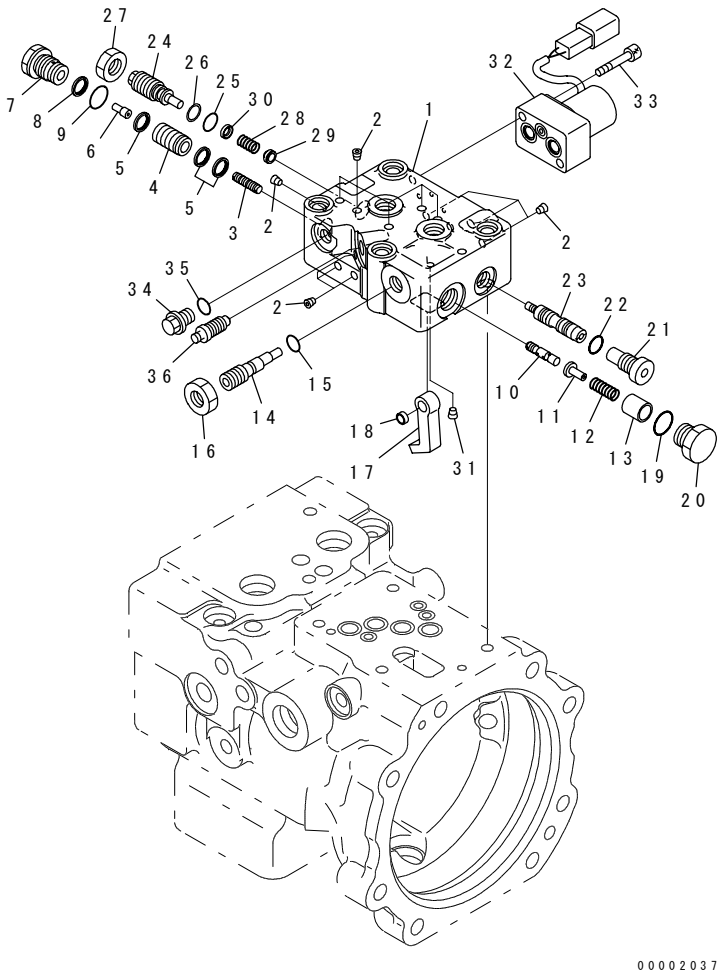

INDEX	PART NO.	DESCRIPTION	Q'TY	SERIAL NO.
	(708-3T-00151)	PUMP ASS'Y.	1	DJC00001-
		THIS ASSEMBLY CONSISTS OF ALL PARTS SHOWN IN FIGS.Y1600-11A0 TO Y1600-14A0.		
	(★708-3T-03271)	.VALVE ASS'Y,SERVO.	1	DJC00001-
	708-3T-04360	..BODY ASS'Y.	1	DJC00001-
1	☆	...BODY.	1	DJC00001-
2	☆	...PLUG.	16	DJC00001-
	(★708-3T-04320)	..PISTON SUB ASS'Y.	1	DJC00001-
3	☆	...PISTON.	1	DJC00001-
4	☆	...SLEEVE.	1	DJC00001-
5	(★708-1S-15390)	...SEAL.	3	DJC00001-
	(★708-3T-04340)	..PISTON SUB ASS'Y.	1	DJC00001-
6	☆	...PISTON.	1	DJC00001-
7	☆	...PLUG.	1	DJC00001-
8	(★708-1S-15390)	...SEAL.	1	DJC00001-
9	(★07002-11623)	...O-RING.	1	DJC00001-
10	(★708-3T-15280)	..SPOOL.	1	DJC00001-
11	(★708-3T-15310)	..SEAT.	1	DJC00001-
12	(★708-3T-15410)	..SPRING.	1	DJC00001-
13	(★708-3T-15290)	..RETAINER.	1	DJC00001-
14	(★708-3T-15250)	..PLUG.	1	DJC00001-
15	(★07000-11006)	..O-RING.	1	DJC00001-
16	(★01583-11207)	..NUT.	1	DJC00001-
17	(★708-3T-15260)	..LEVER.	1	DJC00001-
18	(★708-1S-15280)	..SPACER.	1	DJC00001-
19	(★07002-11623)	..O-RING.	1	DJC00001-
20	(★708-1S-15290)	..PLUG.	1	DJC00001-
21	(★708-3T-15560)	..PLUG.	1	DJC00001-
22	(★07002-11223)	..O-RING.	1	DJC00001-
23	(★708-3T-03711)	..SPOOL SUB ASS'Y.	1	DJC00001-
24	(★708-3T-15521)	..PLUG.	1	DJC00001-
25	(★07000-11008)	..O-RING.	1	DJC00001-
26	(★07001-01008)	..RING.	1	DJC00001-
27	(★01583-51408)	..NUT.	1	DJC00001-
28	(★708-3T-15530)	..SPRING.	1	DJC00001-
29	(★708-1S-15350)	..SEAT.	1	DJC00001-
30	(★708-1S-15360)	..SEAT.	1	DJC00001-
31	(★708-3T-15811)	..ORIFICE.	1	DJC00001-
32	702-21-60700	..PILOT VALVE.	1	DJC00001-
33	01252-60635	..BOLT.	2	DJC00001-
34	708-8E-16150	..PLUG.	1	DJC00001-
35	07002-11023	..O-RING.	1	DJC00001-

FIG NO. : Y1600-13A0

INDEX	PART NO.	DESCRIPTION	Q'TY	SERIAL NO.
36	20B-27-11210	..BLEEDER.....	1	DJC00001-

PC70-8

FIG.Y1600-14A0 MAIN PUMP (4/4) (WITH BLADE)

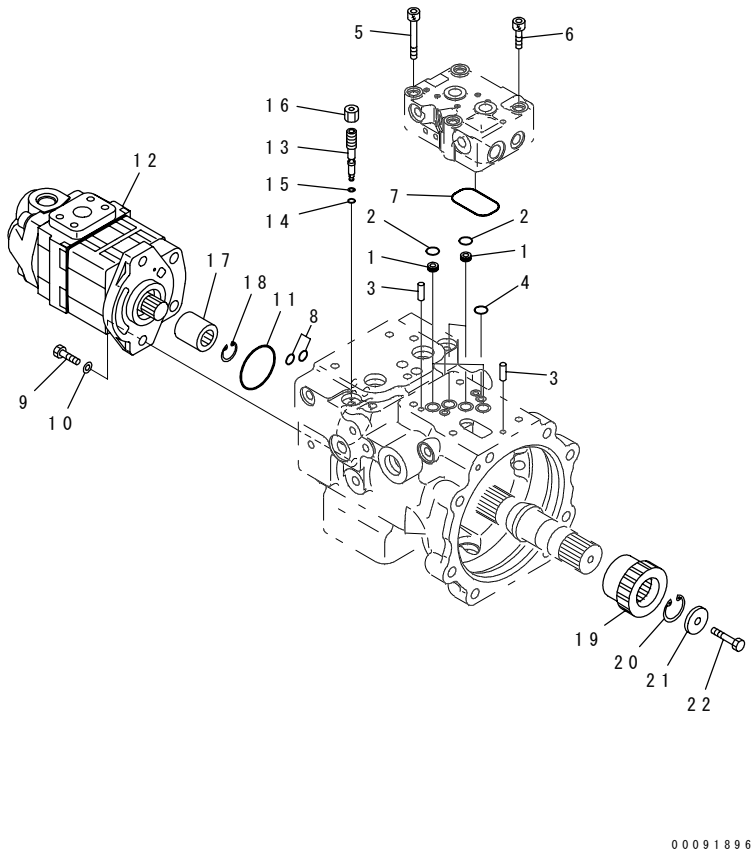

INDEX	PART NO.	DESCRIPTION	Q'TY	SERIAL NO.
	(708-3T-00151)	PUMP ASS'Y.	1	DJC00001-
		THIS ASSEMBLY CONSISTS OF ALL PARTS SHOWN IN FIGS.Y1600-11A0 TO Y1600-14A0.		
1	708-2L-25480	.FILTER.	4	DJC00001-
2	708-2L-25490	.O-RING.	4	DJC00001-
3	04020-00616	.PIN,DOWEL.	2	DJC00001-
4	07000-11008	.O-RING.	3	DJC00001-
5	01252-60855	.BOLT.	3	DJC00001-
6	01252-60840	.BOLT.	1	DJC00001-
7	07000-13042	.O-RING.	1	DJC00001-
8	07000-11008	.O-RING.	2	DJC00001-
9	07372-21030	.BOLT.	2	DJC00001-
10	01643-31032	.WASHER.	2	DJC00001-
11	07000-12050	.O-RING.	1	DJC00001-
12	708-3T-04620	.PUMP ASS'Y.	1	DJC00001-
	708-3T-04160	.PLUG ASS'Y.	2	DJC00001-
13	708-3S-15810	..PLUG.	1	DJC00001-
14	07000-11003	..O-RING.	1	DJC00001-
15	07001-01003	..RING,BACK-UP.	1	DJC00001-
16	708-3S-15820	.NUT.	2	DJC00001-
17	708-1W-28150	.COUPLING.	1	DJC00001-
18	04065-02012	.RING,SNAP.	1	DJC00001-
19	708-3T-12170	.COUPLING.	1	DJC00001-
20	04065-03212	.RING,SNAP.	1	DJC00001-
21	708-3T-12180	.RETAINER.	1	DJC00001-
22	01010-80825	.BOLT.	1	DJC00001-

FIG NO. : Y1620-01A0

FIG.Y1620-01A0 BOOM CYLINDER (INNER PARTS)

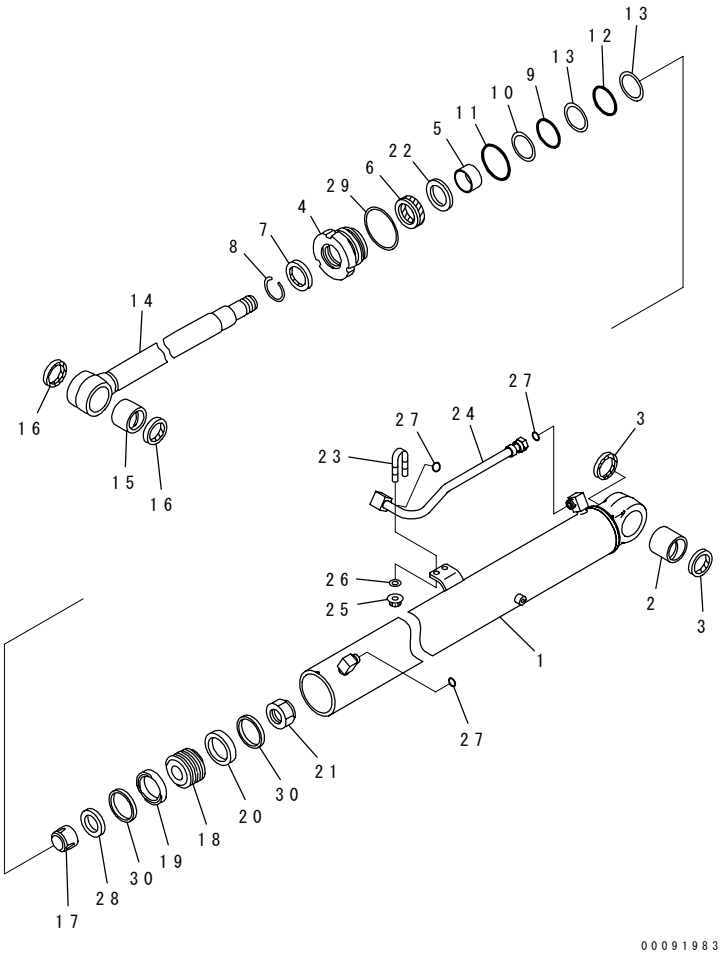

INDEX	PART NO.	DESCRIPTION	Q'TY	SERIAL NO.
G1	(⊙707-00-XT261)	CYLINDER GROUP,BOOM.	1	DJC00001-
	(⊙707-00-XJ881)	CYLINDER GROUP.	1	DJC00001-
		==========		
	707-00-0J881	CYLINDER ASS'Y,BOOM.	1	DJC00001-
1	707-11-11G00	.CYLINDER,BOOM.	1	DJC00001-
2	707-76-65290	.BUSHING.	1	DJC00001-
3	07145-00065	.SEAL,DUST. (KIT)	2	DJC00001-
4	707-29-11971	.HEAD,CYLINDER.	1	DJC00001-
5	707-52-90401	.BUSHING.	1	DJC00001-
6	707-51-65860	.PACKING,ROD. (KIT)	1	DJC00001-
7	707-56-65740	.SEAL,DUST. (KIT)	1	DJC00001-
8	07179-12079	.RING,SNAP.	1	DJC00001-
9	07000-B2110	.O-RING. (KIT)	1	DJC00001-
10	707-35-91610	.RING,BACK-UP. (KIT)	1	DJC00001-
11	07000-B2115	.O-RING. (KIT)	1	DJC00001-
12	07000-B2110	.O-RING. (KIT)	1	DJC00001-
13	707-35-91610	.RING,BACK-UP. (KIT)	2	DJC00001-
14	721-58-65140	.ROD,PISTON.	1	DJC00001-
15	07143-10606	.BUSHING.	1	DJC00001-
16	07145-00060	.SEAL,DUST. (KIT)	2	DJC00001-
17	707-71-70940	.PLUNGER.	1	DJC00001-
18	707-36-11A12	.PISTON.	1	DJC00001-
19	707-44-11250	.RING,PISTON. (KIT)	1	DJC00001-
20	707-39-11510	.RING,WEAR. (KIT)	1	DJC00001-
21	707-67-48020	.NUT.	1	DJC00001-
22	707-51-65650	.RING,BUFFER. (KIT)	1	DJC00001-
23	07283-32236	CLIP.	1	DJC00001-
24	707-86-55950	TUBE.	1	DJC00001-
25	01597-01009	NUT.	2	DJC00001-
26	01643-31032	WASHER.	2	DJC00001-
27	02896-61015	O-RING. (KIT)	3	DJC00001-
28	707-40-11420	RETAINER.	1	DJC00001-
29	707-45-11920	WASHER,LOCK.	1	DJC00001-
30	707-44-11930	RING.	2	DJC00001-
		==========		
		SERVICE KIT.		
K	707-99-36710	SERVICE KIT,BOOM CYLINDER.	1	DJC00001-

FIG.Y1620-11A0 ARM CYLINDER (INNER PARTS)

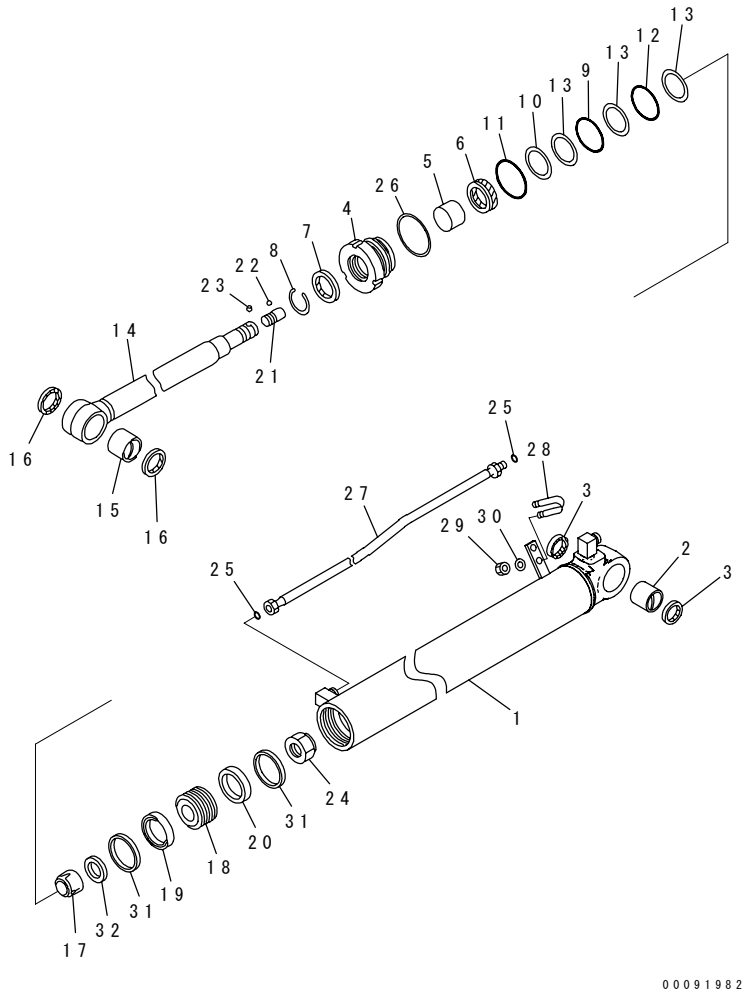

INDEX	PART NO.	DESCRIPTION	Q'TY	SERIAL NO.
G1	(⊙707-00-XT271)	CYLINDER GROUP,(NATURAL YELLOW).....	1	DJC00001-
	(⊙707-00-XJ891)	CYLINDER GROUP,(VIOLET BLUE).....	1	DJC00001-
		==========.....		
	707-00-0J891	CYLINDER ASS'Y,ARM.....	1	DJC00001-
1	707-11-10J10	.CYLINDER,ARM.....	1	DJC00001-
2	07143-10506	.BUSHING.....	1	DJC00001-
3	07145-00055	.SEAL,DUST.....(KIT).....	2	DJC00001-
4	707-29-10871	.HEAD,CYLINDER.....	1	DJC00001-
5	707-52-90351	.BUSHING.....	1	DJC00001-
6	707-51-60860	.PACKING,ROD.....(KIT).....	1	DJC00001-
7	707-56-60740	.SEAL,DUST.....(KIT).....	1	DJC00001-
8	07179-12074	.RING,SNAP.....	1	DJC00001-
9	07000-B2095	.O-RING.....(KIT).....	1	DJC00001-
10	707-51-60650	.RING,BACK-UP.....(KIT).....	1	DJC00001-
11	07000-B2100	.O-RING.....(KIT).....	1	DJC00001-
12	07000-B2095	.O-RING.....(KIT).....	1	DJC00001-
13	07146-02096	.RING,BACK-UP.....(KIT).....	3	DJC00001-
14	721-58-60810	.ROD,PISTON.....	1	DJC00001-
15	07143-10606	.BUSHING.....	1	DJC00001-
16	07145-00060	.SEAL,DUST.....(KIT).....	2	DJC00001-
17	707-71-70950	.PLUNGER.....	1	DJC00001-
18	707-36-10832	.PISTON.....	1	DJC00001-
19	707-44-10150	.RING,PISTON.....(KIT).....	1	DJC00001-
20	07156-01012	.RING,WEAR.....(KIT).....	1	DJC00001-
21	707-71-60100	.PLUNGER.....	1	DJC00001-
22	04260-00635	.BALL.....	9	DJC00001-
23	707-71-91280	.CAP.....	1	DJC00001-
24	707-67-45020	.NUT.....	1	DJC00001-
25	02896-61015	O-RING.....(KIT).....	3	DJC00001-
26	707-45-10920	O-RING,LOCK.....	1	DJC00001-
27	707-86-55960	TUBE.....	1	DJC00001-
28	07283-32236	CLIP.....	1	DJC00001-
29	01597-01009	NUT.....	2	DJC00001-
30	01643-31032	WASHER.....	2	DJC00001-
31	707-44-10930	RING.....	2	DJC00001-
32	707-40-10020	RETAINER.....	1	DJC00001-
		==========.....		
		SERVICE KIT.....		
K	707-99-35350	SERVICE KIT,ARM CYLINDER.....	1	DJC00001-

FIG.Y1620-41A0 BUCKET CYLINDER (INNER PARTS)

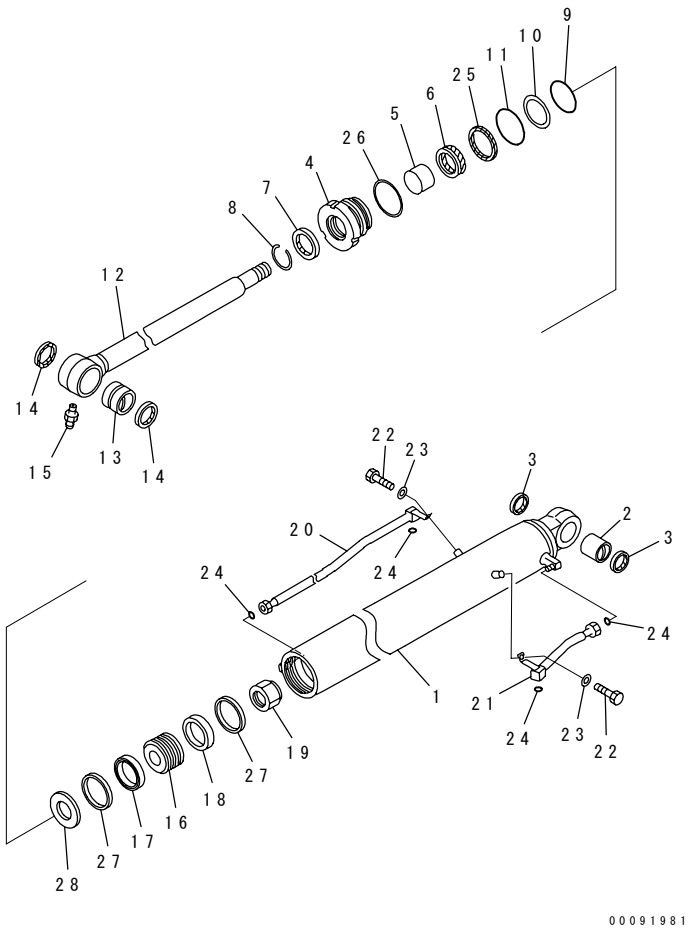

INDEX	PART NO.	DESCRIPTION	Q'TY	SERIAL NO.
G1	(⊙707-00-XT281)	CYLINDER GROUP,BUCKET	1	DJC00001-
	(⊙707-00-XJ901)	CYLINDER GROUP		DJC00001-
		==========		
	707-00-0J901	CYLINDER ASS'Y,BUCKET	1	DJC00001-
1	707-11-90A20	.CYLINDER,BUCKET	1	DJC00001-
2	07143-10505	.BUSHING	1	DJC00001-
3	07145-00050	.SEAL,DUST (KIT)	2	DJC00001-
4	707-29-90A20	.HEAD	1	DJC00001-
5	707-52-90301	.BUSHING	1	DJC00001-
6	707-51-55860	.PACKING,ROD (KIT)	1	DJC00001-
7	707-56-55740	.SEAL,DUST (KIT)	1	DJC00001-
8	07179-12069	.RING,SNAP	1	DJC00001-
9	07000-B2085	.O-RING (KIT)	1	DJC00001-
10	07146-02086	.RING,BACK-UP (KIT)	1	DJC00001-
11	07000-B2090	.O-RING (KIT)	1	DJC00001-
12	721-58-55700	.ROD,PISTON	1	DJC00001-
13	07144-10606	.BUSHING	1	DJC00001-
14	07145-00060	.SEAL,DUST (KIT)	2	DJC00001-
15	07020-00000	.FITTING,GREASE	1	DJC00001-
16	707-36-90862	.PISTON	1	DJC00001-
17	707-44-90150	.RING,PISTON (KIT)	1	DJC00001-
18	07156-00912	.RING,WEAR (KIT)	1	DJC00001-
19	707-67-42020	.NUT	1	DJC00001-
20	707-86-48860	TUBE	1	DJC00001-
21	707-86-48870	TUBE	1	DJC00001-
22	01010-81020	BOLT	2	DJC00001-
23	01643-31032	WASHER	2	DJC00001-
24	02896-61012	O-RING (KIT)	4	DJC00001-
25	707-51-55650	RING,BUFFER (KIT)	1	DJC00001-
26	707-45-90940	WASHER,LOCK	1	DJC00001-
27	707-44-90930	RING	2	DJC00001-
28	707-40-90420	RETAINER	1	DJC00001-
		==========		
		SERVICE KIT		
K	707-99-26710	SERVICE KIT,BUCKET CYLINDER	1	DJC00001-

FIG.Y1621-01A0 BLADE CYLINDER (INNER PARTS)

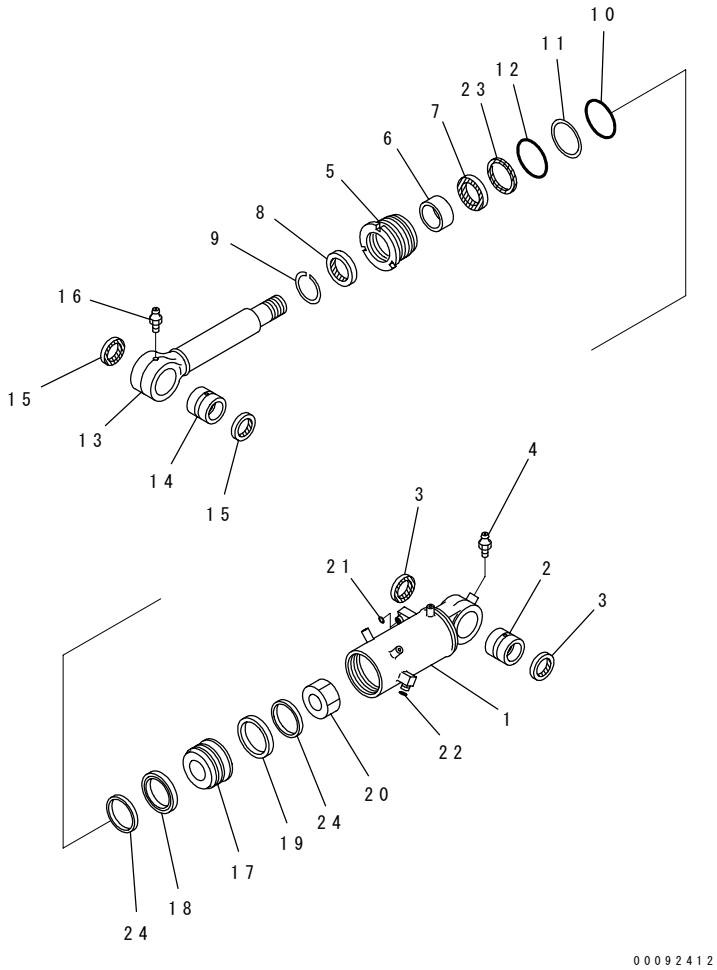

INDEX	PART NO.	DESCRIPTION	Q'TY	SERIAL NO.
G1	(⊙707-00-0T291)	CYLINDER GROUP,BLADE	1	DJC00001-
		==========		
	707-00-0J911	CYLINDER ASS'Y	1	DJC00001-
1	707-11-13870	.CYLINDER	1	DJC00001-
2	07144-10706	.BUSHING	1	DJC00001-
3	07145-00070	.SEAL,DUST (KIT)	2	DJC00001-
4	07020-00000	.FITTING,GREASE	1	DJC00001-
5	707-29-13621	.HEAD,CYLINDER	1	DJC00001-
6	707-52-90401	.BUSHING	1	DJC00001-
7	707-51-65860	.PACKING,ROD (KIT)	1	DJC00001-
8	707-56-65740	.SEAL,DUST (KIT)	1	DJC00001-
9	07179-12079	.RING,SNAP	1	DJC00001-
10	07000-B2125	.O-RING (KIT)	1	DJC00001-
11	07146-02126	.RING,BACK-UP (KIT)	1	DJC00001-
12	07000-B2130	.O-RING (KIT)	1	DJC00001-
13	721-58-65150	.ROD,PISTON	1	DJC00001-
14	07144-10706	.BUSHING	1	DJC00001-
15	07145-00070	.SEAL,DUST (KIT)	2	DJC00001-
16	07020-00000	.FITTING,GREASE	1	DJC00001-
17	707-36-13042	.PISTON	1	DJC00001-
18	707-44-13150	.RING,PISTON (KIT)	1	DJC00001-
19	07156-01315	.RING,WEAR (KIT)	1	DJC00001-
20	707-67-48020	.NUT	1	DJC00001-
21	02896-61012	.O-RING (KIT)	1	DJC00001-
22	02896-61009	.O-RING (KIT)	1	DJC00001-
23	707-51-65650	.RING,BUFFER (KIT)	1	DJC00001-
24	707-44-13930	.RING	2	DJC00001-
		SERVICE KIT		
K	707-99-42550	SERVICE KIT,BLADE CYLINDER	1	DJC00001-

FIG NO. : Y1627-01A0

FIG.Y1627-01A0 SWIVEL JOINT (INNER PARTS)

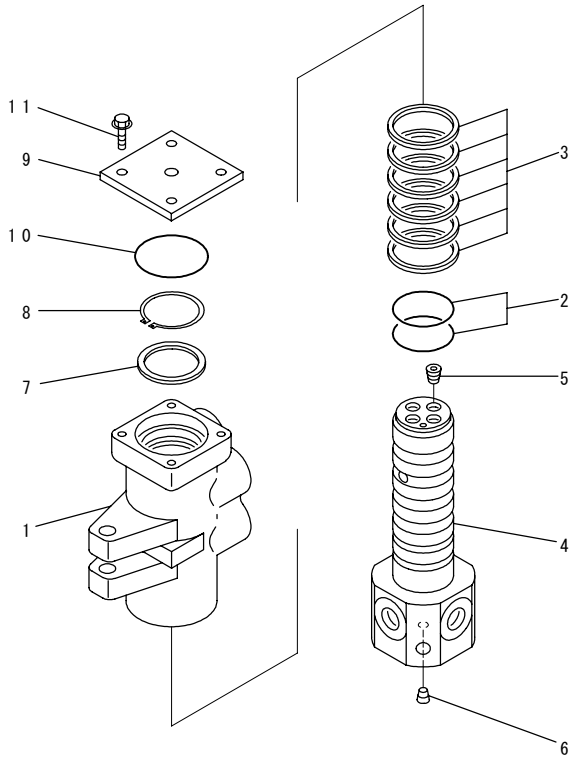

00080382

INDEX	PART NO.	DESCRIPTION	Q'TY	SERIAL NO.
	703-06-22270	SWIVEL JOINT ASS'Y.	1	DJC00001-
1	703-06-91170	.ROTOR.	1	DJC00001-
2	07000-15060	.O-RING.	2	DJC00001-
3	703-06-95122	.SEAL,SLIPPER.	6	DJC00001-
4	703-06-92133	.SHAFT.	1	DJC00001-
5	703-08-98110	..PLUG.	4	DJC00001-
	□703-08-98010	..PLUG.	4	DJC00001-
	□703-08-98210	..PLUG.	4	DJC00001-
6	703-13-98820	..PLUG.	2	DJC00001-
7	703-06-94110	.RING.	1	DJC00001-
8	04064-05520	.RING,SNAP.	1	DJC00001-
9	703-06-93191	.COVER.	1	DJC00001-
10	07000-12075	.O-RING.	1	DJC00001-
11	01435-00830	.BOLT.	4	DJC00001-

FIG.Y1627-01A1 SWIVEL JOINT (INNER PARTS) (WITH BLADE)

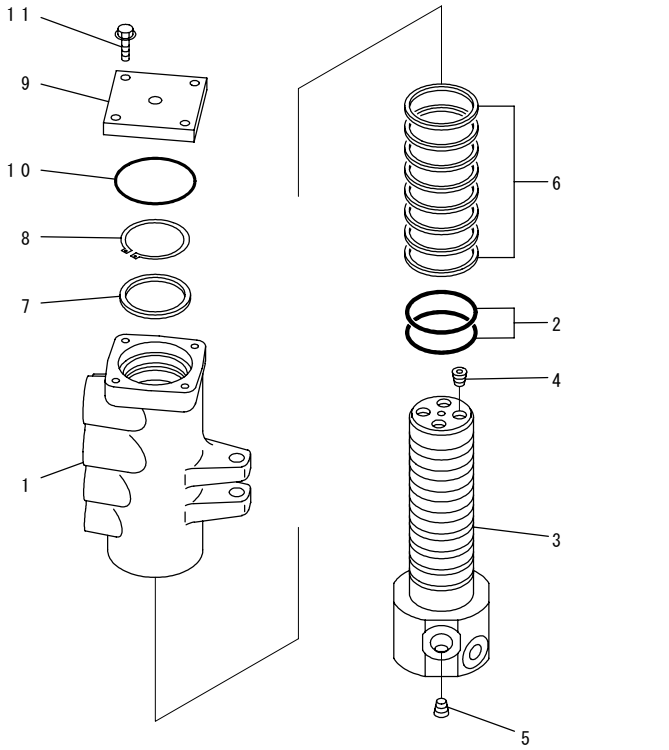

00080384

INDEX	PART NO.	DESCRIPTION	Q'TY	SERIAL NO.
	703-07-23230	SWIVEL JOINT ASS'Y.	1	DJC00001-
1	703-07-91230	.ROTOR.	1	DJC00001-
2	07000-15070	.O-RING.	2	DJC00001-
3	703-07-92183	.SHAFT.	1	DJC00001-
4	703-08-98110	..PLUG.	4	DJC00001-
5	703-13-98820	..PLUG.	3	DJC00001-
6	703-07-95122	.SEAL,SLIPPER.	8	DJC00001-
7	703-07-94170	.RING.	1	DJC00001-
8	04064-06525	.RING,SNAP.	1	DJC00001-
9	703-07-93181	.COVER.	1	DJC00001-
10	07000-12085	.O-RING.	1	DJC00001-
11	01435-00830	.BOLT.	4	DJC00001-

FIG.Y1640-01A0 SWING MOTOR (1/3)

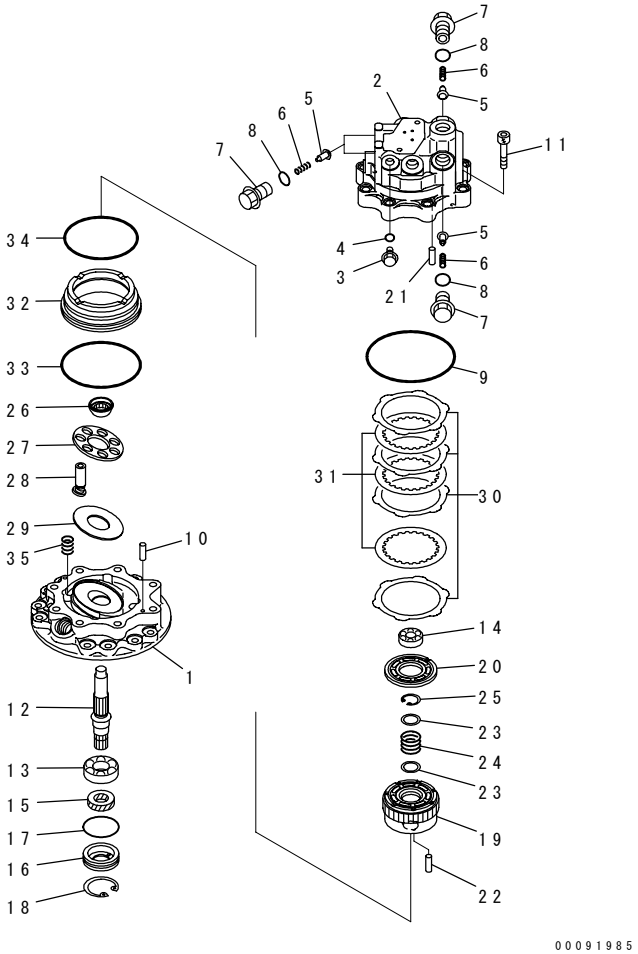

INDEX	PART NO.	DESCRIPTION	Q'TY	SERIAL NO.
	708-7S-00151	MOTOR ASS'Y. THIS ASSEMBLY CONSISTS OF ALL PARTS SHOWN IN FIGS.Y1640-01A0 TO Y1640-03A0.	1	DJC00001-
	708-7S-01281	.MOTOR SUB ASS'Y.	1	DJC00001-
1	(★708-7S-13611)	..PLATE,SWASH.	1	DJC00001-
2	(★708-7S-21511)	..HOUSING.	1	DJC00001-
3	706-73-71450	..PLUG.	1	DJC00001-
4	07002-61423	..O-RING.	1	DJC00001-
5	(★709-25-11650)	..VALVE,CHECK.	4	DJC00001-
6	(★700-80-63230)	..SPRING.	4	DJC00001-
7	(★708-7S-21610)	..PLUG.	4	DJC00001-
8	(★07002-62434)	..O-RING.	4	DJC00001-
9	(★07000-B2145)	..O-RING.	1	DJC00001-
10	(★720-68-19610)	..PIN.	2	DJC00001-
11	01252-61245	..BOLT.	8	DJC00001-
12	(★708-7S-22110)	..SHAFT.	1	DJC00001-
13	(★708-7S-22140)	..BEARING.	1	DJC00001-
14	(★708-7S-22150)	..BEARING.	1	DJC00001-
15	708-7T-12330	..SEAL,OIL.	1	DJC00001-
16	708-7S-22310	..COVER.	1	DJC00001-
17	07000-B2055	..O-RING.	1	DJC00001-
18	04065-06020	..RING,SNAP.	1	DJC00001-
19	(★708-7S-23111)	..BLOCK,CYLINDER.	1	DJC00001-
20	(★708-7S-23210)	..PLATE,VALVE.	1	DJC00001-
21	(★720-68-19610)	..PIN.	1	DJC00001-
22	(★708-2L-23360)	..PIN.	3	DJC00001-
23	(★708-7S-13530)	..SPACER.	2	DJC00001-
24	(★708-7S-23510)	..SPRING.	1	DJC00001-
25	(★04065-03212)	..RING,SNAP.	1	DJC00001-
26	(★708-1S-13350)	..GUIDE,RETAINER.	1	DJC00001-
27	(★708-1S-13340)	..RETAINER,SHOE.	1	DJC00001-
28	(★708-7S-23310)	..PISTON SUB ASS'Y.	7	DJC00001-
29	(★708-7S-23410)	..PLATE,THRUST.	1	DJC00001-
30	(★708-7S-25130)	..PLATE.	4	DJC00001-
31	(★708-7S-25120)	..DISC.	3	DJC00001-
32	(★708-7S-25140)	..PISTON,BRAKE.	1	DJC00001-
33	(★07000-B2130)	..O-RING.	1	DJC00001-
34	(★07000-B2120)	..O-RING.	1	DJC00001-
35	(★708-7S-25150)	..SPRING.	4	DJC00001-

FIG.Y1640-02A0 SWING MOTOR (2/3)

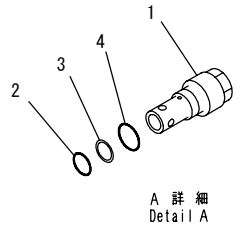

A 詳 細
Detail A

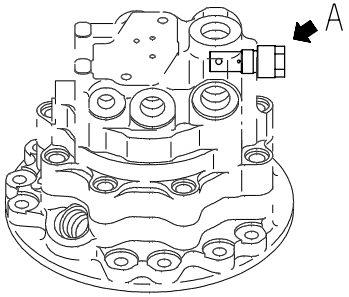

00091986

INDEX	PART NO.	DESCRIPTION	Q'TY	SERIAL NO.
	(708-7S-00151)	MOTOR ASS'Y.....	1	DJC00001-
		THIS ASSEMBLY CONSISTS OF ALL PARTS SHOWN IN FIGS.Y1640-01A0 TO Y1640-03A0.		
1	702-73-01590	.VALVE ASS'Y,RELIEF.....	1	DJC00001-
2	07000-F2016	..O-RING.....	1	DJC00001-
3	723-60-22230	..RING.....	1	DJC00001-
4	07002-12434	..O-RING.....	1	DJC00001-

FIG NO. : Y1640-03A0

FIG.Y1640-03A0 SWING MOTOR (3/3)

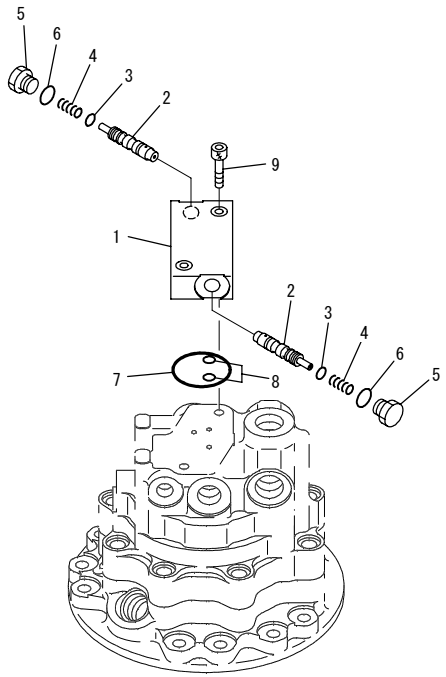

PW5S050

INDEX	PART NO.	DESCRIPTION	Q'TY	SERIAL NO.
	(708-7S-00151)	MOTOR ASS'Y..... THIS ASSEMBLY CONSISTS OF ALL PARTS SHOWN IN FIGS.Y1640-01A0 TO Y1640-03A0.	1	DJC00001-
	702-15-73000	.VALVE ASS'Y.....	1	DJC00001-
1	☆	..BODY.....	1	DJC00001-
2	☆	..SPOOL.....	2	DJC00001-
3	☆	..SEAL.....	2	DJC00001-
4	☆	..SPRING.....	2	DJC00001-
5	☆	..PLUG.....	2	DJC00001-
6	(★07002-01423)	..O-RING.....	2	DJC00001-
7	07000-B3042	.O-RING.....	1	DJC00001-
8	07000-B1007	.O-RING.....	2	DJC00001-
9	01252-60825	.BOLT.....	2	DJC00001-

FIG.Y1651-01A0 TRAVEL MOTOR (1/3)

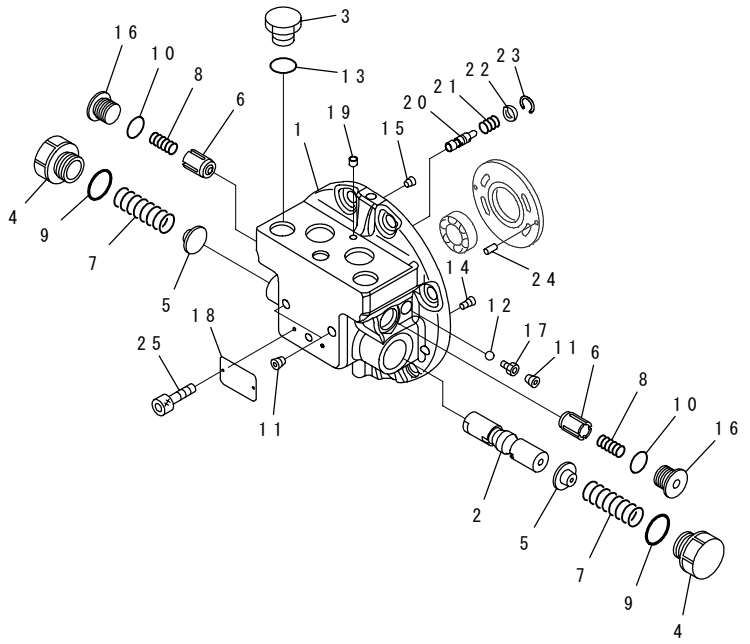

INDEX	PART NO.	DESCRIPTION	Q'TY	SERIAL NO.
	201-60-81301	MOTOR ASS'Y.	2	DJC00001-
		THIS ASSEMBLY CONSISTS OF ALL PARTS SHOWN IN FIGS.Y1651-01A0, 02A0 AND 03A0.		
	TZ110D200001-B	.MOTOR ASS'Y.	1	DJC00001-
		THIS ASSEMBLY CONSISTS OF ALL PARTS SHOWN IN FIGS.Y1651-01A0 AND Y1651-02A0.		
	TZ111D400000-F	.CONTROL VALVE ASS'Y.	1	DJC00001-
	TZ111D410000-F	..FLANGE ASS'Y,REAR.	1	DJC00001-
	TZ111D410100-F	...FLANGE KIT,REAR.	1	DJC00001-
1	☆	....FLANGE,REAR.	1	DJC00001-
2	☆	....SPOOL.	1	DJC00001-
3	07040-12012	...PLUG.	1	DJC00001-
4	TZ110D4024-00	...PLUG.	2	DJC00001-
5	TZ869A205200-B	...RETAINER,SPRING.	2	DJC00001-
6	TZ500D4054-00	...VALVE.	2	DJC00001-
7	TZ116D4056-00	...SPRING.	2	DJC00001-
8	TZ500D4055-00	...SPRING.	2	DJC00001-
9	TZJB2401-P26-9	...O-RING. (KIT)	2	DJC00001-
10	07000-12018	...O-RING. (KIT)	2	DJC00001-
11	TZGM1-8-S	...PLUG.	3	DJC00001-
12	☆	...BALL.	1	DJC00001-
13	07002-12034	...O-RING. (KIT)	1	DJC00001-
14	☆	...FILTER.	1	DJC00001-
15	☆	...ORIFICE.	1	DJC00001-
16	TZ610B2021-00	...PLUG.	2	DJC00001-
17	☆	...PLUG.	1	DJC00001-
18	☆	...PLATE, NAME.	1	DJC00001-
19	TZGDL1-16-S	...PLUG.	4	DJC00001-
20	TZ200B2073-00	...VALVE.	1	DJC00001-
21	TZ300B2043-01	...SPRING.	1	DJC00001-
22	TZ300B2039-00	...STOPPER.	1	DJC00001-
23	TZ300B2042-00	...RING.	1	DJC00001-
24	TZJB1354-4-10	..PIN.	1	DJC00001-
25	01252-31230	..BOLT.	8	DJC00001-
		SERVICE KIT.		
K	TZ131D9000-00	SEAL KIT,TRAVEL MOTOR.	1	DJC00001-

FIG.Y1651-02A0 TRAVEL MOTOR (2/3)

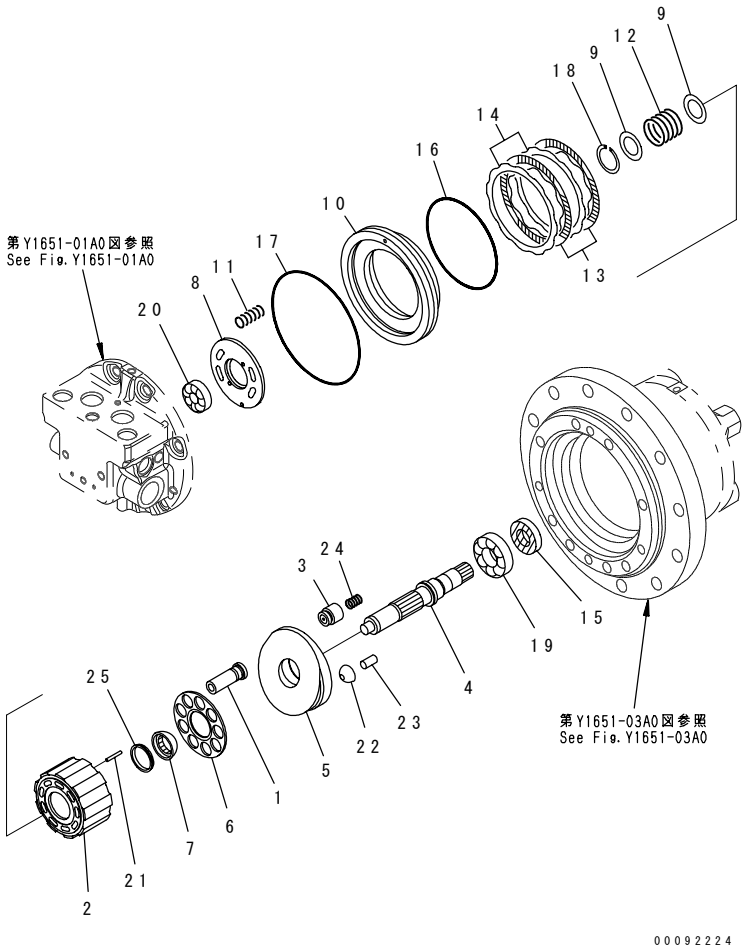

INDEX	PART NO.	DESCRIPTION	Q'TY	SERIAL NO.
	(201-60-81301)	MOTOR ASS'Y..... THIS ASSEMBLY CONSISTS OF ALL PARTS SHOWN IN FIGS.Y1651-01A0, 02A0 AND 03A0.	2	DJC00001-
	(TZ110D200001-B)	.MOTOR ASS'Y..... THIS ASSEMBLY CONSISTS OF ALL PARTS SHOWN IN FIGS.Y1651-01A0 AND Y1651-02A0.	1	DJC00001-
	TZ277B2205-00	..CYL & PISTON KIT.....	1	DJC00001-
1	☆	...PISTON KIT.....	9	DJC00001-
2	☆	...BLOCK,CYLINDER.....	1	DJC00001-
3	TZ263B2070-01	..PISTON.....	1	DJC00001-
4	TZ110D2002-00	..SHAFT.....	1	DJC00001-
5	TZ110D200300-B	..PLATE,SWASH.....	1	DJC00001-
6	TZ277B2007-00	..PLATE,RETAINER.....	1	DJC00001-
7	TZ263B2008-01	..BOWL,THRUST.....	1	DJC00001-
8	TZ110D2009-01	..PLATE,TIMING.....	1	DJC00001-
9	TZ880A2010-00	..WASHER.....	2	DJC00001-
10	TZ266B2012-00	..PISTON.....	1	DJC00001-
11	TZ500D2013-00	..SPRING.....	10	DJC00001-
12	TZ277B2014-00	..SPRING.....	1	DJC00001-
13	TZ800A2015-00	..PLATE.....	2	DJC00001-
14	TZ800A2016-00	..PLATE.....	3	DJC00001-
15	TZTCZ-30-50-9	..SEAL,OIL.....(KIT).....	1	DJC00001-
16	TZ266B2035-00	..O-RING.....(KIT).....	1	DJC00001-
17	TZ266B2039-00	..O-RING.....(KIT).....	1	DJC00001-
18	TZTH-R-42	..RING,SNAP.....	1	DJC00001-
19	06000-06206	..BEARING.....	1	DJC00001-
20	TZ400G2049-00	..BEARING.....	1	DJC00001-
21	TZ263B2098-00	..PIN.....	3	DJC00001-
22	TZ263B2076-02	..PIVOT.....	2	DJC00001-
23	TZ263B2077-01	..PIN.....	2	DJC00001-
24	TZ263B2090-00	..SPRING.....	1	DJC00001-
25	TZ263B2011-03	..WASHER.....	1	DJC00001-
		SERVICE KIT.....		
K	(TZ131D9000-00)	SEAL KIT,TRAVEL MOTOR.....	1	DJC00001-

FIG.Y1651-03A0 TRAVEL MOTOR (3/3)

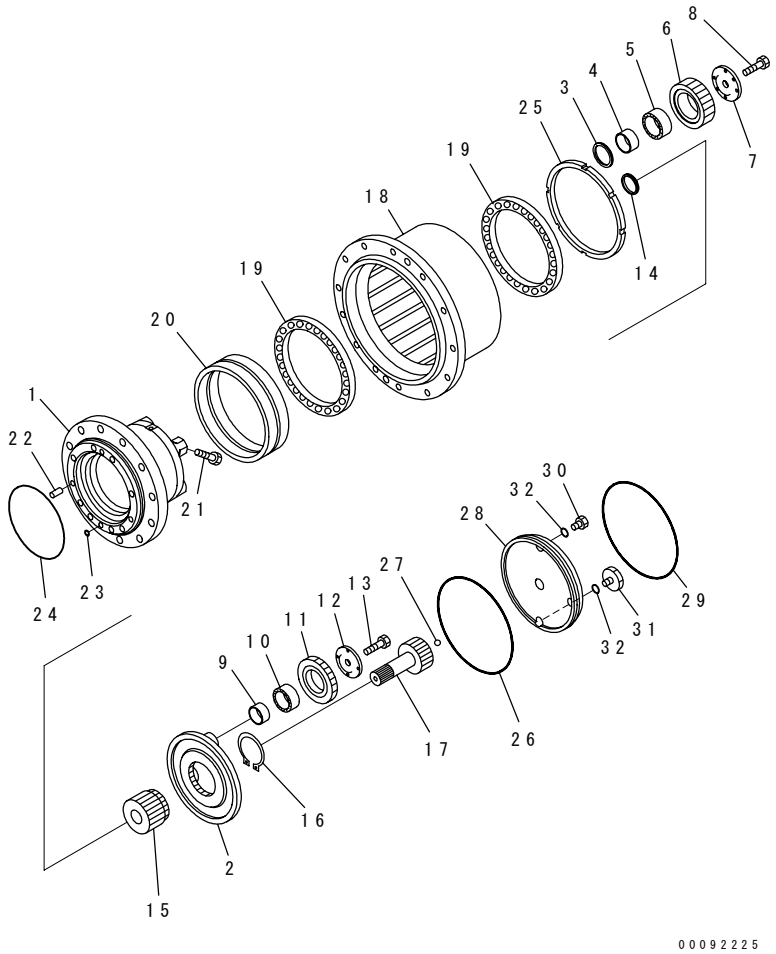

INDEX	PART NO.	DESCRIPTION	Q'TY	SERIAL NO.
	(201-60-81301)	MOTOR ASS'Y	2	DJC00001-
		THIS ASSEMBLY CONSISTS OF ALL PARTS SHOWN IN FIGS.Y1651-01A0, 02A0 AND 03A0.		
	TZ131D1000-00	.FINAL ASS'Y	1	DJC00001-
1	TZ110D1002-00	..SPINDLE	1	DJC00001-
2	TZ111D1003-00	..CARRIER	1	DJC00001-
3	TZ110D1011-00	..WASHER,THRUST	4	DJC00001-
4	TZ110D1030-00	..BEARING	4	DJC00001-
5	TZ110D1028-00	..BEARING	4	DJC00001-
6	TZ110D1007-00	..GEAR	4	DJC00001-
7	TZ110D1010-00	..WASHER,THRUST	4	DJC00001-
8	TZ1180102010L	..BOLT	4	DJC00001-
9	TZ110D1029-00	..BEARING	3	DJC00001-
10	TZ110D1027-00	..BEARING	3	DJC00001-
11	TZ111D1005-00	..GEAR	3	DJC00001-
12	TZ440D1012-00	..WASHER,THRUST	3	DJC00001-
13	TZ1180082010L2	..BOLT	3	DJC00001-
14	TZ400G1009-00	..COLLAR,THRUST	1	DJC00001-
15	TZ110D1006-00	..GEAR	1	DJC00001-
16	04064-04518	..RING	1	DJC00001-
17	TZ111D1004-00	..GEAR	1	DJC00001-
18	TZ110D1001-00	..HUB	1	DJC00001-
19	TZ110D1024-00	..BEARING	2	DJC00001-
20	TZ192-230-30BH	..FLOATING SEAL ASS'Y (KIT)	1	DJC00001-
21	TZJB1177M812-B	..BOLT	2	DJC00001-
22	TZ263B2077-01	..PIN	2	DJC00001-
23	07000-11007	..O-RING (KIT)	2	DJC00001-
24	TZJW1516-G37-7	..O-RING (KIT)	1	DJC00001-
25	TZ110D1022-00	..NUT	1	DJC00001-
26	07000-05230	..O-RING (KIT)	1	DJC00001-
27	04260-00952	..BALL	1	DJC00001-
28	TZ110D1013-00	..COVER	1	DJC00001-
29	TZ810B1018-00	..RING	1	DJC00001-
30	TZ810B2021-00	..PLUG	2	DJC00001-
31	TZ410D1033-01	..PLUG	1	DJC00001-
32	07000-12014	..O-RING (KIT)	3	DJC00001-
		SERVICE KIT		
K	(TZ131D9000-00)	SEAL KIT,TRAVEL MOTOR	1	DJC00001-

FIG.Y1660-01A0 MAIN VALVE (6-VALVE) (1/16) (WITHOUT BLADE)

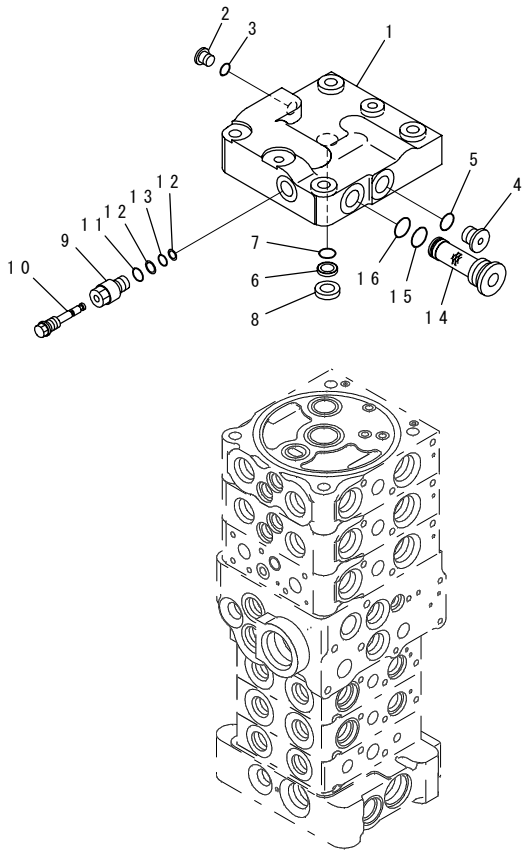

00091950

INDEX	PART NO.	DESCRIPTION	Q'TY	SERIAL NO.
	723-27-50900	CONTROL VALVE.....	1	DJC00001-
		THIS ASSEMBLY CONSISTS OF ALL PARTS SHOWN IN FIGS.Y1662-01A0 TO Y1662-18A0.		
	☆	.COVER GROUP.....	1	DJC00001-
1	☆	..COVER.....	1	DJC00001-
2	708-8E-16160	..PLUG.....	1	DJC00001-
3	07002-11023	..O-RING.....	1	DJC00001-
4	702-21-55620	..PLUG.....	1	DJC00001-
5	07002-11423	..O-RING.....	1	DJC00001-
6	702-21-53120	..FILTER.....	1	DJC00001-
7	702-21-55420	..O-RING.....	1	DJC00001-
8	☆	..SEAT.....	1	DJC00001-
9	723-11-38620	..PLUG.....	1	DJC00001-
10	723-26-16990	..PLUG.....	1	DJC00001-
11	07002-11223	..O-RING.....	1	DJC00001-
12	07000-11003	..O-RING,BACK-UP.....	2	DJC00001-
13	07001-01003	..RING.....	1	DJC00001-
14	723-11-14390	..FILTER,BACK-UP.....	1	DJC00001-
15	07002-12434	..O-RING.....	1	DJC00001-
16	723-11-19130	..O-RING.....	1	DJC00001-

FIG.Y1660-02A0 MAIN VALVE (6-VALVE) (2/16) (WITHOUT BLADE)

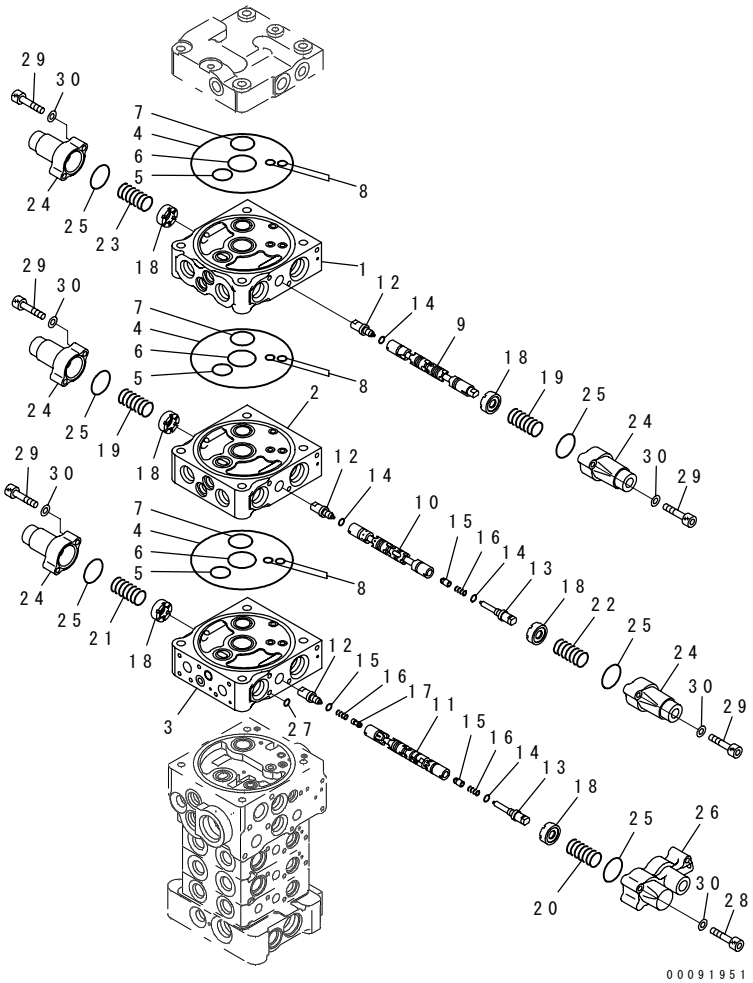

INDEX	PART NO.	DESCRIPTION	Q'TY	SERIAL NO.
	(723-27-50900)	CONTROL VALVE.....	1	DJC00001-
		THIS ASSEMBLY CONSISTS OF ALL PARTS SHOWN IN FIGS.Y1662-01A0 TO Y1662-18A0.		
	☆	.BODY GROUP.....	1	DJC00001-
1	☆	..BLOCK,VALVE.....	1	DJC00001-
2	☆	..BLOCK,VALVE.....	1	DJC00001-
3	☆	..BLOCK,VALVE.....	1	DJC00001-
4	07000-12120	..O-RING.....	3	DJC00001-
5	07000-12020	..O-RING.....	3	DJC00001-
6	723-26-15830	..O-RING.....	3	DJC00001-
7	723-26-15840	..O-RING.....	3	DJC00001-
8	07000-11008	..O-RING.....	6	DJC00001-
9	☆	..SPOOL.....	1	DJC00001-
10	☆	..SPOOL.....	1	DJC00001-
11	☆	..SPOOL.....	1	DJC00001-
12	☆	..PLUG.....	3	DJC00001-
13	☆	..PLUG.....	2	DJC00001-
14	☆	..O-RING.....	5	DJC00001-
15	☆	..VALVE.....	2	DJC00001-
16	☆	..SPRING.....	3	DJC00001-
17	☆	..VALVE.....	1	DJC00001-
18	723-26-15121	..RETAINER.....	6	DJC00001-
19	709-26-11450	..SPRING.....	2	DJC00001-
20	723-26-14490	..SPRING.....	1	DJC00001-
21	723-26-16621	..SPRING.....	1	DJC00001-
22	723-26-14510	..SPRING.....	1	DJC00001-
23	723-26-16621	..SPRING.....	1	DJC00001-
24	723-26-15110	..CASE.....	5	DJC00001-
25	575-41-17420	..O-RING.....	6	DJC00001-
26	723-26-17110	..CASE,SPRING.....	1	DJC00001-
27	702-21-54260	..O-RING.....	1	DJC00001-
28	01252-60635	..BOLT.....	3	DJC00001-
29	01252-60630	..BOLT.....	10	DJC00001-
30	01641-20608	..WASHER.....	13	DJC00001-

FIG.Y1660-03A0 MAIN VALVE (6-VALVE) (3/16) (WITHOUT BLADE)

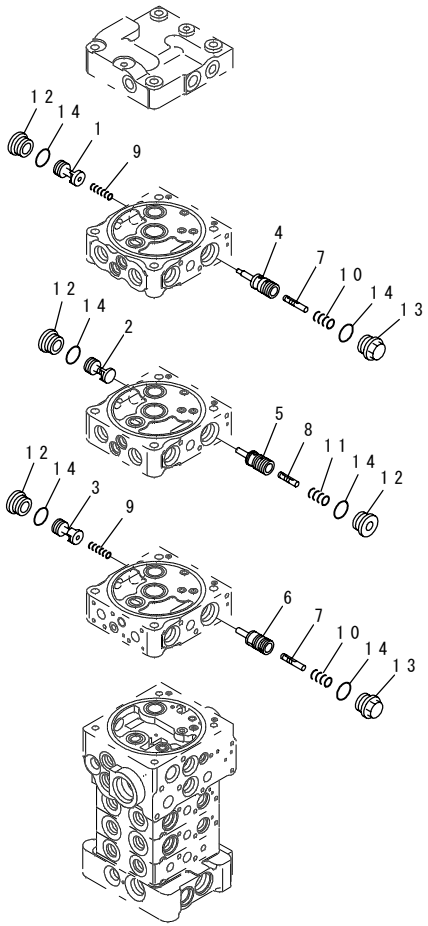

INDEX	PART NO.	DESCRIPTION	Q'TY	SERIAL NO.
	(723-27-50900)	CONTROL VALVE.....	1	DJC00001-
		THIS ASSEMBLY CONSISTS OF ALL PARTS SHOWN IN FIGS.Y1662-01A0 TO Y1662-18A0.		
	☆	.BODY GROUP.....	1	DJC00001-
1	☆	..VALVE.....	1	DJC00001-
2	☆	..VALVE.....	1	DJC00001-
3	☆	..VALVE.....	1	DJC00001-
4	☆	..VALVE.....	1	DJC00001-
5	☆	..VALVE.....	1	DJC00001-
6	☆	..VALVE.....	1	DJC00001-
7	☆	..PISTON.....	2	DJC00001-
8	☆	..PISTON.....	1	DJC00001-
9	723-26-14220	..SPRING.....	2	DJC00001-
10	723-26-14240	..SPRING.....	2	DJC00001-
11	723-26-14140	..SPRING.....	1	DJC00001-
12	723-26-15230	..PLUG.....	4	DJC00001-
13	723-26-15370	..PLUG.....	2	DJC00001-
14	07002-12434	..O-RING.....	6	DJC00001-

FIG.Y1660-04A0 MAIN VALVE (6-VALVE) (4/16) (WITHOUT BLADE)

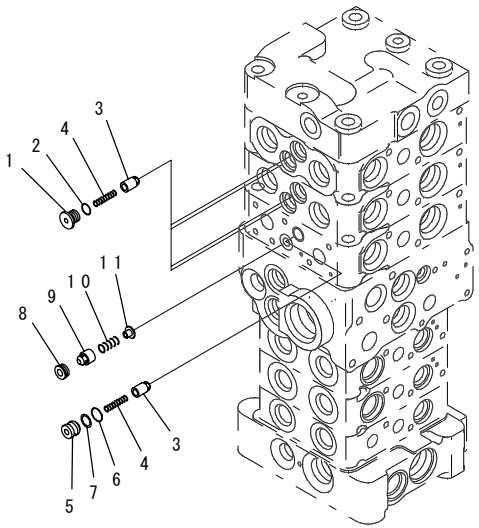

PW5H705

INDEX	PART NO.	DESCRIPTION	Q'TY	SERIAL NO.
	(723-27-50900)	CONTROL VALVE..... THIS ASSEMBLY CONSISTS OF ALL PARTS SHOWN IN FIGS.Y1662-01A0 TO Y1662-18A0.	1	DJC00001-
	☆	.BODY GROUP.....	1	DJC00001-
1	723-26-15220	..PLUG.....	4	DJC00001-
2	07002-11223	..O-RING.....	4	DJC00001-
3	☆	..VALVE.....	5	DJC00001-
4	723-26-14150	..SPRING.....	5	DJC00001-
5	723-26-16230	..PLUG.....	1	DJC00001-
6	07000-11008	..O-RING.....	1	DJC00001-
7	07001-01008	..RING.....	1	DJC00001-
8	723-26-16240	..SEAT.....	1	DJC00001-
9	☆	..VALVE.....	1	DJC00001-
10	723-26-16260	..SPRING.....	1	DJC00001-
11	723-26-16270	..RETAINER.....	1	DJC00001-

FIG.Y1660-05A0 MAIN VALVE (6-VALVE) (5/16) (WITHOUT BLADE)

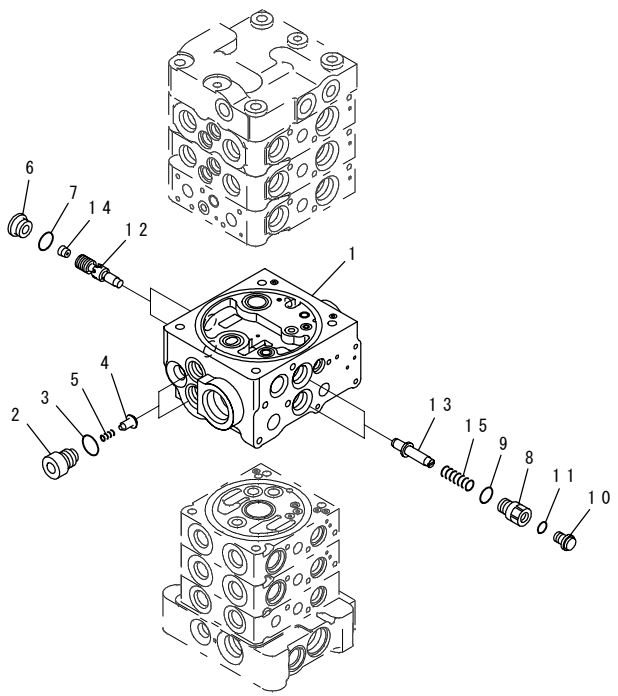

INDEX	PART NO.	DESCRIPTION	Q'TY	SERIAL NO.
	(723-27-50900)	CONTROL VALVE.....	1	DJC00001-
		THIS ASSEMBLY CONSISTS OF ALL PARTS SHOWN IN FIGS.Y1662-01A0 TO Y1662-18A0.		
	☆	.BODY GROUP.....	1	DJC00001-
1	☆	..BODY,VALVE.....	1	DJC00001-
2	723-26-17180	..PLUG.....	2	DJC00001-
3	07002-11823	..O-RING.....	2	DJC00001-
4	☆	..VALVE.....	2	DJC00001-
5	723-26-17170	..SPRING.....	2	DJC00001-
6	723-11-26170	..PLUG.....	2	DJC00001-
7	07002-11623	..O-RING.....	2	DJC00001-
8	723-26-16890	..PLUG.....	2	DJC00001-
9	07002-11823	..O-RING.....	2	DJC00001-
10	708-8E-16160	..PLUG.....	2	DJC00001-
11	07002-11023	..O-RING.....	2	DJC00001-
12	☆	..VALVE.....	2	DJC00001-
13	723-26-17190	..RETAINER.....	2	DJC00001-
14	702-21-56270	..ORIFICE.....	2	DJC00001-
15	723-26-14640	..SPRING.....	2	DJC00001-

FIG.Y1660-06A0 MAIN VALVE (6-VALVE) (6/16) (WITHOUT BLADE)

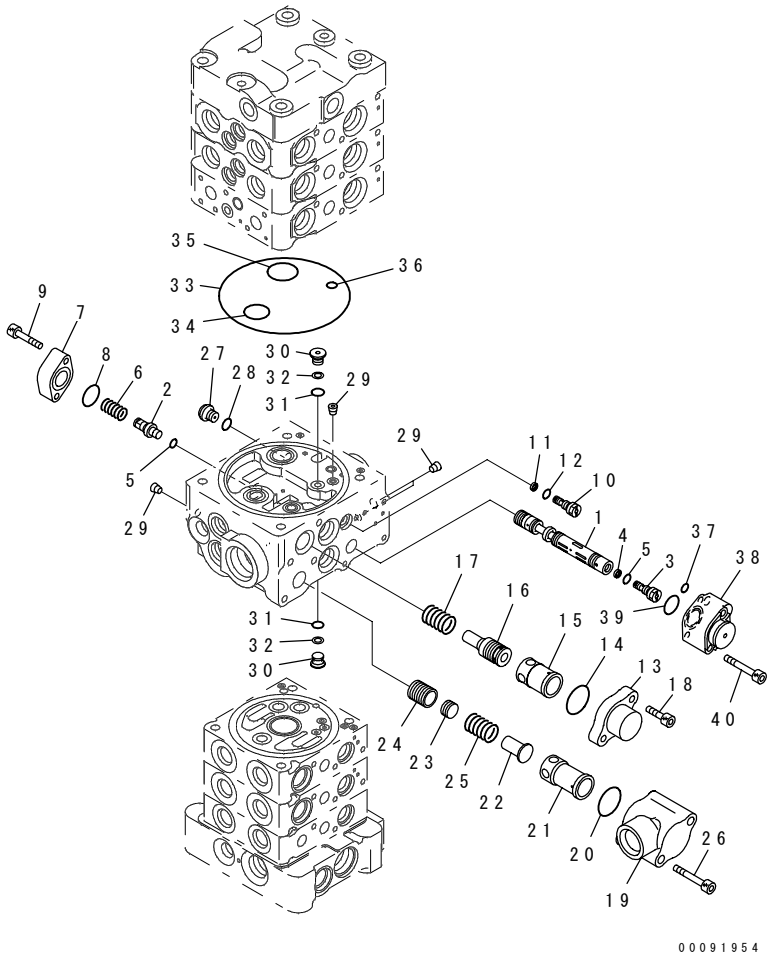

INDEX	PART NO.	DESCRIPTION	Q'TY	SERIAL NO.
	(723-27-50900)	CONTROL VALVE.....	1	DJC00001-
		THIS ASSEMBLY CONSISTS OF ALL PARTS SHOWN IN FIGS.Y1662-01A0 TO Y1662-18A0.		
	☆	.BODY GROUP.....	1	DJC00001-
1	☆	..SPOOL.....	1	DJC00001-
2	☆	..PLUG.....	1	DJC00001-
3	☆	..ORIFICE.....	1	DJC00001-
4	☆	..RING.....	1	DJC00001-
5	☆	..O-RING.....	2	DJC00001-
6	723-26-14650	..SPRING.....	1	DJC00001-
7	723-26-16940	..FLANGE.....	1	DJC00001-
8	722-12-19120	..O-RING.....	1	DJC00001-
9	01252-60640	..BOLT.....	2	DJC00001-
10	☆	..ORIFICE.....	1	DJC00001-
11	722-12-15160	..RING.....	1	DJC00001-
12	07002-10823	..O-RING.....	1	DJC00001-
13	723-26-16350	..FLANGE.....	1	DJC00001-
14	723-11-19110	..O-RING.....	1	DJC00001-
15	723-26-16360	..SLEEVE.....	1	DJC00001-
16	723-26-16371	..PISTON.....	1	DJC00001-
17	723-26-16380	..SPRING.....	1	DJC00001-
18	01252-60820	..BOLT.....	2	DJC00001-
19	723-26-16390	..CASE.....	1	DJC00001-
20	723-11-19110	..O-RING.....	1	DJC00001-
21	☆	..SLEEVE.....	1	DJC00001-
22	723-26-16420	..RETAINER.....	1	DJC00001-
23	☆	..PISTON.....	1	DJC00001-
24	☆	..VALVE.....	1	DJC00001-
25	723-26-16450	..SPRING.....	1	DJC00001-
26	01252-60855	..BOLT.....	2	DJC00001-
27	708-8E-16160	..PLUG.....	1	DJC00001-
28	07002-11023	..O-RING.....	1	DJC00001-
29	☆	..PLUG.....	4	DJC00001-
30	723-26-16460	..PLUG.....	2	DJC00001-
31	07000-11007	..O-RING.....	2	DJC00001-
32	07001-01007	..RING,BACK-UP.....	2	DJC00001-
33	07000-12120	..O-RING.....	1	DJC00001-
34	07000-12020	..O-RING.....	1	DJC00001-
35	723-26-15840	..O-RING.....	1	DJC00001-
36	07000-11008	..O-RING.....	1	DJC00001-
37	07000-11006	..O-RING.....	1	DJC00001-
38	723-26-16920	..CASE,SPRING.....	1	DJC00001-

FIG NO. : Y166O-06AO

INDEX	PART NO.	DESCRIPTION	Q'TY	SERIAL NO.
39	722-12-19120	..O-RING.....	1	DJC00001-
40	01252-60640	..BOLT.....	2	DJC00001-

PC70-8

FIG.Y1660-07A0 MAIN VALVE (6-VALVE) (7/16) (WITHOUT BLADE)

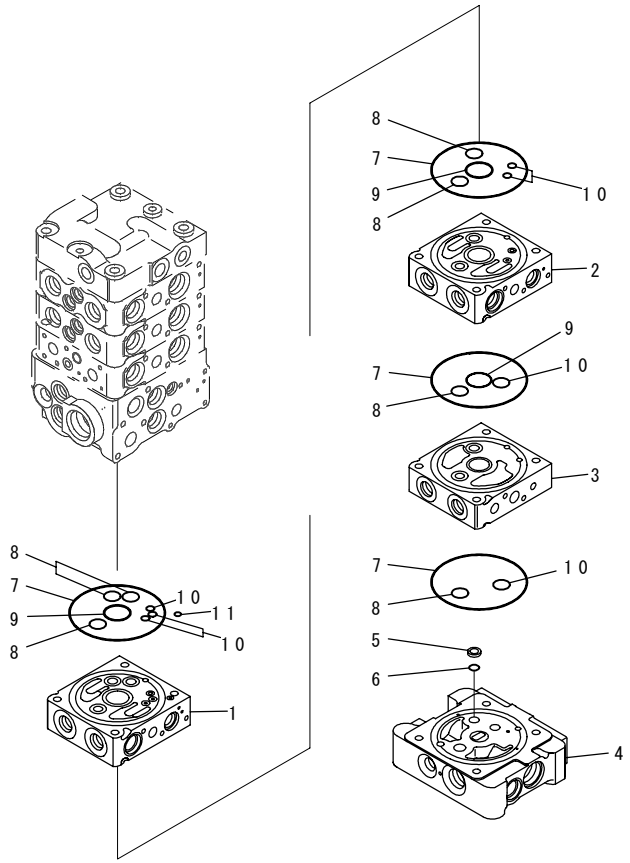

00091955

INDEX	PART NO.	DESCRIPTION	Q'TY	SERIAL NO.
	(723-27-50900)	CONTROL VALVE.....	1	DJC00001-
		THIS ASSEMBLY CONSISTS OF ALL PARTS SHOWN IN FIGS.Y1662-01A0 TO Y1662-18A0.		
	☆	.BODY GROUP.....	1	DJC00001-
1	☆	..BLOCK,VALVE.....	1	DJC00001-
2	☆	..BLOCK,VALVE.....	1	DJC00001-
3	☆	..BLOCK,VALVE.....	1	DJC00001-
4	☆	..BLOCK.....	1	DJC00001-
5	702-21-53120	..FILTER.....	1	DJC00001-
6	702-21-55420	..O-RING.....	1	DJC00001-
7	07000-12100	..O-RING.....	4	DJC00001-
8	723-11-19130	..O-RING.....	7	DJC00001-
9	723-11-19110	..O-RING.....	3	DJC00001-
10	07000-11006	..O-RING.....	7	DJC00001-
11	702-21-54260	..O-RING.....	1	DJC00001-

FIG.Y1660-08A0 MAIN VALVE (6-VALVE) (8/16) (WITHOUT BLADE)

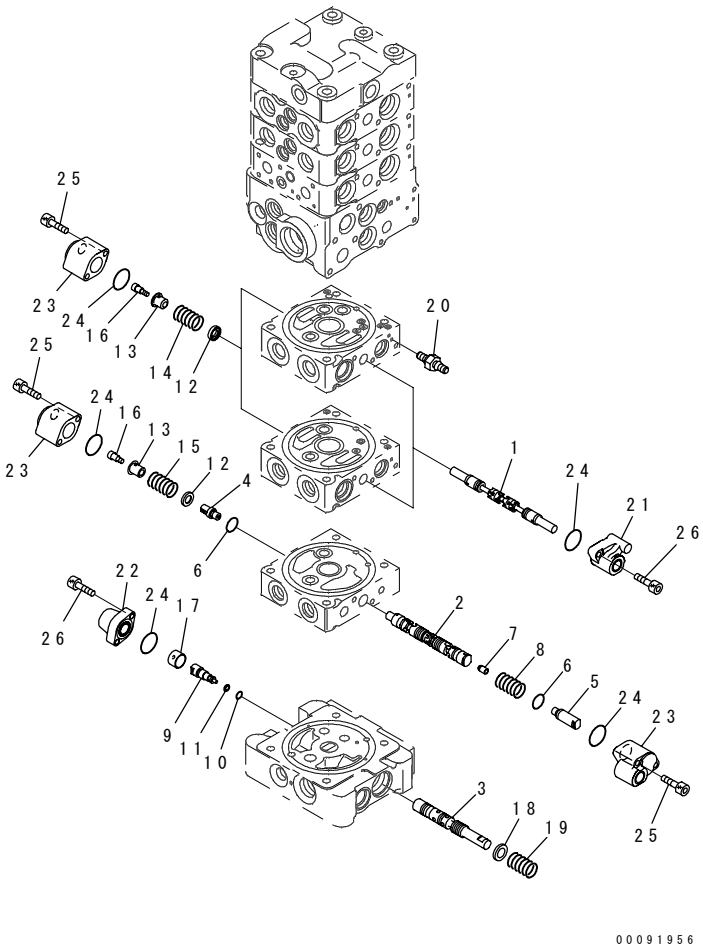

INDEX	PART NO.	DESCRIPTION	Q'TY	SERIAL NO.
	(723-27-50900)	CONTROL VALVE.....	1	DJC00001-
		THIS ASSEMBLY CONSISTS OF ALL PARTS SHOWN IN FIGS.Y1662-01A0 TO Y1662-18A0.		
	☆	.BODY GROUP.....	1	DJC00001-
1	☆	..SPOOL.....	2	DJC00001-
2	☆	..SPOOL.....	1	DJC00001-
3	☆	..SPOOL.....	1	DJC00001-
4	☆	..PLUG.....	1	DJC00001-
5	☆	..PLUG.....	1	DJC00001-
6	☆	..O-RING.....	2	DJC00001-
7	☆	..POPPET.....	2	DJC00001-
8	723-11-17510	..SPRING.....	2	DJC00001-
9	723-26-16470	..PLUG.....	1	DJC00001-
10	07000-11005	..O-RING.....	1	DJC00001-
11	07001-01005	..RING.....	1	DJC00001-
12	723-11-17330	..RETAINER.....	3	DJC00001-
13	723-11-17353	..RETAINER.....	3	DJC00001-
14	723-11-17341	..SPRING.....	2	DJC00001-
15	723-11-38930	..SPRING.....	1	DJC00001-
16	723-11-17361	..BOLT.....	3	DJC00001-
17	723-26-16480	..RETAINER.....	1	DJC00001-
18	723-26-16490	..SPACER.....	1	DJC00001-
19	723-26-14310	..SPRING.....	1	DJC00001-
20	723-11-29620	..PLUG.....	1	DJC00001-
21	723-11-37220	..CASE,SPRING.....	2	DJC00001-
22	723-11-17410	..CASE,SPRING.....	1	DJC00001-
23	723-11-27880	..CASE,SPRING.....	4	DJC00001-
24	722-12-19120	..O-RING.....	7	DJC00001-
25	01252-60640	..BOLT.....	8	DJC00001-
26	01252-60620	..BOLT.....	6	DJC00001-

FIG.Y1660-09A0 MAIN VALVE (6-VALVE) (9/16) (WITHOUT BLADE)

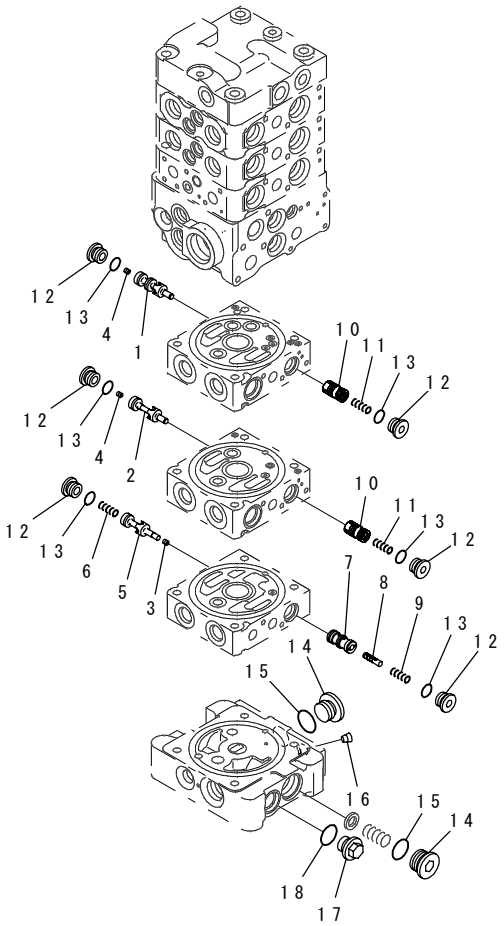

00091957

INDEX	PART NO.	DESCRIPTION	Q'TY	SERIAL NO.
	(723-27-50900)	CONTROL VALVE.....	1	DJC00001-
		THIS ASSEMBLY CONSISTS OF ALL PARTS SHOWN IN FIGS.Y1662-01A0 TO Y1662-18A0.		
	☆	.BODY GROUP.....	1	DJC00001-
1	☆	..VALVE.....	1	DJC00001-
2	☆	..VALVE.....	1	DJC00001-
3	☆	..ORIFICE.....	1	DJC00001-
4	☆	..ORIFICE.....	2	DJC00001-
5	☆	..VALVE.....	1	DJC00001-
6	723-11-15130	..SPRING.....	1	DJC00001-
7	☆	..VALVE.....	1	DJC00001-
8	☆	..PISTON.....	1	DJC00001-
9	723-11-16130	..SPRING.....	1	DJC00001-
10	☆	..VALVE SUB ASS'Y.....	2	DJC00001-
11	723-11-16230	..SPRING.....	2	DJC00001-
12	723-11-15110	..PLUG.....	6	DJC00001-
13	07002-11623	..O-RING.....	6	DJC00001-
14	723-26-15230	..PLUG.....	2	DJC00001-
15	07002-12434	..O-RING.....	2	DJC00001-
16	☆	..PLUG.....	1	DJC00001-
17	706-8E-14191	..PLUG.....	1	DJC00001-
18	07002-11823	..O-RING.....	1	DJC00001-

FIG.Y1660-10A0 MAIN VALVE (6-VALVE) (10/16) (WITHOUT BLADE)

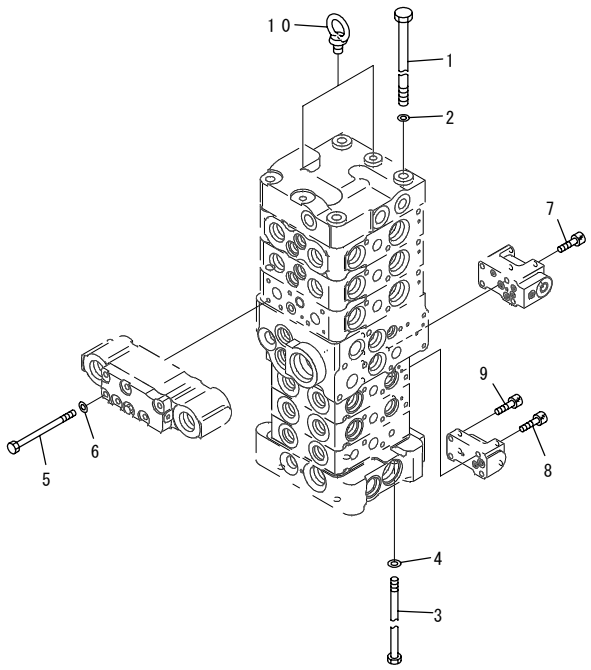

INDEX	PART NO.	DESCRIPTION	Q'TY	SERIAL NO.
	(723-27-50900)	CONTROL VALVE.....	1	DJC00001-
		THIS ASSEMBLY CONSISTS OF ALL PARTS SHOWN IN FIGS.Y1662-01A0 TO Y1662-18A0.		
1	700-25-11120	.BOLT.....	4	DJC00001-
2	01643-31032	.WASHER.....	4	DJC00001-
3	723-11-29660	.BOLT.....	4	DJC00001-
4	01643-30823	.WASHER.....	4	DJC00001-
5	723-26-16510	.BOLT.....	6	DJC00001-
6	01643-30623	.WASHER.....	6	DJC00001-
7	01252-60650	.BOLT.....	4	DJC00001-
8	01252-60635	.BOLT.....	2	DJC00001-
9	01252-60616	.BOLT.....	2	DJC00001-
10	04530-10815	.BOLT,EYE.....	2	DJC00001-

FIG.Y1660-11A0 MAIN VALVE (6-VALVE) (11/16) (WITHOUT BLADE)

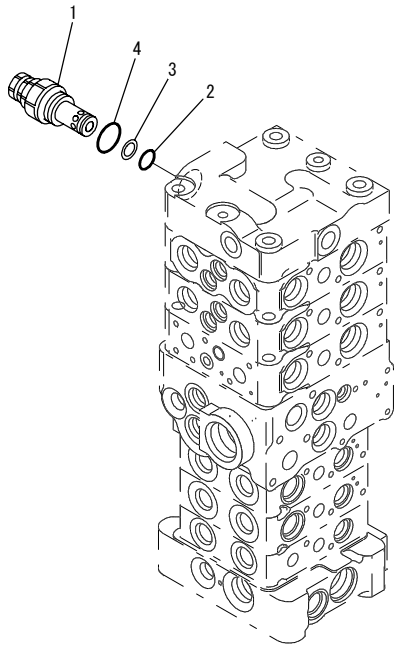

00010523

INDEX	PART NO.	DESCRIPTION	Q'TY	SERIAL NO.
	(723-27-50900)	CONTROL VALVE.....	1	DJC00001-
		THIS ASSEMBLY CONSISTS OF ALL PARTS SHOWN IN FIGS.Y1662-01A0 TO Y1662-18A0.		
1	723-20-63300	.VALVE ASS'Y,RELIEF.....	1	DJC00001-
2	700-22-11410	..O-RING.....	1	DJC00001-
3	700-80-64220	..RING.....	1	DJC00001-
4	07002-12434	..O-RING.....	1	DJC00001-

FIG.Y1660-12A0 MAIN VALVE (6-VALVE) (12/16) (WITHOUT BLADE)

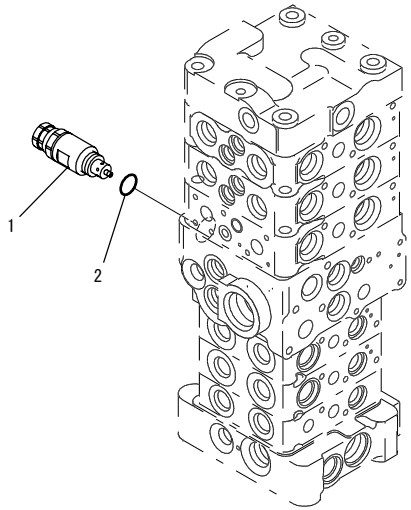

00010524

INDEX	PART NO.	DESCRIPTION	Q'TY	SERIAL NO.
	(723-27-50900)	CONTROL VALVE..... THIS ASSEMBLY CONSISTS OF ALL PARTS SHOWN IN FIGS.Y1662-01A0 TO Y1662-18A0.	1	DJC00001-
1	723-20-67200	.VALVE ASS'Y,SUCTION AND SAFETY.....	1	DJC00001-
2	07002-12034	..O-RING.....	1	DJC00001-

FIG.Y1660-13A0 MAIN VALVE (6-VALVE) (13/16) (WITHOUT BLADE)

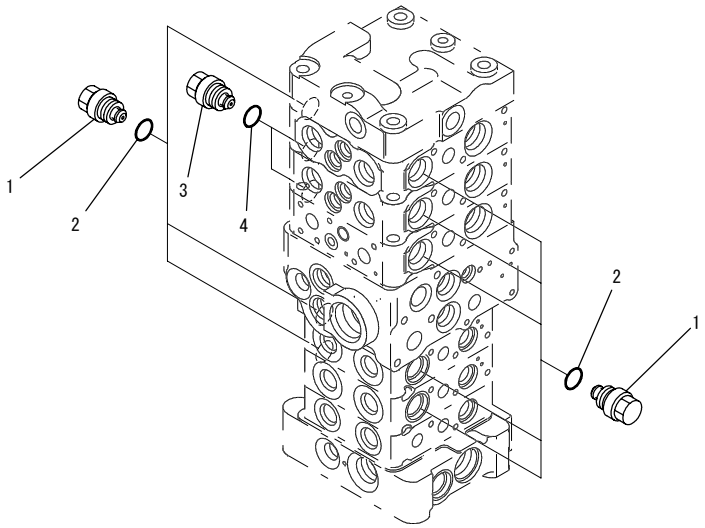

00010525

INDEX	PART NO.	DESCRIPTION	Q'TY	SERIAL NO.
	(723-27-50900)	CONTROL VALVE.....	1	DJC00001-
		THIS ASSEMBLY CONSISTS OF ALL PARTS SHOWN IN FIGS.Y1662-01A0 TO Y1662-18A0.		
1	723-20-80100	.VALVE ASS'Y,SUCTION.....	8	DJC00001-
2	07002-12034	..O-RING.....	1	DJC00001-
3	723-10-80200	.VALVE ASS'Y,SUCTION.....	2	DJC00001-
4	07002-12034	..O-RING.....	1	DJC00001-

FIG.Y1660-14A0 MAIN VALVE (6-VALVE) (14/16) (WITHOUT BLADE)

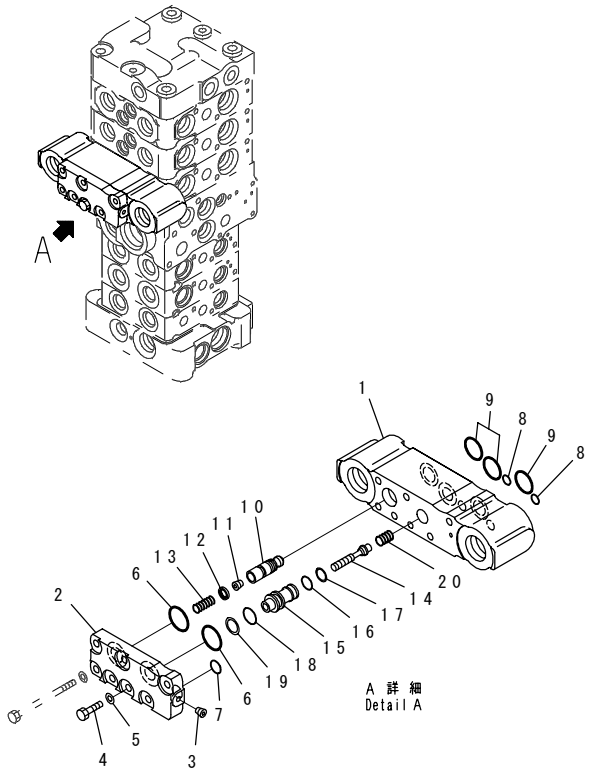

INDEX	PART NO.	DESCRIPTION	Q'TY	SERIAL NO.
	(723-27-50900)	CONTROL VALVE.....	1	DJC00001-
		THIS ASSEMBLY CONSISTS OF ALL PARTS SHOWN IN FIGS.Y1662-01A0 TO Y1662-18A0.		
	723-20-96200	.VALVE ASS'Y.....	1	DJC00001-
1	☆	..BLOCK.....	1	DJC00001-
2	723-20-96150	..PLATE.....	1	DJC00001-
3	☆	..PLUG.....	1	DJC00001-
4	01010-80620	..BOLT.....	1	DJC00001-
5	01643-30623	..WASHER.....	1	DJC00001-
6	723-11-29490	..O-RING.....	2	DJC00001-
7	07000-11009	..O-RING.....	1	DJC00001-
8	07000-11006	..O-RING.....	2	DJC00001-
9	723-11-18150	..O-RING.....	3	DJC00001-
10	☆	..VALVE.....	1	DJC00001-
11	☆	..ORIFICE.....	1	DJC00001-
12	☆	..SEAL.....	1	DJC00001-
13	723-20-96140	..SPRING.....	1	DJC00001-
	723-11-00710	..VALVE SUB ASS'Y.....	1	DJC00001-
14	☆	...PISTON.....	1	DJC00001-
15	☆	...SLEEVE.....	1	DJC00001-
16	07000-11010	..O-RING.....	1	DJC00001-
17	07001-01010	..RING.....	1	DJC00001-
18	07000-12012	..O-RING.....	1	DJC00001-
19	07001-02012	..RING.....	1	DJC00001-
20	723-11-19950	..SPRING.....	1	DJC00001-

FIG.Y1660-15A0 MAIN VALVE (6-VALVE) (15/16) (WITHOUT BLADE)

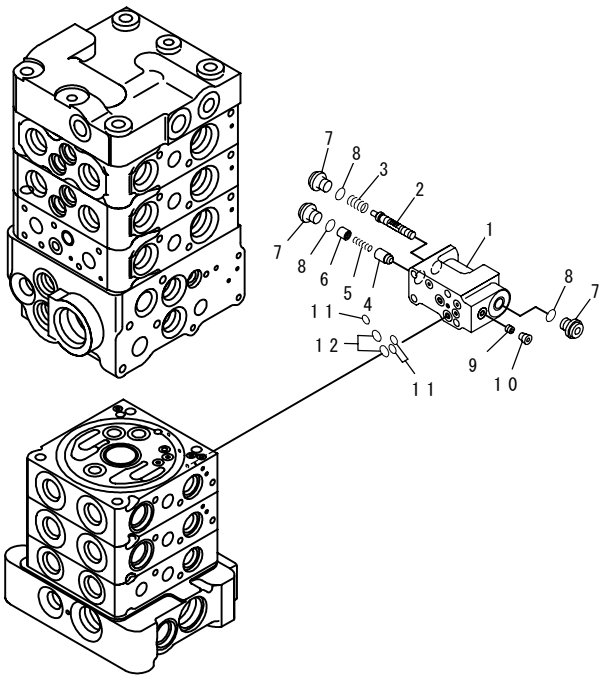

INDEX	PART NO.	DESCRIPTION	Q'TY	SERIAL NO.
	(723-27-50900)	CONTROL VALVE..... THIS ASSEMBLY CONSISTS OF ALL PARTS SHOWN IN FIGS.Y1662-01A0 TO Y1662-18A0.	1	DJC00001-
	723-11-01910	.VALVE ASS'Y.....	1	DJC00001-
1	☆	..BLOCK.....	1	DJC00001-
2	☆	..SPOOL.....	1	DJC00001-
3	723-11-27830	..SPRING.....	1	DJC00001-
4	☆	..VALVE.....	1	DJC00001-
5	723-11-18180	..SPRING.....	1	DJC00001-
6	723-11-27840	..SPACER.....	1	DJC00001-
7	723-11-27850	..PLUG.....	3	DJC00001-
8	07002-11023	..O-RING.....	3	DJC00001-
9	☆	..ORIFICE.....	1	DJC00001-
10	☆	..PLUG.....	1	DJC00001-
11	07000-11005	..O-RING.....	3	DJC00001-
12	07000-11007	..O-RING.....	2	DJC00001-

FIG.Y1660-16A0 MAIN VALVE (6-VALVE) (16/16) (WITHOUT BLADE)

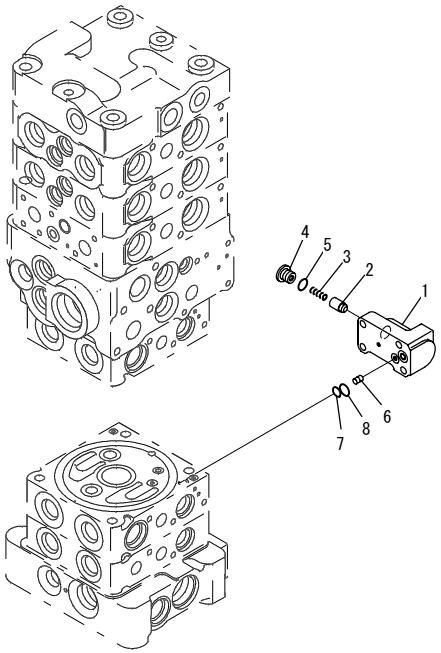

PW5H719

INDEX	PART NO.	DESCRIPTION	Q'TY	SERIAL NO.
	(723-27-50900)	CONTROL VALVE..... THIS ASSEMBLY CONSISTS OF ALL PARTS SHOWN IN FIGS.Y1662-01A0 TO Y1662-18A0.	1	DJC00001-
	723-11-01241	.VALVE ASS'Y.....	1	DJC00001-
1	☆	..BLOCK.....	1	DJC00001-
2	☆	..VALVE.....	1	DJC00001-
3	723-11-18180	..SPRING.....	1	DJC00001-
4	723-11-18190	..PLUG.....	1	DJC00001-
5	07002-11023	..O-RING.....	1	DJC00001-
6	☆	..ORIFICE.....	1	DJC00001-
7	07000-11006	..O-RING.....	1	DJC00001-
8	07000-11008	..O-RING.....	1	DJC00001-

FIG.Y1662-01A0 MAIN VALVE (7-VALVE) (1/18) (ATTACHMENT AND WITHOUT BLADE)

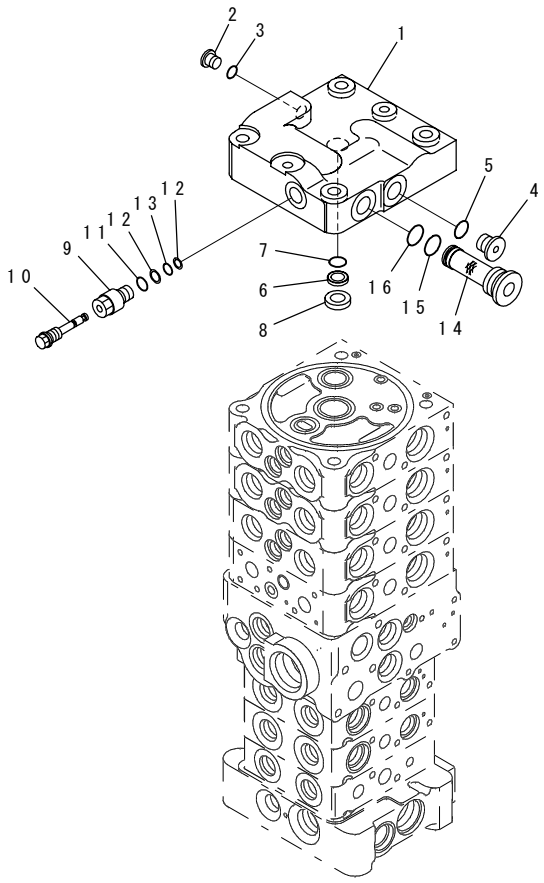

00091906

INDEX	PART NO.	DESCRIPTION	Q'TY	SERIAL NO.
	723-27-50900	CONTROL VALVE..... THIS ASSEMBLY CONSISTS OF ALL PARTS SHOWN IN FIGS.Y1662-01A0 TO Y1662-18A0.	1	DJC00001-
	☆	.COVER GROUP.....	1	DJC00001-
1	☆	..COVER.....	1	DJC00001-
2	708-8E-16160	..PLUG.....	1	DJC00001-
3	07002-11023	..O-RING.....	1	DJC00001-
4	702-21-55620	..PLUG.....	1	DJC00001-
5	07002-11423	..O-RING.....	1	DJC00001-
6	702-21-53120	..FILTER.....	1	DJC00001-
7	702-21-55420	..O-RING.....	1	DJC00001-
8	☆	..SEAT.....	1	DJC00001-
9	723-11-38620	..PLUG.....	1	DJC00001-
10	723-26-16990	..PLUG.....	1	DJC00001-
11	07002-11223	..O-RING.....	1	DJC00001-
12	07000-11003	..O-RING,BACK-UP.....	2	DJC00001-
13	07001-01003	..RING.....	1	DJC00001-
14	723-11-14390	..FILTER,BACK-UP.....	1	DJC00001-
15	07002-12434	..O-RING.....	1	DJC00001-
16	723-11-19130	..O-RING.....	1	DJC00001-

FIG.Y1662-02A0 MAIN VALVE (7-VALVE) (2/18) (ATTACHMENT AND WITHOUT BLADE)

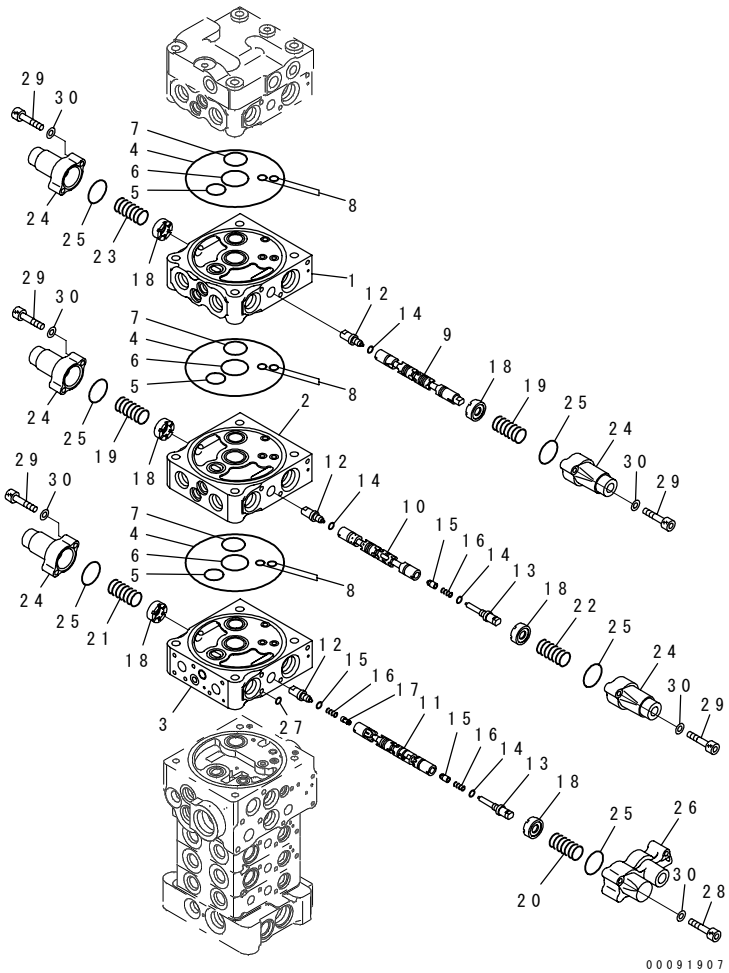

INDEX	PART NO.	DESCRIPTION	Q'TY	SERIAL NO.
	(723-27-50900)	CONTROL VALVE	1	DJC00001-
		THIS ASSEMBLY CONSISTS OF ALL PARTS SHOWN IN FIGS.Y1662-01A0 TO Y1662-18A0.		
	☆	.BODY GROUP	1	DJC00001-
1	☆	..BLOCK,VALVE	1	DJC00001-
2	☆	..BLOCK,VALVE	1	DJC00001-
3	☆	..BLOCK,VALVE	1	DJC00001-
4	07000-12120	..O-RING	3	DJC00001-
5	07000-12020	..O-RING	3	DJC00001-
6	723-26-15830	..O-RING	3	DJC00001-
7	723-26-15840	..O-RING	3	DJC00001-
8	07000-11008	..O-RING	6	DJC00001-
9	☆	..SPOOL	1	DJC00001-
10	☆	..SPOOL	1	DJC00001-
11	☆	..SPOOL	1	DJC00001-
12	☆	..PLUG	3	DJC00001-
13	☆	..PLUG	2	DJC00001-
14	☆	..O-RING	5	DJC00001-
15	☆	..VALVE	2	DJC00001-
16	☆	..SPRING	3	DJC00001-
17	☆	..VALVE	1	DJC00001-
18	723-26-15121	..RETAINER	6	DJC00001-
19	709-26-11450	..SPRING	2	DJC00001-
20	723-26-14490	..SPRING	1	DJC00001-
21	723-26-16621	..SPRING	1	DJC00001-
22	723-26-14510	..SPRING	1	DJC00001-
23	723-26-16621	..SPRING	1	DJC00001-
24	723-26-15110	..CASE	5	DJC00001-
25	575-41-17420	..O-RING	6	DJC00001-
26	723-26-17110	..CASE,SPRING	1	DJC00001-
27	702-21-54260	..O-RING	1	DJC00001-
28	01252-60635	..BOLT	3	DJC00001-
29	01252-60630	..BOLT	10	DJC00001-
30	01641-20608	..WASHER	13	DJC00001-

FIG.Y1662-03A0 MAIN VALVE (7-VALVE) (3/18) (ATTACHMENT AND WITHOUT BLADE)

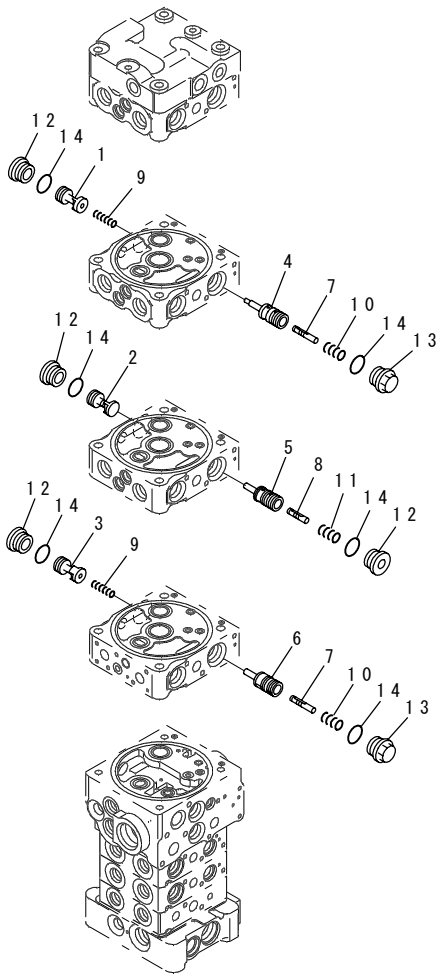

00091908

INDEX	PART NO.	DESCRIPTION	Q'TY	SERIAL NO.
	(723-27-50900)	CONTROL VALVE.....	1	DJC00001-
		THIS ASSEMBLY CONSISTS OF ALL PARTS SHOWN IN FIGS.Y1662-01A0 TO Y1662-18A0.		
	☆	.BODY GROUP.....	1	DJC00001-
1	☆	..VALVE.....	1	DJC00001-
2	☆	..VALVE.....	1	DJC00001-
3	☆	..VALVE.....	1	DJC00001-
4	☆	..VALVE.....	1	DJC00001-
5	☆	..VALVE.....	1	DJC00001-
6	☆	..VALVE.....	1	DJC00001-
7	☆	..PISTON.....	2	DJC00001-
8	☆	..PISTON.....	1	DJC00001-
9	723-26-14220	..SPRING.....	2	DJC00001-
10	723-26-14240	..SPRING.....	2	DJC00001-
11	723-26-14140	..SPRING.....	1	DJC00001-
12	723-26-15230	..PLUG.....	4	DJC00001-
13	723-26-15370	..PLUG.....	2	DJC00001-
14	07002-12434	..O-RING.....	6	DJC00001-

FIG.Y1662-04A0 MAIN VALVE (7-VALVE) (4/18) (ATTACHMENT AND WITHOUT BLADE)

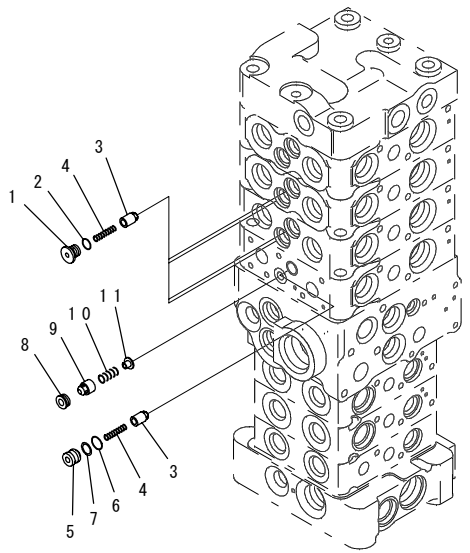

PW5H682

INDEX	PART NO.	DESCRIPTION	Q'TY	SERIAL NO.
	(723-27-50900)	CONTROL VALVE.....	1	DJC00001-
		THIS ASSEMBLY CONSISTS OF ALL PARTS SHOWN IN FIGS.Y1662-01A0 TO Y1662-18A0.		
	☆	.BODY GROUP.....	1	DJC00001-
1	723-26-15220	..PLUG.....	4	DJC00001-
2	07002-11223	..O-RING.....	4	DJC00001-
3	☆	..VALVE.....	5	DJC00001-
4	723-26-14150	..SPRING.....	5	DJC00001-
5	723-26-16230	..PLUG.....	1	DJC00001-
6	07000-11008	..O-RING.....	1	DJC00001-
7	07001-01008	..RING.....	1	DJC00001-
8	723-26-16240	..SEAT.....	1	DJC00001-
9	☆	..VALVE.....	1	DJC00001-
10	723-26-16260	..SPRING.....	1	DJC00001-
11	723-26-16270	..RETAINER.....	1	DJC00001-

FIG.Y1662-05A0 MAIN VALVE (7-VALVE) (5/18) (ATTACHMENT AND WITHOUT BLADE)

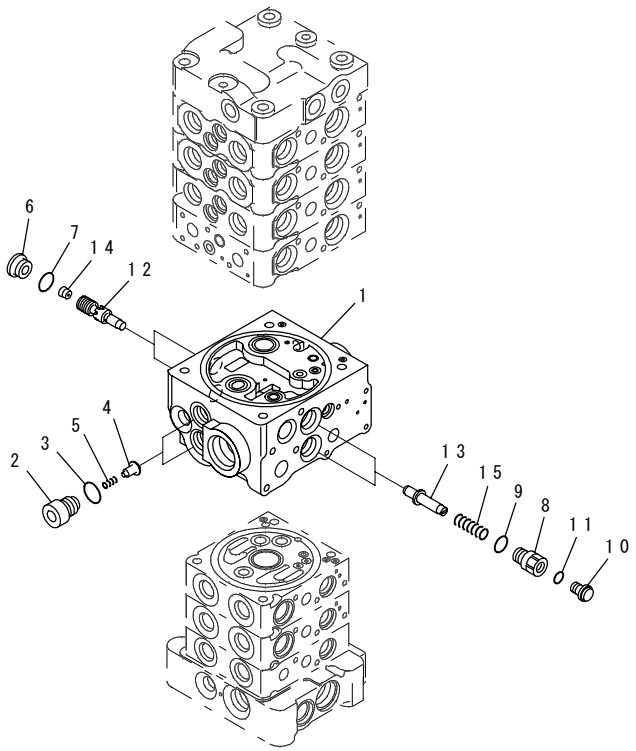

INDEX	PART NO.	DESCRIPTION	Q'TY	SERIAL NO.
	(723-27-50900)	CONTROL VALVE.....	1	DJC00001-
		THIS ASSEMBLY CONSISTS OF ALL PARTS SHOWN IN FIGS.Y1662-01A0 TO Y1662-18A0.		
	☆	.BODY GROUP.....	1	DJC00001-
1	☆	..BODY,VALVE.....	1	DJC00001-
2	723-26-17180	..PLUG.....	2	DJC00001-
3	07002-11823	..O-RING.....	2	DJC00001-
4	☆	..VALVE.....	2	DJC00001-
5	723-26-17170	..SPRING.....	2	DJC00001-
6	723-11-26170	..PLUG.....	2	DJC00001-
7	07002-11623	..O-RING.....	2	DJC00001-
8	723-26-16890	..PLUG.....	2	DJC00001-
9	07002-11823	..O-RING.....	2	DJC00001-
10	708-8E-16160	..PLUG.....	2	DJC00001-
11	07002-11023	..O-RING.....	2	DJC00001-
12	☆	..VALVE.....	2	DJC00001-
13	723-26-17190	..RETAINER.....	2	DJC00001-
14	702-21-56270	..ORIFICE.....	2	DJC00001-
15	723-26-14640	..SPRING.....	2	DJC00001-

FIG.Y1662-06A0 MAIN VALVE (7-VALVE) (6/18) (ATTACHMENT AND WITHOUT BLADE)

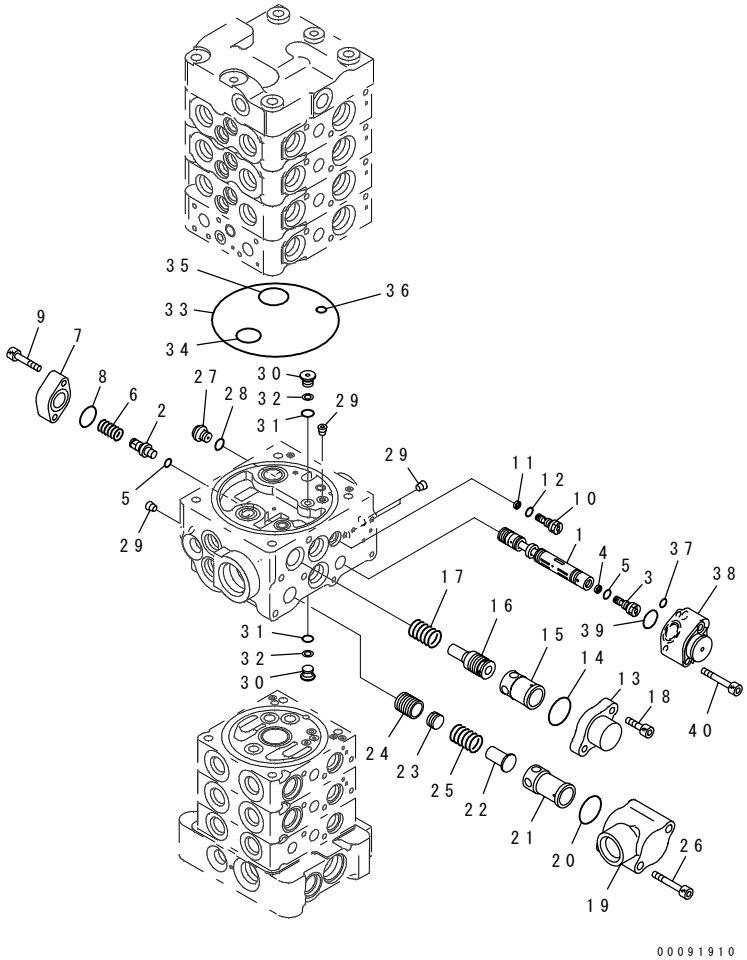

INDEX	PART NO.	DESCRIPTION	Q'TY	SERIAL NO.
	(723-27-50900)	CONTROL VALVE.....	1	DJC00001-
		THIS ASSEMBLY CONSISTS OF ALL PARTS SHOWN IN FIGS.Y1662-01A0 TO Y1662-18A0.		
	☆	.BODY GROUP.....	1	DJC00001-
1	☆	..SPOOL.....	1	DJC00001-
2	☆	..PLUG.....	1	DJC00001-
3	☆	..ORIFICE.....	1	DJC00001-
4	☆	..RING.....	1	DJC00001-
5	☆	..O-RING.....	2	DJC00001-
6	723-26-14650	..SPRING.....	1	DJC00001-
7	723-26-16940	..FLANGE.....	1	DJC00001-
8	722-12-19120	..O-RING.....	1	DJC00001-
9	01252-60640	..BOLT.....	2	DJC00001-
10	☆	..ORIFICE.....	1	DJC00001-
11	722-12-15160	..RING.....	1	DJC00001-
12	07002-10823	..O-RING.....	1	DJC00001-
13	723-26-16350	..FLANGE.....	1	DJC00001-
14	723-11-19110	..O-RING.....	1	DJC00001-
15	723-26-16360	..SLEEVE.....	1	DJC00001-
16	723-26-16371	..PISTON.....	1	DJC00001-
17	723-26-16380	..SPRING.....	1	DJC00001-
18	01252-60820	..BOLT.....	2	DJC00001-
19	723-26-16390	..CASE.....	1	DJC00001-
20	723-11-19110	..O-RING.....	1	DJC00001-
21	☆	..SLEEVE.....	1	DJC00001-
22	723-26-16420	..RETAINER.....	1	DJC00001-
23	☆	..PISTON.....	1	DJC00001-
24	☆	..VALVE.....	1	DJC00001-
25	723-26-16450	..SPRING.....	1	DJC00001-
26	01252-60855	..BOLT.....	2	DJC00001-
27	708-8E-16160	..PLUG.....	1	DJC00001-
28	07002-11023	..O-RING.....	1	DJC00001-
29	☆	..PLUG.....	4	DJC00001-
30	723-26-16460	..PLUG.....	2	DJC00001-
31	07000-11007	..O-RING.....	2	DJC00001-
32	07001-01007	..RING,BACK-UP.....	2	DJC00001-
33	07000-12120	..O-RING.....	1	DJC00001-
34	07000-12020	..O-RING.....	1	DJC00001-
35	723-26-15840	..O-RING.....	1	DJC00001-
36	07000-11008	..O-RING.....	1	DJC00001-
37	07000-11006	..O-RING.....	1	DJC00001-
38	723-26-16920	..CASE,SPRING.....	1	DJC00001-

FIG.Y1662-06A0 MAIN VALVE (7-VALVE) (6/18) (ATTACHMENT AND WITHOUT BLADE)

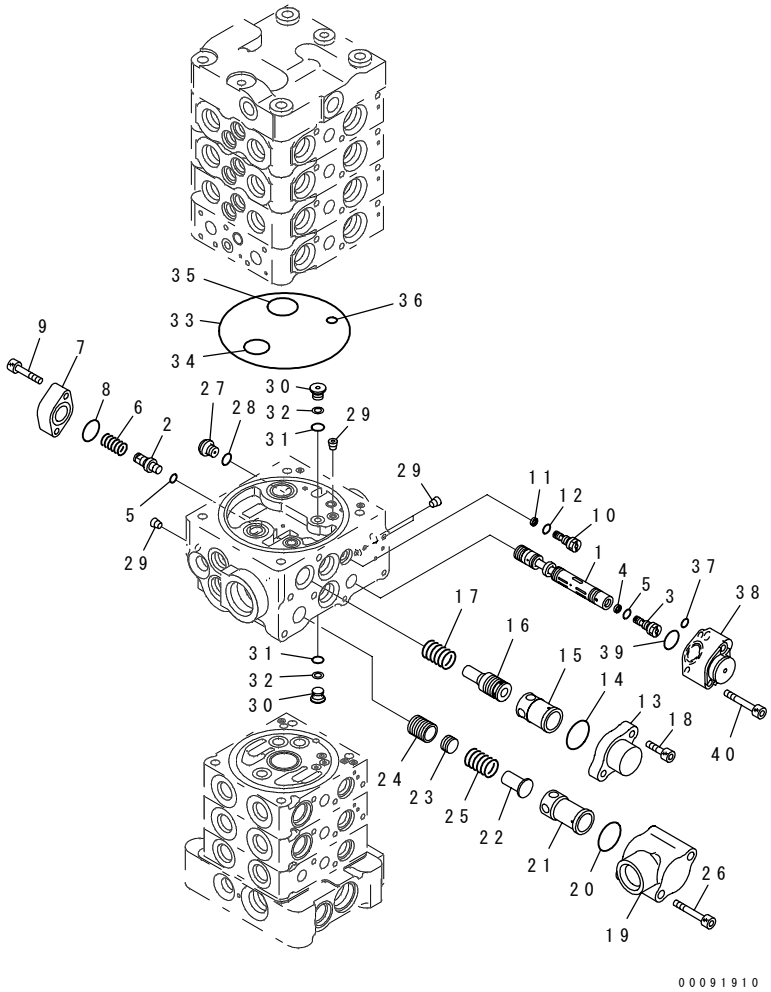

INDEX	PART NO.	DESCRIPTION	Q'TY	SERIAL NO.
39	722-12-19120	..O-RING.....	1	DJC00001-
40	01252-60640	..BOLT.....	2	DJC00001-

FIG.Y1662-07A0 MAIN VALVE (7-VALVE) (7/18) (ATTACHMENT AND WITHOUT BLADE)

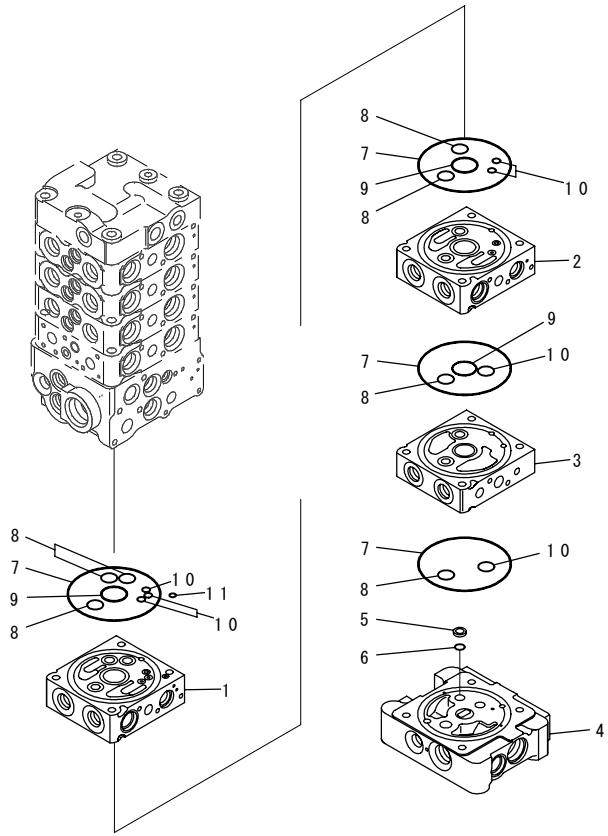

INDEX	PART NO.	DESCRIPTION	Q'TY	SERIAL NO.
	(723-27-50900)	CONTROL VALVE.....	1	DJC00001-
		THIS ASSEMBLY CONSISTS OF ALL PARTS SHOWN IN FIGS.Y1662-01A0 TO Y1662-18A0.		
	☆	.BODY GROUP.....	1	DJC00001-
1	☆	..BLOCK,VALVE.....	1	DJC00001-
2	☆	..BLOCK,VALVE.....	1	DJC00001-
3	☆	..BLOCK,VALVE.....	1	DJC00001-
4	☆	..BLOCK.....	1	DJC00001-
5	702-21-53120	..FILTER.....	1	DJC00001-
6	702-21-55420	..O-RING.....	1	DJC00001-
7	07000-12100	..O-RING.....	4	DJC00001-
8	723-11-19130	..O-RING.....	7	DJC00001-
9	723-11-19110	..O-RING.....	3	DJC00001-
10	07000-11006	..O-RING.....	7	DJC00001-
11	702-21-54260	..O-RING.....	1	DJC00001-

FIG.Y1662-08A0 MAIN VALVE (7-VALVE) (8/18) (ATTACHMENT AND WITHOUT BLADE)

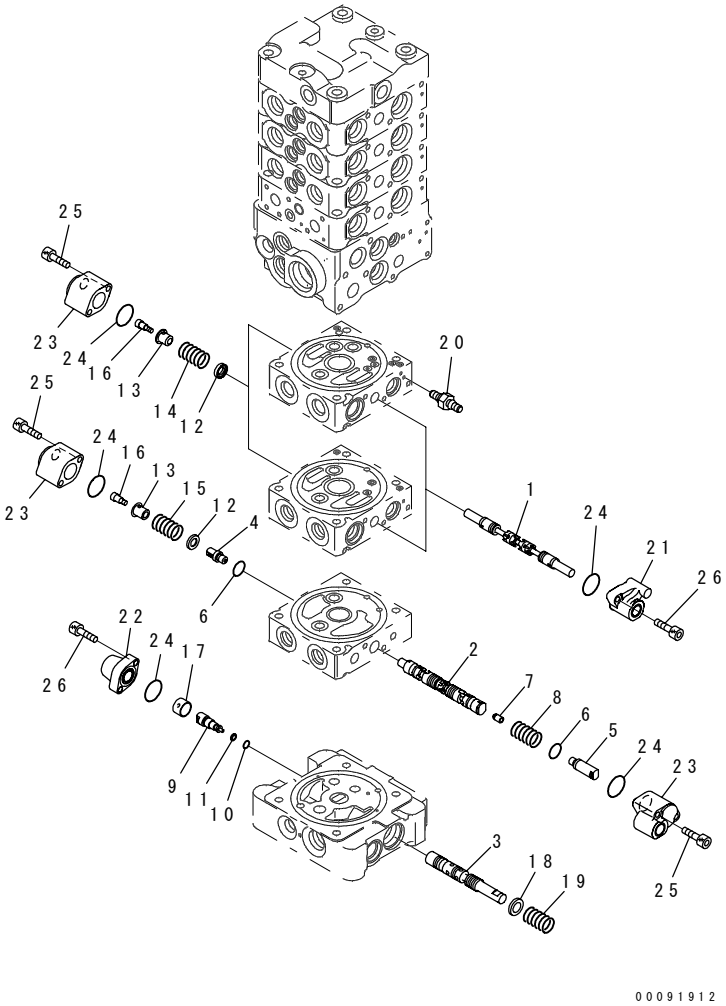

INDEX	PART NO.	DESCRIPTION	Q'TY	SERIAL NO.
	(723-27-50900)	CONTROL VALVE.....	1	DJC00001-
		THIS ASSEMBLY CONSISTS OF ALL PARTS SHOWN IN FIGS.Y1662-01A0 TO Y1662-18A0.		
	☆	.BODY GROUP.....	1	DJC00001-
1	☆	..SPOOL.....	2	DJC00001-
2	☆	..SPOOL.....	1	DJC00001-
3	☆	..SPOOL.....	1	DJC00001-
4	☆	..PLUG.....	1	DJC00001-
5	☆	..PLUG.....	1	DJC00001-
6	☆	..O-RING.....	2	DJC00001-
7	☆	..POPPET.....	2	DJC00001-
8	723-11-17510	..SPRING.....	2	DJC00001-
9	723-26-16470	..PLUG.....	1	DJC00001-
10	07000-11005	..O-RING.....	1	DJC00001-
11	07001-01005	..RING.....	1	DJC00001-
12	723-11-17330	..RETAINER.....	3	DJC00001-
13	723-11-17353	..RETAINER.....	3	DJC00001-
14	723-11-17341	..SPRING.....	2	DJC00001-
15	723-11-38930	..SPRING.....	1	DJC00001-
16	723-11-17361	..BOLT.....	3	DJC00001-
17	723-26-16480	..RETAINER.....	1	DJC00001-
18	723-26-16490	..SPACER.....	1	DJC00001-
19	723-26-14310	..SPRING.....	1	DJC00001-
20	723-11-29620	..PLUG.....	1	DJC00001-
21	723-11-37220	..CASE,SPRING.....	2	DJC00001-
22	723-11-17410	..CASE,SPRING.....	1	DJC00001-
23	723-11-27880	..CASE,SPRING.....	4	DJC00001-
24	722-12-19120	..O-RING.....	7	DJC00001-
25	01252-60640	..BOLT.....	8	DJC00001-
26	01252-60620	..BOLT.....	6	DJC00001-

FIG.Y1662-09A0 MAIN VALVE (7-VALVE) (9/18) (ATTACHMENT AND WITHOUT BLADE)

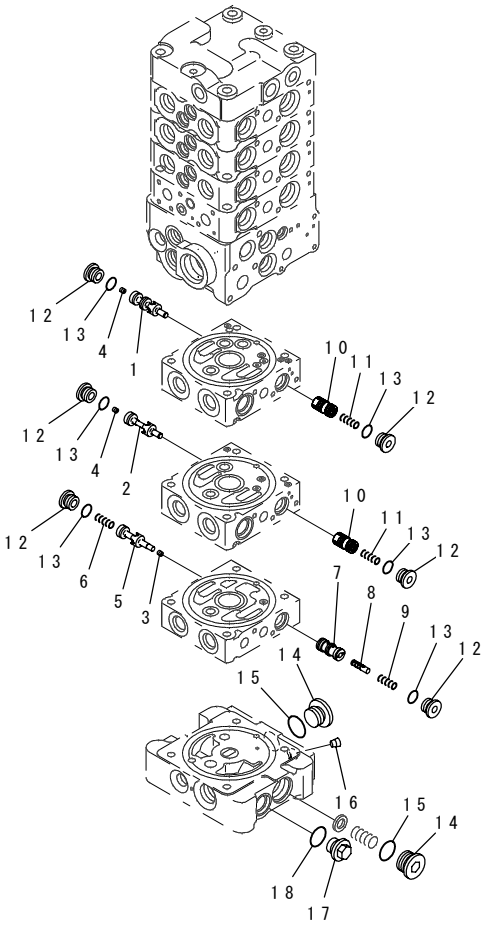

00091913

INDEX	PART NO.	DESCRIPTION	Q'TY	SERIAL NO.
	(723-27-50900)	CONTROL VALVE.....	1	DJC00001-
		THIS ASSEMBLY CONSISTS OF ALL PARTS SHOWN IN FIGS.Y1662-01A0 TO Y1662-18A0.		
	☆	.BODY GROUP.....	1	DJC00001-
1	☆	..VALVE.....	1	DJC00001-
2	☆	..VALVE.....	1	DJC00001-
3	☆	..ORIFICE.....	1	DJC00001-
4	☆	..ORIFICE.....	2	DJC00001-
5	☆	..VALVE.....	1	DJC00001-
6	723-11-15130	..SPRING.....	1	DJC00001-
7	☆	..VALVE.....	1	DJC00001-
8	☆	..PISTON.....	1	DJC00001-
9	723-11-16130	..SPRING.....	1	DJC00001-
10	☆	..VALVE SUB ASS'Y.....	2	DJC00001-
11	723-11-16230	..SPRING.....	2	DJC00001-
12	723-11-15110	..PLUG.....	6	DJC00001-
13	07002-11623	..O-RING.....	6	DJC00001-
14	723-26-15230	..PLUG.....	2	DJC00001-
15	07002-12434	..O-RING.....	2	DJC00001-
16	☆	..PLUG.....	1	DJC00001-
17	706-8E-14191	..PLUG.....	1	DJC00001-
18	07002-11823	..O-RING.....	1	DJC00001-

FIG.Y1662-10A0 MAIN VALVE (7-VALVE) (10/18) (ATTACHMENT AND WITHOUT BLADE)

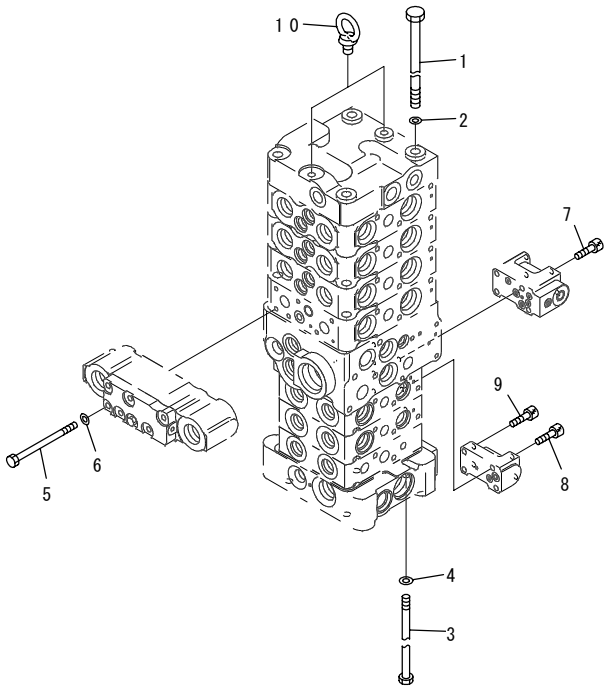

00091914

INDEX	PART NO.	DESCRIPTION	Q'TY	SERIAL NO.
	(723-27-50900)	CONTROL VALVE..... THIS ASSEMBLY CONSISTS OF ALL PARTS SHOWN IN FIGS.Y1662-01A0 TO Y1662-18A0.	1	DJC00001-
1	700-85-11111	.BOLT.....	4	DJC00001-
2	01643-31032	.WASHER.....	4	DJC00001-
3	723-11-29660	.BOLT.....	4	DJC00001-
4	01643-30823	.WASHER.....	4	DJC00001-
5	723-26-16510	.BOLT.....	6	DJC00001-
6	01643-30623	.WASHER.....	6	DJC00001-
7	01252-60650	.BOLT.....	4	DJC00001-
8	01252-60635	.BOLT.....	2	DJC00001-
9	01252-60616	.BOLT.....	2	DJC00001-
10	04530-10815	.BOLT,EYE.....	2	DJC00001-

FIG.Y1662-11A0 MAIN VALVE (7-VALVE) (11/18) (ATTACHMENT AND WITHOUT BLADE)

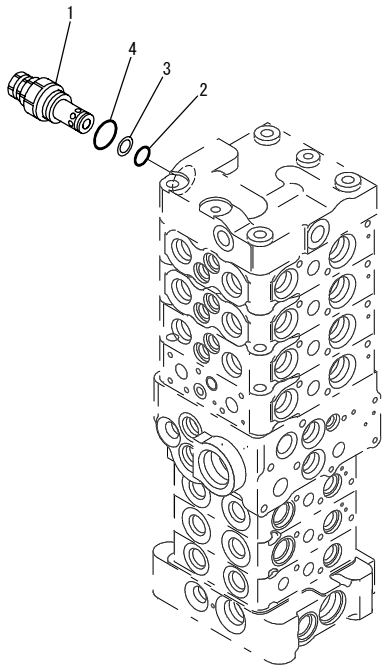

00010528

INDEX	PART NO.	DESCRIPTION	Q'TY	SERIAL NO.
	(723-27-50900)	CONTROL VALVE..... THIS ASSEMBLY CONSISTS OF ALL PARTS SHOWN IN FIGS.Y1662-01A0 TO Y1662-18A0.	1	DJC00001-
1	723-20-63300	.VALVE ASS'Y,RELIEF.....	1	DJC00001-
2	700-22-11410	..O-RING.....	1	DJC00001-
3	700-80-64220	..RING.....	1	DJC00001-
4	07002-12434	..O-RING.....	1	DJC00001-

FIG.Y1662-12A0 MAIN VALVE (7-VALVE) (12/18) (ATTACHMENT AND WITHOUT BLADE)

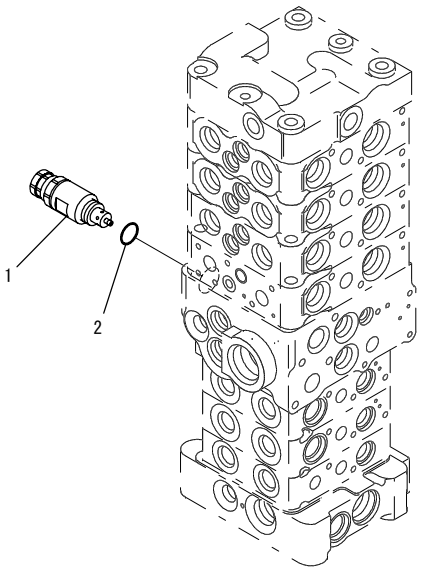

00010529

INDEX	PART NO.	DESCRIPTION	Q'TY	SERIAL NO.
	(723-27-50900)	CONTROL VALVE..... THIS ASSEMBLY CONSISTS OF ALL PARTS SHOWN IN FIGS.Y1662-01A0 TO Y1662-18A0.	1	DJC00001-
1	723-20-67200	.VALVE ASS'Y,SUCTION AND SAFETY.....	1	DJC00001-
2	07002-12034	..O-RING.....	1	DJC00001-

FIG.Y1662-13A0 MAIN VALVE (7-VALVE) (13/18) (ATTACHMENT AND WITHOUT BLADE)

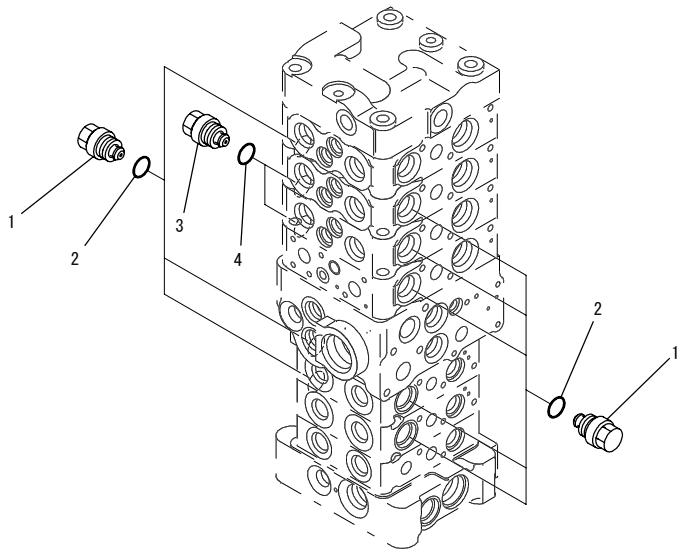

INDEX	PART NO.	DESCRIPTION	Q'TY	SERIAL NO.
	(723-27-50900)	CONTROL VALVE.....	1	DJC00001-
		THIS ASSEMBLY CONSISTS OF ALL PARTS SHOWN IN FIGS.Y1662-01A0 TO Y1662-18A0.		
1	723-20-80100	.VALVE ASS'Y,SUCTION.....	8	DJC00001-
2	07002-12034	..O-RING.....	1	DJC00001-
3	723-10-80200	.VALVE ASS'Y,SUCTION.....	2	DJC00001-
4	07002-12034	..O-RING.....	1	DJC00001-

FIG.Y1662-14A0 MAIN VALVE (7-VALVE) (14/18) (ATTACHMENT AND WITHOUT BLADE)

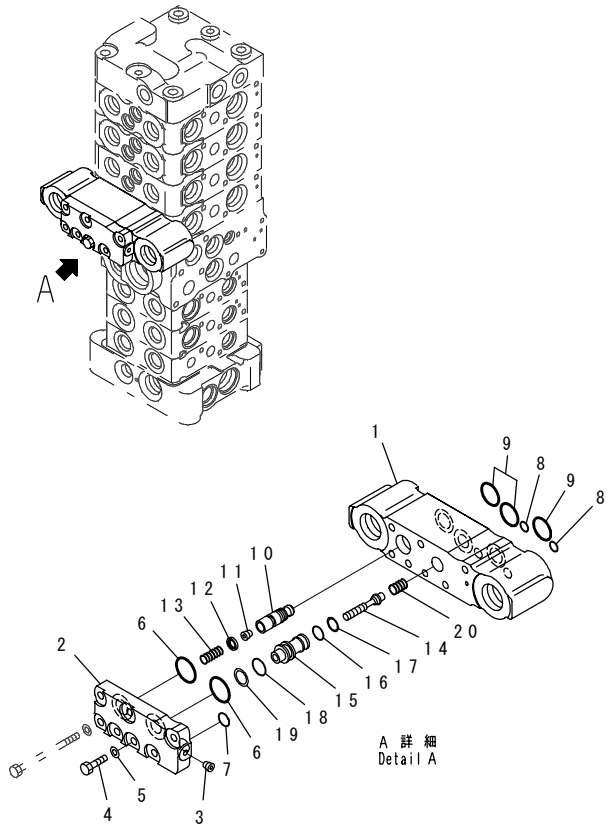

PW5H693

INDEX	PART NO.	DESCRIPTION	Q'TY	SERIAL NO.
	(723-27-50900)	CONTROL VALVE..... THIS ASSEMBLY CONSISTS OF ALL PARTS SHOWN IN FIGS.Y1662-01A0 TO Y1662-18A0.	1	DJC00001-
	723-20-96200	.VALVE ASS'Y.....	1	DJC00001-
1	☆	..BLOCK.....	1	DJC00001-
2	723-20-96150	..PLATE.....	1	DJC00001-
3	☆	..PLUG.....	1	DJC00001-
4	01010-80620	..BOLT.....	1	DJC00001-
5	01643-30623	..WASHER.....	1	DJC00001-
6	723-11-29490	..O-RING.....	2	DJC00001-
7	07000-11009	..O-RING.....	1	DJC00001-
8	07000-11006	..O-RING.....	2	DJC00001-
9	723-11-18150	..O-RING.....	3	DJC00001-
10	☆	..VALVE.....	1	DJC00001-
11	☆	..ORIFICE.....	1	DJC00001-
12	☆	..SEAL.....	1	DJC00001-
13	723-20-96140	..SPRING.....	1	DJC00001-
	723-11-00710	..VALVE SUB ASS'Y.....	1	DJC00001-
14	☆	...PISTON.....	1	DJC00001-
15	☆	...SLEEVE.....	1	DJC00001-
16	07000-11010	..O-RING.....	1	DJC00001-
17	07001-01010	..RING.....	1	DJC00001-
18	07000-12012	..O-RING.....	1	DJC00001-
19	07001-02012	..RING.....	1	DJC00001-
20	723-11-19950	..SPRING.....	1	DJC00001-

FIG.Y1662-15AO MAIN VALVE (7-VALVE) (15/18) (ATTACHMENT AND WITHOUT BLADE)

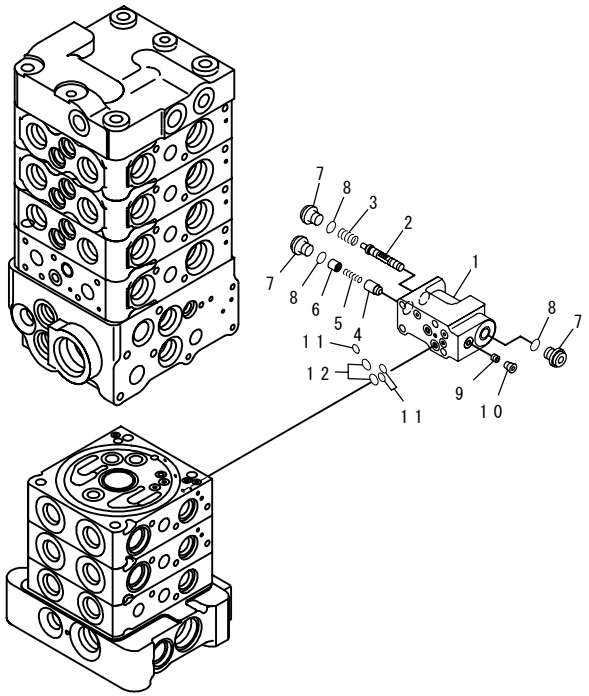

PJ5H944

INDEX	PART NO.	DESCRIPTION	Q'TY	SERIAL NO.
	(723-27-50900)	CONTROL VALVE..... THIS ASSEMBLY CONSISTS OF ALL PARTS SHOWN IN FIGS.Y1662-01AO TO Y1662-18AO.	1	DJC00001-
	723-11-01910	.VALVE ASS'Y.....	1	DJC00001-
1	☆	..BLOCK.....	1	DJC00001-
2	☆	..SPOOL.....	1	DJC00001-
3	723-11-27830	..SPRING.....	1	DJC00001-
4	☆	..VALVE.....	1	DJC00001-
5	723-11-18180	..SPRING.....	1	DJC00001-
6	723-11-27840	..SPACER.....	1	DJC00001-
7	723-11-27850	..PLUG.....	3	DJC00001-
8	07002-11023	..O-RING.....	3	DJC00001-
9	☆	..ORIFICE.....	1	DJC00001-
10	☆	..PLUG.....	1	DJC00001-
11	07000-11005	..O-RING.....	3	DJC00001-
12	07000-11007	..O-RING.....	2	DJC00001-

FIG.Y1662-16A0 MAIN VALVE (7-VALVE) (16/18) (ATTACHMENT AND WITHOUT BLADE)

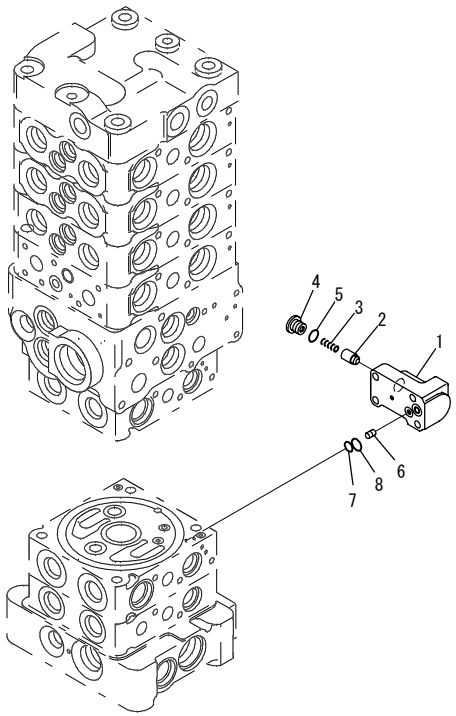

PW5H696

INDEX	PART NO.	DESCRIPTION	Q'TY	SERIAL NO.
	(723-27-50900)	CONTROL VALVE..... THIS ASSEMBLY CONSISTS OF ALL PARTS SHOWN IN FIGS.Y1662-01A0 TO Y1662-18A0.	1	DJC00001-
	723-11-01241	.VALVE ASS'Y.....	1	DJC00001-
1	☆	..BLOCK.....	1	DJC00001-
2	☆	..VALVE.....	1	DJC00001-
3	723-11-18180	..SPRING.....	1	DJC00001-
4	723-11-18190	..PLUG.....	1	DJC00001-
5	07002-11023	..O-RING.....	1	DJC00001-
6	☆	..ORIFICE.....	1	DJC00001-
7	07000-11006	..O-RING.....	1	DJC00001-
8	07000-11008	..O-RING.....	1	DJC00001-

FIG.Y1662-17A0 MAIN VALVE (7-VALVE) (17/18) (ATTACHMENT AND WITHOUT BLADE)

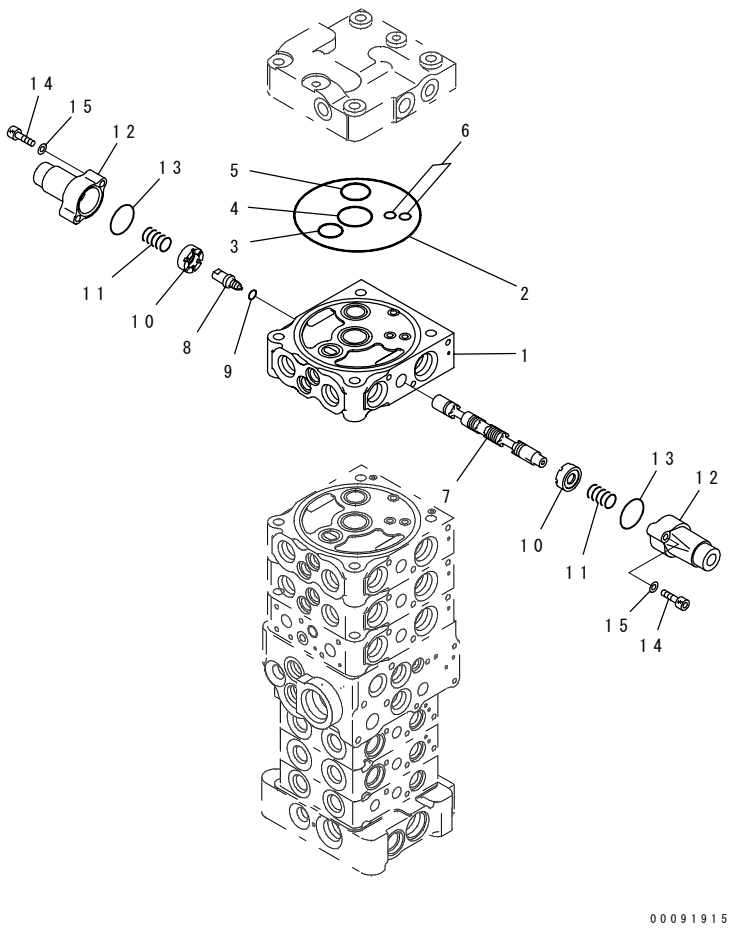

INDEX	PART NO.	DESCRIPTION	Q'TY	SERIAL NO.
	(723-27-50900)	CONTROL VALVE.....	1	DJC00001-
		THIS ASSEMBLY CONSISTS OF ALL PARTS SHOWN IN FIGS.Y1662-01A0 TO Y1662-18A0.		
	723-21-07501	.VALVE SUB ASS'Y.....	1	DJC00001-
1	☆	..BLOCK,VALVE.....	1	DJC00001-
2	07000-12120	..O-RING.....	1	DJC00001-
3	07000-12020	..O-RING.....	1	DJC00001-
4	723-26-15830	..O-RING.....	1	DJC00001-
5	723-26-15840	..O-RING.....	1	DJC00001-
6	07000-11008	..O-RING.....	2	DJC00001-
7	☆	..SPOOL.....	1	DJC00001-
8	☆	..PLUG.....	1	DJC00001-
9	☆	..O-RING.....	1	DJC00001-
10	723-26-15121	..RETAINER.....	2	DJC00001-
11	709-26-11450	..SPRING.....	2	DJC00001-
12	723-26-15110	..CASE.....	2	DJC00001-
13	575-41-17420	..O-RING.....	2	DJC00001-
14	01252-60630	..BOLT.....	4	DJC00001-
15	01641-20608	..WASHER.....	4	DJC00001-

FIG.Y1662-18A0 MAIN VALVE (7-VALVE) (18/18) (ATTACHMENT AND WITHOUT BLADE)

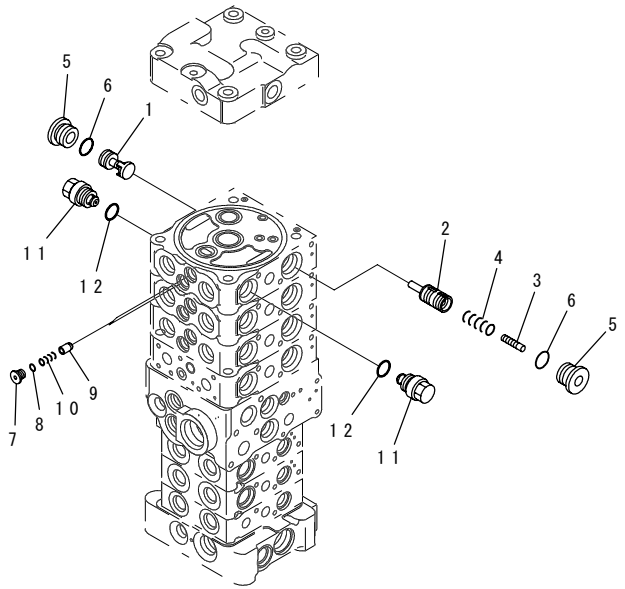

00010531

INDEX	PART NO.	DESCRIPTION	Q'TY	SERIAL NO.
	(723-27-50900)	CONTROL VALVE..... THIS ASSEMBLY CONSISTS OF ALL PARTS SHOWN IN FIGS.Y1662-01A0 TO Y1662-18A0.	1	DJC00001-
	(723-21-07501)	.VALVE SUB ASS'Y.....	1	DJC00001-
1	☆	..VALVE.....	1	DJC00001-
2	☆	..VALVE.....	1	DJC00001-
3	☆	..PISTON.....	1	DJC00001-
4	723-26-14140	..SPRING.....	1	DJC00001-
5	723-26-15230	..PLUG.....	2	DJC00001-
6	07002-12434	..O-RING.....	2	DJC00001-
7	723-26-15220	..PLUG.....	2	DJC00001-
8	07002-11223	..O-RING.....	2	DJC00001-
9	☆	..VALVE.....	2	DJC00001-
10	723-26-14150	..SPRING.....	2	DJC00001-
11	723-20-80100	..VALVE ASS'Y,SUCTION.....	2	DJC00001-
12	07002-12034	...O-RING.....	1	DJC00001-

FIG.Y1662-21A0 MAIN VALVE (7-VALVE) (1/18) (WITH BLADE)

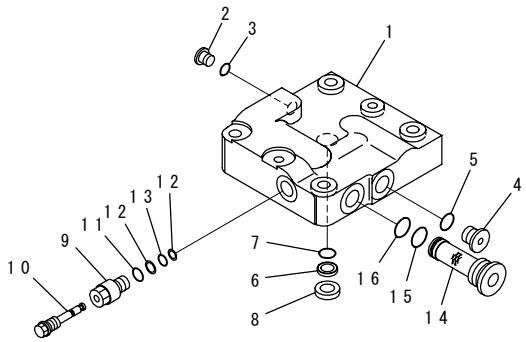

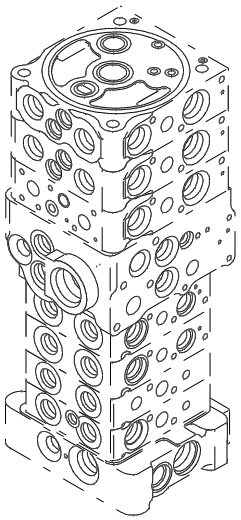

00091959

INDEX	PART NO.	DESCRIPTION	Q'TY	SERIAL NO.
	723-27-51100	CONTROL VALVE.....	1	DJC00001-
		THIS ASSEMBLY CONSISTS OF ALL PARTS SHOWN IN FIGS.Y1662-21A0 TO Y1662-38A0.		
	☆	.COVER GROUP.....	1	DJC00001-
1	☆	..COVER.....	1	DJC00001-
2	708-8E-16160	..PLUG.....	1	DJC00001-
3	07002-11023	..O-RING.....	1	DJC00001-
4	702-21-55620	..PLUG.....	1	DJC00001-
5	07002-11423	..O-RING.....	1	DJC00001-
6	702-21-53120	..FILTER.....	1	DJC00001-
7	702-21-55420	..O-RING.....	1	DJC00001-
8	☆	..SEAT.....	1	DJC00001-
9	723-11-38620	..PLUG.....	1	DJC00001-
10	723-26-16990	..PLUG.....	1	DJC00001-
11	07002-11223	..O-RING.....	1	DJC00001-
12	07000-11003	..O-RING,BACK-UP.....	2	DJC00001-
13	07001-01003	..RING.....	1	DJC00001-
14	723-11-14390	..FILTER,BACK-UP.....	1	DJC00001-
15	07002-12434	..O-RING.....	1	DJC00001-
16	723-11-19130	..O-RING.....	1	DJC00001-

FIG.Y1662-22A0 MAIN VALVE (7-VALVE) (2/18) (WITH BLADE)

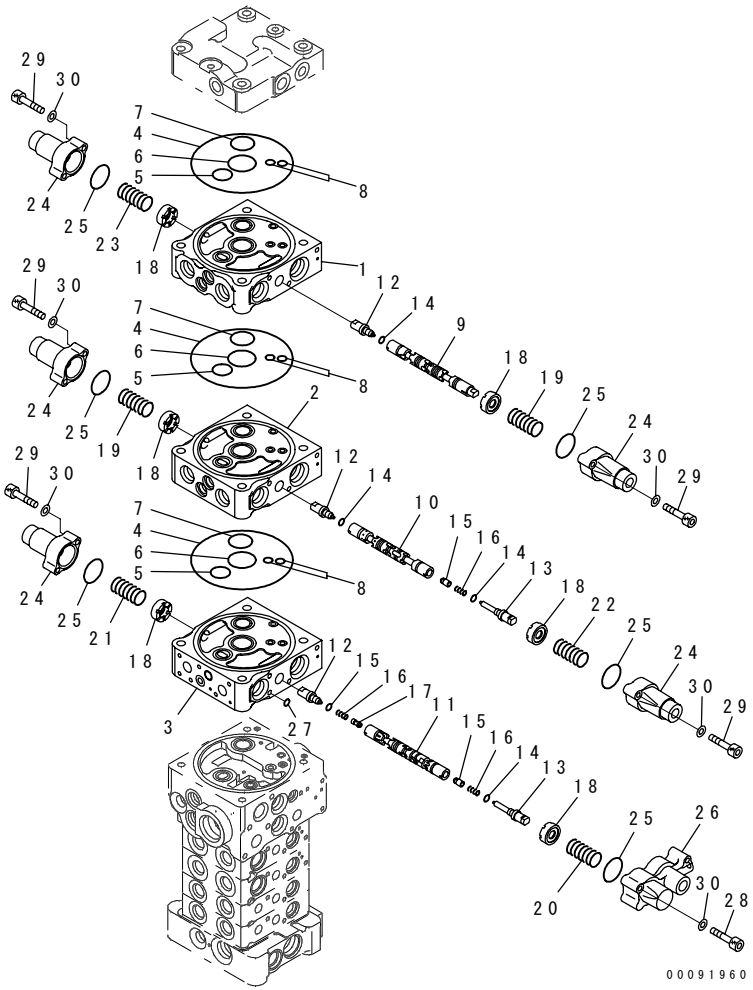

INDEX	PART NO.	DESCRIPTION	Q'TY	SERIAL NO.
	(723-27-51100)	CONTROL VALVE.....	1	DJC00001-
		THIS ASSEMBLY CONSISTS OF ALL PARTS SHOWN IN FIGS.Y1662-21A0 TO Y1662-38A0.		
	☆	.BODY GROUP.....	1	DJC00001-
1	☆	..BLOCK,VALVE.....	1	DJC00001-
2	☆	..BLOCK,VALVE.....	1	DJC00001-
3	☆	..BLOCK,VALVE.....	1	DJC00001-
4	07000-12120	..O-RING.....	3	DJC00001-
5	07000-12020	..O-RING.....	3	DJC00001-
6	723-26-15830	..O-RING.....	3	DJC00001-
7	723-26-15840	..O-RING.....	3	DJC00001-
8	07000-11008	..O-RING.....	6	DJC00001-
9	☆	..SPOOL.....	1	DJC00001-
10	☆	..SPOOL.....	1	DJC00001-
11	☆	..SPOOL.....	1	DJC00001-
12	☆	..PLUG.....	3	DJC00001-
13	☆	..PLUG.....	2	DJC00001-
14	☆	..O-RING.....	5	DJC00001-
15	☆	..VALVE.....	2	DJC00001-
16	☆	..SPRING.....	3	DJC00001-
17	☆	..VALVE.....	1	DJC00001-
18	723-26-15121	..RETAINER.....	6	DJC00001-
19	709-26-11450	..SPRING.....	2	DJC00001-
20	723-26-14490	..SPRING.....	1	DJC00001-
21	723-26-16621	..SPRING.....	1	DJC00001-
22	723-26-14510	..SPRING.....	1	DJC00001-
23	723-26-16621	..SPRING.....	1	DJC00001-
24	723-26-15110	..CASE.....	5	DJC00001-
25	575-41-17420	..O-RING.....	6	DJC00001-
26	723-26-17110	..CASE,SPRING.....	1	DJC00001-
27	702-21-54260	..O-RING.....	1	DJC00001-
28	01252-60635	..BOLT.....	3	DJC00001-
29	01252-60630	..BOLT.....	10	DJC00001-
30	01641-20608	..WASHER.....	13	DJC00001-

FIG.Y1662-23A0 MAIN VALVE (7-VALVE) (3/18) (WITH BLADE)

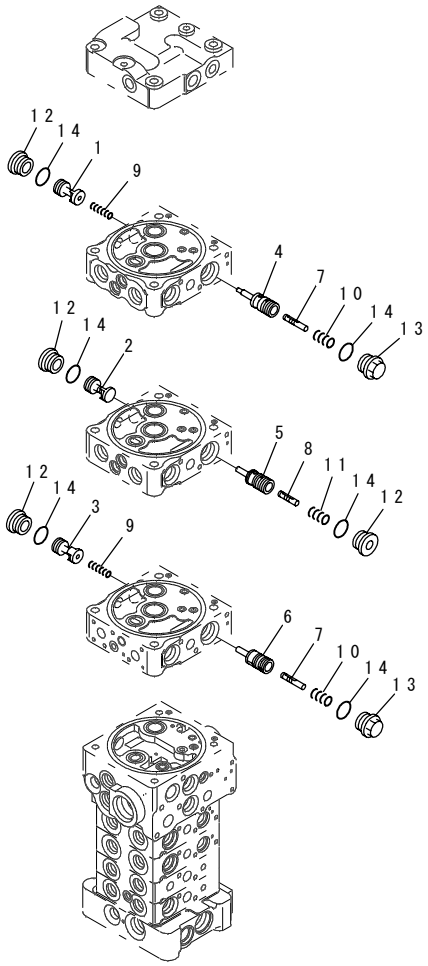

INDEX	PART NO.	DESCRIPTION	Q'TY	SERIAL NO.
	(723-27-51100)	CONTROL VALVE.....	1	DJC00001-
		THIS ASSEMBLY CONSISTS OF ALL PARTS SHOWN IN FIGS.Y1662-21A0 TO Y1662-38A0.		
	☆	.BODY GROUP.....	1	DJC00001-
1	☆	..VALVE.....	1	DJC00001-
2	☆	..VALVE.....	1	DJC00001-
3	☆	..VALVE.....	1	DJC00001-
4	☆	..VALVE.....	1	DJC00001-
5	☆	..VALVE.....	1	DJC00001-
6	☆	..VALVE.....	1	DJC00001-
7	☆	..PISTON.....	2	DJC00001-
8	☆	..PISTON.....	1	DJC00001-
9	723-26-14220	..SPRING.....	2	DJC00001-
10	723-26-14240	..SPRING.....	2	DJC00001-
11	723-26-14140	..SPRING.....	1	DJC00001-
12	723-26-15230	..PLUG.....	4	DJC00001-
13	723-26-15370	..PLUG.....	2	DJC00001-
14	07002-12434	..O-RING.....	6	DJC00001-

FIG.Y1662-24A0 MAIN VALVE (7-VALVE) (4/18) (WITH BLADE)

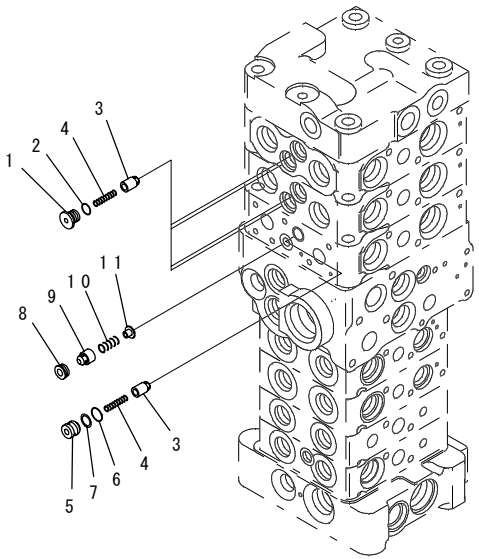

PW5H773

INDEX	PART NO.	DESCRIPTION	Q'TY	SERIAL NO.
	(723-27-51100)	CONTROL VALVE.....	1	DJC00001-
		THIS ASSEMBLY CONSISTS OF ALL PARTS SHOWN IN FIGS.Y1662-21A0 TO Y1662-38A0.		
	☆	.BODY GROUP.....	1	DJC00001-
1	723-26-15220	..PLUG.....	4	DJC00001-
2	07002-11223	..O-RING.....	4	DJC00001-
3	☆	..VALVE.....	5	DJC00001-
4	723-26-14150	..SPRING.....	5	DJC00001-
5	723-26-16230	..PLUG.....	1	DJC00001-
6	07000-11008	..O-RING.....	1	DJC00001-
7	07001-01008	..RING.....	1	DJC00001-
8	723-26-16240	..SEAT.....	1	DJC00001-
9	☆	..VALVE.....	1	DJC00001-
10	723-26-16260	..SPRING.....	1	DJC00001-
11	723-26-16270	..RETAINER.....	1	DJC00001-

FIG.Y1662-25A0 MAIN VALVE (7-VALVE) (5/18) (WITH BLADE)

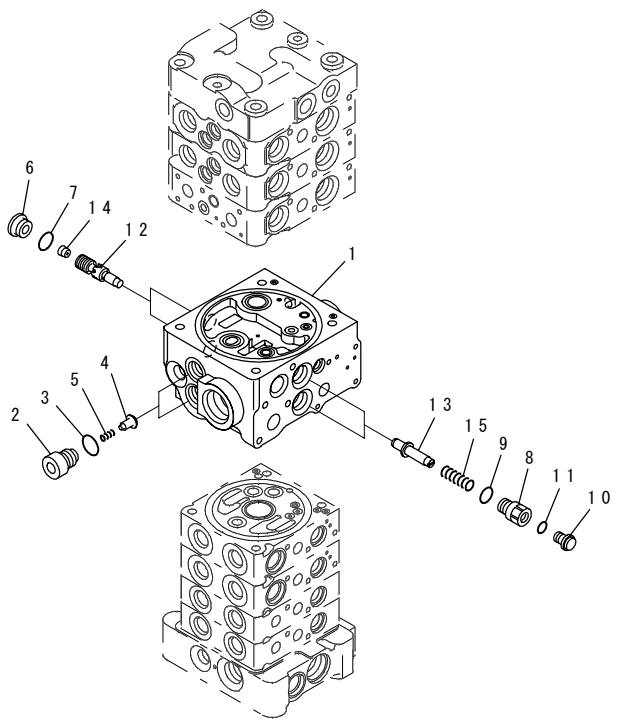

INDEX	PART NO.	DESCRIPTION	Q'TY	SERIAL NO.
	(723-27-51100)	CONTROL VALVE.....	1	DJC00001-
		THIS ASSEMBLY CONSISTS OF ALL PARTS SHOWN IN FIGS.Y1662-21A0 TO Y1662-38A0.		
	☆	.BODY GROUP.....	1	DJC00001-
1	☆	..BODY,VALVE.....	1	DJC00001-
2	723-26-17180	..PLUG.....	2	DJC00001-
3	07002-11823	..O-RING.....	2	DJC00001-
4	☆	..VALVE.....	2	DJC00001-
5	723-26-17170	..SPRING.....	2	DJC00001-
6	723-11-26170	..PLUG.....	2	DJC00001-
7	07002-11623	..O-RING.....	2	DJC00001-
8	723-26-16890	..PLUG.....	2	DJC00001-
9	07002-11823	..O-RING.....	2	DJC00001-
10	708-8E-16160	..PLUG.....	2	DJC00001-
11	07002-11023	..O-RING.....	2	DJC00001-
12	☆	..VALVE.....	2	DJC00001-
13	723-26-17190	..RETAINER.....	2	DJC00001-
14	702-21-56270	..ORIFICE.....	2	DJC00001-
15	723-26-14640	..SPRING.....	2	DJC00001-

FIG.Y1662-26A0 MAIN VALVE (7-VALVE) (6/18) (WITH BLADE)

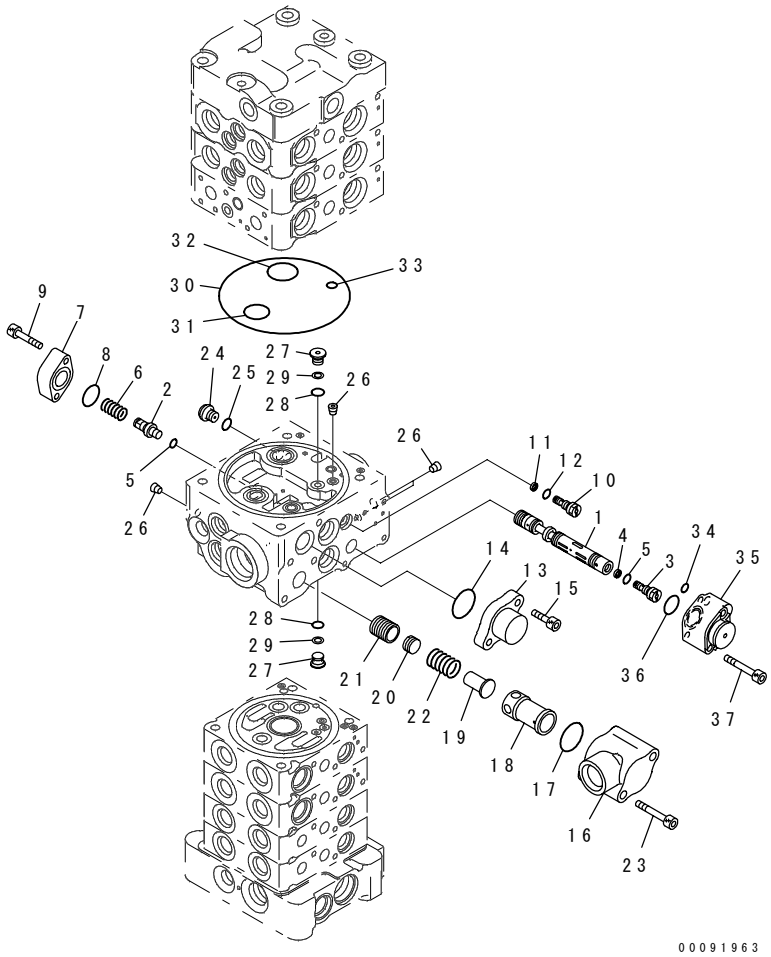

INDEX	PART NO.	DESCRIPTION	Q'TY	SERIAL NO.
	(723-27-51100)	CONTROL VALVE.....	1	DJC00001-
		THIS ASSEMBLY CONSISTS OF ALL PARTS SHOWN IN FIGS.Y1662-21A0 TO Y1662-38A0.		
	☆	.BODY GROUP.....	1	DJC00001-
1	☆	..SPOOL.....	1	DJC00001-
2	☆	..PLUG.....	1	DJC00001-
3	☆	..ORIFICE.....	1	DJC00001-
4	☆	..RING.....	1	DJC00001-
5	☆	..O-RING.....	2	DJC00001-
6	723-26-14650	..SPRING.....	1	DJC00001-
7	723-26-16940	..FLANGE.....	1	DJC00001-
8	722-12-19120	..O-RING.....	1	DJC00001-
9	01252-60640	..BOLT.....	2	DJC00001-
10	☆	..ORIFICE.....	1	DJC00001-
11	722-12-15160	..RING.....	1	DJC00001-
12	07002-10823	..O-RING.....	1	DJC00001-
13	723-26-16650	..FLANGE.....	1	DJC00001-
14	723-11-19110	..O-RING.....	1	DJC00001-
15	01252-60820	..BOLT.....	2	DJC00001-
16	723-26-16390	..CASE.....	1	DJC00001-
17	723-11-19110	..O-RING.....	1	DJC00001-
18	☆	..SLEEVE.....	1	DJC00001-
19	723-26-16420	..RETAINER.....	1	DJC00001-
20	☆	..PISTON.....	1	DJC00001-
21	☆	..VALVE.....	1	DJC00001-
22	723-26-16450	..SPRING.....	1	DJC00001-
23	01252-60855	..BOLT.....	2	DJC00001-
24	708-8E-16160	..PLUG.....	1	DJC00001-
25	07002-11023	..O-RING.....	1	DJC00001-
26	☆	..PLUG.....	4	DJC00001-
27	723-26-16460	..PLUG.....	2	DJC00001-
28	07000-11007	..O-RING.....	2	DJC00001-
29	07001-01007	..RING,BACK-UP.....	2	DJC00001-
30	07000-12120	..O-RING.....	1	DJC00001-
31	07000-12020	..O-RING.....	1	DJC00001-
32	723-26-15840	..O-RING.....	1	DJC00001-
33	07000-11008	..O-RING.....	1	DJC00001-
34	07000-11006	..O-RING.....	1	DJC00001-
35	723-26-16920	..CASE,SPRING.....	1	DJC00001-
36	722-12-19120	..O-RING.....	1	DJC00001-
37	01252-60640	..BOLT.....	2	DJC00001-

FIG.Y1662-27A0 MAIN VALVE (7-VALVE) (7/18) (WITH BLADE)

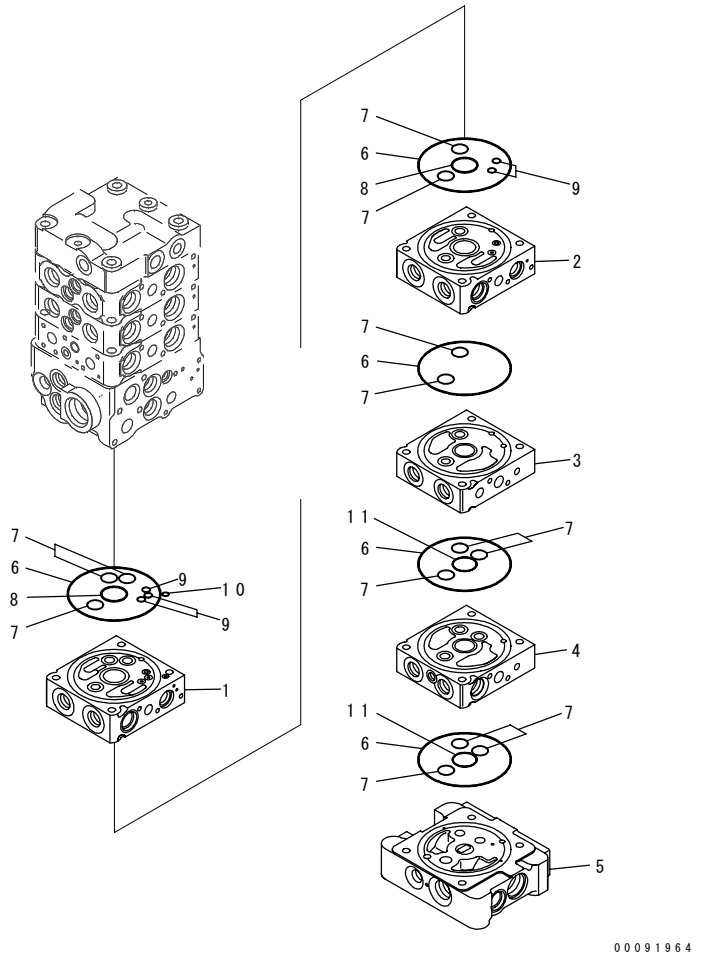

INDEX	PART NO.	DESCRIPTION	Q'TY	SERIAL NO.
	(723-27-51100)	CONTROL VALVE.....	1	DJC00001-
		THIS ASSEMBLY CONSISTS OF ALL PARTS SHOWN IN FIGS.Y1662-21A0 TO Y1662-38A0.		
	☆	.BODY GROUP.....	1	DJC00001-
1	☆	..BLOCK,VALVE.....	1	DJC00001-
2	☆	..BLOCK,VALVE.....	1	DJC00001-
3	☆	..BLOCK,VALVE.....	1	DJC00001-
4	☆	..BLOCK,VALVE.....	1	DJC00001-
5	☆	..BLOCK.....	1	DJC00001-
6	07000-12100	..O-RING.....	5	DJC00001-
7	723-11-19130	..O-RING.....	13	DJC00001-
8	723-11-19110	..O-RING.....	2	DJC00001-
9	07000-11006	..O-RING.....	5	DJC00001-
10	702-21-54260	..O-RING.....	1	DJC00001-
11	700-80-61260	..O-RING.....	2	DJC00001-

FIG.Y1662-28A0 MAIN VALVE (7-VALVE) (8/18) (WITH BLADE)

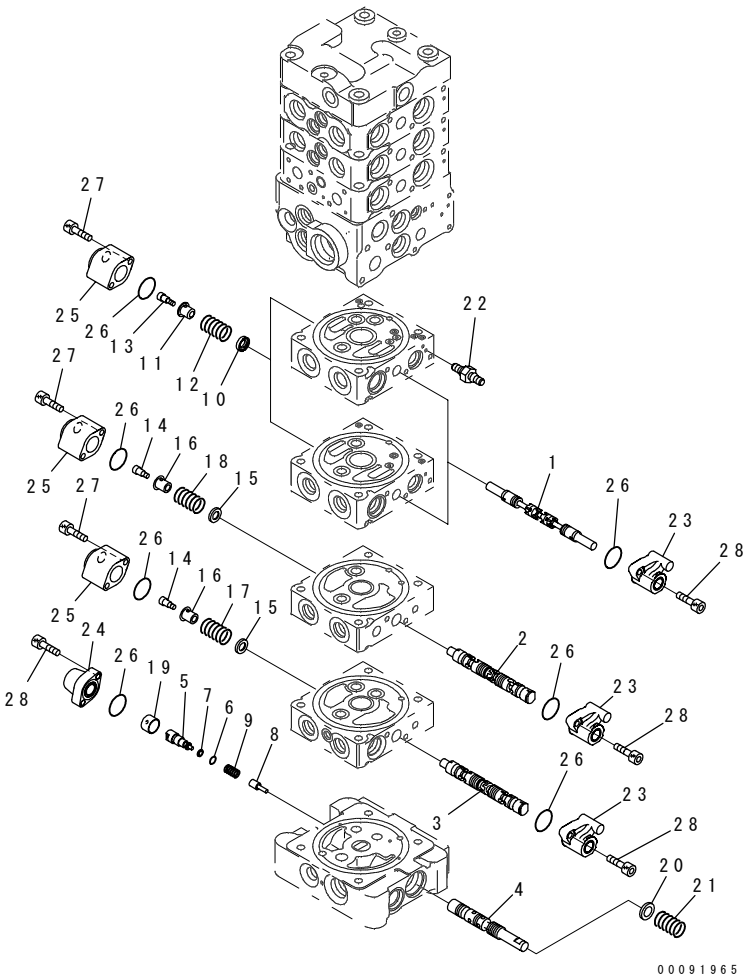

INDEX	PART NO.	DESCRIPTION	Q'TY	SERIAL NO.
	(723-27-51100)	CONTROL VALVE.....	1	DJC00001-
		THIS ASSEMBLY CONSISTS OF ALL PARTS SHOWN IN FIGS.Y1662-21A0 TO Y1662-38A0.		
	☆	.BODY GROUP.....	1	DJC00001-
1	☆	..SPOOL.....	2	DJC00001-
2	☆	..SPOOL.....	1	DJC00001-
3	☆	..SPOOL.....	1	DJC00001-
4	☆	..SPOOL.....	1	DJC00001-
5	723-26-16470	..PLUG.....	1	DJC00001-
6	07000-11005	..O-RING.....	1	DJC00001-
7	07001-01005	..RING.....	1	DJC00001-
8	723-26-16520	..VALVE.....	1	DJC00001-
9	723-26-16530	..SPRING.....	1	DJC00001-
10	723-11-17330	..RETAINER.....	2	DJC00001-
11	723-11-17353	..RETAINER.....	2	DJC00001-
12	723-11-17341	..SPRING.....	2	DJC00001-
13	723-11-17361	..BOLT.....	2	DJC00001-
14	723-11-27910	..BOLT.....	2	DJC00001-
15	723-26-16560	..RETAINER.....	2	DJC00001-
16	723-26-16570	..RETAINER.....	2	DJC00001-
17	723-26-16540	..SPRING.....	1	DJC00001-
18	723-26-16551	..SPRING.....	1	DJC00001-
19	723-26-16480	..RETAINER.....	1	DJC00001-
20	723-26-16490	..SPACER.....	1	DJC00001-
21	723-26-14310	..SPRING.....	1	DJC00001-
22	723-11-29620	..PLUG.....	1	DJC00001-
23	723-11-37220	..CASE,SPRING.....	4	DJC00001-
24	723-11-17410	..CASE,SPRING.....	1	DJC00001-
25	723-11-27880	..CASE,SPRING.....	4	DJC00001-
26	722-12-19120	..O-RING.....	9	DJC00001-
27	01252-60640	..BOLT.....	8	DJC00001-
28	01252-60620	..BOLT.....	10	DJC00001-

FIG.Y1662-29AO MAIN VALVE (7-VALVE) (9/18) (WITH BLADE)

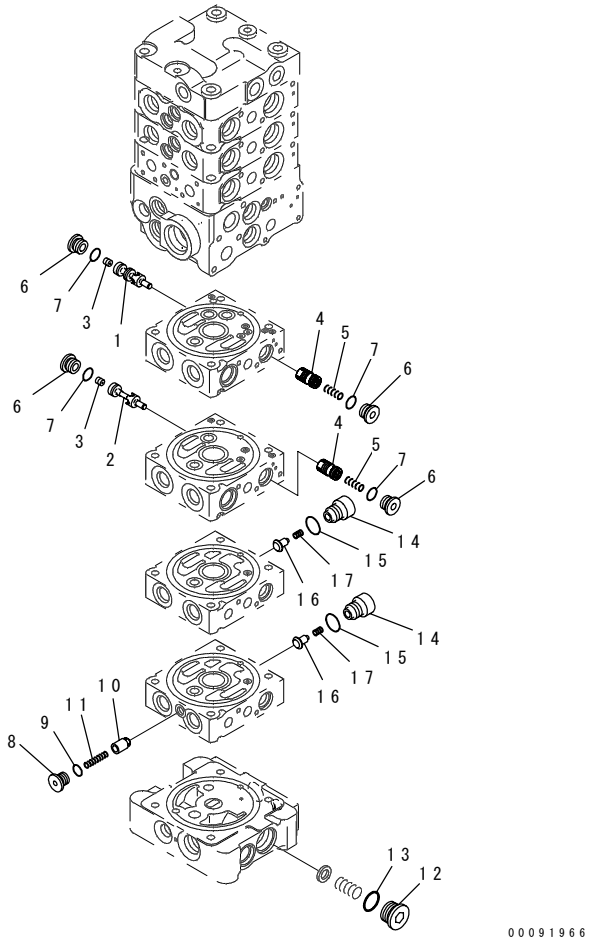

INDEX	PART NO.	DESCRIPTION	Q'TY	SERIAL NO.
	(723-27-51100)	CONTROL VALVE.....	1	DJC00001-
		THIS ASSEMBLY CONSISTS OF ALL PARTS SHOWN IN FIGS.Y1662-21AO TO Y1662-38AO.		
	☆	.BODY GROUP.....	1	DJC00001-
1	☆	..VALVE.....	1	DJC00001-
2	☆	..VALVE.....	1	DJC00001-
3	☆	..ORIFICE.....	2	DJC00001-
4	☆	..VALVE SUB ASS'Y.....	2	DJC00001-
5	723-11-16230	..SPRING.....	2	DJC00001-
6	723-11-15110	..PLUG.....	4	DJC00001-
7	07002-11623	..O-RING.....	4	DJC00001-
8	723-11-18190	..PLUG.....	1	DJC00001-
9	07002-11023	..O-RING.....	1	DJC00001-
10	☆	..VALVE.....	1	DJC00001-
11	723-11-18180	..SPRING.....	1	DJC00001-
12	723-26-15230	..PLUG.....	1	DJC00001-
13	07002-12434	..O-RING.....	1	DJC00001-
14	723-26-17180	..PLUG.....	2	DJC00001-
15	07002-11823	..O-RING.....	2	DJC00001-
16	☆	..VALVE.....	2	DJC00001-
17	723-26-17170	..SPRING.....	2	DJC00001-

FIG.Y1662-30A0 MAIN VALVE (7-VALVE) (10/18) (WITH BLADE)

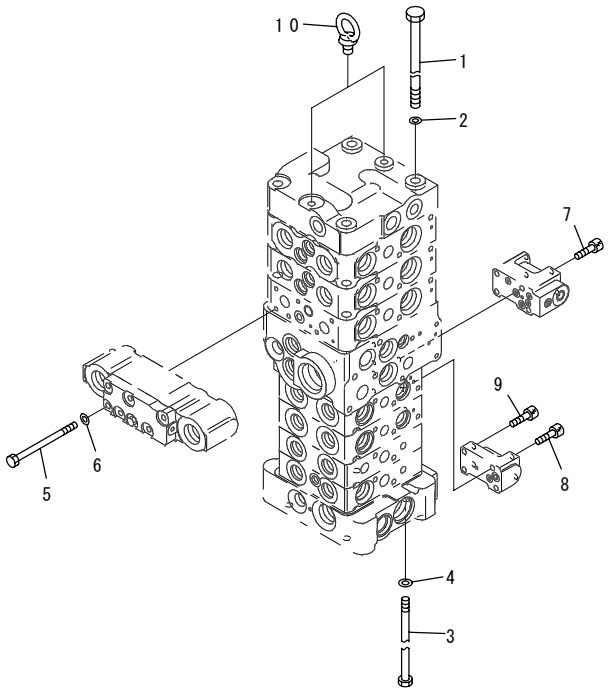

00091967

INDEX	PART NO.	DESCRIPTION	Q'TY	SERIAL NO.
	(723-27-51100)	CONTROL VALVE.....	1	DJC00001-
		THIS ASSEMBLY CONSISTS OF ALL PARTS SHOWN IN FIGS.Y1662-21A0 TO Y1662-38A0.		
1	700-25-11120	.BOLT.....	4	DJC00001-
2	01643-31032	.WASHER.....	4	DJC00001-
3	723-11-29680	.BOLT.....	4	DJC00001-
4	01643-30823	.WASHER.....	4	DJC00001-
5	723-26-16510	.BOLT.....	6	DJC00001-
6	01643-30623	.WASHER.....	6	DJC00001-
7	01252-60650	.BOLT.....	4	DJC00001-
8	01252-60635	.BOLT.....	2	DJC00001-
9	01252-60616	.BOLT.....	2	DJC00001-
10	04530-10815	.BOLT,EYE.....	2	DJC00001-

FIG.Y1662-31A0 MAIN VALVE (7-VALVE) (11/18) (WITH BLADE)

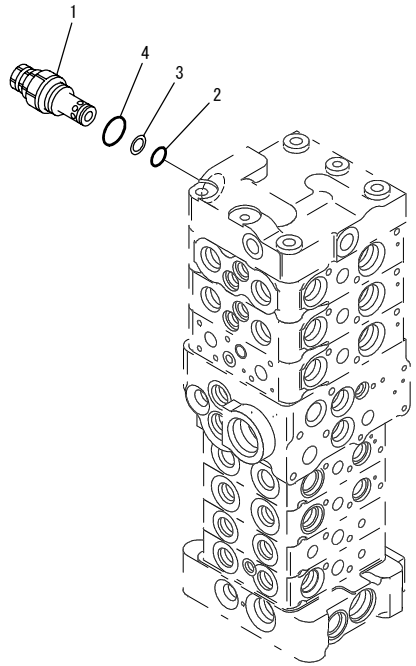

00010536

INDEX	PART NO.	DESCRIPTION	Q'TY	SERIAL NO.
	(723-27-51100)	CONTROL VALVE.....	1	DJC00001-
		THIS ASSEMBLY CONSISTS OF ALL PARTS SHOWN IN FIGS.Y1662-21A0 TO Y1662-38A0.		
1	723-20-63300	.VALVE ASS'Y,RELIEF.....	1	DJC00001-
2	700-22-11410	..O-RING.....	1	DJC00001-
3	700-80-64220	..RING.....	1	DJC00001-
4	07002-12434	..O-RING.....	1	DJC00001-

FIG.Y1662-32A0 MAIN VALVE (7-VALVE) (12/18) (WITH BLADE)

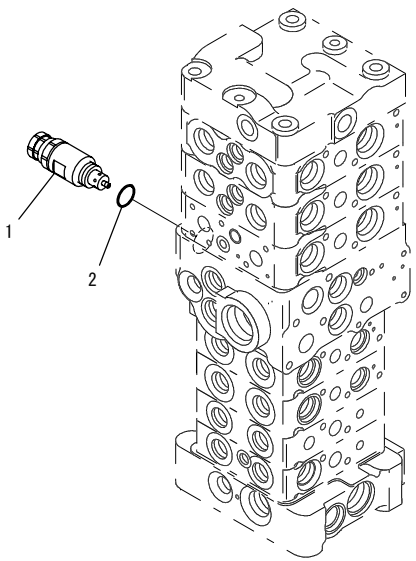

00010537

INDEX	PART NO.	DESCRIPTION	Q'TY	SERIAL NO.
	(723-27-51100)	CONTROL VALVE.....	1	DJC00001-
		THIS ASSEMBLY CONSISTS OF ALL PARTS SHOWN IN FIGS.Y1662-21A0 TO Y1662-38A0.		
1	723-20-67200	.VALVE ASS'Y,SUCTION AND SAFETY.....	1	DJC00001-
2	07002-12034	..O-RING.....	1	DJC00001-

FIG.Y1662-33A0 MAIN VALVE (7-VALVE) (13/18) (WITH BLADE)

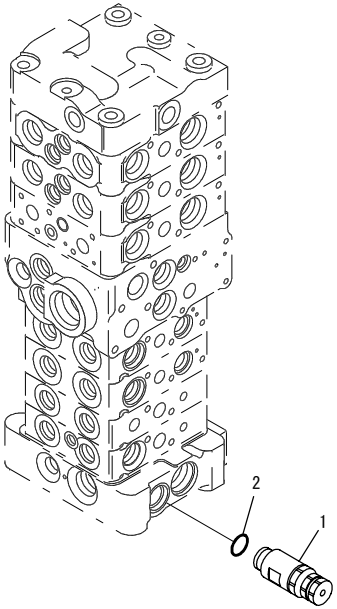

00010538

INDEX	PART NO.	DESCRIPTION	Q'TY	SERIAL NO.
	(723-27-51100)	CONTROL VALVE..... THIS ASSEMBLY CONSISTS OF ALL PARTS SHOWN IN FIGS.Y1662-21A0 TO Y1662-38A0.	1	DJC00001-
1	723-20-64300	.VALVE ASS'Y,SUCTION AND SAFETY.....	1	DJC00001-
2	07002-12034	..O-RING.....	1	DJC00001-

FIG.Y1662-34A0 MAIN VALVE (7-VALVE) (14/18) (WITH BLADE)

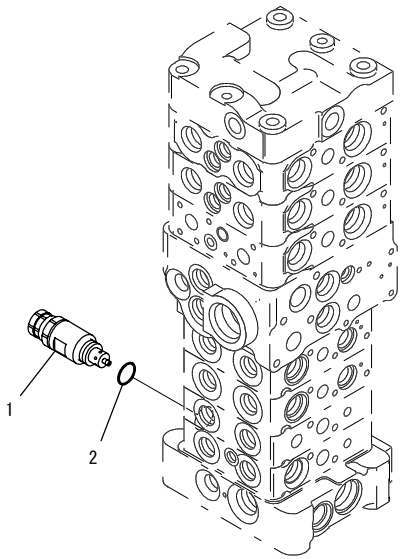

00010539

INDEX	PART NO.	DESCRIPTION	Q'TY	SERIAL NO.
	(723-27-51100)	CONTROL VALVE.....	1	DJC00001-
		THIS ASSEMBLY CONSISTS OF ALL PARTS SHOWN IN FIGS.Y1662-21A0 TO Y1662-38A0.		
1	723-10-20900	.VALVE ASS'Y,SUCTION AND SAFETY.....	1	DJC00001-
2	07002-12034	..O-RING.....	1	DJC00001-

FIG.Y1662-35A0 MAIN VALVE (7-VALVE) (15/18) (WITH BLADE)

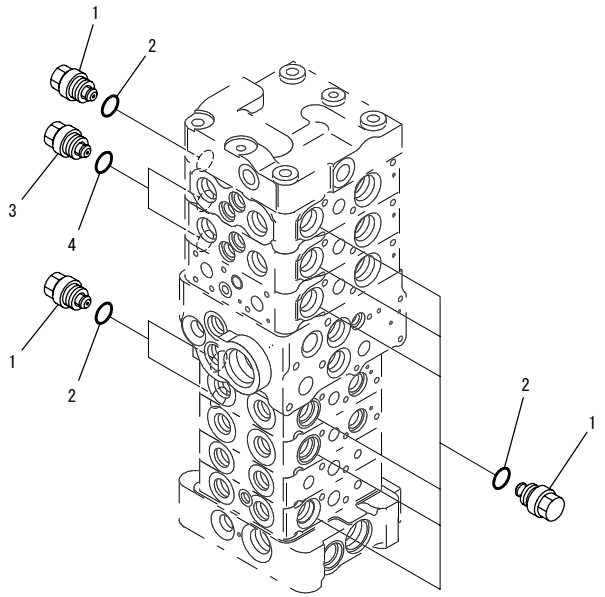

INDEX	PART NO.	DESCRIPTION	Q'TY	SERIAL NO.
	(723-27-51100)	CONTROL VALVE.....	1	DJC00001-
		THIS ASSEMBLY CONSISTS OF ALL PARTS SHOWN IN FIGS.Y1662-21A0 TO Y1662-38A0.		
1	723-20-80100	.VALVE ASS'Y,SUCTION.....	9	DJC00001-
2	07002-12034	..O-RING.....	1	DJC00001-
3	723-10-80200	.VALVE ASS'Y,SUCTION.....	2	DJC00001-
4	07002-12034	..O-RING.....	1	DJC00001-

FIG.Y1662-36A0 MAIN VALVE (7-VALVE) (16/18) (WITH BLADE)

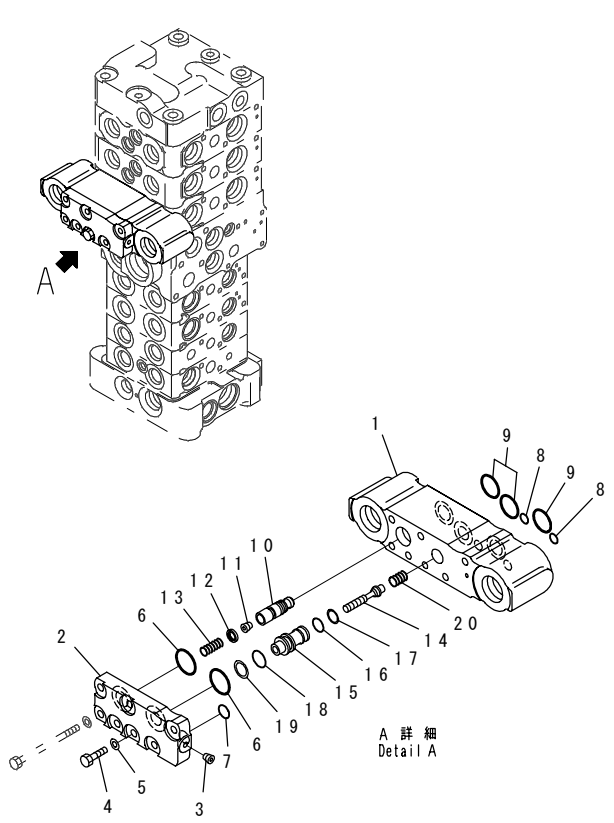

INDEX	PART NO.	DESCRIPTION	Q'TY	SERIAL NO.
	(723-27-51100)	CONTROL VALVE..... THIS ASSEMBLY CONSISTS OF ALL PARTS SHOWN IN FIGS.Y1662-21A0 TO Y1662-38A0.	1	DJC00001-
	723-20-96200	.VALVE ASS'Y.....	1	DJC00001-
1	☆	..BLOCK.....	1	DJC00001-
2	723-20-96150	..PLATE.....	1	DJC00001-
3	☆	..PLUG.....	1	DJC00001-
4	01010-80620	..BOLT.....	1	DJC00001-
5	01643-30623	..WASHER.....	1	DJC00001-
6	723-11-29490	..O-RING.....	2	DJC00001-
7	07000-11009	..O-RING.....	1	DJC00001-
8	07000-11006	..O-RING.....	2	DJC00001-
9	723-11-18150	..O-RING.....	3	DJC00001-
10	☆	..VALVE.....	1	DJC00001-
11	☆	..ORIFICE.....	1	DJC00001-
12	☆	..SEAL.....	1	DJC00001-
13	723-20-96140	..SPRING.....	1	DJC00001-
	723-11-00710	..VALVE SUB ASS'Y.....	1	DJC00001-
14	☆	...PISTON.....	1	DJC00001-
15	☆	...SLEEVE.....	1	DJC00001-
16	07000-11010	..O-RING.....	1	DJC00001-
17	07001-01010	..RING.....	1	DJC00001-
18	07000-12012	..O-RING.....	1	DJC00001-
19	07001-02012	..RING.....	1	DJC00001-
20	723-11-19950	..SPRING.....	1	DJC00001-

FIG.Y1662-37A0 MAIN VALVE (7-VALVE) (17/18) (WITH BLADE)

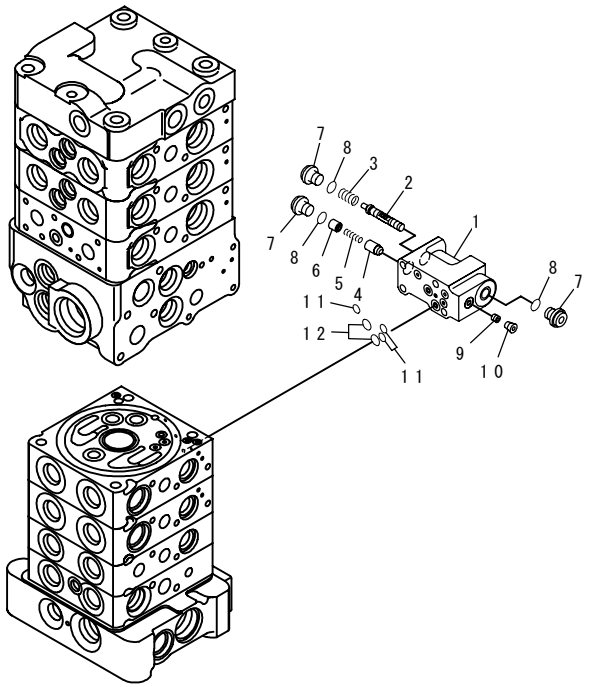

INDEX	PART NO.	DESCRIPTION	Q'TY	SERIAL NO.
	(723-27-51100)	CONTROL VALVE..... THIS ASSEMBLY CONSISTS OF ALL PARTS SHOWN IN FIGS.Y1662-21A0 TO Y1662-38A0.	1	DJC00001-
	723-11-01910	.VALVE ASS'Y.....	1	DJC00001-
1	☆	..BLOCK.....	1	DJC00001-
2	☆	..SPOOL.....	1	DJC00001-
3	723-11-27830	..SPRING.....	1	DJC00001-
4	☆	..VALVE.....	1	DJC00001-
5	723-11-18180	..SPRING.....	1	DJC00001-
6	723-11-27840	..SPACER.....	1	DJC00001-
7	723-11-27850	..PLUG.....	3	DJC00001-
8	07002-11023	..O-RING.....	3	DJC00001-
9	☆	..ORIFICE.....	1	DJC00001-
10	☆	..PLUG.....	1	DJC00001-
11	07000-11005	..O-RING.....	3	DJC00001-
12	07000-11007	..O-RING.....	2	DJC00001-

FIG.Y1662-38A0 MAIN VALVE (7-VALVE) (18/18) (WITH BLADE)

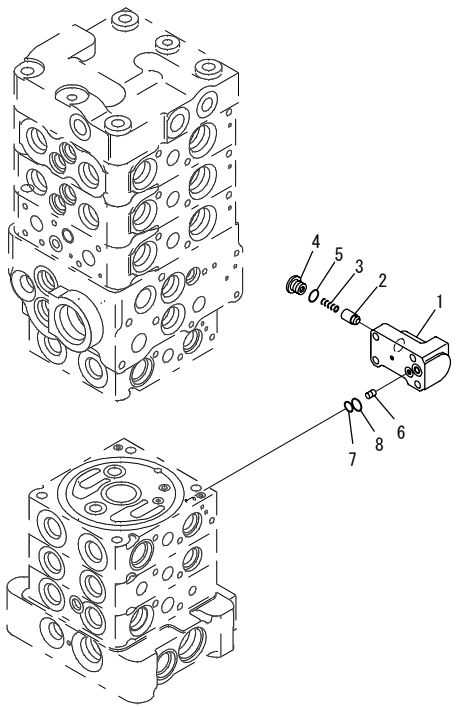

PW5H789

INDEX	PART NO.	DESCRIPTION	Q'TY	SERIAL NO.
	(723-27-51100)	CONTROL VALVE.....	1	DJC00001-
		THIS ASSEMBLY CONSISTS OF ALL PARTS SHOWN IN FIGS.Y1662-21A0 TO Y1662-38A0.		
	723-11-01241	.VALVE ASS'Y.....	1	DJC00001-
1	☆	..BLOCK.....	1	DJC00001-
2	☆	..VALVE.....	1	DJC00001-
3	723-11-18180	..SPRING.....	1	DJC00001-
4	723-11-18190	..PLUG.....	1	DJC00001-
5	07002-11023	..O-RING.....	1	DJC00001-
6	☆	..ORIFICE.....	1	DJC00001-
7	07000-11006	..O-RING.....	1	DJC00001-
8	07000-11008	..O-RING.....	1	DJC00001-

FIG.Y1664-01A0 MAIN VALVE (8-VALVE) (1/20) (ATTACHMENT AND WITH BLADE)

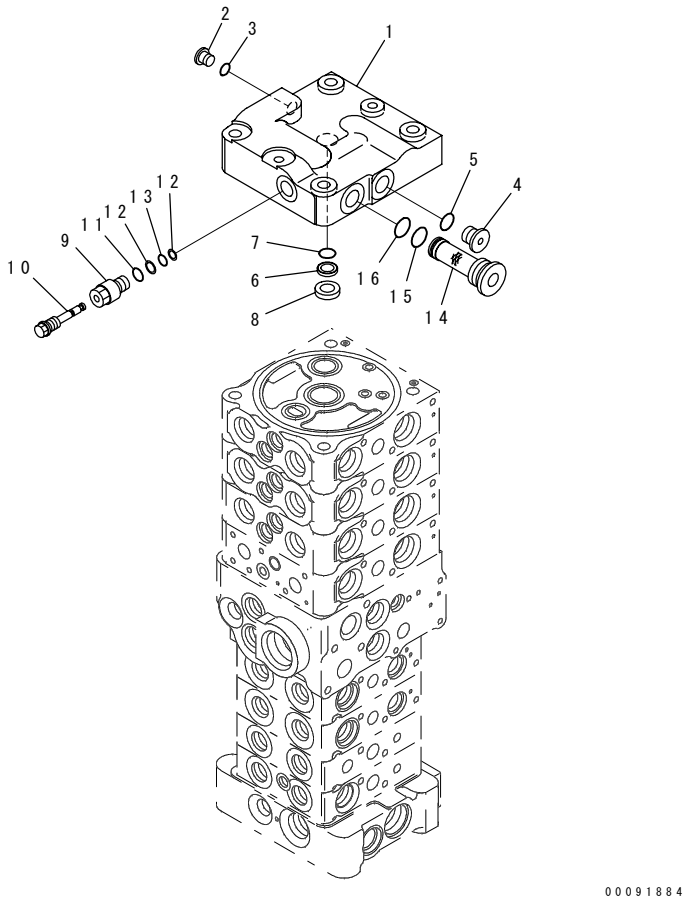

00091884

INDEX	PART NO.	DESCRIPTION	Q'TY	SERIAL NO.
	723-28-51500	CONTROL VALVE.....	1	DJC00001-
		THIS ASSEMBLY CONSISTS OF ALL PARTS SHOWN IN FIGS.Y1664-01A0 TO Y1664-20A0.		
	☆	.COVER GROUP.....	1	DJC00001-
1	☆	..COVER.....	1	DJC00001-
2	708-8E-16160	..PLUG.....	1	DJC00001-
3	07002-11023	..O-RING.....	1	DJC00001-
4	702-21-55620	..PLUG.....	1	DJC00001-
5	07002-11423	..O-RING.....	1	DJC00001-
6	702-21-53120	..FILTER.....	1	DJC00001-
7	702-21-55420	..O-RING.....	1	DJC00001-
8	☆	..SEAT.....	1	DJC00001-
9	723-11-38620	..PLUG.....	1	DJC00001-
10	723-26-16990	..PLUG.....	1	DJC00001-
11	07002-11223	..O-RING.....	1	DJC00001-
12	07000-11003	..O-RING,BACK-UP.....	2	DJC00001-
13	07001-01003	..RING.....	1	DJC00001-
14	723-11-14390	..FILTER,BACK-UP.....	1	DJC00001-
15	07002-12434	..O-RING.....	1	DJC00001-
16	723-11-19130	..O-RING.....	1	DJC00001-

FIG.Y1664-02A0 MAIN VALVE (8-VALVE) (2/20) (ATTACHMENT AND WITH BLADE)

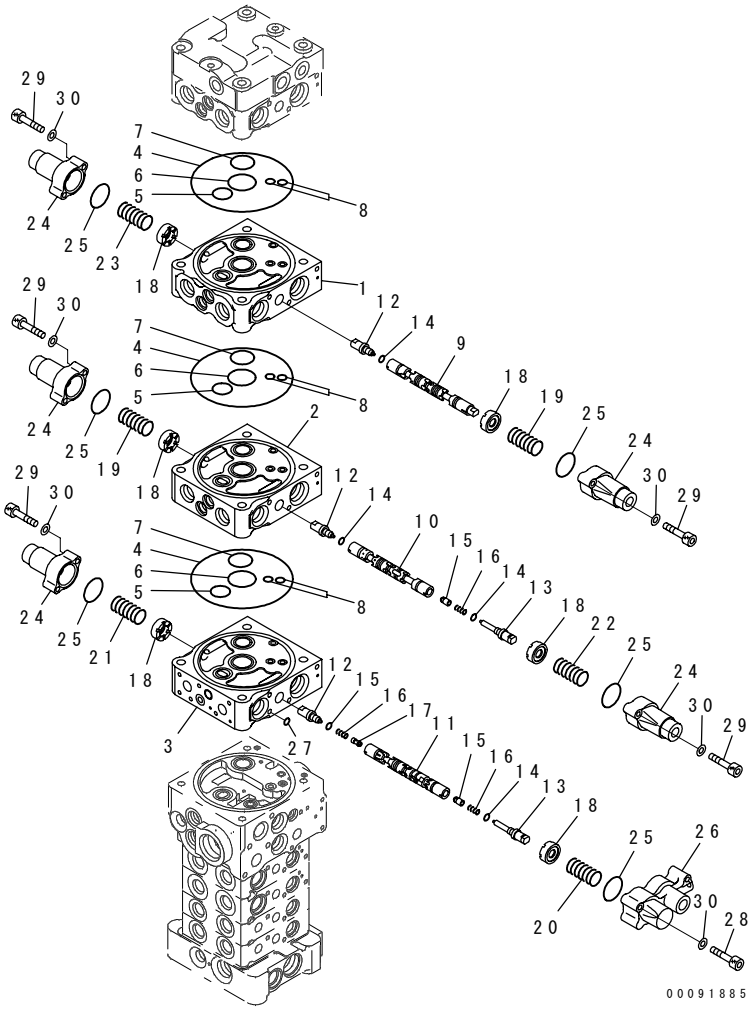

INDEX	PART NO.	DESCRIPTION	Q'TY	SERIAL NO.
	(723-28-51500)	CONTROL VALVE.....	1	DJC00001-
		THIS ASSEMBLY CONSISTS OF ALL PARTS SHOWN IN FIGS.Y1664-01A0 TO Y1664-20A0.		
	☆	.BODY GROUP.....	1	DJC00001-
1	☆	..BLOCK,VALVE.....	1	DJC00001-
2	☆	..BLOCK,VALVE.....	1	DJC00001-
3	☆	..BLOCK,VALVE.....	1	DJC00001-
4	07000-12120	..O-RING.....	3	DJC00001-
5	07000-12020	..O-RING.....	3	DJC00001-
6	723-26-15830	..O-RING.....	3	DJC00001-
7	723-26-15840	..O-RING.....	3	DJC00001-
8	07000-11008	..O-RING.....	6	DJC00001-
9	☆	..SPOOL.....	1	DJC00001-
10	☆	..SPOOL.....	1	DJC00001-
11	☆	..SPOOL.....	1	DJC00001-
12	☆	..PLUG.....	3	DJC00001-
13	☆	..PLUG.....	2	DJC00001-
14	☆	..O-RING.....	5	DJC00001-
15	☆	..VALVE.....	2	DJC00001-
16	☆	..SPRING.....	3	DJC00001-
17	☆	..VALVE.....	1	DJC00001-
18	723-26-15121	..RETAINER.....	6	DJC00001-
19	709-26-11450	..SPRING.....	2	DJC00001-
20	723-26-14490	..SPRING.....	1	DJC00001-
21	723-26-16621	..SPRING.....	1	DJC00001-
22	723-26-14510	..SPRING.....	1	DJC00001-
23	723-26-16621	..SPRING.....	1	DJC00001-
24	723-26-15110	..CASE.....	5	DJC00001-
25	575-41-17420	..O-RING.....	6	DJC00001-
26	723-26-17110	..CASE,SPRING.....	1	DJC00001-
27	702-21-54260	..O-RING.....	1	DJC00001-
28	01252-60635	..BOLT.....	3	DJC00001-
29	01252-60630	..BOLT.....	10	DJC00001-
30	01641-20608	..WASHER.....	13	DJC00001-

FIG.Y1664-03A0 MAIN VALVE (8-VALVE) (3/20) (ATTACHMENT AND WITH BLADE)

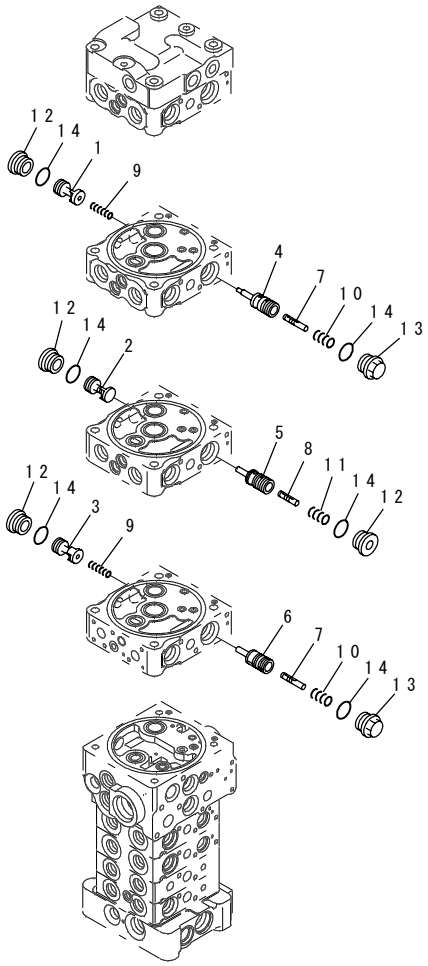

INDEX	PART NO.	DESCRIPTION	Q'TY	SERIAL NO.
	(723-28-51500)	CONTROL VALVE.....	1	DJC00001-
		THIS ASSEMBLY CONSISTS OF ALL PARTS SHOWN IN FIGS.Y1664-01A0 TO Y1664-20A0.		
	☆	.BODY GROUP.....	1	DJC00001-
1	☆	..VALVE.....	1	DJC00001-
2	☆	..VALVE.....	1	DJC00001-
3	☆	..VALVE.....	1	DJC00001-
4	☆	..VALVE.....	1	DJC00001-
5	☆	..VALVE.....	1	DJC00001-
6	☆	..VALVE.....	1	DJC00001-
7	☆	..PISTON.....	2	DJC00001-
8	☆	..PISTON.....	1	DJC00001-
9	723-26-14220	..SPRING.....	2	DJC00001-
10	723-26-14240	..SPRING.....	2	DJC00001-
11	723-26-14140	..SPRING.....	1	DJC00001-
12	723-26-15230	..PLUG.....	4	DJC00001-
13	723-26-15370	..PLUG.....	2	DJC00001-
14	07002-12434	..O-RING.....	6	DJC00001-

FIG.Y1664-04A0 MAIN VALVE (8-VALVE) (4/20) (ATTACHMENT AND WITH BLADE)

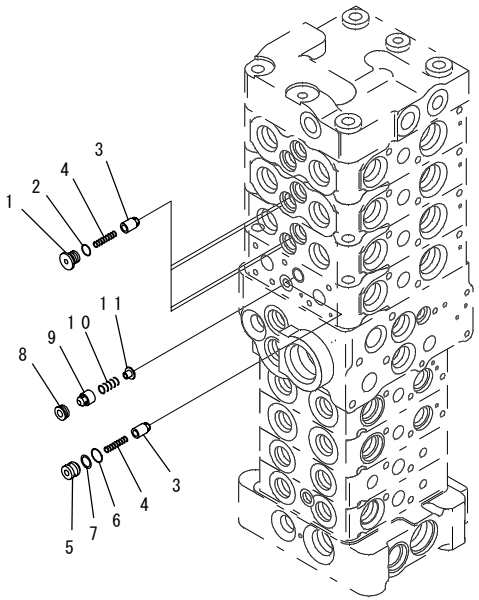

PW5H748

INDEX	PART NO.	DESCRIPTION	Q'TY	SERIAL NO.
	(723-28-51500)	CONTROL VALVE..... THIS ASSEMBLY CONSISTS OF ALL PARTS SHOWN IN FIGS.Y1664-01A0 TO Y1664-20A0.	1	DJC00001-
	☆	.BODY GROUP.....	1	DJC00001-
1	723-26-15220	..PLUG.....	4	DJC00001-
2	07002-11223	..O-RING.....	4	DJC00001-
3	☆	..VALVE.....	5	DJC00001-
4	723-26-14150	..SPRING.....	5	DJC00001-
5	723-26-16230	..PLUG.....	1	DJC00001-
6	07000-11008	..O-RING.....	1	DJC00001-
7	07001-01008	..RING.....	1	DJC00001-
8	723-26-16240	..SEAT.....	1	DJC00001-
9	☆	..VALVE.....	1	DJC00001-
10	723-26-16260	..SPRING.....	1	DJC00001-
11	723-26-16270	..RETAINER.....	1	DJC00001-

FIG.Y1664-05A0 MAIN VALVE (8-VALVE) (5/20) (ATTACHMENT AND WITH BLADE)

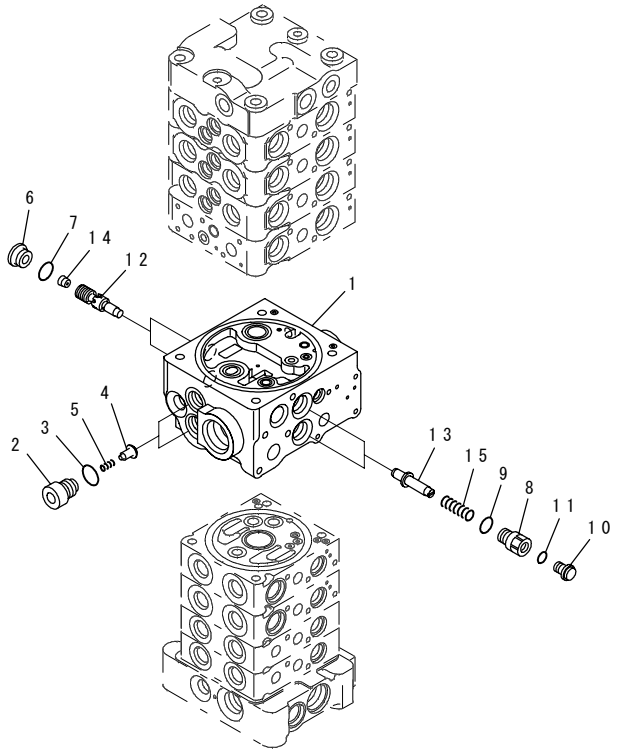

INDEX	PART NO.	DESCRIPTION	Q'TY	SERIAL NO.
	(723-28-51500)	CONTROL VALVE.....	1	DJC00001-
		THIS ASSEMBLY CONSISTS OF ALL PARTS SHOWN IN FIGS.Y1664-01A0 TO Y1664-20A0.		
	☆	.BODY GROUP.....	1	DJC00001-
1	☆	..BODY,VALVE.....	1	DJC00001-
2	723-26-17180	..PLUG.....	2	DJC00001-
3	07002-11823	..O-RING.....	2	DJC00001-
4	☆	..VALVE.....	2	DJC00001-
5	723-26-17170	..SPRING.....	2	DJC00001-
6	723-11-26170	..PLUG.....	2	DJC00001-
7	07002-11623	..O-RING.....	2	DJC00001-
8	723-26-16890	..PLUG.....	2	DJC00001-
9	07002-11823	..O-RING.....	2	DJC00001-
10	708-8E-16160	..PLUG.....	2	DJC00001-
11	07002-11023	..O-RING.....	2	DJC00001-
12	☆	..VALVE.....	2	DJC00001-
13	723-26-17190	..RETAINER.....	2	DJC00001-
14	702-21-56270	..ORIFICE.....	2	DJC00001-
15	723-26-14640	..SPRING.....	2	DJC00001-

FIG.Y1664-06A0 MAIN VALVE (8-VALVE) (6/20) (ATTACHMENT AND WITH BLADE)

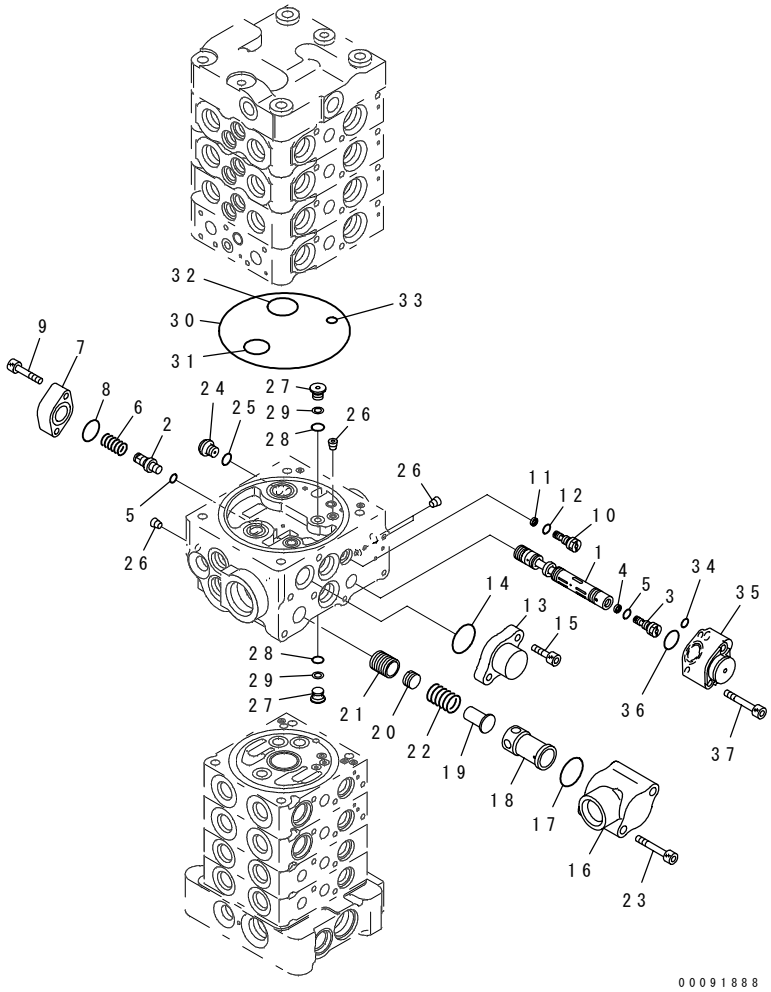

INDEX	PART NO.	DESCRIPTION	Q'TY	SERIAL NO.
	(723-28-51500)	CONTROL VALVE.....	1	DJC00001-
		THIS ASSEMBLY CONSISTS OF ALL PARTS SHOWN IN FIGS.Y1664-01A0 TO Y1664-20A0.		
	☆	.BODY GROUP.....	1	DJC00001-
1	☆	..SPOOL.....	1	DJC00001-
2	☆	..PLUG.....	1	DJC00001-
3	☆	..ORIFICE.....	1	DJC00001-
4	☆	..RING.....	1	DJC00001-
5	☆	..O-RING.....	2	DJC00001-
6	723-26-14650	..SPRING.....	1	DJC00001-
7	723-26-16940	..FLANGE.....	1	DJC00001-
8	722-12-19120	..O-RING.....	1	DJC00001-
9	01252-60640	..BOLT.....	2	DJC00001-
10	☆	..ORIFICE.....	1	DJC00001-
11	722-12-15160	..RING.....	1	DJC00001-
12	07002-10823	..O-RING.....	1	DJC00001-
13	723-26-16650	..FLANGE.....	1	DJC00001-
14	723-11-19110	..O-RING.....	1	DJC00001-
15	01252-60820	..BOLT.....	2	DJC00001-
16	723-26-16390	..CASE.....	1	DJC00001-
17	723-11-19110	..O-RING.....	1	DJC00001-
18	☆	..SLEEVE.....	1	DJC00001-
19	723-26-16420	..RETAINER.....	1	DJC00001-
20	☆	..PISTON.....	1	DJC00001-
21	☆	..VALVE.....	1	DJC00001-
22	723-26-16450	..SPRING.....	1	DJC00001-
23	01252-60855	..BOLT.....	2	DJC00001-
24	708-8E-16160	..PLUG.....	1	DJC00001-
25	07002-11023	..O-RING.....	1	DJC00001-
26	☆	..PLUG.....	4	DJC00001-
27	723-26-16460	..PLUG.....	2	DJC00001-
28	07000-11007	..O-RING.....	2	DJC00001-
29	07001-01007	..RING,BACK-UP.....	2	DJC00001-
30	07000-12120	..O-RING.....	1	DJC00001-
31	07000-12020	..O-RING.....	1	DJC00001-
32	723-26-15840	..O-RING.....	1	DJC00001-
33	07000-11008	..O-RING.....	1	DJC00001-
34	07000-11006	..O-RING.....	1	DJC00001-
35	723-26-16920	..CASE,SPRING.....	1	DJC00001-
36	722-12-19120	..O-RING.....	1	DJC00001-
37	01252-60640	..BOLT.....	2	DJC00001-

FIG.Y1664-07A0 MAIN VALVE (8-VALVE) (7/20) (ATTACHMENT AND WITH BLADE)

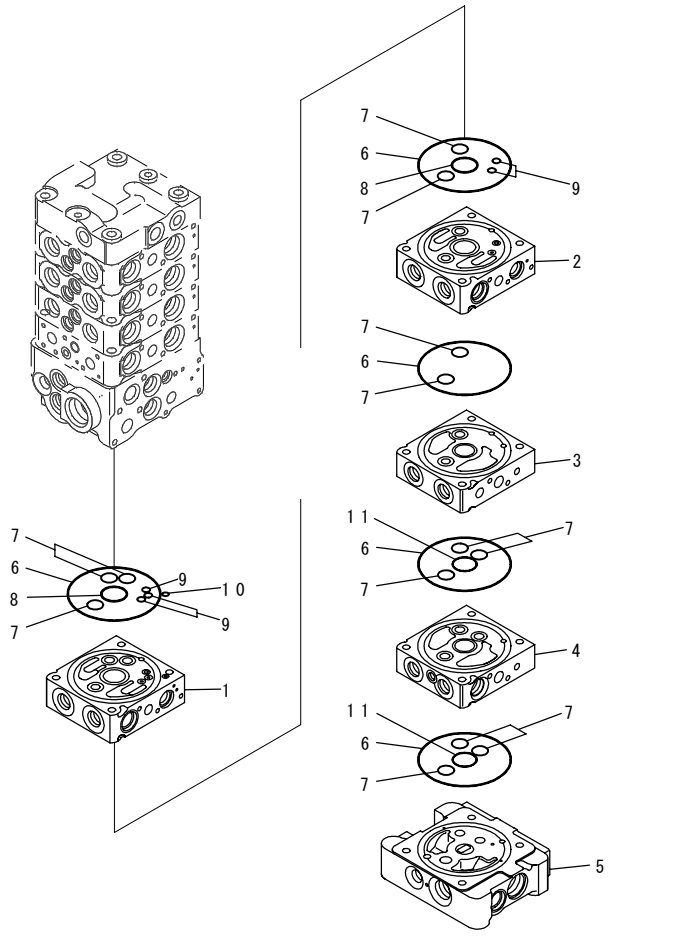

INDEX	PART NO.	DESCRIPTION	Q'TY	SERIAL NO.
	(723-28-51500)	CONTROL VALVE.....	1	DJC00001-
		THIS ASSEMBLY CONSISTS OF ALL PARTS SHOWN IN FIGS.Y1664-01A0 TO Y1664-20A0.		
	☆	.BODY GROUP.....	1	DJC00001-
1	☆	..BLOCK,VALVE.....	1	DJC00001-
2	☆	..BLOCK,VALVE.....	1	DJC00001-
3	☆	..BLOCK,VALVE.....	1	DJC00001-
4	☆	..BLOCK,VALVE.....	1	DJC00001-
5	☆	..BLOCK.....	1	DJC00001-
6	07000-12100	..O-RING.....	5	DJC00001-
7	723-11-19130	..O-RING.....	13	DJC00001-
8	723-11-19110	..O-RING.....	2	DJC00001-
9	07000-11006	..O-RING.....	5	DJC00001-
10	702-21-54260	..O-RING.....	1	DJC00001-
11	700-80-61260	..O-RING.....	2	DJC00001-

FIG.Y1664-08A0 MAIN VALVE (8-VALVE) (8/20) (ATTACHMENT AND WITH BLADE)

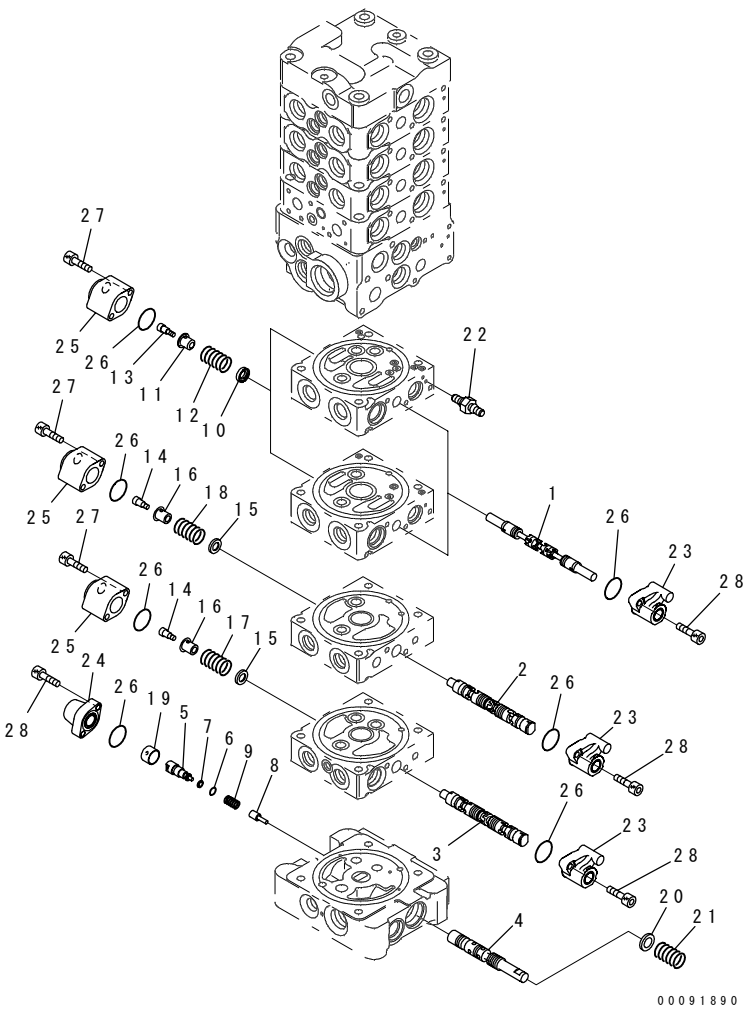

INDEX	PART NO.	DESCRIPTION	Q'TY	SERIAL NO.
	(723-28-51500)	CONTROL VALVE.....	1	DJC00001-
		THIS ASSEMBLY CONSISTS OF ALL PARTS SHOWN IN FIGS.Y1664-01A0 TO Y1664-20A0.		
	☆	.BODY GROUP.....	1	DJC00001-
1	☆	..SPOOL.....	2	DJC00001-
2	☆	..SPOOL.....	1	DJC00001-
3	☆	..SPOOL.....	1	DJC00001-
4	☆	..SPOOL.....	1	DJC00001-
5	723-26-16470	..PLUG.....	1	DJC00001-
6	07000-11005	..O-RING.....	1	DJC00001-
7	07001-01005	..RING.....	1	DJC00001-
8	723-26-16520	..VALVE.....	1	DJC00001-
9	723-26-16530	..SPRING.....	1	DJC00001-
10	723-11-17330	..RETAINER.....	2	DJC00001-
11	723-11-17353	..RETAINER.....	2	DJC00001-
12	723-11-17341	..SPRING.....	2	DJC00001-
13	723-11-17361	..BOLT.....	2	DJC00001-
14	723-11-27910	..BOLT.....	2	DJC00001-
15	723-26-16560	..RETAINER.....	2	DJC00001-
16	723-26-16570	..RETAINER.....	2	DJC00001-
17	723-26-16540	..SPRING.....	1	DJC00001-
18	723-26-16551	..SPRING.....	1	DJC00001-
19	723-26-16480	..RETAINER.....	1	DJC00001-
20	723-26-16490	..SPACER.....	1	DJC00001-
21	723-26-14310	..SPRING.....	1	DJC00001-
22	723-11-29620	..PLUG.....	1	DJC00001-
23	723-11-37220	..CASE,SPRING.....	4	DJC00001-
24	723-11-17410	..CASE,SPRING.....	1	DJC00001-
25	723-11-27880	..CASE,SPRING.....	4	DJC00001-
26	722-12-19120	..O-RING.....	9	DJC00001-
27	01252-60640	..BOLT.....	8	DJC00001-
28	01252-60620	..BOLT.....	10	DJC00001-

FIG.Y1664-09A0 MAIN VALVE (8-VALVE) (9/20) (ATTACHMENT AND WITH BLADE)

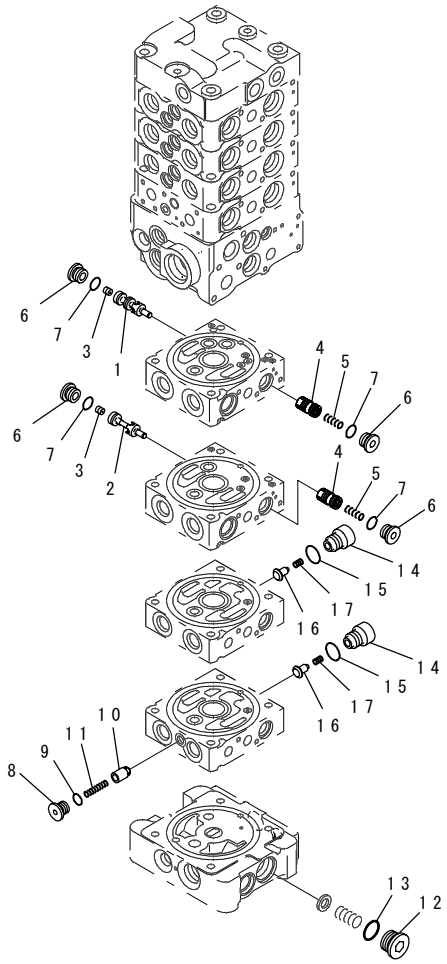

INDEX	PART NO.	DESCRIPTION	Q'TY	SERIAL NO.
	(723-28-51500)	CONTROL VALVE.....	1	DJC00001-
		THIS ASSEMBLY CONSISTS OF ALL PARTS SHOWN IN FIGS.Y1664-01A0 TO Y1664-20A0.		
	☆	.BODY GROUP.....	1	DJC00001-
1	☆	..VALVE.....	1	DJC00001-
2	☆	..VALVE.....	1	DJC00001-
3	☆	..ORIFICE.....	2	DJC00001-
4	☆	..VALVE SUB ASS'Y.....	2	DJC00001-
5	723-11-16230	..SPRING.....	2	DJC00001-
6	723-11-15110	..PLUG.....	4	DJC00001-
7	07002-11623	..O-RING.....	4	DJC00001-
8	723-11-18190	..PLUG.....	1	DJC00001-
9	07002-11023	..O-RING.....	1	DJC00001-
10	☆	..VALVE.....	1	DJC00001-
11	723-11-18180	..SPRING.....	1	DJC00001-
12	723-26-15230	..PLUG.....	1	DJC00001-
13	07002-12434	..O-RING.....	1	DJC00001-
14	723-26-17180	..PLUG.....	2	DJC00001-
15	07002-11823	..O-RING.....	2	DJC00001-
16	☆	..VALVE.....	2	DJC00001-
17	723-26-17170	..SPRING.....	2	DJC00001-

FIG.Y1664-10A0 MAIN VALVE (8-VALVE) (10/20) (ATTACHMENT AND WITH BLADE)

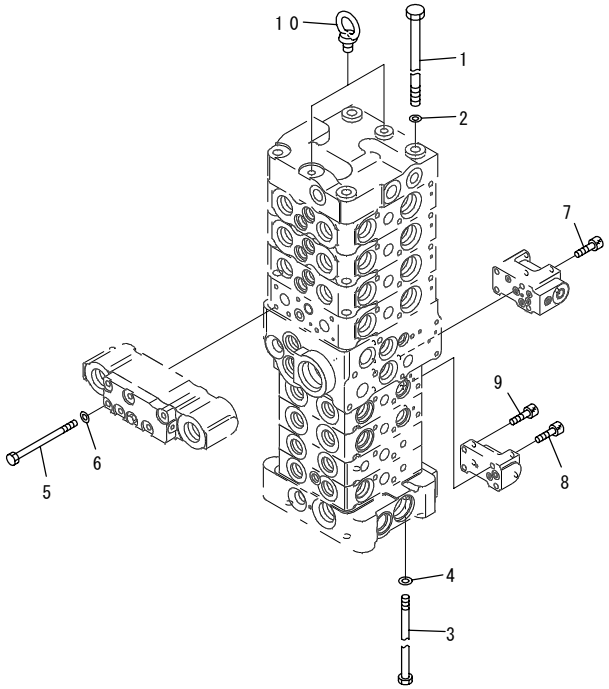

00091892

INDEX	PART NO.	DESCRIPTION	Q'TY	SERIAL NO.
	(723-28-51500)	CONTROL VALVE..... THIS ASSEMBLY CONSISTS OF ALL PARTS SHOWN IN FIGS.Y1664-01A0 TO Y1664-20A0.	1	DJC00001-
1	700-85-11111	.BOLT.....	4	DJC00001-
2	01643-31032	.WASHER.....	4	DJC00001-
3	723-11-29680	.BOLT.....	4	DJC00001-
4	01643-30823	.WASHER.....	4	DJC00001-
5	723-26-16510	.BOLT.....	6	DJC00001-
6	01643-30623	.WASHER.....	6	DJC00001-
7	01252-60650	.BOLT.....	4	DJC00001-
8	01252-60635	.BOLT.....	2	DJC00001-
9	01252-60616	.BOLT.....	2	DJC00001-
10	04530-10815	.BOLT,EYE.....	2	DJC00001-

FIG.Y1664-11A0 MAIN VALVE (8-VALVE) (11/20) (ATTACHMENT AND WITH BLADE)

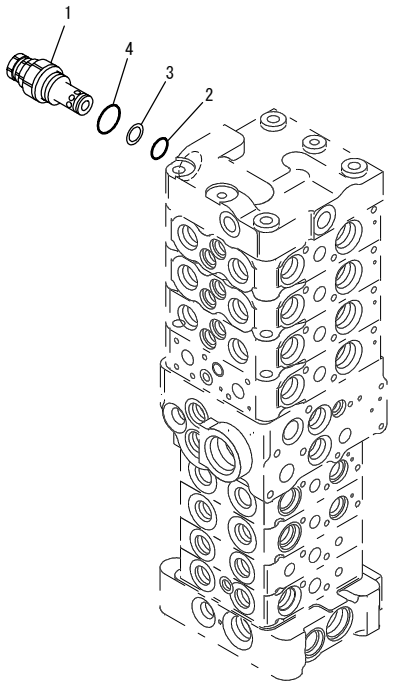

00010545

INDEX	PART NO.	DESCRIPTION	Q'TY	SERIAL NO.
	(723-28-51500)	CONTROL VALVE..... THIS ASSEMBLY CONSISTS OF ALL PARTS SHOWN IN FIGS.Y1664-01A0 TO Y1664-20A0.	1	DJC00001-
1	723-20-63300	.VALVE ASS'Y,RELIEF.....	1	DJC00001-
2	700-22-11410	..O-RING.....	1	DJC00001-
3	700-80-64220	..RING.....	1	DJC00001-
4	07002-12434	..O-RING.....	1	DJC00001-

FIG.Y1664-12A0 MAIN VALVE (8-VALVE) (12/20) (ATTACHMENT AND WITH BLADE)

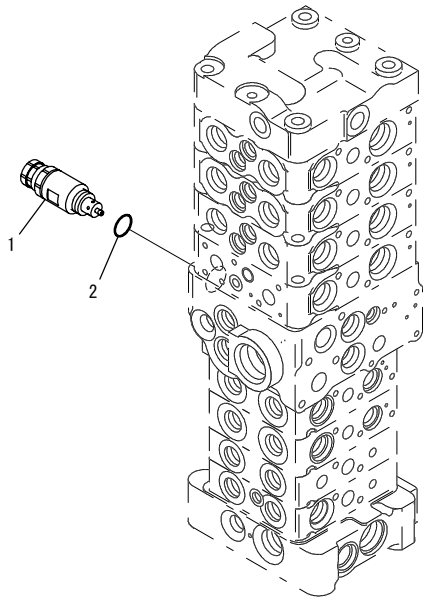

00010546

INDEX	PART NO.	DESCRIPTION	Q'TY	SERIAL NO.
	(723-28-51500)	CONTROL VALVE..... THIS ASSEMBLY CONSISTS OF ALL PARTS SHOWN IN FIGS.Y1664-01A0 TO Y1664-20A0.	1	DJC00001-
1	723-20-67200	.VALVE ASS'Y,SUCTION AND SAFETY.....	1	DJC00001-
2	07002-12034	..O-RING.....	1	DJC00001-

FIG.Y1664-13A0 MAIN VALVE (8-VALVE) (13/20) (ATTACHMENT AND WITH BLADE)

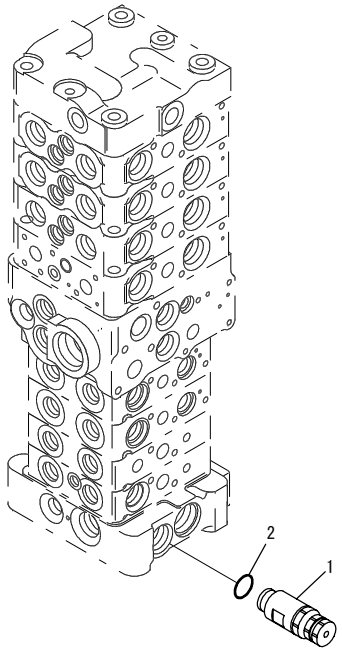

00010547

INDEX	PART NO.	DESCRIPTION	Q'TY	SERIAL NO.
	(723-28-51500)	CONTROL VALVE..... THIS ASSEMBLY CONSISTS OF ALL PARTS SHOWN IN FIGS.Y1664-01A0 TO Y1664-20A0.	1	DJC00001-
1	723-20-64300	.VALVE ASS'Y,SUCTION AND SAFETY.....	1	DJC00001-
2	07002-12034	..O-RING.....	1	DJC00001-

FIG.Y1664-14A0 MAIN VALVE (8-VALVE) (14/20) (ATTACHMENT AND WITH BLADE)

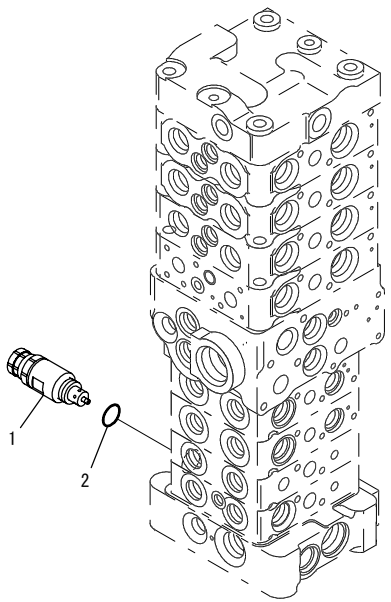

00010548

INDEX	PART NO.	DESCRIPTION	Q'TY	SERIAL NO.
	(723-28-51500)	CONTROL VALVE.....	1	DJC00001-
		THIS ASSEMBLY CONSISTS OF ALL PARTS SHOWN IN FIGS.Y1664-01A0 TO Y1664-20A0.		
1	723-10-20900	.VALVE ASS'Y,SUCTION AND SAFETY.....	1	DJC00001-
2	07002-12034	..O-RING.....	1	DJC00001-

FIG.Y1664-15A0 MAIN VALVE (8-VALVE) (15/20) (ATTACHMENT AND WITH BLADE)

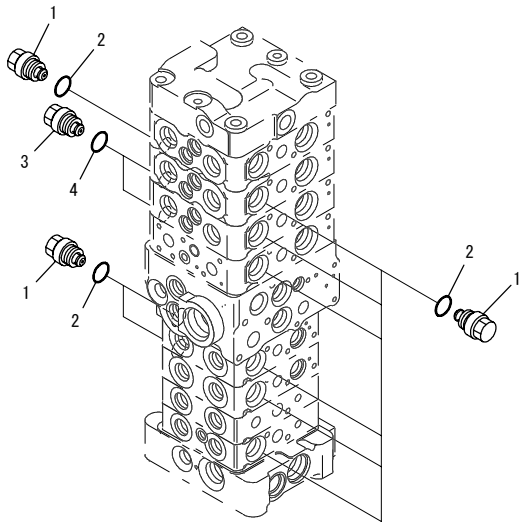

INDEX	PART NO.	DESCRIPTION	Q'TY	SERIAL NO.
	(723-28-51500)	CONTROL VALVE..... THIS ASSEMBLY CONSISTS OF ALL PARTS SHOWN IN FIGS.Y1664-01A0 TO Y1664-20A0.	1	DJC00001-
1	723-20-80100	.VALVE ASS'Y,SUCTION.....	9	DJC00001-
2	07002-12034	..O-RING.....	1	DJC00001-
3	723-10-80200	.VALVE ASS'Y,SUCTION.....	2	DJC00001-
4	07002-12034	..O-RING.....	1	DJC00001-

FIG.Y1664-16A0 MAIN VALVE (8-VALVE) (16/20) (ATTACHMENT AND WITH BLADE)

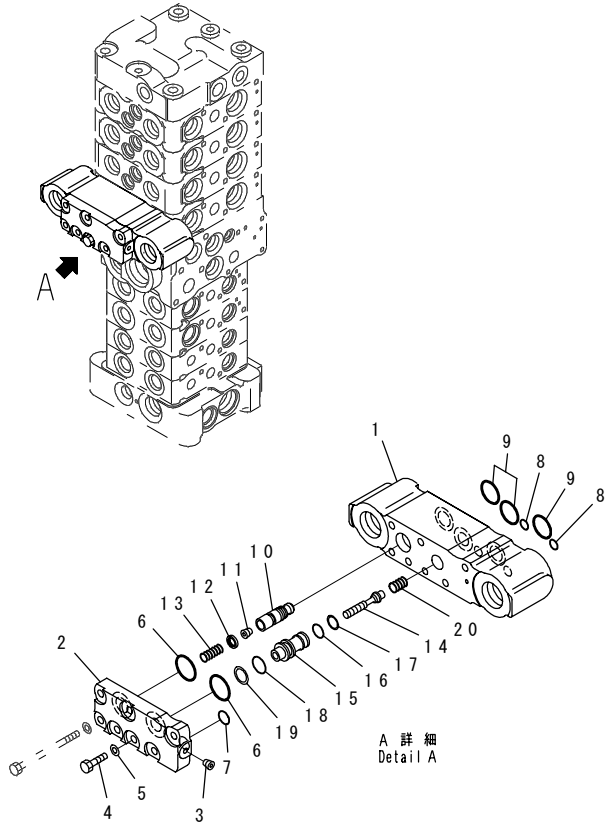

INDEX	PART NO.	DESCRIPTION	Q'TY	SERIAL NO.
	(723-28-51500)	CONTROL VALVE..... THIS ASSEMBLY CONSISTS OF ALL PARTS SHOWN IN FIGS.Y1664-01A0 TO Y1664-20A0.	1	DJC00001-
	723-20-96200	.VALVE ASS'Y.....	1	DJC00001-
1	☆	..BLOCK.....	1	DJC00001-
2	723-20-96150	..PLATE.....	1	DJC00001-
3	☆	..PLUG.....	1	DJC00001-
4	01010-80620	..BOLT.....	1	DJC00001-
5	01643-30623	..WASHER.....	1	DJC00001-
6	723-11-29490	..O-RING.....	2	DJC00001-
7	07000-11009	..O-RING.....	1	DJC00001-
8	07000-11006	..O-RING.....	2	DJC00001-
9	723-11-18150	..O-RING.....	3	DJC00001-
10	☆	..VALVE.....	1	DJC00001-
11	☆	..ORIFICE.....	1	DJC00001-
12	☆	..SEAL.....	1	DJC00001-
13	723-20-96140	..SPRING.....	1	DJC00001-
	723-11-00710	..VALVE SUB ASS'Y.....	1	DJC00001-
14	☆	...PISTON.....	1	DJC00001-
15	☆	...SLEEVE.....	1	DJC00001-
16	07000-11010	..O-RING.....	1	DJC00001-
17	07001-01010	..RING.....	1	DJC00001-
18	07000-12012	..O-RING.....	1	DJC00001-
19	07001-02012	..RING.....	1	DJC00001-
20	723-11-19950	..SPRING.....	1	DJC00001-

FIG.Y1664-17A0 MAIN VALVE (8-VALVE) (17/20) (ATTACHMENT AND WITH BLADE)

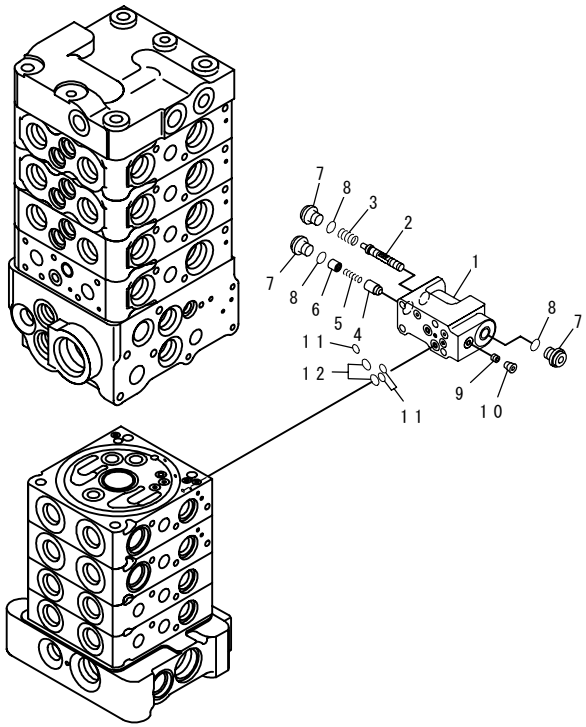

PJ5H946

INDEX	PART NO.	DESCRIPTION	Q'TY	SERIAL NO.
	(723-28-51500)	CONTROL VALVE..... THIS ASSEMBLY CONSISTS OF ALL PARTS SHOWN IN FIGS.Y1664-01A0 TO Y1664-20A0.	1	DJC00001-
	723-11-01910	.VALVE ASS'Y.....	1	DJC00001-
1	☆	..BLOCK.....	1	DJC00001-
2	☆	..SPOOL.....	1	DJC00001-
3	723-11-27830	..SPRING.....	1	DJC00001-
4	☆	..VALVE.....	1	DJC00001-
5	723-11-18180	..SPRING.....	1	DJC00001-
6	723-11-27840	..SPACER.....	1	DJC00001-
7	723-11-27850	..PLUG.....	3	DJC00001-
8	07002-11023	..O-RING.....	3	DJC00001-
9	☆	..ORIFICE.....	1	DJC00001-
10	☆	..PLUG.....	1	DJC00001-
11	07000-11005	..O-RING.....	3	DJC00001-
12	07000-11007	..O-RING.....	2	DJC00001-

FIG.Y1664-18A0 MAIN VALVE (8-VALVE) (18/20) (ATTACHMENT AND WITH BLADE)

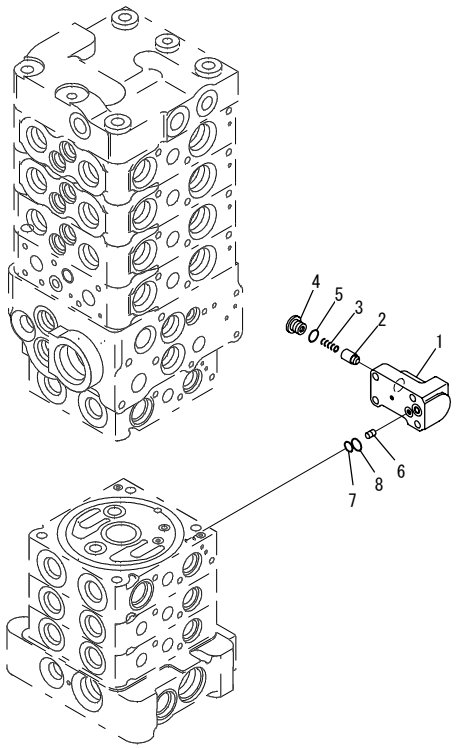

PW5H764

INDEX	PART NO.	DESCRIPTION	Q'TY	SERIAL NO.
	(723-28-51500)	CONTROL VALVE..... THIS ASSEMBLY CONSISTS OF ALL PARTS SHOWN IN FIGS.Y1664-01A0 TO Y1664-20A0.	1	DJC00001-
	723-11-01241	.VALVE ASS'Y.....	1	DJC00001-
1	☆	..BLOCK.....	1	DJC00001-
2	☆	..VALVE.....	1	DJC00001-
3	723-11-18180	..SPRING.....	1	DJC00001-
4	723-11-18190	..PLUG.....	1	DJC00001-
5	07002-11023	..O-RING.....	1	DJC00001-
6	☆	..ORIFICE.....	1	DJC00001-
7	07000-11006	..O-RING.....	1	DJC00001-
8	07000-11008	..O-RING.....	1	DJC00001-

FIG.Y1664-19A0 MAIN VALVE (8-VALVE) (19/20) (ATTACHMENT AND WITH BLADE)

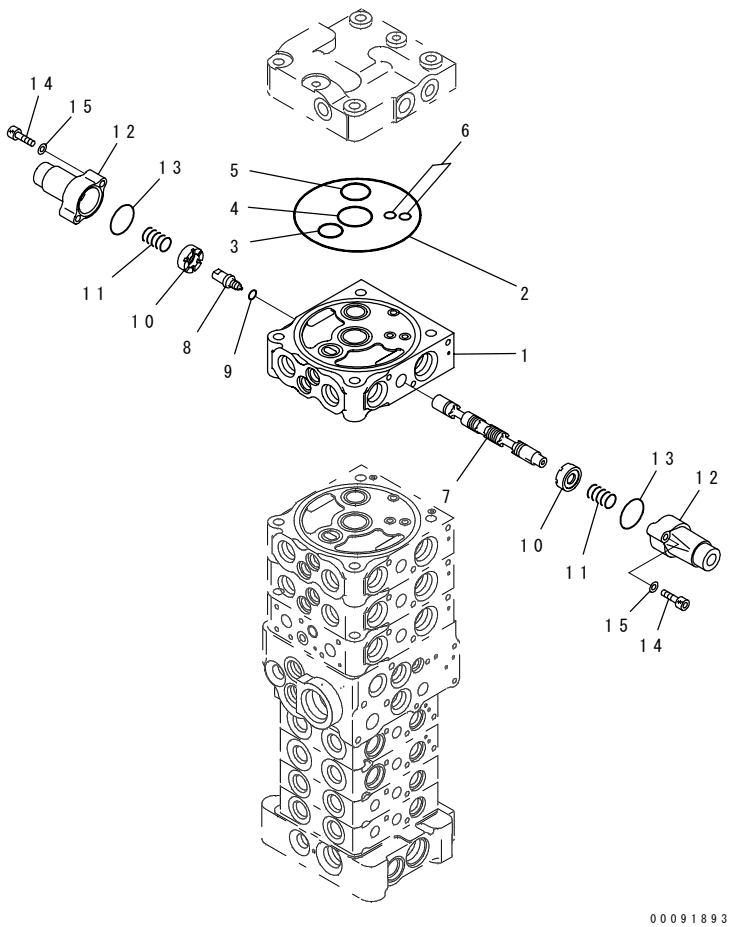

INDEX	PART NO.	DESCRIPTION	Q'TY	SERIAL NO.
	(723-28-51500)	CONTROL VALVE.....	1	DJC00001-
		THIS ASSEMBLY CONSISTS OF ALL PARTS SHOWN IN FIGS.Y1664-01A0 TO Y1664-20A0.		
	723-21-07501	.VALVE SUB ASS'Y.....	1	DJC00001-
1	☆	..BLOCK,VALVE.....	1	DJC00001-
2	07000-12120	..O-RING.....	1	DJC00001-
3	07000-12020	..O-RING.....	1	DJC00001-
4	723-26-15830	..O-RING.....	1	DJC00001-
5	723-26-15840	..O-RING.....	1	DJC00001-
6	07000-11008	..O-RING.....	2	DJC00001-
7	☆	..SPOOL.....	1	DJC00001-
8	☆	..PLUG.....	1	DJC00001-
9	☆	..O-RING.....	1	DJC00001-
10	723-26-15121	..RETAINER.....	2	DJC00001-
11	709-26-11450	..SPRING.....	2	DJC00001-
12	723-26-15110	..CASE.....	2	DJC00001-
13	575-41-17420	..O-RING.....	2	DJC00001-
14	01252-60630	..BOLT.....	4	DJC00001-
15	01641-20608	..WASHER.....	4	DJC00001-

FIG.Y1664-20A0 MAIN VALVE (8-VALVE) (20/20) (ATTACHMENT AND WITH BLADE)

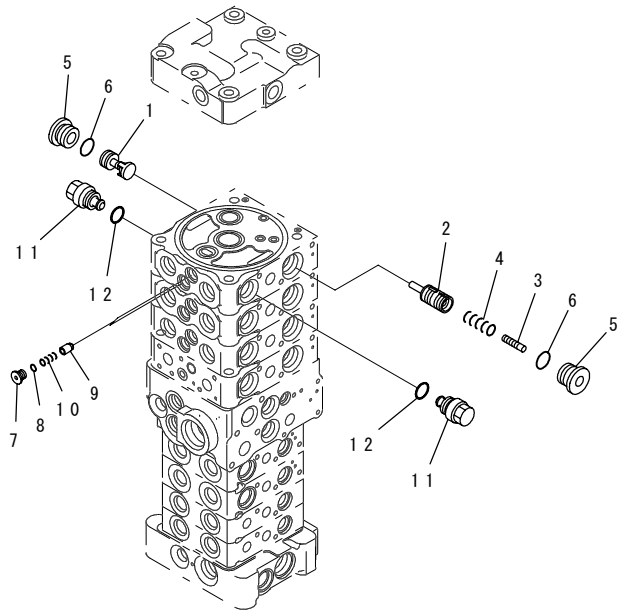

00010550

INDEX	PART NO.	DESCRIPTION	Q'TY	SERIAL NO.
	(723-28-51500)	CONTROL VALVE..... THIS ASSEMBLY CONSISTS OF ALL PARTS SHOWN IN FIGS.Y1664-01A0 TO Y1664-20A0.	1	DJC00001-
	(723-21-07501)	.VALVE SUB ASS'Y.....	1	DJC00001-
1	☆	..VALVE.....	1	DJC00001-
2	☆	..VALVE.....	1	DJC00001-
3	☆	..PISTON.....	1	DJC00001-
4	723-26-14140	..SPRING.....	1	DJC00001-
5	723-26-15230	..PLUG.....	2	DJC00001-
6	07002-12434	..O-RING.....	2	DJC00001-
7	723-26-15220	..PLUG.....	2	DJC00001-
8	07002-11223	..O-RING.....	2	DJC00001-
9	☆	..VALVE.....	2	DJC00001-
10	723-26-14150	..SPRING.....	2	DJC00001-
11	723-20-80100	..VALVE ASS'Y,SUCTION.....	2	DJC00001-
12	07002-12034	...O-RING.....	1	DJC00001-

FIG.Y1670-01A0 PPC VALVE (FOR TRAVEL)

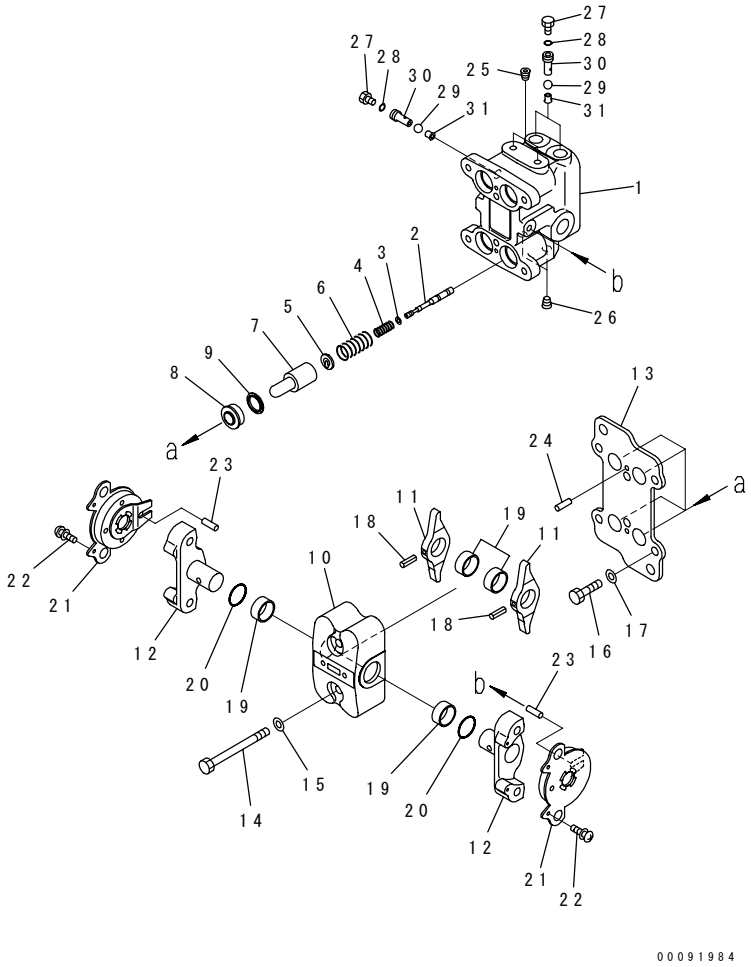

INDEX	PART NO.	DESCRIPTION	Q'TY	SERIAL NO.
	702-16-04270	PILOT VALVE	1	DJC00001-
		THIS ASSEMBLY CONSISTS OF ALL PARTS SHOWN IN FIGS.Y1670-01A0 AND Y1670-02A0.		
1	☆	.BODY,VALVE	1	DJC00001-
2	☆	.VALVE	4	DJC00001-
3	☆	.SHIM, 0.30MM	4	DJC00001-
4	☆	.SPRING	4	DJC00001-
5	☆	.RETAINER	4	DJC00001-
6	☆	.SPRING	4	DJC00001-
7	☆	.PISTON	4	DJC00001-
8	702-16-71150	.SEAL	4	DJC00001-
9	702-16-71160	.SEAT	4	DJC00001-
10	☆	.CASE	1	DJC00001-
11	☆	.LEVER	2	DJC00001-
12	☆	.SHAFT	2	DJC00001-
13	☆	.PLATE	1	DJC00001-
14	01010-80855	.BOLT	2	DJC00001-
15	01643-30823	.WASHER	2	DJC00001-
16	01010-80816	.BOLT	4	DJC00001-
17	702-16-54331	.WASHER, 1.60MM	4	DJC00001-
	702-16-54341	.WASHER, 1.30MM	4	DJC00001-
	702-16-54351	.WASHER, 1.00MM	4	DJC00001-
	702-16-56380	WASHER, 1.90MM		DJC00001-
	702-16-56390	.WASHER, 2.20MM	4	DJC00001-
18	☆	.PIN,SPRING	2	DJC00001-
19	☆	.BUSHING	4	DJC00001-
20	07000-12018	.O-RING	2	DJC00001-
21	☆	.DAMPER ASS'Y	2	DJC00001-
22	01023-10306	.SCREW	4	DJC00001-
23	702-16-73650	.PIN	2	DJC00001-
24	04022-04016	.PIN,DOWEL	2	DJC00001-
25	☆	.PLUG	2	DJC00001-
26	☆	.PLUG	2	DJC00001-
27	07040-11209	.PLUG	3	DJC00001-
28	07002-11223	.O-RING	3	DJC00001-
29	☆	.BALL	3	DJC00001-
30	702-16-55940	.PLUG	3	DJC00001-
31	702-16-55950	.SEAT	3	DJC00001-

FIG.Y1670-11A0 PPC VALVE (FOR WORK EQUIPMENT) (L.H. AND R.H.)

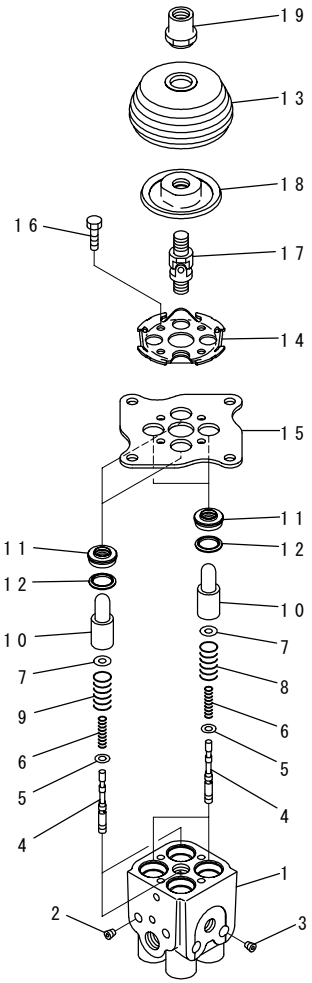

INDEX	PART NO.	DESCRIPTION	Q'TY	SERIAL NO.
	702-16-03910	PILOT VALVE	1	DJC00001-
1	☆	.BODY,VALVE	1	DJC00001-
2	☆	.PLUG	2	DJC00001-
3	☆	.PLUG	2	DJC00001-
4	☆	.VALVE	4	DJC00001-
5	702-16-51140	.SHIM, 0.30MM	4	DJC00001-
6	702-16-53420	.SPRING	4	DJC00001-
7	702-16-53140	.RETAINER	4	DJC00001-
8	702-16-53470	.SPRING	2	DJC00001-
9	702-16-53590	.SPRING	2	DJC00001-
10	702-16-53170	.PISTON	4	DJC00001-
11	702-16-71210	.SEAL	4	DJC00001-
12	702-16-71160	.SEAT	4	DJC00001-
13	702-16-71280	.BOOT	1	DJC00001-
14	702-16-71131	.PLATE	1	DJC00001-
15	702-16-71141	.PLATE	1	DJC00001-
16	01010-80620	.BOLT	4	DJC00001-
17	702-16-51240	.JOINT,UNIVERSAL	1	DJC00001-
18	702-16-71361	.DISC	1	DJC00001-
19	702-16-71441	.NUT	1	DJC00001-

FIG.Y1670-21A0 PPC VALVE (FOR ATTACHMENT)

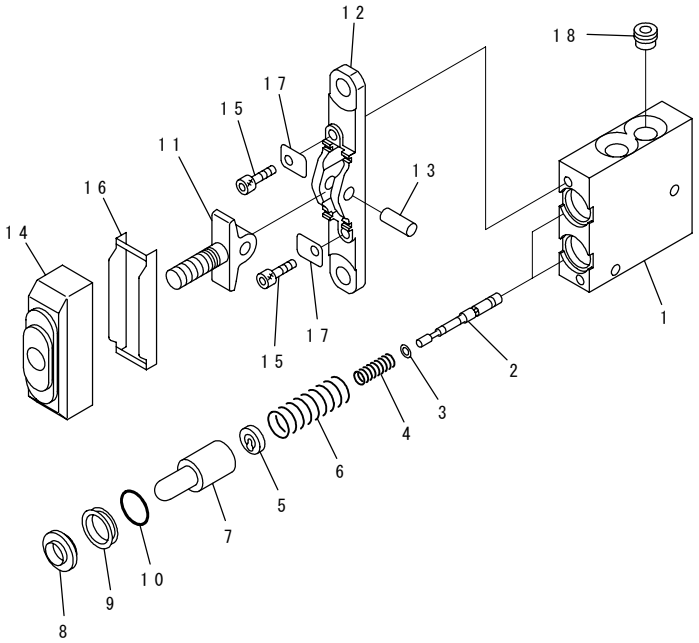

INDEX	PART NO.	DESCRIPTION	Q'TY	SERIAL NO.
	702-16-01270	PILOT VALVE	1	DJC00001-
1	☆	.BODY,VALVE	1	DJC00001-
2	☆	.VALVE	2	DJC00001-
3	702-16-51140	.SHIM, 0.30MM	2	DJC00001-
	702-16-54670	.SHIM, 0.20MM	4	DJC00001-
4	702-16-54550	.SPRING	2	DJC00001-
5	702-16-54571	.RETAINER	2	DJC00001-
6	702-16-54560	.SPRING	2	DJC00001-
7	702-16-53170	.PISTON	2	DJC00001-
8	702-16-51270	.SEAL	2	DJC00001-
9	702-16-54580	.COLLAR	2	DJC00001-
10	702-16-54590	.O-RING	2	DJC00001-
11	☆	.LEVER	1	DJC00001-
12	☆	.PLATE	1	DJC00001-
13	☆	.SHAFT	1	DJC00001-
14	702-16-54641	.BOOT	1	DJC00001-
15	01252-30625	.BOLT	2	DJC00001-
16	702-16-54660	.PLATE	1	DJC00001-
17	702-16-54650	.PLATE	2	DJC00001-
18	702-16-54880	.FILTER	1	DJC00001-

FIG.Y1670-51A0 PPC VALVE (FOR BLADE)

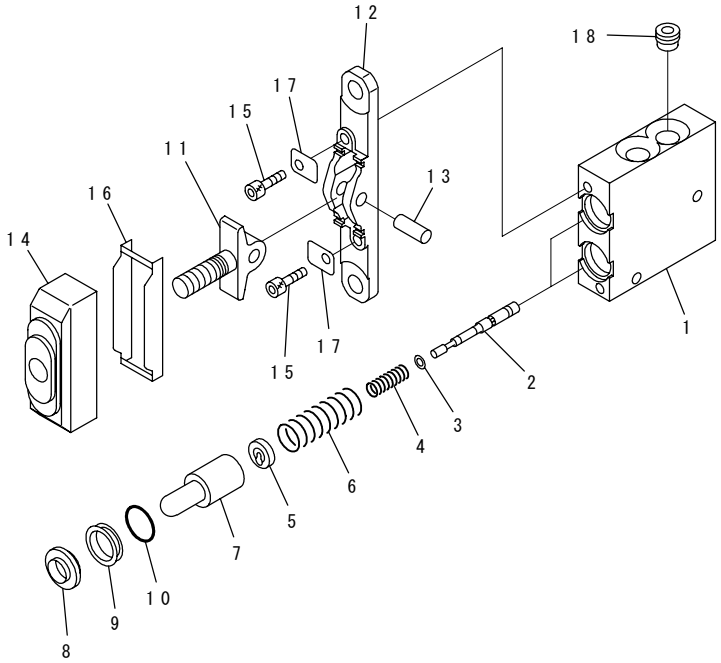

INDEX	PART NO.	DESCRIPTION	Q'TY	SERIAL NO.
	702-16-01600	PILOT VALVE	1	DJC00001-
1	☆	.BODY,VALVE	1	DJC00001-
2	☆	.VALVE	2	DJC00001-
3	702-16-51140	.SHIM, 0.30MM	2	DJC00001-
	702-16-54670	.SHIM, 0.20MM	4	DJC00001-
4	702-16-54550	.SPRING	2	DJC00001-
5	702-16-54571	.RETAINER	2	DJC00001-
6	702-16-54160	.SPRING	2	DJC00001-
7	702-16-53170	.PISTON	2	DJC00001-
8	702-16-51270	.SEAL	2	DJC00001-
9	702-16-54580	.COLLAR	2	DJC00001-
10	702-16-54590	.O-RING	2	DJC00001-
11	☆	.LEVER	1	DJC00001-
12	☆	.PLATE	1	DJC00001-
13	☆	.SHAFT	1	DJC00001-
14	702-16-54641	.BOOT	1	DJC00001-
15	01252-60625	.BOLT	2	DJC00001-
16	702-16-54660	.PLATE	1	DJC00001-
17	702-16-54650	.PLATE	2	DJC00001-
18	702-16-54880	.FILTER	1	DJC00001-

FIG.Y1672-01A0 SAFETY VALVE (FOR ATTACHMENT)

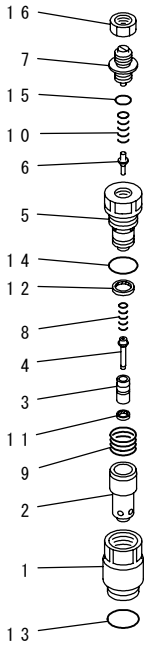

PVB8203

INDEX	PART NO.	DESCRIPTION	Q'TY	SERIAL NO.
	709-70-74700	VALVE ASS'Y,SUCTION AND SAFETY.....	1	DJC00001-
1	☆	.SLEEVE.....	1	DJC00001-
2	☆	.SLEEVE.....	1	DJC00001-
3	☆	.POPPET.....	1	DJC00001-
4	☆	.PISTON.....	1	DJC00001-
5	☆	.PLUG.....	1	DJC00001-
6	☆	.POPPET.....	1	DJC00001-
7	☆	.SCREW.....	1	DJC00001-
8	☆	.SPRING.....	1	DJC00001-
9	☆	.SPRING.....	1	DJC00001-
10	☆	.SPRING.....	1	DJC00001-
11	☆	.SEAL.....	1	DJC00001-
12	☆	.SEAL.....	1	DJC00001-
13	709-25-11390	.O-RING.....	1	DJC00001-
14	☆	.O-RING.....	1	DJC00001-
15	☆	.O-RING.....	1	DJC00001-
16	☆	.NUT.....	1	DJC00001-

NUMERICAL INDEX

PARTS NO.	FIG NO.	INDEX	PAGE
ND021045-0530	A601P-02C2	4	AA- 105
ND021100-5060	A601P-02C2	1	AA- 105
ND021200-8610	A601P-02C2	19	AA- 105
ND021401-4900	A601P-02C2	2	AA- 105
ND021411-0570	A601P-02C2	3	AA- 105
ND021501-7640	A601P-02C2	8	AA- 105
ND021506-0070	A601P-02C2	21	AA- 105
ND021542-0160	A601P-02C2	26	AA- 105
ND021551-2360	A601P-02C2	12	AA- 105
ND021580-4670	A601P-02C2	9	AA- 105
ND021602-5230	A601P-02C2	29	AA- 105
ND021605-1970	A601P-02C2	13	AA- 105
ND021605-2950	A601P-02C2	14	AA- 105
ND021620-2720	A601P-02C2	10	AA- 105
ND021626-0190	A601P-02C2	24	AA- 105
ND021626-0250	A601P-02C2	25	AA- 105
ND028062-0130	A621P-02B0	2	AA- 113
ND028062-5790	A621P-02B0	31	AA- 114
ND028063-0030	A621P-02B0	17	AA- 113
ND028099-3160	A621P-02B0	9	AA- 113
ND028099-3310	A621P-02B0	7	AA- 113
ND028099-3570	A621P-02B0	3	AA- 113
ND028100-2881	A621P-02B0	1	AA- 113
ND028200-1590	A621P-02B0	4	AA- 113
ND028300-5091	A621P-02B0	7	AA- 113
ND028300-6750	A621P-02B0	7	AA- 113
ND028306-0070	A621P-02B0	16	AA- 113
ND028327-0171	A621P-02B0	18	AA- 113
ND028371-1500	A621P-02B0	15	AA- 113
ND028381-0071	A621P-02B0	7	AA- 113
ND028501-7880	A621P-02B0	12	AA- 113
ND028510-5390	A621P-02B0	10	AA- 113
ND028901-5190	A621P-02B0	34	AA- 114
ND053404-0240	A621P-02B0	9	AA- 113
ND053480-7560	A621P-02B0	9	AA- 113
ND053505-0290	A621P-02B0	9	AA- 113
ND053660-0443	A621P-02B0	9	AA- 113
ND121041-0270	A601P-02C2	22	AA- 105
ND121400-3950	A601P-02C2	1	AA- 105
ND126000-3730	A601P-02C2	11	AA- 105
ND128099-5830	A621P-02B0	9	AA- 113
ND128961-0010	A621P-02B0	13	AA- 113
ND153400-2192	A621P-02B0	9	AA- 113
ND228401-1440	A621P-02B0	8	AA- 113
ND90170-10061	A621P-02B0	25	AA- 113
ND90200-06241	A621P-02B0	30	AA- 114
ND90258-06001	A621P-02B0	28	AA- 113
ND90258-10001	A621P-02B0	26	AA- 113
ND90260-00501	A621P-02B0	32	AA- 114
ND90801-10050	A621P-02B0	22	AA- 113

PARTS NO.	FIG NO.	INDEX	PAGE
ND90804-10050	A621P-02B0	20	AA- 113
ND91310-04251	A601P-02C2	16	AA- 105
ND92150-06061	A601P-02C2	30	AA- 105
ND949006-5460	A601P-02C2	15	AA- 105
ND949006-5590	A601P-02C2	5	AA- 105
ND949006-6401	A601P-02C2	27	AA- 105
ND949006-6910	A621P-02B0	29	AA- 113
ND949007-5110	A601P-02C2	16	AA- 105
ND949007-6280	A601P-02C2	28	AA- 105
ND949007-6530	A621P-02B0	23	AA- 113
ND949007-6850	A621P-02B0	33	AA- 114
ND949011-5700	A621P-02B0	21	AA- 113
ND949017-1290	A621P-02B0	27	AA- 113
ND949020-0600	A621P-02B0	24	AA- 113
ND949042-3741	A621P-02B0	19	AA- 113
ND949043-2000	A601P-02C2	7	AA- 105
ND949056-1001	A601P-02C2	18	AA- 105
ND949056-2481	A601P-02C2	17	AA- 105
ND949056-2520	A601P-02C2	23	AA- 105
ND949056-4480	A621P-02B0	35	AA- 114
ND949100-1750	A621P-02B0	6	AA- 113
ND949100-1920	A621P-02B0	7	AA- 113
ND949100-1930	A621P-02B0	5	AA- 113
ND949100-2790	A601P-02C2	20	AA- 105
ND949100-3980	A601P-02C2	20	AA- 105
ND949100-4500	A621P-02B0	7	AA- 113
ND949100-5010	A601P-02C2	6	AA- 105
ND949170-4040	A621P-02B0	7	AA- 113
ND949170-4070	A621P-02B0	14	AA- 113
ND949173-0571	A621P-02B0	11	AA- 113
REU419B-418-C	Y1062-01A0	15	Y0- 3
RFU419B-418-A	Y1062-01A0	1	Y0- 3
RFU419B-418-B	Y1062-01A0	6	Y0- 3
RFU419B-418-C	Y1062-01A0	7	Y0- 3
RFU419B-418-D	Y1062-01A0	3	Y0- 3
RFU419B-418-E	Y1062-01A0	4	Y0- 3
RFU419B-418-F	Y1062-01A0	16	Y0- 3
TZGDL1-16-S	Y1651-01A0	19	Y0- 43
TZGM1-8-S	Y1651-01A0	11	Y0- 43
TZJB1177M812-B	Y1651-03A0	21	Y0- 47
TZJB1354-4-10	Y1651-01A0	24	Y0- 43
TZJB2401-P26-9	Y1651-01A0	9	Y0- 43
TZJW1516-G37-7	Y1651-03A0	24	Y0- 47
TZTCZ-30-50-9	Y1651-02A0	15	Y0- 45
TZTH-R-42	Y1651-02A0	18	Y0- 45
TZ110D1001-00	Y1651-03A0	18	Y0- 47
TZ110D1002-00	Y1651-03A0	1	Y0- 47
TZ110D1006-00	Y1651-03A0	15	Y0- 47
TZ110D1007-00	Y1651-03A0	6	Y0- 47
TZ110D1010-00	Y1651-03A0	7	Y0- 47

PARTS NO.	FIG NO.	INDEX	PAGE
TZ110D1011-00	Y1651-03A0	3	Y0- 47
TZ110D1013-00	Y1651-03A0	28	Y0- 47
TZ110D1022-00	Y1651-03A0	25	Y0- 47
TZ110D1024-00	Y1651-03A0	19	Y0- 47
TZ110D1027-00	Y1651-03A0	10	Y0- 47
TZ110D1028-00	Y1651-03A0	5	Y0- 47
TZ110D1029-00	Y1651-03A0	9	Y0- 47
TZ110D1030-00	Y1651-03A0	4	Y0- 47
TZ110D200001-B	Y1651-01A0	1	Y0- 43
TZ110D200001-B	Y1651-02A0	1	Y0- 45
TZ110D2002-00	Y1651-02A0	4	Y0- 45
TZ110D200300-B	Y1651-02A0	5	Y0- 45
TZ110D2009-01	Y1651-02A0	8	Y0- 45
TZ110D4024-00	Y1651-01A0	4	Y0- 43
TZ111D1003-00	Y1651-03A0	2	Y0- 47
TZ111D1004-00	Y1651-03A0	17	Y0- 47
TZ111D1005-00	Y1651-03A0	11	Y0- 47
TZ111D400000-F	Y1651-01A0	1	Y0- 43
TZ111D410000-F	Y1651-01A0	1	Y0- 43
TZ111D410100-F	Y1651-01A0	1	Y0- 43
TZ116D4056-00	Y1651-01A0	7	Y0- 43
TZ1180082010L2	Y1651-03A0	13	Y0- 47
TZ1180102010L	Y1651-03A0	8	Y0- 47
TZ131D1000-00	Y1651-03A0	1	Y0- 47
TZ131D9000-00	Y1651-01A0	K	Y0- 43
TZ131D9000-00	Y1651-02A0	K	Y0- 45
TZ131D9000-00	Y1651-03A0	K	Y0- 47
TZ192-230-30BH	Y1651-03A0	20	Y0- 47
TZ200B2073-00	Y1651-01A0	20	Y0- 43
TZ263B2008-01	Y1651-02A0	7	Y0- 45
TZ263B2011-03	Y1651-02A0	25	Y0- 45
TZ263B2070-01	Y1651-02A0	3	Y0- 45
TZ263B2076-02	Y1651-02A0	22	Y0- 45
TZ263B2077-01	Y1651-02A0	23	Y0- 45
TZ263B2077-01	Y1651-03A0	22	Y0- 47
TZ263B2090-00	Y1651-02A0	24	Y0- 45
TZ263B2098-00	Y1651-02A0	21	Y0- 45
TZ266B2012-00	Y1651-02A0	10	Y0- 45
TZ266B2035-00	Y1651-02A0	16	Y0- 45
TZ266B2039-00	Y1651-02A0	17	Y0- 45
TZ277B2007-00	Y1651-02A0	6	Y0- 45
TZ277B2014-00	Y1651-02A0	12	Y0- 45
TZ277B2205-00	Y1651-02A0	1	Y0- 45
TZ300B2039-00	Y1651-01A0	22	Y0- 43
TZ300B2042-00	Y1651-01A0	23	Y0- 43
TZ300B2043-01	Y1651-01A0	21	Y0- 43
TZ400G1009-00	Y1651-03A0	14	Y0- 47
TZ400G2049-00	Y1651-02A0	20	Y0- 45
TZ410D1033-01	Y1651-03A0	31	Y0- 47
TZ440D1012-00	Y1651-03A0	12	Y0- 47

PARTS NO.	FIG NO.	INDEX	PAGE
TZ500D2013-00	Y1651-02A0	11	Y0- 45
TZ500D4054-00	Y1651-01A0	6	Y0- 43
TZ500D4055-00	Y1651-01A0	8	Y0- 43
TZ610B2021-00	Y1651-01A0	16	Y0- 43
TZ800A2015-00	Y1651-02A0	13	Y0- 45
TZ800A2016-00	Y1651-02A0	14	Y0- 45
TZ810B1018-00	Y1651-03A0	29	Y0- 47
TZ810B2021-00	Y1651-03A0	30	Y0- 47
TZ869A205200-B	Y1651-01A0	5	Y0- 43
TZ880A2010-00	Y1651-02A0	9	Y0- 45
01010-D0612	K0210-06A0	21	K0- 15
01010-D0816	K0210-02A0	10	K0- 7
01010-D0816	K0210-02A0	18	K0- 7
01010-D0816	K0210-02A0	7	K0- 7
01010-D0820	K0110-01A0	5	K0- 3
01010-D0820	K0210-02A0	13	K0- 7
01010-D0820	K0210-02A0	20	K0- 7
01010-D0820	K0210-42A0	2	K0- 79
01010-D0825	K0210-37A1	10	K0- 69
01010-D0825	K0210-40A0	5	K0- 75
01010-D0825	K0210-40A0	9	K0- 75
01010-D1025	K0210-06A0	6	K0- 15
01010-D1025	K0210-13A0	2	K0- 25
01010-D1025	K0210-37A1	2	K0- 69
01010-D1030	K0210-46A2	14	K0- 89
01010-D1045	K0210-14A0	12	K0- 27
01010-D1045	K0210-45A2	11	K0- 87
01010-D1230	K0210-22A0	2	K0- 49
01010-80610	E0200-05A0	19	E0- 13
01010-80612	D0100-01A0	16	D0- 3
01010-80612	K0210-36A0	29	K0- 67
01010-80616	C0100-08A0	5	C0- 17
01010-80616	E0200-10A0	3	E0- 23
01010-80616	K0210-18A0	14	K0- 41
01010-80616	K0210-18A0	5	K0- 41
01010-80616	K0210-22A0	15	K0- 49
01010-80616	K0210-22A0	9	K0- 49
01010-80616	K0210-53A0	4	K0- 95
01010-80616	K0700-03A0	17	K0- 111
01010-80620	K0210-42A0	20	K0- 79
01010-80620	K0350-01A0	3	K0- 105
01010-80620	K0700-02A0	9	K0- 109
01010-80620	Y1660-14A0	4	Y0- 77
01010-80620	Y1662-14A0	4	Y0- 111
01010-80620	Y1662-36A0	4	Y0- 151
01010-80620	Y1664-16A0	4	Y0- 187
01010-80620	Y1670-11A0	16	Y0- 199
01010-80625	K0700-03A0	9	K0- 111
01010-80812	E0200-10A0	18	E0- 23
01010-80816	C0100-05A0	8	C0- 11

PARTS NO.	FIG NO.	INDEX	PAGE
01010-80816	E0200-07A0	4	E0- 17
01010-80816	E0200-10A0	6	E0- 23
01010-80816	K0210-35A0	3	K0- 65
01010-80816	K0210-36A0	8	K0- 67
01010-80816	K0700-01A0	13	K0- 107
01010-80816	K0700-03A0	2	K0- 111
01010-80816	M1130-01A0	28	M0- 5
01010-80816	Y1670-01A0	16	Y0- 197
01010-80820	B0100-01A0	27	B0- 3
01010-80820	B0100-01A0	33	B0- 3
01010-80820	B0200-01A0	2	B0- 5
01010-80820	C0100-02A0	18	C0- 5
01010-80820	C0100-02A0	21	C0- 5
01010-80820	C0100-04A0	11	C0- 9
01010-80820	C0100-05A0	10	C0- 11
01010-80820	C0100-06A0	2	C0- 13
01010-80820	E0200-09A0	2	E0- 21
01010-80820	H0320-02A0	21	H0- 31
01010-80820	K0210-06A0	18	K0- 15
01010-80820	K0210-31A0	2	K0- 57
01010-80820	K0210-33A0	2	K0- 61
01010-80820	K0210-36A0	5	K0- 67
01010-80820	K0700-03A0	19	K0- 111
01010-80825	C0100-03A0	2	C0- 7
01010-80825	E0200-09A0	5	E0- 21
01010-80825	K0210-55A0	5	K0- 99
01010-80825	T1210-02A1	17	T0- 25
01010-80825	Y1600-04A0	23	Y0- 13
01010-80825	Y1600-14A0	22	Y0- 23
01010-80830	C0100-06A0	13	C0- 13
01010-80830	C0100-06A0	8	C0- 13
01010-80830	E0200-08A0	2	E0- 19
01010-80830	H0311-01A1	15	H0- 19
01010-80830	K0210-42A0	13	K0- 79
01010-80830	K0700-03A0	7	K0- 111
01010-80830	R0120-01A0	17	R0- 5
01010-80830	Y1600-04A0	12	Y0- 13
01010-80835	H0120-01A0	12	H0- 5
01010-80835	H0120-01A1	12	H0- 7
01010-80835	H0120-01A2	12	H0- 9
01010-80835	H0120-01A3	12	H0- 11
01010-80835	H0312-01A1	30	H0- 23
01010-80845	K0210-36A0	2	K0- 67
01010-80850	E0200-02A0	2	E0- 7
01010-80850	E0200-02A0	8	E0- 7
01010-80850	H0311-01A1	17	H0- 19
01010-80855	Y1670-01A0	14	Y0- 197
01010-80895	K0700-01A0	8	K0- 107
01010-81016	E0200-01A0	17	E0- 5
01010-81016	E0200-02A0	20	E0- 7

PARTS NO.	FIG NO.	INDEX	PAGE
01010-81016	E0200-04A0	15	E0- 11
01010-81016	E0200-05A0	16	E0- 13
01010-81016	H0312-01A0	17	H0- 21
01010-81016	H0312-01A1	17	H0- 23
01010-81016	H0340-01A0	26	H0- 35
01010-81016	H1840-01A0	28	H0- 65
01010-81016	K0210-22A0	43	K0- 50
01010-81016	K0210-22A0	46	K0- 50
01010-81016	K0210-35A0	25	K0- 65
01010-81016	K0210-35A0	27	K0- 65
01010-81016	K0210-36A0	14	K0- 67
01010-81016	K0210-36A0	17	K0- 67
01010-81016	K0210-36A0	20	K0- 67
01010-81016	K0210-36A0	23	K0- 67
01010-81016	K0700-03A0	5	K0- 111
01010-81020	B0600-01A0	10	B0- 7
01010-81020	C0100-09A0	2	C0- 19
01010-81020	C0100-09A0	5	C0- 19
01010-81020	D0200-01A0	10	D0- 5
01010-81020	D0200-01A0	18	D0- 5
01010-81020	E0100-01A0	20	E0- 3
01010-81020	E0100-01A0	24	E0- 3
01010-81020	E0200-01A0	14	E0- 5
01010-81020	E0200-01A0	21	E0- 5
01010-81020	E0200-01A0	24	E0- 5
01010-81020	E0200-02A0	23	E0- 7
01010-81020	E0200-02A0	5	E0- 7
01010-81020	E0200-03A0	8	E0- 9
01010-81020	E0200-04A0	13	E0- 11
01010-81020	E0200-04A0	17	E0- 11
01010-81020	E0200-04A0	2	E0- 11
01010-81020	E0200-04A0	22	E0- 11
01010-81020	E0200-04A0	25	E0- 11
01010-81020	E0200-04A0	28	E0- 11
01010-81020	E0200-04A0	31	E0- 11
01010-81020	E0200-04A0	34	E0- 11
01010-81020	E0200-04A0	37	E0- 11
01010-81020	E0200-04A0	40	E0- 11
01010-81020	E0200-04A0	9	E0- 11
01010-81020	E0200-05A0	10	E0- 13
01010-81020	E0200-05A0	14	E0- 13
01010-81020	E0200-05A0	4	E0- 13
01010-81020	E0200-08A0	15	E0- 19
01010-81020	E0200-08A0	18	E0- 19
01010-81020	E0200-10A0	13	E0- 23
01010-81020	E0200-10A0	9	E0- 23
01010-81020	H0320-01A0	11	H0- 27
01010-81020	H0320-01A0	15	H0- 27
01010-81020	H0320-01A1	12	H0- 29
01010-81020	H0320-01A1	8	H0- 29

PARTS NO.	FIG NO.	INDEX	PAGE
01010-81020	H0320-02A0	10	H0- 31
01010-81020	H0320-02A0	25	H0- 31
01010-81020	H1210-01A0	4	H0- 37
01010-81020	H1831-02A0	4	H0- 63
01010-81020	K0210-09A0	8	K0- 21
01010-81020	K0210-14A0	2	K0- 27
01010-81020	K0210-16A0	2	K0- 31
01010-81020	K0210-16A0	8	K0- 31
01010-81020	K0210-16A1	2	K0- 33
01010-81020	K0210-16A1	8	K0- 33
01010-81020	K0210-16A2	3	K0- 35
01010-81020	K0210-16A2	9	K0- 35
01010-81020	K0210-16A3	3	K0- 37
01010-81020	K0210-16A3	9	K0- 37
01010-81020	K0210-32A0	15	K0- 59
01010-81020	K0210-32A0	20	K0- 59
01010-81020	K0210-34A0	12	K0- 63
01010-81020	K0210-35A0	12	K0- 65
01010-81020	K0210-35A0	15	K0- 65
01010-81020	K0210-35A0	19	K0- 65
01010-81020	K0210-35A0	6	K0- 65
01010-81020	K0210-35A0	9	K0- 65
01010-81020	K0210-45A0	5	K0- 85
01010-81020	K0210-45A2	14	K0- 87
01010-81020	K0350-01A0	8	K0- 105
01010-81020	K0700-02A0	23	K0- 109
01010-81020	K0700-03A0	14	K0- 111
01010-81020	M1110-01A0	14	M0- 3
01010-81020	M1110-01A0	16	M0- 3
01010-81020	M1150-01A0	10	M0- 9
01010-81020	M1150-02A0	10	M0- 11
01010-81020	M1150-02A0	16	M0- 11
01010-81020	M1150-02A0	20	M0- 11
01010-81020	M1150-02A0	23	M0- 11
01010-81020	M1150-02A0	26	M0- 11
01010-81020	M1150-02A0	5	M0- 11
01010-81020	P1120-02A1	11	P0- 7
01010-81020	T1210-02A1	20	T0- 25
01010-81020	Y1620-41A0	22	Y0- 29
01010-81025	A241T-01A2	8	AA- 65
01010-81025	B0200-01A0	5	B0- 5
01010-81025	B0600-01A0	26	B0- 7
01010-81025	C0100-02A0	10	C0- 5
01010-81025	C0100-02A0	5	C0- 5
01010-81025	C0100-03A0	5	C0- 7
01010-81025	C0100-07A0	13	C0- 15
01010-81025	D0200-01A0	20	D0- 5
01010-81025	D0200-02A0	10	D0- 7
01010-81025	E0100-01A0	9	E0- 3
01010-81025	E0200-01A0	7	E0- 5

PARTS NO.	FIG NO.	INDEX	PAGE
01010-81025	E0200-02A0	12	E0- 7
01010-81025	E0200-02A0	17	E0- 7
01010-81025	E0200-02A0	26	E0- 7
01010-81025	E0200-04A0	6	E0- 11
01010-81025	H0110-01A0	11	H0- 3
01010-81025	H0120-01A0	16	H0- 5
01010-81025	H0120-01A1	16	H0- 7
01010-81025	H0120-01A2	16	H0- 9
01010-81025	H0120-01A3	16	H0- 11
01010-81025	H1210-01A0	16	H0- 37
01010-81025	H1220-01A0	19	H0- 39
01010-81025	H1270-03A0	13	H0- 45
01010-81025	H1831-02A0	7	H0- 63
01010-81025	J1110-01A0	11	J0- 3
01010-81025	J1110-01A1	11	J0- 5
01010-81025	K0210-14A0	5	K0- 27
01010-81025	K0210-18A0	2	K0- 41
01010-81025	K0210-45A0	3	K0- 85
01010-81025	K0210-45A0	8	K0- 85
01010-81025	M1110-01A0	11	M0- 3
01010-81025	M1150-01A0	16	M0- 9
01010-81025	M1220-01A0	13	M0- 13
01010-81025	R1100-01A0	14	R0- 13
01010-81025	R1100-01A1	14	R0- 15
01010-81025	T1110-04A0	10	T0- 9
01010-81025	T1110-04A1	10	T0- 11
01010-81025	T1110-05A1	19	T0- 13
01010-81025	T1110-05A1	29	T0- 13
01010-81025	T1110-05A1	9	T0- 13
01010-81030	C0100-02A0	15	C0- 5
01010-81030	C0100-02A0	34	C0- 5
01010-81030	D0200-04A0	2	D0- 11
01010-81030	E0200-01A0	3	E0- 5
01010-81030	E0200-08A0	13	E0- 19
01010-81030	H1270-04A0	1	H0- 47
01010-81030	K0210-14A0	14	K0- 27
01010-81030	K0210-45A2	4	K0- 87
01010-81030	M1150-02A0	2	M0- 11
01010-81035	B0600-01A0	15	B0- 7
01010-81035	C0100-01A0	11	C0- 3
01010-81035	C0100-01A0	4	C0- 3
01010-81035	C0100-07A0	10	C0- 15
01010-81035	H0110-01A0	19	H0- 3
01010-81035	H1270-05A0	2	H0- 49
01010-81035	K0210-45A2	8	K0- 87
01010-81035	K0700-01A0	10	K0- 107
01010-81035	M1140-01A0	7	M0- 7
01010-81035	M1150-02A0	7	M0- 11
01010-81035	T1110-05A1	16	T0- 13
01010-81035	T1110-05A1	26	T0- 13

PARTS NO.	FIG NO.	INDEX	PAGE
01010-81035	T1110-05A1	6	T0- 13
01010-81040	B0600-01A0	17	B0- 7
01010-81040	E0200-05A0	7	E0- 13
01010-81040	K0210-37A1	5	K0- 69
01010-81045	B0600-01A0	19	B0- 7
01010-81045	D0200-01A0	15	D0- 5
01010-81045	E0200-01A0	11	E0- 5
01010-81045	K0210-16A0	14	K0- 31
01010-81045	K0210-16A0	23	K0- 31
01010-81045	K0210-16A1	14	K0- 33
01010-81045	K0210-16A1	24	K0- 33
01010-81045	K0210-16A2	15	K0- 35
01010-81045	K0210-16A2	25	K0- 35
01010-81045	K0210-16A3	15	K0- 37
01010-81045	K0210-16A3	25	K0- 37
01010-81065	T1110-05A1	13	T0- 13
01010-81065	T1110-05A1	23	T0- 13
01010-81070	H0320-02A0	15	H0- 31
01010-81070	H0320-02A0	4	H0- 31
01010-81080	E0200-03A0	4	E0- 9
01010-81090	H1831-02A0	1	H0- 63
01010-81220	M1140-01A0	16	M0- 7
01010-81220	T1110-02A0	6	T0- 5
01010-81225	B0100-01A0	29	B0- 3
01010-81225	B0200-01A0	13	B0- 5
01010-81225	H1270-06A0	5	H0- 51
01010-81225	J1110-01A0	7	J0- 3
01010-81225	J1110-01A1	7	J0- 5
01010-81225	K0210-16A0	5	K0- 31
01010-81225	K0210-16A1	5	K0- 33
01010-81225	K0210-16A2	6	K0- 35
01010-81225	K0210-16A3	6	K0- 37
01010-81225	M1130-01A0	20	M0- 5
01010-81225	M1140-01A0	4	M0- 7
01010-81225	M1810-01A0	12	M0- 23
01010-81225	M1810-01A0	14	M0- 23
01010-81225	M1810-01A0	17	M0- 23
01010-81225	M1810-01A0	2	M0- 23
01010-81225	M1810-01A0	20	M0- 23
01010-81225	M1810-01A0	22	M0- 23
01010-81225	M1810-01A0	25	M0- 23
01010-81225	M1810-01A0	27	M0- 23
01010-81225	M1810-01A0	30	M0- 23
01010-81225	M1810-01A0	4	M0- 23
01010-81225	M1810-01A0	7	M0- 23
01010-81225	M1810-01A0	9	M0- 23
01010-81225	T1110-02A0	3	T0- 5
01010-81230	H0110-01A0	30	H0- 3
01010-81230	H1270-01A0	20	H0- 41
01010-81230	H1270-03A0	6	H0- 45

PARTS NO.	FIG NO.	INDEX	PAGE
01010-81230	H1270-04A0	19	H0- 47
01010-81230	J1110-01A0	4	J0- 3
01010-81230	J1110-01A1	4	J0- 5
01010-81230	J1310-01A0	11	J0- 7
01010-81230	J1310-01A0	4	J0- 7
01010-81230	M1110-01A0	23	M0- 3
01010-81230	M1130-01A0	1	M0- 5
01010-81230	M1130-01A0	12	M0- 5
01010-81230	M1140-01A0	19	M0- 7
01010-81230	M1150-01A0	19	M0- 9
01010-81230	M1310-01A0	2	M0- 15
01010-81230	R1100-01A0	4	R0- 13
01010-81230	R1100-01A1	4	R0- 15
01010-81230	T1110-03A0	16	T0- 7
01010-81230	T1110-03A0	4	T0- 7
01010-81230	T1110-03A0	9	T0- 7
01010-81230	T1210-01A0	15	T0- 19
01010-81230	T1210-01A0	9	T0- 19
01010-81230	T1210-01A1	15	T0- 21
01010-81230	T1210-01A1	9	T0- 21
01010-81230	T1210-01A2	15	T0- 23
01010-81230	T1210-01A2	9	T0- 23
01010-81230	T1710-01A0	14	T0- 37
01010-81230	T1710-01A0	8	T0- 37
01010-81235	C0100-08A0	10	C0- 17
01010-81235	M1150-01A0	2	M0- 9
01010-81235	M1220-01A0	19	M0- 13
01010-81235	N1310-01A0	2	N0- 11
01010-81235	N1310-01A1	2	N0- 13
01010-81235	R0300-01A0	9	R0- 9
01010-81240	H0311-01A0	3	H0- 17
01010-81240	H0311-01A1	3	H0- 19
01010-81245	B0600-01A0	13	B0- 7
01010-81245	H0120-01A0	7	H0- 5
01010-81245	H0120-01A1	7	H0- 7
01010-81245	H0120-01A2	7	H0- 9
01010-81245	H0120-01A3	7	H0- 11
01010-81250	H1270-05A0	9	H0- 49
01010-81265	H1210-01A0	20	H0- 37
01010-81270	H1270-01A0	25	H0- 41
01010-81270	H1270-01A0	29	H0- 41
01010-81270	T1210-02A1	6	T0- 25
01010-81285	B0100-01A0	14	B0- 3
01010-81285	B0100-01A0	9	B0- 3
01010-81430	D0100-01A0	12	D0- 3
01010-81435	R1100-01A0	17	R0- 13
01010-81435	R1100-01A1	17	R0- 15
01010-81440	K0700-01A0	4	K0- 107
01010-81445	H0120-01A0	9	H0- 5
01010-81445	H0120-01A1	9	H0- 7

PARTS NO.	FIG NO.	INDEX	PAGE
01010-81445	H0120-01A2	9	H0- 9
01010-81445	H0120-01A3	9	H0- 11
01010-81465	R0200-01A0	10	R0- 7
01010-81475	R0120-01A0	19	R0- 5
01010-81490	K0700-01A0	6	K0- 107
01010-81640	P1210-01A0	5	P0- 9
01010-81645	N1210-01A0	2	N0- 5
01010-81680	N1110-01A0	4	N0- 3
01010-81690	K1120-01A0	5	K0- 115
01011-81010	N1210-52A0	4	N0- 9
01011-81240	H0311-01A0	5	H0- 17
01011-81240	H0311-01A1	5	H0- 19
01011-81620	T1230-01A0	20	T0- 29
01011-81620	T1230-01A0	24	T0- 29
01011-81630	B0100-01A0	21	B0- 3
01011-81630	T1230-01A0	27	T0- 29
01011-81630	T1230-01A0	30	T0- 29
01018-31095	A601T-01C1	13	AA- 107
01023-10306	Y1670-01A0	22	Y0- 197
01023-10406	H1270-03A0	8	H0- 45
01023-10508	K0210-22A0	39	K0- 49
01023-10620	K0210-36A0	12	K0- 67
01023-20416	K0210-14A0	21	K0- 27
01023-20416	K0210-52A0	2	K0- 93
01023-20416	K0210-52A0	8	K0- 93
01023-20512	K0210-20A0	12	K0- 45
01023-20512	K0210-20A0	16	K0- 45
01023-20512	K0210-23A0	12	K0- 53
01023-20512	K0210-23A0	16	K0- 53
01023-20616	K0210-06A0	16	K0- 15
01023-20616	K0210-38A0	29	K0- 71
01023-60320	K0210-19A0	17	K0- 43
01023-60410	K0210-19A0	1	K0- 43
01023-60510	K0210-53A0	3	K0- 95
01023-60616	K0350-01A0	7	K0- 105
01023-70420	K0210-08A0	16	K0- 19
01023-70420	K0210-38A0	17	K0- 71
01023-70616	K0210-03A0	4	K0- 9
01023-70616	K0210-03A0	5	K0- 9
01050-31430	A223R-01A1	2	AA- 55
01050-31845	A233P-01A7	3	AA- 57
01124-60825	A153P-01A8	3	AA- 19
01124-60825	A1670-01A5	4	AA- 31
01164-50840	A401P-01K6	6	AA- 73
01225-70416	K0210-38A0	25	K0- 71
01236-40816	A501P-01A7	8	AA- 91
01240-00616	K0210-02A0	36	K0- 7
01245-00612	K0210-02A0	25	K0- 7
01245-00612	K0210-39A0	19	K0- 73
01245-00612	K0210-39A0	23	K0- 73

PARTS NO.	FIG NO.	INDEX	PAGE
01245-00616	K0210-04A0	6	K0- 11
01245-00616	K0210-05A0	3	K0- 13
01245-00616	K0210-05A0	6	K0- 13
01245-00616	K0210-07A0	4	K0- 17
01245-00616	K0210-08A0	13	K0- 19
01245-00616	K0210-18A0	12	K0- 41
01245-00616	K0210-18A0	18	K0- 41
01245-00616	K0210-18A0	23	K0- 41
01245-00616	K0210-22A0	13	K0- 49
01245-00616	K0210-22A0	20	K0- 49
01245-00616	K0210-22A0	23	K0- 49
01245-00616	K0210-38A0	13	K0- 71
01245-00616	K0210-38A0	20	K0- 71
01245-00616	K0210-38A0	3	K0- 71
01245-00616	K0210-39A0	13	K0- 73
01245-00616	K0210-39A0	20	K0- 73
01245-00616	K0210-39A0	28	K0- 73
01245-00616	K0210-42A0	16	K0- 79
01245-00620	K0210-20A0	9	K0- 45
01245-00620	K0210-23A0	9	K0- 53
01245-00820	K0210-06A0	3	K0- 15
01245-00820	K0210-07A0	14	K0- 17
01245-00820	K0210-55A0	2	K0- 99
01245-01020	K0210-04A0	3	K0- 11
01252-30625	Y1670-21A0	15	Y0- 201
01252-31230	Y1651-01A0	25	Y0- 43
01252-41025	K0210-17A0	8	K0- 39
01252-41025	K0210-21A0	10	K0- 47
01252-41025	M1420-01A0	4	M0- 17
01252-60516	A471P-02A6	2	AA- 87
01252-60616	A471P-02A6	9	AA- 87
01252-60616	Y1660-10A0	9	Y0- 69
01252-60616	Y1662-10A0	9	Y0- 103
01252-60616	Y1662-30A0	9	Y0- 139
01252-60616	Y1664-10A0	9	Y0- 175
01252-60620	Y1660-08A0	26	Y0- 65
01252-60620	Y1662-08A0	26	Y0- 99
01252-60620	Y1662-28A0	28	Y0- 135
01252-60620	Y1664-08A0	28	Y0- 171
01252-60625	Y1670-51A0	15	Y0- 203
01252-60630	Y1660-02A0	29	Y0- 51
01252-60630	Y1662-02A0	29	Y0- 85
01252-60630	Y1662-17A0	14	Y0- 117
01252-60630	Y1662-22A0	29	Y0- 123
01252-60630	Y1664-02A0	29	Y0- 159
01252-60630	Y1664-19A0	14	Y0- 193
01252-60635	Y1600-03A0	33	Y0- 9
01252-60635	Y1600-13A0	33	Y0- 19
01252-60635	Y1660-02A0	28	Y0- 51
01252-60635	Y1660-10A0	8	Y0- 69

PARTS NO.	FIG NO.	INDEX	PAGE
01252-60635	Y1662-02A0	28	Y0- 85
01252-60635	Y1662-10A0	8	Y0- 103
01252-60635	Y1662-22A0	28	Y0- 123
01252-60635	Y1662-30A0	8	Y0- 139
01252-60635	Y1664-02A0	28	Y0- 159
01252-60635	Y1664-10A0	8	Y0- 175
01252-60640	Y1660-06A0	40	Y0- 60
01252-60640	Y1660-06A0	9	Y0- 59
01252-60640	Y1660-08A0	25	Y0- 65
01252-60640	Y1662-06A0	40	Y0- 94
01252-60640	Y1662-06A0	9	Y0- 93
01252-60640	Y1662-08A0	25	Y0- 99
01252-60640	Y1662-26A0	37	Y0- 131
01252-60640	Y1662-26A0	9	Y0- 131
01252-60640	Y1662-28A0	27	Y0- 135
01252-60640	Y1664-06A0	37	Y0- 167
01252-60640	Y1664-06A0	9	Y0- 167
01252-60640	Y1664-08A0	27	Y0- 171
01252-60650	Y1660-10A0	7	Y0- 69
01252-60650	Y1662-10A0	7	Y0- 103
01252-60650	Y1662-30A0	7	Y0- 139
01252-60650	Y1664-10A0	7	Y0- 175
01252-60820	Y1660-06A0	18	Y0- 59
01252-60820	Y1662-06A0	18	Y0- 93
01252-60820	Y1662-26A0	15	Y0- 131
01252-60820	Y1664-06A0	15	Y0- 167
01252-60825	Y1640-03A0	9	Y0- 41
01252-60840	Y1600-04A0	6	Y0- 13
01252-60840	Y1600-14A0	6	Y0- 23
01252-60855	Y1600-04A0	5	Y0- 13
01252-60855	Y1600-14A0	5	Y0- 23
01252-60855	Y1660-06A0	26	Y0- 59
01252-60855	Y1662-06A0	26	Y0- 93
01252-60855	Y1662-26A0	23	Y0- 131
01252-60855	Y1664-06A0	23	Y0- 167
01252-61235	Y1600-02A0	18	Y0- 7
01252-61235	Y1600-12A0	18	Y0- 17
01252-61245	Y1640-01A0	11	Y0- 37
01252-70516	H0110-01A0	4	H0- 3
01252-70816	K0210-19A0	9	K0- 43
01252-80820	K0210-20A0	3	K0- 45
01252-80820	K0210-23A0	3	K0- 53
01252-81020	K0210-04A0	15	K0- 11
01370-00508	M1510-01A0	3	M0- 19
01370-40510	K0210-20A0	14	K0- 45
01370-40510	K0210-23A0	14	K0- 53
01370-40610	K0210-20A0	19	K0- 45
01370-40610	K0210-23A0	19	K0- 53
01434-00820	E0100-01A0	27	E0- 3
01434-00820	E0200-08A0	9	E0- 19

PARTS NO.	FIG NO.	INDEX	PAGE
01434-10620	C0100-04A0	2	C0- 9
01434-10620	C0100-04A0	5	C0- 9
01434-10620	C0100-04A0	8	C0- 9
01435-00608	K0210-51A0	10	K0- 91
01435-00612	K0210-18A0	20	K0- 41
01435-00612	K0210-22A0	17	K0- 49
01435-00612	K0210-38A0	15	K0- 71
01435-00612	K0210-43A0	10	K0- 81
01435-00612	K0210-43A0	6	K0- 81
01435-00616	A153T-01D8	12	AA- 23
01435-00616	K0210-08A0	2	K0- 19
01435-00616	K0210-30A0	2	K0- 55
01435-00616	K0210-38A0	15	K0- 71
01435-00616	K0210-39A0	17	K0- 73
01435-00616	K0210-39A0	2	K0- 73
01435-00625	A421P-01A2	9	AA- 81
01435-00625	K0210-51A0	2	K0- 91
01435-00812	A233P-01A7	5	AA- 57
01435-00814	A111V-01A9	7	AA- 9
01435-00814	A153T-01D8	17	AA- 23
01435-00814	A161O-01K7	9	AA- 29
01435-00814	A411R-01C4	7	AA- 77
01435-00816	A204V-01A1	9	AA- 39
01435-00816	A211P-01A9	3	AA- 47
01435-00816	A211P-01A9	6	AA- 47
01435-00816	A301P-01B0	11	AA- 67
01435-00816	A601T-01C1	12	AA- 107
01435-00816	A681P-01A8	2	AA- 119
01435-00820	A161O-01K7	3	AA- 29
01435-00820	A173S-01A5	2	AA- 35
01435-00820	A219P-01B8	6	AA- 49
01435-00820	A241T-01A2	5	AA- 65
01435-00820	A471P-02A6	12	AA- 87
01435-00820	A471P-02A6	14	AA- 87
01435-00820	A681P-01A8	18	AA- 119
01435-00820	A681P-01A8	8	AA- 119
01435-00820	K0210-39A0	4	K0- 73
01435-00825	A207S-01A3	8	AA- 45
01435-00825	A301P-01B0	12	AA- 67
01435-00825	A311P-01B2	13	AA- 69
01435-00825	A681P-01A8	5	AA- 119
01435-00830	Y1627-01A0	11	Y0- 33
01435-00830	Y1627-01A1	11	Y0- 35
01435-00835	A681P-01A8	11	AA- 119
01435-00840	A153T-01D8	14	AA- 23
01435-00840	A311P-01B2	5	AA- 69
01435-00840	A421R-01A1	5	AA- 83
01435-00840	A681P-01A8	30	AA- 119
01435-00850	A4710-01A2	4	AA- 89
01435-00850	A501P-01A7	13	AA- 91

PARTS NO.	FIG NO.	INDEX	PAGE
01435-00855	A204W-01A3	3	AA- 41
01435-00855	A501P-01A7	12	AA- 91
01435-00855	A502R-01A7	2	AA- 97
01435-00860	A204W-01A3	4	AA- 41
01435-00860	A681P-01A8	14	AA- 119
01435-00865	A241S-01A3	11	AA- 63
01435-00870	A204W-01A3	5	AA- 41
01435-00875	A601T-01C1	16	AA- 107
01435-00880	A311P-01B2	24	AA- 69
01435-01014	A411S-01D5	4	AA- 79
01435-01016	A311P-01B2	17	AA- 69
01435-01020	A105P-01B1	2	AA- 5
01435-01020	A4710-01A2	2	AA- 89
01435-01020	A502R-01A7	1	AA- 97
01435-01025	A161O-01K7	6	AA- 29
01435-01025	A241T-01A2	8	AA- 65
01435-01025	A411P-01C5	10	AA- 75
01435-01025	A411P-01C5	6	AA- 75
01435-01025	A411S-01D5	12	AA- 79
01435-01030	A221P-01B1	2	AA- 51
01435-01035	A421P-01A2	2	AA- 81
01435-01035	A601T-01C1	2	AA- 107
01435-01035	A681P-01A8	22	AA- 119
01435-01040	A311P-01B2	8	AA- 69
01435-01045	A151V-01B1	2	AA- 17
01435-01045	A411S-01D5	11	AA- 79
01435-01045	A471P-02A6	6	AA- 87
01435-01045	A681P-01A8	33	AA- 119
01435-01055	A311P-01B2	15	AA- 69
01435-01055	A681P-01A8	24	AA- 119
01435-01065	A153U-01A3	3	AA- 25
01435-01065	A681P-01A8	27	AA- 119
01435-01070	A131V-01A5	1	AA- 15
01435-01075	A153U-01A3	2	AA- 25
01435-01080	A207S-01A3	5	AA- 45
01435-01235	A1670-01A5	6	AA- 31
01435-01235	A621S-01B7	1	AA- 117
01435-01270	A204V-01A1	6	AA- 39
01435-40610	K0210-07A0	8	K0- 17
01435-40610	M1130-01A0	22	M0- 5
01435-40612	K0210-02A0	39	K0- 7
01435-40616	K0210-02A0	33	K0- 7
01435-40616	K0210-08A0	9	K0- 19
01435-40616	K0210-44A0	11	K0- 83
01435-40616	K0210-54A0	10	K0- 97
01435-40616	K0310-01A0	2	K0- 101
01435-40616	K0310-01A1	2	K0- 103
01435-40620	K0210-54A0	14	K0- 97
01435-40816	K0210-20A0	6	K0- 45
01435-40816	K0210-23A0	6	K0- 53

PARTS NO.	FIG NO.	INDEX	PAGE
01435-40820	K0210-41A0	11	K0- 77
01435-40820	K0210-41A0	7	K0- 77
01436-00805	A601T-01C1	4	AA- 107
01436-01065	A411P-01C5	8	AA- 75
01436-01080	A411P-01C5	7	AA- 75
01580-10403	K0210-54A0	6	K0- 97
01580-10605	K0210-09A0	10	K0- 21
01580-10806	K0110-01A0	4	K0- 3
01580-11008	A601T-01C1	9	AA- 107
01580-11008	K0210-05A0	10	K0- 13
01580-11008	K0210-06A0	9	K0- 15
01580-11008	M1110-01A0	27	M0- 3
01580-11008	R1100-01A0	11	R0- 13
01580-11008	R1100-01A1	11	R0- 15
01580-11210	H1220-01A0	27	H0- 39
01580-11613	T1230-01A0	21	T0- 29
01580-11613	T1230-01A0	25	T0- 29
01580-11613	T1230-01A0	28	T0- 29
01580-11613	T1230-01A0	31	T0- 29
01580-40605	K0210-20A0	10	K0- 45
01580-40605	K0210-23A0	10	K0- 53
01582-01411	A401P-01K6	3	AA- 73
01582-11210	Y1600-02A0	24	Y0- 7
01582-11210	Y1600-12A0	24	Y0- 17
01583-11207	Y1600-03A0	16	Y0- 9
01583-11207	Y1600-13A0	16	Y0- 19
01583-11408	K0210-37A1	8	K0- 69
01583-11408	K0210-46A2	12	K0- 89
01583-11811	K0210-08A0	11	K0- 19
01583-51408	Y1600-03A0	27	Y0- 9
01583-51408	Y1600-13A0	27	Y0- 19
01584-00806	A161O-01K7	4	AA- 29
01584-00806	A204W-01A3	6	AA- 41
01584-00806	A401P-01K6	7	AA- 73
01584-00806	A4710-01A2	5	AA- 89
01584-00806	A681P-01A8	19	AA- 119
01584-30806	K0210-07A0	2	K0- 17
01597-01009	C0100-07A0	16	C0- 15
01597-01009	H0320-02A0	19	H0- 31
01597-01009	H0320-02A0	8	H0- 31
01597-01009	N1210-51A0	35	N0- 7
01597-01009	Y1620-01A0	25	Y0- 25
01597-01009	Y1620-11A0	29	Y0- 27
01601-20410	K0210-54A0	8	K0- 97
01601-20513	H0110-01A0	5	H0- 3
01601-20513	K0210-22A0	40	K0- 49
01640-20408	K0210-54A0	7	K0- 97
01640-20508	A471P-02A6	3	AA- 87
01640-20610	K0210-06A0	10	K0- 15
01640-20816	H1831-02A0	10	H0- 63

PARTS NO.	FIG NO.	INDEX	PAGE
01640-21016	A207S-01A3	9	AA- 45
01640-21016	A601T-01C1	14	AA- 107
01640-21626	N1310-01A0	10	NO- 11
01640-21626	N1310-01A1	10	NO- 13
01641-20608	Y1660-02A0	30	YO- 51
01641-20608	Y1662-02A0	30	YO- 85
01641-20608	Y1662-17A0	15	YO- 117
01641-20608	Y1662-22A0	30	YO- 123
01641-20608	Y1664-02A0	30	YO- 159
01641-20608	Y1664-19A0	15	YO- 193
01643-A1445	K0700-01A0	5	KO- 107
01643-11032	A241T-01A2	9	AA- 65
01643-30623	C0100-04A0	3	CO- 9
01643-30623	C0100-04A0	6	CO- 9
01643-30623	C0100-04A0	9	CO- 9
01643-30623	C0100-08A0	6	CO- 17
01643-30623	D0100-01A0	17	DO- 3
01643-30623	E0200-05A0	20	EO- 13
01643-30623	E0200-10A0	4	EO- 23
01643-30623	K0210-06A0	11	KO- 15
01643-30623	K0210-18A0	15	KO- 41
01643-30623	K0210-18A0	6	KO- 41
01643-30623	K0210-22A0	10	KO- 49
01643-30623	K0210-22A0	16	KO- 49
01643-30623	K0210-36A0	30	KO- 67
01643-30623	K0210-42A0	21	KO- 79
01643-30623	K0210-53A0	5	KO- 95
01643-30623	K0350-01A0	4	KO- 105
01643-30623	K0700-02A0	10	KO- 109
01643-30623	K0700-03A0	10	KO- 111
01643-30623	K0700-03A0	18	KO- 111
01643-30623	M1220-01A0	16	MO- 13
01643-30623	Y1660-10A0	6	YO- 69
01643-30623	Y1660-14A0	5	YO- 77
01643-30623	Y1662-10A0	6	YO- 103
01643-30623	Y1662-14A0	5	YO- 111
01643-30623	Y1662-30A0	6	YO- 139
01643-30623	Y1662-36A0	5	YO- 151
01643-30623	Y1664-10A0	6	YO- 175
01643-30623	Y1664-16A0	5	YO- 187
01643-30823	B0100-01A0	28	BO- 3
01643-30823	B0100-01A0	34	BO- 3
01643-30823	B0200-01A0	3	BO- 5
01643-30823	C0100-02A0	19	CO- 5
01643-30823	C0100-02A0	22	CO- 5
01643-30823	C0100-03A0	3	CO- 7
01643-30823	C0100-04A0	12	CO- 9
01643-30823	C0100-05A0	11	CO- 11
01643-30823	C0100-05A0	9	CO- 11
01643-30823	C0100-06A0	3	CO- 13

PARTS NO.	FIG NO.	INDEX	PAGE
01643-30823	E0100-01A0	28	EO- 3
01643-30823	E0200-02A0	3	EO- 7
01643-30823	E0200-02A0	9	EO- 7
01643-30823	E0200-07A0	5	EO- 17
01643-30823	E0200-08A0	3	EO- 19
01643-30823	E0200-08A0	8	EO- 19
01643-30823	E0200-09A0	3	EO- 21
01643-30823	E0200-09A0	6	EO- 21
01643-30823	E0200-10A0	19	EO- 23
01643-30823	E0200-10A0	7	EO- 23
01643-30823	H0120-01A0	13	HO- 5
01643-30823	H0120-01A1	13	HO- 7
01643-30823	H0120-01A2	13	HO- 9
01643-30823	H0120-01A3	13	HO- 11
01643-30823	H0311-01A1	16	HO- 19
01643-30823	H0311-01A1	18	HO- 19
01643-30823	H0312-01A1	31	HO- 23
01643-30823	H0320-02A0	22	HO- 31
01643-30823	K0110-01A0	3	KO- 3
01643-30823	K0210-06A0	19	KO- 15
01643-30823	K0210-31A0	3	KO- 57
01643-30823	K0210-33A0	3	KO- 61
01643-30823	K0210-35A0	4	KO- 65
01643-30823	K0210-36A0	3	KO- 67
01643-30823	K0210-36A0	6	KO- 67
01643-30823	K0210-36A0	9	KO- 67
01643-30823	K0210-42A0	14	KO- 79
01643-30823	K0210-55A0	6	KO- 99
01643-30823	K0700-01A0	14	KO- 107
01643-30823	K0700-01A0	9	KO- 107
01643-30823	K0700-03A0	20	KO- 111
01643-30823	K0700-03A0	3	KO- 111
01643-30823	K0700-03A0	8	KO- 111
01643-30823	M1110-01A0	20	MO- 3
01643-30823	M1130-01A0	10	MO- 5
01643-30823	M1130-01A0	29	MO- 5
01643-30823	R0120-01A0	18	RO- 5
01643-30823	T1210-02A1	18	TO- 25
01643-30823	Y1600-04A0	13	YO- 13
01643-30823	Y1660-10A0	4	YO- 69
01643-30823	Y1662-10A0	4	YO- 103
01643-30823	Y1662-30A0	4	YO- 139
01643-30823	Y1664-10A0	4	YO- 175
01643-30823	Y1670-01A0	15	YO- 197
01643-31032	A471P-02A6	7	AA- 87
01643-31032	B0100-01A0	2	BO- 3
01643-31032	B0100-01A0	5	BO- 3
01643-31032	B0200-01A0	6	BO- 5
01643-31032	B0600-01A0	11	BO- 7
01643-31032	B0600-01A0	16	BO- 7

PARTS NO.	FIG NO.	INDEX	PAGE
01643-31032	B0600-01A0	18	BO- 7
01643-31032	B0600-01A0	20	BO- 7
01643-31032	B0600-01A0	27	BO- 7
01643-31032	C0100-02A0	35	CO- 5
01643-31032	C0100-07A0	11	CO- 15
01643-31032	C0100-07A0	17	CO- 15
01643-31032	C0100-09A0	3	CO- 19
01643-31032	C0100-09A0	6	CO- 19
01643-31032	D0200-01A0	11	DO- 5
01643-31032	D0200-01A0	16	DO- 5
01643-31032	D0200-01A0	19	DO- 5
01643-31032	D0200-01A0	21	DO- 5
01643-31032	D0200-02A0	11	DO- 7
01643-31032	D0200-04A0	3	DO- 11
01643-31032	E0100-01A0	10	EO- 3
01643-31032	E0100-01A0	21	EO- 3
01643-31032	E0100-01A0	25	EO- 3
01643-31032	E0200-01A0	12	EO- 5
01643-31032	E0200-01A0	15	EO- 5
01643-31032	E0200-01A0	18	EO- 5
01643-31032	E0200-01A0	22	EO- 5
01643-31032	E0200-01A0	25	EO- 5
01643-31032	E0200-01A0	4	EO- 5
01643-31032	E0200-01A0	8	EO- 5
01643-31032	E0200-02A0	13	EO- 7
01643-31032	E0200-02A0	18	EO- 7
01643-31032	E0200-02A0	21	EO- 7
01643-31032	E0200-02A0	24	EO- 7
01643-31032	E0200-02A0	27	EO- 7
01643-31032	E0200-02A0	6	EO- 7
01643-31032	E0200-03A0	5	EO- 9
01643-31032	E0200-03A0	9	EO- 9
01643-31032	E0200-04A0	10	EO- 11
01643-31032	E0200-04A0	14	EO- 11
01643-31032	E0200-04A0	16	EO- 11
01643-31032	E0200-04A0	18	EO- 11
01643-31032	E0200-04A0	23	EO- 11
01643-31032	E0200-04A0	26	EO- 11
01643-31032	E0200-04A0	29	EO- 11
01643-31032	E0200-04A0	3	EO- 11
01643-31032	E0200-04A0	32	EO- 11
01643-31032	E0200-04A0	35	EO- 11
01643-31032	E0200-04A0	38	EO- 11
01643-31032	E0200-04A0	41	EO- 11
01643-31032	E0200-04A0	7	EO- 11
01643-31032	E0200-05A0	11	EO- 13
01643-31032	E0200-05A0	15	EO- 13
01643-31032	E0200-05A0	17	EO- 13
01643-31032	E0200-05A0	5	EO- 13
01643-31032	E0200-05A0	8	EO- 13

PARTS NO.	FIG NO.	INDEX	PAGE
01643-31032	E0200-08A0	14	EO- 19
01643-31032	E0200-08A0	16	EO- 19
01643-31032	E0200-08A0	19	EO- 19
01643-31032	E0200-10A0	10	EO- 23
01643-31032	E0200-10A0	14	EO- 23
01643-31032	H0110-01A0	12	HO- 3
01643-31032	H0110-01A0	20	HO- 3
01643-31032	H0120-01A0	17	HO- 5
01643-31032	H0120-01A1	17	HO- 7
01643-31032	H0120-01A2	17	HO- 9
01643-31032	H0120-01A3	17	HO- 11
01643-31032	H0312-01A0	18	HO- 21
01643-31032	H0312-01A1	18	HO- 23
01643-31032	H0320-01A0	12	HO- 27
01643-31032	H0320-01A0	16	HO- 27
01643-31032	H0320-01A1	13	HO- 29
01643-31032	H0320-01A1	9	HO- 29
01643-31032	H0320-02A0	11	HO- 31
01643-31032	H0320-02A0	16	HO- 31
01643-31032	H0320-02A0	20	HO- 31
01643-31032	H0320-02A0	26	HO- 31
01643-31032	H0320-02A0	5	HO- 31
01643-31032	H0320-02A0	9	HO- 31
01643-31032	H0340-01A0	27	HO- 35
01643-31032	H1210-01A0	17	HO- 37
01643-31032	H1210-01A0	5	HO- 37
01643-31032	H1220-01A0	20	HO- 39
01643-31032	H1270-03A0	14	HO- 45
01643-31032	H1270-04A0	2	HO- 47
01643-31032	H1270-05A0	3	HO- 49
01643-31032	H1831-02A0	2	HO- 63
01643-31032	H1831-02A0	5	HO- 63
01643-31032	H1831-02A0	8	HO- 63
01643-31032	H1840-01A0	29	HO- 65
01643-31032	J1110-01A0	12	JO- 3
01643-31032	J1110-01A1	12	JO- 5
01643-31032	K0210-05A0	9	KO- 13
01643-31032	K0210-09A0	9	KO- 21
01643-31032	K0210-14A0	15	KO- 27
01643-31032	K0210-14A0	3	KO- 27
01643-31032	K0210-14A0	6	KO- 27
01643-31032	K0210-16A0	15	KO- 31
01643-31032	K0210-16A0	24	KO- 31
01643-31032	K0210-16A0	3	KO- 31
01643-31032	K0210-16A0	9	KO- 31
01643-31032	K0210-16A1	15	KO- 33
01643-31032	K0210-16A1	25	KO- 33
01643-31032	K0210-16A1	3	KO- 33
01643-31032	K0210-16A1	9	KO- 33
01643-31032	K0210-16A2	10	KO- 35

PARTS NO.	FIG NO.	INDEX	PAGE
01643-31032	K0210-16A2	16	K0- 35
01643-31032	K0210-16A2	26	K0- 35
01643-31032	K0210-16A2	4	K0- 35
01643-31032	K0210-16A3	10	K0- 37
01643-31032	K0210-16A3	16	K0- 37
01643-31032	K0210-16A3	26	K0- 37
01643-31032	K0210-16A3	4	K0- 37
01643-31032	K0210-18A0	3	K0- 41
01643-31032	K0210-22A0	44	K0- 50
01643-31032	K0210-22A0	47	K0- 50
01643-31032	K0210-32A0	16	K0- 59
01643-31032	K0210-32A0	21	K0- 59
01643-31032	K0210-34A0	13	K0- 63
01643-31032	K0210-35A0	10	K0- 65
01643-31032	K0210-35A0	13	K0- 65
01643-31032	K0210-35A0	16	K0- 65
01643-31032	K0210-35A0	20	K0- 65
01643-31032	K0210-35A0	26	K0- 65
01643-31032	K0210-35A0	28	K0- 65
01643-31032	K0210-35A0	7	K0- 65
01643-31032	K0210-36A0	15	K0- 67
01643-31032	K0210-36A0	18	K0- 67
01643-31032	K0210-36A0	21	K0- 67
01643-31032	K0210-36A0	24	K0- 67
01643-31032	K0210-37A1	6	K0- 69
01643-31032	K0210-45A0	4	K0- 85
01643-31032	K0210-45A0	6	K0- 85
01643-31032	K0210-45A0	9	K0- 85
01643-31032	K0210-45A2	15	K0- 87
01643-31032	K0210-45A2	5	K0- 87
01643-31032	K0210-45A2	6	K0- 87
01643-31032	K0210-45A2	9	K0- 87
01643-31032	K0350-01A0	9	K0- 105
01643-31032	K0700-01A0	11	K0- 107
01643-31032	K0700-02A0	24	K0- 109
01643-31032	K0700-03A0	15	K0- 111
01643-31032	K0700-03A0	6	K0- 111
01643-31032	M1110-01A0	12	M0- 3
01643-31032	M1110-01A0	15	M0- 3
01643-31032	M1110-01A0	17	M0- 3
01643-31032	M1110-01A0	29	M0- 3
01643-31032	M1130-01A0	18	M0- 5
01643-31032	M1140-01A0	8	M0- 7
01643-31032	M1150-01A0	11	M0- 9
01643-31032	M1150-01A0	17	M0- 9
01643-31032	M1150-02A0	21	M0- 11
01643-31032	M1150-02A0	24	M0- 11
01643-31032	M1150-02A0	27	M0- 11
01643-31032	M1150-02A0	3	M0- 11
01643-31032	M1150-02A0	6	M0- 11

PARTS NO.	FIG NO.	INDEX	PAGE
01643-31032	M1150-02A0	8	M0- 11
01643-31032	M1220-01A0	14	M0- 13
01643-31032	N1210-51A0	36	N0- 7
01643-31032	N1210-52A0	5	N0- 9
01643-31032	P1120-02A1	12	P0- 7
01643-31032	R0120-01A0	4	R0- 5
01643-31032	R1100-01A0	12	R0- 13
01643-31032	R1100-01A0	15	R0- 13
01643-31032	R1100-01A1	12	R0- 15
01643-31032	R1100-01A1	15	R0- 15
01643-31032	T1110-04A0	11	T0- 9
01643-31032	T1110-04A1	11	T0- 11
01643-31032	T1110-05A1	10	T0- 13
01643-31032	T1110-05A1	14	T0- 13
01643-31032	T1110-05A1	17	T0- 13
01643-31032	T1110-05A1	20	T0- 13
01643-31032	T1110-05A1	24	T0- 13
01643-31032	T1110-05A1	27	T0- 13
01643-31032	T1110-05A1	30	T0- 13
01643-31032	T1110-05A1	7	T0- 13
01643-31032	T1210-02A1	21	T0- 25
01643-31032	Y1600-14A0	10	Y0- 23
01643-31032	Y1620-01A0	26	Y0- 25
01643-31032	Y1620-11A0	30	Y0- 27
01643-31032	Y1620-41A0	23	Y0- 29
01643-31032	Y1660-10A0	2	Y0- 69
01643-31032	Y1662-10A0	2	Y0- 103
01643-31032	Y1662-30A0	2	Y0- 139
01643-31032	Y1664-10A0	2	Y0- 175
01643-31232	B0100-01A0	10	B0- 3
01643-31232	B0100-01A0	15	B0- 3
01643-31232	B0100-01A0	30	B0- 3
01643-31232	B0200-01A0	14	B0- 5
01643-31232	B0600-01A0	14	B0- 7
01643-31232	C0100-08A0	11	C0- 17
01643-31232	E0100-01A0	6	E0- 3
01643-31232	H0110-01A0	31	H0- 3
01643-31232	H0120-01A0	8	H0- 5
01643-31232	H0120-01A1	8	H0- 7
01643-31232	H0120-01A2	8	H0- 9
01643-31232	H0120-01A3	8	H0- 11
01643-31232	H0311-01A0	4	H0- 17
01643-31232	H0311-01A0	6	H0- 17
01643-31232	H0311-01A1	4	H0- 19
01643-31232	H0311-01A1	6	H0- 19
01643-31232	H1210-01A0	21	H0- 37
01643-31232	H1220-01A0	26	H0- 39
01643-31232	H1270-01A0	21	H0- 41
01643-31232	H1270-01A0	26	H0- 41
01643-31232	H1270-01A0	30	H0- 41

PARTS NO.	FIG NO.	INDEX	PAGE
01643-31232	H1270-03A0	7	H0- 45
01643-31232	H1270-04A0	20	H0- 47
01643-31232	H1270-05A0	10	H0- 49
01643-31232	H1270-06A0	6	H0- 51
01643-31232	J1110-01A0	5	J0- 3
01643-31232	J1110-01A0	8	J0- 3
01643-31232	J1110-01A1	5	J0- 5
01643-31232	J1110-01A1	8	J0- 5
01643-31232	J1310-01A0	12	J0- 7
01643-31232	J1310-01A0	5	J0- 7
01643-31232	K0210-16A0	6	K0- 31
01643-31232	K0210-16A1	6	K0- 33
01643-31232	K0210-16A2	7	K0- 35
01643-31232	K0210-16A3	7	K0- 37
01643-31232	M1110-01A0	24	M0- 3
01643-31232	M1130-01A0	13	M0- 5
01643-31232	M1130-01A0	2	M0- 5
01643-31232	M1140-01A0	17	M0- 7
01643-31232	M1140-01A0	20	M0- 7
01643-31232	M1140-01A0	5	M0- 7
01643-31232	M1150-01A0	20	M0- 9
01643-31232	M1150-01A0	3	M0- 9
01643-31232	M1220-01A0	20	M0- 13
01643-31232	M1310-01A0	3	M0- 15
01643-31232	M1810-01A0	13	M0- 23
01643-31232	M1810-01A0	18	M0- 23
01643-31232	M1810-01A0	21	M0- 23
01643-31232	M1810-01A0	26	M0- 23
01643-31232	M1810-01A0	3	M0- 23
01643-31232	M1810-01A0	31	M0- 23
01643-31232	M1810-01A0	8	M0- 23
01643-31232	N1310-01A0	3	N0- 11
01643-31232	N1310-01A1	3	N0- 13
01643-31232	R1100-01A0	5	R0- 13
01643-31232	R1100-01A1	5	R0- 15
01643-31232	T1110-02A0	4	T0- 5
01643-31232	T1110-02A0	7	T0- 5
01643-31232	T1110-03A0	10	T0- 7
01643-31232	T1110-03A0	17	T0- 7
01643-31232	T1110-03A0	5	T0- 7
01643-31232	T1210-01A0	10	T0- 19
01643-31232	T1210-01A0	16	T0- 19
01643-31232	T1210-01A1	10	T0- 21
01643-31232	T1210-01A1	16	T0- 21
01643-31232	T1210-01A2	10	T0- 23
01643-31232	T1210-01A2	16	T0- 23
01643-31232	T1210-02A1	7	T0- 25
01643-31232	T1710-01A0	15	T0- 37
01643-31232	T1710-01A0	9	T0- 37
01643-31445	D0100-01A0	13	D0- 3
01643-31445	H0120-01A0	10	H0- 5
01643-31445	H0120-01A1	10	H0- 7
01643-31445	H0120-01A2	10	H0- 9
01643-31445	H0120-01A3	10	H0- 11
01643-31445	K0700-01A0	7	K0- 107
01643-31445	P1210-01A0	3	P0- 9
01643-31445	R0120-01A0	20	R0- 5
01643-31445	R0200-01A0	11	R0- 7
01643-31445	R1100-01A0	18	R0- 13
01643-31445	R1100-01A1	18	R0- 15
01643-31645	B0100-01A0	20	B0- 3
01643-31645	K1120-01A0	6	K0- 115
01643-31645	N1210-01A0	3	N0- 5
01643-31645	P1210-01A0	6	P0- 9
01643-51032	D0200-03A0	8	D0- 9
01643-51032	K0210-17A0	9	K0- 39
01643-51032	K0210-21A0	11	K0- 47
01643-51032	M1150-02A0	11	M0- 11
01643-51032	M1150-02A0	17	M0- 11
01643-51232	Y1600-02A0	23	Y0- 7
01643-51232	Y1600-12A0	23	Y0- 17
01643-70623	K0210-04A0	7	K0- 11
01643-70623	K0210-05A0	2	K0- 13
01643-70623	K0210-05A0	5	K0- 13
01643-70623	K0210-06A0	22	K0- 15
01643-70623	K0210-07A0	5	K0- 17
01643-70623	K0210-08A0	14	K0- 19
01643-70623	K0210-18A0	13	K0- 41
01643-70623	K0210-18A0	19	K0- 41
01643-70623	K0210-18A0	24	K0- 41
01643-70623	K0210-22A0	14	K0- 49
01643-70623	K0210-22A0	21	K0- 49
01643-70623	K0210-22A0	24	K0- 49
01643-70623	K0210-38A0	14	K0- 71
01643-70623	K0210-38A0	21	K0- 71
01643-70623	K0210-38A0	4	K0- 71
01643-70623	K0210-39A0	14	K0- 73
01643-70623	K0210-39A0	21	K0- 73
01643-70623	K0210-39A0	24	K0- 73
01643-70623	K0210-39A0	29	K0- 73
01643-70623	K0210-41A0	14	K0- 77
01643-70623	K0210-42A0	17	K0- 79
01643-70823	K0110-01A0	6	K0- 3
01643-70823	K0210-02A0	11	K0- 7
01643-70823	K0210-02A0	14	K0- 7
01643-70823	K0210-02A0	19	K0- 7
01643-70823	K0210-02A0	21	K0- 7
01643-70823	K0210-02A0	8	K0- 7
01643-70823	K0210-06A0	2	K0- 15
01643-70823	K0210-20A0	4	K0- 45

PARTS NO.	FIG NO.	INDEX	PAGE
01643-70823	K0210-23A0	4	K0- 53
01643-70823	K0210-37A1	11	K0- 69
01643-70823	K0210-39A0	11	K0- 73
01643-70823	K0210-40A0	10	K0- 75
01643-70823	K0210-40A0	6	K0- 75
01643-70823	K0210-42A0	3	K0- 79
01643-70823	K0210-55A0	3	K0- 99
01643-71032	K0210-04A0	16	K0- 11
01643-71032	K0210-05A0	11	K0- 13
01643-71032	K0210-06A0	7	K0- 15
01643-71032	K0210-13A0	3	K0- 25
01643-71032	K0210-14A0	13	K0- 27
01643-71032	K0210-37A1	3	K0- 69
01643-71032	K0210-45A2	12	K0- 87
01643-71032	K0210-46A2	15	K0- 89
01643-71232	K0210-22A0	3	K0- 49
01643-81032	C0100-02A0	11	C0- 5
01643-81032	C0100-02A0	16	C0- 5
01643-81032	C0100-02A0	6	C0- 5
01643-81032	C0100-03A0	6	C0- 7
01643-81032	C0100-07A0	14	C0- 15
01803-02228	T1510-01A0	9	T0- 31
01803-02228	T1510-01A1	9	T0- 33
01803-02228	T1510-01A2	9	T0- 35
02720-40104	A101P-01A2	9	AA- 3
02756-00507	T1110-04A0	1	T0- 9
02756-00507	T1110-04A1	1	T0- 11
02756-20408	T1210-01A0	5	T0- 19
02756-20408	T1210-01A1	5	T0- 21
02756-20408	T1210-01A2	5	T0- 23
02761-002A3	H1840-01A0	24	H0- 65
02762-005A4	H0340-01A0	1	H0- 35
02781-0021D	H0340-01A0	22	H0- 35
02781-0021D	H1840-02A0	24	H0- 67
02781-0021D	H1840-02A1	26	H0- 69
02781-0021D	P1120-01A0	29	P0- 3
02781-0021D	P1120-01A1	29	P0- 5
02781-0031D	H1831-01A0	24	H0- 61
02781-0031D	K0210-16A0	25	K0- 31
02781-0031D	K0210-16A1	26	K0- 33
02781-0031D	K0210-16A2	27	K0- 35
02781-0031D	K0210-16A3	27	K0- 37
02781-00313	H1290-01A0	1	H0- 53
02781-00315	H0340-01A0	15	H0- 35
02781-00315	H0340-01A0	6	H0- 35
02781-00315	H1290-01A0	5	H0- 53
02781-00315	P1120-01A0	32	P0- 3
02781-00315	P1120-01A1	32	P0- 5
02781-0042A	H0312-01A1	38	H0- 23
02781-00422	H1220-01A0	4	H0- 39

PARTS NO.	FIG NO.	INDEX	PAGE
02781-00422	H1290-01A0	12	H0- 53
02781-00522	H0330-01A0	3	H0- 33
02781-00522	H0340-01A0	2	H0- 35
02781-00522	H1210-01A0	6	H0- 37
02781-00522	N1310-01A0	5	N0- 11
02781-00522	N1310-01A1	5	N0- 13
02781-00522	P1120-01A0	26	P0- 3
02781-00522	P1120-01A1	26	P0- 5
02781-00628	H0312-01A0	3	H0- 21
02781-00628	H0312-01A0	8	H0- 21
02781-00628	H0312-01A1	3	H0- 23
02781-00628	H0312-01A1	8	H0- 23
02782-1021A	H1840-02A0	2	H0- 67
02782-1021A	H1840-02A1	2	H0- 69
02782-10210	H0340-01A0	18	H0- 35
02782-10210	H1831-01A0	6	H0- 61
02782-10210	H1840-02A0	1	H0- 67
02782-10210	H1840-02A1	1	H0- 69
02782-10210	N1210-52A0	23	N0- 9
02782-10212	H0312-01A0	11	H0- 21
02782-10212	H0312-01A1	11	H0- 23
02782-1031B	P1120-02A1	2	P0- 7
02782-10311	D0200-03A0	4	D0- 9
02782-10311	D0200-04A0	12	D0- 11
02782-10311	N1310-01A0	4	N0- 11
02782-10311	N1310-01A1	4	N0- 13
02782-10313	D0100-01A0	9	D0- 3
02782-10313	H1840-02A0	21	H0- 67
02782-10315	C0100-03A0	7	C0- 7
02782-10315	H0340-01A0	9	H0- 35
02782-10315	H1840-02A1	23	H0- 69
02782-10516	H0330-01A0	7	H0- 33
02782-10516	H1831-01A0	14	H0- 61
02782-10522	H0330-01A0	2	H0- 33
02782-10522	H1210-01A0	9	H0- 37
02782-10522	N1210-52A0	26	N0- 9
02782-10522	P1120-01A0	15	P0- 3
02782-10522	P1120-01A1	15	P0- 5
02782-10628	H0312-01A0	1	H0- 21
02782-10628	H0312-01A1	1	H0- 23
02782-10628	H0340-01A0	32	H0- 35
02782-10628	H1270-01A0	9	H0- 41
02782-10628	H1270-04A0	12	H0- 47
02782-10630	H0312-01A0	6	H0- 21
02782-10630	H0312-01A1	6	H0- 23
02783-10210	K0210-16A0	19	K0- 31
02783-10210	K0210-16A1	20	K0- 33
02783-10210	K0210-16A2	21	K0- 35
02783-10210	K0210-16A3	21	K0- 37
02783-10315	N1210-52A0	20	N0- 9

PARTS NO.	FIG NO.	INDEX	PAGE
02783-10422	H1270-04A0	3	H0- 47
02783-10422	H1270-04A0	6	H0- 47
02783-10422	H1270-04A0	9	H0- 47
02783-10422	N1210-52A0	12	N0- 9
02783-10422	N1210-52A0	17	N0- 9
02783-10628	H0340-01A0	29	H0- 35
02783-10628	H1270-04A0	15	H0- 47
02896-11008	H0312-01A0	15	H0- 21
02896-11008	H0312-01A1	15	H0- 23
02896-11008	H0340-01A0	20	H0- 35
02896-11008	H0340-01A0	24	H0- 35
02896-11008	H1270-02A0	3	H0- 43
02896-11008	H1270-02A0	7	H0- 43
02896-11008	H1831-01A0	13	H0- 61
02896-11008	H1831-01A0	19	H0- 61
02896-11008	H1831-01A0	8	H0- 61
02896-11008	H1840-02A0	13	H0- 67
02896-11008	H1840-02A0	26	H0- 67
02896-11008	H1840-02A0	15	H0- 69
02896-11008	H1840-02A1	28	H0- 69
02896-11008	K0210-14A0	25	K0- 27
02896-11008	K0210-14A0	30	K0- 27
02896-11008	K0210-16A0	17	K0- 31
02896-11008	K0210-16A0	20	K0- 31
02896-11008	K0210-16A0	29	K0- 31
02896-11008	K0210-16A1	18	K0- 33
02896-11008	K0210-16A1	21	K0- 33
02896-11008	K0210-16A1	31	K0- 33
02896-11008	K0210-16A2	19	K0- 35
02896-11008	K0210-16A2	22	K0- 35
02896-11008	K0210-16A2	32	K0- 35
02896-11008	K0210-16A3	19	K0- 37
02896-11008	K0210-16A3	22	K0- 37
02896-11008	K0210-16A3	32	K0- 37
02896-11008	K0210-31A0	9	K0- 57
02896-11008	K0210-33A0	9	K0- 61
02896-11008	K0210-37A1	16	K0- 69
02896-11008	K0210-37A1	19	K0- 69
02896-11008	K0210-37A1	22	K0- 69
02896-11008	K0210-45A2	20	K0- 87
02896-11008	K0210-45A2	23	K0- 87
02896-11008	K0210-45A2	25	K0- 87
02896-11008	N1210-52A0	25	N0- 9
02896-11008	P1120-01A0	24	P0- 3
02896-11008	P1120-01A0	30	P0- 3
02896-11008	P1120-01A1	24	P0- 5
02896-11008	P1120-01A1	30	P0- 5
02896-11009	C0100-03A0	9	C0- 7
02896-11009	D0100-01A0	11	D0- 3
02896-11009	D0200-01A0	4	D0- 5

PARTS NO.	FIG NO.	INDEX	PAGE
02896-11009	D0200-02A0	6	D0- 7
02896-11009	D0200-03A0	6	D0- 9
02896-11009	D0200-04A0	11	D0- 11
02896-11009	D0200-04A0	14	D0- 11
02896-11009	H0312-01A0	27	H0- 21
02896-11009	H0312-01A1	27	H0- 23
02896-11009	H0340-01A0	11	H0- 35
02896-11009	H0340-01A0	17	H0- 35
02896-11009	H0340-01A0	8	H0- 35
02896-11009	H1290-01A0	3	H0- 53
02896-11009	H1290-01A0	7	H0- 53
02896-11009	H1831-01A0	26	H0- 61
02896-11009	H1840-02A0	23	H0- 67
02896-11009	H1840-02A1	25	H0- 69
02896-11009	K0210-16A0	26	K0- 31
02896-11009	K0210-16A1	27	K0- 33
02896-11009	K0210-16A2	28	K0- 35
02896-11009	K0210-16A3	28	K0- 37
02896-11009	N1210-52A0	22	N0- 9
02896-11009	P1120-02A1	3	P0- 7
02896-11012	H0312-01A1	34	H0- 23
02896-11012	H0312-01A1	40	H0- 24
02896-11012	H1220-01A0	6	H0- 39
02896-11012	H1220-01A0	9	H0- 39
02896-11012	H1270-01A0	18	H0- 41
02896-11012	H1270-04A0	11	H0- 47
02896-11012	H1270-04A0	5	H0- 47
02896-11012	H1270-04A0	8	H0- 47
02896-11012	H1290-01A0	10	H0- 53
02896-11012	H1290-01A0	14	H0- 53
02896-11012	H1340-01A0	5	H0- 59
02896-11012	N1210-52A0	14	N0- 9
02896-11012	N1210-52A0	19	N0- 9
02896-11012	P1120-02A1	7	P0- 7
02896-11012	T1110-04A0	7	T0- 9
02896-11012	T1110-04A1	7	T0- 11
02896-11012	T1110-05A1	2	T0- 13
02896-11012	T1210-02A1	29	T0- 25
02896-11015	H0330-01A0	5	H0- 33
02896-11015	H0340-01A0	4	H0- 35
02896-11015	H1210-01A0	11	H0- 37
02896-11015	H1210-01A0	8	H0- 37
02896-11015	H1220-01A0	3	H0- 39
02896-11015	H1310-01A0	10	H0- 55
02896-11015	H1310-01A0	7	H0- 55
02896-11015	H1310-01A1	10	H0- 57
02896-11015	H1310-01A1	7	H0- 57
02896-11015	H1831-01A0	16	H0- 61
02896-11015	N1210-52A0	28	N0- 9
02896-11015	N1310-01A0	6	N0- 11

PARTS NO.	FIG NO.	INDEX	PAGE
02896-11015	N1310-01A1	6	N0- 13
02896-11015	P1120-01A0	16	P0- 3
02896-11015	P1120-01A0	27	P0- 3
02896-11015	P1120-01A1	16	P0- 5
02896-11015	P1120-01A1	27	P0- 5
02896-11015	T1110-04A0	4	T0- 9
02896-11015	T1110-04A1	4	T0- 11
02896-11018	H0312-01A0	10	H0- 21
02896-11018	H0312-01A0	5	H0- 21
02896-11018	H0312-01A1	10	H0- 23
02896-11018	H0312-01A1	5	H0- 23
02896-11018	H1270-01A0	11	H0- 41
02896-11018	H1270-04A0	14	H0- 47
02896-11018	H1270-04A0	17	H0- 47
02896-11018	H1270-05A0	7	H0- 49
02896-11018	T1110-05A1	4	T0- 13
02896-11018	T1210-02A1	30	T0- 25
02896-21009	P1120-01A0	21	P0- 3
02896-21009	P1120-01A0	33	P0- 3
02896-21009	P1120-01A1	21	P0- 5
02896-21009	P1120-01A1	33	P0- 5
02896-61009	Y1621-01A0	22	Y0- 31
02896-61012	Y1620-41A0	24	Y0- 29
02896-61012	Y1621-01A0	21	Y0- 31
02896-61015	Y1620-01A0	27	Y0- 25
02896-61015	Y1620-11A0	25	Y0- 27
02896-61018	H0340-01A0	31	H0- 35
02896-61018	H0340-01A0	34	H0- 35
04010-00516	A241T-01A2	3	AA- 65
04020-00616	Y1600-04A0	3	Y0- 13
04020-00616	Y1600-14A0	3	Y0- 23
04020-00820	A201S-01A4	17	AA- 37
04020-01024	Y1600-02A0	17	Y0- 7
04020-01024	Y1600-12A0	17	Y0- 17
04020-01228	A201S-01A4	18	AA- 37
04020-01228	B0100-01A0	11	B0- 3
04020-01228	B0100-01A0	16	B0- 3
04020-01638	N1110-01A0	5	N0- 3
04020-01638	N1210-51A0	29	N0- 7
04022-04016	Y1670-01A0	24	Y0- 197
04025-00312	A241T-01A2	7	AA- 65
04025-00408	A201S-01A4	19	AA- 37
04025-00412	H1270-03A0	15	H0- 45
04025-00412	T1210-02A1	11	T0- 25
04025-00512	A204V-01A1	4	AA- 39
04050-11612	M1220-01A0	17	M0- 13
04050-12018	H1270-03A0	9	H0- 45
04050-12020	K0210-07A0	12	K0- 17
04050-14025	N1310-01A0	9	N0- 11
04050-14025	N1310-01A1	9	N0- 13

PARTS NO.	FIG NO.	INDEX	PAGE
04052-20633	K0210-06A0	12	K0- 15
04052-20833	M1110-01A0	21	M0- 3
04052-20833	M1130-01A0	11	M0- 5
04052-21038	M1110-01A0	28	M0- 3
04052-21038	M1130-01A0	19	M0- 5
04064-02512	N1210-51A0	18	N0- 7
04064-03015	T1210-02A1	12	T0- 25
04064-03515	R0120-01A0	11	R0- 5
04064-04518	Y1651-03A0	16	Y0- 47
04064-05520	Y1627-01A0	8	Y0- 33
04064-06525	Y1627-01A1	8	Y0- 35
04065-02012	Y1600-14A0	18	Y0- 23
04065-03012	A235P-01A1	3	AA- 59
04065-03212	Y1600-04A0	21	Y0- 13
04065-03212	Y1600-14A0	20	Y0- 23
04065-03212	Y1640-01A0	25	Y0- 37
04065-04218	Y1600-02A0	5	Y0- 7
04065-04218	Y1600-12A0	5	Y0- 17
04065-06020	Y1640-01A0	18	Y0- 37
04065-07225	Y1600-01A0	28	Y0- 5
04065-07225	Y1600-11A0	28	Y0- 15
04082-00212	T1710-01A0	7	T0- 37
04120-21767	K0700-04A0	1	K0- 113
04205-10825	M1110-01A0	19	M0- 3
04260-00635	Y1620-11A0	22	Y0- 27
04260-00952	Y1651-03A0	27	Y0- 47
04418-02550	A111P-01C9	3	AA- 7
04418-02550	A111P-01C9	9	AA- 7
04418-02550	A981P-01A4	2	AA- 125
04418-13060	U0100-02A0	3	U0- 5
04418-13060	U0100-02A1	3	U0- 7
04418-13060	U0100-02A2	3	U0- 9
04418-13060	U0100-02A3	3	U0- 11
04434-50610	E0200-10A0	8	E0- 23
04434-50810	E0200-04A0	27	E0- 11
04434-50810	E0200-05A0	2	E0- 13
04434-50810	K0210-35A0	14	K0- 65
04434-51010	E0200-04A0	21	E0- 11
04434-51010	E0200-04A0	24	E0- 11
04434-51010	K0210-09A0	7	K0- 21
04434-51010	K0210-36A0	22	K0- 67
04434-51010	K0350-01A0	11	K0- 105
04434-51208	A219P-01B8	7	AA- 49
04434-51210	K0210-32A0	19	K0- 59
04434-51310	H0312-01A0	16	H0- 21
04434-51310	H0312-01A1	16	H0- 23
04434-51410	E0200-04A0	36	E0- 11
04434-51410	E0200-04A0	39	E0- 11
04434-51410	E0200-05A0	1	E0- 13
04434-51410	K0210-22A0	45	K0- 50

PARTS NO.	FIG NO.	INDEX	PAGE
04434-51508	A411R-01C4	6	AA- 77
04434-51708	K0210-35A0	2	K0- 65
04434-51710	E0100-01A0	19	E0- 3
04434-51710	E0200-04A0	1	E0- 11
04434-51710	E0200-05A0	12	E0- 13
04434-51710	K0210-22A0	42	K0- 50
04434-51910	D0200-01A0	9	D0- 5
04434-51910	D0200-02A0	14	D0- 7
04434-51910	E0200-04A0	30	E0- 11
04434-51910	E0200-08A0	4	E0- 19
04434-51910	K0700-02A0	19	K0- 109
04434-52110	E0200-03A0	2	E0- 9
04434-52110	E0200-03A0	6	E0- 9
04434-52310	E0200-04A0	12	E0- 11
04434-52310	E0200-04A0	8	E0- 11
04434-52310	E0200-08A0	5	E0- 19
04434-52310	E0200-10A0	12	E0- 23
04434-52310	K0210-35A0	11	K0- 65
04434-52310	K0210-36A0	19	K0- 67
04434-52310	K0700-02A0	20	K0- 109
04434-52511	E0100-01A0	22	E0- 3
04434-52511	E0200-01A0	20	E0- 5
04434-52511	K0210-36A0	13	K0- 67
04434-52711	E0200-01A0	5	E0- 5
04434-52711	E0200-04A0	4	E0- 11
04434-52711	K0210-35A0	8	K0- 65
04434-52711	K0700-02A0	17	K0- 109
04434-52712	D0200-01A0	12	D0- 5
04434-52712	D0200-02A0	15	D0- 7
04434-52712	E0200-04A0	33	E0- 11
04434-53211	A681P-01A8	16	AA- 119
04434-53211	E0200-02A0	15	E0- 7
04434-53211	K0210-35A0	5	K0- 65
04434-53211	K0700-02A0	15	K0- 109
04434-53211	K0700-02A0	18	K0- 109
04434-53411	H1210-01A0	2	H0- 37
04434-53411	K0210-36A0	16	K0- 67
04434-53411	K0700-02A0	11	K0- 109
04435-51610	H0340-01A0	25	H0- 35
04435-51910	D0200-01A0	17	D0- 5
04435-51910	D0200-02A0	17	D0- 7
04435-51910	E0200-02A0	19	E0- 7
04530-10815	Y1660-10A0	10	Y0- 69
04530-10815	Y1662-10A0	10	Y0- 103
04530-10815	Y1662-30A0	10	Y0- 139
04530-10815	Y1664-10A0	10	Y0- 175
04530-11018	Y1600-01A0	6	Y0- 5
04530-11018	Y1600-11A0	6	Y0- 15
06000-06206	Y1651-02A0	19	Y0- 45
06124-01616	K0210-19A0	13	K0- 43

PARTS NO.	FIG NO.	INDEX	PAGE
07000-B1007	Y1640-03A0	8	Y0- 41
07000-B2012	Y1600-02A0	19	Y0- 7
07000-B2012	Y1600-12A0	19	Y0- 17
07000-B2055	Y1640-01A0	17	Y0- 37
07000-B2085	Y1620-41A0	9	Y0- 29
07000-B2090	Y1620-41A0	11	Y0- 29
07000-B2095	Y1620-11A0	12	Y0- 27
07000-B2095	Y1620-11A0	9	Y0- 27
07000-B2100	Y1620-11A0	11	Y0- 27
07000-B2110	Y1620-01A0	12	Y0- 25
07000-B2110	Y1620-01A0	9	Y0- 25
07000-B2115	Y1620-01A0	11	Y0- 25
07000-B2120	Y1640-01A0	34	Y0- 37
07000-B2125	Y1621-01A0	10	Y0- 31
07000-B2130	Y1621-01A0	12	Y0- 31
07000-B2130	Y1640-01A0	33	Y0- 37
07000-B2145	Y1640-01A0	9	Y0- 37
07000-B3042	Y1640-03A0	7	Y0- 41
07000-E2065	C0100-07A0	9	C0- 15
07000-F2016	Y1640-02A0	2	Y0- 39
07000-F2065	Y1600-01A0	27	Y0- 5
07000-F2065	Y1600-11A0	27	Y0- 15
07000-03038	R0110-01A0	9	R0- 3
07000-03040	A501P-01A7	11	AA- 91
07000-05230	Y1651-03A0	26	Y0- 47
07000-11003	Y1600-04A0	15	Y0- 13
07000-11003	Y1600-14A0	14	Y0- 23
07000-11003	Y1660-01A0	12	Y0- 49
07000-11003	Y1662-01A0	12	Y0- 83
07000-11003	Y1662-21A0	12	Y0- 121
07000-11003	Y1664-01A0	12	Y0- 157
07000-11005	Y1660-08A0	10	Y0- 65
07000-11005	Y1660-15A0	11	Y0- 79
07000-11005	Y1662-08A0	10	Y0- 99
07000-11005	Y1662-15A0	11	Y0- 113
07000-11005	Y1662-28A0	6	Y0- 135
07000-11005	Y1662-37A0	11	Y0- 153
07000-11005	Y1664-08A0	6	Y0- 171
07000-11005	Y1664-17A0	11	Y0- 189
07000-11006	Y1600-03A0	15	Y0- 9
07000-11006	Y1600-13A0	15	Y0- 19
07000-11006	Y1660-06A0	37	Y0- 59
07000-11006	Y1660-07A0	10	Y0- 63
07000-11006	Y1660-14A0	8	Y0- 77
07000-11006	Y1660-16A0	7	Y0- 81
07000-11006	Y1662-06A0	37	Y0- 93
07000-11006	Y1662-07A0	10	Y0- 97
07000-11006	Y1662-14A0	8	Y0- 111
07000-11006	Y1662-16A0	7	Y0- 115
07000-11006	Y1662-26A0	34	Y0- 131

PARTS NO.	FIG NO.	INDEX	PAGE
07000-11006	Y1662-27A0	9	Y0- 133
07000-11006	Y1662-36A0	8	Y0- 151
07000-11006	Y1662-38A0	7	Y0- 155
07000-11006	Y1664-06A0	34	Y0- 167
07000-11006	Y1664-07A0	9	Y0- 169
07000-11006	Y1664-16A0	8	Y0- 187
07000-11006	Y1664-18A0	7	Y0- 191
07000-11007	C0100-02A0	25	C0- 5
07000-11007	Y1651-03A0	23	Y0- 47
07000-11007	Y1660-06A0	31	Y0- 59
07000-11007	Y1660-15A0	12	Y0- 79
07000-11007	Y1662-06A0	31	Y0- 93
07000-11007	Y1662-15A0	12	Y0- 113
07000-11007	Y1662-26A0	28	Y0- 131
07000-11007	Y1662-37A0	12	Y0- 153
07000-11007	Y1664-06A0	28	Y0- 167
07000-11007	Y1664-17A0	12	Y0- 189
07000-11008	Y1600-03A0	25	Y0- 9
07000-11008	Y1600-04A0	4	Y0- 13
07000-11008	Y1600-13A0	25	Y0- 19
07000-11008	Y1600-14A0	4	Y0- 23
07000-11008	Y1600-14A0	8	Y0- 23
07000-11008	Y1660-02A0	8	Y0- 51
07000-11008	Y1660-04A0	6	Y0- 55
07000-11008	Y1660-06A0	36	Y0- 59
07000-11008	Y1660-16A0	8	Y0- 81
07000-11008	Y1662-02A0	8	Y0- 85
07000-11008	Y1662-04A0	6	Y0- 89
07000-11008	Y1662-06A0	36	Y0- 93
07000-11008	Y1662-16A0	8	Y0- 115
07000-11008	Y1662-17A0	6	Y0- 117
07000-11008	Y1662-22A0	8	Y0- 123
07000-11008	Y1662-24A0	6	Y0- 127
07000-11008	Y1662-26A0	33	Y0- 131
07000-11008	Y1662-38A0	8	Y0- 155
07000-11008	Y1664-02A0	8	Y0- 159
07000-11008	Y1664-04A0	6	Y0- 163
07000-11008	Y1664-06A0	33	Y0- 167
07000-11008	Y1664-18A0	8	Y0- 191
07000-11008	Y1664-19A0	6	Y0- 193
07000-11009	Y1660-14A0	7	Y0- 77
07000-11009	Y1662-14A0	7	Y0- 111
07000-11009	Y1662-36A0	7	Y0- 151
07000-11009	Y1664-16A0	7	Y0- 187
07000-11010	Y1660-14A0	16	Y0- 77
07000-11010	Y1662-14A0	16	Y0- 111
07000-11010	Y1662-36A0	16	Y0- 151
07000-11010	Y1664-16A0	16	Y0- 187
07000-12010	Y1600-02A0	22	Y0- 7
07000-12010	Y1600-12A0	22	Y0- 17

PARTS NO.	FIG NO.	INDEX	PAGE
07000-12011	K0210-37A1	15	K0- 69
07000-12011	K0210-37A1	18	K0- 69
07000-12011	K0210-37A1	21	K0- 69
07000-12011	K0210-45A2	18	K0- 87
07000-12011	K0210-45A2	21	K0- 87
07000-12011	K0210-45A2	26	K0- 87
07000-12012	Y1660-14A0	18	Y0- 77
07000-12012	Y1662-14A0	18	Y0- 111
07000-12012	Y1662-36A0	18	Y0- 151
07000-12012	Y1664-16A0	18	Y0- 187
07000-12014	Y1600-04A0	10	Y0- 13
07000-12014	Y1651-03A0	32	Y0- 47
07000-12015	K0210-14A0	29	K0- 27
07000-12015	K0210-31A0	7	K0- 57
07000-12015	K0210-33A0	7	K0- 61
07000-12018	K0210-14A0	23	K0- 27
07000-12018	K0210-31A0	5	K0- 57
07000-12018	K0210-33A0	5	K0- 61
07000-12018	Y1651-01A0	10	Y0- 43
07000-12018	Y1670-01A0	20	Y0- 197
07000-12020	Y1660-02A0	5	Y0- 51
07000-12020	Y1660-06A0	34	Y0- 59
07000-12020	Y1662-02A0	5	Y0- 85
07000-12020	Y1662-06A0	34	Y0- 93
07000-12020	Y1662-17A0	3	Y0- 117
07000-12020	Y1662-22A0	5	Y0- 123
07000-12020	Y1662-26A0	31	Y0- 131
07000-12020	Y1664-02A0	5	Y0- 159
07000-12020	Y1664-06A0	31	Y0- 167
07000-12020	Y1664-19A0	3	Y0- 193
07000-12035	R0200-01A0	8	R0- 7
07000-12050	Y1600-14A0	11	Y0- 23
07000-12060	Y1600-04A0	11	Y0- 13
07000-12070	H0311-01A0	2	H0- 17
07000-12070	H0311-01A1	2	H0- 19
07000-12075	Y1627-01A0	10	Y0- 33
07000-12085	A401P-01K6	8	AA- 73
07000-12085	Y1627-01A1	10	Y0- 35
07000-12100	Y1660-07A0	7	Y0- 63
07000-12100	Y1662-07A0	7	Y0- 97
07000-12100	Y1662-27A0	6	Y0- 133
07000-12100	Y1664-07A0	6	Y0- 169
07000-12120	Y1660-02A0	4	Y0- 51
07000-12120	Y1660-06A0	33	Y0- 59
07000-12120	Y1662-02A0	4	Y0- 85
07000-12120	Y1662-06A0	33	Y0- 93
07000-12120	Y1662-17A0	2	Y0- 117
07000-12120	Y1662-22A0	4	Y0- 123
07000-12120	Y1662-26A0	30	Y0- 131
07000-12120	Y1664-02A0	4	Y0- 159

PARTS NO.	FIG NO.	INDEX	PAGE
07000-12120	Y1664-06A0	30	Y0- 167
07000-12120	Y1664-19A0	2	Y0- 193
07000-12135	H0110-01A0	10	H0- 3
07000-12145	H0110-01A0	18	H0- 3
07000-13025	H0120-01A0	4	H0- 5
07000-13025	H0120-01A1	4	H0- 7
07000-13025	H0120-01A2	4	H0- 9
07000-13025	H0120-01A3	4	H0- 11
07000-13025	K1120-01A0	4	K0- 115
07000-13025	T1210-02A1	15	T0- 25
07000-13030	H0312-01A1	29	H0- 23
07000-13031	T1210-02A1	10	T0- 25
07000-13032	H0311-01A1	14	H0- 19
07000-13035	C0100-02A0	3	C0- 5
07000-13035	H0320-02A0	13	H0- 31
07000-13035	H0320-02A0	2	H0- 31
07000-13042	H1270-03A0	16	H0- 45
07000-13042	Y1600-04A0	7	Y0- 13
07000-13042	Y1600-14A0	7	Y0- 23
07000-13048	H1270-03A0	17	H0- 45
07000-13050	D0100-01A0	15	D0- 3
07000-15060	Y1627-01A0	2	Y0- 33
07000-15070	Y1627-01A1	2	Y0- 35
07000-72070	A311P-01B2	25	AA- 69
07000-72070	A311P-01B2	6	AA- 69
07000-73025	A311P-01B2	10	AA- 69
07001-01003	Y1600-04A0	16	Y0- 13
07001-01003	Y1600-14A0	15	Y0- 23
07001-01003	Y1660-01A0	13	Y0- 49
07001-01003	Y1662-01A0	13	Y0- 83
07001-01003	Y1662-21A0	13	Y0- 121
07001-01003	Y1664-01A0	13	Y0- 157
07001-01005	Y1660-08A0	11	Y0- 65
07001-01005	Y1662-08A0	11	Y0- 99
07001-01005	Y1662-28A0	7	Y0- 135
07001-01005	Y1664-08A0	7	Y0- 171
07001-01007	Y1660-06A0	32	Y0- 59
07001-01007	Y1662-06A0	32	Y0- 93
07001-01007	Y1662-26A0	29	Y0- 131
07001-01007	Y1664-06A0	29	Y0- 167
07001-01008	Y1600-03A0	26	Y0- 9
07001-01008	Y1600-13A0	26	Y0- 19
07001-01008	Y1660-04A0	7	Y0- 55
07001-01008	Y1662-04A0	7	Y0- 89
07001-01008	Y1662-24A0	7	Y0- 127
07001-01008	Y1664-04A0	7	Y0- 163
07001-01010	Y1660-14A0	17	Y0- 77
07001-01010	Y1662-14A0	17	Y0- 111
07001-01010	Y1662-36A0	17	Y0- 151
07001-01010	Y1664-16A0	17	Y0- 187

PARTS NO.	FIG NO.	INDEX	PAGE
07001-02012	Y1660-14A0	19	Y0- 77
07001-02012	Y1662-14A0	19	Y0- 111
07001-02012	Y1662-36A0	19	Y0- 151
07001-02012	Y1664-16A0	19	Y0- 187
07001-03042	H1270-03A0	18	H0- 45
07001-03048	H1270-03A0	19	H0- 45
07002-01423	Y1640-03A0	6	Y0- 41
07002-10823	Y1660-06A0	12	Y0- 59
07002-10823	Y1662-06A0	12	Y0- 93
07002-10823	Y1662-26A0	12	Y0- 131
07002-10823	Y1664-06A0	12	Y0- 167
07002-11023	H0312-01A0	22	H0- 21
07002-11023	H0312-01A1	22	H0- 23
07002-11023	H0312-01A1	36	H0- 23
07002-11023	H1831-01A0	11	H0- 61
07002-11023	H1831-01A0	21	H0- 61
07002-11023	N1210-52A0	7	N0- 9
07002-11023	T1110-05A1	32	T0- 13
07002-11023	Y1600-03A0	35	Y0- 9
07002-11023	Y1600-13A0	35	Y0- 19
07002-11023	Y1660-01A0	3	Y0- 49
07002-11023	Y1660-05A0	11	Y0- 57
07002-11023	Y1660-06A0	28	Y0- 59
07002-11023	Y1660-15A0	8	Y0- 79
07002-11023	Y1660-16A0	5	Y0- 81
07002-11023	Y1662-01A0	3	Y0- 83
07002-11023	Y1662-05A0	11	Y0- 91
07002-11023	Y1662-06A0	28	Y0- 93
07002-11023	Y1662-15A0	8	Y0- 113
07002-11023	Y1662-16A0	5	Y0- 115
07002-11023	Y1662-21A0	3	Y0- 121
07002-11023	Y1662-25A0	11	Y0- 129
07002-11023	Y1662-26A0	25	Y0- 131
07002-11023	Y1662-29A0	9	Y0- 137
07002-11023	Y1662-37A0	8	Y0- 153
07002-11023	Y1662-38A0	5	Y0- 155
07002-11023	Y1664-01A0	3	Y0- 157
07002-11023	Y1664-05A0	11	Y0- 165
07002-11023	Y1664-06A0	25	Y0- 167
07002-11023	Y1664-09A0	9	Y0- 173
07002-11023	Y1664-17A0	8	Y0- 189
07002-11023	Y1664-18A0	5	Y0- 191
07002-11223	B0600-01A0	2	B0- 7
07002-11223	H1270-03A0	20	H0- 45
07002-11223	Y1600-01A0	17	Y0- 5
07002-11223	Y1600-03A0	22	Y0- 9
07002-11223	Y1600-11A0	17	Y0- 15
07002-11223	Y1600-13A0	22	Y0- 19
07002-11223	Y1660-01A0	11	Y0- 49
07002-11223	Y1660-04A0	2	Y0- 55

PARTS NO.	FIG NO.	INDEX	PAGE
07002-11223	Y1662-01A0	11	Y0- 83
07002-11223	Y1662-04A0	2	Y0- 89
07002-11223	Y1662-18A0	8	Y0- 119
07002-11223	Y1662-21A0	11	Y0- 121
07002-11223	Y1662-24A0	2	Y0- 127
07002-11223	Y1664-01A0	11	Y0- 157
07002-11223	Y1664-04A0	2	Y0- 163
07002-11223	Y1664-20A0	8	Y0- 195
07002-11223	Y1670-01A0	28	Y0- 197
07002-11423	D0200-03A0	3	D0- 9
07002-11423	D0200-03A0	5	D0- 9
07002-11423	D0200-04A0	13	D0- 11
07002-11423	H0312-01A0	14	H0- 21
07002-11423	H0312-01A0	26	H0- 21
07002-11423	H0312-01A1	14	H0- 23
07002-11423	H0312-01A1	26	H0- 23
07002-11423	H0340-01A0	19	H0- 35
07002-11423	H0340-01A0	23	H0- 35
07002-11423	H1270-02A0	2	H0- 43
07002-11423	H1270-02A0	6	H0- 43
07002-11423	H1831-01A0	12	H0- 61
07002-11423	H1831-01A0	18	H0- 61
07002-11423	H1831-01A0	25	H0- 61
07002-11423	H1831-01A0	7	H0- 61
07002-11423	H1840-02A0	12	H0- 67
07002-11423	H1840-02A0	25	H0- 67
07002-11423	H1840-02A1	14	H0- 69
07002-11423	H1840-02A1	27	H0- 69
07002-11423	K0210-14A0	26	K0- 27
07002-11423	K0210-14A0	32	K0- 27
07002-11423	K0210-16A0	18	K0- 31
07002-11423	K0210-16A0	21	K0- 31
07002-11423	K0210-16A0	27	K0- 31
07002-11423	K0210-16A0	30	K0- 31
07002-11423	K0210-16A1	19	K0- 33
07002-11423	K0210-16A1	22	K0- 33
07002-11423	K0210-16A1	28	K0- 33
07002-11423	K0210-16A1	32	K0- 33
07002-11423	K0210-16A2	20	K0- 35
07002-11423	K0210-16A2	23	K0- 35
07002-11423	K0210-16A2	29	K0- 35
07002-11423	K0210-16A2	33	K0- 35
07002-11423	K0210-16A3	20	K0- 37
07002-11423	K0210-16A3	23	K0- 37
07002-11423	K0210-16A3	29	K0- 37
07002-11423	K0210-16A3	33	K0- 37
07002-11423	K0210-31A0	10	K0- 57
07002-11423	K0210-33A0	10	K0- 61
07002-11423	N1210-52A0	24	N0- 9
07002-11423	P1120-01A0	25	P0- 3

PARTS NO.	FIG NO.	INDEX	PAGE
07002-11423	P1120-01A0	31	P0- 3
07002-11423	P1120-01A1	25	P0- 5
07002-11423	P1120-01A1	31	P0- 5
07002-11423	Y1600-01A0	19	Y0- 5
07002-11423	Y1600-11A0	19	Y0- 15
07002-11423	Y1660-01A0	5	Y0- 49
07002-11423	Y1662-01A0	5	Y0- 83
07002-11423	Y1662-21A0	5	Y0- 121
07002-11423	Y1664-01A0	5	Y0- 157
07002-11623	N1210-51A0	11	N0- 7
07002-11623	Y1600-03A0	19	Y0- 9
07002-11623	Y1600-03A0	9	Y0- 9
07002-11623	Y1600-13A0	19	Y0- 19
07002-11623	Y1600-13A0	9	Y0- 19
07002-11623	Y1660-05A0	7	Y0- 57
07002-11623	Y1660-09A0	13	Y0- 67
07002-11623	Y1662-05A0	7	Y0- 91
07002-11623	Y1662-09A0	13	Y0- 101
07002-11623	Y1662-25A0	7	Y0- 129
07002-11623	Y1662-29A0	7	Y0- 137
07002-11623	Y1664-05A0	7	Y0- 165
07002-11623	Y1664-09A0	7	Y0- 173
07002-11823	D0100-01A0	10	D0- 3
07002-11823	H1290-01A0	2	H0- 53
07002-11823	H1290-01A0	9	H0- 53
07002-11823	H1340-01A0	4	H0- 59
07002-11823	H1840-02A0	22	H0- 67
07002-11823	P1120-02A1	4	P0- 7
07002-11823	P1120-02A1	8	P0- 7
07002-11823	Y1660-05A0	3	Y0- 57
07002-11823	Y1660-05A0	9	Y0- 57
07002-11823	Y1660-09A0	18	Y0- 67
07002-11823	Y1662-05A0	3	Y0- 91
07002-11823	Y1662-05A0	9	Y0- 91
07002-11823	Y1662-09A0	18	Y0- 101
07002-11823	Y1662-25A0	3	Y0- 129
07002-11823	Y1662-25A0	9	Y0- 129
07002-11823	Y1662-29A0	15	Y0- 137
07002-11823	Y1664-05A0	3	Y0- 165
07002-11823	Y1664-05A0	9	Y0- 165
07002-11823	Y1664-09A0	15	Y0- 173
07002-12034	C0100-03A0	8	C0- 7
07002-12034	H0312-01A1	33	H0- 23
07002-12034	H0330-01A0	8	H0- 33
07002-12034	H0340-01A0	10	H0- 35
07002-12034	H0340-01A0	14	H0- 35
07002-12034	H0340-01A0	16	H0- 35
07002-12034	H0340-01A0	7	H0- 35
07002-12034	H1220-01A0	5	H0- 39
07002-12034	H1220-01A0	8	H0- 39

PARTS NO.	FIG NO.	INDEX	PAGE
07002-12034	H1270-01A0	17	H0- 41
07002-12034	H1270-04A0	10	H0- 47
07002-12034	H1270-04A0	4	H0- 47
07002-12034	H1270-04A0	7	H0- 47
07002-12034	H1270-06A0	2	H0- 51
07002-12034	H1290-01A0	13	H0- 53
07002-12034	H1290-01A0	6	H0- 53
07002-12034	H1310-01A0	6	H0- 55
07002-12034	H1310-01A0	9	H0- 55
07002-12034	H1310-01A1	6	H0- 57
07002-12034	H1310-01A1	9	H0- 57
07002-12034	H1831-01A0	15	H0- 61
07002-12034	H1831-01A0	23	H0- 61
07002-12034	H1831-01A0	3	H0- 61
07002-12034	H1831-01A0	5	H0- 61
07002-12034	H1840-02A1	24	H0- 69
07002-12034	N1210-52A0	13	N0- 9
07002-12034	N1210-52A0	16	N0- 9
07002-12034	N1210-52A0	18	N0- 9
07002-12034	N1210-52A0	21	N0- 9
07002-12034	T1110-05A1	34	T0- 13
07002-12034	Y1651-01A0	13	Y0- 43
07002-12034	Y1660-12A0	2	Y0- 73
07002-12034	Y1660-13A0	2	Y0- 75
07002-12034	Y1660-13A0	4	Y0- 75
07002-12034	Y1662-12A0	2	Y0- 107
07002-12034	Y1662-13A0	2	Y0- 109
07002-12034	Y1662-13A0	4	Y0- 109
07002-12034	Y1662-18A0	12	Y0- 119
07002-12034	Y1662-32A0	2	Y0- 143
07002-12034	Y1662-33A0	2	Y0- 145
07002-12034	Y1662-34A0	2	Y0- 147
07002-12034	Y1662-35A0	2	Y0- 149
07002-12034	Y1662-35A0	4	Y0- 149
07002-12034	Y1664-12A0	2	Y0- 179
07002-12034	Y1664-13A0	2	Y0- 181
07002-12034	Y1664-14A0	2	Y0- 183
07002-12034	Y1664-15A0	2	Y0- 185
07002-12034	Y1664-15A0	4	Y0- 185
07002-12034	Y1664-20A0	12	Y0- 195
07002-12434	H0110-01A0	25	H0- 3
07002-12434	H0311-01A0	10	H0- 17
07002-12434	H0311-01A1	10	H0- 19
07002-12434	H0312-01A0	4	H0- 21
07002-12434	H0312-01A0	9	H0- 21
07002-12434	H0312-01A1	39	H0- 24
07002-12434	H0312-01A1	4	H0- 23
07002-12434	H0312-01A1	9	H0- 23
07002-12434	H0330-01A0	4	H0- 33
07002-12434	H0340-01A0	3	H0- 35

PARTS NO.	FIG NO.	INDEX	PAGE
07002-12434	H1210-01A0	10	H0- 37
07002-12434	H1210-01A0	7	H0- 37
07002-12434	H1220-01A0	2	H0- 39
07002-12434	H1270-01A0	10	H0- 41
07002-12434	H1270-04A0	13	H0- 47
07002-12434	H1270-04A0	16	H0- 47
07002-12434	M1140-01A0	12	M0- 7
07002-12434	N1210-51A0	9	N0- 7
07002-12434	N1210-52A0	27	N0- 9
07002-12434	N1310-01A0	7	N0- 11
07002-12434	N1310-01A1	7	N0- 13
07002-12434	P1120-01A0	17	P0- 3
07002-12434	P1120-01A0	28	P0- 3
07002-12434	P1120-01A1	17	P0- 5
07002-12434	P1120-01A1	28	P0- 5
07002-12434	Y1640-02A0	4	Y0- 39
07002-12434	Y1660-01A0	15	Y0- 49
07002-12434	Y1660-03A0	14	Y0- 53
07002-12434	Y1660-09A0	15	Y0- 67
07002-12434	Y1660-11A0	4	Y0- 71
07002-12434	Y1662-01A0	15	Y0- 83
07002-12434	Y1662-03A0	14	Y0- 87
07002-12434	Y1662-09A0	15	Y0- 101
07002-12434	Y1662-11A0	4	Y0- 105
07002-12434	Y1662-18A0	6	Y0- 119
07002-12434	Y1662-21A0	15	Y0- 121
07002-12434	Y1662-23A0	14	Y0- 125
07002-12434	Y1662-29A0	13	Y0- 137
07002-12434	Y1662-31A0	4	Y0- 141
07002-12434	Y1664-01A0	15	Y0- 157
07002-12434	Y1664-03A0	14	Y0- 161
07002-12434	Y1664-09A0	13	Y0- 173
07002-12434	Y1664-11A0	4	Y0- 177
07002-12434	Y1664-20A0	6	Y0- 195
07002-13334	H0320-01A0	2	H0- 27
07002-13334	H0320-01A0	4	H0- 27
07002-13334	H0320-01A0	9	H0- 27
07002-13334	H0320-01A1	2	H0- 29
07002-13334	H0320-01A1	6	H0- 29
07002-13334	H0320-02A0	28	H0- 31
07002-13334	H1270-01A0	13	H0- 41
07002-13334	H1270-05A0	6	H0- 49
07002-13334	T1210-02A1	24	T0- 25
07002-13334	T1210-02A1	28	T0- 25
07002-21423	P1120-01A0	19	P0- 3
07002-21423	P1120-01A0	22	P0- 3
07002-21423	P1120-01A1	19	P0- 5
07002-21423	P1120-01A1	22	P0- 5
07002-22034	P1120-01A0	34	P0- 3
07002-22034	P1120-01A1	34	P0- 5

PARTS NO.	FIG NO.	INDEX	PAGE
07002-61023	Y1600-01A0	11	Y0- 5
07002-61023	Y1600-01A0	13	Y0- 5
07002-61023	Y1600-11A0	11	Y0- 15
07002-61023	Y1600-11A0	13	Y0- 15
07002-61423	Y1640-01A0	4	Y0- 37
07002-62434	H0340-01A0	30	H0- 35
07002-62434	H0340-01A0	33	H0- 35
07002-62434	Y1600-01A0	5	Y0- 5
07002-62434	Y1600-11A0	5	Y0- 15
07002-62434	Y1640-01A0	8	Y0- 37
07003-01015	A153T-01D8	6	AA- 23
07005-00812	A411P-01C5	4	AA- 75
07005-01212	A411S-01D5	18	AA- 79
07005-01412	A153T-01D8	4	AA- 23
07005-01412	A411R-01C4	4	AA- 77
07005-01412	A411S-01D5	16	AA- 79
07005-01412	D0200-01A0	5	D0- 5
07005-01412	D0200-02A0	7	D0- 7
07005-01412	D0200-04A0	16	D0- 11
07005-01412	D0200-04A0	7	D0- 11
07005-02216	A211P-01A9	9	AA- 47
07005-02216	A221P-01B1	6	AA- 51
07005-02216	B9999-01Y4	7	AA- 133
07005-02216	V0100-01A0	8	V0- 3
07005-03016	B0600-01A0	4	B0- 7
07012-00075	N1210-51A0	4	N0- 7
07020-00000	N1110-01A0	3	N0- 3
07020-00000	N1210-51A0	30	N0- 7
07020-00000	T1210-01A0	13	T0- 19
07020-00000	T1210-01A0	21	T0- 19
07020-00000	T1210-01A0	7	T0- 19
07020-00000	T1210-01A1	13	T0- 21
07020-00000	T1210-01A1	21	T0- 21
07020-00000	T1210-01A1	7	T0- 21
07020-00000	T1210-01A2	13	T0- 23
07020-00000	T1210-01A2	21	T0- 23
07020-00000	T1210-01A2	7	T0- 23
07020-00000	T1230-01A0	13	T0- 29
07020-00000	T1230-01A0	18	T0- 29
07020-00000	T1230-01A0	6	T0- 29
07020-00000	V0100-01A0	10	V0- 3
07020-00000	Y1620-41A0	15	Y0- 29
07020-00000	Y1621-01A0	16	Y0- 31
07020-00000	Y1621-01A0	4	Y0- 31
07020-00675	J1310-01A0	8	J0- 7
07020-00675	T1110-03A0	14	T0- 7
07020-00675	T1110-03A0	2	T0- 7
07020-00675	T1710-01A0	5	T0- 37
07020-00675	V0100-01A0	12	V0- 3
07020-00900	R0120-01A0	8	R0- 5

PARTS NO.	FIG NO.	INDEX	PAGE
07020-00900	T1110-01A0	7	T0- 3
07020-00900	T1210-01A0	20	T0- 19
07020-00900	T1210-01A1	20	T0- 21
07020-00900	T1210-01A2	20	T0- 23
07020-00900	T1230-01A0	14	T0- 29
07020-00900	T1230-01A0	7	T0- 29
07020-00900	V0100-01A0	11	V0- 3
07030-00252	B0600-01A0	8	B0- 7
07040-11007	H0312-01A0	21	H0- 21
07040-11007	H0312-01A1	21	H0- 23
07040-11007	H0312-01A1	35	H0- 23
07040-11007	H1831-01A0	10	H0- 61
07040-11007	H1831-01A0	20	H0- 61
07040-11007	T1110-05A1	31	T0- 13
07040-11209	B0600-01A0	1	B0- 7
07040-11209	H1270-03A0	21	H0- 45
07040-11209	Y1670-01A0	27	Y0- 197
07040-11409	D0200-03A0	2	D0- 9
07040-11612	N1210-51A0	10	N0- 7
07040-12012	H1270-06A0	1	H0- 51
07040-12012	T1110-05A1	33	T0- 13
07040-12012	Y1651-01A0	3	Y0- 43
07040-12412	H0311-01A0	9	H0- 17
07040-12412	H0311-01A1	9	H0- 19
07042-00415	A221P-01B1	3	AA- 51
07042-20108	A153S-01C0	2	AA- 21
07042-70312	A201S-01A4	12	AA- 37
07043-50108	R0110-01A0	10	R0- 3
07043-70108	A201S-01A4	21	AA- 37
07043-70415	A311P-01B2	23	AA- 69
07043-71019	D0100-01A0	7	D0- 3
07044-12412	H0110-01A0	24	H0- 3
07044-12412	Y1600-01A0	4	Y0- 5
07044-12412	Y1600-11A0	4	Y0- 15
07046-21210	A219P-01B8	8	AA- 49
07046-23016	A207P-01B0	1	AA- 43
07046-41008	A101P-01A2	5	AA- 3
07046-41810	A101P-01A2	6	AA- 3
07046-41810	A201S-01A4	20	AA- 37
07046-42216	A101P-01A2	7	AA- 3
07046-42216	A201S-01A4	8	AA- 37
07046-42516	A101P-01A2	8	AA- 3
07046-42516	A201S-01A4	9	AA- 37
07046-43016	A201S-01A4	10	AA- 37
07046-44016	A201S-01A4	11	AA- 37
07049-01012	N1210-52A0	8	N0- 9
07049-01620	K0210-10A0	4	K0- 23
07049-01620	N1210-51A0	28	N0- 7
07056-18425	D0100-01A0	6	D0- 3
07094-10518	H1210-01A0	18	H0- 37

PARTS NO.	FIG NO.	INDEX	PAGE
07094-10620	H1270-01A0	27	H0- 41
07094-30417	H1220-01A0	22	H0- 39
07094-30620	H1270-01A0	22	H0- 41
07095-00419	H0312-01A1	37	H0- 23
07095-00420	H1220-01A0	24	H0- 39
07095-00524	H1210-01A0	19	H0- 37
07095-00525	H1220-01A0	28	H0- 39
07095-00526	H1220-01A0	25	H0- 39
07095-00526	K0210-32A0	12	K0- 59
07095-00627	H1270-01A0	23	H0- 41
07095-00627	H1270-01A0	28	H0- 41
07095-00630	K0700-02A0	14	K0- 109
07095-01034	K0210-35A0	23	K0- 65
07095-20211	E0200-04A0	19	E0- 11
07095-20211	E0200-05A0	13	E0- 13
07095-20314	E0200-03A0	3	E0- 9
07095-20314	E0200-03A0	7	E0- 9
07095-20418	E0100-01A0	23	E0- 3
07095-20419	D0200-01A0	13	D0- 5
07095-20419	D0200-02A0	16	D0- 7
07095-20419	D0200-02A0	3	D0- 7
07095-20420	E0200-01A0	6	E0- 5
07095-20420	E0200-04A0	5	E0- 11
07095-20523	A681P-01A8	17	AA- 119
07095-20523	E0200-02A0	16	E0- 7
07095-20523	H1831-01A0	28	H0- 61
07095-20523	K0700-02A0	16	K0- 109
07095-20627	H1210-01A0	3	H0- 37
07095-20627	K0700-02A0	12	K0- 109
07143-10505	Y1620-41A0	2	Y0- 29
07143-10506	Y1620-11A0	2	Y0- 27
07143-10606	Y1620-01A0	15	Y0- 25
07143-10606	Y1620-11A0	15	Y0- 27
07144-10505	T1710-01A0	3	T0- 37
07144-10606	Y1620-41A0	13	Y0- 29
07144-10706	Y1621-01A0	14	Y0- 31
07144-10706	Y1621-01A0	2	Y0- 31
07145-00050	T1230-01A0	12	T0- 29
07145-00050	T1230-01A0	5	T0- 29
07145-00050	T1710-01A0	4	T0- 37
07145-00050	Y1620-41A0	3	Y0- 29
07145-00055	Y1620-11A0	3	Y0- 27
07145-00060	T1210-01A0	18	T0- 19
07145-00060	T1210-01A1	18	T0- 21
07145-00060	T1210-01A2	18	T0- 23
07145-00060	T1230-01A0	11	T0- 29
07145-00060	T1230-01A0	4	T0- 29
07145-00060	Y1620-01A0	16	Y0- 25
07145-00060	Y1620-11A0	16	Y0- 27
07145-00060	Y1620-41A0	14	Y0- 29

PARTS NO.	FIG NO.	INDEX	PAGE
07145-00065	T1110-01A0	6	T0- 3
07145-00065	T1110-01A0	8	T0- 3
07145-00065	Y1620-01A0	3	Y0- 25
07145-00070	Y1621-01A0	15	Y0- 31
07145-00070	Y1621-01A0	3	Y0- 31
07146-02086	Y1620-41A0	10	Y0- 29
07146-02096	Y1620-11A0	13	Y0- 27
07146-02126	Y1621-01A0	11	Y0- 31
07155-00515	R0120-01A0	9	R0- 5
07156-00912	Y1620-41A0	18	Y0- 29
07156-01012	Y1620-11A0	20	Y0- 27
07156-01315	Y1621-01A0	19	Y0- 31
07177-05030	R0120-01A0	14	R0- 5
07179-12069	Y1620-41A0	8	Y0- 29
07179-12074	Y1620-11A0	8	Y0- 27
07179-12079	Y1620-01A0	8	Y0- 25
07179-12079	Y1621-01A0	9	Y0- 31
07206-30812	A411S-01D5	17	AA- 79
07206-31014	A153T-01D8	5	AA- 23
07206-31014	A411R-01C4	3	AA- 77
07206-31014	D0200-01A0	6	D0- 5
07206-31014	D0200-02A0	8	D0- 7
07206-31014	D0200-04A0	8	D0- 11
07238-10208	N1210-51A0	33	N0- 7
07260-20932	B0600-01A0	22	B0- 7
07270-00865	D0200-04A0	4	D0- 11
07270-00875	D0200-03A0	9	D0- 9
07281-00259	A331P-01C4	6	AA- 71
07281-00609	A207S-01A3	3	AA- 45
07283-32236	Y1620-01A0	23	Y0- 25
07283-32236	Y1620-11A0	28	Y0- 27
07283-32738	N1210-51A0	34	N0- 7
07283-33442	H0320-02A0	18	H0- 31
07283-33442	H0320-02A0	7	H0- 31
07283-34346	C0100-07A0	15	C0- 15
07285-00100	D0200-03A0	10	D0- 9
07285-00100	D0200-04A0	5	D0- 11
07285-00125	H0110-01A0	14	H0- 3
07285-00150	B0600-01A0	23	B0- 7
07285-00180	A111V-01A9	9	AA- 9
07285-00200	A111V-01A9	5	AA- 9
07285-00200	B0600-01A0	6	B0- 7
07285-00220	A111V-01A9	4	AA- 9
07286-01656	A111V-01A9	8	AA- 9
07289-00045	C0100-07A0	3	C0- 15
07289-00055	C0100-07A0	2	C0- 15
07289-00055	C0100-07A0	5	C0- 15
07289-00055	H0311-01A1	12	H0- 19
07289-00095	B0200-01A0	11	B0- 5
07289-00095	H0311-01A0	8	H0- 17

PARTS NO.	FIG NO.	INDEX	PAGE
07289-00095	H0311-01A1	8	H0- 19
07299-00055	C0100-07A0	20	C0- 15
07299-00055	C0100-07A0	7	C0- 15
07299-00070	C0100-07A0	19	C0- 15
07372-21030	Y1600-14A0	9	Y0- 23
07372-21035	D0200-03A0	7	D0- 9
07700-40240	D0200-04A0	9	D0- 11
07700-50455	D0100-01A0	8	D0- 3
07950-10450	V0300-01A0	1	V0- 5
07950-90403	V0300-01A0	2	V0- 5
07951-41017	V0300-01A0	1	V0- 5
07952-70004	V0300-01A0	1	V0- 5
08000-00020	E0100-01A0	2	E0- 3
08000-00021	E0100-01A0	3	E0- 3
08017-B0701	K0210-09A0	3	K0- 21
08028-GH035	E0100-01A0	8	E0- 3
08028-43030	E0200-08A0	17	E0- 19
08028-48035	E0200-08A0	11	E0- 19
08034-20414	A411S-01D5	3	AA- 79
08034-20414	K0210-08A0	17	K0- 19
08034-20414	K0210-08A0	3	K0- 19
08034-20414	K0210-09A0	4	K0- 21
08034-20414	K0210-22A0	38	K0- 49
08034-20414	K0210-35A0	17	K0- 65
08034-20414	K0210-35A0	22	K0- 65
08034-20414	K0210-51A0	11	K0- 91
08034-20414	K0210-51A0	3	K0- 91
08034-20414	K0210-52A0	4	K0- 93
08034-20414	K0210-52A0	5	K0- 93
08034-20414	K0210-53A0	8	K0- 95
08034-20519	E0200-04A0	20	E0- 11
08034-20519	H1270-01A0	3	H0- 41
08034-20519	H1270-01A0	6	H0- 41
08034-20519	K0210-15A0	22	K0- 29
08034-20519	K0210-22A0	31	K0- 49
08034-20519	K0210-35A0	21	K0- 65
08034-20519	K0210-46A2	11	K0- 89
08034-20536	A311P-01B2	27	AA- 69
08034-20536	D0200-02A0	13	D0- 7
08034-20536	D0200-02A0	4	D0- 7
08034-20536	H0312-01A1	37	H0- 23
08034-20536	H1220-01A0	29	H0- 39
08034-20536	H1840-01A0	26	H0- 65
08034-20536	K0210-32A0	13	K0- 59
08034-20536	K0210-32A0	17	K0- 59
08034-20536	K0210-34A0	14	K0- 63
08034-20536	K0210-37A1	34	K0- 69
08034-20823	K0210-35A0	24	K0- 65
08034-20823	P1120-01A0	12	P0- 3
08034-20823	P1120-01A0	6	P0- 3

PARTS NO.	FIG NO.	INDEX	PAGE
08034-20823	P1120-01A1	12	P0- 5
08034-20823	P1120-01A1	6	P0- 5
08034-20876	K0210-44A0	15	K0- 83
08034-20876	K0210-44A0	7	K0- 83
08034-40521	H1831-02A0	12	H0- 63
08034-40521	K0210-21A0	12	K0- 47
08034-40521	K0350-01A0	12	K0- 105
08034-40521	P1120-01A0	14	P0- 3
08034-40521	P1120-01A1	14	P0- 5
08034-40521	T1110-02A0	9	T0- 5
08037-01008	K0210-09A0	11	K0- 21
08037-01610	K0210-10A0	3	K0- 23
08037-02512	C0100-02A0	36	C0- 5
08037-02512	M1220-01A0	18	M0- 13
08037-03620	D0200-01A0	8	D0- 5
08037-05016	K0210-32A0	18	K0- 59
08037-11425	K0210-19A0	2	K0- 43
08038-00035	E0100-01A0	15	E0- 3
08038-00519	E0200-08A0	10	E0- 19
08038-00519	E0200-10A0	17	E0- 23
08038-00525	E0200-03A0	10	E0- 9
08038-02027	E0200-10A0	15	E0- 23
08038-04030	E0100-01A0	16	E0- 3
08038-04030	E0100-01A0	18	E0- 3
08038-04030	E0200-10A0	16	E0- 23
08038-12027	E0200-01A0	19	E0- 5
08038-42009	E0100-01A0	12	E0- 3
08041-01000	K0210-54A0	3	K0- 97
08041-02000	K0210-54A0	3	K0- 97
08041-03000	K0210-54A0	3	K0- 97
08056-00271	K0210-08A0	15	K0- 19
08059-00515	K0210-36A0	25	K0- 67
08088-30000	E0200-08A0	1	E0- 19
08116-02410	K0210-08A0	15	K0- 19
08160-72400	E0200-09A0	1	E0- 21
08193-20012	E0200-05A0	18	E0- 13
08193-20012	E0200-05A0	3	E0- 13
08193-20012	K0700-03A0	4	K0- 111
08193-21012	A311P-01B2	9	AA- 69
08193-21012	T1110-02A0	5	T0- 5
08211-00720	E0200-05A0	21	E0- 13
08211-00720	E0200-06A0	3	E0- 15
08211-00720	E0200-08A0	6	E0- 19
08211-01020	E0200-10A0	11	E0- 23
08211-01920	E0200-04A0	42	E0- 11
08211-02820	H1831-01A0	27	H0- 61
08211-11320	C0100-08A0	8	C0- 17
08211-11320	E0200-02A0	14	E0- 7
08211-11320	E0200-06A0	2	E0- 15
08211-11520	E0200-06A0	1	E0- 15

PARTS NO.	FIG NO.	INDEX	PAGE
08912-51600	K0210-53A0	6	K0- 95
09002-00810	V0300-01A0	8	V0- 5
09002-01214	V0300-01A0	8	V0- 5
09002-01317	V0300-01A0	8	V0- 5
09002-01922	V0300-01A0	8	V0- 5
09002-02427	V0300-01A0	8	V0- 5
09002-03032	V0300-01A0	8	V0- 5
09007-00632	V0300-01A0	5	V0- 5
09007-00836	V0300-01A0	6	V0- 5
09019-28036	V0300-01A0	7	V0- 5
09033-00190	V0300-01A0	4	V0- 5
09056-04613	V0300-01A0	3	V0- 5
09133-A2321	U0100-02A0	4	U0- 5
09133-A2321	U0100-02A1	4	U0- 7
09133-A2321	U0100-02A2	4	U0- 9
09133-A2321	U0100-02A3	4	U0- 11
09134-A0881	U0100-02A0	16	U0- 5
09134-A0881	U0100-02A1	16	U0- 7
09134-A0881	U0100-02A2	16	U0- 9
09134-A0881	U0100-02A3	16	U0- 11
09232-02525	N1210-51A0	16	N0- 7
09370-00050	R0120-01A0	10	R0- 5
09412-10025	K0210-07A0	15	K0- 17
09415-02512	K0210-22A0	25	K0- 49
09416-10200	K0210-38A0	10	K0- 71
09416-10200	K0210-38A0	8	K0- 71
09461-00023	M1130-01A0	17	M0- 5
09484-00450	K0700-03A0	11	K0- 111
09650-90104	U0100-02A0	10	U0- 5
09650-90104	U0100-02A1	10	U0- 7
09650-90104	U0100-02A2	10	U0- 9
09650-90104	U0100-02A3	10	U0- 11
09651-A0481	U0100-01A0	8	U0- 3
09653-A0481	U0100-02A0	6	U0- 5
09653-A0481	U0100-02A0	7	U0- 5
09653-A0481	U0100-02A1	6	U0- 7
09653-A0481	U0100-02A1	7	U0- 7
09653-A0481	U0100-02A2	6	U0- 9
09653-A0481	U0100-02A2	7	U0- 9
09653-A0481	U0100-02A3	6	U0- 11
09653-A0481	U0100-02A3	7	U0- 11
09654-A0481	U0100-01A0	5	U0- 3
09657-A0881	U0100-01A0	21	U0- 3
09659-A057B	U0100-01A0	22	U0- 3
09659-A057B	U0100-01A0	23	U0- 3
09667-A0481	U0100-02A0	11	U0- 5
09667-A0481	U0100-02A1	11	U0- 7
09667-A0481	U0100-02A2	11	U0- 9
09667-A0481	U0100-02A3	11	U0- 11
09669-0000E	U0100-02A0	9	U0- 5

PARTS NO.	FIG NO.	INDEX	PAGE
09669-0000E	U0100-02A1	9	U0- 7
09669-0000E	U0100-02A2	9	U0- 9
09669-0000E	U0100-02A3	9	U0- 11
09685-00001	U0100-02A0	13	U0- 5
09685-00001	U0100-02A1	13	U0- 7
09685-00001	U0100-02A2	13	U0- 9
09685-00001	U0100-02A3	13	U0- 11
09690-B0063	U0100-02A0	1	U0- 5
09690-B0063	U0100-02A1	1	U0- 7
09690-B0063	U0100-02A2	1	U0- 9
09690-B0063	U0100-02A3	1	U0- 11
09690-F0355	U0100-01A0	28	U0- 3
09690-P0800	U0100-01A0	2	U0- 3
09690-P0900	U0100-01A0	1	U0- 3
09801-A0481	U0100-01A0	7	U0- 3
09803-A0481	U0100-01A0	6	U0- 3
09805-C0881	U0100-02A0	8	U0- 5
09805-C0881	U0100-02A1	8	U0- 7
09805-C0881	U0100-02A2	8	U0- 9
09805-C0881	U0100-02A3	8	U0- 11
09808-A0881	U0100-02A0	15	U0- 5
09808-A0881	U0100-02A1	15	U0- 7
09808-A0881	U0100-02A2	15	U0- 9
09808-A0881	U0100-02A3	15	U0- 11
09817-A0753	B0100-01A0	24	B0- 3
09822-09000	U0100-01A0	9	U0- 3
09839-09000	U0100-01A0	20	U0- 3
09845-00480	U0100-02A0	27	U0- 5
09845-00480	U0100-02A1	27	U0- 7
09845-00480	U0100-02A2	27	U0- 9
09845-00480	U0100-02A3	27	U0- 11
09920-00150	A153U-01A3	4	AA- 25
09920-00150	A204W-01A3	7	AA- 41
09920-00150	A211P-01A9	10	AA- 47
09920-00150	A221P-01B1	7	AA- 51
09920-00150	A401P-01K6	10	AA- 73
09960-00801	U0100-01A0	11	U0- 3
09960-00802	U0100-01A0	12	U0- 3
09963-A1640	U0100-02A0	12	U0- 5
09963-A1640	U0100-02A1	12	U0- 7
09963-A1640	U0100-02A2	12	U0- 9
09963-A1640	U0100-02A3	12	U0- 11
101-32-11173	R0500-01A0	4	R0- 11
101-32-11271	R0500-01A0	3	R0- 11
101-32-11281	R0500-01A0	10	R0- 11
11Y-09-11160	K0700-03A0	12	K0- 111
11Y-09-11170	A411R-01C4	5	AA- 77
11Y-54-13630	M1130-01A0	30	M0- 5
11Y-62-12130	K0210-16A0	16	K0- 31
11Y-62-12130	K0210-16A0	28	K0- 31

PARTS NO.	FIG NO.	INDEX	PAGE
11Y-62-12130	K0210-16A1	16	K0- 33
11Y-62-12130	K0210-16A1	29	K0- 33
11Y-62-12130	K0210-16A2	17	K0- 35
11Y-62-12130	K0210-16A2	30	K0- 35
11Y-62-12130	K0210-16A3	17	K0- 37
11Y-62-12130	K0210-16A3	30	K0- 37
11Y-62-12130	K0210-31A0	8	K0- 57
11Y-62-12130	K0210-33A0	8	K0- 61
11Y-62-12140	K0210-37A1	14	K0- 69
11Y-62-12140	K0210-45A2	24	K0- 87
11Y-62-12160	K0210-14A0	24	K0- 27
11Y-62-12330	K0210-16A1	17	K0- 33
11Y-62-12330	K0210-16A1	30	K0- 33
11Y-62-12330	K0210-16A2	18	K0- 35
11Y-62-12330	K0210-16A2	31	K0- 35
11Y-62-12330	K0210-16A3	18	K0- 37
11Y-62-12330	K0210-16A3	31	K0- 37
11Y-62-12340	H1270-05A0	4	H0- 49
11Y-62-12360	H1290-01A0	8	H0- 53
11Y-62-12490	H1840-02A0	6	H0- 67
11Y-62-12490	H1840-02A1	6	H0- 69
11Y-98-31130	U0100-02A0	32	U0- 5
11Y-98-31130	U0100-02A1	33	U0- 7
11Y-98-31130	U0100-02A2	32	U0- 9
11Y-98-31130	U0100-02A3	33	U0- 11
110-30-00086	R0300-01A0	6	R0- 9
112-32-11221	R0500-01A0	9	R0- 11
112-86-01360	C0100-06A0	10	C0- 13
112-86-01360	C0100-06A0	5	C0- 13
12R-60-11230	H0110-01A0	21	H0- 3
124-01-61130	B0200-01A0	9	B0- 5
124-49-51430	H0340-01A0	13	H0- 35
124-54-26540	M1110-01A0	25	M0- 3
124-54-26540	M1130-01A0	3	M0- 5
124-54-26540	M1140-01A0	21	M0- 7
130-09-12931	T1210-01A0	19	T0- 19
130-09-12931	T1210-01A1	19	T0- 21
130-09-12931	T1210-01A2	19	T0- 23
130-43-64260	M1130-01A0	21	M0- 5
135-70-13251	T1510-01A0	11	T0- 31
135-70-13251	T1510-01A1	11	T0- 33
135-70-13251	T1510-01A2	11	T0- 35
14X-60-31130	H0110-01A0	15	H0- 3
14X-98-35181	U0100-02A0	30	U0- 5
14X-98-35181	U0100-02A1	31	U0- 7
14X-98-35181	U0100-02A2	30	U0- 9
14X-98-35181	U0100-02A3	31	U0- 11
141-30-00616	R0110-01A0	7	R0- 3
141-30-00623	R0110-01A0	7	R0- 3
141-30-00630	R0110-01A0	8	R0- 3

PARTS NO.	FIG NO.	INDEX	PAGE
142-62-14450	B0100-01A0	25	B0- 3
144-874-7470	A681P-01A8	34	AA- 119
154-30-51460	M1520-01A0	2	M0- 21
154-61-16570	A1610-01K7	8	AA- 29
154-61-16570	A211P-01A9	7	AA- 47
154-61-16570	A4710-01A2	3	AA- 89
17M-911-3530	K0210-44A0	9	K0- 83
175-06-81610	K0210-51A0	8	K0- 91
175-30-16210	T1510-01A0	10	T0- 31
175-30-16210	T1510-01A1	10	T0- 33
175-30-16210	T1510-01A2	10	T0- 35
175-54-34170	M1810-01A0	10	M0- 23
175-54-34170	M1810-01A0	15	M0- 23
175-54-34170	M1810-01A0	23	M0- 23
175-54-34170	M1810-01A0	28	M0- 23
175-54-34170	M1810-01A0	5	M0- 23
175-61-17240	E0200-03A0	1	E0- 9
175-61-23220	C0100-06A0	12	C0- 13
175-61-23220	C0100-06A0	7	C0- 13
19M-06-31720	E0200-01A0	1	E0- 5
195-01-14540	A601T-01C1	3	AA- 107
195-33-11220	E0200-01A0	10	E0- 5
195-43-22820	K1120-01A0	2	K0- 115
195-979-3510	A681P-01A8	10	AA- 119
20B-27-11210	H1840-02A0	11	H0- 67
20B-27-11210	H1840-02A1	11	H0- 69
20B-27-11210	Y1600-03A0	36	Y0- 10
20B-27-11210	Y1600-13A0	36	Y0- 20
20B-54-12210	H1270-03A0	3	H0- 45
20D-62-17620	A153T-01D8	13	AA- 23
20D-973-3350	T1210-02A1	22	T0- 25
20D-973-3360	T1210-02A1	25	T0- 25
20M-62-82792	K0210-15A0	21	K0- 29
20M-62-82792	K0210-46A2	10	K0- 89
20M-977-8130	A5010-01A9	3	AA- 93
20N-62-72670	D0200-02A0	12	D0- 7
20S-06-13230	E0100-01A0	11	E0- 3
20S-26-71250	N1210-51A0	14	N0- 7
20T-06-31660	E0200-01A0	1	E0- 5
20T-06-81230	E0200-01A0	1	E0- 5
20T-43-71110	K0210-37A1	12	K0- 69
20T-43-71190	K0210-37A1	13	K0- 69
20T-54-42510	A5010-01A9	2	AA- 93
20T-54-74510	E0200-02A0	29	E0- 7
20T-54-74550	K0210-02A0	27	K0- 7
20T-62-71671	H1220-01A0	16	H0- 39
20T-910-8660	K0210-45A2	17	K0- 87
20U-06-21680	E0100-01A0	13	E0- 3
20U-62-22320	K0210-16A0	7	K0- 31
20U-62-22320	K0210-16A1	7	K0- 33

PARTS NO.	FIG NO.	INDEX	PAGE
20U-62-22320	K0210-16A2	8	K0- 35
20U-62-22320	K0210-16A3	8	K0- 37
20U-62-41690	P1120-02A1	6	P0- 7
20U-62-42230	D0200-04A0	10	D0- 11
20U-70-31310	T1110-03A0	12	T0- 7
20U-91-01450	P1120-02A1	9	P0- 7
20X-30-21141	R1100-01A0	7	R0- 13
20X-30-21141	R1100-01A1	7	R0- 15
20X-60-22140	H0110-01A0	7	H0- 3
20X-70-14151	T1510-01A0	1	T0- 31
20X-70-14151	T1510-01A1	1	T0- 33
20X-70-14151	T1510-01A2	1	T0- 35
20X-70-14160	T1510-01A0	3	T0- 31
20X-70-14160	T1510-01A1	3	T0- 33
20X-70-14160	T1510-01A2	3	T0- 35
20X-70-14170	T1510-01A0	4	T0- 31
20X-70-14170	T1510-01A1	4	T0- 33
20X-70-14170	T1510-01A2	4	T0- 35
20X-70-14180	T1510-01A0	5	T0- 31
20X-70-14180	T1510-01A1	5	T0- 33
20X-70-14180	T1510-01A2	5	T0- 35
20X-70-22140	T1210-01A0	3	T0- 19
20X-70-22140	T1210-01A1	3	T0- 21
20X-70-22140	T1210-01A2	3	T0- 23
20X-70-24150	T1230-01A0	2	T0- 29
20X-70-24150	T1230-01A0	9	T0- 29
20Y-00-D1282	U0100-01A0	26	U0- 3
20Y-00-D1332	V0100-01A0	1	V0- 3
20Y-00-D1401	U0100-01A0	24	U0- 3
20Y-00-D1520	U0100-01A0	25	U0- 3
20Y-00-D1750	U0100-02A0	19	U0- 5
20Y-00-D1750	U0100-02A1	19	U0- 7
20Y-00-D1750	U0100-02A2	19	U0- 9
20Y-00-D1750	U0100-02A3	19	U0- 11
20Y-00-D1760	U0100-02A0	20	U0- 5
20Y-00-D1760	U0100-02A1	20	U0- 7
20Y-00-D1760	U0100-02A2	20	U0- 9
20Y-00-D1760	U0100-02A3	20	U0- 11
20Y-00-D1770	U0100-02A0	21	U0- 5
20Y-00-D1770	U0100-02A1	21	U0- 7
20Y-00-D1770	U0100-02A2	21	U0- 9
20Y-00-D1770	U0100-02A3	21	U0- 11
20Y-00-D1780	U0100-02A0	22	U0- 5
20Y-00-D1780	U0100-02A1	22	U0- 7
20Y-00-D1780	U0100-02A2	22	U0- 9
20Y-00-D1780	U0100-02A3	22	U0- 11
20Y-00-D1850	U0100-02A0	23	U0- 5
20Y-00-D1850	U0100-02A1	23	U0- 7
20Y-00-D1850	U0100-02A2	23	U0- 9
20Y-00-D1850	U0100-02A3	23	U0- 11

PARTS NO.	FIG NO.	INDEX	PAGE
20Y-00-D1851	U0100-02A0	23	U0- 5
20Y-00-D1851	U0100-02A1	23	U0- 7
20Y-00-D1851	U0100-02A2	23	U0- 9
20Y-00-D1851	U0100-02A3	23	U0- 11
20Y-00-D1940	U0100-02A0	31	U0- 5
20Y-00-D1940	U0100-02A1	32	U0- 7
20Y-00-D1940	U0100-02A2	31	U0- 9
20Y-00-D1940	U0100-02A3	32	U0- 11
20Y-00-D1960	U0100-01A0	27	U0- 3
20Y-00-41330	K0210-39A0	6	K0- 73
20Y-04-11161	D0100-01A0	2	D0- 3
20Y-04-21580	D0100-01A0	4	D0- 3
20Y-06-21551	T1110-02A0	2	T0- 5
20Y-06-23472	K0210-39A0	27	K0- 73
20Y-06-41830	K0210-53A0	9	K0- 95
20Y-06-41990	K0210-52A0	3	K0- 93
20Y-06-41990	Y1062-01A0	1	Y0- 3
20Y-06-42121	K0210-22A0	35	K0- 49
20Y-06-42180	K0210-52A0	6	K0- 93
20Y-06-42190	K0210-22A0	36	K0- 49
20Y-06-42430	K0210-53A0	1	K0- 95
20Y-06-81310	K0210-53A0	7	K0- 95
20Y-30-16330	R0200-01A0	9	R0- 7
20Y-30-16330	R0300-01A0	8	R0- 9
20Y-43-21231	K0210-14A0	19	K0- 27
20Y-43-21241	K0210-14A0	20	K0- 27
20Y-43-22211	K0210-17A0	1	K0- 39
20Y-43-22221	K0210-21A0	1	K0- 47
20Y-43-22250	K0210-17A0	4	K0- 39
20Y-43-22250	K0210-21A0	6	K0- 47
20Y-43-22261	K0210-17A0	5	K0- 39
20Y-43-22261	K0210-21A0	7	K0- 47
20Y-43-22370	K0210-17A0	6	K0- 39
20Y-43-22370	K0210-21A0	8	K0- 47
20Y-43-22390	K0210-21A0	3	K0- 47
20Y-43-22421	K0210-17A0	3	K0- 39
20Y-43-22421	K0210-21A0	4	K0- 47
20Y-43-22611	K0210-17A0	1	K0- 39
20Y-43-22621	K0210-17A0	2	K0- 39
20Y-43-22630	K0210-17A0	2	K0- 39
20Y-43-31421	K0210-19A0	10	K0- 43
20Y-43-31432	K0210-19A0	8	K0- 43
20Y-43-31440	K0210-19A0	11	K0- 43
20Y-43-31450	K0210-19A0	12	K0- 43
20Y-43-31522	K0210-19A0	5	K0- 43
20Y-43-31611	K0210-19A0	6	K0- 43
20Y-43-31621	K0210-19A0	7	K0- 43
20Y-43-41111	K0210-14A0	11	K0- 27
20Y-43-41121	K0210-14A0	4	K0- 27
20Y-43-41143	K0210-20A0	1	K0- 45

PARTS NO.	FIG NO.	INDEX	PAGE
20Y-43-41152	K0210-20A0	7	K0- 45
20Y-43-41152	K0210-23A0	7	K0- 53
20Y-43-41162	K0210-20A0	5	K0- 45
20Y-43-41173	K0210-20A0	2	K0- 45
20Y-43-41181	K0210-20A0	11	K0- 45
20Y-43-41181	K0210-23A0	11	K0- 53
20Y-43-41191	K0210-20A0	13	K0- 45
20Y-43-41191	K0210-23A0	13	K0- 53
20Y-43-41281	K0210-20A0	17	K0- 45
20Y-43-41281	K0210-23A0	17	K0- 53
20Y-43-41290	K0210-18A0	16	K0- 41
20Y-43-41290	K0210-18A0	21	K0- 41
20Y-43-41290	K0210-18A0	25	K0- 41
20Y-43-41290	K0210-22A0	11	K0- 49
20Y-43-41290	K0210-22A0	18	K0- 49
20Y-43-41290	K0210-22A0	22	K0- 49
20Y-43-41290	K0210-39A0	30	K0- 73
20Y-43-41290	K0210-42A0	15	K0- 79
20Y-43-41290	K0310-01A0	3	K0- 101
20Y-43-41290	K0310-01A1	3	K0- 103
20Y-43-41313	K0210-22A0	1	K0- 49
20Y-43-41323	K0210-22A0	7	K0- 49
20Y-43-41332	K0210-22A0	12	K0- 49
20Y-43-41343	K0210-23A0	1	K0- 53
20Y-43-41353	K0210-22A0	19	K0- 49
20Y-43-41361	K0210-14A0	7	K0- 27
20Y-43-41415	K0210-18A0	1	K0- 41
20Y-43-41423	K0210-18A0	9	K0- 41
20Y-43-41442	K0210-18A0	17	K0- 41
20Y-43-41453	K0210-18A0	22	K0- 41
20Y-43-41461	K0210-20A0	18	K0- 45
20Y-43-41461	K0210-23A0	18	K0- 53
20Y-43-41472	K0210-18A0	4	K0- 41
20Y-43-41491	K0210-18A0	27	K0- 41
20Y-43-41533	K0210-23A0	2	K0- 53
20Y-43-41591	K0210-20A0	15	K0- 45
20Y-43-41591	K0210-23A0	15	K0- 53
20Y-43-41621	K0210-18A0	7	K0- 41
20Y-43-41631	K0210-22A0	4	K0- 49
20Y-43-41641	K0210-18A0	8	K0- 41
20Y-43-41651	K0210-18A0	10	K0- 41
20Y-43-41661	K0210-18A0	11	K0- 41
20Y-43-41661	K0210-22A0	8	K0- 49
20Y-43-41671	K0210-22A0	30	K0- 49
20Y-43-41740	K0210-22A0	27	K0- 49
20Y-43-41750	K0210-22A0	28	K0- 49
20Y-43-41780	K0210-22A0	34	K0- 49
20Y-43-41790	K0210-22A0	29	K0- 49
20Y-43-41850	K0210-23A0	5	K0- 53
20Y-43-41970	K0210-18A0	26	K0- 41

PARTS NO.	FIG NO.	INDEX	PAGE
20Y-43-42130	K0210-53A0	2	K0- 95
20Y-53-11E91	M1130-01A0	23	MO- 5
20Y-53-11721	K0210-07A0	6	K0- 17
20Y-53-11761	M1130-01A0	25	MO- 5
20Y-53-11771	K0210-07A0	13	K0- 17
20Y-53-11781	K0210-07A0	7	K0- 17
20Y-53-11880	K0210-41A0	6	K0- 77
20Y-53-11931	K0210-07A0	9	K0- 17
20Y-53-12111	K0210-39A0	25	K0- 73
20Y-53-12154	K0210-39A0	1	K0- 73
20Y-53-12161	K0210-39A0	16	K0- 73
20Y-53-12172	K0210-39A0	7	K0- 73
20Y-53-12221	K0210-52A0	7	K0- 93
20Y-53-12232	K0210-08A0	8	K0- 19
20Y-53-12240	K0210-39A0	26	K0- 73
20Y-53-12280	K0210-06A0	23	K0- 15
20Y-53-12291	K0210-39A0	15	K0- 73
20Y-53-12310	K0210-38A0	12	K0- 71
20Y-53-12310	K0210-38A0	19	K0- 71
20Y-53-12310	K0210-38A0	2	K0- 71
20Y-53-12310	K0210-39A0	12	K0- 73
20Y-53-12310	K0210-43A0	11	K0- 81
20Y-53-12310	K0210-43A0	7	K0- 81
20Y-53-12310	K0210-44A0	12	K0- 83
20Y-53-12310	K0210-54A0	11	K0- 97
20Y-53-12310	K0210-54A0	15	K0- 97
20Y-53-12371	K0210-54A0	4	K0- 97
20Y-53-12483	K0210-39A0	18	K0- 73
20Y-53-12591	K0210-41A0	2	K0- 77
20Y-53-12661	K0210-05A0	7	K0- 13
20Y-53-12731	K0210-54A0	13	K0- 97
20Y-53-12760	K0210-41A0	10	K0- 77
20Y-53-12781	K0210-41A0	9	K0- 77
20Y-53-12790	K0210-08A0	15	K0- 19
20Y-53-12860	K0210-54A0	17	K0- 97
20Y-53-13280	K0210-43A0	3	K0- 81
20Y-53-13351	K0210-44A0	3	K0- 83
20Y-53-13361	K0210-44A0	6	K0- 83
20Y-53-13371	K0210-43A0	1	K0- 81
20Y-53-13421	K0210-43A0	8	K0- 81
20Y-53-13451	K0210-44A0	10	K0- 83
20Y-53-13461	K0210-44A0	13	K0- 83
20Y-53-13480	K0210-43A0	2	K0- 81
20Y-53-13490	K0210-41A0	1	K0- 77
20Y-53-13631	K0210-54A0	1	K0- 97
20Y-53-13820	K0210-51A0	9	K0- 91
20Y-54-11611	K0210-02A0	26	K0- 7
20Y-54-11611	K0210-06A0	8	K0- 15
20Y-54-11611	M1110-01A0	26	MO- 3
20Y-54-14590	K0210-04A0	5	K0- 11

PARTS NO.	FIG NO.	INDEX	PAGE
20Y-54-14590	K0210-07A0	3	K0- 17
20Y-54-27991	M1420-01A0	3	MO- 17
20Y-54-36342	K0210-07A0	11	K0- 17
20Y-54-36380	K0210-06A0	1	K0- 15
20Y-54-39450	K0210-08A0	5	K0- 19
20Y-54-39460	K0210-08A0	6	K0- 19
20Y-54-39480	K0210-08A0	7	K0- 19
20Y-54-52211	K0210-08A0	1	K0- 19
20Y-54-52621	K0210-02A0	24	K0- 7
20Y-54-52820	K0210-05A0	12	K0- 13
20Y-54-63414	M1130-01A0	4	MO- 5
20Y-54-65790	K0210-41A0	13	K0- 77
20Y-54-83290	K0210-38A0	6	K0- 71
20Y-60-11410	H1831-01A0	4	HO- 61
20Y-60-21340	H0110-01A0	3	HO- 3
20Y-62-15831	K0210-16A0	13	K0- 31
20Y-62-15831	K0210-16A0	22	K0- 31
20Y-62-15831	K0210-16A1	13	K0- 33
20Y-62-15831	K0210-16A1	23	K0- 33
20Y-62-15831	K0210-16A2	14	K0- 35
20Y-62-15831	K0210-16A2	24	K0- 35
20Y-62-15831	K0210-16A3	14	K0- 37
20Y-62-15831	K0210-16A3	24	K0- 37
20Y-62-18890	K0210-31A0	6	K0- 57
20Y-62-18890	K0210-33A0	6	K0- 61
20Y-62-18910	K0210-14A0	22	K0- 27
20Y-62-18910	K0210-31A0	4	K0- 57
20Y-62-18910	K0210-33A0	4	K0- 61
20Y-62-21940	H1831-01A0	22	HO- 61
20Y-62-22160	H1840-02A0	18	HO- 67
20Y-62-22160	H1840-02A1	13	HO- 69
20Y-62-22160	H1840-02A1	20	HO- 69
20Y-62-22160	P1120-01A0	18	PO- 3
20Y-62-22160	P1120-01A1	18	PO- 5
20Y-62-22310	H1831-01A0	2	HO- 61
20Y-62-22790	H1840-01A0	12	HO- 65
20Y-62-22790	H1840-01A0	19	HO- 65
20Y-62-22790	K0210-15A0	13	K0- 29
20Y-62-22790	K0210-15A0	3	K0- 29
20Y-62-22790	K0210-32A0	6	K0- 59
20Y-62-22790	K0210-34A0	5	K0- 63
20Y-62-22790	K0210-37A1	29	K0- 69
20Y-62-22790	K0210-46A2	4	K0- 89
20Y-62-22810	H1840-01A0	13	HO- 65
20Y-62-22810	H1840-01A0	20	HO- 65
20Y-62-22810	K0210-15A0	14	K0- 29
20Y-62-22810	K0210-34A0	6	K0- 63
20Y-62-22810	K0210-37A1	30	K0- 69
20Y-62-22820	H1840-01A0	21	HO- 65
20Y-62-22820	H1840-01A0	5	HO- 65

PARTS NO.	FIG NO.	INDEX	PAGE
20Y-62-22820	K0210-15A0	15	K0- 29
20Y-62-22820	K0210-15A0	4	K0- 29
20Y-62-22820	K0210-32A0	7	K0- 59
20Y-62-22820	K0210-34A0	7	K0- 63
20Y-62-22820	K0210-37A1	31	K0- 69
20Y-62-22820	K0210-46A2	5	K0- 89
20Y-62-22830	H1840-01A0	23	HO- 65
20Y-62-22830	H1840-01A0	6	HO- 65
20Y-62-22830	K0210-15A0	16	K0- 29
20Y-62-22830	K0210-15A0	6	K0- 29
20Y-62-22830	K0210-32A0	8	K0- 59
20Y-62-22830	K0210-34A0	8	K0- 63
20Y-62-22830	K0210-37A1	32	K0- 69
20Y-62-22830	K0210-46A2	6	K0- 89
20Y-62-22840	H1840-01A0	7	HO- 65
20Y-62-22840	K0210-15A0	18	K0- 29
20Y-62-22840	K0210-34A0	9	K0- 63
20Y-62-22850	H1840-01A0	22	HO- 65
20Y-62-22850	H1840-01A0	8	HO- 65
20Y-62-22850	K0210-15A0	17	K0- 29
20Y-62-22850	K0210-15A0	5	K0- 29
20Y-62-22850	K0210-32A0	9	K0- 59
20Y-62-22850	K0210-34A0	10	K0- 63
20Y-62-22850	K0210-37A1	33	K0- 69
20Y-62-22850	K0210-46A2	7	K0- 89
20Y-62-22860	H1840-01A0	14	HO- 65
20Y-62-22860	K0210-15A0	19	K0- 29
20Y-62-22860	K0210-32A0	10	K0- 59
20Y-62-22860	K0210-46A2	8	K0- 89
20Y-62-25360	K0210-45A2	7	K0- 87
20Y-62-27680	H1840-02A0	3	HO- 67
20Y-62-27680	H1840-02A1	3	HO- 69
20Y-62-58480	H1270-02A0	5	HO- 43
20Y-62-58480	H1840-02A0	5	HO- 67
20Y-62-58480	H1840-02A1	5	HO- 69
20Y-970-3350	H1270-03A0	12	HO- 45
201-00-D1010	U0100-01A0	19	UO- 3
201-00-61320	U0100-02A1	30	UO- 7
201-00-61320	U0100-02A3	30	UO- 11
201-00-71840	U0100-02A0	29	UO- 5
201-00-71840	U0100-02A1	29	UO- 7
201-00-71840	U0100-02A2	29	UO- 9
201-00-71840	U0100-02A3	29	UO- 11
201-00-71960	U0100-02A0	17	UO- 5
201-00-71960	U0100-02A1	17	UO- 7
201-00-71960	U0100-02A2	17	UO- 9
201-00-71960	U0100-02A3	17	UO- 11
201-00-81141	U0100-01A0	3	UO- 3
201-01-71260	B0100-01A0	17	BO- 3
201-01-81130	B0600-01A0	5	BO- 7

PARTS NO.	FIG NO.	INDEX	PAGE
201-01-81191	B0600-01A0	9	B0- 7
201-01-81330	B0600-01A0	25	B0- 7
201-01-81831	B0200-01A0	4	B0- 5
201-01-82111	B0200-01A0	10	B0- 5
201-03-71810	C0100-08A0	1	C0- 17
201-03-81141	C0100-02A0	13	C0- 5
201-03-81151	C0100-02A0	14	C0- 5
201-03-81161	C0100-02A0	17	C0- 5
201-03-81171	H0320-02A0	6	H0- 31
201-03-81180	C0100-02A0	20	C0- 5
201-03-81191	C0100-01A0	13	C0- 3
201-03-81191	C0100-01A0	6	C0- 3
201-03-81221	C0100-01A0	12	C0- 3
201-03-81221	C0100-01A0	5	C0- 3
201-03-81231	C0100-08A0	7	C0- 17
201-03-81321	C0100-07A0	8	C0- 15
201-03-81350	C0100-07A0	12	C0- 15
201-03-81410	C0100-02A0	26	C0- 5
201-03-81421	C0100-08A0	3	C0- 17
201-03-81511	C0100-04A0	10	C0- 9
201-03-81521	C0100-04A0	7	C0- 9
201-03-81531	C0100-04A0	4	C0- 9
201-03-81611	M1150-02A0	4	M0- 11
201-03-81650	C0100-01A0	14	C0- 3
201-03-81650	C0100-01A0	7	C0- 3
201-03-81660	C0100-01A0	15	C0- 3
201-03-81670	C0100-04A0	1	C0- 9
201-03-81680	C0100-09A0	1	C0- 19
201-03-81751	C0100-03A0	4	C0- 7
201-03-81760	C0100-05A0	6	C0- 11
201-03-81771	C0100-02A0	32	C0- 5
201-03-81780	C0100-05A0	4	C0- 11
201-03-81820	C0100-06A0	11	C0- 13
201-03-81820	C0100-06A0	6	C0- 13
201-03-81841	C0100-06A0	4	C0- 13
201-03-81851	C0100-06A0	9	C0- 13
201-03-81861	C0100-05A0	3	C0- 11
201-03-81871	C0100-05A0	7	C0- 11
201-03-81881	C0100-05A0	5	C0- 11
201-03-81891	C0100-05A0	12	C0- 11
201-03-81911	C0100-02A0	33	C0- 5
201-03-81931	C0100-05A0	2	C0- 11
201-03-81941	C0100-05A0	1	C0- 11
201-03-81951	C0100-02A0	32	C0- 5
201-03-81960	C0100-05A0	13	C0- 11
201-03-81971	C0100-05A0	14	C0- 11
201-03-81991	C0100-08A0	12	C0- 17
201-03-89960	C0100-09A0	4	C0- 19
201-03-89961	C0100-09A0	4	C0- 19
201-04-81112	D0100-01A0	1	D0- 3

PARTS NO.	FIG NO.	INDEX	PAGE
201-04-81380	D0200-01A0	7	D0- 5
201-04-81512	D0200-01A0	1	D0- 5
201-04-81522	D0200-01A0	2	D0- 5
201-04-81531	D0200-02A0	1	D0- 7
201-04-81540	D0200-02A0	2	D0- 7
201-04-81551	D0200-02A0	9	D0- 7
201-04-81560	D0200-01A0	3	D0- 5
201-04-81560	D0200-02A0	5	D0- 7
201-04-81650	D0200-04A0	15	D0- 11
201-06-81112	K0210-35A0	1	K0- 65
201-06-81123	E0200-01A0	1	E0- 5
201-06-81124	E0200-01A0	1	E0- 5
201-06-81151	E0200-01A0	2	E0- 5
201-06-81161	E0200-02A0	22	E0- 7
201-06-81170	E0200-04A0	11	E0- 11
201-06-81211	T1110-02A0	8	T0- 5
201-06-81231	E0100-01A0	17	E0- 3
201-06-81250	E0100-01A0	7	E0- 3
201-06-81261	E0200-08A0	7	E0- 19
201-06-81270	E0100-01A0	1	E0- 3
201-06-81292	E0200-10A0	1	E0- 23
201-06-81320	K0210-22A0	37	K0- 49
201-06-81321	K0210-22A0	37	K0- 49
201-06-81330	K1730-01A0	1	K0- 117
201-06-81440	E0100-01A0	4	E0- 3
201-06-81521	E0200-02A0	25	E0- 7
201-06-81530	E0200-05A0	6	E0- 13
201-06-83321	E0100-01A0	14	E0- 3
201-06-83331	E0100-01A0	26	E0- 3
201-06-83511	K0350-01A0	5	K0- 105
201-06-83521	K0350-01A0	10	K0- 105
201-06-83531	E0200-09A0	4	E0- 21
201-25-72102	N1110-01A0	1	N0- 3
201-25-72110	N1110-01A0	2	N0- 3
201-26-71220	N1210-51A0	21	N0- 7
201-26-71270	N1210-51A0	17	N0- 7
201-26-81000	N1210-01A0	1	N0- 5
201-26-81000	N1210-51A0	1	N0- 7
201-26-81000	N1210-52A0	1	N0- 9
201-26-81120	N1210-51A0	1	N0- 7
201-26-82111	N1210-52A0	10	N0- 9
201-26-82120	N1210-52A0	9	N0- 9
201-26-82130	N1210-51A0	31	N0- 7
201-27-D1110	P1210-01A0	1	P0- 9
201-27-61230	P1210-01A0	2	P0- 9
201-30-D0110	R0110-01A0	1	R0- 3
201-30-D1000	R0110-01A0	1	R0- 3
201-30-00080	R0200-01A0	6	R0- 7
201-30-00313	R0200-01A0	1	R0- 7
201-30-52131	R0110-01A0	3	R0- 3

PARTS NO.	FIG NO.	INDEX	PAGE
201-30-52141	R0110-01A0	4	R0- 3
201-30-52160	R0110-01A0	5	R0- 3
201-30-52180	R0110-01A0	6	R0- 3
201-30-62312	R0120-01A0	6	R0- 5
201-30-71310	R0120-01A0	15	R0- 5
201-30-73312	R0200-01A0	1	R0- 7
201-30-73390	R0200-01A0	5	R0- 7
201-30-74G20	R1100-01A0	2	R0- 13
201-30-74G20	R1100-01A1	2	R0- 15
201-30-74210	R1100-01A0	3	R0- 13
201-30-74210	R1100-01A1	3	R0- 15
201-30-74220	R1100-01A0	6	R0- 13
201-30-74220	R1100-01A1	6	R0- 15
201-30-74250	R1100-01A0	8	R0- 13
201-30-74250	R1100-01A1	8	R0- 15
201-30-75141	R0120-01A0	2	R0- 5
201-30-75310	R0120-01A0	13	R0- 5
201-30-76121	R0200-01A0	3	R0- 7
201-30-76140	R0200-01A0	2	R0- 7
201-30-76161	R0200-01A0	4	R0- 7
201-30-81112	R1100-01A0	1	R0- 13
201-32-02201	R0500-01A0	1	R0- 11
201-32-51120	R0500-01A0	1	R0- 11
201-32-51130	R0500-01A0	2	R0- 11
201-32-51140	R0500-01A0	5	R0- 11
201-32-51240	R0500-01A0	8	R0- 11
201-32-71110	R0500-01A0	7	R0- 11
201-32-71150	R0500-01A0	6	R0- 11
201-32-71190	R0500-01A0	11	R0- 11
201-43-81311	K0210-37A1	9	K0- 69
201-43-81501	K0210-19A0	1	K0- 43
201-43-81511	K0210-19A0	4	K0- 43
201-46-73190	J1110-01A0	9	J0- 3
201-46-73190	J1110-01A1	9	J0- 5
201-46-81121	J1110-01A0	13	J0- 3
201-46-81121	J1110-01A1	13	J0- 5
201-46-81131	M1510-01A0	5	M0- 19
201-46-81141	J1110-01A0	14	J0- 3
201-46-81141	J1110-01A1	14	J0- 5
201-46-81150	M1510-01A0	4	M0- 19
201-46-83220	J1110-01A0	6	J0- 3
201-46-83220	J1110-01A1	6	J0- 5
201-46-83232	J1110-01A0	10	J0- 3
201-46-83232	J1110-01A1	10	J0- 5
201-46-84321	M1510-01A0	1	M0- 19
201-54-63230	K0350-01A0	6	K0- 105
201-54-80052	K0210-04A0	1	K0- 11
201-54-80052	K0210-05A0	1	K0- 13
201-54-81101	M1110-01A0	1	M0- 3
201-54-81120	M1110-01A0	2	M0- 3

PARTS NO.	FIG NO.	INDEX	PAGE
201-54-81152	M1110-01A0	22	M0- 3
201-54-81171	M1110-01A0	3	M0- 3
201-54-81180	M1110-01A0	4	M0- 3
201-54-81191	M1110-01A0	5	M0- 3
201-54-81201	M1130-01A0	1	M0- 5
201-54-81212	M1130-01A0	4	M0- 5
201-54-81241	M1130-01A0	6	M0- 5
201-54-81251	M1130-01A0	7	M0- 5
201-54-81270	M1130-01A0	8	M0- 5
201-54-81290	M1110-01A0	6	M0- 3
201-54-81301	M1140-01A0	13	M0- 7
201-54-81311	M1140-01A0	13	M0- 7
201-54-81321	M1140-01A0	14	M0- 7
201-54-81331	M1140-01A0	6	M0- 7
201-54-81340	M1140-01A0	11	M0- 7
201-54-81350	M1140-01A0	15	M0- 7
201-54-81360	M1110-01A0	7	M0- 3
201-54-81370	M1130-01A0	5	M0- 5
201-54-81380	M1110-01A0	8	M0- 3
201-54-81411	M1130-01A0	14	M0- 5
201-54-81431	M1110-01A0	31	M0- 3
201-54-81470	M1130-01A0	16	M0- 5
201-54-81480	M1130-01A0	15	M0- 5
201-54-81490	M1130-01A0	14	M0- 5
201-54-81501	M1140-01A0	1	M0- 7
201-54-81512	M1140-01A0	1	M0- 7
201-54-81540	M1140-01A0	2	M0- 7
201-54-81551	M1140-01A0	3	M0- 7
201-54-81560	M1140-01A0	18	M0- 7
201-54-81620	M1150-01A0	14	M0- 9
201-54-81630	M1150-01A0	15	M0- 9
201-54-81630	M1150-01A0	9	M0- 9
201-54-81661	M1310-01A0	1	M0- 15
201-54-81711	M1810-01A0	1	M0- 23
201-54-81860	K1120-01A0	1	K0- 115
201-54-81921	M1150-01A0	6	M0- 9
201-54-81931	M1150-01A0	12	M0- 9
201-54-81940	M1150-01A0	7	M0- 9
201-54-81950	M1150-01A0	13	M0- 9
201-54-81960	M1150-01A0	8	M0- 9
201-54-81990	M1110-01A0	10	M0- 3
201-54-82102	M1130-01A0	22	M0- 5
201-54-82112	M1130-01A0	23	M0- 5
201-54-82131	M1130-01A0	27	M0- 5
201-54-82151	M1130-01A0	24	M0- 5
201-54-82162	K0210-40A0	11	K0- 75
201-54-82171	M1130-01A0	26	M0- 5
201-54-82182	K0210-40A0	12	K0- 75
201-54-82192	K0210-40A0	13	K0- 75
201-54-82321	M1810-01A0	6	M0- 23

PARTS NO.	FIG NO.	INDEX	PAGE
201-54-82331	M1810-01A0	11	MO- 23
201-54-82341	M1810-01A0	16	MO- 23
201-54-82351	M1810-01A0	19	MO- 23
201-54-82361	M1810-01A0	24	MO- 23
201-54-82380	M1810-01A0	29	MO- 23
201-54-82512	M1220-01A0	2	MO- 13
201-54-82513	M1220-01A0	2	MO- 13
201-54-82521	M1220-01A0	8	MO- 13
201-54-82531	M1220-01A0	10	MO- 13
201-54-82540	M1220-01A0	3	MO- 13
201-54-82550	M1220-01A0	4	MO- 13
201-54-82570	M1220-01A0	12	MO- 13
201-54-82580	M1220-01A0	5	MO- 13
201-54-82590	M1220-01A0	6	MO- 13
201-54-82611	M1420-01A0	2	MO- 17
201-54-82650	M1220-01A0	7	MO- 13
201-54-83112	K0210-13A0	1	KO- 25
201-54-83121	K0210-55A0	1	KO- 99
201-54-83130	K0210-40A0	8	KO- 75
201-54-83142	K0210-36A0	1	KO- 67
201-54-83151	K0210-55A0	4	KO- 99
201-54-83211	K0210-38A0	1	KO- 71
201-54-83221	K0210-38A0	7	KO- 71
201-54-83231	K0210-38A0	9	KO- 71
201-54-83241	K0210-38A0	11	KO- 71
201-54-83251	K0210-38A0	18	KO- 71
201-54-83261	K0210-44A0	1	KO- 83
201-54-83271	K0210-44A0	4	KO- 83
201-54-83282	K0210-38A0	5	KO- 71
201-54-83311	K0210-08A0	12	KO- 19
201-54-83320	K0210-39A0	8	KO- 73
201-54-83330	K0210-39A0	22	KO- 73
201-54-83341	K0210-40A0	1	KO- 75
201-54-83360	K0210-54A0	9	KO- 97
201-54-83370	K0210-38A0	23	KO- 71
201-54-83380	K0210-40A0	4	KO- 75
201-54-83390	K0210-40A0	3	KO- 75
201-54-83411	K0210-09A0	2	KO- 21
201-54-83420	K0210-36A0	27	KO- 67
201-54-83430	K0210-36A0	26	KO- 67
201-54-83510	K0210-16A0	4	KO- 31
201-54-83510	K0210-16A1	4	KO- 33
201-54-83510	K0210-16A2	5	KO- 35
201-54-83510	K0210-16A3	5	KO- 37
201-54-83520	K0210-16A0	10	KO- 31
201-54-83520	K0210-16A1	10	KO- 33
201-54-83520	K0210-16A2	11	KO- 35
201-54-83520	K0210-16A3	11	KO- 37
201-54-83530	K0210-16A0	11	KO- 31
201-54-83530	K0210-16A1	11	KO- 33

PARTS NO.	FIG NO.	INDEX	PAGE
201-54-83530	K0210-16A2	12	KO- 35
201-54-83530	K0210-16A3	12	KO- 37
201-54-83540	K0210-16A0	12	KO- 31
201-54-83540	K0210-16A1	12	KO- 33
201-54-83540	K0210-16A2	13	KO- 35
201-54-83540	K0210-16A3	13	KO- 37
201-54-83551	K0210-45A2	13	KO- 87
201-54-83560	K0210-45A2	10	KO- 87
201-54-83570	K0210-46A2	13	KO- 89
201-54-83611	K0210-41A0	3	KO- 77
201-54-83621	K0210-41A0	12	KO- 77
201-54-83630	K0210-41A0	4	KO- 77
201-54-83640	K0210-41A0	5	KO- 77
201-54-83670	K0210-42A0	1	KO- 79
201-54-83711	K0310-01A0	1	KO- 101
201-54-83731	K0310-01A1	1	KO- 103
201-54-83780	K0210-07A0	10	KO- 17
201-54-83791	K0210-07A0	1	KO- 17
201-54-84112	K0210-01A0	1	KO- 5
201-54-85121	K0210-01A0	3	KO- 5
201-54-85133	K0210-01A0	5	KO- 5
201-54-85143	K0210-01A0	2	KO- 5
201-54-85151	K0210-01A0	4	KO- 5
201-54-85161	K0210-01A0	6	KO- 5
201-54-85171	K0210-01A0	7	KO- 5
201-54-85223	K0210-07A0	16	KO- 17
201-54-85301	K0210-02A0	1	KO- 7
201-54-85311	K0210-02A0	2	KO- 7
201-54-85341	K0210-06A0	5	KO- 15
201-54-85421	K0210-04A0	8	KO- 11
201-54-85441	K0210-04A0	9	KO- 11
201-54-85451	K0210-04A0	11	KO- 11
201-54-85461	K0210-04A0	1	KO- 11
201-54-85471	K0210-04A0	18	KO- 11
201-54-85481	K0210-06A0	15	KO- 15
201-54-85510	K0210-03A0	1	KO- 9
201-54-85520	K0210-04A0	2	KO- 11
201-54-85560	K0210-04A0	19	KO- 11
201-54-85570	K0210-05A0	1	KO- 13
201-54-85580	K0210-04A0	4	KO- 11
201-54-87112	M1150-01A0	1	MO- 9
201-54-87131	M1130-01A0	9	MO- 5
201-54-87141	M1150-01A0	18	MO- 9
201-54-87151	M1150-02A0	1	MO- 11
201-54-87171	M1150-02A0	22	MO- 11
201-54-87181	M1150-02A0	19	MO- 11
201-54-87191	M1150-02A0	18	MO- 11
201-54-87211	M1150-01A0	5	MO- 9
201-54-87230	M1150-02A0	9	MO- 11
201-54-87240	M1150-02A0	12	MO- 11

PARTS NO.	FIG NO.	INDEX	PAGE
201-54-87250	M1150-02A0	13	MO- 11
201-54-87260	M1150-02A0	14	MO- 11
201-54-87270	M1150-02A0	15	MO- 11
201-54-87280	M1150-01A0	4	MO- 9
201-57-81111	K0110-01A0	1	KO- 3
201-57-81121	K0110-01A0	2	KO- 3
201-60-12172	H0110-01A0	2	HO- 3
201-60-65240	H0110-01A0	26	HO- 3
201-60-81111	H0110-01A0	1	HO- 3
201-60-81112	H0110-01A0	1	HO- 3
201-60-81121	H0110-01A0	22	HO- 3
201-60-81141	H0110-01A0	17	HO- 3
201-60-81160	H0110-01A0	9	HO- 3
201-60-81170	H0110-01A0	13	HO- 3
201-60-81301	P1210-01A0	4	PO- 9
201-60-81301	Y1651-01A0	1	YO- 43
201-60-81301	Y1651-02A0	1	YO- 45
201-60-81301	Y1651-03A0	1	YO- 47
201-60-81610	N1310-01A0	8	NO- 11
201-60-81610	N1310-01A1	8	NO- 13
201-62-66140	P1120-01A0	13	PO- 3
201-62-66140	P1120-01A1	13	PO- 5
201-62-71780	H1220-01A0	15	HO- 39
201-62-72840	H1220-01A0	14	HO- 39
201-62-77130	H1220-01A0	17	HO- 39
201-62-81210	H0320-02A0	27	HO- 31
201-62-81311	H0311-01A0	7	HO- 17
201-62-81311	H0311-01A1	7	HO- 19
201-62-82111	H0312-01A0	2	HO- 21
201-62-82111	H0312-01A1	2	HO- 23
201-62-82121	H0312-01A0	7	HO- 21
201-62-82121	H0312-01A1	7	HO- 23
201-62-82132	H0312-01A1	37	HO- 23
201-62-82141	H0312-01A0	12	HO- 21
201-62-82141	H0312-01A1	12	HO- 23
201-62-82151	H0312-01A0	23	HO- 21
201-62-82151	H0312-01A1	23	HO- 23
201-62-82161	H0320-01A0	13	HO- 27
201-62-82161	H0320-01A1	10	HO- 29
201-62-82171	H0330-01A0	1	HO- 33
201-62-82180	H0330-01A0	6	HO- 33
201-62-82190	H0340-01A0	21	HO- 35
201-62-82210	H0340-01A0	28	HO- 35
201-62-82221	K0210-15A0	2	KO- 29
201-62-82231	H1210-01A0	1	HO- 37
201-62-82241	H1210-01A0	12	HO- 37
201-62-82251	H1220-01A0	11	HO- 39
201-62-82261	H1220-01A0	10	HO- 39
201-62-82272	H1220-01A0	13	HO- 39
201-62-82281	H1220-01A0	12	HO- 39

PARTS NO.	FIG NO.	INDEX	PAGE
201-62-82291	H1290-01A0	4	HO- 53
201-62-82311	H1290-01A0	11	HO- 53
201-62-82361	H1340-01A0	1	HO- 59
201-62-82371	H1340-01A0	2	HO- 59
201-62-82390	H0320-01A0	1	HO- 27
201-62-82390	H0320-01A1	1	HO- 29
201-62-82491	H1840-01A0	1	HO- 65
201-62-82511	H1840-01A0	2	HO- 65
201-62-82521	H1840-01A0	9	HO- 65
201-62-82531	H1840-01A0	3	HO- 65
201-62-82541	H1840-01A0	10	HO- 65
201-62-82551	H1840-01A0	11	HO- 65
201-62-82561	H1840-01A0	4	HO- 65
201-62-82611	H0320-01A0	6	HO- 27
201-62-82611	H0320-01A1	3	HO- 29
201-62-82631	H1210-01A0	13	HO- 37
201-62-82660	H1831-01A0	17	HO- 61
201-62-82670	H0340-01A0	12	HO- 35
201-62-82680	H0340-01A0	5	HO- 35
201-62-82691	H0320-02A0	23	HO- 31
201-62-82712	H1210-01A0	14	HO- 37
201-62-82722	H1210-01A0	15	HO- 37
201-62-82731	H0320-02A0	17	HO- 31
201-62-82760	H0320-02A0	12	HO- 31
201-62-82771	H0320-02A0	1	HO- 31
201-62-82781	H1831-02A0	3	HO- 63
201-62-82793	H1831-02A0	6	HO- 63
201-62-82811	H1840-01A0	25	HO- 65
201-62-82821	K0210-15A0	1	KO- 29
201-62-82830	H1840-01A0	16	HO- 65
201-62-82840	H1840-01A0	17	HO- 65
201-62-82850	H1840-01A0	18	HO- 65
201-62-82861	K0210-15A0	9	KO- 29
201-62-82871	K0210-15A0	12	KO- 29
201-62-82881	K0210-15A0	10	KO- 29
201-62-82891	K0210-15A0	11	KO- 29
201-62-83111	K0210-32A0	3	KO- 59
201-62-83121	K0210-32A0	4	KO- 59
201-62-83141	K0210-32A0	5	KO- 59
201-62-83150	K0210-32A0	1	KO- 59
201-62-83160	K0210-34A0	1	KO- 63
201-62-83171	K0210-32A0	2	KO- 59
201-62-83211	K0210-34A0	3	KO- 63
201-62-83231	K0210-34A0	4	KO- 63
201-62-83261	K0210-34A0	2	KO- 63
201-62-83341	P1120-02A1	5	PO- 7
201-62-83351	K0210-15A0	7	KO- 29
201-62-83361	K0210-15A0	8	KO- 29
201-62-83412	H0120-01A0	2	HO- 5
201-62-83412	H0120-01A2	2	HO- 9

PARTS NO.	FIG NO.	INDEX	PAGE
201-62-83421	H0120-01A1	2	H0- 7
201-62-83421	H0120-01A3	2	H0- 11
201-62-83430	H0120-01A0	3	H0- 5
201-62-83430	H0120-01A1	3	H0- 7
201-62-83430	H0120-01A2	3	H0- 9
201-62-83430	H0120-01A3	3	H0- 11
201-62-83441	H0120-01A0	11	H0- 5
201-62-83441	H0120-01A1	11	H0- 7
201-62-83451	H0120-01A2	11	H0- 9
201-62-83451	H0120-01A3	11	H0- 11
201-62-83511	K0210-37A1	25	K0- 69
201-62-83521	K0210-37A1	26	K0- 69
201-62-83551	K0210-37A1	28	K0- 69
201-62-83561	K0210-37A1	27	K0- 69
201-62-83610	P1120-01A0	2	P0- 3
201-62-83610	P1120-01A1	1	P0- 5
201-62-83620	P1120-01A0	3	P0- 3
201-62-83620	P1120-01A1	3	P0- 5
201-62-83631	H0312-01A0	19	H0- 21
201-62-83631	H0312-01A1	19	H0- 23
201-62-83710	P1120-01A0	8	P0- 3
201-62-83710	P1120-01A1	7	P0- 5
201-62-83720	P1120-01A0	9	P0- 3
201-62-83720	P1120-01A1	9	P0- 5
201-62-83800	H1840-02A0	20	H0- 67
201-62-83800	H1840-02A1	22	H0- 69
201-62-83820	H1310-01A0	1	H0- 55
201-62-83830	H1310-01A0	2	H0- 55
201-62-83840	H1310-01A0	3	H0- 55
201-62-83850	H1310-01A0	4	H0- 55
201-62-83860	H1310-01A1	1	H0- 57
201-62-83870	H1310-01A1	2	H0- 57
201-62-83880	H1310-01A1	3	H0- 57
201-62-83890	H1310-01A1	4	H0- 57
201-62-83911	K0210-46A2	1	K0- 89
201-62-83921	K0210-46A2	2	K0- 89
201-62-83931	K0210-46A2	3	K0- 89
201-62-83950	P1120-01A0	23	P0- 3
201-62-83950	P1120-01A1	23	P0- 5
201-62-83980	H1840-02A0	10	H0- 67
201-62-83980	H1840-02A1	10	H0- 69
201-62-83990	H0312-01A0	13	H0- 21
201-62-83990	H0312-01A1	13	H0- 23
201-62-84111	T1110-04A0	2	T0- 9
201-62-84111	T1110-04A1	2	T0- 11
201-62-84121	T1110-04A0	3	T0- 9
201-62-84121	T1110-04A1	3	T0- 11
201-62-84131	T1110-04A0	5	T0- 9
201-62-84131	T1110-04A1	5	T0- 11
201-62-84141	T1110-04A0	6	T0- 9

PARTS NO.	FIG NO.	INDEX	PAGE
201-62-84141	T1110-04A1	6	T0- 11
201-62-84211	H1220-01A0	18	H0- 39
201-62-84241	H1220-01A0	23	H0- 39
201-62-84260	H0320-01A0	7	H0- 27
201-62-84260	H0320-01A1	4	H0- 29
201-62-84281	H0120-01A0	14	H0- 5
201-62-84281	H0120-01A1	14	H0- 7
201-62-84281	H0120-01A2	14	H0- 9
201-62-84281	H0120-01A3	14	H0- 11
201-62-84290	H0120-01A0	15	H0- 5
201-62-84290	H0120-01A1	15	H0- 7
201-62-84290	H0120-01A2	15	H0- 9
201-62-84290	H0120-01A3	15	H0- 11
201-62-84311	M1150-02A0	25	M0- 11
201-62-84401	H1840-01A0	1	H0- 65
201-62-84470	H0312-01A1	32	H0- 23
201-62-84501	H1840-01A0	9	H0- 65
201-62-84510	R1100-01A0	13	R0- 13
201-62-84510	R1100-01A1	13	R0- 15
201-62-84601	H1840-01A0	16	H0- 65
201-62-84700	H1840-02A0	19	H0- 67
201-62-84700	H1840-02A1	21	H0- 69
201-62-84800	H1840-02A0	9	H0- 67
201-62-84800	H1840-02A1	9	H0- 69
201-62-84950	H0312-01A1	37	H0- 23
201-62-86110	N1210-52A0	11	N0- 9
201-70-D4150	T1230-01A0	8	T0- 29
201-70-D4160	T1230-01A0	1	T0- 29
201-70-D4170	T1230-01A0	15	T0- 29
201-70-D4180	T1230-01A0	16	T0- 29
201-70-22141	T1210-01A0	4	T0- 19
201-70-22141	T1210-01A1	4	T0- 21
201-70-22141	T1210-01A2	4	T0- 23
201-70-22150	T1210-01A0	17	T0- 19
201-70-22150	T1210-01A1	17	T0- 21
201-70-22150	T1210-01A2	17	T0- 23
201-70-22150	T1230-01A0	19	T0- 29
201-70-22150	T1510-01A0	12	T0- 31
201-70-22150	T1510-01A1	12	T0- 33
201-70-22150	T1510-01A2	12	T0- 35
201-70-22150	T1710-01A0	10	T0- 37
201-70-64210	T1230-01A0	26	T0- 29
201-70-64210	T1230-01A0	29	T0- 29
201-70-64270	T1230-01A0	10	T0- 29
201-70-64270	T1230-01A0	3	T0- 29
201-70-71230	T1110-01A0	5	T0- 3
201-70-71240	J1310-01A0	1	J0- 7
201-70-71270	T1110-03A0	7	T0- 7
201-70-71290	J1310-01A0	7	J0- 7
201-70-71380	T1110-03A0	18	T0- 7

PARTS NO.	FIG NO.	INDEX	PAGE
201-70-71610	T1110-03A0	1	T0- 7
201-70-72220	T1210-01A0	2	T0- 19
201-70-72220	T1210-01A1	2	T0- 21
201-70-72220	T1210-01A2	2	T0- 23
201-70-74171	T1510-01A0	6	T0- 31
201-70-74171	T1510-01A1	6	T0- 33
201-70-74171	T1510-01A2	6	T0- 35
201-70-74181	T1510-01A0	7	T0- 31
201-70-74181	T1510-01A1	7	T0- 33
201-70-74181	T1510-01A2	7	T0- 35
201-70-81A50	T1510-01A0	2	T0- 31
201-70-81A50	T1510-01A1	2	T0- 33
201-70-81B50	T1510-01A0	1	T0- 31
201-70-81B60	T1510-01A0	1	T0- 31
201-70-81B70	T1510-01A0	1	T0- 31
201-70-81111	T1510-01A0	1	T0- 31
201-70-83111	T1210-01A0	1	T0- 19
201-70-83210	T1210-01A2	1	T0- 23
201-70-84A71	T1110-01A0	2	T0- 3
201-70-84B70	T1110-01A0	4	T0- 3
201-70-84B80	T1110-01A0	3	T0- 3
201-70-84112	T1110-01A0	1	T0- 3
201-71-81110	P1120-02A1	10	P0- 7
201-91-07190	T1710-01A0	2	T0- 37
201-91-08200	T1710-01A0	1	T0- 37
201-910-6730	M1140-01A0	10	M0- 7
201-910-8112	R1100-01A1	1	R0- 15
201-910-8210	T1710-01A0	1	T0- 37
201-920-8A80	T1510-01A2	2	T0- 35
201-920-8B30	T1510-01A2	1	T0- 35
201-920-8B40	T1510-01A2	1	T0- 35
201-920-8B50	T1510-01A2	1	T0- 35
201-920-8D40	T1510-01A1	1	T0- 33
201-920-8120	T1510-01A2	1	T0- 35
201-920-8210	T1510-01A1	1	T0- 33
201-97-38310	T1210-01A1	1	T0- 21
201-973-6730	T1110-05A1	18	T0- 13
201-973-6730	T1110-05A1	22	T0- 13
201-973-6740	T1110-05A1	21	T0- 13
201-973-7430	T1110-05A1	28	T0- 13
201-973-7680	T1110-05A1	15	T0- 13
201-973-7690	T1110-05A1	5	T0- 13
201-973-8121	H1270-04A0	18	H0- 47
201-973-8171	H1270-05A0	8	H0- 49
201-973-8180	T1110-05A1	25	T0- 13
201-973-8191	H1270-01A0	19	H0- 41
201-973-8210	T1110-05A1	3	T0- 13
201-973-8220	T1110-05A1	1	T0- 13
201-973-8231	H1270-01A0	2	H0- 41
201-973-8241	H1270-01A0	1	H0- 41

PARTS NO.	FIG NO.	INDEX	PAGE
201-973-8280	H1270-06A0	3	H0- 51
201-973-8290	H1270-06A0	4	H0- 51
201-973-8420	H1270-01A0	4	H0- 41
201-973-8430	H1270-01A0	5	H0- 41
201-973-8440	H1270-01A0	8	H0- 41
201-973-8450	H1270-01A0	7	H0- 41
201-979-8660	K0700-02A0	21	K0- 109
201-979-8712	K0700-02A0	1	K0- 109
201-979-8721	K0700-02A0	2	K0- 109
201-979-8731	K0700-02A0	3	K0- 109
201-979-8741	K0700-02A0	4	K0- 109
201-979-8752	K0700-02A0	5	K0- 109
201-979-8761	K0700-02A0	6	K0- 109
201-979-8771	K0700-02A0	7	K0- 109
201-979-8781	K0700-02A0	8	K0- 109
201-979-8811	K0700-01A0	3	K0- 107
201-979-8831	K0700-01A0	12	K0- 107
201-979-8841	K0700-03A0	13	K0- 111
201-979-8850	C0100-06A0	1	C0- 13
201-979-8861	K0210-42A0	18	K0- 79
201-979-8870	K0210-42A0	19	K0- 79
201-979-8880	K0210-42A0	11	K0- 79
201-979-8890	K0210-42A0	6	K0- 79
201-979-8902	K0210-42A0	4	K0- 79
201-979-8910	K0210-44A0	8	K0- 83
201-979-8920	K0210-44A0	14	K0- 83
201-979-8930	K0210-44A0	5	K0- 83
201-979-8940	K0210-44A0	2	K0- 83
201-979-8951	K0210-42A0	4	K0- 79
201-979-8960	K0210-42A0	8	K0- 79
201-979-8970	K0210-42A0	5	K0- 79
201-979-8980	K0210-42A0	12	K0- 79
201-979-8990	K0210-42A0	10	K0- 79
201-98-81022	U0100-01A0	10	U0- 3
201-98-81030	U0100-01A0	13	U0- 3
201-98-81041	U0100-02A0	25	U0- 5
201-98-81041	U0100-02A1	25	U0- 7
201-98-81041	U0100-02A2	25	U0- 9
201-98-81041	U0100-02A3	25	U0- 11
201-98-81072	U0100-01A0	14	U0- 3
201-98-81080	U0100-01A0	15	U0- 3
201-98-81090	U0100-02A0	24	U0- 5
201-98-81090	U0100-02A1	24	U0- 7
201-98-81090	U0100-02A2	24	U0- 9
201-98-81090	U0100-02A3	24	U0- 11
201-98-81110	U0100-02A0	26	U0- 5
201-98-81110	U0100-02A1	26	U0- 7
201-98-81110	U0100-02A2	26	U0- 9
201-98-81110	U0100-02A3	26	U0- 11
201-98-81130	U0100-02A0	28	U0- 5

PARTS NO.	FIG NO.	INDEX	PAGE
201-98-81130	U0100-02A1	28	U0- 7
201-98-81130	U0100-02A2	28	U0- 9
201-98-81130	U0100-02A3	28	U0- 11
201-98-81150	U0100-02A0	34	U0- 5
201-98-81150	U0100-02A1	35	U0- 7
201-98-81150	U0100-02A2	35	U0- 9
201-98-81150	U0100-02A3	36	U0- 11
201-98-89210	U0100-02A0	33	U0- 5
201-98-89210	U0100-02A1	34	U0- 7
201-98-89210	U0100-02A2	33	U0- 9
201-98-89210	U0100-02A3	34	U0- 11
201-98-89230	U0100-02A2	34	U0- 9
201-98-89230	U0100-02A3	35	U0- 11
201-99-98821	K0700-01A0	2	K0- 107
203-00-31120	U0100-02A0	5	U0- 5
203-00-31120	U0100-02A1	5	U0- 7
203-00-31120	U0100-02A2	5	U0- 9
203-00-31120	U0100-02A3	5	U0- 11
203-00-56640	H1270-03A0	4	H0- 45
203-01-67540	B0100-01A0	18	B0- 3
203-30-00231	R0300-01A0	1	R0- 9
203-30-42260	R0120-01A0	7	R0- 5
203-30-53111	R0300-01A0	1	R0- 9
203-30-53120	R0300-01A0	2	R0- 9
203-30-53141	R0300-01A0	3	R0- 9
203-30-53150	R0300-01A0	4	R0- 9
203-30-53160	R0300-01A0	5	R0- 9
203-43-51620	K0210-14A0	8	K0- 27
203-46-D6160	J1110-01A0	2	J0- 3
203-46-D6160	J1110-01A1	2	J0- 5
203-46-D6160	R1100-01A0	9	R0- 13
203-46-D6160	R1100-01A1	9	R0- 15
203-46-31181	J1110-01A0	3	J0- 3
203-46-31181	J1110-01A1	3	J0- 5
203-46-31181	R1100-01A0	10	R0- 13
203-46-31181	R1100-01A1	10	R0- 15
203-54-21110	K1120-01A0	3	K0- 115
203-54-55660	E0200-02A0	28	E0- 7
203-54-56630	M1220-01A0	15	M0- 13
203-54-56960	B0600-01A0	28	B0- 7
203-54-56960	H1831-02A0	11	H0- 63
203-60-31100	H0110-01A0	27	H0- 3
203-60-31230	H0110-01A0	27	H0- 3
203-60-31240	H0110-01A0	28	H0- 3
203-60-31250	H0110-01A0	29	H0- 3
203-62-41150	P1120-01A0	1	P0- 3
203-62-41150	P1120-01A0	7	P0- 3
203-62-41150	P1120-01A1	11	P0- 5
203-62-41150	P1120-01A1	5	P0- 5
203-62-42770	H0120-01A0	5	H0- 5

PARTS NO.	FIG NO.	INDEX	PAGE
203-62-42770	H0120-01A1	5	H0- 7
203-62-42770	H0120-01A2	5	H0- 9
203-62-42770	H0120-01A3	5	H0- 11
203-62-43380	T1210-02A1	8	T0- 25
203-62-43390	T1210-02A1	9	T0- 25
203-62-58880	H0312-01A0	25	H0- 21
203-62-58880	H0312-01A1	25	H0- 23
203-62-65380	H1270-03A0	5	H0- 45
203-62-65570	H1270-03A0	1	H0- 45
203-62-65580	H1270-03A0	2	H0- 45
203-70-53380	T1110-04A0	8	T0- 9
203-70-53380	T1110-04A1	8	T0- 11
203-70-53390	T1110-04A0	9	T0- 9
203-70-53390	T1110-04A1	9	T0- 11
203-937-7890	H1220-01A0	21	H0- 39
203-973-5660	T1110-05A1	12	T0- 13
203-973-5660	T1110-05A1	8	T0- 13
203-973-5690	T1110-05A1	11	T0- 13
203-973-5730	T1210-02A1	23	T0- 25
203-973-5803	T1210-02A1	10	T0- 25
203-973-6610	T1210-02A1	16	T0- 25
205-03-62660	C0100-02A0	24	C0- 5
205-04-62140	D0200-04A0	6	D0- 11
205-54-51250	K0210-38A0	24	K0- 71
205-54-75240	K0210-39A0	10	K0- 73
205-70-66580	J1310-01A0	10	J0- 7
205-70-66580	J1310-01A0	3	J0- 7
205-70-66580	T1110-03A0	15	T0- 7
205-70-66580	T1110-03A0	3	T0- 7
205-70-66580	T1110-03A0	8	T0- 7
205-70-66580	T1210-01A0	14	T0- 19
205-70-66580	T1210-01A0	8	T0- 19
205-70-66580	T1210-01A1	14	T0- 21
205-70-66580	T1210-01A1	8	T0- 21
205-70-66580	T1210-01A2	14	T0- 23
205-70-66580	T1210-01A2	8	T0- 23
205-70-66580	T1710-01A0	13	T0- 37
206-03-43340	C0100-02A0	27	C0- 5
206-03-43340	C0100-08A0	9	C0- 17
206-06-33430	H1840-02A0	14	H0- 67
207-06-61490	K0210-09A0	6	K0- 21
207-43-81240	K0210-45A2	16	K0- 87
207-62-64740	H0320-01A0	10	H0- 27
207-62-64740	H0320-01A0	5	H0- 27
207-62-64740	H0320-01A1	7	H0- 29
207-62-64740	H0320-02A0	14	H0- 31
207-62-64740	H0320-02A0	29	H0- 31
207-62-64740	H0320-02A0	3	H0- 31
207-62-64740	H1270-01A0	14	H0- 41
207-62-72110	H0320-01A0	8	H0- 27

PARTS NO.	FIG NO.	INDEX	PAGE
207-62-72110	H0320-01A1	5	H0- 29
208-03-71161	C0100-03A0	1	C0- 7
208-06-19170	K0210-32A0	14	K0- 59
208-06-19170	K0210-34A0	11	K0- 63
208-06-19170	K0210-35A0	18	K0- 65
208-43-71420	K0210-36A0	11	K0- 67
208-53-11330	K0210-39A0	5	K0- 73
208-53-11920	K0210-43A0	9	K0- 81
208-53-11941	K0210-43A0	5	K0- 81
208-53-12280	K0210-19A0	3	K0- 43
208-53-12290	K0210-54A0	5	K0- 97
208-53-12440	K0210-43A0	4	K0- 81
208-53-12460	K0210-40A0	2	K0- 75
208-53-12991	K0210-38A0	26	K0- 71
208-979-7560	K0210-54A0	12	K0- 97
209-72-12230	K0210-30A0	3	K0- 55
209-72-12230	K0210-39A0	3	K0- 73
21J-06-12440	K0210-08A0	10	K0- 19
21J-62-22110	H1270-02A0	1	H0- 43
21J-62-22110	H1840-02A0	4	H0- 67
21J-62-22110	H1840-02A1	4	H0- 69
21T-06-11351	K0350-01A0	1	K0- 105
21T-06-32810	M1220-01A0	1	M0- 13
21T-06-32810	T1110-02A0	1	T0- 5
21T-72-14930	T1210-02A1	19	T0- 25
21U-46-31220	M1510-01A0	2	M0- 19
21U-54-21260	M1110-01A0	9	M0- 3
21U-62-34720	P1120-01A0	11	P0- 3
21U-62-34720	P1120-01A1	10	P0- 5
21U-62-34740	H1840-01A0	15	H0- 65
21U-62-34740	K0210-15A0	20	K0- 29
21U-62-34740	K0210-32A0	11	K0- 59
21U-62-34740	K0210-46A2	9	K0- 89
21U-62-34750	H0312-01A0	12	H0- 21
21U-62-34750	H0312-01A1	12	H0- 23
21U-62-34750	P1120-01A0	4	P0- 3
21U-62-34750	P1120-01A1	2	P0- 5
21U-62-34760	P1120-01A0	5	P0- 3
21U-62-34760	P1120-01A1	4	P0- 5
21U-62-34770	P1120-01A0	10	P0- 3
21U-62-34770	P1120-01A1	8	P0- 5
21U-70-31390	H1831-02A0	9	H0- 63
21U-70-31390	K0210-10A0	2	K0- 23
21U-98-31160	U0100-02A0	14	U0- 5
21U-98-31160	U0100-02A1	14	U0- 7
21U-98-31160	U0100-02A2	14	U0- 9
21U-98-31160	U0100-02A3	14	U0- 11
21W-01-21150	B0600-01A0	3	B0- 7
21W-01-31460	R0300-01A0	10	R0- 9
21W-01-38190	B0100-01A0	7	B0- 3

PARTS NO.	FIG NO.	INDEX	PAGE
21W-01-41180	B0100-01A0	12	B0- 3
21W-01-41223	B0600-01A0	21	B0- 7
21W-01-42190	B0600-01A0	7	B0- 7
21W-26-41111	N1210-51A0	25	N0- 7
21W-26-41120	N1210-51A0	22	N0- 7
21W-26-41130	N1210-51A0	26	N0- 7
21W-26-41140	N1210-51A0	15	N0- 7
21W-26-41160	N1210-51A0	2	N0- 7
21W-26-41170	N1210-51A0	20	N0- 7
21W-26-41180	N1210-51A0	12	N0- 7
21W-26-41230	N1210-51A0	5	N0- 7
21W-26-41240	N1210-51A0	3	N0- 7
21W-26-41250	N1210-51A0	13	N0- 7
21W-26-41260	N1210-51A0	24	N0- 7
21W-26-41270	N1210-51A0	19	N0- 7
21W-26-41281	N1210-51A0	6	N0- 7
21W-26-41290	N1210-51A0	7	N0- 7
21W-26-41320	N1210-52A0	3	N0- 9
21W-26-51140	N1210-51A0	8	N0- 7
21W-26-51370	N1210-51A0	32	N0- 7
21W-26-52610	N1210-51A0	27	N0- 7
21W-30-14540	R0110-01A0	2	R0- 3
21W-30-32610	R0120-01A0	5	R0- 5
21W-30-32620	R0120-01A0	3	R0- 5
21W-30-34110	R1100-01A0	16	R0- 13
21W-30-34110	R1100-01A1	16	R0- 15
21W-30-51120	R0120-01A0	16	R0- 5
21W-30-51222	R0120-01A0	1	R0- 5
21W-60-41121	H0110-01A0	8	H0- 3
21W-60-41121	V0100-01A0	2	V0- 3
21W-60-41150	H0110-01A0	23	H0- 3
21W-60-41170	H0110-01A0	6	H0- 3
21W-62-11620	D0200-01A0	14	D0- 5
21W-62-41780	K0210-45A2	22	K0- 87
21W-62-42460	H1340-01A0	3	H0- 59
21W-62-42470	H1220-01A0	7	H0- 39
21W-62-42470	H1270-01A0	15	H0- 41
21W-62-42481	H1220-01A0	1	H0- 39
21W-62-42630	P1120-01A1	20	P0- 5
21W-62-42640	H0320-01A0	3	H0- 27
21W-62-42810	H1831-01A0	9	H0- 61
21W-62-43121	H1310-01A0	8	H0- 55
21W-62-43121	H1310-01A1	8	H0- 57
21W-62-43131	H1310-01A0	5	H0- 55
21W-62-43131	H1310-01A1	5	H0- 57
21W-62-43160	H0312-01A1	28	H0- 23
21W-62-43260	H0311-01A1	13	H0- 19
21W-62-43860	P1120-02A1	1	P0- 7
21W-62-43900	H1831-01A0	9	H0- 61
21W-62-43930	H1840-02A0	8	H0- 67

PARTS NO.	FIG NO.	INDEX	PAGE
21W-62-43930	H1840-02A1	8	H0- 69
21W-62-43950	H0312-01A0	24	H0- 21
21W-62-43950	H0312-01A1	24	H0- 23
21W-62-43980	K0210-37A1	17	K0- 69
21W-62-43980	K0210-45A2	19	K0- 87
21W-62-43990	K0210-37A1	20	K0- 69
21W-62-44640	K0210-14A0	27	K0- 27
21W-62-44650	K0210-14A0	28	K0- 27
21W-62-44920	H0312-01A0	20	H0- 21
21W-62-44920	H0312-01A1	20	H0- 23
21W-62-45140	P1120-01A0	20	P0- 3
21W-62-45930	H1840-02A0	16	H0- 67
21W-62-45930	H1840-02A1	18	H0- 69
21W-62-51820	H1840-02A0	7	H0- 67
21W-62-51820	H1840-02A1	7	H0- 69
21W-62-52311	H0311-01A0	1	H0- 17
21W-62-53311	H0311-01A1	1	H0- 19
21W-62-53320	H0311-01A1	11	H0- 19
21W-70-21810	T1510-01A0	8	T0- 31
21W-70-21810	T1510-01A1	8	T0- 33
21W-70-21810	T1510-01A2	8	T0- 35
21W-70-24C10	T1510-01A1	1	T0- 33
21W-70-24C20	T1510-01A1	1	T0- 33
21W-70-32280	T1110-03A0	11	T0- 7
21W-70-41930	J1310-01A0	6	J0- 7
21W-70-41940	J1310-01A0	6	J0- 7
21W-70-42170	T1230-01A0	22	T0- 29
21W-70-42180	T1230-01A0	17	T0- 29
21W-70-44321	T1210-01A0	6	T0- 19
21W-70-44321	T1210-01A1	6	T0- 21
21W-70-44321	T1210-01A2	6	T0- 23
21W-71-11131	T1710-01A0	11	T0- 37
21W-71-11141	T1710-01A0	6	T0- 37
21W-973-4141	H1270-01A0	12	H0- 41
21W-973-4471	T1210-02A1	3	T0- 25
21W-973-4491	T1210-02A1	4	T0- 25
21W-973-4550	T1210-02A1	26	T0- 25
21W-973-4560	H1270-05A0	5	H0- 49
21W-973-4560	T1210-02A1	27	T0- 25
21W-973-4630	T1210-02A1	2	T0- 25
21W-973-4640	T1210-02A1	1	T0- 25
21W-977-1120	A5010-01A9	1	AA- 93
21X-60-11130	N1310-01A0	11	N0- 11
21X-60-11130	N1310-01A1	11	N0- 13
21Y-70-14710	J1310-01A0	13	J0- 7
21Y-70-14770	T1110-03A0	6	T0- 7
21Y-70-14770	T1210-01A0	11	T0- 19
21Y-70-14770	T1210-01A1	11	T0- 21
21Y-70-14770	T1210-01A2	11	T0- 23
21Y-70-14770	T1230-01A0	23	T0- 29

PARTS NO.	FIG NO.	INDEX	PAGE
21Y-70-14780	T1230-01A0	23	T0- 29
21Y-70-14830	T1710-01A0	12	T0- 37
21Y-70-14850	J1310-01A0	13	J0- 7
22B-01-21190	B0100-01A0	3	B0- 3
22B-01-21190	B0100-01A0	6	B0- 3
22B-01-21530	B0100-01A0	19	B0- 3
22B-03-11350	C0100-02A0	23	C0- 5
22B-03-12590	C0100-02A0	12	C0- 5
22B-06-11910	K0210-22A0	26	K0- 49
22B-06-21430	K0210-36A0	10	K0- 67
22B-43-23580	K0210-37A1	23	K0- 69
22B-54-13840	K0350-01A0	2	K0- 105
22B-54-15580	K0210-02A0	38	K0- 7
22B-54-15580	K0210-03A0	7	K0- 9
22B-54-15832	K0210-03A0	3	K0- 9
22B-54-16330	K0210-05A0	13	K0- 13
22B-54-16461	K0210-04A0	14	K0- 11
22B-54-16461	K0210-37A1	24	K0- 69
22B-54-17282	K0210-10A0	1	K0- 23
22B-54-28710	K0210-08A0	4	K0- 19
22B-54-28720	K0210-08A0	4	K0- 19
22B-62-12320	H1270-01A0	24	H0- 41
22B-62-17450	H1840-02A1	12	H0- 69
22B-62-19410	T1210-02A1	5	T0- 25
22F-06-33430	H1270-02A0	4	H0- 43
22F-06-33430	H1270-02A0	8	H0- 43
22F-06-33430	H1840-02A1	16	H0- 69
22F-46-11240	J1310-01A0	2	J0- 7
22F-46-11240	J1310-01A0	9	J0- 7
22F-98-D8430	U0100-02A0	2	U0- 5
22F-98-D8430	U0100-02A1	2	U0- 7
22F-98-D8430	U0100-02A2	2	U0- 9
22F-98-D8430	U0100-02A3	2	U0- 11
22F-98-28130	U0100-01A0	18	U0- 3
22F-98-28380	U0100-01A0	17	U0- 3
22H-54-11680	M1110-01A0	18	M0- 3
22H-54-11761	M1110-01A0	13	M0- 3
22H-54-14770	K0210-51A0	6	K0- 91
22H-54-15221	K0210-06A0	13	K0- 15
22H-54-15231	K0210-04A0	13	K0- 11
22H-54-15240	K0210-06A0	4	K0- 15
22H-54-15260	K0210-06A0	17	K0- 15
22H-54-15272	K0210-05A0	1	K0- 13
22H-54-15281	K0210-05A0	4	K0- 13
22H-54-15290	K0210-05A0	8	K0- 13
22H-54-15310	K0210-06A0	20	K0- 15
22H-54-15410	K0210-03A0	6	K0- 9
22H-54-15430	K0210-03A0	2	K0- 9
22H-54-15450	K0210-04A0	17	K0- 11
22H-54-15480	K0210-04A0	10	K0- 11

PARTS NO.	FIG NO.	INDEX	PAGE
22H-54-15490	K0210-04A0	12	K0- 11
22H-54-15513	K0210-02A0	1	K0- 7
22H-54-15530	K0210-02A0	4	K0- 7
22H-54-15540	K0210-02A0	5	K0- 7
22H-54-15560	K0210-02A0	6	K0- 7
22H-54-15620	K0210-38A0	16	K0- 71
22H-54-15770	K0210-09A0	1	K0- 21
22H-54-15970	K0210-02A0	15	K0- 7
22H-979-1440	K0700-03A0	16	K0- 111
22H-98-11110	U0100-01A0	4	U0- 3
22H-98-11220	U0100-01A0	16	U0- 3
22L-54-21250	M1220-01A0	11	M0- 13
22L-979-2232	K0700-03A0	21	K0- 111
22L-98-18270	U0100-02A0	18	U0- 5
22L-98-18270	U0100-02A1	18	U0- 7
22L-98-18270	U0100-02A2	18	U0- 9
22L-98-18270	U0100-02A3	18	U0- 11
22M-54-24531	K0210-02A0	29	K0- 7
22M-54-24541	K0210-02A0	30	K0- 7
22M-54-24560	K0210-02A0	9	K0- 7
22M-54-24570	K0210-02A0	12	K0- 7
22M-54-24582	K0210-02A0	37	K0- 7
22M-54-24592	K0210-02A0	31	K0- 7
22M-54-24620	K0210-02A0	16	K0- 7
22M-54-24630	K0210-02A0	17	K0- 7
22M-54-24640	K0210-02A0	22	K0- 7
22M-54-24660	K0210-02A0	23	K0- 7
22M-54-24961	K0210-52A0	1	K0- 93
22M-54-24970	K0210-02A0	32	K0- 7
22M-54-25490	K0210-02A0	3	K0- 7
22M-54-25712	K0210-02A0	34	K0- 7
22M-54-25722	K0210-02A0	35	K0- 7
22M-54-26150	K0210-02A0	28	K0- 7
22M-54-28480	K0210-51A0	5	K0- 91
22M-910-2860	K0210-38A0	22	K0- 71
22M-97-71140	H1840-01A0	27	H0- 65
22M-977-1140	K0210-16A0	1	K0- 31
22M-977-1140	K0210-16A1	1	K0- 33
22M-977-1140	K0210-16A2	1	K0- 35
22M-977-1140	K0210-16A3	1	K0- 37
22M-977-1140	K0700-02A0	22	K0- 109
22P-01-11140	A153W-01A7	1	AA- 27
22P-01-11170	A681P-01A8	21	AA- 119
22P-01-11181	B0600-01A0	24	B0- 7
22P-01-11260	B0100-01A0	1	B0- 3
22P-01-11270	B0100-01A0	4	B0- 3
22P-01-11280	B0100-01A0	13	B0- 3
22P-01-11320	B0100-01A0	22	B0- 3
22P-01-11350	B0100-01A0	32	B0- 3
22P-01-11360	B0100-01A0	31	B0- 3

PARTS NO.	FIG NO.	INDEX	PAGE
22P-01-11410	B0100-01A0	23	B0- 3
22P-01-11421	A207S-01A3	2	AA- 45
22P-01-11430	A207S-01A3	6	AA- 45
22P-01-11450	B0100-01A0	26	B0- 3
22P-01-12120	B0200-01A0	12	B0- 5
22P-03-11111	C0100-01A0	1	C0- 3
22P-03-11121	C0100-01A0	8	C0- 3
22P-03-11131	C0100-02A0	1	C0- 5
22P-03-11181	C0100-02A0	4	C0- 5
22P-03-11211	C0100-07A0	1	C0- 15
22P-03-11221	C0100-07A0	4	C0- 15
22P-03-11311	C0100-07A0	6	C0- 15
22P-03-11331	C0100-07A0	18	C0- 15
22P-03-11541	C0100-02A0	1	C0- 5
22P-03-11551	C0100-02A0	2	C0- 5
22P-03-11630	C0100-04A0	17	C0- 9
22P-03-11640	C0100-04A0	18	C0- 9
22P-03-11741	C0100-04A0	16	C0- 9
22P-03-11751	C0100-02A0	28	C0- 5
22P-03-11781	C0100-02A0	29	C0- 5
22P-03-11811	C0100-02A0	7	C0- 5
22P-03-11811	C0100-04A0	15	C0- 9
22P-03-11821	C0100-02A0	30	C0- 5
22P-03-11830	C0100-02A0	8	C0- 5
22P-03-11841	C0100-01A0	2	C0- 3
22P-03-11851	C0100-01A0	3	C0- 3
22P-03-11851	C0100-04A0	13	C0- 9
22P-03-11861	C0100-01A0	9	C0- 3
22P-03-11870	C0100-01A0	10	C0- 3
22P-03-11870	C0100-04A0	14	C0- 9
22P-03-11880	C0100-02A0	9	C0- 5
22P-03-11891	C0100-02A0	31	C0- 5
22P-06-11152	E0200-02A0	1	E0- 7
22P-06-11162	E0200-02A0	4	E0- 7
22P-06-11172	E0200-02A0	10	E0- 7
22P-06-11830	E0200-02A0	11	E0- 7
22P-43-13310	K0210-37A1	4	K0- 69
22P-53-12981	K0210-38A0	27	K0- 71
22P-60-12112	H1831-01A0	1	H0- 61
22P-62-13310	H1270-05A0	1	H0- 49
22P-62-13400	H1270-03A0	1	H0- 45
22P-62-13410	H1270-03A0	10	H0- 45
22P-62-13420	H1270-03A0	10	H0- 45
22P-62-13570	H1270-03A0	11	H0- 45
22P-62-15270	K0210-14A0	31	K0- 27
22P-70-11121	T1110-03A0	13	T0- 7
22P-70-11311	T1210-01A0	12	T0- 19
22P-70-11311	T1210-01A1	12	T0- 21
22P-70-11311	T1210-01A2	12	T0- 23
22U-04-21200	D0100-01A0	3	D0- 3

PARTS NO.	FIG NO.	INDEX	PAGE
22U-04-21210	D0100-01A0	3	D0- 3
22U-04-21220	D0100-01A0	5	D0- 3
22U-06-21130	E0100-01A0	5	E0- 3
22U-06-22360	K0210-19A0	15	K0- 43
22U-06-22380	K0210-22A0	32	K0- 49
22U-06-22460	K0210-22A0	33	K0- 49
22U-06-22490	K0210-19A0	14	K0- 43
22U-43-21111	K0210-14A0	16	K0- 27
22U-43-21121	K0210-14A0	17	K0- 27
22U-43-21131	K0210-14A0	18	K0- 27
22U-43-21172	K0210-21A0	1	K0- 47
22U-43-21192	K0210-21A0	2	K0- 47
22U-43-21211	K0210-21A0	5	K0- 47
22U-43-21350	K0210-14A0	9	K0- 27
22U-43-21360	K0210-14A0	10	K0- 27
22U-43-21470	K0210-45A2	3	K0- 87
22U-43-21730	K0210-37A1	7	K0- 69
22U-43-22340	K0210-54A0	2	K0- 97
22U-43-23251	K0210-22A0	5	K0- 49
22U-43-23260	K0210-19A0	16	K0- 43
22U-43-23260	K0210-22A0	41	K0- 49
22U-43-23290	K0210-22A0	6	K0- 49
22U-54-25110	K0210-45A0	7	K0- 85
22U-54-25120	K0210-45A0	1	K0- 85
22U-54-25340	K0210-39A0	9	K0- 73
22U-54-25531	K0210-45A0	2	K0- 85
22U-54-25590	K0210-09A0	5	K0- 21
22U-54-25660	K0210-45A2	2	K0- 87
23D-950-4450	K0210-54A0	16	K0- 97
23S-54-18281	K0210-06A0	14	K0- 15
23S-56-21150	A207S-01A3	7	AA- 45
23S-61-24870	H0320-01A0	14	H0- 27
23S-61-24870	H0320-01A1	11	H0- 29
23S-61-24870	H0320-02A0	24	H0- 31
362-03-14120	C0100-08A0	4	C0- 17
362-46-11210	M1520-01A0	1	M0- 21
415-15-14331	N1210-52A0	15	N0- 9
415-64-13120	M1140-01A0	9	M0- 7
417-03-21350	C0100-08A0	2	C0- 17
417-06-22610	E0200-07A0	7	E0- 17
417-43-16210	M1110-01A0	30	M0- 3
418-54-35450	K0210-40A0	7	K0- 75
418-54-35450	K0210-41A0	8	K0- 77
419-06-27130	M1420-01A0	1	M0- 17
421-06-22830	E0200-07A0	6	E0- 17
421-06-22880	E0200-07A0	1	E0- 17
421-06-22910	E0200-07A0	3	E0- 17
421-06-22990	E0200-07A0	2	E0- 17
421-06-23330	M1220-01A0	1	M0- 13
421-06-23330	T1110-02A0	1	T0- 5

PARTS NO.	FIG NO.	INDEX	PAGE
421-54-11381	M1220-01A0	9	M0- 13
423-S62-3370	K0210-42A0	7	K0- 79
423-S62-4330	K0700-01A0	1	K0- 107
423-07-31771	K0210-42A0	9	K0- 79
423-60-35460	H0110-01A0	16	H0- 3
424-15-12580	N1210-51A0	23	N0- 7
426-01-11310	A681P-01A8	32	AA- 119
426-09-11230	K0210-34A0	15	K0- 63
426-925-3890	K0210-38A0	28	K0- 71
427-43-28660	H1270-01A0	16	H0- 41
431-12-16290	K0210-16A2	2	K0- 35
431-12-16290	K0210-16A3	2	K0- 37
437-40-26240	K0210-20A0	8	K0- 45
437-40-26240	K0210-23A0	8	K0- 53
561-02-12420	B9999-01Y5	6	AA- 135
566-03-12620	K0700-02A0	13	K0- 109
566-35-42430	H0120-01A0	6	H0- 5
566-35-42430	H0120-01A1	6	H0- 7
566-35-42430	H0120-01A2	6	H0- 9
566-35-42430	H0120-01A3	6	H0- 11
575-41-17420	Y1660-02A0	25	Y0- 51
575-41-17420	Y1662-02A0	25	Y0- 85
575-41-17420	Y1662-17A0	13	Y0- 117
575-41-17420	Y1662-22A0	25	Y0- 123
575-41-17420	Y1664-02A0	25	Y0- 159
575-41-17420	Y1664-19A0	13	Y0- 193
600-051-1100	A681P-01A8	3	AA- 119
600-051-1100	A681P-01A8	6	AA- 119
600-051-1140	A681P-01A8	28	AA- 119
600-051-1140	A681P-01A8	9	AA- 119
600-051-1180	A681P-01A8	12	AA- 119
600-051-2060	E0200-01A0	23	E0- 5
600-051-2060	E0200-05A0	9	E0- 13
600-051-2080	E0200-01A0	16	E0- 5
600-051-2080	K0700-03A0	1	K0- 111
600-051-2100	A681P-01A8	25	AA- 119
600-051-2140	E0200-01A0	13	E0- 5
600-051-2140	E0200-01A0	9	E0- 5
600-051-2180	A311P-01B2	16	AA- 69
600-051-2180	A681P-01A8	20	AA- 119
600-051-2180	A681P-01A8	31	AA- 119
600-051-5160	A153T-01D8	15	AA- 23
600-181-1930	B9999-01Y5	7	AA- 135
600-181-9960	B0200-01A0	7	B0- 5
600-181-9960	B9999-01Y5	9	AA- 135
600-184-1160	B9999-01Y5	1	AA- 135
600-184-1260	B9999-01Y5	2	AA- 135
600-184-1260	B9999-01Y5	8	AA- 135
600-184-1350	B9999-01Y5	1	AA- 135
600-185-2200	B9999-01Y5	3	AA- 135

PARTS NO.	FIG NO.	INDEX	PAGE
600-185-2210	B9999-01Y5	3	AA- 135
600-185-2230	B9999-01Y5	5	AA- 135
600-211-1870	A311P-01B2	20	AA- 69
600-211-2110	A311P-01B2	3	AA- 69
600-211-2110	B9999-01Y4	3	AA- 133
600-211-2110	V0100-01A0	3	V0- 3
600-311-3630	B9999-01Y1	3	AA- 131
600-311-3630	B9999-01Y4	5	AA- 133
600-311-3630	V0100-01A0	5	V0- 3
600-311-3640	B9999-01Y1	4	AA- 131
600-311-3660	B9999-01Y1	5	AA- 131
600-311-3670	B9999-01Y1	6	AA- 131
600-311-3690	B9999-01Y1	8	AA- 131
600-311-3710	B9999-01Y1	5	AA- 131
600-311-3870	A411P-01C5	2	AA- 75
600-311-4210	B9999-01Y1	7	AA- 131
600-311-4220	B9999-01Y1	7	AA- 131
600-311-6720	A411P-01C5	3	AA- 75
600-311-9732	D0200-04A0	1	D0- 11
600-311-9733	D0200-04A0	1	D0- 11
600-319-3870	B9999-01Y4	3	AA- 133
600-319-3870	V0100-01A0	3	V0- 3
600-319-4110	B9999-01Y1	2	AA- 131
600-319-4110	B9999-01Y4	3	AA- 133
600-319-4110	V0100-01A0	3	V0- 3
600-319-4200	B9999-01Y1	2	AA- 131
600-411-1280	K0210-17A0	7	K0- 39
600-411-1280	K0210-21A0	9	K0- 47
600-421-6240	A173R-01A7	1	AA- 33
600-475-3700	A471P-01A6	1	AA- 85
600-625-7520	A503P-01A3	1	AA- 99
600-813-4461	A621P-01B0	1	AA- 111
600-813-4461	A621P-02B0	1	AA- 113
600-815-2170	E0200-10A0	2	E0- 23
600-815-2341	A131R-01A6	1	AA- 13
600-815-8941	B9999-A3S1	1	AA- 129
600-815-8941	E0200-10A0	5	E0- 23
600-861-3610	A601P-01C2	1	AA- 103
600-861-3610	A601P-02C2	1	AA- 105
6127-71-5710	A411S-01D5	15	AA- 79
6130-12-4581	A681P-01A8	29	AA- 119
6130-32-1361	A223R-01A1	1	AA- 55
6130-32-1361	A401P-01K6	4	AA- 73
6131-12-5920	A411S-01D5	10	AA- 79
6136-11-8120	A111P-01C9	5	AA- 7
6136-11-8130	A111P-01C9	6	AA- 7
6136-11-8142	A111P-01C9	7	AA- 7
6136-11-8142	B9999-01Y4	2	AA- 133
6136-11-8142	V0100-01A0	7	V0- 3
6136-31-1431	A233P-01A7	2	AA- 57

PARTS NO.	FIG NO.	INDEX	PAGE
6136-52-1620	A201S-01A4	22	AA- 37
6140-11-6331	A173R-01A7	2	AA- 33
6140-21-1130	A201S-01A4	16	AA- 37
6141-21-1332	A221P-01B1	4	AA- 51
6141-21-1530	A201S-01A4	5	AA- 37
6141-64-2560	A681P-01A8	4	AA- 119
6143-11-4290	A681P-01A8	13	AA- 119
6143-11-4290	A681P-01A8	26	AA- 119
6144-81-6580	B0100-01A0	8	B0- 3
6150-21-5920	A219P-01B8	4	AA- 49
6150-21-5930	A219P-01B8	5	AA- 49
6150-21-6750	A111V-01A9	1	AA- 9
6150-81-6920	A681P-01A8	23	AA- 119
6152-11-9990	A411P-01C5	9	AA- 75
6161-51-8990	A411S-01D5	6	AA- 79
6161-61-6950	A601T-01C1	6	AA- 107
6162-53-5420	A311P-01B2	22	AA- 69
6162-53-5430	A311P-01B2	21	AA- 69
6162-53-5450	A311P-01B2	19	AA- 69
6162-73-4690	D0200-04A0	15	D0- 11
6162-73-5940	A153T-01D8	8	AA- 23
6167-11-6640	A681P-01A8	7	AA- 119
6201-11-5850	A153P-01A8	4	AA- 19
6201-11-5850	A1670-01A5	3	AA- 31
6201-51-5910	A311P-01B2	2	AA- 69
6202-21-4151	A621S-01B7	2	AA- 117
6202-43-5320	A241S-01A3	9	AA- 63
6204-11-1840	A101P-01A2	17	AA- 3
6204-11-3830	A601T-01C1	8	AA- 107
6204-11-4850	A131P-01B9	2	AA- 11
6204-11-4850	A131R-01A6	2	AA- 13
6204-11-5990	A1610-01K7	2	AA- 29
6204-11-6421	A173S-01A5	1	AA- 35
6204-11-8610	A207S-01A3	1	AA- 45
6204-11-8810	A111P-01C9	4	AA- 7
6204-11-8810	B9999-01Y4	1	AA- 133
6204-11-8810	V0100-01A0	9	V0- 3
6204-13-1610	A101P-01A2	18	AA- 3
6204-19-1310	A101P-01A2	2	AA- 3
6204-19-1310	A8110-01B4	1	AA- 121
6204-21-1610	A201S-01A4	4	AA- 37
6204-21-3510	A204W-01A3	2	AA- 41
6204-21-4230	A221P-01B1	1	AA- 51
6204-21-5150	A211P-01A9	2	AA- 47
6204-21-5180	A211P-01A9	8	AA- 47
6204-21-5180	A221P-01B1	5	AA- 51
6204-21-5520	A219P-01B8	3	AA- 49
6204-21-6820	A153T-01D8	16	AA- 23
6204-26-8100	A8110-01B4	5	AA- 121
6204-26-8600	A8110-01B4	7	AA- 121

PARTS NO.	FIG NO.	INDEX	PAGE
6204-27-8100	A811O-01B4	5	AA- 121
6204-27-8600	A811O-01B4	7	AA- 121
6204-28-8100	A811O-01B4	5	AA- 121
6204-28-8600	A811O-01B4	7	AA- 121
6204-29-1210	A201S-01A4	2	AA- 37
6204-29-1220	A201S-01A4	3	AA- 37
6204-29-8100	A811O-01B4	5	AA- 121
6204-29-8600	A811O-01B4	7	AA- 121
6204-31-3310	A235P-01A1	10	AA- 59
6204-31-4193	A223P-01D3	2	AA- 53
6204-31-4272	A223P-01D3	1	AA- 53
6204-31-6331	A204V-01A1	3	AA- 39
6204-31-6341	A204V-01A1	2	AA- 39
6204-31-6350	A204V-01A1	5	AA- 39
6204-41-1131	A241T-01A2	4	AA- 65
6204-41-2110	A241T-01A2	10	AA- 65
6204-41-3110	A241S-01A3	13	AA- 63
6204-41-4410	A101P-01A2	14	AA- 3
6204-41-4510	A101P-01A2	12	AA- 3
6204-41-4520	A101P-01A2	13	AA- 3
6204-41-4541	A101P-01A2	15	AA- 3
6204-41-4550	A101P-01A2	16	AA- 3
6204-41-5110	A241S-01A3	1	AA- 63
6204-41-5120	A241S-01A3	2	AA- 63
6204-41-5620	A241S-01A3	10	AA- 63
6204-41-5710	A241S-01A3	12	AA- 63
6204-51-1310	A301P-01B0	5	AA- 67
6204-51-1330	A301P-01B0	7	AA- 67
6204-51-1340	A301P-01B0	8	AA- 67
6204-51-1620	A201S-01A4	23	AA- 37
6204-51-1711	A201S-01A4	15	AA- 37
6204-51-1910	A301P-01B0	9	AA- 67
6204-51-5421	A311P-01B2	4	AA- 69
6204-51-5730	A311P-01B2	1	AA- 69
6204-51-6122	A211P-01A9	5	AA- 47
6204-51-8190	A311P-01B2	26	AA- 69
6204-51-8920	A411S-01D5	5	AA- 79
6204-61-1630	A501P-01A7	2	AA- 91
6204-61-1650	A501P-01A7	4	AA- 91
6204-61-1660	A501P-01A7	7	AA- 91
6204-81-6321	A601T-01C1	11	AA- 107
6204-81-6740	A601T-01C1	17	AA- 107
6205-11-5580	A153P-01A8	2	AA- 19
6205-11-5691	A1670-01A5	1	AA- 31
6205-11-5811	A151V-01B1	1	AA- 17
6205-21-5152	A211P-01A9	1	AA- 47
6205-43-5310	A241S-01A3	5	AA- 63
6205-43-5410	A241S-01A3	6	AA- 63
6205-43-5500	A241S-01A3	3	AA- 63
6205-51-5400	A311P-01B2	18	AA- 69

PARTS NO.	FIG NO.	INDEX	PAGE
6205-51-5411	A311P-01B2	18	AA- 69
6205-51-5910	A311P-01B2	11	AA- 69
6205-51-5920	A311P-01B2	12	AA- 69
6205-51-5950	A311P-01B2	14	AA- 69
6205-51-6120	A211P-01A9	4	AA- 47
6205-51-7611	A153T-01D8	11	AA- 23
6205-51-8251	A153T-01D8	7	AA- 23
6205-51-8530	A153T-01D8	10	AA- 23
6205-51-8560	A153T-01D8	9	AA- 23
6205-61-1210	A501P-01A7	5	AA- 91
6205-61-1300	A501P-01A7	1	AA- 91
6205-61-3500	A601U-01A5	1	AA- 109
6205-61-3500	B9999-01Y4	6	AA- 133
6205-61-3500	V0100-01A0	6	V0- 3
6205-61-5251	A331P-01C4	7	AA- 71
6205-61-5261	A331P-01C4	4	AA- 71
6205-61-5420	A331P-01C4	1	AA- 71
6205-61-8680	A501P-01A7	9	AA- 91
6205-61-8690	A501P-01A7	14	AA- 91
6205-81-9580	E0200-08A0	12	E0- 19
6206-11-5911	A1670-01A5	5	AA- 31
6206-21-1420	A201S-01A4	7	AA- 37
6206-21-1430	A201S-01A4	6	AA- 37
6206-21-3840	A204V-01A1	8	AA- 39
6206-21-3930	A401P-01K6	9	AA- 73
6206-51-1320	A301P-01B0	6	AA- 67
6206-61-1121	A501P-01A7	6	AA- 91
6206-61-1731	A501P-01A7	10	AA- 91
6206-61-3850	A504P-01A8	1	AA- 101
6206-71-5940	A411R-01C4	2	AA- 77
6207-11-1431	A101P-01A2	3	AA- 3
6207-11-8140	A111P-01C9	2	AA- 7
6207-18-1431	A101P-01A2	3	AA- 3
6207-18-1431	A811O-01B4	2	AA- 121
6207-19-1431	A101P-01A2	3	AA- 3
6207-19-1431	A811O-01B4	2	AA- 121
6207-21-1190	A201S-01A4	24	AA- 37
6207-21-2121	A811O-01B4	4	AA- 121
6207-31-2420	A235P-01A1	2	AA- 59
6207-31-3101	A235P-01A1	7	AA- 59
6207-31-3130	A235P-01A1	9	AA- 59
6207-31-3140	A235P-01A1	11	AA- 59
6207-31-3800	A235P-01A1	7	AA- 59
6207-36-3300	A235P-01A1	12	AA- 59
6207-36-3300	A811O-01B4	8	AA- 121
6207-36-3900	A235P-01A1	12	AA- 59
6207-36-3900	A811O-01B4	8	AA- 121
6207-37-3300	A235P-01A1	12	AA- 59
6207-37-3300	A811O-01B4	8	AA- 121
6207-37-3900	A235P-01A1	12	AA- 59

PARTS NO.	FIG NO.	INDEX	PAGE
6207-37-3900	A811O-01B4	8	AA- 121
6207-38-3300	A235P-01A1	12	AA- 59
6207-38-3300	A811O-01B4	8	AA- 121
6207-38-3900	A235P-01A1	12	AA- 59
6207-38-3900	A811O-01B4	8	AA- 121
6207-39-3300	A235P-01A1	12	AA- 59
6207-39-3300	A811O-01B4	8	AA- 121
6207-39-3900	A235P-01A1	12	AA- 59
6207-39-3900	A811O-01B4	8	AA- 121
6207-41-4130	A101P-01A2	10	AA- 3
6207-51-1400	A301P-01B0	3	AA- 67
6207-51-1410	A301P-01B0	3	AA- 67
6207-51-1610	A301P-01B0	10	AA- 67
6207-61-3261	A502P-01E8	1	AA- 95
6208-11-1440	A101P-01A2	4	AA- 3
6208-11-1910	A105P-01B1	1	AA- 5
6208-11-5850	A1670-01A5	7	AA- 31
6208-18-1440	A101P-01A2	4	AA- 3
6208-18-1440	A811O-01B4	3	AA- 121
6208-19-1440	A101P-01A2	4	AA- 3
6208-19-1440	A811O-01B4	3	AA- 121
6208-31-3400	A235P-01A1	12	AA- 59
6208-31-3500	A235P-01A1	12	AA- 59
6208-36-3400	A235P-01A1	12	AA- 59
6208-36-3400	A811O-01B4	8	AA- 121
6208-37-3400	A235P-01A1	12	AA- 59
6208-37-3400	A811O-01B4	8	AA- 121
6208-38-3400	A235P-01A1	12	AA- 59
6208-38-3400	A811O-01B4	8	AA- 121
6208-39-3400	A235P-01A1	12	AA- 59
6208-39-3400	A811O-01B4	8	AA- 121
6208-61-5210	A331P-01C4	5	AA- 71
6208-61-5220	A331P-01C4	8	AA- 71
6208-61-5400	A331P-01C4	1	AA- 71
6208-61-5410	A331P-01C4	2	AA- 71
6208-61-5420	A331P-01C4	3	AA- 71
6208-81-6590	A601T-01C1	7	AA- 107
6209-11-8210	A111V-01A9	2	AA- 9
6209-41-4210	A101P-01A2	11	AA- 3
6210-11-5820	A471P-02A6	5	AA- 87
6215-71-5292	A421P-01A2	8	AA- 81
6215-81-9510	A201S-01A4	14	AA- 37
6215-81-9510	A201S-01A4	14	AA- 37
6215-81-9710	A201S-01A4	13	AA- 37
6215-81-9710	A201S-01A4	13	AA- 37
6215-81-9720	A153T-01D8	3	AA- 23
6216-84-9740	A471P-02A6	15	AA- 87
6217-71-5770	A421P-01A2	11	AA- 81
6219-81-1990	A471P-02A6	16	AA- 87
6221-41-5410	A241S-01A3	7	AA- 63

PARTS NO.	FIG NO.	INDEX	PAGE
6221-41-5420	A241S-01A3	8	AA- 63
6221-41-5540	A241S-01A3	4	AA- 63
6221-61-1520	A501P-01A7	3	AA- 91
6251-71-6530	A4710-01A2	1	AA- 89
6251-81-7210	E0200-02A0	7	E0- 7
6261-81-2600	A471P-02A6	1	AA- 87
6261-81-2902	A471P-02A6	13	AA- 87
6261-81-2911	A471P-02A6	13	AA- 87
6261-81-6901	A471P-02A6	15	AA- 87
6271-11-1100	A101P-01A2	1	AA- 3
6271-11-1960	A105P-01B1	3	AA- 5
6271-11-3100	A421R-01A1	1	AA- 83
6271-11-3810	A421R-01A1	3	AA- 83
6271-11-3811	A421R-01A1	3	AA- 83
6271-11-3830	A421R-01A1	4	AA- 83
6271-11-3850	A421R-01A1	2	AA- 83
6271-11-3880	A421R-01A1	6	AA- 83
6271-11-4130	A153U-01A3	1	AA- 25
6271-11-4440	A131P-01B9	1	AA- 11
6271-11-4920	A153W-01A7	3	AA- 27
6271-11-4930	A153W-01A7	2	AA- 27
6271-11-5140	A153S-01C0	1	AA- 21
6271-11-5260	A1610-01K7	1	AA- 29
6271-11-5430	A1610-01K7	5	AA- 29
6271-11-5850	A1670-01A5	2	AA- 31
6271-11-8200	A111P-01C9	1	AA- 7
6271-11-8210	A111P-01C9	1	AA- 7
6271-11-8610	A207S-01A3	4	AA- 45
6271-11-8930	A111V-01A9	6	AA- 9
6271-11-8970	A111V-01A9	3	AA- 9
6271-11-9140	A111P-01C9	8	AA- 7
6271-11-9150	A1610-01K7	7	AA- 29
6271-21-1000	A201S-01A4	1	AA- 37
6271-21-3110	A204W-01A3	1	AA- 41
6271-21-3210	A204V-01A1	7	AA- 39
6271-21-5460	A219P-01B8	1	AA- 49
6271-21-5470	A219P-01B8	2	AA- 49
6271-21-5850	A411S-01D5	19	AA- 79
6271-31-1490	A233P-01A7	1	AA- 57
6271-31-1990	A233P-01A7	4	AA- 57
6271-31-2100	A235P-01A1	4	AA- 59
6271-31-2110	A235P-01A1	1	AA- 59
6271-31-6300	A204V-01A1	1	AA- 39
6271-38-2100	A235P-01A1	4	AA- 59
6271-38-2100	A811O-01B4	10	AA- 121
6271-38-2110	A235P-01A1	1	AA- 59
6271-38-2110	A811O-01B4	13	AA- 121
6271-39-2100	A235P-01A1	4	AA- 59
6271-39-2100	A811O-01B4	10	AA- 121
6271-39-2110	A235P-01A1	1	AA- 59

PARTS NO.	FIG NO.	INDEX	PAGE
6271-39-2110	A811O-01B4	13	AA- 121
6271-41-1190	A241T-01A2	6	AA- 65
6271-41-1220	A241T-01A2	2	AA- 65
6271-41-1500	A241T-01A2	1	AA- 65
6271-51-1200	A301P-01B0	1	AA- 67
6271-51-1410	A301P-01B0	2	AA- 67
6271-51-5790	A311P-01B2	7	AA- 69
6271-51-8240	A153T-01D8	2	AA- 23
6271-51-8540	A153T-01D8	1	AA- 23
6271-71-1110	A401P-01K6	1	AA- 73
6271-71-1210	A421P-01A2	1	AA- 81
6271-71-1720	A411R-01C4	1	AA- 77
6271-71-3170	A401P-01K6	2	AA- 73
6271-71-3310	A401P-01K6	5	AA- 73
6271-71-5110	A421P-01A2	4	AA- 81
6271-71-5120	A421P-01A2	5	AA- 81
6271-71-5130	A421P-01A2	6	AA- 81
6271-71-5140	A421P-01A2	7	AA- 81
6271-71-5210	A421P-01A2	3	AA- 81
6271-71-5510	A411S-01D5	13	AA- 79
6271-71-5520	A411S-01D5	9	AA- 79
6271-71-5530	A411S-01D5	14	AA- 79
6271-71-5890	A421P-01A2	10	AA- 81
6271-71-6110	B9999-01Y1	1	AA- 131
6271-71-6200	B9999-01Y1	1	AA- 131
6271-71-6200	D0200-03A0	1	D0- 9
6271-71-6580	A411P-01C5	5	AA- 75
6271-71-6700	A411P-01C5	1	AA- 75
6271-71-6710	A411P-01C5	1	AA- 75
6271-71-7211	A411S-01D5	7	AA- 79
6271-71-7800	A411S-01D5	1	AA- 79
6271-71-7990	A411S-01D5	8	AA- 79
6271-71-9890	A411S-01D5	2	AA- 79
6271-81-1910	A471P-02A6	8	AA- 87
6271-81-1930	A471P-02A6	8	AA- 87
6271-81-1940	A471P-02A6	16	AA- 87
6271-81-1950	A471P-02A6	16	AA- 87
6271-81-2440	A981P-01A4	1	AA- 125
6271-81-2990	A9850-01A9	1	AA- 127
6271-81-6340	A601T-01C1	10	AA- 107
6271-81-6380	A601T-01C1	15	AA- 107
6271-81-6440	A601T-01C1	5	AA- 107
6271-81-6450	A601T-01C1	1	AA- 107
6271-81-6990	A5010-01A9	4	AA- 93
6271-81-7400	B0200-01A0	1	B0- 5
6271-81-7400	B9999-01Y5	1	AA- 135
6271-81-8240	A681P-01A8	1	AA- 119
6271-81-8500	A153P-01A8	1	AA- 19
6271-81-8980	A681P-01A8	15	AA- 119
6271-81-9190	A471P-02A6	4	AA- 87

PARTS NO.	FIG NO.	INDEX	PAGE
6271-81-9201	A471P-02A6	10	AA- 87
6271-81-9220	A471P-02A6	10	AA- 87
6271-81-9220	A471P-02A6	13	AA- 87
6691-41-8230	A301P-01B0	13	AA- 67
6754-81-9410	A471P-02A6	10	AA- 87
6754-81-9480	A471P-02A6	11	AA- 87
700-22-11410	Y1660-11A0	2	Y0- 71
700-22-11410	Y1662-11A0	2	Y0- 105
700-22-11410	Y1662-31A0	2	Y0- 141
700-22-11410	Y1664-11A0	2	Y0- 177
700-25-11120	Y1660-10A0	1	Y0- 69
700-25-11120	Y1662-30A0	1	Y0- 139
700-30-63140	Y1600-04A0	19	Y0- 13
700-80-61260	Y1662-27A0	11	Y0- 133
700-80-61260	Y1664-07A0	11	Y0- 169
700-80-63230	Y1640-01A0	6	Y0- 37
700-80-64220	Y1660-11A0	3	Y0- 71
700-80-64220	Y1662-11A0	3	Y0- 105
700-80-64220	Y1662-31A0	3	Y0- 141
700-80-64220	Y1664-11A0	3	Y0- 177
700-85-11111	Y1662-10A0	1	Y0- 103
700-85-11111	Y1664-10A0	1	Y0- 175
702-15-73000	Y1640-03A0	1	Y0- 41
702-16-01270	K0210-37A1	1	K0- 69
702-16-01270	K0210-45A2	1	K0- 87
702-16-01270	Y1670-21A0	1	Y0- 201
702-16-01600	Y1670-51A0	1	Y0- 203
702-16-03910	K0210-31A0	1	K0- 57
702-16-03910	K0210-33A0	1	K0- 61
702-16-03910	Y1670-11A0	1	Y0- 199
702-16-04270	K0210-14A0	1	K0- 27
702-16-04270	Y1670-01A0	1	Y0- 197
702-16-51140	Y1670-11A0	5	Y0- 199
702-16-51140	Y1670-21A0	3	Y0- 201
702-16-51140	Y1670-51A0	3	Y0- 203
702-16-51240	Y1670-11A0	17	Y0- 199
702-16-51270	Y1670-21A0	8	Y0- 201
702-16-51270	Y1670-51A0	8	Y0- 203
702-16-53140	Y1670-11A0	7	Y0- 199
702-16-53170	Y1670-11A0	10	Y0- 199
702-16-53170	Y1670-21A0	7	Y0- 201
702-16-53170	Y1670-51A0	7	Y0- 203
702-16-53420	Y1670-11A0	6	Y0- 199
702-16-53470	Y1670-11A0	8	Y0- 199
702-16-53590	Y1670-11A0	9	Y0- 199
702-16-54160	Y1670-51A0	6	Y0- 203
702-16-54331	Y1670-01A0	17	Y0- 197
702-16-54341	Y1670-01A0	17	Y0- 197
702-16-54351	Y1670-01A0	17	Y0- 197
702-16-54550	Y1670-21A0	4	Y0- 201

PARTS NO.	FIG NO.	INDEX	PAGE
702-16-54550	Y1670-51A0	4	Y0- 203
702-16-54560	Y1670-21A0	6	Y0- 201
702-16-54571	Y1670-21A0	5	Y0- 201
702-16-54571	Y1670-51A0	5	Y0- 203
702-16-54580	Y1670-21A0	9	Y0- 201
702-16-54580	Y1670-51A0	9	Y0- 203
702-16-54590	Y1670-21A0	10	Y0- 201
702-16-54590	Y1670-51A0	10	Y0- 203
702-16-54641	Y1670-21A0	14	Y0- 201
702-16-54641	Y1670-51A0	14	Y0- 203
702-16-54650	Y1670-21A0	17	Y0- 201
702-16-54650	Y1670-51A0	17	Y0- 203
702-16-54660	Y1670-21A0	16	Y0- 201
702-16-54660	Y1670-51A0	16	Y0- 203
702-16-54670	Y1670-21A0	3	Y0- 201
702-16-54670	Y1670-51A0	3	Y0- 203
702-16-54880	Y1670-21A0	18	Y0- 201
702-16-54880	Y1670-51A0	18	Y0- 203
702-16-55940	Y1670-01A0	30	Y0- 197
702-16-55950	Y1670-01A0	31	Y0- 197
702-16-56380	Y1670-01A0	17	Y0- 197
702-16-56390	Y1670-01A0	17	Y0- 197
702-16-71131	Y1670-11A0	14	Y0- 199
702-16-71141	Y1670-11A0	15	Y0- 199
702-16-71150	Y1670-01A0	8	Y0- 197
702-16-71160	Y1670-01A0	9	Y0- 197
702-16-71160	Y1670-11A0	12	Y0- 199
702-16-71210	Y1670-11A0	11	Y0- 199
702-16-71280	Y1670-11A0	13	Y0- 199
702-16-71361	Y1670-11A0	18	Y0- 199
702-16-71441	Y1670-11A0	19	Y0- 199
702-16-73650	Y1670-01A0	23	Y0- 197
702-21-53120	Y1660-01A0	6	Y0- 49
702-21-53120	Y1660-07A0	5	Y0- 63
702-21-53120	Y1662-01A0	6	Y0- 83
702-21-53120	Y1662-07A0	5	Y0- 97
702-21-53120	Y1662-21A0	6	Y0- 121
702-21-53120	Y1664-01A0	6	Y0- 157
702-21-54260	Y1660-02A0	27	Y0- 51
702-21-54260	Y1660-07A0	11	Y0- 63
702-21-54260	Y1662-02A0	27	Y0- 85
702-21-54260	Y1662-07A0	11	Y0- 97
702-21-54260	Y1662-22A0	27	Y0- 123
702-21-54260	Y1662-27A0	10	Y0- 133
702-21-54260	Y1664-02A0	27	Y0- 159
702-21-54260	Y1664-07A0	10	Y0- 169
702-21-55420	Y1660-01A0	7	Y0- 49
702-21-55420	Y1660-07A0	6	Y0- 63
702-21-55420	Y1662-01A0	7	Y0- 83
702-21-55420	Y1662-07A0	6	Y0- 97

PARTS NO.	FIG NO.	INDEX	PAGE
702-21-55420	Y1662-21A0	7	Y0- 121
702-21-55420	Y1664-01A0	7	Y0- 157
702-21-55620	Y1660-01A0	4	Y0- 49
702-21-55620	Y1662-01A0	4	Y0- 83
702-21-55620	Y1662-21A0	4	Y0- 121
702-21-55620	Y1664-01A0	4	Y0- 157
702-21-56270	Y1660-05A0	14	Y0- 57
702-21-56270	Y1662-05A0	14	Y0- 91
702-21-56270	Y1662-25A0	14	Y0- 129
702-21-56270	Y1664-05A0	14	Y0- 165
702-21-60700	Y1600-03A0	32	Y0- 9
702-21-60700	Y1600-13A0	32	Y0- 19
702-73-01590	Y1640-02A0	1	Y0- 39
703-06-22270	N1310-01A0	1	N0- 11
703-06-22270	Y1627-01A0	1	Y0- 33
703-06-91170	Y1627-01A0	1	Y0- 33
703-06-92133	Y1627-01A0	4	Y0- 33
703-06-93191	Y1627-01A0	9	Y0- 33
703-06-94110	Y1627-01A0	7	Y0- 33
703-06-95122	Y1627-01A0	3	Y0- 33
703-07-23230	N1310-01A1	1	N0- 13
703-07-23230	Y1627-01A1	1	Y0- 35
703-07-91230	Y1627-01A1	1	Y0- 35
703-07-92183	Y1627-01A1	3	Y0- 35
703-07-93181	Y1627-01A1	9	Y0- 35
703-07-94170	Y1627-01A1	7	Y0- 35
703-07-95122	Y1627-01A1	6	Y0- 35
703-08-98010	Y1627-01A0	5	Y0- 33
703-08-98110	Y1627-01A0	5	Y0- 33
703-08-98110	Y1627-01A1	4	Y0- 35
703-08-98210	Y1627-01A0	5	Y0- 33
703-13-98820	Y1627-01A0	6	Y0- 33
703-13-98820	Y1627-01A1	5	Y0- 35
706-73-71450	Y1640-01A0	3	Y0- 37
706-8E-14191	Y1660-09A0	17	Y0- 67
706-8E-14191	Y1662-09A0	17	Y0- 101
707-00-XJ881	Y1620-01A0	G1	Y0- 25
707-00-XJ891	Y1620-11A0	G1	Y0- 27
707-00-XJ901	Y1620-41A0	G1	Y0- 29
707-00-XT261	T1120-01A0	1	T0- 15
707-00-XT261	Y1620-01A0	G1	Y0- 25
707-00-XT271	T1140-01A0	1	T0- 17
707-00-XT271	Y1620-11A0	G1	Y0- 27
707-00-XT281	T1220-01A0	1	T0- 27
707-00-XT281	Y1620-41A0	G1	Y0- 29
707-00-0J881	Y1620-01A0	1	Y0- 25
707-00-0J891	Y1620-11A0	1	Y0- 27
707-00-0J901	Y1620-41A0	1	Y0- 29
707-00-0J911	Y1621-01A0	1	Y0- 31
707-00-0T291	T1720-01A0	1	T0- 39

PARTS NO.	FIG NO.	INDEX	PAGE
707-00-0T291	Y1621-01A0	G1	Y0- 31
707-11-10J10	Y1620-11A0	1	Y0- 27
707-11-11G00	Y1620-01A0	1	Y0- 25
707-11-13870	Y1621-01A0	1	Y0- 31
707-11-90A20	Y1620-41A0	1	Y0- 29
707-29-10871	Y1620-11A0	4	Y0- 27
707-29-11971	Y1620-01A0	4	Y0- 25
707-29-13621	Y1621-01A0	5	Y0- 31
707-29-90A20	Y1620-41A0	4	Y0- 29
707-35-91610	Y1620-01A0	10	Y0- 25
707-35-91610	Y1620-01A0	13	Y0- 25
707-36-10832	Y1620-11A0	18	Y0- 27
707-36-11A12	Y1620-01A0	18	Y0- 25
707-36-13042	Y1621-01A0	17	Y0- 31
707-36-90862	Y1620-41A0	16	Y0- 29
707-39-11510	Y1620-01A0	20	Y0- 25
707-40-10020	Y1620-11A0	32	Y0- 27
707-40-11420	Y1620-01A0	28	Y0- 25
707-40-90420	Y1620-41A0	28	Y0- 29
707-44-10150	Y1620-11A0	19	Y0- 27
707-44-10930	Y1620-11A0	31	Y0- 27
707-44-11250	Y1620-01A0	19	Y0- 25
707-44-11930	Y1620-01A0	30	Y0- 25
707-44-13150	Y1621-01A0	18	Y0- 31
707-44-13930	Y1621-01A0	24	Y0- 31
707-44-90150	Y1620-41A0	17	Y0- 29
707-44-90930	Y1620-41A0	27	Y0- 29
707-45-10920	Y1620-11A0	26	Y0- 27
707-45-11920	Y1620-01A0	29	Y0- 25
707-45-90940	Y1620-41A0	26	Y0- 29
707-51-55650	Y1620-41A0	25	Y0- 29
707-51-55860	Y1620-41A0	6	Y0- 29
707-51-60650	Y1620-11A0	10	Y0- 27
707-51-60860	Y1620-11A0	6	Y0- 27
707-51-65650	Y1620-01A0	22	Y0- 25
707-51-65650	Y1621-01A0	23	Y0- 31
707-51-65860	Y1620-01A0	6	Y0- 25
707-51-65860	Y1621-01A0	7	Y0- 31
707-52-90301	Y1620-41A0	5	Y0- 29
707-52-90351	Y1620-11A0	5	Y0- 27
707-52-90401	Y1620-01A0	5	Y0- 25
707-52-90401	Y1621-01A0	6	Y0- 31
707-56-50540	R0120-01A0	12	R0- 5
707-56-55740	Y1620-41A0	7	Y0- 29
707-56-60740	Y1620-11A0	7	Y0- 27
707-56-65740	Y1620-01A0	7	Y0- 25
707-56-65740	Y1621-01A0	8	Y0- 31
707-67-42020	Y1620-41A0	19	Y0- 29
707-67-45020	Y1620-11A0	24	Y0- 27
707-67-48020	Y1620-01A0	21	Y0- 25

PARTS NO.	FIG NO.	INDEX	PAGE
707-67-48020	Y1621-01A0	20	Y0- 31
707-71-60100	Y1620-11A0	21	Y0- 27
707-71-70940	Y1620-01A0	17	Y0- 25
707-71-70950	Y1620-11A0	17	Y0- 27
707-71-91280	Y1620-11A0	23	Y0- 27
707-76-65290	Y1620-01A0	2	Y0- 25
707-86-48860	Y1620-41A0	20	Y0- 29
707-86-48870	Y1620-41A0	21	Y0- 29
707-86-55950	Y1620-01A0	24	Y0- 25
707-86-55960	Y1620-11A0	27	Y0- 27
707-99-26710	Y1620-41A0	K	Y0- 29
707-99-35350	Y1620-11A0	K	Y0- 27
707-99-36710	Y1620-01A0	K	Y0- 25
707-99-42550	Y1621-01A0	K	Y0- 31
708-1L-25210	Y1600-01A0	18	Y0- 5
708-1L-25210	Y1600-11A0	18	Y0- 15
708-1L-29340	Y1600-01A0	3	Y0- 5
708-1S-13340	Y1640-01A0	27	Y0- 37
708-1S-13350	Y1640-01A0	26	Y0- 37
708-1S-15280	Y1600-03A0	18	Y0- 9
708-1S-15280	Y1600-13A0	18	Y0- 19
708-1S-15290	Y1600-03A0	20	Y0- 9
708-1S-15290	Y1600-13A0	20	Y0- 19
708-1S-15350	Y1600-03A0	29	Y0- 9
708-1S-15350	Y1600-13A0	29	Y0- 19
708-1S-15360	Y1600-03A0	30	Y0- 9
708-1S-15360	Y1600-13A0	30	Y0- 19
708-1S-15390	Y1600-03A0	5	Y0- 9
708-1S-15390	Y1600-03A0	8	Y0- 9
708-1S-15390	Y1600-13A0	5	Y0- 19
708-1S-15390	Y1600-13A0	8	Y0- 19
708-1T-19210	Y1600-04A0	18	Y0- 13
708-1T-19230	Y1600-04A0	9	Y0- 13
708-1U-13461	Y1600-02A0	14	Y0- 7
708-1U-13461	Y1600-12A0	14	Y0- 17
708-1W-22140	Y1600-01A0	21	Y0- 5
708-1W-22140	Y1600-11A0	21	Y0- 15
708-1W-22320	Y1600-01A0	24	Y0- 5
708-1W-22320	Y1600-11A0	24	Y0- 15
708-1W-23130	Y1600-02A0	3	Y0- 7
708-1W-23130	Y1600-12A0	3	Y0- 17
708-1W-28150	Y1600-14A0	17	Y0- 23
708-2L-23360	Y1640-01A0	22	Y0- 37
708-2L-25480	Y1600-04A0	1	Y0- 13
708-2L-25480	Y1600-14A0	1	Y0- 23
708-2L-25490	Y1600-04A0	2	Y0- 13
708-2L-25490	Y1600-14A0	2	Y0- 23
708-23-05011	Y1600-01A0	22	Y0- 5
708-23-05011	Y1600-11A0	22	Y0- 15
708-23-12840	Y1600-01A0	23	Y0- 5

PARTS NO.	FIG NO.	INDEX	PAGE
708-23-12840	Y1600-11A0	23	Y0- 15
708-3S-15810	Y1600-04A0	14	Y0- 13
708-3S-15810	Y1600-14A0	13	Y0- 23
708-3S-15820	Y1600-04A0	17	Y0- 13
708-3S-15820	Y1600-14A0	16	Y0- 23
708-3T-00151	H0210-01A1	1	H0- 15
708-3T-00151	Y1600-11A0	1	Y0- 15
708-3T-00151	Y1600-12A0	1	Y0- 17
708-3T-00151	Y1600-13A0	1	Y0- 19
708-3T-00151	Y1600-14A0	1	Y0- 23
708-3T-00161	H0210-01A0	1	H0- 13
708-3T-00161	Y1600-01A0	1	Y0- 5
708-3T-00161	Y1600-02A0	1	Y0- 7
708-3T-00161	Y1600-03A0	1	Y0- 9
708-3T-00161	Y1600-04A0	1	Y0- 13
708-3T-01151	Y1600-11A0	1	Y0- 15
708-3T-01151	Y1600-12A0	1	Y0- 17
708-3T-01161	Y1600-01A0	1	Y0- 5
708-3T-01161	Y1600-02A0	1	Y0- 7
708-3T-03271	Y1600-13A0	1	Y0- 19
708-3T-03281	Y1600-03A0	1	Y0- 9
708-3T-03711	Y1600-03A0	23	Y0- 9
708-3T-03711	Y1600-13A0	23	Y0- 19
708-3T-04160	Y1600-04A0	14	Y0- 13
708-3T-04160	Y1600-14A0	13	Y0- 23
708-3T-04190	Y1600-01A0	14	Y0- 5
708-3T-04190	Y1600-11A0	14	Y0- 15
708-3T-04210	Y1600-02A0	1	Y0- 7
708-3T-04210	Y1600-12A0	1	Y0- 17
708-3T-04240	Y1600-11A0	1	Y0- 15
708-3T-04250	Y1600-01A0	1	Y0- 5
708-3T-04270	Y1600-02A0	10	Y0- 7
708-3T-04270	Y1600-12A0	10	Y0- 17
708-3T-04320	Y1600-03A0	3	Y0- 9
708-3T-04320	Y1600-13A0	3	Y0- 19
708-3T-04340	Y1600-03A0	6	Y0- 9
708-3T-04340	Y1600-13A0	6	Y0- 19
708-3T-04360	Y1600-03A0	1	Y0- 9
708-3T-04360	Y1600-13A0	1	Y0- 19
708-3T-04520	Y1600-04A0	8	Y0- 13
708-3T-04620	Y1600-14A0	12	Y0- 23
708-3T-12170	Y1600-04A0	20	Y0- 13
708-3T-12170	Y1600-14A0	19	Y0- 23
708-3T-12180	Y1600-04A0	22	Y0- 13
708-3T-12180	Y1600-14A0	21	Y0- 23
708-3T-12190	B0600-01A0	12	B0- 7
708-3T-12210	Y1600-01A0	26	Y0- 5
708-3T-12210	Y1600-11A0	26	Y0- 15
708-3T-12240	Y1600-11A0	20	Y0- 15
708-3T-12250	Y1600-01A0	20	Y0- 5

PARTS NO.	FIG NO.	INDEX	PAGE
708-3T-13150	Y1600-02A0	4	Y0- 7
708-3T-13150	Y1600-12A0	4	Y0- 17
708-3T-13312	Y1600-02A0	9	Y0- 7
708-3T-13312	Y1600-12A0	9	Y0- 17
708-3T-13340	Y1600-02A0	8	Y0- 7
708-3T-13340	Y1600-12A0	8	Y0- 17
708-3T-13351	Y1600-02A0	6	Y0- 7
708-3T-13351	Y1600-12A0	6	Y0- 17
708-3T-13360	Y1600-02A0	7	Y0- 7
708-3T-13360	Y1600-12A0	7	Y0- 17
708-3T-13412	Y1600-02A0	15	Y0- 7
708-3T-13412	Y1600-12A0	15	Y0- 17
708-3T-13451	Y1600-02A0	16	Y0- 7
708-3T-13451	Y1600-12A0	16	Y0- 17
708-3T-14120	Y1600-02A0	26	Y0- 7
708-3T-14120	Y1600-12A0	26	Y0- 17
708-3T-14130	Y1600-02A0	21	Y0- 7
708-3T-14130	Y1600-12A0	21	Y0- 17
708-3T-14151	Y1600-01A0	8	Y0- 5
708-3T-14151	Y1600-11A0	8	Y0- 15
708-3T-14160	Y1600-01A0	10	Y0- 5
708-3T-14160	Y1600-11A0	10	Y0- 15
708-3T-14170	Y1600-01A0	9	Y0- 5
708-3T-14170	Y1600-11A0	9	Y0- 15
708-3T-14190	Y1600-02A0	25	Y0- 7
708-3T-14190	Y1600-12A0	25	Y0- 17
708-3T-15250	Y1600-03A0	14	Y0- 9
708-3T-15250	Y1600-13A0	14	Y0- 19
708-3T-15260	Y1600-03A0	17	Y0- 9
708-3T-15260	Y1600-13A0	17	Y0- 19
708-3T-15280	Y1600-03A0	10	Y0- 9
708-3T-15280	Y1600-13A0	10	Y0- 19
708-3T-15290	Y1600-03A0	13	Y0- 9
708-3T-15290	Y1600-13A0	13	Y0- 19
708-3T-15310	Y1600-03A0	11	Y0- 9
708-3T-15310	Y1600-13A0	11	Y0- 19
708-3T-15410	Y1600-13A0	12	Y0- 19
708-3T-15420	Y1600-03A0	12	Y0- 9
708-3T-15521	Y1600-03A0	24	Y0- 9
708-3T-15521	Y1600-13A0	24	Y0- 19
708-3T-15530	Y1600-03A0	28	Y0- 9
708-3T-15530	Y1600-13A0	28	Y0- 19
708-3T-15560	Y1600-03A0	21	Y0- 9
708-3T-15560	Y1600-13A0	21	Y0- 19
708-3T-15811	Y1600-03A0	31	Y0- 9
708-3T-15811	Y1600-13A0	31	Y0- 19
708-7S-00151	N1210-52A0	1	N0- 9
708-7S-00151	Y1640-01A0	1	Y0- 37
708-7S-00151	Y1640-02A0	1	Y0- 39
708-7S-00151	Y1640-03A0	1	Y0- 41

PARTS NO.	FIG NO.	INDEX	PAGE
708-7S-01281	Y1640-01A0	1	Y0- 37
708-7S-13530	Y1640-01A0	23	Y0- 37
708-7S-13611	Y1640-01A0	1	Y0- 37
708-7S-21511	Y1640-01A0	2	Y0- 37
708-7S-21610	Y1640-01A0	7	Y0- 37
708-7S-22110	Y1640-01A0	12	Y0- 37
708-7S-22140	Y1640-01A0	13	Y0- 37
708-7S-22150	Y1640-01A0	14	Y0- 37
708-7S-22310	Y1640-01A0	16	Y0- 37
708-7S-23111	Y1640-01A0	19	Y0- 37
708-7S-23210	Y1640-01A0	20	Y0- 37
708-7S-23310	Y1640-01A0	28	Y0- 37
708-7S-23410	Y1640-01A0	29	Y0- 37
708-7S-23510	Y1640-01A0	24	Y0- 37
708-7S-25120	Y1640-01A0	31	Y0- 37
708-7S-25130	Y1640-01A0	30	Y0- 37
708-7S-25140	Y1640-01A0	32	Y0- 37
708-7S-25150	Y1640-01A0	35	Y0- 37
708-7T-12330	Y1640-01A0	15	Y0- 37
708-7T-51210	Y1600-02A0	20	Y0- 7
708-7T-51210	Y1600-12A0	20	Y0- 17
708-8D-12221	Y1600-01A0	25	Y0- 5
708-8D-12221	Y1600-11A0	25	Y0- 15
708-8E-16150	N1210-52A0	6	N0- 9
708-8E-16150	Y1600-01A0	12	Y0- 5
708-8E-16150	Y1600-03A0	34	Y0- 9
708-8E-16150	Y1600-11A0	12	Y0- 15
708-8E-16150	Y1600-13A0	34	Y0- 19
708-8E-16160	Y1660-01A0	2	Y0- 49
708-8E-16160	Y1660-05A0	10	Y0- 57
708-8E-16160	Y1660-06A0	27	Y0- 59
708-8E-16160	Y1662-01A0	2	Y0- 83
708-8E-16160	Y1662-05A0	10	Y0- 91
708-8E-16160	Y1662-06A0	27	Y0- 93
708-8E-16160	Y1662-21A0	2	Y0- 121
708-8E-16160	Y1662-25A0	10	Y0- 129
708-8E-16160	Y1662-26A0	24	Y0- 131
708-8E-16160	Y1664-01A0	2	Y0- 157
708-8E-16160	Y1664-05A0	10	Y0- 165
708-8E-16160	Y1664-06A0	24	Y0- 167
708-8F-31610	N1210-52A0	2	N0- 9
709-25-11390	Y1672-01A0	13	Y0- 205
709-25-11650	Y1640-01A0	5	Y0- 37
709-26-11450	Y1660-02A0	19	Y0- 51
709-26-11450	Y1662-02A0	19	Y0- 85
709-26-11450	Y1662-17A0	11	Y0- 117
709-26-11450	Y1662-22A0	19	Y0- 123
709-26-11450	Y1664-02A0	19	Y0- 159
709-26-11450	Y1664-19A0	11	Y0- 193
709-70-74700	H1270-03A0	22	H0- 45

PARTS NO.	FIG NO.	INDEX	PAGE
709-70-74700	Y1672-01A0	1	Y0- 205
720-68-19610	Y1600-01A0	7	Y0- 5
720-68-19610	Y1600-11A0	7	Y0- 15
720-68-19610	Y1640-01A0	10	Y0- 37
720-68-19610	Y1640-01A0	21	Y0- 37
721-58-55700	Y1620-41A0	12	Y0- 29
721-58-60810	Y1620-11A0	14	Y0- 27
721-58-65140	Y1620-01A0	14	Y0- 25
721-58-65150	Y1621-01A0	13	Y0- 31
722-12-15160	Y1660-06A0	11	Y0- 59
722-12-15160	Y1662-06A0	11	Y0- 93
722-12-15160	Y1662-26A0	11	Y0- 131
722-12-15160	Y1664-06A0	11	Y0- 167
722-12-19120	Y1660-06A0	39	Y0- 60
722-12-19120	Y1660-06A0	8	Y0- 59
722-12-19120	Y1660-08A0	24	Y0- 65
722-12-19120	Y1662-06A0	39	Y0- 94
722-12-19120	Y1662-06A0	8	Y0- 93
722-12-19120	Y1662-08A0	24	Y0- 99
722-12-19120	Y1662-26A0	36	Y0- 131
722-12-19120	Y1662-26A0	8	Y0- 131
722-12-19120	Y1662-28A0	26	Y0- 135
722-12-19120	Y1664-06A0	36	Y0- 167
722-12-19120	Y1664-06A0	8	Y0- 167
722-12-19120	Y1664-08A0	26	Y0- 171
723-10-20900	Y1662-34A0	1	Y0- 147
723-10-20900	Y1664-14A0	1	Y0- 183
723-10-80200	Y1660-13A0	3	Y0- 75
723-10-80200	Y1662-13A0	3	Y0- 109
723-10-80200	Y1662-35A0	3	Y0- 149
723-10-80200	Y1664-15A0	3	Y0- 185
723-11-00710	Y1660-14A0	14	Y0- 77
723-11-00710	Y1662-14A0	14	Y0- 111
723-11-00710	Y1662-36A0	14	Y0- 151
723-11-00710	Y1664-16A0	14	Y0- 187
723-11-01241	Y1660-16A0	1	Y0- 81
723-11-01241	Y1662-16A0	1	Y0- 115
723-11-01241	Y1662-38A0	1	Y0- 155
723-11-01241	Y1664-18A0	1	Y0- 191
723-11-01910	Y1660-15A0	1	Y0- 79
723-11-01910	Y1662-15A0	1	Y0- 113
723-11-01910	Y1662-37A0	1	Y0- 153
723-11-01910	Y1664-17A0	1	Y0- 189
723-11-14390	Y1660-01A0	14	Y0- 49
723-11-14390	Y1662-01A0	14	Y0- 83
723-11-14390	Y1662-21A0	14	Y0- 121
723-11-14390	Y1664-01A0	14	Y0- 157
723-11-15110	Y1660-09A0	12	Y0- 67
723-11-15110	Y1662-09A0	12	Y0- 101
723-11-15110	Y1662-29A0	6	Y0- 137

PARTS NO.	FIG NO.	INDEX	PAGE
723-11-15110	Y1664-09A0	6	Y0- 173
723-11-15130	Y1660-09A0	6	Y0- 67
723-11-15130	Y1662-09A0	6	Y0- 101
723-11-16130	Y1660-09A0	9	Y0- 67
723-11-16130	Y1662-09A0	9	Y0- 101
723-11-16230	Y1660-09A0	11	Y0- 67
723-11-16230	Y1662-09A0	11	Y0- 101
723-11-16230	Y1662-29A0	5	Y0- 137
723-11-16230	Y1664-09A0	5	Y0- 173
723-11-17330	Y1660-08A0	12	Y0- 65
723-11-17330	Y1662-08A0	12	Y0- 99
723-11-17330	Y1662-28A0	10	Y0- 135
723-11-17330	Y1664-08A0	10	Y0- 171
723-11-17341	Y1660-08A0	14	Y0- 65
723-11-17341	Y1662-08A0	14	Y0- 99
723-11-17341	Y1662-28A0	12	Y0- 135
723-11-17341	Y1664-08A0	12	Y0- 171
723-11-17353	Y1660-08A0	13	Y0- 65
723-11-17353	Y1662-08A0	13	Y0- 99
723-11-17353	Y1662-28A0	11	Y0- 135
723-11-17353	Y1664-08A0	11	Y0- 171
723-11-17361	Y1660-08A0	16	Y0- 65
723-11-17361	Y1662-08A0	16	Y0- 99
723-11-17361	Y1662-28A0	13	Y0- 135
723-11-17361	Y1664-08A0	13	Y0- 171
723-11-17410	Y1660-08A0	22	Y0- 65
723-11-17410	Y1662-08A0	22	Y0- 99
723-11-17410	Y1662-28A0	24	Y0- 135
723-11-17410	Y1664-08A0	24	Y0- 171
723-11-17510	Y1660-08A0	8	Y0- 65
723-11-17510	Y1662-08A0	8	Y0- 99
723-11-18150	Y1660-14A0	9	Y0- 77
723-11-18150	Y1662-14A0	9	Y0- 111
723-11-18150	Y1662-36A0	9	Y0- 151
723-11-18150	Y1664-16A0	9	Y0- 187
723-11-18180	Y1660-15A0	5	Y0- 79
723-11-18180	Y1660-16A0	3	Y0- 81
723-11-18180	Y1662-15A0	5	Y0- 113
723-11-18180	Y1662-16A0	3	Y0- 115
723-11-18180	Y1662-29A0	11	Y0- 137
723-11-18180	Y1662-37A0	5	Y0- 153
723-11-18180	Y1662-38A0	3	Y0- 155
723-11-18180	Y1664-09A0	11	Y0- 173
723-11-18180	Y1664-17A0	5	Y0- 189
723-11-18180	Y1664-18A0	3	Y0- 191
723-11-18190	Y1660-16A0	4	Y0- 81
723-11-18190	Y1662-16A0	4	Y0- 115
723-11-18190	Y1662-29A0	8	Y0- 137
723-11-18190	Y1662-38A0	4	Y0- 155
723-11-18190	Y1664-09A0	8	Y0- 173

PARTS NO.	FIG NO.	INDEX	PAGE
723-11-18190	Y1664-18A0	4	Y0- 191
723-11-19110	Y1660-06A0	14	Y0- 59
723-11-19110	Y1660-06A0	20	Y0- 59
723-11-19110	Y1660-07A0	9	Y0- 63
723-11-19110	Y1662-06A0	14	Y0- 93
723-11-19110	Y1662-06A0	20	Y0- 93
723-11-19110	Y1662-07A0	9	Y0- 97
723-11-19110	Y1662-26A0	14	Y0- 131
723-11-19110	Y1662-26A0	17	Y0- 131
723-11-19110	Y1662-27A0	8	Y0- 133
723-11-19110	Y1664-06A0	14	Y0- 167
723-11-19110	Y1664-06A0	17	Y0- 167
723-11-19110	Y1664-07A0	8	Y0- 169
723-11-19130	Y1660-01A0	16	Y0- 49
723-11-19130	Y1660-07A0	8	Y0- 63
723-11-19130	Y1662-01A0	16	Y0- 83
723-11-19130	Y1662-07A0	8	Y0- 97
723-11-19130	Y1662-21A0	16	Y0- 121
723-11-19130	Y1662-27A0	7	Y0- 133
723-11-19130	Y1664-01A0	16	Y0- 157
723-11-19130	Y1664-07A0	7	Y0- 169
723-11-19950	Y1660-14A0	20	Y0- 77
723-11-19950	Y1662-14A0	20	Y0- 111
723-11-19950	Y1662-36A0	20	Y0- 151
723-11-19950	Y1664-16A0	20	Y0- 187
723-11-26170	Y1660-05A0	6	Y0- 57
723-11-26170	Y1662-05A0	6	Y0- 91
723-11-26170	Y1662-25A0	6	Y0- 129
723-11-26170	Y1664-05A0	6	Y0- 165
723-11-27830	Y1660-15A0	3	Y0- 79
723-11-27830	Y1662-15A0	3	Y0- 113
723-11-27830	Y1662-37A0	3	Y0- 153
723-11-27830	Y1664-17A0	3	Y0- 189
723-11-27840	Y1660-15A0	6	Y0- 79
723-11-27840	Y1662-15A0	6	Y0- 113
723-11-27840	Y1662-37A0	6	Y0- 153
723-11-27840	Y1664-17A0	6	Y0- 189
723-11-27850	Y1660-15A0	7	Y0- 79
723-11-27850	Y1662-15A0	7	Y0- 113
723-11-27850	Y1662-37A0	7	Y0- 153
723-11-27850	Y1664-17A0	7	Y0- 189
723-11-27880	Y1660-08A0	23	Y0- 65
723-11-27880	Y1662-08A0	23	Y0- 99
723-11-27880	Y1662-28A0	25	Y0- 135
723-11-27880	Y1664-08A0	25	Y0- 171
723-11-27910	Y1662-28A0	14	Y0- 135
723-11-27910	Y1664-08A0	14	Y0- 171
723-11-29490	Y1660-14A0	6	Y0- 77
723-11-29490	Y1662-14A0	6	Y0- 111
723-11-29490	Y1662-36A0	6	Y0- 151

PARTS NO.	FIG NO.	INDEX	PAGE
723-11-29490	Y1664-16A0	6	Y0- 187
723-11-29620	Y1660-08A0	20	Y0- 65
723-11-29620	Y1662-08A0	20	Y0- 99
723-11-29620	Y1662-28A0	22	Y0- 135
723-11-29620	Y1664-08A0	22	Y0- 171
723-11-29660	Y1660-10A0	3	Y0- 69
723-11-29660	Y1662-10A0	3	Y0- 103
723-11-29680	Y1662-30A0	3	Y0- 139
723-11-29680	Y1664-10A0	3	Y0- 175
723-11-37220	Y1660-08A0	21	Y0- 65
723-11-37220	Y1662-08A0	21	Y0- 99
723-11-37220	Y1662-28A0	23	Y0- 135
723-11-37220	Y1664-08A0	23	Y0- 171
723-11-38620	Y1660-01A0	9	Y0- 49
723-11-38620	Y1662-01A0	9	Y0- 83
723-11-38620	Y1662-21A0	9	Y0- 121
723-11-38620	Y1664-01A0	9	Y0- 157
723-11-38930	Y1660-08A0	15	Y0- 65
723-11-38930	Y1662-08A0	15	Y0- 99
723-20-63300	Y1660-11A0	1	Y0- 71
723-20-63300	Y1662-11A0	1	Y0- 105
723-20-63300	Y1662-31A0	1	Y0- 141
723-20-63300	Y1664-11A0	1	Y0- 177
723-20-64300	Y1662-33A0	1	Y0- 145
723-20-64300	Y1664-13A0	1	Y0- 181
723-20-67200	Y1660-12A0	1	Y0- 73
723-20-67200	Y1662-12A0	1	Y0- 107
723-20-67200	Y1662-32A0	1	Y0- 143
723-20-67200	Y1664-12A0	1	Y0- 179
723-20-80100	Y1660-13A0	1	Y0- 75
723-20-80100	Y1662-13A0	1	Y0- 109
723-20-80100	Y1662-18A0	11	Y0- 119
723-20-80100	Y1662-35A0	1	Y0- 149
723-20-80100	Y1664-15A0	1	Y0- 185
723-20-80100	Y1664-20A0	11	Y0- 195
723-20-96140	Y1660-14A0	13	Y0- 77
723-20-96140	Y1662-14A0	13	Y0- 111
723-20-96140	Y1662-36A0	13	Y0- 151
723-20-96140	Y1664-16A0	13	Y0- 187
723-20-96150	Y1660-14A0	2	Y0- 77
723-20-96150	Y1662-14A0	2	Y0- 111
723-20-96150	Y1662-36A0	2	Y0- 151
723-20-96150	Y1664-16A0	2	Y0- 187
723-20-96200	Y1660-14A0	1	Y0- 77
723-20-96200	Y1662-14A0	1	Y0- 111
723-20-96200	Y1662-36A0	1	Y0- 151
723-20-96200	Y1664-16A0	1	Y0- 187
723-21-07501	Y1662-17A0	1	Y0- 117
723-21-07501	Y1662-18A0	1	Y0- 119
723-21-07501	Y1664-19A0	1	Y0- 193

PARTS NO.	FIG NO.	INDEX	PAGE
723-21-07501	Y1664-20A0	1	Y0- 195
723-26-14140	Y1660-03A0	11	Y0- 53
723-26-14140	Y1662-03A0	11	Y0- 87
723-26-14140	Y1662-18A0	4	Y0- 119
723-26-14140	Y1662-23A0	11	Y0- 125
723-26-14140	Y1664-03A0	11	Y0- 161
723-26-14140	Y1664-20A0	4	Y0- 195
723-26-14150	Y1660-04A0	4	Y0- 55
723-26-14150	Y1662-04A0	4	Y0- 89
723-26-14150	Y1662-18A0	10	Y0- 119
723-26-14150	Y1662-24A0	4	Y0- 127
723-26-14150	Y1664-04A0	4	Y0- 163
723-26-14150	Y1664-20A0	10	Y0- 195
723-26-14220	Y1660-03A0	9	Y0- 53
723-26-14220	Y1662-03A0	9	Y0- 87
723-26-14220	Y1662-23A0	9	Y0- 125
723-26-14220	Y1664-03A0	9	Y0- 161
723-26-14240	Y1660-03A0	10	Y0- 53
723-26-14240	Y1662-03A0	10	Y0- 87
723-26-14240	Y1662-23A0	10	Y0- 125
723-26-14240	Y1664-03A0	10	Y0- 161
723-26-14310	Y1660-08A0	19	Y0- 65
723-26-14310	Y1662-08A0	19	Y0- 99
723-26-14310	Y1662-28A0	21	Y0- 135
723-26-14310	Y1664-08A0	21	Y0- 171
723-26-14490	Y1660-02A0	20	Y0- 51
723-26-14490	Y1662-02A0	20	Y0- 85
723-26-14490	Y1662-22A0	20	Y0- 123
723-26-14490	Y1664-02A0	20	Y0- 159
723-26-14510	Y1660-02A0	22	Y0- 51
723-26-14510	Y1662-02A0	22	Y0- 85
723-26-14510	Y1662-22A0	22	Y0- 123
723-26-14510	Y1664-02A0	22	Y0- 159
723-26-14640	Y1660-05A0	15	Y0- 57
723-26-14640	Y1662-05A0	15	Y0- 91
723-26-14640	Y1662-25A0	15	Y0- 129
723-26-14640	Y1664-05A0	15	Y0- 165
723-26-14650	Y1660-06A0	6	Y0- 59
723-26-14650	Y1662-06A0	6	Y0- 93
723-26-14650	Y1662-26A0	6	Y0- 131
723-26-14650	Y1664-06A0	6	Y0- 167
723-26-15110	Y1660-02A0	24	Y0- 51
723-26-15110	Y1662-02A0	24	Y0- 85
723-26-15110	Y1662-17A0	12	Y0- 117
723-26-15110	Y1662-22A0	24	Y0- 123
723-26-15110	Y1664-02A0	24	Y0- 159
723-26-15110	Y1664-19A0	12	Y0- 193
723-26-15121	Y1660-02A0	18	Y0- 51
723-26-15121	Y1662-02A0	18	Y0- 85
723-26-15121	Y1662-17A0	10	Y0- 117

PARTS NO.	FIG NO.	INDEX	PAGE
723-26-15121	Y1662-22A0	18	Y0- 123
723-26-15121	Y1664-02A0	18	Y0- 159
723-26-15121	Y1664-19A0	10	Y0- 193
723-26-15220	Y1660-04A0	1	Y0- 55
723-26-15220	Y1662-04A0	1	Y0- 89
723-26-15220	Y1662-18A0	7	Y0- 119
723-26-15220	Y1662-24A0	1	Y0- 127
723-26-15220	Y1664-04A0	1	Y0- 163
723-26-15220	Y1664-20A0	7	Y0- 195
723-26-15230	Y1660-03A0	12	Y0- 53
723-26-15230	Y1660-09A0	14	Y0- 67
723-26-15230	Y1662-03A0	12	Y0- 87
723-26-15230	Y1662-09A0	14	Y0- 101
723-26-15230	Y1662-18A0	5	Y0- 119
723-26-15230	Y1662-23A0	12	Y0- 125
723-26-15230	Y1662-29A0	12	Y0- 137
723-26-15230	Y1664-03A0	12	Y0- 161
723-26-15230	Y1664-09A0	12	Y0- 173
723-26-15230	Y1664-20A0	5	Y0- 195
723-26-15370	Y1660-03A0	13	Y0- 53
723-26-15370	Y1662-03A0	13	Y0- 87
723-26-15370	Y1662-23A0	13	Y0- 125
723-26-15370	Y1664-03A0	13	Y0- 161
723-26-15830	Y1660-02A0	6	Y0- 51
723-26-15830	Y1662-02A0	6	Y0- 85
723-26-15830	Y1662-17A0	4	Y0- 117
723-26-15830	Y1662-22A0	6	Y0- 123
723-26-15830	Y1664-02A0	6	Y0- 159
723-26-15830	Y1664-19A0	4	Y0- 193
723-26-15840	Y1660-02A0	7	Y0- 51
723-26-15840	Y1660-06A0	35	Y0- 59
723-26-15840	Y1662-02A0	7	Y0- 85
723-26-15840	Y1662-06A0	35	Y0- 93
723-26-15840	Y1662-17A0	5	Y0- 117
723-26-15840	Y1662-22A0	7	Y0- 123
723-26-15840	Y1662-26A0	32	Y0- 131
723-26-15840	Y1664-02A0	7	Y0- 159
723-26-15840	Y1664-06A0	32	Y0- 167
723-26-15840	Y1664-19A0	5	Y0- 193
723-26-16230	Y1660-04A0	5	Y0- 55
723-26-16230	Y1662-04A0	5	Y0- 89
723-26-16230	Y1662-24A0	5	Y0- 127
723-26-16230	Y1664-04A0	5	Y0- 163
723-26-16240	Y1660-04A0	8	Y0- 55
723-26-16240	Y1662-04A0	8	Y0- 89
723-26-16240	Y1662-24A0	8	Y0- 127
723-26-16240	Y1664-04A0	8	Y0- 163
723-26-16260	Y1660-04A0	10	Y0- 55
723-26-16260	Y1662-04A0	10	Y0- 89
723-26-16260	Y1662-24A0	10	Y0- 127

PARTS NO.	FIG NO.	INDEX	PAGE
723-26-16260	Y1664-04A0	10	Y0- 163
723-26-16270	Y1660-04A0	11	Y0- 55
723-26-16270	Y1662-04A0	11	Y0- 89
723-26-16270	Y1662-24A0	11	Y0- 127
723-26-16270	Y1664-04A0	11	Y0- 163
723-26-16350	Y1660-06A0	13	Y0- 59
723-26-16350	Y1662-06A0	13	Y0- 93
723-26-16360	Y1660-06A0	15	Y0- 59
723-26-16360	Y1662-06A0	15	Y0- 93
723-26-16371	Y1660-06A0	16	Y0- 59
723-26-16371	Y1662-06A0	16	Y0- 93
723-26-16380	Y1660-06A0	17	Y0- 59
723-26-16380	Y1662-06A0	17	Y0- 93
723-26-16390	Y1660-06A0	19	Y0- 59
723-26-16390	Y1662-06A0	19	Y0- 93
723-26-16390	Y1662-26A0	16	Y0- 131
723-26-16390	Y1664-06A0	16	Y0- 167
723-26-16420	Y1660-06A0	22	Y0- 59
723-26-16420	Y1662-06A0	22	Y0- 93
723-26-16420	Y1662-26A0	19	Y0- 131
723-26-16420	Y1664-06A0	19	Y0- 167
723-26-16450	Y1660-06A0	25	Y0- 59
723-26-16450	Y1662-06A0	25	Y0- 93
723-26-16450	Y1662-26A0	22	Y0- 131
723-26-16450	Y1664-06A0	22	Y0- 167
723-26-16460	Y1660-06A0	30	Y0- 59
723-26-16460	Y1662-06A0	30	Y0- 93
723-26-16460	Y1662-26A0	27	Y0- 131
723-26-16460	Y1664-06A0	27	Y0- 167
723-26-16470	Y1660-08A0	9	Y0- 65
723-26-16470	Y1662-08A0	9	Y0- 99
723-26-16470	Y1662-28A0	5	Y0- 135
723-26-16470	Y1664-08A0	5	Y0- 171
723-26-16480	Y1660-08A0	17	Y0- 65
723-26-16480	Y1662-08A0	17	Y0- 99
723-26-16480	Y1662-28A0	19	Y0- 135
723-26-16480	Y1664-08A0	19	Y0- 171
723-26-16490	Y1660-08A0	18	Y0- 65
723-26-16490	Y1662-08A0	18	Y0- 99
723-26-16490	Y1662-28A0	20	Y0- 135
723-26-16490	Y1664-08A0	20	Y0- 171
723-26-16510	Y1660-10A0	5	Y0- 69
723-26-16510	Y1662-10A0	5	Y0- 103
723-26-16510	Y1662-30A0	5	Y0- 139
723-26-16510	Y1664-10A0	5	Y0- 175
723-26-16520	Y1662-28A0	8	Y0- 135
723-26-16520	Y1664-08A0	8	Y0- 171
723-26-16530	Y1662-28A0	9	Y0- 135
723-26-16530	Y1664-08A0	9	Y0- 171
723-26-16540	Y1662-28A0	17	Y0- 135

PARTS NO.	FIG NO.	INDEX	PAGE
723-26-16540	Y1664-08A0	17	Y0- 171
723-26-16551	Y1662-28A0	18	Y0- 135
723-26-16551	Y1664-08A0	18	Y0- 171
723-26-16560	Y1662-28A0	15	Y0- 135
723-26-16560	Y1664-08A0	15	Y0- 171
723-26-16570	Y1662-28A0	16	Y0- 135
723-26-16570	Y1664-08A0	16	Y0- 171
723-26-16621	Y1660-02A0	21	Y0- 51
723-26-16621	Y1660-02A0	23	Y0- 51
723-26-16621	Y1662-02A0	21	Y0- 85
723-26-16621	Y1662-02A0	23	Y0- 85
723-26-16621	Y1662-22A0	21	Y0- 123
723-26-16621	Y1662-22A0	23	Y0- 123
723-26-16621	Y1664-02A0	21	Y0- 159
723-26-16621	Y1664-02A0	23	Y0- 159
723-26-16650	Y1662-26A0	13	Y0- 131
723-26-16650	Y1664-06A0	13	Y0- 167
723-26-16890	Y1660-05A0	8	Y0- 57
723-26-16890	Y1662-05A0	8	Y0- 91
723-26-16890	Y1662-25A0	8	Y0- 129
723-26-16890	Y1664-05A0	8	Y0- 165
723-26-16920	Y1660-06A0	38	Y0- 59
723-26-16920	Y1662-06A0	38	Y0- 93
723-26-16920	Y1662-26A0	35	Y0- 131
723-26-16920	Y1664-06A0	35	Y0- 167
723-26-16940	Y1660-06A0	7	Y0- 59
723-26-16940	Y1662-06A0	7	Y0- 93
723-26-16940	Y1662-26A0	7	Y0- 131
723-26-16940	Y1664-06A0	7	Y0- 167
723-26-16990	Y1660-01A0	10	Y0- 49
723-26-16990	Y1662-01A0	10	Y0- 83
723-26-16990	Y1662-21A0	10	Y0- 121
723-26-16990	Y1664-01A0	10	Y0- 157
723-26-17110	Y1660-02A0	26	Y0- 51
723-26-17110	Y1662-02A0	26	Y0- 85
723-26-17110	Y1662-22A0	26	Y0- 123
723-26-17110	Y1664-02A0	26	Y0- 159
723-26-17170	Y1660-05A0	5	Y0- 57
723-26-17170	Y1662-05A0	5	Y0- 91
723-26-17170	Y1662-25A0	5	Y0- 129
723-26-17170	Y1662-29A0	17	Y0- 137
723-26-17170	Y1664-05A0	5	Y0- 165
723-26-17170	Y1664-09A0	17	Y0- 173
723-26-17180	Y1660-05A0	2	Y0- 57
723-26-17180	Y1662-05A0	2	Y0- 91
723-26-17180	Y1662-25A0	2	Y0- 129
723-26-17180	Y1662-29A0	14	Y0- 137
723-26-17180	Y1664-05A0	2	Y0- 165
723-26-17180	Y1664-09A0	14	Y0- 173
723-26-17190	Y1660-05A0	13	Y0- 57

PARTS NO.	FIG NO.	INDEX	PAGE
723-26-17190	Y1662-05A0	13	Y0- 91
723-26-17190	Y1662-25A0	13	Y0- 129
723-26-17190	Y1664-05A0	13	Y0- 165
723-26-50300	H0120-01A0	1	H0- 5
723-27-50900	H0120-01A2	1	H0- 9
723-27-50900	Y1660-01A0	1	Y0- 49
723-27-50900	Y1660-02A0	1	Y0- 51
723-27-50900	Y1660-03A0	1	Y0- 53
723-27-50900	Y1660-04A0	1	Y0- 55
723-27-50900	Y1660-05A0	1	Y0- 57
723-27-50900	Y1660-06A0	1	Y0- 59
723-27-50900	Y1660-07A0	1	Y0- 63
723-27-50900	Y1660-08A0	1	Y0- 65
723-27-50900	Y1660-09A0	1	Y0- 67
723-27-50900	Y1660-10A0	1	Y0- 69
723-27-50900	Y1660-11A0	1	Y0- 71
723-27-50900	Y1660-12A0	1	Y0- 73
723-27-50900	Y1660-13A0	1	Y0- 75
723-27-50900	Y1660-14A0	1	Y0- 77
723-27-50900	Y1660-15A0	1	Y0- 79
723-27-50900	Y1660-16A0	1	Y0- 81
723-27-50900	Y1662-01A0	1	Y0- 83
723-27-50900	Y1662-02A0	1	Y0- 85
723-27-50900	Y1662-03A0	1	Y0- 87
723-27-50900	Y1662-04A0	1	Y0- 89
723-27-50900	Y1662-05A0	1	Y0- 91
723-27-50900	Y1662-06A0	1	Y0- 93
723-27-50900	Y1662-07A0	1	Y0- 97
723-27-50900	Y1662-08A0	1	Y0- 99
723-27-50900	Y1662-09A0	1	Y0- 101
723-27-50900	Y1662-10A0	1	Y0- 103
723-27-50900	Y1662-11A0	1	Y0- 105
723-27-50900	Y1662-12A0	1	Y0- 107
723-27-50900	Y1662-13A0	1	Y0- 109
723-27-50900	Y1662-14A0	1	Y0- 111
723-27-50900	Y1662-15A0	1	Y0- 113
723-27-50900	Y1662-16A0	1	Y0- 115
723-27-50900	Y1662-17A0	1	Y0- 117
723-27-50900	Y1662-18A0	1	Y0- 119
723-27-51100	H0120-01A1	1	H0- 7
723-27-51100	Y1662-21A0	1	Y0- 121
723-27-51100	Y1662-22A0	1	Y0- 123
723-27-51100	Y1662-23A0	1	Y0- 125
723-27-51100	Y1662-24A0	1	Y0- 127
723-27-51100	Y1662-25A0	1	Y0- 129
723-27-51100	Y1662-26A0	1	Y0- 131
723-27-51100	Y1662-27A0	1	Y0- 133
723-27-51100	Y1662-28A0	1	Y0- 135
723-27-51100	Y1662-29A0	1	Y0- 137
723-27-51100	Y1662-30A0	1	Y0- 139

PARTS NO.	FIG NO.	INDEX	PAGE
723-27-51100	Y1662-31A0	1	Y0- 141
723-27-51100	Y1662-32A0	1	Y0- 143
723-27-51100	Y1662-33A0	1	Y0- 145
723-27-51100	Y1662-34A0	1	Y0- 147
723-27-51100	Y1662-35A0	1	Y0- 149
723-27-51100	Y1662-36A0	1	Y0- 151
723-27-51100	Y1662-37A0	1	Y0- 153
723-27-51100	Y1662-38A0	1	Y0- 155
723-28-51500	H0120-01A3	1	H0- 11
723-28-51500	Y1664-01A0	1	Y0- 157
723-28-51500	Y1664-02A0	1	Y0- 159
723-28-51500	Y1664-03A0	1	Y0- 161
723-28-51500	Y1664-04A0	1	Y0- 163
723-28-51500	Y1664-05A0	1	Y0- 165
723-28-51500	Y1664-06A0	1	Y0- 167
723-28-51500	Y1664-07A0	1	Y0- 169
723-28-51500	Y1664-08A0	1	Y0- 171
723-28-51500	Y1664-09A0	1	Y0- 173
723-28-51500	Y1664-10A0	1	Y0- 175
723-28-51500	Y1664-11A0	1	Y0- 177
723-28-51500	Y1664-12A0	1	Y0- 179
723-28-51500	Y1664-13A0	1	Y0- 181
723-28-51500	Y1664-14A0	1	Y0- 183
723-28-51500	Y1664-15A0	1	Y0- 185
723-28-51500	Y1664-16A0	1	Y0- 187
723-28-51500	Y1664-17A0	1	Y0- 189
723-28-51500	Y1664-18A0	1	Y0- 191
723-28-51500	Y1664-19A0	1	Y0- 193
723-28-51500	Y1664-20A0	1	Y0- 195
723-60-22230	Y1640-02A0	3	Y0- 39
7826-23-4001	K0210-51A0	1	K0- 91
7826-23-4002	K0210-51A0	1	K0- 91
7835-31-3401	K0210-30A0	1	K0- 55
7835-45-2001	K0210-36A0	4	K0- 67
7861-74-5100	K0210-36A0	28	K0- 67
7861-92-5810	D0100-01A0	14	D0- 3
7861-93-1421	B0200-01A0	8	B0- 5
7861-93-1812	H1840-02A0	17	H0- 67
7861-93-1812	H1840-02A1	19	H0- 69
7861-93-1840	H1840-02A0	15	H0- 67
7861-93-1840	H1840-02A1	17	H0- 69
7861-93-1840	K0210-14A0	33	K0- 27
7861-93-3320	H0311-01A0	11	H0- 17
7861-93-3320	H0311-01A1	19	H0- 19
7861-94-3000	K0210-36A0	7	K0- 67
8A13-10-3100	K0210-51A0	7	K0- 91
8A13-10-4320	K0210-51A0	4	K0- 91
8233-06-3350	K0210-36A0	31	K0- 67

PARTS NO.	FIG NO.	INDEX	PAGE

For future use, write your Komatsu machine and distributor information below:

Machine Serial Number:

Engine Serial Number:

Date Delivered:

Komatsu Distributor Name:

Address:

Phone Number:

Fax Number:

E-mail Address:

© All Right Reserved. January 18,2011

Komatsu and its logo are the registered name and trademark of Komatsu Ltd., Japan