SPARE PARTS CATALOGUE

PC71

Serial Number : NL 20001 and Upto NL 23166
Serial Number : N 200001 and Upto N 201404
Serial Number : N220001 and Up

Product Identification Number (PIN)

10th FEBRUARY, 2017

FOREWORD

When ordering a spare part, specify the part number, part name, and quantity required, and also specify your machine model code, machine serial number, engine serial number and the service meter reading.

This Parts Book describes not only standard items but also optional equipment and attachments. To order a part, please contact your nearest Komatsu distributor.

This Parts Book contains the information and special symbols as follows:

Figure and list	When you open the Parts Catalogue you will find an illustration on the left page (even-numbered page) for the spare parts group. Each individual part in the group is given an index number. On the right page, the component parts of the group are listed in the order of the index numbers shown on the illustration page. The part number, part name, and applicable machine serial number are given for each part.
FIG. No.	The FIG. No. is the number of the illustration shown on the page. It is not the spare part number. The numbers are not always continuous.
INDEX	This is the same as the index number in the illustration. The parts are listed in index number order.
PART No.	The number given in the PART No. column is the part number for the part shown. It is the code used when ordering that part it is important that there is no mistake in this code number when ordering.
DESCRIPTION	This gives the name of part that has the part number listed. The mark "**.**" is put in front of the part name of an assembly part and the item is entered following the assembly. If a part marked with "**.**" is a sub assembly, its components are marked "**. .**" Example: ELEMENT ASSEMBLY, AIR CLEANER **.** ELEMENT ASSEMBLY, OUTER **. .** ELEMENT, OUTER **. .** NUT, WI NG **. .** WASHER
Q'TY (Quantity)	This specifies the number of pieces used for one machine. However, if a part is included in the assembly and/or component, the quantity per such assembly and/or component is specified.
SERIAL No.	Applicable engine serial number is indicated for the engine volume. In the chassis volume, this indicates the machine serial number in which the part is used.
Symbols and codes	Symbols and codes are used in the PART No. and DESCRIPTION columns, and represent the following: C1 The part specified in the line above can be used instead of this part.

Symbols and Codes



This part can be used i nstead of the part specified in the line immediately above.



This part and the part s pecified in the line immediately above are interchangeable.



The part specified in th e DESCRIPTION column can be used instead of this part if it is used as a set.



This shows discontinued part. The part specified in the above line is supplied instead.



This shows a discontinued part. The part specified in the DESCRIPTION column is supplied instead as a set.



This part cannot be suppl ied as an in dividual part. It is supplied as an assembly.



This part cannot be suppl ied as an in dividual part. It is supplied as an assembl y. However, it is suppl ied as an individual part by an authorized distributors only.



This indicates a part group. The part marked with this symbol is not considered a supply part.

==== The parts s urrounded by this line are components of the part group specified in the above line.

G-1, G-2 These indicate categories of part groups.

KIT This indicates kit parts. For kit parts, refer to the service kit tables provided in this Parts Book



This indicates a part supplied as semi-fini shed. It requires additional work before installation.

PAINT (1) This indicates parts shipped painted with undercoat.

PAINT (2) This indicates parts supplied with different col ors from the original color of your machine.

(A) This code indicates special parts for c old weather 'A:' specification (-30°C) machines.

(B) This indicates special parts for cold weather "B" specification (-50°C) machines.

PC71-7	Serial No: NL20001 and Upto NL 23166
	Serial No: N 200001 and Upto N 201404
	Serial No: N 220001 and Up
ENGINE 4R 1040	201-01-N1150 AND UP
COVER PAGE	1
FOREWORD	2
CONTENTS	4

CONTENTS

FIGURE NO.	TITLE
ENGINE	
A0100-01A0	ENGINE
ENGINE RELATED PARTS	
B0100-01A0B	ENGINE MOUNT
B0200-01A0A	AIR CLEANER MOUNT (6 INCH)
B0200-01A0B	AIR CLEANER MOUNT (6 INCH)(QUARRY SPEC)
B0200-51A1	AIR CLEANER (DOUBLE ELEMENT TYPE)
B0400-02A0	FUEL CONTROL (AUTO DECEL)
B0600-01A0A	DUMPER
COOLING SYSTEM	
C0100-01A0A	RADIATOR AND OIL COOLER ASSEMBLY
C0100-01A1	RADIATOR & OIL COOLER ASSEMBLY (AL)(LTK USE)
C0100-01A0B	RADIATOR & OIL COOLER ASSEMBLY (AL)(KIPL USE)
C0100-02A0B	COVER ASSEMBLY
C0100-02B0	COVER ASSY (AL)(LTK USE)
C0100-02A0C	COVER ASSY (AL)(KIPL USE)
C0100-03A0B	RADIATOR MOUNT
C0100-04A0	RADIATOR MOUNTING (Al)(LTK USE)
C0100-03A0C	RADIATOR MOUNTING (Al)(KIPL USE)
C0310-01A0A	FAN GUARD
FUEL TANK AND RELATED PARTS	
D0100-01A0	FUEL TANK
D0200-01A3B	FUEL LINE (WITH WATER SEPERATOR & ADDITIONAL FUEL FILTER)
D0200-02A3B	FUEL LINE (WITH WATER SEPARATOR & ADDITIONAL FUEL FILTER)
ELECTRICAL SYSTEM	
E0100-01A0B	BATTERY
E0100-N1A0	BATTERY LARGE CAPACITY
E0200-01A0B	WIRING (ENGINE)
E0200-02A0	WIRING (HORN AND RELAY)
E0200-03A1B	WIRING (HARNESS)
E0200-04A1B	WIRING (HARNESS)
E0200-06A10	WIRING (AUTO DECEL SYSTEM)
HYDRAULIC SYSTEM	
H0110-01A1A	HYDRAULIC TANK (WITH PROTECTOR)
H0120-02A0	MAIN VALVE (WITH PLUGS)(MOUNT BRACKET)(BLADE)
H0311-01A0A	SUCTION LINE
H0312-01A0	DELIVERY LINE
H0320-01A0A	OIL COOLER LINE
H0320-02A0	OIL COOLER LINE (1 ATTACHMENT)
H0330-01A0A	RETURN LINE
H0340-01A0A	DRAIN LINE
H1210-01A0A	BOOM DRIFT LINE
H1220-01A0A	ARM AND BUCKET LINE
H1270-01A0	ATTACHMENT LINE - MAIN VALVE PIPING (1 ATTACHMENT)
H1270-02A0	ATTACHMENT LINE - SUPPLEMENTARY FILTER PIPING (1 ATTACHMENT)
H1270-03A0	ATTACHMENT LINE - SUPPLEMENTARY FILTER PIPING (1 ATTACHMENT)
H1270-05A0	PILOT LINE ROUTING (1 ATTACHMENT)

H1270-06A0	ATTACHMENT LINE (ACCUMULATOR MOUNTING) (1 ATTACHMENT)
H1290-01A0A	BLADE LINE
H1310-01A0A	TRAVEL LINE
H1340-01A0A	SWING LINE
H1831-01A0	SOLENOID VALVE
H1832-01A0A	SOLENOID VALVE LINE
H1833-02A0A	PRESSURE SWITCH BLOCK
H1840-01A0A	P.P.C. MAIN LINE
MAIN REVOLVING FRAME AND RELATED PARTS	
J1110-01A2	REVOLVING FRAME (BLADE SPEC.)
J1310-01A0	BOOM FOOT PIN
OPERATOR'S COMPARTMENT AND CONTROL SYSTEM	
K0110-01A1	OPERATOR SEAT WITH BELT
K0110-02A1	SEAT INNER PARTS
K0110-03A0	SEAT INNER PARTS
K0210-01A0	OPERATOR'S CAB (CAB, GRIP & OPEN LOCK)
K0210-02A0	OPERATOR'S CAB (FRONT WINDOW)
K0210-05A0	OPERATOR'S CAB
K0210-06A0N	OPERATOR'S CAB (ELECTRICAL)
K0210-07A0	OPERATOR'S CAB (INSIDE COVER)
K0210-08A0	OPERATOR'S CAB (DOOR)
K0210-014A0	OPERATOR'S CAB (INSTALLATION PARTS)
K0210-015A0	OPERATOR'S CAB WITH FOPS-STD
K0210-16A0	OPERATOR'S CAB(WITH ADDL. LAMPS)
K0210-17A0	OPERATOR' S CAB (ADDL. LAMPS ,W.TOP GUARD)
K0230-01A0	OPERATOR'S CAB WITH FOPS / MESH - TUNNELING
K0310-01A1	FLOOR MAT (BLADE SPEC.)
K0700-01A6	HEATER COVER
K1110-01A0	FLOOR (FLOOR FRAME)(BLADE SPEC.)
K1110-02A0A	FLOOR FRAME (BASE)
K1110-03A0A	FLOOR FRAME (SAFETY LOCK LEVER)
K1110-04A0	FLOOR FRAME (TRAVEL LEVER)
K1110-05A3	FLOOR FRAME (FUEL CONTROL)
K1110-06A0	FLOOR FRAME (LEVER LH)
K1110-07A0A	FLOOR FRAME (P.P.C. WORK LINE)
K1110-08A3	FLOOR FRAME (P.P.C. TRAVEL LINE) (BLADE SPEC.)
K1110-09B9	FLOOR FRAME (COVER LH)(FOR RADIO LESS)(BLADE SPEC.)
K1110-10A0	FLOOR FRAME (LEVER RH)
K1110-11A0	FLOOR FRAME (PANEL)
K1110-12A0B	FLOOR FRAME (HARNESS)
K1110-N1A0	FLOOR FRAME HARNESS (HS MODE WIRING)
K1110-13A0A	FLOOR FRAME (BLADE CONTROL) (BLADE SPEC.)
K1110-14A0	FOOT PEDAL MOUNTING (1 ATTACHMENT)
K1110-14B0	FOOT PEDAL MOUNTING WITH HOUR-METER(1 ATTACHMENT)
K1110-15A0	FLOOR FRAME - PILOT HOSE CONN. FROM FOOOT PEDAL (1 ATT)
K1110-016A0	FLOOR FRAME (HARNESS) FOR HOUR METER
K1120-01A0	FLOOR MOUNT
GUARD	
M1110-02A1	HOOD
M1110-03A0	HOOD (MOUNTING PARTS)
M1110-04A0	HOOD-TUNNEL SPEC
M1130-01A0	LEFT SIDE COVER
M1140-01A0	RIGHT SIDE COVER
M1150-01A3A	PARTITION (FRAME)(WITH WATER SEPTR. & ADDNL. FUEL FILTER)
M1220-01A0	LAMP CASE
M1220-02A0	LAMP CASE - QUARRY SPEC
M1310-01A0	HAND RAIL
M1420-01A0	REAR VIEW MIRROR(RH)
M1510-01A0A	COUNTER WEIGHT

M1510-02A0	COUNTER WEIGHT-HOOK(TUNNEL SPEC)
M1520-01A0	COUNTER WEIGHT MOUNTING
M1810-01A1A	UNDER COVER (STRENGTH TYPE)
SWING CIRCLE AND RELATED PARTS	
N1110-01A0	SWING CIRCLE
N1210-01A0	SWING MACHINERY
N1210-51A0	SWING MACHINERY
N1210-052A0	SWING MACHINERY (RELATED PARTS)
N1310-01A1A	SWIVEL JOINT (MOUNTING PARTS)(BLADE SPEC.)
TRAVEL AND LOWER PIPING	
P1120-01A1A	TRAVEL PIPING (BLADE SPEC.)
P1210-01A0	FINAL DRIVE
P1240-01A0	BLADE LINE (LOWER)
P1240-N1A0	BLADE BLIND LINE
UNDERCARRIAGE	
R0110-01A0A	FRONT IDLER
R0120-01A0A	IDLER CUSHION
R0200-0N2A0	TRACK ROLLER
R0200-0N3A0	TRACK ROLLER
R0300-02A0A	CARRIER ROLLER
R0300-03A0	CARRIER ROLLER
R0500-01A0A	TRACK SHOE (TRIPLE GROUSER WITH HOLE)(450MM WIDE)
R0500-02A0A	TRACK SHOE (TRIPLE GROUSER WITH HOLE)(450MM WIDE)
R1100-01A1A	TRACK FRAME (BLADE SPEC.)
R1100-02A0	TRACK FRAME(QUARRY SPEC)
R1200-01A0	TRACK ROLLER GUARD
WORK EQUIPMENT	
T1110-01A0A	BOOM
T1110-02A0	BOOM - (FOR 1 ATTACHMENT)
T1110-03A0	BOOM - TUNNELING
T1110-04A0	BOOM - TUNNELING (FOR 1 ATTACHMENT)
T1120-01A0	BOOM CYLINDER
T1140-01A0	ARM CYLINDER
T1140-03A0	ARM CYLINDER-TUNNELING
T1210-01A0	ARM
T1210-01B0	ARM (2.25M)
T1210-02A0	ARM - (1 ATTACHMENT)
T1210-04A0	ARM (1 ATTACHMENT)
T1210-03A0	ARM (1 ATTACHMENT)(QUARRY SPEC)
T1220-01A0	BUCKET CYLINDER
T1230-01A1	BUCKET LINK (STRENGTH TYPE)
T1510-01A4	BUCKET 0.09 CU.M WIDTH 450MM (VERTICAL PIN TYPE)
T1510-N01A0	REINFORCED BUCKET - 0.3M3 WIDTH 750MM (HORIZONTAL PIN TYPE)
T1510-N02A0	SHALLOW BUCKET - 0.3 CU.M
T1510-N02A1	SHALLOW BUCKET - 0.35 CU.M
T1510-N03A0	BUCKET 0.3 CU.M (HORIZONTAL PIN TYPE)(QUARRY SPEC)
T1710-01A0	BLADE
T1720-01A0	BLADE CYLINDER
MARKS AND PLATES	
U0100-01A0	DECAL AND PLATES
ACCESSORY	
V0300-01A0	TOOL KIT
MISCELLANEOUS	
W1117-01A1	MANUAL GREASING
SERVICE KIT	
Y1600-01A0A	MAIN PUMP (1/6)
Y1600-02A0A	MAIN PUMP (2/6)
Y1600-03A0A	MAIN PUMP (3/6)

Y1600-04A0A	MAIN PUMP (4/6)
Y1600-05A0A	MAIN PUMP (5/6)
Y1600-06A0A	MAIN PUMP (6/6)
Y1620-01A0A	BOOM CYLINDER (INNER PARTS)
Y1620-11A0A	ARM CYLINDER (INNER PARTS)
Y1620-13A0	ARM CYLINDER (INNER PARTS)-TUNNELING
Y1620-41A0A	BUCKET CYLINDER (INNER PARTS)
Y1621-01A0A	BLADE CYLINDER (INNER PARTS)
Y1627-01A1D	SWIVEL JOINT (INNER PARTS) (BLADE SPEC.)
Y1640-01A0	SWING MOTOR (1/2)
Y1640-02A0	SWING MOTOR (2/2)
Y1651-01A0A	TRAVEL MOTOR (1/3)
Y-1651-01A1	TRAVEL MOTOER (1/3)
Y1651-02A0A	TRAVEL MOTOR (2/3)
Y-1651-02A1	TRAVEL MOTOER (2/3)
Y1651-03A0A	TRAVEL MOTOR (3/3)
Y-1651-03A1	TRAVEL MOTOER (3/3)
Y1662-21A0	MAIN VALVE (7-VALVE)(1/7)(FOR BLADE)
Y1662-22A0	MAIN VALVE (7-VALVE)(2/7)(FOR BLADE)
Y1662-23A0	MAIN VALVE (7-VALVE)(3/7)(FOR BLADE)
Y1662-24A0	MAIN VALVE (7-VALVE)(4/7)(FOR BLADE)
Y1662-25A0	MAIN VALVE (7-VALVE)(5/7)(FOR BLADE)
Y1662-26A0	MAIN VALVE (7-VALVE)(6/7)(FOR BLADE)
Y1662-27A0	MAIN VALVE (7-VALVE)(7/7)(FOR BLADE)
Y1662-35A0	MAIN VALVE - (1 ATTACHMENT)
Y1662-36A0	MAIN VALVE (1 ATTACHMENT)
Y1670-01A0	PPC VALVE (FOR TRAVEL)
Y1670-11A0	PPC VALVE (FOR WORK EQUIPMENT)
Y1670-21A0	PPC VALVE (FOR ATTACHMENT)
Y1679-01A0	PILOT VALVE

ENGINE

PC71-7

FIG. A0100-01A0 ENGINE



Index	Code	Part Number	Description	Qty	Serial No.
		201-01-N1153	ENGINE ASSY	1	NL 20396-
	C1	201-01-N1152	ENGINE ASSY	1	NL 20201-NL 20395
	C1	201-01-N1151	ENGINE ASSY	1	NL 20171-NL 20200
	C1	201-01-N1150	ENGINE ASSY	1	NL 20001-NL 20170

PC71-7

ENGINE RELATED PARTS

PC71-7

FIG. B0100-01A0B ENGINE MOUNT

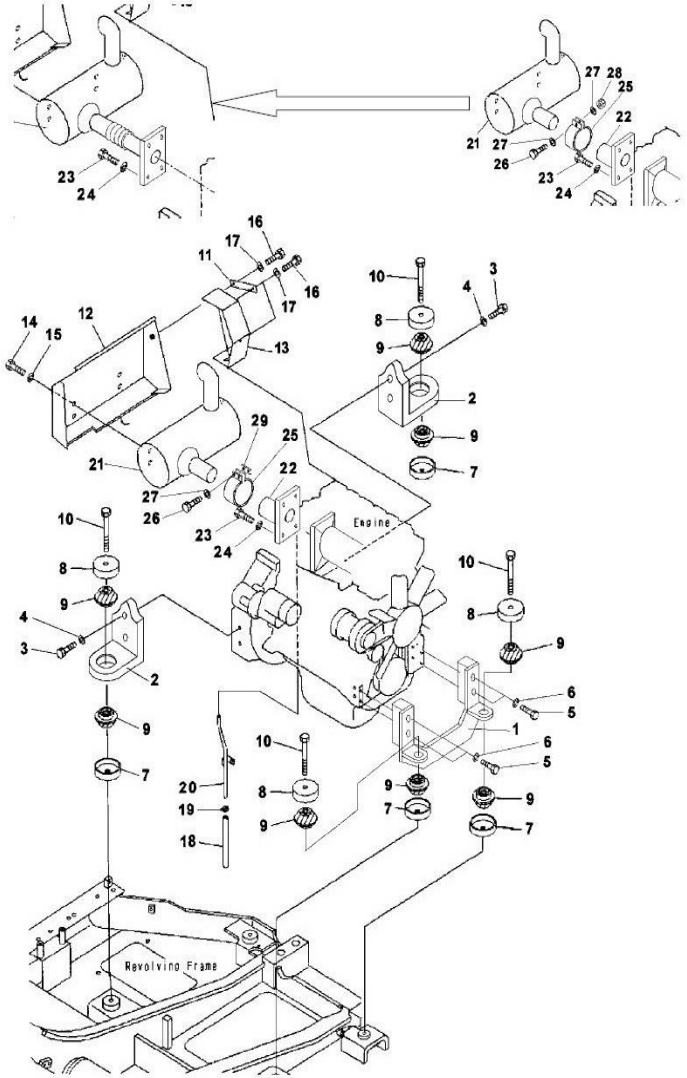

Index	Code	Part Number	Description	Qty	Serial No.
1		201-01-N1250	BRACKET	1	NL 20001-
2		201-01-N1261	BRACKET	2	N 220005-
	C1	201-01-N1260	BRACKET	2	NL 20001- N 220004
3		01010-81465	BOLT	4	NL 20001-
4		01643-31445	WASHER	4	NL 21171-
	C1	201-01-N1270	WASHER	4	NL 20001-NL21170
5		01011-81420	BOLT	4	NL 20001-
6		01643-31445	WASHER	4	NL 20001-
7		201-01-N1870	STOPPER	4	NL 21266-
	C1	201-01-71260	STOPPER	4	NL 20001-NL21265
8		201-01-71720	STOPPER	4	NL 20001-
9		201-01-N1960	CUSHION	4	NL22805-
	C1	201-01-71250	CUSHION	4	NL22367-NL22804
	C1	201-01-N1960	CUSHION	4	NL22267-NL22366
	C1	201-01-71250	CUSHION	4	NL22026-NL22266
	C1	201-01-N1960	CUSHION	4	NL21964-NL22025
	C1	201-01-71250	CUSHION	8	NL 20001NL21963
10		01011-81630	BOLT	4	NL 20001-
11		142-62-14450	PLATE	1	NL 20001-
12		201-01-N1741	COVER	1	NL 20784-
	C1	201-01-N1740	COVER	1	NL 20214-NL20783
	C1	201-01-N1370	COVER	1	NL 20001-NL20213
13		201-01-N1382	COVER	1	NL 20784-
	C1	201-01-N1381	COVER	1	NL 20001-NL20783
14		01010-81225	BOLT	4	NL 20001-
15		01643-31232	WASHER	4	NL 20001-
16		01010-80820	BOLT	3	NL 20001-
17		01643-30823	WASHER	3	NL 20001-
18		07260-20935	HOSE	1	NL 20204-
	C1	07260-20932	HOSE	1	NL 20001- NL20203
19		07285-00155	CLIP	1	NL 20204-
	C1	07285-00150	CLIP	1	NL 20001- NL20203
20		201-01-N1390	TUBE	1	NL 20001-
21		201-01-N1320	MUFFLER	1	NL 20288-

PC71-7

FIG. B0100-01A0B ENGINE MOUNT

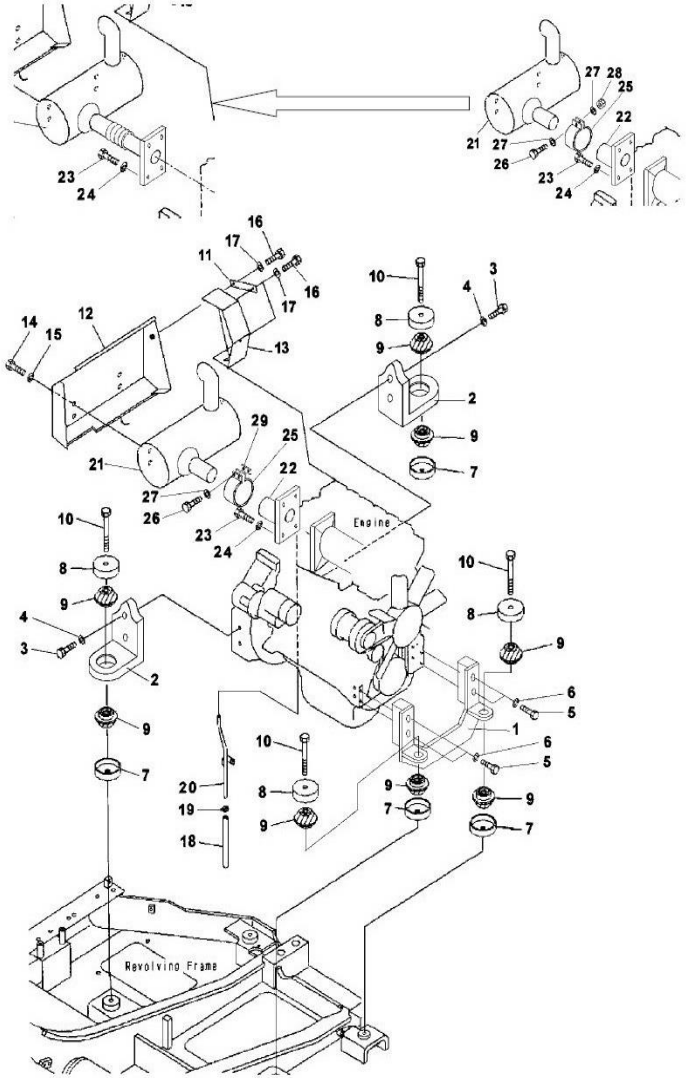

Index	Code	Part Number	Description	Qty	Serial No.
	C1	201-01-N1560	MUFFLER	1	NL20204 - NL20287
	C1	201-01-N1320	MUFFLER	1	NL 20001- NL20203
22		201-01-N1790	FLANGE	1	NL 20288-
	C1	201-01-N1280	FLANGE	1	NL 20001- NL20287
23		01010-81030	BOLT	4	NL 20001-
24		01643-31032	WASHER	4	NL 20001-
25		201-01-N1780	CLAMP	1	NL 20288-
25	C1	201-01-N1290	CLAMP	1	NL 20001- NL20203
26	C1	01010-80835	BOLT	1	NL 20001- NL20203
26		01435-01025	BOLT	2	NL 20288-
27	C1	01602-20825	WASHER	2	NL 20001-NL20203
28	C1	01580-00806	NUT	1	NL 20001-NL20203
29		201-01-N1810	PLATE	1	NL 20288-

PC71-7

FIG. B0200-01A0A AIR CLEANER MOUNT (6 INCH)

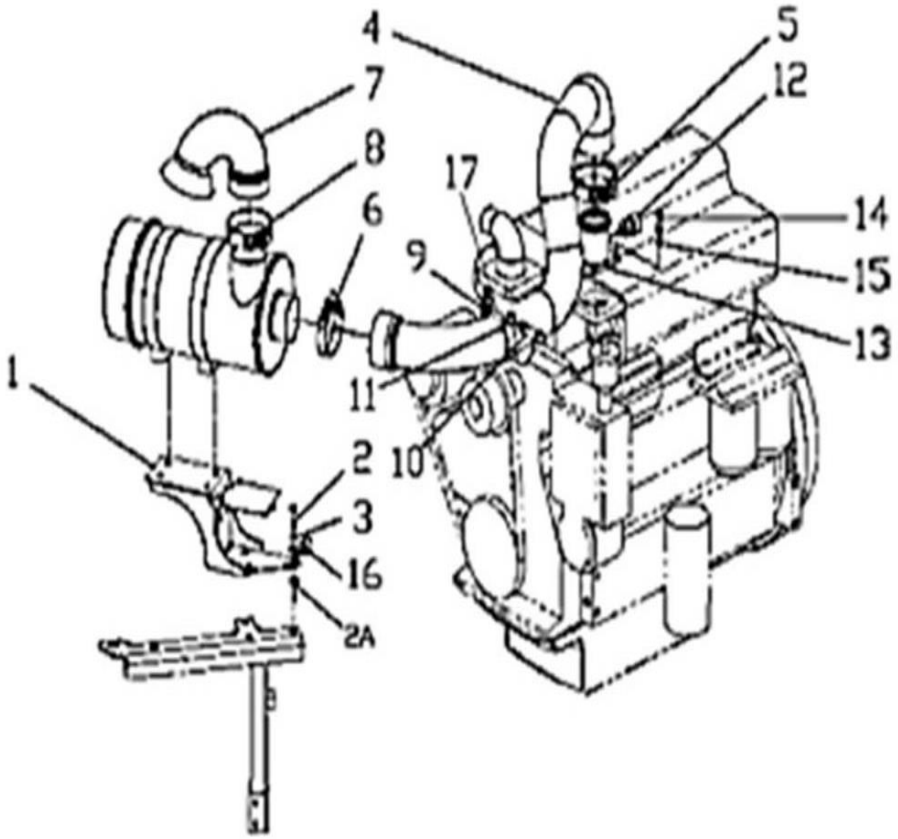

Index	Code	Part Number	Description	Qty	Serial No.
1		201-01-N1681	BRACKET	1	NL 20784 -
	C1	201-01-N1680	BRACKET	1	NL 20125-NL20783
	C1	201-01-N1410	BRACKET	1	NL 20001-NL20124
		201-01-N1220	BRACKET	1	NL 20001 -
2		01010-81025	BOLT	3	NL 20001-
2a		01580-10806	NUT	4	NL 20001-
3		01643-31032	WASHER	3	NL 20001-
4		201-01-N1161	AIR DUCT	1	NL 22899-
	C1	201-01-N1160	AIR DUCT	1	NL 20001-NL22898
5		07289-00080	CLAMP	1	NL 20001-
6		07289-00095	CLAMP	1	NL 20001-
7		201-01-N1171	HOSE	1	NL 20001-
	C1	07281-00909	CLAMP	1	NL 20001-NL20770
9		201-01-N1970	HOSE	1	NL 21779-
	C1	201-01-N1230	CLIP	1	NL 20001- NL21778
10		01010-81030	BOLT	1	NL 22779-
	C1	01010-81290	BOLT	1	NL 22763-NL 22778
	C1	01010-81030	BOLT	1	NL 21779-NL 22762
	C1	01010-81025	BOLT	1	NL 20001-NL21778
11		01643-31032	WASHER	1	NL 22779-
	C1	01643-31232	WASHER	1	NL 22763-NL 22778
	C1	01643-31032	WASHER	1	NL 20001-NL 22762
12		08670-02001	INDICATOR, DUST	1	NL 20001-
13		201-01-N1240	BRACKET	1	NL 20001-
14		01010-80825	BOLT	4	NL 20001-
15		01643-30823	WASHER	4	NL 20001-
16		04434-51010	CLIP	1	NL 20047-
17		175-40-22540	SPACER	1	N200141-
	C1	176-38-41350	SPACER	1	NL 22763-N200140

PC71-7

FIG. B0200-01A0B AIR CLEANER MOUNT (6 INCH)(QUARRY SPEC)

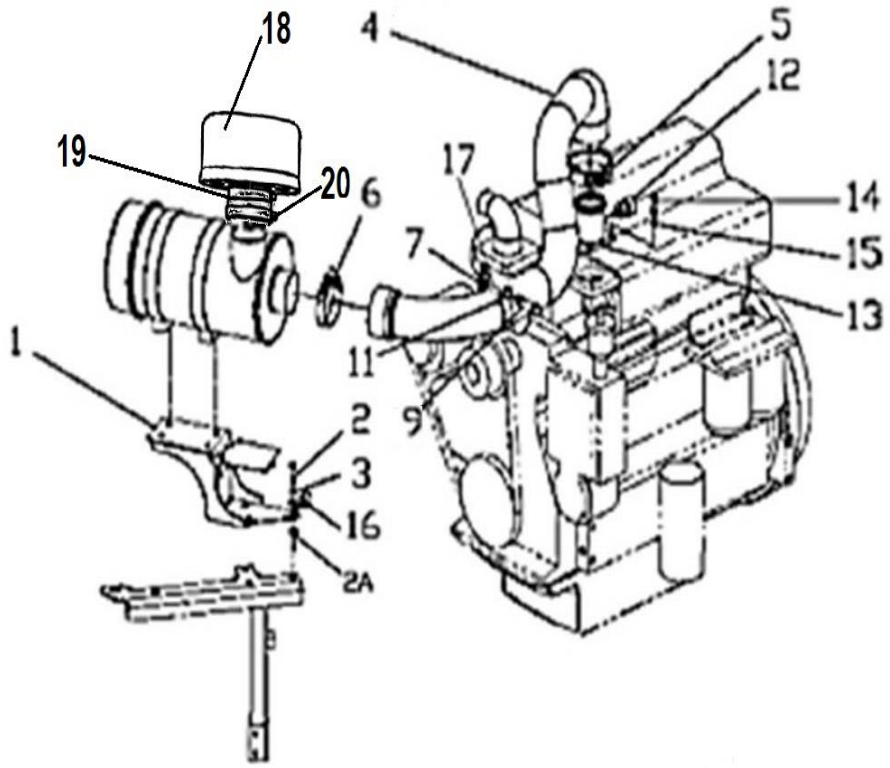

Index	Code	Part Number	Description	Qty	Serial No.
1		201-01-N1681	BRACKET	1	NL 20784 -
	C1	201-01-N1680	BRACKET	1	NL 20125-NL20783
	C1	201-01-N1410	BRACKET	1	NL 20001-NL20124
	C1	201-01-N1220	BRACKET	1	NL 20001 -
2		01010-81025	BOLT	3	NL 20001-
2a		01580-10806	NUT	4	NL 20001-
3		01643-31032	WASHER	3	NL 20001-
4		201-01-N1161	AIR DUCT	1	NL 22899-
	C1	201-01-N1160	AIR DUCT	1	NL 20001-NL22898
5		07289-00080	CLAMP	1	NL 20001-
6		07289-00095	CLAMP	1	NL 20001-
7		201-01-N1970	CLIP	1	NL 21779-
	C1	201-01-N1230	CLIP	1	NL 20001- NL21778
9		01010-81030	BOLT	1	NL 22779-
	C1	01010-81290	BOLT	1	NL 22763-NL 22778
	C1	01010-81030	BOLT	1	NL 21779-NL 22762
	C1	01010-81025	BOLT	1	NL 20001-NL21778
11		01643-31032	WASHER	1	NL 22779-
	C1	01643-31232	WASHER	1	NL 22763-NL 22778
	C1	01643-31032	WASHER	1	NL 20001-NL 22762
12		08670-02001	INDICATOR, DUST	1	NL 20001-
13		201-01-N1240	BRACKET	1	NL 20001-
14		01010-80825	BOLT	4	NL 20001-
15		01643-30823	WASHER	4	NL 20001-
16		04434-51010	CLIP	1	NL 20047-
17		175-40-22540	SPACER	1	N200141
	C1	176-38-41350	SPACER	1	NL 22763-N200140
18		201-01-N2080	PRE-CLEANER	1	NL 20001-
19		201-01-N2120	DUCT	1	NL 20001-
20		07289-00080	CLAMP	1	NL 20001-

PC71-7

FIG. B0200-51A1 AIR CLEANER (DOUBLE ELEMENT TYPE)

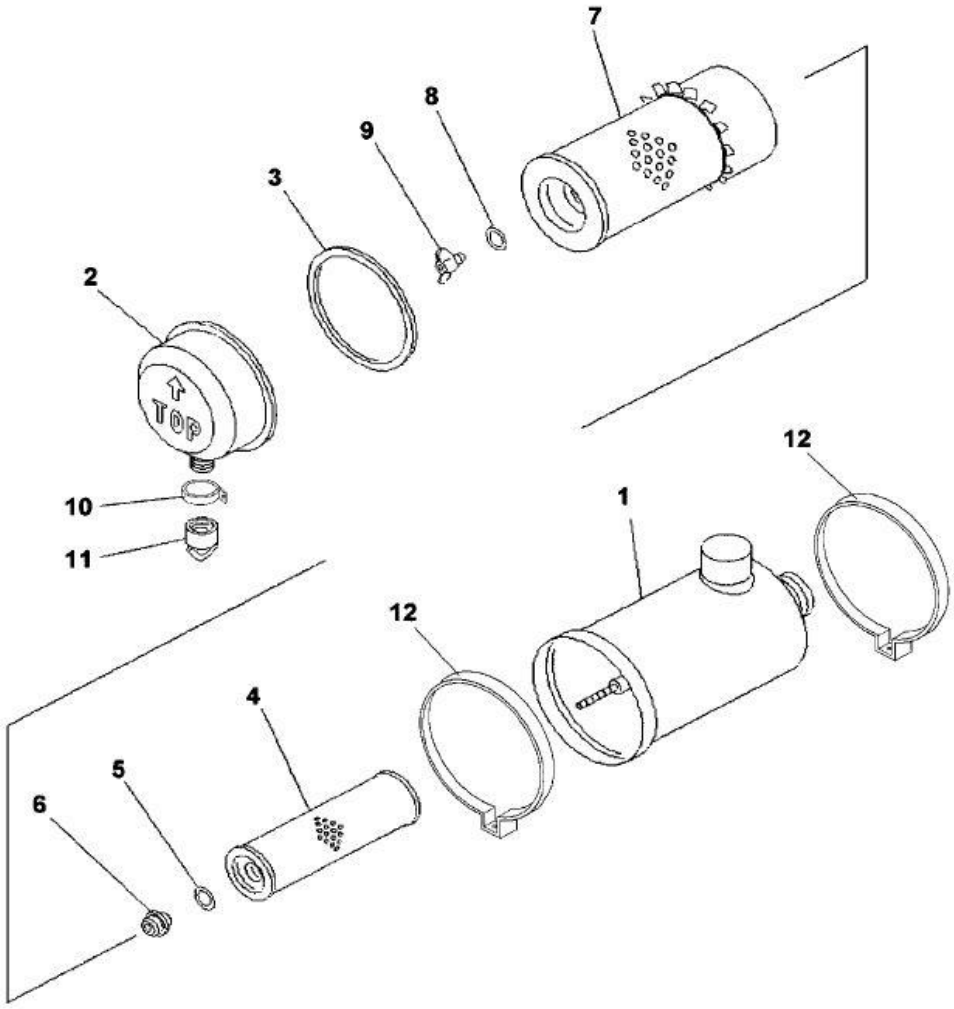

Index	Code	Part Number	Description	Qty	Serial No.
1		201-01-N1180	AIR CLEANER ASS'Y	1	NL 20001-
		201-01-N1420	• HOUSING ASS'Y	1	NL 20001-
		#	• • BODY	1	NL 20001-
2		#	• • COVER	1	NL 20001-
3		#	• • SEAL	1	NL 20001-
4		#	• SAFETY ELEMENT	1	NL 20001-
5		#	• O-RING	1	NL 20001-
6		#	• NUT	1	NL 20001-
7		#	• PRIMARY ELEMENT	1	NL 20001-
8		#	• O-RING	1	NL 20001-
9		#	• WING NUT	1	NL 20001-
10		#	• CLIP	1	NL 20001-
11		#	• VALVE	1	NL 20001-
12		#	• MOUNTING STRAP	2	NL 20001-

PC71-7

FIG. B0400-02A0 FUEL CONTROL (AUTO DECEL)

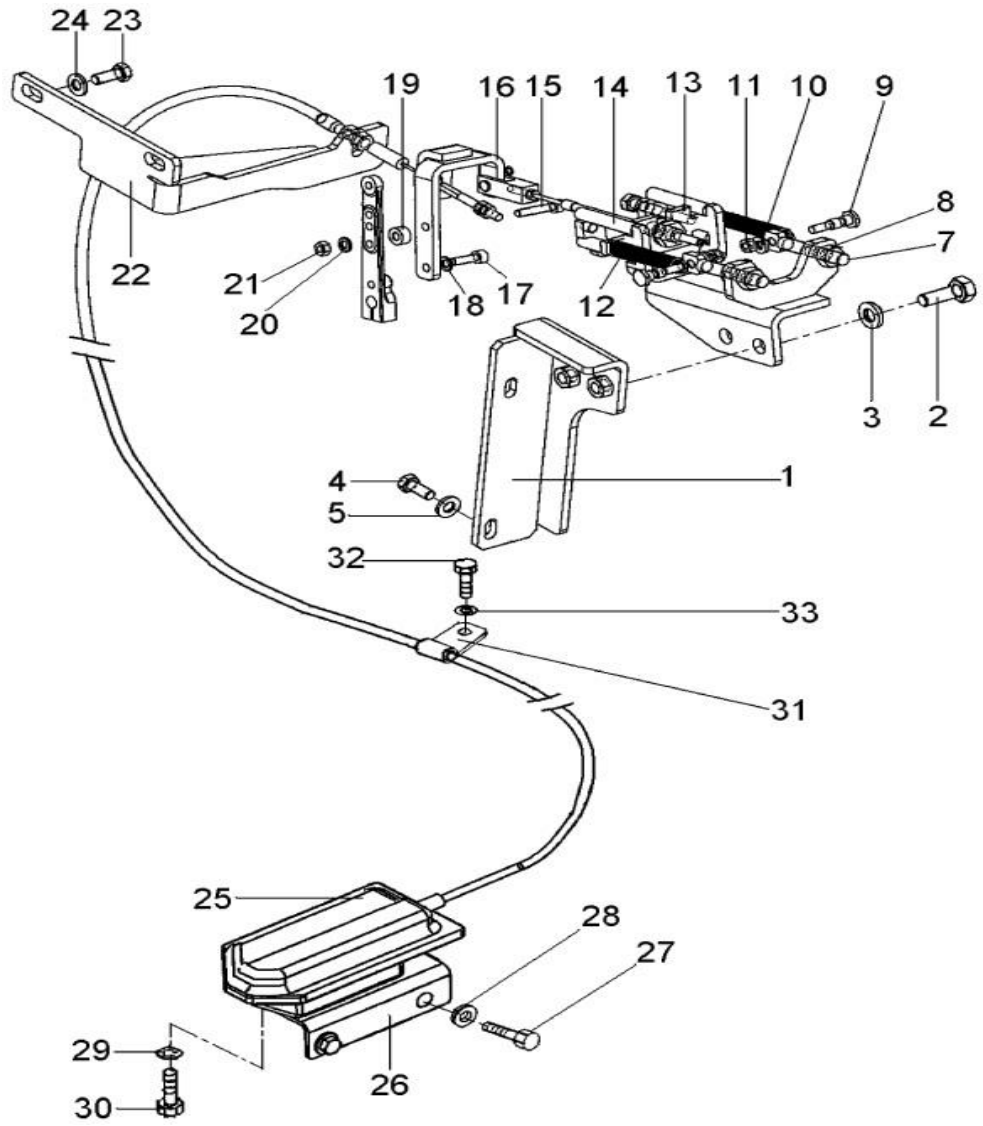

Index	Code	Part Number	Description	Qty	Serial No.
1		201-01-N2030	BRACKET	1	NL22481-
2		01010-81030	BOLT	2	NL22481-
3		01643-31032	WASHER	2	NL22481-
4		01010-80820	BOLT	2	NL22481-
5		01643-30823	WASHER	2	NL22481-
7		201-01-N2050	BOLT	2	NL22481-
8		01580-11008	NUT	2	NL22481-
9		201-01-N2040	BOLT	2	NL22481-
10		01643-30623	WASHER	2	NL22481-
11		01580-10605	NUT	2	NL22481-
12		201-04-N1360	TENSIONING SPRING	2	NL22481-
13		201-01-N2010	FLOAT	1	NL22481-
14		201-01-N2020	BRACKET	1	NL22481-
15		01252-70630	BOLT	1	NL22481-
16		201-01-N1991	LEVER	1	NL22481-
17		01252-70620	BOLT	1	NL22481-
18		01602-20619	WASHER	2	NL22481-
19		201-01-N2070	SPACER	1	NL22481-
20		01602-20619	WASHER	1	NL22481-
21		01580-10605	NUT	1	NL22481-
22		201-01-N1981	BRACKET	1	NL22481-
23		01010-81025	BOLT	2	NL22481-
24		01643-31032	WASHER	2	NL22481-
25		201-972-7110	MOTOR	1	NL22481-
26		201-01-N2060	BRACKET	1	NL22481-
27		01010-81225	BOLT	2	NL22481-
28		01643-31232	WASHER	2	NL22481-
29		01643-30623	WASHER	3	NL22481-
30		01010-80616	BOLT	3	NL22481-
31		04434-50612	CLIP	1	NL22481-
32		01010-81020	BOLT	1	NL22481-
33		01643-31032	WASHER	1	NL22481-

PC71-7

FIG. B0600-01A0A DUMPER

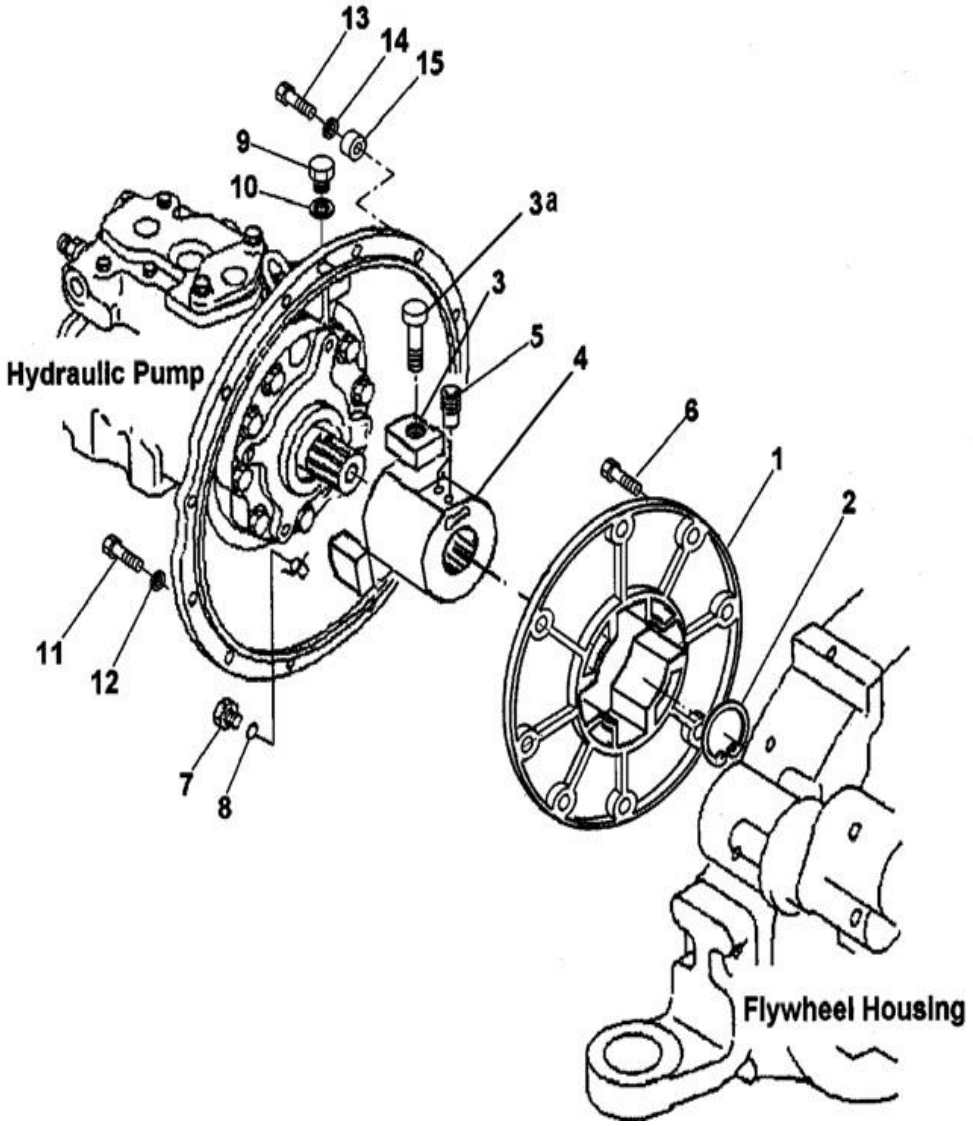

Index	Code	Part Number	Description	Qty	Serial No.
1		201-01-N1111	COUPLING	1	NL 20106-
	C1	201-01-N1110	COUPLING	1	NL 20001-NL 20105
		#	• COUPLING ELEMENT	1	NL 20001-
2		#	• ARRESTOR	4	NL 20001-
3		#	• BOLT	4	NL 20001-
4		#	• HUB	1	NL 20001-
5		#	• GRUB SCREW	1	NL 20001-
6		01010-81035	BOLT	8	NL 20001-
7		07040-11209	PLUG	1	NL 20001-
8		07002-11223	O-RING	1	NL 20001-
9		07041-13012	PLUG	1	NL 20001-
10		07002-13034	O-RING	1	NL 20001-
11		01010-81035	BOLT	12	NL 20001-
12		01643-31032	WASHER	12	NL 20001-
13	C1	01010-81060	BOLT	1	NL 20001-NL 20449
14	C1	01643-31032	WASHER	1	NL 20001-NL 20449
15	C1	201-01-73310	COLLAR	1	NL 20213-NL 20449
	C1	144-874-7470	BOSS	1	NL 20156-NL 20212

PC71-7

COOLING SYSTEM

PC71-7

FIG. C0100-01A0A RADIATOR AND OIL COOLER ASSEMBLY

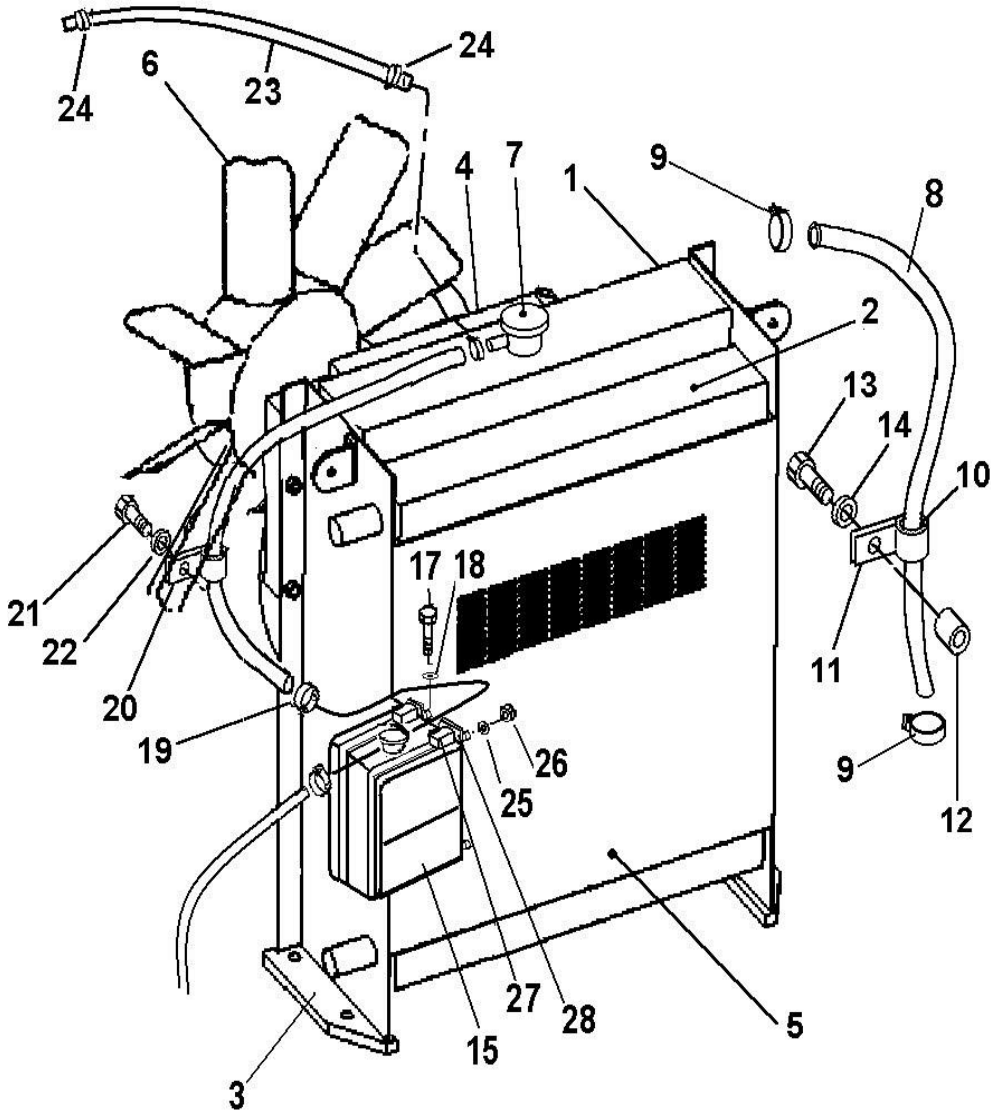

Index	Code	Part Number	Description	Qty	Serial No.
1	C1	201-03-N1920	RADIATOR & OIL COOLER ASSY	1	NL 20991-NL 200079
	C1	201-03-N1841	RADIATOR & OIL COOLER ASSY	1	NL 20560-NL 20990
	C1	201-03-N1840	RADIATOR & OIL COOLER ASSY	1	NL 20236-NL 20559
	C1	201-03-N1112	RADIATOR & OIL COOLER ASSY	1	NL 20214-NL 20235
	C1	201-03-N1111	RADIATOR & OIL COOLER ASSY	1	NL 20171-NL 20213
	C1	201-03-N1110	RADIATOR & OIL COOLER ASSY	1	NL 20001-NL 20170
	C1	201-03-N1851	• RADIATOR	1	NL 20236-NL 200079
	C1	201-03-N1850	• RADIATOR	1	NL 20236-NL 200079
2	C1	201-03-N1662	• OIL COOLER	1	NL 20991-NL 200079
	C1	201-03-N1661	• OIL COOLER	1	NL 20236-NL 20990
3	C1	201-03-N1711	• SIDE FRAME	2	NL 20236-NL 200079
4	C1	201-03-N1691	• FAN COWLING	1	NL 20236-NL 200079
5	C1	201-03-N1722	• DUST GUARD	1	NL 20991-NL 200079
	C1	201-03-N1721	• DUST GUARD	1	NL 20236-NL 20990
6	C1	201-03-N1681	• FAN ASSY	1	NL 20236-NL 200079
7	C1	201-03-N1870	• RADIATOR CAP	1	NL 20236-NL 200079
	C1	201-03-N1730	• RADIATOR CAP	1	NL 20001-NL 200079
8	C1	201-03-N1750	HOSE.....	1	NL 20171-NL 20559
	C1	201-03-N1380	HOSE.....	1	NL 20001-NL 20170
9	C1	07281-00289	CLAMP	2	NL 20001-NL 20559
10	C1	07095-00628	CUSHION	1	NL 20001-NL 20559
11	C1	201-62-N1320	CLIP	1	NL 20057-NL 20559
	C1	23S-61-21870	CLIP	1	NL 20001-NL 20056
12	C1	144-874-7470	SPACER	1	NL 20001-NL 20559
13	C1	01010-81050	BOLT	1	NL 20001-NL 20559
14	C1	01643-31032	WASHER	1	NL 20030-NL 20559
15	C1	203-03-61640	SURGE TANK	1	NL 20236-NL 200079
17	C1	01010-80855	BOLT	2	NL 20236-NL 200079
18	C1	01643-30828	WASHER	2	NL 20236-NL 200079
19	C1	07285-00095	CLIP	3	NL 20550-NL 200079
	C1	206-03-43340	CLIP	3	NL 20236-NL 20549
20	C1	04434-51610	P-CLIP	2	NL 20236-NL 200079
21	C1	01010-81016	BOLT	1	NL 20236-NL 200079
22	C1	01643-31032	WASHER	1	NL 20236-NL 200079

PC71-7

FIG. C0100-01A0A RADIATOR AND OIL COOLER ASSEMBLY

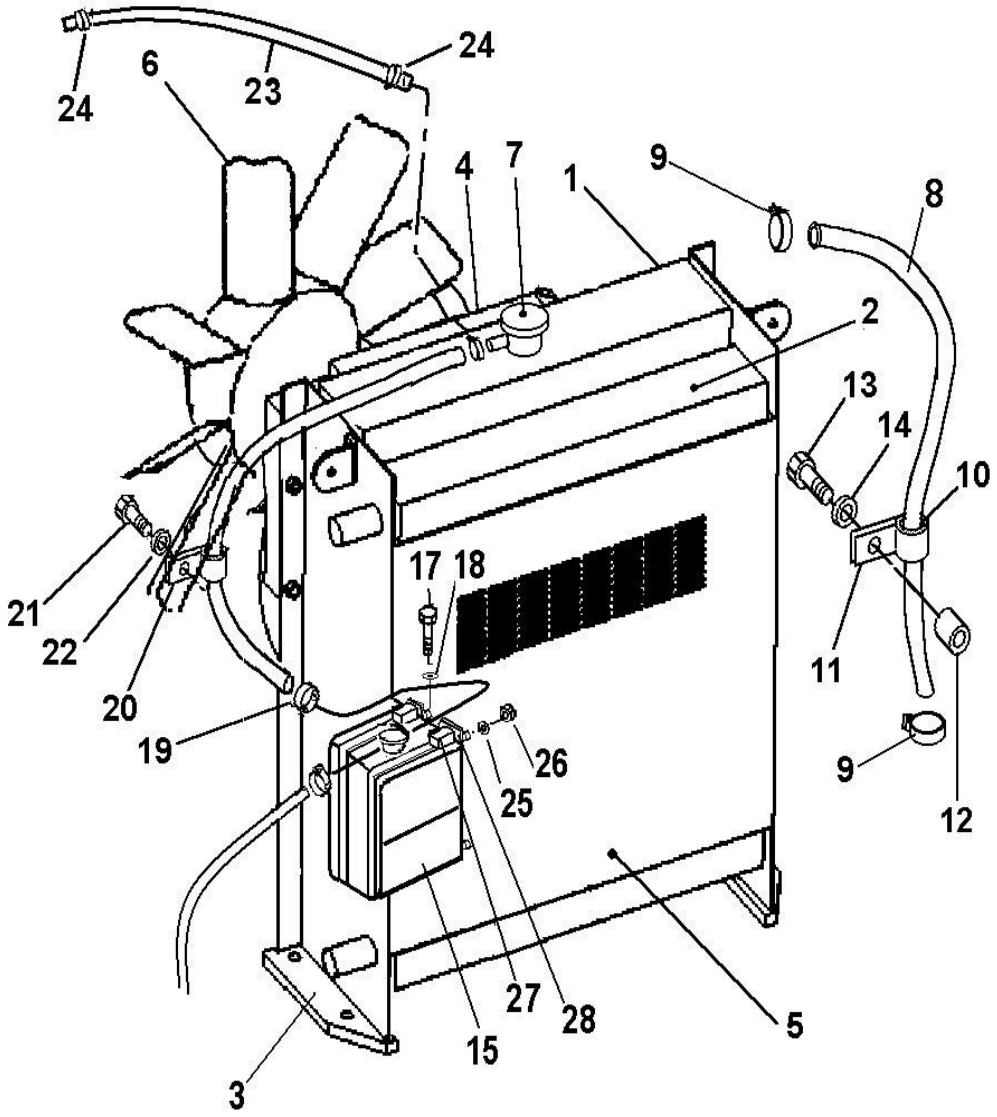

Index	Code	Part Number	Description	Qty	Serial No.
23	C1	07260-20932	HOSE	1	NL 20820-NL 200079
24	C1	07281-00167	CLIP	2	NL 20820-NL 200079
25	C1	01643-30823	WASHER	4	NL 20858-NL 200079
26	C1	01580-10806	NUT	4	NL 20858-NL 200079
27	C1	201-03-N1910	CLAMP	2	NL 20858-NL 200079
28	C1	201-03-N1890	BRACKET	1	NL 20858-NL 200079

PC71-7

FIG. C0100-01A1 RADIATOR & OIL COOLER ASSEMBLY (AL)

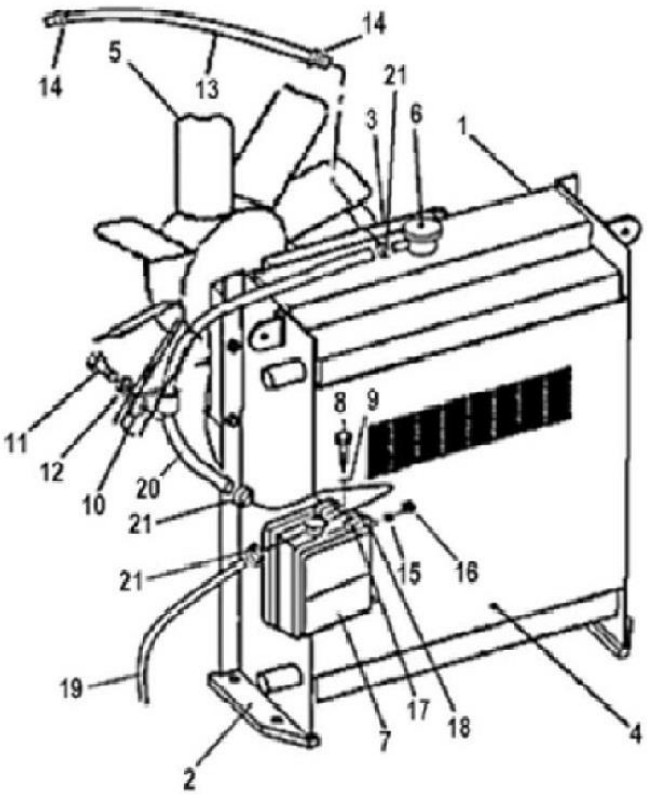

Index	Code	Part Number	Description	Qty	Serial No.
	C1	201-03-N1950	RADIATOR & OIL COOLER ASSY	1	NL 22763-NL22778
1	C1	201-03-N1980	• RADIATOR	1	NL 22763-NL22778
2	C1	#	• SIDE FRAME	2	NL 22763-NL22778
3	C1	#	• FAN COWLING	1	NL 22763-NL22778
4	C1	#	• DUST GUARD	1	NL 22763-NL22778
5	C1	201-03-N1970	• FAN ASSY	1	NL 22763-NL22778
6	C1	201-03-N1870	• RADIATOR CAP	1	NL 22763-NL22778
7	C1	203-03-61640	SURGE TANK	1	NL 22763-NL22778
8	C1	01010-80855	BOLT	2	NL 22763-NL22778
9	C1	01643-30828	WASHER	2	NL 22763-NL22778
10	C1	04434-51610	P-CLIP	2	NL 22763-NL22778
11	C1	01010-81016	BOLT	1	NL 22763-NL22778
12	C1	01643-31032	WASHER	1	NL 22763-NL22778
13	C1	07260-20940	HOSE.....	1	NL 22763-NL22778
14	C1	07281-00167	CLIP	2	NL 22763-NL22778
15	C1	01643-30823	WASHER	4	NL 22763-NL22778
16	C1	01580-10806	NUT.....	4	NL 22763-NL22778
17	C1	201-03-N1910	CLAMP	2	NL 22763-NL22778
18	C1	201-03-N1890	BRACKET	1	NL 22763-NL22778
19	C1	20Y-03-21390	HOSE.....	1	NL 22763-NL22778
20	C1	20Y-03-21450	HOSE.....	1	NL 22763-NL22778
21	C1	206-03-43340	CLIP	3	NL 22763-NL22778

PC71-7

FIG. C0100-01A0B RADIATOR & OIL COOLER ASSEMBLY (AL)

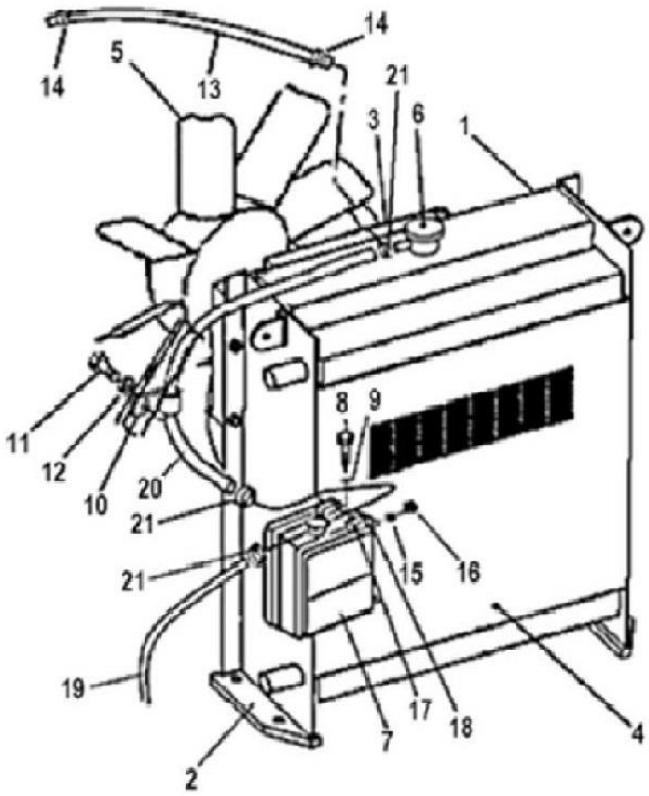

Index	Code	Part Number	Description	Qty	Serial No.
		201-03-N1950	RADIATOR & OIL COOLER ASSY	1	NL 200080-
1		201-03-N1980	• RADIATOR	1	NL 200080-
2		#	• SIDE FRAME	2	NL 200080-
3		#	• FAN COWLING	1	NL 200080-
4		#	• DUST GUARD	1	NL 200080-
5		201-03-N1970	• FAN ASSY	1	NL 200080-
6		201-03-N1870	• RADIATOR CAP	1	NL 200080-
7		203-03-61640	SURGE TANK	1	NL 200080-
8		01010-80850	BOLT	2	NL 200080-
9		01643-30823	WASHER	2	NL 200080-
10		04434-51410	P-CLIP	1	NL 200080-
11		01010-81016	BOLT	1	NL 200080-
12		01643-31032	WASHER	1	NL 200080-
13		07260-20940	HOSE	1	NL 200080-
14		07281-00167	CLIP	2	NL 200080-
15		01643-30823	WASHER	4	NL 200080-
16		01580-10806	NUT	4	NL 200080-
17		201-03-N1910	CLAMP	2	NL 200080-
18		201-03-N1890	BRACKET	1	NL 200080-
19		20Y-03-21390	HOSE	1	NL 200080-
20		20Y-03-21450	HOSE	1	NL 200080-
21		206-03-43340	CLIP	3	NL 200080-

PC71-7

FIG. C0100-02A0B COVER ASSEMBLY

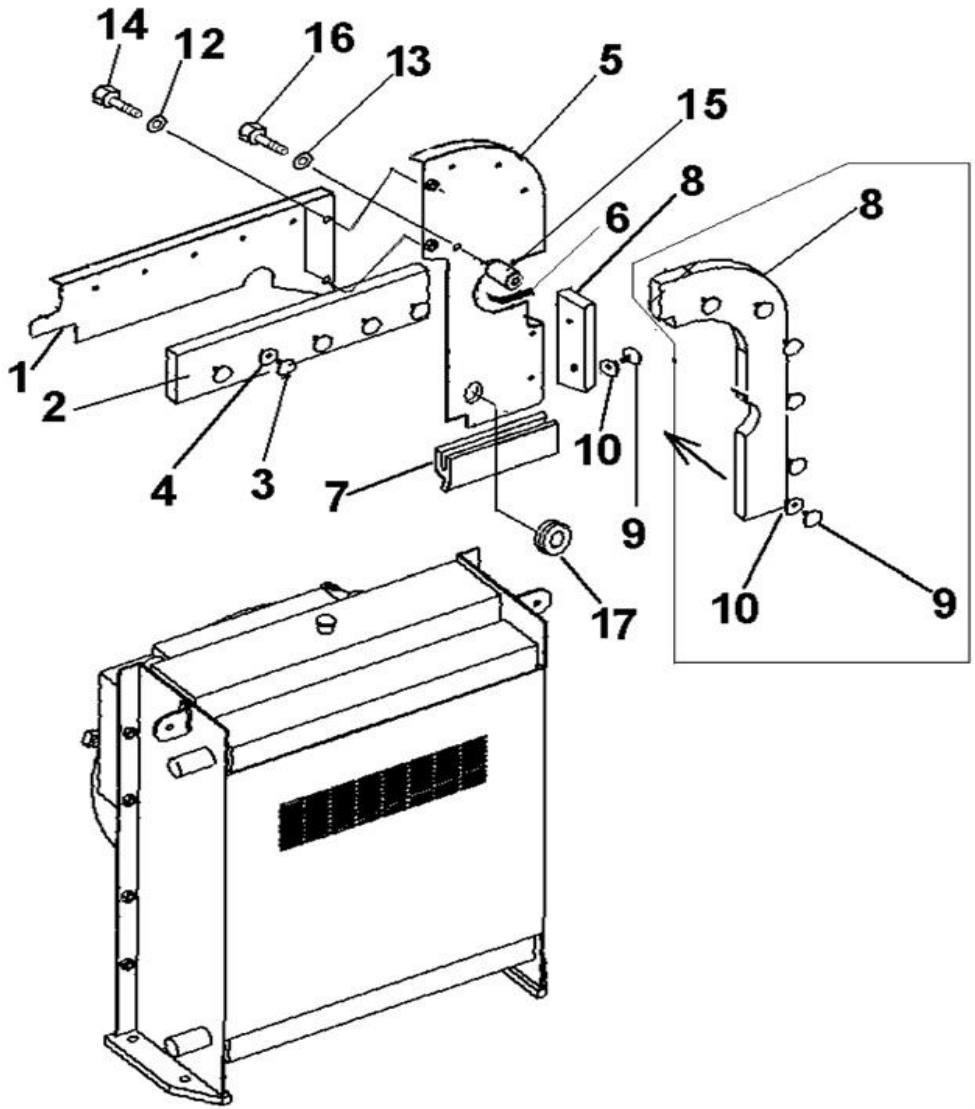

Index	Code	Part Number	Description	Qty	Serial No.
1	C1	201-54-N2992	COVER ASSY	1	NL 20934-NL 200079
	C1	201-54-N2991	COVER ASSY	1	NL 20235-NL 20933
	C1	201-54-N2990	COVER ASSY	1	NL 20214-NL 20235
	C1	201-54-N2550	COVER ASSY	1	NL 20171-NL 20213
	C1	201-54-N2060	COVER ASSY	1	NL 20001-NL 20170
	C1	201-54-N1710	• COVER	1	NL 20001-NL 20170
2	C1	201-03-N1580	• SHEET	1	NL 20001-NL 20170
3	C1	201-54-N1120	• PLUG	5	NL 20001-NL 20170
4	C1	201-54-N2210	• WASHER	5	NL 20001-NL 20170
	C1	201-54-N2670	COVER ASSY	1	NL 20171-NL 200079
	C1	201-54-N2190	COVER ASSY	1	NL 20059-NL 20170
	C1	201-54-N2050	COVER ASSY	1	NL 20001-NL20058
5	C1	201-54-N2541	• COVER	1	NL20784-NL 200079
	C1	201-54-N2540	• COVER	1	NL 20171-NL20783
	C1	201-54-N1690	• COVER	1	NL 20059-NL 20170
	C1	201-54-N2120	• COVER	1	NL 20001-NL 200079
6	C1	201-03-N1630	• SEAL	1	NL 20001-NL 200079
7	C1	201-03-N2210	• BEADING	0.1	NL 20001-NL 200079
7A	C1	08037-01610	• GROMMET	1	NL 20001-NL 200079
8	C1	201-03-N1780	• SHEET	1	NL 20171-NL 200079
	C1	201-03-N1570	SHEET	1	NL 20001-NL 20170
9	C1	201-54-N2130	• PLUG	2	NL 20171-NL 200079
	C1	201-54-N2130	PLUG	5	NL 20001-NL 20170
10	C1	201-54-N2210	• WASHER	2	NL 20171-NL 200079
	C1	201-54-N2210	WASHER	5	NL 20001-NL 20170
11	C1	01010-81020	BOLT	3	NL 20001-NL 200079
12	C1	01643-31032	WASHER	3	NL 20001-NL 200079
13	C1	01643-31032	WASHER	2	NL 20001-NL 200079
14	C1	01010-81016	BOLT	2	NL 20001-NL 200079
15	C1	001 287 80 D	SPACER	2	NL 20001-NL 200079
16	C1	01010-81040	BOLT	2	NL 20001-NL 200079
17	C1	08037-01610	GROMMET	1	NL 20001-NL 200079

PC71-7

FIG. C0100-02B0 COVER ASSY (AL)

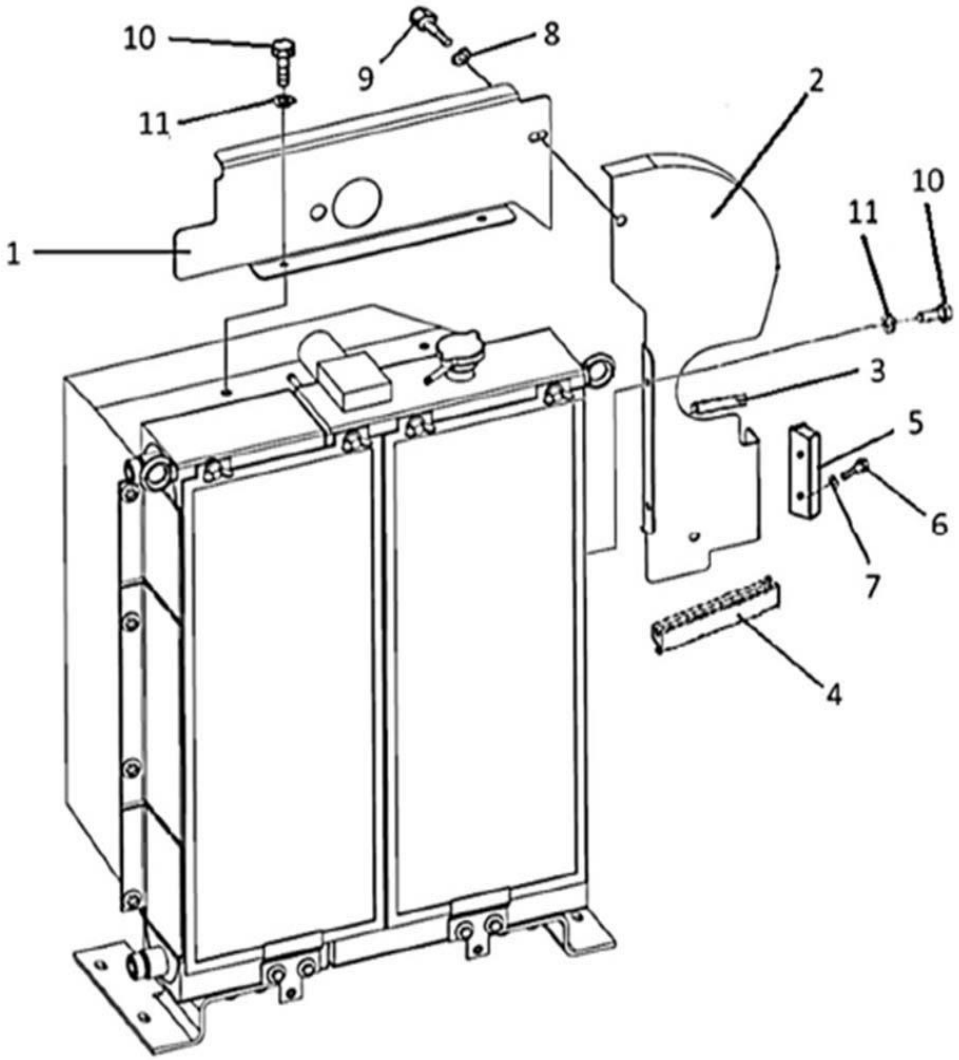

Index	Code	Part Number	Description	Qty	Serial No.
1	C1	201-54-N3690	COVER ASSY	1	NL 22763-NL22778
2	C1	201-54-N3710	COVER	1	NL 22763-NL22778
3	C1	201-03-N1630	• SEAL	1	NL 22763-NL22778
4	C1	201-03-N2210	• BEADING	0	NL 22763-NL22778
5	C1	201-03-N1780	• SHEET	1	NL 22763-NL22778
6	C1	201-54-N2130	• PLUG	2	NL 22763-NL22778
7	C1	201-54-N2210	• WASHER	2	NL 22763-NL22778
8	C1	01643-31032	WASHER	1	NL 22763-NL22778
9	C1	01010-81016	BOLT	1	NL 22763-NL22778
10	C1	01010-80816	BOLT	4	NL 22763-NL22778
11	C1	01643-30823	WASHER	4	NL 22763-NL22778

PC71-7

FIG. C0100-02A0C COVER ASSY (AL)

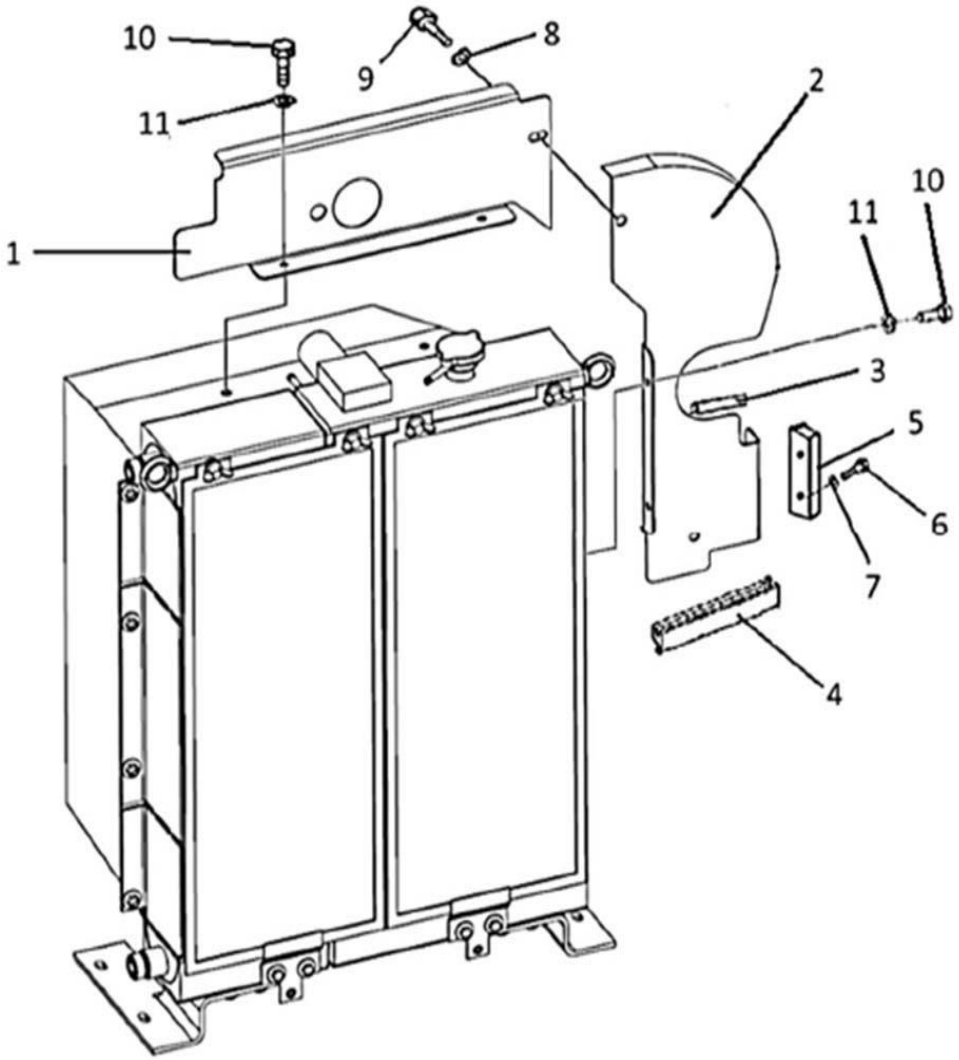

Index	Code	Part Number	Description	Qty	Serial No.
1		201-54-N3691	COVER ASSY	1	NL 200080-
2		201-54-N3711	COVER	1	NL 200080-
3		201-03-N1631	• SEAL	1	NL 200080-
4		201-03-N2210	• BEADING	1	NL 200080-
5		201-03-N1780	• SHEET	1	NL 200080-
6		201-54-N2130	• PLUG	2	NL 200080-
7		201-54-N2210	• WASHER	2	NL 200080-
8		01643-31032	WASHER	1	NL 200080-
9		01010-81016	BOLT	1	NL 200080-
10		01010-80816	BOLT	4	NL 200080-
11		01643-30823	WASHER	4	NL 200080-

PC71-7

FIG. C0100-03A0B RADIATOR MOUNT

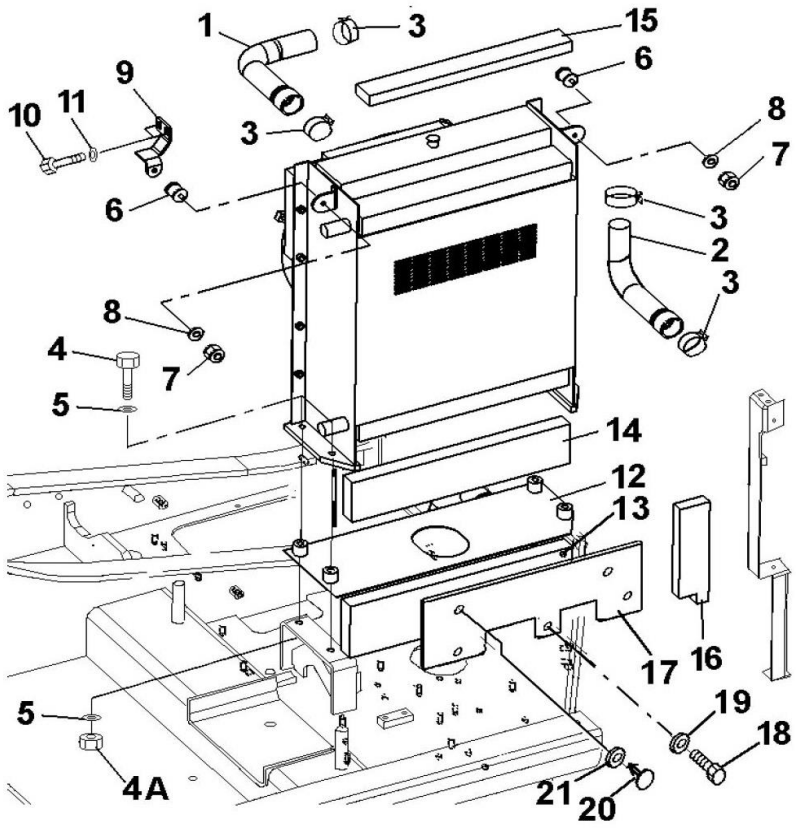

Index	Code	Part Number	Description	Qty	Serial No.
1	C1	201-03-N1760	HOSE	1	NL 20171-NL 200079
	C1	201-03-N1130	HOSE	1	NL 20001-NL 20170
2	C1	201-03-N1550	HOSE	1	NL 20001-NL 200079
3	C1	201-54-N3280	CLAMP	4	NL 21235-NL 200079
	C1	07289-00055	CLAMP	4	NL 20001-NL 21234
4	C1	01010-81245	BOLT	4	NL 20171-NL 200079
	C1	01010-81275	BOLT	4	NL 20001-NL 20170
4A	C1	01580-11210	NUT	4	NL 20001-NL 200079
5	C1	01643-31232	WASHER	8	NL 20001-NL 200079
6	C1	20R-03-11190	CUSHION	2	NL 20001-NL 200079
12	C1	201-03-N1311	PLATE	1	NL 20001-NL 20170
13	C1	201-03-N1430	SHEET	1	NL 20001-NL 200079
14	C1	201-03-N1460	SHEET	1	NL 20001-NL 20025
15	C1	201-03-N1450	SHEET	1	NL 20001-NL 20025
16	C1	201-03-N1470	SHEET	1	NL 20001-NL 200079
17	C1	201-03-N1650	PLATE	1	NL 20171 -NL 200079
	C1	201-03-N1640	PLATE	1	NL 20026 NL 20170
	C1	201-03-N1610	PLATE	1	NL 20001-NL 20025
18	C1	01010-80835	BOLT	2	NL 20428 -NL 200079
	C1	01010-80816	BOLT	2	NL 20335 -NL20427
	C1	01010-81016	BOLT	2	NL 20026-NL 20334
19A	C1	001 287 80 D	SPACER	2	NL 20428 -NL 200079
19	C1	01643-30823	WASHER	2	NL 20335 -NL 200079
	C1	01643-31032	WASHER	2	NL 20026-NL 20334
20	C1	201-54-N2130	PLUG	3	NL 20171-NL 200079
	C1	201-54-N2130	PLUG	6	NL 20001-NL 20170
21	C1	201-54-N2130	PLUG	3	NL 20171-NL 200079
	C1	201-54-N2210	WASHER	6	NL 20001-NL 20170

PC71-7

FIG. C0100-04A0 RADIATOR MOUNTING (AI)

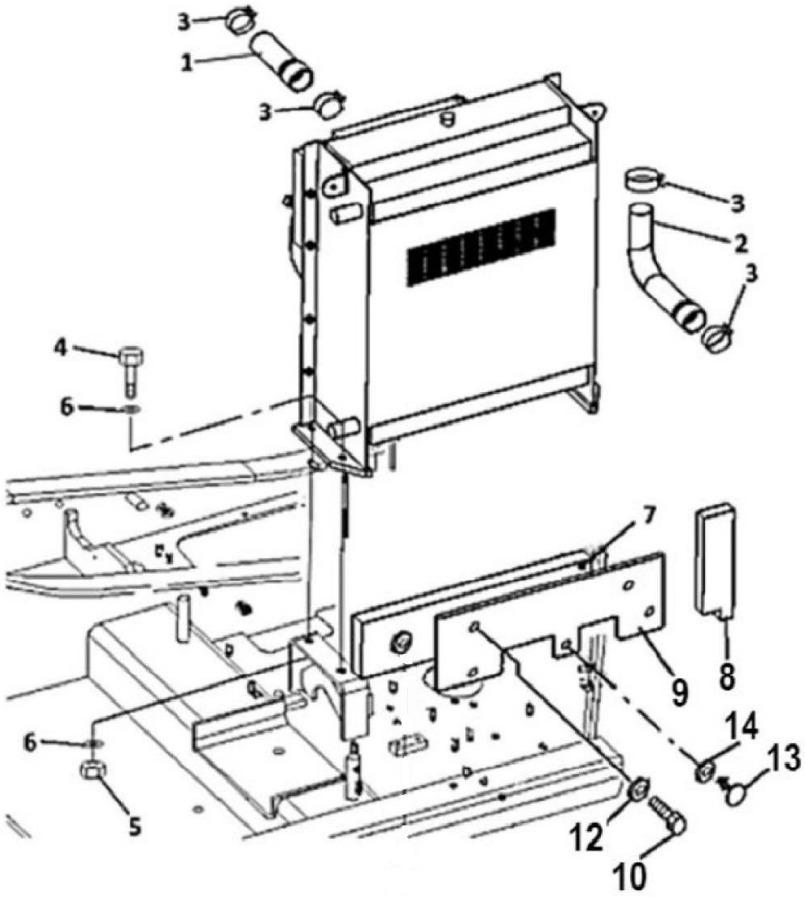

Index	Code	Part Number	Description	Qty	Serial No.
1	C1	201-03-N1960	HOSE	1	NL 22763-NL22778
2	C1	201-03-N1550	HOSE	1	NL 22763-NL22778
3	C1	201-54-N3280	CLAMP	4	NL 22763-NL22778
5	C1	01580-11210	NUT	4	NL 22763-NL22778
6	C1	01643-31232	WASHER	8	NL 22763-NL22778
7	C1	201-03-N1430	SHEET	1	NL 22763-NL22778
8	C1	201-03-N1470	SHEET	1	NL 22763-NL22778
9	C1	201-03-N3720	PLATE	1	NL 22763-NL22778
10	C1	01010-80816	BOLT	2	NL 22763-NL22778
11	C1	001 287 80 D	SPACER	2	NL 22763-NL22778
12	C1	01643-30823	WASHER	2	NL 22763-NL22778
13	C1	201-54-N2130	PLUG	3	NL 22763-NL22778
14	C1	201-54-N2210	WASHER	6	NL 22763-NL22778

PC71-7

FIG. C0100-03A0C RADIATOR MOUNTING (AI)

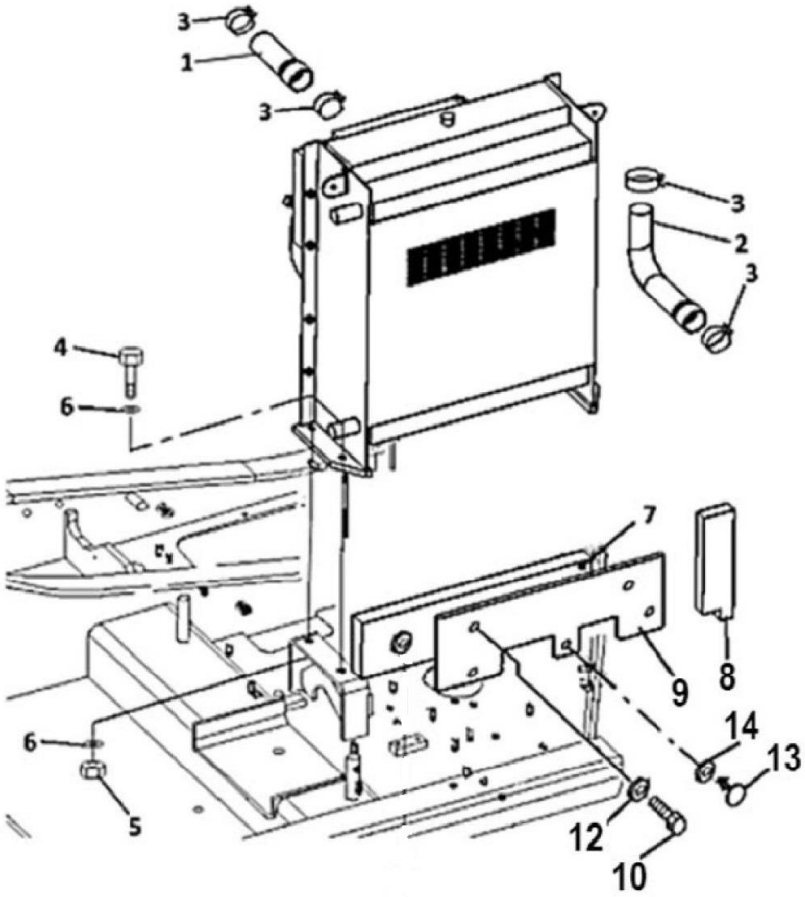

Index	Code	Part Number	Description	Qty	Serial No.
1		201-03-N1961	HOSE	1	NL 200080-
2		201-03-N1550	HOSE	1	NL 200080-
3		201-54-N3280	CLAMP	4	NL 200080-
4		01010-81240	BOLT	4	NL 200080-
5		01580-11210	NUT	4	NL 200080-
6		175-54-34170	WASHER	8	NL 200080-
7		201-03-N1430	SHEET	1	NL 200080-
8		201-03-N1470	SHEET	1	NL 200080-
9		201-03-N3720	COVER	1	NL 200080-
10		01010-80816	BOLT	2	NL 200080-
12		01643-30823	WASHER	2	NL 200080-
13		201-54-N2130	PLUG	3	NL 200080-
14		201-54-N2210	WASHER	3	NL 200080-

PC71-7

FIG. C0310-01A0A FAN GUARD

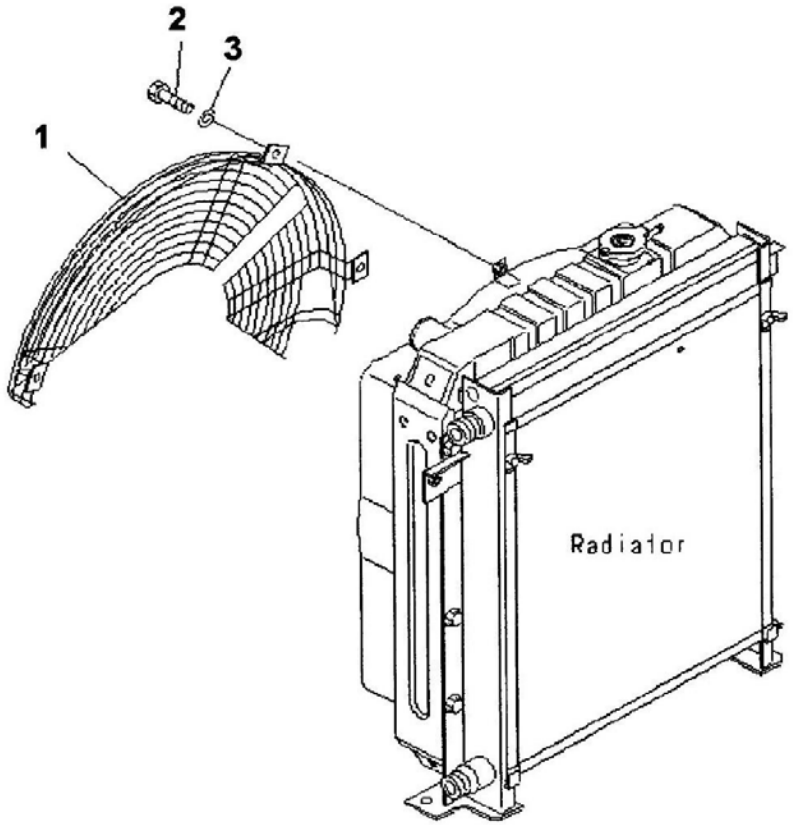

Index	Code	Part Number	Description	Qty	Serial No.
1		201-03-N1812	GUARD	1	N200194-
1	C1	201-03-N1811	GUARD	1	NL 21171-N200193
	C1	201-03-N1810	GUARD	1	NL 20171-NL 21170
	C1	201-03-N1140	GUARD	1	NL 20001-NL 20170
2		01010-80816	BOLT	3	NL 20001-
3		01643-30823	WASHER	3	NL 20001-

PC71-7

FUEL TANK AND RELATED PARTS

FIG. D0100-01A0 FUEL TANK

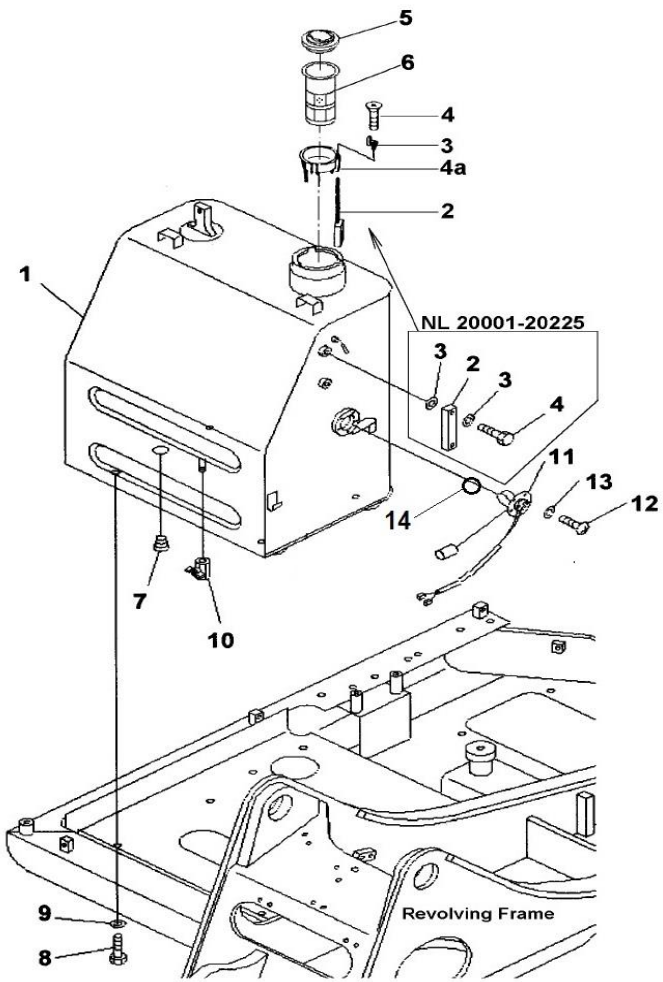

Index	Code	Part Number	Description	Qty	Serial No.
1		201-04-N1341	TANK	1	N200134-
	C1	201-04-N1340	TANK	1	NL 22386-N200133
	C1	201-04-N1320	TANK	1	NL 22386-N200133
	C1	201-04-N1260	TANK	1	NL 20226-NL22385
	C1	201-04-N1180	TANK	1	NL 20001-NL20225
		20Y-04-21550	FLOT ASSEMBLY	1	NL 20226-
2		20Y-04-21570	• FLOAT	1	NL 20226-
3		20Y-04-21580	• CAP	1	NL 20226-
4		#	• SCREW	1	NL 20226-
4A		#	• GUIDE	1	NL 20226-
2	C1	20Y-04-21220	GAUGE, LEVEL	1	NL 20001-NL20225
3	C1	20N-60-41371	• GASKET	4	NL 20001-NL20225
4	C1	20N-60-41360	• BOLT	2	NL 20001-NL20225
5		20Y-04-N4670	CAP	1	NL 22529-
	C1	20Y-04-11161	CAP	1	NL 20653-NL22528
	C1	20Y-04-11160	CAP	1	NL 20001-NL20652
6		205-04-71141	STRAINER	1	NL 20226-
	C1	07056-18416	STRAINER	1	NL 20001-NL20225
8		01010-81430	BOLT	4	NL 20001-
9		01643-31445	WASHER	4	NL 20001-
10		07700-50455	VALVE	1	NL 20001-
11		7861-92-5810	SENSOR, FUEL	1	N200134-
	C1	20T-06-81381	FLOAT, FUEL LEVEL	1	NL 20001-N200133
12		01010-80612	BOLT	4	N200134-
	C1	01220-40510	SCREW	5	NL 20001-N200133
13		01643-30623	WASHER	4	N200134-
	C1	01601-20513	WASHER, SPRING	5	NL 20001-N200133
14		07000-13050	O-RING	1	N200134-

PC71-7

FIG. D0200-01A3B FUEL LINE (WITH WATER SEPERATOR & ADDITIONAL FUEL FILTER)

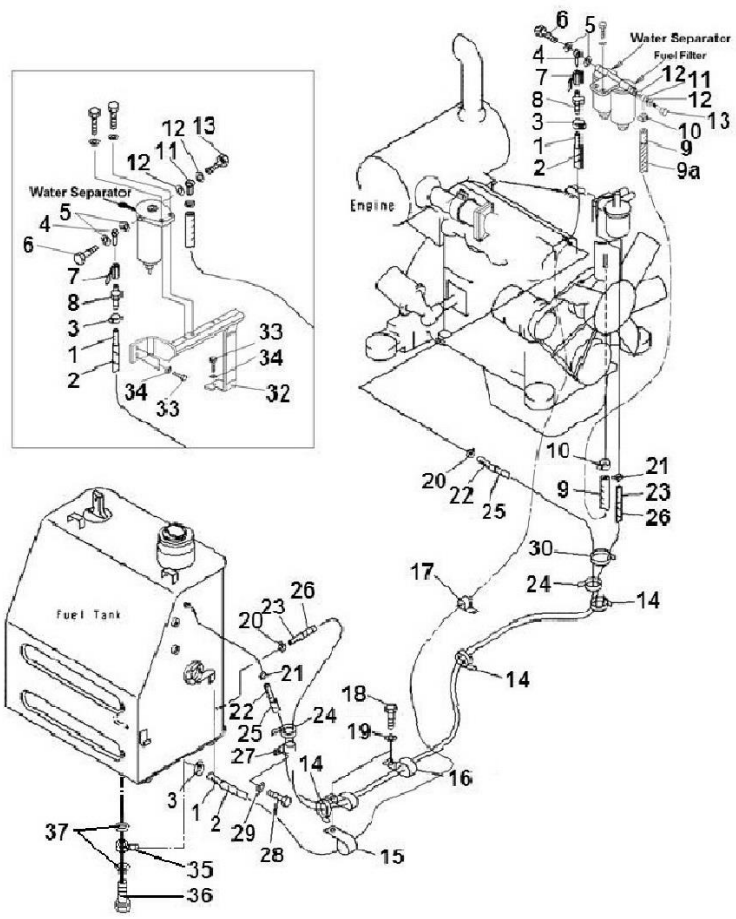

Index	Code	Part Number	Description	Qty	Serial No.
1		201-04-N1150	HOSE ASSEMBLY	1	NL 20001-
		201-04-N1190	• HOSE	1	NL 20001-
2		08017-21915	• CONDUIT	1	NL 20101-
	C1	08017-21915N	CONDUIT	1	NL 20001-NL20100
3		07281-00197	HOSE CLIP	2	NL 20830-
	C1	07281-00167	CLAMP	2	NL 20001-NL20829
4		205-04-62140	JOINT	1	NL 20001-
5		07005-01412	SEAL	2	NL 20001-
6		07206-31014	BOLT	1	NL 20001-
7		07700-50240	VALVE	1	NL 22553-
	C1	07700-40240	VALVE	1	NL 20001-NL22552
8		203-04-31130	NIPPLE	1	NL 20001-
9		201-04-N1240	HOSE	1	NL 20001-
9a		08017-21906	CONDUIT	1	NL 20101-
	C1	08017-21906N	CONDUIT	1	NL 20001-NL20001
10		07281-00197	HOSE CLIP	2	NL 20830-
	C1	07281-00167	CLAMP	2	NL 20001-NL20829
11		205-04-62150	JOINT	1	NL 20001-
12		07005-01412	SEAL	2	NL 20001-
13		07206-31014	BOLT	1	NL 20001-
14		08034-00519	BAND	7	NL 20001-
15		04434-53211	CLIP	1	NL 20001-
17		04434-52711	CLIP	3	NL 20001-
18		01010-81020	BOLT	2	NL 20991-
	C1	01010-81045	BOLT	2	NL 20001-NL20990
19		01643-31032	WASHER	2	NL 20001-
20		07281-00197	HOSE CLIP	2	NL 20830-
	C1	07285-00150	CLIP	2	NL 20001-NL20829
21		07281-00167	CLIP	2	NL 20001-
		201-04-N1160	HOSE	1	NL 20001-
22		201-04-N1220	• HOSE	1	NL 20001-
23		201-04-N1230	• HOSE	1	NL 20001-
24		08034-00519	• BAND	2	NL 20001-
25		08017-21915	• CONDUIT	1	NL 20101-

PC71-7

FIG. D0200-01A3B FUEL LINE (WITH WATER SEPERATOR & ADDITIONAL FUEL FILTER)

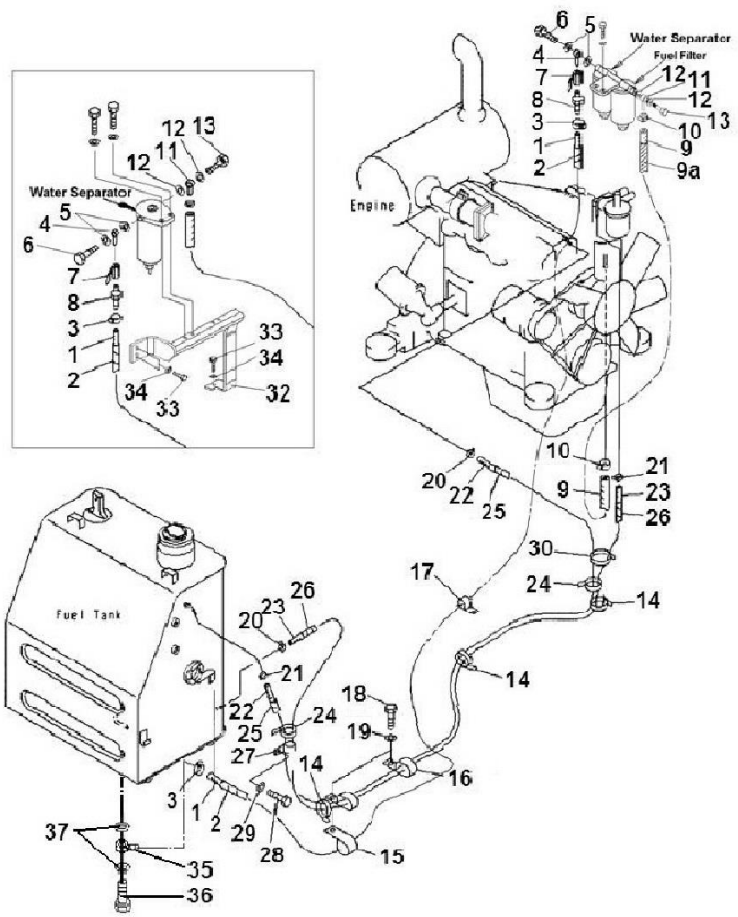

Index	Code	Part Number	Description	Qty	Serial No.
	C1	08017-21915N	• CONDUIT	1	NL 20001-NL20100
26		08017-21915	• CONDUIT	1	NL 20101-
	C1	08017-21915N	CONDUIT	1	NL 20001-NL20100
27		04434-51410	CLIP	1	NL 20001-
28		01010-81016	BOLT	1	NL 20001-
29		01643-31032	WASHER	1	NL 20001-
30		08034-20823	BAND	1	NL 20001-
32	C1	201-04-N1250	BRACKET	1	NL 20025-NL 20045
	C1	201-04-N1110	BRACKET	1	NL 20001-NL 20024
33	C1	01010-81025	BOLT	2	NL 20025-NL 20045
	C1	#N/A	BOLT	3	NL 20001-NL 20024
34	C1	01643-31032	WASHER	2	NL 20025-NL 20045
35		205-04-62150	JOINT	1	NL 22386-
36		07206-31014	BOLT	2	NL 22386-
37		07005-01412	SEAL	2	NL 22386-

PC71-7

FIG. D0200-02A3B FUEL LINE (WITH WATER SEPARATOR & ADDITIONAL FUEL FILTER)

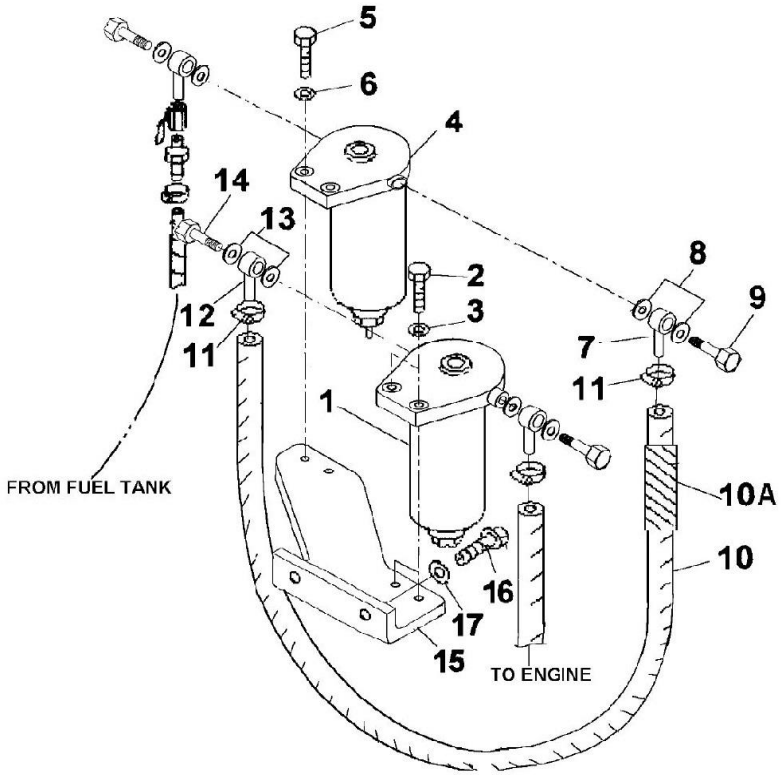

Index	Code	Part Number	Description	Qty	Serial No.
1	C1	201-01-N1210	FILTER	1	NL 20001-NL 20200
2	C1	01010-81240	BOLT	2	NL 20001-NL 20200
	C1	01010-81230	BOLT	2	NL 20001-NL 20200
3	C1	01643-31232	WASHER	2	NL 20001-NL 20200
4	C1	201-01-N1190	WATER SEPARATOR A	1	NL 20001-NL 20200
5	C1	01010-81240	BOLT	2	NL 20046-NL 20200
	C1	01010-81230	BOLT	2	NL 20001- N 20056
6	C1	01643-31232	WASHER	2	NL 20001-NL 20200
7	C1	205-04-62150	JOINT	1	NL 20001-NL 20200
8	C1	07005-01412	GASKET	2	NL 20001-NL 20200
9	C1	07206-31014	BOLT	1	NL 20001-NL 20200
10	C1	201-04-N1240	HOSE	1	NL 20046-NL 20200
	C1	201-04-N1210	HOSE	1	NL 20001-NL 20045
10A	C1	08017-21906N	CONDUIT	1	NL 20001-NL 20200
	C1	08017-21906	CONDUIT	1	NL 20046-NL20100
	C1	08017-21916	CONDUIT	1	NL 20001- NL20045
11	C1	11Y-09-11140	CLAMP	2	NL 20001-NL 20200
12	C1	205-04-62150	JOINT	1	NL 20001-NL 20200
13	C1	07005-01412	GASKET	2	NL 20001-NL 20200
14	C1	07206-31014	JOINT	1	NL 20001-NL 20200
15	C1	201-01-N1590	BRACKET	1	NL 20046-NL 20200
	C1	201-01-N1540	BRACKET	1	NL 20001- NL20045
16	C1	01010-81020	BOLT	2	NL 20001-NL 20200
	C1	01010-80820	BOLT	2	NL 20001-NL 20200
17	C1	01643-31032	WASHER	2	NL 20001-NL 20200
	C1	01643-30823	WASHER	2	NL 20001-NL 20200

PC71-7

ELECTRICAL SYSTEM

PC71-7

FIG. E0100-01A0B BATTERY

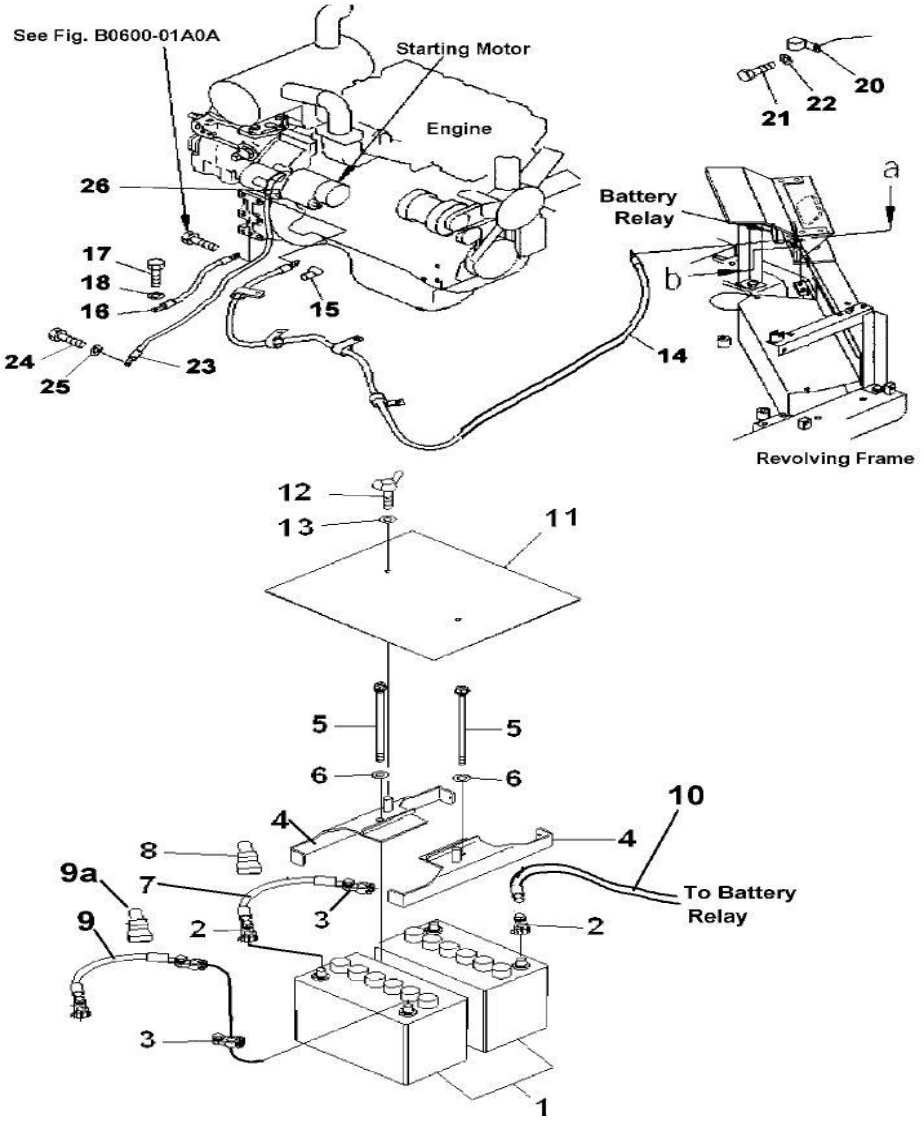

Index	Code	Part Number	Description	Qty	Serial No.
1		201-06-N1650	BATTERY	2	NL 21179-
	C1	203-06-N1130	BATTERY	2	NL 20991-NL 21178
2		20Y-06-N1790	TERMINAL (+)	2	NL 22125-
	C1	08000-00020	TERMINAL (+)	2	NL 20991-NL 22124
3		20Y-06-N1810	TERMINAL (-)	2	NL 22125-
	C1	08000-00021	TERMINAL (-)	2	NL 20991-NL 22124
4		201-54-N3260	BATTERY CLAMP	2	NL 20991-
5		21W-06-21290	BOLT	2	NL 20991-
6		01643-31032	WASHER	2	NL 20991-
7		08028-68035	CABLE	1	NL 20991-
8		08038-22009	CAP	2	NL 20991-
9		08028-AH035	CABLE, BLACK	1	NL 20991-
9a		08038-42009	CAP	2	NL 20991-
10		08028-68050	CABLE, RED	1	NL 20991-
11		203-06-71380	COVER	1	NL 20991-
12		01434-00820	BOLT, WING	2	NL 20991-
13		01643-30823	WASHER	2	NL 20991-
14		201-06-73321	WIRE	1	NL 20991-
15		08038-04030	CAP	1	NL 20001-
16		08028-48025	CABLE	1	NL 20001-
17		01010-81025	BOLT	1	NL 20001-
18		01643-31032	WASHER	1	NL 20001-
20		04434-51710	CLIP	2	NL 20001-
21		01010-81016	BOLT	1	NL 20001-
22		01643-31032	WASHER	2	NL 20001-
23		08028-43045	CABLE	1	NL 20001-
24		01010-81016	BOLT	1	NL 20001-
25		01643-31032	WASHER	1	NL 20001-
26		08038-04030	CAP	1	NL 20001-

PC71-7

FIG. E0100-N1A0 BATTERY LARGE CAPACITY

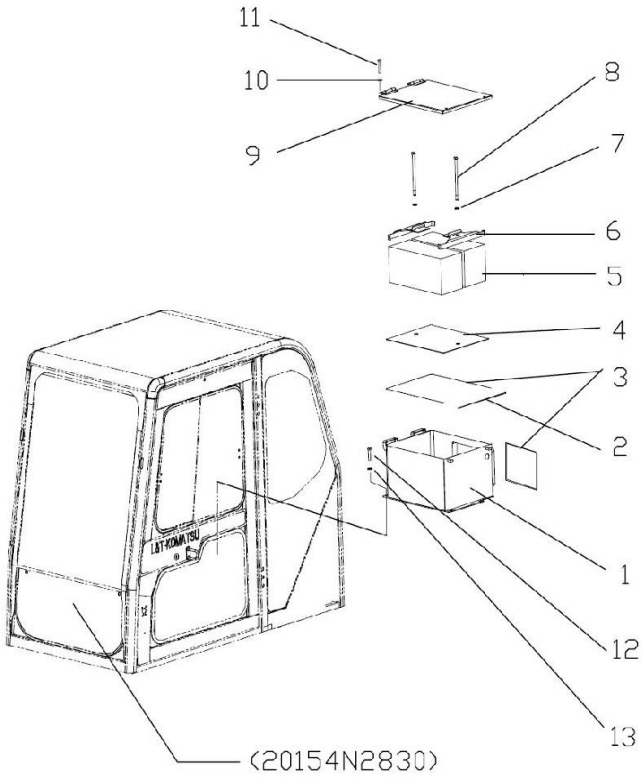

Index	Code	Part Number	Description	Qty	Serial No.
1		(201-54-N2830)	CABIN	1	NL 20090-
		201-54-N2680	BATTERY BOX	1	NL 20090-
2		20Y-54-29241	SEAL	1	NL 20090-
3		20Y-54-N2940	LINING	2	NL 20251-
	C1	20Y-54-44420	LINING	2	NL 20090-NL20250
4		201-54-N2710	SHEET	1	NL 20090-
5		20Y-06-N1170	BATTERY	2	NL 20090-
6		205-06-71173	HOLDER	2	NL 20090-
7		01643-31232	WASHER	2	NL 20090-
8		#N/A	WASHER	2	NL 20090-
9		201-54-N2690	WASHER	1	NL 20090-
10		01643-30623	WASHER	4	NL 20090-
11		01010-80616	BOLT	4	NL 20090-
12		01010-D1045	BOLT	4	NL 20090-
13		01643-31032	WASHER	4	NL 20090-
		01643-31032	WASHER	4	NL 20090-
			FOR LARGER CAPACITY BATTERY		
		208 472 41 U	CABLE	2	
			REPLACES		
		08028AH035	CABLE - EARTHING CABLE	1	
		01643-31032	CABLE - BATTERY TO RELAY		
			REFER PARTS CATALOGUE SHEETS		
			& E005 FOR MOUNTING DETAILS		

FIG. E0200-01A0B WIRING (ENGINE)

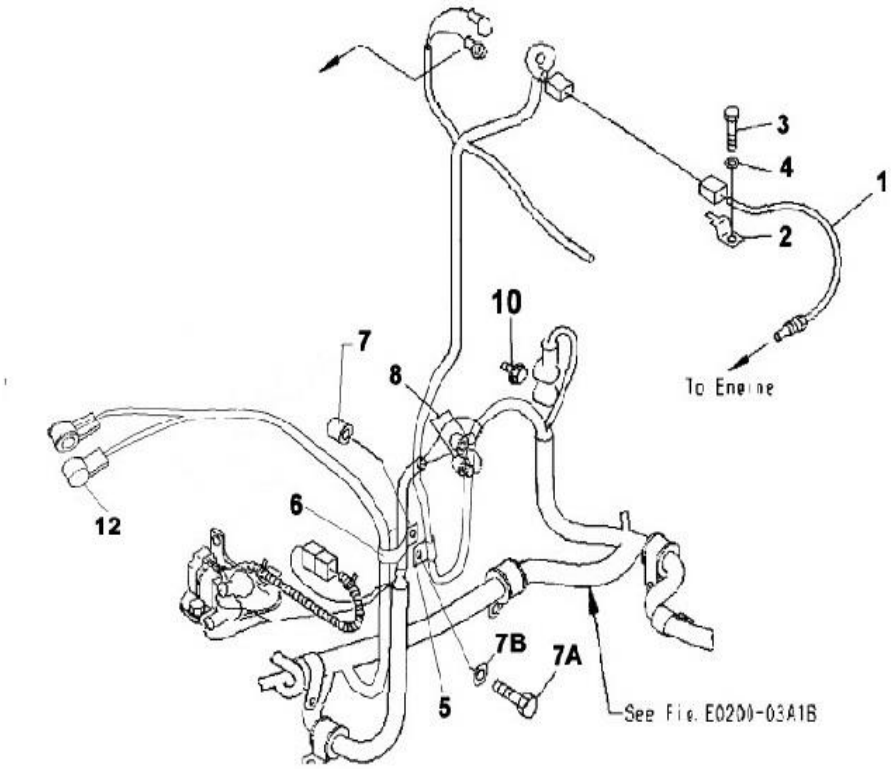

Index	Code	Part Number	Description	Qty	Serial No.
1		7861-92-3320	SENSOR-ENGINE WATER TEMPERAT	1	NL 20001-
2		08053-01510	CLIP	1	NL 20001-
3		01010-80816	BOLT M8x16	1	NL 20001-
4		01643-30823	WASHER	1	NL 20001-
5		04434-51710	CLIP	1	NL 20001-
6		04434-53211	CLIP	1	NL 20001-
7		144-87-47470	SEAT	1	NL 20001-
7a		01010-80845	BOLT	1	NL 20001-
7b		01643-30823	WASHER	1	NL 20001-
8		08038-00519	CAP	2	NL 20001-
11		04434-51010	CLIP	1	NL 20518-
	C1	04435-51710	CLIP	1	NL 20001-NL 20517
12		08038-00519	CAP	1	NL 20001-

PC71-7

FIG. E0200-02A0 WIRING (HORN AND RELAY)

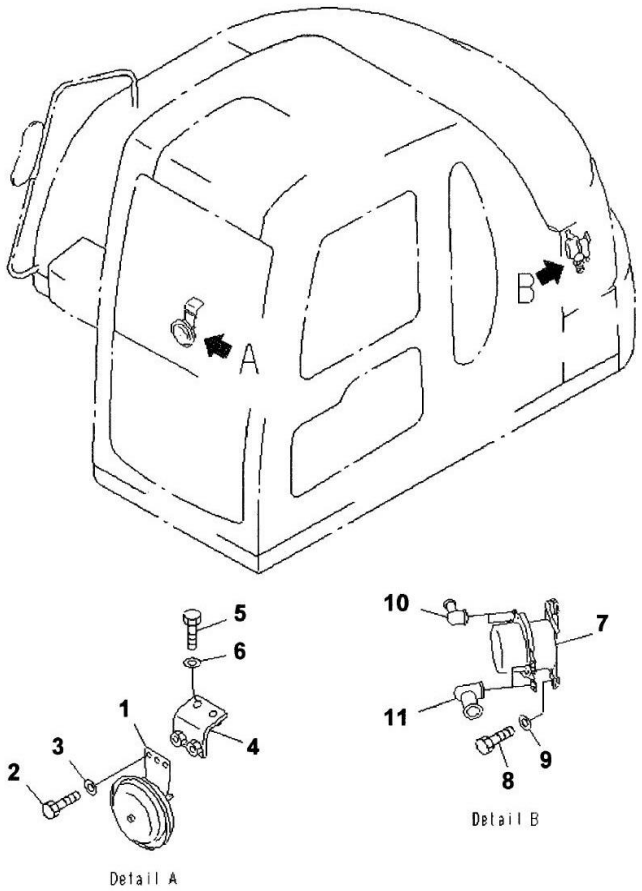

Index	Code	Part Number	Description	Qty	Serial No.
1		08160-52400	HORN	1	NL 20001-
2		01010-80816	BOLT	2	NL 20001-
3		01602-20825	WASHER, SPRING	2	NL 20001-
4		201-06-71461	BRACKET	1	NL 20001-
5		01010-80835	BOLT	2	NL 20001-
6		01643-30823	WASHER	2	NL 20001-
7		08088-31000	SWITCH, BATTERY RELAY	1	NL 20001-
8		01010-80825	BOLT	2	NL 20030-
	C1	01010-80830	BOLT	2	NL 20001-NL 20029
9		01602-20825	WASHER, SPRING	2	NL 20001-
10		08038-00519	CAP	2	NL 20001-
11		08038-00035	CAP	2	NL 20001-

FIG. E0200-03A1B WIRING (HARNESS)

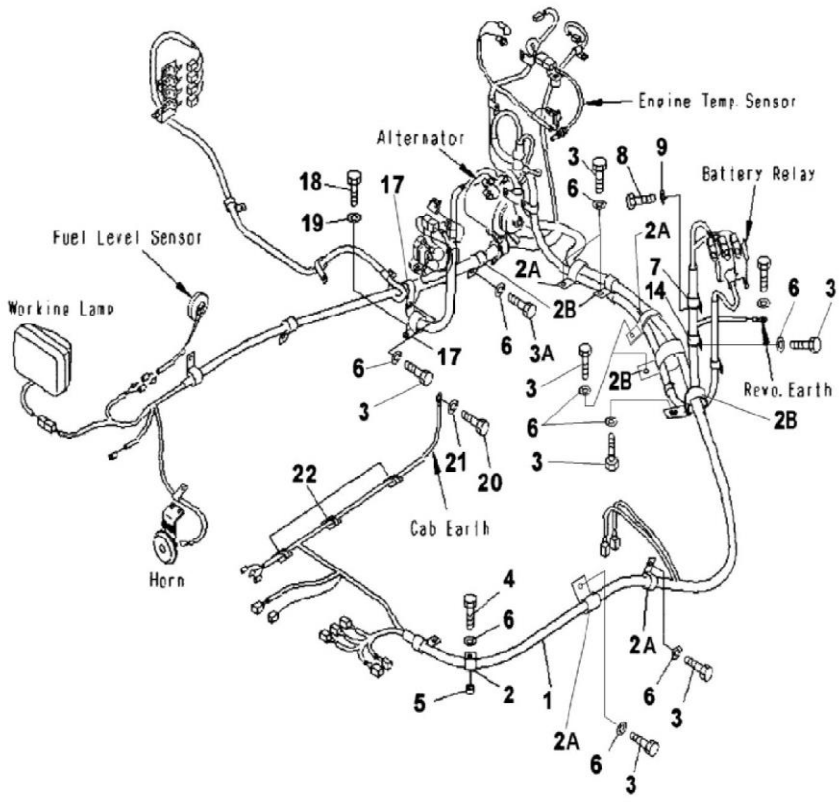

Index	Code	Part Number	Description	Qty	Serial No.
1		201-06-N1911	WIRING HARNESS	1	NL 200097
	C1	201-06-N1910	WIRING HARNESS	1	NL 200001- NL 200096
	C1	201-06-N1850	WIRING HARNESS	1	NL 22476- NL 201404
	C1	201-06-N1641	WIRING HARNESS	1	NL 21725-NL22475
	C1	201-06-N1640	WIRING HARNESS	1	NL 20991-NL21724
	C1	201-06-N1242	WIRING HARNESS	1	NL 20090-NL20990
	C1	201-06-N1241	WIRING HARNESS	1	NL 20047-NL20089
	C1	201-06-N1240	WIRING HARNESS	1	NL 20001-NL20046
		08020-00000	• DIODE	5	NL 20001-
		20T-06-81230	• FUSIBLE LINK	2	NL 20001-
		22U-06-11270	• FUSIBLE LINK	1	NL 20001-
2		08036-02514	CLIP	1	NL 20001-
2A		04435-51710	CLIP	4	NL 20001-
2B		04434-53211	CLIP	4	NL 20001-
3		01010-81020	BOLT	8	NL 20001-
3A		01010-81016	BOLT	1	NL 20001-
4		01010-81040	BOLT	1	NL 20001-
5		201-03-29160	SPACER	1	NL 20001-
6		01643-31032	WASHER	10	NL 20001-
7		04434-52511	CLIP	1	NL 20001-
8		01010-81016	BOLT	1	NL 20001-
9		01643-31032	WASHER	1	NL 20001-
17		04434-52511	CLIP	2	NL 20001-
18		01010-81016	BOLT	1	NL 20001-
19		01643-31032	WASHER	1	NL 20001-
20		01010-81025	BOLT	1	NL 20001-
21		01643-31032	WASHER	1	NL 20001-

PC71-7

FIG. E0200-04A1B WIRING (HARNESS)

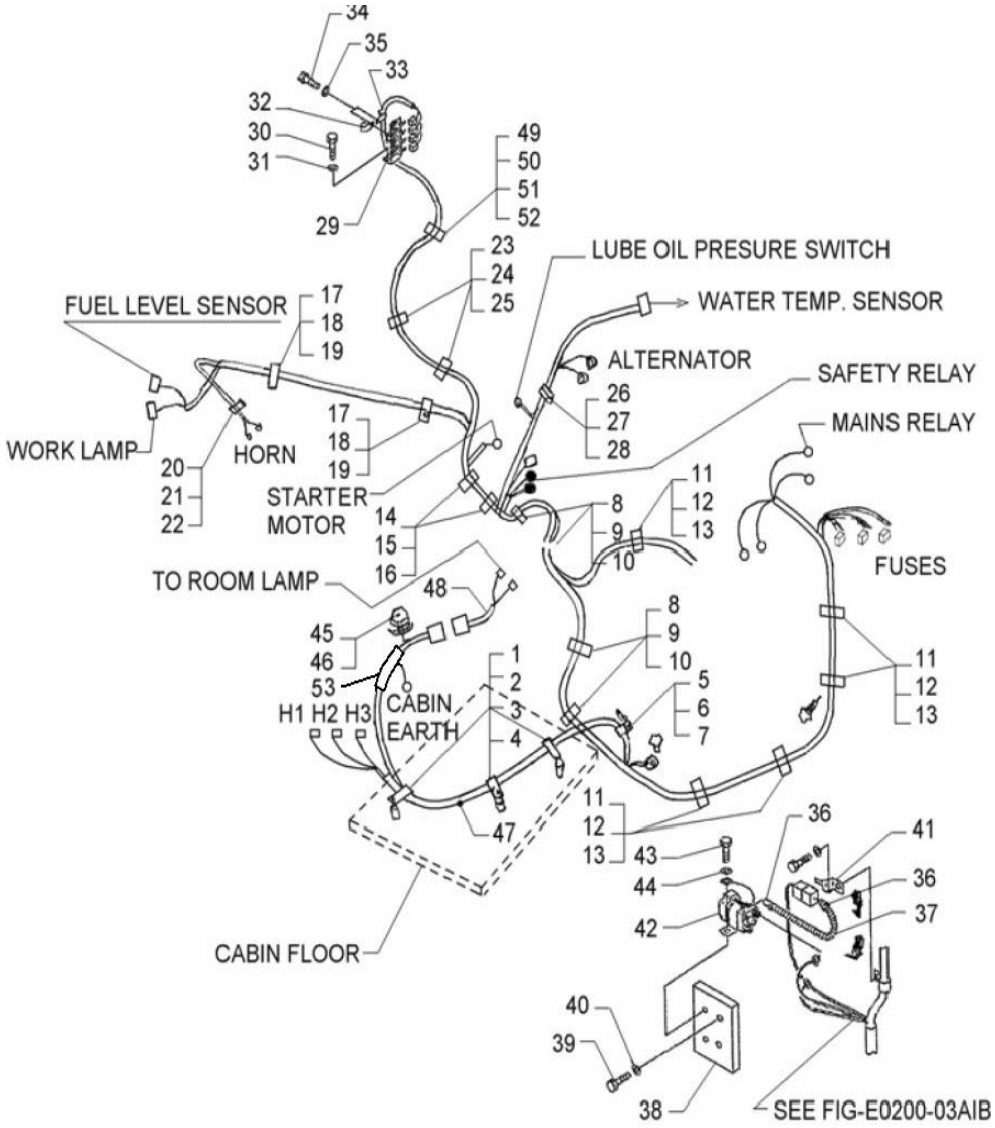

Index	Code	Part Number	Description	Qty	Serial No.
1		04434-52712	CLIP	3	N220001-
	C1	04434-52710	CLIP	3	NL 21538-N201404
2		195-33-11220	SPACER	3	NL 21538-
3		01010-81050	BOLT	3	NL 21538-
4		01643-31032	WASHER	3	NL 21538-
5		04434-52310	CLIP	1	NL 21538-
6		01010-81020	BOLT	1	NL 21538-
7		01643-31032	WASHER	1	NL 21538-
8		04435-52112	CLIP	4	NL 21538-
9		01643-31032	WASHER	4	NL 21538-
10		01010-81025	BOLT	4	NL 21538-
11		04434-51910	CLIP	2	N220001-
	C1	04434-51912	CLIP	2	NL 21538-N201404
12		01010-81020	BOLT	2	NL 21538-
13		01643-31032	WASHER	2	NL 21538-
11		04434-51910	CLIP	2	N220001-
	C1	04434-51912	CLIP	2	NL 21538-N201404
12		01010-81020	BOLT	2	NL 21538-
13		01643-31032	WASHER	2	NL 21538-
14		04435-51910	CLIP	2	NL 21538-
15		01010-81020	BOLT	2	NL 21538-
16		01643-31032	WASHER	2	NL 21538-
17		04434-51710	CLIP	2	NL 21538-
18		01010-81025	BOLT	2	NL 21538-
19		01643-31032	WASHER	2	NL 21538-
20		04434-51010	CLIP	1	NL 21538-
21		01010-81020	BOLT	1	NL 21538-
22		01643-31032	WASHER	1	NL 21538-
23		04434-51710	CLIP	3	NL 21538-
24		01010-81025	BOLT	3	NL 21538-
25		01643-31032	WASHER	3	NL 21538-
29		201-06-71322	BRACKET	1	NL 21538-
30		01010-81025	BOLT	2	NL 21538-
31		01643-31032	WASHER	2	NL 21538-

PC71-7

FIG. E0200-04A1B WIRING (HARNESS)

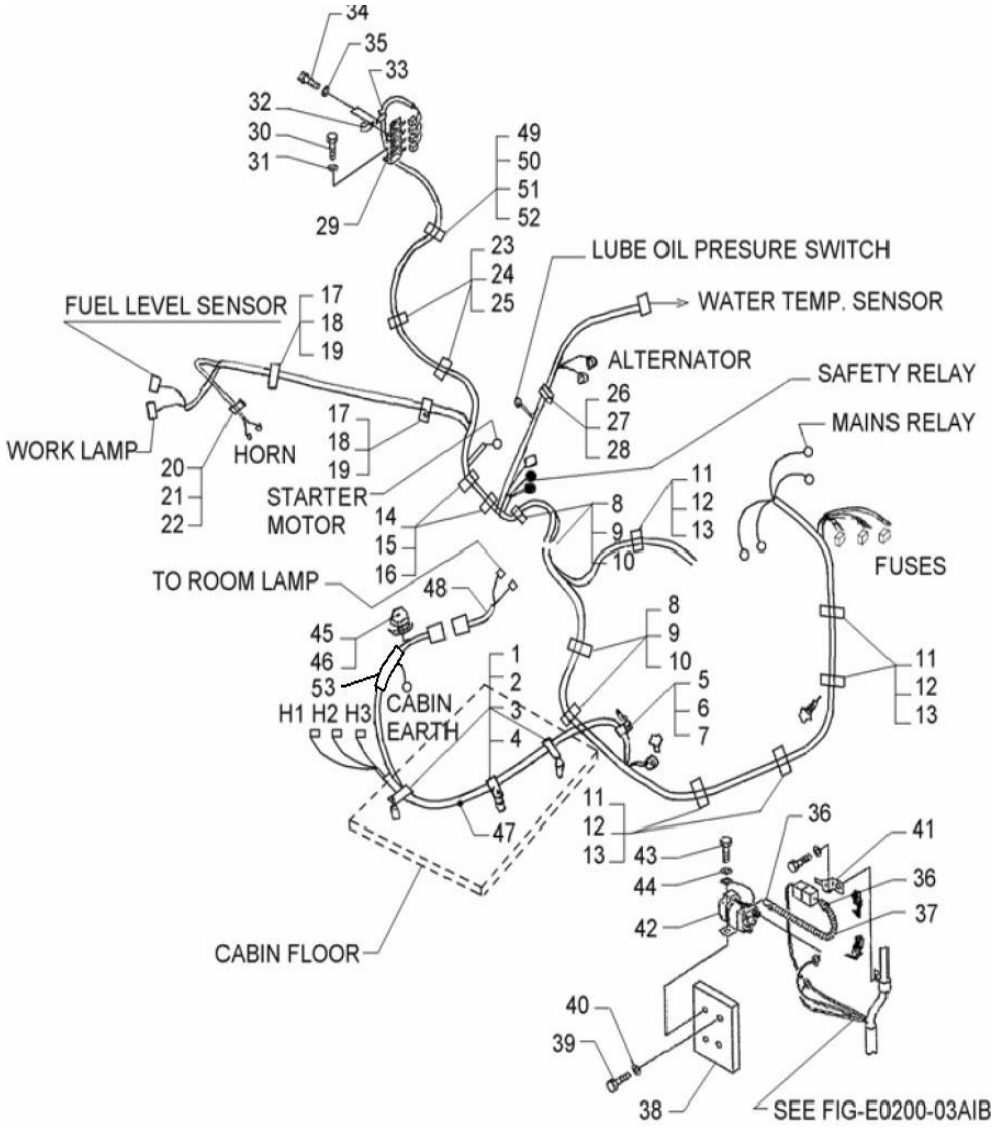

Index	Code	Part Number	Description	Qty	Serial No.
32		04434-51010	CLIP	1	NL 21538-
33		04434-51710	CLIP	1	NL 21538-
34		01010-81016	BOLT	2	NL 21538-
35		01643-51032	WASHER	2	NL 21538-
26		04434-51710	CLIP	1	NL 21538-
27		01010-81025	BOLT	1	NL 21538-
28		01643-31032	WASHER	1	NL 21538-
36		08034-00519	BAND	4	NL 21538-
37		08017-30702	CONDUIT	1	NL 21538-
38		201-06-N1120	PLATE	1	NL 21538-
39		01010-81225	BOLT	2	NL 21538-
40		01643-31232	WASHER	2	NL 21538-
41		08053-01512	CLIP	1	NL 21538-
42		600-81-58941	SAFETY RELAY	1	NL 21538-
43		01010-80820	BOLT	2	NL 21538-
44		01643-30823	WASHER	2	NL 21538-
45		01010-81025	BOLT	1	NL 21538-
46		01643-31032	WASHER	1	NL 21538-
47		201-06-N1641	WIRING HARNESS	1	NL 21726
	C1	201-06-N1640	WIRING HARNESS	1	NL 21538-NL 21725
48		201-06-N1670	WIRING HARNESS	1	NL 21538-
49		04434-51410	CLIP	1	NL 21538-
50		01010-81050	BOLT	1	NL 21538-
51		01643-31032	WASHER	1	NL 21538-
52		195-33-11220	SPACER	1	NL 21538-
53		201-06-N1830	HARNESS	1	NL 22476-

FIG. E0200-06A10 WIRING (AUTO DECEL SYSTEM)

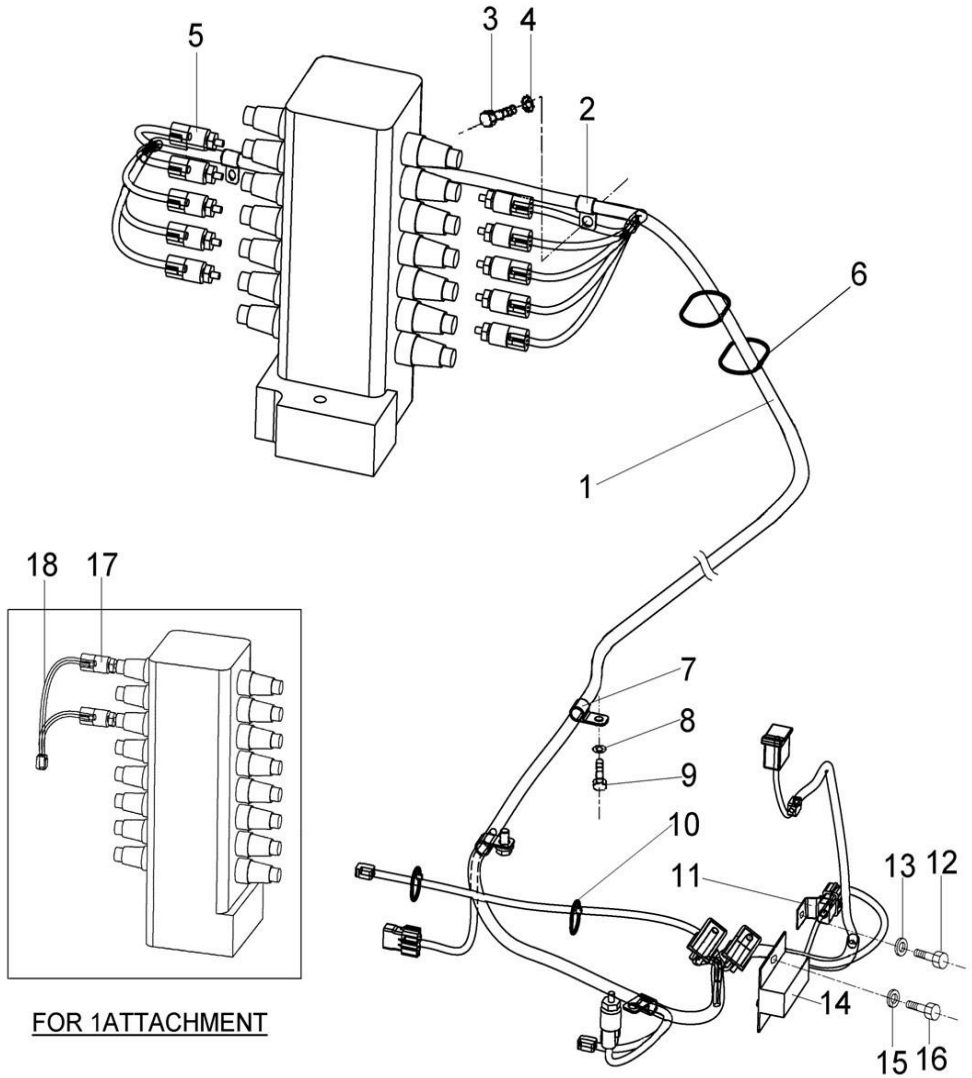

Index	Code	Part Number	Description	Qty	Serial No.
1		201-06-N1932	WIRING HARNESS (AUTO DECEL)	1	N220001-
	C1	201-06-N1860	WIRING HARNESS (AUTO DECEL)	1	NL22481-N201404
2		08036-01414	CLIP	2	NL22481-
3		01010-81016	BOLT	2	NL22481-
4		01643-31032	WASHER	2	NL22481-
5		20Y-06-25150	SWITCH	1	N220001-
	C1	206-06-61130	SWITCH	2	NL22481-N201404
6		08034-00536	BAND	2	NL22481-
7		08036-01414	CLIP	2	NL22481-
8		01643-31032	WASHER	2	NL22481-
9		01010-80616	BOLT	2	NL22481-
10		08034-00414	BAND	2	NL22481-
11		08053-01510	CLIP	1	NL22481-
12		01010-81020	BOLT	1	NL22481-
13		01643-30823	WASHER	1	NL22481-
14		20Y-06-N1710	CONTROLLER	1	NL22481-
15		01643-30823	WASHER	2	NL22481-
16		01010-80820	BOLT	2	NL22481-
17		206-06-61130	SWITCH	1	NL22481-
18		20Y-06-41251	WIRING HARNESS (AUTO DECEL)	1	NL22481-

HYDRAULIC SYSTEM

PC71-7

FIG. H0110-01A1A HYDRAULIC TANK (WITH PROTECTOR)

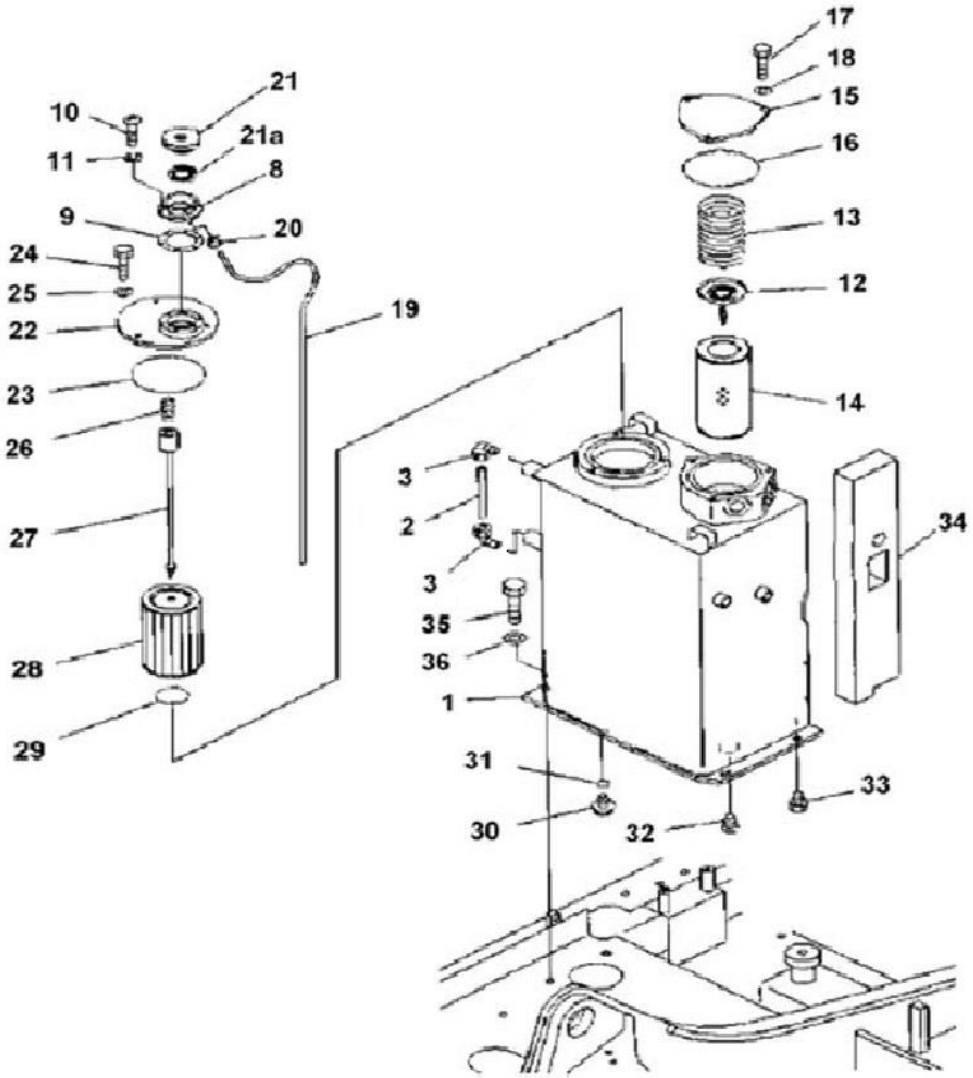

Index	Code	Part Number	Description	Qty	Serial No.
1		201-60-N1200	TANK ASS'Y	1	NL 22861-
	C1	201-60-N1140	TANK ASS'Y	1	NL 20280-NL 22860
	C1	201-60-73261	TANK ASS'Y	1	NL 20001-NL 20279
		#	• TANK	1	NL 20001-
2		201-60-65240	TUBE	1	NL 20001-
3		203-60-31100	ELBOW ASS'Y	2	NL 20001-
8		201-60-12171	FILLER, NECK	1	NL 20001-
9		20Y-60-21340	GASKET	1	NL 20001-
10		01252-70516	BOLT	6	NL 20001-
11		01601-20513	WASHER	6	NL 20001-
12		201-60-62130	VALVE ASS'Y	1	NL 20001-
13		20X-60-22140	SPRING	1	NL 20001-
14		201-60-71180	ELEMENT	1	NL 20001-
15		201-60-62150	COVER	1	NL 20001-
16		07000-12135	O-RING	1	NL 20001-
17		01010-81025	BOLT	3	NL 20001-
18		01643-31032	WASHER	3	NL 20001-
19		07270-00865	TUBE	1	NL 20196-
	C1	07270-00880	TUBE	1	NL 20001- NL20195
20		07285-00095	CLIP	1	NL 20001-
21		22P-60-11150	CAP ASS'Y	1	NL 21114-
	C1	201-60-12190	CAP ASS'Y	1	NL 20001- NL21113
21a		423-60-35460	• ELEMENT	1	NL 21114-
22		201-60-73240	COVER	1	NL 20001-
23		07000-12135	O-RING	1	NL 20001-
24		01010-81035	BOLT	3	NL 20001-
25		01643-31032	WASHER	3	NL 20001-
26		12R-60-11230	SPRING	1	NL 20001-
27		201-60-73220	ROD	1	NL 20001-
28		201-60-65210	STRAINER	1	NL 20001-
29		201-60-65220	• O-RING	1	NL 20001-
30		07044-12412	PLUG	1	NL 20001-
31		07002-12434	O-RING	1	NL 20001-
32		07043-70617	PLUG	1	NL 20001-

PC71-7

FIG. H0110-01A1A HYDRAULIC TANK (WITH PROTECTOR)

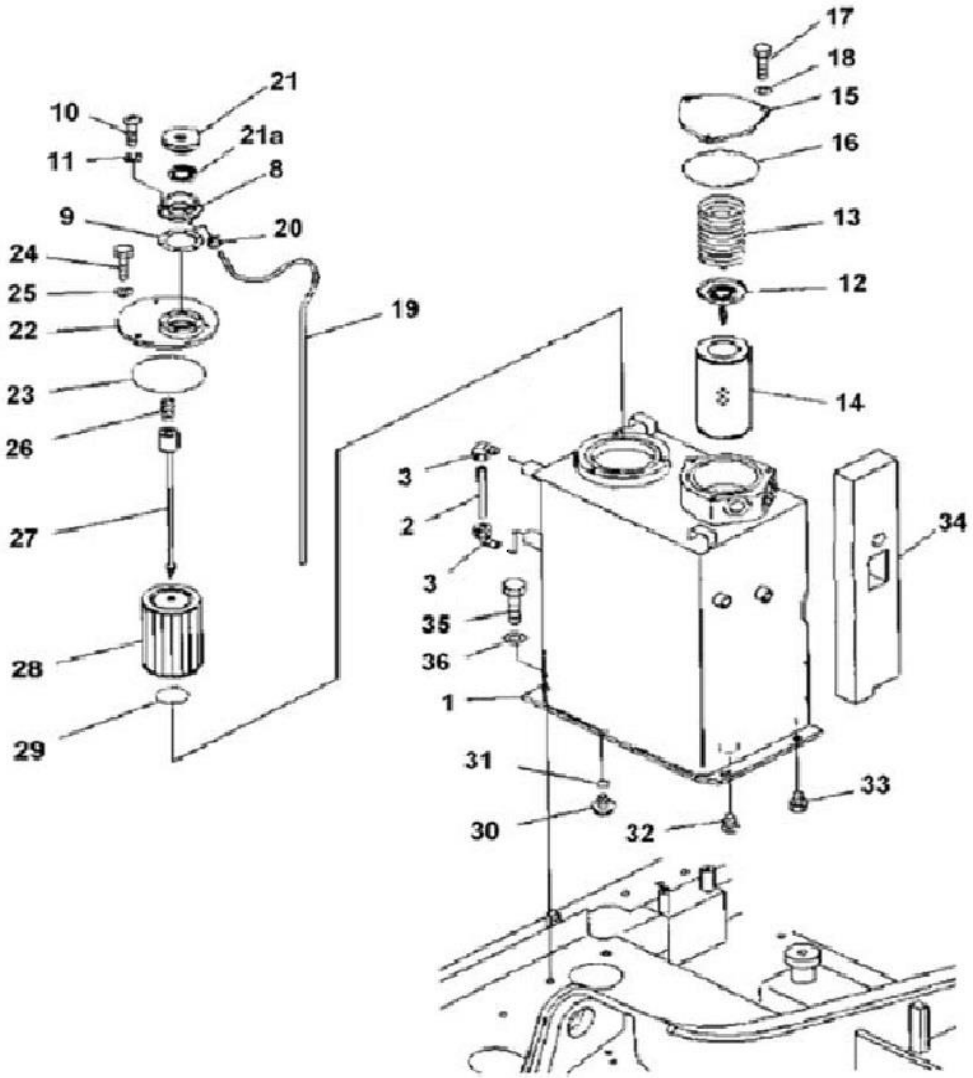

Index	Code	Part Number	Description	Qty	Serial No.
33		07043-A0108	PLUG	1	NL 20001-
34		201-60-N1270	SHEET	1	NL 22861-
	C1	201-60-73231	SHEET	1	NL 20001-NL 22860
35		01010-81230	BOLT	4	NL 20001-
36		01643-31232	WASHER	4	NL 20001-

PC71-7

FIG. H0120-02A0 MAIN VALVE (WITH PLUGS)(MOUNT BRACKET)(BLADE)

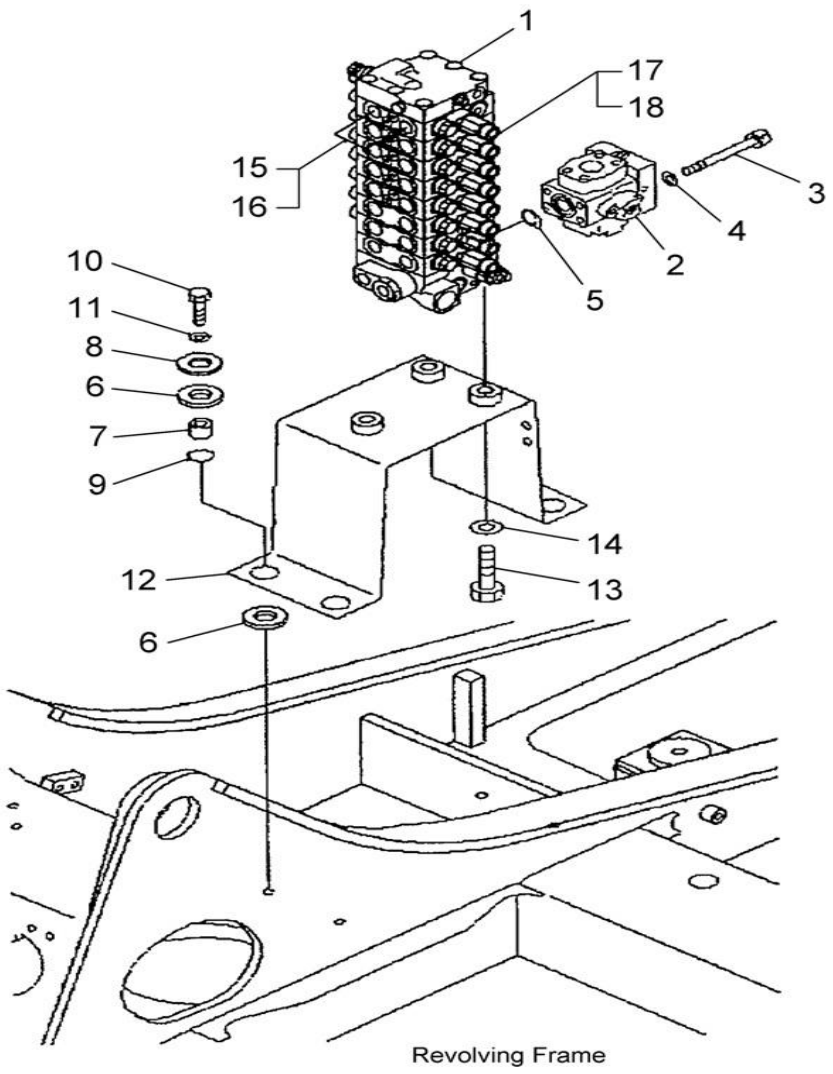

Index	Code	Part Number	Description	Qty	Serial No.
1		(723-28-16102)	VALVE ASSY MAIN (8 SEG)	1	NL 21733-
	C1	(723-28-16101)	VALVE ASSY MAIN (8 SEG)	1	NL 21153-NL 21732
2		(702-21-09155)	VALVE ASSY, PILOT	1	NL 21153-
3		202 329 53 Q	BOLT	4	NL 21153-
4		01643-51032	WASHER	4	NL 21153-
5		07000-13032	O-RING	1	NL 21153-
6		203-62-42770	CUSHION	8	NL 21153-
7		21W-62-11620	SPACER	4	NL 21153-
8		566-35-42430	PLATE	4	NL 21153-
9		07000-13025	O-RING	4	NL 21153-
10		01010-81245	BOLT	4	NL 21153-
11		01643-31232	WASHER	4	NL 21153-
12		201-62-74250	BRACKET	1	NL 21153-
13		01010-81445	BOLT	3	NL 21153-
14		01643-31445	WASHER	3	NL 21153-
15		07040-12012	PLUG	2	NL 21153-
16		07000-12034	O-RING	2	NL 21153-
17		07040-11409	PLUG	2	NL 21153-
18		07002-11423	O-RING	2	NL 21153-

PC71-7

FIG. H0311-01A0A SUCTION LINE

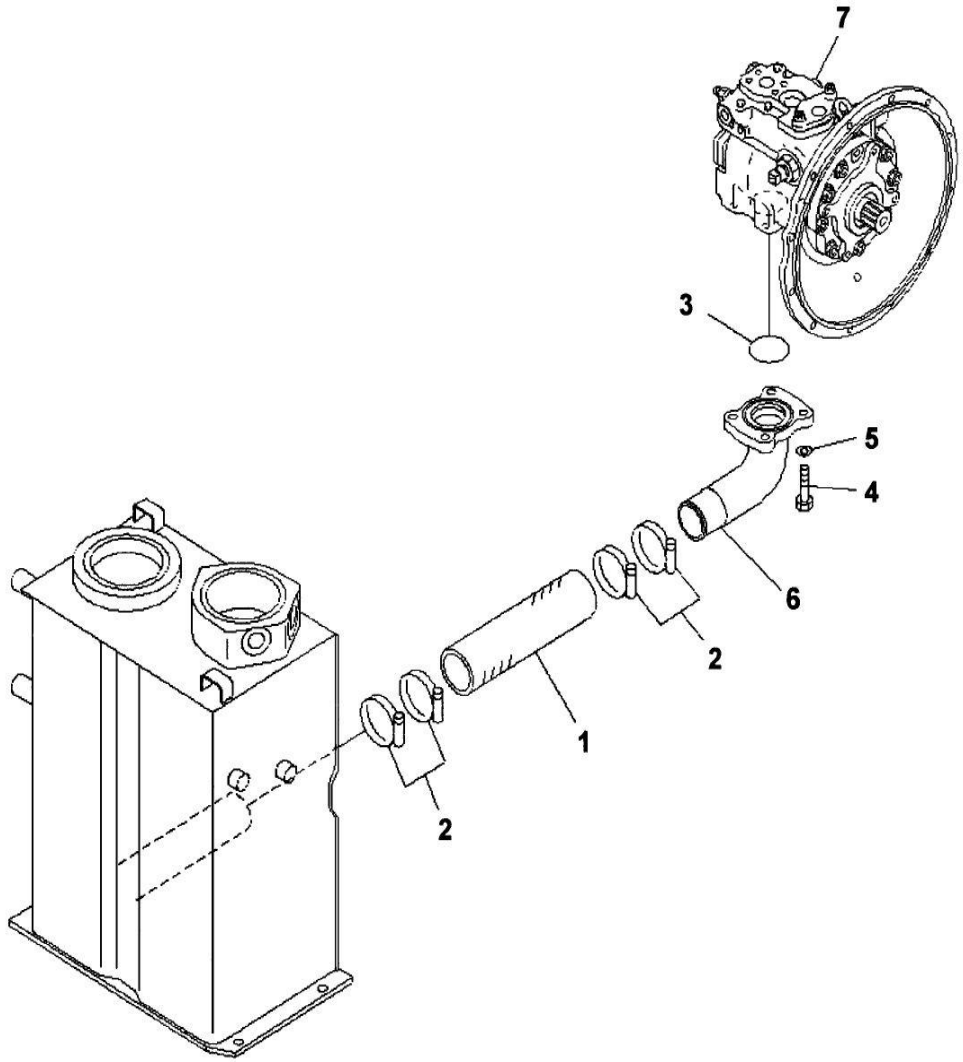

Index	Code	Part Number	Description	Qty	Serial No.
1		201-62-N3750	HOSE	1	N220001-
	C1	07260-25826	HOSE	1	NL 20484-N201404
	C1	07260-25825	HOSE	1	NL 20001-NL 20483
2		07289-00080	CLAMP	4	NL 20001-
3		07000-12075	O-RING	1	NL 20001-
4		01010-81240	BOLT	4	NL 20001-
5		01643-31232	WASHER	4	NL 20001-
6		201-62-74213	ELBOW	1	NL 20484-
	C1	201-62-74212	ELBOW	1	NL 20001-NL 20483
7		(708-1W-00131)	PUMP ASSEMBLY, MAIN	1	NL 20001-

FIG. H0312-01A0 DELIVERY LINE

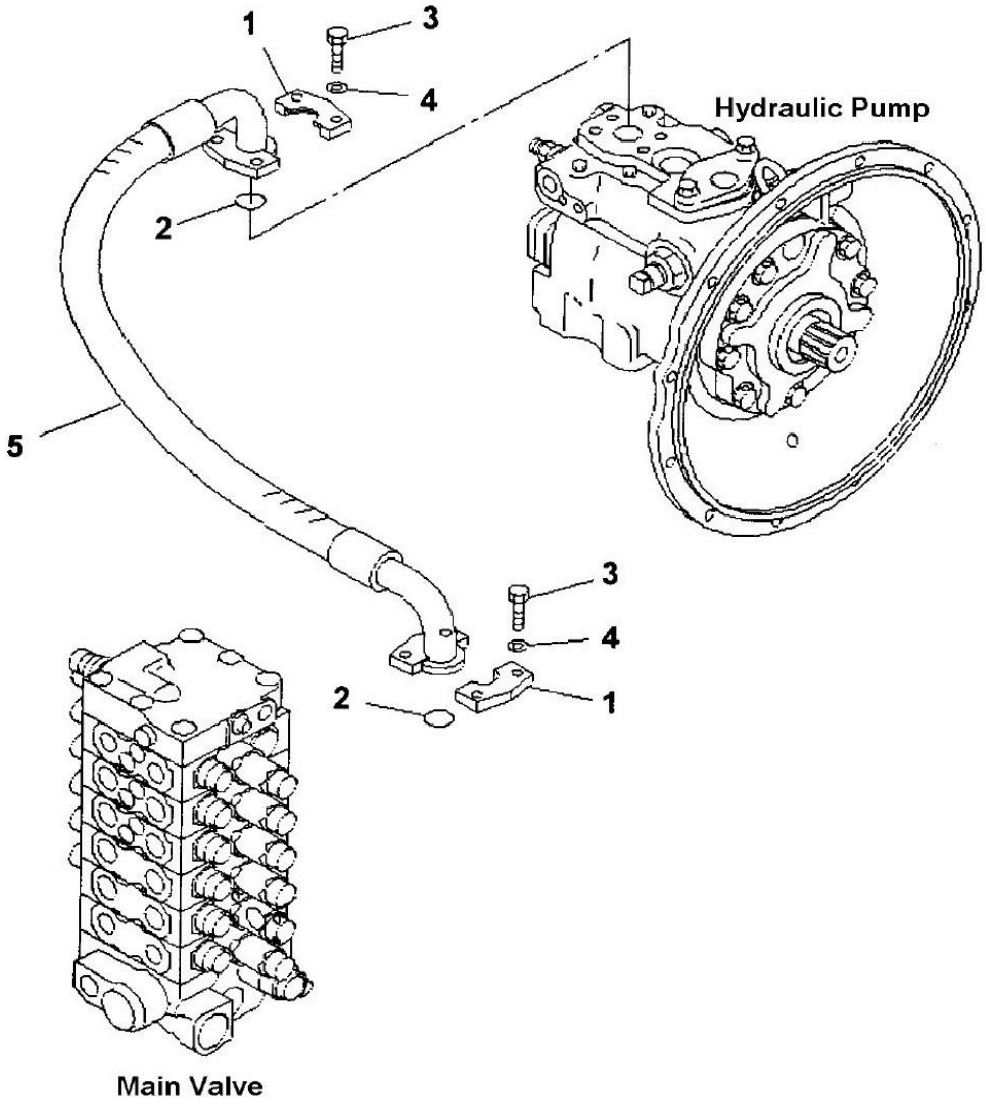

Index	Code	Part Number	Description	Qty	Serial No.
1		07371-31049	FLANGE, SPLIT	4	NL 20001-
2		07000-13032	O-RING	2	NL 20001-
3		07372-21035	BOLT	8	NL 20001-
4		01643-51032	WASHER	8	NL 20001-
5		201-62-N3760	HOSE	1	N220001-
	C1	201-62-71110	HOSE	1	NL 20063-N201404
	C1	201-62-71111	HOSE	1	NL 20001-NL 20062

PC71-7

FIG. H0320-01A0A OIL COOLER LINE

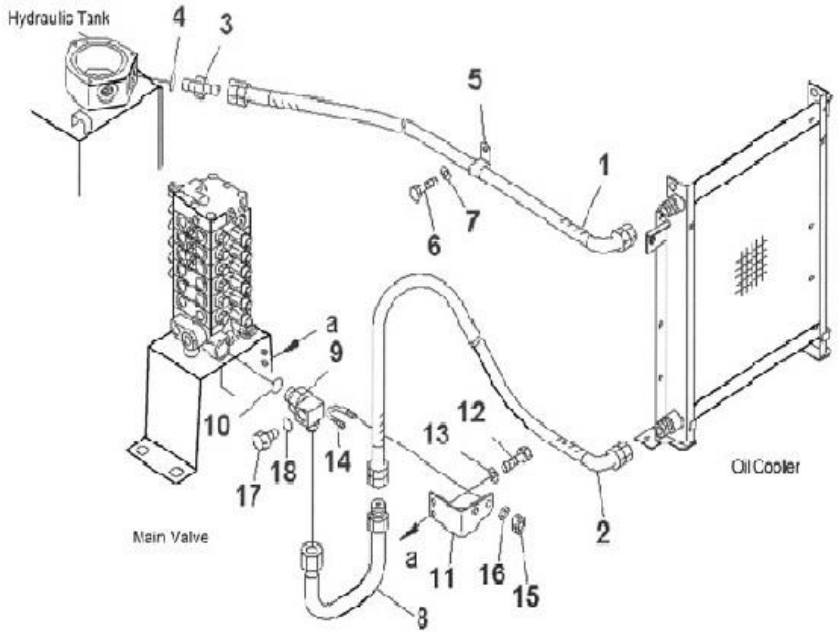

Index	Code	Part Number	Description	Qty	Serial No.
1		201-62-N2171	HOSE	1	N220001-
	C1	201-62-N2170	HOSE	1	NL 20854-N201404
2		201-62-N2181	HOSE	1	N220001-
	C1	201-62-N2180	HOSE	1	NL 20854-N201404
3		201-62-N3220	UNION	1	NL 20854-
3a		02896-11018	O-RING	2	NL 20854-
4		07002-13334	O-RING	1	NL 20001-
5		201-62-N1320	CLIP	2	NL 20057-
	C1	23S-61-24870	CLIP	2	NL 20001-NL 20056
6		01010-81025	BOLT	2	NL 20001-
7		01643-31032	WASHER	2	NL 20001-
8		201-62-N2140	TUBE	1	NL 20854-
8a		02896-11018	O-RING	2	NL 20854-
9		201-973-N330	ELBOW	1	NL 22385-
	C1	02782-10632	ELBOW	1	NL 20854-NL 22384
9a		02896-11018	O-RING	1	NL 20001-
10		07002-13334	O-RING	1	NL 20001-
11		201-62-74240	BRACKET	1	NL 20001-
12		01010-81025	BOLT	2	NL 20095-
	C1	204 338 32 M	BOLT	2	NL 20001-NL 20094
13		01643-31032	WASHER	2	NL 20001-
14		07283-23442	CLIP	1	NL 20001-
15		01599-01011	NUT	2	NL 20001-
16		01643-31032	WASHER	2	NL 20001-
17		07040-12412	PLUG	1	NL 22385-
18		07002-12434	O-RING	1	NL 22385-

PC71-7

FIG. H0320-02A0 OIL COOLER LINE (1 ATTACHMENT)

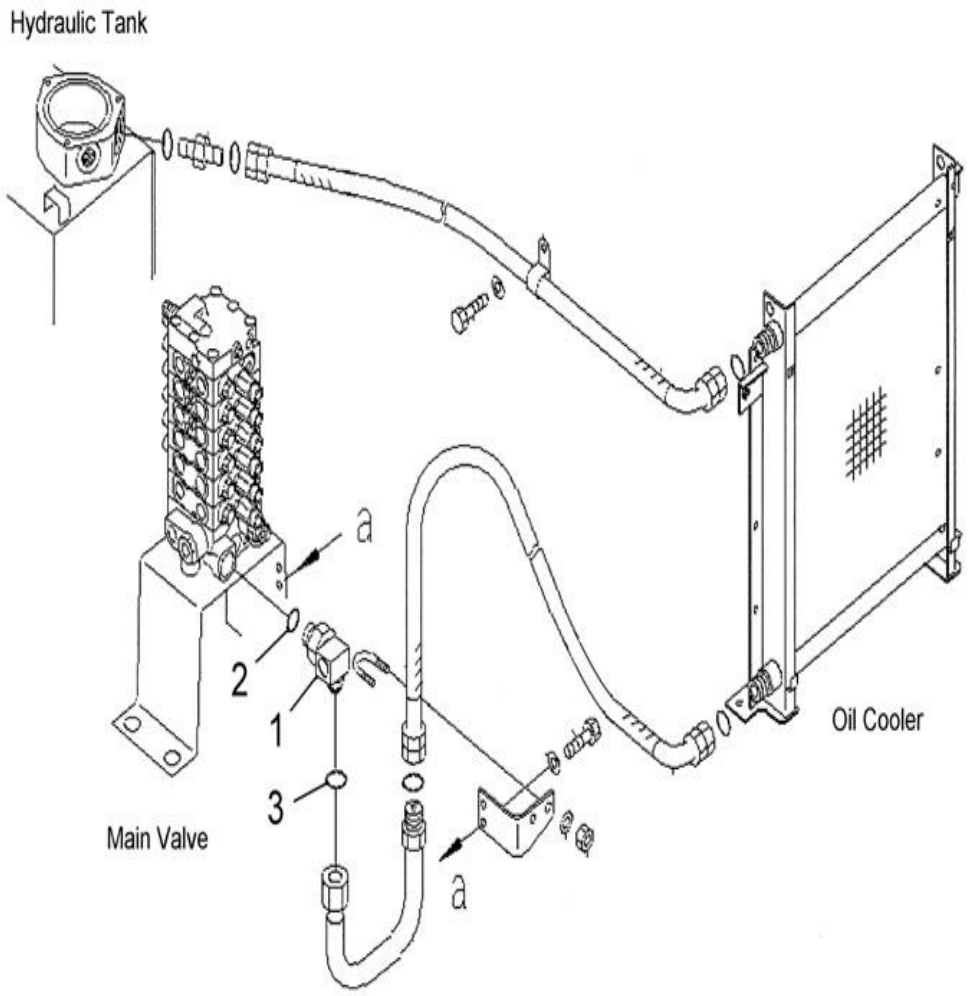

Index	Code	Part Number	Description	Qty	Serial No.
1		201-973-N330	ELBOW	1	NL 22105
2		07002-13334	O-RING	1	NL 22105
3		02896-11018	O-RING	1	NL 22105

PC71-7

FIG. H0330-01A0A RETURN LINE

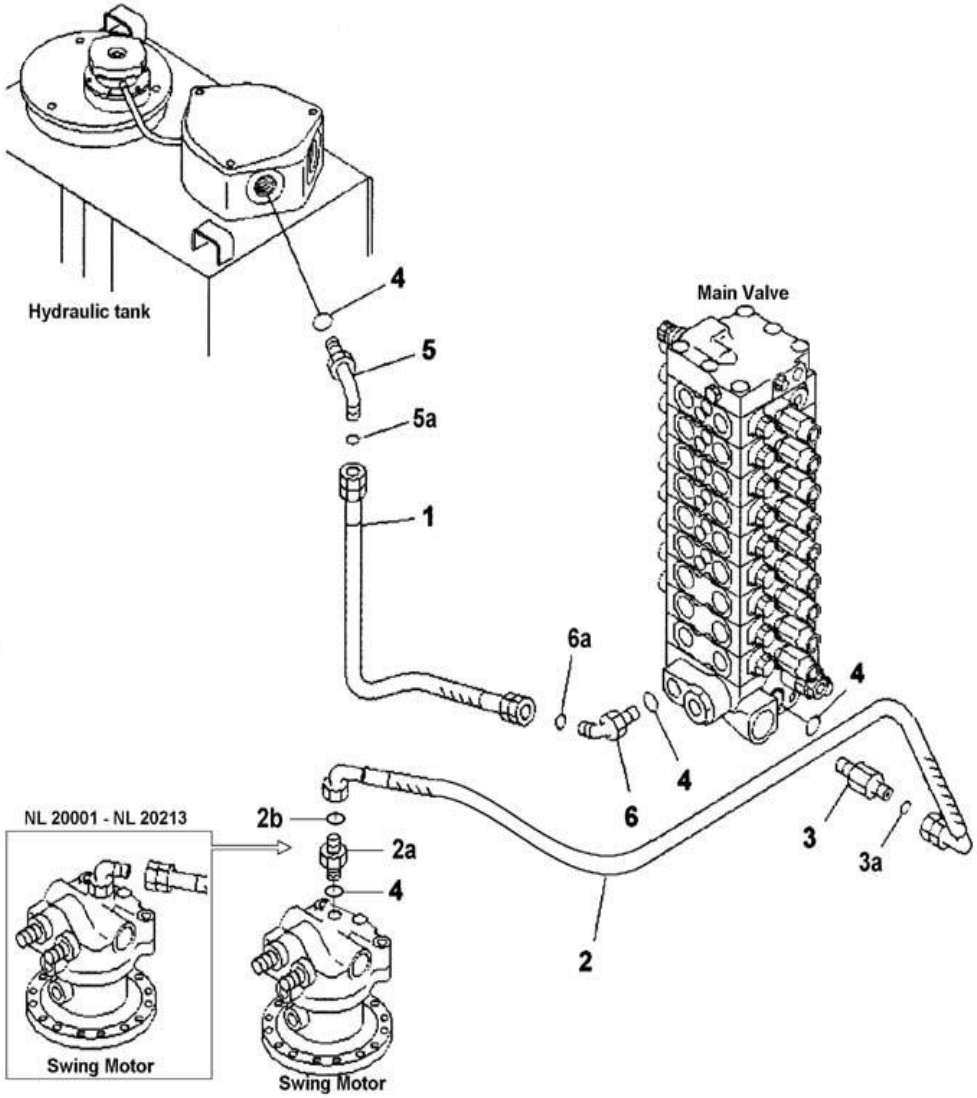

Index	Code	Part Number	Description	Qty	Serial No.
1		02774-C0605	HOSE	1	N22001
	C1	201-62-N2190	HOSE	1	NL 20991-N201404
2		201-62-N2721	HOSE	1	N22001
	C1	201-62-N2720	HOSE	1	NL 20991-N201404
2a		02781-00628	UNION	1	NL 20991
2b		02896-11018	O-RING	1	NL 20991-
3		201-62-N2530	NIPPLE	1	NL 20991-
3a		02896-11018	O-RING	1	NL 20991-
4		07002-12434	O-RING	3	NL 20001-
5		201-62-N2540	ELBOW	1	NL 20991-
5a		02896-11018	O-RING	1	NL 20991-
6		02782-10628	ELBOW	1	NL 20991-
6a		02896-11018	O-RING	1	NL 20991

PC71-7

FIG. H0340-01A0A DRAIN LINE

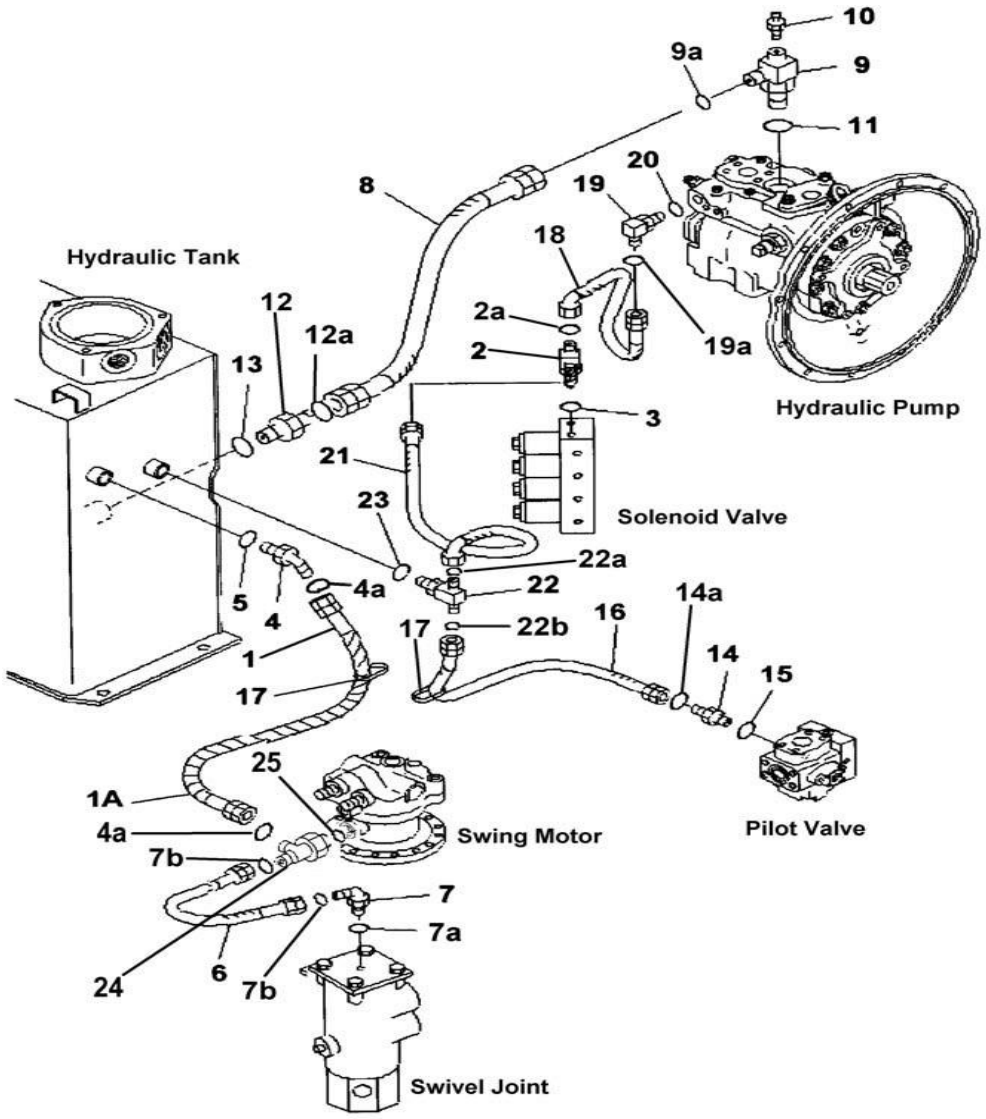

Index	Code	Part Number	Description	Qty	Serial No.
1		201-62-N2211	HOSE A	1	N22001
	C1	201-62-N2210	HOSE A	1	NL 20001 -N201404
1a		08210-01805	• SPIRAL TUBE	1	NL 20001 -
2		201-62-N2110	TEE	1	NL 20001 -
2a		02896-11008	O-RING	1	NL 20001 -
3		07002-11423	O-RING	1	NL 20001 -
4		02783-10422	ELBOW	1	NL 20001 -
4a		02896-11012	O-RING	2	NL 20001 -
5		07002-12034	O-RING	1	NL 20001 -
6		201-62-N2711	HOSE A	1	N22001
	C1	201-62-N2710	HOSE A	1	NL 20001 -N201404
7		02782-10311	ELBOW	1	NL 20001 -
7a		07002-11423	O-RING	1	NL 20001 -
7b		02896-11009	O-RING	2	NL 20001 -
8		201-62-N2691	HOSE A	1	N22001
	C1	201-62-N2690	HOSE A	1	NL 20001 -N201404
9		201-62-N2680	ELBOW	1	NL 20001 -
9a		02896-11018	O-RING	1	NL 20001 -
10		20B-27-11210	BLEEDER	1	NL 20001 -
11		07002-12434	O-RING	1	NL 20001 -
12		02781-00628	UNION	1	NL 20001 -
12a		02896-11018	O-RING	1	NL 20001 -
13		07002-12434	O-RING	1	NL 20001 -
14		02781-0021D	UNION	1	NL 20001 -
14a		02896-11008	O-RING	1	NL 20001 -
15		07002-11423	O-RING	1	NL 20001 -
16		201-62-N2221	HOSE A	1	N22001
	C1	201-62-N2220	HOSE A	1	NL 20001 -N201404
17		08034-00519	BAND	2	NL 20001 -
18		201-62-N2230	HOSE	1	NL 20001 -
19		02782-10210	ELBOW	1	NL 20001 -
19a		02896-11008	O-RING	1	NL 20001 -
20		07002-11423	O-RING	1	NL 20001 -
21		02741-003A7	HOSE	1	N220001

PC71-7

FIG. H0340-01A0A DRAIN LINE

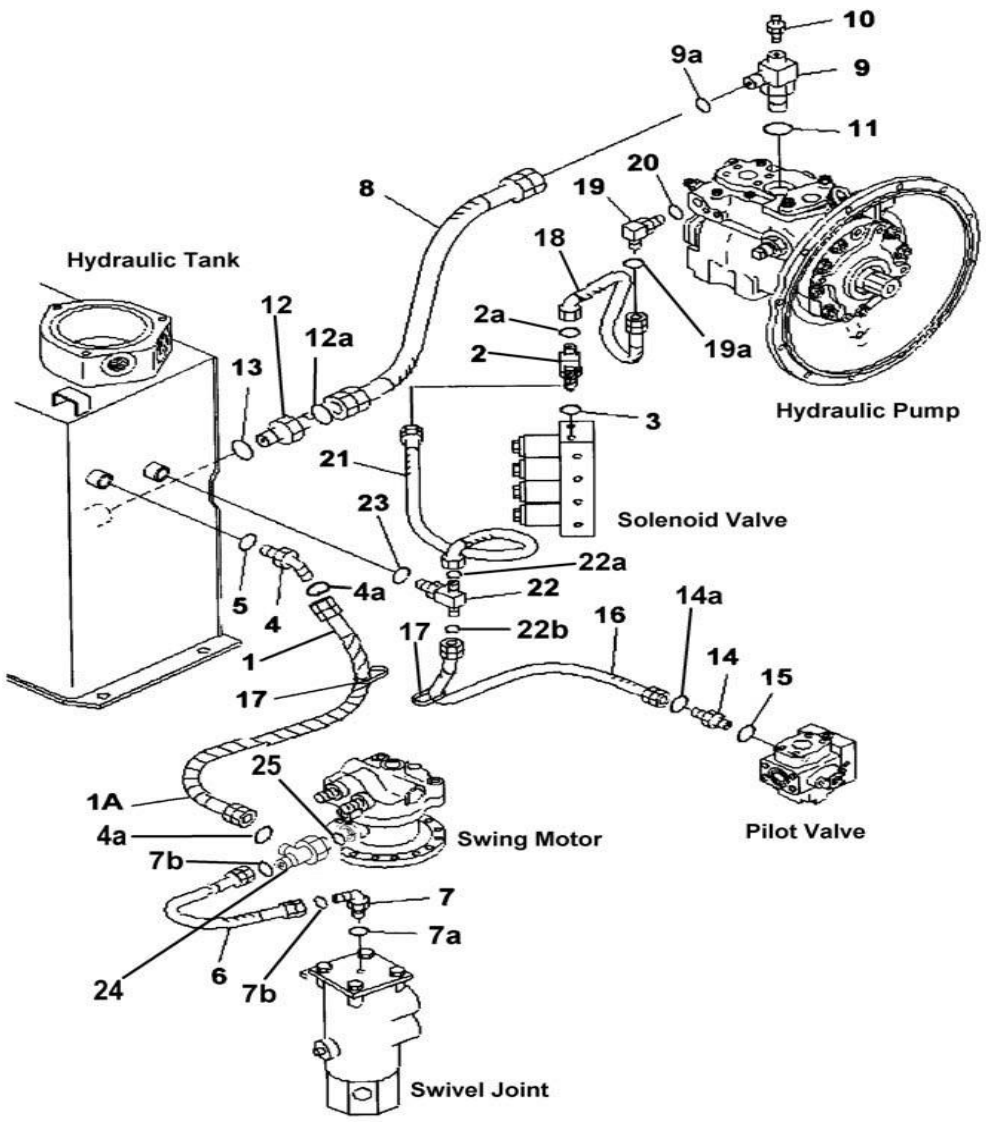

Index	Code	Part Number	Description	Qty	Serial No.
	C1	201-62-N2240	HOSE	1	NL 20001 -N201404
22		201-62-N2450	TEE	1	NL 20001 -
22a		02896-11008	O-RING	1	NL 20001 -
22b		02896-11009	O-RING	1	NL 20001 -
23		07002-12034	O-RING	1	NL 20001 -
24		201-62-N3270	TEE	1	NL 20001 -
25		700212034	O-RING	1	NL 20001 -

PC71-7

FIG. H1210-01A0A BOOM DRIFT LINE

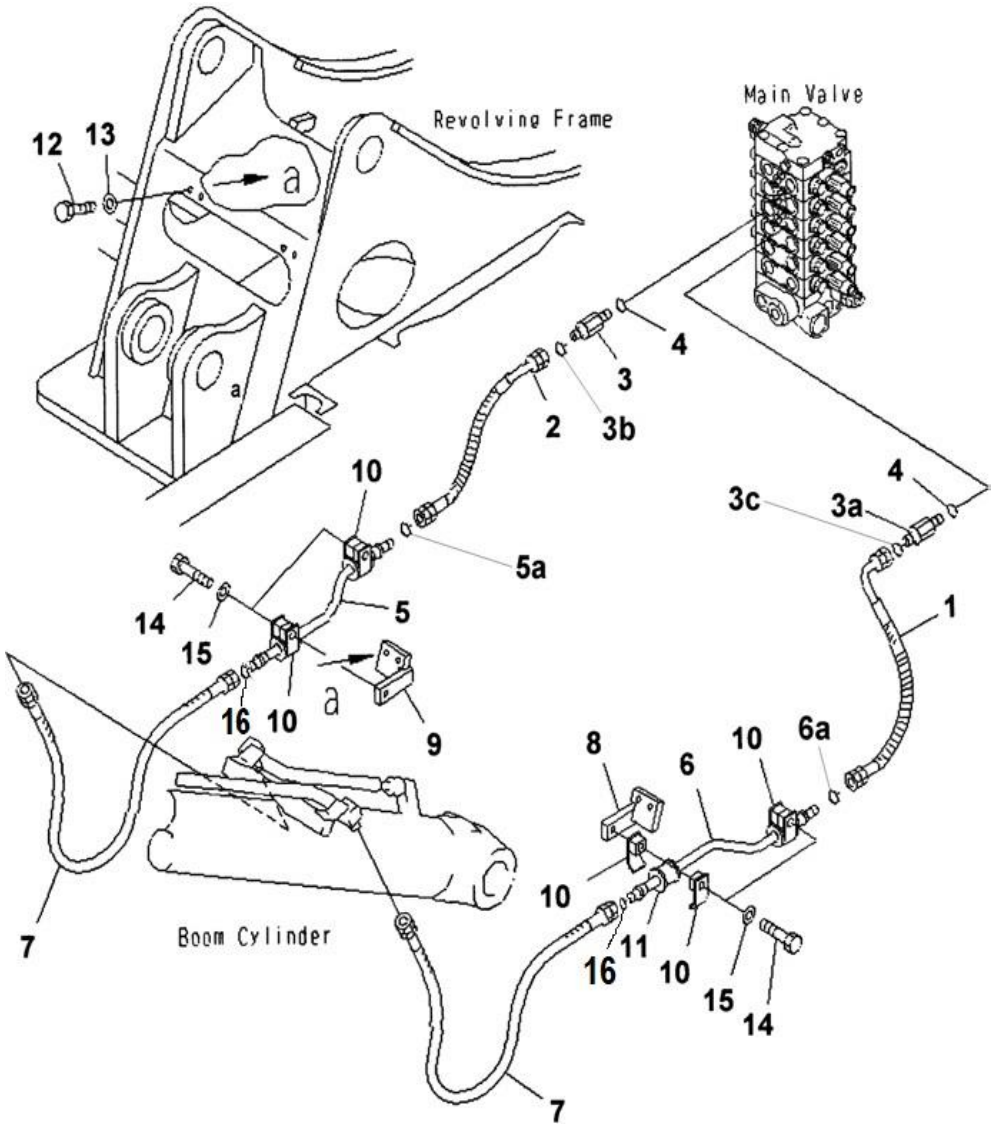

Index	Code	Part Number	Description	Qty	Serial No.
1		201-62-N1561	HOSE	1	N220001
	C1	201-62-N1560	HOSE	1	NL 20991 -N201404
2		201-62-N1590	HOSE	1	NL 20991 -
3		201-62-N2050	NIPPLE	1	NL 20991 -
3a		201-62-N2050	UNION	1	N220001-
	C1	02781-00522	UNION	1	NL 20991 -N201404
3b		02896-11015	O-RING	1	NL 20991 -
3c		02896-11015	O-RING	1	NL 20991 -
4		07002-12434	O-RING	2	NL 20001 -
5		201-62-N1570	TUBE	1	NL 20991 -
5a		02896-11015	O-RING	2	NL 20991 -
6		201-62-N3290	TUBE	1	NL 22335 -
	C1	201-62-N2150	TUBE	1	NL 20991 -NL22334
6a		02896-11015	O-RING	1	NL 20991 -
7		02756-C0508	HOSE	2	N220001-
	C1	201-62-N1580	HOSE	2	NL 20991 -N201404
8		201-62-72880	BRACKET	1	NL 20001 -
9		201-62-72890	BRACKET	1	NL 20001 -
10		07094-10417	CLAMP	8	NL 20001 -
11		07095-00421	CUSHION	4	NL 20001 -
12		01010-81030	BOLT	4	NL 20001 -
13		01643-31032	WASHER	4	NL 20001 -
14		01010-81065	BOLT	4	NL 20001 -
15		01643-31032	WASHER	4	NL 20001 -
16		02896-11015	O-RING	2	N220001-

PC71-7

FIG. H1220-01A0A ARM AND BUCKET LINE

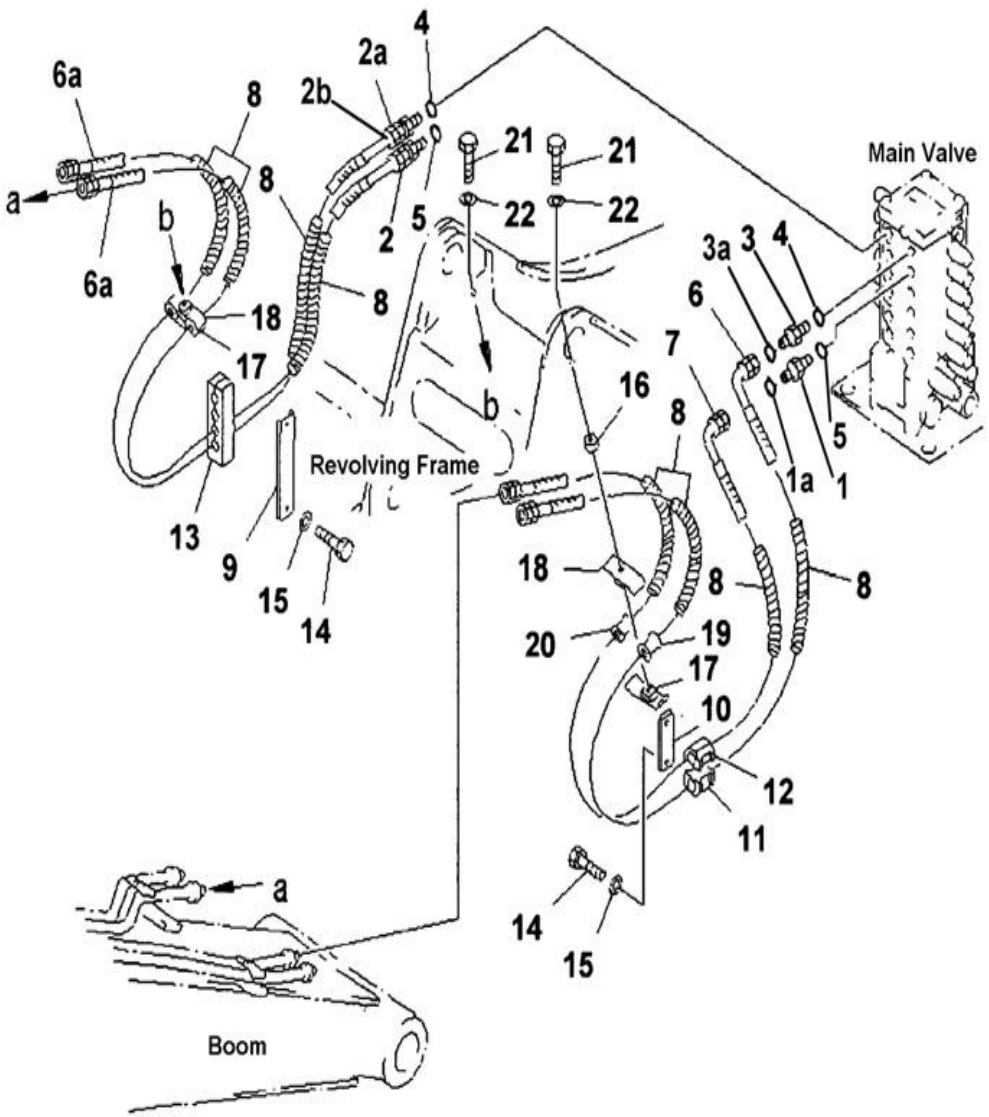

Index	Code	Part Number	Description	Qty	Serial No.
1		201-62-N2060	NIPPLE	1	NL 20991 -
1a		02896-11015	O-RING	1	NL 20991 -
2		201-62-N2070	NIPPLE	1	NL 20991 -
2a		201-62-N2080	NIPPLE	1	NL 20991 -
2b		02896-11012	O-RING	1	NL 20991 -
3		201-62-N2080	UNION	1	N220001-
	C1	02781-00422	UNION	1	NL 20991 -N201404
3a		02896-11012	O-RING	1	NL 20991 -
4		07002-12034	O-RING	2	NL 20001 -
5		07002-12434	O-RING	2	NL 20001 -
6		201-62-N1671	HOSE A	1	N220001-
	C1	201-62-N1670	HOSE A	1	NL 20991 -N201404
6a		201-62-N1641	HOSE A	2	N220001-
	C1	201-62-N1640	HOSE A	2	NL 20991 -N201404
7		201-62-N1621	HOSE A	1	N220001-
	C1	201-62-N1620	HOSE A	1	NL 20991 -N201404
8		203-62-32440	COVER	8	NL 20001 -
9		201-62-72840	PLATE	1	NL 20001 -
10		201-62-71780	PLATE	1	NL 20001 -
11		20T-62-71671	CUSHIION	1	NL 20001 -
12		201-62-77130	CUSHIION	1	NL 20001 -
13		20T-62-72142	CUSHIION	1	NL 20001 -
14		01010-81025	BOLT	4	NL 20001 -
15		01643-31032	WASHER	4	NL 20001 -
16		203-937-7890	SPACER	2	NL 20001 -
17		07094-20417	CLAMP	2	NL 20001 -
18		201-62-72830	CLAMP	2	NL 20001 -
19		07095-00420	CUSHIION	3	NL 20001 -
20		07095-00526	CUSHIION	1	NL 20001 -
21		01010-81070	BOLT	2	NL 20001 -
22		01643-31032	WASHER	2	NL 20001 -

PC71-7

FIG. H1270-01A0 ATTACHMENT LINE - MAIN VALVE PIPING (1 ATTACHMENT)

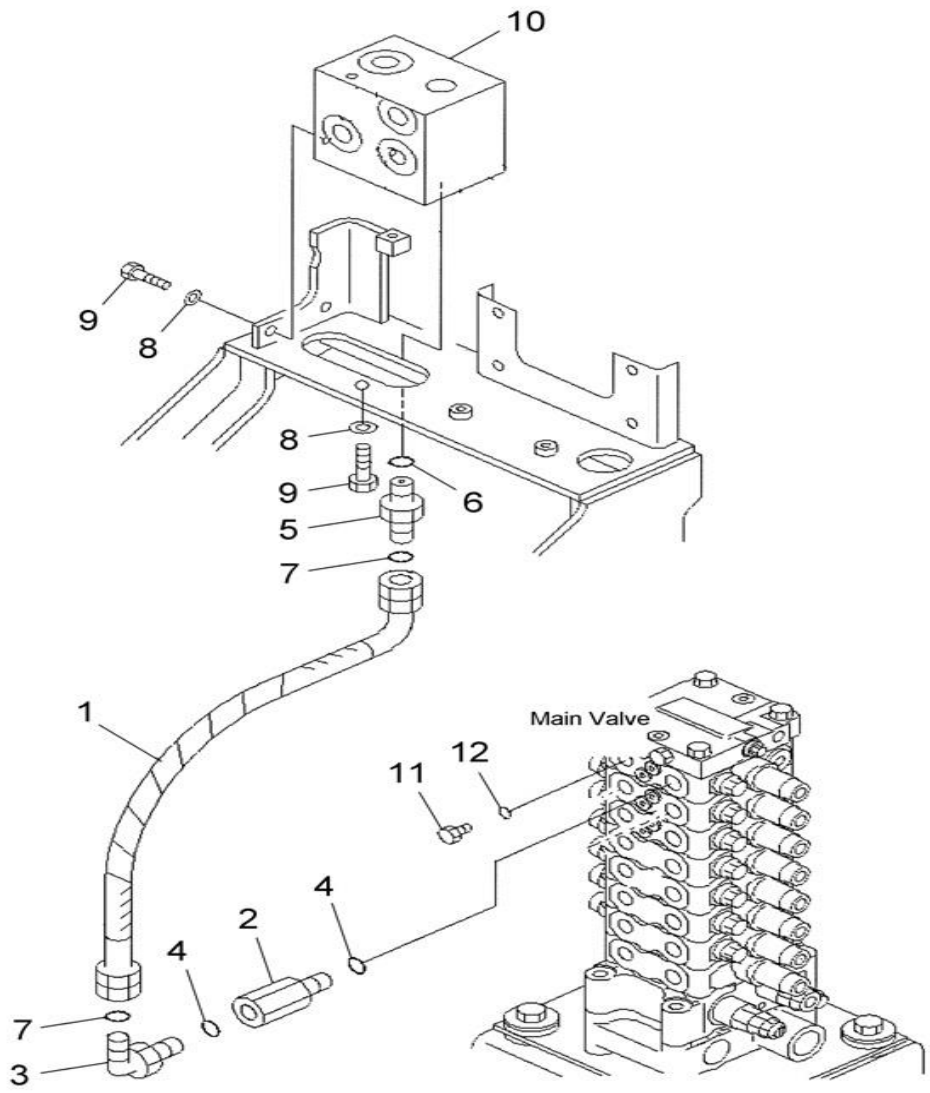

Index	Code	Part Number	Description	Qty	Serial No.
1		201-973-N550	HOSE	1	N220001-
	C1	201-973-N210	HOSE	1	NL 22105 - N201404
2		201-973-7540	JOINT	1	NL 22105
3		02782-10422	ELBOW	1	NL 22105
4		07002-12034	O-RING	2	NL 22105
5		201-973-N340	NIPPLE	1	NL 22105
6		07002-12034	O-RING	1	NL 22105
7		02896-11012	O-RING	2	NL 22105
8		01643-31032	WASHER	3	NL 22105
9		01010-81025	BOLT	3	NL 22105
10		201-973-N110	BLOCK	1	NL 22105
11		07040-12012	PLUG	1	NL 22105
12		07002-12034	O-RING	1	NL 22105

PC71-7

FIG. H1270-02A0 ATTACHMENT LINE - SUPPLEMENTARY FILTER PIPING (1 ATTACHMENT)

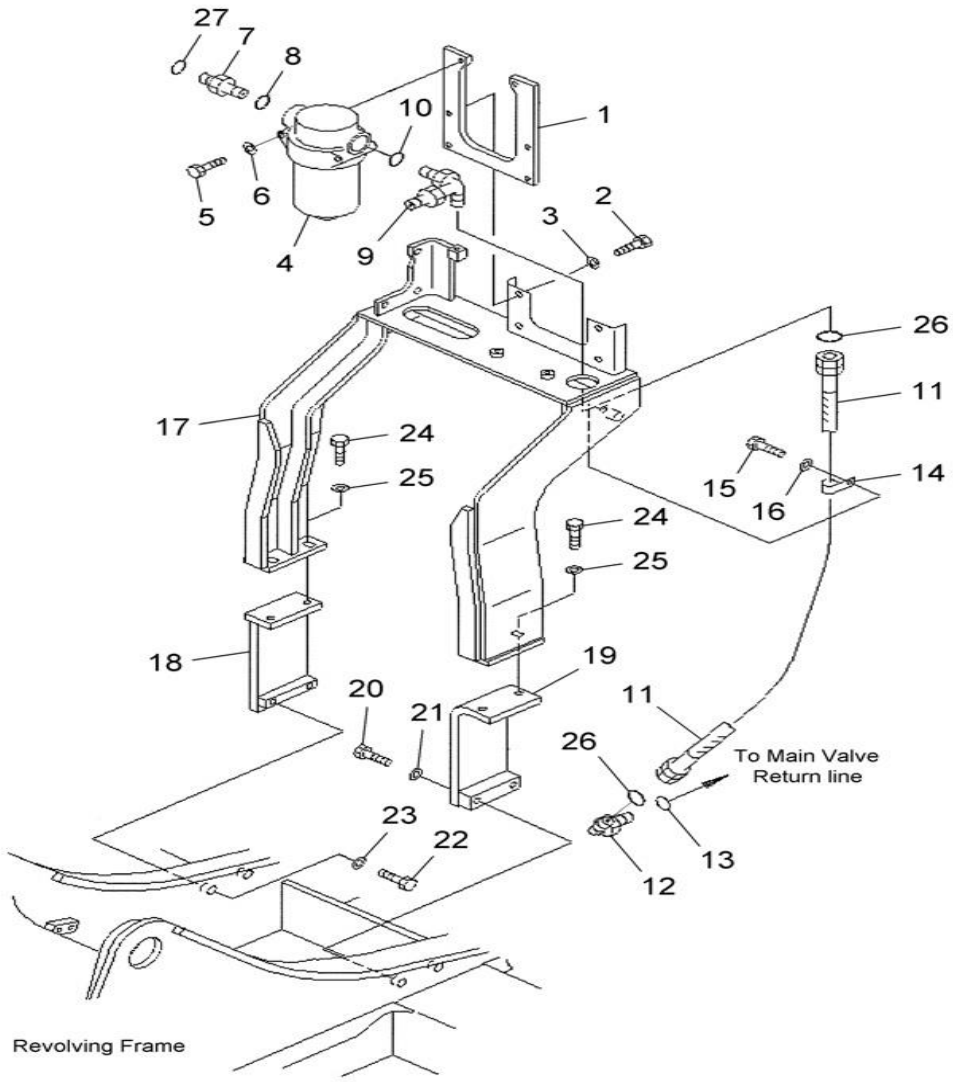

Index	Code	Part Number	Description	Qty	Serial No.
1		201-973-7160	PLATE	1	NL 22105
2		01010-81025	BOLT	4	NL 22105
3		01643-31032	WASHER	4	NL 22105
4		201-973-7270	FILTER ASSY	1	NL 22105
		201-973-7480	• ELEMENT ASSY	1	NL 22105
5		01010-81095	BOLT	2	NL 22105
6		01643-31032	WASHER	2	NL 22105
7		201-973-N350	NIPPLE	1	NL 22105
8		07002-13334	O-RING	1	NL 22105
9		201-973-N360	ELBOW	1	NL 22105
10		07002-13334	O-RING	1	NL 22105
11		201-973-N250	HOSE	1	NL 22105
12		02782-10628	ELBOW	1	NL 22105
13		07002-12434	O-RING	1	NL 22105
14		443452711	CLIP	2	NL 22105
15		01010-81020	BOLT	2	NL 22105
16		01643-31032	WASHER	2	NL 22105
17		201-973-N420	BRACKET	1	N200001-
	C1	201-973-N130	BRACKET	1	NL 22105 - NL 23166
18		201-973-N440	BRACKET	1	NL22558-
	C1	201-973-7620	BRACKET	1	NL 22105 - NL22557
19		201-973-7630	BRACKET	1	NL 22105
20		01010-81470	BOLT	2	NL 22105
21		01643-31445	WASHER	2	NL 22105
22		01010-81435	BOLT	2	NL 22105
23		01643-31445	WASHER	2	NL 22105
24		01010-81235	BOLT	4	NL 22105
25		01643-31232	WASHER	4	NL 22105
26		02896-11018	O-RING	2	NL 22105
27		02896-11018	O-RING	1	NL 22105

PC71-7

FIG. H1270-03A0 ATTACHMENT LINE - SUPPLEMENTARY FILTER PIPING (1 ATTACHMENT)

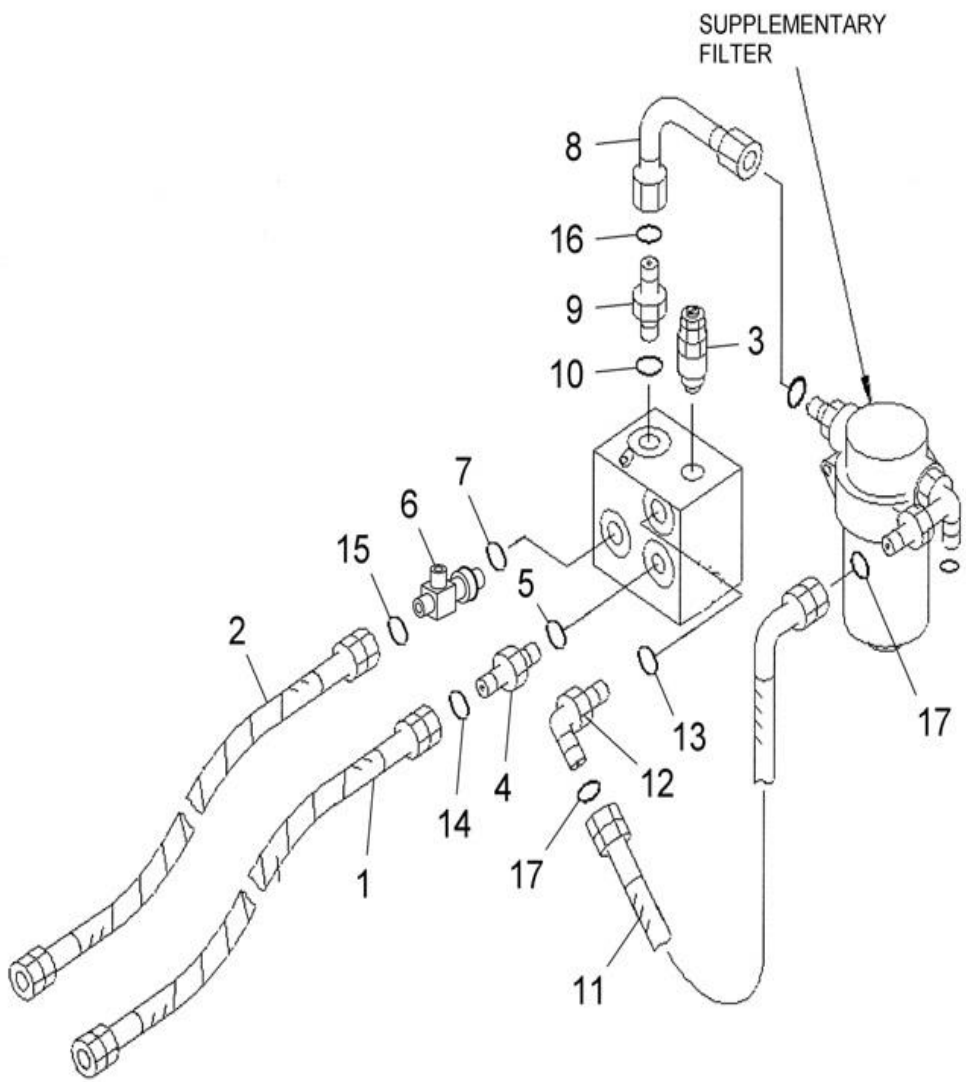

Index	Code	Part Number	Description	Qty	Serial No.
1		201-973-N560	HOSE	1	N220001-
	C1	201-973-N220	HOSE	1	NL 22105 - N201404
2		201-973-N580	HOSE	1	N220001-
	C1	201-973-N230	HOSE	1	NL 22105 - N201404
3		709-70-74700	RELIEF VALVE	1	NL 22105
4		02781-00422	UNION	1	NL 22105
5		07002-12034	O-RING	1	NL 22105
6		201-62-N3320	TEE	1	NL 22105
7		07002-12434	O-RING	1	NL 22105
8		201-973-N140	TUBE	1	NL 22105
9		02781-00628	UNION	1	NL 22105
10		07002-12434	O-RING	1	NL 22105
11		201-973-N240	HOSE	1	NL 22105
12		02782-10630	ELBOW	1	NL 22105
13		07002-12434	O-RING	1	NL 22105
14		02896-11012	O-RING	1	NL 22105
15		02896-11018	O-RING	1	NL 22105
16		02896-11018	O-RING	1	NL 22105
17		02896-11018	O-RING	2	NL 22105

PC71-7

FIG. H1270-05A0 PILOT LINE ROUTING (1 ATTACHMENT)

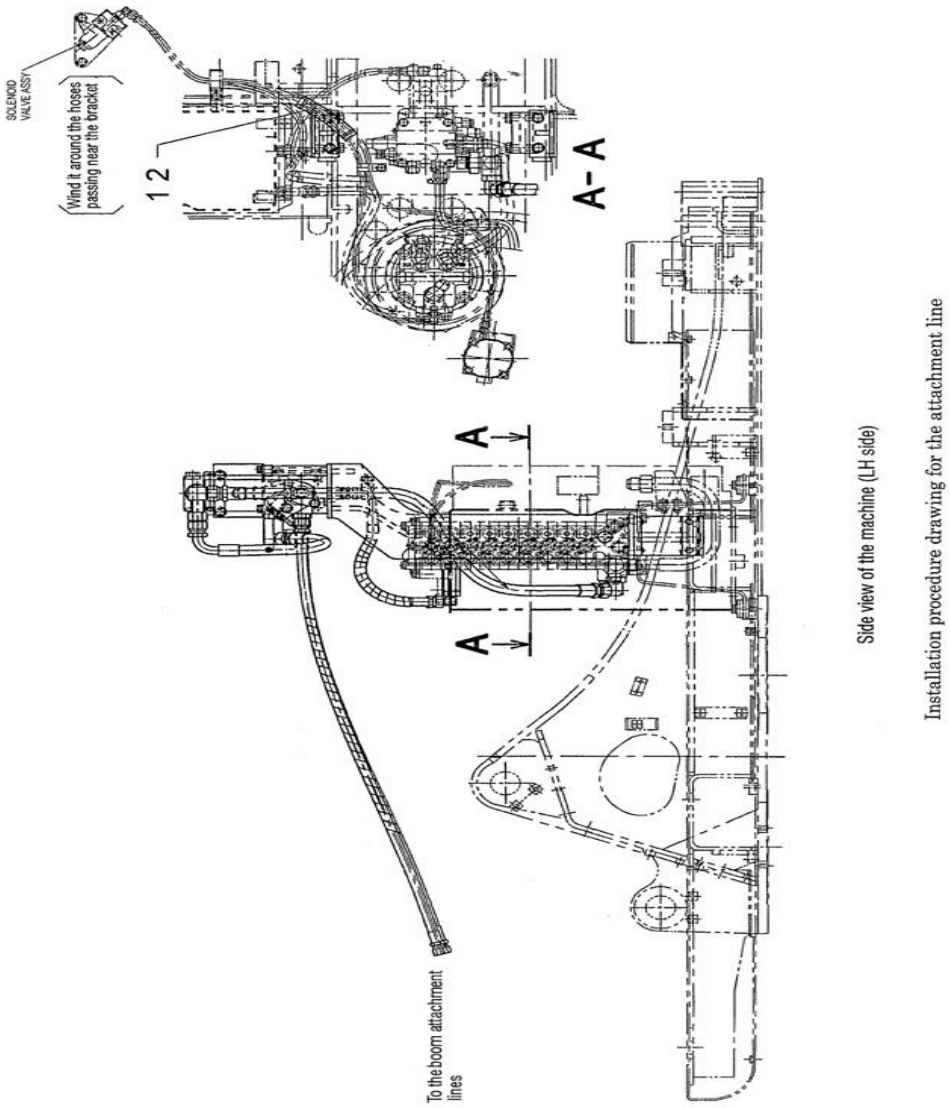

Index	Code	Part Number	Description	Qty	Serial No.
1		20U-62-26170	SEAT	1	NL 22105
2		08034-00823	BAND	2	NL 22105

PC71-7

FIG. H1270-06A0 ATTACHMENT LINE (ACCUMULATOR MOUNTING) (1 ATTACHMENT)

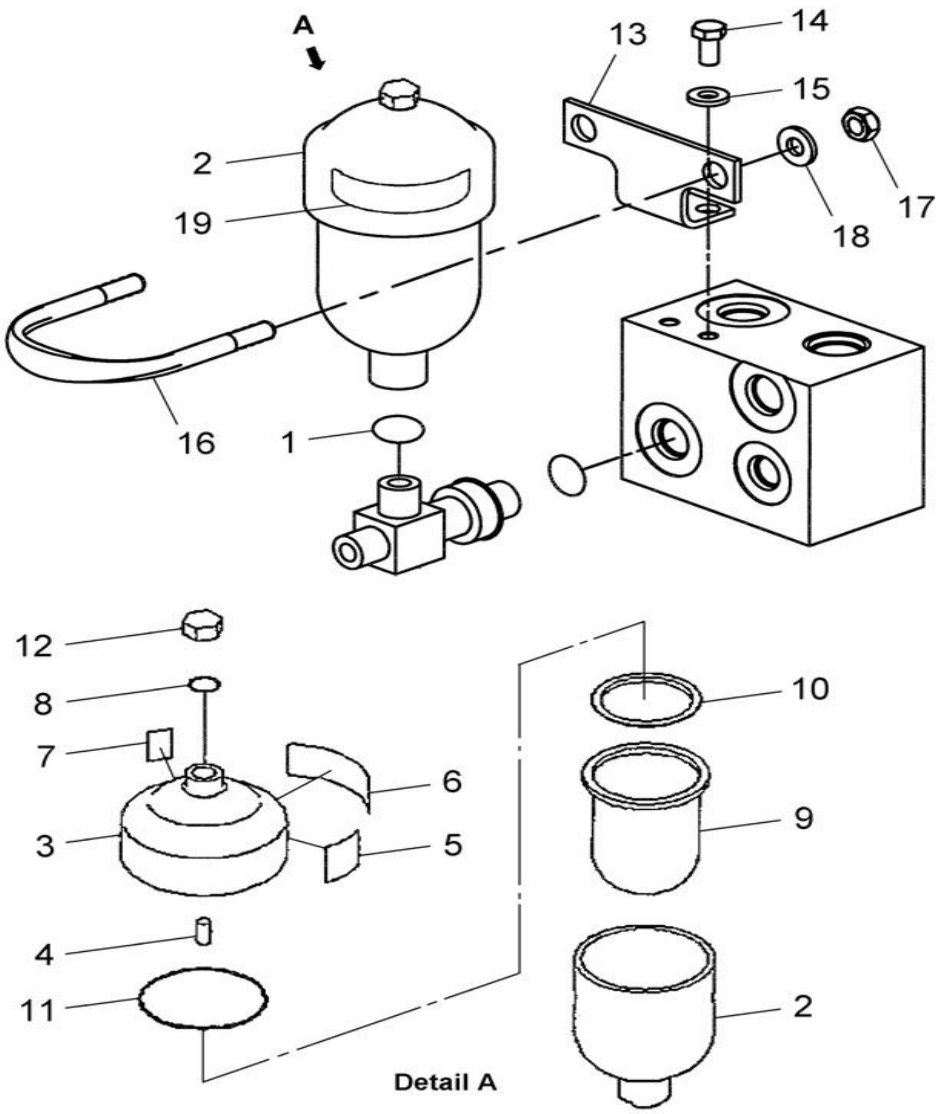

Index	Code	Part Number	Description	Qty	Serial No.
1		07002-12034	O-RING	1	NL 22105
		22B-62-24461	ACCUMULATOR	1	N200365
	C1	22B-62-24460	ACCUMULATOR	1	NL 22105 - N200364
2		#	• SHELL	1	NL 22105
3		#	• LID	1	NL 22105
4		#	• CORE	1	NL 22105
5		#	• NAME, PLATE	1	NL 22105
6		#	• PLATE	1	NL 22105
7		#	• PLATE	1	NL 22105
8		07000-01008	• O-RING	1	NL 22105
9		205-60-71340	• BLADDER	1	NL 22105
10		205-60-71350	• RING	1	NL 22105
11		205-60-71360	• O-RING	1	NL 22105
12		22B-62-24470	• CAP	1	NL 22105
13		201-973-N390	BRACKET	1	NL 22105
14		01010-81020	BOLT	2	NL 22105
15		01643-31032	WASHER	2	NL 22105
16		07283-38973	CLIP	1	NL 22105
17		01597-01211	NUT	2	NL 22105
18		01643-31232	WASHER	2	NL 22105
19		09659-A057B	PLATE	1	NL 22105

PC71-7

FIG. H1290-01A0A BLADE LINE

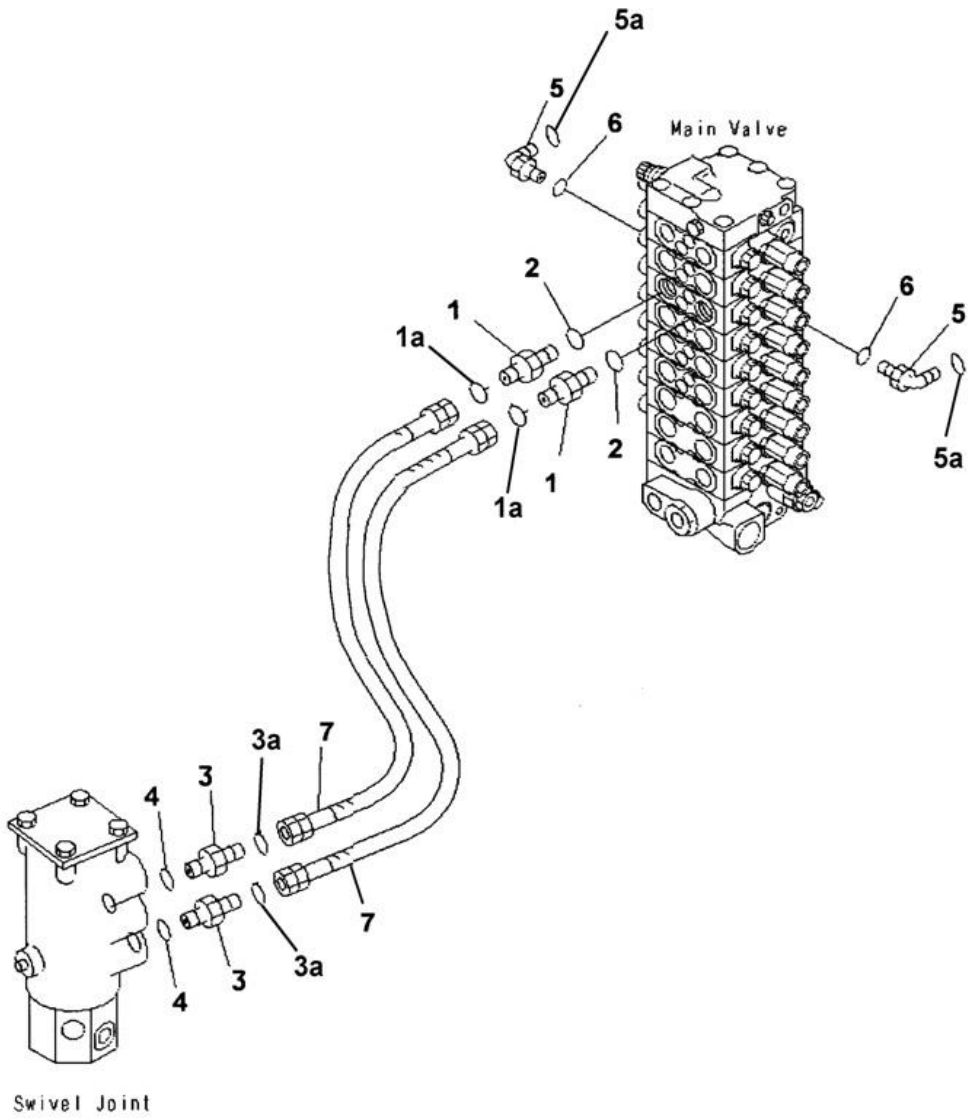

Index	Code	Part Number	Description	Qty	Serial No.
1		02781-00315	UNION	2	NL 20991 -
1a		02896-11009	O-RING	2	NL 20991 -
2		07002-12034	O-RING	2	NL 20001 -
3		02781-00315	UNION	2	NL 20991 -
3a		02896-11009	O-RING	2	NL 20991 -
4		07002-12034	O-RING	2	NL 20001 -
5		02782-10210	ELBOW	2	NL 20991 -
5a		02896-11012	O-RING	2	N220001-
	C1	02896-11008	O-RING	2	NL 20991 - N201404
6		07002-11423	O-RING	2	NL 20001 -
7		201-910-N160	HOSE A	2	NL 20991 -

PC71-7

FIG. H1310-01A0A TRAVEL LINE

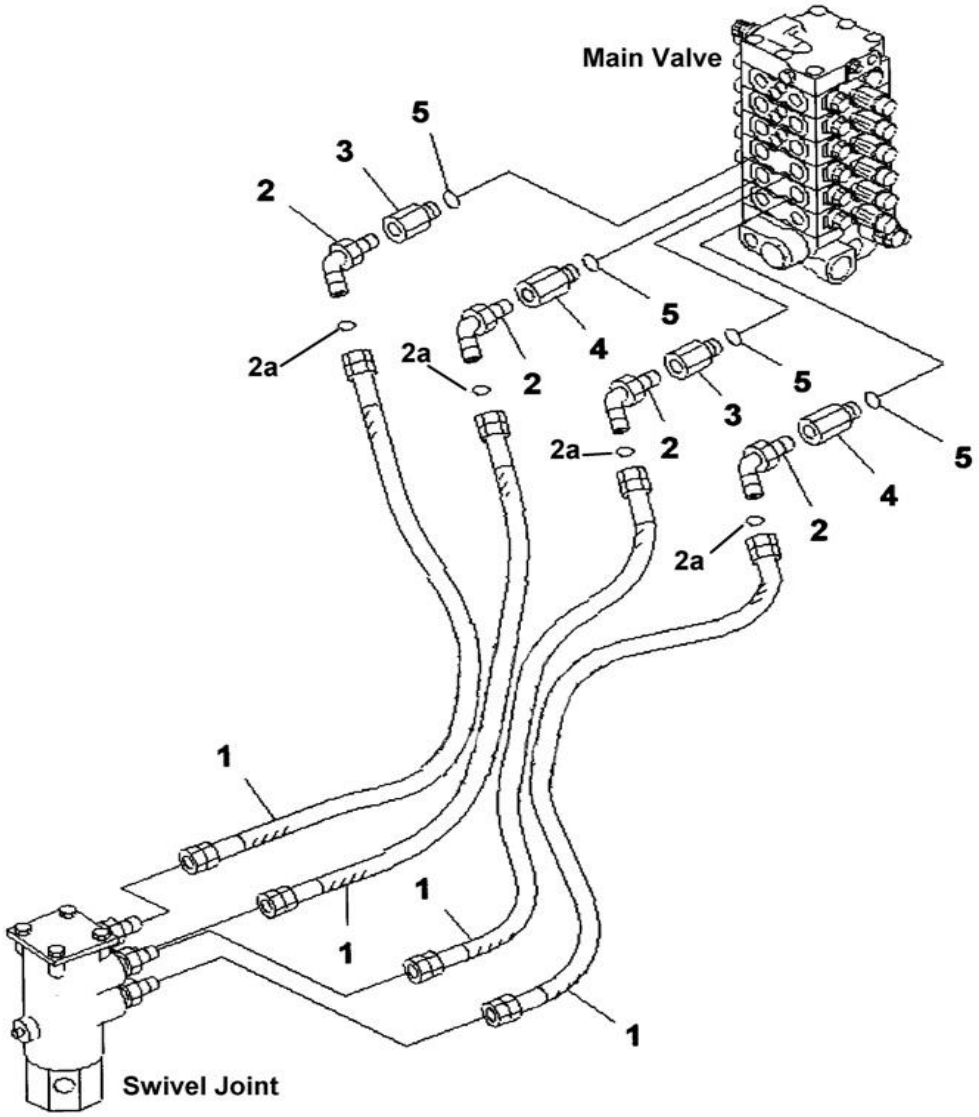

Index	Code	Part Number	Description	Qty	Serial No.
1		201-62-N1770	HOSE ASS'Y	4	NL 20991 -
2		02783-10522	ELBOW	4	NL 20991 -
2a		02896-11015	O-RING	4	NL 20991 -
3		201-62-71820	JOINT	2	NL 20001 -
4		201-62-71810	JOINT	2	NL 20001 -
5		07002-12434	O-RING	8	NL 20001 -

PC71-7

FIG. H1340-01A0A SWING LINE

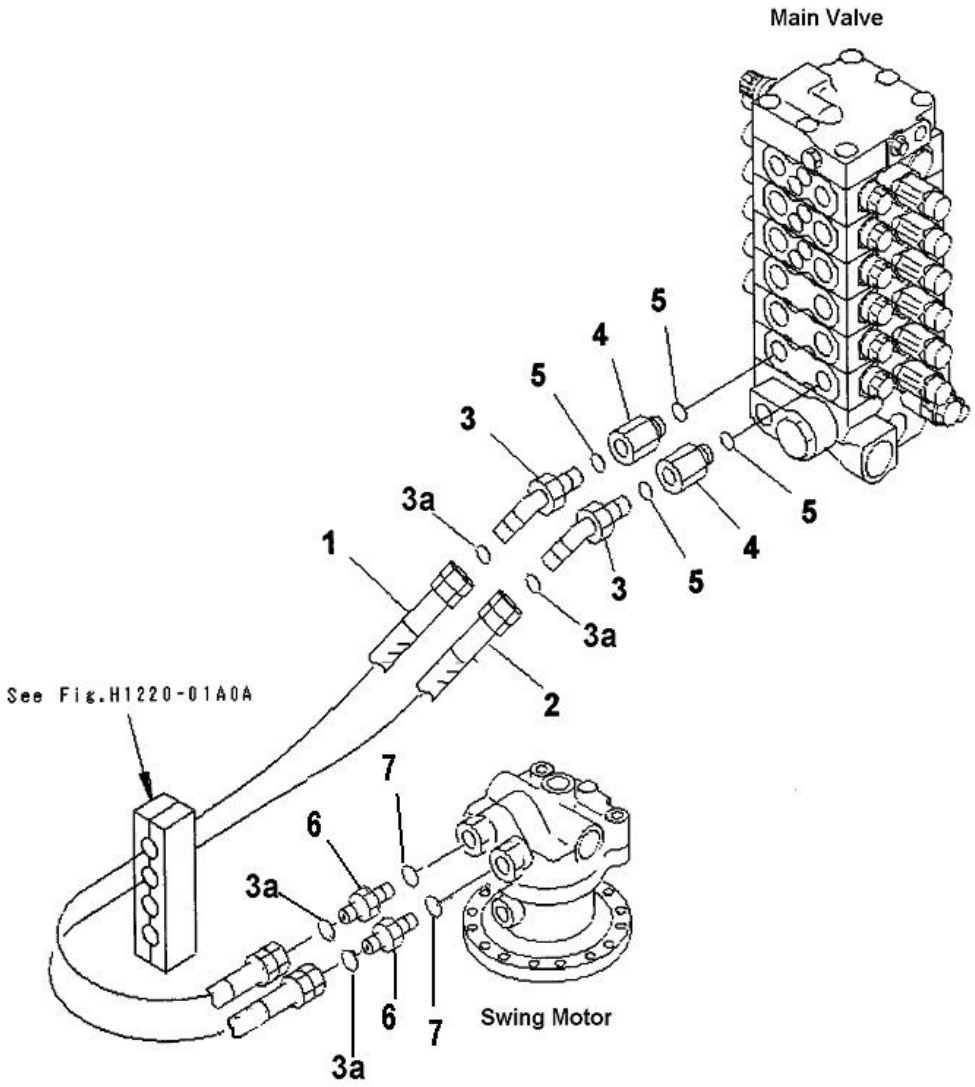

Index	Code	Part Number	Description	Qty	Serial No.
1		201-62-N1761	HOSE A	1	N220001-
	C1	201-62-N1760	HOSE A	1	NL 20991 - N201404
2		201-62-N1751	HOSE A	1	N220001-
	C1	201-62-N1750	HOSE A	1	NL 20991 - N201404
3		02783-10422	ELBOW	2	NL 20991 -
3a		02896-11012	O-RING	4	NL 20991 -
4		124-49-51430	JOINT	2	NL 20001 -
5		07002-12034	O-RING	4	NL 20001 -
6		02781-00422	UNION	2	NL 20991 -
7		07002-12034	O-RING	2	NL 20991 -

FIG. H1831-01A0 SOLENOID VALVE

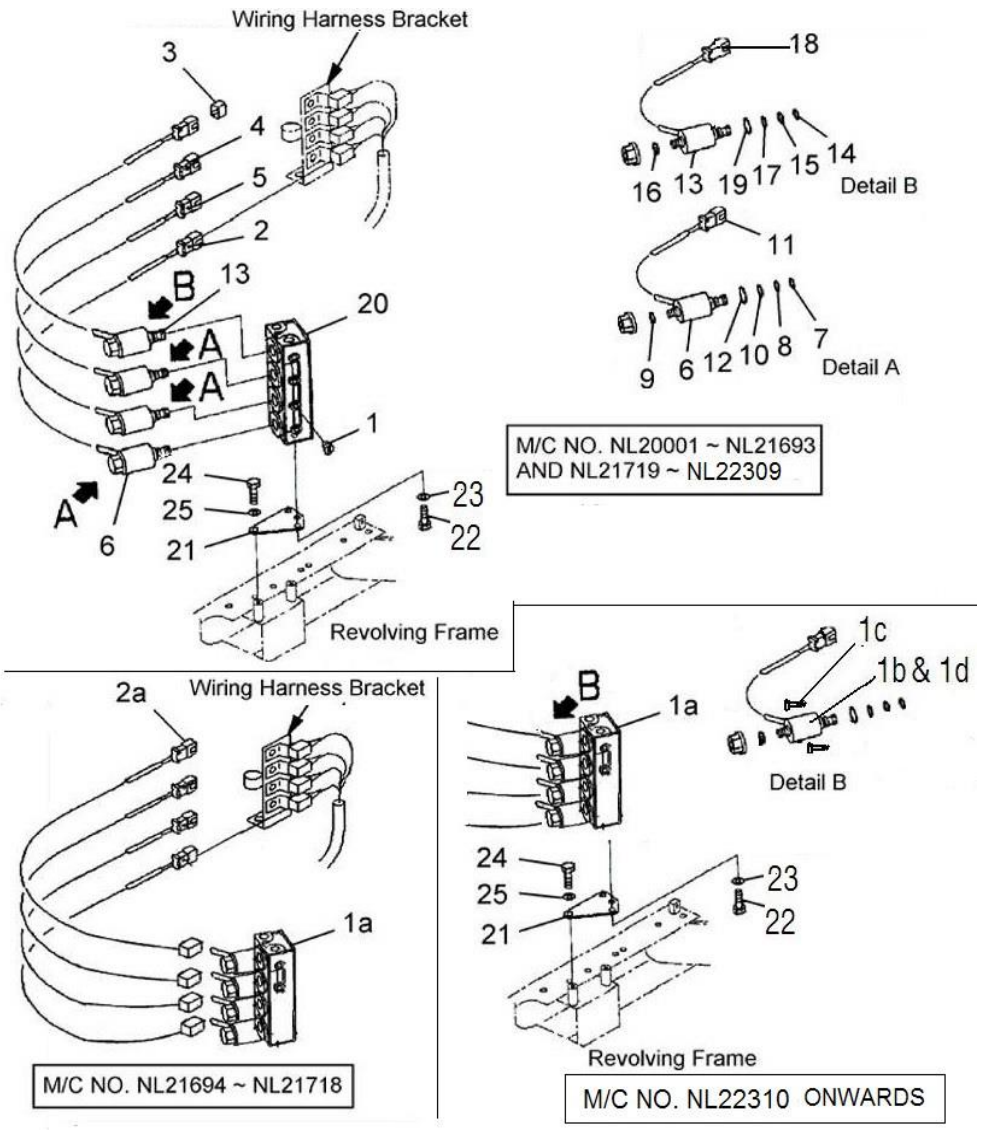

Index	Code	Part Number	Description	Qty	Serial No.
1	C1	201-60-72101	** SOLENOID LINE **	1	NL 20287-NL22309
			(M/C NONL 20001~21693)		
			AND (M/C NONL 21719~ NL22309)		
			VALVE ASS'Y, SOLENOID		
	C1	201-60-72100	VALVE ASS'Y, SOLENOID	1	NL 20001-NL 20286
	C1	07043-70108	• PLUG	1	NL 20001-NL22309
2	C1	201-60-65320	• MARK V3	1	NL 20001-NL22309
3	C1	201-60-72130	• MARK V1	1	NL 20001-NL22309
4	C1	201-60-72140	• MARK V4	1	NL 20001-NL22309
5	C1	201-60-72150	• MARK V5	1	NL 20001-NL22309
6	C1	203-60-62161	• SOLENOID VALVE	3	NL 20001-NL22309
7	C1	07000-02012	• • O-RING	1	NL 20001-NL22309
8	C1	07000-02014	• • O-RING	1	NL 20001-NL22309
9	C1	07000-12016	• • O-RING	1	NL 20001-NL22309
10	C1	07000-02018	• • O-RING	1	NL 20001-NL22309
11	C1	08055-00282	• • CONNECTOR	1	NL 20001-NL22309
12	C1	203-60-62190	• • O-RING	1	NL 20001-NL22309
13	C1	201-60-72110	• SOLENOID VALVE, P.P.CLOCK	1	NL 20001-NL22309
14	C1	07000-02012	• • O-RING	1	NL 20001-NL22309
15	C1	07000-02014	• • O-RING	1	NL 20001-NL22309
16	C1	07000-12016	• • O-RING	1	NL 20001-NL22309
17	C1	07000-02018	• • O-RING	1	NL 20001-NL22309
18	C1	08055-00282	• • CONNECTOR	1	NL 20001-NL22309
19	C1	203-60-62190	• • O-RING	1	NL 20001-NL22309
20	C1	201-62-65541	• BLOCK	1	NL 20287-NL22309
	C1	201-62-65540	• BLOCK	1	NL 20001-NL 20286
21		201-62-N3310	PLATE	1	NL 22310-
	C1	201-62-74160	PLATE	1	NL 20001-NL22309
22		01010-81235	BOLT	2	NL 20001-
23		01643-31232	WASHER	2	NL 20001-
24		01010-81025	BOLT	2	NL 20001-
25		01643-31032	WASHER	2	NL 20001-
			** SOLENOID LINE **		
1a		201-60-N1180	VALVE ASS'Y, SOLENOID	1	NL 22310-

PC71-7

FIG. H1831-01A0 SOLENOID VALVE

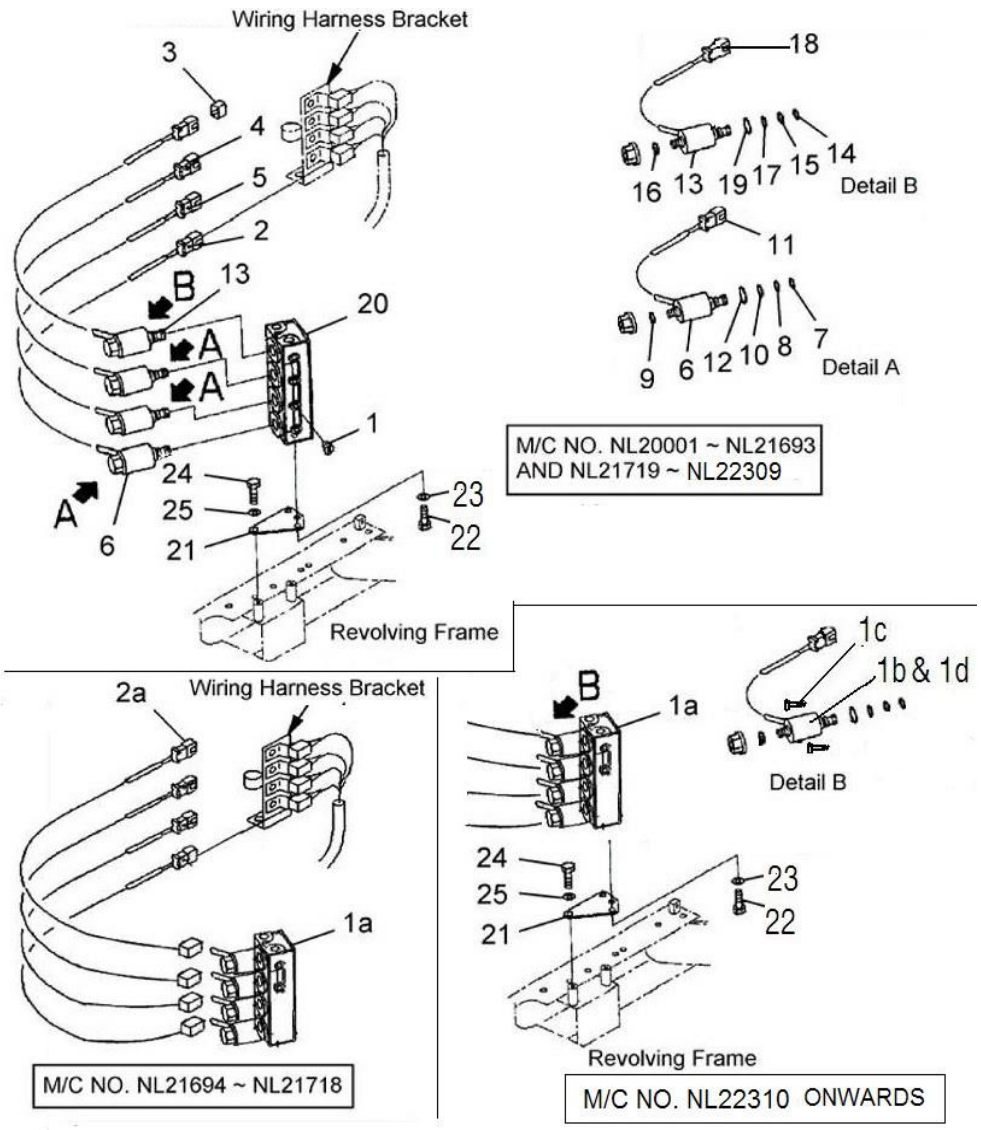

Index	Code	Part Number	Description	Qty	Serial No.
	C1	201-60-N1180	VALVE ASS'Y, SOLENOID	1	NL 21694-NL 21718
1b		201-60-N1240	• SOLENOID A	4	NL 22310-
	C1	201-60-N1240	• SOLENOID A	4	NL 21694-NL 21718
1c		201-60-N1250	• • SCREW	2	NL 22310-
1d	C1	201-60-N1250	• • SCREW	2	NL 21694-NL 21718
		201-60-N1260	• • SEAL KIT	1	NL 22310-
	C1	201-60-N1260	• • SEAL KIT	1	NL 21694-NL 21718
2a	C1	201-06-N1710	WIRING HARNESS	4	NL 21694-NL 21718

FIG. H1832-01A0A SOLENOID VALVE LINE

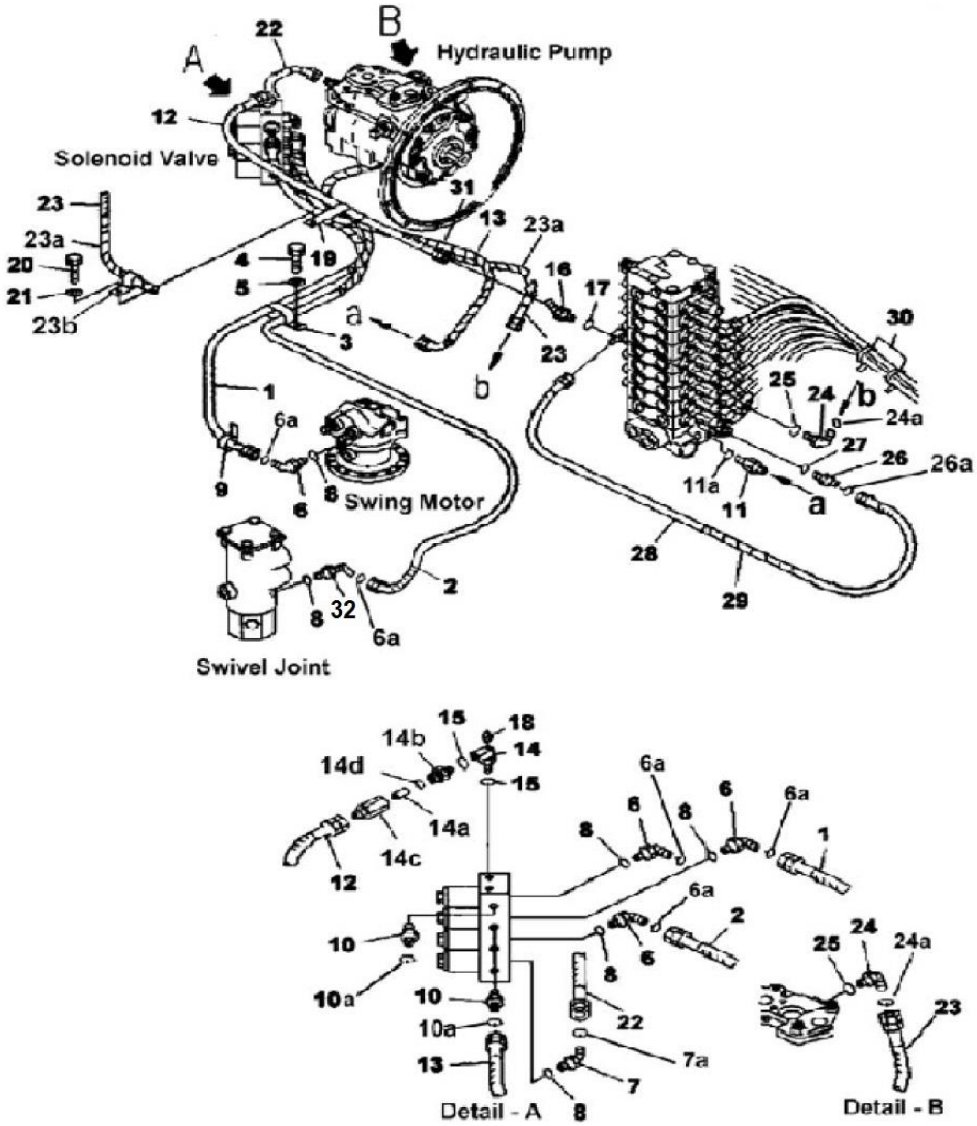

Index	Code	Part Number	Description	Qty	Serial No.
		201-62-N2251	HOSE A	1	N220001-
	C1	201-62-N2250	HOSE A	1	NL 20991 - N201404
1		02740-00213	• HOSE- 1300 MM, WHITE	1	N220001-
	C1	201-62-N2850	• HOSE- 1300 MM, WHITE	1	NL 20991 - N201404
2		02740-00215	• HOSE- 1500 MM, YELLOW	1	N220001-
	C1	21W-62-N2840	• HOSE- 1500 MM, YELLOW	1	NL 20991 - N201404
3		04435-51610	CLIP	1	NL 20001 -
4		01010-81020	BOLT	1	NL 20001 -
5		01643-31032	WASHER	1	NL 20001 -
6		02782-10210	ELBOW	4	NL 20991 -
6a		02896-11008	O-RING	5	NL 20991 -
7		02783-10210	ELBOW	1	NL 20991 -
7a		02896-11008	O-RING	1	NL 20991 -
8		07002-11423	O-RING	6	NL 20001 -
9		08034-00519	BAND	6	NL 20001 -
10		201-62-N2460	NIPPLE	2	NL 20991 -
10a		02896-11008	O-RING	2	NL 20991 -
11		201-62-N2160	UNION	1	NL 20991 -
11a		02896-11008	O-RING	1	NL 20991 -
		201-62-N2261	HOSE A	1	N220001-
	C1	201-62-N2260	HOSE A	1	NL 20001 - N201404
12		201-62-N2871	• HOSE- 800 MM, BLACK-WHITE	1	N220001-
	C1	201-62-N2870	• HOSE- 800 MM, BLACK-WHITE	1	NL 20001 - N201404
13		02740-00211	• HOSE- 1100 MM, GREEN-ORANGE	1	N220001-
	C1	20S-62-N2840	• HOSE- 1100 MM, GREEN-ORANGE	1	NL 20001 - N201404
14		201-62-75740	ELBOW	1	NL 20001 -
		20T-62-71900	FILTER A	1	NL 20001 -
14a		20T-62-71910	• STRAINER	1	NL 20001 -
14b		20T-62-71920	• UNION	1	NL 20001 -
14c		20T-62-71930	• UNION	1	NL 20001 -
14d		07002-01823	• O-RING	1	NL 20001 -
15		07002-11423	O-RING	2	NL 20001 -
16		02783-10210	ELBOW	1	N220001-
	C1	07236-10210	ELBOW	1	NL 20001 - N201404

PC71-7

FIG. H1832-01A0A SOLENOID VALVE LINE

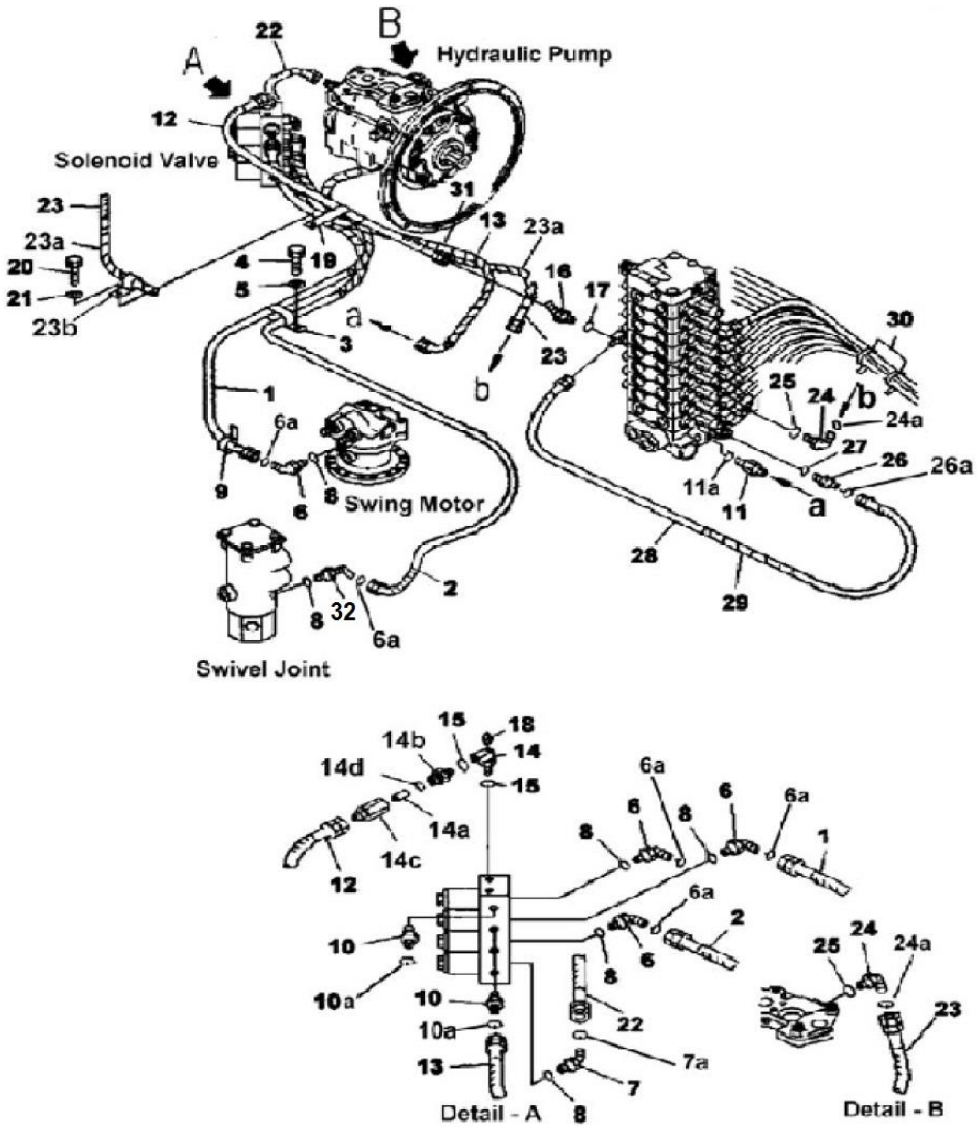

Index	Code	Part Number	Description	Qty	Serial No.
17		07002-11423	O-RING	1	NL 20001 -
18		07042-30108	PLUG	1	NL 20001 -
19		20Y-62-15891	CLIP	1	NL 20001 -
20		01010-81025	BOLT	1	NL 20001 -
21		01643-31032	WASHER	1	NL 20001 -
22		201-62-N2271	HOSE- 300MM	1	N220001-
	C1	201-62-N2270	HOSE- 300MM	1	NL 20991 - N201404
		201-62-N3061	HOSE A	1	N220001-
	C1	201-62-N3060	HOSE A	1	NL 20991 - N201404
23		201-62-N3071	• HOSE	1	N220001-
	C1	201-62-N3070	• HOSE	1	NL 20991 - N201404
23a		08210-01214	• SPIRAL TUBE	1	NL 20001 -
23b		04435-51610	CLIP	1	N220001-
	C1	113-899-7950	CLIP	1	NL 20001 - N201404
24		02782-10210	ELBOW	1	NL 20991 -
24a		02896-11008	O-RING	2	NL 20991 -
25		07002-11423	O-RING	2	NL 20001 -
26		02781-00210	UNION	1	NL 20991 -
26a		02896-11008	O-RING	1	NL 20991 -
27		07002-11423	O-RING	1	NL 20001 -
28		201-62-N2281	HOSE A	1	N220001-
	C1	201-62-N2280	HOSE A	1	NL 20991 - N201404
29		363-18-32130	• PROTECTOR	1	NL 20001 -
30		08034-00536	BAND	3	NL 20001 -
31		201-62-75320	COVER	1	NL 20001 -
32		02781-0021D	UNION	1	N220001-

PC71-7

FIG. H1833-02A0A PRESSURE SWITCH BLOCK

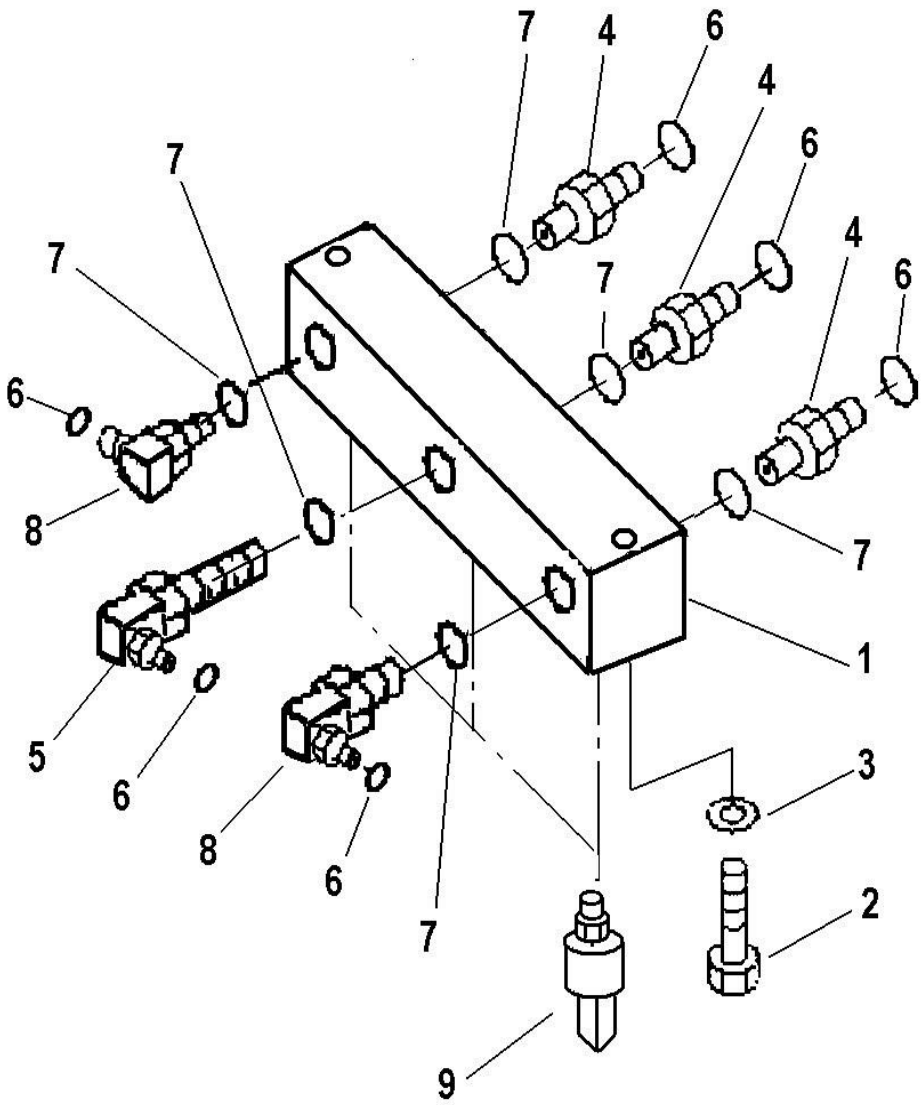

Index	Code	Part Number	Description	Qty	Serial No.
1		201-62-N3210	BLOCK, PRESSURE SWITCH	1	NL 20991-
2		01010-81045	BOLT	2	NL 20991-
3		01643-31032	WASHER	2	NL 20991-
4		02781-0021D	UNION	3	NL 20991-
5		02782-10212	ELBOW	1	N220001-
	C1	11Y-62-12370	ELBOW	1	NL 20991- N201404
6		02896-11008	O-RING	6	NL 20991-
7		07002-11423	O-RING	6	NL 20991-
8		02782-10210	ELBOW	2	NL 20991-
9		206-06-61130	SWITCH	3	NL 20991-

PC71-7

FIG. H1840-01A0A P.P.C. MAIN LINE

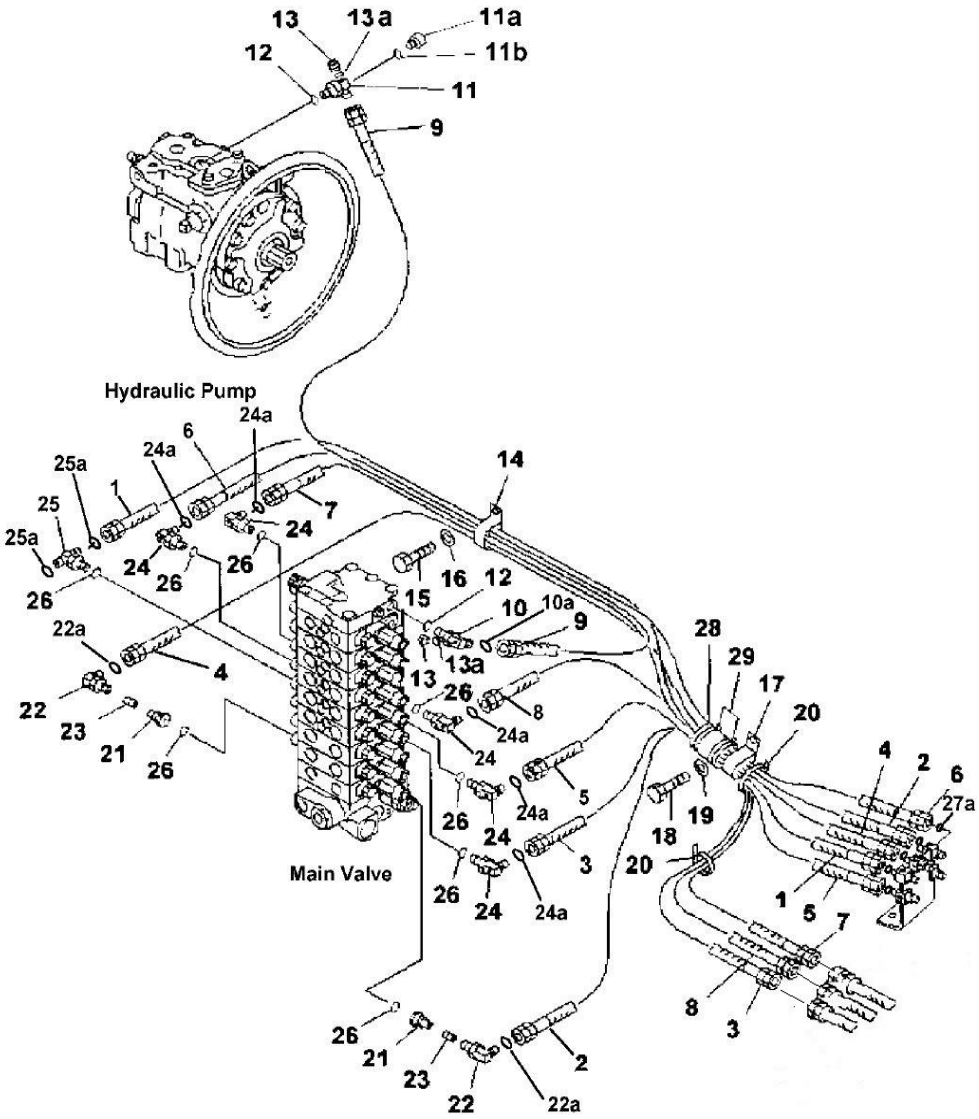

Index	Code	Part Number	Description	Qty	Serial No.
		201-62-N2291	HOSE A	1	N220001-
	C1	201-62-N2290	HOSE A	1	NL 20991 - N201404
1		02740-00220	• HOSE - 1400MM, YELLOW	1	N220001-
	C1	201-62-N3040	• HOSE - 1400MM, YELLOW	1	NL 20991 - N201404
2		02740-00217	• HOSE - 1100MM, WHITE	1	N220001-
	C1	201-62-N2860	• HOSE - 1100MM, WHITE	1	NL 20991 - N201404
3		02740-00217	• HOSE - 1100MM, BLACK	1	N220001-
	C1	201-62-N2860	• HOSE - 1100MM, BLACK	1	NL 20991 - N201404
4		02740-00221	• HOSE - 1500MM, BROWN	1	N220001-
	C1	201-62-N2840	• HOSE - 1500MM, BROWN	1	NL 20991 - N201404
5		02740-00217	• HOSE - 1100MM, GREEN	1	N220001-
	C1	201-62-N2860	• HOSE - 1100MM, GREEN	1	NL 20991 - N201404
6		02740-00220	• HOSE - 1400MM, ORANGE	1	N220001-
	C1	201-62-N3040	• HOSE - 1400MM, ORANGE	1	NL 20991 - N201404
7		02740-00220	• HOSE - 1400MM, RED	1	N220001-
	C1	201-62-N3040	• HOSE - 1400MM, RED	1	NL 20991 - N201404
8		02740-00217	• HOSE - 1100MM, BLUE	1	N220001-
	C1	201-62-N2860	• HOSE - 1100MM, BLUE	1	NL 20991 - N201404
9		201-62-N2311	HOSE A	1	N220001-
	C1	201-62-N2310	HOSE A	1	NL 20991 - N201404
10		201-62-N2120	ELBOW	1	NL 20991 -
10a		02896-11009	O-RING	1	NL 20991 -
11		201-62-N2130	ELBOW	1	NL 20991 -
11a		02896-11009	PLUG	1	NL 20991 -
11b		000 304 44 R	O-RING	1	NL 20001
12		07002-11423	O-RING	2	NL 20001 -
13		07040-11007	PLUG	2	NL 20001 -
13a		07002-11023	O'RING	2	NL 20001 -
14		207-62-N1330	CLIP	1	NL 20057 -
15		01010-81025	BOLT	1	NL 20095 -
16		01643-31032	WASHER	1	NL 20001 -
17		21T-06-11950	CLIP	1	NL 20001 -
18		01010-81025	BOLT	1	NL 20095 -
19		01643-31032	WASHER	1	NL 20001 -

PC71-7

FIG. H1840-01A0A P.P.C. MAIN LINE

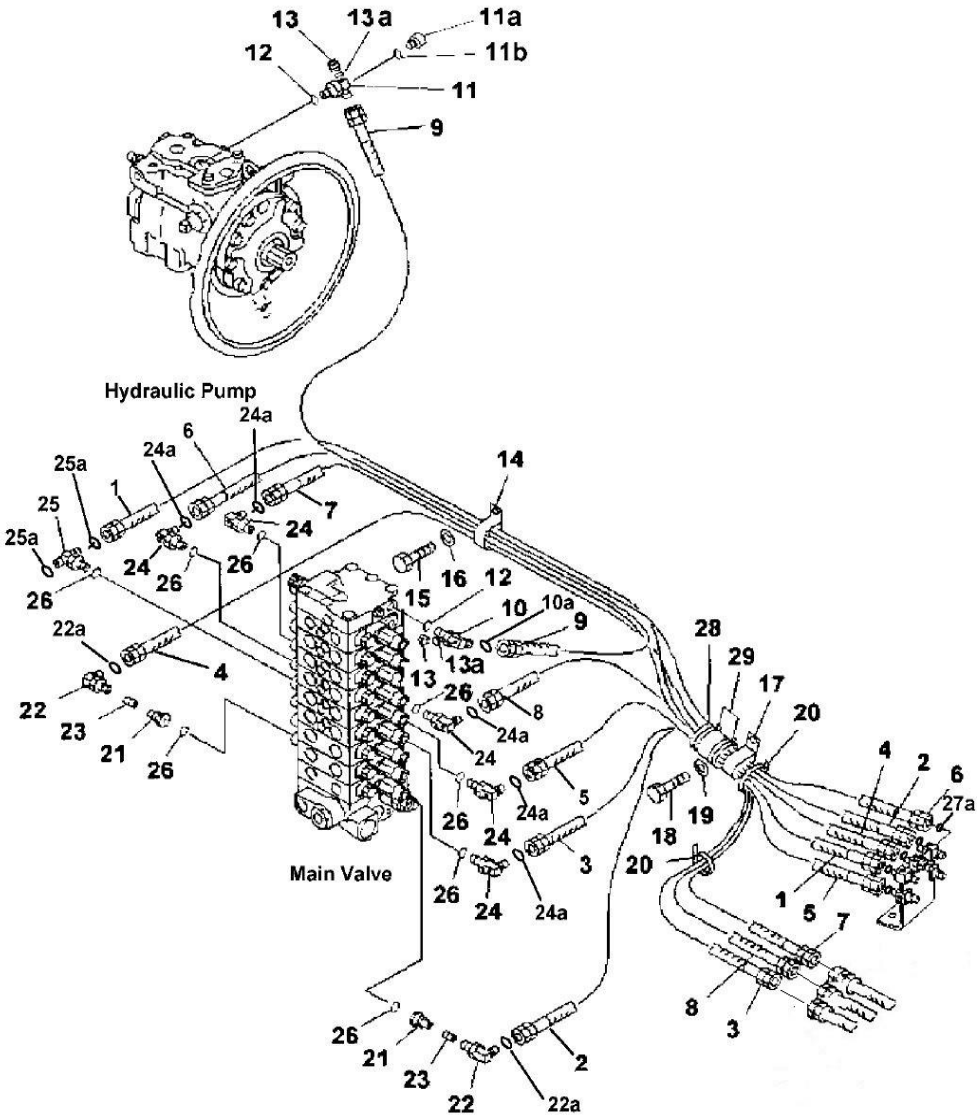

Index	Code	Part Number	Description	Qty	Serial No.
20		08034-00536	BAND	1	NL 20001 -
		201-62-N2490	VALVE A	2	NL 20001 -
21		21Y-62-11590	• PLUG	1	NL 20001 -
22		201-62-N2480	• ELBOW	1	NL 20991 -
22a		02896-11008	O-RING	2	NL 20991 -
23		20T-60-82320	• POPPET	1	NL 20001 -
24		201-62-N3330	ELBOW	9	NL 22481 -
	C1	02782-10210	ELBOW	9	NL 20991 -NL22480
24a		02896-11008	O-RING	9	NL 20991 -
25		201-62-N3340	TEE	1	NL 22481 -
	C1	11Y-62-12250	TEE	1	NL 20991 -NL22480
25a		02896-11008	O-RING	2	NL 20991 -
26		07002-11423	O-RING	12	NL 20001 -
27a		02896-11008	O-RING	5	NL 20001 -
28		20U-62-26170	SEAT	2	NL 20001 -
29		08034-00823	BAND	4	NL 20001 -

PC71-7

MAIN REVOLVING FRAME & RELATED PARTS

PC71-7

FIG. J1110-01A2 REVOLVING FRAME (BLADE SPEC.)

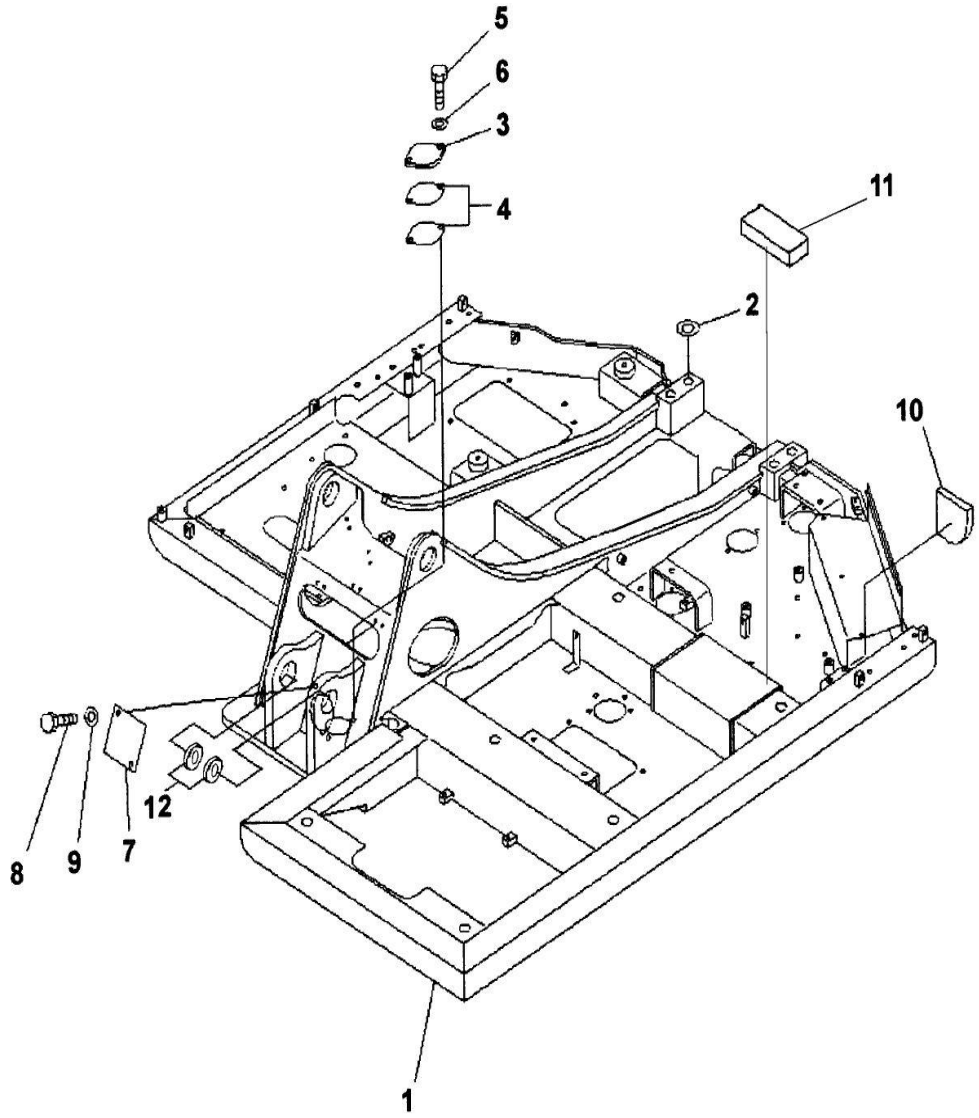

Index	Code	Part Number	Description	Qty	Serial No.
1		201-46-N0011	FRAME, REVOLVING	1	NL 22481-
	C1	201-46-N0010	FRAME, REVOLVING	1	NL 20991-NL22480
		201-46-N2400	• FRAME, REVOLVING	1	NL 22481-
	C1	201-46-N2191	• FRAME, REVOLVING	1	NL 20991-NL22480
	C1	201-46-N2190	• FRAME, REVOLVING	1	NL 20223-NL20990
	C1	201-46-N2020	• FRAME, REVOLVING	1	NL 20195-NL20222
	C1	201-46-N1170	• FRAME, REVOLVING	1	NL 20001-NL20194
2		21K-46-21190	PLATE - 10 MM	3	NL 20001-
		363-46-32140	SHIM - 05 MM	2	NL 20001-
		20S-71-11250	SPACER - 2.3 MM	2	NL 20001-
3		203-46-56160	COVER	1	NL 20001-
4		203-46-31181	GASKET	2	NL 20001-
5		01010-81230	BOLT	2	NL 20001-
6		01643-31232	WASHER	2	NL 20001-
7		201-46-71170	PLATE	1	NL 20001-
8		01010-81225	BOLT	2	NL 20001-
9		01643-31232	WASHER	2	NL 20001-
10		201-46-71220	SHEET	1	NL 20001-
11		201-46-73250	SHEET	1	NL 20001-
12		201-46-73190	SPACER	2	NL 20001-

PC71-7

FIG. J1310-01A0 BOOM FOOT PIN

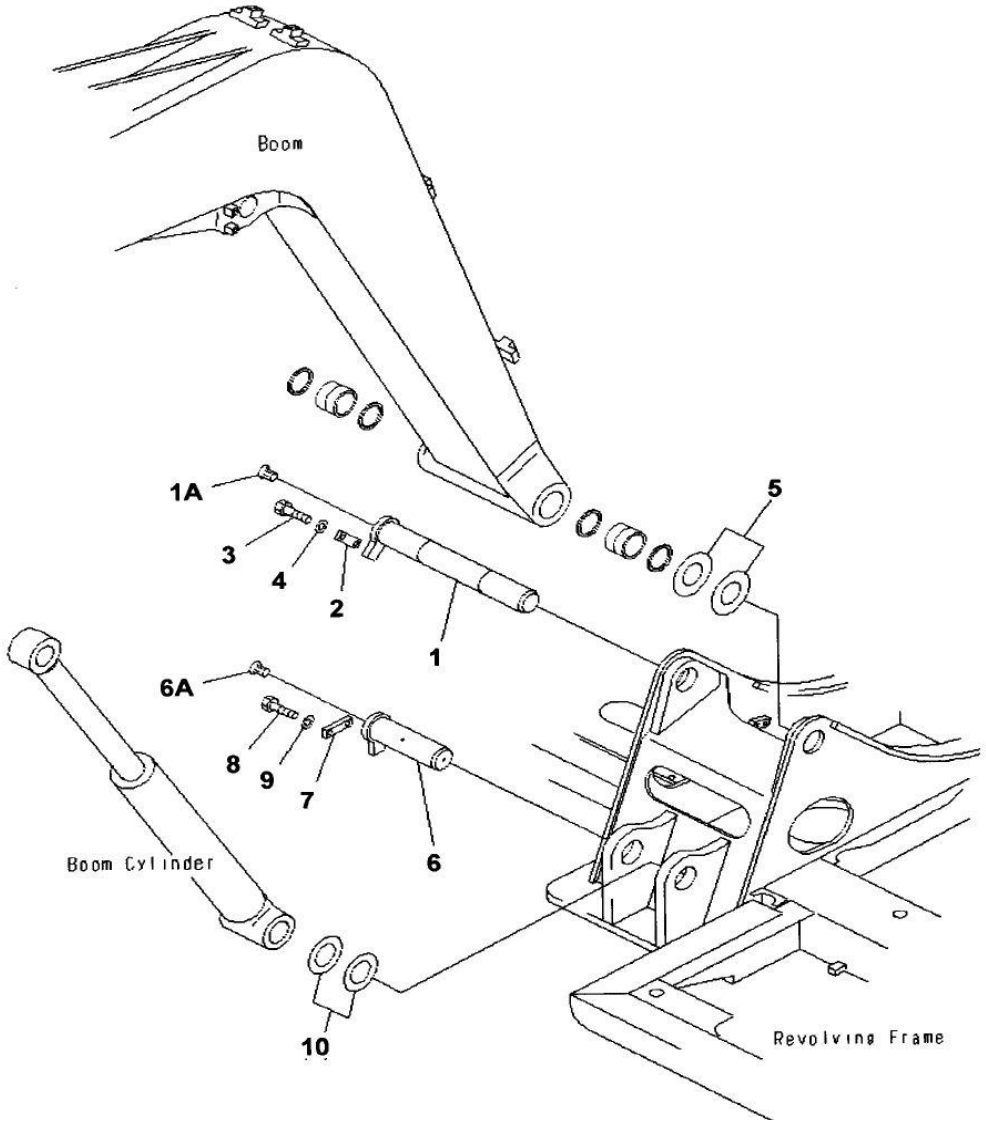

Index	Code	Part Number	Description	Qty	Serial No.
1		201-70-71240	SHAFT	1	NL 20001-
1A		22F-46-11240	CAP	1	NL 20001-
2		203-46-56270	PLATE	1	NL 20001-
3		01010-81230	BOLT	2	NL 20001-
4		01643-31232	WASHER	2	NL 20001-
5		20X-70-31310	SPACER- 1.0 MM	2	NL 20001-
5		20X-70-31320	SPACER- 0.5 MM	2	NL 20001-
6		201-70-71290	SHAFT	1	NL 20001-
6a		22F-46-11240	CAP	1	NL 20001-
7		203-46-56270	PLATE	1	NL 20001-
8		01010-81230	BOLT	2	NL 20001-
9		01643-31232	WASHER	2	NL 20001-
10		21Y-70-14710	SPACER- 1.0 MM	1	N220001-
	C1	202-70-48460	SPACER- 1.0 MM	1	NL 20001-N201404
10		21Y-70-14850	SPACER- 2.0 MM	1	N220001-
	C1	203-70-44430	SPACER- 2.0 MM	1	NL 20001-N201404

PC71-7

OPERATOR'S COMPARTMENT & CONTROL SYSTEM

PC71-7

FIG. K0110-01A1 OPERATOR SEAT WITH BELT

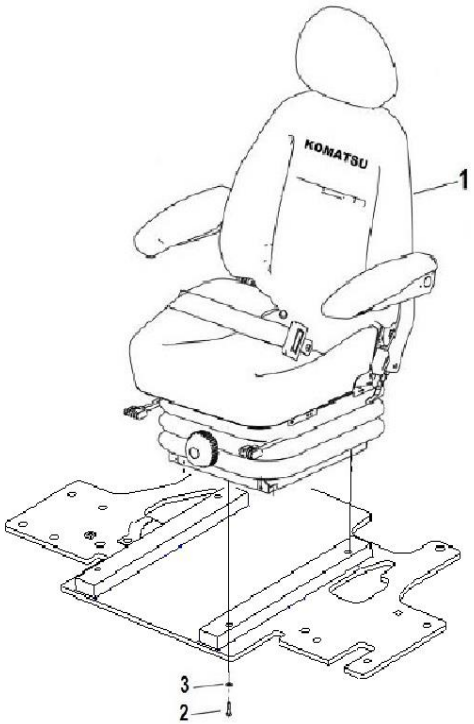

Index	Code	Part Number	Description	Qty	Serial No.
1		203-57-N1122	SEAT ASS'Y	1	N220001-
	C1	207-57-N1172	SEAT ASS'Y	1	NL 22839- N201404
	C1	207-57-N1171	SEAT ASS'Y	1	NL 22839- N201404
	C1	207-57-N1170	SEAT ASS'Y	1	NL 21210-NL22838
	C1	207-57-N1130	SEAT ASS'Y	1	NL 20672-NL21209
	C1	201-57-N1120	SEAT ASS'Y	1	NL 20001-NL20671
2		01010-80830	BOLT	4	NL 20001-
		01010-80820	BOLT	4	NL 20001-
3		01643-30823	WASHER	4	NL 20001-

PC71-7

FIG. K0110-02A1 SEAT INNER PARTS

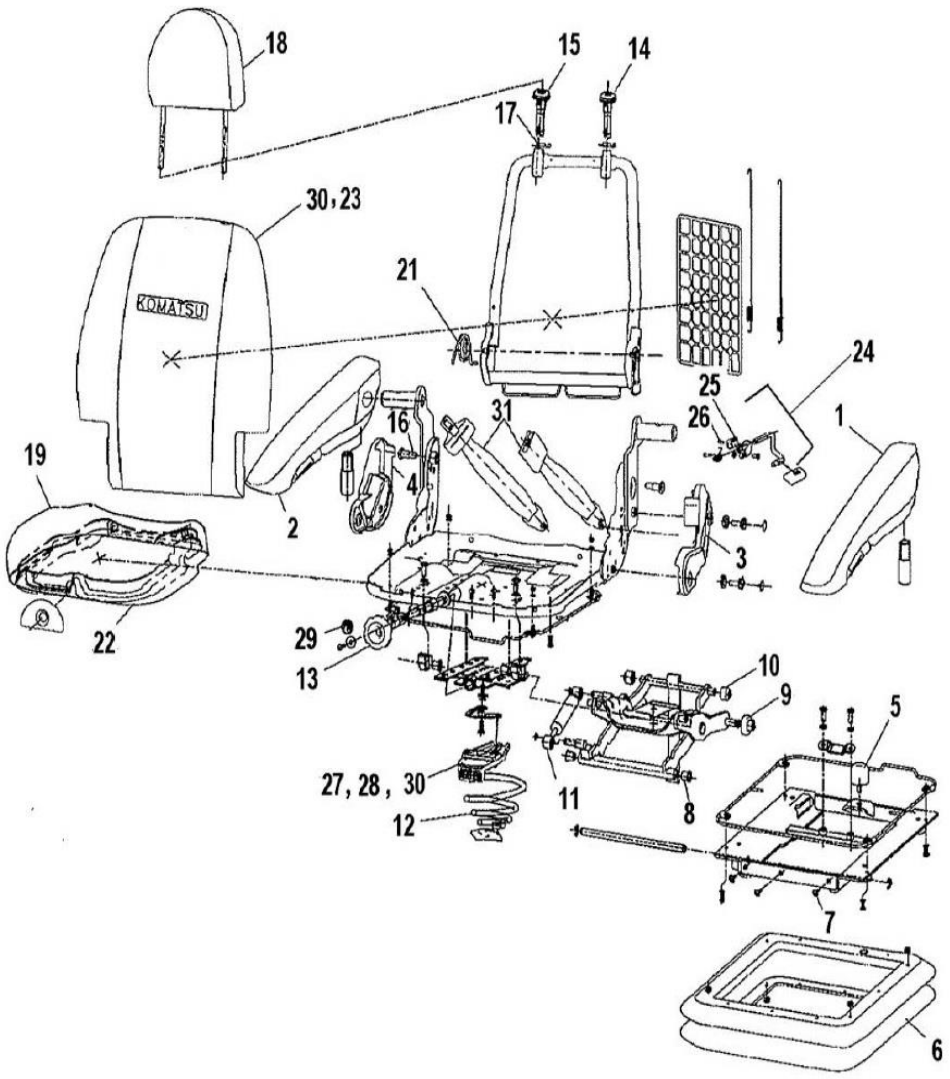

Index	Code	Part Number	Description	Qty	Serial No.
1	C1	207-57-N1180	ASSY ARMPAD COMPL_LH	1	NL21672- N200887
2	C1	207-57-N1190	ASSY ARMPAD COMPL_RH	1	NL21672- N200887
3	C1	207-57-N1210	SIDE COVER -LH	1	NL21672- N200887
4	C1	207-57-N1220	SIDE COVER -RH	1	NL21672- N200887
5	C1	207-57-N1230	SPRING AID	1	NL21672- N200887
6	C1	207-57-N1240	BELLOW	1	NL21672- N200887
7	C1	207-57-N1250	BUTTON-BELLOW	6	NL21672- N200887
8	C1	207-57-N1260	CLIP BEARING	5	NL21672- N200887
9	C1	207-57-N1270	GUIDE ROLLER	2	NL21672- N200887
10	C1	207-57-N1280	ROLLER	2	NL21672- N200887
11	C1	207-57-N1290	SHOCK ABSORBER	1	NL21672- N200887
12	C1	207-57-N1310	CONICAL SPRING	4	NL21672- N200887
13	C1	207-57-N1320	PLASTIC KNOB	1	NL21672- N200887
14	C1	207-57-N1330	ASSY HEAD REST BUSH -ACTIVE	1	NL21672- N200887
15	C1	207-57-N1340	HEADREST BUSH-PASSIVE	1	NL21672- N200887
16	C1	207-57-N1350	SPECIAL BOLT	2	NL21672- N200887
17	C1	207-57-N1360	PLASTIC CAP-12mm HEAD REST	2	NL21672- N200887
18	C1	207-57-N1370	HEADREST UPHOLSTERY	1	NL21672- N200887
19	C1	207-57-N1380	SEAT BASE UPHOLSTERY	1	NL21672- N200887
20	C1	207-57-N1390	BACK REST UPHOLSTERY	1	NL21672- N200887
21	C1	207-57-N1410	CONTROL SPRING RECL	1	NL21672- N200887
22	C1	207-57-N1420	SEAT BASE CUSHION-LTK	1	NL21672- N200887
23	C1	207-57-N1430	BACK REST CUSHION COMPL	1	NL21672- N200887
24	C1	207-57-N1520	KIT ASSY HINGE BRACKET	1	NL21672- N200887
25	C1	207-57-N1440	• TOOTHED BLOCK-INTER LOCK	1	NL21672- N200887
26	C1	207-57-N1450	• SPRING DOWEL 4X14	1	NL21672- N200887
27	C1	207-57-N1460	WT.ADJ.INDICATOR COVER	1	NL21672- N200887
28	C1	207-57-N1470	WT.ADJ.INDICATOR ARROW	1	NL21672- N200887
29	C1	207-57-N1480	WEIGHT ADJUSTMENT STICKER	1	NL21672- N200887
30	C1	207-57-N1490	WT.ADJ.DIAL INDICATOR BASE	1	NL21672- N200887
31	C1	207-57-N1510	SEAT BELT ASSY	1	NL21672- N200887

FIG. K0110-03A0 SEAT INNER PARTS

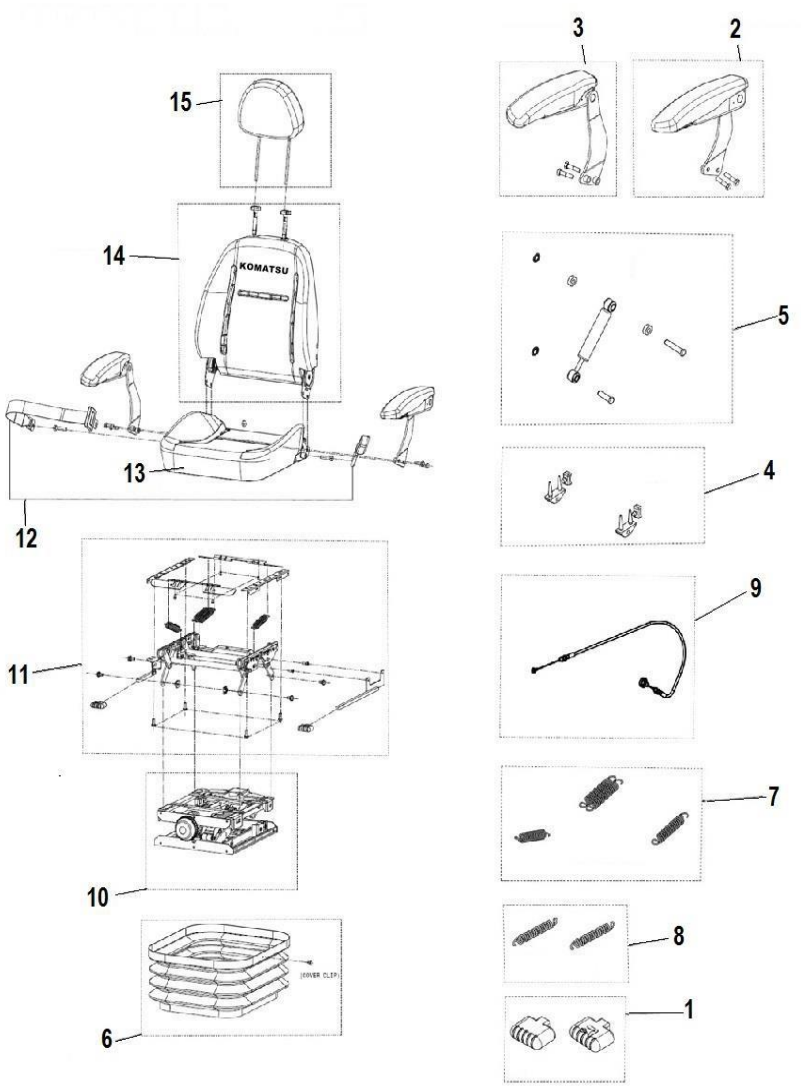

Index	Code	Part Number	Description	Qty	Serial No.
1		117 0930 0206 10	.RECL KNOB KIT		N200888
			..RECLINER KNOB	1	N200888
			..HT RISER KNOB	1	
2		102 3943 0613 10	.ARMREST KIT LH		N200888
			..COMFORT ARMREST WA LH	1	
			..M10X40 HEX HD BOLT	2	
3		102 3948 0613 10	.ARMREST KIT RH		N200888
			..COMFORT ARMREST WA RH	1	
			..M10X40 HEX HD BOLT	2	
4		118 0046 0114 10	.BUMP STOP KIT		N200888
			..BUMP STOP	2	
			..UP STOP	2	
5		116 0640 1815 10	.DAMPER ASSEMBLY KIT		N200888
			..DAMPER ASSY 160416	1	
			..SPACER SINTERED	2	
			..STARLOCK WASHER	2	
			..HEADED PIN 35	1	
			..HEADED PIN 50	1	
6		117 0929 0238 10	.BELLOW COVER KIT		N200888
			..COVER CLIP	25	
			..BELLOW COVER	1	
7		114 0137 0517 10	.HT RISER SPRING KIT		N200888
			..SPRING 78193	4	
8		114 0138 0518 10	.LATCH SPRING KIT		N200888
			..LATCH SPRING 150360	2	
9		116 0606 6223 10	.RECLINER CABLE		N200888
			..RECLINER ADJUSTER CABLE	1	
10		102 2923 0717 10	.SUSPENSION KIT		N200888
			..SUSPENSION ASSY	1	
11		102 3944 0646 10	.HT.RISER KIT		N200888
			..HT.RISER ASSY	1	
			..BELLOW MTG FRONT AND REAR BK	2	
			..BELLOW MTG SIDE BKT	2	
			..BELLOW MTG SCREW	2	

PC71-7

FIG. K0110-03A0 SEAT INNER PARTS

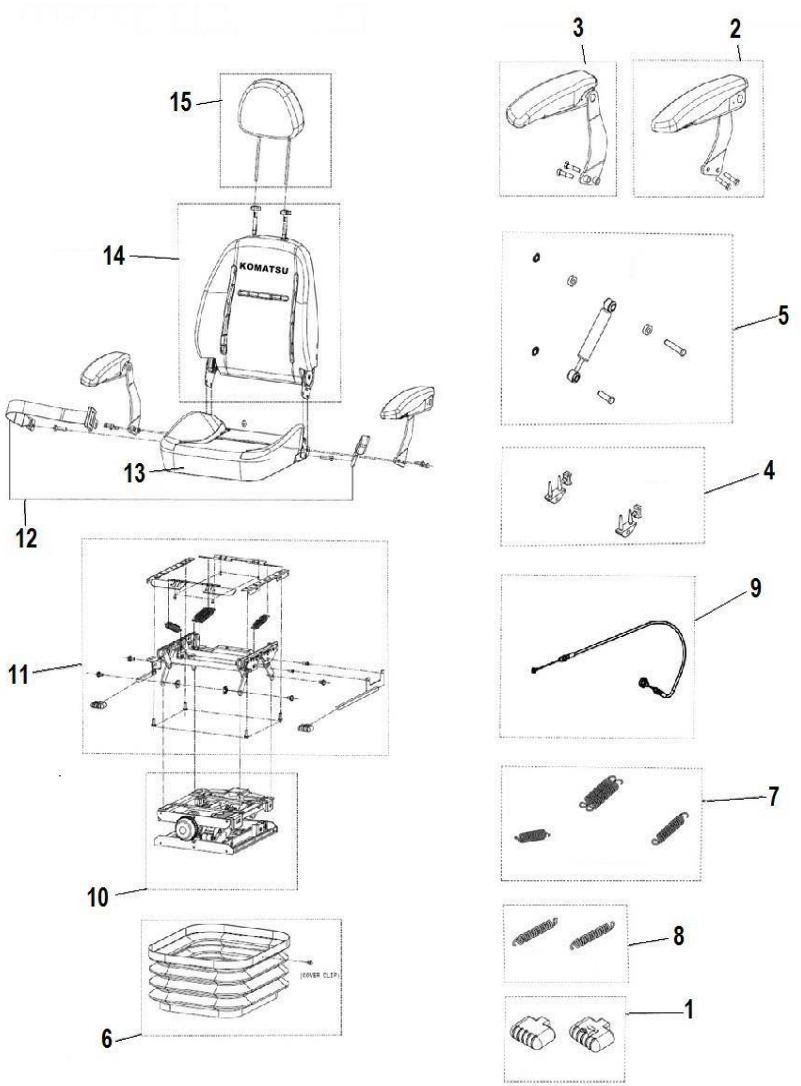

Index	Code	Part Number	Description	Qty	Serial No.
			..HEX HEADED BOLT M6X20	6	
			..SHOULDER BOLT M8	4	
			..SLIDER BLOCK	2	
12		116 0278 0518 60	.SAFETY BELT KIT		N200888
			..SAFETY BELT	1	
13		102 3945 0612 10	.CUSHION ASSY KIT		N200888
			..CUSHION FRAME	1	
			..CUSHION FOAM	1	
			..CUSHION TRIM	1	
14		102 3946 0611 10	.BACKREST ASY KIT		N200888
			..BACK FRAME	1	
			..BACK FOAM	1	
			..BACKREST TRIM	1	
			..GUIDE H/R RH	1	
			..GUIDE H/R ACTIVE LH	1	
15		102 3947 0615 10	.HEADREST ASSY KIT		N200888
			..H/R PU PAD 1	1	
			..H/R TRIM 1	1	

FIG. K0210-01A0 OPERATOR'S CAB (CAB, GRIP & OPEN LOCK)

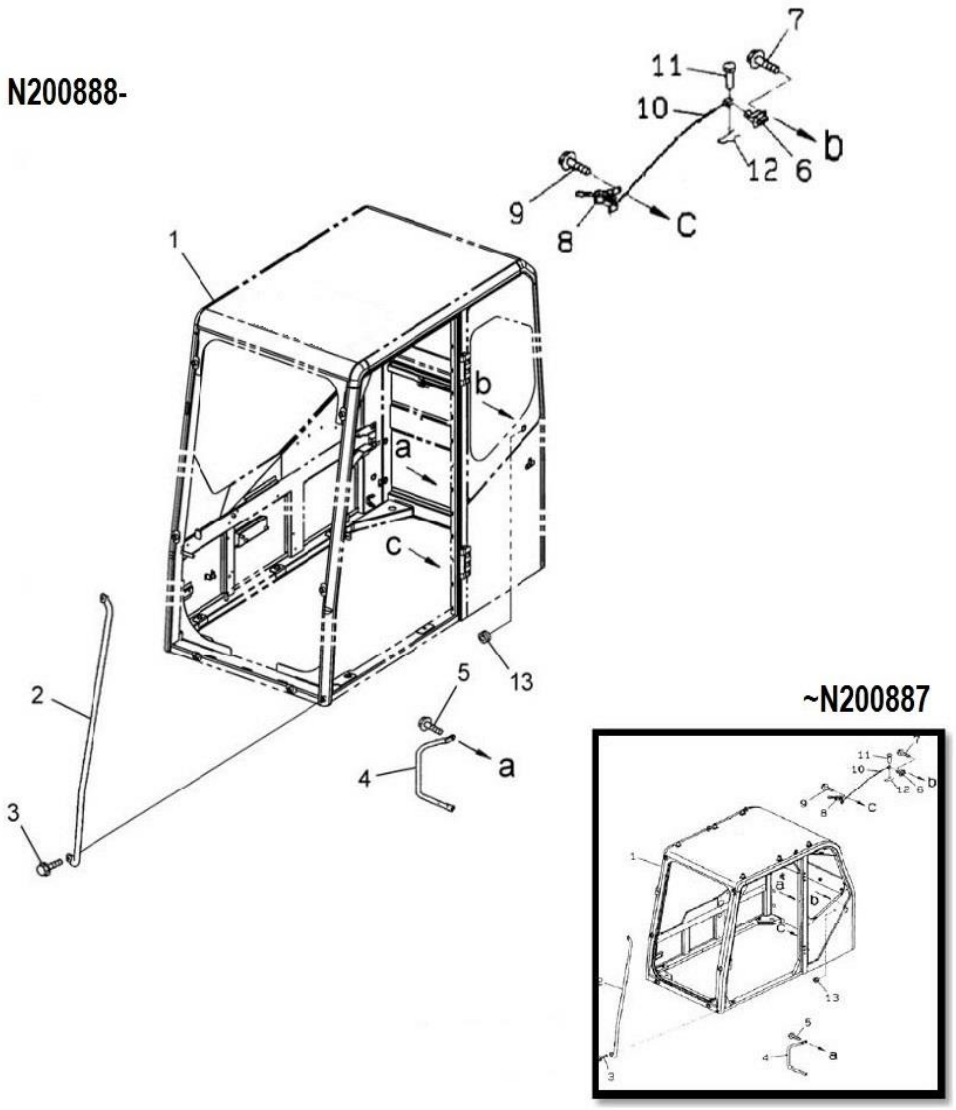

Index	Code	Part Number	Description	Qty	Serial No.
1		#	CAB	1	NL 20001-
2		20Y-54-44120	GRIP	1	NL 20001-
3		01435-41020	BOLT	2	NL 20001-
4		201-54-72470	GRIP	1	NL 20001-
5		01435-41025	BOLT	2	NL 20001-
6		20Y-54-N4570	LOCK	1	NL 21367-
	C1	20Y-54-36380	LOCK	1	NL 20001-NL21366
7		01435-40820	BOLT	4	NL 20001-
8		20Y-54-N7760	LOCK, RELEASE	1	NL 23101
	C1	20Y-54-N4590	LOCK, RELEASE	1	NL 21367- NL23100
	C1	20Y-54-35982	LOCK, RELEASE	1	NL 20001-NL 21366
9		01435-00616	BOLT	3	NL 20001-
10		20Y-54-N7750	CABLE	1	NL 23101-
	C1	20Y-54-N2730	CABLE	1	NL 20194-NL23100
	C1	20Y-54-35996	CABLE	1	NL 20001-NL20193
11		04205-10520	PIN	1	NL 20001-
12		04052-10530	PIN	1	NL 20001-
13		09415-01610	CAP	1	N220001-
	C1	08037-01610	GROMMET	1	NL 20114- N201404
	C1	09415-01610	CAP	1	NL 20001-NL20113

PC71-7

FIG. K0210-02A0 OPERATOR'S CAB (FRONT WINDOW)

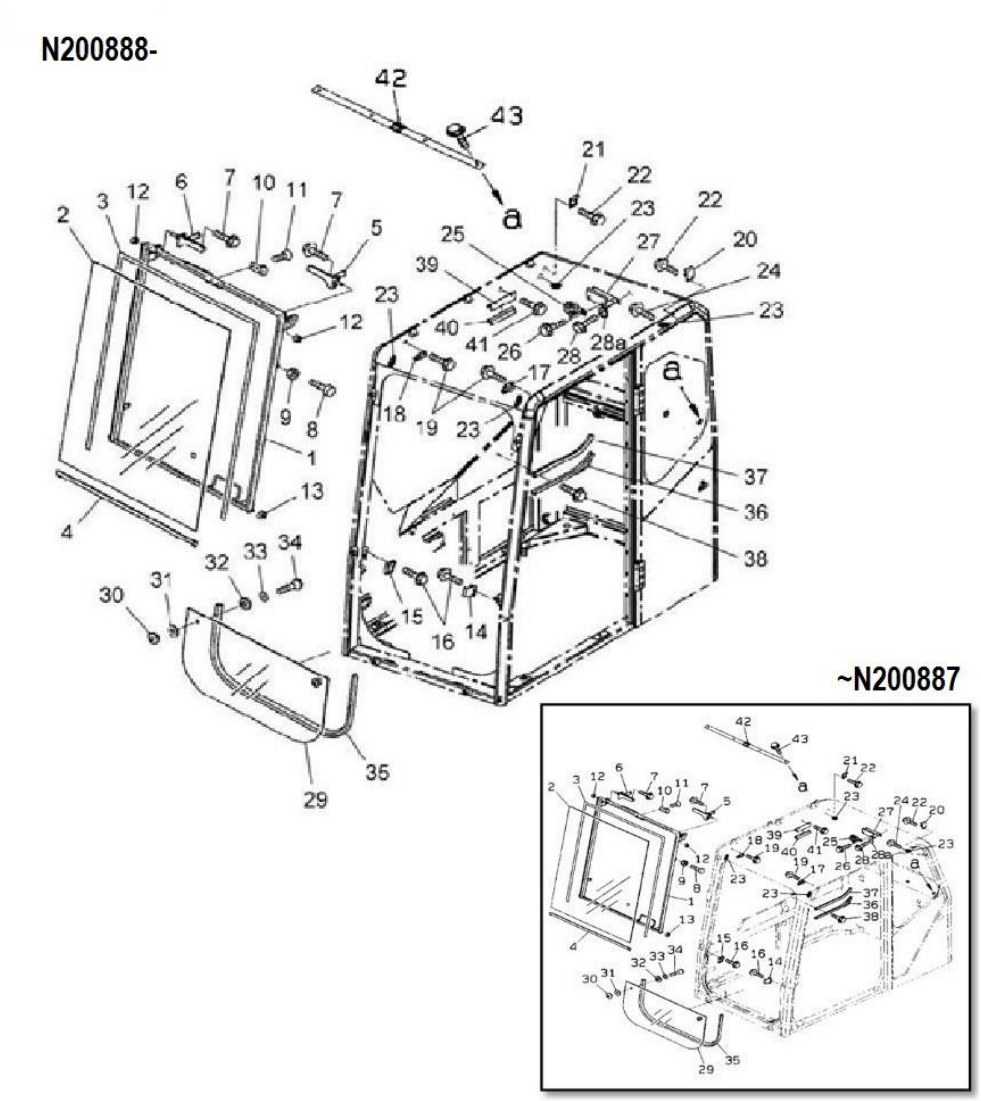

Index	Code	Part Number	Description	Qty	Serial No.
		20Y-54-44200	FRONT WINDOW ASSY	1	NL 20001-
1		20Y-54-44130	• FRONT WINDOW	1	NL 20001-
2		20Y-54-N1610	• GLASS	1	NL 20001-
3		20Y-54-N8450	• SEAL (DUM)	3.8	N200295
	C1	20Y-54-N2360	• SEAL (DUM)	3.8	NL 20001- N200294
4		20Y-54-44550	• SEAL	1	NL 20001-
5		20Y-54-43130	LATCH ASSY (LH)	1	NL 20001-
6		20Y-54-43140	LATCH ASSY (RH)	1	NL 20001-
7		01435-40820	BOLT	4	NL 20001-
8		20Y-54-14290	STOPPER	2	NL 20001-
9		01580-11008	NUT	2	NL 20001-
10		20Y-54-14310	STRIKER	1	NL 20001-
11		20Y-54-N1120	SCREW	3	NL 20001-
12		20Y-54-44150	ROLLER	2	NL 20001-
13		20Y-54-44160	ROLLER	2	NL 20001-
14		20Y-54-N2230	BRACKET (LH)	1	NL 20001-
15		20Y-54-N2240	BRACKET (RH)	1	NL 20001-
16		01435-40820	BOLT	4	NL 20001-
17		20Y-54-44210	DOVE TAIL (LH)	1	NL 20001-
18		20Y-54-44220	DOVE TAIL (RH)	1	NL 20001-
19		01435-40820	BOLT	4	NL 20001-
20		20Y-54-44230	BRACKET (LH)	1	NL 20001-
21		20Y-54-44240	BRACKET (RH)	1	NL 20001-
22		01435-40820	BOLT	4	NL 20001-
23		20Y-54-44250	SEAL	3	NL 20001-
24		01435-41020	BOLT	6	NL 20001-
25		20Y-54-N4620	LOCK ASS'Y	1	NL 21367-
	C1	205-54-63310	LOCK ASS'Y	1	NL 20001-NL21366
26		01435-40820	BOLT	2	NL 20001-
27		20Y-54-N8860	BRACKET	1	N220001-
	C1	20Y-54-44260	BRACKET	1	NL 20001- N201404
28		01435-40820	BOLT	2	NL 20001-
28a		01643-71032	WASHER	2	NL 20001-
		20Y-54-N8700	LOWER GLASS ASSY	1	N220001-

PC71-7

FIG. K0210-02A0 OPERATOR'S CAB (FRONT WINDOW)

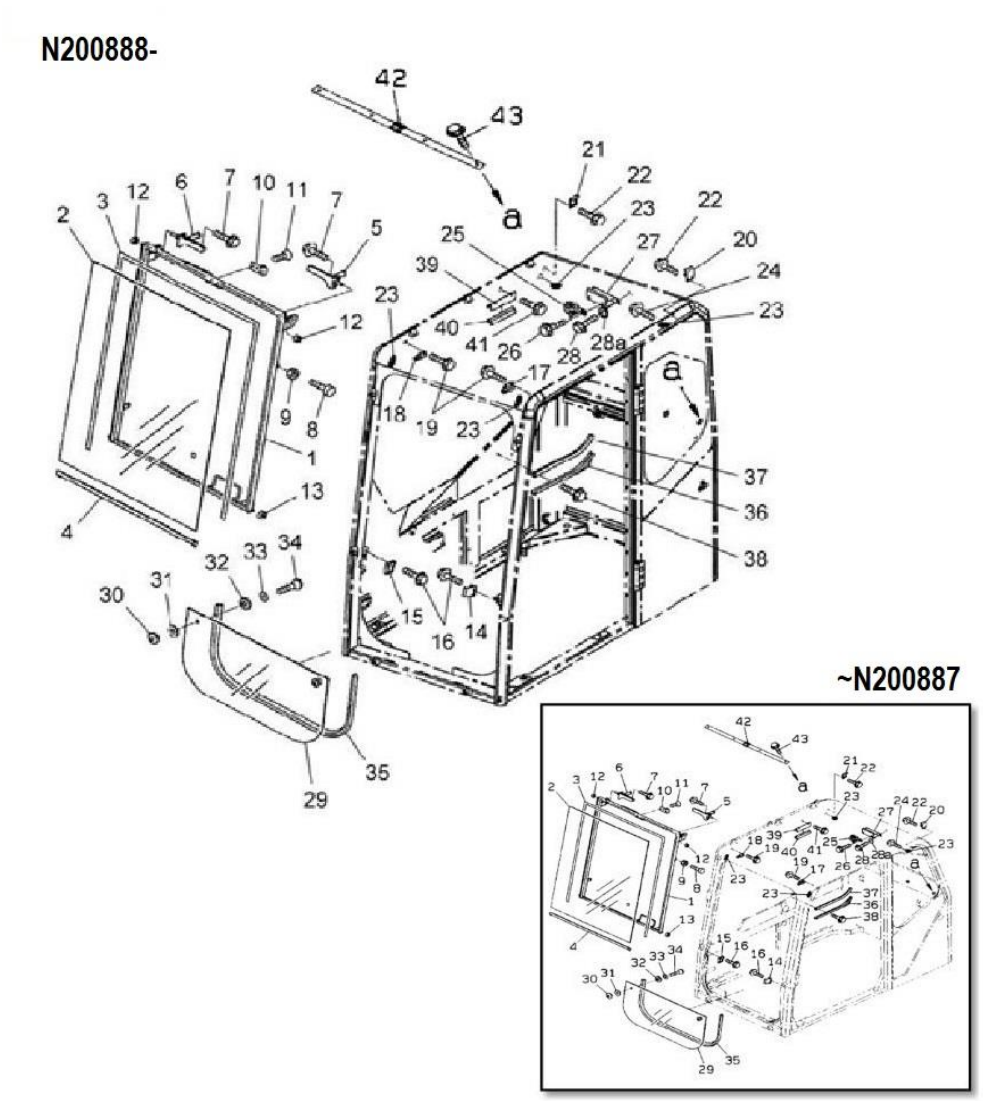

Index	Code	Part Number	Description	Qty	Serial No.
	C1	20Y-54-44300	LOWER GLASS ASSY	1	NL 20001- N201404
29		20Y-54-44280	• GLASS	1	NL 20001-
30		20Y-54-N4020	• NUT	2	NL 20869-
	C1	20T-54-74870	• NUT	2	NL 20001-NL 20868
31		20T-54-74880	• GROMMET	2	NL 20001-
32		20T-54-74890	• GROMMET	2	NL 20001-
33		20Y-54-14330	• WASHER	2	NL 20001-
35		20Y-54-N3380	RUNCHANNEL	1	NL 21001-
	C1	20Y-54-44560	RUNCHANNEL	1	NL 20001-NL21000
36		20Y-54-44290	STAY	1	NL 21001-
37	C1	20Y-54-N3390	RUNCHANNEL	1	NL 21150-NL21000
		20Y-54-44570	RUNCHANNEL	1	NL 20001-
38		01435-40820	BOLT	3	NL 20001-
39		20Y-54-44310	STAY	1	NL 20001-
40		20Y-54-N3410	RUNCHANNEL	1	NL 21001-
	C1	20Y-54-44850	RUNCHANNEL	1	NL 20001-NL21000
41		01435-40820	BOLT	2	NL 20001-
42		20Y-54-N1490	FRAME	1	NL 20001-
43		01435-40830	BOLT	4	NL 20001-

PC71-7

FIG. K0210-05A0 OPERATOR'S CAB

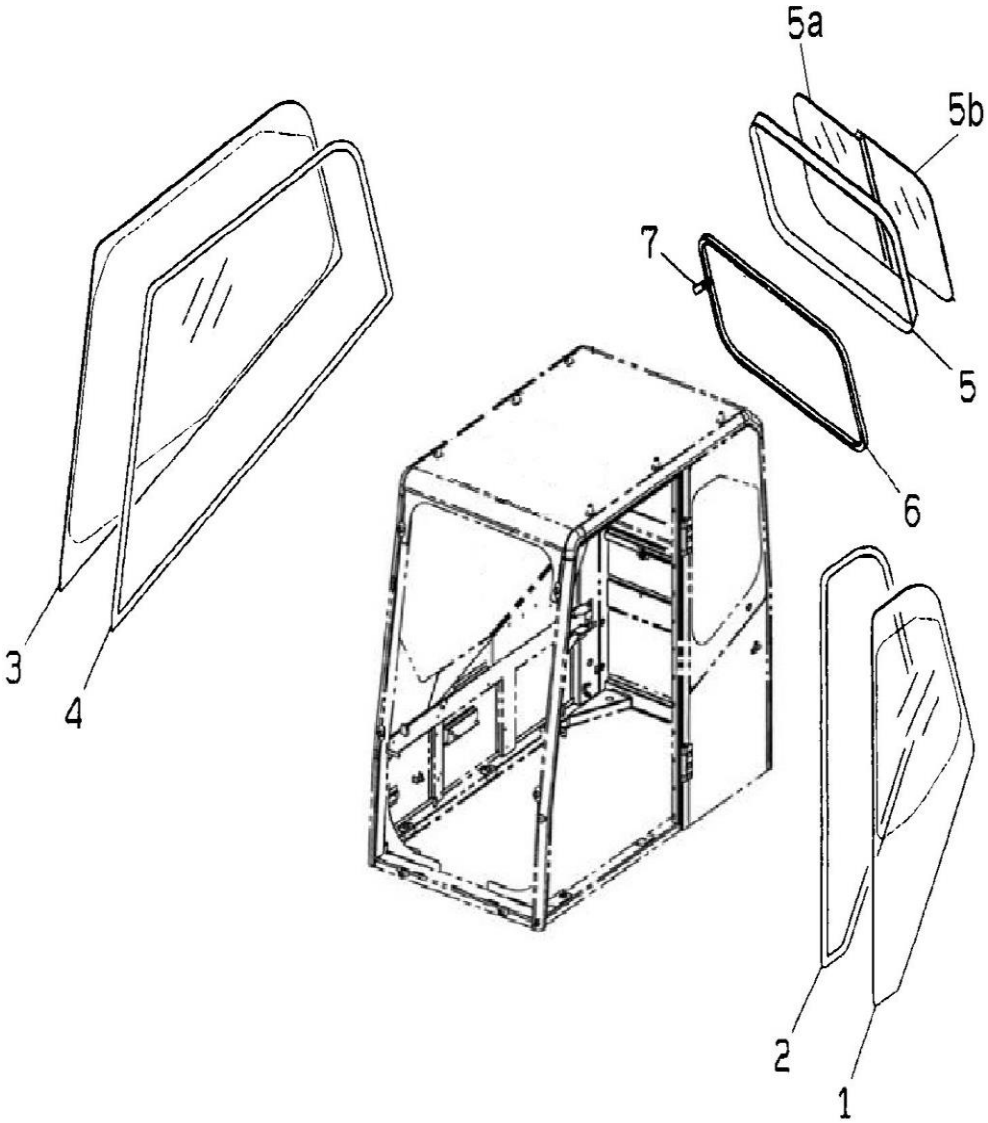

Index	Code	Part Number	Description	Qty	Serial No.
1		20Y-54-N1620	GLASS	1	NL 20001
2		20Y-54-N8330	SEAL (DUM)	1	N200295
	C1	20Y-54-N2360	SEAL (DUM)	6.4	NL 20001- N200294
3		20Y-54-N1630	GLASS	1	NL 20001-
4		20Y-54-N8340	SEAL (DUM)	1	N200295
	C1	20Y-54-N2360	SEAL (DUM)	4.7	NL 20001- N200294
		20Y-54-N1570	REAR SASH ASSY	1	NL 20001-
5		#	• FRAME	1	NL 20001-
5a		20Y-54-N1550	• GLASS	1	NL 20001-
5b		20Y-54-N1560	• GLASS	1	NL 20001-
6		20Y-54-44380	WEATHER STRIP	1	NL 20001-
7		207-54-N1110	TAG	1	NL 20001-
	C1	20T-54-75250	TAG	1	NL 20001-

PC71-7

FIG. K0210-06A0N OPERATOR'S CAB (ELECTRICAL)

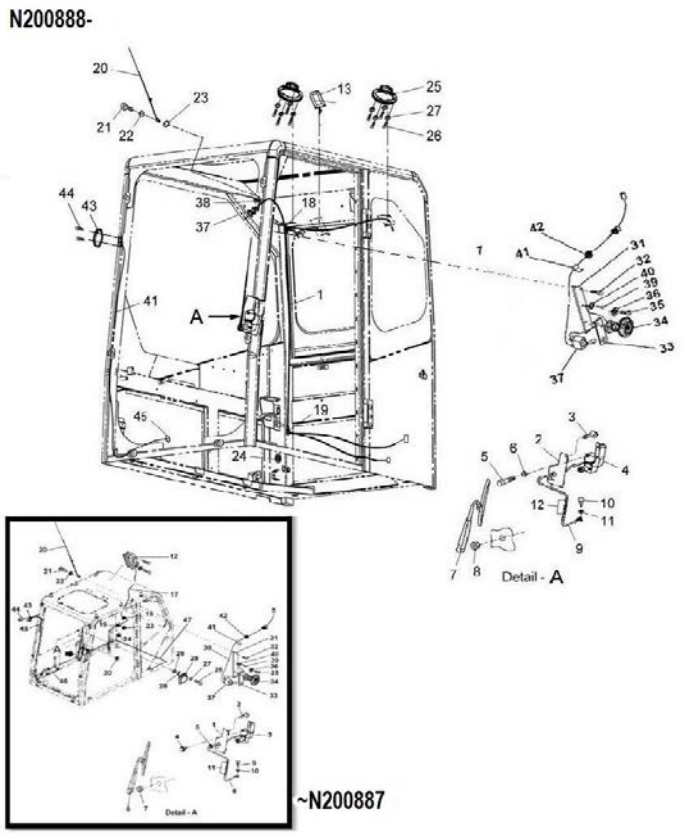

Index	Code	Part Number	Description	Qty	Serial No.
1		20Y-06-N2380	WIRING HARNESS	1	N220001-
2		20Y-54-N3180	BRACKET	1	N220001-
	C1	20Y-54-11791	BRACKET	1	NL 20001- N201404
3		01435-41016	BOLT	2	NL 22950-
	C1	01435-41020	BOLT	2	NL 20001- NL 22949
4		20Y-06-N1290	WIPER MOTOR	1	NL 20001-
5		20Y-54-14380	BOLT	4	NL 20001-
6		08037-02512	GROMMET	1	NL 20001-
7		20Y-06-N1220	WIPER ASSEMBLY	1	NL 20001-
8		01580-10806	NUT	1	NL 20001-
9		20Y-06-11382	WIRING HARNESS	1	NL 20001-
10		01370-40408	SCREW	2	NL 20001-
11		01641-50405	WASHER	2	NL 20001-
12		08051-00801	CLIP	2	NL 22950-
	C1	20Y-54-13440	CLIP	2	NL 20001- NL 22949
13		20Y-06-N1980	ROOM LAMP	1	NL70491-
	C1	20Y-06-N1150	ROOM LAMP	1	NL 20001- NL70490
18		08037-01610	GROMMET	1	NL 20001-
19		08037-11025	GROMMET	1	NL 20001-
20		20Y-54-N3160	ANTENNA	1	NL 20001-
21		01220-40420	SCREW	2	NL 20001-
22		01641-50405	WAHSER	2	NL 20001-
23		08037-02512	GROMMET	1	NL 20001-
24		08037-11025	GROMMET	1	NL 20001-
25		20Y-54-N5010	SPEAKER	2	NL 22950-
	C1	201-06-71270	SPEAKER	1	NL 20001-NL 22949
26		01220-40412	SCREW	2	NL 20001-
27		01641-20405	WASHER	2	NL 20001-
31		20Y-54-N2431	PLATE	1	NL 20001-
32		01435-41020	BOLT	2	NL 20001-
33		20Y-06-N2090	PLATE	1	NL 22950-
	C1	20Y-54-N1230	PLATE	1	NL 20001- NL 22949
34		20Y-06-N2030	FAN	1	NL70491-
	C1	20Y-06-N1160	FAN	1	NL 20001- NL70490

PC71-7

FIG. K0210-06A0N OPERATOR'S CAB (ELECTRICAL)

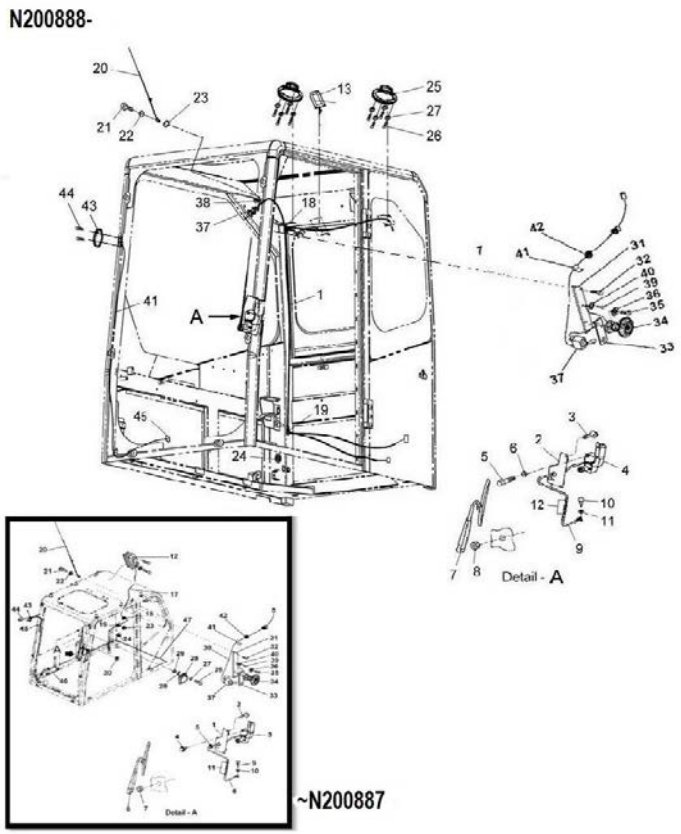

Index	Code	Part Number	Description	Qty	Serial No.
35		01220-40525	SCREW	2	NL 20001-
36		01641-20405	WASHER	2	NL 22950-
	C1	01641-50508	WASHER	2	NL 20001- NL 22949
37		20Y-06-N2020	TOGGLE SWITCH	1	NL70491-
	C1	20Y-06-N1130	TOGGLE SWITCH	1	NL 20001- NL70490
38		20Y-06-N2050	WIRING HARNESS	2	NL 22950-
	C1	20Y-54-44440	WIRING HARNESS	2	NL 20001- NL 22949
39		01220-40616	SCREW	1	NL 20001-
40		01641-50608	WASHER	1	NL 22950-
	C1	01641-50405	WASHER	1	NL 20001- NL 22949
41		20Y-54-13440	CLIP	3	NL 20001-
42		08037-01008	GROMMET	1	NL 20001-
43		20Y-54-N5450	PLATE	1	NL 20001-
44		01370-40412	CLIP	2	NL 20001-
45		08037-01008	GROMMET	1	NL 20001-

PC71-7

FIG. K0210-07A0 OPERATOR'S CAB (INSIDE COVER)

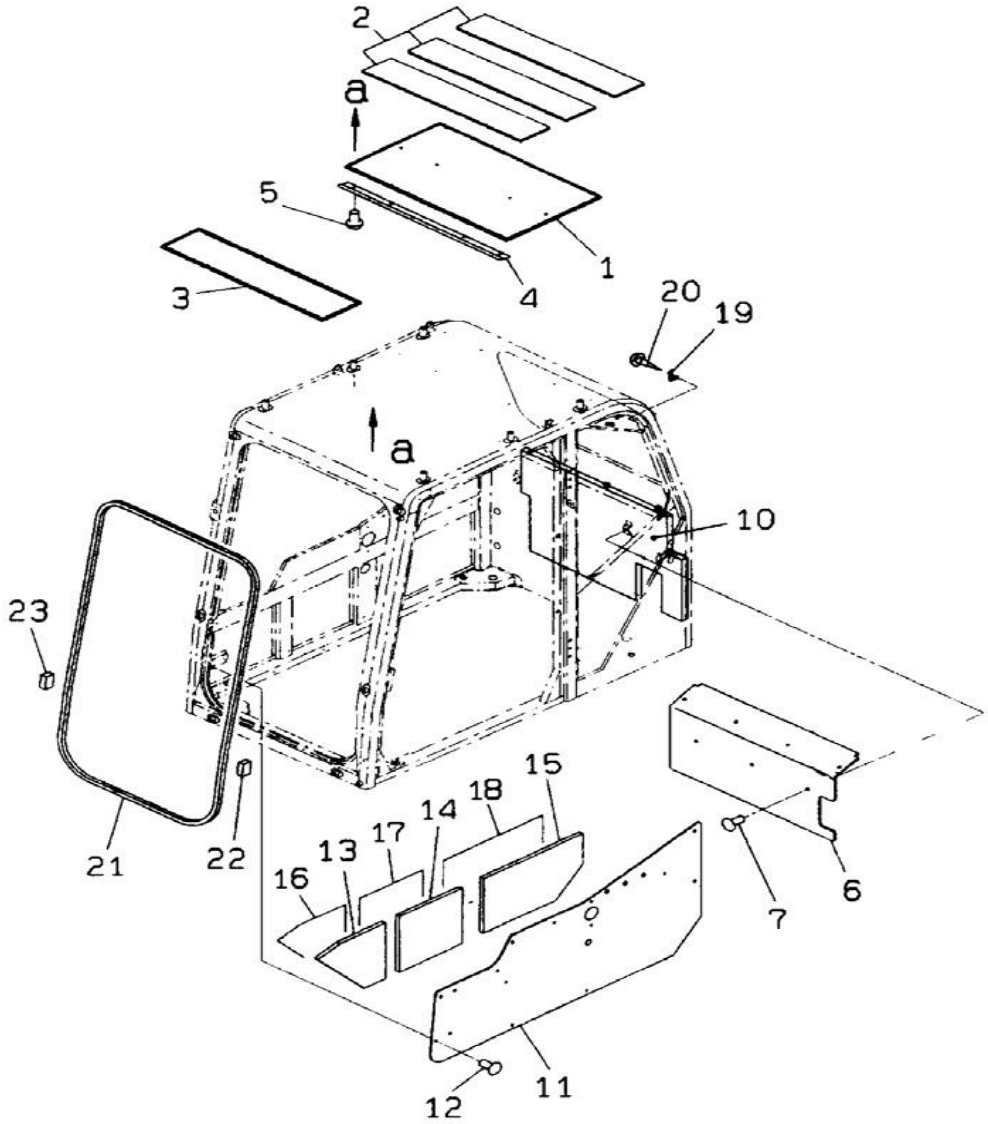

Index	Code	Part Number	Description	Qty	Serial No.
1		201-54-N1320	LINING	1	NL 20001-
2		20Y-54-N1980	SHEET	3	NL 20001-
3		201-54-N1330	LINING (LH)	1	NL 20001-
4		20Y-54-44490	FINISHER	1	NL 20001-
5		20Y-54-18690	RIVET	20	NL 20001-
6		20Y-54-44520	LINING	1	NL 20001-
7		201-54-N1120	PLUG	3	NL 20001-
10		20Y-54-N1930	SHEET	1	NL 20001-
11		201-54-N1340	SHEET	1	NL 20001-
12		201-54-N1110	PLUG	13	NL 20001-
13		20Y-54-N1990	SHEET	1	NL 20001-
14		20Y-54-N2010	SHEET	1	NL 20001-
15		20Y-54-N2020	SHEET	1	NL 20001-
16		20Y-54-44960	SHEET	1	NL 20001-
17		20Y-54-44970	SHEET	1	NL 20001-
18		20Y-54-44980	SHEET	1	NL 20001-
19		205-54-51250	HANGER	1	NL 20001-
20		01370-30412	SCREW	2	NL 20001-
21		20Y-54-N1750	TRIM	1	NL 20001
	C1	20Y-54-44530	TRIM	1	NL 20001-
22		20Y-54-44580	BLOCK (LH)	1	NL 20001-
23		20Y-54-44590	BLOCK (RH)	1	NL 20001-

PC71-7

FIG. K0210-08A0 OPERATOR'S CAB (DOOR)

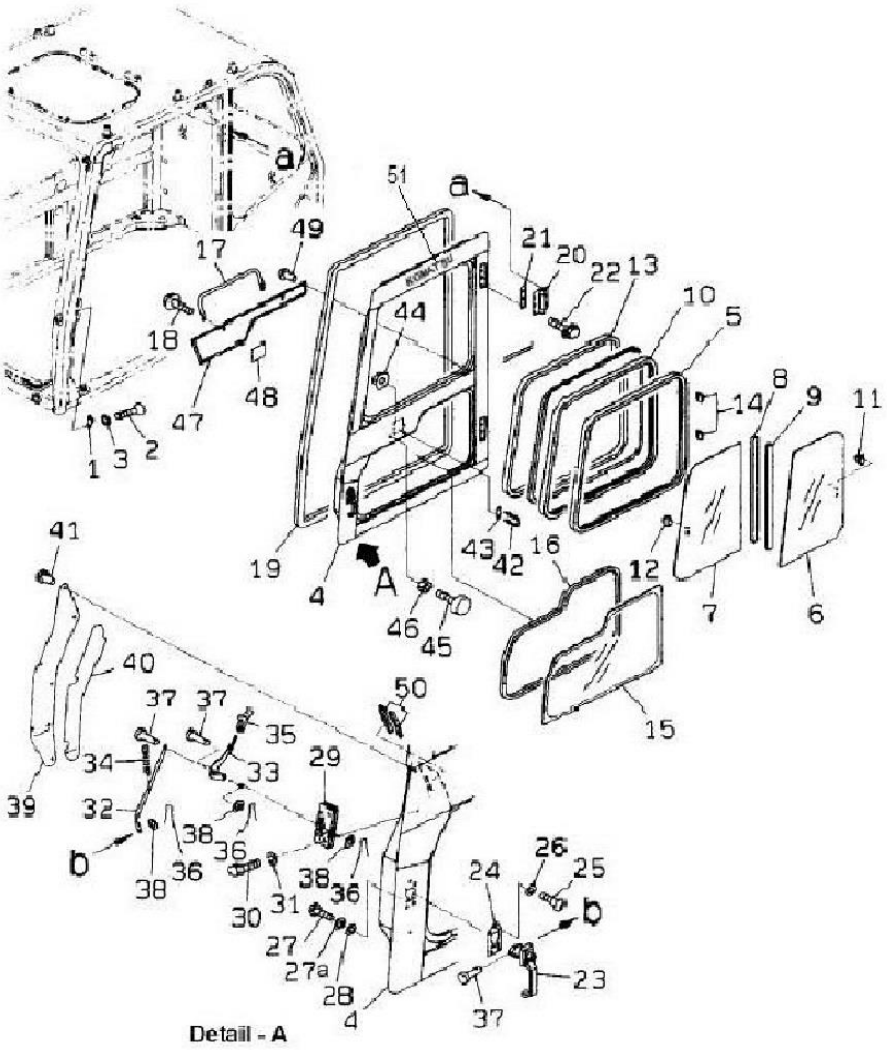

Index	Code	Part Number	Description	Qty	Serial No.
1		21J-54-16190	STRIKER	1	NL 20001-
2		20Y-54-N1110	SCREW	2	NL 20001-
3		20U-54-25190	WASHER	2	NL 20001-
4		203-54-N2100	DOOR	1	N220001-
	C1	20Y-54-45910	DOOR	1	NL 20001- N201404
		20Y-54-N1540	SASH ASS'Y	1	NL 20001-
5		#	• SASH FRAME	1	NL 20001-
6		20Y-54-N1240	• GLASS	1	NL 20001-
7		20Y-54-N1250	• GLASS	1	NL 20001-
8		#	• FRAME	1	NL 20001-
9		#	• SEAL	1	NL 20001-
10		#	• SEAL	1	NL 20001-
11		#	• LOCK ASS'Y	1	NL 20001-
12		#	• LOCK	1	NL 20001-
13		20Y-54-44810	TRIM	1	NL 20001-
14		20Y-54-44830	SEAT	12	NL 20001-
14A		20Y-54-N2370	RUBBER	2.3	NL 20001-
15		20Y-54-N1640	GLASS	1	NL 20001-
16		20Y-54-N2370	DAMRUBBER	2.3	NL 20001-
17		20Y-54-44670	GRIP	1	NL 20001-
18		01435-40820	BOLT	2	NL 20001-
19		20Y-54-N2930	SEAL (TRIM)	1	NL 20001-
	C1	20Y-54-44870	SEAL (TRIM)	1	NL 20001-NL20250
20		14X-911-1330	HINGE	2	NL 20001-
21		20Y-54-44820	PLATE	2	NL 20001-
22		01435-41225	BOLT	12	NL 20001-
23		20Y-54-N4581	HANDLE ASS'Y	1	N220001-
	C1	20Y-54-N4580	HANDLE ASS'Y	1	NL 21367- N201404
	C1	14X-911-1531	HANDLE ASS'Y	1	NL 20001-NL21366
24		14X-911-1721	PLATE	1	NL 20001-
25		01245-00816	SCREW	3	NL 20001-
26		01643-30823	WASHER	3	NL 20001-
27		01220-40512	SCREW	5	NL 20001-
28		01641-50508	WASHER	5	NL 20001-

PC71-7

FIG. K0210-08A0 OPERATOR'S CAB (DOOR)

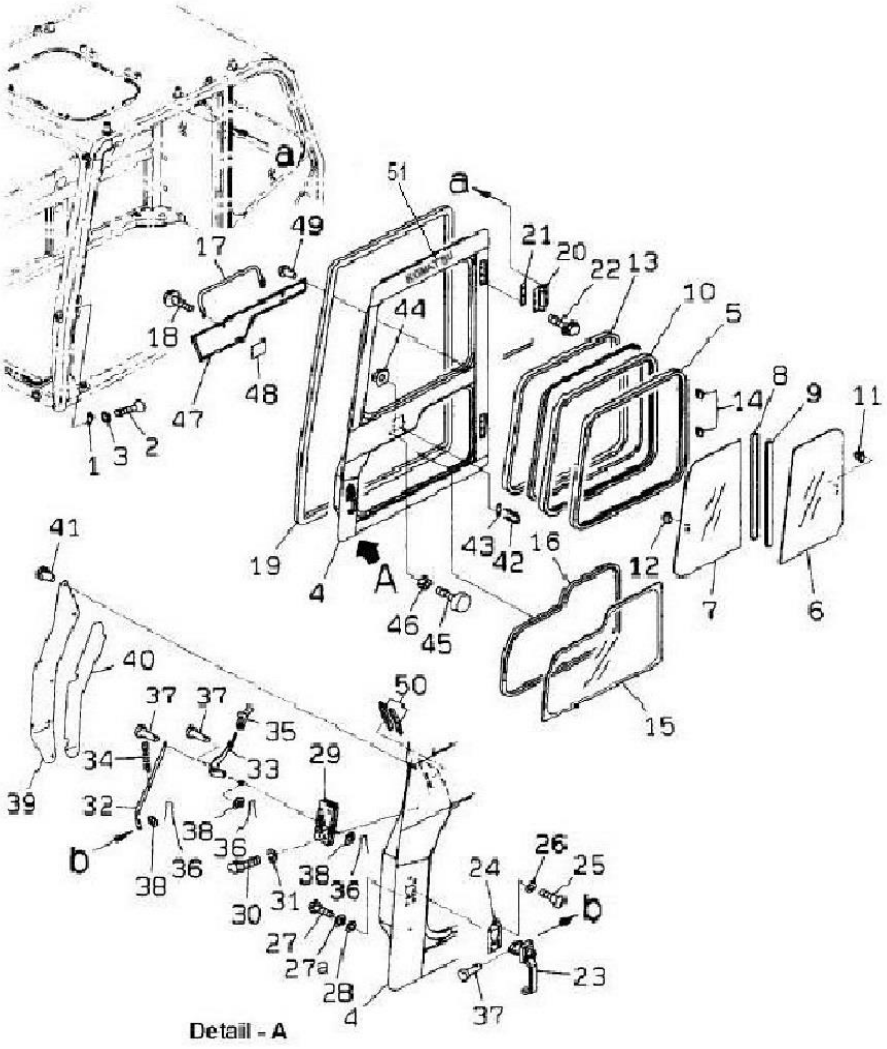

Index	Code	Part Number	Description	Qty	Serial No.
28A		01601-20513	WASHER	5	NL 20001-
29		20Y-54-N4610	DOOR LOCK (LH)	1	NL 21367-
	C1	195-Z11-4510	DOOR LOCK (LH)	1	NL 20001-NL21366
30		01010-80635	BOLT	4	NL 20001-
31		01602-20619	WASHER	4	NL 20001-
32		20Y-54-44680	PLATE	1	NL 20001-
34		176-06-42170	SPRING	1	NL 20001-
35		14X-911-1540	KNOB	1	NL 20001-
36		04050-11612	CUTTER PIN	3	NL 20001-
37		04205-10614	PIN	3	NL 20001-
38		01641-20608	WASHER	3	NL 20001-
39		20Y-54-45710	COVER	1	NL 20001-
40		20Y-54-44721	SEAL	1	NL 20001-
41		01245-00612	SCREW	7	NL 20001-
42		20Y-54-44880	STRIKER	1	NL 20001-
43		20Y-54-35710	PLATE	1	NL 20001-
44		01584-01008	NUT	2	NL 20001-
45		20T-54-75290	STOPPER	2	NL 20001-
46		01580-11008	NUT	2	NL 20001-
47		20Y-54-44732	COVER	1	NL 20001-
48		20Y-54-44840	PLATE	1	NL 20001-
49		20Y-54-18690	RIVET	6	NL 20001-
50		20Y-54-44190	GROMMET	2	NL 20001-
51		09693-00400	EMBLEM	1	N220001-

PC71-7

FIG. K0210-014A0 OPERATOR'S CAB (INSTALLATION PARTS)

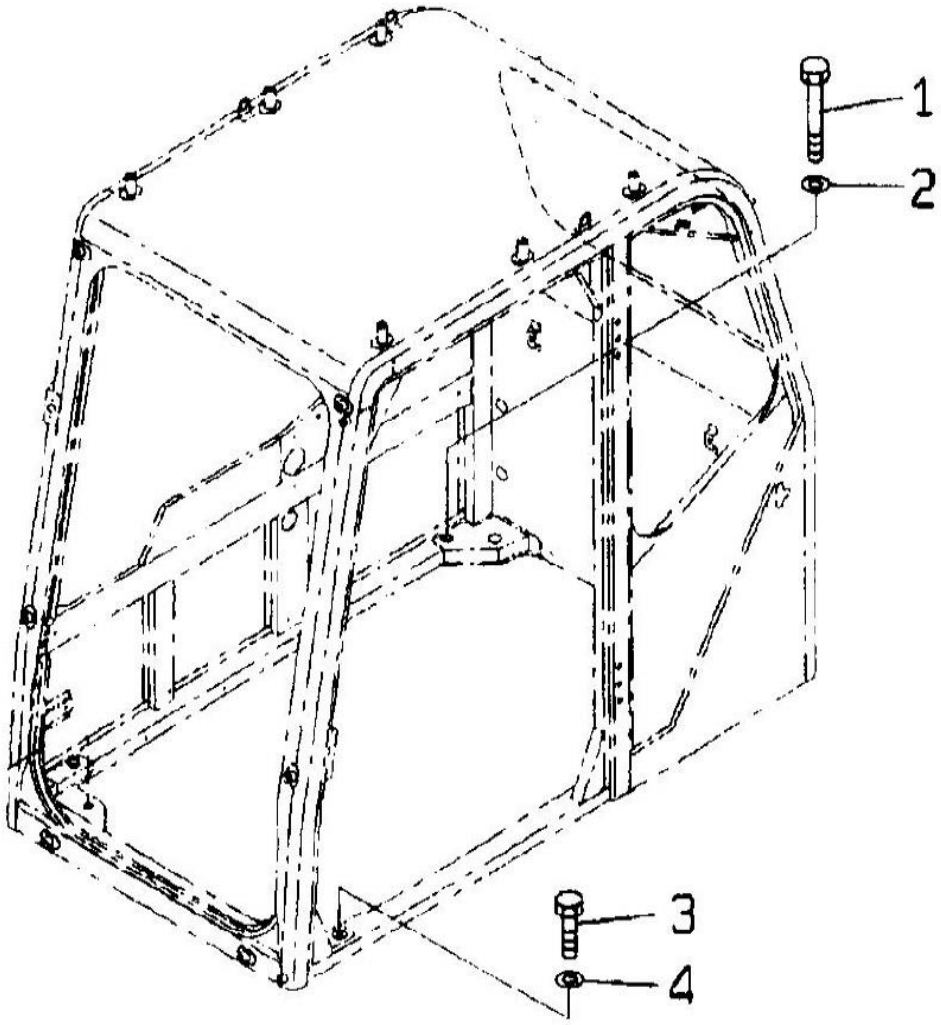

Index	Code	Part Number	Description	Qty	Serial No.
1		01010-81275	BOLT	4	NL 20001-
2		01643-31232	WASHER	4	NL 20001-
3		01010-81230	BOLT	1	NL 20001-
4		01643-31232	WASHER	1	NL 20001-

PC71-7

FIG. K0210-015A0 OPERATOR'S CAB WITH FOPS-STD

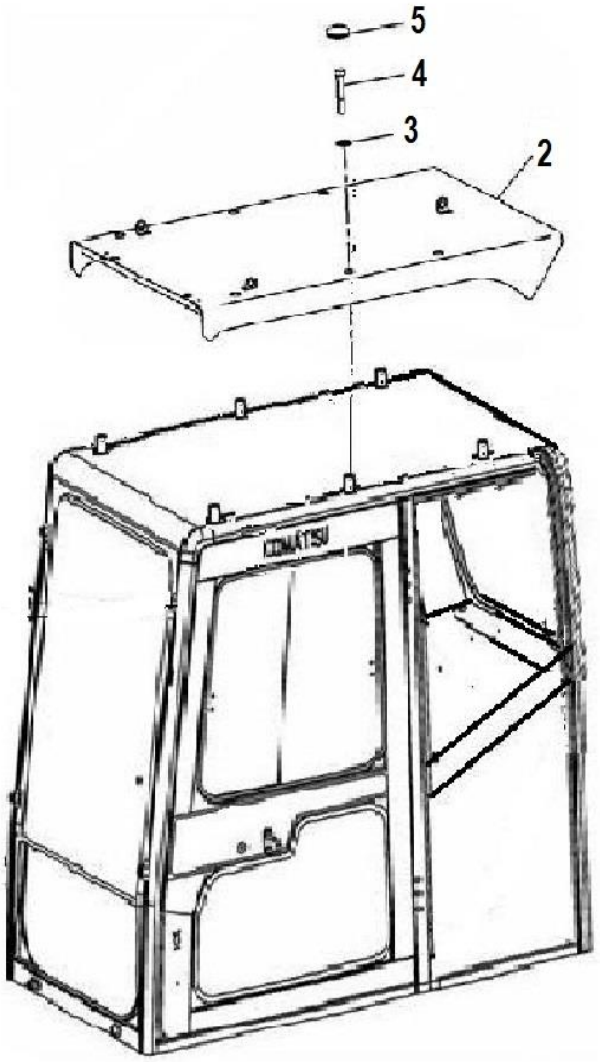

Index	Code	Part Number	Description	Qty	Serial No.
1	#		CABIN STR-STD	1	N220001-
2		20Y-954-N151	GUARD,TOP	1	N220001-
3		22U-54-25170	WASHER	6	N220001-
4		01010-81265	BOLT	6	N220001-
5		09415-02512	CAP	12	N220001-
6		01643-71232	WASHER	4	N220001-

PC71-7

FIG. K0210-16A0 OPERATOR'S CAB(WITH ADDL. LAMPS)

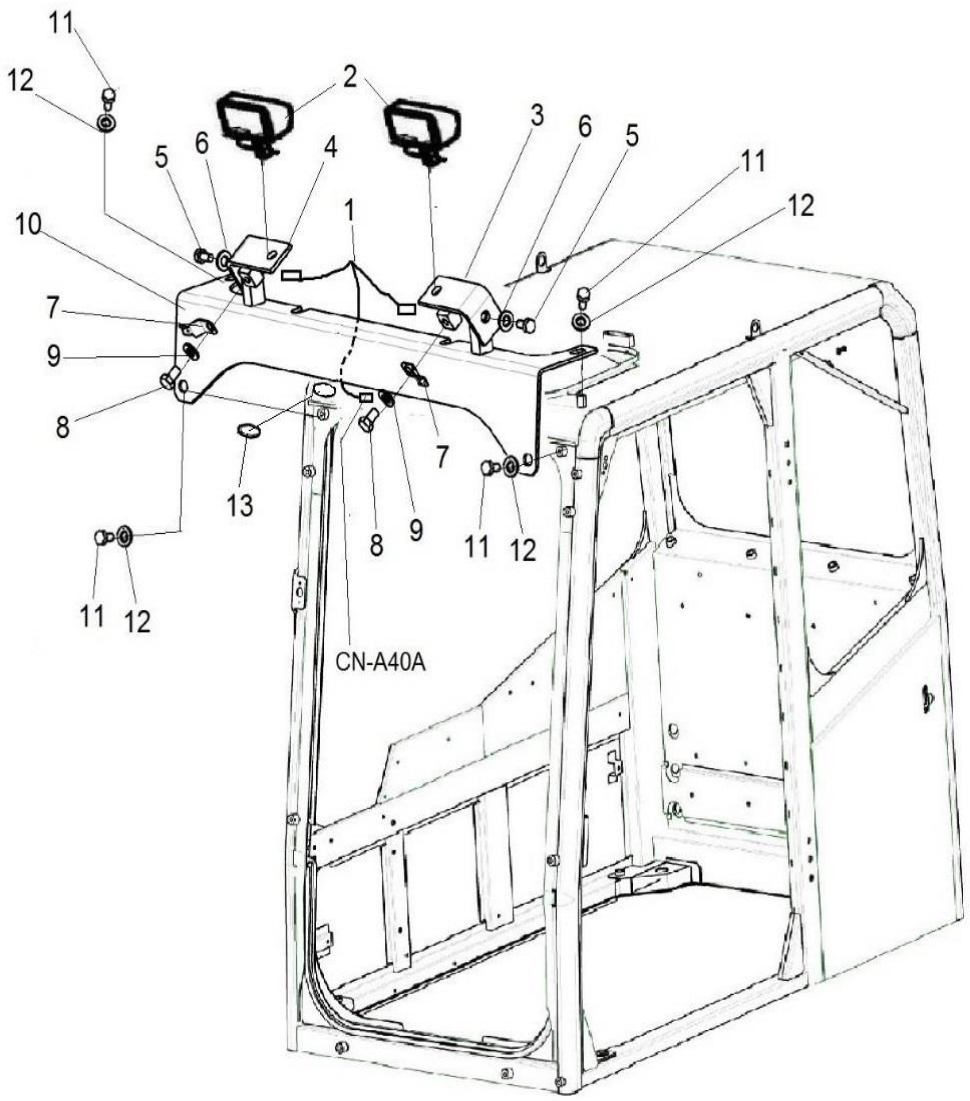

Index	Code	Part Number	Description	Qty	Serial No.
1		203-06-N1421	WIRING HARNESS	1	N220001-
	C1	201-06-N1970	WIRING HARNESS	1	N200128 - N201404
2		20Y-06-N2120	LAMP	2	N200128 -
3		20Y-06-21551	LAMP MTGBRACKET(RIGHT)	1	N200128 -
4		207-06-N1350	LAMP MTGBRACKET(LEFT)	1	N200128 -
5		01010-81220	BOLT	2	N200128 -
6		01643-31232	WASHER	2	N200128 -
7		08193-21012	CLIP	2	N200128 -
8		01010-81220	BOLT	2	N200128 -
9		01643-31232	WASHER	2	N200128 -
10		20Y-54-N5461	BRACKET	1	N200128 -
11		01010-81220	BOLT M12 X 20L	4	N200128 -
12		01643-31232	WASHER	4	N200128 -
14		207-54-N2890	CAP	1	N220001-

FIG. K0210-17A0 OPERATOR' S CAB (ADDL. LAMPS ,W.TOP GUARD)

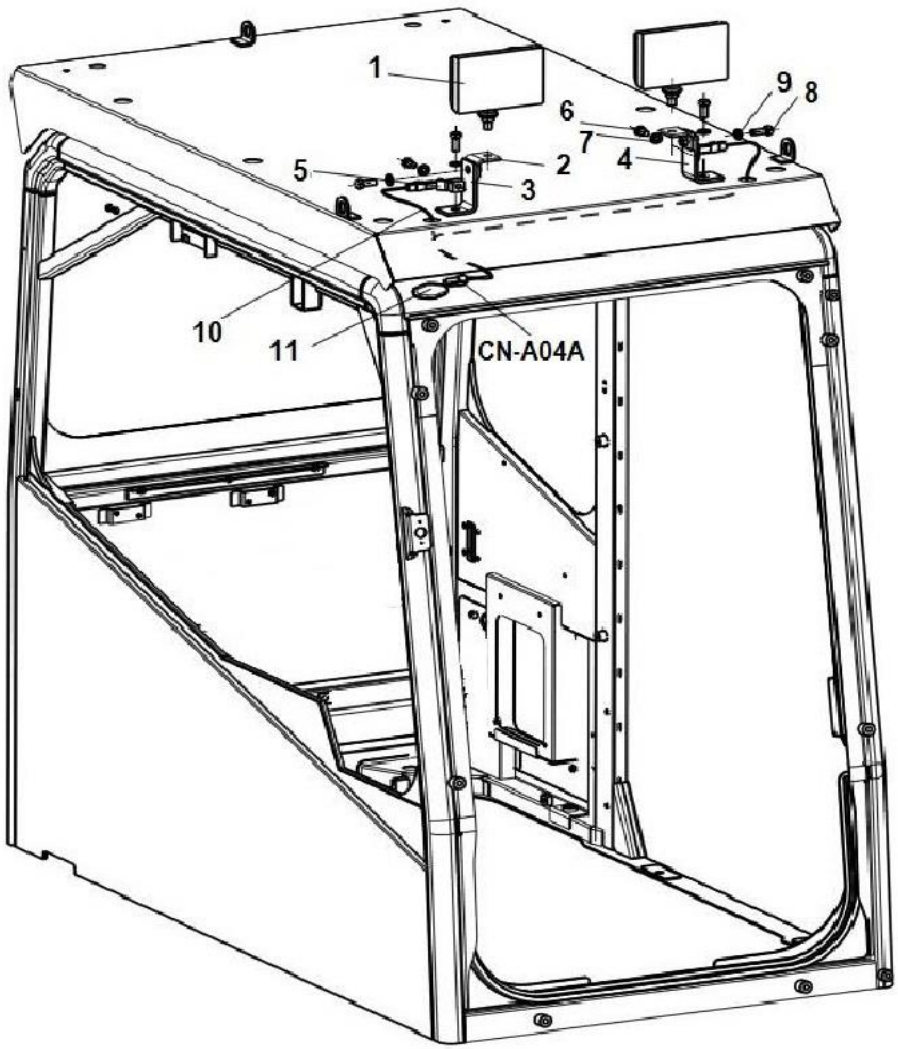

Index	Code	Part Number	Description	Qty	Serial No.
1		20Y-06-N2120	LAMP	1	N220001-
2		20Y-06-21590	BRACKET	2	N220001-
3		207-06-N1350	BRACKET	2	N220001-
4		20Y-06-21551	BRACKET	1	N220001-
5		08193-21012	CLIP	1	N220001-
6		01010-81220	BOLT	2	N220001-
7		01643-31232	WASHER	2	N220001-
8		01010-81230	BOLT	4	N220001-
9		01643-31232	WASHER	4	N220001-
10		203-06-N1421	WIRING HARNESS	1	N220001-
11		207-54-N2890	CAP	1	N220001-

PC71-7

FIG. K0230-01A0 OPERATOR'S CAB WITH FOPS / MESH - TUNNELING

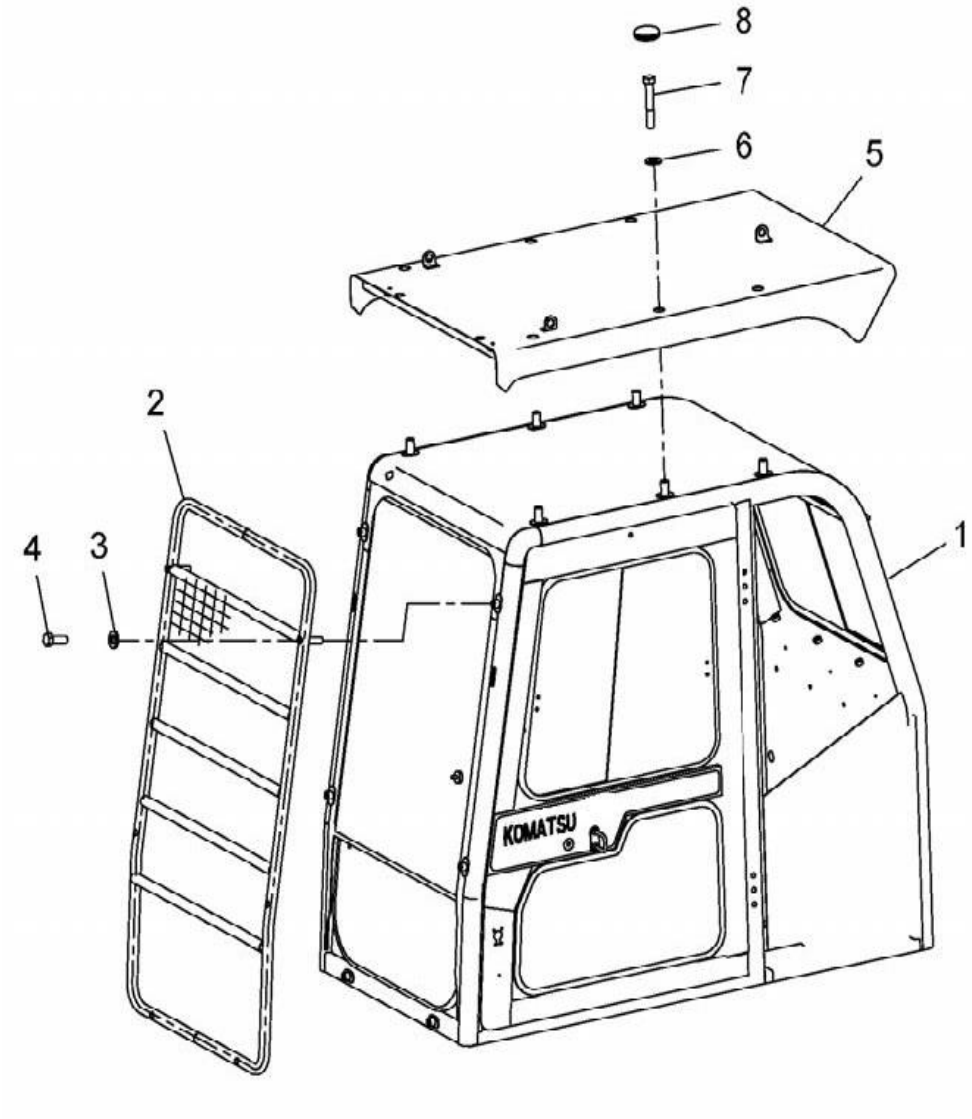

Index	Code	Part Number	Description	Qty	Serial No.
1		#	CABIN STR - TUNNELING	1	NL 22755-
2		201-954-N110	MESH GUARD	1	NL 22755-
3		01643-31232	WASHER	12	NL 22755-
4		01010-81270	BOLT	6	NL 22755-
5		20Y-954-N140	GUARD, TOP	1	NL 22755-
6		22U-54-25170	WASHER	6	NL 22755-
7		01010-81265	BOLT	6	NL 22755-
8		09415-02512	CAP	6	NL 22755-

PC71-7

FIG. K0310-01A1 FLOOR MAT (BLADE SPEC.)

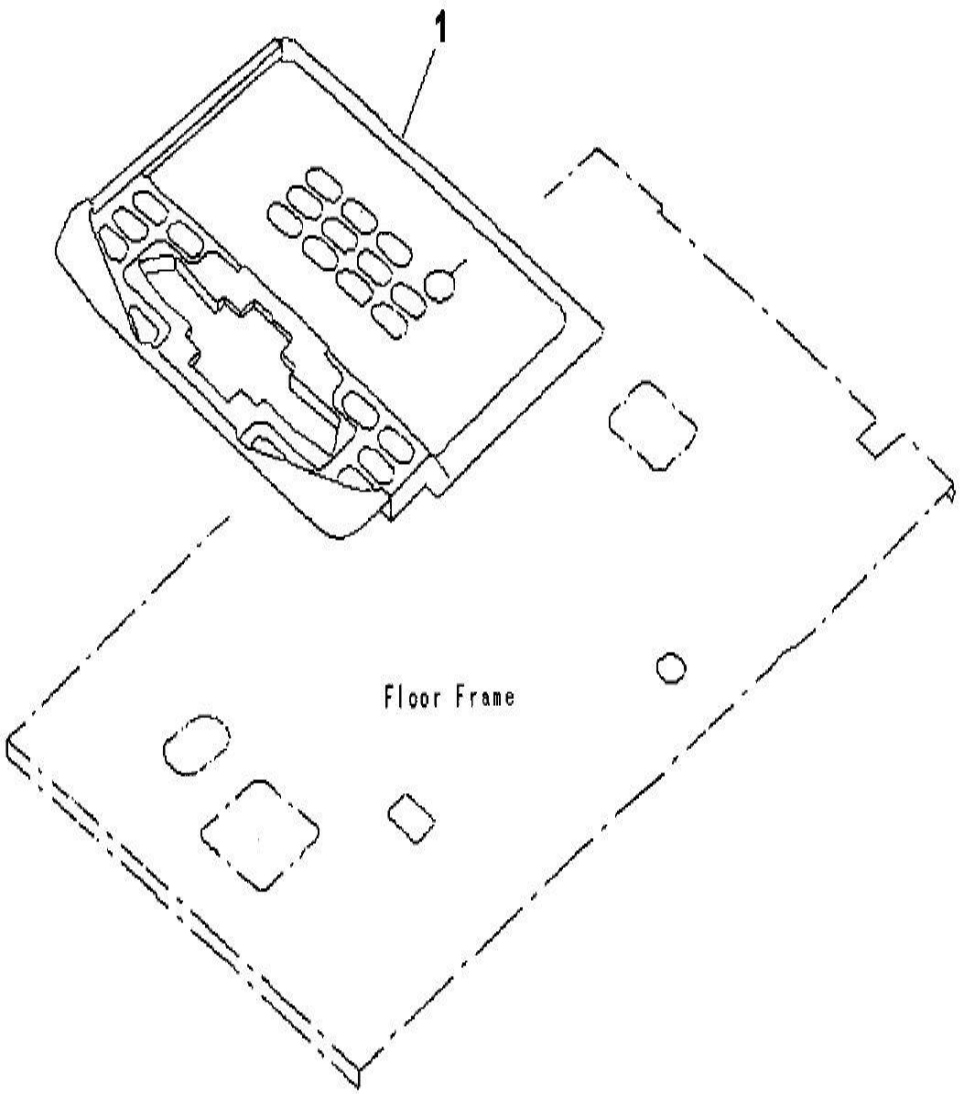

Index	Code	Part Number	Description	Qty	Serial No.
1		201-54-N3230	FLOOR MAT	1	NL 20870-
	C1	201-54-N1420	FLOOR MAT.....	1	NL 20001- NL20869

PC71-7

FIG. K0700-01A6 HEATER COVER

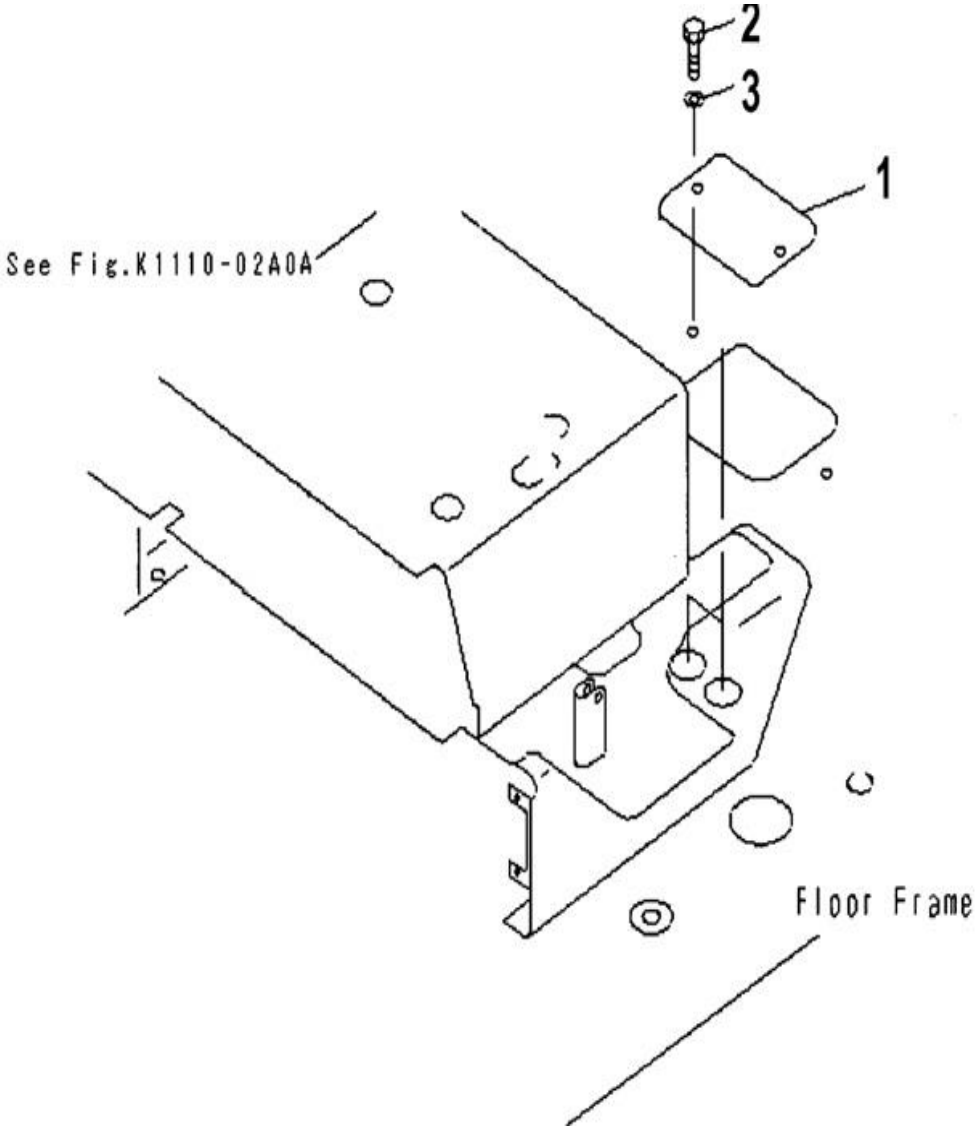

Index	Code	Part Number	Description	Qty	Serial No.
1	C1	201-54-73160	PLATE	1	NL 20001-NL 20044
2	C1	204 338 27 G	BOLT	2	NL 20001-NL 20044
3	C1	01643-31032	WASHER	2	NL 20001-NL 20044

PC71-7

FIG. K1110-01A0 FLOOR (FLOOR FRAME)(BLADE SPEC.)

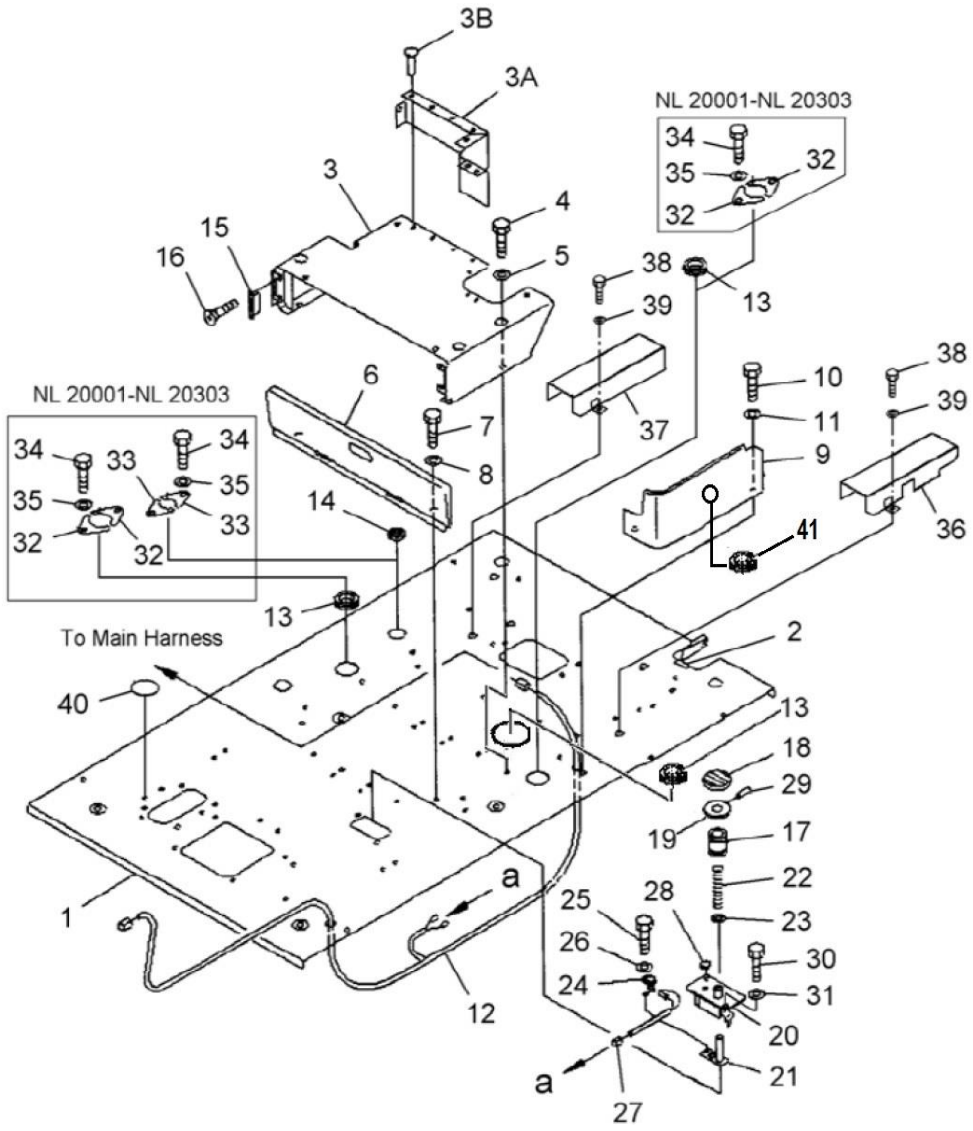

Index	Code	Part Number	Description	Qty	Serial No.
1		201-54-N3190	FLOOR FRAME ASS'Y	1	NL 20870-
	C1	201-54-N1971	FLOOR FRAME ASS'Y	1	NL 20304-NL 20869
	C1	201-54-N1970	FLOOR FRAME ASS'Y	1	NL 20001-NL 20303
2		201-06-71390	SEAL	1	NL 20001-
3		201-54-N3610	BRACKET	1	NL 22481-
	C1	201-54-73213	BRACKET	1	NL 20001-NL22480
3A		201-54-73550	SEAT	1	NL 20001-
3B		20T-54-74510	RETAINER	8	NL 22125-
	C1	20Y-57-11440	RETAINER	8	NL 20001-NL22124
4		01010-81025	BOLT	4	NL 20001-
5		01643-31032	WASHER	4	NL 20001-
6		201-54-73142	COVER	1	NL 20001-
7		01010-81020	BOLT	2	NL 20001-
8		01643-31032	WASHER	2	NL 20001-
9		201-54-N3841	COVER	1	N220001-
	C1	201-54-75141	COVER	1	NL 20001- N201404
10		01010-81020	BOLT	2	NL 20001-
11		01643-31032	WASHER	2	NL 20001-
12	C1	201-06-71811	WIRING	1	NL 20001-NL 20002
13		201-43-N1170	GROMMET	3	NL 20304-
14		201-54-N3140	GROMMET	1	NL 20304-
15		09452-06506	CATCHER	2	NL 20001-
16		01224-40408	SCREW	4	NL 20001-
		20T-43-82311	PEDAL ASS'Y, (FOR BLADE)	1	NL 20001-
17		20T-43-72320	• BOOT	1	NL 20001-
18		20T-43-72330	• CAP	1	NL 20001-
19		20T-43-72340	• PEDAL	1	NL 20001-
20		20T-43-82351	• BODY	1	NL 20001-
21		20T-43-82360	• SHAFT	1	NL 20001-
22		20T-43-72370	• PSPRING	1	NL 20001-
23		20T-43-72380	• WASHER	1	NL 20001-
24		20T-06-71770	• SWITCH, TRAVEL SPEED CHANGE	1	NL 20001-
25		6134-71-5750	• SCREW, CLIP	1	NL 20001-
26		01641-20508	• WASHER	1	NL 20001-

PC71-7

FIG. K1110-01A0 FLOOR (FLOOR FRAME)(BLADE SPEC.)

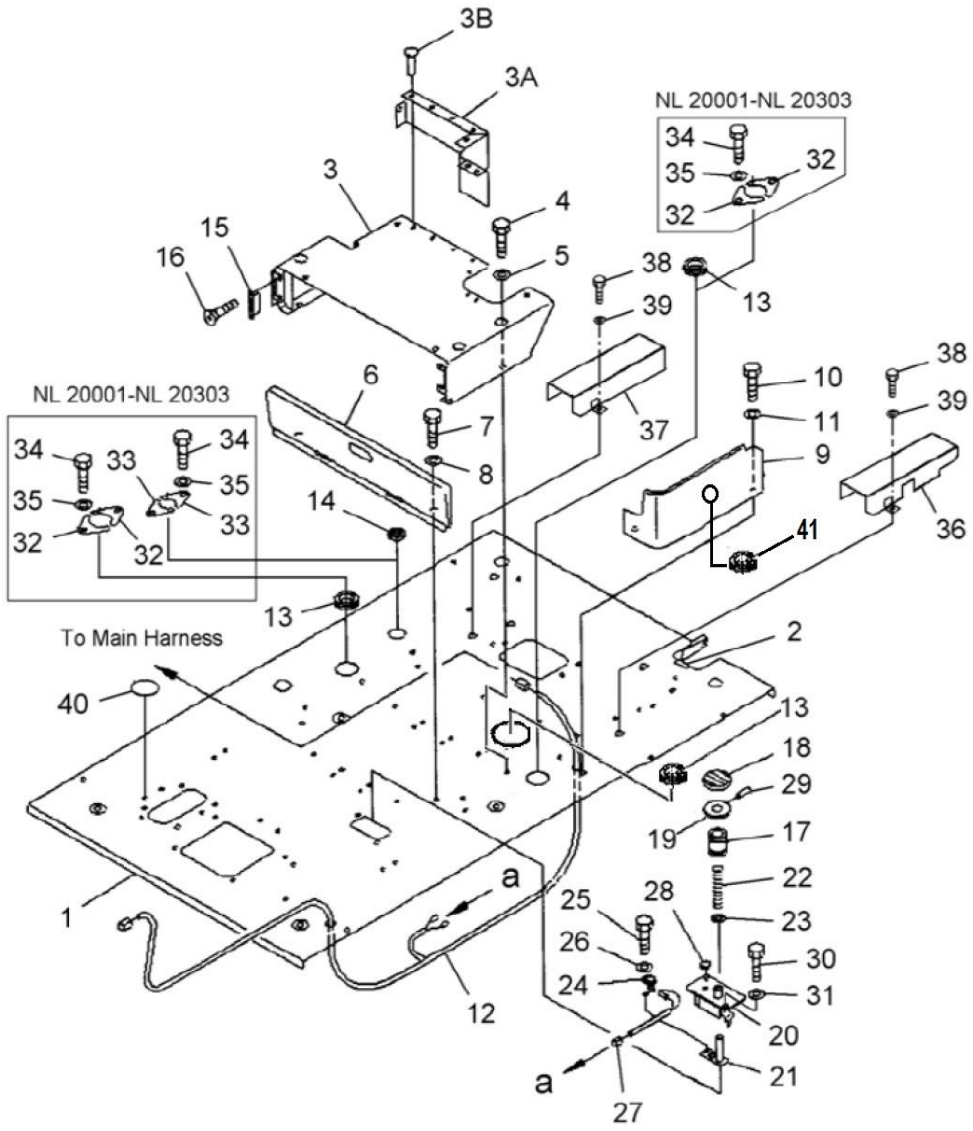

Index	Code	Part Number	Description	Qty	Serial No.
27		20T-06-71781	• HARNESS	1	NL 20001-
28		203-54-32260	• STOPPER	1	NL 20001-
29		04025-00620	• PIN, SPRING	1	NL 20001-
30		01010-81020	BOLT	2	NL 20001-
31		01643-31032	WASHER	2	NL 20001-
32	C1	201-54-75630	PLATE	4	NL 20001-NL 20303
33	C1	201-54-75640	PLATE	2	NL 20001-NL 20303
34	C1	01010-81020	BOLT	6	NL 20001-NL 20303
35	C1	01643-31032	WASHER	6	NL 20001-NL 20303
36		201-54-N4270	BRACKET	1	N220001-
	C1	201-54-N3540	BRACKET	1	NL 21772- N201404
37		201-54-N4260	BRACKET	1	N220001-
	C1	201-54-N3530	BRACKET	1	NL 21772- N201404
38		01010-81020	BOLT	4	NL 21772-
39		01643-31032	WASHER	4	NL 21772-
40		20Y-54-N5690	STICKER, PLUG	1	NL 22013-
41		207-43-N1140	GROMMET	1	N220001-

PC71-7

FIG. K1110-02A0A FLOOR FRAME (BASE)

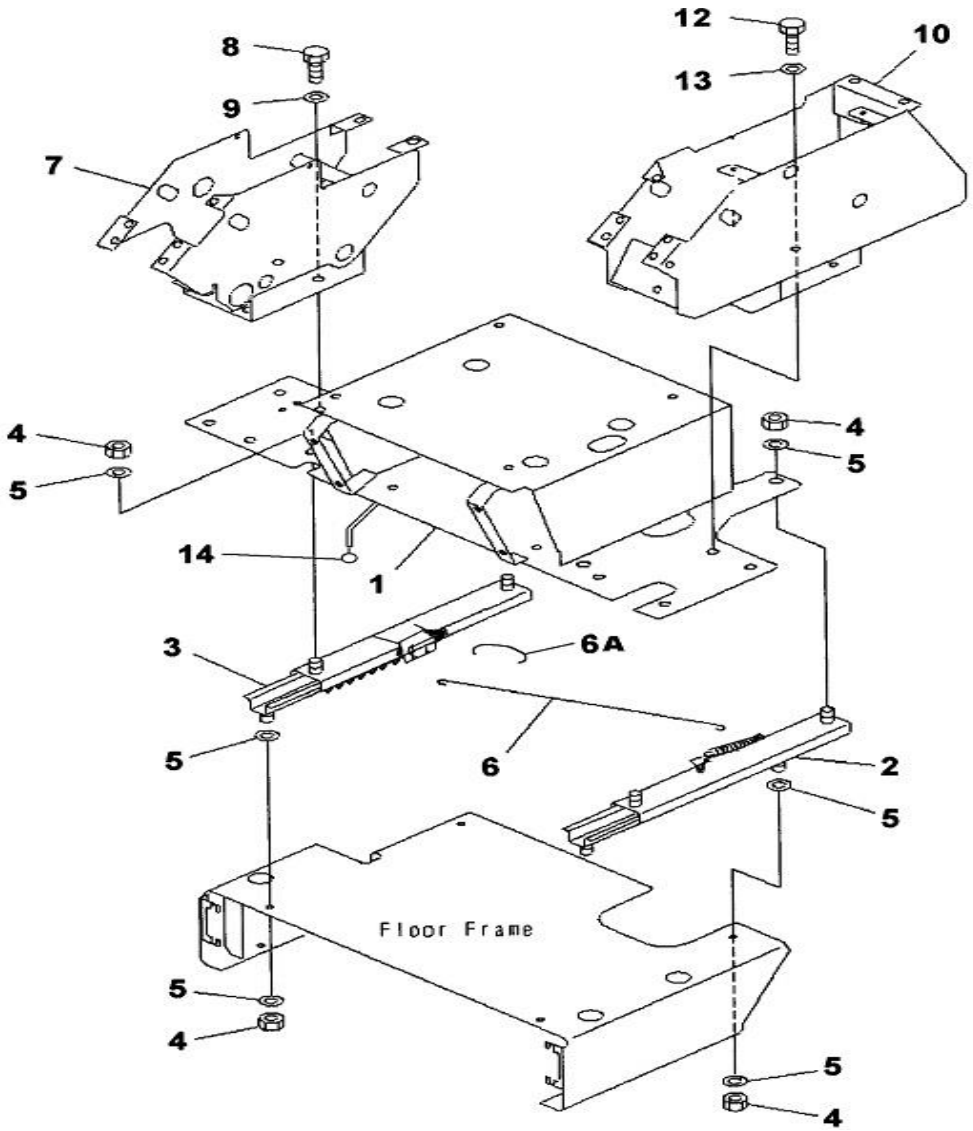

Index	Code	Part Number	Description	Qty	Serial No.
1		201-54-N3160	BRACKET	1	NL 20672-
	C1	201-54-N1810	BRACKET	1	NL 20001-NL20671
2		20Y-57-21360	ADJUSTER, LH	1	NL 20001-
3		20Y-57-21370	ADJUSTER, RH	1	NL 20001-
4		01580-11210	NUT	8	NL 20001-
5		01643-31232	WASHER	12	NL 20001-
6		20Y-57-N1130	WIRE	1	NL 20252-
	C1	20Y-57-21380	WIRE	1	NL 20001-NL 20251
6A		20Y-57-N1140	WIRE	1	NL 20252-
	C1	20Y-57-21390	WIRE	1	NL 20001-NL 20251
7		201-43-N1180	BRACKET, RH	1	NL 22481-
	C1	201-43-N1130	BRACKET, RH	1	NL 20001-NL 22480
8		01010-81025	BOLT	4	NL 20001-
9		01643-31032	WASHER	4	NL 20001-
10		201-54-73562	BRACKET,LH	1	NL 20001-
12		01010-81025	BOLT	4	NL 20001-
13		01643-31032	WASHER	4	NL 20001-
14		09304-00835	KNOB	1	NL 20001-

PC71-7

FIG. K1110-03A0A FLOOR FRAME (SAFETY LOCK LEVER)

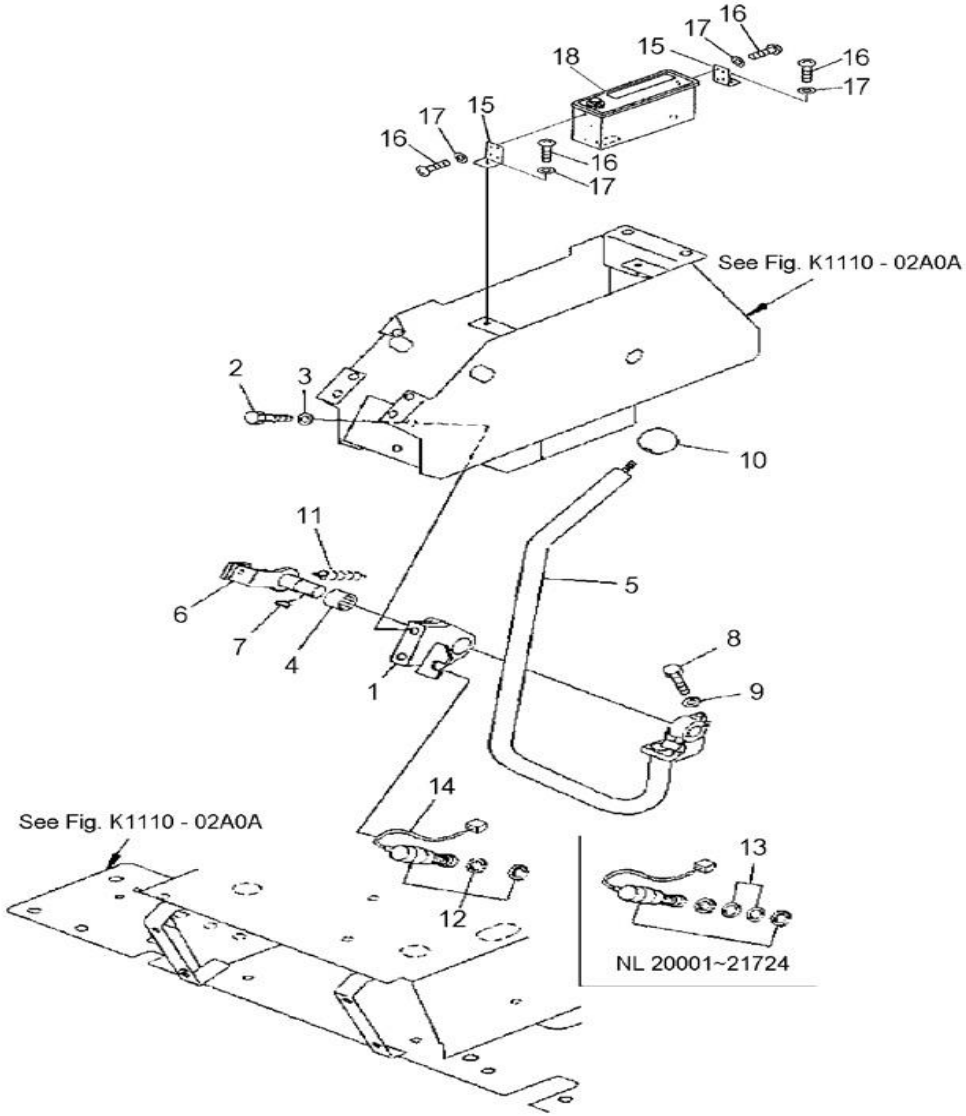

Index	Code	Part Number	Description	Qty	Serial No.
1		20Y-43-23281	PLATE	1	NL 21725-
	C1	201-43-N1110	PLATE	1	NL 20001-NL21724
2		01010-81030	BOLT	2	NL 20001-
3		01643-31032	WASHER	2	NL 20001-
4		06124-02020	BEARING	1	NL 20001-
5		20Y-43-23251	LEVER	1	NL 20001-
6		20Y-43-23270	SHAFT	1	NL 20001-
7		04010-00519	KEY	1	NL 20001-
8		01010-80830	BOLT	1	NL 20001-
9		01643-30823	WASHER	1	NL 20001-
10		09304-10835	KNOB	1	NL 20001-
11		22D-75-13370	SPRING	1	NL 20001-
12		20T-06-71520	SWITCH, PPC LOCK	1	NL 21725-
	C1	22B-06-11480	SWITCH, PPC LOCK	1	NL 20001-NL 21724
13	C1	113-43-31380	WASHER	2	NL 20001-NL 21724
14		201-06-71160	WIRING HARNESS	1	NL 21725-
15		201-54-73440	BRACKET	2	NL 22950-
16		01220-40510	SCREW	6	NL 22950-
17		01641-20508	WASHER	6	NL 22950-
18		20Y-06-N1890	RADIO	1	NL 22950-

FIG. K1110-04A0 FLOOR FRAME (TRAVEL LEVER)

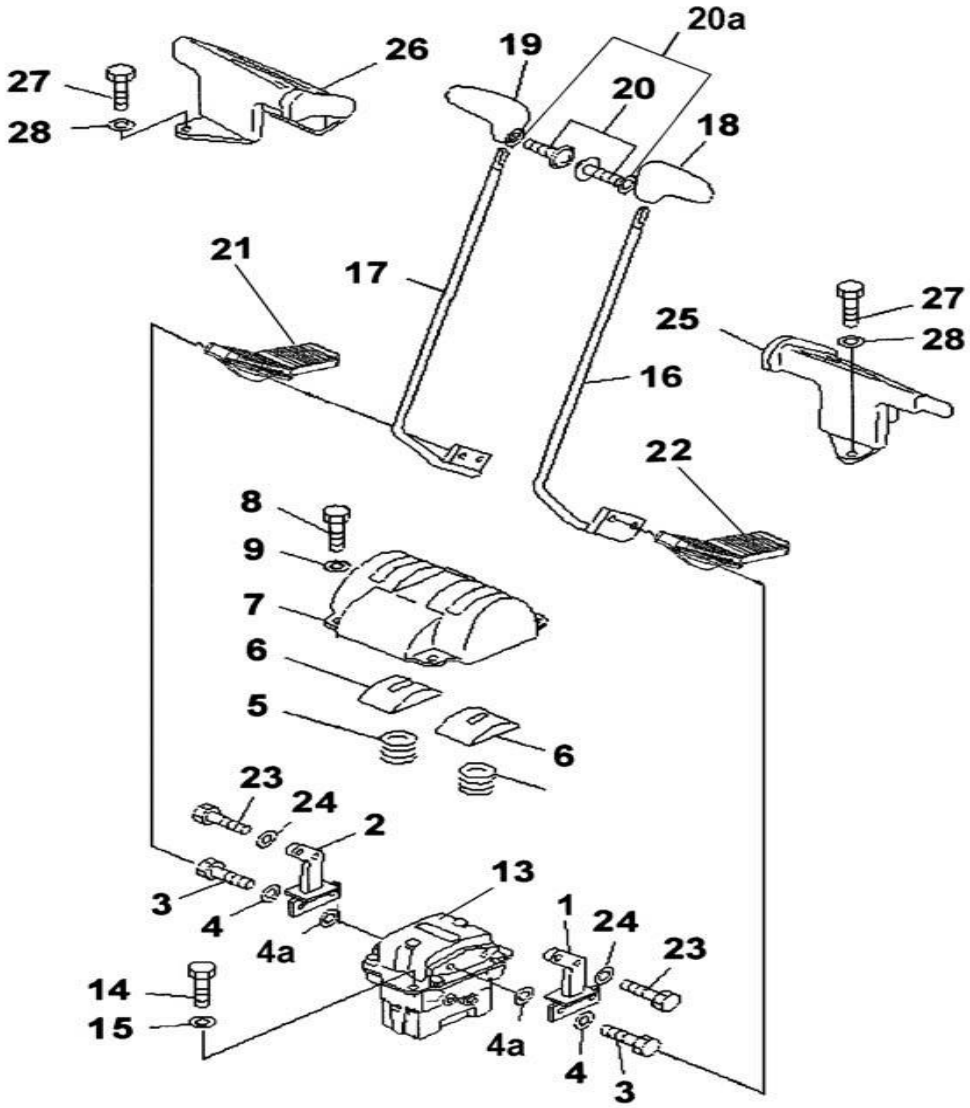

Index	Code	Part Number	Description	Qty	Serial No.
1		20Y-43-N1280	LEVER, LH	1	NL 22106-
	C1	203-43-61310	LEVER, LH	1	NL 20001-NL 22105
2		20Y-43-N1280	LEVER, RH	1	NL 22106-
	C1	203-43-61310	LEVER, RH	1	NL 20001-NL 22105
3		01010-81025	BOLT	4	NL 21675-
	C1	01010-81030	BOLT	4	NL 20001-NL 21674
4		01643-31032	WASHER	4	NL 20001-
4a		01643-31445	WASHER	4	NL 20001-
5		203-43-51620	SPRING	2	NL 20001-
6		20Y-43-21140	COVER	2	NL 20001-
7		20Y-43-41121	COVER	1	NL 20870-
	C1	20Y-43-21151	COVER	1	NL 20019-NL 20869
	C1	20Y-43-21150	COVER	1	NL 20001-NL 20018
8		01010-D1025	BOLT	4	NL 20001-
8a		20Y-43-21260	COLLAR	4	NL 20019-
9		203-54-56970	WASHER	4	NL 20019-
	C1	01643-71032	WASHER	4	NL 20001-NL 20018
13		(702-16-01441)	PILOT VALVE, TRAVEL	1	NL 22049-
	C1	(702-16-01440)	PILOT VALVE, TRAVEL	1	NL 20001-NL 22048
14		01010-81025	BOLT	2	NL 20001-
15		01643-31032	WASHER	2	NL 20001-
16		22U-43-21131	LEVER, LH	1	NL 22106-
	C1	20Y-43-21121	LEVER, LH	1	NL 20001-NL 22105
17		22U-43-21131	LEVER, RH	1	NL 22106-
	C1	20Y-43-21131	LEVER, RH	1	NL 20001-NL 22105
18		20Y-43-N1310	KNOB, LH	1	NL 22414-
	C1	20Y-43-21231	KNOB, LH	1	NL 20001-NL 22413
19		20Y-43-N1320	KNOB, RH	1	NL 22414-
	C1	20Y-43-21241	KNOB, RH	1	NL 20001-NL 22413
20		01220-40416	SCREW	2	NL 20001-
20a		01641-50405	WASHER	2	NL 20001-
21		22U-43-21121	PEDAL	1	NL 20870-
22		22U-43-21111	PEDAL	1	NL 20870-
23		01010-D1045	BOLT	4	NL 20001-

PC71-7

FIG. K1110-04A0 FLOOR FRAME (TRAVEL LEVER)

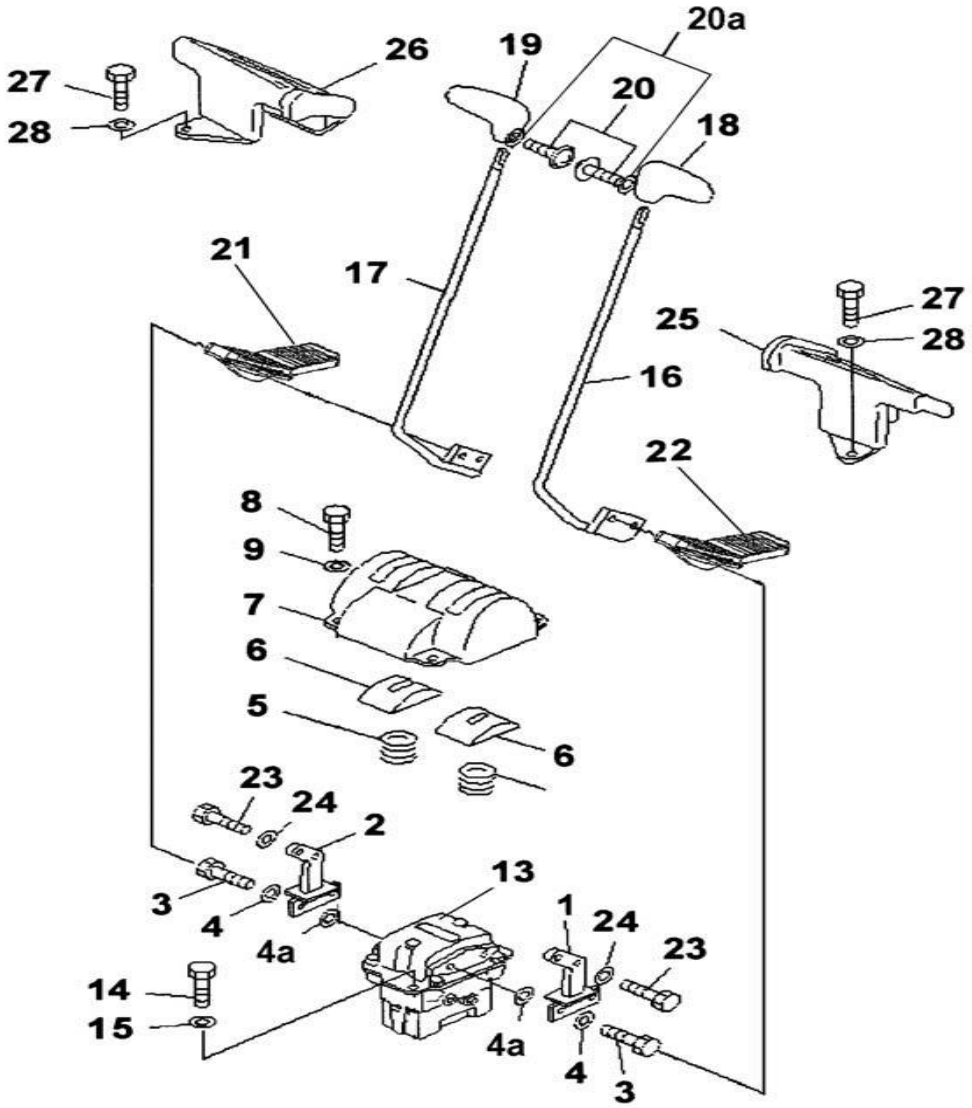

Index	Code	Part Number	Description	Qty	Serial No.
24		01643-71032	WASHER	4	NL 20001-
25		22U-54-25110	REST, FOOT (L.H)	1	NL 20870-
	C1	20Y-54-36521	BRACKET, LH	1	NL 20019-NL 20869
26		22U-54-25120	REST, FOOT (R.H)	1	NL 20870-
	C1	20Y-54-36531	BRACKET, RH	1	NL 20019-NL 20869
27		01010-81025	BOLT	4	NL 20870-
28		01643-31032	WASHER	4	NL 20870-

PC71-7

FIG. K1110-05A3 FLOOR FRAME (FUEL CONTROL)

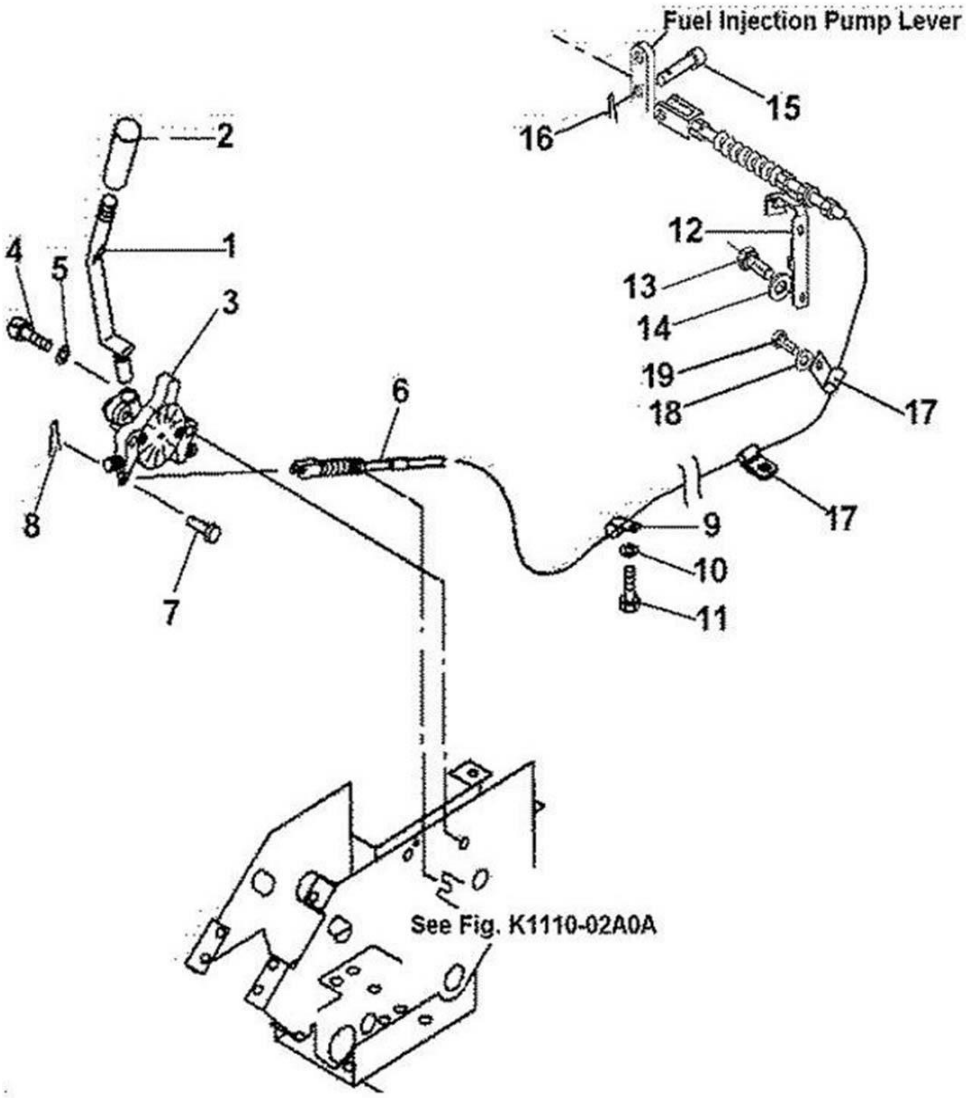

Index	Code	Part Number	Description	Qty	Serial No.
1		20U-43-21261	LEVER	1	NL 20001-
2		203-43-44360	KNOB	1	NL 20001-
3		203-43-61370	CLUTCH	1	NL 20047-
	C1	20U-43-21251	CLUTCH	1	NL 20001-NL 20046
4		01252-71025	BOLT	2	NL 20178-
	C1	202 329 15 Z	BOLT	2	NL 20001-NL 20177
5		01643-31032	WASHER	2	NL 20001-
6		201-43-N1190	CABLE	1	NL 22481-
	C1	201-43-N1120	CABLE	1	NL 20001-NL22480
7		04205-10622	PIN	1	NL 20001-
8		04050-11612	PIN, COTTER	1	NL 20001-
9		08036-01414	CLIP	1	NL 20001-
10		01010-81020	BOLT	1	NL 20001-
11		01643-31032	WASHER	1	NL 20001-
12	C1	201-01-N1641	BRACKET	1	NL 20047-NL22480
	C1	201-01-N1330	BRACKET	1	NL 20001-NL20046
13	C1	01010-81020	BOLT	2	NL 20001-NL22480
14	C1	01643-50823	WASHER	2	NL 20001-NL22480
15		04205-10622	PIN	1	NL 20001-
16		04052-10633	COTTER PIN	1	NL 22481-
	C1	04050-11612	COTTER PIN	1	NL 20001-NL22480
17		04434-50612	CLIP	2	NL 22481-
18		201-03-29160	SPACER	1	NL 22481-
19		01010-81050	BOLT	1	NL 22481-

PC71-7

FIG. K1110-06A0 FLOOR FRAME (LEVER LH)

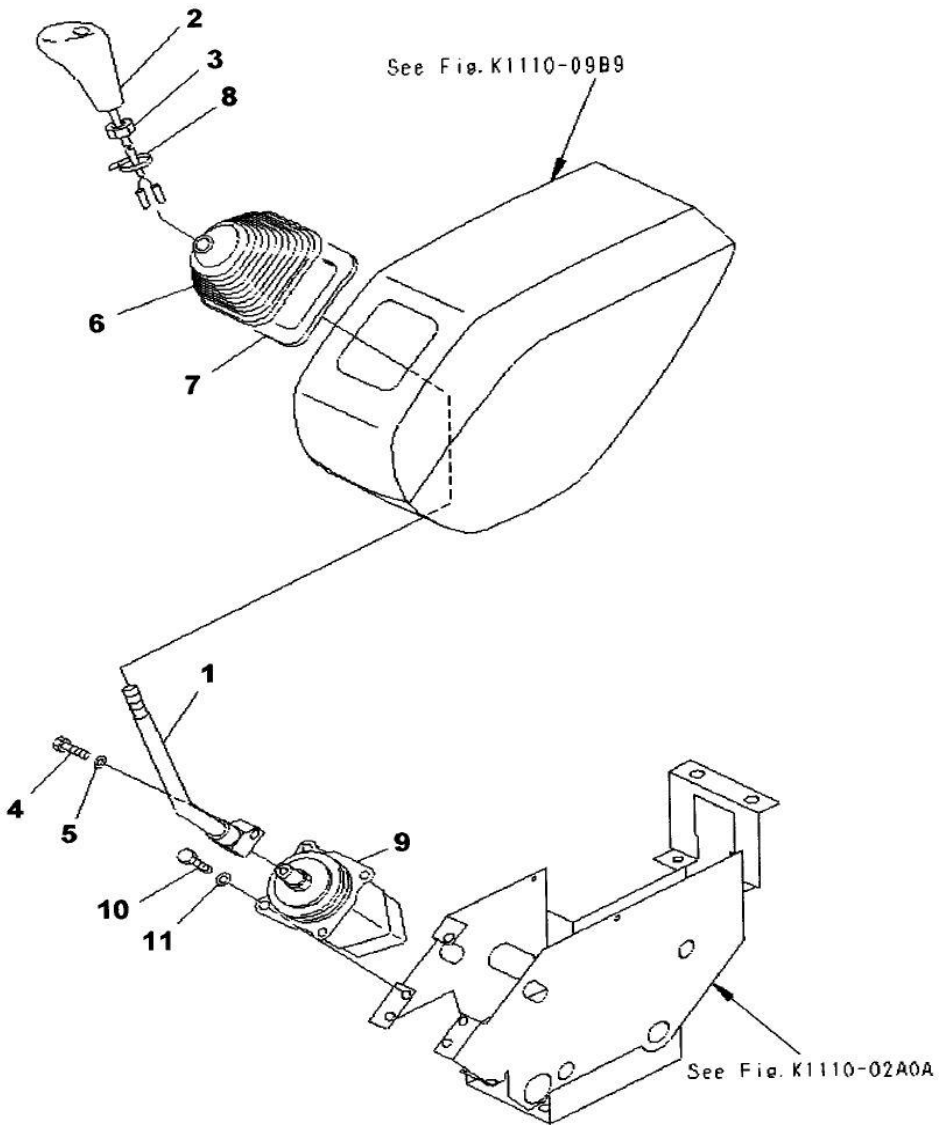

Index	Code	Part Number	Description	Qty	Serial No.
1		201-972-7180	LEVER, LH	1	NL 20001-
2		20T-43-71110	KNOB	1	NL 20001-
3		20T-43-71190	NUT	1	NL 20001-
4		01010-81030	BOLT	1	NL 20001-
5		01643-31032	WASHER	1	NL 20001-
6		20T-43-71160	BOOT	1	NL 20001-
7		20T-43-71360	• PLATE	1	NL 20001-
8		08034-30521	BAND	1	NL 20001-
9		(702-16-03930)	PILOT VALVE, WORK EQUIPMENT	1	NL 20293-
	C1	(702-16-01850)	PILOT VALVE, WORK EQUIPMENT	1	NL 20001-NL 20292
10		01010-80820	BOLT	3	NL 20001-
11		01643-30823	WASHER	3	NL 20001-

PC71-7

FIG. K1110-07A0A FLOOR FRAME (P.P.C. WORK LINE)

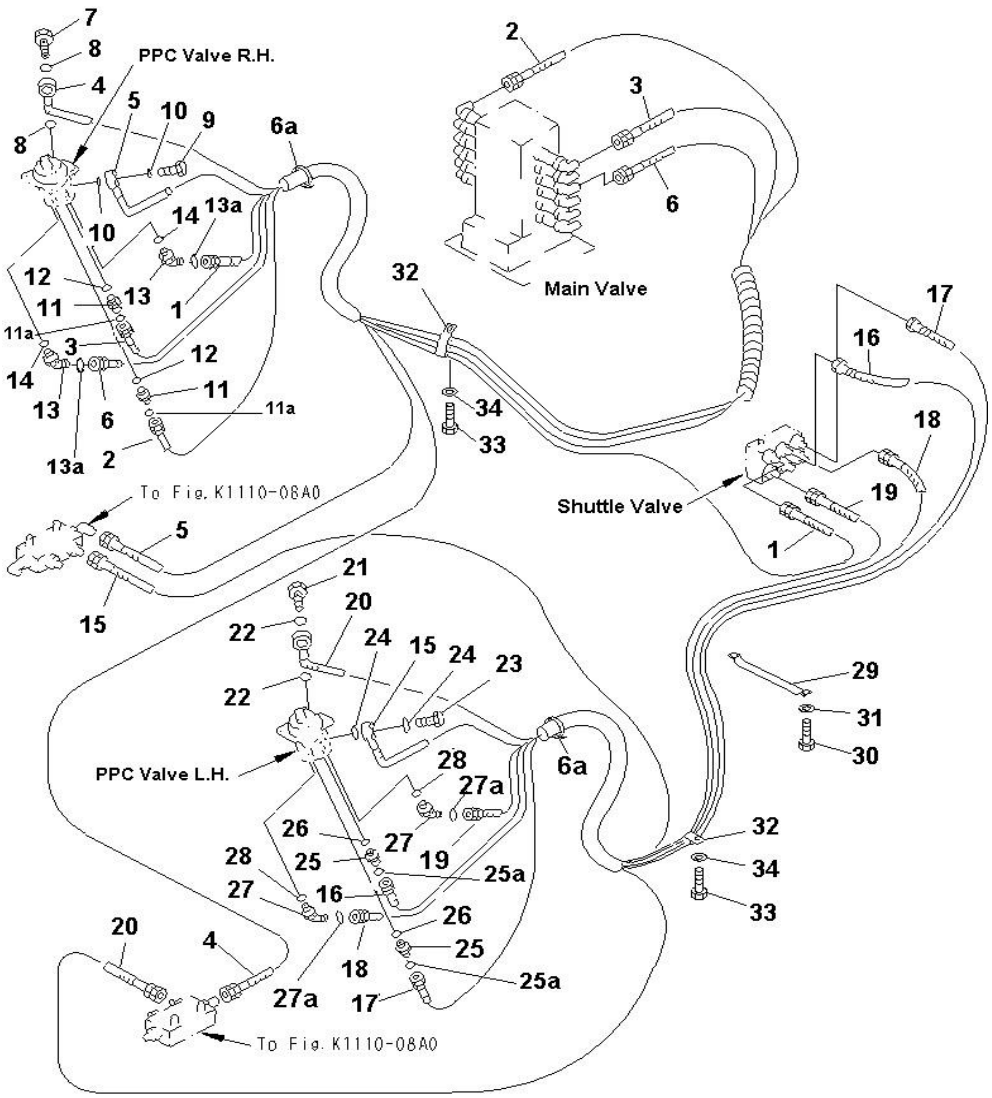

Index	Code	Part Number	Description	Qty	Serial No.
		201-62-N2441	HOSE A	1	N220001-
	C1	201-62-N2440	HOSE A	1	NL 20991 - N201404
1		201-62-N1960	● HOSE - 1655MM, YELLOW	1	NL 20991 -
		20U-62-22190	● ● O-RING	1	NL 20001 -
2		02740-00226	● HOSE - 1600MM, RED	1	N220001-
	C1	201-62-N2830	● HOSE - 1600MM, RED	1	NL 20991 - N201404
3		02740-00226	● HOSE - 1600MM, BLUE	1	N220001-
	C1	201-62-N2830	● HOSE - 1600MM, BLUE	1	NL 20991 - N201404
4		201-62-N2790	● HOSE - 1700MM, BLUE-WHITE	1	NL 20991 -
5		201-62-N2820	● HOSE - 1400MM, RED-GREEN	1	NL 20991 -
6		201-62-N2830	● HOSE - 1600MM, BLACK	1	NL 20991 -
6a		08034-00823	BAND	4	NL 20991 -
7		20Y-62-16170	BOLT	1	NL 20001 -
8		07000-12015	O-RING	2	NL 20001 -
9		702-16-53240	PLUG	1	NL 20001 -
10		07000-12018	O-RING	2	NL 20001 -
11		02781-0021D	UNION	2	NL 20991 -
11a		02896-11008	O-RING	1	NL 20991 -
12		07002-11423	O-RING	2	NL 20001 -
13		02783-10210	ELBOW	2	NL 20991 -
13a		02896-11008	O-RING	2	NL 20991 -
14		07002-11423	O-RING	2	NL 20001 -
		201-62-N2431	HOSE A	1	N220001-
	C1	201-62-N2430	HOSE A	1	NL 20991 - N201404
15		201-62-N2780	● HOSE - 1600 MM, RED-GREEN	1	NL 20991 -
16		201-62-N2751	● HOSE - 1505 MM, BROWN	1	N220001-
	C1	201-62-N2750	● HOSE - 1505 MM, BROWN	1	NL 20991 - N201404
17		201-62-N2761	● HOSE - 1555 MM, WHITE	1	N220001-
	C1	201-62-N2760	● HOSE - 1555 MM, WHITE	1	NL 20991 - N201404
18		201-62-N2751	● HOSE - 1505 MM, ORANGE	1	N220001-
	C1	201-62-N2750	● HOSE - 1505 MM, ORANGE	1	NL 20991 - N201404
19		201-62-N2741	● HOSE - 1405, GREEN	1	N220001-
	C1	201-62-N2740	● HOSE - 1405, GREEN	1	NL 20991 - N201404
20		201-62-N2770	● HOSE - 1400 MM, BLUE-WHITE	1	NL 20991 -

PC71-7

FIG. K1110-07A0A FLOOR FRAME (P.P.C. WORK LINE)

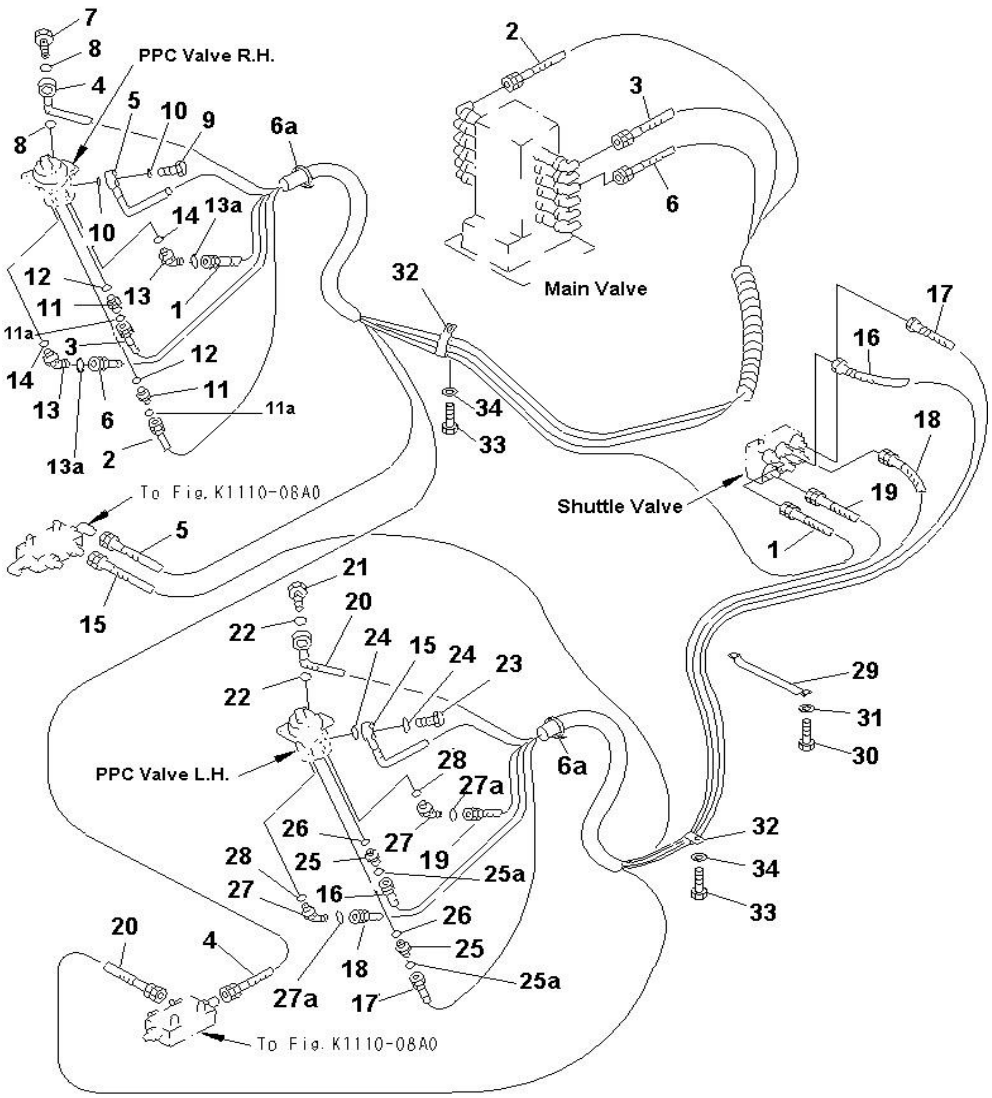

Index	Code	Part Number	Description	Qty	Serial No.
21		20Y-62-16170	BOLT	1	NL 20001 -
22		07000-12015	O-RING	2	NL 20001 -
23		702-16-53240	PLUG	1	NL 20001 -
24		07000-12018	O-RING	2	NL 20001 -
25		02781-0021D	UNION	2	NL 20991 -
25a		02896-11008	O-RING	2	NL 20991 -
26		07002-11423	O-RING	2	NL 20001 -
27		02783-10210	ELBOW	2	NL 20991 -
27a		02896-11008	O-RING	2	NL 20991 -
28		07002-11423	O-RING	2	NL 20001 -
29		201-62-N1120	CLAMP	2	NL 20046 -
30		01010-81016	BOLT	4	NL 20001 -
31		01643-31032	WASHER	4	NL 20001 -
32		04434-53211	CLIP	2	NL 20001 -
33		01010-81016	BOLT	2	NL 20001 -
34		01643-31032	WASHER	2	NL 20001 -

PC71-7

FIG. K1110-08A3 FLOOR FRAME (P.P.C. TRAVEL LINE) (BLADE SPEC.)

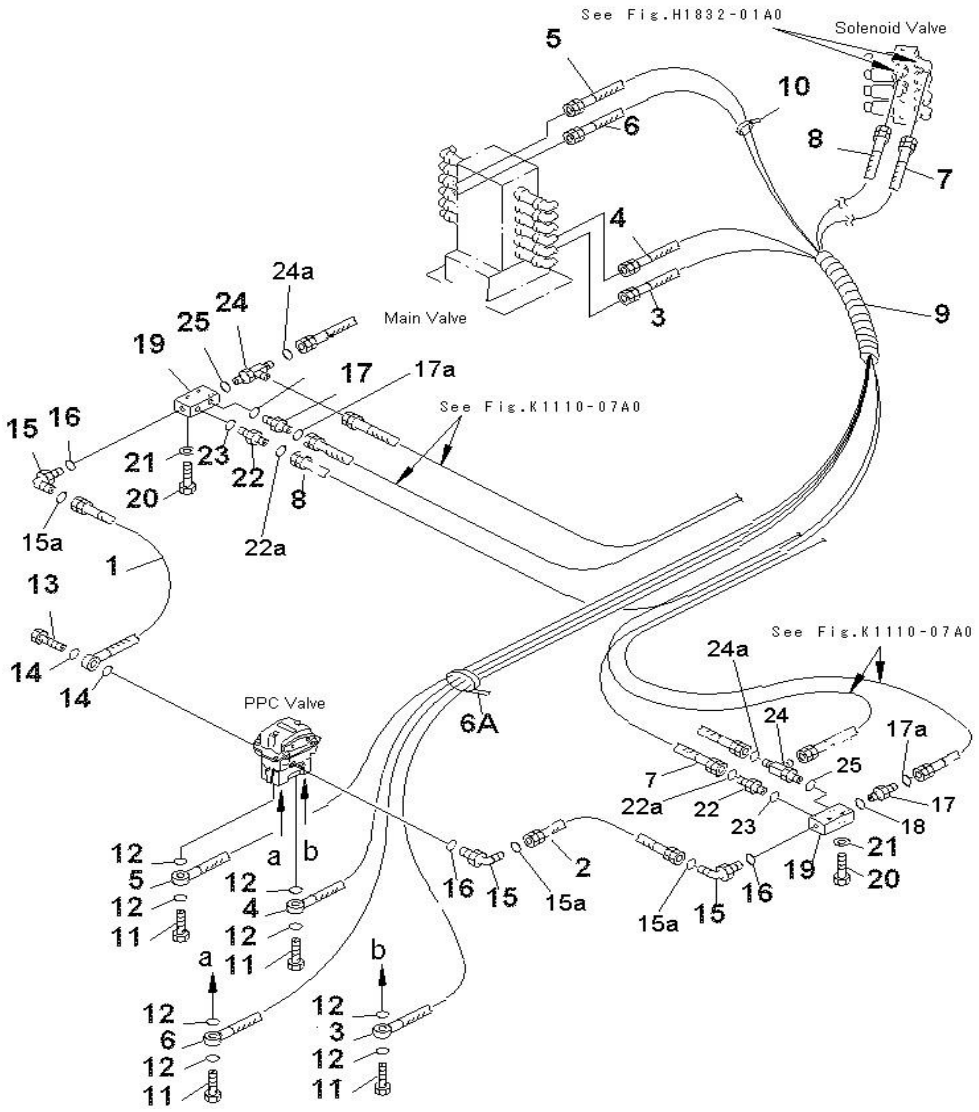

Index	Code	Part Number	Description	Qty	Serial No.
1		201-62-N2320	HOSE - 350 MM, RED-GREEN	1	NL 20991 -
2		02740-002A3	HOSE - 350 MM, BLUE-WHITE	1	N220001-
	C1	201-62-N2330	HOSE - 350 MM, BLUE-WHITE	1	NL 20991 - N201404
		201-62-N2410	HOSE A	1	NL 20001 -
3		201-62-N2990	• HOSE - 2600 MM, ORANGE-YELL	1	NL 20991 -
4		201-62-N2990	• HOSE - 2600 MM, GREEN-YELLO	1	NL 20991 -
5		201-62-N3010	• HOSE - 3100 MM, BLACK-YELLO	1	NL 20991 -
6		201-62-N3010	• HOSE - 3100 MM, BROWN-YELLO	1	NL 20991 -
6a		08034-00536	BAND	1	NL 20991 -
7		201-62-N2340	HOSE - 3290 MM, BLUE-WHITE	1	NL 20991 -
8		201-62-N2350	HOSE - 3370 MM, RED-GREEN	1	NL 20001 -
9		08210-01806	SPIRAL TUBE, TUBE	1	NL 20001 -
10		08034-00834	BAND	1	NL 20001 -
11		20Y-62-16170	BOLT	4	NL 20001 -
12		07000-12015	O-RING	8	NL 20001 -
13		702-16-53240	PLUG	1	NL 20001 -
14		07000-12018	O-RING	2	NL 20001 -
15		02782-10210	ELBOW	3	NL 20991 -
15a		02896-11008	O-RING	3	NL 20991 -
16		07002-11423	O-RING	3	NL 20001 -
17		02781-0021D	UNION	2	NL 20991 -
17a		02896-11008	O-RING	2	NL 20991 -
18		07000-11423	O-RING	2	NL 20001 -
19		20Y-62-15831	BLOCK	2	NL 20001 -
20		01010-81045	BOLT	4	NL 20001 -
21		01643-31032	WASHER	4	NL 20001 -
22		02781-0021D	UNION	2	NL 20991 -
22a		02896-11008	O-RING	2	NL 20991 -
23		07002-11423	O-RING	2	NL 20001 -
24		208-62-N2470	TEE	2	NL 20991 -
24a		02896-11008	O-RING	4	NL 20991 -
25		07002-11423	O-RING	2	NL 20001 -

PC71-7

FIG. K1110-09B9 FLOOR FRAME (COVER LH)(FOR RADIO LESS)(BLADE SPEC.)

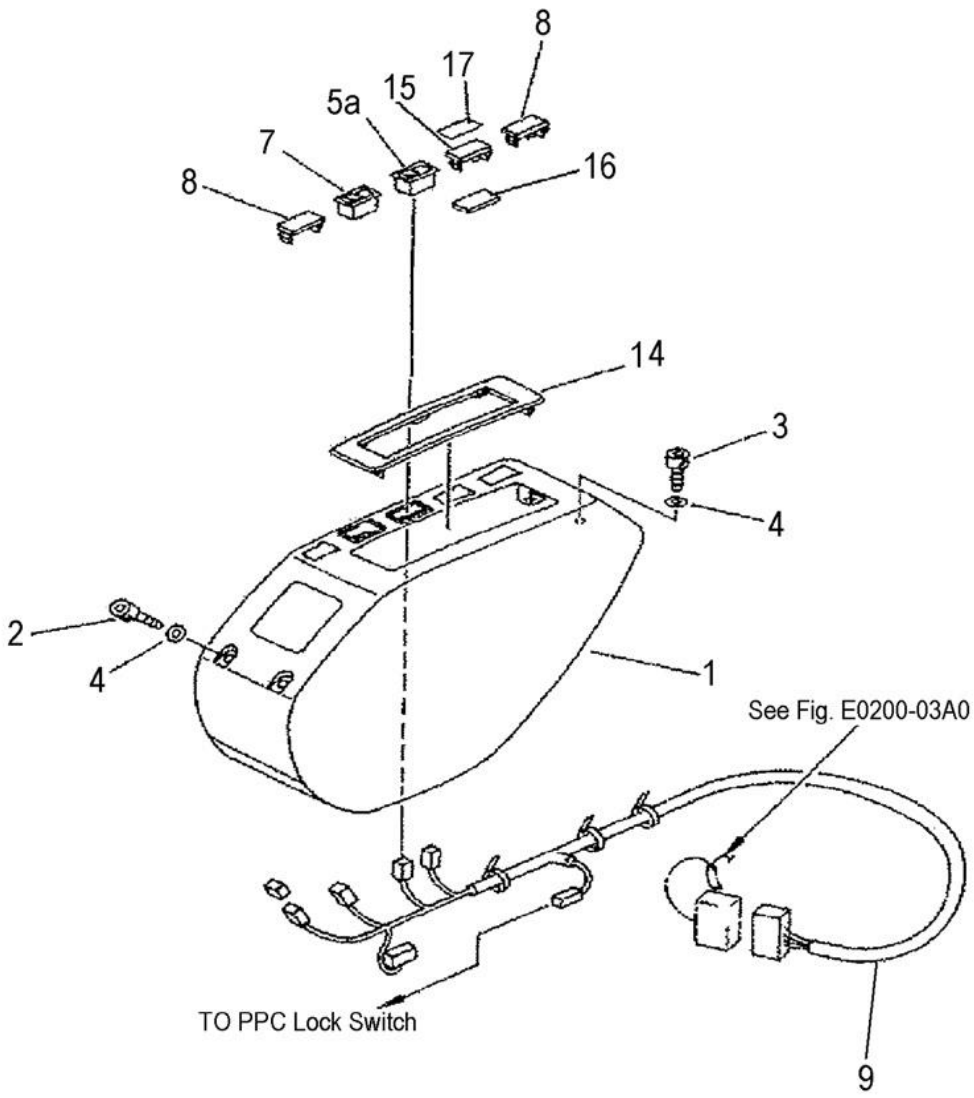

Index	Code	Part Number	Description	Qty	Serial No.
1		201-54-73281	CONSOLE BOX	1	NL 20001-
2		01252-B0855	BOLT	2	NL 20001-
3		01252-B0820	BOLT	2	NL 20001-
4		01643-70823	WASHER	4	NL 20001-
5a		201-06-71230	WIPER SWITCH	1	NL 20001-
7		201-06-71440	SWITCH, SWING LOCK	1	NL 20001-
8		20Y-54-N5390	COVER	2	NL 21772-
	C1	201-54-73410	COVER	3	NL 20001-NL21771
9		201-06-N1251	WIRING HARNESS	1	NL 21725-
	C1	201-06-N1250	WIRING HARNESS	1	NL 20001-NL21724
14		201-54-73291	COVER	1	NL 20001-
15		20Y-06-25150	SWITCH	1	NL 22481-
16		201-54-73190	SPACER	1	NL 22481-
17		20Y-00-N1580	STICKER	1	NL 22481-

PC71-7

FIG. K1110-10A0 FLOOR FRAME (LEVER RH)

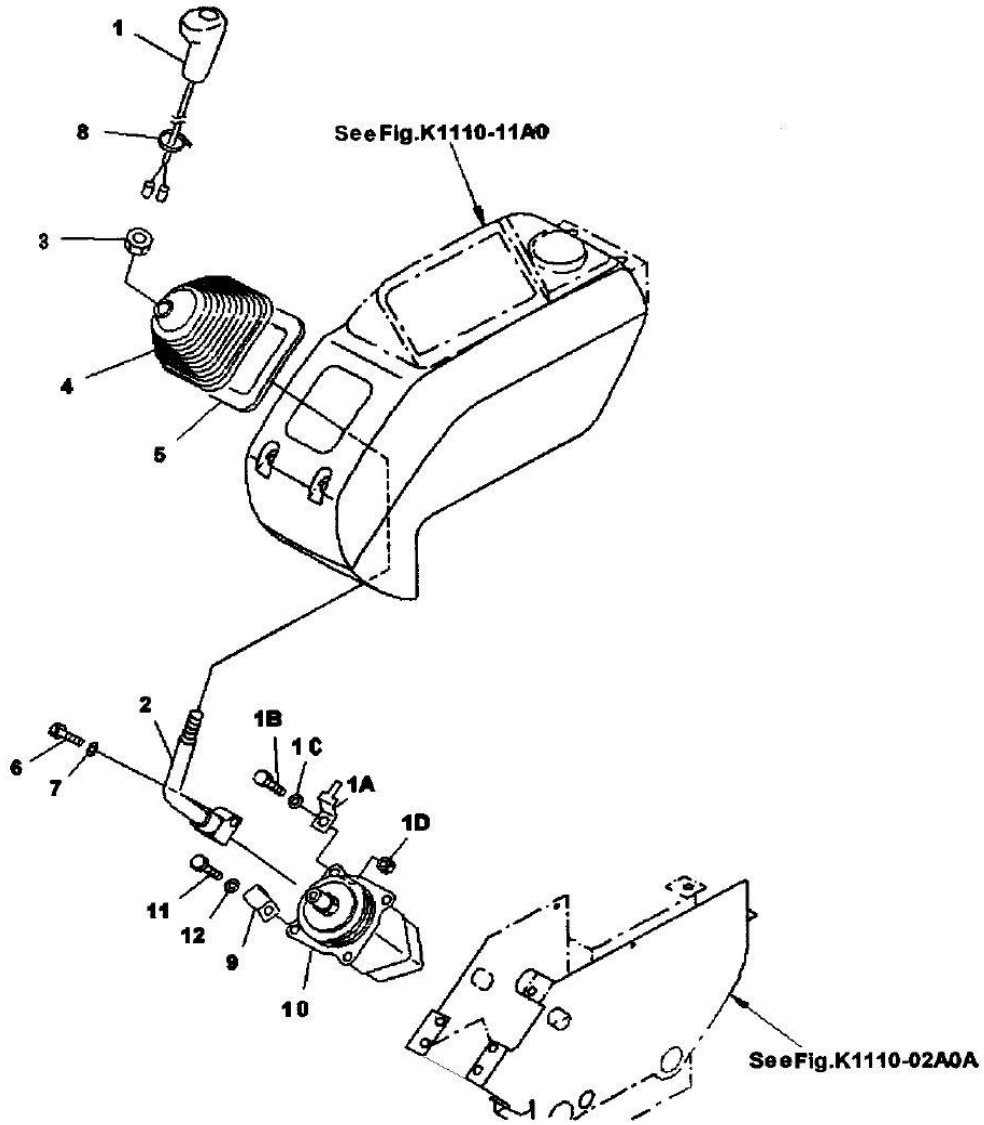

Index	Code	Part Number	Description	Qty	Serial No.
1		20T-06-71112	SWITCH-KNOB, HORN	1	NL 20001-
1A		08053-01510	CLIP	1	NL 20001-
1B		01010-80820	BOLT	1	NL 20001-
1C		01643-30823	WASHER	1	NL 20001-
1D		01580-10806	NUT	1	NL 20001-
2		20T-43-71130	LEVER, RH	1	NL 20001-
3		20T-43-71190	NUT	1	NL 20001-
4		20T-43-71160	BOOT	1	NL 20001-
5		20T-43-71360	• PLATE	1	NL 20001-
6		01010-81030	BOLT	1	NL 20001-
7		01643-31032	WASHER	1	NL 20001-
8		08034-30521	BAND	1	NL 20001-
9		08036-10810	CLIP	1	NL 20001-
10		(702-16-03930)	PILOT VALVE, WORK EQUIPMENT	1	NL 20293-
	C1	(702-16-01850)	PILOT VALVE, WORK EQUIPMENT	1	NL 20001-NL20292
11		01010-80825	BOLT	3	NL 20001-
12		01643-30823	WASHER	3	NL 20001-

PC71-7

FIG. K1110-11A0 FLOOR FRAME (PANEL)

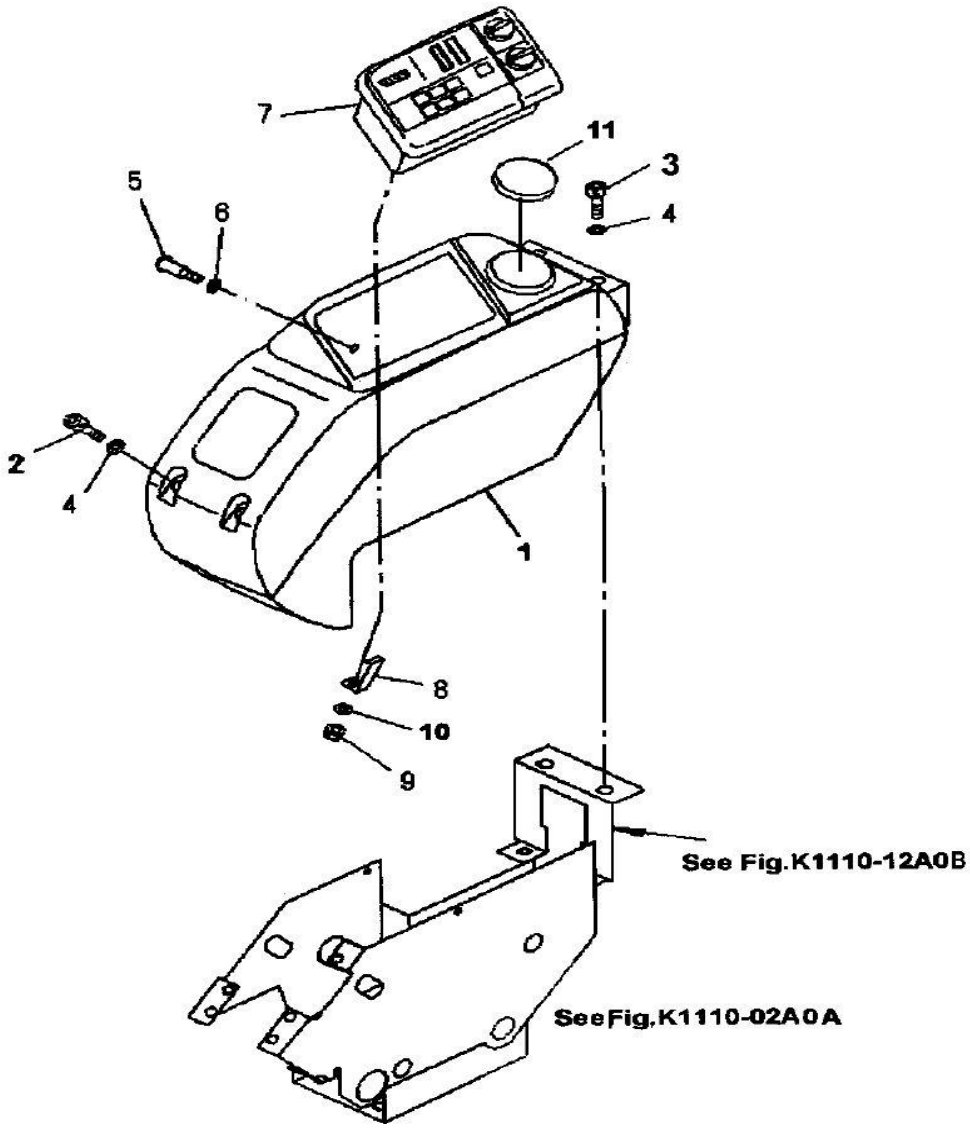

Index	Code	Part Number	Description	Qty	Serial No.
1		201-54-73392	PANEL BOX, RH	1	NL 20001-
2		01252-B0855	BOLT	2	NL 20001-
3		01252-B0820	BOLT	2	NL 20001-
4		01643-70823	WASHER	4	NL 20001-
5		20T-43-71480	BOLT	1	NL 20001-
6		01643-70823	WASHER	1	NL 20001-
7		(7834-75-2003)	MONITOR	1	NL 22762-
	C1	(7834-73-2002)	MONITOR	1	NL 20131-NL 22761
	C1	(7834-73-2001)	MONITOR	1	NL 20001-NL 20130
8		20T-06-71431	BRACKET	4	NL 20001-
9		01580-10605	NUT	4	NL 20001-
10		01641-20608	WASHER	4	NL 20001-
11		201-00-N1120	PLATE	1	NL 20001-

PC71-7

FIG. K1110-12A0B FLOOR FRAME (HARNESS)

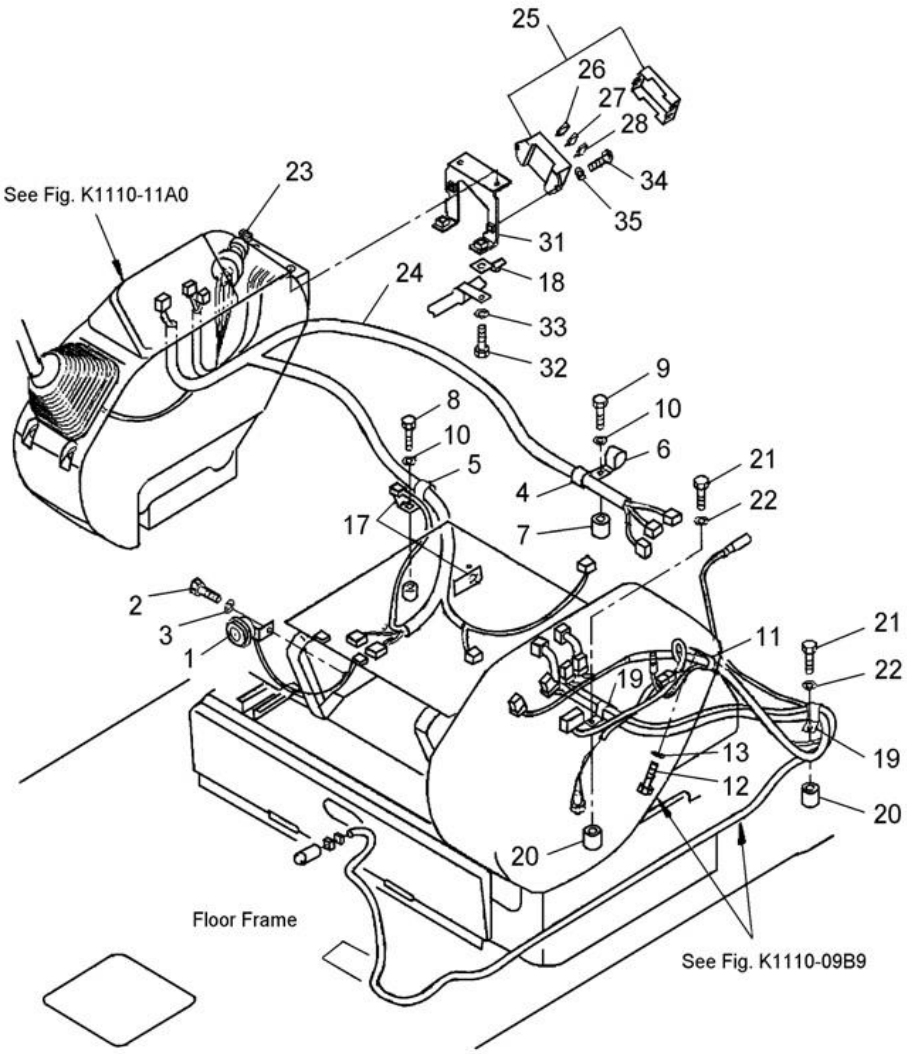

Index	Code	Part Number	Description	Qty	Serial No.
1		203-06-56230	BUZZER ASS'Y, ALARM	1	NL 20001-
2		01010-80616	BOLT	1	NL 20001-
3		01643-30623	WASHER	1	NL 20001-
4		08036-02514	CLIP	1	NL 20001-
5		08036-01814	CLIP	1	NL 20001-
6		08036-12514	CLIP	1	NL 20001-
7		195-33-11220	SPACER	1	NL 20001-
8		01010-81020	BOLT	1	NL 20001-
9		01010-81045	BOLT	1	NL 20001-
10		01643-31032	WASHER	2	NL 20001-
11		04435-51812	CLIP	1	NL 22481-
	C1	08036-01814	CLIP	1	NL 20001-NL22480
12		01010-81020	BOLT	1	NL 20001-
13		01643-31032	WASHER	1	NL 20001-
17		08053-01512	CLIP	1	NL 20001-
18		08053-00910	CLIP	1	NL 20001-
19		08036-02514	CLIP	2	NL 20001-
20		195-33-11220	SPACER	2	NL 20001-
21		01010-81045	BOLT	2	NL 20001-
22		01643-31032	WASHER	2	NL 20001-
23		08086-20000	SWITCH, STARTING	1	NL 20001-
24		201-06-N1680	WIRING HARNESS	1	NL 21538-
	C1	201-06-N1530	WIRING HARNESS	1	NL 20870-NL 21537
	C1	201-06-73113	WIRING HARNESS	1	NL 20590-NL 20869
	C1	201-06-N1530	WIRING HARNESS	1	NL 20585-NL 20589
	C1	201-06-73113	WIRING HARNESS	1	NL 20001-NL 20584
25		205-06-71480	• FUSE BOX, FUSE	1	NL 20001-
26		283-06-16190	• FUSE - 10A	4	NL 20001-
27		205-06-73180	• FUSE - 15A	3	NL 20001-
28		22W-06-13160	• FUSE - 20A	2	NL 20001-
31		201-06-N1550	• BRACKET	1	NL 20400-
	C1	201-06-71431	BRACKET	1	NL 20001-NL 20399
32		01010-80820	BOLT	2	NL 20001-
33		01643-30823	WASHER	2	NL 20001-

PC71-7

FIG. K1110-12A0B FLOOR FRAME (HARNESS)

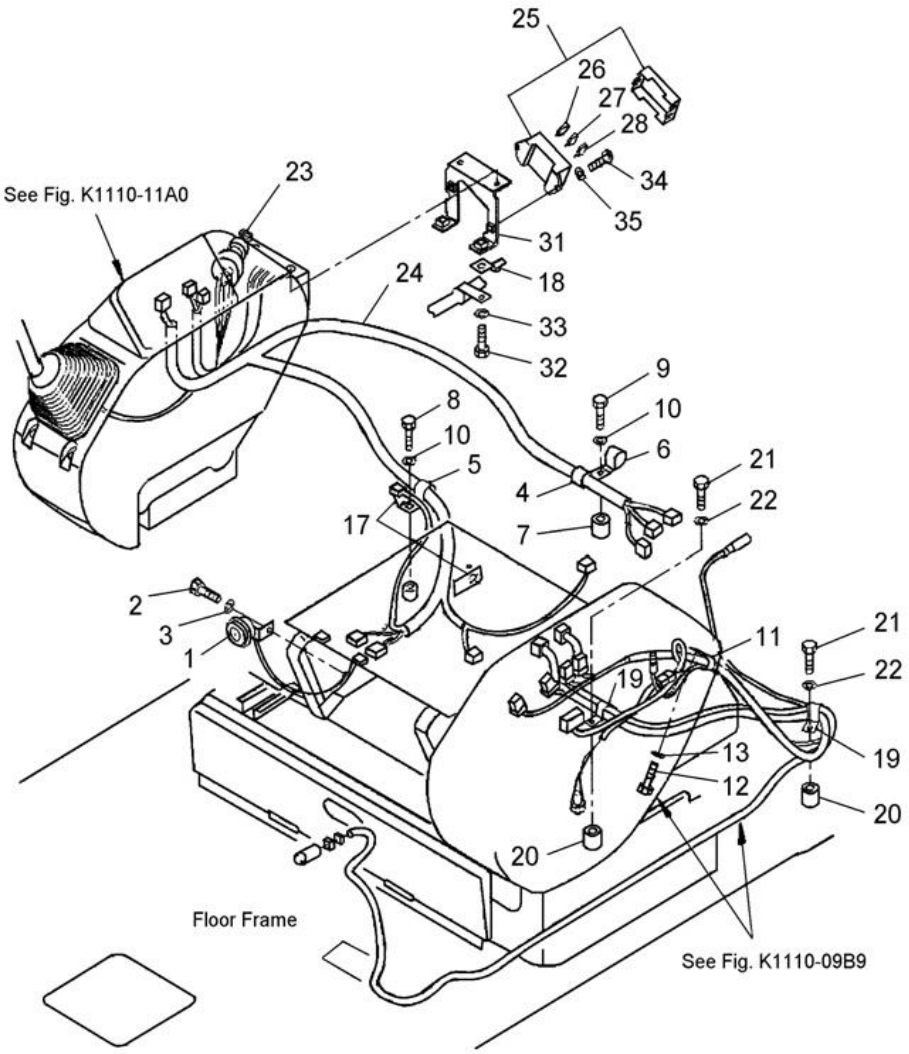

Index	Code	Part Number	Description	Qty	Serial No.
34		01023-20516	SCREW	2	NL 20455-
	C1	01220-30616	SCREW	2	NL 20001-NL 20454
35		01641-20508	WASHER	2	NL 20455-
	C1	01641-20608	WASHER	2	NL 20001-NL 20454

PC71-7

FIG. K1110-N1A0 FLOOR FRAME HARNESS (HS MODE WIRING)

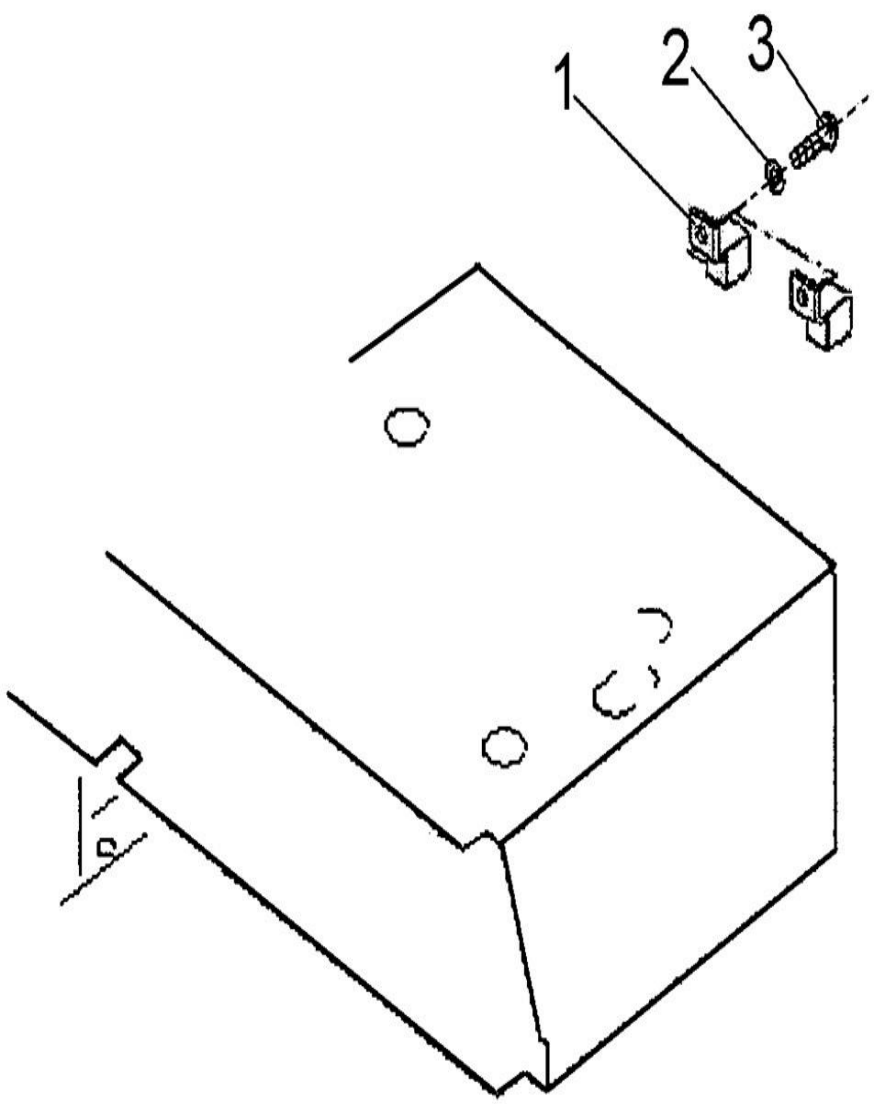

Index	Code	Part Number	Description	Qty	Serial No.
1		569-06-61960	RELAY	4	NL 20090-
2		01643-30623	WASHER	4	NL 22481-
3		01435-00610	BOLT	4	N220001-
	C1	01435-00612	BOLT	4	NL 20090- N201404

PC71-7

FIG. K1110-13A0A FLOOR FRAME (BLADE CONTROL) (BLADE SPEC.)

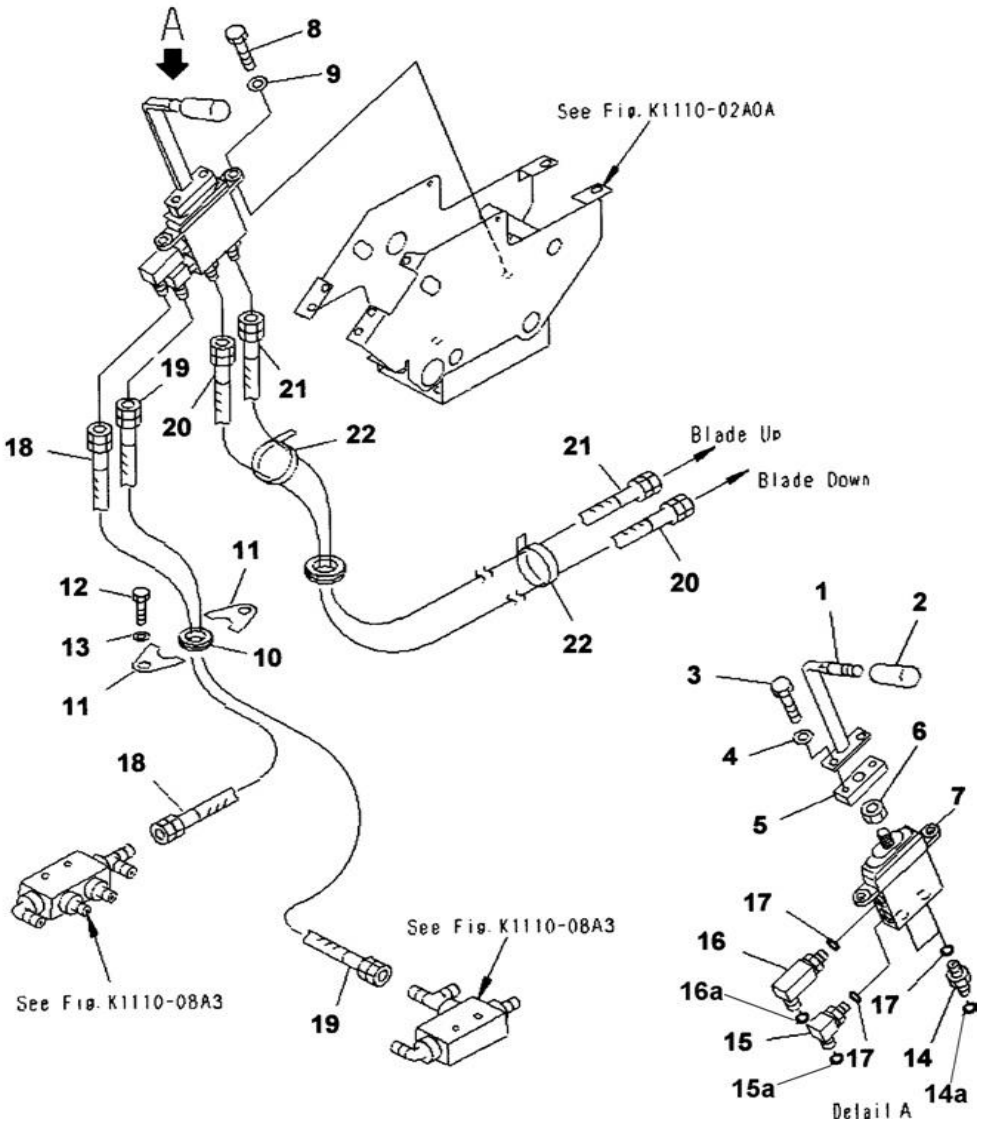

Index	Code	Part Number	Description	Qty	Serial No.
1		201-30-N1410	LEVER	1	N220001-
	C1	201-910-7630	LEVER	1	NL 20001 - N201404
2		203-43-44360	KNOB	1	NL 20001 -
3		01010-81025	BOLT	2	NL 20001 -
4		01643-30823	WASHER	2	NL 20001 -
5		203-43-61520	SEAT	1	NL 20001 -
6		01583-11408	NUT	1	NL 20001 -
7		(702-16-01230)	PILOT VALVE, BLADE	1	NL 20001 -
8		01010-81025	BOLT	2	NL 20001 -
9		01643-31032	WASHER	2	NL 20001 -
10		201-43-N1170	GROMMET	1	N220001-
	C1	207-54-16860	GROMMET	1	NL 20001 - N201404
11		201-54-75640	PLATE	2	NL 20001 -
12		01010-81020	BOLT	2	NL 20001 -
13		01643-31032	WASHER	2	NL 20001 -
14		11Y-62-12140	NIPPLE	2	N220001-
	C1	201-62-N2090	NIPPLE	2	NL 20991 - N201404
14a		02896-11008	O-RING	1	N220001-
15		21W-62-43980	ELBOW	1	NL 20991 - N201404
	C1	201-62-N2020	ELBOW	1	NL 20991 -
15a		02896-11008	O-RING	1	NL 20991 -
16		21W-62-43990	ELBOW	1	N220001-
	C1	201-62-N2030	ELBOW	1	NL 20991 - N201404
16a		02896-11008	O-RING	1	NL 20991 -
17		07000-12011	O-RING	4	NL 20001 -
18		02740-002A5	HOSE - 550 MM	1	N220001-
	C1	201-62-N2360	HOSE - 550 MM	1	NL 20991 - N201404
19		201-62-N2371	HOSE - 1200 MM	1	N220001-
	C1	201-62-N2370	HOSE - 1200 MM	1	NL 20991 - N201404
		201-62-N2420	HOSE ASSEMBLY	1	NL 20991 -
20		201-62-N2891	• HOSE - 2550 MM	1	N220001-
	C1	201-62-N2890	• HOSE - 2550 MM	1	NL 20991 - N201404
21		02740-00227	• HOSE - 2700 MM	1	N220001-
	C1	201-62-N2880	• HOSE - 2700 MM	1	NL 20991 - N201404

FIG. K1110-13A0A FLOOR FRAME (BLADE CONTROL) (BLADE SPEC.)

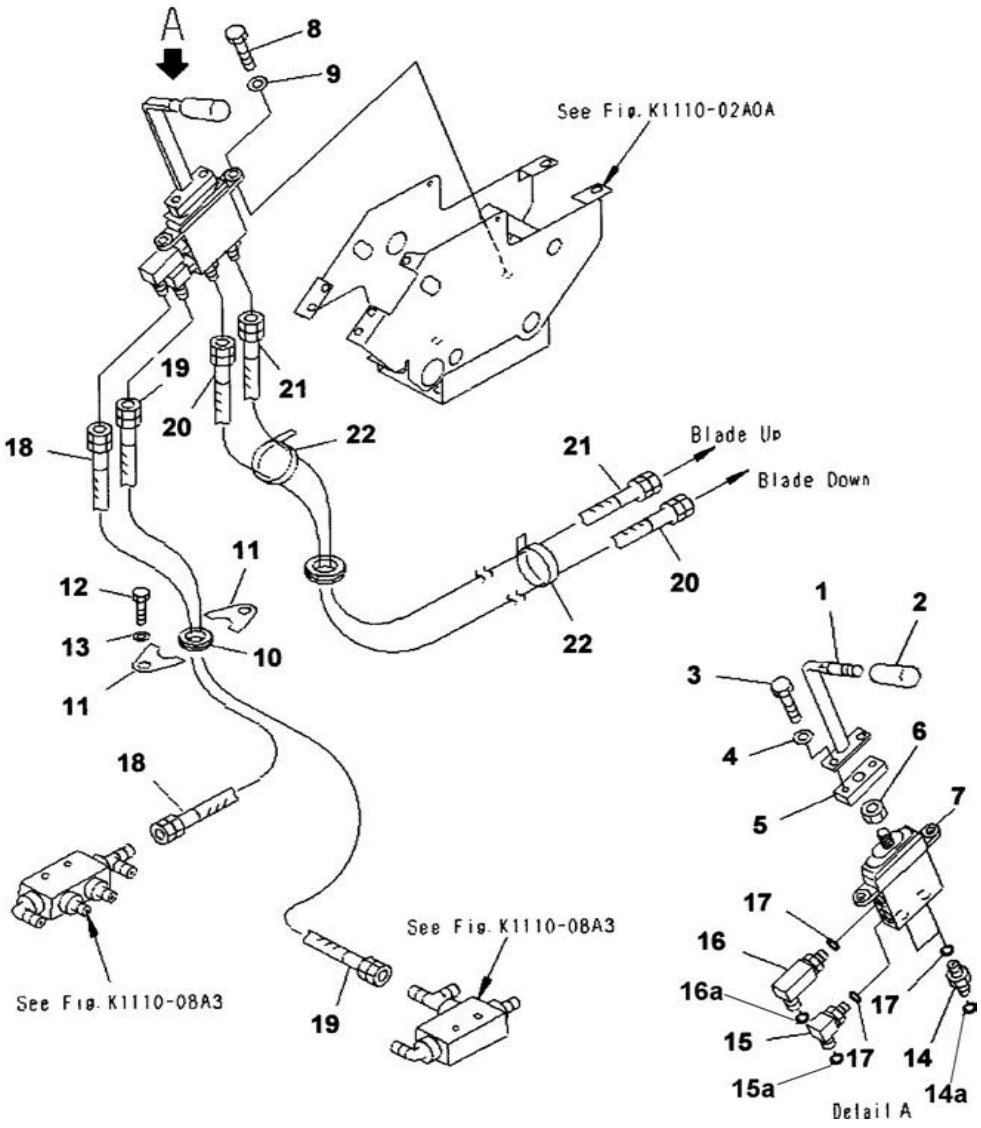

Index	Code	Part Number	Description	Qty	Serial No.
22		08034-00536	BAND	2	NL 20001 -

PC71-7

FIG. K1110-14A0 FOOT PEDAL MOUNTING (1 ATTACHMENT)

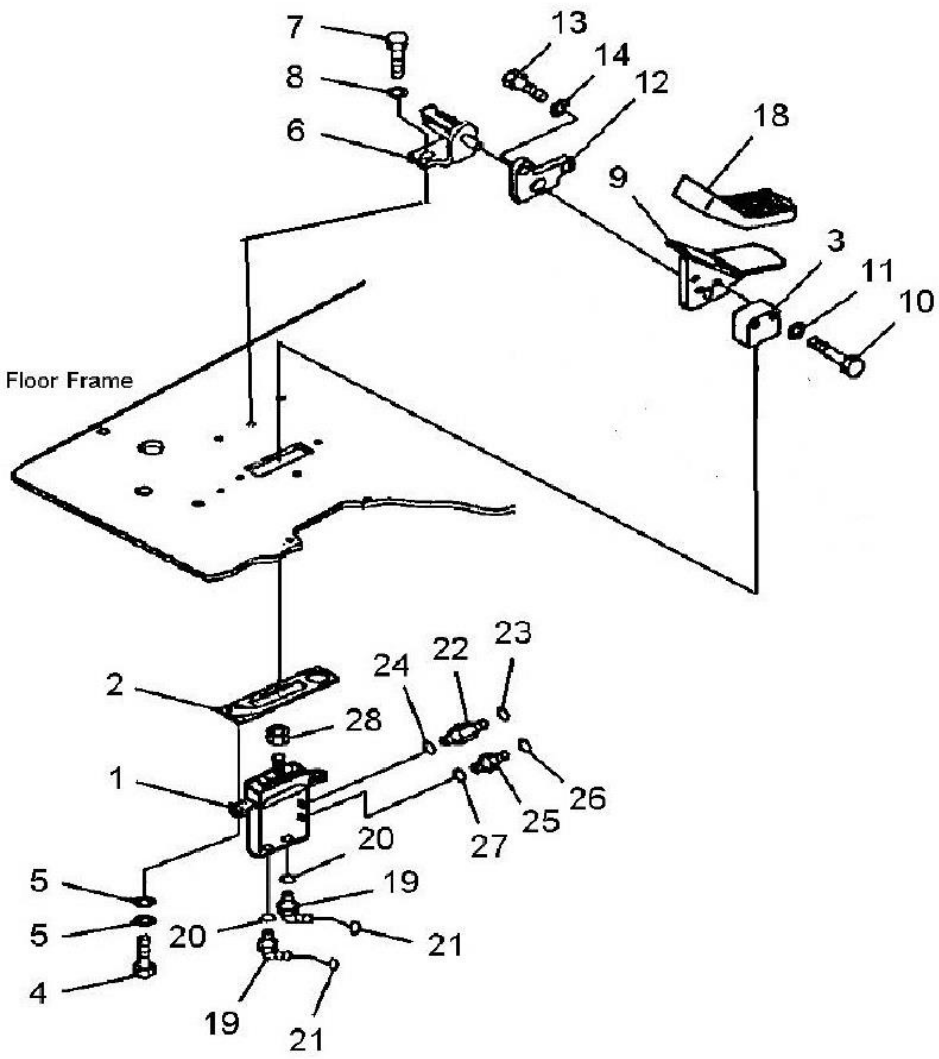

Index	Code	Part Number	Description	Qty	Serial No.
1		702-16-01230	PILOT VAVLE	1	NL 22105
2		22U-54-25660	SEAL	1	NL 22105
3		22U-43-21470	SEAT	1	NL 22105
4		01010-81025	BOLT	2	NL 22105
5		01643-31032	WASHER	4	NL 22105
6		2A5-62-12350	BRACKET	1	N220001-
	C1	20Y-62-25360	BRACKET	1	NL 22105- N201404
7		01010-D1025	BOLT	2	NL 22105
8		01643-71032	WASHER	2	NL 22105
9		22U-4321461	PEDAL	1	NL 22105
10		01010-D1045	BOLT	2	NL 22105
11		01643-71032	WASHER	2	NL 22105
12		22U-43-21480	PLATE	1	NL 22105
13		01010-D1030	BOLT	2	NL 22105
14		01643-71032	WASHER	2	NL 22105
18		22U-54-25670	CAP	1	NL 22105
19		21W-62-43980	ELBOW	2	NL 22105
20		02896-11008	O-RING	2	NL 22105
21		07000-12011	O-RING	2	NL 22105
22		20Y-62-43470	NIPPLE	1	NL 22105
23		02896-11008	O-RING	1	NL 22105
24		07000-12011	O-RING	1	NL 22105
25		11Y-62-12140	NIPPLE	1	NL 22105
26		02896-11008	O-RING	1	NL 22105
27		07000-12011	O-RING	1	NL 22105
28		01583-51408	NUT	1	NL 22105

PC71-7

FIG. K1110-14B0 FOOT PEDAL MOUNTING WITH HOUR-METER(1 ATTACHMENT)

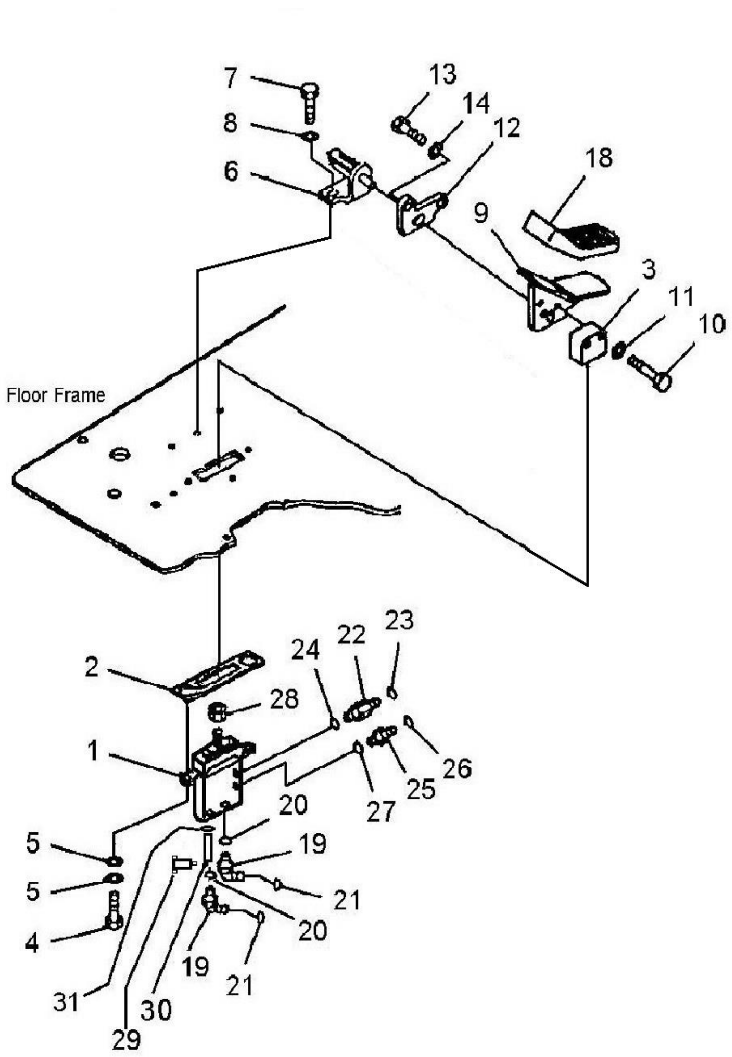

Index	Code	Part Number	Description	Qty	Serial No.
1		702-16-01230	PILOT VAVLE	1	NL 22105
2		22U-54-25660	SEAL	1	NL 22105
3		22U-43-21470	SEAT	1	NL 22105
4		01010-81025	BOLT	2	NL 22105
5		01643-31032	WASHER	4	NL 22105
6		2A5-62-12350	BRACKET	1	N220001-
	C1	20Y-62-25360	BRACKET	1	NL 22105- N201404
7		01010-D1025	BOLT	2	NL 22105
8		01643-71032	WASHER	2	NL 22105
9		22U-4321461	PEDAL	1	NL 22105
10		01010-D1045	BOLT	2	NL 22105
11		01643-71032	WASHER	2	NL 22105
12		22U-43-21480	PLATE	1	NL 22105
13		01010-D1030	BOLT	2	NL 22105
14		01643-71032	WASHER	2	NL 22105
18		22U-54-25670	CAP	1	NL 22105
19		21W-62-43980	ELBOW	2	NL 22105
20		02896-11008	O-RING	2	NL 22105
21		07000-12011	O-RING	2	NL 22105
22		20Y-62-43470	NIPPLE	1	NL 22105
23		02896-11008	O-RING	1	NL 22105
24		07000-12011	O-RING	1	NL 22105
25		11Y-62-12140	NIPPLE	1	NL 22105
26		02896-11008	O-RING	1	NL 22105
27		07000-12011	O-RING	1	NL 22105
28		01583-51408	NUT	1	NL 22105
30		203-62-N2410	JOINT	1	N200103-
31		07000-12011	O-RING	1	N200103-

PC71-7

FIG. K1110-15A0 FLOOR FRAME - PILOT HOSE CONN. FROM FOOOT PEDAL (1 ATT)

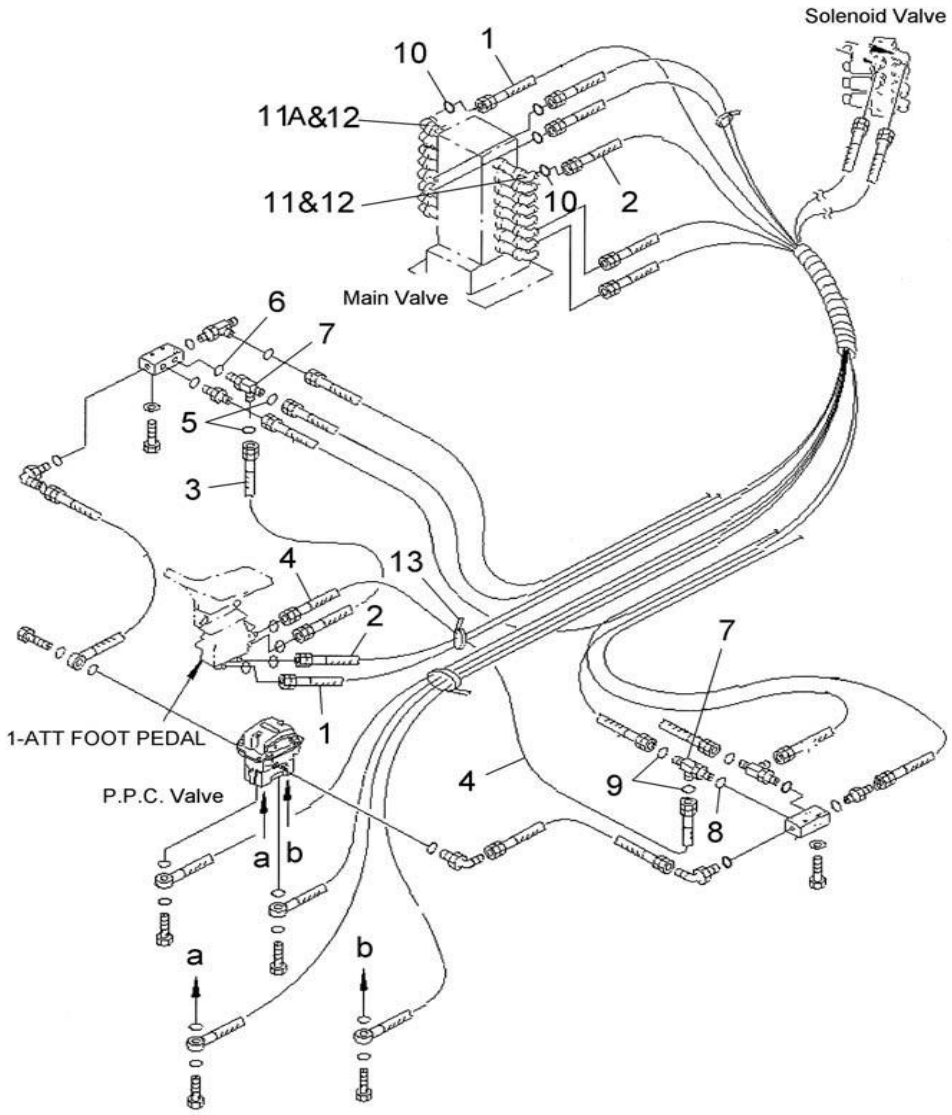

Index	Code	Part Number	Description	Qty	Serial No.
1		201-973-N261	HOSE	1	N220001-
	C1	201-973-N260	HOSE	1	NL 22105- N201404
2		201-62-N3241	HOSE	1	N220001-
	C1	201-62-N3240	HOSE	1	NL 22105- N201404
3		201-973-N291	HOSE	1	N220001-
	C1	201-973-N290	HOSE	1	NL 22105- N201404
4		201-973-N281	HOSE	1	N220001-
	C1	201-973-N280	HOSE	1	NL 22105- N201404
5		02896-11008	O-RING	2	NL 22105-
6		07002-11423	O-RING	1	NL 22105-
7		11Y-62-12330	TEE	2	NL 22105-
8		07002-11423	O-RING	1	NL 22105-
9		02896-11008	O-RING	2	NL 22105-
10		02896-11008	O-RING	2	NL 22105-
11		02782-10210	ELBOW	2	NL 22105-
11A		201-62-N3330	ELBOW	1	NL 22481-
12		07002-11423	O-RING	2	NL 22105-
13		08034-00414	BAND	1	NL 22105-

PC71-7

FIG. K1110-016A0 FLOOR FRAME (HARNESS) FOR HOUR METER

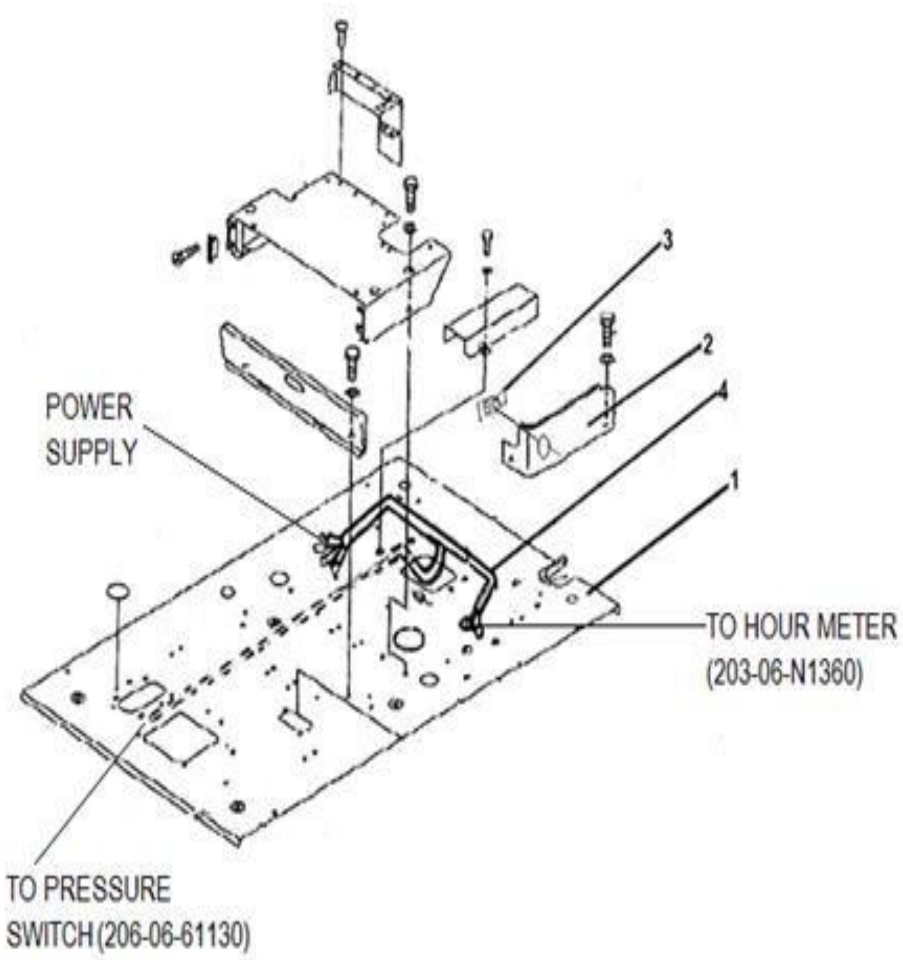

Index	Code	Part Number	Description	Qty	Serial No.
1		201-54-N3631	FLOOR FRAME ASS'Y	1	N220001-
	C1	201-54-N3190	FLOOR FRAME ASS'Y	1	N200103 - N201404
2		201-54-N3841	COVER.	1	N220001-
	C1	201-54-N3850	COVER.	1	N200103 - N201404
3		203-06-N1360	HOUR METER	1	N200103 -
4		201-06-N1980	WIRING HARNESS	1	N200103 -

PC71-7

FIG. K1120-01A0 FLOOR MOUNT

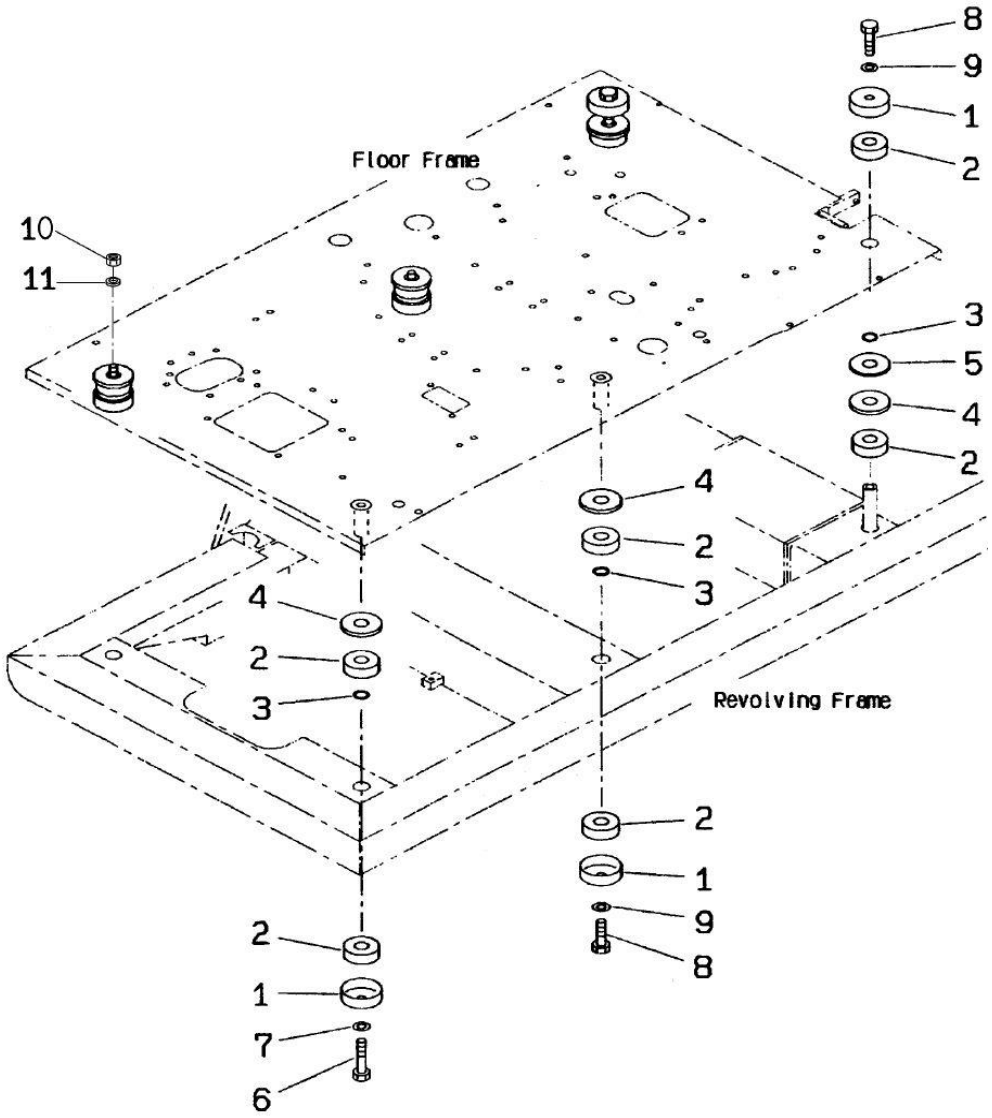

Index	Code	Part Number	Description	Qty	Serial No.
1		201-54-21860	COLLAR	6	NL 20001-
2		203-54-21110	CUSHION	12	NL 20001-
3		07000-13025	O-RING	6	NL 20001-
4		203-54-64130	SPACER	6	NL 20001-
5		203-54-64140	SPACER	2	NL 20001-
6		22W-75-16460	BOLT	2	NL 20001-
7		01643-31645	WASHER	2	NL 20001-
8		01010-81685	BOLT	4	NL 20001-
9		01643-31645	WASHER	4	NL 20001-
10		01580-11613	NUT	2	NL 20028-
11		01643-31645	WASHER	2	NL 20028-

PC71-7

GUARD

PC71-7

FIG. M1110-02A1 HOOD

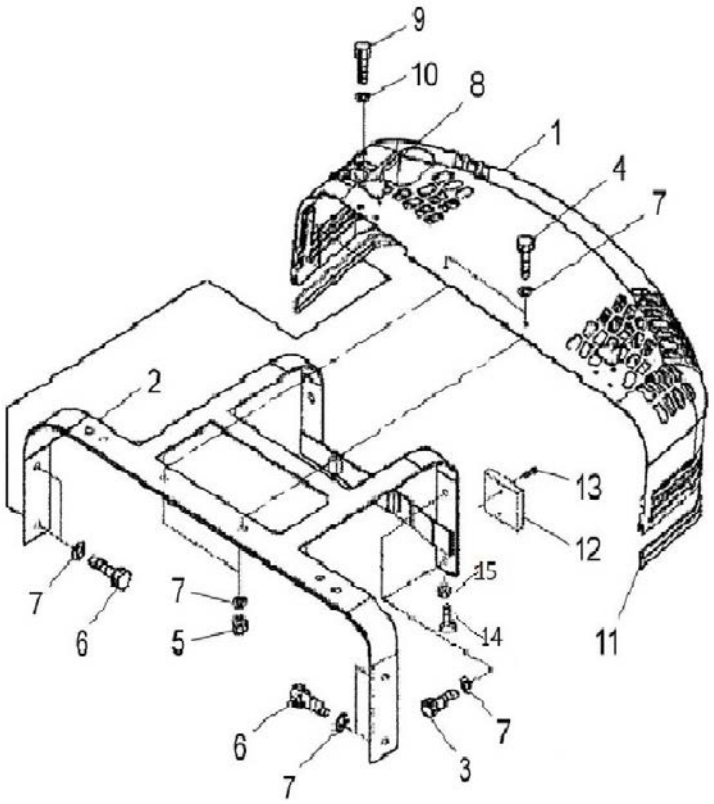

Index	Code	Part Number	Description	Qty	Serial No.
1		201-54-N3300	HOOD ASSY	1	NL 21367-
		201-54-N3361	• HOOD AND FRAME ASSY	1	N220001-
	C1	201-54-N3360	• HOOD AND FRAME ASSY	1	NL 21367-N201404
		#	• • HOOD	1	NL 21367-
2		#	• • HOOD FRAME	1	NL 21367-
3		01010-81025	• • BOLT	4	NL 21367-
4		01010-81025	• • BOLT	4	NL 21367-
5		01580-01008	• • NUT	2	NL 21367-
6		01010-81025	• • BOLT	4	NL 21367-
7		01643-31032	• • WASHER	12	NL 21367-
8		201-54-N2021	• PLATE	2	NL 21367-
9		01010-D1035	• PLATE	6	NL 21367-
10		01643-31032	• WASHER	6	NL 21367-
11		201-54-N3580	• TRIM	4.3	NL 22858-
	C1	201-54-N1540	• TRIM	4.3	NL 21367-NL 22857
12		#	• INSERT	8	N220001-
13		201-54-N2130	• • PLUG	7	N220001-
14		20T-54-75290	STOPPER	2	N220001-
15		01580-11008	NUT	2	N220001-

FIG. M1110-03A0 HOOD (MOUNTING PARTS)

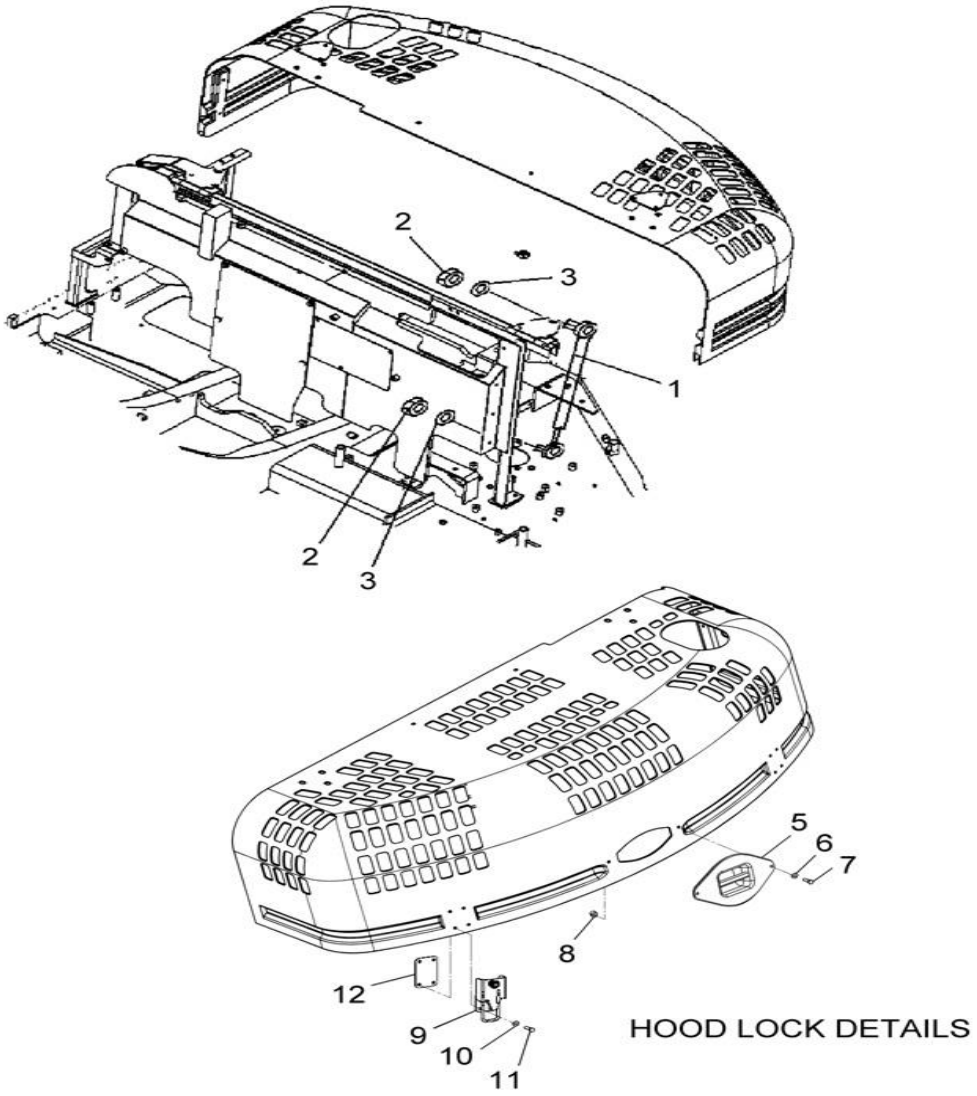

Index	Code	Part Number	Description	Qty	Serial No.
1		201-54-N1880	GAS SPRING	1	NL 20047-
2		01580-11008	NUT	2	NL 20047-
3		01643-31032	WASHER	2	NL 20047-
5		201-54-N3510	COVER	1	NL 20047-
6		01643-70823	WASHER	2	NL 20047-
7		01010-80830	BOLT	2	NL 20047-
8		01580-10806	NUT	2	NL 20047-
9		201-54-N3332	LATCH A	2	NL 22925-
	C1	201-54-N3330	LATCH A	2	NL 20047-NL22924
10		01643-70823	WASHER	4	NL 20047-
11		01010-D0825	BOLT	4	NL 20047-
12		201-54-N3340	BRACKET	2	NL 20047-

PC71-7

FIG. M1110-04A0 HOOD-TUNNEL SPEC

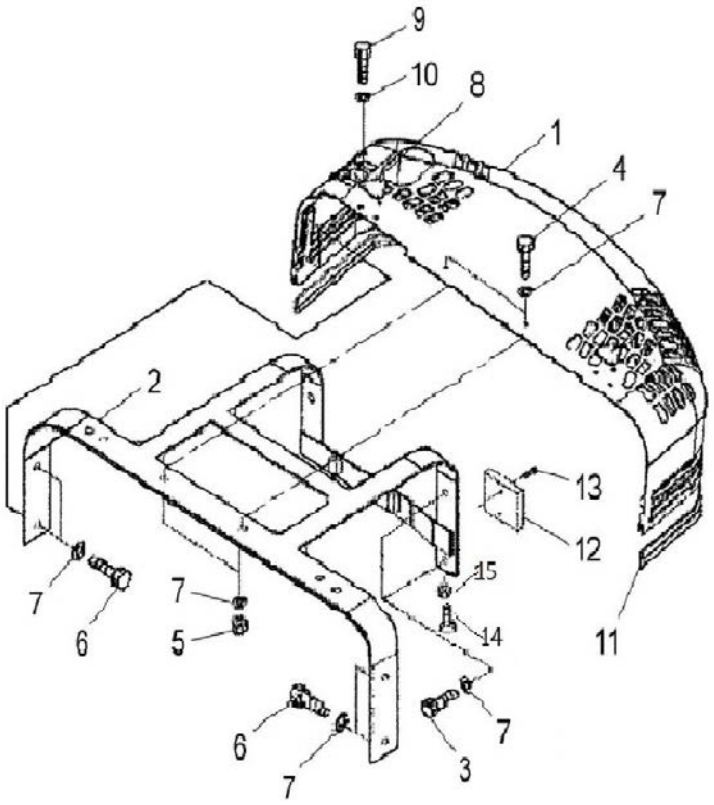

Index	Code	Part Number	Description	Qty	Serial No.
1		201-54-N2412	HOOD ASSY	1	N220001-
		201-54-N2392	• HOOD AND FRAME ASSY	1	N220001-
		#	• • HOOD	1	NL 21367-
2		#	• • HOOD FRAME	1	NL 21367-
3		01010-81025	• • BOLT	4	NL 21367-
4		01010-81025	• • BOLT	4	NL 21367-
5		01580-01008	• • NUT	2	NL 21367-
6		01010-81025	• • BOLT	4	NL 21367-
7		01643-31032	• • WASHER	12	NL 21367-
8		201-54-N2021	• PLATE	2	NL 21367-
9		01010-D1035	• PLATE	6	NL 21367-
10		01643-31032	• WASHER	6	NL 21367-
11		201-54-N3580	• TRIM	4.3	NL 22858-
	C1	201-54-N1540	• TRIM	4.3	NL 21367-NL 22857
12		#	• INSERT	8	N220001-
13		201-54-N2130	• • PLUG	7	N220001-
14		201-54-75290	STOPPER	2	N220001-
15		01580-11008	NUT	2	N220001-

PC71-7

FIG. M1130-01A0 LEFT SIDE COVER

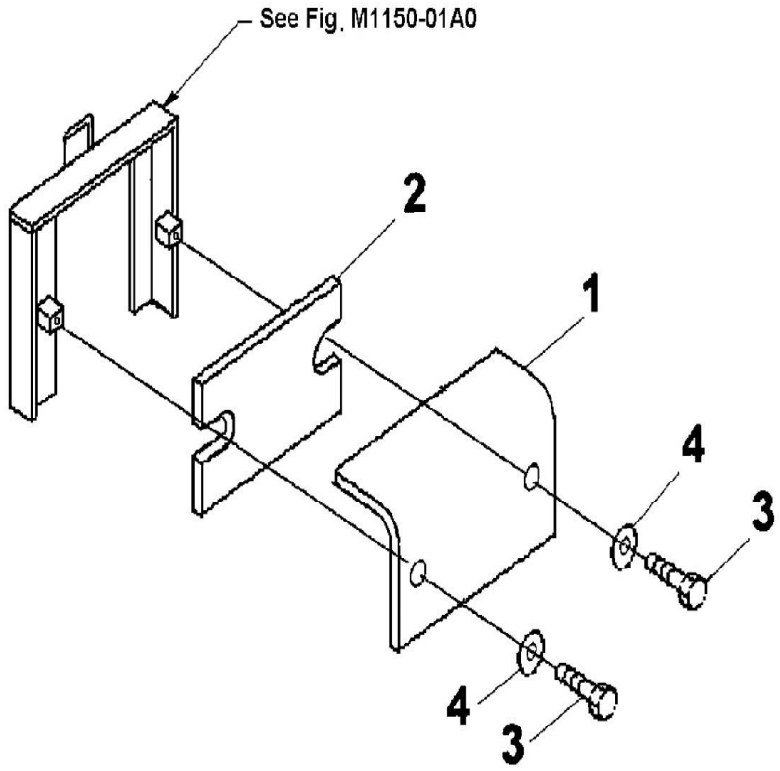

Index	Code	Part Number	Description	Qty	Serial No.
1		201-54-N1380	COVER ASS'Y	1	NL 20001-
2		201-54-N1390	• SHEET	1	NL 20001-
3		01010-81035	BOLT	2	NL 20001-
4		203-54-56970	WASHER	2	NL 20001-

PC71-7

FIG. M1140-01A0 RIGHT SIDE COVER

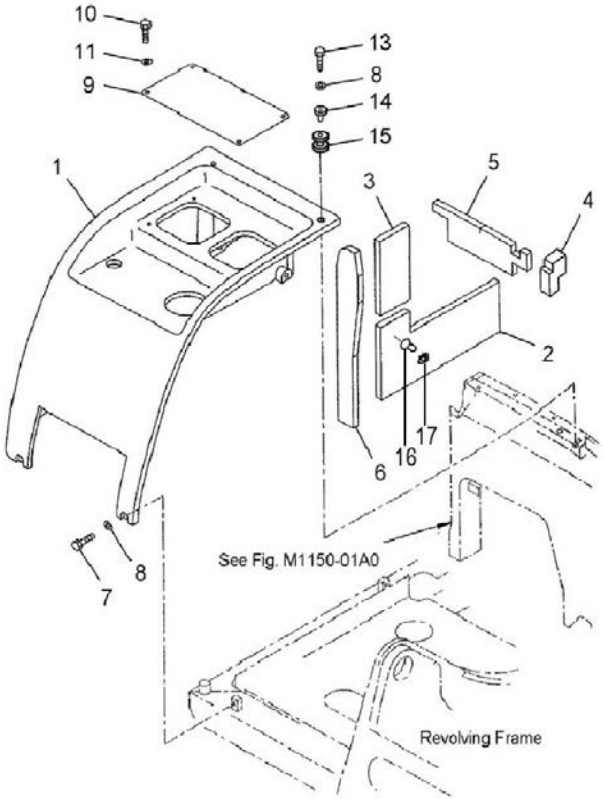

Index	Code	Part Number	Description	Qty	Serial No.
1		201-54-N1600	COVER ASS'Y	1	NL 20001-
2		201-54-N2280	• SHEET	1	NL 20025-
	C1	201-54-71472	• SHEET	1	NL 20001-NL 20024
3		201-54-N2070	• SHEET	1	NL 20001-
4		201-54-N2260	• SHEET	1	NL 20025-
	C1	201-54-72210	• SHEET	1	NL 20001-NL 20024
5		201-54-N2270	• SHEET	1	NL 20025-
	C1	201-54-72220	• SHEET	1	NL 20001-NL 20024
6		201-54-N2080	• SHEET	1	NL 20001-
7		01010-81030	BOLT	6	NL 20001-
8		203-54-56970	WASHER	8	NL 20001-
9		201-54-N2170	PLATE	1	NL 20001-
10		01010-81025	BOLT	4	NL 20001-
11		01643-31032	WASHER	4	NL 20001-
13		01010-81035	BOLT	2	NL 22110-
14		201-54-N3570	BUSH	2	NL 22110-
15		201-54-N3590	GROMMET	2	NL 22376-
	C1	201-54-N3560	GROMMET	2	NL 22110-NL22375
16		201-54-N2130	PLUG	5	N220001-
17		201-54-N2210	WASHER	10	N220001-

PC71-7

FIG. M1150-01A3A PARTITION (FRAME)(WITH WATER SEPTR. & ADDNL. FUEL FILTER)

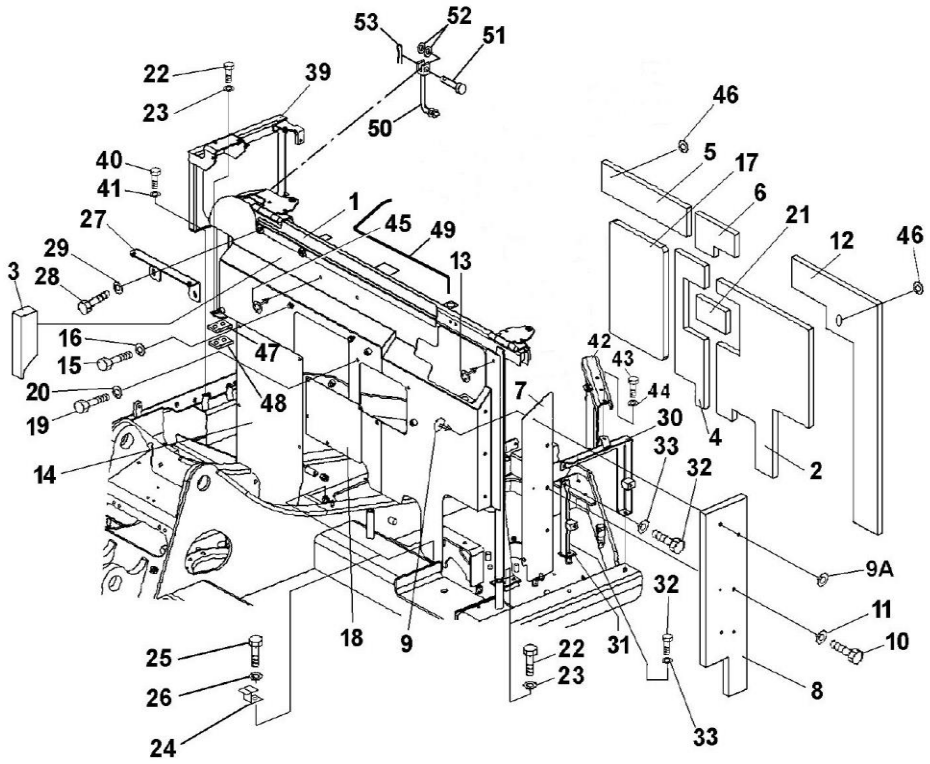

Index	Code	Part Number	Description	Qty	Serial No.
1		201-54-N2951	BRACKET	1	NL 20236-
		201-54-N2950	BRACKET	1	NL 20236-
	C1	201-54-N2730	BRACKET	1	NL 20171-NL 20235
	C1	201-54-N1680	BRACKET	1	NL 20001-NL 20170
2		201-54-N1820	SHEET	1	NL 20001-
3		201-54-N1831	SHEET	1	NL 20001-
		201-54-N1830	SHEET	1	NL 20001-
4		201-54-N1840	SHEET	1	NL 20001-
5		201-54-N1850	SHEET	1	NL 20001-
6		201-54-N1860	SHEET	1	NL 20001-
7		201-54-N1990	PLATE	1	NL 20001-
8		201-03-N1420	SHEET	1	NL 20001-
9		201-54-N2130	PLUG	3	NL 20001-
9A		201-54-N2210	WASHER	3	N220001-
	C1	01643-N2210	WASHER	3	NL 20171-N201404
10		01010-81016	BOLT	3	NL 20001-
11		01643-31032	WASHER	3	NL 20001-
12		201-03-N1441	SHEET	1	NL 20001-
		201-03-N1440	SHEET	1	NL 20001-
13		201-54-N2130	PLUG	1	NL 20001-
14		201-54-N2650	COVER	1	N220001-
	C1	201-54-N2651	COVER	1	NL 20171-N201404
	C1	201-54-N2650	COVER	1	NL 20171-
	C1	201-54-N2010	COVER	1	NL 20001-NL 20170
15		01010-81016	BOLT	4	NL 20001-
16		01643-31032	WASHER	4	NL 20001-
17		201-54-N2090	SHEET	1	NL 20001-
18		201-54-N2640	COVER	1	NL 20171-
18	C1	201-54-N1730	COVER	1	NL 20001-NL 20170
19		01010-81016	BOLT	3	NL 20001-
20		01643-31032	WASHER	3	NL 20001-
21		201-54-N2110	SHEET	1	NL 20001-
22		01010-81020	BOLT	4	NL 20001-
23		01643-31032	WASHER	4	NL 20001-

PC71-7

FIG. M1150-01A3A PARTITION (FRAME)(WITH WATER SEPTR. & ADDNL. FUEL FILTER)

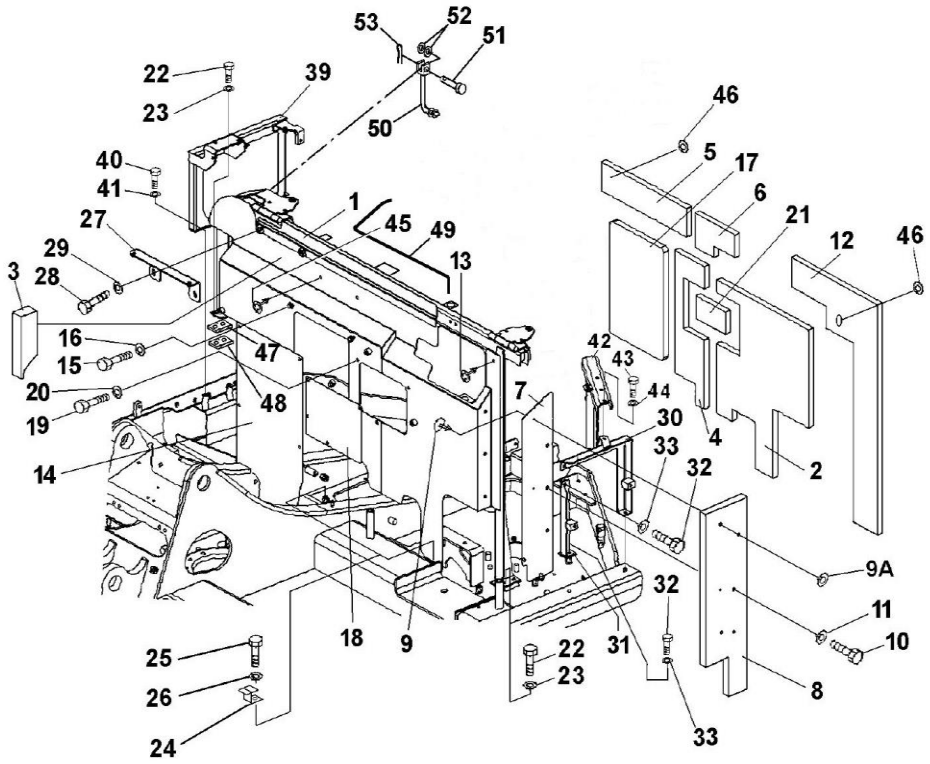

Index	Code	Part Number	Description	Qty	Serial No.
24		20Y-54-12320	CATCH	2	NL 20001-
25		01010-81020	BOLT	2	NL 20001-
26		01643-31032	WASHER	2	NL 20001-
27		201-54-N1980	BRACKET	1	NL 20001-
28		01010-81020	BOLT	2	NL 20025-
	C1	01010-81025	BOLT	2	NL 20001-NL 20024
29		01643-31032	WASHER	2	NL 20001-
30		201-54-N1490	BRACKET	1	NL 20001-
31		201-54-N1480	BRACKET	1	NL 20001-
32		01010-81025	BOLT	3	NL 20001-
33		01643-31032	WASHER	3	NL 20001-
	C1	201-54-N2760	BRACKET	1	NL 20171-NL 20990
	C1	201-54-N1470	BRACKET	1	NL 20001-NL 20170
	C1	201-54-N1510	BRACKET	1	NL 20171-NL 20990
	C1	201-54-N1520	BRACKET	1	NL 20171-NL 20990
39		201-54-N2250	BRACKET	1	NL 20025-
	C1	201-54-N1550	BRACKET	1	NL 20001-NL 20024
40		01010-81025	BOLT	3	NL 20001-
41		01643-31032	WASHER	3	NL 20001-
42		201-54-N2490	BRACKET	1	NL 20125-
	C1	201-54-N1460	BRACKET	1	NL 20001-NL20124
43		01010-81025	BOLT	3	NL 20001-
44		01643-31032	WASHER	3	NL 20001-
45		201-54-N2130	PLUG	18	NL 20001-
46		201-54-N2210	WASHER	22	NL 20060-
	C1	201-54-N2180	WASHER	22	NL 20001-NL 20059
47		201-54-N2610	PLATE	2	NL 20171-
48		201-54-N2620	PLATE	2	NL 20171-
49		201-54-N3010	SPRING	1	NL 20236-
50		201-01-N1730	STAY ROD	1	NL 20236-
51		04205-11235	PIN	1	NL 20236-
52		01643-31232	WASHER	2	NL 20236-
53		04050-13022	SPLIT COTTER PIN	1	NL 20236-

PC71-7

FIG. M1220-01A0 LAMP CASE

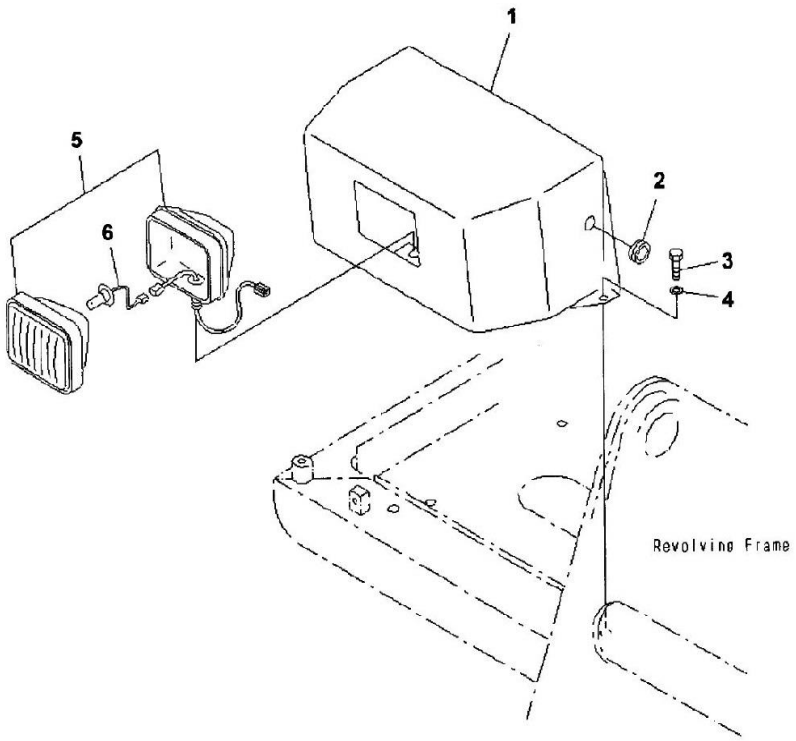

Index	Code	Part Number	Description	Qty	Serial No.
1		201-54-72123	COVER	1	NL 20001-
2		08037-01610	• GROMMET	1	NL 20001-
3		01010-81025	BOLT	2	NL 20001-
4		01643-31032	WASHER	2	NL 20001-
5		22B-06-11350	WORK LAMP ASS'Y	1	NL 20001-
6		421-06-23330	• BULB- 70W	1	NL 20001-

PC71-7

FIG. M1220-02A0 LAMP CASE - QUARRY SPEC

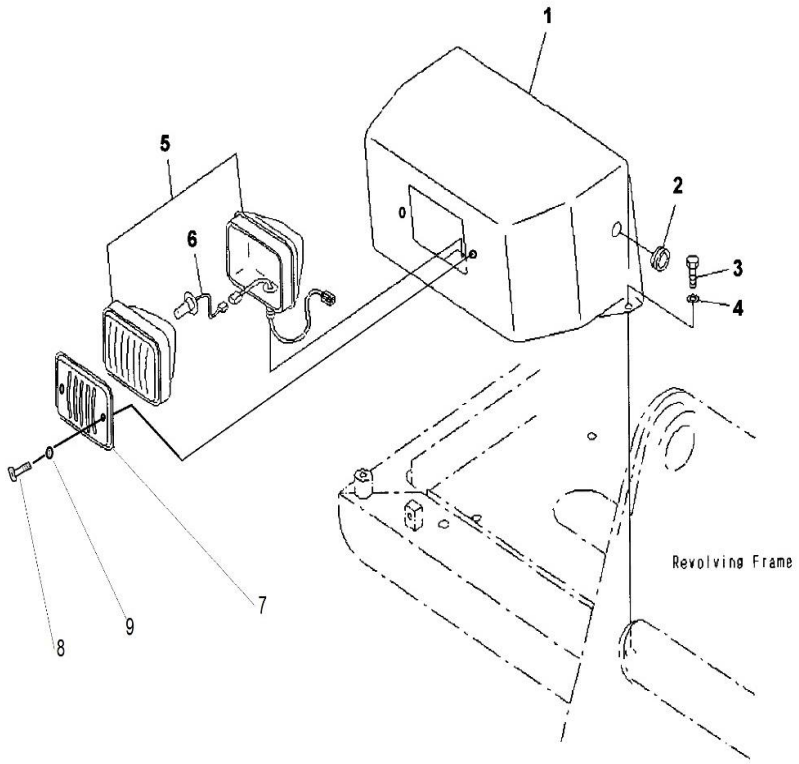

Index	Code	Part Number	Description	Qty	Serial No.
1		201-54-N3271	COVER	1	N200103 -
2		08037-01610	.GROMMET	1	NL 20001 -
3		01010-81025	BOLT	2	NL 20001 -
4		01643-31032	WASHER	2	NL 20001 -
5		22B-06-11350	WORK LAMP ASS'Y	1	NL 20001 -
6		421-06-23330	• BULB - 70W	1	NL 20001 -
7		201-54-N3830	PLATE	1	N200103
8		01010-81025	BOLT	2	N200103-
9		01643-31032	WASHER	2	N200103-

PC71-7

FIG. M1310-01A0 HAND RAIL

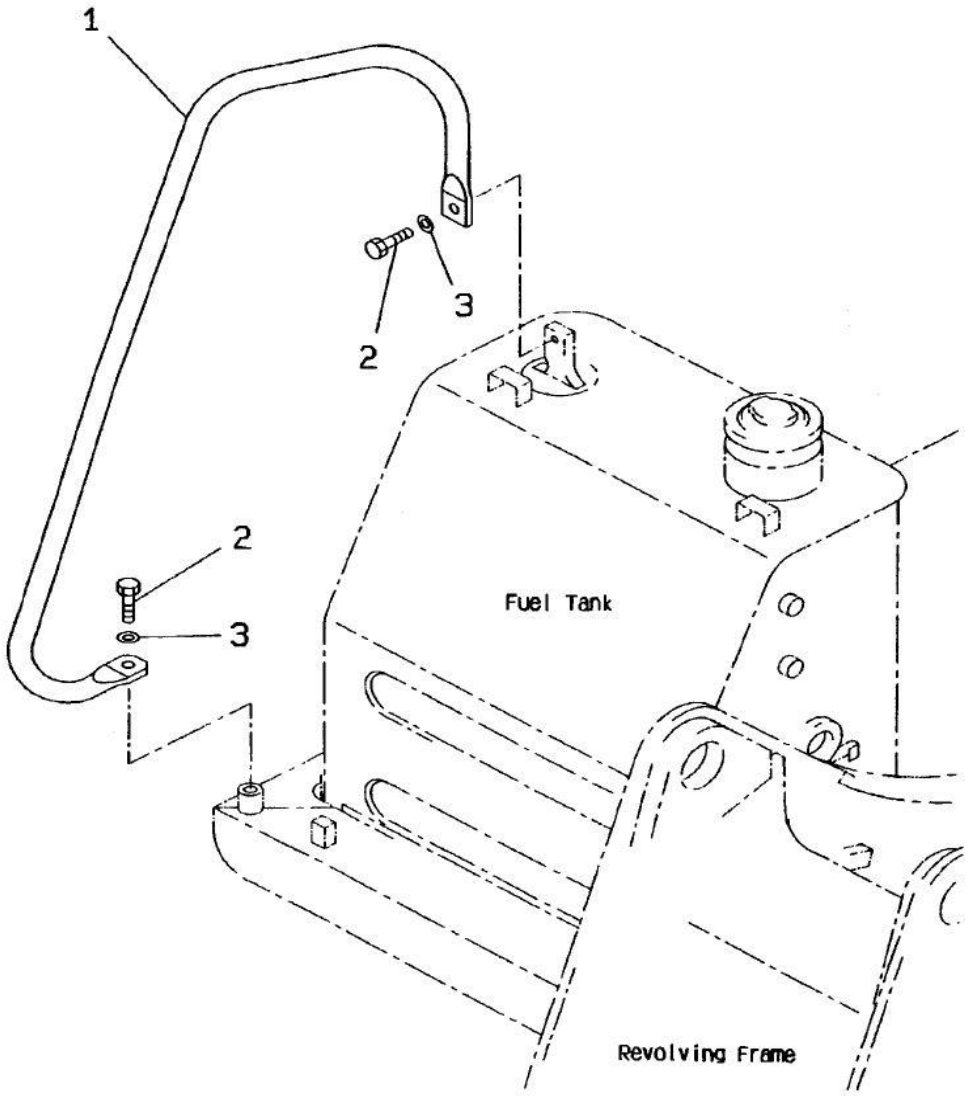

Index	Code	Part Number	Description	Qty	Serial No.
1		201-54-71661	HAND RAIL	1	NL 20001-
2		01010-81025	BOLT	2	NL 20001-
3		01643-31032	WASHER	2	NL 20001-

PC71-7

FIG. M1420-01A0 REAR VIEW MIRROR(RH)

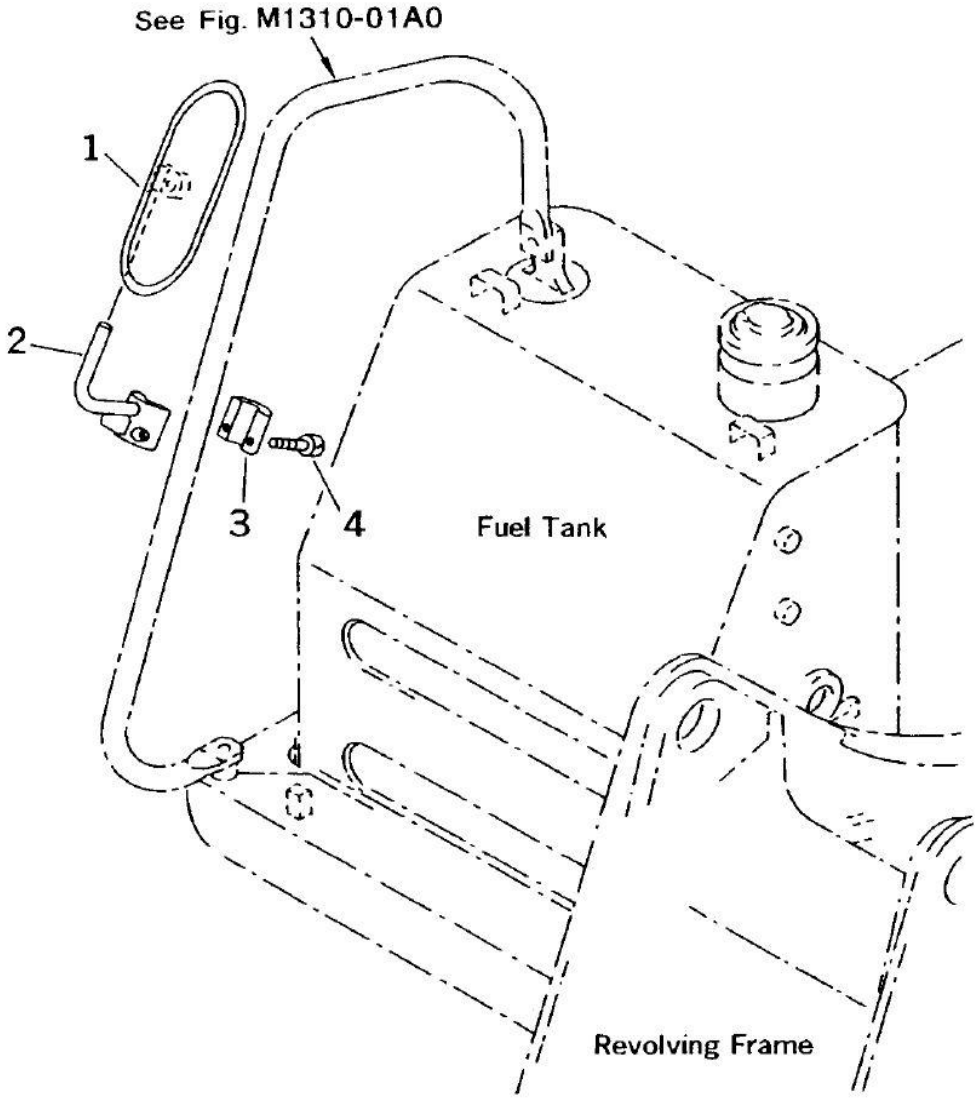

Index	Code	Part Number	Description	Qty	Serial No.
1		20Y-54-N3140	MIRROR	1	NL 20287-
	C1	20Y-54-28911	MIRROR	1	NL 20001-NL20286
2		203-54-67991	SUPPORT	1	NL 20001-
3		20Y-54-27991	CLAMP	1	NL 20001-
4		01252-41025	BOLT	2	NL 20287-
	C1	202 329 15 Z	BOLT	2	NL 20001-NL 20286

FIG. M1510-01A0A COUNTER WEIGHT

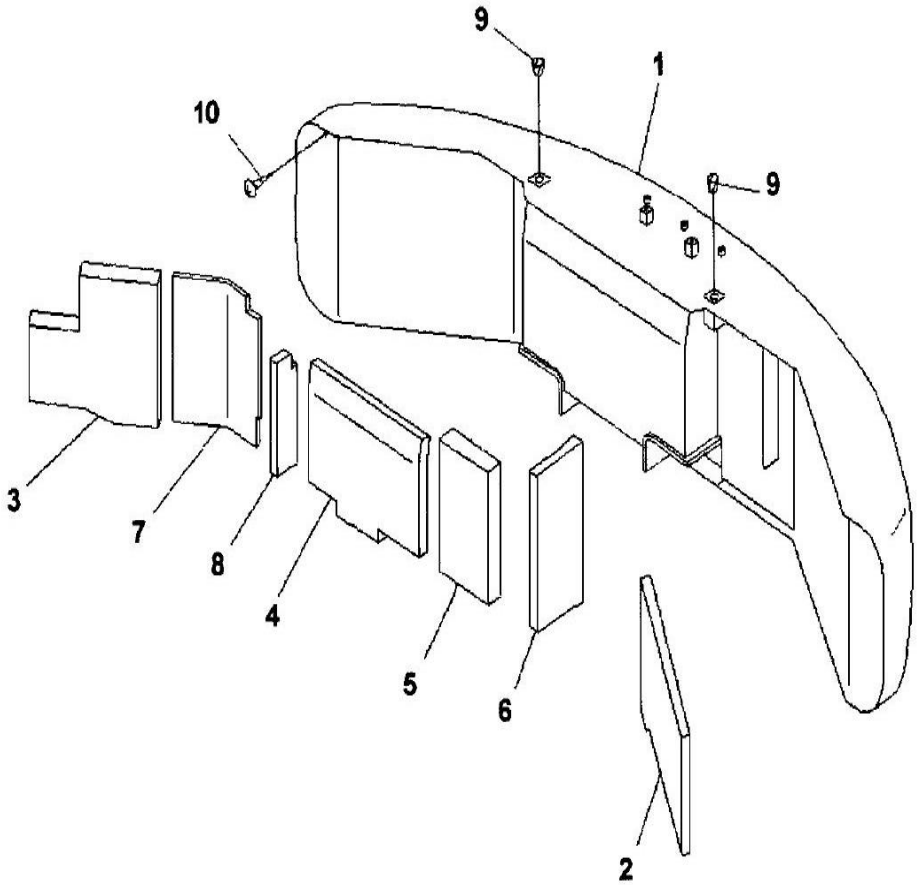

Index	Code	Part Number	Description	Qty	Serial No.
1		201-46-N1421	WEIGHT ASSY, COUNTER	1	NL 20934-
	C1	201-46-N1420	WEIGHT ASSY, COUNTER	1	NL 20001-NL 20933
		201-46-N1181	• WEIGHT, COUNTER	1	NL 20934-
2	C1	201-46-N1640	• SHEET	1	NL 20001-NL 20144
3	C1	201-46-N1680	• SHEET	1	NL 20001-NL 20144
4	C1	201-46-N1660	• SHEET	1	NL 20001-NL 20144
5	C1	201-46-N1710	• SHEET	1	NL 20001-NL 20144
6		201-46-N1650	• SHEET	1	NL 20001-
7	C1	201-46-N1670	• SHEET	1	NL 20001-NL 20144
8	C1	201-46-N1690	• SHEET	1	NL 20001-NL 20144
9		201-46-N2050	CAP	2	NL 20196-
	C1	07049-02025	PLUG	2	NL 20001-NL 20195
10		01370-00508	SCREW	1	NL 20001-

PC71-7

FIG. M1510-02A0 COUNTER WEIGHT-HOOK(TUNNEL SPEC)

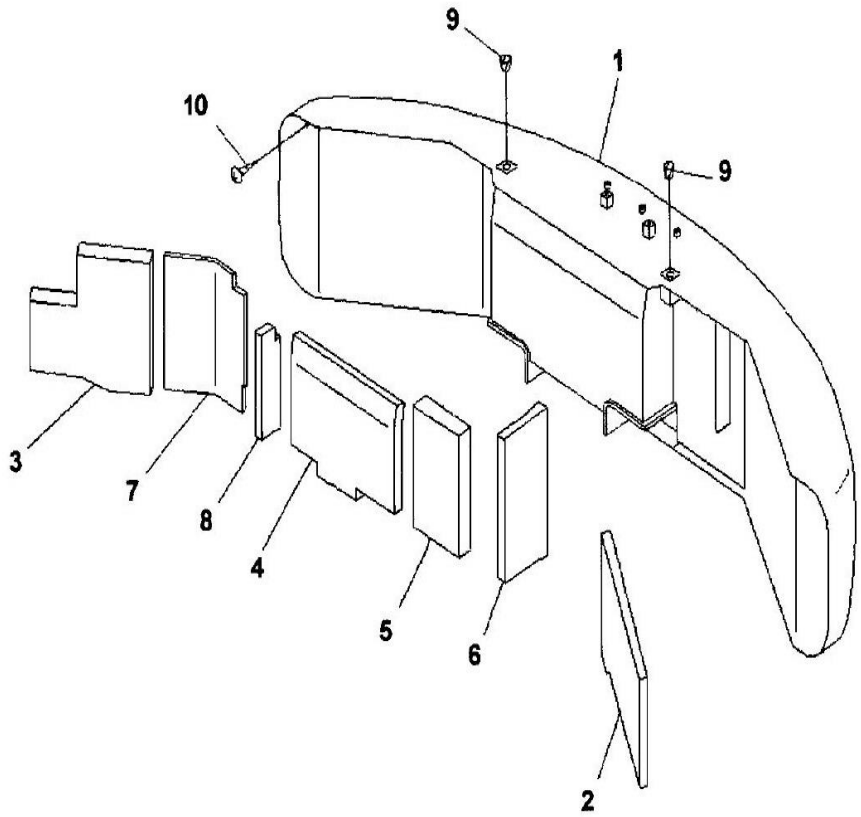

Index	Code	Part Number	Description	Qty	Serial No.
		201-46-N2000	WEIGHT ASSY, COUNTER	1	N220001-
1		201-46-N1751	• WEIGHT, COUNTER	1	N220001-
2	C1	201-46-N1640	• SHEET	1	NL 20001-NL 20144
3	C1	201-46-N1680	• SHEET	1	NL 20001-NL 20144
4	C1	201-46-N1660	• SHEET	1	NL 20001-NL 20144
5	C1	201-46-N1710	• SHEET	1	NL 20001-NL 20144
6		201-46-N1650	• SHEET	1	NL 20001-
7	C1	201-46-N1670	• SHEET	1	NL 20001-NL 20144
8	C1	201-46-N1690	• SHEET	1	NL 20001-NL 20144
9		201-46-N2050	CAP	2	NL 20196-
	C1	07049-02025	PLUG.....	2	NL 20001-NL 20195
10		01370-00508	SCREW	1	NL 20001-

PC71-7

FIG. M1520-01A0 COUNTER WEIGHT MOUNTING

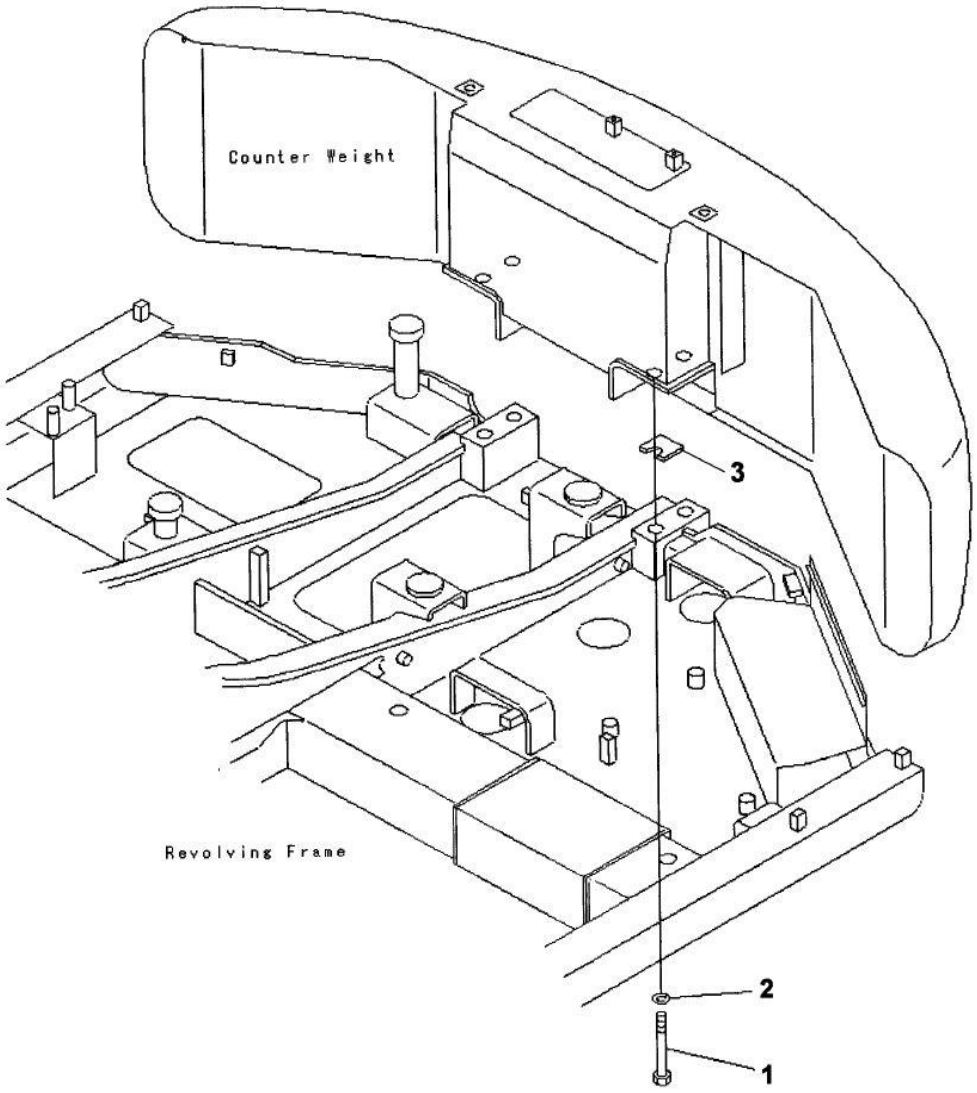

Index	Code	Part Number	Description	Qty	Serial No.
1		362-46-N1121	BOLT	4	NL 21850-
	C1	362-46-N1120	BOLT	4	NL 20001-NL 21849
2		154-30-51460	WASHER	4	NL 20001-
3		201-46-N1610	PLATE	2	NL 20001-

PC71-7

FIG. M1810-01A1A UNDER COVER (STRENGTH TYPE)

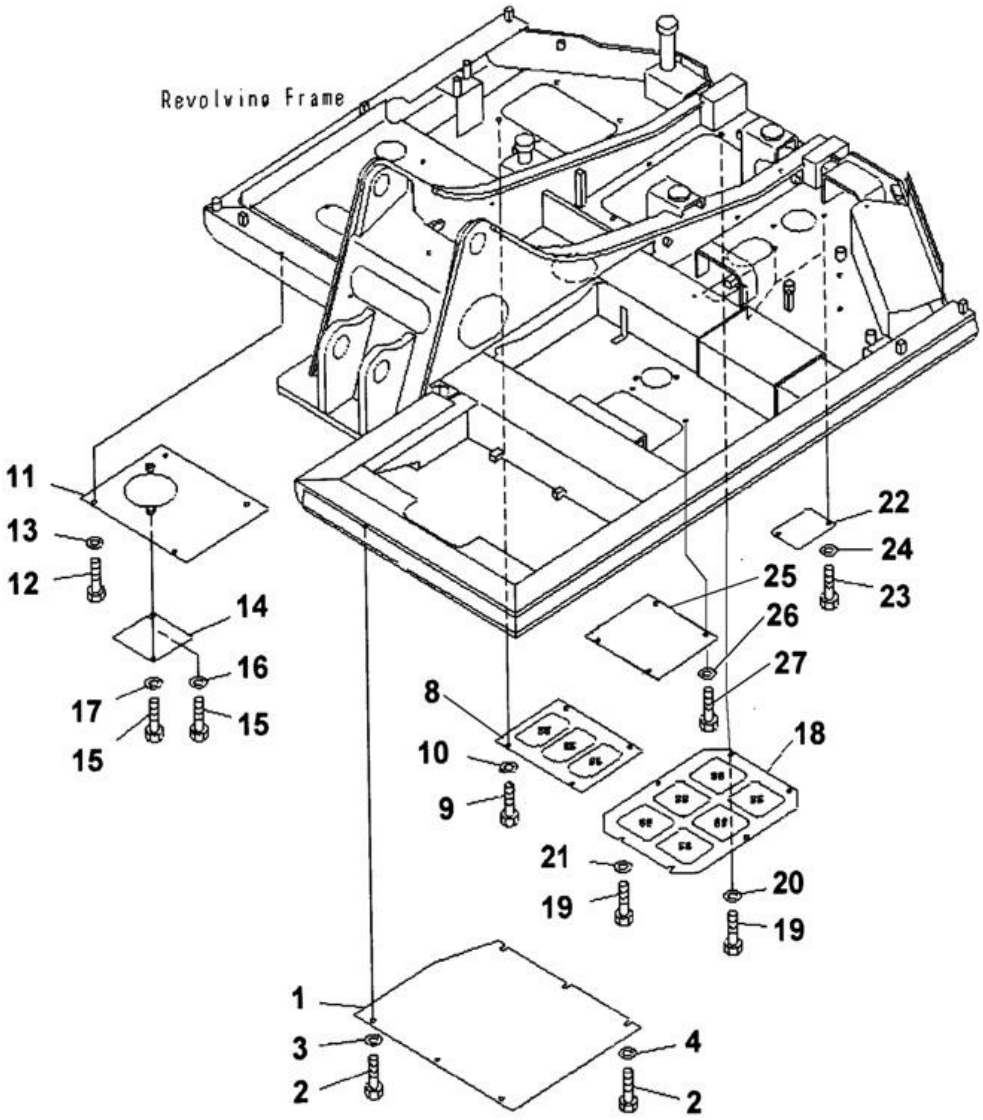

Index	Code	Part Number	Description	Qty	Serial No.
1		201-54-N3660	COVER	1	NL 22655-
	C1	201-54-N3180	COVER	1	NL 20786-NL 22654
	C1	201-54-N3050	COVER	1	NL 20288-NL 20785
	C1	201-54-71781	COVER	1	NL 20001-NL 20287
2		01010-81025	BOLT	6	NL 20001-
3		01643-31032	WASHER	3	NL 20001-
4		203-54-56970	WASHER	3	NL 20001-
8		201-54-72321	COVER	1	NL 20288-
	C1	201-54-72340	COVER	1	NL 20001-NL20287
9		01010-81025	BOLT	4	NL 20001-
10		01643-31032	WASHER	4	NL 20001-
11		201-54-N3070	COVER	1	NL 20288-
	C1	201-54-75710	COVER	1	NL 20001-NL20287
12		01010-81025	BOLT	4	NL 20001-
13		01643-31032	WASHER	4	NL 20001-
14		201-54-N3020	COVER	1	NL 20288-
	C1	201-54-71490	COVER	1	NL 20001-NL 20287
15		01010-81025	BOLT	2	NL 20001-
16		203-54-56970	WASHER	1	NL 20001-
17		01643-31032	WASHER	1	NL 20001-
18		201-54-N3060	COVER	1	NL 20288-
	C1	201-54-75420	COVER	1	NL 20001-NL 20287
19		01010-81025	BOLT	6	NL 20001-
20		01643-31032	WASHER	4	NL 20001-
21		203-54-56970	WASHER	2	NL 20001-
22		201-54-N3670	COVER	1	NL 22674-
	C1	201-54-71792	COVER	1	NL 20001-NL 22673
23		01010-81025	BOLT	2	NL 20001-
24		01643-31032	WASHER	2	NL 20001-
25		201-910-N210	COVER	1	NL 22481-
	C1	201-910-N150	COVER	1	NL 20288-NL 22480
	C1	201-910-7481	COVER	1	NL 20142-NL 20287
26		01643-31032	WASHER	4	NL 20142-
27		01010-81025	BOLT	4	NL 20142-

PC71-7

SWING CIRCLE & RELATED PARTS

PC71-7

FIG. N1110-01A0 SWING CIRCLE

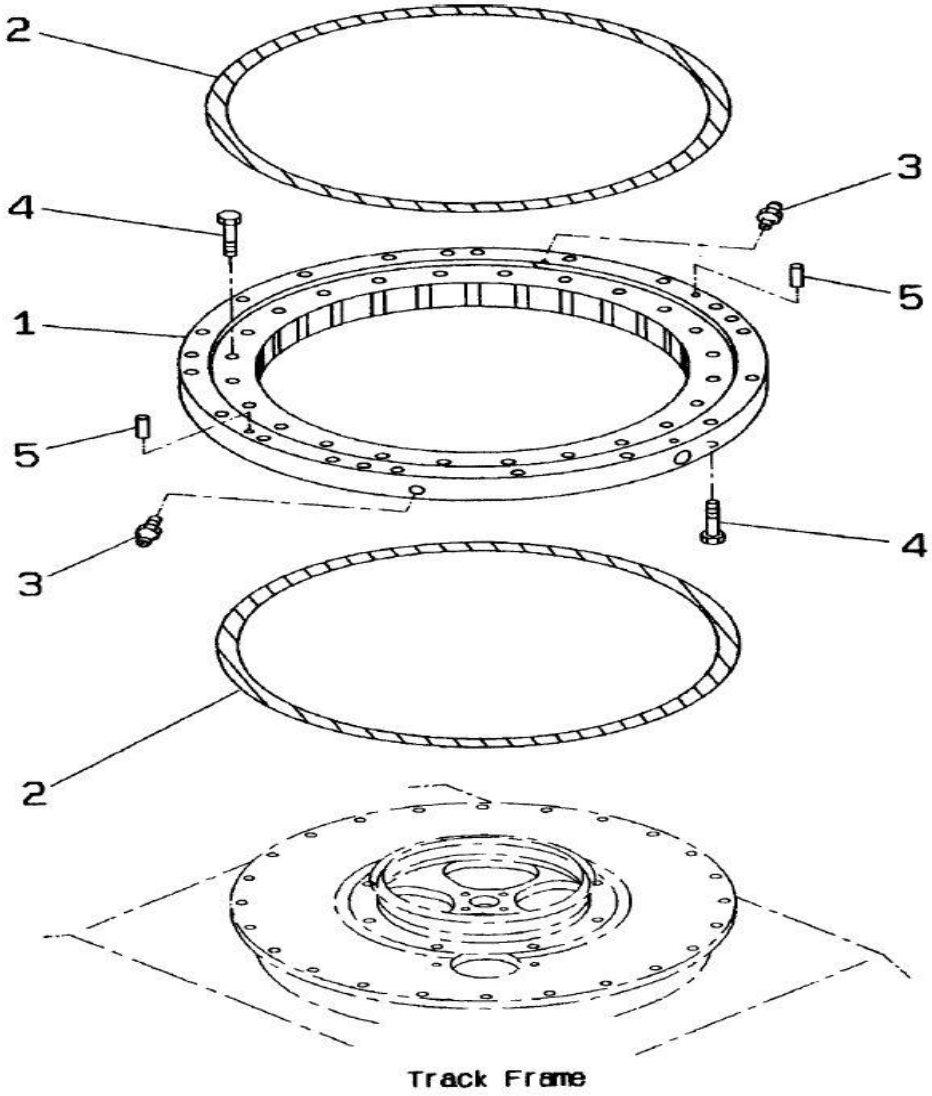

Index	Code	Part Number	Description	Qty	Serial No.
1		201-25-72102	CIRCLE, SWING	1	NL 22786-
	C1	201-25-N1160	CIRCLE, SWING	1	NL 22757-NL 22785
	C1	201-25-72102	CIRCLE, SWING	1	NL 20001-NL 22756
2		201-25-72110	• SEAL, RING	2	NL 20001-
3		07020-00000	• FITTING, GREASE	2	NL 20001-
4		01010-81680	BOLT	46	NL 21510-
	C1	205 338 12 L	BOLT	46	NL 20001-NL 21509
5		04020-01638	PIN, DOWEL	2	NL 20001-

PC71-7

FIG. N1210-01A0 SWING MACHINERY

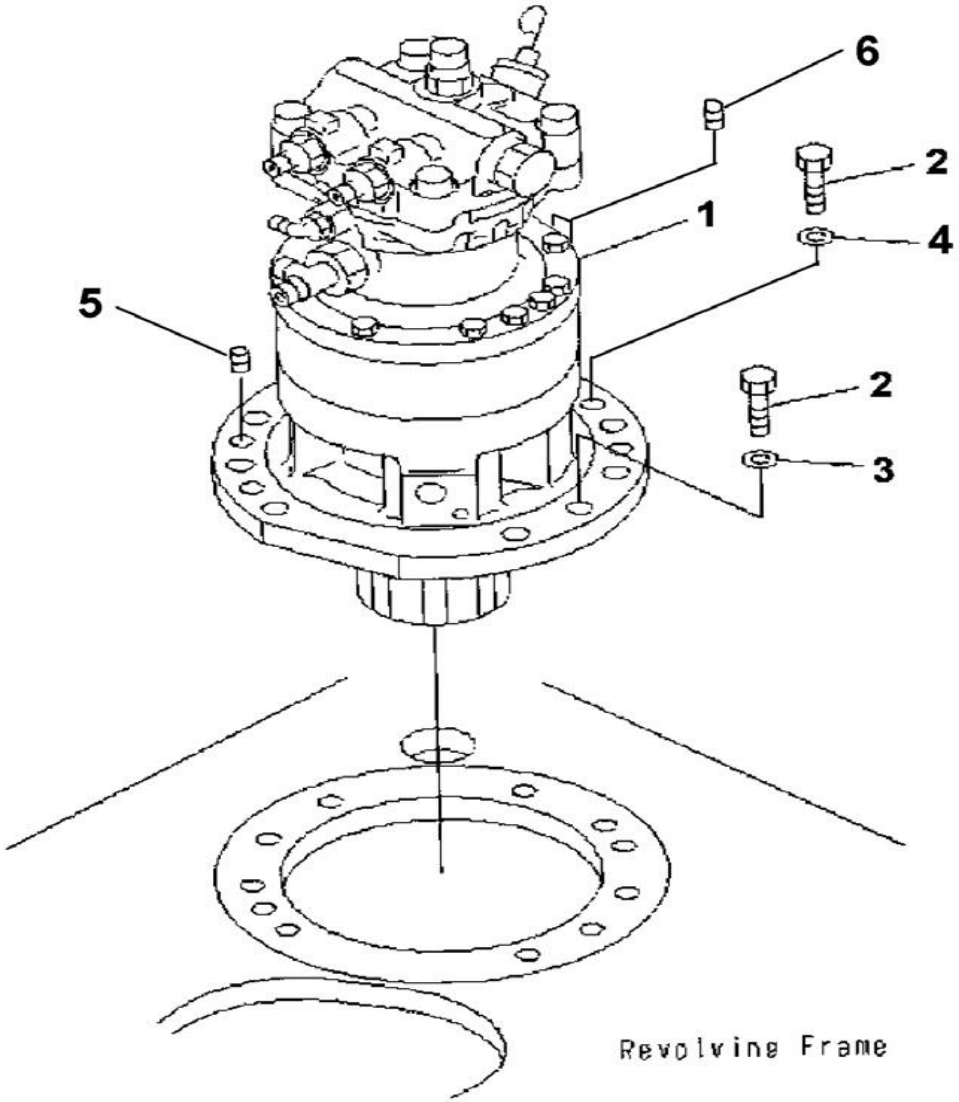

Index	Code	Part Number	Description	Qty	Serial No.
1		(201-26-N1130)	SWING MACHINERY	1	NL 20991-
	C1	(201-26-N1120)	SWING MACHINERY	1	NL 20312-NL 20990
	C1	(201-26-00120)	SWING MACHINERY	1	NL 20001-NL 20311
2		01010-81645	BOLT	10	NL 21154-
	C1	205 338 11 K	BOLT	8	NL 20001-NL 21153
3		01643-31645	WASHER	9	NL 21154-
	C1	01643-31645	WASHER	8	NL 20001-NL 21153
4		201-26-N1150	WASHER	1	NL 21154-
5		07049-01418	PLUG	2	NL 21070-
6		07049-02025	PLUG	2	NL 21070-

FIG. N1210-51A0 SWING MACHINERY

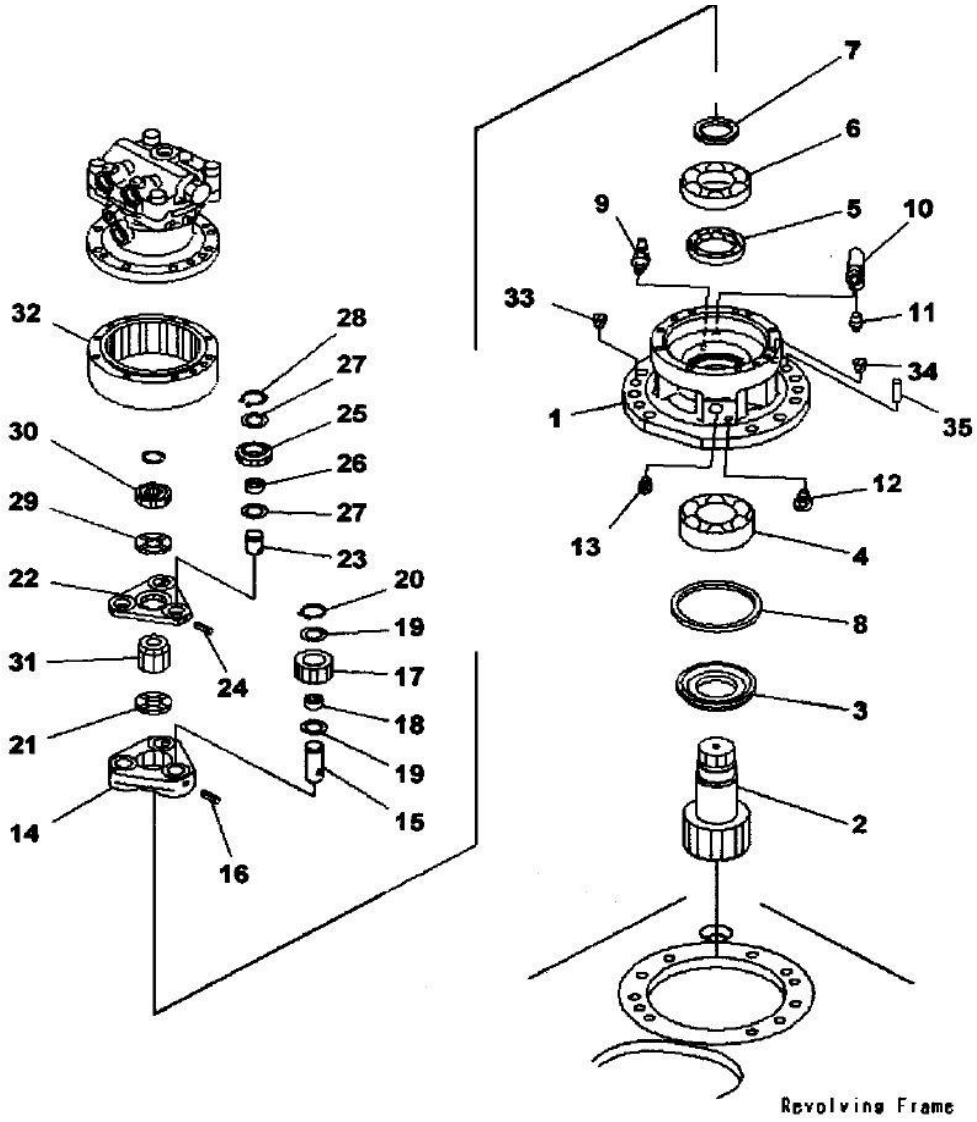

Index	Code	Part Number	Description	Qty	Serial No.
1		201-26-N1130	SWING MACHINERY A	1	NL 20991-
	C1	201-26-N1120	SWING MACHINERY A	1	NL 20312-NL 20990
	C1	201-26-00120	SWING MACHINERY A	1	NL 20001-NL 20311
		201-26-N1140	• CASE	1	N220001-
	C1	201-26-71113	• CASE	1	NL 20001-N201404
2		201-26-71140	• SHAFT	1	NL 20001-
3		201-26-71261	• PLATE	1	NL 20001-
4		201-26-71210	• BEARING	1	NL 20001-
5		07012-00065	• SEAL, OIL	1	NL 20001-
6		201-26-62320	• BEARING	1	NL 20001-
7		201-26-71250	• SPACER	1	NL 20001-
8		07145-00125	• SEAL, OIL	1	NL 20001-
9		07020-00900	• FITTING, GREASE	1	NL 20001-
10		201-26-62420	• PIPE	1	NL 20001-
11		07042-30312	• PLUG	1	NL 20001-
12		07029-00000	• VALVE	1	NL 20001-
13		07042-00415	• PLUG	1	NL 20001-
14		201-26-71130	• CARRIER	1	NL 20001-
15		201-26-71230	• SHAFT	3	NL 20001-
16		20S-26-71250	• PIN	3	NL 20001-
17		201-26-71180	• GEAR	3	NL 20001-
18		201-26-71290	• BEARING	3	NL 20001-
19		201-26-71270	• WASHER, THRUST	6	NL 20001-
20		04064-02512	• RING, SNAP	3	NL 20001-
21		201-26-71240	• WASHER, THRUST	1	NL 20001-
22		201-26-71121	• CARRIER	1	NL 20001-
23		201-26-71220	• SHAFT	3	NL 20001-
24		20S-26-71250	• PIN	3	NL 20001-
25		201-26-71160	• GEAR	3	NL 20001-
26		424-15-12580	• BEARING	3	NL 20001-
27		201-26-71270	• WASHER, THRUST	6	NL 20001-
28		04064-02512	• RING, SNAP	3	NL 20001-
29		201-26-71240	• WASHER, THRUST	1	NL 20001-
30		201-26-71150	• GEAR	1	NL 20001-

PC71-7

FIG. N1210-51A0 SWING MACHINERY

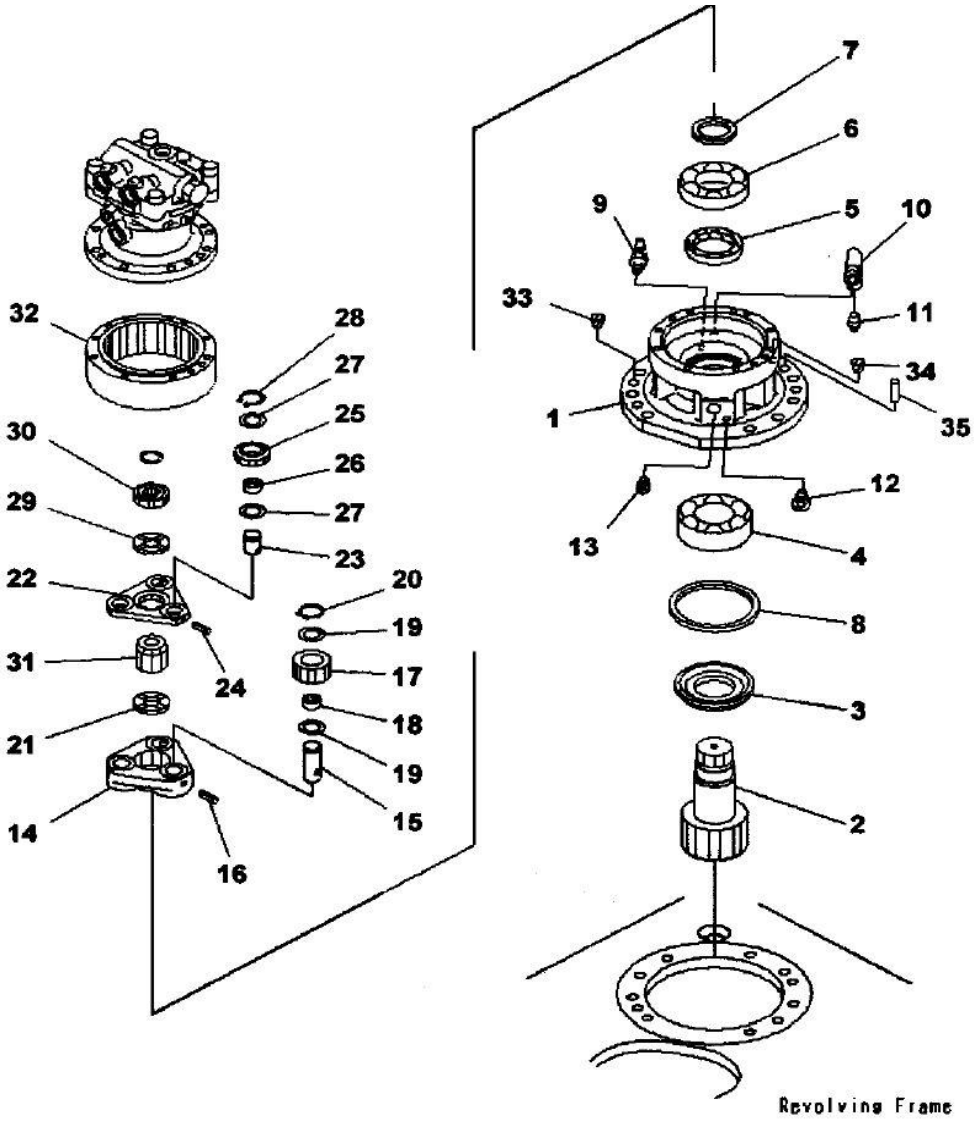

Index	Code	Part Number	Description	Qty	Serial No.
31		201-26-71171	• GEAR	1	NL 20001-
32		201-26-71190	• RING, GEAR	1	NL 20001-
33		07049-01620	• PLUG	2	NL 20001-
34		07049-02025	• PLUG	4	NL 20001-
35		04020-01638	• PIN	2	NL 20001-

PC71-7

FIG. N1210-052A0 SWING MACHINERY (RELATED PARTS)

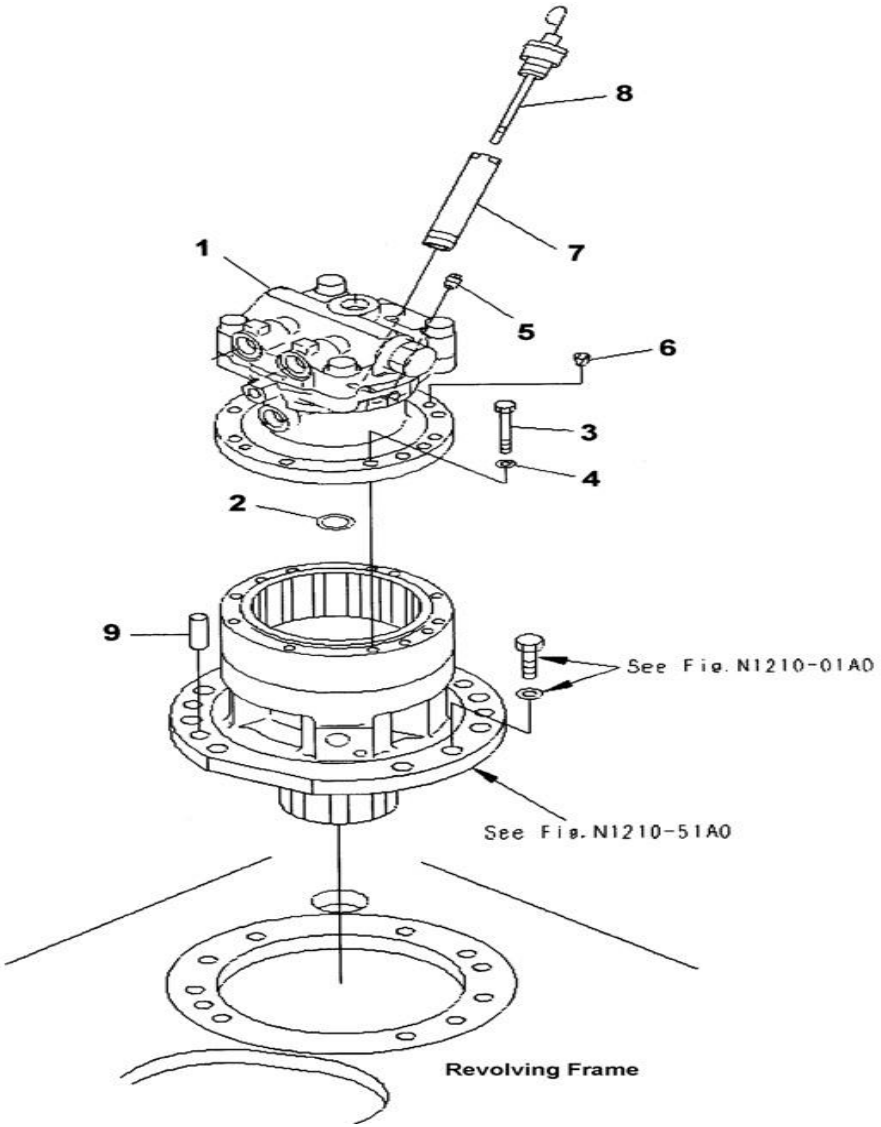

Index	Code	Part Number	Description	Qty	Serial No.
1		(201-26-N1130)	SWING MACHINERY A	1	NL 20991 -
	C1	(201-26-N1120)	SWING MACHINERY A	1	NL 20312 -NL20990
			THESE ASSY CONSISTS OF ALL.....		
			PARTS SHOWN IN FIGS N1210-51A0..		
			AND N1210-52A0.....		
		(708-7T-N1120)	• MOTOR ASSY, SWING	1	NL 20991 -
	C1	(708-7T-N1110)	• MOTOR ASSY, SWING	1	NL 20312 -NL20990
2		201-26-62190	• RING, SNAP	1	NL 20001 -
3		01011-81000	• BOLT	12	NL 20001 -
4		01643-31032	• WASHER	12	NL 20001 -
5		07042-30108	• PLUG	1	NL 20001 -
6		07049-01012	• PLUG	2	NL 20001 -
7		203-26-61350	• FILLER	1	NL 20001 -
8		201-26-71280	• GAUGE, OIL LEVEL	1	NL 20001 -
9		04020-01638	• PIN	2	NL 20001 -

FIG. N1310-01A1A SWIVEL JOINT (MOUNTING PARTS)(BLADE SPEC.)

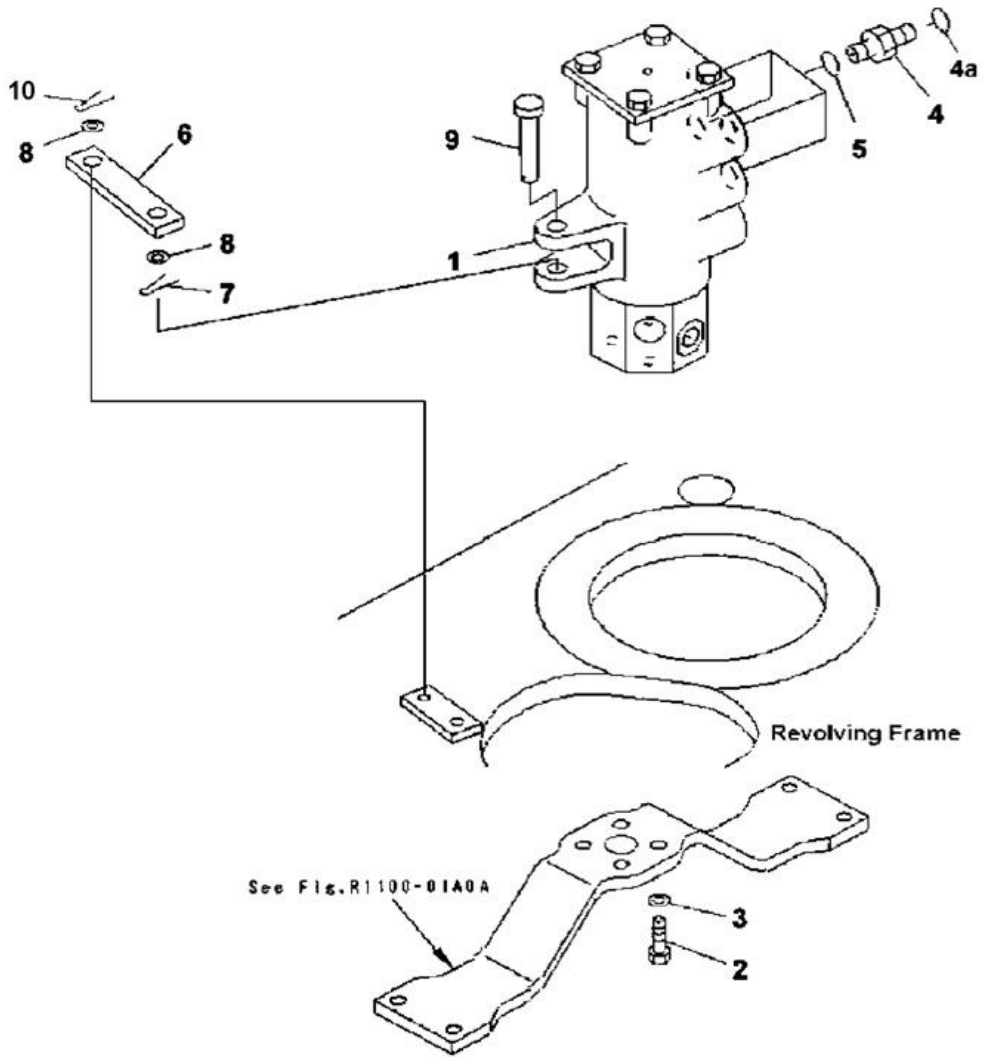

Index	Code	Part Number	Description	Qty	Serial No.
1		(703-07-23230)	SWIVEL JOINT ASS'Y	1	NL 20001-
2		01010-81235	BOLT	4	NL 20178-
3		01643-31232	WASHER	4	NL 20001-
4		02781-00522	UNION	4	NL 20991-
4a		02896-11015	O-RING	4	NL 20991-
5		07002-12434	O-RING	4	NL 20001-
6		21W-60-31340	PLATE	1	NL 20001-
7		04050-14025	PIN	1	NL 20001-
8		01640-21626	WASHER	2	NL 20001-
9		21X-60-11130	PIN	1	NL 20001-
10		04052-11664	PIN	1	NL 21266-

TRAVEL LOWER PIPING

PC71-7

FIG. P1120-01A1A TRAVEL PIPING (BLADE SPEC.)

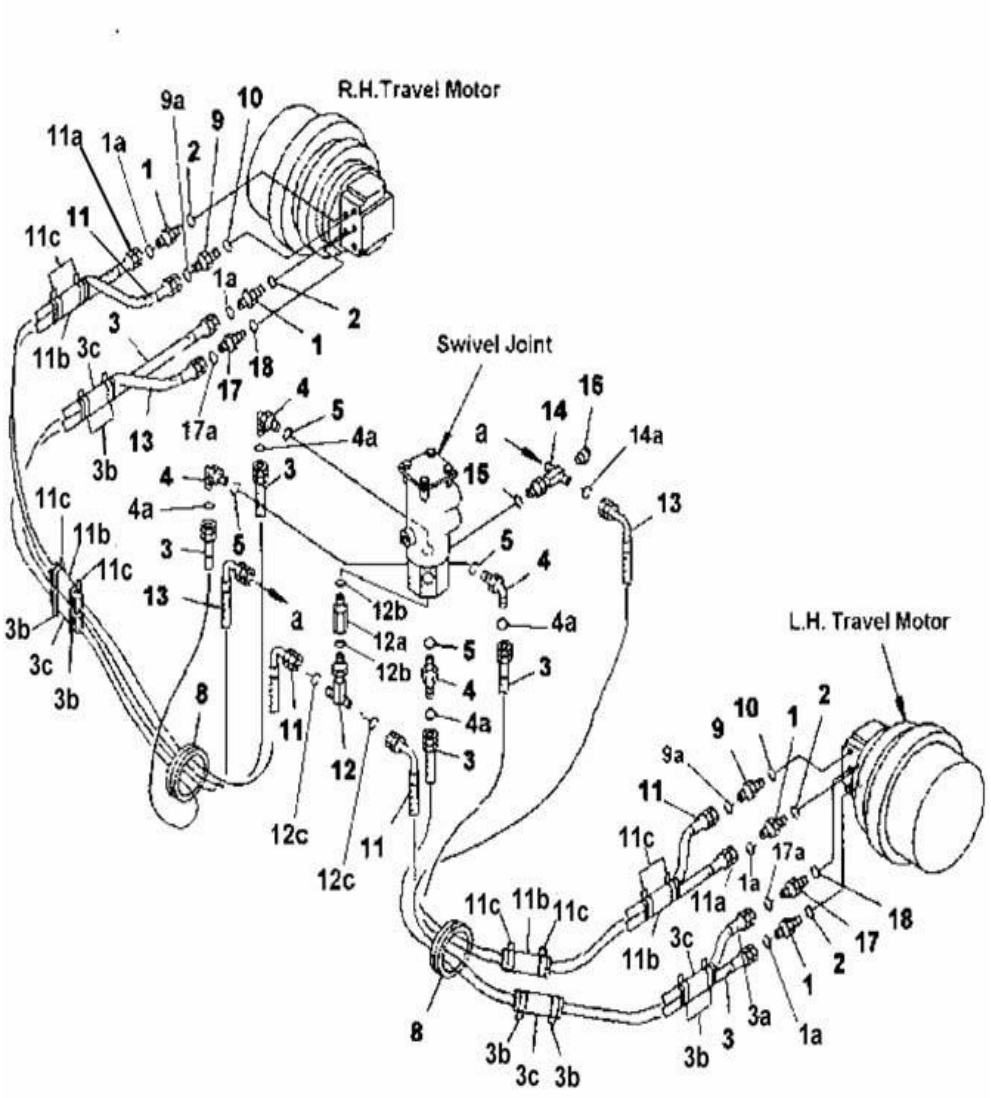

Index	Code	Part Number	Description	Qty	Serial No.
1		02781-00522	UNION	4	NL 20991 -
1a		02896-11015	O-RING	1	NL 20991 -
2		07002-12434	O-RING	4	NL 20001 -
		201-62-N2381	HOSE ASSY	2	N220001-
	C1	201-62-N2380	HOSE ASSY	2	NL 20188 -N201404
3		201-62-N3091	• HOSE	1	N220001-
	C1	201-62-N3090	• HOSE	1	NL 20991 -N201404
3a		201-62-N3081	• HOSE	1	N220001-
	C1	201-62-N3080	• HOSE	1	NL 20991 -N201404
3b		08034-20536	• BAND	4	N220001-
	C1	08034-00823	• BAND	4	NL 20991 -N201404
3c		201-62-N3770	• COVER	2	N220001-
	C1	203-62-41150	• COVER	2	NL 20991 -N201404
4		02782-10522	ELBOW	4	NL 20991 -
4a		02896-11015	O-RING	4	NL 20991 -
5		07002-12434	O-RING	4	NL 20001 -
8		201-62-66140	GROMMET	2	NL 20001 -
9		02781-00315	UNION	2	NL 20001 -
9a		02896-11009	O-RING	1	NL 20991 -
10		07002-12034	O-RING	2	NL 20991 -
		201-62-N2391	HOSE ASSY	2	N220001-
	C1	201-62-N2390	HOSE ASSY	2	NL 20188 -N201404
11		201-62-N3111	• HOSE	1	N220001-
	C1	201-62-N3110	• HOSE	1	NL 20991 -N201404
11a		201-62-N3091	• HOSE	1	N220001-
	C1	201-62-N3090	• HOSE	1	NL 20991 -N201404
11b		201-62-N3770	• COVER	2	N220001-
	C1	203-62-41150	• COVER	2	NL 20188 -N201404
11c		08034-20536	• BAND	4	N220001-
	C1	08034-00823	• BAND	4	NL 20188 -N201404
12		201-62-N2510	TEE	1	NL 20991 -
12a		20Y-62-22160	ADAPTER	1	NL 20991 -
12b		02896-11009	O-RING	2	NL 20001 -
12c		02896-11009	O-RING	2	NL 20001 -

PC71-7

FIG. P1120-01A1A TRAVEL PIPING (BLADE SPEC.)

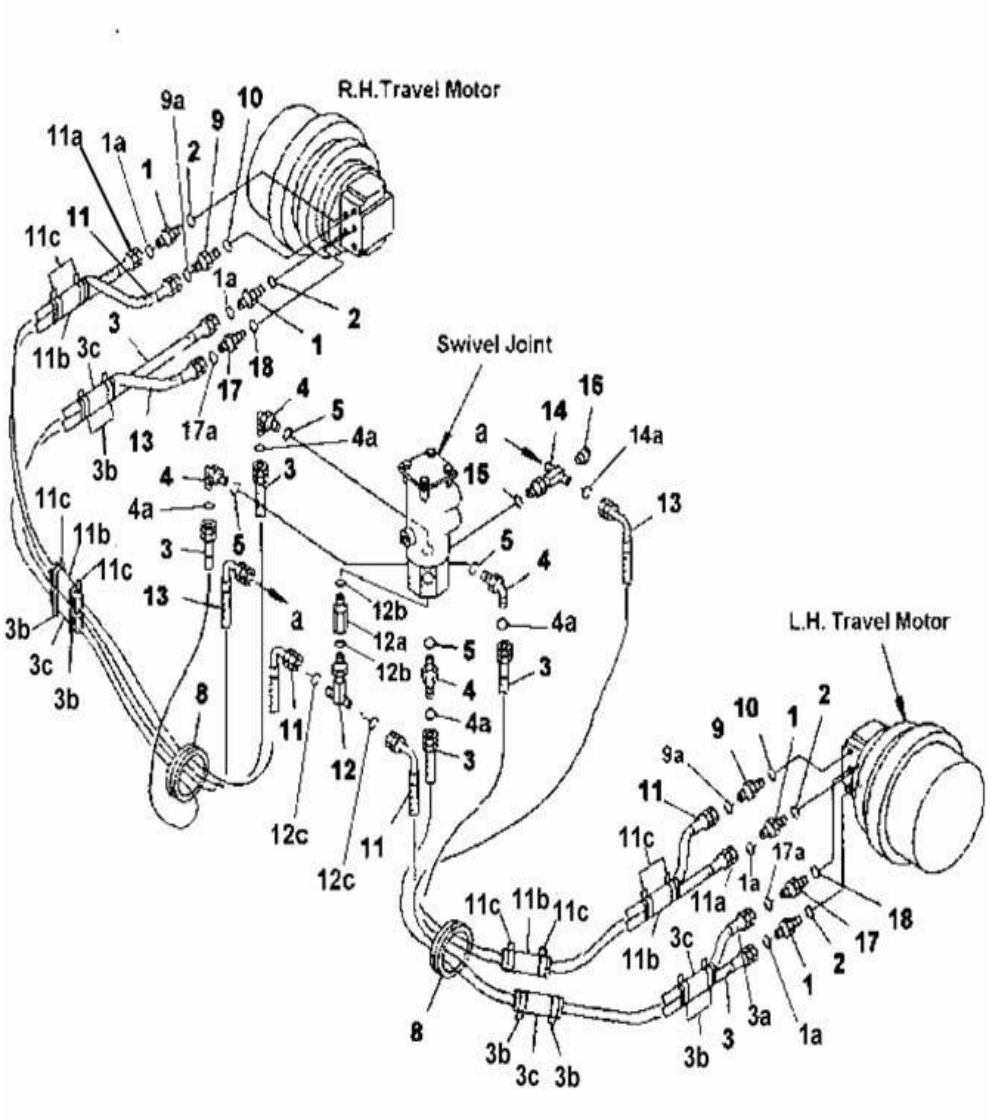

Index	Code	Part Number	Description	Qty	Serial No.
14		20Y-62-N2520	TEE	1	NL 20991 -
14a		02896-11009	O-RING	2	NL 20991 -
15		07002-11423	O-RING	1	NL 20001 -
16		07042-30108	PLUG	1	NL 20001 -
17		02781-0021D	UNION	2	NL 20991 -
17a		02896-11008	O-RING	2	NL 20991 -
18		07002-11423	O-RING	2	NL 20001 -

PC71-7

FIG. P1210-01A0 FINAL DRIVE

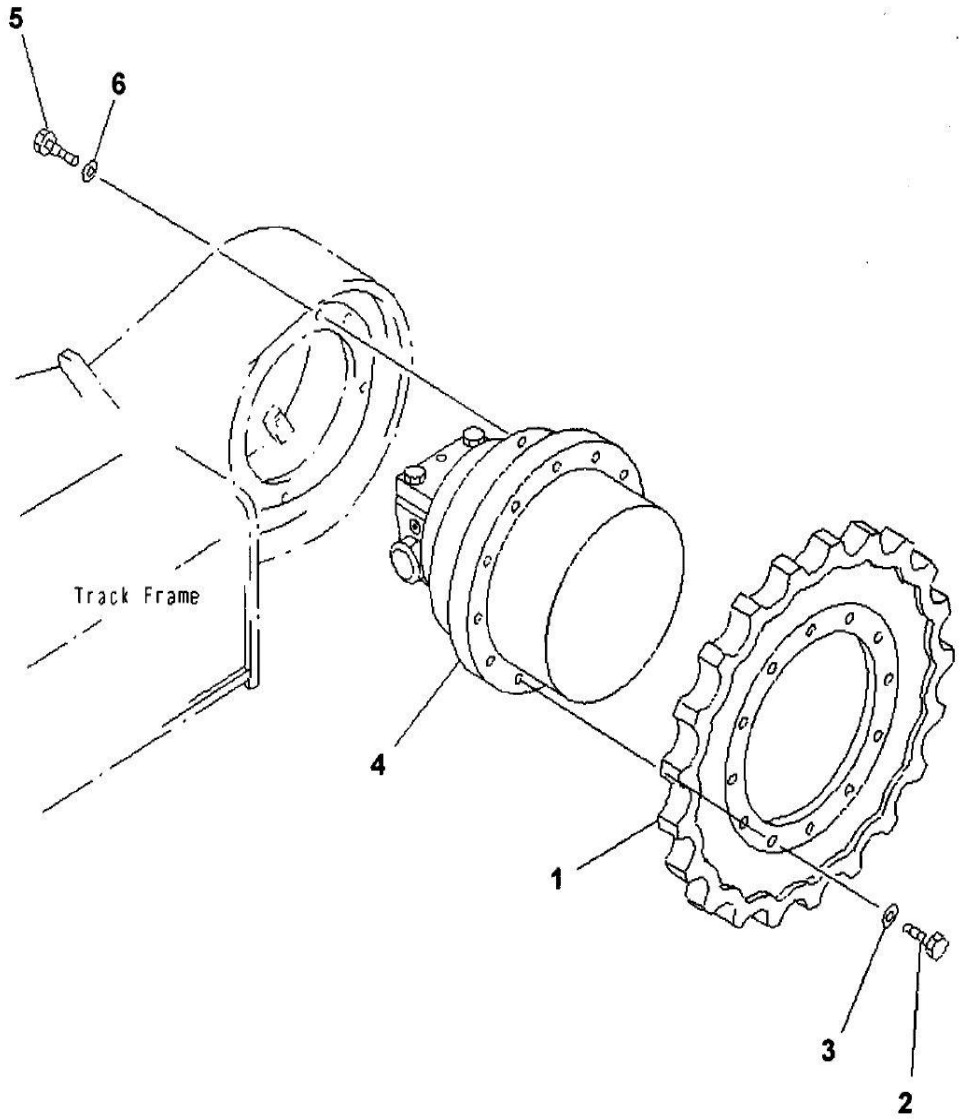

Index	Code	Part Number	Description	Qty	Serial No.
1		21W-27-N1111	SPROCKET	2	NL23045-
	C1	21W-27-N1110	SPROCKET	2	NL 22672-NL23044
	C1	201-27-D1110	SPROCKET	2	NL 22361-NL 22671
	C1	21W-27-11111	SPROCKET	2	NL 20003-NL 22360
2		201-27-61230	BOLT	24	NL 20003-
3		01643-31445	WASHER	24	NL 20003-
4		(201-60-81301)	TRAVEL MOTOR ASS'Y	2	NL 22941-
	C1	(201-60-73900)	TRAVEL MOTOR ASS'Y	2	NL 20319-NL 22940
	C1	(201-60-73601)	TRAVEL MOTOR ASS'Y	2	NL 20189-NL 20318
	C1	(201-60-73600)	TRAVEL MOTOR ASS'Y	2	NL 20003-NL 20188
5		01010-81640	BOLT	24	NL23045-
	C1	01010-61640	BOLT	24	NL 21564-NL23044
	C1	01010-81640	BOLT	24	NL 20003-NL 21563
6		01643-31645	WASHER	24	NL 20003-

FIG. P1240-01A0 BLADE LINE (LOWER)

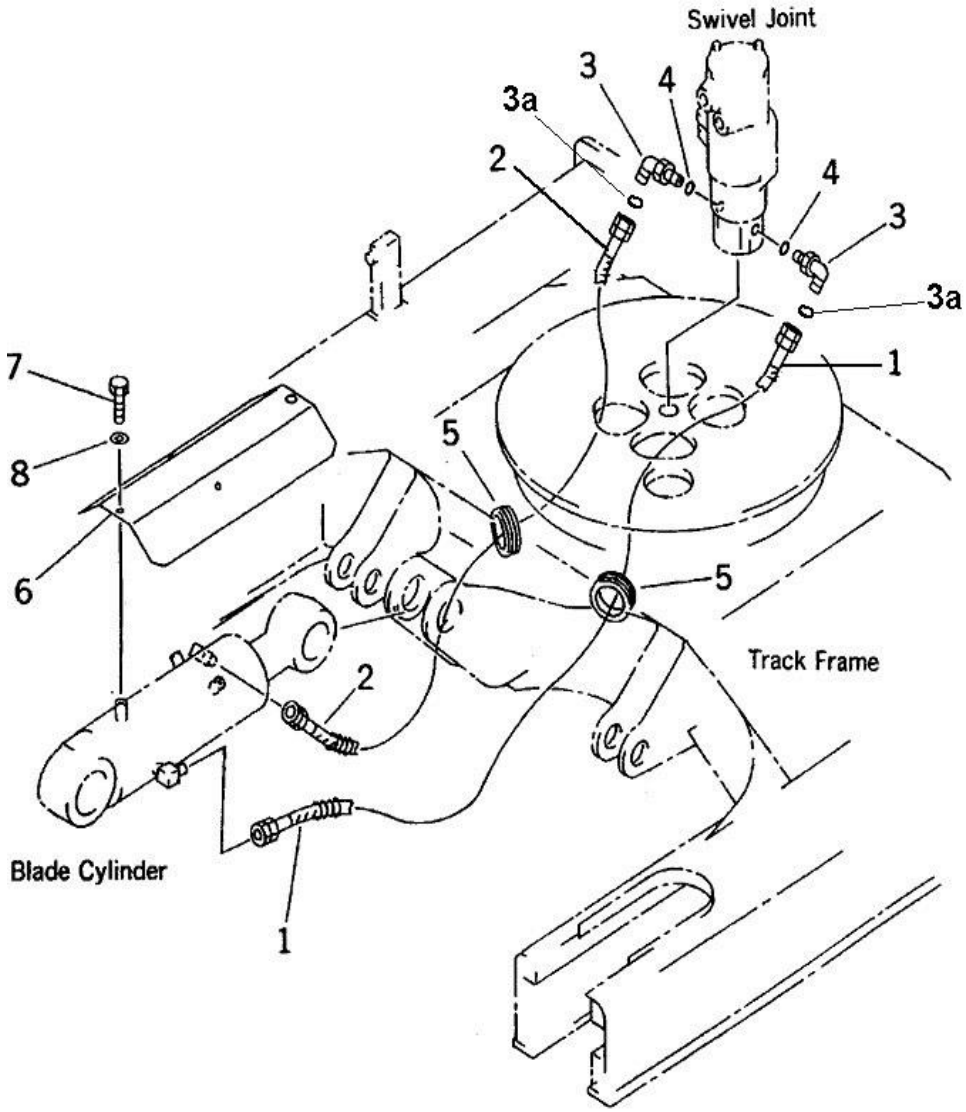

Index	Code	Part Number	Description	Qty	Serial No.
1		201-910-N170	HOSE- 1100 MM	1	NL 20991-
2		201-910-N180	HOSE- 1250 MM	1	NL 20991-
3		201-62-N1790	ELBOW	2	NL 20991-
3a		02896-11012	ELBOW	2	NL 20991-
4		07002-11823	O-RING	2	NL 20001-
5		20U-910-1450	GROMMET	2	NL 20001-
6		21W-71-11210	COVER	1	NL 20001-
7		01010-81020	BOLT	3	NL 20001-
8		01643-31032	WASHER	3	NL 20001-

FIG. P1240-N1A0 BLADE BLIND LINE

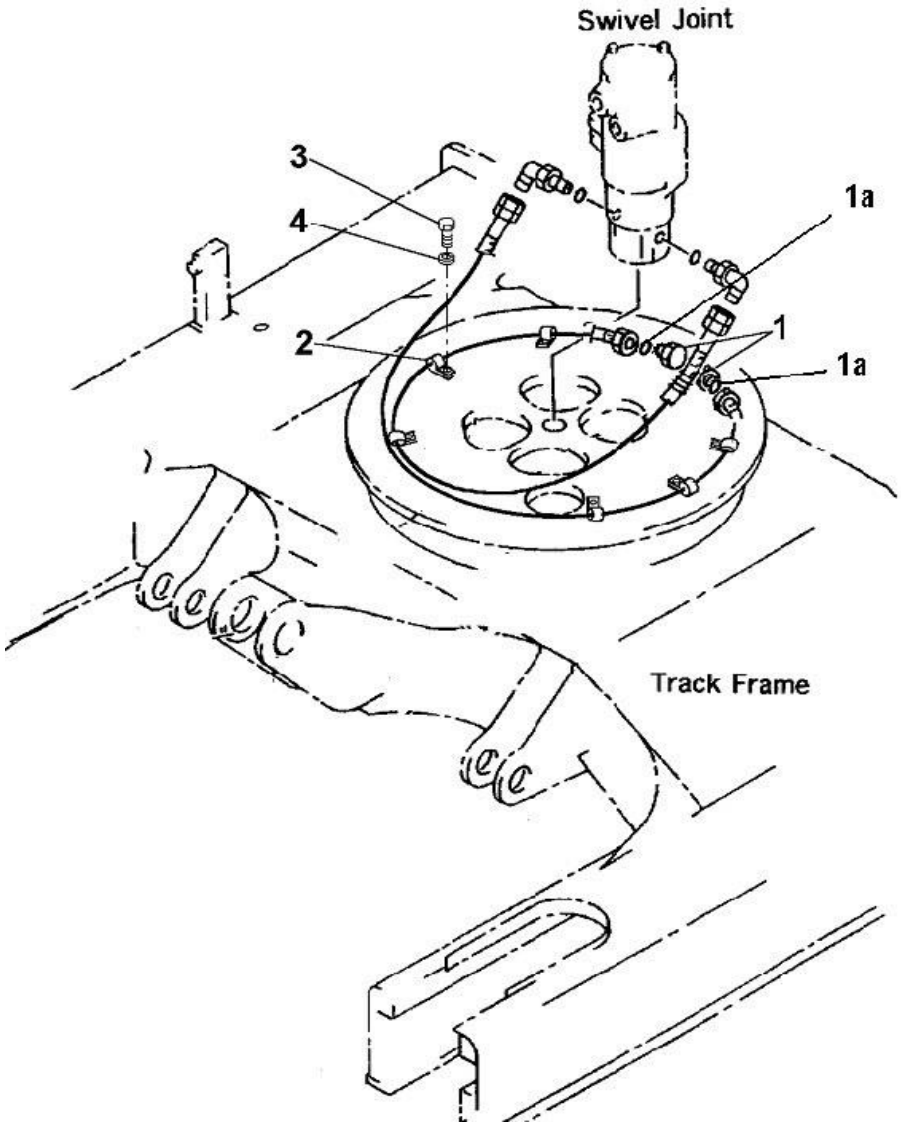

Index	Code	Part Number	Description	Qty	Serial No.
1		07376-70422	PLUG	2	NL 20991-
1a		02896-11012	O-RING	2	NL 20991-
2		04434-52712	CLIP	6	NL 20001-
3		01010-81225	BOLT	6	NL 20001-
4		01643-31232	WASHER	6	NL 20001-

PC71-7

UNDERCARRIAGE

PC71-7

FIG. R0110-01A0A FRONT IDLER

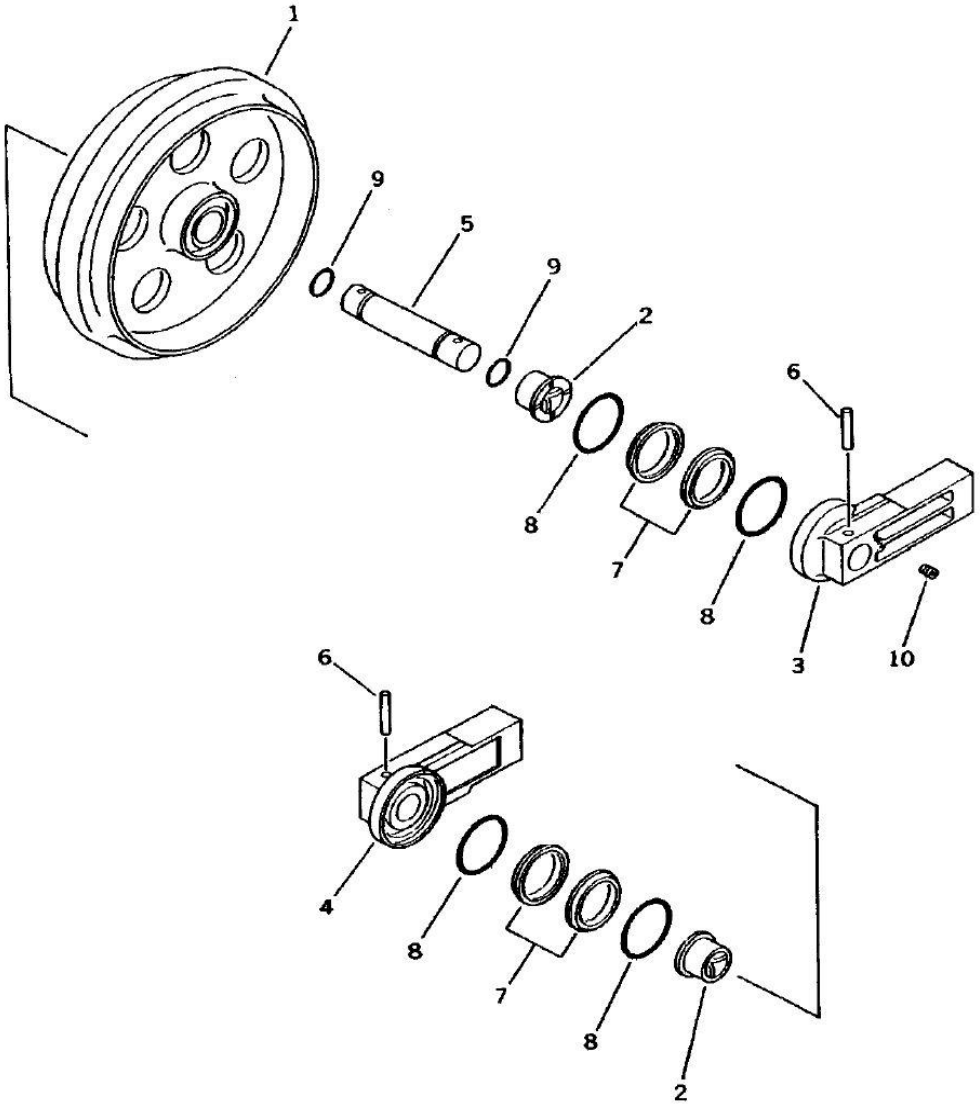

Index	Code	Part Number	Description	Qty	Serial No.
1		21W-30-00080	IDLER ASS'Y	2	NL 20001-
		21W-30-12513	• IDLER	1	NL 20001-
2		21W-30-14540	• BUSHING	2	NL 20001-
3		201-30-52131	• SUPPORT, OUTER	1	NL 20001-
4		201-30-52141	• SUPPORT, INNER	1	NL 20001-
5		201-30-52160	• SHAFT	1	NL 20001-
6		201-30-52180	• PIN	2	NL 20001-
		141-30-00616	• FLOATING SEAL ASS'Y	2	NL 20001-
7		141-30-00623	• • SEAL RING ASS'Y	1	NL 20001-
		#	• • • RING, SEAL	2	NL 20001-
8		141-30-00630	• • O-RING ASS'Y	1	NL 20001-
		#	• • • O-RING	2	NL 20001-
9		07000-03038	• O-RING	2	NL 20001-
10		07043-50108	• PLUG	1	NL 20001-

PC71-7

FIG. R0120-01A0A IDLER CUSHION

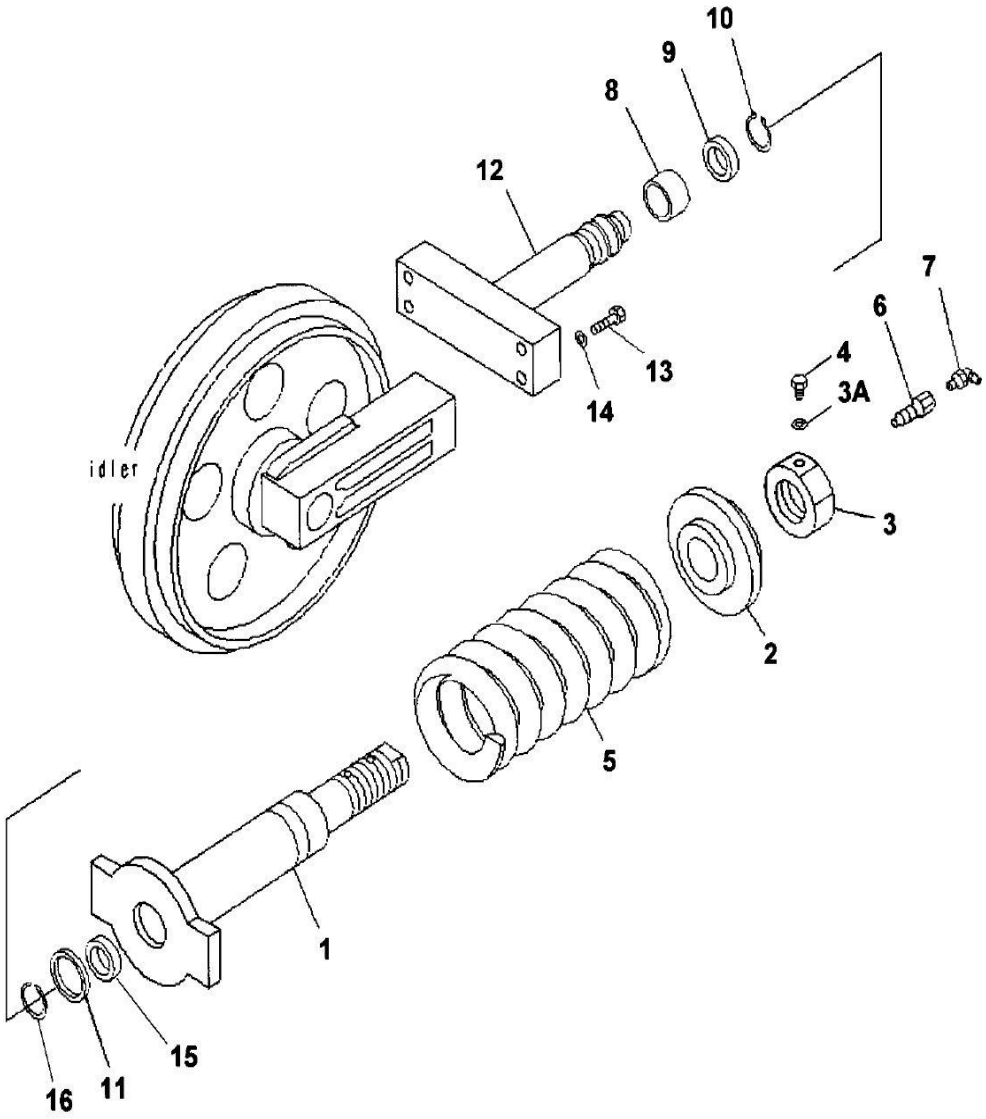

Index	Code	Part Number	Description	Qty	Serial No.
1		201-30-75320	CYLINDER	2	NL 20385-
	C1	201-30-75111	CYLINDER	2	NL 20001-NL 20384
2		201-30-75141	COLLAR	2	NL 20001-
3		21W-30-32620	NUT	2	NL 20001-
3A		01643-31032	WASHER	2	NL 20001-
4		21W-30-32610	BOLT	2	NL 20001-
5		21W-30-41170	SPRING, RECOIL	2	NL 20001-
6		20M-30-31240	VALVE	2	NL 20001-
7		07020-00900	FITTING, GREASE	2	NL 20001-
8		07155-00515	RING, WEAR	2	NL 20001-
9		09370-00050	U-PACKING	2	NL 20001-
10		04064-03515	RING, SNAP	2	NL 20001-
11		707-56-50540	SEAL, DUST	2	NL 20385-
	C1	113-30-24240	SEAL, DUST	2	NL 20001-NL 20384
12		201-30-75310	ROD	2	NL 20385-
	C1	201-30-75132	YOKE	2	NL 20001-NL 20384
13		01010-81475	BOLT	8	NL 20001-
14		01643-31445	WASHER	8	NL 20001-
15		07177-05030	BUSHING	2	NL 20385-
16		201-30-71310	RING	2	NL 20385-

PC71-7

FIG. R0200-0N2A0 TRACK ROLLER

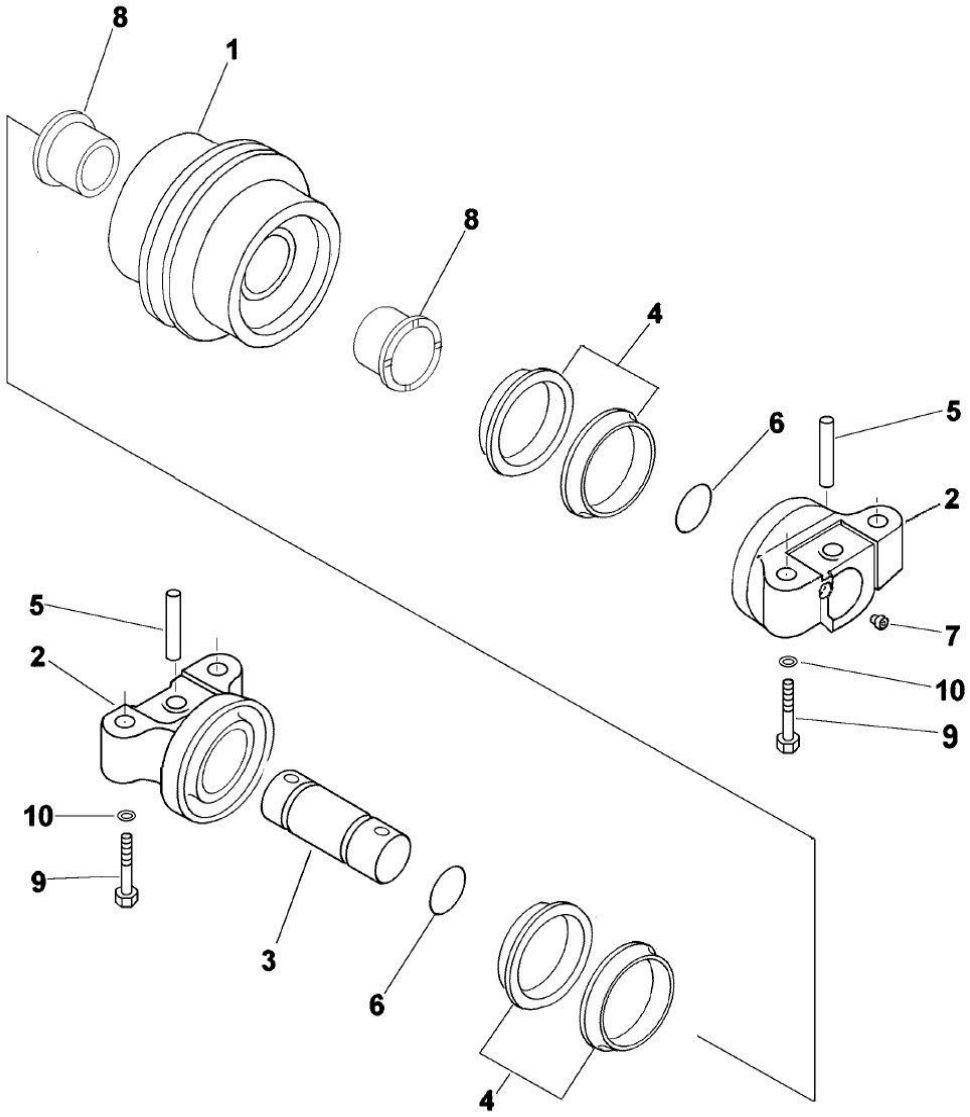

Index	Code	Part Number	Description	Qty	Serial No.
1		201-30-N1880	TRACK ROLLER ASS'Y	10	NL 20001- NL 20924
		201-30-N1930	• ROLLER	1	NL 20255- NL 20924
2		201-30-N1940	• ROLLER END COLLAR	2	NL 20255- NL 20924
3		201-30-N1950	• ROLLER SHAFT	1	NL 20255- NL 20924
4		201-30-N1960	• SEAL GROUP	2	NL 20255- NL 20924
4a		#	• SEAL RING	2	NL 20255- NL 20924
4b		#	• O-RING	2	NL 20255- NL 20924
5		201-30-N1970	• SPRING DOWEL	2	NL 20255- NL 20924
6		201-30-N1980	• SEAL O-RING (SHAFT)	2	NL 20255- NL 20924
7		U 200 374 69	• PLUG	2	NL 20255- NL 20924
8		201-30-N2010	• BRONGE BUSHING	2	NL 20255- NL 20924
9		206 338 54 C	BOLT	40	NL 21509- NL 20924
	C1	01010-81465	BOLT	40	NL 20255-NL 21508
10		01643-31445	WASHER	40	NL 20255- NL 20924

PC71-7

FIG. R0200-0N3A0 TRACK ROLLER

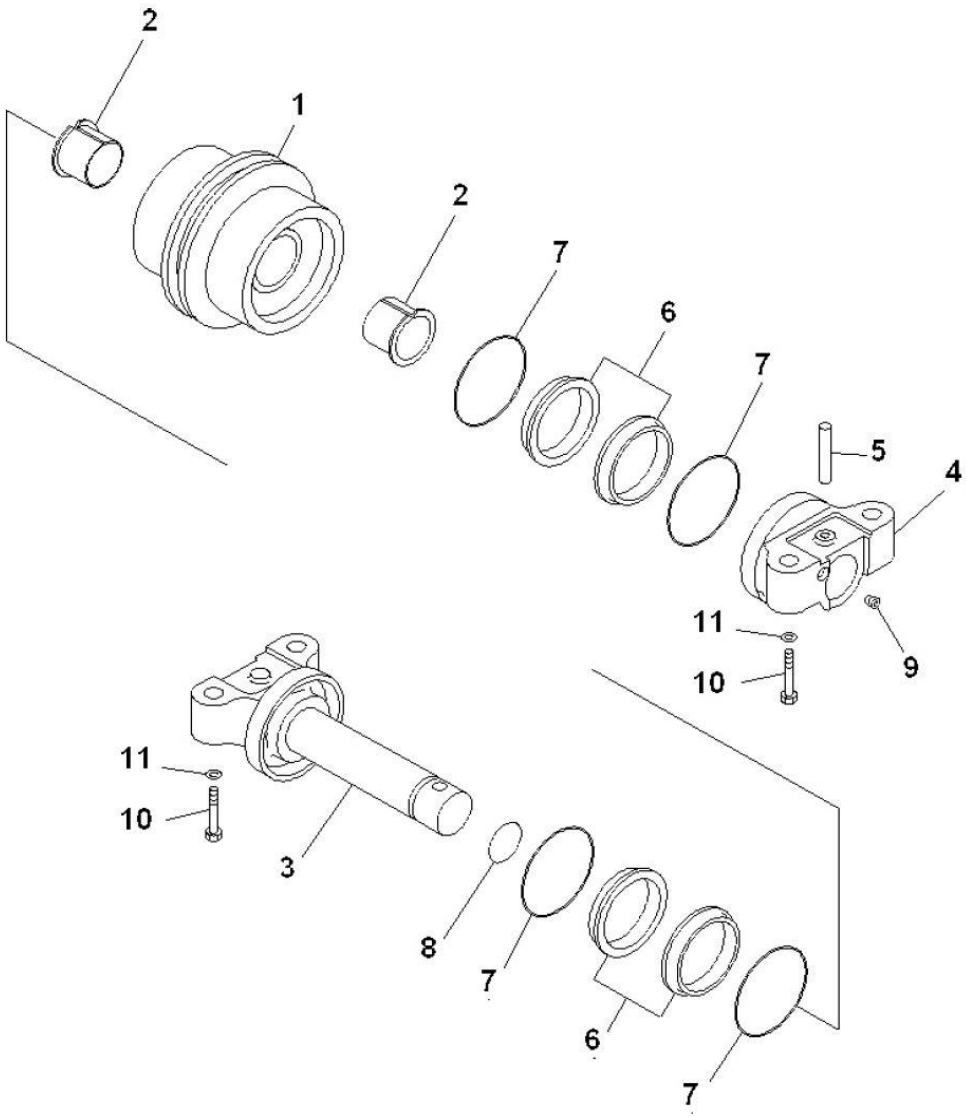

Index	Code	Part Number	Description	Qty	Serial No.
1		201-30-00313	TRACK ROLLER ASSEMBLY	10	NL 21869-
	C1	201-30-00310	TRACK ROLLER ASSEMBLY	10	NL 20925-NL 21868
		201-30-73312	• ROLLER	1	NL 21869-
	C1	201-30-73310	• ROLLER	1	NL 20925-NL 21868
2		201-30-76140	• BUSHING	2	NL 21869-
	C1	201-30-73440	• BUSHING	2	NL 20925-NL 21868
3		201-30-76121	• SHAFT	1	NL 21869-
	C1	201-30-73320	• SHAFT	1	NL 20925-NL 21868
4		201-30-N1890	• COLLAR, OUTER	1	NL 21869-
	C1	201-30-N2020	• COLLAR, OUTER	1	NL 20925-NL 21868
5		201-30-73390	• PIN	1	NL 20925
		201-30-00080	• FLOATING SEAL ASSY	2	NL 20925-
6		#	• • SEAL	2	NL 20925
7		#	• • O-RING	2	NL 20925
8		07000-12035	• O-RING	1	NL 20925
9		20Y-30-16330	• PLUG	1	NL 20925
10		01010-81465	BOLT	40	NL 20925
11		01643-31445	WASHER	40	NL 20925

PC71-7

FIG. R0300-02A0A CARRIER ROLLER

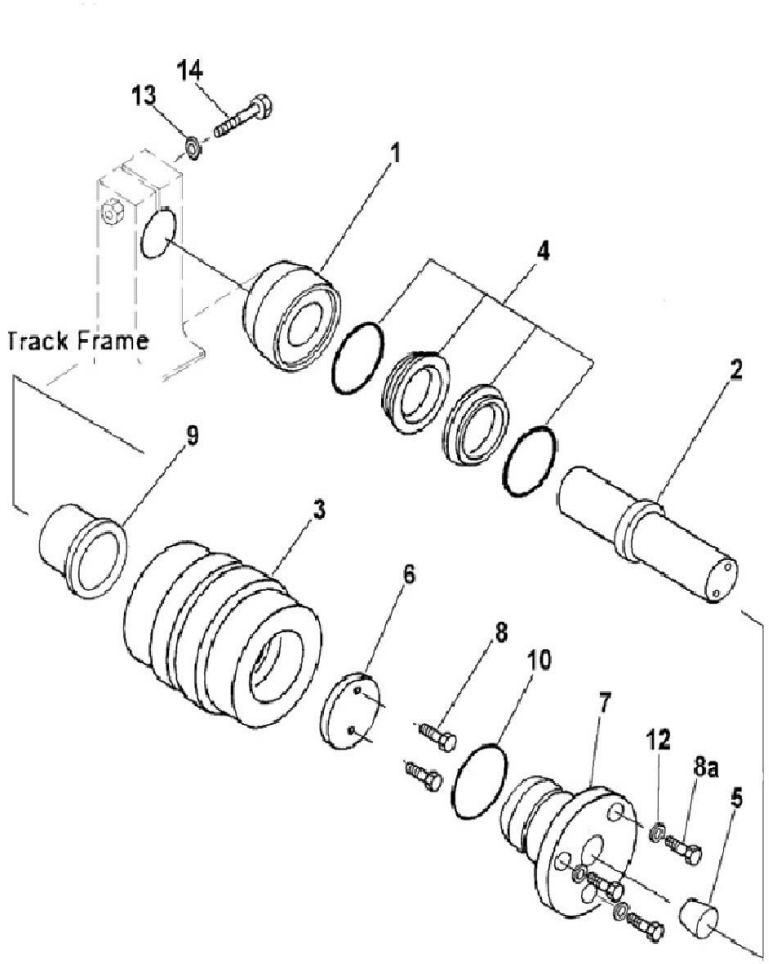

Index	Code	Part Number	Description	Qty	Serial No.
1	C1	201-30-N1890	CARRIER ROLLER ASSEMBLY	2	NL 20255-NL 22834
	C1	201-30-N2020	• END COLLAR	1	NL 20255-NL 22834
2	C1	201-30-N2150	• SHAFT	1	NL 20855-NL 22834
	C1	201-30-N2030	• SHAFT	1	NL 20255-NL 20854
3	C1	201-30-N2040	• ROLLER SHELL	1	NL 20255-NL 22834
4	C1	201-30-N2050	• SEAL GROUP	1	NL 20255-NL 22834
4a	C1	#	• • SEAL RING	2	NL 20255-NL 22834
4b	C1	#	• • O-RING	2	NL 20255-NL 22834
5	C1	U 203 374 69	• PLUG TAPER	1	NL 20255-NL 22834
6	C1	201-30-N2160	• PLATE	1	NL 20855-NL 22834
	C1	201-30-N2070	• PLATE	1	NL 20255-NL 20854
7	C1	201-30-N2080	• COVER PLATE	1	NL 20255-NL 22834
8	C1	201-30-N2170	• HEX HEAD SCREW	2	NL 20855-NL 22834
	C1	201-30-N2290	• HEX HEAD SCREW	5	NL 20255-NL 20854
8a	C1	201-30-N2090	• HEX HEAD SCREW	3	NL 20855-NL 22834
9	C1	201-30-N2110	• BRONZE BUSH	1	NL 20255-NL 22834
10	C1	201-30-N2120	• SEAL O-RING	1	NL 20255-NL 22834
12	C1	201-30-N2140	• SPRING LOCK WASHER	3	NL 20255-NL 22834
13	C1	205 338 55 H	BOLT	2	NL 22004-NL 22834
	C1	01010-81685	BOLT	2	NL 20255-NL 22003
14	C1	01643-31645	WASHER	2	NL 20255-NL 22834

FIG. R0300-03A0 CARRIER ROLLER

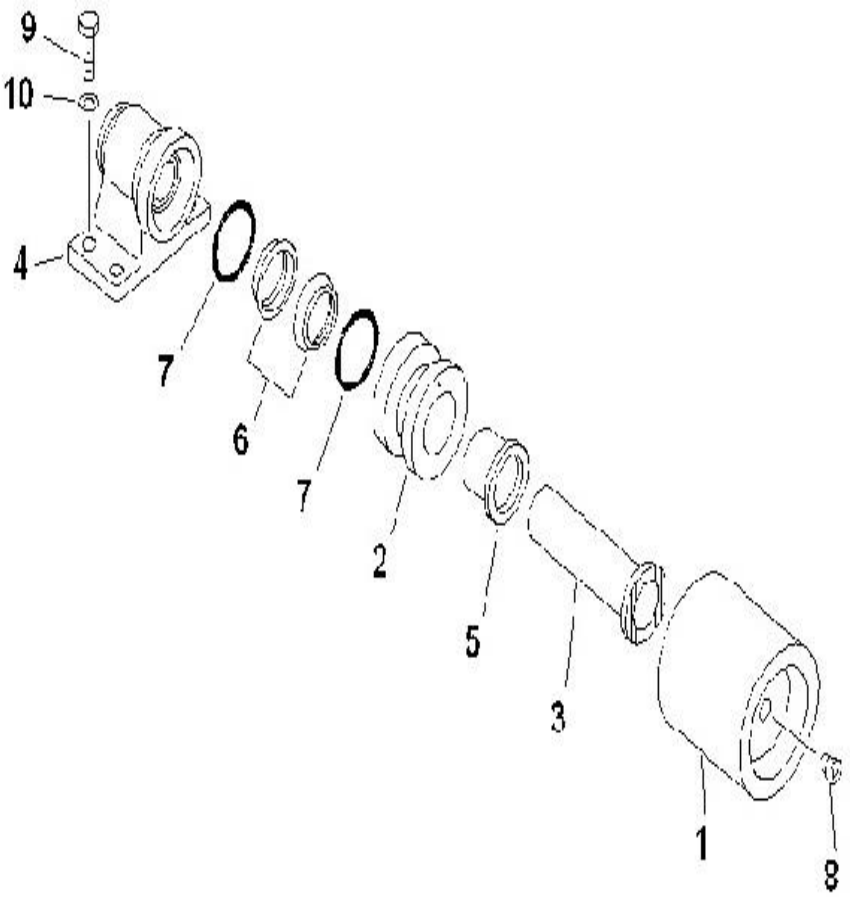

Index	Code	Part Number	Description	Qty	Serial No.
		203-30-00231	CARRIER ROLLER	2	NL 22835-
1		203-30-53310	• ROLLER	1	N220001-
	C1	203-30-53111	• ROLLER	1	NL 22835-N201404
2		203-30-53120	• COLLER	1	NL 22835-
3		203-30-53340	• SHAFT	1	N220001-
	C1	203-30-53141	• SHAFT	1	NL 22835-N201404
4		203-30-53150	• COLLAR	1	NL 22835-
5		203-30-53160	• BUSHING	1	NL 22835-
		110-30-00086	• FLOATING SEAL A	1	NL 22835-
6		#	• • RING	2	NL 22835-
7		#	• • O-RING	2	NL 22835-
8		203-30-16330	• PLUG	1	NL 22835-
9		01010-81235	BOLT	8	NL 22835-
10		201-30-N2190	SPACER	8	NL 22835-

PC71-7

FIG. R0500-01A0A TRACK SHOE (TRIPLE GROUSER WITH HOLE)(450MM WIDE)

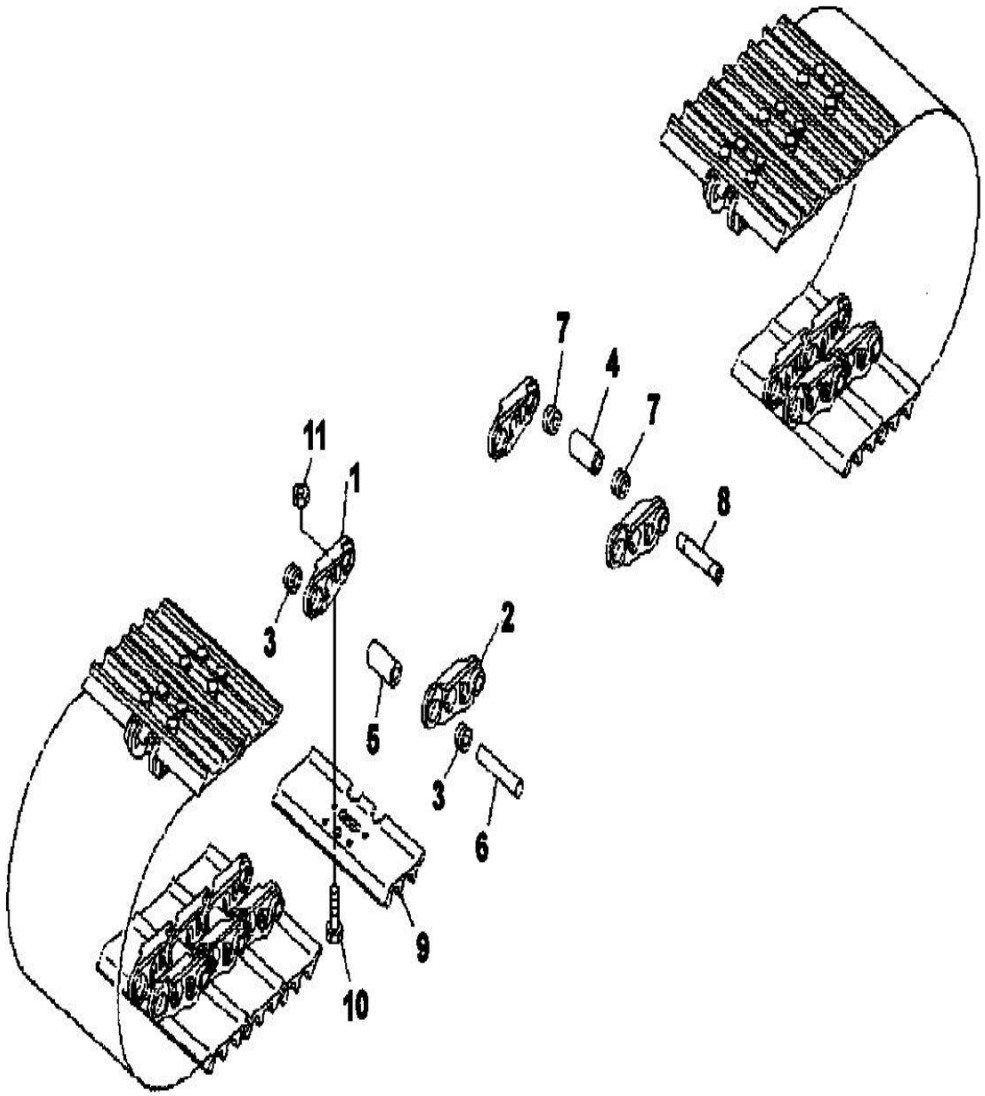

Index	Code	Part Number	Description	Qty	Serial No.
1		#	TRACK SHOE ASSY	1	NL 20174-NL 21849
		201-32-N1270	• TRACK SHOE ASSY	2	NL 20174-NL 21849
		201-32-00300	• • TRACK LINK ASSY	1	NL 20174-NL 21849
		201-32-51120	• • • LINK - LH	38	NL 20174-NL 21849
2		201-32-51130	• • • LINK - RH	38	NL 20174-NL 21849
3		101-32-11271	• • • SEAL DUST	72	NL 20174-NL 21849
4		101-32-11173	• • • BUSHING MASTER	2	NL 20174-NL 21849
5		201-32-51140	• • • BUSHING	36	NL 20174-NL 21849
6		201-32-71150	• • • PIN	36	NL 20174-NL 21849
7		201-32-11281	• • • SEAL DUST	4	NL 20174-NL 21849
8		201-32-71190	• • • PIN MASTER	2	NL 20174-NL 21849
9		201-32-71110	• • SHOE, ...	38	NL 20174-NL 21849
10		201-32-51211	• • BOLT	152	NL 20174-NL 21849
11		201-32-11221	• • NUT	152	NL 20174-NL 21849

PC71-7

FIG. R0500-02A0A TRACK SHOE (TRIPLE GROUSER WITH HOLE)(450MM WIDE)

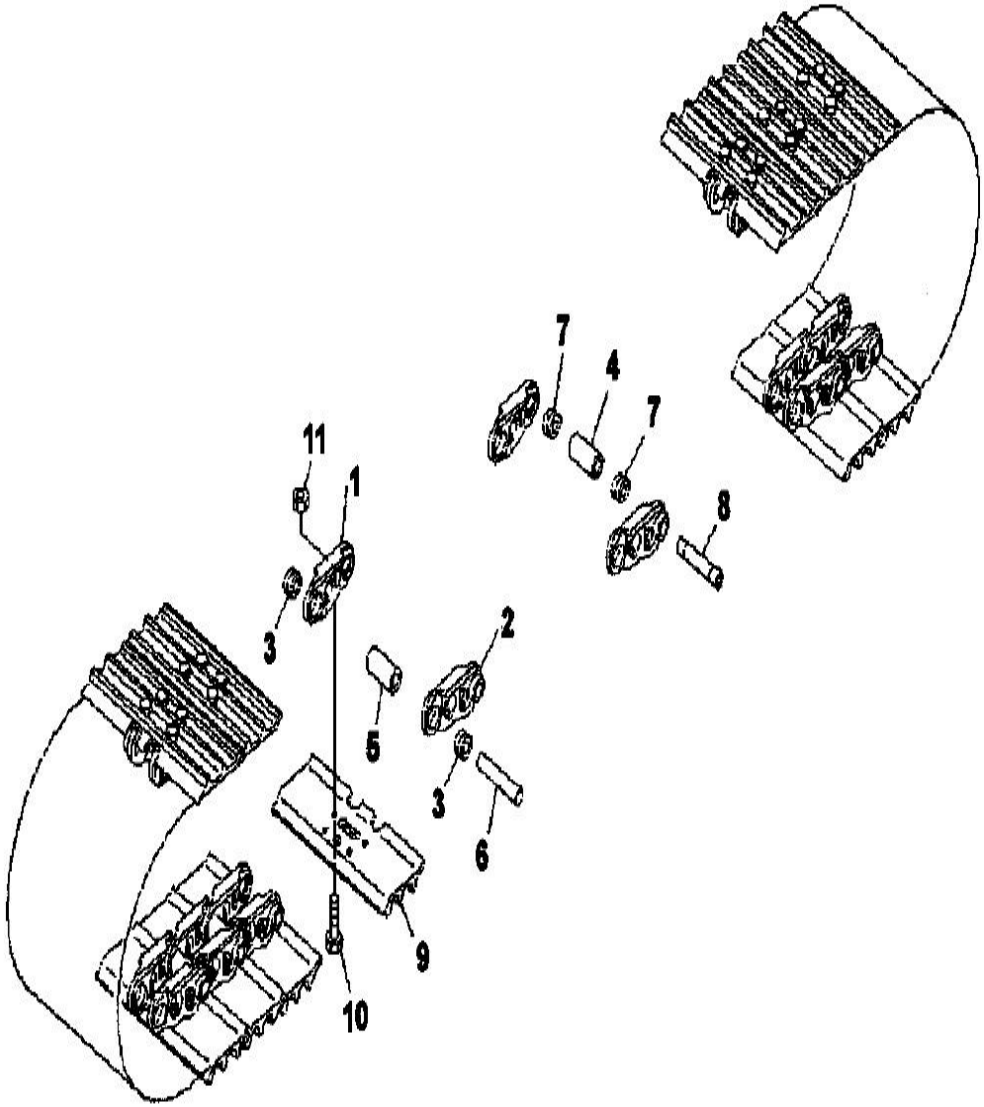

Index	Code	Part Number	Description	Qty	Serial No.
1		#	TRACK SHOE ASSY	1	NL 21850-
		201-32-N1281	• TRACK SHOE ASSY	2	N220001-
	C1	201-32-N1280	• TRACK SHOE ASSY	2	NL 21850-N201404
		201-32-00300	• • TRACK LINK ASSY	1	NL 21850-
		201-32-51122	• • • LINK - LH	38	N220001-
	C1	201-32-51120	• • • LINK - LH	38	NL 21850-N201404
2		201-32-51132	• • • LINK - RH	38	N220001-
	C1	201-32-51130	• • • LINK - RH	38	NL 21850-N201404
3		101-32-11271	• • • SEAL DUST	72	NL 21850-
4		22P-32-11170	• • • BUSHING MASTER	2	N220001-
	C1	101-32-11173	• • • BUSHING MASTER	2	NL 21850-N201404
5		201-32-51140	• • • BUSHING	36	NL 21850-
6		201-32-71150	• • • PIN	36	NL 21850-
7		101-32-11281	• • • SEAL DUST	4	N220001-
	C1	201-32-11281	• • • SEAL DUST	4	NL 21850-N201404
8		201-32-71190	• • • PIN MASTER	2	NL 21850-
9		201-32-71110	• • SHOE,	38	NL 21850-
10		201-32-51240	• • BOLT	152	NL 21850-
11		11Y-32-11220	• • NUT	152	N220001-
	C1	201-32-11221	• • NUT	152	NL 21850-N201404

PC71-7

FIG. R1100-01A1A TRACK FRAME (BLADE SPEC.)

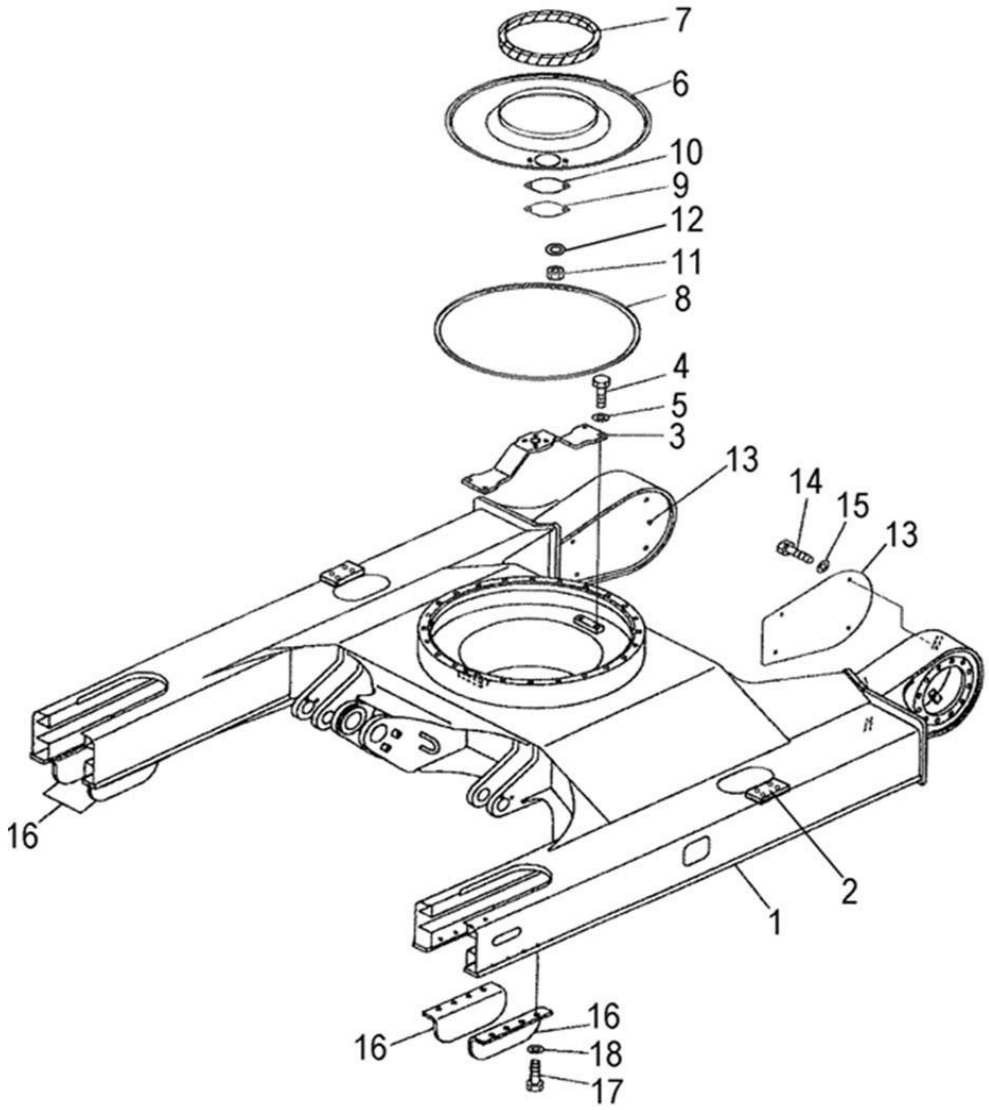

Index	Code	Part Number	Description	Qty	Serial No.
1		201-910-N011	FRAME, TRACK A	1	NL 22835-
	C1	201-910-N010	FRAME, TRACK A	1	NL 20188-NL 22834
		201-910-N141	• FRAME, TRACK	1	NL 22835-
		201-910-N140	• FRAME, TRACK	1	NL 20188-
	C1	201-910-N120	• FRAME, TRACK	1	NL 20001-NL 20187
2		201-30-74G20	• • PLATE ASSY (WELDED)	2	NL 22835-
	C1	201-30-N1320	• • PLATE ASSY (WELDED)	2	NL 20001-NL 22834
	C1	#	• .• PLATE (WELDED)	1	NL 20001-NL 22834
	C1	#	• • • PLATE (WELDED)	1	NL 20001-NL 22834
	C1	#	• • • PLATE (WELDED)	1	NL 20001-NL 22834
	C1	#	• • • NUT (WELDED)	1	NL 20001-NL 22834
3		201-30-74210	BRACKET	1	NL 20001-
4		01010-81230	BOLT	4	NL 20001-
5		01643-31232	WASHER	4	NL 20001-
		201-30-74220	COVER ASS'Y	1	NL 20001-
6		#	• COVER	1	NL 20001-
7		20X-30-21141	• SEAL	1	NL 20001-
8		201-30-74250	• SEAL	1	NL 20001-
9		203-46-56160	COVER	1	NL 20001-
10		203-46-31181	GASKET	1	NL 20001-
11		01580-11008	NUT	2	NL 20001-
12		01643-31032	WASHER	2	NL 20001-
13		201-62-76211	COVER	2	NL 20001-
14		01010-81025	BOLT	8	NL 20001-
15		01643-31032	WASHER	8	NL 20001-
16		21W-30-34110	GUARD	4	NL 20001-
17		01010-81435	BOLT	16	NL 20001-
18		01643-31445	WASHER	16	NL 20001-

PC71-7

FIG. R1100-02A0 TRACK FRAME(QUARRY SPEC)

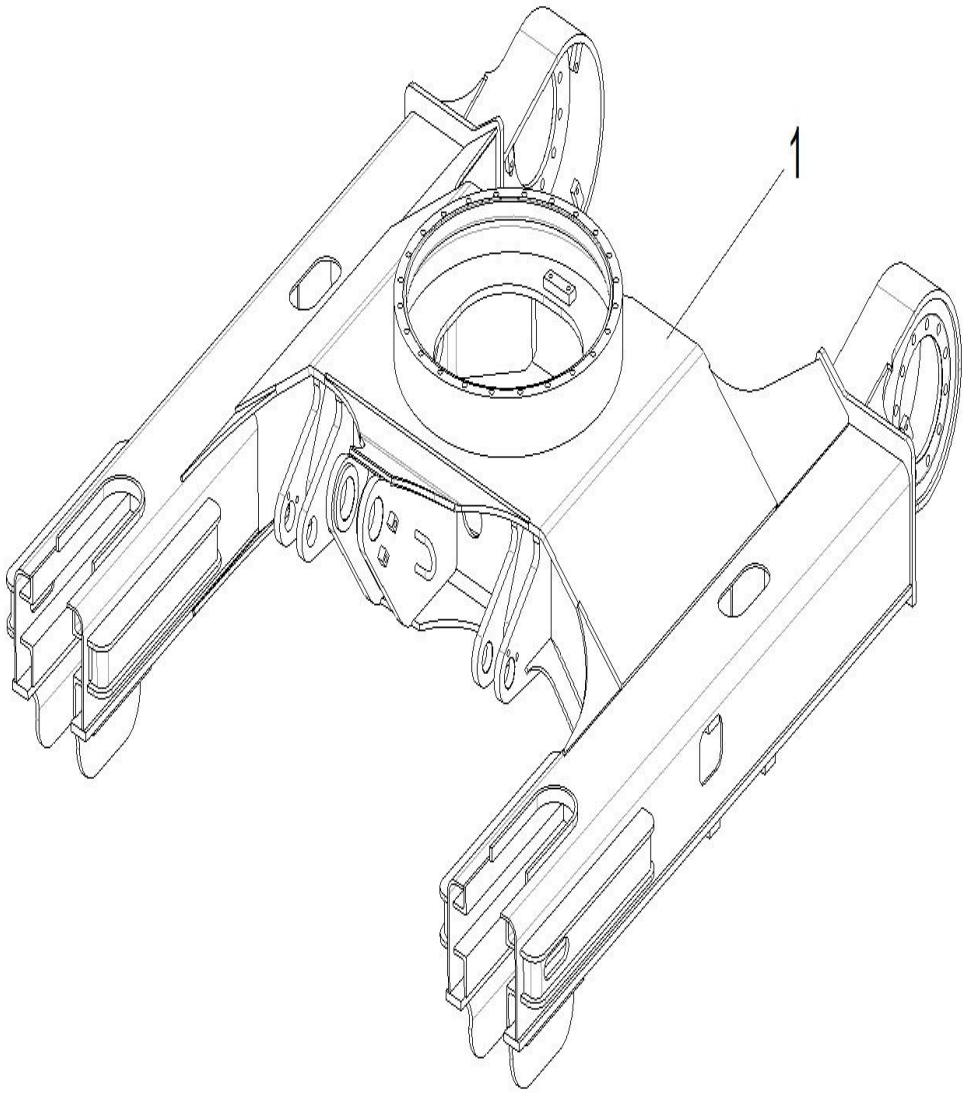

Index	Code	Part Number	Description	Qty	Serial No.
1		201-910-N200	TRACK FRAME ASS'Y	1	N200103 -

PC71-7

FIG. R1200-01A0 TRACK ROLLER GUARD

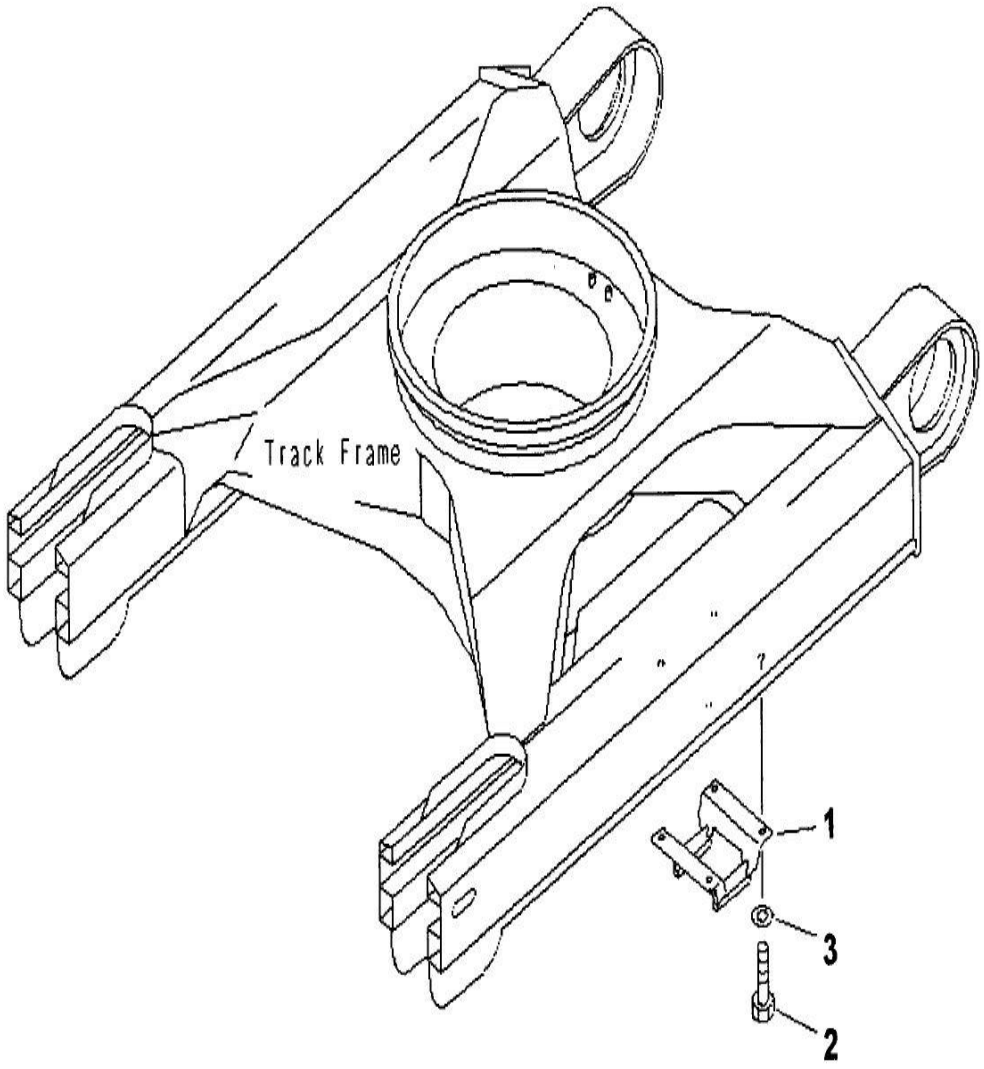

Index	Code	Part Number	Description	Qty	Serial No.
1		201-30-N1730	GUARD	2	NL 20064-
	C1	201-30-N1420	GUARD	2	NL 20001-NL 20063
2		01010-81455	BOLT	8	NL 20064-
	C1	01010-81435	BOLT	8	NL 20001-NL 20063
3		01643-31445	WASHER	8	NL 20001-

PC71-7

WORK EQUIPMENTS

PC71-7

FIG. T1110-01A0A BOOM

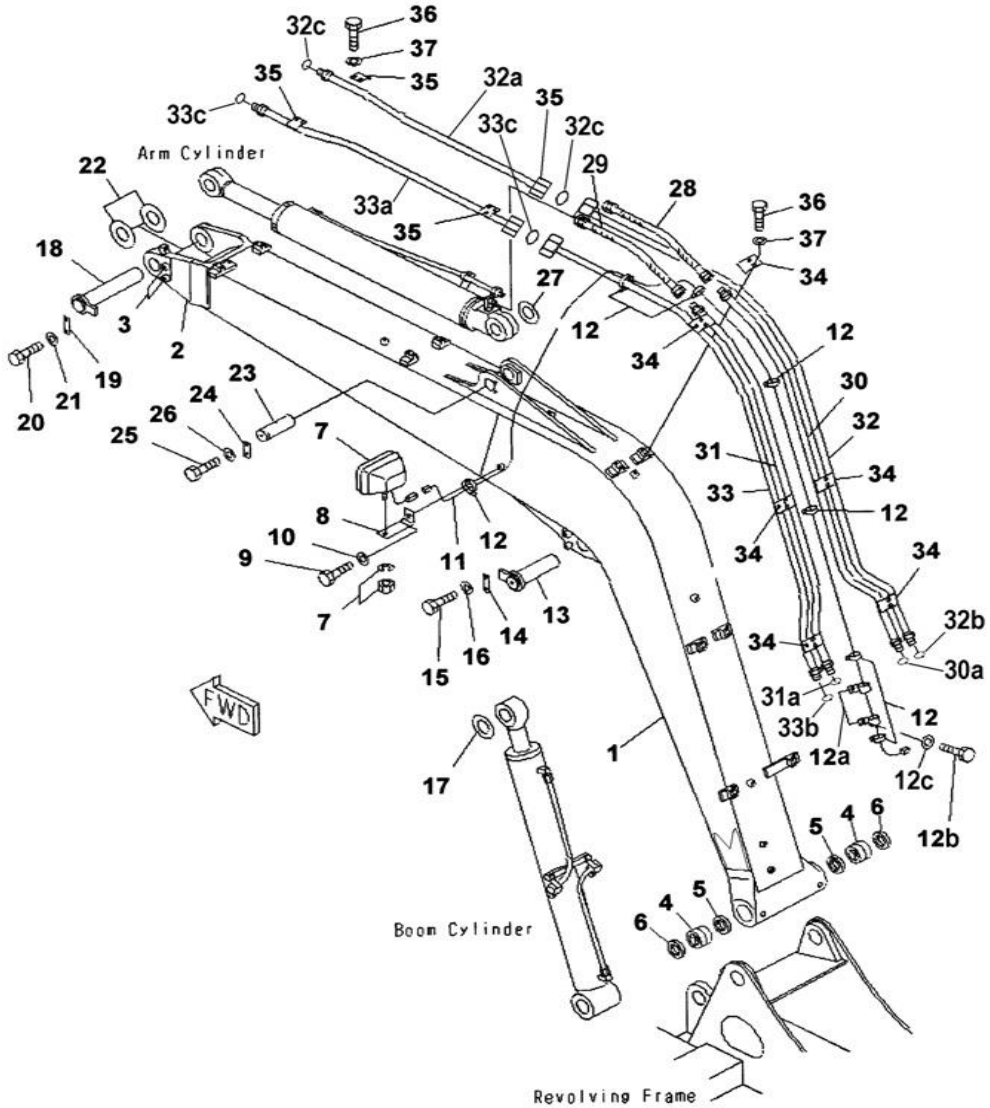

Index	Code	Part Number	Description	Qty	Serial No.
1		201-70-N0010	BOOM ASS'Y	1	NL 20001-
		201-70-N1500	• BOOM ASS'Y	1	NL 20001-
		#	• • BOOM	1	NL 20001-
		201-70-71XE1	• • • BRACKET (WELDED)	1	NL 20001-
2		#	• • • BRACKET (WELDED)	1	NL 20001-
3		203-46-41130	• • • SEAT (WELDED)	2	NL 20001-
4		201-70-71230	• • BUSHING	2	NL 20001-
5		07145-00065	• • SEAL, DUST	2	NL 20001-
6		07145-00065	SEAL, DUST	2	NL 20001-
7		201-06-71280	WORK LAMP ASS'Y	1	NL 20001-
		421-06-23330	• BULB- 70W	1	NL 20001-
8		203-06-56410	BRACKET	1	NL 20001-
9		01010-81225	BOLT	1	NL 20001-
10		01643-31232	WASHER	1	NL 20001-
11		201-06-71360	WIRING HARNESS	1	NL 20001-
12		08034-00519	BAND	8	NL 20001-
12a		04434-50608	CLIP	2	NL 20001-
12b		01010-80816	BOLT	2	NL 20001-
12c		01643-30823	WASHER	2	NL 20001-
13		201-70-71610	PIN	1	NL 20001-
14		203-46-56270	PLATE	1	NL 20001-
15		01010-81230	BOLT	2	NL 20001-
16		01643-31232	WASHER	2	NL 20001-
17		201-70-N1870	SPACER - 1.0 MM	1	NL 20114-
	C1	21Y-70-14770	SPACER - 1.0 MM	1	NL 20001-NL20113
17a		201-70-N1880	SPACER - 1.0 MM	1	NL 20114-
	C1	21Y-70-14780	SPACER - 1.0 MM	1	NL 20001-NL20113
18		201-70-71270	SHAFT	1	NL 20001-
19		203-46-56270	PLATE	1	NL 20001-
20		01010-81230	BOLT	2	NL 20001-
21		01643-31232	WASHER	2	NL 20001-
22		21W-70-32280	SPACER - 1.0 MM	1	NL 20001-
		20U-70-31310	SPACER	1	NL 20001-
23		201-70-71250	PIN	1	NL 20001-

PC71-7

FIG. T1110-01A0A BOOM

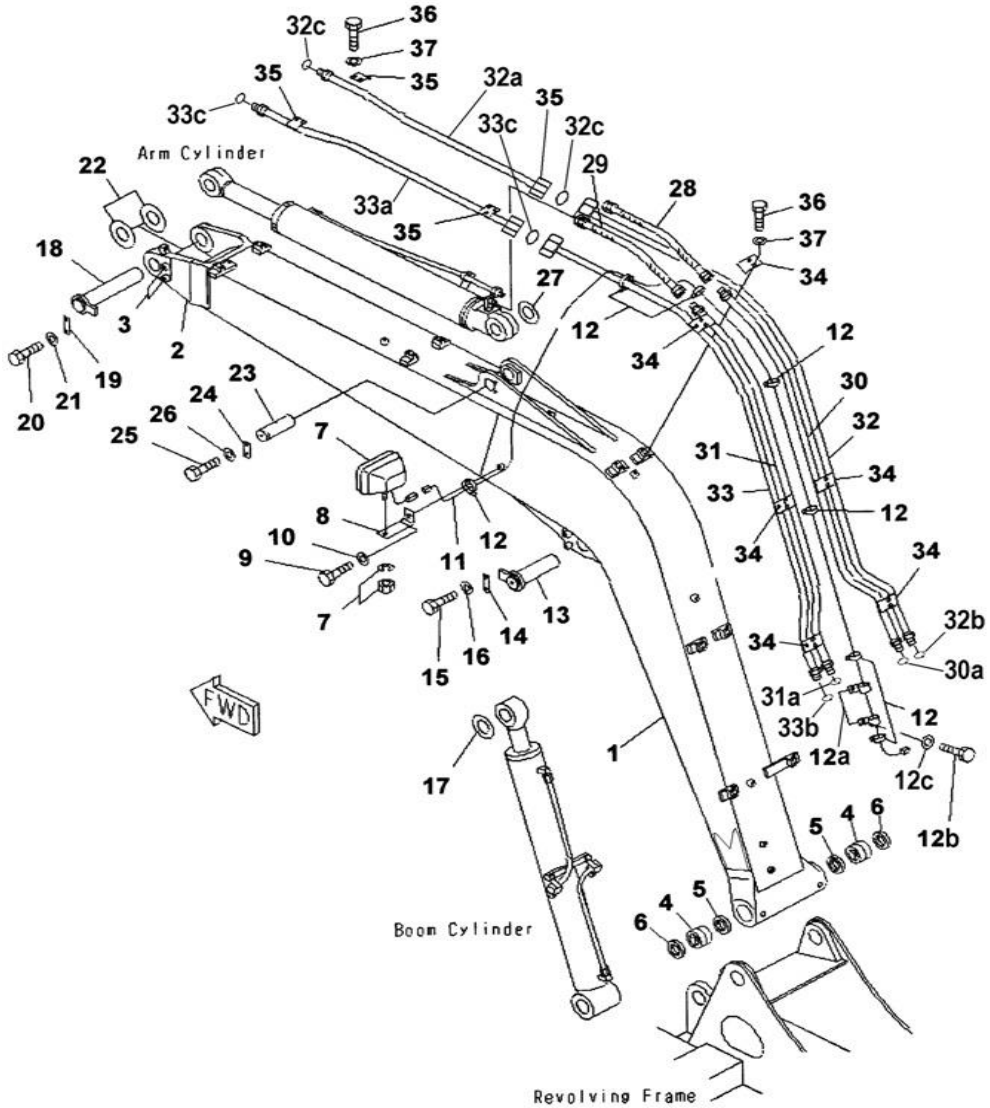

Index	Code	Part Number	Description	Qty	Serial No.
24		04082-00212	LOCK	1	NL 20001-
25		01010-81230	BOLT	2	NL 20001-
26		01643-31232	WASHER	2	NL 20001-
27		201-70-71380	SPACER - 1.0 MM	1	NL 20001-
28		02756-C0407	HOSE	1	N220001-
	C1	201-62-N1660	HOSE	1	NL 20196-N201404
29		02756-C0507	HOSE	1	N220001-
	C1	201-62-N1630	HOSE	1	NL 20991-N201404
30		201-62-N1650	TUBE	1	NL 20991-
30a		02896-11012	O-RING	2	NL 20991-
31		201-62-N2570	TUBE	1	NL 20991-
31a		02896-11015	O-RING	2	NL 20991-
32		201-62-N1730	TUBE	1	NL 20991-
32a		201-62-N1740	TUBE	1	NL 20991-
32b		02896-11012	O-RING	1	NL 20991-
32c		02896-11012	O-RING	2	NL 20991-
33		201-62-N1680	TUBE	1	NL 20001-
33a		201-62-N1690	TUBE	1	NL 20001-
33b		02896-11012	O-RING	1	NL 20001-
33c		02896-11012	O-RING	2	NL 20001-
34		203-70-53380	CLAMP	6	NL 20001-
35		203-70-53390	CLAMP	4	NL 20001-
36		01010-81025	BOLT	20	NL 20001-
37		01643-31032	WASHER	20	NL 20001-

PC71-7

FIG. T1110-02A0 BOOM - (FOR 1 ATTACHMENT)

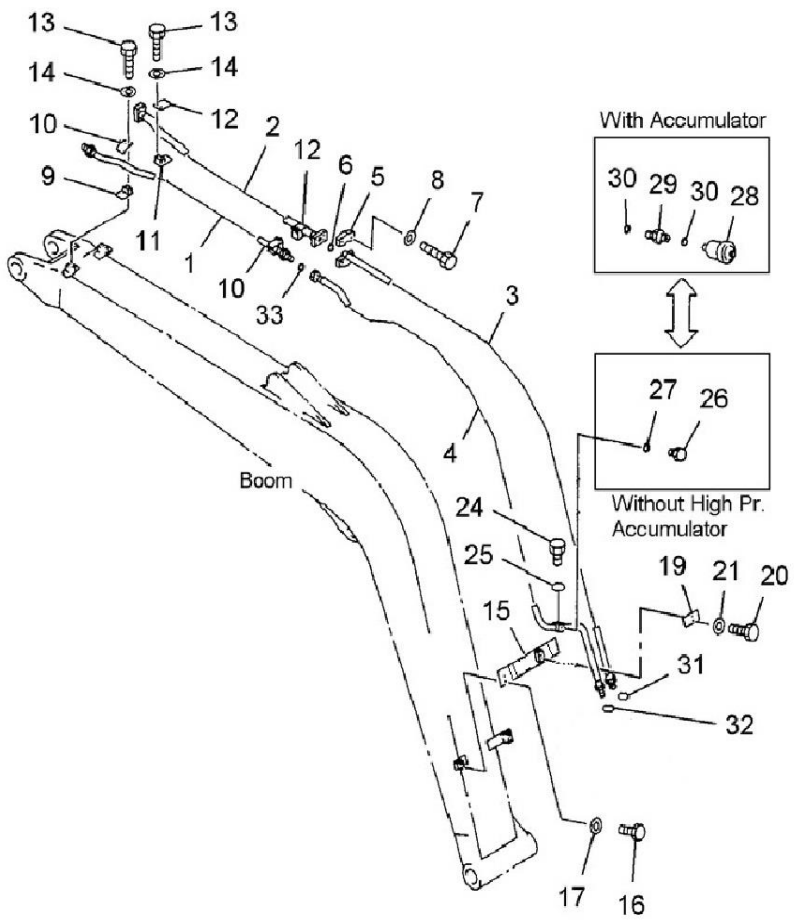

Index	Code	Part Number	Description	Qty	Serial No.
1		201-973-N150	TUBE	1	NL 22105
2		201-973-7380	TUBE	1	NL 22105
3		201-973-N160	TUBE	1	NL 22105
4		201-973-N170	TUBE	1	NL 22105
5		07371-30640	FLANGE	2	NL 22105
6		07000-13025	O-RING	1	NL 22105
7		07372-21035	BOLT	4	NL 22105
8		01643-51032	WASHER	4	NL 22105
9		203-973-5690	SEAT	4	NL 22105
10		203-973-5660	CLAMP	4	NL 22105
11		201-973-6740	SEAT	4	NL 22105
12		201-973-6730	CLAMP	4	NL 22105
13		01010-81065	BOLT	16	NL 22105
14		01643-31032	WASHER	16	NL 22105
15		201-973-N520	SEAT	1	N200106
	C1	201-973-7411	SEAT	1	NL 22105-N200105
16		01010-81035	BOLT	4	NL 22105
17		01643-31032	WASHER	4	NL 22105
19		201-973-7430	CLAMP	1	NL 22105
20		01010-81030	BOLT	2	NL 22105
21		01643-31032	WASHER	2	NL 22105
24		07040-11007	PLUG	1	NL 22105
25		07002-11023	O-RING	1	NL 22105
26		07040-12012	PLUG	1	NL 22105
27		07002-12034	O-RING	1	NL 22105
28		#	ACCUMULATOR	1	NL 22105
29		#	UNION	1	NL 22105
30		#	O-RING	1	NL 22105
31		02896-11018	O-RING	1	NL 22105
32		02896-11012	O-RING	1	NL 22105
33		02896-11012	O-RING	1	NL 22105

PC71-7

FIG. T1110-03A0 BOOM - TUNNELING

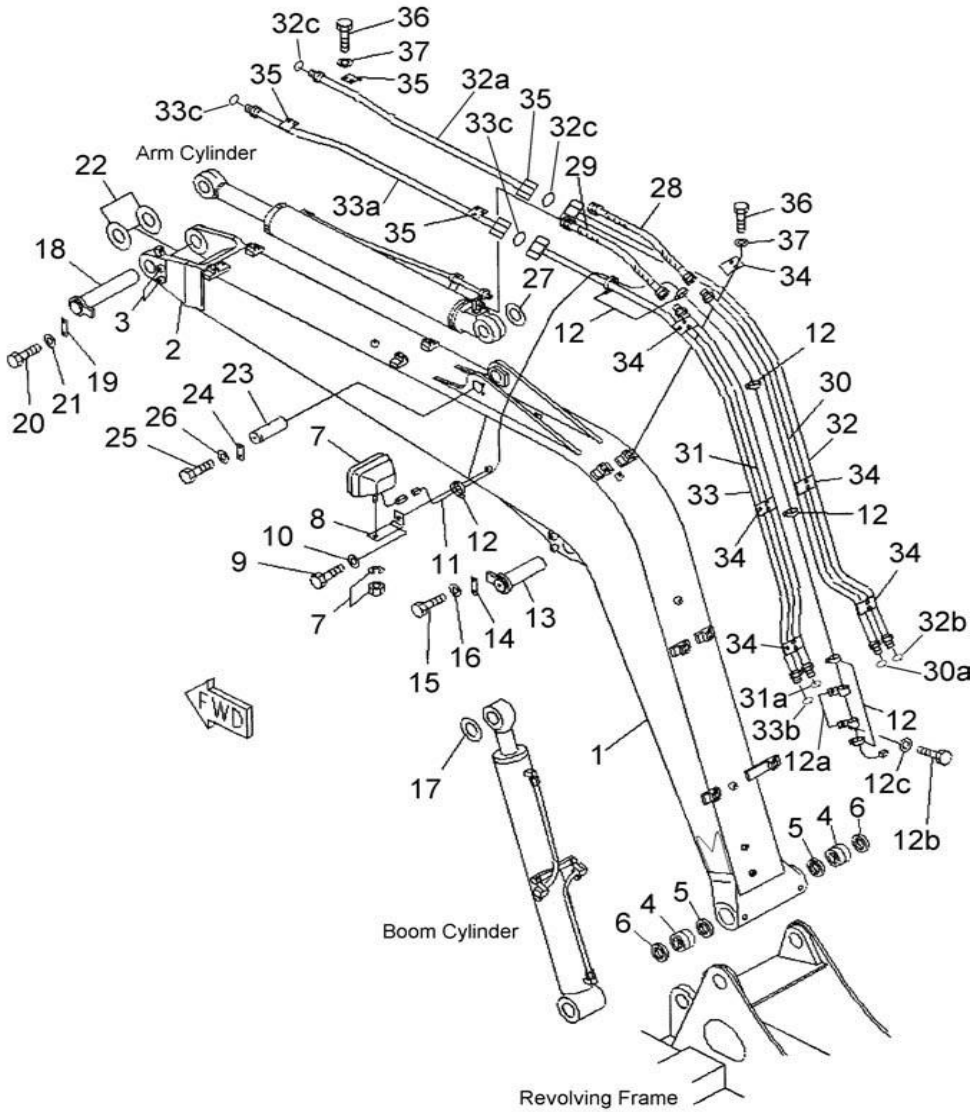

Index	Code	Part Number	Description	Qty	Serial No.
1		201-70-N0110	BOOM ASSY	1	NL22390-
		201-70-N1700	• BOOM ASSY	1	NL22390-
		#	• • BOOM	1	NL22390-
		201-70-71XE1	• • • BRACKET (WELDED)	1	NL22390-
2		#	• • • BRACKET (WELDED)	1	NL22390-
3		203-46-41130	• • • SEAT (WELDED)	2	NL22390-
4		201-70-71230	• • BUSHING	2	NL22390-
5		07145-00065	• • SEAL, DUST	2	NL22390-
6		07145-00065	SEAL, DUST	2	NL22390-
7		201-06-71280	WORK LAMP ASS'Y	1	NL22390-
		421-06-23330	• BULB- 70W	1	NL22390-
8		203-06-56410	BRACKET	1	NL22390-
9		01010-81225	BOLT	1	NL22390-
10		01643-31232	WASHER	1	NL22390-
11		201-06-71360	WIRING HARNESS	1	NL22390-
12		08034-00519	BAND	8	NL22390-
12a		04434-50608	CLIP	2	NL22390-
12b		01010-80816	BOLT	2	NL22390-
12c		01643-30823	WASHER	2	NL22390-
13		201-70-71610	PIN	1	NL22390-
14		203-46-56270	PLATE	1	NL22390-
15		01010-81230	BOLT	2	NL22390-
16		01643-31232	WASHER	2	NL22390-
17		201-70-N1870	SPACER - 1.0 MM	1	NL22390-
17a		201-70-N1880	SPACER - 1.0 MM	1	NL22390-
18		201-70-71270	SHAFT	1	NL22390-
19		203-46-56270	PLATE	1	NL22390-
20		01010-81230	BOLT	2	NL22390-
21		01643-31232	WASHER	2	NL22390-
22		21W-70-32280	SPACER - 1.0 MM	1	NL22390-
23		201-70-71250	PIN	1	NL22390-
24		04082-00212	LOCK	1	NL22390-
25		01010-81230	BOLT	2	NL22390-
26		01643-31232	WASHER	2	NL22390-

PC71-7

FIG. T1110-03A0 BOOM - TUNNELING

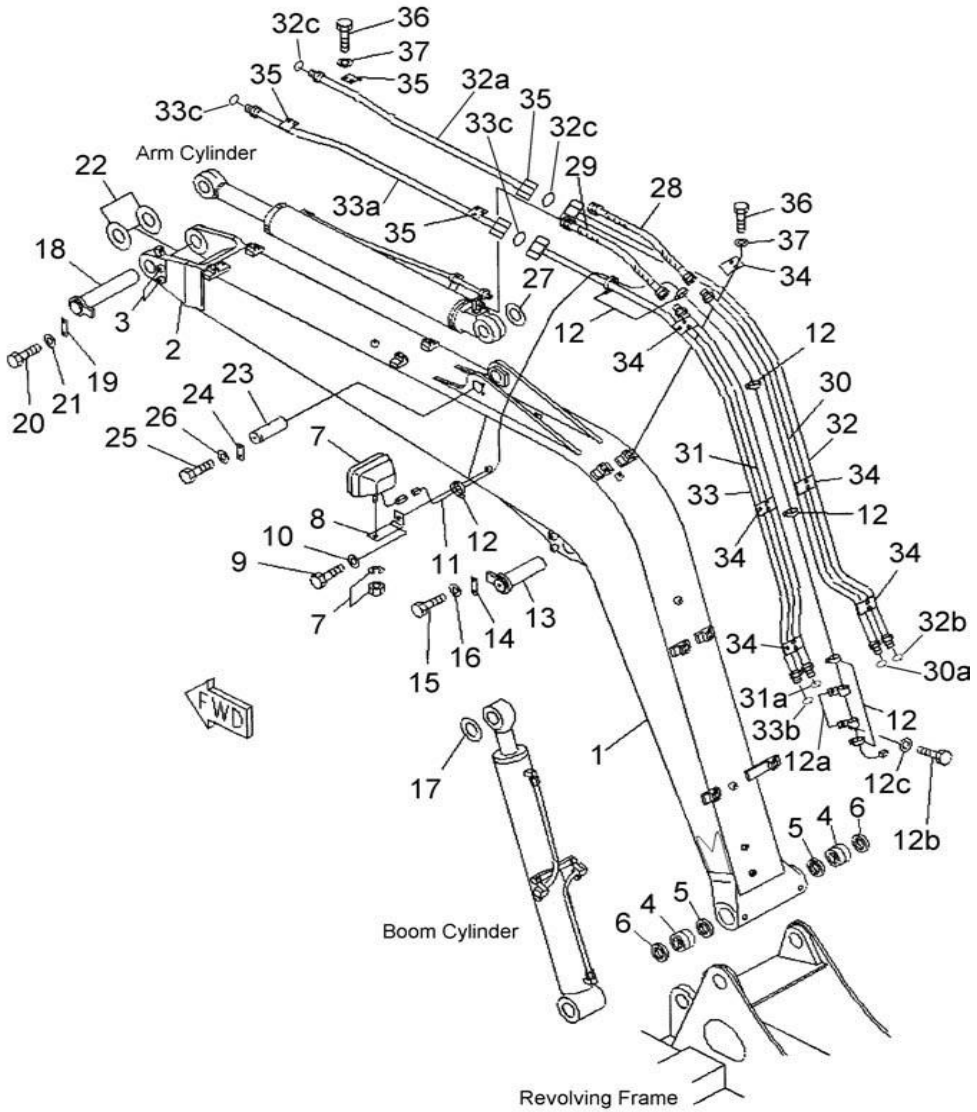

Index	Code	Part Number	Description	Qty	Serial No.
27		201-70-71380	SPACER - 1.0 MM	1	NL22390-
28		201-62-N3460	HOSE	1	NL22755-
	C1	201-62-N1660	HOSE	1	NL22390-NL 22754
29		201-62-N3450	HOSE	1	NL22755-
	C1	201-62-N1630	HOSE	1	NL22390-NL 22754
30		201-62-N3350	TUBE	1	NL22390-
30a		02896-11012	O-RING	2	NL22390-
31		201-62-N3360	TUBE	1	NL22390-
31a		02896-11015	O-RING	2	NL22390-
32		201-62-N3370	TUBE	1	NL22390-
32a		201-62-N3380	TUBE	1	NL22390-
32b		02896-11012	O-RING	1	NL22390-
32c		02896-11012	O-RING	2	NL22390-
33		201-62-N3390	TUBE	1	NL22390-
33a		201-62-N3410	TUBE	1	NL22390-
33b		02896-11012	O-RING	1	NL22390-
33c		02896-11012	O-RING	2	NL22390-
34		203-70-53380	CLAMP	6	NL22390-
35		203-70-53390	CLAMP	4	NL22390-
36		01010-81025	BOLT	20	NL22390-
37		01643-31032	WASHER	20	NL22390-

PC71-7

FIG. T1110-04A0 BOOM - TUNNELING (FOR 1 ATTACHMENT)

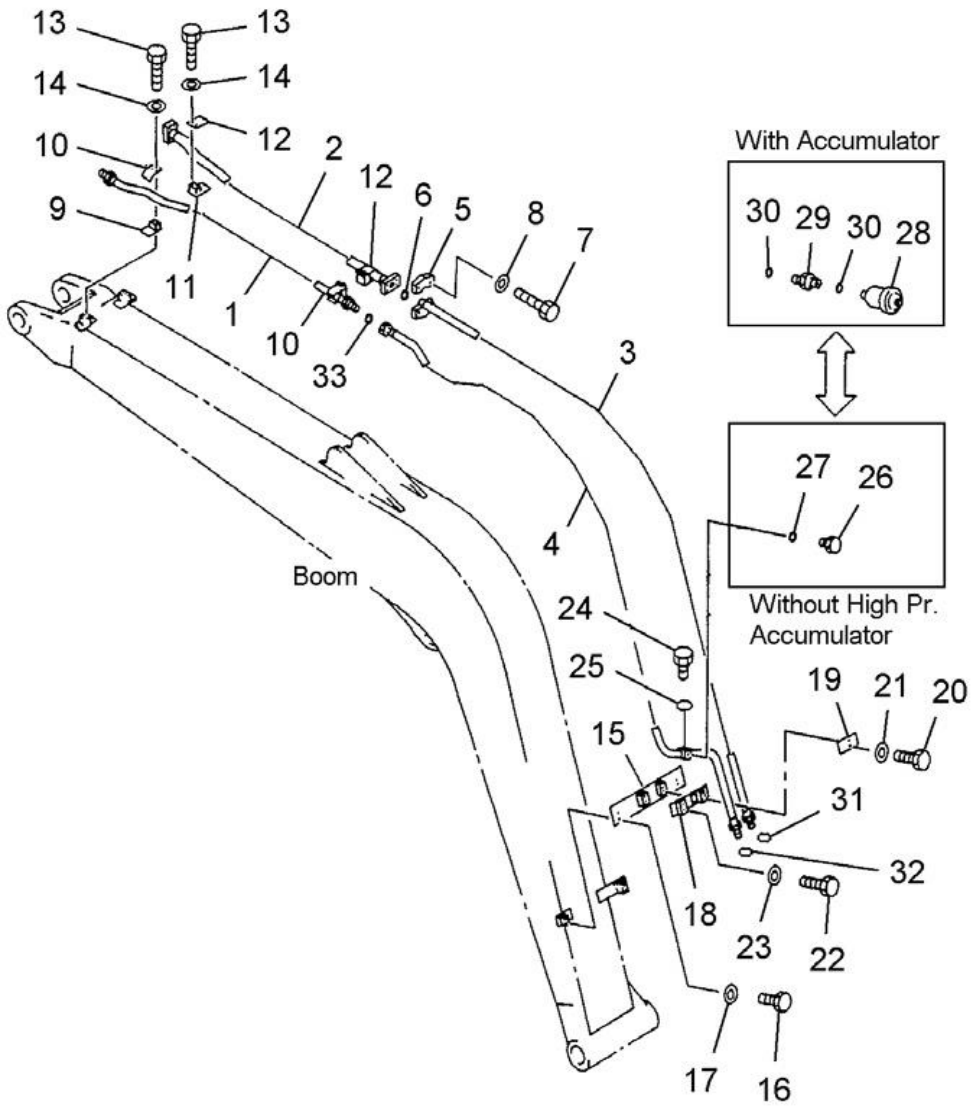

Index	Code	Part Number	Description	Qty	Serial No.
1		201-973-N461	TUBE	1	NL23123-
2		201-973-N480	TUBE	1	NL23080-
3		201-973-N470	TUBE	1	NL23080-
4		201-973-N451	TUBE	1	NL23123-
5		07371-30640	FLANGE	2	N220001-
6		07000-13025	O-RING	1	N220001-
7		07372-21035	BOLT	4	N220001-
8		01643-51032	WASHER	4	N220001-
9		203-973-5690	SEAT	4	N220001-
10		203-973-5660	CLAMP	4	N220001-
11		201-973-6740	SEAT	4	N220001-
12		201-973-6730	CLAMP	4	N220001-
13		01010-81065	BOLT	16	N220001-
14		01643-31032	WASHER	16	N220001-
15		201-973-N520	SEAT	1	N200106
	C1	201-973-7411	SEAT	1	NL 22105-N200105
16		01010-81035	BOLT	4	N220001-
17		01643-31032	WASHER	4	N220001-
19		201-973-7430	CLAMP	1	N220001-
20		01010-81030	BOLT	2	N220001-
21		01643-31032	WASHER	2	N220001-
24		07040-11007	PLUG	1	N220001-
25		07002-11023	O-RING	1	N220001-
26		07040-12012	PLUG	1	N220001-
27		07002-12034	O-RING	1	N220001-
28		#	ACCUMULATOR	1	N220001-
29		#	UNION	1	N220001-
30		#	O-RING	1	N220001-
31		02896-11018	O-RING	1	N220001-
32		02896-11012	O-RING	1	N220001-
33		02896-11012	O-RING	1	N220001-

PC71-7

FIG. T1120-01A0 BOOM CYLINDER

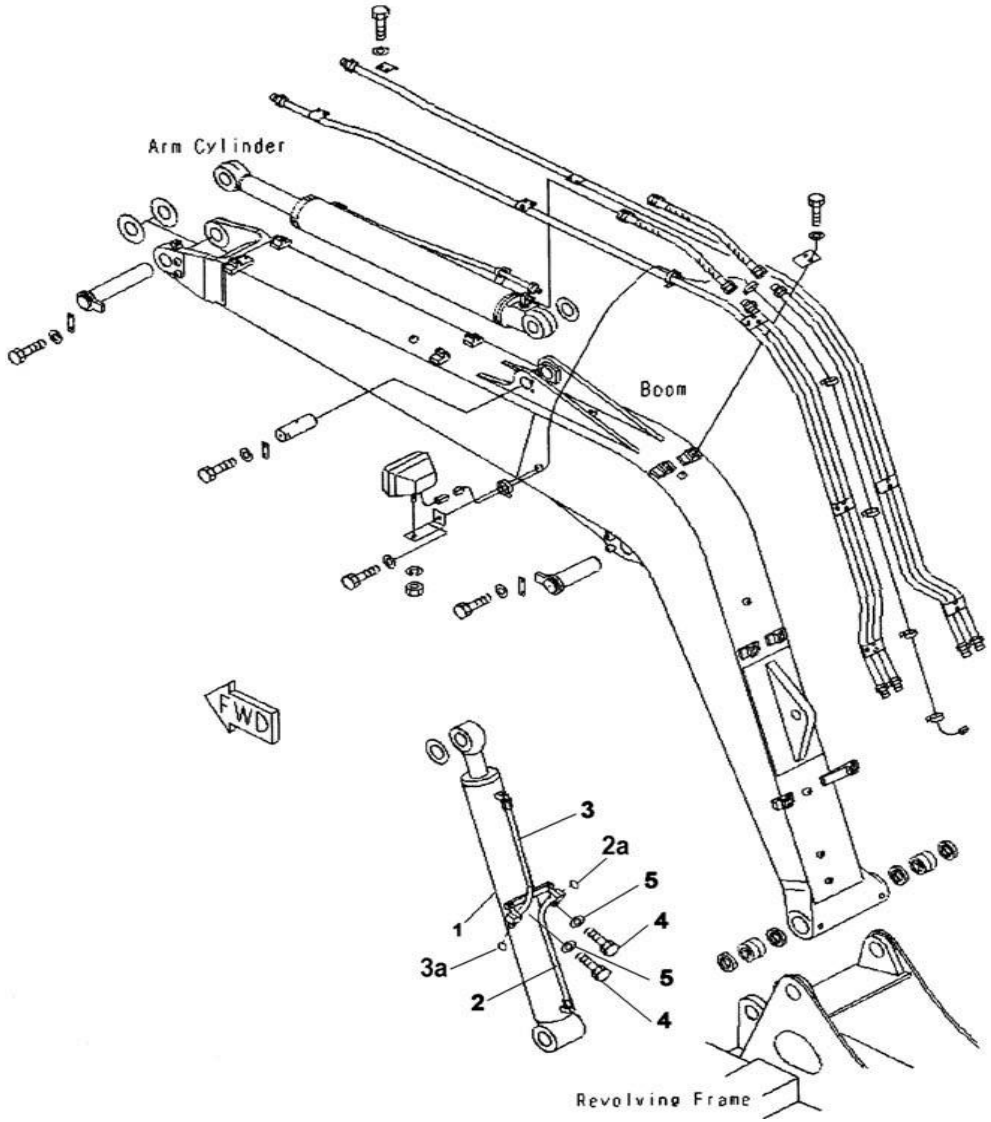

Index	Code	Part Number	Description	Qty	Serial No.
1		201-63-N1311	BOOM CYLINDER ASS'Y	1	N220001-
	C1	201-63-N1310	BOOM CYLINDER ASS'Y	1	NL 20991-N201404
		(707-00-N1111)	• CYLINDER	1	N220001-
	C1	(707-00-N1110)	• CYLINDER	1	NL 20991-N201404
2		201-63-N1240	• TUBE	1	NL 20991-
2a		02896-11015	• O-RING	1	NL 20991-
3		201-63-N1250	• TUBE	1	NL 20991-
3a		02896-11015	• O-RING	1	NL 20991-
4		01010-81020	• BOLT	2	NL 20001-
5		01643-31032	• WASHER	2	NL 20001-

PC71-7

FIG. T1140-01A0 ARM CYLINDER

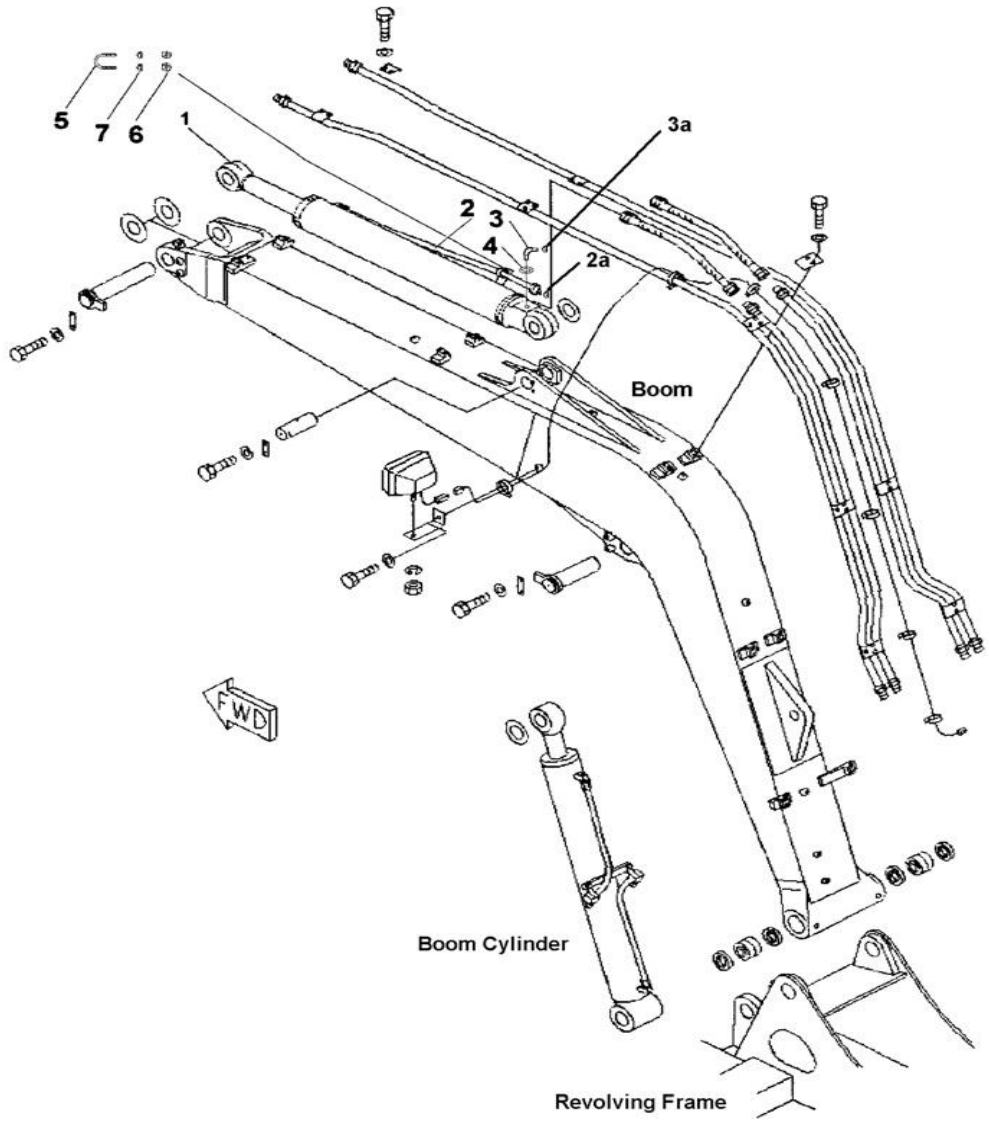

Index	Code	Part Number	Description	Qty	Serial No.
1		201-63-N1291	ARM CYLINDER ASSY	1	N220001-
	C1	201-63-N1290	ARM CYLINDER ASSY	1	NL 20991-N201404
		(707-00-N1121)	• CYLINDER	1	N220001-
	C1	(707-00-N1120)	• CYLINDER	1	NL 20991-N201404
2		201-63-N1261	• TUBE	1	N220001-
	C1	201-63-N1260	• TUBE	1	NL 20991-N201404
2a		02896-11012	• O-RING	1	NL 20991-
3		02782-10516	• ELBOW	1	NL 20991-
3a		02896-11015	• O-RING	1	NL 20991-
4		07002-12034	• O-RING	1	NL 20001-
5		07283-32236	• CLIP	1	NL 20098-
	C1	07283-22236	• U-CLAMP	1	NL 20001-NL20097
6		01599-01011N	• NUT	2	NL 20001-
7		01643-31032	• WASHER	2	NL 20001-

FIG. T1140-03A0 ARM CYLINDER-TUNNELING

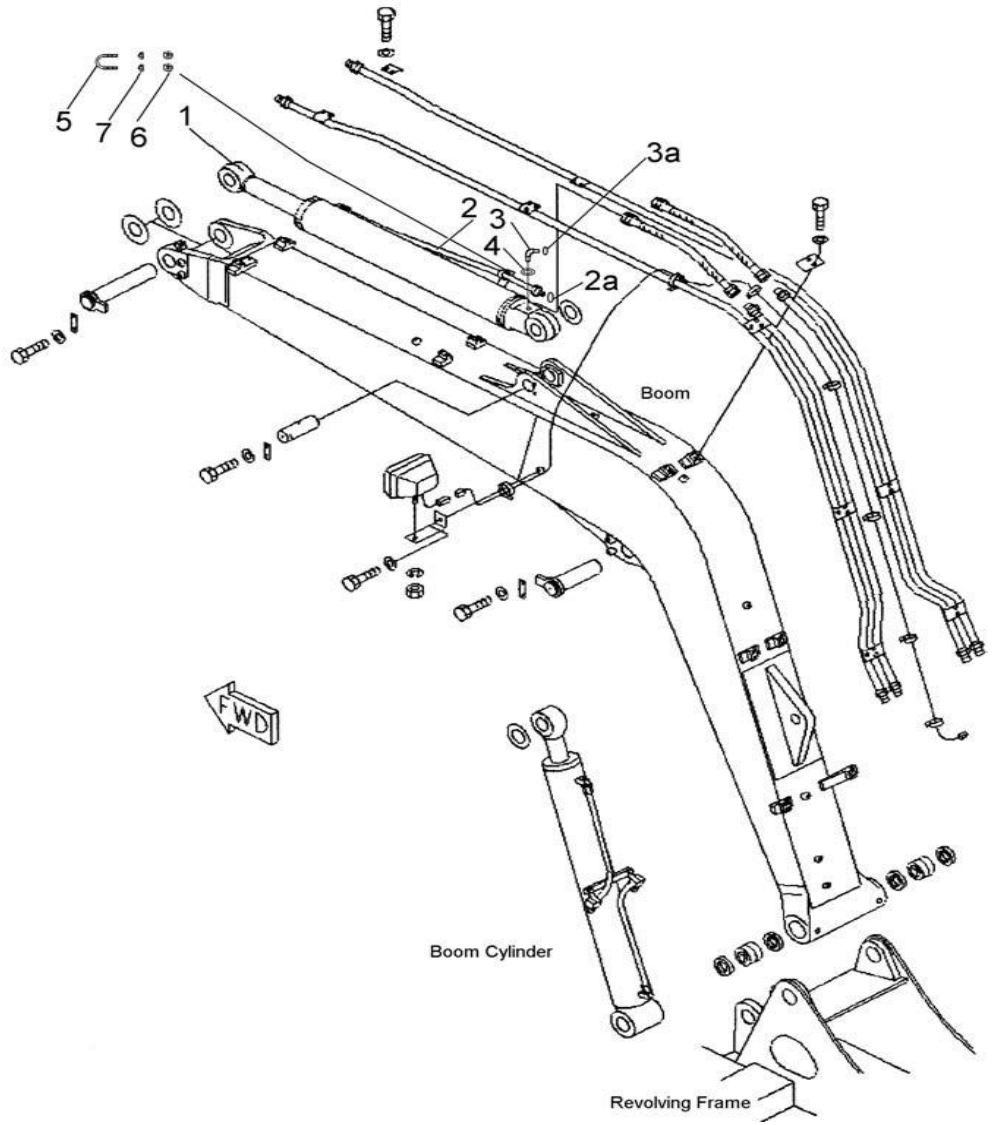

Index	Code	Part Number	Description	Qty	Serial No.
1		201-63-N1380	ARM CYLINDER TUNNELIG	1	NL22390-
		(707-00-N1160)	• CYLINDER	1	NL22390-
2		201-63-N1261	• TUBE	1	N220001-
	C1	201-63-N1260	• TUBE	1	NL22390-N201404
2a		02896-11012	• O-RING	2	NL22390-
3		02782-10516	• ELBOW	1	NL22390-
3a		02896-11015	• O-RING	1	NL22390-
4		07002-12034	• O-RING	1	NL22390-
5		07283-32236	• CLIP	1	NL22390-
6		01599-01011N	• NUT	2	NL22390-
7		01643-31032	• WASHER	2	NL22390-

PC71-7

FIG. T1210-01A0 ARM

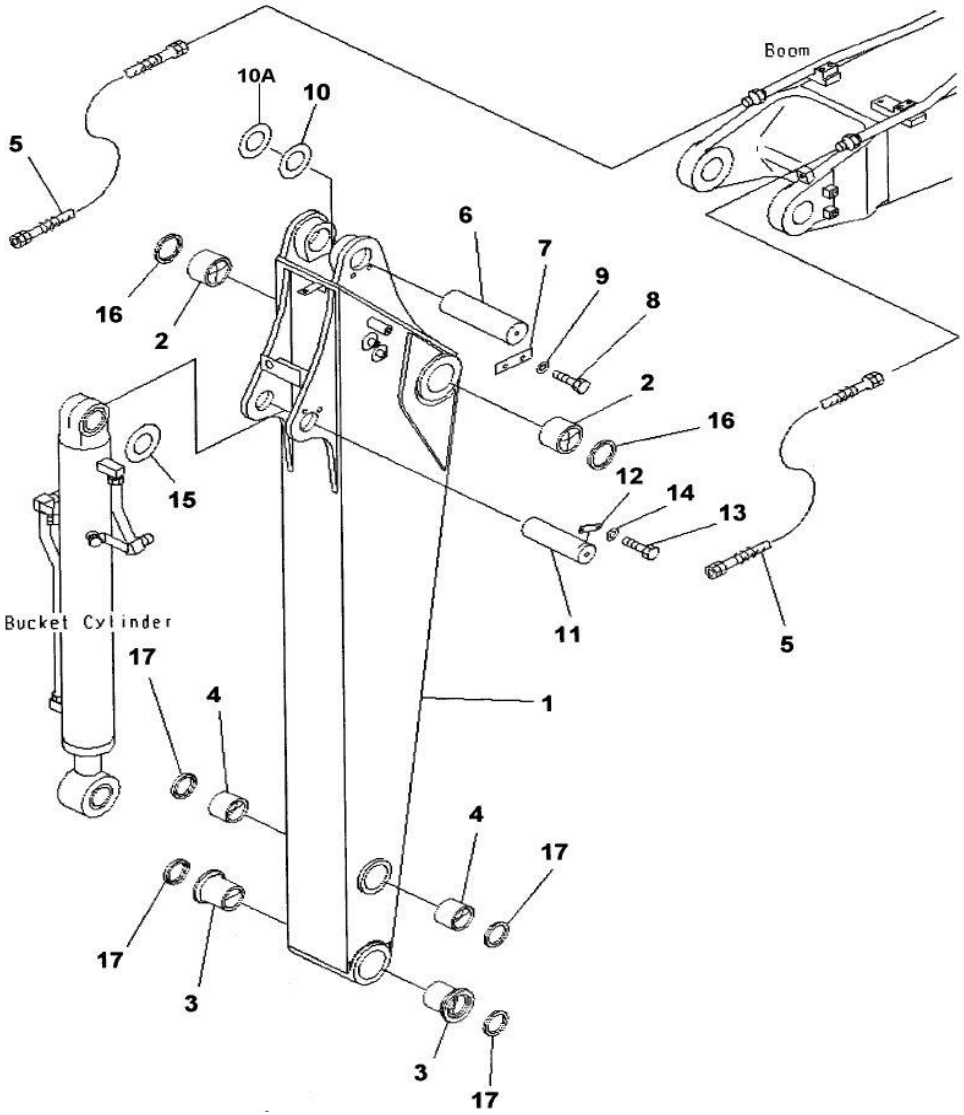

Index	Code	Part Number	Description	Qty	Serial No.
1		201-70-N0020	ARM A.	1	NL 20002-
		201-70-N1810	• ARM ASS'Y	1	N220001-
	C1	201-70-N1800	• ARM ASS'Y	1	NL 20002-N201404
		#	• • ARM	1	NL 20002-
2		201-70-72220	• • BUSHING	2	NL 20002-
3		20X-70-22140	• • BUSHING	2	NL 20002-
4		201-70-22141	• • BUSHING	2	NL 20002-
5		201-62-N3740	HOSE	2	N220001-
	C1	201-62-N1710	HOSE	2	NL 20991-N201404
6		201-70-72230	PIN	1	NL 20002-
7		04082-00212	LOCK	1	NL 20002-
8		01010-81230	BOLT	2	NL 20002-
9		01643-31232	WASHER	2	NL 20002-
10		21Y-70-14770	SPACER - 1.0 MM	1	NL 20002-
10A		21Y-70-14780	SPACER	1	NL 20002-
11		201-70-72241	PIN	1	NL 20002-
12		04082-00212	LOCK	1	NL 20002-
13		01010-81230	BOLT	2	NL 20002-
14		01643-31232	WASHER	2	NL 20002-
15		201-70-22150	SPACER - 1.0 MM	1	NL 20002-
16		07145-00060	SEAL, DUST	2	NL 20002-
17		130-09-12931	SEAL, DUST	4	NL 20002-

FIG. T1210-01B0 ARM (2.25M)

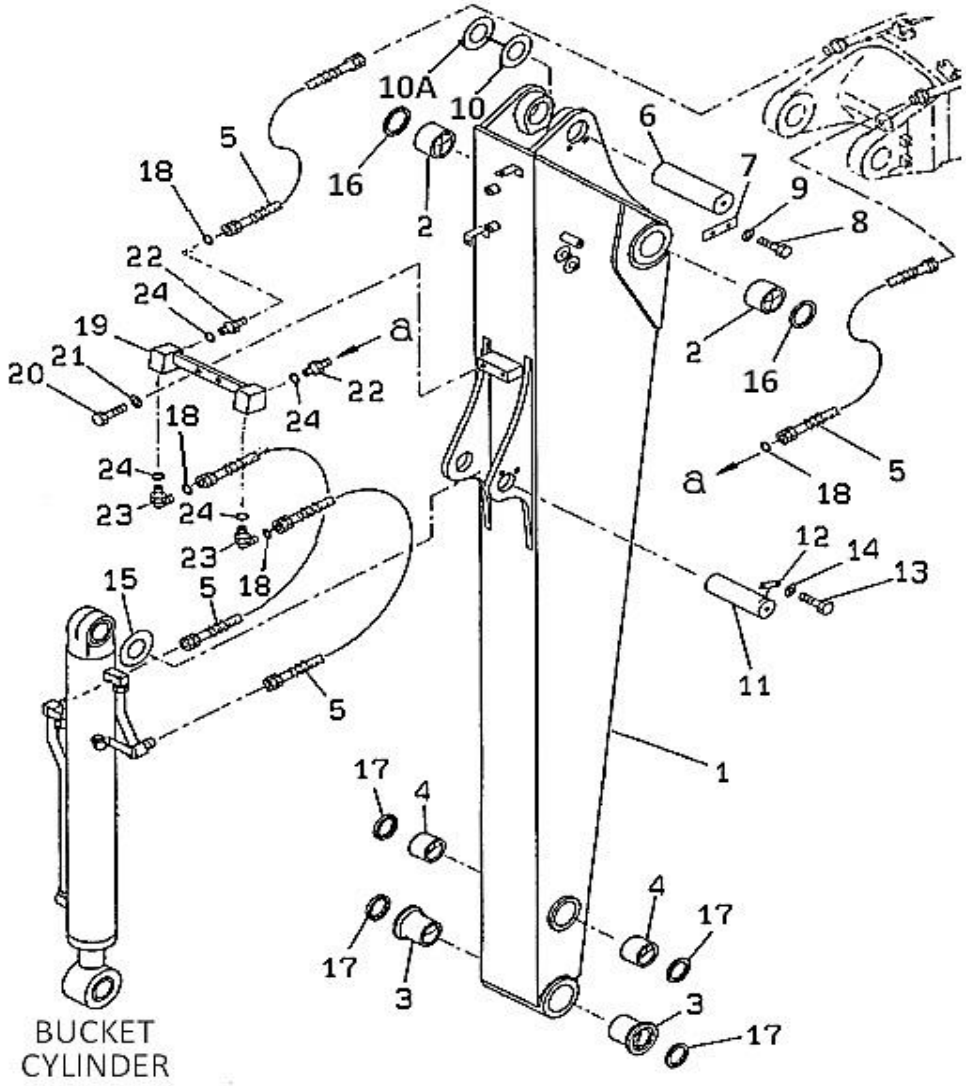

Index	Code	Part Number	Description	Qty	Serial No.
1		201-943-N010	ARM A	1	NL 22780-
		201-943-N220	• ARM ASS`Y	1	NL 22780-
		#	• • ARM	1	NL 22780-
2		201-70-72220	• • BUSHING	2	NL 22780-
3		20X-70-22140	• • BUSHING	2	NL 22780-
4		201-70-22141	• • BUSHING	2	NL 22780-
5		201-62-N3740	HOSE	4	N220001-
	C1	201-62-N1710	HOSE	4	NL 22780-N201404
6		201-70-72230	PIN	1	NL 22780-
7		04082-00212	LOCK	1	NL 22780-
8		01010-81230	BOLT	2	NL 22780-
9		01643-31232	WASHER	2	NL 22780-
10		21Y-70-14770	SPACER - 1.0 MM	1	NL 22780-
10A		21Y-70-14780	SPACER	1	NL 22780-
11		201-70-72241	PIN	1	NL 22780-
12		04082-00212	LOCK	1	NL 22780-
13		01010-81230	BOLT	2	NL 22780-
14		01643-31232	WASHER	2	NL 22780-
15		201-70-22150	SPACER - 1.0 MM	1	NL 22780-
16		07145-00060	SEAL, DUST	2	NL 22780-
17		130-09-12931	SEAL, DUST	4	NL 22780-
18		02896-11012	O-RING	4	NL 22780-
19		201-943-N230	CLAMP	1	NL 22780-
20		01010-81030	BOLT	2	NL 22780-
21		01643-31032	WASHER	2	NL 22780-
22		02781-00422	UNION	2	NL 22780-
23		02783-10422	ELBOW	2	NL 22780-
24		07002-12034	O-RING	4	NL 22780-

PC71-7

FIG. T1210-02A0 ARM - (1 ATTACHMENT)

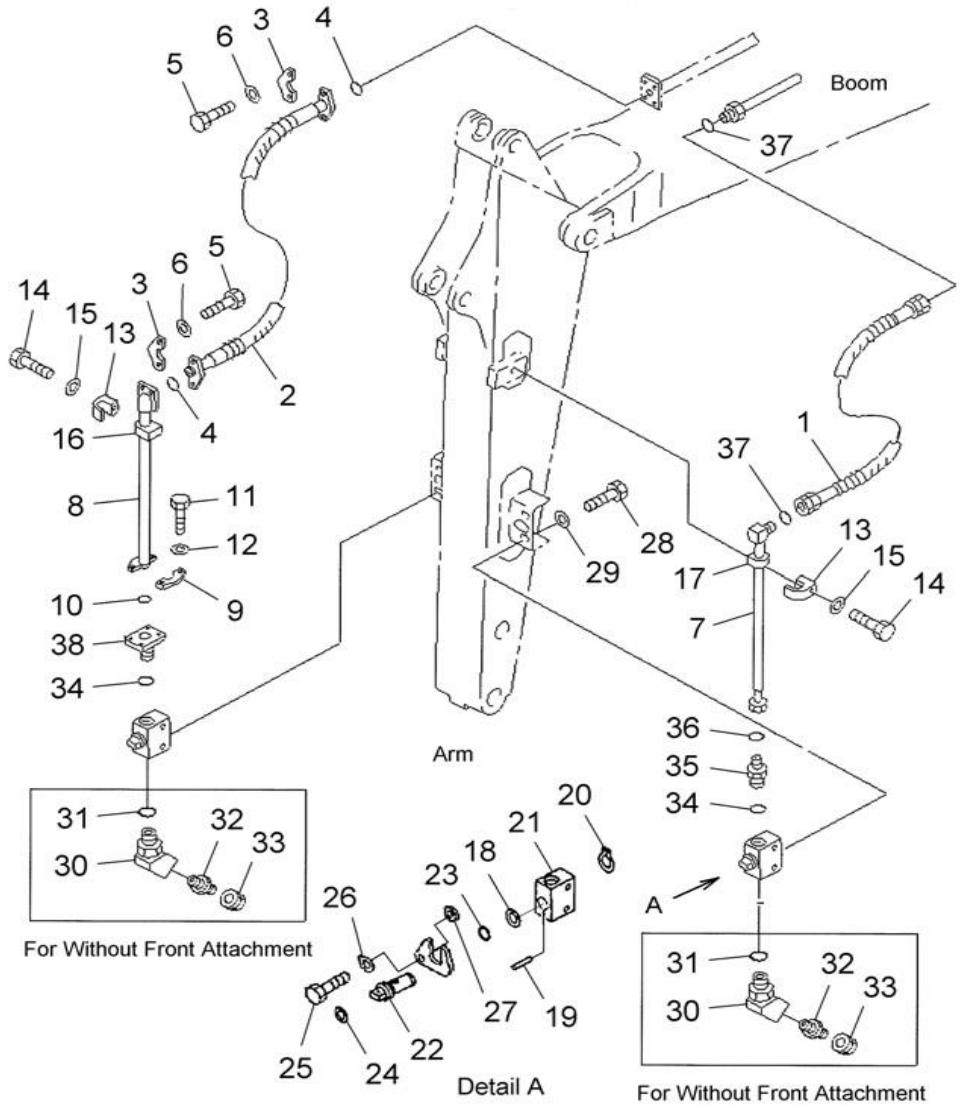

Index	Code	Part Number	Description	Qty	Serial No.
1		201-973-N570	HOSE	1	N220001-
	C1	201-973-N310	HOSE	1	NL 22105 - N201404
2		201-973-N320	HOSE	1	NL 22105
3		07371-30640	FLANGE	4	NL 22105
4		07000-13025	O-RING	2	NL 22105
5		07372-21035	BOLT	8	NL 22105
6		01643-51032	WASHER	8	NL 22105
7		201-973-N180	TUBE	1	NL 22105
8		201-973-7390	TUBE	1	NL 22105
9		07371-30640	FLANGE	2	NL 22105
10		07000-13025	O-RING	1	NL 22105
11		07372-21035	BOLT	4	NL 22105
12		01643-51032	WASHER	4	NL 22105
13		203-973-5780	CLAMP	2	NL 22105
14		01010-81270	BOLT	2	NL 22105
15		01643-31232	WASHER	2	NL 22105
16		203-62-43380	CUSHION	1	NL 22105
17		203-62-43390	CUSHION	1	NL 22105
		203-973-N130	VALVE A	2	N220001-
	C1	203-973-5803	VALVE A	2	NL 22105 - N201404
18		07000-13031	• O-RING	1	NL 22105
19		04025-00412	• PIN,SPRING	1	NL 22105
20		04064-03015	• RING , SNAP	1	NL 22105
21		#	• BODY	1	NL 22105
22		#	• SHAFT	1	NL 22105
23		07000-13025	• O-RING	1	NL 22105
24		203-973-6610	• PLATE	1	NL 22105
25		01010-80825	• BOLT	1	NL 22105
26		01643-30823	• WASHER	1	NL 22105
27		21T-72-14930	• BOSS	1	NL 22105
28		01010-81020	BOLT	4	NL 22105
29		01643-31032	WASHER	4	NL 22105
30		203-973-N170	ELBOW	2	NL 22105
	C1	203-973-5730	ELBOW	2	NL 22105

PC71-7

FIG. T1210-02A0 ARM - (1 ATTACHMENT)

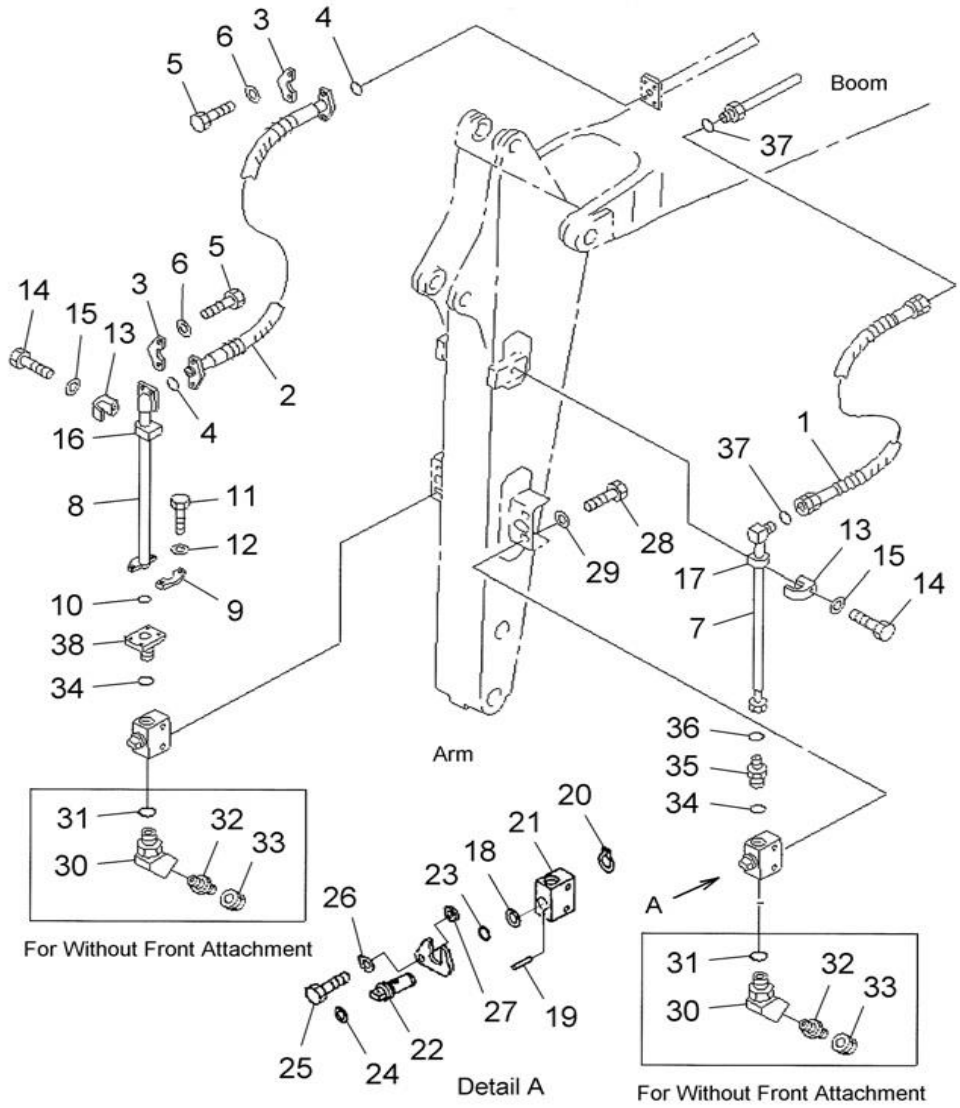

Index	Code	Part Number	Description	Qty	Serial No.
31		07002-13334	O-RING	2	NL 22105
32		20D-973-3350	NIPPLE	2	NL 22105
33		20D-973-3360	PLUG	2	NL 22105
34		07002-13334	O-RING	2	NL 22105
35		201-973-N370	NIPPLE	1	NL 22105
36		02896-11012	O-RING	1	NL 22105
37		02896-11012	O-RING	2	NL 22105
38		201-973-6810	NIPPLE	1	NL 22105

PC71-7

FIG. T1210-04A0 ARM (1 ATTACHMENT)

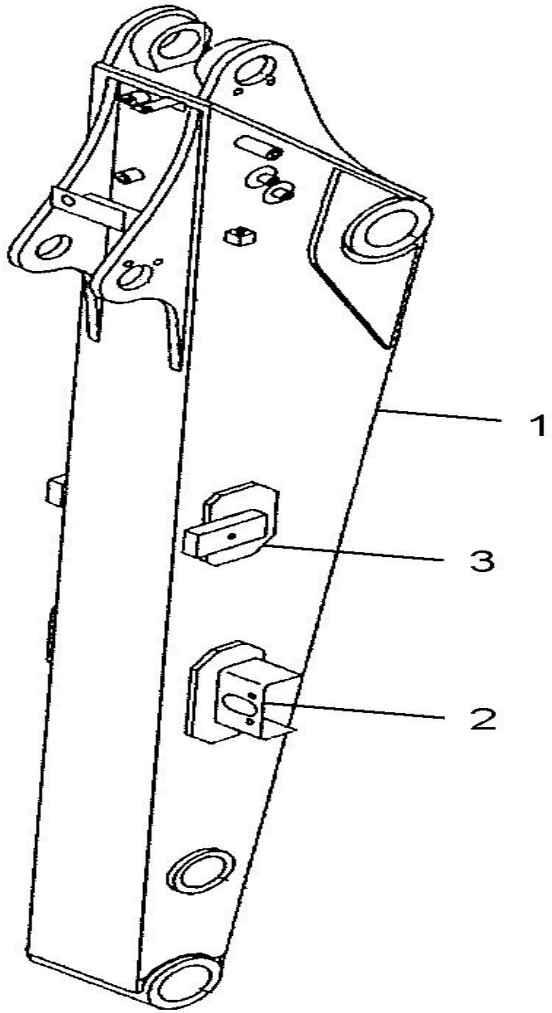

Index	Code	Part Number	Description	Qty	Serial No.
		201-70-N0100	ARM A.	1	NL 22105
1		#	• ARM	1	NL 22105
2		202-973-6321	• • BRACKET	2	NL 22105
3		202-973-6331	• • BRACKET	2	NL 22105

PC71-7

FIG. T1210-03A0 ARM (1 ATTACHMENT)(QUARRY SPEC)

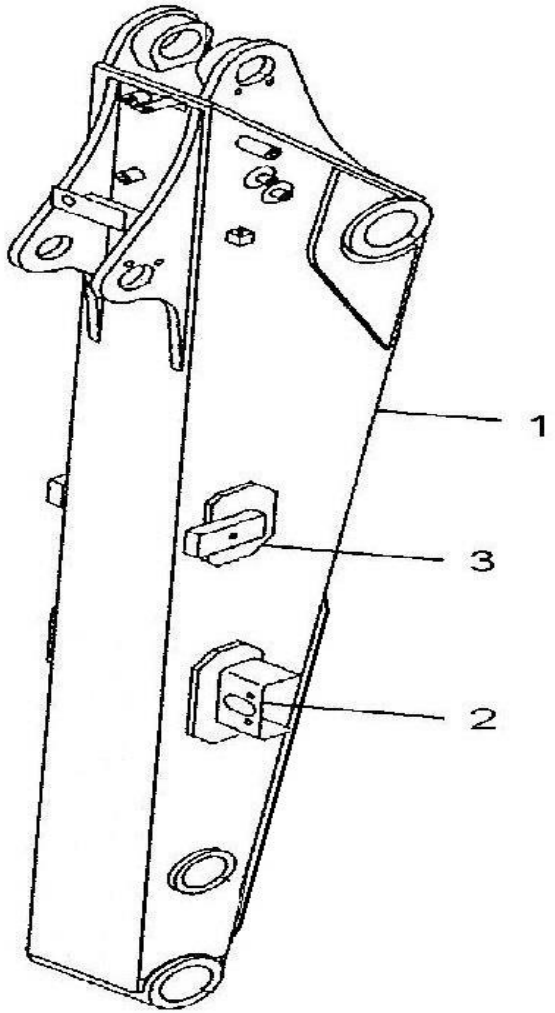

Index	Code	Part Number	Description	Qty	Serial No.
1		201-973-N200	ARM	1	N200103
2		202-973-6321	• BRACKET	2	N200103
3		202-973-6331	• BRACKET	2	N200103

PC71-7

FIG. T1220-01A0 BUCKET CYLINDER

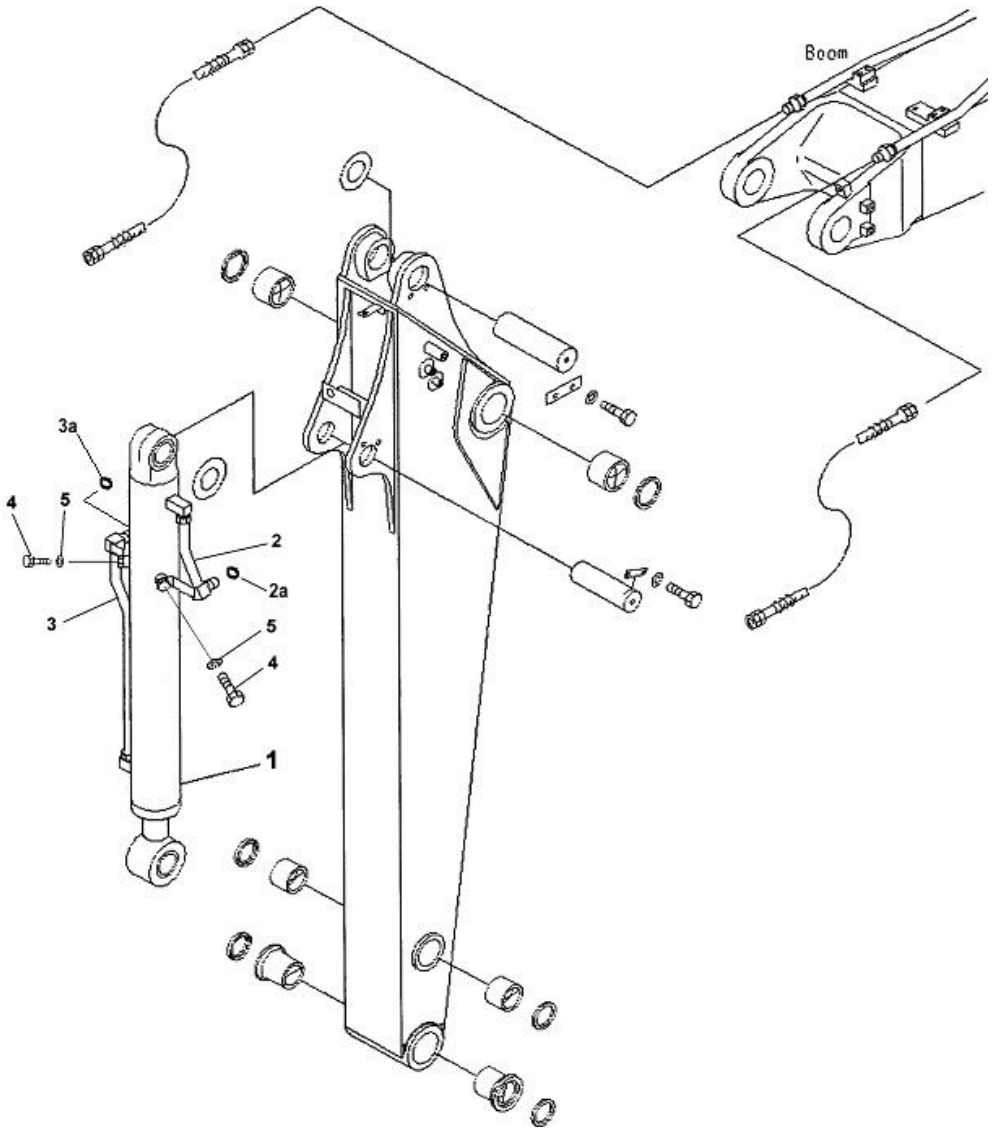

Index	Code	Part Number	Description	Qty	Serial No.
		201-63-N1321	BUCKET CYLINDER ASSY	1	N220001-
	C1	201-63-N1320	BUCKET CYLINDER ASSY	1	NL 20991-N201404
1		(707-00-N1131)	• CYLINDER	1	N220001-
	C1	(707-00-N1130)	• CYLINDER	1	NL 20991-N201404
2		201-63-N1270	• TUBE	1	NL 20991-
2a		02896-11012	• O-RING	1	NL 20991-
3		201-63-N1280	• TUBE	1	NL 20991-
3a		02896-11012	• O-RING	1	NL 20991-
4		01010-81020	• BOLT	2	NL 20001-
5		01643-31032	• WASHER	2	NL 20001-

PC71-7

FIG. T1230-01A1 BUCKET LINK (STRENGTH TYPE)

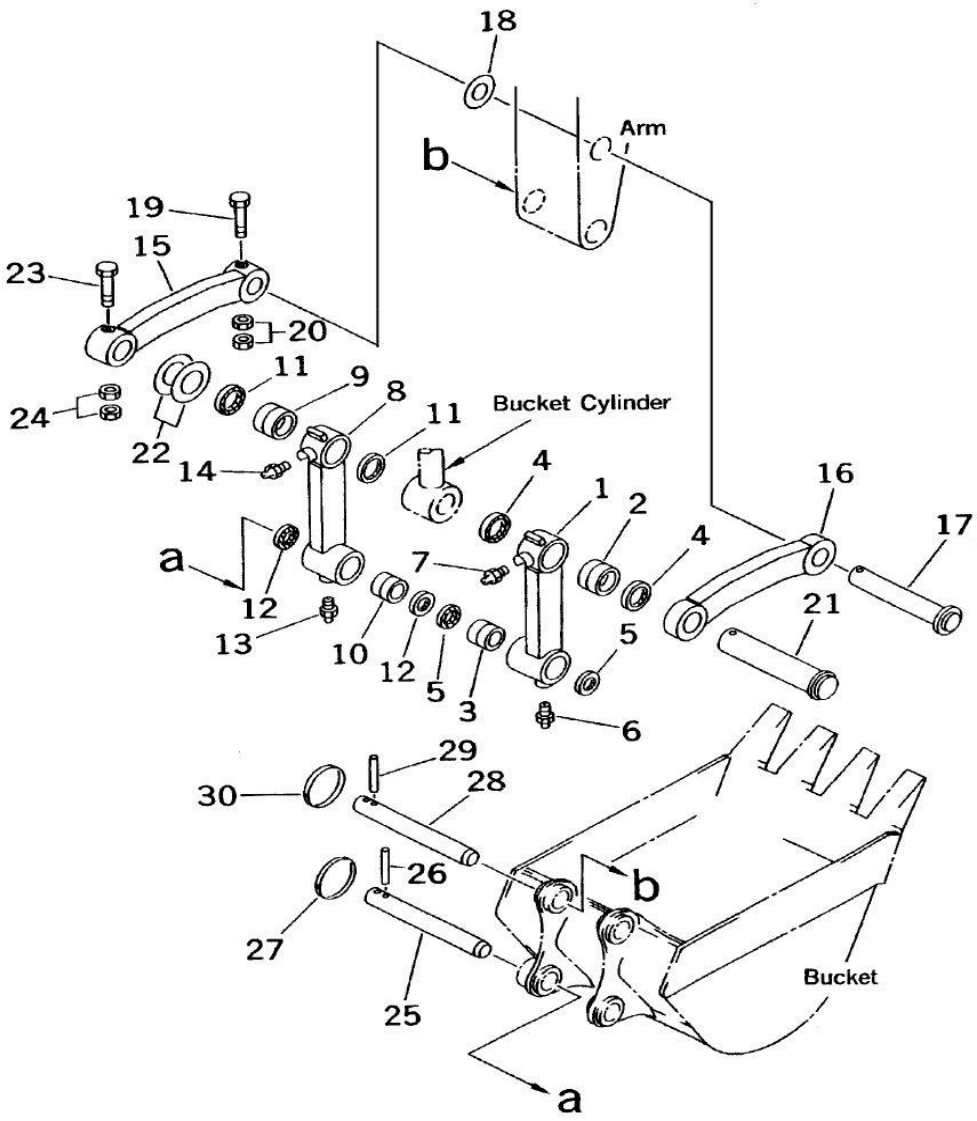

Index	Code	Part Number	Description	Qty	Serial No.
		201-70-N0030	LINK ASS'Y, LH	1	NL 20001-
		201-70-00830	• LINK ASS'Y, LH	1	NL 20001-
1		#	• • LINK, LH	1	NL 20001-
2		20X-70-24150	• • BUSHING	1	NL 20001-
3		201-70-64270	• • BUSHING	1	NL 20001-
4		07145-00060	SEAL, DUST	2	NL 20001-
5		07145-00050	SEAL, DUST	2	NL 20001-
6		07020-00000	FITTING, GREASE	1	NL 20001-
7		07020-00900	FITTING, GREASE	1	NL 20001-
		201-70-N0040	LINK ASS'Y, RH	1	NL 20001-
		201-70-00840	• LINK ASS'Y, RH	1	NL 20001-
8		#	• • LINK, RH	1	NL 20001-
9		20X-70-24150	• • BUSHING	1	NL 20001-
10		201-70-64270	• • BUSHING	1	NL 20001-
11		07145-00060	SEAL, DUST	2	NL 20001-
12		07145-00050	SEAL, DUST	2	NL 20001-
13		07020-00000	FITTING, GREASE	1	NL 20001-
14		07020-00900	FITTING, GREASE	1	NL 20001-
		201-70-N0060	LINK	1	NL 20001-
15		201-70-N1960	• LINK	1	NL 21541-
	C1	201-70-64170	• LINK	1	NL 20001-NL 21540
		201-70-N0050	LINK	1	NL 20001-
16		201-70-N2430	• LINK	1	N220001-
	C1	201-70-64180	• LINK	1	NL 20001-N201404
17		20X-70-24260	SHAFT	1	NL 20001-
18		201-70-22150	SPACER - 1.0 MM	1	NL 20001-
19		01011-81630	BOLT	1	NL 21541-
	C1	01011-81620	BOLT	1	NL 20001-NL 21540
20		01580-11613	NUT	2	NL 20001-
21		201-70-64220	SHAFT	1	NL 20001-
22		21Y-70-14770	SPACER - 1.0 MM	1	NL 20001-
		21Y-70-14780	SPACER - 2.0 MM	1	NL 20001-
23		01011-81630	BOLT	1	NL 21541-
	C1	01011-81620	BOLT	1	NL 20001-NL 21540

PC71-7

FIG. T1230-01A1 BUCKET LINK (STRENGTH TYPE)

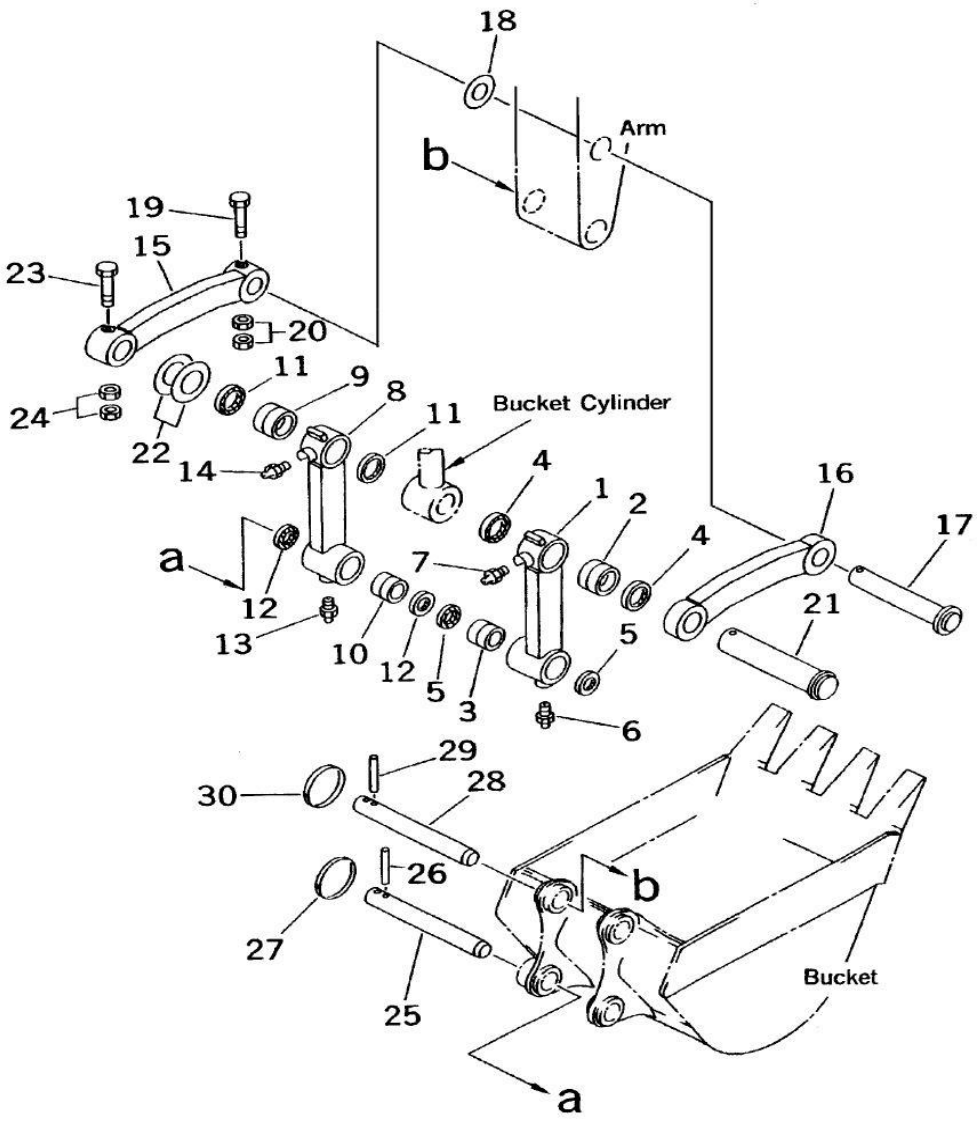

Index	Code	Part Number	Description	Qty	Serial No.
24		01580-11613	NUT	2	NL 20001-
25		201-70-74230	PIN	1	NL 20001-
26		201-70-74260	PIN	1	NL 20001-
27		201-70-74274	RING	1	NL 20001-
28		201-70-74230	PIN	1	NL 20001-
29		201-70-74240	PIN	1	NL 20001-
30		201-70-74254	RING	1	NL 20001-
			WHILE USING 0.09M3 BUCKET		
29		201-70-74260	PIN	1	NL 20001-
30		201-70-74274	RING	1	NL 20001-

PC71-7

FIG. T1510-01A4 BUCKET 0.09 CU.M WIDTH 450MM (VERTICAL PIN TYPE)

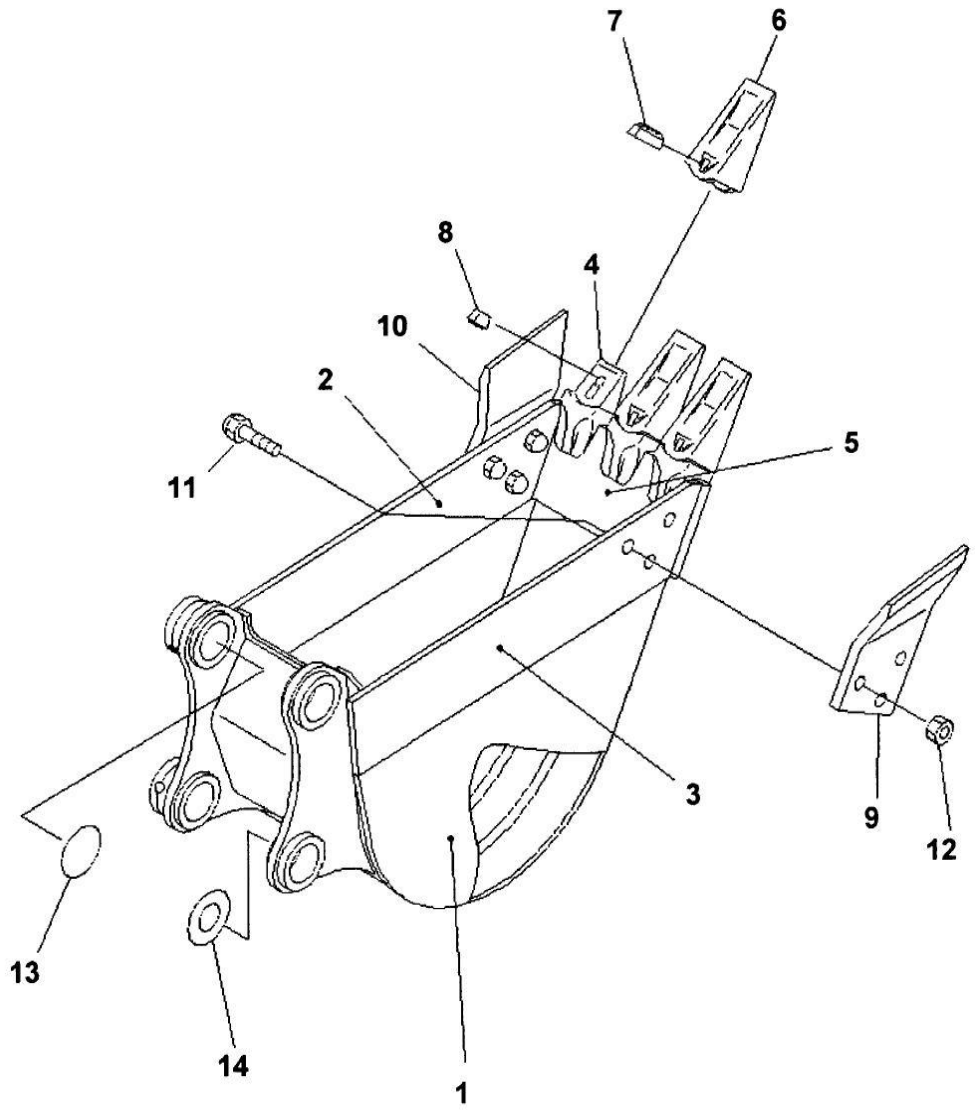

Index	Code	Part Number	Description	Qty	Serial No.
1		201-70-N0090	BUCKET (350MM)	1	NL 20001-
		201-926-N110	• BUCKET (350MM)	1	NL 20001-
2		201-926-N120	• • PLATE, RH (WELDED)	1	NL 20001-
3		201-926-N130	• • PLATE, LH (WELDED)	1	NL 20001-
4		20X-70-23150	• • ADAPTER (WELDED)	3	NL 20001-
5		20X-926-2320	• • LIP (WELDED)	1	NL 20001-
6		20X-70-N1120	TOOTH	3	N220001-
	C1	20X-70-23160	TOOTH	3	NL 20001-N201404
7		203-70-43212	PIN	3	NL 20001-
8		203-70-43220	PIN	3	NL 20001-
9		201-70-N1850	SIDE CUTTER, LH	1	NL 20114-
	C1	201-70-74171	SIDE CUTTER, LH	1	NL 20001-NL20113
10		201-70-N1860	SIDE CUTTER, RH	1	NL 20114-
	C1	201-70-74181	SIDE CUTTER, RH	1	NL 20001-NL20113
11		208-32-11231	BOLT	6	NL 20001-
		21W-70-21810	BOLT	6	NL 20001-
12		01803-02228	NUT	6	NL 20001-
13		175-30-16210	O-RING	2	NL 20001-
14		135-70-13290	SPACER - 3.2MM	1	NL 20001-
14		135-70-13251	SPACER - 1.6MM	1	NL 20001-
14		201-70-22150	SPACER - 1.0MM	1	NL 20001-

PC71-7

FIG. T1510-N01A0 REINFORCED BUCKET - 0.3M3 WIDTH 750MM (HORIZONTAL PIN TYPE)

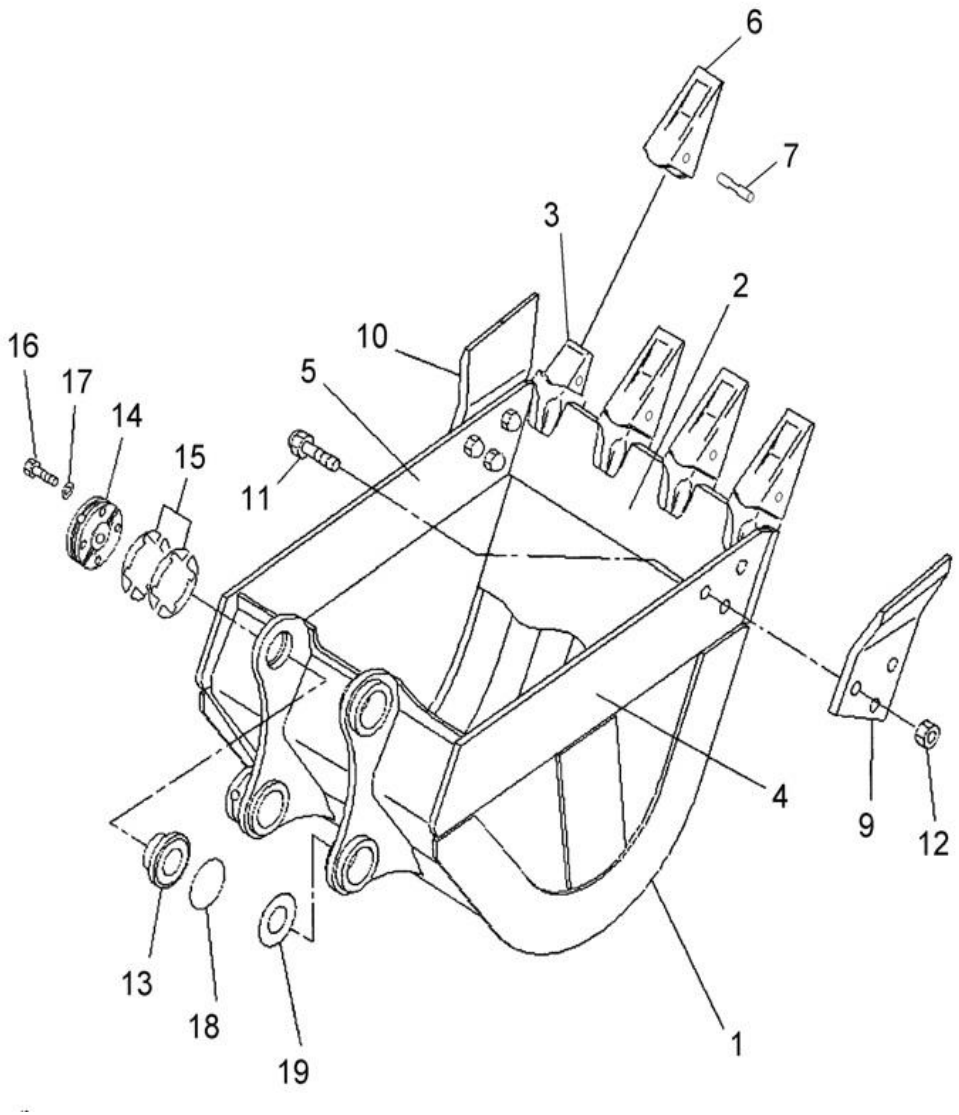

Index	Code	Part Number	Description	Qty	Serial No.
1		201-70-N0080	BUCKET A	1	NL 20220-N201404
		201-70-N1570	• BUCKET ASSEMBLY	1	NL 20220-N201404
		201-70-N1410	• • BUCKET, (650MM)	1	NL 20220-N201404
2		201-70-N1720	• • • PLATE (WELDED)	1	NL 20220-N201404
3		20X-70-14151	• • • ADAPTOR (WELDED)	4	NL 20220-N201404
4		21W-70-24C10	• • • PLATE, LH(WELDED)	1	NL 20220-N201404
5		21W-70-24C20	• • • PLATE L, RH(WELDED)	1	NL 20220-N201404
6		20X-70-N1130	• • TOOTH	4	NL 20220-N201404
7		201-70-N2000	• • PIN A	4	NL 21412-N201404
		#	• • • PIN	1	NL 20220-N201404
		#	• • • SPRING	1	NL 20220-N201404
9		201-70-N1850	• • SIDE CUTTER, L.H	1	NL 20220-N201404
10		201-70-N1860	• • SIDE CUTTER, R.H	1	NL 20220-N201404
11		21W-70-21810	• • BOLT	6	NL 20220-N201404
12		01803-02228	• NUT	6	NL 20220-N201404
13		20X-70-N1150	SPACER	1	NL 20245-N201404
13	C1	20X-70-24231	SPACER	1	NL 20220-NL 20244
14		201-70-74220	PLATE	1	NL 20220-N201404
15		20X-70-24250	PLATE - 0.5MM	20	NL 20220-N201404
16		01010-81260	BOLT	4	NL 20220-N201404
17		01343-31232	WASHER	4	NL 20220-N201404
18		175-30-16210	O-RING	2	NL 20220-N201404
19		135-70-13290	SPACER - 3.2MM	1	NL 20220-N201404
19		135-70-13251	SPACER - 1.6MM	1	NL 20220-N201404
19		201-70-22150	SPACER - 1.0MM	1	NL 20220-N201404

PC71-7

FIG. T1510-N02A0 SHALLOW BUCKET - 03 CU.M

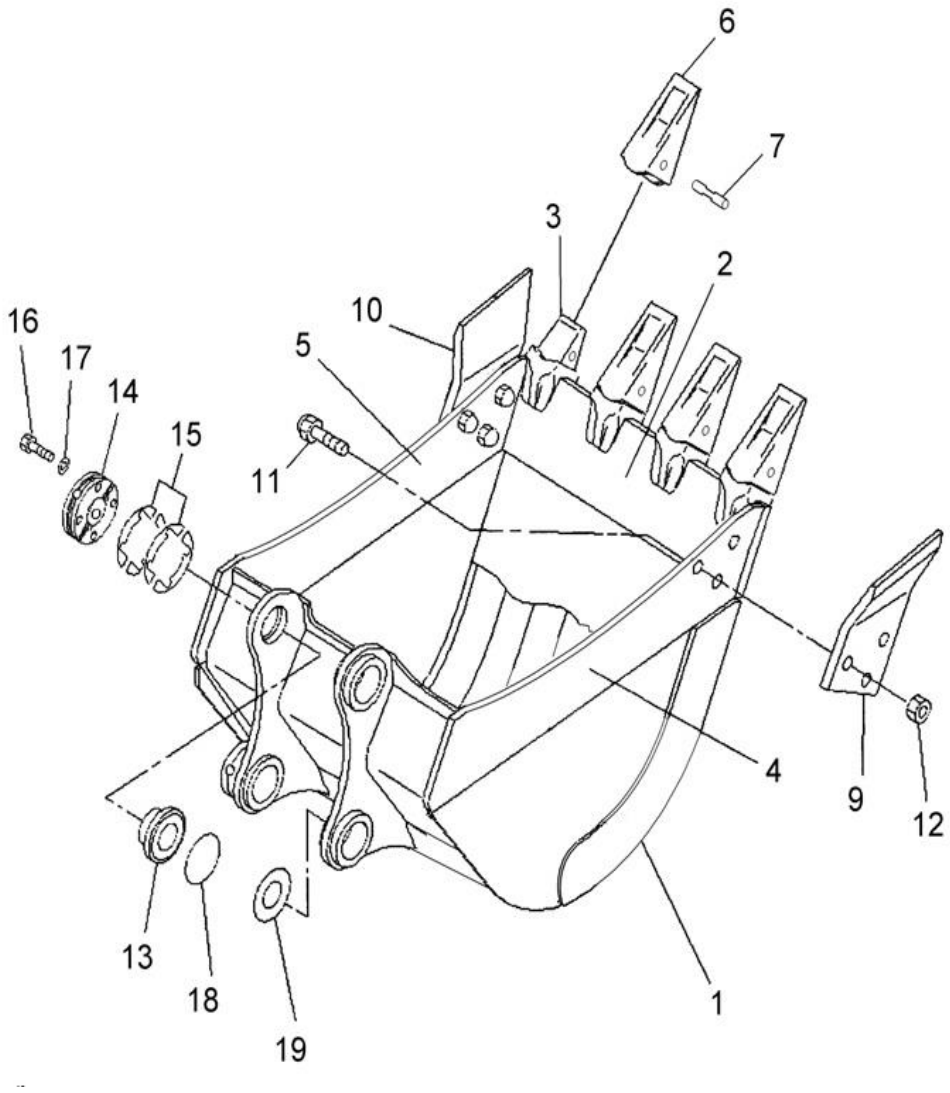

Index	Code	Part Number	Description	Qty	Serial No.
1		201-70-N0070	BUCKET ASSEMBLY	1	NL 20281 -
		201-920-N100	• BUCKET ASSEMBLY	1	NL 20281 -
		201-920-N110	• • BUCKET STR	1	NL 20281 -
2		201-920-N241	• • • PLATE (WELDED)	1	NL 22896
	C1	201-920-N240	• • • PLATE (WELDED)	1	NL 20281 - NL 22895
3		20X-70-14151	• • • ADAPTOR (WELDED)	4	NL 20281 -
4		201-920-N190	• • • PLATE (WELDED)	1	NL 20281 -
5		201-920-N180	• • • PLATE R.H(WELDED)	1	NL 20281 -
6		20X-70-N1130	• • TOOTH	4	NL 20281 -
7		201-70-N2000	• • PIN A	4	NL 21412 -
		#	• • • PIN	4	NL 20281 -
		#	• • • SPRING	4	NL 20281 -
9		201-70-N1850	• • SIDE CUTTER LH	1	NL 20281 -
10		201-70-N1860	• • SIDE CUTTER RH	1	NL 20281 -
11		208-32-11231	• • BOLT	6	N220001-
	C1	21W-70-21810	• • BOLT	6	NL 20281 - N201404
12		01803-02228	• • NUT	6	NL 20281 -
13		20X-70-N1150	SPACER	1	NL 20281 -
14		201-70-74220	PLATE	1	NL 20281 -
15		20X-70-24250	SPACER	16	NL 20281 -
16		01010-81230	01010-81260	4	NL 20281 -
17		01643-31232	WASHER	4	NL 20281 -
18		175-30-16210	O-RING	2	NL 20281 -
19		135-70-13290	SPACER - 3.2MM	1	NL 20281 -
19		135-70-13251	SPACER - 1.6MM	1	NL 20281 -
19		201-70-22150	SPACER - 1.0MM	1	NL 20281 -

PC71-7

FIG. T1510-N04A0 SHALLOW BUCKET - 0.35 CU.M

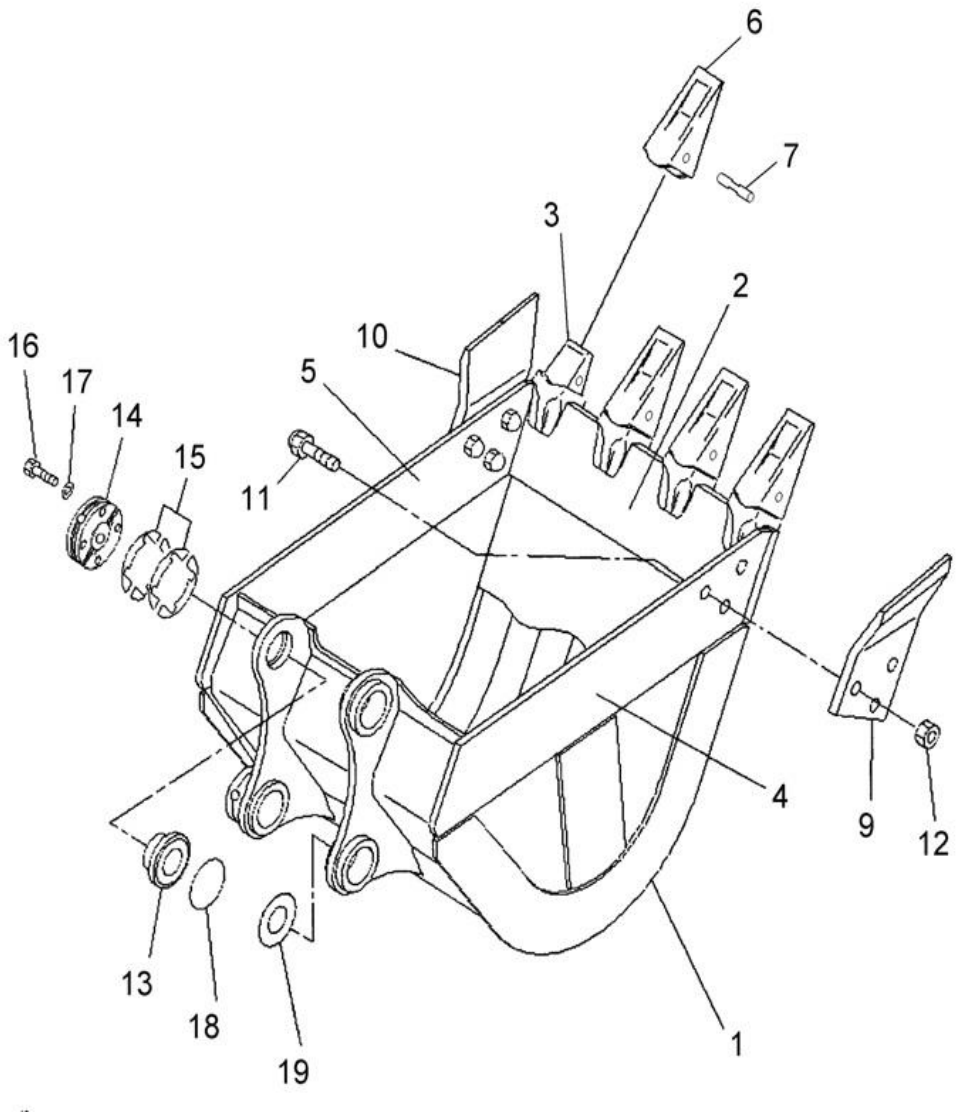

Index	Code	Part Number	Description	Qty	Serial No.
1		201-70-N0120	BUCKET A	1	N220001-
		201-920-N450	• • BUCKET	1	N220001-
2		201-920-N311	• • • PLATE (WELDED)	1	NL 22896-
3		20X-70-14151	• • • ADAPTOR (WELDED)	4	N220001-
4		201-920-N270	• • • PLATE, LH(WELDED)	1	N220001-
5		201-920-N280	• • • PLATE L, RH(WELDED)	1	N220001-
6		20X-70-N1130	• • TOOTH	4	N220001-
7		201-70-N2000	• • PIN A	4	N220001-
		#	• • • PIN	1	N220001-
		#	• • • SPRING	1	N220001-
9		201-70-N1850	• • SIDE CUTTER, L.H	1	N220001-
10		201-70-N1860	• • SIDE CUTTER, R.H	1	N220001-
11		21W-70-21810	• • BOLT	6	N220001-
12		01803-02228	• NUT	6	N220001-
13		20X-70-N1150	SPACER	1	N220001-
13	C1	20X-70-24231	SPACER	1	N220001-
14		201-70-74220	PLATE	1	N220001-
15		20X-70-24250	PLATE - 0.5MM	16	N220001-
16		01010-81260	BOLT	4	N220001-
17		01343-31232	WASHER	4	N220001-
18		175-30-16210	O-RING	2	N220001-
19		135-70-13290	SPACER - 3.2MM	1	N220001-
19		135-70-13251	SPACER - 1.6MM	1	N220001-
19		201-70-22150	SPACER - 1.0MM	1	N220001-

PC71-7

FIG. T1510-N03A0 BUCKET 0.3 CU.M (HORIZONTAL PIN TYPE)(QUARRY SPEC)

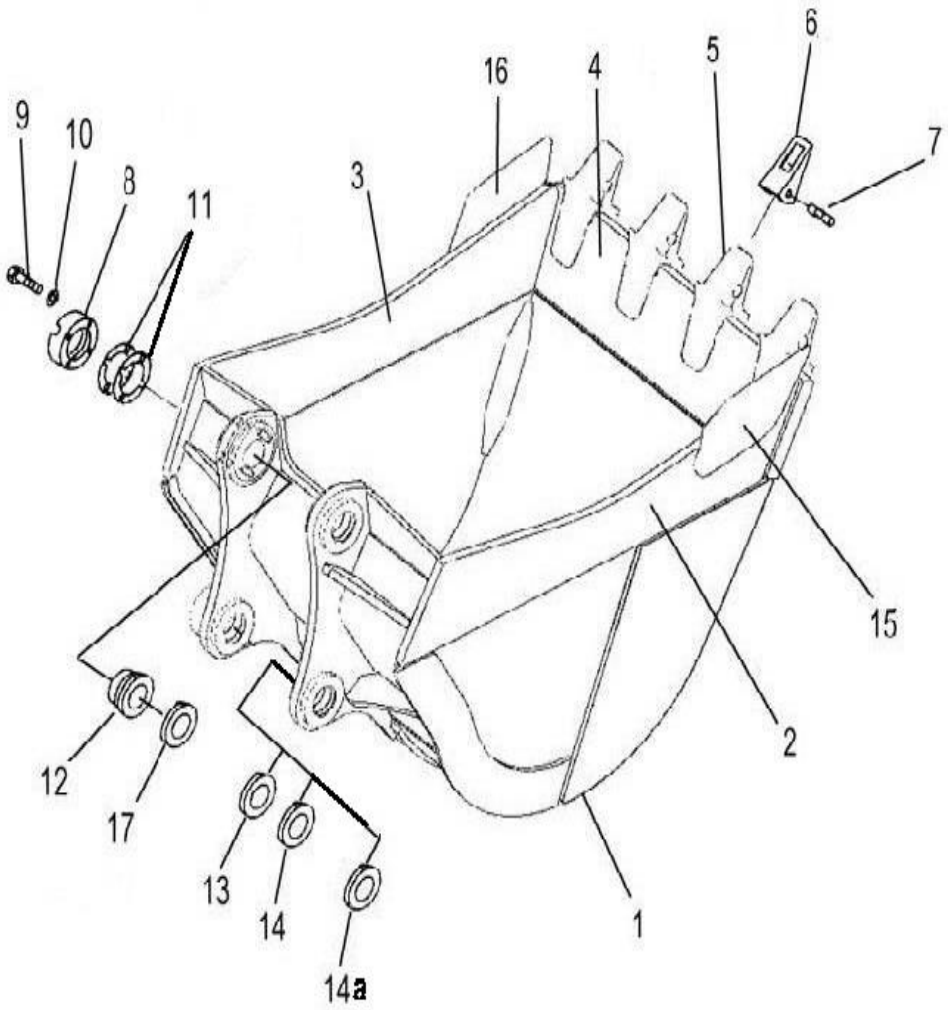

Index	Code	Part Number	Description	Qty	Serial No.
		201-70-N0130	BUCKET ASSEMBLY	1	N200103-
1		201-934-N110	• BUCKET	1	N200103-
2		201-934-N150	• • PLATE (WELDED)	1	N200103-
3		201-934-N160	• • PLATE (WELDED)	1	N200103-
4		201-934-N170	• • PLATE (WELDED)	1	N200103-
5		20X-70-14151	• • ADAPTER (WELDED)	4	N200103-
6		20X-70-N1130	TOOTH	4	N200103-
7		201-70-N2000	PIN	4	N200103-
8		201-70-74220	PLATE	1	N200103-
9		01010-81260	BOLT	4	N200103-
10		01643-31232	WASHER	4	N200103-
11		20X-70-24250	SPACER 0.5MM	16	N200103-
12		20X-70-N1150	BUSHING	1	N200103-
13		135-70-13290	SPACER	1	N200103-
14		135-70-13251	SPACER	1	N200103-
14a		201-70-22150	SPACER	1	N200103-
15		20Y-934-N260	PLATE L.H	1	N200103-
16		20Y-934-N270	PLATE R.H	1	N200103-
17		175-30-16210	O-RING	2	N200103-

FIG. T1710-01A0 BLADE

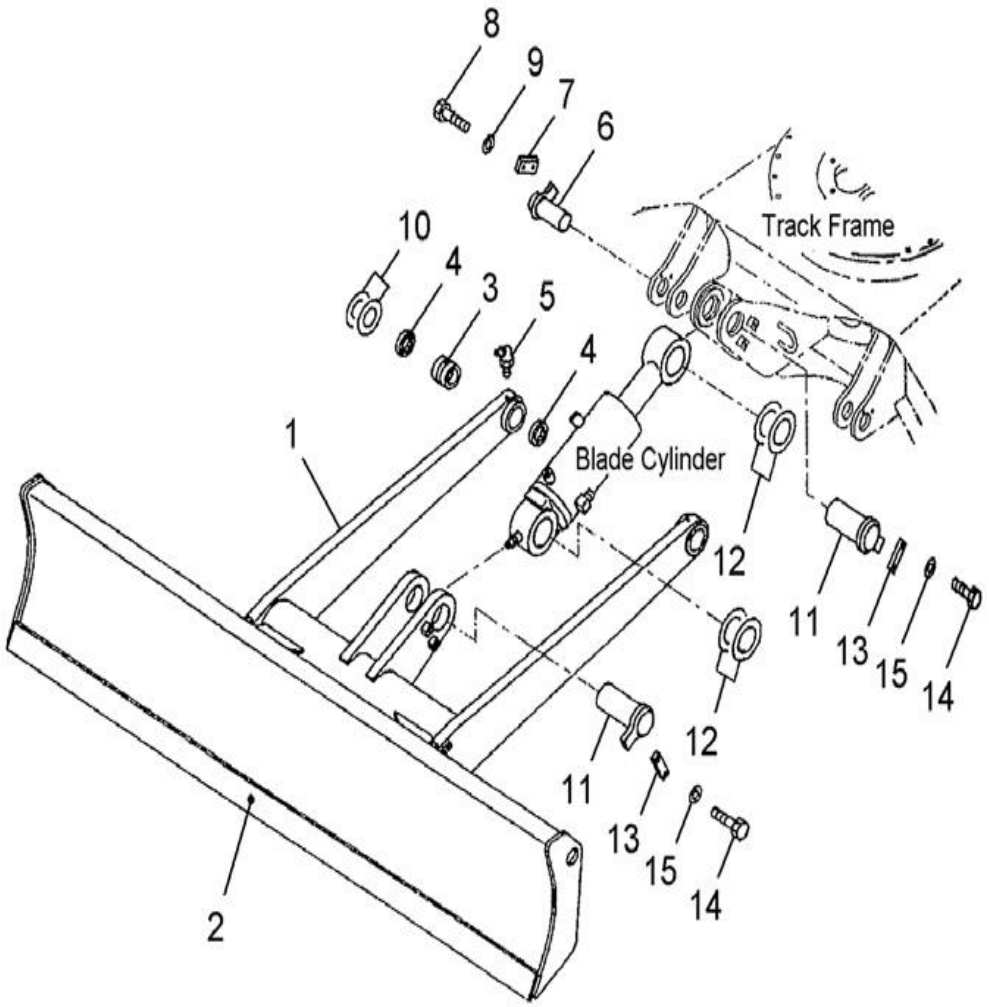

Index	Code	Part Number	Description	Qty	Serial No.
1		201-910-N020	BLADE A	1	NL 20001-
		201-910-0020	• BLADE ASS'Y	1	NL 20001-
		#	• • BLADE	1	NL 20001-
2		201-910-7180	• • • EDGE, CUTTING (WELDED)	1	N220001-
	C1	201-910-7190	• • • EDGE, CUTTING (WELDED)	1	NL 20001- N201404
3		07144-10505	• • BUSHING	2	NL 20001-
4		07145-00050	SEAL, DUST	4	NL 20001-
5		07020-00675	FITTING, GREASE	2	NL 20001-
6		21W-71-N1130	PIN	2	NL 22139-
	C1	21W-71-11141	PIN	2	NL 20001-NL22138
7		201-30-N2180	LOCK	2	NL 22139-
	C1	04082-00212	LOCK	2	NL 20001-NL22138
8		01010-81230	BOLT	4	NL 20001-
9		01643-31232	WASHER	4	NL 20001-
10		201-70-22150	SPACER - 1.0MM	2	NL 20001-
11		21W-71-11131	PIN	2	NL 20001-
12		21Y-70-14830	SPACER - 1.0MM	6	NL 20001-
13		203-46-56270	PLATE	2	NL 20001-
14		01010-81230	BOLT	4	NL 20001-
15		01643-31232	WASHER	4	NL 20001-
16		135-70-13290	SPACER	3	N220001-
17		135-70-13251	SPACER	3	N220001-
18		21Y-70-14840	SPACER	6	N220001-

PC71-7

FIG. T1720-01A0 BLADE CYLINDER

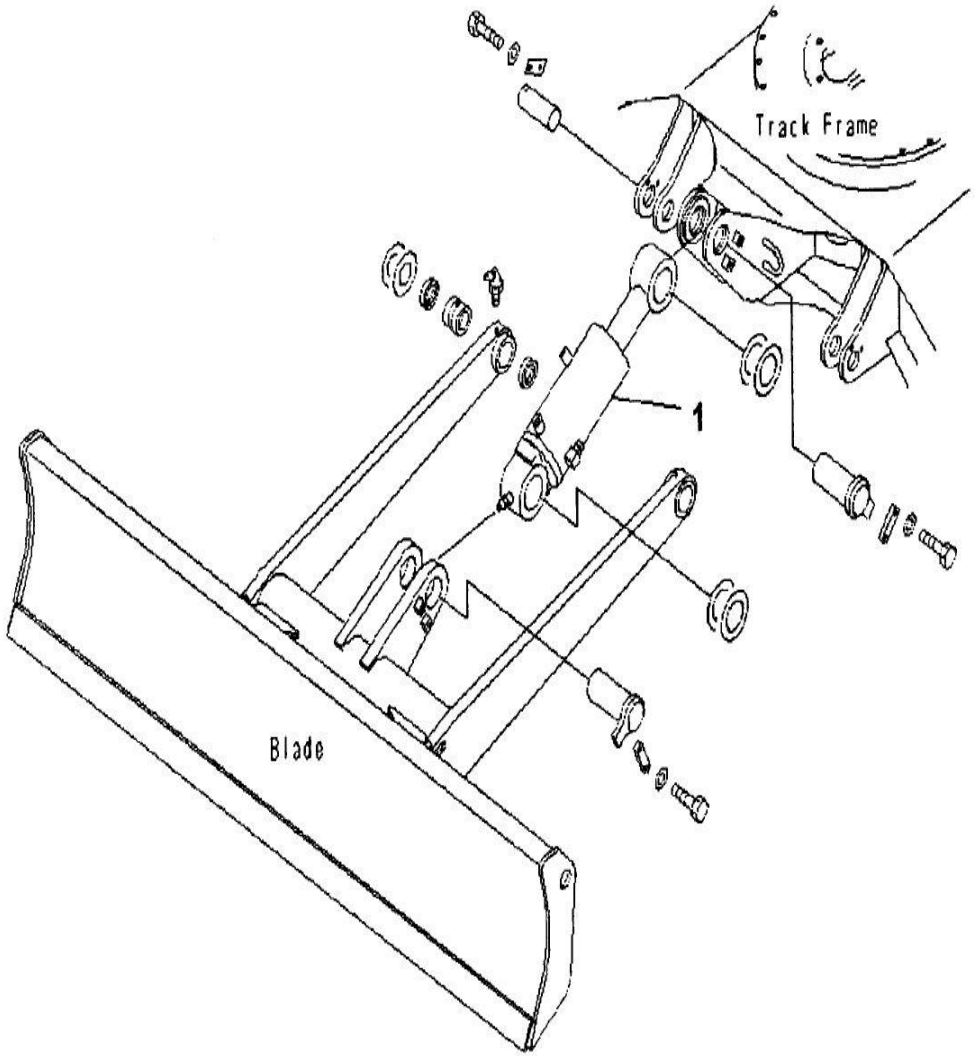

Index	Code	Part Number	Description	Qty	Serial No.
1		(707-00-N1141)	CYLINDER ASS'Y, BLADE	1	N220001-
	C1	(707-00-N1140)	CYLINDER ASS'Y, BLADE	1	NL 20991- N201404

PC71-7

MARKS & PLATES

PC71-7

FIG. U0100-01A0 DECAL AND PLATES

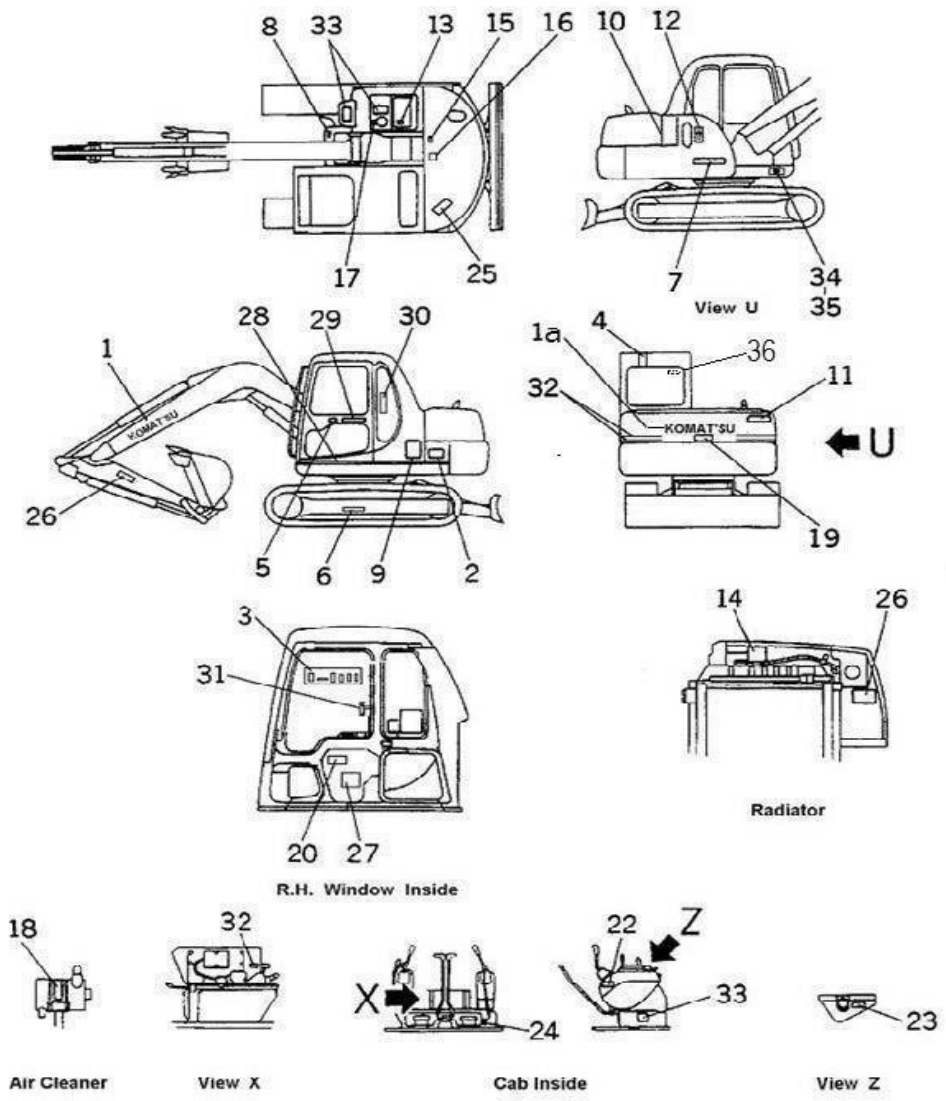

Index	Code	Part Number	Description	Qty	Serial No.
1		201-00-N1250	DECAL ASSEMBLY	1	NL 20143-
		09690-P0710	NAME PLATE	2	N200128-
1		09690-P0315	NAME PLATE - FOR TUNNELING	2	N220001-
	C1	201-00-N1160	NAME PLATE - FOR TUNNELING	2	NL 22390- N201404
1a		09690-P0710	NAME PLATE	1	N200128-
2		201-00-N1220	MARK PLATE	2	NL 20143-
3		201-00-N1270	CAB DECAL ASSEMBLY	1	NL 20143-
4		09803-A0481	PLATE	1	NL 20143-
5		20Y-00-22450	PLATE	1	NL 20143-
6		09657-A0881	PLATE	2	NL 20143-
7		09690-B0315	MARK PLATE - KOMATSU	1	NL 20143-
8		20Y-00-N1160	MARK PLATE -	1	NL 20143-
9		201-00-N1530	MARK PLATE	1	N220001-
	C1	201-00-N1170	MARK PLATE	1	NL 20143- N201404
10		201-00-N1180	MARK PLATE	1	NL 20143-
11		201-00-N1230	MARK PLATE	1	NL 20143-
12		203-00-31120	PLATE	1	NL 20143-
13		203-00-N1120	PLATE	1	NL 20143-
14		09653-A0481	PLATE - SAFETY	1	NL 20143-
15		09805-C0881	PLATE - SAFETY	1	NL 20143-
16		21W-98-31820	PLATE	1	NL 20143-
17		09669-0000E	PLATE	1	NL 20143-
18		201-00-1191	PLATE	1	NL 20143-
19		09667-A0481	PLATE SAFETY	1	NL 20143-
20		09963-03001	PLATE	1	NL 20143-
22		203-00-56290	PLATE	1	NL 20143-
23		362-54-38150	STARTER SWITCH PLATE	1	NL 20143-
24		09685-00001	PLATE	1	NL 20143-
25		09808-A0881	PLATE	1	NL 20143-
26		09134-A0881	PLATE	2	NL 20143-
27	C1	20Y-00-N1280	STICKER - KOMATSU LOGO	1	NL 20143-N200127
28		20Y-00-N1810	FLOOR SHEET	1	N200128-
29		09693-00400	EMBLEM	1	N220001-
	C1	20Y-54-N1390	PLATE - CABIN DOOR	1	NL 20845- N201404

PC71-7

FIG. U0100-01A0 DECAL AND PLATES

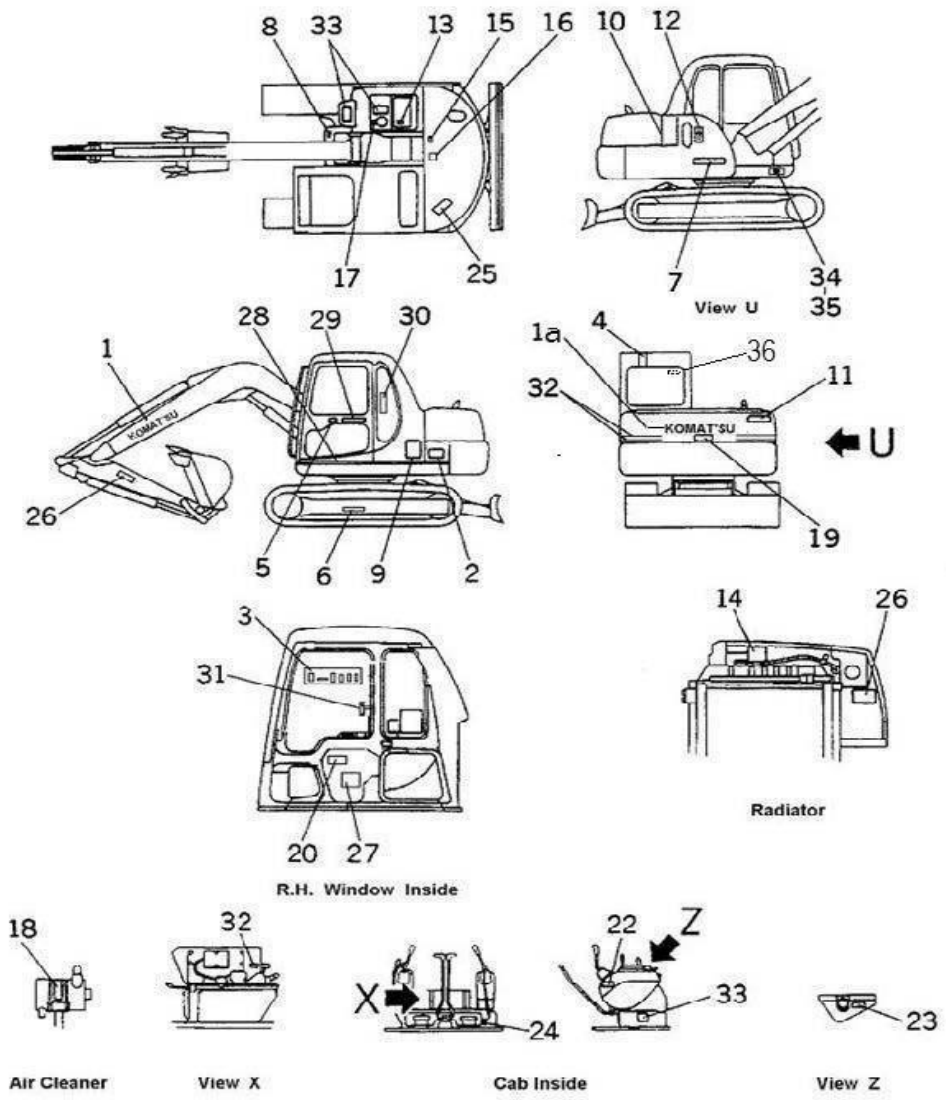

Index	Code	Part Number	Description	Qty	Serial No.
	C1	20Y-54-N1160	PLATE - CABIN DOOR	1	NL 20143-NL 20844
30		201-00-N1510	LIFTING CHART	1	N200128-
31	C1	201-00-N1280	LOCK RELEASE STICKER	1	NL 20143-NL 22679
32		201-00-N1240	STRIBES FOR HOOD	1	NL20143-
33		20Y-00-N1230	ANTI SLIP STICKER	2	NL20143-
34		09601-130H0	NAME PLATE	1	N220001-
	C1	20Y-00-N1520	NAME PLATE	1	N200128- N201404
	C1	20Y-00-N1150	MACHINE MODEL PLATE	1	NL 20143-NL 20189
35	C1	04418-13060	SCREW.	1	NL20143 -
36		20Y-00-N1140	PLATE.	1	NL 20001-
37		203-00-N1110	PLATE.	1	N220001-
38		22U-00-21270	PLATE.	1	N220001-
39		09659-A057B	PLATE.	2	N220001-
40		201-00-71330	PLATE.	1	N220001-
41		09845-00480	PLATE.	1	N220001-

PC71-7

ACCESSORY

PC71-7

FIG. V0300-01A0 TOOL KIT

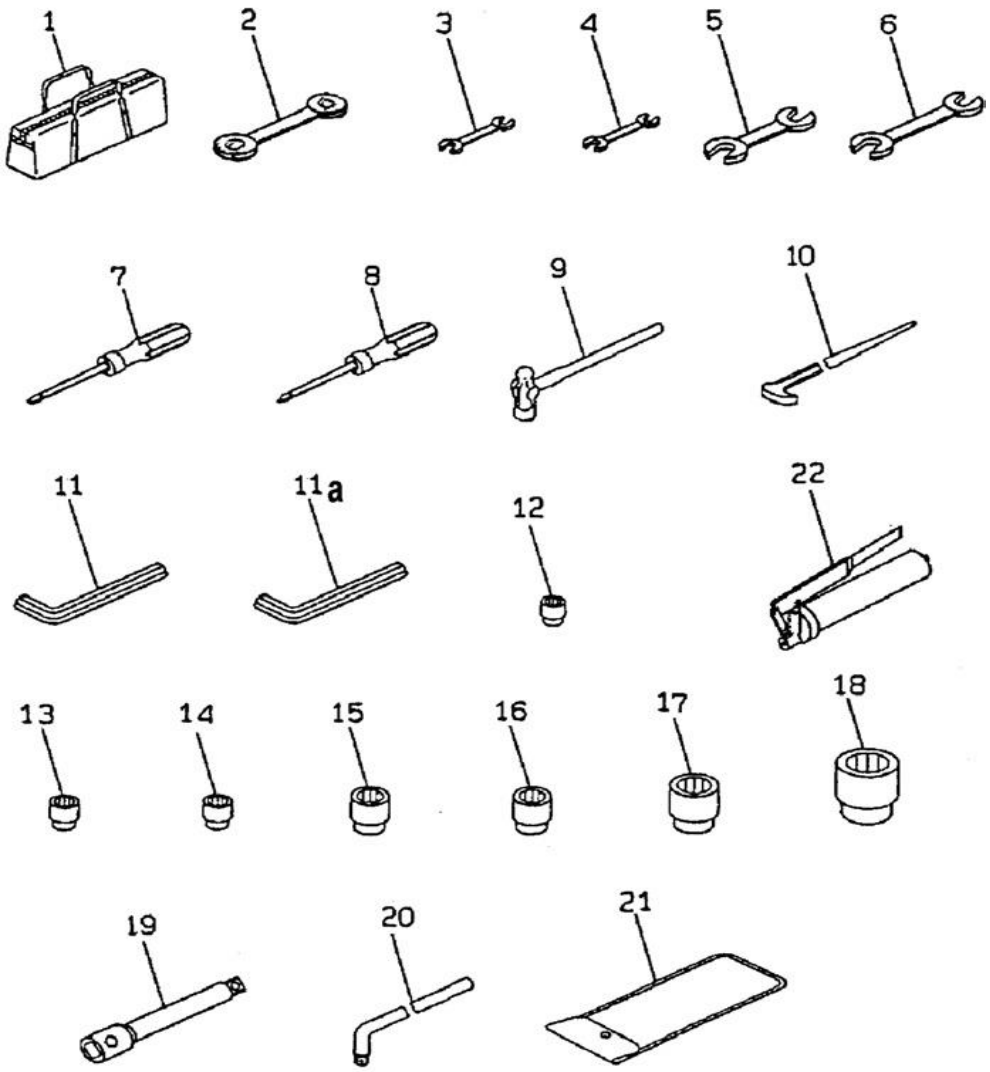

Index	Code	Part Number	Description	Qty	Serial No.
1		09056-04613	BAG	1	N220001-
	C1	20Y-98-N1250	BAG	1	NL 20147- N201404
2		201-98-N1160	RING - SPANNER 12 - 13	1	NL 20147-
3		208-98-N1130	DOUBLE SPANNER 10 - 11	1	NL 20147-
4		20Y-98-N1320	DOUBLE SPANNER 14 - 15	1	NL 20147-
5		20Y-98-N1330	DOUBLE SPANNER 16 - 17	1	NL 20147-
6		20Y-98-N1220	DOUBLE SPANNER 30 - 32	1	NL 20147-
7		20Y-98-N1210	SCREW DRIVER	1	NL 20147-
8		201-98-N1170	ELECTRICIAN'S SCREW DRIVER	1	NL 20147-
9		20Y-98-N1230	HAMMER	1	NL 20147-
10		20Y-98-N1260	BAR	1	NL 20147-
11		20Y-98-N1360	ALLEN KEY - 5mm	1	NL 20147-
11a		20Y-98-N1340	ALLEN KEY - 8mm	1	NL 20595-
12		20Y-98-N1120	SOCKET - 12mm	1	NL 20595-
13		20Y-98-N1130	SOCKET - 14mm	1	NL 20147-
14		20Y-98-N1110	SOCKET - 16mm	1	NL 20147-
15		20Y-98-N1270	SOCKET - 18mm	1	NL 20147-
16		20Y-98-N1160	SOCKET - 22mm	1	NL 20147-
17		20Y-98-N1170	SOCKET - 24mm	1	NL 20147-
18		20Y-98-N1180	SOCKET - 30mm	1	NL 20147-
19		20Y-98-N1190	EXTENSION BAR	1	NL 20147-
20		20Y-98-N1240	HANDLE	1	NL 20147-
21		20Y-98-21140	TOOL BAG	1	NL 20147-
22		20Y-98-N1370	HAND OPERATED GREASE GUN- 5kg	1	NL 20147-

PC71-7

MISCELLANEOUS

FIG. W1117-01A1 MANUAL GREASING

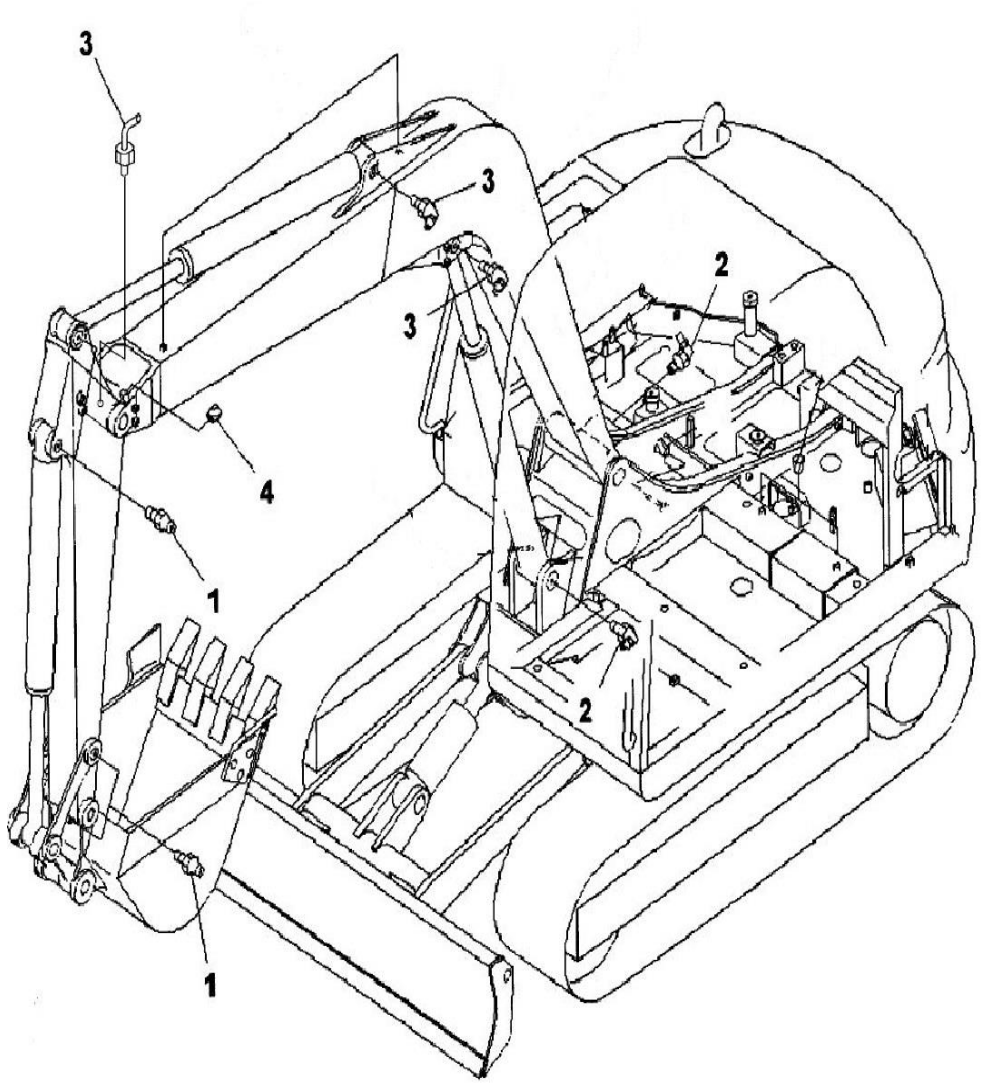

Index	Code	Part Number	Description	Qty	Serial No.
1		07020-00000	FITTING, GREASE	4	NL 20001-
2		07020-00900	FITTING, GREASE	3	NL 20001-
3		07020-00675	FITTING, GREASE	3	NL 20001-
4		07049-01418	PLUG.....	1	NL 20001-

PC71-7

SERVICE KIT

PC71-7

FIG. Y1600-01A0A MAIN PUMP (1/6)

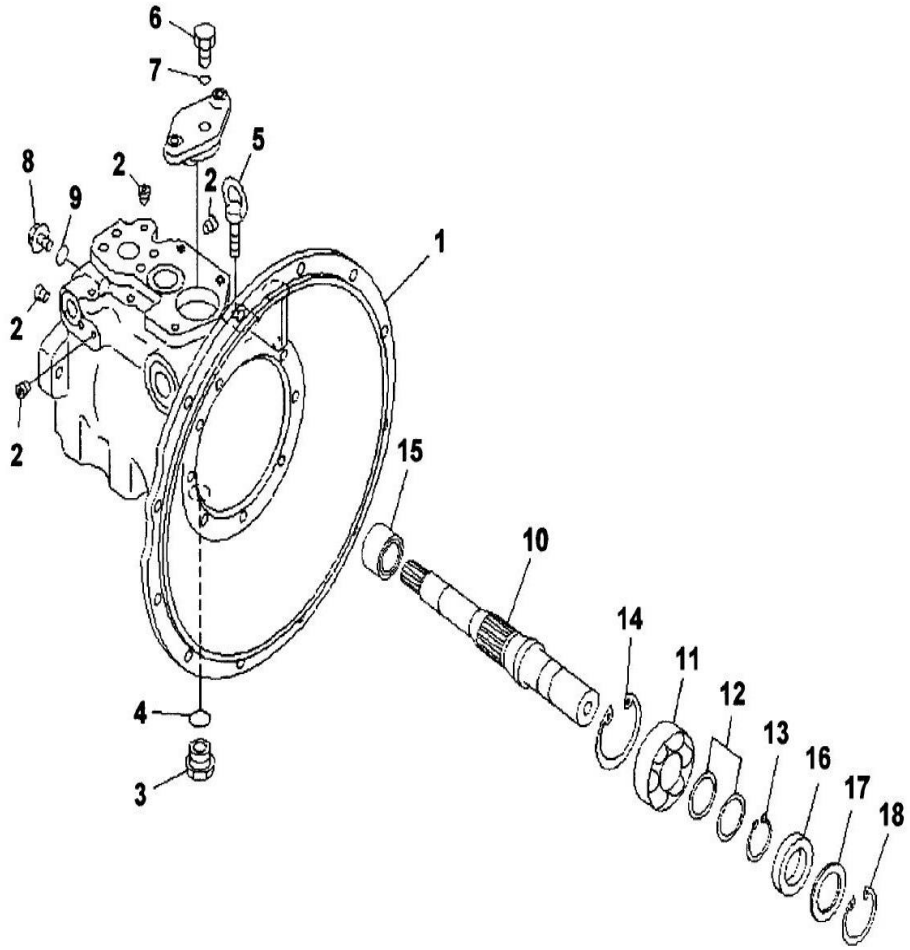

Index	Code	Part Number	Description	Qty	Serial No.
1		708-1W-00131	PUMP ASS'Y	1	NL 20001-
			THIS ASSY CONSISTS OF		
			ALL PARTS SHWN. IN FIGS		
			Y1600-01A0A TO Y1600-06A0A		
		708-1W-01130	• PUMP SUB ASS'Y	1	NL 20001-
		(*708-1W-04110)	• • CASE ASS'Y	1	NL 20001-
		#	• • • CASE, PUMP	1	NL 20001-
2		#	• • • PLUG	10	NL 20001-
3		07044-12412	• • PLUG	1	NL 20001-
4		07002-62432	• • O-RING	1	N220001-
	C1	708-1W-28910	• • O-RING	1	NL 20001- N201404
5		04530-11018	• • BOLT, EYE	1	NL 20001-
6		720-68-19870	• • PLUG	1	NL 20001-
7		07002-61223	• • O-RING	1	N220001-
	C1	708-2L-23940	• • O-RING	1	NL 20001- N201404
8		706-8E-14191	• • PLUG	1	NL 20001-
9		07002-11823	• • O-RING	1	NL 20001-
10		(*708-1W-22310)	• • SHAFT	1	NL 20001-
11		(*708-1W-22140)	• • BEARING	1	NL 20001-
12		(*708-23-05011)	• • WASHER KIT	1	NL 20001-
		#	• • • WASHER - 260MM	1	NL 20001-
		#	• • • WASHER - 270MM	1	NL 20001-
		#	• • • WASHER - 280MM	1	NL 20001-
		#	• • • WASHER - 250MM	1	NL 20001-
13		(*708-23-12840)	• • RING, SNAP	1	NL 20001-
14		(*04065-07225)	• • RING	1	NL 20001-
15		(*708-1W-22320)	• • BEARING	1	NL 20001-
16		708-8D-12221	• • SEAL, OIL	1	N220001-
	C1	708-8D-12220	• • SEAL, OIL	1	NL 20001- N201404
17		708-1W-22160	• • SPACER	1	NL 20001-
18		04065-05520	• • RING	1	NL 20001-

PC71-7

FIG. Y1600-02A0A MAIN PUMP (2/6)

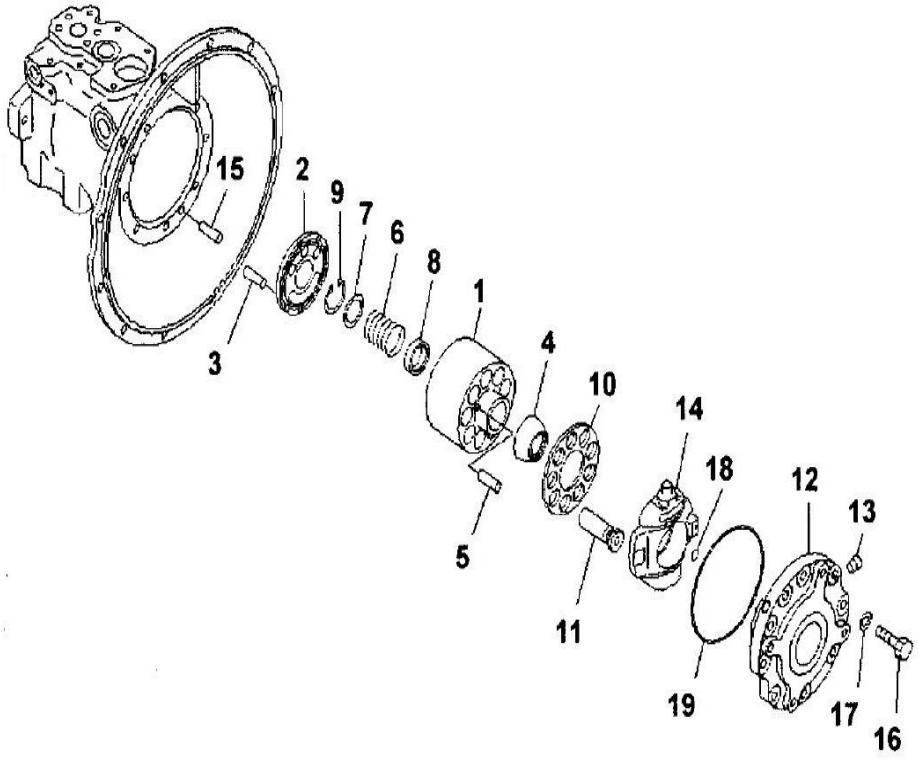

Index	Code	Part Number	Description	Qty	Serial No.
1		(708-1W-00131)	PUMP ASS'Y	1	NL 20001-
			THIS ASSY CONSISTS OF		
			ALL PARTS SHWN. IN FIGS.		
			Y1600-01A0A TO Y1600-06A0A		
		(708-1W-01130)	• PUMP SUB ASS'Y	1	NL 20001-
		(*708-1W-04180)	• • CYLINDER BLOCK ASS'Y	1	NL 20001-
		#	• • • BLOCK, CYLINDER	1	NL 20001-
2		#	• • • PLATE VALVE	1	NL 20001-
3		(*720-68-19610)	• • PIN	1	NL 20001-
4		(*708-1W-23351)	• • GUIDE, RETAINER	1	NL 20001-
5		(*708-7L-13360)	• • PIN	3	NL 20001-
6		(*708-1W-23150)	• • SPRING	1	NL 20001-
7		(*708-1W-23130)	• • SEAT	1	NL 20001-
8		(*708-1W-23140)	• • SEAT	1	NL 20001-
9		(*04065-04218)	• • RING, SNAP	1	NL 20001-
10		(*708-1W-33340)	• • RETAINER, SHOE	1	NL 20001-
11		(*708-1W-33310)	• • PISTON SUB ASS'Y	9	NL 20001-
		(*708-1W-04160)	• • CRADLE ASS'Y	1	NL 20001-
		(*708-1W-04150)	• • • CRADLE SUB ASS'Y	1	NL 20001-
12		#	• • • CRADLE	1	NL 20001-
13		#	• • • PLUG	1	NL 20001-
14		(*708-1W-23450)	• • • CAM, ROCKER	1	NL 20001-
15		(*04020-01024)	• • PIN	1	NL 20001-
16		(*01010-81035)	• • BOLT	8	NL 20001-
17		(*01643-31032)	• • WASHER	8	NL 20001-
18		(*07000-B2011)	• • O-RING	1	NL 20001-
19		(*07000-02145)	• • O-RING	1	NL 20001-

PC71-7

FIG. Y1600-03A0A MAIN PUMP (3/6)

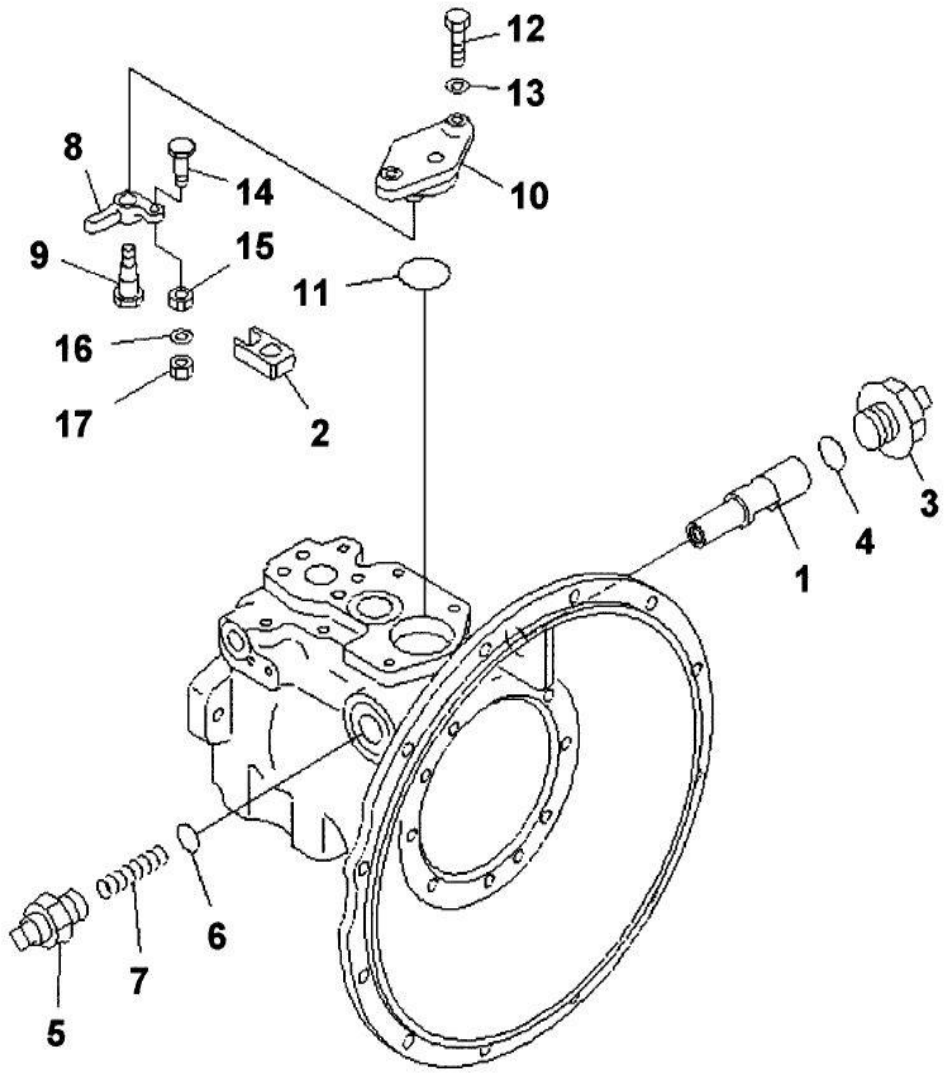

Index	Code	Part Number	Description	Qty	Serial No.
1		(708-1W-00131)	PUMP ASS'Y	1	NL 20001-
			THIS ASSY CONSISTS OF		
			ALL PARTS SHWN. IN FIGS.		
			Y1600-01A0A TO Y1600-06A0A		
		(708-1W-01130)	• • PUMP SUB ASS'Y	1	NL 20001-
		(*708-1W-24150)	• • PISTON, SERVO	1	NL 20001-
2		(*708-1W-24450)	• • SLIDER	1	NL 20001-
3		(*708-1W-24250)	• • BOLT, ADJUST	1	NL 20001-
4		07002-63334	• • O-RING	1	N220001-
	C1	708-1W-28930	• • O-RING	1	NL 20001- N201404
5		(*708-1W-24311)	• • BOLT, ADJUST	1	NL 20001-
6		07002-62434	• • O-RING	1	N220001-
	C1	708-1W-28910	• • O-RING	1	NL 20001- N201404
7		708-1W-24350	• • SPRING	1	NL 20001-
8		(*708-1W-25840)	• • LEVER	1	NL 20001-
9		(*708-1W-26132)	• • PIN	1	NL 20001-
10		(*708-1W-26113)	• • COVER	1	NL 20001-
11		(*07000-03045)	• • O-RING	1	NL 20001-
12		(*01010-80830)	• • BOLT	2	NL 20001-
13		(*01643-30823)	• • WASHER	2	NL 20001-
14		(*708-1W-26210)	• • PIN	1	NL 20001-
15		(*708-1W-26221)	• • SLIDER	1	NL 20001-
16		(*708-1W-26230)	• • WASHER	1	NL 20001-
17		01580-10605	• • NUT	1	NL 20001-

FIG. Y1600-04A0A MAIN PUMP (4/6)

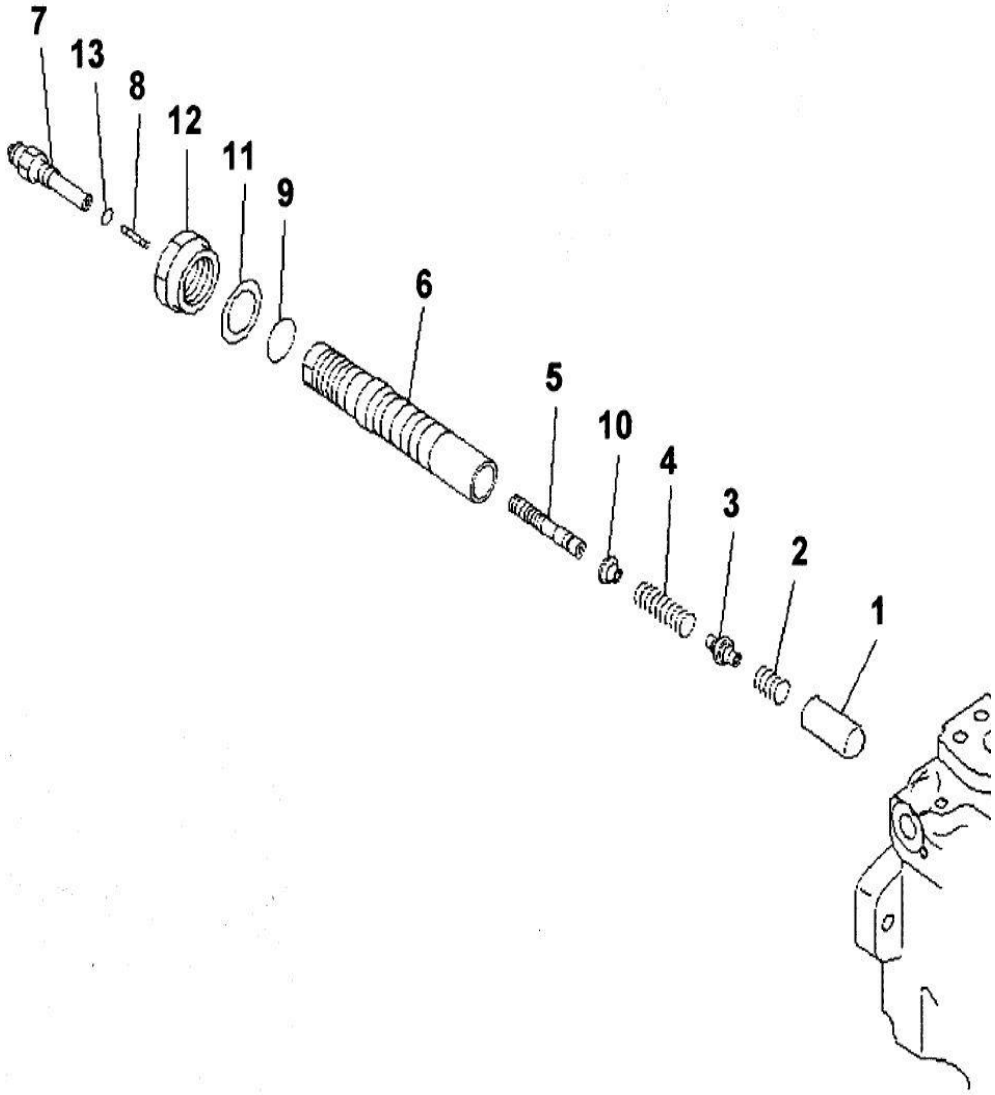

Index	Code	Part Number	Description	Qty	Serial No.
1		(708-1W-00131)	PUMP ASS'Y	1	NL 20001-
			THIS ASSY CONSISTS OF.....		
			ALL PARTS SHWN. IN FIGS.....		
			Y1600-01A0A TO Y1600-06A0A.....		
		708-1W-04691	• VALVE ASS'Y, PC	1	NL 20001-
		(*708-1W-25110)	• • PISTON	1	NL 20001-
2		(*708-1W-26410)	• • SPRING	1	NL 20001-
3		(*708-1W-25140)	• • SEAT	1	NL 20001-
4		(*708-1W-26420)	• • SPRING	1	NL 20001-
5		(*708-1W-25910)	• • SPOOL	1	NL 20001-
6		(*708-1W-25192)	• • SLEEVE	1	NL 20001-
7		(*708-1W-26470)	• • NIPPLE	1	NL 20001-
8		(*708-1W-26480)	• • PIN	1	NL 20001-
9		07002-63034	• • O-RING	1	N220001-
	C1	708-1W-28920	• • O-RING	1	NL 20001- N201404
10		(*708-1W-26460)	• • SEAT	1	NL 20001-
11		(*708-1W-25351)	• • WASHER	1	NL 20001-
12		(*708-1W-25311)	• • NUT	1	NL 20001-
13		(*07002-11223)	• • O-RING	1	NL 20001-

FIG. Y1600-05A0A MAIN PUMP (5/6)

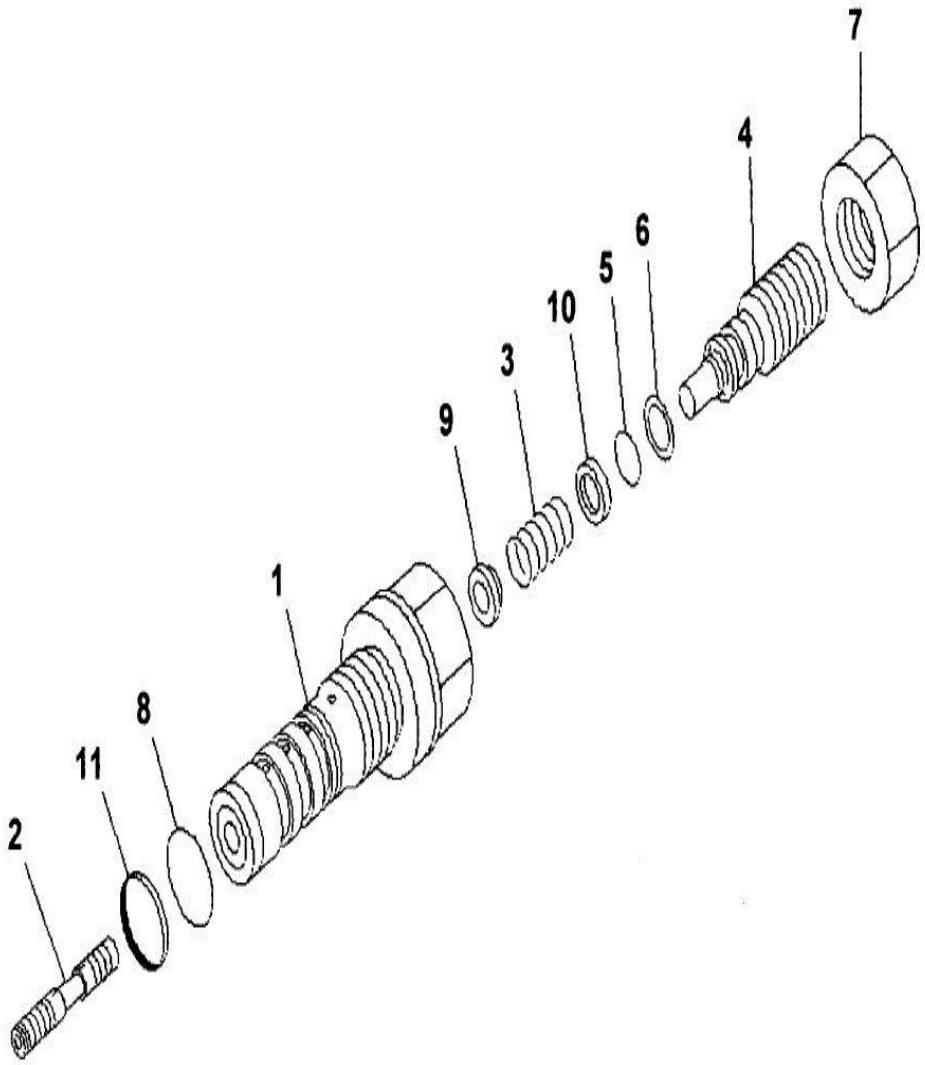

Index	Code	Part Number	Description	Qty	Serial No.
1		(708-1W-00131)	PUMP ASS'Y	1	NL 20001-
			THIS ASSY CONSISTS OF		
			ALL PARTS SHWN. IN FIGS.....		
			Y1600-01A0A TO Y1600-06A0A.....		
		708-1W-04712	• VALVE ASS'Y, LS	1	NL 20001-
		(*708-1W-25523)	• • SLEEVE	1	NL 20001-
2		(*708-1W-25513)	• • SPOOL	1	NL 20001-
3		(*708-1W-25550)	• • SPRING	1	NL 20001-
4		(*708-1W-25561)	• • PLUG	1	NL 20001-
5		(*07000-12010)	• • O-RING	1	NL 20001-
6		(*07001-02010)	• • RING	1	NL 20001-
7		(*01583-11811)	• • NUT	1	NL 20001-
8		07002-63034	• • O-RING	1	N220001-
	C1	708-1W-28910	• • O-RING	1	NL 20001- N201404
9		(*708-1W-25591)	• • SEAT	1	NL 20001-
10		(*708-1W-25580)	• • SEAT	1	NL 20001-
11		708-1W-25630	• • SEAL	1	NL 20001-

PC71-7

FIG. Y1600-06A0A MAIN PUMP (6/6)

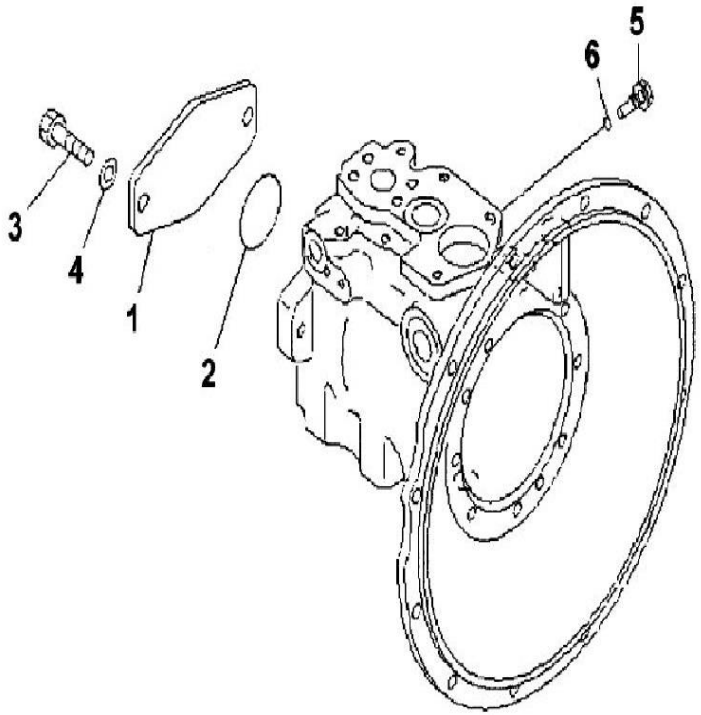

Index	Code	Part Number	Description	Qty	Serial No.
1		(708-1W-00131)	PUMP ASS'Y	1	NL 20001-
			THIS ASSY CONSISTS OF		
			ALL PARTS SHWN. IN FIGS		
			Y1600-01A0A TO Y1600-06A0A		
		708-1W-28750	• PLATE	1	NL 20001-
2		07000-02060	• O-RING	1	NL 20001-
3		01010-81235	• BOLT	2	NL 20001-
4		01643-31232	• WASHER	2	NL 20001-
5		708-1W-25730	• ORIFICE	1	NL 20001-
6		07002-61023	• O-RING	1	N220001-
	C1	708-2L-23920	• O-RING	1	NL 20001- N201404

PC71-7

FIG. Y1620-01A0A BOOM CYLINDER (INNER PARTS)

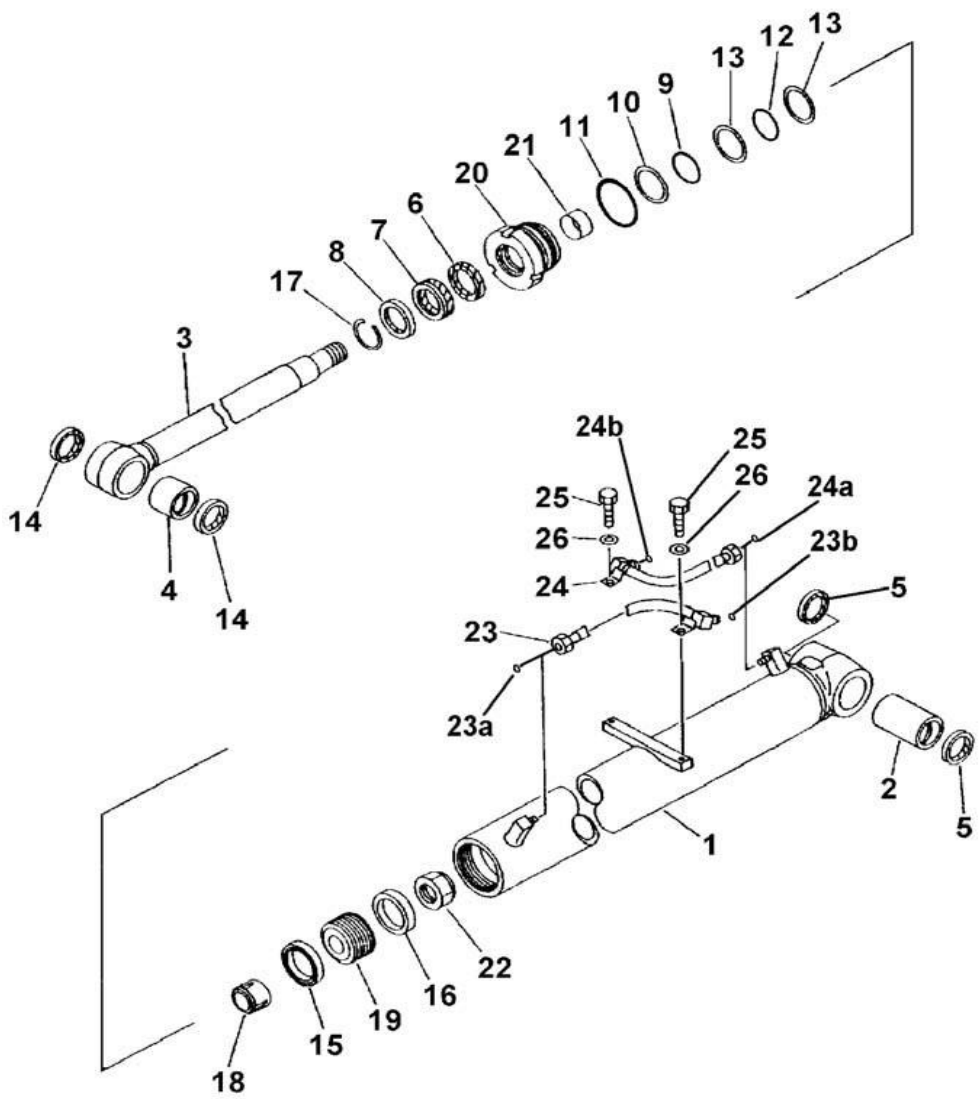

Index	Code	Part Number	Description	Qty	Serial No.
G1		(201-63-N1311)	CYLINDER GROUP, BOOM	1	N220001-
	C1	(201-63-N1310)	CYLINDER GROUP, BOOM	1	NL 20991- N201404
	C1	(201-63-N1190)	CYLINDER GROUP, BOOM	1	NL 20003-NL 20990
		707-00-N1111	CYLINDER ASS'Y., BOOM	1	N220001-
	C1	707-00-N1110	CYLINDER ASS'Y., BOOM	1	NL 20991- N201404
	C1	707-00-0A800	CYLINDER ASS'Y., BOOM	1	NL 20003-NL 20990
		305 467 86 D	• CBA KIT	1	NL 20991-
	C1	304 467 60 E	• CBA KIT	1	NL 20003-NL 20990
1		#	• • CYLINDER, BODY	1	NL 20003-
2		707-76-65290	• • BUSHING	1	NL 20003-
		F 304 467 61	• ROD PISTON KIT	1	NL 20003-
3		#	• • ROD PISTON	1	NL 20003-
4		07143-10606	• • BUSHING	1	NL 20003-
		G 301 496 94	• CYLINDER KIT	1	NL 20003-
5		#	• • SEAL DUST	2	NL 20003-
6		#	• • RING, BUFFER	1	NL 20003-
7		#	• • PACKING, ROD	1	NL 20003-
8		#	• • SEAL, DUST	1	NL 20003-
9		#	• • O-RING	1	NL 20003-
10		#	• • RING, BACKUP	1	NL 20003-
11		#	• • O-RING	1	NL 20003-
12		#	• • O-RING	1	NL 20003-
13		#	• • O-RING, BACKUP	2	NL 20003-
14		#	• • SEAL DUST	1	NL 20003-
15		#	• • ROD, PISTON	1	NL 20003-
16		#	• • RING, WEAR	1	NL 20003-
17		017179-12079	• RING, SNAP	2	NL 20003-
18		707-71-70720	• PLUNGER	1	NL 20003-
19		707-36-11610	• PISTON	1	NL 20003-
20		707-29-11970	• HEAD, CYLINDER	1	NL 20003-
21		707-52-90401	• BUSHING	1	N220001-
	C1	707-52-90400	• BUSHING	1	NL 20003- N201404
22		07165-14547	• NUT	1	NL 20003-
23		201-63-N1250	TUBE	1	NL 20991-

PC71-7

FIG. Y1620-01A0A BOOM CYLINDER (INNER PARTS)

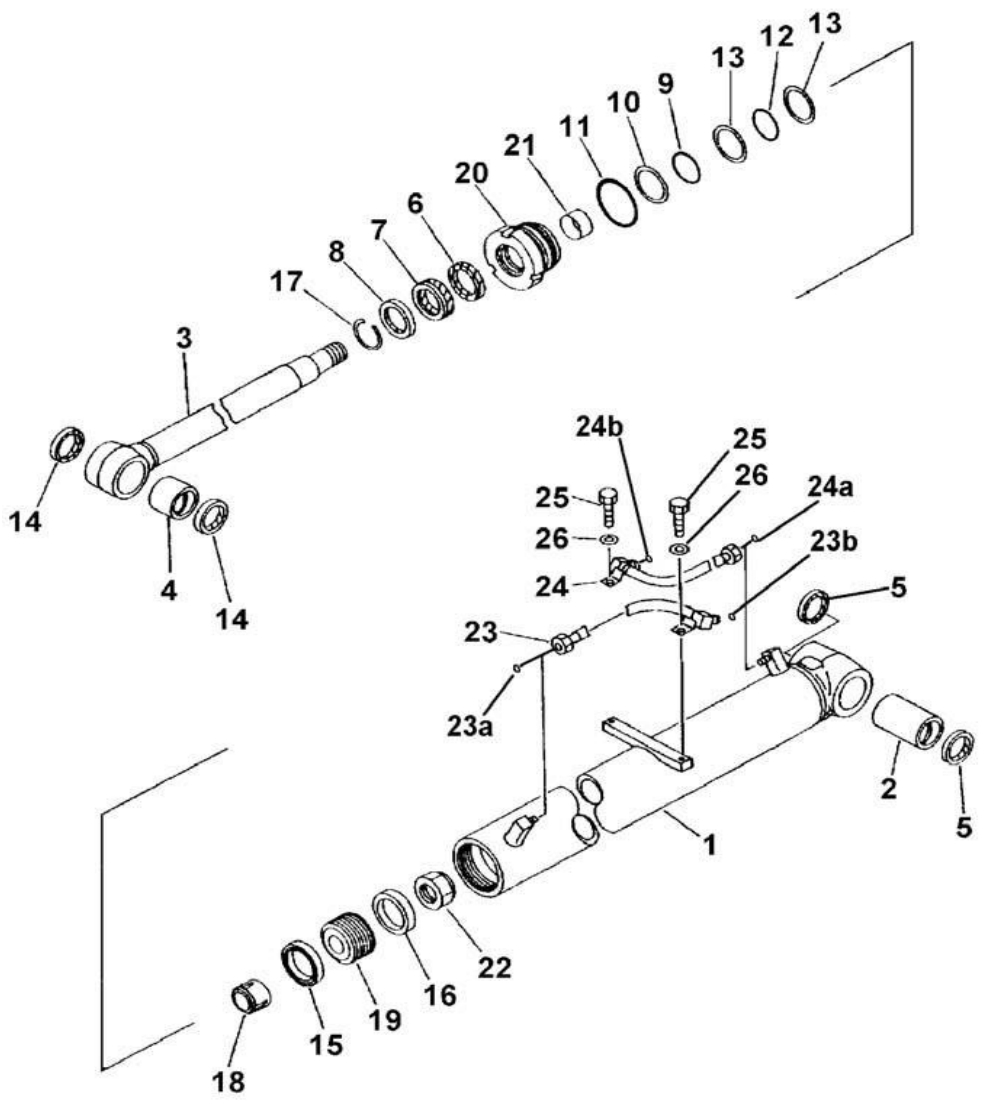

Index	Code	Part Number	Description	Qty	Serial No.
	C1	201-63-N1120	TUBE	1	NL 20003-NL 20990
23a		02896-11012	O-RING	1	NL 20991-
23b		02896-11015	O-RING	1	NL 20991-
24		201-63-N1240	TUBE	1	NL 20991-
	C1	201-63-N1110	TUBE	1	NL 20003-NL 20990
24a		02896-11012	O-RING	1	NL 20991-
24b		02896-11015	O-RING	1	NL 20991-
25		01010-81020	BOLT	2	NL 20003-
26		01643-31032	WASHER	2	NL 20003-

PC71-7

FIG. Y1620-11A0A ARM CYLINDER (INNER PARTS)

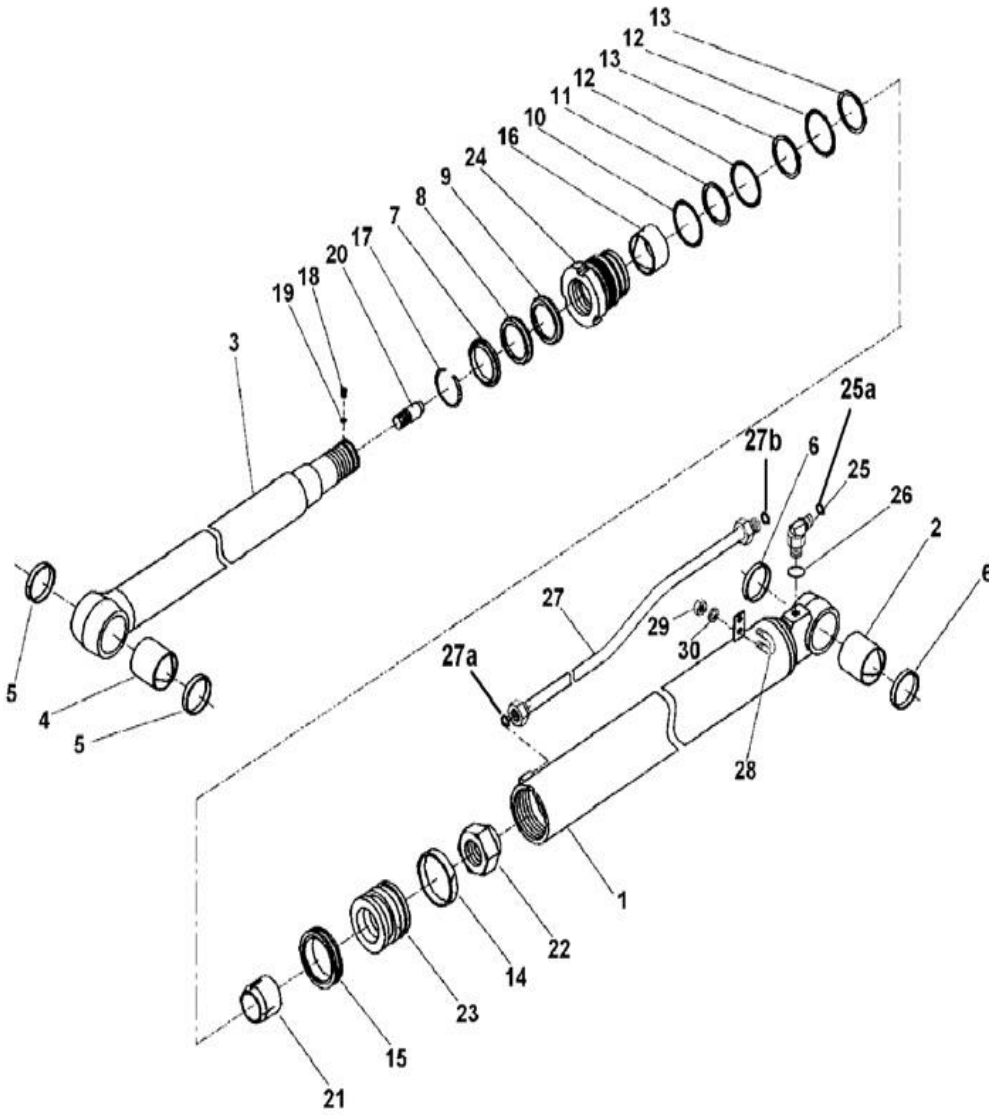

Index	Code	Part Number	Description	Qty	Serial No.
G1		(201-63-N1291)	CYLINDER GROUP, ARM	1	N220001-
	C1	(201-63-N1290)	CYLINDER GROUP, ARM	1	NL 20991- N201404
	C1	(201-63-N1210)	CYLINDER GROUP, ARM	1	NL 20003-NL 20990
		707-00-N1121	CYLINDER ASS'Y., ARM	1	N220001-
	C1	707-00-N1120	CYLINDER ASS'Y., ARM	1	NL 20991- N201404
	C1	707-00-0A810	CYLINDER ASS'Y., ARM	1	NL 20003-NL 20990
		305 467 87 F	• CBA KIT	1	NL 20991-
	C1	304 467 62 G	• CBA KIT	1	NL 20003-NL 20990
1		#	• • CYLINDER BODY	1	NL 20003-
2		07143-10506	• • BUSHING	1	NL 20003-
		304 467 63 H	• ROD PISTON KIT	1	NL 20003-
3		#	• • ROD PISTON	1	NL 20003-
4		07143-10506	• • BUSHING	1	NL 20003-
		301 496 97 K	• CYLINDER KIT	1	NL 20003-
5		#	• • SEAL DUST	1	NL 20003-
6		#	• • SEAL DUST	2	NL 20003-
7		#	• • SEAL DUST	2	NL 20003-
8		#	• • PACKING ROD	1	NL 20003-
9		#	• • RING BUFFER	1	NL 20003-
10		#	• • O-RING	1	NL 20003-
11		#	• • RING, BACKUP	1	NL 20003-
12		#	• • O-RING	2	NL 20003-
13		#	• • RING, BACK-UP	2	NL 20003-
14		#	• • RING, WEAR	1	NL 20003-
15		#	• • RING, PISTON	1	NL 20003-
16		707-52-90351	• BUSHING	1	N220001-
	C1	707-52-90350	• BUSHING	1	NL 20003- N201404
17		07179-12074	• RING, SNAP	1	NL 20003-
18		707-71-91280	• PLUG	1	NL 20003-
19		04260-00635	• BALL	9	NL 20003-
20		707-71-60100	• PLUNGER	1	NL 20003-
21		707-71-70690	• PLUNGER	1	NL 20003-
22		07165-14244	• NUT	1	NL 20003-
23		707-36-10420	• PISTON	1	NL 20003-

PC71-7

FIG. Y1620-11A0A ARM CYLINDER (INNER PARTS)

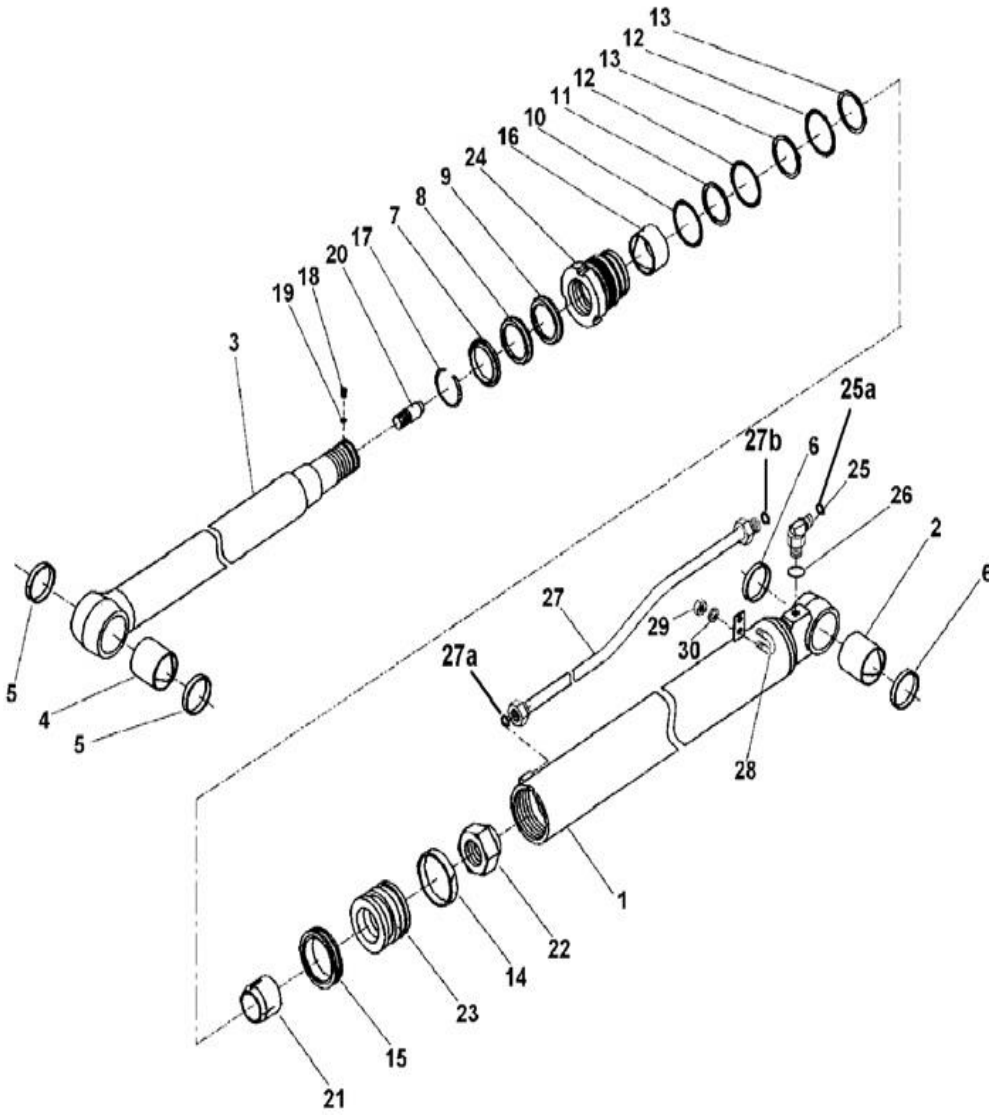

Index	Code	Part Number	Description	Qty	Serial No.
24		707-29-10870	• HEAD, CYLINDER	1	NL 20003-
25		02782-10516	ELBOW	1	NL 20991-
	C1	113-63-22390	ELBOW	1	NL 20003-NL 20990
25a		02896-11015	O-RING	1	NL 20991
26		07002-12034	O-RING	1	NL 20003-
27		201-63-N1261	TUBE	1	N220001-
	C1	201-63-N1260	TUBE	1	NL 20991- N201404
	C1	201-63-N1130	TUBE	1	NL 20003-NL 20990
27a		02896-11012	O-RING	1	NL 20991-
27b		02896-11012	O-RING	1	NL 20991-
28		07283-32236	CLIP	1	NL 20098-
	C1	07283-22236	CLIP	1	NL 20003-NL20097
29		01599-01011	NUT	2	NL 20003-
30		01643-31032	WASHER	2	NL 20003-

FIG. Y1620-13A0 ARM CYLINDER (INNER PARTS)-TUNNELING

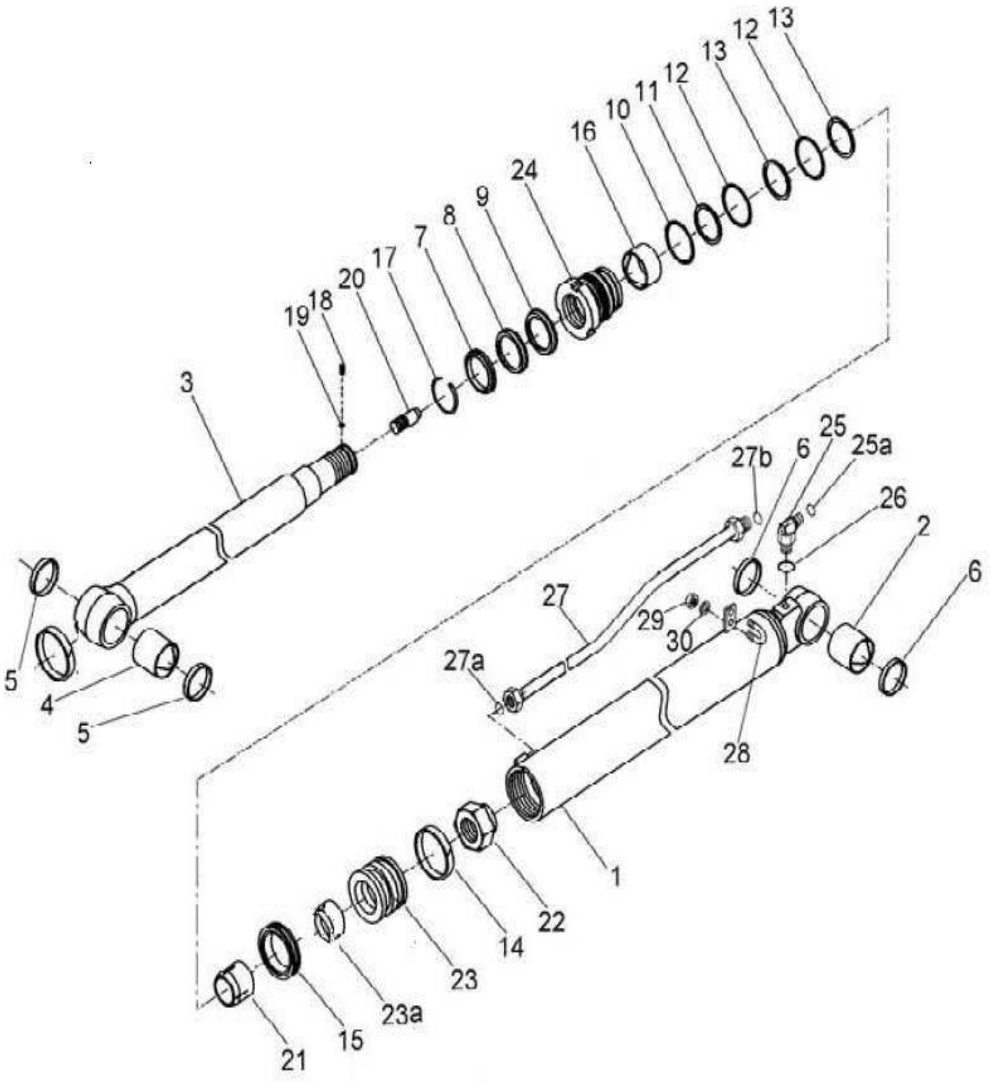

Index	Code	Part Number	Description	Qty	Serial No.
G1		(201-63-N1380)	CYLINDER GROUP, ARM	1	NL22390-
		707-00-N1160	CYLINDER ASS'Y., ARM	1	NL22390-
		305 467 87 F	• CBA KIT	1	NL22390-
1		#	• • CYLINDER BODY	1	NL22390-
2		07143-10506	• • BUSHING	1	NL22390-
		304 467 63 H	• ROD PISTON KIT	1	NL22390-
3		#	• • ROD PISTON	1	NL22390-
4		07143-10506	• • BUSHING	1	NL22390-
		301 496 97 K	• CYLINDER KIT	1	NL22390-
5		#	• • SEAL DUST	1	NL22390-
6		#	• • SEAL DUST	2	NL22390-
7		#	• • SEAL DUST	2	NL22390-
8		#	• • PACKING ROD	1	NL22390-
9		#	• • RING BUFFER	1	NL22390-
10		#	• • O-RING	1	NL22390-
11		#	• • RING, BACKUP	1	NL22390-
12		#	• • O-RING	2	NL22390-
13		#	• • RING, BACK-UP	2	NL22390-
14		#	• • RING, WEAR	1	NL22390-
15		#	• • RING, PISTON	1	NL22390-
16		707-52-90351	• BUSHING	1	N220001-
	C1	707-52-90350	• BUSHING	1	NL22390- N201404
17		07179-12074	• RING, SNAP	1	NL22390-
18		707-71-91280	• PLUG	1	NL22390-
19		04260-00635	• BALL	9	NL22390-
20		707-71-60100	• PLUNGER	1	NL22390-
21		707-71-70690	• PLUNGER	1	NL22390-
22		07165-14244	• NUT	1	NL22390-
23		707-36-10420	• PISTON	1	NL22390-
23a		201-63-N1370	• SPACER TUBE	1	NL22390-
24		707-29-10870	• HEAD, CYLINDER	1	NL22390-
25		02782-10516	ELBOW	1	NL22390-
25a		02896-11015	O-RING	1	NL22390-
26		07002-12034	O-RING	1	NL22390-

PC71-7

FIG. Y1620-13A0 ARM CYLINDER (INNER PARTS)-TUNNELING

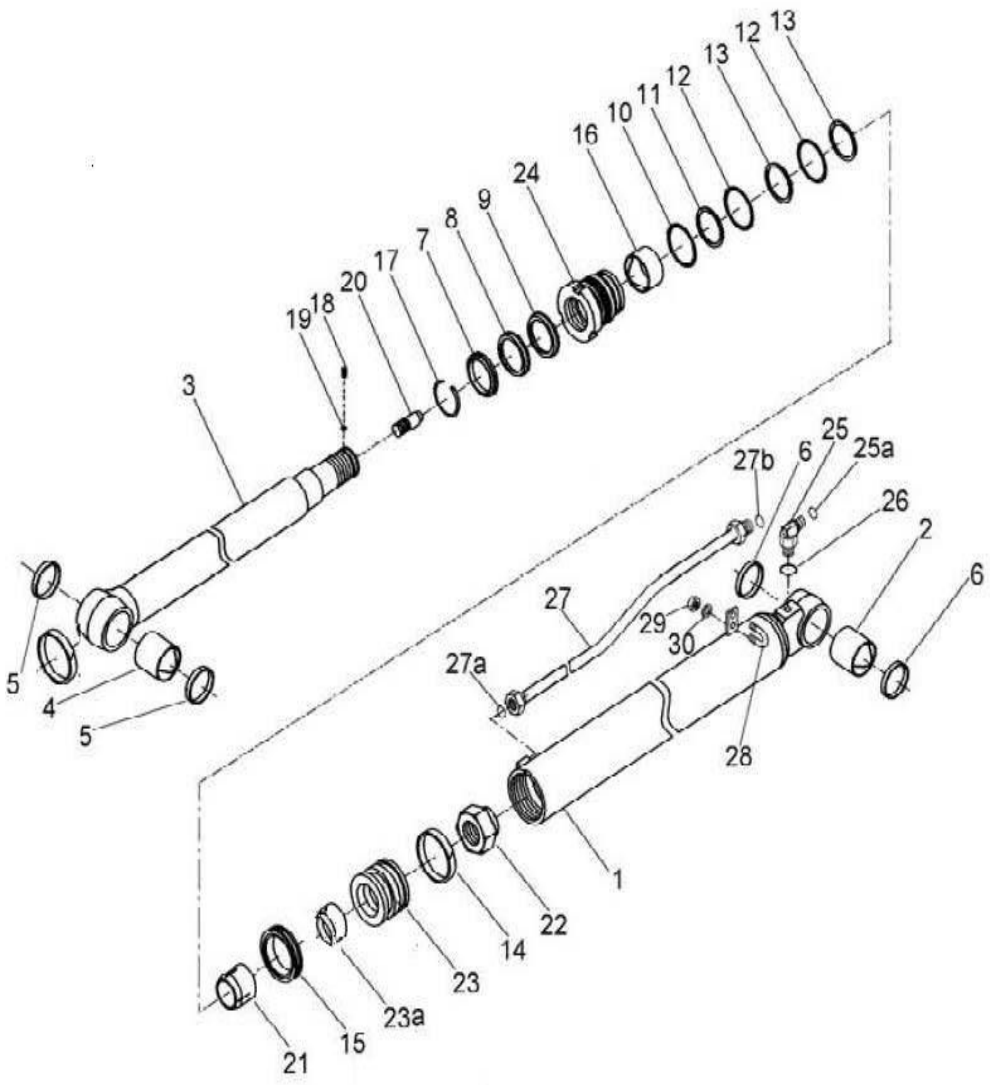

Index	Code	Part Number	Description	Qty	Serial No.
27		201-63-N1261	TUBE	1	N220001-
	C1	201-63-N1260	TUBE	1	NL22390- N201404
27a		02896-11012	O-RING	1	NL22390-
27b		02896-11012	O-RING	1	NL22390-
28		07283-32236	CLIP	1	NL22390-
29		01599-01011	NUT	2	NL22390-
30		01643-31032	WASHER	2	NL22390-

PC71-7

FIG. Y1620-41A0A BUCKET CYLINDER (INNER PARTS)

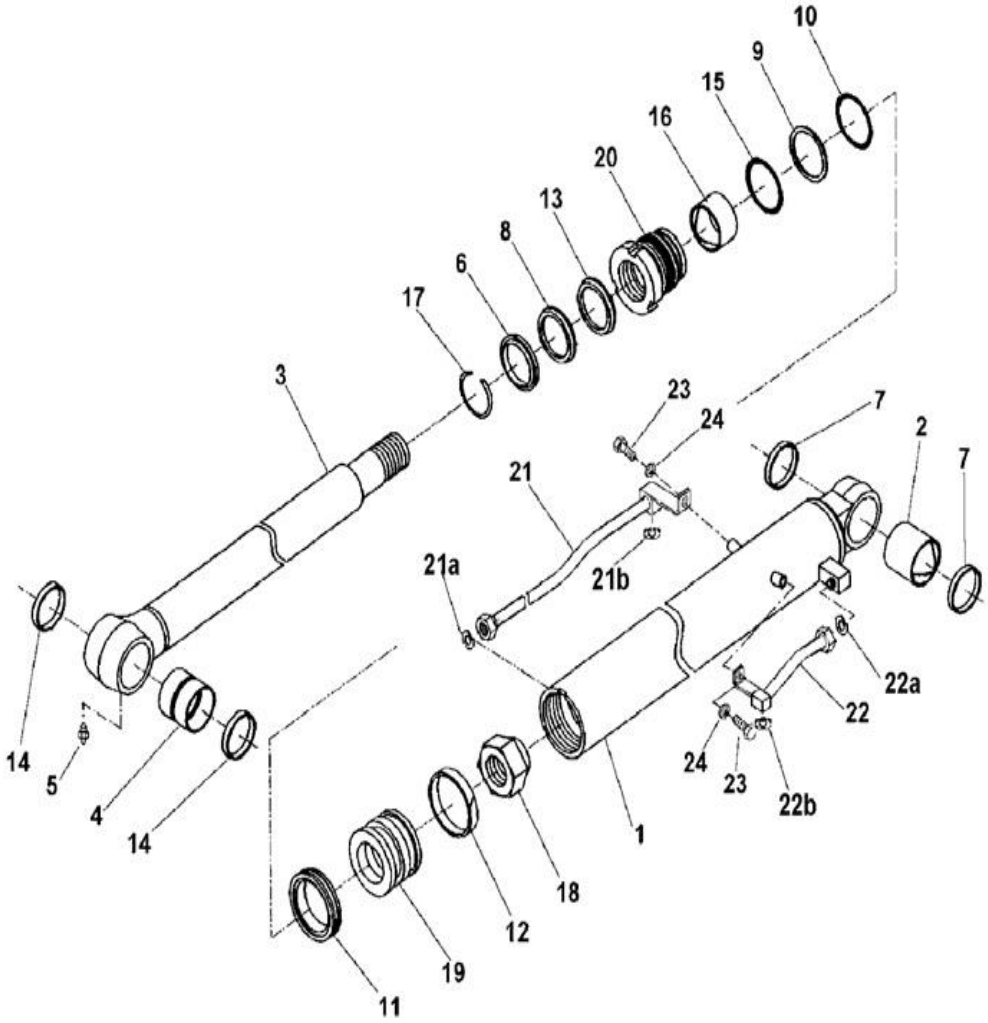

Index	Code	Part Number	Description	Qty	Serial No.
G1		(201-63-N1321)	CYLINDER GROUP, BUCKET	1	N220001-
G1	C1	(201-63-N1320)	CYLINDER GROUP, BUCKET	1	NL 20991- N201404
	C1	(201-63-N1220)	CYLINDER GROUP, BUCKET	1	NL 20002-NL 20990
		707-00-N1131	CYLINDER ASS'Y., BUCKET	1	N220001-
	C1	707-00-N1130	CYLINDER ASS'Y., BUCKET	1	NL 20991- N201404
	C1	707-00-0A820	CYLINDER ASS'Y., BUCKET	1	NL 20002-NL 20990
		305 467 88 F	• CBA KIT	1	NL 20991-
	C1	304 467 64 K	• CBA KIT	1	NL 20002-NL 20990
1		#	• • CYLINDER BODY	1	NL 20002-
2		07143-10505	• BUSHING	1	NL 20002-
		304 467 65 K	• ROD PISTON KIT	1	NL 20002-
3		#	• • ROD PISTON	1	NL 20002-
4		07144-10606	• • BUSHING	1	NL 20002-
5		#	• • FITTING, GREASE	1	NL 20002-
		301 496 95 H	• CYLINDER KIT	1	NL 20002-
6		#	• • SEAL, DUST	1	NL 20002-
7		#	• • SEAL DUST	2	NL 20002-
8		#	• • PACKING, ROD	1	NL 20002-
9		#	• • RING, BACK-UP	1	NL 20002-
10		#	• • O-RING	1	NL 20002-
11		#	• • ROD, PISTON	1	NL 20002-
12		#	• • RING WEAR	1	NL 20002-
13		#	• • RING, BUFFER	1	NL 20002-
14		#	• • SEAL DUST	2	NL 20002-
15		#	• • O-RING	1	NL 20002-
16		707-52-90301	• BUSHING	1	N220001-
	C1	707-52-90300	• BUSHING	1	NL 20002- N201404
17		07179-12069	• RING, SNAP	1	NL 20002-
18		07165-13941	• NYLOCK NUT	1	NL 20002-
19		707-36-90240	• PISTON	1	NL 20002-
20		707-29-90850	• HEAD, CYLINDER	1	NL 20002-
21		201-63-N1280	TUBE	1	NL 20991-
	C1	201-63-N1230	TUBE	1	NL 20002-NL 20990
21a		02896-11012	O-RING	1	NL 20991-

PC71-7

FIG. Y1620-41A0A BUCKET CYLINDER (INNER PARTS)

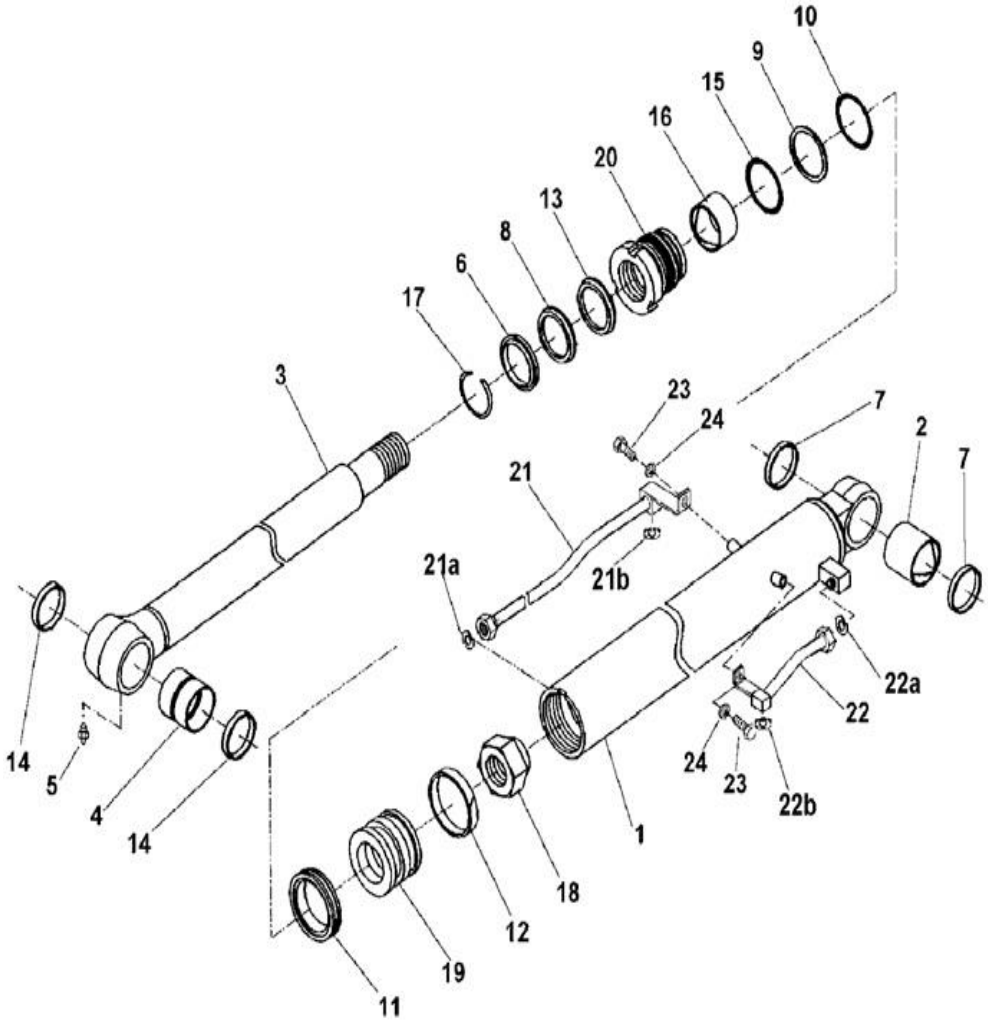

Index	Code	Part Number	Description	Qty	Serial No.
21b		02896-11012	O-RING	1	NL 20991-
22		201-63-N1270	TUBE	1	NL 20991-
	C1	201-63-N1140	TUBE	1	NL 20002-NL 20990
22a		02896-11012	O-RING	1	NL 20991-
22b		02896-11012	O-RING	1	NL 20991-
23		01010-81020	BOLT	2	NL 20002-
24		01643-31032	WASHER	2	NL 20002-

PC71-7

FIG. Y1621-01A0A BLADE CYLINDER (INNER PARTS)

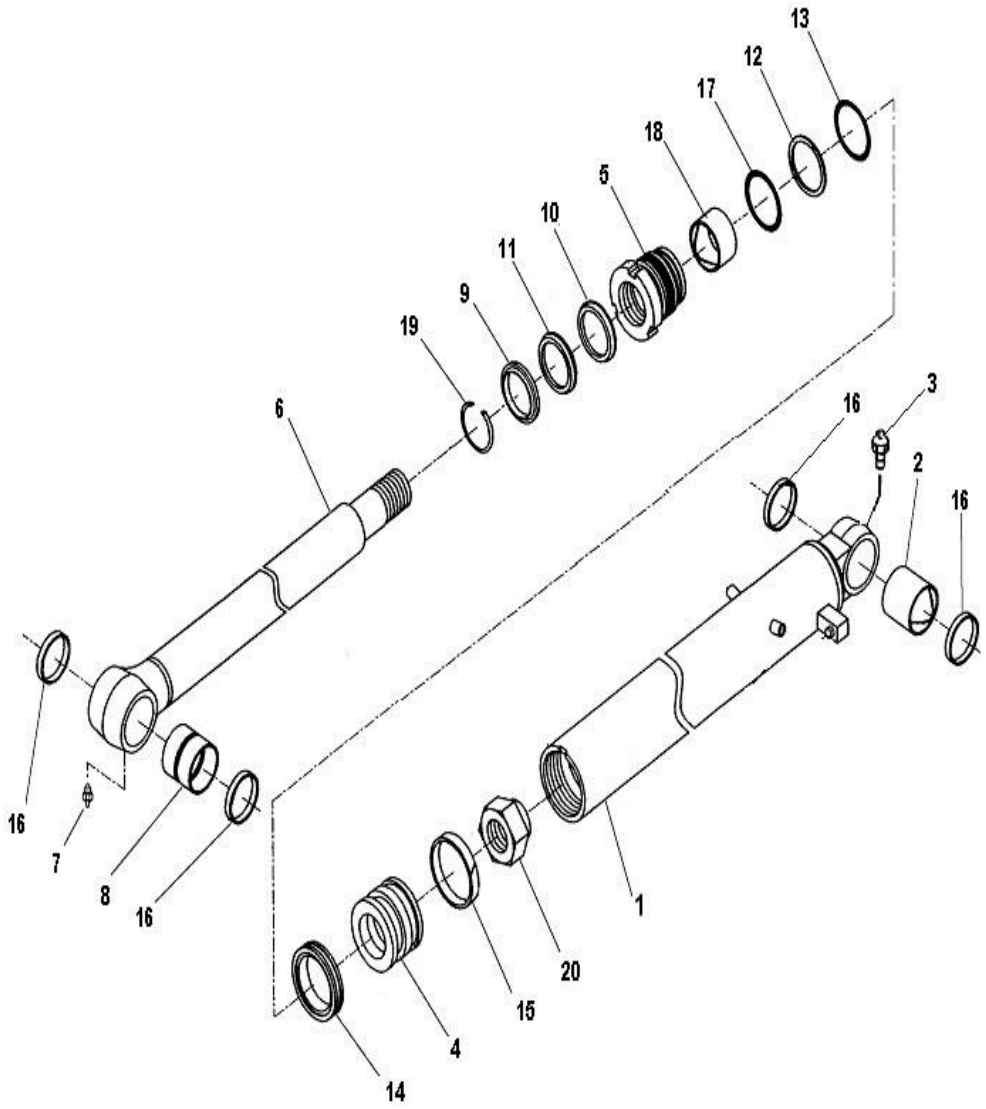

Index	Code	Part Number	Description	Qty	Serial No.
1		707-00-N1141	CYLINDER ASS'Y, BLADE	1	NL 20991-
	C1	707-00-N1140	CYLINDER ASS'Y, BLADE	1	NL 20991-
	C1	707-00-0A840	CYLINDER ASS'Y, BLADE	1	NL 20003-NL 20990
		305 467 89 G	• CBA KIT	1	NL 20991-
	C1	304 467 66 L	• CBA KIT	1	NL 20003-NL 20990
		#	• • CYLINDER BODY	1	NL 20003-
2		07144-10706	• • BUSHING	1	NL 20003-
3		#	• • FITTING, GREASE	1	NL 20003-
4		707-36-12170	• PISTON	1	NL 20003-
5		707-29-12780	• HEAD, CYLINDER	1	NL 20003-
		304 467 67 M	• ROD PISTON KIT	1	NL 20003-
6		#	• • ROD, PISTON	1	NL 20003-
7		#	• • FITTING, GREASE	1	NL 20003-
8		07144-10706	• • BUSHING	1	NL 20003-
		301 496 96 J	• CYLINDER KIT	1	NL 20003-
9		#	• • SEAL, DUST	1	NL 20003-
10		#	• • PACKING, ROD	1	NL 20003-
11		#	• • RING, BUFFER	1	NL 20003-
12		#	• • RING, BACKUP	1	NL 20003-
13		#	• • O-RING	1	NL 20003-
14		#	• • RING, PISTON	1	NL 20003-
15		#	• • RING, WEAR	1	NL 20003-
16		#	• • DUST SEAL	4	NL 20003-
17		#	• • O-RING	1	NL 20003-
18		707-52-90471	• BUSHING	1	N220001-
	C1	707-52-90470	• BUSHING	1	NL 20003- N201404
19		07179-12084	• RING, SNAP	1	NL 20003-
20		07165-15252	• NYLOC NUT	1	NL 20003-

PC71-7

FIG. Y1627-01A1D SWIVEL JOINT (INNER PARTS) (BLADE SPEC.)

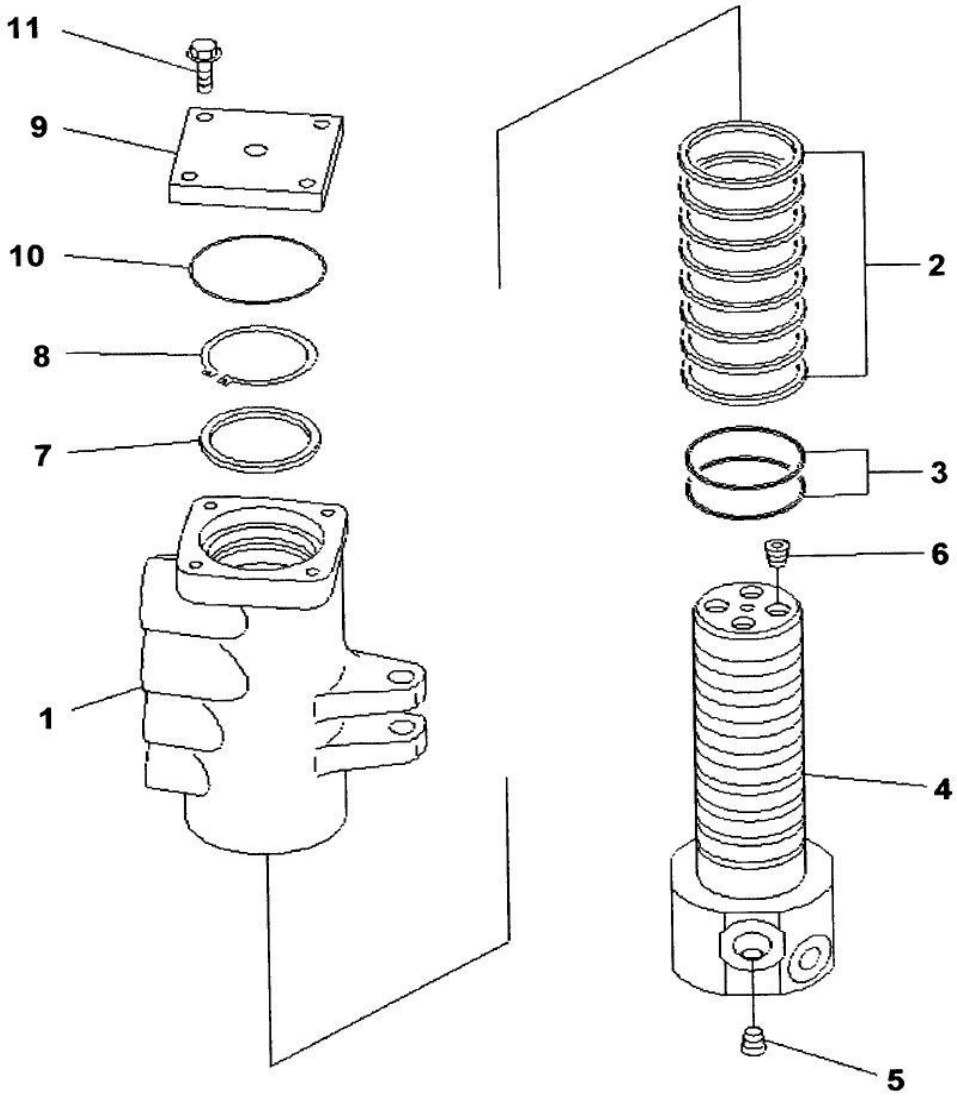

Index	Code	Part Number	Description	Qty	Serial No.
1		703-07-23230	SWIVEL JOINT ASS'Y	1	NL 20001-
		703-07-91230	• ROTOR	1	NL 20001-
2		703-07-95122	• SEAL, SLIPPER	8	NL 20001-
3		07000-15070	• O-RING	2	NL 20001-
4		703-07-92183	• SHAFT	1	NL 20001-
5		703-13-98920	• PLUG	3	NL 20001-
6		703-08-98110	• PLUG	4	NL 20001-
7		703-07-94170	• RING	1	NL 20001-
8		04064-06525	• RING, SNAP	1	NL 20001-
9		703-07-93181	• COVER	1	NL 20001-
10		07000-12085	• O-RING	1	NL 20001-
11		01435-00830	• BOLT	4	NL 20001-

PC71-7

FIG. Y1640-01A0 SWING MOTOR (1/2)

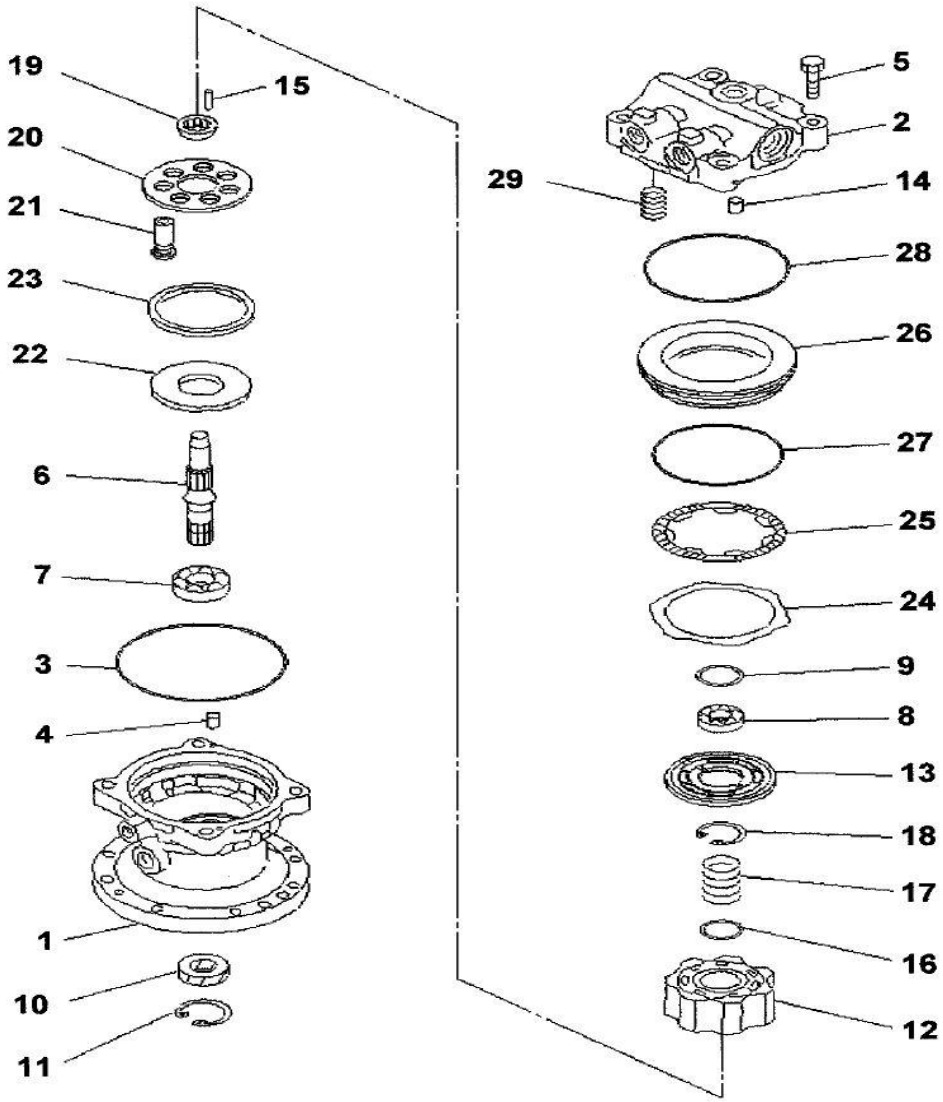

Index	Code	Part Number	Description	Qty	Serial No.
1		(708-7T-N1120)	MOTOR ASS'Y	1	NL 20991-
	C1	(708-7T-N1110)	MOTOR ASS'Y	1	NL 20312-NL 20990
	C1	(708-7T-00461)	MOTOR ASS'Y	1	NL 20001-NL 20311
			THIS ASSY CONSISTS OF ALL		
			PARTS SHOWN IN FIGS		
			Y-1640-01A0 AND Y1640-02A0		
		(708-7T-01192)	• MOTOR SUB ASS'Y	1	N220001-
	C1	(708-7T-01191)	• MOTOR SUB ASS'Y	1	NL 20312- N201404
	C1	(708-7T-01040)	• MOTOR SUB ASS'Y	1	NL 20001-NL 20311
		(*708-7T-11240)	• CASE MOTOR	1	NL 20001-
2		(*708-7T-11640)	• COVER	1	NL 20001-
3		(*708-7T-51210)	• O-RING	1	NL 20001-
4		(*720-68-19610)	• PIN	2	NL 20001-
5		(*01010-81250)	• BOLT	4	NL 20001-
6		(*708-7T-12220)	• SHAFT	1	NL 20001-
7		(*708-7T-12240)	• BEARING	1	NL 20001-
8		(*708-7T-12250)	• BEARING	1	NL 20001-
9		(*708-7T-05020)	• SPACER KIT	1	NL 20001-
		#	• SPACER - 1.6mm	1	NL 20001-
		#	• SPACER - 1.7mm	1	NL 20001-
		#	• SPACER - 1.8mm	1	NL 20001-
		#	• SPACER - 1.9mm	1	NL 20001-
		#	• SPACER - 2.0mm	1	NL 20001-
		#	• SPACER - 2.1mm	1	NL 20001-
		#	• SPACER - 2.2mm	1	NL 20001-
10		708-7T-12330	• SEAL	1	NL 20262-
	C1	887-00-60549	• SEAL	1	NL 20001-NL 20261
11		04065-04518	• RING, SNAP	1	NL 20001-
12		(*708-7T-13150)	• BLOCK, CYLINDER	1	N220001-
	C1	(*708-7T-13140)	• BLOCK, CYLINDER	1	NL 20001- N201404
13		(*708-7T-13261)	• PLATE, VALVE	1	NL 20001-
14		(*720-68-19610)	• PIN	1	NL 20001-
15		(*708-7T-13540)	• PIN	3	NL 20001-
16		(*708-7T-13530)	• WASHER	2	NL 20001-

PC71-7

FIG. Y1640-01A0 SWING MOTOR (1/2)

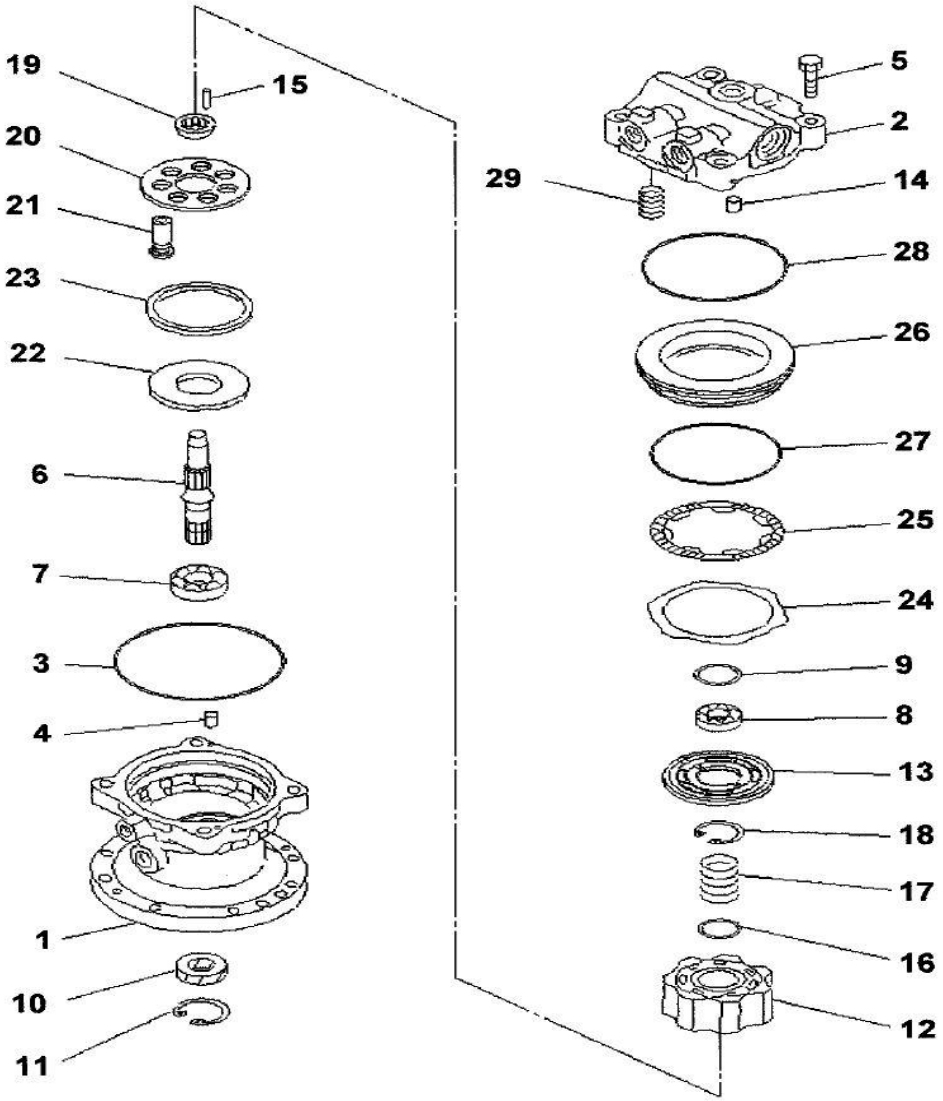

Index	Code	Part Number	Description	Qty	Serial No.
17		(*708-7T-13570)	• SPRING	1	NL 20001-
18		(*04065-03815)	• RING	1	NL 20001-
19		(*708-7T-13510)	• GUIDE	1	NL 20001-
20		(*708-7T-13342)	• RETAINER	1	NL 20001-
21		(*708-7T-13352)	• PISTON SUB ASS'Y	7	NL 20001-
22		(*708-7T-53420)	• PLATE	1	NL 20001-
23		(*708-7T-13710)	SPACER	1	NL 20001-
24		(*708-7T-52512)	PLATE	3	NL 20001-
25		(*708-7T-15120)	DISC	2	NL 20001-
26		(*708-7T-15140)	PISTON	1	NL 20001-
27		(*07000-12130)	O-RING	1	NL 20001-
28		(*708-7T-55220)	O-RING	1	NL 20001-
29		(*708-7T-15150)	SPRING	4	NL 20001-

PC71-7

FIG. Y1640-02A0 SWING MOTOR (2/2)

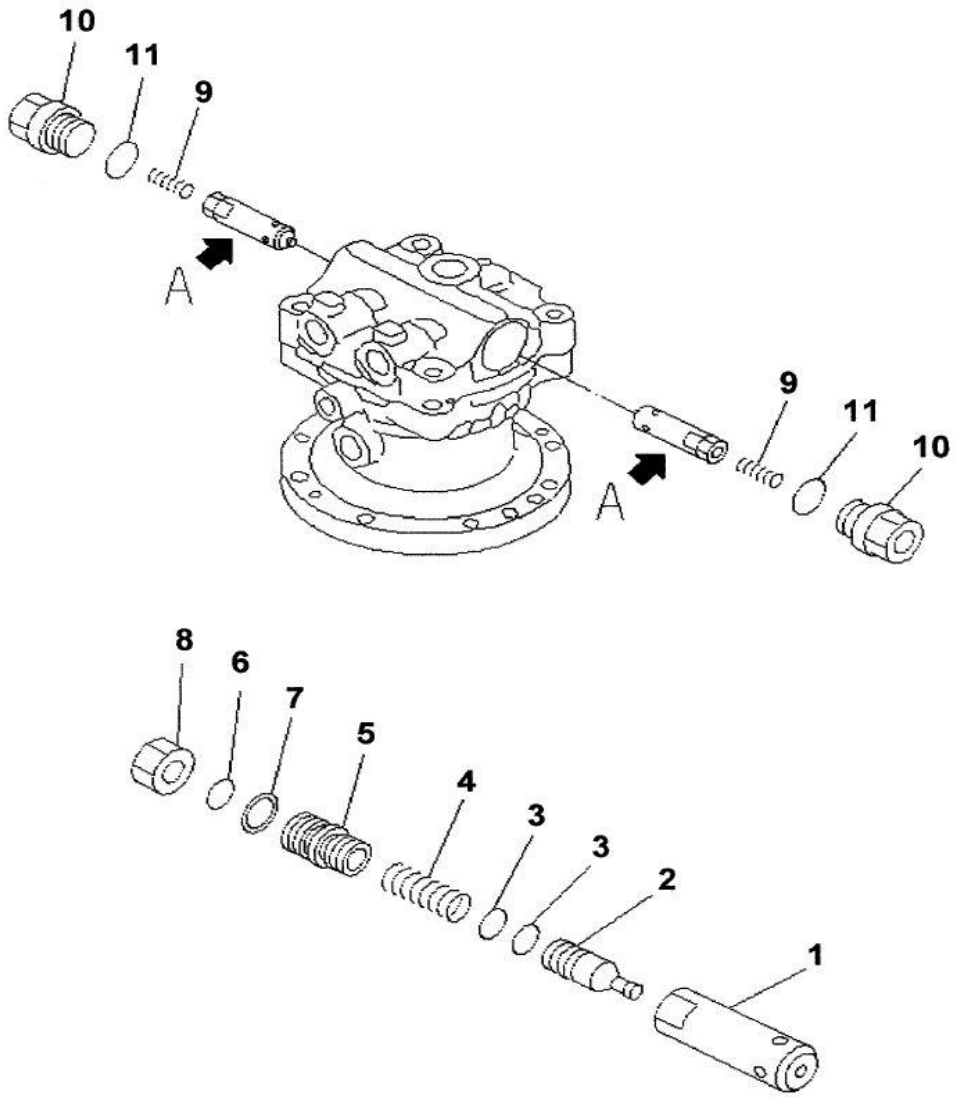

Index	Code	Part Number	Description	Qty	Serial No.
1		(708-7T-N1120)	MOTOR ASS'Y	1	NL 20991-
	C1	(708-7T-N1110)	MOTOR ASS'Y	1	NL 20312-NL 20990
	C1	(708-7T-00461)	MOTOR ASS'Y	1	NL 20001-NL 20311
			THIS ASSY CONSISTS OF ALL	1	
			PARTS SHOWN IN FIGS	1	
			Y-1640-01A0 AND Y1640-02A0	1	
		702-73-02130	• VALVE ASS'Y, RELIEF	2	NL 20001-
		702-73-02101	• RELIEF VALVE ASS'Y	2	NL 20001-
		#	• SLEEVE	1	NL 20001-
2		#	• VALVE	1	NL 20001-
3		#	• SEAL	2	NL 20001-
4		#	• SPRING	1	NL 20001-
5		#	• SCREW	1	NL 20001-
6		#	• O-RING	1	NL 20001-
7		#	• RING	1	NL 20001-
8		#	• NUT	1	NL 20001-
9		708-7T-16610	• SPRING	2	NL 20001-
10		708-7T-16510	• PLUG	2	NL 20001-
11		07002-13334	• O-RING	2	NL 20001-

PC71-7

FIG. Y1651-01A0A TRAVEL MOTOR (1/3)

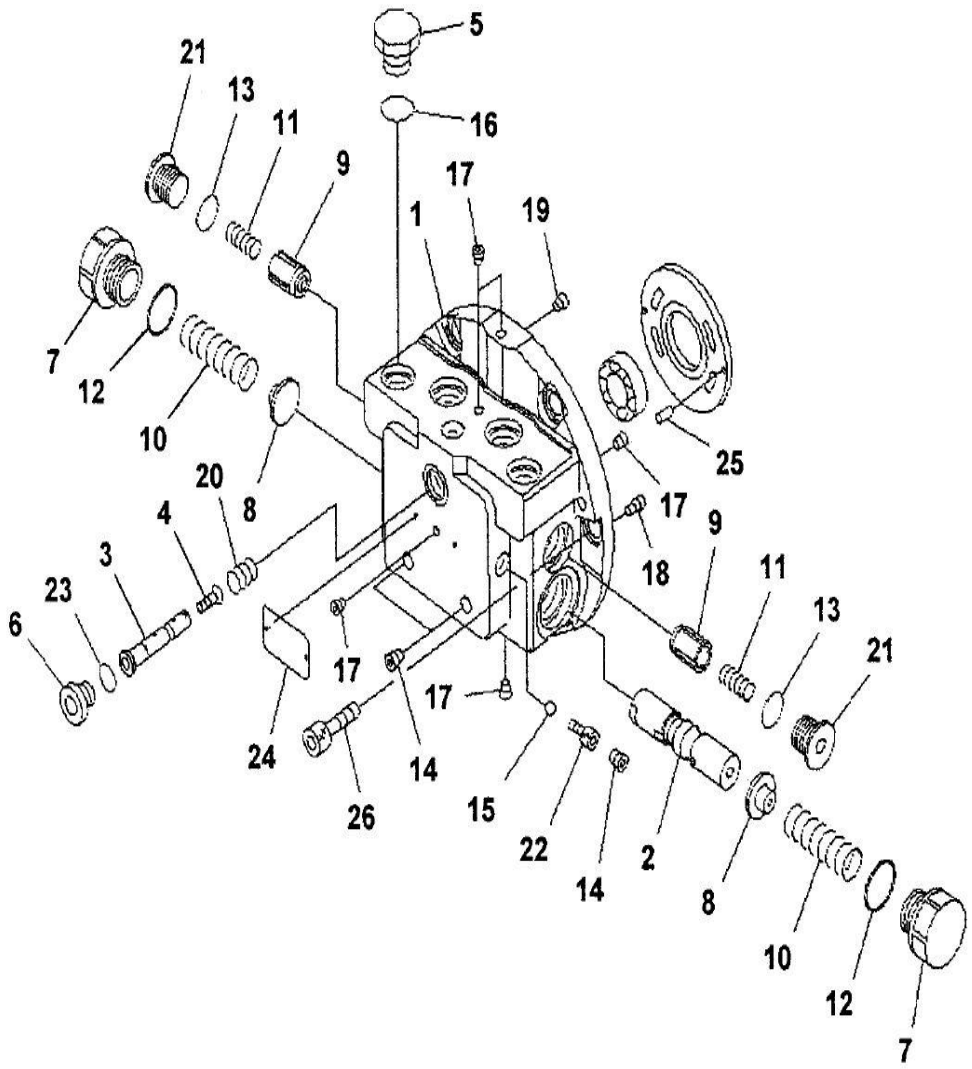

Index	Code	Part Number	Description	Qty	Serial No.
	C1	(201-60-73900)	TRAVEL MOTOR ASS'Y	2	NL 20319-NL 22940
	C1	(201-60-73601)	TRAVEL MOTOR ASS'Y	2	NL 20189-NL 20318
	C1	(201-60-73600)	TRAVEL MOTOR ASS'Y	2	NL 20003-NL 20188
			THIS ASSY CONSISTS OF		
			ALL PARTS IN FIGS		
			Y1651-01A0A, 02A0A AND 03A0A		
		TZ500D200000-G	• MOTOR ASS'Y	1	NL 20003-
			THIS ASSY CONSISTS OF		
			ALL PARTS IN FIGS		
			Y1651-01A0A, AND Y1651-02A0A		
		TZ505D400002-D	• CONTROL VALVA ASS'Y	1	NL 20003-
		TZ505D410002-D	• • FLANGE ASS'Y, REAR	1	NL 20003-
		TZ505D410102-D	• • • FLANGE KIT, REAR	1	NL 20003-
1		#	• • • FLANGE, REAR	1	NL 20003-
2		#	• • • SPOOL	1	NL 20003-
		TZ502D4110-00	• • • SPOOL KIT	1	NL 20003-
3		#	• • • SPOOL	1	NL 20003-
4		#	• • • STOPPER, OIL	1	NL 20003-
5		TZ100A2021-00	• • • PLUG	1	NL 20003-
6		TZ810B2021-00	• • • PLUG	1	NL 20003-
7		TZ860A2051-00	• • • PLUG	2	NL 20003-
8		TZ869A205200-B	• • • RETAINER, SPRING	2	NL 20003-
9		TZ500D4054-00	• • • VALVE	2	NL 20003-
10		TZ860A2056-00	• • • SPRING	2	NL 20003-
11		TZ500D4055-00	• • • SPRING	2	NL 20003-
12		TZJB2401-P26-9	• • • O-RING (KIT)	2	NL 20003-
13		07000-12018	• • • O-RING (KIT)	2	NL 20003-
14		TZGM1-8-S	• • • PLUG	3	NL 20003-
15		TZJB501-3-16	• • • BALL	1	NL 20003-
16		07002-12034	• • • O-RING (KIT)	1	NL 20003-
17		TZGDL1-16-S	• • • PLUG	5	NL 20003-
18		TZ976B2079-00	• • • FILTER	1	NL 20003-
19		TZS0505	• • • ORIFICE	1	NL 20003-
20		TZ500D4089-00	• • • SPRING	1	NL 20003-

PC71-7

FIG. Y1651-01A0A TRAVEL MOTOR (1/3)

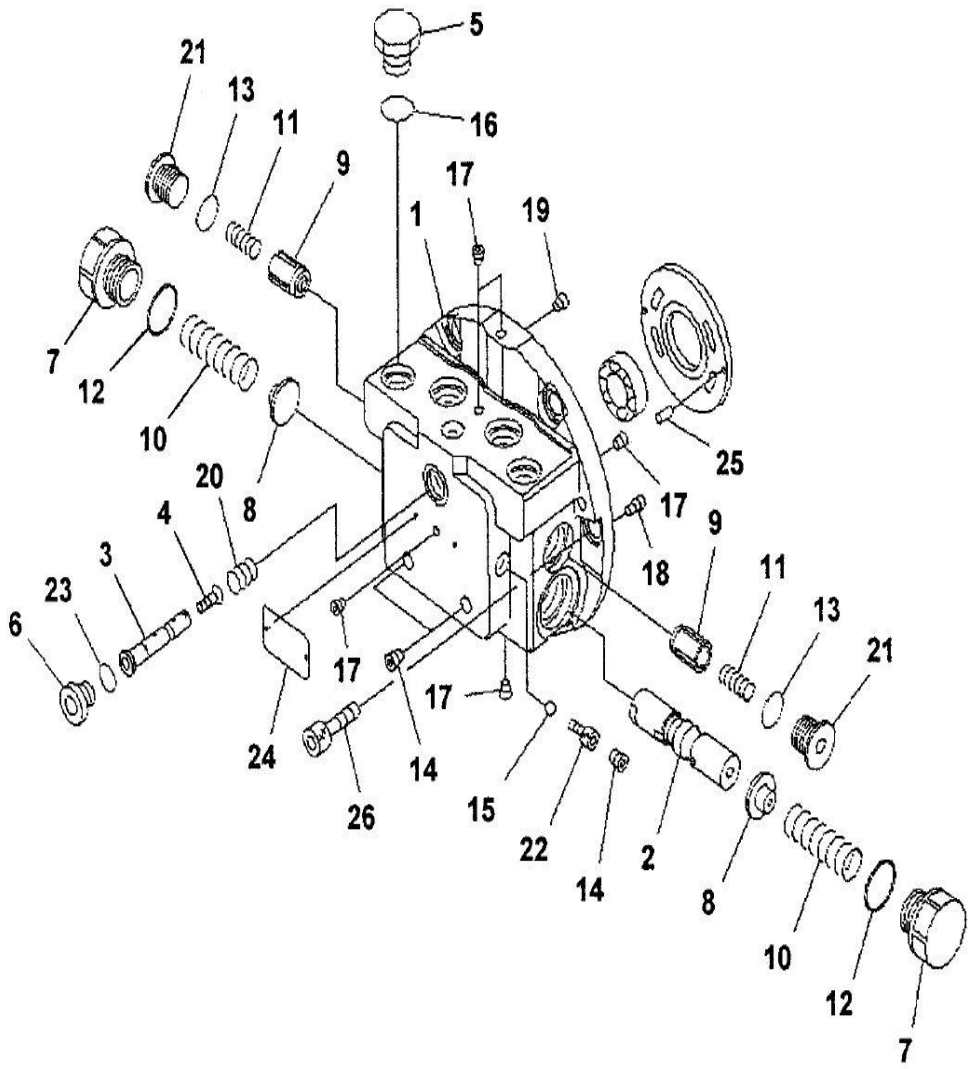

Index	Code	Part Number	Description	Qty	Serial No.
21		TZ610B2021-00	• • • PLUG	2	NL 20003-
22		TZ571B2079-00	• • • PLUG	1	NL 20003-
23		07000-12014	• • • O-RING (KIT)	1	NL 20003-
24		TZ850A0006-00	• • • NAME PLATE	1	NL 20003-
25		TZJB1354-4-10	• • PIN	2	NL 20003-
26		TZJB1176M12-32	• • BOLT	6	NL 20003-

PC71-7

FIG. Y-1651-01A1 TRAVEL MOTOER (1/3)

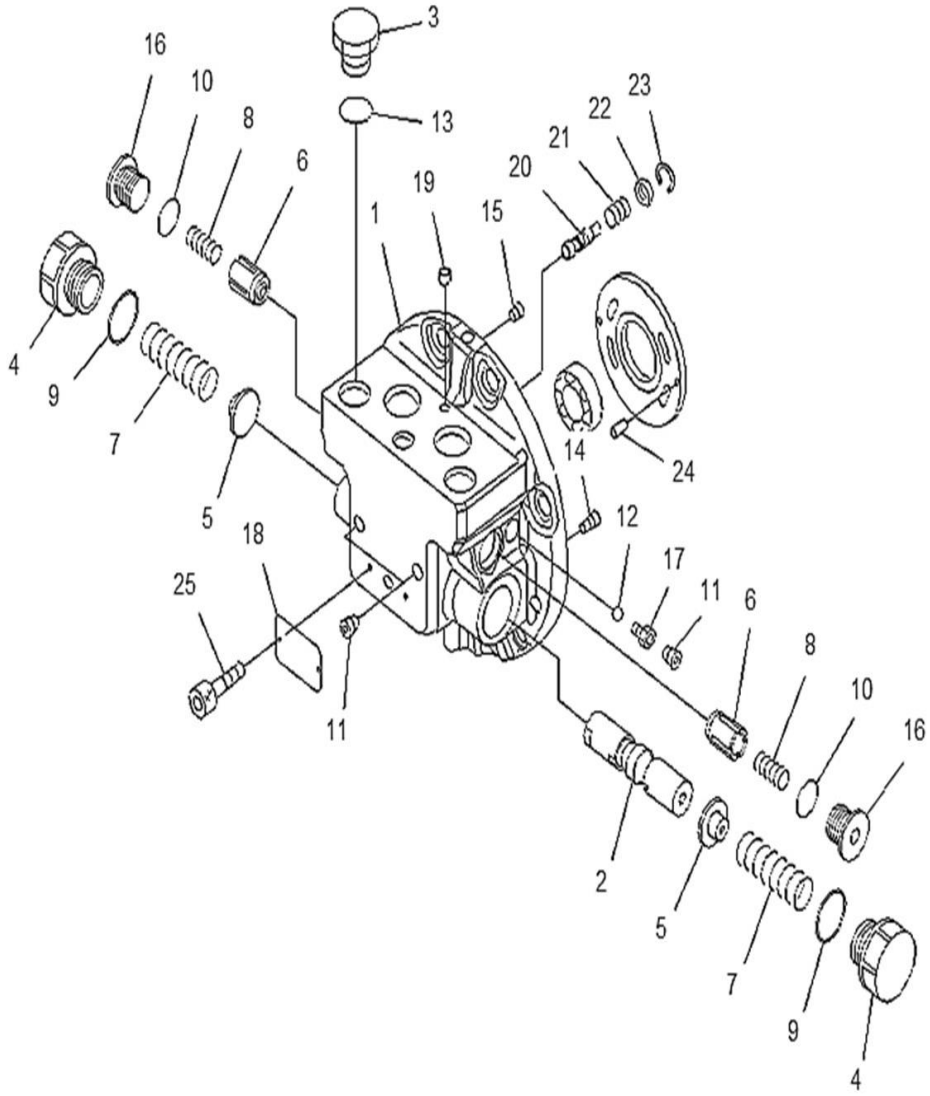

Index	Code	Part Number	Description	Qty	Serial No.
		201-60-81301	MOTOR ASS'Y	2	NL22941-
			THIS ASSY CONSISTS OF		
			ALL PARTS IN FIGS		
			Y1651-01A1, 02A1 AND 03A1		
		TZ110D200001-B	• MOTOR ASS'Y	1	NL22941-
			THIS ASSEMBLY CONSISTS OF		
			ALL PARTS IN FIGS		
			Y1651-01A1 AND Y1651-02A1		
		TZ111D400000-F	• CONTROL VALVE ASS'Y	1	NL22941-
		TZ111D410000-F	• • FLANGE ASS'Y,REAR	1	NL22941-
		TZ111D410100-F	• • • FLANGE KIT,REAR	1	NL22941-
1		#	• • • FLANGE,REAR	1	NL22941-
2		#	• • • SPOOL	1	NL22941-
3		07040-12012	• • • PLUG	1	NL22941-
4		TZ110D4024-00	• • • PLUG	2	NL22941-
5		TZ869A205200-B	• • • RETAINER,SPRING	2	NL22941-
6		TZ500D4054-00	• • • VALVE	2	NL22941-
7		TZ116D4056-00	• • • SPRING	2	NL22941-
8		TZ500D4055-00	• • • SPRING	2	NL22941-
9		TZJB2401-P26-9	• • • O-RING (KIT)	2	NL22941-
10		07000-12018	• • • O-RING (KIT)	2	NL22941-
11		TZGM1-8-S	• • • PLUG	3	NL22941-
12		#	• • • BALL	1	NL22941-
13		07002-12034	• • • O-RING (KIT)	1	NL22941-
14		#	• • • FILTER	1	NL22941-
15		#	• • • ORIFICE	1	NL22941-
16		TZ610B2021-00	• • • PLUG	2	NL22941-
17		#	• • • PLUG	1	NL22941-
18		#	• • • PLATE, NAME	1	NL22941-
19		TZGDL1-16-S	• • • PLUG	4	NL22941-
20		TZ200B2073-00	• • • VALVE	1	NL22941-
21		TZ300B2043-01	• • • SPRING	1	NL22941-
22		TZ300B2039-00	• • • STOPPER	1	NL22941-
23		TZ300B2042-00	• • • RING	1	NL22941-

PC71-7

FIG. Y-1651-01A1 TRAVEL MOTOER (1/3)

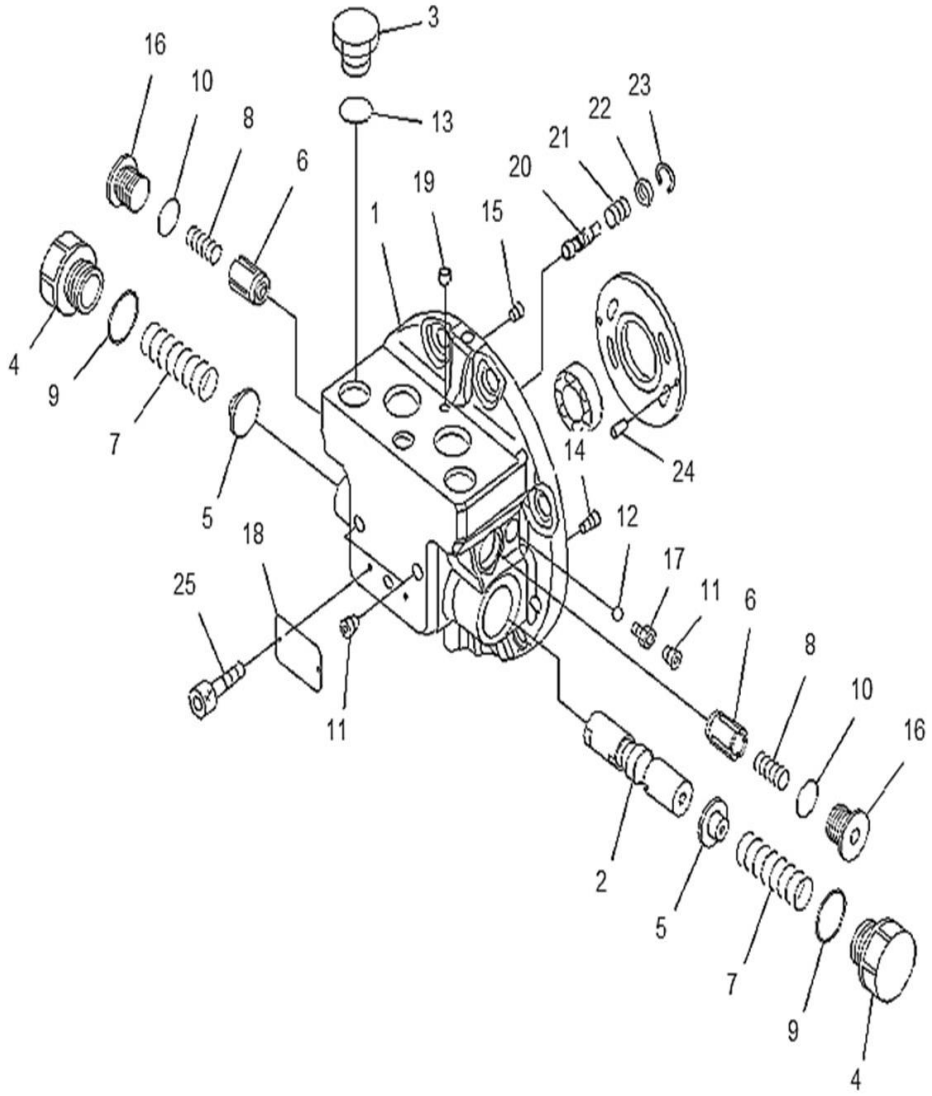

Index	Code	Part Number	Description	Qty	Serial No.
24		TZJB1354-4-10	PIN	1	NL22941-
25		01252-31230	BOLT	8	NL22941-
			SERVICE KIT.....		
K		TZ131D9000-00	SEAL KIT,TRAVEL MOTOR	1	NL22941-

FIG. Y1651-02A0A TRAVEL MOTOR (2/3)

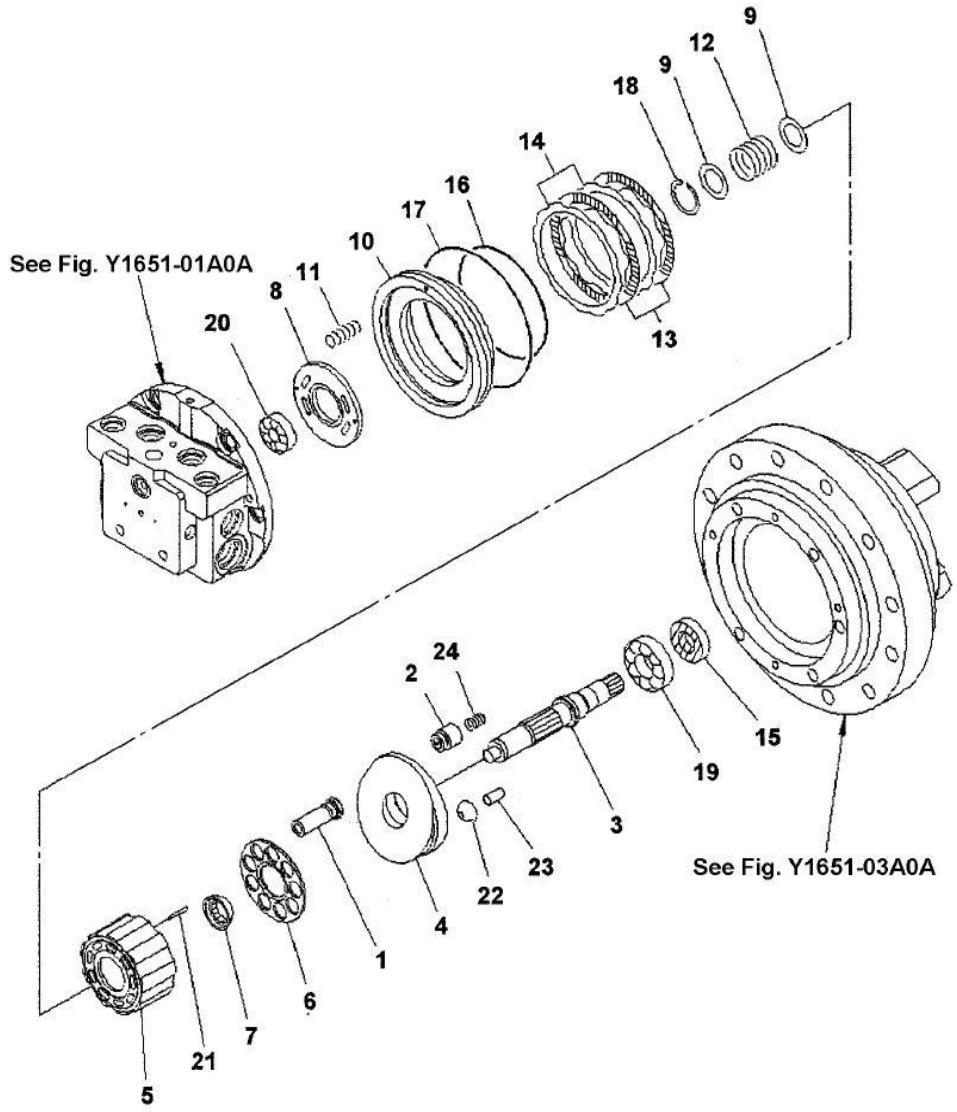

Index	Code	Part Number	Description	Qty	Serial No.
	C1	(201-60-73900)	TRAVEL MOTOR ASS'Y	2	NL 20319-NL 22940
	C1	(201-60-73601)	TRAVEL MOTOR ASS'Y	2	NL 20189-NL 20318
	C1	(201-60-73600)	TRAVEL MOTOR ASS'Y	2	NL 20003-NL 20188
			THIS ASSY CONSISTS OF		
			ALL PARTS IN FIGS. Y1651-01A0A, 02A0A AND 03A0A		
		TZ500D200000-G	• MOTOR ASS'Y	1	NL 20003-
			THIS ASSY CONSISTS OF		
			ALL PARTS IN FIGS. Y1651-01A0A, AND Y1651-02A0A		
		TZ500D2105-00	• • PISTON KIT	1	NL 20003-
1		#	• • • PISTON ASS'Y	9	NL 20003-
2		TZ500D2070-00	• • PISTON ASS'Y	1	NL 20003-
3		TZ500D2002-00	• • SHAFT	1	NL 20003-
4		TZ500D200300-G	• • PLATE SWASH	1	NL 20003-
5		TZ500D2004-00	• • BLOCK, CYLINDER	1	NL 20003-
6		TZ500D2007-00	• • PLATE, RETAINER	1	NL 20003-
7		TZ500D2008-00	• • BOWL, THRUST	1	NL 20003-
8		TZ500D2009-00	• • PLATE, TIMING	1	NL 20003-
9		TZ500D2010-00	• • WASHER	2	NL 20003-
10		TZ500D2012-00	• • PISTON	1	NL 20003-
11		TZ500D2013-00	• • SPRING	8	NL 20003-
12		TZ500D2014-00	• • SPRING	1	NL 20003-
13		TZ500D2015-00	• • DISC	2	NL 20003-
14		TZ500D2016-00	• • PLATE	2	NL 20003-
15		TZ15Z-22-42-10	• • SEAL, OIL (KIT)	1	NL 20003-
16		TZ500D2035-00	• • O-RING (KIT)	1	NL 20003-
17		TZ500D2039-00	• • O-RING (KIT)	1	NL 20003-
18		TZIRTW-36	• • RING, SNAP	1	NL 20003-
19		TZ880A2029-00	• • BEARING	1	NL 20003-
20		06000-06301	• • BEARING	1	NL 20003-
21		TZ500D2098-00	• • PIN	3	NL 20003-
22		TZ500D2076-00	• • PIVOT	2	NL 20003-
23		TZ263B2077-01	• • PIN	2	NL 20003-

PC71-7

FIG. Y1651-02A0A TRAVEL MOTOR (2/3)

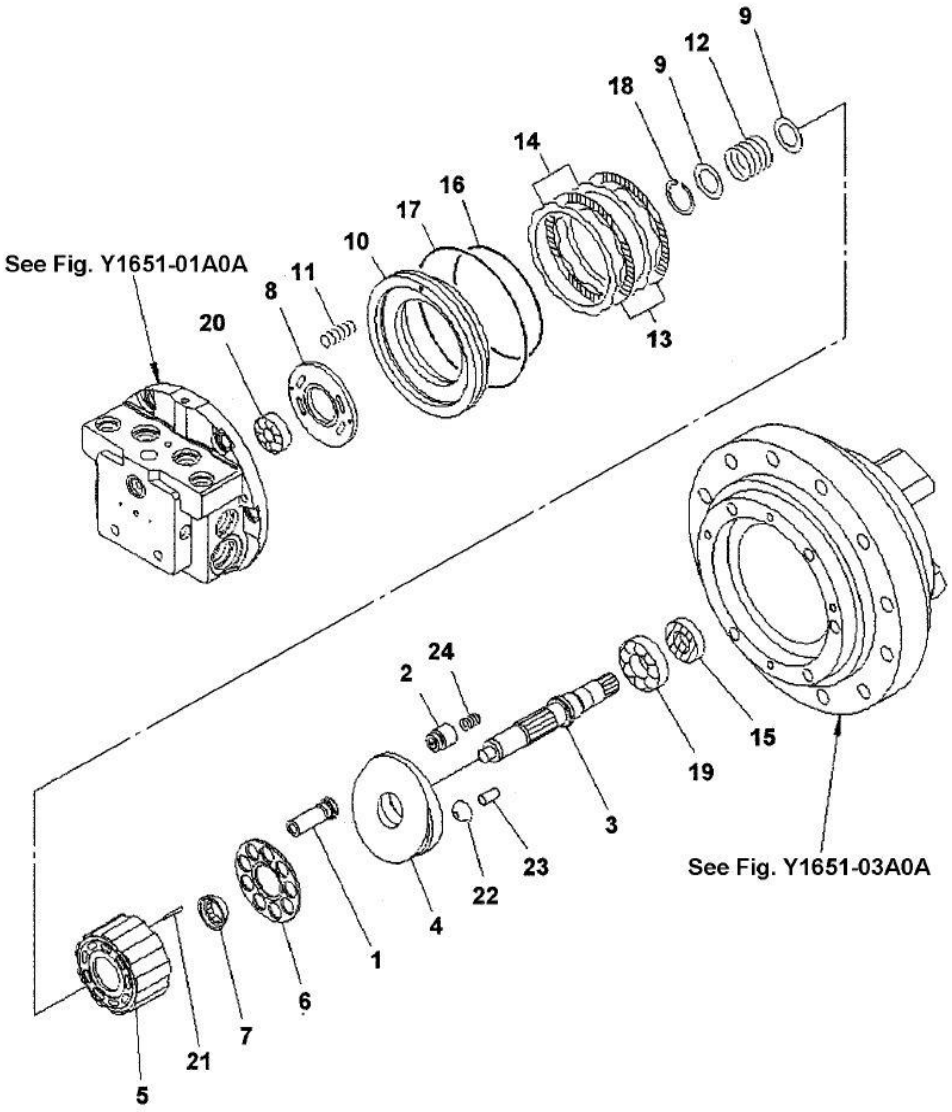

Index	Code	Part Number	Description	Qty	Serial No.
24		TZ844B2085-00	• • SPRING	1	NL 20003-

PC71-7

FIG. Y-1651-02A1 TRAVEL MOTOER (2/3)

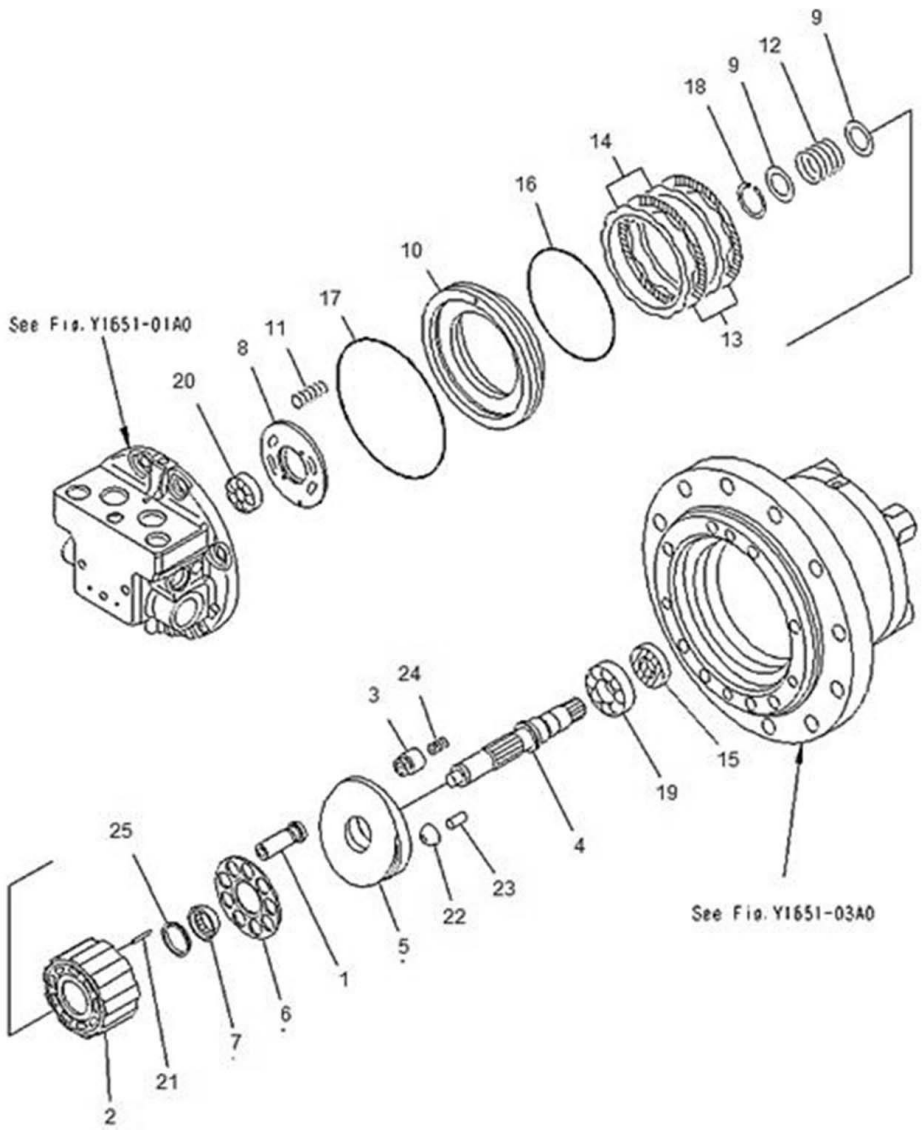

Index	Code	Part Number	Description	Qty	Serial No.
1		(201-60-81301)	MOTOR ASS'Y	2	NL22941-
			THIS ASSY CONSISTS OF		
			ALL PARTS IN FIGS		
			Y1651-01A1, 02A1 AND 03A1		
		(TZ110D200001-B	• MOTOR ASS'Y	1	NL22941-
			THIS ASSEMBLY CONSISTS OF		
			ALL PARTS IN FIGS		
			Y1651-01A1 AND Y1651-02A1		
		TZ277B2205-00	• • CYL & PISTON KIT	1	NL22941-
		#	• • • PISTON KIT	9	NL22941-
2		#	• • • BLOCK,CYLINDER	1	NL22941-
3		TZ263B2070-01	• • PISTON	1	NL22941-
4		TZ110D2002-00	• • SHAFT	1	NL22941-
5		TZ110D200300-B	• • PLATE,SWASH	1	NL22941-
6		TZ277B2007-00	• • PLATE,RETAINER	1	NL22941-
7		TZ263B2008-01	• • BOWL,THRUST	1	NL22941-
8		TZ110D2009-01	• • PLATE,TIMING	1	NL22941-
9		TZ880A2010-00	• • WASHER	2	NL22941-
10		TZ266B2012-00	• • PISTON	1	NL22941-
11		TZ500D2013-00	• • SPRING	10	NL22941-
12		TZ277B2014-00	• • SPRING	1	NL22941-
13		TZ800A2015-00	• • PLATE	2	NL22941-
14		TZ800A2016-00	• • PLATE	3	NL22941-
15		TZTCZ-30-50-9	• • SEAL, OIL (KIT)	1	NL22941-
16		TZ266B2035-00	• • O-RING (KIT)	1	NL22941-
17		TZ266B2039-00	• • O-RING (KIT)	1	NL22941-
18		TZTH-R-42	• • RING, SNAP	1	NL22941-
19		06000-06206	• • BEARING	1	NL22941-
20		TZ400G2049-00	• • BEARING	1	NL22941-
21		TZ263B2098-00	• • PIN	3	NL22941-
22		TZ263B2076-02	• • PIVOT	2	NL22941-
23		TZ263B2077-01	• • PIN	2	NL22941-
24		TZ263B2090-00	• • SPRING	1	NL22941-
25		TZ263B2011-03	• • WASHER	1	NL22941-

PC71-7

FIG. Y-1651-02A1 TRAVEL MOTOER (2/3)

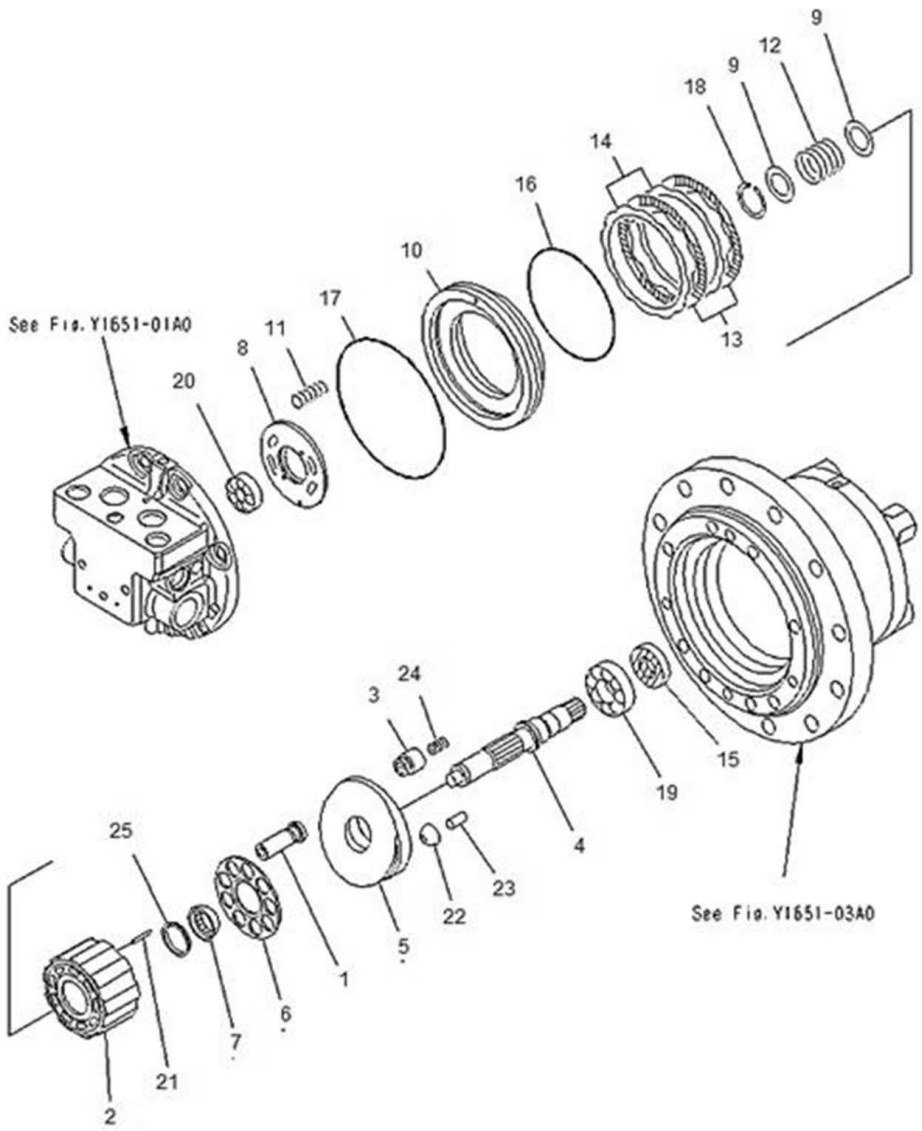

Index	Code	Part Number	Description	Qty	Serial No.
			SERVICE KIT.....		
K		(TZ131D9000-00)	SEAL KIT,TRAVEL MOTOR	1	NL22941-

FIG. Y1651-03A0A TRAVEL MOTOR (3/3)

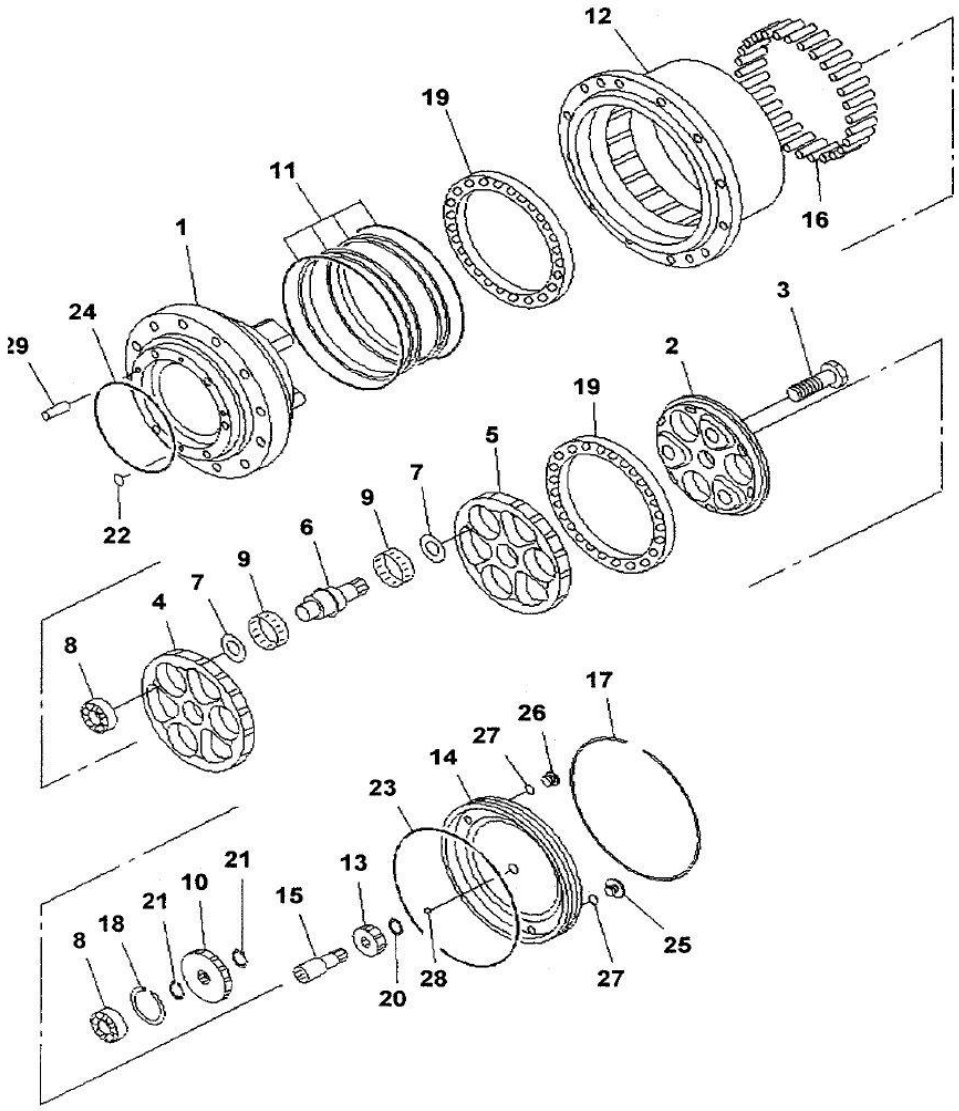

Index	Code	Part Number	Description	Qty	Serial No.
	C1	(201-60-73900)	TRAVEL MOTOR ASS'Y	2	NL 20319-NL 22940
	C1	(201-60-73601)	TRAVEL MOTOR ASS'Y	2	NL 20189-NL 20318
	C1	(201-60-73600)	TRAVEL MOTOR ASS'Y	2	NL 20003-NL 20188
			THIS ASSY CONSISTS OF		
			ALL PARTS IN FIGS		
			Y1651-01A0A, 02A0A AND 03A0A		
		TZ502D1000-00	• FINAL ASS'Y	1	NL 20003-
		(*TZ500D1102-00	• • SPINDLE KIT	1	NL 20003-
		(*TZ500D1132-00	• • • SPINDLE ASS'Y	1	NL 20003-
1		#	• • • SPINDLE	1	NL 20003-
2		#	• • • FLANGE, HOLD	1	NL 20003-
3		TZ500D1019-00	• • • BOLT, REAMER	3	NL 20003-
		(*TZ529D1104-00	• • RV GEAR ASS'Y	1	NL 20003-
4		#	• • • RV GEAR	1	NL 20003-
5		#	• • • RV GEAR	1	NL 20003-
		(TZ529D120900-0	• • • SHAFT ASSY	1	NL 20003-
6		#	• • • SHAFT, CRANK	3	NL 20003-
7		#	• • • SPACER	6	NL 20003-
8		#	• • • BEARING	6	NL 20003-
9		#	• • • BEARING	6	NL 20003-
		TZ502D1107-00	• • SPUR GEAR KIT (3 PIECES)	1	NL 20003-
10		#	• • • SPUR GEAR	3	NL 20003-
		TZES20423232-B	• • FLOATING SEAL ASS'Y (KIT	1	NL 20003-
11		#	• • • SEAL, FLOATING (KIT)	2	NL 20003-
12		(*TZ500D1001-00	• • HUB	1	NL 20003-
13		TZ502D1006-00	• • GEAR, INPUT	1	NL 20003-
14		TZ500D1008-08	• • COVER	1	NL 20003-
15		TZ500D1015-00	• • SHAFT	1	NL 20003-
16		TZ500D1017-00	• • PIN	28	NL 20003-
17		TZ810B1018-00	• • RING	1	NL 20003-
18		(*TZ860A1013-00	• • SNAP RING SET (15 KINDS)	3	NL 20003-
19		(*TZ500D1021-00	• • BEARING	2	NL 20003-
20		TZJB2804-S19	• • RING, SNAP	1	NL 20003-
21		04064-02512	• • RING, SNAP	6	NL 20003-

PC71-7

FIG. Y1651-03A0A TRAVEL MOTOR (3/3)

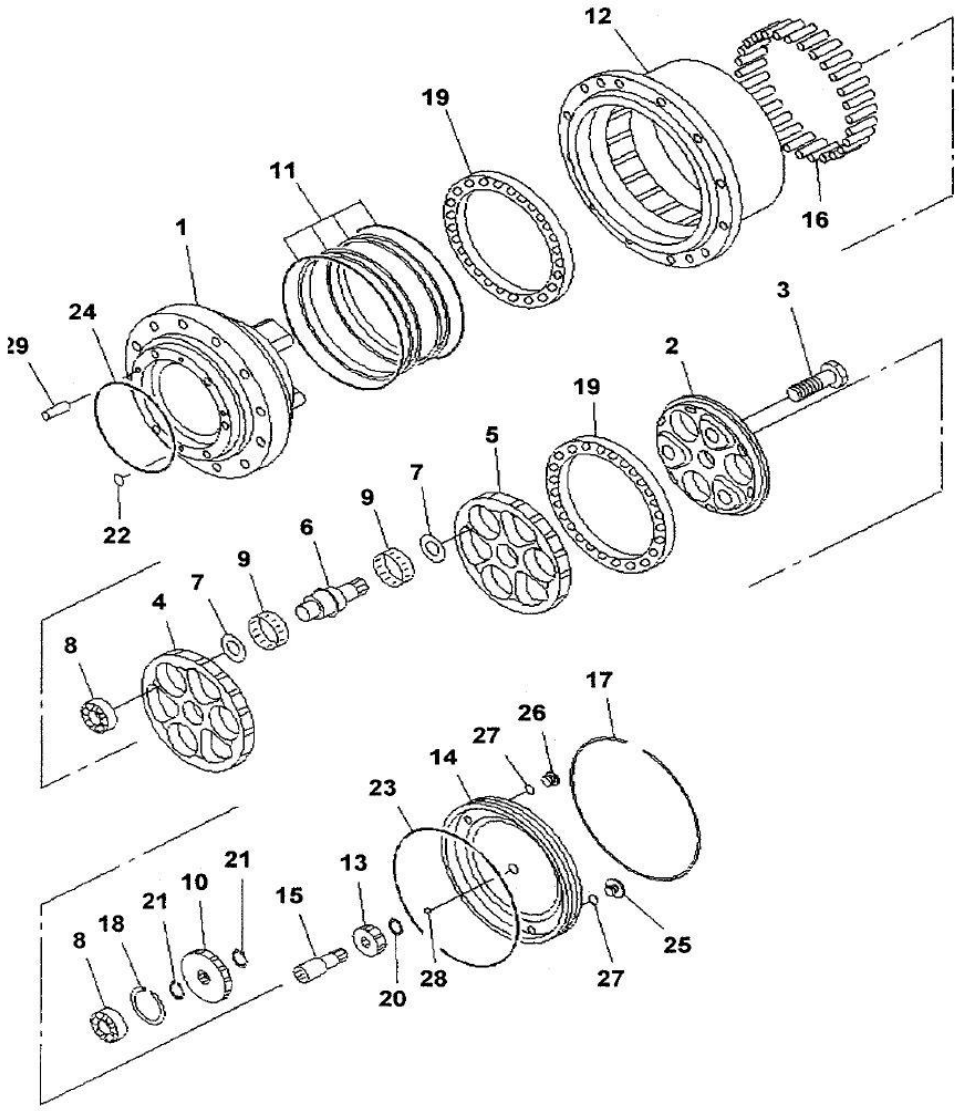

Index	Code	Part Number	Description	Qty	Serial No.
22		07000-11008	• • O-RING (KIT)	2	NL 20003-
23		07000-15230	• • O-RING (KIT)	1	NL 20003-
24		TZJW1516-G35-5	• • O-RING (KIT)	1	NL 20003-
25		TZ410D1033-00	• • PLUG	1	NL 20003-
26		TZ810B2021-00	• • PLUG	2	NL 20003-
27		07000-12014	• • O-RING (KIT)	3	NL 20003-
28		04260-00952	• • BALL	1	NL 20003-
29		TZJB1354-8-22	• • PIN	2	NL 20003-
K1		TZ505D9000-00	SEAL KIT	1	NL 20003-
		TZJB2401-P26-9	• O-RING	2	NL 20003-
		07000-12018	• O-RING	2	NL 20003-
		07002-12034	• O-RING	1	NL 20003-
		07000-12014	• O-RING	1	NL 20003-
		TZ15Z-22-42-10	• SEAL, OIL	1	NL 20003-
		TZ500D2035-00	• O-RING	1	NL 20003-
		TZ500D2039-00	• O-RING	1	NL 20003-
		TZES20423232-B	• FLOATING SEAL ASS'Y	1	NL 20003-
		#	• • SEAL, FLOATING	2	NL 20003-
		07000-11008	• O-RING	2	NL 20003-
		07000-15230	• O-RING	1	NL 20003-
		TZJW1516-G35-5	• O-RING	1	NL 20003-
		07000-12014	• O-RING	3	NL 20003-

PC71-7

FIG. Y-1651-03A1 TRAVEL MOTOER (3/3)

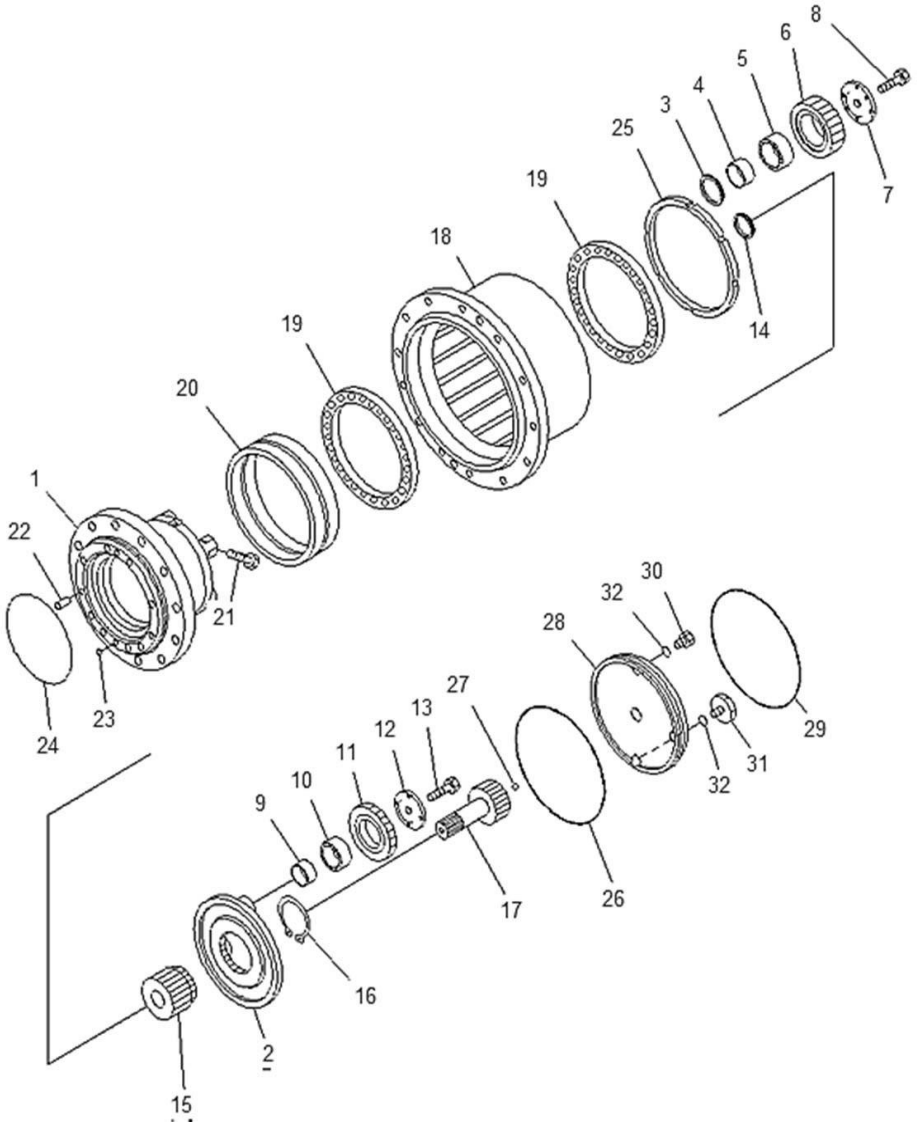

Index	Code	Part Number	Description	Qty	Serial No.
1		(201-60-81301)	MOTOR ASS'Y	2	NL22941-
			THIS ASSEMBLY CONSISTS OF		
			ALL PARTS IN FIGS		
			Y1651-01A1, 02A1 AND 03A1		
		TZ131D1000-00	• FINAL ASS'Y	1	NL22941-
		TZ110D1002-00	• • SPINDLE	1	NL22941-
2		TZ111D1003-00	• • CARRIER	1	NL22941-
3		TZ110D1011-00	• • WASHER,THRUST	4	NL22941-
4		TZ110D1030-00	• • BEARING	4	NL22941-
5		TZ110D1028-00	• • BEARING	4	NL22941-
6		TZ110D1007-00	• • GEAR	4	NL22941-
7		TZ110D1010-00	• • WASHER,THRUST	4	NL22941-
8		TZ1180102010L	• • BOLT	4	NL22941-
9		TZ110D1029-00	• • BEARING	3	NL22941-
10		TZ110D1027-00	• • BEARING	3	NL22941-
11		TZ111D1005-00	• • GEAR	3	NL22941-
12		TZ440D1012-00	• • WASHER,THRUST	3	NL22941-
13		TZ1180082010L2	• • BOLT	3	NL22941-
14		TZ400G1009-00	• • COLLAR,THRUST	1	NL22941-
15		TZ110D1006-00	• • GEAR	1	NL22941-
16		04064-04518	• • RING	1	NL22941-
17		TZ111D1004-00	• • GEAR	1	NL22941-
18		TZ110D1001-00	• • HUB	1	NL22941-
19		TZ110D1024-00	• • BEARING	2	NL22941-
20		TZ192-230-30BH	• • FLOATING SEAL ASS'Y (KIT)	1	NL22941-
21		TZJB1177M812-B	• • BOLT	2	NL22941-
22		TZ263B2077-01	• • PIN	2	NL22941-
23		07000-11007	• • O-RING (KIT)	2	NL22941-
24		TZJW1516-G37-7	• • O-RING (KIT)	1	NL22941-
25		TZ110D1022-00	• • NUT	1	NL22941-
26		07000-05230	• • O-RING (KIT)	1	NL22941-
27		04260-00952	• • BALL	1	NL22941-
28		TZ110D1013-00	• • COVER	1	NL22941-
29		TZ810B1018-00	• • RING	1	NL22941-

PC71-7

FIG. Y-1651-03A1 TRAVEL MOTOER (3/3)

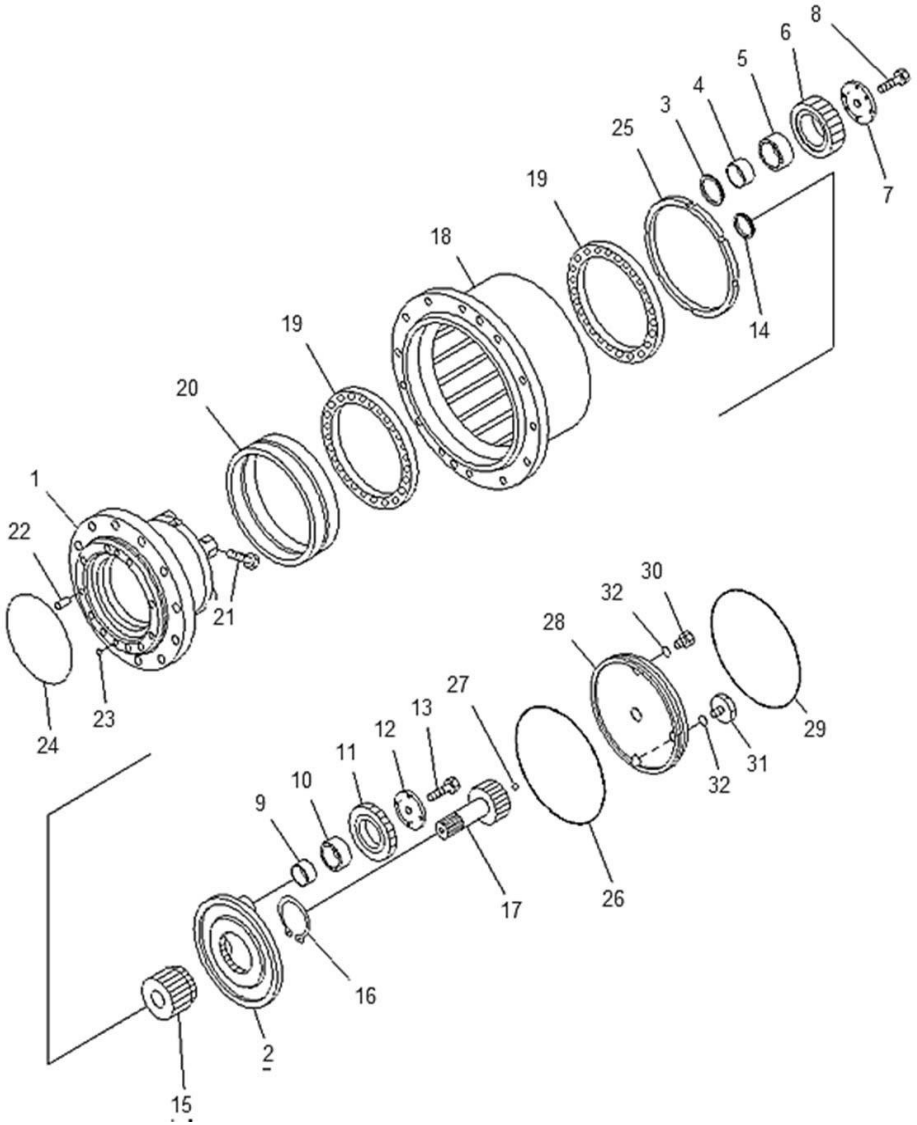

Index	Code	Part Number	Description	Qty	Serial No.
30		TZ810B2021-00	• • PLUG	2	NL22941-
31		TZ410D1033-01	• • PLUG	1	NL22941-
32		07000-12014	• • O-RING (KIT)	3	NL22941-
			SERVICE KIT.....		
K		(TZ131D9000-00)	SEAL KIT,TRAVEL MOTOR	1	NL22941-

PC71-7

FIG. Y1662-21A0 MAIN VALVE (7-VALVE)(1/7)(FOR BLADE)

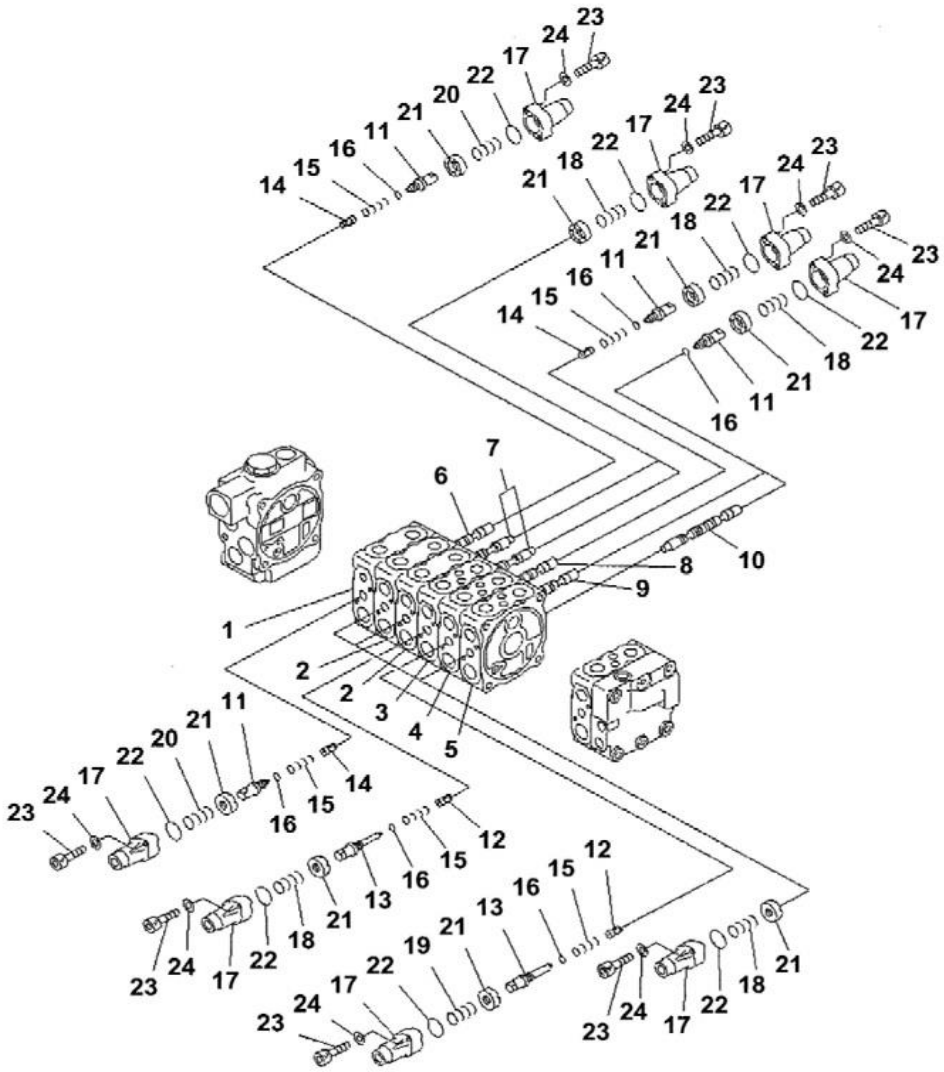

Index	Code	Part Number	Description	Qty	Serial No.
		723-27-16102	VALVE ASS'Y	1	NL 21733-
	C1	723-27-16101	VALVE ASS'Y	1	NL 20001-NL21732
			THIS ASSY CONSISTS OF		
			PARTS SHOWN IN FIGS.		
			Y1662-21A0 TO Y1662-27A0		
		#	• BODY GROUP	1	NL 20001-
1		#	• • BLOCK	1	NL 20001-
2		#	• • BLOCK	2	NL 20001-
3		#	• • BLOCK	1	NL 20001-
4		#	• • BLOCK	1	NL 20001-
5		#	• • BLOCK	1	NL 20001-
6		#	• • SPOOL	1	NL 20001-
7		#	• • SPOOL	2	NL 20001-
8		#	• • SPOOL	1	NL 20001-
9		#	• • SPOOL	1	NL 20001-
10		#	• • SPOOL	1	NL 20001-
11		#	• • PLUG	5	NL 20001-
12		#	• • VALVE	2	NL 20001-
13		#	• • PLUG	2	NL 20001-
14		#	• • VALVE	3	NL 20001-
15		#	• • SPRING	5	NL 20001-
16		#	• • O-RING	7	NL 20001-
17		723-26-15110	• • CASE	12	NL 20001-
18		709-26-11450	• • SPRING	9	NL 20001-
19		723-26-14210	• • SPRING	1	NL 20001-
20		723-26-14122	• • SPRING	2	NL 20001-
21		723-26-15121	• • RETAINER	12	N220001-
	C1	723-26-15120	• • RETAINER	12	NL 20001- N201404
22		575-41-17420	• • O-RING	12	NL 20001-
23		01252-60630	• • BOLT	24	NL 20001-
24		01641-20608	• • WASHER	24	NL 20001-

PC71-7

FIG. Y1662-22A0 MAIN VALVE (7-VALVE)(2/7)(FOR BLADE)

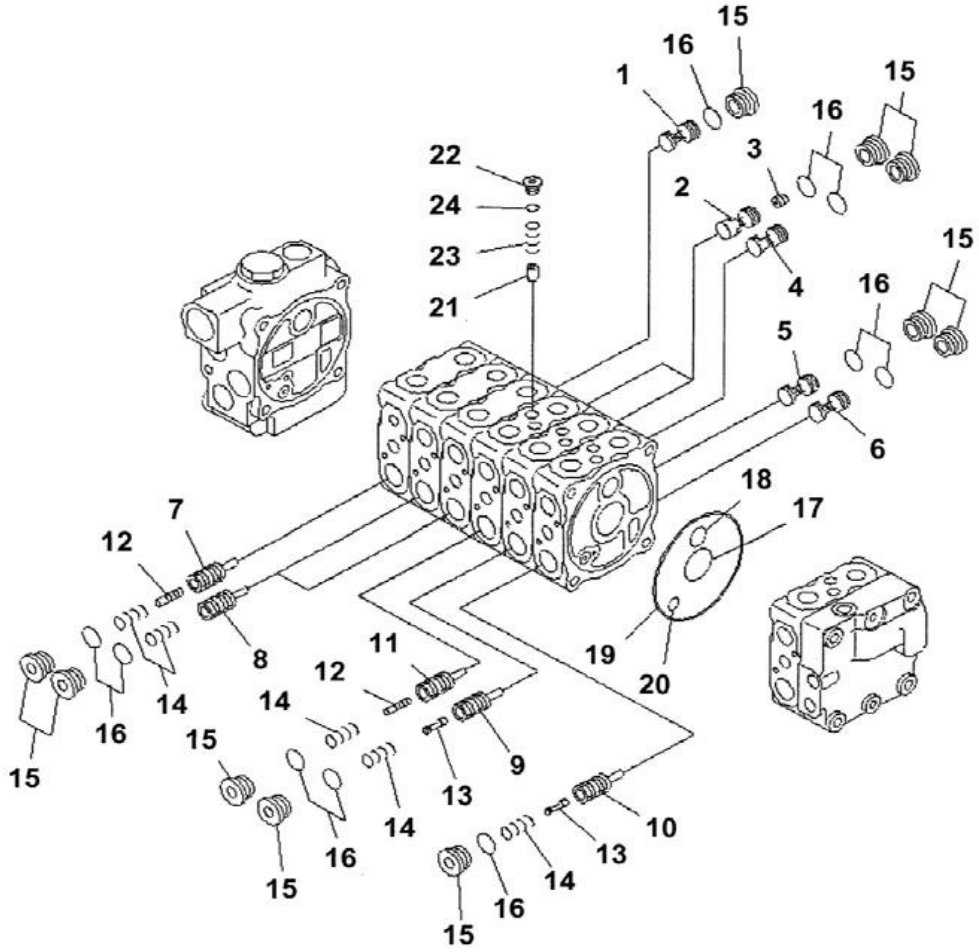

Index	Code	Part Number	Description	Qty	Serial No.
		(723-27-16102)	VALVE ASS'Y	1	NL 21733-
	C1	(723-27-16101)	VALVE ASS'Y	1	NL 20001-NL21732
			THIS ASSY CONSISTS OF		
			PARTS SHOWN IN FIGS.		
			Y1662-21A0 TO Y1662-27A0		
		#	• BODY GROUP	1	NL 20001-
1		#	• • VALVE	1	NL 20001-
2		#	• • VALVE	2	NL 20001-
3		723-30-51130	• • PLUG	2	NL 20001-
4		#	• • VALVE	1	NL 20001-
5		#	• • VALVE	1	NL 20001-
6		#	• • VALVE	1	NL 20001-
7		#	• • VALVE	1	NL 20001-
8		#	• • VALVE SUB ASS'Y	2	NL 20001-
9		#	• • VALVE	1	NL 20001-
10		#	• • VALVE	1	NL 20001-
11		#	• • VALVE	1	NL 20001-
12		723-26-51150	• • PISTON	2	NL 20001-
13		723-26-51190	• • PISTON	2	NL 20001-
14		723-26-14140	• • SPRING	6	NL 20001-
15		723-26-1 5230	• • PLUG	12	NL 20001-
16		07002-12434	• • O-RING	12	NL 20001-
17		07000-13035	• • O-RING	6	NL 20001-
18		07000-12020	• • O-RING	6	NL 20001-
19		07000-12120	• • O-RING	6	NL 20001-
20		07000-12010	• • O-RING	6	NL 20001-
21		#	• • VALVE	6	NL 20001-
22		723-26-1 5220	• • PLUG	6	NL 20001-
23		723-26-14150	• • SPRING	6	NL 20001-
24		07002-11223	• • O-RING	6	NL 20001-

FIG. Y1662-23A0 MAIN VALVE (7-VALVE)(3/7)(FOR BLADE)

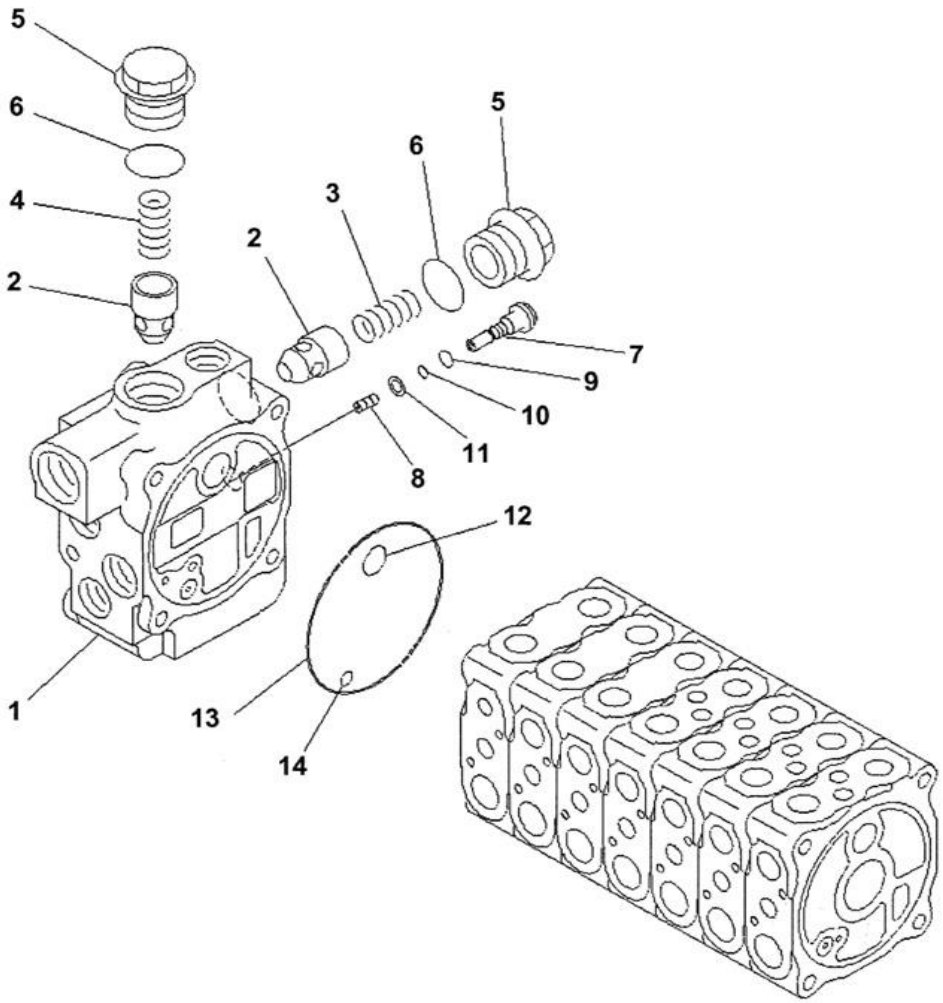

Index	Code	Part Number	Description	Qty	Serial No.
1		(723-27-16102)	VALVE ASS'Y	1	NL 21733-
	C1	(723-27-16101)	VALVE ASS'Y	1	NL 20001-NL21732
			THIS ASSY CONSISTS OF		
			PARTS SHOWN IN FIGS.		
			Y1662-21A0 TO Y1662-27A0		
		723-26-00802	• BLOCK SUB ASS'Y	1	NL 20001-
		723-26-11210	• • BLOCK	1	NL 20001-
2		201-62-72610	• • POPPET	2	NL 20001-
3		195-40-31140	• • SPRING	1	NL 20001-
4		700-22-11311	• • SPRING	1	NL 20001-
5		723-26-15390	• • PLUG	2	NL 20001-
6		07002-13334	• • O-RING	2	NL 20001-
		723-20-85100	• • PLUG ASS'Y	1	NL 20001-
7		#	• • • PLUG	1	NL 20001-
8		#	• • • SCREW	1	NL 20001-
9		07002-11023	• • • O-RING	1	NL 20001-
10		07000-11004	• • • O-RING	1	NL 20001-
11		07001-01004	• • • RING	1	NL 20001-
12		07000-12020	• • O-RING	1	NL 20001-
13		07000-12120	• • O-RING	1	NL 20001-
14		07000-02120	• • O-RING	1	NL 20001-

FIG. Y1662-24A0 MAIN VALVE (7-VALVE)(4/7)(FOR BLADE)

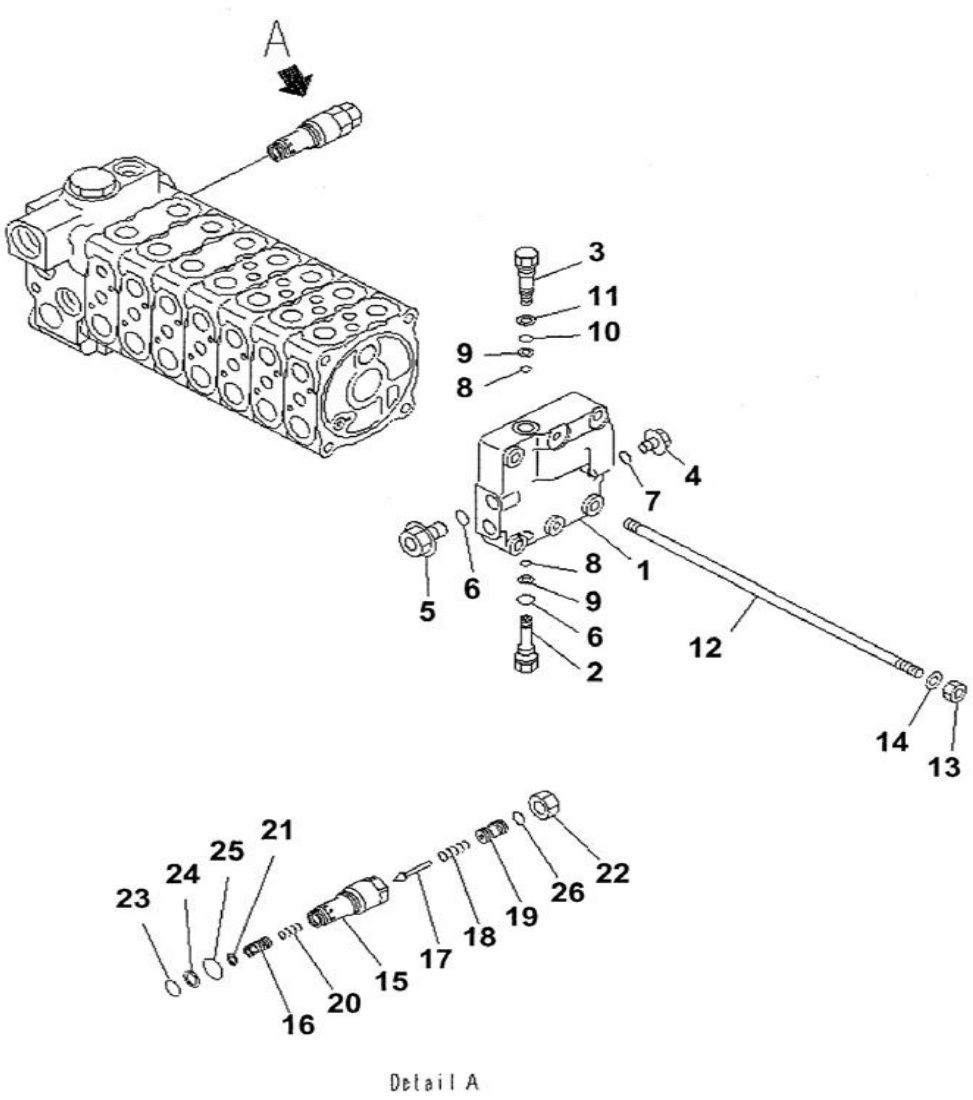

Index	Code	Part Number	Description	Qty	Serial No.
		(723-27-16102)	VALVE ASS'Y	1	NL 21733-
	C1	(723-27-16101)	VALVE ASS'Y	1	NL 20001-NL21732
			THIS ASSY CONSISTS OF		
			PARTS SHOWN IN FIGS.		
			Y1662-21A0 TO Y1662-27A0		
		723-26-00901	• COVER SUB ASS'Y	1	NL 20001-
1		723-26-11370	• • COVER	1	NL 20001-
2		723-26-15170	• • PLUG	1	NL 20001-
3		723-26-15190	• • PLUG	1	NL 20001-
4		708-8E-16160	• • PLUG	1	NL 20001-
5		706-73-71450	• • PLUG	1	NL 20001-
6		07002-11423	• • O-RING	2	NL 20001-
7		07002-11023	• • O-RING	1	NL 20001-
8		07000-11007	• • O-RING	2	NL 20001-
9		07001-01007	• • O-RING, BACK-UP	2	NL 20001-
10		07000-11009	• • O-RING	1	NL 20001-
11		07001-01009	• • O-RING, BACK-UP	1	NL 20001-
12		723-26-15670	• STUD	4	NL 20001-
13		01580-11008	• NUT	4	NL 20001-
14		01643-31032	• WASHER	4	NL 20001-
		709-20-52300	• VALVE ASS'Y,RELIEF	1	NL 20001-
15		#	• • SLEEVE	1	NL 20001-
16		#	• • VALVE	1	NL 20001-
17		#	• • POPPET	1	NL 20001-
18		#	• • SPRING	1	NL 20001-
19		#	• • SCREW	1	NL 20001-
20		#	• • SPRING	1	NL 20001-
21		#	• • RING	1	NL 20001-
22		#	• • NUT	1	NL 20001-
23		700-22-11410	• • O-RING	1	NL 20001-
24		700-80-64220	• • RING	1	NL 20001-
25		07002-02434	• • O-RING	1	NL 20001-
26		#	• • O-RING	1	NL 20001-

FIG. Y1662-25A0 MAIN VALVE (7-VALVE)(5/7)(FOR BLADE)

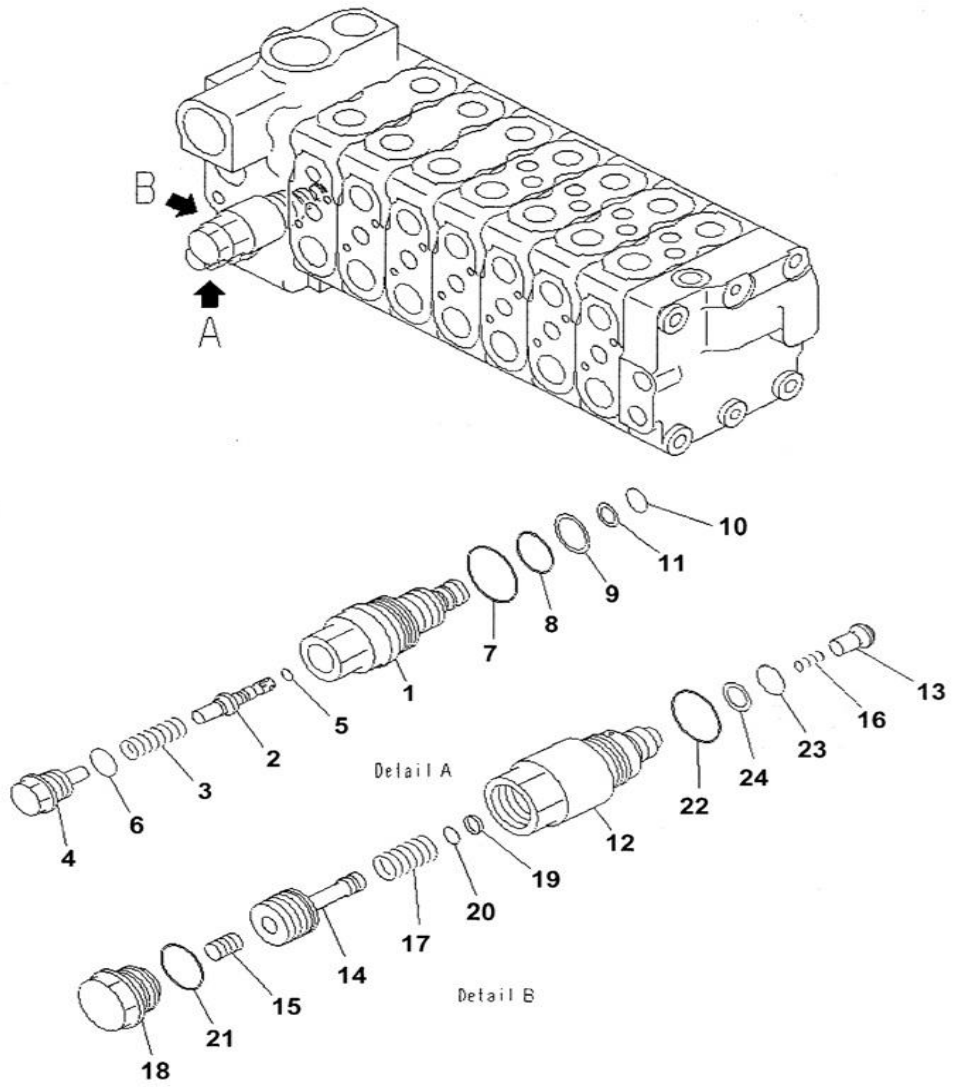

Index	Code	Part Number	Description	Qty	Serial No.
		(723-27-16102)	VALVE ASS'Y	1	NL 21733-
	C1	(723-27-16101)	VALVE ASS'Y	1	NL 20001-NL21732
			THIS ASSY CONSISTS OF		
			PARTS SHOWN IN FIGS.		
			Y1662-21A0 TO Y1662-27A0		
		723-20-70500	• VALVE ASS'Y	1	NL 20001-
1		#	• • SLEEVE	1	NL 20001-
2		#	• • VALVE	1	NL 20001-
3		#	• • SPRING	1	NL 20001-
4		#	• • PLUG	1	NL 20001-
5		#	• • RING	1	NL 20001-
6		#	• • O-RING	1	NL 20001-
7		07002-12434	• • O-RING	1	NL 20001-
8		07000-12016	• • O-RING	1	NL 20001-
9		07001-02016	• • O-RING, BACK-UP	1	NL 20001-
10		07000-11009	• • O-RING	1	NL 20001-
11		07001-01009	• • O-RING, BACK-UP	1	NL 20001-
		723-30-60101	• VALVE ASS'Y	1	NL 20001-
12		#	• • SLEEVE	1	NL 20001-
13		#	• • VALVE	1	NL 20001-
14		#	• • PISTON	1	NL 20001-
15		#	• • PISTON	1	NL 20001-
16		#	• • SPRING	1	NL 20001-
17		#	• • SPRING	1	NL 20001-
18		#	• • PLUG	1	NL 20001-
19		#	• • SEAL	1	NL 20001-
20		#	• • O-RING	1	NL 20001-
21		#	• • O-RING	1	NL 20001-
22		709-25-11390	• • O-RING	1	NL 20001-
23		07000-12012	• • O-RING	1	NL 20001-
24		07001-02012	• • O-RING, BACK-UP	1	NL 20001-

FIG. Y1662-26A0 MAIN VALVE (7-VALVE)(6/7)(FOR BLADE)

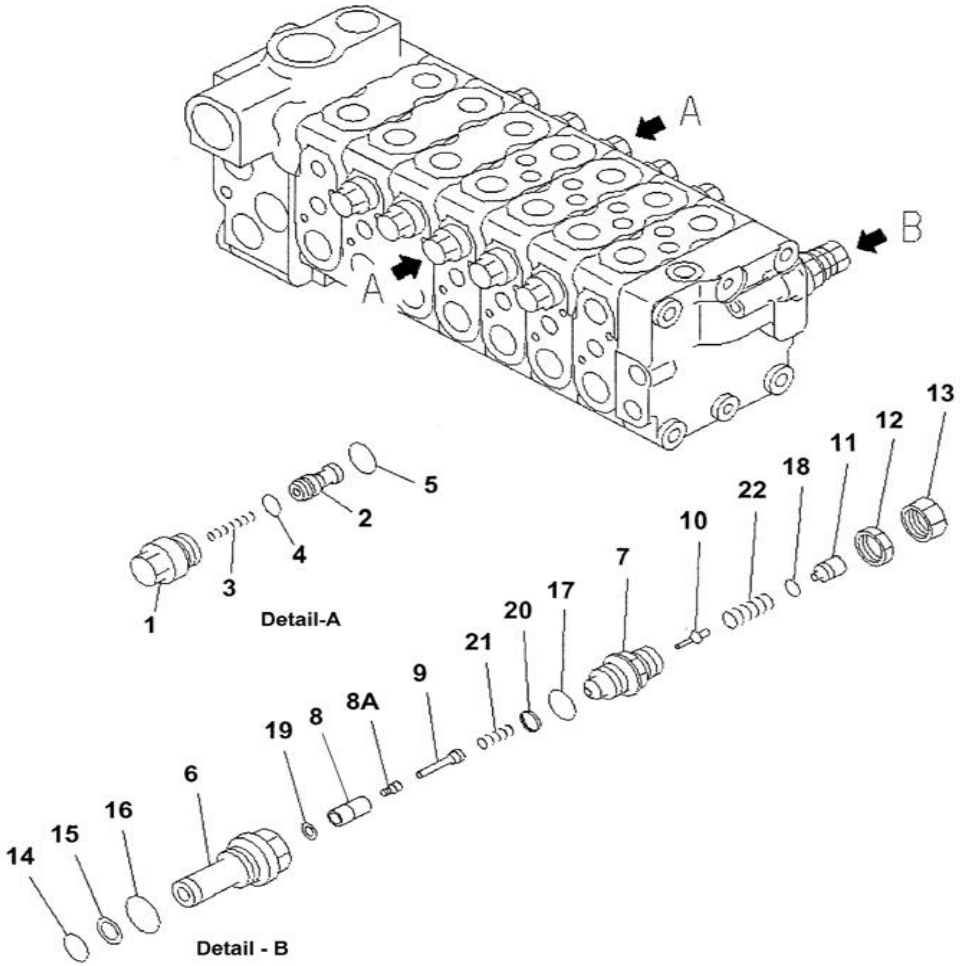

Index	Code	Part Number	Description	Qty	Serial No.
1		(723-27-16102)	VALVE ASS'Y	1	NL 21733-
	C1	(723-27-16101)	VALVE ASS'Y	1	NL 20001-NL21732
			THIS ASSY CONSISTS OF		
			PARTS SHOWN IN FIGS		
			Y1662-21A0 TO Y1662-27A0		
		723-20-80100	• VALVE ASS'Y, SUCTION	10	NL 20001-
		#	• • SLEEVE	1	NL 20001-
2		#	• • VALVE	1	NL 20001-
3		#	• • SPRING	1	NL 20001-
4		#	• • SEAL	1	NL 20001-
5		07002-12034	• • O-RING	1	NL 20001-
		723-20-61101	• VALVE ASS'Y,RELIEF	1	NL 20001-
6		#	• • SLEEVE	1	NL 20001-
7		#	• • PLUG	1	NL 20001-
8		#	• • POPPET	1	NL 20001-
8A		#	• • SEAT	1	NL 20001-
9		#	• • PISTON	1	NL 20001-
10		#	• • POPPET	1	NL 20001-
11		#	• • SPACER	1	NL 20001-
12		#	• • NUT	1	NL 20001-
13		#	• • NUT	1	NL 20001-
14		700-22-11410	• • O-RING	1	NL 20001-
15		700-80-64220	• • RING	1	NL 20001-
16		07002-12434	• • O-RING	1	NL 20001-
17		#	• • O-RING	1	NL 20001-
18		#	• • O-RING	1	NL 20001-
19		#	• • SEAL	1	NL 20001-
20		#	• • SEAL	1	NL 20001-
21		#	• • SPRING	1	NL 20001-
22		#	• • SPRING	1	NL 20001-

FIG. Y1662-27A0 MAIN VALVE (7-VALVE)(7/7)(FOR BLADE)

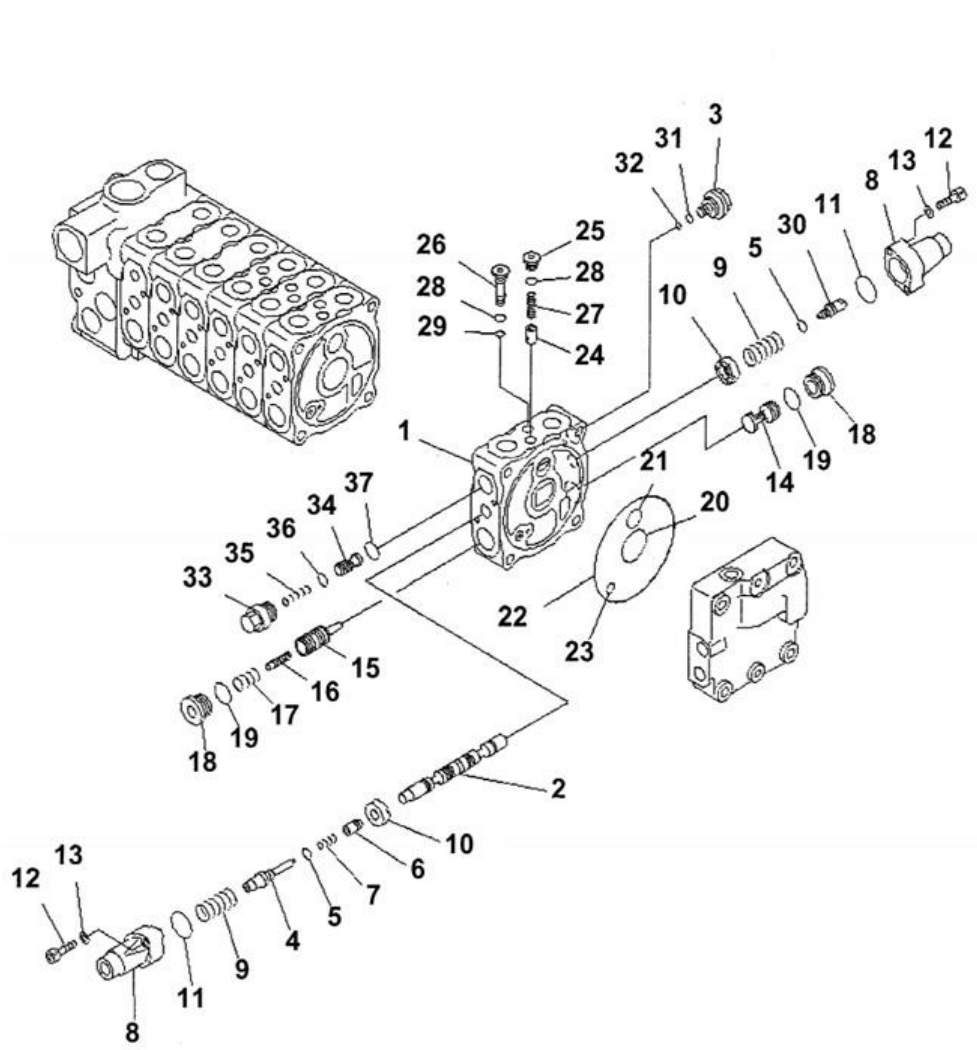

Index	Code	Part Number	Description	Qty	Serial No.
1		(723-27-16102)	VALVE ASS'Y	1	NL 21733-
	C1	(723-27-16101)	VALVE ASS'Y	1	NL 20001-NL21732
			THIS ASSY CONSISTS OF	1	
			PARTS SHOWN IN FIGS.		
			Y1662-21A0 TO Y1662-27A0	1	
		723-21-02400	• VALVE SUB ASS'Y	1	NL 20001-
		#	• • BLOCK	1	NL 20001-
2		#	• • SPOOL	1	NL 20001-
3		#	• • PLUG	1	NL 20001-
4		#	• • PLUG	1	NL 20001-
5		07002-10823	• • O-RING	2	NL 20001-
6		723-26-15160	• • VALVE	1	NL 20001-
7		723-26-14130	• • SPRING	1	NL 20001-
8		723-26-15110	• • CASE	2	NL 20001-
9		709-26-11450	• • SPRING	2	NL 20001-
10		723-26-15121	• • RETAINER	2	N220001-
	C1	723-26-15120	• • RETAINER	2	NL 20001- N201404
11		575-41-17420	• • O-RING	2	NL 20001-
12		01252-60630	• • BOLT	4	NL 20001-
13		01641-20608	• • WASHER	4	NL 20001-
14		#	• • VALVE	1	NL 20001-
15		#	• • VALVE	1	NL 20001-
16		723-26-51190	• • PISTON	1	NL 20001-
17		723-26-14140	• • SPRING	1	NL 20001-
18		723-26-15230	• • PLUG	2	NL 20001-
19		07002-12434	• • O-RING	2	NL 20001-
20		07000-13035	• • O-RING	1	NL 20001-
21		07000-12020	• • O-RING	1	NL 20001-
22		07000-02120	• • O-RING	1	NL 20001-
23		07000-12010	• • O-RING	1	NL 20001-
24		#	• • VALVE	1	NL 20001-
25		723-26-15220	• • PLUG	1	NL 20001-
26		723-26-15330	• • PLUG	1	NL 20001-
27		723-26-14150	• • SPRING	1	NL 20001-

PC71-7

FIG. Y1662-27A0 MAIN VALVE (7-VALVE)(7/7)(FOR BLADE)

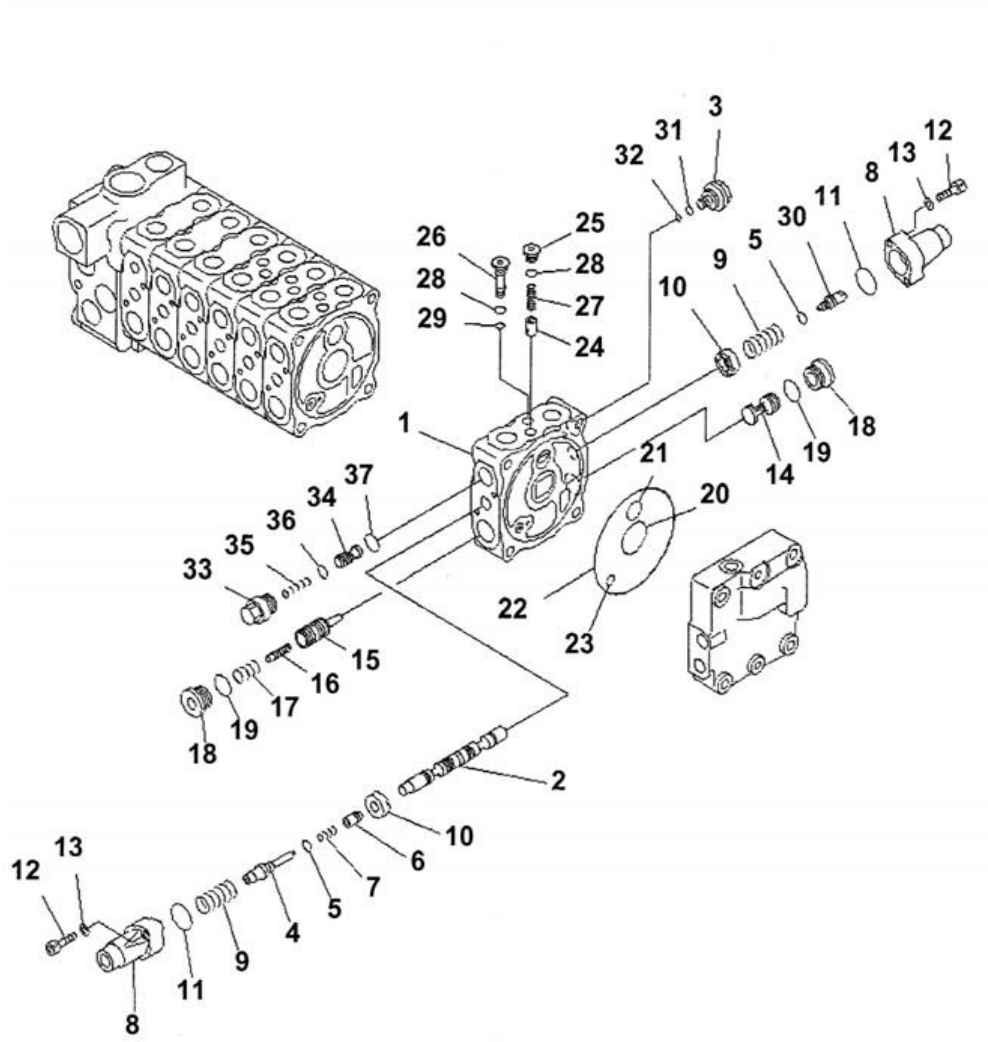

Index	Code	Part Number	Description	Qty	Serial No.
28		07002-11223	• • O-RING	2	NL 20001-
29		07000-11006	• • O-RING	1	NL 20001-
30		723-26-15310	• • PLUG	1	NL 20001-
31		07002-1 2034	• • O-RING	1	NL 20001-
32		07000-11007	• • O-RING	1	NL 20001-
		723-20-80100	• • VALVE ASS'Y,SUCTION	1	NL 20001-
33		#	• • • SLEEVE	1	NL 20001-
34		#	• • • VALVE	1	NL 20001-
35		#	• • • SPRING	1	NL 20001-
36		#	• • • SEAL	1	NL 20001-
37		07002-12034	• • • O-RING	1	NL 20001-

PC71-7

FIG. Y1662-35A0 MAIN VALVE - (1 ATTACHMENT)

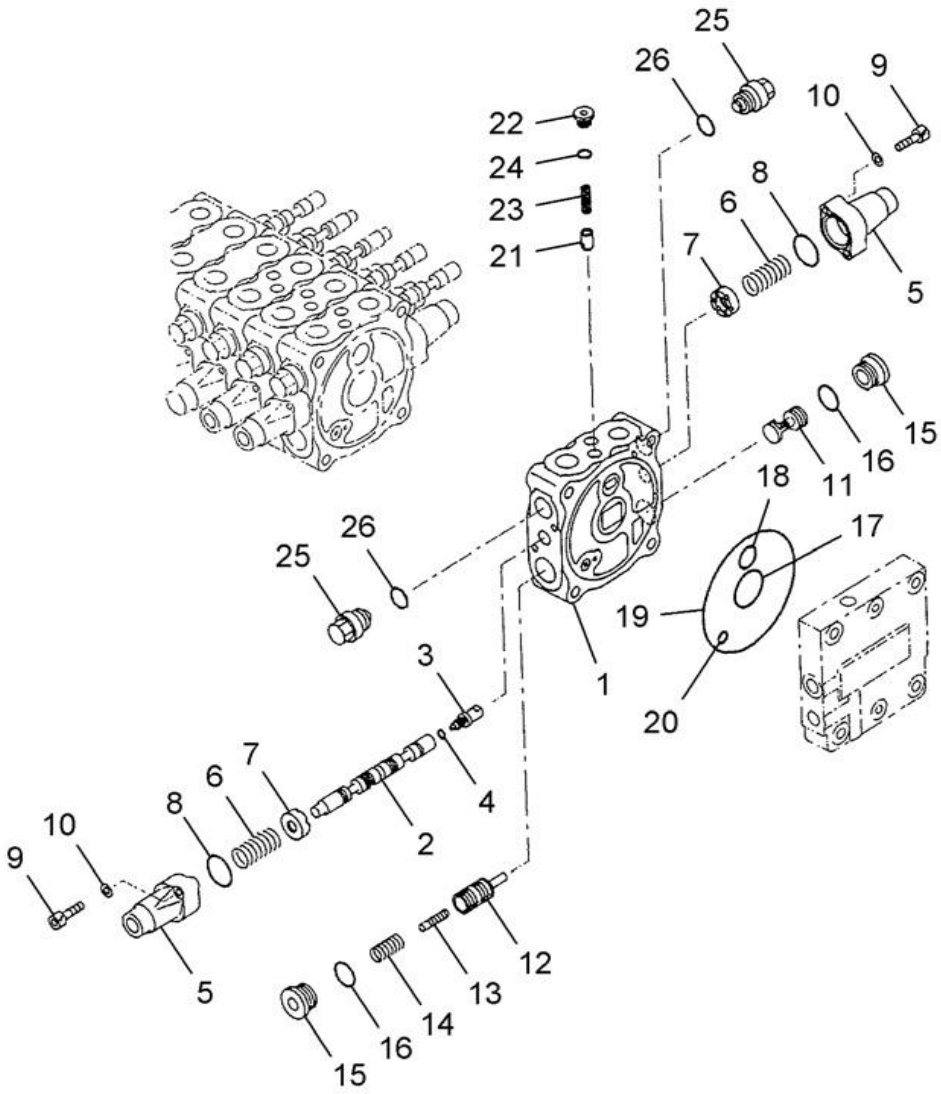

Index	Code	Part Number	Description	Qty	Serial No.
1		723-21-01801	VALVE ASSY	1	NL 22105
	C1	723-21-01800	VALVE ASSY	1	NL 22105
		#	• BLOCK	1	NL 22105
2		#	• SPOOL	1	NL 22105
3		#	• PLUG	1	NL 22105
4		#	• O-RING	1	NL 22105
5		723-26-15110	• CASE	2	NL 22105
6		709-26-11450	• SPRING	2	NL 22105
7		723-26-15121	• RETAINER	2	NL 22105
	C1	723-26-15120	• RETAINER	2	NL 22105
8		575-41-17420	• O-RING	2	NL 22105
9		01252-30630	• BOLT	4	NL 22105
10		01641-20608	• WASHER	4	NL 22105
11		#	• VALVE	1	NL 22105
12		#	• VALVE	1	NL 22105
13		723-26-51150	• PISTON	1	NL 22105
14		723-26-14140	• SPRING	1	NL 22105
15		723-26-15230	• PLUG	2	NL 22105
16		07002-12434	• O-RING	2	NL 22105
17		07000-13035	• O-RING	1	NL 22105
18		07000-12020	• O-RING	1	NL 22105
19		07000-02120	• O-RING	1	NL 22105
20		07000-12010	• O-RING	1	NL 22105
21		#	• VALVE	2	NL 22105
22		723-26-15220	• PLUG	2	NL 22105
23		723-26-14150	• SPRING	2	NL 22105
24		07002-11223	• O-RING	2	NL 22105
25		723-20-80100	• VALVE ASSY SUCTION	2	NL 22105
26		07002-02034	• • O-RING	1	NL 22105

PC71-7

FIG. Y1662-36A0 MAIN VALVE (1 ATTACHMENT)

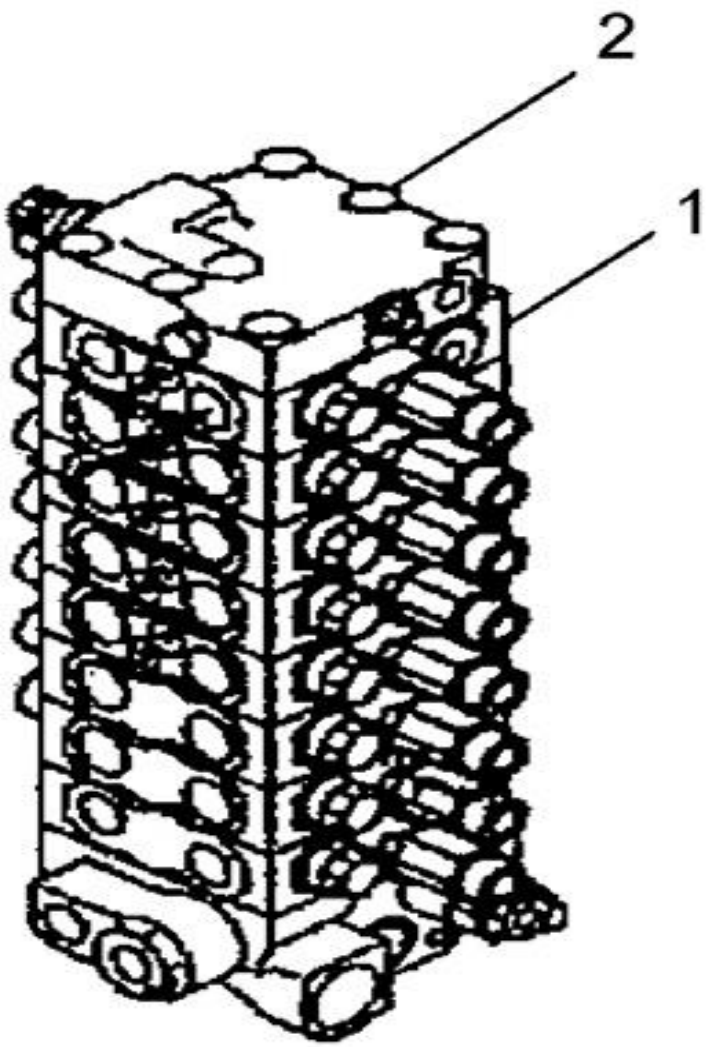

Index	Code	Part Number	Description	Qty	Serial No.
1		723-21-01801	VALVE A	1	NL 22105
2		723-26-15680	STUD	4	NL 22105

PC71-7

FIG. Y1670-01A0 PPC VALVE (FOR TRAVEL)

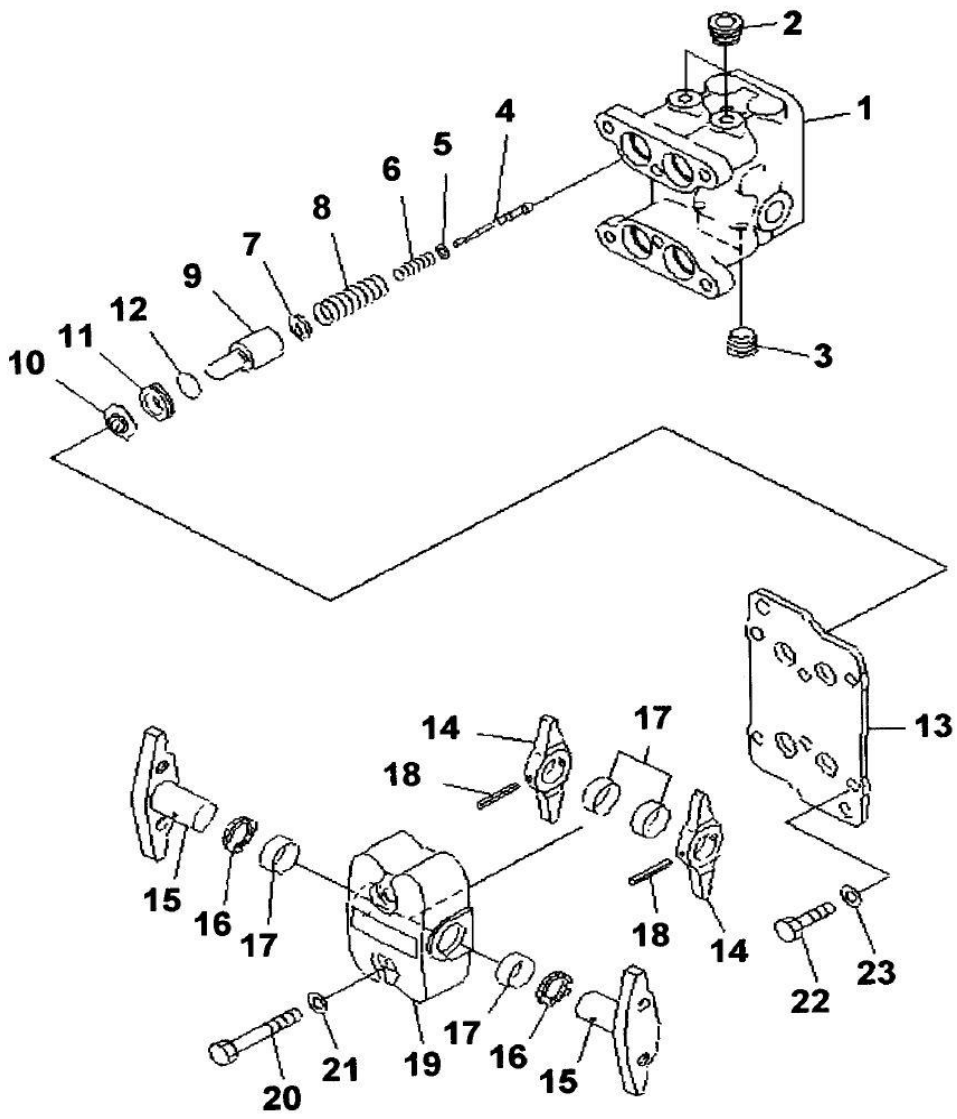

Index	Code	Part Number	Description	Qty	Serial No.
		702-16-01441	PILOT VALVE	1	NL 22049-
	C1	702-16-01440	PILOT VALVE	1	NL 20001-NL22048
1		#	• BODY, VALVE	1	NL 20001-
2		#	• PLUG	2	NL 20001-
3		#	• PLUG	2	NL 20001-
4		#	• VALVE	4	NL 20001-
5		702-16-51140	• SHIM - 030MM	4	NL 20001-
6		702-16-53420	• SPRING	4	NL 20001-
7		702-16-53140	• RETAINER	4	NL 20001-
8		702-16-54420	• SPRING	4	NL 20001-
9		702-16-53170	• PISTON	4	NL 20001-
10		702-16-51270	• SEAL	4	NL 20001-
11		702-16-54170	• COLLAR	4	NL 20001-
12		07000-02020	• O-RING	4	NL 20001-
13		#	• PLATE	1	NL 20001-
14		#	• LEVER	2	NL 20001-
15		702-16-54251	• SHAFT	2	NL 20001-
16		702-16-54280	• SEAL, DUST	2	NL 20001-
17		702-16-54430	• BUSHING	4	NL 20001-
18		04025-00432	• PIN, SPRING	2	NL 20001-
19		702-16-54310	• CASE	1	NL 20001-
20		01010-80855	• BOLT	2	NL 20001-
21		01643-30823	• WASHER	2	NL 20001-
22		01010-80816	• BOLT	4	NL 20001-
23		702-16-54351	• WASHER - 100MM	4	NL 20001-
		702-16-54341	• WASHER - 130MM	4	NL 20001-
		702-16-54331	• WASHER - 160MM	4	NL 20001-

PC71-7

FIG. Y1670-11A0 PPC VALVE (FOR WORK EQUIPMENT)

NL 20001 - NL 20292

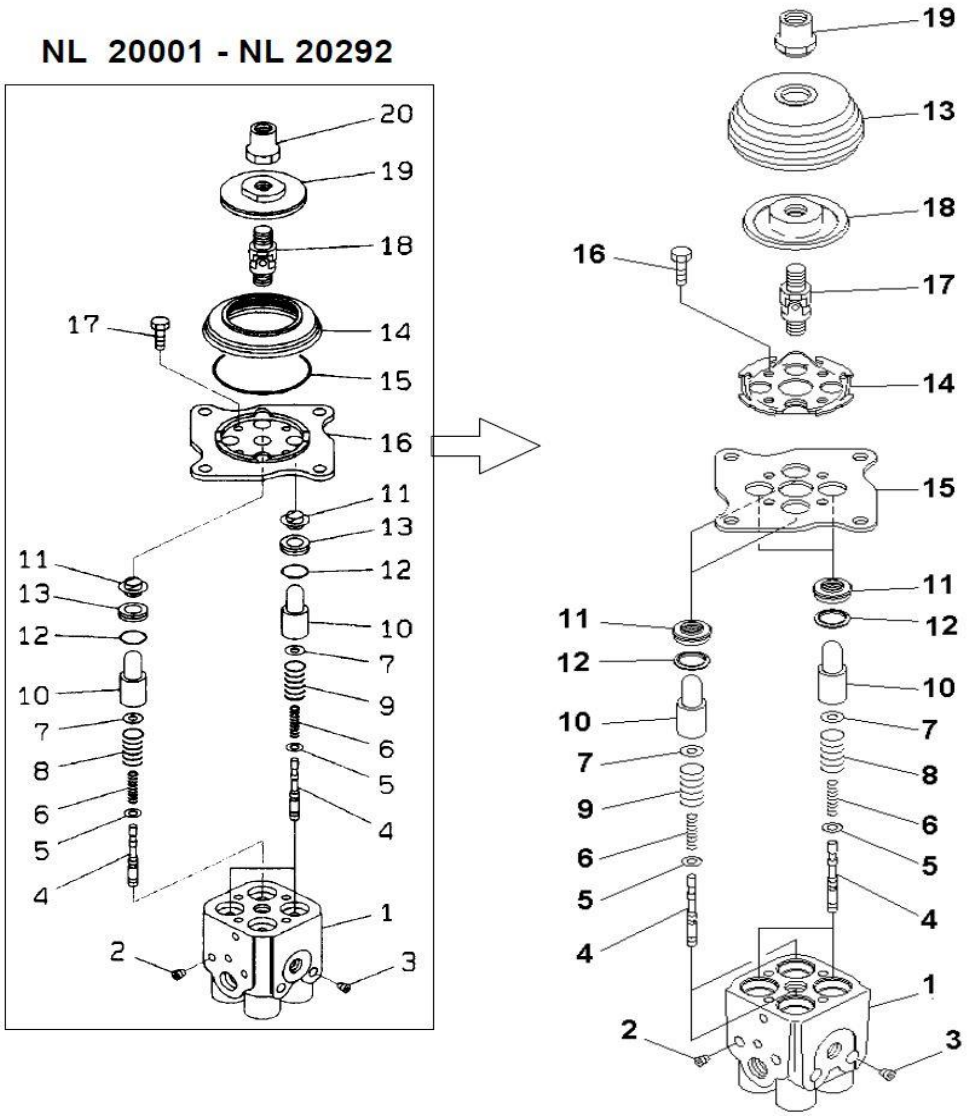

Index	Code	Part Number	Description	Qty	Serial No.
1	C1	702-16-01850	PILOT VALVE	1	NL 20001-NL 20292
	C1	#	• BODY, VALVE	1	NL 20001-NL 20292
2	C1	#	• PLUG	2	NL 20001-NL 20292
3	C1	#	• PLUG	2	NL 20001-NL 20292
4	C1	#	• VALVE	4	NL 20001-NL 20292
5	C1	702-16-51140	• SHIM - 030 MM	4	NL 20001-NL 20292
6	C1	702-16-53420	• SPRING	4	NL 20001-NL 20292
7	C1	702-16-53140	• RETAINER	4	NL 20001-NL 20292
8	C1	702-16-53950	• SPRING	2	NL 20001-NL 20292
9	C1	702-16-53590	• SPRING	2	NL 20001-NL 20292
10	C1	702-16-53170	• PISTON	4	NL 20001-NL 20292
11	C1	702-16-57430	• SEAL	4	NL 20001-NL 20292
12	C1	07000-12020	• O-RING	4	NL 20001-NL 20292
13	C1	702-16-54170	• COLLAR	4	NL 20001-NL 20292
14	C1	702-16-53190	• BOOT	1	NL 20001-NL 20292
15	C1	07000-02070	• O-RING	1	NL 20001-NL 20292
16	C1	702-16-53210	• PLATE	1	NL 20001-NL 20292
17	C1	01010-80620	• BOLT	4	NL 20001-NL 20292
18	C1	702-16-51240	• JOINT	1	NL 20001-NL 20292
19	C1	702-16-53980	• DISC	1	NL 20001-NL 20292
20	C1	702-16-53230	• NUT	1	NL 20001-NL 20292
		702-16-03930	PILOT VALVE	1	NL 20293-
1		#	• BODY, VALVE	1	NL 20293-
2		#	• PLUG	2	NL 20293-
3		#	• PLUG	2	NL 20293-
4		#	• VALVE	4	NL 20293-
5		702-16-51140	• SHIM - 0.30mm	4	NL 20293-
6		702-16-53420	• SPRING	4	NL 20293-
7		702-16-53140	• RETAINER	4	NL 20293-
8		702-16-53950	• SPRING	2	NL 20293-
9		702-16-53590	• SPRING	2	NL 20293-
10		702-16-53170	• PISTON	4	NL 20293-
11		702-16-71210	• SEAL	4	NL 20293-
12		702-16-71160	• SEAT	4	NL 20293-

PC71-7

FIG. Y1670-11A0 PPC VALVE (FOR WORK EQUIPMENT)

NL 20001 - NL 20292

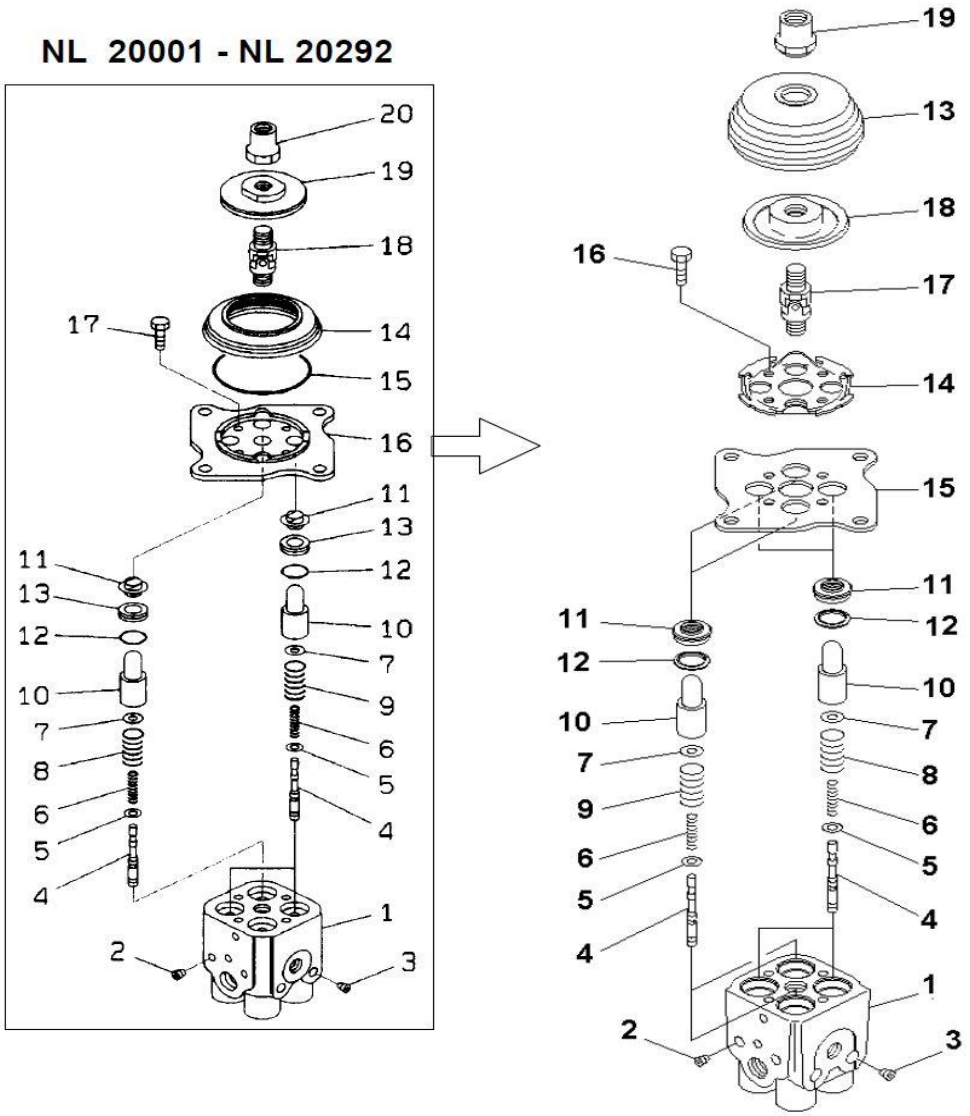

Index	Code	Part Number	Description	Qty	Serial No.
13		702-16-71280	• BOOT	1	NL 20293-
14		702-16-71131	• PLATE	1	NL 20293-
15		702-16-71141	• PLATE	1	NL 20293-
16		01010-80620	• BOLT	4	NL 20293-
17		702-16-51240	• JOINT, UNIVERSAL	1	NL 20293-
18		702-16-71361	• DISC	1	NL 20293-
19		702-16-71441	• NUT	1	NL 20293-

PC71-7

FIG. Y1670-21A0 PPC VALVE (FOR ATTACHMENT)

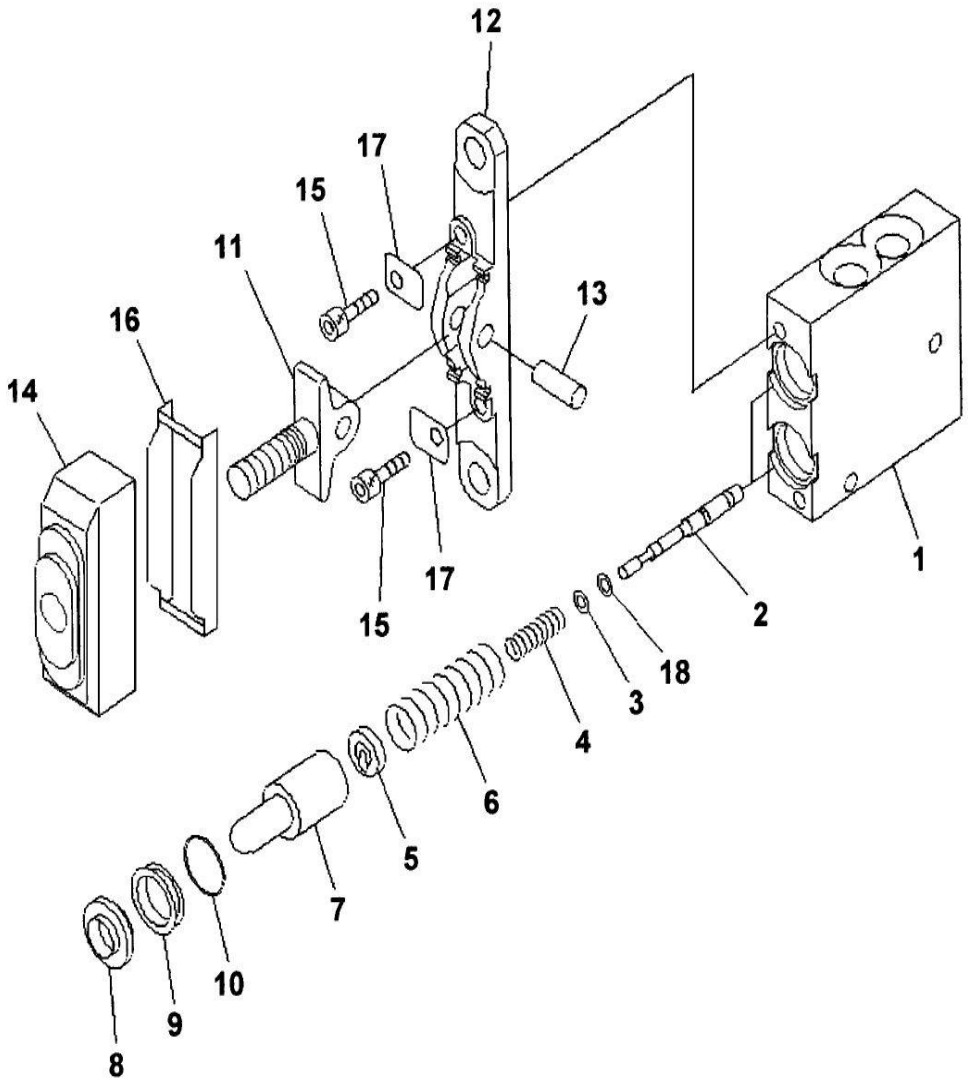

Index	Code	Part Number	Description	Qty	Serial No.
1		702-16-01230	PILOT VALVE	1	NL 20001-
		#	• BODY, VALVE	1	NL 20001-
2		#	• VALVE	2	NL 20001-
3		702-16-51140	• SHIM - 030 MM	2	NL 20001-
4		702-16-54550	• SPRING	2	NL 20001-
5		702-16-54571	• RETAINER	2	N220001-
	C1	702-16-54570	• RETAINER	2	NL 20001- N201404
6		702-16-54560	• SPRING	2	NL 20001-
7		702-16-53170	• PISTON	2	NL 20001-
8		702-16-51270	• SEAL	2	NL 20001-
9		702-16-54580	• COLLAR	2	NL 20001-
10		702-16-54590	• O-RING	2	NL 20001-
11		#	• LEVER	1	NL 20001-
12		#	• PLATE	1	NL 20001-
13		#	• SHAFT	1	NL 20001-
14		702-16-54640	• BOOT	1	NL 20001-
15		01252-30625	• BOLT	2	NL 20001-
16		702-16-54660	• PLATE	1	NL 20001-
17		702-16-54650	• PLATE	2	NL 20001-
18		702-16-54670	• SHIM - 020 MM	4	NL 20001-

PC71-7

FIG. Y1679-01A0 PILOT VALVE

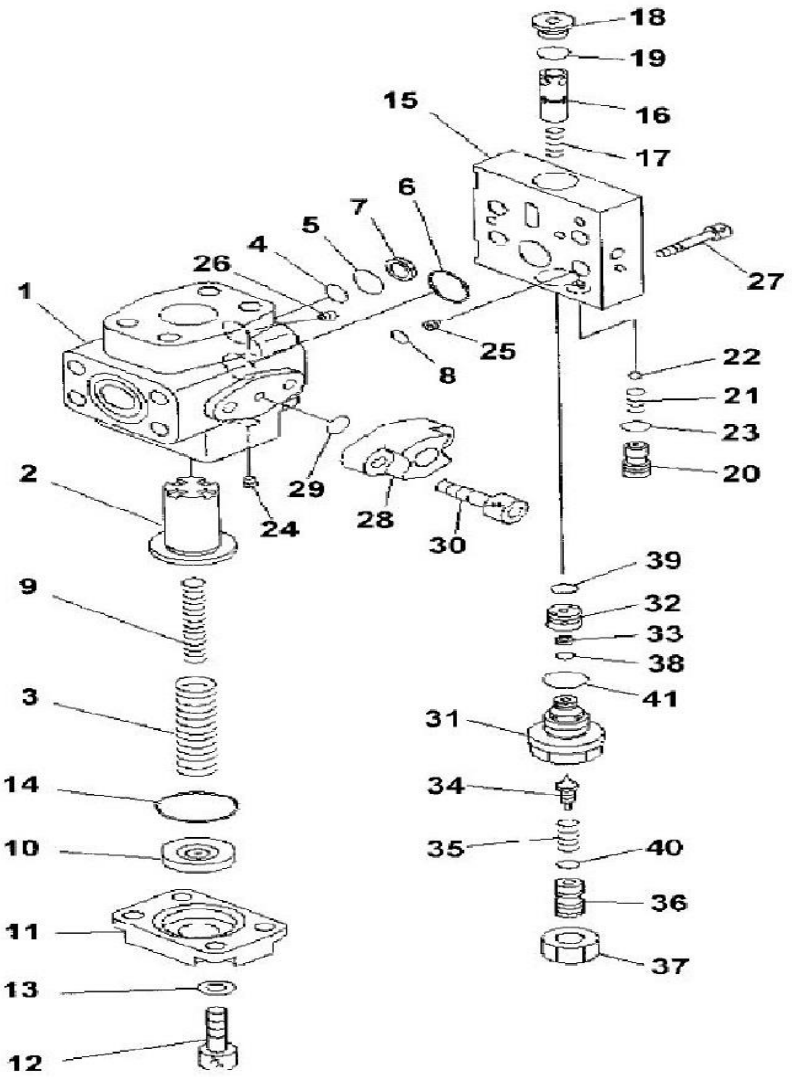

Index	Code	Part Number	Description	Qty	Serial No.
1		702-21-09155	VALVE ASS'Y	1	NL 20001-
		#	• BLOCK	1	NL 20001-
2		#	• VALVE	1	NL 20001-
3		#	• SPRING	1	NL 20001-
4		#	• O-RING	1	NL 20001-
5		#	• O-RING	1	NL 20001-
6		#	• O-RING	1	NL 20001-
7		702-21-53120	• FILTER	1	NL 20001-
8		07000-11009	• O-RING	1	NL 20001-
9		#	• SPRING	1	NL 20001-
10		#	• PLATE	1	NL 20001-
11		#	• PLATE	1	NL 20001-
12		01252-60820	• BOLT	4	NL 20001-
13		01643-50823	• WASHER	4	NL 20001-
14		#	• O-RING	1	NL 20001-
15		#	• BLOCK	1	NL 20001-
16		#	• SPOOL	1	NL 20001-
17		#	• SPRING	1	NL 20001-
18		#	• PLUG	1	NL 20001-
19		07002-11423	• O-RING	1	NL 20001-
20		#	• SEAT	1	NL 20001-
21		#	• SPRING	1	NL 20001-
22		04260-00793	• BALL	1	NL 20001-
23		07000-11009	• O-RING	1	NL 20001-
24		#	• PLUG	3	NL 20001-
25		#	• ORIFICE	1	NL 20001-
26		#	• ORIFICE	1	NL 20001-
27		01252-60520	• BOLT	3	NL 20001-
28		#	• FLANGE	1	NL 20001-
29		07000-12020	• O-RING	1	NL 20001-
30		01252-61025	• BOLT	2	NL 20001-
		702-21-55200	• VALVE ASS'Y	1	NL 20001-
31		#	• • SLEEVE	1	NL 20001-
32		#	• • COLLAR	1	NL 20001-

PC71-7

FIG. Y1679-01A0 PILOT VALVE

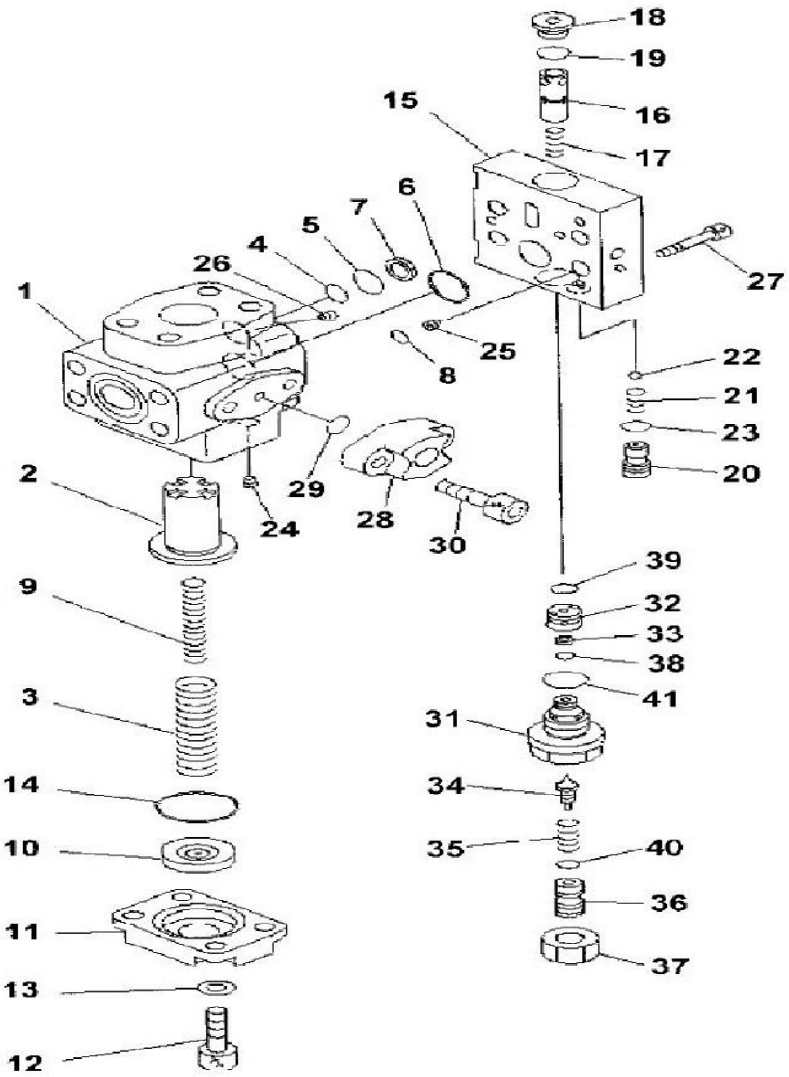

Index	Code	Part Number	Description	Qty	Serial No.
33		#	• • FILTER	1	NL 20001-
34		#	• • POPPET	1	NL 20001-
35		#	• • SPRING	1	NL 20001-
36		#	• • SCREW	1	NL 20001-
37		#	• • NUT	1	NL 20001-
38		#	• • O-RING	1	NL 20001-
39		702-16-53920	• • O-RING	1	NL 20001-
40		#	• • O-RING	1	NL 20001-
41		07002-11623	• • O-RING	1	NL 20001-

PC71-7

NUMERICAL INDEX

PC71-7

Part No.	Fig. No.	Index	Part No.	Fig. No.	Index	Part No.	Fig. No.	Index	Part No.	Fig. No.	Index
(*01010-81035)	Y1600-02A0A	16	(*708-1W-26410)	Y1600-04A0A	2	(201-60-73600)	Y1651-02A0A	-	(708-7T-00461)	Y1640-02A0	-
(*01010-81250)	Y1640-01A0	5	(*708-1W-26420)	Y1600-04A0A	4	(201-60-73600)	Y1651-03A0A	-	(708-7T-01040)	Y1640-01A0	-
(*01583-11811)	Y1600-05A0A	7	(*708-1W-26460)	Y1600-04A0A	10	(201-60-73601)	P1210-01A0	-	(708-7T-01191)	Y1640-01A0	-
(*01643-30823)	Y1600-03A0A	13	(*708-1W-26470)	Y1600-04A0A	7	(201-60-73601)	Y1651-01A0A	-	(708-7T-01192)	Y1640-01A0	-
(*01643-31032)	Y1600-02A0A	17	(*708-1W-26480)	Y1600-04A0A	8	(201-60-73601)	Y1651-02A0A	-	(708-7T-N1110)	N1210-052A0	-
(*04020-01024)	Y1600-02A0A	15	(*708-1W-33310)	Y1600-02A0A	11	(201-60-73601)	Y1651-03A0A	-	(708-7T-N1110)	Y1640-01A0	-
(*04065-03815)	Y1640-01A0	18	(*708-1W-33340)	Y1600-02A0A	10	(201-60-73900)	P1210-01A0	-	(708-7T-N1110)	Y1640-02A0	-
(*04065-04218)	Y1600-02A0A	9	(*708-23-05011)	Y1600-01A0A	12	(201-60-73900)	Y1651-01A0A	-	(708-7T-N1120)	N1210-052A0	-
(*04065-07225)	Y1600-01A0A	14	(*708-23-12840)	Y1600-01A0A	13	(201-60-73900)	Y1651-02A0A	-	(708-7T-N1120)	Y1640-01A0	1
(*07000-02145)	Y1600-02A0A	19	(*708-7L-13360)	Y1600-02A0A	5	(201-60-73900)	Y1651-03A0A	-	(708-7T-N1120)	Y1640-02A0	1
(*07000-03045)	Y1600-03A0A	11	(*708-7T-05020)	Y1640-01A0	9	(201-60-81301)	P1210-01A0	4	(723-27-16101)	Y1662-22A0	-
(*07000-12010)	Y1600-05A0A	5	(*708-7T-11240)	Y1640-01A0	-	(201-60-81301)	Y-1651-02A1	1	(723-27-16101)	Y1662-23A0	-
(*07000-12130)	Y1640-01A0	27	(*708-7T-11640)	Y1640-01A0	2	(201-60-81301)	Y-1651-03A1	1	(723-27-16101)	Y1662-24A0	-
(*07000-B2011)	Y1600-02A0A	18	(*708-7T-12220)	Y1640-01A0	6	(201-63-N1190)	Y1620-01A0A	-	(723-27-16101)	Y1662-25A0	-
(*07001-02010)	Y1600-05A0A	6	(*708-7T-12240)	Y1640-01A0	7	(201-63-N1210)	Y1620-11A0A	-	(723-27-16101)	Y1662-26A0	-
(*07002-11223)	Y1600-04A0A	13	(*708-7T-12250)	Y1640-01A0	8	(201-63-N1220)	Y1620-41A0A	-	(723-27-16101)	Y1662-27A0	-
(*708-1W-04110)	Y1600-01A0A	-	(*708-7T-13140)	Y1640-01A0	-	(201-63-N1290)	Y1620-11A0A	-	(723-27-16102)	Y1662-22A0	-
(*708-1W-04150)	Y1600-02A0A	-	(*708-7T-13150)	Y1640-01A0	12	(201-63-N1291)	Y1620-11A0A	G1	(723-27-16102)	Y1662-23A0	1
(*708-1W-04160)	Y1600-02A0A	-	(*708-7T-13261)	Y1640-01A0	13	(201-63-N1310)	Y1620-01A0A	-	(723-27-16102)	Y1662-24A0	-
(*708-1W-04180)	Y1600-02A0A	-	(*708-7T-13342)	Y1640-01A0	20	(201-63-N1311)	Y1620-01A0A	G1	(723-27-16102)	Y1662-25A0	-
(*708-1W-22140)	Y1600-01A0A	11	(*708-7T-13352)	Y1640-01A0	21	(201-63-N1320)	Y1620-41A0A	G1	(723-27-16102)	Y1662-26A0	1
(*708-1W-22310)	Y1600-01A0A	10	(*708-7T-13510)	Y1640-01A0	19	(201-63-N1321)	Y1620-41A0A	G1	(723-27-16102)	Y1662-27A0	1
(*708-1W-22320)	Y1600-01A0A	15	(*708-7T-13530)	Y1640-01A0	16	(201-63-N1380)	Y1620-13A0	G1	(723-28-16101)	H0120-02A0	-
(*708-1W-23130)	Y1600-02A0A	7	(*708-7T-13540)	Y1640-01A0	15	(702-16-01230)	K1110-13A0A	7	(723-28-16102)	H0120-02A0	1
(*708-1W-23140)	Y1600-02A0A	8	(*708-7T-13570)	Y1640-01A0	17	(702-16-01440)	K1110-04A0	-	(7834-73-2001)	K1110-11A0	-
(*708-1W-23150)	Y1600-02A0A	6	(*708-7T-13710)	Y1640-01A0	23	(702-16-01441)	K1110-04A0	13	(7834-73-2002)	K1110-11A0	-
(*708-1W-23351)	Y1600-02A0A	4	(*708-7T-15120)	Y1640-01A0	25	(702-16-01850)	K1110-06A0	-	(7834-75-2003)	K1110-11A0	7
(*708-1W-23450)	Y1600-02A0A	14	(*708-7T-15140)	Y1640-01A0	26	(702-16-01850)	K1110-10A0	-	(TZ110D200001-B)	Y-1651-02A1	-
(*708-1W-24150)	Y1600-03A0A	-	(*708-7T-15150)	Y1640-01A0	29	(702-16-03930)	K1110-06A0	9	(TZ131D9000-00)	Y-1651-02A1	K
(*708-1W-24250)	Y1600-03A0A	3	(*708-7T-51210)	Y1640-01A0	3	(702-16-03930)	K1110-10A0	10	(TZ131D9000-00)	Y-1651-03A1	K
(*708-1W-24311)	Y1600-03A0A	5	(*708-7T-52512)	Y1640-01A0	24	(702-21-09155)	H0120-02A0	2	(TZ529D120900-00)	Y1651-03A0A	-
(*708-1W-24450)	Y1600-03A0A	2	(*708-7T-53420)	Y1640-01A0	22	(703-07-23230)	N1310-01A1A	1	000 304 44 R	H1840-01A0A	11b
(*708-1W-25110)	Y1600-04A0A	-	(*708-7T-55220)	Y1640-01A0	28	(707-00-N1110)	T1120-01A0	-	001 287 80 D	C0100-02A0B	15
(*708-1W-25140)	Y1600-04A0A	3	(*720-68-19610)	Y1600-02A0A	3	(707-00-N1111)	T1120-01A0	-	001 287 80 D	C0100-03A0B	19A
(*708-1W-25192)	Y1600-04A0A	6	(*720-68-19610)	Y1640-01A0	4	(707-00-N1120)	T1140-01A0	-	001 287 80 D	C0100-04A0	11
(*708-1W-25311)	Y1600-04A0A	12	(*720-68-19610)	Y1640-01A0	14	(707-00-N1121)	T1140-01A0	-	01010-61640	P1210-01A0	-
(*708-1W-25351)	Y1600-04A0A	11	(*TZ500D1001-00)	Y1651-03A0A	12	(707-00-N1130)	T1220-01A0	-	01010-80612	D0100-01A0	12
(*708-1W-25513)	Y1600-05A0A	2	(*TZ500D1021-00)	Y1651-03A0A	19	(707-00-N1131)	T1220-01A0	1	01010-80616	B0400-02A0	30
(*708-1W-25523)	Y1600-05A0A	-	(*TZ500D1102-00)	Y1651-03A0A	-	(707-00-N1140)	T1720-01A0	-	01010-80616	E0100-N1A0	11
(*708-1W-25550)	Y1600-05A0A	3	(*TZ500D1132-00)	Y1651-03A0A	-	(707-00-N1141)	T1720-01A0	1	01010-80616	E0200-06A10	9
(*708-1W-25561)	Y1600-05A0A	4	(*TZ529D1104-00)	Y1651-03A0A	-	(707-00-N1160)	T1140-03A0	-	01010-80616	K1110-12A0B	2
(*708-1W-25580)	Y1600-05A0A	10	(*TZ860A1013-00)	Y1651-03A0A	18	(708-1W-00131)	H0311-01A0A	7	01010-80620	Y1670-11A0	17
(*708-1W-25591)	Y1600-05A0A	9	(201-26-00120)	N1210-01A0	-	(708-1W-00131)	Y1600-02A0A	1	01010-80620	Y1670-11A0	16
(*708-1W-25840)	Y1600-03A0A	8	(201-26-N1120)	N1210-01A0	-	(708-1W-00131)	Y1600-03A0A	1	01010-80635	K0210-08A0	30
(*708-1W-25910)	Y1600-04A0A	5	(201-26-N1120)	N1210-052A0	-	(708-1W-00131)	Y1600-04A0A	1	01010-80816	C0100-02B0	10
(*708-1W-26113)	Y1600-03A0A	10	(201-26-N1130)	N1210-01A0	1	(708-1W-00131)	Y1600-05A0A	1	01010-80816	C0100-02A0C	10
(*708-1W-26132)	Y1600-03A0A	9	(201-26-N1130)	N1210-052A0	1	(708-1W-00131)	Y1600-06A0A	1	01010-80816	C0100-03A0B	-
(*708-1W-26210)	Y1600-03A0A	14	(201-54-N2830)	E0100-N1A0	1	(708-1W-01130)	Y1600-02A0A	-	01010-80816	C0100-04A0	10
(*708-1W-26221)	Y1600-03A0A	15	(201-60-73600)	P1210-01A0	-	(708-1W-01130)	Y1600-03A0A	-	01010-80816	C0100-03A0C	10
(*708-1W-26230)	Y1600-03A0A	16	(201-60-73600)	Y1651-01A0A	-	(708-7T-00461)	Y1640-01A0	-	01010-80816	C0310-01A0A	2

Part No.	Fig. No.	Index	Part No.	Fig. No.	Index	Part No.	Fig. No.	Index	Part No.	Fig. No.	Index
01010-80816	E0200-01A0B	3	01010-81016	M1150-01A3A	19	01010-81025	H0320-01A0A	12	01010-81030	K1110-03A0A	2
01010-80816	E0200-02A0	2	01010-81020	B0400-02A0	32	01010-81025	H1220-01A0A	14	01010-81030	K1110-04A0	-
01010-80816	T1110-01A0A	12b	01010-81020	C0100-02A0B	11	01010-81025	H1270-01A0	9	01010-81030	K1110-06A0	4
01010-80816	T1110-03A0	12b	01010-81020	D0200-01A3B	18	01010-81025	H1270-02A0	2	01010-81030	K1110-10A0	6
01010-80816	Y1670-01A0	22	01010-81020	D0200-02A3B	16	01010-81025	H1831-01A0	24	01010-81030	M1140-01A0	7
01010-80820	B0100-01A0B	16	01010-81020	E0200-03A1B	3	01010-81025	H1832-01A0A	20	01010-81030	T1110-02A0	20
01010-80820	B0400-02A0	4	01010-81020	E0200-04A1B	6	01010-81025	H1840-01A0A	15	01010-81030	T1110-04A0	20
01010-80820	D0200-02A3B	-	01010-81020	E0200-04A1B	12	01010-81025	H1840-01A0A	18	01010-81030	T1210-01B0	20
01010-80820	E0200-04A1B	43	01010-81020	E0200-04A1B	12	01010-81025	K1110-01A0	4	01010-81035	B0600-01A0A	6
01010-80820	E0200-06A10	16	01010-81020	E0200-04A1B	15	01010-81025	K1110-02A0A	8	01010-81035	B0600-01A0A	11
01010-80820	K0110-01A1	-	01010-81020	E0200-04A1B	21	01010-81025	K1110-02A0A	12	01010-81035	H0110-01A1A	24
01010-80820	K1110-06A0	10	01010-81020	E0200-06A10	12	01010-81025	K1110-04A0	3	01010-81035	M1130-01A0	3
01010-80820	K1110-10A0	1B	01010-81020	H1270-02A0	15	01010-81025	K1110-04A0	14	01010-81035	M1140-01A0	13
01010-80820	K1110-12A0B	32	01010-81020	H1270-06A0	14	01010-81025	K1110-04A0	27	01010-81035	T1110-02A0	16
01010-80825	B0200-01A0A	14	01010-81020	H1832-01A0A	4	01010-81025	K1110-13A0A	3	01010-81035	T1110-04A0	16
01010-80825	B0200-01A0B	14	01010-81020	K1110-01A0	7	01010-81025	K1110-13A0A	8	01010-81040	C0100-02A0B	16
01010-80825	E0200-02A0	8	01010-81020	K1110-01A0	10	01010-81025	K1110-14A0	4	01010-81040	E0200-03A1B	4
01010-80825	K1110-10A0	11	01010-81020	K1110-01A0	30	01010-81025	K1110-14B0	4	01010-81045	D0200-01A3B	-
01010-80825	T1210-02A0	25	01010-81020	K1110-01A0	34	01010-81025	M1110-02A1	3	01010-81045	H1833-02A0A	2
01010-80830	E0200-02A0	-	01010-81020	K1110-01A0	38	01010-81025	M1110-02A1	4	01010-81045	K1110-08A3	20
01010-80830	K0110-01A1	2	01010-81020	K1110-05A3	10	01010-81025	M1110-02A1	6	01010-81045	K1110-12A0B	9
01010-80830	K1110-03A0A	8	01010-81020	K1110-05A3	13	01010-81025	M1110-04A0	3	01010-81045	K1110-12A0B	21
01010-80830	M1110-03A0	7	01010-81020	K1110-12A0B	8	01010-81025	M1110-04A0	4	01010-81050	C0100-01A0A	13
01010-80835	B0100-01A0B	26	01010-81020	K1110-12A0B	12	01010-81025	M1110-04A0	6	01010-81050	E0200-04A1B	3
01010-80835	C0100-03A0B	18	01010-81020	K1110-13A0A	12	01010-81025	M1140-01A0	10	01010-81050	E0200-04A1B	50
01010-80835	E0200-02A0	5	01010-81020	M1150-01A3A	22	01010-81025	M1150-01A3A	-	01010-81050	K1110-05A3	19
01010-80845	E0200-01A0B	7a	01010-81020	M1150-01A3A	25	01010-81025	M1150-01A3A	32	01010-81060	B0600-01A0A	13
01010-80850	C0100-01A0B	8	01010-81020	M1150-01A3A	28	01010-81025	M1150-01A3A	40	01010-81065	H1210-01A0A	14
01010-80855	C0100-01A0A	17	01010-81020	P1240-01A0	7	01010-81025	M1150-01A3A	43	01010-81065	T1110-02A0	13
01010-80855	C0100-01A1	8	01010-81020	T1120-01A0	4	01010-81025	M1220-01A0	3	01010-81065	T1110-04A0	13
01010-80855	Y1670-01A0	20	01010-81020	T1210-02A0	28	01010-81025	M1220-02A0	3	01010-81070	H1220-01A0A	21
01010-81016	C0100-01A0A	21	01010-81020	T1220-01A0	4	01010-81025	M1220-02A0	8	01010-81095	H1270-02A0	5
01010-81016	C0100-01A1	11	01010-81020	Y1620-01A0A	25	01010-81025	M1310-01A0	2	01010-81220	K0210-16A0	5
01010-81016	C0100-01A0B	11	01010-81020	Y1620-41A0A	23	01010-81025	M1810-01A1A	2	01010-81220	K0210-16A0	8
01010-81016	C0100-02A0B	14	01010-81025	B0200-01A0A	2	01010-81025	M1810-01A1A	9	01010-81220	K0210-16A0	11
01010-81016	C0100-02B0	9	01010-81025	B0200-01A0A	-	01010-81025	M1810-01A1A	12	01010-81220	K0210-17A0	6
01010-81016	C0100-02A0C	9	01010-81025	B0200-01A0B	2	01010-81025	M1810-01A1A	15	01010-81225	B0100-01A0B	14
01010-81016	C0100-03A0B	-	01010-81025	B0200-01A0B	-	01010-81025	M1810-01A1A	19	01010-81225	B0400-02A0	27
01010-81016	D0200-01A3B	28	01010-81025	B0400-02A0	23	01010-81025	M1810-01A1A	23	01010-81225	E0200-04A1B	39
01010-81016	E0100-01A0B	21	01010-81025	D0200-01A3B	33	01010-81025	M1810-01A1A	27	01010-81225	J1110-01A2	8
01010-81016	E0100-01A0B	24	01010-81025	E0100-01A0B	17	01010-81025	R1100-01A1A	14	01010-81225	P1240-N1A0	3
01010-81016	E0200-03A1B	3A	01010-81025	E0200-03A1B	20	01010-81025	T1110-01A0A	36	01010-81225	T1110-01A0A	9
01010-81016	E0200-03A1B	8	01010-81025	E0200-04A1B	10	01010-81025	T1110-03A0	36	01010-81225	T1110-03A0	9
01010-81016	E0200-03A1B	18	01010-81025	E0200-04A1B	18	01010-81030	B0100-01A0B	23	01010-81230	D0200-02A3B	-
01010-81016	E0200-04A1B	34	01010-81025	E0200-04A1B	24	01010-81030	B0200-01A0A	10	01010-81230	D0200-02A3B	-
01010-81016	E0200-06A10	3	01010-81025	E0200-04A1B	30	01010-81030	B0200-01A0A	-	01010-81230	H0110-01A1A	35
01010-81016	K1110-07A0A	30	01010-81025	E0200-04A1B	27	01010-81030	B0200-01A0B	9	01010-81230	J1110-01A2	5
01010-81016	K1110-07A0A	33	01010-81025	E0200-04A1B	45	01010-81030	B0200-01A0B	-	01010-81230	J1310-01A0	3
01010-81016	M1150-01A3A	10	01010-81025	H0110-01A1A	17	01010-81030	B0400-02A0	2	01010-81230	J1310-01A0	8
01010-81016	M1150-01A3A	15	01010-81025	H0320-01A0A	6	01010-81030	H1210-01A0A	12	01010-81230	K0210-014A0	3

Part No.	Fig. No.	Index	Part No.	Fig. No.	Index	Part No.	Fig. No.	Index	Part No.	Fig. No.	Index
01010-81230	K0210-17A0	8	01010-81640	P1210-01A0	-	01252-B0820	K1110-09B9	3	01580-11008	B0400-02A0	8
01010-81230	R1100-01A1A	4	01010-81645	N1210-01A0	2	01252-B0820	K1110-11A0	3	01580-11008	K0210-02A0	9
01010-81230	T1110-01A0A	15	01010-81680	N1110-01A0	4	01252-B0855	K1110-09B9	2	01580-11008	K0210-08A0	46
01010-81230	T1110-01A0A	20	01010-81685	K1120-01A0	8	01252-B0855	K1110-11A0	2	01580-11008	M1110-02A1	15
01010-81230	T1110-01A0A	25	01010-81685	R0300-02A0A	-	01343-31232	T1510-N01A0	17	01580-11008	M1110-03A0	2
01010-81230	T1110-03A0	15	01010-D0825	M1110-03A0	11	01343-31232	T1510-N02A1	17	01580-11008	M1110-04A0	15
01010-81230	T1110-03A0	20	01010-D1025	K1110-04A0	8	01370-00508	M1510-01A0A	10	01580-11008	R1100-01A1A	11
01010-81230	T1110-03A0	25	01010-D1025	K1110-14A0	7	01370-00508	M1510-02A0	10	01580-11008	Y1662-24A0	13
01010-81230	T1210-01A0	8	01010-D1025	K1110-14B0	7	01370-30412	K0210-07A0	20	01580-11210	C0100-03A0B	4A
01010-81230	T1210-01A0	13	01010-D1030	K1110-14A0	13	01370-40408	K0210-06A0N	10	01580-11210	C0100-04A0	5
01010-81230	T1210-01B0	8	01010-D1030	K1110-14B0	13	01370-40412	K0210-06A0N	44	01580-11210	C0100-03A0C	5
01010-81230	T1210-01B0	13	01010-D1035	M1110-02A1	9	01434-00820	E0100-01A0B	12	01580-11210	K1110-02A0A	4
01010-81230	T1510-N02A0	16	01010-D1035	M1110-04A0	9	01435-00610	K1110-N1A0	3	01580-11613	K1120-01A0	10
01010-81230	T1710-01A0	8	01010-D1045	E0100-N1A0	12	01435-00612	K1110-N1A0	-	01580-11613	T1230-01A1	20
01010-81230	T1710-01A0	14	01010-D1045	K1110-04A0	23	01435-00616	K0210-01A0	9	01580-11613	T1230-01A1	24
01010-81235	H1270-02A0	24	01010-D1045	K1110-14A0	10	01435-00830	Y1627-01A1D	11	01583-11408	K1110-13A0A	6
01010-81235	H1831-01A0	22	01010-D1045	K1110-14B0	10	01435-01025	B0100-01A0B	26	01583-51408	K1110-14A0	28
01010-81235	N1310-01A1A	2	01011-81000	N1210-052A0	3	01435-40820	K0210-01A0	7	01583-51408	K1110-14B0	28
01010-81235	R0300-03A0	9	01011-81420	B0100-01A0B	5	01435-40820	K0210-02A0	7	01584-01008	K0210-08A0	44
01010-81235	Y1600-06A0A	3	01011-81620	T1230-01A1	-	01435-40820	K0210-02A0	16	01597-01211	H1270-06A0	17
01010-81240	C0100-04A0	4	01011-81620	T1230-01A1	-	01435-40820	K0210-02A0	19	01599-01011	H0320-01A0A	15
01010-81240	C0100-03A0C	4	01011-81630	B0100-01A0B	10	01435-40820	K0210-02A0	22	01599-01011	Y1620-11A0A	29
01010-81240	D0200-02A3B	2	01011-81630	T1230-01A1	19	01435-40820	K0210-02A0	26	01599-01011	Y1620-13A0	29
01010-81240	D0200-02A3B	5	01011-81630	T1230-01A1	23	01435-40820	K0210-02A0	28	01599-01011N	T1140-01A0	6
01010-81240	H0311-01A0A	4	01023-20516	K1110-12A0B	34	01435-40820	K0210-02A0	38	01599-01011N	T1140-03A0	6
01010-81245	C0100-03A0B	4	01220-30616	K1110-12A0B	-	01435-40820	K0210-02A0	41	01601-20513	D0100-01A0	-
01010-81245	H0120-02A0	10	01220-40412	K0210-06A0N	26	01435-40820	K0210-08A0	18	01601-20513	H0110-01A1A	11
01010-81260	T1510-N01A0	16	01220-40416	K1110-04A0	20	01435-40830	K0210-02A0	43	01601-20513	K0210-08A0	28A
01010-81260	T1510-N02A1	16	01220-40420	K0210-06A0N	21	01435-41016	K0210-06A0N	3	01602-20619	B0400-02A0	18
01010-81260	T1510-N03A0	9	01220-40510	D0100-01A0	-	01435-41020	K0210-01A0	3	01602-20619	B0400-02A0	20
01010-81265	K0210-015A0	4	01220-40510	K1110-03A0A	16	01435-41020	K0210-02A0	24	01602-20619	K0210-08A0	31
01010-81265	K0230-01A0	7	01220-40512	K0210-08A0	27	01435-41020	K0210-06A0N	-	01602-20825	B0100-01A0B	27
01010-81270	K0230-01A0	4	01220-40525	K0210-06A0N	35	01435-41020	K0210-06A0N	32	01602-20825	E0200-02A0	3
01010-81270	T1210-02A0	14	01220-40616	K0210-06A0N	39	01435-41025	K0210-01A0	5	01602-20825	E0200-02A0	9
01010-81275	C0100-03A0B	-	01224-40408	K1110-01A0	16	01435-41225	K0210-08A0	22	01640-21626	N1310-01A1A	8
01010-81275	K0210-014A0	1	01245-00612	K0210-08A0	41	01580-00806	B0100-01A0B	28	01641-20405	K0210-06A0N	27
01010-81290	B0200-01A0A	-	01245-00816	K0210-08A0	25	01580-01008	M1110-02A1	5	01641-20405	K0210-06A0N	36
01010-81290	B0200-01A0B	-	01252-30625	Y1670-21A0	15	01580-01008	M1110-04A0	5	01641-20508	K1110-01A0	26
01010-81430	D0100-01A0	8	01252-30630	Y1662-35A0	9	01580-10605	B0400-02A0	11	01641-20508	K1110-03A0A	17
01010-81435	H1270-02A0	22	01252-31230	Y-1651-01A1	25	01580-10605	B0400-02A0	21	01641-20508	K1110-12A0B	35
01010-81435	R1100-01A1A	17	01252-41025	M1420-01A0	4	01580-10605	K1110-11A0	9	01641-20608	K0210-08A0	38
01010-81435	R1200-01A0	-	01252-60520	Y1679-01A0	27	01580-10605	Y1600-03A0A	17	01641-20608	K1110-11A0	10
01010-81445	H0120-02A0	13	01252-60630	Y1662-21A0	23	01580-10806	B0200-01A0A	2a	01641-20608	K1110-12A0B	-
01010-81455	R1200-01A0	2	01252-60630	Y1662-27A0	12	01580-10806	B0200-01A0B	2a	01641-20608	Y1662-21A0	24
01010-81465	B0100-01A0B	3	01252-60820	Y1679-01A0	12	01580-10806	C0100-01A0A	26	01641-20608	Y1662-27A0	13
01010-81465	R0200-0N2A0	-	01252-61025	Y1679-01A0	30	01580-10806	C0100-01A1	16	01641-20608	Y1662-35A0	10
01010-81465	R0200-0N3A0	10	01252-70516	H0110-01A1A	10	01580-10806	C0100-01A0B	16	01641-50405	K0210-06A0N	11
01010-81470	H1270-02A0	20	01252-70620	B0400-02A0	17	01580-10806	K0210-06A0N	8	01641-50405	K0210-06A0N	22
01010-81475	R0120-01A0A	13	01252-70630	B0400-02A0	15	01580-10806	K1110-10A0	1D	01641-50405	K0210-06A0N	-
01010-81640	P1210-01A0	5	01252-71025	K1110-05A3	4	01580-10806	M1110-03A0	8	01641-50405	K1110-04A0	20a

Part No.	Fig. No.	Index	Part No.	Fig. No.	Index	Part No.	Fig. No.	Index	Part No.	Fig. No.	Index
01641-50508	K0210-06A0N	-	01643-31032	B0200-01A0B	11	01643-31032	H0320-01A0A	16	01643-31032	M1150-01A3A	16
01641-50508	K0210-08A0	28	01643-31032	B0200-01A0B	-	01643-31032	H1210-01A0A	13	01643-31032	M1150-01A3A	20
01641-50608	K0210-06A0N	40	01643-31032	B0400-02A0	3	01643-31032	H1210-01A0A	15	01643-31032	M1150-01A3A	23
01643-30623	B0400-02A0	10	01643-31032	B0400-02A0	24	01643-31032	H1220-01A0A	15	01643-31032	M1150-01A3A	26
01643-30623	B0400-02A0	29	01643-31032	B0400-02A0	33	01643-31032	H1220-01A0A	22	01643-31032	M1150-01A3A	29
01643-30623	D0100-01A0	13	01643-31032	B0600-01A0A	12	01643-31032	H1270-01A0	8	01643-31032	M1150-01A3A	33
01643-30623	E0100-N1A0	10	01643-31032	B0600-01A0A	14	01643-31032	H1270-02A0	3	01643-31032	M1150-01A3A	41
01643-30623	K1110-12A0B	3	01643-31032	C0100-01A0A	14	01643-31032	H1270-02A0	6	01643-31032	M1150-01A3A	44
01643-30623	K1110-N1A0	2	01643-31032	C0100-01A0A	22	01643-31032	H1270-02A0	16	01643-31032	M1220-01A0	4
01643-30823	B0100-01A0B	17	01643-31032	C0100-01A1	12	01643-31032	H1270-06A0	15	01643-31032	M1220-02A0	4
01643-30823	B0200-01A0A	15	01643-31032	C0100-01A0B	12	01643-31032	H1831-01A0	25	01643-31032	M1220-02A0	9
01643-30823	B0200-01A0B	15	01643-31032	C0100-02A0B	12	01643-31032	H1832-01A0A	5	01643-31032	M1310-01A0	3
01643-30823	B0400-02A0	5	01643-31032	C0100-02A0B	13	01643-31032	H1832-01A0A	21	01643-31032	M1810-01A1A	3
01643-30823	C0100-01A0A	25	01643-31032	C0100-02B0	8	01643-31032	H1833-02A0A	3	01643-31032	M1810-01A1A	10
01643-30823	C0100-01A1	15	01643-31032	C0100-02A0C	8	01643-31032	H1840-01A0A	16	01643-31032	M1810-01A1A	13
01643-30823	C0100-01A0B	9	01643-31032	C0100-03A0B	-	01643-31032	H1840-01A0A	19	01643-31032	M1810-01A1A	17
01643-30823	C0100-01A0B	15	01643-31032	D0200-01A3B	19	01643-31032	K0700-01A6	3	01643-31032	M1810-01A1A	20
01643-30823	C0100-02B0	11	01643-31032	D0200-01A3B	29	01643-31032	K1110-01A0	5	01643-31032	M1810-01A1A	24
01643-30823	C0100-02A0C	11	01643-31032	D0200-01A3B	34	01643-31032	K1110-01A0	8	01643-31032	M1810-01A1A	26
01643-30823	C0100-03A0B	19	01643-31032	D0200-02A3B	17	01643-31032	K1110-01A0	11	01643-31032	N1210-052A0	4
01643-30823	C0100-04A0	12	01643-31032	E0100-01A0B	6	01643-31032	K1110-01A0	31	01643-31032	P1240-01A0	8
01643-30823	C0100-03A0C	12	01643-31032	E0100-01A0B	18	01643-31032	K1110-01A0	35	01643-31032	R0120-01A0A	3A
01643-30823	C0310-01A0A	3	01643-31032	E0100-01A0B	22	01643-31032	K1110-01A0	39	01643-31032	R1100-01A1A	12
01643-30823	D0200-02A3B	-	01643-31032	E0100-01A0B	25	01643-31032	K1110-02A0A	9	01643-31032	R1100-01A1A	15
01643-30823	E0100-01A0B	13	01643-31032	E0100-N1A0	13	01643-31032	K1110-02A0A	13	01643-31032	T1110-01A0A	37
01643-30823	E0200-01A0B	4	01643-31032	E0100-N1A0	-	01643-31032	K1110-03A0A	3	01643-31032	T1110-02A0	14
01643-30823	E0200-01A0B	7b	01643-31032	E0100-N1A0	-	01643-31032	K1110-04A0	4	01643-31032	T1110-02A0	17
01643-30823	E0200-02A0	6	01643-31032	E0200-03A1B	6	01643-31032	K1110-04A0	15	01643-31032	T1110-02A0	21
01643-30823	E0200-04A1B	44	01643-31032	E0200-03A1B	9	01643-31032	K1110-04A0	28	01643-31032	T1110-03A0	37
01643-30823	E0200-06A10	13	01643-31032	E0200-03A1B	19	01643-31032	K1110-05A3	5	01643-31032	T1110-04A0	14
01643-30823	E0200-06A10	15	01643-31032	E0200-03A1B	21	01643-31032	K1110-05A3	11	01643-31032	T1110-04A0	17
01643-30823	K0110-01A1	3	01643-31032	E0200-04A1B	4	01643-31032	K1110-06A0	5	01643-31032	T1110-04A0	21
01643-30823	K0210-08A0	26	01643-31032	E0200-04A1B	7	01643-31032	K1110-07A0A	31	01643-31032	T1120-01A0	5
01643-30823	K1110-03A0A	9	01643-31032	E0200-04A1B	9	01643-31032	K1110-07A0A	34	01643-31032	T1140-01A0	7
01643-30823	K1110-06A0	11	01643-31032	E0200-04A1B	13	01643-31032	K1110-08A3	21	01643-31032	T1140-03A0	7
01643-30823	K1110-10A0	1C	01643-31032	E0200-04A1B	13	01643-31032	K1110-10A0	7	01643-31032	T1210-01B0	21
01643-30823	K1110-10A0	12	01643-31032	E0200-04A1B	16	01643-31032	K1110-12A0B	10	01643-31032	T1210-02A0	29
01643-30823	K1110-12A0B	33	01643-31032	E0200-04A1B	19	01643-31032	K1110-12A0B	13	01643-31032	T1220-01A0	5
01643-30823	K1110-13A0A	4	01643-31032	E0200-04A1B	22	01643-31032	K1110-12A0B	22	01643-31032	Y1620-01A0A	26
01643-30823	T1110-01A0A	12c	01643-31032	E0200-04A1B	25	01643-31032	K1110-13A0A	9	01643-31032	Y1620-11A0A	30
01643-30823	T1110-03A0	12c	01643-31032	E0200-04A1B	31	01643-31032	K1110-13A0A	13	01643-31032	Y1620-13A0	30
01643-30823	T1210-02A0	26	01643-31032	E0200-04A1B	28	01643-31032	K1110-14A0	5	01643-31032	Y1620-41A0A	24
01643-30823	Y1670-01A0	21	01643-31032	E0200-04A1B	46	01643-31032	K1110-14B0	5	01643-31032	Y1662-24A0	14
01643-30828	C0100-01A0A	18	01643-31032	E0200-04A1B	51	01643-31032	M1110-02A1	7	01643-31232	B0100-01A0B	15
01643-30828	C0100-01A1	9	01643-31032	E0200-06A10	4	01643-31032	M1110-02A1	10	01643-31232	B0200-01A0A	-
01643-31032	B0100-01A0B	24	01643-31032	E0200-06A10	8	01643-31032	M1110-03A0	3	01643-31232	B0200-01A0B	-
01643-31032	B0200-01A0A	3	01643-31032	H0110-01A1A	18	01643-31032	M1110-04A0	7	01643-31232	B0400-02A0	28
01643-31032	B0200-01A0A	11	01643-31032	H0110-01A1A	25	01643-31032	M1110-04A0	10	01643-31232	C0100-03A0B	5
01643-31032	B0200-01A0A	-	01643-31032	H0320-01A0A	7	01643-31032	M1140-01A0	11	01643-31232	C0100-04A0	6
01643-31032	B0200-01A0B	3	01643-31032	H0320-01A0A	13	01643-31032	M1150-01A3A	11	01643-31232	D0200-02A3B	3

Part No.	Fig. No.	Index	Part No.	Fig. No.	Index	Part No.	Fig. No.	Index	Part No.	Fig. No.	Index
01643-31232	D0200-02A3B	6	01643-31445	K1110-04A0	4a	02740-00217	H1840-01A0A	8	02782-10516	Y1620-11A0A	25
01643-31232	E0100-N1A0	7	01643-31445	P1210-01A0	3	02740-00220	H1840-01A0A	1	02782-10516	Y1620-13A0	25
01643-31232	E0200-04A1B	40	01643-31445	R0120-01A0A	14	02740-00220	H1840-01A0A	6	02782-10522	P1120-01A1A	4
01643-31232	H0110-01A1A	36	01643-31445	R0200-0N2A0	10	02740-00220	H1840-01A0A	7	02782-10628	H0330-01A0A	6
01643-31232	H0120-02A0	11	01643-31445	R0200-0N3A0	11	02740-00221	H1840-01A0A	4	02782-10628	H1270-02A0	12
01643-31232	H0311-01A0A	5	01643-31445	R1100-01A1A	18	02740-00226	K1110-07A0A	2	02782-10630	H1270-03A0	12
01643-31232	H1270-02A0	25	01643-31445	R1200-01A0	3	02740-00226	K1110-07A0A	3	02782-10632	H0320-01A0A	-
01643-31232	H1270-06A0	18	01643-31645	K1120-01A0	7	02740-00227	K1110-13A0A	21	02783-10210	H1832-01A0A	7
01643-31232	H1831-01A0	23	01643-31645	K1120-01A0	9	02740-002A3	K1110-08A3	2	02783-10210	H1832-01A0A	16
01643-31232	J1110-01A2	6	01643-31645	K1120-01A0	11	02740-002A5	K1110-13A0A	18	02783-10210	K1110-07A0A	13
01643-31232	J1110-01A2	9	01643-31645	N1210-01A0	3	02741-003A7	H0340-01A0A	21	02783-10210	K1110-07A0A	27
01643-31232	J1310-01A0	4	01643-31645	N1210-01A0	-	02756-C0407	T1110-01A0A	28	02783-10422	H0340-01A0A	4
01643-31232	J1310-01A0	9	01643-31645	P1210-01A0	6	02756-C0507	T1110-01A0A	29	02783-10422	H1340-01A0A	3
01643-31232	K0210-014A0	2	01643-31645	R0300-02A0A	14	02756-C0508	H1210-01A0A	7	02783-10422	T1210-01B0	23
01643-31232	K0210-014A0	4	01643-50823	K1110-05A3	14	02774-C0605	H0330-01A0A	1	02783-10522	H1310-01A0A	2
01643-31232	K0210-16A0	6	01643-50823	Y1679-01A0	13	02781-00210	H1832-01A0A	26	02896-11008	H0340-01A0A	2a
01643-31232	K0210-16A0	9	01643-51032	E0200-04A1B	35	02781-0021D	H0340-01A0A	14	02896-11008	H0340-01A0A	14a
01643-31232	K0210-16A0	12	01643-51032	H0120-02A0	4	02781-0021D	H1832-01A0A	32	02896-11008	H0340-01A0A	19a
01643-31232	K0210-17A0	7	01643-51032	H0312-01A0	4	02781-0021D	H1833-02A0A	4	02896-11008	H0340-01A0A	22a
01643-31232	K0210-17A0	9	01643-51032	T1110-02A0	8	02781-0021D	K1110-07A0A	11	02896-11008	H1290-01A0A	-
01643-31232	K0230-01A0	3	01643-51032	T1110-04A0	8	02781-0021D	K1110-07A0A	25	02896-11008	H1832-01A0A	6a
01643-31232	K1110-02A0A	5	01643-51032	T1210-02A0	6	02781-0021D	K1110-08A3	17	02896-11008	H1832-01A0A	7a
01643-31232	M1150-01A3A	52	01643-51032	T1210-02A0	12	02781-0021D	K1110-08A3	22	02896-11008	H1832-01A0A	10a
01643-31232	N1310-01A1A	3	01643-70823	K1110-09B9	4	02781-0021D	P1120-01A1A	17	02896-11008	H1832-01A0A	11a
01643-31232	P1240-N1A0	4	01643-70823	K1110-11A0	4	02781-00315	H1290-01A0A	1	02896-11008	H1832-01A0A	24a
01643-31232	R1100-01A1A	5	01643-70823	K1110-11A0	6	02781-00315	H1290-01A0A	3	02896-11008	H1832-01A0A	26a
01643-31232	T1110-01A0A	10	01643-70823	M1110-03A0	6	02781-00315	P1120-01A1A	9	02896-11008	H1833-02A0A	6
01643-31232	T1110-01A0A	16	01643-70823	M1110-03A0	10	02781-00422	H1220-01A0A	-	02896-11008	H1840-01A0A	22a
01643-31232	T1110-01A0A	21	01643-71032	K0210-02A0	28a	02781-00422	H1270-03A0	4	02896-11008	H1840-01A0A	24a
01643-31232	T1110-01A0A	26	01643-71032	K1110-04A0	-	02781-00422	H1340-01A0A	6	02896-11008	H1840-01A0A	25a
01643-31232	T1110-03A0	10	01643-71032	K1110-04A0	24	02781-00422	T1210-01B0	22	02896-11008	H1840-01A0A	27a
01643-31232	T1110-03A0	16	01643-71032	K1110-14A0	8	02781-00522	H1210-01A0A	-	02896-11008	K1110-07A0A	11a
01643-31232	T1110-03A0	21	01643-71032	K1110-14A0	11	02781-00522	N1310-01A1A	4	02896-11008	K1110-07A0A	13a
01643-31232	T1110-03A0	26	01643-71032	K1110-14A0	14	02781-00522	P1120-01A1A	1	02896-11008	K1110-07A0A	25a
01643-31232	T1210-01A0	9	01643-71032	K1110-14B0	8	02781-00628	H0330-01A0A	2a	02896-11008	K1110-07A0A	27a
01643-31232	T1210-01A0	14	01643-71032	K1110-14B0	11	02781-00628	H0340-01A0A	12	02896-11008	K1110-08A3	15a
01643-31232	T1210-01B0	9	01643-71032	K1110-14B0	14	02781-00628	H1270-03A0	9	02896-11008	K1110-08A3	17a
01643-31232	T1210-01B0	14	01643-71232	K0210-015A0	6	02782-10210	H0340-01A0A	19	02896-11008	K1110-08A3	22a
01643-31232	T1210-02A0	15	01643-N2210	M1150-01A3A	-	02782-10210	H1290-01A0A	5	02896-11008	K1110-08A3	24a
01643-31232	T1510-N02A0	17	017179-12079	Y1620-01A0A	17	02782-10210	H1832-01A0A	6	02896-11008	K1110-13A0A	14a
01643-31232	T1510-N03A0	10	01803-02228	T1510-01A4	12	02782-10210	H1832-01A0A	24	02896-11008	K1110-13A0A	15a
01643-31232	T1710-01A0	9	01803-02228	T1510-N01A0	12	02782-10210	H1833-02A0A	8	02896-11008	K1110-13A0A	16a
01643-31232	T1710-01A0	15	01803-02228	T1510-N02A0	12	02782-10210	H1840-01A0A	-	02896-11008	K1110-14A0	20
01643-31232	Y1600-06A0A	4	01803-02228	T1510-N02A1	12	02782-10210	K1110-08A3	15	02896-11008	K1110-14A0	23
01643-31445	B0100-01A0B	4	02740-00211	H1832-01A0A	13	02782-10210	K1110-15A0	11	02896-11008	K1110-14A0	26
01643-31445	B0100-01A0B	6	02740-00213	H1832-01A0A	1	02782-10212	H1833-02A0A	5	02896-11008	K1110-14B0	20
01643-31445	D0100-01A0	9	02740-00215	H1832-01A0A	2	02782-10311	H0340-01A0A	7	02896-11008	K1110-14B0	23
01643-31445	H0120-02A0	14	02740-00217	H1840-01A0A	2	02782-10422	H1270-01A0	3	02896-11008	K1110-14B0	26
01643-31445	H1270-02A0	21	02740-00217	H1840-01A0A	3	02782-10516	T1140-01A0	3	02896-11008	K1110-15A0	5
01643-31445	H1270-02A0	23	02740-00217	H1840-01A0A	5	02782-10516	T1140-03A0	3	02896-11008	K1110-15A0	9

Part No.	Fig. No.	Index	Part No.	Fig. No.	Index	Part No.	Fig. No.	Index	Part No.	Fig. No.	Index
02896-11008	K1110-15A0	10	02896-11012	Y1620-41A0A	22a	04050-14025	N1310-01A1A	7	04434-51710	E0200-04A1B	26
02896-11008	P1120-01A1A	17a	02896-11012	Y1620-41A0A	22b	04052-10530	K0210-01A0	12	04434-51910	E0200-04A1B	11
02896-11009	H0340-01A0A	7b	02896-11015	H1210-01A0A	3b	04052-10633	K1110-05A3	16	04434-51910	E0200-04A1B	11
02896-11009	H0340-01A0A	22b	02896-11015	H1210-01A0A	3c	04052-11664	N1310-01A1A	10	04434-51912	E0200-04A1B	-
02896-11009	H1290-01A0A	1a	02896-11015	H1210-01A0A	5a	04064-02512	N1210-51A0	20	04434-51912	E0200-04A1B	-
02896-11009	H1290-01A0A	3a	02896-11015	H1210-01A0A	6a	04064-02512	N1210-51A0	28	04434-52310	E0200-04A1B	5
02896-11009	H1840-01A0A	10a	02896-11015	H1210-01A0A	16	04064-02512	Y1651-03A0A	21	04434-52511	E0200-03A1B	7
02896-11009	H1840-01A0A	11a	02896-11015	H1220-01A0A	1a	04064-03015	T1210-02A0	20	04434-52511	E0200-03A1B	17
02896-11009	P1120-01A1A	9a	02896-11015	H1310-01A0A	2a	04064-03515	R0120-01A0A	10	04434-52710	E0200-04A1B	-
02896-11009	P1120-01A1A	12b	02896-11015	N1310-01A1A	4a	04064-04518	Y-1651-03A1	16	04434-52711	H1270-02A0	14
02896-11009	P1120-01A1A	12c	02896-11015	P1120-01A1A	1a	04064-06525	Y1627-01A1D	8	04434-52711	D0200-01A3B	17
02896-11009	P1120-01A1A	14a	02896-11015	P1120-01A1A	4a	04065-04518	Y1640-01A0	11	04434-52712	E0200-04A1B	1
02896-11012	H0340-01A0A	4a	02896-11015	T1110-01A0A	31a	04065-05520	Y1600-01A0A	18	04434-52712	P1240-N1A0	2
02896-11012	H1220-01A0A	2b	02896-11015	T1110-03A0	31a	04082-00212	T1110-01A0A	24	04434-53211	D0200-01A3B	15
02896-11012	H1220-01A0A	3a	02896-11015	T1120-01A0	2a	04082-00212	T1110-03A0	24	04434-53211	E0200-01A0B	6
02896-11012	H1270-01A0	7	02896-11015	T1120-01A0	3a	04082-00212	T1210-01A0	7	04434-53211	E0200-03A1B	2B
02896-11012	H1270-03A0	14	02896-11015	T1140-01A0	3a	04082-00212	T1210-01A0	12	04434-53211	K1110-07A0A	32
02896-11012	H1290-01A0A	5a	02896-11015	T1140-03A0	3a	04082-00212	T1210-01B0	7	04435-51610	H1832-01A0A	3
02896-11012	H1340-01A0A	3a	02896-11015	Y1620-01A0A	23b	04082-00212	T1210-01B0	12	04435-51610	H1832-01A0A	23b
02896-11012	P1240-01A0	3a	02896-11015	Y1620-01A0A	24b	04082-00212	T1710-01A0	-	04435-51710	E0200-01A0B	-
02896-11012	P1240-N1A0	1a	02896-11015	Y1620-11A0A	25a	04205-10520	K0210-01A0	11	04435-51710	E0200-03A1B	2A
02896-11012	T1110-01A0A	30a	02896-11015	Y1620-13A0	25a	04205-10614	K0210-08A0	37	04435-51812	K1110-12A0B	11
02896-11012	T1110-01A0A	32b	02896-11018	H0320-01A0A	3a	04205-10622	K1110-05A3	7	04435-51910	E0200-04A1B	14
02896-11012	T1110-01A0A	32c	02896-11018	H0320-01A0A	8a	04205-10622	K1110-05A3	15	04435-52112	E0200-04A1B	8
02896-11012	T1110-01A0A	33b	02896-11018	H0320-01A0A	9a	04205-11235	M1150-01A3A	51	04530-11018	Y1600-01A0A	5
02896-11012	T1110-01A0A	33c	02896-11018	H0320-02A0	3	04260-00635	Y1620-11A0A	19	06000-06206	Y-1651-02A1	19
02896-11012	T1110-02A0	32	02896-11018	H0330-01A0A	2b	04260-00635	Y1620-13A0	19	06000-06301	Y1651-02A0A	20
02896-11012	T1110-02A0	33	02896-11018	H0330-01A0A	3a	04260-00793	Y1679-01A0	22	06124-02020	K1110-03A0A	4
02896-11012	T1110-03A0	30a	02896-11018	H0330-01A0A	5a	04260-00952	Y1651-03A0A	28	07000-01008	H1270-06A0	8
02896-11012	T1110-03A0	32b	02896-11018	H0330-01A0A	6a	04260-00952	Y-1651-03A1	27	07000-02012	H1831-01A0	7
02896-11012	T1110-03A0	32c	02896-11018	H0340-01A0A	9a	04418-13060	U0100-01A0	35	07000-02012	H1831-01A0	14
02896-11012	T1110-03A0	33b	02896-11018	H0340-01A0A	12a	04434-50608	T1110-01A0A	12a	07000-02014	H1831-01A0	8
02896-11012	T1110-03A0	33c	02896-11018	H1270-02A0	26	04434-50608	T1110-03A0	12a	07000-02014	H1831-01A0	15
02896-11012	T1110-04A0	32	02896-11018	H1270-02A0	27	04434-50612	B0400-02A0	31	07000-02018	H1831-01A0	10
02896-11012	T1110-04A0	33	02896-11018	H1270-03A0	15	04434-50612	K1110-05A3	17	07000-02018	H1831-01A0	17
02896-11012	T1140-01A0	2a	02896-11018	H1270-03A0	16	04434-51010	B0200-01A0A	16	07000-02020	Y1670-01A0	12
02896-11012	T1140-03A0	2a	02896-11018	H1270-03A0	17	04434-51010	B0200-01A0B	16	07000-02060	Y1600-06A0A	2
02896-11012	T1210-01B0	18	02896-11018	T1110-02A0	31	04434-51010	E0200-01A0B	11	07000-02070	Y1670-11A0	15
02896-11012	T1210-02A0	36	02896-11018	T1110-04A0	31	04434-51010	E0200-04A1B	20	07000-02120	Y1662-23A0	14
02896-11012	T1210-02A0	37	04010-00519	K1110-03A0A	7	04434-51010	E0200-04A1B	32	07000-02120	Y1662-27A0	22
02896-11012	T1220-01A0	2a	04020-01638	N1110-01A0	5	04434-51410	C0100-01A0B	10	07000-02120	Y1662-35A0	19
02896-11012	T1220-01A0	3a	04020-01638	N1210-51A0	35	04434-51410	D0200-01A3B	27	07000-03038	R0110-01A0A	9
02896-11012	Y1620-01A0A	23a	04020-01638	N1210-052A0	9	04434-51410	E0200-04A1B	49	07000-05230	Y-1651-03A1	26
02896-11012	Y1620-01A0A	24a	04025-00412	T1210-02A0	19	04434-51610	C0100-01A0A	20	07000-11004	Y1662-23A0	10
02896-11012	Y1620-11A0A	27a	04025-00432	Y1670-01A0	18	04434-51610	C0100-01A1	10	07000-11006	Y1662-27A0	29
02896-11012	Y1620-11A0A	27b	04025-00620	K1110-01A0	29	04434-51710	E0100-01A0B	20	07000-11007	Y-1651-03A1	23
02896-11012	Y1620-13A0	27a	04050-11612	K0210-08A0	36	04434-51710	E0200-01A0B	5	07000-11007	Y1662-24A0	8
02896-11012	Y1620-13A0	27b	04050-11612	K1110-05A3	8	04434-51710	E0200-04A1B	17	07000-11007	Y1662-27A0	32
02896-11012	Y1620-41A0A	21a	04050-11612	K1110-05A3	-	04434-51710	E0200-04A1B	23	07000-11008	Y1651-03A0A	22
02896-11012	Y1620-41A0A	21b	04050-13022	M1150-01A3A	53	04434-51710	E0200-04A1B	33	07000-11008	Y1651-03A0A	-

Part No.	Fig. No.	Index	Part No.	Fig. No.	Index	Part No.	Fig. No.	Index	Part No.	Fig. No.	Index
07000-11009	Y1662-24A0	10	07000-13025	T1110-02A0	6	07002-11423	K1110-07A0A	14	07002-12434	H1270-03A0	7
07000-11009	Y1662-25A0	10	07000-13025	T1110-04A0	6	07002-11423	K1110-07A0A	26	07002-12434	H1270-03A0	10
07000-11009	Y1679-01A0	8	07000-13025	T1210-02A0	4	07002-11423	K1110-07A0A	28	07002-12434	H1270-03A0	13
07000-11009	Y1679-01A0	23	07000-13025	T1210-02A0	10	07002-11423	K1110-08A3	16	07002-12434	H1310-01A0A	5
07000-11423	K1110-08A3	18	07000-13025	T1210-02A0	23	07002-11423	K1110-08A3	23	07002-12434	N1310-01A1A	5
07000-12010	Y1662-22A0	20	07000-13031	T1210-02A0	18	07002-11423	K1110-08A3	25	07002-12434	P1120-01A1A	2
07000-12010	Y1662-27A0	23	07000-13032	H0120-02A0	5	07002-11423	K1110-15A0	6	07002-12434	P1120-01A1A	5
07000-12010	Y1662-35A0	20	07000-13032	H0312-01A0	2	07002-11423	K1110-15A0	8	07002-12434	Y1662-22A0	16
07000-12011	K1110-13A0A	17	07000-13035	Y1662-22A0	17	07002-11423	K1110-15A0	12	07002-12434	Y1662-25A0	7
07000-12011	K1110-14A0	21	07000-13035	Y1662-27A0	20	07002-11423	P1120-01A1A	15	07002-12434	Y1662-26A0	16
07000-12011	K1110-14A0	24	07000-13035	Y1662-35A0	17	07002-11423	P1120-01A1A	18	07002-12434	Y1662-27A0	19
07000-12011	K1110-14A0	27	07000-13050	D0100-01A0	14	07002-11423	Y1662-24A0	6	07002-12434	Y1662-35A0	16
07000-12011	K1110-14B0	21	07000-15070	Y1627-01A1D	3	07002-11423	Y1679-01A0	19	07002-13034	B0600-01A0A	10
07000-12011	K1110-14B0	24	07000-15230	Y1651-03A0A	23	07002-11623	Y1679-01A0	41	07002-13334	H0320-01A0A	4
07000-12011	K1110-14B0	27	07000-15230	Y1651-03A0A	-	07002-11823	P1240-01A0	4	07002-13334	H0320-01A0A	10
07000-12011	K1110-14B0	31	07001-01004	Y1662-23A0	11	07002-11823	Y1600-01A0A	9	07002-13334	H0320-02A0	2
07000-12012	Y1662-25A0	23	07001-01007	Y1662-24A0	9	07002-12034	H0340-01A0A	25	07002-13334	H1270-02A0	8
07000-12014	Y1651-01A0A	23	07001-01009	Y1662-24A0	11	07002-12034	H0340-01A0A	5	07002-13334	H1270-02A0	10
07000-12014	Y1651-03A0A	27	07001-01009	Y1662-25A0	11	07002-12034	H0340-01A0A	23	07002-13334	T1210-02A0	31
07000-12014	Y1651-03A0A	-	07001-02012	Y1662-25A0	24	07002-12034	H1220-01A0A	4	07002-13334	T1210-02A0	34
07000-12014	Y1651-03A0A	-	07001-02016	Y1662-25A0	9	07002-12034	H1270-01A0	4	07002-13334	Y1640-02A0	11
07000-12014	Y-1651-03A1	32	07002-01823	H1832-01A0A	14d	07002-12034	H1270-01A0	6	07002-13334	Y1662-23A0	6
07000-12015	K1110-07A0A	8	07002-02034	Y1662-35A0	26	07002-12034	H1270-01A0	12	07002-61023	Y1600-06A0A	6
07000-12015	K1110-07A0A	22	07002-02434	Y1662-24A0	25	07002-12034	H1270-03A0	5	07002-61223	Y1600-01A0A	7
07000-12015	K1110-08A3	12	07002-1 2034	Y1662-27A0	31	07002-12034	H1270-06A0	1	07002-62432	Y1600-01A0A	4
07000-12016	H1831-01A0	9	07002-10823	Y1662-27A0	5	07002-12034	H1290-01A0A	2	07002-62434	Y1600-03A0A	6
07000-12016	H1831-01A0	16	07002-11023	H1840-01A0A	13a	07002-12034	H1290-01A0A	4	07002-63034	Y1600-04A0A	9
07000-12016	Y1662-25A0	8	07002-11023	T1110-02A0	25	07002-12034	H1340-01A0A	5	07002-63034	Y1600-05A0A	8
07000-12018	K1110-07A0A	10	07002-11023	T1110-04A0	25	07002-12034	H1340-01A0A	7	07002-63334	Y1600-03A0A	4
07000-12018	K1110-07A0A	24	07002-11023	Y1662-23A0	9	07002-12034	P1120-01A1A	10	07005-01412	D0200-01A3B	5
07000-12018	K1110-08A3	14	07002-11023	Y1662-24A0	7	07002-12034	T1110-02A0	27	07005-01412	D0200-01A3B	12
07000-12018	Y1651-01A0A	13	07002-11223	B0600-01A0A	8	07002-12034	T1110-04A0	27	07005-01412	D0200-01A3B	37
07000-12018	Y-1651-01A1	10	07002-11223	Y1662-22A0	24	07002-12034	T1140-01A0	4	07005-01412	D0200-02A3B	8
07000-12018	Y1651-03A0A	-	07002-11223	Y1662-27A0	28	07002-12034	T1140-03A0	4	07005-01412	D0200-02A3B	13
07000-12020	Y1662-22A0	18	07002-11223	Y1662-35A0	24	07002-12034	T1210-01B0	24	07012-00065	N1210-51A0	5
07000-12020	Y1662-23A0	12	07002-11423	H0120-02A0	18	07002-12034	Y1620-11A0A	26	07020-00000	N1110-01A0	3
07000-12020	Y1662-27A0	21	07002-11423	H0340-01A0A	3	07002-12034	Y1620-13A0	26	07020-00000	T1230-01A1	6
07000-12020	Y1662-35A0	18	07002-11423	H0340-01A0A	7a	07002-12034	Y1651-01A0A	16	07020-00000	T1230-01A1	13
07000-12020	Y1670-11A0	12	07002-11423	H0340-01A0A	15	07002-12034	Y-1651-01A1	13	07020-00000	W1117-01A1	1
07000-12020	Y1679-01A0	29	07002-11423	H0340-01A0A	20	07002-12034	Y1651-03A0A	-	07020-00675	T1710-01A0	5
07000-12034	H0120-02A0	16	07002-11423	H1290-01A0A	6	07002-12034	Y1662-26A0	5	07020-00675	W1117-01A1	3
07000-12035	R0200-0N3A0	8	07002-11423	H1832-01A0A	8	07002-12034	Y1662-27A0	37	07020-00900	N1210-51A0	9
07000-12075	H0311-01A0A	3	07002-11423	H1832-01A0A	15	07002-12434	H0110-01A1A	31	07020-00900	R0120-01A0A	7
07000-12085	Y1627-01A1D	10	07002-11423	H1832-01A0A	17	07002-12434	H0320-01A0A	18	07020-00900	T1230-01A1	7
07000-12120	Y1662-22A0	19	07002-11423	H1832-01A0A	25	07002-12434	H0330-01A0A	4	07020-00900	T1230-01A1	14
07000-12120	Y1662-23A0	13	07002-11423	H1832-01A0A	27	07002-12434	H0340-01A0A	11	07020-00900	W1117-01A1	2
07000-12135	H0110-01A1A	16	07002-11423	H1833-02A0A	7	07002-12434	H0340-01A0A	13	07029-00000	N1210-51A0	12
07000-12135	H0110-01A1A	23	07002-11423	H1840-01A0A	12	07002-12434	H1210-01A0A	4	07040-11007	H1840-01A0A	13
07000-13025	H0120-02A0	9	07002-11423	H1840-01A0A	26	07002-12434	H1220-01A0A	5	07040-11007	T1110-02A0	24
07000-13025	K1120-01A0	3	07002-11423	K1110-07A0A	12	07002-12434	H1270-02A0	13	07040-11007	T1110-04A0	24

Part No.	Fig. No.	Index	Part No.	Fig. No.	Index	Part No.	Fig. No.	Index	Part No.	Fig. No.	Index
07040-11209	B0600-01A0A	7	07145-00060	T1230-01A1	4	07283-32236	Y1620-13A0	28	08034-00414	K1110-15A0	13
07040-11409	H0120-02A0	17	07145-00060	T1230-01A1	11	07283-38973	H1270-06A0	16	08034-00519	D0200-01A3B	14
07040-12012	H0120-02A0	15	07145-00065	T1110-01A0A	5	07285-00095	C0100-01A0A	19	08034-00519	D0200-01A3B	24
07040-12012	H1270-01A0	11	07145-00065	T1110-01A0A	6	07285-00095	H0110-01A1A	20	08034-00519	E0200-04A1B	36
07040-12012	T1110-02A0	26	07145-00065	T1110-03A0	5	07285-00150	B0100-01A0B	-	08034-00519	H0340-01A0A	17
07040-12012	T1110-04A0	26	07145-00065	T1110-03A0	6	07285-00150	D0200-01A3B	-	08034-00519	H1832-01A0A	9
07040-12012	Y-1651-01A1	3	07145-00125	N1210-51A0	8	07285-00155	B0100-01A0B	19	08034-00519	T1110-01A0A	12
07040-12412	H0320-01A0A	17	07155-00515	R0120-01A0A	8	07289-00055	C0100-03A0B	-	08034-00519	T1110-03A0	12
07041-13012	B0600-01A0A	9	07165-13941	Y1620-41A0A	18	07289-00080	B0200-01A0A	5	08034-00536	E0200-06A10	6
07042-00415	N1210-51A0	13	07165-14244	Y1620-11A0A	22	07289-00080	B0200-01A0B	5	08034-00536	H1832-01A0A	30
07042-30108	H1832-01A0A	18	07165-14244	Y1620-13A0	22	07289-00080	B0200-01A0B	20	08034-00536	H1840-01A0A	20
07042-30108	N1210-052A0	5	07165-14547	Y1620-01A0A	22	07289-00080	H0311-01A0A	2	08034-00536	K1110-08A3	6a
07042-30108	P1120-01A1A	16	07165-15252	Y1621-01A0A	20	07289-00095	B0200-01A0A	6	08034-00536	K1110-13A0A	22
07042-30312	N1210-51A0	11	07177-05030	R0120-01A0A	15	07289-00095	B0200-01A0B	6	08034-00823	H1270-05A0	2
07043-50108	R0110-01A0A	10	07179-12069	Y1620-41A0A	17	07371-30640	T1110-02A0	5	08034-00823	H1840-01A0A	29
07043-70108	H1831-01A0	-	07179-12074	Y1620-11A0A	17	07371-30640	T1110-04A0	5	08034-00823	K1110-07A0A	6a
07043-70617	H0110-01A1A	32	07179-12074	Y1620-13A0	17	07371-30640	T1210-02A0	3	08034-00823	P1120-01A1A	-
07043-A0108	H0110-01A1A	33	07179-12084	Y1621-01A0A	19	07371-30640	T1210-02A0	9	08034-00823	P1120-01A1A	-
07044-12412	H0110-01A1A	30	07206-31014	D0200-01A3B	6	07371-31049	H0312-01A0	1	08034-00834	K1110-08A3	10
07044-12412	Y1600-01A0A	3	07206-31014	D0200-01A3B	13	07372-21035	H0312-01A0	3	08034-20536	P1120-01A1A	3b
07049-01012	N1210-052A0	6	07206-31014	D0200-01A3B	36	07372-21035	T1110-02A0	7	08034-20536	P1120-01A1A	11c
07049-01418	N1210-01A0	5	07206-31014	D0200-02A3B	9	07372-21035	T1110-04A0	7	08034-20823	D0200-01A3B	30
07049-01418	W1117-01A1	4	07206-31014	D0200-02A3B	14	07372-21035	T1210-02A0	5	08034-30521	K1110-06A0	8
07049-01620	N1210-51A0	33	07236-10210	H1832-01A0A	-	07372-21035	T1210-02A0	11	08034-30521	K1110-10A0	8
07049-02025	M1510-01A0A	-	07260-20932	B0100-01A0B	-	07376-70422	P1240-N1A0	1	08036-01414	E0200-06A10	2
07049-02025	M1510-02A0	-	07260-20932	C0100-01A0A	23	07700-40240	D0200-01A3B	-	08036-01414	E0200-06A10	7
07049-02025	N1210-01A0	6	07260-20935	B0100-01A0B	18	07700-50240	D0200-01A3B	7	08036-01414	K1110-05A3	9
07049-02025	N1210-51A0	34	07260-20940	C0100-01A1	13	07700-50455	D0100-01A0	10	08036-01814	K1110-12A0B	5
07056-18416	D0100-01A0	-	07260-20940	C0100-01A0B	13	08000-00020	E0100-01A0B	-	08036-01814	K1110-12A0B	-
07094-10417	H1210-01A0A	10	07260-25825	H0311-01A0A	-	08000-00021	E0100-01A0B	-	08036-02514	E0200-03A1B	2
07094-20417	H1220-01A0A	17	07260-25826	H0311-01A0A	-	08017-21906	D0200-01A3B	9a	08036-02514	K1110-12A0B	4
07095-00420	H1220-01A0A	19	07270-00865	H0110-01A1A	19	08017-21906	D0200-02A3B	-	08036-02514	K1110-12A0B	19
07095-00421	H1210-01A0A	11	07270-00880	H0110-01A1A	-	08017-21906N	D0200-01A3B	-	08036-10810	K1110-10A0	9
07095-00526	H1220-01A0A	20	07281-00167	C0100-01A0A	24	08017-21906N	D0200-02A3B	10A	08036-12514	K1110-12A0B	6
07095-00628	C0100-01A0A	10	07281-00167	C0100-01A1	14	08017-21915	D0200-01A3B	2	08037-01008	K0210-06A0N	42
07143-10505	Y1620-41A0A	2	07281-00167	C0100-01A0B	14	08017-21915	D0200-01A3B	25	08037-01008	K0210-06A0N	45
07143-10506	Y1620-11A0A	2	07281-00167	D0200-01A3B	-	08017-21915	D0200-01A3B	26	08037-01610	C0100-02A0B	7A
07143-10506	Y1620-11A0A	4	07281-00167	D0200-01A3B	-	08017-21915N	D0200-01A3B	-	08037-01610	C0100-02A0B	17
07143-10506	Y1620-13A0	2	07281-00167	D0200-01A3B	21	08017-21915N	D0200-01A3B	-	08037-01610	K0210-01A0	-
07143-10506	Y1620-13A0	4	07281-00197	D0200-01A3B	3	08017-21915N	D0200-01A3B	-	08037-01610	K0210-06A0N	18
07143-10606	Y1620-01A0A	4	07281-00197	D0200-01A3B	10	08017-21916	D0200-02A3B	-	08037-01610	M1220-01A0	2
07144-10505	T1710-01A0	3	07281-00197	D0200-01A3B	20	08017-30702	E0200-04A1B	37	08037-01610	M1220-02A0	2
07144-10606	Y1620-41A0A	4	07281-00289	C0100-01A0A	9	08020-00000	E0200-03A1B	-	08037-02512	K0210-06A0N	6
07144-10706	Y1621-01A0A	2	07281-00909	B0200-01A0A	-	08028-43045	E0100-01A0B	23	08037-02512	K0210-06A0N	23
07144-10706	Y1621-01A0A	8	07283-22236	T1140-01A0	-	08028-48025	E0100-01A0B	16	08037-11025	K0210-06A0N	19
07145-00050	T1230-01A1	5	07283-22236	Y1620-11A0A	-	08028-68035	E0100-01A0B	7	08037-11025	K0210-06A0N	24
07145-00050	T1230-01A1	12	07283-23442	H0320-01A0A	14	08028-68050	E0100-01A0B	10	08038-00035	E0200-02A0	11
07145-00050	T1710-01A0	4	07283-32236	T1140-01A0	5	08028AH035	E0100-N1A0	-	08038-00519	E0200-01A0B	8
07145-00060	T1210-01A0	16	07283-32236	T1140-03A0	5	08028-AH035	E0100-01A0B	9	08038-00519	E0200-01A0B	12
07145-00060	T1210-01B0	16	07283-32236	Y1620-11A0A	28	08034-00414	E0200-06A10	10	08038-00519	E0200-02A0	10

Part No.	Fig. No.	Index	Part No.	Fig. No.	Index	Part No.	Fig. No.	Index	Part No.	Fig. No.	Index
08038-04030	E0100-01A0B	15	09845-00480	U0100-01A0	41	135-70-13290	T1710-01A0	16	201-01-N1110	B0600-01A0A	-
08038-04030	E0100-01A0B	26	09963-03001	U0100-01A0	20	141-30-00616	R0110-01A0A	-	201-01-N1111	B0600-01A0A	1
08038-22009	E0100-01A0B	8	101-32-11173	R0500-01A0A	4	141-30-00623	R0110-01A0A	7	201-01-N1150	A0100-01A0	-
08038-42009	E0100-01A0B	9a	101-32-11173	R0500-02A0A	-	141-30-00630	R0110-01A0A	8	201-01-N1151	A0100-01A0	-
08051-00801	K0210-06A0N	12	101-32-11271	R0500-01A0A	3	142-62-14450	B0100-01A0B	11	201-01-N1152	A0100-01A0	-
08053-00910	K1110-12A0B	18	101-32-11271	R0500-02A0A	3	144-874-7470	B0600-01A0A	-	201-01-N1153	A0100-01A0	-
08053-01510	E0200-01A0B	2	101-32-11281	R0500-02A0A	7	144-874-7470	C0100-01A0A	12	201-01-N1160	B0200-01A0A	-
08053-01510	E0200-06A10	11	102 2923 0717 105	K0110-03A0	10	144-87-47470	E0200-01A0B	7	201-01-N1160	B0200-01A0B	-
08053-01510	K1110-10A0	1A	102 3943 0613 105	K0110-03A0	2	14X-911-1330	K0210-08A0	20	201-01-N1161	B0200-01A0A	4
08053-01512	E0200-04A1B	41	102 3944 0646 105	K0110-03A0	11	14X-911-1531	K0210-08A0	-	201-01-N1161	B0200-01A0B	4
08053-01512	K1110-12A0B	17	102 3945 0612 105	K0110-03A0	13	14X-911-1540	K0210-08A0	35	201-01-N1171	B0200-01A0A	7
08055-00282	H1831-01A0	11	102 3946 0611 105	K0110-03A0	14	14X-911-1721	K0210-08A0	24	201-01-N1180	B0200-51A1	1
08055-00282	H1831-01A0	18	102 3947 0615 105	K0110-03A0	15	154-30-51460	M1520-01A0	2	201-01-N1190	D0200-02A3B	4
08086-20000	K1110-12A0B	23	102 3948 0613 105	K0110-03A0	3	175-30-16210	T1510-01A4	13	201-01-N1210	D0200-02A3B	1
08088-31000	E0200-02A0	7	110-30-00086	R0300-03A0	-	175-30-16210	T1510-N01A0	18	201-01-N1220	B0200-01A0A	-
08160-52400	E0200-02A0	1	113-30-24240	R0120-01A0A	-	175-30-16210	T1510-N02A0	18	201-01-N1220	B0200-01A0B	-
08193-21012	K0210-16A0	7	113-43-31380	K1110-03A0A	13	175-30-16210	T1510-N02A1	18	201-01-N1230	B0200-01A0A	-
08193-21012	K0210-17A0	5	113-63-22390	Y1620-11A0A	-	175-30-16210	T1510-N03A0	17	201-01-N1230	B0200-01A0B	-
08210-01214	H1832-01A0A	23a	113-899-7950	H1832-01A0A	-	175-40-22540	B0200-01A0A	17	201-01-N1240	B0200-01A0A	13
08210-01805	H0340-01A0A	1a	114 0137 0517 105	K0110-03A0	7	175-40-22540	B0200-01A0B	17	201-01-N1240	B0200-01A0B	13
08210-01806	K1110-08A3	9	114 0138 0518 105	K0110-03A0	8	175-54-34170	C0100-03A0C	6	201-01-N1250	B0100-01A0B	1
08670-02001	B0200-01A0A	12	116 0278 0518 607	K0110-03A0	12	176-06-42170	K0210-08A0	34	201-01-N1260	B0100-01A0B	-
08670-02001	B0200-01A0B	12	116 0606 6223 105	K0110-03A0	9	176-38-41350	B0200-01A0A	-	201-01-N1261	B0100-01A0B	2
09056-04613	V0300-01A0	1	116 0640 1815 105	K0110-03A0	5	176-38-41350	B0200-01A0B	-	201-01-N1270	B0100-01A0B	-
09134-A0881	U0100-01A0	26	117 0929 0238 105	K0110-03A0	6	195-33-11220	E0200-04A1B	2	201-01-N1280	B0100-01A0B	-
09304-00835	K1110-02A0A	14	117 0930 0206 105	K0110-03A0	1	195-33-11220	E0200-04A1B	52	201-01-N1290	B0100-01A0B	25
09304-10835	K1110-03A0A	10	118 0046 0114 105	K0110-03A0	4	195-33-11220	K1110-12A0B	7	201-01-N1320	B0100-01A0B	21
09370-00050	R0120-01A0A	9	11Y-09-11140	D0200-02A3B	11	195-33-11220	K1110-12A0B	20	201-01-N1320	B0100-01A0B	-
09415-01610	K0210-01A0	13	11Y-32-11220	R0500-02A0A	11	195-40-31140	Y1662-23A0	3	201-01-N1330	K1110-05A3	-
09415-01610	K0210-01A0	-	11Y-62-12140	K1110-13A0A	14	195-Z11-4510	K0210-08A0	-	201-01-N1370	B0100-01A0B	-
09415-02512	K0210-015A0	5	11Y-62-12140	K1110-14A0	25	201-00-1191	U0100-01A0	18	201-01-N1381	B0100-01A0B	-
09415-02512	K0230-01A0	8	11Y-62-12140	K1110-14B0	25	201-00-71330	U0100-01A0	40	201-01-N1382	B0100-01A0B	13
09452-06506	K1110-01A0	15	11Y-62-12250	H1840-01A0A	-	201-00-N1120	K1110-11A0	11	201-01-N1390	B0100-01A0B	20
09601-130H0	U0100-01A0	34	11Y-62-12330	K1110-15A0	7	201-00-N1160	U0100-01A0	-	201-01-N1410	B0200-01A0A	-
09653-A0481	U0100-01A0	14	11Y-62-12370	H1833-02A0A	-	201-00-N1170	U0100-01A0	-	201-01-N1410	B0200-01A0B	-
09657-A0881	U0100-01A0	6	124-49-51430	H1340-01A0A	4	201-00-N1180	U0100-01A0	10	201-01-N1420	B0200-51A1	-
09659-A057B	H1270-06A0	19	12R-60-11230	H0110-01A1A	26	201-00-N1220	U0100-01A0	2	201-01-N1540	D0200-02A3B	-
09659-A057B	U0100-01A0	39	130-09-12931	T1210-01A0	17	201-00-N1230	U0100-01A0	11	201-01-N1560	B0100-01A0B	-
09667-A0481	U0100-01A0	19	130-09-12931	T1210-01B0	17	201-00-N1240	U0100-01A0	32	201-01-N1590	D0200-02A3B	15
09669-0000E	U0100-01A0	17	135-70-13251	T1510-01A4	14	201-00-N1250	U0100-01A0	1	201-01-N1641	K1110-05A3	12
09685-00001	U0100-01A0	24	135-70-13251	T1510-N01A0	19	201-00-N1270	U0100-01A0	3	201-01-N1680	B0200-01A0A	-
09690-B0315	U0100-01A0	7	135-70-13251	T1510-N02A0	19	201-00-N1280	U0100-01A0	31	201-01-N1680	B0200-01A0B	-
09690-P0315	U0100-01A0	1	135-70-13251	T1510-N02A1	19	201-00-N1510	U0100-01A0	30	201-01-N1681	B0200-01A0A	1
09690-P0710	U0100-01A0	-	135-70-13251	T1510-N03A0	14	201-00-N1530	U0100-01A0	9	201-01-N1681	B0200-01A0B	1
09690-P0710	U0100-01A0	1a	135-70-13251	T1710-01A0	17	201-01-71250	B0100-01A0B	-	201-01-N1730	M1150-01A3A	50
09693-00400	K0210-08A0	51	135-70-13290	T1510-01A4	14	201-01-71250	B0100-01A0B	-	201-01-N1740	B0100-01A0B	-
09693-00400	U0100-01A0	29	135-70-13290	T1510-N01A0	19	201-01-71250	B0100-01A0B	-	201-01-N1741	B0100-01A0B	12
09803-A0481	U0100-01A0	4	135-70-13290	T1510-N02A0	19	201-01-71260	B0100-01A0B	-	201-01-N1780	B0100-01A0B	25
09805-C0881	U0100-01A0	15	135-70-13290	T1510-N02A1	19	201-01-71720	B0100-01A0B	8	201-01-N1790	B0100-01A0B	22
09808-A0881	U0100-01A0	25	135-70-13290	T1510-N03A0	13	201-01-73310	B0600-01A0A	15	201-01-N1810	B0100-01A0B	29

Part No.	Fig. No.	Index	Part No.	Fig. No.	Index	Part No.	Fig. No.	Index	Part No.	Fig. No.	Index
201-01-N1870	B0100-01A0B	7	201-03-N1681	C0100-01A0A	6	201-04-N1240	D0200-02A3B	10	201-25-72110	N1110-01A0	2
201-01-N1960	B0100-01A0B	9	201-03-N1691	C0100-01A0A	4	201-04-N1250	D0200-01A3B	32	201-25-N1160	N1110-01A0	-
201-01-N1960	B0100-01A0B	-	201-03-N1711	C0100-01A0A	3	201-04-N1260	D0100-01A0	-	201-26-00120	N1210-51A0	-
201-01-N1960	B0100-01A0B	-	201-03-N1721	C0100-01A0A	-	201-04-N1320	D0100-01A0	-	201-26-62190	N1210-052A0	2
201-01-N1970	B0200-01A0A	9	201-03-N1722	C0100-01A0A	5	201-04-N1340	D0100-01A0	-	201-26-62320	N1210-51A0	6
201-01-N1970	B0200-01A0B	7	201-03-N1730	C0100-01A0A	-	201-04-N1341	D0100-01A0	1	201-26-62420	N1210-51A0	10
201-01-N1981	B0400-02A0	22	201-03-N1750	C0100-01A0A	8	201-04-N1360	B0400-02A0	12	201-26-71113	N1210-51A0	-
201-01-N1991	B0400-02A0	16	201-03-N1760	C0100-03A0B	1	201-06-71160	K1110-03A0A	14	201-26-71121	N1210-51A0	22
201-01-N2010	B0400-02A0	13	201-03-N1780	C0100-02A0B	8	201-06-71230	K1110-09B9	5a	201-26-71130	N1210-51A0	14
201-01-N2020	B0400-02A0	14	201-03-N1780	C0100-02B0	5	201-06-71270	K0210-06A0N	-	201-26-71140	N1210-51A0	2
201-01-N2030	B0400-02A0	1	201-03-N1780	C0100-02A0C	5	201-06-71280	T1110-01A0A	7	201-26-71150	N1210-51A0	30
201-01-N2040	B0400-02A0	9	201-03-N1810	C0310-01A0A	-	201-06-71280	T1110-03A0	7	201-26-71160	N1210-51A0	25
201-01-N2050	B0400-02A0	7	201-03-N1811	C0310-01A0A	1	201-06-71322	E0200-04A1B	29	201-26-71171	N1210-51A0	31
201-01-N2060	B0400-02A0	26	201-03-N1812	C0310-01A0A	1	201-06-71360	T1110-01A0A	11	201-26-71180	N1210-51A0	17
201-01-N2070	B0400-02A0	19	201-03-N1840	C0100-01A0A	-	201-06-71360	T1110-03A0	11	201-26-71190	N1210-51A0	32
201-01-N2080	B0200-01A0B	18	201-03-N1841	C0100-01A0A	-	201-06-71390	K1110-01A0	2	201-26-71210	N1210-51A0	4
201-01-N2120	B0200-01A0B	19	201-03-N1850	C0100-01A0A	-	201-06-71431	K1110-12A0B	-	201-26-71220	N1210-51A0	23
201-03-29160	E0200-03A1B	5	201-03-N1851	C0100-01A0A	-	201-06-71440	K1110-09B9	7	201-26-71230	N1210-51A0	15
201-03-29160	K1110-05A3	18	201-03-N1870	C0100-01A0A	7	201-06-71461	E0200-02A0	4	201-26-71240	N1210-51A0	21
201-03-N1110	C0100-01A0A	-	201-03-N1870	C0100-01A1	6	201-06-71811	K1110-01A0	12	201-26-71240	N1210-51A0	29
201-03-N1111	C0100-01A0A	-	201-03-N1870	C0100-01A0B	6	201-06-73113	K1110-12A0B	-	201-26-71250	N1210-51A0	7
201-03-N1112	C0100-01A0A	-	201-03-N1890	C0100-01A0A	28	201-06-73113	K1110-12A0B	-	201-26-71261	N1210-51A0	3
201-03-N1130	C0100-03A0B	-	201-03-N1890	C0100-01A1	18	201-06-73321	E0100-01A0B	14	201-26-71270	N1210-51A0	19
201-03-N1140	C0310-01A0A	-	201-03-N1890	C0100-01A0B	18	201-06-N1120	E0200-04A1B	38	201-26-71270	N1210-51A0	27
201-03-N1311	C0100-03A0B	12	201-03-N1910	C0100-01A0A	27	201-06-N1240	E0200-03A1B	-	201-26-71280	N1210-052A0	8
201-03-N1380	C0100-01A0A	-	201-03-N1910	C0100-01A1	17	201-06-N1241	E0200-03A1B	-	201-26-71290	N1210-51A0	18
201-03-N1420	M1150-01A3A	8	201-03-N1910	C0100-01A0B	17	201-06-N1242	E0200-03A1B	-	201-26-N1120	N1210-51A0	-
201-03-N1430	C0100-03A0B	13	201-03-N1920	C0100-01A0A	1	201-06-N1250	K1110-09B9	-	201-26-N1130	N1210-51A0	1
201-03-N1430	C0100-04A0	7	201-03-N1950	C0100-01A1	-	201-06-N1251	K1110-09B9	9	201-26-N1140	N1210-51A0	-
201-03-N1430	C0100-03A0C	7	201-03-N1950	C0100-01A0B	-	201-06-N1530	K1110-12A0B	-	201-26-N1150	N1210-01A0	4
201-03-N1440	M1150-01A3A	-	201-03-N1960	C0100-04A0	1	201-06-N1530	K1110-12A0B	-	201-27-61230	P1210-01A0	2
201-03-N1441	M1150-01A3A	12	201-03-N1961	C0100-03A0C	1	201-06-N1550	K1110-12A0B	31	201-27-D1110	P1210-01A0	-
201-03-N1450	C0100-03A0B	15	201-03-N1970	C0100-01A1	5	201-06-N1640	E0200-03A1B	-	201-30-00080	R0200-0N3A0	-
201-03-N1460	C0100-03A0B	14	201-03-N1970	C0100-01A0B	5	201-06-N1640	E0200-04A1B	-	201-30-00310	R0200-0N3A0	-
201-03-N1470	C0100-03A0B	16	201-03-N1980	C0100-01A1	1	201-06-N1641	E0200-03A1B	-	201-30-00313	R0200-0N3A0	1
201-03-N1470	C0100-04A0	8	201-03-N1980	C0100-01A0B	1	201-06-N1641	E0200-04A1B	47	201-30-52131	R0110-01A0A	3
201-03-N1470	C0100-03A0C	8	201-03-N2210	C0100-02A0B	7	201-06-N1650	E0100-01A0B	1	201-30-52141	R0110-01A0A	4
201-03-N1550	C0100-03A0B	2	201-03-N2210	C0100-02B0	4	201-06-N1670	E0200-04A1B	48	201-30-52160	R0110-01A0A	5
201-03-N1550	C0100-04A0	2	201-03-N2210	C0100-02A0C	4	201-06-N1680	K1110-12A0B	24	201-30-52180	R0110-01A0A	6
201-03-N1550	C0100-03A0C	2	201-03-N3720	C0100-04A0	9	201-06-N1710	H1831-01A0	2a	201-30-71310	R0120-01A0A	16
201-03-N1570	C0100-02A0B	-	201-03-N3720	C0100-03A0C	9	201-06-N1830	E0200-04A1B	53	201-30-73310	R0200-0N3A0	-
201-03-N1580	C0100-02A0B	2	201-04-N1110	D0200-01A3B	-	201-06-N1850	E0200-03A1B	-	201-30-73312	R0200-0N3A0	-
201-03-N1610	C0100-03A0B	-	201-04-N1150	D0200-01A3B	1	201-06-N1860	E0200-06A10	-	201-30-73320	R0200-0N3A0	-
201-03-N1630	C0100-02A0B	6	201-04-N1160	D0200-01A3B	-	201-06-N1910	E0200-03A1B	-	201-30-73390	R0200-0N3A0	5
201-03-N1630	C0100-02B0	3	201-04-N1180	D0100-01A0	-	201-06-N1911	E0200-03A1B	1	201-30-73440	R0200-0N3A0	-
201-03-N1631	C0100-02A0C	3	201-04-N1190	D0200-01A3B	-	201-06-N1932	E0200-06A10	1	201-30-74210	R1100-01A1A	3
201-03-N1640	C0100-03A0B	-	201-04-N1210	D0200-02A3B	-	201-06-N1970	K0210-16A0	-	201-30-74220	R1100-01A1A	-
201-03-N1650	C0100-03A0B	17	201-04-N1220	D0200-01A3B	22	201-06-N1980	K1110-016A0	4	201-30-74250	R1100-01A1A	8
201-03-N1661	C0100-01A0A	-	201-04-N1230	D0200-01A3B	23	201-25-72102	N1110-01A0	1	201-30-74G20	R1100-01A1A	2
201-03-N1662	C0100-01A0A	2	201-04-N1240	D0200-01A3B	9	201-25-72102	N1110-01A0	-	201-30-75111	R0120-01A0A	-

Part No.	Fig. No.	Index	Part No.	Fig. No.	Index	Part No.	Fig. No.	Index	Part No.	Fig. No.	Index
201-30-75132	R0120-01A0A	-	201-32-51140	R0500-02A0A	5	201-46-N2191	J1110-01A2	-	201-54-N1600	M1140-01A0	1
201-30-75141	R0120-01A0A	2	201-32-51211	R0500-01A0A	10	201-46-N2400	J1110-01A2	-	201-54-N1680	M1150-01A3A	-
201-30-75310	R0120-01A0A	12	201-32-51240	R0500-02A0A	10	201-54-21860	K1120-01A0	1	201-54-N1690	C0100-02A0B	-
201-30-75320	R0120-01A0A	1	201-32-71110	R0500-01A0A	9	201-54-71472	M1140-01A0	-	201-54-N1710	C0100-02A0B	-
201-30-76121	R0200-0N3A0	3	201-32-71110	R0500-02A0A	9	201-54-71490	M1810-01A1A	-	201-54-N1730	M1150-01A3A	18
201-30-76140	R0200-0N3A0	2	201-32-71150	R0500-01A0A	6	201-54-71661	M1310-01A0	1	201-54-N1810	K1110-02A0A	-
201-30-N1320	R1100-01A1A	-	201-32-71150	R0500-02A0A	6	201-54-71781	M1810-01A1A	-	201-54-N1820	M1150-01A3A	2
201-30-N1410	K1110-13A0A	1	201-32-71190	R0500-01A0A	8	201-54-71792	M1810-01A1A	-	201-54-N1830	M1150-01A3A	-
201-30-N1420	R1200-01A0	-	201-32-71190	R0500-02A0A	8	201-54-72123	M1220-01A0	1	201-54-N1831	M1150-01A3A	3
201-30-N1730	R1200-01A0	1	201-32-N1270	R0500-01A0A	-	201-54-72210	M1140-01A0	-	201-54-N1840	M1150-01A3A	4
201-30-N1880	R0200-0N2A0	1	201-32-N1280	R0500-02A0A	-	201-54-72220	M1140-01A0	-	201-54-N1850	M1150-01A3A	5
201-30-N1890	R0200-0N3A0	4	201-32-N1281	R0500-02A0A	-	201-54-72321	M1810-01A1A	8	201-54-N1860	M1150-01A3A	6
201-30-N1890	R0300-02A0A	1	201-43-N1110	K1110-03A0A	-	201-54-72340	M1810-01A1A	-	201-54-N1880	M1110-03A0	1
201-30-N1930	R0200-0N2A0	-	201-43-N1120	K1110-05A3	-	201-54-72470	K0210-01A0	4	201-54-N1970	K1110-01A0	-
201-30-N1940	R0200-0N2A0	2	201-43-N1130	K1110-02A0A	-	201-54-73142	K1110-01A0	6	201-54-N1971	K1110-01A0	-
201-30-N1950	R0200-0N2A0	3	201-43-N1170	K1110-01A0	13	201-54-73160	K0700-01A6	1	201-54-N1980	M1150-01A3A	27
201-30-N1960	R0200-0N2A0	4	201-43-N1170	K1110-13A0A	10	201-54-73190	K1110-09B9	16	201-54-N1990	M1150-01A3A	7
201-30-N1970	R0200-0N2A0	5	201-43-N1180	K1110-02A0A	7	201-54-73213	K1110-01A0	-	201-54-N2010	M1150-01A3A	-
201-30-N1980	R0200-0N2A0	6	201-43-N1190	K1110-05A3	6	201-54-73281	K1110-09B9	1	201-54-N2021	M1110-02A1	8
201-30-N2010	R0200-0N2A0	8	201-46-71170	J1110-01A2	7	201-54-73291	K1110-09B9	14	201-54-N2021	M1110-04A0	8
201-30-N2020	R0200-0N3A0	-	201-46-71220	J1110-01A2	10	201-54-73392	K1110-11A0	1	201-54-N2050	C0100-02A0B	-
201-30-N2020	R0300-02A0A	-	201-46-73190	J1110-01A2	12	201-54-73410	K1110-09B9	-	201-54-N2060	C0100-02A0B	-
201-30-N2030	R0300-02A0A	-	201-46-73250	J1110-01A2	11	201-54-73440	K1110-03A0A	15	201-54-N2070	M1140-01A0	3
201-30-N2040	R0300-02A0A	3	201-46-N0010	J1110-01A2	-	201-54-73550	K1110-01A0	3A	201-54-N2080	M1140-01A0	6
201-30-N2050	R0300-02A0A	4	201-46-N0011	J1110-01A2	1	201-54-73562	K1110-02A0A	10	201-54-N2090	M1150-01A3A	17
201-30-N2070	R0300-02A0A	-	201-46-N1170	J1110-01A2	-	201-54-75141	K1110-01A0	-	201-54-N2110	M1150-01A3A	21
201-30-N2080	R0300-02A0A	7	201-46-N1181	M1510-01A0A	-	201-54-75290	M1110-04A0	14	201-54-N2120	C0100-02A0B	-
201-30-N2090	R0300-02A0A	8a	201-46-N1420	M1510-01A0A	-	201-54-75420	M1810-01A1A	-	201-54-N2130	C0100-02A0B	9
201-30-N2110	R0300-02A0A	9	201-46-N1421	M1510-01A0A	1	201-54-75630	K1110-01A0	32	201-54-N2130	C0100-02A0B	-
201-30-N2120	R0300-02A0A	10	201-46-N1610	M1520-01A0	3	201-54-75640	K1110-01A0	33	201-54-N2130	C0100-02B0	6
201-30-N2140	R0300-02A0A	12	201-46-N1640	M1510-01A0A	2	201-54-75640	K1110-13A0A	11	201-54-N2130	C0100-02A0C	6
201-30-N2150	R0300-02A0A	2	201-46-N1640	M1510-02A0	2	201-54-75710	M1810-01A1A	-	201-54-N2130	C0100-03A0B	20
201-30-N2160	R0300-02A0A	6	201-46-N1650	M1510-01A0A	6	201-54-N1110	K0210-07A0	12	201-54-N2130	C0100-03A0B	-
201-30-N2170	R0300-02A0A	8	201-46-N1650	M1510-02A0	6	201-54-N1120	C0100-02A0B	3	201-54-N2130	C0100-03A0B	21
201-30-N2180	T1710-01A0	7	201-46-N1660	M1510-01A0A	4	201-54-N1120	K0210-07A0	7	201-54-N2130	C0100-04A0	13
201-30-N2190	R0300-03A0	10	201-46-N1660	M1510-02A0	4	201-54-N1320	K0210-07A0	1	201-54-N2130	C0100-03A0C	13
201-30-N2290	R0300-02A0A	-	201-46-N1670	M1510-01A0A	7	201-54-N1330	K0210-07A0	3	201-54-N2130	M1110-02A1	13
201-32-00300	R0500-01A0A	-	201-46-N1670	M1510-02A0	7	201-54-N1340	K0210-07A0	11	201-54-N2130	M1110-04A0	13
201-32-00300	R0500-02A0A	-	201-46-N1680	M1510-01A0A	3	201-54-N1380	M1130-01A0	1	201-54-N2130	M1140-01A0	16
201-32-11221	R0500-01A0A	11	201-46-N1680	M1510-02A0	3	201-54-N1390	M1130-01A0	2	201-54-N2130	M1150-01A3A	9
201-32-11221	R0500-02A0A	-	201-46-N1690	M1510-01A0A	8	201-54-N1420	K0310-01A1	-	201-54-N2130	M1150-01A3A	13
201-32-11281	R0500-01A0A	7	201-46-N1690	M1510-02A0	8	201-54-N1460	M1150-01A3A	-	201-54-N2130	M1150-01A3A	45
201-32-11281	R0500-02A0A	-	201-46-N1710	M1510-01A0A	5	201-54-N1470	M1150-01A3A	-	201-54-N2170	M1140-01A0	9
201-32-51120	R0500-01A0A	-	201-46-N1710	M1510-02A0	5	201-54-N1480	M1150-01A3A	31	201-54-N2180	M1150-01A3A	-
201-32-51120	R0500-02A0A	-	201-46-N1751	M1510-02A0	1	201-54-N1490	M1150-01A3A	30	201-54-N2190	C0100-02A0B	-
201-32-51122	R0500-02A0A	-	201-46-N2000	M1510-02A0	-	201-54-N1510	M1150-01A3A	-	201-54-N2210	C0100-02A0B	4
201-32-51130	R0500-01A0A	2	201-46-N2020	J1110-01A2	-	201-54-N1520	M1150-01A3A	-	201-54-N2210	C0100-02A0B	10
201-32-51130	R0500-02A0A	-	201-46-N2050	M1510-01A0A	9	201-54-N1540	M1110-02A1	-	201-54-N2210	C0100-02A0B	-
201-32-51132	R0500-02A0A	2	201-46-N2050	M1510-02A0	9	201-54-N1540	M1110-04A0	-	201-54-N2210	C0100-02B0	7
201-32-51140	R0500-01A0A	5	201-46-N2190	J1110-01A2	-	201-54-N1550	M1150-01A3A	-	201-54-N2210	C0100-02A0C	7

Part No.	Fig. No.	Index	Part No.	Fig. No.	Index	Part No.	Fig. No.	Index	Part No.	Fig. No.	Index
201-54-N2210	C0100-03A0B	-	201-54-N3330	M1110-03A0	-	201-60-N1180	H1831-01A0	-	201-62-N1680	T1110-01A0A	33
201-54-N2210	C0100-04A0	14	201-54-N3332	M1110-03A0	9	201-60-N1200	H0110-01A1A	1	201-62-N1690	T1110-01A0A	33a
201-54-N2210	C0100-03A0C	14	201-54-N3340	M1110-03A0	12	201-60-N1240	H1831-01A0	1b	201-62-N1710	T1210-01A0	-
201-54-N2210	M1140-01A0	17	201-54-N3360	M1110-02A1	-	201-60-N1240	H1831-01A0	-	201-62-N1710	T1210-01B0	-
201-54-N2210	M1150-01A3A	9A	201-54-N3361	M1110-02A1	-	201-60-N1250	H1831-01A0	1c	201-62-N1730	T1110-01A0A	32
201-54-N2210	M1150-01A3A	46	201-54-N3510	M1110-03A0	5	201-60-N1250	H1831-01A0	1d	201-62-N1740	T1110-01A0A	32a
201-54-N2250	M1150-01A3A	39	201-54-N3530	K1110-01A0	-	201-60-N1260	H1831-01A0	-	201-62-N1750	H1340-01A0A	-
201-54-N2260	M1140-01A0	4	201-54-N3540	K1110-01A0	-	201-60-N1260	H1831-01A0	-	201-62-N1751	H1340-01A0A	2
201-54-N2270	M1140-01A0	5	201-54-N3560	M1140-01A0	-	201-60-N1270	H0110-01A1A	34	201-62-N1760	H1340-01A0A	-
201-54-N2280	M1140-01A0	2	201-54-N3570	M1140-01A0	14	201-62-65540	H1831-01A0	-	201-62-N1761	H1340-01A0A	1
201-54-N2392	M1110-04A0	-	201-54-N3580	M1110-02A1	11	201-62-65541	H1831-01A0	20	201-62-N1770	H1310-01A0A	1
201-54-N2412	M1110-04A0	1	201-54-N3580	M1110-04A0	11	201-62-66140	P1120-01A1A	8	201-62-N1790	P1240-01A0	3
201-54-N2490	M1150-01A3A	42	201-54-N3590	M1140-01A0	15	201-62-71110	H0312-01A0	-	201-62-N1960	K1110-07A0A	1
201-54-N2540	C0100-02A0B	-	201-54-N3610	K1110-01A0	3	201-62-71111	H0312-01A0	-	201-62-N2020	K1110-13A0A	-
201-54-N2541	C0100-02A0B	5	201-54-N3631	K1110-016A0	1	201-62-71780	H1220-01A0A	10	201-62-N2030	K1110-13A0A	-
201-54-N2550	C0100-02A0B	-	201-54-N3660	M1810-01A1A	1	201-62-71810	H1310-01A0A	4	201-62-N2050	H1210-01A0A	3
201-54-N2610	M1150-01A3A	47	201-54-N3670	M1810-01A1A	22	201-62-71820	H1310-01A0A	3	201-62-N2050	H1210-01A0A	3a
201-54-N2620	M1150-01A3A	48	201-54-N3690	C0100-02B0	1	201-62-72610	Y1662-23A0	2	201-62-N2060	H1220-01A0A	1
201-54-N2640	M1150-01A3A	18	201-54-N3691	C0100-02A0C	1	201-62-72830	H1220-01A0A	18	201-62-N2070	H1220-01A0A	2
201-54-N2650	M1150-01A3A	14	201-54-N3710	C0100-02B0	2	201-62-72840	H1220-01A0A	9	201-62-N2080	H1220-01A0A	2a
201-54-N2650	M1150-01A3A	-	201-54-N3711	C0100-02A0C	2	201-62-72880	H1210-01A0A	8	201-62-N2080	H1220-01A0A	3
201-54-N2651	M1150-01A3A	-	201-54-N3830	M1220-02A0	7	201-62-72890	H1210-01A0A	9	201-62-N2090	K1110-13A0A	-
201-54-N2670	C0100-02A0B	-	201-54-N3841	K1110-01A0	9	201-62-74160	H1831-01A0	-	201-62-N2110	H0340-01A0A	2
201-54-N2680	E0100-N1A0	-	201-54-N3841	K1110-016A0	2	201-62-74212	H0311-01A0A	-	201-62-N2120	H1840-01A0A	10
201-54-N2690	E0100-N1A0	9	201-54-N3850	K1110-016A0	-	201-62-74213	H0311-01A0A	6	201-62-N2130	H1840-01A0A	11
201-54-N2710	E0100-N1A0	4	201-54-N4260	K1110-01A0	37	201-62-74240	H0320-01A0A	11	201-62-N2140	H0320-01A0A	8
201-54-N2730	M1150-01A3A	-	201-54-N4270	K1110-01A0	36	201-62-74250	H0120-02A0	12	201-62-N2150	H1210-01A0A	-
201-54-N2760	M1150-01A3A	-	201-57-N1120	K0110-01A1	-	201-62-75320	H1832-01A0A	31	201-62-N2160	H1832-01A0A	11
201-54-N2950	M1150-01A3A	-	201-60-12171	H0110-01A1A	8	201-62-75740	H1832-01A0A	14	201-62-N2170	H0320-01A0A	-
201-54-N2951	M1150-01A3A	1	201-60-12190	H0110-01A1A	-	201-62-76211	R1100-01A1A	13	201-62-N2171	H0320-01A0A	1
201-54-N2990	C0100-02A0B	-	201-60-62130	H0110-01A1A	12	201-62-77130	H1220-01A0A	12	201-62-N2180	H0320-01A0A	-
201-54-N2991	C0100-02A0B	-	201-60-62150	H0110-01A1A	15	201-62-N1120	K1110-07A0A	29	201-62-N2181	H0320-01A0A	2
201-54-N2992	C0100-02A0B	1	201-60-65210	H0110-01A1A	28	201-62-N1320	C0100-01A0A	11	201-62-N2190	H0330-01A0A	-
201-54-N3010	M1150-01A3A	49	201-60-65220	H0110-01A1A	29	201-62-N1320	H0320-01A0A	5	201-62-N2210	H0340-01A0A	-
201-54-N3020	M1810-01A1A	14	201-60-65240	H0110-01A1A	2	201-62-N1560	H1210-01A0A	-	201-62-N2211	H0340-01A0A	1
201-54-N3050	M1810-01A1A	-	201-60-65320	H1831-01A0	2	201-62-N1561	H1210-01A0A	1	201-62-N2220	H0340-01A0A	-
201-54-N3060	M1810-01A1A	18	201-60-71180	H0110-01A1A	14	201-62-N1570	H1210-01A0A	5	201-62-N2221	H0340-01A0A	16
201-54-N3070	M1810-01A1A	11	201-60-72100	H1831-01A0	-	201-62-N1580	H1210-01A0A	-	201-62-N2230	H0340-01A0A	18
201-54-N3140	K1110-01A0	14	201-60-72101	H1831-01A0	1	201-62-N1590	H1210-01A0A	2	201-62-N2240	H0340-01A0A	-
201-54-N3160	K1110-02A0A	1	201-60-72110	H1831-01A0	13	201-62-N1620	H1220-01A0A	-	201-62-N2250	H1832-01A0A	-
201-54-N3180	M1810-01A1A	-	201-60-72130	H1831-01A0	3	201-62-N1621	H1220-01A0A	7	201-62-N2251	H1832-01A0A	-
201-54-N3190	K1110-01A0	1	201-60-72140	H1831-01A0	4	201-62-N1630	T1110-01A0A	-	201-62-N2260	H1832-01A0A	-
201-54-N3190	K1110-016A0	-	201-60-72150	H1831-01A0	5	201-62-N1630	T1110-03A0	-	201-62-N2261	H1832-01A0A	-
201-54-N3230	K0310-01A1	1	201-60-73220	H0110-01A1A	27	201-62-N1640	H1220-01A0A	-	201-62-N2270	H1832-01A0A	-
201-54-N3260	E0100-01A0B	4	201-60-73231	H0110-01A1A	-	201-62-N1641	H1220-01A0A	6a	201-62-N2271	H1832-01A0A	22
201-54-N3271	M1220-02A0	1	201-60-73240	H0110-01A1A	22	201-62-N1650	T1110-01A0A	30	201-62-N2280	H1832-01A0A	-
201-54-N3280	C0100-03A0B	3	201-60-73261	H0110-01A1A	-	201-62-N1660	T1110-01A0A	-	201-62-N2281	H1832-01A0A	28
201-54-N3280	C0100-04A0	3	201-60-81301	Y-1651-01A1	-	201-62-N1660	T1110-03A0	-	201-62-N2290	H1840-01A0A	-
201-54-N3280	C0100-03A0C	3	201-60-N1140	H0110-01A1A	-	201-62-N1670	H1220-01A0A	-	201-62-N2291	H1840-01A0A	-
201-54-N3300	M1110-02A1	1	201-60-N1180	H1831-01A0	1a	201-62-N1671	H1220-01A0A	6	201-62-N2310	H1840-01A0A	-

Part No.	Fig. No.	Index	Part No.	Fig. No.	Index	Part No.	Fig. No.	Index	Part No.	Fig. No.	Index
201-62-N2311	H1840-01A0A	9	201-62-N2860	H1840-01A0A	-	201-62-N3760	H0312-01A0	5	201-70-71230	T1110-01A0A	4
201-62-N2320	K1110-08A3	1	201-62-N2860	H1840-01A0A	-	201-62-N3770	P1120-01A1A	3c	201-70-71230	T1110-03A0	4
201-62-N2330	K1110-08A3	-	201-62-N2860	H1840-01A0A	-	201-62-N3770	P1120-01A1A	11b	201-70-71240	J1310-01A0	1
201-62-N2340	K1110-08A3	7	201-62-N2860	H1840-01A0A	-	201-63-N1110	Y1620-01A0A	-	201-70-71250	T1110-01A0A	23
201-62-N2350	K1110-08A3	8	201-62-N2870	H1832-01A0A	-	201-63-N1120	Y1620-01A0A	-	201-70-71250	T1110-03A0	23
201-62-N2360	K1110-13A0A	-	201-62-N2871	H1832-01A0A	12	201-63-N1130	Y1620-11A0A	-	201-70-71270	T1110-01A0A	18
201-62-N2370	K1110-13A0A	-	201-62-N2880	K1110-13A0A	-	201-63-N1140	Y1620-41A0A	-	201-70-71270	T1110-03A0	18
201-62-N2371	K1110-13A0A	19	201-62-N2890	K1110-13A0A	-	201-63-N1230	Y1620-41A0A	-	201-70-71290	J1310-01A0	6
201-62-N2380	P1120-01A1A	-	201-62-N2891	K1110-13A0A	20	201-63-N1240	T1120-01A0	2	201-70-71380	T1110-01A0A	27
201-62-N2381	P1120-01A1A	-	201-62-N2990	K1110-08A3	3	201-63-N1240	Y1620-01A0A	24	201-70-71380	T1110-03A0	27
201-62-N2390	P1120-01A1A	-	201-62-N2990	K1110-08A3	4	201-63-N1250	T1120-01A0	3	201-70-71610	T1110-01A0A	13
201-62-N2391	P1120-01A1A	-	201-62-N3010	K1110-08A3	5	201-63-N1250	Y1620-01A0A	23	201-70-71610	T1110-03A0	13
201-62-N2410	K1110-08A3	-	201-62-N3010	K1110-08A3	6	201-63-N1260	T1140-01A0	-	201-70-71XE1	T1110-01A0A	-
201-62-N2420	K1110-13A0A	-	201-62-N3040	H1840-01A0A	-	201-63-N1260	T1140-03A0	-	201-70-71XE1	T1110-03A0	-
201-62-N2430	K1110-07A0A	-	201-62-N3040	H1840-01A0A	-	201-63-N1260	Y1620-11A0A	-	201-70-72220	T1210-01A0	2
201-62-N2431	K1110-07A0A	-	201-62-N3040	H1840-01A0A	-	201-63-N1260	Y1620-13A0	-	201-70-72220	T1210-01B0	2
201-62-N2440	K1110-07A0A	-	201-62-N3060	H1832-01A0A	-	201-63-N1261	T1140-01A0	2	201-70-72230	T1210-01A0	6
201-62-N2441	K1110-07A0A	-	201-62-N3061	H1832-01A0A	-	201-63-N1261	T1140-03A0	2	201-70-72230	T1210-01B0	6
201-62-N2450	H0340-01A0A	22	201-62-N3070	H1832-01A0A	-	201-63-N1261	Y1620-11A0A	27	201-70-72241	T1210-01A0	11
201-62-N2460	H1832-01A0A	10	201-62-N3071	H1832-01A0A	23	201-63-N1261	Y1620-13A0	27	201-70-72241	T1210-01B0	11
201-62-N2480	H1840-01A0A	22	201-62-N3080	P1120-01A1A	-	201-63-N1270	T1220-01A0	2	201-70-74171	T1510-01A4	-
201-62-N2490	H1840-01A0A	-	201-62-N3081	P1120-01A1A	3a	201-63-N1270	Y1620-41A0A	22	201-70-74181	T1510-01A4	-
201-62-N2510	P1120-01A1A	12	201-62-N3090	P1120-01A1A	-	201-63-N1280	T1220-01A0	3	201-70-74220	T1510-N01A0	14
201-62-N2530	H0330-01A0A	3	201-62-N3090	P1120-01A1A	-	201-63-N1280	Y1620-41A0A	21	201-70-74220	T1510-N02A0	14
201-62-N2540	H0330-01A0A	5	201-62-N3091	P1120-01A1A	3	201-63-N1290	T1140-01A0	-	201-70-74220	T1510-N02A1	14
201-62-N2570	T1110-01A0A	31	201-62-N3091	P1120-01A1A	11a	201-63-N1291	T1140-01A0	1	201-70-74220	T1510-N03A0	8
201-62-N2680	H0340-01A0A	9	201-62-N3110	P1120-01A1A	-	201-63-N1310	T1120-01A0	-	201-70-74230	T1230-01A1	25
201-62-N2690	H0340-01A0A	-	201-62-N3111	P1120-01A1A	11	201-63-N1311	T1120-01A0	1	201-70-74230	T1230-01A1	28
201-62-N2691	H0340-01A0A	8	201-62-N3210	H1833-02A0A	1	201-63-N1320	T1220-01A0	-	201-70-74240	T1230-01A1	29
201-62-N2710	H0340-01A0A	-	201-62-N3220	H0320-01A0A	3	201-63-N1321	T1220-01A0	-	201-70-74254	T1230-01A1	30
201-62-N2711	H0340-01A0A	6	201-62-N3240	K1110-15A0	-	201-63-N1370	Y1620-13A0	23a	201-70-74260	T1230-01A1	26
201-62-N2720	H0330-01A0A	-	201-62-N3241	K1110-15A0	2	201-63-N1380	T1140-03A0	1	201-70-74260	T1230-01A1	29
201-62-N2721	H0330-01A0A	2	201-62-N3270	H0340-01A0A	24	201-70-00830	T1230-01A1	-	201-70-74274	T1230-01A1	27
201-62-N2740	K1110-07A0A	-	201-62-N3290	H1210-01A0A	6	201-70-00840	T1230-01A1	-	201-70-74274	T1230-01A1	30
201-62-N2741	K1110-07A0A	19	201-62-N3310	H1831-01A0	21	201-70-22141	T1210-01A0	4	201-70-N0010	T1110-01A0A	1
201-62-N2750	K1110-07A0A	-	201-62-N3320	H1270-03A0	6	201-70-22141	T1210-01B0	4	201-70-N0020	T1210-01A0	1
201-62-N2750	K1110-07A0A	-	201-62-N3330	H1840-01A0A	24	201-70-22150	T1210-01A0	15	201-70-N0030	T1230-01A1	-
201-62-N2751	K1110-07A0A	16	201-62-N3330	K1110-15A0	11A	201-70-22150	T1210-01B0	15	201-70-N0040	T1230-01A1	-
201-62-N2751	K1110-07A0A	18	201-62-N3340	H1840-01A0A	25	201-70-22150	T1230-01A1	18	201-70-N0050	T1230-01A1	-
201-62-N2760	K1110-07A0A	-	201-62-N3350	T1110-03A0	30	201-70-22150	T1510-01A4	14	201-70-N0060	T1230-01A1	-
201-62-N2761	K1110-07A0A	17	201-62-N3360	T1110-03A0	31	201-70-22150	T1510-N01A0	19	201-70-N0070	T1510-N02A0	1
201-62-N2770	K1110-07A0A	20	201-62-N3370	T1110-03A0	32	201-70-22150	T1510-N02A0	19	201-70-N0080	T1510-N01A0	1
201-62-N2780	K1110-07A0A	15	201-62-N3380	T1110-03A0	32a	201-70-22150	T1510-N02A1	19	201-70-N0090	T1510-01A4	1
201-62-N2790	K1110-07A0A	4	201-62-N3390	T1110-03A0	33	201-70-22150	T1510-N03A0	14a	201-70-N0100	T1210-04A0	-
201-62-N2820	K1110-07A0A	5	201-62-N3410	T1110-03A0	33a	201-70-22150	T1710-01A0	10	201-70-N0110	T1110-03A0	1
201-62-N2830	K1110-07A0A	-	201-62-N3450	T1110-03A0	29	201-70-64170	T1230-01A1	-	201-70-N0120	T1510-N02A1	1
201-62-N2830	K1110-07A0A	-	201-62-N3460	T1110-03A0	28	201-70-64180	T1230-01A1	-	201-70-N0130	T1510-N03A0	-
201-62-N2830	K1110-07A0A	6	201-62-N3740	T1210-01A0	5	201-70-64220	T1230-01A1	21	201-70-N1410	T1510-N01A0	-
201-62-N2840	H1840-01A0A	-	201-62-N3740	T1210-01B0	5	201-70-64270	T1230-01A1	3	201-70-N1500	T1110-01A0A	-
201-62-N2850	H1832-01A0A	-	201-62-N3750	H0311-01A0A	1	201-70-64270	T1230-01A1	10	201-70-N1570	T1510-N01A0	-

Part No.	Fig. No.	Index	Part No.	Fig. No.	Index	Part No.	Fig. No.	Index	Part No.	Fig. No.	Index
201-70-N1700	T1110-03A0	-	201-926-N120	T1510-01A4	2	201-973-N330	H0320-01A0A	9	203-30-53141	R0300-03A0	-
201-70-N1720	T1510-N01A0	2	201-926-N130	T1510-01A4	3	201-973-N330	H0320-02A0	1	203-30-53150	R0300-03A0	4
201-70-N1800	T1210-01A0	-	201-934-N110	T1510-N03A0	1	201-973-N340	H1270-01A0	5	203-30-53160	R0300-03A0	5
201-70-N1810	T1210-01A0	-	201-934-N150	T1510-N03A0	2	201-973-N350	H1270-02A0	7	203-30-53310	R0300-03A0	1
201-70-N1850	T1510-01A4	9	201-934-N160	T1510-N03A0	3	201-973-N360	H1270-02A0	9	203-30-53340	R0300-03A0	3
201-70-N1850	T1510-N01A0	9	201-934-N170	T1510-N03A0	4	201-973-N370	T1210-02A0	35	203-43-44360	K1110-05A3	2
201-70-N1850	T1510-N02A0	9	201-943-N010	T1210-01B0	1	201-973-N390	H1270-06A0	13	203-43-44360	K1110-13A0A	2
201-70-N1850	T1510-N02A1	9	201-943-N220	T1210-01B0	-	201-973-N420	H1270-02A0	17	203-43-51620	K1110-04A0	5
201-70-N1860	T1510-01A4	10	201-943-N230	T1210-01B0	19	201-973-N440	H1270-02A0	18	203-43-61310	K1110-04A0	-
201-70-N1860	T1510-N01A0	10	201-954-N110	K0230-01A0	2	201-973-N451	T1110-04A0	4	203-43-61310	K1110-04A0	-
201-70-N1860	T1510-N02A0	10	201-972-7110	B0400-02A0	25	201-973-N461	T1110-04A0	1	203-43-61370	K1110-05A3	3
201-70-N1860	T1510-N02A1	10	201-972-7180	K1110-06A0	1	201-973-N470	T1110-04A0	3	203-43-61520	K1110-13A0A	5
201-70-N1870	T1110-01A0A	17	201-973-6730	T1110-02A0	12	201-973-N480	T1110-04A0	2	203-46-31181	J1110-01A2	4
201-70-N1870	T1110-03A0	17	201-973-6730	T1110-04A0	12	201-973-N520	T1110-02A0	15	203-46-31181	R1100-01A1A	10
201-70-N1880	T1110-01A0A	17a	201-973-6740	T1110-02A0	11	201-973-N520	T1110-04A0	15	203-46-41130	T1110-01A0A	3
201-70-N1880	T1110-03A0	17a	201-973-6740	T1110-04A0	11	201-973-N550	H1270-01A0	1	203-46-41130	T1110-03A0	3
201-70-N1960	T1230-01A1	15	201-973-6810	T1210-02A0	38	201-973-N560	H1270-03A0	1	203-46-56160	J1110-01A2	3
201-70-N2000	T1510-N01A0	7	201-973-7160	H1270-02A0	1	201-973-N570	T1210-02A0	1	203-46-56160	R1100-01A1A	9
201-70-N2000	T1510-N02A0	7	201-973-7270	H1270-02A0	4	201-973-N580	H1270-03A0	2	203-46-56270	J1310-01A0	2
201-70-N2000	T1510-N02A1	7	201-973-7380	T1110-02A0	2	201-98-N1160	V0300-01A0	2	203-46-56270	J1310-01A0	7
201-70-N2000	T1510-N03A0	7	201-973-7390	T1210-02A0	8	201-98-N1170	V0300-01A0	8	203-46-56270	T1110-01A0A	14
201-70-N2430	T1230-01A1	16	201-973-7411	T1110-02A0	-	202 329 15 Z	K1110-05A3	-	203-46-56270	T1110-01A0A	19
201-910-0020	T1710-01A0	-	201-973-7411	T1110-04A0	-	202 329 15 Z	M1420-01A0	-	203-46-56270	T1110-03A0	14
201-910-7180	T1710-01A0	2	201-973-7430	T1110-02A0	19	202 329 53 Q	H0120-02A0	3	203-46-56270	T1110-03A0	19
201-910-7190	T1710-01A0	-	201-973-7430	T1110-04A0	19	202-70-48460	J1310-01A0	-	203-46-56270	T1710-01A0	13
201-910-7481	M1810-01A1A	-	201-973-7480	H1270-02A0	-	202-973-6321	T1210-04A0	2	203-54-21110	K1120-01A0	2
201-910-7630	K1110-13A0A	-	201-973-7540	H1270-01A0	2	202-973-6321	T1210-03A0	2	203-54-32260	K1110-01A0	28
201-910-N010	R1100-01A1A	-	201-973-7620	H1270-02A0	-	202-973-6331	T1210-04A0	3	203-54-56970	K1110-04A0	9
201-910-N011	R1100-01A1A	1	201-973-7630	H1270-02A0	19	202-973-6331	T1210-03A0	3	203-54-56970	M1130-01A0	4
201-910-N020	T1710-01A0	1	201-973-N110	H1270-01A0	10	203-00-31120	U0100-01A0	12	203-54-56970	M1140-01A0	8
201-910-N120	R1100-01A1A	-	201-973-N130	H1270-02A0	-	203-00-56290	U0100-01A0	22	203-54-56970	M1810-01A1A	4
201-910-N140	R1100-01A1A	-	201-973-N140	H1270-03A0	8	203-00-N1110	U0100-01A0	37	203-54-56970	M1810-01A1A	16
201-910-N141	R1100-01A1A	-	201-973-N150	T1110-02A0	1	203-00-N1120	U0100-01A0	13	203-54-56970	M1810-01A1A	21
201-910-N150	M1810-01A1A	-	201-973-N160	T1110-02A0	3	203-03-61640	C0100-01A0A	15	203-54-64130	K1120-01A0	4
201-910-N160	H1290-01A0A	7	201-973-N170	T1110-02A0	4	203-03-61640	C0100-01A1	7	203-54-64140	K1120-01A0	5
201-910-N170	P1240-01A0	1	201-973-N180	T1210-02A0	7	203-03-61640	C0100-01A0B	7	203-54-67991	M1420-01A0	2
201-910-N180	P1240-01A0	2	201-973-N200	T1210-03A0	1	203-04-31130	D0200-01A3B	8	203-54-N2100	K0210-08A0	4
201-910-N200	R1100-02A0	1	201-973-N210	H1270-01A0	-	203-06-56230	K1110-12A0B	1	203-57-N1122	K0110-01A1	1
201-910-N210	M1810-01A1A	25	201-973-N220	H1270-03A0	-	203-06-56410	T1110-01A0A	8	203-60-31100	H0110-01A1A	3
201-920-N100	T1510-N02A0	-	201-973-N230	H1270-03A0	-	203-06-56410	T1110-03A0	8	203-60-62161	H1831-01A0	6
201-920-N110	T1510-N02A0	-	201-973-N240	H1270-03A0	11	203-06-71380	E0100-01A0B	11	203-60-62190	H1831-01A0	12
201-920-N180	T1510-N02A0	5	201-973-N250	H1270-02A0	11	203-06-N1130	E0100-01A0B	-	203-60-62190	H1831-01A0	19
201-920-N190	T1510-N02A0	4	201-973-N260	K1110-15A0	-	203-06-N1360	K1110-016A0	3	203-62-32440	H1220-01A0A	8
201-920-N240	T1510-N02A0	-	201-973-N261	K1110-15A0	1	203-06-N1421	K0210-16A0	1	203-62-41150	P1120-01A1A	-
201-920-N241	T1510-N02A0	2	201-973-N280	K1110-15A0	-	203-06-N1421	K0210-17A0	10	203-62-41150	P1120-01A1A	-
201-920-N270	T1510-N02A1	4	201-973-N281	K1110-15A0	4	203-26-61350	N1210-052A0	7	203-62-42770	H0120-02A0	6
201-920-N280	T1510-N02A1	5	201-973-N290	K1110-15A0	-	203-30-00231	R0300-03A0	-	203-62-43380	T1210-02A0	16
201-920-N311	T1510-N02A1	2	201-973-N291	K1110-15A0	3	203-30-16330	R0300-03A0	8	203-62-43390	T1210-02A0	17
201-920-N450	T1510-N02A1	-	201-973-N310	T1210-02A0	-	203-30-53111	R0300-03A0	-	203-62-N2410	K1110-14B0	30
201-926-N110	T1510-01A4	-	201-973-N320	T1210-02A0	2	203-30-53120	R0300-03A0	2	203-70-43212	T1510-01A4	7

Part No.	Fig. No.	Index	Part No.	Fig. No.	Index	Part No.	Fig. No.	Index	Part No.	Fig. No.	Index
203-70-43220	T1510-01A4	8	207-57-N1130	K0110-01A1	-	20S-62-N2840	H1832-01A0A	-	20X-70-14151	T1510-N01A0	3
203-70-44430	J1310-01A0	-	207-57-N1170	K0110-01A1	-	20S-71-11250	J1110-01A2	-	20X-70-14151	T1510-N02A0	3
203-70-53380	T1110-01A0A	34	207-57-N1171	K0110-01A1	-	20T-06-71112	K1110-10A0	1	20X-70-14151	T1510-N02A1	3
203-70-53380	T1110-03A0	34	207-57-N1172	K0110-01A1	-	20T-06-71431	K1110-11A0	8	20X-70-14151	T1510-N03A0	5
203-70-53390	T1110-01A0A	35	207-57-N1180	K0110-02A1	1	20T-06-71520	K1110-03A0A	12	20X-70-22140	T1210-01A0	3
203-70-53390	T1110-03A0	35	207-57-N1190	K0110-02A1	2	20T-06-71770	K1110-01A0	24	20X-70-22140	T1210-01B0	3
203-937-7890	H1220-01A0A	16	207-57-N1210	K0110-02A1	3	20T-06-71781	K1110-01A0	27	20X-70-23150	T1510-01A4	4
203-973-5660	T1110-02A0	10	207-57-N1220	K0110-02A1	4	20T-06-81230	E0200-03A1B	-	20X-70-23160	T1510-01A4	-
203-973-5660	T1110-04A0	10	207-57-N1230	K0110-02A1	5	20T-06-81381	D0100-01A0	-	20X-70-24150	T1230-01A1	2
203-973-5690	T1110-02A0	9	207-57-N1240	K0110-02A1	6	20T-43-71110	K1110-06A0	2	20X-70-24150	T1230-01A1	9
203-973-5690	T1110-04A0	9	207-57-N1250	K0110-02A1	7	20T-43-71130	K1110-10A0	2	20X-70-24231	T1510-N01A0	13
203-973-5730	T1210-02A0	-	207-57-N1260	K0110-02A1	8	20T-43-71160	K1110-06A0	6	20X-70-24231	T1510-N02A1	13
203-973-5780	T1210-02A0	13	207-57-N1270	K0110-02A1	9	20T-43-71160	K1110-10A0	4	20X-70-24250	T1510-N01A0	15
203-973-5803	T1210-02A0	-	207-57-N1280	K0110-02A1	10	20T-43-71190	K1110-06A0	3	20X-70-24250	T1510-N02A0	15
203-973-6610	T1210-02A0	24	207-57-N1290	K0110-02A1	11	20T-43-71190	K1110-10A0	3	20X-70-24250	T1510-N02A1	15
203-973-N130	T1210-02A0	-	207-57-N1310	K0110-02A1	12	20T-43-71360	K1110-06A0	7	20X-70-24250	T1510-N03A0	11
203-973-N170	T1210-02A0	30	207-57-N1320	K0110-02A1	13	20T-43-71360	K1110-10A0	5	20X-70-24260	T1230-01A1	17
204 338 27 G	K0700-01A6	2	207-57-N1330	K0110-02A1	14	20T-43-71480	K1110-11A0	5	20X-70-31310	J1310-01A0	5
204 338 32 M	H0320-01A0A	-	207-57-N1340	K0110-02A1	15	20T-43-72320	K1110-01A0	17	20X-70-31320	J1310-01A0	5
205 338 11 K	N1210-01A0	-	207-57-N1350	K0110-02A1	16	20T-43-72330	K1110-01A0	18	20X-70-N1120	T1510-01A4	6
205 338 12 L	N1110-01A0	-	207-57-N1360	K0110-02A1	17	20T-43-72340	K1110-01A0	19	20X-70-N1130	T1510-N01A0	6
205 338 55 H	R0300-02A0A	13	207-57-N1370	K0110-02A1	18	20T-43-72370	K1110-01A0	22	20X-70-N1130	T1510-N02A0	6
205-04-62140	D0200-01A3B	4	207-57-N1380	K0110-02A1	19	20T-43-72380	K1110-01A0	23	20X-70-N1130	T1510-N02A1	6
205-04-62150	D0200-01A3B	11	207-57-N1390	K0110-02A1	20	20T-43-82311	K1110-01A0	-	20X-70-N1130	T1510-N03A0	6
205-04-62150	D0200-01A3B	35	207-57-N1410	K0110-02A1	21	20T-43-82351	K1110-01A0	20	20X-70-N1150	T1510-N01A0	13
205-04-62150	D0200-02A3B	7	207-57-N1420	K0110-02A1	22	20T-43-82360	K1110-01A0	21	20X-70-N1150	T1510-N02A0	13
205-04-62150	D0200-02A3B	12	207-57-N1430	K0110-02A1	23	20T-54-74510	K1110-01A0	3B	20X-70-N1150	T1510-N02A1	13
205-04-71141	D0100-01A0	6	207-57-N1440	K0110-02A1	25	20T-54-74870	K0210-02A0	-	20X-70-N1150	T1510-N03A0	12
205-06-71173	E0100-N1A0	6	207-57-N1450	K0110-02A1	26	20T-54-74880	K0210-02A0	31	20X-926-2320	T1510-01A4	5
205-06-71480	K1110-12A0B	25	207-57-N1460	K0110-02A1	27	20T-54-74890	K0210-02A0	32	20Y-00-22450	U0100-01A0	5
205-06-73180	K1110-12A0B	27	207-57-N1470	K0110-02A1	28	20T-54-75250	K0210-05A0	-	20Y-00-N1140	U0100-01A0	36
205-54-51250	K0210-07A0	19	207-57-N1480	K0110-02A1	29	20T-54-75290	K0210-08A0	45	20Y-00-N1150	U0100-01A0	-
205-54-63310	K0210-02A0	-	207-57-N1490	K0110-02A1	30	20T-54-75290	M1110-02A1	14	20Y-00-N1160	U0100-01A0	8
205-60-71340	H1270-06A0	9	207-57-N1510	K0110-02A1	31	20T-60-82320	H1840-01A0A	23	20Y-00-N1230	U0100-01A0	33
205-60-71350	H1270-06A0	10	207-57-N1520	K0110-02A1	24	20T-62-71671	H1220-01A0A	11	20Y-00-N1280	U0100-01A0	27
205-60-71360	H1270-06A0	11	207-62-N1330	H1840-01A0A	14	20T-62-71900	H1832-01A0A	-	20Y-00-N1520	U0100-01A0	-
206 338 54 C	R0200-0N2A0	9	208 472 41 U	E0100-N1A0	-	20T-62-71910	H1832-01A0A	14a	20Y-00-N1580	K1110-09B9	17
206-03-43340	C0100-01A0A	-	208-32-11231	T1510-01A4	11	20T-62-71920	H1832-01A0A	14b	20Y-00-N1810	U0100-01A0	28
206-03-43340	C0100-01A1	21	208-32-11231	T1510-N02A0	11	20T-62-71930	H1832-01A0A	14c	20Y-03-21390	C0100-01A1	19
206-03-43340	C0100-01A0B	21	208-62-N2470	K1110-08A3	24	20T-62-72142	H1220-01A0A	13	20Y-03-21390	C0100-01A0B	19
206-06-61130	E0200-06A10	-	208-98-N1130	V0300-01A0	3	20U-43-21251	K1110-05A3	-	20Y-03-21450	C0100-01A1	20
206-06-61130	E0200-06A10	17	20B-27-11210	H0340-01A0A	10	20U-43-21261	K1110-05A3	1	20Y-03-21450	C0100-01A0B	20
206-06-61130	H1833-02A0A	9	20D-973-3350	T1210-02A0	32	20U-54-25190	K0210-08A0	3	20Y-04-11160	D0100-01A0	-
207-06-N1350	K0210-16A0	4	20D-973-3360	T1210-02A0	33	20U-62-22190	K1110-07A0A	-	20Y-04-11161	D0100-01A0	-
207-06-N1350	K0210-17A0	3	20M-30-31240	R0120-01A0A	6	20U-62-26170	H1270-05A0	1	20Y-04-21220	D0100-01A0	2
207-43-N1140	K1110-01A0	41	20N-60-41360	D0100-01A0	4	20U-62-26170	H1840-01A0A	28	20Y-04-21550	D0100-01A0	-
207-54-16860	K1110-13A0A	-	20N-60-41371	D0100-01A0	3	20U-70-31310	T1110-01A0A	-	20Y-04-21570	D0100-01A0	2
207-54-N1110	K0210-05A0	7	20R-03-11190	C0100-03A0B	6	20U-910-1450	P1240-01A0	5	20Y-04-21580	D0100-01A0	3
207-54-N2890	K0210-16A0	14	20S-26-71250	N1210-51A0	16	20X-30-21141	R1100-01A1A	7	20Y-04-N4670	D0100-01A0	5
207-54-N2890	K0210-17A0	11	20S-26-71250	N1210-51A0	24	20X-60-22140	H0110-01A1A	13	20Y-06-11382	K0210-06A0N	9

Part No.	Fig. No.	Index	Part No.	Fig. No.	Index	Part No.	Fig. No.	Index	Part No.	Fig. No.	Index
20Y-06-21551	K0210-16A0	3	20Y-54-18690	K0210-08A0	49	20Y-54-44960	K0210-07A0	16	20Y-54-N4620	K0210-02A0	25
20Y-06-21551	K0210-17A0	4	20Y-54-27991	M1420-01A0	3	20Y-54-44970	K0210-07A0	17	20Y-54-N5010	K0210-06A0N	25
20Y-06-21590	K0210-17A0	2	20Y-54-28911	M1420-01A0	-	20Y-54-44980	K0210-07A0	18	20Y-54-N5390	K1110-09B9	8
20Y-06-25150	E0200-06A10	5	20Y-54-29241	E0100-N1A0	2	20Y-54-45710	K0210-08A0	39	20Y-54-N5450	K0210-06A0N	43
20Y-06-25150	K1110-09B9	15	20Y-54-35710	K0210-08A0	43	20Y-54-45910	K0210-08A0	-	20Y-54-N5461	K0210-16A0	10
20Y-06-41251	E0200-06A10	18	20Y-54-35982	K0210-01A0	-	20Y-54-N1110	K0210-08A0	2	20Y-54-N5690	K1110-01A0	40
20Y-06-N1130	K0210-06A0N	-	20Y-54-35996	K0210-01A0	-	20Y-54-N1120	K0210-02A0	11	20Y-54-N7750	K0210-01A0	10
20Y-06-N1150	K0210-06A0N	-	20Y-54-36380	K0210-01A0	-	20Y-54-N1160	U0100-01A0	-	20Y-54-N7760	K0210-01A0	8
20Y-06-N1160	K0210-06A0N	-	20Y-54-36521	K1110-04A0	-	20Y-54-N1230	K0210-06A0N	-	20Y-54-N8330	K0210-05A0	2
20Y-06-N1170	E0100-N1A0	5	20Y-54-36531	K1110-04A0	-	20Y-54-N1240	K0210-08A0	6	20Y-54-N8340	K0210-05A0	4
20Y-06-N1220	K0210-06A0N	7	20Y-54-43130	K0210-02A0	5	20Y-54-N1250	K0210-08A0	7	20Y-54-N8450	K0210-02A0	3
20Y-06-N1290	K0210-06A0N	4	20Y-54-43140	K0210-02A0	6	20Y-54-N1390	U0100-01A0	-	20Y-54-N8700	K0210-02A0	-
20Y-06-N1710	E0200-06A10	14	20Y-54-44120	K0210-01A0	2	20Y-54-N1490	K0210-02A0	42	20Y-54-N8860	K0210-02A0	27
20Y-06-N1790	E0100-01A0B	2	20Y-54-44130	K0210-02A0	1	20Y-54-N1540	K0210-08A0	-	20Y-57-11440	K1110-01A0	-
20Y-06-N1810	E0100-01A0B	3	20Y-54-44150	K0210-02A0	12	20Y-54-N1550	K0210-05A0	5a	20Y-57-21360	K1110-02A0A	2
20Y-06-N1890	K1110-03A0A	18	20Y-54-44160	K0210-02A0	13	20Y-54-N1560	K0210-05A0	5b	20Y-57-21370	K1110-02A0A	3
20Y-06-N1980	K0210-06A0N	13	20Y-54-44190	K0210-08A0	50	20Y-54-N1570	K0210-05A0	-	20Y-57-21380	K1110-02A0A	-
20Y-06-N2020	K0210-06A0N	37	20Y-54-44200	K0210-02A0	-	20Y-54-N1610	K0210-02A0	2	20Y-57-21390	K1110-02A0A	-
20Y-06-N2030	K0210-06A0N	34	20Y-54-44210	K0210-02A0	17	20Y-54-N1620	K0210-05A0	1	20Y-57-N1130	K1110-02A0A	6
20Y-06-N2050	K0210-06A0N	38	20Y-54-44220	K0210-02A0	18	20Y-54-N1630	K0210-05A0	3	20Y-57-N1140	K1110-02A0A	6A
20Y-06-N2090	K0210-06A0N	33	20Y-54-44230	K0210-02A0	20	20Y-54-N1640	K0210-08A0	15	20Y-60-21340	H0110-01A1A	9
20Y-06-N2120	K0210-16A0	2	20Y-54-44240	K0210-02A0	21	20Y-54-N1750	K0210-07A0	21	20Y-62-15831	K1110-08A3	19
20Y-06-N2120	K0210-17A0	1	20Y-54-44250	K0210-02A0	23	20Y-54-N1930	K0210-07A0	10	20Y-62-15891	H1832-01A0A	19
20Y-06-N2380	K0210-06A0N	1	20Y-54-44260	K0210-02A0	-	20Y-54-N1980	K0210-07A0	2	20Y-62-16170	K1110-07A0A	7
20Y-30-16330	R0200-0N3A0	9	20Y-54-44280	K0210-02A0	29	20Y-54-N1990	K0210-07A0	13	20Y-62-16170	K1110-07A0A	21
20Y-43-21121	K1110-04A0	-	20Y-54-44290	K0210-02A0	36	20Y-54-N2010	K0210-07A0	14	20Y-62-16170	K1110-08A3	11
20Y-43-21131	K1110-04A0	-	20Y-54-44300	K0210-02A0	-	20Y-54-N2020	K0210-07A0	15	20Y-62-22160	P1120-01A1A	12a
20Y-43-21140	K1110-04A0	6	20Y-54-44310	K0210-02A0	39	20Y-54-N2230	K0210-02A0	14	20Y-62-25360	K1110-14A0	-
20Y-43-21150	K1110-04A0	-	20Y-54-44380	K0210-05A0	6	20Y-54-N2240	K0210-02A0	15	20Y-62-25360	K1110-14B0	-
20Y-43-21151	K1110-04A0	-	20Y-54-44420	E0100-N1A0	-	20Y-54-N2360	K0210-02A0	-	20Y-62-43470	K1110-14A0	22
20Y-43-21231	K1110-04A0	-	20Y-54-44440	K0210-06A0N	-	20Y-54-N2360	K0210-05A0	-	20Y-62-43470	K1110-14B0	22
20Y-43-21241	K1110-04A0	-	20Y-54-44490	K0210-07A0	4	20Y-54-N2360	K0210-05A0	-	20Y-62-N2520	P1120-01A1A	14
20Y-43-21260	K1110-04A0	8a	20Y-54-44520	K0210-07A0	6	20Y-54-N2370	K0210-08A0	14A	20Y-934-N260	T1510-N03A0	15
20Y-43-23251	K1110-03A0A	5	20Y-54-44530	K0210-07A0	-	20Y-54-N2370	K0210-08A0	16	20Y-934-N270	T1510-N03A0	16
20Y-43-23270	K1110-03A0A	6	20Y-54-44550	K0210-02A0	4	20Y-54-N2431	K0210-06A0N	31	20Y-954-N140	K0230-01A0	5
20Y-43-23281	K1110-03A0A	1	20Y-54-44560	K0210-02A0	-	20Y-54-N2730	K0210-01A0	-	20Y-954-N151	K0210-015A0	2
20Y-43-41121	K1110-04A0	7	20Y-54-44570	K0210-02A0	-	20Y-54-N2930	K0210-08A0	19	20Y-98-21140	V0300-01A0	21
20Y-43-N1280	K1110-04A0	1	20Y-54-44580	K0210-07A0	22	20Y-54-N2940	E0100-N1A0	3	20Y-98-N1110	V0300-01A0	14
20Y-43-N1280	K1110-04A0	2	20Y-54-44590	K0210-07A0	23	20Y-54-N3140	M1420-01A0	1	20Y-98-N1120	V0300-01A0	12
20Y-43-N1310	K1110-04A0	18	20Y-54-44670	K0210-08A0	17	20Y-54-N3160	K0210-06A0N	20	20Y-98-N1130	V0300-01A0	13
20Y-43-N1320	K1110-04A0	19	20Y-54-44680	K0210-08A0	32	20Y-54-N3180	K0210-06A0N	2	20Y-98-N1160	V0300-01A0	16
20Y-54-11791	K0210-06A0N	-	20Y-54-44721	K0210-08A0	40	20Y-54-N3380	K0210-02A0	35	20Y-98-N1170	V0300-01A0	17
20Y-54-12320	M1150-01A3A	24	20Y-54-44732	K0210-08A0	47	20Y-54-N3390	K0210-02A0	37	20Y-98-N1180	V0300-01A0	18
20Y-54-13440	K0210-06A0N	-	20Y-54-44810	K0210-08A0	13	20Y-54-N3410	K0210-02A0	40	20Y-98-N1190	V0300-01A0	19
20Y-54-13440	K0210-06A0N	41	20Y-54-44820	K0210-08A0	21	20Y-54-N4020	K0210-02A0	30	20Y-98-N1210	V0300-01A0	7
20Y-54-14290	K0210-02A0	8	20Y-54-44830	K0210-08A0	14	20Y-54-N4570	K0210-01A0	6	20Y-98-N1220	V0300-01A0	6
20Y-54-14310	K0210-02A0	10	20Y-54-44840	K0210-08A0	48	20Y-54-N4580	K0210-08A0	-	20Y-98-N1230	V0300-01A0	9
20Y-54-14330	K0210-02A0	33	20Y-54-44850	K0210-02A0	-	20Y-54-N4581	K0210-08A0	23	20Y-98-N1240	V0300-01A0	20
20Y-54-14380	K0210-06A0N	5	20Y-54-44870	K0210-08A0	-	20Y-54-N4590	K0210-01A0	-	20Y-98-N1250	V0300-01A0	-
20Y-54-18690	K0210-07A0	5	20Y-54-44880	K0210-08A0	42	20Y-54-N4610	K0210-08A0	29	20Y-98-N1260	V0300-01A0	10

Part No.	Fig. No.	Index	Part No.	Fig. No.	Index	Part No.	Fig. No.	Index	Part No.	Fig. No.	Index
20Y-98-N1270	V0300-01A0	15	21Y-70-14780	T1210-01B0	10A	304 467 63 H	Y1620-13A0	-	702-16-53140	Y1670-11A0	7
20Y-98-N1320	V0300-01A0	4	21Y-70-14780	T1230-01A1	-	304 467 64 K	Y1620-41A0A	-	702-16-53170	Y1670-01A0	9
20Y-98-N1330	V0300-01A0	5	21Y-70-14830	T1710-01A0	12	304 467 65 K	Y1620-41A0A	-	702-16-53170	Y1670-11A0	10
20Y-98-N1340	V0300-01A0	11a	21Y-70-14840	T1710-01A0	18	304 467 66 L	Y1621-01A0A	-	702-16-53170	Y1670-11A0	10
20Y-98-N1360	V0300-01A0	11	21Y-70-14850	J1310-01A0	10	304 467 67 M	Y1621-01A0A	-	702-16-53170	Y1670-21A0	7
20Y-98-N1370	V0300-01A0	22	22B-06-11350	M1220-01A0	5	305 467 86 D	Y1620-01A0A	-	702-16-53190	Y1670-11A0	14
21J-54-16190	K0210-08A0	1	22B-06-11350	M1220-02A0	5	305 467 87 F	Y1620-11A0A	-	702-16-53210	Y1670-11A0	16
21K-46-21190	J1110-01A2	2	22B-06-11480	K1110-03A0A	-	305 467 87 F	Y1620-13A0	-	702-16-53230	Y1670-11A0	20
21T-06-11950	H1840-01A0A	17	22B-62-24460	H1270-06A0	-	305 467 88 F	Y1620-41A0A	-	702-16-53240	K1110-07A0A	9
21T-72-14930	T1210-02A0	27	22B-62-24461	H1270-06A0	-	305 467 89 G	Y1621-01A0A	-	702-16-53240	K1110-07A0A	23
21W-06-21290	E0100-01A0B	5	22B-62-24470	H1270-06A0	12	362-46-N1120	M1520-01A0	-	702-16-53240	K1110-08A3	13
21W-27-11111	P1210-01A0	-	22D-75-13370	K1110-03A0A	11	362-46-N1121	M1520-01A0	1	702-16-53420	Y1670-01A0	6
21W-27-N1110	P1210-01A0	-	22F-46-11240	J1310-01A0	1A	362-54-38150	U0100-01A0	23	702-16-53420	Y1670-11A0	6
21W-27-N1111	P1210-01A0	1	22F-46-11240	J1310-01A0	6a	363-18-32130	H1832-01A0A	29	702-16-53420	Y1670-11A0	6
21W-30-00080	R0110-01A0A	1	22P-32-11170	R0500-02A0A	4	363-46-32140	J1110-01A2	-	702-16-53590	Y1670-11A0	9
21W-30-12513	R0110-01A0A	-	22P-60-11150	H0110-01A1A	21	421-06-23330	M1220-01A0	6	702-16-53590	Y1670-11A0	9
21W-30-14540	R0110-01A0A	2	22U-00-21270	U0100-01A0	38	421-06-23330	M1220-02A0	6	702-16-53920	Y1679-01A0	39
21W-30-32610	R0120-01A0A	4	22U-06-11270	E0200-03A1B	-	421-06-23330	T1110-01A0A	-	702-16-53950	Y1670-11A0	8
21W-30-32620	R0120-01A0A	3	22U-43-21111	K1110-04A0	22	421-06-23330	T1110-03A0	-	702-16-53950	Y1670-11A0	8
21W-30-34110	R1100-01A1A	16	22U-43-21121	K1110-04A0	21	423-60-35460	H0110-01A1A	21a	702-16-53980	Y1670-11A0	19
21W-30-41170	R0120-01A0A	5	22U-43-21131	K1110-04A0	16	424-15-12580	N1210-51A0	26	702-16-54170	Y1670-01A0	11
21W-60-31340	N1310-01A1A	6	22U-43-21131	K1110-04A0	17	566-35-42430	H0120-02A0	8	702-16-54170	Y1670-11A0	13
21W-62-11620	H0120-02A0	7	22U-4321461	K1110-14A0	9	569-06-61960	K1110-N1A0	1	702-16-54251	Y1670-01A0	15
21W-62-43980	K1110-13A0A	15	22U-4321461	K1110-14B0	9	575-41-17420	Y1662-21A0	22	702-16-54280	Y1670-01A0	16
21W-62-43980	K1110-14A0	19	22U-43-21470	K1110-14A0	3	575-41-17420	Y1662-27A0	11	702-16-54310	Y1670-01A0	19
21W-62-43980	K1110-14B0	19	22U-43-21470	K1110-14B0	3	575-41-17420	Y1662-35A0	8	702-16-54331	Y1670-01A0	-
21W-62-43990	K1110-13A0A	16	22U-43-21480	K1110-14A0	12	600-81-58941	E0200-04A1B	42	702-16-54341	Y1670-01A0	-
21W-62-N2840	H1832-01A0A	-	22U-43-21480	K1110-14B0	12	6134-71-5750	K1110-01A0	25	702-16-54351	Y1670-01A0	23
21W-70-21810	T1510-01A4	-	22U-54-25110	K1110-04A0	25	700-22-11311	Y1662-23A0	4	702-16-54420	Y1670-01A0	8
21W-70-21810	T1510-N01A0	11	22U-54-25120	K1110-04A0	26	700-22-11410	Y1662-24A0	23	702-16-54430	Y1670-01A0	17
21W-70-21810	T1510-N02A0	-	22U-54-25170	K0210-015A0	3	700-22-11410	Y1662-26A0	14	702-16-54550	Y1670-21A0	4
21W-70-21810	T1510-N02A1	11	22U-54-25170	K0230-01A0	6	700-80-64220	Y1662-24A0	24	702-16-54560	Y1670-21A0	6
21W-70-24C10	T1510-N01A0	4	22U-54-25660	K1110-14A0	2	700-80-64220	Y1662-26A0	15	702-16-54570	Y1670-21A0	-
21W-70-24C20	T1510-N01A0	5	22U-54-25660	K1110-14B0	2	702-16-01230	K1110-14A0	1	702-16-54571	Y1670-21A0	5
21W-70-32280	T1110-01A0A	22	22U-54-25670	K1110-14A0	18	702-16-01230	K1110-14B0	1	702-16-54580	Y1670-21A0	9
21W-70-32280	T1110-03A0	22	22U-54-25670	K1110-14B0	18	702-16-01230	Y1670-21A0	1	702-16-54590	Y1670-21A0	10
21W-71-11131	T1710-01A0	11	22W-06-13160	K1110-12A0B	28	702-16-01440	Y1670-01A0	-	702-16-54640	Y1670-21A0	14
21W-71-11141	T1710-01A0	-	22W-75-16460	K1120-01A0	6	702-16-01441	Y1670-01A0	-	702-16-54650	Y1670-21A0	17
21W-71-11210	P1240-01A0	6	23S-61-21870	C0100-01A0A	-	702-16-01850	Y1670-11A0	1	702-16-54660	Y1670-21A0	16
21W-71-N1130	T1710-01A0	6	23S-61-24870	H0320-01A0A	-	702-16-03930	Y1670-11A0	-	702-16-54670	Y1670-21A0	18
21W-98-31820	U0100-01A0	16	283-06-16190	K1110-12A0B	26	702-16-51140	Y1670-01A0	5	702-16-57430	Y1670-11A0	11
21X-60-11130	N1310-01A1A	9	2A5-62-12350	K1110-14A0	6	702-16-51140	Y1670-11A0	5	702-16-71131	Y1670-11A0	14
21Y-62-11590	H1840-01A0A	21	2A5-62-12350	K1110-14B0	6	702-16-51140	Y1670-11A0	5	702-16-71141	Y1670-11A0	15
21Y-70-14710	J1310-01A0	10	301 496 95 H	Y1620-41A0A	-	702-16-51140	Y1670-21A0	3	702-16-71160	Y1670-11A0	12
21Y-70-14770	T1110-01A0A	-	301 496 96 J	Y1621-01A0A	-	702-16-51240	Y1670-11A0	18	702-16-71210	Y1670-11A0	11
21Y-70-14770	T1210-01A0	10	301 496 97 K	Y1620-11A0A	-	702-16-51240	Y1670-11A0	17	702-16-71280	Y1670-11A0	13
21Y-70-14770	T1210-01B0	10	301 496 97 K	Y1620-13A0	-	702-16-51270	Y1670-01A0	10	702-16-71361	Y1670-11A0	18
21Y-70-14770	T1230-01A1	22	304 467 60 E	Y1620-01A0A	-	702-16-51270	Y1670-21A0	8	702-16-71441	Y1670-11A0	19
21Y-70-14780	T1110-01A0A	-	304 467 62 G	Y1620-11A0A	-	702-16-53140	Y1670-01A0	7	702-21-09155	Y1679-01A0	1
21Y-70-14780	T1210-01A0	10A	304 467 63 H	Y1620-11A0A	-	702-16-53140	Y1670-11A0	7	702-21-53120	Y1679-01A0	7

Part No.	Fig. No.	Index	Part No.	Fig. No.	Index	Part No.	Fig. No.	Index	Part No.	Fig. No.	Index
702-21-55200	Y1679-01A0	-	707-71-70690	Y1620-13A0	21	723-26-14122	Y1662-21A0	20	TZ110D1013-00	Y-1651-03A1	28
702-73-02101	Y1640-02A0	-	707-71-70720	Y1620-01A0A	18	723-26-14130	Y1662-27A0	7	TZ110D1022-00	Y-1651-03A1	25
702-73-02130	Y1640-02A0	-	707-71-91280	Y1620-11A0A	18	723-26-14140	Y1662-22A0	14	TZ110D1024-00	Y-1651-03A1	19
703-07-23230	Y1627-01A1D	1	707-71-91280	Y1620-13A0	18	723-26-14140	Y1662-27A0	17	TZ110D1027-00	Y-1651-03A1	10
703-07-91230	Y1627-01A1D	-	707-76-65290	Y1620-01A0A	2	723-26-14140	Y1662-35A0	14	TZ110D1028-00	Y-1651-03A1	5
703-07-92183	Y1627-01A1D	4	708-1W-00131	Y1600-01A0A	1	723-26-14150	Y1662-22A0	23	TZ110D1029-00	Y-1651-03A1	9
703-07-93181	Y1627-01A1D	9	708-1W-01130	Y1600-01A0A	-	723-26-14150	Y1662-27A0	27	TZ110D1030-00	Y-1651-03A1	4
703-07-94170	Y1627-01A1D	7	708-1W-04691	Y1600-04A0A	-	723-26-14150	Y1662-35A0	23	TZ110D200001-B	Y-1651-01A1	-
703-07-95122	Y1627-01A1D	2	708-1W-04712	Y1600-05A0A	-	723-26-14210	Y1662-21A0	19	TZ110D2002-00	Y-1651-02A1	4
703-08-98110	Y1627-01A1D	6	708-1W-22160	Y1600-01A0A	17	723-26-15110	Y1662-21A0	17	TZ110D200300-B	Y-1651-02A1	5
703-13-98920	Y1627-01A1D	5	708-1W-24350	Y1600-03A0A	7	723-26-15110	Y1662-27A0	8	TZ110D2009-01	Y-1651-02A1	8
706-73-71450	Y1662-24A0	5	708-1W-25630	Y1600-05A0A	11	723-26-15110	Y1662-35A0	5	TZ110D4024-00	Y-1651-01A1	4
706-8E-14191	Y1600-01A0A	8	708-1W-25730	Y1600-06A0A	5	723-26-15120	Y1662-21A0	-	TZ111D1003-00	Y-1651-03A1	2
707-00-0A800	Y1620-01A0A	-	708-1W-28750	Y1600-06A0A	-	723-26-15120	Y1662-27A0	-	TZ111D1004-00	Y-1651-03A1	17
707-00-0A810	Y1620-11A0A	-	708-1W-28910	Y1600-01A0A	-	723-26-15120	Y1662-35A0	-	TZ111D1005-00	Y-1651-03A1	11
707-00-0A820	Y1620-41A0A	-	708-1W-28910	Y1600-03A0A	-	723-26-15121	Y1662-21A0	21	TZ111D400000-F	Y-1651-01A1	-
707-00-0A840	Y1621-01A0A	-	708-1W-28910	Y1600-05A0A	-	723-26-15121	Y1662-27A0	10	TZ111D410000-F	Y-1651-01A1	-
707-00-N1110	Y1620-01A0A	-	708-1W-28920	Y1600-04A0A	-	723-26-15121	Y1662-35A0	7	TZ111D410100-F	Y-1651-01A1	-
707-00-N1111	Y1620-01A0A	-	708-1W-28930	Y1600-03A0A	-	723-26-15160	Y1662-27A0	6	TZ116D4056-00	Y-1651-01A1	7
707-00-N1120	Y1620-11A0A	-	708-2L-23920	Y1600-06A0A	-	723-26-15170	Y1662-24A0	2	TZ1180082010L2	Y-1651-03A1	13
707-00-N1121	Y1620-11A0A	-	708-2L-23940	Y1600-01A0A	-	723-26-15190	Y1662-24A0	3	TZ1180102010L	Y-1651-03A1	8
707-00-N1130	Y1620-41A0A	-	708-7T-12330	Y1640-01A0	10	723-26-15220	Y1662-27A0	25	TZ131D1000-00	Y-1651-03A1	-
707-00-N1131	Y1620-41A0A	-	708-7T-16510	Y1640-02A0	10	723-26-15220	Y1662-35A0	22	TZ131D9000-00	Y-1651-01A1	K
707-00-N1140	Y1621-01A0A	-	708-7T-16610	Y1640-02A0	9	723-26-15230	Y1662-27A0	18	TZ15Z-22-42-10	Y1651-02A0A	15
707-00-N1141	Y1621-01A0A	1	708-8D-12220	Y1600-01A0A	-	723-26-15230	Y1662-35A0	15	TZ15Z-22-42-10	Y1651-03A0A	-
707-00-N1160	Y1620-13A0	-	708-8D-12221	Y1600-01A0A	16	723-26-15310	Y1662-27A0	30	TZ192-230-30BH	Y-1651-03A1	20
707-29-10870	Y1620-11A0A	24	708-8E-16160	Y1662-24A0	4	723-26-15330	Y1662-27A0	26	TZ200B2073-00	Y-1651-01A1	20
707-29-10870	Y1620-13A0	24	709-20-52300	Y1662-24A0	-	723-26-15390	Y1662-23A0	5	TZ263B2008-01	Y-1651-02A1	7
707-29-11970	Y1620-01A0A	20	709-25-11390	Y1662-25A0	22	723-26-15670	Y1662-24A0	12	TZ263B2011-03	Y-1651-02A1	25
707-29-12780	Y1621-01A0A	5	709-26-11450	Y1662-21A0	18	723-26-15680	Y1662-36A0	2	TZ263B2070-01	Y-1651-02A1	3
707-29-90850	Y1620-41A0A	20	709-26-11450	Y1662-27A0	9	723-26-51150	Y1662-22A0	12	TZ263B2076-02	Y-1651-02A1	22
707-36-10420	Y1620-11A0A	23	709-26-11450	Y1662-35A0	6	723-26-51150	Y1662-35A0	13	TZ263B2077-01	Y1651-02A0A	23
707-36-10420	Y1620-13A0	23	709-70-74700	H1270-03A0	3	723-26-51190	Y1662-22A0	13	TZ263B2077-01	Y-1651-02A1	23
707-36-11610	Y1620-01A0A	19	720-68-19870	Y1600-01A0A	6	723-26-51190	Y1662-27A0	16	TZ263B2077-01	Y-1651-03A1	22
707-36-12170	Y1621-01A0A	4	723-20-61101	Y1662-26A0	-	723-27-16101	Y1662-21A0	-	TZ263B2090-00	Y-1651-02A1	24
707-36-90240	Y1620-41A0A	19	723-20-70500	Y1662-25A0	-	723-27-16102	Y1662-21A0	-	TZ263B2098-00	Y-1651-02A1	21
707-52-90300	Y1620-41A0A	-	723-20-80100	Y1662-26A0	-	723-30-51130	Y1662-22A0	3	TZ266B2012-00	Y-1651-02A1	10
707-52-90301	Y1620-41A0A	16	723-20-80100	Y1662-27A0	-	723-30-60101	Y1662-25A0	-	TZ266B2035-00	Y-1651-02A1	16
707-52-90350	Y1620-11A0A	-	723-20-80100	Y1662-35A0	25	7861-92-3320	E0200-01A0B	1	TZ266B2039-00	Y-1651-02A1	17
707-52-90350	Y1620-13A0	-	723-20-85100	Y1662-23A0	-	7861-92-5810	D0100-01A0	11	TZ277B2007-00	Y-1651-02A1	6
707-52-90351	Y1620-11A0A	16	723-21-01800	Y1662-35A0	-	887-00-60549	Y1640-01A0	-	TZ277B2014-00	Y-1651-02A1	12
707-52-90351	Y1620-13A0	16	723-21-01801	Y1662-35A0	1	F 304 467 61	Y1620-01A0A	-	TZ277B2205-00	Y-1651-02A1	-
707-52-90400	Y1620-01A0A	-	723-21-01801	Y1662-36A0	1	G 301 496 94	Y1620-01A0A	-	TZ300B2039-00	Y-1651-01A1	22
707-52-90401	Y1620-01A0A	21	723-21-02400	Y1662-27A0	-	TZ100A2021-00	Y1651-01A0A	5	TZ300B2042-00	Y-1651-01A1	23
707-52-90470	Y1621-01A0A	-	723-26-00802	Y1662-23A0	-	TZ110D1001-00	Y-1651-03A1	18	TZ300B2043-01	Y-1651-01A1	21
707-52-90471	Y1621-01A0A	18	723-26-00901	Y1662-24A0	-	TZ110D1002-00	Y-1651-03A1	-	TZ400G1009-00	Y-1651-03A1	14
707-56-50540	R0120-01A0A	11	723-26-1 5220	Y1662-22A0	22	TZ110D1006-00	Y-1651-03A1	15	TZ400G2049-00	Y-1651-02A1	20
707-71-60100	Y1620-11A0A	20	723-26-1 5230	Y1662-22A0	15	TZ110D1007-00	Y-1651-03A1	6	TZ410D1033-00	Y1651-03A0A	25
707-71-60100	Y1620-13A0	20	723-26-11210	Y1662-23A0	-	TZ110D1010-00	Y-1651-03A1	7	TZ410D1033-01	Y-1651-03A1	31
707-71-70690	Y1620-11A0A	21	723-26-11370	Y1662-24A0	1	TZ110D1011-00	Y-1651-03A1	3	TZ440D1012-00	Y-1651-03A1	12

PC71-7

Part No.	Fig. No.	Index
TZ500D1008-08	Y1651-03A0A	14
TZ500D1015-00	Y1651-03A0A	15
TZ500D1017-00	Y1651-03A0A	16
TZ500D1019-00	Y1651-03A0A	3
TZ500D200000-G	Y1651-01A0A	-
TZ500D200000-G	Y1651-02A0A	-
TZ500D2002-00	Y1651-02A0A	3
TZ500D200300-G	Y1651-02A0A	4
TZ500D2004-00	Y1651-02A0A	5
TZ500D2007-00	Y1651-02A0A	6
TZ500D2008-00	Y1651-02A0A	7
TZ500D2009-00	Y1651-02A0A	8
TZ500D2010-00	Y1651-02A0A	9
TZ500D2012-00	Y1651-02A0A	10
TZ500D2013-00	Y1651-02A0A	11
TZ500D2013-00	Y-1651-02A1	11
TZ500D2014-00	Y1651-02A0A	12
TZ500D2015-00	Y1651-02A0A	13
TZ500D2016-00	Y1651-02A0A	14
TZ500D2035-00	Y1651-02A0A	16
TZ500D2035-00	Y1651-03A0A	-
TZ500D2039-00	Y1651-02A0A	17
TZ500D2039-00	Y1651-03A0A	-
TZ500D2070-00	Y1651-02A0A	2
TZ500D2076-00	Y1651-02A0A	22
TZ500D2098-00	Y1651-02A0A	21
TZ500D2105-00	Y1651-02A0A	-
TZ500D4054-00	Y1651-01A0A	9
TZ500D4054-00	Y-1651-01A1	6
TZ500D4055-00	Y1651-01A0A	11
TZ500D4055-00	Y-1651-01A1	8
TZ500D4089-00	Y1651-01A0A	20
TZ502D1000-00	Y1651-03A0A	-
TZ502D1006-00	Y1651-03A0A	13
TZ502D1107-00	Y1651-03A0A	-
TZ502D4110-00	Y1651-01A0A	-
TZ505D400002-D	Y1651-01A0A	-
TZ505D410002-D	Y1651-01A0A	-
TZ505D410102-D	Y1651-01A0A	-
TZ505D9000-00	Y1651-03A0A	K1
TZ571B2079-00	Y1651-01A0A	22
TZ610B2021-00	Y1651-01A0A	21
TZ610B2021-00	Y-1651-01A1	16
TZ800A2015-00	Y-1651-02A1	13
TZ800A2016-00	Y-1651-02A1	14
TZ810B1018-00	Y1651-03A0A	17
TZ810B1018-00	Y-1651-03A1	29
TZ810B2021-00	Y1651-01A0A	6
TZ810B2021-00	Y1651-03A0A	26
TZ810B2021-00	Y-1651-03A1	30
TZ844B2085-00	Y1651-02A0A	24
TZ850A0006-00	Y1651-01A0A	24
TZ860A2051-00	Y1651-01A0A	7
TZ860A2056-00	Y1651-01A0A	10
TZ869A205200-B	Y1651-01A0A	8
TZ869A205200-B	Y-1651-01A1	5
TZ880A2010-00	Y-1651-02A1	9
TZ880A2029-00	Y1651-02A0A	19
TZ976B2079-00	Y1651-01A0A	18
TZES20423232-B	Y1651-03A0A	-
TZES20423232-B	Y1651-03A0A	-
TZGDL1-16-S	Y1651-01A0A	17
TZGDL1-16-S	Y-1651-01A1	19
TZGM1-8-S	Y1651-01A0A	14
TZGM1-8-S	Y-1651-01A1	11
TZIRTW-36	Y1651-02A0A	18
TZJB1176M12-32	Y1651-01A0A	26
TZJB1177M812-B	Y-1651-03A1	21
TZJB1354-4-10	Y1651-01A0A	25
TZJB1354-4-10	Y-1651-01A1	24
TZJB1354-8-22	Y1651-03A0A	29
TZJB2401-P26-9	Y1651-01A0A	12
TZJB2401-P26-9	Y-1651-01A1	9
TZJB2401-P26-9	Y1651-03A0A	-
TZJB2804-S19	Y1651-03A0A	20
TZJB501-3-16	Y1651-01A0A	15
TZJW1516-G35-5	Y1651-03A0A	24
TZJW1516-G35-5	Y1651-03A0A	-
TZJW1516-G37-7	Y-1651-03A1	24
TZS0505	Y1651-01A0A	19
TZTCZ-30-50-9	Y-1651-02A1	15
TZTH-R-42	Y-1651-02A1	18
U 200 374 69	R0200-0N2A0	7
U 203 374 69	R0300-02A0A	5