CATERPILLAR®

KEBP0302-20
May 2009

RUTHZIL TRATOR COMERCIAL DE PEÇAS LTDA 11 97083-6812 ROLANDO

Parts Manual

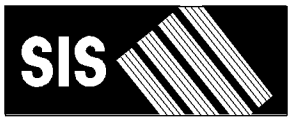

See "General Information" for New Parts Manual Features.

PS-360C Pneumatic Compactor

PJF1-Up (Machine)
CRS2700-Up (Engine)

Powered By 3054C Engine
This Parts Manual is also available in .pdf Format on Compact Disc (CD-ROM) - Caterpillar Form No. KERP0302.

Product and Dealer Information

Note: For product identification plate locations, see the section “Product Identification Information” in the Operation and Maintenance Manual.

Delivery Date: _____

Product Information

Model: _____

Product Identification Number: _____

Engine Serial Number: _____

Transmission Serial Number: _____

Generator Serial Number: _____

Attachment Serial Numbers: _____

Attachment Information: _____

Customer Equipment Number: _____

Dealer Equipment Number: _____

Dealer Information

Name: _____ Branch: _____

Address: _____

_____

_____

	Dealer Contact	Phone Number	Hours
Sales:	_____	_____	_____
Parts:	_____	_____	_____
Service:	_____	_____	_____

MEMORANDA

TABLE OF CONTENTS

Name	Page
GENERAL INFORMATION	A3
REPAIR ALTERNATIVES	A6
SUPPLEMENTAL COOLANT ADDITIVES	A7
MAINTENANCE PARTS	A8
INDEX	A12
MACHINE ARRANGEMENT	1
CHASSIS AR	1
COMMON AR	1
ENGINE ARRANGEMENT	2
ENGINE AR	2
ENGINE AR-PRIMARY	7
INSTALLATION AR-ENGINE	11
BASIC ENGINE	12
CAMSHAFT GP	12
COVER GP-FRONT HOUSING	13
COVER GP-VALVE MECHANISM	15
CRANKSHAFT GP	25
CYLINDER BLOCK GP	30
CYLINDER HEAD GP	34
DRIVE GP-FAN	37
DRIVE GP-PUMP	39
FLYWHEEL GP	40
HOUSING GP-FLYWHEEL	41
HOUSING GP-FRONT	42
LIFTING GP-ENGINE	46
MOUNTING GP-ENGINE	47
MOUNTING GP-ENGINE FLEXIBLE	48
PAN GP-OIL	49
PISTON & ROD GP	53
PLUG GP-ENGINE	56
PULLEY GP-CRANKSHAFT	59
ROCKER ARM GP	60
SERVICE GP-ENGINE	61
VALVE MECHANISM GP	64
LUBRICATION SYSTEM	67
FILTER GP-ENGINE OIL	67
PUMP GP-ENGINE OIL	68
COOLING SYSTEM	69
CONNECTION GP-WATER	69
COOLER GP-ENGINE OIL	71
COOLER GP-FLTR BASE & ENG OIL	73
FAN GP-SUCTION	75
PUMP GP-WATER	76
RADIATOR & HYD OIL COOLER GP	78
RECOVERY GP-COOLANT	82
AIR INLET AND EXHAUST SYSTEM	83
AIR CLEANER GP	83
ELBOW GP-AIR INLET	85
LINES GP-AIR	86
MUFFLER GP	89
TURBOCHARGER GP	90
FUEL SYSTEM	92
GAUGE GP-SIGHT	92
GOVERNOR GP	93
LINES GP-DRAIN	99
LINES GP-FUEL	100
PUMP GP-FUEL INJECTION	101
PUMP GP-FUEL PRM & PRIM FILTER	112
TANK & MTG GP-FUEL	118
TANK GP-FUEL	119
ELECTRICAL AND STARTING SYSTEM	120
ALARM GP	120
ALTERNATOR GP-CHARGING	121
BATTERY & WIRING GP	122
CONVERTER GP-ELECTRICAL	127
ELECTRICAL AR	128
GLOW PLUG GP	129
LAMP GP-FLOOD	130
LAMP GP-SIGNAL	134
LIGHTING GP-FLOOD	138
LIGHTING GP-SIGNAL	140
SOLENOID GP-THROTTLE	142
STARTING MOTOR GP-ELECTRIC	143
SWITCH GP-DISCONNECT	144
SWITCH GP-MAGNETIC	145
SWITCH GP-ROTARY	149
SWITCH GP-START	150
WARNING GP-BACKUP	151
WIRING GP-MACHINE	152
POWER TRAIN	159
AXLE GP-DRIVE	159
AXLE GP-FRONT	161
DIFFERENTIAL GP	162
HUB GP-WHEEL	166
MOTOR & MTG GP-PROPEL	167
POWER TRAIN AR	176
PUMP & MTG GP-PROPEL	177
RIM GP-DEMOUNTABLE	180
SHAFT GP-DRIVE	181
TIRE & RIM GP	182
WHEEL & TIRE GP	184
FRAME AND BODY	192
BALLAST GP-FRAME	192
COVER GP-ACCESS	193
FRAME GP-MAIN	194
FRAME GP-TIRE SCRAPER	200

TABLE OF CONTENTS

Name	Page
HOOD GP-ENGINE	202
SKIRT GP-TIRE	206
BRAKING SYSTEM	209
BRAKE GP-PARKING	209
LINES GP-BRAKE & SHIFT	215
PUMP GP-HAND	216
VALVE GP-BRAKE & SHIFT	218
VALVE GP-BRAKE CONTROL	220
STEERING SYSTEM	224
BAR GP-OSCILLATING & STEERING	224
CONTROL GP-STEERING	228
CYLINDER & MTG GP-STEERING	229
LINES GP-STEERING	230
PUMP & MTG GP-STEERING	239
PUMP GP-METERING	241
HYDRAULIC SYSTEM	243
CAP & STRAINER GP-HYD OIL FILL	243
CONTROL GP-HYDRAULIC	244
CYLINDER GP-HYDRAULIC	245
FILTER & MTG GP-HYDRAULIC	246
HEAD GP-PUMP	248
HYDRAULIC AR	249
HYDRAULIC AR-AUXILIARY	249
LINES GP-FLUSHING	250
LINES GP-HYDRAULIC	252
LINES GP-HYDRAULIC FILTER	255
LINES GP-HYDRAULIC OIL COOLER	258
MOTOR GP-PISTON	260
PUMP & MTG GP-AUXILIARY	267
PUMP GP-CHARGE	268
PUMP GP-GEAR	269
PUMP GP-PISTON	271
ROTATING GP-MOTOR	276
ROTATING GP-PUMP	279
STRAINER GP	283
TANK & MTG GP-HYDRAULIC	284
TANK GP-HYDRAULIC	286
VALVE GP-FLUSHING	287
VALVE GP-PUMP CONTROL	288
VALVE GP-RELIEF	290
VALVE GP-SPEED SENSING	292
WATER SYSTEM	293
FILTER GP-WATER	293
MAT & MTG GP-WATER	294
PUMP GP-ADDITIVE SPRAY	296
PUMP GP-WATER SPRAY	297
SPRAY GP-ADDITIVE	298
SPRAY GP-WATER	308
TANK GP-WATER	318
OPERATOR STATION	319
CABLE GP-PROPEL	319
CANOPY GP	321
CONSOLE GP-INSTRUMENT	322
CONSOLE GP-OPERATOR	326
CONTROL GP-HANDLE	340
GUARD GP-VANDALISM	341
HORN GP-ELECTRIC	342
LEVER GP-PROPEL	343
OPERATOR AR	349
PLATFORM GP-OPERATOR	350
RAIL GP-SLIDER	360
ROPS GP	361
SEAT GP	362
SEAT GP-SUSPENSION	367
SUPPORT GP-SEAT	370
SERVICE EQUIPMENT AND SUPPLIES	371
FILM GP	371
PLATE & FILM GP	373
PART NUMBER INDEX	B1

GENERAL INFORMATION

1. MACHINE IDENTIFICATION

Caterpillar machines are identified by Product Identification Numbers (PIN). Some components included in a machine may be identified by Serial Numbers (S/N). Typical components that will be serialized include engines, transmissions, bulldozers, and rippers. The machine and engine are further identified by arrangement numbers and in some cases modification numbers. These numbers are shown on the product identification plate(s) and on the master plate in the operator's compartment.

Caterpillar dealers need all of these numbers to determine accurate parts identification.

SIS *New Feature*

Effective First Quarter 2001 the Caterpillar Product Identification Number (PIN) changed from 8 to 17 characters. In an effort to provide uniform equipment identification, Caterpillar and other construction equipment manufacturers are moving to comply with the latest version of the product identification numbering standard. Non-road machine PINs are defined by ISO 10261. The new PIN format will apply to all Caterpillar machines and generator sets. The PIN plates and frame marking will display the 17 character PIN. The new format will look like the following:

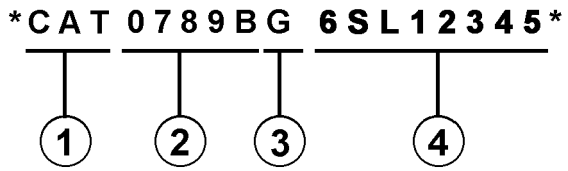

Where:

1. Caterpillar's World Manufacturing Code (characters 1-3)

2. Machine Descriptor (characters 4-8)

3. Check Character (character 9)

4. Machine Indicator Section (MIS) or Product Sequence Number (characters 10-17). These were previously referred to as the Serial Number.

Machines and generator sets produced before First Quarter 2001 will maintain their 8 character PIN format.

Components such as engines, transmissions, axles, etc. and work tools will continue to use an 8 character Serial Number (S/N).

2. ORDERING PARTS

⚠ WARNING

When replacement parts are required for this product Caterpillar recommends using Caterpillar replacement parts or parts with equivalent specifications including, but not limited to, physical dimensions, type, strength and material.

Failure to heed this warning can lead to premature failures, product damage, personal injury or death.

Quality Caterpillar replacement parts are available from Caterpillar dealers throughout the world. Their parts inventories are up to date and include all parts normally required to protect your investment in Caterpillar machines. Dealers may offer repair kits or remanufactured parts to allow selection of the most effective repair alternative for a particular situation. When ordering parts, your order should specify the quantity, part number, part name, and the serial number/product identification number of the machine for which the parts are needed.

3. PARTS MANUAL ORGANIZATION

Product information in this manual is presented as "information elements" that represent all of the components for the specific model. Engine Arrangement and Seat Group are examples of information elements. The information elements are organized alphabetically by part name and secondarily by part number within each major section of the manual.

4. TABLE OF CONTENTS

A table of contents (TOC) is found at the beginning of the manual. The TOC lists each section of the manual with a complete list of all information elements organized as they appear in the manual. Page numbers are provided for quick reference to detailed parts identification illustrations and serviceable consist lists.

5. MAINTENANCE PARTS INDEX

The Maintenance Parts Index, located near the beginning of the manual, references most frequently used maintenance part numbers, providing description, quantity, usage and page number. This information is organized alphabetically by part description.

GENERAL INFORMATION

6. INDEX

The index located near the front of the manual is an alphabetical listing of all information elements included in the manual. Page numbers are provided for quick reference to detailed parts identification illustrations and serviceable consist lists.

7. PART NUMBER INDEX

A numerical index listing all part numbers and the corresponding page number(s) appears at the back of the manual.

8. CAPTIONS

Captions located at the beginning of each information element identify the part number and part name along with additional descriptive information. PIN and S/N information found in each caption should be used to select correct information for a specific machine. Field replacement options, identification of optional attachment components, and where used ("part of") information is also provided.

The first line of a caption is shown in larger type font to indicate the beginning of an information element. Captions for additional pages that may be required to illustrate an information element will be shown in standard type font and will include the term *(contd.)* .

9. NON-SERVICED PARTS

In some instances it is necessary to display non-serviced parts that are a link to a lower level serviceable consist lists. These non-serviced part numbers are shown in *italic* type indicating that they are not available.

10. PARTS LIST REFERENCE NUMBERS

Numbers shown in the Ref No column correspond to numbers used in the associated graphic(s). An alphabetic suffix may be added to a reference number to identify lower level consist items. Numbers shown in the Graphic Ref column refer to the graphic number identifier displayed in the lower left corner of each illustration. The Graphic Ref number may be used in combination with the item Ref No to determine the correct part number. There may be intentional omission of a Ref No in a consist list as information is updated to reflect the latest serviceable part numbers.

11. INDENTED PART NAMES

When a part name is indented in a parts list, it is part of (included in) the group or assembly under which it is indented.

12. ILLUSTRATION REFERENCE LETTERS

When necessary, illustrations contain reference letters (A, B, C etc.) that are intended to track lines and harnesses from one point to another. They are also used to show where to reconnect illustrations that have been separated.

13. ABBREVIATIONS AND SYMBOLS

O.D. – Outside Diameter
I.D. – Inside Diameter
A – Not Part Of This Group
B – Use As Required
C – Change From Previous Type
D – Order By The Meter
E – Order By The Centimeter
F – Not Shown
G – Order By The Inch
I – Refer To Hydraulic Information System
M – Metric Part
R – Remfg Part May Be Available
Y – Separate Illustration
Z – Not Serviced Separately

SIS *New Feature*

14. DESCRIPTION OF TYPE CHANGES

Type - A type is defined as any configuration change that requires an additional Information Element for an Arrangement, Group, or Assembly. If serial number breaks for types are not available, a type # (Type 1, Type 2, etc.) will be displayed in the caption. These "type" changes are identified with a "C" note (change from previous type) in the Parts List. Only the "types" that apply to this Parts Manual will be included. Additional types may exist causing "C" notes to appear on an Information Element when no other types are shown.

15.<END>

This symbol indicates the end of an information element.

NOTE:

Continuing improvement and advancement of product design may cause changes to your machine which may not be included in this publication. Whenever a question arises regarding your caterpillar product or this publication, please consult your caterpillar dealer for the latest available information.

FRAME AND BODY

8E-3299 PLATFORM GP-CAB

PIN 3SK1-99999

SMCS-7253 100090751

NOTE	REF NO	GRAPHIC REF	PART NUMBER	QTY	PART NAME (1 2 3 4 5 6 PRODUCT LEVEL)	SEE PAGE
	*	1	3T-3863	1	PLATE AS	
	2	1	6E-2062	25	BOLT (3/8-16X.750IN)	
	3	1	6P-1076	41	WASHER-HARD (3MM THK)	
	4	1	9P-1644	2	SUPPORT AS-FOOT	
	5	1	7P-2229	18	BOLT (1/2-13X1IN)	
		1	6P-[illegible]	18	WASHER-HARD (4MM THK)	
	6	1	6E-6136	*	COVER AS-LH	
		1	9F-2978	6	NUT-WELD (3/8-16 THD)	
		1	1P-0188	1	CLIP	
	7	1	7S-3411	4	COVER	
	8	1	9J-0488	18	SCREW-HEAD (3/8-16X.875IN)	
	9	1	[illegible]-4474	1	COVER	
		1	6E-[illegible]	*	GASKET	
	10	1	6E-3249	1	[illegible]	
		1	6E-3250	1	GASKET	
	11	1	3T-3638	1	HANDHOLD	
	12	1	6E-6676	1	COVER AS	
		1	9F-2978	8	NUT-WELD (3/8-16 THD)	
		1	6E-6678	1	GASKET	
	13	1	7T-0131	1	FLOORPLATE AS	
		1	1F-0748	4	NUT-WELD (1/2-13 THD)	
	14	1	7V-6067	1	PLUG-BUTTON	
	15	1	7T-0136	1	PLATE AS	
		1	9F-2978	5	NUT-WELD (3/8-16 THD)	
	16	1	7T-6066	1	COVER	
		1	7T-6779	1	GASKET	
	17	1	3T-3861	1	PLATE AS	
	18	1	6T-6264	4	BOLT (1/4-20X.625IN)	
M		1	9T-4205	4	WASHER-HARD (2MM THK)	
	19	1	6L-6494	1	FLOOR MAT	
	20	1	6E-6846	1	MODULE AS-OPERATOR	
	21	1	3T-3834	1	HANDHOLD	
	22	1	9P-6671	2	PLUG	
	23	2	6T-6264	4	BOLT (1/4-20X.625IN)	
M		2	9T-4205	4	WASHER-HARD (2MM THK)	
	24	2	6E-3062	17	BOLT (3/8-16X.750IN)	
	26	2	6P-1076	21	WASHER-HARD (3MM THK)	
	26	2	7T-0135	1	SEAL	
	27	2	7X-0075	2	BOLT (3/4-10X5IN)	
		2	7X-0682	2	WASHER-HARD (6MM THK)	
	28	2	3T-3462	2	PLATE	
	29	2	3T-3290	1	PLATE AS	
		2	7S-6828	8	SPACER	
	30	2	3T-6281	1	SEAL	
	31	2	7S-6817	1	GASKET	
	32	2	7S-6616	1	COVER AS	
		2	2R-3276	2	WASHER	
		2	6P-6626	2	SCREW-KNURLED	
	33	2	9W-3429	1	COVER	
	34	2	6E-6697	1	COVER	
	35	2	6D-3931	8	SCREW-SOCKET HEAD	
	36	2	9W-3142	8	MOUNTING	
	37	2	9W-6027	2	PLATE	
	38	2	7X-0090	2	BOLT (7/8-9X5IN)	
		2	7X-0672	2	WASHER-HARD	
	39	2	4L-6454	4	BOLT (3/8-16X1.0IN)	
	40	2	3T-4788	1	COVER	

12 FRAME AND BODY 1 of 4 SELP4570-01

FRAME AND BODY

8E-3299 PLATFORM GP-CAB (contd.)

100090751

NOTE	REF NO	GRAPHIC REF	PART NUMBER	QTY	PART NAME (1 2 3 4 5 6 PRODUCT LEVEL)	SEE PAGE
	41	2	6E-2516	1	COVER	
	42	2	7T-0134	1	PLATE	
	43	2	7T-0138	1	GASKET	
	44	2	7S-6724	1	GASKET	
	45	2	7S-6723	1	COVER	
	46	*	6V-1950	2	PLUG-BUTTON	

M-METRIC PART

SELP4570-01 2 of 4 FRAME AND BODY 13

FRAME AND BODY

8E-3299 PLATFORM GP-CAB (contd.)

100090751

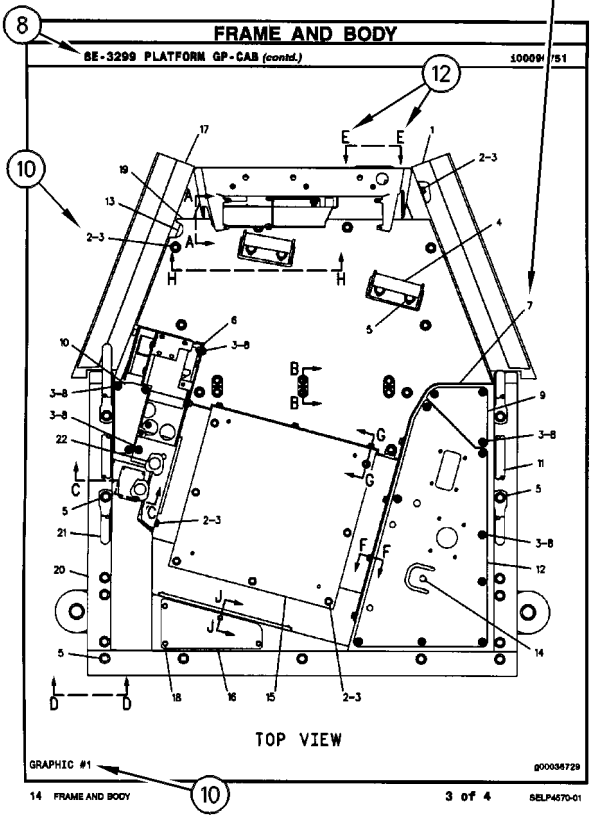

14 FRAME AND BODY 3 of 4 SELP4570-01

FRAME AND BODY

8E-3299 PLATFORM GP-CAB (contd.)

100090751

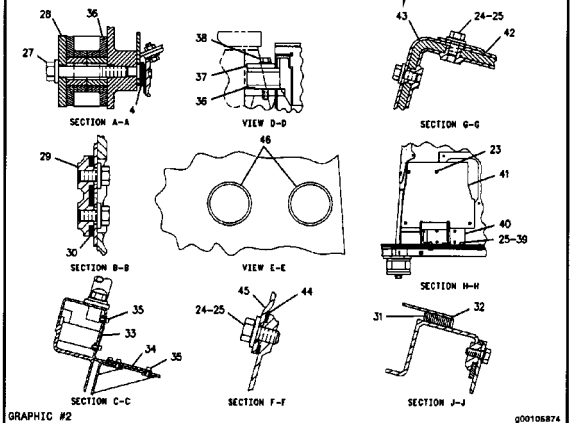

SELP4570-01 4 of 4 FRAME AND BODY 15

REPAIR ALTERNATIVES

REMANUFACTURED COMPONENTS

As an option when making repairs consider Caterpillar Remanufactured Components. Components that are available through the Caterpillar Remanufactured Program are identified three ways in the parts book:

- with the letter R in the note field of the parts list
- with an R* at the beginning of the first line of the caption
- with an *R at the end of the first line of the caption

Typical components included in the Remanufacturing Program include:

ALTERNATORS
CONNECTING RODS
CRANKSHAFTS - UNDERSIZE
CRANKSHAFTS - UPGRADE TO NEW
CYLINDER HEADS
ELECTRONIC CONTROL MODULES (ECM)
ELECTRONIC SENSORS
FUEL INJECTORS
FUEL NOZZLES
FUEL PUMPS
GOVERNORS
OIL PUMPS
PISTONS
SHORT BLOCKS
STARTERS
TURBOCHARGERS - COMPLETE
TURBOCHARGER CARTRIDGES
WATER PUMPS

Caterpillar Remanufactured engines for many engine arrangements are also available.

SUPPLEMENTAL COOLANT ADDITIVES

CUSTOMER BENEFITS:

Protects against cavitation, foam, erosion, corrosion, and scale buildup in cooling systems.

- Provides measured coolant conditioner.

DESCRIPTION:

Additives deplete from the coolant with normal operation. For this reason, Supplemental Coolant Additives (SCA) must be added to all heavy duty coolants at regular intervals. In addition, when not using a fully formulated, pre-charged antifreeze, like Caterpillar's DEAC, an initial charge of SCA must be added to the cooling system. The amount of SCA added to the system is dependent on the capacity of the system.

The SCA for initial fill is provided as a liquid. SCA's for maintenance intervals are available in liquid form and as a spin-on element. (No Spin-on available for 3600 Family of Engines)

NOTE:

The amount of SCA added at initial fill is not the same as the amount added at maintenance intervals.

The coolant additive elements can be used with any ethylene or propylene glycol type antifreeze which meets ASTM D4985 or ASTM D5345 Specifications.

NOTE:

For use with standard heavy duty coolant only, not for use with Extended Life Coolant.

PARTS NEEDED:

Cooling System Capacity		Liquid SCA at Initial Fill	Liquid SCA at Maintenance*	Spin-on SCA Maintenance Element*
Liters	Gallons			
22-30	(6-8)	3P-2044 (1)	6V-3542 (1)	111-2370 (1)
30-38	(8-10)	3P-2044 (1) 6V-3542 (1)	111-2372 (1)	111-2369 (1)
38-49	(10-13)	3P-2044 (1) 8T-1589 (1)	111-2372 (1)	111-2369 (1)
49-64	(13-17)	3P-2044 (2)	8T-1589 (1)	9N-3368 (1)
64-83	(17-22)	3P-2044 (2) 8T-1589 (1)	111-2372 (1) 6V-3542 (1)	111-2371 (1)
83-114	(22-30)	3P-2044 (3) 8T-1589 (1)	3P-2044 (1)	9N-3718 (1)
114-163	(30-43)	3P-2044 (5)	3P-2044 (1) 6V-3542 (1)	111-2371 (2)
163-242	(43-64)	3P-2044 (8)	3P-2044 (2)	9N-3718 (2)

** Normal maintenance period is 250 hrs. See your Operation and Maintenance Manual for complete coolant maintenance instructions.*

( ) Indicates quantity required.

MAINTENANCE PARTS

DESCRIPTION	PART NUMBER	QTY	WHERE USED	PAGE
AIR INLET AND EXHAUST SYSTEM				
FILTER ELEMENT AS-AIR (PRIMARY)	206-5234	1	AIR CLEANER GP	83
FILTER ELEMENT AS-AIR (SECONDARY)	206-5235	1	AIR CLEANER GP	83
BASIC ENGINE				
CAP AS (ENGINE OIL FILLER)	136-3608	1	COVER GP-VALVE MECHANISM	17
		1	COVER GP-VALVE MECHANISM	19
		1	COVER GP-VALVE MECHANISM	21
		1	COVER GP-VALVE MECHANISM	23
CAP-OIL FILLER (ENGINE)	130-9888	1	COVER GP-VALVE MECHANISM	15
		1	COVER GP-VALVE MECHANISM	17
		1	COVER GP-VALVE MECHANISM	19
		1	COVER GP-VALVE MECHANISM	21
		1	COVER GP-VALVE MECHANISM	23
GASKET (VALVE COVER)	225-6451	1	COVER GP-VALVE MECHANISM	15
		1	COVER GP-VALVE MECHANISM	17
		1	COVER GP-VALVE MECHANISM	19
		1	COVER GP-VALVE MECHANISM	21
		1	COVER GP-VALVE MECHANISM	23
PLUG-DRAIN (ENGINE OIL)	7C-0351	2	PAN GP-OIL	49
		2	PAN GP-OIL	51
V-BELT SET (INCLUDES 2-BELTS) (FAN DRIVE)	128-5397	1	DRIVE GP-FAN	38
	247-0099	1	DRIVE GP-FAN	37
COOLING SYSTEM				
CAP AS-VENTED (COOLANT RECOVERY)	229-3469		RECOVERY GP-COOLANT	82
CAP-PRESSURE (16-PSI) (RADIATOR)	211-6574	1	RADIATOR & HYD OIL COOLER GP	80
CONNECTION GP-WATER (TEMPERATURE REGULATOR)	254-2269	1	CONNECTION GP-WATER	70
REGULATOR-WATER TEMPERATURE	225-6908	1	CONNECTION GP-WATER	69
V-BELT SET (INCLUDES 2-BELTS) (FAN DRIVE)	3N-1491	1	FAN GP-SUCTION	75

MAINTENANCE PARTS

DESCRIPTION	PART NUMBER	QTY	WHERE USED	PAGE
ELECTRICAL AND STARTING SYSTEM				
BATTERY (12-VOLT, MAINTENANCE FREE, WET)	3T-5760	2	BATTERY & WIRING GP	122
		2	BATTERY & WIRING GP	124
CIRCUIT BREAKER AS (60-AMPERE) (ALTERNATOR)	171-2208	1	WIRING GP-MACHINE	152
		1	WIRING GP-MACHINE	155
CIRCUIT BREAKER AS (60-AMPERE) (GLOW PLUG)	171-2208	1	WIRING GP-MACHINE	152
		1	WIRING GP-MACHINE	155
CIRCUIT BREAKER AS (60-AMPERE) (MAIN)	171-2208	1	WIRING GP-MACHINE	152
		1	WIRING GP-MACHINE	155
FLASHER AS	8V-2514	1	LIGHTING GP-SIGNAL	140
FUSE (10-AMPERE)	3K-8782	1	LIGHTING GP-SIGNAL	140
GLOW PLUG (24-VOLT)	226-8770	4	GLOW PLUG GP	129
KEY (BATTERY DISCONNECT)	8H-5306	1	SWITCH GP-DISCONNECT	144
LAMP	127-1559	1	LAMP GP-SIGNAL	136
	127-1560	1	LAMP GP-SIGNAL	137
LAMP (24-VOLT) (TURN SIGNAL, HAZARD)	7N-5876	1	LIGHTING GP-SIGNAL	140
LAMP (24-VOLT, 10-WATT) (SIGNAL)	5C-8315	1	LAMP GP-SIGNAL	134
		1	LAMP GP-SIGNAL	135
		1	LAMP GP-SIGNAL	136
		1	LAMP GP-SIGNAL	137
LAMP (24-VOLT, 21-WATT) (SIGNAL)	5C-9584	1	LAMP GP-SIGNAL	134
		1	LAMP GP-SIGNAL	135
		2	LAMP GP-SIGNAL	136
		2	LAMP GP-SIGNAL	137
LAMP (FRONT, LH)	118-9024	1	LAMP GP-SIGNAL	134
LAMP (FRONT, RH)	118-6650	1	LAMP GP-SIGNAL	135
LAMP AS-INDICATOR (RED) (TURN SIGNAL, HAZARD)	2N-2371	1	LIGHTING GP-SIGNAL	140
LAMP-HALOGEN (24-VOLT, 65-WATT) (FLOODLIGHT)	9X-3463	1	LAMP GP-FLOOD	130
		1	LAMP GP-FLOOD	131
		1	LAMP GP-FLOOD	132
		1	LAMP GP-FLOOD	133
FRAME AND BODY				
CAP AS (WATER TANK)	7R-8588	1	FRAME GP-MAIN	194
		1	FRAME GP-MAIN	196
		1	FRAME GP-MAIN	198
PLUG (PIPE)	3J-5390	3	FRAME GP-MAIN	194
STRAINER (WATER TANK)	7R-0476	1	FRAME GP-MAIN	194
		1	FRAME GP-MAIN	196
		1	FRAME GP-MAIN	198

MAINTENANCE PARTS

DESCRIPTION	PART NUMBER	QTY	WHERE USED	PAGE
FUEL SYSTEM				
CAP AS-FILLER (FUEL)	7T-2036	1	TANK GP-FUEL	119
FILTER ELEMENT-FUEL (FUEL CAP)	4B-1663	1	TANK GP-FUEL	119
	4B-5949	1	TANK GP-FUEL	119
FILTER ELEMENT-WTR SEP & FUEL	1R-1804	1	PUMP GP-FUEL PRM & PRIM FILTER	116
		1	PUMP GP-FUEL PRM & PRIM FILTER	117
SEAL (FUEL FILTER)	207-2757	1	PUMP GP-FUEL PRM & PRIM FILTER	116
		1	PUMP GP-FUEL PRM & PRIM FILTER	117
STRAINER-FUEL (TANK)	9P-7121	1	TANK GP-FUEL	119
HYDRAULIC SYSTEM				
CAP & STRAINER GP-HYD OIL FILL	127-5113	1	TANK GP-HYDRAULIC	286
CAP-FILLER (HYDRAULIC TANK)	7H-1447	1	CAP & STRAINER GP-HYD OIL FILL	243
FILTER-OIL (ADVANCED EFFICIENCY) (HYDRAULIC)	1G-8878	1	FILTER & MTG GP-HYDRAULIC	246
SCREEN-SUCTION (HYDRAULIC OIL)	145-0878	3	TANK & MTG GP-HYDRAULIC	284
	154-0868	1	STRAINER GP	283
STRAINER (HYDRAULIC TANK)	9J-3047	1	CAP & STRAINER GP-HYD OIL FILL	243
LUBRICATION SYSTEM				
FILTER AS-ENGINE OIL	7W-2326	1	FILTER GP-ENGINE OIL	67
OPERATOR STATION				
CIRCUIT BREAKER AS (15-AMPERE) (GOVERNOR CONTROL)	6T-3643	1	PLATFORM GP-OPERATOR	351
		1	PLATFORM GP-OPERATOR	354
		1	PLATFORM GP-OPERATOR	357
CIRCUIT BREAKER AS (15-AMPERE) (LIGHTS)	6T-3643	1	PLATFORM GP-OPERATOR	351
		1	PLATFORM GP-OPERATOR	354
		1	PLATFORM GP-OPERATOR	357
FUSE (10-AMPERE)	3K-8782	5	CONSOLE GP-INSTRUMENT	322
		5	CONSOLE GP-INSTRUMENT	324
FUSE (15-AMPERE)	8M-8948	1	CONSOLE GP-INSTRUMENT	322
		1	CONSOLE GP-INSTRUMENT	324
LAMP (24-VOLT)	107-1983	3	CONSOLE GP-INSTRUMENT	322
		3	CONSOLE GP-INSTRUMENT	324
LAMP (24-VOLT) (ALTERNATOR)	7N-5876	1	CONSOLE GP-INSTRUMENT	322
		1	CONSOLE GP-INSTRUMENT	324
LAMP (24-VOLT) (PARKING BRAKE)	116-5270	1	CONSOLE GP-OPERATOR	326
		1	CONSOLE GP-OPERATOR	328
		1	CONSOLE GP-OPERATOR	331
		1	CONSOLE GP-OPERATOR	333
		1	CONSOLE GP-OPERATOR	335
		1	CONSOLE GP-OPERATOR	338
LAMP AS-INDICATOR (RED) (ALTERNATOR)	2N-2371	1	CONSOLE GP-INSTRUMENT	322
SEAT BELT GP (RETRACTABLE, 76-MM)	230-6367	1	SEAT GP	363
		1	SEAT GP	365
		1	SEAT GP-SUSPENSION	367

MAINTENANCE PARTS

DESCRIPTION	PART NUMBER	QTY	WHERE USED	PAGE
POWER TRAIN				
KEY	136-8622	1	DIFFERENTIAL GP	164
LAMP (24-VOLT, 3-WATT) (SPEEDOMETER)	115-1748	1	MOTOR & MTG GP-PROPEL	174
STEERING SYSTEM				
GASKET	077-4101	1	BAR GP-OSCILLATING & STEERING	224
		1	BAR GP-OSCILLATING & STEERING	226
WATER SYSTEM				
CAP AS	7R-8588	1	TANK GP-WATER	318
CAP AS-FILLER (WATER TANK)	4W-3087	1	SPRAY GP-WATER	308
		1	SPRAY GP-WATER	311
		1	SPRAY GP-WATER	314
CAP-FUEL (ADDITIVE TANK)	111-4053	1	SPRAY GP-ADDITIVE	298
		1	SPRAY GP-ADDITIVE	302
FILTER-WATER	148-3046	1	FILTER GP-WATER	293
FUSE (10-AMPERE)	3K-8782	1	SPRAY GP-ADDITIVE	298
FUSE (10-AMPERE) (REAR WIPER)	3K-8782	1	SPRAY GP-ADDITIVE	302
		1	SPRAY GP-ADDITIVE	305
FUSE (15-AMPERE)	8M-8948	1	SPRAY GP-WATER	309
		1	SPRAY GP-WATER	312
		1	SPRAY GP-WATER	315
PLUG	3J-5390	2	SPRAY GP-WATER	314
SCREEN (ADDITIVE TANK)	9R-5895	1	SPRAY GP-ADDITIVE	298
		1	SPRAY GP-ADDITIVE	302
		1	SPRAY GP-ADDITIVE	305
STRAINER (ADDITIVE SPRAY)	140-3562	1	SPRAY GP-ADDITIVE	298
		1	SPRAY GP-ADDITIVE	302
		1	SPRAY GP-ADDITIVE	305
STRAINER (WATER SPRAY)	140-3138	9	SPRAY GP-WATER	308
		9	SPRAY GP-WATER	311
		9	SPRAY GP-WATER	314
STRAINER (WATER TANK FILL)	7R-0476	1	TANK GP-WATER	318

INDEX

Name	Page
A	
ADAPTER GP	177
ADJUSTER GP-HEIGHT (SUSPENSION SEAT)	368
AFTERCOOLER AS	80
AIR CLEANER GP	84
AIR CLEANER GP–ENGINE	83
ALARM GP	120
ALARM GP (BACKUP)	151
ALTERNATOR GP-CHARGING	121
AXLE GP-DRIVE	159
AXLE GP-FRONT	161
B	
BALLAST GP-FRAME	192
BAR GP-OSCILLATING & STEERING	224, 226
BATTERY & WIRING GP	122, 124
BATTERY (12-VOLT, MAINTENANCE FREE, WET)	122, 124
BRAKE GP-PARKING	209, 211, 213
C	
CABLE GP-PROPEL–SLIDING PLATFORM	320
CABLE GP-PROPEL–STATIONARY PLATFORM	319
CAMSHAFT GP	12
CANOPY GP	321
CAP & STRAINER GP-HYD OIL FILL	243, 286
CAP AS	318
CAP AS (ENGINE OIL FILLER)	17, 19, 21, 23
CAP AS (WATER TANK)	194, 196, 198
CAP AS-FILLER (FUEL)	119
CAP AS-FILLER (WATER TANK)	308, 311, 314
CAP AS-VENTED (COOLANT RECOVERY)	82
CAP-FILLER (HYDRAULIC TANK)	243
CAP-FUEL (ADDITIVE TANK)	298, 302
CAP-OIL FILLER (ENGINE)	15, 17, 19, 21, 23
CAP-PRESSURE (16-PSI) (RADIATOR)	80
CHASSIS AR	1
CIRCUIT BREAKER AS (15-AMPERE) (GOVERNOR CONTROL)	351, 354, 357
CIRCUIT BREAKER AS (15-AMPERE) (LIGHTS)	351, 354, 357
CIRCUIT BREAKER AS (60-AMPERE) (ALTERNATOR)	152, 155
CIRCUIT BREAKER AS (60-AMPERE) (GLOW PLUG)	152, 155
CIRCUIT BREAKER AS (60-AMPERE) (MAIN)	152, 155
COMMON AR	1
CONNECTION GP-WATER	69, 70
CONNECTION GP-WATER (TEMPERATURE REGULATOR)	70
CONSOLE GP-INSTRUMENT	322, 324
CONSOLE GP-OPERATOR	333, 335, 338
CONSOLE GP-OPERATOR–STATIONARY PLATFORM	326, 328, 331
CONTROL GP-HANDLE–PROPEL LEVER	340
CONTROL GP-HYDRAULIC	244
CONTROL GP-STEERING	228
CONVERTER GP-ELECTRICAL	127
COOLER GP-ENGINE OIL	71, 72, 73
COOLER GP-FLTR BASE & ENG OIL	73, 74
COOLER GP-HYDRAULIC OIL	80
COVER GP-ACCESS–WITHOUT ADDITIVE SPRAY	193
COVER GP-FRONT HOUSING	13, 14
COVER GP-VALVE MECHANISM	15, 17, 19, 21, 23
CRANKSHAFT GP	25

INDEX

Name	Page
	27
	29
CYLINDER & MTG GP-STEERING	229
CYLINDER BLOCK GP	30
	32
	33
CYLINDER GP-HYDRAULIC–STEERING	245
CYLINDER HEAD GP	34
	35
	36
D	
DIAPHRAGM (CRANKCASE PRESSURE CONTACTOR)	15
	17
	19
DIFFERENTIAL GP	162
	164
DRAIN AS (FUEL FILTER)	116
	117
DRIVE GP-FAN	37
	38
DRIVE GP-PUMP	39
E	
ELBOW GP-AIR INLET	85
ELECTRICAL AR	128
ENGINE AR	2
	3
	4
	5
	6
ENGINE AR-PRIMARY	7
	8
	9
	10
F	
FAN GP-SUCTION	75
FASTENER GP	159
	167
	170
FASTENER GP (PARKING BRAKE)	209
	211
FASTENER GP-SEAT	367
FILLER GP-ENGINE OIL	15
	17
	19
	21
FILM GP–ENGLISH	371
FILM GP–UNIVERSAL	372
FILM-IDENTIFICATION (CIRCUIT PANEL)	152
	155
FILM-IDENTIFICATION (WATER FOR WATER SPRAY)	305
FILM-PANEL (INSTRUMENT)	322
	324
FILM-PANEL (SIDE CONSOLE)	326
	328
	331
	333
	335
	338
FILM-WARNING (HOT FLUID UNDER PRESSURE, U.S.)	371
FILTER & MTG GP-HYDRAULIC	246
FILTER AS-ENGINE OIL	67
FILTER BASE & ENG OIL COOLER	73
	74
FILTER ELEMENT AS-AIR (PRIMARY)	83
FILTER ELEMENT AS-AIR (SECONDARY)	83
FILTER ELEMENT-FUEL (FUEL CAP)	119
FILTER ELEMENT-WTR SEP & FUEL	116
	117
FILTER GP-ENGINE OIL	67
FILTER GP-OIL (HYDRAULIC)	246
FILTER GP-WATER	293
FILTER-OIL (ADVANCED EFFICIENCY) (HYDRAULIC)	246
FILTER-WATER	293
FLASHER AS	140
FLYWHEEL GP	40
FRAME GP-MAIN	194
	196
	198
FRAME GP-TIRE SCRAPER	200
	201
FUSE (10-AMPERE)	140
	298
	322
	324
FUSE (10-AMPERE) (REAR WIPER)	302
	305
FUSE (15-AMPERE)	309
	312
	315
	322
	324
G	
GASKET	224
	226
GASKET (VALVE COVER)	15
	17
	19
	21

INDEX

Name	Page
	23
GAUGE AS-OIL LEVEL (DIPSTICK) (ENGINE)	49
	51
GAUGE GP-COOLANT TEMPERATURE (ENGINE)	322
	324
GAUGE GP-OIL TEMPERATURE (HYDRAULIC)	322
	324
GAUGE GP-SIGHT–FUEL TANK	92
GAUGE-LIQUID LEVEL (HYDRAULIC TANK)	284
GLOW PLUG (24-VOLT)	129
GLOW PLUG GP	129
GOVERNOR GP	93
	95
	97
GUARD GP-VANDALISM	341

H

HARNESS AS-CONSOLE	328
	331
	335
	338
HARNESS AS-CONSOLE (SIDE)	326
	333
HARNESS AS-ENGINE	152
	155
HARNESS AS-LIGHTING (TURN SIGNAL)	134
	135
	136
	137
HARNESS AS-LIGHTING (WORK LIGHTS, FRONT)	138
HARNESS AS-PANEL	322
HARNESS AS-PANEL (INSTRUMENT)	324
HARNESS AS-PLATFORM	353
	357
HARNESS AS-SENSOR (SPEED)	174
HARNESS AS-WIRING (PROPEL LEVER)	343
HARNESS AS-WIRING (SPEEDOMETER) (PROPEL MOTOR)	174
HARNESS AS-WIRING (WATER SPRAY)	308
	311
	314
HEAD GP-PUMP	248
HOOD GP-ENGINE	202
	204
HORN AS (24-VOLT, LOW TONE)	342
HORN GP-ELECTRIC	342
HOUSING GP-FLYWHEEL	41
HOUSING GP-FRONT	42
	44
HUB GP-WHEEL	166
HYDRAULIC AR	249
HYDRAULIC AR-AUXILIARY	249

I

INDICATOR AS (ENGINE OIL PRESSURE)	322
	324
INDICATOR-AIR FILTER SERVICE	84
INSTALLATION AR-ENGINE	11

K

KEY	164
KEY (BATTERY DISCONNECT)	144
KIT-ADJUSTER	368
KIT-BEARING (STEERING METERING PUMP)	241
KIT-CHECK VALVE (STEERING METERING PUMP)	241
KIT-PUMP ROTATING GROUP (ROTATING GROUP)	281
KIT-RECEPTACLE (12-PIN)	333
KIT-RECEPTACLE (2-PIN)	93
	97
	308
	311
KIT-SEAL (PUMP HEAD RELIEF VALVE)	248
KIT-SEAL (STEERING METERING PUMP)	241
KIT-SERVICE METER	322
KIT-SPRING (STEERING METERING PUMP)	241

L

LAMP	136
	137
LAMP (24-VOLT)	322
	324
LAMP (24-VOLT) (ALTERNATOR)	322
	324
LAMP (24-VOLT) (PARKING BRAKE)	326
	328
	331
	333
	335
	338
LAMP (24-VOLT) (TURN SIGNAL, HAZARD)	140
LAMP (24-VOLT, 10-WATT) (SIGNAL)	134
	135
	136
	137
LAMP (24-VOLT, 21-WATT) (SIGNAL)	134
	135
	136
	137
LAMP (24-VOLT, 3-WATT) (SPEEDOMETER)	174
LAMP (FRONT, LH)	134

INDEX

Name	Page
LAMP (FRONT, RH)	135
LAMP AS-INDICATOR (RED) (ALTERNATOR)	322
LAMP AS-INDICATOR (RED) (TURN SIGNAL, HAZARD)	140
LAMP GP-FLOOD	130, 131, 132, 133
LAMP GP-SIGNAL–FRONT, LH	134
LAMP GP-SIGNAL–FRONT, RH	135
LAMP GP-SIGNAL–REAR, LH	137
LAMP GP-SIGNAL–REAR, RH	136
LAMP-HALOGEN (24-VOLT, 65-WATT) (FLOODLIGHT)	130, 131, 132, 133
LEVER GP-PROPEL	326, 328, 333, 335, 343, 345, 347
LIFTING GP-ENGINE	46
LIGHTING GP-FLOOD	138
LIGHTING GP-SIGNAL	140
LINES GP-AIR	86, 87, 88
LINES GP-BRAKE & SHIFT	215
LINES GP-DRAIN–FUEL TANK	99
LINES GP-FLUSHING–BRAKE, DIFFERENTIAL	250
LINES GP-FUEL	100
LINES GP-HYDRAULIC FILTER	255, 256, 257
LINES GP-HYDRAULIC OIL COOLER	258
LINES GP-HYDRAULIC–PROPEL	252, 253, 254
LINES GP-STEERING	234
LINES GP-STEERING–SLIDING PLATFORM	235, 237
LINES GP-STEERING–STATIONARY PLATFORM	230, 232

M

Name	Page
MAT & MTG GP-WATER	294
MODULE GP-TIMER	351
MODULE GP-TIMER (GOVERNOR CONTROL)	353
	356
MOTOR & MTG GP-PROPEL	167, 170, 172, 173
MOTOR & MTG GP-PROPEL–LH, SPEEDOMETER	174
MOTOR GP-PISTON	264, 265
MOTOR GP-PISTON–LH PROPEL, SPEEDOMETER	266
MOTOR GP-PISTON–PROPEL	260, 262
MOUNTING GP-ENGINE	47
MOUNTING GP-ENGINE FLEXIBLE	48
MUFFLER GP	89

O

Name	Page
OPERATOR AR–SLIDING PLATFORM	349
OPERATOR AR–STATIONARY PLATFORM	349

P

Name	Page
PADLOCK GP	373, 375
PAN GP-OIL–ENGINE	49, 51
PISTON & ROD GP	53, 55
PLATE & FILM GP	373, 375
PLATFORM GP-OPERATOR	350
PLATFORM GP-OPERATOR–SLIDING	353, 356
PLATFORM GP-OPERATOR–STATIONARY	351
PLUG	193, 314
PLUG (PIPE)	194
PLUG GP-ENGINE	56, 57, 58
PLUG-DRAIN (ENGINE OIL)	49, 51
POTENTIOMETER (WATER SPRAY)	314
POWER TRAIN AR	176
PULLEY GP-CRANKSHAFT	59
PUMP & MTG GP-AUXILIARY	267
PUMP & MTG GP-PROPEL	177
PUMP & MTG GP-STEERING	239
PUMP GP-ADDITIVE SPRAY	296
PUMP GP-CHARGE	268
PUMP GP-ENGINE OIL	68
PUMP GP-FUEL INJECTION	101, 104

INDEX

Name	Page
	105
	106
	107
	110
PUMP GP-FUEL PRM & PRIM FILTER	112
	114
	116
	117
PUMP GP-GEAR (STEERING)	239
PUMP GP-GEAR–AUXILIARY	270
PUMP GP-GEAR–STEERING	269
PUMP GP-HAND–PARKING BRAKE RELEASE	216
	217
PUMP GP-METERING–STEERING	241
PUMP GP-PISTON–PROPEL	271
	272
	274
PUMP GP-WATER	76
PUMP GP-WATER SPRAY	297
	308
	311
	314

R

RADIATOR & HYD OIL COOLER GP	78
	80
RADIATOR GP	80
RAIL GP-SLIDER	360
RECOVERY GP-COOLANT	82
REGULATOR-WATER TEMPERATURE	69
RELAY AS (24-VOLT) (BRAKE RELAY ONE)	351
	353
	356
RELAY AS (24-VOLT) (BRAKE RELAY TWO)	351
	353
	356
RELAY AS (24-VOLT) (NEUTRAL START RELAY ONE)	351
	353
	356
RELAY AS (24-VOLT) (NEUTRAL START RELAY THREE)	351
	353
	356
RELAY AS (24-VOLT) (NEUTRAL START RELAY TWO)	351
	353
	356
RELAY AS (24-VOLT) (TIMER)	308
	311
	314
RIM GP-DEMOUNTABLE	180
	183
	191
ROCKER ARM GP	60
ROPS GP	361
ROTATING GP-MOTOR–CONTROL	277
ROTATING GP-MOTOR–PROPEL	276
ROTATING GP-PUMP–PROPEL PISTON PUMP	279
	281

S

SCREEN (ADDITIVE TANK)	298
	302
	305
SCREEN-SUCTION (HYDRAULIC OIL)	283
	284
SEAL (FUEL FILTER)	116
	117
SEAL GP-DUO-CONE	162
	164
SEAT BELT GP (RETRACTABLE, 76-MM)	363
	365
	367
SEAT GP	362
	363
	365
SEAT GP-SUSPENSION–VINYL	367
	368
SENDER AS-PRESSURE (ENGINE OIL)	153
	156
SENDER AS-TEMPERATURE (ENGINE COOLANT)	153
	156
SENDER-TEMPERATURE (HYDRAULIC OIL)	284
SERVICE GP-ENGINE	61
	62
SHAFT GP-DRIVE	181
SKIRT GP-TIRE	206
SOLENOID	142
SOLENOID (GOVERNOR)	97
SOLENOID GP-THROTTLE (GOVERNOR)	93
	95
SOLENOID GP-THROTTLE–GOVERNOR	142
SPEEDOMETER AS-ELECTRONIC	174
SPRAY GP-ADDITIVE	298
	302
	305
SPRAY GP-WATER	308
	311
	314
STARTING MOTOR GP-ELECTRIC	143
STRAINER (ADDITIVE SPRAY)	298
	302
	305
STRAINER (HYDRAULIC TANK)	243

INDEX

Name	Page
STRAINER (WATER SPRAY)	308, 311, 314
STRAINER (WATER TANK FILL)	318
STRAINER (WATER TANK)	194, 196, 198
STRAINER GP–BRAKE, DIFFERENTIAL FLUSHING	283
STRAINER-FUEL (TANK)	119
SUPPORT GP-SEAT	370
SWITCH AS-MAGNETIC (START RELAY)	147
SWITCH AS-PUSH BUTTON (PARKING BRAKE)	326, 328, 331, 333, 335, 338
SWITCH AS-PUSH BUTTON (VIBRATORY CONTROL)	340
SWITCH AS-TOGGLE (SPEED SELECT)	326, 329, 331, 333, 336, 338
SWITCH AS-TOGGLE (THROTTLE LOCK ON, OFF)	322, 324
SWITCH AS-TOGGLE (WATER SPRAY CONTROL)	308, 311, 314
SWITCH GP-DISCONNECT–BATTERY	144
SWITCH GP-MAGNETIC	145
SWITCH GP-MAGNETIC–MAIN RELAY	148
SWITCH GP-MAGNETIC–START RELAY	146, 147
SWITCH GP-PUSH BUTTON (HORN)	326, 328, 331, 333, 335, 338
SWITCH GP-ROTARY (TURN SIGNAL, HAZARD)	140
SWITCH GP-ROTARY–FLOODLIGHTS	149
SWITCH GP-START–ENGINE, KEY	150
SWITCH-LIMIT	288
SWITCH-TEMPERATURE	110
SWITCH-TEMPERATURE (ENGINE COOLANT)	107
SWITCH-TEMPERATURE (TIMING ADVANCE)	101
SWITCH-TOGGLE (ADDITIVE SPRAY CONTROL)	298, 302, 305
SWITCH-TOGGLE (START AID)	324
SWITCH-TOGGLE (STARTING AID)	322

T

Name	Page
TANK & MTG GP-FUEL	118
TANK & MTG GP-HYDRAULIC	284
TANK GP-COOLANT	82
TANK GP-FUEL	119
TANK GP-HYDRAULIC	286
TANK GP-WATER	318
TIRE & RIM GP	182, 183
TURBOCHARGER GP	90

V

Name	Page
V-BELT SET (INCLUDES 2-BELTS) (FAN DRIVE)	37, 38, 75
VALVE GP (TIRE INFLATION)	182, 188
VALVE GP-BRAKE & SHIFT	218
VALVE GP-BRAKE CONTROL	220, 222
VALVE GP-CHECK (BRAKE, DIFFERENTIAL FLUSHING)	250
VALVE GP-FLUSHING–PROPEL MOTOR	287
VALVE GP-PUMP CONTROL–PROPEL	288
VALVE GP-RELIEF (CHARGE PRESSURE)	248
VALVE GP-RELIEF (MULTIFUNCTION)	248
VALVE GP-RELIEF (PRESSURE OVERRIDE)	248
VALVE GP-RELIEF–CHARGE PRESSURE	290
VALVE GP-RELIEF–PRESSURE OVERRIDE	291
VALVE GP-SHUTOFF (ENGINE OIL)	62
VALVE GP-SOLENOID (24-VOLT) (FUEL SHUTOFF)	104, 105, 106
VALVE GP-SOLENOID (BRAKE)	218
VALVE GP-SOLENOID (SHIFT)	218
VALVE GP-SPEED SENSING	292
VALVE MECHANISM GP	64, 65
VALVE-BYPASS (HYDRAULIC OIL COOLER)	258
VALVE-RELIEF (AXLE, FRONT)	161

W

Name	Page
WARNING GP-BACKUP	151

INDEX

Name	Page	Name	Page
WHEEL & TIRE GP	184		
	185		
	186		
	187		
	188		
	189		
	190		
	191		
WIRING GP-MACHINE	152		
	155		

MACHINE ARRANGEMENT

246-8992 CHASSIS AR

S/N: PJF1-UP

PART OF 246-8991 COMMON AR

SMCS-7000 **i02593505**

NOTE	PART NUMBER	QTY	PART NAME 1 2 3 4 5 6 (PRODUCT LEVEL)	SEE PAGE
Y	*131-2374*	1	BAR GP-OSCILLATING & STEERING	224
Y	*246-8993*	1	FRAME GP-MAIN	194
Y	*204-6469*	1	FRAME GP-TIRE SCRAPER	200
Y	*249-2734*	1	HOOD GP-ENGINE	202
Y	*131-2324*	1	LINES GP-DRAIN (FUEL TANK)	99
Y	*131-2392*	1	MAT & MTG GP-WATER	294
Y	*246-8995*	1	PLATE & FILM GP	373
Y	*246-9014*	1	TANK & MTG GP-FUEL	118
Y	*246-9018*	1	TANK & MTG GP-HYDRAULIC	284

Y-SEPARATE ILLUSTRATION

<END>

246-8991 COMMON AR

S/N: PJF1-UP

SMCS-7000 **i03545224**

NOTE	PART NUMBER	QTY	PART NAME 1 2 3 4 5 6 (PRODUCT LEVEL)	SEE PAGE
Y	*246-8992*	1	CHASSIS AR	1
Y	*246-9027*	1	ELECTRICAL AR	128
YR	**177-9752**	1	ENGINE AR-PRIMARY	7
			S/N: PJF1-362	
Y	*246-9028*	1	HYDRAULIC AR	249
Y	*246-9026*	1	HYDRAULIC AR-AUXILIARY	249
Y	*246-8996*	1	INSTALLATION AR-ENGINE	11
			S/N: PJF1-467	
Y	*212-5931*	1	POWER TRAIN AR	176
Y	*135-5152*	1	ROPS GP	361
Y	*256-2424*	1	SPRAY GP-WATER	308

R-REMFG PART MAY BE AVAILABLE
Y-SEPARATE ILLUSTRATION

<END>

ENGINE ARRANGEMENT

304-6910 ENGINE AR

S/N: PJF1-UP

AN ATTACHMENT

SMCS-1000 **i02703492**

NOTE	PART NUMBER	QTY	PART NAME 1 2 3 4 5 6 (PRODUCT LEVEL)	SEE PAGE
Y	**297-4055**	1	ENGINE AR-PRIMARY	9

Y-SEPARATE ILLUSTRATION

ENGINE ARRANGEMENT

304-7046 ENGINE AR

S/N: PJF1-UP

AN ATTACHMENT

SMCS-1000 **i02703502**

NOTE	PART NUMBER	QTY	PART NAME 1 2 3 4 5 6 (PRODUCT LEVEL)	SEE PAGE
Y	**297-4047**	1	ENGINE AR-PRIMARY	8

Y-SEPARATE ILLUSTRATION

ENGINE ARRANGEMENT

331-0143 ENGINE AR

S/N: PJF1-UP

AN ATTACHMENT

SMCS-1000 **i03538646**

NOTE	PART NUMBER	QTY	PART NAME 1 2 3 4 5 6 (PRODUCT LEVEL)	SEE PAGE
Y	**329-2197**	1	ENGINE AR-PRIMARY	10
Y	*246-8996*	1	INSTALLATION AR-ENGINE	11

Y-SEPARATE ILLUSTRATION

ENGINE ARRANGEMENT

342-5796 ENGINE AR

S/N: PJF1-UP

AN ATTACHMENT

SMCS-1000 **i03538645**

NOTE	PART NUMBER	QTY	PART NAME 1 2 3 4 5 6 (PRODUCT LEVEL)	SEE PAGE
YR	**297-4055**	1	ENGINE AR-PRIMARY	9
Y	*246-8996*	1	INSTALLATION AR-ENGINE	11

R-REMFG PART MAY BE AVAILABLE
Y-SEPARATE ILLUSTRATION

ENGINE ARRANGEMENT

342-5797 ENGINE AR

S/N: PJF1-UP

AN ATTACHMENT

SMCS-1000 **i03538644**

NOTE	PART NUMBER	QTY	PART NAME 1 2 3 4 5 6 (PRODUCT LEVEL)	SEE PAGE
Y	**297-4047**	1	ENGINE AR-PRIMARY	8
Y	*246-8996*	1	INSTALLATION AR-ENGINE	11

Y-SEPARATE ILLUSTRATION

ENGINE ARRANGEMENT

177-9752 ENGINE AR-PRIMARY

S/N: CRS2700-UP
97 BRAKE KW (129 BHP) AT 2200 RPM
PART OF 246-8991 COMMON AR

SMCS-1000 **i02770459**

NOTE	PART NUMBER	QTY	PART NAME 1 2 3 4 5 6 (PRODUCT LEVEL)	SEE PAGE
Y	*233-9533*	1	ALTERNATOR GP-CHARGING	121
Y	*231-0038*	1	CONNECTION GP-WATER	69
Y	*240-5535*	1	CONVERTER GP-ELECTRICAL	127
Y	*238-2799*	1	COOLER GP-FLTR BASE & ENG OIL	73
Y	*230-9196*	1	COVER GP-FRONT HOUSING	13
Y	*234-0251*	1	COVER GP-VALVE MECHANISM	15
			S/N: CRS2700-13968	
Y	*269-3101*	1	COVER GP-VALVE MECHANISM	17
			S/N: CRS13969-UP	
Y	*308-4729*	1	CRANKSHAFT GP	29
Y	*308-4728*	1	CYLINDER BLOCK GP	33
Y	*308-4731*	1	CYLINDER HEAD GP	36
Y	*230-9699*	1	DRIVE GP-FAN	37
Y	*270-4374*	1	ELBOW GP-AIR INLET	85
Y	*232-7378*	1	FILTER GP-ENGINE OIL	67
Y	*233-9417*	1	PUMP GP-FUEL PRM & PRIM FILTER	112
Y	*245-9831*	1	FLYWHEEL GP	40
Y	*233-9834*	1	GLOW PLUG GP	129
Y	*223-7825*	1	HOUSING GP-FLYWHEEL	41
Y	*308-4764*	1	HOUSING GP-FRONT	44
Y	*232-3713*	1	LIFTING GP-ENGINE	46
Y	*252-6456*	1	MOUNTING GP-ENGINE	47
Y	*232-2565*	1	PAN GP-OIL	49
Y	*308-4730*	1	PISTON & ROD GP	55
Y	*225-4317*	1	PLUG GP-ENGINE	56
Y	*253-2479*	1	PLUG GP-ENGINE	58
Y	*232-6204*	1	PLUG GP-ENGINE	57
Y	*230-7353*	1	PULLEY GP-CRANKSHAFT	59
Y	*230-7578*	1	PUMP GP-ENGINE OIL	68
Y	*308-4733*	1	PUMP GP-FUEL INJECTION	107
Y	*230-7355*	1	PUMP GP-WATER	76
Y	*230-7304*	1	STARTING MOTOR GP-ELECTRIC	143
Y	*233-9539*	1	TURBOCHARGER GP	90
Y	*308-4732*	1	VALVE MECHANISM GP	65
			AVAILABLE REPAIR KIT(S):	
	277-5156	1	KIT-GASKET (TOP)	
	272-0494	1	KIT-GASKET (BOTTOM)	

Y-SEPARATE ILLUSTRATION

ENGINE ARRANGEMENT

297-4047 ENGINE AR-PRIMARY

S/N: CRS2700-UP
97 BRAKE KW (129 BHP) AT 2200 RPM
PART OF 304-7046, 342-5797 ENGINE AR
AN ATTACHMENT

SMCS-1000 **i03547420**

NOTE	PART NUMBER	QTY	PART NAME 1 2 3 4 5 6 (PRODUCT LEVEL)	SEE PAGE
Y	*233-9533*	1	ALTERNATOR GP-CHARGING	121
Y	*231-0038*	1	CONNECTION GP-WATER	69
Y	*240-5535*	1	CONVERTER GP-ELECTRICAL	127
Y	*238-2799*	1	COOLER GP-FLTR BASE & ENG OIL	73
Y	*230-9196*	1	COVER GP-FRONT HOUSING	13
Y	*269-3101*	1	COVER GP-VALVE MECHANISM	17
Y	*308-4729*	1	CRANKSHAFT GP	29
Y	*308-4728*	1	CYLINDER BLOCK GP	33
Y	*308-4731*	1	CYLINDER HEAD GP	36
Y	*234-9680*	1	DRIVE GP-FAN	38
Y	*270-4374*	1	ELBOW GP-AIR INLET	85
Y	*232-7378*	1	FILTER GP-ENGINE OIL	67
Y	*245-9831*	1	FLYWHEEL GP	40
Y	*233-9834*	1	GLOW PLUG GP	129
Y	*223-7825*	1	HOUSING GP-FLYWHEEL	41
Y	*308-4764*	1	HOUSING GP-FRONT	44
Y	*232-3713*	1	LIFTING GP-ENGINE	46
Y	*252-6456*	1	MOUNTING GP-ENGINE	47
Y	*232-2565*	1	PAN GP-OIL	49
Y	*308-4730*	1	PISTON & ROD GP	55
Y	*225-4317*	1	PLUG GP-ENGINE	56
Y	*232-6204*	1	PLUG GP-ENGINE	57
Y	*253-2479*	1	PLUG GP-ENGINE	58
Y	*230-7353*	1	PULLEY GP-CRANKSHAFT	59
Y	*230-7578*	1	PUMP GP-ENGINE OIL	68
Y	*308-4733*	1	PUMP GP-FUEL INJECTION	107
Y	*233-9417*	1	PUMP GP-FUEL PRM & PRIM FILTER	112
Y	*230-7355*	1	PUMP GP-WATER	76
Y	*230-7304*	1	STARTING MOTOR GP-ELECTRIC	143
Y	*233-9539*	1	TURBOCHARGER GP	90
Y	*308-4732*	1	VALVE MECHANISM GP	65
	268-0867	1	CYLINDER BLOCK GP-SHORT	
			AVAILABLE GASKET KIT(S):	
	272-0494	1	KIT-GASKET (BOTTOM)	
			(INCLUDES GASKETS & SEALS)	
	277-5156		KIT-GASKET (TOP)	
			(INCLUDES GASKETS, SEAL, WASHER & VALVE SEAL KIT)	

Y-SEPARATE ILLUSTRATION

ENGINE ARRANGEMENT

297-4055 ENGINE AR-PRIMARY

S/N: CRS2700-UP
97 BRAKE KW (129 BHP) AT 2200 RPM
PART OF 304-6910, 342-5796 ENGINE AR
AN ATTACHMENT

SMCS-1000 **i03091345**

NOTE	PART NUMBER	QTY	PART NAME 1 2 3 4 5 6 (PRODUCT LEVEL)	SEE PAGE
Y	*233-9533*	1	ALTERNATOR GP-CHARGING	121
Y	*231-0038*	1	CONNECTION GP-WATER	69
Y	*240-5535*	1	CONVERTER GP-ELECTRICAL	127
Y	*238-2799*	1	COOLER GP-FLTR BASE & ENG OIL	73
Y	*230-9196*	1	COVER GP-FRONT HOUSING	13
Y	*269-3101*	1	COVER GP-VALVE MECHANISM	17
Y	*308-4729*	1	CRANKSHAFT GP	29
Y	*308-4728*	1	CYLINDER BLOCK GP	33
Y	*308-4731*	1	CYLINDER HEAD GP	36
Y	*234-9680*	1	DRIVE GP-FAN	38
Y	*270-4374*	1	ELBOW GP-AIR INLET	85
Y	*232-7378*	1	FILTER GP-ENGINE OIL	67
Y	*245-9831*	1	FLYWHEEL GP	40
Y	*233-9834*	1	GLOW PLUG GP	129
Y	*223-7825*	1	HOUSING GP-FLYWHEEL	41
Y	*308-4764*	1	HOUSING GP-FRONT	44
Y	*232-3713*	1	LIFTING GP-ENGINE	46
Y	*252-6456*	1	MOUNTING GP-ENGINE	47
Y	*232-2565*	1	PAN GP-OIL	49
Y	*308-4730*	1	PISTON & ROD GP	55
Y	*225-4317*	1	PLUG GP-ENGINE	56
Y	*232-6204*	1	PLUG GP-ENGINE	57
Y	*253-2479*	1	PLUG GP-ENGINE	58
Y	*230-7353*	1	PULLEY GP-CRANKSHAFT	59
Y	*230-7578*	1	PUMP GP-ENGINE OIL	68
Y	*308-4733*	1	PUMP GP-FUEL INJECTION	107
Y	*233-9417*	1	PUMP GP-FUEL PRM & PRIM FILTER	112
Y	*230-7355*	1	PUMP GP-WATER	76
Y	*230-7304*	1	STARTING MOTOR GP-ELECTRIC	143
Y	*233-9539*	1	TURBOCHARGER GP	90
Y	*308-4732*	1	VALVE MECHANISM GP	65
	268-0867	1	CYLINDER BLOCK GP-SHORT	
			AVAILABLE GASKET KIT(S):	
	272-0494	1	KIT-GASKET (BOTTOM)	
			(INCLUDES GASKETS & SEALS)	
	277-5156	1	KIT-GASKET (TOP)	
			(INCLUDES GASKETS, SEAL, WASHER & VALVE SEAL KIT)	

Y-SEPARATE ILLUSTRATION

ENGINE ARRANGEMENT

329-2197 ENGINE AR-PRIMARY

S/N: CRS2700-UP
PART OF 331-0143 ENGINE AR
AN ATTACHMENT

SMCS-1000 **i03571235**

NOTE	PART NUMBER	QTY	PART NAME 1 2 3 4 5 6 (PRODUCT LEVEL)	SEE PAGE
Y	*233-9533*	1	ALTERNATOR GP-CHARGING	121
Y	*231-0038*	1	CONNECTION GP-WATER	69
Y	*240-5535*	1	CONVERTER GP-ELECTRICAL	127
Y	*238-2799*	1	COOLER GP-FLTR BASE & ENG OIL	73
Y	*230-9196*	1	COVER GP-FRONT HOUSING	13
Y	*269-3101*	1	COVER GP-VALVE MECHANISM	17
Y	*308-4729*	1	CRANKSHAFT GP	29
Y	*308-4728*	1	CYLINDER BLOCK GP	33
Y	*308-4731*	1	CYLINDER HEAD GP	36
Y	*234-9680*	1	DRIVE GP-FAN	38
Y	*270-4374*	1	ELBOW GP-AIR INLET	85
Y	*232-7378*	1	FILTER GP-ENGINE OIL	67
Y	*245-9831*	1	FLYWHEEL GP	40
Y	*233-9834*	1	GLOW PLUG GP	129
Y	*223-7825*	1	HOUSING GP-FLYWHEEL	41
Y	*308-4764*	1	HOUSING GP-FRONT	44
Y	*232-3713*	1	LIFTING GP-ENGINE	46
Y	*252-6456*	1	MOUNTING GP-ENGINE	47
Y	*232-2565*	1	PAN GP-OIL	49
Y	*308-4730*	1	PISTON & ROD GP	55
Y	*225-4317*	1	PLUG GP-ENGINE	56
Y	*232-6204*	1	PLUG GP-ENGINE	57
Y	*253-2479*	1	PLUG GP-ENGINE	58
Y	*230-7353*	1	PULLEY GP-CRANKSHAFT	59
Y	*230-7578*	1	PUMP GP-ENGINE OIL	68
Y	*347-5444*	1	PUMP GP-FUEL INJECTION	110
Y	*233-9417*	1	PUMP GP-FUEL PRM & PRIM FILTER	112
Y	*230-7355*	1	PUMP GP-WATER	76
Y	*230-7304*	1	STARTING MOTOR GP-ELECTRIC	143
Y	*233-9539*	1	TURBOCHARGER GP	90
Y	*308-4732*	1	VALVE MECHANISM GP	65
	268-0867	1	CYLINDER BLOCK GP-SHORT	
			AVAILABLE GASKET KIT(S):	
		1	KIT-GASKET (BOTTOM)	
		1	KIT-GASKET (TOP)	

Y-SEPARATE ILLUSTRATION

ENGINE ARRANGEMENT

246-8996 INSTALLATION AR-ENGINE

S/N: PJF1-467

PART OF 246-8991 COMMON AR, 331-0143, 342-5796, 342-5797 ENGINE AR

ALSO AN ATTACHMENT

SMCS-1000 **i02450785**

NOTE	PART NUMBER	QTY	PART NAME 1 2 3 4 5 6 (PRODUCT LEVEL)	SEE PAGE
Y	*250-6138*	1	AIR CLEANER GP	84
Y	*153-4980*	1	DRIVE GP-PUMP	39
Y	*246-9034*	1	FAN GP-SUCTION	75
Y	*227-4799*	1	GOVERNOR GP	93
Y	*246-9006*	1	LINES GP-AIR	86
Y	*249-2737*	1	LINES GP-FUEL	100
Y	*246-8997*	1	MOUNTING GP-ENGINE FLEXIBLE	48
Y	*246-9025*	1	MUFFLER GP	89
Y	*246-9003*	1	RADIATOR & HYD OIL COOLER GP	78
Y	*250-6135*	1	RECOVERY GP-COOLANT	82
Y	*220-1960*	1	SERVICE GP-ENGINE (FLUID SAMPLING, DRAIN)	61
			S/N: PJF1-304	
Y	*283-7620*	1	SERVICE GP-ENGINE (FLUID SAMPLING, DRAIN)	62
			S/N: PJF305-UP	

Y-SEPARATE ILLUSTRATION

BASIC ENGINE

232-7528 CAMSHAFT GP

S/N: CRS2700-UP

PART OF 177-9752 ENGINE AR-PRIMARY

SMCS-1210 **i01863441**

NOTE	REF NO	GRAPHIC REF	PART NUMBER	QTY	PART NAME 1 2 3 4 5 6 (PRODUCT LEVEL)	SEE PAGE
	1	1	**1B-8736**	1	KEY-WOODRUFF	
	2	1	**225-5967**	1	CAMSHAFT	

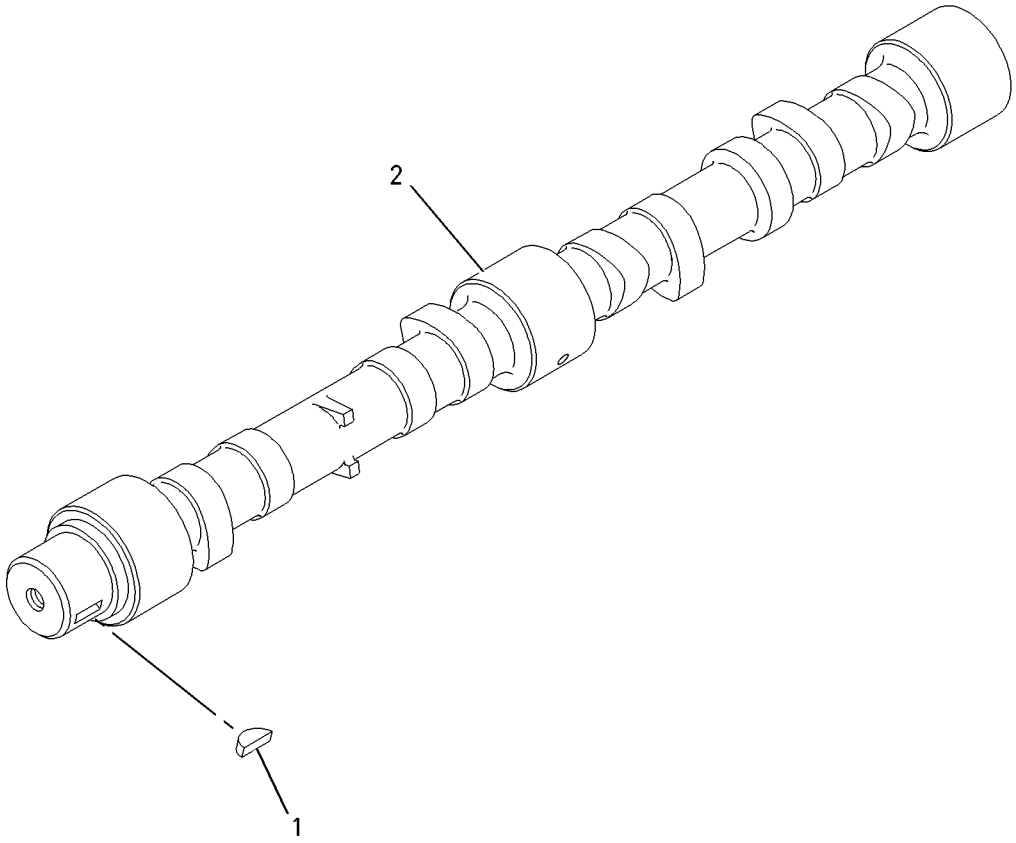

GRAPHIC #1 **<END>** g00911297

230-9196 COVER GP-FRONT HOUSING

S/N: CRS2700-UP
PART OF 177-9752, 297-4047, 297-4055 ENGINE AR-PRIMARY
ALSO AN ATTACHMENT
TYPE 1

SMCS-1151, 1166 **i02655372**

NOTE	REF NO	GRAPHIC REF	PART NUMBER	QTY	PART NAME 1 2 3 4 5 6 (PRODUCT LEVEL)	SEE PAGE
M	1	1	**100-4830**	1	BOLT (M10X1.5X20-MM)	
	2	1	**111-8222**	5	BOLT (M8X16-MM)	
	3	1	**209-5502**	1	COVER AS (POWER TAKE-OFF)	
	3A	1	**209-5503**	1	SEAL-COVER	
	4	1	**6I-0646**	1	BOLT (M10X1.5X14-MM)	
	5	1	**214-3203**	1	WASHER (SEALING)	

M-METRIC PART

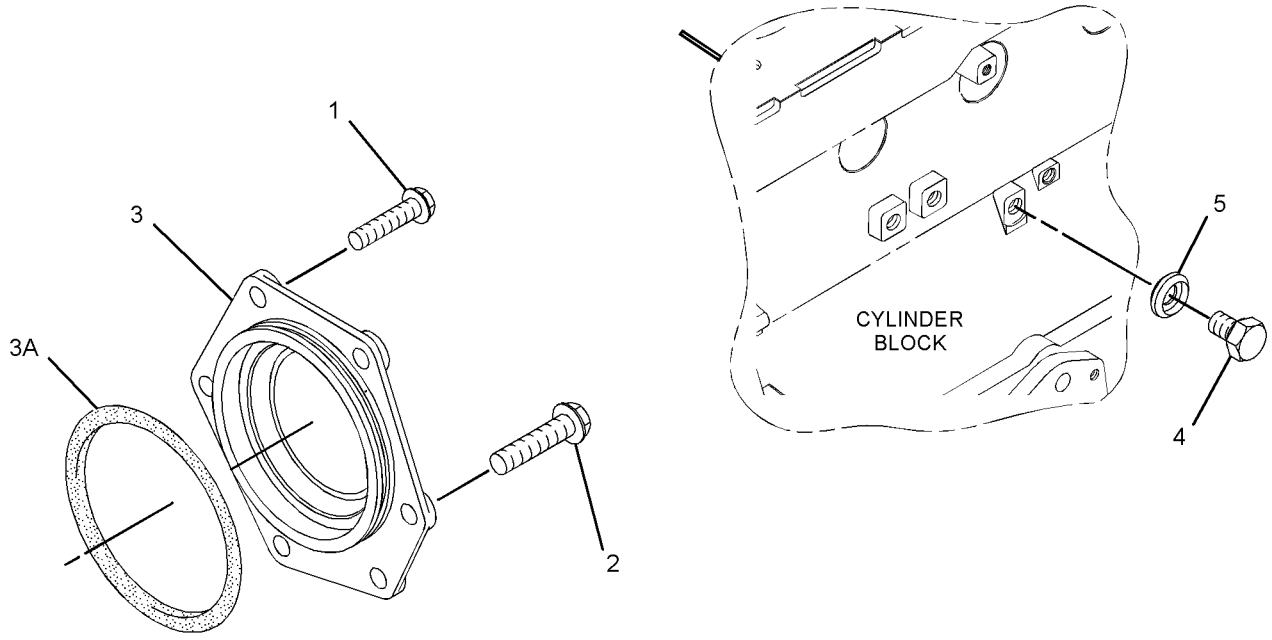

GRAPHIC #1 **<END>** g01342815

230-9196 COVER GP-FRONT HOUSING

S/N: CRS2700-UP
PART OF 297-4047, 297-4055, 329-2197 ENGINE AR-PRIMARY
AN ATTACHMENT
TYPE 2

SMCS-1151, 1166 **i03257593**

NOTE	REF NO	GRAPHIC REF	PART NUMBER	QTY	PART NAME 1 2 3 4 5 6 (PRODUCT LEVEL)	SEE PAGE
	1	1	**6I-0646**	1	BOLT (M10X1.5X14-MM)	
M	2	1	**100-4830**	1	BOLT (M10X1.5X20-MM)	
	3	1	**111-8222**	5	BOLT (M8X16-MM)	
	4	1	**214-3203**	1	WASHER (SEALING)	
C	5	1	**329-7854**	1	PLATE AS	
	5A	1	**329-7856**	1	SEAL-O-RING	

C-CHANGE FROM PREVIOUS TYPE
M-METRIC PART

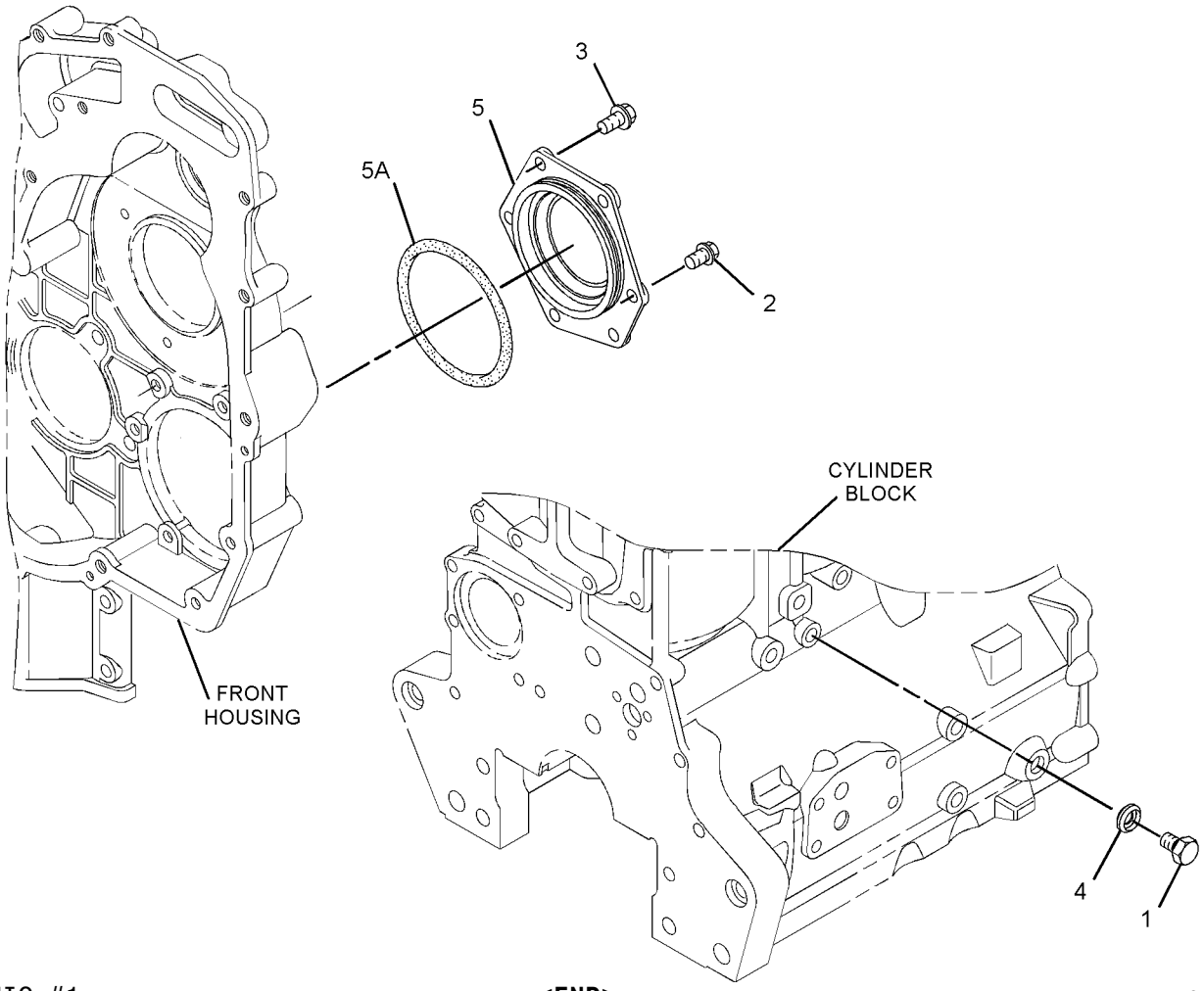

GRAPHIC #1 **<END>** g01649494

BASIC ENGINE

234-0251 COVER GP-VALVE MECHANISM

S/N: CRS2700-13968

PART OF 177-9752 ENGINE AR-PRIMARY

SMCS-1107, 1120 **i02136408**

NOTE	REF NO	GRAPHIC REF	PART NUMBER	QTY	PART NAME 1 2 3 4 5 6 (PRODUCT LEVEL)	SEE PAGE
	1	1	**5D-1026**	1	CLAMP-HOSE	
M	2	1	**6I-0254**	1	BOLT (M8X1.25X30-MM)	
	3	1	**6I-0517**	1	SPRING (CRANKCASE BREATHER HOSE)	
	4	1	**6I-0846**	3	BOLT (M6X1X14-MM)	
	5	1	**6I-4374**	1	BOLT (M8X1.25X60-MM)	
	6	1	**7C-1281**	1	BRACKET	
	7	1	**198-8645**	1	HOSE (CRANKCASE BREATHER)	
	9	1	**226-8763**	1	COVER AS-VALVE	
	9A	1	**225-6451**	1	GASKET (VALVE COVER)	
	9B	1	**225-6455**	10	BOLT	
	9C	1	**225-6456**	1	SPRING	
	9D	1	**225-6461**	1	CAP	
	9E	1	**225-6464**	1	DIAPHRAGM (CRANKCASE PRESSURE CONTACTOR)	
	9F	1	**225-6477**	1	PLATE	
	9G	1	**225-6478**	4	SCREW-MACHINE	
	9H	1	**225-6479**	1	CAP	
	10	1	**230-9127**	1	COVER	
	11	1	**230-9144**	1	CONNECTOR	
	11A	1	**150-7732**	1	SEAL-O-RING	
	11B	1	**225-6455**	2	BOLT	
	11C	1	**225-6517**	1	GASKET	
	12	1	**230-9152**	1	FILLER GP-ENGINE OIL	
	12A	1	**6I-1201**	1	SEAL-O-RING	
	12B	1	**130-9888**	1	CAP-OIL FILLER (ENGINE)	
	12C	1	**113-1504**	1	SEAL-O-RING	

M-METRIC PART

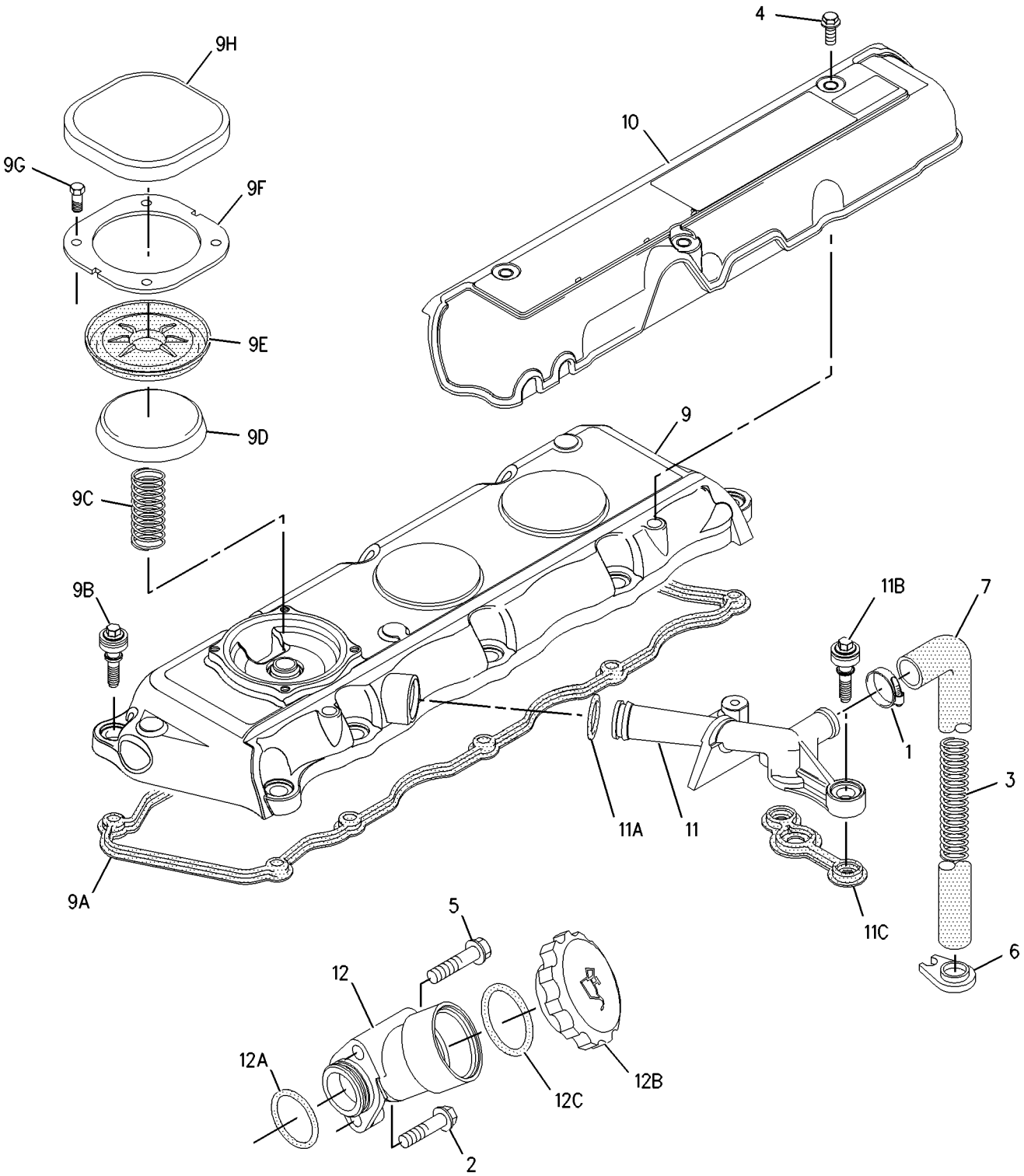

GRAPHIC #1 **<END>** g00985145

269-3101 COVER GP-VALVE MECHANISM

S/N: CRS13969-41077

PART OF 177-9752 ENGINE AR-PRIMARY

TYPE 1

SMCS-1107, 1120 **i02342248**

NOTE	REF NO	GRAPHIC REF	PART NUMBER	QTY	PART NAME 1 2 3 4 5 6 (PRODUCT LEVEL)	SEE PAGE
	1	1	**5D-1026**	1	CLAMP-HOSE	
M	2	1	**6I-0254**	1	BOLT (M8X1.25X30-MM)	
	3	1	**162-1565**	1	SPRING (CRANKCASE BREATHER HOSE)	
	4	1	**6I-0846**	3	BOLT (M6X1X14-MM)	
	5	1	**6I-4374**	1	BOLT (M8X1.25X60-MM)	
	6	1	**7C-1281**	1	BRACKET	
	7	1	**198-9169**	1	HOSE (CRANKCASE BREATHER)	
	8	1	**230-9127**	1	COVER	
	9	1	**230-9144**	1	CONNECTOR	
	9A	1	**150-7732**	1	SEAL-O-RING	
	9B	1	**225-6455**	2	BOLT	
	9C	1	**225-6517**	1	GASKET	
	10	1	**230-9152**	1	FILLER GP-ENGINE OIL	
	10A	1	**6I-1201**	1	SEAL-O-RING	
	10B	1	**130-9888**	1	CAP-OIL FILLER (ENGINE)	
	10C	1	**113-1504**	1	SEAL-O-RING	
	11	1	**247-7799**	1	COVER AS-VALVE	
	11A	1	**136-3608**	1	CAP AS (ENGINE OIL FILLER)	
	11B	1	**124-0506**	1	SEAL	
	11C	1	**225-6451**	1	GASKET (VALVE COVER)	
	11D	1	**225-6455**	10	BOLT	
	11E	1	**225-6456**	1	SPRING	
	11F	1	**225-6461**	1	CAP	
	11G	1	**225-6464**	1	DIAPHRAGM (CRANKCASE PRESSURE CONTACTOR)	
	11H	1	**225-6477**	1	PLATE	
	11J	1	**225-6478**	4	SCREW-MACHINE	
	11K	1	**225-6479**	1	CAP	

M-METRIC PART

269-3101 **COVER GP-VALVE MECHANISM** *(contd.)* **i02342248**

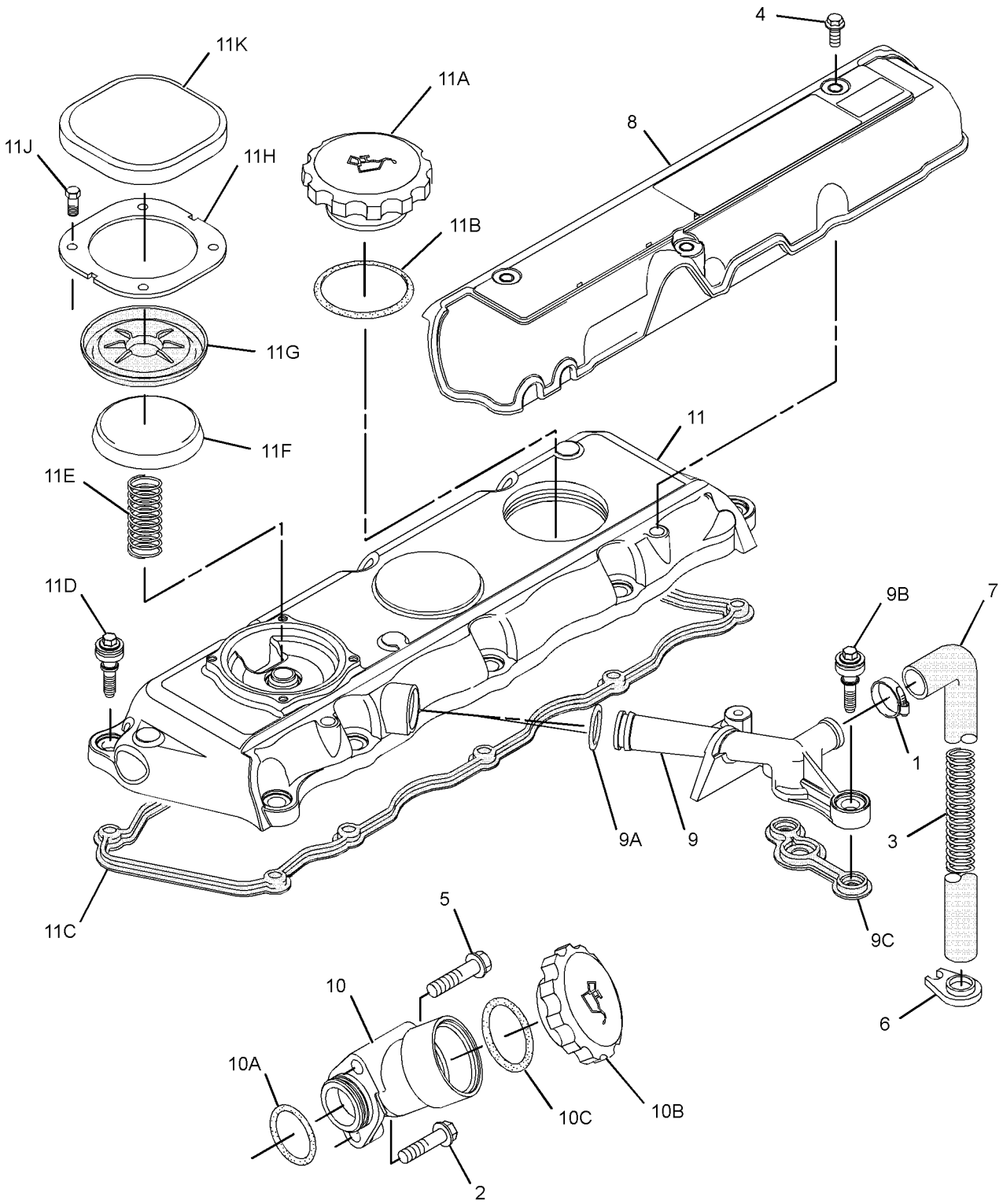

GRAPHIC #1 **<END>** g01171325

269-3101 COVER GP-VALVE MECHANISM

S/N: CRS13969-41077
PART OF 177-9752, 297-4055, 329-2197 ENGINE AR-PRIMARY
ALSO AN ATTACHMENT
TYPE 2

SMCS-1107, 1120 **i02593748**

NOTE	REF NO	GRAPHIC REF	PART NUMBER	QTY	PART NAME 1 2 3 4 5 6 (PRODUCT LEVEL)	SEE PAGE
	1	1	**5D-1026**	1	CLAMP-HOSE	
M	2	1	**6I-0254**	1	BOLT (M8X1.25X30-MM)	
	3	1	**162-1565**	1	SPRING (CRANKCASE BREATHER HOSE)	
	4	1	**6I-0846**	3	BOLT (M6X1X14-MM)	
	5	1	**6I-4374**	1	BOLT (M8X1.25X60-MM)	
	6	1	**7C-1281**	1	BRACKET	
	7	1	**198-9169**	1	HOSE (CRANKCASE BREATHER)	
	8	1	**230-9127**	1	COVER	
C	9	1	**287-8573**	1	PIPE-BREATHER	
	10	1	**230-9152**	1	FILLER GP-ENGINE OIL	
	10A	1	**6I-1201**	1	SEAL-O-RING	
	10B	1	**130-9888**	1	CAP-OIL FILLER (ENGINE)	
	10C	1	**113-1504**	1	SEAL-O-RING	
	11	1	**247-7799**	1	COVER AS-VALVE	
	11A	1	**136-3608**	1	CAP AS (ENGINE OIL FILLER)	
	11B	1	**124-0506**	1	SEAL	
	11C	1	**225-6451**	1	GASKET (VALVE COVER)	
	11D	1	**225-6455**	10	BOLT	
	11E	1	**225-6456**	1	SPRING	
	11F	1	**225-6461**	1	CAP	
	11G	1	**225-6464**	1	DIAPHRAGM (CRANKCASE PRESSURE CONTACTOR)	
	11H	1	**225-6477**	1	PLATE	
	11J	1	**225-6478**	4	SCREW-MACHINE	
	11K	1	**225-6479**	1	CAP	
C	12	1	**100-4838**	2	BOLT (M6X20-MM)	

C-CHANGE FROM PREVIOUS TYPE
M-METRIC PART

269-3101 **COVER GP-VALVE MECHANISM** *(contd.)* **i02593748**

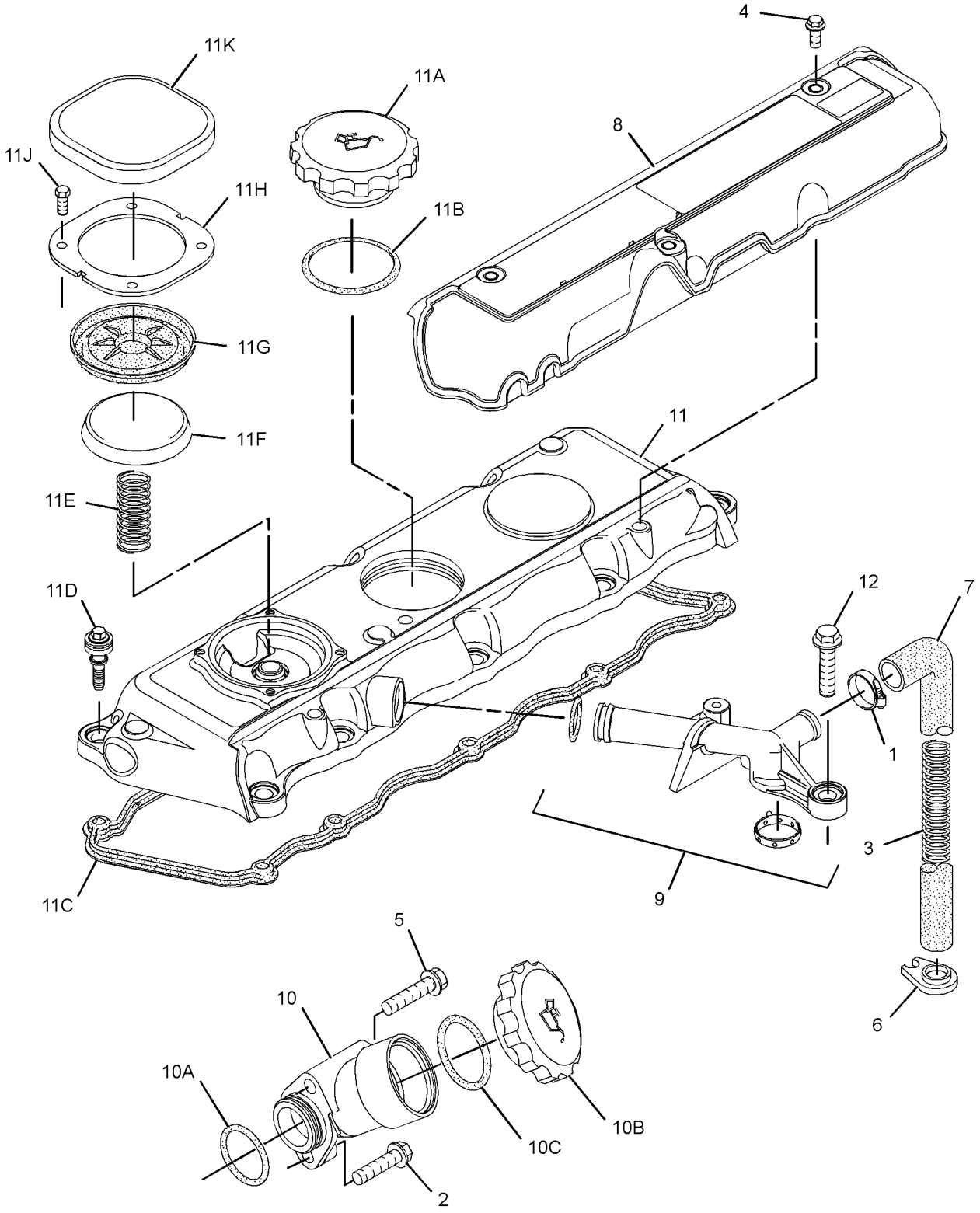

GRAPHIC #1 **<END>** g01294724

269-3101 COVER GP-VALVE MECHANISM

S/N: CRS41078-UP
PART OF 297-4047, 297-4055 ENGINE AR-PRIMARY
AN ATTACHMENT
TYPE 1

SMCS-1107, 1120 **i02702236**

NOTE	REF NO	GRAPHIC REF	PART NUMBER	QTY	PART NAME 1 2 3 4 5 6 (PRODUCT LEVEL)	SEE PAGE
	1	1	**5D-1026**	1	CLAMP-HOSE	
M	2	1	**6I-0254**	1	BOLT (M8X1.25X30-MM)	
	3	1	**162-1565**	1	SPRING (CRANKCASE BREATHER HOSE)	
	4	1	**6I-0846**	3	BOLT (M6X1X14-MM)	
	5	1	**6I-4374**	1	BOLT (M8X1.25X60-MM)	
	6	1	**7C-1281**	1	BRACKET	
	7	1	**198-9169**	1	HOSE (CRANKCASE BREATHER)	
	8	1	**230-9127**	1	COVER	
C	9	1	**287-8573**	1	PIPE-BREATHER	
	10	1	**230-9152**	1	FILLER GP-ENGINE OIL	
	10A	1	**6I-1201**	1	SEAL-O-RING	
	10B	1	**130-9888**	1	CAP-OIL FILLER (ENGINE)	
	10C	1	**113-1504**	1	SEAL-O-RING	
	11	1	**308-1393**	1	COVER GP-VALVE MECHANISM	
	11A	1	**136-3608**	1	CAP AS (ENGINE OIL FILLER)	
	11B	1	**124-0506**	1	SEAL	
	11C	1	**225-6456**	1	SPRING	
	11D	1	**225-6461**	1	CAP	
	11E	1	**225-6464**	1	DIAPHRAGM (CRANKCASE PRESSURE CONTACTOR)	
	11F	1	**225-6477**	1	PLATE	
	11G	1	**225-6478**	4	SCREW-MACHINE	
	11H	1	**225-6479**	1	CAP	
	11J	1	**225-6451**	1	GASKET (VALVE COVER)	
C	12	1	**100-4838**	2	BOLT (M6X20-MM)	

C-CHANGE FROM PREVIOUS TYPE
M-METRIC PART

269-3101 **COVER GP-VALVE MECHANISM** *(contd.)* **i02702236**

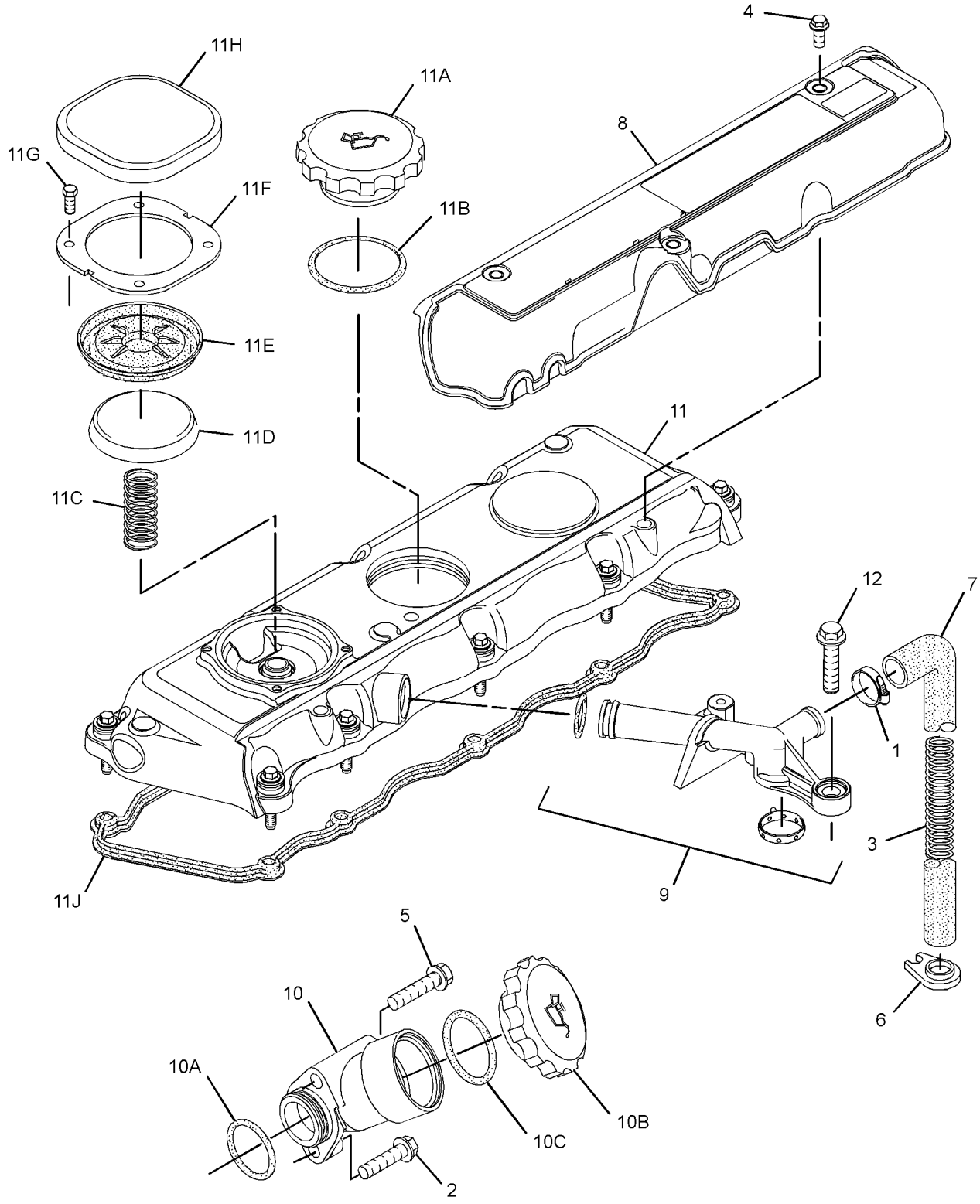

GRAPHIC #1 **<END>** g01372331

269-3101 COVER GP-VALVE MECHANISM

S/N: CRS41078-UP
PART OF 297-4047, 297-4055, 329-2197 ENGINE AR-PRIMARY
AN ATTACHMENT
TYPE 2

SMCS-1107, 1120 **i02891498**

NOTE	REF NO	GRAPHIC REF	PART NUMBER	QTY	PART NAME 1 2 3 4 5 6 (PRODUCT LEVEL)	SEE PAGE
	1	1	**5D-1026**	1	CLAMP-HOSE	
M	2	1	**6I-0254**	1	BOLT (M8X1.25X30-MM)	
	3	1	**162-1565**	1	SPRING (CRANKCASE BREATHER HOSE)	
	4	1	**6I-0846**	3	BOLT (M6X1X14-MM)	
	5	1	**6I-4374**	1	BOLT (M8X1.25X60-MM)	
	6	1	**7C-1281**	1	BRACKET	
	7	1	**198-9169**	1	HOSE (CRANKCASE BREATHER)	
	8	1	**230-9127**	1	COVER	
	9	1	**287-8573**	1	PIPE-BREATHER	
C	10	1	**321-2383**	1	FILLER GP-ENGINE OIL	
	10A	1	**306-2337**	1	SEAL-O-RING	
	10B	1	**130-9888**	1	CAP-OIL FILLER (ENGINE)	
	10C	1	**113-1504**	1	SEAL-O-RING	
	11	1	**308-1393**	1	COVER GP-VALVE MECHANISM	
	11A	1	**136-3608**	1	CAP AS (ENGINE OIL FILLER)	
	11B	1	**124-0506**	1	SEAL	
	11C	1	**225-6456**	1	SPRING	
	11D	1	**225-6461**	1	CAP	
	11E	1	**225-6464**	1	DIAPHRAGM (CRANKCASE PRESSURE CONTACTOR)	
	11F	1	**225-6477**	1	PLATE	
	11G	1	**225-6478**	4	SCREW-MACHINE	
	11H	1	**225-6479**	1	CAP	
	11J	1	**225-6451**	1	GASKET (VALVE COVER)	
	12	1	**100-4838**	2	BOLT (M6X20-MM)	

C-CHANGE FROM PREVIOUS TYPE
M-METRIC PART

269-3101 **COVER GP-VALVE MECHANISM** *(contd.)* **i02891498**

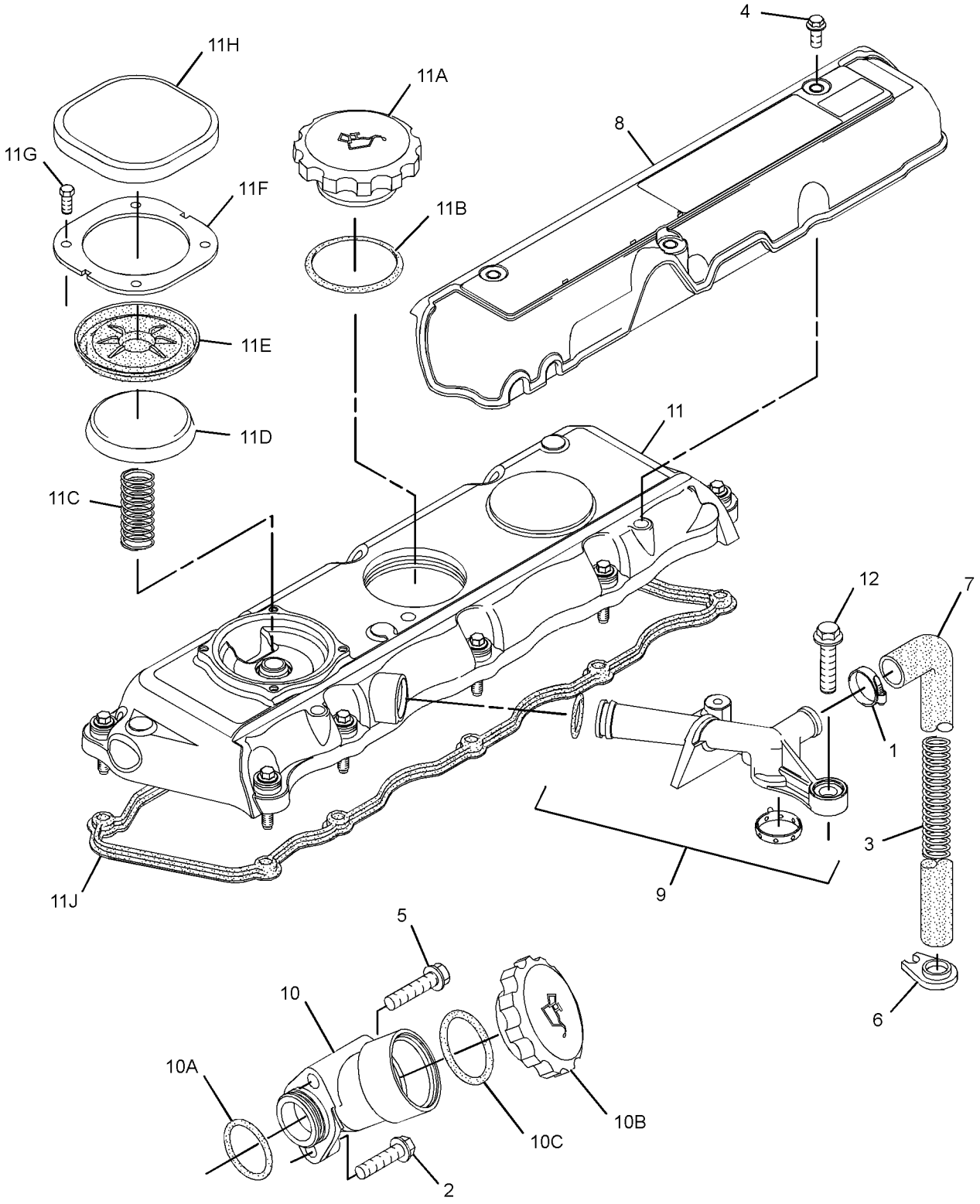

GRAPHIC #1 **<END>** g01372331

232-7400 CRANKSHAFT GP

S/N: CRS2700-UP
PART OF 308-4729 CRANKSHAFT GP
ALSO AN ATTACHMENT

SMCS-1202 **i03331708**

NOTE	REF NO	GRAPHIC REF	PART NUMBER	QTY	PART NAME 1 2 3 4 5 6 (PRODUCT LEVEL)	SEE PAGE
	1	1	**1B-8736**	1	KEY-WOODRUFF	
	2	1	**225-7772**	1	BEARING SET-MAIN (STANDARD)	
AB		1	**233-3785**		KIT-CRANKSHAFT BEARING (0.020-IN US ID)	
AB		1	**233-3784**		KIT-CRANKSHAFT BEARING (0.010-IN US ID)	
AB		1	**233-3786**		KIT-CRANKSHAFT BEARING (0.030-IN US ID)	
	3	1	**032-9090**	2	WASHER-THRUST (STANDARD-UPPER)	
AB		1	**067-6873**		WASHER-THRUST (0.18-MM OS)	
	4	1	**032-9091**	2	WASHER-THRUST (STANDARD-LOWER)	
AB		1	**067-6874**		WASHER-THRUST (0.18-MM OS)	
	5	1	**298-4524**	1	KIT-BEARING	
AB		1	**315-3396**		KIT-BEARING (0.25-MM OS)	
AB		1	**315-3397**		KIT-BEARING (0.5-MM OS)	
AB		1	**315-3398**		KIT-BEARING (0.75-MM OS)	

A-NOT PART OF THIS GROUP
B-USE AS REQUIRED

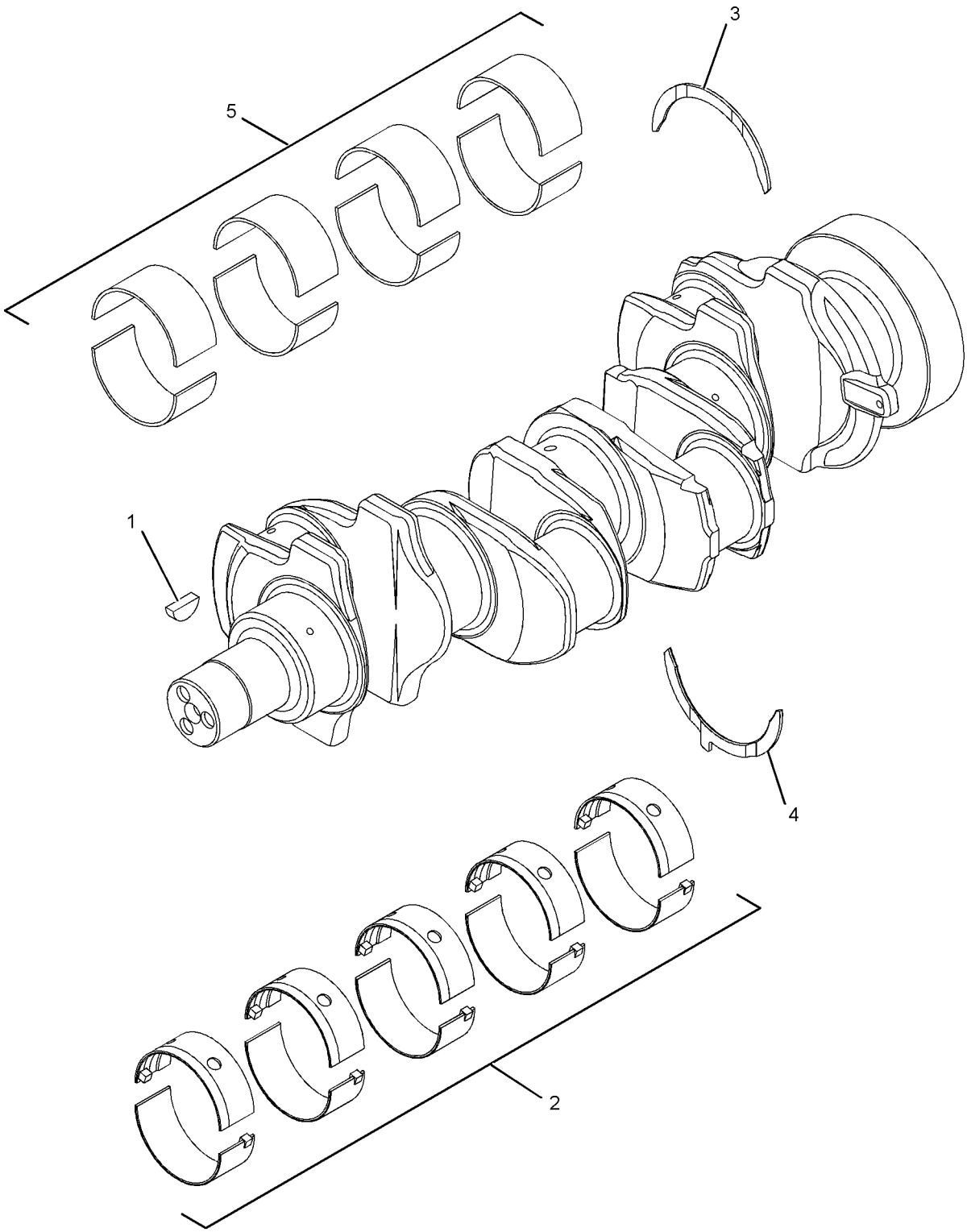

GRAPHIC #1 **<END>** g01369317

232-7439 CRANKSHAFT GP

S/N: CRS2700-UP

PART OF 177-9752 ENGINE AR-PRIMARY

SMCS-1202 **i02782845**

NOTE	REF NO	GRAPHIC REF	PART NUMBER	QTY	PART NAME 1 2 3 4 5 6 (PRODUCT LEVEL)	SEE PAGE
	1	1	**1B-8736**	1	KEY-WOODRUFF	
	2	1	**216-8314**	1	GEAR-CRANKSHAFT (34-TEETH)	
	3	1	**232-7400**	1	CRANKSHAFT GP	
	4	1	**225-7772**	1	BEARING SET-MAIN (STANDARD)	
AB		1	**233-3784**		KIT-CRANKSHAFT BEARING (0.010-IN US ID)	
AB		1	**233-3785**		KIT-CRANKSHAFT BEARING (0.020-IN US ID)	
AB		1	**233-3786**		KIT-CRANKSHAFT BEARING (0.030-IN US ID)	
	5	1	**225-7781**	1	BEARING SET-ROD (STANDARD)	
AB		1	**233-3788**		KIT-ROD BEARING (0.25-MM OS)	
AB		1	**233-3789**		KIT-ROD BEARING (0.51-MM OS)	
AB		1	**233-3790**		KIT-ROD BEARING (0.76-MM OS)	
	6	1	**032-9090**	2	WASHER-THRUST (STANDARD-UPPER)	
AB		1	**067-6873**		WASHER-THRUST (0.18-MM OS) (UPPER)	
	7	1	**032-9091**	2	WASHER-THRUST (STANDARD-LOWER)	
AB		1	**067-6874**		WASHER-THRUST (0.18-MM OS) (LOWER)	

A-NOT PART OF THIS GROUP
B-USE AS REQUIRED

232-7439 **CRANKSHAFT GP** *(contd.)* **i02782845**

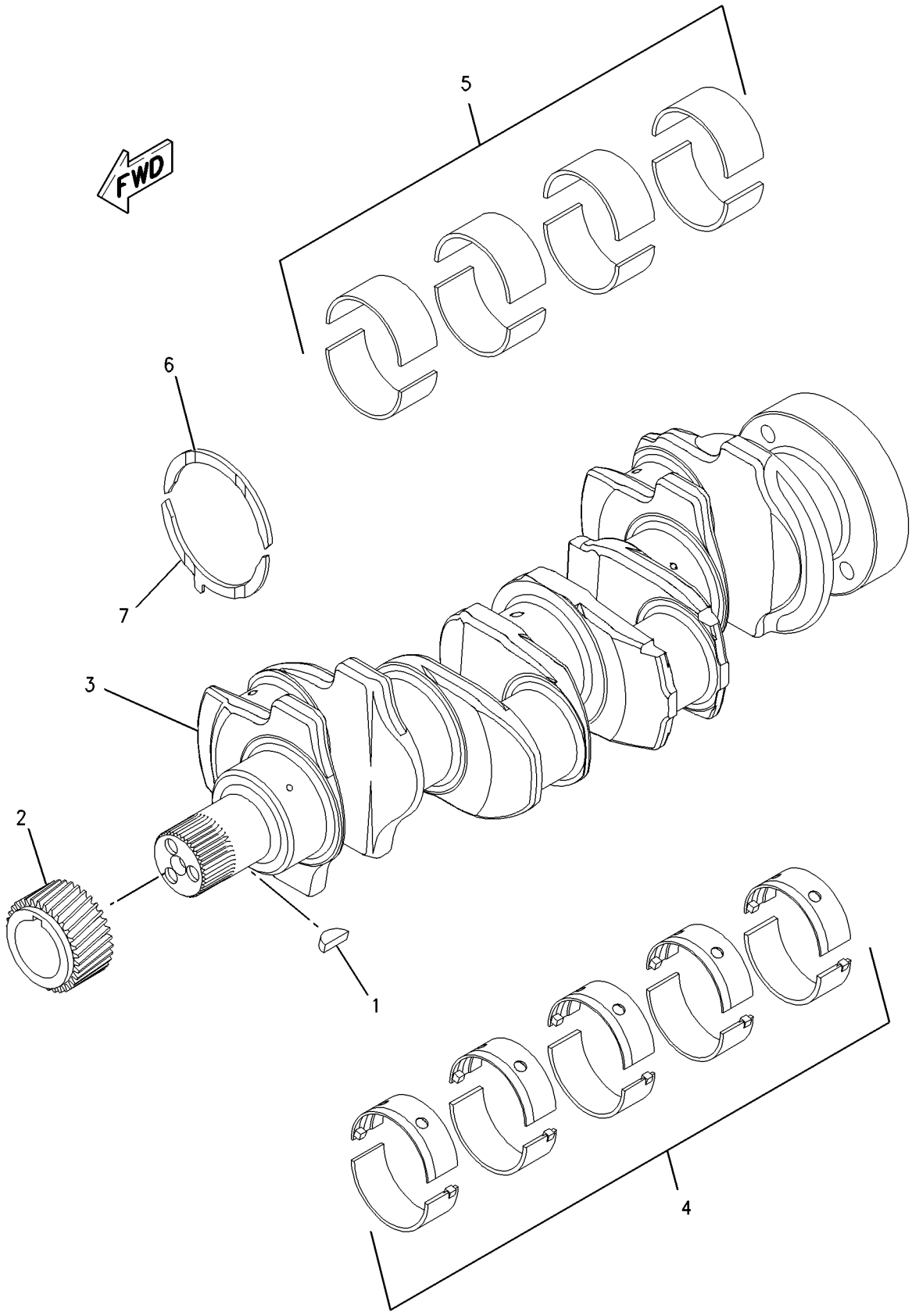

GRAPHIC #1 **<END>** g00950782

308-4729 CRANKSHAFT GP

S/N: CRS2700-UP

PART OF 177-9752, 297-4047, 297-4055, 329-2197 ENGINE AR-PRIMARY

ALSO AN ATTACHMENT

SMCS-1202 **i02747293**

NOTE	REF NO	GRAPHIC REF	PART NUMBER	QTY	PART NAME 1 2 3 4 5 6 (PRODUCT LEVEL)	SEE PAGE
	1	1	**216-8314**	1	GEAR-CRANKSHAFT (34-TEETH)	
Y	2	1	**232-7400**	1	CRANKSHAFT GP	25

Y-SEPARATE ILLUSTRATION

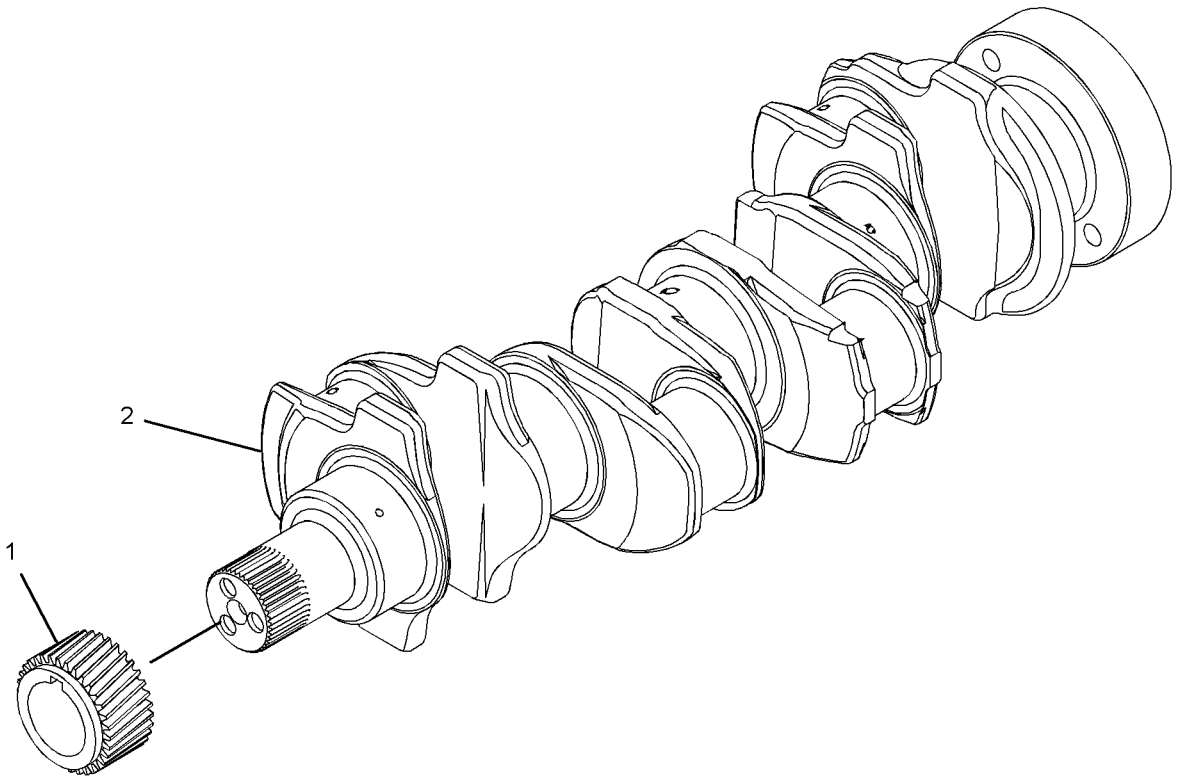

GRAPHIC #1 **<END>** g01376252

232-7604 CYLINDER BLOCK GP

S/N: CRS2700-UP

PART OF 232-7606, 308-4728 CYLINDER BLOCK GP

ALSO AN ATTACHMENT

SMCS-1201 **i03251704**

NOTE	REF NO	GRAPHIC REF	PART NUMBER	QTY	PART NAME 1 2 3 4 5 6 (PRODUCT LEVEL)	SEE PAGE
	1	1	**6I-0572**	4	BOLT (M8X1.25X20-MM)	
	2	1	**035-8068**	10	BOLT (5/8-18X3.75-IN)	
	3	1	**067-6002**	10	DOWEL	
	4	1	**067-6006**	1	PLUG	
	5	1	**067-6043**	1	PLUG-SIDE	
M	6	1	**100-4841**	4	BOLT (M6X1X10-MM)	
	7	1	**185-0884**	2	DOWEL	
	8	1	**225-7944**	1	GASKET (ENGINE OIL FILTER BASE)	
	9	1	**225-8858**	2	PLUG	
	10	1	**232-3751**	1	PLATE	
	11	1	**232-7440**	1	BEARING	
	12	1	**276-5605**	4	JET AS-PISTON COOLING	
	13	1	**232-7596**	1	PLUG	
	14	1	**232-7597**	2	PLUG	
	15	1	**232-7599**	1	PLUG	
	16	1	**232-7600**	1	PLUG-CUP	
	17	1	**232-7603**	1	PLUG	

M-METRIC PART

232-7604 CYLINDER BLOCK GP *(contd.)* **i03251704**

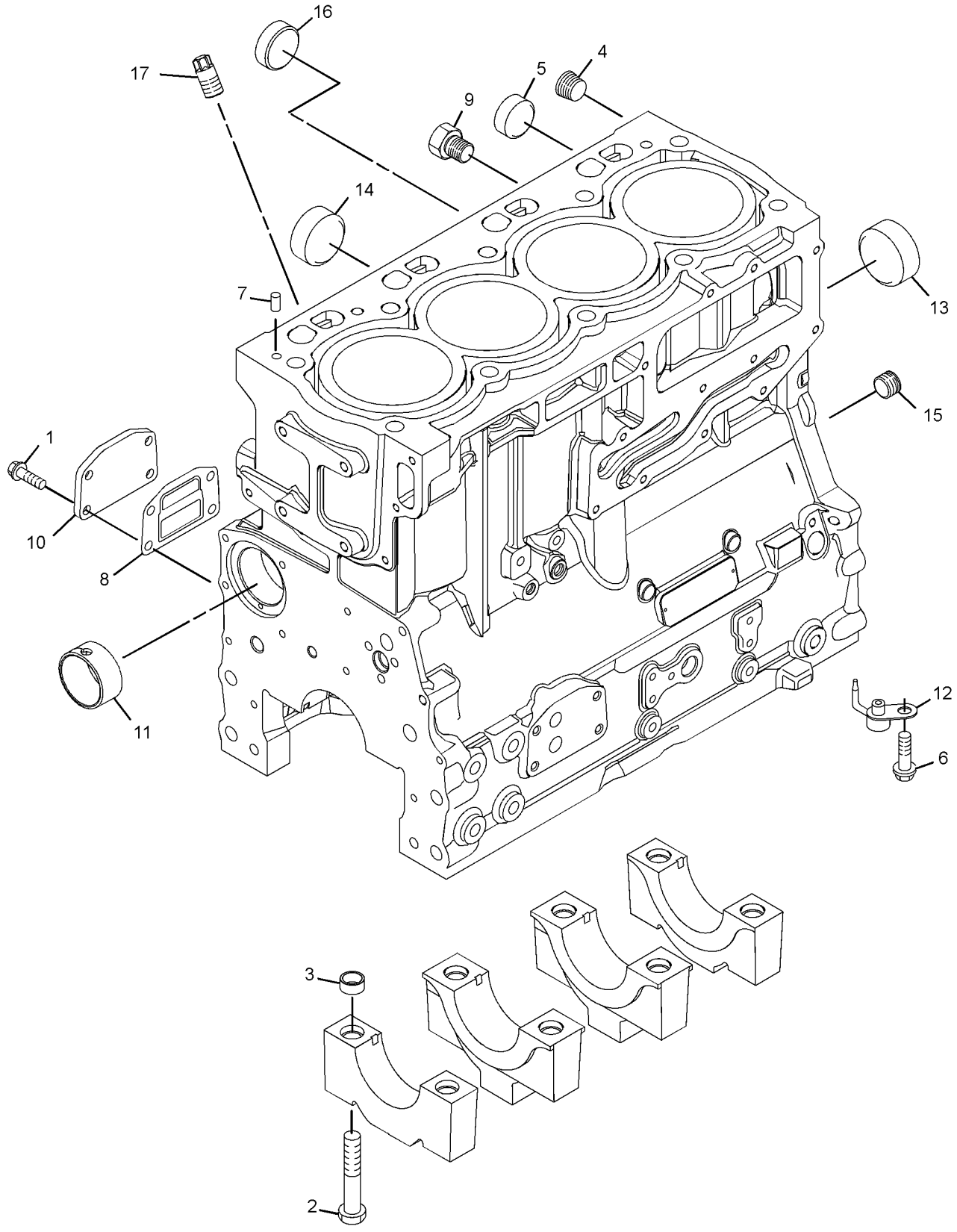

GRAPHIC #1 **<END>** g01652625

BASIC ENGINE

232-7606 CYLINDER BLOCK GP

S/N: CRS2700-UP

PART OF 177-9752 ENGINE AR-PRIMARY

SMCS-1201 **i01863465**

NOTE	REF NO	GRAPHIC REF	PART NUMBER	QTY	PART NAME 1 2 3 4 5 6 (PRODUCT LEVEL)	SEE PAGE
M	1	1	**209-9219**	10	BOLT (M8X1.25X16-MM)	
	2	1	**232-7449**	1	HOUSING AS	
Y	3	1	**232-7604**	1	CYLINDER BLOCK GP	30

M-METRIC PART
Y-SEPARATE ILLUSTRATION

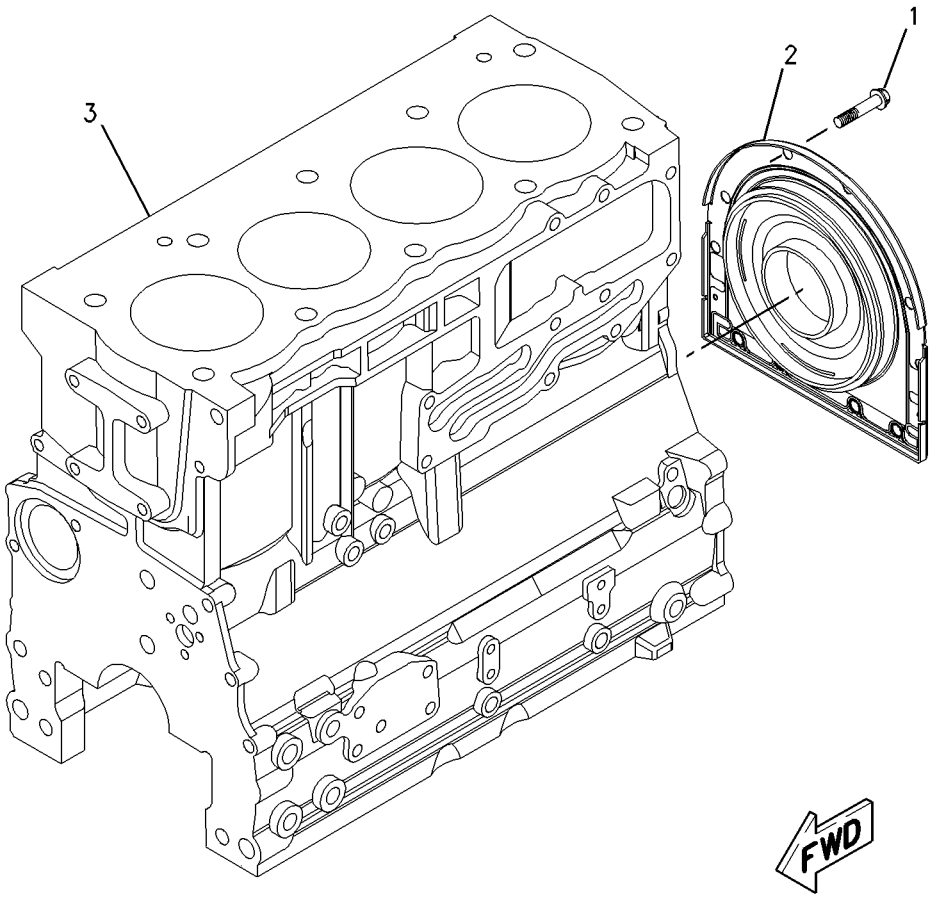

GRAPHIC #1 **<END>** g00952056

308-4728 CYLINDER BLOCK GP

S/N: CRS2700-UP

PART OF 177-9752, 297-4047, 297-4055, 329-2197 ENGINE AR-PRIMARY

ALSO AN ATTACHMENT

SMCS-1201 **i02719089**

NOTE	REF NO	GRAPHIC REF	PART NUMBER	QTY	PART NAME 1 2 3 4 5 6 (PRODUCT LEVEL)	SEE PAGE
M	1	1	**209-9219**	10	BOLT (M8X1.25X16-MM)	
	2	1	**232-7449**	1	HOUSING AS	
Y	3	1	**232-7604**	1	CYLINDER BLOCK GP	30

M-METRIC PART
Y-SEPARATE ILLUSTRATION

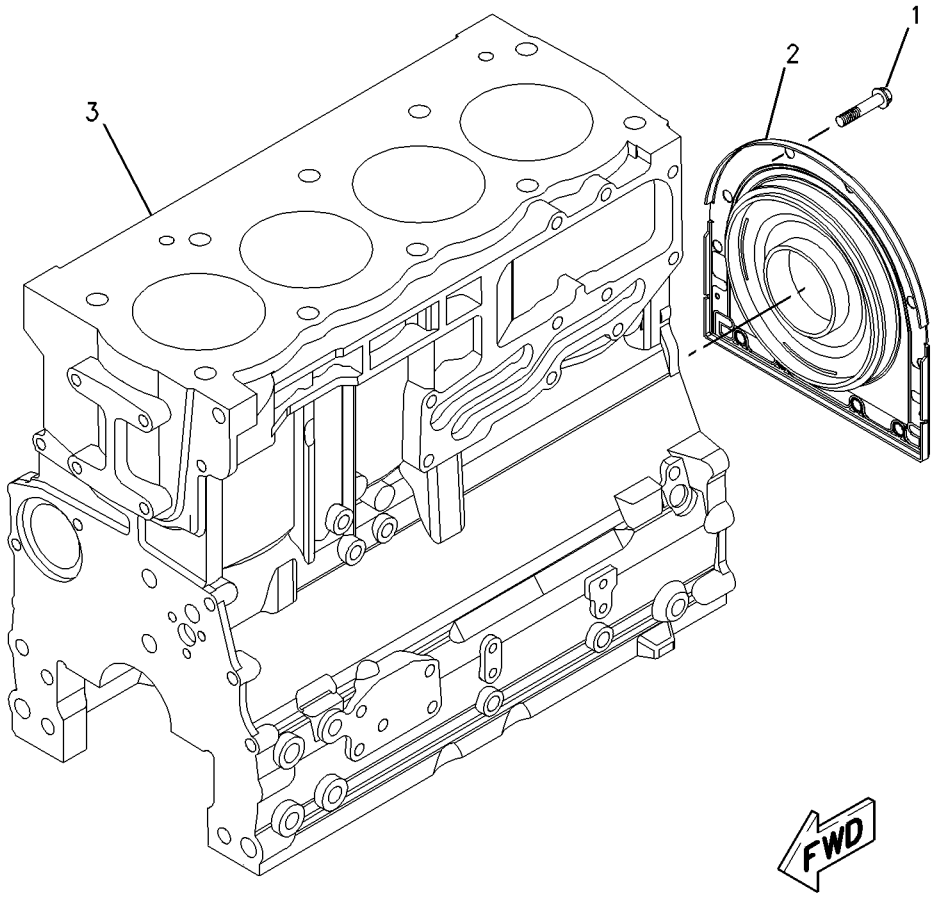

GRAPHIC #1 **<END>** g00952056

BASIC ENGINE

232-7519 CYLINDER HEAD GP

S/N: CRS2700-UP

PART OF 232-7524, 308-4731 CYLINDER HEAD GP

ALSO AN ATTACHMENT

SMCS-1100 **i03598227**

NOTE	REF NO	GRAPHIC REF	PART NUMBER	QTY	PART NAME 1 2 3 4 5 6 (PRODUCT LEVEL)	SEE PAGE
	1	1	**2B-0858**	1	PLUG-PIPE	
	2	1	**9Y-5015**	2	PLUG-FREEZE	
	3	1	**067-6006**	4	PLUG	
	4	1	**147-1979**	16	RETAINER-VALVE SPRING	
	5	1	**185-0882**	8	GUIDE-VALVE (INTAKE)	
	6	1	**199-9751**	1	SEAL-O-RING	
	7	1	**329-6655**	4	INSERT-VALVE SEAT (INLET)	
	8	1	**322-9663**	4	INSERT-VALVE SEAT (EXHAUST)	
	9	1	**225-5495**	4	VALVE-INLET	
	10	1	**225-5496**	8	SPRING-VALVE	
	11	1	**252-6438**	4	SEAL-INLET VALVE	
	12	1	**225-5498**	8	CAP	
	13	1	**225-5499**	4	VALVE-EXHAUST	
	14	1	**232-1322**	1	PLUG	
	15	1	**254-3954**	4	SEAL-EXHAUST VALVE	

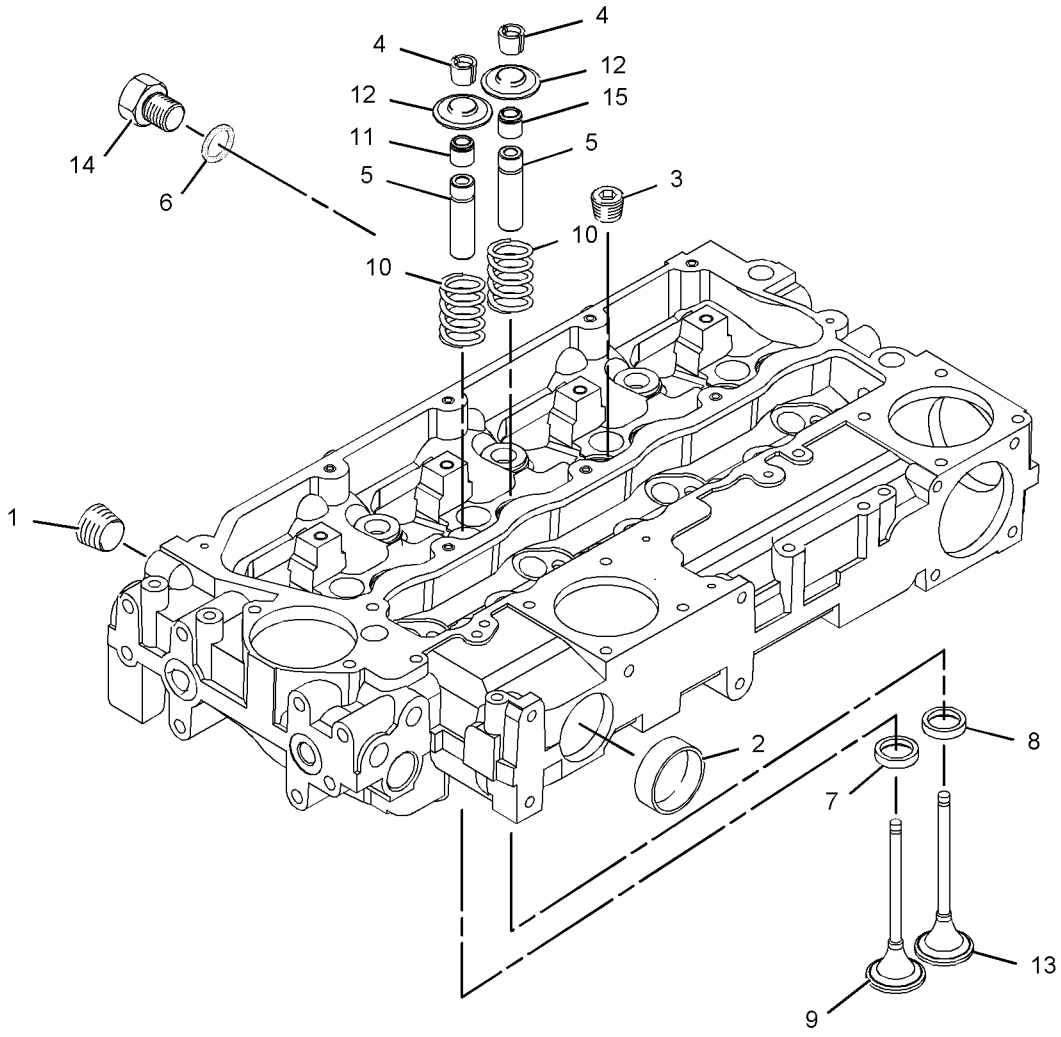

GRAPHIC #1 **<END>** g01095382

BASIC ENGINE

232-7524 CYLINDER HEAD GP

S/N: CRS2700-UP

PART OF 177-9752 ENGINE AR-PRIMARY

SMCS-1100 **i02499233**

NOTE	REF NO	GRAPHIC REF	PART NUMBER	QTY	PART NAME 1 2 3 4 5 6 (PRODUCT LEVEL)	SEE PAGE
	1	1	**225-5501**	7	BOLT (M15X1.5X137-MM)	
	2	1	**225-5502**	3	BOLT (M15X1.5X162-MM)	
	3	1	**258-4946**	1	GASKET-HEAD	
Y	4	1	**232-7519**	1	CYLINDER HEAD GP	34

Y-SEPARATE ILLUSTRATION

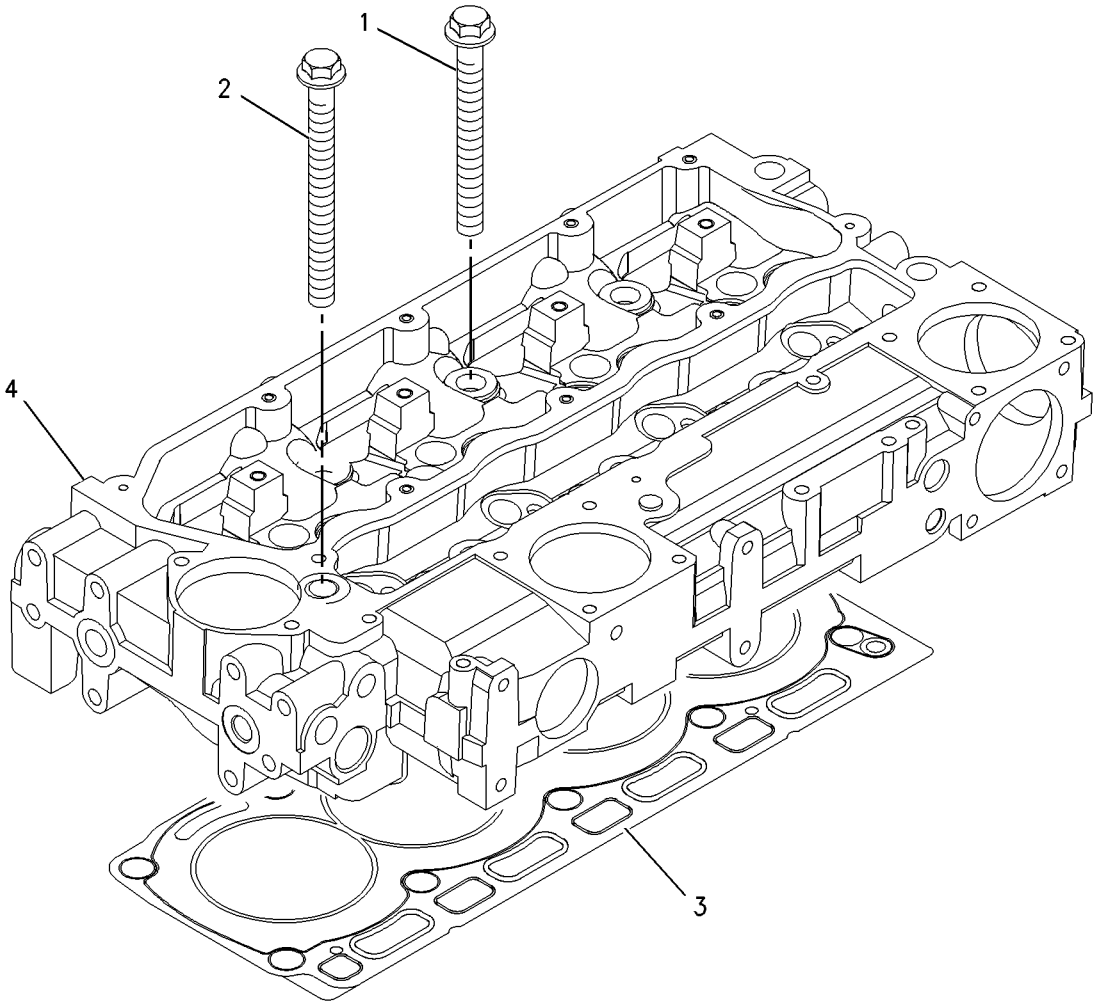

GRAPHIC #1 **<END>** g00909291

308-4731 CYLINDER HEAD GP

S/N: CRS2700-UP

PART OF 177-9752, 297-4047, 297-4055, 329-2197 ENGINE AR-PRIMARY

ALSO AN ATTACHMENT

SMCS-1100 **i02719202**

NOTE	REF NO	GRAPHIC REF	PART NUMBER	QTY	PART NAME 1 2 3 4 5 6 (PRODUCT LEVEL)	SEE PAGE
	1	1	**225-5501**	7	BOLT (M15X1.5X137-MM)	
	2	1	**225-5502**	3	BOLT (M15X1.5X162-MM)	
Y	3	1	**232-7519**	1	CYLINDER HEAD GP	34
	4	1	**258-4946**	1	GASKET-HEAD	

Y-SEPARATE ILLUSTRATION

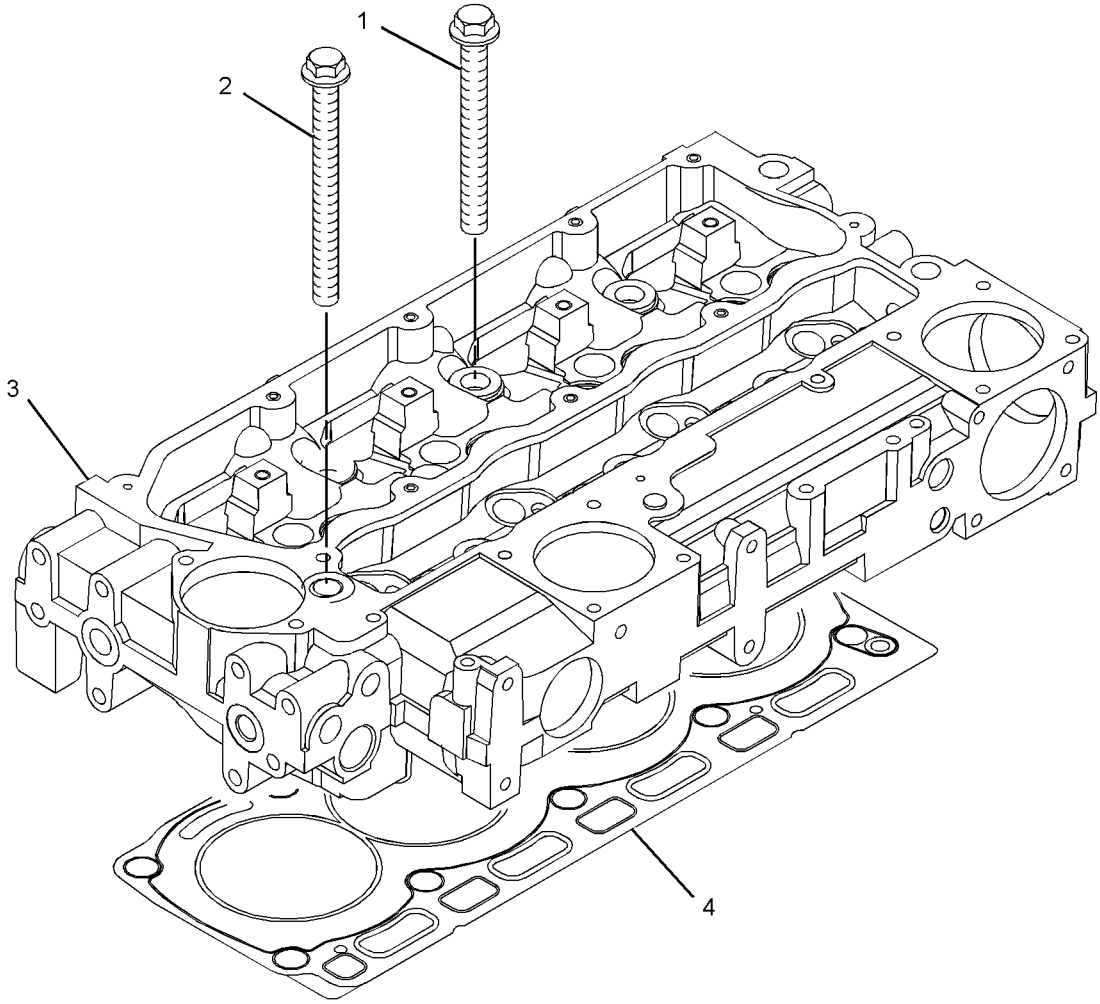

GRAPHIC #1 **<END>** g01367488

230-9699 DRIVE GP-FAN

S/N: CRS2700-UP

PART OF 177-9752 ENGINE AR-PRIMARY

SMCS-1359 **i02138065**

NOTE	REF NO	GRAPHIC REF	PART NUMBER	QTY	PART NAME 1 2 3 4 5 6 (PRODUCT LEVEL)	SEE PAGE
	1	1	**111-0859**	4	BOLT (M10X1.5X35-MM)	
	2	1	**130-3879**	1	PULLEY-FAN DRIVE	
	3	1	**230-8065**	1	HOUSING AS	
	4	1	**247-0099**	1	V-BELT SET (INCLUDES 2-BELTS) (FAN DRIVE)	

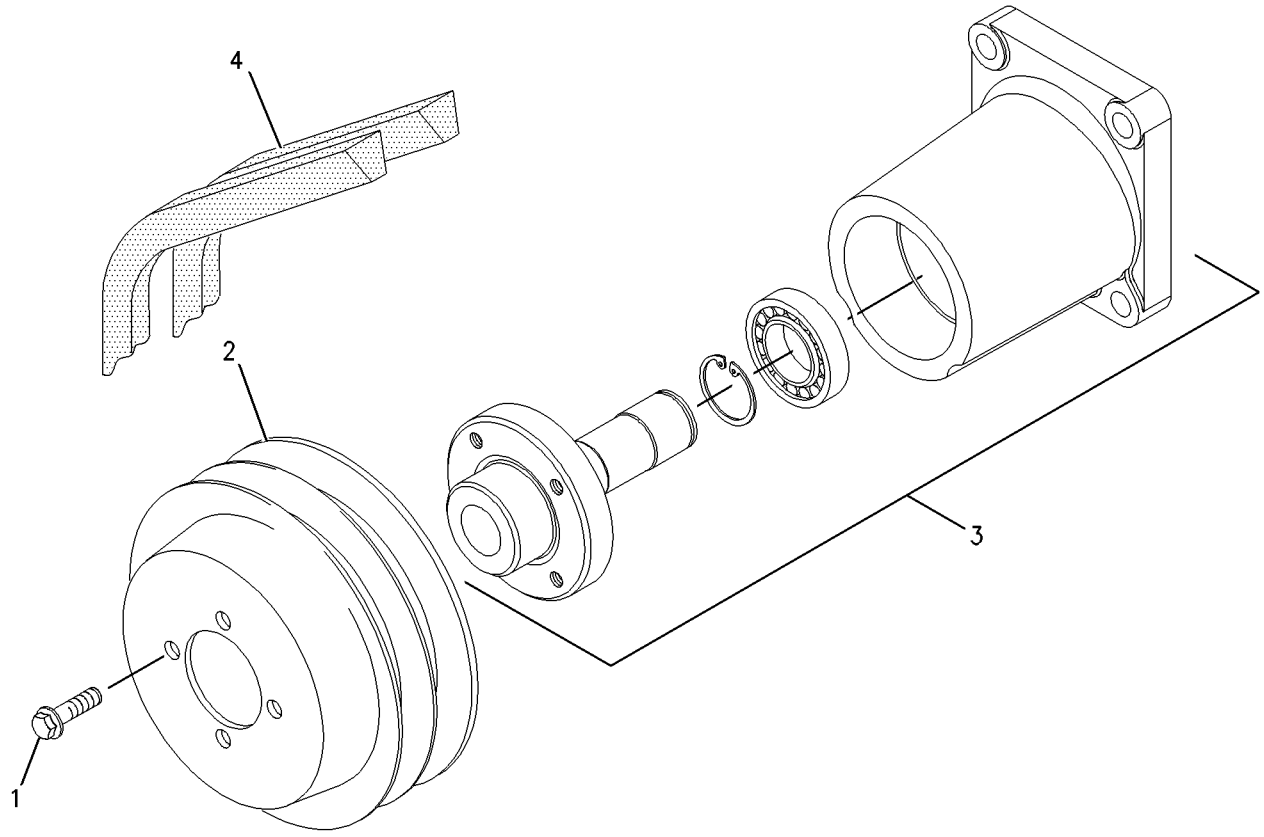

GRAPHIC #1 **<END>** g00956514

234-9680 DRIVE GP-FAN

S/N: CRS2700-UP

PART OF 297-4047, 297-4055, 329-2197 ENGINE AR-PRIMARY

AN ATTACHMENT

SMCS-1359 **i02747378**

NOTE	REF NO	GRAPHIC REF	PART NUMBER	QTY	PART NAME 1 2 3 4 5 6 (PRODUCT LEVEL)	SEE PAGE
	1	1	**111-0859**	4	BOLT (M10X1.5X35-MM)	
	2	1	**130-3879**	1	PULLEY-FAN DRIVE	
	3	1	**230-8065**	1	HOUSING AS	
	4	1	**128-5397**	1	V-BELT SET (INCLUDES 2-BELTS) (FAN DRIVE)	

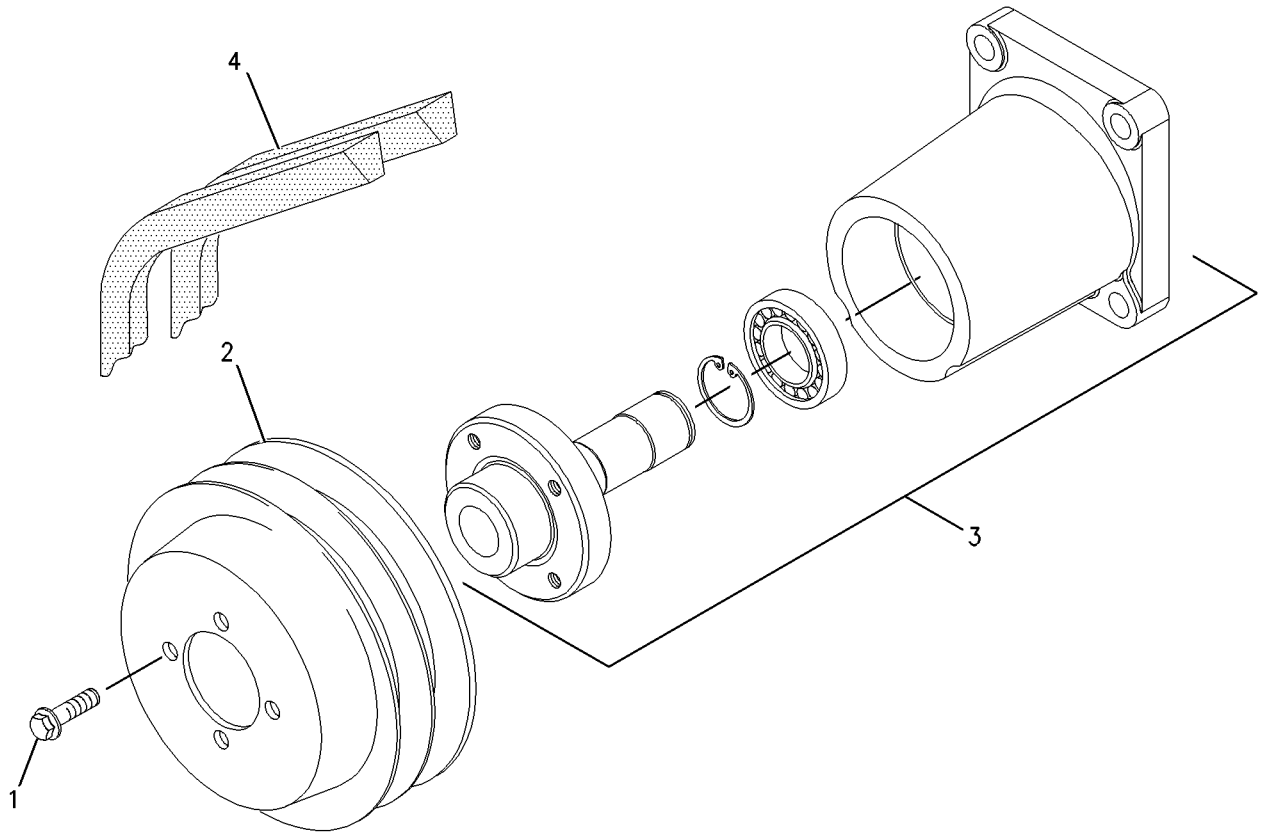

GRAPHIC #1 **<END>** g00956514

153-4980 DRIVE GP-PUMP

S/N: PJF1-467
PART OF 246-8996 INSTALLATION AR-ENGINE
ALSO AN ATTACHMENT

SMCS-3108 **i01639017**

NOTE	REF NO	GRAPHIC REF	PART NUMBER	QTY	PART NAME 1 2 3 4 5 6 (PRODUCT LEVEL)	SEE PAGE
	1	1	**102-1733**	1	FLANGE-NYLON	
	2	1	**0T-0924**	8	BOLT (3/8-24X1.5IN)	

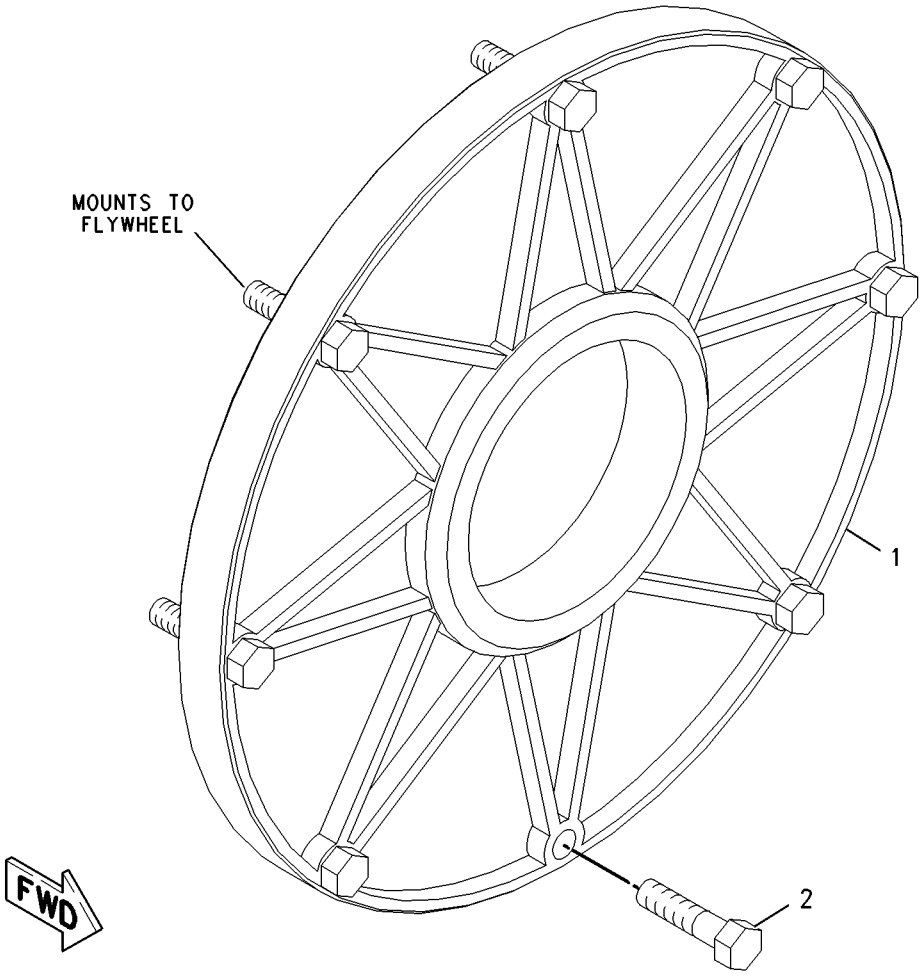

GRAPHIC #1 **<END>** g00847131

245-9831 FLYWHEEL GP

S/N: CRS2700-UP

PART OF 177-9752, 297-4047, 297-4055, 329-2197 ENGINE AR-PRIMARY

ALSO AN ATTACHMENT

SMCS-1156 **i02030175**

NOTE	REF NO	GRAPHIC REF	PART NUMBER	QTY	PART NAME 1 2 3 4 5 6 (PRODUCT LEVEL)	SEE PAGE
	1	1	**0S-1603**	10	BOLT (1/2-20X1.5-IN)	
	2	1	**5P-8245**	10	WASHER-HARD (13.5X25.5X3-MM THK)	
	3	1	**165-6689**	1	FLYWHEEL AS	
	4	1	**033-7687**	1	RING-STARTING MOTOR (126-TEETH)	

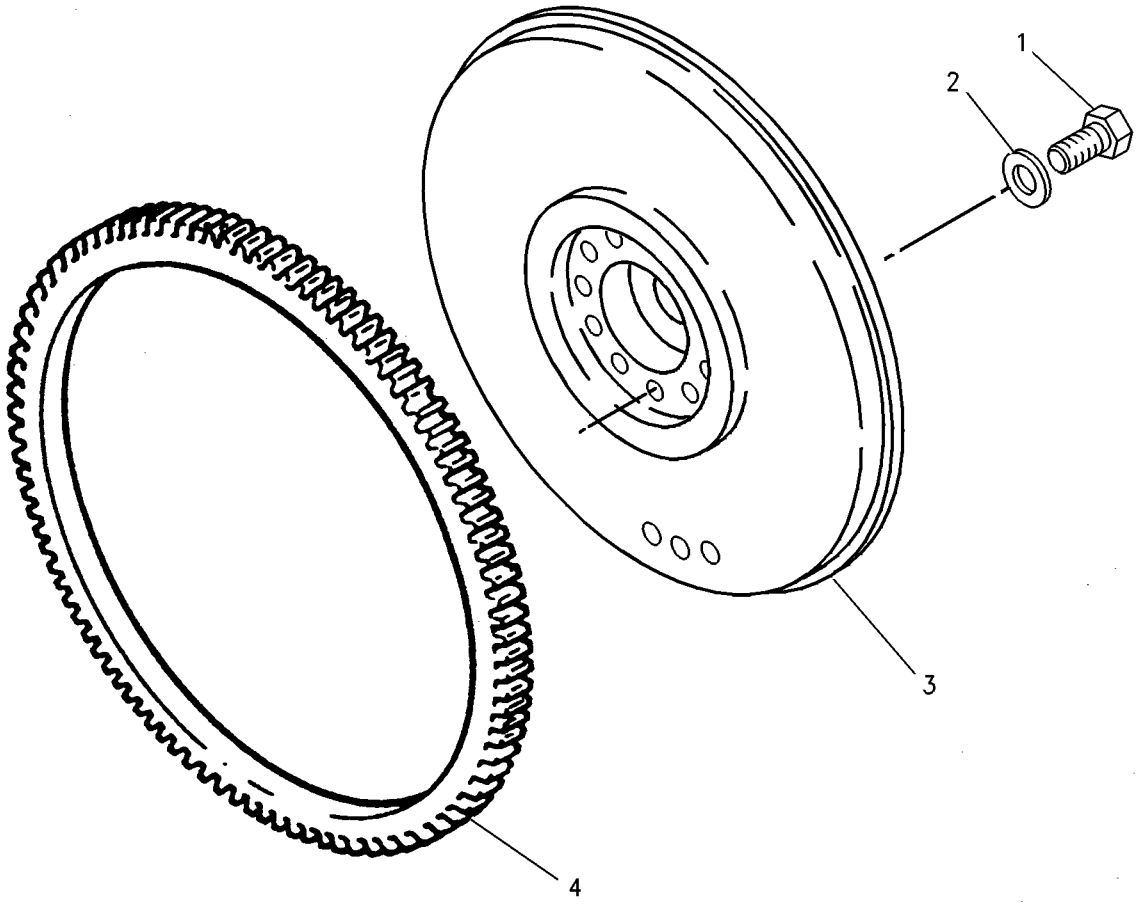

GRAPHIC #1 **<END>** g00931180

223-7825 HOUSING GP-FLYWHEEL

S/N: CRS2700-UP

PART OF 177-9752, 297-4047, 297-4055, 329-2197 ENGINE AR-PRIMARY

ALSO AN ATTACHMENT

SMCS-1157 **i02711262**

NOTE	REF NO	GRAPHIC REF	PART NUMBER	QTY	PART NAME 1 2 3 4 5 6 (PRODUCT LEVEL)	SEE PAGE
M	1	1	**6I-0423**	2	BOLT (M12X1.75X30-MM)	
	2	1	**6I-0631**	2	BOLT (M6X1X12-MM)	
	3	1	**6I-0847**	1	PLUG	
	4	1	**6I-4200**	3	BOLT (M10X1.5X16-MM)	
	5	1	**7W-4642**	1	SHIELD-DUST	
	6	1	**287-8597**	2	DOWEL	
	7	1	**102-1957**	1	PLATE	
M	8	1	**121-0883**	6	BOLT (M10X1.5X30-MM)	
	9	1	**199-3108**	1	PLUG	
	10	1	**149-9176**	1	HOUSING-FLYWHEEL	
	11	1	**199-3109**	1	PLUG	

M-METRIC PART

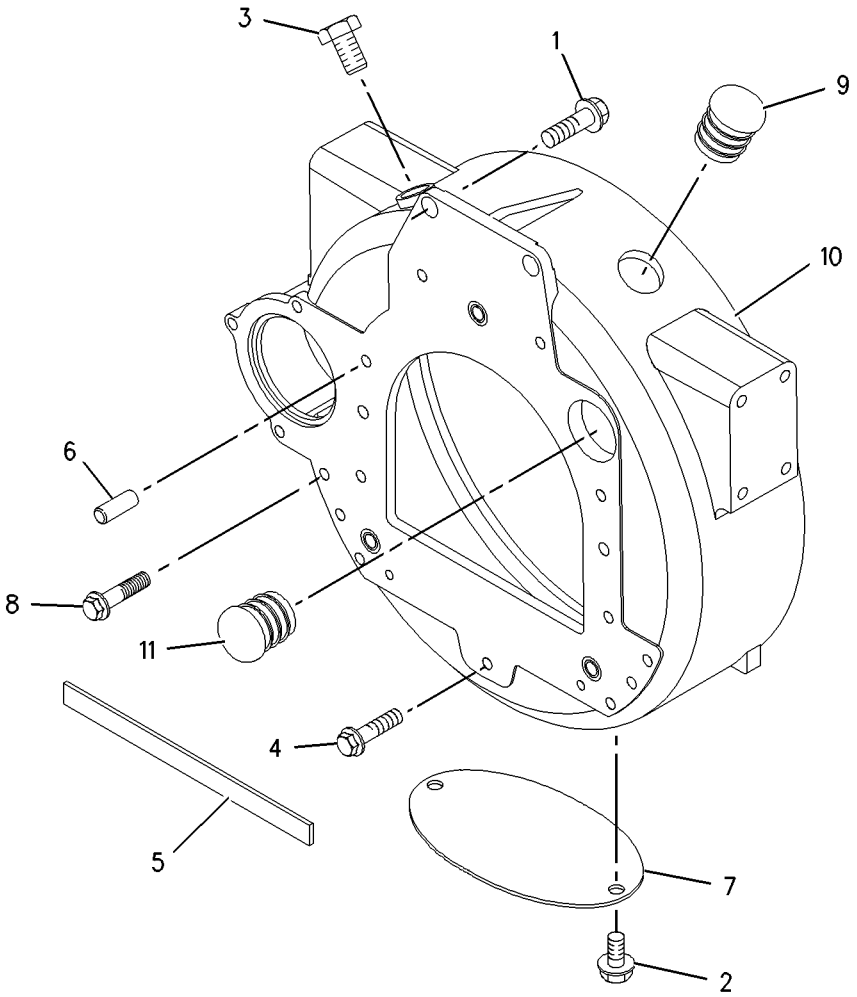

GRAPHIC #1 **<END>** g00993081

BASIC ENGINE

232-6179 HOUSING GP-FRONT

S/N: CRS2700-UP

PART OF 177-9752 ENGINE AR-PRIMARY

SMCS-1151, 1162 **i02918652**

NOTE	REF NO	GRAPHIC REF	PART NUMBER	QTY	PART NAME 1 2 3 4 5 6 (PRODUCT LEVEL)	SEE PAGE
	1	1	**1B-8736**	1	KEY-WOODRUFF	
	2	1	**288-0422**	1	SEAL-OIL (FRONT)	
M	3	1	**6I-0217**	8	BOLT (M8X1.25X20-MM)	
M	4	1	**6I-0645**	4	BOLT (M8X1.25X25-MM)	
CM	5	1	**6I-0650**	3	BOLT (M10X1.5X65-MM)	
	6	1	**7C-4616**	1	BOLT (M12X1.75X45-MM)	
	7	1	**067-6179**	1	DOWEL	
C	8	1	**324-0444**	1	HUB-IDLER GEAR	
C	9	1	**295-1711**	1	PLATE-RETAINING	
M	10	1	**100-3751**	5	BOLT (M8X1.25X65-MM)	
M	11	1	**100-4830**	1	BOLT (M10X1.5X20-MM)	
M	12	1	**124-3815**	9	BOLT (M8X16X1.25-MM)	
	13	1	**232-3666**	1	WASHER-THRUST	
	14	1	**216-8634**	1	GEAR-CAMSHAFT (68-TEETH)	
	15	1	**277-3012**	1	GASKET-COVER	
	17	1	**226-8767**	1	COVER AS-FRONT	
	17A	1	**226-8766**	1	GASKET-COVER	
	18	1	**133-1011**	1	WASHER	
	19	1	**251-4336**	1	GEAR AS-IDLER (73-TEETH)	
	20	1	**323-3515**	1	HOUSING-FRONT	

C-CHANGE FROM PREVIOUS TYPE
M-METRIC PART

232-6179 **HOUSING GP-FRONT** *(contd.)* **i02918652**

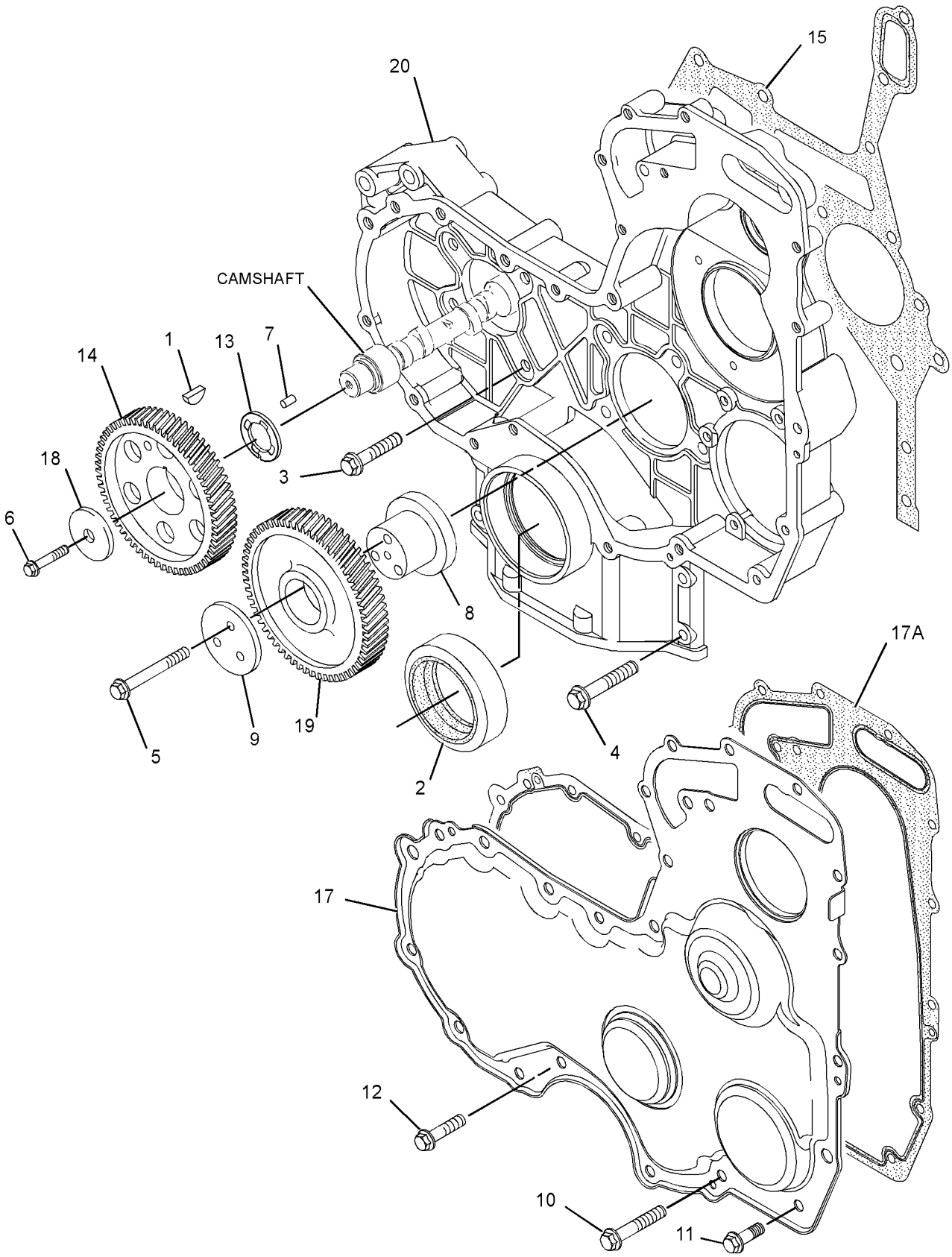

GRAPHIC #1 **<END>** g01311941

BASIC ENGINE

308-4764 HOUSING GP-FRONT

S/N: CRS2700-UP

PART OF 177-9752, 297-4047, 297-4055, 329-2197 ENGINE AR-PRIMARY

ALSO AN ATTACHMENT

SMCS-1151, 1162 **i02909695**

NOTE	REF NO	GRAPHIC REF	PART NUMBER	QTY	PART NAME 1 2 3 4 5 6 (PRODUCT LEVEL)	SEE PAGE
	1	1	**1B-8736**	1	KEY-WOODRUFF	
M	2	1	**6I-0217**	8	BOLT (M8X1.25X20-MM)	
M	3	1	**6I-0645**	4	BOLT (M8X1.25X25-MM)	
M	4	1	**6I-0650**	3	BOLT (M10X1.5X65-MM)	
	5	1	**7C-4616**	1	BOLT (M12X1.75X45-MM)	
	6	1	**067-6179**	1	DOWEL	
M	7	1	**100-3751**	5	BOLT (M8X1.25X65-MM)	
M	8	1	**100-4830**	1	BOLT (M10X1.5X20-MM)	
M	9	1	**124-3815**	9	BOLT (M8X16X1.25-MM)	
	10	1	**133-1011**	1	WASHER	
	11	1	**216-8634**	1	GEAR-CAMSHAFT (68-TEETH)	
	12	1	**226-8767**	1	COVER AS-FRONT	
	12A	1	**226-8766**	1	GASKET-COVER	
	13	1	**232-3666**	1	WASHER-THRUST	
	14	1	**251-4336**	1	GEAR AS-IDLER (73-TEETH)	
	15	1	**277-3012**	1	GASKET-COVER	
	16	1	**324-0444**	1	HUB-IDLER GEAR	
	17	1	**288-0422**	1	SEAL-OIL	
	18	1	**323-3515**	1	HOUSING-FRONT	
	19	1	**295-1711**	1	PLATE-RETAINING	

M-METRIC PART

308-4764 **HOUSING GP-FRONT** *(contd.)* **i02909695**

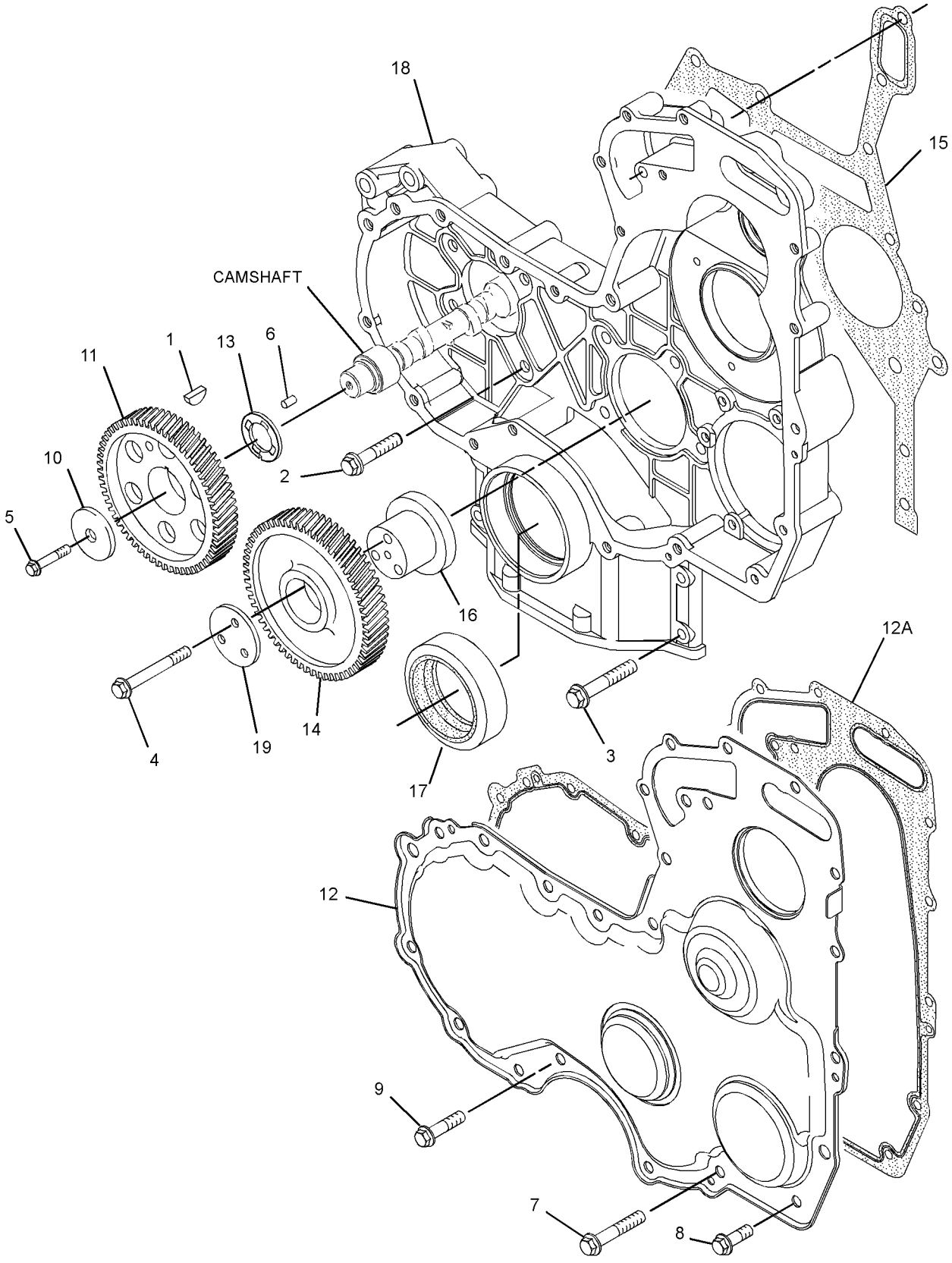

GRAPHIC #1 **<END>** g01451477

232-3713 LIFTING GP-ENGINE

S/N: CRS2700-UP

PART OF 177-9752, 297-4047, 297-4055, 329-2197 ENGINE AR-PRIMARY

ALSO AN ATTACHMENT

SMCS-1122 **i02419718**

NOTE	REF NO	GRAPHIC REF	PART NUMBER	QTY	PART NAME 1 2 3 4 5 6 (PRODUCT LEVEL)	SEE PAGE
M	1	1	**100-4830**	4	BOLT (M10X1.5X20-MM)	
	2	1	**225-8848**	1	PLATE-LIFTING	
	3	1	**275-2452**	1	PLATE-LIFTING	

M-METRIC PART

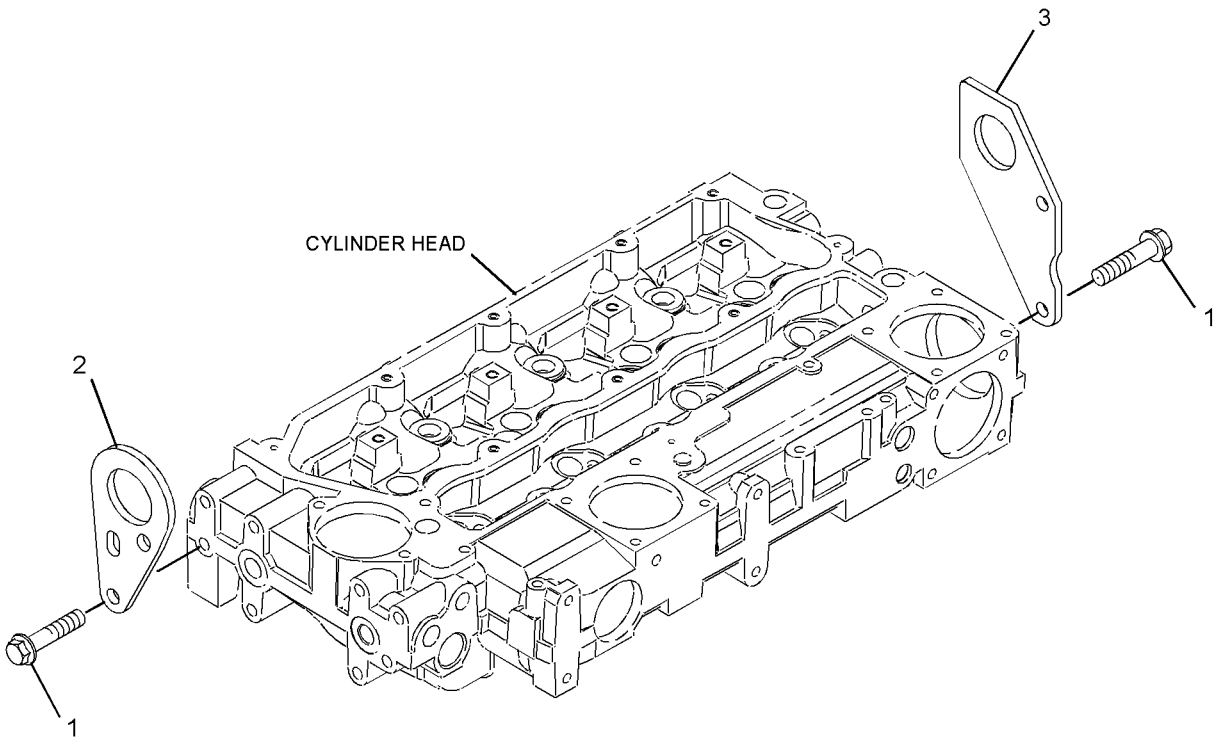

GRAPHIC #1 **<END>** g01210949

252-6456 MOUNTING GP-ENGINE

S/N: CRS2700-UP

PART OF 177-9752, 297-4047, 297-4055, 329-2197 ENGINE AR-PRIMARY

ALSO AN ATTACHMENT

SMCS-1152 **i03245107**

NOTE	REF NO	GRAPHIC REF	PART NUMBER	QTY	PART NAME 1 2 3 4 5 6 (PRODUCT LEVEL)	SEE PAGE
	1	1	**6H-3616**	3	PLUG-PROTECTION	
	2	1	**195-2132**	1	SUPPORT-FRONT (LH)	
	3	1	**195-2134**	1	SUPPORT-FRONT (RH)	
	4	1	**195-2136**	8	STUD	
	5	1	**195-2221**	8	NUT (M12X1.75-THD)	

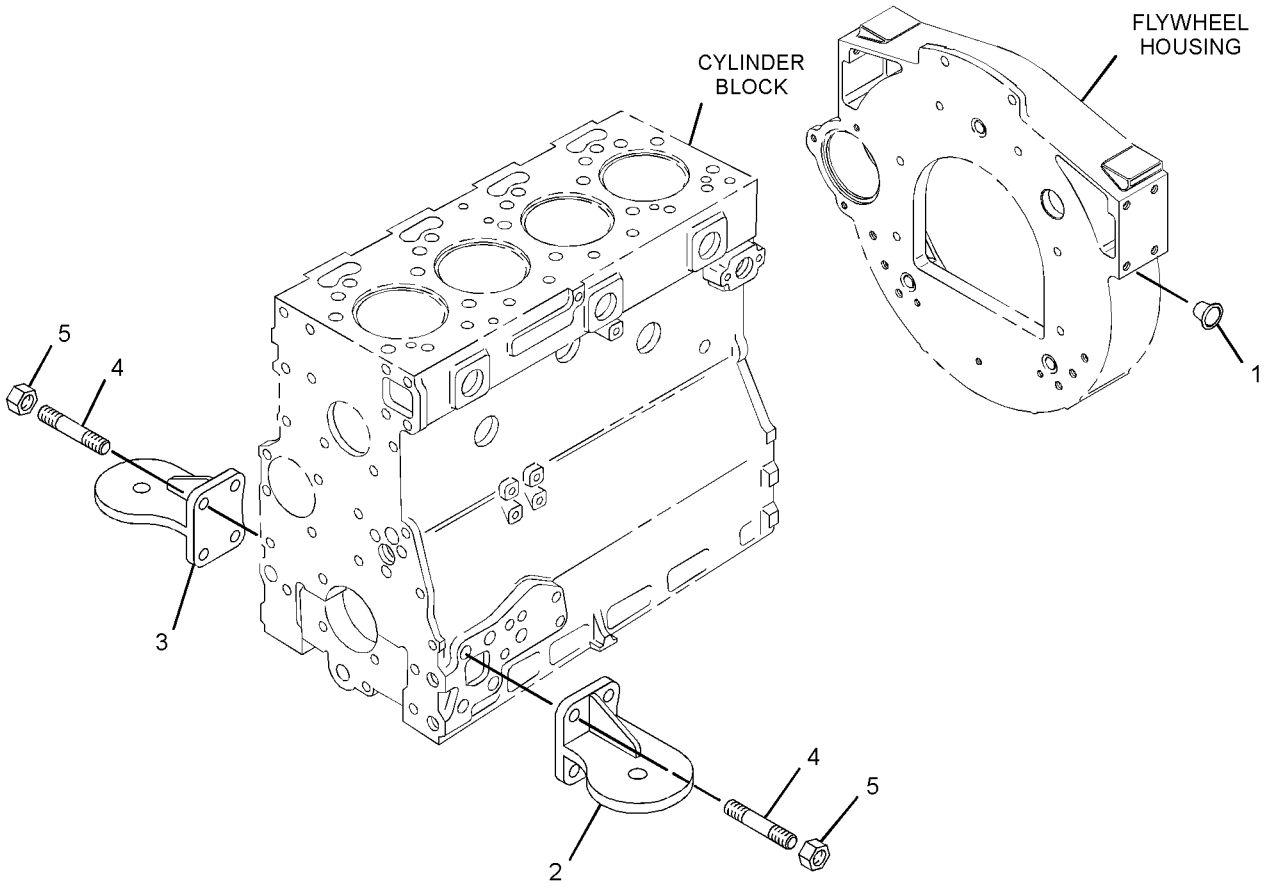

GRAPHIC #1 **<END>** g01647441

BASIC ENGINE

246-8997 MOUNTING GP-ENGINE FLEXIBLE

S/N: PJF1-467
PART OF 246-8996 INSTALLATION AR-ENGINE
ALSO AN ATTACHMENT

SMCS-1152 **i03126535**

NOTE	REF NO	GRAPHIC REF	PART NUMBER	QTY	PART NAME 1 2 3 4 5 6 (PRODUCT LEVEL)	SEE PAGE
	1	1	**6Y-9915**	4	MOUNT AS	
	2	1	**9W-9952**	4	WASHER (16.75X86X8-MM THK)	
	3	1	**9W-9953**	4	SLEEVE	
	4	1	**240-0520**	1	SUPPORT AS-ENGINE	
	5	1	**4P-8134**	1	CLIP	
	6	1	**8T-4121**	10	WASHER-HARD (11X21X2.5-MM THK)	
	7	1	**8T-4122**	8	WASHER-HARD (17X32X3.5-MM THK)	
M	8	1	**8T-4132**	4	NUT (M16X2-THD)	
M	9	1	**8T-4174**	4	BOLT (M16X2X120-MM)	
M	10	1	**8T-4186**	8	BOLT (M10X1.5X40-MM)	
	11	1	**116-0118**	1	CLIP	
M	12	1	**8T-4195**	2	BOLT (M10X1.5X30-MM)	

M-METRIC PART

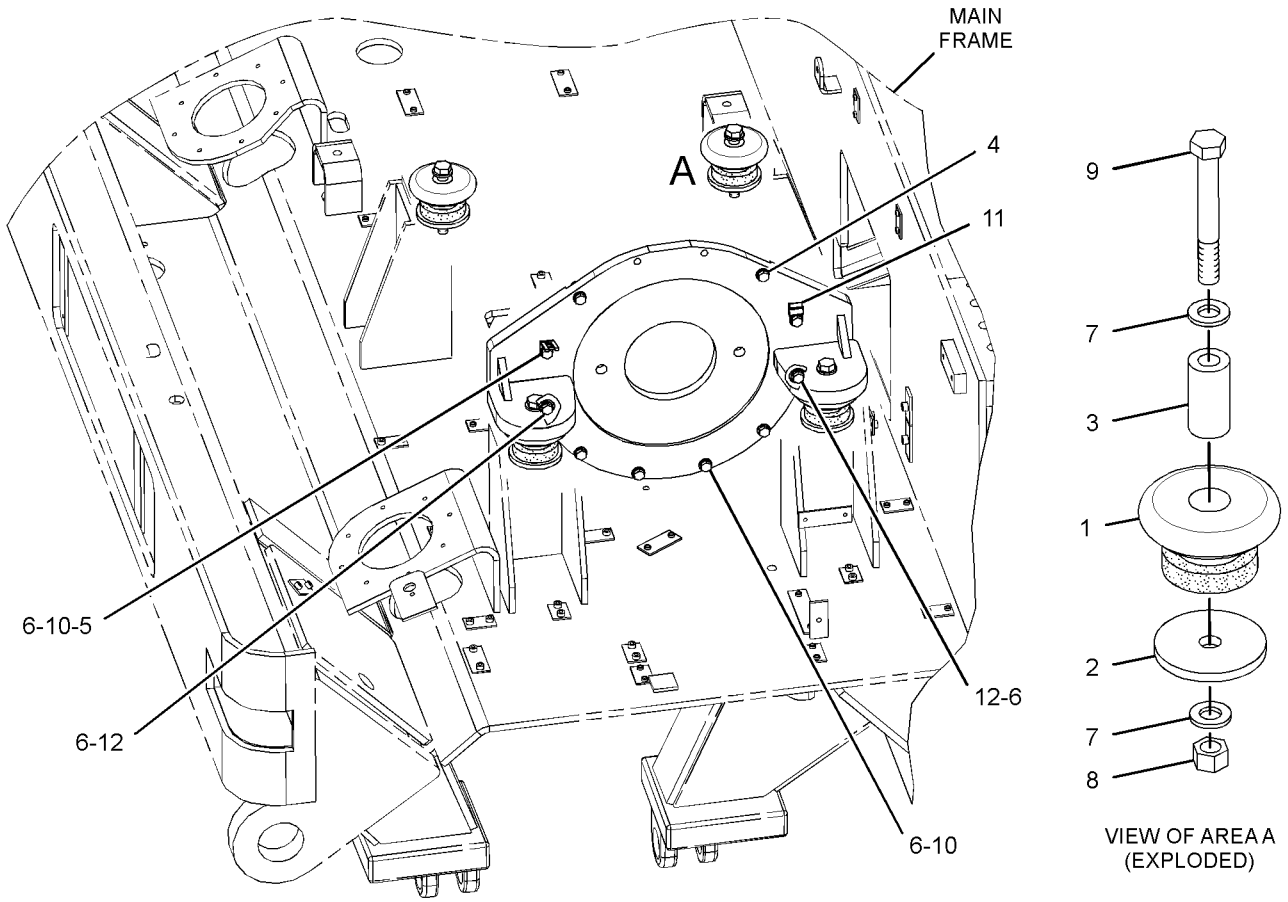

RIGHT SIDE VIEW
(UPPER REAR)

GRAPHIC #1 **<END>** g01726613

232-2565 PAN GP-OIL—ENGINE

S/N: CRS2700-UP
PART OF 177-9752 ENGINE AR-PRIMARY
TYPE 1

SMCS-1302 **i02231119**

NOTE	REF NO	GRAPHIC REF	PART NUMBER	QTY	PART NAME 1 2 3 4 5 6 (PRODUCT LEVEL)	SEE PAGE
	1	1	**5P-6718**	2	SEAL-O-RING (SUMP DRAIN)	
M	2	1	**6I-0217**	12	BOLT (M8X1.25X20-MM)	
M	3	1	**6I-0260**	2	BOLT (M8X1.25X25-MM)	
	4	1	**6I-0289**	1	PLUG	
M	5	1	**6I-0363**	2	BOLT (M6X1X20-MM)	
	6	1	**6I-0572**	2	BOLT (M8X1.25X20-MM)	
	7	1	**6I-1497**	1	SEAL	
	8	1	**7C-0351**	2	PLUG-DRAIN (ENGINE OIL)	
	9	1	**067-6213**	1	GASKET	
	10	1	**101-3771**	6	BOLT	
	11	1	**232-2551**	1	TUBE AS	
	12	1	**6I-4079**	1	NUT	
	13	1	**263-2162**	1	GAUGE AS-OIL LEVEL (DIPSTICK) (ENGINE)	
	14	1	**225-6004**	1	PAN AS-OIL	
	15	1	**7C-1224**	2	INSERT	
	16	1	**225-6005**	1	GASKET	
	17	1	**230-8094**	1	BRIDGE	
	18	1	**225-6041**	1	TUBE	

M-METRIC PART

232-2565 **PAN GP-OIL** *(contd.)* **i02231119**

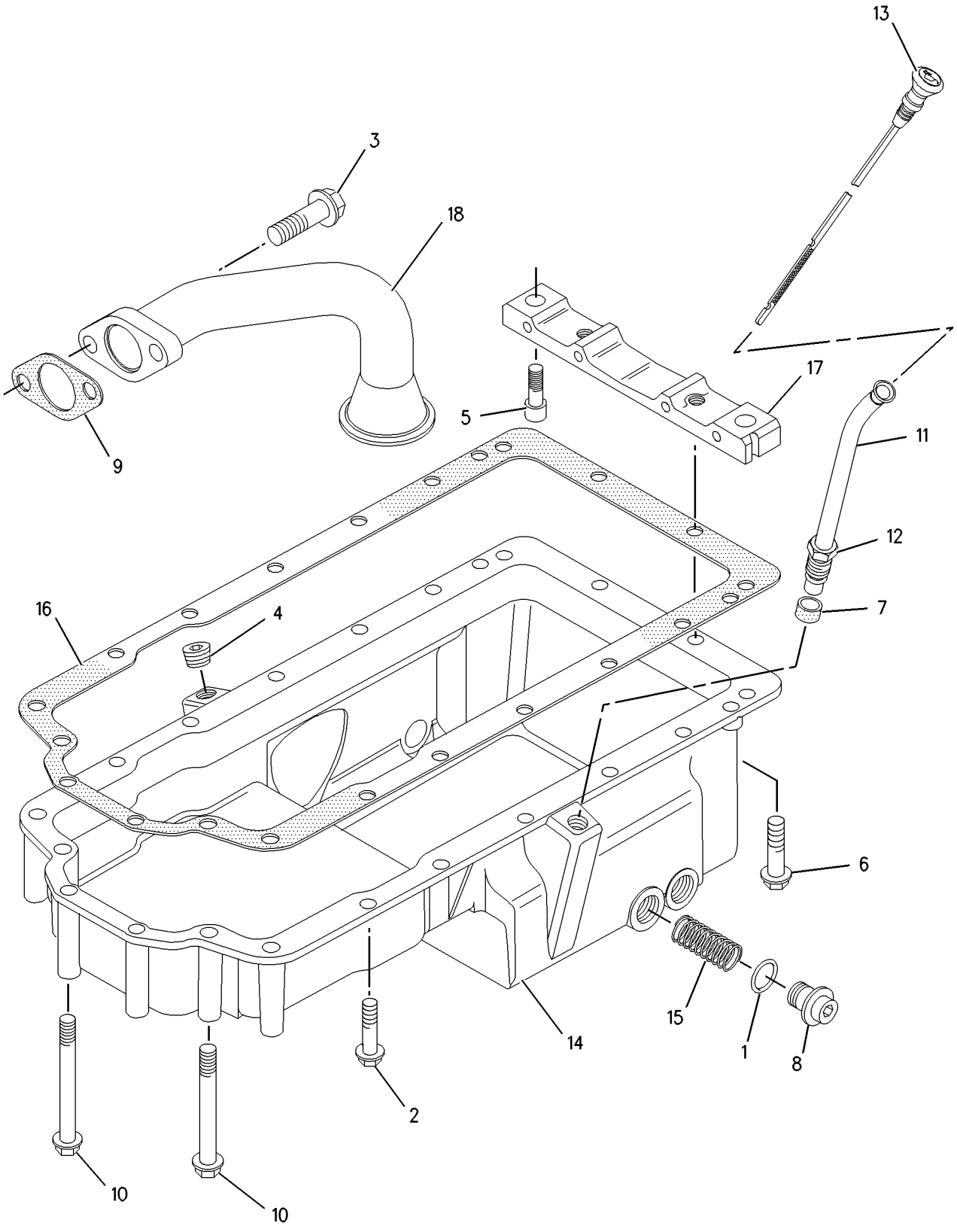

GRAPHIC #1 **<END>** g00994129

232-2565 PAN GP-OIL—ENGINE

S/N: CRS2700-UP
PART OF 177-9752, 297-4047, 297-4055, 329-2197 ENGINE AR-PRIMARY
ALSO AN ATTACHMENT
TYPE 2

SMCS-1302 **i02655478**

NOTE	REF NO	GRAPHIC REF	PART NUMBER	QTY	PART NAME 1 2 3 4 5 6 (PRODUCT LEVEL)	SEE PAGE
	1	1	**275-9883**	2	SEAL	
M	2	1	**6I-0217**	12	BOLT (M8X1.25X20-MM)	
M	3	1	**6I-0260**	2	BOLT (M8X1.25X25-MM)	
	4	1	**6I-0289**	1	PLUG	
M	5	1	**6I-0363**	2	BOLT (M6X1X20-MM)	
	6	1	**6I-0572**	2	BOLT (M8X1.25X20-MM)	
	7	1	**6I-1497**	1	SEAL	
	8	1	**7C-0351**	2	PLUG-DRAIN (ENGINE OIL)	
	9	1	**067-6213**	1	GASKET	
	10	1	**101-3771**	6	BOLT	
	11	1	**251-8338**	1	TUBE AS	
	13	1	**263-2162**	1	GAUGE AS-OIL LEVEL (DIPSTICK) (ENGINE)	
	14	1	**304-8764**	1	PAN AS-OIL (ENGINE)	
	15	1	**7C-1224**	2	INSERT	
	16	1	**225-6005**	1	GASKET	
	17	1	**230-8094**	1	BRIDGE	
	18	1	**225-6041**	1	TUBE	

M-METRIC PART

232-2565 **PAN GP-OIL** *(contd.)* **i02655478**

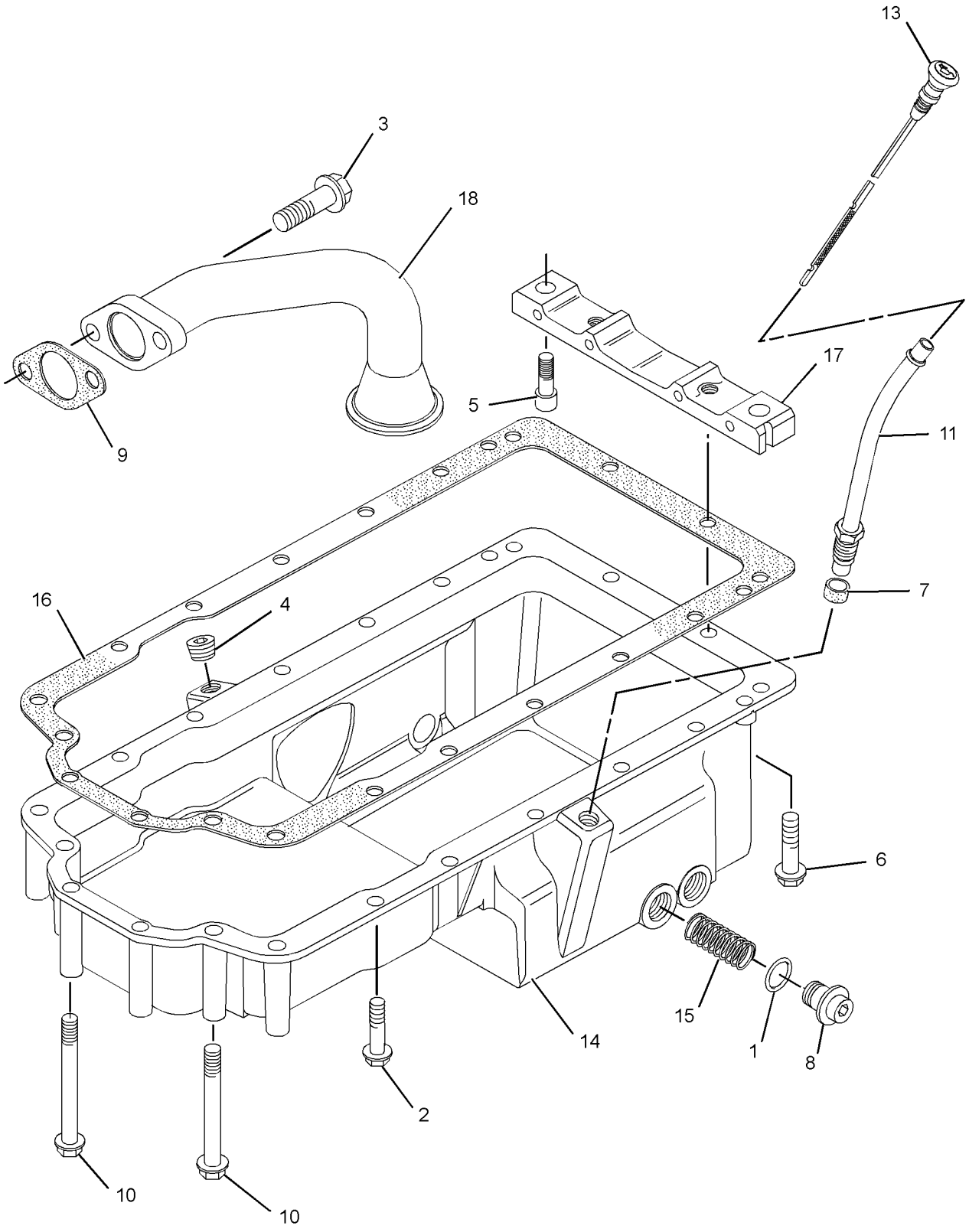

GRAPHIC #1 **<END>** g01271681

232-7442 PISTON & ROD GP

S/N: CRS2700-UP

PART OF 177-9752 ENGINE AR-PRIMARY

SMCS-1225 **i03038356**

NOTE	REF NO	GRAPHIC REF	PART NUMBER	QTY	PART NAME 1 2 3 4 5 6 (PRODUCT LEVEL)	SEE PAGE
	1	1	**225-5437**	4	PISTON AS	
					(EACH PISTON AS INCLUDES)	
	2	1	**124-3536**	2	RING-RETAINING	
	3	1	**225-5436**	1	KIT-PISTON RING	
AB		1	**288-1394**	1	PISTON AS (0.5-MM OS)	
AB		1	**288-1395**	1	PISTON AS (1.0-MM OS)	
BJ	4	1	**225-5441**	4	ROD AS-CONNECTING (LENGTH L)	
					—OR—	
BJ		1	**225-5451**	4	ROD AS-CONNECTING (LENGTH K)	
					—OR—	
BJ		1	**225-5453**	4	ROD AS-CONNECTING (LENGTH J)	
					—OR—	
BJ		1	**225-5454**	4	ROD AS-CONNECTING (LENGTH H)	
					—OR—	
BJ		1	**225-5458**	4	ROD AS-CONNECTING (LENGTH G)	
					—OR—	
BJ		1	**225-5459**	4	ROD AS-CONNECTING (LENGTH F)	
					(EACH ROD AS INCLUDES)	
	5	1	**225-5438**	1	BUSHING	
	6	1	**225-5439**	2	BOLT-SPECIAL (CONNECTING ROD)	

A-NOT PART OF THIS GROUP
B-USE AS REQUIRED
J-ENSURE THAT CORRECT ROD LENGTH IS FITTED

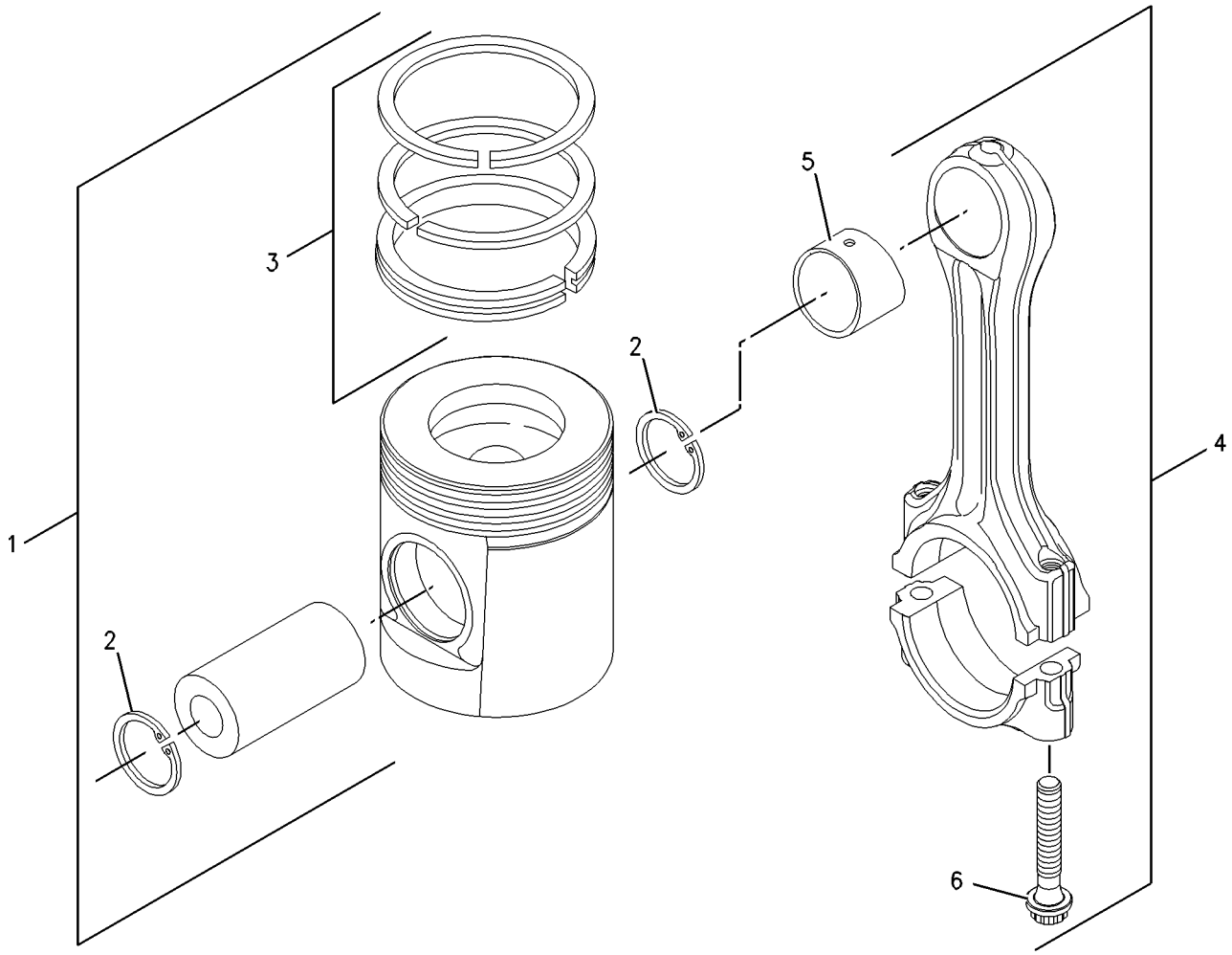

GRAPHIC #1 **<END>** g00909669

308-4730 PISTON & ROD GP

S/N: CRS2700-UP

PART OF 177-9752, 297-4047, 297-4055, 329-2197 ENGINE AR-PRIMARY

ALSO AN ATTACHMENT

SMCS-1225 **i02719129**

NOTE	REF NO	GRAPHIC REF	PART NUMBER	QTY	PART NAME 1 2 3 4 5 6 (PRODUCT LEVEL)	SEE PAGE
	1	1	**225-5437**	4	PISTON AS	
					(EACH PISTON AS INCLUDES)	
	1A	1	**124-3536**	2	RING-RETAINING	
	1B	1	**225-5436**	1	KIT-PISTON RING	
BJ	2	1	**225-5441**	4	ROD AS-CONNECTING (LENGTH L)	
					—OR—	
BJ		1	**225-5451**	4	ROD AS-CONNECTING (LENGTH K)	
					—OR—	
BJ		1	**225-5453**	4	ROD AS-CONNECTING (LENGTH J)	
					—OR—	
BJ		1	**225-5454**	4	ROD AS-CONNECTING (LENGTH H)	
					—OR—	
BJ		1	**225-5458**	4	ROD AS-CONNECTING (LENGTH G)	
					—OR—	
BJ		1	**225-5459**	4	ROD AS-CONNECTING (LENGTH F)	
					(EACH ROD AS INCLUDES)	
	2A	1	**225-5438**	1	BUSHING	
	2B	1	**225-5439**	2	BOLT-SPECIAL (CONNECTING ROD)	

B-USE AS REQUIRED
J-ENSURE THAT CORRECT ROD LENGTH IS FITTED

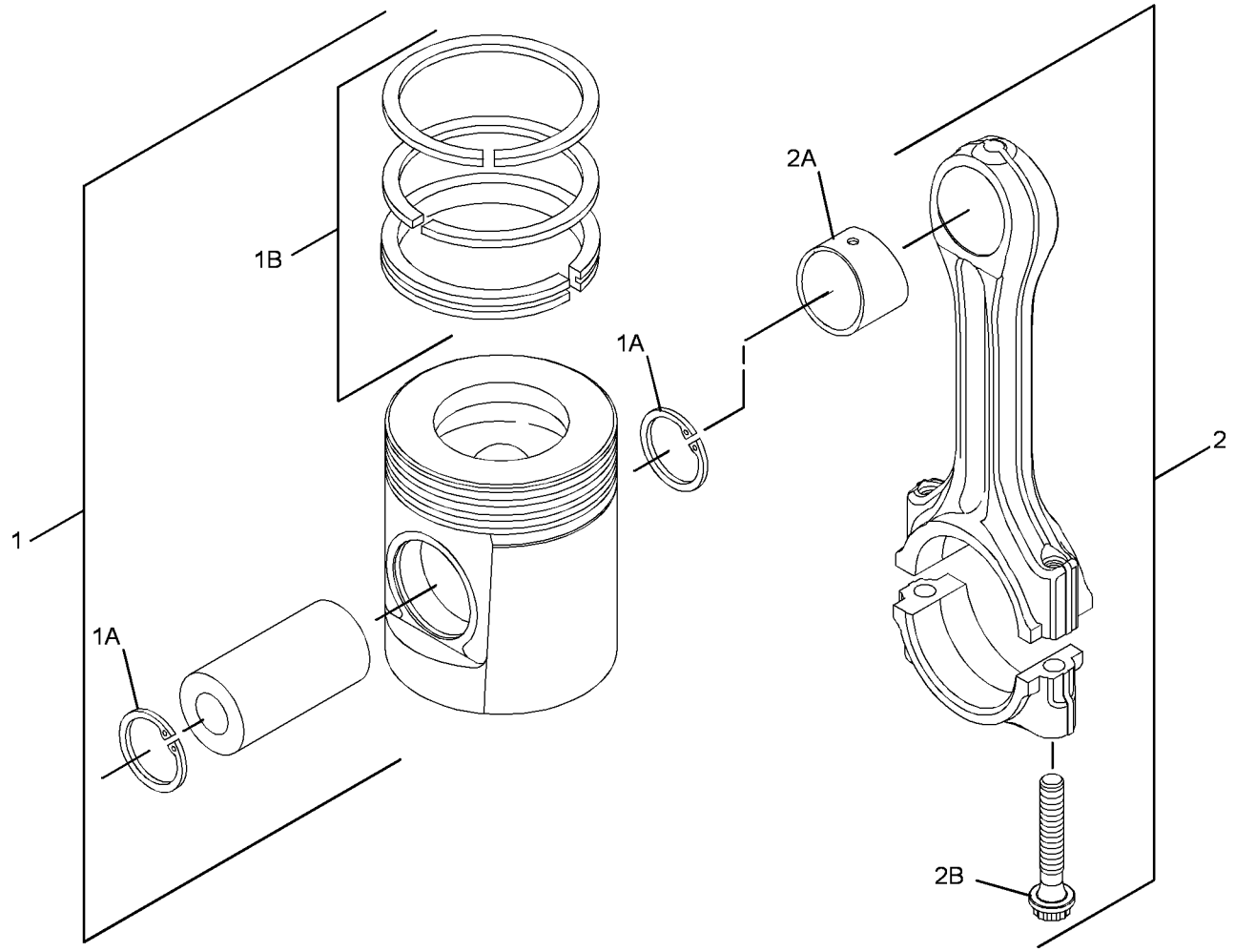

GRAPHIC #1 **<END>** g01374535

225-4317 PLUG GP-ENGINE

S/N: CRS2700-UP
FRONT HOUSING,CYLINDER HEAD
PART OF 177-9752, 297-4047, 297-4055, 329-2197 ENGINE AR-PRIMARY
ALSO AN ATTACHMENT

SMCS-1000 **i01862406**

NOTE	REF NO	GRAPHIC REF	PART NUMBER	QTY	PART NAME 1 2 3 4 5 6 (PRODUCT LEVEL)	SEE PAGE
	1	1	**2B-0858**	3	PLUG-PIPE	

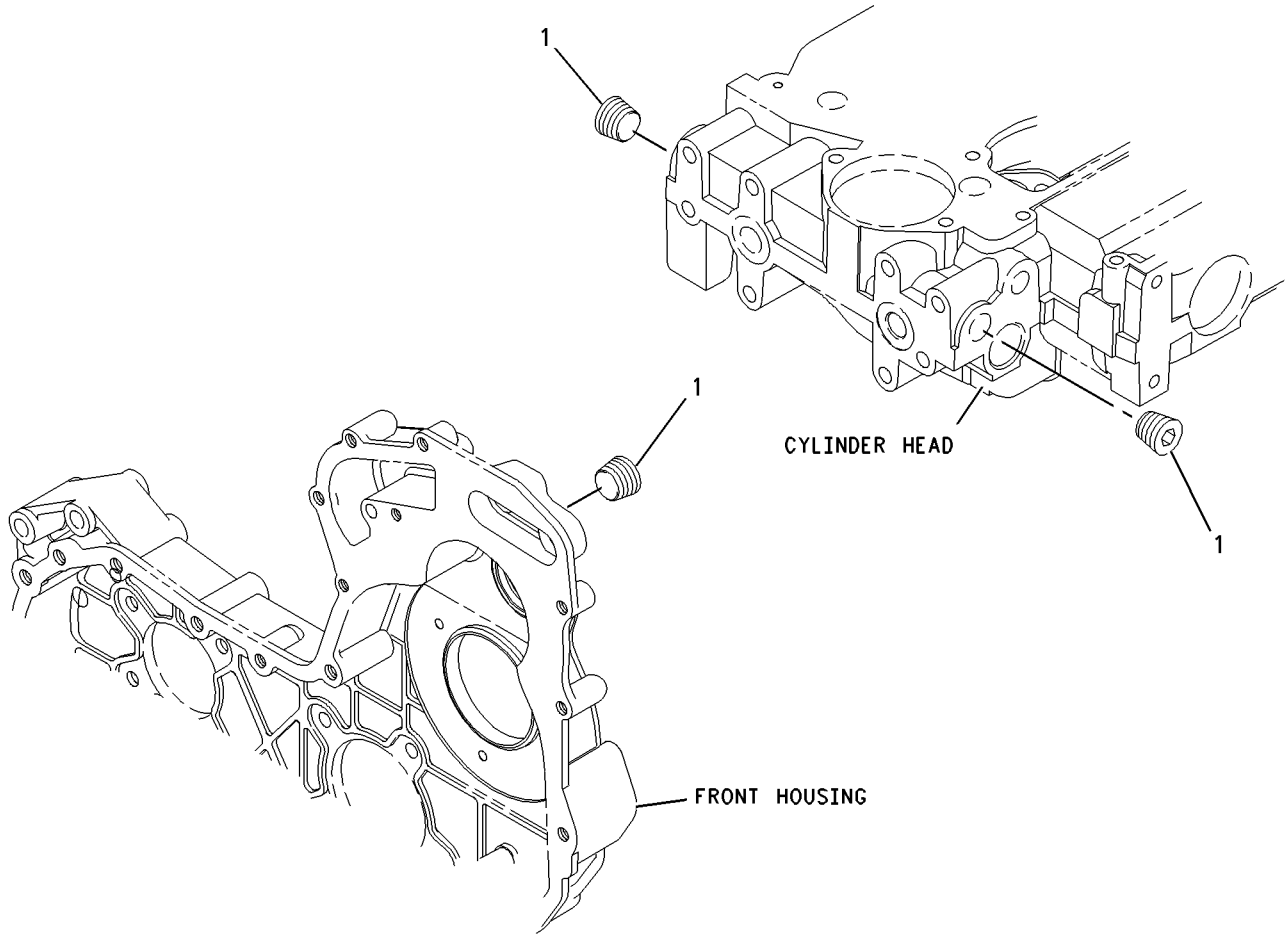

GRAPHIC #1 **<END>** g00911937

232-6204 PLUG GP-ENGINE

S/N: CRS2700-UP
CYLINDER HEAD
PART OF 177-9752, 297-4047, 297-4055, 329-2197 ENGINE AR-PRIMARY
ALSO AN ATTACHMENT

SMCS-1000 **i01863022**

NOTE	REF NO	GRAPHIC REF	PART NUMBER	QTY	PART NAME 1 2 3 4 5 6 (PRODUCT LEVEL)	SEE PAGE
	1	1	**199-9751**	1	SEAL-O-RING	
	2	1	**232-1322**	1	PLUG	

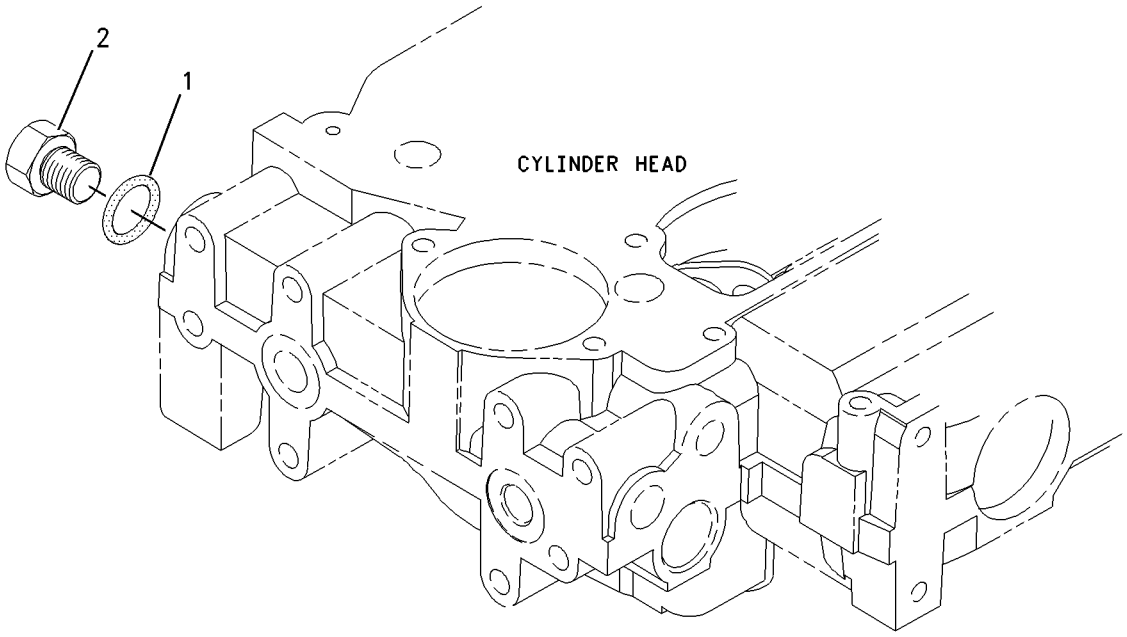

GRAPHIC #1 **<END>** g00950934

253-2479 PLUG GP-ENGINE

S/N: CRS2700-UP

PART OF 177-9752, 297-4047, 297-4055, 329-2197 ENGINE AR-PRIMARY

ALSO AN ATTACHMENT

SMCS-1000 **i02091108**

NOTE	REF NO	GRAPHIC REF	PART NUMBER	QTY	PART NAME 1 2 3 4 5 6 (PRODUCT LEVEL)	SEE PAGE
	1	1	**035-8063**	1	PLUG	
	2	1	**199-9267**	1	SEAL-O-RING	
	3	1	**232-3861**	1	PLUG	

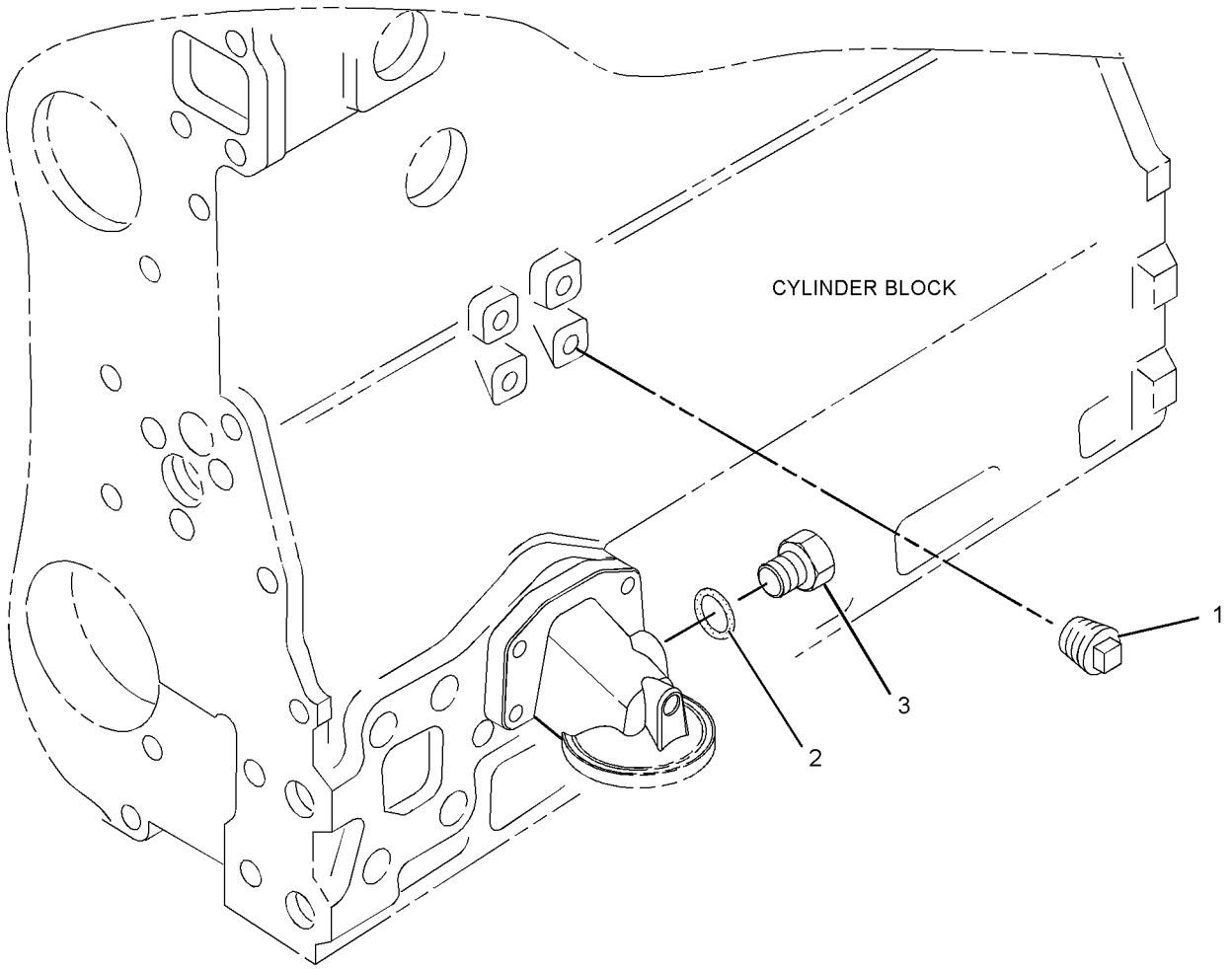

GRAPHIC #1 **<END>** g01079757

230-7353 PULLEY GP-CRANKSHAFT

S/N: CRS2700-UP

PART OF 177-9752, 297-4047, 297-4055, 329-2197 ENGINE AR-PRIMARY

ALSO AN ATTACHMENT

SMCS-1205 **i02009617**

NOTE	REF NO	GRAPHIC REF	PART NUMBER	QTY	PART NAME 1 2 3 4 5 6 (PRODUCT LEVEL)	SEE PAGE
	1	1	**6I-0501**	1	BLOCK	
	2	1	**6I-0502**	1	PULLEY	
	3	1	**7W-4634**	3	BOLT (7/16-20X1.5 IN)	

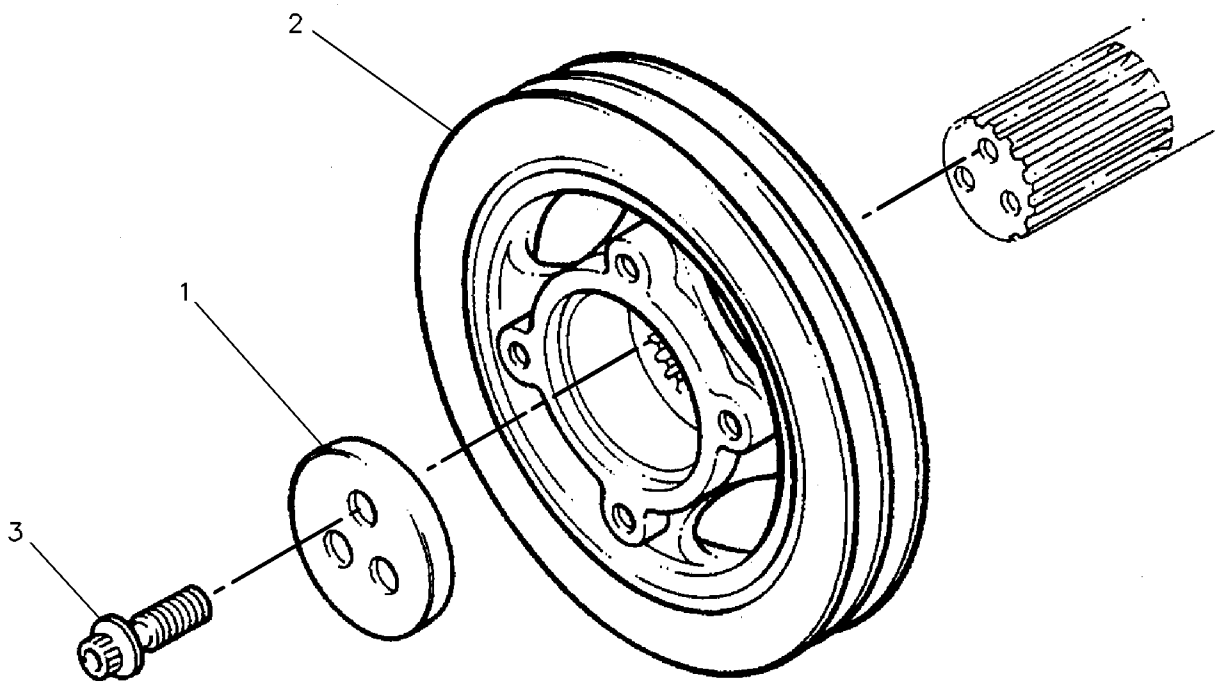

GRAPHIC #1 **<END>** g00130941

BASIC ENGINE

225-5963 ROCKER ARM GP

S/N: CRS2700-UP

PART OF 308-4732 VALVE MECHANISM GP

ALSO AN ATTACHMENT

SMCS-1102, 1123 **i03255454**

NOTE	REF NO	GRAPHIC REF	PART NUMBER	QTY	PART NAME 1 2 3 4 5 6 (PRODUCT LEVEL)	SEE PAGE
	1	1	**225-5625**	4	LEVER AS	
					(EACH INCLUDES)	
	1A	1	**5B-9079**	1	NUT-JAM (3/8-24-THD)	
	1B	1	**185-1546**	1	SCREW	
	2	1	**225-5634**	1	SHAFT AS	
	2A	1	**225-5629**	2	PLUG	
	3	1	**225-5638**	3	SPRING	
	4	1	**225-5640**	4	LEVER AS	
					(EACH INCLUDES)	
	4A	1	**5B-9079**	1	NUT-JAM (3/8-24-THD)	
	4B	1	**185-1546**	1	SCREW	
	5	1	**225-5959**	2	CLIP	
	6	1	**225-5960**	1	BOLT (M8X1.25X60-MM)	
	7	1	**225-5961**	2	WASHER (26.7X34.32X0.38-MM THK)	
	8	1	**225-5962**	3	BOLT (M8X1.25X30-MM)	

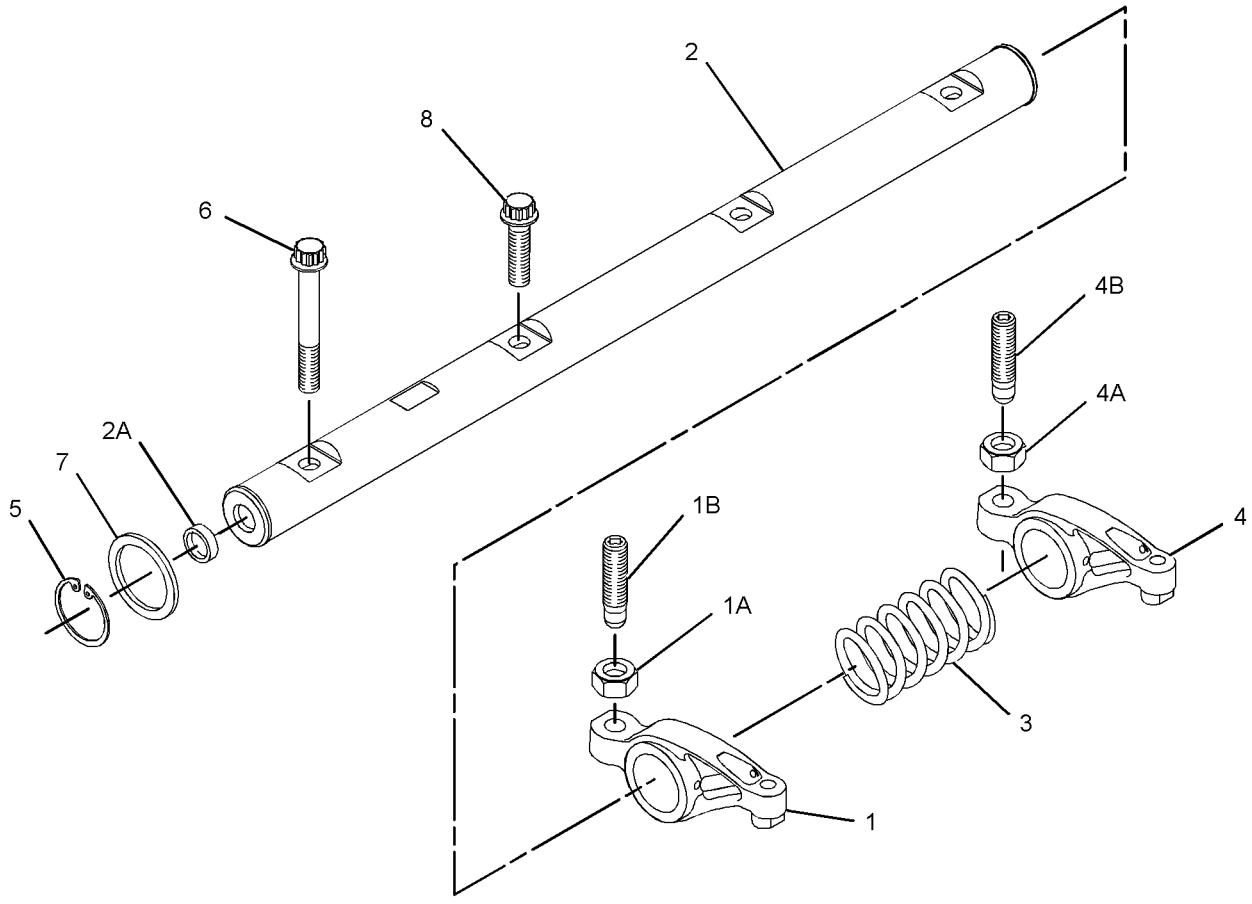

GRAPHIC #1 **<END>** g01368510

220-1960 SERVICE GP-ENGINE

S/N: PJF1-304

FLUID SAMPLING, DRAIN

PART OF 246-8996 INSTALLATION AR-ENGINE

SMCS-1261, 1263, 1302, 7542 **i03244629**

NOTE	REF NO	GRAPHIC REF	PART NUMBER	QTY	PART NAME 1 2 3 4 5 6 (PRODUCT LEVEL)	SEE PAGE
	1	1	**1P-4278**	1	CLAMP-HOSE	
	2	1	**5D-1026**	1	CLAMP-HOSE	
	3	1	**8C-3445**	1	CAP-DUST	
	4	1	**8T-7859**	1	CONNECTOR	
	5	1	**157-0670**	1	CAP-DUST	
	6	1	**6V-7238**	1	VALVE-SHUTOFF (ENGINE OIL DRAIN)	
		1	**3K-0360**	1	SEAL-O-RING	
	7	1	**154-9025**	1	VALVE-FLUID SAMPLING (COOLANT)	
	8	1	**159-5255**	1	ADAPTER	
	9	1	**8C-3446**	1	VALVE-FLUID SAMPLING (ENGINE OIL)	
		1	**3J-7354**	1	SEAL-O-RING	
	10	1	**5P-9186**	1	SEAL-O-RING	
	11	1	**7K-1181**	1	STRAP-CABLE	
	12	1	**8T-7876**	1	SEAL-O-RING	
E	13	1	**5P-0743**		HOSE (50-CM)	
E	14	1	**5P-1420**		HOSE (80-CM)	

E-ORDER BY THE CENTIMETER

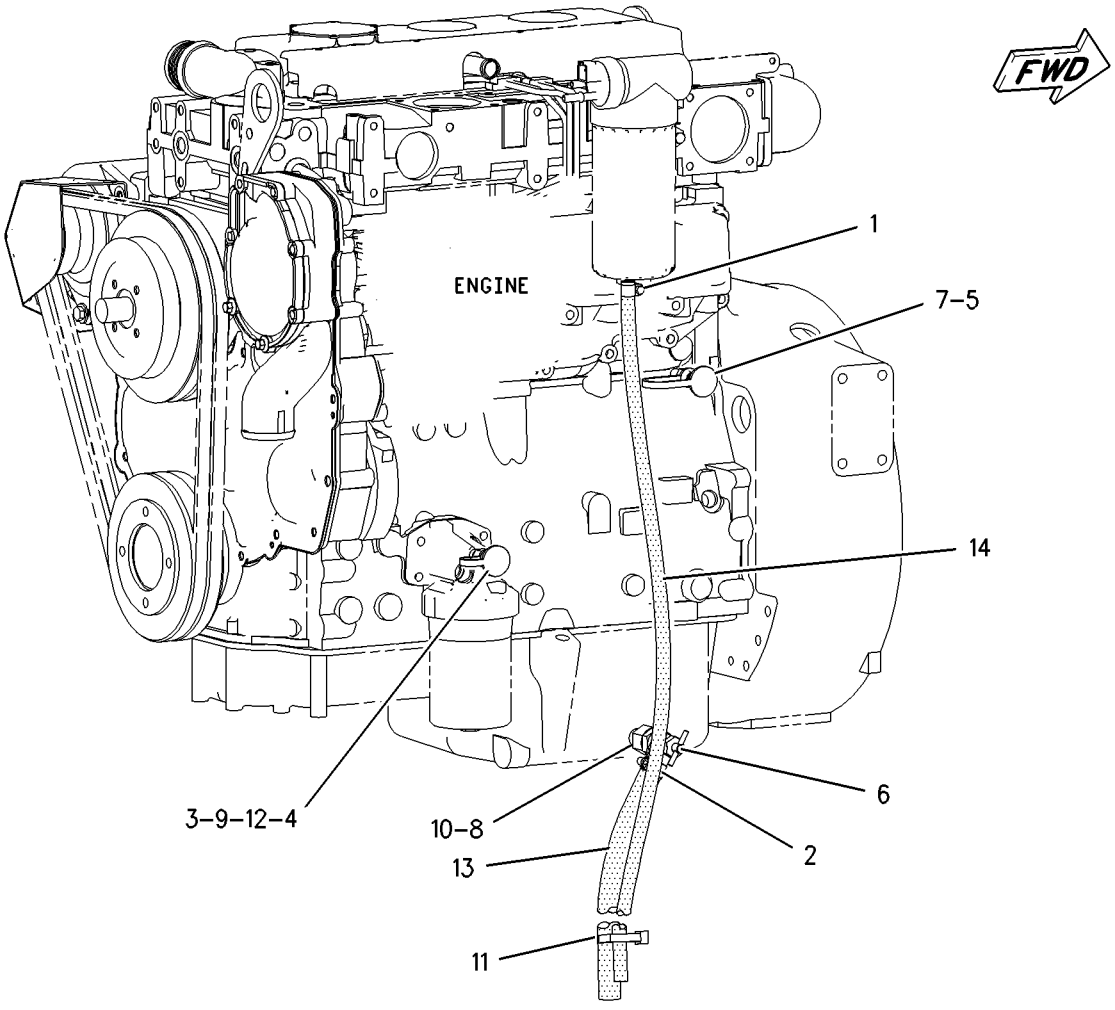

GRAPHIC #1 **<END>** g01002140

BASIC ENGINE

283-7620 SERVICE GP-ENGINE

S/N: PJF305-467
PART OF 246-8996 INSTALLATION AR-ENGINE
ALSO AN ATTACHMENT

SMCS-1261, 1263, 1302, 7542 **i03598226**

NOTE	REF NO	GRAPHIC REF	PART NUMBER	QTY	PART NAME 1 2 3 4 5 6 (PRODUCT LEVEL)	SEE PAGE
	1	1	**1P-4278**	2	CLAMP-HOSE	
	2	1	**5D-1026**	1	CLAMP-HOSE	
	3	1	**5P-7833**	1	VALVE-SHUTOFF (ENGINE OIL)	
	4	1	**8C-3445**	1	CAP-DUST	
	5	1	**8T-7859**	1	CONNECTOR	
	6	1	**157-0670**	1	CAP-DUST	
	7	1	*165-2273*	1	VALVE GP-SHUTOFF (ENGINE OIL)	
		1	**3K-0360**	1	SEAL-O-RING	
		1	**6V-7238**	1	VALVE-SHUTOFF	
	8	1	**154-9025**	1	VALVE-FLUID SAMPLING (ENGINE OIL)	
	9	1	**159-5255**	1	ADAPTER	
	10	1	*164-5590*	1	VALVE AS-FLUID SAMPLING (ENGINE OIL)	
		1	**3J-7354**	1	SEAL-O-RING	
		1	**8C-3446**	1	VALVE-FLUID SAMPLING	
	11	1	**3B-7764**	1	BUSHING (REDUCING)	
	12	1	**3P-1823**	1	ADAPTER-PIPE	
	13	1	**5P-9186**	1	SEAL-O-RING	
	14	1	**7K-1181**	1	STRAP-CABLE	
	15	1	**8T-7876**	1	SEAL-O-RING	
E	16	1	**5P-0743**		HOSE (50-CM)	
E	17	1	**5P-1442**		HOSE (74-CM)	
E	18	1	**5P-1420**		HOSE (80-CM)	

E-ORDER BY THE CENTIMETER

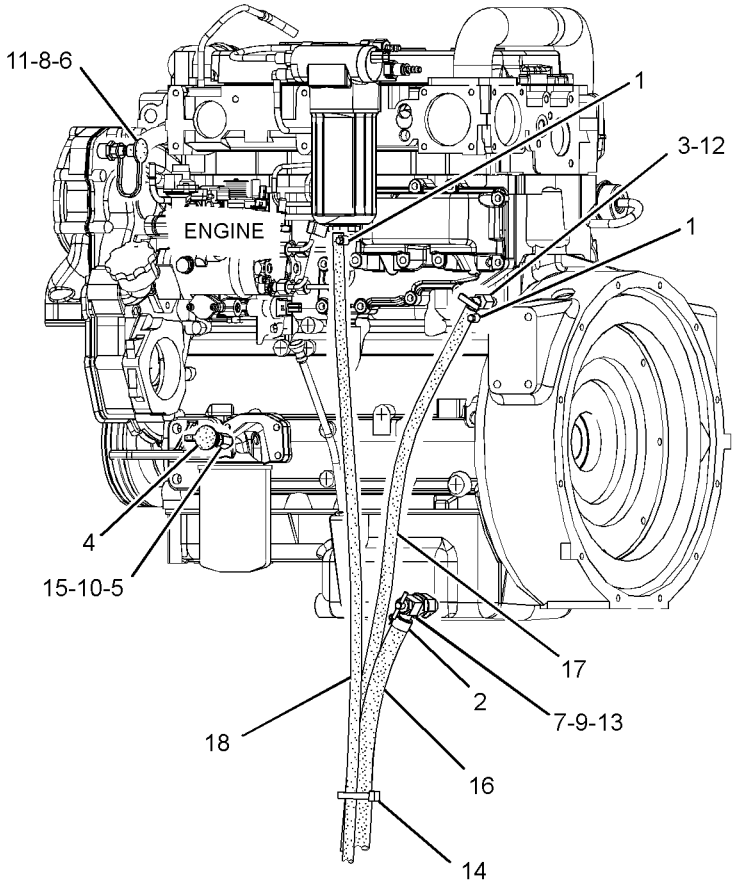

REAR VIEW
(RIGHT SIDE)

GRAPHIC #1 **<END>** g01273776

BASIC ENGINE

232-7526 VALVE MECHANISM GP

S/N: CRS2700-UP

PART OF 177-9752 ENGINE AR-PRIMARY

SMCS-1102, 1121, 1123 **i01863433**

NOTE	REF NO	GRAPHIC REF	PART NUMBER	QTY	PART NAME 1 2 3 4 5 6 (PRODUCT LEVEL)	SEE PAGE
	1	1	**067-6095**	8	ROD	
	2	1	**138-2053**	8	TAPPET	
	3	1	**225-5963**	1	ROCKER ARM GP	
	4	1	**225-5625**	4	LEVER AS	
					(EACH INCLUDES)	
	5	1	**5B-9079**	1	NUT-JAM (3/8-24-THD)	
	6	1	**185-1546**	1	SCREW	
	7	1	**225-5634**	1	SHAFT AS	
	8	1	**225-5629**	2	PLUG	
	9	1	**225-5638**	3	SPRING	
	10	1	**225-5640**	4	LEVER AS	
					(EACH INCLUDES)	
	11	1	**5B-9079**	1	NUT-JAM (3/8-24-THD)	
	12	1	**185-1546**	1	SCREW	
	13	1	**225-5959**	2	CLIP	
	14	1	**225-5960**	1	BOLT (M8X1.25X60-MM)	
	15	1	**225-5961**	2	WASHER (26.7X34.32X0.38-MM THK)	
	16	1	**225-5962**	3	BOLT (M8X1.25X30-MM)	

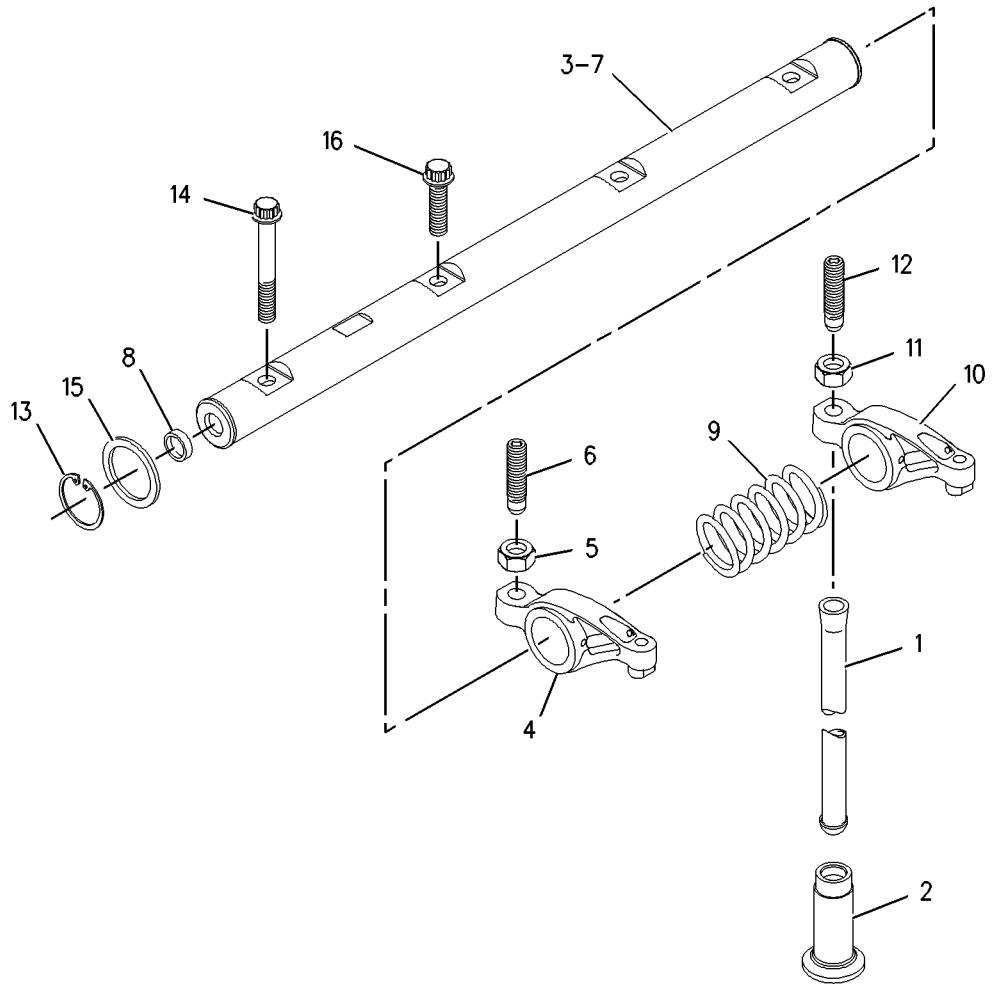

GRAPHIC #1 **<END>** g00910253

BASIC ENGINE

308-4732 VALVE MECHANISM GP

S/N: CRS2700-UP

PART OF 177-9752, 297-4047, 297-4055, 329-2197 ENGINE AR-PRIMARY

ALSO AN ATTACHMENT

SMCS-1102, 1121, 1123 **i02719187**

NOTE	REF NO	GRAPHIC REF	PART NUMBER	QTY	PART NAME 1 2 3 4 5 6 (PRODUCT LEVEL)	SEE PAGE
	1	1	**067-6095**	8	ROD	
	2	1	**138-2053**	8	TAPPET	
Y	3	1	**225-5963**	1	ROCKER ARM GP	60
	4	1	**225-5967**	1	CAMSHAFT	

Y-SEPARATE ILLUSTRATION

308-4732 **VALVE MECHANISM GP** *(contd.)* **i02719187**

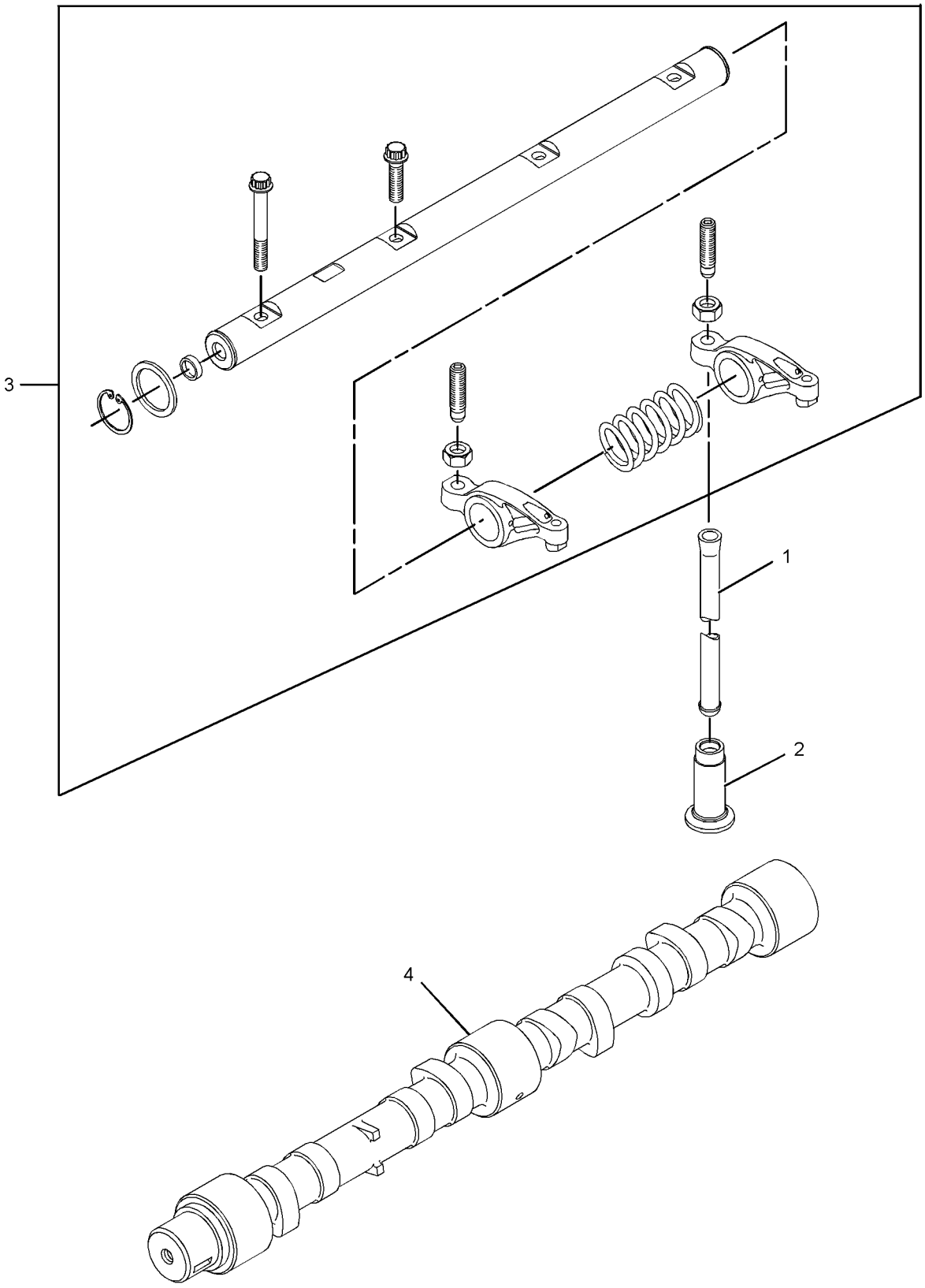

GRAPHIC #1 **<END>** g01368563

LUBRICATION SYSTEM

232-7378 FILTER GP-ENGINE OIL

S/N: CRS2700-UP

PART OF 177-9752, 297-4047, 297-4055, 329-2197 ENGINE AR-PRIMARY

ALSO AN ATTACHMENT

SMCS-1306, 1308 **i01863019**

NOTE	REF NO	GRAPHIC REF	PART NUMBER	QTY	PART NAME 1 2 3 4 5 6 (PRODUCT LEVEL)	SEE PAGE
	1	1	**7W-2326**	1	FILTER AS-ENGINE OIL	

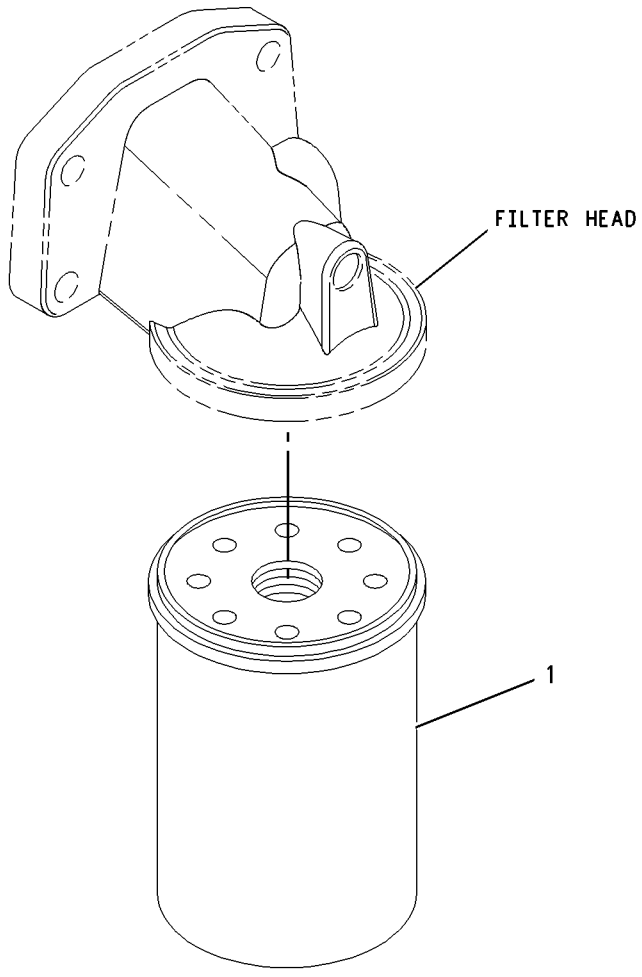

GRAPHIC #1 **<END>** g00950898

LUBRICATION SYSTEM

230-7578 PUMP GP-ENGINE OIL

S/N: CRS2700-UP

PART OF 177-9752, 297-4047, 297-4055, 329-2197 ENGINE AR-PRIMARY

ALSO AN ATTACHMENT

SMCS-1304, 1315 **i01862499**

NOTE	REF NO	GRAPHIC REF	PART NUMBER	QTY	PART NAME 1 2 3 4 5 6 (PRODUCT LEVEL)	SEE PAGE
M	1	1	**100-4461**	5	BOLT (M10X1.50X50-MM)	
	2	1	**225-8329**	1	PUMP AS-ENGINE OIL	

M-METRIC PART

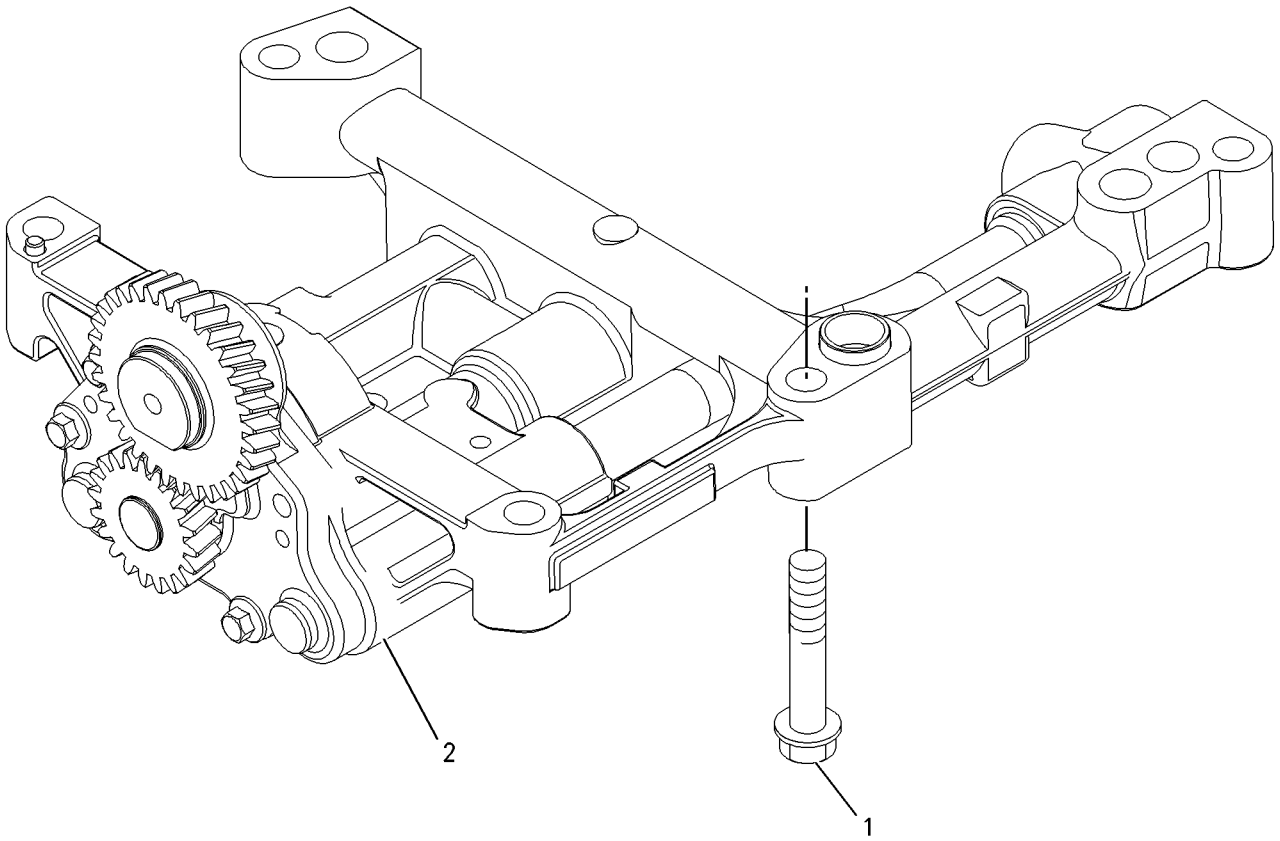

GRAPHIC #1 **<END>** g00911993

231-0038 CONNECTION GP-WATER

S/N: CRS2700-2714

PART OF 177-9752 ENGINE AR-PRIMARY

SMCS-1380 **i02131563**

NOTE	REF NO	GRAPHIC REF	PART NUMBER	QTY	PART NAME 1 2 3 4 5 6 (PRODUCT LEVEL)	SEE PAGE
M	1	1	**6I-0260**	1	BOLT (M8X1.25X25-MM)	
M	2	1	**100-3751**	1	BOLT (M8X1.25X65-MM)	
	3	1	**225-6907**	1	CONNECTION AS	
	4	1	**225-6908**	1	REGULATOR-WATER TEMPERATURE	
	5	1	**252-1821**	1	SEAL-O-RING (WATER TEMPERATURE REGULATOR)	

M-METRIC PART

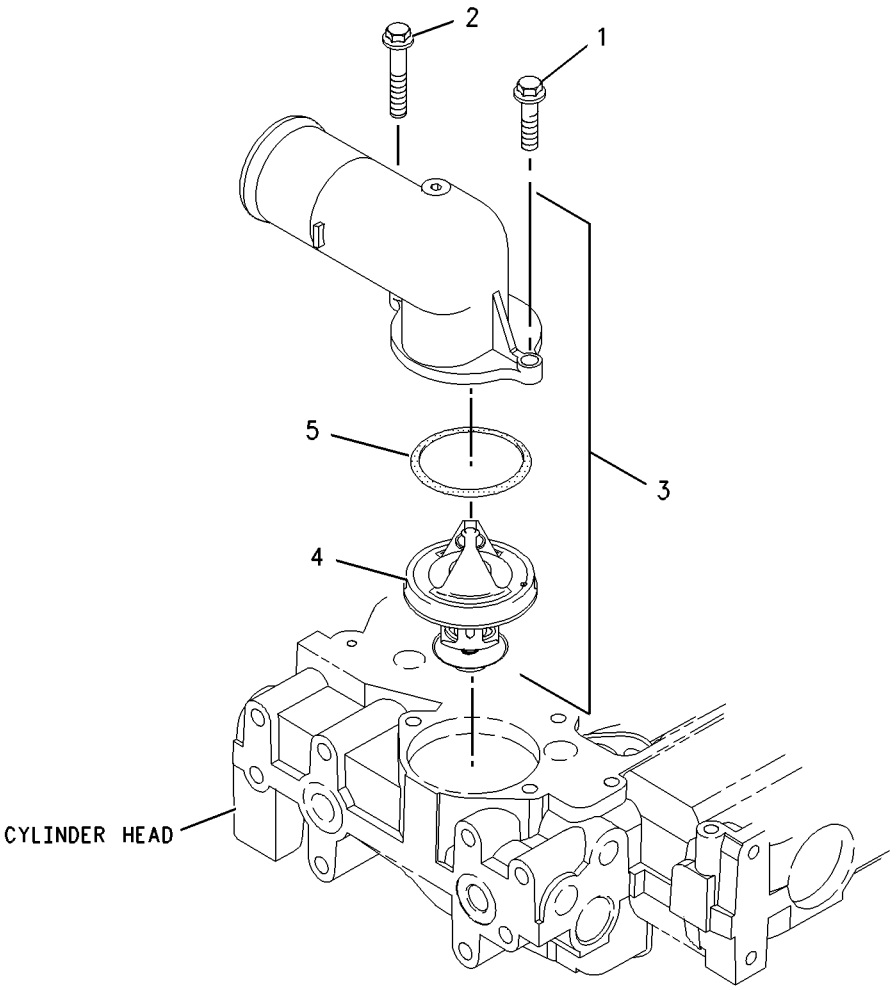

GRAPHIC #1 **<END>** g00956620

231-0038 CONNECTION GP-WATER

S/N: CRS2715-UP

PART OF 177-9752, 297-4047, 297-4055, 329-2197 ENGINE AR-PRIMARY

ALSO AN ATTACHMENT

SMCS-1380 **i02309389**

NOTE	REF NO	GRAPHIC REF	PART NUMBER	QTY	PART NAME 1 2 3 4 5 6 (PRODUCT LEVEL)	SEE PAGE
M	1	1	**6I-0260**	1	BOLT (M8X1.25X25-MM)	
M	2	1	**100-3751**	1	BOLT (M8X1.25X65-MM)	
	3	1	**254-2269**	1	CONNECTION GP-WATER (TEMPERATURE REGULATOR)	
	4	1	**254-2270**	1	SEAL-O-RING (WATER TEMPERATURE REGULATOR)	

M-METRIC PART

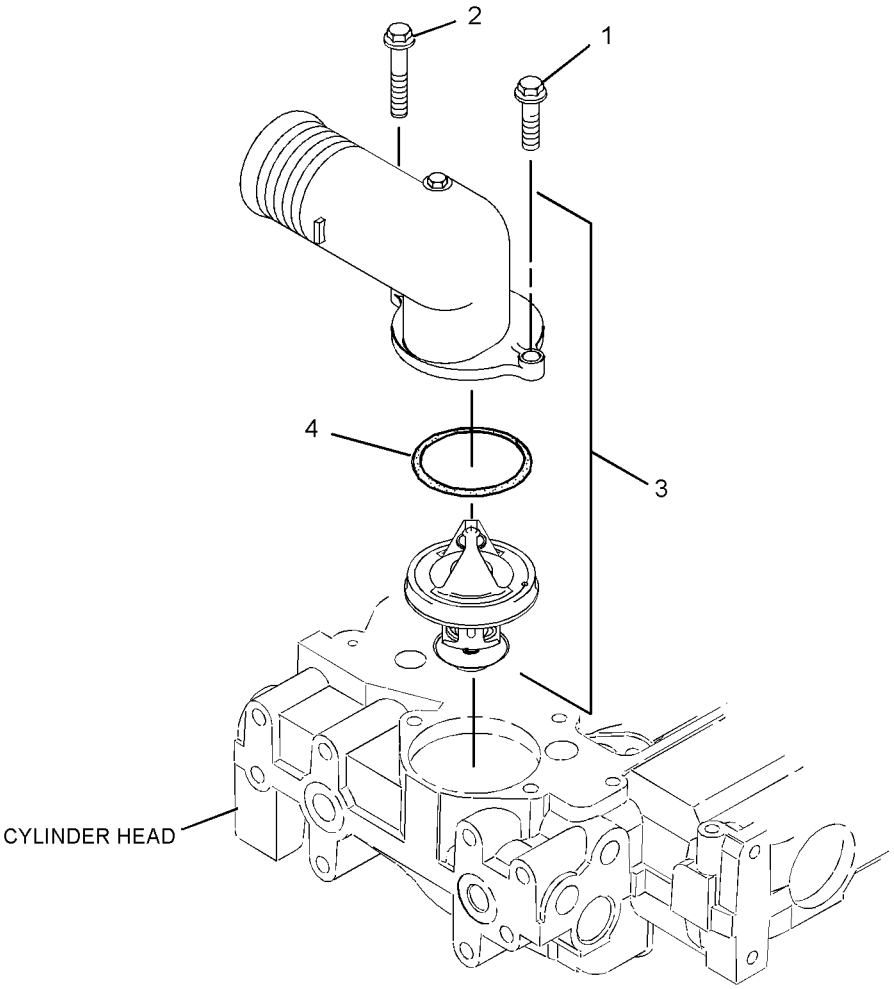

GRAPHIC #1 **<END>** g01156772

232-3722 COOLER GP-ENGINE OIL

S/N: CRS2700-UP

PART OF 238-2799 COOLER GP-FLTR BASE & ENG OIL

ALSO AN ATTACHMENT

SMCS-1378 **i02525143**

NOTE	REF NO	GRAPHIC REF	PART NUMBER	QTY	PART NAME 1 2 3 4 5 6 (PRODUCT LEVEL)	SEE PAGE
M	1	1	**6I-0260**	10	BOLT (M8X1.25X25-MM)	
	2	1	**6I-4374**	3	BOLT (M8X1.25X60-MM)	
M	3	1	**101-3895**	4	BOLT (M8X1.25X35-MM)	
	4	1	**225-6817**	1	COOLER-OIL (ENGINE)	
	5	1	**225-6818**	2	SEAL	
	6	1	**272-2265**	1	SEAL	

M-METRIC PART

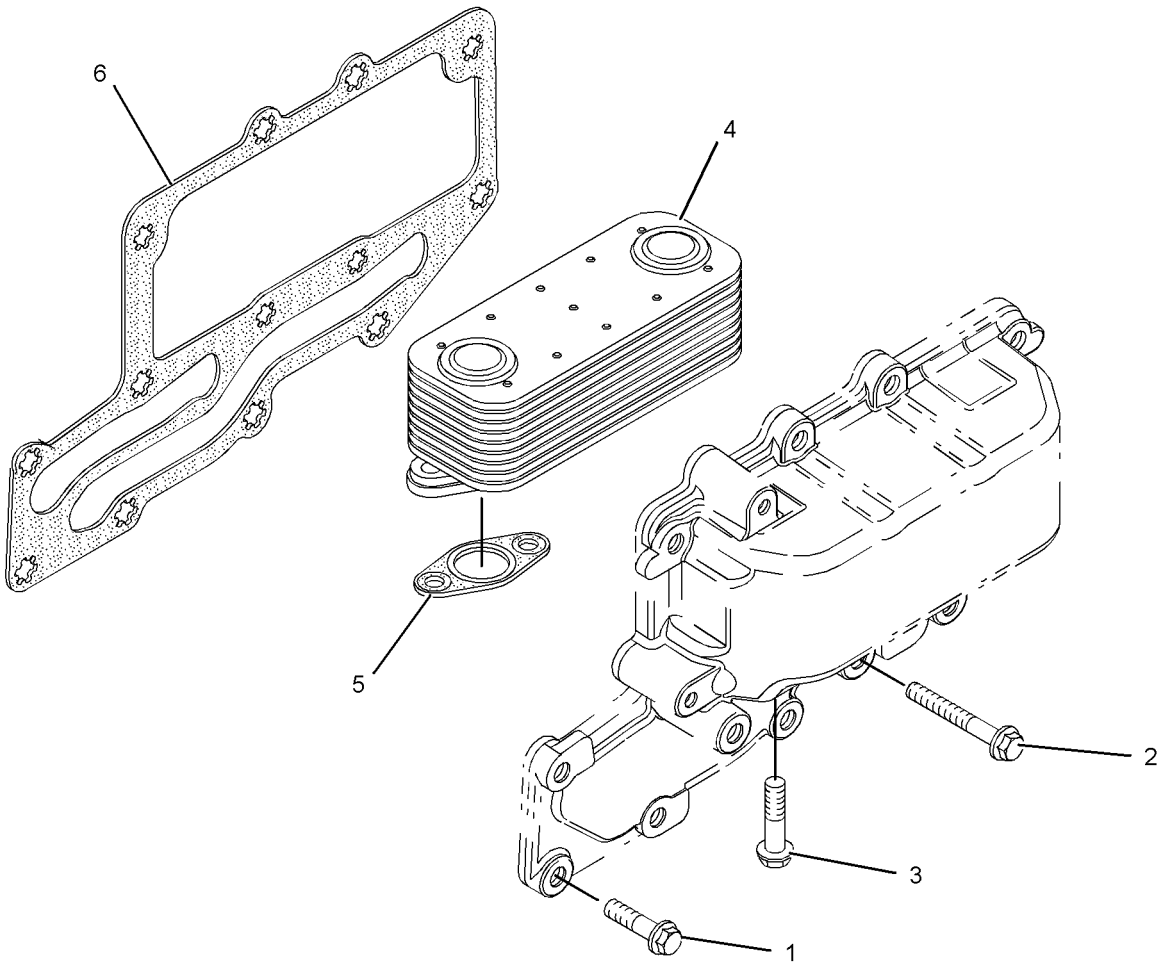

GRAPHIC #1 **<END>** g01111678

296-5616 COOLER GP-ENGINE OIL

S/N: CRS2700-UP

PART OF 238-2799 COOLER GP-FLTR BASE & ENG OIL

AN ATTACHMENT

SMCS-1378 **i02654739**

NOTE	REF NO	GRAPHIC REF	PART NUMBER	QTY	PART NAME 1 2 3 4 5 6 (PRODUCT LEVEL)	SEE PAGE
	1	1	**6I-0218**	2	BOLT (M8X1.25X25-MM)	
M	2	1	**6I-0260**	8	BOLT (M8X1.25X25-MM)	
	3	1	**6I-4374**	3	BOLT (M8X1.25X60-MM)	
M	4	1	**101-3895**	4	BOLT (M8X1.25X35-MM)	
	5	1	**225-6817**	1	COOLER-OIL	
	6	1	**225-6818**	2	SEAL	
	7	1	**272-2265**	1	SEAL	

M-METRIC PART

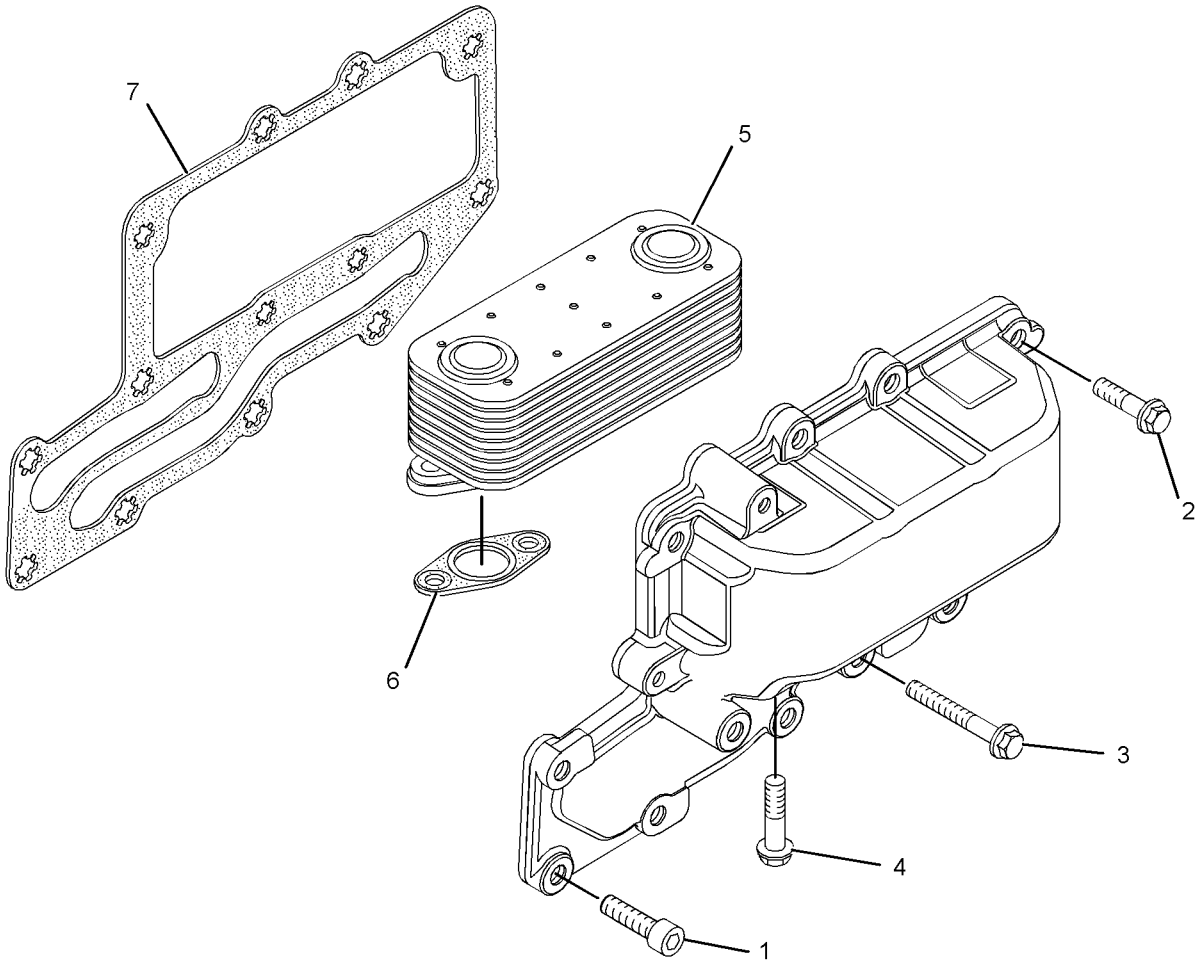

GRAPHIC #1 **<END>** g01318786

238-2799 COOLER GP-FLTR BASE & ENG OIL

S/N: CRS2700-UP
PART OF 177-9752, 297-4047, 297-4055 ENGINE AR-PRIMARY
ALSO AN ATTACHMENT
TYPE 1

SMCS-1306, 1378 **i02574011**

NOTE	REF NO	GRAPHIC REF	PART NUMBER	QTY	PART NAME 1 2 3 4 5 6 (PRODUCT LEVEL)	SEE PAGE
	1	1	**6I-0572**	4	BOLT (M8X1.25X20-MM)	
M	2	1	**6I-0645**	4	BOLT (M8X1.25X25-MM)	
	3	1	**8T-7876**	1	SEAL-O-RING	
	4	1	**225-7941**	1	PLUG	
	5	1	**225-7944**	2	GASKET	
	6	1	**249-0974**	1	HEAD AS-OIL FILTER	
Y	7	1	**232-3722**	1	COOLER GP-ENGINE OIL	71
	8	1	**232-3751**	1	PLATE	

M-METRIC PART
Y-SEPARATE ILLUSTRATION

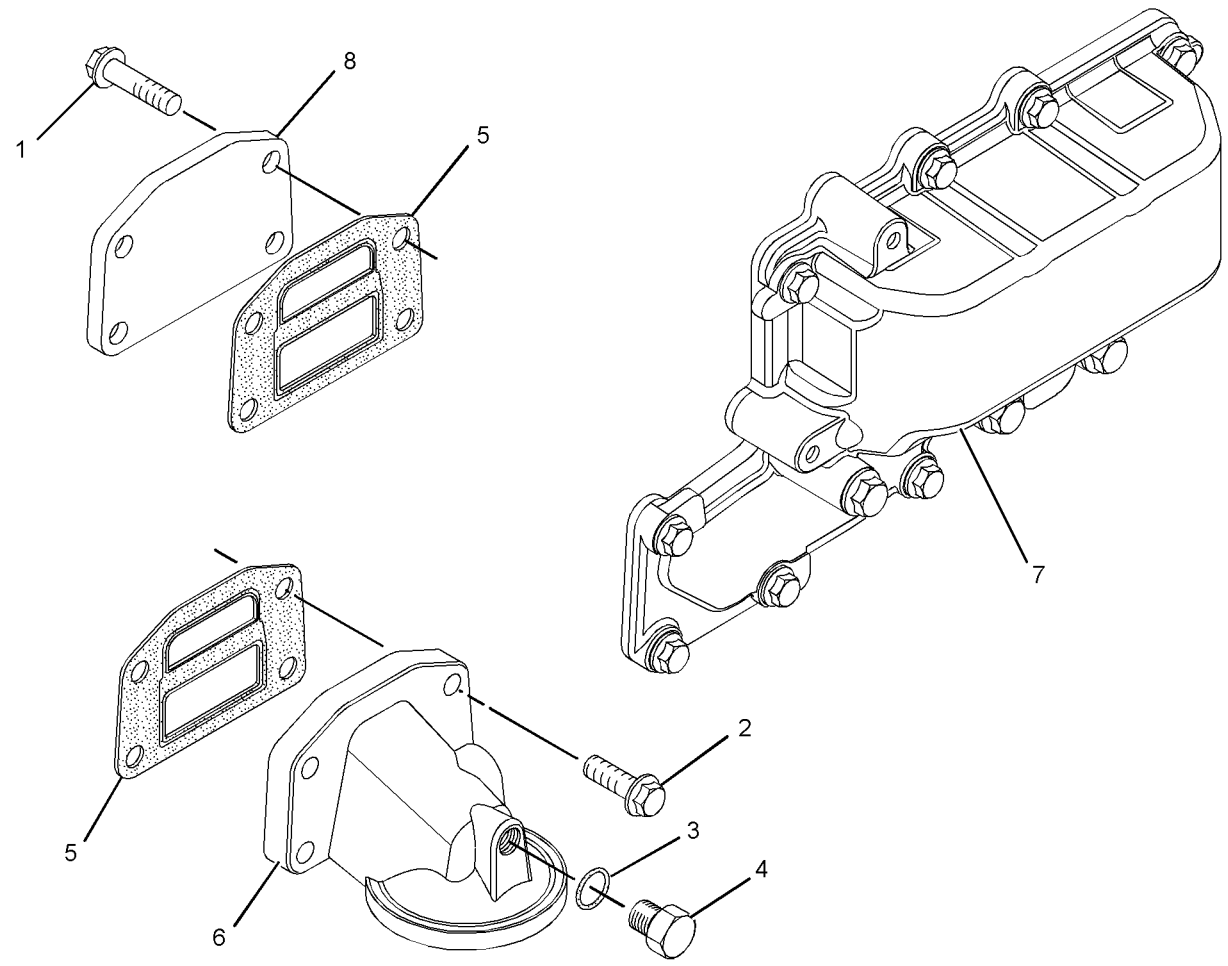

GRAPHIC #1 **<END>** g01289551

238-2799 COOLER GP-FLTR BASE & ENG OIL

S/N: CRS2700-UP
PART OF 297-4047, 297-4055, 329-2197 ENGINE AR-PRIMARY
AN ATTACHMENT
TYPE 2

SMCS-1306, 1378 **i03244621**

NOTE	REF NO	GRAPHIC REF	PART NUMBER	QTY	PART NAME 1 2 3 4 5 6 (PRODUCT LEVEL)	SEE PAGE
	1	1	**6I-0572**	4	BOLT (M8X1.25X20-MM)	
M	2	1	**6I-0645**	4	BOLT (M8X1.25X25-MM)	
	3	1	**8T-7876**	1	SEAL-O-RING	
	4	1	**225-7941**	1	PLUG	
	5	1	**225-7944**	2	GASKET	
	6	1	**249-0974**	1	HEAD AS-OIL FILTER	
CY	7	1	**296-5616**	1	COOLER GP-ENGINE OIL	72
	8	1	**232-3751**	1	PLATE	

C-CHANGE FROM PREVIOUS TYPE
M-METRIC PART
Y-SEPARATE ILLUSTRATION

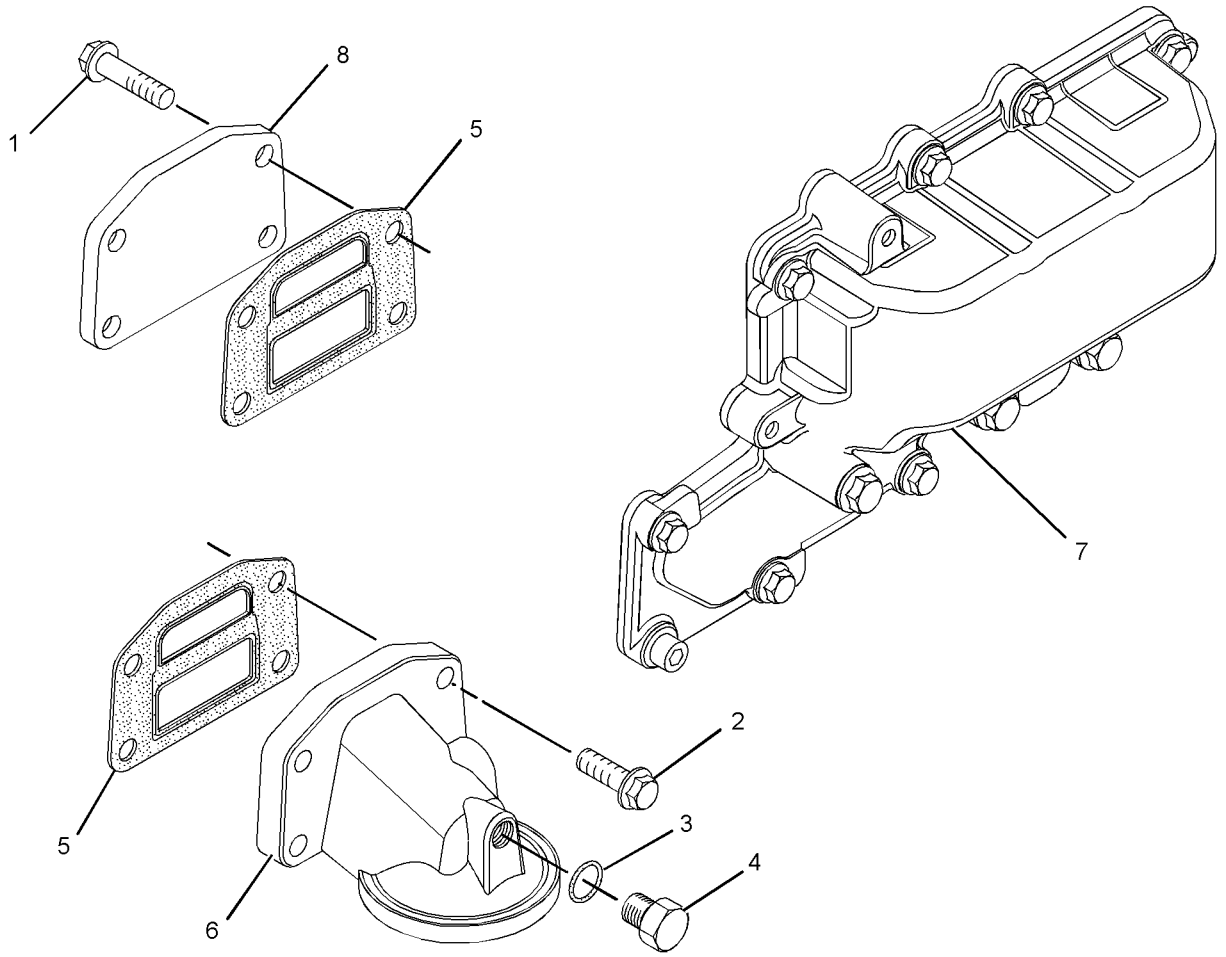

GRAPHIC #1 **<END>** g01621027

246-9034 FAN GP-SUCTION

S/N: PJF1-467

PART OF 246-8996 INSTALLATION AR-ENGINE

ALSO AN ATTACHMENT

SMCS-1356 **i02173138**

NOTE	REF NO	GRAPHIC REF	PART NUMBER	QTY	PART NAME 1 2 3 4 5 6 (PRODUCT LEVEL)	SEE PAGE
	1	1	**142-3388**	1	SPACER-FAN	
M	2	1	**153-3061**	4	BOLT (M8X1.25X130-MM)	
	3	1	**179-1531**	2	GUARD AS-FAN	
	4	1	**250-9247**	1	SPIDER AS-FAN (9-BLADE)	
	5	1	**5M-3062**	2	BOLT (3/8-16X0.75-IN)	
	6	1	**8T-4121**	6	WASHER-HARD (11X21X2.5-MM THK)	
M	7	1	**8T-4195**	6	BOLT (M10X1.5X30-MM)	
	8	1	**8T-4224**	4	WASHER-HARD (8.8X16X2-MM THK)	
	9	1	**8T-4896**	2	WASHER-HARD (10.2X18.5X2.5-MM THK)	
	10	1	**3N-1491**	1	V-BELT SET (INCLUDES 2-BELTS) (FAN DRIVE)	
	11	1	**130-3880**	1	PULLEY-FAN DRIVE	

M-METRIC PART

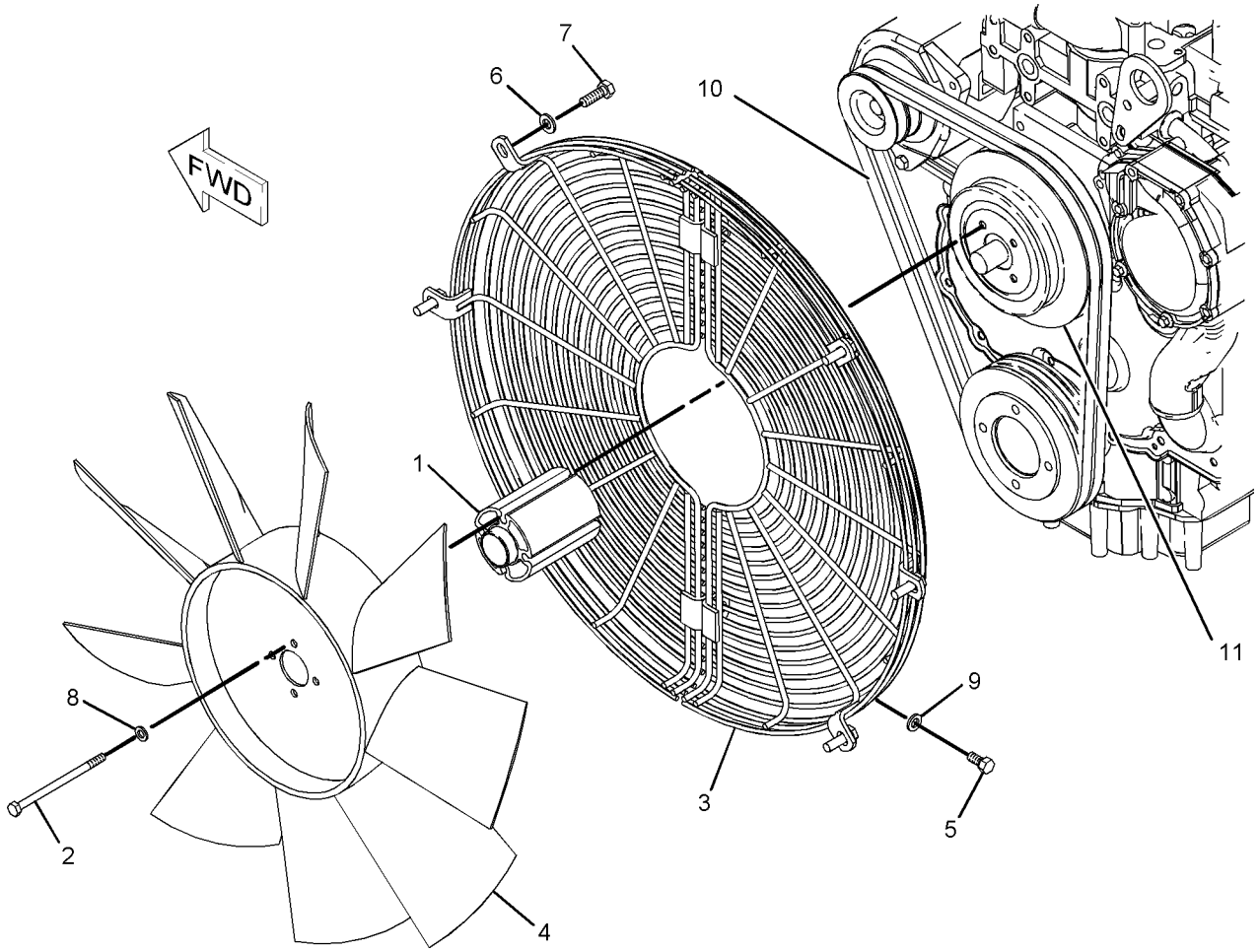

GRAPHIC #1 **<END>** g01100582

COOLING SYSTEM

230-7355 PUMP GP-WATER

S/N: CRS2700-UP

PART OF 177-9752, 297-4047, 297-4055, 329-2197 ENGINE AR-PRIMARY

ALSO AN ATTACHMENT

SMCS-1361 **i03568522**

NOTE	REF NO	GRAPHIC REF	PART NUMBER	QTY	PART NAME 1 2 3 4 5 6 (PRODUCT LEVEL)	SEE PAGE
M	1	1	**6I-0217**	2	BOLT (M8X1.25X20-MM)	
M	2	1	**6I-0254**	2	BOLT (M8X1.25X30-MM)	
M	3	1	**100-3751**	5	BOLT (M8X1.25X65-MM)	
	4	1	**113-8129**	2	BOLT (M8X1.25X75-MM)	
	5	1	**225-7741**	1	CONNECTION AS	
	6	1	**225-7738**	1	SEAL-O-RING	
	7	1	**225-7739**	1	SEAL-O-RING	
	8	1	**225-8016**	1	PUMP GP-WATER	
	8A	1	**225-8019**	1	GASKET	
	8B	1	**286-3592**	1	GEAR-WATER PUMP	
					AVAILABLE REPAIR KIT(S):	
			247-0144	1	KIT-WATER PUMP	
					(INCLUDES 2 DIFFERENT GASKETS)	

M-METRIC PART

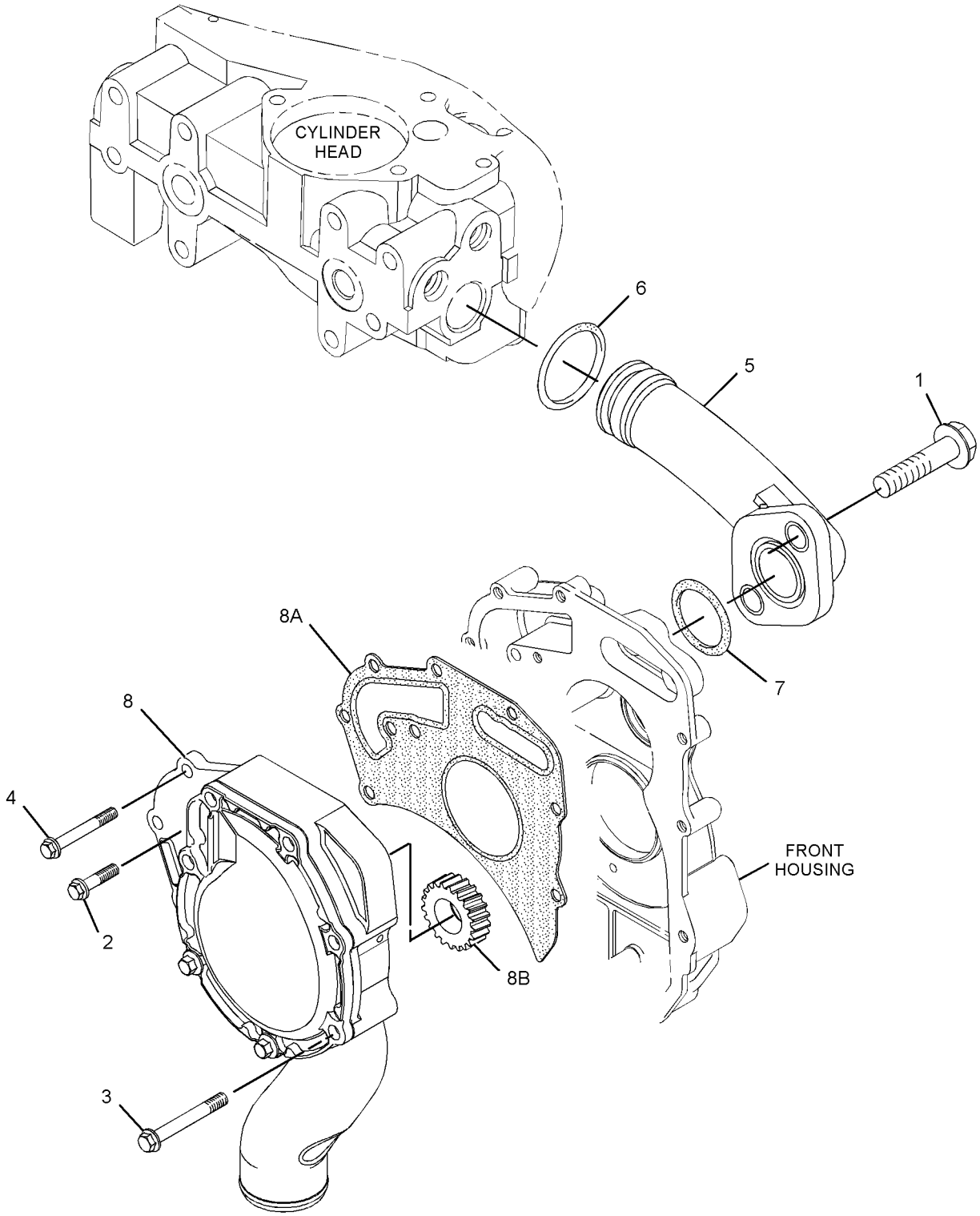

GRAPHIC #1 **<END>** g01897273

COOLING SYSTEM

246-9003 RADIATOR & HYD OIL COOLER GP

S/N: PJF1-467

PART OF 246-8996 INSTALLATION AR-ENGINE

ALSO AN ATTACHMENT

SMCS-1351, 1353, 1374 **i02655069**

NOTE	REF NO	GRAPHIC REF	PART NUMBER	QTY	PART NAME 1 2 3 4 5 6 (PRODUCT LEVEL)	SEE PAGE
Y	1	1	**246-9004**	1	RADIATOR & HYD OIL COOLER GP	80
	2	1	**201-7350**	1	SHROUD AS	
M		1	**8T-3490**	24	NUT-WELD (M10X1.5-THD)	
	3	1	**247-9606**	2	BRACKET	
	4	1	**112-4159**	2	MOUNTING AS	
	5	1	**5R-5927**	2	WASHER (14X65X6-MM THK)	
M	6	1	**8T-4244**	2	NUT (M12X1.75-THD)	
	7	1	**5P-4116**	8	WASHER-HARD (8.8X20.5X2-MM THK)	
M	8	1	**8T-7547**	4	BOLT (M8X1.25X30-MM)	
	9	1	**264-2781**	1	HOSE	
	10	1	**261-2726**	1	HOSE	
	11	1	**8T-4223**	4	WASHER-HARD (13.5X25.5X3-MM THK)	
M	12	1	**8T-4176**	2	BOLT (M12X1.75X90-MM)	
	13	1	**8T-6703**	4	CLAMP-HOSE	
	14	1	**8T-4121**	22	WASHER-HARD (11X21X2.5-MM THK)	
M	15	1	**8T-4191**	8	BOLT (M10X1.5X16-MM)	
	16	1	**5D-1026**	1	CLAMP-HOSE	
	17	1	**219-0617**	2	BAR	
	18	1	**248-6816**	2	MOUNT	
M	19	1	**8T-4136**	6	BOLT (M10X1.5X25-MM)	
	20	1	**183-6121**	2	WASHER (10.31X38.1X4.78-MM THK)	
M	21	1	**8T-4182**	2	BOLT (M10X1.5X45-MM)	
M	22	1	**8T-4133**	2	NUT (M10X1.5-THD)	
	23	1	**258-4997**	1	BAFFLE	
M	24	1	**8T-4137**	12	BOLT (M10X1.5X20-MM)	
	25	1	**258-4998**	1	FOAM	
	26	1	**259-6277**	1	FOAM	
	27	1	**258-4995**	1	PLATE AS	
	28	1	**258-4996**	1	SKIRT	
	29	1	**7X-7729**	6	WASHER (11X25X3-MM THK)	
E	30	1	**5P-1505**		HOSE (39-CM)	
E	31	1	**201-1601**		SEAL (26-CM)	
M	32	1	**5C-7261**	2	NUT (M8X1.25-THD)	
M	33	1	**7X-2537**	2	BOLT (M8X1.25X35-MM)	

E-ORDER BY THE CENTIMETER
M-METRIC PART
Y-SEPARATE ILLUSTRATION

246-9003 **RADIATOR & HYD OIL COOLER GP** *(contd.)* **i02655069**

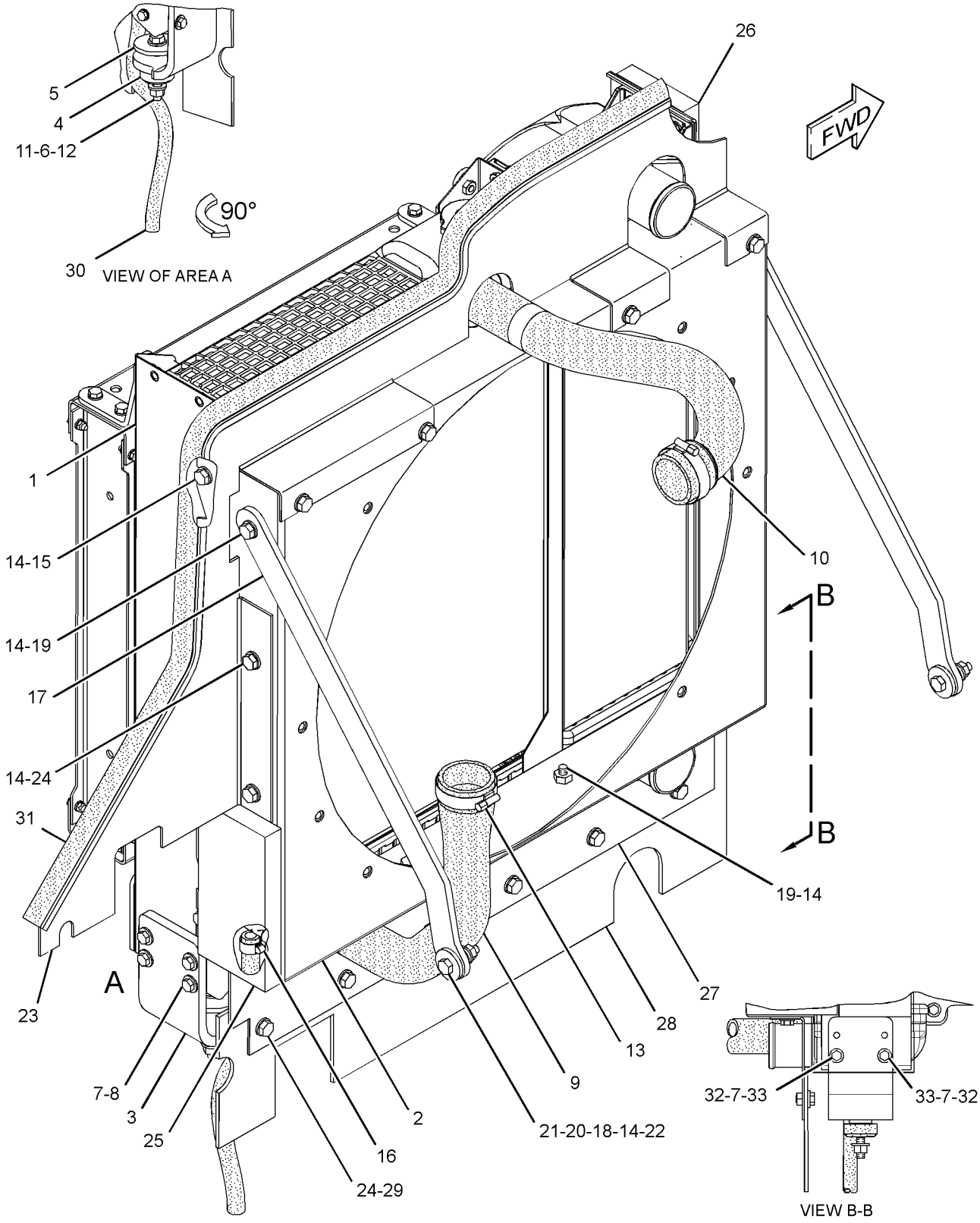

GRAPHIC #1 **<END>** g01347103

COOLING SYSTEM

246-9004 RADIATOR & HYD OIL COOLER GP

S/N: PJF1-467

PART OF 246-9003 RADIATOR & HYD OIL COOLER GP

ALSO AN ATTACHMENT

SMCS-1351, 1353, 1374 **i03599043**

NOTE	REF NO	GRAPHIC REF	PART NUMBER	QTY	PART NAME 1 2 3 4 5 6 (PRODUCT LEVEL)	SEE PAGE
	1	1	**218-5014**	2	SPACER (8.2X18X7-MM THK)	
	2	1	**246-9035**	1	RADIATOR GP	
		1	**140-2358**	1	PLUG AS	
		1	**2D-6392**	1	SEAL-O-RING	
		1	**5F-9144**	1	SEAL-O-RING	
		1	**211-6574**	1	CAP-PRESSURE (16-PSI) (RADIATOR)	
	3	1	**247-9604**	1	COOLER GP-HYDRAULIC OIL	
	4	1	**251-1987**	1	AFTERCOOLER AS	
	5	1	**5P-4116**	2	WASHER-HARD (8.8X20.5X2-MM THK)	
M	6	1	**8T-4189**	8	BOLT (M8X1.25X20-MM)	
M	7	1	**8T-4200**	10	BOLT (M8X1.25X16-MM)	
	8	1	**8T-4224**	18	WASHER-HARD (8.8X16X2-MM THK)	
M	9	1	**8T-4908**	2	BOLT (M8X1.25X25-MM)	
D	10	1	**5P-5687**		SEAL (0.67-M)	

D-ORDER BY THE METER
M-METRIC PART

246-9004 RADIATOR & HYD OIL COOLER GP *(contd.)* i03599043

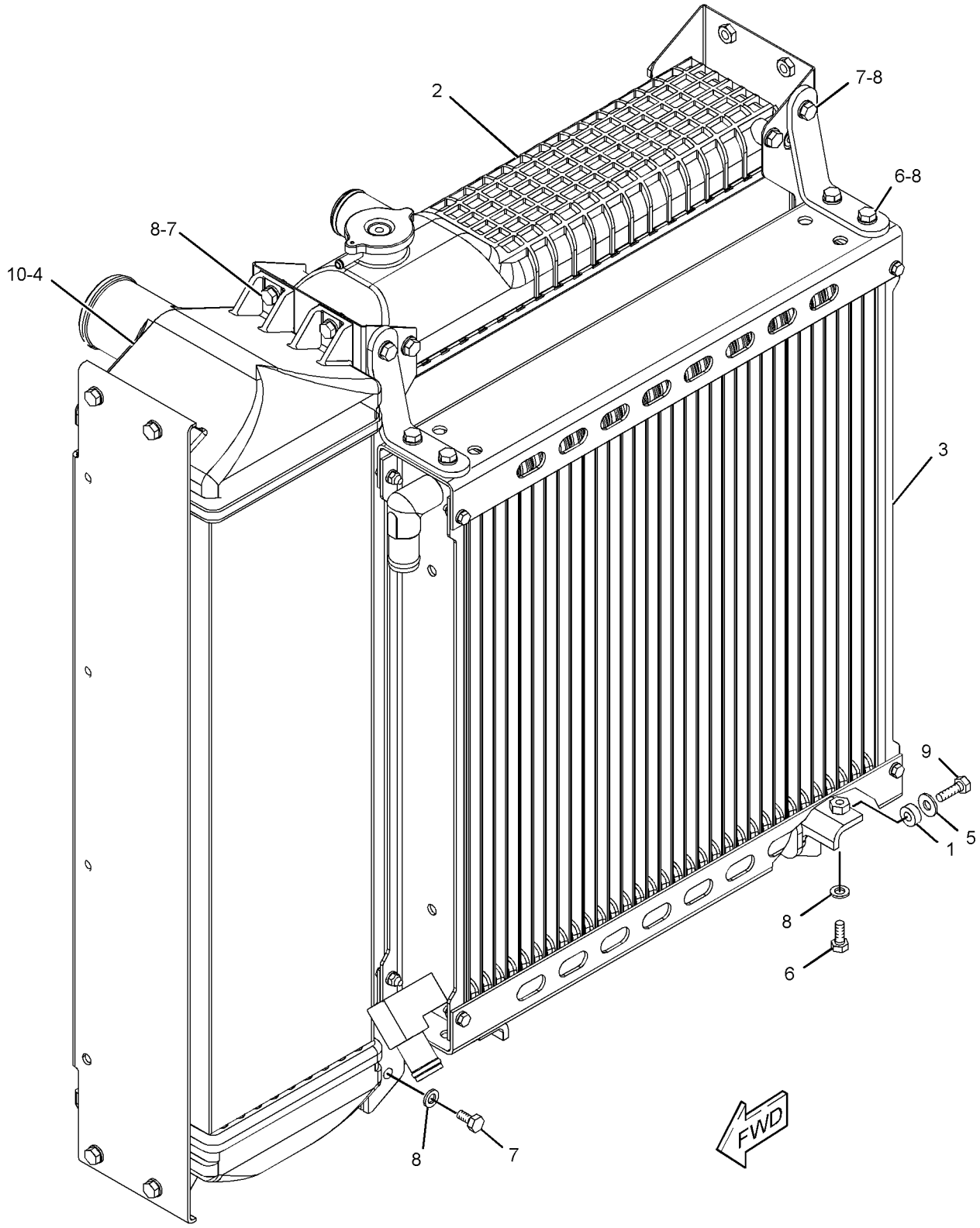

GRAPHIC #1 **<END>** g01923794

COOLING SYSTEM

250-6135 RECOVERY GP-COOLANT

S/N: PJF1-467
PART OF 246-8996 INSTALLATION AR-ENGINE
ALSO AN ATTACHMENT

SMCS-1354 **i02216328**

NOTE	REF NO	GRAPHIC REF	PART NUMBER	QTY	PART NAME 1 2 3 4 5 6 (PRODUCT LEVEL)	SEE PAGE
	1	1	**1P-4278**	2	CLAMP-HOSE	
	2	1	**178-3620**	1	STRAP-DUAL CLAMP	
	3	1	**228-5108**	1	TANK GP-COOLANT	
		1	**229-3469**		CAP AS-VENTED (COOLANT RECOVERY)	
M	4	1	**5C-7261**	4	NUT (M8X1.25-THD)	
	5	1	**8T-4224**	4	WASHER-HARD (8.8X16X2-MM THK)	
E	6	1	**5P-1420**		HOSE (115-CM)	

E-ORDER BY THE CENTIMETER
M-METRIC PART

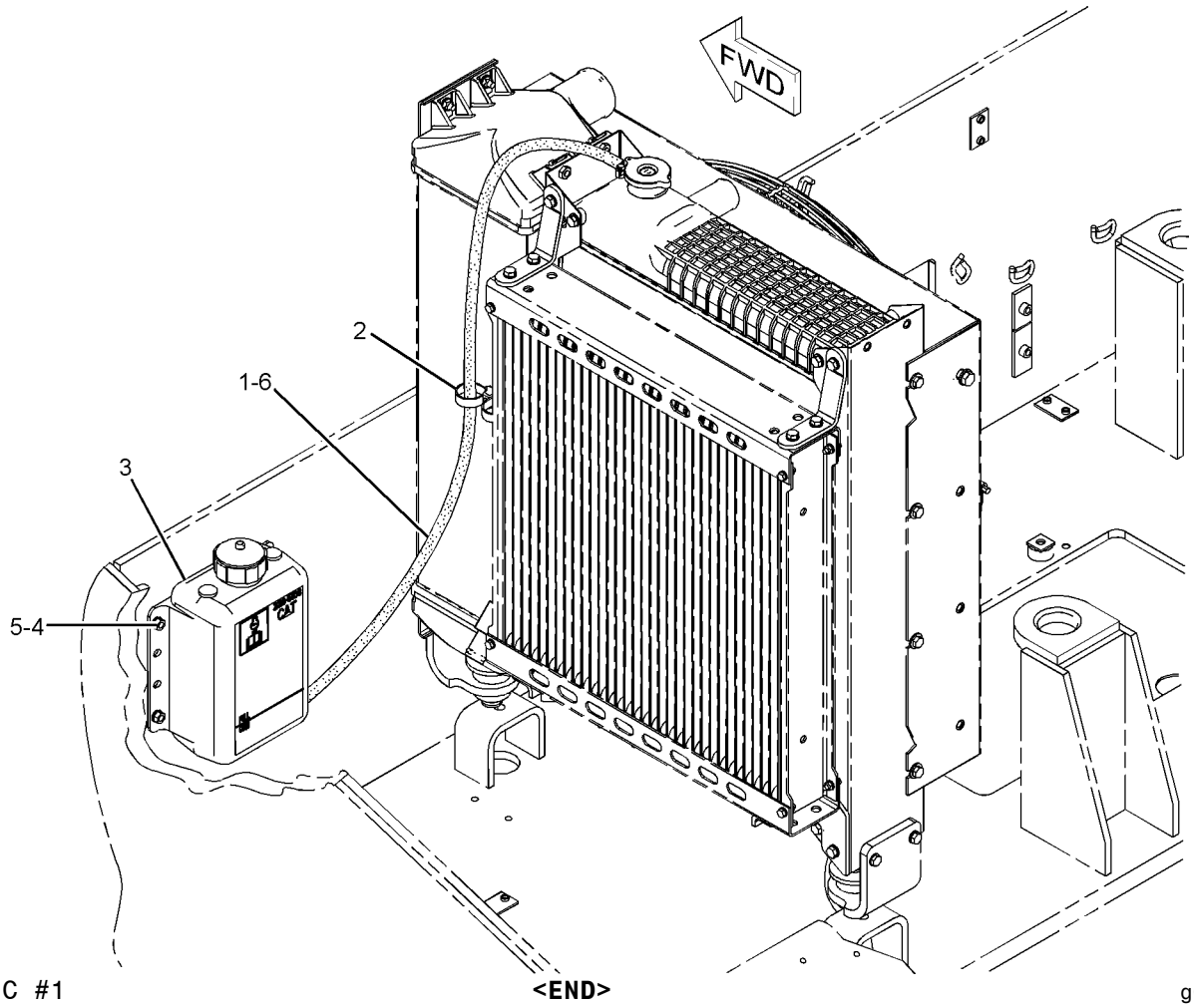

GRAPHIC #1 **<END>** g01092431

AIR INLET AND EXHAUST SYSTEM

204-7034 AIR CLEANER GP–ENGINE

S/N: PJF1-467
PART OF 250-6138 AIR CLEANER GP
ALSO AN ATTACHMENT

SMCS-1051, 1054 **i03599049**

NOTE	REF NO	GRAPHIC REF	PART NUMBER	QTY	PART NAME 1 2 3 4 5 6 (PRODUCT LEVEL)	SEE PAGE
	1	1	**206-5234**	1	FILTER ELEMENT AS-AIR (PRIMARY)	
	2	1	**206-5235**	1	FILTER ELEMENT AS-AIR (SECONDARY)	
	3	1	**131-8829**	1	VALVE-DUST (AIR CLEANER)	
	4	1	**245-3556**	2	BRACKET	
	5	1	**206-5237**	1	COVER AS	

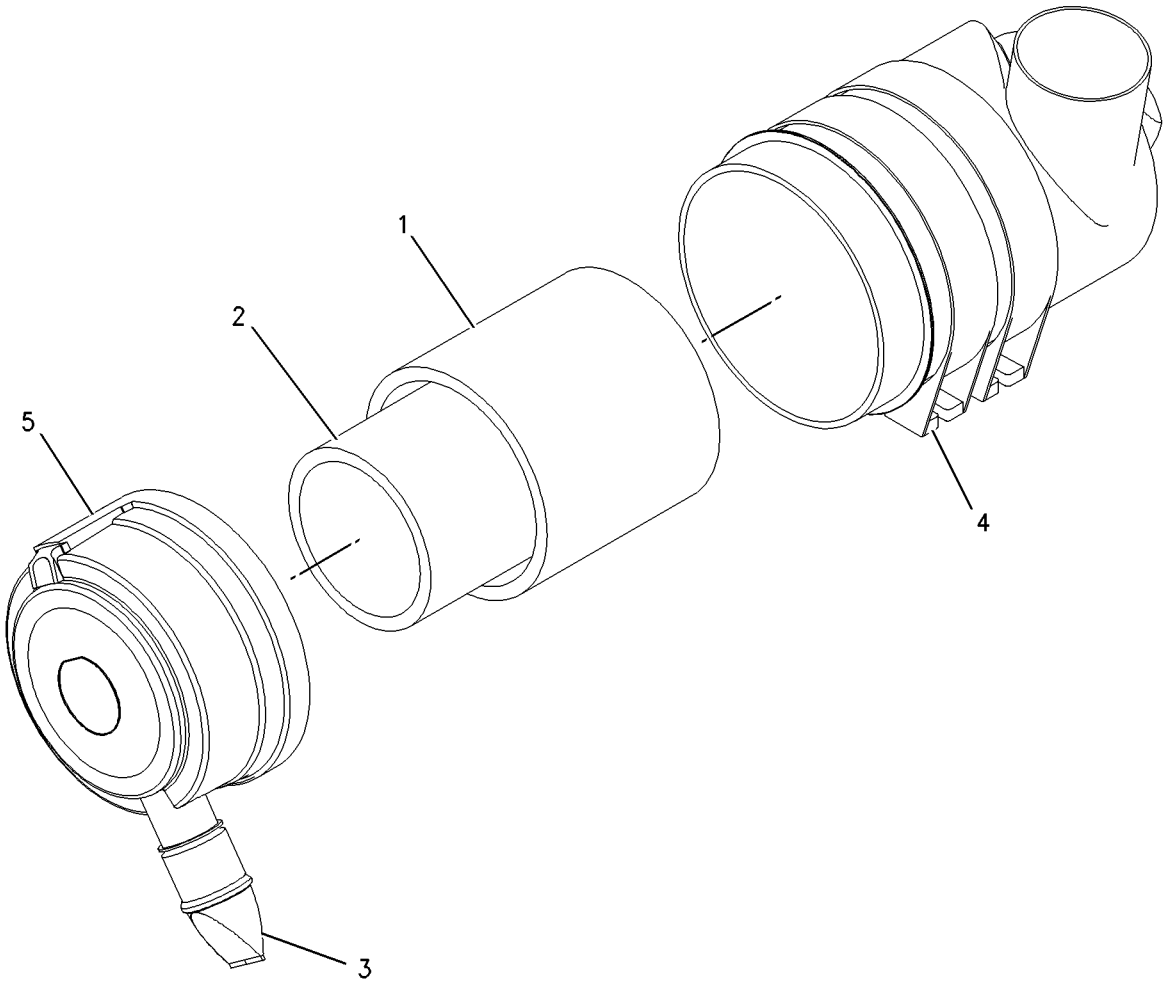

GRAPHIC #1 **<END>** g00948052

AIR INLET AND EXHAUST SYSTEM

250-6138 AIR CLEANER GP

S/N: PJF1-467
PART OF 246-8996 INSTALLATION AR-ENGINE
ALSO AN ATTACHMENT

SMCS-1051, 1054 **i02188594**

NOTE	REF NO	GRAPHIC REF	PART NUMBER	QTY	PART NAME 1 2 3 4 5 6 (PRODUCT LEVEL)	SEE PAGE
	1	1	**3B-6552**	1	ELBOW-PIPE	
	2	1	**6I-2933**	1	INDICATOR-AIR FILTER SERVICE	
Y	3	1	**204-7034**	1	AIR CLEANER GP	83
	4	1	**256-3007**	1	BRACKET-MOUNTING	
M	5	1	**5C-7261**	4	NUT (M8X1.25-THD)	
	6	1	**8T-4121**	4	WASHER-HARD (11X21X2.5-MM THK)	
M	7	1	**8T-4136**	4	BOLT (M10X1.5X25-MM)	
	8	1	**8T-4224**	8	WASHER-HARD (8.8X16X2-MM THK)	
M	9	1	**8T-7547**	4	BOLT (M8X1.25X30-MM)	

M-METRIC PART
Y-SEPARATE ILLUSTRATION

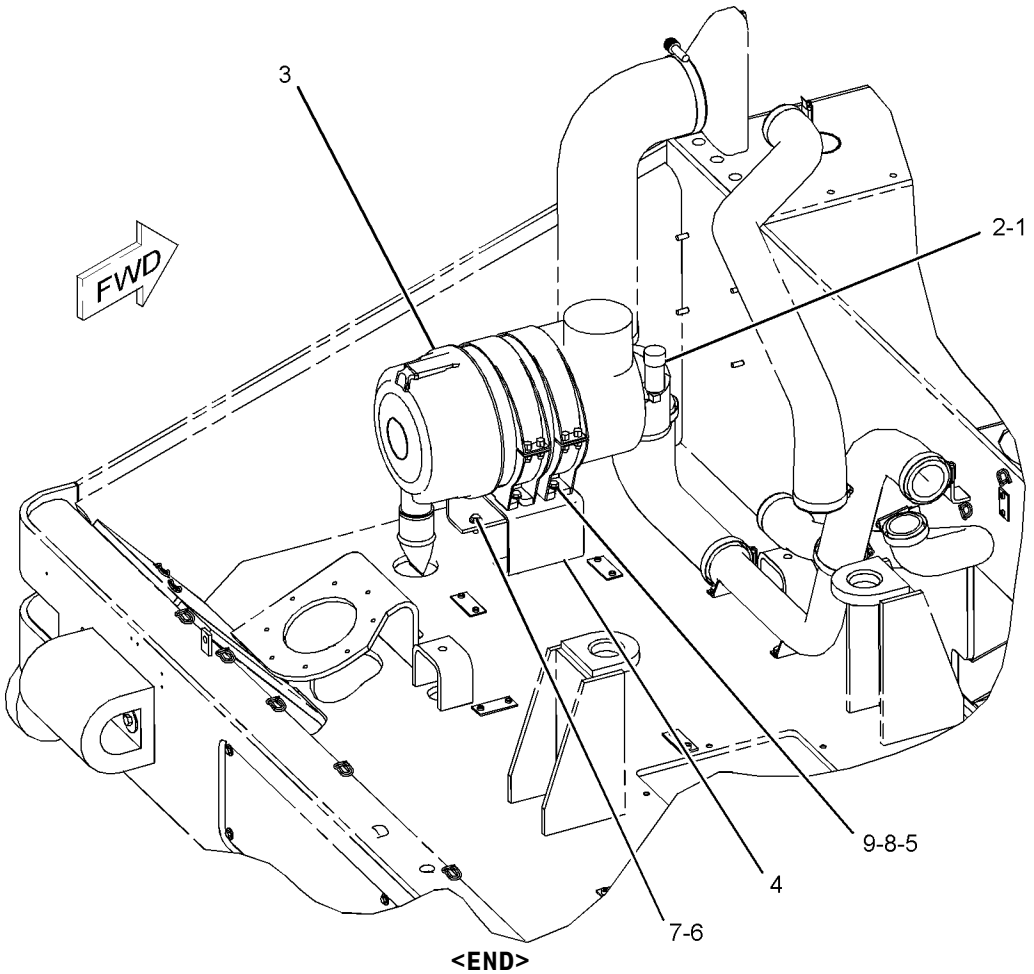

GRAPHIC #1 **<END>** g01107211

AIR INLET AND EXHAUST SYSTEM

270-4374 ELBOW GP-AIR INLET

S/N: CRS2700-UP

PART OF 177-9752, 297-4047, 297-4055, 329-2197 ENGINE AR-PRIMARY

ALSO AN ATTACHMENT

SMCS-1087 **i02356282**

NOTE	REF NO	GRAPHIC REF	PART NUMBER	QTY	PART NAME 1 2 3 4 5 6 (PRODUCT LEVEL)	SEE PAGE
	1	1	**6I-0572**	10	BOLT (M8X1.25X20-MM)	
	2	1	**114-2579**	3	GASKET	
	3	1	**115-1162**	3	PLATE	
	4	1	**233-7489**	2	BOLT (M8X1.25-MM)	
	5	1	**251-6241**	4	BOLT-SPECIAL	
	6	1	**256-4447**	1	ELBOW AS-AIR INLET	
	6A	1	**238-8288**	1	GASKET-INLET	

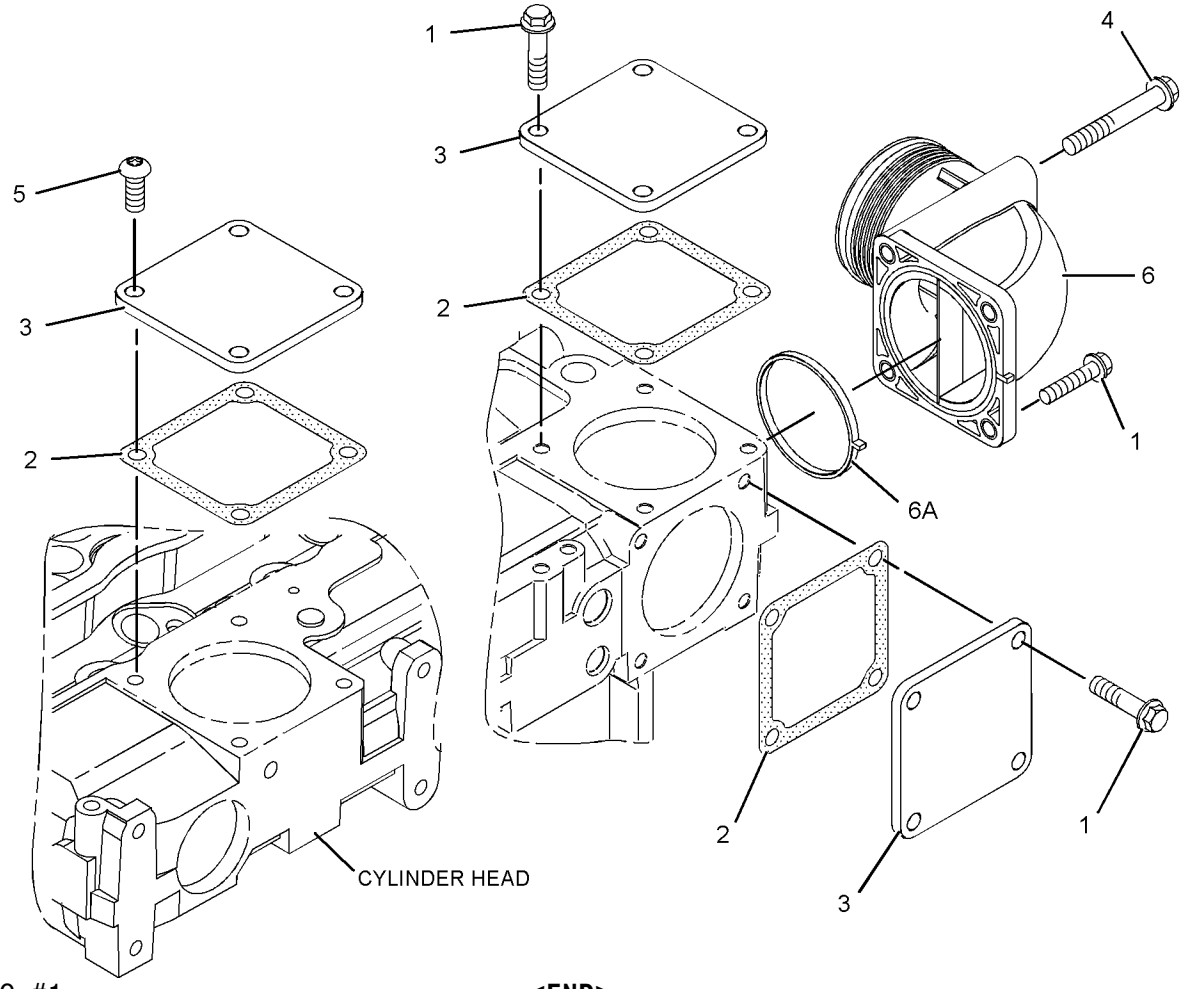

GRAPHIC #1 **<END>** g01153363

AIR INLET AND EXHAUST SYSTEM

246-9006 LINES GP-AIR

S/N: PJF1-304

PART OF 246-8996 INSTALLATION AR-ENGINE

SMCS-1071 **i02186253**

NOTE	REF NO	GRAPHIC REF	PART NUMBER	QTY	PART NAME 1 2 3 4 5 6 (PRODUCT LEVEL)	SEE PAGE
	1	1	**246-9017**	1	HOSE-AIR	
	2	1	**246-9016**	1	MANIFOLD-AIR INLET	
	3	1	**246-9011**	1	HOSE-AIR	
	4	1	**268-8905**	1	HOSE-AIR	
	5	1	**246-9008**	1	TUBE AS	
	6	1	**246-9007**	1	HOSE-AIR	
	7	1	**268-8906**	1	HOSE	
	8	1	**8T-4224**	6	WASHER-HARD (8.8X16X2-MM THK)	
M	9	1	**8T-4908**	4	BOLT (M8X1.25X25-MM)	
M	10	1	**8T-4200**	2	BOLT (M8X1.25X16-MM)	
	11	1	**8T-4984**	7	CLAMP-HOSE	
	12	1	**8T-4985**	1	CLAMP-HOSE	
	13	1	**8T-4987**	2	CLAMP-HOSE	

M-METRIC PART

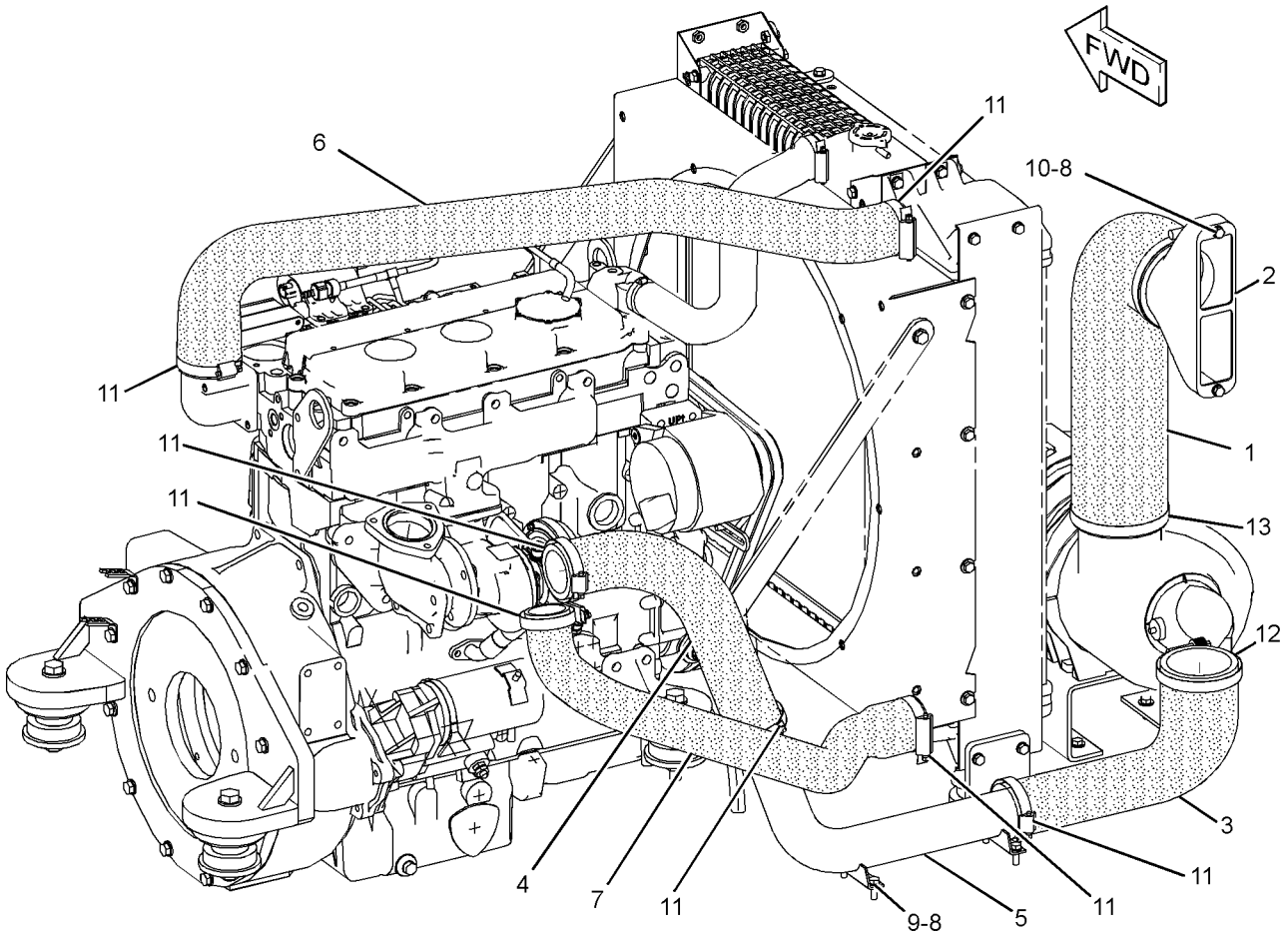

GRAPHIC #1 **<END>** g01172316

AIR INLET AND EXHAUST SYSTEM

246-9006 LINES GP-AIR

S/N: PJF305-332

PART OF 246-8996 INSTALLATION AR-ENGINE

SMCS-1071 **i02416046**

NOTE	REF NO	GRAPHIC REF	PART NUMBER	QTY	PART NAME 1 2 3 4 5 6 (PRODUCT LEVEL)	SEE PAGE
	1	1	**246-9017**	1	HOSE-AIR	
	2	1	**246-9016**	1	MANIFOLD-AIR INLET	
	3	1	**246-9011**	1	HOSE-AIR	
	4	1	**268-8905**	1	HOSE-AIR	
	5	1	**246-9008**	1	TUBE AS	
	6	1	**246-9007**	1	HOSE-AIR	
C	7	1	**281-2212**	1	HOSE	
	8	1	**8T-4224**	6	WASHER-HARD (8.8X16X2-MM THK)	
M	9	1	**8T-4908**	4	BOLT (M8X1.25X25-MM)	
M	10	1	**8T-4200**	2	BOLT (M8X1.25X16-MM)	
C	11	1	**8T-4984**	6	CLAMP-HOSE	
C	12	1	**8T-6703**	1	CLAMP-HOSE	
C	13	1	**9X-2201**	1	CLAMP-HOSE	
C	14	1	**9X-6654**	2	CLAMP-HOSE	

C-CHANGE FROM PREVIOUS TYPE
M-METRIC PART

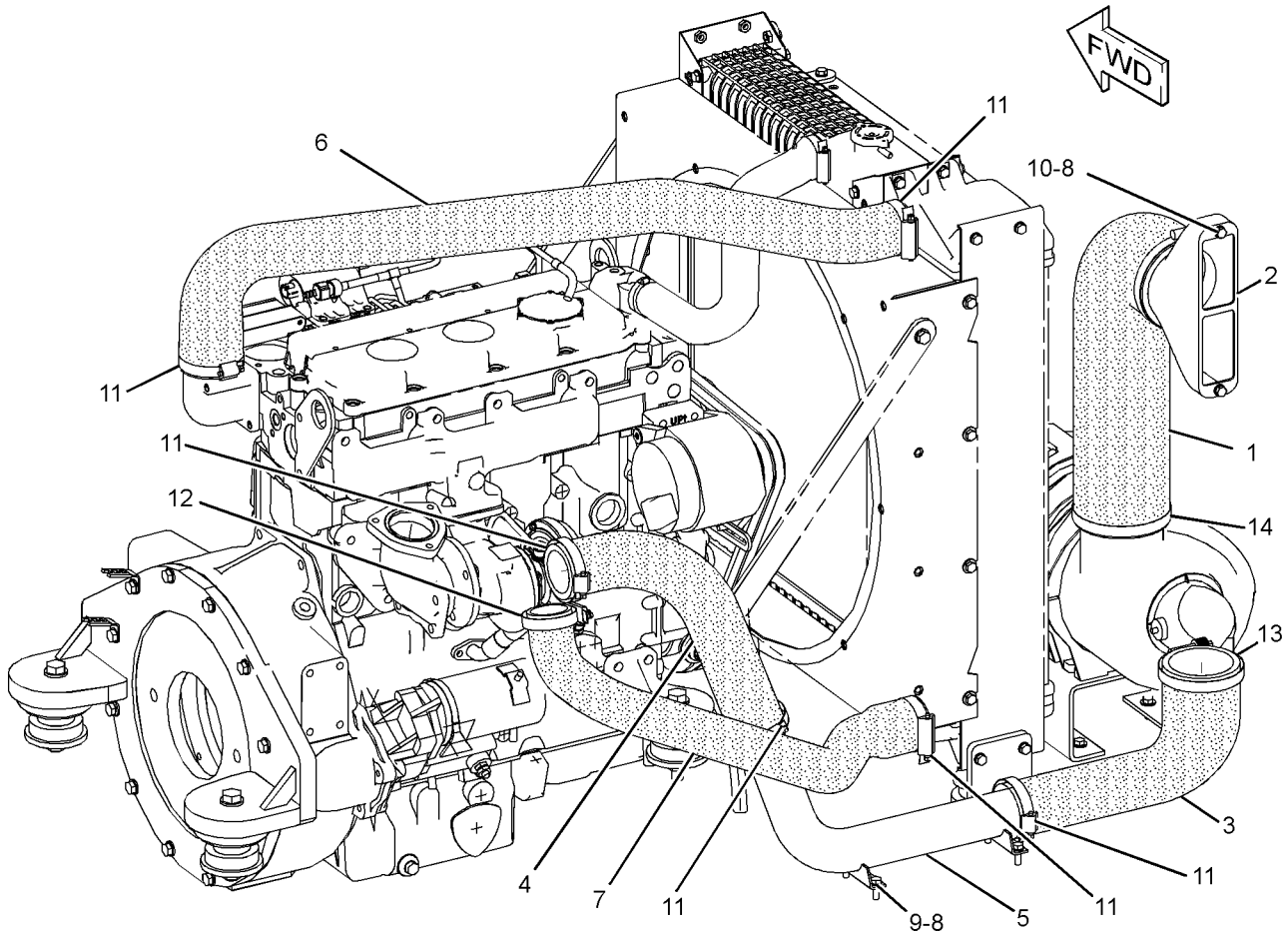

GRAPHIC #1 **<END>** g01207791

AIR INLET AND EXHAUST SYSTEM

246-9006 LINES GP-AIR

S/N: PJF333-467
PART OF 246-8996 INSTALLATION AR-ENGINE
ALSO AN ATTACHMENT

SMCS-1071 **i02565484**

NOTE	REF NO	GRAPHIC REF	PART NUMBER	QTY	PART NAME 1 2 3 4 5 6 (PRODUCT LEVEL)	SEE PAGE
	1	1	**246-9017**	1	HOSE-AIR	
	2	1	**246-9016**	1	MANIFOLD-AIR INLET	
	3	1	**246-9011**	1	HOSE-AIR	
	4	1	**268-8905**	1	HOSE-AIR	
	5	1	**246-9008**	1	TUBE AS	
	6	1	**246-9007**	1	HOSE-AIR	
	7	1	**281-2212**	1	HOSE	
	8	1	**8T-4224**	6	WASHER-HARD (8.8X16X2-MM THK)	
M	9	1	**8T-4908**	4	BOLT (M8X1.25X25-MM)	
M	10	1	**8T-4200**	2	BOLT (M8X1.25X16-MM)	
C	11	1	**8T-4984**	3	CLAMP-HOSE	
	12	1	**8T-6703**	1	CLAMP-HOSE	
C	13	1	**291-3960**	1	CLAMP-HOSE	
C	14	1	**291-3957**	2	CLAMP-HOSE	
C	15	1	**291-3961**	3	CLAMP-HOSE	

C-CHANGE FROM PREVIOUS TYPE
M-METRIC PART

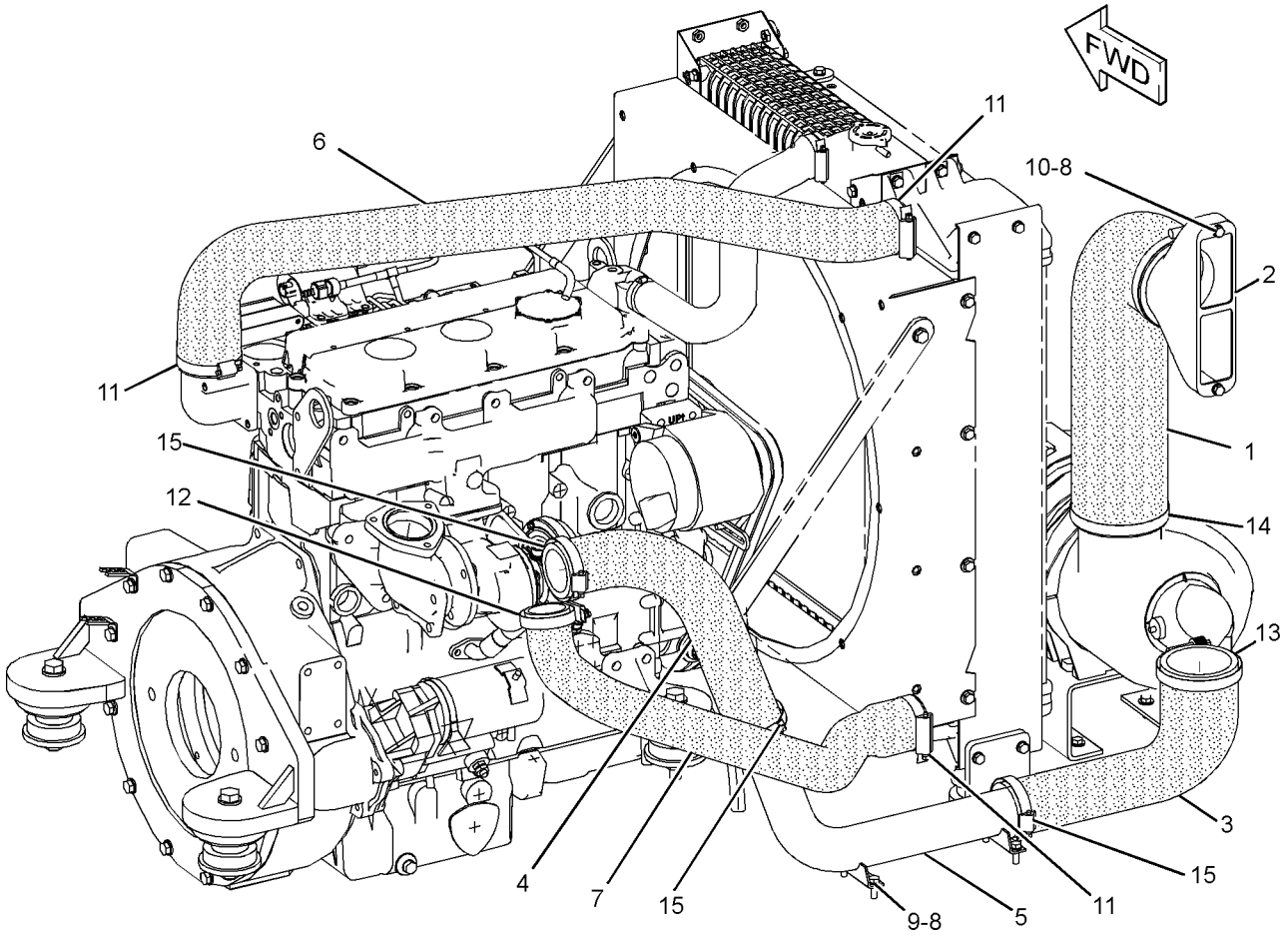

GRAPHIC #1 **<END>** g01285316

246-9025 MUFFLER GP

S/N: PJF1-467
PART OF 246-8996 INSTALLATION AR-ENGINE
ALSO AN ATTACHMENT

SMCS-1062 **i02144641**

NOTE	REF NO	GRAPHIC REF	PART NUMBER	QTY	PART NAME 1 2 3 4 5 6 (PRODUCT LEVEL)	SEE PAGE
	1	1	**6I-4039**	1	GASKET	
	2	1	**217-2728**	1	MUFFLER	
	3	1	**249-2740**	1	TUBE AS	
	4	1	**250-6133**	1	PLATE	
	5	1	**8M-3121**	1	CLAMP	
	6	1	**8T-4121**	11	WASHER-HARD (11X21X2.5-MM THK)	
M	7	1	**8T-4133**	3	NUT (M10X1.5-THD)	
M	8	1	**8T-4186**	1	BOLT (M10X1.5X40-MM)	
M	9	1	**8T-4195**	7	BOLT (M10X1.5X30-MM)	

M-METRIC PART

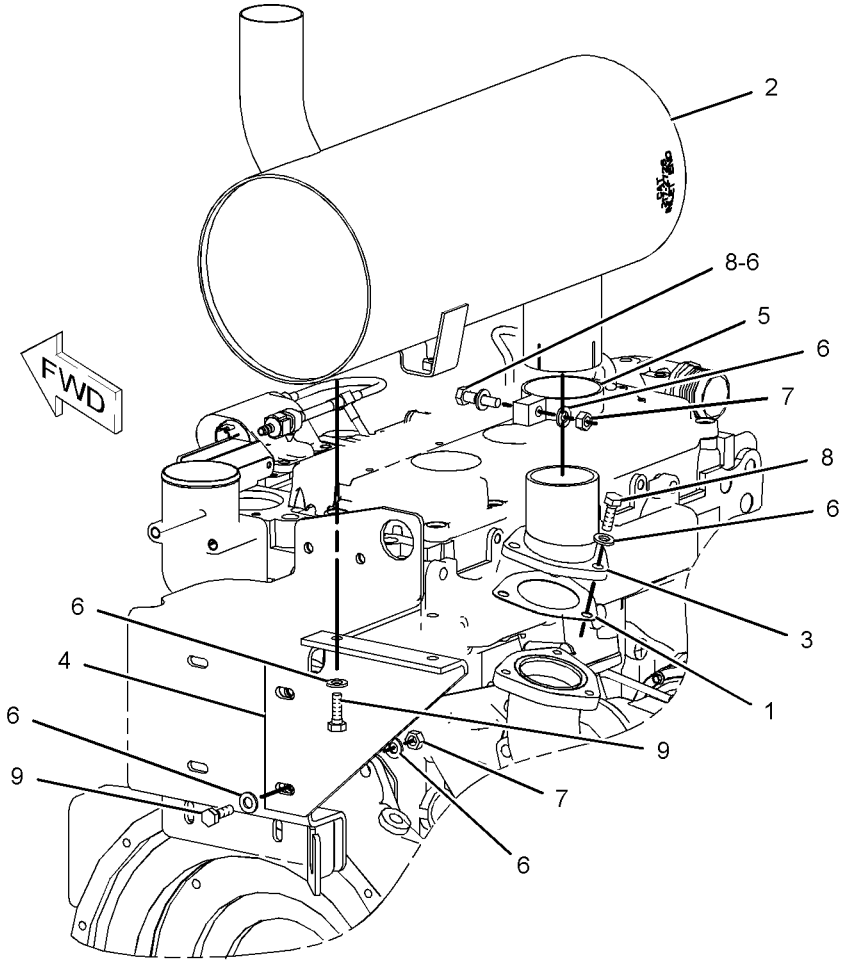

GRAPHIC #1 **<END>** g01090668

AIR INLET AND EXHAUST SYSTEM

233-9539 TURBOCHARGER GP

S/N: CRS2700-UP

PART OF 177-9752, 297-4047, 297-4055, 329-2197 ENGINE AR-PRIMARY

ALSO AN ATTACHMENT

SMCS-1052, 1053 **i02640220**

NOTE	REF NO	GRAPHIC REF	PART NUMBER	QTY	PART NAME 1 2 3 4 5 6 (PRODUCT LEVEL)	SEE PAGE
M	1	1	**6I-0217**	2	BOLT (M8X1.25X20-MM)	
	2	1	**6I-0563**	7	NUT (M10X1.15-THD)	
M	3	1	**6I-0593**	2	BOLT (M10X1.5X30-MM)	
M	4	1	**6I-0654**	3	BOLT (M10X1.5X25-MM)	
	5	1	**147-5553**	7	STUD	
	6	1	**174-9638**	8	BOLT	
	7	1	**194-5390**	1	GASKET-MANIFOLD	
	8	1	**225-8533**	1	GASKET	
	9	1	**225-8534**	1	GASKET	
	10	1	**225-8536**	1	GASKET	
	11	1	**227-4562**	1	ELBOW-EXHAUST	
	12	1	**302-0581**	1	ADAPTER-EXHAUST	
	13	1	**106-8916**	2	BOLT (M6X16-MM)	
	14	1	**233-9534**	1	TURBOCHARGER GP	
	15	1	**233-9536**	1	TUBE AS	
	15A	1	**225-8524**	3	BOLT-SPECIAL (BANJO)	
	15B	1	**225-8526**	7	WASHER (10.4X13.75X1.37-MM THK)	
	16	1	**233-9537**	1	TUBE AS	
	17	1	**252-9614**	1	MANIFOLD-EXHAUST	
	18	1	**249-7106**	1	BRACKET-ELBOW	

M-METRIC PART

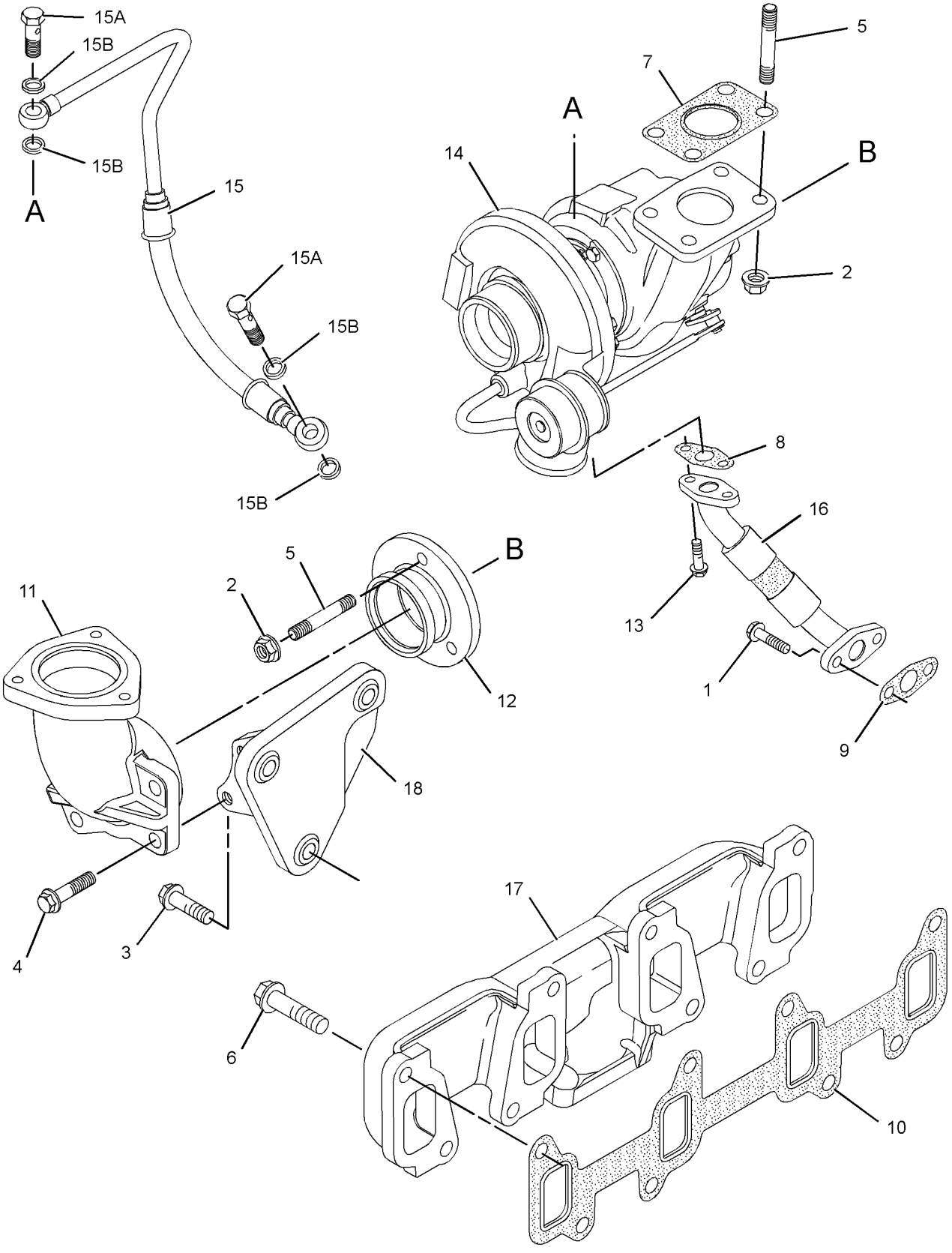

GRAPHIC #1 **<END>** g01327108

8T-3785 GAUGE GP-SIGHT–FUEL TANK

S/N: PJF1-UP

PART OF 246-9014 TANK & MTG GP-FUEL

SMCS-7479 **i01256562**

NOTE	REF NO	GRAPHIC REF	PART NUMBER	QTY	PART NAME 1 2 3 4 5 6 (PRODUCT LEVEL)	SEE PAGE
	1	1	**8F-3469**	4	SEAL-O-RING	
	2	1	**1H-1023**	2	SEAL-O-RING	

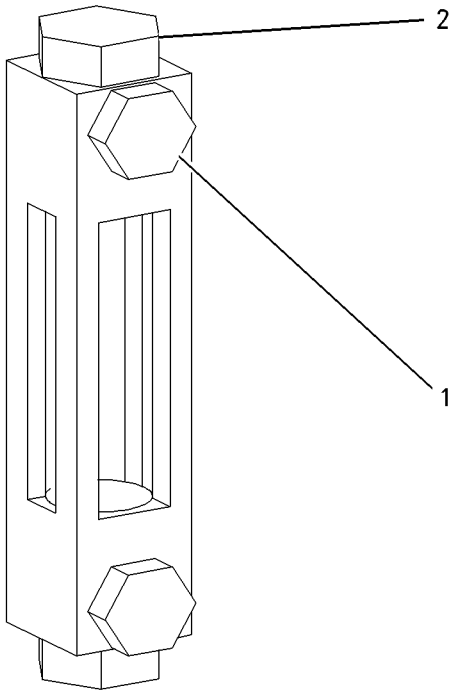

GRAPHIC #1 **<END>** g00670183

FUEL SYSTEM

227-4799 GOVERNOR GP

S/N: PJF1-380

PART OF 246-8996 INSTALLATION AR-ENGINE

SMCS-1264, 1908 **i02593509**

NOTE	REF NO	GRAPHIC REF	PART NUMBER	QTY	PART NAME 1 2 3 4 5 6 (PRODUCT LEVEL)	SEE PAGE
	1	1	**3S-2093**	1	STRAP-CABLE	
	2	1	**6V-8187**	3	NUT (1/4-28-THD)	
	3	1	**8E-0853**	1	BALL JOINT AS	
	4	1	**9L-2685**	1	BALL JOINT AS	
	5	1	**116-0118**	2	CLIP	
	6	1	**148-1517**	1	RESISTOR AS	
		1	**102-8802**	1	KIT-RECEPTACLE (2-PIN)	
					(INCLUDES RECEPTACLE AS & WEDGE)	
CY	7	1	**120-4187**	1	SOLENOID GP-THROTTLE (GOVERNOR)	142
	8	1	**227-4794**	1	PLATE	
	9	1	**262-4947**	1	ROD	
M	10	1	**125-3295**	2	SCREW-PAN HEAD (M2.5X0.45X12-MM)	
	11	1	**4P-8134**	1	CLIP	
M	12	1	**5C-2890**	4	NUT (M6X1-THD)	
	13	1	**5P-4115**	1	WASHER-HARD (7.2X19X2-MM THK)	
	14	1	**5P-4116**	3	WASHER-HARD (8.8X20.5X2-MM THK)	
M	15	1	**6V-7357**	4	BOLT (M6X1X25-MM)	
M	16	1	**8T-6869**	1	BOLT (M8X1.25X60-MM)	
M	17	1	**8T-7547**	3	BOLT (M8X1.25X30-MM)	
	18	1	**9X-8256**	8	WASHER (6.6X12X2-MM THK)	

C-CHANGE FROM PREVIOUS TYPE
M-METRIC PART
Y-SEPARATE ILLUSTRATION

227-4799 **GOVERNOR GP** *(contd.)* **i02593509**

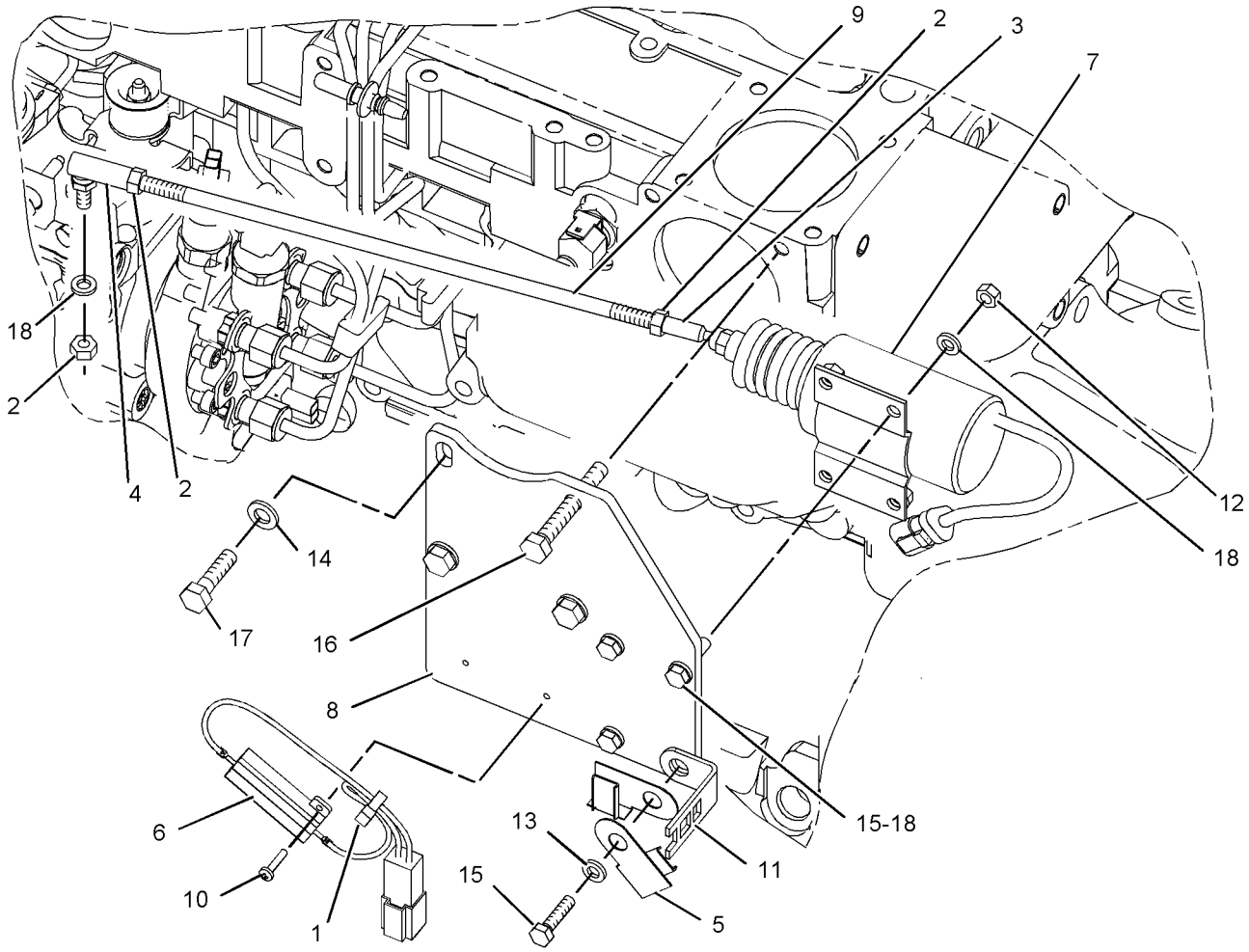

GRAPHIC #1 **<END>** g01099870

227-4799 GOVERNOR GP

S/N: PJF381-454

PART OF 246-8996 INSTALLATION AR-ENGINE

SMCS-1264, 1908 **i02819066**

NOTE	REF NO	GRAPHIC REF	PART NUMBER	QTY	PART NAME 1 2 3 4 5 6 (PRODUCT LEVEL)	SEE PAGE
	1	1	**3S-2093**	1	STRAP-CABLE	
	2	1	**6V-8187**	3	NUT (1/4-28-THD)	
	3	1	**8E-0853**	1	BALL JOINT AS	
	4	1	**9L-2685**	1	BALL JOINT AS	
	5	1	**116-0118**	2	CLIP	
	6	1	**148-1517**	1	RESISTOR AS	
		1	**5P-0623**	5	WIRE-ELECTRICAL	
		1	**8T-8729**	2	PIN-CONNECTOR (16-GA TO 18-GA)	
		1	**102-8802**	1	KIT-RECEPTACLE (2-PIN)	
					(INCLUDES RECEPTACLE AS & WEDGE)	
Y	7	1	*120-4187*	1	SOLENOID GP-THROTTLE (GOVERNOR)	142
	8	1	**227-4794**	1	PLATE	
	9	1	**262-4947**	1	ROD	
M	10	1	**125-3295**	2	SCREW-PAN HEAD (M2.5X0.45X12-MM)	
	11	1	**4P-8134**	1	CLIP	
M	12	1	**5C-2890**	4	NUT (M6X1-THD)	
	13	1	**5P-4115**	1	WASHER-HARD (7.2X19X2-MM THK)	
	14	1	**5P-4116**	3	WASHER-HARD (8.8X20.5X2-MM THK)	
CM	15	1	**6V-7357**	3	BOLT (M6X1X25-MM)	
M	16	1	**8T-6869**	1	BOLT (M8X1.25X60-MM)	
CM	17	1	**8T-4908**	3	BOLT (M8X1.25X25-MM)	
	18	1	**9X-8256**	8	WASHER (6.6X12X2-MM THK)	
CM	19	1	**8T-4138**	1	BOLT (M6X1X20-MM)	

C-CHANGE FROM PREVIOUS TYPE
M-METRIC PART
Y-SEPARATE ILLUSTRATION

227-4799 **GOVERNOR GP** *(contd.)* **i02819066**

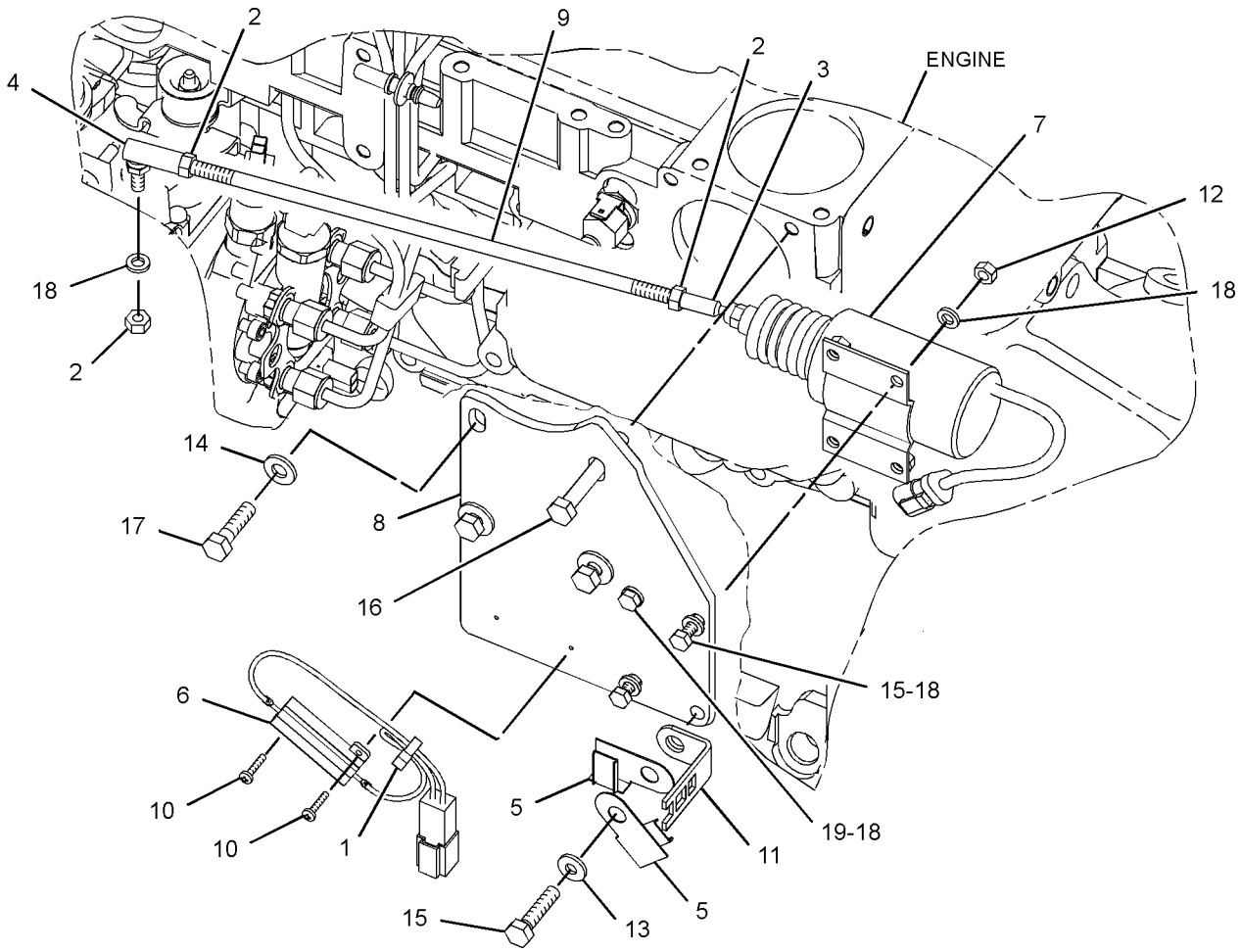

GRAPHIC #1 **<END>** g01416981

227-4799 GOVERNOR GP

S/N: PJF455-467
PART OF 246-8996 INSTALLATION AR-ENGINE
ALSO AN ATTACHMENT

SMCS-1264, 1908 **i03446940**

NOTE	REF NO	GRAPHIC REF	PART NUMBER	QTY	PART NAME 1 2 3 4 5 6 (PRODUCT LEVEL)	SEE PAGE
	1	1	**3S-2093**	1	STRAP-CABLE	
	2	1	**6V-8187**	3	NUT (1/4-28-THD)	
	3	1	**8E-0853**	1	BALL JOINT AS	
	4	1	**9L-2685**	1	BALL JOINT AS	
	5	1	**116-0118**	2	CLIP	
	6	1	**148-1517**	1	RESISTOR AS	
D		1	**5P-5623**		WIRE-ELECTRICAL (16-GA, BLACK) (0.5-M)	
		1	**186-3735**	2	PIN-CONNECTOR (16-GA TO 18-GA)	
		1	**102-8802**	1	KIT-RECEPTACLE (2-PIN)	
					(INCLUDES RECEPTACLE AS & WEDGE)	
C	7	1	**307-5598**	1	SOLENOID (GOVERNOR)	
	8	1	**227-4794**	1	PLATE	
C	9	1	**230-7881**	1	ROD	
M	10	1	**125-3295**	2	SCREW-PAN HEAD (M2.5X0.45X12-MM)	
	11	1	**4P-8134**	1	CLIP	
M	12	1	**5C-2890**	4	NUT (M6X1-THD)	
	13	1	**5P-4115**	1	WASHER-HARD (7.2X19X2-MM THK)	
	14	1	**5P-4116**	3	WASHER-HARD (8.8X20.5X2-MM THK)	
M	15	1	**6V-7357**	3	BOLT (M6X1X25-MM)	
M	16	1	**8T-6869**	1	BOLT (M8X1.25X60-MM)	
M	17	1	**8T-4908**	3	BOLT (M8X1.25X25-MM)	
	18	1	**9X-8256**	8	WASHER (6.6X12X2-MM THK)	
M	19	1	**8T-4138**	1	BOLT (M6X1X20-MM)	

C-CHANGE FROM PREVIOUS TYPE
D-ORDER BY THE METER
M-METRIC PART

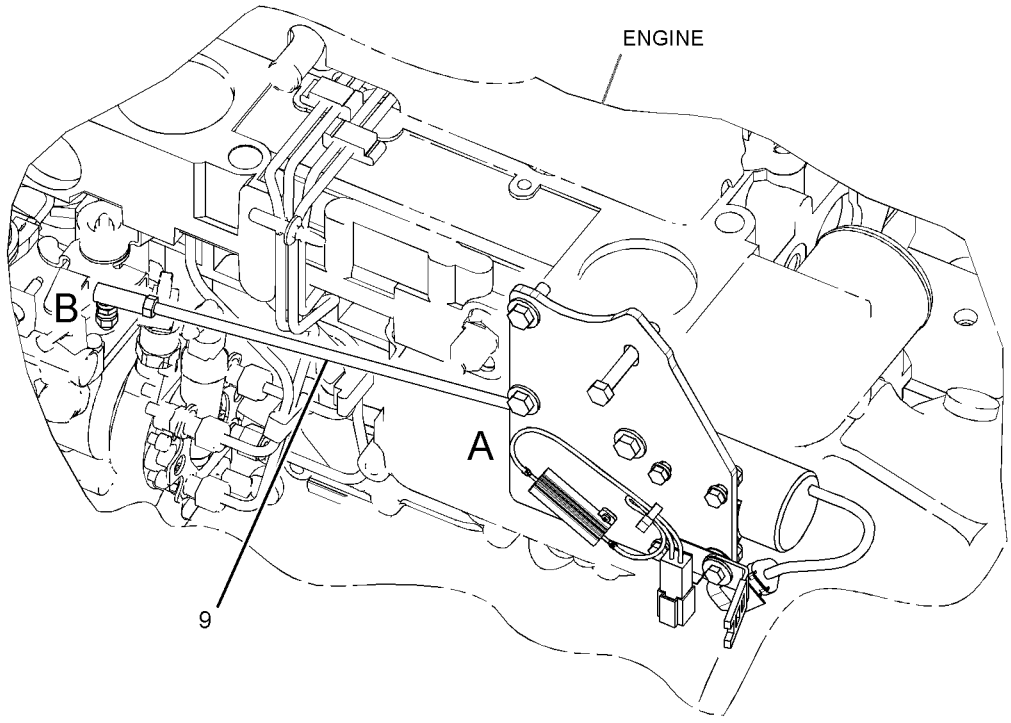

REAR VIEW
(UPPER RIGHT)

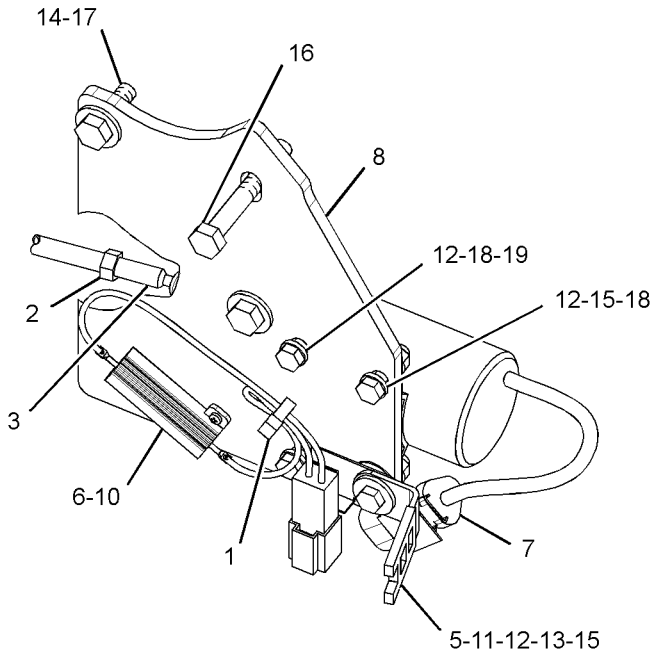

VIEW OF AREA A

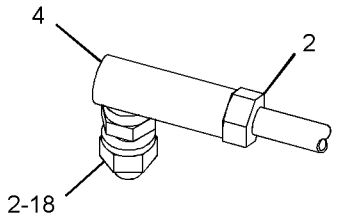

VIEW OF AREA B

GRAPHIC #1 **<END>** g01794454

131-2324 LINES GP-DRAIN–FUEL TANK

S/N: PJF1-UP

PART OF 246-8992 CHASSIS AR

SMCS-1274 **i03577220**

NOTE	REF NO	GRAPHIC REF	PART NUMBER	QTY	PART NAME 1 2 3 4 5 6 (PRODUCT LEVEL)	SEE PAGE
	1	1	**5D-1026**	1	CLAMP-HOSE	
E	2	1	**5P-0743**		HOSE (120-CM)	

E-ORDER BY THE CENTIMETER

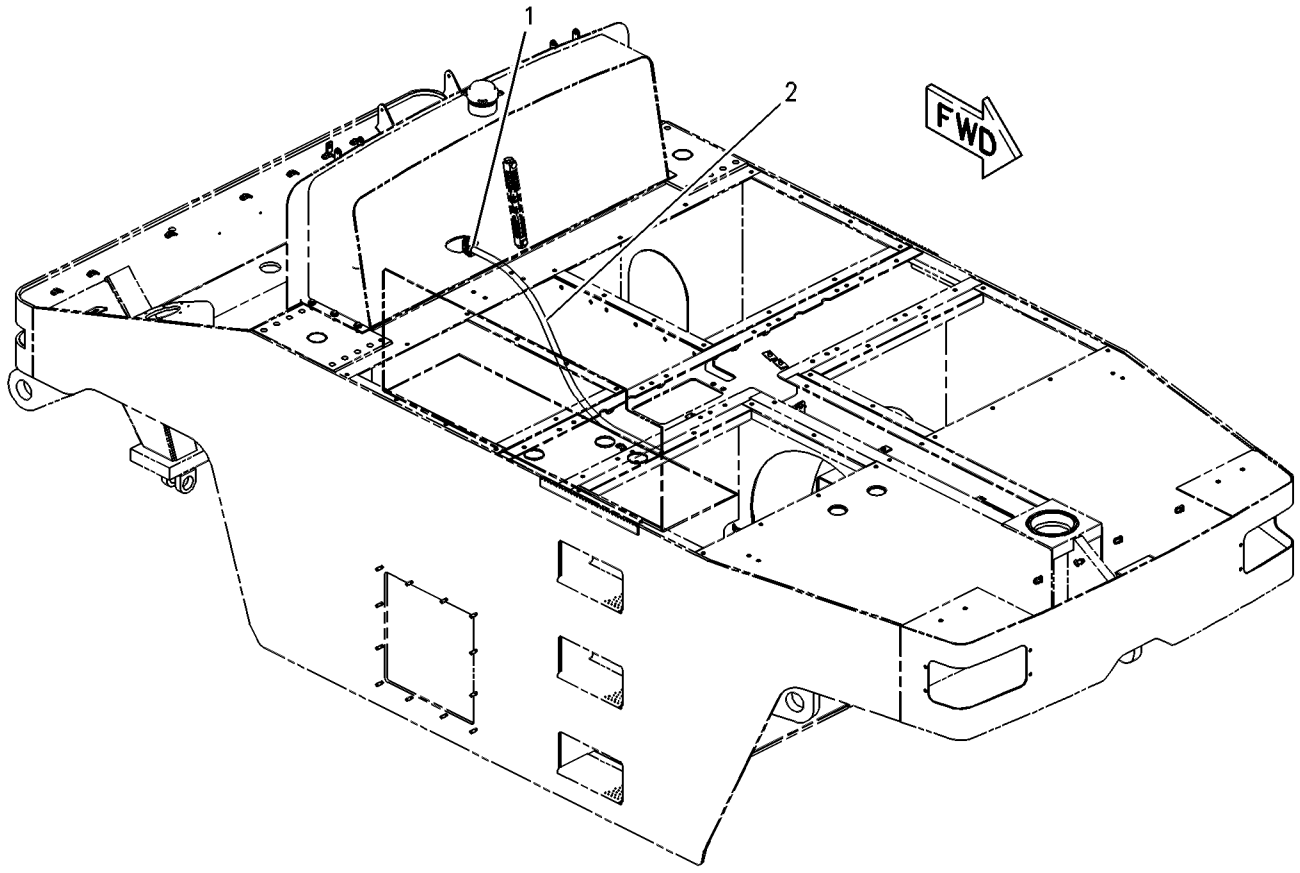

GRAPHIC #1 **<END>** g00294673

FUEL SYSTEM

249-2737 LINES GP-FUEL

S/N: PJF1-467
PART OF 246-8996 INSTALLATION AR-ENGINE
ALSO AN ATTACHMENT

SMCS-1274 **i03569852**

NOTE	REF NO	GRAPHIC REF	PART NUMBER	QTY	PART NAME 1 2 3 4 5 6 (PRODUCT LEVEL)	SEE PAGE
	1	1	**5P-4961**	4	CLAMP-HOSE	
E	2	1	**5P-1442**		HOSE (84-CM)	
E	2A	1	**5P-1442**		HOSE (86-CM)	
	3	1	**239-5433**	1	CONNECTOR-SPECIAL	
	4	1	**156-3617**	4	CLAMP-HALF	
	5	1	**228-5778**	1	PLATE AS	
	6	1	**177-2215**	1	STRAP-DUAL CLAMP	
	7	1	**102-8703**	2	PLATE-COVER	
M	8	1	**7X-2537**	2	BOLT (M8X1.25X35-MM)	
M	9	1	**8T-6912**	1	BOLT (M8X1.25X50-MM)	
	10	1	**5P-4116**	2	WASHER-HARD (8.8X20.5X2-MM THK)	
M	11	1	**5C-7261**	1	NUT (M8X1.25-THD)	
	12	1	**5E-9315**	2	FITTING-HOSE	

E-ORDER BY THE CENTIMETER
M-METRIC PART

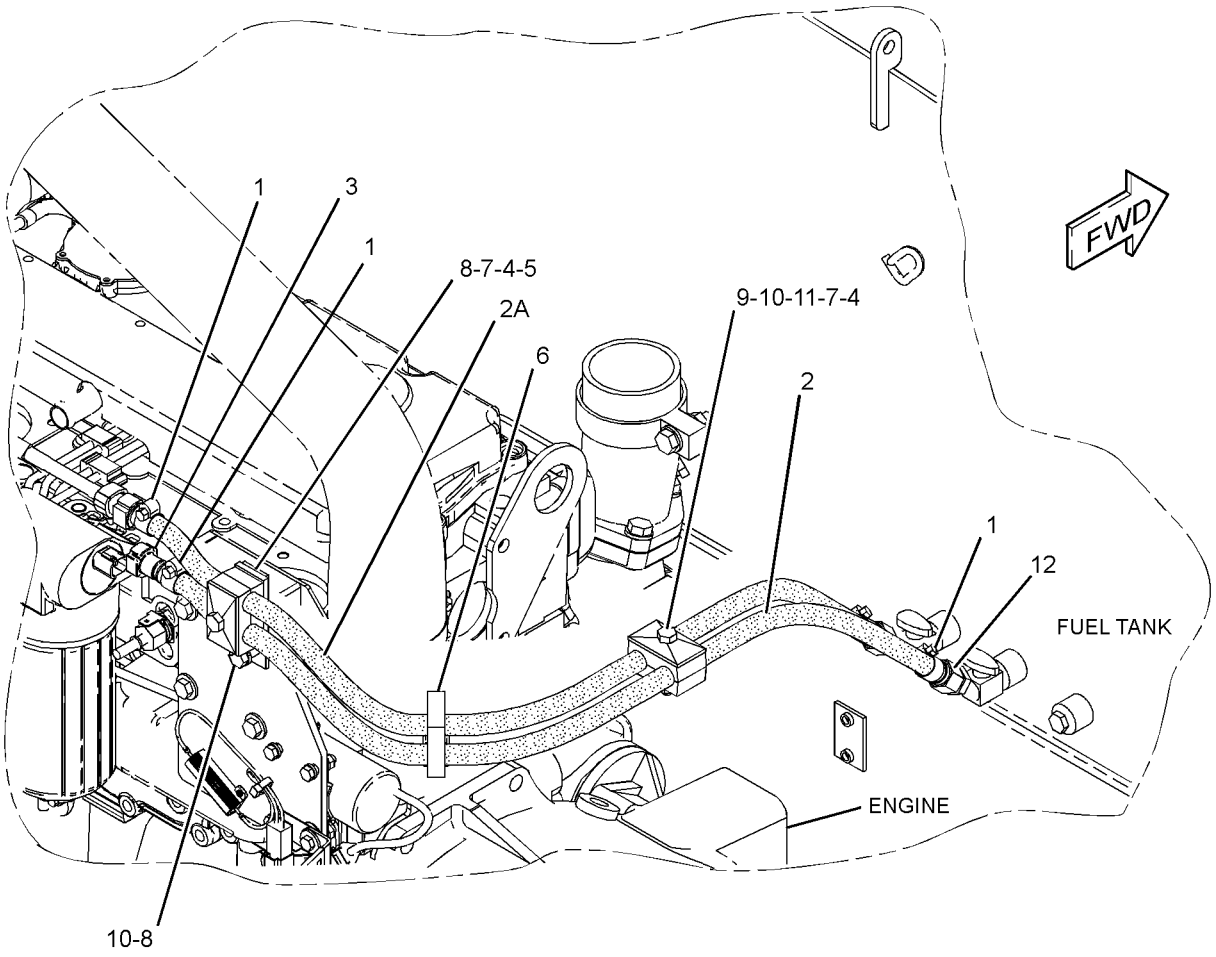

GRAPHIC #1 **<END>** g01207761

FUEL SYSTEM

233-9526 PUMP GP-FUEL INJECTION

S/N: CRS2700-UP

PART OF 177-9752 ENGINE AR-PRIMARY

SMCS-1251, 1290 **i02452222**

NOTE	REF NO	GRAPHIC REF	PART NUMBER	QTY	PART NAME 1 2 3 4 5 6 (PRODUCT LEVEL)	SEE PAGE
M	1	1	**6I-0217**	1	BOLT (M8X1.25X20-MM)	
M	2	1	**6I-0260**	3	BOLT (M8X1.25X25-MM)	
	3	1	**6I-0291**	1	NUT (M8X1.25-THD)	
	4	1	**035-8017**	1	UNION	
	5	1	**067-6264**	1	FITTING-FLARED	
	6	1	**067-6265**	1	FITTING-BRASS	
M	7	1	**100-4830**	1	BOLT (M10X1.5X20-MM)	
	8	1	**111-3422**	1	NUT	
	9	1	**111-3423**	1	WASHER	
M	10	1	**124-3815**	1	BOLT (M8X16X1.25-MM)	
	11	1	**140-8714**	1	CLIP	
	12	2	**235-1790**	1	SWITCH-TEMPERATURE (TIMING ADVANCE)	
	13	2	**199-9252**	1	SEAL-O-RING	
	14	2	**199-9751**	2	SEAL-O-RING	
	15	1	**236-2144**	1	TUBE AS	
	15A	1	**067-6999**	1	FERRULE	
	15B	1	**106-8835**	1	NUT	
	16	1	**230-8989**	1	GEAR-FUEL PUMP (68-TEETH)	
	17	1	**230-8995**	1	TUBE AS (CYL NO.1)	
	18	1	**230-8996**	1	TUBE AS (CYL NO.2)	
	19	1	**230-8997**	1	TUBE AS (CYL NO.3)	
	20	1	**230-8998**	1	TUBE AS (CYL NO.4)	
	21	1	**230-8999**	4	INJECTOR AS-FUEL	
					(EACH INCLUDES)	
	21A	1	**140-8718**	1	WASHER	
C	22	1	**240-5571**	1	BRACKET	
	25	2	**232-1295**	1	PLUG	
	26	2	**232-1322**	2	PLUG	
	27	2	**232-1323**	1	PLUG-CUP	
	28	1	**232-1328**	1	CAP	
	29	2	**232-1793**	1	CABLE	
	30	1	**232-1794**	3	HOSE	
	31	1	**232-2725**	2	CLIP	
	32	1	**232-2726**	1	CLIP	
	33	1	**232-3149**	3	WASHER (8.35X16.85X1.55-MM THK)	
	34	1	**232-3157**	1	BRACKET	
	35	1	**238-8671**	4	CLAMP-INJECTOR	
	36	1	**232-3274**	4	BOLT (M8X1.25X48.1-MM)	
Y	37	1	**236-6910**	1	PUMP GP-FUEL INJECTION	104
	38	1	**160-7197**	1	CLIP	
F			**232-3263**	3	CLIP-PIPE	

C-CHANGE FROM PREVIOUS TYPE
F-NOT SHOWN
M-METRIC PART
Y-SEPARATE ILLUSTRATION

233-9526 **PUMP GP-FUEL INJECTION** *(contd.)* **i02452222**

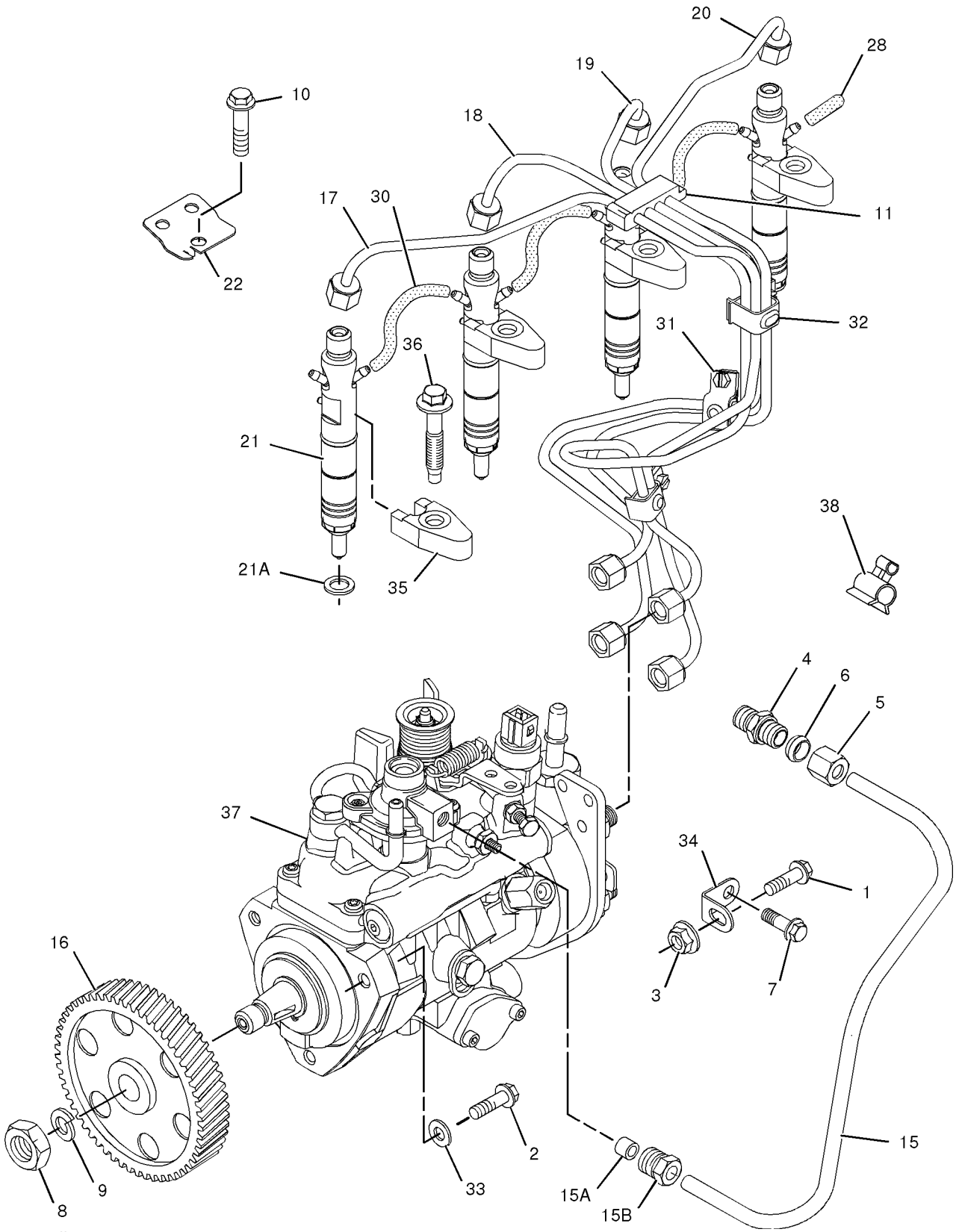

GRAPHIC #1 g01047405

233-9526 **PUMP GP-FUEL INJECTION** *(contd.)* **i02452222**

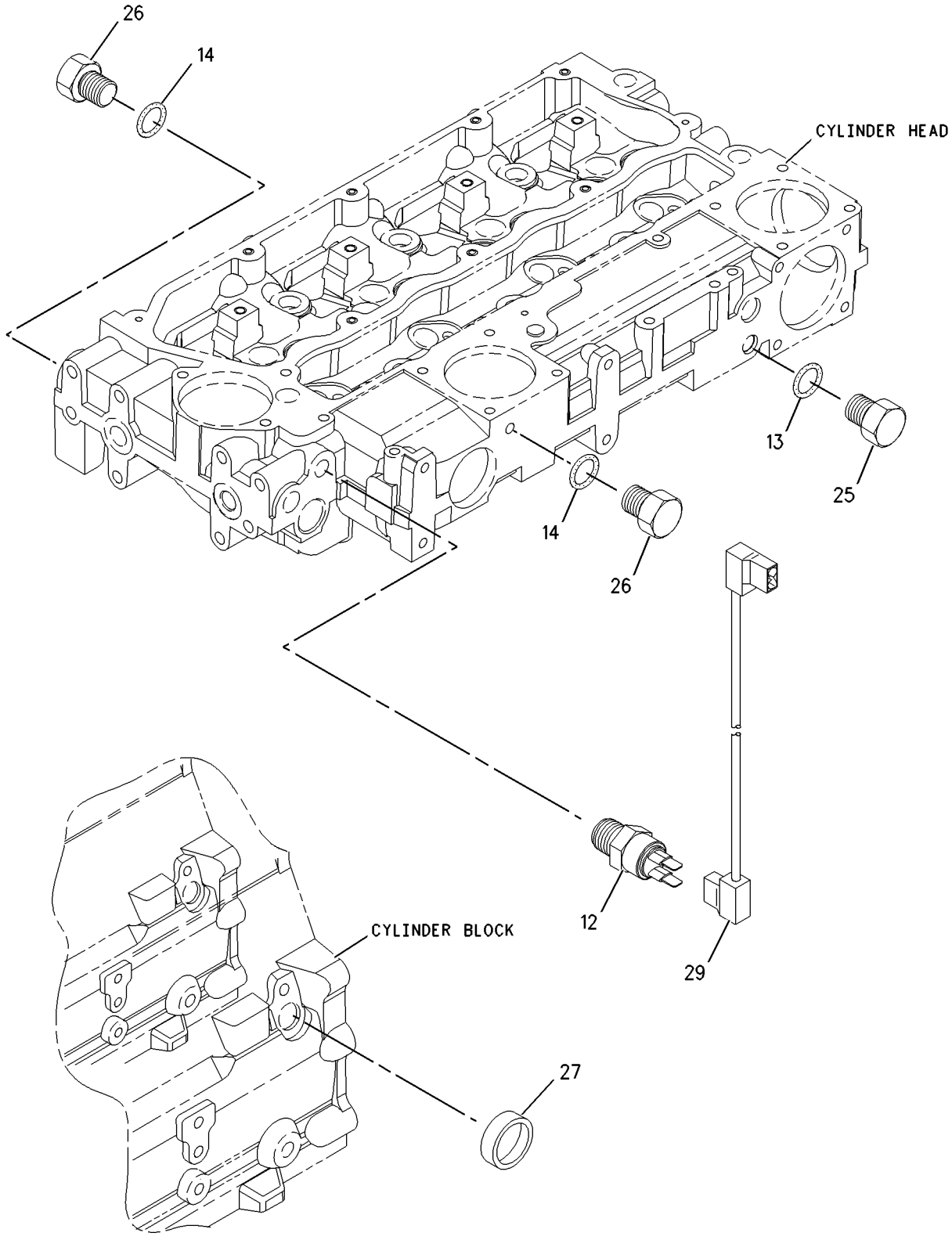

GRAPHIC #2 **<END>** g01003060

236-6910 PUMP GP-FUEL INJECTION

S/N: CRS2700-UP

PART OF 233-9526 PUMP GP-FUEL INJECTION

FIELD REPLACEMENT ORDER 248-2367—PAGE 105

SMCS-1251, 1290 **i03091341**

NOTE	REF NO	GRAPHIC REF	PART NUMBER	QTY	PART NAME 1 2 3 4 5 6 (PRODUCT LEVEL)	SEE PAGE
	1	1	**152-3968**	1	SEAL-O-RING	
	2	1	**147-2645**	1	VALVE GP-SOLENOID (24-VOLT) (FUEL SHUTOFF)	

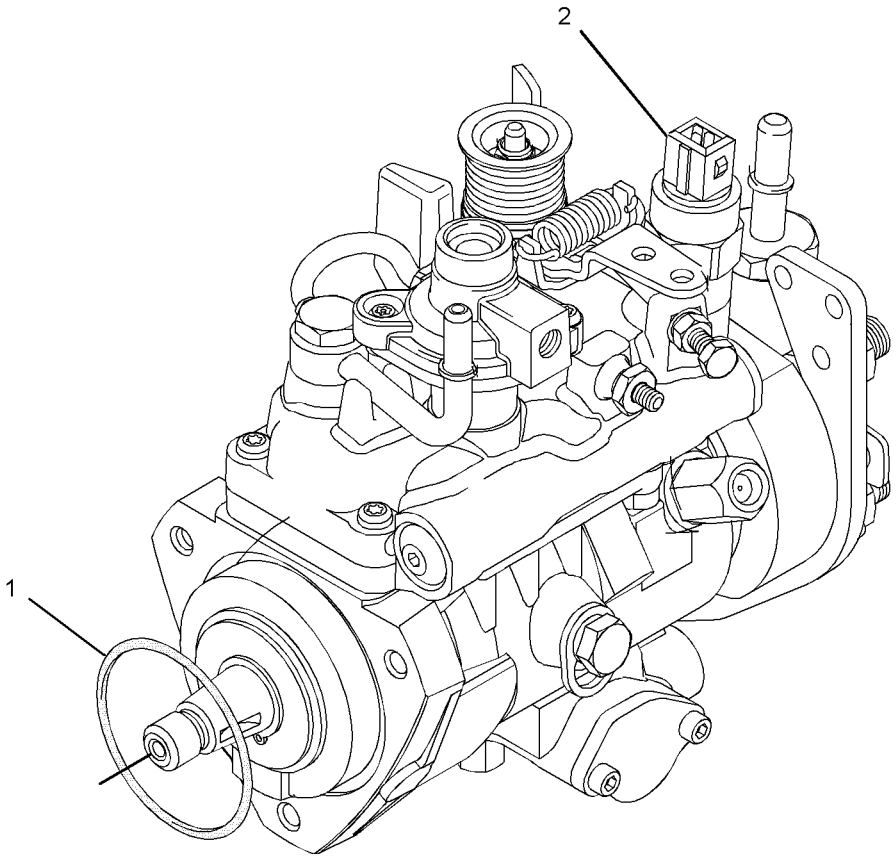

GRAPHIC #1 **<END>** g01085467

248-2367 PUMP GP-FUEL INJECTION

S/N: CRS2700-UP

FIELD REPLACEMENT FOR 236-6910—PAGE 104. FOR USE WITH 2200 RPM RATED ENGINE

SMCS-1251, 1290 **i03091340**

NOTE	REF NO	GRAPHIC REF	PART NUMBER	QTY	PART NAME 1 2 3 4 5 6 (PRODUCT LEVEL)	SEE PAGE
	1	1	**152-3968**	1	SEAL-O-RING	
	2	1	**147-2645**	1	VALVE GP-SOLENOID (24-VOLT) (FUEL SHUTOFF)	

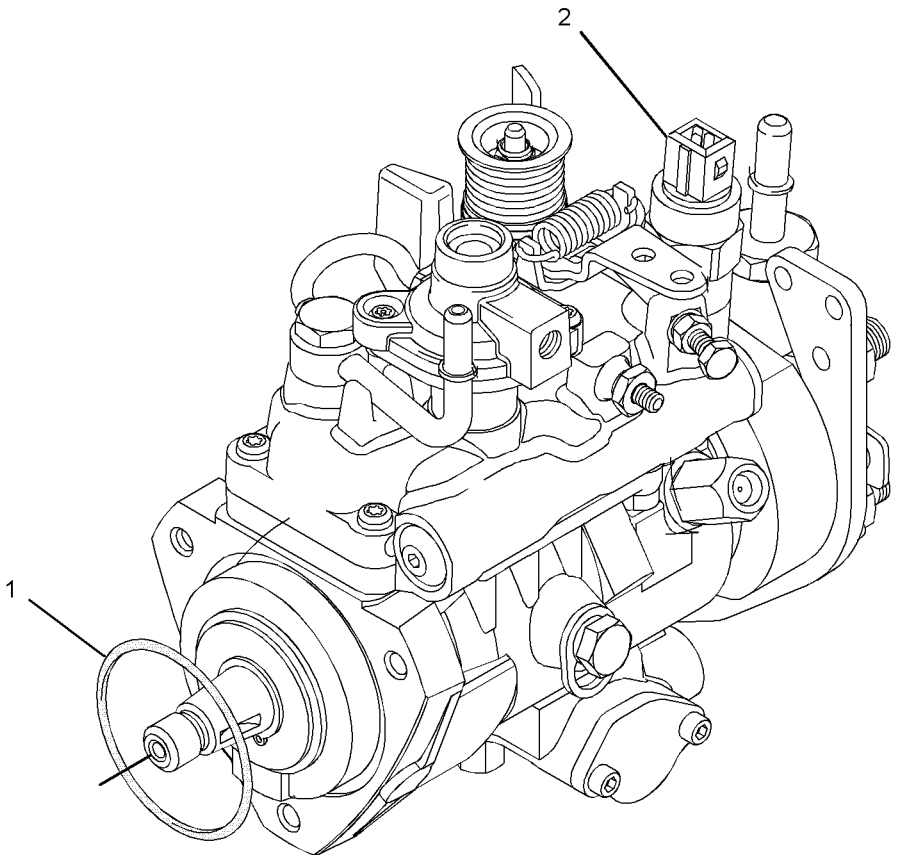

GRAPHIC #1 **<END>** g01085467

284-4999 PUMP GP-FUEL INJECTION

S/N: CRS2700-UP
PART OF 308-4733 PUMP GP-FUEL INJECTION
FIELD REPLACEMENT ORDER 284-5000 PUMP GP-FUEL INJECTION
ALSO AN ATTACHMENT

SMCS-1251, 1290 **i02436732**

NOTE	REF NO	GRAPHIC REF	PART NUMBER	QTY	PART NAME 1 2 3 4 5 6 (PRODUCT LEVEL)	SEE PAGE
	1	1	**152-3968**	1	SEAL-O-RING	
	2	1	**147-2645**	1	VALVE GP-SOLENOID (24-VOLT) (FUEL SHUTOFF)	

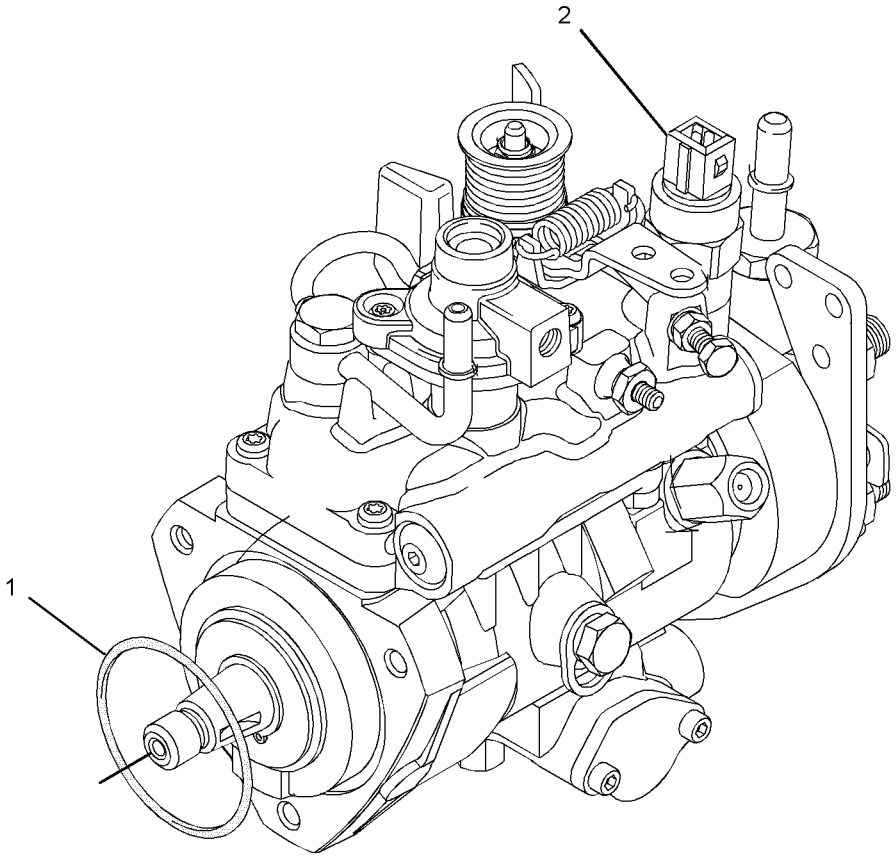

GRAPHIC #1 **<END>** g01085467

308-4733 PUMP GP-FUEL INJECTION

S/N: CRS2700-UP

PART OF 177-9752, 297-4047, 297-4055 ENGINE AR-PRIMARY

ALSO AN ATTACHMENT

SMCS-1251, 1290 **i03196719**

NOTE	REF NO	GRAPHIC REF	PART NUMBER	QTY	PART NAME 1 2 3 4 5 6 (PRODUCT LEVEL)	SEE PAGE
M	1	1	**6I-0217**	1	BOLT (M8X1.25X20-MM)	
M	2	1	**6I-0260**	3	BOLT (M8X1.25X25-MM)	
	3	1	**6I-0291**	1	NUT (M8X1.25-THD)	
	4	1	**035-8017**	1	UNION	
	5	1	**067-6264**	1	FITTING-FLARED	
	6	1	**067-6265**	1	FITTING-BRASS	
M	7	1	**100-4830**	1	BOLT (M10X1.5X20-MM)	
M	8	1	**124-3815**	1	BOLT (M8X16X1.25-MM)	
	9	1	**140-8714**	1	CLIP	
	10	1	**318-2365**	1	CLIP	
	11	1	**230-8989**	1	GEAR-FUEL PUMP (68-TEETH)	
	12	1	**230-8995**	1	TUBE AS (CYL NO.1)	
	13	1	**230-8996**	1	TUBE AS (CYL NO.2)	
	14	1	**230-8997**	1	TUBE AS (CYL NO.3)	
	15	1	**230-8998**	1	TUBE AS (CYL NO.4)	
	16	1	**230-8999**	4	INJECTOR AS-FUEL	
		1	**232-2724**	1	NOZZLE	
		1	**275-1038**	1	SEAL-O-RING	
	16A	1	**140-8718**	1	WASHER	
	17	2	**232-1323**	1	PLUG-CUP	
	18	1	**232-1328**	1	CAP	
	19	2	**232-1793**	1	CABLE	
	20	1	**232-1794**	3	HOSE	
	21	1	**232-2725**	2	CLIP	
	22	1	**232-2726**	1	CLIP	
	23	1	**232-3126**	1	CLIP	
	24	1	**232-3149**	3	WASHER (8.35X16.85X1.55-MM THK)	
	25	1	**232-3157**	1	BRACKET	
	26	1	**232-3274**	4	BOLT (M8X1.25X48.1-MM)	
	27	2	**235-1790**	1	SWITCH-TEMPERATURE (ENGINE COOLANT)	
	28	1	**236-2144**	1	TUBE AS	
	28A	1	**067-6999**	1	FERRULE	
	29	1	**238-8671**	4	CLAMP-INJECTOR	
	30	1	**240-5571**	1	BRACKET	
Y	31	1	*284-4999*	1	PUMP GP-FUEL INJECTION	106

M-METRIC PART
Y-SEPARATE ILLUSTRATION

308-4733 **PUMP GP-FUEL INJECTION** *(contd.)* **i03196719**

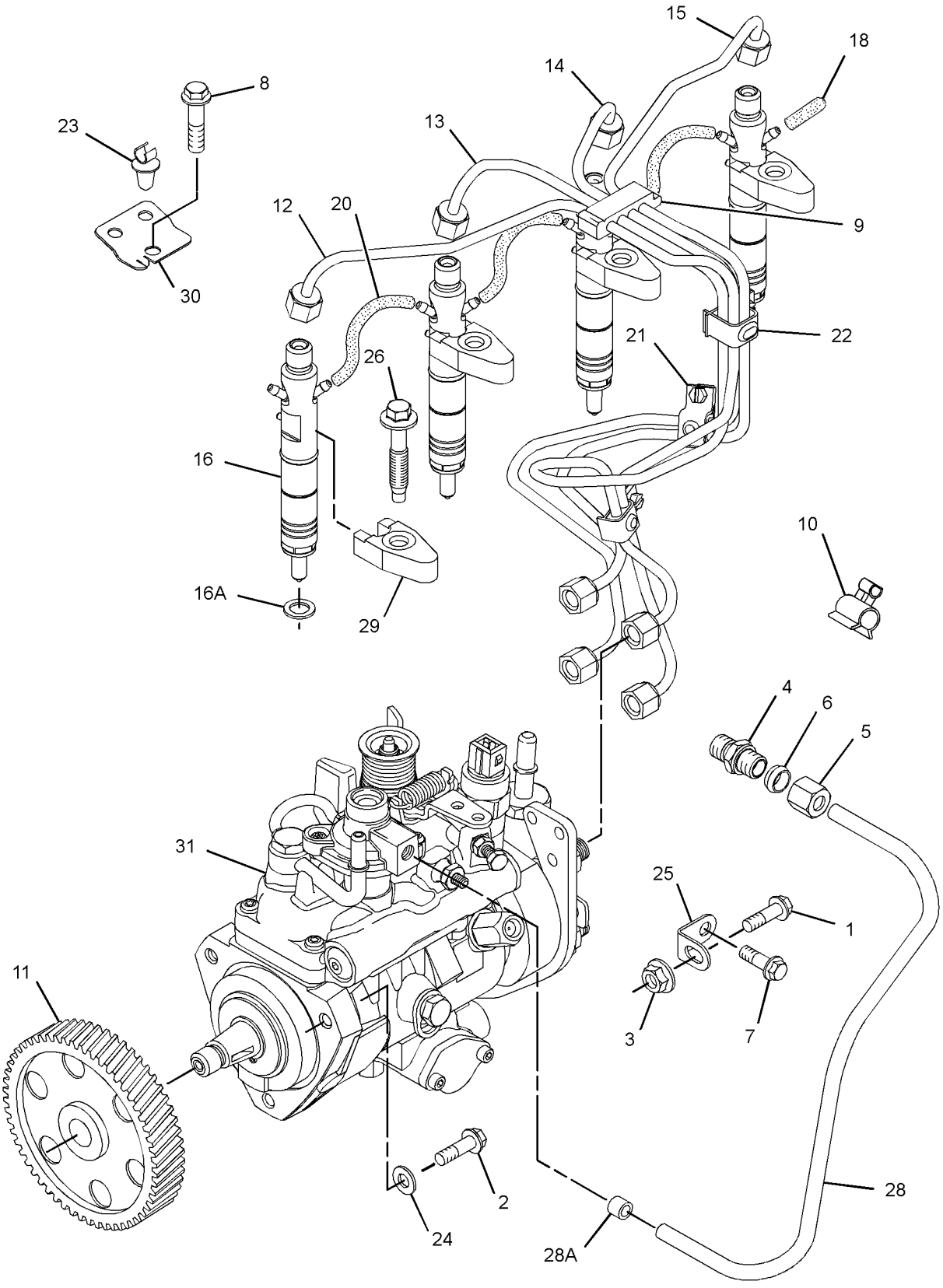

GRAPHIC #1 g01742134

308-4733 **PUMP GP-FUEL INJECTION** *(contd.)* **i03196719**

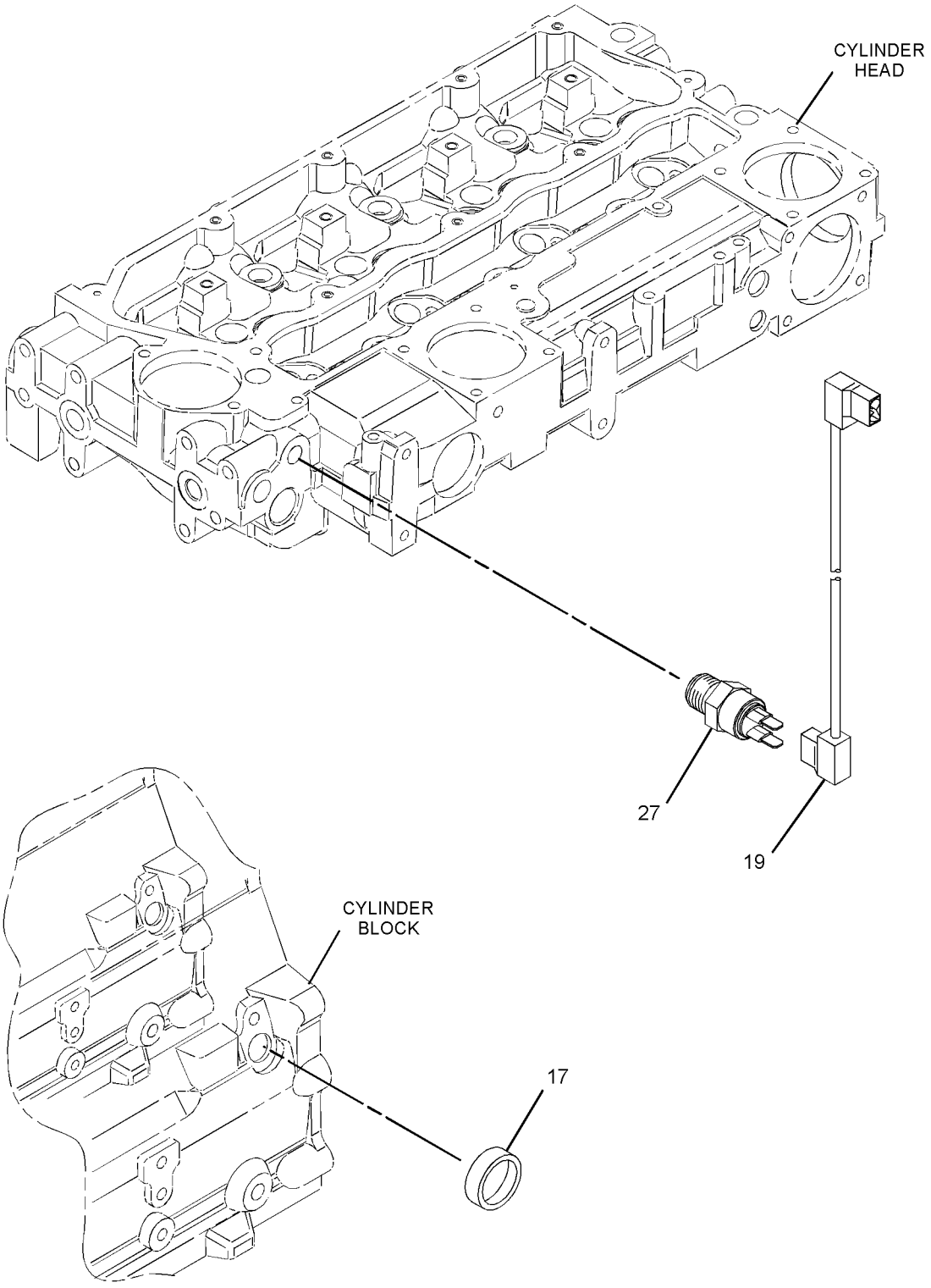

GRAPHIC #2 **<END>** g01375868

FUEL SYSTEM

347-5444 PUMP GP-FUEL INJECTION

S/N: CRS2700-UP

PART OF 329-2197 ENGINE AR-PRIMARY

AN ATTACHMENT

SMCS-1251, 1290 **i03571244**

NOTE	REF NO	GRAPHIC REF	PART NUMBER	QTY	PART NAME 1 2 3 4 5 6 (PRODUCT LEVEL)	SEE PAGE
M	1	1	**6I-0217**	1	BOLT (M8X1.25X20-MM)	
M	2	1	**6I-0260**	3	BOLT (M8X1.25X25-MM)	
	3	1	**6I-0291**	1	NUT (M8X1.25-THD)	
	4	1	**035-8017**	1	UNION	
	5	1	**067-6264**	1	FITTING-FLARED	
	6	1	**067-6265**	1	FITTING-BRASS	
M	7	1	**100-4830**	1	BOLT (M10X1.5X20-MM)	
M	8	1	**124-3815**	1	BOLT (M8X16X1.25-MM)	
	9	1	**140-8714**	1	CLIP	
	10	1	**230-8989**	1	GEAR-FUEL PUMP (68-TEETH)	
	11	1	**230-8995**	1	TUBE AS (CYL NO.1)	
	12	1	**230-8996**	1	TUBE AS (CYL NO.2)	
	13	1	**230-8997**	1	TUBE AS (CYL NO.3)	
	14	1	**230-8998**	1	TUBE AS (CYL NO.4)	
	15	1	**230-8999**	4	INJECTOR AS-FUEL	
					(EACH INCLUDES)	
	15A	1	**140-8718**	1	WASHER	
	15B	1	**232-2724**	1	NOZZLE	
	15C	1	**275-1038**	1	SEAL-O-RING	
	16	1	**232-1328**	1	CAP	
	17	1	**232-1793**	1	CABLE	
	18	1	**232-1794**	3	HOSE	
	19	1	**232-2725**	2	CLIP	
	20	1	**232-2726**	1	CLIP	
	21	1	**232-3149**	3	WASHER (8.35X16.85X1.55-MM THK)	
	22	1	**232-3157**	1	BRACKET	
	23	1	**232-3274**	4	BOLT (M8X1.25X48.1-MM)	
	24	1	**235-1790**	1	SWITCH-TEMPERATURE	
	25	1	**236-2144**	1	TUBE AS	
	25A	1	**067-6999**	1	FERRULE	
	26	1	**238-8671**	4	CLAMP-INJECTOR	
	27	1	**240-5571**	1	BRACKET	
	28	1	**284-4990**	1	PUMP GP-FUEL INJECTION	
	29	1	**318-2365**	1	CLIP	

M-METRIC PART

347-5444 **PUMP GP-FUEL INJECTION** *(contd.)* **i03571244**

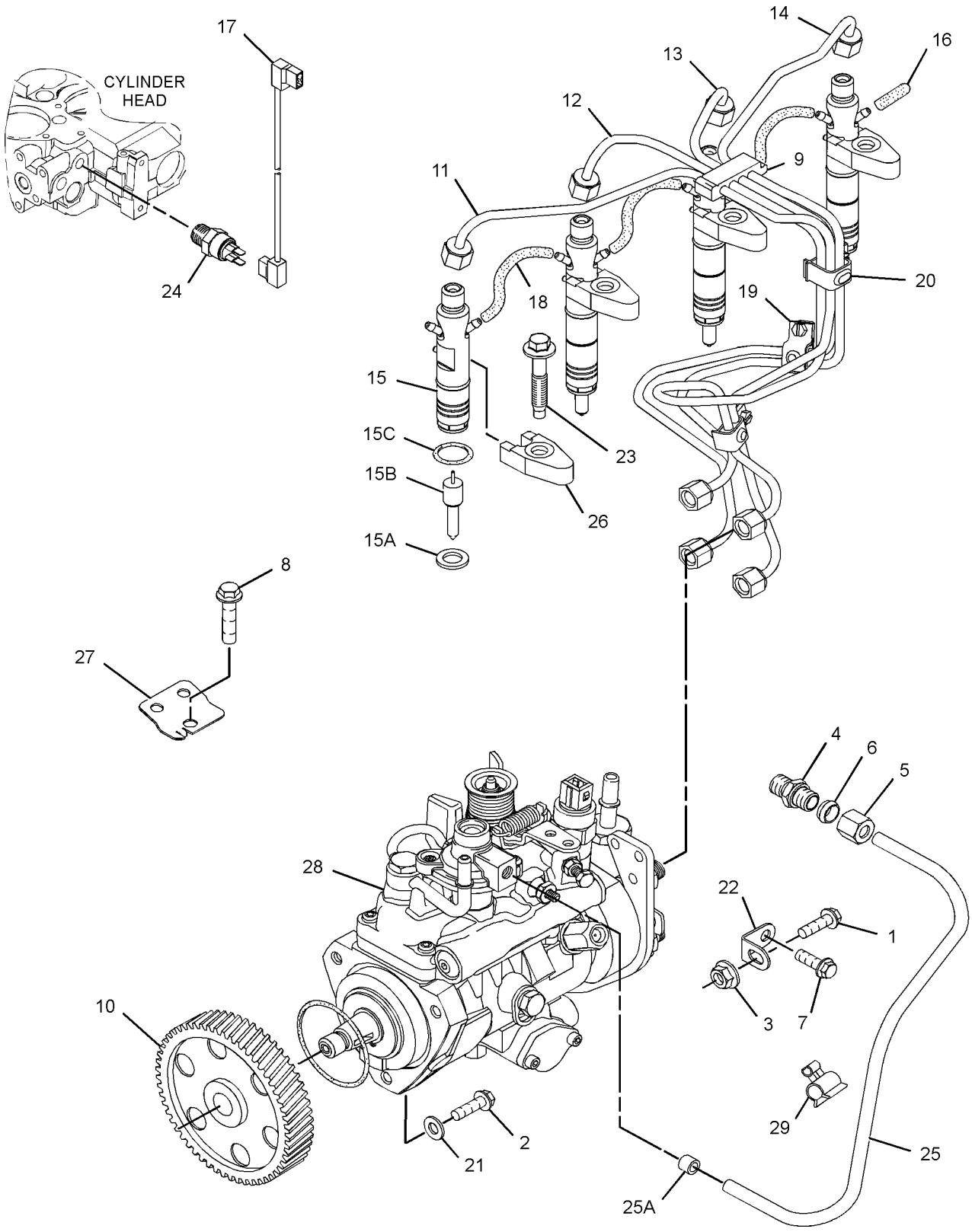

GRAPHIC #1 **<END>** g01902545

233-9417 PUMP GP-FUEL PRM & PRIM FILTER

S/N: CRS2700-UP

PART OF 177-9752 ENGINE AR-PRIMARY

TYPE 1

SMCS-1258, 1260 **i03126263**

NOTE	REF NO	GRAPHIC REF	PART NUMBER	QTY	PART NAME 1 2 3 4 5 6 (PRODUCT LEVEL)	SEE PAGE
	1	1	**237-0285**	1	BRACKET	
	2	1	**240-9756**	1	KIT-MOUNTING (FUEL PRIMING PUMP)	
	2A	1	**232-9758**	3	WASHER (6.51X17.785X1.6-MM THK)	
		1	**120-6872**	3	BOLT	
					(KIT ALSO INCLUDES SPACERS & MOUNTS)	
	4	1	**237-0286**	1	PLUG	
	5	1	**215-9508**	1	FITTING (QUICK DISCONNECT, MALE)	
	6	1	**215-9509**	1	FITTING (QUICK DISCONNECT, FEMALE)	
	7	1	**232-3126**	1	CLIP	
Y	8	1	**270-6992**	1	PUMP GP-FUEL PRM & PRIM FILTER	116
	10	1	**232-9759**	1	LINE AS-FUEL (LOW PRESSURE FEED)	
	11	1	**237-0284**	1	LINE AS-FUEL (LOW PRESSURE RETURN)	
	12	1	**232-1115**	1	CLIP-PIPE	

Y-SEPARATE ILLUSTRATION

233-9417 **PUMP GP-FUEL PRM & PRIM FILTER** *(contd.)* **i03126263**

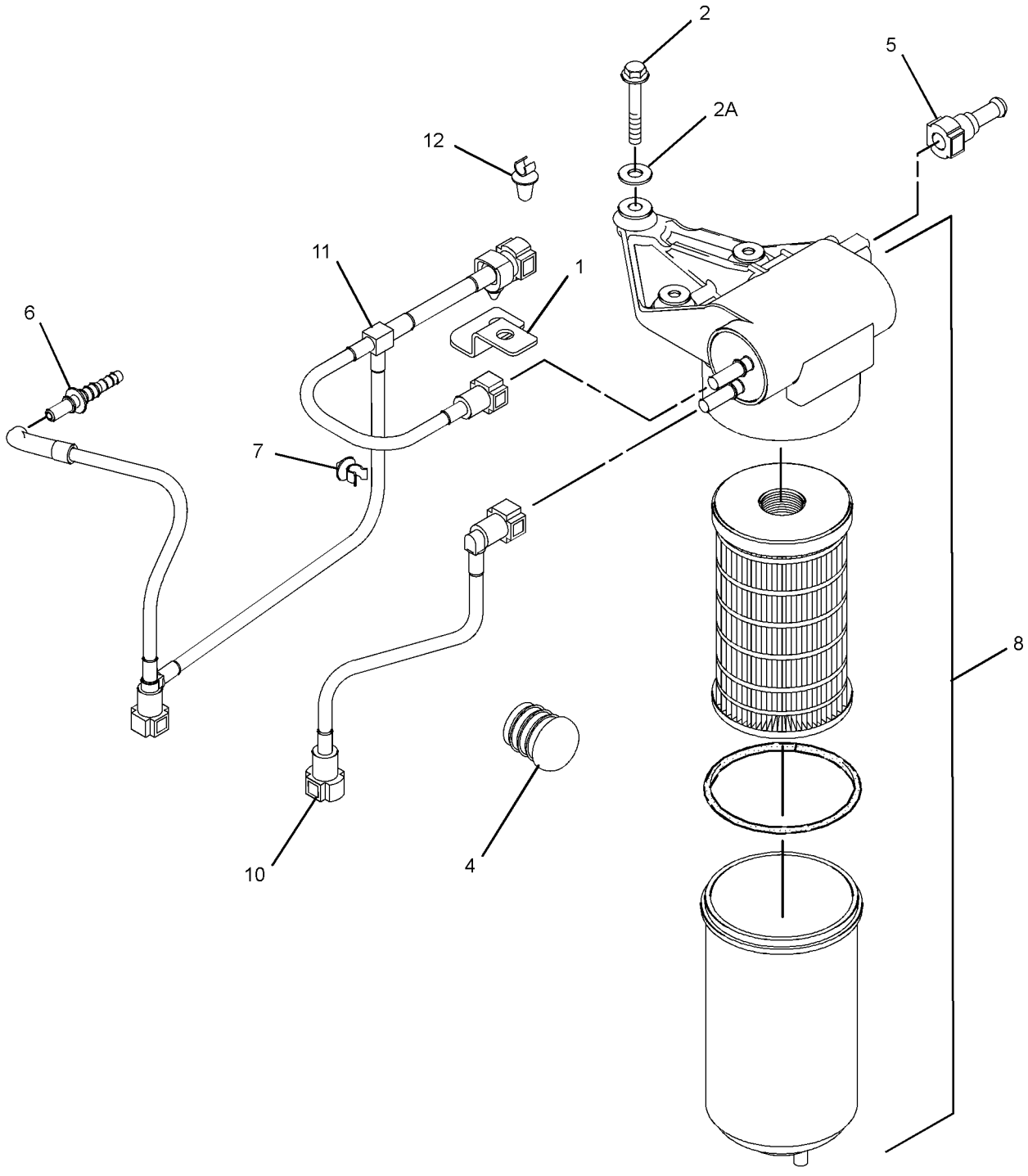

GRAPHIC #1 **<END>** g01592194

233-9417 PUMP GP-FUEL PRM & PRIM FILTER

S/N: CRS2700-UP

PART OF 177-9752, 297-4047, 297-4055, 329-2197 ENGINE AR-PRIMARY

ALSO AN ATTACHMENT

TYPE 2

SMCS-1258, 1260 **i03112764**

NOTE	REF NO	GRAPHIC REF	PART NUMBER	QTY	PART NAME 1 2 3 4 5 6 (PRODUCT LEVEL)	SEE PAGE
	1	1	**237-0285**	1	BRACKET	
	2	1	**240-9756**	1	KIT-MOUNTING (FUEL PRIMING PUMP)	
	2A	1	**232-9758**	3	WASHER (6.51X17.785X1.6-MM THK)	
		1	**120-6872**	3	BOLT	
					(KIT ALSO INCLUDES SPACERS & MOUNTS)	
	4	1	**237-0286**	1	PLUG	
	5	1	**215-9508**	1	FITTING (QUICK DISCONNECT, MALE)	
	6	1	**215-9509**	1	FITTING (QUICK DISCONNECT, FEMALE)	
	7	1	**232-3126**	1	CLIP	
CY	8	1	**299-9265**	1	PUMP GP-FUEL PRM & PRIM FILTER	117
	10	1	**232-9759**	1	LINE AS-FUEL (LOW PRESSURE FEED)	
	11	1	**237-0284**	1	LINE AS-FUEL (LOW PRESSURE RETURN)	
	12	1	**311-6822**	1	CLIP-TUBE	

C-CHANGE FROM PREVIOUS TYPE
Y-SEPARATE ILLUSTRATION

233-9417 **PUMP GP-FUEL PRM & PRIM FILTER** *(contd.)* **i03112764**

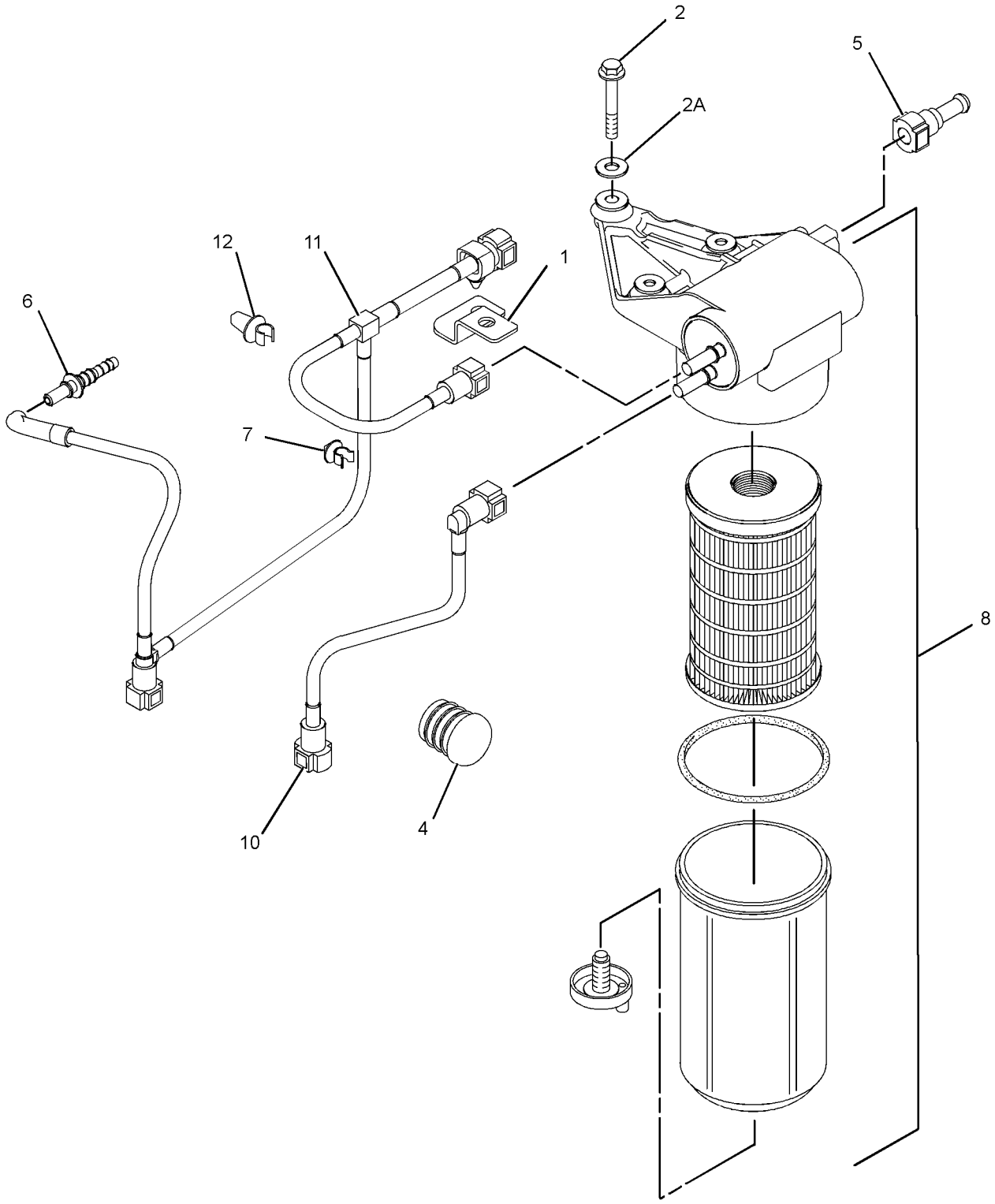

GRAPHIC #1 **<END>** g01591514

270-6992 PUMP GP-FUEL PRM & PRIM FILTER

S/N: CRS2700-UP

PART OF 233-9417 PUMP GP-FUEL PRM & PRIM FILTER

SMCS-1258, 1260 **i03595188**

NOTE	REF NO	GRAPHIC REF	PART NUMBER	QTY	PART NAME 1 2 3 4 5 6 (PRODUCT LEVEL)	SEE PAGE
	1	1	**1R-1804**	1	FILTER ELEMENT-WTR SEP & FUEL	
	2	1	**207-2757**	1	SEAL (FUEL FILTER)	
	3	1	**221-2014**	1	BOWL AS	
		1	**222-6617**	1	DRAIN AS (FUEL FILTER)	
Z	4	1		1	BASE GP-FUEL FILTER	

Z-NOT SERVICED SEPARATELY

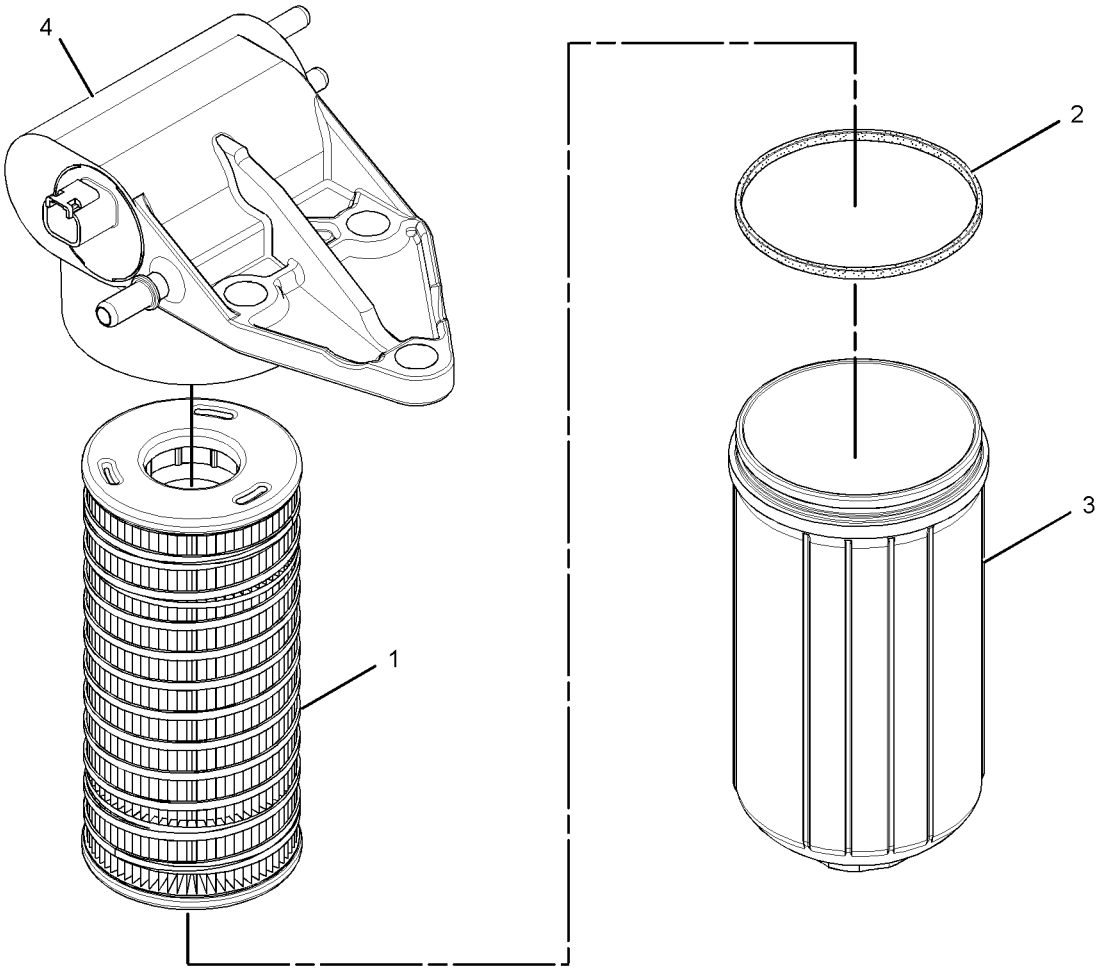

GRAPHIC #1 **<END>** g01299949

299-9265 PUMP GP-FUEL PRM & PRIM FILTER

S/N: CRS2700-UP

PART OF 233-9417 PUMP GP-FUEL PRM & PRIM FILTER

ALSO AN ATTACHMENT

SMCS-1258, 1260 **i03332681**

NOTE	REF NO	GRAPHIC REF	PART NUMBER	QTY	PART NAME 1 2 3 4 5 6 (PRODUCT LEVEL)	SEE PAGE
	1	1	**207-2757**	1	SEAL (FUEL FILTER)	
	2	1	**221-2014**	1	BOWL AS	
	2A	1	**222-6617**	1	DRAIN AS (FUEL FILTER)	
	3	1	**1R-1804**	1	FILTER ELEMENT-WTR SEP & FUEL	

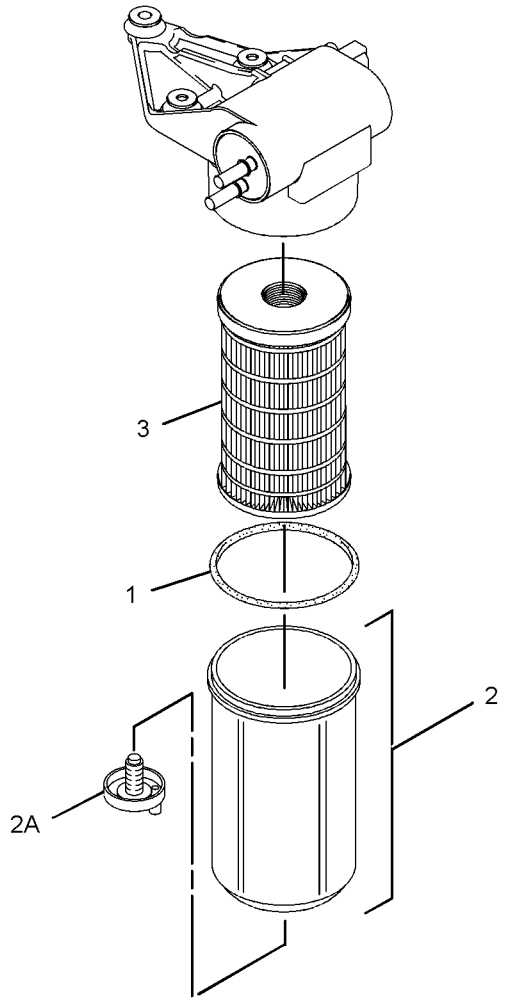

GRAPHIC #1 **<END>** g01419891

FUEL SYSTEM

246-9014 TANK & MTG GP-FUEL

S/N: PJF1-UP

PART OF 246-8992 CHASSIS AR

SMCS-1273 **i02144338**

NOTE	REF NO	GRAPHIC REF	PART NUMBER	QTY	PART NAME 1 2 3 4 5 6 (PRODUCT LEVEL)	SEE PAGE
	1	1	**6V-7238**	1	VALVE-SHUTOFF (FUEL TANK)	
	2	1	**7R-6774**	2	ADAPTER	
	3	1	**7X-7655**	2	VALVE-DRAIN (FUEL TANK)	
Y	4	1	**8T-3785**	1	GAUGE GP-SIGHT (FUEL TANK)	92
	5	1	**145-5665**	1	SHEET	
Y	6	1	*246-9015*	1	TANK GP-FUEL	119
	7	1	**3K-0360**	1	SEAL-O-RING	
	8	1	**5M-6213**	1	PLUG-PIPE	
	9	1	**6V-8397**	2	SEAL-O-RING	
M	10	1	**8T-4192**	6	BOLT (M12X1.75X25-MM)	
	11	1	**8T-4223**	6	WASHER-HARD (13.5X25.5X3-MM THK)	
BD	12	1	**5P-7483**		SEAL	

B-USE AS REQUIRED
D-ORDER BY THE METER
M-METRIC PART
Y-SEPARATE ILLUSTRATION

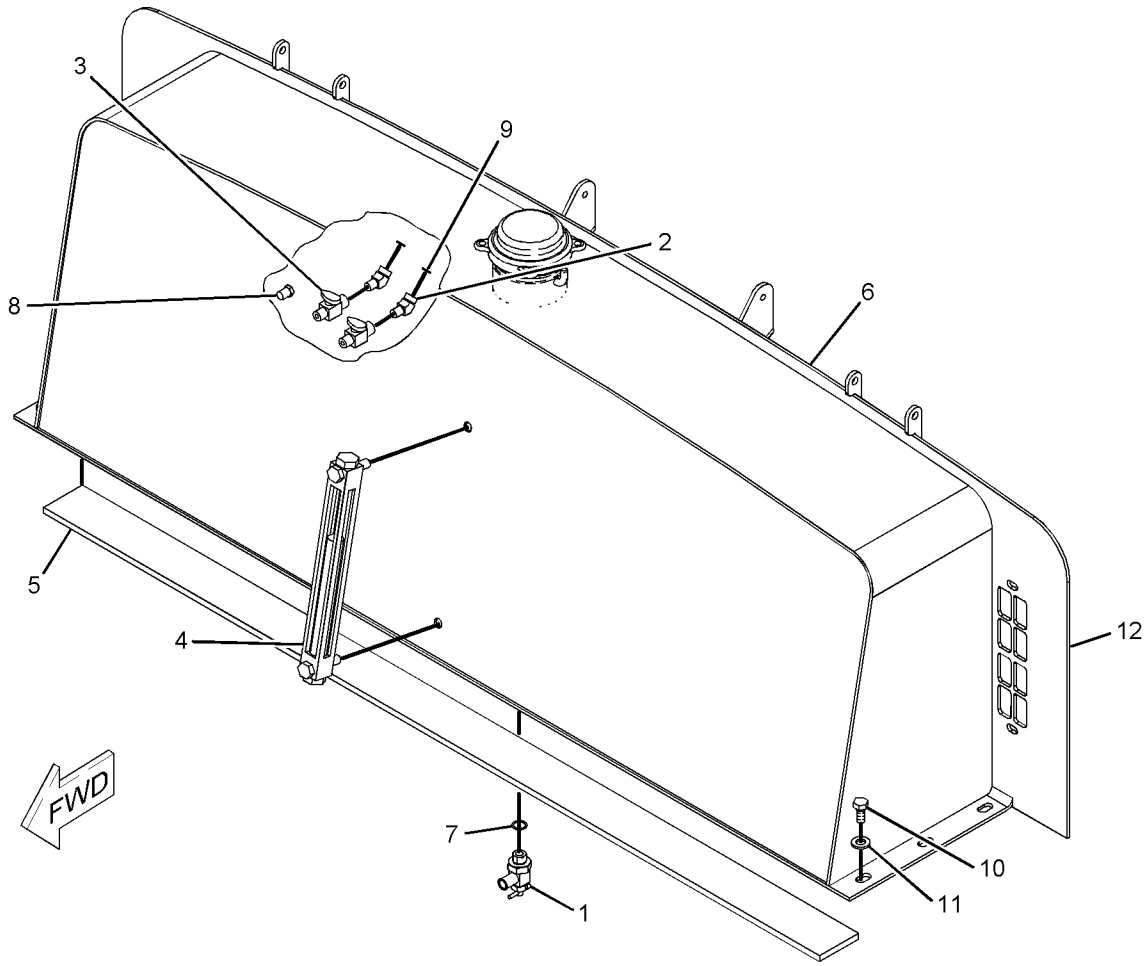

GRAPHIC #1 **<END>** g01090221

246-9015 TANK GP-FUEL

S/N: PJF1-UP
200 LITERS (44 GALLONS)
PART OF 246-9014 TANK & MTG GP-FUEL

SMCS-1273 **i03577200**

NOTE	REF NO	GRAPHIC REF	PART NUMBER	QTY	PART NAME 1 2 3 4 5 6 (PRODUCT LEVEL)	SEE PAGE
	1	1	**7T-2036**	1	CAP AS-FILLER (FUEL)	
	1A	1	**4B-5423**	1	GASKET	
	1B	1	**4B-5949**	1	FILTER ELEMENT-FUEL (FUEL CAP)	
	1C	1	**4B-1663**	1	FILTER ELEMENT-FUEL (FUEL CAP)	
	1D	1	**7T-2037**	1	GASKET (FUEL CAP)	
	1E	1	**7B-2002**	1	WASHER (10.2X44.5X3-MM THK)	
	1F	1	**7T-2009**	1	VALVE AS	
	1G	1	**3F-4134**	1	BAFFLE (FUEL TANK FILL CAP)	
	2	1	**9P-7121**	1	STRAINER-FUEL (TANK)	
	3	1	**246-9013**	1	TANK AS-FUEL	

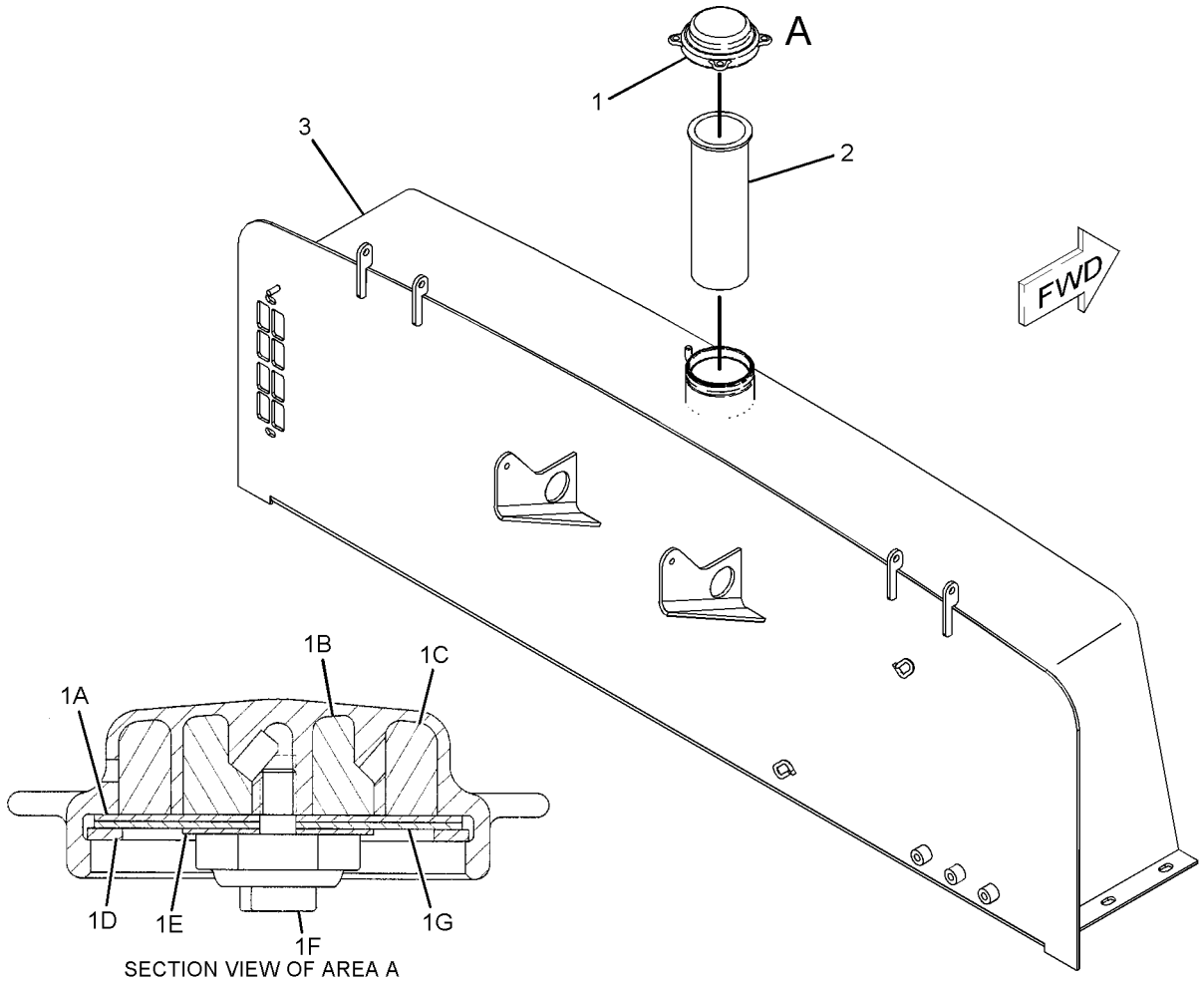

GRAPHIC #1 **<END>** g01090651

244-1090 ALARM GP

S/N: PJF1-UP

PART OF 265-0833 WARNING GP-BACKUP

SMCS-7400, 7402, 7406, 7407, 7429 **i03569866**

NOTE	REF NO	GRAPHIC REF	PART NUMBER	QTY	PART NAME 1 2 3 4 5 6 (PRODUCT LEVEL)	SEE PAGE
	1	1	**102-8802**	1	KIT-RECEPTACLE (2-PIN)	
					(INCLUDES RECEPTACLE AS & WEDGE)	
	2	1	**186-3735**	2	PIN-CONNECTOR (16-GA TO 18-GA)	
E	3	1	**9X-1813**		SLEEVE (31-CM)	
D	4	1	**5P-5623**		WIRE-ELECTRICAL (16-GA, BLACK) (0.4-M EACH)	

D-ORDER BY THE METER
E-ORDER BY THE CENTIMETER

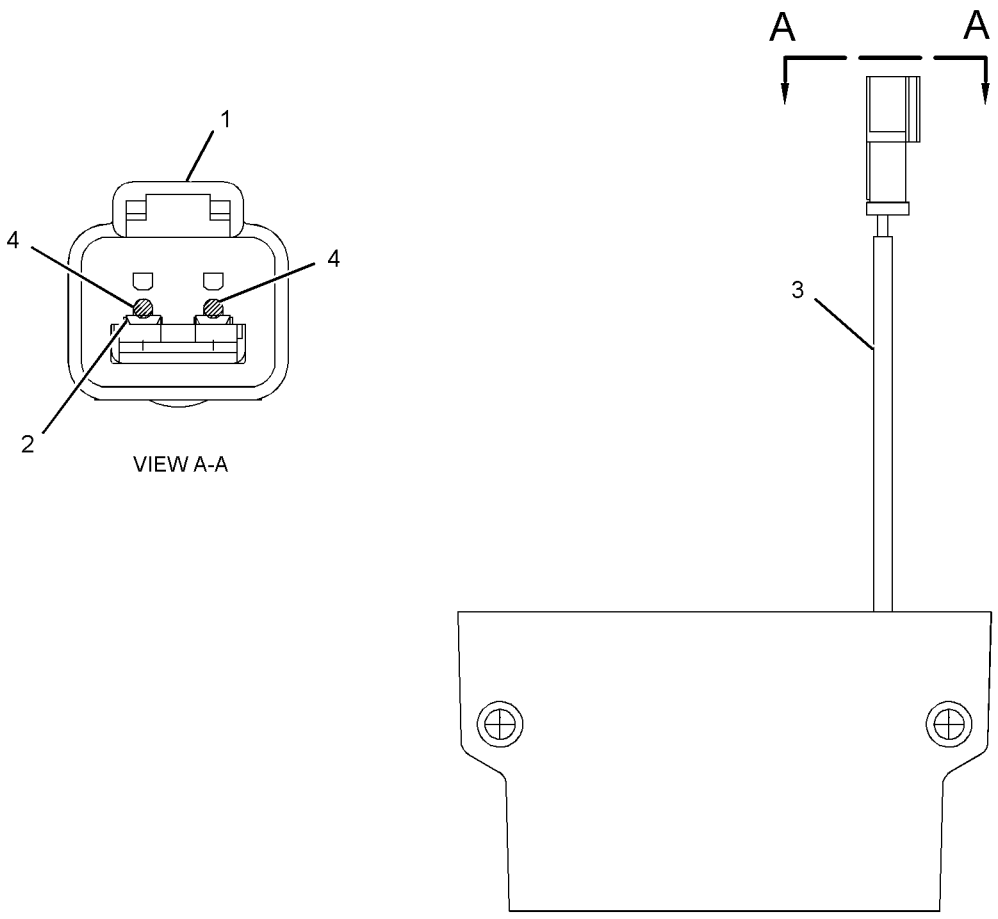

GRAPHIC #1 **<END>** g01894853

233-9533 ALTERNATOR GP-CHARGING

S/N: CRS2700-UP
24-VOLT, 55-AMPERE
PART OF 177-9752, 297-4047, 297-4055, 329-2197 ENGINE AR-PRIMARY
ALSO AN ATTACHMENT

SMCS-1405 **i03544290**

NOTE	REF NO	GRAPHIC REF	PART NUMBER	QTY	PART NAME 1 2 3 4 5 6 (PRODUCT LEVEL)	SEE PAGE
	1	1	**6B-0933**	1	SPACER (10.31X19.05X6.35-MM THK)	
M	2	1	**6I-0260**	1	BOLT (M8X1.25X25-MM)	
M	3	1	**6I-0454**	1	BOLT (M10X1.5X70-MM)	
	4	1	**6I-0594**	1	NUT (M10X1.15-THD)	
	6	1	**100-8451**	1	BOLT (M8X1.25X130-MM)	
	7	1	**113-6349**	1	NUT (M12X1.75X93-MM)	
M	8	1	**140-8783**	2	BOLT (M10X45-THD)	
	9	1	**225-3146**	1	ALTERNATOR GP-CHARGING (24-VOLT)	
	10	1	**233-9530**	1	BRACKET	
	11	1	**233-9531**	1	LEVER-ADJUSTING	
	12	1	**233-9532**	1	PULLEY-ALTERNATOR	
	13	1	**067-6366**	1	WASHER	

M-METRIC PART

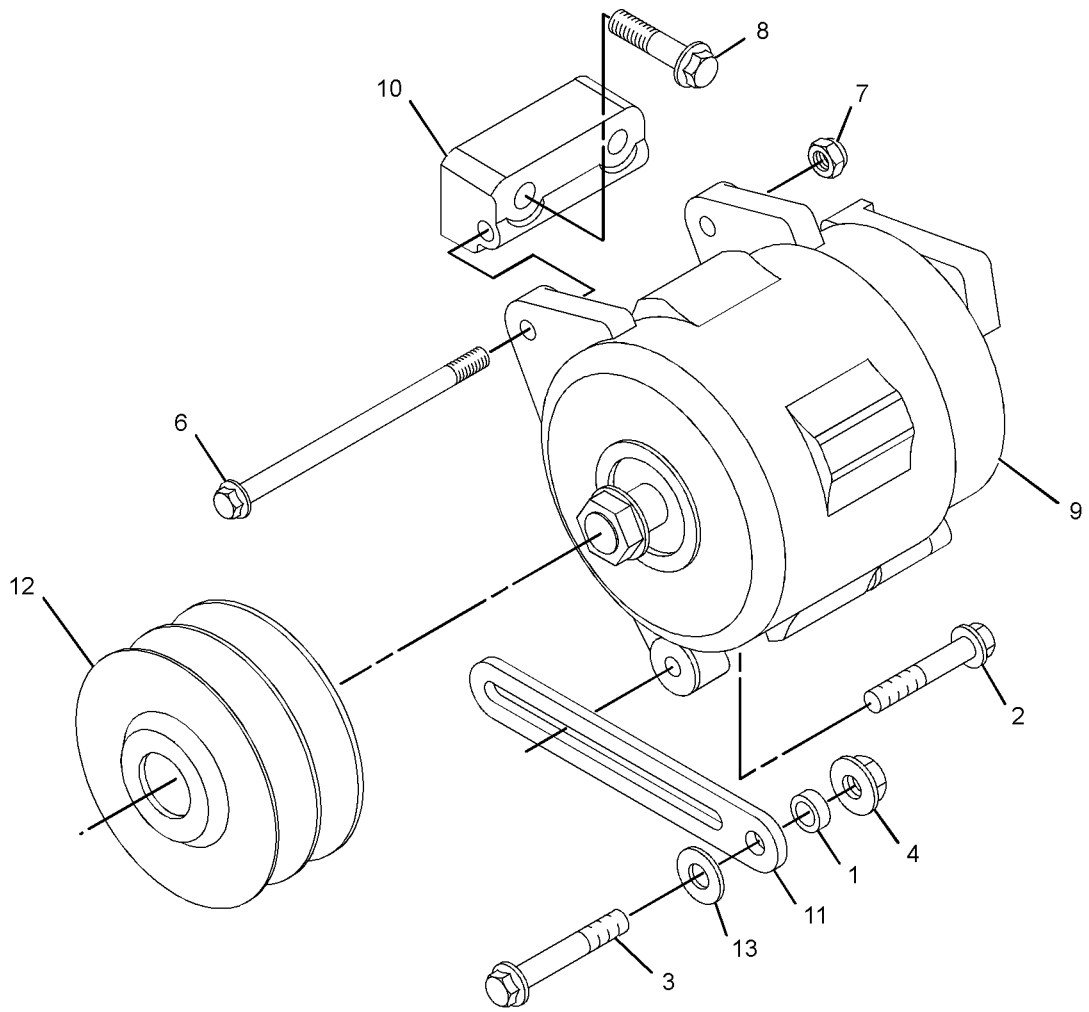

GRAPHIC #1

<END>

g01875334

ELECTRICAL AND STARTING SYSTEM

251-1984 BATTERY & WIRING GP

S/N: PJF1-UP
PART OF 246-9027 ELECTRICAL AR
TYPE 1

SMCS-1401, 1402, 1408 **i03599054**

NOTE	REF NO	GRAPHIC REF	PART NUMBER	QTY	PART NAME 1 2 3 4 5 6 (PRODUCT LEVEL)	SEE PAGE
	1	1	**3T-5760**	2	BATTERY (12-VOLT, MAINTENANCE FREE, WET)	
	2	1	**3P-2179**	1	CABLE AS	
E		1	**5P-0747**		CABLE (00-GA, BLACK) (15-CM)	
		1	**8C-5917**	1	TERMINAL AS-BATTERY (POSITIVE)	
		1	**1M-6119**	2	BOLT (5/16-18X1.375-IN)	
		1	**1M-6120**	2	NUT (5/16-18-THD)	
		1	**8T-9757**	1	TERMINAL AS-BATTERY (NEGATIVE)	
		1	**9G-0003**	1	COVER-TERMINAL (BLACK)	
		1	**8L-8413**	1	STRAP-CABLE	
		1	**9G-0004**	1	COVER-TERMINAL (RED)	
		1	**8L-8413**	1	STRAP-CABLE	
	3	1	**132-3268**	1	HOLD-DOWN AS	
	4	1	**038-9317**	2	TREAD-NONSKID	
	5	1	**7R-8439**	10	CLAMP	
	6	1	**3V-0046**	5	PLATE	
	7	1	**8C-6561**	5	BOLT (5/16-18X1.375-IN)	
	8	1	**7R-7907**	8	CLAMP	
	9	1	**128-3101**	1	COVER-BATTERY	
	10	1	**8T-4222**	2	WASHER-PLATED (11X32X2.5-MM THK)	
	11	1	**7V-5628**	4	PLATE	
M	12	1	**8C-8451**	8	BOLT (M6X1X40-MM)	
	13	1	**141-4962**	1	CABLE AS	
		1	**1S-7251**	1	TERMINAL-CABLE (00-GA, 1/2-IN BOLT)	
E		1	**5P-0761**		CABLE (00-GA, RED) (163-CM)	
		1	**8N-1725**	1	COVER-TERMINAL (RED)	
		1	**8L-8413**	1	STRAP-CABLE	
		1	**3S-6049**	1	TERMINAL AS-BATTERY (POSITIVE)	
		1	**1M-6119**	1	BOLT (5/16-18X1.375-IN)	
		1	**1M-6120**	1	NUT (5/16-18-THD)	
	14	1	**141-4963**	1	CABLE AS	
E		1	**5P-0747**		CABLE (00-GA, BLACK) (287-CM)	
		1	**8S-3020**	1	TERMINAL-CABLE (00-GA, 3/8-IN BOLT)	
		1	**9G-0003**	1	COVER-TERMINAL (BLACK)	
		1	**8L-8413**	1	STRAP-CABLE	
		1	**8T-9757**	1	TERMINAL AS-BATTERY (NEGATIVE)	
M	15	1	**7X-0474**	2	BOLT (M10X1.5X220-MM)	
	16	1	**5Y-1423**	2	CABLE AS	
					(EACH AS INCLUDES)	
		1	**1S-7251**	1	TERMINAL-CABLE (00-GA, 1/2-IN BOLT)	
		1	**1S-7252**	1	TERMINAL-CABLE (00-GA, 3/8-IN BOLT)	
E		1	**5P-0747**		CABLE (00-GA, BLACK) (33-CM)	
	17	1	**8T-4223**	3	WASHER-HARD (13.5X25.5X3-MM THK)	
	18	1	**1K-6872**	1	LOCKNUT (1/2-13-THD)	
	19	1	**8N-0869**	1	COVER-TERMINAL (RED)	
M	20	1	**8T-4179**	2	BOLT (M12X1.75X20-MM)	
	21	1	**8T-4896**	1	WASHER-HARD (10.2X18.5X2.5-MM THK)	
	22	1	**4D-1326**	1	LOCKWASHER	
	23	1	**5M-3062**	1	BOLT (3/8-16X0.75-IN)	
	24	1	**7X-7729**	1	WASHER (11X25X3-MM THK)	
M	25	1	**8T-4137**	1	BOLT (M10X1.5X20-MM)	
Y	26	1	**7N-0718**	1	SWITCH GP-DISCONNECT (BATTERY)	144
	27	1	**3E-8320**	1	PLATE-INSTRUCTION (BATTERY)	
	28	1	**259-4419**	1	PLATE AS	

251-1984 **BATTERY & WIRING GP** *(contd.)* **i03599054**

E-ORDER BY THE CENTIMETER
M-METRIC PART
Y-SEPARATE ILLUSTRATION

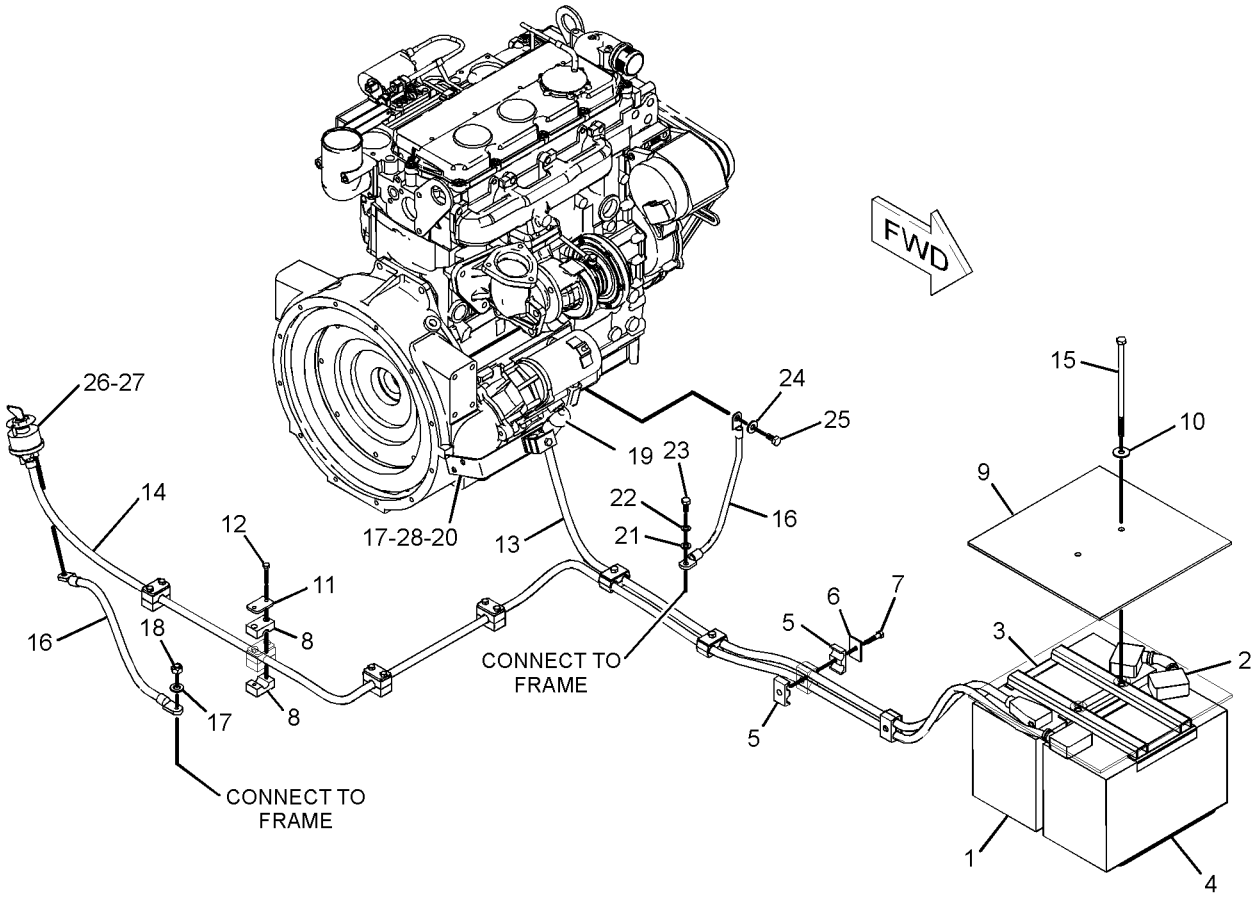

GRAPHIC #1 **<END>** g01923795

ELECTRICAL AND STARTING SYSTEM

251-1984 BATTERY & WIRING GP

S/N: PJF1-UP
PART OF 246-9027 ELECTRICAL AR
TYPE 2

SMCS-1401, 1402, 1408 **i03599055**

NOTE	REF NO	GRAPHIC REF	PART NUMBER	QTY	PART NAME 1 2 3 4 5 6 (PRODUCT LEVEL)	SEE PAGE
	1	1	**3T-5760**	2	BATTERY (12-VOLT, MAINTENANCE FREE, WET)	
	2	1	**3P-2179**	1	CABLE AS	
E		1	**5P-0747**		CABLE (00-GA, BLACK) (15-CM)	
		1	**8C-5917**	1	TERMINAL AS-BATTERY (POSITIVE)	
		1	**1M-6119**	2	BOLT (5/16-18X1.375-IN)	
		1	**1M-6120**	2	NUT (5/16-18-THD)	
		1	**8T-9757**	1	TERMINAL AS-BATTERY (NEGATIVE)	
		1	**9G-0003**	1	COVER-TERMINAL (BLACK)	
		1	**8L-8413**	1	STRAP-CABLE	
		1	**9G-0004**	1	COVER-TERMINAL (RED)	
		1	**8L-8413**	1	STRAP-CABLE	
	3	1	**132-3268**	1	HOLD-DOWN AS	
	4	1	**038-9317**	2	TREAD-NONSKID	
C	5	1	**154-4880**	10	CLAMP-HALF	
C	6	1	**102-8703**	5	PLATE-COVER	
CM	7	1	**7X-2537**	5	BOLT (M8X1.25X35-MM)	
	8	1	**7R-7907**	8	CLAMP	
	9	1	**128-3101**	1	COVER-BATTERY	
	10	1	**8T-4222**	2	WASHER-PLATED (11X32X2.5-MM THK)	
	11	1	**7V-5628**	4	PLATE	
M	12	1	**8C-8451**	8	BOLT (M6X1X40-MM)	
	13	1	**141-4962**	1	CABLE AS	
		1	**1S-7251**	1	TERMINAL-CABLE (00-GA, 1/2-IN BOLT)	
E		1	**5P-0761**		CABLE (00-GA, RED) (163-CM)	
		1	**8N-1725**	1	COVER-TERMINAL (RED)	
		1	**8L-8413**	1	STRAP-CABLE	
		1	**3S-6049**	1	TERMINAL AS-BATTERY (POSITIVE)	
		1	**1M-6119**	1	BOLT (5/16-18X1.375-IN)	
		1	**1M-6120**	1	NUT (5/16-18-THD)	
	14	1	**141-4963**	1	CABLE AS	
E		1	**5P-0747**		CABLE (00-GA, BLACK) (287-CM)	
		1	**8S-3020**	1	TERMINAL-CABLE (00-GA, 3/8-IN BOLT)	
		1	**9G-0003**	1	COVER-TERMINAL (BLACK)	
		1	**8L-8413**	1	STRAP-CABLE	
		1	**8T-9757**	1	TERMINAL AS-BATTERY (NEGATIVE)	
M	15	1	**7X-0474**	2	BOLT (M10X1.5X220-MM)	
	16	1	**5Y-1423**	2	CABLE AS	
					(EACH AS INCLUDES)	
		1	**1S-7251**	1	TERMINAL-CABLE (00-GA, 1/2-IN BOLT)	
		1	**1S-7252**	1	TERMINAL-CABLE (00-GA, 3/8-IN BOLT)	
E		1	**5P-0747**		CABLE (00-GA, BLACK) (33-CM)	
	17	1	**8T-4223**	3	WASHER-HARD (13.5X25.5X3-MM THK)	
	18	1	**1K-6872**	1	LOCKNUT (1/2-13-THD)	
	19	1	**8N-0869**	1	COVER-TERMINAL (RED)	
M	20	1	**8T-4179**	2	BOLT (M12X1.75X20-MM)	
	21	1	**8T-4896**	1	WASHER-HARD (10.2X18.5X2.5-MM THK)	
	22	1	**4D-1326**	1	LOCKWASHER	
	23	1	**5M-3062**	1	BOLT (3/8-16X0.75-IN)	
	24	1	**7X-7729**	1	WASHER (11X25X3-MM THK)	
M	25	1	**8T-4137**	1	BOLT (M10X1.5X20-MM)	
Y	26	1	**7N-0718**	1	SWITCH GP-DISCONNECT (BATTERY)	144
	27	1	**3E-8320**	1	PLATE-INSTRUCTION (BATTERY)	
C	28	1	**284-2729**	1	PLATE AS	

C-CHANGE FROM PREVIOUS TYPE
E-ORDER BY THE CENTIMETER
M-METRIC PART
Y-SEPARATE ILLUSTRATION

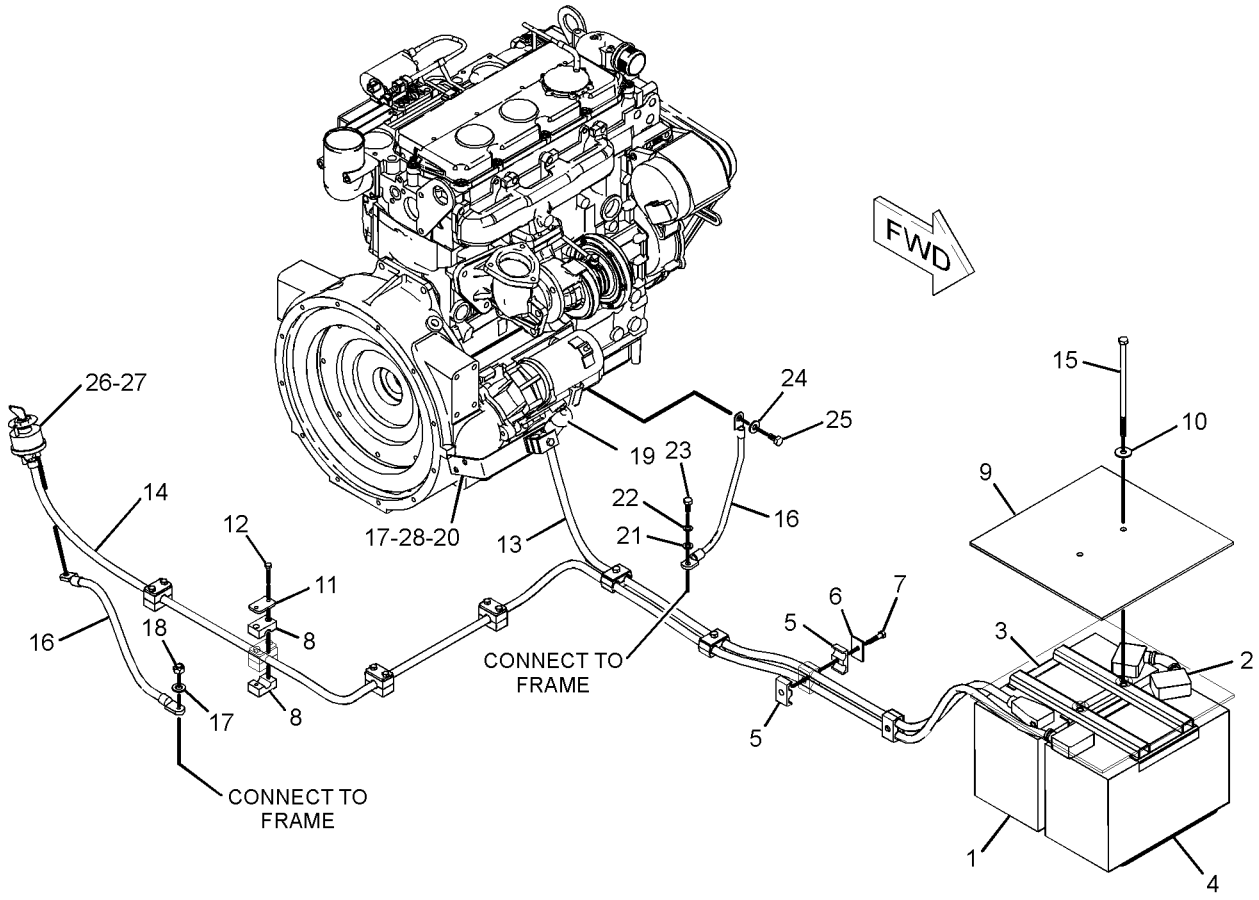

GRAPHIC #1 **<END>** g01923796

240-5535 CONVERTER GP-ELECTRICAL

S/N: CRS2700-UP

PART OF 177-9752, 297-4047, 297-4055, 329-2197 ENGINE AR-PRIMARY

ALSO AN ATTACHMENT

SMCS-1421 **i02877891**

NOTE	REF NO	GRAPHIC REF	PART NUMBER	QTY	PART NAME 1 2 3 4 5 6 (PRODUCT LEVEL)	SEE PAGE
	1	1	**300-5183**	1	RESISTOR AS (24-VOLT)	

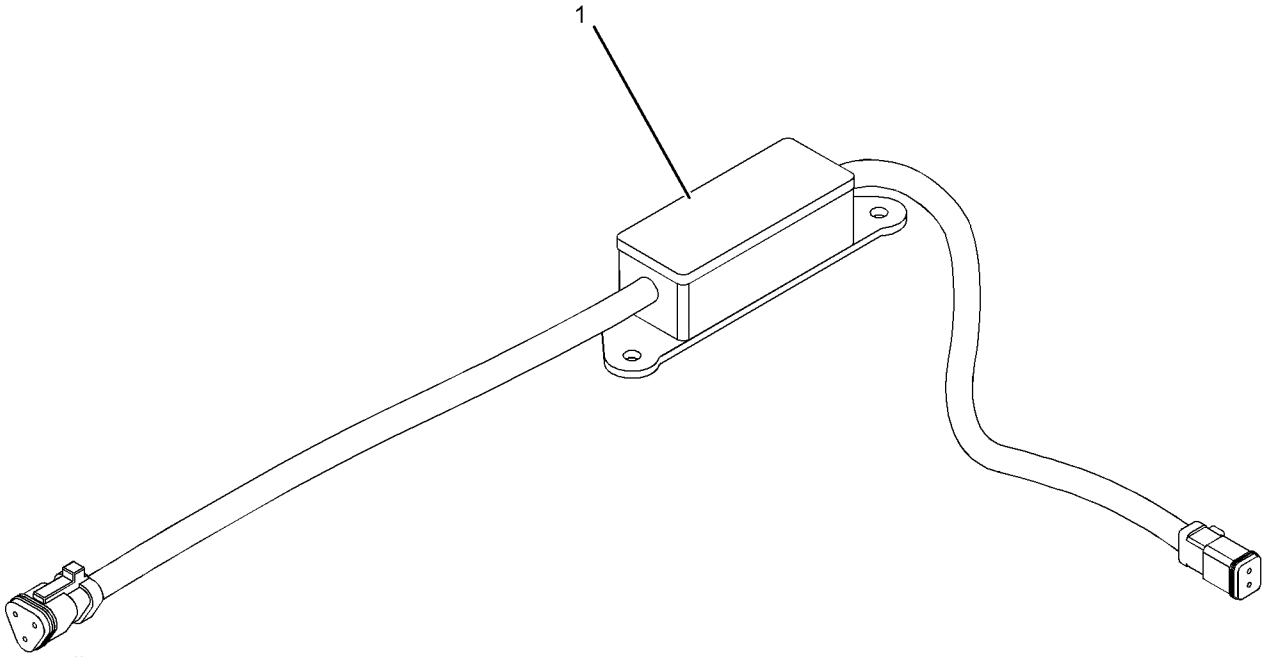

GRAPHIC #1 **<END>** g01029709

ELECTRICAL AND STARTING SYSTEM

246-9027 ELECTRICAL AR

S/N: PJF1-UP

PART OF 246-8991 COMMON AR

SMCS-1408 **i02326462**

NOTE	PART NUMBER	QTY	PART NAME 1 2 3 4 5 6 (PRODUCT LEVEL)	SEE PAGE
Y	*251-1984*	1	BATTERY & WIRING GP	122
Y	*120-7065*	1	HORN GP-ELECTRIC	342
Y	*255-7162*	1	LIGHTING GP-FLOOD	138
Y	*265-0833*	1	WARNING GP-BACKUP	151
Y	*251-1978*	1	WIRING GP-MACHINE	152

Y-SEPARATE ILLUSTRATION

<END>

233-9834 GLOW PLUG GP

S/N: CRS2700-UP

PART OF 177-9752, 297-4047, 297-4055, 329-2197 ENGINE AR-PRIMARY

ALSO AN ATTACHMENT

SMCS-1412 **i02783077**

NOTE	REF NO	GRAPHIC REF	PART NUMBER	QTY	PART NAME 1 2 3 4 5 6 (PRODUCT LEVEL)	SEE PAGE
	1	1	**286-4880**	1	BUS BAR AS	
	2	1	**226-8770**	4	GLOW PLUG (24-VOLT)	
	3	1	**232-3126**	1	CLIP	

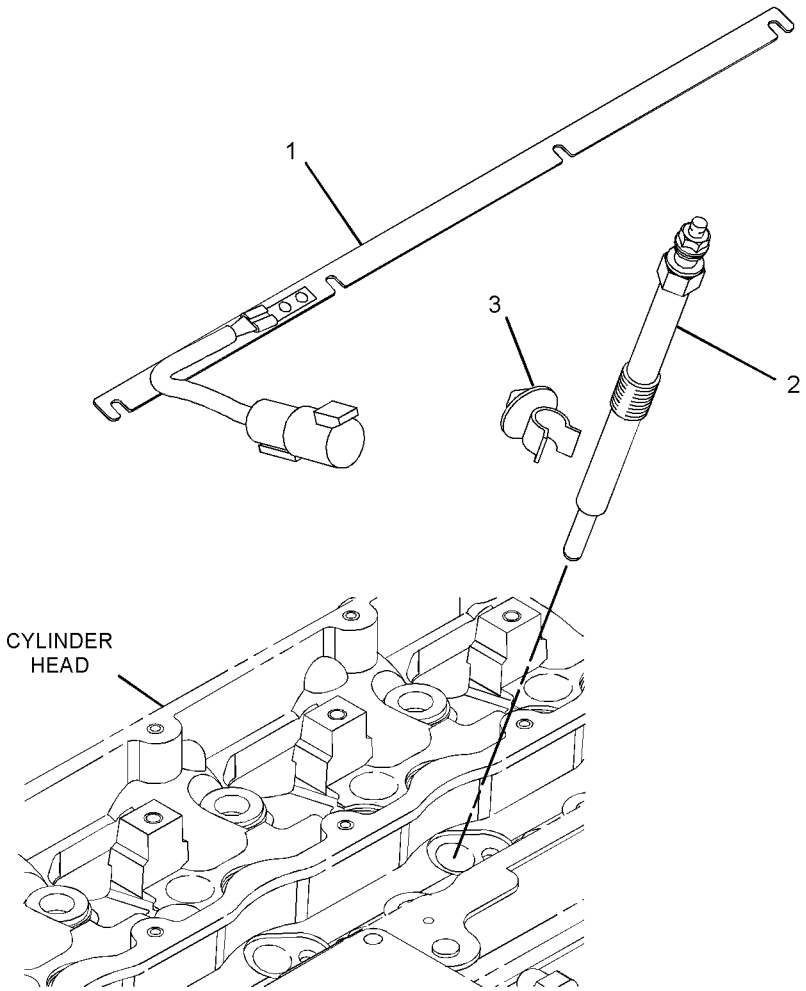

GRAPHIC #1 **<END>** g01392990

9X-1439 LAMP GP-FLOOD

S/N: PJF1-UP
24-VOLT
OPTIONAL FIELD REPLACEMENT ORDER 162-3294—PAGE 132, 1-165-0699
KIT-MOUNTING BRACKET, 1-155-2270 KIT-CONNECTING PLUG, 2-8T-8730
SOCKET-CONNECTOR

SMCS-1434 **i02441101**

NOTE	REF NO	GRAPHIC REF	PART NUMBER	QTY	PART NAME 1 2 3 4 5 6 (PRODUCT LEVEL)	SEE PAGE
	1	1	**9X-4244**	4	SCREW-SPECIAL	
	2	1	**9X-4174**	1	LENS AS (FLOODLIGHT)	
		1	**9X-4243**	1	SEAL	
M	3	1	**8T-0337**	2	SCREW-MACHINE (M4X0.7X12-MM)	
	4	1	**9X-3455**	1	BODY AS-LAMP	
		1	**8T-4121**	1	WASHER-HARD (11X21X2.5-MM THK)	
M		1	**8T-4133**	1	NUT (M10X1.5-THD)	
	5	1	**9X-3463**	1	LAMP-HALOGEN (24-VOLT, 65-WATT) (FLOODLIGHT)	

M-METRIC PART

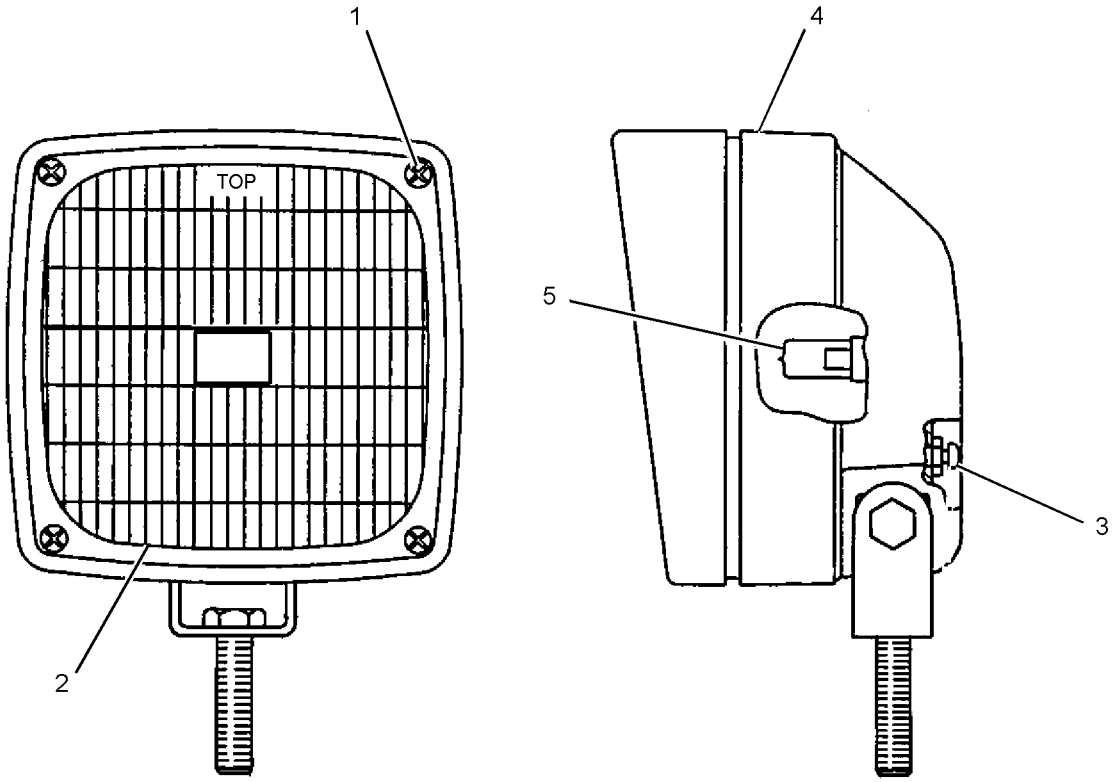

GRAPHIC #1 **<END>** g01219599

9X-4381 LAMP GP-FLOOD

S/N: PJF1-UP
24-VOLT
PART OF 255-7162 LIGHTING GP-FLOOD
FIELD REPLACEMENT ORDER 9X-1439—PAGE 130, 1-8T-4133 NUT, 1-8T-4121 WASHER-HARD. OPTIONAL FIELD REPLACEMENT ORDER 2-8T-8730 SOCKET-CONNECTOR, 1-165-0699 KIT-MOUNTING BRACKET, 1-102-8807 KIT-CONNECTING PLUG, 171-2065—PAGE 133

SMCS-1434 **i02280910**

NOTE	REF NO	GRAPHIC REF	PART NUMBER	QTY	PART NAME 1 2 3 4 5 6 (PRODUCT LEVEL)	SEE PAGE
	1	1	**9X-4244**	4	SCREW-SPECIAL	
	2	1	**9X-4174**	1	LENS AS (FLOODLIGHT)	
		1	**9X-4243**	1	SEAL	
M	3	1	**8T-0337**	2	SCREW-MACHINE (M4X0.7X12-MM)	
	4	1	**9X-3455**	1	BODY AS-LAMP	
		1	**8T-4121**	1	WASHER-HARD (11X21X2.5-MM THK)	
M		1	**8T-4133**	1	NUT (M10X1.5-THD)	
	5	1	**9X-3463**	1	LAMP-HALOGEN (24-VOLT, 65-WATT) (FLOODLIGHT)	

M-METRIC PART

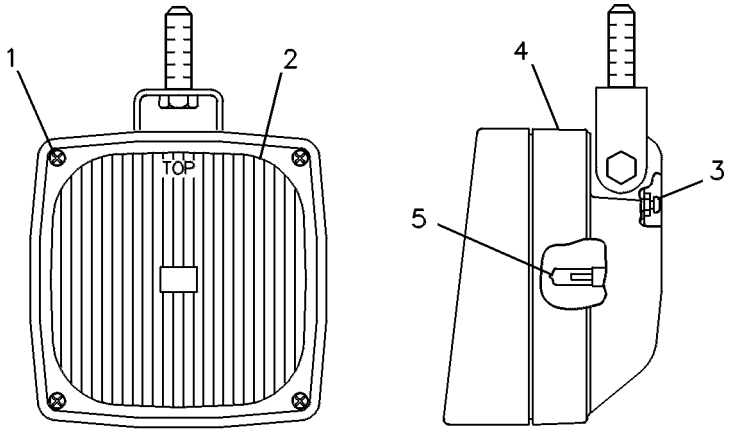

GRAPHIC #1 **<END>** g00085054

162-3294 LAMP GP-FLOOD

S/N: PJF1-UP
24-VOLT
FIELD REPLACEMENT FOR 9X-1439—PAGE 130

SMCS-1434 **i03498304**

NOTE	REF NO	GRAPHIC REF	PART NUMBER	QTY	PART NAME 1 2 3 4 5 6 (PRODUCT LEVEL)	SEE PAGE
	1	1	**9X-3463**	1	LAMP-HALOGEN (24-VOLT, 65-WATT) (FLOODLIGHT)	
	2	1	**162-5372**	1	BODY AS-LAMP	
	3	1	**336-7235**	1	LENS AS (FLOODLIGHT)	
	4	1	**158-0252**	1	BEZEL	
	5	1	**188-8849**	2	CLAMP	
	6	1	**186-3735**	2	PIN-CONNECTOR (16-GA TO 18-GA)	
	7	1	**102-8802**	1	KIT-RECEPTACLE (2-PIN)	
					(INCLUDES RECEPTACLE AS & WEDGE)	

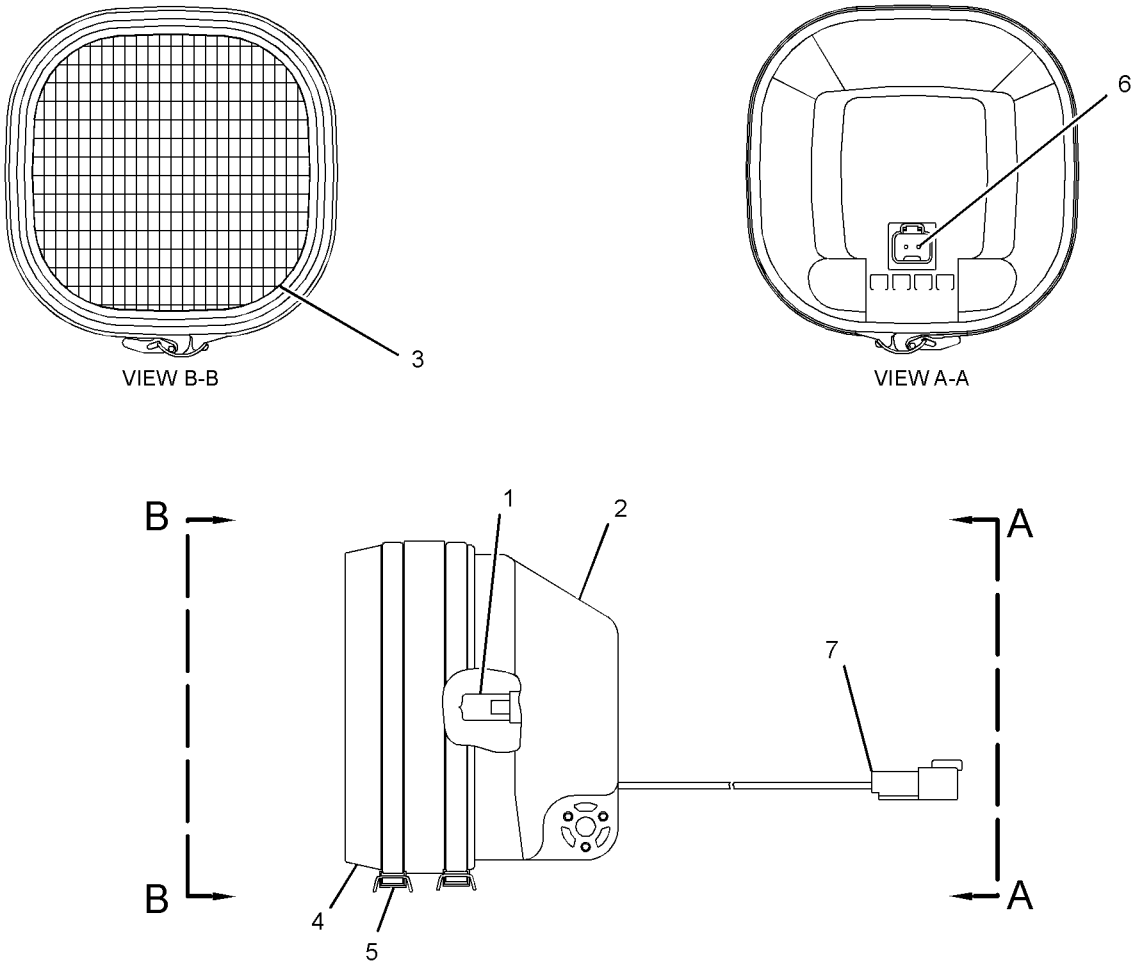

GRAPHIC #1 **<END>** g01839434

171-2065 LAMP GP-FLOOD

S/N: PJF1-UP
24-VOLT
FIELD REPLACEMENT FOR 9X-4381—PAGE 131

SMCS-1434 **i03496201**

NOTE	REF NO	GRAPHIC REF	PART NUMBER	QTY	PART NAME 1 2 3 4 5 6 (PRODUCT LEVEL)	SEE PAGE
	1	1	**9X-3463**	1	LAMP-HALOGEN (24-VOLT, 65-WATT) (FLOODLIGHT)	
	2	1	**162-5372**	1	BODY AS-LAMP	
	3	1	**336-7235**	1	LENS AS (FLOODLIGHT)	
	4	1	**158-0252**	1	BEZEL	
	5	1	**188-8849**	2	CLAMP	
	6	1	**186-3735**	2	PIN-CONNECTOR (16-GA TO 18-GA)	
	8	1	**102-8802**	1	KIT-RECEPTACLE (2-PIN)	
					(INCLUDES RECEPTACLE AS & WEDGE)	

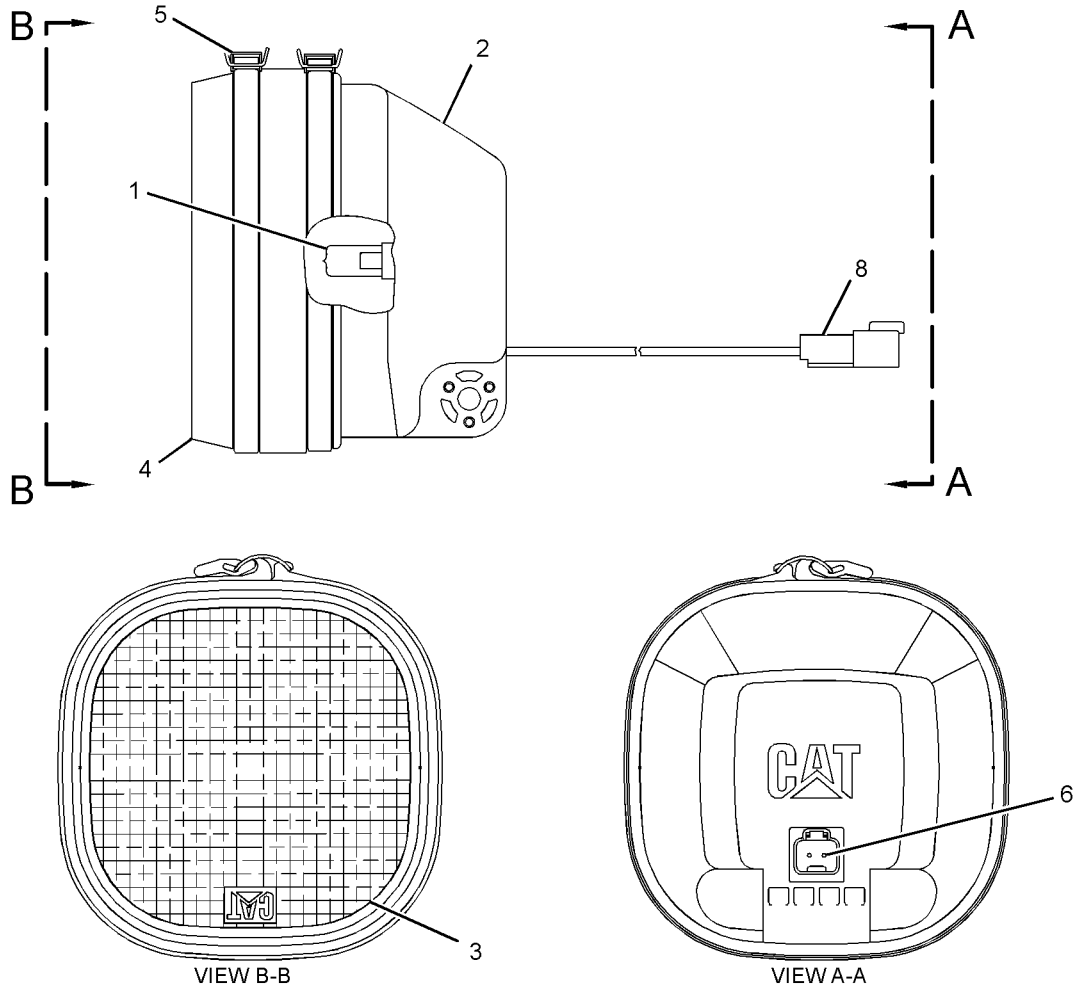

GRAPHIC #1 **<END>** g01838757

147-5578 LAMP GP-SIGNAL–FRONT, LH

S/N: PJF1-UP
PART OF 255-7161 LIGHTING GP-SIGNAL
AN ATTACHMENT

SMCS-1430 **i03577221**

NOTE	REF NO	GRAPHIC REF	PART NUMBER	QTY	PART NAME 1 2 3 4 5 6 (PRODUCT LEVEL)	SEE PAGE
	1	1	**118-9024**	1	LAMP (FRONT, LH)	
	2	1	**121-5900**	1	HARNESS AS-LIGHTING (TURN SIGNAL)	
		1	**102-8803**	1	KIT-RECEPTACLE (3-PIN)	
					(INCLUDES RECEPTACLE AS & WEDGE)	
		1	**186-3735**	3	PIN-CONNECTOR (16-GA TO 18-GA)	
	3	1	**5C-9584**	1	LAMP (24-VOLT, 21-WATT) (SIGNAL)	
	4	1	**5C-8315**	1	LAMP (24-VOLT, 10-WATT) (SIGNAL)	

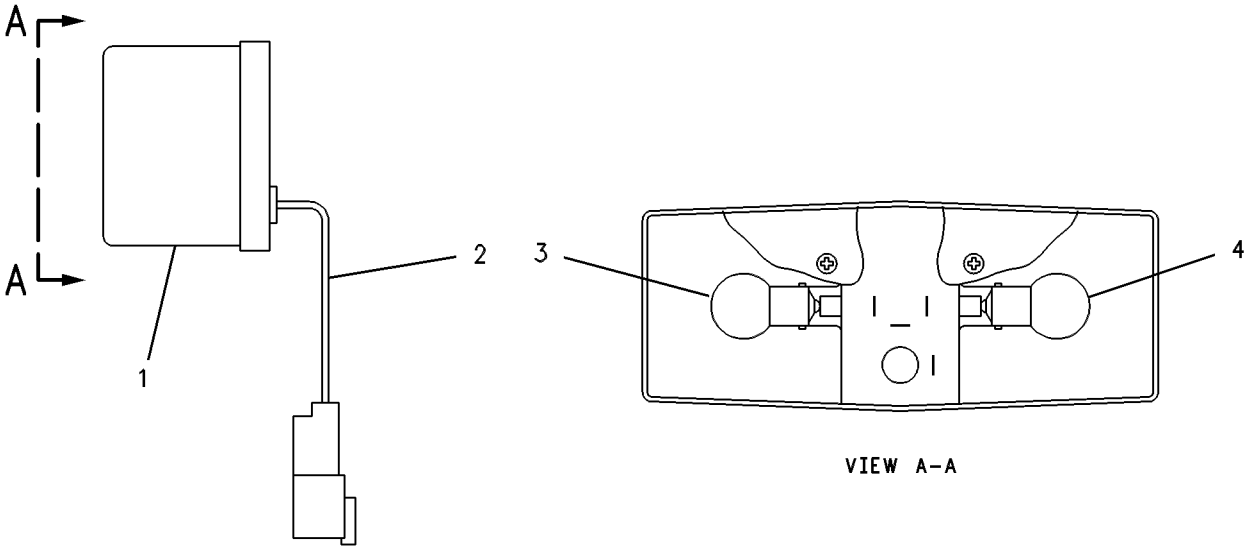

GRAPHIC #1 **<END>** g00284386

147-5579 LAMP GP-SIGNAL–FRONT, RH

S/N: PJF1-UP

PART OF 255-7161 LIGHTING GP-SIGNAL

AN ATTACHMENT

SMCS-1430 **i03569893**

NOTE	REF NO	GRAPHIC REF	PART NUMBER	QTY	PART NAME 1 2 3 4 5 6 (PRODUCT LEVEL)	SEE PAGE
	1	1	**118-6650**	1	LAMP (FRONT, RH)	
	2	1	**122-3734**	1	HARNESS AS-LIGHTING (TURN SIGNAL)	
		1	**102-8803**	1	KIT-RECEPTACLE (3-PIN)	
					(INCLUDES RECEPTACLE AS & WEDGE)	
		1	**186-3735**	3	PIN-CONNECTOR (16-GA TO 18-GA)	
		1	**5P-4571**	3	TERMINAL-BLADE (14-GA)	
	3	1	**5C-9584**	1	LAMP (24-VOLT, 21-WATT) (SIGNAL)	
	4	1	**5C-8315**	1	LAMP (24-VOLT, 10-WATT) (SIGNAL)	

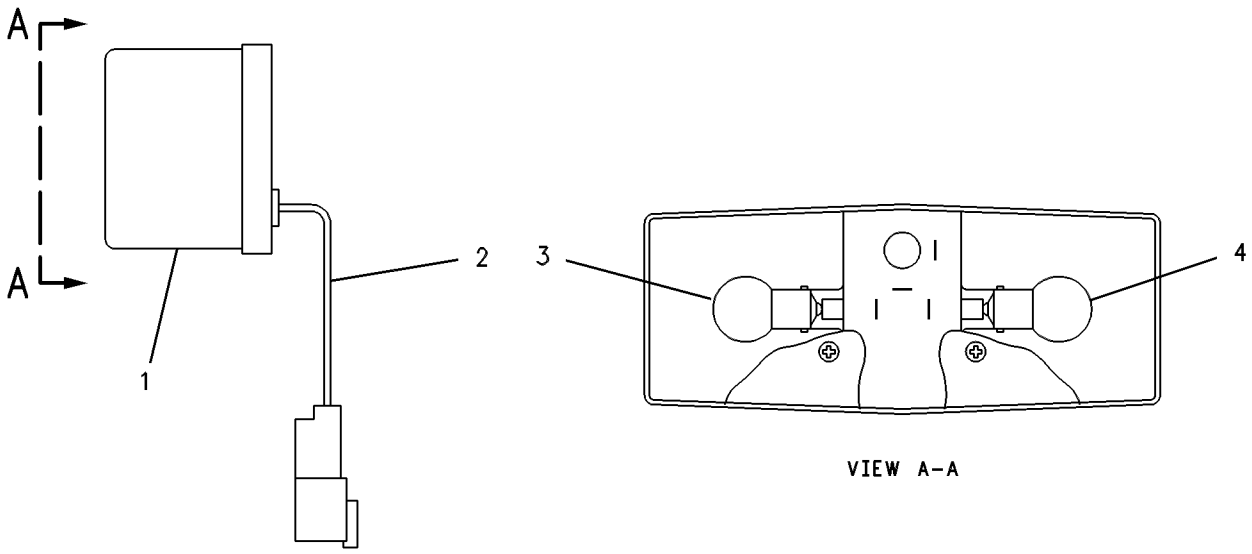

VIEW A–A

GRAPHIC #1 **<END>** g00284387

147-8566 LAMP GP-SIGNAL–REAR, RH

S/N: PJF1-UP
PART OF 255-7161 LIGHTING GP-SIGNAL
AN ATTACHMENT

SMCS-1430 **i02171258**

NOTE	REF NO	GRAPHIC REF	PART NUMBER	QTY	PART NAME 1 2 3 4 5 6 (PRODUCT LEVEL)	SEE PAGE
	1	1	**127-1559**	1	LAMP	
	2	1	**147-8569**	1	HARNESS AS-LIGHTING (TURN SIGNAL)	
		1	**102-8804**	1	KIT-RECEPTACLE (4-PIN)	
					(INCLUDES RECEPTACLE AS & WEDGE)	
	3	1	**5C-9584**	2	LAMP (24-VOLT, 21-WATT) (SIGNAL)	
	4	1	**5C-8315**	1	LAMP (24-VOLT, 10-WATT) (SIGNAL)	

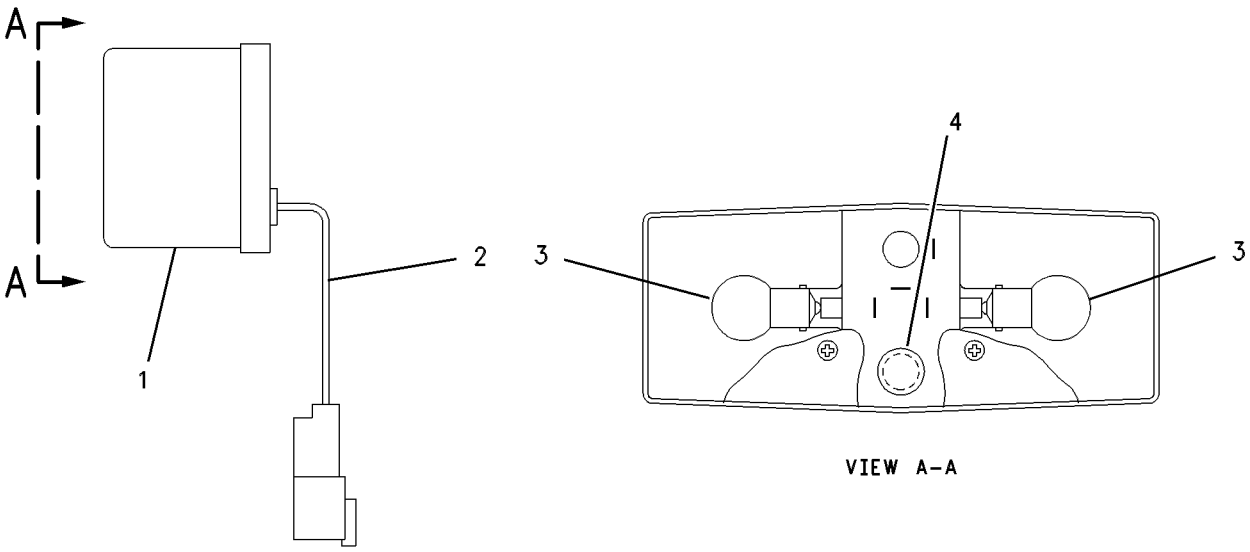

GRAPHIC #1 **<END>** g00329758

147-8567 LAMP GP-SIGNAL–REAR, LH

S/N: PJF1-UP

PART OF 255-7161 LIGHTING GP-SIGNAL

AN ATTACHMENT

SMCS-1430 **i02171259**

NOTE	REF NO	GRAPHIC REF	PART NUMBER	QTY	PART NAME 1 2 3 4 5 6 (PRODUCT LEVEL)	SEE PAGE
	1	1	**127-1560**	1	LAMP	
	2	1	**147-8569**	1	HARNESS AS-LIGHTING (TURN SIGNAL)	
		1	**102-8804**	1	KIT-RECEPTACLE (4-PIN)	
					(INCLUDES RECEPTACLE AS & WEDGE)	
	3	1	**5C-9584**	2	LAMP (24-VOLT, 21-WATT) (SIGNAL)	
	4	1	**5C-8315**	1	LAMP (24-VOLT, 10-WATT) (SIGNAL)	

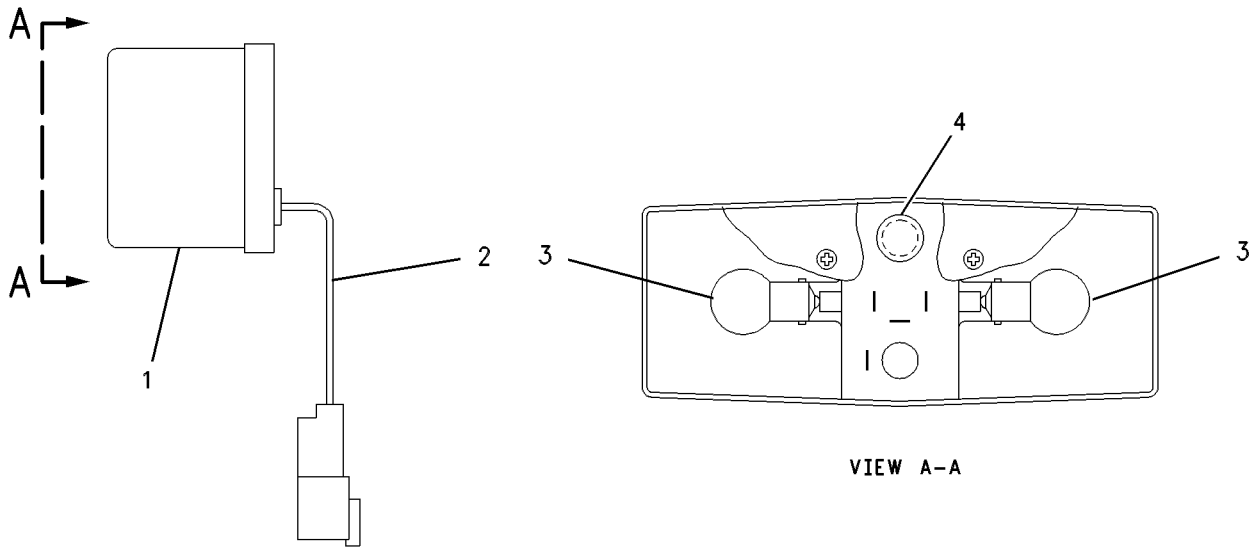

VIEW A–A

GRAPHIC #1 **<END>** g00329759

ELECTRICAL AND STARTING SYSTEM

255-7162 LIGHTING GP-FLOOD

S/N: PJF1-UP

PART OF 246-9027 ELECTRICAL AR

SMCS-1434 **i02593513**

NOTE	REF NO	GRAPHIC REF	PART NUMBER	QTY	PART NAME 1 2 3 4 5 6 (PRODUCT LEVEL)	SEE PAGE
	1	1	**149-9116**	2	PLATE AS	
Y	2	1	**9X-4381**	2	LAMP GP-FLOOD (24-VOLT) (REAR)	131
	3	1	**262-4804**	1	HARNESS AS-LIGHTING (WORK LIGHT, RH)	
		1	**102-8802**	1	KIT-RECEPTACLE (2-PIN)	
					(INCLUDES RECEPTACLE AS & WEDGE)	
	4	1	**4P-8134**	2	CLIP	
Y	5	1	**3K-1650**	1	SWITCH GP-ROTARY (FLOODLIGHTS)	149
Y	6	1	**9X-4381**	2	LAMP GP-FLOOD (24-VOLT) (FRONT)	131
	7	1	**8T-4121**	4	WASHER-HARD (11X21X2.5-MM THK)	
M	8	1	**8T-4133**	4	NUT (M10X1.5-THD)	
	9	1	**3S-2093**	38	STRAP-CABLE	
	10	1	**170-8577**	1	HARNESS AS-LIGHTING (WORK LIGHTS, FRONT)	
		1	**102-8803**	2	KIT-RECEPTACLE (3-PIN)	
					(INCLUDES RECEPTACLE AS & WEDGE)	
		1	**9G-3695**	6	PLUG	
		1	**155-2260**	2	KIT-CONNECTING PLUG (3-PIN)	
		1	**155-2271**	1	KIT-CONNECTING PLUG (4-PIN)	
					(EACH PLUG KIT INCLUDES PLUG AS, WEDGE & INTERFACE SEAL)	
	11	1	**8T-4223**	1	WASHER-HARD (13.5X25.5X3-MM THK)	
	12	1	**1K-6872**	1	LOCKNUT (1/2-13-THD)	
	13	1	**7K-1181**	9	STRAP-CABLE	
	14	1	**7G-7053**	2	GROMMET	
	15	1	**8T-4224**	8	WASHER-HARD (8.8X16X2-MM THK)	
M	16	1	**8T-4189**	8	BOLT (M8X1.25X20-MM)	

M-METRIC PART
Y-SEPARATE ILLUSTRATION

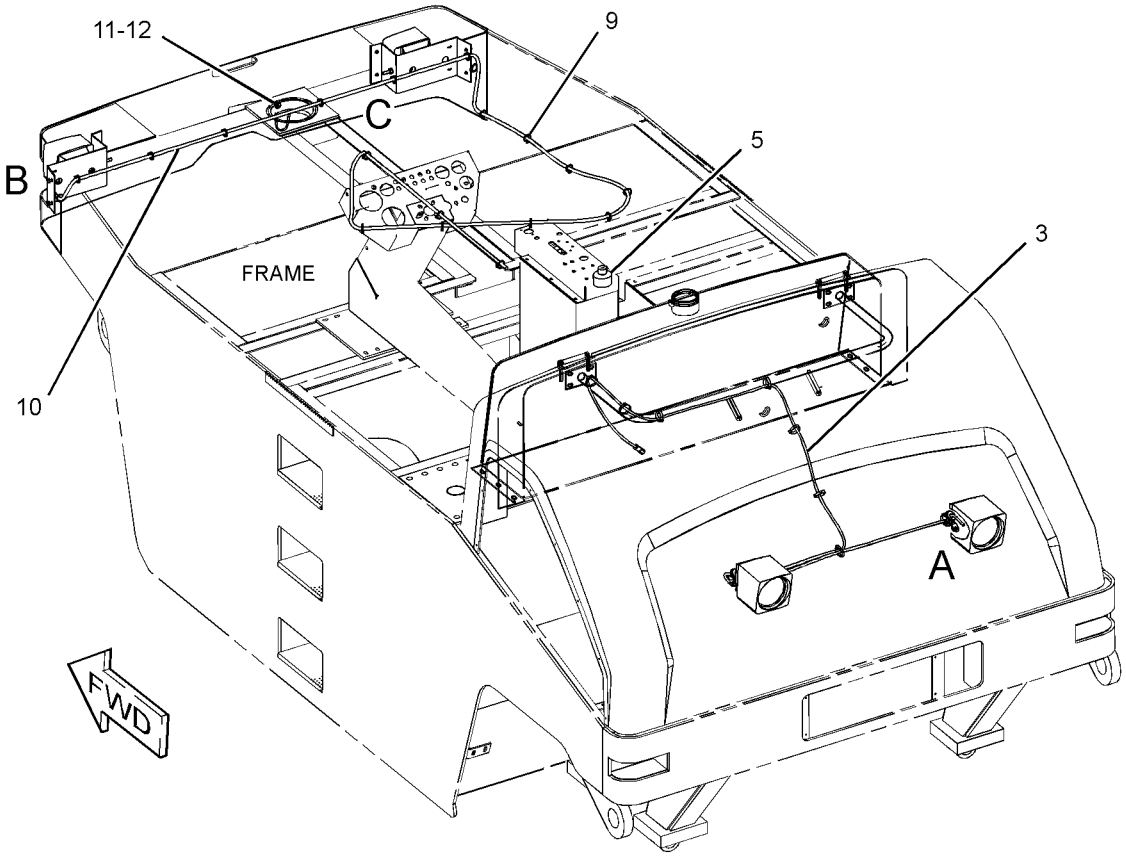

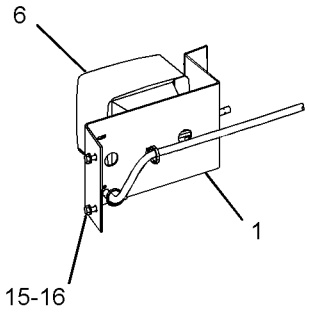

VIEW OF AREA B

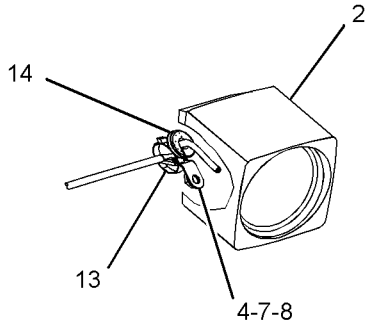

VIEW OF AREA A

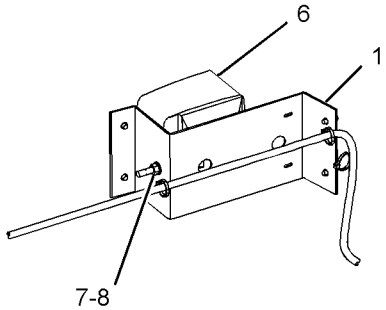

VIEW OF AREA C

GRAPHIC #1 **<END>** g01261146

ELECTRICAL AND STARTING SYSTEM

255-7161 LIGHTING GP-SIGNAL

S/N: PJF1-UP

AN ATTACHMENT

SMCS-1430 **i03125721**

NOTE	REF NO	GRAPHIC REF	PART NUMBER	QTY	PART NAME 1 2 3 4 5 6 (PRODUCT LEVEL)	SEE PAGE
	1	1	**2N-2371**	1	LAMP AS-INDICATOR (RED) (TURN SIGNAL, HAZARD)	
		1	**2V-7088**	1	LENS-RED	
		1	**6V-8367**	1	LOCKWASHER	
		1	**6V-8382**	1	NUT-HEX (11/16-27-THD)	
		1	**6V-8817**	2	SCREW-MACHINE (4-36X4.76-IN)	
	2	1	**2V-7086**	1	LENS-GREEN	
	3	1	**4B-2049**	3	NUT (10-32-THD)	
	4	1	**4V-7740**	3	SCREW-BUTTON HEAD	
	5	1	**5V-2998**	1	PLATE	
M	6	1	**6V-9491**	4	SCREW-MACHINE (M4X0.7X20-MM)	
	7	1	**7N-5876**	1	LAMP (24-VOLT) (TURN SIGNAL, HAZARD)	
M	8	1	**8T-0337**	4	SCREW-MACHINE (M4X0.7X12-MM)	
	9	1	**8V-2514**	1	FLASHER AS	
	10	1	**8X-6296**	1	LEVER	
M	11	1	**5C-8312**	4	NUT (M4X0.7-THD)	
	12	1	**108-3239**	1	HOLDER-FUSE	
Y	13	1	*147-5578*	1	LAMP GP-SIGNAL (FRONT, LH)	134
Y	14	1	*147-5579*	1	LAMP GP-SIGNAL (FRONT, RH)	135
Y	15	1	*147-8566*	1	LAMP GP-SIGNAL (REAR, RH)	136
Y	16	1	*147-8567*	1	LAMP GP-SIGNAL (REAR, LH)	137
	17	1	**173-3064**	1	SWITCH GP-ROTARY (TURN SIGNAL, HAZARD)	
		1	**5L-7200**	1	SCREW (8-32X0.375-IN)	
		1	**9B-7233**	1	LOCKWASHER	
M	18	1	**099-0492**	2	LOCKNUT (M6X1-THD)	
	19	1	**3K-8782**	1	FUSE (10-AMPERE)	
	20	1	**8T-0328**	3	WASHER-HARD (5.5X10X1-MM THK)	
	21	1	**8T-4205**	2	WASHER-HARD (7.2X14.5X2-MM THK)	
	22	1	**4B-4863**	12	WASHER (4.7X11X1.2-MM THK)	

M-METRIC PART
Y-SEPARATE ILLUSTRATION

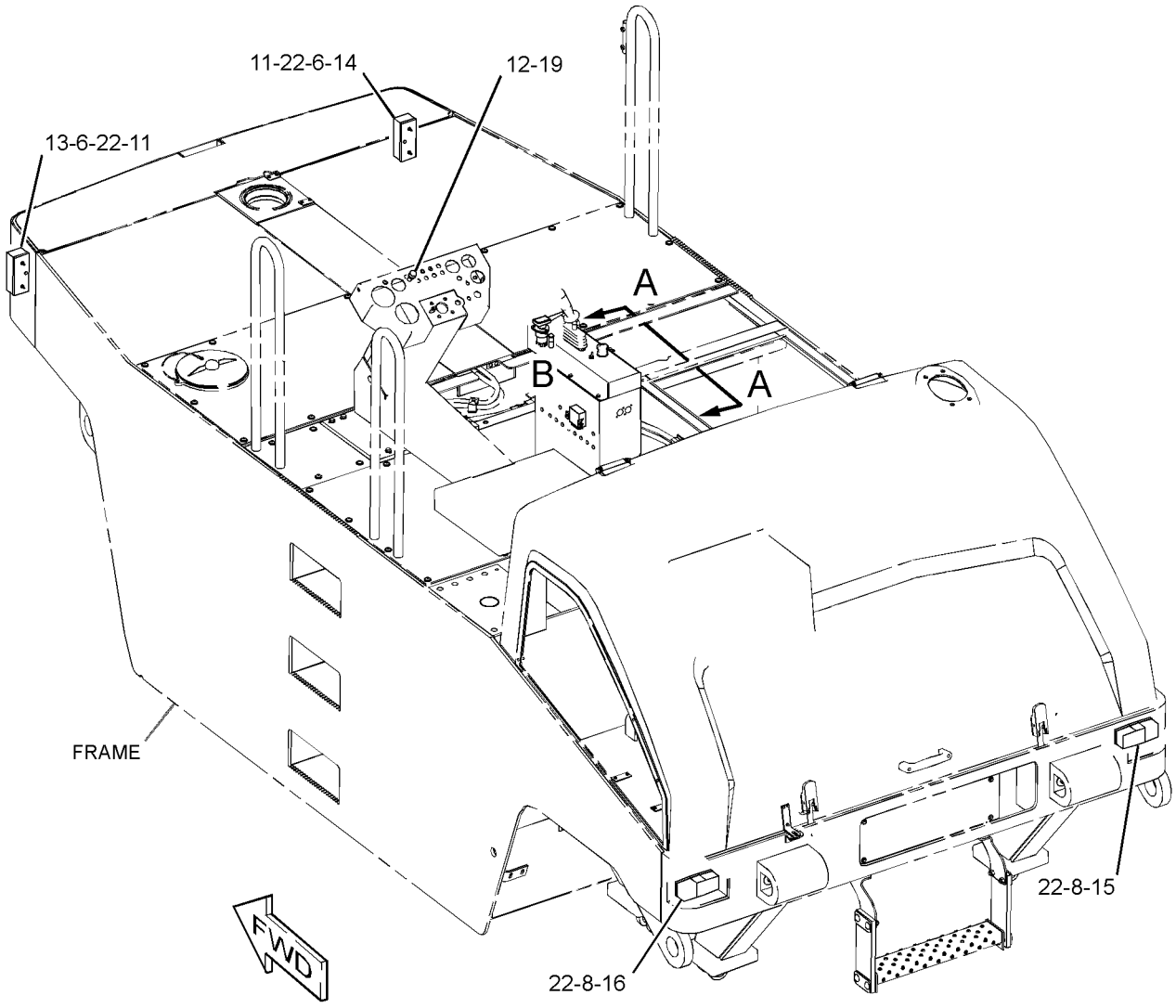

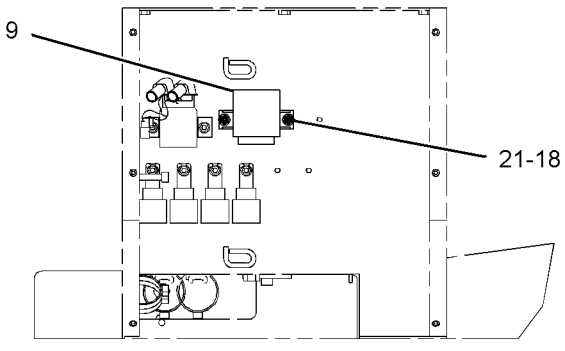

VIEW A-A

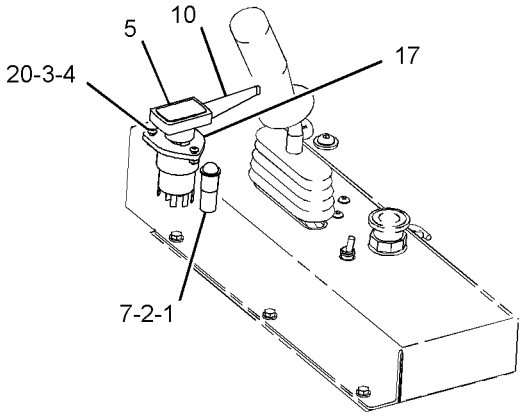

VIEW OF AREA B

GRAPHIC #1 **<END>** g01870358

120-4187 SOLENOID GP-THROTTLE–GOVERNOR

S/N: PJF1-454

PART OF 227-4799 GOVERNOR GP

SMCS-1265 **i03569903**

NOTE	REF NO	GRAPHIC REF	PART NUMBER	QTY	PART NAME 1 2 3 4 5 6 (PRODUCT LEVEL)	SEE PAGE
	1	1	**119-7017**	1	SOLENOID	
	2	1	**102-8803**	1	KIT-RECEPTACLE (3-PIN)	
					(INCLUDES RECEPTACLE AS & WEDGE)	
E	3	1	**9X-1813**		SLEEVE (12-CM)	
	4	1	**186-3735**	3	PIN-CONNECTOR (16-GA TO 18-GA)	

E-ORDER BY THE CENTIMETER

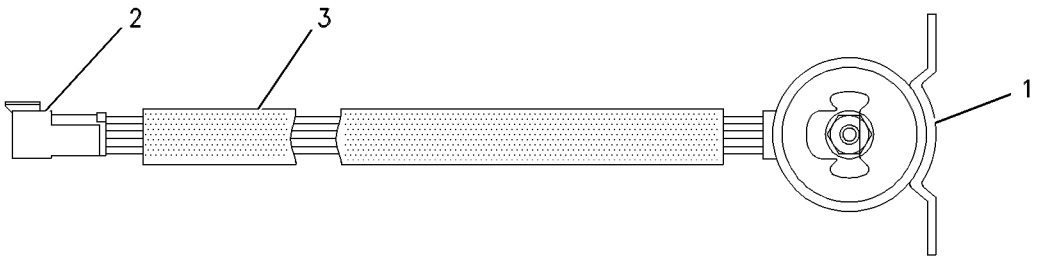

GRAPHIC #1 **<END>** g00476791

230-7304 STARTING MOTOR GP-ELECTRIC

S/N: CRS2700-UP

PART OF 177-9752, 297-4047, 297-4055, 329-2197 ENGINE AR-PRIMARY

ALSO AN ATTACHMENT

SMCS-1453 **i02014704**

NOTE	REF NO	GRAPHIC REF	PART NUMBER	QTY	PART NAME 1 2 3 4 5 6 (PRODUCT LEVEL)	SEE PAGE
	1	1	**6I-0364**	3	STUD (M10X1.5X30-MM)	
	2	1	**6I-0594**	3	NUT (M10X1.5-THD)	
	3	1	**225-3150**	1	STARTING MOTOR GP-ELECTRIC	

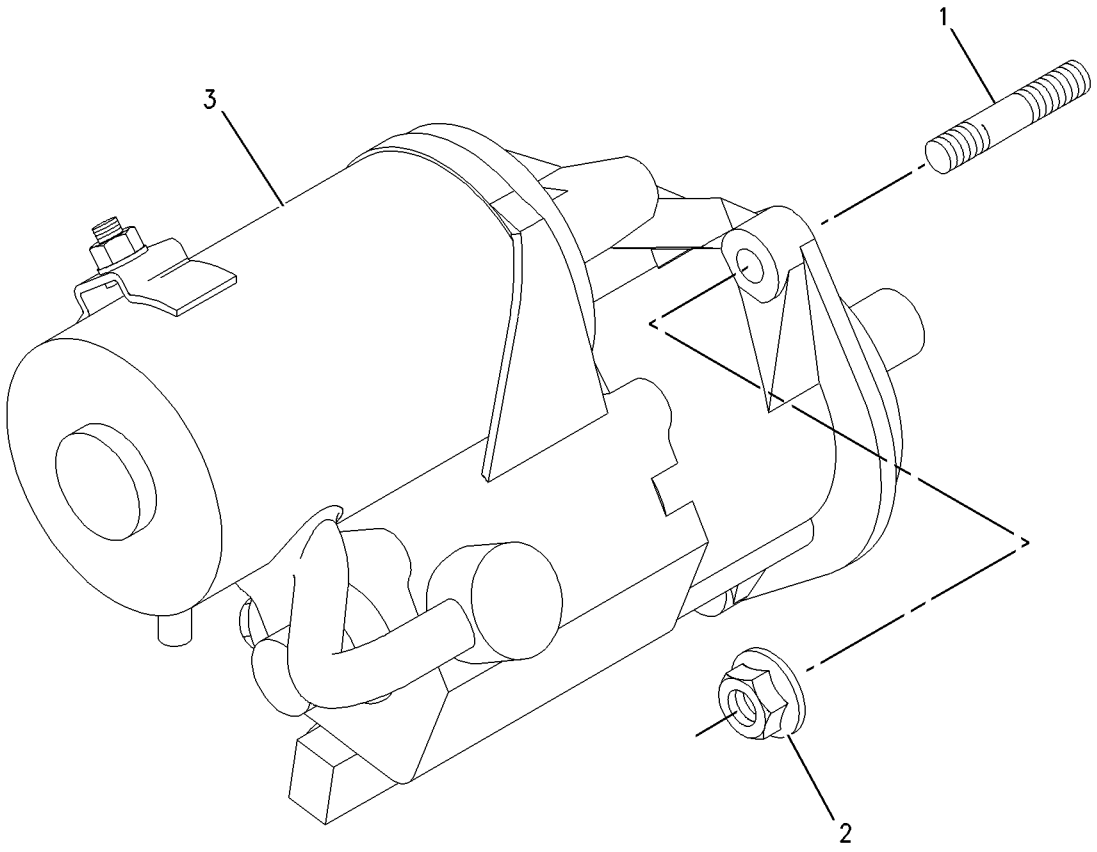

GRAPHIC #1 **<END>** g00933413

7N-0718 SWITCH GP-DISCONNECT–BATTERY

S/N: PJF1-UP
12-VOLT
PART OF 251-1984 BATTERY & WIRING GP

SMCS-1411 **i02459121**

NOTE	REF NO	GRAPHIC REF	PART NUMBER	QTY	PART NAME 1 2 3 4 5 6 (PRODUCT LEVEL)	SEE PAGE
	1	1	**8H-5306**	1	KEY (BATTERY DISCONNECT)	
	2	1	**8H-5303**	1	NUT (3/4-16-THD)	
	3	1	**2H-3922**	2	LOCKWASHER	
	4	1	**9F-5644**	2	LOCKWASHER	
	5	1	**6F-7045**	2	NUT-FULL (3/8-24-THD)	

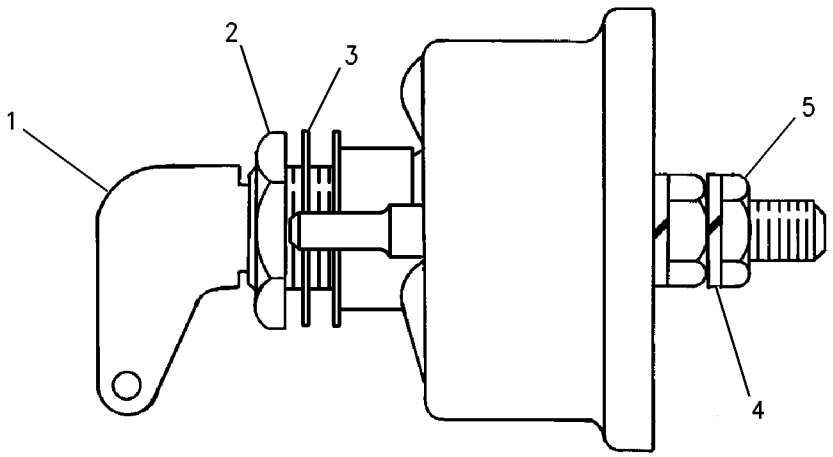

GRAPHIC #1 **<END>** g00715584

118-3534 SWITCH GP-MAGNETIC

S/N: PJF1-UP
24-VOLT
PART OF 251-1978 WIRING GP-MACHINE

SMCS-7499 **i02883861**

NOTE	PART NUMBER	QTY	PART NAME 1 2 3 4 5 6 (PRODUCT LEVEL)	SEE PAGE
Y	*175-2308*	1	SWITCH GP-MAGNETIC (24-VOLT) (START RELAY)	146
			—OR—	
Y	*175-2309*	1	SWITCH GP-MAGNETIC (24-VOLT) (START RELAY)	147

Y-SEPARATE ILLUSTRATION

<END>

175-2308 SWITCH GP-MAGNETIC–START RELAY

S/N: PJF1-UP
24-VOLT
PART OF 118-3534 SWITCH GP-MAGNETIC

SMCS-7499 **i03371288**

NOTE	REF NO	GRAPHIC REF	PART NUMBER	QTY	PART NAME 1 2 3 4 5 6 (PRODUCT LEVEL)	SEE PAGE
	1	1	**102-8802**	1	KIT-RECEPTACLE (2-PIN)	
					(INCLUDES RECEPTACLE AS & WEDGE)	
	2	1	**186-3735**	2	PIN-CONNECTOR (16-GA TO 18-GA)	
	3	1	**1H-3338**	2	LOCKWASHER (EXTERNAL TOOTH)	
	4	1	**012-0380**	2	LOCKWASHER	
M	5	1	**5C-2890**	2	NUT (M6X1-THD)	
E	6	1	**9X-1813**		SLEEVE (16-CM)	

E-ORDER BY THE CENTIMETER
M-METRIC PART

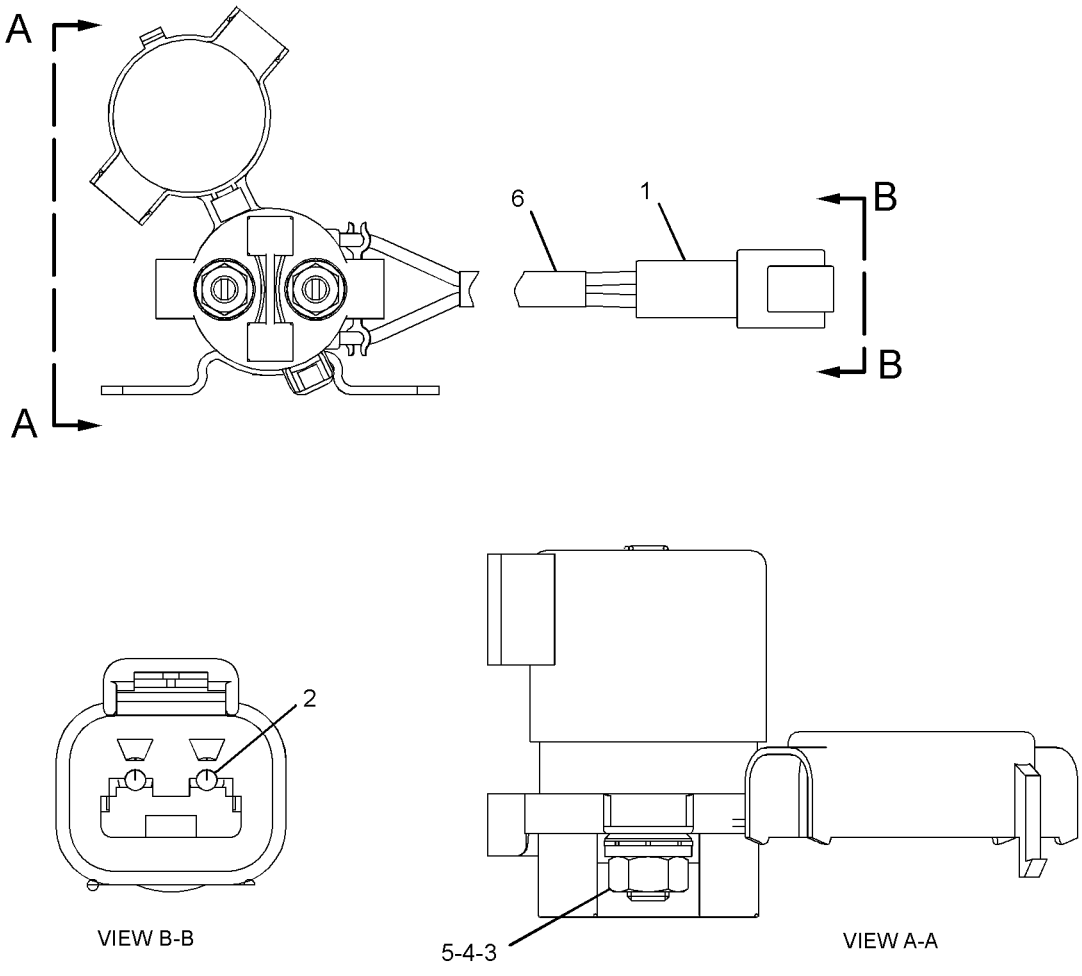

GRAPHIC #1 **<END>** g01266266

175-2309 SWITCH GP-MAGNETIC–START RELAY

S/N: PJF1-UP
24-VOLT
PART OF 118-3534 SWITCH GP-MAGNETIC

SMCS-7499 **i03371361**

NOTE	REF NO	GRAPHIC REF	PART NUMBER	QTY	PART NAME 1 2 3 4 5 6 (PRODUCT LEVEL)	SEE PAGE
	1	1	**117-9081**	1	SWITCH AS-MAGNETIC (START RELAY)	
	1A	1	**1H-3338**	2	LOCKWASHER (EXTERNAL TOOTH)	
M	1B	1	**5C-2890**	2	NUT (M6X1-THD)	
	1C	1	**012-0380**	2	LOCKWASHER	
	2	1	**102-8802**	1	KIT-RECEPTACLE (2-PIN)	
					(INCLUDES RECEPTACLE AS & WEDGE)	
	3	1	**186-3735**	2	PIN-CONNECTOR (16-GA TO 18-GA)	
E	4	1	**9X-1813**		SLEEVE (16-CM)	

E-ORDER BY THE CENTIMETER
M-METRIC PART

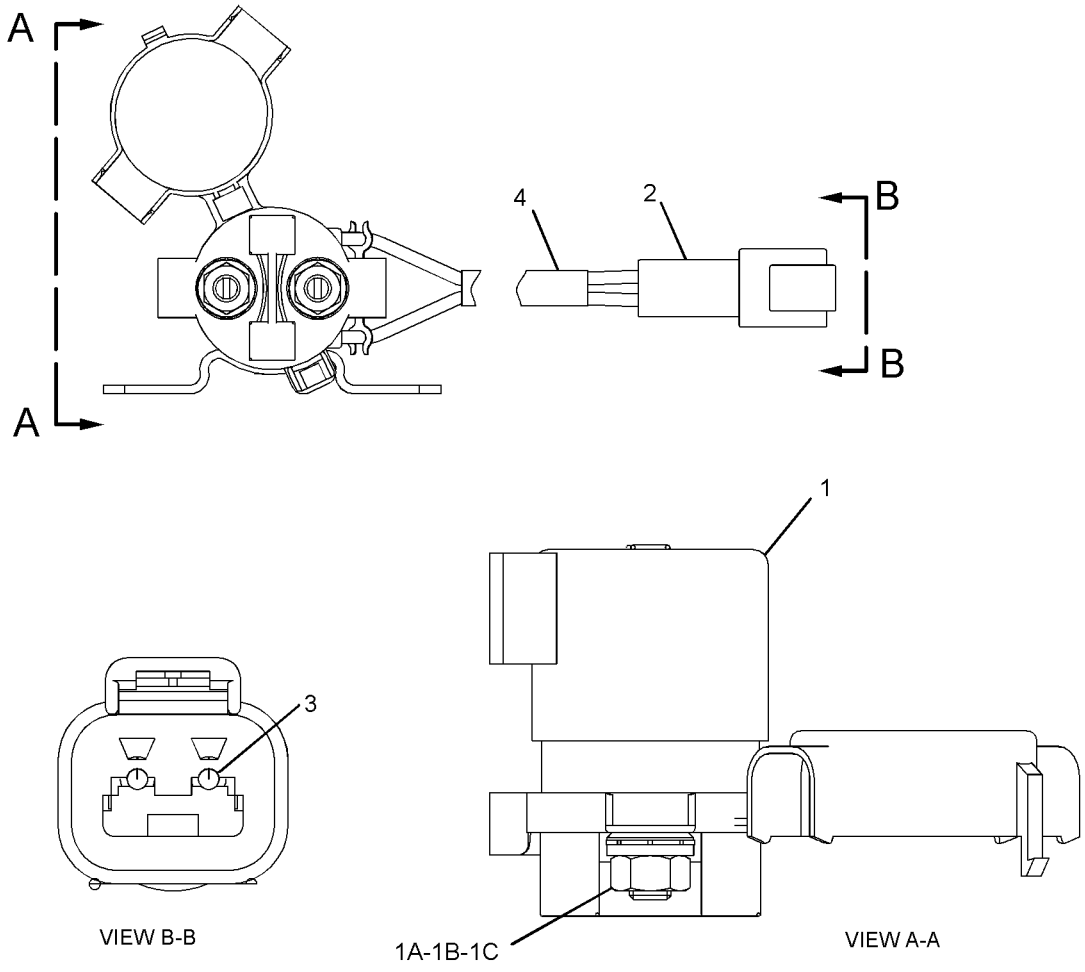

GRAPHIC #1

<END>

g01266277

241-8368 SWITCH GP-MAGNETIC—MAIN RELAY

S/N: PJF1-UP
24-VOLT
PART OF 246-9032, 251-1955 PLATFORM GP-OPERATOR
ALSO AN ATTACHMENT

SMCS-7499 **i03570587**

NOTE	REF NO	GRAPHIC REF	PART NUMBER	QTY	PART NAME 1 2 3 4 5 6 (PRODUCT LEVEL)	SEE PAGE
	1	1	**155-2270**	1	KIT-CONNECTING PLUG (2-PIN)	
					(INCLUDES PLUG AS, WEDGE & INTERFACE SEAL)	
	2	1	**4F-2294**	2	NUT-JAM (5/16-24-THD)	
	3	1	**186-3736**	2	SOCKET-CONNECTOR (16-GA TO 18-GA)	

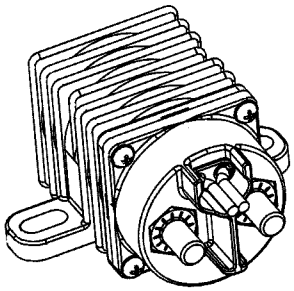

ISOMETRIC VIEW

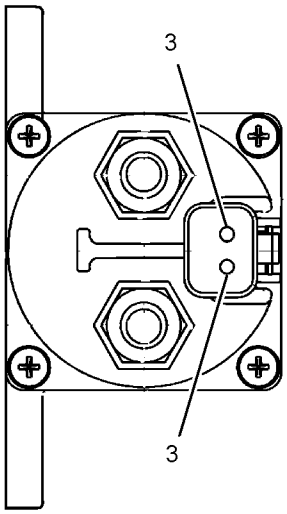

VIEW A-A

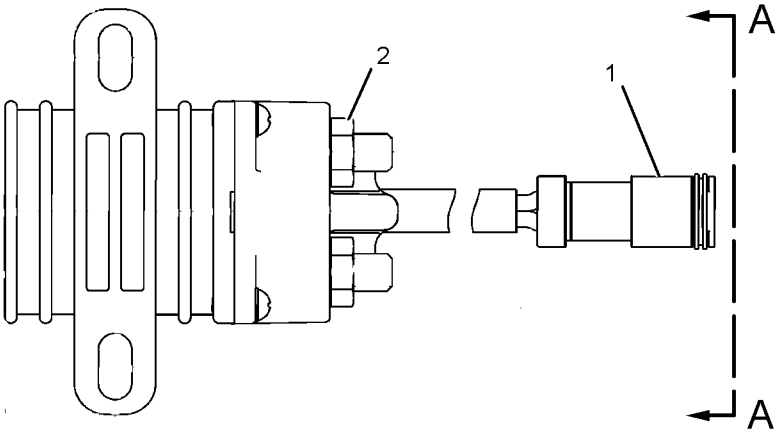

GRAPHIC #1 **<END>** g01077362

3K-1650 SWITCH GP-ROTARY–FLOODLIGHTS

S/N: PJF1-UP

PART OF 255-7162 LIGHTING GP-FLOOD

SMCS-7332 **i01548958**

NOTE	REF NO	GRAPHIC REF	PART NUMBER	QTY	PART NAME 1 2 3 4 5 6 (PRODUCT LEVEL)	SEE PAGE
	1	1	**7S-5432**	1	KNOB-SWITCH	
		1	**5L-7200**	1	SCREW (8-32X0.375-IN)	
	2	1	**6V-8362**	4	SCREW-MACHINE (8-32X0.31-IN)	
		1	**9B-7233**	4	LOCKWASHER	

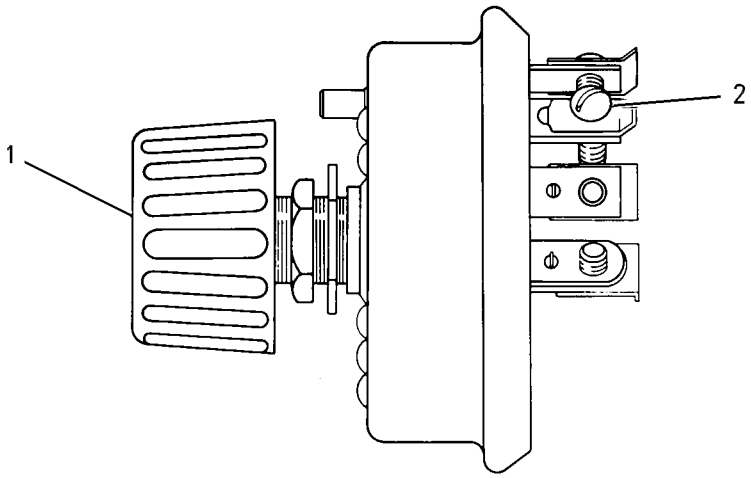

GRAPHIC #1 **<END>** g00578990

9G-7641 SWITCH GP-START–ENGINE, KEY

S/N: PJF1-UP
PART OF 246-9033 CONSOLE GP-INSTRUMENT
ALSO AN ATTACHMENT

SMCS-1416 **i03568136**

NOTE	REF NO	GRAPHIC REF	PART NUMBER	QTY	PART NAME 1 2 3 4 5 6 (PRODUCT LEVEL)	SEE PAGE
	1	1	**6V-8362**	4	SCREW-MACHINE (8-32X0.31-IN)	
	2	1	**9B-7233**	4	LOCKWASHER	
	3	1	**7T-6799**	1	NUT-MOUNTING (1-32-THD)	

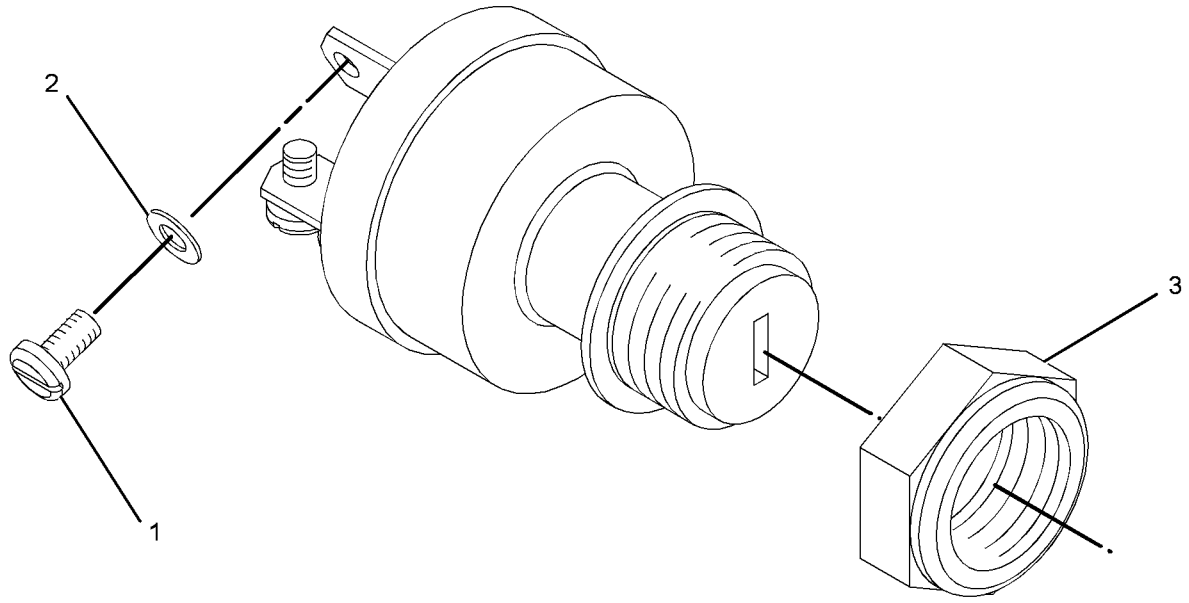

GRAPHIC #1 **<END>** g01890881

265-0833 WARNING GP-BACKUP

S/N: PJF1-UP

PART OF 246-9027 ELECTRICAL AR

SMCS-7406 **i03213182**

NOTE	REF NO	GRAPHIC REF	PART NUMBER	QTY	PART NAME 1 2 3 4 5 6 (PRODUCT LEVEL)	SEE PAGE
	1	1	**116-0118**	1	CLIP	
	2	1	**240-1434**	1	BRACKET	
Y	3	1	**244-1090**	1	ALARM GP (BACKUP)	120
	4	1	**264-7848**	1	BRACKET	
	5	1	**8T-4121**	4	WASHER-HARD (11X21X2.5-MM THK)	
M	6	1	**8T-4133**	2	NUT (M10X1.5-THD)	
M	7	1	**8T-4192**	2	BOLT (M12X1.75X25-MM)	
M	8	1	**8T-4198**	2	BOLT (M10X1.5X100-MM)	
	9	1	**8T-4223**	2	WASHER-HARD (13.5X25.5X3-MM THK)	

M-METRIC PART
Y-SEPARATE ILLUSTRATION

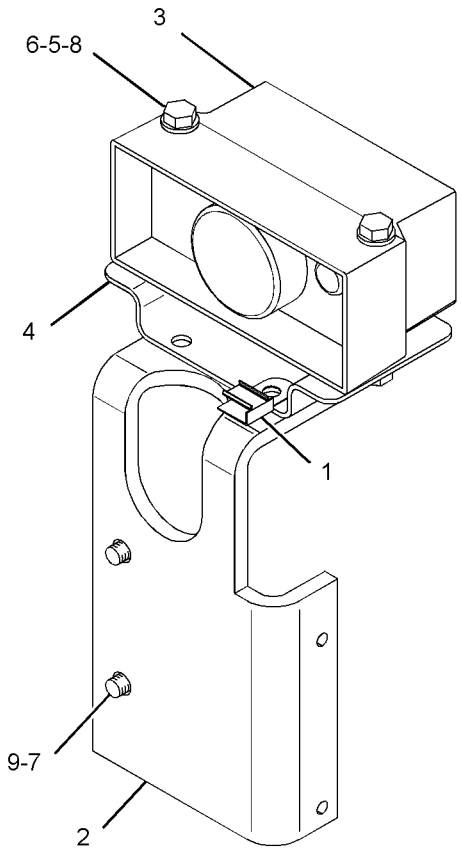

GRAPHIC #1 **<END>** g01269938

ELECTRICAL AND STARTING SYSTEM

251-1978 WIRING GP-MACHINE

S/N: PJF1-423

PART OF 246-9027 ELECTRICAL AR

SMCS-1408 **i03569900**

NOTE	REF NO	GRAPHIC REF	PART NUMBER	QTY	PART NAME 1 2 3 4 5 6 (PRODUCT LEVEL)	SEE PAGE
	1	1	**251-1982**	1	HARNESS AS-ENGINE	
		1	**102-8802**	2	KIT-RECEPTACLE (2-PIN)	
		1	**102-8803**	1	KIT-RECEPTACLE (3-PIN)	
		1	**102-8804**	2	KIT-RECEPTACLE (4-PIN)	
		1	**102-8805**	1	KIT-RECEPTACLE (6-PIN)	
		1	**102-8801**	1	KIT-RECEPTACLE (12-PIN)	
					(EACH RECEPTACLE KIT INCLUDES RECEPTACLE AS & WEDGE)	
		1	**7E-0976**	2	BOOT	
		1	**9G-4348**	1	HOUSING-PLUG	
		1	**100-3320**	1	PLUG AS-CONNECTOR (2-PIN)	
		1	**126-5011**	1	SEAL-CONNECTOR	
		1	**155-2255**	1	KIT-CONNECTING PLUG (12-PIN)	
		1	**155-2260**	3	KIT-CONNECTING PLUG (3-PIN)	
		1	**155-2270**	10	KIT-CONNECTING PLUG (2-PIN)	
		1	**155-2271**	2	KIT-CONNECTING PLUG (4-PIN)	
		1	**155-2274**	1	KIT-CONNECTING PLUG (6-PIN)	
					(EACH PLUG KIT INCLUDES PLUG AS, WEDGE & INTERFACE SEAL)	
	2	1	**132-5789**	6	CLIP	
	3	1	**156-6175**	2	CLIP	
	4	1	**255-4145**	1	CABLE AS	
	5	1	**255-4146**	1	CABLE AS	
	6	1	**7K-1181**	38	STRAP-CABLE	
	7	1	**232-0295**	1	PLATE AS	
	8	1	**8T-4224**	6	WASHER-HARD (8.8X16X2-MM THK)	
M	9	1	**8T-4189**	4	BOLT (M8X1.25X20-MM)	
	10	1	**5P-4115**	5	WASHER-HARD (7.2X19X2-MM THK)	
M	11	1	**8T-4970**	1	BOLT (M6X1X14-MM)	
	12	1	**8T-4121**	2	WASHER-HARD (11X21X2.5-MM THK)	
M	13	1	**8T-4137**	3	BOLT (M10X1.5X20-MM)	
M	14	1	**8T-4908**	2	BOLT (M8X1.25X25-MM)	
	15	1	**1G-9959**	2	CLAMP	
	16	1	**2G-5786**	1	CABLE AS	
E		1	**5P-0744**		CABLE (00-GA, BLACK) (48-CM)	
		1	**5P-2600**	1	RING-TERMINAL (FOR 1/2-IN BOLT)	
		1	**035-0425**	1	RING-TERMINAL (FOR 3/8-IN BOLT)	
	17	1	**7X-7729**	1	WASHER (11X25X3-MM THK)	
M	21	1	**5C-2874**	2	NUT (M5X0.8-THD)	
	22	1	**8T-8799**	4	BOOT	
M	23	1	**7X-2548**	1	BOLT (M12X1.75X16-MM)	
	24	1	**8T-4223**	4	WASHER-HARD (13.5X25.5X3-MM THK)	
	25	1	**3S-2093**	4	STRAP-CABLE	
	27	1	**8L-5008**	1	ELBOW-PIPE	
	28	1	**257-9290**	1	FILM-IDENTIFICATION (CIRCUIT PANEL)	
	29	1	**171-2208**	1	CIRCUIT BREAKER AS (60-AMPERE) (ALTERNATOR)	
	29A	1	**171-2208**	1	CIRCUIT BREAKER AS (60-AMPERE) (MAIN)	
	29B	1	**171-2208**	1	CIRCUIT BREAKER AS (60-AMPERE) (GLOW PLUG)	
					(EACH CIRCUIT BREAKER AS INCLUDES)	
		1	**6V-8187**	2	NUT (1/4-28-THD)	
		1	**8T-4205**	2	WASHER-HARD (7.2X14.5X2-MM THK)	
		1	**253-2111**	2	LOCKWASHER	
	30	1	**4B-4274**	6	WASHER (5.5X13X1.2-MM THK)	
	31	1	**6V-7978**	6	SCREW-MACHINE (10-32X0.375-IN)	
	32	1	**7V-9275**	1	STRAP	
	34	1	**116-0118**	5	CLIP	

251-1978 **WIRING GP-MACHINE** *(contd.)* **i03569900**

NOTE	REF NO	GRAPHIC REF	PART NUMBER	QTY	PART NAME 1 2 3 4 5 6 (PRODUCT LEVEL)	SEE PAGE
M	35	1	**8T-4138**	4	BOLT (M6X1X20-MM)	
M	36	1	**5C-2890**	5	NUT (M6X1-THD)	
	37	1	**240-1451**	1	CABLE AS	
BD		1	**5P-5675**		WIRE (6-GA, BLACK)	
		1	**128-4190**	2	TERMINAL AS	
					(EACH INCLUDES)	
E		1	**6V-9023**		TUBE-HEAT SHRINK (12.7-MM DIA) (4-CM)	
M	38	1	**8T-4179**	3	BOLT (M12X1.75X20-MM)	
	39	1	**4P-7429**	5	CLIP	
	40	1	**9X-8256**	2	WASHER (6.6X12X2-MM THK)	
	41	1	**234-2955**	1	CABLE AS	
BD		1	**5P-5675**		WIRE (6-GA, BLACK)	
		1	**152-5542**	2	TERMINAL AS (6-GA TO 8-GA)	
					(EACH INCLUDES)	
E		1	**119-3662**		TUBE-HEAT SHRINK (4-CM)	
		1	**8T-8799**	1	BOOT	
Y	42	1	**118-3534**	1	SWITCH GP-MAGNETIC (24-VOLT) (GLOW PLUG)	145
Y	42A	1	**118-3534**	1	SWITCH GP-MAGNETIC (24-VOLT) (MAIN POWER RELAY)	145
	43	1	**232-3633**	1	BRACKET AS	
		1	**7T-1099**	2	LINK	
	44	1	**3S-2093**	5	STRAP-CABLE	
	45	1	**6N-5926**	1	SENDER AS-TEMPERATURE (ENGINE COOLANT)	
M	46	1	**196-4205**	4	BOLT-STACKING (M6X1X44-MM)	
	47	1	**7R-7954**	2	PLATE	
	48	1	**228-5778**	2	PLATE AS	
	49	1	**156-3617**	4	CLAMP-HALF	
	50	1	**102-8703**	2	PLATE-COVER	
M	51	1	**7X-2537**	2	BOLT (M8X1.25X35-MM)	
	52	1	**1G-9960**	4	CLAMP	
	53	1	**7V-5628**	1	PLATE	
M	54	1	**7X-2533**	2	BOLT (M6X1X35-MM)	
	55	1	**6V-8188**	1	NUT (1/2-13-THD)	
	56	1	**173-6519**	1	SENDER AS-PRESSURE (ENGINE OIL)	
		1	**4B-2049**	1	NUT (10-32-THD)	
		1	**8T-0328**	1	WASHER-HARD (5.5X10X1-MM THK)	
		1	**8F-1434**	1	LOCKWASHER	

B-USE AS REQUIRED
D-ORDER BY THE METER
E-ORDER BY THE CENTIMETER
M-METRIC PART
Y-SEPARATE ILLUSTRATION

251-1978 **WIRING GP-MACHINE** *(contd.)* **i03569900**

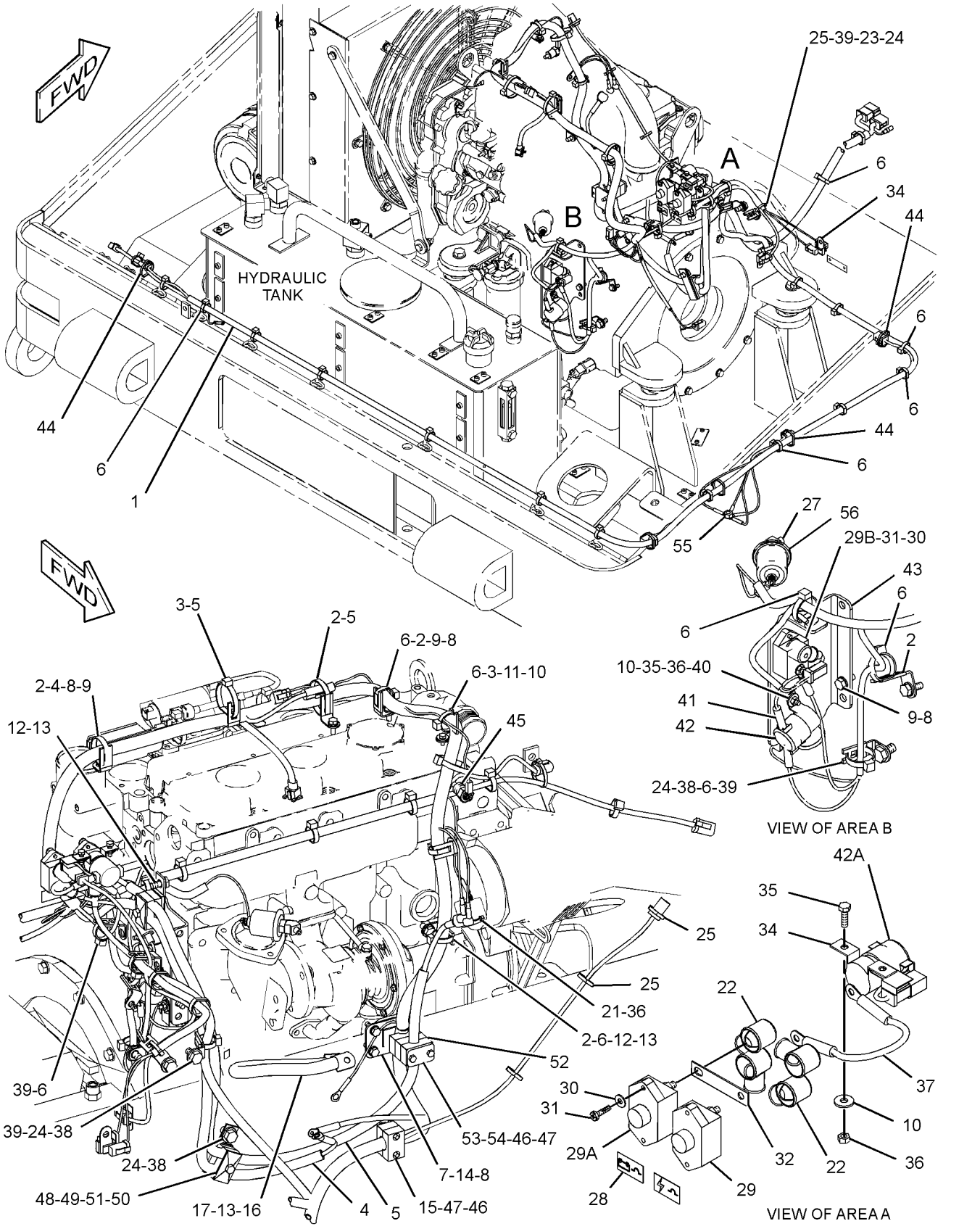

GRAPHIC #1 **<END>** g01353403

ELECTRICAL AND STARTING SYSTEM

251-1978 WIRING GP-MACHINE

S/N: PJF424-451

PART OF 246-9027 ELECTRICAL AR

SMCS-1408 **i03599060**

NOTE	REF NO	GRAPHIC REF	PART NUMBER	QTY	PART NAME 1 2 3 4 5 6 (PRODUCT LEVEL)	SEE PAGE
	1	1	**251-1982**	1	HARNESS AS-ENGINE	
		1	**7E-0976**	2	BOOT	
		1	**9G-4348**	1	HOUSING-PLUG	
		1	**180-9339**	11	PIN-CONNECTOR (14-GA TO 18-GA)	
		1	**100-3320**	1	PLUG AS-CONNECTOR (2-PIN)	
		1	**126-5011**	1	SEAL-CONNECTOR	
		1	**155-2255**	1	KIT-CONNECTING PLUG (12-PIN)	
		1	**155-2260**	3	KIT-CONNECTING PLUG (3-PIN)	
		1	**155-2270**	10	KIT-CONNECTING PLUG (2-PIN)	
		1	**155-2271**	2	KIT-CONNECTING PLUG (4-PIN)	
		1	**155-2274**	1	KIT-CONNECTING PLUG (6-PIN)	
					(EACH PLUG KIT INCLUDES PLUG AS, WEDGE & INTERFACE SEAL)	
		1	**8T-8737**	10	PLUG-SEAL	
		1	**9G-3695**	19	PLUG	
		1	**102-8802**	2	KIT-RECEPTACLE (2-PIN)	
		1	**102-8803**	1	KIT-RECEPTACLE (3-PIN)	
		1	**102-8804**	2	KIT-RECEPTACLE (4-PIN)	
		1	**102-8805**	1	KIT-RECEPTACLE (6-PIN)	
		1	**102-8801**	1	KIT-RECEPTACLE (12-PIN)	
					(EACH RECEPTACLE KIT INCLUDES RECEPTACLE AS & WEDGE)	
		1	**8N-1547**	1	SOCKET-CONNECTOR (6-GA)	
		1	**180-9340**	48	SOCKET-CONNECTOR (14-GA TO 18-GA)	
C	2	2	**132-5789**	4	CLIP	
	3	2	**156-6175**	2	CLIP	
	4	2	**255-4145**	1	CABLE AS	
	5	1	**255-4146**	1	CABLE AS	
C	6	1,2	**7K-1181**	35	STRAP-CABLE	
	7	2	**232-0295**	1	PLATE AS	
		2	**178-8505**	1	PLATE AS	
	8	1,2	**8T-4224**	5	WASHER-HARD (8.8X16X2-MM THK)	
M	9	1,2	**8T-4189**	3	BOLT (M8X1.25X20-MM)	
	10	1,2	**5P-4115**	5	WASHER-HARD (7.2X19X2-MM THK)	
M	11	2	**8T-4970**	1	BOLT (M6X1X14-MM)	
	12	2	**8T-4121**	2	WASHER-HARD (11X21X2.5-MM THK)	
M	13	2	**8T-4137**	3	BOLT (M10X1.5X20-MM)	
M	14	2	**8T-4908**	2	BOLT (M8X1.25X25-MM)	
	15	2	**1G-9959**	2	CLAMP	
	16	2	**2G-5786**	1	CABLE AS	
E		2	**5P-0744**		CABLE (00-GA, BLACK) (48-CM)	
		2	**5P-2600**	1	RING-TERMINAL (FOR 1/2-IN BOLT)	
		2	**035-0425**	1	RING-TERMINAL (FOR 3/8-IN BOLT)	
	17	2	**7X-7729**	1	WASHER (11X25X3-MM THK)	
M	21	2	**5C-2874**	2	NUT (M5X0.8-THD)	
	22	2	**8T-8799**	4	BOOT	
M	23	2	**7X-2548**	1	BOLT (M12X1.75X16-MM)	
	24	1,2	**8T-4223**	4	WASHER-HARD (13.5X25.5X3-MM THK)	
	25	2	**3S-2093**	10	STRAP-CABLE	
	27	1	**8L-5008**	1	ELBOW-PIPE	
	28	2	**257-9290**	1	FILM-IDENTIFICATION (CIRCUIT PANEL)	
	29	2	**171-2208**	1	CIRCUIT BREAKER AS (60-AMPERE) (ALTERNATOR)	
	29A	2	**171-2208**	1	CIRCUIT BREAKER AS (60-AMPERE) (MAIN)	
	29B	1	**171-2208**	1	CIRCUIT BREAKER AS (60-AMPERE) (GLOW PLUG)	
					(EACH CIRCUIT BREAKER AS INCLUDES)	
		1	**6V-8187**	2	NUT (1/4-28-THD)	

251-1978 **WIRING GP-MACHINE** *(contd.)* **i03599060**

NOTE	REF NO	GRAPHIC REF	PART NUMBER	QTY	PART NAME 1 2 3 4 5 6 (PRODUCT LEVEL)	SEE PAGE
		1	**8T-4205**	2	WASHER-HARD (7.2X14.5X2-MM THK)	
		1	**253-2111**	2	LOCKWASHER	
	30	1,2	**4B-4274**	6	WASHER (5.5X13X1.2-MM THK)	
	31	1,2	**6V-7978**	6	SCREW-MACHINE (10-32X0.375-IN)	
	32	2	**7V-9275**	1	STRAP	
	34	2	**116-0118**	4	CLIP	
M	35	1,2	**8T-4138**	4	BOLT (M6X1X20-MM)	
M	36	1,2	**5C-2890**	5	NUT (M6X1-THD)	
	37	2	**240-1451**	1	CABLE AS	
BD		2	**5P-5675**		WIRE (6-GA, BLACK)	
		2	**128-4190**	2	TERMINAL AS	
					(EACH INCLUDES)	
E		2	**6V-9023**		TUBE-HEAT SHRINK (12.7-MM DIA) (4-CM)	
M	38	1,2	**8T-4179**	3	BOLT (M12X1.75X20-MM)	
C	39	1,2	**4P-7429**	3	CLIP	
	40	1,2	**9X-8256**	2	WASHER (6.6X12X2-MM THK)	
	41	1	**234-2955**	1	CABLE AS	
BD		1	**5P-5675**		WIRE (6-GA, BLACK)	
		1	**152-5542**	2	TERMINAL AS (6-GA TO 8-GA)	
					(EACH INCLUDES)	
E		1	**119-3662**		TUBE-HEAT SHRINK (4-CM)	
		1	**8T-8799**	1	BOOT	
Y	42	1	**118-3534**	1	SWITCH GP-MAGNETIC (24-VOLT) (GLOW PLUG)	145
Y	42A	2	**118-3534**	1	SWITCH GP-MAGNETIC (24-VOLT) (MAIN POWER RELAY)	145
	43	1	**232-3633**	1	BRACKET AS	
		1	**7T-1099**	2	LINK	
	45	2	**6N-5926**	1	SENDER AS-TEMPERATURE (ENGINE COOLANT)	
M	46	2	**196-4205**	4	BOLT-STACKING (M6X1X44-MM)	
	47	2	**7R-7954**	2	PLATE	
	48	2	**228-5778**	2	PLATE AS	
					(EACH INCLUDES)	
		2	**102-8704**	1	PLATE AS	
	49	2	**156-3617**	4	CLAMP-HALF	
	50	2	**102-8703**	2	PLATE-COVER	
M	51	2	**7X-2537**	2	BOLT (M8X1.25X35-MM)	
	52	2	**1G-9960**	4	CLAMP	
	53	2	**7V-5628**	1	PLATE	
M	54	2	**7X-2533**	2	BOLT (M6X1X35-MM)	
	55	1	**6V-8188**	1	NUT (1/2-13-THD)	
	56	1	**173-6519**	1	SENDER AS-PRESSURE (ENGINE OIL)	
		1	**4B-2049**	1	NUT (10-32-THD)	
		1	**8T-0328**	1	WASHER-HARD (5.5X10X1-MM THK)	
		1	**8F-1434**	1	LOCKWASHER	
C	57	2	**177-2215**	1	STRAP-DUAL CLAMP	
C	58	2	**5P-4116**	1	WASHER-HARD (8.8X20.5X2-MM THK)	
C	59	2	**4P-7428**	1	CLIP	

B-USE AS REQUIRED
C-CHANGE FROM PREVIOUS TYPE
D-ORDER BY THE METER
E-ORDER BY THE CENTIMETER
M-METRIC PART
Y-SEPARATE ILLUSTRATION

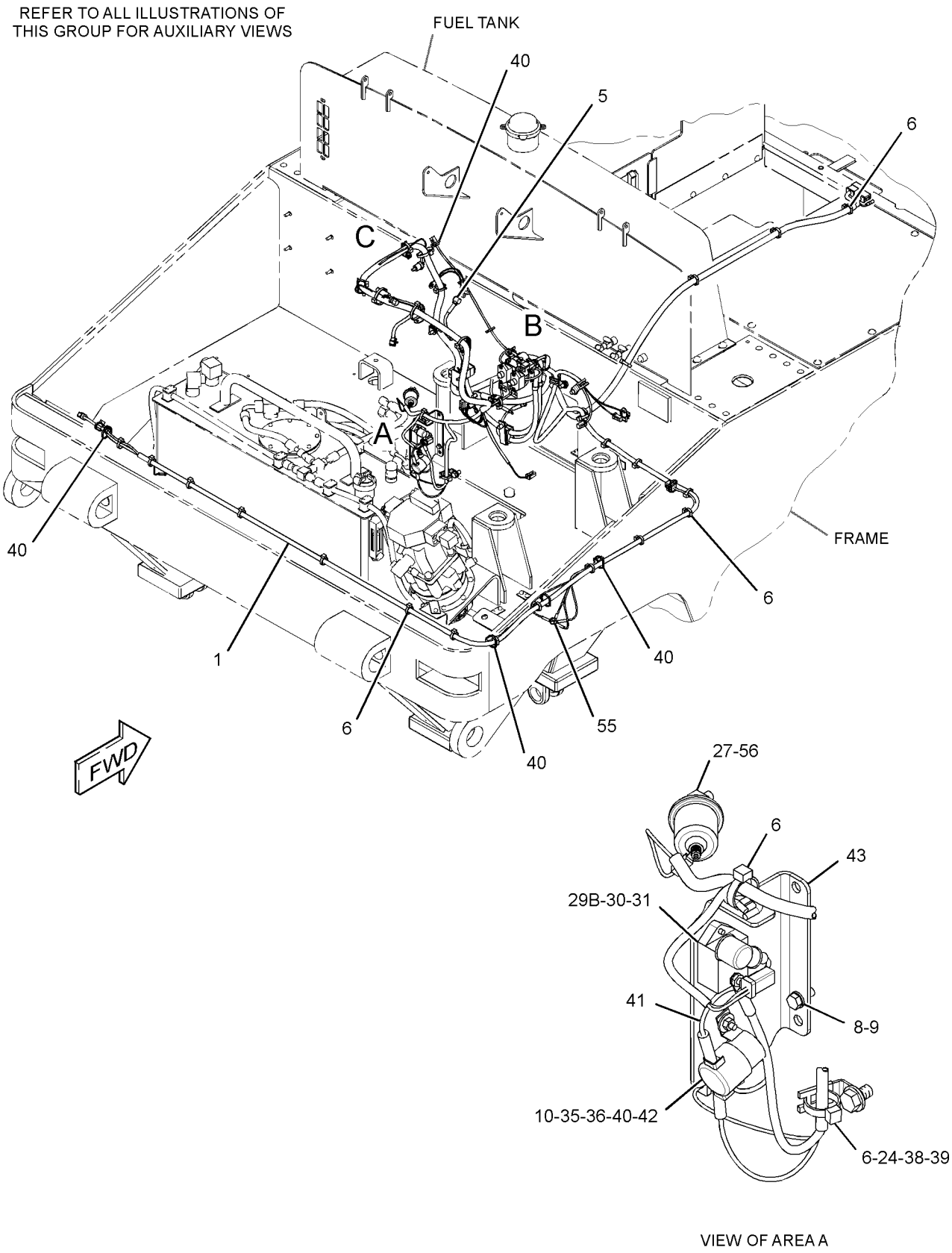

GRAPHIC #1

g01887434

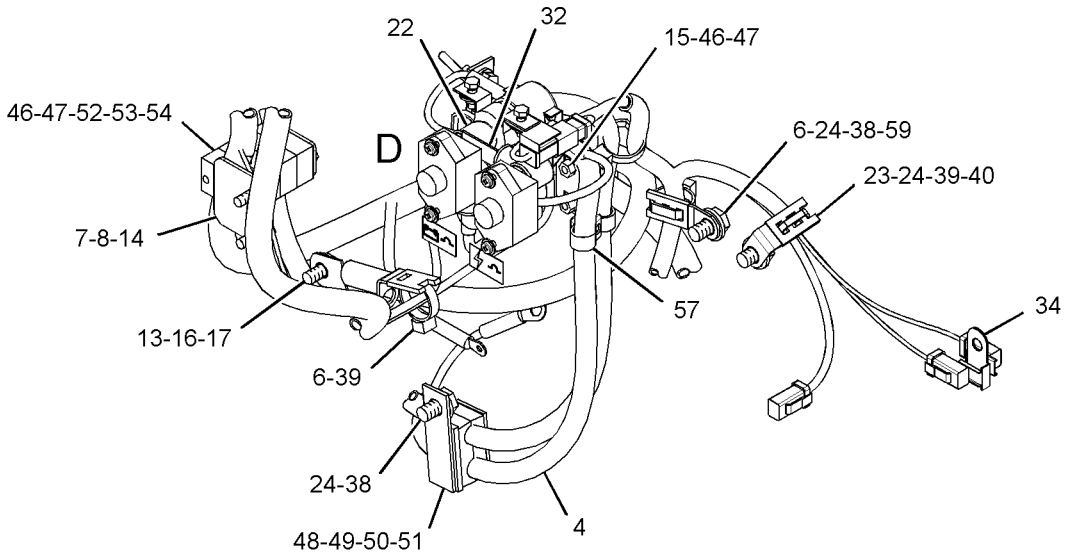

VIEW OF AREA B

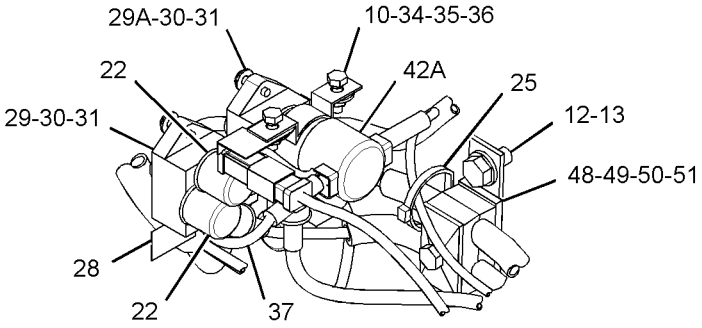

VIEW OF AREA D 90°

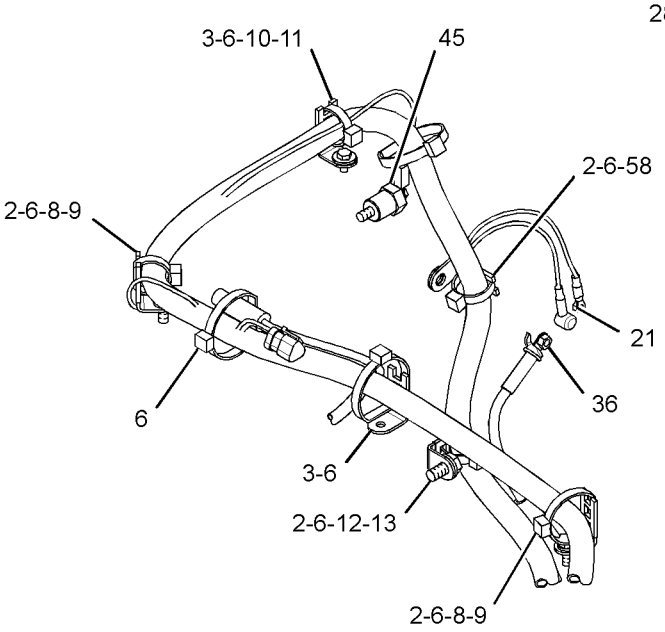

VIEW OF AREA C

GRAPHIC #2 **<END>** g01923813

210-6752 AXLE GP-DRIVE

S/N: PJF1-UP

PART OF 212-5931 POWER TRAIN AR

SMCS-3278 **i03599108**

NOTE	REF NO	GRAPHIC REF	PART NUMBER	QTY	PART NAME 1 2 3 4 5 6 (PRODUCT LEVEL)	SEE PAGE
	1	1	**6V-0406**	2	SEAL-BONDED	
	2	1	**8C-6781**	2	ADAPTER	
	3	1	*171-6727*	2	ADAPTER AS	
					(EACH INCLUDES)	
		1	**4J-5477**	1	SEAL-O-RING	
		1	**8T-4128**	1	ADAPTER	
B	4	1	**077-2967**	4	SHIM (0.08-M THK)	
B	5	1	**077-3005**	4	SHIM (3.5-MM THK)	
	6	1	**122-3629**	2	FASTENER GP	
					(EACH INCLUDES)	
		1	**8V-4102**	2	STRAP	
		1	**8V-4107**	4	BOLT-SELF-LOCKING (1/4-28X0.62-IN)	
	7	1	**122-3631**	2	YOKE	
	8	1	**122-8064**	4	PIN AS	
Y	9	1	**211-6011**	2	DIFFERENTIAL GP	162
	10	1	**213-5244**	2	SEAL	
	11	1	**0S-1629**	2	BOLT (1/2-20X1-IN)	
	12	1	**2M-9780**	2	SEAL-O-RING	
	13	1	**5K-5068**	2	FITTING-PIPE (PIPE CONNECT)	
	14	1	**5M-6214**	2	PLUG-PIPE	
	15	1	**6V-8397**	8	SEAL-O-RING	
	16	1	**6V-8715**	2	CONNECTOR	
	17	1	**6V-9836**	2	TEE-SWIVEL	
	18	1	**8T-4121**	4	WASHER-HARD (11X21X2.5-MM THK)	
M	19	1	**8T-4195**	4	BOLT (M10X1.5X30-MM)	
	20	1	**8T-4821**	2	WASHER (13.5X40X3-MM THK)	

B-USE AS REQUIRED
M-METRIC PART
Y-SEPARATE ILLUSTRATION

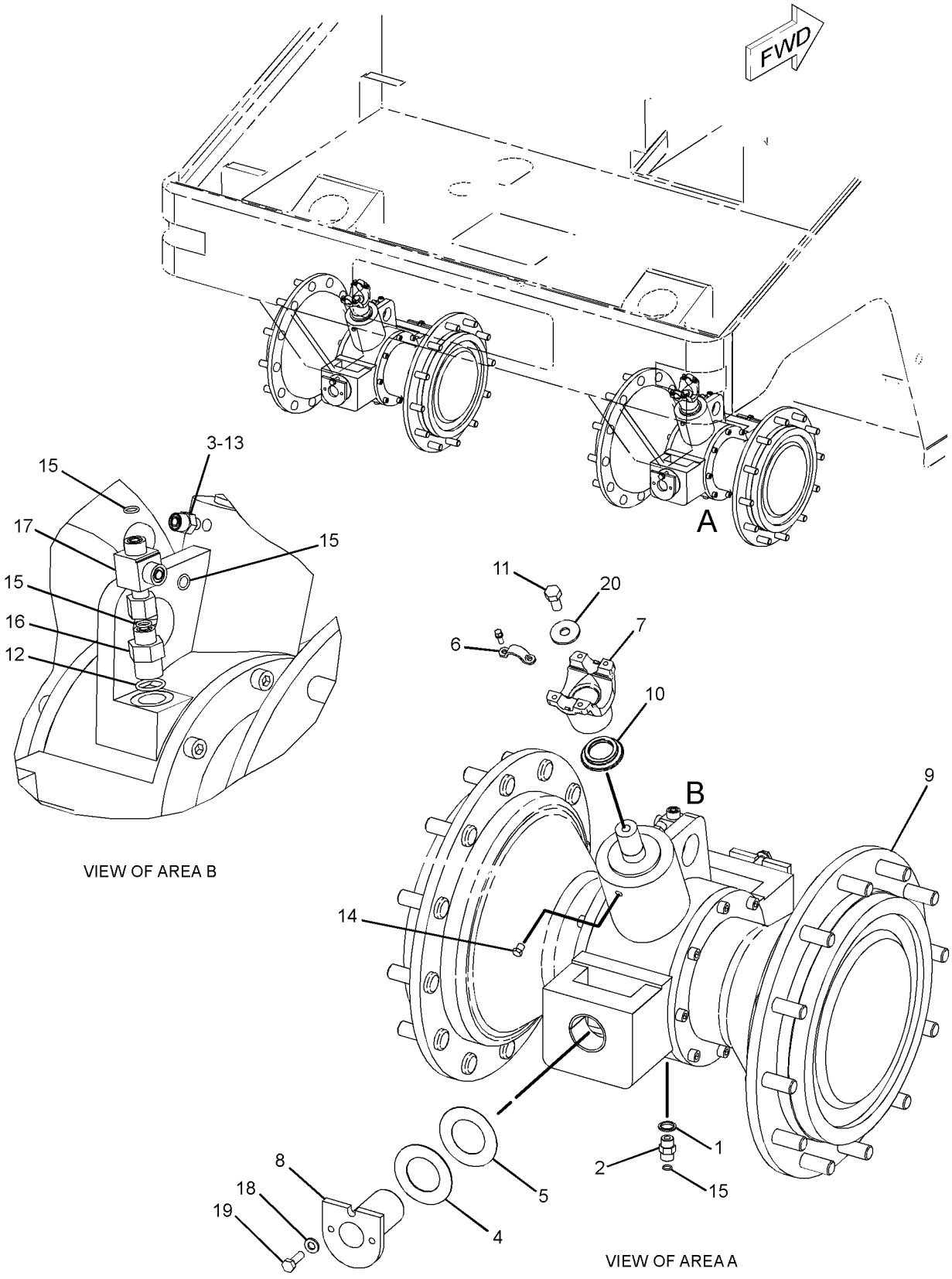

GRAPHIC #1 **<END>** g01923857

POWER TRAIN

131-2385 AXLE GP-FRONT

S/N: PJF1-UP

PART OF 212-5931 POWER TRAIN AR

SMCS-3020, 3282 **i03577240**

NOTE	REF NO	GRAPHIC REF	PART NUMBER	QTY	PART NAME 1 2 3 4 5 6 (PRODUCT LEVEL)	SEE PAGE
	1	1	**3B-8485**	3	FITTING-GREASE	
	2	1	**4B-7270**	3	CONE-BEARING	
	3	1	**6B-3223**	3	CUP-BEARING	
	4	1	**6U-1989**	3	VALVE-RELIEF (AXLE, FRONT)	
	5	1	**9X-8256**	12	WASHER (6.6X12X2-MM THK)	
	6	1	**077-7513**	3	CONE-BEARING	
Y	7	1	**137-5763**	3	HUB GP-WHEEL	166
	8	1	**138-3817**	3	NUT-BEARING	
	9	1	**138-4538**	3	LOCKWASHER-BEARING	
	10	1	**138-4709**	3	SPACER (92.25X125X8-MM THK)	
	11	1	**139-3223**	3	COVER	
	12	1	**139-6096**	3	SEAL-LIP TYPE	
	13	1	**4V-2444**	3	SEAL	
M	14	1	**5C-9553**	12	BOLT (M6X1X16-MM)	
	15	1	**6V-1864**	3	CUP-BEARING	

M-METRIC PART
Y-SEPARATE ILLUSTRATION

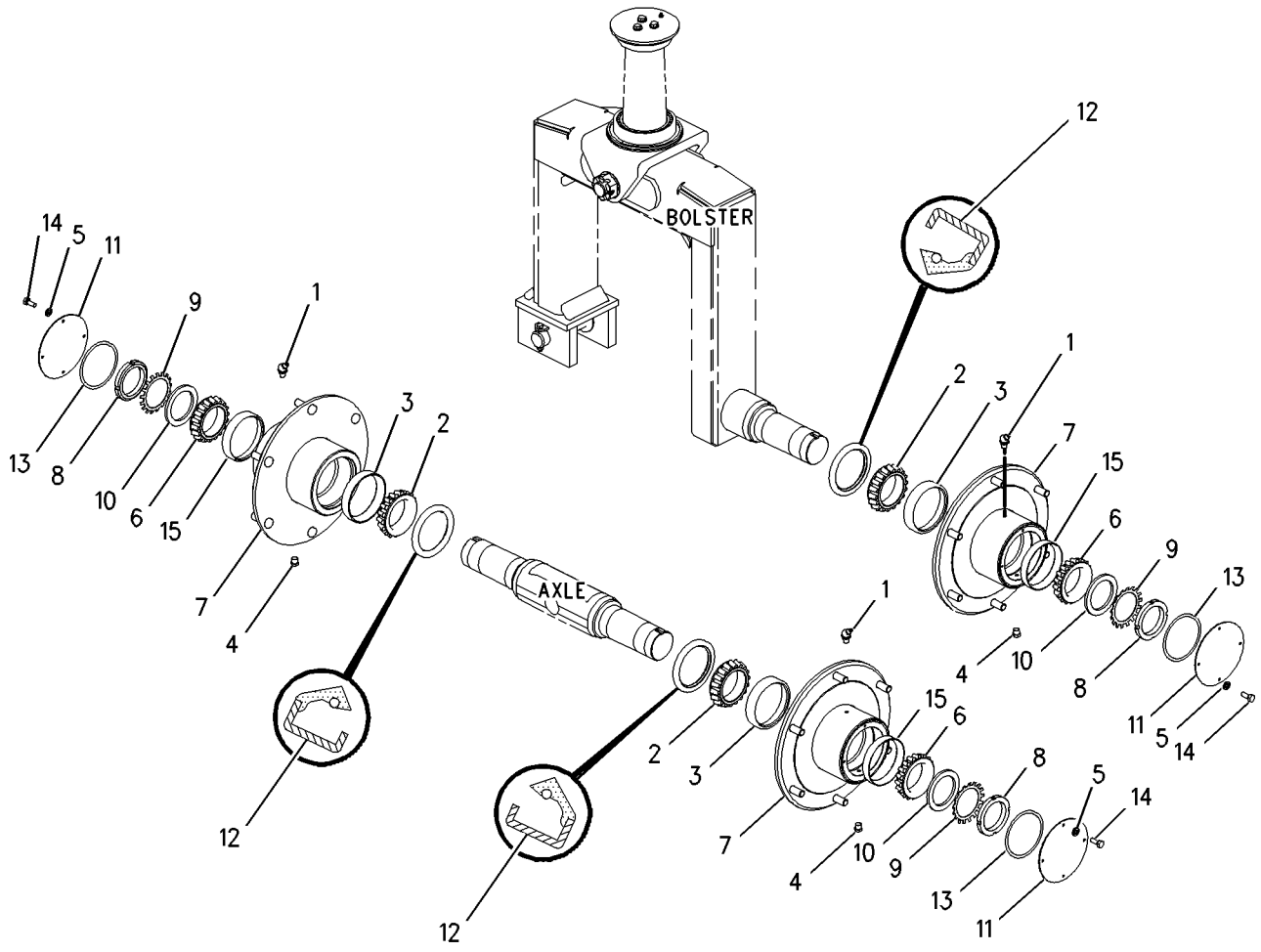

GRAPHIC #1 **<END>** g00807334

211-6011 DIFFERENTIAL GP

S/N: PJF1-UP
PART OF 210-6752 AXLE GP-DRIVE
TYPE 1

SMCS-3258, 3283, 3284 **i03599119**

NOTE	REF NO	GRAPHIC REF	PART NUMBER	QTY	PART NAME 1 2 3 4 5 6 (PRODUCT LEVEL)	SEE PAGE
	1	1	**157-6766**	2	RING-RETAINING	
	2	1	**140-2091**	24	STUD	
	3	1	**151-7502**	6	WASHER-ANTIROTATION	
	4	1	**156-4592**	4	BEARING AS	
R	5	1	**5K-1078**	2	SEAL GP-DUO-CONE	
					(EACH INCLUDES)	
		1	**5K-1075**	2	RING-SEALING	
	6	1	**136-7807**	2	BEARING AS-TAPERED ROLLER	
B	7	1	**136-8627**	2	KIT-SHIM	
B	8	1	**136-8624**	2	KIT-SHIM	
	9	1	**136-8619**	1	RING-RETAINING	
	10	1	**132-8041**	1	COVER-END	
	11	1	**6K-7909**	1	RING-RETAINING	
	12	1	**136-8614**	1	GEAR SET	
	13	1	**136-8620**	1	SEAL	
	14	1	**136-8615**	1	NUT-RING	
	15	1	**7X-9372**	1	SEAL-O-RING	
	16	1	**136-7808**	2	BEARING AS-TAPERED ROLLER	
	17	1	**183-2965**	1	HOUSING	
	18	1	**157-6770**	2	NUT-RING	
	19	1	**157-6776**	6	SHAFT-PLANETARY	
	20	1	**4D-6695**	2	SEAL-O-RING	
	21	1	**151-7505**	6	RING-RETAINING	
	22	1	**151-7510**	324	NEEDLE	
	23	1	**151-7500**	6	WASHER-GEAR	
	24	1	**157-6778**	6	GEAR-PLANETARY	
B	25	1	**157-6762**	2	KIT-SHIM	
					(EACH INCLUDES 2-SHIMS)	
	26	1	**157-6763**	2	PAD	
	27	1	**157-6774**	2	GEAR-SUN	
	28	1	**5Y-1138**	2	RING-RETAINING	
	29	1	**157-6780**	2	CARRIER-PLANETARY	
	30	1	**159-3511**	4	PLUG	
	31	1	**144-9774**	4	WASHER	
B	32	1	**157-6761**	2	KIT-SHIM	
					(EACH INCLUDES 3-SHIMS)	
	33	1	**157-6783**	2	RING-SPACER	
M	34	1	**9X-6032**	24	BOLT-SOCKET HEAD (M10X1.5X30-MM)	
	35	1	**187-8875**	2	HUB	
	36	1	**136-8641**	2	SEAL-O-RING	
B	37	1	**136-8629**	2	SHIM (5-MM THK)	
	38	1	**180-5117**	2	BEARING	
	39	1	**136-8622**	1	KEY	
	40	1	**6V-5201**	2	RING-RETAINING	
	41	1	**157-6771**	2	HOUSING-OUTPUT	
	42	1	**184-7696**	2	COVER	

B-USE AS REQUIRED
M-METRIC PART
R-REMFG PART MAY BE AVAILABLE

211-6011 DIFFERENTIAL GP *(contd.)* **i03599119**

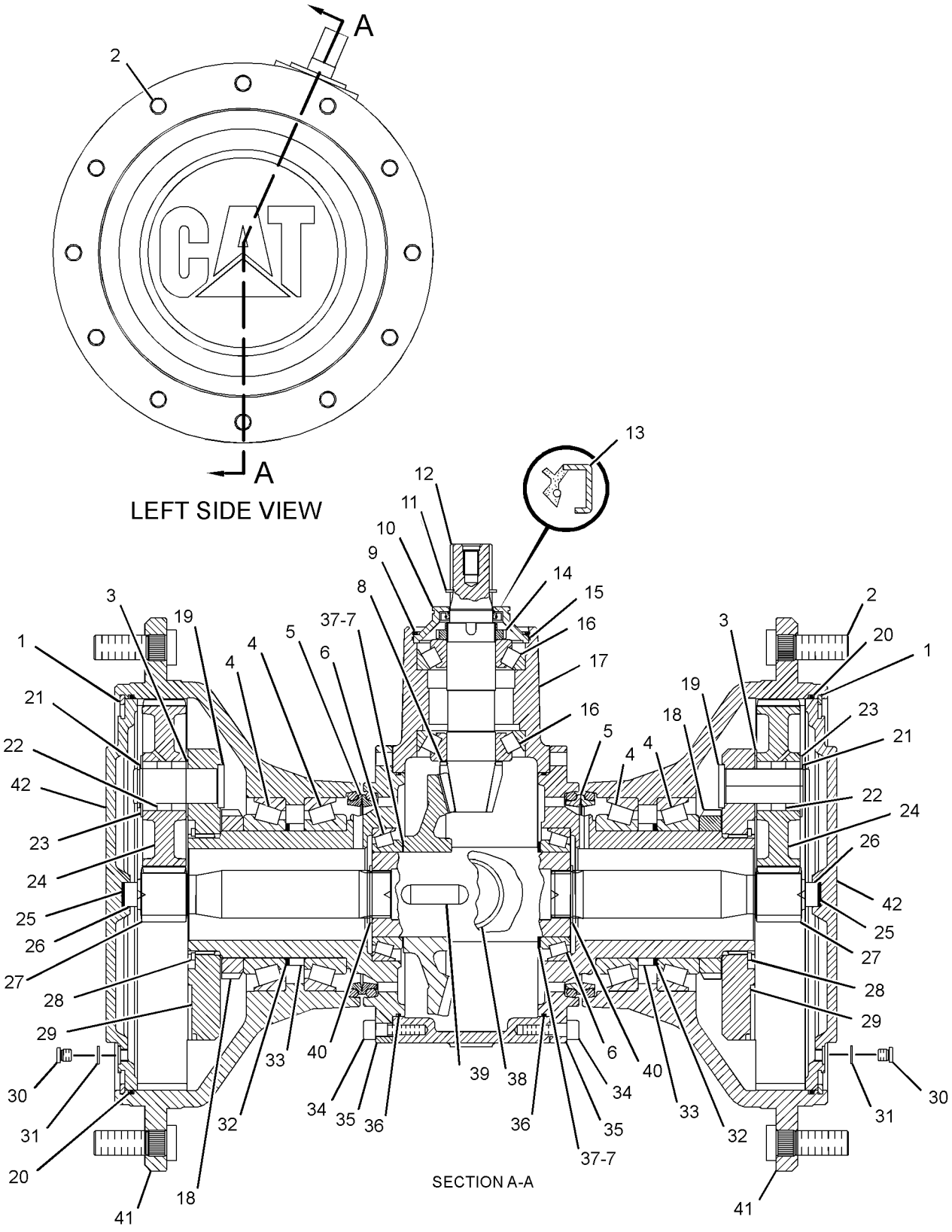

GRAPHIC #1 **<END>** g01415160

POWER TRAIN

211-6011 DIFFERENTIAL GP

S/N: PJF1-UP
PART OF 210-6752 AXLE GP-DRIVE
TYPE 2

SMCS-3258, 3283, 3284 **i03542122**

NOTE	REF NO	GRAPHIC REF	PART NUMBER	QTY	PART NAME 1 2 3 4 5 6 (PRODUCT LEVEL)	SEE PAGE
	1	1	**157-6766**	2	RING-RETAINING	
	2	1	**140-2091**	24	STUD	
	3	1	**151-7502**	6	WASHER-ANTIROTATION	
	4	1	**156-4592**	4	BEARING AS	
R	5	1	**5K-1078**	2	SEAL GP-DUO-CONE	
					(EACH INCLUDES)	
		1	**5K-1075**	2	RING-SEALING	
	6	1	**136-7807**	2	BEARING AS-TAPERED ROLLER	
B	7	1	**136-8627**	2	KIT-SHIM	
B	8	1	**136-8624**	2	KIT-SHIM	
					(EACH KIT INCLUDES SHIMS)	
	9	1	**136-8619**	1	RING-RETAINING	
	10	1	**132-8041**	1	COVER-END	
	11	1	**6K-7909**	1	RING-RETAINING	
	12	1	**136-8614**	1	GEAR SET	
	13	1	**136-8620**	1	SEAL	
	14	1	**136-8615**	1	NUT-RING	
	15	1	**7X-9372**	1	SEAL-O-RING	
	16	1	**136-7808**	2	BEARING AS-TAPERED ROLLER	
	17	1	**183-2965**	1	HOUSING	
	18	1	**157-6770**	2	NUT-RING	
	19	1	**157-6776**	6	SHAFT-PLANETARY	
	20	1	**4D-6695**	2	SEAL-O-RING	
	21	1	**151-7505**	6	RING-RETAINING	
	22	1	**151-7510**	324	NEEDLE	
	23	1	**151-7500**	6	WASHER-GEAR	
	24	1	**157-6778**	6	GEAR-PLANETARY	
B	25	1	**157-6762**	2	KIT-SHIM	
					(EACH INCLUDES 2-SHIMS)	
	26	1	**157-6763**	2	PAD	
	27	1	**157-6774**	2	GEAR-SUN	
	28	1	**5Y-1138**	2	RING-RETAINING	
	29	1	**157-6780**	2	CARRIER-PLANETARY	
C	30	1	**320-7645**	2	PLUG	
B	32	1	**157-6761**	2	KIT-SHIM	
					(EACH INCLUDES 3-SHIMS)	
	33	1	**157-6783**	2	RING-SPACER	
M	34	1	**9X-6032**	24	BOLT-SOCKET HEAD (M10X1.5X30-MM)	
	35	1	**187-8875**	2	HUB	
	36	1	**136-8641**	2	SEAL-O-RING	
B	37	1	**136-8629**	2	SHIM (5-MM THK)	
	38	1	**180-5117**	2	BEARING	
	39	1	**136-8622**	1	KEY	
	40	1	**6V-5201**	2	RING-RETAINING	
	41	1	**157-6771**	2	HOUSING-OUTPUT	
C	42	1	**320-7644**	2	COVER-OUTPUT	
	43	1	**197-6447**	1	SHAFT-OUTPUT	
	44	1	**5W-1701**	2	WASHER (22X27X1.5-MM THK)	

B-USE AS REQUIRED
C-CHANGE FROM PREVIOUS TYPE
M-METRIC PART
R-REMFG PART MAY BE AVAILABLE

211-6011 DIFFERENTIAL GP *(contd.)* **i03542122**

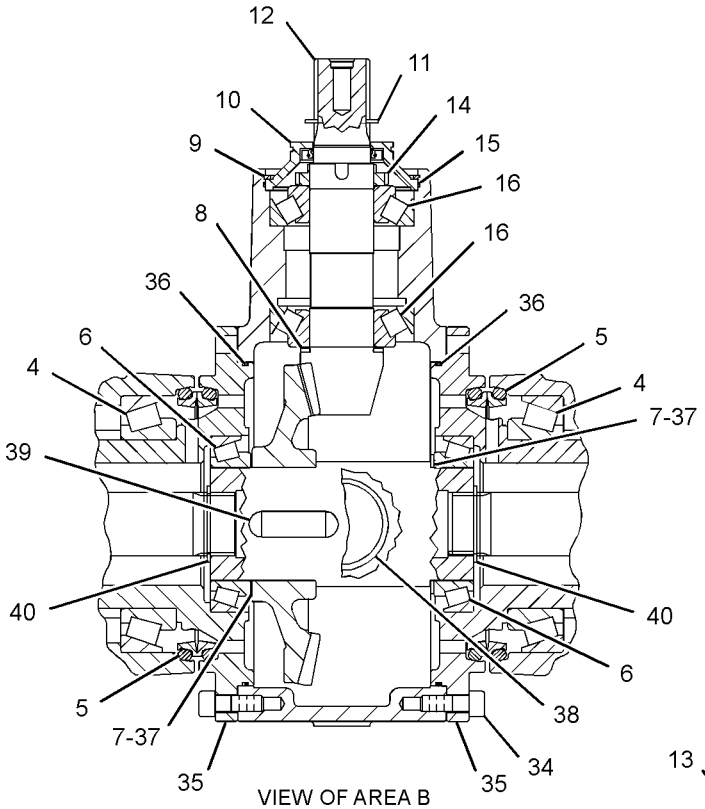

VIEW OF AREA B

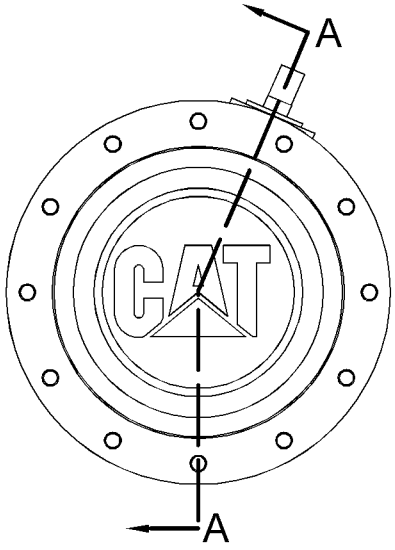

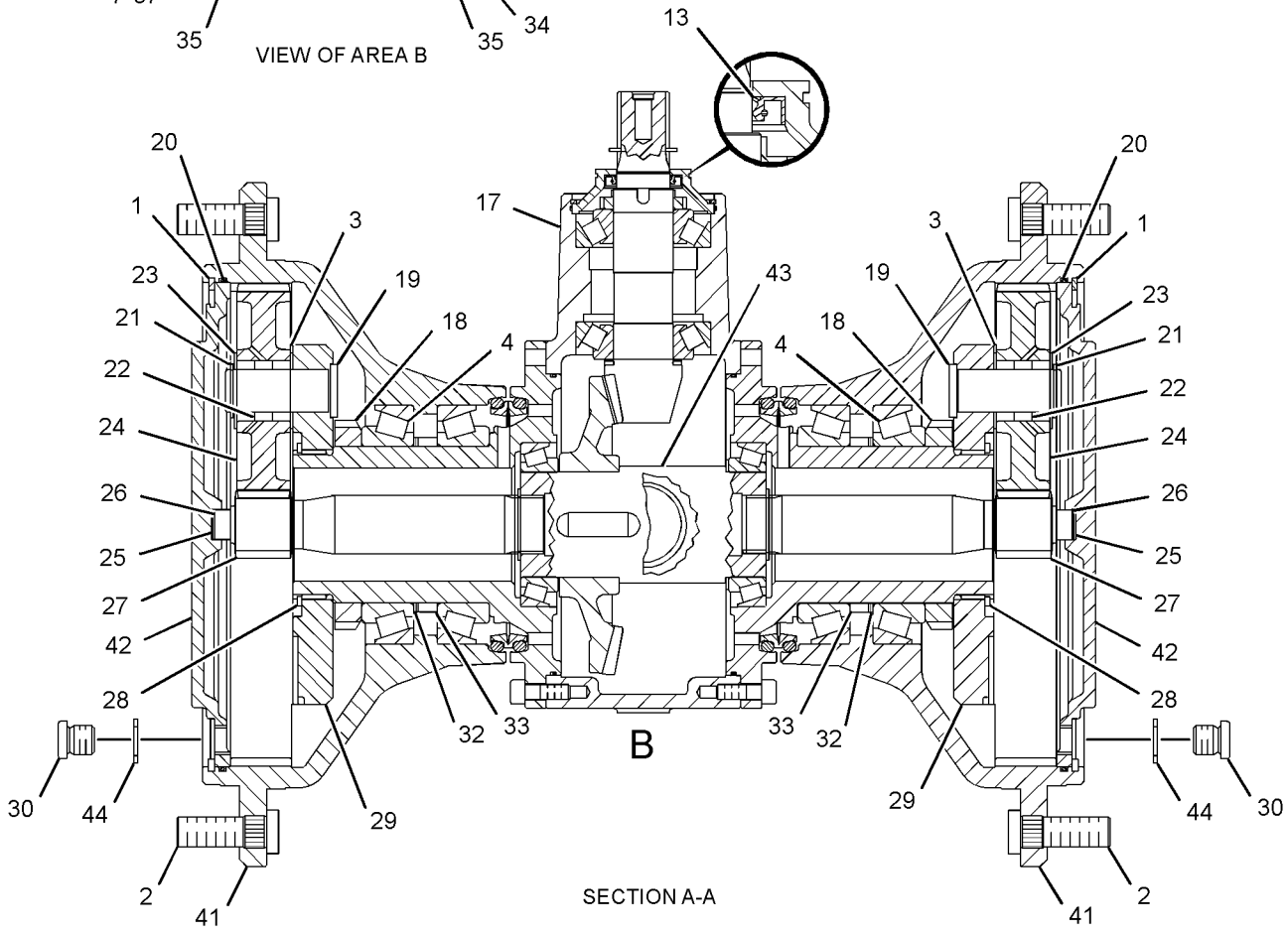

SECTION A-A

GRAPHIC #1 **<END>** g01871753

137-5763 HUB GP-WHEEL

S/N: PJF1-UP

PART OF 131-2385 AXLE GP-FRONT

SMCS-4215 **i01668695**

NOTE	REF NO	GRAPHIC REF	PART NUMBER	QTY	PART NAME 1 2 3 4 5 6 (PRODUCT LEVEL)	SEE PAGE
	1	1	*200-5961*	1	HUB	
	2	1	**140-2091**	6	STUD-WHEEL	

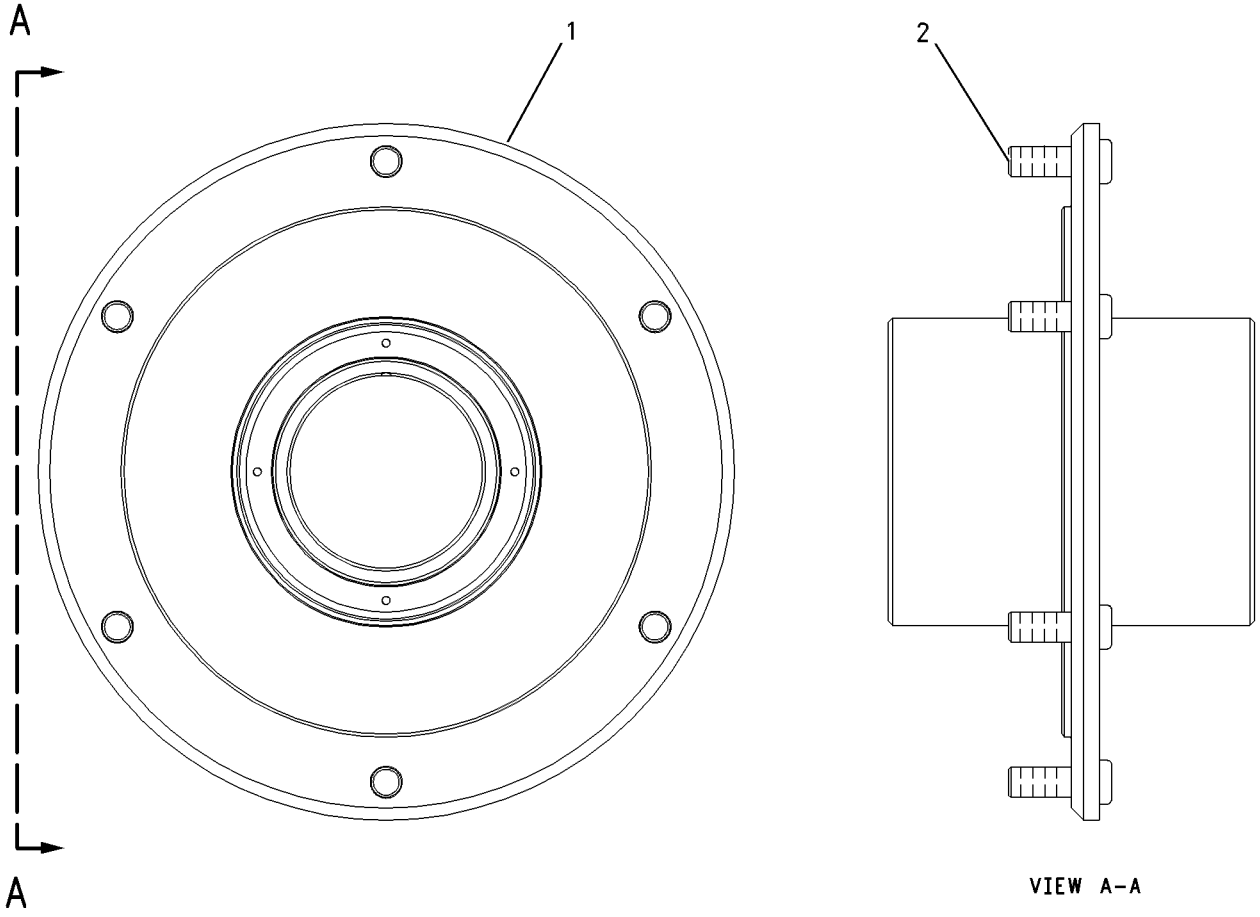

GRAPHIC #1 **<END>** g00291532

POWER TRAIN

247-9620 MOTOR & MTG GP-PROPEL

S/N: PJF1-257

PART OF 246-9028 HYDRAULIC AR

SMCS-4351, 5058 **i02186277**

NOTE	REF NO	GRAPHIC REF	PART NUMBER	QTY	PART NAME 1 2 3 4 5 6 (PRODUCT LEVEL)	SEE PAGE
M	1	1	**095-9805**	4	BOLT-SOCKET HEAD (M14X2X40-MM)	
	2	1	**103-7268**	1	ADAPTER	
YR	3	1	**120-7527**	1	MOTOR GP-PISTON (PROPEL)	260
	4	1	**122-3629**	1	FASTENER GP	
		1	**8V-4102**	2	STRAP	
		1	**8V-4107**	2	BOLT-SELF-LOCKING (1/4-28X0.62-IN)	
	5	1	**122-3631**	1	YOKE	
Y	6	1	**136-6881**	1	SHAFT GP-DRIVE	181
	7	1	**139-2211**	2	CAP (TAMPER RESISTANT)	
	8	1	**143-4889**	1	FLANGE	
	9	1	**151-5064**	1	ELBOW	
	10	1	**178-0570**	1	WASHER	
Y	11	1	**249-6709**	1	BRAKE GP-PARKING	213
	12	1	*250-1476*	1	TEE AS	
		1	**3J-1907**	1	SEAL-O-RING	
		1	**4J-5477**	2	SEAL-O-RING	
		1	**086-9035**	1	TEE	
	13	1	**0S-1629**	1	BOLT (1/2-20X1-IN)	
	14	1	**117-8801**	1	SEAL-O-RING	
	15	1	*148-8316*	1	CONNECTOR AS	
		1	**3J-7354**	1	SEAL-O-RING	
		1	**4J-5477**	1	SEAL-O-RING	
		1	**6V-8647**	1	CONNECTOR	
	16	1	*148-8325*	1	CONNECTOR AS	
		1	**3J-1907**	1	SEAL-O-RING	
		1	**4J-5477**	1	SEAL-O-RING	
		1	**6V-8641**	1	CONNECTOR	
	17	1	*148-8328*	1	CONNECTOR AS	
		1	**3D-2824**	1	SEAL-O-RING	
		1	**6V-8398**	1	SEAL-O-RING	
		1	**6V-8633**	1	CONNECTOR	
	18	1	*148-8347*	1	ELBOW AS	
		1	**3D-2824**	1	SEAL-O-RING	
		1	**6V-9007**	1	ELBOW	
		1	**6V-9746**	1	SEAL-O-RING	
	19	1	*148-8381*	1	ELBOW AS	
		1	**3D-2824**	1	SEAL-O-RING	
		1	**6V-8398**	1	SEAL-O-RING	
		1	**8T-5429**	1	ELBOW	
	20	1	*148-8448*	1	FITTING AS	
		1	**4J-5477**	2	SEAL-O-RING	
		1	**6V-9842**	1	TEE-SWIVEL	
	21	1	**1P-3702**	1	SEAL-RECTANGULAR	
	22	1	**1P-3703**	1	SEAL-RECTANGULAR	
	23	1	**3J-1907**	1	SEAL-O-RING	
	24	1	**4D-3120**	4	BOLT-SOCKET HEAD (3/8-16X1.5-IN)	
	25	1	**5P-7812**	1	SEAL-O-RING	
	26	1	**6V-8397**	1	SEAL-O-RING	
	27	1	**6V-9746**	1	SEAL-O-RING	
	28	1	**7X-0510**	4	WASHER-HARD (15.5X29X3-MM THK)	
	29	1	**8L-2786**	2	SEAL-O-RING	
	30	1	**8T-4224**	8	WASHER-HARD (8.8X16X2-MM THK)	
	31	1	**8T-4821**	1	WASHER (13.5X40X3-MM THK)	
	32	1	**8T-4896**	4	WASHER-HARD (10.2X18.5X2.5-MM THK)	
M	33	1	**8T-4908**	8	BOLT (M8X1.25X25-MM)	
	34	1	**8T-9377**	4	BOLT (3/8-16X2.25-IN)	

247-9620 **MOTOR & MTG GP-PROPEL** *(contd.)* **i02186277**

NOTE	REF NO	GRAPHIC REF	PART NUMBER	QTY	PART NAME 1 2 3 4 5 6 (PRODUCT LEVEL)	SEE PAGE
	35	1	**9S-4185**	2	PLUG-O-RING	
	36	1	**9S-8001**	1	PLUG-O-RING	

M-METRIC PART
R-REMFG PART MAY BE AVAILABLE
Y-SEPARATE ILLUSTRATION

247-9620 **MOTOR & MTG GP-PROPEL** *(contd.)* **i02186277**

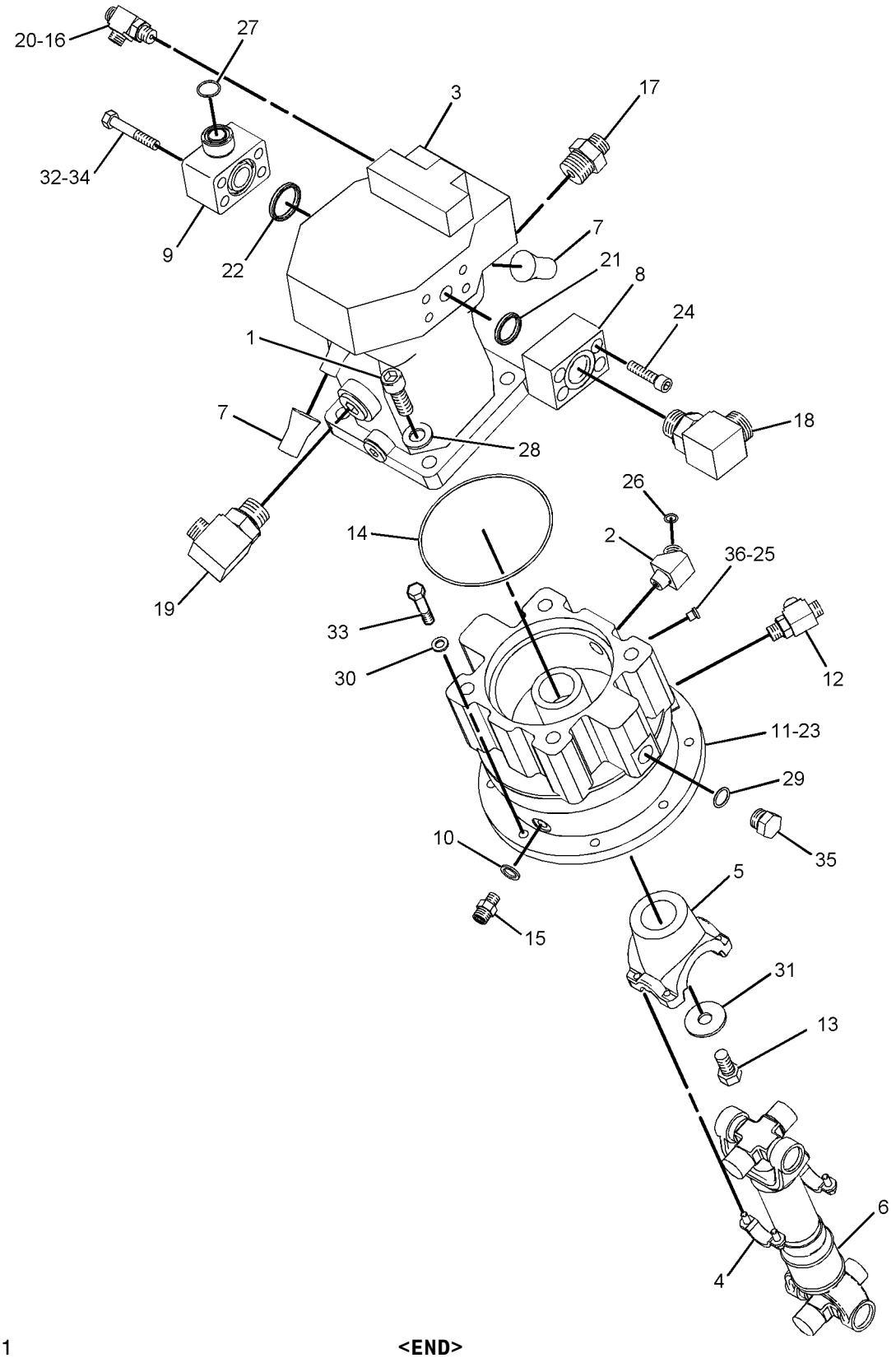

GRAPHIC #1 **<END>** g01099714

POWER TRAIN

247-9620 MOTOR & MTG GP-PROPEL

S/N: PJF258-UP

PART OF 246-9028 HYDRAULIC AR

SMCS-4351, 5058 **i03188951**

NOTE	REF NO	GRAPHIC REF	PART NUMBER	QTY	PART NAME 1 2 3 4 5 6 (PRODUCT LEVEL)	SEE PAGE
M	1	1	**095-9805**	4	BOLT-SOCKET HEAD (M14X2X40-MM)	
	2	1	**103-7268**	1	ADAPTER	
CY	3	1	**260-1329**	1	MOTOR GP-PISTON (PROPEL)	262
	4	1	**122-3629**	1	FASTENER GP	
		1	**8V-4102**	2	STRAP	
		1	**8V-4107**	2	BOLT-SELF-LOCKING (1/4-28X0.62-IN)	
	5	1	**122-3631**	1	YOKE	
Y	6	1	**136-6881**	1	SHAFT GP-DRIVE (PARKING BRAKE)	181
	8	1	**143-4889**	1	FLANGE	
	9	1	**151-5064**	1	ELBOW	
Y	11	1	**249-6709**	1	BRAKE GP-PARKING	213
	12	1	*250-1476*	1	TEE AS	
		1	**3J-1907**	1	SEAL-O-RING	
		1	**4J-5477**	2	SEAL-O-RING	
		1	**086-9035**	1	TEE	
	13	1	**0S-1629**	1	BOLT (1/2-20X1-IN)	
	14	1	**5E-8771**	1	SEAL-O-RING	
	15	1	*148-8316*	1	CONNECTOR AS	
		1	**3J-7354**	1	SEAL-O-RING	
		1	**4J-5477**	1	SEAL-O-RING	
		1	**6V-8647**	1	CONNECTOR	
	16	1	*148-8325*	1	CONNECTOR AS	
		1	**3J-1907**	1	SEAL-O-RING	
		1	**4J-5477**	1	SEAL-O-RING	
		1	**6V-8641**	1	CONNECTOR	
	17	1	*148-8328*	1	CONNECTOR AS	
		1	**3D-2824**	1	SEAL-O-RING	
		1	**6V-8398**	1	SEAL-O-RING	
		1	**6V-8633**	1	CONNECTOR	
	18	1	*148-8347*	1	ELBOW AS	
		1	**3D-2824**	1	SEAL-O-RING	
		1	**6V-9007**	1	ELBOW	
		1	**6V-9746**	1	SEAL-O-RING	
	19	1	*148-8381*	1	ELBOW AS	
		1	**3D-2824**	1	SEAL-O-RING	
		1	**6V-8398**	1	SEAL-O-RING	
		1	**8T-5429**	1	ELBOW	
	20	1	*148-8448*	1	FITTING AS	
		1	**4J-5477**	2	SEAL-O-RING	
		1	**6V-9842**	1	TEE-SWIVEL	
	21	1	**4J-5267**	1	SEAL-O-RING	
	22	1	**1P-3703**	1	SEAL-RECTANGULAR	
	23	1	**3J-1907**	1	SEAL-O-RING	
	24	1	**4D-3120**	4	BOLT-SOCKET HEAD (3/8-16X1.5-IN)	
	26	1	**6V-8397**	1	SEAL-O-RING	
	27	1	**6V-9746**	1	SEAL-O-RING	
	28	1	**7X-0510**	4	WASHER-HARD (15.5X29X3-MM THK)	
	30	1	**8T-4224**	8	WASHER-HARD (8.8X16X2-MM THK)	
	31	1	**8T-4821**	1	WASHER (13.5X40X3-MM THK)	
	32	1	**8T-4896**	4	WASHER-HARD (10.2X18.5X2.5-MM THK)	
M	33	1	**8T-4908**	8	BOLT (M8X1.25X25-MM)	
	34	1	**8T-9377**	4	BOLT (3/8-16X2.25-IN)	
	35	1	*148-8411*	2	PLUG AS	
					(EACH INCLUDES)	
		1	**3K-0360**	1	SEAL-O-RING	
		1	**9S-4185**	1	PLUG-O-RING	

247-9620 **MOTOR & MTG GP-PROPEL** *(contd.)* **i03188951**

C-CHANGE FROM PREVIOUS TYPE
M-METRIC PART
Y-SEPARATE ILLUSTRATION

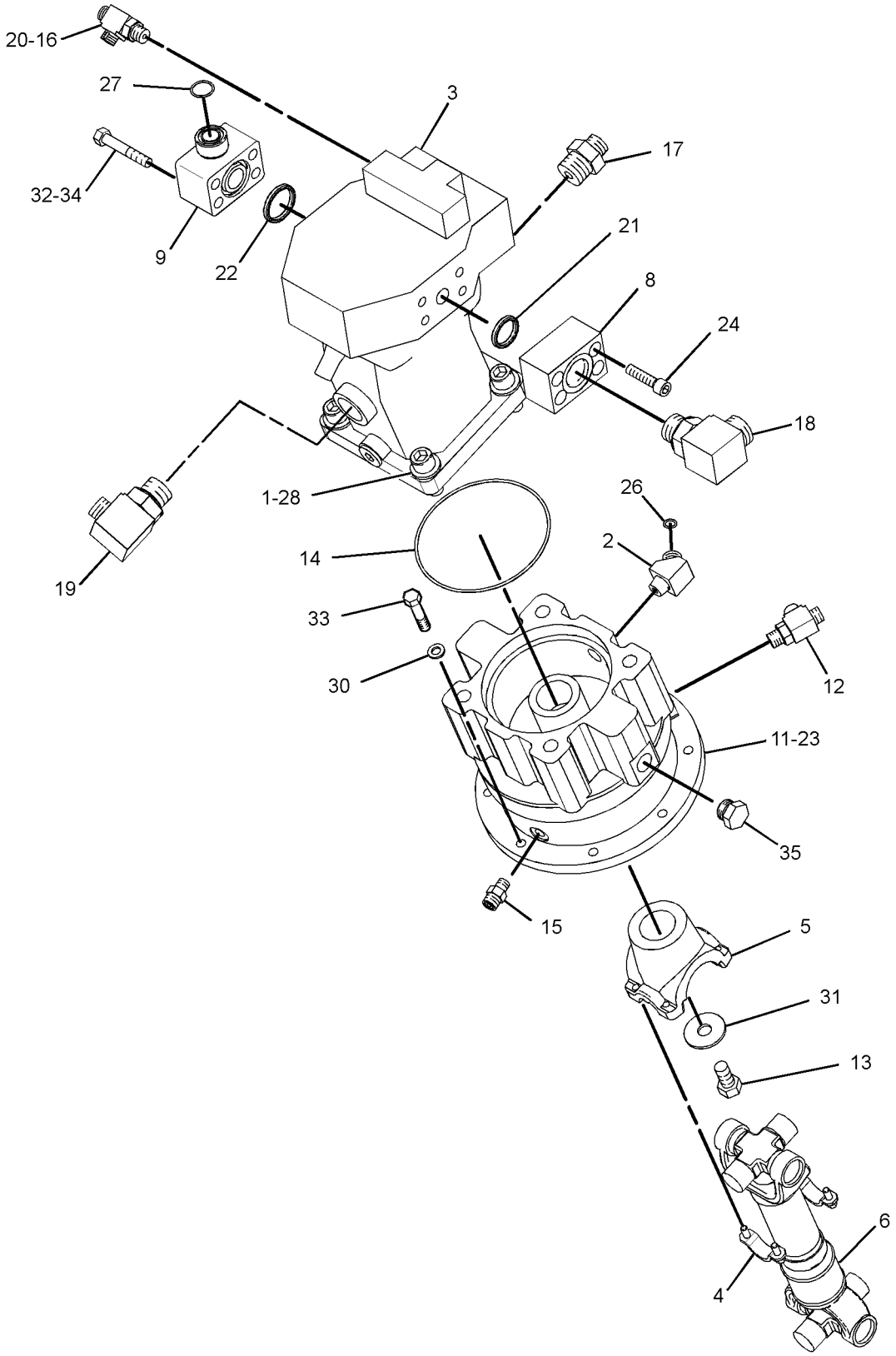

GRAPHIC #1 **<END>** g01865761

255-7159 MOTOR & MTG GP-PROPEL

S/N: PJF1-UP
AN ATTACHMENT
TYPE 1

SMCS-4351, 5058 **i02206361**

NOTE	REF NO	GRAPHIC REF	PART NUMBER	QTY	PART NAME 1 2 3 4 5 6 (PRODUCT LEVEL)	SEE PAGE
M	1	1	**095-9805**	4	BOLT-SOCKET HEAD (M14X2X40-MM)	
Y	2	1	**260-1330**	1	MOTOR GP-PISTON (PROPEL, LH)	264
	3	1	**7X-0510**	4	WASHER-HARD (15.5X29X3-MM THK)	

M-METRIC PART
Y-SEPARATE ILLUSTRATION

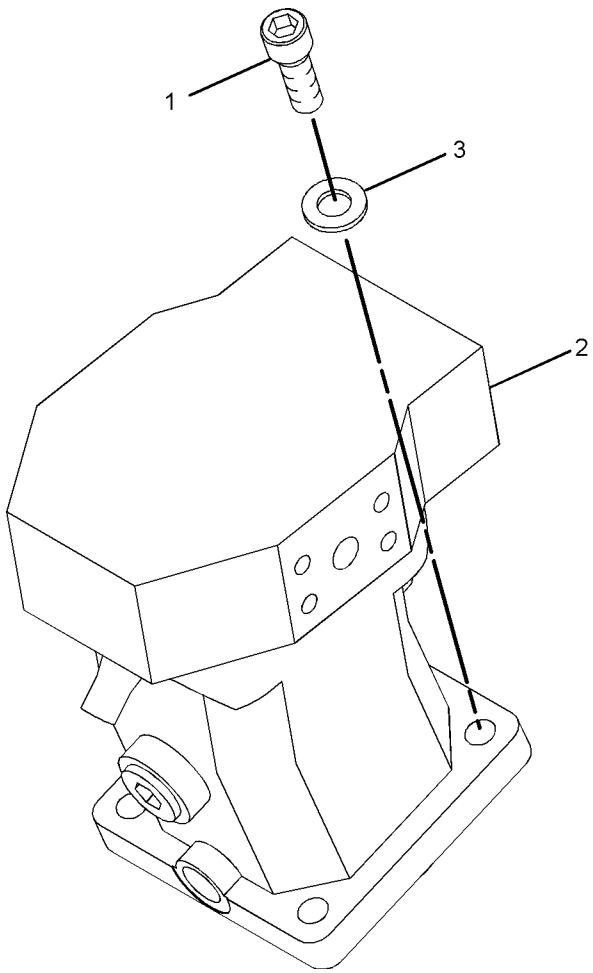

GRAPHIC #1 **<END>** g01095243

255-7159 MOTOR & MTG GP-PROPEL

S/N: PJF1-UP
AN ATTACHMENT
TYPE 2

SMCS-4351, 5058 **i02243352**

NOTE	REF NO	GRAPHIC REF	PART NUMBER	QTY	PART NAME 1 2 3 4 5 6 (PRODUCT LEVEL)	SEE PAGE
M	1	1	**095-9805**	4	BOLT-SOCKET HEAD (M14X2X40-MM)	
CY	2	1	**260-1331**	1	MOTOR GP-PISTON (PROPEL)	265
	3	1	**7X-0510**	4	WASHER-HARD (15.5X29X3-MM THK)	

C-CHANGE FROM PREVIOUS TYPE
M-METRIC PART
Y-SEPARATE ILLUSTRATION

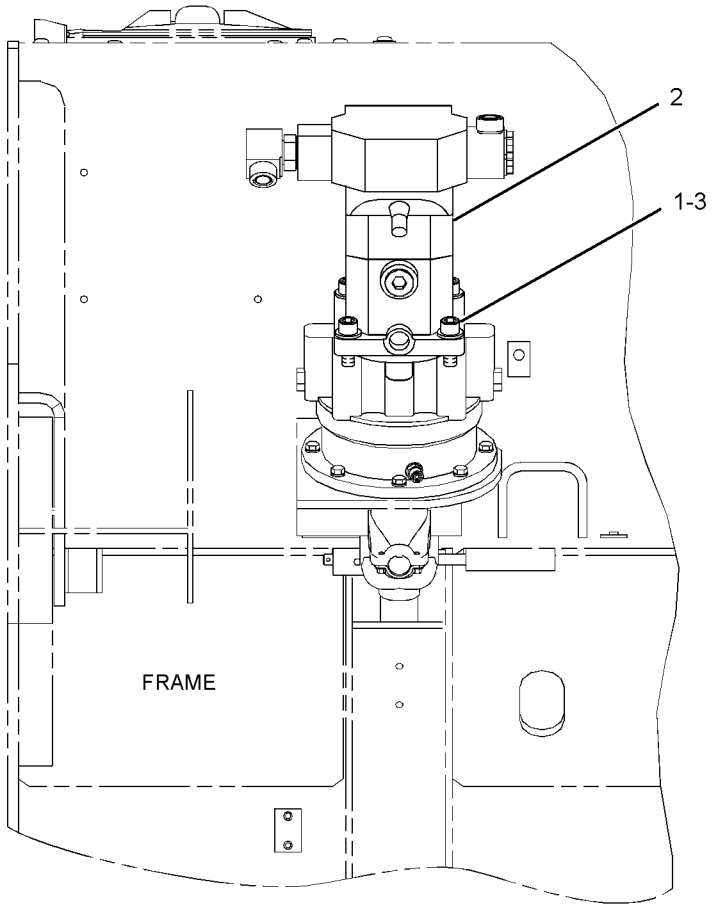

FRONT VIEW

GRAPHIC #1 **<END>** g01261576

260-1345 MOTOR & MTG GP-PROPEL—LH, SPEEDOMETER

S/N: PJF1-UP

AN ATTACHMENT

SMCS-4351, 5058 **i02366892**

NOTE	REF NO	GRAPHIC REF	PART NUMBER	QTY	PART NAME 1 2 3 4 5 6 (PRODUCT LEVEL)	SEE PAGE
M	1	1	**095-9805**	4	BOLT-SOCKET HEAD (M14X2X40-MM)	
	2	1	**145-3343**	1	SPEEDOMETER AS-ELECTRONIC	
		1	**4B-2043**	6	NUT (8-32-THD)	
		1	**9B-7233**	6	LOCKWASHER	
		1	**115-1748**	1	LAMP (24-VOLT, 3-WATT) (SPEEDOMETER)	
Y	3	1	*260-1334*	1	MOTOR GP-PISTON (LH PROPEL, SPEEDOMETER)	266
	4	1	**7X-0510**	4	WASHER-HARD (15.5X29X3-MM THK)	
F		1	**7K-1181**	16	STRAP-CABLE	
F		1	**276-4881**	1	HARNESS AS-WIRING (SPEEDOMETER) (PROPEL MOTOR)	
		1	**8T-8737**	1	PLUG-SEAL	
		1	**155-2260**	1	KIT-CONNECTING PLUG (3-PIN)	
		1	**155-2270**	1	KIT-CONNECTING PLUG (2-PIN)	
					(EACH KIT INCLUDES PLUG AS, WEDGE & INTERFACE SEAL)	
F		1	**276-4882**	1	HARNESS AS-SENSOR (SPEED)	
		1	**102-8802**	1	KIT-RECEPTACLE (2-PIN)	
					(INCLUDES RECEPTACLE AS & WEDGE)	
		1	**155-2270**	1	KIT-CONNECTING PLUG (2-PIN)	
					(INCLUDES PLUG AS, WEDGE & INTERFACE SEAL)	

F-NOT SHOWN
M-METRIC PART
Y-SEPARATE ILLUSTRATION

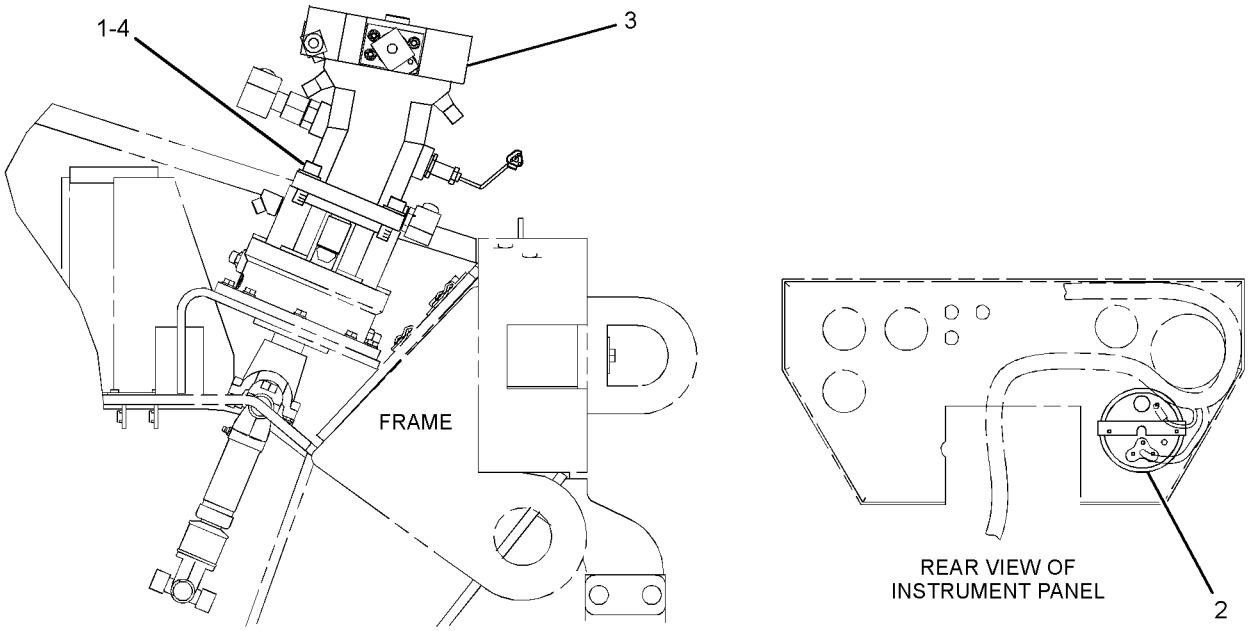

LEFT SIDE VIEW

GRAPHIC #1 **<END>** g01158146

212-5931 POWER TRAIN AR

S/N: PJF1-UP

PART OF 246-8991 COMMON AR

SMCS-3000, 4000 **i01754975**

NOTE	PART NUMBER	QTY	PART NAME 1 2 3 4 5 6 (PRODUCT LEVEL)	SEE PAGE
Y	*210-6752*	1	AXLE GP-DRIVE	159
Y	*131-2385*	1	AXLE GP-FRONT	161
Y	*155-9678*	1	WHEEL & TIRE GP	184

Y-SEPARATE ILLUSTRATION

<END>

258-0889 PUMP & MTG GP-PROPEL

S/N: PJF1-UP

PART OF 246-9028 HYDRAULIC AR

SMCS-3203, 3204, 5070 **i03594649**

NOTE	REF NO	GRAPHIC REF	PART NUMBER	QTY	PART NAME 1 2 3 4 5 6 (PRODUCT LEVEL)	SEE PAGE
	1	1	**191-8922**	1	HUB-COUPLING	
M		1	**6V-8200**	1	BOLT-SOCKET HEAD (M12X1.75X35-MM)	
	2	1	**7X-5308**	4	CAP-DUST	
	3	1	**187-3547**	2	COUPLER AS-QUICK DISCONNECT (TEST PORT)	
		1	**3J-1907**	1	SEAL-O-RING	
	4	1	**9X-6580**	1	NUT (1-3/16-12-THD)	
	5	1	**286-9681**	2	VALVE-CONTROL (PROPEL PUMP)	
	6	1	**145-5618**	1	VALVE AS-CHECK (PROPEL PUMP)	
Y	7	1	*194-5326*	1	PUMP GP-PISTON (PROPEL)	271
	8	1	*148-8308*	1	ADAPTER AS	
		1	**2S-4078**	1	SEAL-O-RING	
		1	**7X-2470**	1	ADAPTER	
	9	1	*148-8327*	3	CONNECTOR AS	
					(EACH INCLUDES)	
		1	**3D-2824**	1	SEAL-O-RING	
		1	**6V-8637**	1	CONNECTOR	
		1	**6V-9746**	1	SEAL-O-RING	
	10	1	*148-8328*	1	CONNECTOR AS	
		1	**3D-2824**	1	SEAL-O-RING	
		1	**6V-8398**	1	SEAL-O-RING	
		1	**6V-8633**	1	CONNECTOR	
	11	1	*148-8345*	1	CONNECTOR AS	
		1	**2M-9780**	1	SEAL-O-RING	
		1	**6V-8398**	1	SEAL-O-RING	
		1	**6V-8638**	1	CONNECTOR	
	12	1	*148-8347*	2	ELBOW AS	
					(EACH INCLUDES)	
		1	**3D-2824**	1	SEAL-O-RING	
		1	**6V-9007**	1	ELBOW	
		1	**6V-9746**	1	SEAL-O-RING	
	13	1	*148-8352*	1	ELBOW AS	
		1	**5K-9090**	1	SEAL-O-RING	
		1	**6V-9854**	1	ELBOW	
	14	1	*148-8355*	1	ELBOW AS	
		1	**5K-9090**	1	SEAL-O-RING	
		1	**6V-9005**	1	ELBOW	
		1	**7M-8485**	1	SEAL-O-RING	
	15	1	*148-8418*	1	REDUCER AS	
		1	**6V-8398**	1	SEAL-O-RING	
		1	**6V-8942**	1	REDUCER-O-RING	
	16	1	*150-4033*	1	TEE AS	
		1	**6V-9746**	2	SEAL-O-RING	
		1	**6V-9846**	1	TEE-SWIVEL	
	17	1	*164-5567*	1	COUPLER AS-QUICK DISCONNECT	
		1	**3J-1907**	1	SEAL-O-RING	
		1	**6V-3965**	1	FITTING (QUICK DISCONNECT)	
	18	1	*169-7397*	1	ADAPTER GP	
		1	**3K-0360**	1	SEAL-O-RING	
		1	**3P-1932**	1	ADAPTER	
	19	1	*183-3409*	2	PLUG AS	
					(EACH INCLUDES)	
		1	**9S-8002**	1	PLUG-O-RING	
		1	**033-5853**	1	SEAL-O-RING	
	20	1	**7X-5315**	1	FITTING AS (QUICK DISCONNECT)	
	21	1	**4J-0520**	2	SEAL-O-RING	
	22	1	**8T-4123**	2	WASHER (22X35X3.5-MM THK)	

258-0889 **PUMP & MTG GP-PROPEL** *(contd.)* **i03594649**

NOTE	REF NO	GRAPHIC REF	PART NUMBER	QTY	PART NAME 1 2 3 4 5 6 (PRODUCT LEVEL)	SEE PAGE
	23	1	**8T-4223**	8	WASHER-HARD (13.5X25.5X3-MM THK)	
M	24	1	**8T-4648**	8	BOLT (M12X1.75X70-MM)	
M	25	1	**8T-5460**	2	BOLT (M20X2.5X40-MM)	
	26	1	*150-4047*	2	ADAPTER AS	
		1	**3J-7354**	1	SEAL-O-RING	
		1	**8T-2353**	1	ADAPTER	
F			**139-2211**	2	CAP (TAMPER RESISTANT)	

F-NOT SHOWN
M-METRIC PART
Y-SEPARATE ILLUSTRATION

258-0889 **PUMP & MTG GP-PROPEL** *(contd.)* **i03594649**

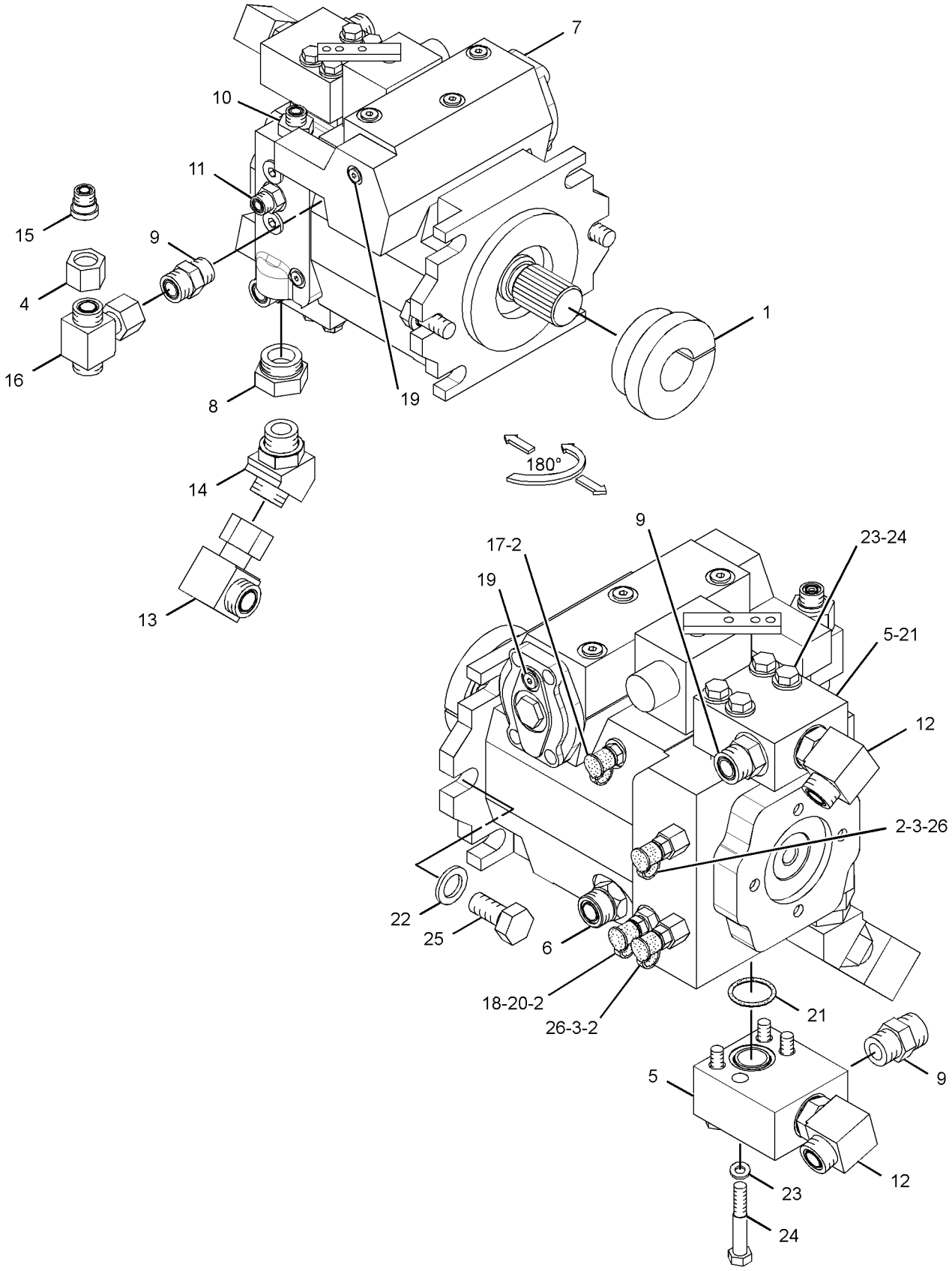

GRAPHIC #1 **<END>** g01418273

194-7759 RIM GP-DEMOUNTABLE

S/N: PJF1-417

PART OF 291-0520 TIRE & RIM GP, 194-7757 WHEEL & TIRE GP

ALSO AN ATTACHMENT

SMCS-4209 **i02520424**

NOTE	REF NO	GRAPHIC REF	PART NUMBER	QTY	PART NAME 1 2 3 4 5 6 (PRODUCT LEVEL)	SEE PAGE
	1	1	**246-2359**	1	SEAL-O-RING	

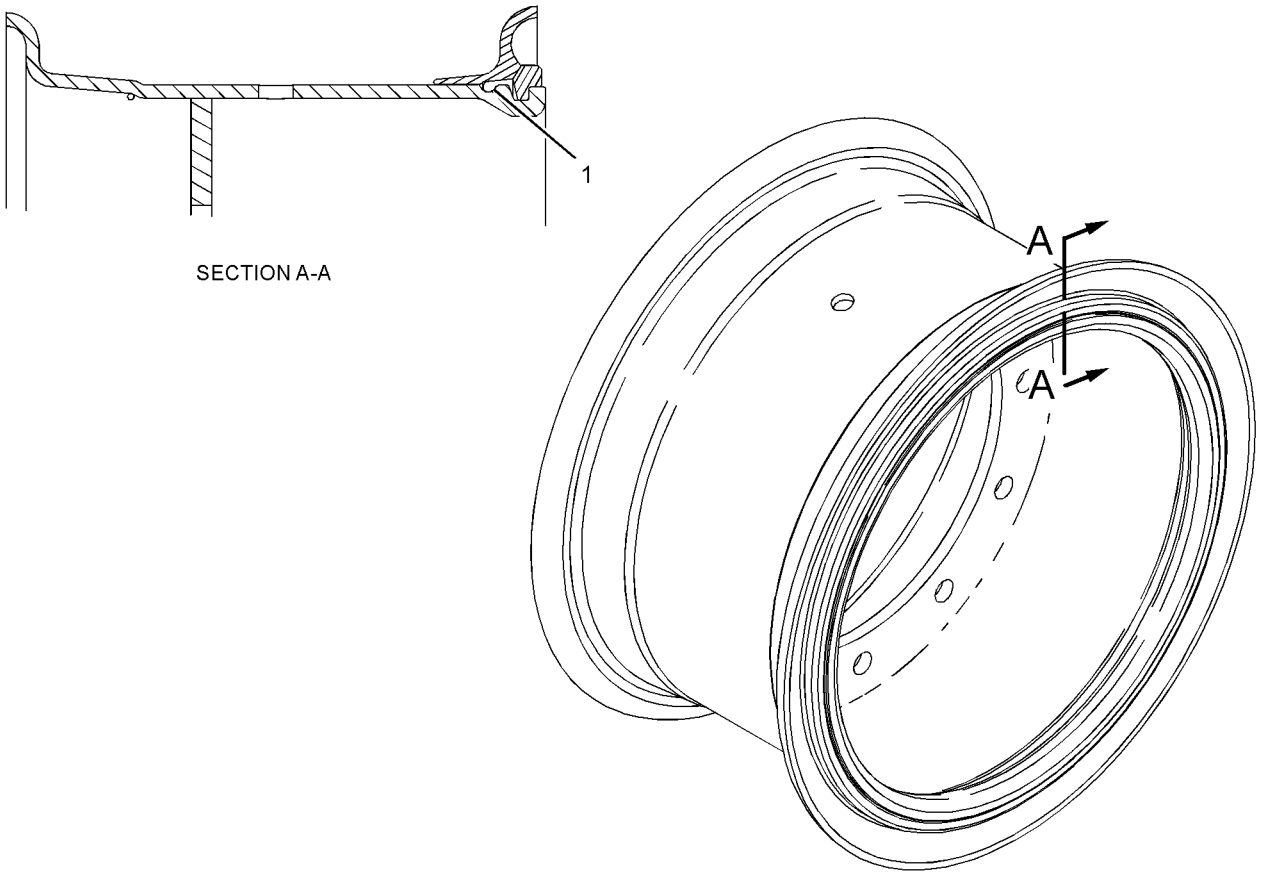

GRAPHIC #1 **<END>** g01282131

136-6881 SHAFT GP-DRIVE

S/N: PJF1-UP

PART OF 247-9617 BRAKE GP-PARKING, 247-9620 MOTOR & MTG GP-PROPEL

SMCS-3253 **i03577243**

NOTE	REF NO	GRAPHIC REF	PART NUMBER	QTY	PART NAME 1 2 3 4 5 6 (PRODUCT LEVEL)	SEE PAGE
	1	1	**140-5883**	2	KIT-CROSS & BEARING (DRIVE SHAFT)	
	2	1	**156-9456**	1	YOKE-SLIP	
	3	1	**027-1287**	1	FITTING-GREASE	
	4	1	**156-9457**	1	SHAFT	
	5	1	**156-9455**	1	KIT-CAP & WASHER (DRIVE SHAFT)	
					(INCLUDES DUST CAP & WASHERS)	

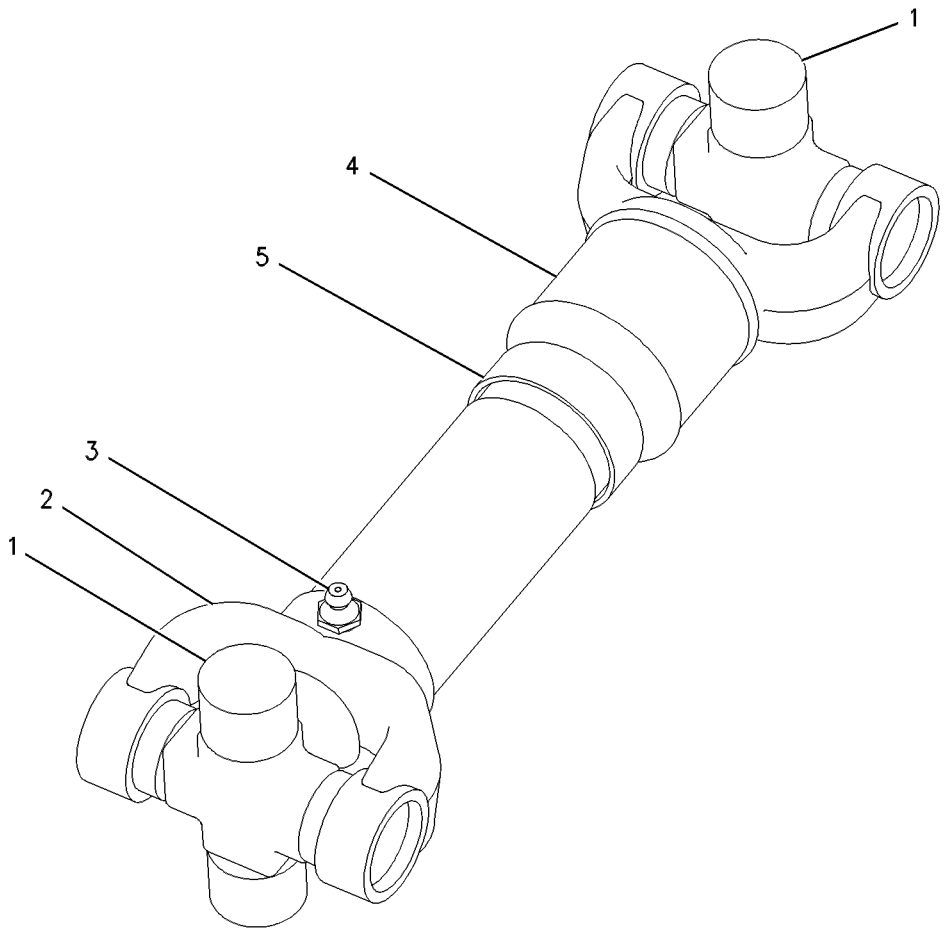

GRAPHIC #1 **<END>** g00336298

291-0520 TIRE & RIM GP

S/N: PJF1-417
PART OF 291-0521 WHEEL & TIRE GP
AN ATTACHMENT

SMCS-4202, 4203, 4209 **i02565450**

NOTE	REF NO	GRAPHIC REF	PART NUMBER	QTY	PART NAME 1 2 3 4 5 6 (PRODUCT LEVEL)	SEE PAGE
	1	1	**1K-8374**	1	VALVE GP (TIRE INFLATION)	
		1	**2D-2507**	1	SPUD	
		1	**2D-2508**	1	GROMMET	
		1	**2D-2509**	1	LOCKNUT (11/16-16-THD)	
		1	**3K-2316**	1	VALVE	
		1	**6F-3930**	1	CORE-VALVE	
		1	**6F-3931**	1	CAP-VALVE STEM	
	2	1	**077-3895**	1	CAP-VALVE STEM	
	3	1	**098-1483**	1	ADAPTER	
Y	4	1	**194-7759**	1	RIM GP-DEMOUNTABLE	180
	5	1	*291-0519*	1	TIRE (14/70-20)	

Y-SEPARATE ILLUSTRATION

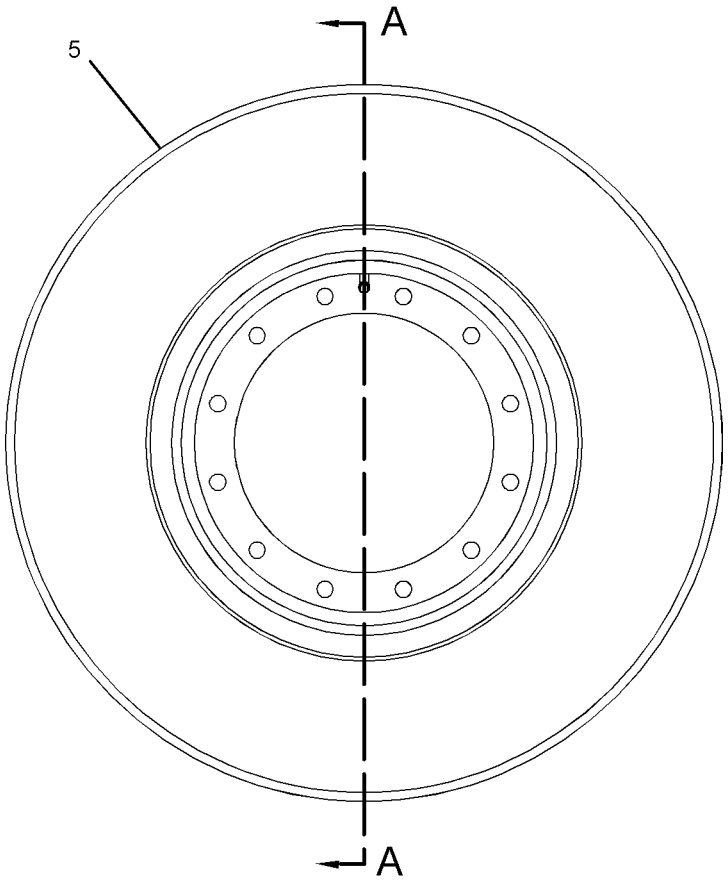

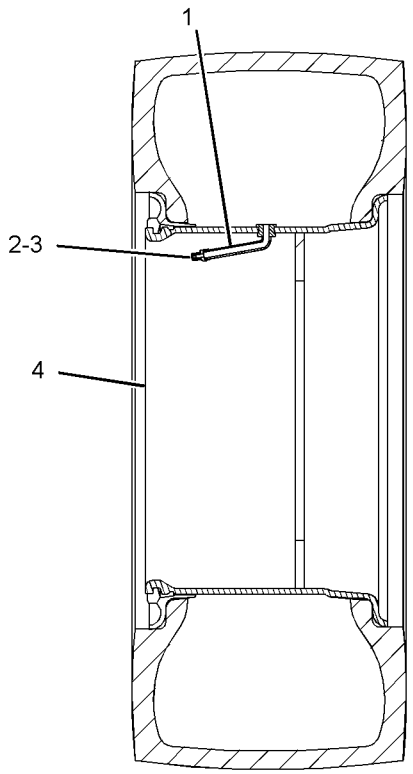

SECTION A-A

GRAPHIC #1 **<END>** g01285429

330-9392 TIRE & RIM GP

S/N: PJF418-UP
PART OF 291-0521 WHEEL & TIRE GP
AN ATTACHMENT

SMCS-4202, 4203, 4209 **i03112002**

NOTE	REF NO	GRAPHIC REF	PART NUMBER	QTY	PART NAME 1 2 3 4 5 6 (PRODUCT LEVEL)	SEE PAGE
	1	1	*291-0519*	1	TIRE (14/70-20)	
	2	1	**330-9395**	1	RIM GP-DEMOUNTABLE	
	3	1	**330-9396**	1	TUBE	
	4	1	**330-9398**	1	FLAP	

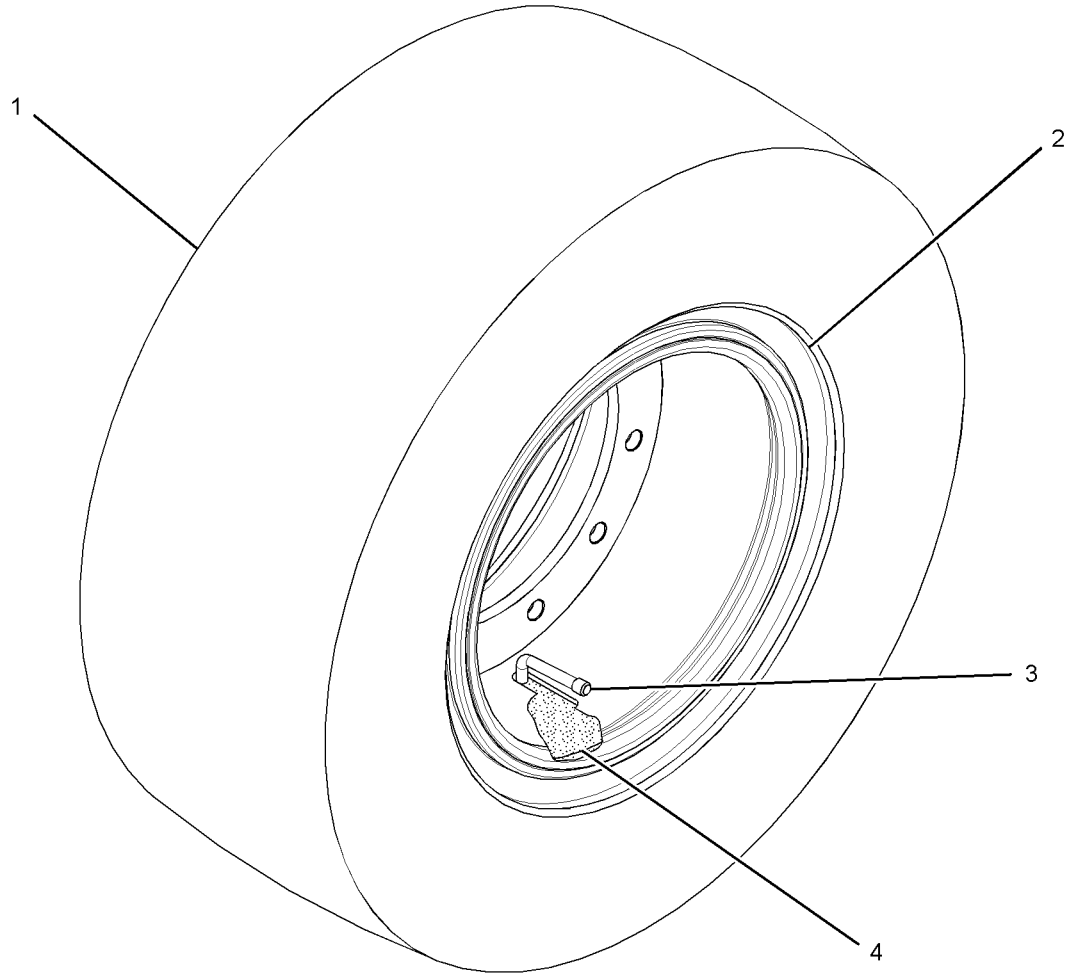

GRAPHIC #1 **<END>** g01622707

155-9678 WHEEL & TIRE GP

S/N: PJF1-417
PART OF 212-5931 POWER TRAIN AR
ALSO AN ATTACHMENT

SMCS-4202 **i01756332**

NOTE	REF NO	GRAPHIC REF	PART NUMBER	QTY	PART NAME 1 2 3 4 5 6 (PRODUCT LEVEL)	SEE PAGE
M	1	1	**8T-3573**	66	NUT	
CY	2	1	*194-7757*	7	WHEEL & TIRE GP	188
	3	1	**8T-4123**	66	WASHER (22X35X3.5-MM THK)	

C-CHANGE FROM PREVIOUS TYPE
M-METRIC PART
Y-SEPARATE ILLUSTRATION

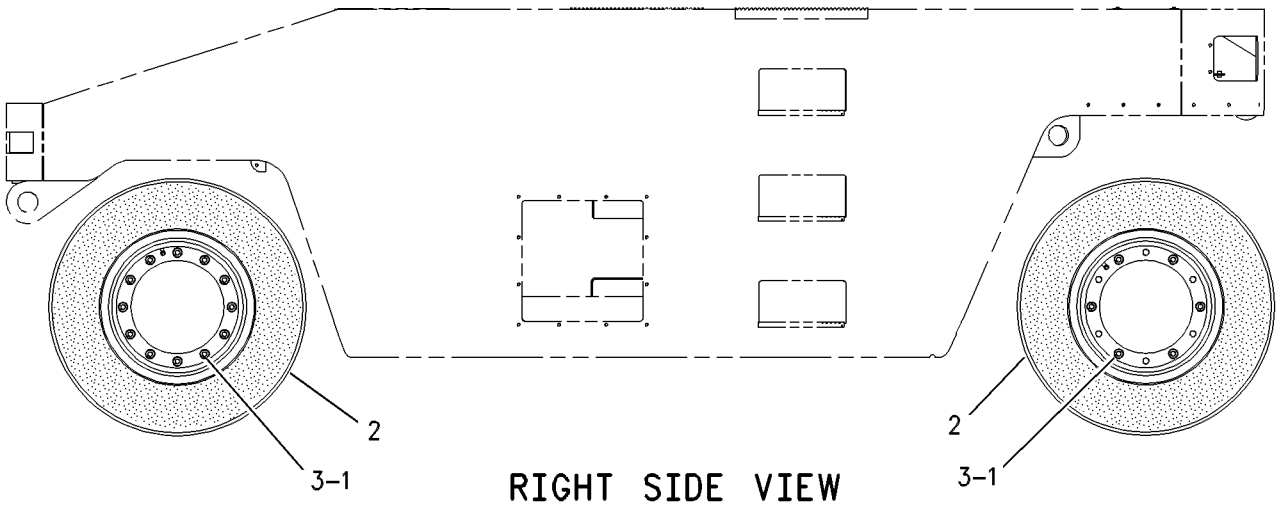

RIGHT SIDE VIEW

GRAPHIC #1 **<END>** g00510881

155-9678 WHEEL & TIRE GP

S/N: PJF418-UP
PART OF 212-5931 POWER TRAIN AR
ALSO AN ATTACHMENT

SMCS-4202 **i03111982**

NOTE	REF NO	GRAPHIC REF	PART NUMBER	QTY	PART NAME 1 2 3 4 5 6 (PRODUCT LEVEL)	SEE PAGE
M	1	1	**8T-3573**	66	NUT (M20X1.5-THD)	
CY	2	1	*330-9390*	7	WHEEL & TIRE GP	191
	3	1	**8T-4123**	66	WASHER (22X35X3.5-MM THK)	

C-CHANGE FROM PREVIOUS TYPE
M-METRIC PART
Y-SEPARATE ILLUSTRATION

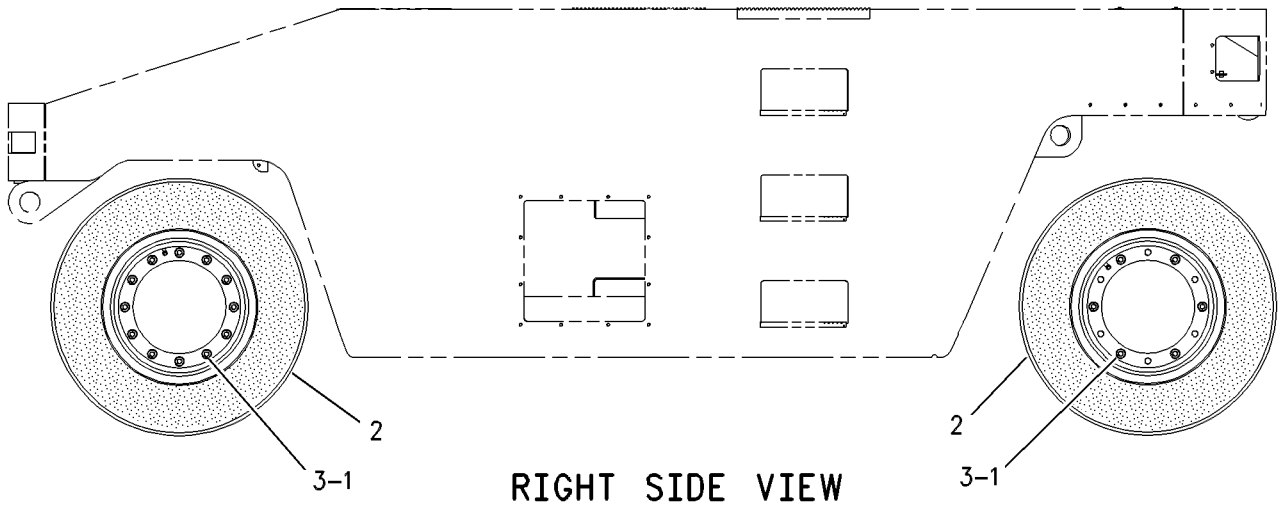

RIGHT SIDE VIEW

GRAPHIC #1 **<END>** g00510881

161-6708 WHEEL & TIRE GP

S/N: PJF1-417
AN ATTACHMENT

SMCS-4202 **i03599160**

NOTE	REF NO	GRAPHIC REF	PART NUMBER	QTY	PART NAME 1 2 3 4 5 6 (PRODUCT LEVEL)	SEE PAGE
CY	1	1	*194-7757*	1	WHEEL & TIRE GP	188

C-CHANGE FROM PREVIOUS TYPE
Y-SEPARATE ILLUSTRATION

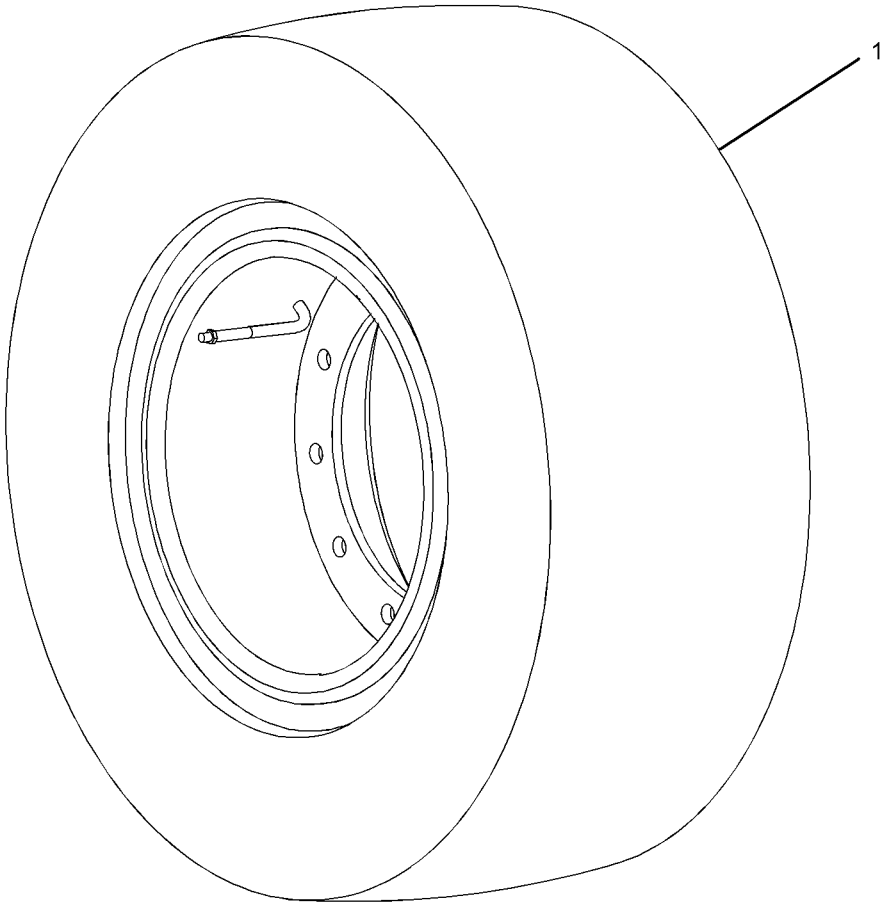

GRAPHIC #1 **<END>** g01865753

161-6708 WHEEL & TIRE GP

S/N: PJF418-UP
AN ATTACHMENT

SMCS-4202 **i03112000**

NOTE	REF NO	GRAPHIC REF	PART NUMBER	QTY	PART NAME 1 2 3 4 5 6 (PRODUCT LEVEL)	SEE PAGE
CY	1	1	*330-9390*	1	WHEEL & TIRE GP	191

C-CHANGE FROM PREVIOUS TYPE
Y-SEPARATE ILLUSTRATION

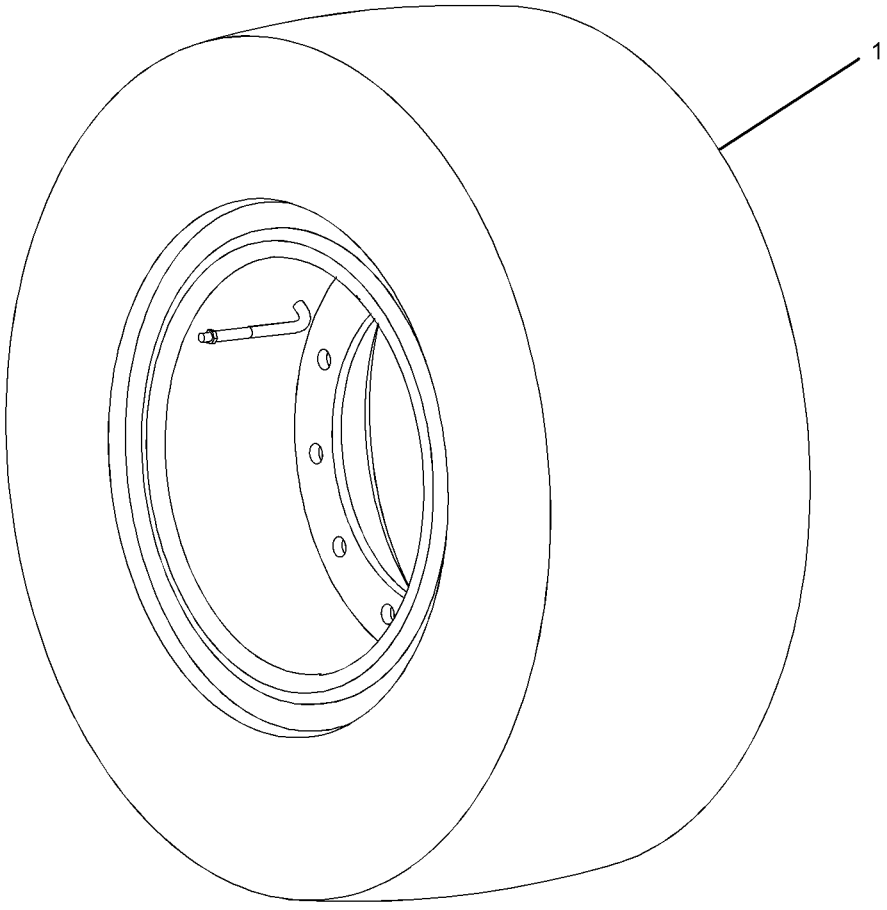

GRAPHIC #1 **<END>** g01865753

194-7757 WHEEL & TIRE GP

S/N: PJF1-417

PART OF 155-9678, 161-6708 WHEEL & TIRE GP

ALSO AN ATTACHMENT

SMCS-4202 **i03577726**

NOTE	REF NO	GRAPHIC REF	PART NUMBER	QTY	PART NAME 1 2 3 4 5 6 (PRODUCT LEVEL)	SEE PAGE
	1	1	**1K-8374**	1	VALVE GP (TIRE INFLATION)	
		1	**2D-2507**	1	SPUD	
		1	**2D-2508**	1	GROMMET	
		1	**2D-2509**	1	LOCKNUT (11/16-16-THD)	
		1	**6F-3930**	1	CORE-VALVE	
		1	**6F-3931**	1	CAP-VALVE STEM	
		1	**3K-2316**	1	VALVE	
	2	1	**077-3895**	1	CAP-VALVE STEM	
	3	1	**098-1483**	1	ADAPTER	
	4	1	**194-7758**	1	TIRE (14X70X20)	
Y	5	1	**194-7759**	1	RIM GP-DEMOUNTABLE	180

Y-SEPARATE ILLUSTRATION

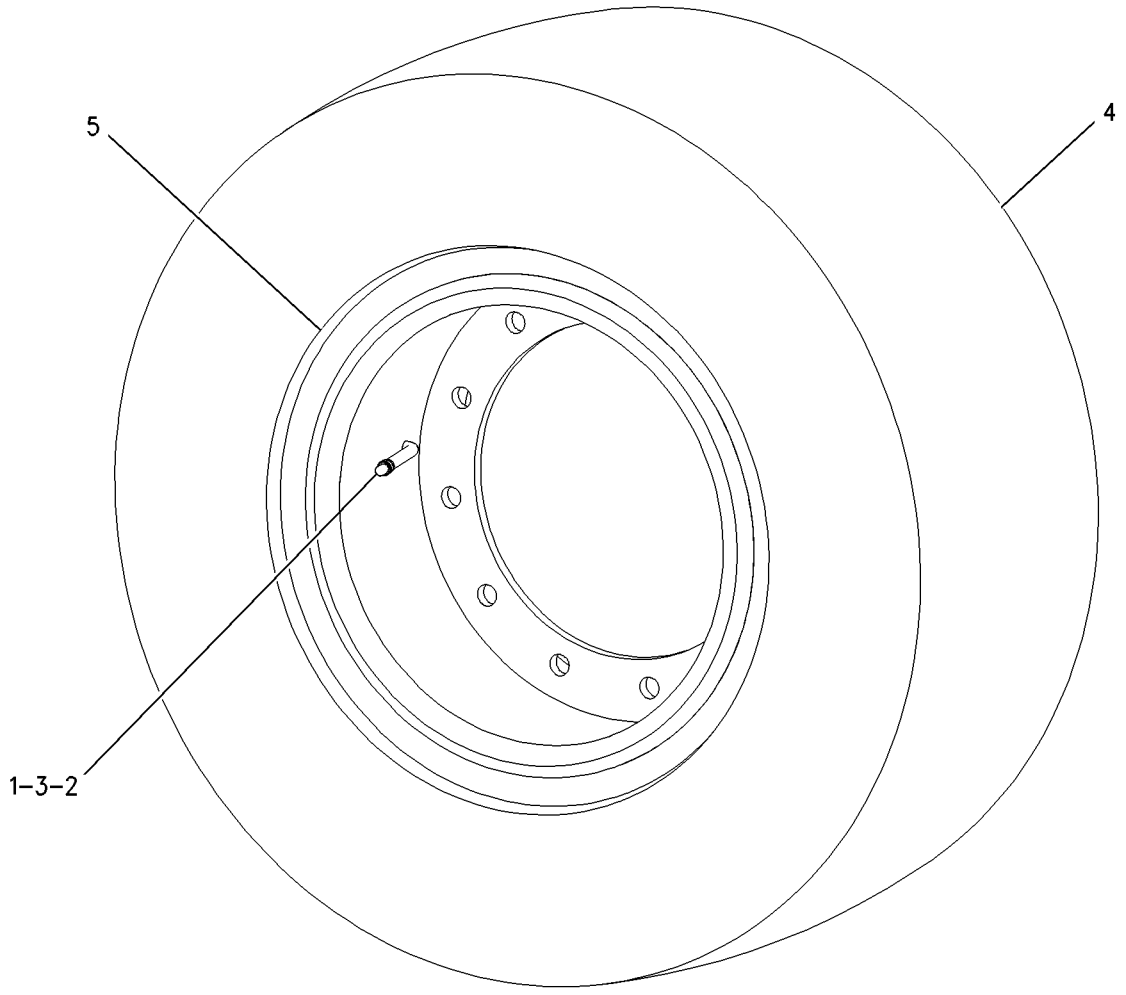

GRAPHIC #1 **<END>** g00745662

291-0521 WHEEL & TIRE GP

S/N: PJF1-417
AN ATTACHMENT

SMCS-4202 **i02565449**

NOTE	REF NO	GRAPHIC REF	PART NUMBER	QTY	PART NAME 1 2 3 4 5 6 (PRODUCT LEVEL)	SEE PAGE
M	1	1	**8T-3573**	66	NUT	
Y	2	1	*291-0520*	7	TIRE & RIM GP	182
	3	1	**8T-4123**	66	WASHER (22X35X3.5-MM THK)	

M-METRIC PART
Y-SEPARATE ILLUSTRATION

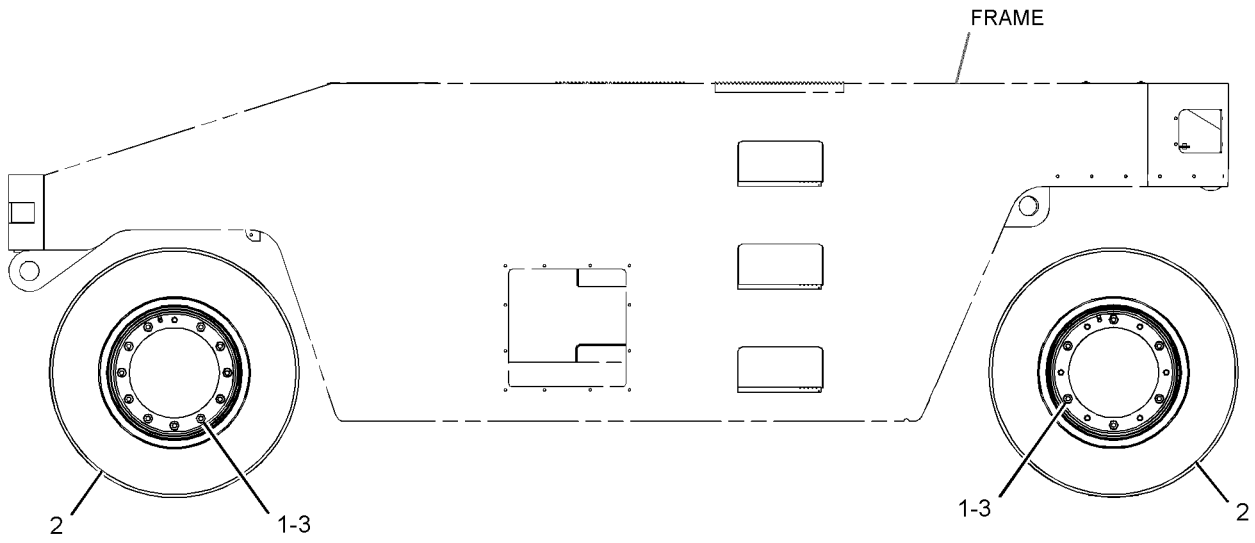

RIGHT SIDE VIEW

GRAPHIC #1 **<END>** g01285417

291-0521 WHEEL & TIRE GP

S/N: PJF418-UP
AN ATTACHMENT

SMCS-4202 **i03112001**

NOTE	REF NO	GRAPHIC REF	PART NUMBER	QTY	PART NAME 1 2 3 4 5 6 (PRODUCT LEVEL)	SEE PAGE
M	1	1	**8T-3573**	66	NUT (M20X1.5-THD)	
CY	2	1	*330-9392*	7	TIRE & RIM GP	183
	3	1	**8T-4123**	66	WASHER (22X35X3.5-MM THK)	

C-CHANGE FROM PREVIOUS TYPE
M-METRIC PART
Y-SEPARATE ILLUSTRATION

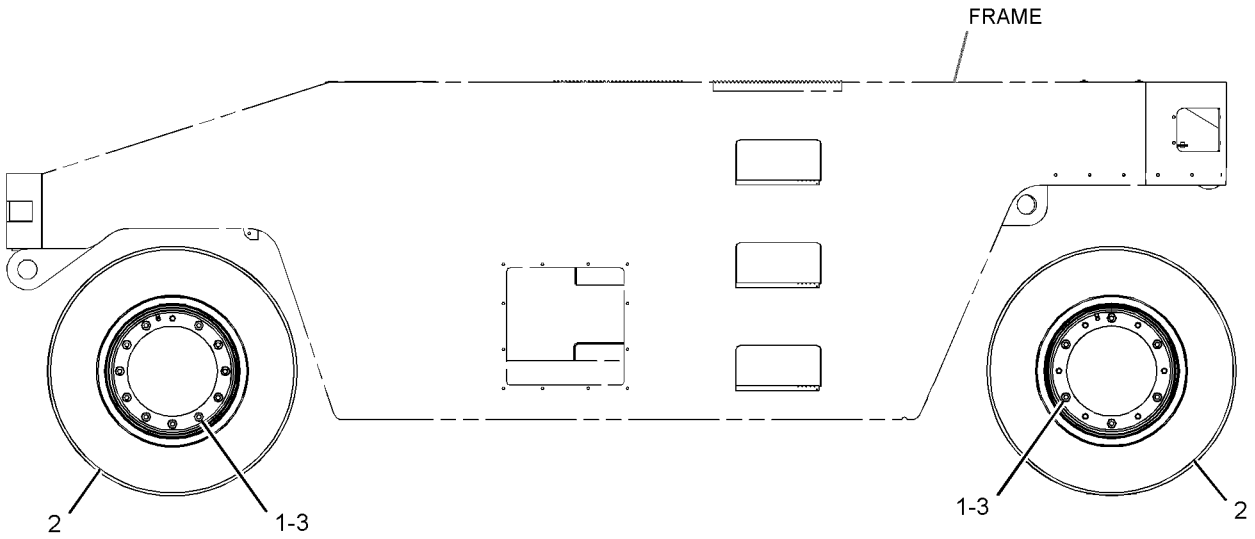

RIGHT SIDE VIEW

GRAPHIC #1 **<END>** g01285417

330-9390 WHEEL & TIRE GP

S/N: PJF418-UP
PART OF 155-9678, 161-6708 WHEEL & TIRE GP
ALSO AN ATTACHMENT

SMCS-4202 **i03577727**

NOTE	REF NO	GRAPHIC REF	PART NUMBER	QTY	PART NAME 1 2 3 4 5 6 (PRODUCT LEVEL)	SEE PAGE
	1	1	*194-7758*	1	TIRE (14X70X20)	
	2	1	**330-9395**	1	RIM GP-DEMOUNTABLE	
	3	1	**330-9396**	1	TUBE	
	4	1	**330-9398**	1	FLAP	

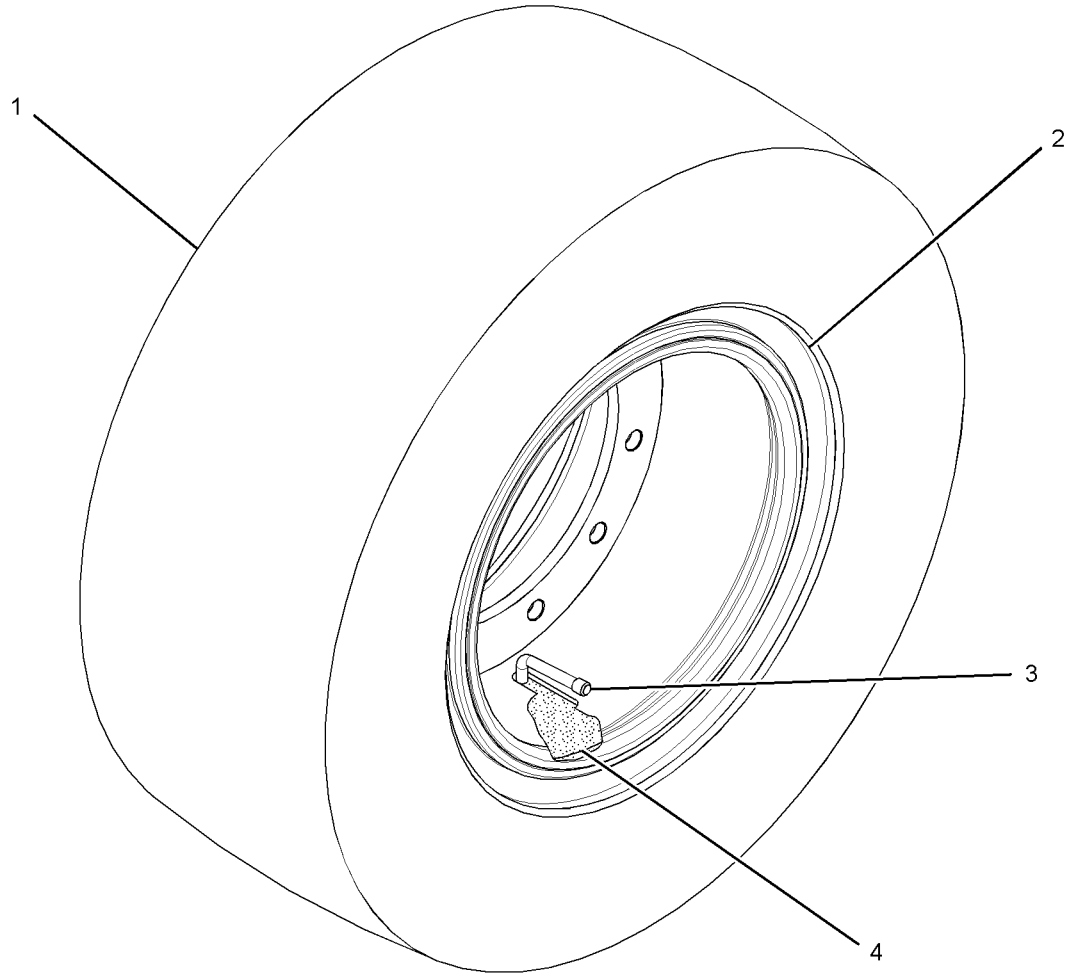

GRAPHIC #1 **<END>** g01622699

FRAME AND BODY

214-7191 BALLAST GP-FRAME

S/N: PJF1-UP

AN ATTACHMENT

SMCS-7056 **i01678474**

NOTE	REF NO	GRAPHIC REF	PART NUMBER	QTY	PART NAME 1 2 3 4 5 6 (PRODUCT LEVEL)	SEE PAGE
M	1	1	**3E-3881**	1	EYEBOLT (M24X3-THD)	
	2	1	**209-9963**	2	PLATE	
	3	1	**209-9979**	2	PLATE	
	4	1	**209-9980**	2	PLATE	

M-METRIC PART

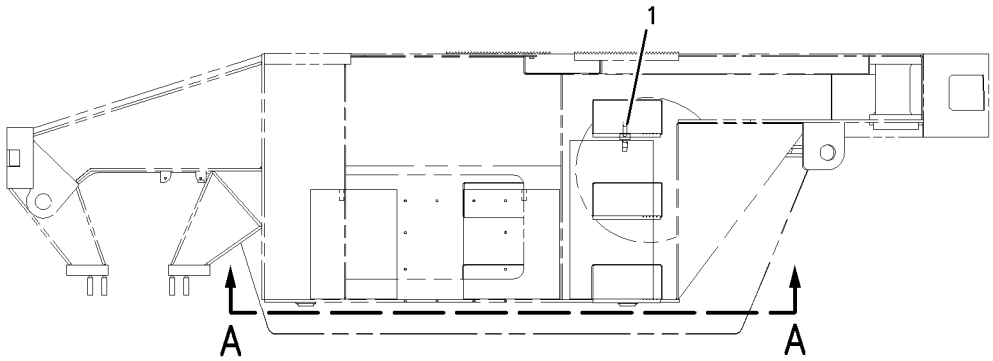

RIGHT SIDE VIEW

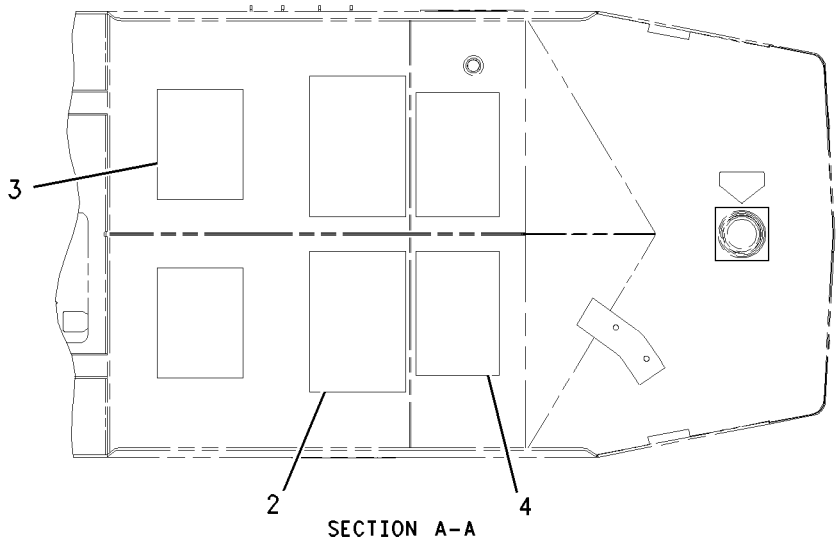

SECTION A-A

GRAPHIC #1 **<END>** g00868539

256-2423 COVER GP-ACCESS—WITHOUT ADDITIVE SPRAY

S/N: PJF1-UP

AN ATTACHMENT

SMCS-726A **i02597737**

NOTE	REF NO	GRAPHIC REF	PART NUMBER	QTY	PART NAME 1 2 3 4 5 6 (PRODUCT LEVEL)	SEE PAGE
	1	1	**140-7524**	1	PLATE AS-FLOOR	
M		1	**8T-3612**	2	NUT-WELD (M8X1.25-THD)	
M	2	1	**141-9203**	10	SCREW-BUTTON HEAD (M10X1.5X30-MM)	
	3	1	**7X-7729**	10	WASHER (11X25X3-MM THK)	
	4	1	**3J-5390**	3	PLUG	

M-METRIC PART

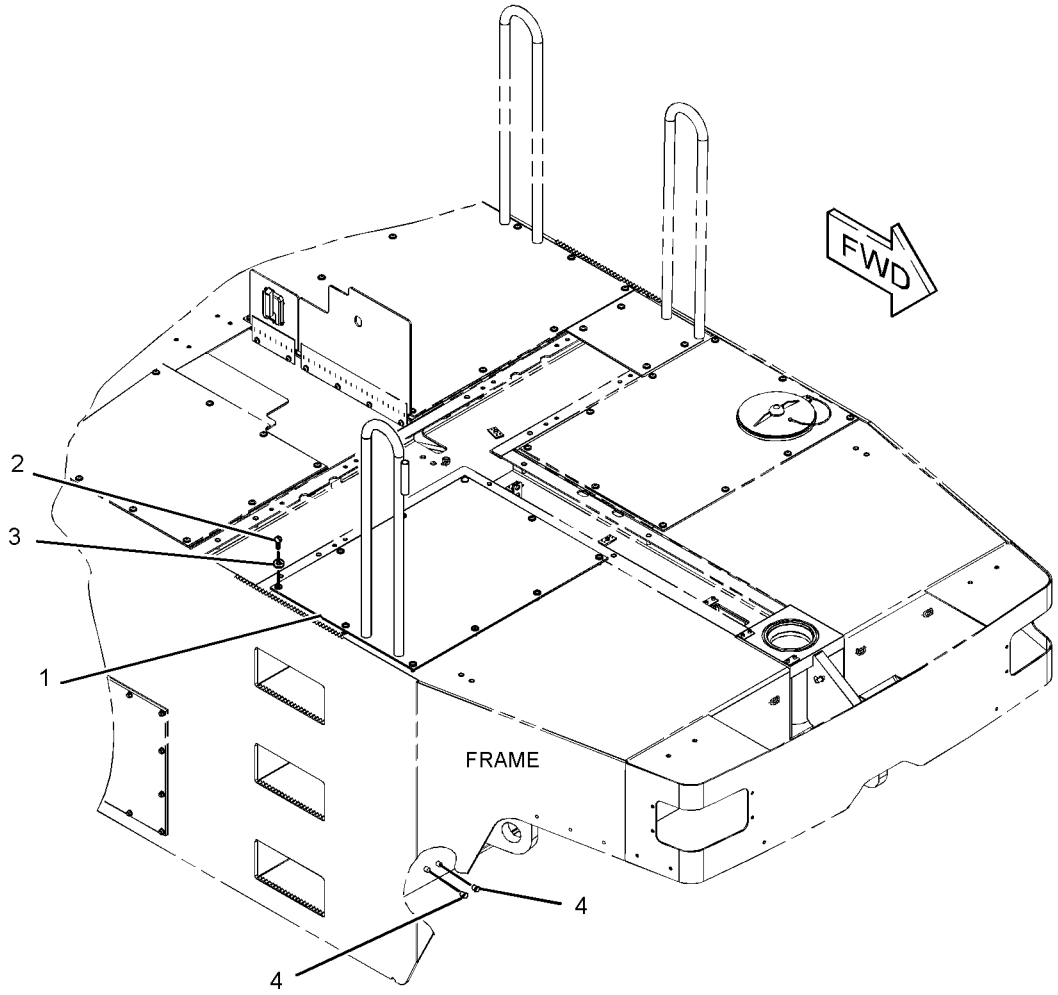

GRAPHIC #1 **<END>** g01270475

FRAME AND BODY

246-8993 FRAME GP-MAIN

S/N: PJF1-298

PART OF 246-8992 CHASSIS AR

SMCS-7051 **i03599161**

NOTE	REF NO	GRAPHIC REF	PART NUMBER	QTY	PART NAME 1 2 3 4 5 6 (PRODUCT LEVEL)	SEE PAGE
	1	1	**1D-4689**	8	BOLT (1/2-13X1.75-IN)	
	2	1	**3J-5390**	3	PLUG (PIPE)	
	3	1	**4V-9804**	4	PLATE	
	4	1	**6V-1518**	1	LATCH AS	
J		1	**7X-7465**	1	LOCK AS-CYLINDER	
	5	1	**7R-0376**	1	RIM	
	6	1	**7R-0476**	1	STRAINER (WATER TANK)	
	7	1	**7R-8578**	1	LANYARD	
	8	1	**7R-8588**	1	CAP AS (WATER TANK)	
M	9	1	**8T-0337**	6	SCREW-MACHINE (M4X0.7X12-MM)	
M	10	1	**8T-6411**	4	SCREW-MACHINE (M6X1X12-MM)	
	11	1	**9C-2235**	2	SUPPORT-STEP (RUBBER)	
	12	1	**082-1163**	1	COVER-MANHOLE	
	13	1	**098-0571**	1	GASKET	
	14	1	**124-2631**	12	NUT-FLANGE	
	15	1	**131-6586**	1	BAR AS	
	16	1	**139-3176**	68	INSERT-THREADED	
	17	1	**140-7526**	1	PLATE AS-FLOOR	
	18	1	**140-7530**	1	PLATE AS-FLOOR	
	19	1	**140-9622**	1	COVER AS	
	20	1	**140-9623**	1	COVER AS	
	21	1	**140-9624**	1	COVER AS	
	22	1	**141-3243**	1	COVER AS	
M	23	1	**141-9203**	42	SCREW-BUTTON HEAD (M10X1.5X30-MM)	
	24	1	**145-7353**	2	BUMPER	
	25	1	**145-8630**	1	GASKET	
	26	1	**145-8632**	1	BRACKET (RH)	
	27	1	**145-8633**	1	BRACKET (LH)	
	28	1	**146-7588**	1	COVER	
	29	1	**250-6136**	1	PLATE	
	30	1	**255-4144**	1	FRAME AS	
	30A	1	**5L-1545**	1	CUP-BEARING	
	30B	1	**9K-1171**	1	CUP-BEARING	
		1	**145-8940**	2	BAR	
	31	1	**1K-6872**	8	LOCKNUT (1/2-13-THD)	
	32	1	**6V-1897**	1	PLUG-PIPE	
M	33	1	**6V-7743**	1	LOCKNUT (M6X1-THD)	
	34	1	**7X-7729**	30	WASHER (11X25X3-MM THK)	
M	35	1	**8T-0309**	6	SCREW-MACHINE (M4X0.7X10-MM)	
	36	1	**8T-4121**	10	WASHER-HARD (11X21X2.5-MM THK)	
M	37	1	**8T-4136**	4	BOLT (M10X1.5X25-MM)	
M	38	1	**8T-4138**	1	BOLT (M6X1X20-MM)	
M	39	1	**8T-4171**	1	BOLT (M6X1X12-MM)	
M	40	1	**8T-4186**	4	BOLT (M10X1.5X40-MM)	
M	41	1	**8T-4191**	6	BOLT (M10X1.5X16-MM)	
	42	1	**8T-4226**	4	WASHER-PLATED (10.5X45X3-MM THK)	
	43	1	**9X-8256**	4	WASHER (6.6X12X2-MM THK)	
E	44	1	**145-5664**		SEAL (86.6-CM EACH)	
E	44A	1	**145-5664**		SEAL (58.9-CM EACH)	
E	44B	1	**145-5664**		SEAL (98.8-CM EACH)	
E	44C	1	**145-5664**		SEAL (59.7-CM EACH)	
E	44D	1	**145-5664**		SEAL (71.3-CM EACH)	

E-ORDER BY THE CENTIMETER
J-REQUIRES CORPORATE KEY
M-METRIC PART

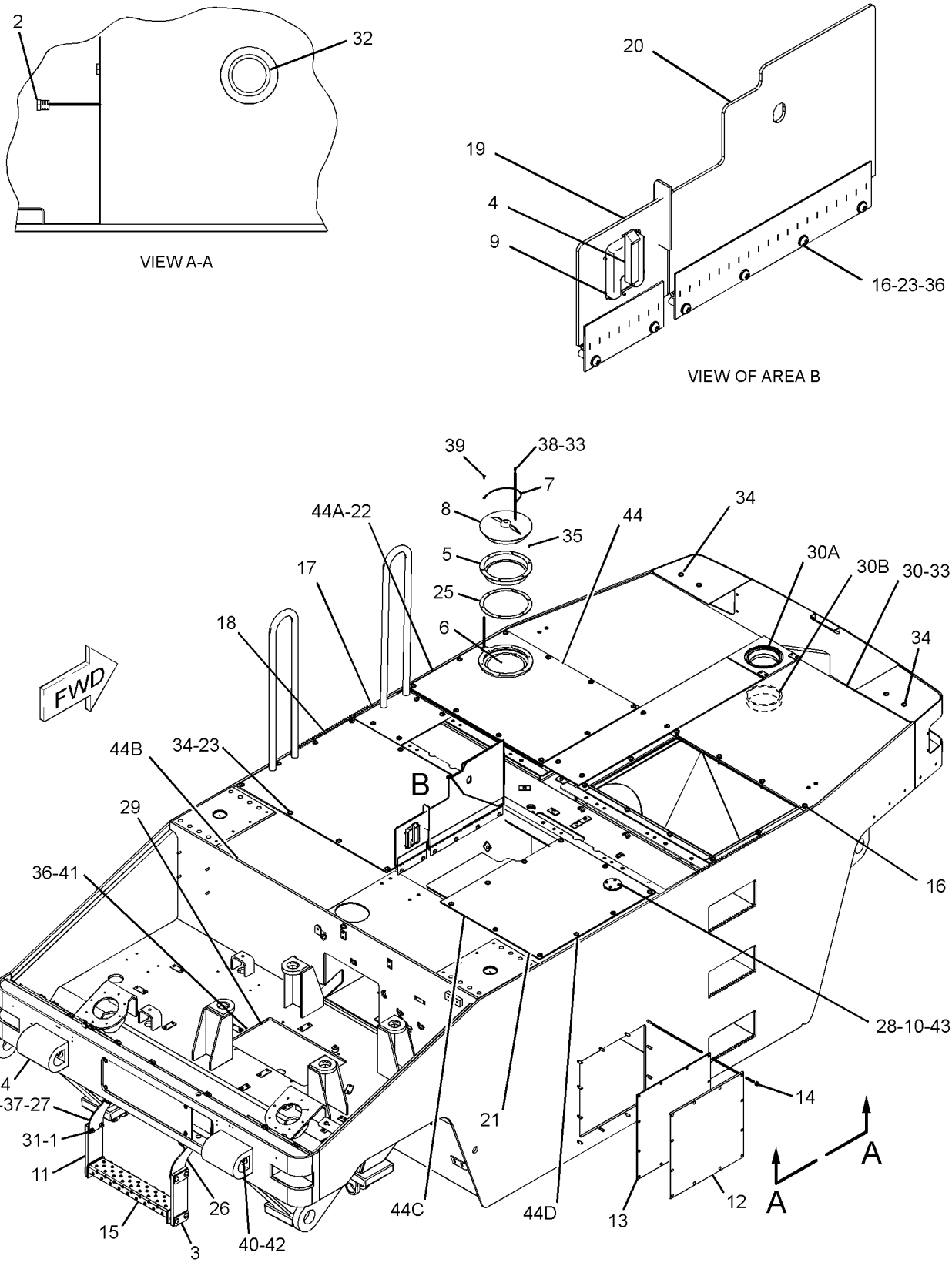

GRAPHIC #1 **<END>** g01905895

FRAME AND BODY

246-8993 FRAME GP-MAIN

S/N: PJF299-345

PART OF 246-8992 CHASSIS AR

SMCS-7051 **i03577301**

NOTE	REF NO	GRAPHIC REF	PART NUMBER	QTY	PART NAME 1 2 3 4 5 6 (PRODUCT LEVEL)	SEE PAGE
	1	1	**1D-4689**	8	BOLT (1/2-13X1.75-IN)	
M	2	1	**8T-4191**	6	BOLT (M10X1.5X16-MM)	
	3	1	**4V-9804**	4	PLATE	
	4	1	**6V-1518**	1	LATCH AS	
J		1	**7X-7465**	1	LOCK AS-CYLINDER	
	5	1	**7R-0376**	1	RIM	
	6	1	**7R-0476**	1	STRAINER (WATER TANK)	
	7	1	**7R-8578**	1	LANYARD	
	8	1	**7R-8588**	1	CAP AS (WATER TANK)	
M	9	1	**8T-0337**	6	SCREW-MACHINE (M4X0.7X12-MM)	
	10	1	**8T-4226**	4	WASHER-PLATED (10.5X45X3-MM THK)	
	11	1	**9C-2235**	2	SUPPORT-STEP (RUBBER)	
	12	1	**082-1163**	1	COVER-MANHOLE	
	13	1	**098-0571**	1	GASKET	
	14	1	**124-2631**	12	NUT-FLANGE	
	15	1	**131-6586**	1	BAR AS	
	16	1	**139-3176**	68	INSERT-THREADED	
	17	1	**140-7526**	1	PLATE AS-FLOOR	
	18	1	**140-7530**	1	PLATE AS-FLOOR	
	19	1	**140-9622**	1	COVER AS	
	20	1	**140-9623**	1	COVER AS	
C	21	1	**274-1571**	1	COVER AS	
	22	1	**141-3243**	1	COVER AS	
M	23	1	**141-9203**	42	SCREW-BUTTON HEAD (M10X1.5X30-MM)	
	24	1	**145-7353**	2	BUMPER	
	25	1	**145-8630**	1	GASKET	
	26	1	**145-8632**	1	BRACKET (RH)	
	27	1	**145-8633**	1	BRACKET (LH)	
M	28	1	**8T-4185**	4	BOLT (M10X1.5X50-MM)	
	29	1	**250-6136**	1	PLATE	
	30	1	**255-4144**	1	FRAME AS	
		1	**145-8940**	2	BAR	
		1	**5L-1545**	1	CUP-BEARING	
		1	**9K-1171**	1	CUP-BEARING	
	31	1	**1K-6872**	8	LOCKNUT (1/2-13-THD)	
	32	1	**6V-1897**	1	PLUG-PIPE	
M	33	1	**6V-7743**	1	LOCKNUT (M6X1-THD)	
	34	1	**7X-7729**	36	WASHER (11X25X3-MM THK)	
M	35	1	**8T-0309**	6	SCREW-MACHINE (M4X0.7X10-MM)	
	36	1	**8T-4121**	16	WASHER-HARD (11X21X2.5-MM THK)	
M	37	1	**8T-4136**	4	BOLT (M10X1.5X25-MM)	
M	38	1	**8T-4138**	1	BOLT (M6X1X20-MM)	
M	39	1	**8T-4171**	1	BOLT (M6X1X12-MM)	
E	40	1	**145-5664**		SEAL (86.6-CM EACH)	
E	40A	1	**145-5664**		SEAL (58.9-CM EACH)	
E	40B	1	**145-5664**		SEAL (98.8-CM EACH)	
E	40C	1	**145-5664**		SEAL (59.7-CM EACH)	
E	40D	1	**145-5664**		SEAL (71.3-CM EACH)	

C-CHANGE FROM PREVIOUS TYPE
E-ORDER BY THE CENTIMETER
J-REQUIRES CORPORATE KEY
M-METRIC PART

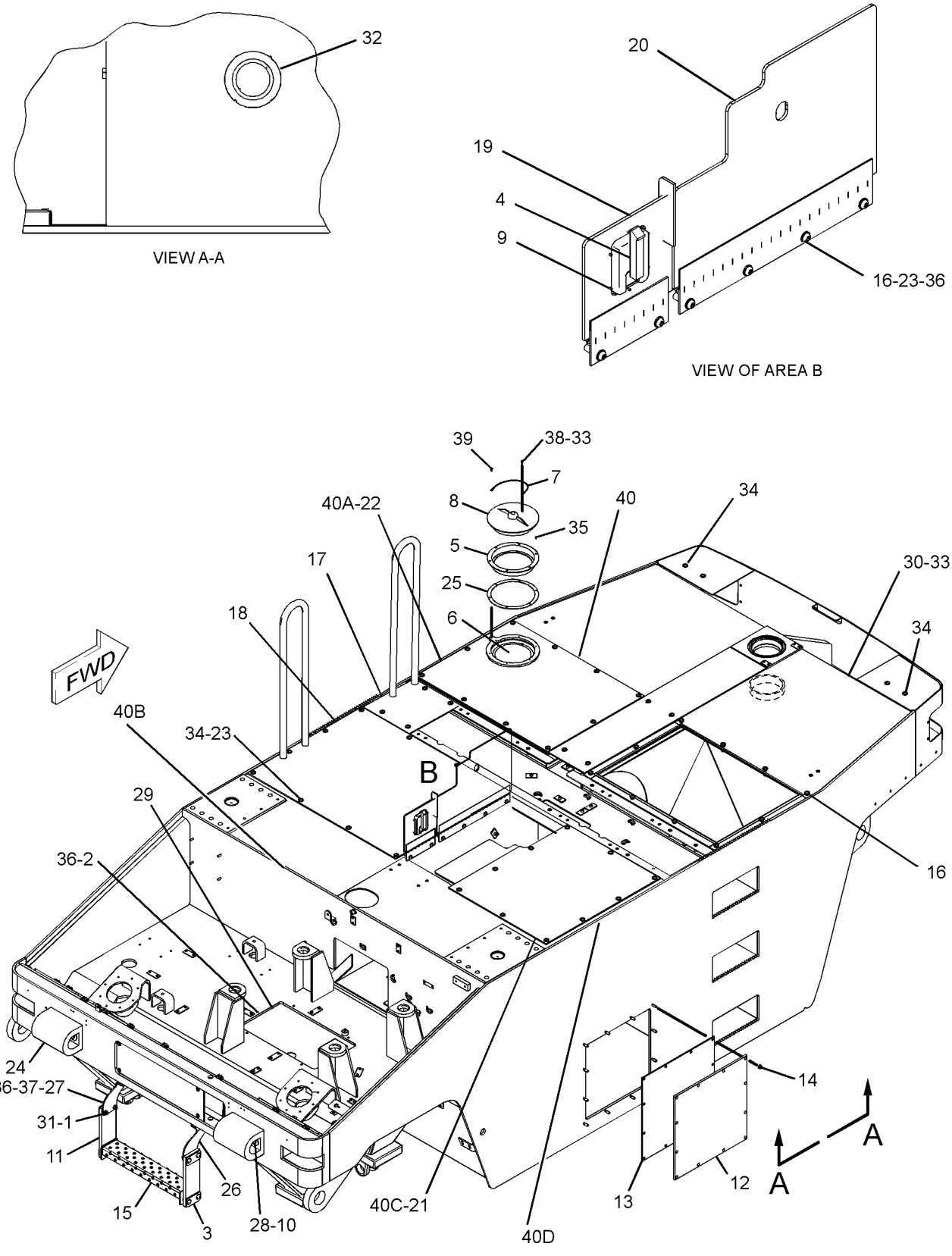

GRAPHIC #1 **<END>** g01905893

FRAME AND BODY

246-8993 FRAME GP-MAIN

S/N: PJF346-UP

PART OF 246-8992 CHASSIS AR

SMCS-7051 **i03577304**

NOTE	REF NO	GRAPHIC REF	PART NUMBER	QTY	PART NAME 1 2 3 4 5 6 (PRODUCT LEVEL)	SEE PAGE
	1	1	**1D-4689**	8	BOLT (1/2-13X1.75-IN)	
M	2	1	**8T-4191**	6	BOLT (M10X1.5X16-MM)	
	3	1	**4V-9804**	4	PLATE	
	4	1	**6V-1518**	1	LATCH AS	
J		1	**7X-7465**	1	LOCK AS-CYLINDER	
	5	1	**7R-0376**	1	RIM	
	6	1	**7R-0476**	1	STRAINER (WATER TANK)	
	7	1	**7R-8578**	1	LANYARD	
	8	1	**7R-8588**	1	CAP AS (WATER TANK)	
M	9	1	**8T-0337**	6	SCREW-MACHINE (M4X0.7X12-MM)	
	10	1	**8T-4226**	4	WASHER-PLATED (10.5X45X3-MM THK)	
	11	1	**9C-2235**	2	SUPPORT-STEP (RUBBER)	
	12	1	**082-1163**	1	COVER-MANHOLE	
	13	1	**098-0571**	1	GASKET	
	14	1	**189-1943**	12	LOCKNUT	
	15	1	**131-6586**	1	BAR AS	
	16	1	**139-3176**	68	INSERT-THREADED	
	17	1	**140-7526**	1	PLATE AS-FLOOR	
	18	1	**140-7530**	1	PLATE AS-FLOOR	
	19	1	**140-9622**	1	COVER AS	
	20	1	**140-9623**	1	COVER AS	
	21	1	**274-1571**	1	COVER AS	
	22	1	**141-3243**	1	COVER AS	
M	23	1	**141-9203**	42	SCREW-BUTTON HEAD (M10X1.5X30-MM)	
	24	1	**145-7353**	2	BUMPER	
	25	1	**145-8630**	1	GASKET	
	26	1	**145-8632**	1	BRACKET (RH)	
	27	1	**145-8633**	1	BRACKET (LH)	
M	28	1	**8T-4185**	4	BOLT (M10X1.5X50-MM)	
	29	1	**250-6136**	1	PLATE	
C	30	1	**277-0746**	1	FRAME AS	
	31	1	**1K-6872**	8	LOCKNUT (1/2-13-THD)	
	32	1	**6V-1897**	1	PLUG-PIPE	
M	33	1	**6V-7743**	1	LOCKNUT (M6X1-THD)	
	34	1	**7X-7729**	36	WASHER (11X25X3-MM THK)	
M	35	1	**8T-0309**	6	SCREW-MACHINE (M4X0.7X10-MM)	
	36	1	**8T-4121**	16	WASHER-HARD (11X21X2.5-MM THK)	
M	37	1	**8T-4136**	4	BOLT (M10X1.5X25-MM)	
M	38	1	**8T-4138**	1	BOLT (M6X1X20-MM)	
M	39	1	**8T-4171**	1	BOLT (M6X1X12-MM)	
E	40	1	**145-5664**		SEAL (86.6-CM EACH)	
E	40A	1	**145-5664**		SEAL (58.9-CM EACH)	
E	40B	1	**145-5664**		SEAL (98.8-CM EACH)	
E	40C	1	**145-5664**		SEAL (59.7-CM EACH)	
E	40D	1	**145-5664**		SEAL (71.3-CM EACH)	

C-CHANGE FROM PREVIOUS TYPE
E-ORDER BY THE CENTIMETER
J-REQUIRES CORPORATE KEY
M-METRIC PART

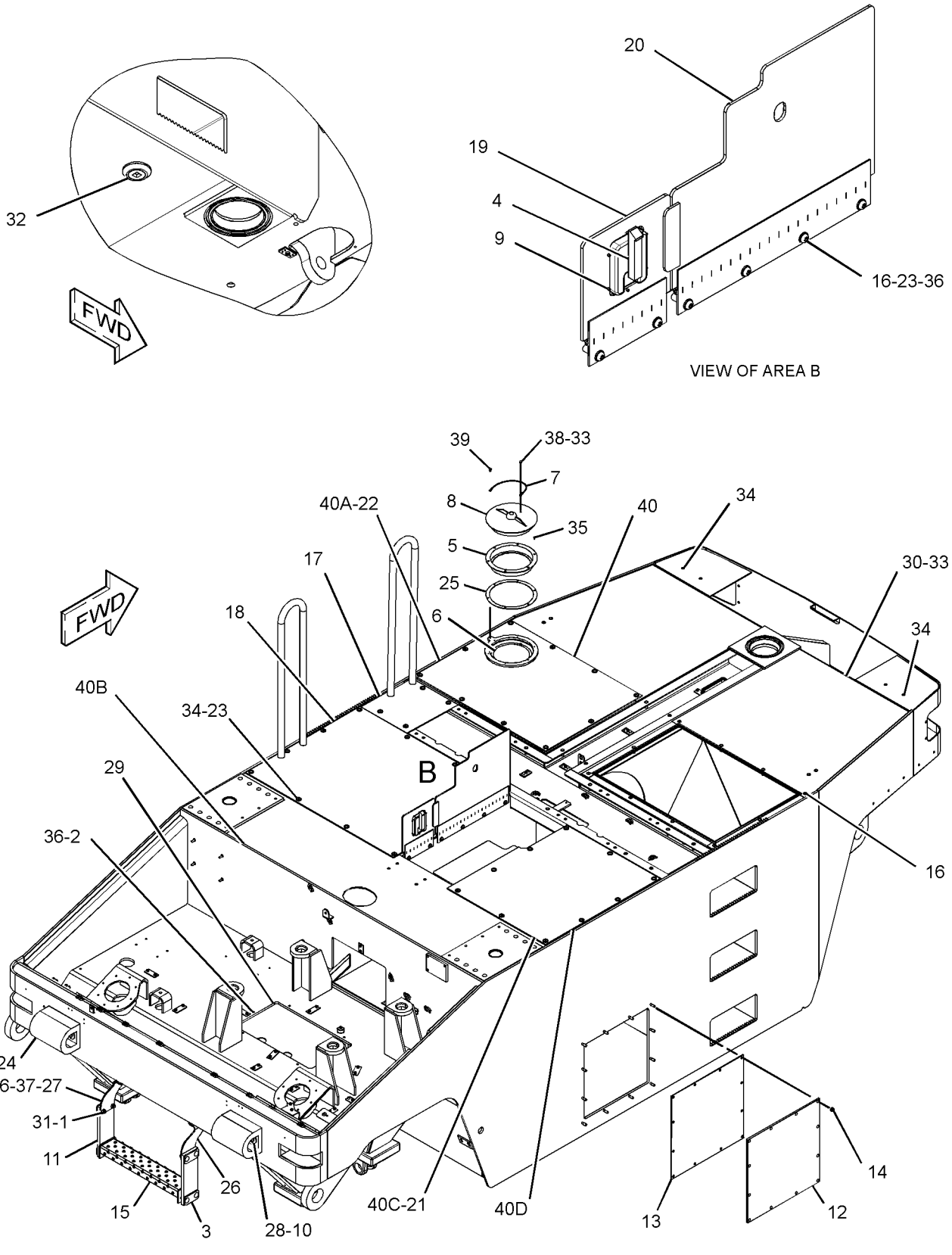

GRAPHIC #1 **<END>** g01907633

FRAME AND BODY

204-6469 FRAME GP-TIRE SCRAPER

S/N: PJF1-345

PART OF 246-8992 CHASSIS AR

SMCS-7050 **i01540655**

NOTE	REF NO	GRAPHIC REF	PART NUMBER	QTY	PART NAME 1 2 3 4 5 6 (PRODUCT LEVEL)	SEE PAGE
	1	1	**165-0005**	1	FRAME AS	
	1A	1	**7R-7963**	1	PLATE AS	
M	1B	1	**8T-3490**	4	NUT-WELD (M10X1.5-THD)	
	2	1	**8T-4121**	8	WASHER-HARD (11X21X2.5-MM THK)	
M	3	1	**8T-4133**	4	NUT (M10X1.5-THD)	
M	4	1	**8T-4196**	4	BOLT (M10X1.5X35-MM)	

M-METRIC PART

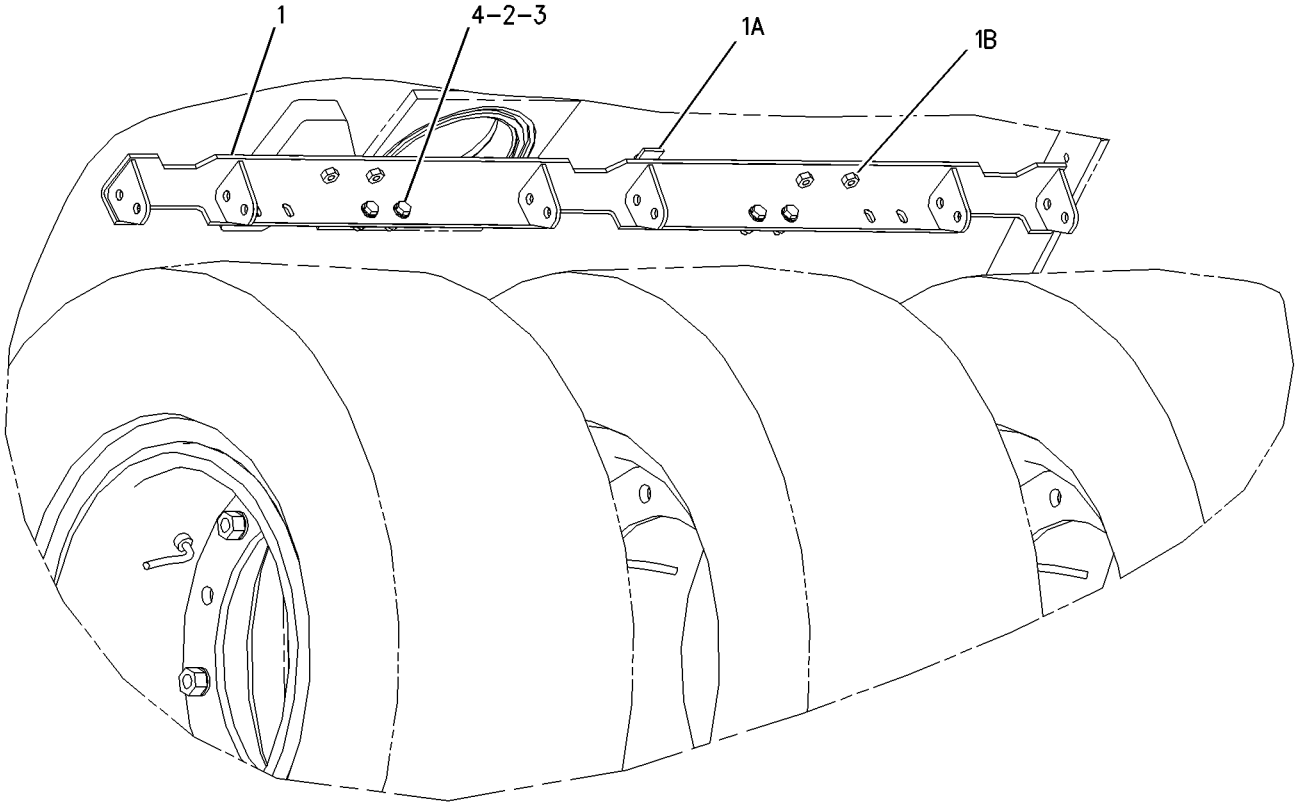

GRAPHIC #1 **<END>** g00801023

204-6469 FRAME GP-TIRE SCRAPER

S/N: PJF346-UP

PART OF 246-8992 CHASSIS AR

SMCS-7050 **i02660167**

NOTE	REF NO	GRAPHIC REF	PART NUMBER	QTY	PART NAME 1 2 3 4 5 6 (PRODUCT LEVEL)	SEE PAGE
C	1	1	**302-8690**	1	FRAME AS	
	1A	1	**102-8704**	1	PLATE AS	
M	1B	1	**8T-3490**	4	NUT-WELD (M10X1.5-THD)	
	2	1	**8T-4121**	8	WASHER-HARD (11X21X2.5-MM THK)	
M	3	1	**8T-4133**	4	NUT (M10X1.5-THD)	
M	4	1	**8T-4196**	4	BOLT (M10X1.5X35-MM)	

C-CHANGE FROM PREVIOUS TYPE
M-METRIC PART

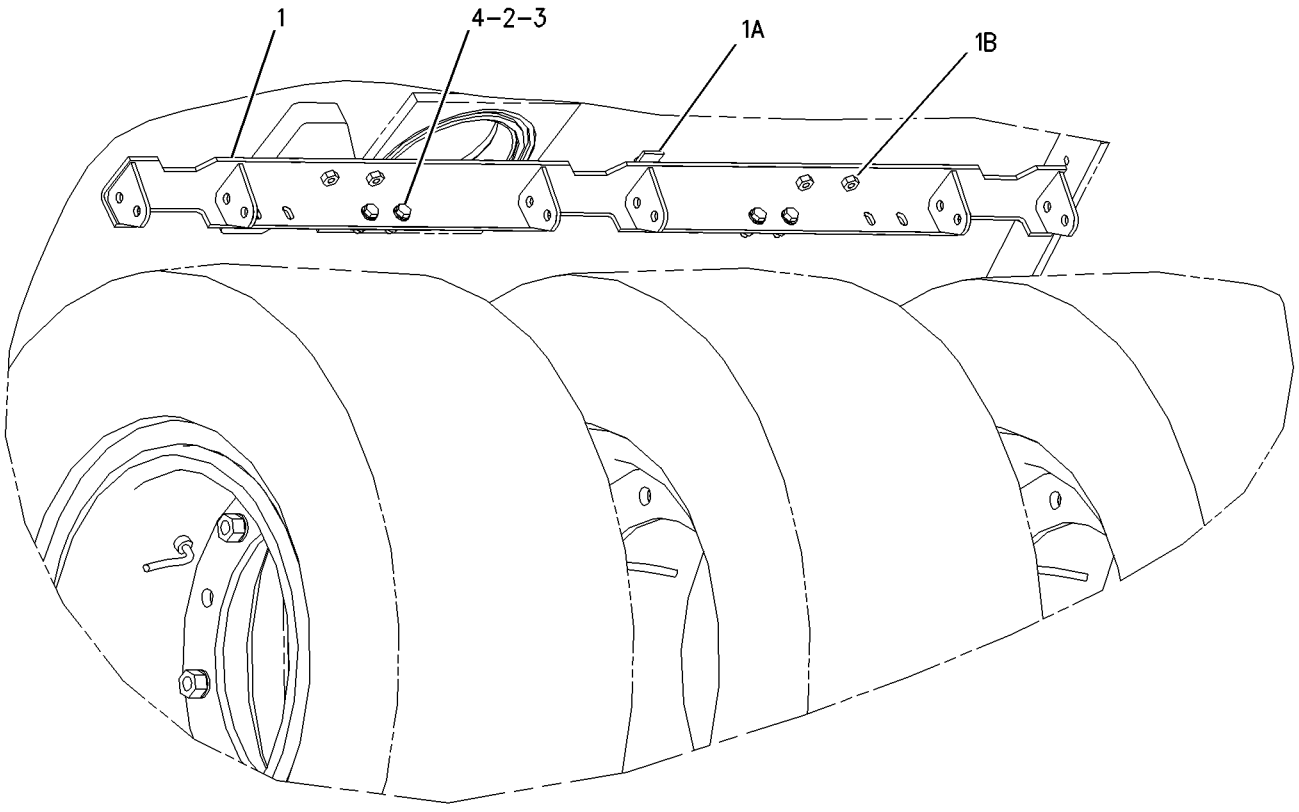

GRAPHIC #1 **<END>** g00801023

FRAME AND BODY

249-2734 HOOD GP-ENGINE

S/N: PJF1-327, 329

PART OF 246-8992 CHASSIS AR

SMCS-7251 **i03599202**

NOTE	REF NO	GRAPHIC REF	PART NUMBER	QTY	PART NAME 1 2 3 4 5 6 (PRODUCT LEVEL)	SEE PAGE
M	1	1	**9X-2039**	4	SCREW-TRUSS HEAD (M10X1.5X35-MM)	
M	2	1	**6V-9188**	9	LOCKNUT (M5X0.8-THD)	
M	3	1	**8T-0326**	9	BOLT (M5X0.8X25-MM)	
	4	1	**9V-4787**	4	STUD-BALL	
	5	1	**131-7945**	1	ROD	
	6	1	**136-5084**	1	GRILL-LH	
	7	1	**136-5085**	1	GRILL-RH	
	8	1	**136-5570**	2	HINGE AS	
	9	1	**137-5771**	2	CLAMP	
	10	1	**138-4415**	2	SPRING-GAS	
	11	1	**138-7123**	2	BRACKET AS	
	12	1	**138-7124**	1	ANGLE	
	13	1	**138-7125**	2	BUMPER	
	14	1	**145-4746**	1	STRAP AS	
	15	1	**145-5255**	16	RIVET	
	16	1	**158-7799**	2	LATCH	
	17	1	**159-0196**	1	PLATE	
	18	1	**159-0197**	1	PLATE	
	19	1	**166-6385**	1	PIPE AS-EXHAUST	
	20	1	**172-8857**	1	GASKET	
	21	1	**184-7733**	1	HANDLE	
	22	1	**249-2733**	1	HOOD AS	
		1	**4P-8134**	3	CLIP	
	23	1	**250-6139**	1	BRACKET AS	
M	24	1	**5C-2890**	2	NUT (M6X1-THD)	
M	25	1	**5C-7261**	2	NUT (M8X1.25-THD)	
	26	1	**5P-4115**	2	WASHER-HARD (7.2X19X2-MM THK)	
M	27	1	**6V-4298**	6	BOLT (M5X0.8X16-MM)	
M	28	1	**6V-7744**	2	LOCKNUT (M10X1.5-THD)	
	29	1	**6V-8189**	2	NUT (5/16-18-THD)	
M	30	1	**6V-8653**	2	BOLT-SOCKET HEAD (M6X1X40-MM)	
	31	1	**8T-4224**	2	WASHER-HARD (8.8X16X2-MM THK)	
M	32	1	**7X-2544**	2	BOLT (M10X1.5X104-MM)	
	33	1	**7X-7729**	8	WASHER (11X25X3-MM THK)	
	34	1	**8T-0328**	24	WASHER-HARD (5.5X10X1-MM THK)	
	35	1	**8T-4121**	18	WASHER-HARD (11X21X2.5-MM THK)	
M	36	1	**8T-4133**	8	NUT (M10X1.5-THD)	
M	37	1	**8T-4196**	8	BOLT (M10X1.5X35-MM)	

M-METRIC PART

249-2734 **HOOD GP-ENGINE** *(contd.)* **i03599202**

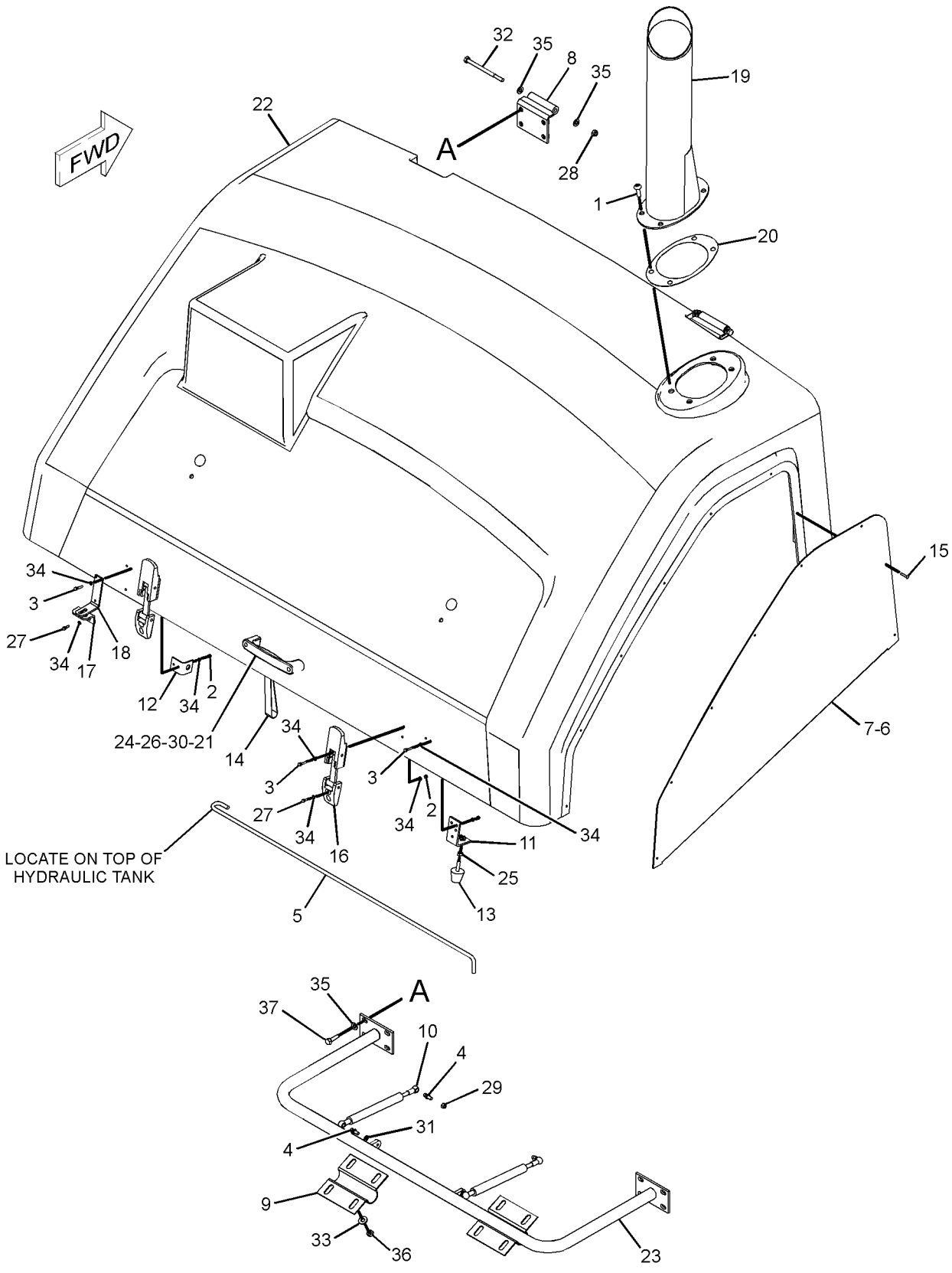

GRAPHIC #1 **<END>** g01923954

FRAME AND BODY

249-2734 HOOD GP-ENGINE

S/N: PJF328, 330-UP

PART OF 246-8992 CHASSIS AR

SMCS-7251 **i03599203**

NOTE	REF NO	GRAPHIC REF	PART NUMBER	QTY	PART NAME 1 2 3 4 5 6 (PRODUCT LEVEL)	SEE PAGE
M	1	1	**9X-2039**	4	SCREW-TRUSS HEAD (M10X1.5X35-MM)	
M	2	1	**6V-9188**	9	LOCKNUT (M5X0.8-THD)	
M	3	1	**8T-0326**	9	BOLT (M5X0.8X25-MM)	
	4	1	**9V-4787**	4	STUD-BALL	
	5	1	**131-7945**	1	ROD	
	6	1	**136-5084**	1	GRILL-LH	
	7	1	**136-5085**	1	GRILL-RH	
	8	1	**136-5570**	2	HINGE AS	
	9	1	**137-5771**	2	CLAMP	
C	10	1	**294-9284**	2	SPRING-GAS	
	11	1	**138-7123**	2	BRACKET AS	
	12	1	**138-7124**	1	ANGLE	
	13	1	**138-7125**	2	BUMPER	
	14	1	**145-4746**	1	STRAP AS	
	15	1	**145-5255**	16	RIVET	
	16	1	**158-7799**	2	LATCH	
	17	1	**159-0196**	1	PLATE	
	18	1	**159-0197**	1	PLATE	
	19	1	**166-6385**	1	PIPE AS-EXHAUST	
	20	1	**172-8857**	1	GASKET	
	21	1	**184-7733**	1	HANDLE	
	22	1	**249-2733**	1	HOOD AS	
		1	**4P-8134**	3	CLIP	
	23	1	**250-6139**	1	BRACKET AS	
M	24	1	**5C-2890**	2	NUT (M6X1-THD)	
M	25	1	**5C-7261**	2	NUT (M8X1.25-THD)	
	26	1	**5P-4115**	2	WASHER-HARD (7.2X19X2-MM THK)	
M	27	1	**6V-4298**	6	BOLT (M5X0.8X16-MM)	
M	28	1	**6V-7744**	2	LOCKNUT (M10X1.5-THD)	
	29	1	**6V-8189**	2	NUT (5/16-18-THD)	
M	30	1	**6V-8653**	2	BOLT-SOCKET HEAD (M6X1X40-MM)	
	31	1	**8T-4224**	2	WASHER-HARD (8.8X16X2-MM THK)	
M	32	1	**7X-2544**	2	BOLT (M10X1.5X104-MM)	
	33	1	**7X-7729**	8	WASHER (11X25X3-MM THK)	
	34	1	**8T-0328**	24	WASHER-HARD (5.5X10X1-MM THK)	
	35	1	**8T-4121**	18	WASHER-HARD (11X21X2.5-MM THK)	
M	36	1	**8T-4133**	8	NUT (M10X1.5-THD)	
M	37	1	**8T-4196**	8	BOLT (M10X1.5X35-MM)	

C-CHANGE FROM PREVIOUS TYPE
M-METRIC PART

249-2734 **HOOD GP-ENGINE** *(contd.)* **i03599203**

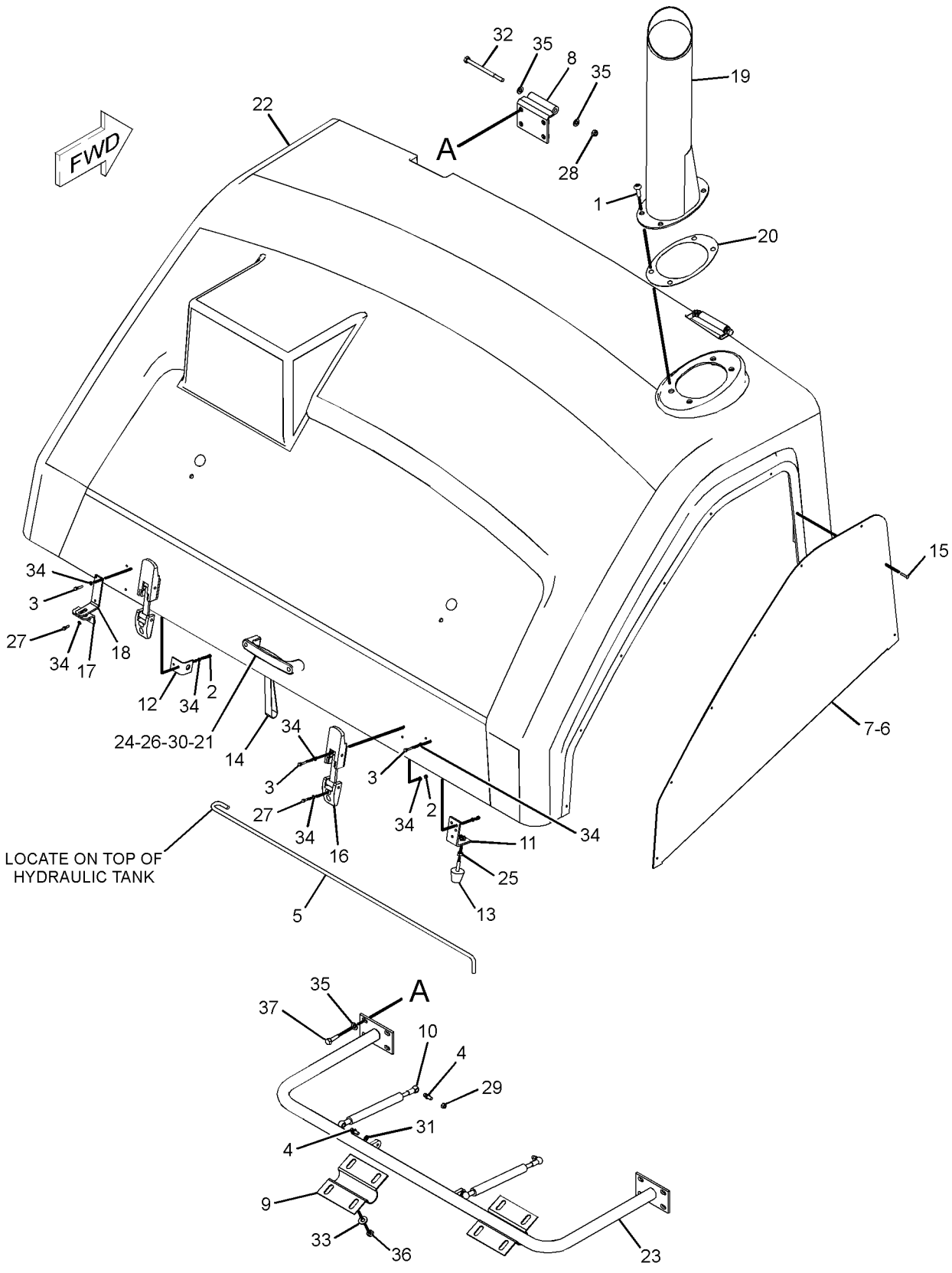

GRAPHIC #1 **<END>** g01923956

FRAME AND BODY

179-8028 SKIRT GP-TIRE

S/N: PJF1-UP

AN ATTACHMENT

SMCS-718T **i03599183**

NOTE	REF NO	GRAPHIC REF	PART NUMBER	QTY	PART NAME 1 2 3 4 5 6 (PRODUCT LEVEL)	SEE PAGE
	1	2	**1P-7403**	10	EYEBOLT	
	2	1,2	**7K-1181**	22	STRAP-CABLE	
	3	2	**8G-1798**	4	SPACER	
	4	1	**108-9591**	4	STRAP	
	5	1	**109-7092**	1	FILM-INSTRUCTION (NO STEP)	
	6	1,2	**151-2970**	4	PLATE	
	7	1	**151-5351**	1	PLATE AS (RH)	
		1	**7T-1099**	3	LINK	
M		1	**8T-3490**	1	NUT-WELD (M10X1.5-THD)	
	8	1	**151-5352**	1	PLATE AS (LH)	
		1	**7T-1099**	3	LINK	
M		1	**8T-3490**	1	NUT-WELD (M10X1.5-THD)	
	9	1	**151-5353**	1	PLATE AS	
		1	**7T-1099**	6	LINK	
	10	1	**151-5354**	1	PLATE AS	
M		1	**6V-9632**	2	NUT-WELD (M6X1-THD)	
		1	**7T-1099**	8	LINK	
	11	2	**151-6145**	2	PLATE	
	12	2	**151-6146**	8	PLATE	
	13	1	**164-9987**	1	PLATE AS (LH)	
		1	**7T-1099**	2	LINK	
M		1	**8T-3490**	1	NUT-WELD (M10X1.5-THD)	
	14	1	**165-0012**	1	PLATE AS (RH)	
		1	**7T-1099**	2	LINK	
M		1	**8T-3490**	1	NUT-WELD (M10X1.5-THD)	
	15	1	**178-1151**	1	SKIRT-TIRE	
	16	1	**178-1152**	1	SKIRT-TIRE	
	17	1	**178-1153**	1	SKIRT-TIRE	
	18	1	**178-1154**	1	SKIRT-TIRE	
	19	1	**178-1155**	1	SKIRT-TIRE	
	20	1	**178-1156**	1	SKIRT-TIRE	
	21	1	**179-4793**	4	LANYARD	
	22	1	**179-4794**	8	LANYARD	
	23	2	**179-4795**	2	LANYARD	
	24	1	**179-4796**	2	LANYARD	
	25	1	**3D-5279**	2	GROMMET	
M	26	1,2	**5C-7261**	34	NUT (M8X1.25-THD)	
	27	1,2	**5P-4116**	76	WASHER-HARD (8.8X20.5X2-MM THK)	
	28	2	**6V-8185**	10	NUT (1/4-20-THD)	
M	29	1	**7X-2619**	2	BOLT (M6X1X10-MM)	
	30	2	**7X-7729**	4	WASHER (11X25X3-MM THK)	
M	31	1	**8T-4137**	4	BOLT (M10X1.5X20-MM)	
M	32	2	**8T-4186**	4	BOLT (M10X1.5X40-MM)	
M	33	2	**8T-4197**	4	BOLT (M8X1.25X40-MM)	
	34	1,2	**8T-4222**	8	WASHER-PLATED (11X32X2.5-MM THK)	
M	35	2	**8T-6912**	4	BOLT (M8X1.25X50-MM)	
M	36	1	**8T-7547**	26	BOLT (M8X1.25X30-MM)	
	37	1,2	**9X-8256**	12	WASHER (6.6X12X2-MM THK)	

M-METRIC PART

179-8028 SKIRT GP-TIRE *(contd.)* **i03599183**

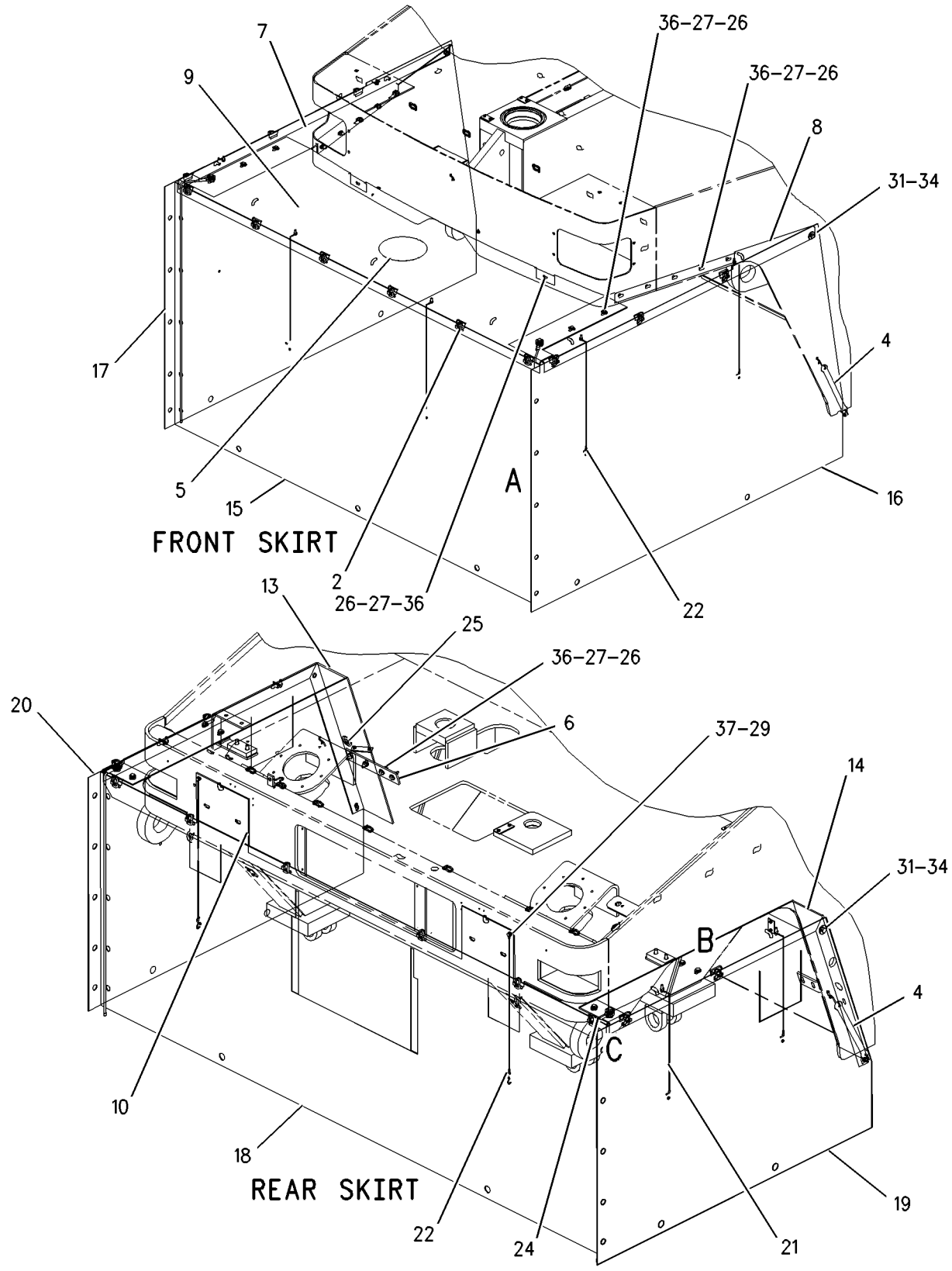

GRAPHIC #1 g00683804

179-8028 SKIRT GP-TIRE *(contd.)* i03599183

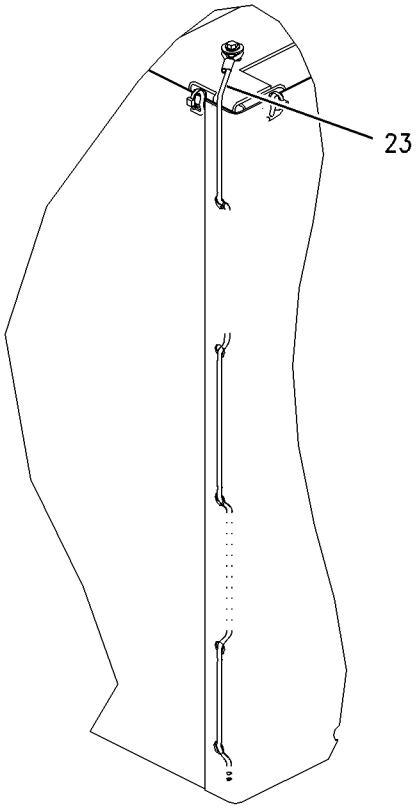

VIEW OF AREA A

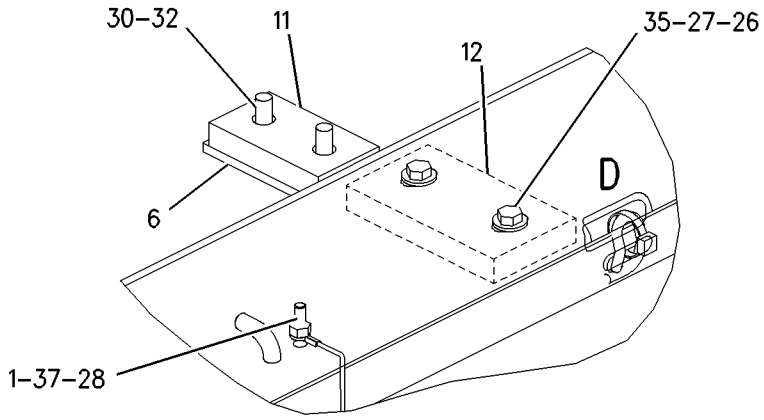

VIEW OF AREA B

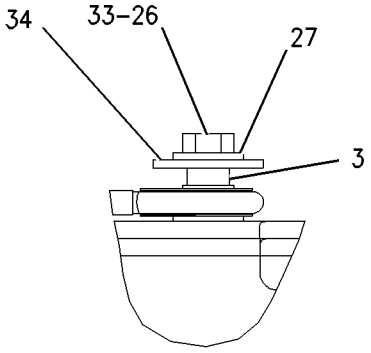

VIEW OF AREA C

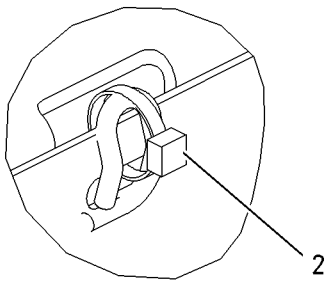

VIEW OF AREA D

GRAPHIC #2 **<END>** g00683805

BRAKING SYSTEM

247-9617 BRAKE GP-PARKING

S/N: PJF1-413

PART OF 246-9028 HYDRAULIC AR

SMCS-4061, 4267 **i02186297**

NOTE	REF NO	GRAPHIC REF	PART NUMBER	QTY	PART NAME 1 2 3 4 5 6 (PRODUCT LEVEL)	SEE PAGE
	1	1	**103-7268**	1	ADAPTER	
	2	1	**122-3629**	1	FASTENER GP (PARKING BRAKE)	
		1	**8V-4102**	2	STRAP	
		1	**8V-4107**	4	BOLT-SELF-LOCKING (1/4-28X0.62-IN)	
	3	1	**122-3631**	1	YOKE	
Y	4	1	**136-6881**	1	SHAFT GP-DRIVE (PARKING BRAKE)	181
	5	1	**139-2211**	2	CAP (TAMPER RESISTANT)	
	6	1	**143-4889**	1	FLANGE	
	7	1	**151-5064**	1	ELBOW	
Y	8	1	**249-6709**	1	BRAKE GP-PARKING	213
	9	1	**0S-1629**	1	BOLT (1/2-20X1-IN)	
	10	1	**117-8801**	1	SEAL-O-RING	
	11	1	*148-8316*	1	CONNECTOR AS	
		1	**3J-7354**	1	SEAL-O-RING	
		1	**4J-5477**	1	SEAL-O-RING	
		1	**6V-8647**	1	CONNECTOR	
	12	1	*148-8325*	1	CONNECTOR AS	
		1	**3J-1907**	1	SEAL-O-RING	
		1	**4J-5477**	1	SEAL-O-RING	
		1	**6V-8641**	1	CONNECTOR	
	13	1	*148-8347*	1	ELBOW AS	
		1	**3D-2824**	1	SEAL-O-RING	
		1	**6V-9007**	1	ELBOW	
		1	**6V-9746**	1	SEAL-O-RING	
	14	1	*148-8368*	1	ELBOW AS	
		1	**3J-1907**	1	SEAL-O-RING	
		1	**4J-5477**	1	SEAL-O-RING	
		1	**6V-8627**	1	ELBOW	
	15	1	*148-8392*	1	ELBOW AS	
		1	**6V-9746**	1	SEAL-O-RING	
		1	**6V-9853**	1	ELBOW	
	16	1	*148-8411*	2	PLUG AS	
					(EACH INCLUDES)	
		1	**3K-0360**	1	SEAL-O-RING	
		1	**9S-4185**	1	PLUG-O-RING	
	17	1	*153-6245*	1	ELBOW AS	
		1	**2M-9780**	1	SEAL-O-RING	
		1	**6V-8398**	1	SEAL-O-RING	
		1	**136-6811**	1	ELBOW	
	18	1	*164-5606*	1	CONNECTOR AS	
		1	**3D-2824**	1	SEAL-O-RING	
		1	**8T-0078**	1	CONNECTOR	
		1	**6V-9746**	1	SEAL-O-RING	
	19	1	**1P-3703**	1	SEAL-RECTANGULAR	
	20	1	**4D-3120**	4	BOLT-SOCKET HEAD (3/8-16X1.5-IN)	
	21	1	**4J-5267**	1	SEAL-O-RING	
	22	1	**6V-8397**	1	SEAL-O-RING	
	23	1	**6V-9746**	1	SEAL-O-RING	
	24	1	**8T-4224**	8	WASHER-HARD (8.8X16X2-MM THK)	
	25	1	**8T-4821**	1	WASHER (13.5X40X3-MM THK)	
	26	1	**8T-4896**	4	WASHER-HARD (10.2X18.5X2.5-MM THK)	
M	27	1	**8T-4908**	8	BOLT (M8X1.25X25-MM)	
	28	1	**8T-9377**	4	BOLT (3/8-16X2.25-IN)	

M-METRIC PART
Y-SEPARATE ILLUSTRATION

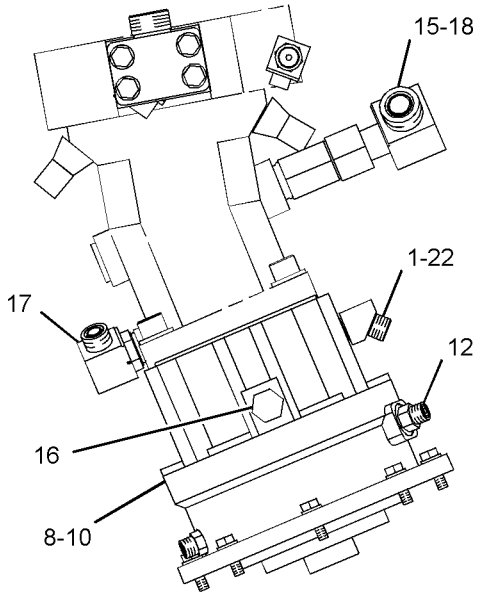

VIEW A-A

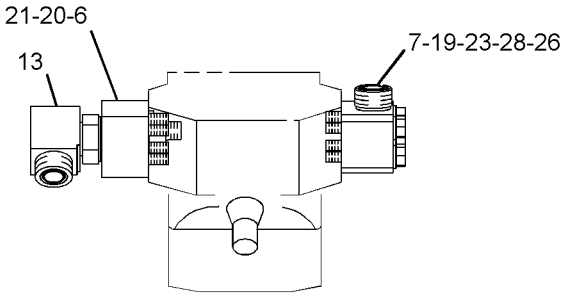

VIEW OF AREA C

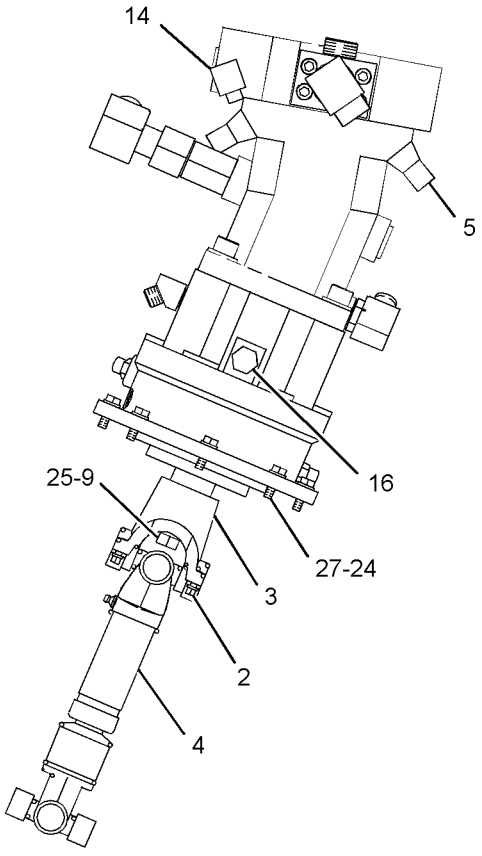

VIEW B-B

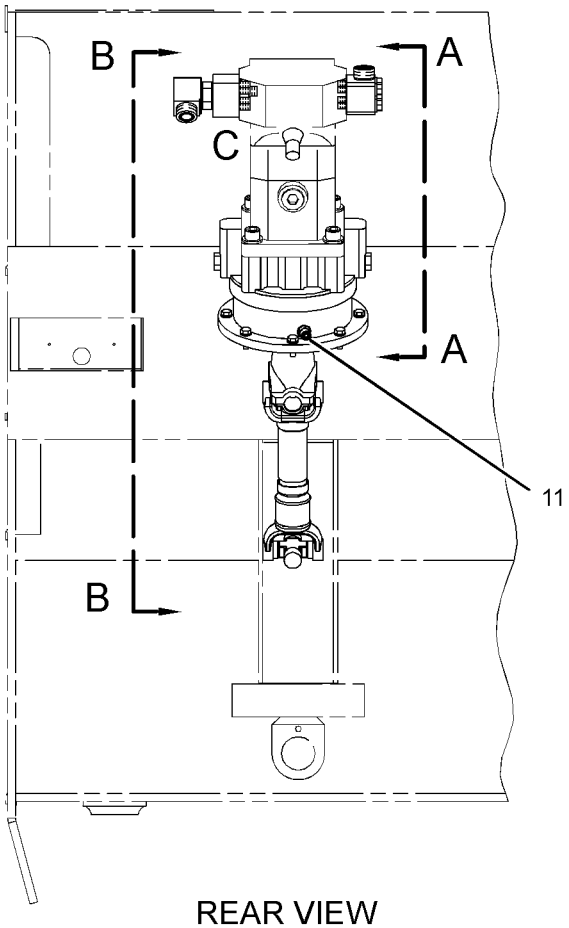

REAR VIEW

GRAPHIC #1 **<END>** g01257601

247-9617 BRAKE GP-PARKING

S/N: PJF414-UP

PART OF 246-9028 HYDRAULIC AR

SMCS-4061, 4267 **i02974261**

NOTE	REF NO	GRAPHIC REF	PART NUMBER	QTY	PART NAME 1 2 3 4 5 6 (PRODUCT LEVEL)	SEE PAGE
	1	1	**103-7268**	1	ADAPTER	
	2	1	**122-3629**	1	FASTENER GP (PARKING BRAKE)	
	3	1	**122-3631**	1	YOKE	
Y	4	1	**136-6881**	1	SHAFT GP-DRIVE (PARKING BRAKE)	181
	5	1	**139-2211**	2	CAP (TAMPER RESISTANT)	
	6	1	**143-4889**	1	FLANGE	
	7	1	**151-5064**	1	ELBOW	
Y	8	1	**249-6709**	1	BRAKE GP-PARKING	213
	9	1	**0S-1629**	1	BOLT (1/2-20X1-IN)	
C	10	1	**5E-8771**	1	SEAL-O-RING	
	11	1	*148-8316*	1	CONNECTOR AS	
		1	**3J-7354**	1	SEAL-O-RING	
		1	**4J-5477**	1	SEAL-O-RING	
		1	**6V-8647**	1	CONNECTOR	
	12	1	*148-8325*	1	CONNECTOR AS	
		1	**3J-1907**	1	SEAL-O-RING	
		1	**4J-5477**	1	SEAL-O-RING	
		1	**6V-8641**	1	CONNECTOR	
	13	1	*148-8347*	1	ELBOW AS	
		1	**3D-2824**	1	SEAL-O-RING	
		1	**6V-9007**	1	ELBOW	
		1	**6V-9746**	1	SEAL-O-RING	
	14	1	*148-8368*	1	ELBOW AS	
		1	**3J-1907**	1	SEAL-O-RING	
		1	**4J-5477**	1	SEAL-O-RING	
		1	**6V-8627**	1	ELBOW	
	15	1	*148-8392*	1	ELBOW AS	
		1	**6V-9746**	1	SEAL-O-RING	
		1	**6V-9853**	1	ELBOW	
	16	1	*148-8411*	2	PLUG AS	
					(EACH INCLUDES)	
		1	**3K-0360**	1	SEAL-O-RING	
		1	**9S-4185**	1	PLUG-O-RING	
C	17	1	*148-8372*	1	ELBOW AS	
		1	**2M-9780**	1	SEAL-O-RING	
		1	**6V-8398**	1	SEAL-O-RING	
		1	**6V-8721**	1	ELBOW	
	18	1	*164-5606*	1	CONNECTOR AS	
		1	**3D-2824**	1	SEAL-O-RING	
		1	**8T-0078**	1	CONNECTOR	
		1	**6V-9746**	1	SEAL-O-RING	
	19	1	**1P-3703**	1	SEAL-RECTANGULAR	
	20	1	**4D-3120**	4	BOLT-SOCKET HEAD (3/8-16X1.5-IN)	
	21	1	**4J-5267**	1	SEAL-O-RING	
	22	1	**6V-8397**	1	SEAL-O-RING	
	23	1	**6V-9746**	1	SEAL-O-RING	
	24	1	**8T-4224**	8	WASHER-HARD (8.8X16X2-MM THK)	
	25	1	**8T-4821**	1	WASHER (13.5X40X3-MM THK)	
	26	1	**8T-4896**	4	WASHER-HARD (10.2X18.5X2.5-MM THK)	
M	27	1	**8T-4908**	8	BOLT (M8X1.25X25-MM)	
	28	1	**8T-9377**	4	BOLT (3/8-16X2.25-IN)	

C-CHANGE FROM PREVIOUS TYPE
M-METRIC PART
Y-SEPARATE ILLUSTRATION

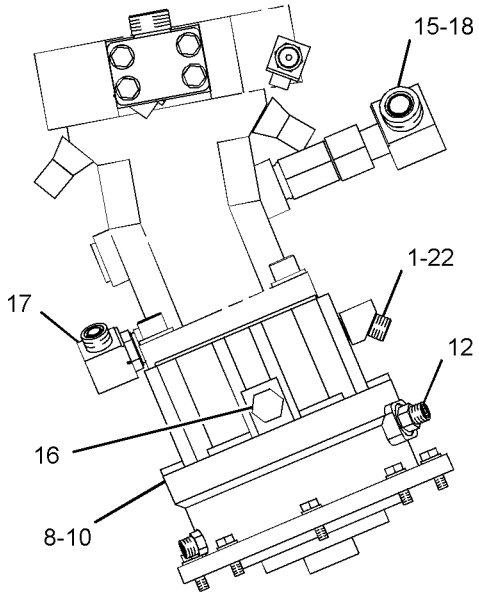

VIEW A-A

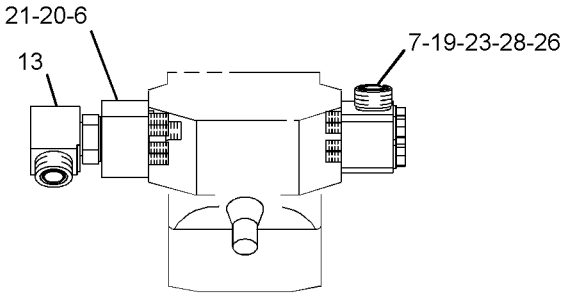

VIEW OF AREA C

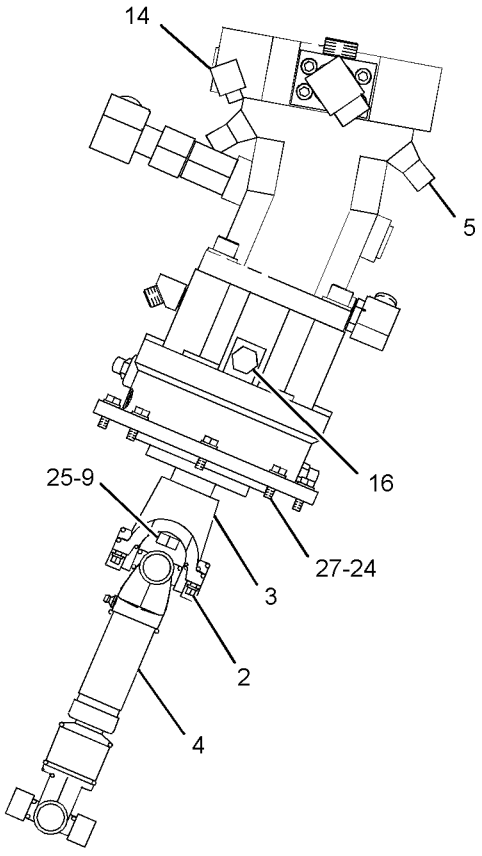

VIEW B-B

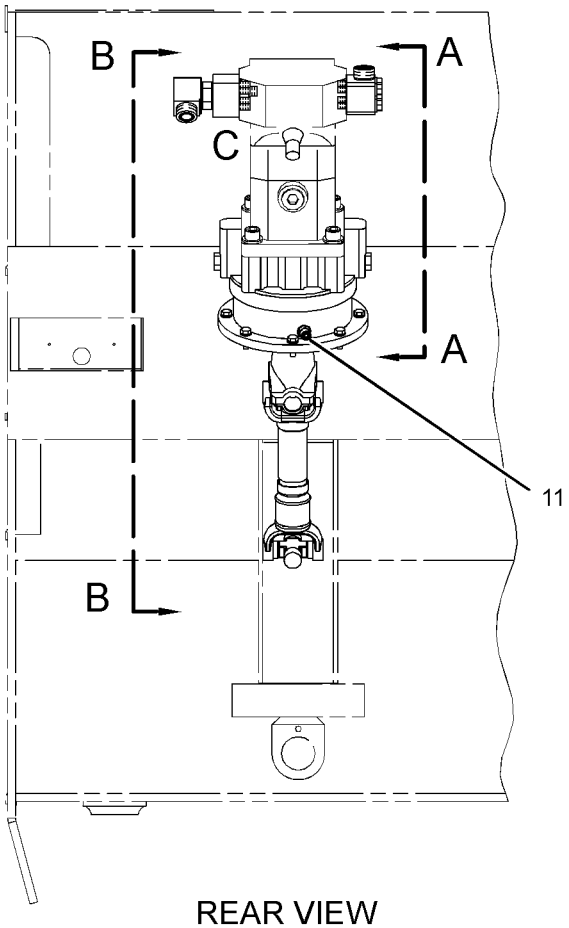

REAR VIEW

GRAPHIC #1 **<END>** g01257601

249-6709 BRAKE GP-PARKING

S/N: PJF1-UP

PART OF 247-9617 BRAKE GP-PARKING, 247-9620 MOTOR & MTG GP-PROPEL

SMCS-4061, 4267 **i03599163**

NOTE	REF NO	GRAPHIC REF	PART NUMBER	QTY	PART NAME 1 2 3 4 5 6 (PRODUCT LEVEL)	SEE PAGE
	1	1	**136-8066**	1	SHAFT	
	2	1	**9S-8001**	1	PLUG-O-RING	
	3	1	**5P-7812**	1	SEAL-O-RING	
	4	1	**5M-3396**	2	BALL BEARING	
M	5	1	**6V-5192**	8	BOLT-SOCKET HEAD (M8X1.25X30-MM)	
	6	1	**136-8071**	1	RING-BACKUP	
	7	1	**146-4263**	1	SEAL-O-RING	
	8	1	**136-8065**	10	SPRING	
	9	1	**136-8070**	1	RING-BACKUP	
	10	1	**5E-8771**	1	SEAL-O-RING	
	11	1	**136-8068**	6	DISC-MIDDLE	
	12	1	**136-8064**	5	DISC-FRICTION	
B	13	1	**251-9614**	1	KIT-SHIM (PARKING BRAKE)	
					(INCLUDES 3-SHIMS)	
	14	1	**136-8620**	1	SEAL	
	15	1	**6V-5200**	1	RING-RETAINING	
	16	1	**167-7938**	1	SHIM	
	17	1	**9S-8002**	1	PLUG-O-RING	
	18	1	**3J-7354**	1	SEAL-O-RING	
	19	1	**136-8067**	1	PISTON-BRAKE	
	20	1	**176-1599**	1	PLATE-END	
	21	1	**8C-3113**	1	RING-RETAINING	
	22	1	**5P-3864**	1	SEAL-O-RING	
	23	1	**9S-4185**	2	PLUG-O-RING	
	24	1	**8L-2786**	2	SEAL-O-RING	
	25	1	**176-7082**	1	FLANGE	

B-USE AS REQUIRED
M-METRIC PART

249-6709 BRAKE GP-PARKING *(contd.)* **i03599163**

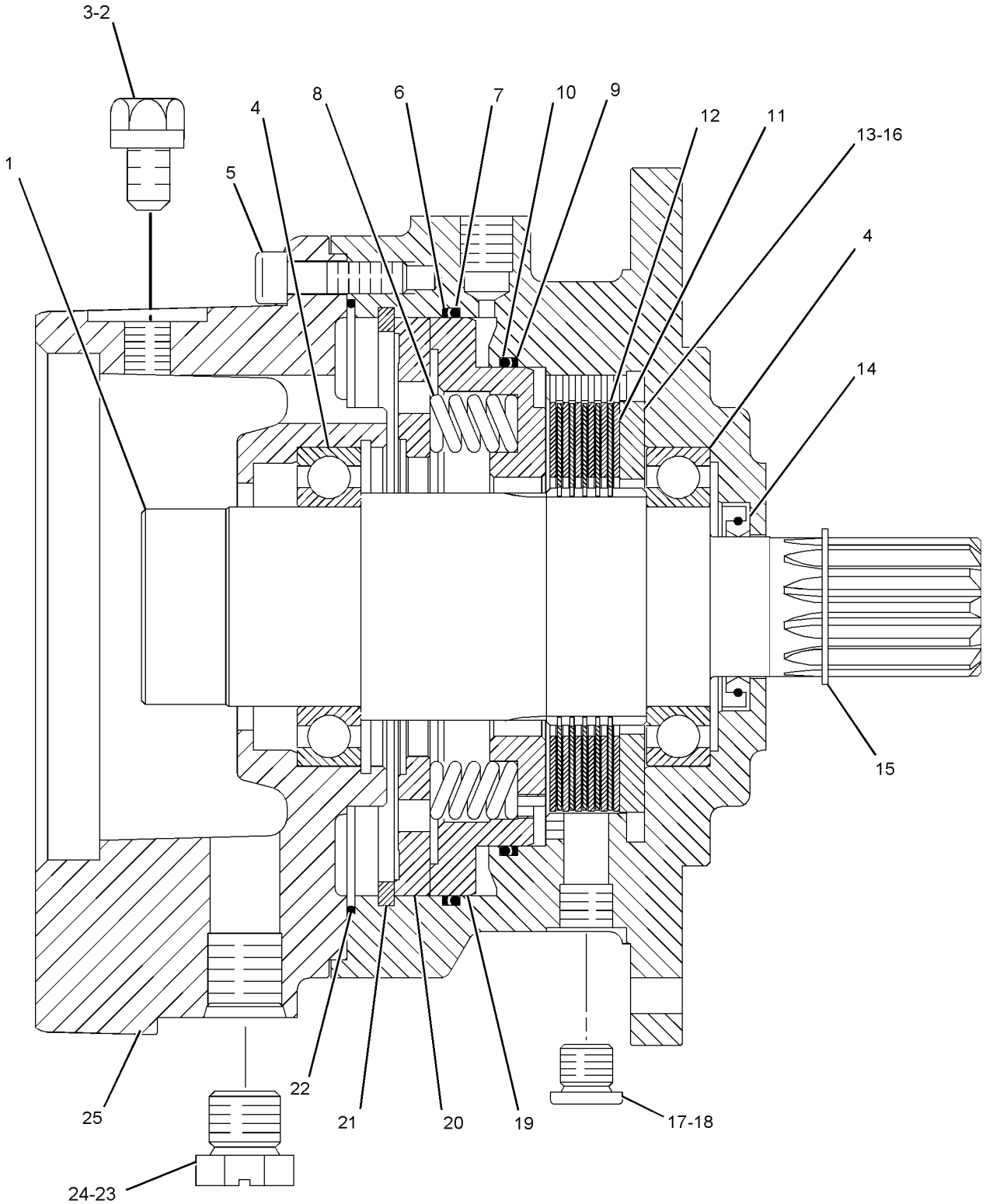

GRAPHIC #1 **<END>** g01062608

BRAKING SYSTEM

249-2720 LINES GP-BRAKE & SHIFT

S/N: PJF1-UP

PART OF 246-9028 HYDRAULIC AR

SMCS-4257 **i02366885**

NOTE	REF NO	GRAPHIC REF	PART NUMBER	QTY	PART NAME 1 2 3 4 5 6 (PRODUCT LEVEL)	SEE PAGE
	1	1	**196-4204**	6	BOLT (M6X1X40-MM)	
	2	1	**107-4749**	6	PLATE	
I	3	1	**140-9267**	1	HOSE AS	
I	4	1	**155-7526**	1	HOSE AS	
	5	1	**177-2215**	2	STRAP-DUAL CLAMP	
I	6	1	**101-8745**	1	HOSE AS	
I	7	1	**185-1632**	1	HOSE AS	
	8	1	**206-6418**	18	CLAMP-HALF	
I	9	1	**249-2723**	1	HOSE AS	
I	10	1	**261-2725**	1	HOSE AS	
	11	1	**125-4984**	3	CLAMP	
	12	1	**4K-8864**	2	CLIP	
M	13	1	**7X-2533**	12	BOLT (M6X1X35-MM)	

I-REFER TO HYDRAULIC INFORMATION SYSTEM
M-METRIC PART

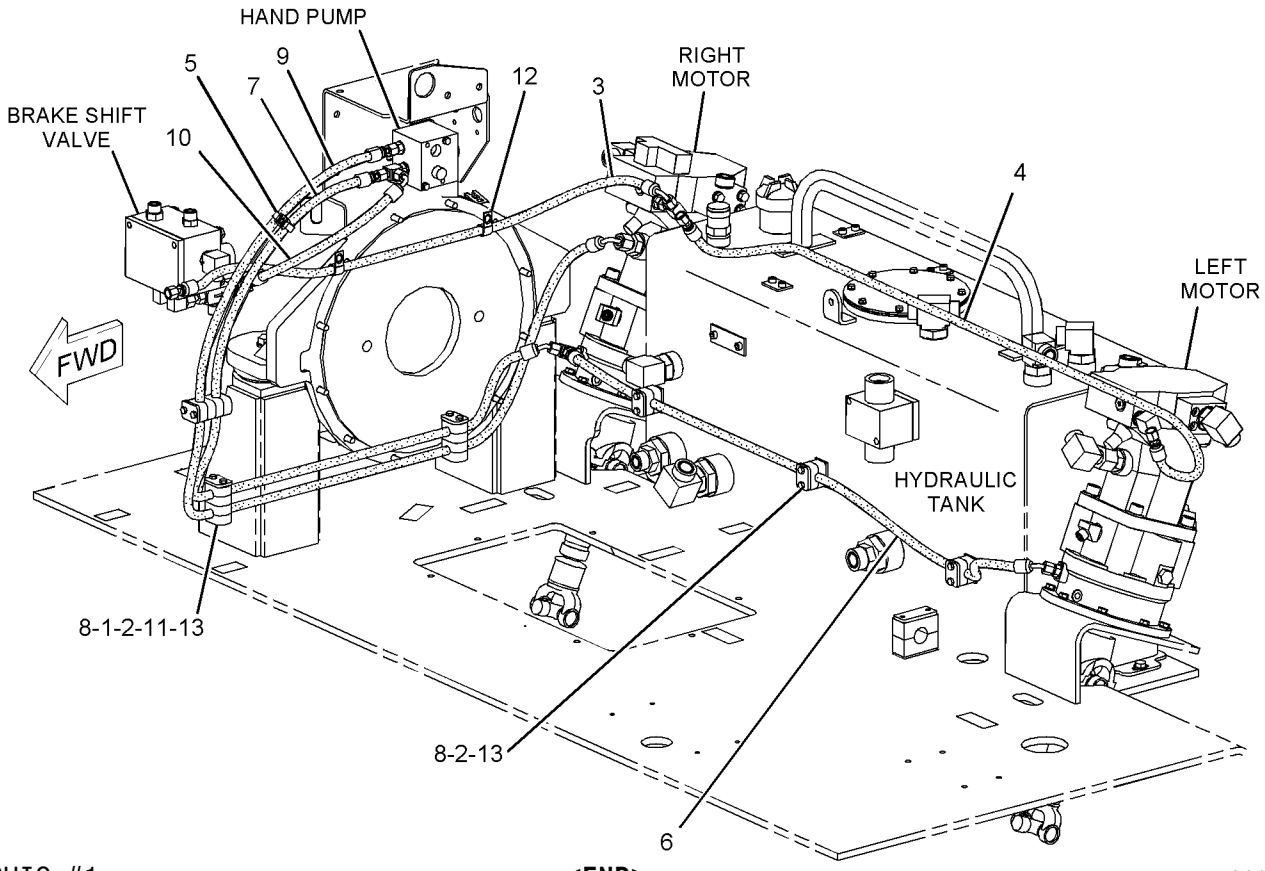

GRAPHIC #1 **<END>** g01138598

115-8488 PUMP GP-HAND—PARKING BRAKE RELEASE

S/N: PJF1-UP

PART OF 251-1953 PUMP GP-HAND

SMCS-4116 **i02079693**

NOTE	REF NO	GRAPHIC REF	PART NUMBER	QTY	PART NAME 1 2 3 4 5 6 (PRODUCT LEVEL)	SEE PAGE
	1	1	**118-9520**	1	PUMP	
	2	1	**118-9521**	2	VALVE-CHECK	
	3	1	**9S-8004**	1	PLUG-O-RING	
	4	1	**3J-1907**	1	SEAL-O-RING	
	5	1	**183-3203**	1	KNOB	

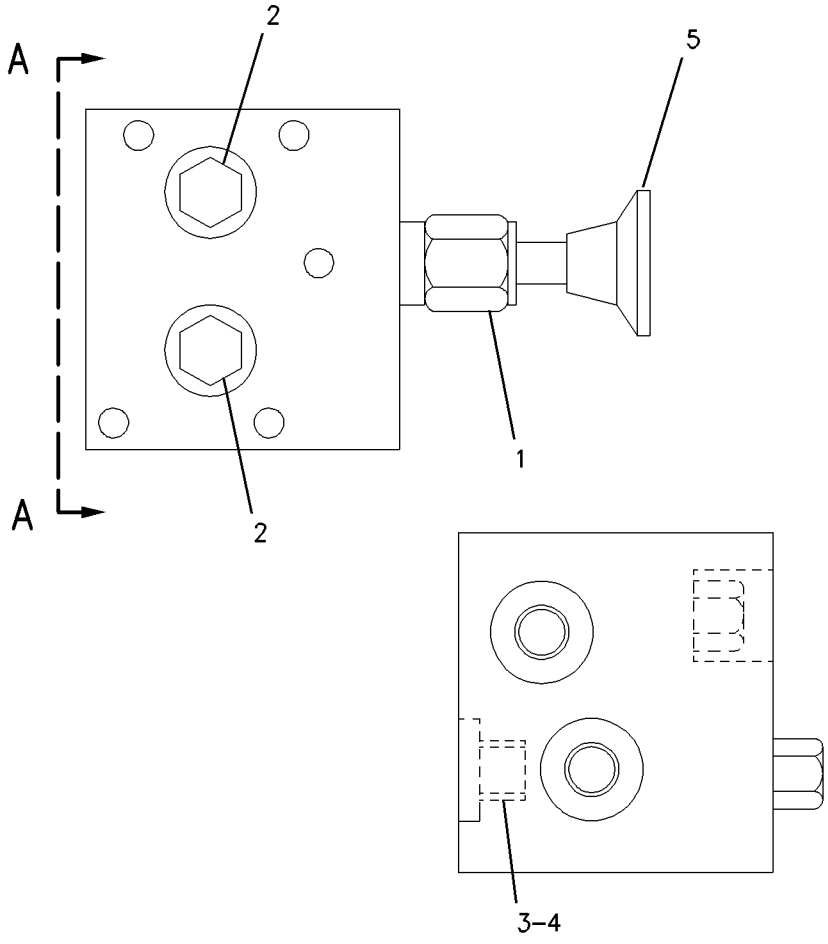

VIEW A–A

GRAPHIC #1 **<END>** g00670815

251-1953 PUMP GP-HAND—PARKING BRAKE RELEASE

S/N: PJF1-UP

PART OF 246-9028 HYDRAULIC AR

SMCS-4116 **i02386580**

NOTE	REF NO	GRAPHIC REF	PART NUMBER	QTY	PART NAME 1 2 3 4 5 6 (PRODUCT LEVEL)	SEE PAGE
Y	1	1	**115-8488**	1	PUMP GP-HAND (PARKING BRAKE RELEASE)	216
	2	1	**240-0514**	1	SUPPORT AS	
	3	1	*250-1476*	1	TEE AS	
		1	**3J-1907**	1	SEAL-O-RING	
		1	**4J-5477**	2	SEAL-O-RING	
		1	**086-9035**	1	TEE	
	4	1	*148-8325*	1	CONNECTOR AS	
		1	**3J-1907**	1	SEAL-O-RING	
		1	**4J-5477**	1	SEAL-O-RING	
		1	**6V-8641**	1	CONNECTOR	
M	5	1	**7X-7888**	2	BOLT (M6X1X90-MM)	
	6	1	**9X-8256**	2	WASHER (6.6X12X2-MM THK)	
	7	1	**8T-4121**	4	WASHER-HARD (11X21X2.5-MM THK)	
M	8	1	**8T-4136**	2	BOLT (M10X1.5X25-MM)	
M	9	1	**8T-4186**	2	BOLT (M10X1.5X40-MM)	

M-METRIC PART
Y-SEPARATE ILLUSTRATION

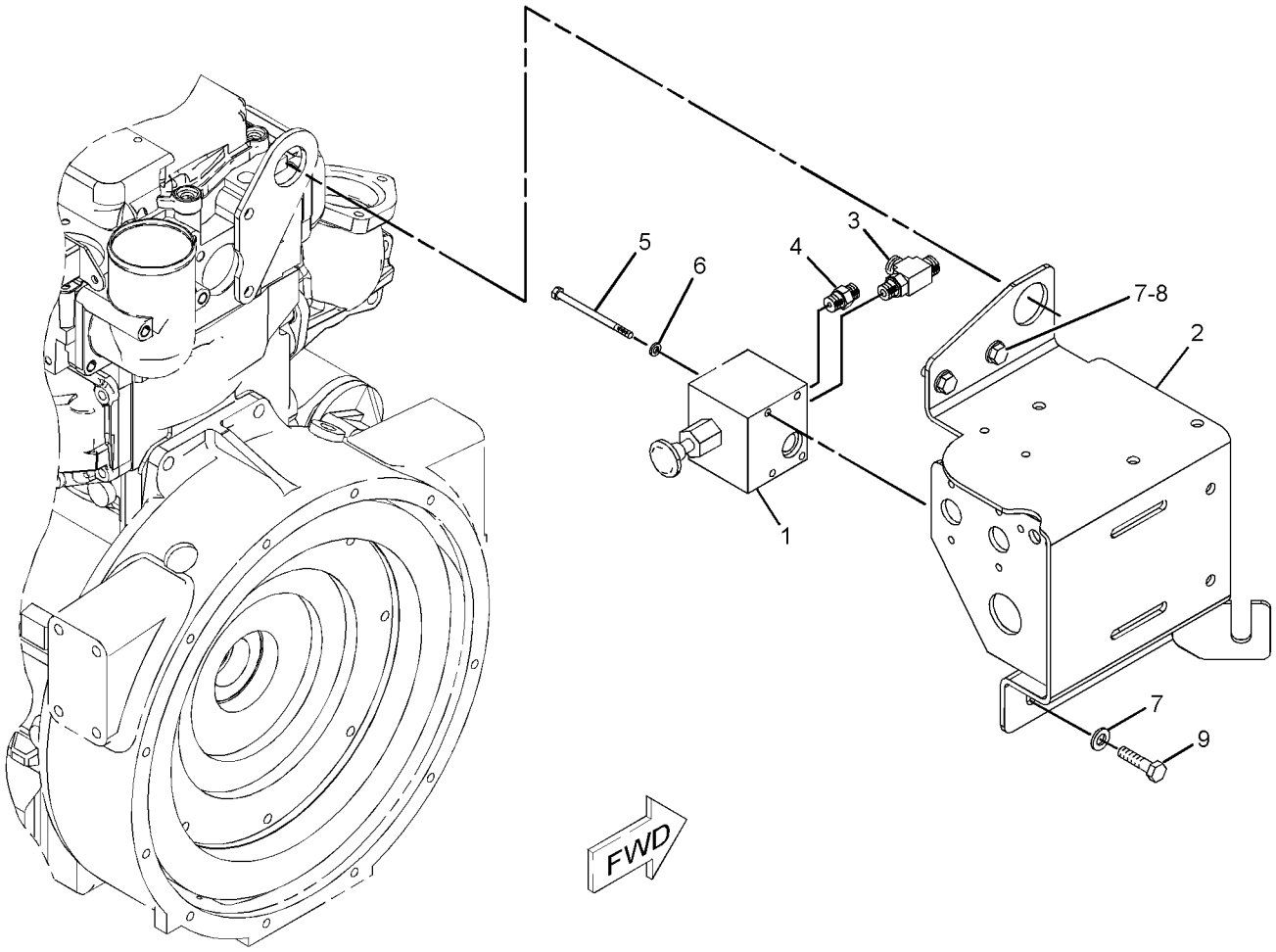

GRAPHIC #1 **<END>** g01294078

1G-9759 VALVE GP-BRAKE & SHIFT

S/N: PJF1-UP

PART OF 257-0025 VALVE GP-BRAKE CONTROL

SMCS-4265, 4356 **i02517265**

NOTE	REF NO	GRAPHIC REF	PART NUMBER	QTY	PART NAME 1 2 3 4 5 6 (PRODUCT LEVEL)	SEE PAGE
	1	1	**3J-1907**	2	SEAL-O-RING	
	2	1	**3K-0360**	1	SEAL-O-RING	
	3	1	**9S-8004**	2	PLUG-O-RING	
	4	1	**3J-7354**	1	SEAL-O-RING	
	5	1	**9S-8002**	1	PLUG-O-RING	
	6	1	**9S-8005**	1	PLUG-O-RING	
	7	1	**1G-4378**	1	LOCK	
	8	1	**107-0818**	2	COIL	
J	9	1	**1G-9922**	1	VALVE GP-SOLENOID (BRAKE)	
J	10	1	**1G-9922**	1	VALVE GP-SOLENOID (SHIFT)	
H	11	1	**1G-4376**	1	VALVE GP-CHECK	
	12	1	**7X-9181**	2	KIT-SEAL (PRESSURE REDUCING VALVE)	
					(EACH INCLUDES SEAL-O-RINGS & BACKUP-RINGS)	
	13	1	**155-1279**	1	KIT-SEAL (CHECK VALVE)	
					(INCLUDES SEAL-O-RINGS AND BACKUP RING)	
	14	1	**2U-6509**	2	NUT-SOLENOID (1/2-18-THD)	
					AVAILABLE REPAIR KIT(S):	
H			**1G-4381**	1	KIT-SEAL (CHECK VALVE)	
J			**1G-4380**	1	KIT-SEAL (SOLENOID VALVE)	

H-KIT MARKED H SERVICES PART(S) MARKED H
J-KIT MARKED J SERVICES PART(S) MARKED J

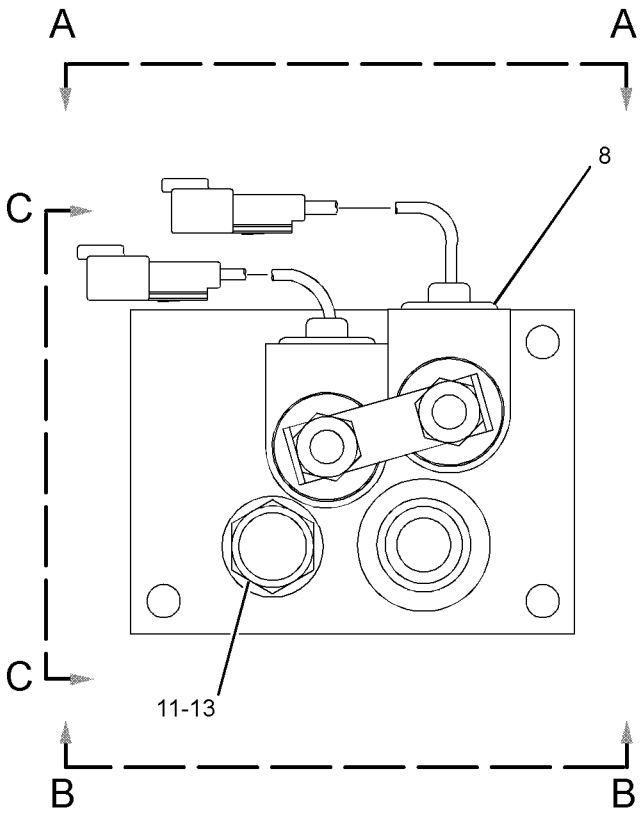

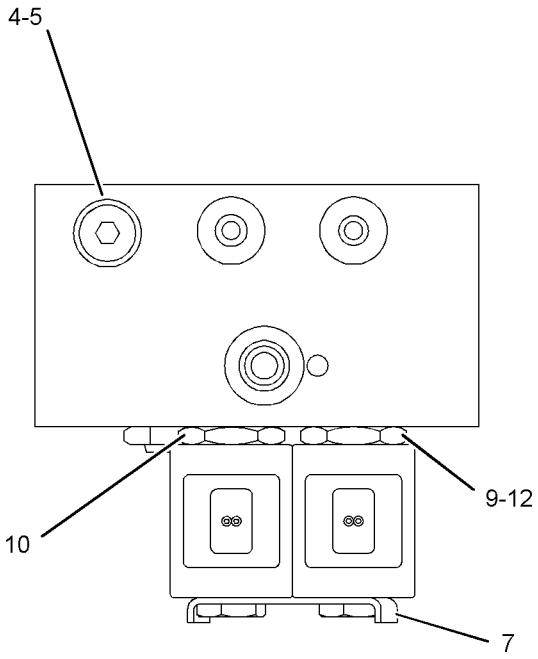

VIEW A-A

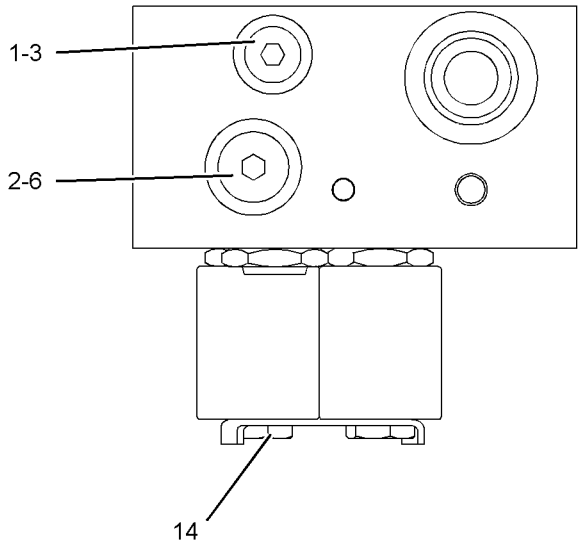

VIEW B-B

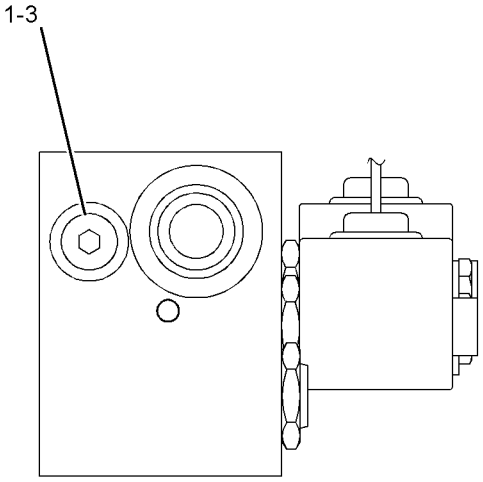

VIEW C-C

GRAPHIC #1 **<END>** g01259894

BRAKING SYSTEM

257-0025 VALVE GP-BRAKE CONTROL

S/N: PJF1-359

PART OF 246-9028 HYDRAULIC AR

SMCS-4265, 4282 **i02293713**

NOTE	REF NO	GRAPHIC REF	PART NUMBER	QTY	PART NAME 1 2 3 4 5 6 (PRODUCT LEVEL)	SEE PAGE
Y	1	1	**1G-9759**	1	VALVE GP-BRAKE & SHIFT	218
	2	1	**115-3075**	1	VALVE-NEEDLE	
	3	1	*148-8326*	1	CONNECTOR AS	
		1	**3J-7354**	1	SEAL-O-RING	
		1	**6V-8397**	1	SEAL-O-RING	
		1	**6V-9872**	1	CONNECTOR	
	4	1	*148-8340*	1	CONNECTOR AS	
		1	**3K-0360**	1	SEAL-O-RING	
		1	**6V-8398**	1	SEAL-O-RING	
		1	**6V-8639**	1	CONNECTOR	
	5	1	*148-8345*	2	CONNECTOR AS	
					(EACH INCLUDES)	
		1	**2M-9780**	1	SEAL-O-RING	
		1	**6V-8398**	1	SEAL-O-RING	
		1	**6V-8638**	1	CONNECTOR	
	6	1	*148-8367*	1	ELBOW AS	
		1	**6V-8397**	1	SEAL-O-RING	
		1	**6V-9850**	1	ELBOW	
	7	1	*148-8368*	1	ELBOW AS	
		1	**3J-1907**	1	SEAL-O-RING	
		1	**4J-5477**	1	SEAL-O-RING	
		1	**6V-8627**	1	ELBOW	
	8	1	*148-8369*	1	ELBOW AS	
		1	**3J-7354**	1	SEAL-O-RING	
		1	**4J-5477**	1	SEAL-O-RING	
		1	**6V-8628**	1	ELBOW	
	9	1	*150-3070*	1	ADAPTER AS	
		1	**3J-1907**	1	SEAL-O-RING	
		1	**7X-3163**	1	ADAPTER-SWIVEL	
	10	1	*153-6245*	1	ELBOW AS	
		1	**2M-9780**	1	SEAL-O-RING	
		1	**6V-8398**	1	SEAL-O-RING	
		1	**136-6811**	1	ELBOW	
	11	1	**164-5619**	1	PLUG AS	
		1	**2M-9780**	1	SEAL-O-RING	
		1	**9S-8006**	1	PLUG-O-RING	
	12	1	*183-3408*	1	PLUG AS	
		1	**6V-5049**	1	SEAL-O-RING	
		1	**9S-8004**	1	PLUG-O-RING	
	13	1	**7X-0575**	3	WASHER-HARD (10.2X22.5X5-MM THK)	
M	14	1	**8T-4178**	3	BOLT (M10X1.5X90-MM)	

M-METRIC PART
Y-SEPARATE ILLUSTRATION

257-0025 **VALVE GP-BRAKE CONTROL** *(contd.)* **i02293713**

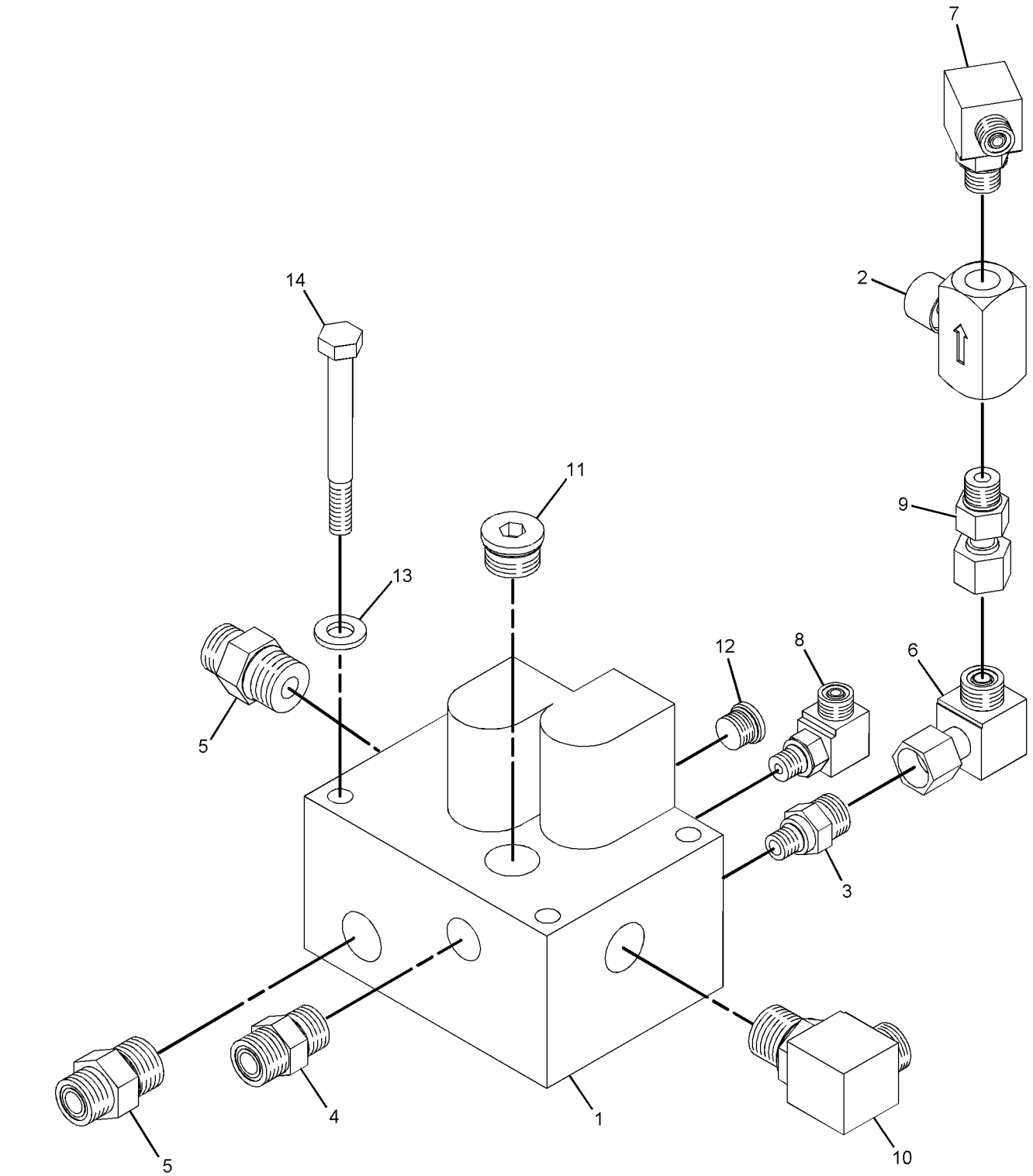

GRAPHIC #1 **<END>** g01093012

BRAKING SYSTEM

257-0025 VALVE GP-BRAKE CONTROL

S/N: PJF360-UP

PART OF 246-9028 HYDRAULIC AR

SMCS-4265, 4282 **i02763884**

NOTE	REF NO	GRAPHIC REF	PART NUMBER	QTY	PART NAME 1 2 3 4 5 6 (PRODUCT LEVEL)	SEE PAGE
Y	1	1	**1G-9759**	1	VALVE GP-BRAKE & SHIFT	218
	2	1	**115-3075**	1	VALVE-NEEDLE	
	3	1	*148-8326*	1	CONNECTOR AS	
		1	**3J-7354**	1	SEAL-O-RING	
		1	**6V-8397**	1	SEAL-O-RING	
		1	**6V-9872**	1	CONNECTOR	
	4	1	*148-8340*	1	CONNECTOR AS	
		1	**3K-0360**	1	SEAL-O-RING	
		1	**6V-8398**	1	SEAL-O-RING	
		1	**6V-8639**	1	CONNECTOR	
C	5	1	*148-8345*	3	CONNECTOR AS	
					(EACH INCLUDES)	
		1	**2M-9780**	1	SEAL-O-RING	
		1	**6V-8398**	1	SEAL-O-RING	
		1	**6V-8638**	1	CONNECTOR	
	6	1	*148-8367*	1	ELBOW AS	
		1	**6V-8397**	1	SEAL-O-RING	
		1	**6V-9850**	1	ELBOW	
	7	1	*148-8368*	1	ELBOW AS	
		1	**3J-1907**	1	SEAL-O-RING	
		1	**4J-5477**	1	SEAL-O-RING	
		1	**6V-8627**	1	ELBOW	
	8	1	*148-8369*	1	ELBOW AS	
		1	**3J-7354**	1	SEAL-O-RING	
		1	**4J-5477**	1	SEAL-O-RING	
		1	**6V-8628**	1	ELBOW	
	9	1	*150-3070*	1	ADAPTER AS	
		1	**3J-1907**	1	SEAL-O-RING	
		1	**7X-3163**	1	ADAPTER-SWIVEL	
	11	1	*164-5619*	1	PLUG AS	
		1	**2M-9780**	1	SEAL-O-RING	
		1	**9S-8006**	1	PLUG-O-RING	
	12	1	*183-3408*	1	PLUG AS	
		1	**6V-5049**	1	SEAL-O-RING	
		1	**9S-8004**	1	PLUG-O-RING	
	13	1	**7X-0575**	3	WASHER-HARD (10.2X22.5X5-MM THK)	
M	14	1	**8T-4178**	3	BOLT (M10X1.5X90-MM)	

C-CHANGE FROM PREVIOUS TYPE
M-METRIC PART
Y-SEPARATE ILLUSTRATION

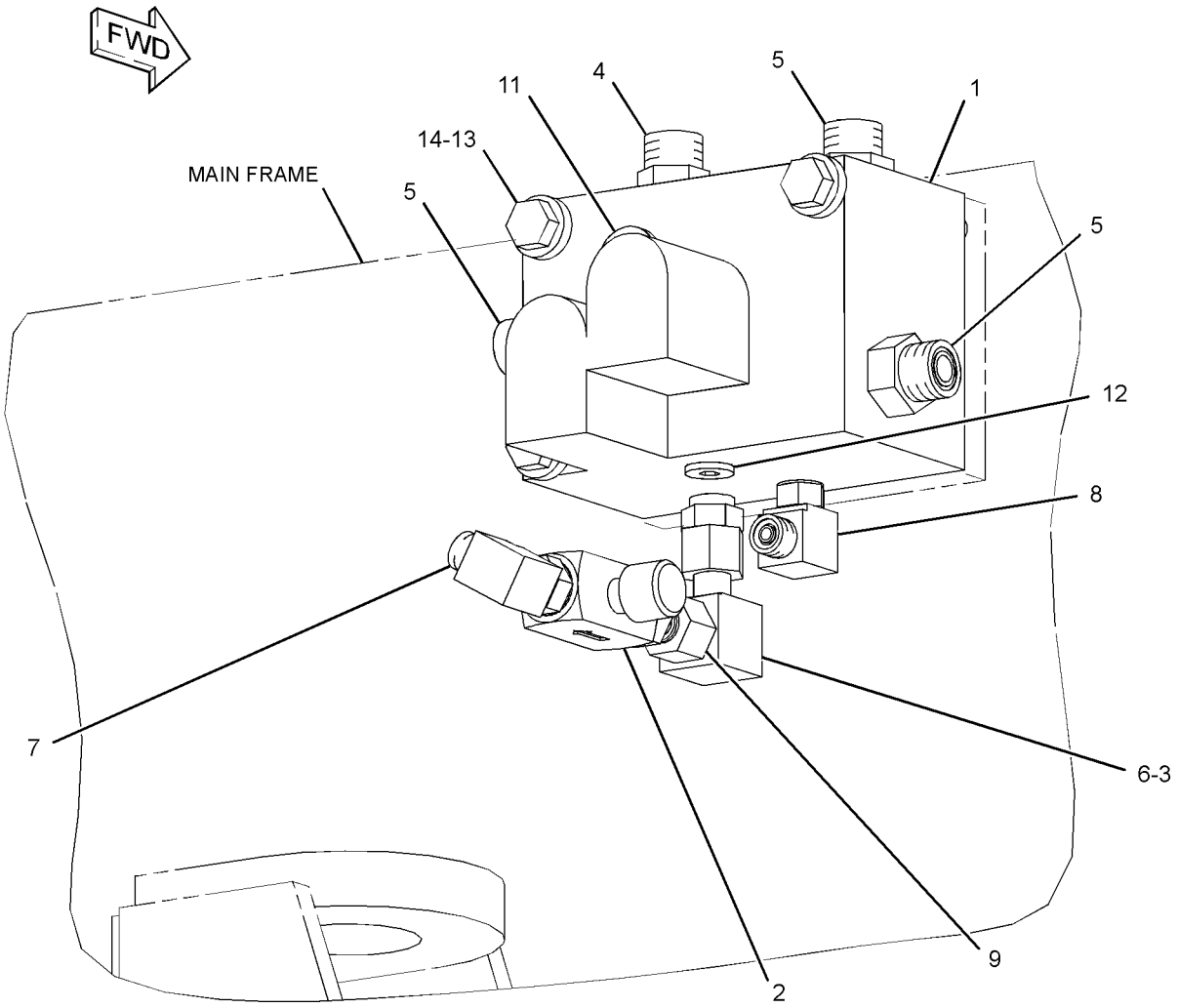

GRAPHIC #1 **<END>** g01423308

STEERING SYSTEM

131-2374 BAR GP-OSCILLATING & STEERING

S/N: PJF1-345

PART OF 246-8992 CHASSIS AR

SMCS-4313, 7057 **i03577320**

NOTE	REF NO	GRAPHIC REF	PART NUMBER	QTY	PART NAME 1 2 3 4 5 6 (PRODUCT LEVEL)	SEE PAGE
	1	1	**272-3106**	1	KINGPIN	
	2	1	**1B-4157**	1	NUT (1 3/4-12 NF)	
	3	1	**3B-8488**	1	FITTING-GREASE	
	4	1	**3B-8489**	1	FITTING-GREASE	
	5	1	**7L-6551**	1	CONE-BEARING	
	6	1	**8D-2256**	1	CONE-BEARING	
B	7	1	**077-3005**	4	SHIM (3.5-MM THK)	
	8	1	**077-4101**	1	GASKET	
	9	1	**095-0894**	1	PIN-SPRING	
	10	1	**122-8041**	1	DISC-SPACER (47.7X81.8X1.94-MM THK)	
	11	1	**123-4588**	1	PLATE	
	12	1	**123-4744**	1	SEAL-RING	
B	13	1	**137-3561**	1	SHIM (2-MM THK)	
I	14	1	**141-7726**	1	HOSE AS	
	15	1	**146-3621**	1	AXLE-DOUBLE	
	16	1	**146-3624**	1	BOLSTER AS	
		1	**7R-7963**	1	PLATE AS	
	17	1	**146-8901**	2	BEARING	
	18	1	**146-8921**	2	BEARING	
	19	1	**146-9316**	1	PIN	
B	20	1	**146-9351**	8	SHIM (1-MM THK)	
	21	1	**146-9355**	1	PIN AS	
B	22	1	**237-4890**	1	SHIM (4-MM THK)	
	23	1	*148-8320*	2	CONNECTOR AS	
					(EACH INCLUDES)	
		1	**8C-6865**	1	CONNECTOR	
		1	**4J-5477**	1	SEAL-O-RING	
M	24	1	**6V-7744**	1	LOCKNUT (M10X1.5-THD)	
M	25	1	**8T-4139**	3	BOLT (M12X1.75X30-MM)	
M	26	1	**8T-4172**	1	BOLT (M10X1.5X80-MM)	
	27	1	**8T-4223**	3	WASHER-HARD (13.5X25.5X3-MM THK)	

B-USE AS REQUIRED
I-REFER TO HYDRAULIC INFORMATION SYSTEM
M-METRIC PART

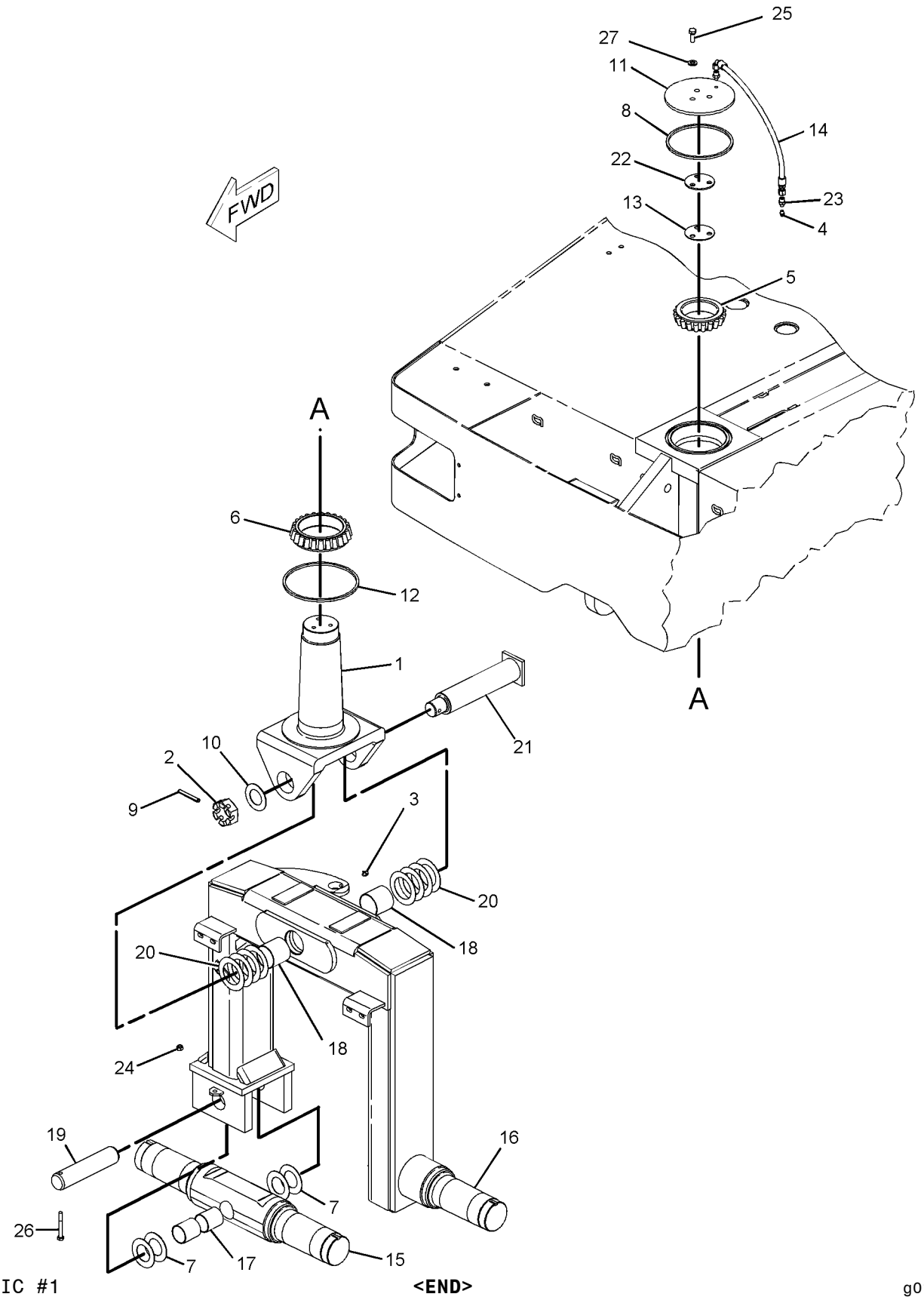

GRAPHIC #1 **<END>** g01057230

STEERING SYSTEM

131-2374 BAR GP-OSCILLATING & STEERING

S/N: PJF346-UP

PART OF 246-8992 CHASSIS AR

SMCS-4313, 7057 **i02741506**

NOTE	REF NO	GRAPHIC REF	PART NUMBER	QTY	PART NAME 1 2 3 4 5 6 (PRODUCT LEVEL)	SEE PAGE
	1	1	**296-8247**	1	KINGPIN	
	2	1	**1B-4157**	1	NUT (1 3/4-12 NF)	
	3	1	**3B-8488**	1	FITTING-GREASE	
	4	1	**3B-8489**	1	FITTING-GREASE	
	5	1	**7L-6551**	1	CONE-BEARING	
	6	1	**8D-2256**	1	CONE-BEARING	
B	7	1	**077-3005**	4	SHIM (3.5-MM THK)	
	8	1	**077-4101**	1	GASKET	
	9	1	**095-0894**	1	PIN-SPRING	
	10	1	**122-8041**	1	DISC-SPACER (47.7X81.8X1.94-MM THK)	
	11	1	**123-4588**	1	PLATE	
	12	1	**123-4744**	1	SEAL-RING	
B	13	1	**137-3561**	1	SHIM (2-MM THK)	
I	14	1	**141-7726**	1	HOSE AS	
	15	1	**146-3621**	1	AXLE-DOUBLE	
C	16	1	**302-8691**	1	BOLSTER AS	
		1	**102-8704**	1	PLATE AS	
	17	1	**146-8901**	2	BEARING	
	18	1	**146-8921**	2	BEARING	
	19	1	**146-9316**	1	PIN	
B	20	1	**146-9351**	8	SHIM (1-MM THK)	
	21	1	**146-9355**	1	PIN AS	
B	22	1	**237-4890**	1	SHIM (4-MM THK)	
	23	1	*148-8320*	2	CONNECTOR AS	
					(EACH INCLUDES)	
		1	**8C-6865**	1	CONNECTOR	
		1	**4J-5477**	1	SEAL-O-RING	
M	24	1	**6V-7744**	1	LOCKNUT (M10X1.5-THD)	
M	25	1	**8T-4139**	3	BOLT (M12X1.75X30-MM)	
M	26	1	**8T-4172**	1	BOLT (M10X1.5X80-MM)	
	27	1	**8T-4223**	3	WASHER-HARD (13.5X25.5X3-MM THK)	

B-USE AS REQUIRED
C-CHANGE FROM PREVIOUS TYPE
I-REFER TO HYDRAULIC INFORMATION SYSTEM
M-METRIC PART

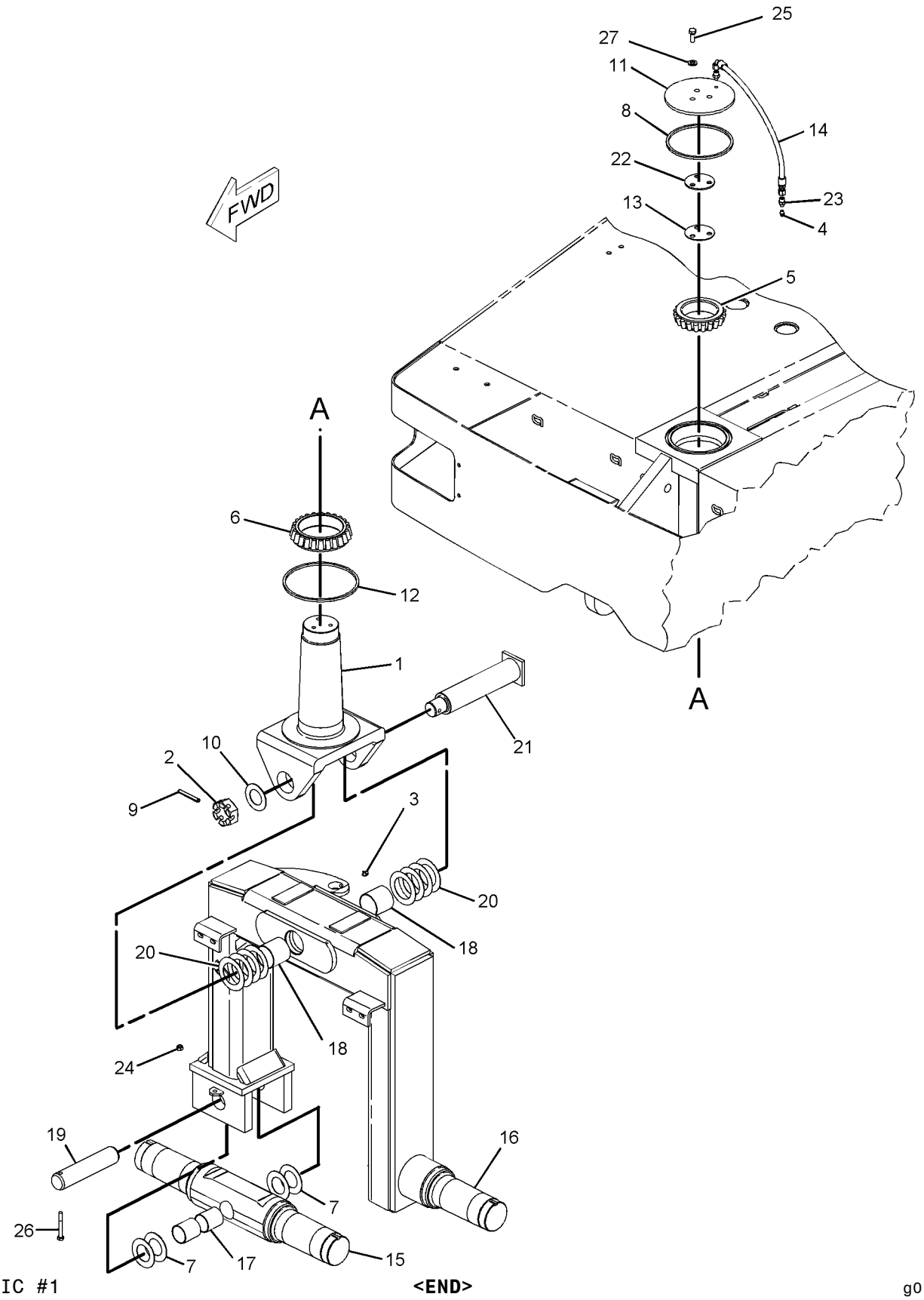

GRAPHIC #1 **<END>** g01057230

STEERING SYSTEM

120-7057 CONTROL GP-STEERING

S/N: PJF1-UP
PART OF 246-9029, 251-1957 OPERATOR AR
ALSO AN ATTACHMENT

SMCS-4309, 4322, 4343 **i03535980**

NOTE	REF NO	GRAPHIC REF	PART NUMBER	QTY	PART NAME 1 2 3 4 5 6 (PRODUCT LEVEL)	SEE PAGE
	1	1	**8R-2916**	1	COVER AS (CAT STEERING WHEEL)	
	2	1	**000-6321**	1	NUT (13/16-20-THD)	
	3	1	**077-9543**	1	COLUMN-STEERING	
Y	4	1	**133-4896**	1	PUMP GP-METERING (STEERING)	241
C	5	1	**145-9291**	1	STEERING WHEEL AS	
	6	1	**153-7368**	1	PLUG	
	7	1	**3K-0360**	4	SEAL-O-RING	
	8	1	**4L-9337**	4	BOLT (3/8-16X1.5-IN)	
	9	1	**6V-8397**	4	SEAL-O-RING	
	10	1	**6V-8634**	2	CONNECTOR	
	11	1	**8T-0076**	2	CONNECTOR	
	12	1	**8T-4896**	4	WASHER-HARD (10.2X18.5X2.5-MM THK)	

C-CHANGE FROM PREVIOUS TYPE
Y-SEPARATE ILLUSTRATION

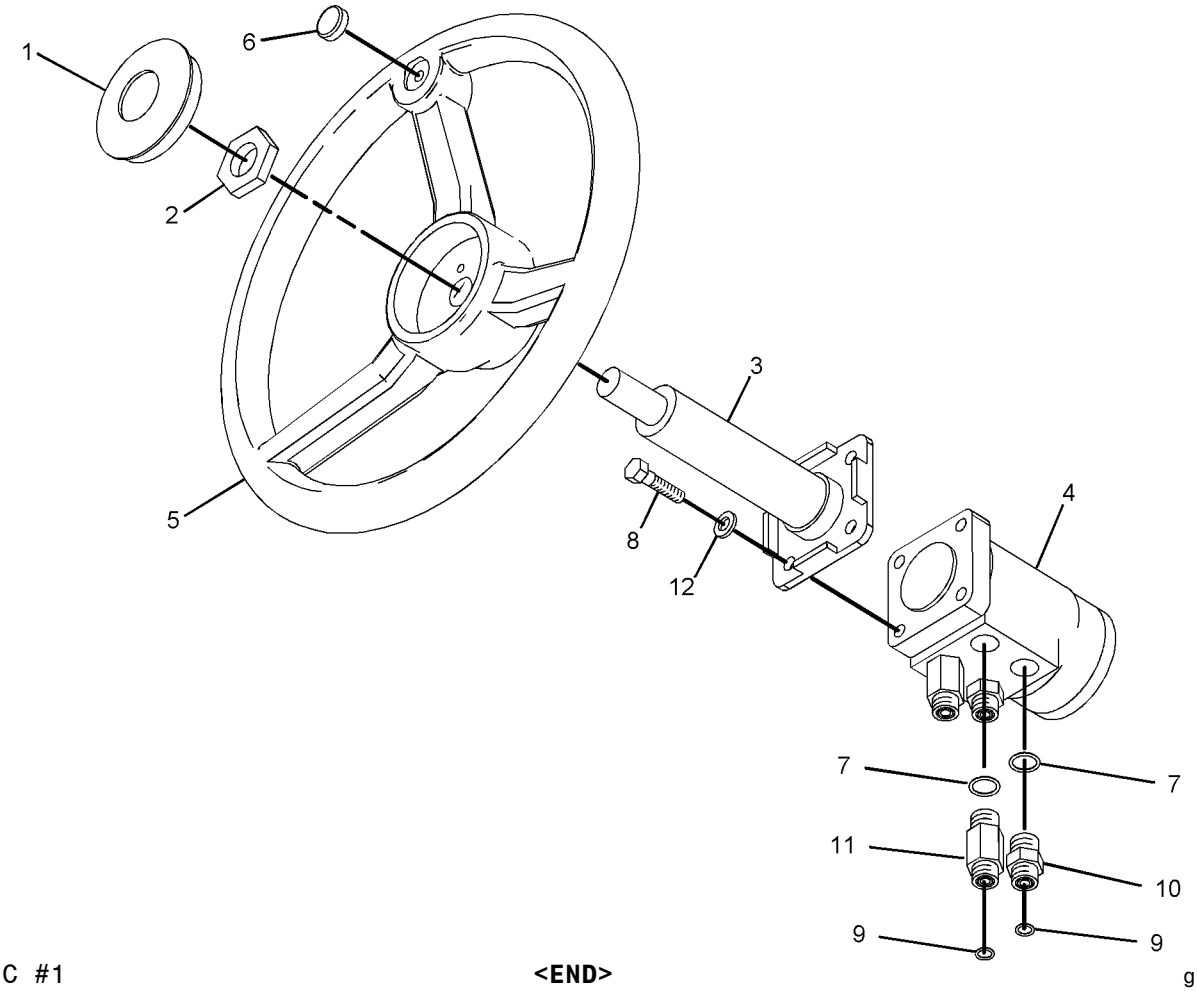

GRAPHIC #1 **<END>** g01091071

131-2357 CYLINDER & MTG GP-STEERING

S/N: PJF1-UP

PART OF 246-9026 HYDRAULIC AR-AUXILIARY

SMCS-4303 **i02593522**

NOTE	REF NO	GRAPHIC REF	PART NUMBER	QTY	PART NAME 1 2 3 4 5 6 (PRODUCT LEVEL)	SEE PAGE
	1	1	**3B-8489**	1	FITTING-GREASE	
	2	1	**035-7869**	1	BEARING	
B	3	1	**077-2840**	2	SPACER (1-MM THK)	
B	4	1	**077-3108**	2	SPACER (1.6-MM THK)	
B	5	1	**077-3124**	2	SPACER (2-MM THK)	
	6	1	**106-6340**	2	SPACER (10.74X17.14X7-MM THK)	
	7	1	**108-2084**	2	PIN AS	
Y	8	1	**122-3755**	1	CYLINDER GP-HYDRAULIC (STEERING)	245
	9	1	**6V-8398**	4	SEAL-O-RING	
	10	1	**6V-9851**	2	ELBOW	
	11	1	**7X-7729**	2	WASHER (11X25X3-MM THK)	
M	12	1	**8T-4137**	2	BOLT (M10X1.5X20-MM)	

B-USE AS REQUIRED
M-METRIC PART
Y-SEPARATE ILLUSTRATION

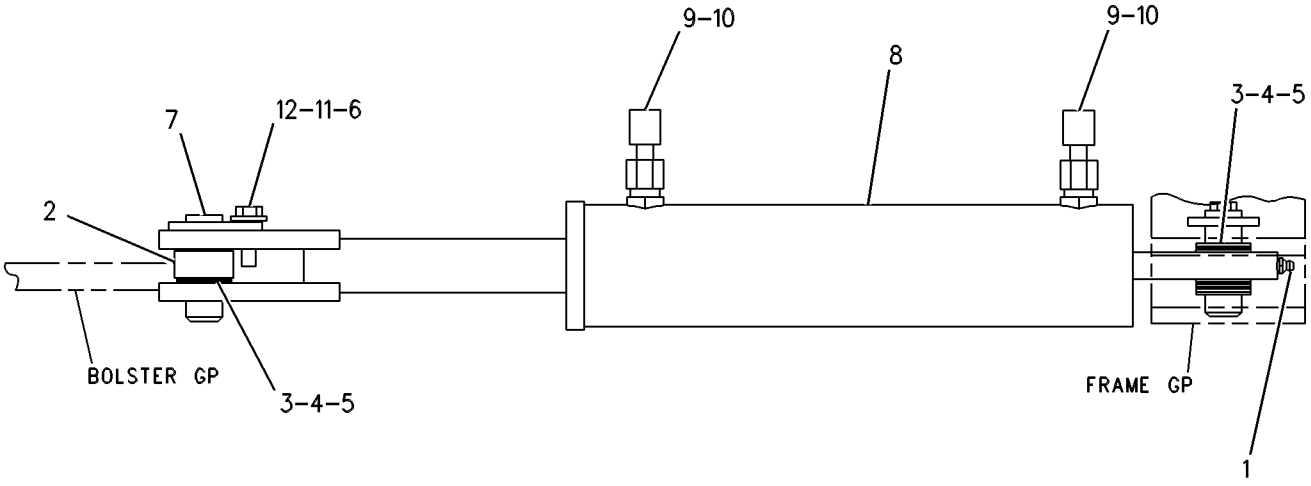

GRAPHIC #1 **<END>** g00294677

STEERING SYSTEM

246-9031 LINES GP-STEERING—STATIONARY PLATFORM

S/N: PJF1-345

PART OF 246-9029 OPERATOR AR

SMCS-4104, 4133, 4304 **i02274801**

NOTE	REF NO	GRAPHIC REF	PART NUMBER	QTY	PART NAME 1 2 3 4 5 6 (PRODUCT LEVEL)	SEE PAGE
	1	1	**4V-0611**	4	CLAMP	
	2	1	**4V-0612**	1	PLATE	
	3	1	**6W-2463**	18	CLAMP	
	4	1	**7R-7907**	4	CLAMP	
	5	1	**7R-7954**	1	PLATE	
	6	1	**7R-7959**	2	BOLT-SPECIAL	
	7	1	**7R-7964**	1	PLATE (BOLT LOCK)	
	8	1	**7V-5628**	1	PLATE	
I	9	1	**087-0333**	1	HOSE AS	
I	10	1	**144-3939**	1	HOSE AS	
I	11	1	**144-3940**	1	HOSE AS	
I	12	1	**144-3942**	1	HOSE AS	
I	13	1	**145-3754**	1	HOSE AS	
I	14	1	**148-0796**	1	HOSE AS	
I	15	1	**249-2735**	1	HOSE AS	
I	16	1	**249-2736**	1	HOSE AS	
	17	1	*148-8377*	2	ELBOW AS	
					(EACH INCLUDES)	
		1	**6V-8397**	2	SEAL-O-RING	
		1	**6V-8980**	1	ELBOW	
	18	1	*149-5452*	2	UNION AS	
					(EACH INCLUDES)	
		1	**6V-8397**	2	SEAL-O-RING	
		1	**6V-8994**	1	UNION	
	19	1	**3V-0046**	9	PLATE	
	20	1	**4M-5282**	2	BOLT (1/4-20X1.5-IN)	
	21	1	**4V-0939**	1	BOLT (5/16-18X1.73-IN)	
	22	1	**6V-9168**	6	NUT (11/16-16-THD)	
	23	1	**7X-0440**	1	BOLT (5/16-18X1.75-IN)	
	24	1	**8C-6561**	9	BOLT (5/16-18X1.375-IN)	

I-REFER TO HYDRAULIC INFORMATION SYSTEM

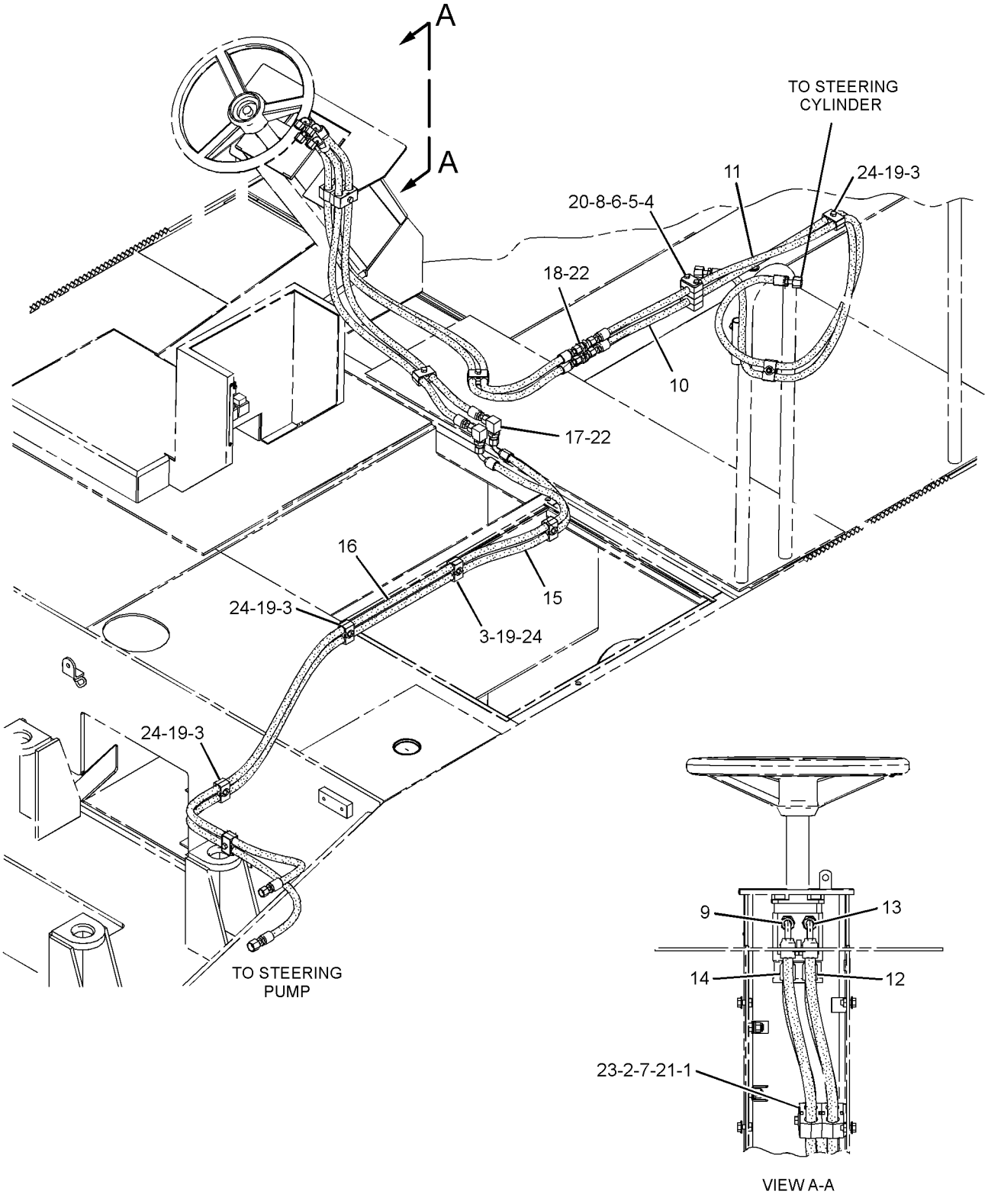

GRAPHIC #1 **<END>** g01165098

STEERING SYSTEM

246-9031 LINES GP-STEERING—STATIONARY PLATFORM

S/N: PJF346-UP

PART OF 246-9029 OPERATOR AR

SMCS-4104, 4133, 4304 **i03042126**

NOTE	REF NO	GRAPHIC REF	PART NUMBER	QTY	PART NAME 1 2 3 4 5 6 (PRODUCT LEVEL)	SEE PAGE
CM	1	1	**196-4205**	2	BOLT-STACKING (M6X1X44-MM)	
	2	1	**7R-7907**	4	CLAMP	
	3	1	**7R-7954**	1	PLATE	
	4	1	**7V-5628**	1	PLATE	
I	5	1	**087-0333**	1	HOSE AS	
C	6	1	**102-8703**	9	PLATE-COVER	
C	7	1	**102-8705**	1	PLATE	
I	8	1	**144-3939**	1	HOSE AS	
I	9	1	**144-3940**	1	HOSE AS	
I	10	1	**144-3942**	1	HOSE AS	
I	11	1	**145-3754**	1	HOSE AS	
I	12	1	**148-0796**	1	HOSE AS	
CM	13	1	**206-0451**	1	BOLT-STACKING (M8X1.25X44-MM)	
C	14	1	**206-0452**	1	PLATE	
I	15	1	**249-2735**	1	HOSE AS	
I	16	1	**249-2736**	1	HOSE AS	
	17	1	*148-8377*	2	ELBOW AS	
					(EACH INCLUDES)	
		1	**6V-8397**	2	SEAL-O-RING	
		1	**6V-8980**	1	ELBOW	
	18	1	*149-5452*	2	UNION AS	
					(EACH INCLUDES)	
		1	**6V-8397**	2	SEAL-O-RING	
		1	**6V-8994**	1	UNION	
C	19	1	**154-4880**	14	CLAMP-HALF	
C	20	1	**154-4881**	4	CLAMP-HALF	
	21	1	**6V-9168**	6	NUT (11/16-16-THD)	
CM	22	1	**7X-0818**	1	BOLT (M8X1.25X45-MM)	
CM	23	1	**7X-2537**	9	BOLT (M8X1.25X35-MM)	
CM	24	1	**8C-8451**	2	BOLT (M6X1X40-MM)	
	25	1	**156-3618**	4	CLAMP-HALF	

C-CHANGE FROM PREVIOUS TYPE
I-REFER TO HYDRAULIC INFORMATION SYSTEM
M-METRIC PART

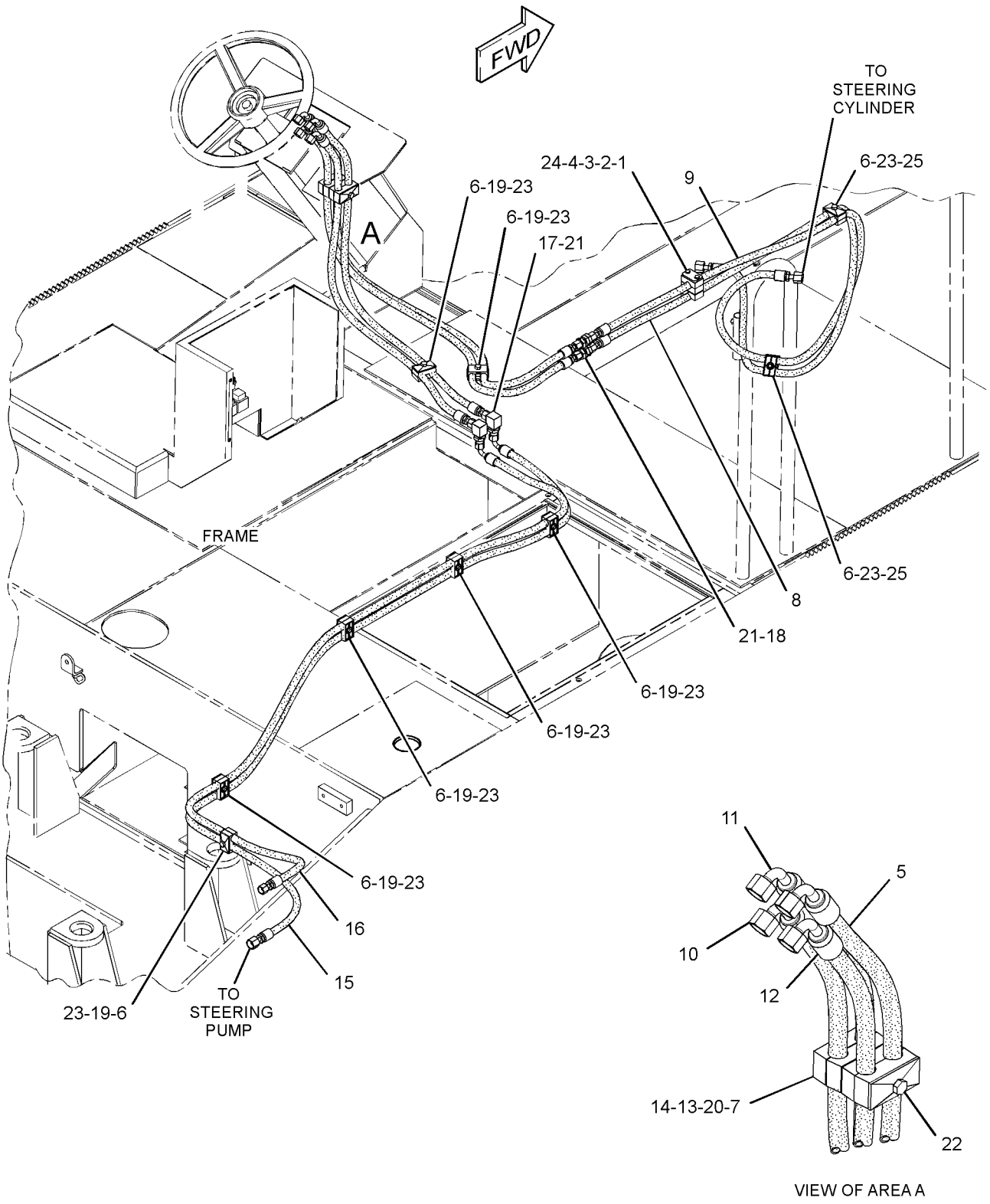

GRAPHIC #1 **<END>** g01792373

STEERING SYSTEM

247-9627 LINES GP-STEERING

S/N: PJF1-UP

PART OF 246-9026 HYDRAULIC AR-AUXILIARY

SMCS-4104, 4133, 4304 **i02326197**

NOTE	REF NO	GRAPHIC REF	PART NUMBER	QTY	PART NAME 1 2 3 4 5 6 (PRODUCT LEVEL)	SEE PAGE
	1	1	**7R-7908**	6	CLAMP	
	2	1	**7R-7941**	2	CLAMP	
	3	1	**7R-7951**	1	PLATE	
	4	1	**7V-5628**	3	PLATE	
I	5	1	**247-9626**	1	HOSE AS	
I	6	1	**247-9629**	1	HOSE AS	
M	7	1	**7X-2535**	2	BOLT (M6X1X60-MM)	
M	8	1	**8C-8451**	6	BOLT (M6X1X40-MM)	

I-REFER TO HYDRAULIC INFORMATION SYSTEM
M-METRIC PART

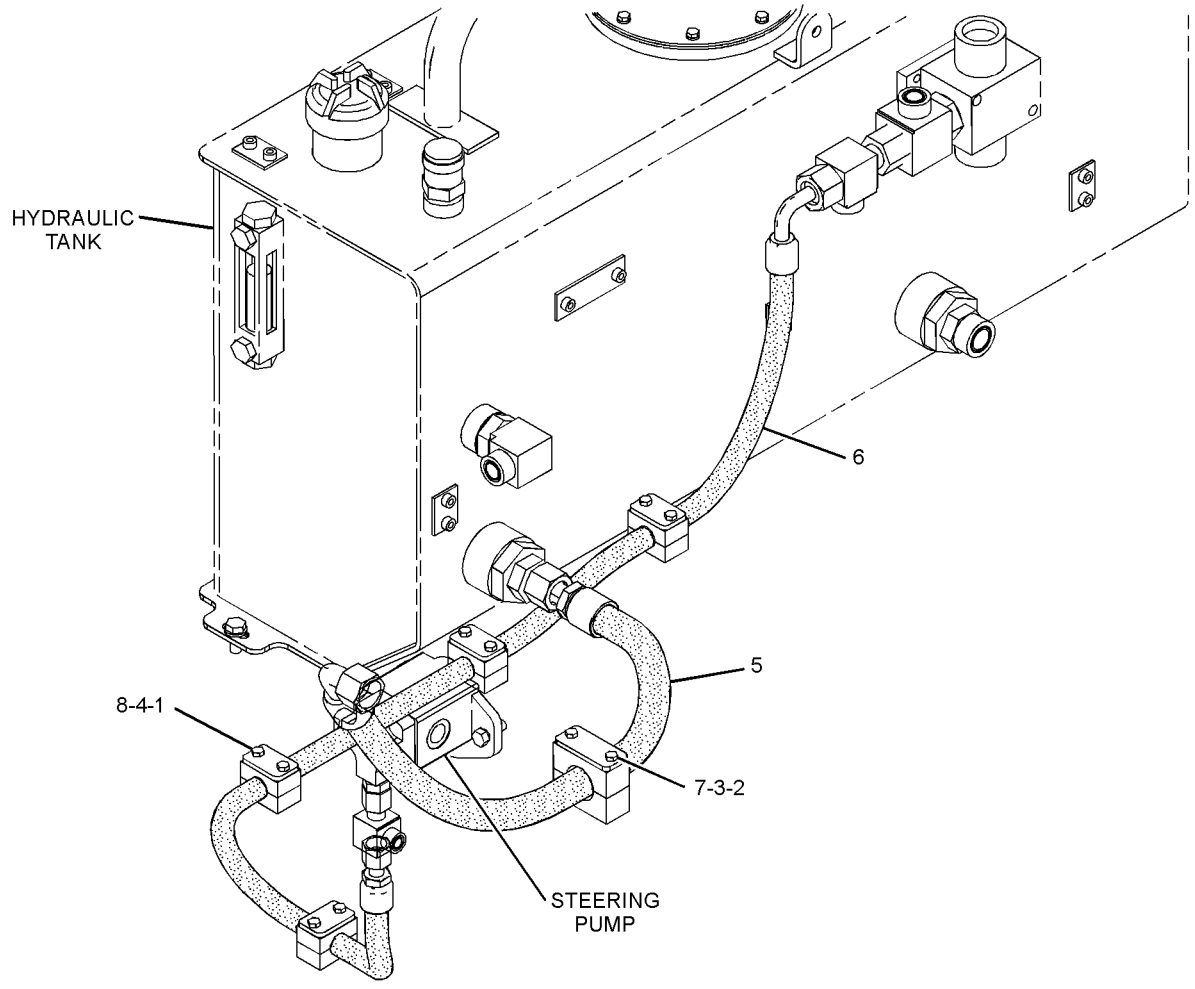

GRAPHIC #1 **<END>** g01176366

STEERING SYSTEM

251-1964 LINES GP-STEERING—SLIDING PLATFORM

S/N: PJF1-UP
PART OF 251-1957 OPERATOR AR
AN ATTACHMENT
TYPE 1

SMCS-4104, 4133, 4304 **i02276587**

NOTE	REF NO	GRAPHIC REF	PART NUMBER	QTY	PART NAME 1 2 3 4 5 6 (PRODUCT LEVEL)	SEE PAGE
	1	1	**6W-2463**	14	CLAMP	
	2	1	**7R-7907**	4	CLAMP	
	3	1	**7R-7954**	1	PLATE	
	4	1	**7R-7959**	2	BOLT-SPECIAL	
	5	1	**7V-5628**	1	PLATE	
I	6	1	**131-6430**	2	HOSE AS	
I	7	1	**144-3939**	1	HOSE AS	
I	8	1	**144-3940**	1	HOSE AS	
I	9	1	**168-6315**	2	HOSE AS	
I	10	1	**249-2735**	1	HOSE AS	
I	11	1	**249-2736**	1	HOSE AS	
	12	1	**3V-0046**	7	PLATE	
	13	1	**4M-5282**	2	BOLT (1/4-20X1.5-IN)	
	15	1	**148-8377**	2	ELBOW AS	
					(EACH INCLUDES)	
		1	**6V-8397**	2	SEAL-O-RING	
		1	**6V-8980**	1	ELBOW	
	16	1	**149-5452**	2	UNION AS	
					(EACH INCLUDES)	
		1	**6V-8397**	2	SEAL-O-RING	
		1	**6V-8994**	1	UNION	
	17	1	**6V-9168**	6	NUT (11/16-16-THD)	
	18	1	**8C-6561**	7	BOLT (5/16-18X1.375-IN)	

I-REFER TO HYDRAULIC INFORMATION SYSTEM

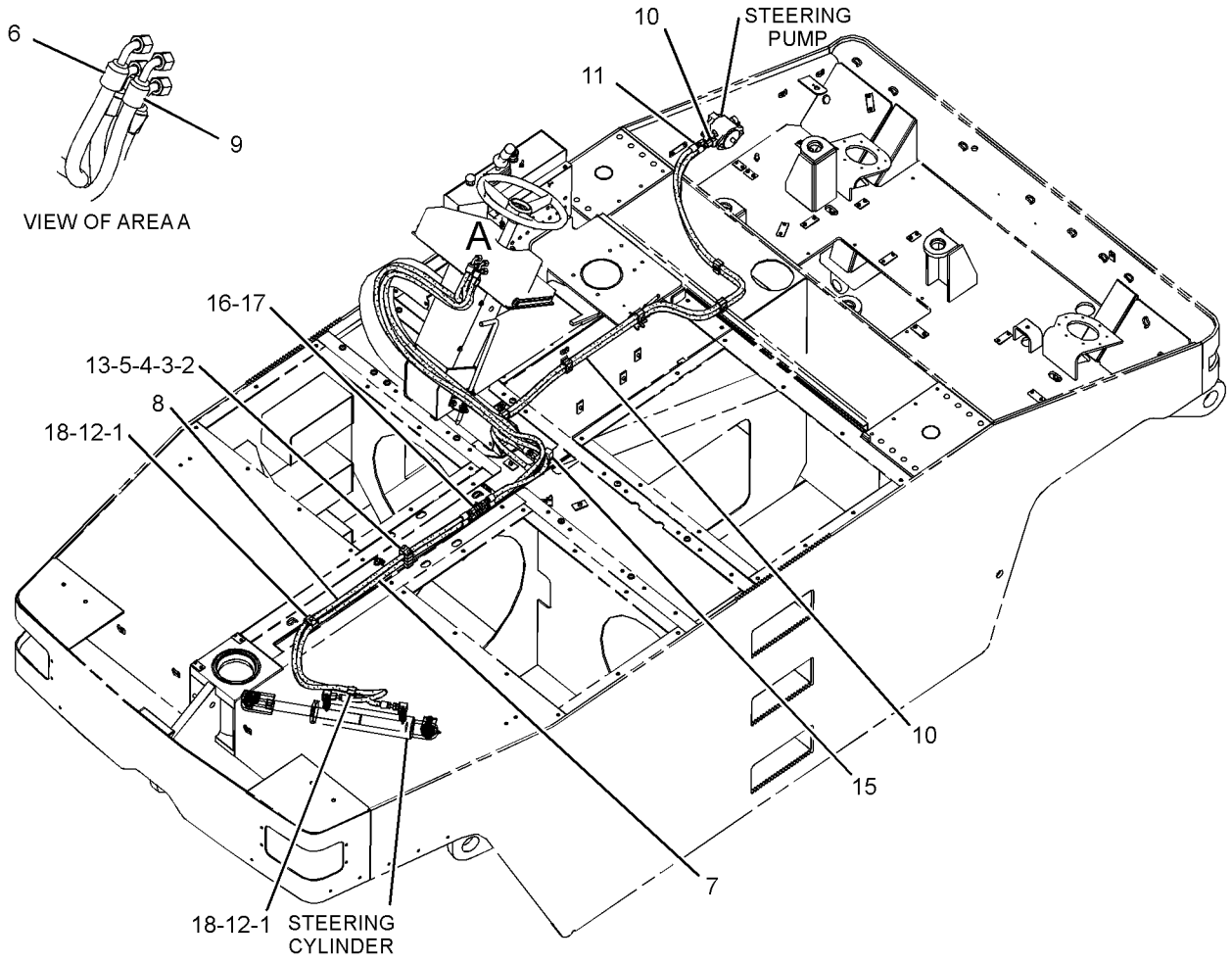

GRAPHIC #1 **<END>** g01164358

251-1964 LINES GP-STEERING—SLIDING PLATFORM

S/N: PJF1-UP
PART OF 251-1957 OPERATOR AR
AN ATTACHMENT
TYPE 2

SMCS-4104, 4133, 4304 **i02739618**

NOTE	REF NO	GRAPHIC REF	PART NUMBER	QTY	PART NAME 1 2 3 4 5 6 (PRODUCT LEVEL)	SEE PAGE
C	1	1	**154-4880**	14	CLAMP-HALF	
	2	1	**7R-7907**	4	CLAMP	
	3	1	**7R-7954**	1	PLATE	
CM	4	1	**196-4205**	2	BOLT-STACKING (M6X1X44-MM)	
	5	1	**7V-5628**	1	PLATE	
CI	6	1	**131-6430**	2	HOSE AS	
I	7	1	**144-3939**	1	HOSE AS	
I	8	1	**144-3940**	1	HOSE AS	
CI	9	1	**168-6315**	2	HOSE AS	
I	10	1	**249-2735**	1	HOSE AS	
I	11	1	**249-2736**	1	HOSE AS	
C	12	1	**102-8703**	7	PLATE-COVER	
CM	13	1	**8C-8451**	2	BOLT (M6X1X40-MM)	
	15	1	**148-8377**	2	ELBOW AS	
					(EACH INCLUDES)	
		1	**6V-8397**	2	SEAL-O-RING	
		1	**6V-8980**	1	ELBOW	
	16	1	**149-5452**	2	UNION AS	
					(EACH INCLUDES)	
		1	**6V-8397**	2	SEAL-O-RING	
		1	**6V-8994**	1	UNION	
	17	1	**6V-9168**	6	NUT (11/16-16-THD)	
CM	18	1	**7X-2537**	7	BOLT (M8X1.25X35-MM)	

C-CHANGE FROM PREVIOUS TYPE
I-REFER TO HYDRAULIC INFORMATION SYSTEM
M-METRIC PART

251-1964 **LINES GP-STEERING** *(contd.)* **i02739618**

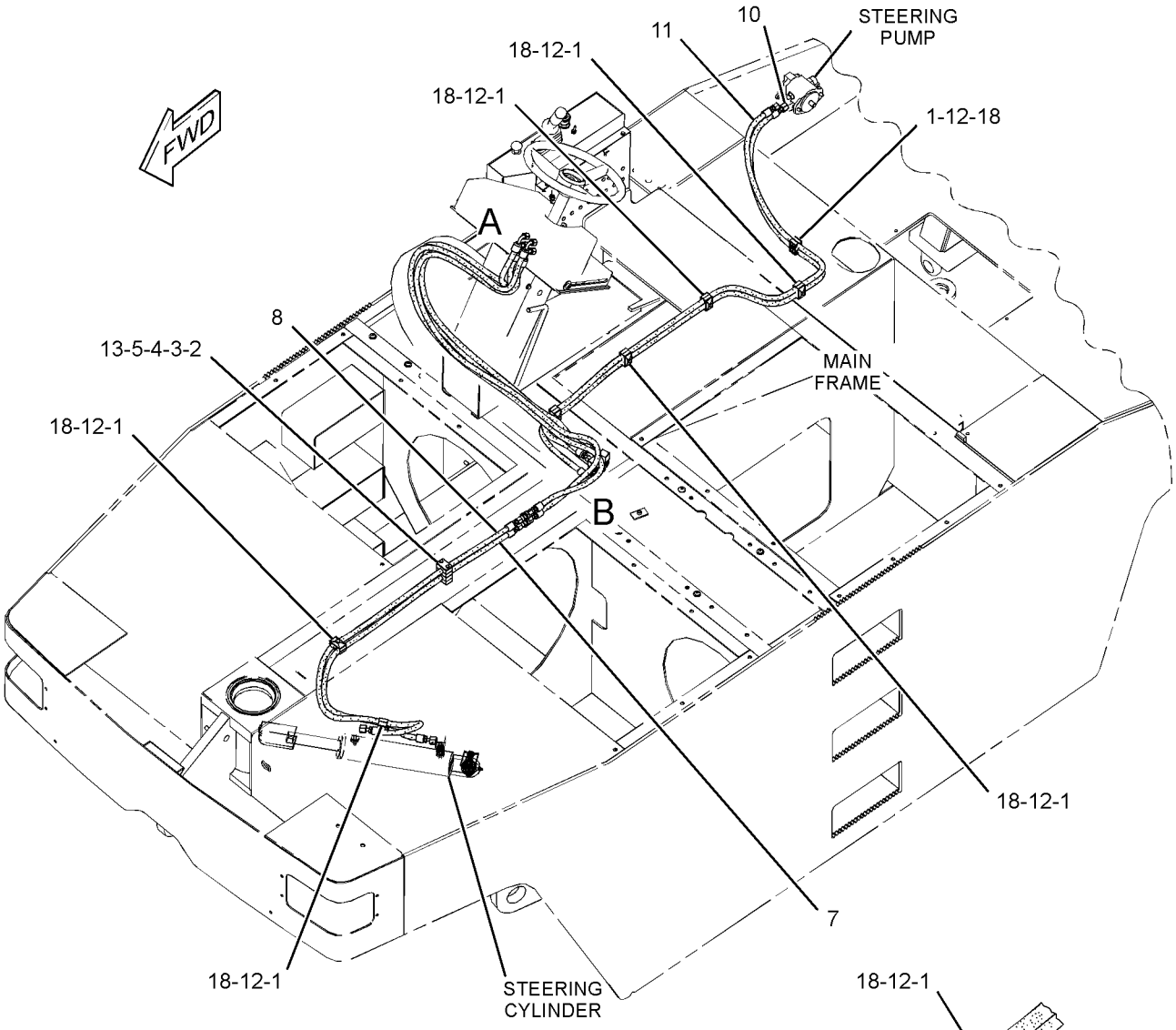

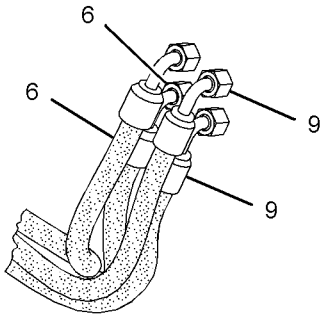

VIEW OF AREA A

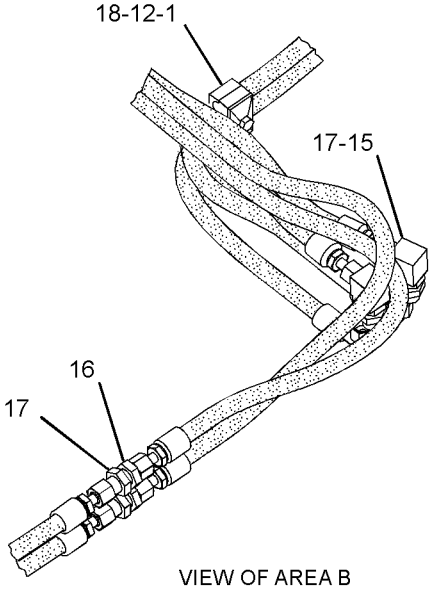

VIEW OF AREA B

GRAPHIC #1 **<END>** g01407034

STEERING SYSTEM

247-9628 PUMP & MTG GP-STEERING

S/N: PJF1-UP

PART OF 246-9026 HYDRAULIC AR-AUXILIARY

SMCS-4306 **i02145000**

NOTE	REF NO	GRAPHIC REF	PART NUMBER	QTY	PART NAME 1 2 3 4 5 6 (PRODUCT LEVEL)	SEE PAGE
	1	1	**7X-5308**	1	CAP-DUST	
Y	2	1	**121-6758**	1	PUMP GP-GEAR (STEERING)	269
	3	1	*148-8424*	1	TEE AS	
		1	**6V-8397**	1	SEAL-O-RING	
		1	**8T-8902**	1	TEE	
	4	1	*148-8318*	1	CONNECTOR AS	
		1	**3K-0360**	1	SEAL-O-RING	
		1	**6V-8397**	1	SEAL-O-RING	
		1	**6V-8634**	1	CONNECTOR	
	5	1	*148-8322*	1	CONNECTOR AS	
		1	**2M-9780**	1	SEAL-O-RING	
		1	**6V-8640**	1	CONNECTOR	
		1	**6V-9746**	1	SEAL-O-RING	
	6	1	*150-4037*	1	TEE AS	
		1	**6V-8398**	2	SEAL-O-RING	
		1	**6V-9844**	1	TEE-SWIVEL	
	7	1	*164-5567*	1	COUPLER AS-QUICK DISCONNECT	
		1	**3J-1907**	1	SEAL-O-RING	
		1	**6V-3965**	1	FITTING (QUICK DISCONNECT)	
	8	1	*164-5624*	1	ELBOW AS	
		1	**3J-1907**	1	SEAL-O-RING	
		1	**6V-8398**	1	SEAL-O-RING	
		1	**9X-2085**	1	ELBOW	
	9	1	**4L-6454**	2	BOLT (3/8-16X1-IN)	
	10	1	**8T-4896**	2	WASHER-HARD (10.2X18.5X2.5-MM THK)	

Y-SEPARATE ILLUSTRATION

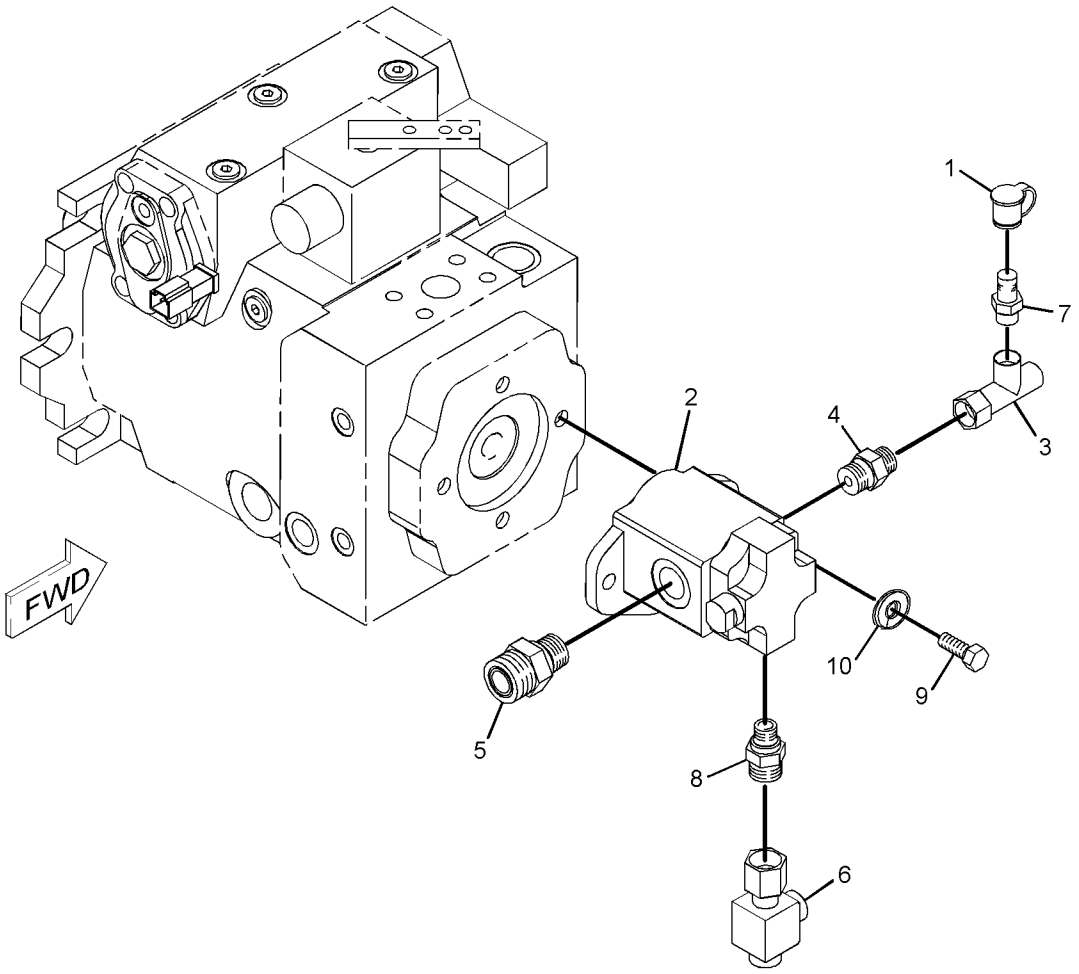

GRAPHIC #1 **<END>** g01092645

133-4896 PUMP GP-METERING—STEERING

S/N: PJF1-UP
PART OF 120-7057 CONTROL GP-STEERING
ALSO AN ATTACHMENT

SMCS-4312 **i02068074**

NOTE	REF NO	GRAPHIC REF	PART NUMBER	QTY	PART NAME 1 2 3 4 5 6 (PRODUCT LEVEL)	SEE PAGE
	1	1	**8F-5340**	1	SEAL-LIP TYPE	
	2	1	**9J-8076**	1	BUSHING-TERMINAL	
	3	1	**9J-5442**	1	RING-RETAINING	
J	4	1	**077-7423**	1	SEAL	
N	5	1	**3G-6891**	2	RACE	
	6	1	**7J-8009**	1	PIN	
	7	1	**7J-6839**	1	DRIVE-CONTROL END	
	8	1	**114-5190**	1	SPACER (23.8X55.9X4-MM THK)	
J	9	1	**053-6950**	3	SEAL	
	10	1	**118-6722**	1	GEROTOR AS	
HZ	11	1		1	RETAINER-BALL	
HZ	12	1		1	BALL	
HJZ	13	1		1	SEAL-O-RING	
HZ	14	1		1	SEAT	
HJZ	15	1		1	SEAL-O-RING	
	16	1	**3G-6906**	1	SCREW (9/16-18X0.559-IN)	
	17	1	**114-5180**	1	CAP	
	18	1	**118-1305**	7	BOLT	
	19	1	**6R-8146**	1	SPACER	
J	20	1	**7J-6833**	1	SEAL	
N	21	1	**077-9902**	1	BEARING	
					AVAILABLE REPAIR KIT(S):	
H			**175-3948**	1	KIT-CHECK VALVE (STEERING METERING PUMP)	
J			**118-4341**	1	KIT-SEAL (STEERING METERING PUMP)	
N			**077-8345**	1	KIT-BEARING (STEERING METERING PUMP)	
			9T-8560	1	KIT-SPRING (STEERING METERING PUMP)	

H-KIT MARKED H SERVICES PART(S) MARKED H
J-KIT MARKED J SERVICES PART(S) MARKED J
N-KIT MARKED N SERVICES PART(S) MARKED N
Z-NOT SERVICED SEPARATELY

133-4896 PUMP GP-METERING *(contd.)* i02068074

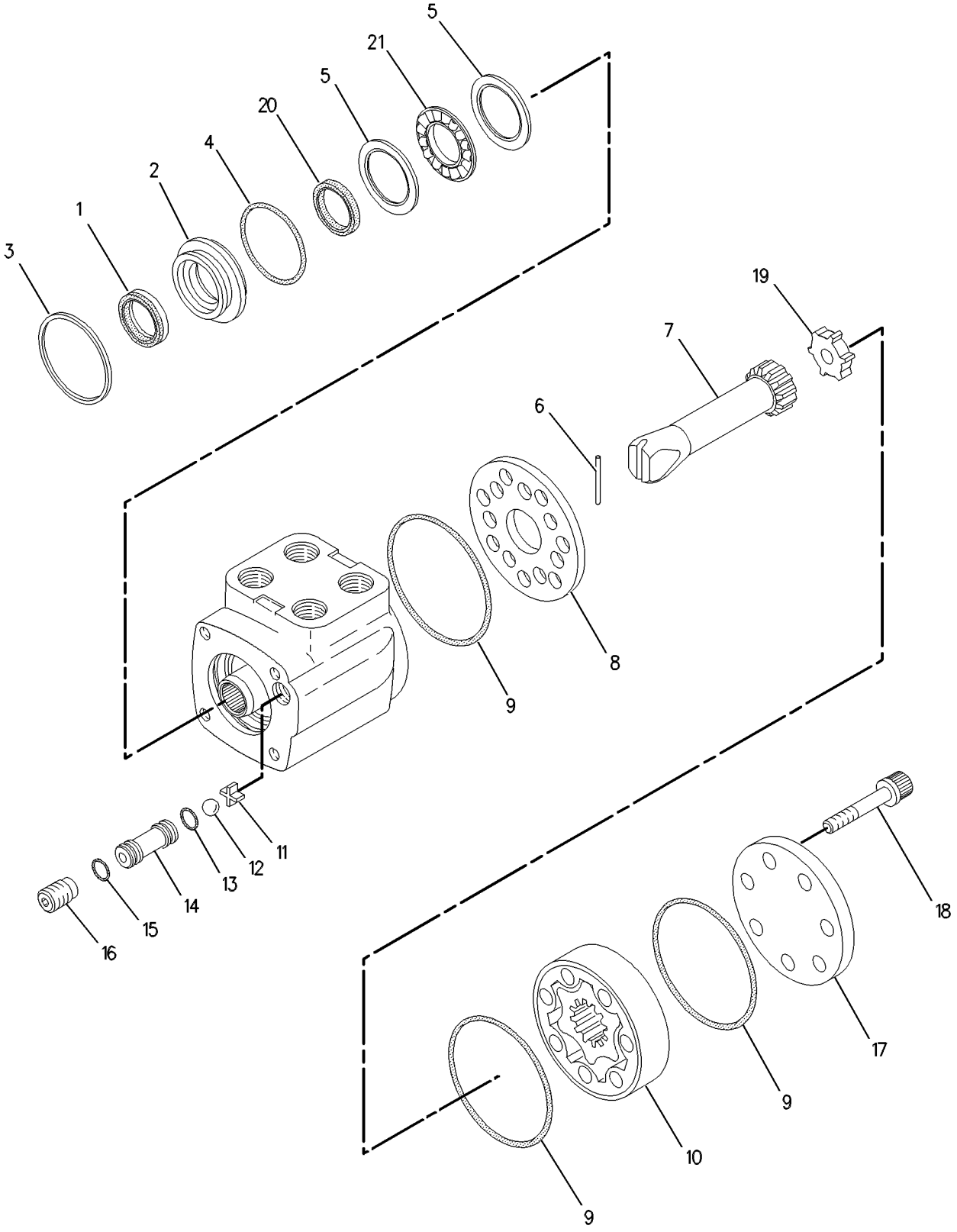

GRAPHIC #1 **<END>** g00618919

127-5113 CAP & STRAINER GP-HYD OIL FILL

S/N: PJF1-UP

PART OF 246-9019 TANK GP-HYDRAULIC

SMCS-5056 **i03362300**

NOTE	REF NO	GRAPHIC REF	PART NUMBER	QTY	PART NAME 1 2 3 4 5 6 (PRODUCT LEVEL)	SEE PAGE
	1	1	**4B-9782**	1	BALL	
	2	1	**6H-5139**	1	PLATE-PRESSURE	
	3	1	**7H-1447**	1	CAP-FILLER (HYDRAULIC TANK)	
	4	1	**9H-6454**	1	GASKET (HYDRAULIC TANK FILL CAP)	
	5	1	**9J-3047**	1	STRAINER (HYDRAULIC TANK)	
	6	1	**3G-0361**	1	GASKET (HYDRAULIC TANK)	

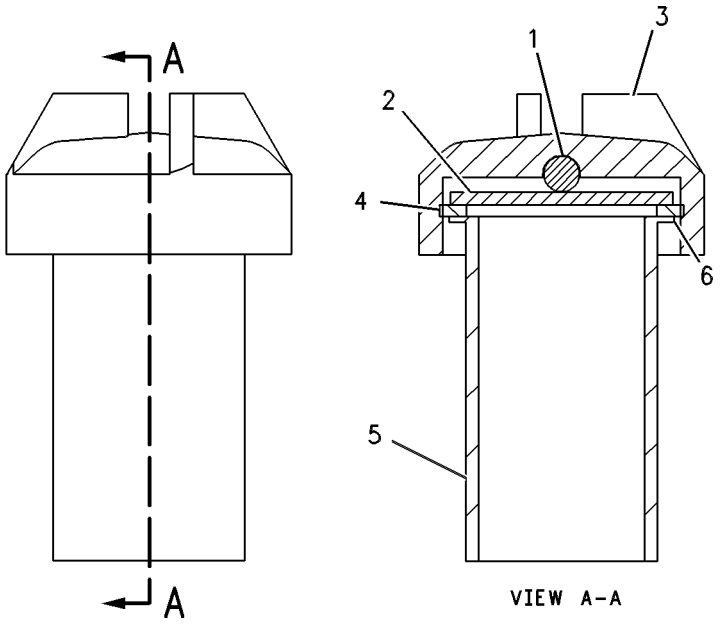

GRAPHIC #1 **<END>** g00295838

214-5830 CONTROL GP-HYDRAULIC

S/N: PJF1-UP

PART OF 194-5327 PUMP GP-PISTON

SMCS-5051, 5063 **i01710712**

NOTE	REF NO	GRAPHIC REF	PART NUMBER	QTY	PART NAME 1 2 3 4 5 6 (PRODUCT LEVEL)	SEE PAGE
M	1	1	**096-0001**	4	BOLT-SOCKET HEAD (M8X1.25X40-MM)	
	2	1	**179-2864**	1	COVER	
	3	1	**111-8824**	1	PLUG	
	4	1	**214-5935**	1	VALVE	
	5	1	**153-2162**	2	RING	
	6	1	**153-2163**	2	RING	
	7	1	**179-4915**	1	PISTON	
	8	1	**7R-8872**	2	SEAL-O-RING	
	9	1	**153-2159**	1	COVER	
M	10	1	**119-0942**	1	NUT (M16X1.5-MM-THD)	
M	11	1	**8T-1158**	4	BOLT-SOCKET HEAD (M8X1.25X20-MM)	

M-METRIC PART

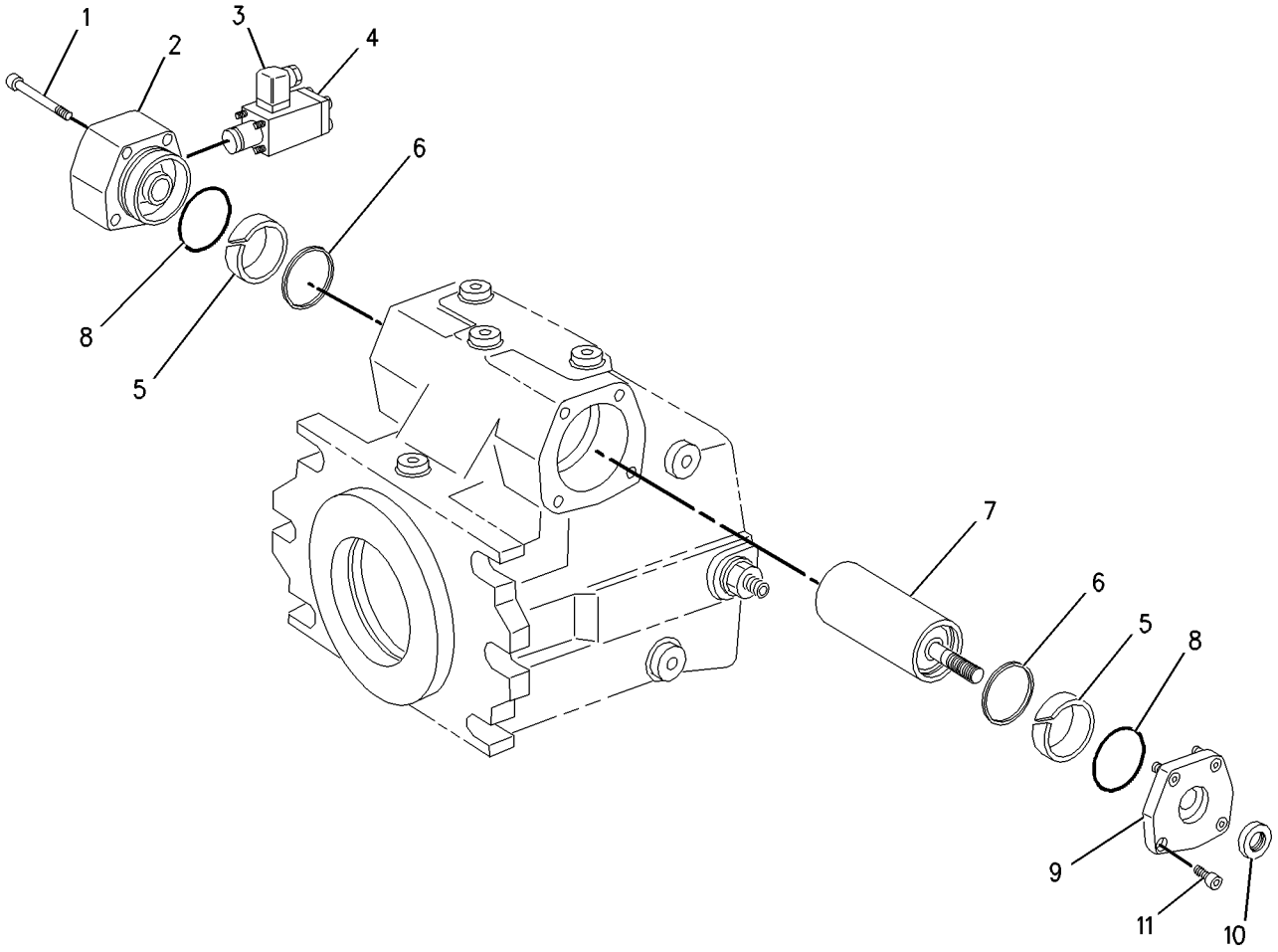

GRAPHIC #1 **<END>** g00883225

122-3755 CYLINDER GP-HYDRAULIC–STEERING

S/N: PJF1-UP

76.2-MM (3-IN) BORE X 304.8-MM (12-IN) STROKE

PART OF 131-2357 CYLINDER & MTG GP-STEERING

SMCS-4303, 5102 **i02911611**

NOTE	REF NO	GRAPHIC REF	PART NUMBER	QTY	PART NAME 1 2 3 4 5 6 (PRODUCT LEVEL)	SEE PAGE
	1	1	**2K-7471**	1	LOCKNUT (1-14-THD)	
	2	1	**5E-9959**	1	PISTON	
J	3	1	**5E-9960**	1	SEAL	
J	4	1	**5F-1678**	1	SEAL-O-RING	
	5	1	**5E-9962**	1	ROD AS	
	6	1	**5E-9964**	1	SLEEVE	
J	7	1	**5H-8848**	1	SEAL-O-RING	
J	8	1	**6J-5731**	1	RING-BACKUP	
	9	1	**143-8929**	1	WIRE-LOCK	
	10	1	**078-0085**	1	WASHER	
	11	1	**2A-0762**	2	BOLT (1/4-20X0.625-IN)	
J	12	1	**3E-4103**	1	WIPER-ROD	
J	13	1	**086-9623**	1	SEAL	
	14	1	**035-7869**	1	BEARING	
					AVAILABLE REPAIR KIT(S):	
J			**122-1161**	1	KIT-SEAL (STEERING CYLINDER)	

J-KIT MARKED J SERVICES PARTS MARKED J

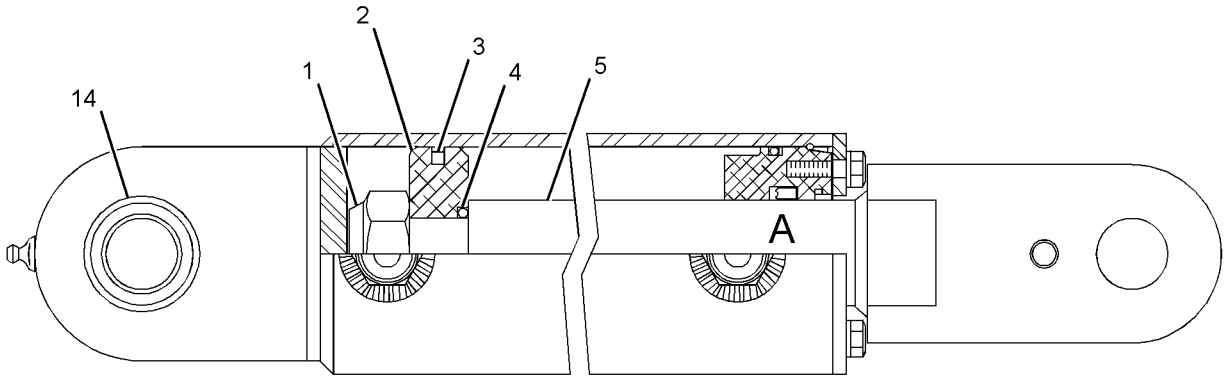

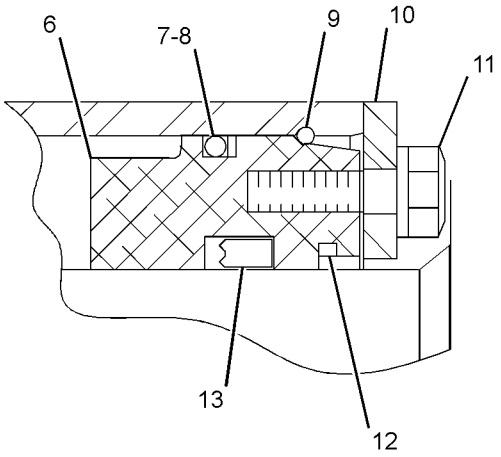

VIEW OF AREA A

GRAPHIC #1 **<END>** g01473692

HYDRAULIC SYSTEM

258-0888 FILTER & MTG GP-HYDRAULIC

S/N: PJF1-UP

PART OF 246-9026 HYDRAULIC AR-AUXILIARY

SMCS-5068 **i03577321**

NOTE	REF NO	GRAPHIC REF	PART NUMBER	QTY	PART NAME 1 2 3 4 5 6 (PRODUCT LEVEL)	SEE PAGE
	1	1	**8C-3451**	1	CAP-DUST	
	2	1	*164-5586*	1	TEE AS	
		1	**6V-8398**	1	SEAL-O-RING	
		1	**7X-0871**	1	TEE	
	3	1	**180-3813**	1	FILTER GP-OIL (HYDRAULIC)	
		1	**1G-8878**	1	FILTER-OIL (ADVANCED EFFICIENCY) (HYDRAULIC)	
	4	1	*148-8305*	1	ADAPTER AS	
		1	**3J-1907**	1	SEAL-O-RING	
		1	**5P-9617**	1	ADAPTER	
	5	1	*148-8328*	1	CONNECTOR AS	
		1	**3D-2824**	1	SEAL-O-RING	
		1	**6V-8398**	1	SEAL-O-RING	
		1	**6V-8633**	1	CONNECTOR	
	6	1	*148-8381*	2	ELBOW AS	
					(EACH INCLUDES)	
		1	**3D-2824**	1	SEAL-O-RING	
		1	**6V-8398**	1	SEAL-O-RING	
		1	**8T-5429**	1	ELBOW	
	7	1	*164-5590*	1	VALVE AS-FLUID SAMPLING (HYDRAULIC OIL)	
		1	**3J-7354**	1	SEAL-O-RING	
		1	**8C-3446**	1	VALVE-FLUID SAMPLING (HYDRAULIC OIL)	
	8	1	**8T-4121**	4	WASHER-HARD (11X21X2.5-MM THK)	
M	9	1	**8T-4195**	4	BOLT (M10X1.5X30-MM)	

M-METRIC PART

258-0888 **FILTER & MTG GP-HYDRAULIC** *(contd.)* **i03577321**

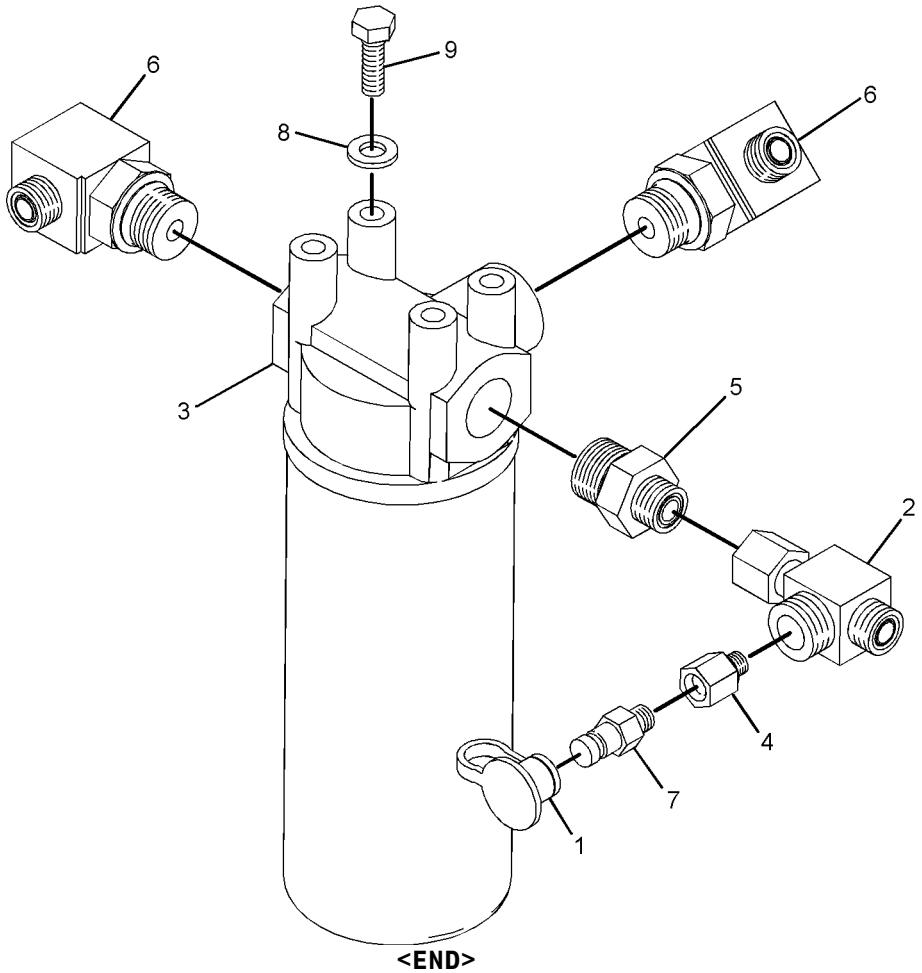

GRAPHIC #1 **<END>** g01090129

HYDRAULIC SYSTEM

133-1858 HEAD GP-PUMP

S/N: PJF1-UP

PART OF 194-5327 PUMP GP-PISTON

SMCS-3222, 5070 **i02326518**

NOTE	REF NO	GRAPHIC REF	PART NUMBER	QTY	PART NAME 1 2 3 4 5 6 (PRODUCT LEVEL)	SEE PAGE
J	1	1	**152-9143**	2	VALVE GP-RELIEF (MULTIFUNCTION)	
					(EACH INCLUDES)	
		1	**123-7556**	1	CAP	
	4	1	**6V-8398**	2	SEAL-O-RING	
M	5	1	**3E-8008**	4	BOLT-SOCKET HEAD (M16X2X90-MM)	
Y	6	1	**6E-4402**	1	VALVE GP-RELIEF (CHARGE PRESSURE)	290
	7	1	**144-9101**	1	PLUG-BREAK OFF	
	8	1	**133-1855**	1	HEAD	
	9	1	**2P-1692**	1	SEAL-O-RING	
	10	1	**126-1598**	1	BUSHING	
	11	1	**126-1597**	1	BEARING	
	12	1	**126-1477**	1	BUSHING-COUPLING	
Y	13	1	**126-1424**	1	VALVE GP-RELIEF (PRESSURE OVERRIDE)	291
M	14	1	**123-2017**	1	PLUG	
M	15	1	**152-9144**	4	PLUG	
					AVAILABLE REPAIR KIT(S):	
J			**145-0905**	1	KIT-SEAL (PUMP HEAD RELIEF VALVE)	

J-KIT MARKED J SERVICES PART(S) MARKED J
M-METRIC PART
Y-SEPARATE ILLUSTRATION

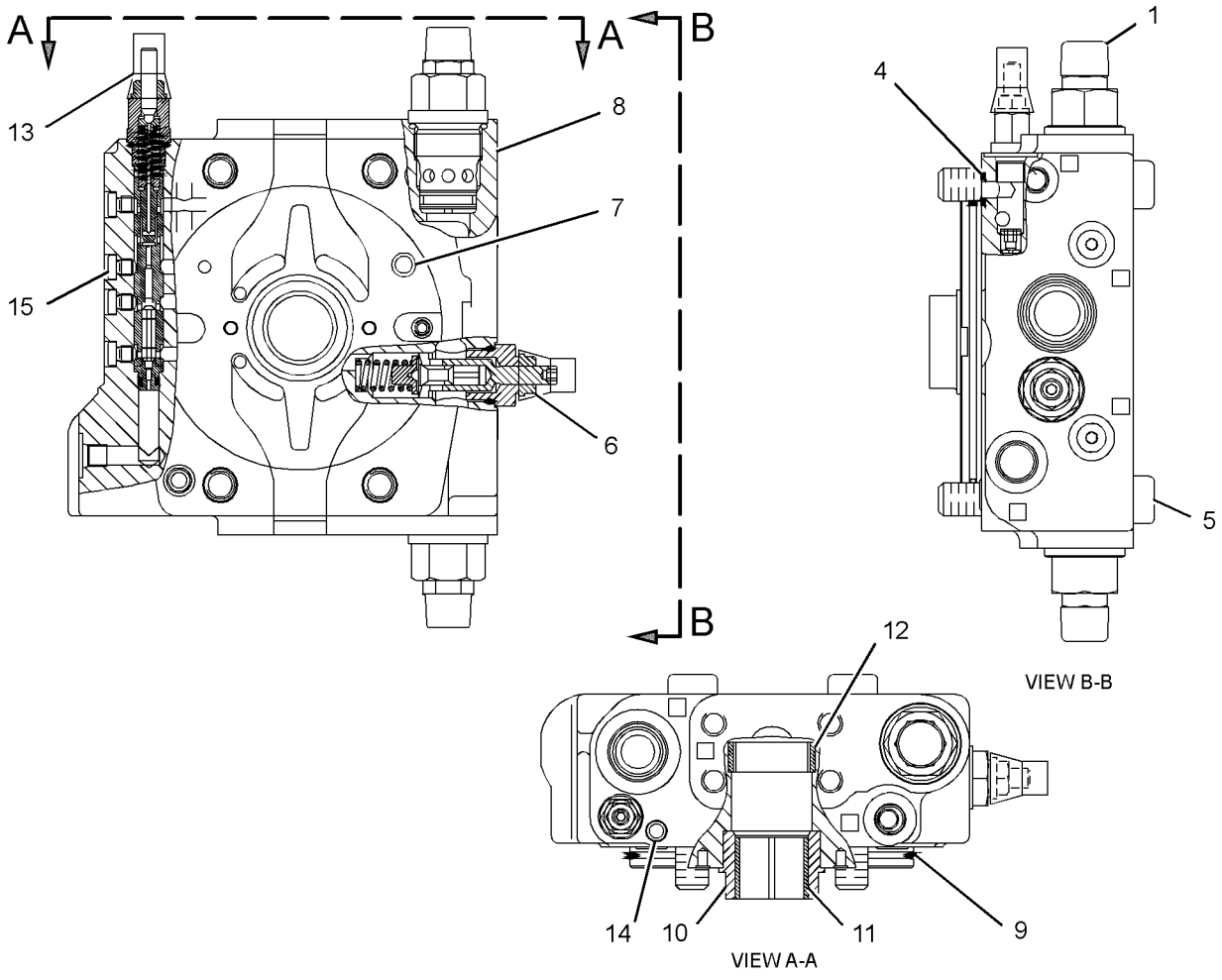

GRAPHIC #1 **<END>** g01165367

HYDRAULIC SYSTEM

246-9028 HYDRAULIC AR

S/N: PJF1-UP

PART OF 246-8991 COMMON AR

SMCS-5050 **i02144262**

NOTE	PART NUMBER	QTY	PART NAME 1 2 3 4 5 6 (PRODUCT LEVEL)	SEE PAGE
Y	*247-9617*	1	BRAKE GP-PARKING	209
Y	*249-2720*	1	LINES GP-BRAKE & SHIFT	215
Y	*247-9630*	1	LINES GP-FLUSHING (BRAKE, DIFFERENTIAL)	250
Y	*249-2727*	1	LINES GP-HYDRAULIC (PROPEL)	252
Y	*247-9620*	1	MOTOR & MTG GP-PROPEL (RH)	167
Y	*249-2711*	1	PUMP & MTG GP-AUXILIARY	267
Y	*258-0889*	1	PUMP & MTG GP-PROPEL	177
Y	*251-1953*	1	PUMP GP-HAND (PARKING BRAKE RELEASE)	217
Y	*257-0023*	1	STRAINER GP (BRAKE, DIFFERENTIAL FLUSHING)	283
Y	*257-0025*	1	VALVE GP-BRAKE CONTROL	220

Y-SEPARATE ILLUSTRATION

<END>

246-9026 HYDRAULIC AR-AUXILIARY

S/N: PJF1-UP

PART OF 246-8991 COMMON AR

SMCS-5050 **i02144260**

NOTE	PART NUMBER	QTY	PART NAME 1 2 3 4 5 6 (PRODUCT LEVEL)	SEE PAGE
Y	*131-2357*	1	CYLINDER & MTG GP-STEERING	229
Y	*258-0888*	1	FILTER & MTG GP-HYDRAULIC	246
Y	*247-9622*	1	LINES GP-HYDRAULIC FILTER	255
Y	*247-9610*	1	LINES GP-HYDRAULIC OIL COOLER	258
Y	*247-9627*	1	LINES GP-STEERING	234
Y	*247-9628*	1	PUMP & MTG GP-STEERING	239

Y-SEPARATE ILLUSTRATION

<END>

HYDRAULIC SYSTEM

247-9630 LINES GP-FLUSHING—BRAKE, DIFFERENTIAL

S/N: PJF1-UP

PART OF 246-9028 HYDRAULIC AR

SMCS-5057 **i03538562**

NOTE	REF NO	GRAPHIC REF	PART NUMBER	QTY	PART NAME 1 2 3 4 5 6 (PRODUCT LEVEL)	SEE PAGE
I	1	1	**249-2719**	1	HOSE AS	
I	2	1	**249-2718**	1	HOSE AS	
	3	1	**206-6419**	8	CLAMP-HALF	
I	4	1	**249-2715**	1	HOSE AS	
I	5	1	**2T-1760**	1	HOSE AS	
I	6	1	**249-2713**	1	HOSE AS	
	7	1	**177-2215**	4	STRAP-DUAL CLAMP	
	8	1	**8M-2773**	5	CLIP	
	9	1	**156-3618**	4	CLAMP-HALF	
I	10	1	**148-6988**	2	HOSE AS	
I	12	1	**210-2091**	2	HOSE AS	
I	14	1	**249-2712**	1	HOSE AS	
	15	1	**102-8703**	2	PLATE-COVER	
M	16	1	**7X-2537**	2	BOLT (M8X1.25X35-MM)	
	17	1	**107-4749**	4	PLATE	
M	18	1	**7X-2533**	8	BOLT (M6X1X35-MM)	
	19	1	**7R-7908**	2	CLAMP	
	20	1	**7V-5628**	1	PLATE	
M	21	1	**8C-8451**	2	BOLT (M6X1X40-MM)	
	22	1	*150-4037*	2	TEE AS	
					(EACH INCLUDES)	
		1	**6V-8398**	2	SEAL-O-RING	
		1	**6V-9844**	1	TEE-SWIVEL	
	23	1	**201-7651**	1	VALVE GP-CHECK (BRAKE, DIFFERENTIAL FLUSHING)	
I	24	1	**257-0024**	1	HOSE AS	
I	25	1	**8X-6790**	1	HOSE AS	
	26	1	**095-0912**	1	CLIP	
	27	1	**8T-4896**	4	WASHER-HARD (10.2X18.5X2.5-MM THK)	

I-REFER TO HYDRAULIC INFORMATION SYSTEM
M-METRIC PART

247-9630 **LINES GP-FLUSHING** *(contd.)* **i03538562**

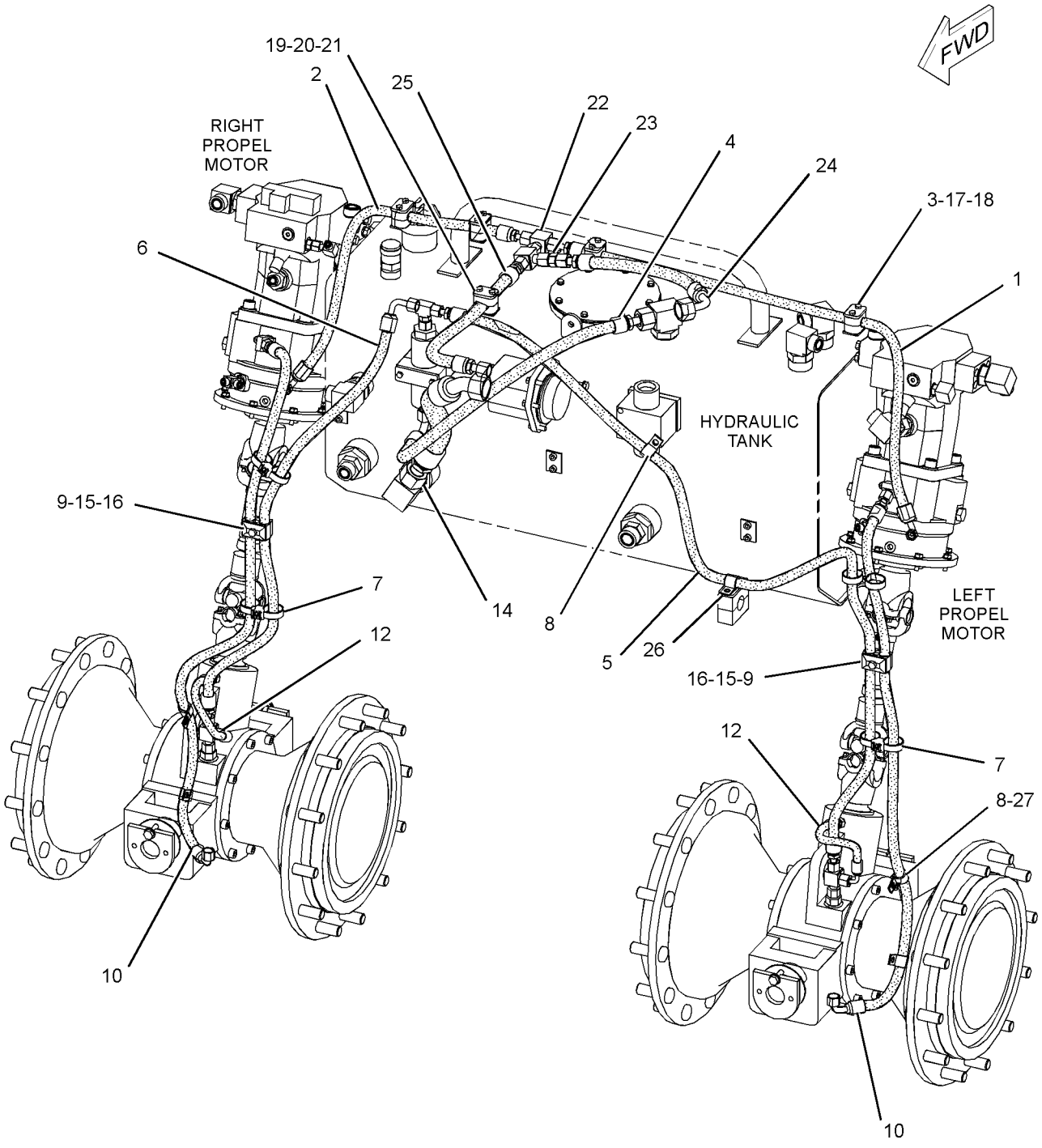

GRAPHIC #1 **<END>** g01167639

HYDRAULIC SYSTEM

249-2727 LINES GP-HYDRAULIC–PROPEL

S/N: PJF1-345

PART OF 246-9028 HYDRAULIC AR

SMCS-5057 **i03598661**

NOTE	REF NO	GRAPHIC REF	PART NUMBER	QTY	PART NAME 1 2 3 4 5 6 (PRODUCT LEVEL)	SEE PAGE
M	1	1	**196-4206**	2	BOLT-STACKING (M6X1X64-MM)	
	2	1	**5V-6152**	4	CLAMP	
	3	1	**7R-7941**	6	CLAMP	
	4	1	**7R-7951**	4	PLATE	
	5	1	**7R-7955**	1	PLATE (SLOTTED)	
	6	1	**154-4884**	6	CLAMP-HALF	
I	7	1	**194-5328**	1	HOSE AS (PROPEL MOTOR, RH)	
	8	1	**207-4499**	3	PLATE-COVER	
I	9	1	**249-2728**	1	HOSE AS (PROPEL MOTOR, LH)	
I	10	1	**249-2729**	1	HOSE AS (PROPEL MOTOR, LH)	
I	11	1	**249-2731**	1	HOSE AS (PROPEL MOTOR, RH)	
I	12	1	**249-2732**	1	HOSE AS (HYDRAULIC TANK STRAINER)	
M	13	1	**7X-2535**	8	BOLT (M6X1X60-MM)	
M	14	1	**8T-6869**	3	BOLT (M8X1.25X60-MM)	

I-REFER TO HYDRAULIC INFORMATION SYSTEM
M-METRIC PART

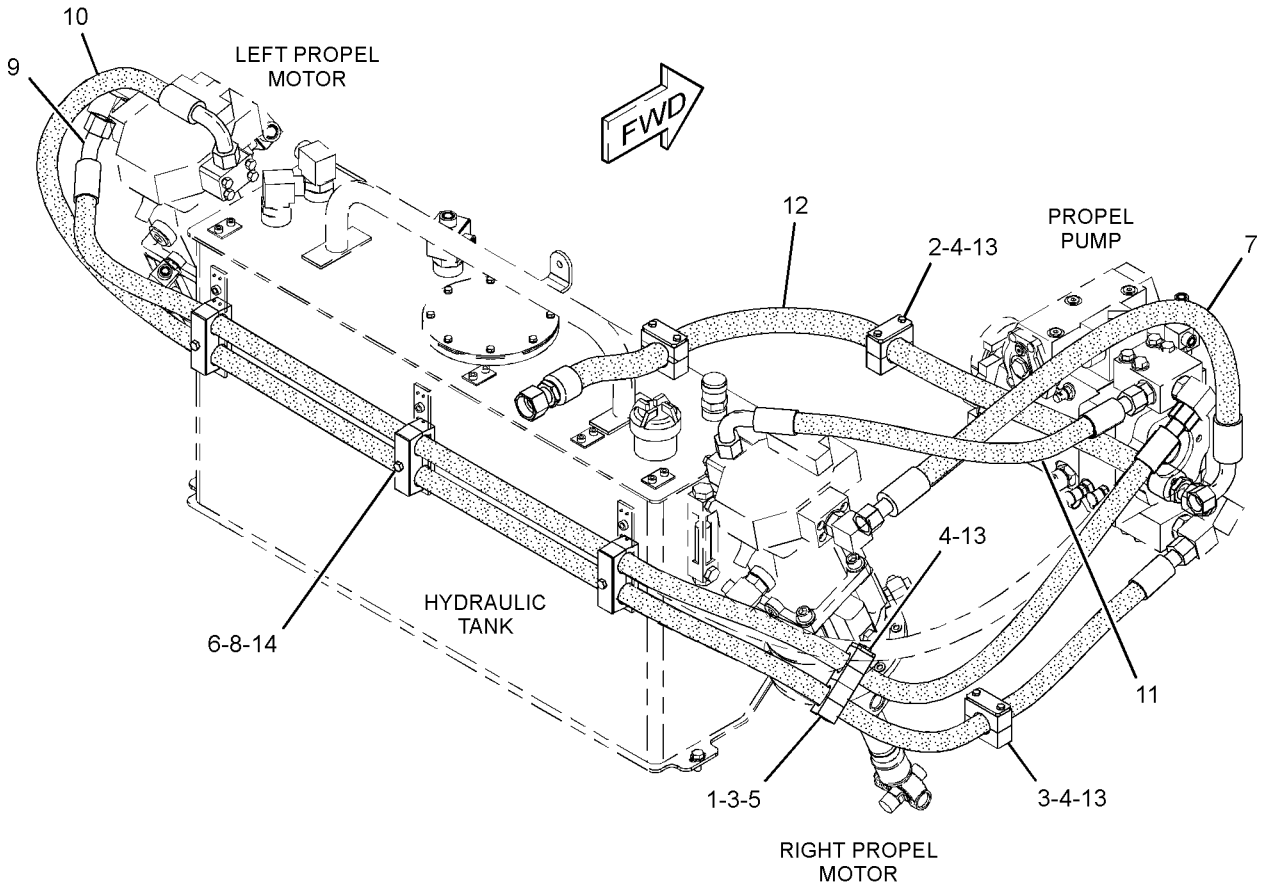

GRAPHIC #1 **<END>** g01191761

249-2727 LINES GP-HYDRAULIC–PROPEL

S/N: PJF346-350

PART OF 246-9028 HYDRAULIC AR

SMCS-5057 **i03598660**

NOTE	REF NO	GRAPHIC REF	PART NUMBER	QTY	PART NAME 1 2 3 4 5 6 (PRODUCT LEVEL)	SEE PAGE
M	1	1	**196-4206**	2	BOLT-STACKING (M6X1X64-MM)	
	2	1	**5V-6152**	4	CLAMP	
C	3	1	**7R-7940**	4	CLAMP	
C	4	1	**7R-7951**	3	PLATE	
	5	1	**7R-7955**	1	PLATE (SLOTTED)	
	6	1	**154-4884**	6	CLAMP-HALF	
I	7	1	**194-5328**	1	HOSE AS (PROPEL MOTOR, RH)	
	8	1	**207-4499**	3	PLATE-COVER	
CI	9	1	**283-5690**	1	HOSE AS (PROPEL MOTOR, LH)	
I	10	1	**249-2729**	1	HOSE AS (PROPEL MOTOR, LH)	
I	11	1	**249-2731**	1	HOSE AS (PROPEL MOTOR, RH)	
I	12	1	**249-2732**	1	HOSE AS (HYDRAULIC TANK STRAINER)	
CM	13	1	**7X-2535**	6	BOLT (M6X1X60-MM)	
M	14	1	**8T-6869**	3	BOLT (M8X1.25X60-MM)	
	15	1	**178-8510**	1	PLATE AS	

C-CHANGE FROM PREVIOUS TYPE
I-REFER TO HYDRAULIC INFORMATION SYSTEM
M-METRIC PART

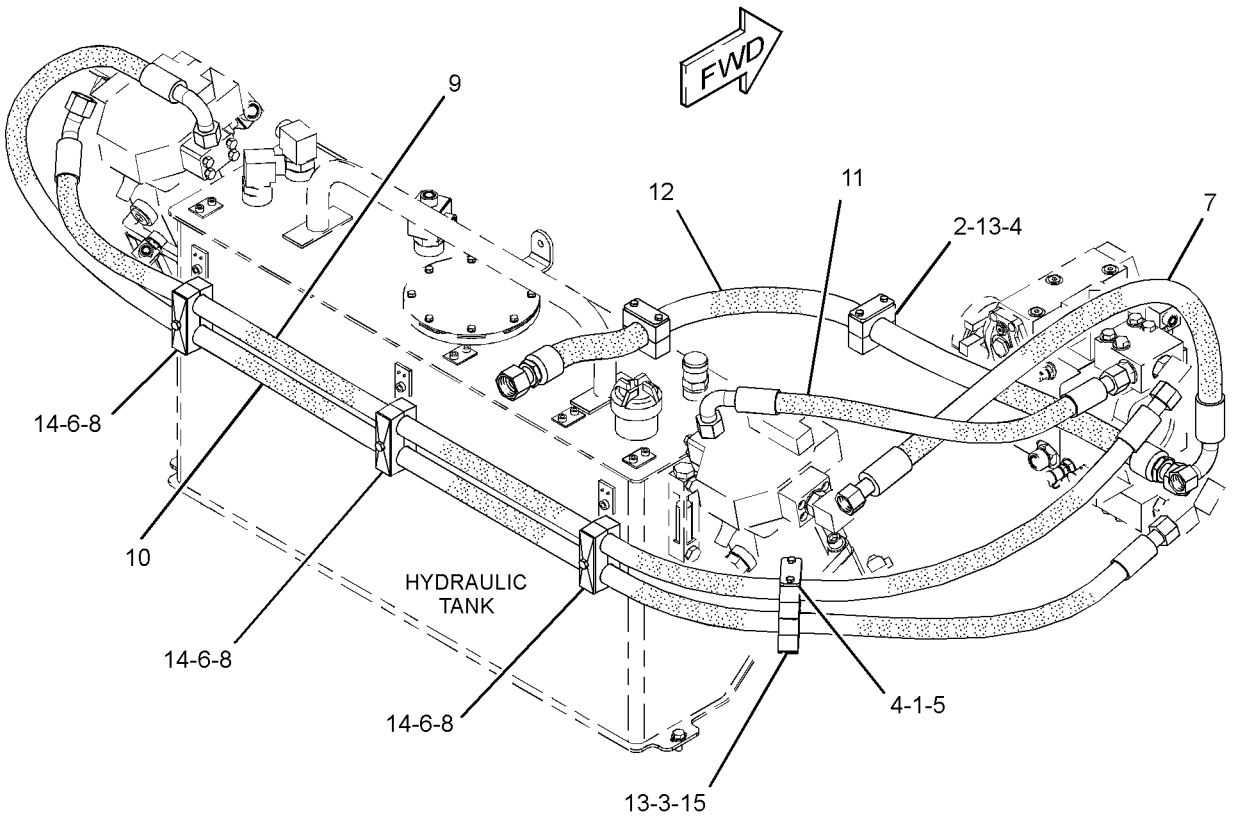

GRAPHIC #1 **<END>** g01347496

HYDRAULIC SYSTEM

249-2727 LINES GP-HYDRAULIC–PROPEL

S/N: PJF351-UP

PART OF 246-9028 HYDRAULIC AR

SMCS-5057 **i03598401**

NOTE	REF NO	GRAPHIC REF	PART NUMBER	QTY	PART NAME 1 2 3 4 5 6 (PRODUCT LEVEL)	SEE PAGE
M	1	1	**196-4206**	2	BOLT-STACKING (M6X1X64-MM)	
	2	1	**5V-6152**	4	CLAMP	
	3	1	**7R-7940**	4	CLAMP	
	4	1	**7R-7951**	3	PLATE	
	5	1	**7R-7955**	1	PLATE (SLOTTED)	
	6	1	**154-4884**	6	CLAMP-HALF	
I	7	1	**194-5328**	1	HOSE AS (PROPEL MOTOR, RH)	
	8	1	**207-4499**	3	PLATE-COVER	
I	9	1	**283-5690**	1	HOSE AS (PROPEL MOTOR, LH)	
I	10	1	**249-2729**	1	HOSE AS (PROPEL MOTOR, LH)	
I	11	1	**249-2731**	1	HOSE AS (PROPEL MOTOR, RH)	
I	12	1	**249-2732**	1	HOSE AS (HYDRAULIC TANK STRAINER)	
M	13	1	**7X-2535**	6	BOLT (M6X1X60-MM)	
M	14	1	**8T-6869**	3	BOLT (M8X1.25X60-MM)	

I-REFER TO HYDRAULIC INFORMATION SYSTEM
M-METRIC PART

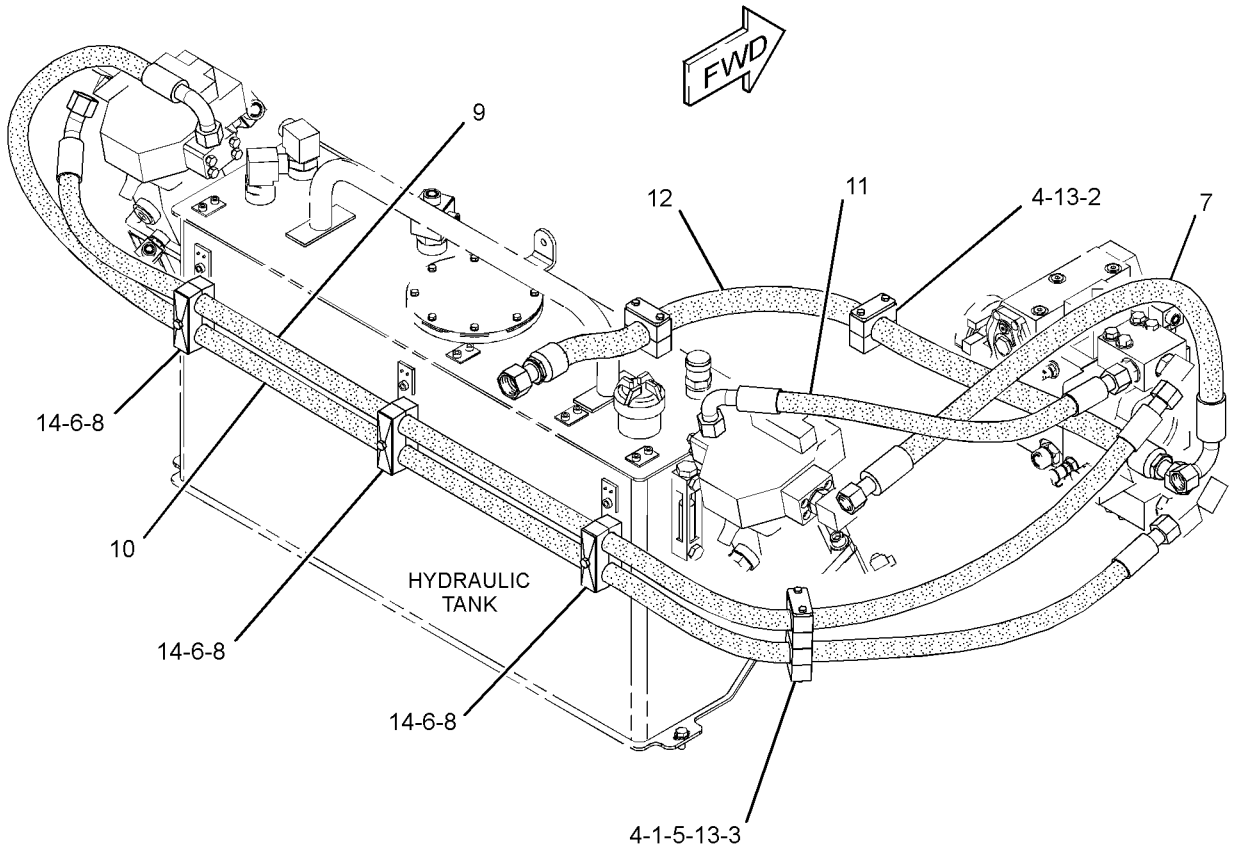

GRAPHIC #1 **<END>** g01618508

247-9622 LINES GP-HYDRAULIC FILTER

S/N: PJF1-310

PART OF 246-9026 HYDRAULIC AR-AUXILIARY

SMCS-5057 **i02145179**

NOTE	REF NO	GRAPHIC REF	PART NUMBER	QTY	PART NAME 1 2 3 4 5 6 (PRODUCT LEVEL)	SEE PAGE
	1	1	**102-8705**	1	PLATE	
	2	1	**154-4883**	2	CLAMP-HALF	
	3	1	**177-2215**	2	STRAP-DUAL CLAMP	
I	4	1	**247-9618**	1	HOSE AS	
I	5	1	**247-9623**	1	HOSE AS	
I	6	1	**247-9624**	1	HOSE AS	
I	7	1	**258-5506**	1	HOSE AS	
M	8	1	**5C-7261**	1	NUT (M8X1.25-THD)	
	9	1	**8T-4224**	1	WASHER-HARD (8.8X16X2-MM THK)	
M	10	1	**8T-6869**	1	BOLT (M8X1.25X60-MM)	

I-REFER TO HYDRAULIC INFORMATION SYSTEM
M-METRIC PART

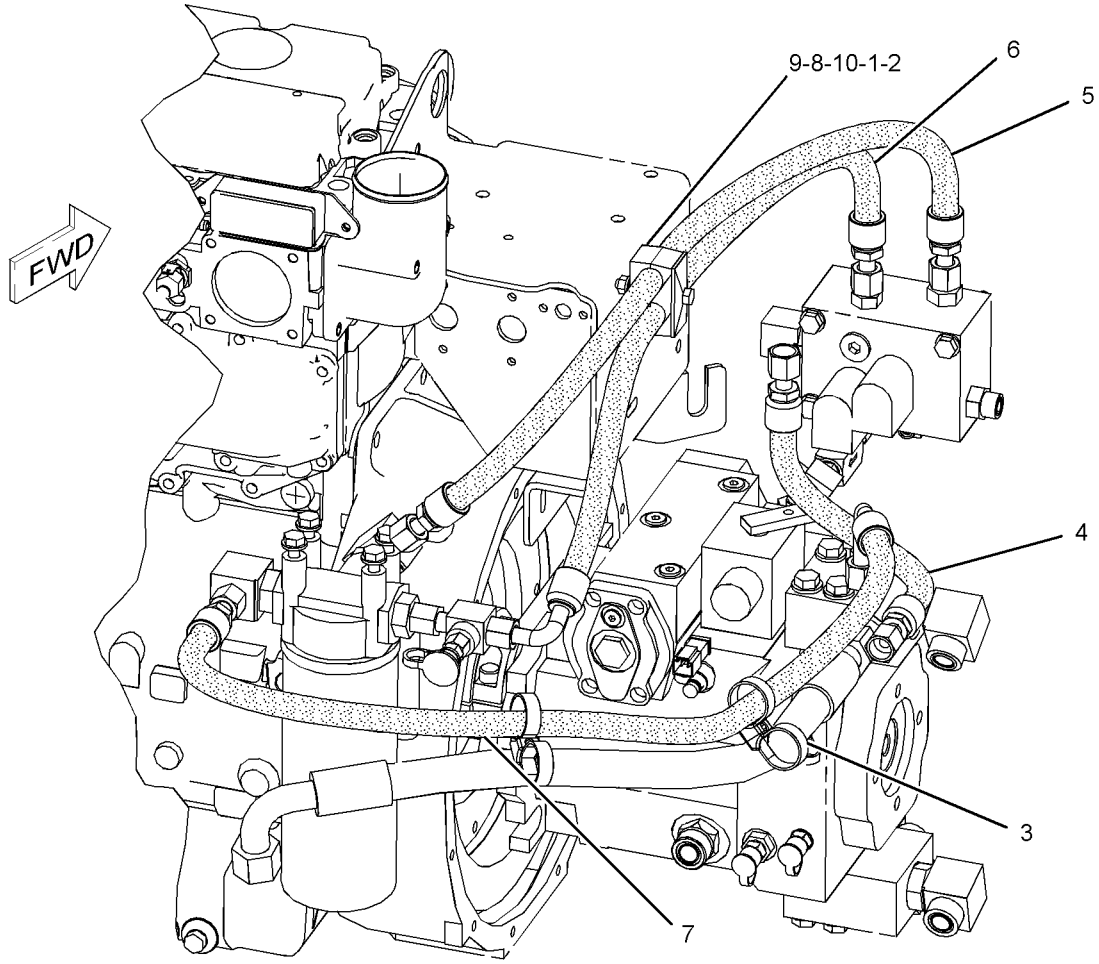

GRAPHIC #1 **<END>** g01090732

HYDRAULIC SYSTEM

247-9622 LINES GP-HYDRAULIC FILTER

S/N: PJF311-359

PART OF 246-9026 HYDRAULIC AR-AUXILIARY

SMCS-5057 **i02763668**

NOTE	REF NO	GRAPHIC REF	PART NUMBER	QTY	PART NAME 1 2 3 4 5 6 (PRODUCT LEVEL)	SEE PAGE
C	1	1	**177-2215**	3	STRAP-DUAL CLAMP	
I	2	1	**247-9618**	1	HOSE AS	
I	3	1	**247-9623**	1	HOSE AS	
I	4	1	**247-9624**	1	HOSE AS	
I	5	1	**258-5506**	1	HOSE AS	

C-CHANGE FROM PREVIOUS TYPE
I-REFER TO HYDRAULIC INFORMATION SYSTEM

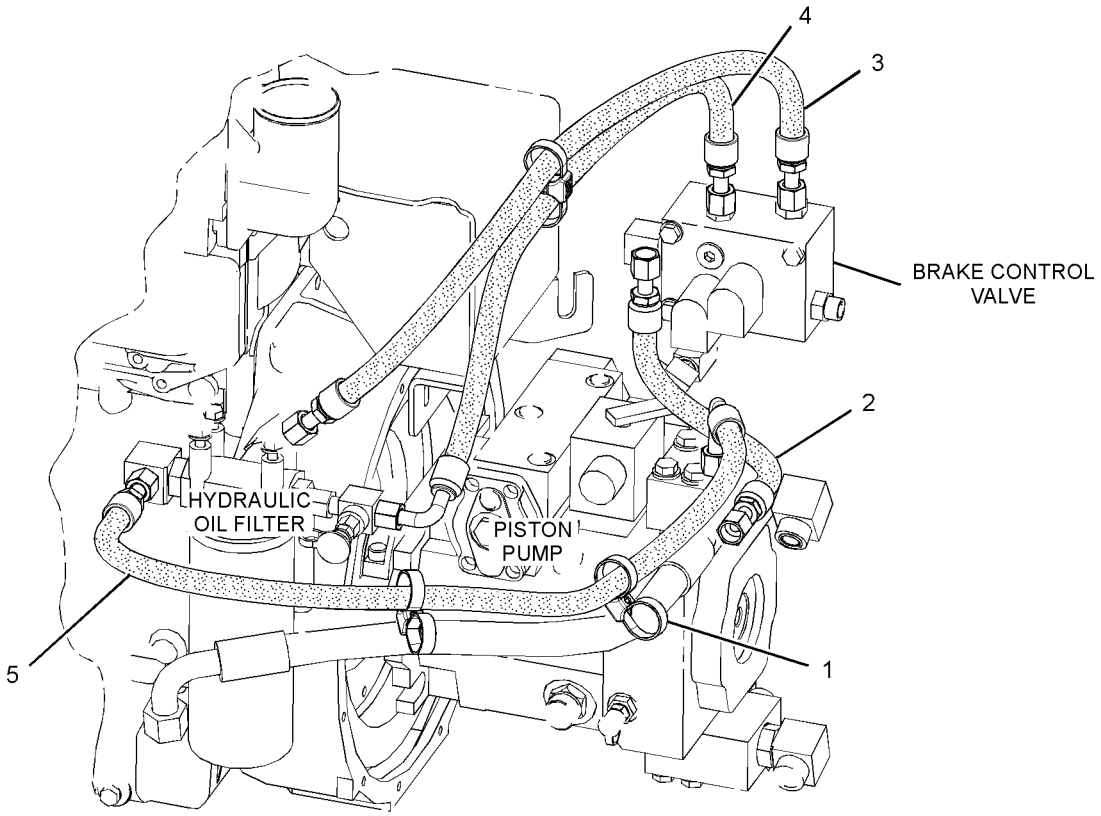

REAR VIEW
(UPPER RIGHT)

GRAPHIC #1 **<END>** g01393563

247-9622 LINES GP-HYDRAULIC FILTER

S/N: PJF360-UP

PART OF 246-9026 HYDRAULIC AR-AUXILIARY

SMCS-5057 **i02819091**

NOTE	REF NO	GRAPHIC REF	PART NUMBER	QTY	PART NAME 1 2 3 4 5 6 (PRODUCT LEVEL)	SEE PAGE
	1	1	**177-2215**	3	STRAP-DUAL CLAMP	
CI	2	1	**215-9209**	1	HOSE AS	
I	3	1	**247-9623**	1	HOSE AS	
I	4	1	**247-9624**	1	HOSE AS	
I	5	1	**258-5506**	1	HOSE AS	

C-CHANGE FROM PREVIOUS TYPE
I-REFER TO HYDRAULIC INFORMATION SYSTEM

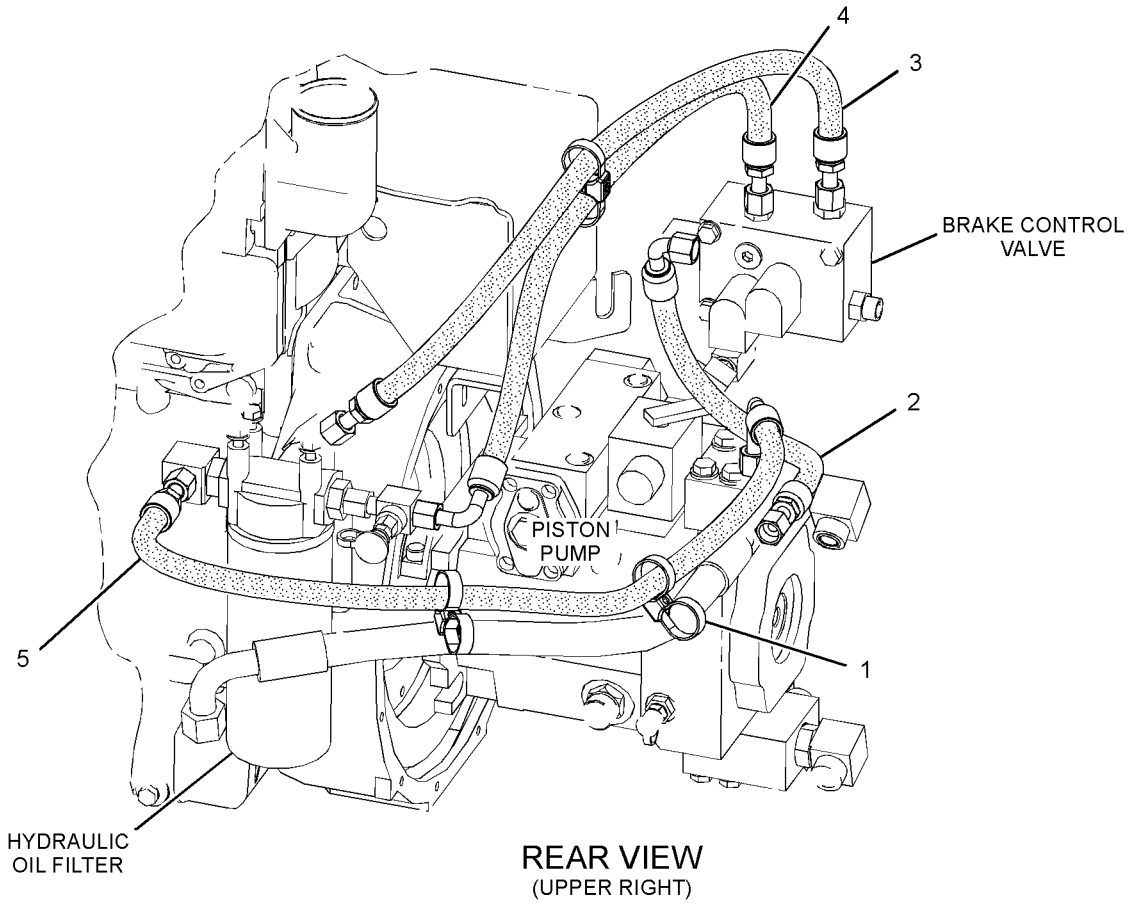

REAR VIEW
(UPPER RIGHT)

GRAPHIC #1 **<END>** g01417096

HYDRAULIC SYSTEM

247-9610 LINES GP-HYDRAULIC OIL COOLER

S/N: PJF1-UP

PART OF 246-9026 HYDRAULIC AR-AUXILIARY

SMCS-1374, 5057 **i02662443**

NOTE	REF NO	GRAPHIC REF	PART NUMBER	QTY	PART NAME 1 2 3 4 5 6 (PRODUCT LEVEL)	SEE PAGE
M	1	1	**196-4206**	2	BOLT-STACKING (M6X1X64-MM)	
	2	1	**5V-6152**	6	CLAMP	
	3	1	**7R-7939**	4	CLAMP-PIPE	
	4	1	**7R-7951**	4	PLATE	
	5	1	**7X-7958**	2	CLAMP-HOSE	
	6	1	**102-8705**	3	PLATE	
	7	1	**111-8275**	1	VALVE-BYPASS (HYDRAULIC OIL COOLER)	
I	8	1	**195-4479**	1	HOSE AS	
I	9	1	**261-2723**	1	HOSE AS	
I	10	1	**261-2724**	1	HOSE AS	
I	11	1	**263-8951**	1	HOSE AS	
I	12	1	**263-8950**	1	HOSE AS	
I	13	1	**247-9616**	1	HOSE AS	
I	14	1	**215-9209**	1	HOSE AS	
I	15	1	**258-0887**	1	HOSE AS	
	16	1	*148-8335*	1	CONNECTOR AS	
		1	**5K-9090**	1	SEAL-O-RING	
		1	**6V-8635**	1	CONNECTOR	
		1	**7M-8485**	1	SEAL-O-RING	
	17	1	*148-8339*	1	CONNECTOR AS	
		1	**6V-8716**	1	CONNECTOR	
		1	**6V-9746**	1	SEAL-O-RING	
		1	**7M-8485**	1	SEAL-O-RING	
	18	1	*148-8442*	1	TEE AS	
		1	**6V-9746**	2	SEAL-O-RING	
		1	**7M-8485**	1	SEAL-O-RING	
		1	**8T-1685**	1	TEE	
	19	1	*148-8449*	1	TEE AS-SWIVEL	
		1	**6V-9746**	2	SEAL-O-RING	
		1	**6V-9839**	1	TEE-SWIVEL	
	20	1	**207-3643**	6	CLAMP-HALF	
M	21	1	**7X-0818**	3	BOLT (M8X1.25X45-MM)	
M	22	1	**7X-2535**	8	BOLT (M6X1X60-MM)	
M	23	1	**8T-3647**	2	BOLT (M8X1.25X80-MM)	
	24	1	**8T-4224**	2	WASHER-HARD (8.8X16X2-MM THK)	
	25	1	**7R-7955**	1	PLATE (SLOTTED)	

I-REFER TO HYDRAULIC INFORMATION SYSTEM
M-METRIC PART

247-9610 **LINES GP-HYDRAULIC OIL COOLER** *(contd.)* **i02662443**

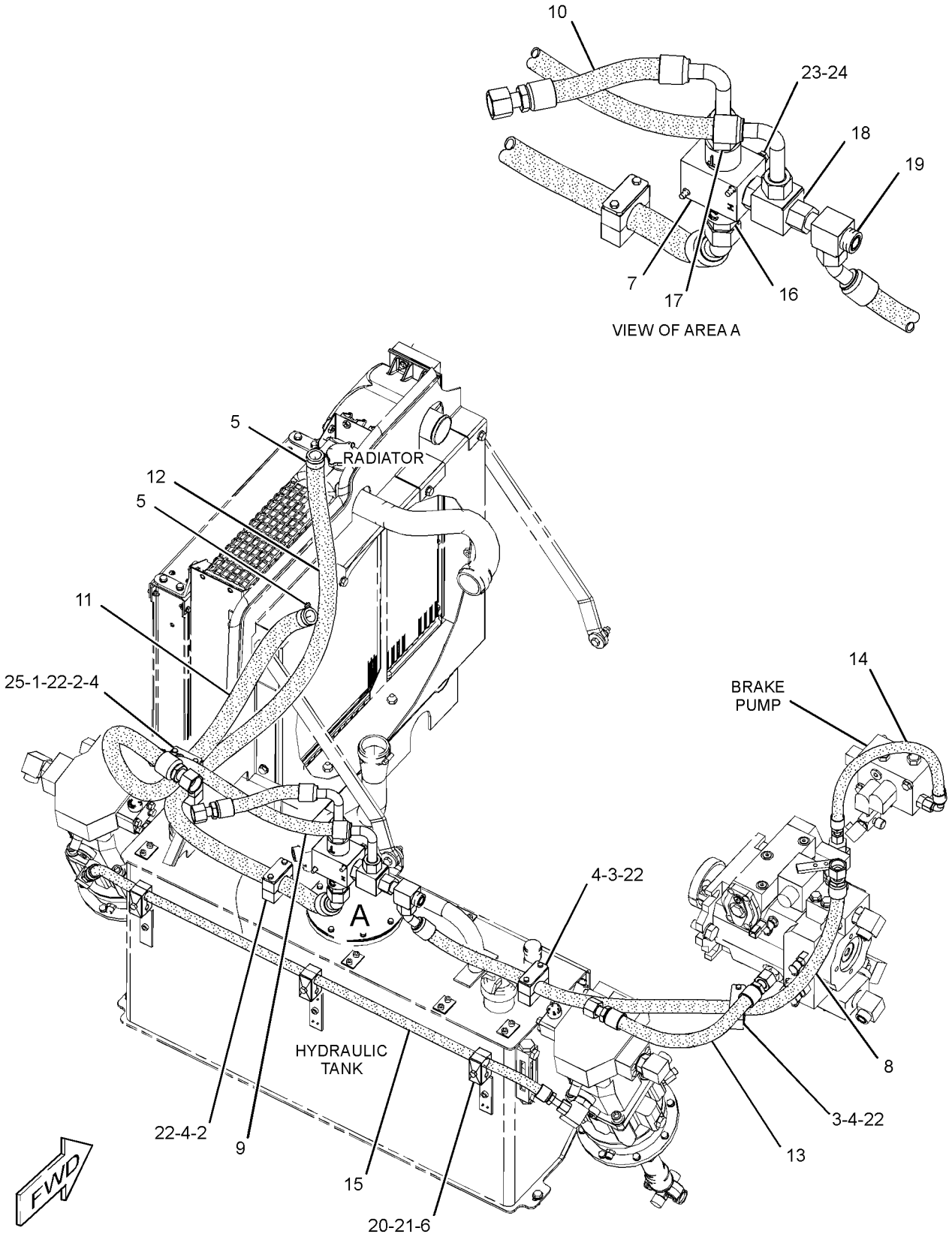

GRAPHIC #1 **<END>** g01343940

HYDRAULIC SYSTEM

120-7527 MOTOR GP-PISTON–PROPEL*R

S/N: PJF1-257

PART OF 247-9620 MOTOR & MTG GP-PROPEL

SMCS-5058 **i02186293**

NOTE	REF NO	GRAPHIC REF	PART NUMBER	QTY	PART NAME 1 2 3 4 5 6 (PRODUCT LEVEL)	SEE PAGE
	1	1	**8T-9598**	1	RING-RETAINING	
	2	1	**137-4505**	1	SHIM	
	3	1	**7X-1553**	1	SEAL-LIP TYPE	
	4	1	**9S-8006**	1	PLUG-O-RING	
	5	1	**6V-4589**	1	SEAL-O-RING	
	6	1	**9S-8008**	1	PLUG-O-RING	
	7	1	**6V-5050**	1	SEAL-O-RING	
	8	1	**6E-6122**	1	SCREW-ADJUSTMENT	
	9	1	**7R-3743**	2	NUT	
	10	1	**139-3268**	1	KIT-SHAFT & BEARING (PROPEL PISTON MOTOR)	
	20	1	**123-5798**	3	SEAT	
	21	1	**192-3292**	1	PIN	
	22	1	**123-5799**	3	SEAT	
	23	1	**137-3780**	2	PLUG	
	24	1	**139-7755**	2	VALVE	
	25	1	**9S-8004**	1	PLUG-O-RING	
	26	1	**6V-5049**	1	SEAL-O-RING	
	27	1	**114-3361**	1	SEAL-O-RING	
	28	1	**137-4605**	1	CONNECTOR-REDUCING	
Y	40	1	**139-7747**	1	VALVE GP-FLUSHING (PROPEL MOTOR)	287
M	41	1	**8T-0341**	2	BOLT-SOCKET HEAD (M10X1.5X60-MM)	
	42	1	**033-6039**	3	SEAL-O-RING	
M	43	1	**8T-9515**	6	BOLT-SOCKET HEAD (M10X1.5X40-MM)	
	44	1	**137-4607**	1	PISTON-STROKING	
	45	1	**9T-3931**	1	PLUG	
	46	1	**109-3203**	1	SEAL-O-RING	
	47	1	**137-4606**	1	PIN-LENS	
	48	1	**2Y-5578**	2	PIN	
	49	1	**6V-7351**	1	SEAL-O-RING	
	50	1	**137-4604**	1	BUSHING-CONTROL	
	51	1	**137-4603**	1	RING-SNAP	
	52	1	**137-4602**	1	SPOOL	
	53	1	**124-0775**	1	SPRING	
	54	1	**137-4601**	1	PLUG	
M	55	1	**9X-6405**	1	SETSCREW-SOCKET (M10X1.5X60-MM)	
Y	56	1	**137-4581**	1	ROTATING GP-MOTOR (PROPEL PISTON MOTOR)	276

M-METRIC PART
Y-SEPARATE ILLUSTRATION

120-7527 MOTOR GP-PISTON *(contd.)* **i02186293**

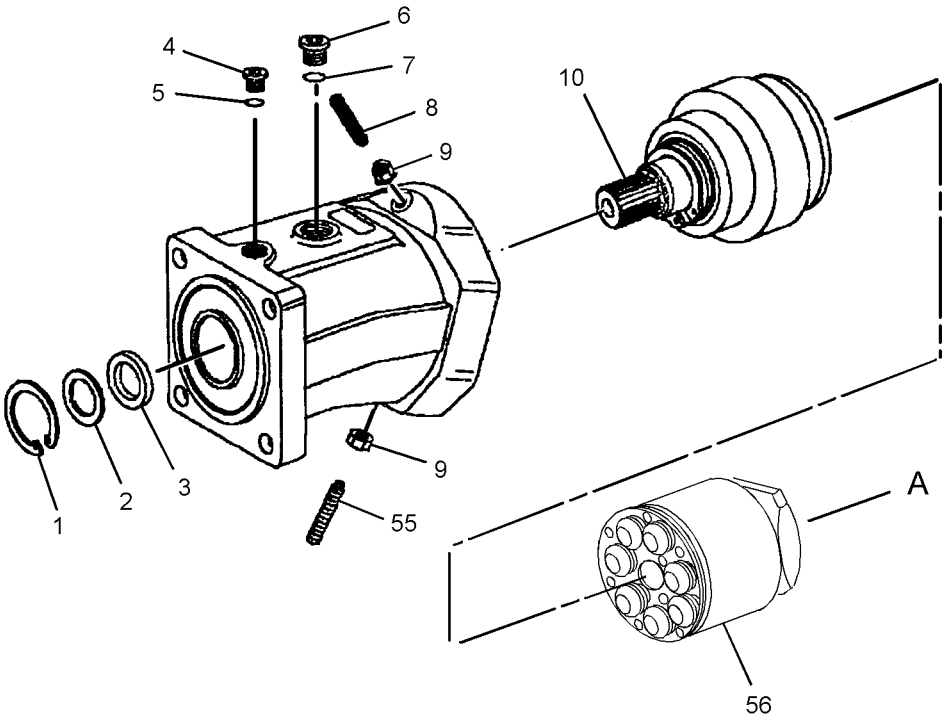

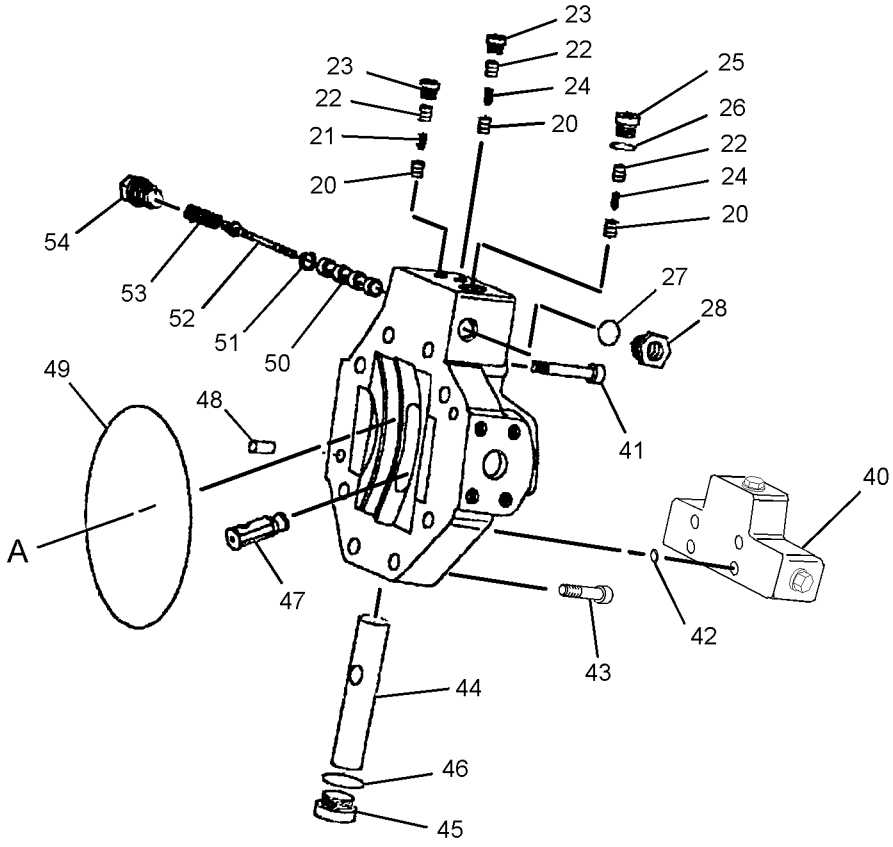

GRAPHIC #1 **<END>** g01188391

HYDRAULIC SYSTEM

260-1329 MOTOR GP-PISTON—PROPEL

S/N: PJF258-UP

PART OF 247-9620 MOTOR & MTG GP-PROPEL

SMCS-5058 **i02185946**

NOTE	REF NO	GRAPHIC REF	PART NUMBER	QTY	PART NAME 1 2 3 4 5 6 (PRODUCT LEVEL)	SEE PAGE
	1	1	**8T-9598**	1	RING-RETAINING	
	2	1	**137-4505**	1	SHIM	
	3	1	**7X-1553**	1	SEAL-LIP TYPE	
	4	1	**9S-8006**	1	PLUG-O-RING (STRAIGHT THREAD O-RING)	
	5	1	**6V-4589**	1	SEAL-O-RING	
	6	1	**267-3703**	1	SETSCREW-SOCKET (M10X1.5X70-MM)	
	7	1	**7R-3743**	2	NUT	
M	8	1	**9X-6405**	1	SETSCREW-SOCKET (M10X1.5X60-MM)	
	9	1	**6E-6350**	14	RING	
	10	1	**252-0705**	14	SCREW-PAN HEAD (M4X0.7X12-MM)	
Y	11	1	**252-6320**	1	ROTATING GP-MOTOR (CONTROL)	277
	12	1	**6V-7351**	1	SEAL-O-RING	
	13	1	**137-4601**	1	PLUG	
	14	1	**107-3117**	3	SEAL-O-RING	
	15	1	**114-3361**	1	SEAL-O-RING	
	16	1	**137-4605**	1	CONNECTOR-REDUCING	
M	17	1	**8T-0341**	2	BOLT-SOCKET HEAD (M10X1.5X60-MM)	
Y	18	1	**139-7747**	1	VALVE GP-FLUSHING (PROPEL MOTOR)	287
M	19	1	**8T-9515**	6	BOLT-SOCKET HEAD (M10X1.5X40-MM)	
	20	1	**033-6039**	3	SEAL-O-RING	
					(PARTS SHOWN IN GRAPHIC(S) WITHOUT A REFERENCE NUMBER ARE NOT SERVICED SEPARATELY)	

M-METRIC PART
Y-SEPARATE ILLUSTRATION

260-1329 MOTOR GP-PISTON *(contd.)* **i02185946**

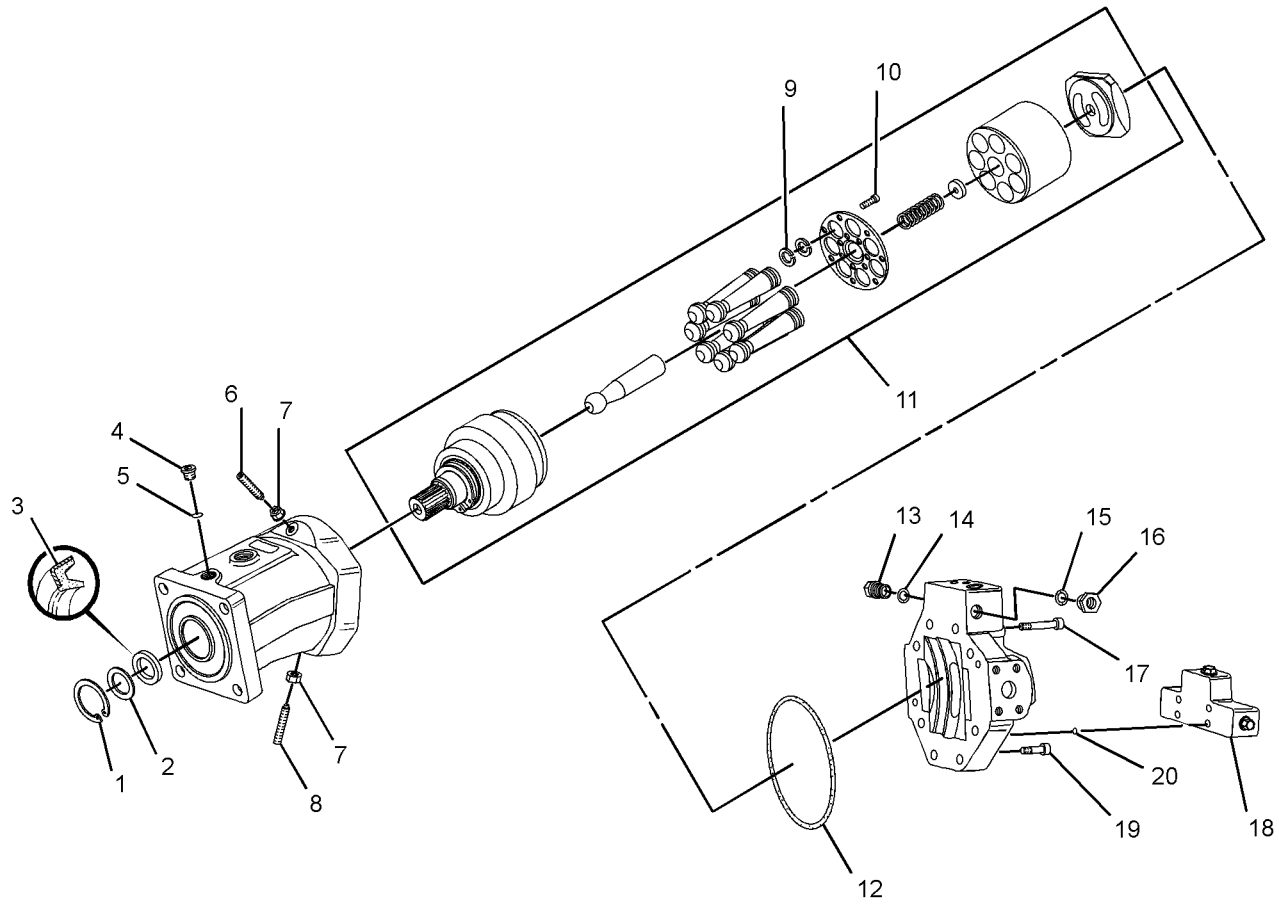

GRAPHIC #1 **<END>** g01262754

HYDRAULIC SYSTEM

260-1330 MOTOR GP-PISTON

S/N: PJF1-UP

PART OF 255-7159 MOTOR & MTG GP-PROPEL, 260-1334 MOTOR GP-PISTON AN ATTACHMENT

SMCS-5058 **i02205147**

NOTE	REF NO	GRAPHIC REF	PART NUMBER	QTY	PART NAME 1 2 3 4 5 6 (PRODUCT LEVEL)	SEE PAGE
					NO BREAKDOWN OF SERVICEABLE PARTS AVAILABLE AT THE TIME OF PUBLICATION)	

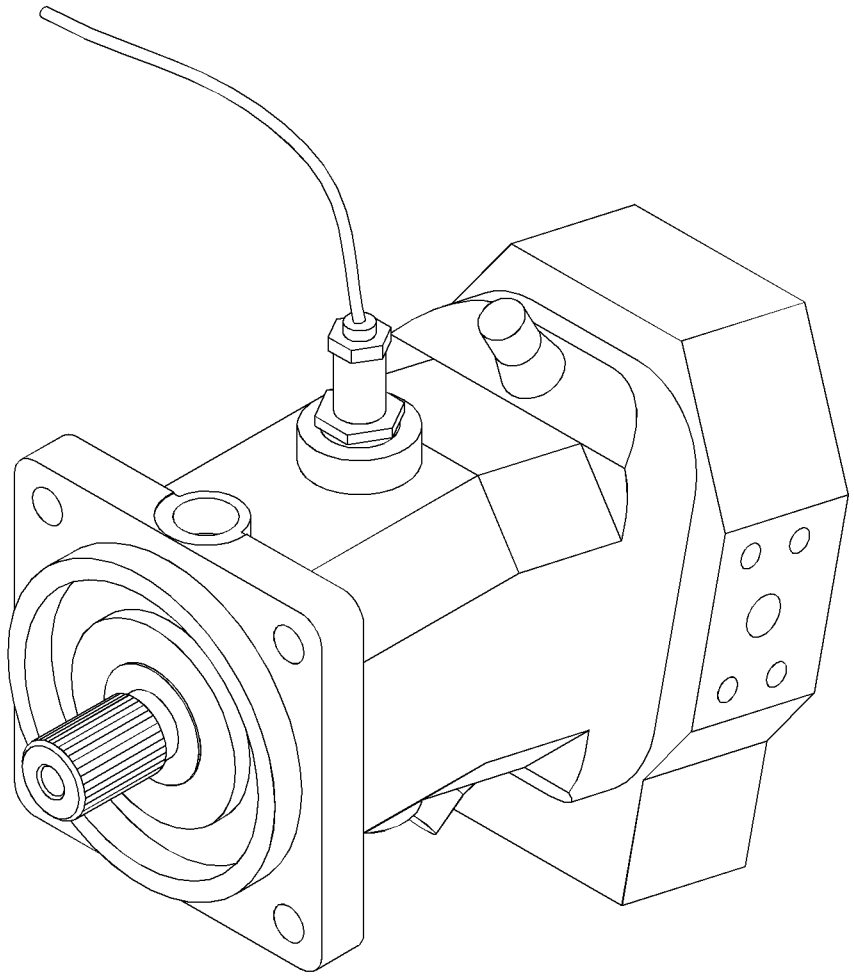

GRAPHIC #1 **<END>** g01263373

HYDRAULIC SYSTEM

260-1331 MOTOR GP-PISTON

S/N: PJF1-UP

PART OF 255-7159 MOTOR & MTG GP-PROPEL

AN ATTACHMENT

SMCS-5058 **i02206352**

NOTE	REF NO	GRAPHIC REF	PART NUMBER	QTY	PART NAME 1 2 3 4 5 6 (PRODUCT LEVEL)	SEE PAGE
					(NO BREAKDOWN OF SERVICEABLE PARTS AVAILABLE AT THE TIME OF PUBLICATION)	

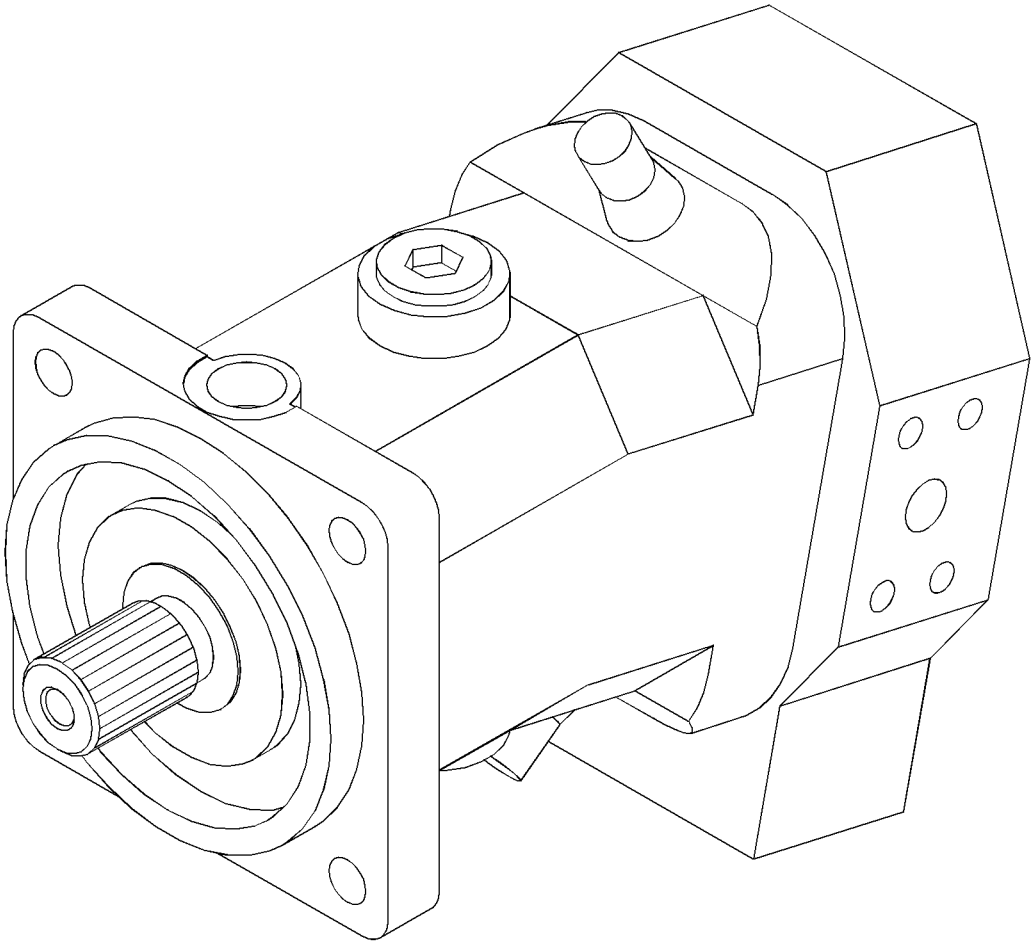

GRAPHIC #1 **<END>** g01262788

260-1334 MOTOR GP-PISTON—LH PROPEL, SPEEDOMETER

S/N: PJF1-UP
PART OF 260-1345 MOTOR & MTG GP-PROPEL
AN ATTACHMENT

SMCS-5058 **i03577322**

NOTE	REF NO	GRAPHIC REF	PART NUMBER	QTY	PART NAME 1 2 3 4 5 6 (PRODUCT LEVEL)	SEE PAGE
	1	1	**102-8803**	1	KIT-RECEPTACLE (3-PIN)	
					(INCLUDES RECEPTACLE AS & WEDGE)	
	2	1	**186-3735**	2	PIN-CONNECTOR (16-GA TO 18-GA)	
	3	1	**8T-8737**	1	PLUG-SEAL	
Y	4	1	**260-1330**	1	MOTOR GP-PISTON (LH PROPEL, SPEEDOMETER)	264

Y-SEPARATE ILLUSTRATION

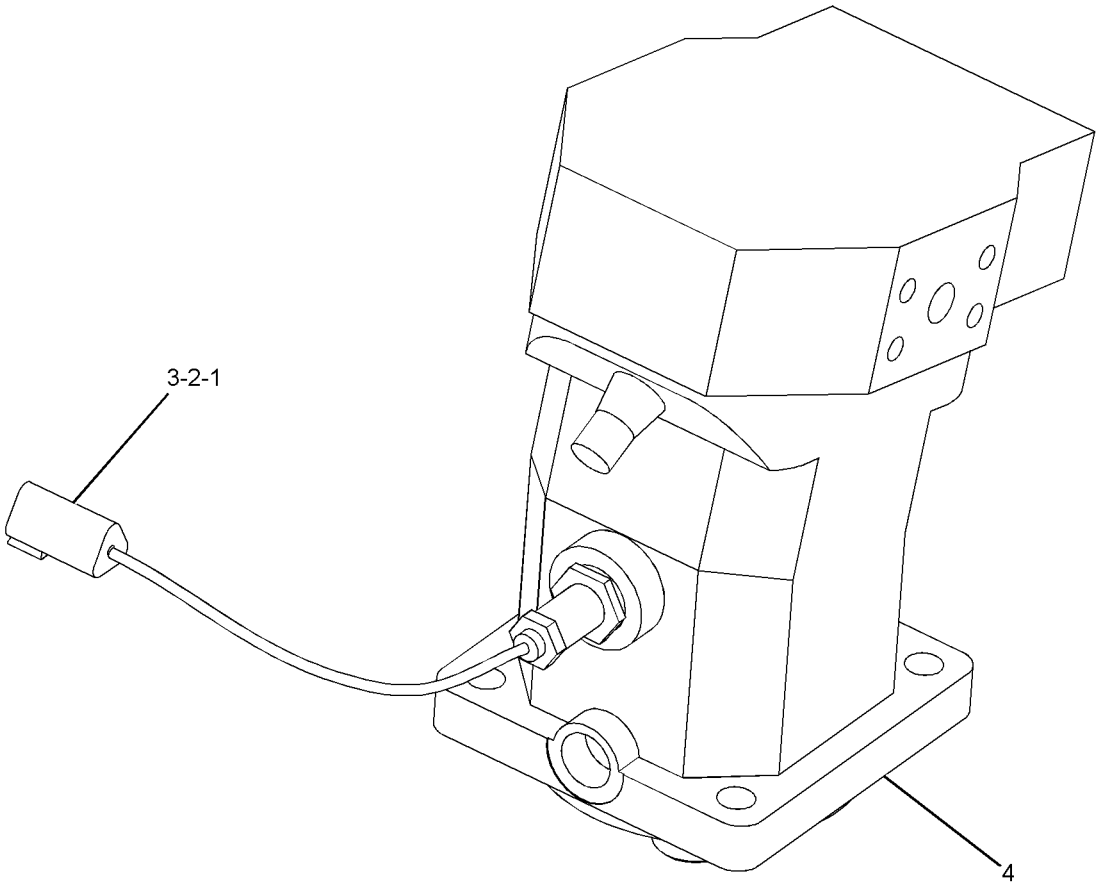

GRAPHIC #1 **<END>** g01160221

249-2711 PUMP & MTG GP-AUXILIARY

S/N: PJF1-UP

PART OF 246-9028 HYDRAULIC AR

SMCS-5070, 5073 **i02144899**

NOTE	REF NO	GRAPHIC REF	PART NUMBER	QTY	PART NAME 1 2 3 4 5 6 (PRODUCT LEVEL)	SEE PAGE
M	1	1	**6I-0260**	5	BOLT (M8X1.25X25-MM)	
	2	1	**9Y-9380**	1	GASKET	
Y	3	1	**255-9152**	1	PUMP GP-GEAR (AUXILIARY)	270
	4	1	*148-8317*	1	CONNECTOR AS	
		1	**3D-2824**	1	SEAL-O-RING	
		1	**5K-9090**	1	SEAL-O-RING	
		1	**6V-8714**	1	CONNECTOR	
	5	1	*148-8345*	1	CONNECTOR AS	
		1	**2M-9780**	1	SEAL-O-RING	
		1	**6V-8398**	1	SEAL-O-RING	
		1	**6V-8638**	1	CONNECTOR	
	6	1	**8T-4224**	1	WASHER-HARD (8.8X16X2-MM THK)	
M	7	1	**8T-6869**	1	BOLT (M8X1.25X60-MM)	

M-METRIC PART
Y-SEPARATE ILLUSTRATION

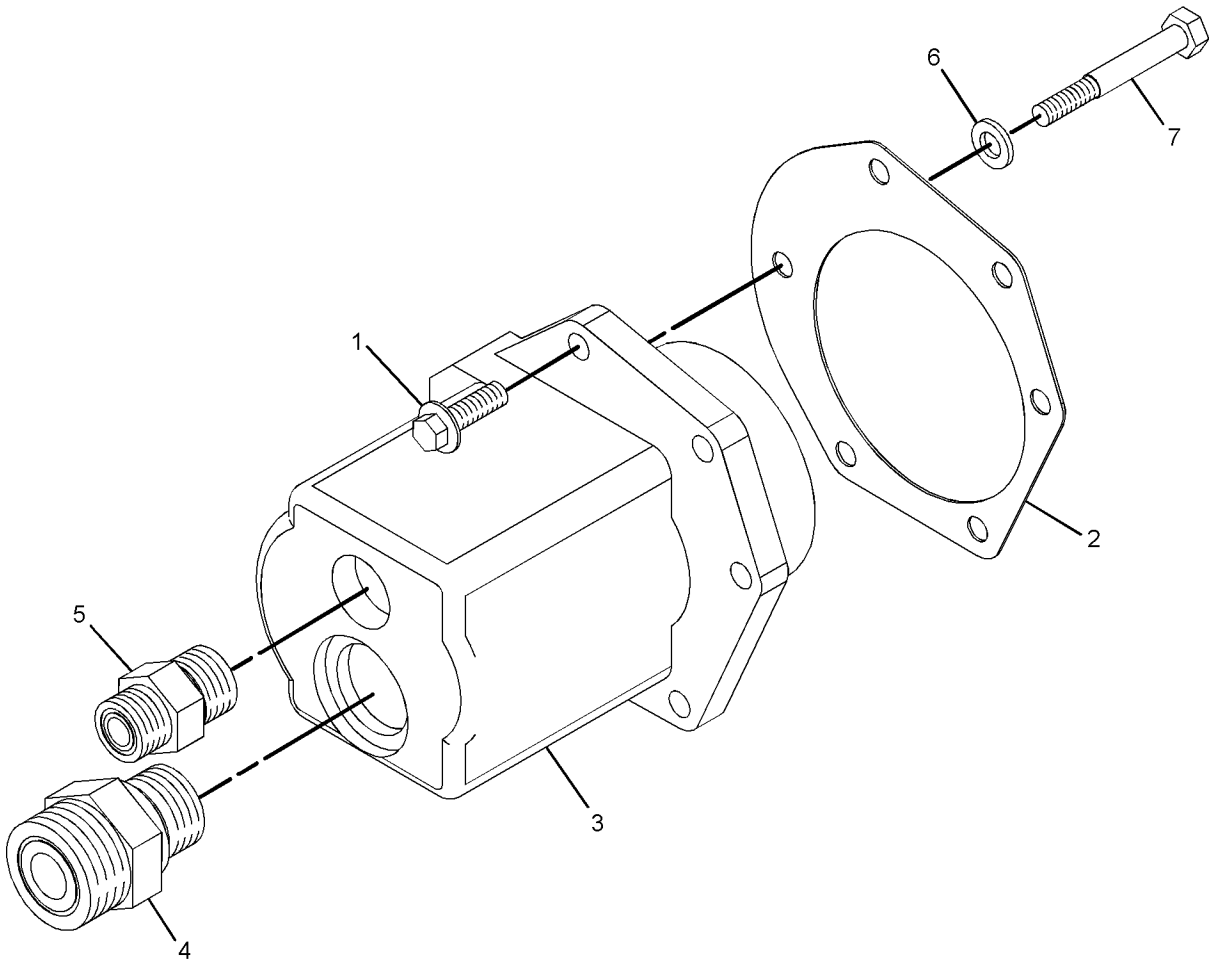

GRAPHIC #1 **<END>** g01091208

HYDRAULIC SYSTEM

179-3271 PUMP GP-CHARGE

S/N: PJF1-UP

PART OF 194-5327 PUMP GP-PISTON

SMCS-3204 **i03602980**

NOTE	REF NO	GRAPHIC REF	PART NUMBER	QTY	PART NAME 1 2 3 4 5 6 (PRODUCT LEVEL)	SEE PAGE
	1	1	**145-0909**	1	RING	
	2	1	**135-8075**	1	COUPLING	
	3	1	**117-7296**	1	KEY-SHAFT	
	4	1	**8H-7521**	1	SEAL-O-RING	
	5	1	**179-3475**	1	GEAR	
	6	1	**126-1477**	1	BUSHING-COUPLING	
	7	1	**118-7521**	1	SEAL	
M	8	1	**8T-0273**	4	BOLT-SOCKET HEAD (M12X1.75X40-MM)	
					PARTS SHOWN IN GRAPHIC(S) WITHOUT A REFERENCE NUMBER ARE NOT SERVICED SEPARATELY	

M-METRIC PART

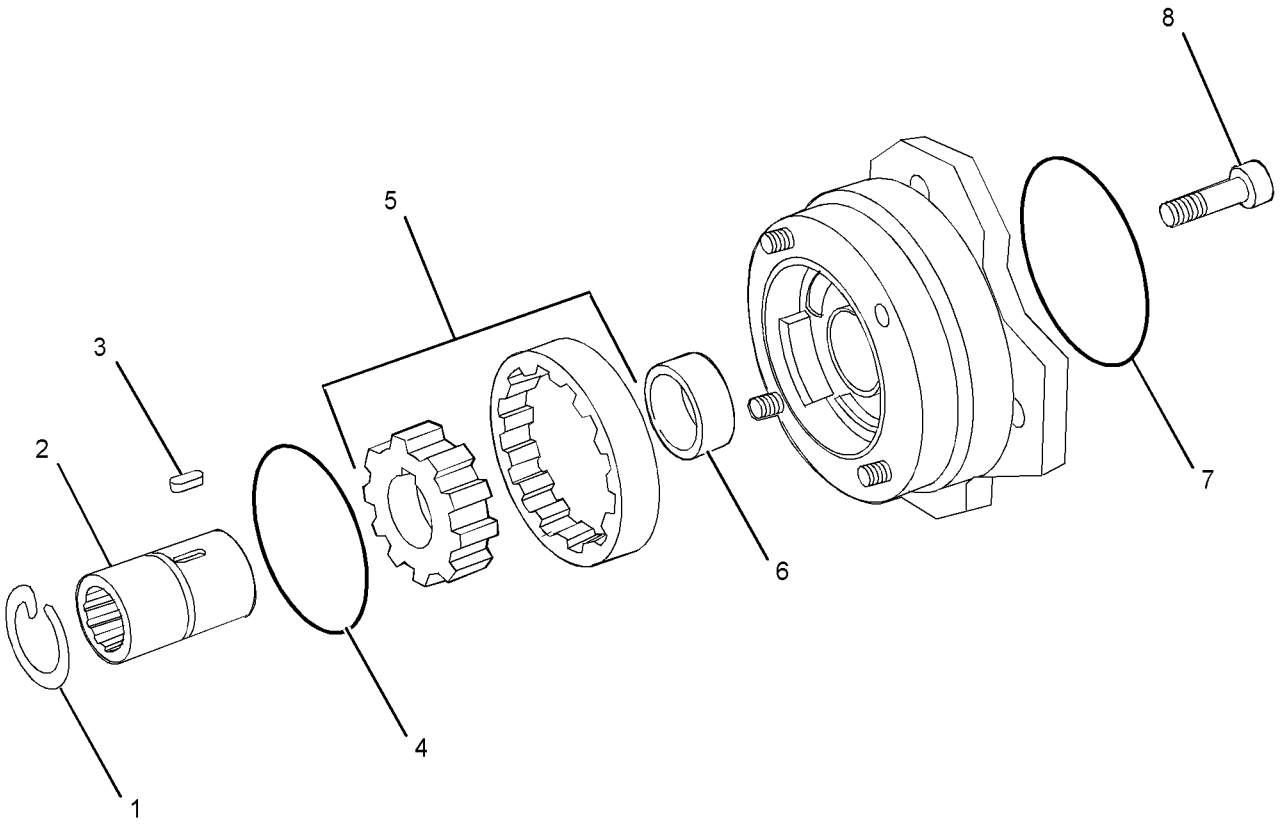

GRAPHIC #1 **<END>** g01927814

121-6758 PUMP GP-GEAR–STEERING

S/N: PJF1-UP

PART OF 247-9628 PUMP & MTG GP-STEERING

SMCS-5073 **i02171330**

NOTE	REF NO	GRAPHIC REF	PART NUMBER	QTY	PART NAME 1 2 3 4 5 6 (PRODUCT LEVEL)	SEE PAGE
	1	1	**140-6223**	1	KIT-RELIEF VALVE (STEERING GEAR PUMP)	
					AVAILABLE REPAIR KIT(S):	
			140-6145	1	KIT-SEAL (STEERING GEAR PUMP)	

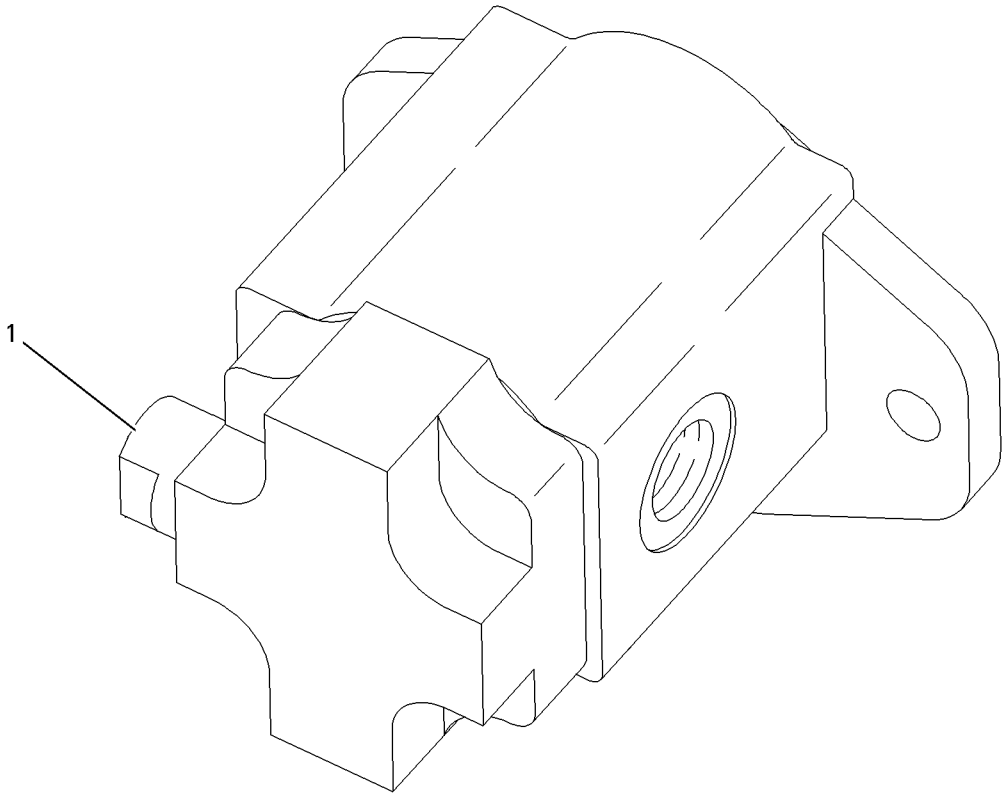

GRAPHIC #1 **<END>** g00647080

255-9152 PUMP GP-GEAR–AUXILIARY

S/N: PJF1-UP

PART OF 249-2711 PUMP & MTG GP-AUXILIARY

SMCS-5073 **i03577324**

NOTE	REF NO	GRAPHIC REF	PART NUMBER	QTY	PART NAME 1 2 3 4 5 6 (PRODUCT LEVEL)	SEE PAGE
J	1	1	**251-4749**	1	LOCKWASHER	
J	2	1	**251-4729**	1	KEY-WOODRUFF	
J	3	1	**4D-6432**	1	LOCKNUT (7/16-20-THD)	
					AVAILABLE REPAIR KIT(S):	
J			**255-0112**	1	KIT-GEAR (AUXILIARY PUMP)	
					(ALSO INCLUDES GEAR & SEAL-O-RING)	
H			**251-4685**	1	KIT-SEAL (AUXILIARY PUMP)	
					(INCLUDES SEALS, O-RINGS, LIP SEALS & BACKING STRIPS)	

H-KIT MARKED H SERVICES PARTS MARKED H
J-KIT MARKED J SERVICES PARTS MARKED J

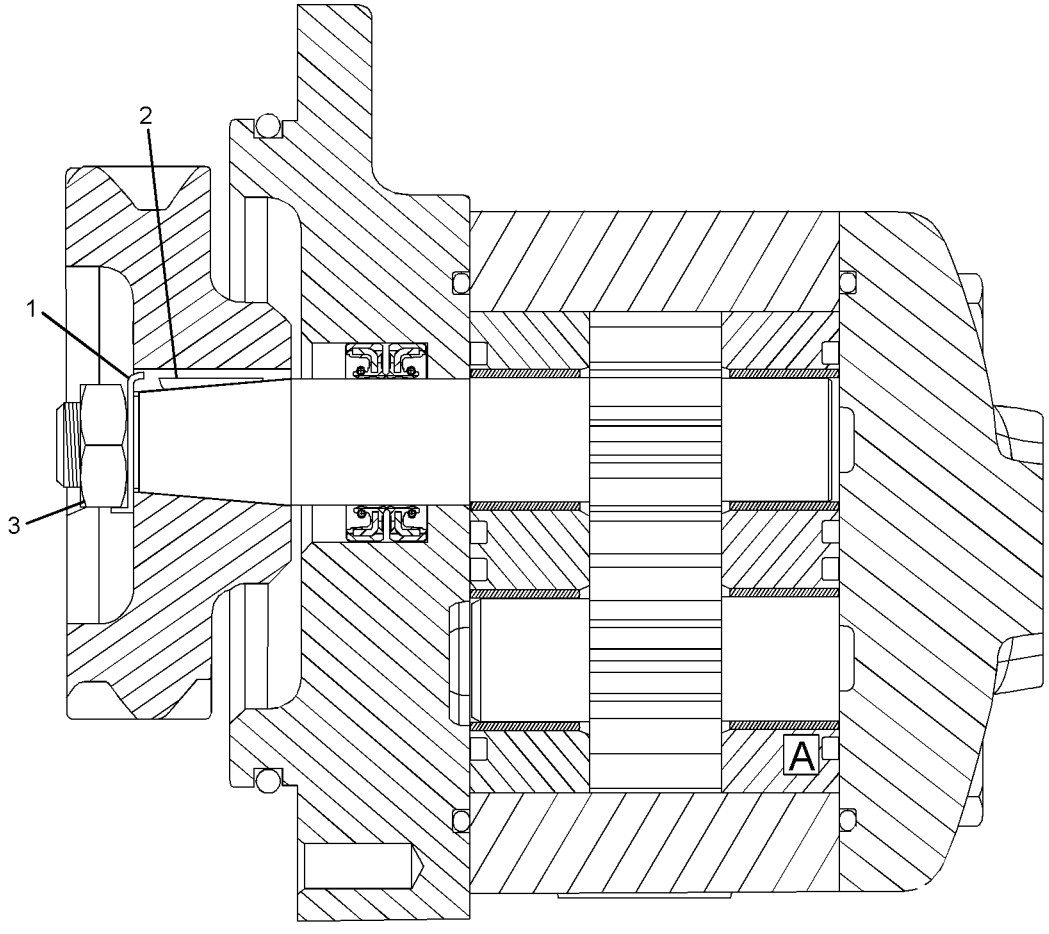

GRAPHIC #1 **<END>** g01905916

194-5326 PUMP GP-PISTON–PROPEL

S/N: PJF1-UP

PART OF 258-0889 PUMP & MTG GP-PROPEL

SMCS-5070 **i03577340**

NOTE	REF NO	GRAPHIC REF	PART NUMBER	QTY	PART NAME 1 2 3 4 5 6 (PRODUCT LEVEL)	SEE PAGE
	1	1	**102-8802**	1	KIT-RECEPTACLE (2-PIN)	
					(INCLUDES RECEPTACLE AS & WEDGE)	
	2	1	**186-3735**	2	PIN-CONNECTOR (16-GA TO 18-GA)	
Y	3	1	**194-5327**	1	PUMP GP-PISTON	272

Y-SEPARATE ILLUSTRATION

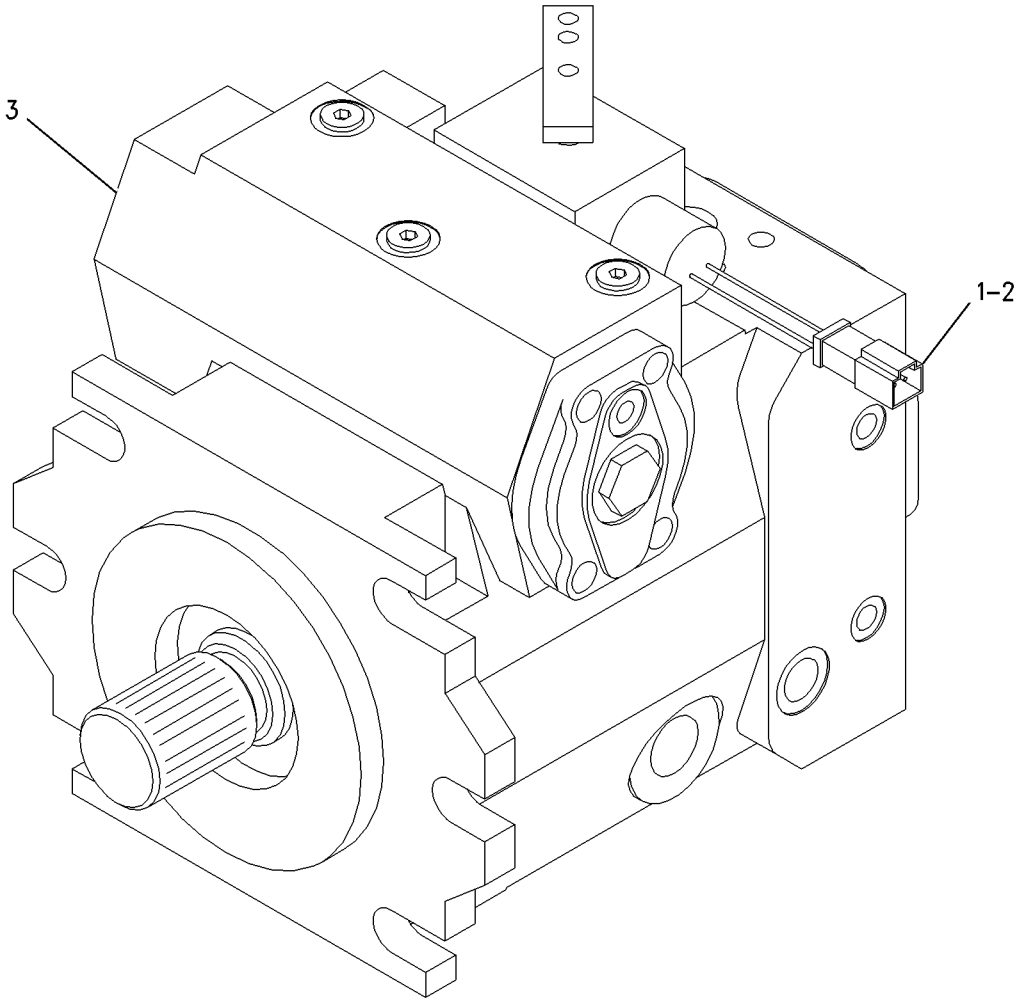

GRAPHIC #1 **<END>** g00801240

HYDRAULIC SYSTEM

194-5327 PUMP GP-PISTON–PROPEL

S/N: PJF1-275

PART OF 194-5326 PUMP GP-PISTON

SMCS-5070 **i03577341**

NOTE	REF NO	GRAPHIC REF	PART NUMBER	QTY	PART NAME 1 2 3 4 5 6 (PRODUCT LEVEL)	SEE PAGE
	1	1	**126-1638**	2	PIN-JOINT	
	2	1	**153-2152**	1	HOUSING	
	3	1	**112-4628**	2	SCREW	
	4	1	**9T-3928**	4	PLUG AS	
					(EACH INCLUDES)	
		1	**187-8001**	1	SEAL	
	5	1	**099-5845**	5	PLUG	
	6	1	**119-0963**	2	ORIFICE	
Y	7	1	**175-4391**	1	VALVE GP-PUMP CONTROL (PROPEL)	288
	8	1	**6E-4614**	2	PIN	
	9	1	**081-3801**	2	PLUG AS	
					(EACH INCLUDES)	
		1	**126-9092**	1	SEAL	
	10	1	**126-1661**	1	PLUG	
	11	1	**126-1645**	1	ORIFICE	
Y	12	1	**179-3271**	1	PUMP GP-CHARGE	268
Y	13	1	**140-3588**	1	VALVE GP-SPEED SENSING	292
	14	1	**208-2375**	1	ORIFICE	
	15	1	**112-4629**	1	SCREW	
Y	16	1	**133-1858**	1	HEAD GP-PUMP (PROPEL)	248
Y	17	1	**179-1307**	1	ROTATING GP-PUMP (PROPEL)	279
Y	18	1	**214-5830**	1	CONTROL GP-HYDRAULIC (PROPEL PISTON PUMP)	244
M	19	1	**6E-4385**	1	LOCKNUT (M12X1.5-THD)	
	20	1	**126-1643**	1	SCREW-ECCENTRIC	
	21	1	**123-7574**	1	SCREW-LOCK	

M-METRIC PART
Y-SEPARATE ILLUSTRATION

194-5327 PUMP GP-PISTON *(contd.)* **i03577341**

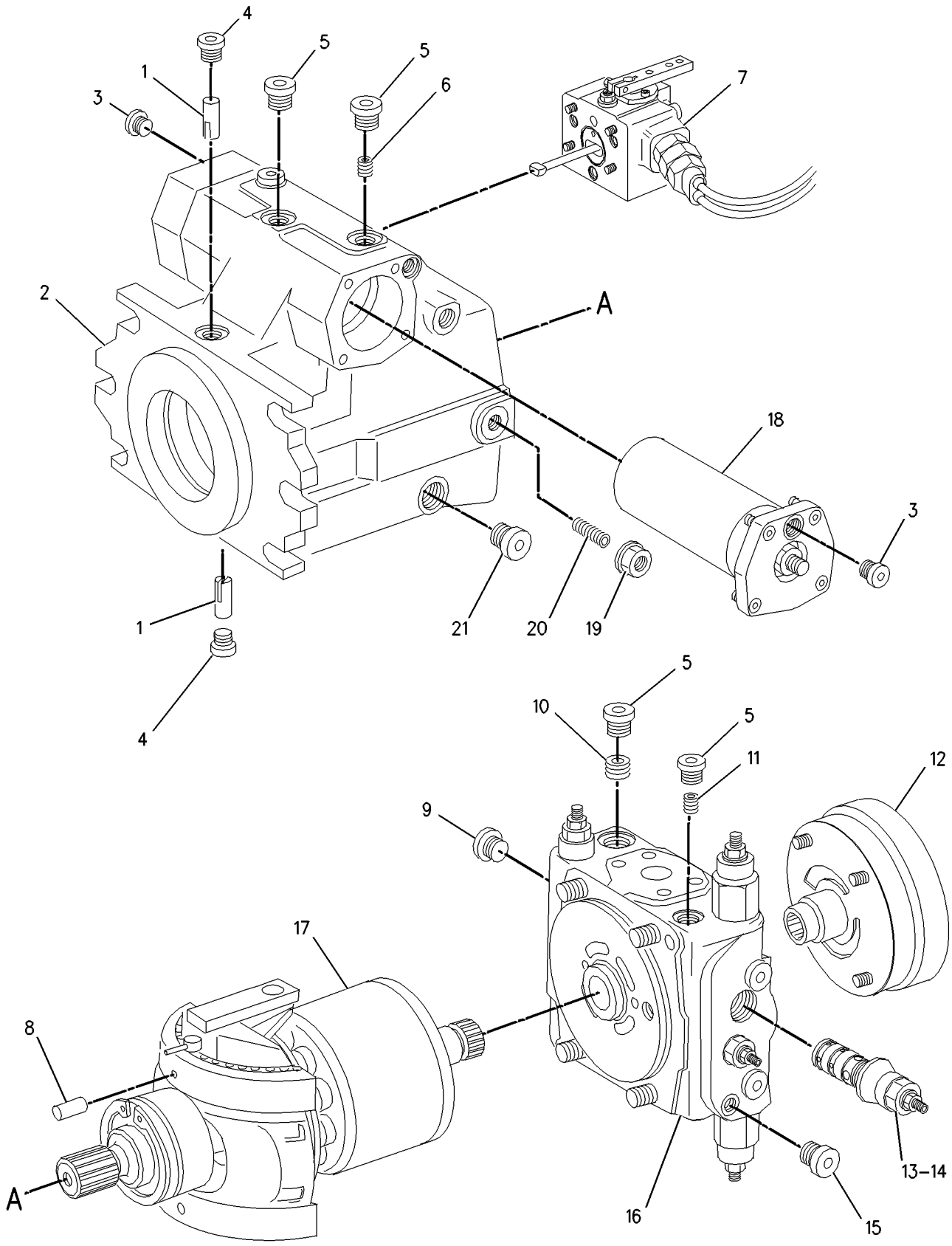

GRAPHIC #1 **<END>** g00883877

HYDRAULIC SYSTEM

194-5327 PUMP GP-PISTON—PROPEL

S/N: PJF276-UP

PART OF 194-5326 PUMP GP-PISTON

SMCS-5070 **i03577342**

NOTE	REF NO	GRAPHIC REF	PART NUMBER	QTY	PART NAME 1 2 3 4 5 6 (PRODUCT LEVEL)	SEE PAGE
	1	1	**126-1638**	2	PIN-JOINT	
	2	1	**153-2152**	1	HOUSING	
	3	1	**112-4628**	2	SCREW	
	4	1	**9T-3928**	4	PLUG AS	
					(EACH INCLUDES)	
		1	**187-8001**	1	SEAL	
	5	1	**099-5845**	5	PLUG	
	6	1	**119-0963**	2	ORIFICE	
Y	7	1	**175-4391**	1	VALVE GP-PUMP CONTROL (PROPEL)	288
C	8	1	**167-6805**	2	PIN	
	9	1	**081-3801**	2	PLUG AS	
					(EACH INCLUDES)	
		1	**126-9092**	1	SEAL	
	10	1	**126-1661**	1	PLUG	
	11	1	**126-1645**	1	ORIFICE	
Y	12	1	**179-3271**	1	PUMP GP-CHARGE	268
Y	13	1	**140-3588**	1	VALVE GP-SPEED SENSING	292
	14	1	**208-2375**	1	ORIFICE	
	15	1	**112-4629**	1	SCREW	
Y	16	1	**133-1858**	1	HEAD GP-PUMP (PROPEL)	248
CY	17	1	**256-8769**	1	ROTATING GP-PUMP (PROPEL)	281
Y	18	1	**214-5830**	1	CONTROL GP-HYDRAULIC (PROPEL PISTON PUMP)	244
M	19	1	**6E-4385**	1	LOCKNUT (M12X1.5-THD)	
	20	1	**126-1643**	1	SCREW-ECCENTRIC	
	21	1	**123-7574**	1	SCREW-LOCK	

C-CHANGE FROM PREVIOUS TYPE
M-METRIC PART
Y-SEPARATE ILLUSTRATION

194-5327 PUMP GP-PISTON *(contd.)* **i03577342**

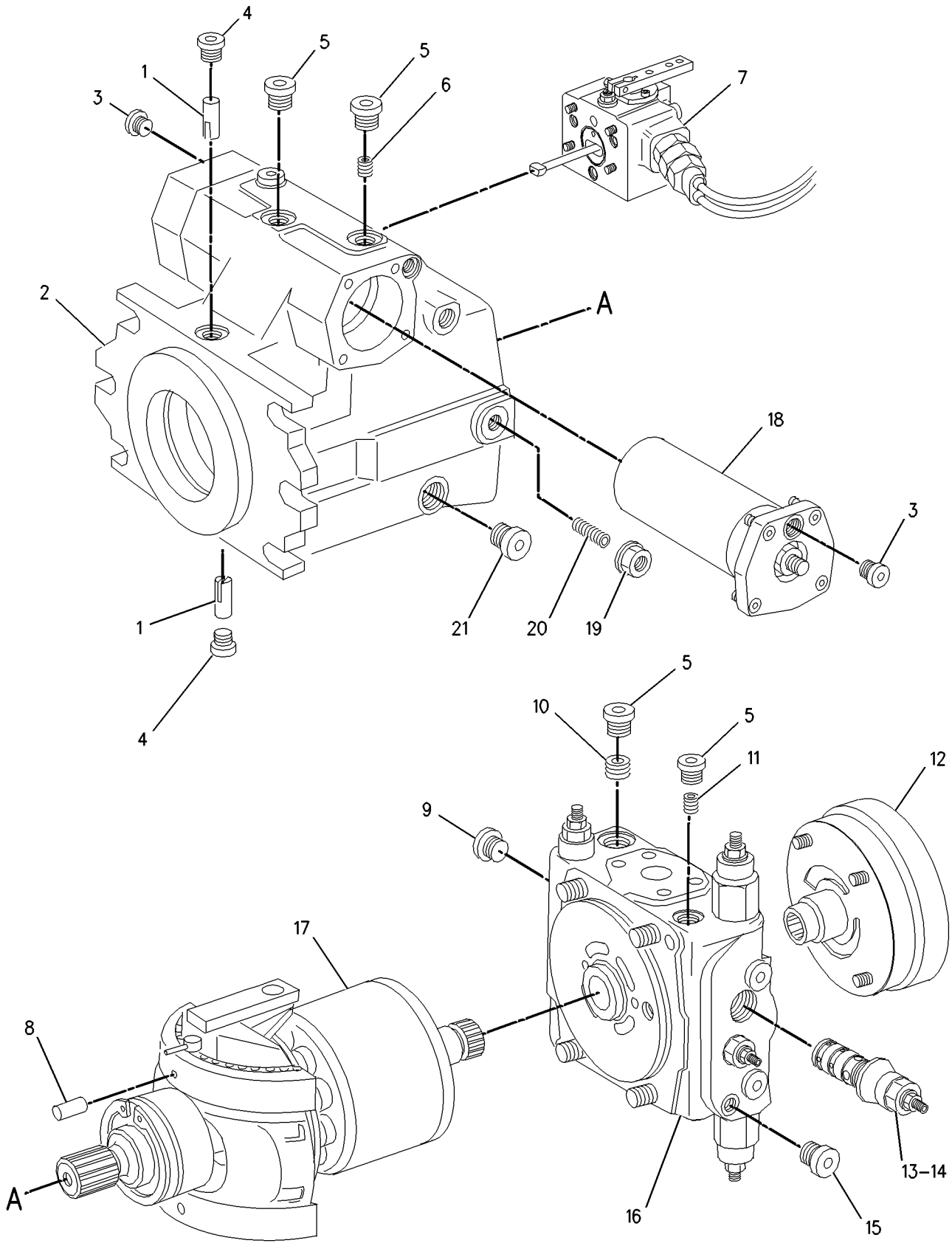

GRAPHIC #1 **<END>** g00883877

HYDRAULIC SYSTEM

137-4581 ROTATING GP-MOTOR–PROPEL

S/N: PJF1-257

PART OF 120-7527 MOTOR GP-PISTON

SMCS-5058 **i03427081**

NOTE	REF NO	GRAPHIC REF	PART NUMBER	QTY	PART NAME 1 2 3 4 5 6 (PRODUCT LEVEL)	SEE PAGE
	1	1	**137-4583**	1	PIN-CENTER	
	2	1	**137-4584**	7	PISTON	
	3	1	**6E-6350**	14	RING	
	4	1	**6E-6349**	1	PLATE-RETAINING	
	5	1	**113-4416**	14	SCREW	
	6	1	**137-4585**	1	SPRING	
	7	1	**137-4586**	1	KIT-SPRING (MOTOR ROTATING GROUP)	
					(INCLUDES SHIMS)	
	8	1	**6E-6336**	1	BARREL	
	9	1	**7R-3711**	1	LENS-CONTROL	

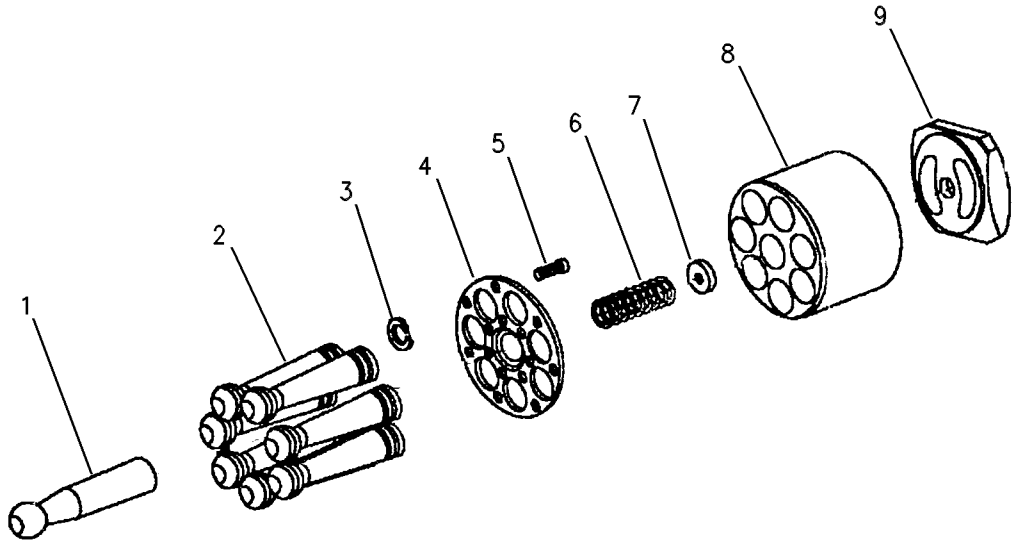

GRAPHIC #1 **<END>** g00265906

252-6320 ROTATING GP-MOTOR–CONTROL

S/N: PJF258-UP

PART OF 260-1329 MOTOR GP-PISTON

SMCS-5058 **i03577343**

NOTE	REF NO	GRAPHIC REF	PART NUMBER	QTY	PART NAME 1 2 3 4 5 6 (PRODUCT LEVEL)	SEE PAGE
	1	1	**141-0243**	1	RING-SNAP	
	2	1	**141-0244**	1	BEARING AS	
	3	1	**133-8929**	1	BEARING AS	
	4	1	**249-5557**	1	KIT-PUMP BARREL (PROPEL MOTOR)	
B	5	1	**141-0247**	1	SHIM (3.5-MM THK)	
B		1	**141-0248**	1	SHIM (3.6-MM THK)	
B		1	**141-0249**	1	SHIM (3.7-MM THK)	
B		1	**141-0250**	1	SHIM (3.8-MM THK)	
B		1	**141-0251**	1	SHIM (3.9-MM THK)	
B		1	**141-0252**	1	SHIM (4-MM THK)	
B	6	1	**141-0235**	1	SHIM (2.65-MM THK)	
B		1	**141-0236**	1	SHIM (2.7-MM THK)	
B		1	**141-0237**	1	SHIM (2.75-MM THK)	
B		1	**141-0238**	1	SHIM (2.8-MM THK)	
B		1	**141-0239**	1	SHIM (2.85-MM THK)	
B		1	**141-0240**	1	SHIM (2.9-MM THK)	
B		1	**141-0241**	1	SHIM (2.95-MM THK)	
B		1	**141-0242**	1	SHIM (3-MM THK)	

PARTS SHOWN IN GRAPHIC(S) WITHOUT A REFERENCE NUMBER ARE NOT SERVICED SEPARATELY

B-USE AS REQUIRED

252-6320 **ROTATING GP-MOTOR** *(contd.)* **i03577343**

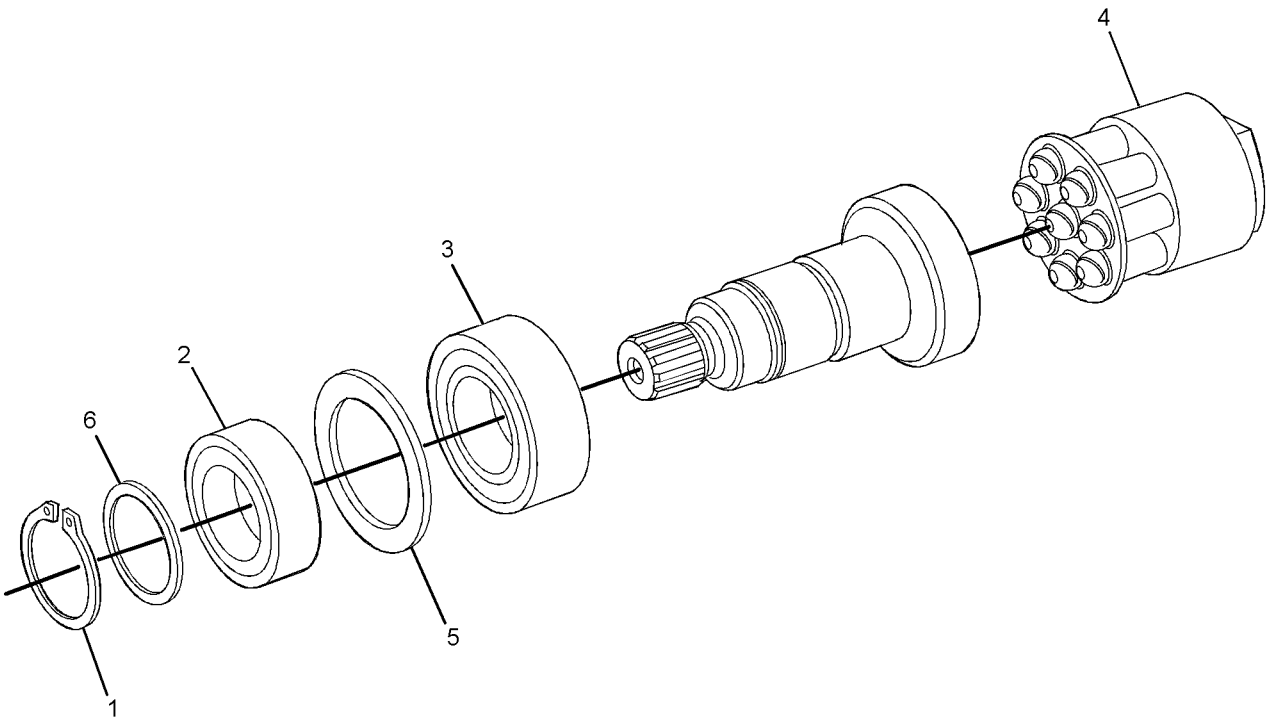

GRAPHIC #1 **<END>** g01905933

179-1307 ROTATING GP-PUMP–PROPEL PISTON PUMP

S/N: PJF1-275

PART OF 194-5327 PUMP GP-PISTON

SMCS-5070 **i01956744**

NOTE	REF NO	GRAPHIC REF	PART NUMBER	QTY	PART NAME 1 2 3 4 5 6 (PRODUCT LEVEL)	SEE PAGE
	1	1	**159-9854**	2	RING-RETAINING	
	2	1	**135-8807**	1	SEAL-SHAFT	
	3	1	**135-8059**	1	SHAFT	
	4	1	**142-9439**	1	BEARING AS	
	5	1	**6V-5201**	1	RING-RETAINING	
	6	1	**126-1413**	1	LINER-BEARING	
	7	1	**135-8051**	1	CRADLE-BEARING	
	8	1	**135-8052**	2	WIRE	
	9	1	**135-8053**	1	LEVER	
	10	1	**179-2934**	1	CYLINDER	
	11	1	**114-4270**	1	RING-RETAINING	
	12	1	**135-8054**	2	SHIM	
	13	1	**126-1416**	1	SPRING	
	14	1	**126-1401**	1	SPRING SET	
B	15	1	**126-1405**	1	SHIM (1.2-MM THK)	
B		1	**126-1406**	1	SHIM (1-MM THK)	
B		1	**126-1407**	1	SHIM (0.8-MM THK)	
B		1	**126-1408**	1	SHIM (0.6-MM THK)	
	16	1	**126-1410**	1	RETAINER-BALL	
	17	1	**126-1409**	1	PLATE-RETAINING	
	18	1	**126-1400**	9	PISTON AS	

B-USE AS REQUIRED

179-1307 ROTATING GP-PUMP *(contd.)* i01956744

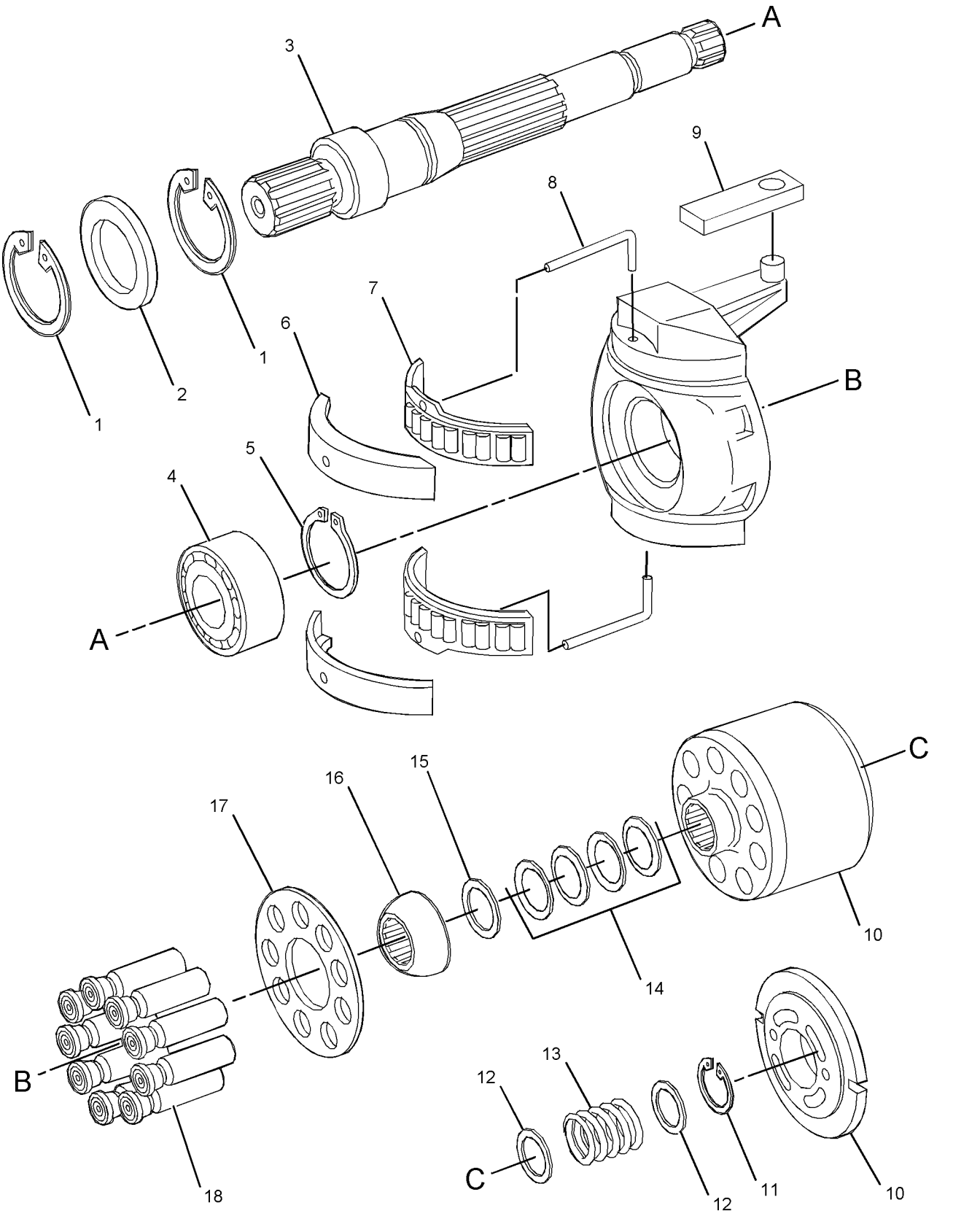

GRAPHIC #1 **<END>** g01017249

256-8769 ROTATING GP-PUMP–PROPEL PISTON PUMP

S/N: PJF276-UP

PART OF 194-5327 PUMP GP-PISTON

SMCS-5070 **i03602963**

NOTE	REF NO	GRAPHIC REF	PART NUMBER	QTY	PART NAME 1 2 3 4 5 6 (PRODUCT LEVEL)	SEE PAGE
	1	1	**159-9854**	2	RING-RETAINING	
	2	1	**135-8807**	1	SEAL-SHAFT	
	3	1	**142-9439**	1	BEARING AS	
	4	1	**6V-5201**	1	RING-RETAINING	
J	5	1	**262-7272**	1	PLATE-CONTROL	
J	6	1	**114-4270**	1	RING-RETAINING	
BJ	7	1	**135-8054**	2	SHIM	
BJ	8	1	**126-1408**	1	SHIM (0.6-MM THK)	
J	9	1	**126-1401**	1	SPRING SET	
BJ	10	1	**126-1405**	1	SHIM (1.2-MM THK)	
BJ	11	1	**126-1406**	1	SHIM (1-MM THK)	
BJ	12	1	**126-1407**	1	SHIM (0.8-MM THK)	
					PARTS SHOWN IN GRAPHIC(S) WITHOUT A REFERENCE NUMBER ARE NOT SERVICED SEPARATELY	
					AVAILABLE REPAIR KIT(S):	
J			**262-7293**	1	KIT-PUMP ROTATING GROUP (ROTATING GROUP)	

B-USE AS REQUIRED
J-KIT MARKED J SERVICES PART(S) MARKED J

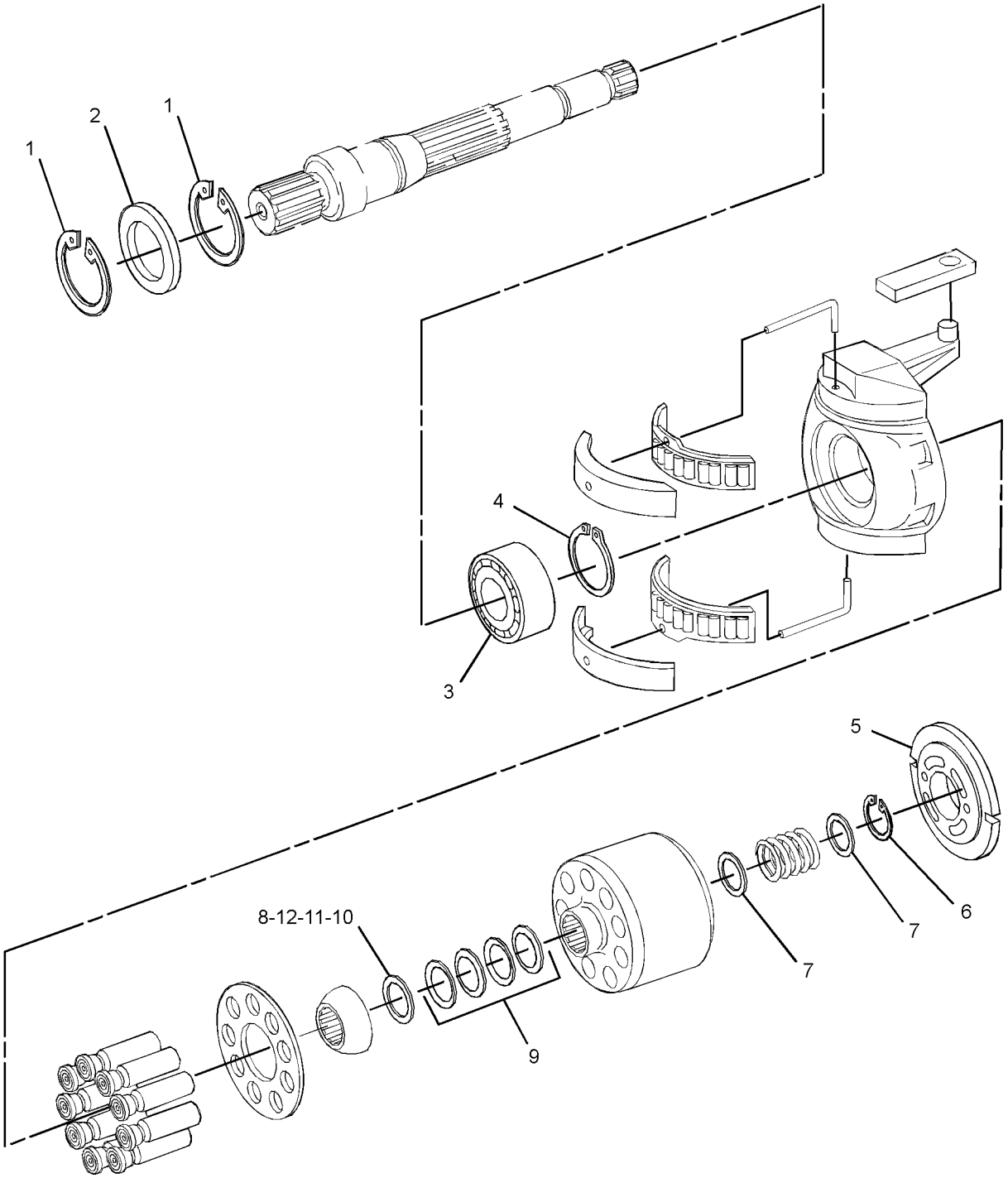

GRAPHIC #1 **<END>** g01927813

257-0023 STRAINER GP–BRAKE, DIFFERENTIAL FLUSHING

S/N: PJF1-UP

PART OF 246-9028 HYDRAULIC AR

SMCS-5050 **i02173142**

NOTE	REF NO	GRAPHIC REF	PART NUMBER	QTY	PART NAME 1 2 3 4 5 6 (PRODUCT LEVEL)	SEE PAGE
	1	1	**7R-7942**	2	CLAMP	
	2	1	**7R-7952**	1	COVER	
	3	1	**154-0868**	1	SCREEN-SUCTION (HYDRAULIC OIL)	
	4	1	**216-4365**	1	HOUSING	
	5	1	*148-8313*	1	ADAPTER AS	
		1	**3K-0360**	1	SEAL-O-RING	
		1	**5P-6944**	1	ADAPTER	
	6	1	*148-8439*	1	TEE AS	
		1	**3J-1907**	1	SEAL-O-RING	
		1	**6V-8397**	2	SEAL-O-RING	
		1	**6V-8774**	1	TEE	
	7	1	**3K-0360**	1	SEAL-O-RING	
	8	1	**6V-8398**	1	SEAL-O-RING	
	9	1	**6V-8639**	1	CONNECTOR	
M	10	1	**8T-3844**	2	BOLT (M6X1X70-MM)	

M-METRIC PART

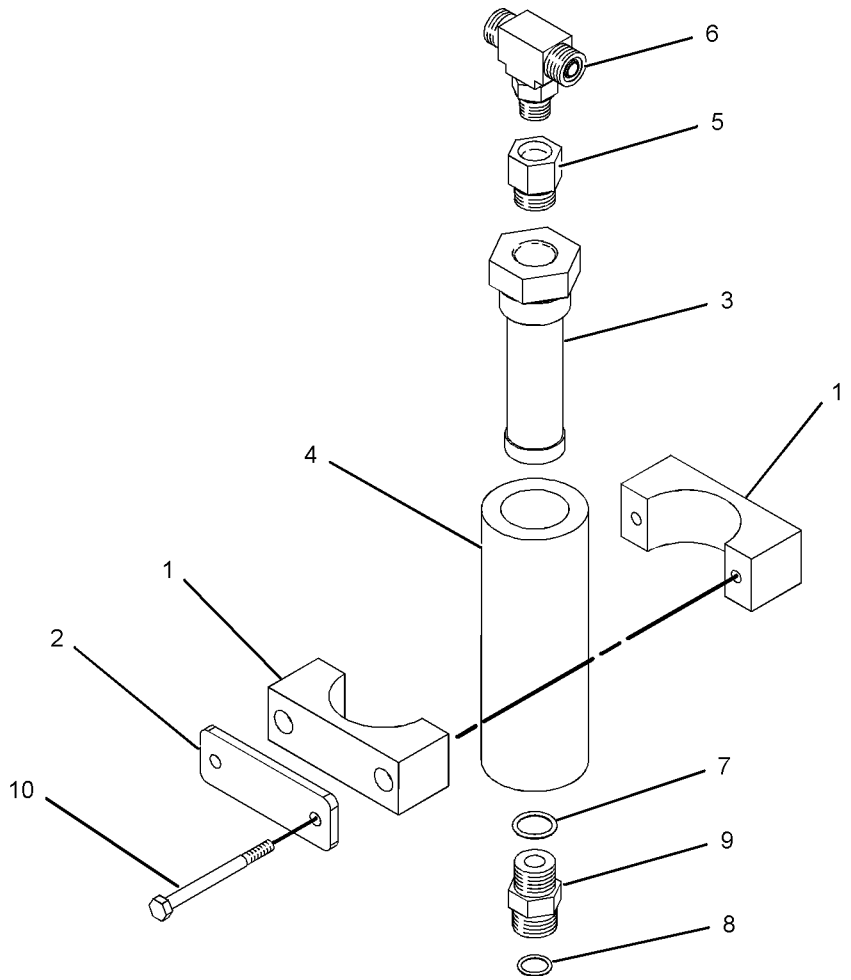

GRAPHIC #1 **<END>** g01091005

HYDRAULIC SYSTEM

246-9018 TANK & MTG GP-HYDRAULIC

S/N: PJF1-UP

PART OF 246-8992 CHASSIS AR

SMCS-5056 **i02593744**

NOTE	REF NO	GRAPHIC REF	PART NUMBER	QTY	PART NAME 1 2 3 4 5 6 (PRODUCT LEVEL)	SEE PAGE
	1	1	**5E-8934**	1	VENT (HYDRAULIC TANK)	
	2	1	**8N-3844**	1	SENDER-TEMPERATURE (HYDRAULIC OIL)	
	3	1	**125-8198**	1	GAUGE-LIQUID LEVEL (HYDRAULIC TANK)	
	4	1	**145-0878**	3	SCREEN-SUCTION (HYDRAULIC OIL)	
	5	1	*241-6151*	1	TEE AS	
		1	**6V-9746**	2	SEAL-O-RING	
		1	**7M-8485**	1	SEAL-O-RING	
		1	**102-1384**	1	TEE-FACE SEAL	
	6	1	*241-6185*	1	PLUG AS	
		1	**3D-2824**	1	SEAL-O-RING	
		1	**5P-9436**	1	PLUG	
Y	7	1	**246-9019**	1	TANK GP-HYDRAULIC	286
	8	1	*148-8335*	1	CONNECTOR AS	
		1	**5K-9090**	1	SEAL-O-RING	
		1	**6V-8635**	1	CONNECTOR	
		1	**7M-8485**	1	SEAL-O-RING	
	9	1	*148-8339*	1	CONNECTOR AS	
		1	**6V-8716**	1	CONNECTOR	
		1	**6V-9746**	1	SEAL-O-RING	
		1	**7M-8485**	1	SEAL-O-RING	
	10	1	*148-8357*	2	ELBOW AS	
					(EACH INCLUDES)	
		1	**5K-9090**	1	SEAL-O-RING	
		1	**6V-9008**	1	ELBOW	
		1	**7M-8485**	1	SEAL-O-RING	
	11	1	*148-8360*	2	ELBOW AS	
					(EACH INCLUDES)	
		1	**6V-9182**	1	ELBOW	
		1	**6V-9746**	1	SEAL-O-RING	
		1	**7M-8485**	1	SEAL-O-RING	
	12	1	**3J-1907**	1	SEAL-O-RING	
	13	1	**8C-3051**	1	ADAPTER	
	14	1	**8T-4121**	2	WASHER-HARD (11X21X2.5-MM THK)	
M	15	1	**8T-4136**	2	BOLT (M10X1.5X25-MM)	
	16	1	**7M-8485**	1	SEAL-O-RING	

M-METRIC PART
Y-SEPARATE ILLUSTRATION

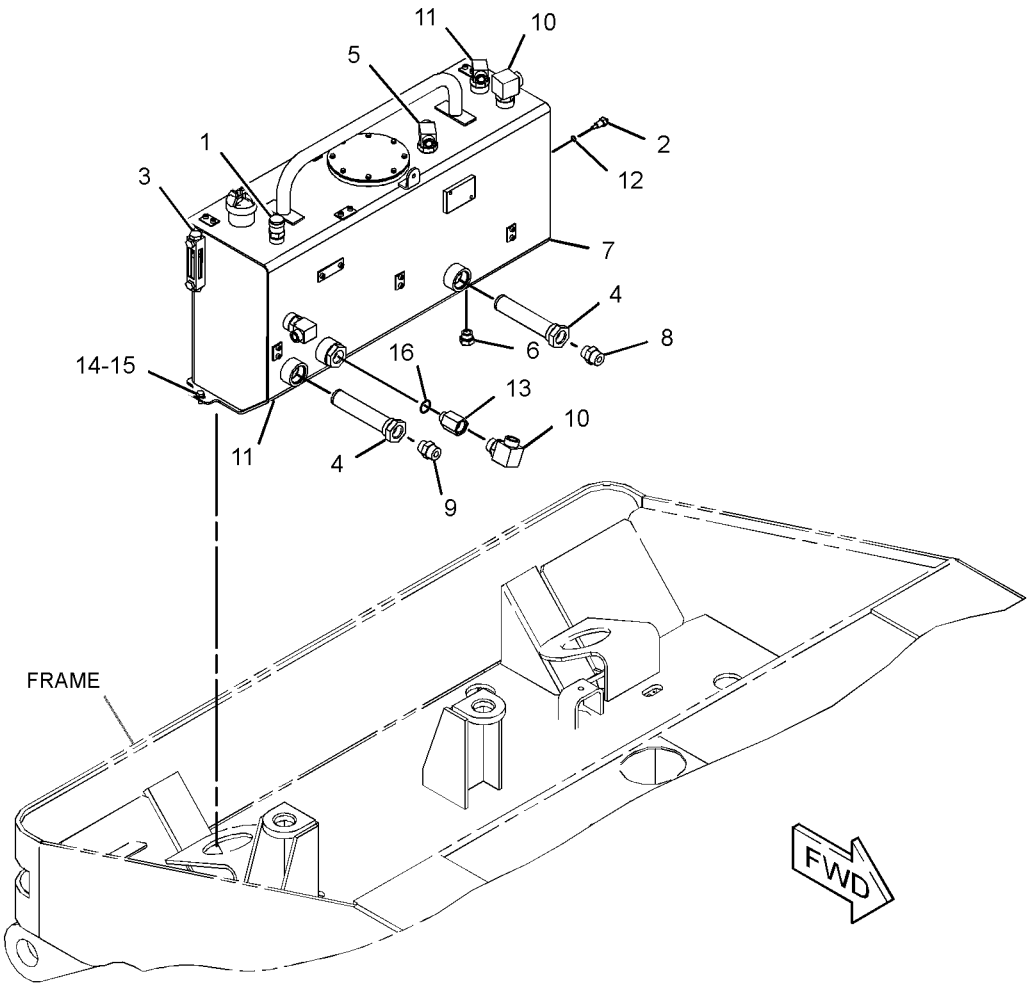

GRAPHIC #1 **<END>** g01276390

HYDRAULIC SYSTEM

246-9019 TANK GP-HYDRAULIC

S/N: PJF1-UP

PART OF 246-9018 TANK & MTG GP-HYDRAULIC

SMCS-5056 **i02144548**

NOTE	REF NO	GRAPHIC REF	PART NUMBER	QTY	PART NAME 1 2 3 4 5 6 (PRODUCT LEVEL)	SEE PAGE
	1	1	**5E-9671**	1	GASKET	
Y	2	1	*127-5113*	1	CAP & STRAINER GP-HYD OIL FILL	243
	3	1	**144-7715**	1	COVER	
	4	1	**246-9020**	1	TANK AS-HYDRAULIC	
M	5	1	**8T-4171**	8	BOLT (M6X1X12-MM)	
	6	1	**9X-8256**	8	WASHER (6.6X12X2-MM THK)	

M-METRIC PART
Y-SEPARATE ILLUSTRATION

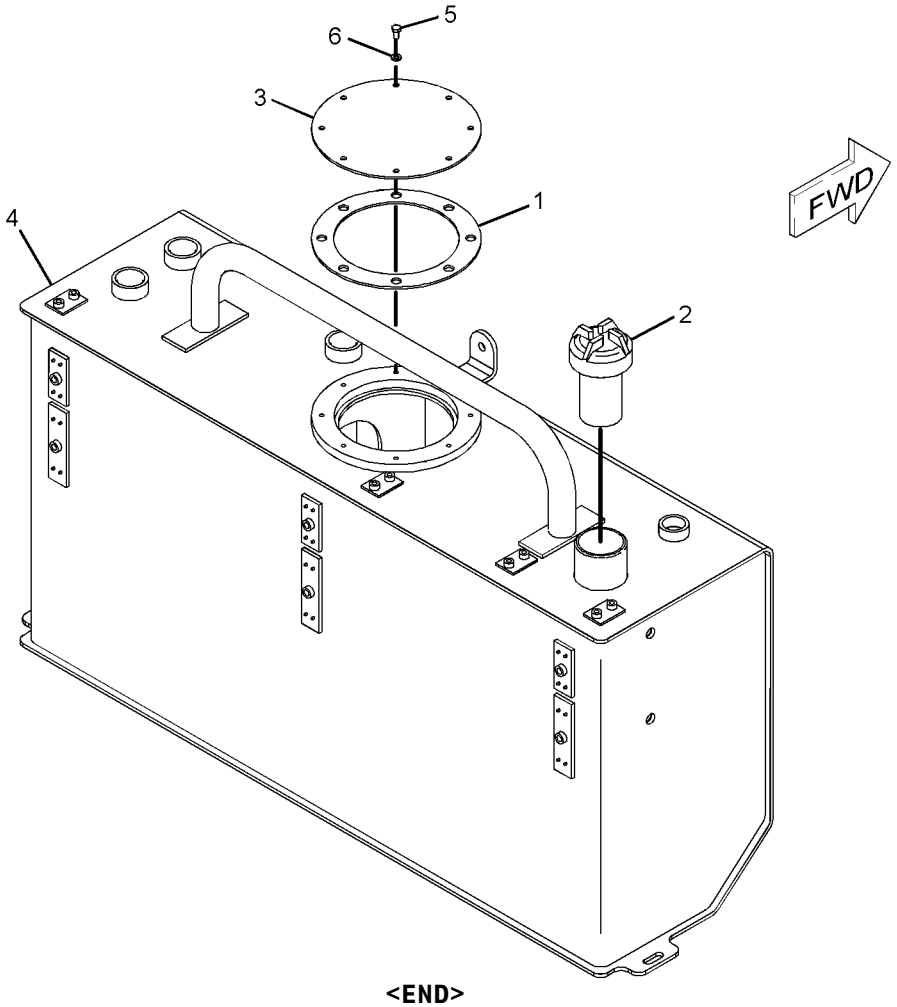

GRAPHIC #1 **<END>** g01092455

139-7747 VALVE GP-FLUSHING—PROPEL MOTOR

S/N: PJF1-UP

PART OF 120-7527, 260-1329 MOTOR GP-PISTON

SMCS-5051, 5058, 5066 **i00526804**

NOTE	REF NO	GRAPHIC REF	PART NUMBER	QTY	PART NAME 1 2 3 4 5 6 (PRODUCT LEVEL)	SEE PAGE
	1	1	**125-4572**	1	RING-RETAINING	
	2	1	**124-9898**	1	PLUG	
	3	1	**124-9901**	1	SPRING	
	4	1	**124-9904**	1	SHIM (1-MM THK)	
	5	1	**6V-8351**	1	SEAL-O-RING	
	6	1	**124-9896**	1	VALVE-PISTON	
	7	1	**124-9908**	1	ORIFICE	
	8	1	**124-9891**	2	PLUG	
	9	1	**124-9900**	2	SPRING	
	10	1	**107-3117**	2	SEAL-O-RING	
	11	1	**124-9899**	2	SPACER	
	12	1	**139-7761**	1	SPOOL	
	13	1	**139-7762**	1	BODY	
M	14	1	**8T-8442**	4	BOLT-SOCKET HEAD (M6X1X30-MM)	

M-METRIC PART

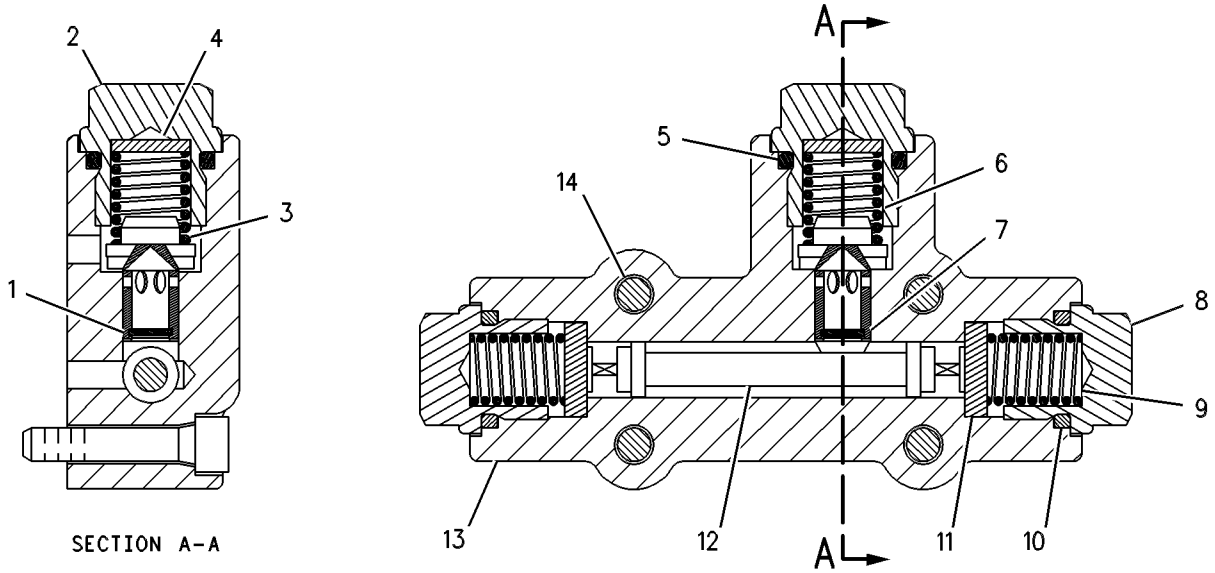

GRAPHIC #1 **<END>** g00268384

HYDRAULIC SYSTEM

175-4391 VALVE GP-PUMP CONTROL–PROPEL

S/N: PJF1-UP

PART OF 194-5327 PUMP GP-PISTON

SMCS-5455 **i02079710**

NOTE	REF NO	GRAPHIC REF	PART NUMBER	QTY	PART NAME 1 2 3 4 5 6 (PRODUCT LEVEL)	SEE PAGE
	1	1	**6V-5586**	1	SEAL-O-RING	
	2	1	**6V-8397**	3	SEAL-O-RING	
	3	1	**111-8892**	1	PIN	
M	4	1	**6E-1607**	1	LOCKNUT-SEALING	
	5	1	**8J-2413**	1	SEAL-O-RING	
	6	1	**135-8070**	1	SHIM	
M	7	1	**099-0822**	2	BOLT-SOCKET HEAD (M5X0.8X10-MM)	
M	8	1	**8T-0269**	2	BOLT-SOCKET HEAD (M6X1X20-MM)	
M	9	1	**134-1374**	1	BOLT-SOCKET HEAD (M5X0.8X20-MM)	
	10	1	**135-8069**	1	HANDLE	
	11	1	**6M-5062**	2	SEAL-O-RING	
	12	1	**179-2130**	1	PIN-ROLLER	
M	13	1	**105-3486**	4	BOLT-SOCKET HEAD (M6X1X50-MM)	
	14	1	**160-1757**	1	PLUG	
	15	1	**135-8072**	1	SWITCH-LIMIT	
	16	1	**135-8073**	1	NUT-JAM (M20X2.5-THD)	
	17	1	**135-8071**	1	ADAPTER	
	18	1	**4J-5351**	1	SEAL-O-RING	
	19	1	**6H-9691**	1	SEAL-O-RING	
	20	1	**5E-7045**	1	PIN-CYLINDER	
	21	1	**4K-2039**	2	SEAL-O-RING	
	22	1	**2Y-2347**	1	SEAL-O-RING	
	23	1	**223-0673**	1	SHIM (2-MM THK)	

M-METRIC PART

175-4391 VALVE GP-PUMP CONTROL *(contd.)* **i02079710**

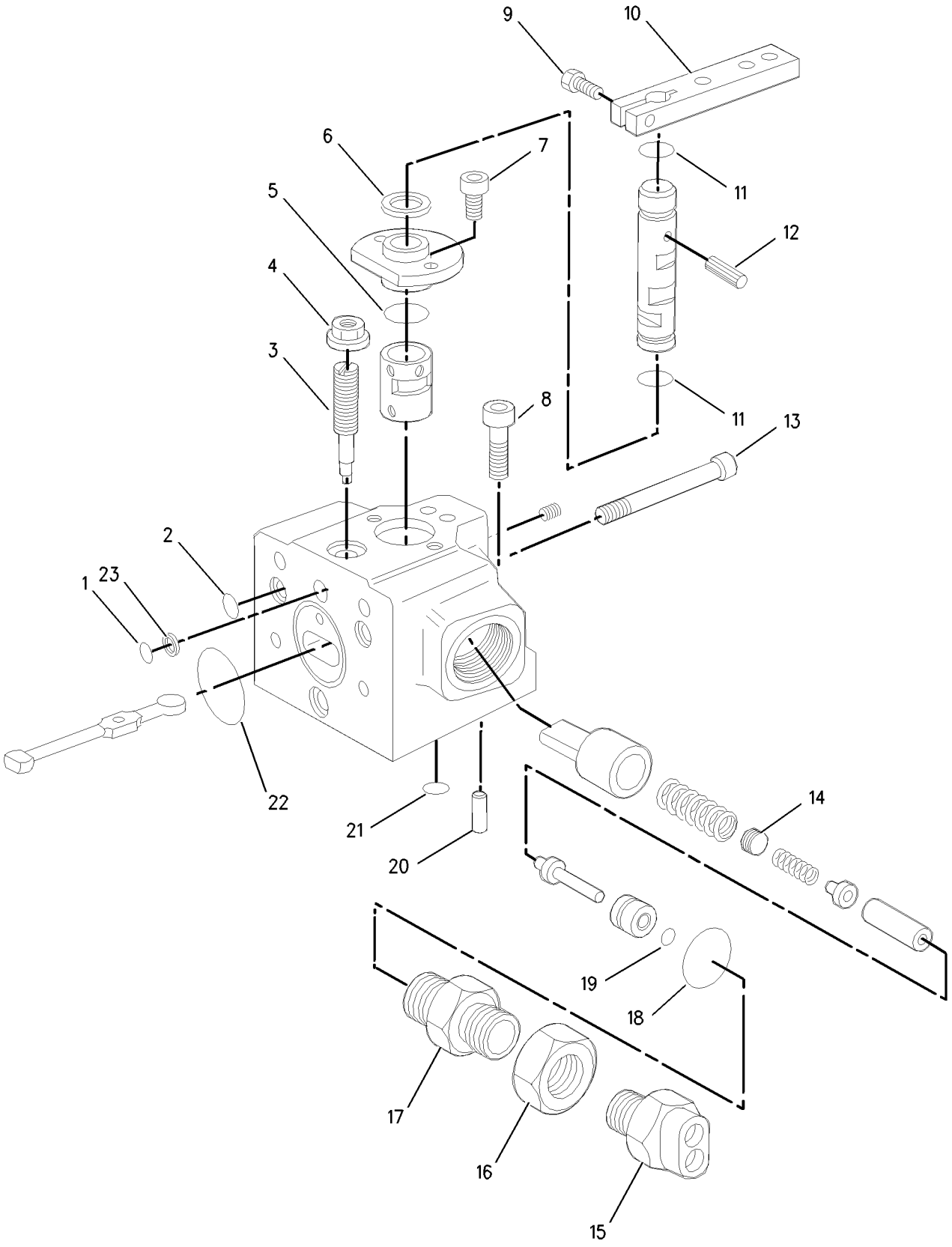

GRAPHIC #1 **<END>** g00898672

HYDRAULIC SYSTEM

6E-4402 VALVE GP-RELIEF–CHARGE PRESSURE

S/N: PJF1-UP

PART OF 133-1858 HEAD GP-PUMP

SMCS-5069, 5117 **i02591010**

NOTE	REF NO	GRAPHIC REF	PART NUMBER	QTY	PART NAME 1 2 3 4 5 6 (PRODUCT LEVEL)	SEE PAGE
	1	1	**202-2342**	1	SPRING	
	2	1	**6E-4404**	1	VALVE-POPPET	
	3	1	**183-8410**	1	SCREW	
	4	1	**6E-4403**	1	PLUG	
M	5	1	**6E-4240**	1	NUT-SEALING (M10X1-THD)	
	6	1	**6V-8352**	1	SEAL-O-RING	
	7	1	**167-7715**	1	RETAINER-SPRING	

M-METRIC PART

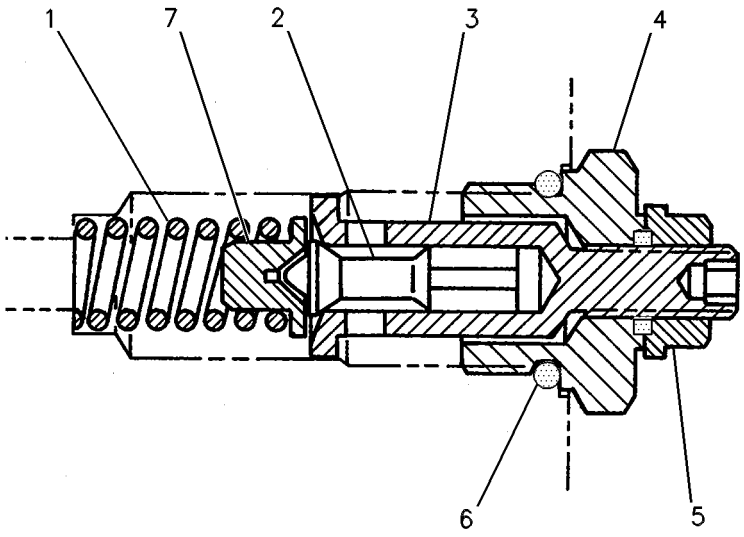

GRAPHIC #1 **<END>** g00252131

126-1424 VALVE GP-RELIEF–PRESSURE OVERRIDE

S/N: PJF1-UP

PART OF 133-1858 HEAD GP-PUMP

SMCS-5069, 5117 **i02070624**

NOTE	REF NO	GRAPHIC REF	PART NUMBER	QTY	PART NAME 1 2 3 4 5 6 (PRODUCT LEVEL)	SEE PAGE
M	1	1	**6E-4401**	1	SETSCREW-ADJUSTMENT	
	2	1	**123-7591**	1	SEAL-O-RING	
M	3	1	**6E-1607**	1	LOCKNUT-SEALING	
	4	1	**112-4718**	1	SEAL-O-RING	

M-METRIC PART

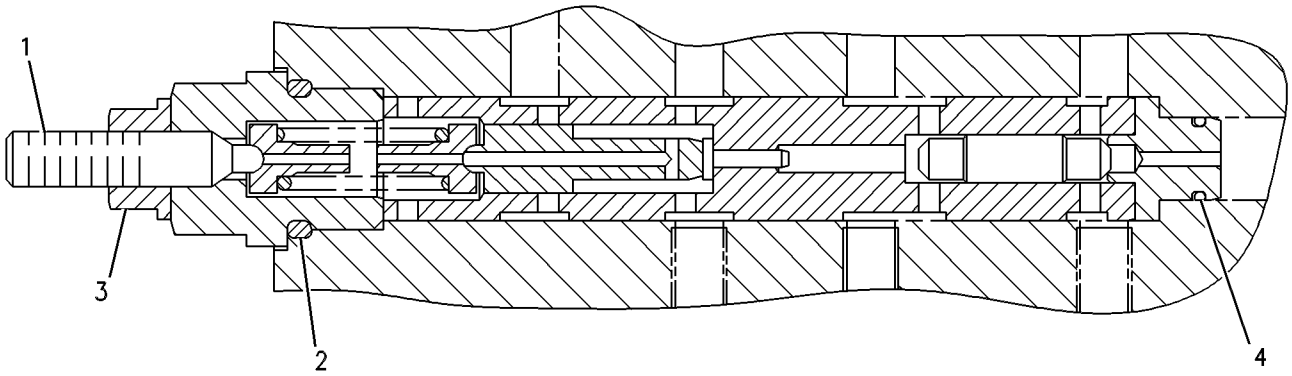

GRAPHIC #1 **<END>** g00280542

HYDRAULIC SYSTEM

140-3588 VALVE GP-SPEED SENSING

S/N: PJF1-UP

PART OF 194-5327 PUMP GP-PISTON

SMCS-3205, 5070 **i01710814**

NOTE	REF NO	GRAPHIC REF	PART NUMBER	QTY	PART NAME 1 2 3 4 5 6 (PRODUCT LEVEL)	SEE PAGE
	1	1	**123-7576**	1	SEAL-O-RING	
M	2	1	**6E-1607**	1	LOCKNUT-SEALING	
	3	1	**126-8882**	1	RING-RETAINING	
	4	1	**126-8883**	1	RING-RETAINING	
	5	1	**126-1473**	1	NUT	

M-METRIC PART

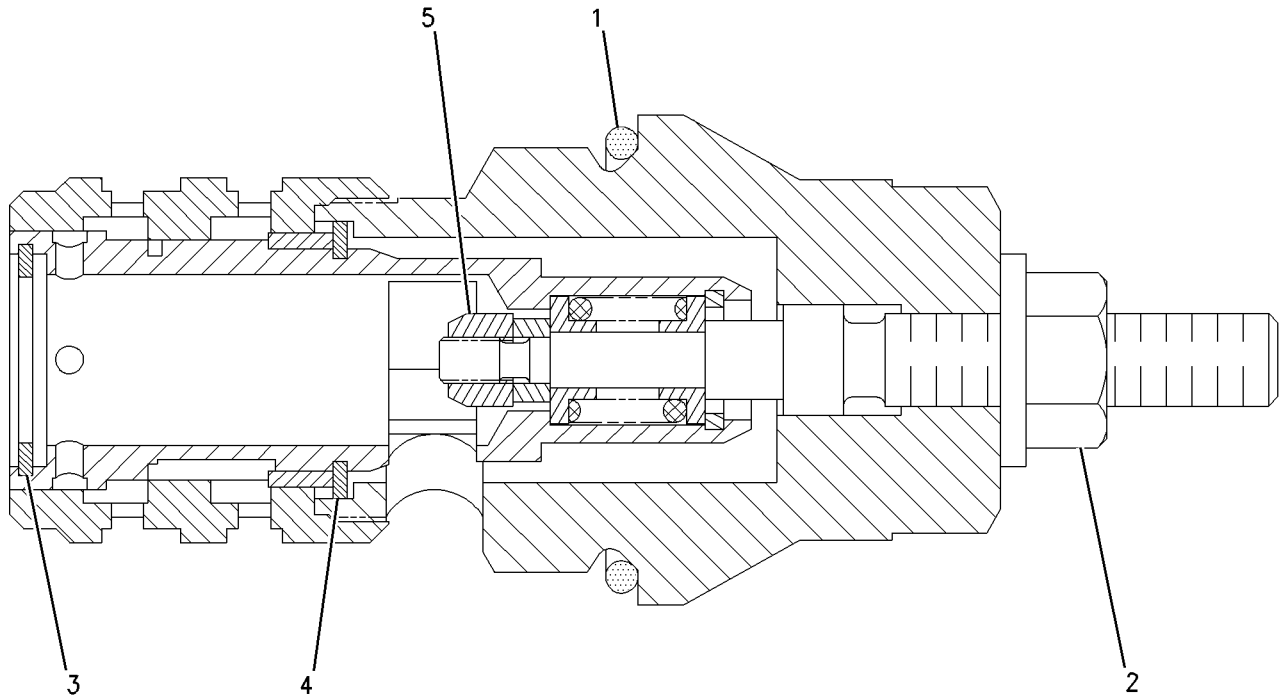

GRAPHIC #1 **<END>** g00883124

WATER SYSTEM

161-8211 FILTER GP-WATER

S/N: PJF1-UP

PART OF 256-2424 SPRAY GP-WATER

SMCS-5612 **i02066149**

NOTE	REF NO	GRAPHIC REF	PART NUMBER	QTY	PART NAME 1 2 3 4 5 6 (PRODUCT LEVEL)	SEE PAGE
	1	1	**148-3046**	1	FILTER-WATER	
	2	1	**5F-8000**	1	SEAL-O-RING	
	3	1	**2K-8199**	2	SEAL-O-RING	

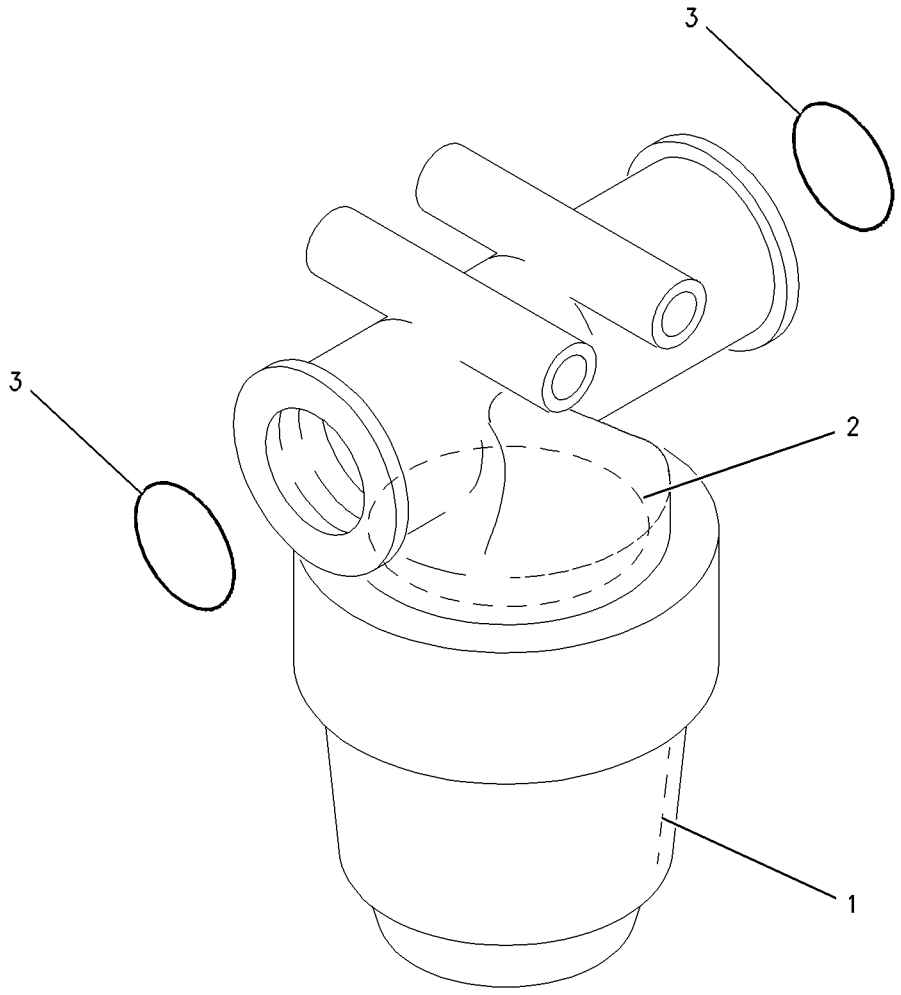

GRAPHIC #1 **<END>** g00636905

WATER SYSTEM

131-2392 MAT & MTG GP-WATER

S/N: PJF1-UP

PART OF 246-8992 CHASSIS AR

SMCS-6610 **i03602962**

NOTE	REF NO	GRAPHIC REF	PART NUMBER	QTY	PART NAME 1 2 3 4 5 6 (PRODUCT LEVEL)	SEE PAGE
	1	1	**3B-4627**	6	PIN-COTTER	
	2	1	**7K-1181**	70	STRAP-CABLE	
	3	1	**3W-9402**	2	PIN	
	4	1	**008-3843**	8	PIN	
	5	1	**156-1661**	1	SUPPORT AS (RH)	
	6	1	**155-9830**	3	BRACKET AS	
	7	1	**156-1662**	1	SUPPORT AS (LH)	
	8	1	**149-0796**	6	PIN	
	9	1	**149-8761**	7	MAT-WATER	

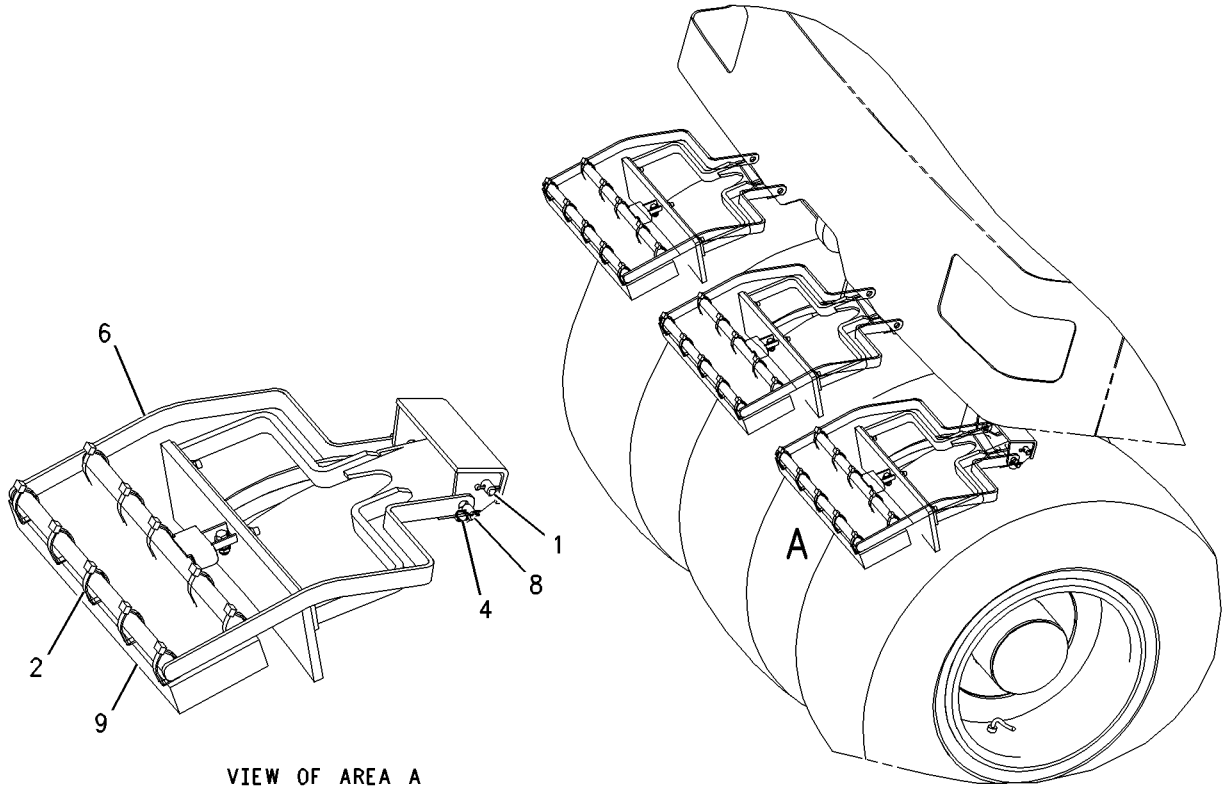

VIEW OF AREA A

FRONT VIEW

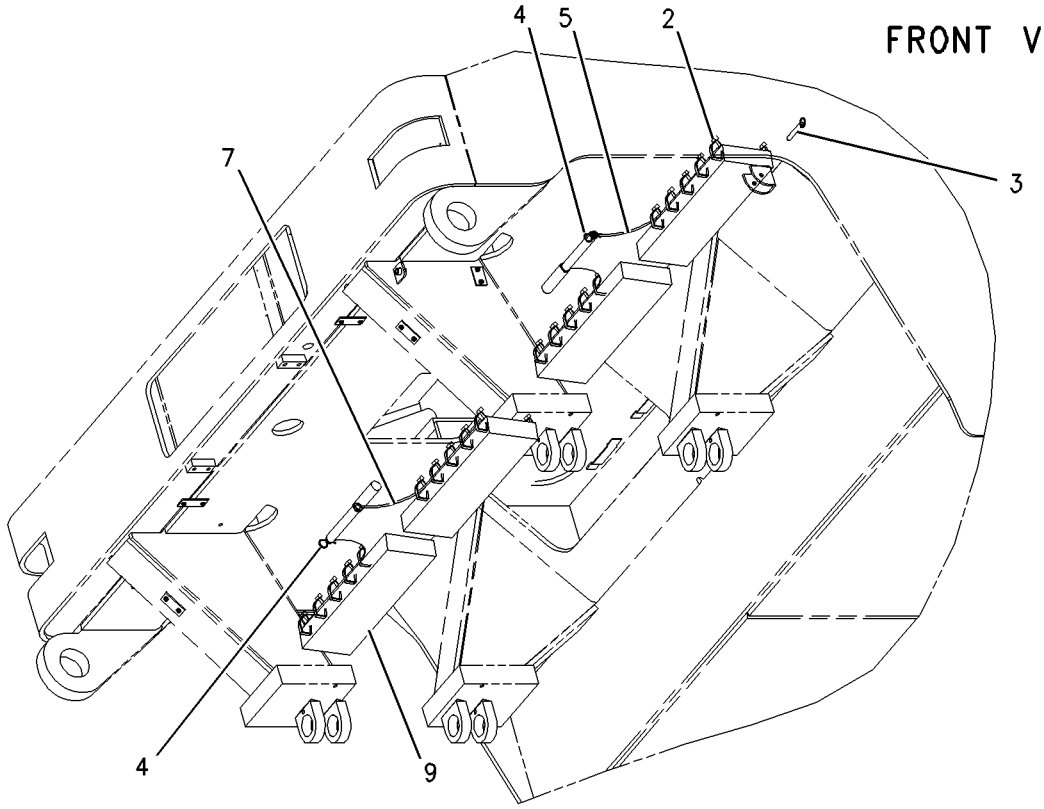

REAR VIEW

GRAPHIC #1 **<END>** g00802265

WATER SYSTEM

145-2910 PUMP GP-ADDITIVE SPRAY

S/N: PJF1-UP
PART OF 256-2425 SPRAY GP-ADDITIVE
AN ATTACHMENT

SMCS-5614 **i01557389**

NOTE	REF NO	GRAPHIC REF	PART NUMBER	QTY	PART NAME 1 2 3 4 5 6 (PRODUCT LEVEL)	SEE PAGE
	1	1	**160-0660**	1	HEAD-PUMP	
	2	1	**160-0662**	1	MOTOR-ELECTRIC PUMP	

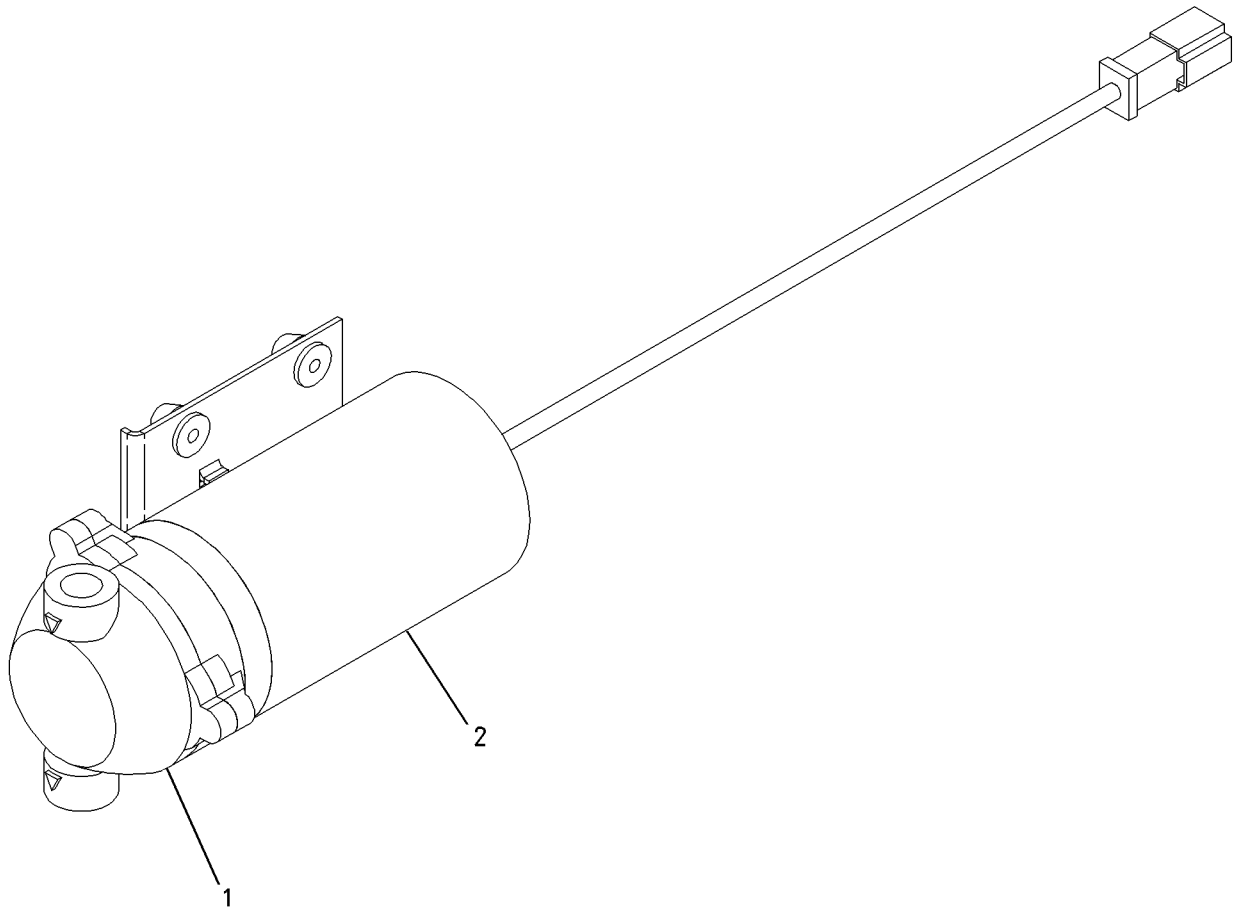

GRAPHIC #1 **<END>** g00809786

WATER SYSTEM

245-7713 PUMP GP-WATER SPRAY

S/N: PJF1-UP

PART OF 256-2424 SPRAY GP-WATER

SMCS-5614 **i02044548**

NOTE	REF NO	GRAPHIC REF	PART NUMBER	QTY	PART NAME 1 2 3 4 5 6 (PRODUCT LEVEL)	SEE PAGE
					(NO SERVICEABLE BREAKDOWN OF PARTS AVAILABLE AT TIME OF PRODUCTION)	

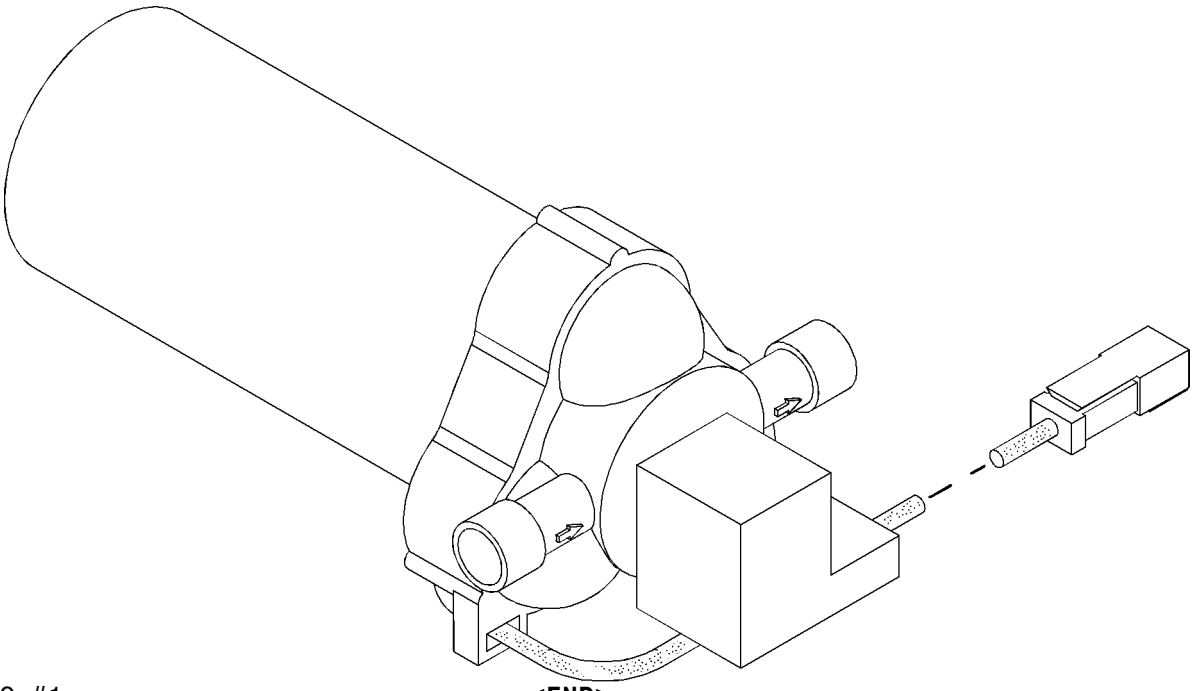

GRAPHIC #1 **<END>** g01054636

WATER SYSTEM

256-2425 SPRAY GP-ADDITIVE

S/N: PJF1-274
AN ATTACHMENT

SMCS-5612 **i02196014**

NOTE	REF NO	GRAPHIC REF	PART NUMBER	QTY	PART NAME 1 2 3 4 5 6 (PRODUCT LEVEL)	SEE PAGE
	1	2	**1G-9960**	2	CLAMP	
	2	1,2	**1P-4278**	6	CLAMP-HOSE	
	3	1	**1P-7297**	1	VALVE-DRAIN (ADDITIVE TANK)	
	4	1,2	**6W-2463**	18	CLAMP	
	5	1,2	**7R-7906**	8	CLAMP	
	6	2	**7R-7954**	1	PLATE	
	7	2	**7R-7959**	2	BOLT-SPECIAL	
	8	1,2	**7V-5628**	5	PLATE	
	9	1	**7X-7655**	1	VALVE-DRAIN (ADDITIVE SPRAY)	
	10	2	**9R-5895**	1	SCREEN (ADDITIVE TANK)	
	11	1,2	**006-0210**	5	TEE-PIPE	
	12	1,2	**030-8370**	2	ADAPTER-PIPE	
	13	1	**101-9605**	1	PLATE	
	14	2	**108-3239**	1	HOLDER-FUSE	
	15	2	**111-4053**	1	CAP-FUEL (ADDITIVE TANK)	
	16	1	**122-1004**	2	CLAMP-HALF	
	17	2	**139-9300**	1	COVER AS	
I	18	2	**140-3124**	1	HOSE AS	
	19	1	**140-3562**	1	STRAINER (ADDITIVE SPRAY)	
	20	1	**140-3598**	1	INSERT-NYLON	
	21	2	**140-3599**	1	INSERT-NYLON	
	22	1	**140-3600**	1	INSERT-NYLON	
	23	1	**140-3601**	2	ELBOW	
	24	1	**140-3602**	1	FITTING	
M	25	2	**141-9203**	10	SCREW-BUTTON HEAD (M10X1.5X30-MM)	
	26	1,2	**141-9504**	4	NIPPLE-PIPE	
	27	1,2	**141-9505**	3	NIPPLE-PIPE	
	28	1,2	**141-9984**	7	NOZZLE	
	29	1,2	**142-6266**	2	VALVE-CHECK (ADDITIVE SPRAY)	
I	30	1	**144-3942**	1	HOSE AS	
Y	31	1	**145-2910**	1	PUMP GP-ADDITIVE SPRAY	296
	32	1,2	**145-3846**	2	INSERT-NYLON	
	33	2	**150-2324**	2	PLATE AS	
	34	1	**151-0835**	2	PLATE AS	
	35	1,2	**003-8747**	4	ELBOW	
	36	1	**3B-7722**	1	BUSHING-PIPE	
	37	2	**3J-1907**	1	SEAL-O-RING	
	38	2	**3K-8782**	1	FUSE (10-AMPERE)	
	39	1,2	**3V-0046**	9	PLATE	
	40	1,2	**4M-5282**	10	BOLT (1/4-20X1.5-IN)	
	41	1,2	**6V-8397**	4	SEAL-O-RING	
	42	2	**6V-8781**	1	TEE-FACE SEAL	
	43	1	**7X-0269**	2	BOLT (1/4-20X4-IN)	
	44	1,2	**7X-7729**	14	WASHER (11X25X3-MM THK)	
	45	2	**8C-3121**	2	BOLT (5/16-18X1.5-IN)	
	46	1,2	**8C-6561**	7	BOLT (5/16-18X1.375-IN)	
	47	1,2	**8C-6869**	2	CONNECTOR	
M	48	1	**8T-4136**	4	BOLT (M10X1.5X25-MM)	
	49	2	**8T-4224**	2	WASHER-HARD (8.8X16X2-MM THK)	
	50	2	**9D-3721**	1	SWITCH-TOGGLE (ADDITIVE SPRAY CONTROL)	
	51	2	**9M-8406**	2	CLIP	
E	52	1	**5P-1442**		HOSE (333-CM)	
E	52A	1	**5P-1442**		HOSE (730-CM)	
E	52B	1	**5P-1442**		HOSE (173-CM)	

E-ORDER BY THE CENTIMETER
I-REFER TO HYDRAULIC INFORMATION SYSTEM
M-METRIC PART
Y-SEPARATE ILLUSTRATION

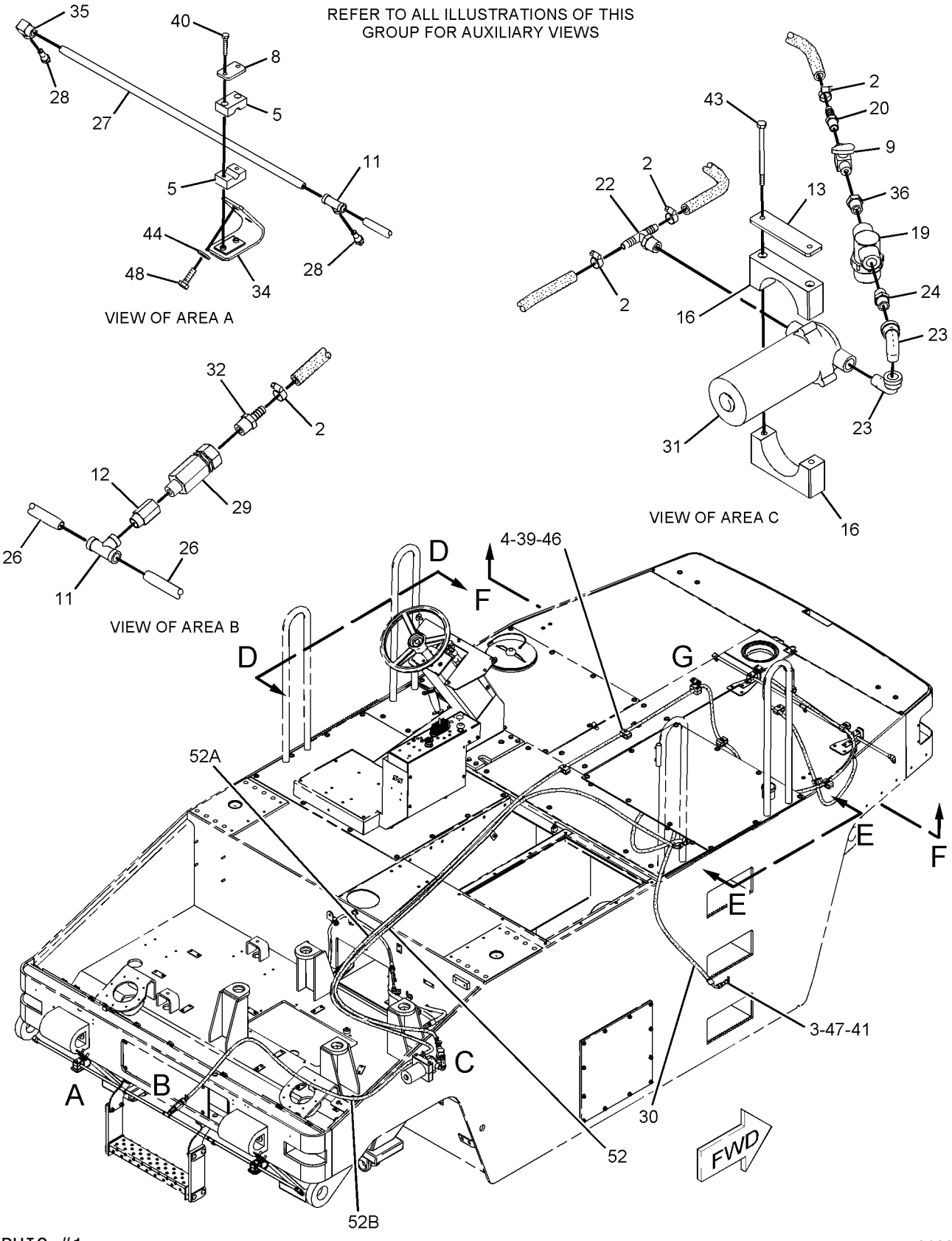

GRAPHIC #1 g01093464

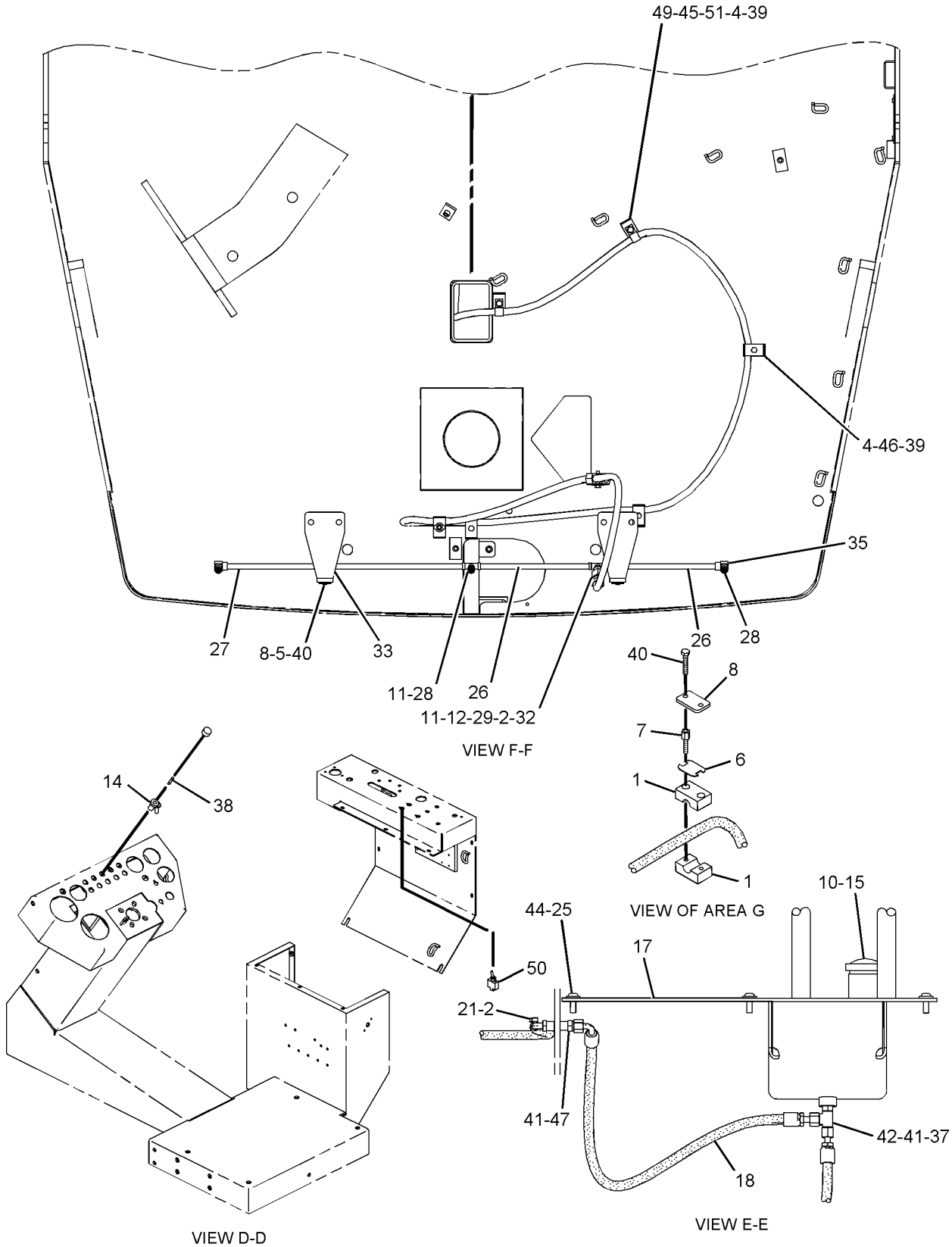

GRAPHIC #2 **<END>** g01093465

WATER SYSTEM

256-2425 SPRAY GP-ADDITIVE

S/N: PJF275-345
AN ATTACHMENT

SMCS-5612 **i02293634**

NOTE	REF NO	GRAPHIC REF	PART NUMBER	QTY	PART NAME 1 2 3 4 5 6 (PRODUCT LEVEL)	SEE PAGE
	1	2	**1G-9960**	2	CLAMP	
	2	1,2	**1P-4278**	6	CLAMP-HOSE	
	3	1	**1P-7297**	1	VALVE-DRAIN (ADDITIVE TANK)	
	5	1,2	**7R-7906**	8	CLAMP	
	6	2	**7R-7954**	1	PLATE	
	7	2	**7R-7959**	2	BOLT-SPECIAL	
	8	1,2	**7V-5628**	5	PLATE	
	9	1	**7X-7655**	1	VALVE-DRAIN (ADDITIVE SPRAY)	
	10	2	**9R-5895**	1	SCREEN (ADDITIVE TANK)	
	11	1,2	**006-0210**	5	TEE-PIPE	
	12	1,2	**030-8370**	2	ADAPTER-PIPE	
	13	1	**101-9605**	1	PLATE	
	14	2	**108-3239**	1	HOLDER-FUSE	
	15	2	**111-4053**	1	CAP-FUEL (ADDITIVE TANK)	
	16	1	**122-1004**	2	CLAMP-HALF	
	17	2	**139-9300**	1	COVER AS	
I	18	2	**140-3124**	1	HOSE AS	
	19	1	**140-3562**	1	STRAINER (ADDITIVE SPRAY)	
	20	1	**140-3598**	1	INSERT-NYLON	
	21	2	**140-3599**	1	INSERT-NYLON	
	22	1	**140-3600**	1	INSERT-NYLON	
	23	1	**140-3601**	2	ELBOW	
	24	1	**140-3602**	1	FITTING (NYLON)	
M	25	2	**141-9203**	10	SCREW-BUTTON HEAD (M10X1.5X30-MM)	
	26	1,2	**141-9504**	4	NIPPLE-PIPE	
	27	1,2	**141-9505**	3	NIPPLE-PIPE	
	28	1,2	**141-9984**	7	NOZZLE	
	29	1,2	**142-6266**	2	VALVE-CHECK (ADDITIVE SPRAY)	
I	30	1	**144-3942**	1	HOSE AS	
Y	31	1	**145-2910**	1	PUMP GP-ADDITIVE SPRAY	296
	32	1,2	**145-3846**	2	INSERT-NYLON	
	35	1,2	**003-8747**	4	ELBOW	
	36	1	**3B-7722**	1	BUSHING-PIPE	
	38	2	**3K-8782**	1	FUSE (10-AMPERE) (REAR WIPER)	
	40	1,2	**4M-5282**	10	BOLT (1/4-20X1.5-IN)	
	41	1,2	**6V-8397**	2	SEAL-O-RING	
	42	2	*148-8435*	1	TEE AS	
		2	**3J-1907**	1	SEAL-O-RING	
		2	**6V-8397**	2	SEAL-O-RING	
		2	**6V-8781**	1	TEE-FACE SEAL	
CM	43	1	**7X-0465**	2	BOLT (M6X1X100-MM)	
	44	2	**7X-7729**	10	WASHER (11X25X3-MM THK)	
	45	2	**8C-3121**	2	BOLT (5/16-18X1.5-IN)	
	47	1,2	**8C-6869**	2	CONNECTOR	
	49	2	**8T-4224**	2	WASHER-HARD (8.8X16X2-MM THK)	
	50	2	**9D-3721**	1	SWITCH-TOGGLE (ADDITIVE SPRAY CONTROL)	
	51	2	**9M-8406**	2	CLIP	
E	52	1	**5P-1442**		HOSE (333-CM)	
E	52A	1	**5P-1442**		HOSE (730-CM)	
E	52B	1	**5P-1442**		HOSE (173-CM)	
	53	1	**3J-5390**	1	PLUG (PIPE)	

C-CHANGE FROM PREVIOUS TYPE
E-ORDER BY THE CENTIMETER
I-REFER TO HYDRAULIC INFORMATION SYSTEM
M-METRIC PART
Y-SEPARATE ILLUSTRATION

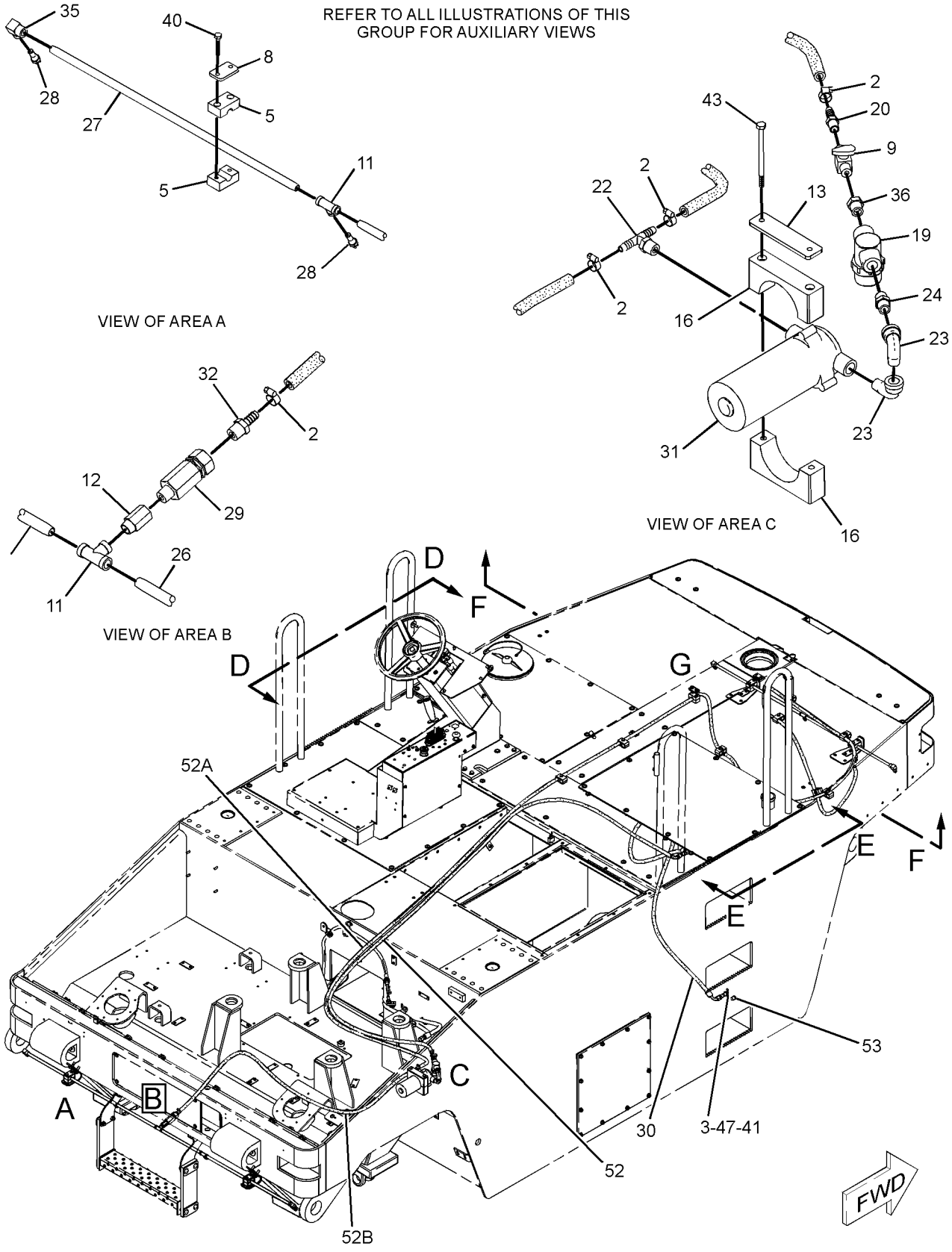

GRAPHIC #1

g01195043

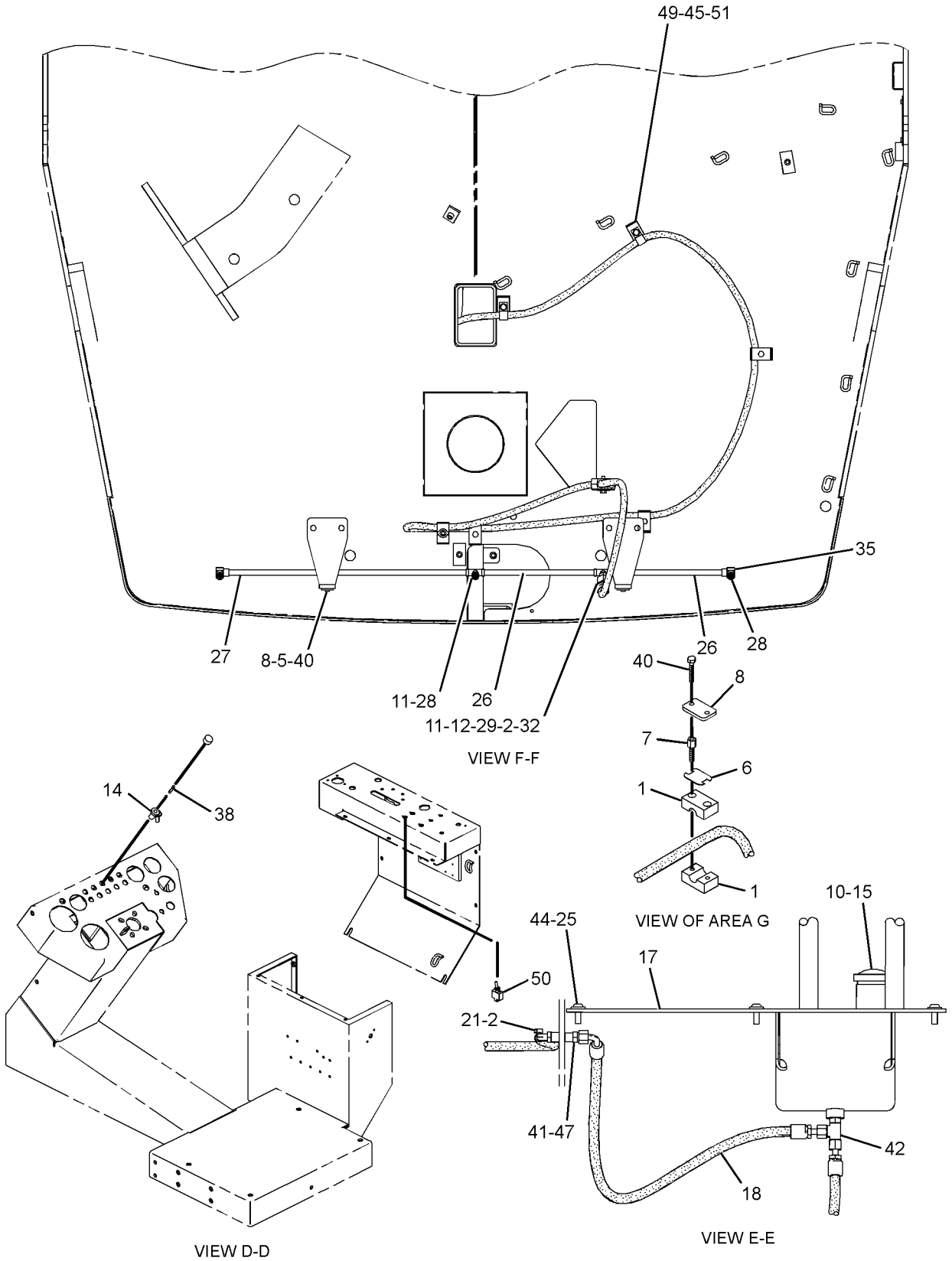

GRAPHIC #2 **<END>** g01195060

WATER SYSTEM

256-2425 SPRAY GP-ADDITIVE

S/N: PJF346-UP
AN ATTACHMENT

SMCS-5612 **i03535982**

NOTE	REF NO	GRAPHIC REF	PART NUMBER	QTY	PART NAME 1 2 3 4 5 6 (PRODUCT LEVEL)	SEE PAGE
	1	2	**1G-9960**	2	CLAMP	
	2	1,2	**1P-4278**	6	CLAMP-HOSE	
	3	2	**1P-7297**	1	VALVE-DRAIN	
	4	2	**3J-5390**	1	PLUG	
	5	1,2	**7R-7906**	8	CLAMP	
	6	2	**7R-7954**	1	PLATE	
CM	7	2	**196-4205**	2	BOLT-STACKING (M6X1X44-MM)	
	8	1,2	**7V-5628**	4	PLATE	
	9	1	**7X-7655**	1	VALVE-DRAIN	
	10	2	**9R-5895**	1	SCREEN (ADDITIVE TANK)	
	11	1,2	**006-0210**	5	TEE-PIPE	
	12	1,2	**030-8370**	2	ADAPTER-PIPE	
	13	1	**101-9605**	1	PLATE	
	14	1	**108-3239**	1	HOLDER-FUSE	
	15	2	**338-0335**	1	CAP-RESERVOIR	
	16	1	**122-1004**	2	CLAMP-HALF	
	17	2	**139-9300**	1	COVER AS	
I	18	2	**140-3124**	1	HOSE AS	
	19	1	**140-3562**	1	STRAINER (ADDITIVE SPRAY)	
	20	1	**140-3598**	1	INSERT-NYLON	
	21	2	**140-3599**	1	INSERT-NYLON	
	22	1	**140-3600**	1	INSERT-NYLON	
	23	1	**140-3601**	2	ELBOW	
	24	1	**140-3602**	1	FITTING	
M	25	2	**141-9203**	10	SCREW-BUTTON HEAD (M10X1.5X30-MM)	
	26	1,2	**141-9504**	4	NIPPLE-PIPE	
	27	1,2	**141-9505**	3	NIPPLE-PIPE	
	28	1,2	**141-9984**	7	NOZZLE	
	29	1,2	**142-6266**	2	VALVE-CHECK	
I	30	2	**144-3942**	1	HOSE AS	
Y	31	1	**145-2910**	1	PUMP GP-ADDITIVE SPRAY	296
	32	1,2	**145-3846**	2	INSERT-NYLON	
	35	1,2	**003-8747**	4	ELBOW	
	36	1	**3B-7722**	1	BUSHING-PIPE	
	38	1	**3K-8782**	1	FUSE (10-AMPERE) (REAR WIPER)	
M	40	1,2	**8C-8451**	8	BOLT (M6X1X40-MM)	
	41	2	**6V-8397**	2	SEAL-O-RING	
	42	2	*148-8435*	1	TEE AS	
		2	**3J-1907**	1	SEAL-O-RING	
		2	**6V-8397**	2	SEAL-O-RING	
		2	**6V-8781**	1	TEE-FACE SEAL	
M	43	1	**7X-0465**	2	BOLT (M6X1X100-MM)	
	44	2	**7X-7729**	10	WASHER (11X25X3-MM THK)	
M	45	2	**8T-4197**	2	BOLT (M8X1.25X40-MM)	
	47	2	**8C-6869**	2	CONNECTOR	
	49	2	**8T-4224**	2	WASHER-HARD (8.8X16X2-MM THK)	
	50	1	**9D-3721**	1	SWITCH-TOGGLE (ADDITIVE SPRAY CONTROL)	
	51	2	**9M-8406**	2	CLIP	
E	52	1	**5P-1442**		HOSE (333-CM)	
E	52A	1	**5P-1442**		HOSE (730-CM)	
E	52B	1	**5P-1442**		HOSE (173-CM)	
	55	2	**278-7591**	1	FILM-IDENTIFICATION (WATER FOR WATER SPRAY)	

C-CHANGE FROM PREVIOUS TYPE
E-ORDER BY THE CENTIMETER
I-REFER TO HYDRAULIC INFORMATION SYSTEM
M-METRIC PART
Y-SEPARATE ILLUSTRATION

REFER TO ALL ILLUSTRATIONS OF
THIS GROUP FOR AUXILIARY VIEWS

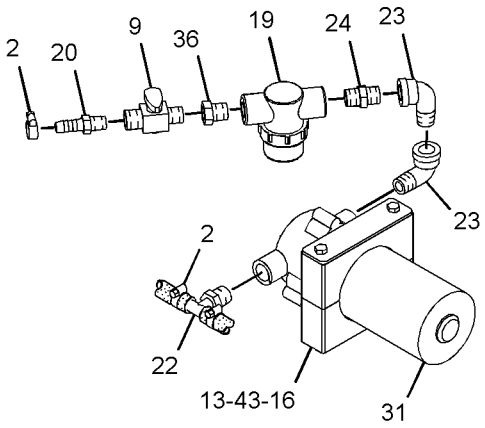

VIEW OF AREA A
(EXPLODED)

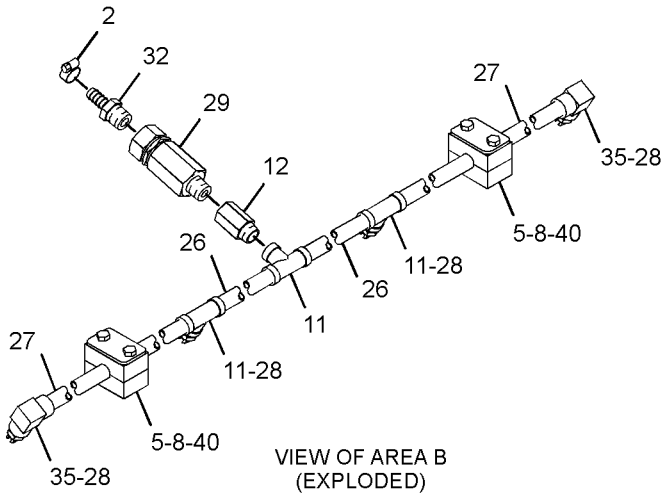

VIEW OF AREA B
(EXPLODED)

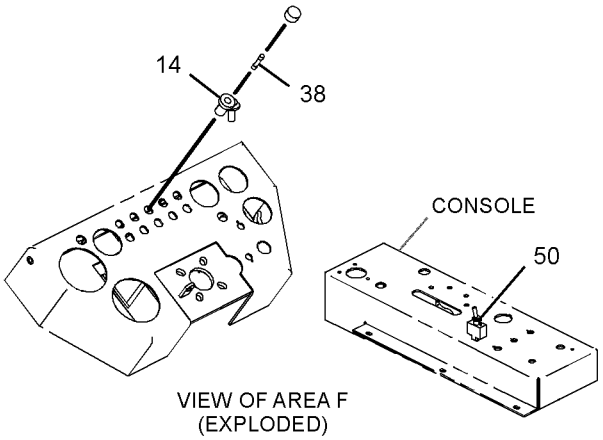

VIEW OF AREA F
(EXPLODED)

GRAPHIC #1

g01866835

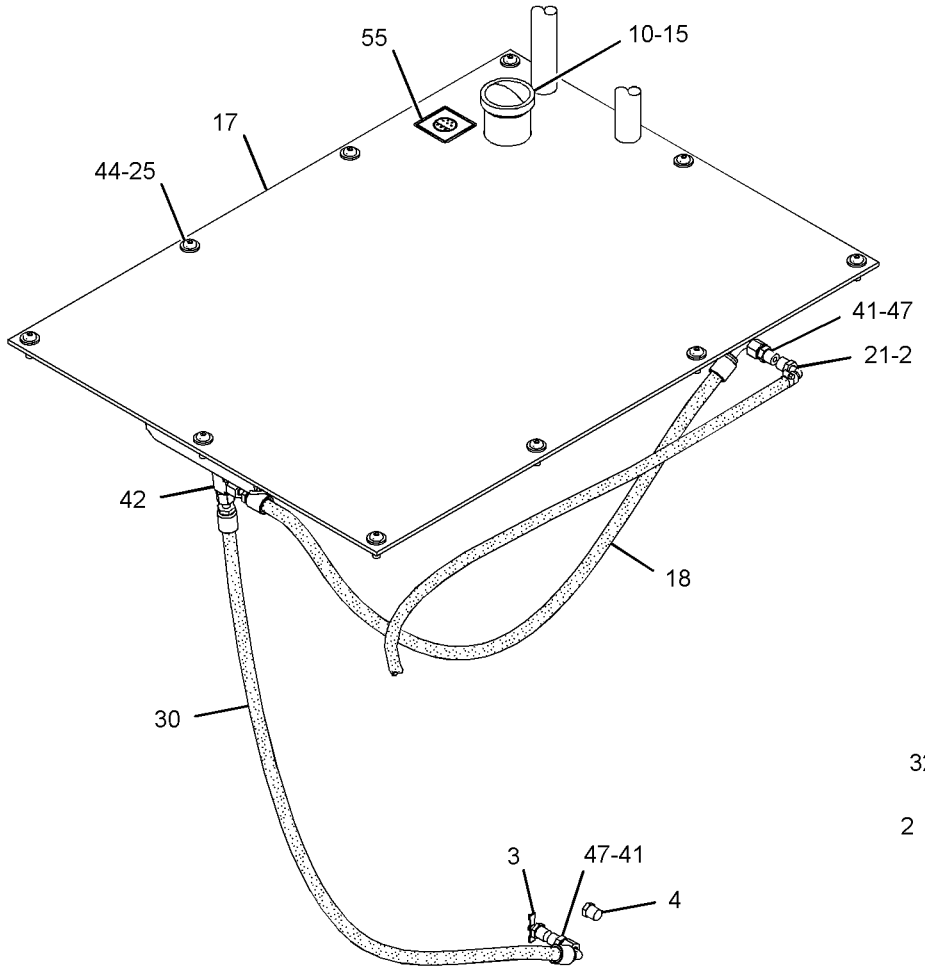

VIEW OF AREA C

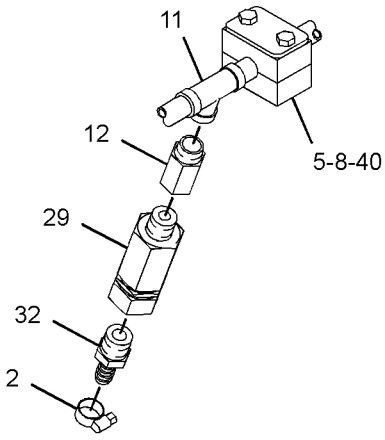

VIEW OF AREA E
(EXPLODED)

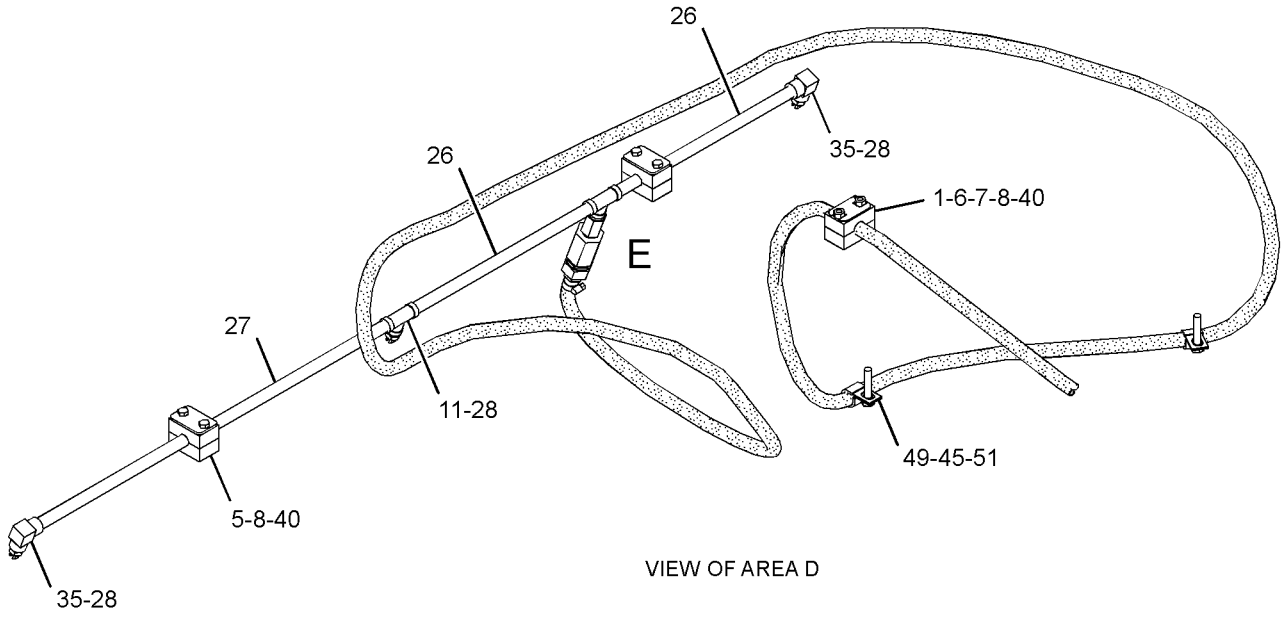

VIEW OF AREA D

GRAPHIC #2

<END>

g01866834

WATER SYSTEM

256-2424 SPRAY GP-WATER

S/N: PJF1-274

PART OF 246-8991 COMMON AR

SMCS-5612 **i02195994**

NOTE	REF NO	GRAPHIC REF	PART NUMBER	QTY	PART NAME 1 2 3 4 5 6 (PRODUCT LEVEL)	SEE PAGE
	1	2	**1G-9960**	2	CLAMP	
	2	1,2	**1P-4278**	10	CLAMP-HOSE	
	3	2	**3E-5239**	1	RELAY AS (24-VOLT) (TIMER)	
	4	1,2	**3S-2093**	14	STRAP-CABLE	
	5	2	**4W-3087**	1	CAP AS-FILLER (WATER TANK)	
	6	2	**6R-3730**	1	PLATE	
	7	2	**6R-4061**	1	FITTING-BRASS	
	8	2	**6R-4076**	2	FITTING-ELBOW	
	9	2	**6V-1520**	1	VALVE-DRAIN (WATER SPRAY)	
	10	2	**6W-2463**	20	CLAMP	
	11	1	**7R-7908**	8	CLAMP	
	12	1	**7R-8578**	1	LANYARD	
	13	1,2	**7V-5628**	5	PLATE	
	14	2	**8L-6005**	1	TEE-PIPE	
	15	2	**9X-0507**	1	VALVE-SHUTOFF (WATER TANK)	
	16	2	**003-2143**	2	ELBOW	
	17	2	**006-5490**	1	ELBOW	
	18	1	**081-2965**	9	SEAL	
	19	2	**101-9605**	1	PLATE	
	20	2	**108-3239**	1	HOLDER-FUSE	
	21	2	**110-8337**	2	KNOB-CONTROL	
	22	2	**122-1004**	2	CLAMP-HALF	
	23	2	**126-7573**	2	SCREW-PAN HEAD	
	24	2	**127-5461**	1	FITTING	
	25	2	**137-9996**	1	TIMER	
	26	2	**137-9997**	2	POTENTIOMETER	
	27	1	**140-3138**	9	STRAINER (WATER SPRAY)	
	28	1	**140-3139**	9	CAP	
	29	1	**140-3140**	9	CLAMP	
	30	2	**140-3599**	3	INSERT-NYLON	
M	31	1	**141-9203**	4	SCREW-BUTTON HEAD (M10X1.5X30-MM)	
	32	1	**141-9983**	2	INSERT	
	33	2	**142-6266**	1	VALVE-CHECK	
	34	2	**145-3846**	2	INSERT-NYLON	
	35	1	**148-7155**	2	ANGLE	
	36	1	**150-2324**	2	PLATE AS	
	37	1	**150-8261**	7	NOZZLE	
	38	1	**151-0835**	2	PLATE AS	
	39	1	**154-7441**	1	PIPE-FRONT	
	40	1	**154-7442**	1	PIPE-REAR	
	41	1	**154-8299**	4	CAP-PIPE	
Y	42	2	**161-8211**	1	FILTER GP-WATER	293
	43	1	**163-1828**	1	PLATE AS	
	44	2	**170-8578**	1	HARNESS AS-WIRING (WATER SPRAY)	
		2	**155-2270**	1	KIT-CONNECTING PLUG (2-PIN)	
					(INCLUDES PLUG AS, WEDGE & INTERFACE SEAL)	
		2	**102-8802**	1	KIT-RECEPTACLE (2-PIN)	
					(INCLUDES RECEPTACLE AS & WEDGE)	
		2	**9G-3695**	1	PLUG	
Y	45	1	**185-1883**	1	TANK GP-WATER	318
Y	46	2	**245-7713**	1	PUMP GP-WATER SPRAY	297
	47	2	**011-5224**	2	BUSHING-REDUCING	
M	48	1,2	**099-0492**	2	LOCKNUT (M6X1-THD)	
	49	2	**1V-6653**	1	SWITCH AS-TOGGLE (WATER SPRAY CONTROL)	
	50	1	**3J-5390**	2	PLUG (PIPE)	
	51	2	**3V-0046**	10	PLATE	

256-2424 **SPRAY GP-WATER** *(contd.)* **i02195994**

NOTE	REF NO	GRAPHIC REF	PART NUMBER	QTY	PART NAME 1 2 3 4 5 6 (PRODUCT LEVEL)	SEE PAGE
	52	2	**4B-4863**	2	WASHER (4.7X11X1.2-MM THK)	
	53	1,2	**4M-5282**	10	BOLT (1/4-20X1.5-IN)	
M	54	2	**5C-7261**	2	NUT (M8X1.25-THD)	
	55	2	**5P-4116**	7	WASHER-HARD (8.8X20.5X2-MM THK)	
	56	2	**7X-0269**	2	BOLT (1/4-20X4-IN)	
	57	1	**7X-7729**	16	WASHER (11X25X3-MM THK)	
	58	2	**8C-6561**	10	BOLT (5/16-18X1.375-IN)	
M	59	2	**8C-8451**	2	BOLT (M6X1X40-MM)	
	60	2	**8M-8948**	1	FUSE (15-AMPERE)	
M	61	2	**8T-3647**	2	BOLT (M8X1.25X80-MM)	
M	62	1	**8T-4138**	1	BOLT (M6X1X20-MM)	
M	63	1	**8T-4171**	1	BOLT (M6X1X12-MM)	
M	64	1	**8T-4195**	8	BOLT (M10X1.5X30-MM)	
M	65	2	**8T-4200**	1	BOLT (M8X1.25X16-MM)	
	66	2	**8T-4205**	3	WASHER-HARD (7.2X14.5X2-MM THK)	
E	67	1	**5P-1442**		HOSE (540-CM)	
E	67A	2	**5P-1442**		HOSE (29-CM)	
E	67B	2	**5P-1442**		HOSE (200-CM)	
E	67C	2	**5P-1442**		HOSE (21-CM)	
E	67D	2	**5P-1442**		HOSE (375-CM)	
M	68	1	**8T-4136**	4	BOLT (M10X1.5X25-MM)	

E-ORDER BY THE CENTIMETER
M-METRIC PART
Y-SEPARATE ILLUSTRATION

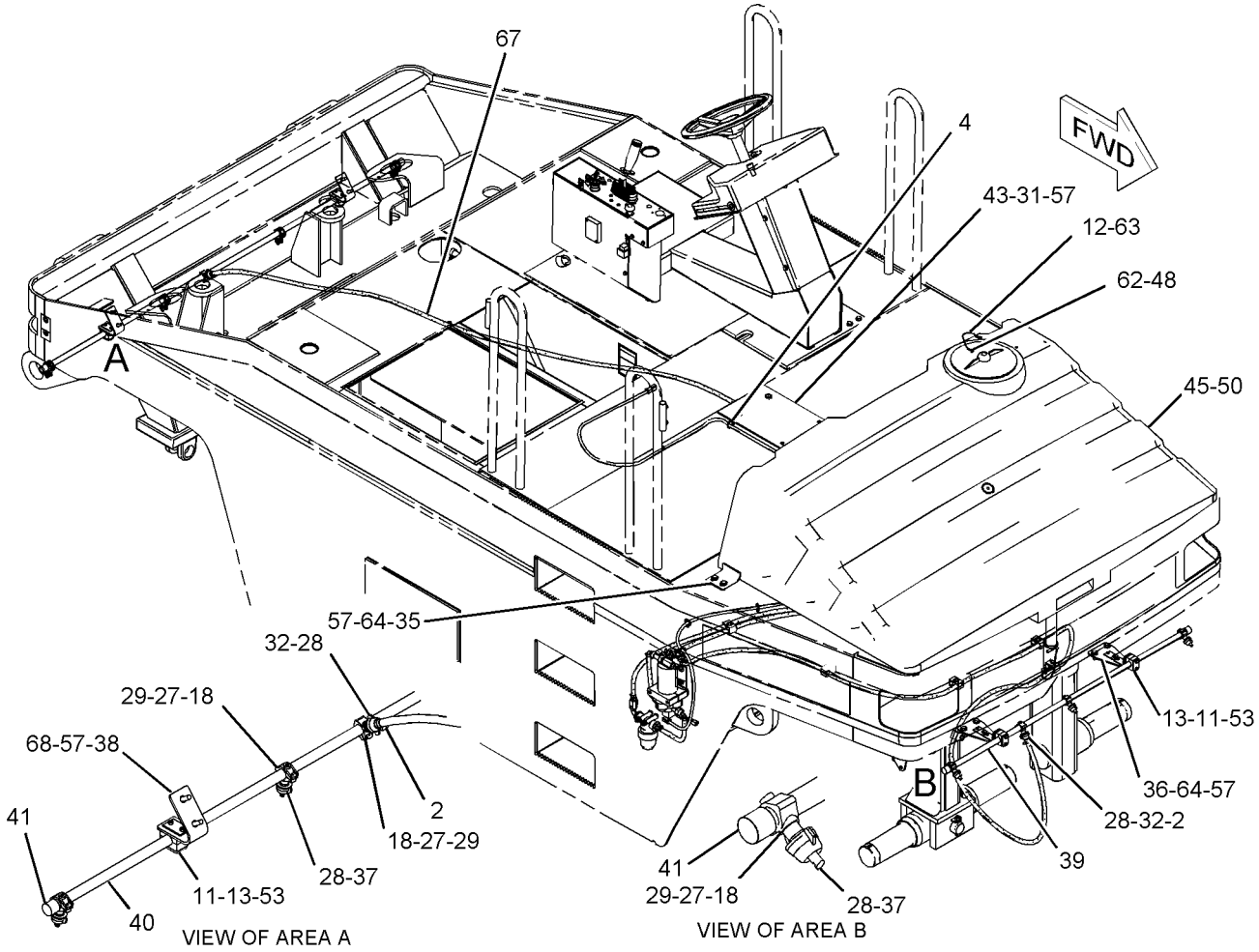

GRAPHIC #1 g01131184

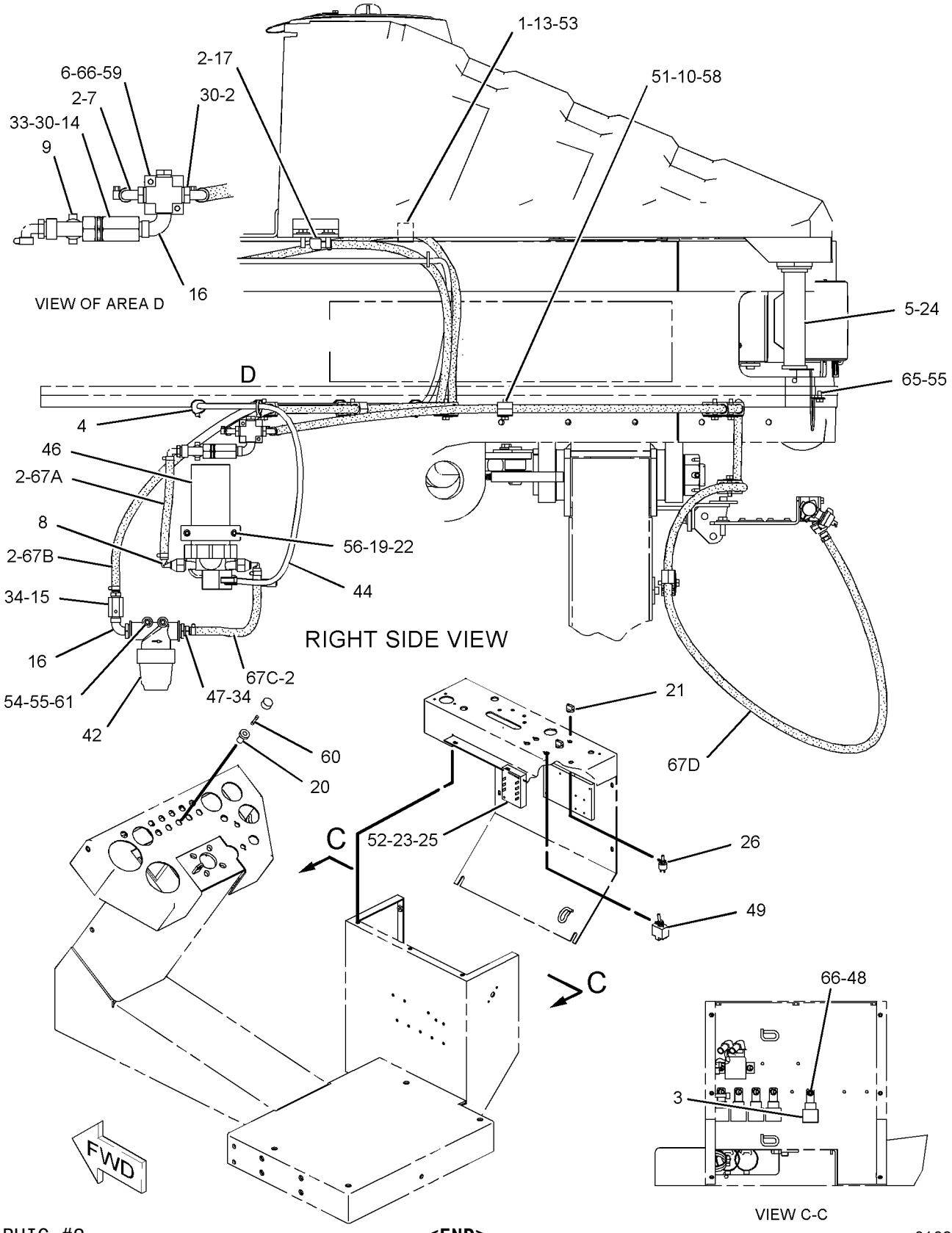

GRAPHIC #2 **<END>** g01093901

WATER SYSTEM

256-2424 SPRAY GP-WATER

S/N: PJF275-329

PART OF 246-8991 COMMON AR

SMCS-5612 **i02293632**

NOTE	REF NO	GRAPHIC REF	PART NUMBER	QTY	PART NAME 1 2 3 4 5 6 (PRODUCT LEVEL)	SEE PAGE
	1	2	**1G-9960**	2	CLAMP	
	2	1,2	**1P-4278**	10	CLAMP-HOSE	
	3	2	**3E-5239**	1	RELAY AS (24-VOLT) (TIMER)	
	4	1,2	**3S-2093**	14	STRAP-CABLE	
	5	2	**4W-3087**	1	CAP AS-FILLER (WATER TANK)	
	6	2	**6R-3730**	1	PLATE	
	7	2	**6R-4061**	1	FITTING-BRASS	
	8	2	**6R-4076**	2	FITTING-ELBOW	
	9	2	**6V-1520**	1	VALVE-DRAIN (WATER SPRAY)	
	10	2	**6W-2463**	20	CLAMP	
	11	1	**7R-7908**	8	CLAMP	
	12	1	**7R-8578**	1	LANYARD	
	13	1,2	**7V-5628**	5	PLATE	
	14	2	**8L-6005**	1	TEE-PIPE	
	15	2	**9X-0507**	1	VALVE-SHUTOFF (WATER TANK)	
	16	2	**003-2143**	2	ELBOW	
	17	2	**006-5490**	1	ELBOW	
	18	1	**081-2965**	9	SEAL	
	19	2	**101-9605**	1	PLATE	
	20	2	**108-3239**	1	HOLDER-FUSE	
	21	2	**110-8337**	2	KNOB-CONTROL	
	22	2	**122-1004**	2	CLAMP-HALF	
	23	2	**126-7573**	2	SCREW-PAN HEAD	
	24	2	**127-5461**	1	FITTING	
	25	2	**137-9996**	1	TIMER	
	26	2	**137-9997**	2	POTENTIOMETER	
	27	1	**140-3138**	9	STRAINER (WATER SPRAY)	
	28	1	**140-3139**	9	CAP	
	29	1	**140-3140**	9	CLAMP	
	30	2	**140-3599**	3	INSERT-NYLON	
M	31	1	**141-9203**	4	SCREW-BUTTON HEAD (M10X1.5X30-MM)	
	32	1	**141-9983**	2	INSERT	
	33	2	**142-6266**	1	VALVE-CHECK	
	34	2	**145-3846**	2	INSERT-NYLON	
	35	1	**148-7155**	2	ANGLE	
	36	1	**150-2324**	2	PLATE AS	
	37	1	**150-8261**	7	NOZZLE	
	38	1	**151-0835**	2	PLATE AS	
	39	1	**154-7441**	1	PIPE-FRONT	
	40	1	**154-7442**	1	PIPE-REAR	
	41	1	**154-8299**	4	CAP-PIPE	
Y	42	2	**161-8211**	1	FILTER GP-WATER	293
	43	1	**163-1828**	1	PLATE AS	
	44	2	**170-8578**	1	HARNESS AS-WIRING (WATER SPRAY)	
		2	**155-2270**	1	KIT-CONNECTING PLUG (2-PIN)	
					(INCLUDES PLUG AS, WEDGE & INTERFACE SEAL)	
		2	**102-8802**	1	KIT-RECEPTACLE (2-PIN)	
					(INCLUDES RECEPTACLE AS & WEDGE)	
		2	**9G-3695**	1	PLUG	
Y	45	1	**185-1883**	1	TANK GP-WATER	318
Y	46	2	**245-7713**	1	PUMP GP-WATER SPRAY	297
	47	2	**011-5224**	2	BUSHING-REDUCING	
M	48	1,2	**099-0492**	2	LOCKNUT (M6X1-THD)	
	49	2	**1V-6653**	1	SWITCH AS-TOGGLE (WATER SPRAY CONTROL)	
	50	1	**3J-5390**	2	PLUG (PIPE)	
	51	2	**3V-0046**	10	PLATE	

256-2424 **SPRAY GP-WATER** *(contd.)* **i02293632**

NOTE	REF NO	GRAPHIC REF	PART NUMBER	QTY	PART NAME 1 2 3 4 5 6 (PRODUCT LEVEL)	SEE PAGE
	52	2	**4B-4863**	2	WASHER (4.7X11X1.2-MM THK)	
	53	1,2	**4M-5282**	10	BOLT (1/4-20X1.5-IN)	
M	54	2	**5C-7261**	2	NUT (M8X1.25-THD)	
	55	2	**5P-4116**	7	WASHER-HARD (8.8X20.5X2-MM THK)	
CM	56	1	**7X-0465**	2	BOLT (M6X1X100-MM)	
	57	1	**7X-7729**	16	WASHER (11X25X3-MM THK)	
	58	2	**8C-6561**	10	BOLT (5/16-18X1.375-IN)	
M	59	2	**8C-8451**	2	BOLT (M6X1X40-MM)	
	60	2	**8M-8948**	1	FUSE (15-AMPERE)	
M	61	2	**8T-3647**	2	BOLT (M8X1.25X80-MM)	
M	62	1	**8T-4138**	1	BOLT (M6X1X20-MM)	
M	63	1	**8T-4171**	1	BOLT (M6X1X12-MM)	
M	64	1	**8T-4195**	8	BOLT (M10X1.5X30-MM)	
M	65	2	**8T-4200**	1	BOLT (M8X1.25X16-MM)	
	66	2	**8T-4205**	3	WASHER-HARD (7.2X14.5X2-MM THK)	
E	67	1	**5P-1442**		HOSE (540-CM)	
E	67A	2	**5P-1442**		HOSE (29-CM)	
E	67B	2	**5P-1442**		HOSE (200-CM)	
E	67C	2	**5P-1442**		HOSE (21-CM)	
E	67D	2	**5P-1442**		HOSE (375-CM)	
M	68	1	**8T-4136**	4	BOLT (M10X1.5X25-MM)	

C-CHANGE FROM PREVIOUS TYPE
E-ORDER BY THE CENTIMETER
M-METRIC PART
Y-SEPARATE ILLUSTRATION

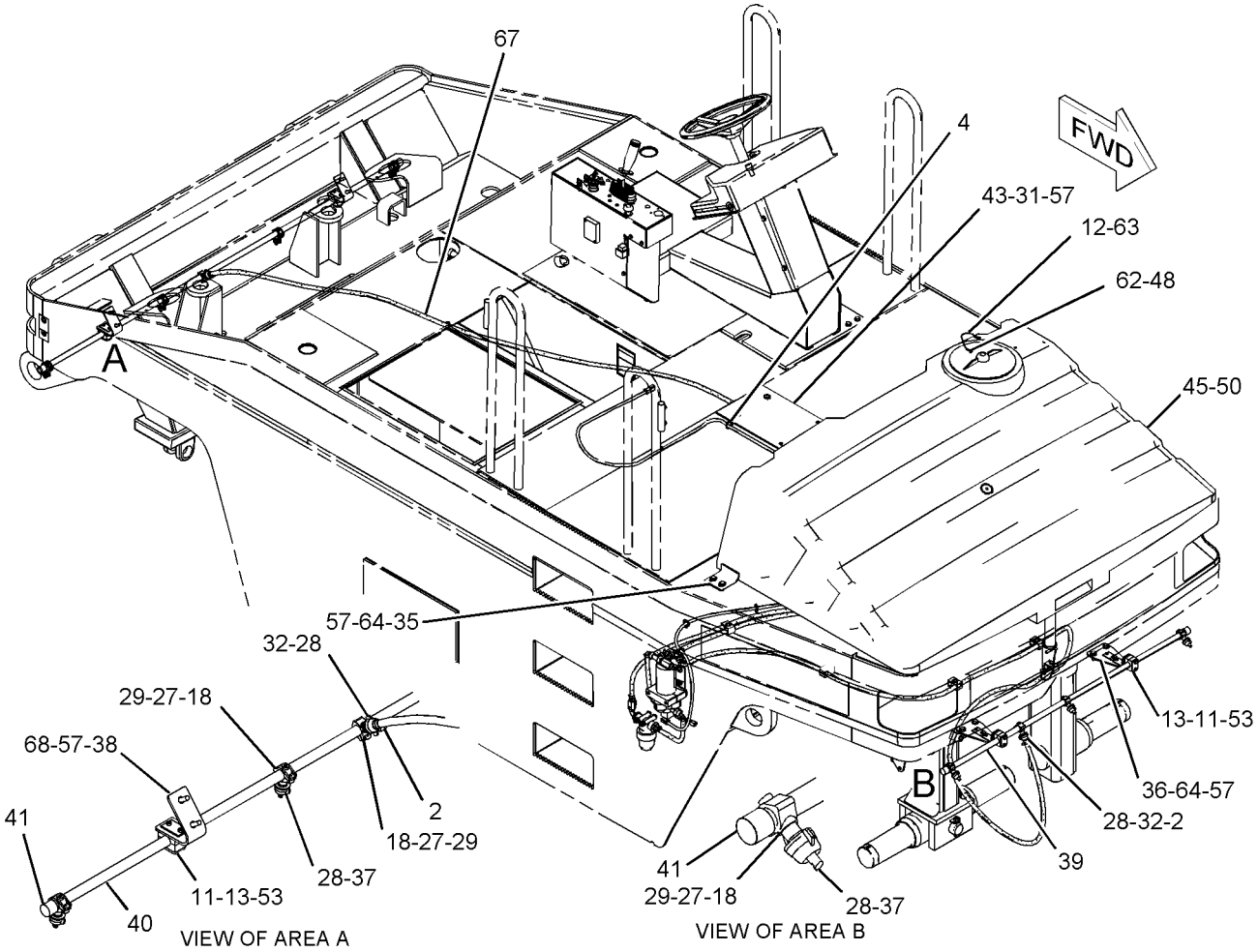

GRAPHIC #1 g01131184

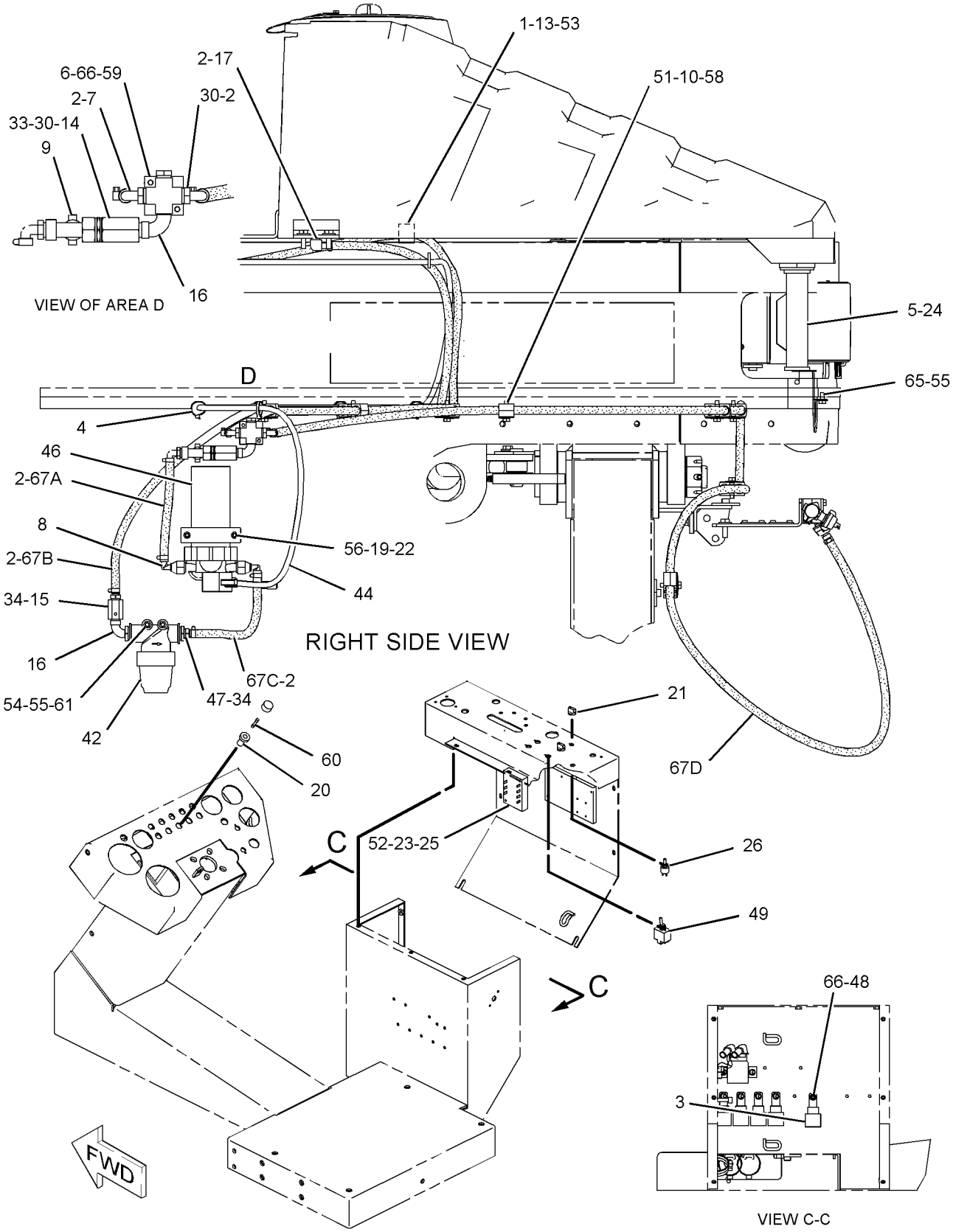

GRAPHIC #2 **<END>** g01093901

WATER SYSTEM

256-2424 SPRAY GP-WATER

S/N: PJF330-UP

PART OF 246-8991 COMMON AR

SMCS-5612 **i03602960**

NOTE	REF NO	GRAPHIC REF	PART NUMBER	QTY	PART NAME 1 2 3 4 5 6 (PRODUCT LEVEL)	SEE PAGE
	1	1	**1G-9960**	2	CLAMP	
	2	1	**1P-4278**	10	CLAMP-HOSE	
	3	2	**3E-5239**	1	RELAY AS (24-VOLT) (TIMER)	
	4	1	**3S-2093**	14	STRAP-CABLE	
	5	1	**4W-3087**	1	CAP AS-FILLER (WATER TANK)	
	6	1	**6R-3730**	1	PLATE	
	7	1	**6R-4061**	1	FITTING-BRASS	
	8	1	**6R-4076**	2	FITTING-ELBOW	
	9	1	**6V-1520**	1	VALVE-DRAIN (WATER SPRAY)	
	10	1	**7R-7908**	8	CLAMP	
	11	1	**7R-8578**	1	LANYARD	
	12	1	**7V-5628**	5	PLATE	
	13	1	**8L-6005**	1	TEE-PIPE	
	14	1	**9X-0507**	1	VALVE-SHUTOFF (WATER TANK)	
	15	1	**003-2143**	2	ELBOW	
	16	1	**006-5490**	1	ELBOW	
	17	1	**101-9605**	1	PLATE	
	18	1	**102-8703**	10	PLATE-COVER	
	19	2	**108-3239**	1	HOLDER-FUSE	
	20	2	**110-8337**	2	KNOB-CONTROL	
	21	1	**122-1004**	2	CLAMP-HALF	
	22	1	**127-5461**	1	FITTING	
	23	1	**140-3138**	9	STRAINER (WATER SPRAY)	
	24	1	**140-3139**	9	CAP	
	25	1	**140-3140**	9	CLAMP	
	26	1	**140-3599**	3	INSERT-NYLON	
M	27	1	**141-9203**	4	SCREW-BUTTON HEAD (M10X1.5X30-MM)	
	28	1	**141-9983**	2	INSERT	
	29	1	**142-6266**	1	VALVE-CHECK	
	30	1	**145-3846**	2	INSERT-NYLON	
	31	1	**148-7155**	2	ANGLE	
	32	1	**150-8261**	7	NOZZLE	
	33	1	**154-7441**	1	PIPE-FRONT	
	34	1	**154-7442**	1	PIPE-REAR	
	35	1	**154-8299**	4	CAP-PIPE	
Y	36	1	**161-8211**	1	FILTER GP-WATER	293
	37	1	**163-1828**	1	PLATE AS	
	38	1	**170-8578**	1	HARNESS AS-WIRING (WATER SPRAY)	
		1	**155-2270**	1	KIT-CONNECTING PLUG (2-PIN)	
					(INCLUDES PLUG AS, WEDGE & INTERFACE SEAL)	
		1	**102-8802**	1	KIT-RECEPTACLE (2-PIN)	
					(INCLUDES RECEPTACLE AS & WEDGE)	
		1	**9G-3695**	1	PLUG	
Y	39	1	**185-1883**	1	TANK GP-WATER	318
Y	40	1	**245-7713**	1	PUMP GP-WATER SPRAY	297
C	41	2	**274-7236**	1	PLATE	
C	42	2	**276-1828**	2	POTENTIOMETER (WATER SPRAY)	
	43	1	**276-2378**	2	PLATE AS	
	44	1	**276-2379**	2	PLATE AS	
C	45	2	**292-2961**	1	TIMER	
	46	1	**011-5224**	2	BUSHING-REDUCING	
M	47	1,2	**099-0492**	2	LOCKNUT (M6X1-THD)	
C	48	2	**141-7220**	2	SCREW-PAN HEAD (8-32X0.63-IN)	
	49	1	**156-3617**	20	CLAMP-HALF	
	50	2	**1V-6653**	1	SWITCH AS-TOGGLE (WATER SPRAY CONTROL)	
	51	1	**3J-5390**	2	PLUG	

256-2424 **SPRAY GP-WATER** ***(contd.)*** **i03602960**

NOTE	REF NO	GRAPHIC REF	PART NUMBER	QTY	PART NAME 1 2 3 4 5 6 (PRODUCT LEVEL)	SEE PAGE
C	52	2	**4B-4274**	1	WASHER (5.5X13X1.2-MM THK)	
M	53	1	**5C-7261**	2	NUT (M8X1.25-THD)	
CM	54	2	**5C-8312**	1	NUT (M4X0.7-THD)	
	55	1	**5P-4116**	7	WASHER-HARD (8.8X20.5X2-MM THK)	
M	56	1	**7X-0465**	2	BOLT (M6X1X100-MM)	
M	58	1	**7X-2537**	10	BOLT (M8X1.25X35-MM)	
	59	1	**7X-7729**	16	WASHER (11X25X3-MM THK)	
M	60	1	**8C-8451**	12	BOLT (M6X1X40-MM)	
	61	2	**8M-8948**	1	FUSE (15-AMPERE)	
CM	62	2	**8T-0024**	1	SCREW (M4X0.7X30-MM)	
M	63	1	**8T-3647**	2	BOLT (M8X1.25X80-MM)	
M	64	1	**8T-4136**	4	BOLT (M10X1.5X25-MM)	
M	65	1	**8T-4138**	1	BOLT (M6X1X20-MM)	
M	66	1	**8T-4171**	1	BOLT (M6X1X12-MM)	
M	67	1	**8T-4195**	8	BOLT (M10X1.5X30-MM)	
M	68	1	**8T-4200**	1	BOLT (M8X1.25X16-MM)	
	69	1,2	**8T-4205**	3	WASHER-HARD (7.2X14.5X2-MM THK)	
	70	2	**9X-8256**	4	WASHER (6.6X12X2-MM THK)	
E	71	1	**5P-1442**		HOSE (540-CM)	
E	72	1	**5P-1442**		HOSE (29-CM)	
E	73	1	**5P-1442**		HOSE (200-CM)	
E	74	1	**5P-1442**		HOSE (21-CM)	
E	75	1	**5P-1442**		HOSE (375-CM)	

C-CHANGE FROM PREVIOUS TYPE
E-ORDER BY THE CENTIMETER
M-METRIC PART
Y-SEPARATE ILLUSTRATION

256-2424 **SPRAY GP-WATER** *(contd.)* **i03602960**

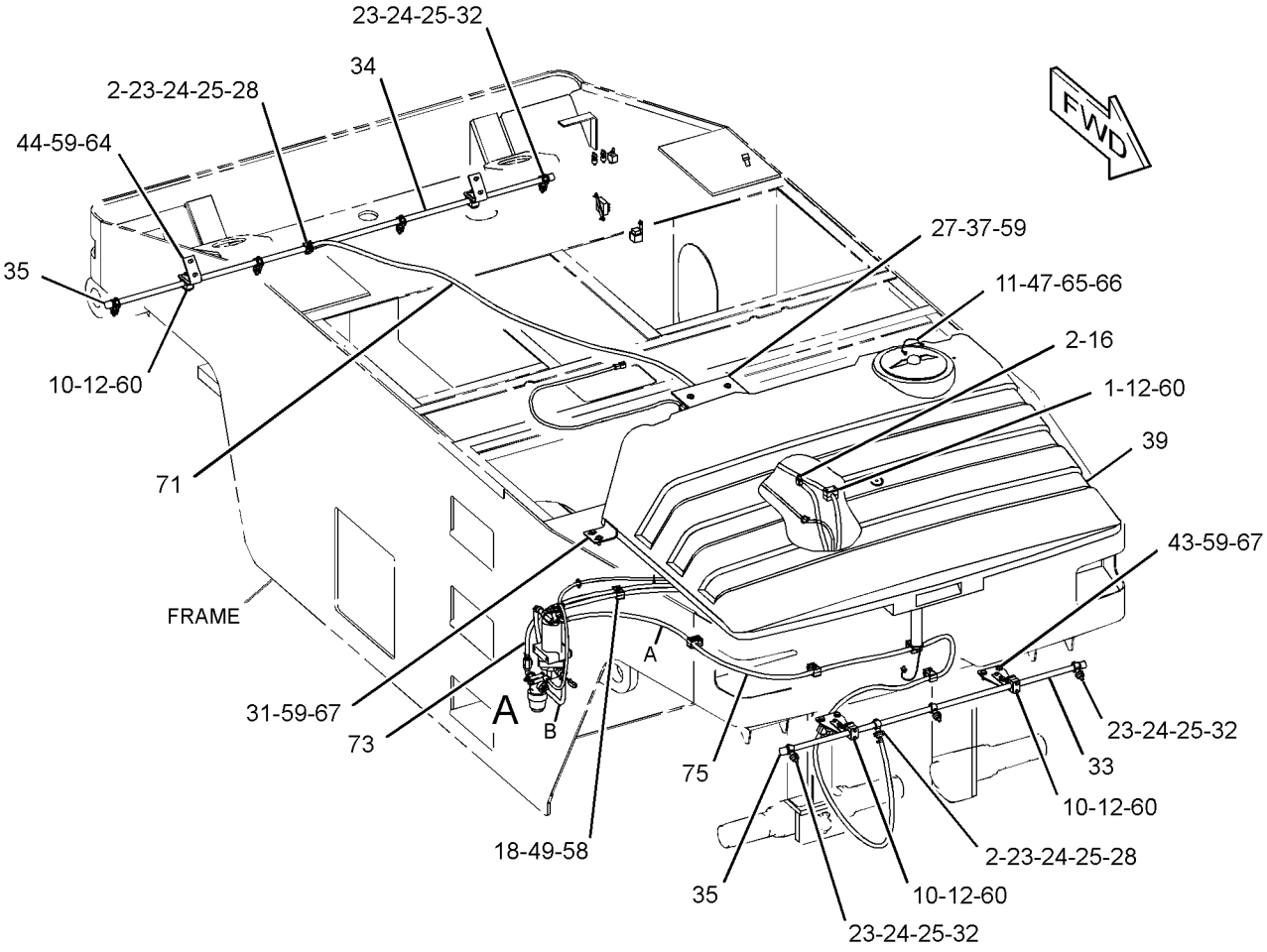

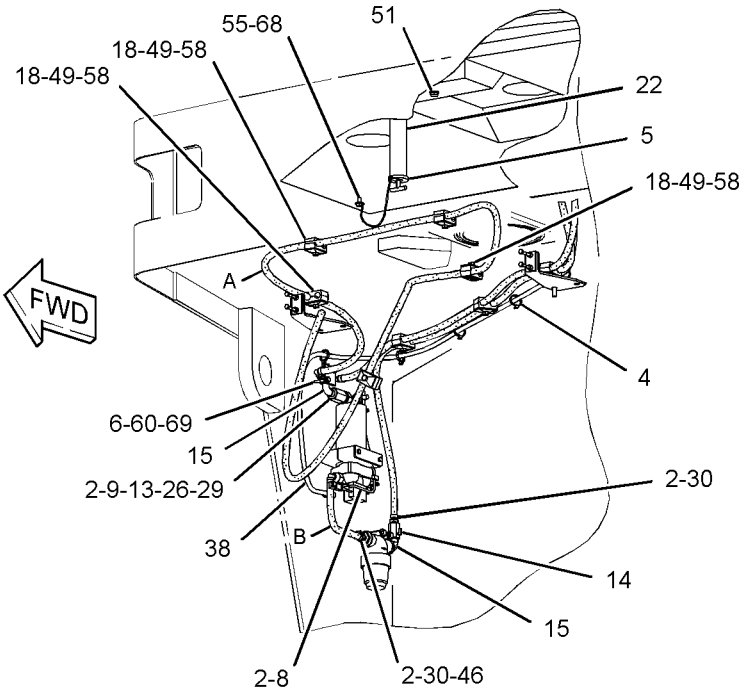

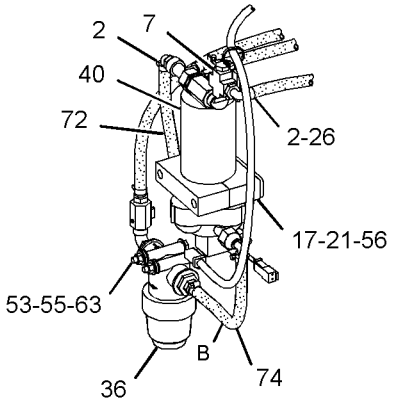

VIEW OF AREA A

GRAPHIC #1

g01372930

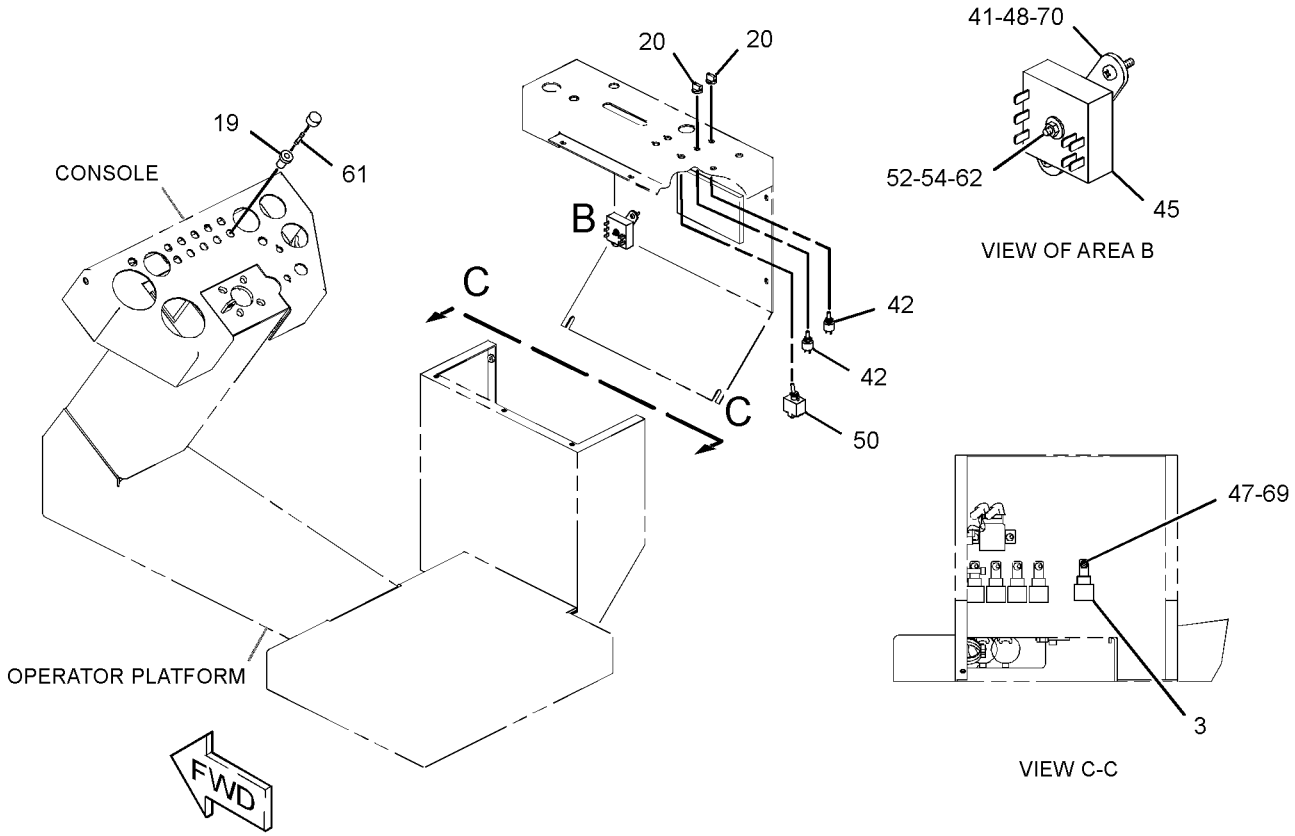

GRAPHIC #2 **<END>** g01372926

WATER SYSTEM

185-1883 TANK GP-WATER

S/N: PJF1-UP

PART OF 256-2424 SPRAY GP-WATER

SMCS-5613 **i03363620**

NOTE	REF NO	GRAPHIC REF	PART NUMBER	QTY	PART NAME 1 2 3 4 5 6 (PRODUCT LEVEL)	SEE PAGE
	1	1	**6W-5698**	2	GROMMET	
	2	1	**7R-0376**	1	RIM	
	3	1	**7R-0431**	6	SCREW (NO 10-16X12.7-MM)	
	4	1	**7R-0476**	1	STRAINER (WATER TANK FILL)	
	5	1	**7R-8588**	1	CAP AS	
	6	1	**127-5463**	1	FITTING	
	7	1	**183-8683**	2	ELBOW	
	8	1	**185-0599**	1	TANK AS-WATER	
E	9	1	**150-6222**		TUBE (21.5-CM)	

E-ORDER BY THE CENTIMETER

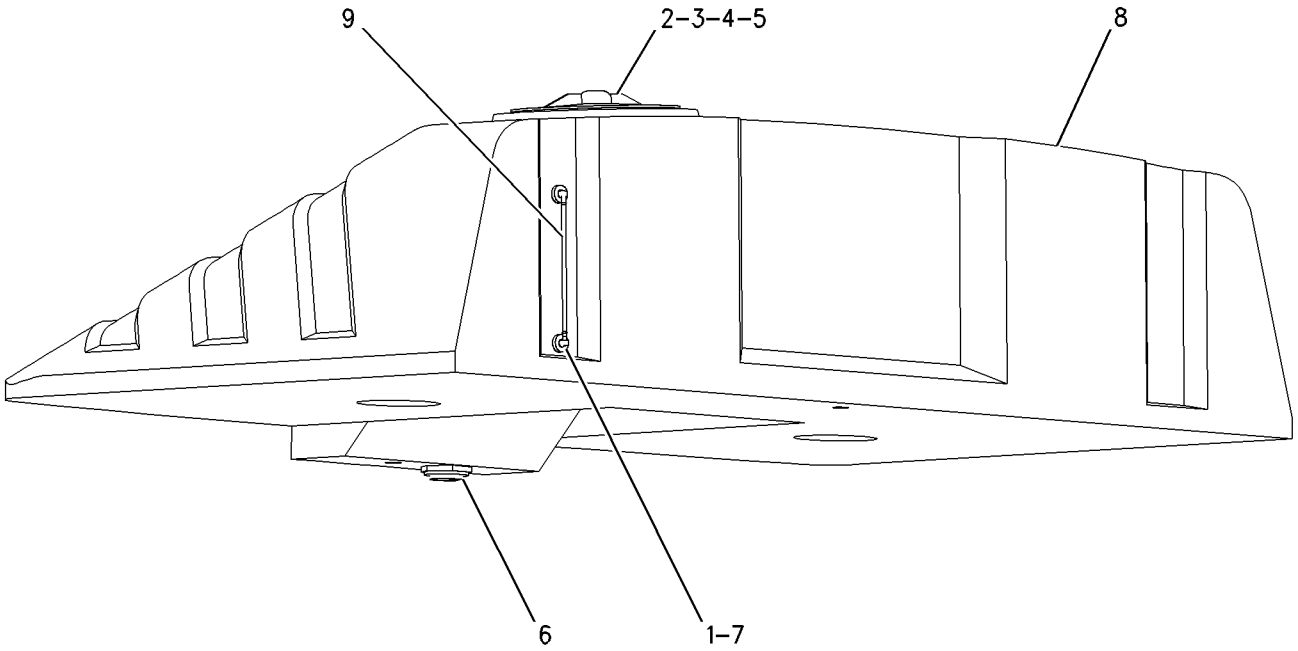

GRAPHIC #1 **<END>** g00671173

OPERATOR STATION

246-9030 CABLE GP-PROPEL–STATIONARY PLATFORM

S/N: PJF1-UP

PART OF 246-9029 OPERATOR AR

SMCS-5154 **i03134785**

NOTE	REF NO	GRAPHIC REF	PART NUMBER	QTY	PART NAME 1 2 3 4 5 6 (PRODUCT LEVEL)	SEE PAGE
	1	1	**6F-0612**	2	NUT-JAM (1/4-28-THD)	
	2	1	**6L-7751**	1	ROD END (SPHERICAL)	
	3	1	**7V-5628**	1	PLATE	
	4	1	**103-5676**	2	CLAMP-HALF	
	5	1	**128-1689**	1	PLATE	
	6	1	**251-1967**	1	CABLE-PROPEL	
M	7	1	**8C-8451**	2	BOLT (M6X1X40-MM)	
M	8	1	**5C-9553**	2	BOLT (M6X1X16-MM)	
	9	1	**7K-1181**	1	STRAP-CABLE	
M	10	1	**8T-4138**	1	BOLT (M6X1X20-MM)	
	11	1	**9X-8256**	4	WASHER (6.6X12X2-MM THK)	

M-METRIC PART

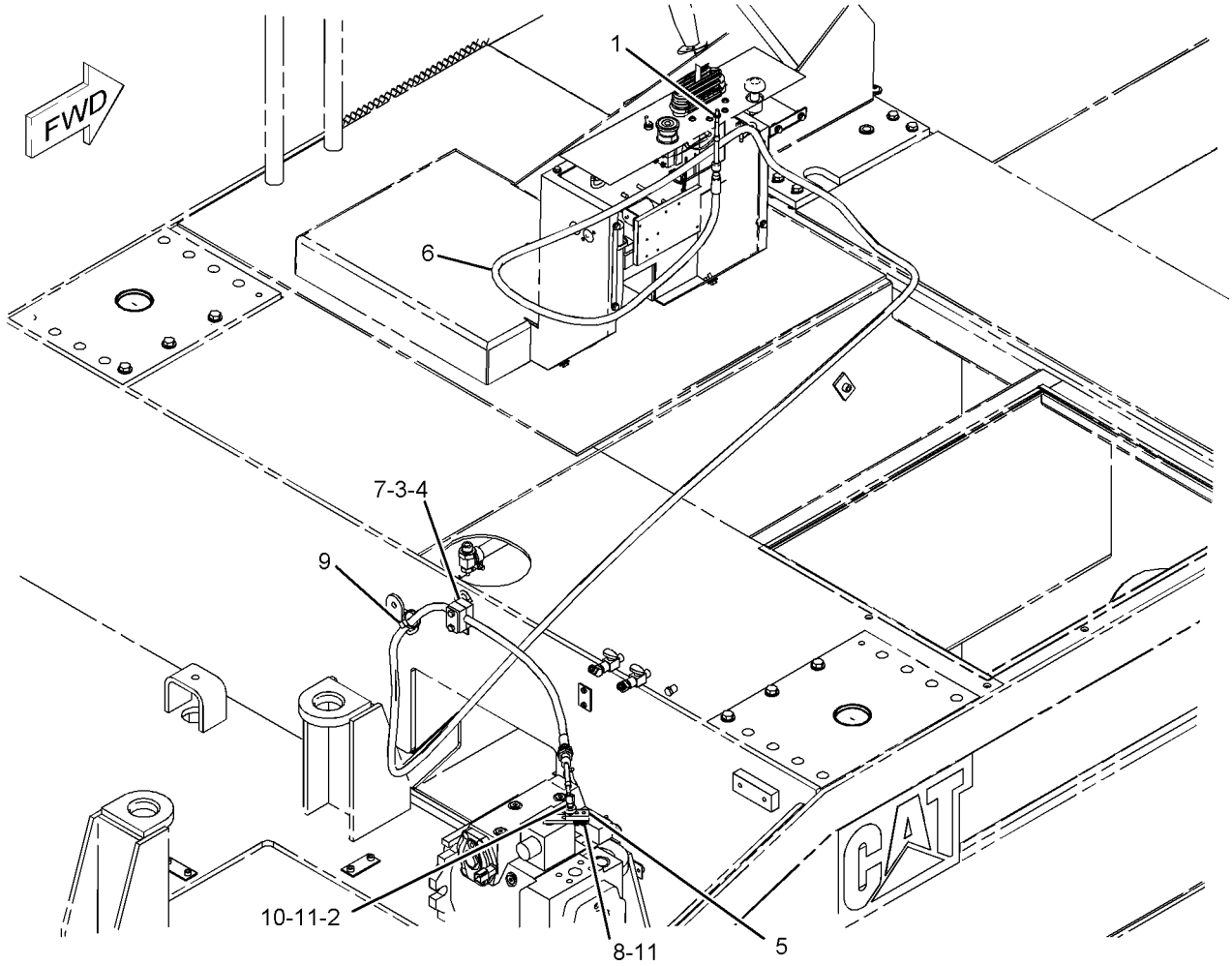

GRAPHIC #1 **<END>** g01092874

OPERATOR STATION

251-1960 CABLE GP-PROPEL—SLIDING PLATFORM

S/N: PJF1-UP
PART OF 251-1957 OPERATOR AR
AN ATTACHMENT

SMCS-5154 **i03134784**

NOTE	REF NO	GRAPHIC REF	PART NUMBER	QTY	PART NAME 1 2 3 4 5 6 (PRODUCT LEVEL)	SEE PAGE
	1	1	**6F-0612**	1	NUT-JAM (1/4-28-THD)	
	2	1	**6L-7751**	1	ROD END	
	3	1	**7K-1181**	2	STRAP-CABLE	
	4	1	**7V-5628**	1	PLATE	
	5	1	**103-5676**	2	CLAMP-HALF	
	6	1	**128-1689**	1	PLATE	
	7	1	**251-1971**	1	CABLE-PROPEL	
M	8	1	**8C-8451**	2	BOLT (M6X1X40-MM)	
M	9	1	**5C-9553**	2	BOLT (M6X1X16-MM)	
M	10	1	**8T-4138**	1	BOLT (M6X1X20-MM)	
	11	1	**9X-8256**	4	WASHER (6.6X12X2-MM THK)	

M-METRIC PART

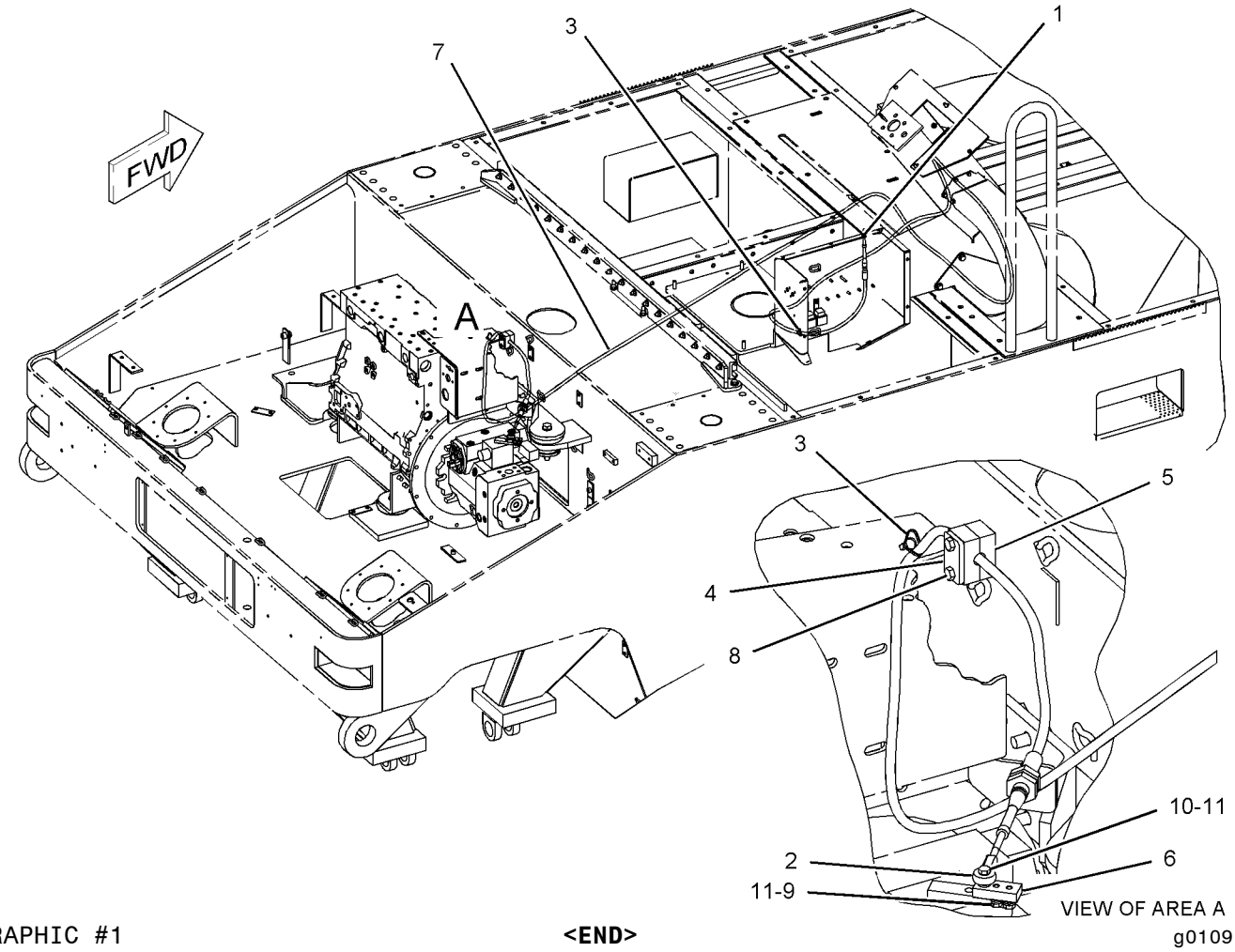

GRAPHIC #1 **<END>** g01091051

OPERATOR STATION

145-5093 CANOPY GP

S/N: PJF1-UP

AN ATTACHMENT

SMCS-7302 **i03577347**

NOTE	REF NO	GRAPHIC REF	PART NUMBER	QTY	PART NAME 1 2 3 4 5 6 (PRODUCT LEVEL)	SEE PAGE
	1	1	**152-0768**	1	CANOPY AS	
	2	1	**5M-3062**	6	BOLT (3/8-16X0.75-IN)	
	3	1	**8T-4896**	6	WASHER-HARD (10.2X18.5X2.5-MM THK)	
D	4	1	**5P-7211**		SEAL (2.5-M)	

D-ORDER BY THE METER

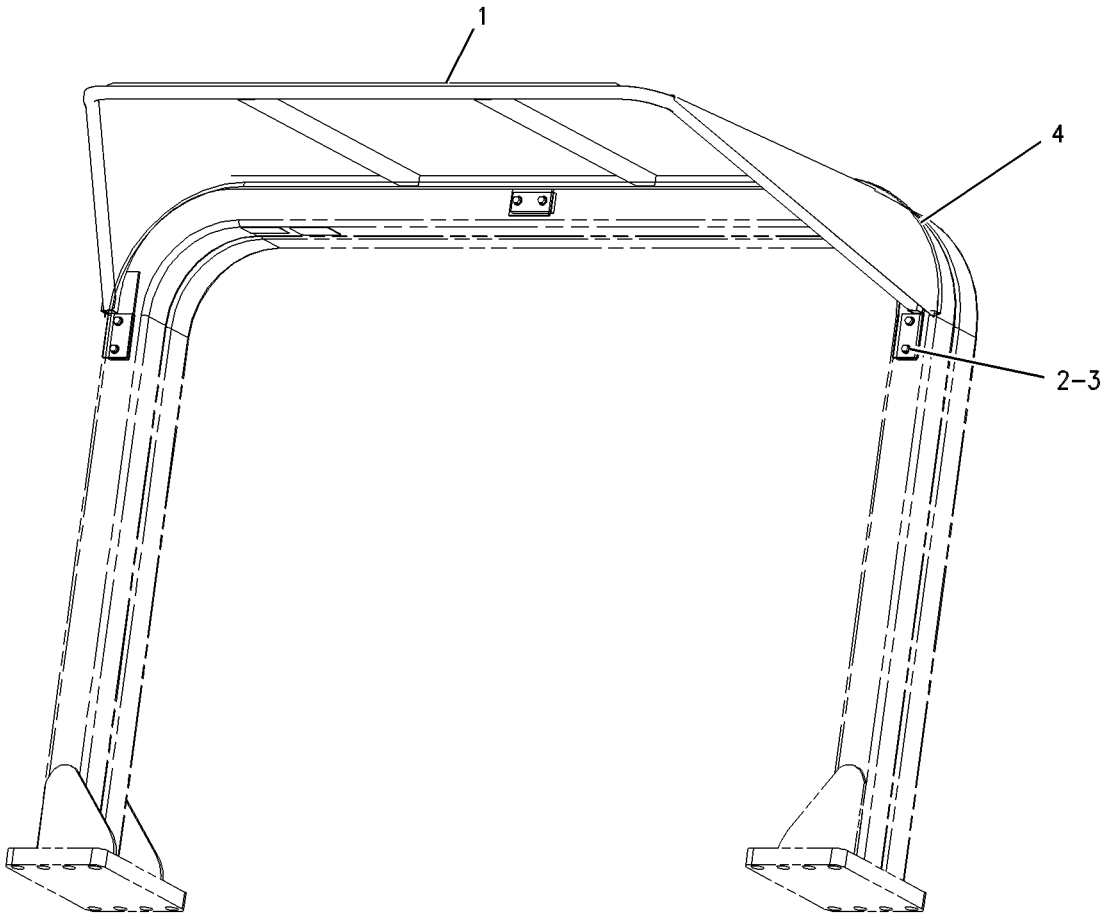

GRAPHIC #1 **<END>** g00506927

OPERATOR STATION

246-9033 CONSOLE GP-INSTRUMENT

S/N: PJF1-283
PART OF 246-9029, 251-1957 OPERATOR AR
ALSO AN ATTACHMENT

SMCS-7451 **i03602942**

NOTE	REF NO	GRAPHIC REF	PART NUMBER	QTY	PART NAME 1 2 3 4 5 6 (PRODUCT LEVEL)	SEE PAGE
	1	1	**120-4008**	1	BOX AS-INSTRUMENT	
	2	1	**3K-8782**	5	FUSE (10-AMPERE)	
	3	1	**108-3239**	6	HOLDER-FUSE	
Y	4	1	**9G-7641**	1	SWITCH GP-START (ENGINE, KEY)	150
	5	1	**205-7700**	1	KIT-SERVICE METER	
					(INCLUDES SERVICE METER & FILM)	
	6	1	**7N-5876**	1	LAMP (24-VOLT) (ALTERNATOR)	
	7	1	**2N-2371**	1	LAMP AS-INDICATOR (RED) (ALTERNATOR)	
		1	**6V-8367**	1	LOCKWASHER	
		1	**6V-8382**	1	NUT-HEX (11/16-27-THD)	
		1	**6V-8817**	2	SCREW-MACHINE (4-36X4.76-IN)	
	8	1	**7K-1181**	6	STRAP-CABLE	
	9	1	**8D-2676**	1	SWITCH AS-TOGGLE (THROTTLE LOCK ON, OFF)	
		1	**3L-8187**	2	LOCKWASHER	
		1	**6T-3631**	2	NUT-HEX (15/32-32-THD)	
		1	**6T-3632**	1	LOCKWASHER	
		1	**6T-3633**	1	RING-LOCKING	
		1	**6V-8374**	2	SCREW-MACHINE (6-32X0.25-IN)	
	10	1	**8L-8413**	6	STRAP-CABLE	
	11	1	**1S-9593**	5	STRAP-CABLE	
	12	1	**2V-7087**	1	LENS-AMBER (ALTERNATOR)	
	13	1	**5P-8500**	2	KEY	
	14	1	**9D-3721**	1	SWITCH-TOGGLE (STARTING AID)	
	15	1	**8M-8948**	1	FUSE (15-AMPERE)	
	16	1	**110-4731**	1	GAUGE GP-COOLANT TEMPERATURE (ENGINE)	
		1	**4B-2043**	5	NUT (8-32-THD)	
		1	**9B-7233**	5	LOCKWASHER	
	17	1	**110-4732**	1	GAUGE GP-OIL TEMPERATURE (HYDRAULIC)	
		1	**4B-2043**	5	NUT (8-32-THD)	
		1	**9B-7233**	5	LOCKWASHER	
	18	1	**130-9153**	1	INDICATOR AS (ENGINE OIL PRESSURE)	
		1	**4B-2043**	5	NUT (8-32-THD)	
		1	**9B-7233**	5	LOCKWASHER	
	19	1	**107-1983**	3	LAMP (24-VOLT)	
	20	1	**257-0022**	1	FILM-PANEL (INSTRUMENT)	
	21	1	**251-1079**	1	HARNESS AS-PANEL	
		1	**1S-9593**	5	STRAP-CABLE	
		1	**102-8801**	1	KIT-RECEPTACLE (12-PIN)	
					(INCLUDES RECEPTACLE AS & WEDGE)	
		1	**7X-8831**	1	DIODE	
		1	**8L-8413**	15	STRAP-CABLE	
		1	**9G-3695**	1	PLUG	
		1	**9G-4348**	1	HOUSING-PLUG	
		1	**9G-4351**	1	HOUSING-RECEPTACLE (4-GA TO 6-GA)	
		1	**155-2255**	1	KIT-CONNECTING PLUG (12-PIN)	
		1	**155-2270**	1	KIT-CONNECTING PLUG (2-PIN)	
					(EACH PLUG KIT INCLUDES PLUG AS, WEDGE & INTERFACE SEAL)	

Y-SEPARATE ILLUSTRATION

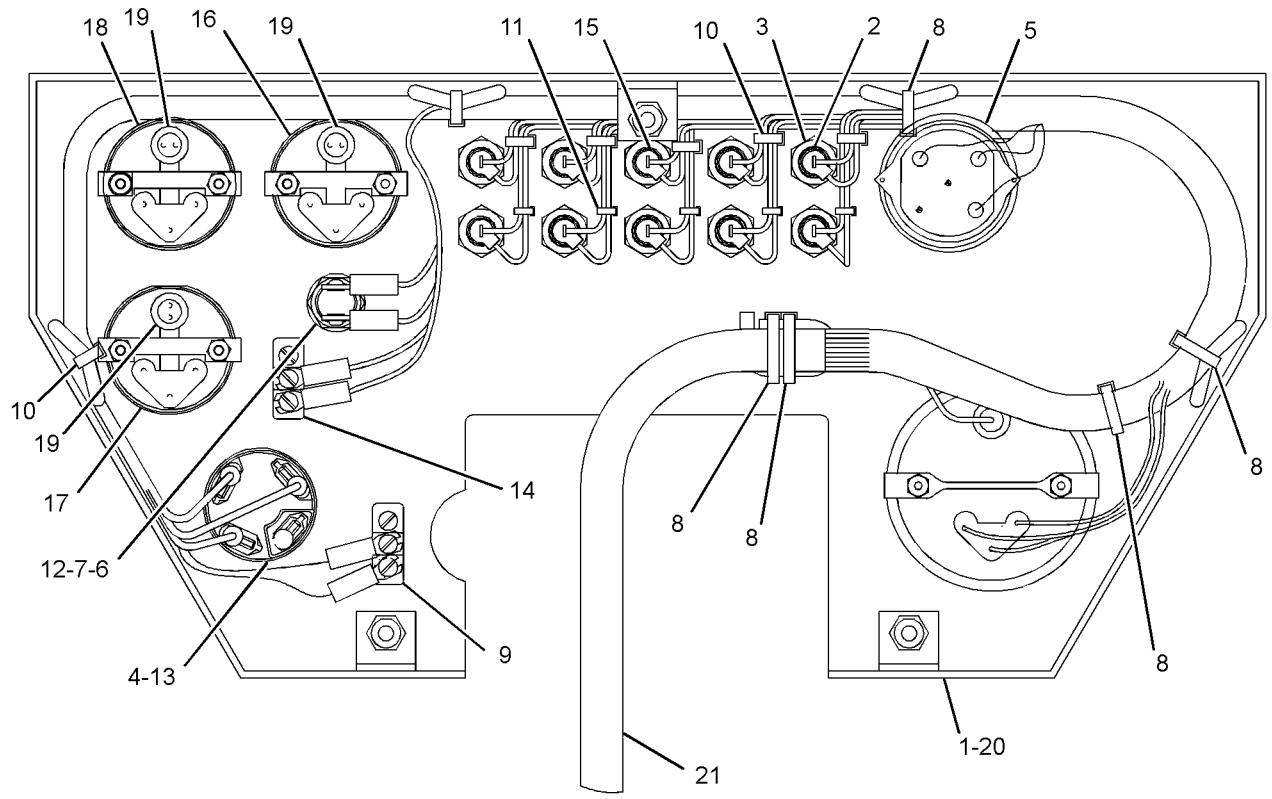

FRONT VIEW

GRAPHIC #1 **<END>** g01927803

OPERATOR STATION

246-9033 CONSOLE GP-INSTRUMENT

S/N: PJF284-UP
PART OF 246-9029, 251-1957 OPERATOR AR
ALSO AN ATTACHMENT

SMCS-7451 **i03577202**

NOTE	REF NO	GRAPHIC REF	PART NUMBER	QTY	PART NAME 1 2 3 4 5 6 (PRODUCT LEVEL)	SEE PAGE
	1	1	**120-4008**	1	BOX AS-INSTRUMENT	
	2	1	**3K-8782**	5	FUSE (10-AMPERE)	
	3	1	**108-3239**	6	HOLDER-FUSE	
Y	4	1	**9G-7641**	1	SWITCH GP-START (ENGINE, KEY)	150
	5	1	**301-7292**	1	KIT-SERVICE METER	
					(INCLUDES SERVICE METER & FILM)	
	6	1	**7N-5876**	1	LAMP (24-VOLT) (ALTERNATOR)	
	7	1	**2N-2371**	1	LAMP AS-INDICATOR (RED) (ALTERNATOR)	
		1	**2V-7088**	1	LENS-RED	
		1	**6V-8367**	1	LOCKWASHER	
		1	**6V-8382**	1	NUT-HEX (11/16-27-THD)	
		1	**6V-8817**	2	SCREW-MACHINE (4-36X4.76-IN)	
	8	1	**7K-1181**	6	STRAP-CABLE	
	9	1	**8L-8413**	6	STRAP-CABLE	
	10	1	**1S-9593**	5	STRAP-CABLE	
	11	1	**2V-7087**	1	LENS-AMBER (ALTERNATOR)	
	12	1	**5P-8500**	2	KEY	
	13	1	**9D-3721**	1	SWITCH-TOGGLE (START AID)	
	14	1	**8M-8948**	1	FUSE (15-AMPERE)	
	15	1	**110-4731**	1	GAUGE GP-COOLANT TEMPERATURE (ENGINE)	
	16	1	**110-4732**	1	GAUGE GP-OIL TEMPERATURE (HYDRAULIC)	
					(EACH INCLUDES GUAGE GP)	
		1	**4B-2043**	5	NUT (8-32-THD)	
		1	**9B-7233**	5	LOCKWASHER	
	17	1	**130-9153**	1	INDICATOR AS (ENGINE OIL PRESSURE)	
		1	**4B-2043**	5	NUT (8-32-THD)	
		1	**9B-7233**	5	LOCKWASHER	
	18	1	**107-1983**	3	LAMP (24-VOLT)	
	19	1	**257-0022**	1	FILM-PANEL (INSTRUMENT)	
C	20	1	**270-8540**	1	HARNESS AS-PANEL (INSTRUMENT)	
		1	**8T-8737**	4	PLUG-SEAL	
		1	**9G-4348**	1	HOUSING-PLUG	
		1	**9G-4351**	1	HOUSING-RECEPTACLE (4-GA TO 6-GA)	
		1	**113-5183**	3	SOCKET-LAMP	
		1	**119-3662**		TUBE-HEAT SHRINK (13-CM)	
		1	**125-7874**		TUBE-HEAT SHRINK (5.72-MM DIA) (10-CM)	
E		1	**125-7875**		TUBE-HEAT SHRINK (30-CM)	
		1	**155-2255**	1	KIT-CONNECTING PLUG (12-PIN)	
		1	**155-2270**	2	KIT-CONNECTING PLUG (2-PIN)	
					(EACH INCLUDES PLUG AS, WEDGE & INTERFACE SEAL)	
		1	**1S-9593**	9	STRAP-CABLE	
		1	**102-8802**	1	KIT-RECEPTACLE (2-PIN)	
		1	**102-8801**	1	KIT-RECEPTACLE (12-PIN)	
					(EACH INCLUDES RECEPTACLE AS & WEDGE)	
E		1	**6V-9023**		TUBE-HEAT SHRINK (12.7-MM DIA) (10-CM)	
		1	**7X-8831**	1	DIODE	
		1	**8L-8413**	30	STRAP-CABLE	
		1	**8N-1546**	1	PIN-CONNECTOR (6-GA)	
		1	**8N-1547**	1	SOCKET-CONNECTOR (6-GA)	
		1	**186-3735**	13	PIN-CONNECTOR (16-GA TO 18-GA)	
		1	**186-3736**	13	SOCKET-CONNECTOR (16-GA TO 18-GA)	
	21	1	**8D-2676**	1	SWITCH AS-TOGGLE (THROTTLE LOCK ON, OFF)	
		1	**3L-8187**	2	LOCKWASHER	
		1	**6T-3631**	2	NUT-HEX (15/32-32-THD)	

246-9033 **CONSOLE GP-INSTRUMENT** *(contd.)* **i03577202**

NOTE	REF NO	GRAPHIC REF	PART NUMBER	QTY	PART NAME 1 2 3 4 5 6 (PRODUCT LEVEL)	SEE PAGE
		1	**6T-3632**	1	LOCKWASHER	
		1	**6T-3633**	1	RING-LOCKING	
		1	**6V-8374**	2	SCREW-MACHINE (6-32XO.25-IN)	

C-CHANGE FROM PREVIOUS TYPE
E-ORDER BY THE CENTIMETER
Y-SEPARATE ILLUSTRATION

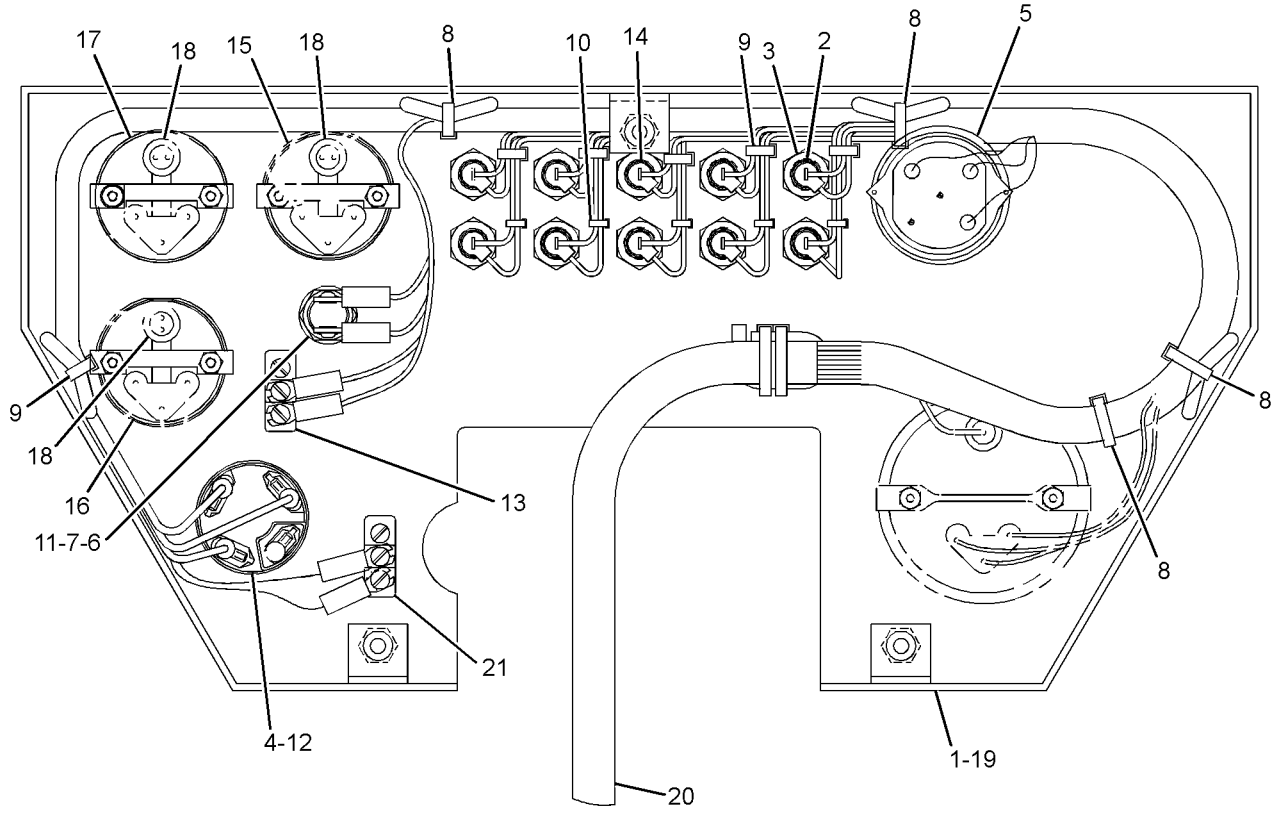

GRAPHIC #1 **<END>** g01907553

OPERATOR STATION

251-1988 CONSOLE GP-OPERATOR—STATIONARY PLATFORM

S/N: PJF1-283

PART OF 246-9029 OPERATOR AR

SMCS-5258 **i02173140**

NOTE	REF NO	GRAPHIC REF	PART NUMBER	QTY	PART NAME 1 2 3 4 5 6 (PRODUCT LEVEL)	SEE PAGE
	1	1	**3T-2357**	1	SWITCH GP-PUSH BUTTON (HORN)	
		1	**2H-3922**	1	LOCKWASHER	
		1	**3B-4501**	1	LOCKWASHER	
		1	**5L-7200**	1	SCREW (8-32X0.375-IN)	
		1	**6V-8363**	2	SCREW (10-32X0.312-IN)	
		1	**6V-8370**	1	NUT-HEX (3/4-32-THD)	
		1	**7T-9515**	1	KNOB-HORN	
		1	**8F-1434**	2	LOCKWASHER	
		1	**9X-0199**	1	BOOT-SWITCH	
	2	1	**7K-1181**	3	STRAP-CABLE	
	3	1	**9X-0506**	2	TIE	
	4	1	**116-5270**	1	LAMP (24-VOLT) (PARKING BRAKE)	
	5	1	**116-5274**	1	KNOB (PARKING BRAKE)	
	6	1	**116-5275**	1	SWITCH AS-PUSH BUTTON (PARKING BRAKE)	
	7	1	**116-6565**	1	BLOCK (LIGHT)	
	8	1	**137-6575**	1	PLATE AS	
		1	**7T-1099**	5	LINK	
	9	1	**145-0830**	1	PLATE AS	
	10	1	**145-2314**	1	FILM-PANEL (SIDE CONSOLE)	
	11	1	**180-5617**	1	BLOCK-CONTACT	
Y	12	1	**244-4471**	1	LEVER GP-PROPEL	343
	13	1	**251-1989**	1	HARNESS AS-CONSOLE (SIDE)	
		1	**102-8802**	3	KIT-RECEPTACLE (2-PIN)	
		1	**102-8804**	1	KIT-RECEPTACLE (4-PIN)	
		1	**102-8805**	1	KIT-RECEPTACLE (6-PIN)	
		1	**102-8801**	2	KIT-RECEPTACLE (12-PIN)	
					(EACH RECEPTACLE KIT INCLUDES RECEPTACLE AS & WEDGE)	
		1	**9G-4348**	1	HOUSING-PLUG	
		1	**9G-4351**	1	HOUSING-RECEPTACLE (4-GA TO 6-GA)	
		1	**9X-1054**	4	PLUG AS-CONNECTOR (4-PIN)	
		1	**3E-5519**	3	PLUG AS-CONNECTOR (5-PIN)	
		1	**127-5484**	1	RECEPTACLE AS-CONNECTOR (1-PIN)	
		1	**155-2270**	1	KIT-CONNECTING PLUG (2-PIN)	
		1	**155-2271**	1	KIT-CONNECTING PLUG (4-PIN)	
		1	**155-2274**	2	KIT-CONNECTING PLUG (6-PIN)	
		1	**155-2255**	2	KIT-CONNECTING PLUG (12-PIN)	
					(EACH PLUG KIT INCLUDES PLUG AS, WEDGE & INTERFACE SEAL)	
	14	1	**2N-3680**	4	SCREW-HEAD (1/4-20X0.75-IN)	
	15	1	**3E-9865**	4	LOCKNUT (1/4-20-THD)	
M	16	1	**5C-9553**	11	BOLT (M6X1X16-MM)	
	17	1	**5P-4115**	6	WASHER-HARD (7.2X19X2-MM THK)	
	18	1	**8T-4205**	9	WASHER-HARD (7.2X14.5X2-MM THK)	
	19	1	**8D-2676**	1	SWITCH AS-TOGGLE (SPEED SELECT)	
		1	**3L-8187**	2	LOCKWASHER	
		1	**6T-3631**	2	NUT-HEX (15/32-32-THD)	
		1	**6T-3632**	1	LOCKWASHER	
		1	**6T-3633**	1	RING-LOCKING	
		1	**6V-8374**	2	SCREW-MACHINE (6-32X0.25-IN)	

M-METRIC PART
Y-SEPARATE ILLUSTRATION

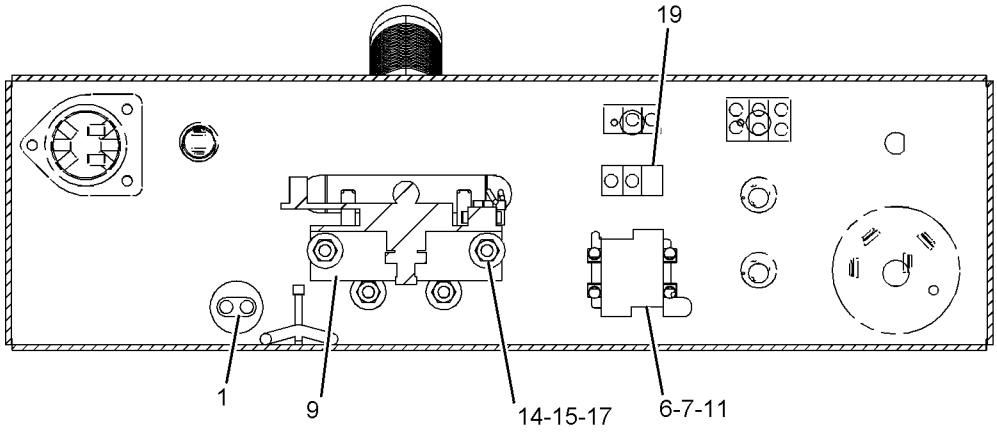

SECTION A-A

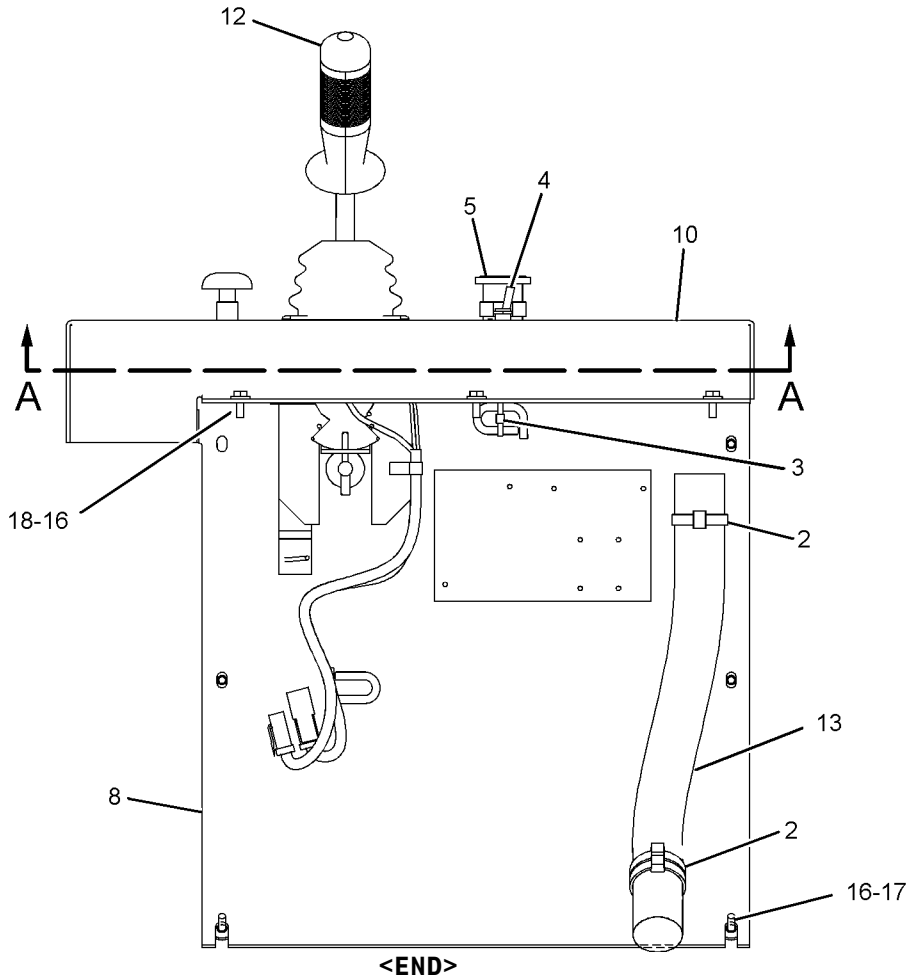

GRAPHIC #1

<END>

g01094068

OPERATOR STATION

251-1988 CONSOLE GP-OPERATOR—STATIONARY PLATFORM

S/N: PJF284-UP

PART OF 246-9029 OPERATOR AR

TYPE 1

SMCS-5258 **i02485141**

NOTE	REF NO	GRAPHIC REF	PART NUMBER	QTY	PART NAME 1 2 3 4 5 6 (PRODUCT LEVEL)	SEE PAGE
	1	1	**3T-2357**	1	SWITCH GP-PUSH BUTTON (HORN)	
		1	**2H-3922**	1	LOCKWASHER	
		1	**3B-4501**	1	LOCKWASHER	
		1	**5L-7200**	1	SCREW (8-32X0.375-IN)	
		1	**6V-8363**	2	SCREW (10-32X0.312-IN)	
		1	**6V-8370**	1	NUT-HEX (3/4-32-THD)	
		1	**7T-9515**	1	KNOB-HORN	
		1	**8F-1434**	2	LOCKWASHER	
		1	**9X-0199**	1	BOOT-SWITCH	
	2	1	**7K-1181**	3	STRAP-CABLE	
	3	1	**9X-0506**	2	TIE	
	4	1	**116-5270**	1	LAMP (24-VOLT) (PARKING BRAKE)	
	5	1	**116-5274**	1	KNOB (PARKING BRAKE)	
	6	1	**116-5275**	1	SWITCH AS-PUSH BUTTON (PARKING BRAKE)	
	7	1	**116-6565**	1	BLOCK (LIGHT)	
	8	1	**137-6575**	1	PLATE AS	
		1	**7T-1099**	5	LINK	
	9	1	**145-0830**	1	PLATE AS	
	10	1	**145-2314**	1	FILM-PANEL (SIDE CONSOLE)	
	11	1	**116-5277**	1	BLOCK-CONTACT	
Y	12	1	**244-4471**	1	LEVER GP-PROPEL	343
C	13	1	**270-8539**	1	HARNESS AS-CONSOLE	
		1	**5C-6158**	1	SOCKET	
		1	**6R-4136**	4	CONNECTOR-BLADE	
		1	**6T-5598**	1	TERMINAL-SOLDER (FOR 5/16-IN BOLT)	
D		1	**6V-1614**		TUBE-HEAT SHRINK (9.52-MM DIA) (1.1-M)	
		1	**9X-1056**	24	TERMINAL-RECEPTACLE	
		1	**104-1995**	3	TERMINAL-BLADE	
		1	**5P-5618**	3	TERMINAL-BLADE (10-GA TO 12-GA)	
		1	**5P-4571**	9	TERMINAL-BLADE (14-GA)	
		1	**131-1474**	13	TERMINAL AS	
		1	**5P-1475**	3	TERMINAL-BLADE (14-GA TO 16-GA, NO. 8 SCREW)	
		1	**5P-1476**	2	TERMINAL-BLADE (14-GA TO 16-GA, NO. 10 SCREW)	
		1	**2L-8049**	1	TERMINAL (6-GA, NO.10 SCREW)	
		1	**2L-8051**	1	TERMINAL (6-GA)	
		1	**2L-8065**	1	TERMINAL (10-GA TO 12-GA)	
E		1	**135-5010**		TUBE (20-CM)	
		1	**1S-9593**	6	STRAP-CABLE	
		1	**102-8802**	3	KIT-RECEPTACLE (2-PIN)	
		1	**102-8804**	1	KIT-RECEPTACLE (4-PIN)	
		1	**102-8801**	2	KIT-RECEPTACLE (12-PIN)	
					(EACH RECEPTACLE KIT INCLUDES RECEPTACLE AS & WEDGE)	
		1	**3E-5519**	3	PLUG AS-CONNECTOR (5-PIN)	
G		1	**160-2247**		SLEEVE-ABRASION (20-IN)	
		1	**8L-8413**	15	STRAP-CABLE	
		1	**9G-4348**	1	HOUSING-PLUG	
		1	**9G-4351**	2	HOUSING-RECEPTACLE (4-GA TO 6-GA)	
		1	**9X-1054**	3	PLUG AS-CONNECTOR (4-PIN)	
		1	**155-2255**	2	KIT-CONNECTING PLUG (12-PIN)	
		1	**155-2270**	2	KIT-CONNECTING PLUG (2-PIN)	
		1	**155-2271**	1	KIT-CONNECTING PLUG (4-PIN)	

251-1988 **CONSOLE GP-OPERATOR** *(contd.)* **i02485141**

NOTE	REF NO	GRAPHIC REF	PART NUMBER	QTY	PART NAME 1 2 3 4 5 6 (PRODUCT LEVEL)	SEE PAGE
		1	**155-2274**	1	KIT-CONNECTING PLUG (6-PIN)	
					(EACH PLUG KIT INCLUDES PLUG AS, WEDGE & INTERFACE SEAL)	
	14	1	**2N-3680**	4	SCREW-HEAD (1/4-20X0.75-IN)	
	15	1	**3E-9865**	4	LOCKNUT (1/4-20-THD)	
M	16	1	**5C-9553**	11	BOLT (M6X1X16-MM)	
	17	1	**5P-4115**	6	WASHER-HARD (7.2X19X2-MM THK)	
	18	1	**8T-4205**	9	WASHER-HARD (7.2X14.5X2-MM THK)	
	19	1	**8D-2676**	1	SWITCH AS-TOGGLE (SPEED SELECT)	
		1	**3L-8187**	2	LOCKWASHER	
		1	**6T-3631**	2	NUT-HEX (15/32-32-THD)	
		1	**6T-3632**	1	LOCKWASHER	
		1	**6T-3633**	1	RING-LOCKING	
		1	**6V-8374**	2	SCREW-MACHINE (6-32X0.25-IN)	

C-CHANGE FROM PREVIOUS TYPE
D-ORDER BY THE METER
E-ORDER BY THE CENTIMETER
G-ORDER BY THE INCH
M-METRIC PART
Y-SEPARATE ILLUSTRATION

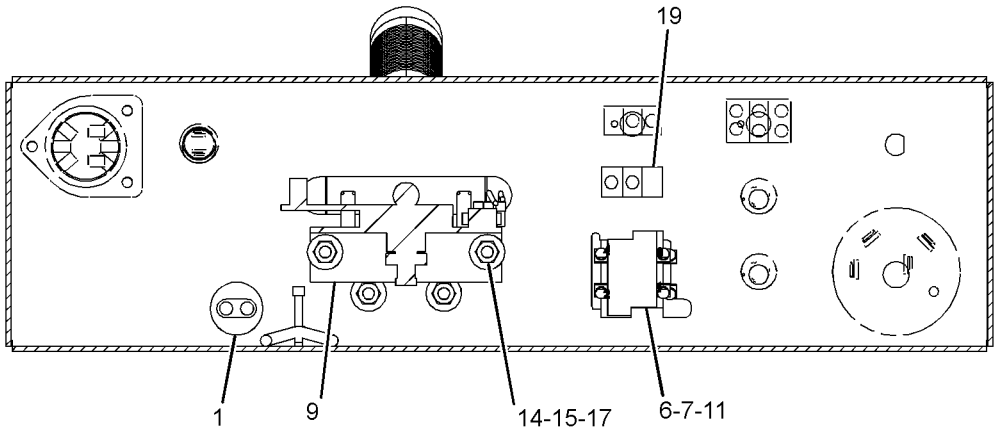

SECTION A-A

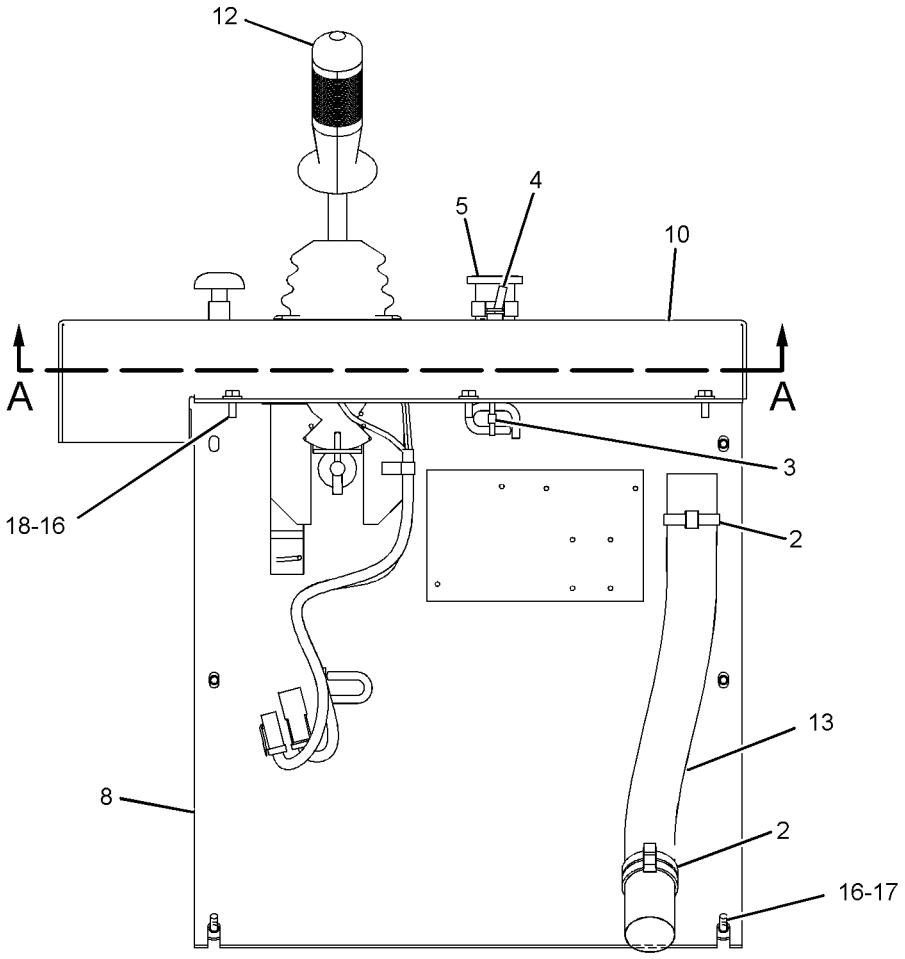

LEFT SIDE VIEW

GRAPHIC #1 **<END>** g01242229

OPERATOR STATION

251-1988 CONSOLE GP-OPERATOR—STATIONARY PLATFORM

S/N: PJF284-UP
PART OF 246-9029 OPERATOR AR
TYPE 2

SMCS-5258 **i03002605**

NOTE	REF NO	GRAPHIC REF	PART NUMBER	QTY	PART NAME 1 2 3 4 5 6 (PRODUCT LEVEL)	SEE PAGE
	1	1	**3T-2357**	1	SWITCH GP-PUSH BUTTON (HORN)	
		1	**2H-3922**	1	LOCKWASHER	
		1	**3B-4501**	1	LOCKWASHER	
		1	**5L-7200**	1	SCREW (8-32X0.375-IN)	
		1	**6V-8363**	2	SCREW (10-32X0.312-IN)	
		1	**6V-8370**	1	NUT-HEX (3/4-32-THD)	
		1	**7T-9515**	1	KNOB-HORN	
		1	**8F-1434**	2	LOCKWASHER	
		1	**9X-0199**	1	BOOT-SWITCH	
	2	1	**7K-1181**	3	STRAP-CABLE	
	3	1	**9X-0506**	2	TIE	
	4	1	**116-5270**	1	LAMP (24-VOLT) (PARKING BRAKE)	
	5	1	**116-5274**	1	KNOB (PARKING BRAKE)	
	6	1	**116-5275**	1	SWITCH AS-PUSH BUTTON (PARKING BRAKE)	
	7	1	**116-6565**	1	BLOCK (LIGHT)	
	8	1	**137-6575**	1	PLATE AS	
		1	**7T-1099**	5	LINK	
	9	1	**145-0830**	1	PLATE AS	
	10	1	**145-2314**	1	FILM-PANEL (SIDE CONSOLE)	
	11	1	**116-5277**	1	BLOCK-CONTACT	
CY	12	1	**321-0119**	1	LEVER GP-PROPEL	347
	13	1	**270-8539**	1	HARNESS AS-CONSOLE	
	14	1	**2N-3680**	4	SCREW-HEAD (1/4-20X0.75-IN)	
	15	1	**3E-9865**	4	LOCKNUT (1/4-20-THD)	
M	16	1	**5C-9553**	11	BOLT (M6X1X16-MM)	
	17	1	**5P-4115**	6	WASHER-HARD (7.2X19X2-MM THK)	
	18	1	**8T-4205**	9	WASHER-HARD (7.2X14.5X2-MM THK)	
	19	1	**8D-2676**	1	SWITCH AS-TOGGLE (SPEED SELECT)	
		1	**3L-8187**	2	LOCKWASHER	
		1	**6T-3631**	2	NUT-HEX (15/32-32-THD)	
		1	**6T-3632**	1	LOCKWASHER	
		1	**6T-3633**	1	RING-LOCKING	
		1	**6V-8374**	2	SCREW-MACHINE (6-32X0.25-IN)	

C-CHANGE FROM PREVIOUS TYPE
M-METRIC PART
Y-SEPARATE ILLUSTRATION

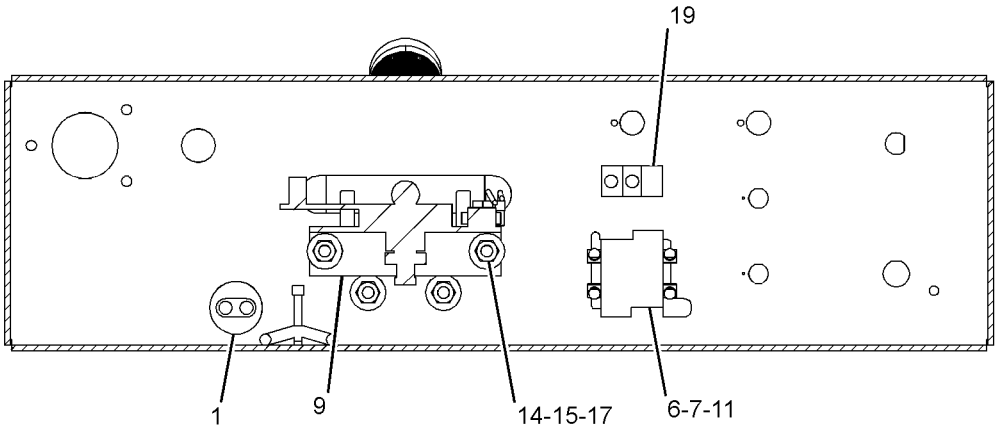

SECTION A-A

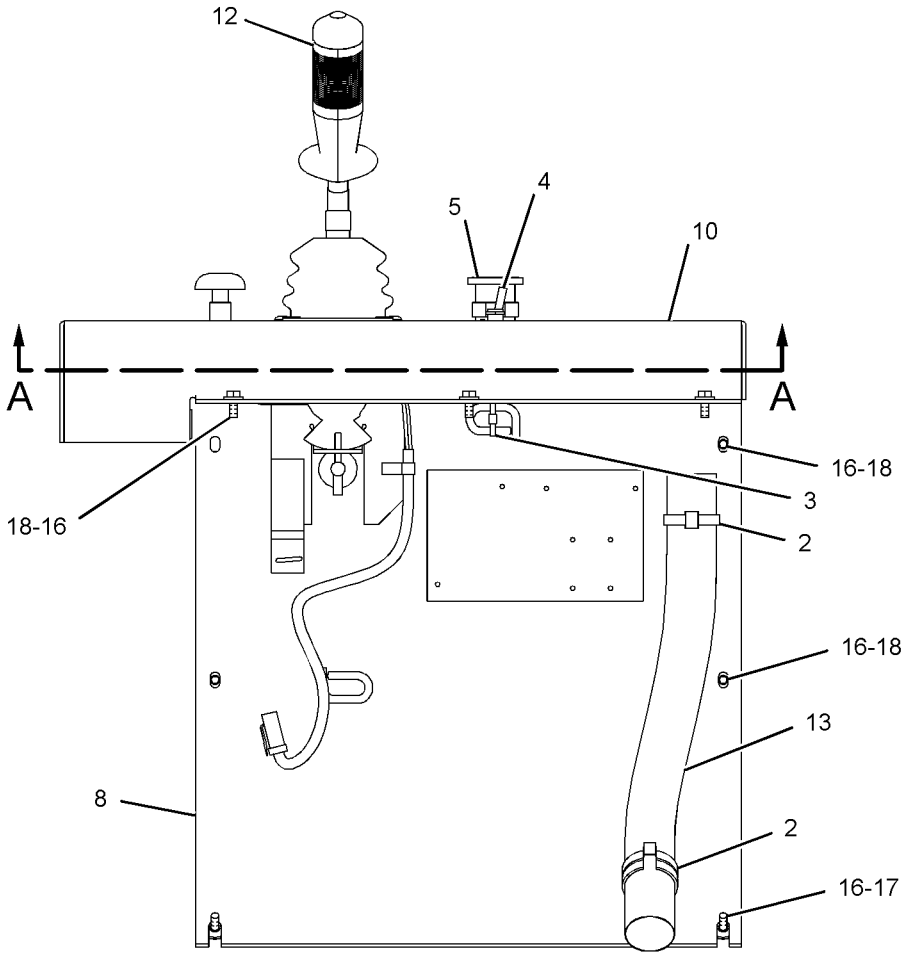

LEFT SIDE VIEW

GRAPHIC #1 **<END>** g01769053

OPERATOR STATION

255-4142 CONSOLE GP-OPERATOR

S/N: PJF1-280
PART OF 251-1957 OPERATOR AR
AN ATTACHMENT

SMCS-5258 **i02171337**

NOTE	REF NO	GRAPHIC REF	PART NUMBER	QTY	PART NAME 1 2 3 4 5 6 (PRODUCT LEVEL)	SEE PAGE
	1	1	**3S-2093**	1	STRAP-CABLE	
	2	1	**3T-2357**	1	SWITCH GP-PUSH BUTTON (HORN)	
		1	**2H-3922**	1	LOCKWASHER	
		1	**3B-4501**	1	LOCKWASHER	
		1	**5L-7200**	1	SCREW (8-32X0.375-IN)	
		1	**6V-8363**	2	SCREW (10-32X0.312-IN)	
		1	**6V-8370**	1	NUT-HEX (3/4-32-THD)	
		1	**7T-9515**	1	KNOB-HORN	
		1	**8F-1434**	2	LOCKWASHER	
		1	**9X-0199**	1	BOOT-SWITCH	
	3	1	**7K-1181**	8	STRAP-CABLE	
	4	1	**9G-9154**	2	CLIP	
	5	1	**9G-9155**	1	CLIP	
	6	1	**9X-0506**	3	TIE	
	7	1	**116-5270**	1	LAMP (24-VOLT) (PARKING BRAKE)	
	8	1	**116-5274**	1	KNOB (PARKING BRAKE)	
	9	1	**116-5275**	1	SWITCH AS-PUSH BUTTON (PARKING BRAKE)	
	10	1	**116-6565**	1	BLOCK (LIGHT)	
	11	1	**165-7670**	1	COVER AS	
	12	1	**171-7075**	1	PLATE AS	
	13	1	**171-9646**	1	FILM-PANEL (SIDE CONSOLE)	
	14	1	**180-5617**	1	BLOCK-CONTACT	
Y	15	1	**244-4471**	1	LEVER GP-PROPEL	343
	16	1	**251-1989**	1	HARNESS AS-CONSOLE (SIDE)	
		1	**1S-9593**	7	STRAP-CABLE	
		1	**102-8802**	3	KIT-RECEPTACLE (2-PIN)	
		1	**102-8804**	1	KIT-RECEPTACLE (4-PIN)	
		1	**102-8805**	1	KIT-RECEPTACLE (6-PIN)	
		1	**102-8801**	2	KIT-RECEPTACLE (12-PIN)	
		1	**102-8801**	1	KIT-RECEPTACLE (12-PIN)	
					(EACH RECEPTACLE KIT INCLUDES RECEPTACLE AS & WEDGE)	
		1	**3E-5519**	3	PLUG AS-CONNECTOR (5-PIN)	
		1	**7G-7918**	3	PLUG-SEAL	
		1	**8L-8413**	16	STRAP-CABLE	
		1	**9G-3695**	14	PLUG	
		1	**9G-4348**	1	HOUSING-PLUG	
		1	**9G-4351**	1	HOUSING-RECEPTACLE (4-GA TO 6-GA)	
		1	**9X-1054**	4	PLUG AS-CONNECTOR (4-PIN)	
		1	**127-5484**	1	RECEPTACLE AS-CONNECTOR (1-PIN)	
		1	**155-2255**	2	KIT-CONNECTING PLUG (12-PIN)	
		1	**155-2270**	1	KIT-CONNECTING PLUG (2-PIN)	
		1	**155-2271**	1	KIT-CONNECTING PLUG (4-PIN)	
		1	**155-2274**	2	KIT-CONNECTING PLUG (6-PIN)	
					(EACH PLUG KIT INCLUDES PLUG AS, WEDGE & INTERFACE SEAL)	
	17	1	**2N-3680**	4	SCREW-HEAD (1/4-20X0.75-IN)	
	18	1	**3E-9865**	4	LOCKNUT (1/4-20-THD)	
M	19	1	**5C-9553**	11	BOLT (M6X1X16-MM)	
	20	1	**5P-4115**	6	WASHER-HARD (7.2X19X2-MM THK)	
	21	1	**8D-2676**	1	SWITCH AS-TOGGLE (SPEED SELECT)	
		1	**3L-8187**	2	LOCKWASHER	
		1	**6T-3631**	2	NUT-HEX (15/32-32-THD)	
		1	**6T-3632**	1	LOCKWASHER	
		1	**6T-3633**	1	RING-LOCKING	

255-4142 **CONSOLE GP-OPERATOR** *(contd.)* **i02171337**

NOTE	REF NO	GRAPHIC REF	PART NUMBER	QTY	PART NAME 1 2 3 4 5 6 (PRODUCT LEVEL)	SEE PAGE
		1	**6V-8374**	2	SCREW-MACHINE (6-32X0.25-IN)	
	22	1	**8T-4121**	1	WASHER-HARD (11X21X2.5-MM THK)	
M	23	1	**8T-4137**	1	BOLT (M10X1.5X20-MM)	
	24	1	**8T-4205**	9	WASHER-HARD (7.2X14.5X2-MM THK)	

M-METRIC PART
Y-SEPARATE ILLUSTRATION

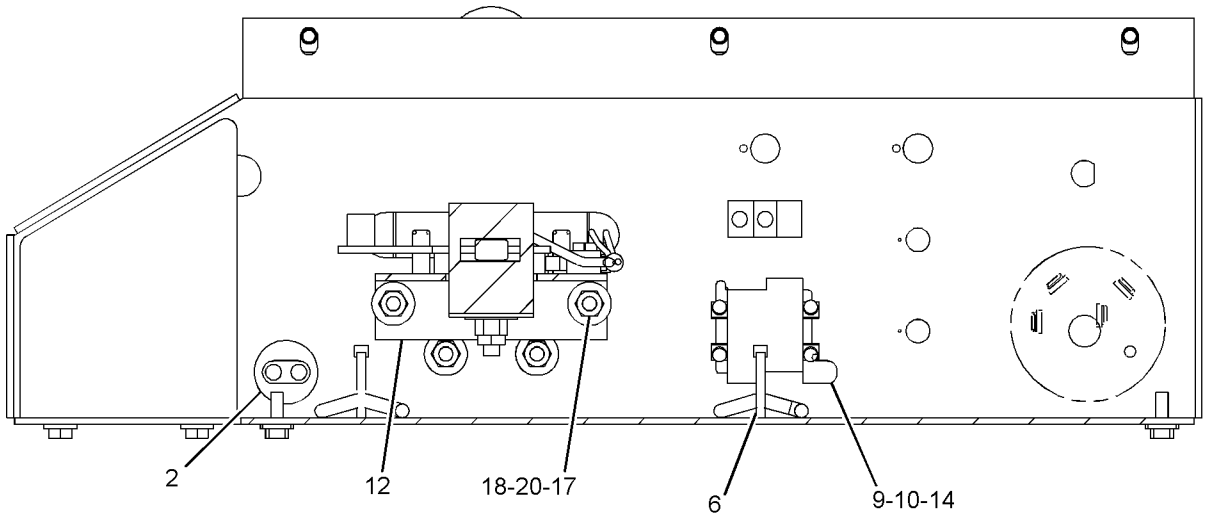

SECTION A-A

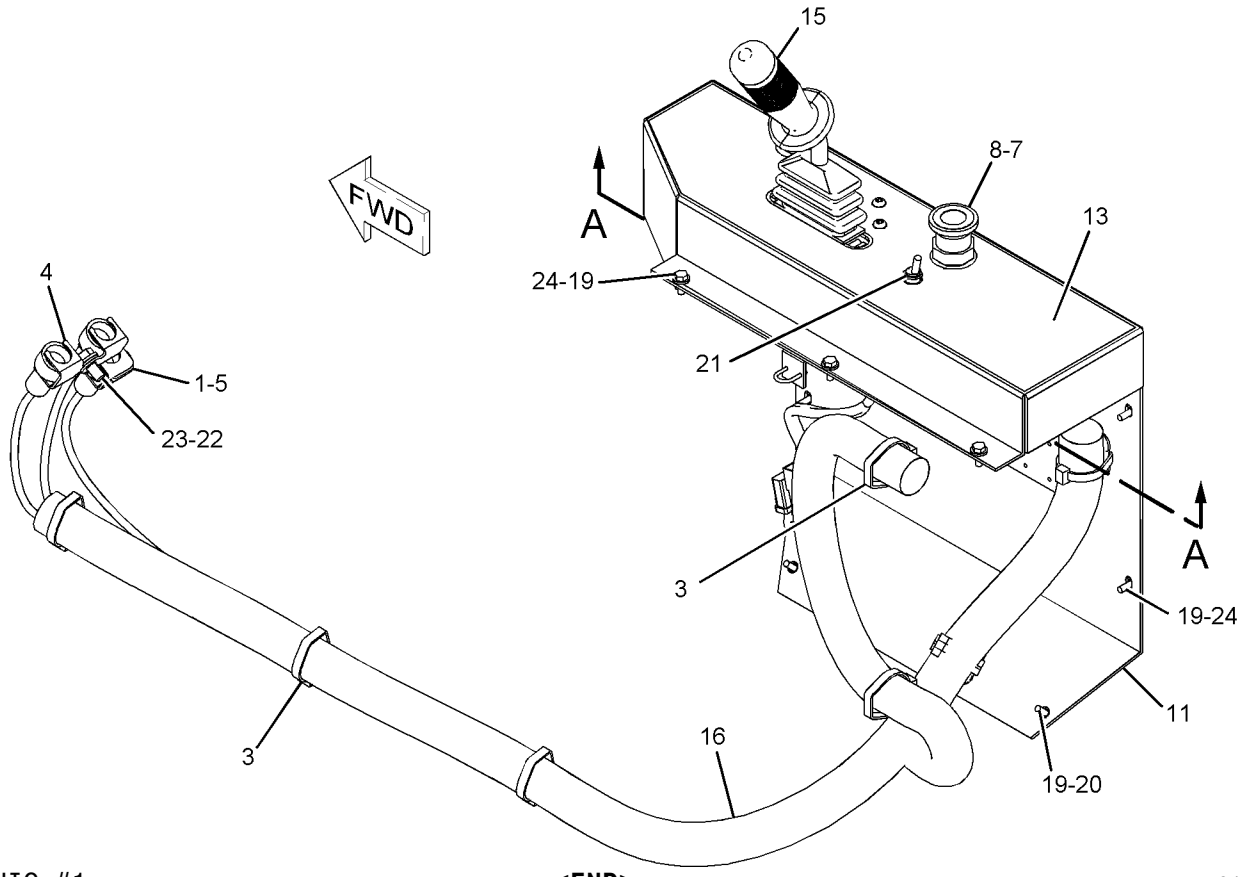

GRAPHIC #1 **<END>** g01094224

OPERATOR STATION

255-4142 CONSOLE GP-OPERATOR

S/N: PJF281-UP
PART OF 251-1957 OPERATOR AR
AN ATTACHMENT
TYPE 1

SMCS-5258 **i02485083**

NOTE	REF NO	GRAPHIC REF	PART NUMBER	QTY	PART NAME 1 2 3 4 5 6 (PRODUCT LEVEL)	SEE PAGE
	1	1	**3S-2093**	1	STRAP-CABLE	
	2	1	**3T-2357**	1	SWITCH GP-PUSH BUTTON (HORN)	
		1	**2H-3922**	1	LOCKWASHER	
		1	**3B-4501**	1	LOCKWASHER	
		1	**5L-7200**	1	SCREW (8-32X0.375-IN)	
		1	**6V-8363**	2	SCREW (10-32X0.312-IN)	
		1	**6V-8370**	1	NUT-HEX (3/4-32-THD)	
		1	**7T-9515**	1	KNOB-HORN	
		1	**8F-1434**	2	LOCKWASHER	
		1	**9X-0199**	1	BOOT-SWITCH	
	3	1	**7K-1181**	8	STRAP-CABLE	
	4	1	**9G-9154**	2	CLIP	
	5	1	**9G-9155**	1	CLIP	
	6	1	**9X-0506**	3	TIE	
	7	1	**116-5270**	1	LAMP (24-VOLT) (PARKING BRAKE)	
	8	1	**116-5274**	1	KNOB (PARKING BRAKE)	
	9	1	**116-5275**	1	SWITCH AS-PUSH BUTTON (PARKING BRAKE)	
	10	1	**116-6565**	1	BLOCK (LIGHT)	
	11	1	**165-7670**	1	COVER AS	
	12	1	**171-7075**	1	PLATE AS	
	13	1	**171-9646**	1	FILM-PANEL (SIDE CONSOLE)	
	14	1	**116-5277**	1	BLOCK-CONTACT	
Y	15	1	**244-4471**	1	LEVER GP-PROPEL	343
C	16	1	**270-8539**	1	HARNESS AS-CONSOLE	
		1	**5C-6158**	1	SOCKET	
		1	**6R-4136**	4	CONNECTOR-BLADE	
		1	**6T-5598**	1	TERMINAL-SOLDER (FOR 5/16-IN BOLT)	
D		1	**6V-1614**		TUBE-HEAT SHRINK (9.52-MM DIA) (1.1-M)	
		1	**9X-1056**	24	TERMINAL-RECEPTACLE	
		1	**104-1995**	3	TERMINAL-BLADE	
		1	**5P-5618**	3	TERMINAL-BLADE (10-GA TO 12-GA)	
		1	**5P-4571**	9	TERMINAL-BLADE (14-GA)	
		1	**131-1474**	13	TERMINAL AS	
		1	**5P-1475**	3	TERMINAL-BLADE (14-GA TO 16-GA, NO. 8 SCREW)	
		1	**5P-1476**	2	TERMINAL-BLADE (14-GA TO 16-GA, NO. 10 SCREW)	
		1	**2L-8049**	1	TERMINAL (6-GA, NO.10 SCREW)	
		1	**2L-8051**	1	TERMINAL (6-GA)	
		1	**2L-8065**	1	TERMINAL (10-GA TO 12-GA)	
E		1	**135-5010**		TUBE (20-CM)	
		1	**1S-9593**	6	STRAP-CABLE	
		1	**102-8802**	3	KIT-RECEPTACLE (2-PIN)	
		1	**102-8804**	1	KIT-RECEPTACLE (4-PIN)	
		1	**102-8801**	2	KIT-RECEPTACLE (12-PIN)	
					(EACH RECEPTACLE KIT INCLUDES RECEPTACLE AS & WEDGE)	
		1	**3E-5519**	3	PLUG AS-CONNECTOR (5-PIN)	
G		1	**160-2247**		SLEEVE-ABRASION (20-IN)	
		1	**8L-8413**	15	STRAP-CABLE	
		1	**9G-4348**	1	HOUSING-PLUG	
		1	**9G-4351**	2	HOUSING-RECEPTACLE (4-GA TO 6-GA)	
		1	**9X-1054**	3	PLUG AS-CONNECTOR (4-PIN)	
		1	**155-2255**	2	KIT-CONNECTING PLUG (12-PIN)	

255-4142 **CONSOLE GP-OPERATOR** *(contd.)* **i02485083**

NOTE	REF NO	GRAPHIC REF	PART NUMBER	QTY	PART NAME 1 2 3 4 5 6 (PRODUCT LEVEL)	SEE PAGE
		1	**155-2270**	2	KIT-CONNECTING PLUG (2-PIN)	
		1	**155-2271**	1	KIT-CONNECTING PLUG (4-PIN)	
		1	**155-2274**	1	KIT-CONNECTING PLUG (6-PIN)	
					(EACH PLUG KIT INCLUDES PLUG AS, WEDGE & INTERFACE SEAL)	
	17	1	**2N-3680**	4	SCREW-HEAD (1/4-20X0.75-IN)	
	18	1	**3E-9865**	4	LOCKNUT (1/4-20-THD)	
M	19	1	**5C-9553**	11	BOLT (M6X1X16-MM)	
	20	1	**5P-4115**	6	WASHER-HARD (7.2X19X2-MM THK)	
	21	1	**8D-2676**	1	SWITCH AS-TOGGLE (SPEED SELECT)	
		1	**3L-8187**	2	LOCKWASHER	
		1	**6T-3631**	2	NUT-HEX (15/32-32-THD)	
		1	**6T-3632**	1	LOCKWASHER	
		1	**6T-3633**	1	RING-LOCKING	
		1	**6V-8374**	2	SCREW-MACHINE (6-32X0.25-IN)	
	22	1	**8T-4121**	1	WASHER-HARD (11X21X2.5-MM THK)	
M	23	1	**8T-4137**	1	BOLT (M10X1.5X20-MM)	
	24	1	**8T-4205**	9	WASHER-HARD (7.2X14.5X2-MM THK)	

C-CHANGE FROM PREVIOUS TYPE
D-ORDER BY THE METER
E-ORDER BY THE CENTIMETER
G-ORDER BY THE INCH
M-METRIC PART
Y-SEPARATE ILLUSTRATION

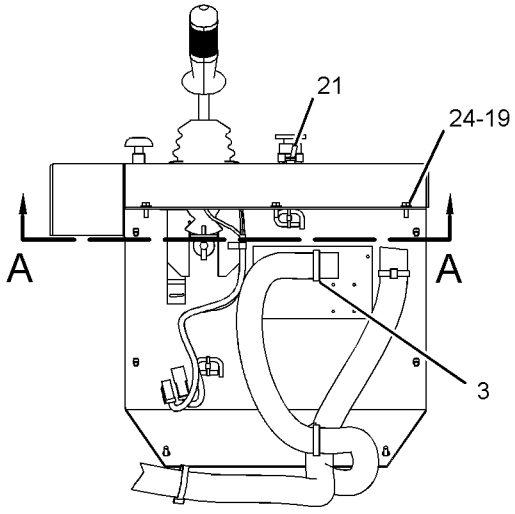

LEFT SIDE VIEW

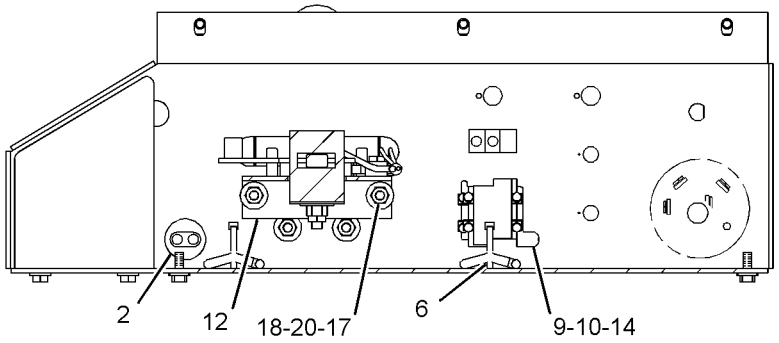

SECTION A-A

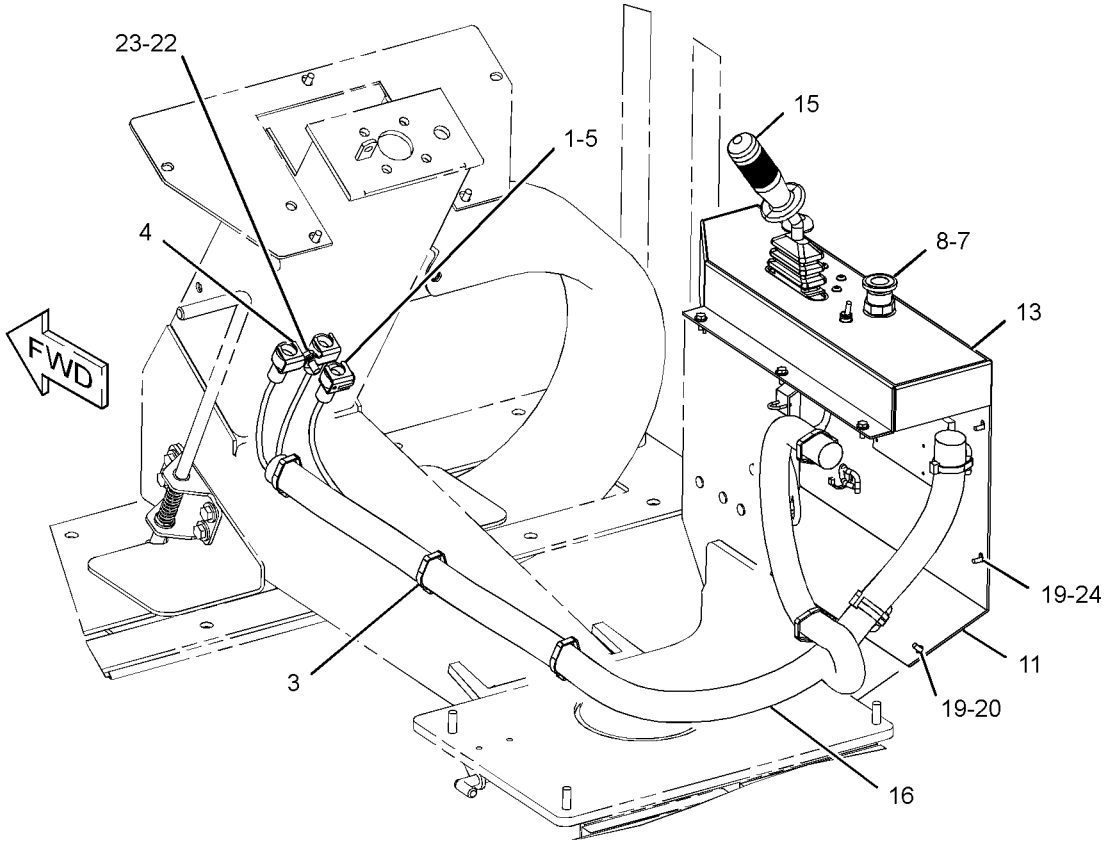

GRAPHIC #1 **<END>** g01241196

OPERATOR STATION

255-4142 CONSOLE GP-OPERATOR

S/N: PJF281-UP
PART OF 251-1957 OPERATOR AR
AN ATTACHMENT
TYPE 2

SMCS-5258 **i03002607**

NOTE	REF NO	GRAPHIC REF	PART NUMBER	QTY	PART NAME 1 2 3 4 5 6 (PRODUCT LEVEL)	SEE PAGE
	1	1	**3S-2093**	4	STRAP-CABLE	
	2	1	**3T-2357**	1	SWITCH GP-PUSH BUTTON (HORN)	
		1	**2H-3922**	1	LOCKWASHER	
		1	**3B-4501**	1	LOCKWASHER	
		1	**5L-7200**	1	SCREW (8-32X0.375-IN)	
		1	**6V-8363**	2	SCREW (10-32X0.312-IN)	
		1	**6V-8370**	1	NUT-HEX (3/4-32-THD)	
		1	**7T-9515**	1	KNOB-HORN	
		1	**8F-1434**	2	LOCKWASHER	
		1	**9X-0199**	1	BOOT-SWITCH	
	3	1	**7K-1181**	8	STRAP-CABLE	
	4	1	**9G-9154**	2	CLIP	
	5	1	**9G-9155**	1	CLIP	
	7	1	**116-5270**	1	LAMP (24-VOLT) (PARKING BRAKE)	
	8	1	**116-5274**	1	KNOB (PARKING BRAKE)	
	9	1	**116-5275**	1	SWITCH AS-PUSH BUTTON (PARKING BRAKE)	
	10	1	**116-6565**	1	BLOCK (LIGHT)	
	11	1	**165-7670**	1	COVER AS	
	12	1	**171-7075**	1	PLATE AS	
	13	1	**171-9646**	1	FILM-PANEL (SIDE CONSOLE)	
	14	1	**116-5277**	1	BLOCK-CONTACT	
CY	15	1	**321-0119**	1	LEVER GP-PROPEL	347
	16	1	**270-8539**	1	HARNESS AS-CONSOLE	
	17	1	**2N-3680**	4	SCREW-HEAD (1/4-20X0.75-IN)	
	18	1	**3E-9865**	4	LOCKNUT (1/4-20-THD)	
M	19	1	**5C-9553**	11	BOLT (M6X1X16-MM)	
	20	1	**5P-4115**	6	WASHER-HARD (7.2X19X2-MM THK)	
	21	1	**8D-2676**	1	SWITCH AS-TOGGLE (SPEED SELECT)	
		1	**3L-8187**	2	LOCKWASHER	
		1	**6T-3631**	2	NUT-HEX (15/32-32-THD)	
		1	**6T-3632**	1	LOCKWASHER	
		1	**6T-3633**	1	RING-LOCKING	
		1	**6V-8374**	2	SCREW-MACHINE (6-32X0.25-IN)	
	22	1	**8T-4121**	1	WASHER-HARD (11X21X2.5-MM THK)	
M	23	1	**8T-4137**	1	BOLT (M10X1.5X20-MM)	
	24	1	**8T-4205**	9	WASHER-HARD (7.2X14.5X2-MM THK)	

C-CHANGE FROM PREVIOUS TYPE
M-METRIC PART
Y-SEPARATE ILLUSTRATION

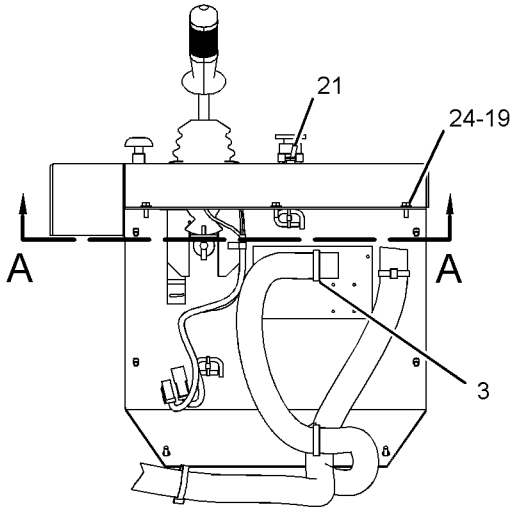

LEFT SIDE VIEW

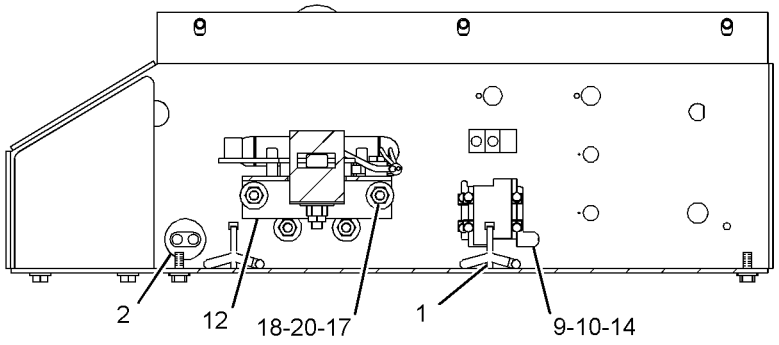

SECTION A-A

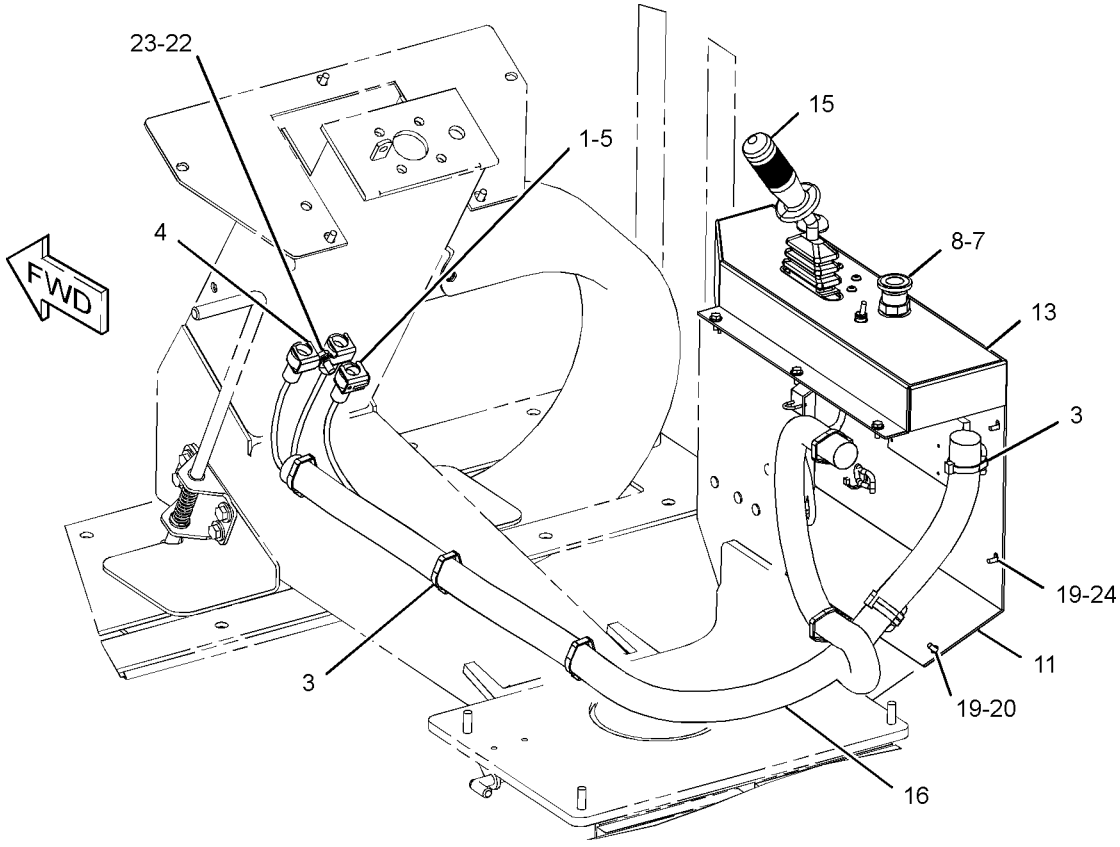

GRAPHIC #1 **<END>** g01775933

OPERATOR STATION

186-3380 CONTROL GP-HANDLE–PROPEL LEVER

S/N: PJF1-UP

PART OF 244-4471, 321-0119 LEVER GP-PROPEL

ALSO AN ATTACHMENT

SMCS-5705 **i03340240**

NOTE	REF NO	GRAPHIC REF	PART NUMBER	QTY	PART NAME 1 2 3 4 5 6 (PRODUCT LEVEL)	SEE PAGE
	1	1	**086-0972**	1	SEAL-O-RING	
	2	1	**107-1723**	2	GASKET	
	3	1	**6B-4540**	6	NUT (4-40-THD)	
	4	1	**1K-6872**	1	LOCKNUT (1/2-13-THD)	
M	5	1	**107-1716**	4	SCREW (4-40X15.88-MM)	
	6	1	**113-1095**	2	HOUSING	
	7	1	**312-5546**	1	SWITCH AS-PUSH BUTTON (VIBRATORY CONTROL)	
	8	1	**107-1721**	1	CAP	
	9	1	**107-2091**	2	BOLT (4-40X0.5-IN)	

M-METRIC PART

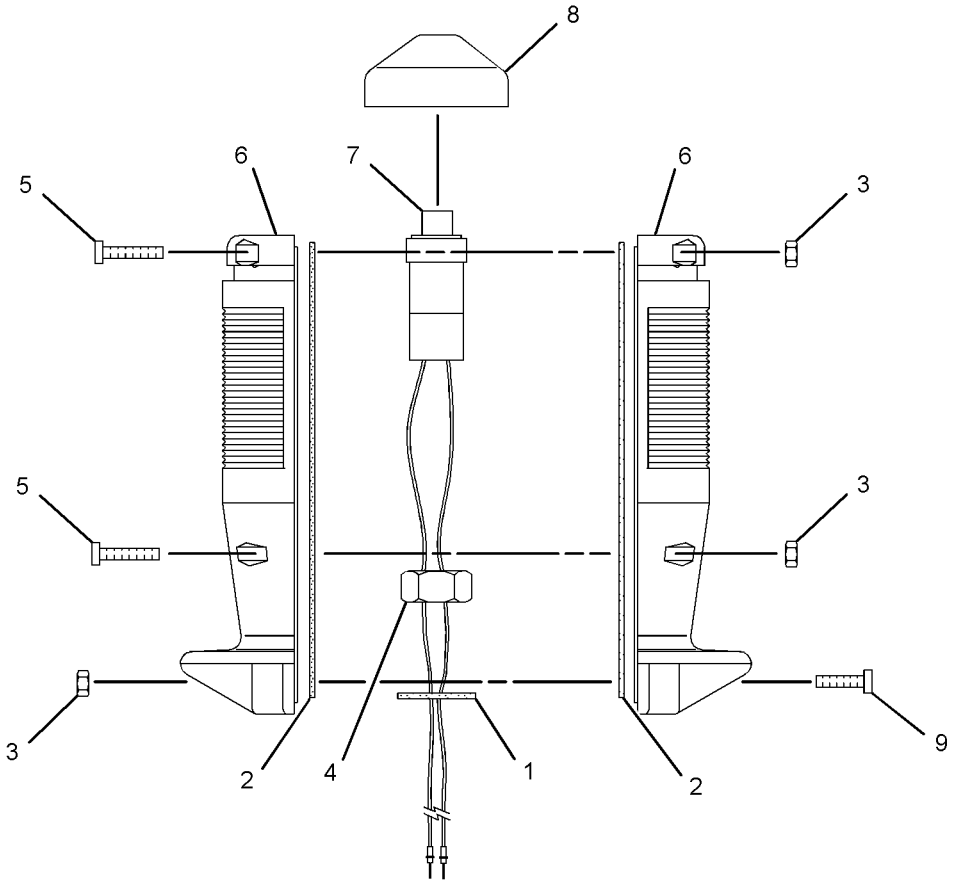

GRAPHIC #1 **<END>** g01422465

OPERATOR STATION

108-7735 GUARD GP-VANDALISM

S/N: PJF1-UP
PART OF 246-9029, 251-1957 OPERATOR AR
ALSO AN ATTACHMENT

SMCS-7315 **i00536423**

NOTE	REF NO	GRAPHIC REF	PART NUMBER	QTY	PART NAME 1 2 3 4 5 6 (PRODUCT LEVEL)	SEE PAGE
	1	1	**105-0951**	1	COVER	
	2	1	**1G-8995**	2	BOLT	
	3	1	**5C-1055**	2	WASHER (14.2X35.1X2.8-MM THK)	

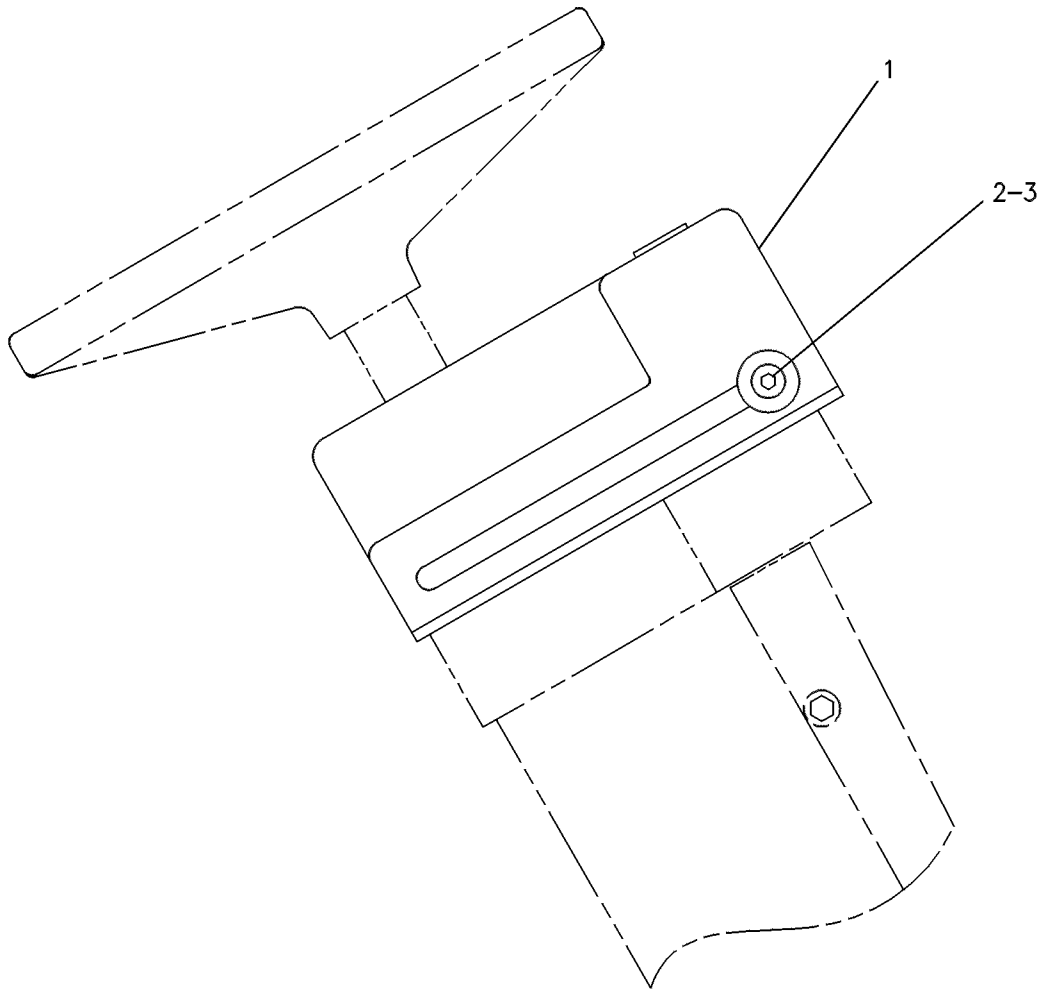

GRAPHIC #1 **<END>** g00237164

OPERATOR STATION

120-7065 HORN GP-ELECTRIC

S/N: PJF1-UP

PART OF 246-9027 ELECTRICAL AR

SMCS-7402 **i02113485**

NOTE	REF NO	GRAPHIC REF	PART NUMBER	QTY	PART NAME 1 2 3 4 5 6 (PRODUCT LEVEL)	SEE PAGE
C	1	1	**163-1201**	1	HORN AS (24-VOLT, LOW TONE)	
	2	1	**8T-4121**	1	WASHER-HARD (11X21X2.5-MM THK)	
M	3	1	**8T-4137**	1	BOLT (M10X1.5X20-MM)	

C-CHANGE FROM PREVIOUS TYPE
M-METRIC PART

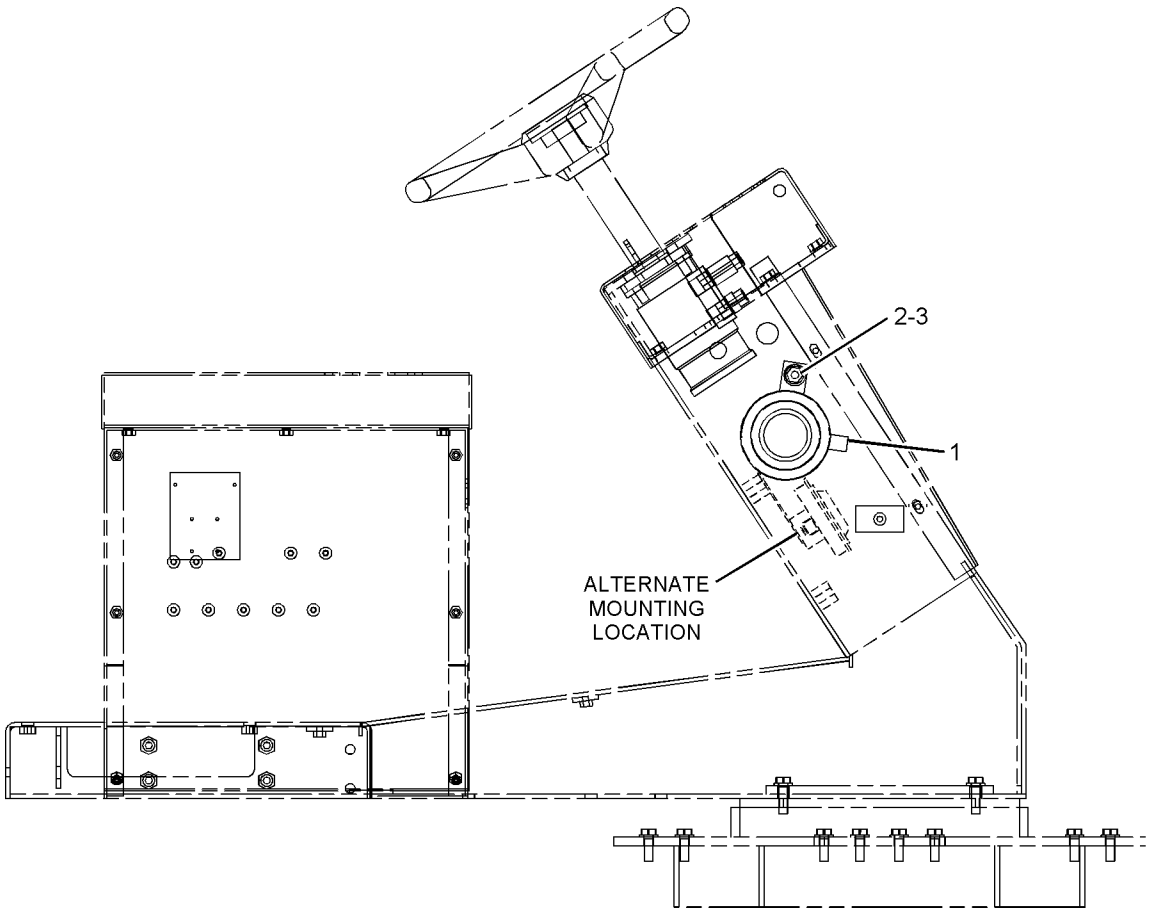

RIGHT SIDE VIEW

GRAPHIC #1 **<END>** g01095228

OPERATOR STATION

244-4471 LEVER GP-PROPEL

S/N: PJF1-UP
PART OF 251-1988, 255-4142 CONSOLE GP-OPERATOR
FIELD REPLACEMENT FOR 321-0119—PAGE 347
ALSO AN ATTACHMENT
TYPE 1

SMCS-3065 **i02169725**

NOTE	REF NO	GRAPHIC REF	PART NUMBER	QTY	PART NAME 1 2 3 4 5 6 (PRODUCT LEVEL)	SEE PAGE
Y	1	1	**186-3380**	1	CONTROL GP-HANDLE (PROPEL LEVER)	340
	2	1	**7U-4891**	2	SCREW (10-32X1-IN)	
	3	1	**186-3169**	2	SPACER	
	4	1	**140-9338**	1	BOOT	
	5	1	**4L-1250**	3	LOCKNUT (10X32-THD)	
HZ	6	1		1	NUT	
JZ	7	1		1	SWITCH AS-LIMIT (PROPEL LEVER)	
	8	1	**219-4581**	1	HARNESS AS-WIRING (PROPEL LEVER)	
	9	1	**7X-2466**	1	CLIP	
	10	1	**3K-6168**	1	BOLT-SOCKET HEAD (10-32X0.625-IN)	
LZ	11	1		1	BEARING	
NZ	12	1		1	CLAMP-CABLE	
PZ	13	1		1	PIN-SWIVEL	
Z	14	1		1	LEVER	
Z	15	1		1	ACTUATOR	
Z	16	1		1	BRACKET	
HZ	17	1		1	NUT	
HZ	18	1		4	WASHER-SPRING	
HZ	19	1		1	RETAINER	
HZ	20	1		3	WASHER	
HZ	21	1		1	WASHER-THRUST	
HZ	22	1		1	BEARING	
HZ	23	1		1	SPACER	
PZ	24	1		1	WASHER	
PZ	25	1		1	CLIP	
NZ	26	1		1	WASHER	
NZ	27	1		1	NUT	
LZ	28	1		2	BOLT	
LZ	29	1		2	SPRING	
LZ	30	1		2	NUT	
JZ	31	1		2	NUT	
JZ	32	1		2	BOLT	
					AVAILABLE REPAIR KIT(S):	
J			**250-0629**	1	KIT-SWITCH (PROPEL LEVER)	
L			**248-6638**	1	KIT-BEARING DETENT (PROPEL LEVER)	
N			**250-0530**	1	KIT-CLAMP (PROPEL LEVER)	
P			**248-6637**	1	KIT-SWIVEL (PROPEL LEVER)	
H			**248-6635**	1	KIT-BEARING DETENT TENSION (PROPEL LEVER)	

H-KIT MARKED H SERVICES PARTS MARKED H
J-KIT MARKED J SERVICES PARTS MARKED J
L-KIT MARKED L SERVICES PARTS MARKED L
N-KIT MARKED N SERVICES PARTS MARKED N
P-KIT MARKED P SERVICES PARTS MARKED P
Y-SEPARATE ILLUSTRATION
Z-NOT SERVICED SEPARATELY

244-4471 LEVER GP-PROPEL *(contd.)* i02169725

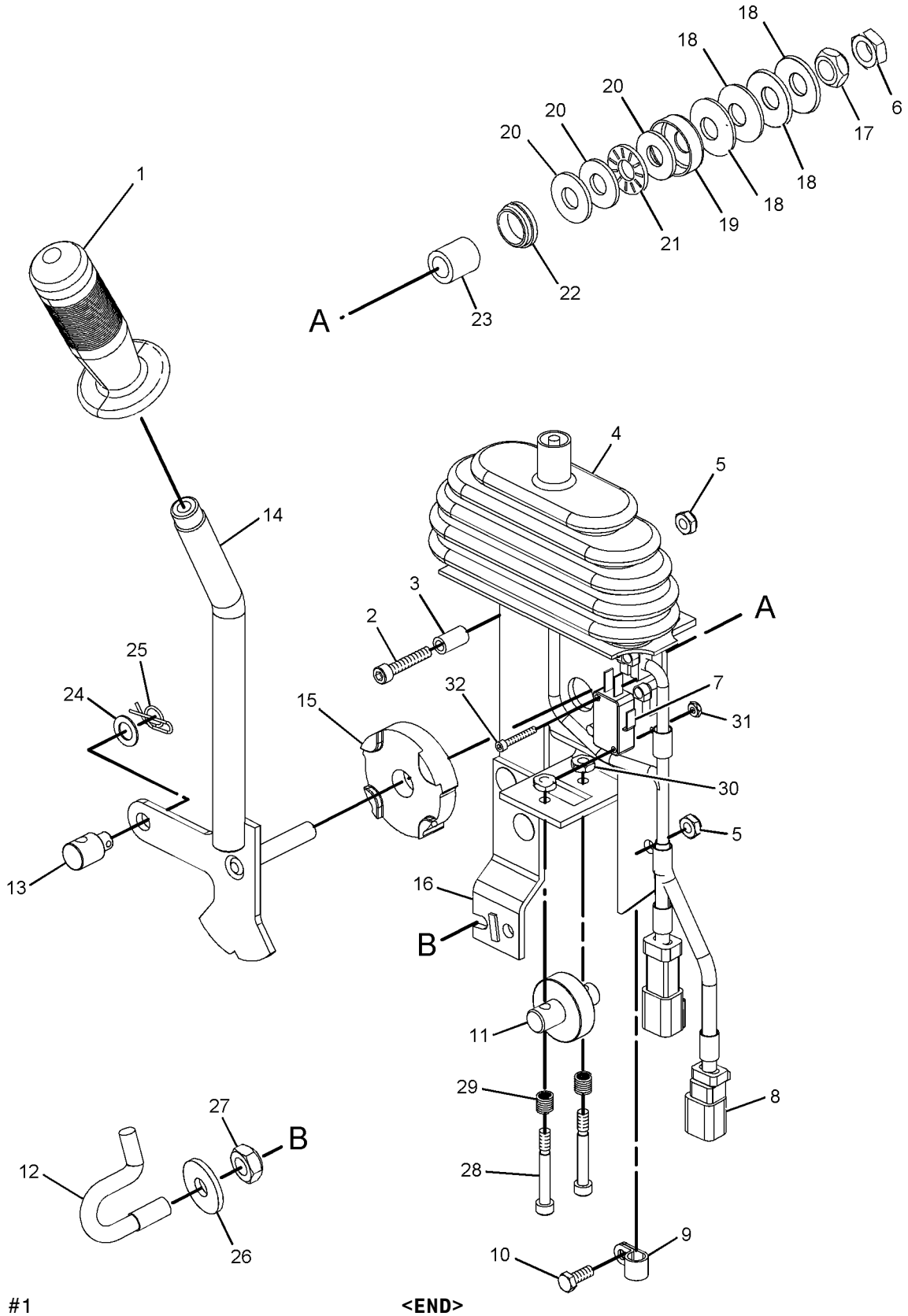

GRAPHIC #1 **<END>** g01094011

OPERATOR STATION

244-4471 LEVER GP-PROPEL

S/N: PJF1-UP
PART OF 251-1988, 255-4142 CONSOLE GP-OPERATOR
FIELD REPLACEMENT FOR 321-0119—PAGE 347
ALSO AN ATTACHMENT
TYPE 2

SMCS-3065 **i03603000**

NOTE	REF NO	GRAPHIC REF	PART NUMBER	QTY	PART NAME 1 2 3 4 5 6 (PRODUCT LEVEL)	SEE PAGE
Y	1	1	**186-3380**	1	CONTROL GP-HANDLE (PROPEL LEVER)	340
	2	1	**7U-4891**	2	SCREW (10-32X1-IN)	
	3	1	**186-3169**	2	SPACER	
	4	1	**140-9338**	1	BOOT	
	5	1	**4L-1250**	3	LOCKNUT (10X32-THD)	
CE	6	1	**125-7876**		TUBE-HEAT SHRINK (4-CM)	
C	7	1	**197-9461**	1	LEVER	
C	8	1	**155-2270**	1	KIT-CONNECTING PLUG (2-PIN)	
					(INCLUDES PLUG AS, WEDGE & INTERFACE SEAL)	
C	9	1	**6T-5098**	1	CLIP-CABLE	
	10	1	**3K-6168**	1	BOLT-SOCKET HEAD (10-32X0.625-IN)	
C	11	1	**9X-3402**	2	SOCKET-CONNECTOR (16-GA TO 18-GA)	
	12	1	**248-6637**	1	KIT-SWIVEL (PROPEL LEVER)	
					(INCLUDES SWIVEL PIN, WASHER & CLIP)	
C	13	1	**151-9272**	1	KIT-RECEPTACLE (2-PIN)	
					(INCLUDES RECEPTACLE AS & WEDGE)	
					PARTS SHOWN IN GRAPHIC(S) WITHOUT A REFERENCE NUMBER ARE NOT SERVICED SEPARATELY	
					AVAILABLE REPAIR KIT(S):	
			250-0629	1	KIT-SWITCH (PROPEL LEVER)	
					(INCLUDES PARTS MARKED J IN THE GRAPHIC)	
			248-6638	1	KIT-BEARING DETENT (PROPEL LEVER)	
					(INCLUDES PARTS MARKED H IN THE GRAPHIC)	
			250-0530	1	KIT-CLAMP (PROPEL LEVER)	
					(INCLUDES PARTS MARKED L IN THE GRAPHIC)	
			248-6635	1	KIT-BEARING DETENT TENSION (PROPEL LEVER)	
					(INCLUDES PARTS MARKED P IN THE GRAPHIC)	

C-CHANGE FROM PREVIOUS TYPE
E-ORDER BY THE CENTIMETER
Y-SEPARATE ILLUSTRATION

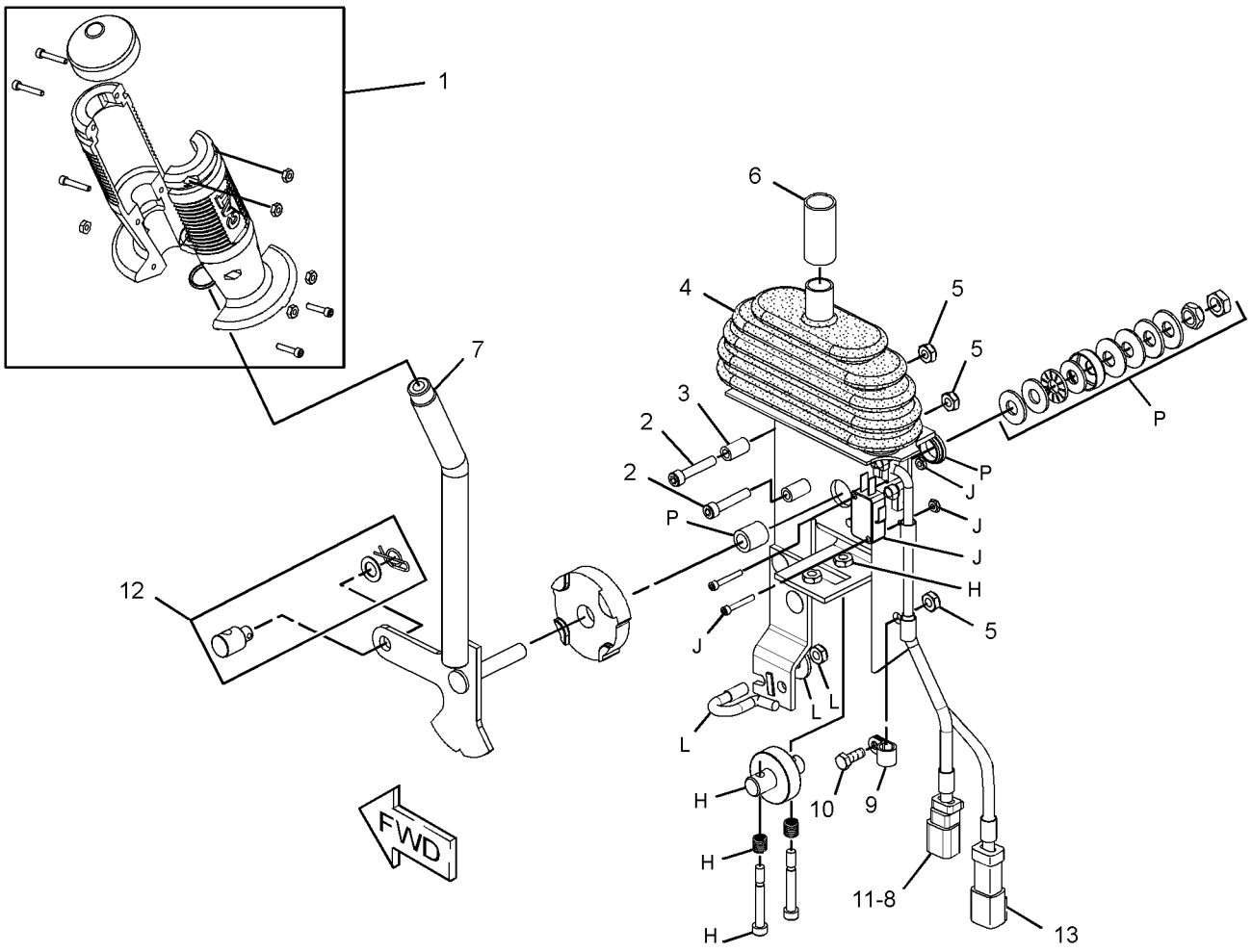

GRAPHIC #1 **<END>** g01927877

321-0119 LEVER GP-PROPEL

S/N: PJF284-UP
PART OF 251-1988, 255-4142 CONSOLE GP-OPERATOR
FIELD REPLACEMENT ORDER 244-4471—PAGE 343
ALSO AN ATTACHMENT

SMCS-3065 **i03602940**

NOTE	REF NO	GRAPHIC REF	PART NUMBER	QTY	PART NAME 1 2 3 4 5 6 (PRODUCT LEVEL)	SEE PAGE
Y	1	1	**186-3380**	1	CONTROL GP-HANDLE (PROPEL LEVER)	340
	2	1	**7U-4891**	2	SCREW (10-32X1-IN)	
	3	1	**186-3169**	2	SPACER	
	4	1	**140-9338**	1	BOOT	
	5	1	**4L-1250**	3	LOCKNUT (10X32-THD)	
E	6	1	**125-7876**		TUBE-HEAT SHRINK (4-CM)	
	7	1	**197-9461**	1	LEVER	
	8	1	**155-2270**	1	KIT-CONNECTING PLUG (2-PIN)	
					(INCLUDES PLUG AS, WEDGE & INTERFACE SEAL)	
	9	1	**6T-5098**	1	CLIP-CABLE	
	10	1	**3K-6168**	1	BOLT-SOCKET HEAD (10-32X0.625-IN)	
	11	1	**9X-3402**	2	SOCKET-CONNECTOR (16-GA TO 18-GA)	
	12	1	**248-6637**	1	KIT-SWIVEL (PROPEL LEVER)	
					(INCLUDES SWIVEL PIN, WASHER & CLIP)	
					PARTS SHOWN IN GRAPHIC(S) WITHOUT A REFERENCE NUMBER ARE NOT SERVICED SEPARATELY	
					AVAILABLE REPAIR KIT(S):	
			250-0629	1	KIT-SWITCH (PROPEL LEVER)	
					(INCLUDES PARTS MARKED J IN THE GRAPHIC)	
			248-6638	1	KIT-BEARING DETENT (PROPEL LEVER)	
					(INCLUDES PARTS MARKED H IN THE GRAPHIC)	
			250-0530	1	KIT-CLAMP (PROPEL LEVER)	
					(INCLUDES PARTS MARKED L IN THE GRAPHIC)	
			248-6635	1	KIT-BEARING DETENT TENSION (PROPEL LEVER)	
					(INCLUDES PARTS MARKED P IN THE GRAPHIC)	

E-ORDER BY THE CENTIMETER
Y-SEPARATE ILLUSTRATION

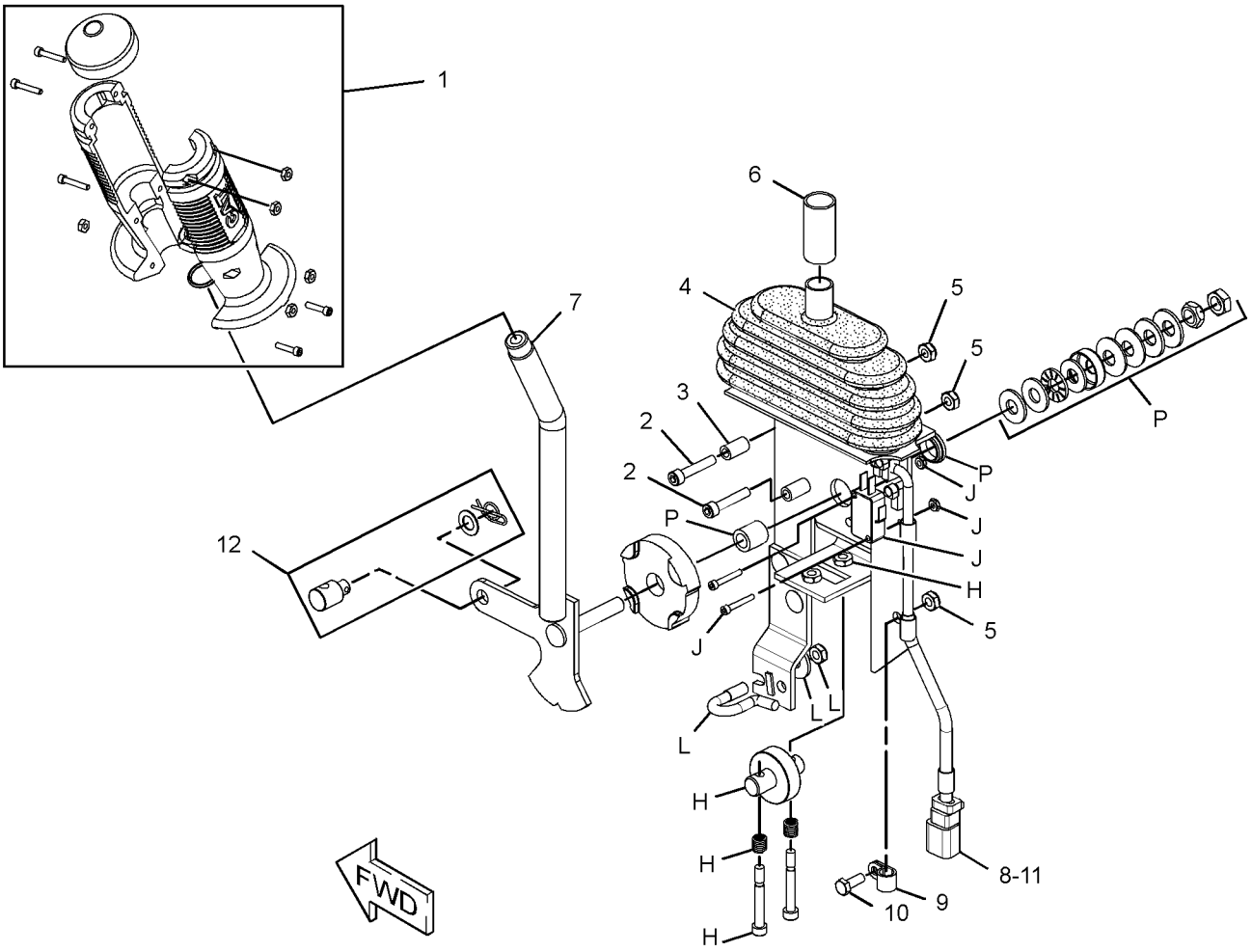

GRAPHIC #1 **<END>** g01927800

OPERATOR STATION

246-9029 OPERATOR AR—STATIONARY PLATFORM

S/N: PJF1-UP

SMCS-7301 **i02145331**

NOTE	PART NUMBER	QTY	PART NAME 1 2 3 4 5 6 (PRODUCT LEVEL)	SEE PAGE
Y	*246-9033*	1	CONSOLE GP-INSTRUMENT	322
Y	*251-1988*	1	CONSOLE GP-OPERATOR (STATIONARY PLATFORM)	326
Y	*246-9030*	1	CABLE GP-PROPEL (STATIONARY PLATFORM)	319
Y	*120-7057*	1	CONTROL GP-STEERING	228
Y	*108-7735*	1	GUARD GP-VANDALISM	341
Y	*246-9031*	1	LINES GP-STEERING (STATIONARY PLATFORM)	230
Y	*246-9032*	1	PLATFORM GP-OPERATOR (STATIONARY)	351
Y	*131-2329*	1	SUPPORT GP-SEAT	370

Y-SEPARATE ILLUSTRATION

<END>

251-1957 OPERATOR AR—SLIDING PLATFORM

S/N: PJF1-UP

AN ATTACHMENT

SMCS-7301 **i02149223**

NOTE	PART NUMBER	QTY	PART NAME 1 2 3 4 5 6 (PRODUCT LEVEL)	SEE PAGE
Y	*246-9033*	1	CONSOLE GP-INSTRUMENT	322
Y	*255-4142*	1	CONSOLE GP-OPERATOR (SLIDING PLATFORM)	333
Y	*251-1960*	1	CABLE GP-PROPEL (SLIDING PLATFORM)	320
Y	*120-7057*	1	CONTROL GP-STEERING	228
Y	*108-7735*	1	GUARD GP-VANDALISM	341
Y	*251-1964*	1	LINES GP-STEERING (SLIDING PLATFORM)	235
Y	*251-1955*	1	PLATFORM GP-OPERATOR (SLIDING)	353

Y-SEPARATE ILLUSTRATION

<END>

OPERATOR STATION

219-1671 PLATFORM GP-OPERATOR

S/N: PJF1-UP

PART OF 246-9032 PLATFORM GP-OPERATOR

SMCS-7253 **i02055875**

NOTE	REF NO	GRAPHIC REF	PART NUMBER	QTY	PART NAME 1 2 3 4 5 6 (PRODUCT LEVEL)	SEE PAGE
	1	1	**7R-7963**	4	PLATE AS	
	2	1	*108-7736*	1	COLUMN AS	
E		1	**5E-9146**		CHANNEL (17-CM)	
		1	**5M-3062**	2	BOLT (3/8-16X0.75-IN)	
M	2A	1	**8T-3612**	6	NUT-WELD (M8X1.25-THD)	
	3	1	**1F-0750**	1	NUT-WELD (3/8-16-THD)	
M	4	1	**6V-9632**	9	NUT-WELD (M6X1-THD)	
	5	1	**7T-1099**	13	LINK	
M	6	1	**8T-3490**	12	NUT-WELD (M10X1.5-THD)	
M	7	1	**8T-3612**	4	NUT-WELD (M8X1.25-THD)	
M	8	1	**9T-6001**	1	BOSS (M10X1.5-THD)	

E-ORDER BY THE CENTIMETER
M-METRIC PART

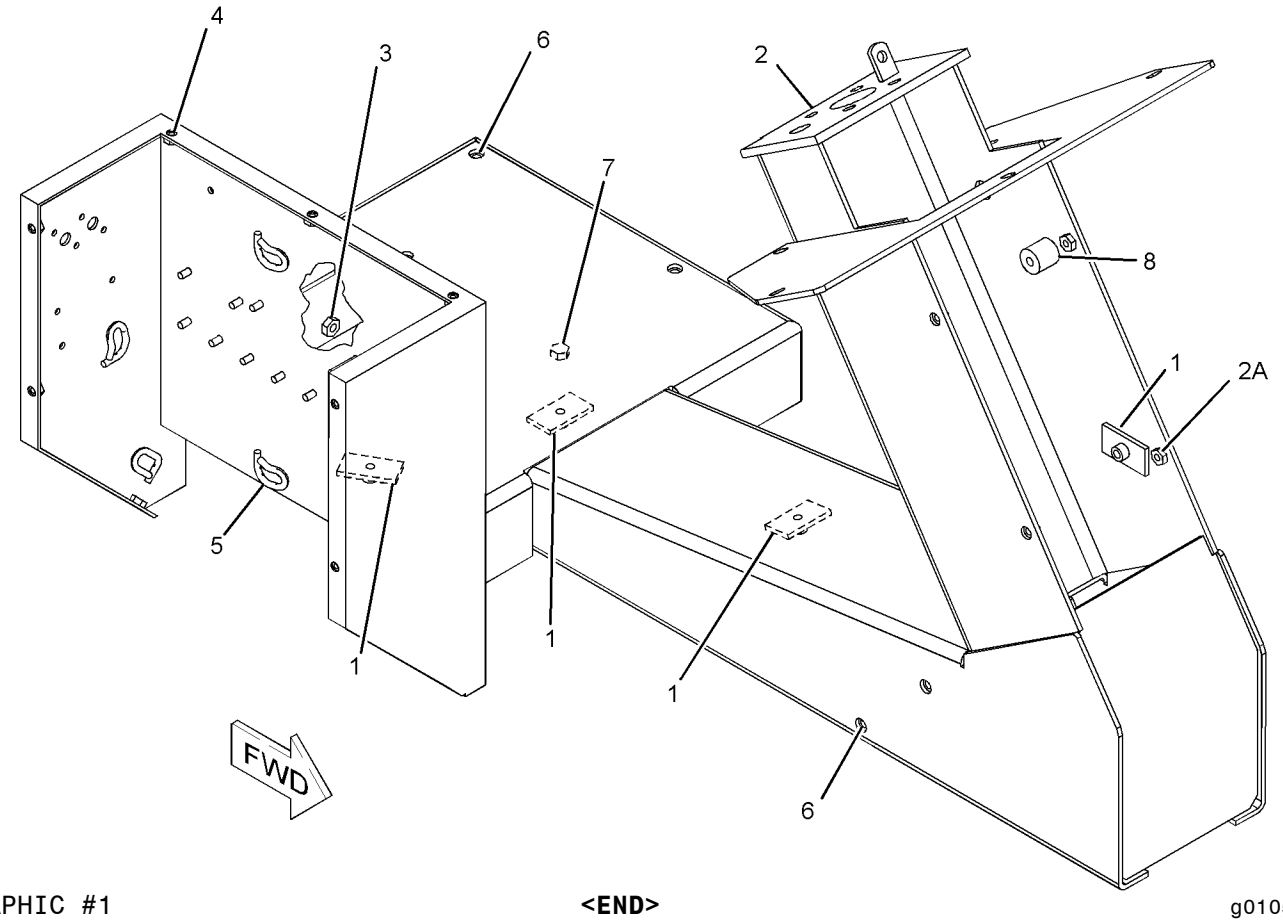

GRAPHIC #1 **<END>** g01055129

OPERATOR STATION

246-9032 PLATFORM GP-OPERATOR—STATIONARY

S/N: PJF1-UP

PART OF 246-9029 OPERATOR AR

SMCS-7253 **i03538550**

NOTE	REF NO	GRAPHIC REF	PART NUMBER	QTY	PART NAME 1 2 3 4 5 6 (PRODUCT LEVEL)	SEE PAGE
	1	1	**3E-5239**	1	RELAY AS (24-VOLT) (BRAKE RELAY ONE)	
	1A	1	**3E-5239**	1	RELAY AS (24-VOLT) (BRAKE RELAY TWO)	
	1B	1	**3E-5239**	1	RELAY AS (24-VOLT) (NEUTRAL START RELAY ONE)	
	1C	1	**3E-5239**	1	RELAY AS (24-VOLT) (NEUTRAL START RELAY TWO)	
	1D	1	**3E-5239**	1	RELAY AS (24-VOLT) (NEUTRAL START RELAY THREE)	
	2	1	**3K-6060**	2	LOCKNUT (3/8-16-THD)	
	3	1	**3S-2093**	3	STRAP-CABLE	
	4	1	**9G-9154**	2	CLIP	
	5	1	**109-9775**	1	COVER	
	6	1	**140-7528**	1	PLATE AS-FLOOR	
M		1	**8T-3612**	2	NUT-WELD (M8X1.25-THD)	
M	7	1	**141-9203**	8	SCREW-BUTTON HEAD (M10X1.5X30-MM)	
	8	1	**228-9108**	1	MODULE GP-TIMER	
Y	9	1	**219-1671**	1	PLATFORM GP-OPERATOR	350
Y	10	1	**241-8368**	1	SWITCH GP-MAGNETIC (24-VOLT) (MAIN POWER RELAY)	148
	11	1	**031-0249**	2	LOCKNUT (10-24-THD)	
	12	1	**055-2102**	2	PLUG	
M	13	1	**099-0492**	7	LOCKNUT (M6X1-THD)	
	14	1	**2N-3480**	2	SCREW-MACHINE (10-24X0.75-IN)	
	15	1	**4B-4274**	4	WASHER (5.5X13X1.2-MM THK)	
	16	1	**4B-4863**	4	WASHER (4.7X11X1.2-MM THK)	
	17	1	**4H-3001**	1	PLUG-BUTTON	
	18	1	**5P-4116**	7	WASHER-HARD (8.8X20.5X2-MM THK)	
	19	1	**6D-4244**	1	CLIP	
	20	1	**6T-3643**	1	CIRCUIT BREAKER AS (15-AMPERE) (LIGHTS)	
	20A	1	**6T-3643**	1	CIRCUIT BREAKER AS (15-AMPERE) (GOVERNOR CONTROL)	
					(EACH CIRCUIT BREAKER INCLUDES)	
		1	**6V-8376**	2	SCREW-MACHINE (8-32X0.25-IN)	
		1	**9B-7233**	2	LOCKWASHER	
	21	1	**7K-1181**	13	STRAP-CABLE	
	22	1	**7X-7729**	8	WASHER (11X25X3-MM THK)	
M	23	1	**8T-4189**	7	BOLT (M8X1.25X20-MM)	
	24	1	**8T-4205**	7	WASHER-HARD (7.2X14.5X2-MM THK)	
	25	1	**8T-4896**	2	WASHER-HARD (10.2X18.5X2.5-MM THK)	
	26	1	**9D-3737**	2	PLUG-BUTTON	
	27	1	**9X-8486**	4	SCREW-MACHINE (8-32X0.75-IN)	
	28	1	**236-0872**	1	STRAP AS	
E		1	**8T-5346**		TUBE-HEAT SHRINK (19.1-MM DIA) (2-CM)	
	29	1	**8C-8514**	1	SCREW-MACHINE (8-32X0.375-IN)	
	30	1	**116-0118**	1	CLIP	

E-ORDER BY THE CENTIMETER
M-METRIC PART
Y-SEPARATE ILLUSTRATION

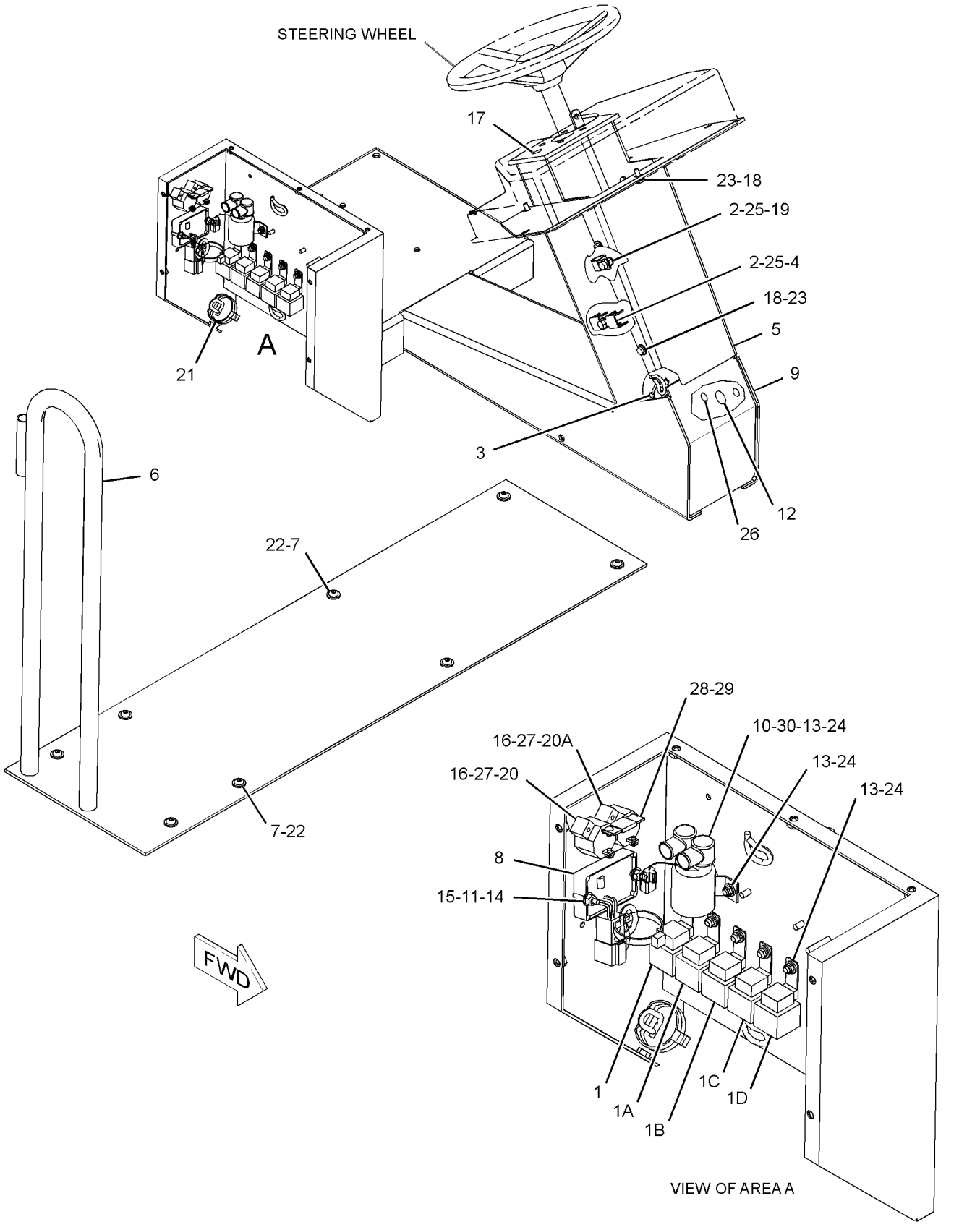

GRAPHIC #1 **<END>** g01870957

OPERATOR STATION

251-1955 PLATFORM GP-OPERATOR—SLIDING

S/N: PJF1-345
PART OF 251-1957 OPERATOR AR
AN ATTACHMENT

SMCS-7253 **i03602920**

NOTE	REF NO	GRAPHIC REF	PART NUMBER	QTY	PART NAME 1 2 3 4 5 6 (PRODUCT LEVEL)	SEE PAGE
	1	1	**1G-6134**	1	BALL BEARING	
	2	1	**1U-5004**	1	SPRING	
	3	1	**2R-0364**	1	RING-RETAINING	
	4	1	**3E-5239**	1	RELAY AS (24-VOLT) (BRAKE RELAY ONE)	
	4A	1	**3E-5239**	1	RELAY AS (24-VOLT) (BRAKE RELAY TWO)	
	4B	1	**3E-5239**	1	RELAY AS (24-VOLT) (NEUTRAL START RELAY ONE)	
	4C	1	**3E-5239**	1	RELAY AS (24-VOLT) (NEUTRAL START RELAY TWO)	
	4D	1	**3E-5239**	1	RELAY AS (24-VOLT) (NEUTRAL START RELAY THREE)	
	5	1	**4P-8134**	2	CLIP	
	6	1	**7K-1181**	4	STRAP-CABLE	
	7	1	**055-2102**	1	PLUG	
	8	1	**106-1239**	1	WHEEL	
	9	1	**125-3674**	1	LATCH-SPRING	
M	10	1	**131-8203**	10	SCREW-FLAT HEAD (M8X1.25X30-MM)	
M	11	1	**141-9203**	12	SCREW-BUTTON HEAD (M10X1.5X30-MM)	
	12	1	**228-9108**	1	MODULE GP-TIMER (GOVERNOR CONTROL)	
	13	1	**165-7314**	1	MOUNT AS	
M		1	**8T-3612**	1	NUT-WELD (M8X1.25-THD)	
	14	1	**165-7316**	1	CARRIER	
	15	1	**165-7319**	1	PLATFORM AS	
		1	**7T-1099**	2	LINK	
M		1	**8T-3490**	6	NUT-WELD (M10X1.5-THD)	
		1	*165-7318*	1	COLUMN AS	
M		1	**6V-9632**	6	NUT-WELD (M6X1-THD)	
		1	**7T-1099**	1	LINK	
M		1	**8T-3612**	4	NUT-WELD (M8X1.25-THD)	
M		1	**8T-4136**	1	BOLT (M10X1.5X25-MM)	
M	15A	1	**9T-6001**	2	BOSS (M10X1.5-THD)	
	16	1	**165-7327**	1	PLATE	
	17	1	**165-7329**	1	MOUNT AS	
M		1	**8T-3490**	4	NUT-WELD (M10X1.5-THD)	
	18	1	**165-7330**	1	COVER AS	
	19	1	**165-7331**	1	COVER	
	20	1	**165-7336**	1	COVER	
	21	1	**165-7340**	1	PLATE	
	22	1	**165-7356**	1	HANDLE	
	23	1	**172-3975**	1	COVER	
	24	1	**172-7605**	1	HANDLE AS	
Y	25	1	**173-5855**	1	RAIL GP-SLIDER	360
	26	1	**175-2612**	1	BRACKET AS	
	27	1	**175-2615**	2	BEARING	
	28	1	**219-1669**	1	BASE AS	
M		1	**6V-9632**	9	NUT-WELD (M6X1-THD)	
		1	**7T-1099**	4	LINK	
M		1	**8T-3612**	6	NUT-WELD (M8X1.25-THD)	
	28A	1	**172-7602**	1	MOUNT	
	29	1	**236-0872**	1	STRAP AS	
		1	*8T-5346*	2	TUBE-HEAT SHRINK (19.1-MM DIA)	
Y	30	1	**241-8368**	1	SWITCH GP-MAGNETIC (24-VOLT) (MAIN POWER RELAY)	148
	31	1	**255-4141**	1	HARNESS AS-PLATFORM	
		1	**102-8801**	2	KIT-RECEPTACLE (12-PIN)	
		1	**102-8802**	2	KIT-RECEPTACLE (2-PIN)	
		1	**102-8803**	2	KIT-RECEPTACLE (3-PIN)	

OPERATOR STATION

251-1955 **PLATFORM GP-OPERATOR** *(contd.)* **i03602920**

NOTE	REF NO	GRAPHIC REF	PART NUMBER	QTY	PART NAME 1 2 3 4 5 6 (PRODUCT LEVEL)	SEE PAGE
		1	**102-8804**	1	KIT-RECEPTACLE (4-PIN)	
					(EACH KIT INCLUDES RECEPTACLE AS & WEDGE)	
		1	**9G-3695**	12	PLUG	
		1	**9G-4348**	1	HOUSING-PLUG	
		1	**9G-4351**	1	HOUSING-RECEPTACLE (4-GA TO 6-GA)	
		1	**155-2255**	2	KIT-CONNECTING PLUG (12-PIN)	
		1	**155-2271**	2	KIT-CONNECTING PLUG (4-PIN)	
		1	**155-2260**	1	KIT-CONNECTING PLUG (3-PIN)	
		1	**155-2270**	1	KIT-CONNECTING PLUG (2-PIN)	
					(EACH KIT INCLUDES PLUG AS, WEDGE & INTERFACE SEAL)	
	32	1	**031-0249**	2	LOCKNUT (10-24-THD)	
	33	1	**091-5013**	1	RING	
M	34	1	**099-0492**	7	LOCKNUT (M6X1-THD)	
	35	1	**2N-3480**	2	SCREW-MACHINE (10-24X0.75-IN)	
	36	1	**4B-4274**	4	WASHER (5.5X13X1.2-MM THK)	
	37	1	**4B-4863**	4	WASHER (4.7X11X1.2-MM THK)	
	38	1	**4H-3001**	1	PLUG-BUTTON	
M	39	1	**5C-7261**	9	NUT (M8X1.25-THD)	
	40	1	**5P-4116**	22	WASHER-HARD (8.8X20.5X2-MM THK)	
	41	1	**6T-3643**	1	CIRCUIT BREAKER AS (15-AMPERE) (LIGHTS)	
	41A	1	**6T-3643**	1	CIRCUIT BREAKER AS (15-AMPERE) (GOVERNOR CONTROL)	
					(EACH AS INCLUDES)	
		1	**6V-8376**	2	SCREW-MACHINE (8-32X0.25-IN)	
		1	**9B-7233**	2	LOCKWASHER	
M	42	1	**6V-7743**	1	LOCKNUT (M6X1-THD)	
M	43	1	**6V-7744**	1	LOCKNUT (M10X1.5-THD)	
	44	1	**6V-8801**	1	NUT (3/8-16-THD)	
	45	1	**116-0118**	1	CLIP	
	46	1	**7X-0579**	1	WASHER-HARD (8.8X25.5X2-MM THK)	
	47	1	**7X-7729**	16	WASHER (11X25X3-MM THK)	
M	48	1	**8T-0269**	6	BOLT-SOCKET HEAD (M6X1X20-MM)	
	49	1	**8T-4121**	14	WASHER-HARD (11X21X2.5-MM THK)	
	50	1	**8T-4122**	1	WASHER-HARD (17X32X3.5-MM THK)	
M	51	1	**8T-4136**	3	BOLT (M10X1.5X25-MM)	
M	52	1	**8T-4183**	2	BOLT (M12X1.75X40-MM)	
M	53	1	**8T-4189**	11	BOLT (M8X1.25X20-MM)	
M	54	1	**8T-4195**	14	BOLT (M10X1.5X30-MM)	
M	55	1	**8T-4199**	2	BOLT (M8X1.25X12-MM)	
M	56	1	**8T-4200**	2	BOLT (M8X1.25X16-MM)	
	57	1	**8T-4205**	7	WASHER-HARD (7.2X14.5X2-MM THK)	
	58	1	**8T-4223**	2	WASHER-HARD (13.5X25.5X3-MM THK)	
	59	1	**8T-4224**	2	WASHER-HARD (8.8X16X2-MM THK)	
	60	1	**8T-4896**	2	WASHER-HARD (10.2X18.5X2.5-MM THK)	
	61	1	**8T-5391**	1	BOLT (5/16-18X0.5-IN)	
M	62	1	**8T-6974**	1	BOLT (M6X1X80-MM)	
	63	1	**8T-8915**	1	BOLT (3/8-16X3.25-IN)	
	64	1	**9X-8256**	6	WASHER (6.6X12X2-MM THK)	
	65	1	**9X-8486**	4	SCREW-MACHINE (8-32X0.75-IN)	
	66	1	**8C-8514**	1	SCREW-MACHINE (8-32X0.375-IN)	

M-METRIC PART
Y-SEPARATE ILLUSTRATION

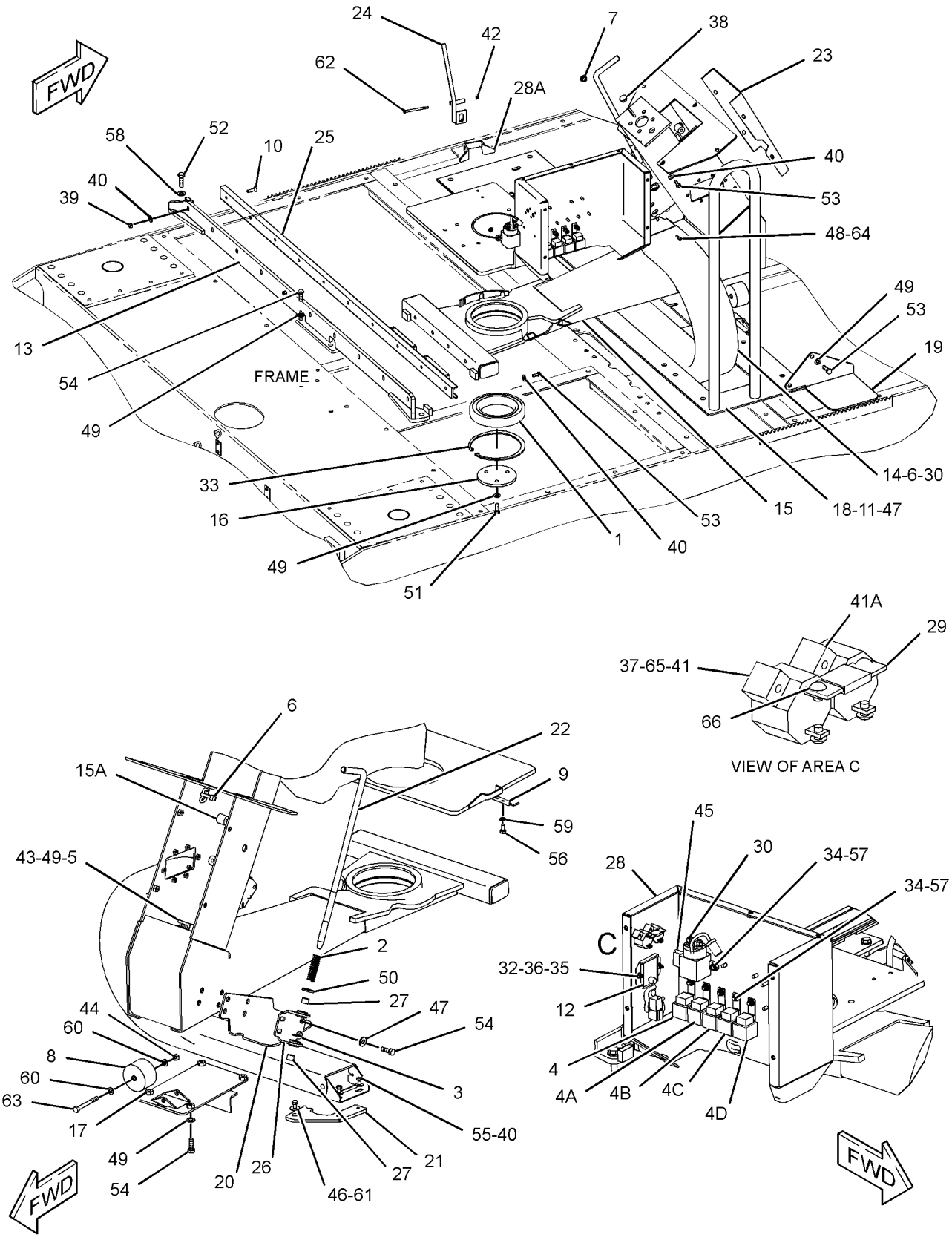

GRAPHIC #1 **<END>** g01927797

OPERATOR STATION

251-1955 PLATFORM GP-OPERATOR—SLIDING

S/N: PJF346-UP
PART OF 251-1957 OPERATOR AR
AN ATTACHMENT

SMCS-7253 **i03538549**

NOTE	REF NO	GRAPHIC REF	PART NUMBER	QTY	PART NAME 1 2 3 4 5 6 (PRODUCT LEVEL)	SEE PAGE
	1	1	**1G-6134**	1	BALL BEARING	
	2	2	**1U-5004**	1	SPRING	
	3	2	**2R-0364**	1	RING-RETAINING	
	4	1	**3E-5239**	1	RELAY AS (24-VOLT) (BRAKE RELAY ONE)	
	4A	1	**3E-5239**	1	RELAY AS (24-VOLT) (BRAKE RELAY TWO)	
	4B	1	**3E-5239**	1	RELAY AS (24-VOLT) (NEUTRAL START RELAY ONE)	
	4C	1	**3E-5239**	1	RELAY AS (24-VOLT) (NEUTRAL START RELAY TWO)	
	4D	1	**3E-5239**	1	RELAY AS (24-VOLT) (NEUTRAL START RELAY THREE)	
	5	2	**4P-8134**	2	CLIP	
C	6	2	**7K-1181**	3	STRAP-CABLE	
	7	2	**055-2102**	1	PLUG	
	8	2	**106-1239**	1	WHEEL	
	9	2	**125-3674**	1	LATCH-SPRING	
M	10	1	**131-8203**	10	SCREW-FLAT HEAD (M8X1.25X30-MM)	
M	11	1	**141-9203**	12	SCREW-BUTTON HEAD (M10X1.5X30-MM)	
	12	1	**228-9108**	1	MODULE GP-TIMER (GOVERNOR CONTROL)	
	13	1	**165-7314**	1	MOUNT AS	
M		1	**8T-3612**	1	NUT-WELD (M8X1.25-THD)	
	14	1	**165-7316**	1	CARRIER	
	15	1	**165-7319**	1	PLATFORM AS	
		1	**7T-1099**	2	LINK	
M		1	**8T-3490**	6	NUT-WELD (M10X1.5-THD)	
		1	*165-7318*	1	COLUMN AS	
M		1	**6V-9632**	6	NUT-WELD (M6X1-THD)	
		1	**7T-1099**	1	LINK	
M		1	**8T-3612**	4	NUT-WELD (M8X1.25-THD)	
M		1	**8T-4136**	1	BOLT (M10X1.5X25-MM)	
M		1	**9T-6001**	2	BOSS (M10X1.5-THD)	
	16	1	**165-7327**	1	PLATE	
	17	2	**165-7329**	1	MOUNT AS	
	18	1	**165-7330**	1	COVER AS	
	19	1	**165-7331**	1	COVER	
	20	2	**165-7336**	1	COVER	
	22	2	**165-7356**	1	HANDLE	
	23	1	**172-3975**	1	COVER	
	24	2	**172-7605**	1	HANDLE AS	
Y	25	1	**173-5855**	1	RAIL GP-SLIDER	360
	26	2	**175-2612**	1	BRACKET AS	
	27	2	**175-2615**	2	BEARING	
	28	1	**219-1669**	1	BASE AS	
M		1	**6V-9632**	9	NUT-WELD (M6X1-THD)	
		1	**7T-1099**	4	LINK	
M		1	**8T-3612**	6	NUT-WELD (M8X1.25-THD)	
		1	**172-7602**	1	MOUNT	
	29	1	**236-0872**	1	STRAP AS	
E		1	**8T-5346**		TUBE-HEAT SHRINK (19.1-MM DIA) (2-CM)	
Y	30	1	**241-8368**	1	SWITCH GP-MAGNETIC (24-VOLT) (MAIN POWER RELAY)	148
	32	1	**031-0249**	2	LOCKNUT (10-24-THD)	
	33	1	**091-5013**	1	RING	
M	34	1	**099-0492**	7	LOCKNUT (M6X1-THD)	
	35	1	**2N-3480**	2	SCREW-MACHINE (10-24X0.75-IN)	
	36	1	**4B-4274**	4	WASHER (5.5X13X1.2-MM THK)	
	37	1	**4B-4863**	4	WASHER (4.7X11X1.2-MM THK)	

251-1955 **PLATFORM GP-OPERATOR** *(contd.)* **i03538549**

NOTE	REF NO	GRAPHIC REF	PART NUMBER	QTY	PART NAME 1 2 3 4 5 6 (PRODUCT LEVEL)	SEE PAGE
	38	2	**4H-3001**	1	PLUG-BUTTON	
M	39	1	**5C-7261**	9	NUT (M8X1.25-THD)	
	40	1,2	**5P-4116**	22	WASHER-HARD (8.8X20.5X2-MM THK)	
	41	1	**6T-3643**	1	CIRCUIT BREAKER AS (15-AMPERE) (LIGHTS)	
	41A	1	**6T-3643**	1	CIRCUIT BREAKER AS (15-AMPERE) (GOVERNOR CONTROL)	
					(EACH CIRCUIT BREAKER AS INCLUDES)	
		1	**6V-8376**	2	SCREW-MACHINE (8-32X0.25-IN)	
		1	**9B-7233**	2	LOCKWASHER	
M	42	2	**6V-7743**	1	LOCKNUT (M6X1-THD)	
M	43	2	**6V-7744**	1	LOCKNUT (M10X1.5-THD)	
	44	2	**6V-8801**	1	NUT (3/8-16-THD)	
	47	1,2	**7X-7729**	16	WASHER (11X25X3-MM THK)	
M	48	1	**8T-0269**	6	BOLT-SOCKET HEAD (M6X1X20-MM)	
	49	1,2	**8T-4121**	14	WASHER-HARD (11X21X2.5-MM THK)	
	50	2	**8T-4122**	1	WASHER-HARD (17X32X3.5-MM THK)	
M	51	1,2	**8T-4136**	3	BOLT (M10X1.5X25-MM)	
M	52	1	**8T-4183**	2	BOLT (M12X1.75X40-MM)	
M	53	1,2	**8T-4189**	11	BOLT (M8X1.25X20-MM)	
M	54	1,2	**8T-4195**	14	BOLT (M10X1.5X30-MM)	
M	55	1	**8T-4199**	2	BOLT (M8X1.25X12-MM)	
M	56	2	**8T-4200**	2	BOLT (M8X1.25X16-MM)	
	57	1	**8T-4205**	7	WASHER-HARD (7.2X14.5X2-MM THK)	
	58	1	**8T-4223**	2	WASHER-HARD (13.5X25.5X3-MM THK)	
	59	2	**8T-4224**	2	WASHER-HARD (8.8X16X2-MM THK)	
	60	2	**8T-4896**	2	WASHER-HARD (10.2X18.5X2.5-MM THK)	
M	62	2	**8T-6974**	1	BOLT (M6X1X80-MM)	
	63	2	**8T-8915**	1	BOLT (3/8-16X3.25-IN)	
	64	1	**9X-8256**	6	WASHER (6.6X12X2-MM THK)	
	65	1	**9X-8486**	4	SCREW-MACHINE (8-32X0.75-IN)	
	66	1	**8C-8514**	1	SCREW-MACHINE (8-32X0.375-IN)	
	67	1	**116-0118**	1	CLIP	
F			**255-4141**	1	HARNESS AS-PLATFORM	
			9G-4348	1	HOUSING-PLUG	
			9G-4351	1	HOUSING-RECEPTACLE (4-GA TO 6-GA)	
			8N-1546	1	PIN-CONNECTOR (6-GA)	
			186-3735	31	PIN-CONNECTOR (16-GA TO 18-GA)	
			9G-3695	10	PLUG	
			8N-1547	1	SOCKET-CONNECTOR (6-GA)	
			186-3736	32	SOCKET-CONNECTOR (16-GA TO 18-GA)	
			102-8801	2	KIT-RECEPTACLE (12-PIN)	
			102-8802	2	KIT-RECEPTACLE (2-PIN)	
			102-8803	2	KIT-RECEPTACLE (3-PIN)	
			102-8804	1	KIT-RECEPTACLE (4-PIN)	
					(EACH RECEPTACLE KIT INCLUDES RECEPTACLE AS & WEDGE)	
			155-2255	2	KIT-CONNECTING PLUG (12-PIN)	
			155-2271	2	KIT-CONNECTING PLUG (4-PIN)	
			155-2260	1	KIT-CONNECTING PLUG (3-PIN)	
			155-2270	1	KIT-CONNECTING PLUG (2-PIN)	
					(EACH PLUG KIT INCLUDES PLUG AS, WEDGE & INTERFACE SEAL)	

C-CHANGE FROM PREVIOUS TYPE
E-ORDER BY THE CENTIMETER
F-NOT SHOWN
M-METRIC PART
Y-SEPARATE ILLUSTRATION

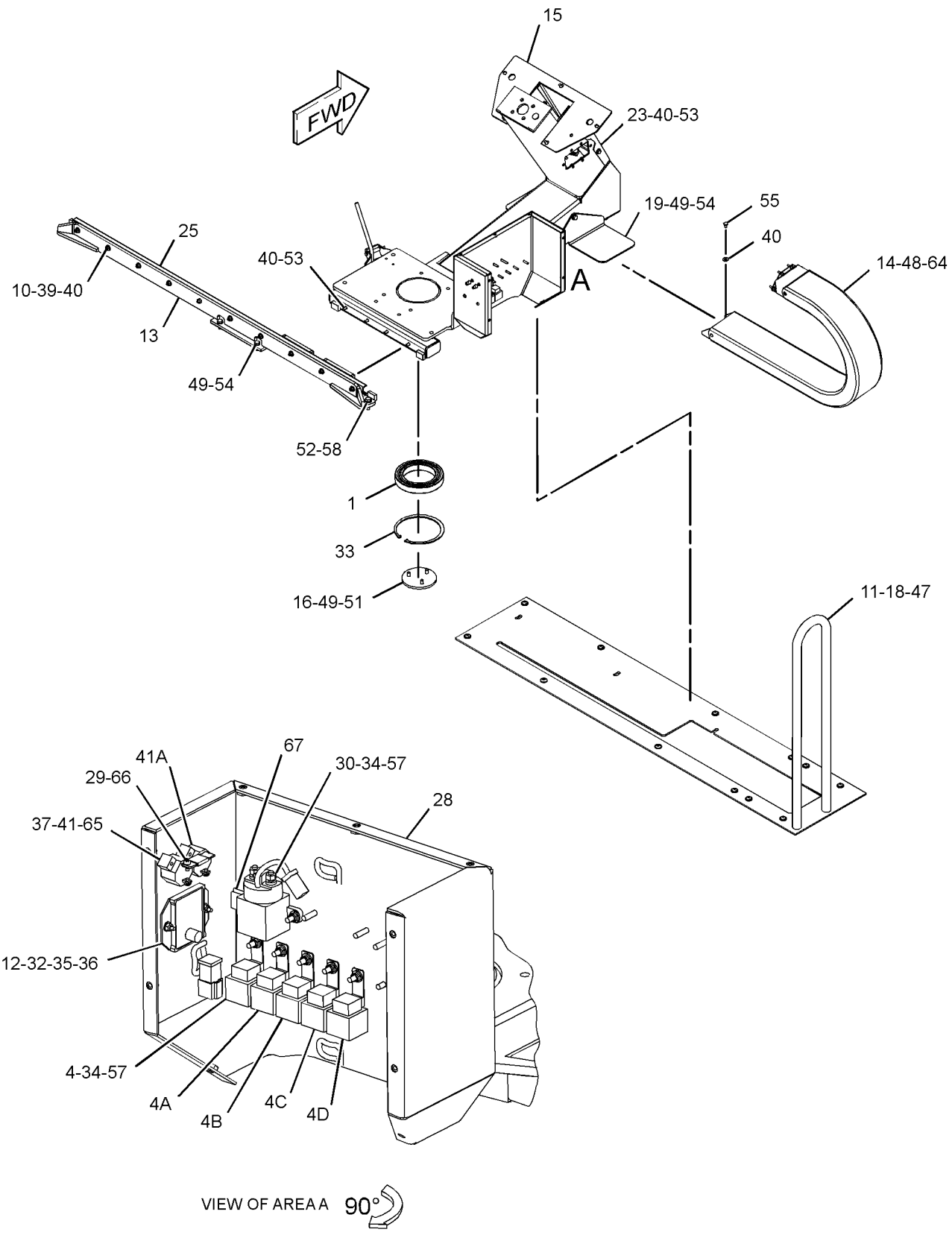

GRAPHIC #1

g01869775

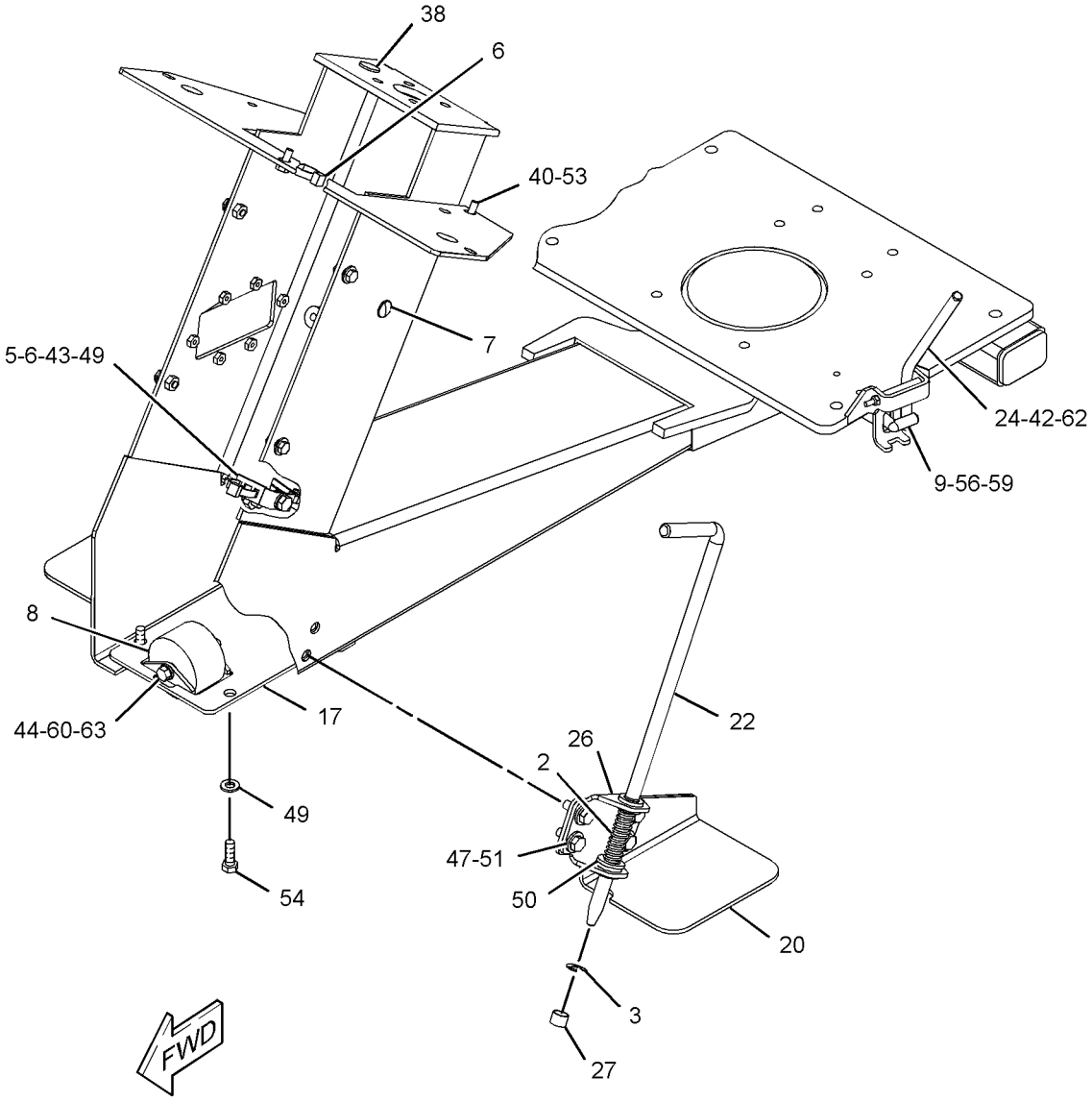

(PARTS REMOVED FOR CLARITY)

GRAPHIC #2 **<END>** g01869776

OPERATOR STATION

173-5855 RAIL GP-SLIDER

S/N: PJF1-UP
PART OF 251-1955 PLATFORM GP-OPERATOR
AN ATTACHMENT

SMCS-7253 **i01293332**

NOTE	REF NO	GRAPHIC REF	PART NUMBER	QTY	PART NAME 1 2 3 4 5 6 (PRODUCT LEVEL)	SEE PAGE
	1	1	**165-7317**	1	RAIL	
	2	1	**165-7323**	2	SLIDER	

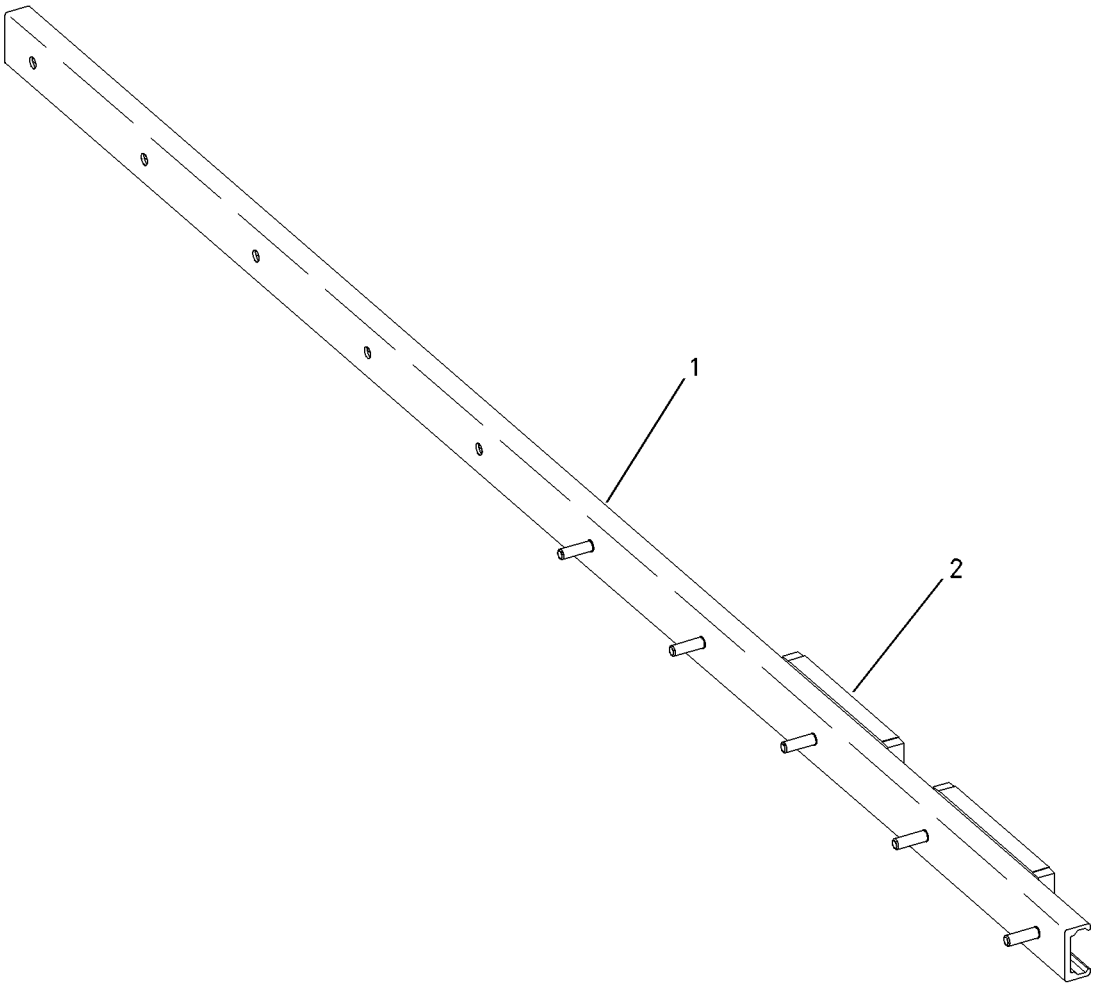

GRAPHIC #1 **<END>** g00685230

OPERATOR STATION

135-5152 ROPS GP

S/N: PJF1-UP

PART OF 246-8991 COMMON AR

SMCS-7323 **i03577348**

NOTE	REF NO	GRAPHIC REF	PART NUMBER	QTY	PART NAME 1 2 3 4 5 6 (PRODUCT LEVEL)	SEE PAGE
	1	1	**137-8558**	1	BAR AS	
	2	1	**8T-4167**	16	WASHER-HARD (26X44X4-MM THK)	
M	3	1	**8T-5878**	16	BOLT (M24X3X80-MM)	

M-METRIC PART

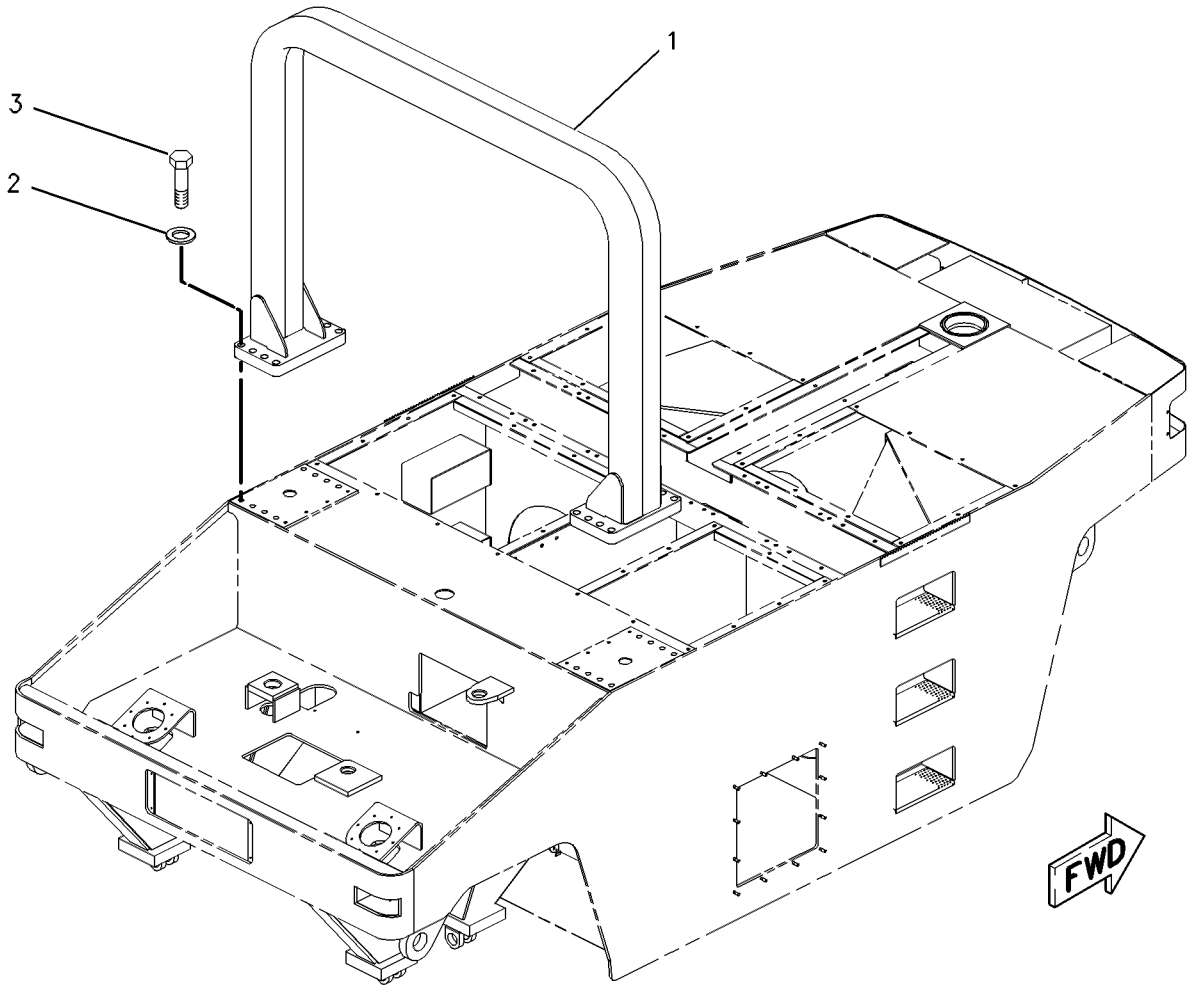

GRAPHIC #1 **<END>** g00291666

OPERATOR STATION

103-2113 SEAT GP

S/N: PJF1-UP
ADJUSTABLE
PART OF 104-1863, 276-9763 SEAT GP
AN ATTACHMENT

SMCS-7312 **i02068025**

NOTE	REF NO	GRAPHIC REF	PART NUMBER	QTY	PART NAME 1 2 3 4 5 6 (PRODUCT LEVEL)	SEE PAGE
	1	1	**103-2072**	1	SEAT	
	2	1	**139-0735**	1	KIT-ADJUSTER (SEAT)	

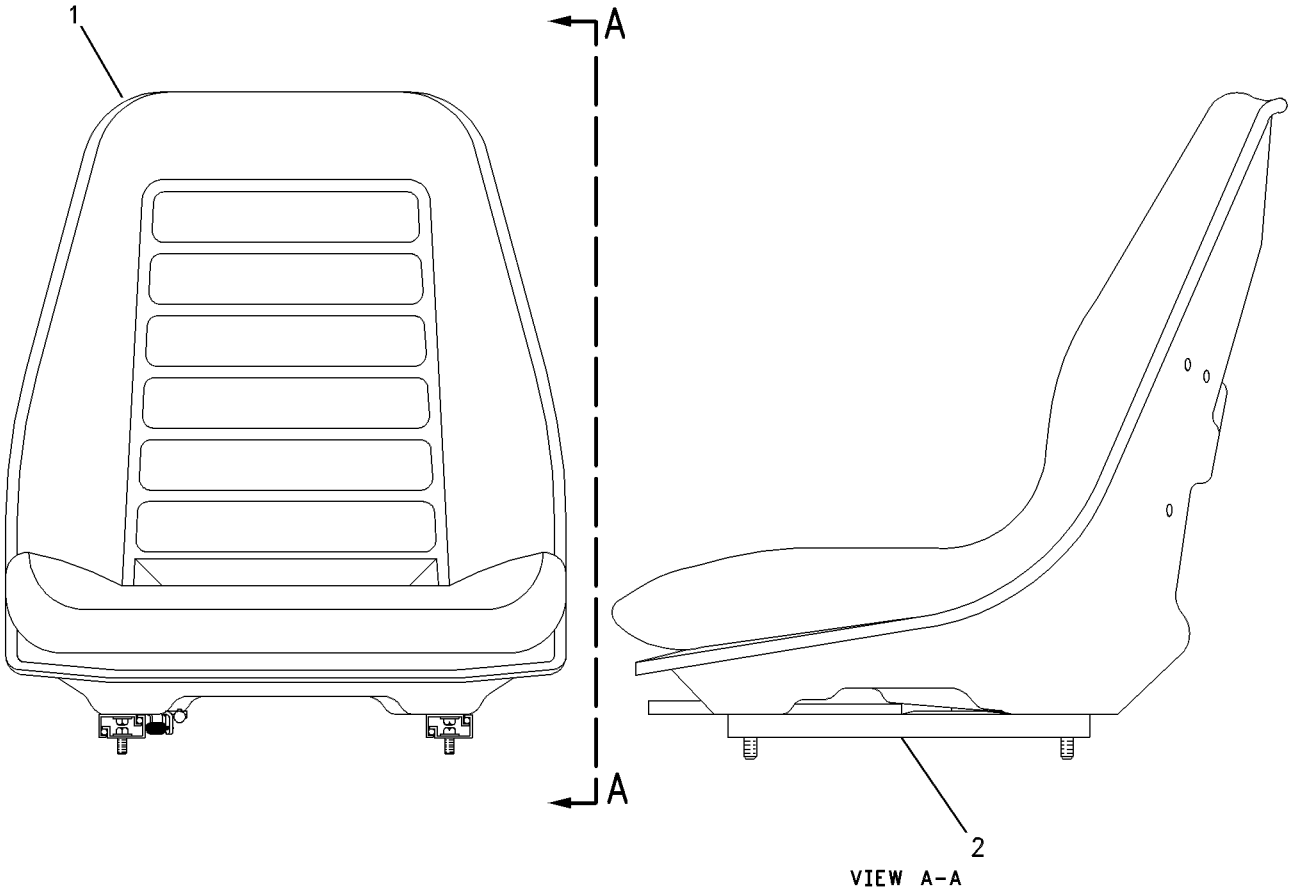

GRAPHIC #1 **<END>** g00601241

OPERATOR STATION

104-1863 SEAT GP

S/N: PJF1-UP

AN ATTACHMENT

SMCS-7312 **i03602907**

NOTE	REF NO	GRAPHIC REF	PART NUMBER	QTY	PART NAME 1 2 3 4 5 6 (PRODUCT LEVEL)	SEE PAGE
	1	1	**5P-7957**	1	LANYARD	
	2	1	**5P-7958**	1	SLEEVE-CABLE SPLICE	
Y	3	1	**103-2113**	1	SEAT GP	362
	4	1	**265-3318**	1	PLATE AS	
	5	1	**230-6367**	1	SEAT BELT GP (RETRACTABLE, 76-MM)	
M	6	1	**129-3180**	2	LOCKNUT (M12X1.75-THD)	
C	7	1	**053-0352**	1	RIVET-ALUMINUM	
	8	1	**124-3885**	2	PLATE	
C	9	1	**1G-4661**	1	ARMREST AS (RH)	
		1	**1G-4698**	2	SPACER	
		1	**1G-4699**	1	SCREW	
		1	**1G-4700**	1	NUT	
		1	**1G-4703**	1	BRACKET	
M	10	1	**5C-7261**	4	NUT (M8X1.25-THD)	
C	11	1	**8T-4121**	8	WASHER-HARD (11X21X2.5-MM THK)	
M	12	1	**8T-4136**	4	BOLT (M10X1.5X25-MM)	
CM	13	1	**8T-4195**	4	BOLT (M10X1.5X30-MM)	
M	14	1	**8T-4200**	3	BOLT (M8X1.25X16-MM)	
C	15	1	**8T-4224**	7	WASHER-HARD (8.8X16X2-MM THK)	
	16	1	**8T-4223**	4	WASHER-HARD (13.5X25.5X3-MM THK)	
M	17	1	**8T-4139**	2	BOLT (M12X1.75X30-MM)	

C-CHANGE FROM PREVIOUS TYPE
M-METRIC PART
Y-SEPARATE ILLUSTRATION

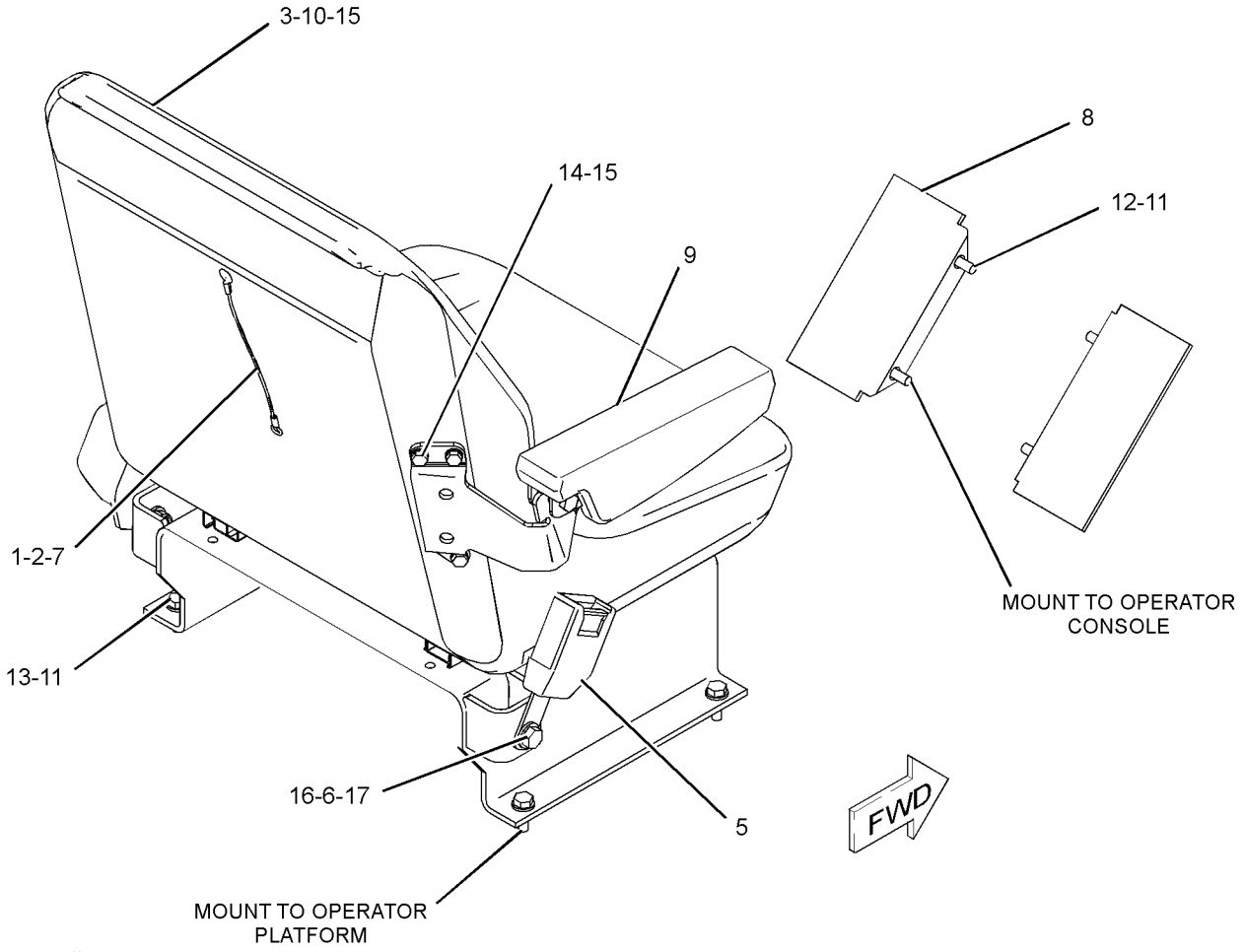

GRAPHIC #1 **<END>** g01927795

OPERATOR STATION

276-9763 SEAT GP

S/N: PJF1-UP

AN ATTACHMENT

SMCS-7312 **i02593749**

NOTE	REF NO	GRAPHIC REF	PART NUMBER	QTY	PART NAME 1 2 3 4 5 6 (PRODUCT LEVEL)	SEE PAGE
	1	1	**5P-7957**	1	LANYARD	
	2	1	**5P-7958**	1	SLEEVE-CABLE SPLICE	
Y	3	1	**103-2113**	1	SEAT GP	362
	4	1	**230-6367**	1	SEAT BELT GP (RETRACTABLE, 76-MM)	
	5	1	**265-3318**	1	PLATE AS	
	6	1	**053-0352**	1	RIVET-ALUMINUM	
M	7	1	**129-3180**	2	LOCKNUT (M12X1.75-THD)	
	8	1	**1G-4661**	1	ARMREST AS (RH)	
		1	**1G-4698**	2	SPACER	
		1	**1G-4699**	1	SCREW	
		1	**1G-4700**	1	NUT	
		1	**1G-4701**	1	ARMREST	
		1	**1G-4703**	1	BRACKET	
M	9	1	**5C-7261**	4	NUT (M8X1.25-THD)	
	10	1	**8T-4121**	4	WASHER-HARD (11X21X2.5-MM THK)	
M	11	1	**8T-4139**	2	BOLT (M12X1.75X30-MM)	
M	12	1	**8T-4195**	4	BOLT (M10X1.5X30-MM)	
M	13	1	**8T-4200**	3	BOLT (M8X1.25X16-MM)	
	14	1	**8T-4223**	4	WASHER-HARD (13.5X25.5X3-MM THK)	
	15	1	**8T-4224**	7	WASHER-HARD (8.8X16X2-MM THK)	

M-METRIC PART
Y-SEPARATE ILLUSTRATION

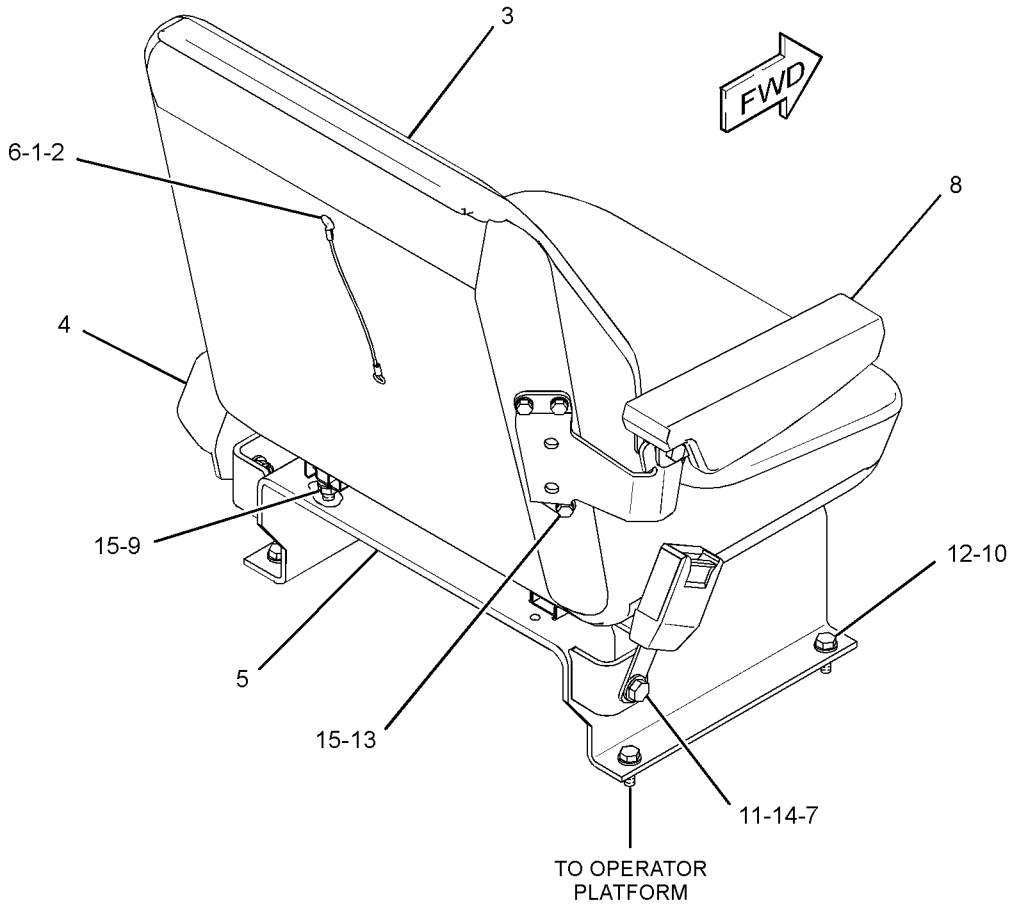

GRAPHIC #1 **<END>** g01270833

OPERATOR STATION

221-4045 SEAT GP-SUSPENSION–VINYL

S/N: PJF1-UP
AN ATTACHMENT

SMCS-7324 **i02593550**

NOTE	REF NO	GRAPHIC REF	PART NUMBER	QTY	PART NAME 1 2 3 4 5 6 (PRODUCT LEVEL)	SEE PAGE
	1	1	**230-6367**	1	SEAT BELT GP (RETRACTABLE, 76-MM)	
Y	2	1	**235-3151**	1	SEAT GP-SUSPENSION (VINYL)	368
	3	1	**236-5056**	1	FASTENER GP-SEAT	
	4	1	**8T-4224**	4	WASHER-HARD (8.8X16X2-MM THK)	
M	5	1	**5A-3604**	4	BOLT-SOCKET HEAD (M8X1.25X25-MM)	
	6	1	**5P-7958**	1	SLEEVE-CABLE SPLICE	

M-METRIC PART
Y-SEPARATE ILLUSTRATION

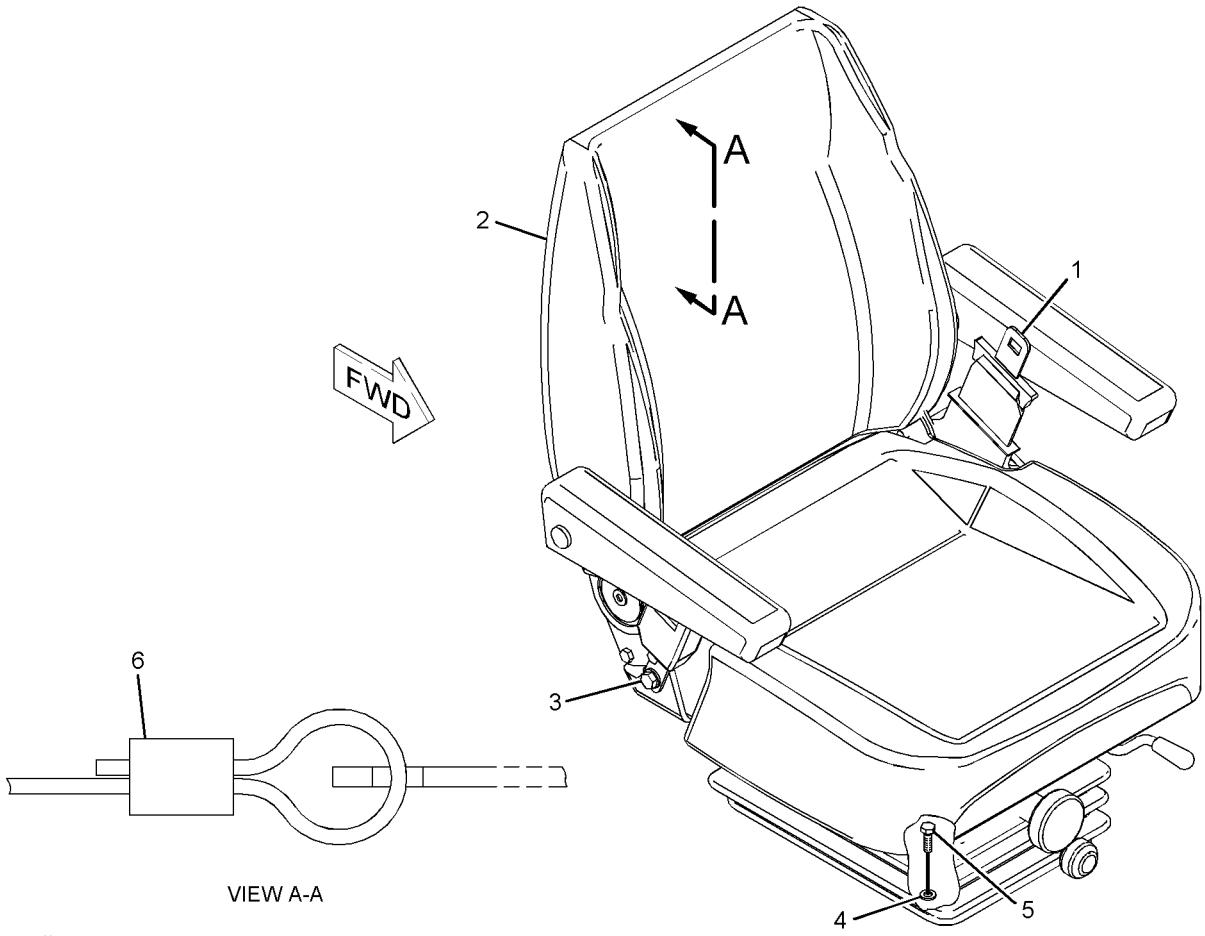

GRAPHIC #1 **<END>** g01090328

OPERATOR STATION

235-3151 SEAT GP-SUSPENSION—VINYL

S/N: PJF1-UP

PART OF 221-4045 SEAT GP-SUSPENSION

AN ATTACHMENT

SMCS-7324 **i03607260**

NOTE	REF NO	GRAPHIC REF	PART NUMBER	QTY	PART NAME 1 2 3 4 5 6 (PRODUCT LEVEL)	SEE PAGE
	1	1	**233-7538**	1	ARMREST (RH)	
	2	1	**233-7537**	1	ARMREST (LH)	
	3	1	**233-7530**	1	COVER-SEAT (BACK, VINYL)	
	4	1	**190-9732**	1	KIT-FOAM BACK (SUSPENSION SEAT)	
	5	1	**247-6479**	1	KIT-SEAT (SUSPENSION SEAT)	
					(INCLUDES SCREWS & WASHERS)	
	6	1	**233-7532**	1	COVER-SEAT (BOTTOM, VINYL)	
	7	1	**233-7533**	1	FOAM-SEAT (BOTTOM)	
	9	1	**202-4739**	1	KIT-STOP (SUSPENSION SEAT)	
					(INCLUDES UPSTOP & BUMPSTOP)	
	10	1	**217-5821**	1	ADJUSTER GP-HEIGHT (SUSPENSION SEAT)	
	11	1	**202-4737**	1	KIT-SEAT (INDICATORS)	
					(INCLUDES WASHER & INDICATOR)	
	12	1	**202-4736**	1	KIT-DAMPER	
					(INCLUDES DAMPERS, PINS, WASHERS, PUSHNUT & SPACER)	
	13	1	**233-7535**	1	KIT-RAIL (SUSPENSION SEAT)	
					(INCLUDES RH-RAIL & LH-RAIL)	
	14	1	**233-7536**	1	KIT-STRAP (SUSPENSION SEAT)	
					(INCLUDES FRONT STRAP & REAR STRAP)	
	15	1	**202-4740**	1	KIT-ADJUSTER	
					(INCLUDES SPACER, PINS, WEIGHT ADJUSTER KNOB, SPRINGS, ADJUSTER SHAFT, SPACERS, ANCHORS,	
					NEEDLE BEARINGS & WASHER BEARING)	
	16	1	**232-4226**	1	KIT-BOOT (SUSPENSION SEAT)	
	17	1	**233-7534**	1	KIT-KNOB	
					(INCLUDES SEAT KNOB & RAIL KNOB)	

235-3151 SEAT GP-SUSPENSION *(contd.)* i03607260

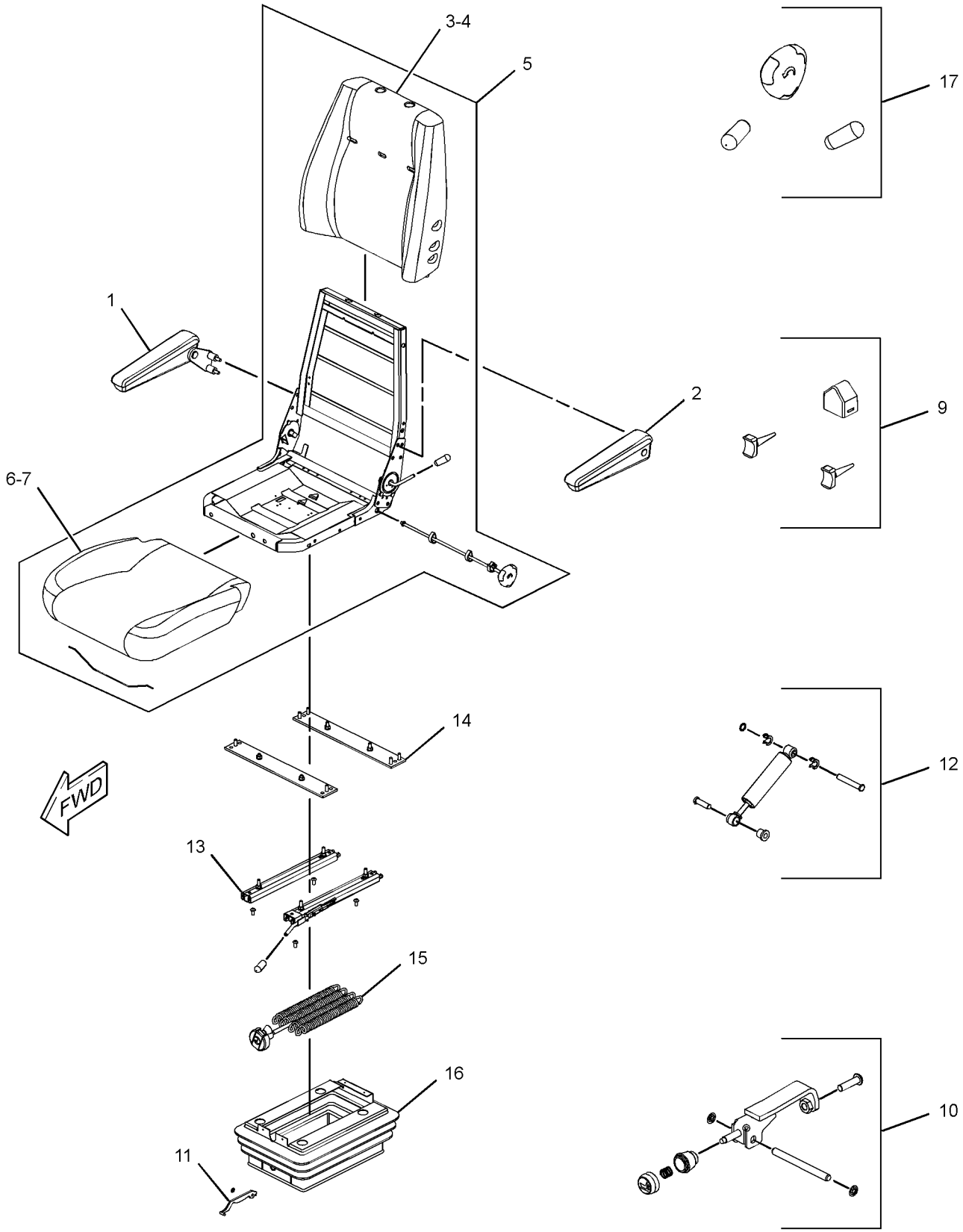

GRAPHIC #1 **<END>** g01418846

OPERATOR STATION

131-2329 SUPPORT GP-SEAT

S/N: PJF1-UP

PART OF 246-9029 OPERATOR AR

SMCS-7321 **i01723130**

NOTE	REF NO	GRAPHIC REF	PART NUMBER	QTY	PART NAME 1 2 3 4 5 6 (PRODUCT LEVEL)	SEE PAGE
	1	1	**137-7655**	1	SUPPORT AS-SEAT	
M		1	**8T-3490**	4	NUT-WELD (M10X1.5 THD)	
	2	1	**8T-4121**	12	WASHER-HARD (11X21X2.5-MM THK)	
M	3	1	**8T-4186**	12	BOLT (M10X1.5X40-MM)	
	4	1	**5A-4878**	1	GROMMET	

M-METRIC PART

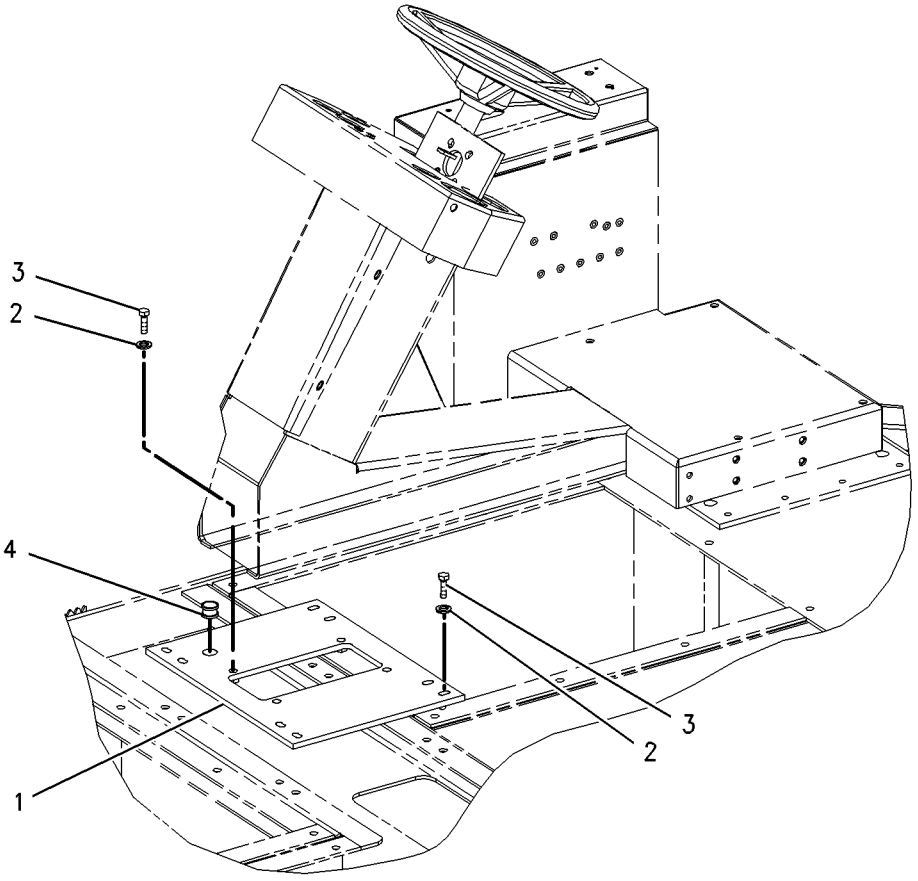

GRAPHIC #1 **<END>** g00885764

SERVICE EQUIPMENT AND SUPPLIES

256-2426 FILM GP—ENGLISH

S/N: PJF1-UP

AN ATTACHMENT

SMCS-7405, 7557 **i02145393**

NOTE	REF NO	GRAPHIC REF	PART NUMBER	QTY	PART NAME 1 2 3 4 5 6 (PRODUCT LEVEL)	SEE PAGE
	1	1	**224-8945**	1	FILM-WARNING (DO NOT USE ETHER, U.S)	
	2	1	**225-0313**	1	FILM-WARNING (JUMP START, READ OMM, U.S.)	
	3	1	**225-3305**	1	FILM-WARNING (UNIVERSAL, READ OMM, U.S.)	
	4	1	**225-4256**	1	FILM-WARNING (HOT FLUID UNDER PRESSURE, U.S.)	

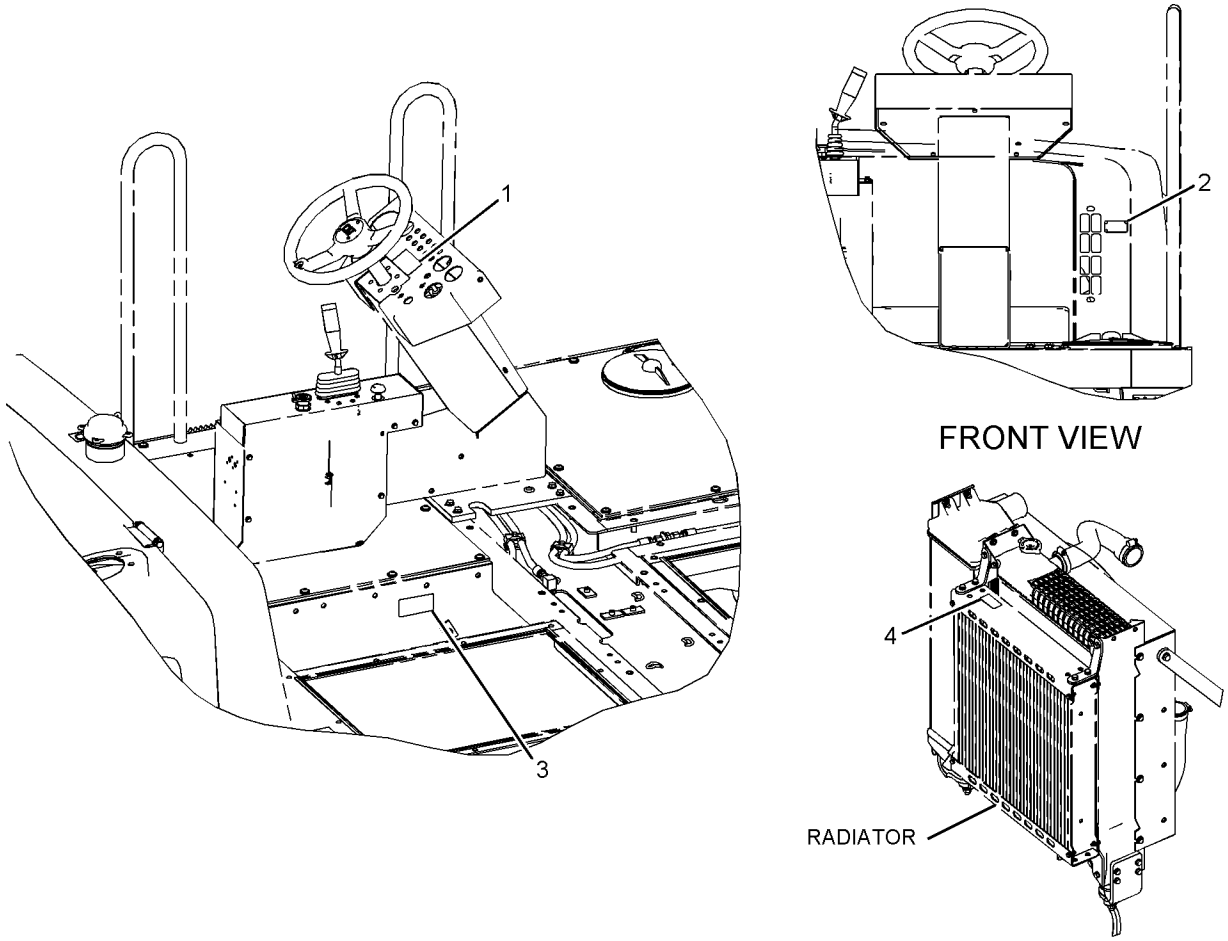

GRAPHIC #1 **<END>** g01092374

SERVICE EQUIPMENT AND SUPPLIES

256-2427 FILM GP–UNIVERSAL

S/N: PJF1-UP

AN ATTACHMENT

SMCS-7405, 7557 **i02171384**

NOTE	REF NO	GRAPHIC REF	PART NUMBER	QTY	PART NAME 1 2 3 4 5 6 (PRODUCT LEVEL)	SEE PAGE
	1	1	**224-8946**	1	FILM-WARNING (NO ETHER SPRAY/AIR INTK, INTL)	
	2	1	**225-0312**	1	FILM-WARNING (JUMP START, READ OMM, INTL)	
	3	1	**224-0554**	1	FILM-WARNING (UNIVERSAL, READ OMM, INTL)	
	4	1	**225-4257**	1	FILM-WARNING (HOT FLUID UNDER PRESS, INTL)	

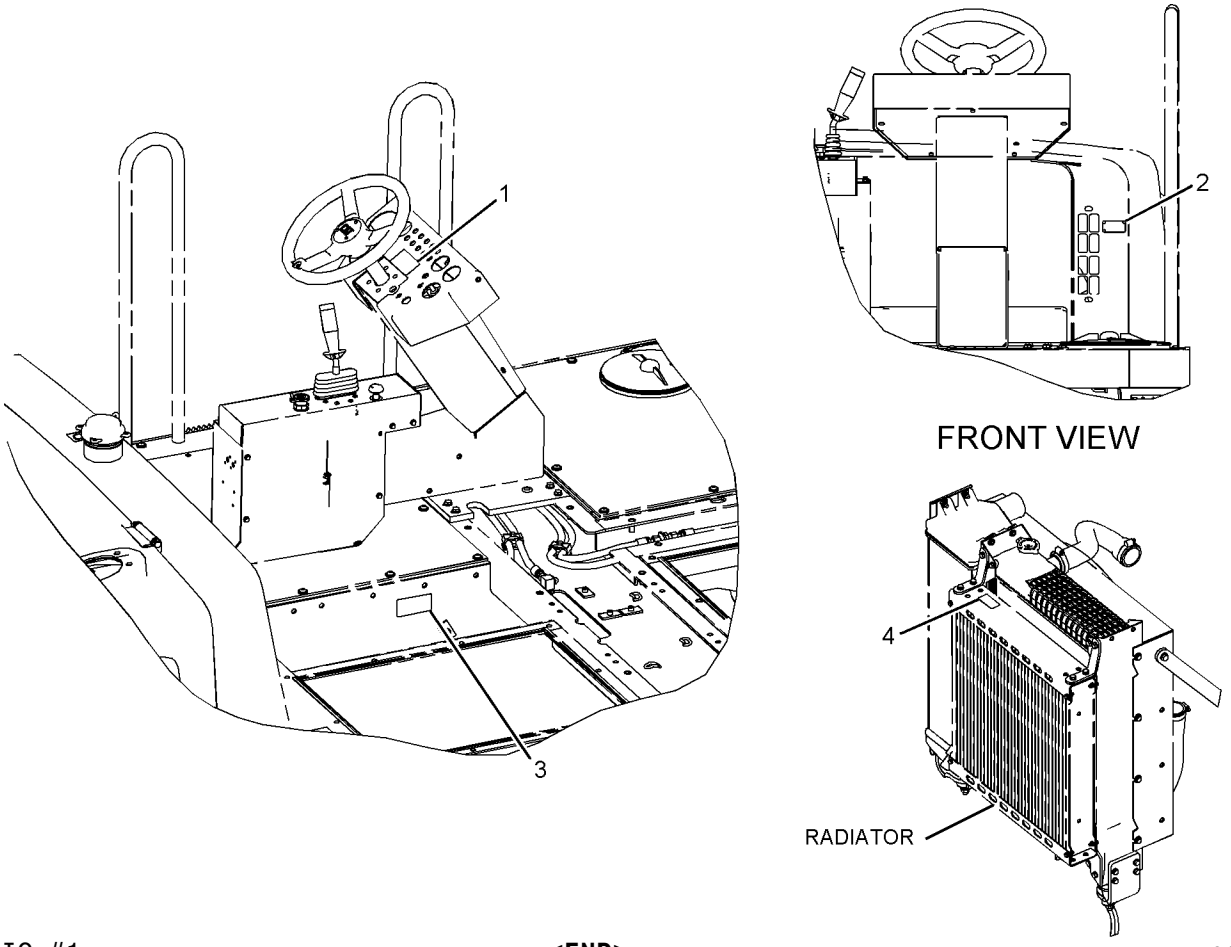

GRAPHIC #1 **<END>** g01092374

SERVICE EQUIPMENT AND SUPPLIES

246-8995 PLATE & FILM GP

S/N: PJF1-367

PART OF 246-8992 CHASSIS AR

SMCS-7405, 7557, 7563 **i03577349**

NOTE	REF NO	GRAPHIC REF	PART NUMBER	QTY	PART NAME 1 2 3 4 5 6 (PRODUCT LEVEL)	SEE PAGE
	1	1	**3E-3010**	1	FILM-INSTRUCTION (HYDRAULIC OIL)	
	2	1	**3E-6515**	1	FILM (CATERPILLAR)	
	3	1	**3E-8149**	2	FILM-IDENTIFICATION (CAT LOGO)	
	4	1	**246-2641**	3	PADLOCK GP	
					(EACH INCLUDES)	
		1	**5P-8500**	1	KEY	
	5	1	**7X-3229**	4	FILM-INSTRUCTION (LIFT EYE, TIE-DOWN LOCATION)	
	6	1	**8C-4535**	1	FILM-IDENTIFICATION (DIESEL FUEL)	
	7	1	**105-2922**	1	FILM-INSTRUCTION (HYDRAULIC OIL LEVEL)	
BE	8	1	**3E-9417**		FILM-STRIPE (BULK)	
	9	1	**211-9987**	1	FILM-INFORMATION (HYDRAULIC OIL)	
	10	1	**219-0305**	1	FILM-WARNING (NO WELD, NO DRILL, READ OMM)	
	11	1	**224-9855**	1	FILM-INSTRUCTION (START AID, READ OMM, INTL)	
	12	1	**239-6986**	1	PLATE-IDENTIFICATION (MACHINE)	
	13	1	**254-6086**	2	FILM (PS-360C)	
	14	1	**255-7160**	1	FILM-NOTICE (SHIPPING, LIFTING, TIE-DOWN)	
	15	1	**257-7836**	1	FILM-IDENTIFICATION (CAT)	

B-USE AS REQUIRED
E-ORDER BY THE CENTIMETER

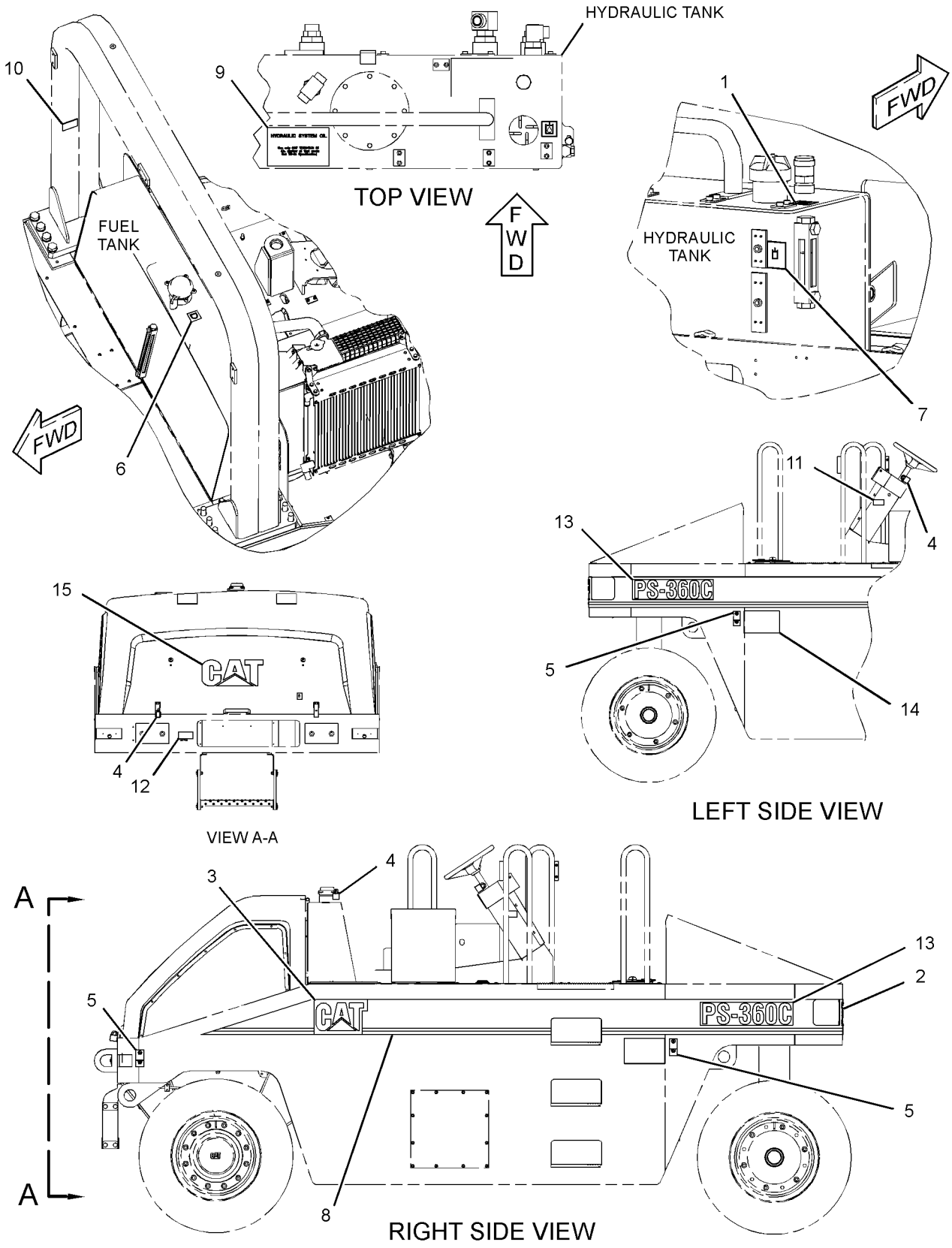

GRAPHIC #1 **<END>** g01257226

SERVICE EQUIPMENT AND SUPPLIES

246-8995 PLATE & FILM GP

S/N: PJF368-UP

PART OF 246-8992 CHASSIS AR

SMCS-7405, 7557, 7563 **i03577350**

NOTE	REF NO	GRAPHIC REF	PART NUMBER	QTY	PART NAME 1 2 3 4 5 6 (PRODUCT LEVEL)	SEE PAGE
	1	1	**3E-3010**	1	FILM-INSTRUCTION (HYDRAULIC OIL)	
C	2	1	**299-8147**	1	FILM-IDENTIFICATION (CATERPILLAR)	
C	3	1	**303-1946**	1	FILM-IDENTIFICATION (CAT PS360C, RH)	
	4	1	**246-2641**	3	PADLOCK GP	
					(EACH INCLUDES)	
		1	**5P-8500**	1	KEY	
	5	1	**7X-3229**	4	FILM-INSTRUCTION (LIFT EYE, TIE-DOWN LOCATION)	
	6	1	**8C-4535**	1	FILM-IDENTIFICATION (DIESEL FUEL)	
	7	1	**105-2922**	1	FILM-INSTRUCTION (HYDRAULIC OIL LEVEL)	
	8	1	**262-5231**	1	FILM-ROPS	
	9	1	**211-9987**	1	FILM-INFORMATION (HYDRAULIC OIL)	
	10	1	**219-0305**	1	FILM-WARNING (NO WELD, NO DRILL, READ OMM)	
	11	1	**224-9855**	1	FILM-INSTRUCTION (START AID, READ OMM, INTL)	
	12	1	**239-6986**	1	PLATE-IDENTIFICATION (MACHINE)	
C	13	1	**303-1945**	1	FILM-IDENTIFICATION (CAT PS360C, LH)	
	14	1	**257-7836**	1	FILM-IDENTIFICATION (CAT)	
AF			**4P-6236**	1	PLATE-SERIAL NUMBER (ENGINE)	
					(ON LH SIDE OF ENGINE BLOCK)	

A-NOT PART OF THIS GROUP
C-CHANGE FROM PREVIOUS TYPE
F-NOT SHOWN

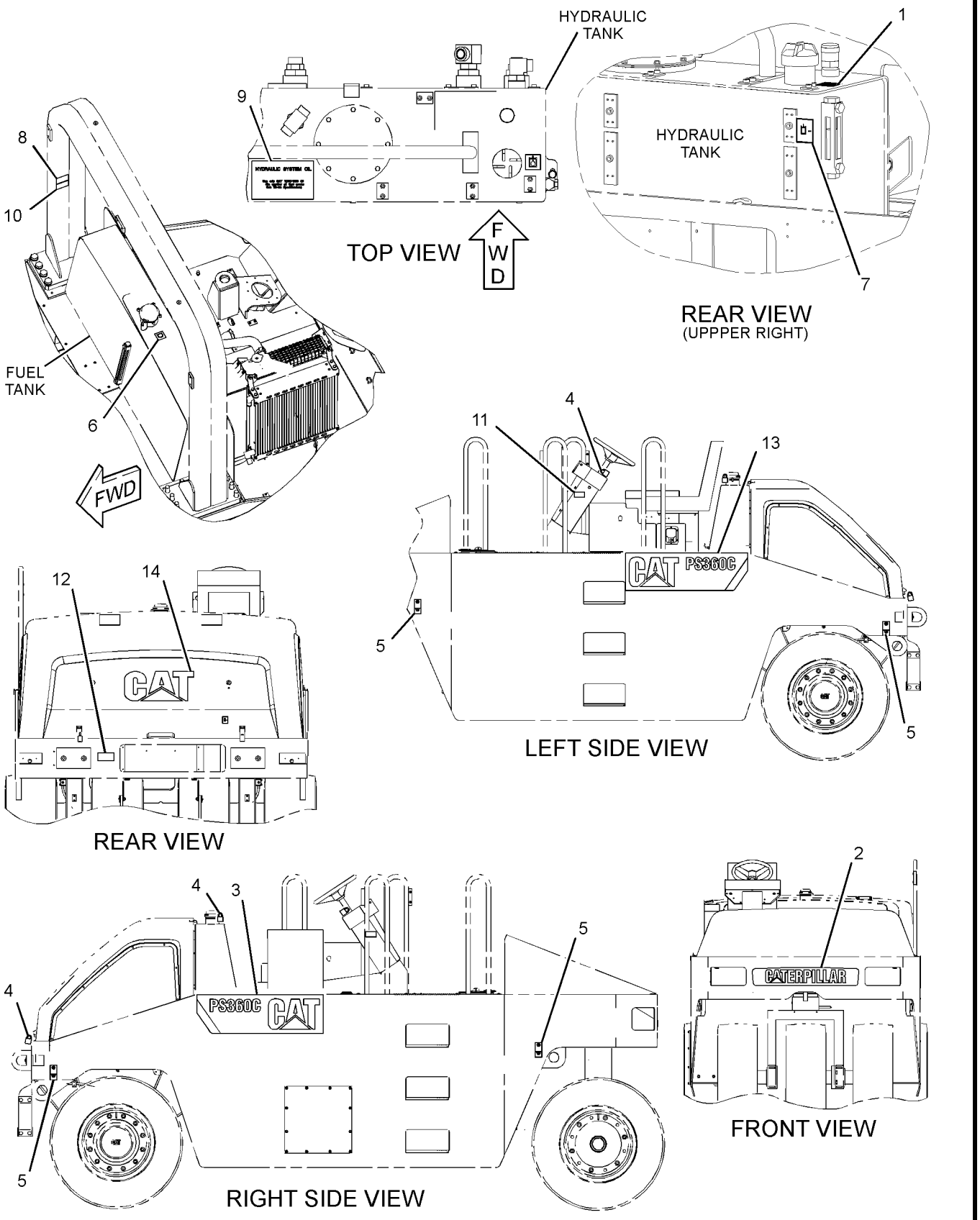

GRAPHIC #1 **<END>** g01868213

PART NUMBER INDEX

Part	Page
0	
0S-1603	40
0S-1629	159
	167
	170
	209
	211
0T-0924	39
1	
1B-4157	224
	226
1B-8736	12
	25
	27
	42
	44
1D-4689	194
	196
	198
1F-0750	350
1G-4376	218
1G-4378	218
1G-4380	218
1G-4381	218
1G-4661	363
	365
1G-4698	363
	365
1G-4699	363
	365
1G-4700	363
	365
1G-4701	365
1G-4703	363
	365
1G-6134	353
	356
1G-8878	246
1G-8995	341
1G-9759	►218
	220
	222
1G-9922	218
1G-9959	152
	155
1G-9960	153
	156
	298
	302
	305
	308
	311
	314
1H-1023	92
1H-3338	146
	147
1K-6872	122
	124
	138
	194
	196
1K-8374	182
	188
1M-6119	122
	124
1M-6120	122
	124
1P-3702	167
1P-3703	167
	170
	209
	211
1P-4278	61
	62
	82
	298
	302
	305
	308
	311
	314
1P-7297	298
	302
	305
1P-7403	206
1R-1804	116
	117
1S-7251	122
	124
1S-7252	122
	124
1S-9593	322
	324
	328
	333
	335
1U-5004	353
	356
1V-6653	308
	311
	314
2	
2A-0762	245
2B-0858	34
	56
2D-2507	182
	188
2D-2508	182
	188
2D-2509	182
	188
2D-6392	80
2G-5786	152
	155
2H-3922	144
	326
	328
	331
	333
	335
	338
2K-7471	245
2K-8199	293
2L-8049	328
	335
2L-8051	328
	335
2L-8065	328
	335
2M-9780	159
	177
	209
	211
	220
	222
	239
	267
2N-2371	140
	322
	324
2N-3480	351
	354
	356
2N-3680	326
	329
	331
	333
	336
	338
2P-1692	248
2R-0364	353
	356
2S-4078	177
2T-1760	250
2U-6509	218
2V-7086	140
2V-7087	322
	324
2V-7088	140
	324
2Y-2347	288
2Y-5578	260
3	
3B-4501	326
	328
	331
	333
	335
	338
3B-4627	294
3B-6552	84
3B-7722	298
	302
	305
3B-7764	62
3B-8485	161
3B-8488	224
	226
3B-8489	224
	226
	229
3D-2824	167
	170
3D-5279	206
3E-3010	373
	375
3E-3881	192
3E-4103	245
3E-5239	308
	311
	314
	351
	353
	356
3E-5519	326
	328
	333
	335
3E-6515	373
3E-8008	248
3E-8149	373
3E-8320	122
	124
3E-9417	373
3E-9865	326
	329
	331
	333
	336
	338
3F-4134	119
3G-0361	243
3G-6891	241
3G-6906	241
3J-1907	167
	170
	177
	209
	211
	216
	217
	218
	220
	222
	239
	246
	267
	284
	298
	302
	305
3J-5390	193
	194
	302
	305
	308
	311
	314
3J-7354	61
	62
	167
	170

► **PRIMARY REFERENCE**

PART NUMBER INDEX

Part	Page
	178
	209
	211
	213
	218
	220
	222
	246
3K-0360	61
	62
	118
	170
	177
	209
	211
	218
	220
	222
	228
	239
	283
3K-1650	138
	▶149
3K-2316	182
	188
3K-6060	351
3K-6168	343
	345
	347
3K-8782	140
	298
	302
	305
	322
	324
3L-8187	322
	324
	326
	329
	331
	333
	336
	338
3N-1491	75
3P-1823	62
3P-1932	177
3P-2179	122
	124
3S-2093	93
	95
	97
	138
	152
	153
	155
	308
	311
	314
	333
	335
	338
	351
3S-6049	122
	124
3T-2357	326
3T-5760	122
	124
3V-0046	122
	230
	235
	298
	308
	311
3W-9402	294
	328
	331
	333
	335
	338
4B-1663	119
4B-2043	174
	322
	324
4B-2049	140
	153
	156
4B-4274	152
	156
	315
	351
	354
	356
4B-4863	140
	309
	312
	351
	354
	356
4B-5423	119
4B-5949	119
4B-7270	161
4B-9782	243
4D-1326	122
	124
4D-3120	167
	170
	209
	211
4D-6432	270
4D-6695	162
	164
4F-2294	148
4H-3001	351
	354
	357
4J-0520	177
4J-5267	170
	209
	211
4J-5351	288
4J-5477	159
	167
	170
	209
	211
	217
4K-2039	288
4K-8864	215
4L-1250	343
	345
	347
4L-6454	239
4L-9337	228
4M-5282	230
	235
	298
	302
	309
	312
4P-6236	375
4P-7428	156
4P-7429	153
	156
4P-8134	48
	93
	95
	97
	138
	202
	204
	353
	356
4V-0611	230
4V-0612	230
4V-0939	230
4V-2444	161
4V-7740	140
4V-9804	194
	196
	198
4W-3087	308
	311
	314
5A-3604	367
5A-4878	370
5B-9079	60
	64
5C-1055	341
5C-2874	152
	155
5C-2890	93
	95
	97
	146
	147
	153
	156
	202
	204
5C-6158	328
	335
5C-7261	78
	82
	84
	100
	202
	204
	206
	255
	309
	312
	315
	354
	357
	363
	365
5C-8312	140
	315
5C-8315	134
	135
	136
	137
5C-9553	161
	319
	320
	326
	329
	331
	333
	336
	338
5C-9584	134
	135
	136
	137
5D-1026	15
	17
	19
	21
	23
	61
	62
	78
	99
5E-7045	288
5E-8771	170
	211
	213
5E-8934	284
5E-9146	350
5E-9315	100
5E-9671	286
5E-9959	245
5E-9960	245
5E-9962	245
5E-9964	245
5F-1678	245
5F-8000	293
5F-9144	80
5H-8848	245
5K-1075	162
	164
5K-1078	162
	164
5K-5068	159
5K-9090	177
	258
	267

▶ **PRIMARY REFERENCE**

PART NUMBER INDEX

Part	Page	Part	Page	Part	Page	Part	Page
	284		97	6E-4385	272		49
5L-1545	194		100		274		51
	196		156	6E-4401	291		73
5L-7200	140		206	6E-4402	248		74
	149		309		▶290		85
	326		312	6E-4403	290	6I-0593	90
	328		315	6E-4404	290	6I-0594	121
	331		351	6E-4614	272		143
	333		354	6E-6122	260	6I-0631	41
	335		357	6E-6336	276	6I-0645	42
	338	5P-4571	135	6E-6349	276		44
5M-3062	75		328	6E-6350	262		73
	122		335		276		74
	124	5P-4961	100	6F-0612	319	6I-0646	13
	321	5P-5618	328		320		14
	350		335	6F-3930	182	6I-0650	42
5M-3396	213	5P-5623	97		188		44
5M-6213	118		120	6F-3931	182	6I-0654	90
5M-6214	159	5P-5675	153		188	6I-0846	15
5P-0623	95		156	6F-7045	144		17
5P-0743	61	5P-5687	80	6H-3616	47		19
	62	5P-6718	49	6H-5139	243		21
	99	5P-6944	283	6H-9691	288		23
5P-0744	152	5P-7211	321	6I-0217	42	6I-0847	41
	155	5P-7483	118		44	6I-1201	15
5P-0747	122	5P-7812	167		49		17
	124		213		51		19
5P-0761	122	5P-7833	62		76		21
	124	5P-7957	363		90	6I-1497	49
5P-1420	61		365		101		51
	62	5P-7958	363		107	6I-2933	84
	82		365		110	6I-4039	89
5P-1442	62		367	6I-0218	72	6I-4079	49
	100	5P-8245	40	6I-0254	15	6I-4200	41
	298	5P-8500	322		17	6I-4374	15
	302		324		19		17
	305		373		21		19
	309		375		23		21
	312	5P-9186	61		76		23
	315		62	6I-0260	49		71
5P-1475	328	5P-9436	284		51		72
	335	5P-9617	246		69	6J-5731	245
5P-1476	328	5R-5927	78		70	6K-7909	162
	335	5V-2998	140		71		164
5P-1505	78	5V-6152	252		72	6L-7751	319
5P-2600	152		253		101		320
	155		254		107	6M-5062	288
5P-3864	213		258		110	6N-5926	153
5P-4115	93	5W-1701	164		121		156
	95	5Y-1138	162		267	6R-3730	308
	97		164	6I-0289	49		311
	152	5Y-1423	122		51		314
	155		124	6I-0291	101	6R-4061	308
	202				107		311
	204				110		314
	326	**6**		6I-0363	49	6R-4076	308
	329				51		311
	331	6B-0933	121	6I-0364	143		314
	333	6B-3223	161	6I-0423	41	6R-4136	328
	336	6B-4540	340	6I-0454	121		335
	338	6D-4244	351	6I-0501	59	6R-8146	241
5P-4116	78	6E-1607	288	6I-0502	59	6T-3631	322
	80		291	6I-0517	15		324
	93		292	6I-0563	90		326
	95	6E-4240	290	6I-0572	30		329

▶ **PRIMARY REFERENCE**

PART NUMBER INDEX

Part	Page
	331
	333
	336
	338
6T-3632	322
	325
	326
	329
	331
	333
	336
	338
6T-3633	322
	325
	326
	329
	331
	333
	336
	338
6T-3643	351
	354
	357
6T-5098	345
	347
6T-5598	328
	335
6U-1989	161
6V-0406	159
6V-1518	194
	196
	198
6V-1520	308
	311
	314
6V-1614	328
	335
6V-1864	161
6V-1897	194
	196
	198
6V-3965	177
	239
6V-4298	202
	204
6V-4589	260
	262
6V-5049	220
	222
	260
6V-5050	260
6V-5192	213
6V-5200	213
6V-5201	162
	164
	279
	281
6V-5586	288
6V-7238	61
	62
	118
6V-7351	260
	262
6V-7357	93
	95
	97
6V-7743	194
	196
	198
	354
	357
6V-7744	202
	204
	224
	226
	354
	357
6V-7978	152
	156
6V-8185	206
6V-8187	93
	95
	97
	152
	155
6V-8188	153
	156
6V-8189	202
	204
6V-8200	177
6V-8351	287
6V-8352	290
6V-8362	149
	150
6V-8363	326
	328
	331
	333
	335
	338
6V-8367	140
	322
	324
6V-8370	326
	328
	331
	333
	335
	338
6V-8374	322
	325
	326
	329
	331
	334
	336
	338
6V-8376	351
	354
	357
6V-8382	140
	322
	324
6V-8397	118
	159
	167
	170
	209
	211
	220
6V-8398	167
	170
	177
	209
	211
	220
	222
	229
	239
	246
	248
	250
	267
	283
6V-8627	209
	211
	220
	222
6V-8628	220
	222
6V-8633	167
	170
	177
	246
6V-8634	228
	239
6V-8635	258
	284
6V-8637	177
6V-8638	177
	220
	222
	267
6V-8639	220
	222
	283
6V-8640	239
6V-8641	167
	170
	209
	211
	217
6V-8647	167
	170
	209
	211
6V-8653	202
	204
6V-8714	267
6V-8715	159
6V-8716	258
	284
6V-8721	211
	222
	228
	230
	232
	235
	237
	239
	283
	288
	298
	302
	305
6V-8774	283
6V-8781	298
	302
	305
6V-8801	354
	357
6V-8817	140
	322
	324
6V-8942	177
6V-8980	230
	232
	235
	237
6V-8994	230
	232
	235
	237
6V-9005	177
6V-9007	167
	170
	177
	209
	211
6V-9008	284
6V-9023	153
	156
	324
6V-9168	230
	232
	235
	237
6V-9182	284
6V-9188	202
	204
6V-9491	140
6V-9632	206
	350
	353
	356
6V-9746	167
	170
	177
	209
	211
	239
	258
	284
6V-9836	159
6V-9839	258
6V-9842	167
	170
6V-9844	239
	250
6V-9846	177
6V-9850	220
	222
6V-9851	229
6V-9853	209
	211
6V-9854	177
6V-9872	220
	222
6W-2463	230
	235

PART NUMBER INDEX

Part	Page
	298
	308
	311
6W-5698	318
6Y-9915	48
7	
7B-2002	119
7C-0351	49
	51
7C-1224	49
	51
7C-1281	15
	17
	19
	21
	23
7C-4616	42
	44
7E-0976	152
	155
7G-7053	138
7G-7918	333
7H-1447	243
7J-6833	241
7J-6839	241
7J-8009	241
7K-1181	61
	62
	138
	152
	155
	174
	206
	294
	319
	320
	322
	324
	326
	328
	331
	333
	335
	338
	351
	353
	356
7L-6551	224
	226
7M-8485	177
	258
	284
7N-0718	122
	124
	▶144
7N-5876	140
	322
	324
7R-0376	194
	196
	198
	318
7R-0431	318
7R-0476	194
	196
	198
	318
7R-3711	276
7R-3743	260
	262
7R-6774	118
7R-7906	298
	302
	305
7R-7907	122
	124
	230
	232
	235
	237
7R-7908	234
	250
	308
	311
	314
7R-7939	258
7R-7940	253
	254
7R-7941	234
	252
7R-7942	283
7R-7951	234
	252
	253
	254
	258
7R-7952	283
7R-7954	153
	156
	230
	232
	235
	237
	298
	302
	305
7R-7955	252
	253
	254
	258
7R-7959	230
	235
	298
	302
7R-7963	200
	224
	350
7R-7964	230
7R-8439	122
7R-8578	194
	196
	198
	308
	311
	314
7R-8588	194
	196
	198
	318
	198
	318
7R-8872	244
7S-5432	149
7T-1099	153
	156
	206
	326
	328
	331
	350
	353
	356
7T-2009	119
7T-2036	119
7T-2037	119
7T-6799	150
7T-9515	326
	328
	331
	333
	335
	338
7U-4891	343
	345
	347
7V-5628	122
	124
	153
	156
	230
	232
	234
	235
	237
	250
	298
	302
	305
7V-9275	152
	156
7W-2326	67
7W-4634	59
7W-4642	41
7X-0269	298
	309
7X-0440	230
7X-0465	302
	305
	312
	315
7X-0474	122
	124
7X-0510	167
	170
	172
	173
	174
7X-0575	220
	222
7X-0579	354
7X-0818	232
	258
7X-0871	246
7X-1553	260
	262
7X-2466	343
7X-2470	177
7X-2533	153
	156
	215
	250
7X-2535	234
	252
	253
	254
	258
7X-2537	78
	100
	124
	153
	156
	232
	237
	250
	315
7X-2544	202
	204
7X-2548	152
	155
7X-2619	206
7X-3163	220
	222
7X-3229	373
	375
7X-5308	177
	239
7X-5315	177
7X-7465	194
	196
	198
7X-7655	118
	298
	302
	305
7X-7729	78
	122
	124
	152
	155
	193
	194
	196
	198
	202
	204
	206
	229
	298
	302
	305
	309
	312
	315
	351

▶ **PRIMARY REFERENCE**

PART NUMBER INDEX

Part	Page	Part	Page	Part	Page	Part	Page
	354		95		153		354
	357		97		156		357
7X-7888	217	8F-1434	153		202		363
7X-7958	258		156		204		365
7X-8831	322		326	8T-0337	130		370
	324		328		131	8T-4122	48
7X-9181	218		331		140		354
7X-9372	162		333		194		357
	164		335		196	8T-4123	177
			338		198		184
		8F-3469	92	8T-0341	260		185
8		8F-5340	241		262		189
		8G-1798	206	8T-1158	244		190
8C-3051	284	8H-5303	144	8T-1685	258	8T-4128	159
8C-3113	213	8H-5306	144	8T-2353	178	8T-4132	48
8C-3121	298	8H-7521	268	8T-3490	78	8T-4133	78
	302	8J-2413	288		200		89
8C-3445	61	8L-2786	167		201		130
	62		213		206		131
8C-3446	61	8L-5008	152		350		138
	62		155		353		151
	246	8L-6005	308		356		200
8C-3451	246		311		370		201
8C-4535	373		314	8T-3573	184		202
	375	8L-8413	122		185		204
8C-5917	122		124		189	8T-4136	78
	124		322		190		84
8C-6561	122		324	8T-3612	193		194
	230		328		350		196
	235		333		351		198
	298		335		353		217
	309	8M-2773	250		356		284
	312	8M-3121	89	8T-3647	258		298
8C-6781	159	8M-8948	309		309		309
8C-6865	224		312		312		312
	226		315		315		315
8C-6869	298		322	8T-3785	▶92		353
	302		324		118		354
	305	8N-0869	122	8T-3844	283		356
8C-8451	122		124	8T-4121	48		357
	124	8N-1546	324		75		363
	232		357		78	8T-4137	78
	234	8N-1547	155		84		122
	237		324		89		124
	250		357		130		152
	305	8N-1725	122		131		155
	309		124		138		206
	312	8N-3844	284		151		229
	315	8R-2916	228		152		334
	319	8S-3020	122		155		336
	320		124		159		338
8C-8514	351	8T-0024	315		194		342
	354	8T-0076	228		196	8T-4138	95
	357	8T-0078	209		198		97
8D-2256	224		211		200		153
	226	8T-0269	288		201		156
8D-2676	322		354		202		194
	324		357		204		196
	326	8T-0273	268		217		198
	329	8T-0309	194		246		309
	331		196		284		312
	333		198		334		315
	336	8T-0326	202		336		319
	338		204		338		320
8E-0853	93	8T-0328	140		342	8T-4139	224

▶ **PRIMARY REFERENCE**

PART NUMBER INDEX

Part	Page
	226
	363
	365
8T-4167	361
8T-4171	194
	196
	198
	286
	309
	312
	315
8T-4172	224
	226
8T-4174	48
8T-4176	78
8T-4178	220
	222
8T-4179	122
	124
	153
	156
8T-4182	78
8T-4183	354
	357
8T-4185	196
	198
8T-4186	48
	89
	194
	206
	217
	370
8T-4189	80
	138
	152
	155
	351
	354
	357
8T-4191	78
	194
	196
	198
8T-4192	118
	151
8T-4195	48
	75
	89
	159
	246
	309
	312
	315
	354
	357
	363
	365
8T-4196	200
	201
	202
	204
8T-4197	206
	305
8T-4198	151
8T-4199	354
	357
8T-4200	80
	86
	87
	88
	309
	312
	315
	354
	357
	363
	365
	367
8T-4205	140
	152
	156
	309
	312
	315
	326
	329
	331
	334
	336
	338
	351
	354
	357
8T-4222	122
	124
	206
8T-4223	78
	118
	122
	124
	138
	151
	152
	155
	178
	224
	226
	354
	357
	363
	365
8T-4224	75
	80
	82
	84
	86
	87
	88
	138
	152
	155
	167
	170
	202
	204
	209
	211
	255
	258
	267
	298
	302
	305
	354
	357
	363
	365
	367
8T-4226	194
	196
	198
8T-4244	78
8T-4648	178
8T-4821	159
	167
	170
	209
	211
8T-4896	75
	122
	124
	167
	170
	209
	211
	228
	239
	250
	321
	351
	354
	357
8T-4908	80
	86
	87
	88
	95
	97
	152
	155
	167
	170
	209
	211
8T-4970	152
	155
8T-4984	86
	87
	88
8T-4985	86
8T-4987	86
8T-5346	351
	353
	356
8T-5391	354
8T-5429	167
	170
	246
8T-5460	178
8T-5878	361
8T-6411	194
8T-6703	78
	87
	88
8T-6869	93
	95
	97
	252
	253
	254
	255
	267
8T-6912	100
	206
8T-6974	354
	357
8T-7547	78
	84
	93
	206
8T-7859	61
	62
8T-7876	61
	62
	73
	74
8T-8442	287
8T-8729	95
8T-8737	155
	174
	266
	324
8T-8799	152
	153
	155
	156
8T-8902	239
8T-8915	354
	357
8T-9377	167
	170
	209
	211
8T-9515	260
	262
8T-9598	260
	262
8T-9757	122
	124
8V-2514	140
8V-4102	159
	167
	170
	209
8V-4107	159
	167
	170
	209
8X-6296	140
8X-6790	250
9B-7233	140
	149
	150
	174
	322
	324
	351

9

► **PRIMARY REFERENCE**

PART NUMBER INDEX

Part	Page
	354
	357
9C-2235	194
	196
	198
9D-3721	298
	302
	305
	322
	324
9D-3737	351
9F-5644	144
9G-0003	122
	124
9G-0004	122
	124
9G-3695	138
	155
	308
	311
	314
	322
	333
	354
	357
9G-4348	152
	155
	322
	324
	326
	328
	333
	335
	354
	357
9G-4351	322
	324
	326
	328
	333
	335
	354
	357
9G-7641	▶150
	322
	324
9G-9154	333
	335
	338
	351
9G-9155	333
	335
	338
9H-6454	243
9J-3047	243
9J-5442	241
9J-8076	241
9K-1171	194
	196
9L-2685	93
	95
	97
9M-8406	298
	302
	305
9P-7121	119
9R-5895	298
	302
9S-4185	168
	170
	209
	211
	213
9S-8001	168
	213
9S-8002	177
	213
	218
9S-8004	216
	218
	220
	222
	260
9S-8005	218
9S-8006	220
	222
	260
	262
9S-8008	260
9T-3928	272
	274
9T-3931	260
9T-6001	350
	353
	356
9T-8560	241
9V-4787	202
	204
9W-9952	48
9W-9953	48
9X-0199	326
	328
	331
	333
	335
	338
9X-0506	326
	328
	331
	333
	335
9X-0507	308
	311
	314
9X-1054	326
	328
	333
	335
9X-1056	328
	335
9X-1439	▶130
9X-1813	120
	142
	146
	147
9X-2039	202
	204
9X-2085	239
9X-2201	87
9X-3402	345
	347
9X-3455	130
	131
9X-3463	130
	131
	132
	133
9X-4174	130
	131
9X-4243	130
	131
9X-4244	130
	131
9X-4381	▶131
	138
9X-6032	162
	164
9X-6405	260
	262
9X-6580	177
9X-6654	87
9X-8256	93
	95
	97
	153
	156
	161
	194
	206
	217
	286
	315
	319
	320
	354
	357
9X-8486	351
	354
	357
9Y-5015	34
9Y-9380	267
0	
000-6321	228
003-2143	308
	311
	314
003-8747	298
	302
	305
006-0210	298
	302
	305
006-5490	308
	311
	314
008-3843	294
011-5224	308
	311
	314
012-0380	146
	147
027-1287	181
030-8370	298
	302
031-0249	351
	354
	356
032-9090	25
	27
032-9091	25
	27
033-5853	177
033-6039	260
	262
033-7687	40
035-0425	152
	155
035-7869	229
	245
035-8017	101
	107
	110
035-8063	58
035-8068	30
038-9317	122
	124
053-0352	363
	365
053-6950	241
055-2102	351
	353
	356
067-6002	30
067-6006	30
	34
067-6043	30
067-6095	64
	65
067-6179	42
	44
067-6213	49
	51
067-6264	101
	107
	110
067-6265	101
	107
	110
067-6366	121
067-6873	25
	27
067-6874	25
	27
067-6999	101
	107
	110
077-2840	229
077-2967	159
077-3005	159
	224
	226
077-3108	229
077-3124	229
077-3895	182
	188

▶ **PRIMARY REFERENCE**

PART NUMBER INDEX

Part	Page
077-4101	224
	226
077-7423	241
077-7513	161
077-8345	241
077-9543	228
077-9902	241
078-0085	245
081-2965	308
	311
081-3801	272
	274
082-1163	194
	196
	198
086-0972	340
086-9035	167
	170
	217
086-9623	245
087-0333	230
	232
091-5013	354
	356
095-0894	224
	226
095-0912	250
095-9805	167
	170
	172
	173
	174
096-0001	244
098-0571	194
	196
	198
098-1483	182
	188
099-0492	140
	308
	311
	314
	351
	354
	356
099-0822	288
099-5845	272
	274
1	
100-3320	152
	155
100-3751	42
	44
	69
	70
	76
100-4461	68
100-4830	13
	14
	42
	44
	46
100-4838	19
	21
	23
100-4841	30
100-8451	121
101-3771	49
	51
101-3895	71
	72
101-8745	215
101-9605	298
	302
	305
	308
	311
	314
102-1384	284
102-1733	39
102-1957	41
102-8703	100
	124
	153
	156
	232
	237
	250
	314
102-8704	156
	201
	226
102-8705	232
	255
	258
102-8801	152
	155
	322
	324
	326
	328
	333
	335
	353
	357
102-8802	93
	95
	97
	120
	132
	133
	138
	146
	147
	152
	155
	174
	271
	308
	311
	314
	324
	326
	328
102-8803	134
	135
	138
	142
	152
	155
	266
	353
	357
102-8804	136
	137
	152
	155
	326
	328
	333
	335
	354
	357
102-8805	152
	155
	326
	333
103-2072	362
103-2113	▶362
	363
	365
103-5676	319
	320
103-7268	167
	170
	209
	211
104-1863	▶363
104-1995	328
	335
105-0951	341
105-2922	373
	375
105-3486	288
106-1239	353
	356
106-6340	229
106-8835	101
106-8916	90
107-0818	218
107-1716	340
107-1721	340
107-1723	340
107-1983	322
	324
107-2091	340
107-3117	262
	287
107-4749	215
	250
108-2084	229
108-3239	140
	298
	302
	305
108-7735	▶341
	349
108-7736	350
108-9591	206
109-3203	260
109-7092	206
109-9775	351
110-4731	322
	324
110-4732	322
	324
110-8337	308
	311
	314
111-0859	37
	38
111-3422	101
111-3423	101
111-4053	298
	302
111-8222	13
	14
111-8275	258
111-8824	244
111-8892	288
112-4159	78
112-4628	272
	274
112-4629	272
	274
112-4718	291
113-1095	340
113-1504	15
	17
	19
	21
	23
113-4416	276
113-5183	324
113-6349	121
113-8129	76
114-2579	85
114-3361	260
	262
114-4270	279
	281
114-5180	241
114-5190	241
115-1162	85
115-1748	174
115-3075	220
	222
115-8488	▶216
	217
116-0118	48
	93
	95
	97
	151
	152

▶ **PRIMARY REFERENCE**

PART NUMBER INDEX

Part	Page
	156
	351
	354
	357
116-5270	326
	328
	331
	333
	335
	338
116-5274	326
	328
	331
	333
	335
	338
116-5275	326
	328
	331
	333
	335
	338
116-5277	328
	331
	335
	338
116-6565	326
	328
	331
	333
	335
	338
117-7296	268
117-8801	167
	209
117-9081	147
118-1305	241
118-3534	▶145
	153
	156
118-4341	241
118-6650	135
118-6722	241
118-7521	268
118-9024	134
118-9520	216
118-9521	216
119-0942	244
119-0963	272
	274
119-3662	153
	156
	324
119-7017	142
120-4008	322
	324
120-4187	93
	95
	▶142
120-6872	112
	114
120-7057	▶228
	349
120-7065	128
	▶342
120-7527	167
	▶260
121-0883	41
121-5900	134
121-6758	239
	▶269
122-1004	298
	302
	305
	308
	311
	314
122-1161	245
122-3629	159
	167
	170
	209
	211
122-3631	159
	167
	170
	209
	211
122-3734	135
122-3755	229
	▶245
122-8041	224
	226
122-8064	159
123-2017	248
123-4588	224
	226
123-4744	224
	226
123-5798	260
123-5799	260
123-7556	248
123-7574	272
	274
123-7576	292
123-7591	291
124-0506	17
	19
	21
	23
124-0775	260
124-2631	194
	196
124-3536	53
	55
124-3815	42
	44
	101
	107
	110
124-3885	363
124-9891	287
124-9896	287
124-9898	287
124-9899	287
124-9900	287
124-9901	287
124-9904	287
124-9908	287
125-3295	93
	95
	97
125-3674	353
	356
125-4572	287
125-4984	215
125-7874	324
125-7875	324
125-7876	345
	347
125-8198	284
126-1400	279
126-1401	279
	281
126-1405	279
	281
126-1406	279
	281
126-1407	279
	281
126-1408	279
	281
126-1409	279
126-1410	279
126-1413	279
126-1416	279
126-1424	248
	▶291
126-1473	292
126-1477	248
	268
126-1597	248
126-1598	248
126-1638	272
	274
126-1643	272
	274
126-1645	272
	274
126-1661	272
	274
126-5011	152
	155
126-7573	308
	311
126-8882	292
126-8883	292
126-9092	272
	274
127-1559	136
127-1560	137
127-5113	▶243
	286
127-5461	308
	311
	314
127-5463	318
127-5484	326
	333
128-1689	319
	320
128-3101	122
	124
128-4190	153
	156
128-5397	38
129-3180	363
	365
130-3879	37
	38
130-3880	75
130-9153	322
	324
130-9888	15
	17
	19
	21
	23
131-1474	328
	335
131-2324	1
	▶99
131-2329	349
	▶370
131-2357	▶229
	249
131-2374	1
	▶224
	▶226
131-2385	▶161
	176
131-2392	1
	▶294
131-6430	235
	237
131-6586	194
	196
	198
131-7945	202
	204
131-8203	353
	356
131-8829	83
132-3268	122
	124
132-5789	152
	155
132-8041	162
	164
133-1011	42
	44
133-1855	248
133-1858	▶248
	272
	274
133-4896	228
	▶241
133-8929	277
134-1374	288
135-5010	328
	335
135-5152	1
	▶361
135-8051	279
135-8052	279
135-8053	279
135-8054	279
	281
135-8059	279
135-8069	288

▶ **PRIMARY REFERENCE**

PART NUMBER INDEX

Part	Page
135-8070	288
135-8071	288
135-8072	288
135-8073	288
135-8075	268
135-8807	279
	281
136-3608	17
	19
	21
	23
136-5084	202
	204
136-5085	202
	204
136-5570	202
	204
136-6811	209
	220
136-6881	167
	170
	▶181
	209
	211
136-7807	162
	164
136-7808	162
	164
136-8064	213
136-8065	213
136-8066	213
136-8067	213
136-8068	213
136-8070	213
136-8071	213
136-8614	162
	164
136-8615	162
	164
136-8619	162
	164
136-8620	162
	164
	213
136-8622	162
	164
136-8624	162
	164
136-8627	162
	164
136-8629	162
	164
136-8641	162
	164
137-3561	224
	226
137-3780	260
137-4505	260
	262
137-4581	260
	▶276
137-4583	276
137-4584	276
137-4585	276
137-4586	276
137-4601	260
	262
137-4602	260
137-4603	260
137-4604	260
137-4605	260
	262
137-4606	260
137-4607	260
137-5763	161
	▶166
137-5771	202
	204
137-6575	326
	328
	331
137-7655	370
137-8558	361
137-9996	308
	311
137-9997	308
	311
138-2053	64
	65
138-3817	161
138-4415	202
138-4538	161
138-4709	161
138-7123	202
	204
138-7124	202
	204
138-7125	202
	204
139-0735	362
139-2211	167
	178
	209
	211
139-3176	194
	196
	198
139-3223	161
139-3268	260
139-6096	161
139-7747	260
	262
	▶287
139-7755	260
139-7761	287
139-7762	287
139-9300	298
	302
	305
140-2091	162
	164
	166
140-2358	80
140-3124	298
	302
	305
140-3138	308
	311
	314
140-3139	308
	311
	314
140-3140	308
	311
	314
140-3562	298
	302
	305
140-3588	272
	274
	▶292
140-3598	298
	302
	305
140-3599	298
	302
	305
140-3600	298
	302
	305
140-3601	298
	302
	305
140-3602	298
	302
	305
140-5883	181
140-6145	269
140-6223	269
140-7524	193
140-7526	194
	196
	198
140-7528	351
140-7530	194
	196
	198
140-8714	101
	107
	110
140-8718	101
	107
	110
140-8783	121
140-9267	215
140-9338	343
	345
	347
140-9622	194
	196
	198
140-9623	194
	196
	198
140-9624	194
141-0235	277
141-0236	277
141-0237	277
141-0238	277
141-0239	277
141-0240	277
141-0241	277
141-0242	277
141-0243	277
141-0244	277
141-0247	277
141-0248	277
141-0249	277
141-0250	277
141-0251	277
141-0252	277
141-3243	194
	196
141-4962	122
	124
141-4963	122
	124
141-7220	314
141-7726	224
	226
141-9203	193
	194
	196
	198
	298
	302
	305
	308
	311
	314
141-9504	298
	302
	305
141-9505	298
	302
	305
141-9983	308
	311
	314
141-9984	298
	302
	305
142-3388	75
142-6266	298
	302
	305
142-9439	279
	281
143-4889	167
	170
	209
	211
143-8929	245
144-3939	230
	232
	235
	237
144-3940	230
	232
	235

▶ **PRIMARY REFERENCE**

PART NUMBER INDEX

Part	Page
	237
144-3942	230
	232
	298
	302
	305
144-7715	286
144-9101	248
144-9774	162
145-0830	326
	328
	331
145-0878	284
145-0905	248
145-0909	268
145-2314	326
	328
	331
145-2910	▶296
	298
	302
	305
145-3343	174
145-3754	230
	232
145-3846	298
	302
	305
	308
	311
	314
145-4746	202
	204
145-5093	▶321
145-5255	202
	204
145-5618	177
145-5664	194
	196
	198
145-5665	118
145-7353	194
	196
	198
145-8630	194
	196
	198
145-8632	194
	196
	198
145-8633	194
	196
	198
145-8940	194
	196
145-9291	228
146-3621	224
	226
146-3624	224
146-4263	213
146-7588	194
146-8901	224
	226
146-8921	224
	226
146-9316	224
	226
146-9351	224
	226
146-9355	224
	226
147-1979	34
147-2645	104
	105
	106
147-5553	90
147-5578	▶134
	140
147-5579	▶135
	140
147-8566	▶136
	140
147-8567	▶137
	140
147-8569	136
	137
148-0796	230
	232
148-1517	93
	95
	97
148-3046	293
148-6988	250
148-7155	308
	311
	314
148-8305	246
148-8308	177
148-8313	283
148-8316	167
	170
	209
	211
148-8317	267
148-8318	239
148-8320	224
	226
148-8322	239
148-8325	167
	170
	209
	211
	217
148-8326	220
	222
148-8327	177
148-8328	167
	170
	177
	246
148-8335	258
	284
148-8339	258
	284
148-8340	220
	222
148-8345	177
	220
	222
	267
148-8347	167
	170
	177
	209
	211
148-8352	177
148-8355	177
148-8357	284
148-8360	284
148-8367	220
	222
148-8368	209
	211
	220
	222
148-8369	220
	222
148-8372	211
148-8377	230
	232
	235
	237
148-8381	167
	170
	246
148-8392	209
	211
148-8411	170
	209
	211
148-8418	177
148-8424	239
148-8435	302
	305
148-8439	283
148-8442	258
148-8448	167
	170
148-8449	258
149-0796	294
149-5452	230
	232
	235
	237
149-8761	294
149-9116	138
149-9176	41
150-2324	298
	308
	311
150-3070	220
	222
150-4033	177
150-4037	239
	250
150-4047	178
150-6222	318
150-7732	15
	17
150-8261	308
	311
	314
151-0835	298
	308
	311
151-2970	206
151-5064	167
	170
	209
	211
151-5351	206
151-5352	206
151-5353	206
151-5354	206
151-6145	206
151-6146	206
151-7500	162
	164
151-7502	162
	164
151-7505	162
	164
151-7510	162
	164
151-9272	345
152-0768	321
152-3968	104
	105
	106
152-5542	153
	156
152-9143	248
152-9144	248
153-2152	272
	274
153-2159	244
153-2162	244
153-2163	244
153-3061	75
153-4980	11
	▶39
153-6245	209
	220
153-7368	228
154-0868	283
154-4880	124
	232
	237
154-4881	232
154-4883	255
154-4884	252
	253
	254
154-7441	308
	311
	314
154-7442	308
	311
	314
154-8299	308
	311
	314
154-9025	61
	62
155-1279	218
155-2255	152
	155
	322
	324
	326

▶ **PRIMARY REFERENCE**

PART NUMBER INDEX

Part	Page	Part	Page	Part	Page	Part	Page
	328	157-6761	162	164-5619	220	173-5855	353
	333		164		222		356
	335	157-6762	162	164-5624	239		▶360
	354		164	164-9987	206	173-6519	153
	357	157-6763	162	165-0005	200		156
155-2260	138		164	165-0012	206	174-9638	90
	152	157-6766	162	165-2273	62	175-2308	145
	155		164	165-6689	40		▶146
	174	157-6770	162	165-7314	353	175-2309	145
	354		164		356		▶147
	357	157-6771	162	165-7316	353	175-2612	353
155-2270	148		164		356		356
	152	157-6774	162	165-7317	360	175-2615	353
	155		164	165-7318	353		356
	174	157-6776	162		356	175-3948	241
	308		164	165-7319	353	175-4391	272
	311	157-6778	162		356		274
	314		164	165-7323	360		▶288
	322	157-6780	162	165-7327	353	176-1599	213
	324		164		356	176-7082	213
	326	157-6783	162	165-7329	353	177-2215	100
	328		164		356		156
	333	158-0252	132	165-7330	353		215
	336		133		356		250
	345	158-7799	202	165-7331	353		255
	347		204		356		256
	354	159-0196	202	165-7336	353		257
	357		204		356	177-9752	1
155-2271	138	159-0197	202	165-7340	353		▶7
	152		204	165-7356	353	178-0570	167
	155	159-3511	162		356	178-1151	206
	326	159-5255	61	165-7670	333	178-1152	206
	328		62		335	178-1153	206
	333	159-9854	279		338	178-1154	206
	336		281	166-6385	202	178-1155	206
	354	160-0660	296		204	178-1156	206
	357	160-0662	296	167-6805	274	178-3620	82
155-2274	152	160-1757	288	167-7715	290	178-8505	155
	155	160-2247	328	167-7938	213	178-8510	253
	326		335	168-6315	235	179-1307	272
	329	160-7197	101		237		▶279
	333	161-6708	▶186	169-7397	177	179-1531	75
	336		▶187	170-8577	138	179-2130	288
155-7526	215	161-8211	▶293	170-8578	308	179-2864	244
155-9678	176		308		311	179-2934	279
	▶184		311		314	179-3271	▶268
	▶185		314	171-2065	▶133		272
155-9830	294	162-1565	17	171-2208	152		274
156-1661	294		19		155	179-3475	268
156-1662	294		21	171-6727	159	179-4793	206
156-3617	100		23	171-7075	333	179-4794	206
	153	162-3294	▶132		335	179-4795	206
	156	162-5372	132		338	179-4796	206
	314		133	171-9646	333	179-4915	244
156-3618	232	163-1201	342		335	179-8028	▶206
	250	163-1828	308		338	180-3813	246
156-4592	162		311	172-3975	353	180-5117	162
	164		314		356		164
156-6175	152	164-5567	177	172-7602	353	180-5617	326
	155		239		356		333
156-9455	181	164-5586	246	172-7605	353	180-9339	155
156-9456	181	164-5590	62		356	180-9340	155
156-9457	181		246	172-8857	202	183-2965	162
157-0670	61	164-5606	209		204		164
	62		211	173-3064	140	183-3203	216

▶ **PRIMARY REFERENCE**

PART NUMBER INDEX

Part	Page
183-3408	220
	222
183-3409	177
183-6121	78
183-8410	290
183-8683	318
184-7696	162
184-7733	202
	204
185-0599	318
185-0882	34
185-0884	30
185-1546	60
	64
185-1632	215
185-1883	308
	311
	314
	▶318
186-3169	343
	345
	347
186-3380	▶340
	343
	345
	347
186-3735	97
	120
	132
	133
	134
	135
	142
	146
	147
	266
	271
	324
	357
186-3736	148
	324
	357
187-3547	177
187-8001	272
	274
187-8875	162
	164
188-8849	132
	133
189-1943	198
190-9732	368
191-8922	177
192-3292	260
194-5326	177
	▶271
194-5327	271
	▶272
	▶274
194-5328	252
	253
	254
194-5390	90
194-7757	184
	186
	▶188
194-7758	188
	191
194-7759	▶180
	182
	188
195-2132	47
195-2134	47
195-2136	47
195-2221	47
195-4479	258
196-4204	215
196-4205	153
	156
	232
	237
	305
196-4206	252
	253
	254
	258
197-6447	164
197-9461	345
	347
198-8645	15
198-9169	17
	19
	21
	23
199-3108	41
199-3109	41
199-9252	101
199-9267	58
199-9751	34
	57
	101
200-5961	166
201-1601	78
201-7350	78
201-7651	250
202-2342	290
202-4736	368
202-4737	368
202-4739	368
202-4740	368
204-6469	1
	▶200
	▶201
204-7034	▶83
	84
205-7700	322
206-0451	232
206-0452	232
206-5234	83
206-5235	83
206-5237	83
206-6418	215
206-6419	250
207-2757	116
	117
207-3643	258
207-4499	252
	253
	254
208-2375	272
	274
209-5502	13
209-5503	13
209-9219	32
	33
209-9963	192
209-9979	192
209-9980	192
210-2091	250
210-6752	▶159
	176
211-6011	159
	▶162
	▶164
211-6574	80
211-9987	373
	375
212-5931	1
	▶176
213-5244	159
214-3203	13
	14
214-5830	▶244
	272
	274
214-5935	244
214-7191	▶192
215-9209	257
	258
215-9508	112
	114
215-9509	112
	114
216-4365	283
216-8314	27
	29
216-8634	42
	44
217-2728	89
217-5821	368
218-5014	80
219-0305	373
	375
219-0617	78
219-1669	353
	356
219-1671	▶350
	351
219-4581	343
220-1960	11
	▶61
221-2014	116
	117
221-4045	▶367
222-6617	116
	117
223-0673	288
223-7825	7
	8
	9
	10
	▶41
224-0554	372
224-8945	371
224-8946	372
224-9855	373
	375
225-0312	372
225-0313	371
225-3146	121
225-3150	143
225-3305	371
225-4256	371
225-4257	372
225-4317	7
	8
	9
	10
	▶56
225-5436	53
	55
225-5437	53
	55
225-5438	53
	55
225-5439	53
	55
225-5441	53
	55
225-5451	53
	55
225-5453	53
	55
225-5454	53
	55
225-5458	53
	55
225-5459	53
	55
225-5495	34
225-5496	34
225-5498	34
225-5499	34
225-5501	35
	36
225-5502	35
	36
225-5625	60
	64
225-5629	60
	64
225-5634	60
	64
225-5638	60
	64
225-5640	60
	64
225-5959	60
	64
225-5960	60
	64
225-5961	60
	64
225-5962	60
	64
225-5963	▶60
	64

2

▶ PRIMARY REFERENCE

PART NUMBER INDEX

Part	Page	Part	Page	Part	Page	Part	Page
	65	225-8016	76		110	232-2725	101
225-5967	12	225-8019	76	230-8996	101		107
	65	225-8329	68		107		110
225-6004	49	225-8524	90		110	232-2726	101
225-6005	49	225-8526	90	230-8997	101		107
	51	225-8533	90		107		110
225-6041	49	225-8534	90		110	232-3126	107
	51	225-8536	90	230-8998	101		112
225-6451	15	225-8848	46		107		114
	17	225-8858	30		110		129
	19	226-8763	15	230-8999	101	232-3149	101
	21	226-8766	42		107		107
	23		44		110		110
225-6455	15	226-8767	42	230-9127	15	232-3157	101
	17		44		17		107
	19	226-8770	129		19		110
225-6456	15	227-4562	90		21	232-3263	101
	17	227-4794	93		23	232-3274	101
	19		95	230-9144	15		107
	21		97		17		110
	23	227-4799	11	230-9152	15	232-3633	153
225-6461	15		▶93		17		156
	17		▶95		19	232-3666	42
	19		▶97		21		44
	21	228-5108	82	230-9196	7	232-3713	7
	23	228-5778	100		8		8
225-6464	15		153		9		9
	17		156		10		10
	19	228-9108	351		▶13		▶46
	21		353		▶14	232-3722	▶71
	23		356	230-9699	7		73
225-6477	15	229-3469	82		▶37	232-3751	30
	17	230-6367	363	231-0038	7		73
	19		365		8		74
	21		367		9	232-3861	58
	23	230-7304	7		10	232-4226	368
225-6478	15		8		▶69	232-6179	▶42
	17		9		▶70	232-6204	7
	19		10	232-0295	152		8
	21		▶143		155		9
	23	230-7353	7	232-1115	112		10
225-6479	15		8	232-1295	101		▶57
	17		9	232-1322	34	232-7378	7
	19		10		57		8
	21		▶59		101		9
	23	230-7355	7	232-1323	101		10
225-6517	15		8		107		▶67
	17		9	232-1328	101	232-7400	▶25
225-6817	71		10		107		27
	72		▶76		110		29
225-6818	71	230-7578	7	232-1793	101	232-7439	▶27
	72		8		107	232-7440	30
225-6907	69		9		110	232-7442	▶53
225-6908	69		10	232-1794	101	232-7449	32
225-7738	76		▶68		107		33
225-7739	76	230-7881	97		110	232-7519	▶34
225-7741	76	230-8065	37	232-2551	49		35
225-7772	25		38	232-2565	7		36
	27	230-8094	49		8	232-7524	▶35
225-7781	27		51		9	232-7526	▶64
225-7941	73	230-8989	101		10	232-7528	▶12
	74		107		▶49	232-7596	30
225-7944	30		110		▶51	232-7597	30
	73	230-8995	101	232-2724	107	232-7599	30
	74		107		110	232-7600	30

▶ **PRIMARY REFERENCE**

PART NUMBER INDEX

Part	Page
232-7603	30
232-7604	▶30
	32
	33
232-7606	▶32
232-9758	112
	114
232-9759	112
	114
233-3784	25
	27
233-3785	25
	27
233-3786	25
	27
233-3788	27
233-3789	27
233-3790	27
233-7489	85
233-7530	368
233-7532	368
233-7533	368
233-7534	368
233-7535	368
233-7536	368
233-7537	368
233-7538	368
233-9417	7
	8
	9
	10
	▶112
	▶114
233-9526	▶101
233-9530	121
233-9531	121
233-9532	121
233-9533	7
	8
	9
	10
	▶121
233-9534	90
233-9536	90
233-9537	90
233-9539	7
	8
	9
	10
	▶90
233-9834	7
	8
	9
	10
	▶129
234-0251	7
	▶15
234-2955	153
	156
234-9680	8
	9
	10
	▶38
235-1790	101
	107
	110
235-3151	367
	▶368
236-0872	351
	353
	356
236-2144	101
	107
	110
236-5056	367
236-6910	101
	▶104
237-0284	112
	114
237-0285	112
	114
237-0286	112
	114
237-4890	224
	226
238-2799	7
	8
	9
	10
	▶73
	▶74
238-8288	85
238-8671	101
	107
	110
239-5433	100
239-6986	373
	375
240-0514	217
240-0520	48
240-1434	151
240-1451	153
	156
240-5535	7
	8
	9
	10
	▶127
240-5571	101
	107
	110
240-9756	112
	114
241-6151	284
241-6185	284
241-8368	▶148
	351
	353
	356
244-1090	▶120
	151
244-4471	326
	328
	333
	335
	▶343
	▶345
245-3556	83
245-7713	▶297
	308
	311
	314
245-9831	7
	8
	9
	10
	▶40
246-2359	180
246-2641	373
	375
246-8991	▶1
246-8992	▶1
246-8993	1
	▶194
	▶196
	▶198
246-8995	1
	▶373
	▶375
246-8996	1
	4
	5
	6
	▶11
246-8997	11
	▶48
246-9003	11
	▶78
246-9004	78
	▶80
246-9006	11
	▶86
	▶87
	▶88
246-9007	86
	87
	88
246-9008	86
	87
	88
246-9011	86
	87
	88
246-9013	119
246-9014	1
	▶118
246-9015	118
	▶119
246-9016	86
	87
	88
246-9017	86
	87
	88
246-9018	1
	▶284
246-9019	284
	▶286
246-9020	286
246-9025	11
	▶89
246-9026	1
	▶249
246-9027	1
	▶128
246-9028	1
	▶249
246-9029	▶349
246-9030	▶319
	349
246-9031	▶230
	▶232
	349
246-9032	349
	▶351
246-9033	▶322
	▶324
	349
246-9034	11
	▶75
246-9035	80
247-0099	37
247-0144	76
247-6479	368
247-7799	17
	19
247-9604	80
247-9606	78
247-9610	249
	▶258
247-9616	258
247-9617	▶209
	▶211
	249
247-9618	255
	256
247-9620	▶167
	▶170
	249
247-9622	249
	▶255
	▶256
	▶257
247-9623	255
	256
	257
247-9624	255
	256
	257
247-9626	234
247-9627	▶234
	249
247-9628	▶239
	249
247-9629	234
247-9630	249
	▶250
248-2367	▶105
248-6635	343
	345
	347
248-6637	343
	345
	347
248-6638	343
	345
	347
248-6816	78
249-0974	73
	74

▶ PRIMARY REFERENCE

PART NUMBER INDEX

Part	Page	Part	Page	Part	Page	Part	Page
249-2711	249		204		▶335		▶265
	▶267	250-9247	75		▶338	260-1334	174
249-2712	250	251-1079	322		349		▶266
249-2713	250	251-1953	▶217	255-4144	194	260-1345	▶174
249-2715	250		249		196	261-2723	258
249-2718	250	251-1955	349	255-4145	152	261-2724	258
249-2719	250		▶353		155	261-2725	215
249-2720	▶215		▶356	255-4146	152	261-2726	78
	249	251-1957	▶349		155	262-4804	138
249-2723	215	251-1960	▶320	255-7159	▶172	262-4947	93
249-2727	249		349		▶173		95
	▶252	251-1964	▶235	255-7160	373	262-5231	375
	▶253		▶237	255-7161	▶140	262-7272	281
	▶254		349	255-7162	128	262-7293	281
249-2728	252	251-1967	319		▶138	263-2162	49
249-2729	252	251-1971	320	255-9152	267		51
	253	251-1978	128		▶270	263-8950	258
	254		▶152	256-2423	▶193	263-8951	258
249-2731	252		▶155	256-2424	1	264-2781	78
	253	251-1982	152		▶308	264-7848	151
	254		155		▶311	265-0833	128
249-2732	252	251-1984	▶122		▶314		▶151
	253		▶124	256-2425	▶298	265-3318	363
	254		128		▶302		365
249-2733	202	251-1987	80		▶305	267-3703	262
	204	251-1988	▶326	256-2426	▶371	268-0867	8
249-2734	1		▶328	256-2427	▶372		9
	▶202		▶331	256-3007	84		10
	▶204		349	256-4447	85	268-8905	86
249-2735	230	251-1989	326	256-8769	274		87
	232		333		▶281		88
	235	251-4336	42	257-0022	322	268-8906	86
	237		44		324	269-3101	7
249-2736	230	251-4685	270	257-0023	249		8
	232	251-4729	270		▶283		9
	235	251-4749	270	257-0024	250		10
	237	251-6241	85	257-0025	▶220		▶17
249-2737	11	251-8338	51		▶222		▶19
	▶100	251-9614	213		249		▶21
249-2740	89	252-0705	262	257-7836	373		▶23
249-5557	277	252-1821	69		375	270-4374	7
249-6709	167	252-6320	262	257-9290	152		8
	170		▶277		155		9
	209	252-6438	34	258-0887	258		10
	211	252-6456	7	258-0888	▶246		▶85
	▶213		8		249	270-6992	112
249-7106	90		9	258-0889	▶177		▶116
250-0530	343		10		249	270-8539	328
	345		▶47	258-4946	35		331
	347	252-9614	90		36		335
250-0629	343	253-2111	152	258-4995	78		338
	345		156	258-4996	78	270-8540	324
	347	253-2479	7	258-4997	78	272-0494	7
250-1476	167		8	258-4998	78		8
	170		9	258-5506	255		9
	217		10		256	272-2265	71
250-6133	89		▶58		257		72
250-6135	11	254-2269	70	259-4419	122	272-3106	224
	▶82	254-2270	70	259-6277	78	274-1571	196
250-6136	194	254-3954	34	260-1329	170		198
	196	254-6086	373		▶262	274-7236	314
	198	255-0112	270	260-1330	172	275-1038	107
250-6138	11	255-4141	353		▶264		110
	▶84		357		266	275-2452	46
250-6139	202	255-4142	▶333	260-1331	173	275-9883	51

▶ **PRIMARY REFERENCE**

PART NUMBER INDEX

Part	Page
276-1828	314
276-2378	314
276-2379	314
276-4881	174
276-4882	174
276-5605	30
276-9763	▶365
277-0746	198
277-3012	42
	44
277-5156	7
	8
	9
278-7591	305
281-2212	87
	88
283-5690	253
	254
283-7620	11
	▶62
284-2729	124
284-4990	110
284-4999	▶106
	107
286-3592	76
286-4880	129
286-9681	177
287-8573	19
	21
	23
287-8597	41
288-0422	42
	44
288-1394	53
288-1395	53
291-0519	182
	183
291-0520	▶182
	189
291-0521	▶189
	▶190
291-3957	88
291-3960	88
291-3961	88
292-2961	314
294-9284	204
295-1711	42
	44
296-5616	▶72
	74
296-8247	226
297-4047	3
	6
	▶8
297-4055	2
	5
	▶9
298-4524	25
299-8147	375
299-9265	114
	▶117

3

Part	Page
300-5183	127
301-7292	324
302-0581	90
302-8690	201
302-8691	226
303-1945	375
303-1946	375
304-6910	▶2
304-7046	▶3
304-8764	51
306-2337	23
307-5598	97
308-1393	21
	23
308-4728	7
	8
	9
	10
	▶33
308-4729	7
	8
	9
	10
	▶29
308-4730	7
	8
	9
	10
	▶55
308-4731	7
	8
	9
	10
	▶36
308-4732	7
	8
	9
	10
	▶65
308-4733	7
	8
	9
	▶107
308-4764	7
	8
	9
	10
	▶44
311-6822	114
312-5546	340
315-3396	25
315-3397	25
315-3398	25
318-2365	107
	110
320-7644	164
320-7645	164
321-0119	331
	338
	▶347
321-2383	23
322-9663	34
323-3515	42

Part	Page
	44
324-0444	42
	44
329-2197	4
	▶10
329-6655	34
329-7854	14
329-7856	14
330-9390	185
	187
	▶191
330-9392	▶183
	190
330-9395	183
	191
330-9396	183
	191
330-9398	183
	191
331-0143	▶4
336-7235	132
	133
338-0335	305
342-5796	▶5
342-5797	▶6
347-5444	10
	▶110

▶ PRIMARY REFERENCE



© 2009 CATERPILLAR
ALL RIGHTS
RESERVED

CAT, CATERPILLAR, THEIR RESPECTIVE LOGOS, “CATERPILLAR YELLOW” AND THE POWER EDGE TRADE DRESS, AS WELL AS CORPORATE AND PRODUCT IDENTITY USED HEREIN, ARE TRADEMARKS OF CATERPILLAR AND MAY NOT BE USED WITHOUT PERMISSION.

PRINTED IN
U.S.A.