ENGINE MOUNTING

RUTHZIL TRATOR COMERCIAL DE PEÇAS LTDA 11 97083-6812 ROLANDO CITRANGULO

R140LC7 HYUNDAI

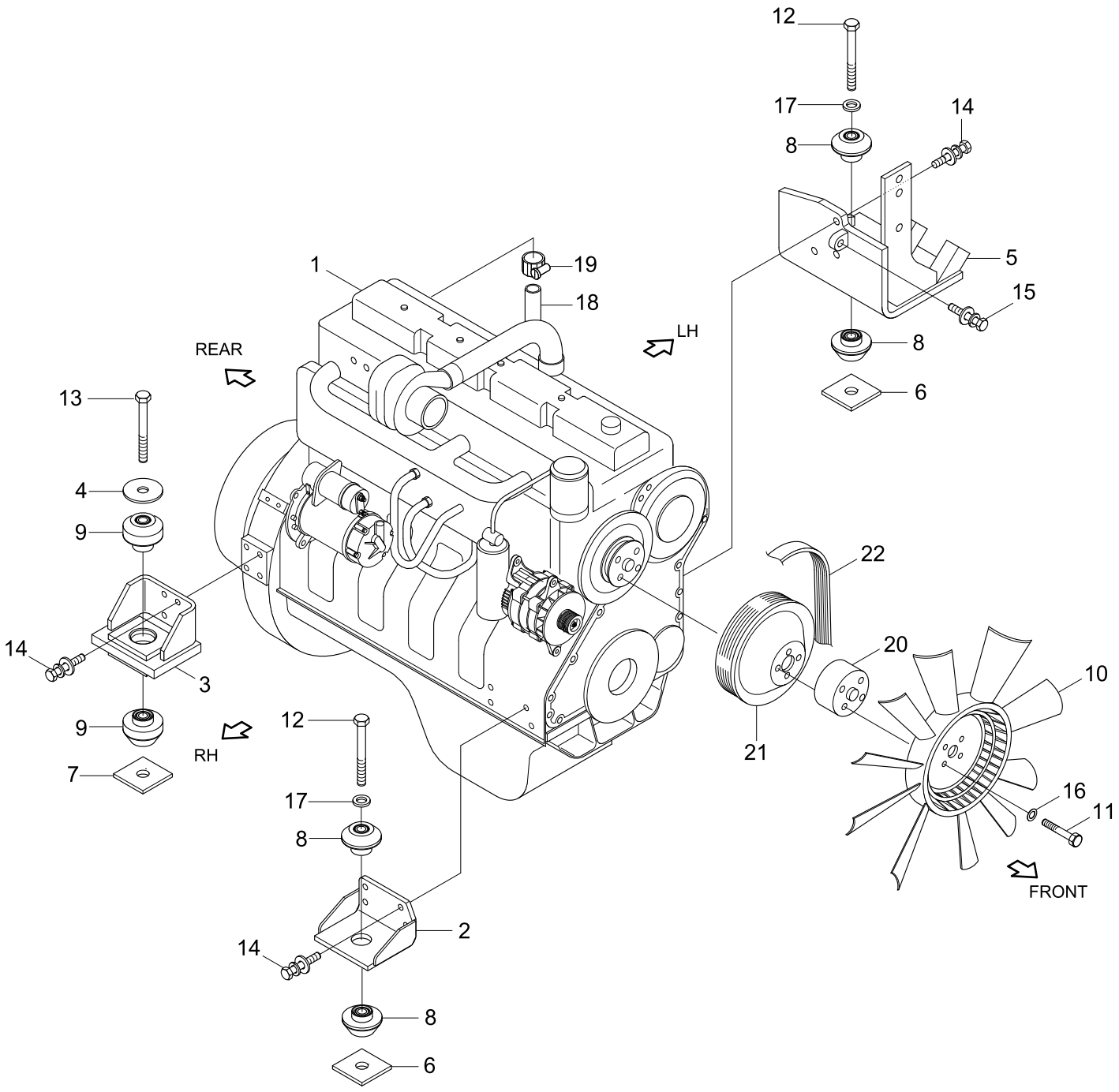

ENGINE ASSY : ITEM #1			
Serial No	Part No.	Pages	Remark
-#1000	11N4-01010	9010 - 9490	Ceres only
#1001 - #1494	11N4-03010	A010 - A500	Ceres only
#1495-	11N4-06010	B010 - B570	This book

Item	Part_No	IS	Ord	T	Description	Qty	Serial_No	ITC	Remark
1	11N4-01010				ENGINE ASSY	1	- #1000		SEE CERES
	11N4-03010				ENGINE ASSY	1	#1001 - #1494	D	SEE CERES
	11N4-06010				ENGINE ASSY	1	#1495 -	D	SEE B010-B570
2	11N4-00020				BRACKET-FRONT	1			
3	11N4-00040				BRACKET-REAR	2			
4	11N4-00060				WASHER-MOUNT	2			
5	11N4-00200				BRACKET-ENGINE & COMP	1	- #3467		
	11N4-00201				BRACKET-ENGINE & COMP	1	#3468 -	B	
6	11N4-00150				NUT-STOPPER	2			
7	11N4-00160				NUT-STOPPER	2			
8	11N6-08255				RUBBER-MOUNT	4	- #1494		
	11N6-08250				RUBBER-MOUNT	4	#1495 -	D	
9	11N6-10450				RUBBER-MOUNT	4			
10	11EK-02320				FAN(24")	1			STD
	11N4-00180				FAN-RING	1			R/FAN, INLINE
11	S017-101202				BOLT-HEX	4			STD
	S017-101002				BOLT-HEX	4			R/FAN, INLINE
12	S017-161352				BOLT-HEX	2			
13	S017-201452				BOLT-HEX	2			
14	S037-123022				BOLT-W/WASHER	14			
15	S037-125522				BOLT-W/WASHER	1			
16	S403-102002				WASHER-PLAIN	4			
17	S441-160002				WASHER-HARDENED	2			
18	11E9-02080				HOSE-BREATHER	1			
19	S520-027000				CLAMP-HOSE,SCREW TYPE	1			

Item	Part_No	IS	Ord	T	Description	Qty	Serial_No	ITC	Remark
20	@				SPACER-FAN	1			NOT
21	3918204				PULLEY-FAN	1	#1975 -	-	STD
	3914462				PULLEY-FAN	1	#1975 -	-	TROPICAL REGION
22	3929330				V-BELT	1	#1975 -	-	STD
	3288746				V-BELT	1	#1975 -	-	TROPICAL REGION

ENGINE CONTROL SYSTEM(-#1000)

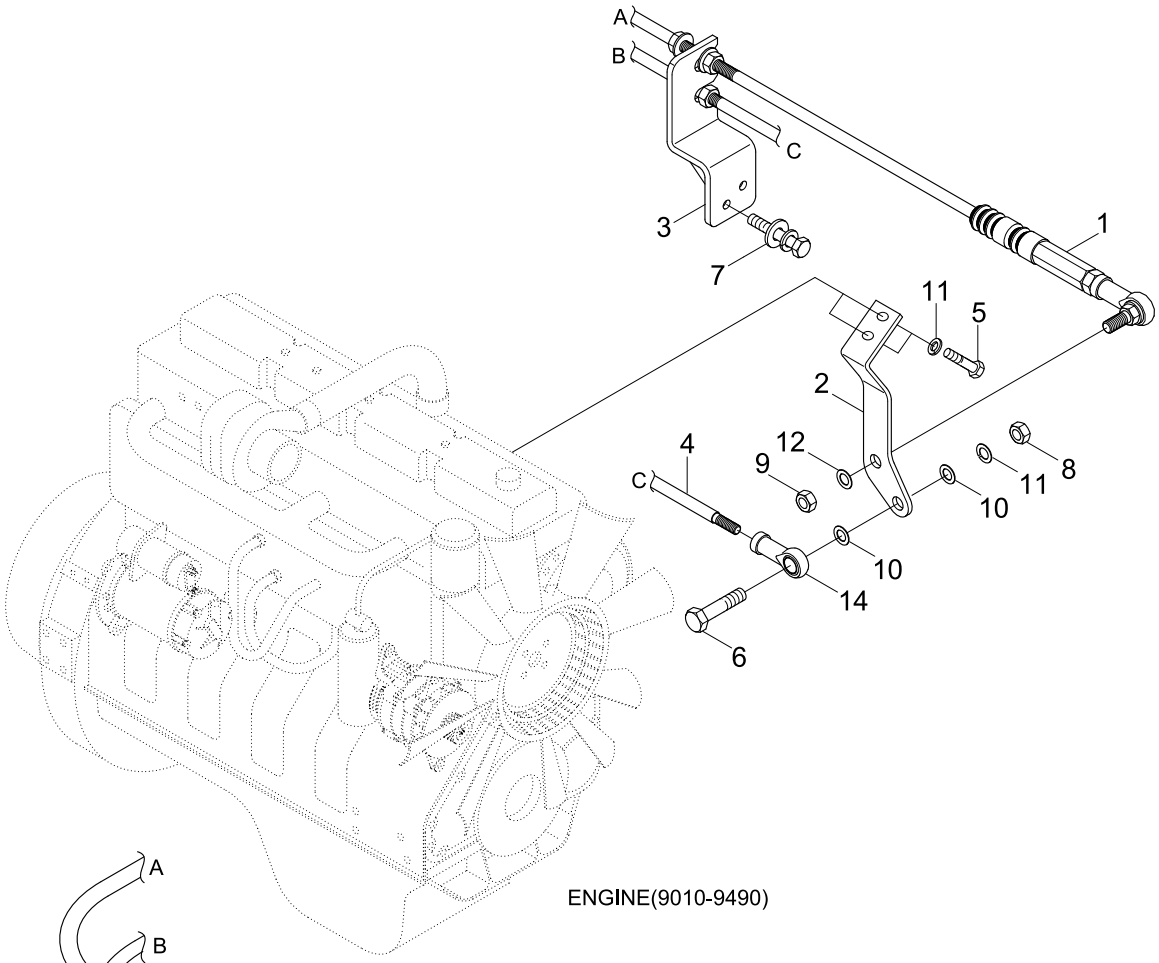

ENGINE(9010-9490)

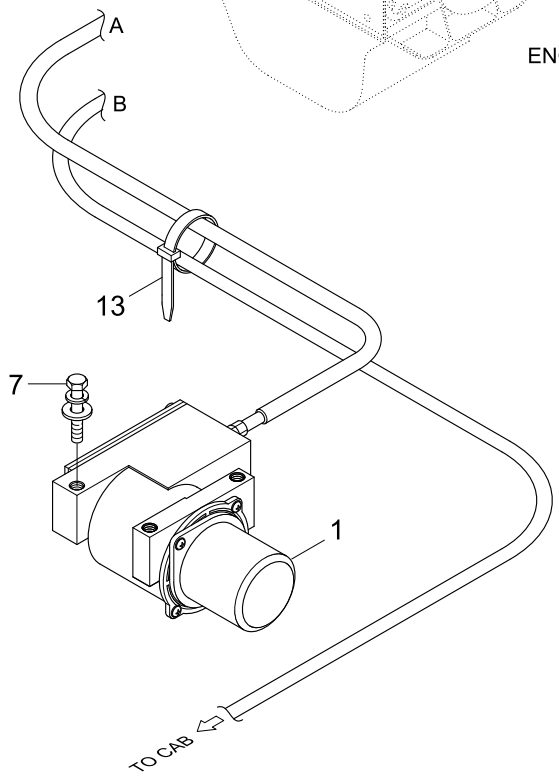

Item	Part_No	IS	Ord	T	Description	Qty	Serial_No	ITC	Remark
*	@				ENGINE CONTROL SYS	1	- #1000	-	NOT
1	21EN-32220				ACTUATOR-ACCEL	1			
2	11EG-60012				LEVER WA	1			
3	11N4-60020				BRACKET-CABLE	1			
4	11E1-4803	10			CABLE-PUSH PULL	1			
5	S015-060152				BOLT-HEX	2			
6	S015-060252				BOLT-HEX	1			
7	S035-082012				BOLT-W/WASHER	5			
8	S205-061002				NUT-HEX	2			
9	S205-08100B				NUT-HEX	1			
10	S403-062002				WASHER-PLAIN	2			
11	S411-060002				WASHER-SPRING	3			
12	S411-080002				WASHER-SPRING	1			
13	S551-020102				CLAMP-BAND	3			
14	S923-106000				ROD END-METRIC	1			

ENGINE CONTROL SYSTEM(#1001-#1494, TIER II)

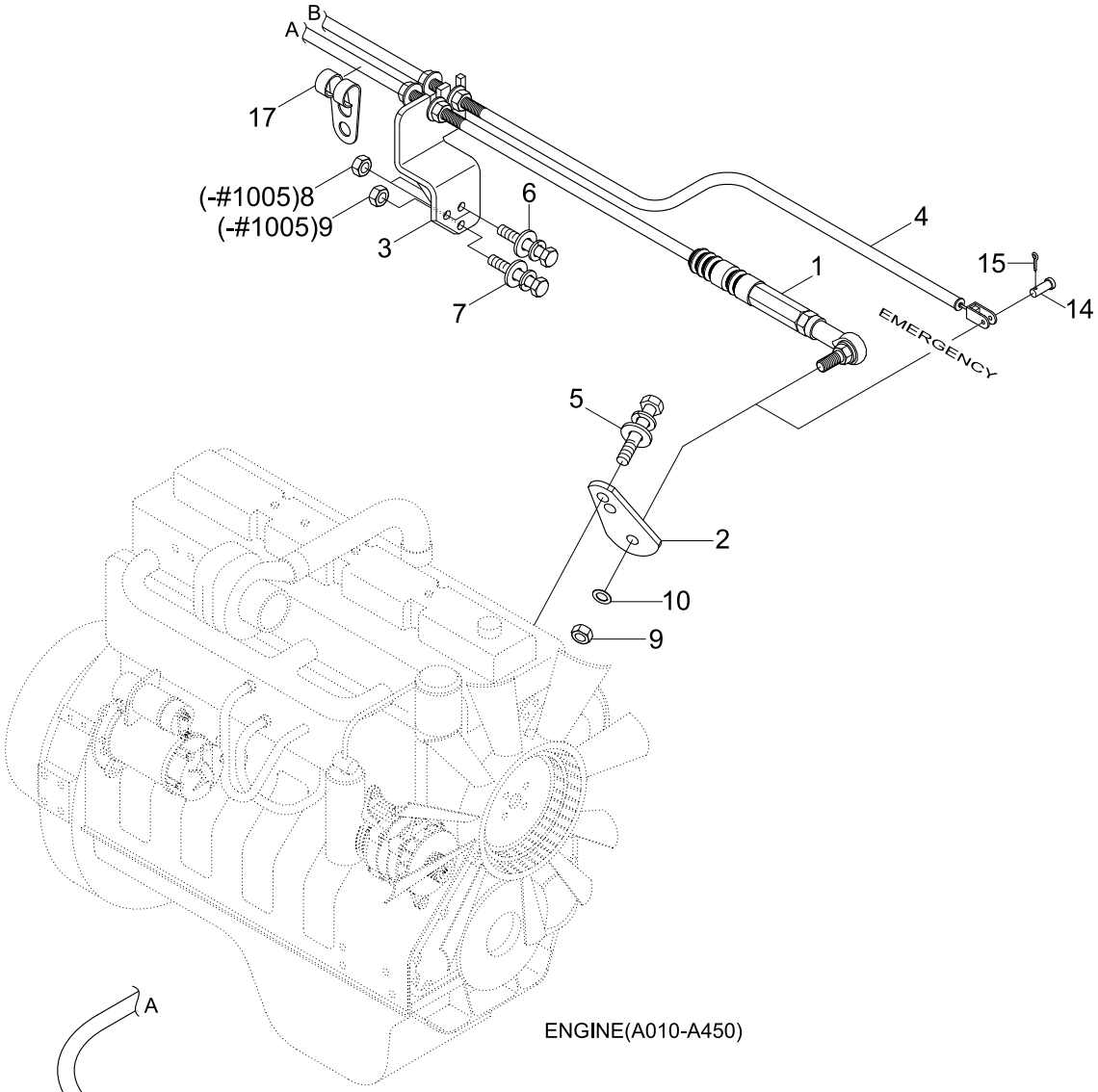

ENGINE(A010-A450)

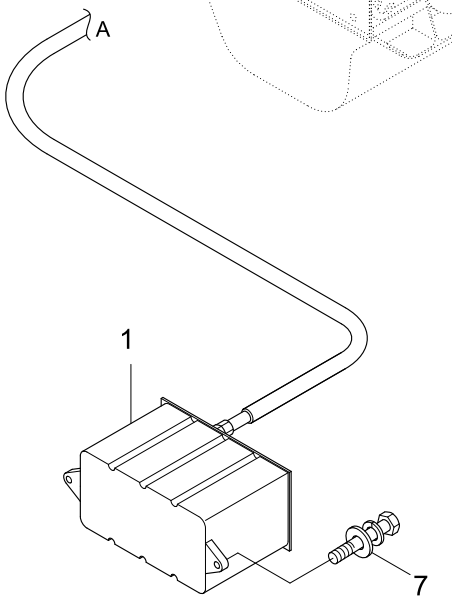

CAB

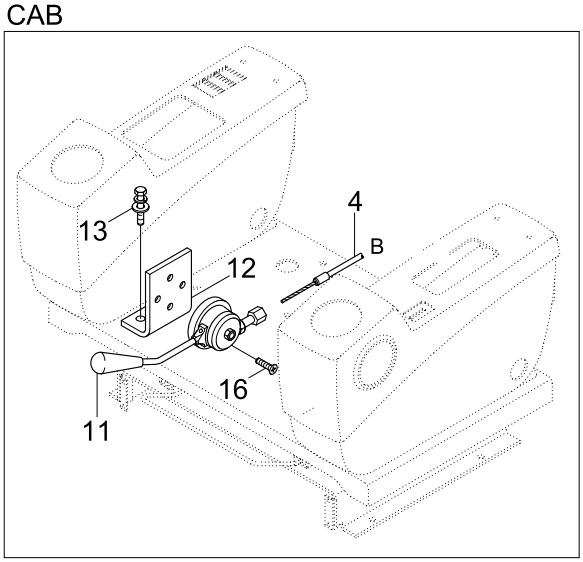

Item	Part_No	IS	Ord	T	Description	Qty	Serial_No	ITC	Remark
*	@				ENGINE CONTROL SYS	1	#1001 - #1494	-	NOT
1	21EN-32260				ACCEL ACTUATOR	1			
2	11N4-63011				LEVER	1			
3	11N4-63022				BRACKET	1	- #1005		
	11N4-63023				BRACKET	1	#1006 -	D	
4	11N8-60190				CABLE-THROTTLE	1	- #1104		
	11N8-60181				CABLE-THROTTLE	1	#1105 -	B	
5	S035-061522				BOLT-W/WASHER	2			
6	S035-062552				BOLT-W/WASHER	2			
7	S035-082052				BOLT-W/WASHER	2			
8	S205-061002				NUT-HEX	2	- #1005	-	
9	S205-061002				NUT-HEX	2	- #1005		
					NUT-HEX	1	#1006 -	A	
10	S403-081002				WASHER-PLAIN	1			
11	11N6-63040				LEVER-EMERGENCY	1	- #1104		
	11N6-63041				LEVER-EMERGENCY	1	#1105 -	B	
12	11N6-63050				BRACKET	1			
13	S037-102522				BOLT-W/WASHER	2			
14	S491-060252				PIN-CLEVIS	1			
15	S461-160152				PIN-SPLIT	1			
16	S141-080142				SCREW-FLAT HD	4			
17	S593-000902				CLIP-HARNESS	3	#1006 - #1104	-	
					CLIP-HARNESS	1	#1105 -	A	

ENGINE CONTROL SYSTEM(#1495-, TIER II)

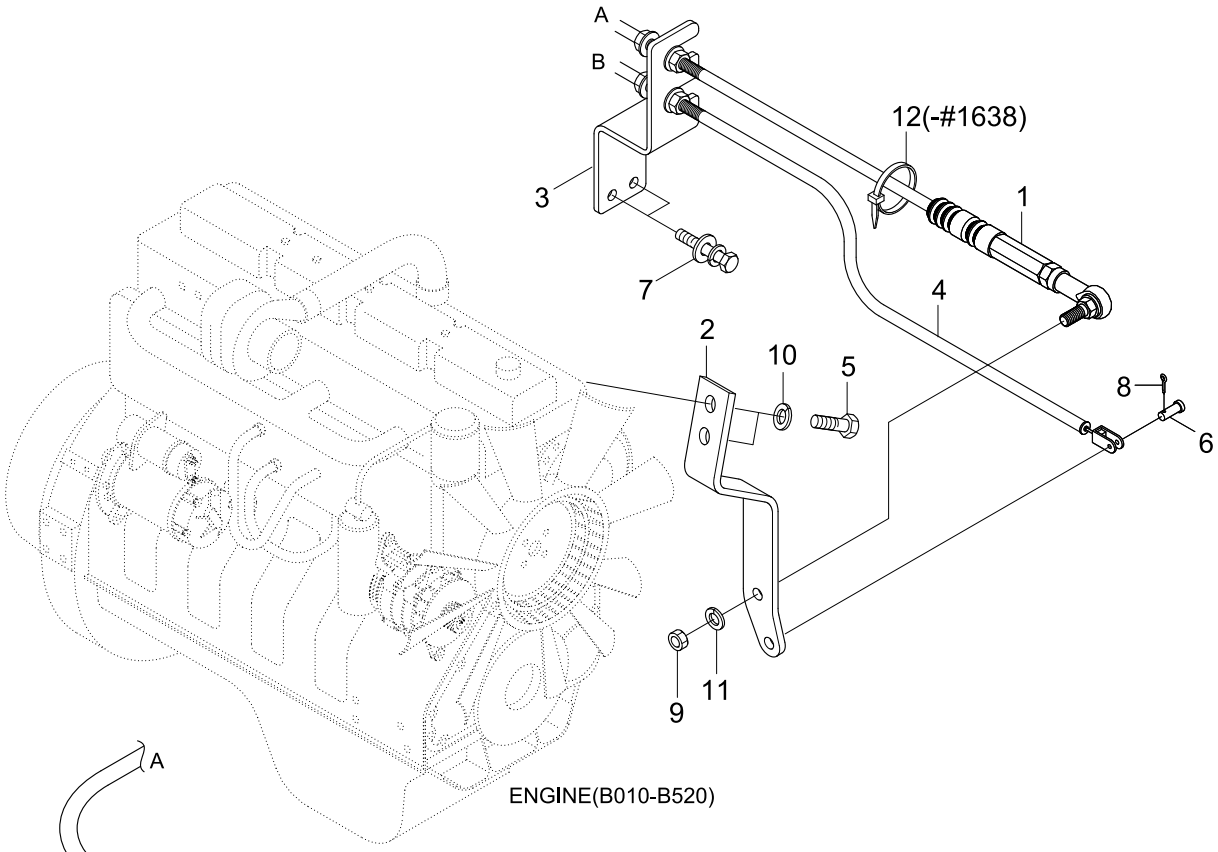

ENGINE(B010-B520)

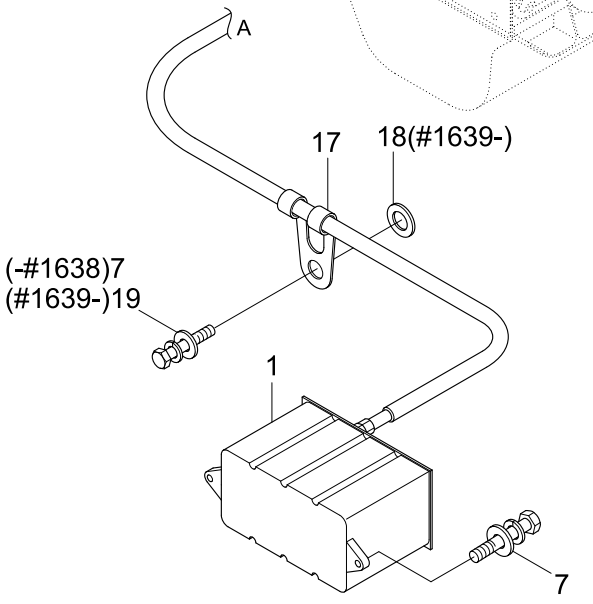

CAB

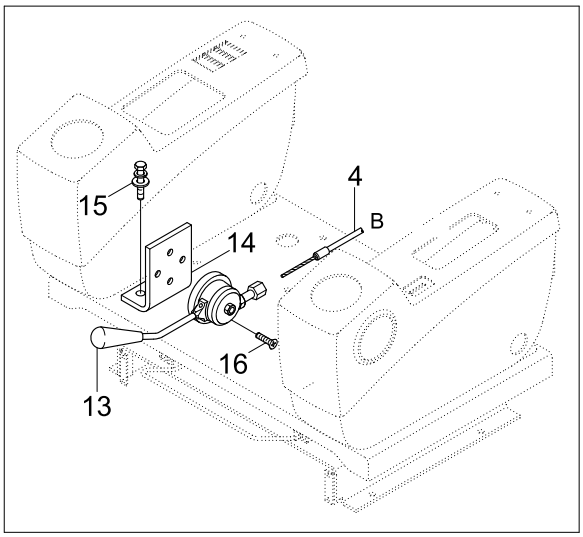

Item	Part_No	IS	Ord	T	Description	Qty	Serial_No	ITC	Remark
*	@				ENGINE CONTROL SYS	1	#1495 -	-	NOT
1	21EN-32260				ACCEL ACTUATOR	1			
2	11EG-60012				LEVER WA	1			
3	11N4-66010				BRACKET-CABLE	1			
4	11N8-60191				CABLE-THROTTLE	1			
5	S015-060152				BOLT-HEX	2			
6	S491-060252				PIN-CLEVIS	1			
7	S035-082012				BOLT-W/WASHER	5	- #1638		
					BOLT-W/WASHER	4	#1639 -	A	
8	S461-160152				PIN-SPLIT	1			
9	S205-08100B				NUT-HEX	1	- #3318		
	S275-08000B				NUT-SELF LOCKING	1	#3319 -	B	
10	S411-060002				WASHER-SPRING	2			
11	S411-080002				WASHER-SPRING	1			
12	S551-020102				CLAMP-BAND	3	- #1638	-	
13	11N6-63041				LEVER-EMERGENCY	1			
14	11N6-63050				BRACKET	1			
15	S037-102522				BOLT-W/WASHER	2			
16	S141-080142				SCREW-FLAT HD	4			
17	S593-000902				CLIP-HARNESS	1	- #3212		
	S593-000802				CLIP-HARNESS	1	#3213 -	B	
18	S035-082022				BOLT-W/WASHER	1	#1639 -	-	
19	11EM-02030				SPACER	1	#1639 -	-	

AIR INTAKE SYSTEM

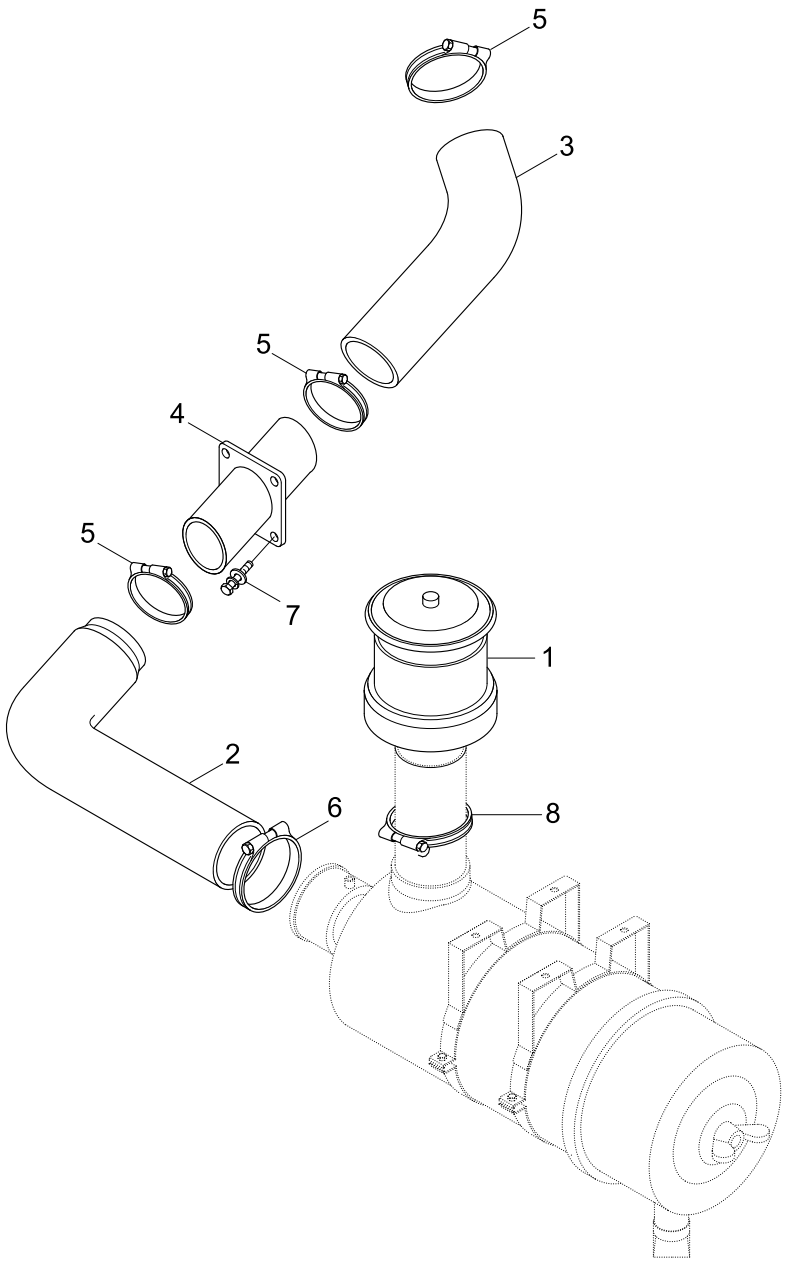

AIR CLEANER ASSY(6220)

Item	Part_No	IS	Ord	T	Description	Qty	Serial_No	ITC	Remark
1	14L3-00920				PRECLEANER	1	- #1257		
	11N6-23060				PRECLEANER	1	#1258 - #1706	A	
	11N6-23061				PRECLEANER	1	#1707 -	B	
2	11N4-20021				HOSE(B)-AIR CLEANER	1			
3	11EG-20023				HOSE	1			
4	11N4-20030				PIPE WA-A/C HOSE	1			
5	11E6-21230				CLAMP-HOSE	3	- #2003		
	11LB-40210				CLAMP-HOSE	3	#2004 -	A	
6	11E6-21240				CLAMP-HOSE	1	- #2003		
	11LB-40310				CLAMP-T/BOLT	1	#2004 -	A	
7	S035-082522				BOLT-W/WASHER	4			
8	11LB-40180				CLAMP-HOSE	1	#2620 -	-	

EXHAUST SYSTEM(-#1494)

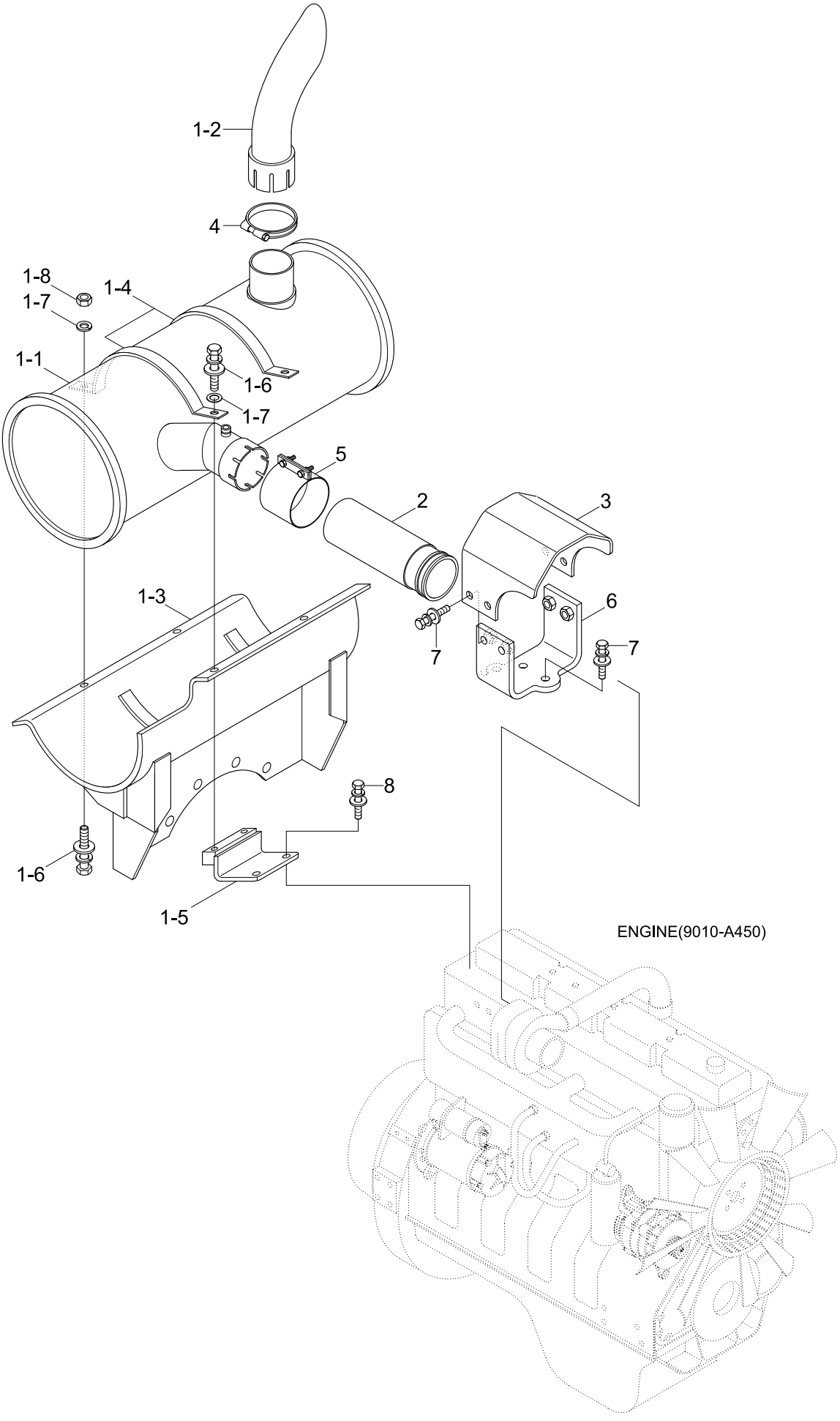

Item	Part_No	IS	Ord	T	Description	Qty	Serial_No	ITC	Remark
*	@				EXHAUST SYSTEM	1	- #1494	-	NOT
1	11N4-32200				MUFFLER SUB ASSY	1	- #1000		
	11N4-33000				MUFFLER SUB ASSY	1	#1001 -	D	
1-1	11N4-30020				.MUFFLER WA	1			
1-2	14EA-33021				.TAIL PIPE	1	- #1000		
	11N4-33010				.PIPE-TAIL	1	#1001 -	D	
1-3	15EA-30031				.BRACKET-MUFFLER	1	- #0087		
	15EA-30032				.BRACKET-MUFFLER	1	#0088 -	B	
1-4	11EM-30130				.CLAMP-BAND	2			
1-5	15EA-30040				.BRACKET	1			
1-6	S017-100302				.BOLT-HEX	5	- #0087		
	S037-103022				.BOLT-W/WASHER	5	#0088 -	B	
1-7	S403-102002				.WASHER-PLAIN	5			
1-8	S203-101002				.NUT-HEX	3	#0088 -	-	
2	11N4-30030				CONNECTOR-PIPE	1			
3	11N4-30070				COVER	1			
4	11E6-32070				CLAMP-EXHAUST PIPE	1			
5	11N6-30040				SEAL CLAMP ASSY	1			
6	11N6-30060				BARCKET	1			
7	S037-102522				BOLT-W/WASHER	6			
8	S037-123522				BOLT-W/WASHER	2			

EXHAUST SYSTEM(#1495-)

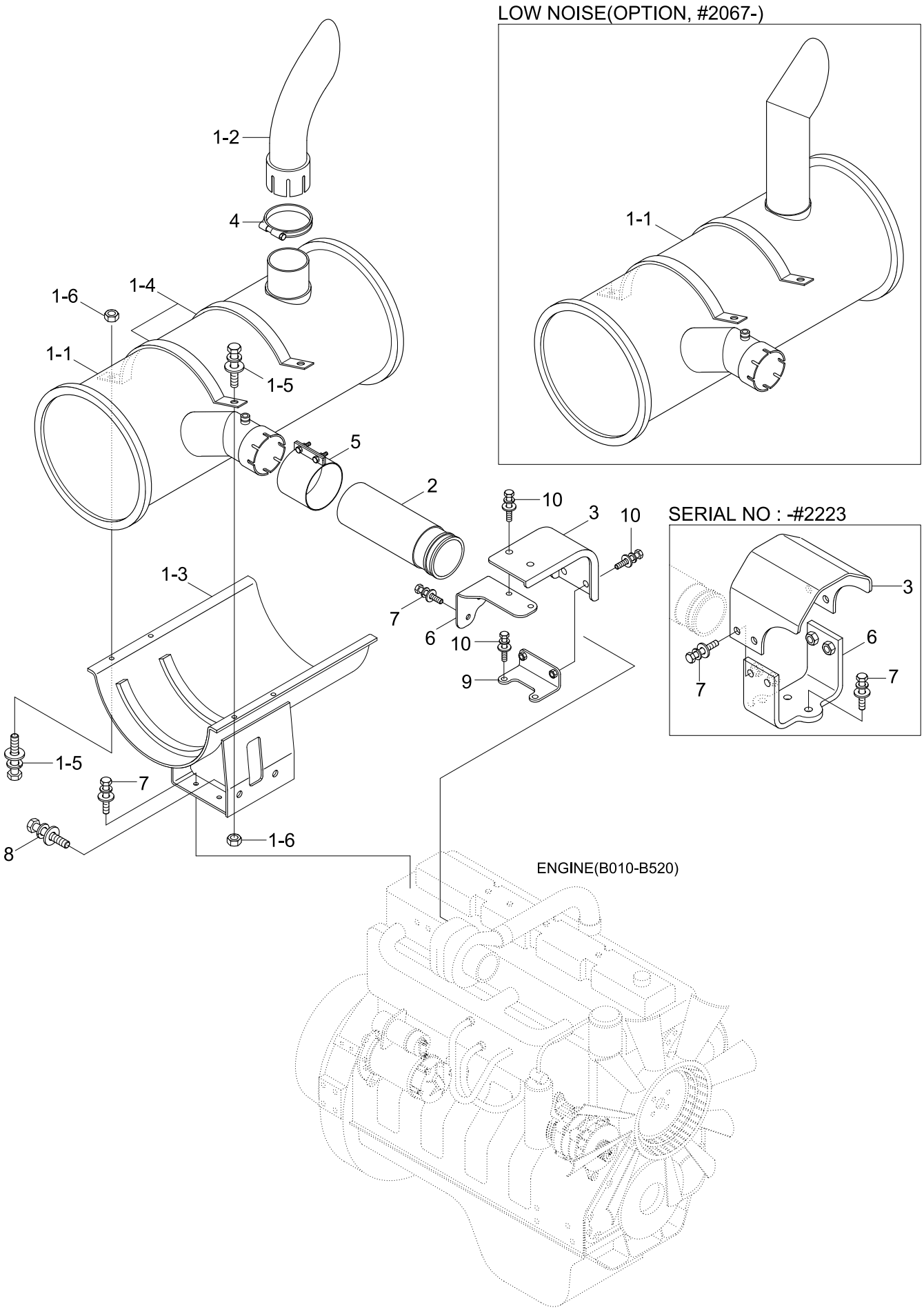

Item	Part_No	IS	Ord	T	Description	Qty	Serial_No	ITC	Remark
*	@				EXHAUST SYSTEM	1	#1495 -	-	NOT
1	11N4-36002				MUFFLER SUB ASSY	1			STD
	11N4-37001				MUFFLER SUB ASSY	1	#2067 -	-	LOW NOISE
1-1	11N4-36010				.MUFFLER WA	1			STD
	11N4-37011				.MUFFLER WA	1	#2067 -	-	LOW NOISE
1-2	11N4-33010				.PIPE-TAIL	1			STD
1-3	11N4-36020				.BRACKET-MUFFLER	1			
1-4	11EM-30130				.CLAMP-BAND	2			
1-5	S037-103052				.BOLT-W/WASHER	4			
1-6	S205-101002				.NUT-HEX	4			
2	11N4-30030				CONNECTOR-PIPE	1			
3	11N4-30070				COVER	1	- #2223		
	11N4-37330				COVER	1	#2224 -	D	
4	11E6-32070				CLAMP-EXHAUST PIPE	1			STD
5	11N6-30040				SEAL CLAMP ASSY	1			
6	11N6-30060				BARCKET	1	- #2223		
	11N4-37310				BRACKET	1	#2224 -	D	
7	S037-102022				BOLT-W/WASHER	10	- #2223		
					BOLT-W/WASHER	6	#2224 -	A	
8	S037-122522				BOLT-W/WASHER	2			
9	11N4-37300				BRACKET	1	#2224 -	-	
10	S035-083022				BOLT-W/WASHER	6	#2224 -	-	

COOLING SYSTEM(-#1000)

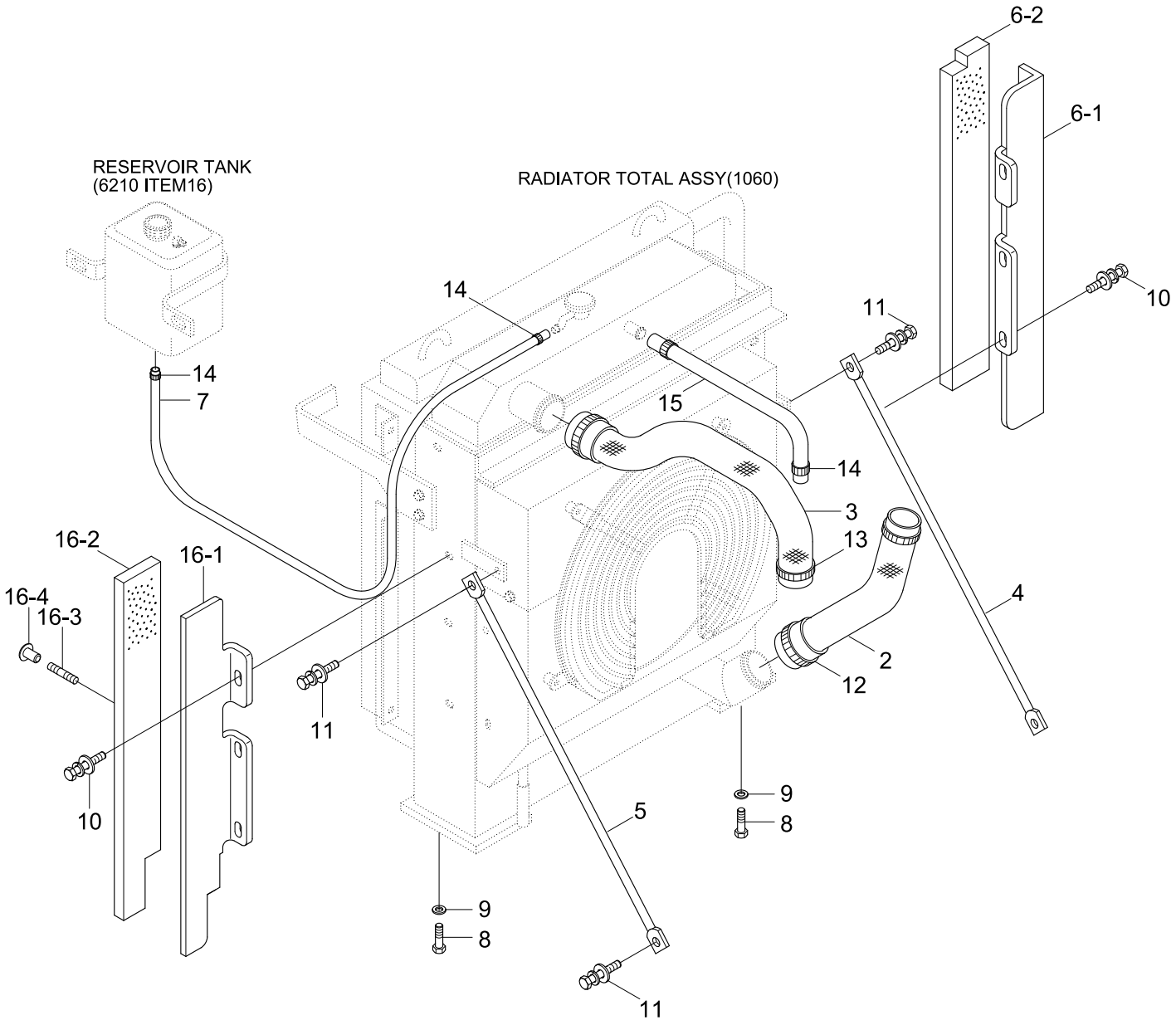

Item	Part_No	IS	Ord	T	Description	Qty	Serial_No	ITC	Remark
*	@				COOLING SYSTEM	1	- #1000	-	NOT
2	11N4-40100				HOSE-RAD(LOW)	1			
3	11N4-40110				HOSE-RAD(UPPER)	1			
4	11N4-40130				ROD ASSY	1			
5	11N4-40140				ROD ASSY	1			
6	11N4-40230				SCREEN PLATE	1			
6-1	11N4-40180				.SCREEN PLATE WA	1			
6-2	11N4-40190				.SPONGE	1			
7	11EG-40400				HOSE-INLET	1			
8	S017-120402				BOLT-HEX	4			
9	S403-122002				WASHER-PLAIN	4			
10	S035-082522				BOLT-W/WASHER	6			
11	S037-122522				BOLT-W/WASHER	4			
12	S520-070000				CLAMP-HOSE,SCREW DRIVE	2	- #0087		
	S572-720006				CLAMP-HOSE,WIRE TYPE	2	#0088 -	B	
13	S520-055000				CLAMP-HOSE	2	- #0087		
	S572-590006				CLAMP-HOSE,WIRE TYPE	2	#0088 -	B	
14	S520-015000				CLAMP-HOSE	4			
15	11N4-40410				HOSE-AIR VENT	1			
16	11N4-40240				SCREEN PLATE(REAR)	1			
16-1	11N4-40250				.SCREEN PLATE(REAR)	1			
16-2	11N4-40260				.SPONGE	1			
16-3	74E7-01440				.BOLT-STUD	5			
16-4	71EM-51580				.CAP-STUD BOLT	5			

COOLING SYSTEM(#1001-#1494, TIER II)

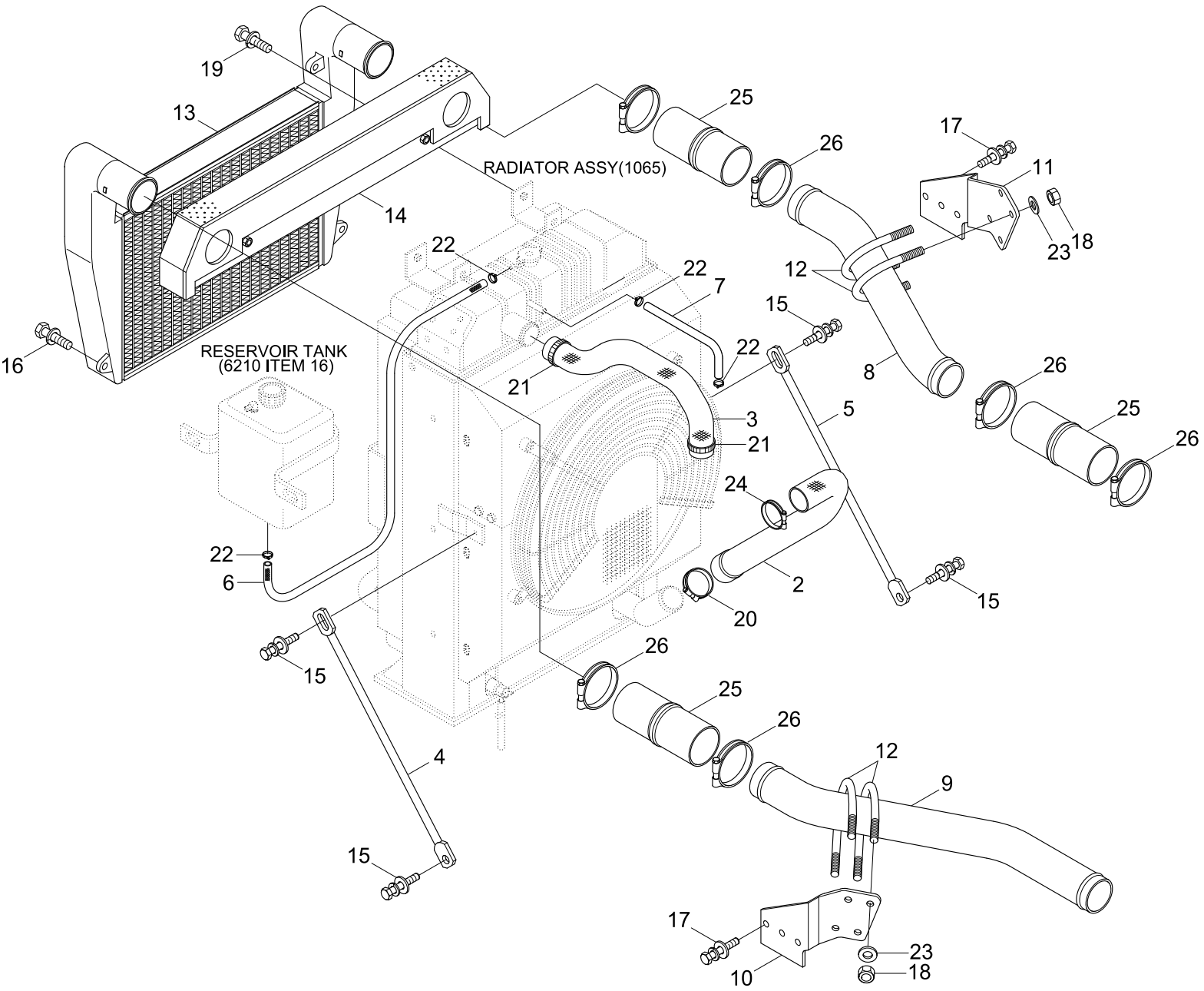

Item	Part_No	IS	Ord	T	Description	Qty	Serial_No	ITC	Remark
*	@				COOLING SYSTEM	1	- #1494	-	NOT
2	11N4-43390				HOSE	1			
3	11N4-43300				HOSE	1			
4	11N4-43311				ROD ASSY	1	- #1131		
	11N4-40130				ROD ASSY	1	#1132 -	D	
5	11N4-43321				ROD ASSY	1	- #1131		
	11N4-40140				ROD ASSY	1	#1132 -	D	
6	11EG-40400				HOSE-INLET	1			
7	11E9-4107	20			HOSE-VENT	1			
8	11N4-43330				PIPE WA	1			
9	11N4-43341				PIPE WA	1			
10	11N4-43362				BRACKET	1	- #1131		
	11N4-43363				BRACKET	1	#1132 -	D	
11	11N4-43371				BRACKET	1	- #1131		
	11N4-43372				BRACKET	1	#1132 -	D	
12	S070-037663				U-BOLT	4			
13	11N4-43401				AIR COOLER-CHARGE	1			
14	11N4-43380				SCREEN ASSY	1	- #1131		
	11N4-43530				SCREEN ASSY	1	#1132 -	D	
15	S037-123022				BOLT-W/WASHER	8			
16	S037-104052				BOLT-W/WASHER	4			
17	S037-102022				BOLT-W/WASHER	6			
18	S205-101002				NUT-HEX	16			
19	S035-081522				BOLT-W/WASHER	4	- #1131		
	S037-101522				BOLT-W/WASHER	4	#1132 -	D	

Item	Part_No	IS	Ord	T	Description	Qty	Serial_No	ITC	Remark
20	S572-720006				CLAMP-HOSE,WIRE TYPE	1			
21	S572-590006				CLAMP-HOSE,WIRE TYPE	2			
22	S520-015000				CLAMP-HOSE	4			
23	S403-102002				WASHER-PLAIN	8	- #1131		
	S441-100002				WASHER-HARDENED	8	#1132 -	D	
24	S572-650006				CLAMP-HOSE,WIRE TYPE	1			
25	11N4-43410				HOSE-CHARGED AIR	3	#1132 -	-	
26	11N6-20340				CLAMP-T/BOLT	6	#1132 -	-	

COOLING SYSTEM(#1495-, TIER II)

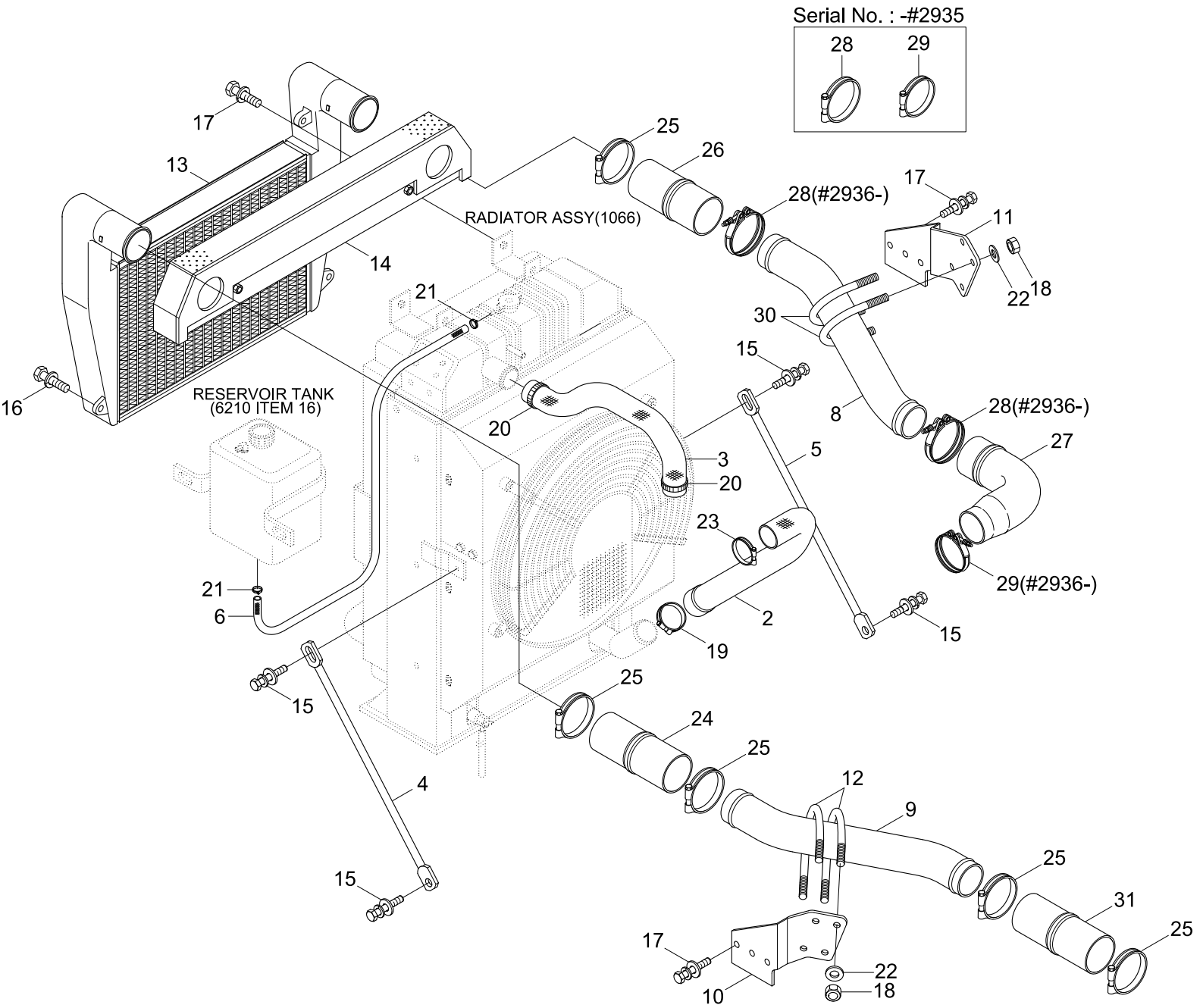

Item	Part_No	IS	Ord	T	Description	Qty	Serial_No	ITC	Remark
*	@				COOLING GROUP(INLINE)	1	#1495 -	-	NOT
2	11N4-46010				HOSE	1			
3	11N4-43300				HOSE	1			
4	11N4-40130				ROD ASSY	1			
5	11N4-40140				ROD ASSY	1			
6	11EG-40400				HOSE-INLET	1			
8	11N4-46020				PIPE WA	1			
9	11N4-43341				PIPE WA	1			
10	11N4-43363				BRACKET	1			
11	11N4-46040				BRACKET	1			
12	S070-037663				U-BOLT	2	- #2734		
	11N4-46060				U-BOLT	2	#2735 -	B	
13	11N4-43401				AIR COOLER-CHARGE	1			
14	11N4-46050				SCREEN ASSY	1			
15	S037-123022				BOLT-W/WASHER	8			
16	S037-104052				BOLT-W/WASHER	4			
17	S037-102022				BOLT-W/WASHER	8			
18	S205-101002				NUT-HEX	16	- #3029		
	S275-100006				NUT-SELF LOCKING	8	#3030 -	B	
19	S572-720006				CLAMP-HOSE,WIRE TYPE	1			
20	S572-590006				CLAMP-HOSE,WIRE TYPE	2			
21	S520-015000				CLAMP-HOSE	2			
22	S441-100002				WASHER-HARDENED	8			
23	S572-750006				CLAMP-HOSE WIRE TYPE	1			
24	11N4-43410				HOSE-CHARGED AIR	1			

Item	Part_No	IS	Ord	T	Description	Qty	Serial_No	ITC	Remark
25	11N6-20340				CLAMP-T/BOLT	5			
26	11N5-40211				HOSE-CHARGE AIR	1			
27	11N4-46030				HOSE-CAC	1			
28	11N6-20380				CLAMP-T/BOLT	2	- #2935		
	11N6-20381				CLAMP-T/BOLT	2	#2936 -	B	
29	11N6-20370				CLAMP-T/BOLT	1	- #2935		
	11N6-20371				CLAMP-T/BOLT	1	#2936 -	B	
30	S071-036130				U-BOLT	2	- #2752		
	11N5-43190				U-BOLT	2	#2753 -	B	
31	11N4-43730				HOSE-CAC	1			

RADIATOR ASSY(-#1000)

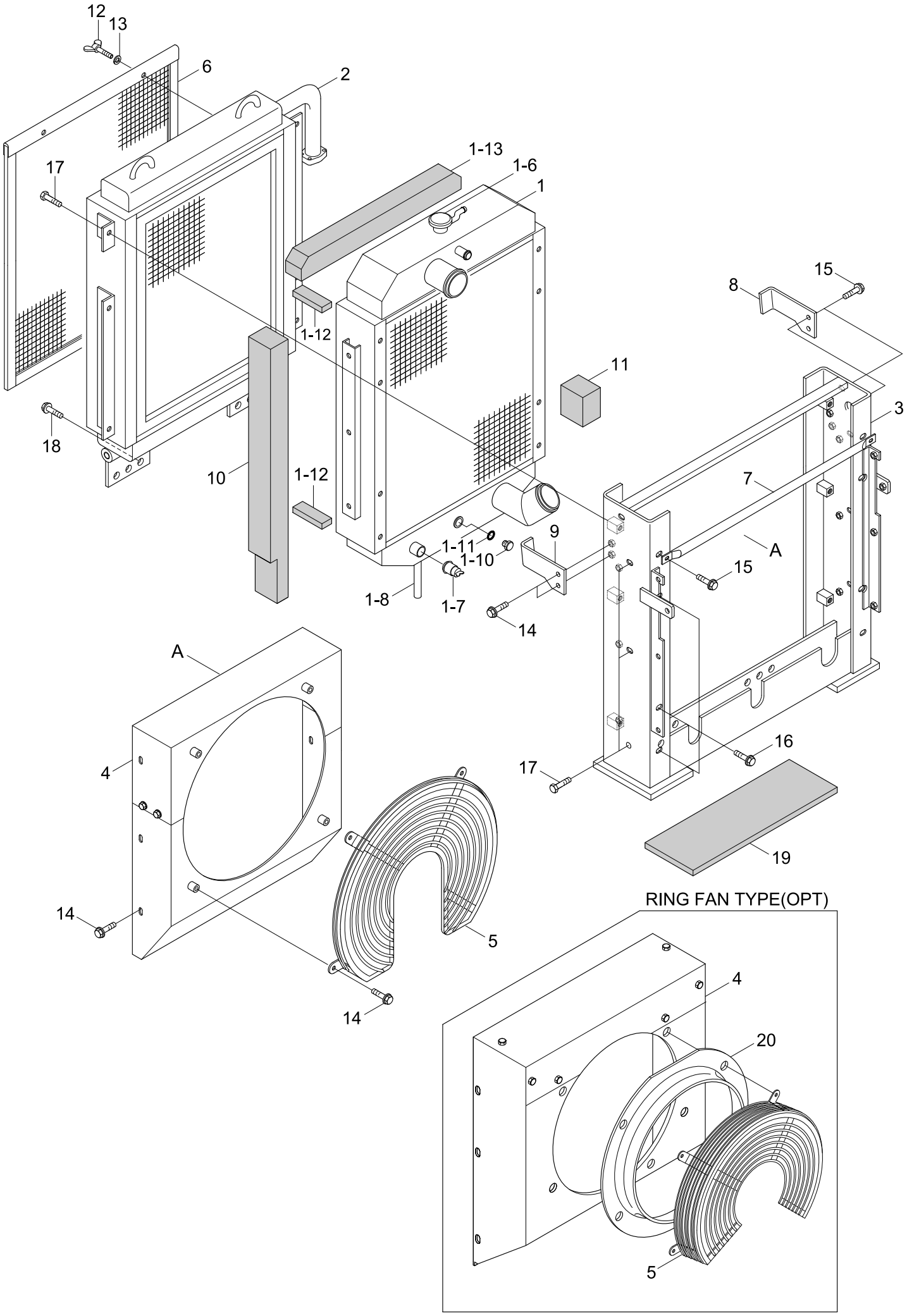

Item	Part_No	IS	Ord	T	Description	Qty	Serial_No	ITC	Remark
*	11N4-40010				RADIATOR TOTAL ASSY	1	- #1000	-	STD
	11N4-41010				RADIATOR TOTAL ASSY	1	- #1000	-	RING FAN, OPT
1	11N4-40020				.RADIATOR ASSY	1			
1-6	12101640				..CAP ASSY	1			
1-7	22900610				..COCK-DRAIN	1			
1-8	96300150				..HOSE-DRAIN	1			
1-10	44701480				..PLUG-DRAIN	1			
1-11	45301370				..O-RING	1			
1-12	45503610				..PACKING	4			
1-13	45503710				..PACKING	1			
2	11N4-40030				.OIL COOLER ASSY	1			
3	11N4-40070				.SUPPORT FRAME ASSY	1			
4	11N4-40040				.SHROUD ASSY	1			STD
	11N4-41040				.SHROUD ASSY	1			RING FAN, OPT
5	11N4-40050				.GUARD-FAN	1			STD
	11N4-41050				.FAN GUARD	1			RING FAN, OPT
6	11EG-40060				.NET-WIRE	1			
7	11EG-40150				.BAR	1			
8	11EG-40100				.BRACKET-HOLDER,RH	1			
9	11EG-40090				.BRACKET-HOLDER,LH	1			
10	11N4-40150				.PACKING	1			
11	11N4-40160				.PACKING	1			
12	S091-060152				.BOLT-WING	2			
13	S411-060002				.WASHER-SPRING	2			
14	S035-081522				.BOLT-W/WASHER	9			

Item	Part_No	IS	Ord	T	Description	Qty	Serial_No	ITC	Remark
15	S035-082022				.BOLT-W/WASHER	16			
16	S035-082522				.BOLT-W/WASHER	2			
17	S037-102522				.BOLT-W/WASHER	12			
18	S037-103542				.BOLT-W/WASHER	6			
19	11N4-40170				.RUBBER PAD	1			
20	11N4-41060				.BELL MOUTH	1			RING FAN, OPT

RADIATOR ASSY(#1001-#1494, TIER II)

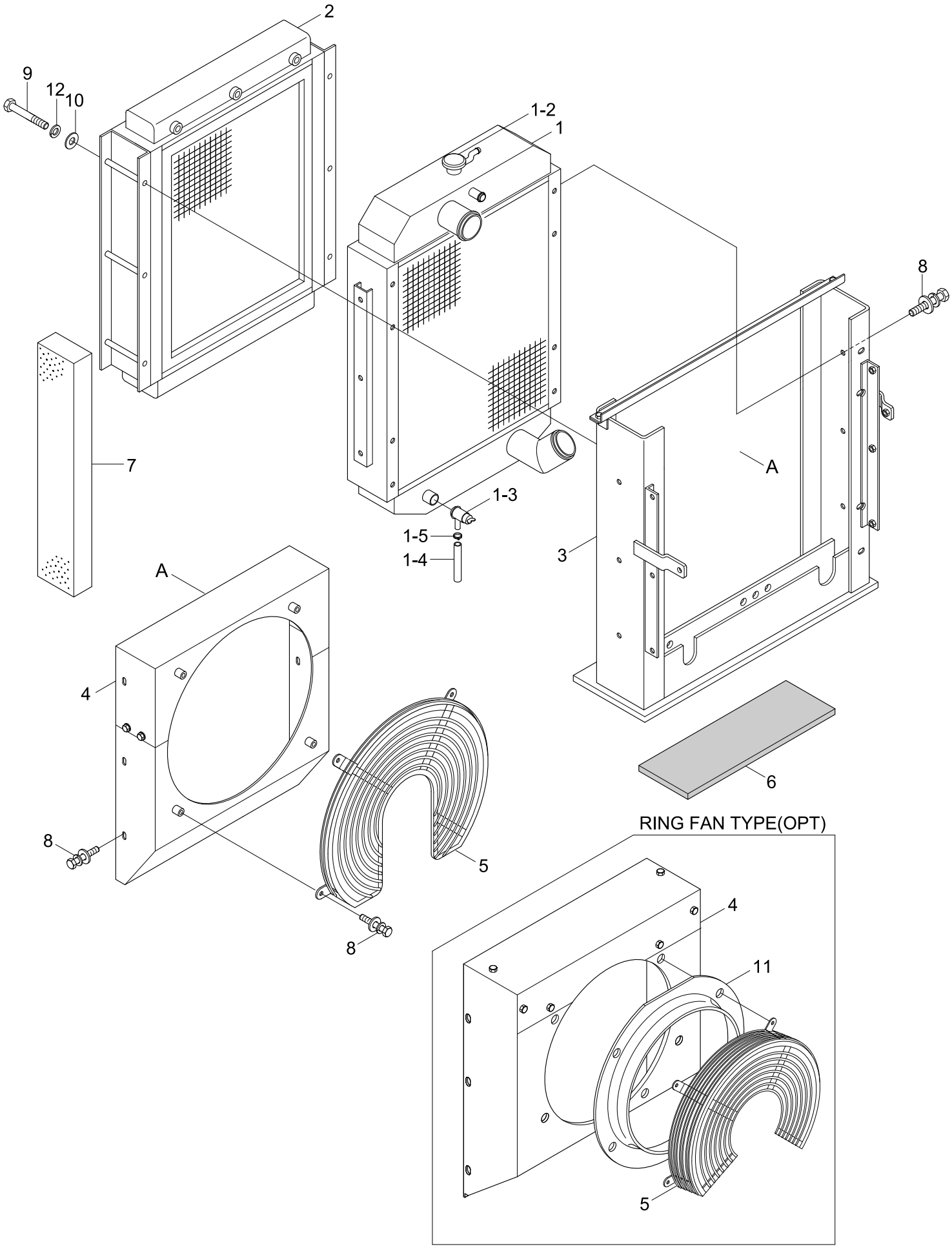

Item	Part_No	IS	Ord	T	Description	Qty	Serial_No	ITC	Remark
*	@				RADIATOR ASSY	1	- #1494	-	NOT
	11N4-43100				RADIATOR TOTAL ASSY	1	#1001 - #1131	D	GENERAL
	11N4-43510				RADIATOR TOTAL ASSY	1	#1132 -	D	GENERAL
	11N4-43200				RADIATOR TOTAL ASSY	1	#1001 - #1131	D	RING FAN, OPT
	11N4-43610				RADIATOR TOTAL ASSY	1	#1132 -	D	RING FAN, OPT
1	11N4-43110				.RADIATOR ASSY	1			
1-2	11EK-42200				..CAP-PRESSURE	1			
1-3	11EK-42210				..COCK-DARIN	1			
1-4	11EK-42220				..HOSE-DRAIN	1			
1-5	S520-015000				..CLAMP-HOSE	1			
2	11N4-43120				.OIL COOLER ASSY	1	- #1131		
	11N4-43520				.OIL COOLER ASSY	1	#1132 -	D	
3	11N4-43130				.FRAME ASSY	1	- #1131		
	11N4-43131				.FRAME ASSY	1	#1132 -	D	
4	11N4-43140				.SHROUD ASSY	1			STD
	11N4-43210				.SHROUD ASSY	1			RING FAN, OPT
5	11N4-40050				.FAN GUARD	1			STD
	11N4-41050				.FAN GUARD	1			RING FAN, OPT
6	11N4-43150				.RUBBER PAD	1			
7	11N4-43160				.SPONGE	1			
8	S035-082022				.BOLT-W/WASHER	24			STD
					.BOLT-W/WASHER	29			RING FAN, OPT
9	S017-121302				.BOLT-HEX	6	- #1131		
	S017-121305				.BOLT-HEX	6	#1132 -	B	
10	S403-121002				.WASHER-PLAIN	6			

Item	Part_No	IS	Ord	T	Description	Qty	Serial_No	ITC	Remark
11	S411-120002				.WASHER-SPRING	6			
12	11N4-41060				.BELL MOUTH	1			RING FAN, OPT

RADIATOR ASSY(#1495-, TIER II)

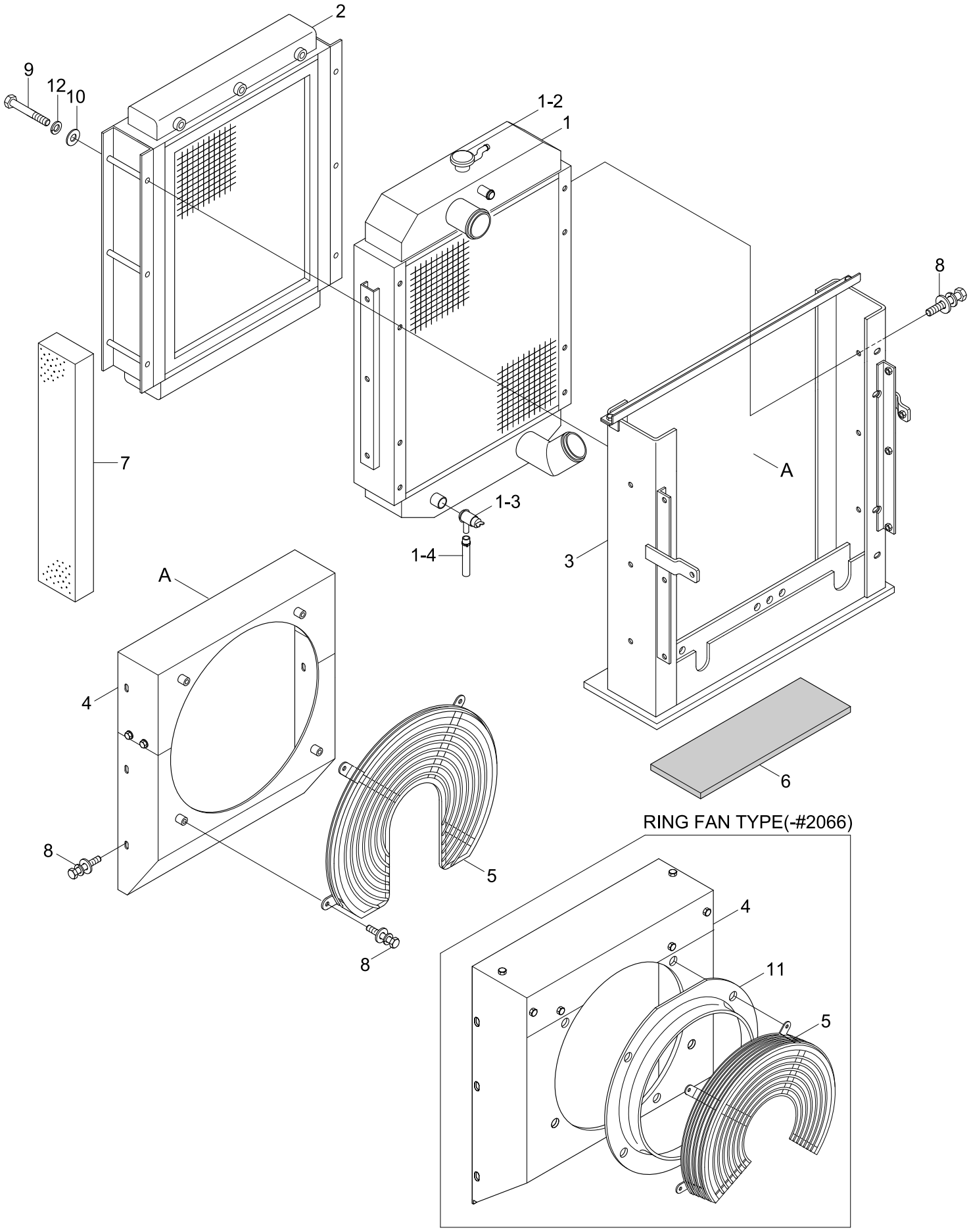

Item	Part_No	IS	Ord	T	Description	Qty	Serial_No	ITC	Remark
*	11N4-43710				RADIATOR TOTAL ASSY	1	#1495 -	D	GENARAL
	11N4-43810				RADIATOR TOTAL ASSY	1	#1495 - #2066	D	RING FAN, OPT
1	11N4-43720				.RADIATOR ASSY	1			
1-2	11EK-42200				..CAP-PRESSURE	1			
1-3	11EK-42210				..COCK-DARIN	1			
1-4	11EK-42220				..HOSE-DRAIN	1			
2	11N4-43520				.OIL COOLER ASSY	1			
3	11N4-43131				.FRAME ASSY	1			
4	11N4-43140				.SHROUD ASSY	1	- #2066		GENARAL
	11N4-43141				.SHROUD ASSY	1	#2067 -	B	LOW NOISE, STD
	11N4-43210				.SHROUD ASSY	1	- #2066	-	RING FAN, OPT
5	11N4-40050				.FAN GUARD	1			GENARAL
	11N4-41050				.FAN GUARD	1	- #2066	-	RING FAN, OPT
6	11N4-43150				.RUBBER PAD	1			
7	11N4-43160				.SPONGE	1			
8	S035-082026				.BOLT-W/WASHER	24			GENARAL
					.BOLT-W/WASHER	29	- #2066	-	RING FAN, OPT
9	S017-121306				.BOLT-HEX	6			
10	S403-12100B				.WASHER-PLAIN	6			
11	11N4-41060				.BELL MOUTH	1	- #2066	-	INLINE
12	S411-120006				.WASHER-SPRING	6			

FUEL SYSTEM(-#1494)

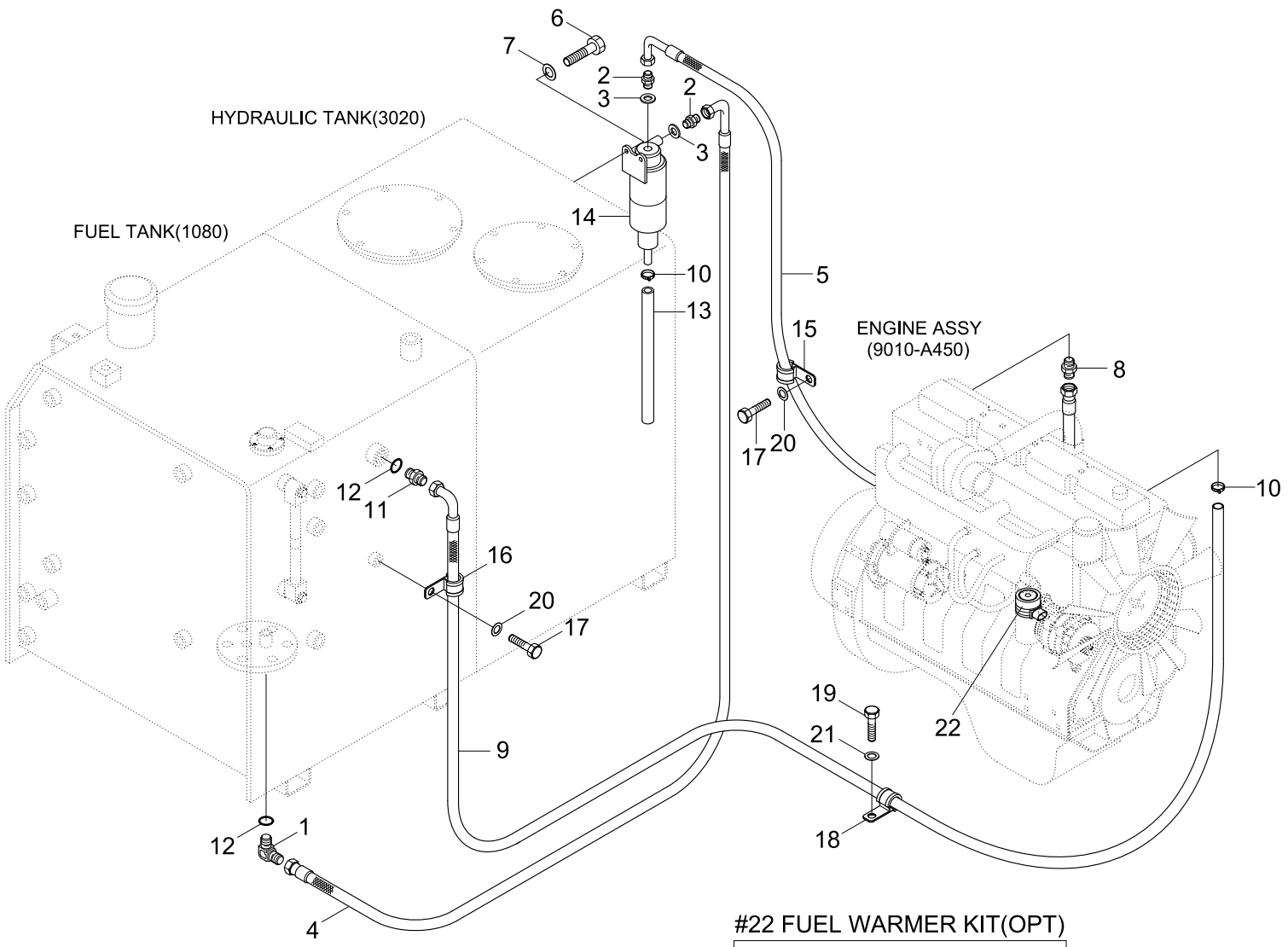

#22 FUEL WARMER KIT(OPT)

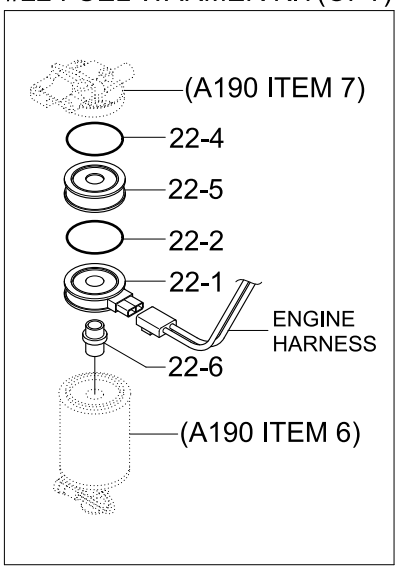

Item	Part_No	IS	Ord	T	Description	Qty	Serial_No	ITC	Remark
*	@				FUEL SYSTEM	1	- #1494	-	NOT
1	P020-110003				ELBOW-90	1			
2	11N6-50010				CONNECTOR	2			
3	P392-140000				WASHER-COPPER	2			
4	11N4-50010				HOSE-FUEL	1			
5	11N4-50020				FUEL HOSE ASSY	1			
6	S015-080202				BOLT-HEX	2			
7	S403-082002				WASHER-PLAIN	2			
8	11EG-53010				CONNECTOR	1			
9	11N4-50030				HOSE-FUEL	1	- #1000		
	11N4-50050				HOSE-FUEL	1	#1001 -	D	
10	S520-015000				CLAMP-HOSE	2			
11	P020-110014				ELBOW-90	1			
12	S631-018001				O-RING	2			
13	11N8-50111				HOSE ASSY	1			
14	11EM-52320				WATER SEPARATOR	1			
15	S543-400002				CLAMP-TUBE	2			
16	S543-200002				CLAMP-TUBE	1			
17	S017-100152				BOLT-HEX	3			
18	31E7-0315				CLAMP-HOSE	1	- #1000	-	
19	S017-120152				BOLT-HEX	1	- #1000	-	
20	S403-101002				WASHER-PLAIN	3			
21	S403-121002				WASHER-PLAIN	1	- #1000	-	
22	11N8-70410				FUEL WARMER KIT	1	#1235 -	-	
22-1	392702300				.HEATER	1	#1235 -	-	

Item	Part_No	IS	Ord	T	Description	Qty	Serial_No	ITC	Remark
22-2	392666000				.O-RING	1	#1235 -	-	
22-4	391902500				.GASKET	1	#1235 -	-	
22-5	@				.ADAPTER	1	#1235 -	-	NOT
22-6	@				.INSERT	1	#1235 - #1494	-	NOT

FUEL SYSTEM(#1495-)

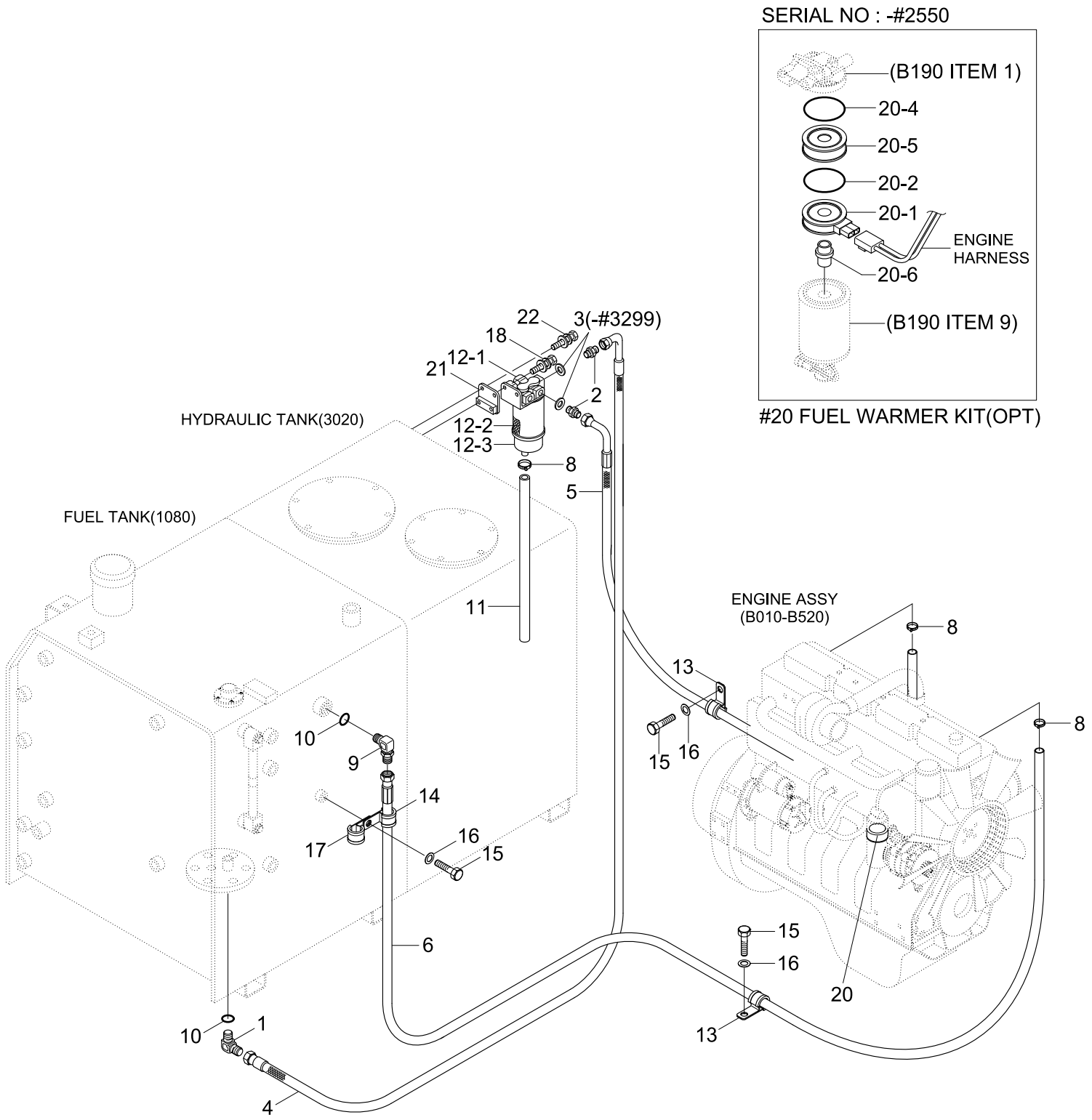

Item	Part_No	IS	Ord	T	Description	Qty	Serial_No	ITC	Remark
*	@				FUEL SYSTEM	1	#1495 -	-	NOT
1	P020-110003				ELBOW-90	1			
2	11N6-50010				CONNECTOR	2	- #1916		
	11NA-50040				CONNECTOR	2	#1917 - #3299	D	
	11QB-50040				CONNECTOR	2	#3300 -	B	
3	P392-140000				WASHER-COPPER	2	- #1916		
	P392-160000				WASHER-COPPER	2	#1917 - #3299	D	
4	11N4-50010				HOSE-FUEL	1			
5	11N4-56011				HOSE-FUEL	1			
6	11N4-56020				HOSE-FUEL	1			
8	S520-015000				CLAMP-HOSE	3			
9	P020-110014				ELBOW-90	1			
10	S631-018001				O-RING	2			
11	11N8-50111				HOSE ASSY	1	- #1540		
	11N8-50112				HOSE ASSY	1	#1541 - #1916	B	
	11N1-50020				HOSE ASSY	1	#1917 - #1995	D	
	11M8-50030				HOSE ASSY	1	#1996 -	A	
12	11EM-52320				WATER SEPARATOR	1	- #1916		
	11LB-20300				PRE FILTER ASSY	1	#1917 - #2550	D	
	11NB-70400				PREFILTER ASSY	1	#2551 -	D	
12-1	11LD-20240				.HEAD-FILTER	1	#1917 -	-	
12-2	11LB-20310				.ELEMENT ASSY-F/FILTER	1	#1917 -	-	
12-3	11LD-20260				.BOWL ASSY-W/KNOB	1	#1917 - #2550	-	
	11NB-70410				.BOWL ASSY-W/HEATER	1	#2551 -	D	
12-3-1	11NB-70420				..GASKET-DRAIN KNOB	1	#0001 -	-	NOT SHOWN

Item	Part_No	IS	Ord	T	Description	Qty	Serial_No	ITC	Remark
13	S543-400002				CLAMP-TUBE	2			
14	S543-200002				CLAMP-TUBE	1			
15	S017-100152				BOLT-HEX	3			
16	S403-101002				WASHER-PLAIN	3			
17	S543-120002				CLAMP-TUBE	1			
18	S015-080202				BOLT-HEX	2	- #1916		
	S035-083022				BOLT-W/WASHER	2	#1917 -	D	
19	S403-082002				WASHER-PLAIN	2	- #1916	-	
20	11N9-70410				FUEL WARMER KIT	1	- #2550	-	
20-1	392702300				.HEATER	1	- #2550	-	
20-2	392666000				.O-RING	1	- #2550	-	
20-4	391902500				.GASKET	1	- #2550	-	
20-5	393458800				.ADAPTER	1	- #2550	-	
20-6	@				.INSERT	1	- #2550	-	NOT
21	11N8-53040				BRACKET	1	#1917 - #1995	-	
22	S035-082022				BOLT-W/WASHER	2	#1917 - #1995	-	

FUEL TANK

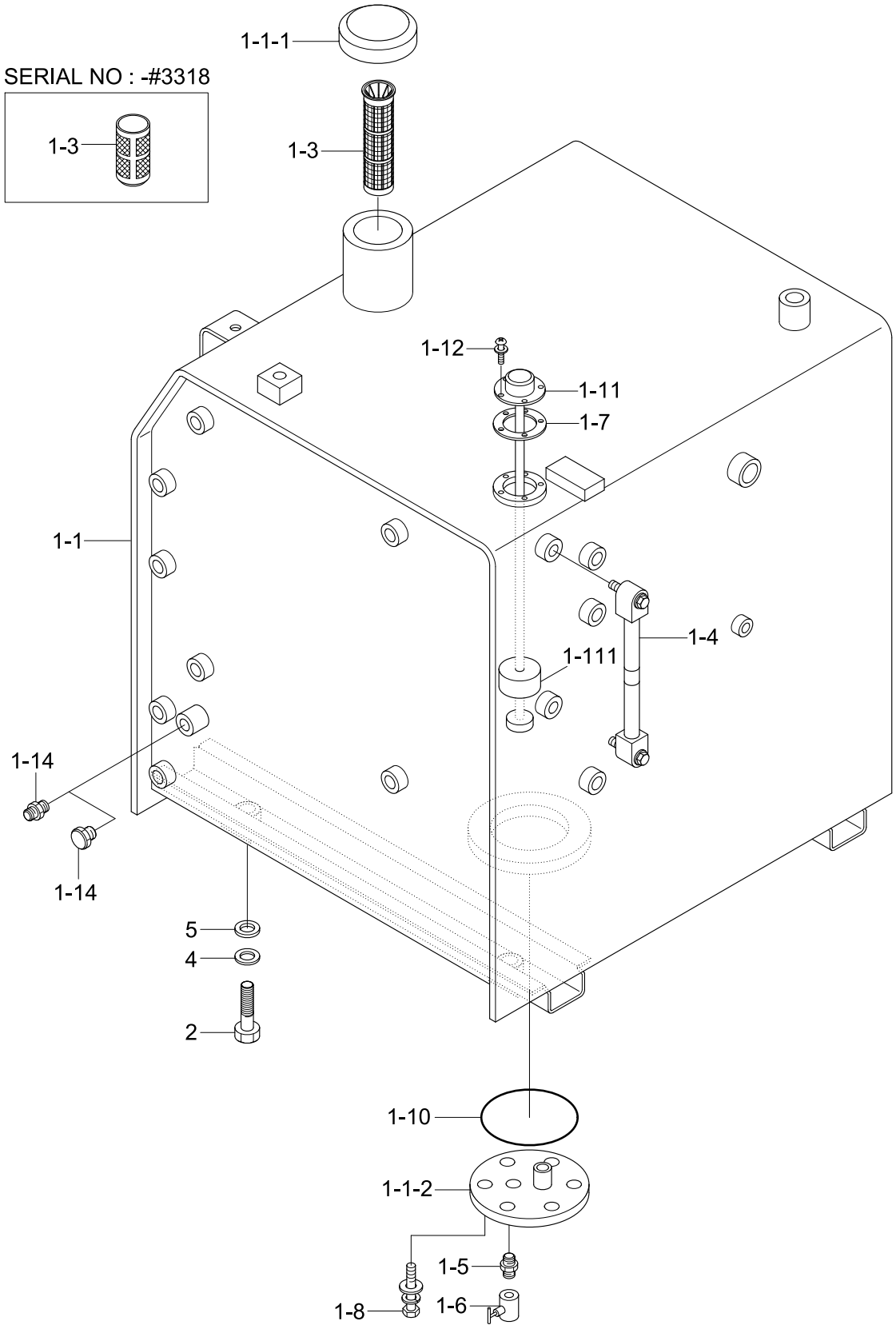
1-1-1
SERIAL NO : -#3318
1-3
1-3
1-12
1-11
1-7
1-1
1-4
1-111
1-14
1-14
5
4
2
1-10
1-1-2
1-5
1-8
1-6

Item	Part_No	IS	Ord	T	Description	Qty	Serial_No	ITC	Remark
1	@				FUEL TANK ASSY	1			NOT
1-1	31N4-02012				.FUEL TANK WA	1	- #1263		
	31N4-02013				.FUEL TANK WA	1	#1264 - #1818	D	
	31N4-02014				.FUEL TANK WA	1	#1819 - #2337	A	
	31N4-02015				.FUEL TANK WA	1	#2338 - #2494	B	
	31N4-02150				.FUEL TANK WA	1	#2495 -	D	
1-1-1	E131-1038	10			..CAP-FILLER	1	- #2337		
	31N4-02120				..FUEL CAP ASSY	1	#2338 -	B	
1-1-2	31N4-02110				..COVER-DRAIN	1			
1-3	31E1-10300				.STRAINER	1	- #3318		
	31QA-02080				.STRAINER	1	#3319 -	B	
1-4	E131-0473	30			.GAUGE-LEVEL	1	- #1000		
	31N6-02100				.GAUGE-LEVEL	1	#1001 - #1263	D	
	31N6-02600				.GAUGE-LEVEL	1	#1264 -	D	
1-5	31E5-3049	10			.FITTING	1			
1-6	E131-1006	10			.VALVE-NEEDLE	1			
1-7	E128-1053	10			.GASKET	1			
1-8	S037-103022				.BOLT-W/WASHER	6			
1-10	S632-170001				.O-RING	1			
1-11	21N6-10701				.SENDER-FUEL	1	- #3374		
	21Q4-10700				.SENDER-FUEL	1	#3375 -	B	
1-111	21N6-10710				..FLOAT	1	#1780 -	-	
1-12	21E4-1104-DA	10			.SCREW-CROSS R/ROUND	5	- #3015		
	S131-051546				.SCREW-W/WASHER	5	#3016 -	A	
1-14	P220-430204				.PLUG-HEX	1			

Item	Part_No	IS	Ord	T	Description	Qty	Serial_No	ITC	Remark
1-14	P090-101008				.CONNECTOR-HOSE	1			F/FILLER PUMP
2	S017-200352				BOLT-HEX	4	- #2337		
	S017-200502				BOLT-HEX	4	#2338 -	C	
4	91E6-60200				WASHER-HARDENED	4			
5	E231-0134	20			SHIM(1.0T)	5	- #0057		
	31N8-01300				SHIM(1.0T)	5	#0058 -	B	

AIRCON & HEATER MOUNTING

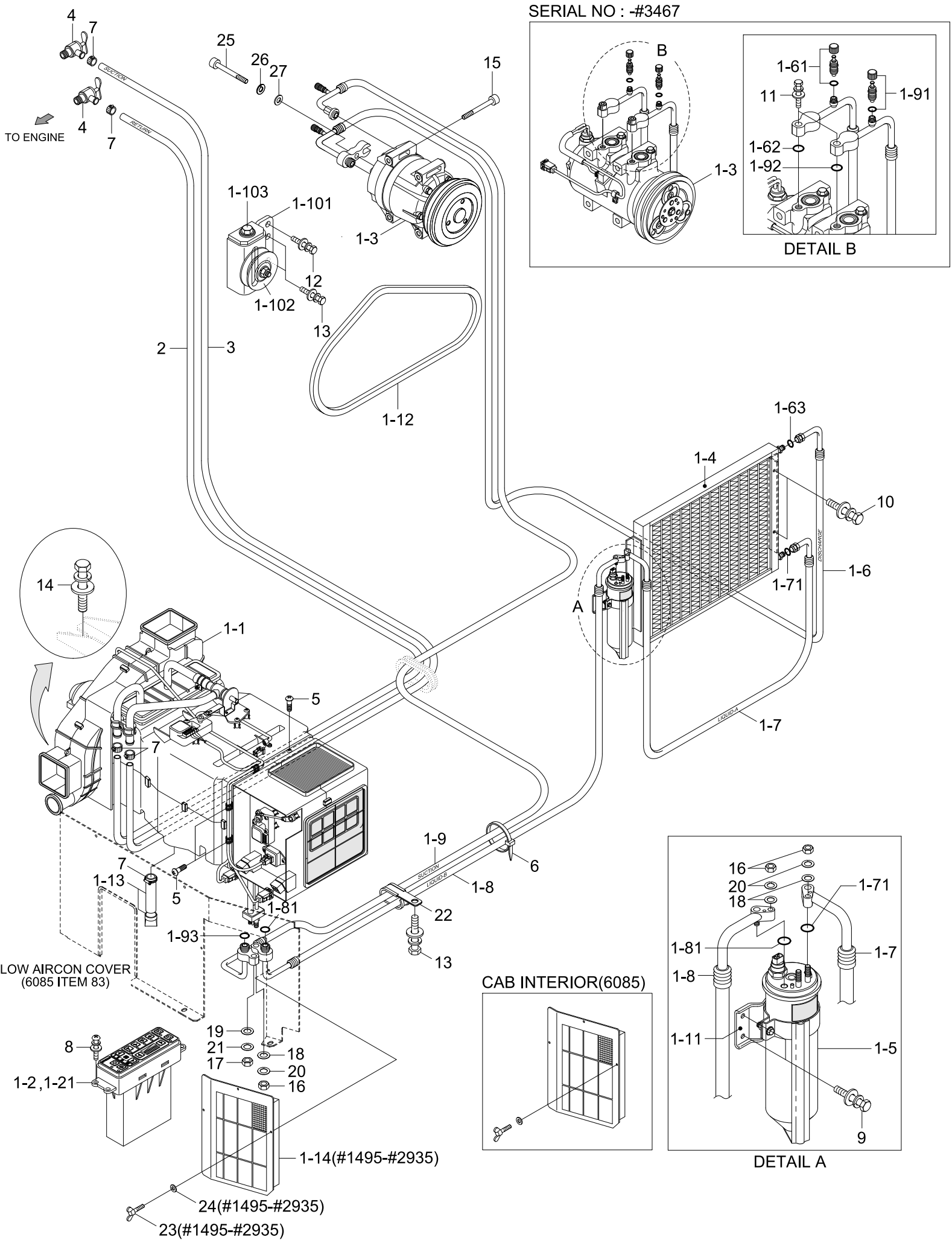

Item	Part_No	IS	Ord	T	Description	Qty	Serial_No	ITC	Remark
1	11N4-90010				AIRCON & HEATER ASSY	1			
1-1	11N6-90020				.AIRCON & HEATER UNIT	1	- #2124		
	11N6-90021				.AIRCON & HEATER UNIT	1	#2125 -	A	
1-2	11N6-90030				.CONTROL ASSY	1	- #1277		
	11N6-90031				.CONTROL ASSY-SEMI	1	#1278 -	A	
1-21	11N6-90850				..DECAL-A/C & HEATER	1			
1-3	11N6-90040				.COMPRESSOR ASSY	1	- #3467		
	11Q6-90040				.COMPRESSOR ASSY	1	#3468 -	D	
1-4	11EM-90050				.CONDENSER ASSY	1			
1-5	11N6-90060				.DRIER-RECEIVER	1			
1-6	11N4-90190				.HOSE-DISCHARGE	1	- #3467		
	11N4-90191				.HOSE-DISCHARGE	1	#3468 -	D	
1-61	A304000301-4				..CHARGE VALVE ASSY	1	- #3467		
1-62	A305000206-2				..O-RING	1	- #3467		
1-63	A305000205-2				..O-RING	1	- #3467		
1-7	11N4-90080				.HOSE(A)-LIQUID	1			
1-71	A305000209-2				..O-RING	2			
1-8	11N4-90090				.HOSE(B)-LIQUID	1			
1-81	A305000209-2				.O-RING	2			
1-9	11N4-90100				.HOSE-SUCTION	1	- #3467		
	11N4-90101				.HOSE-SUCTION	1	#3468 -	D	
1-91	A304000401-4				..CHARGE VALVE ASSY	1	- #3467		
1-92	A310069299-2				..O-RING	1	- #3467		
1-93	A305000203-2				..O-RING	1	- #3467		
1-10	11N6-90110				.PULLEY-IDLE	1			

Item	Part_No	IS	Ord	T	Description	Qty	Serial_No	ITC	Remark
1-101	A4760-508-00-2				..BRACKET-PULLEY	1			
1-102	A4700-511-01-2				..PULLEY-IDLE	1			INCL 1-103
1-103	A8900-518-03-3				...BOLT-TENSION	1			
1-11	11N6-90120				.BRACKET-R/DRIER	1			
1-12	12E2-3505				.V-BELT	1			
1-13	11EK-92090				.HOSE-DRAIN	1			
1-14	11N6-90340				.FILTER-REC	1	#1495 - #2935	D	SEE 6085
2	11E6-92070				HOSE-DRAIN	1			
3	11E6-92080				HOSE	1			
4	14L1-01350				VALVE-HEATER	2			
5	S152-040122				SCREW-TAPPING	4			
6	S551-035146				TIE-WIRE	2			
7	S520-020000				CLAMP-HOSE	5			
8	S131-051546				SCREW-W/WASHER	4			
9	S035-062022				BOLT-W/WASHER	2			
10	S035-082022				BOLT-W/WASHER	4			
11	S035-083022				BOLT-W/WASHER	2	- #3467		
12	S037-101552				BOLT-W/WASHER	1			
13	S037-102022				BOLT-W/WASHER	3			
14	S037-123522				BOLT-W/WASHER	4			
15	S109-080956				BOLT-SOCKET	3	- #3467		
	S109-080856				BOLT-SOCKET	3	#3468 -	D	
16	S205-061002				NUT-HEX	3			
17	S205-081002				NUT-HEX	1			
18	S403-062002				WASHER-PLAIN	3			

Item	Part_No	IS	Ord	T	Description	Qty	Serial_No	ITC	Remark
19	S403-082002				WASHER-PLAIN	1			
20	S411-060002				WASHER-SPRING	3			
21	S411-080002				WASHER-SPRING	1			
22	S543-400002				CLAMP-TUBE	1			
23	S091-060156				BOLT-WING	3	#1495 - #2935		
24	S403-062006				WASHER-PLAIN	3	#1495 - #2935		
25	S018-100356				BOLT-HEX	1	#3468 -		
26	S411-100006				WASHER-SPRING	1	#3468 -		
27	S403-10200B				WASHER-PLAIN	1	#3468 -		

AIR CON & HEATER UNIT(-#2124)

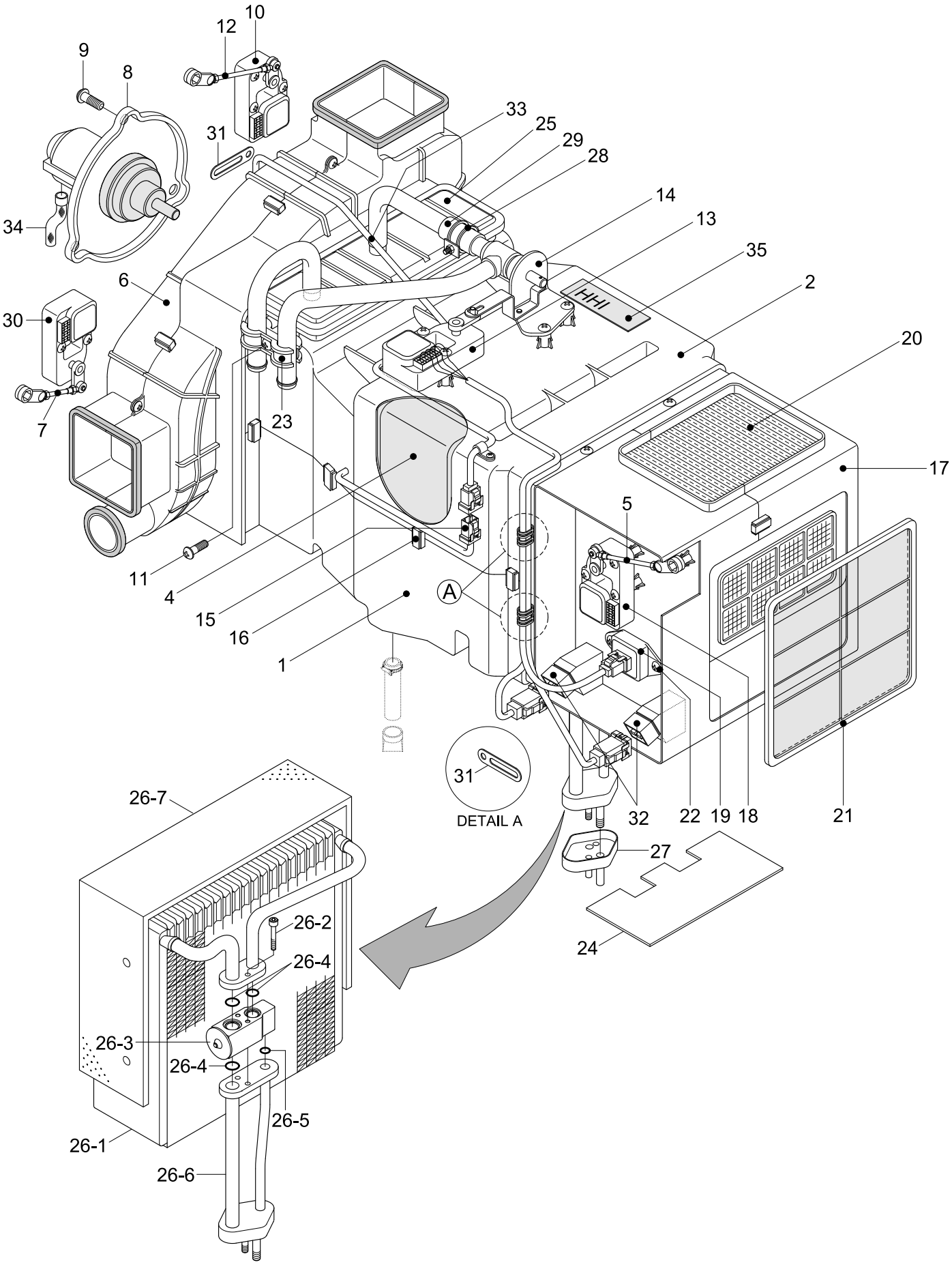

Item	Part_No	IS	Ord	T	Description	Qty	Serial_No	ITC	Remark
*	11N6-90020				.AIRCON & HEATER UNIT	1	- #2124	-	
1	AM12101400-0				..HVAC CASE-LOW	1			
2	AM11101601-0				..HVAC CASE-UPP	1	- #1277		
	AH000089				..HVAC CASE-UPP	1	#1278 -	B	
4	AM75001000-2				..EVAC INSULATION-LOW	1			
5	AM52300100-4				..ROD-INTAKE	1			
6	AW10001400-2				..BLOWER CASE ASSY	1			
7	AW70002400-4				..ROD-DEF/FOOT	1			
8	11N6-90700				..FAN & MOTOR	1			
9	4AH-0886				..SCREW	3			
10	11N6-90710				..MOTOR ACT-VENT	1			
11	K500531				..SCREW	29			
12	AW70002300-4				..ROD-VENT	1			
13	11N6-90720				..MOTOR ACT-TEMP	1			
14	11N6-90730				..VALVE ASSY-WATER	1			
15	A165400100-2				..SENSOR-DUCT	1			
16	4AH-0688				..CLIP-CASE	9			
17	AM13000203-2				..INTAKE CASE ASSY	1			
18	11N6-90740				..MOTOR ACT-INTAKE	1			
19	11N6-90750				..RESISTOR ASSY	1			
20	11N6-90760				..AIR FILTER-FRESH	1			
21	11N6-90770				..AIR FILTER-REFRESH	1			
22	K500533				..SCREW	2			
23	3AH-0770				..CLAMP-PIPE	1			
24	A112050700-3				..PLATE-SIDE	1			

Item	Part_No	IS	Ord	T	Description	Qty	Serial_No	ITC	Remark
25	11N6-90780				..HEATER CORE	1			
26	11N6-90790				..EVAP CORE ASSY	1			
26-1	A111056400-1				...CORE ASSY-LAMI	1			
26-2	A111750100-4				...BOLT-WRENCH,HEX	2	#0001 -	-	
26-3	11N6-90800				...VALVE-EXPANSION	1			
26-4	A305000212-2				...O-RING	3	#0001 -	-	
26-5	A305000211-2				...O-RING	1	#0001 -	-	
26-6	A112059600-2				...PIPE ASSY	1	#0001 -	-	
26-7	A115004900-2				...INSULATION-CORE	1	#0001 -	-	
27	A306201301-3				..CAP-FLANGE	1			
28	4AH-0929				..CLAMP ASSY-HOSE	1			
29	3AH-1007				..HOSE-WATER	1			
30	11N6-90810				..MOTOR ACT-FOOT/DEF	1			
31	4AH-0643				..HOLDER-WIRE	6			
32	11N6-90820				..RELAY	2			
33	11N6-90830				..WIRING ASSY	1			
34	A710051601-3				..HOSE-DRAIN	1			
35	AE73000400Z2				..PLATE-NAME	1			
36	AM800-001-04-3				..HOSE-DRAIN	1			
37	4CC-3354Z				..VALVE-VACUUM	1			

AIR CON & HEATER UNIT(#2125-)

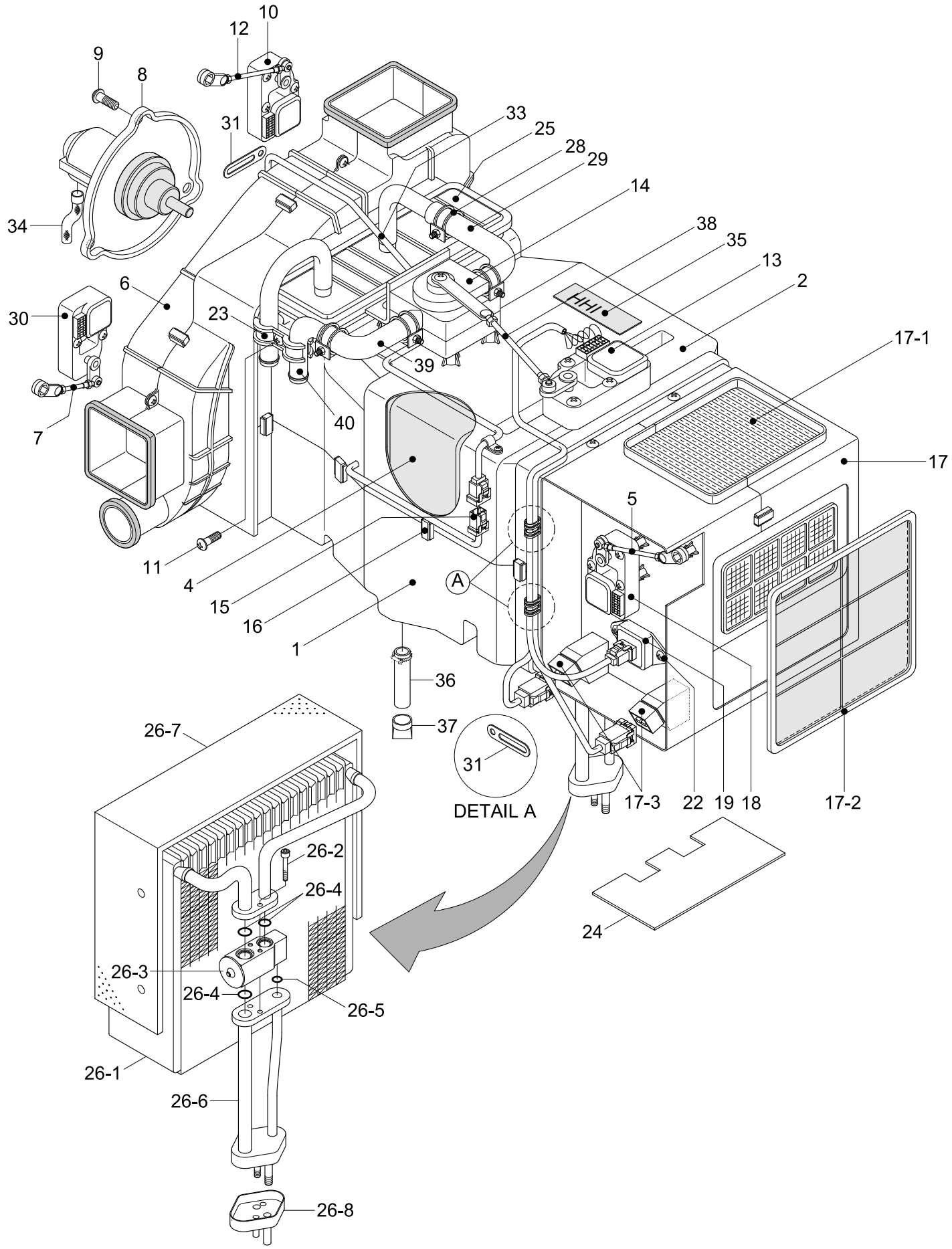

Item	Part_No	IS	Ord	T	Description	Qty	Serial_No	ITC	Remark
*	11N6-90021				.AIRCON & HEATER UNIT	1	#2125 -	A	
1	AM12101400-0				..HVAC CASE-LOW	1			
2	AH000089				..HVAC CASE-UPP	1			
4	AM75001000-2				..EVAC INSULATION-LOW	1			
5	AM52300100-4				..ROD-INTAKE	1			
6	AH000106				..BLOWER CASE ASSY	1			
7	AW70002400-4				..ROD-DEF/FOOT	1			
8	11N6-90700				..FAN & MOTOR	1			
8-1	AW22000800-2				...FAN	1			
8-2	AW21002500-1				...MOTOR	1			
9	AH000866				..SCREW	3			
10	11N6-90710				..MOTOR ACT-VENT	1			
11	K500531				..SCREW	28			
12	AW70002300-4				..ROD-VENT	1			
13	AH100311				..MOTOR ACT-TEMP	1			
14	AH001160				..VLAVE-WATER	1			
15	A165400100-2				..SENSOR-DUCT	1			
16	4AH-0688				..CLIP-CASE	9			
17	AH000055				..INTAKE CASE ASSY	1			
17-1	11N6-90760				...AIR FILTER-FRESH	1			
17-2	11N6-90770				...AIR FILTER-REFRESH	1			
17-3	11N6-90820				...RELAY	1			
18	11N6-90740				..MOTOR ACT-INTAKE	1			
19	AM86000601-2				..RESISTOR ASSY	1			
22	K500533				..SCREW	2			

Item	Part_No	IS	Ord	T	Description	Qty	Serial_No	ITC	Remark
23	AH000314				..CLAMP-H/RAD PIPE	1			
24	A112050700-3				..PLATE-SIDE	1			
25	11N6-90780				..HEATER CORE	1			
26	11N6-90790				..EVAP CORE ASSY	1	- #3467		
	11N6-90791				..EVAP CORE ASSY	1	#3468 -	B	
26-1	A111056400-1				...CORE ASSY-LAMI	1	- #3467		
26-2	A111750100-4				...BOLT-WRENCH,HEX	2	- #3467		
26-3	11N6-90800				...VALVE-EXPANSION	1	- #3467		
26-4	A305000212-2				...O-RING	3	- #3467		
26-5	A305000211-2				...O-RING	1	- #3467		
26-6	A112059600-2				...PIPE ASSY	1	- #3467		
26-7	A115004900-2				...INSULATION-CORE	1	- #3467		
26-8	A306201301-3				...CAP-FLANGE	1	- #3467		
28	AM27000201-3				..CLAMP-WATER HOSE	4			
29	AH001288				..HOSE-OUTLET,WATER	1			
30	11N6-90810				..MOTOR ACT-FOOT/DEF	1			
31	4AH-0643				..HOLDER-WIRE	6			
33	11N6-90830				..WIRING ASSY	1			
34	A710051601-3				..HOSE-DRAIN	1			
35	AM99001201-3				..NAME PLATE	1			
36	AM800-001-04-3				..HOSE-DRAIN	1			
37	4CC-3354Z				..VALVE-VACUUM	1			
38	AH000856				..ROD-TEMP	1			
39	AH001287				..HOSE-INLET,WATER	1			
40	AH001415				..HEATER PIPE-INLET	1			

AIR CONDITIONER MOUNTING

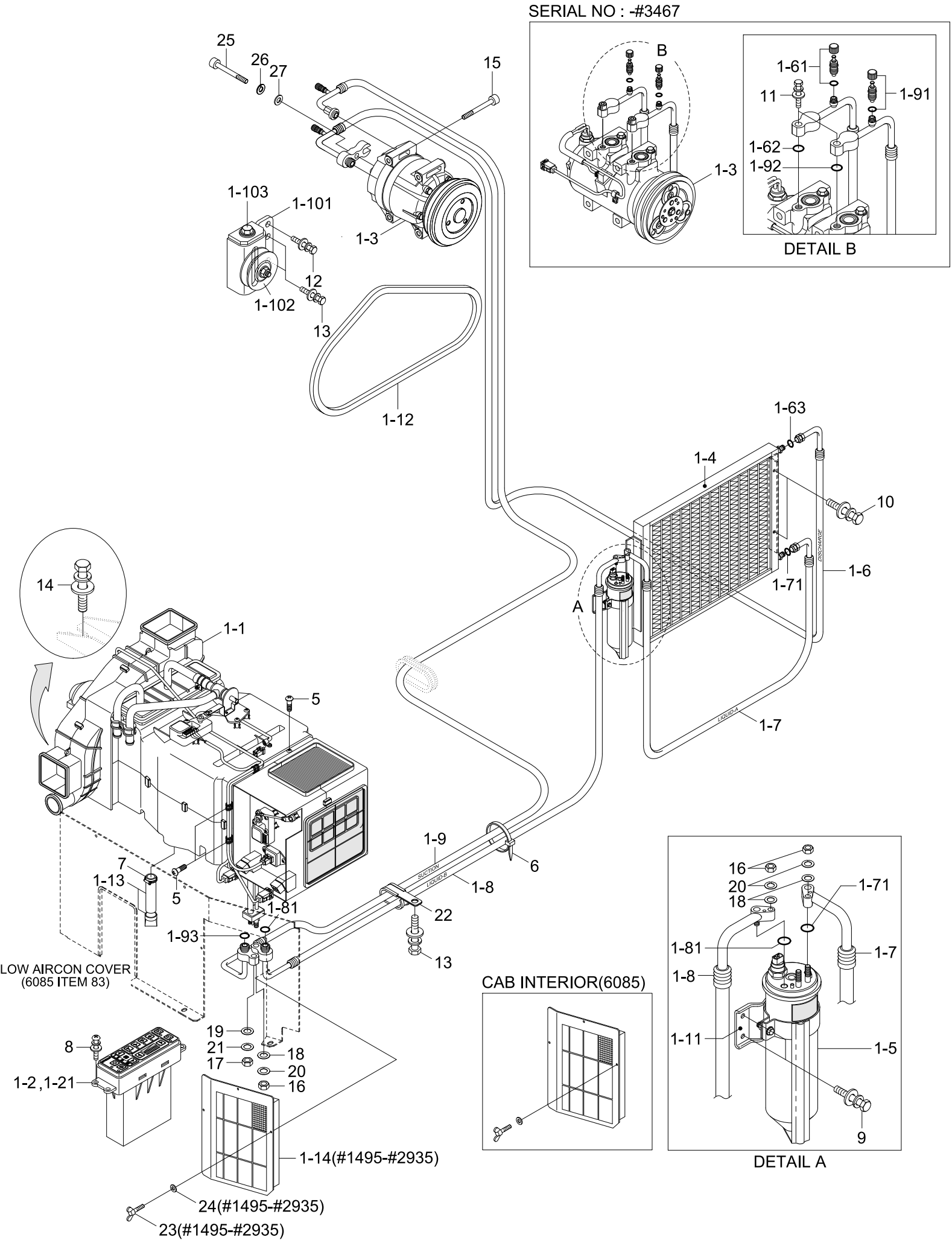

Item	Part_No	IS	Ord	T	Description	Qty	Serial_No	ITC	Remark
1	11N4-90210				AIR CON ASSY	1			
1-1	11N6-90220				.AIR CON UNIT	1	- #1277		
	11N6-90221				.AIRCON UNIT	1	#1278 -	A	
1-2	11N6-90030				.CONTROL ASSY	1	- #1277		
	11N6-90031				.CONTROL ASSY-SEMI	1	#1278 -	A	
1-21	11N6-90850				..DECAL-A/C & HEATER	1			
1-3	11N6-90040				.COMPRESSOR ASSY	1	- #3467		
	11Q6-90040				.COMPRESSOR ASSY	1	#3468 -	D	
1-4	11EM-90050				.CONDENSER ASSY	1			
1-5	11N6-90060				.DRIER-RECEIVER	1			
1-6	11N4-90190				.HOSE-DISCHARGE	1	- #3467		
	11N4-90191				.HOSE-DISCHARGE	1	#3468 -	D	
1-61	A304000301-4				..CHARGE VALVE ASSY	1	- #3467		
1-62	A305000206-2				..O-RING	1	- #3467		
1-63	A305000205-2				..O-RING	1	- #3467		
1-7	11N4-90080				.HOSE(A)-LIQUID	1			
1-71	A305000209-2				..O-RING	2			
1-8	11N4-90090				.HOSE(B)-LIQUID	1			
1-81	A305000209-2				.O-RING	2			
1-9	11N4-90100				.HOSE-SUCTION	1	- #3467		
	11N4-90101				.HOSE-SUCTION	1	#3468 -	D	
1-91	A304000401-4				..CHARGE VALVE ASSY	1	- #3467		
1-92	A310069299-2				..O-RING	1	- #3467		
1-93	A305000203-2				..O-RING	1	- #3467		
1-10	11N6-90110				.PULLEY-IDLE	1			

Item	Part_No	IS	Ord	T	Description	Qty	Serial_No	ITC	Remark
1-101	A4760-508-00-2				..BRACKET-PULLEY	1			
1-102	A4700-511-01-2				..PULLEY-IDLE	1			INCL 1-103
1-103	A8900-518-03-3				...BOLT-TENSION	1			
1-11	11N6-90120				.BRACKET-R/DRIER	1			
1-12	12E2-3505				.V-BELT	1			
1-13	11EK-92090				.HOSE-DRAIN	1			
1-14	11N6-90340				.FILTER-REC	1	#1495 - #2935	D	SEE 6085
5	S152-040122				SCREW-TAPPING	4			
6	S551-035146				TIE-WIRE	2			
7	S520-020000				CLAMP-HOSE	1			
8	S131-051546				SCREW-W/WASHER	4			
9	S035-062022				BOLT-W/WASHER	2			
10	S035-082022				BOLT-W/WASHER	4			
11	S035-083022				BOLT-W/WASHER	2	- #3467		
12	S037-101552				BOLT-W/WASHER	1			
13	S037-102022				BOLT-W/WASHER	3			
14	S037-123522				BOLT-W/WASHER	4			
15	S109-080956				BOLT-SOCKET	3	- #3467		
	S109-080856				BOLT-SOCKET	3	#3468 -	D	
16	S205-061002				NUT-HEX	3			
17	S205-081002				NUT-HEX	1			
18	S403-062002				WASHER-PLAIN	3			
19	S403-082002				WASHER-PLAIN	1			
20	S411-060002				WASHER-SPRING	3			
21	S411-080002				WASHER-SPRING	1			

Item	Part_No	IS	Ord	T	Description	Qty	Serial_No	ITC	Remark
22	S543-400002				CLAMP-TUBE	1			
23	S091-060156				BOLT-WING	3	#1495 - #2935		
24	S403-062006				WASHER-PLAIN	3	#1495 - #2935		
25	S018-100356				BOLT-HEX	1	#3468 -		
26	S411-100006				WASHER-SPRING	1	#3468 -		
27	S403-10200B				WASHER-PLAIN	1	#3468 -		

Item	Part_No	IS	Ord	T	Description	Qty	Serial_No	ITC	Remark
*	11N6-90220				.AIR CON UNIT	1	- #1277	-	
1	AM12101400-0				..HVAC CASE-LOW	1			
3	AM11101602-0				..HVAC CASE-UPP	1			
4	AM75001000-2				..EVAC-INSULATION-LOW	1			
5	AM52300100-4				..ROD-INTAKE	1			
6	AW10001400-2				..BLOWER CASE ASSY	1			
7	AW70002400-4				..ROD-DEF/FOOT	1			
8	11N6-90700				..FAN & MOTOR	1			
9	4AH-0886				..SCREW	3			
10	11N6-90710				..MOTOR ACT-VENT	1			
11	K500531				..SCREW	29			
12	AW70002300-4				..ROD-VENT	1			
15	A165400100-2				..SENSOR-DUCT	1			
16	4AH-0688				..CLIP-CASE	9			
17	AM13000203-2				..INTAKE CASE ASSY	1			
18	11N6-90740				..MOTOR ACT-INTAKE	1			
19	11N6-90750				..RESISTOR	1			
20	11N6-90760				..AIR FILTER-FRESH	1			
21	11N6-90770				..AIR FILTER-RE	1			
22	K500533				..SCREW	2			
24	A112050700-3				..PLATE-SIDE	1			
26	11N6-90790				..EVAP CORE ASSY	1			
26-1	A111056400-1				...CORE ASSY-LAMI	1			
26-2	A111750100-4				...BOLT-WRENCH,HEX	2	#0001 -	-	
26-3	11N6-90800				...VALVE-EXPANSION	1			

Item	Part_No	IS	Ord	T	Description	Qty	Serial_No	ITC	Remark
26-4	A305000212-2				...O-RING	3	#0001 -	-	
26-5	A305000211-2				...O-RING	1	#0001 -	-	
26-6	A112059600-2				...PIPE ASSY	1	#0001 -	-	
26-7	A115004900-2				...INSULATION-CORE	1	#0001 -	-	
27	A306201301-3				..CAP-FLANGE	1			
30	11N6-90810				..MOTOR ACT-FOOT/DEF	1			
31	4AH-0643				..HOLDER-WIRE	6			
32	11N6-90820				..RELAY	2			
33	11N6-90830				..WIRING ASSY	1			
34	A710051601-3				..HOSE-DRAIN	1			
35	AE73000400Z2				..PLATE-NAME	1			
36	AM800-001-04-3				..HOSE-DRAIN	1			
37	4CC-3354Z				..VALVE-VACUUM	1			

AIR CONDITIONER UNIT(#1278-)

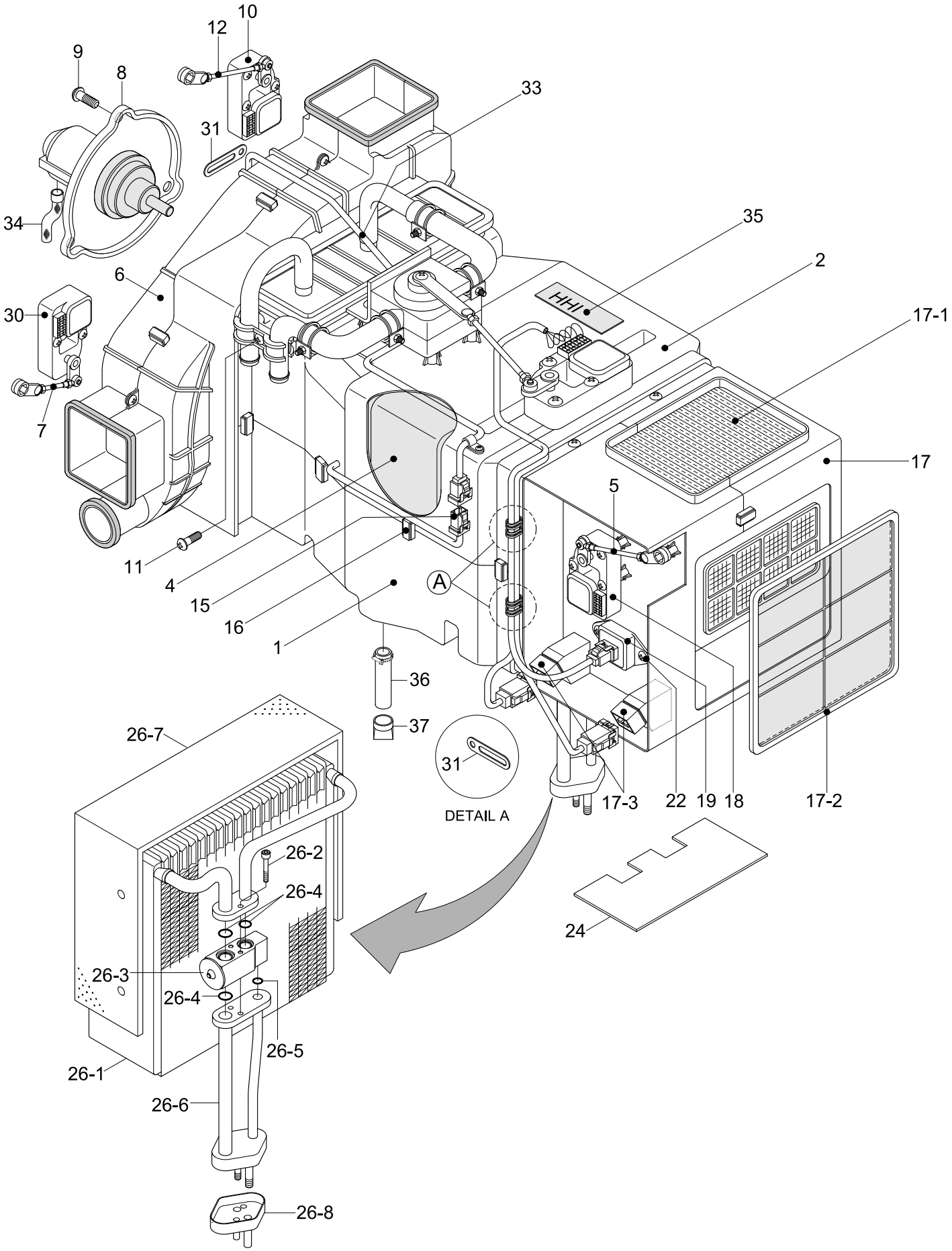

Item	Part_No	IS	Ord	T	Description	Qty	Serial_No	ITC	Remark
*	11N6-90221				.AIRCON UNIT	1	#1278 -	A	
1	AM12101400-0				..HVAC CASE-LOW	1			
2	AH000090				..HVAC CASE UPP ASSY	1			
4	AM75001000-2				..EVAC INSULATION-LOW	1			
5	AM52300100-4				..ROD-INTAKE	1			
6	AH000106				..BLOWER CASE ASSY	1			
7	AW70002400-4				..ROD-DEF/FOOT	1			
8	11N6-90700				..FAN & MOTOR	1			
8-1	AW22000800-2				...FAN	1			
8-2	AW21002500-1				...MOTOR	1			
9	AH000866				..SCREW	3			
10	11N6-90710				..MOTOR ACT-VENT	1			
11	K500531				..SCREW	22			
12	AW70002300-4				..ROD-VENT	1			
15	A165400100-2				..SENSOR-DUCT	1			
16	4AH-0688				..CLIP-CASE	9			
17	AH000055				..INTAKE CASE ASSY	1			
17-1	11N6-90760				...AIR FILTER-FRESH	1			
17-2	11N6-90770				...AIR FILTER-REFRESH	1			
17-3	11N6-90820				...RELAY	1			
18	11N6-90740				..MOTOR ACT-INTAKE	1			
19	AM86000601-2				..RESISTOR ASSY	1			
22	K500533				..SCREW	2			
24	A112050700-3				..PLATE-SIDE	1			
26	11N6-90790				..EVAP CORE ASSY	1	- #3467		

Item	Part_No	IS	Ord	T	Description	Qty	Serial_No	ITC	Remark
26	11N6-90791				..EVAP CORE ASSY	1	#3468 -	B	
26-1	A111056400-1				...CORE ASSY-LAMI	1	- #3467		
26-2	A111750100-4				...BOLT-WRENCH,HEX	2	- #3467		
26-3	11N6-90800				...VALVE-EXPANSION	1	- #3467		
26-4	A305000212-2				...O-RING	3	- #3467		
26-5	A305000211-2				...O-RING	1	- #3467		
26-6	A112059600-2				...PIPE ASSY	1	- #3467		
26-7	A115004900-2				...INSULATION-CORE	1	- #3467		
26-8	A306201301-3				...CAP-FLANGE	1	- #3467		
30	11N6-90810				..MOTOR ACT-FOOT/DEF	1			
31	4AH-0643				..HOLDER-WIRE	6			
33	11N6-90830				..WIRING ASSY	1			
34	A710051601-3				..HOSE-DRAIN	1			
35	AM99001201-3				..NAME PLATE	1			
36	AM800-001-04-3				..HOSE-DRAIN	1			
37	4CC-3354Z				..VALVE-VACUUM	1			

HEATER MOUNTING

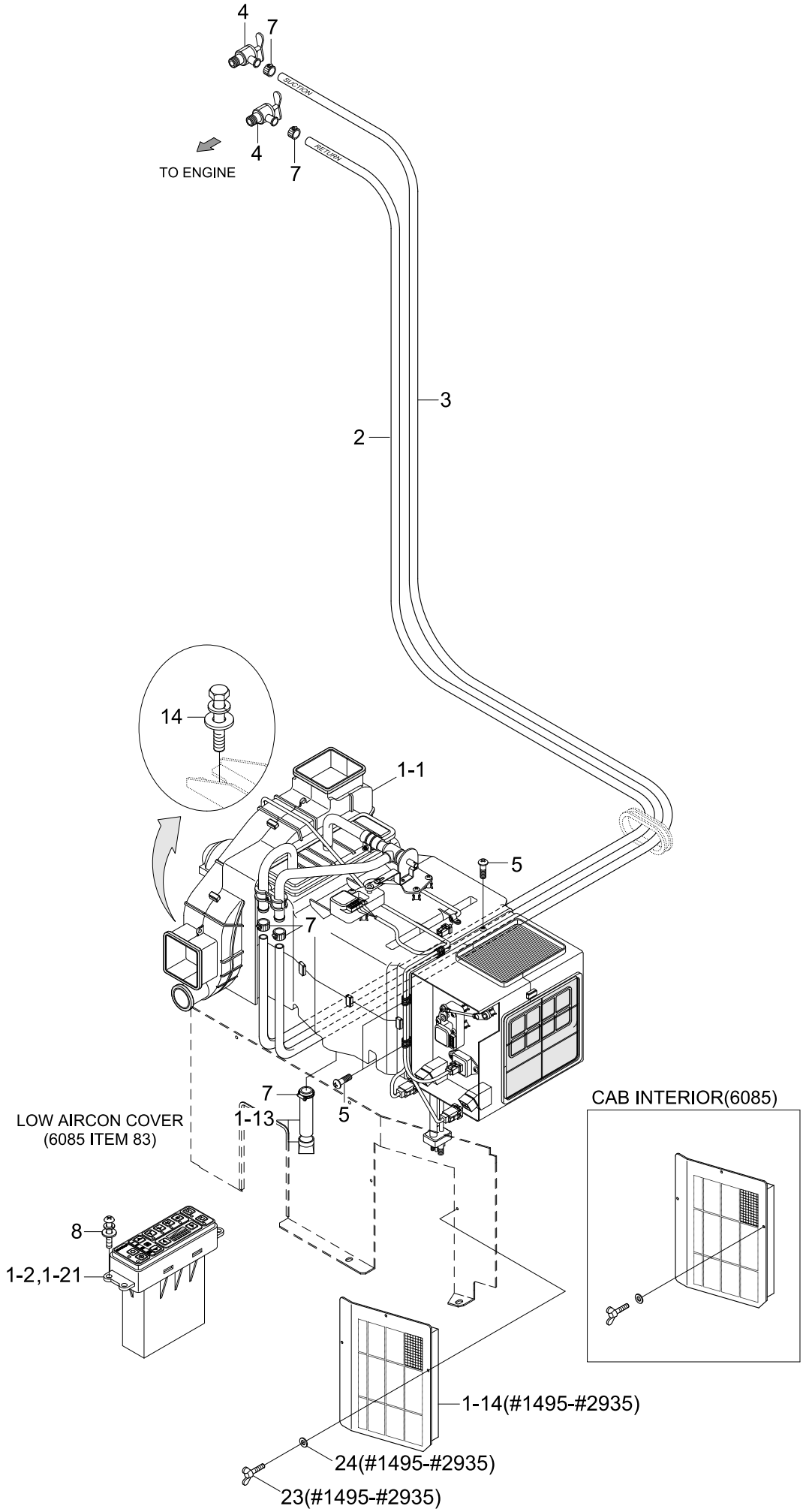

Item	Part_No	IS	Ord	T	Description	Qty	Serial_No	ITC	Remark
1	11N6-90310				HEATER ASSY	1			
1-1	11N6-90320				.HEATER UNIT	1	- #2124		
	11N6-90321				.HEATER UNIT	1	#2125 -	A	
1-2	11N6-90330				.CONTROL ASSY	1	- #1277		
	11N6-90331				.CONTROL ASSY	1	#1278 -	A	
1-21	11N6-90860				..DECAL-HEATER	1			
1-13	11EK-92090				.HOSE-DRAIN	1			
1-14	11N6-90340				.FILTER-REC	1	#1495 - #2935	D	SEE 6085
2	11E6-92070				HOSE-DRAIN	1			
3	11E6-92080				HOSE	1			
4	14L1-01350				VALVE-HEATER	2			
5	S152-040122				SCREW-TAPPING	4			
7	S520-020000				CLAMP-HOSE	5			
8	S131-051546				SCREW-W/WASHER	4			
14	S037-123522				BOLT-W/WASHER	4			
23	S091-060156				BOLT-WING	3	#1495 - #2935	-	
24	S403-062006				WASHER-PLAIN	3	#1495 - #2935	-	

HEATER UNIT(-#2124)

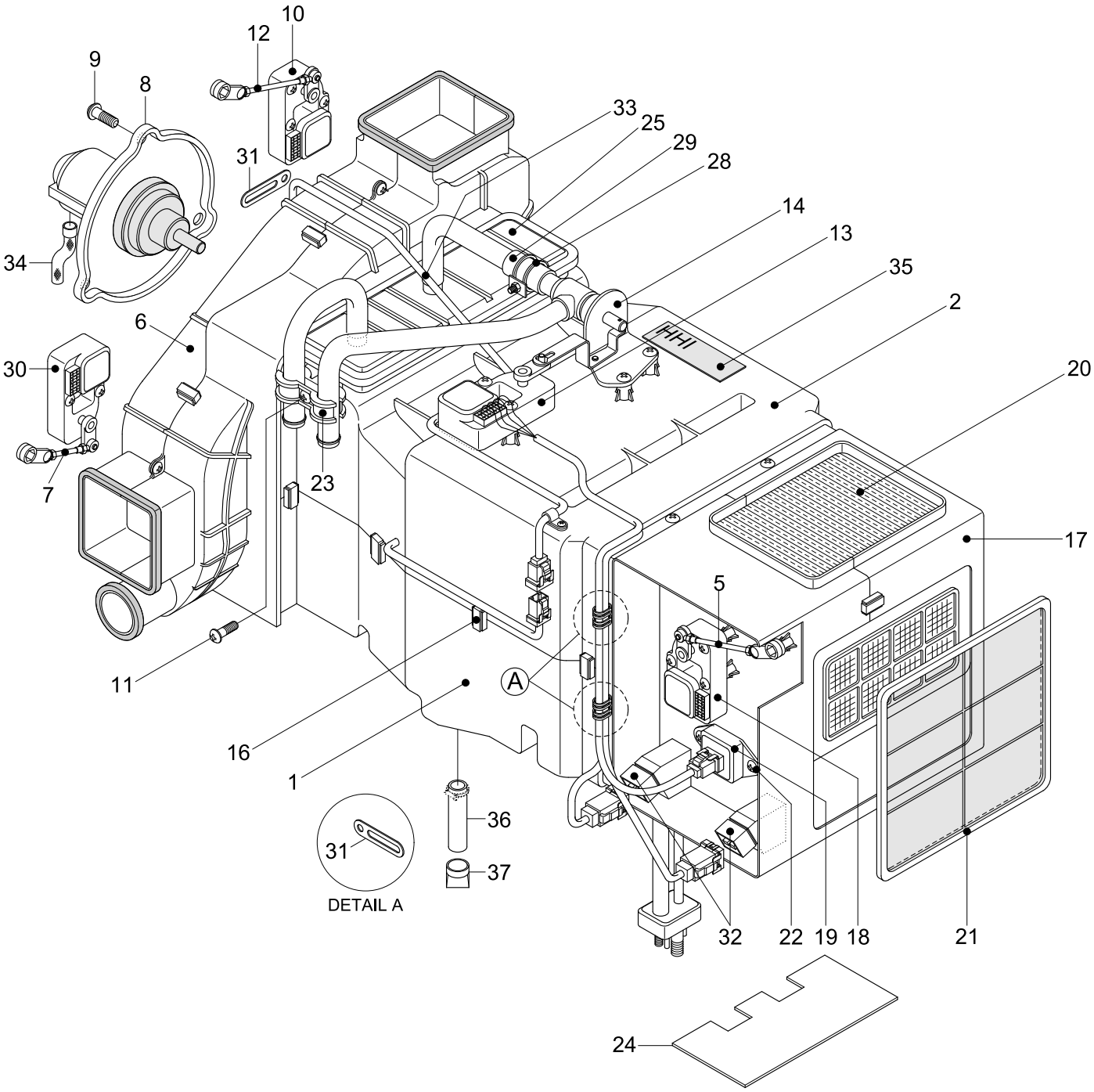

Item	Part_No	IS	Ord	T	Description	Qty	Serial_No	ITC	Remark
*	11N6-90320				.HEATER UNIT	1	- #2124	-	
1	AM12101400-0				..HVAC CASE-LOW	1			
2	AM11101601-0				..HVAC CASE-UPP	1	- #1277		
	AH000089				..HVAC CASE-UPP	1	#1278 -	B	
5	AM52300100-4				..ROD-INTAKE	1			
6	AW10001400-2				..BLOWER CASE ASSY	1			
7	AW70002400-4				..ROD-DEF/FOOT	1			
8	11N6-90700				..FAN & MOTOR	1			
9	4AH-0886				..SCREW	3			
10	11N6-90710				..MOTOR ACT-VENT	1			
11	K500531				..SCREW	29			
12	AW70002300-4				..ROD-VENT	1			
13	11N6-90720				..MOTOR ACT-TEMP	1			
14	11N6-90730				..WATER VALVE	1			
16	4AH-0688				..CLIP-CASE	9			
17	AM13000203-2				..INTAKE CASE ASSY	1			
18	11N6-90740				..MOTOR ACT-INTAKE	1			
19	11N6-90750				..RESISTOR ASSY	1			
20	11N6-90760				..AIR FILTER-FRESH	1			
21	11N6-90770				..AIR FILTER-RE	1			
22	K500533				..SCREW	2			
23	3AH-0770				..CLAMP-PIPE	1			
24	A112050700-3				..PLATE-SIDE	1			
25	11N6-90780				..HEATER CORE	1			
28	4AH-0929				..CLAMP ASSY-HOSE	1			

Item	Part_No	IS	Ord	T	Description	Qty	Serial_No	ITC	Remark
29	3AH-1007				..HOSE-WATER	1			
30	11N6-90810				..MOTOR ACT-FOOT/DEF	1			
31	4AH-0643				..HOLDER-WIRE	6			
32	11N6-90820				..RELAY	2			
33	11N6-90830				..WIRING ASSY	1			
34	A710051601-3				..HOSE-DRAIN	1			
35	AE73000400Z2				..PLATE-NAME	1			

HEATER UNIT(#2125-)

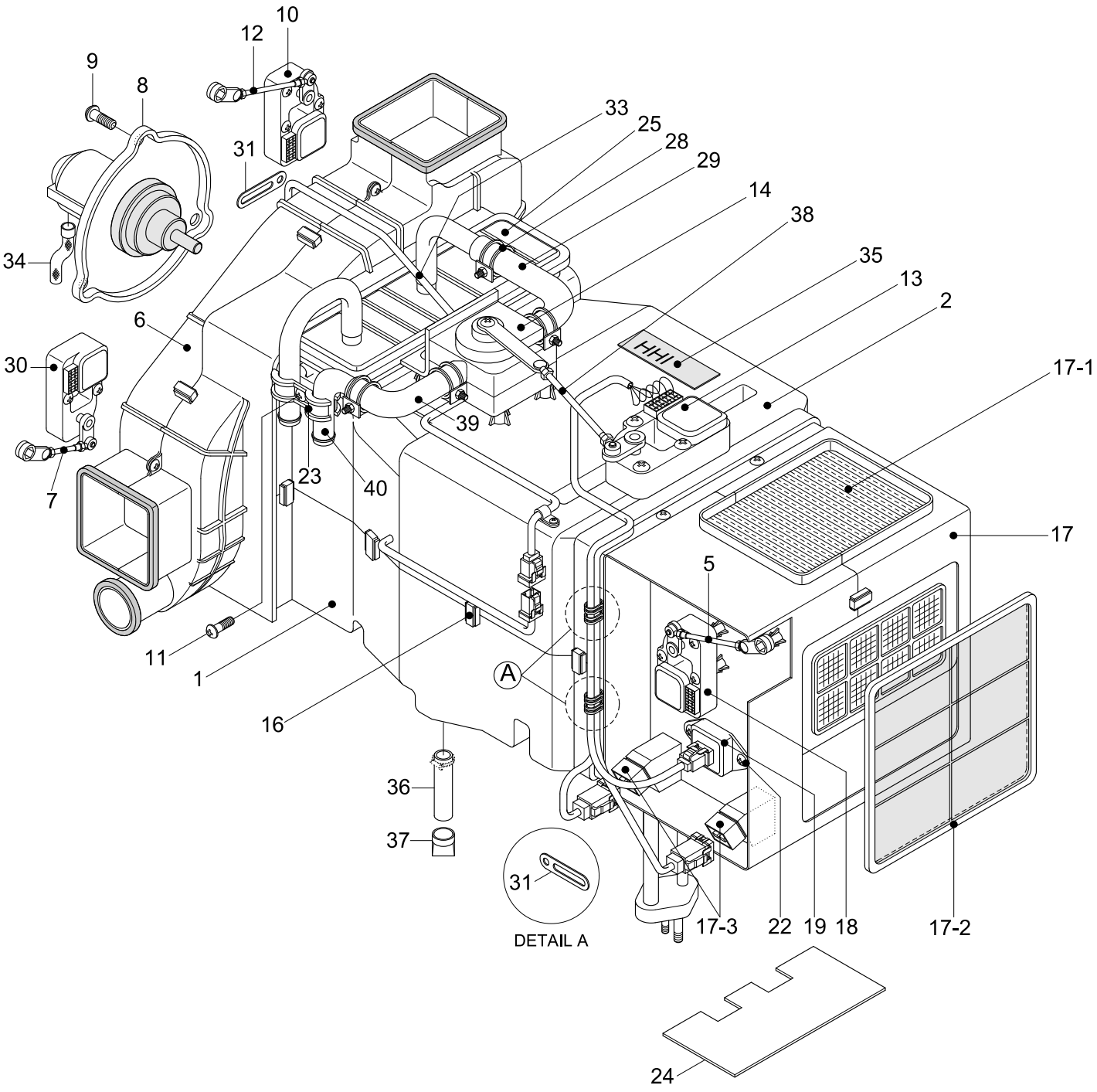

Item	Part_No	IS	Ord	T	Description	Qty	Serial_No	ITC	Remark
*	11N6-90321				.HEATER UNIT	1	#2125 -	A	
1	AM12101400-0				..HVAC CASE-LOW	1			
2	AH000086				..HVAC CASE UPP ASSY	1			
5	AM52300100-4				..ROD-INTAKE	1			
6	AH000106				..BLOWER CASE ASSY	1			
7	AW70002400-4				..ROD-DEF/FOOT	1			
8	11N6-90700				..FAN & MOTOR	1			
8-1	AW22000800-2				...FAN	1			
8-2	AW21002500-1				...MOTOR	1			
9	AH000866				..SCREW	3			
10	11N6-90710				..MOTOR ACT-VENT	1			
11	K500531				..SCREW	28			
12	AW70002300-4				..ROD-VENT	1			
13	AH100311				..MOTOR ACT-TEMP	1			
14	AH001160				..WATER VLAVE	1			
16	4AH-0688				..CLIP-CASE	9			
17	AH000055				..INTAKE CASE ASSY	1			
17-1	11N6-90760				...AIR FILTER-FRESH	1			
17-2	11N6-90770				...AIR FILTER-RE	1			
17-3	11N6-90820				...RELAY	1			
18	11N6-90740				..MOTOR ACT-INTAKE	1			
19	AM86000601-2				..RESISTOR ASSY	1			
22	K500533				..SCREW	2			
23	AH000314				..H/RAD PIPE CLAMP	1			
24	A112050700-3				..PLATE-SIDE	1			

Item	Part_No	IS	Ord	T	Description	Qty	Serial_No	ITC	Remark
25	11N6-90780				..HEATER CORE	1			
28	AM27000201-3				..CLAMP-WATER HOSE	4			
29	AH001288				..HOSE,OUTLET-WATER	1			
30	11N6-90810				..MOTOR ACT-FOOT/DEF	1			
31	4AH-0643				..HOLDER-WIRE	6			
33	11N6-90830				..WIRING ASSY	1			
34	A710051601-3				..HOSE-DRAIN	1			
35	AM99001201-3				..NAME PLATE	1			
36	AM800-001-04-3				..HOSE-DRAIN	1			
37	4CC-3354Z				..VALVE-VACUUM	1			
38	AH000856				..ROD-TEMP	1			
39	AH001287				..HOSE,INLET-WATER	1			
40	AH001415				..HEATER PIPE-INLET	1			

AIRCON & HEATER MOUNTING(AUTO)

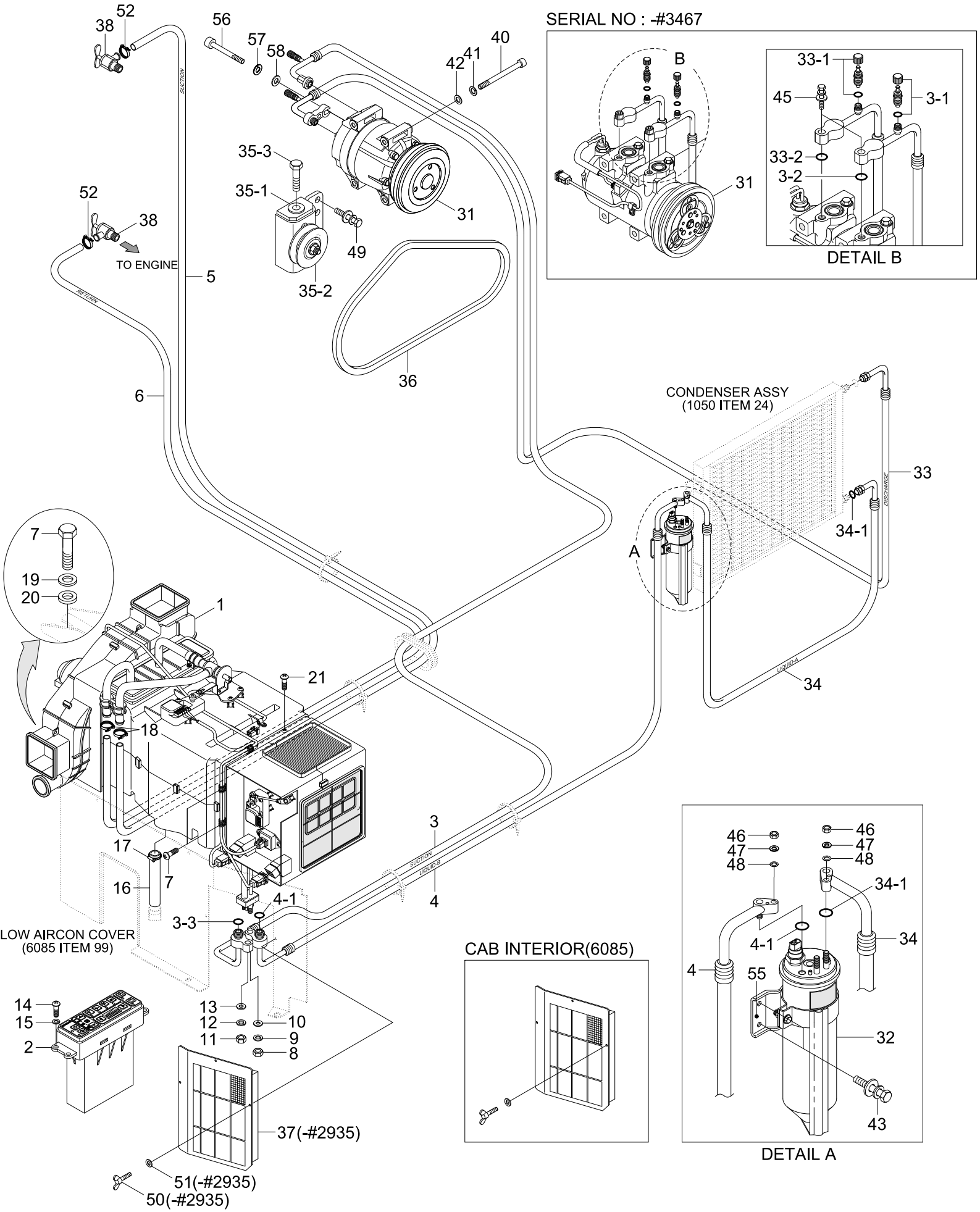

Item	Part_No	IS	Ord	T	Description	Qty	Serial_No	ITC	Remark
*	@				AIRCON & HEATER MTG	1	#0001 -		NOT
1	11N6-90420				AIR CON UNIT	1			SEE 1170
2	11N6-90430				CONTROL ASSY-FATC	1	- #2999		
	11N6-90431				CONTROL ASSY-FATC	1	#3000 -	B	
3	11N4-90100				HOSE-SUCTION	1	- #3467		
	11N4-90101				HOSE-SUCTION	1	#3468 -	D	
3-1	A304000401-4				.CHARGE VALVE ASSY	1	- #3467		
3-2	A310069299-2				.O-RING	1	- #3467		
3-3	A305000203-2				.O-RING	1	- #3467		
4	11N4-90090				HOSE(B)-LIQUID	1			
4-1	A305000209-2				.O-RING	2			
5	11E6-92080				HOSE	1			
6	11E6-92070				HOSE-DRAIN	1			
7	S017-120256				BOLT-HEX	4			
8	S201-061002				NUT-HEX	1			
9	S411-060002				WASHER-SPRING	1			
10	S403-061002				WASHER-PLAIN	1			
11	S201-081002				NUT-HEX	1			
12	S411-080002				WASHER-SPRING	1			
13	S403-081002				WASHER-PLAIN	1			
14	S175-050206				SCREW-SOCKET RD HD	4			
15	S403-052006				WASHER-PLAIN	4			
16	11EK-92090				HOSE-DRAIN	1			
17	S520-020000				CLAMP-HOSE	1			
18	S572-220006				CLAMP-HOSE,WIRE TYPE	2			

Item	Part_No	IS	Ord	T	Description	Qty	Serial_No	ITC	Remark
19	S441-120006				WASHER-HARDENED	4			
20	73NB-56400				SHIM	4			
21	S152-040122				SCREW-TAPPING	4			
31	11N6-90040				COMPRESSOR ASSY	1	- #3467		
	11Q6-90040				COMPRESSOR ASSY	1	#3468 -	D	
32	11N6-90060				DRIER-RECEIVER	1			
33	11N6-90070				HOSE-DISCHARGE	1	- #3467		
	11N6-90191				HOSE-DISCHARGE	1	#3468 -	D	
33-1	A304000301-4				.CHARGE VALVE ASSY	1	- #3467		
33-2	A305000206-2				.O-RING	1	- #3467		
33-3	A305000205-2				.O-RING	1	- #3467		
34	11NA-90220				HOSE(A)-LIQUID	1			
34-1	A305000209-2				.O-RING	2			
35	11N6-90110				PULLEY-IDLE	1			
35-1	A4760-508-00-2				.BRACKET-PULLEY	1			
35-2	A4700-511-01-2				.PULLEY-IDLE	1			
35-3	A8900-518-03-3				..BOLT-TENSION	1			
36	11N8-00130				V-BELT	1			
37	11N6-90340				FILTER-REC	1	- #2935		SEE 6085
38	11L7-90150				VALVE-HEATER	2			
40	S109-080956				BOLT-SOCKET	4	- #3467		
	S109-080856				BOLT-SOCKET	4	#3468 -	D	
41	S403-081006				WASHER-PLAIN	4			
42	S411-080006				WASHER-SPRING	4			
43	S035-061522				BOLT-W/WASHER	2			

Item	Part_No	IS	Ord	T	Description	Qty	Serial_No	ITC	Remark
45	S035-083522				BOLT-W/WASHER	2	- #3467		
46	S205-062002				NUT-HEX	2			
47	S411-060002				WASHER-SPRING	2			
48	S403-062002				WASHER-PLAIN	2			
49	S037-102022				BOLT-W/WASHER	3			
50	S091-060156				BOLT-WING	3	- #2935		
51	S403-061006				WASHER-PLAIN	3	- #2935		
52	S572-220006				CLAMP-HOSE,WIRE TYPE	2			
55	11N6-90120				BRACKET-R/DRIER	1			
56	S018-100356				BOLT-HEX	1	#3468 -		
57	S411-100006				WASHER-SPRING	1	#3468 -		
58	S403-10200B				WASHER-PLAIN	1	#3468 -		

AIRCON & HEATER UNIT-FATC

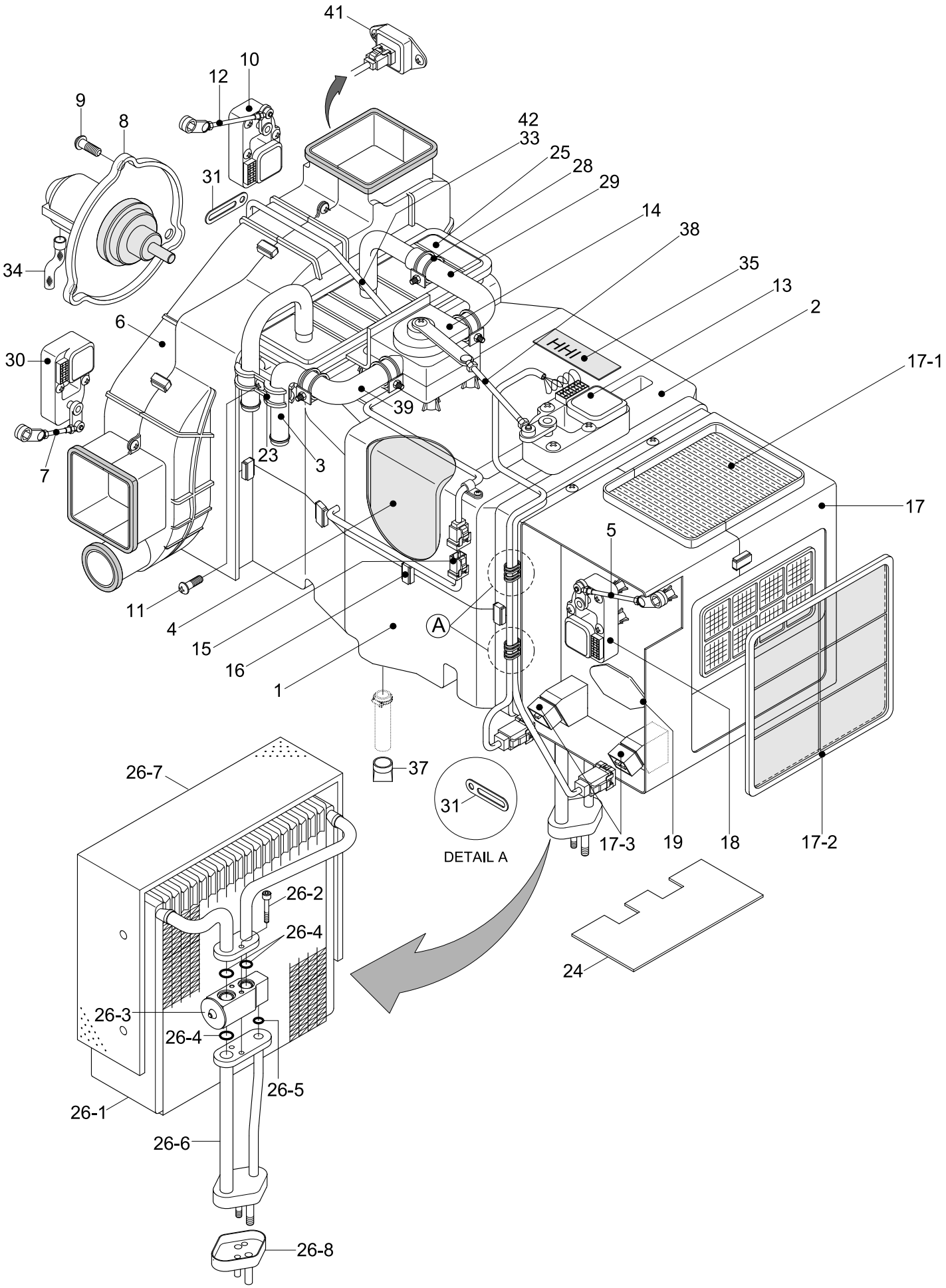

Item	Part_No	IS	Ord	T	Description	Qty	Serial_No	ITC	Remark
*	11N6-90420				AIR CON UNIT	1	#0001 -	-	
1	AM12101400-0				.HVAC CASE-LOW	1			
2	AH000089				.HVAC CASE-UPP	1			
3	AH000854				.I/PIPE & T/SENSOR	1			
4	AM75001000-2				.EVAC INSULATION-LOW	1			
5	AM52300100-4				.ROD-INTAKE	1			
6	AH001694				.BLOWER CASE ASSY	1			
7	AW70002400-4				.ROD-DEF/FOOT	1			
8	11N6-90700				.FAN & MOTOR	1			
8-1	AH001412				..FAN	1			
8-2	AW21002500-1				..MOTOR	1			
9	AH000866				.SCREW	3			
10	11N6-90710				.MOTOR ACT-VENT	1			
11	K500531				.SCREW	28			
12	AW70002300-4				.ROD-VENT	1			
13	AH100311				.MOTOR ACT-TEMP	1			
14	AH001160				.VLAVE-WATER	1			
15	A165400100-2				.SENSOR-DUCT	1			
16	4AH-0688				.CLIP-CASE	9			
17	AH000055				.INTAKE CASE ASSY	1			
17-1	11N6-90760				..AIR FILTER-FRESH	1			
17-2	11N6-90770				..AIR FILTER-REFRESH	1			
17-3	11N6-90820				..RELAY	1			
18	11N6-90740				.MOTOR ACT-INTAKE	1			
19	AH001617				.SEAL-SPONGE	1			

Item	Part_No	IS	Ord	T	Description	Qty	Serial_No	ITC	Remark
23	AH000314				.CLAMP-H/RAD PIPE	1			
24	A120150700-3				.PLATE-SIDE	1			
25	11N6-90780				.HEATER CORE	1			
26	11N6-90790				.EVAP CORE ASSY	1	- #3467		
	11N6-90791				.EVAP CORE ASSY	1	#3468 -	B	
26-1	A111056400-1				..CORE ASSY-LAMI	1	- #3467		
26-2	A111750100-4				..BOLT-WRENCH,HEX	2	- #3467		
26-3	11N6-90800				..VALVE-EXPANSION	1	- #3467		
26-4	A305000212-2				..O-RING	3	- #3467		
26-5	A305000211-2				..O-RING	1	- #3467		
26-6	A112059600-2				..PIPE ASSY	1	- #3467		
26-7	A115004900-2				..INSULATION-CORE	1	- #3467		
26-8	A306201301-3				..CAP-FLANGE	1	- #3467		
28	AH001853				.CLAMP-WATER HOSE	4			
29	AH001288				.HOSE-OUTLET,WATER	1			
30	11N6-90810				.MOTOR ACT-FOOT/DEF	1			
31	4AH-0643				.HOLDER-WIRE	6			
33	AH100268				.WIRING ASSY	1			
34	A710051601-3				.HOSE-DRAIN	1			
35	AH001161				.NAME PLATE	1			
37	4CC-3354Z				.VALVE-VACUUM	1			
38	AH000856				.ROD-TEMP	1			
39	AH001287				.HOSE-INLET,WATER	1			
41	AW92000200-2				.POWER TR	1			
42	AH100312				.SENSOR-AMBIENT	2			

PRE HEATING GROUP(#2735-)

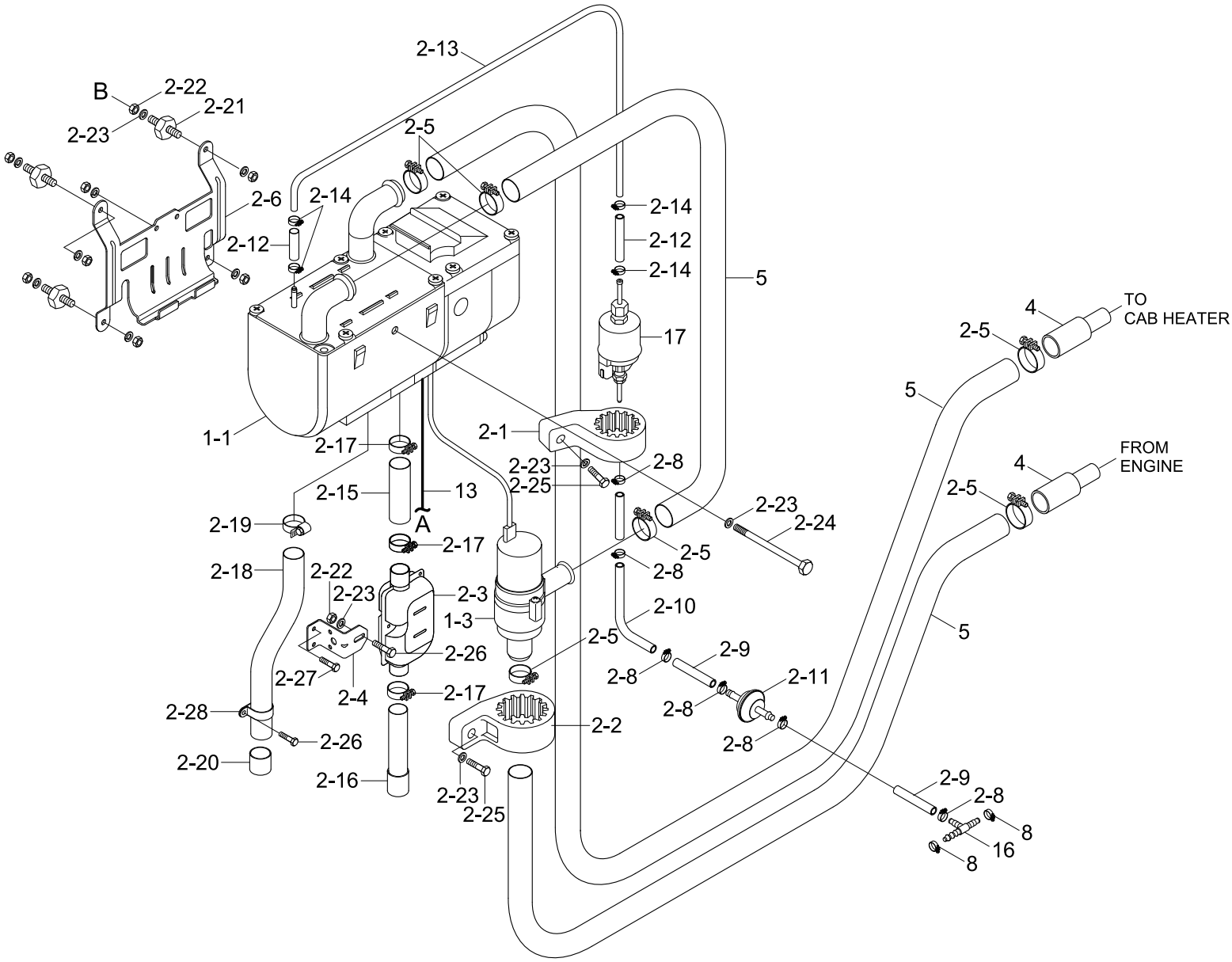

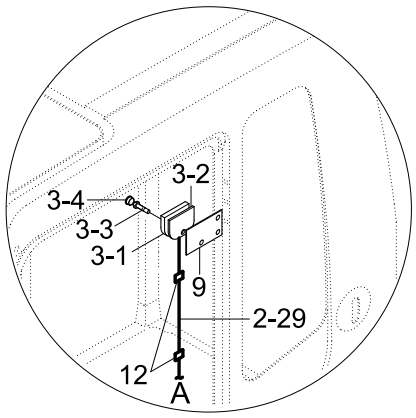

CAB

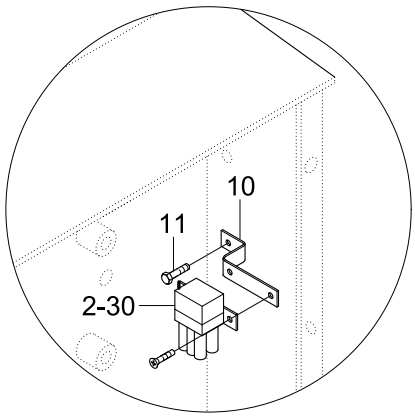

ELECTRIC BOX

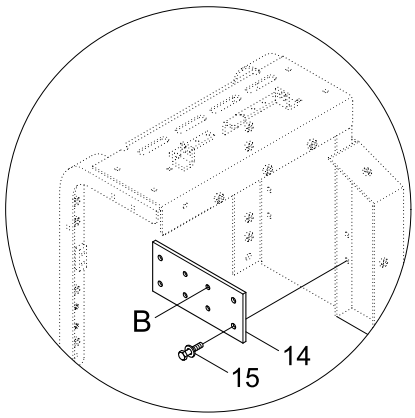

SIDE COWL ASSY-RH

Item	Part_No	IS	Ord	T	Description	Qty	Serial_No	ITC	Remark
*	@				PRE HEATING GROUP	1	#2735 -	-	NOT
1	11N8-90500				HYDRONIC D5WS-24V	1			
N1-1	11N8-94100				.PRE HEATER	1	#2735 -	-	NOT
1-3	11N8-94120				.PUMP-COOLANT	1			
2	11N8-90510				UNIVERSAL KIT D5WS-24V	1			
2-1	11N8-94130				.CLAMP-RUBBER	1			
2-2	11N8-94140				.CLAMP-RUBBER	1			
2-3	11N8-94160				.MUFFLER	1			
2-4	11N8-94170				.BRKT-MUFFLER	1			
2-5	@				.HOSE-CLAMP	10			NOT
2-6	11N8-94150				.BRKT-HEATER	1			
2-8	@				.CLAMP-HOSE	6			NOT
2-9	@				.HOSE	3			NOT
2-10	@				.HOSE-PLASTIC	1			NOT
2-11	11N8-94190				.FILTER FUEL	1			
2-12	@				.HOSE	2			NOT
2-13	@				.HOSE-PLASTIC	1			NOT
2-14	@				.CLAMP-HOSE	4			NOT
2-15	@				.HOSE-EXHAUST	1			NOT
2-16	@				.HOSE-EXHAUST	1			NOT
2-17	@				.CLAMP-EXHAST	3			NOT
2-18	@				.HOSE-INTAKE	1			NOT
2-19	@				.CLAMP-INTAKE	1			NOT
2-20	@				.END CAP	1			NOT
2-21	@				.STUD BOLT	4			NOT

Item	Part_No	IS	Ord	T	Description	Qty	Serial_No	ITC	Remark
2-22	@				.NUT	5			NOT
2-23	@				.WASHER	9			NOT
2-24	@				.BOLT-HEX	1			NOT
2-25	@				.BOLT-HEX	2			NOT
2-26	@				.BOLT-HEX	3			NOT
2-27	@				.BOLT SCREW	2			NOT
2-28	@				.CLAMP	1			NOT
2-30	11N8-94260				.FUSE BOX-P/HEATER	1			
3	11N8-90520				MINI TIMER 12/24V	1			
3-1	@				.TIMER	1			NOT
3-2	@				.CUSHION	1			NOT
3-3	@				.BOLT SCREW	1			NOT
3-4	@				.CAP	1			NOT
4	11N8-94320				REDUCER	2			
5	11N8-94211				HOSE	3			
8	S520-020000				CLAMP-HOSE	2			
9	11N8-94240				PLATE	1			
10	11N8-94270				BRACKET-F/BOX	1			
11	S131-043046				SCREW-W/WASHER	1			
12	21E9-06230				CLAMP-QUICK	2			
13	11N8-94250				HARNESS-P/HEATER	1			
14	11N8-94350				BRACKET	1			
15	S037-101552				BOLT-W/WASHER	4			
16	11N8-94180				TEE-FUEL	1			
17	11N8-94110				PUMP-FUEL	1	#2735 -	-	

RH ELECTRIC

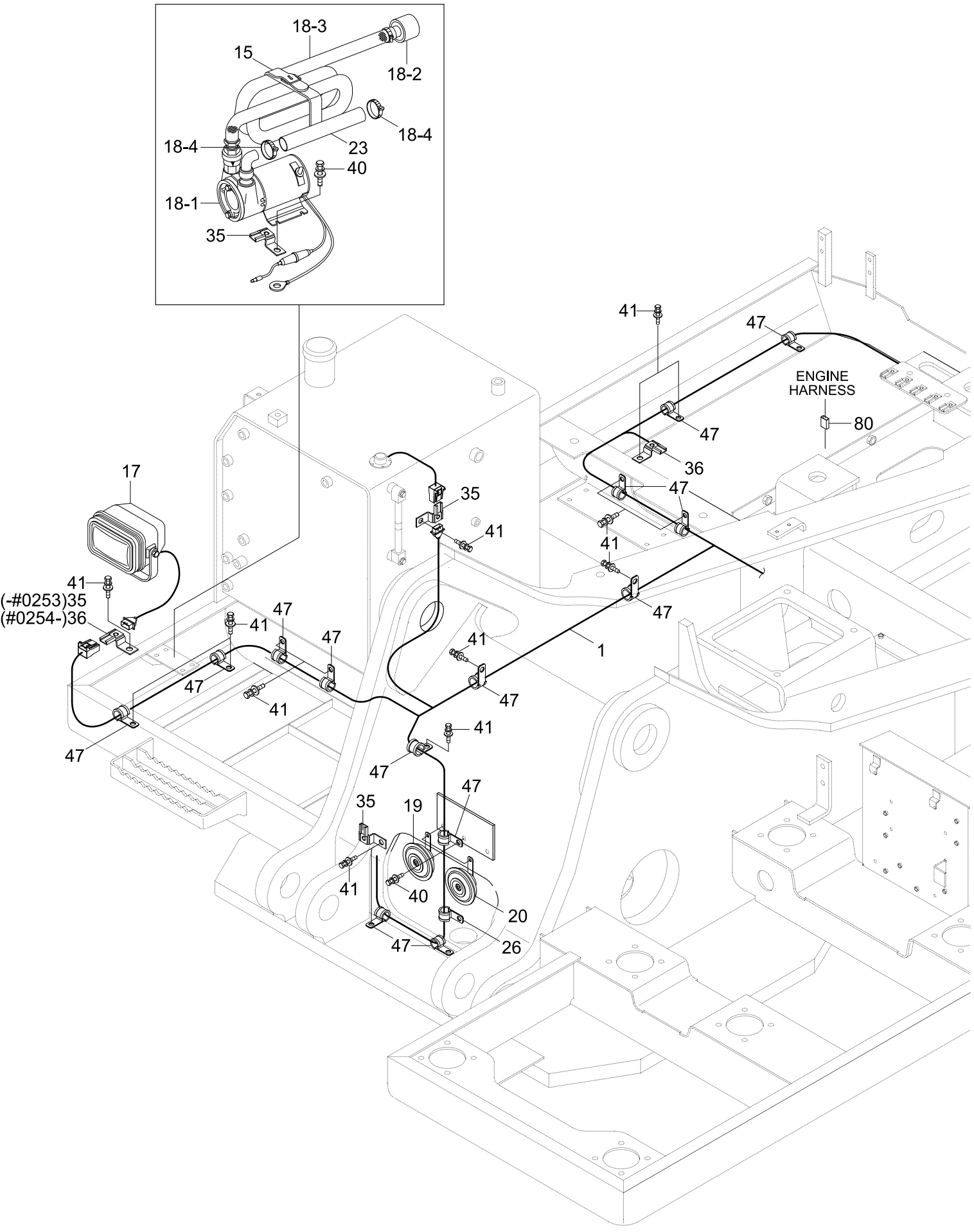
18-3
15
18-2
18-4
18-4
23
40
18-1
35
41
47
ENGINE
HARNESS
80
47
36
47
35
41
41
47
17
41
(-#0253)35
(#0254-)36
47
41
47
47
41
1
47
41
47
41
47
47
35
19
47
41
40
20
47
26

Item	Part_No	IS	Ord	T	Description	Qty	Serial_No	ITC	Remark
1	21N4-10012				HARNESS-FRAME	1	- #0253		MCV:ALP165
	21N4-10013				HARNESS-FRAME	1	#0254 - #1000	D	MCV:ALP165
	21N4-20011				HARNESS-FRAME	1	#1001 - #1234	D	MCV:ALP165
	21N4-20012				HARNESS-FRAME	1	#1235 - #1460	D	MCV:ALP165
	21N4-20014				HARNESS-FRAME	1	#1461 - #2078	B	MCV:ALP165
	21N4-20015				HARNESS-FRAME	1	#2079 - #2550	B	MCV:ALP165
	21N4-20016				HARNESS-FRAME	1	#2551 -	B	MCV:ALP165
	21N4-20600				HARNESS-FRAME	1	#1602 - #2078	-	MCV:UHX22-26
	21N4-20601				HARNESS-FRAME	1	#2079 - #2550	B	MCV:UHX22-26
	21N4-20602				HARNESS-FRAME	1	#2551 -	B	MCV:UHX22-26
15	E127-3158	20			BAND-FUEL PUMP	1			F/FILLER PUMP
17	21N6-20211				WORK LAMP ASSY	1			
17-1	S866-240650				.BULB	1			NOT SHOWN
18	21N6-20311				FUEL FILLER PUMP	1			OPT
18-1	21N6-20301				.PUMP & MOTOR ASSY	1			OPT
18-2	21EM-46000				.STRAINER ASSY	1			OPT
18-3	21EM-46101				.HOSE	1			OPT
18-4	S520-027000				.CLAMP-HOSE	4			OPT
19	21EA-60521				HORN-LOW	1	- #0253		
	21N5-10050				HORN-LOW	1	#0254 -	D	
20	21EA-60531				HORN-HIGH	1	- #0253		
	21N5-10060				HORN-HIGH	1	#0254 -	D	
23	E127-5007	10			HOSE-OUTLET	1	- #0253		
	21N4-20540				HOSE-OUTLET	1	#0254 - #1825	D	
	21N4-20530				HOSE-OUTLET	1	#1826 -	B	

Item	Part_No	IS	Ord	T	Description	Qty	Serial_No	ITC	Remark
26	21E9-00170				CLIP-HARNESS	1			
35	25D1-10640				CLIP ASSY	4	- #0253		
					CLIP ASSY	3	#0254 -	A	
36	25D1-10650				CLIP ASSY	1	- #0253		
					CLIP ASSY	2	#0254 -	A	
40	S035-082542				BOLT-W/WASHER	7			
41	S037-102022				BOLT-W/WASHER	15			
47	S593-000902				CLIP-HARNESS	14	- #3212		
	S593-000802				CLIP-HARNESS	14	#3213 -	B	
80	21N5-20190				PROTECTOR	1	#3343 -	-	

LH ELECTRIC(-#1000)

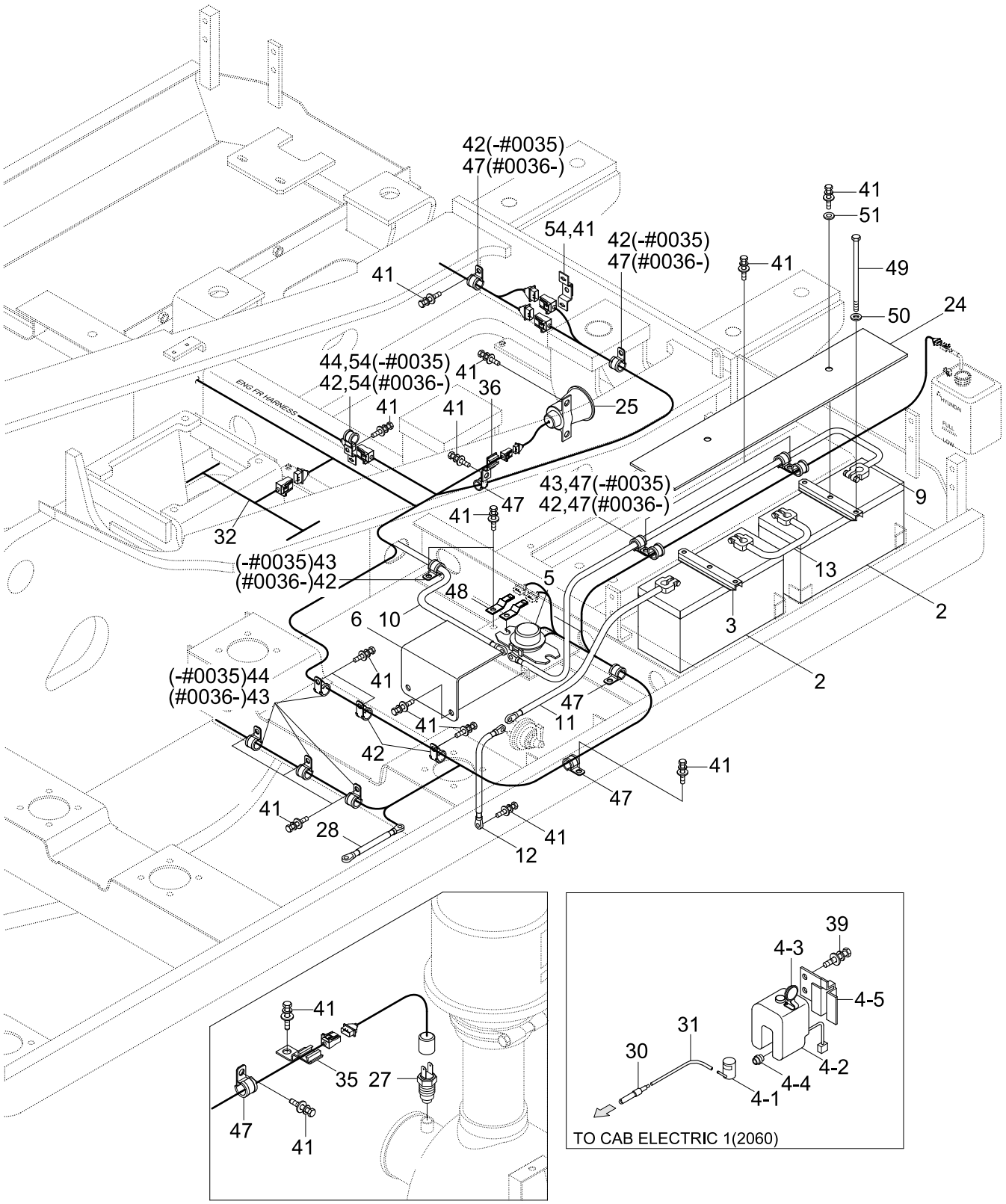

Item	Part_No	IS	Ord	T	Description	Qty	Serial_No	ITC	Remark
*	@				LH ELECTRIC	1	- #1000	-	NOT
2	25D1-00391				BATTERY ASSY	2			
3	21N4-01530				BRACKET-BATTERY	2			
4	21EG-30630				WASHER TANK ASSY	1			
4-1	21EG-10130				.PUMP-MOTOR	1			
4-2	21EG-10140				.TANK	1			
4-3	24L3-30660				.CAP	1			
4-4	24L3-30670				.RUBBER-BUSHING	1			
4-5	24L3-30710				.PLATE	1			
5	21E5-0003	10			RELAY-BATTERY	1			
6	21N4-00022				COVER-BATT RELAY	1	- #0035		
	21N4-00023				COVER-BATT RELAY	1	#0036 -	B	
9	21E2-60130				CABLE(BATT-BATT RY)	1			
10	21N4-01520				CABLE(BATT RY-STARTER)	1			
11	21L8-10320				CABLE(BATT-MASTER SW)	1			
12	21NA-10500				CABLE(MASTER SW-EARTH)	1			
13	21E2-60420				CABLE(BATT-BATT)	1			
24	21N4-01541				COVER BATT	1			
25	21N6-20321				BUZZER-TRAVEL ALARM	1			
27	21L7-20100				SWITCH-AIR CLEANER	1			
28	21N4-01510				STRAP-EARTH	1	- #0035		
	21EH-30720				STRAP-EARTH	1	#0036 -	B	
30	21EM-30570				CONNECTOR-TUBE	1			
31	21EM-30581				HOSE-RUBBER	1			
32	21N4-01501				HARNESS-EXT,TRAVEL	1	- #0035		TRAVEL ALARM

Item	Part_No	IS	Ord	T	Description	Qty	Serial_No	ITC	Remark
32	21N4-01502				HARNESS-EXT, TRAVEL	1	#0036 -	B	
35	25D1-10640				CLIP ASSY	1			
36	25D1-10650				CLIP ASSY	1			
39	S035-062022				BOLT-W/WASHER	2			
41	S037-102022				BOLT-W/WASHER	32			
42	S543-160002				CLAMP-TUBE	2	- #0035		
					CLAMP-TUBE	5	#0036 -	A	
43	S543-200002				CLAMP-TUBE	3	- #0035		
					CLAMP-TUBE	4	#0036 -	A	
44	S543-240002				CLAMP-TUBE	8	- #0035	-	
47	S593-000902				CLIP-HARNESS	6	- #0035		
					CLIP-HARNESS	8	#0036 -	A	
48	21E7-0612				PLATE-CONNECTOR	2			
49	S017-102602				BOLT-HEX	4			
50	S403-102002				WASHER-PLAIN	4			
51	21EN-30560				WASHER-PLAIN	2			
54	21N4-01130				PLATE-CLIP	3			AIRCON COMP

LH ELECTRIC(#1001-, TIER-II)

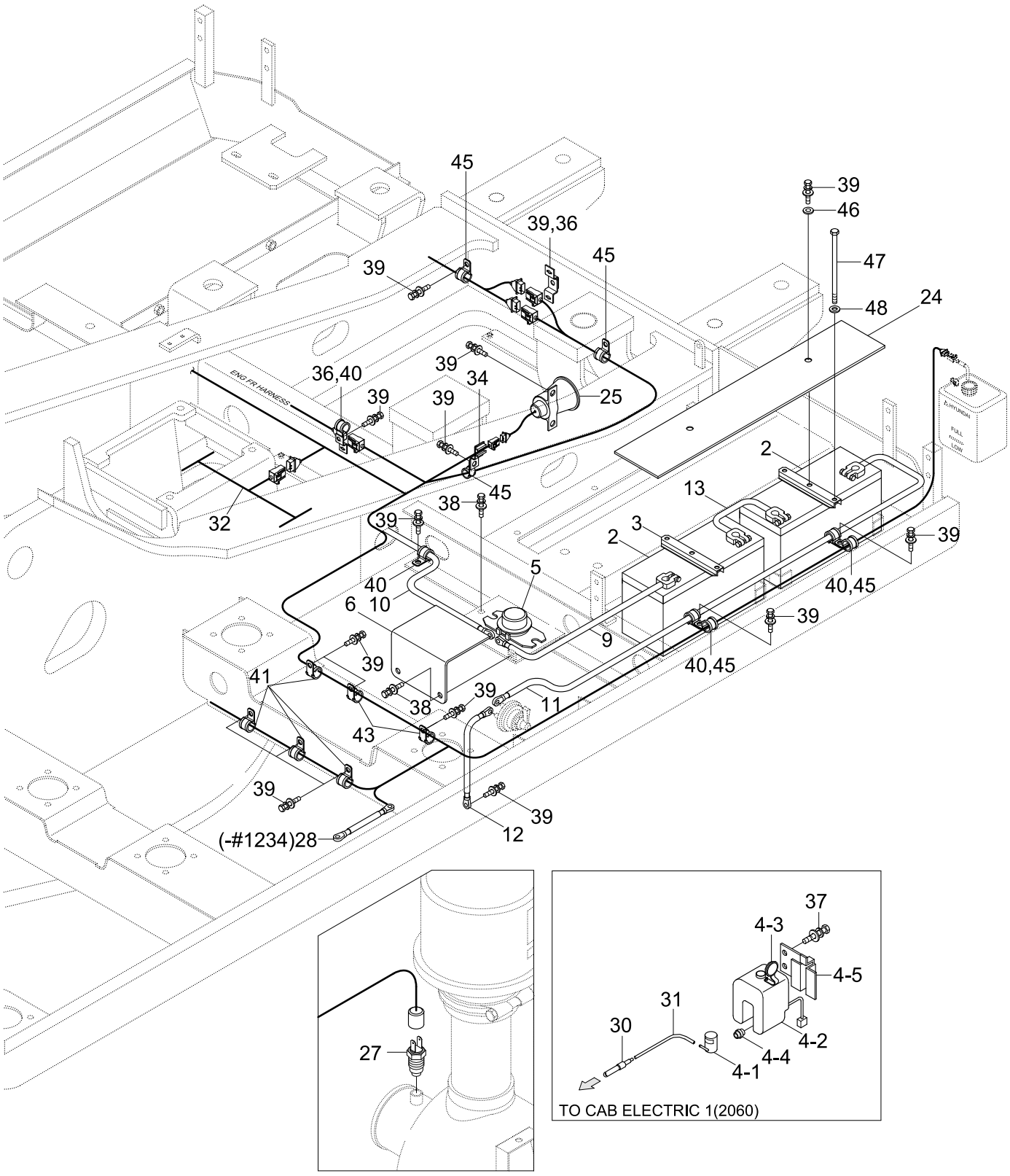

Item	Part_No	IS	Ord	T	Description	Qty	Serial_No	ITC	Remark
*	@				LH ELECTRIC	1	#1001 -	-	NOT
					LH ELECTRIC	1	#1001 -	-	NOT
2	25D1-00391				BATTERY ASSY	2			
3	21N4-01530				BRACKET-BATTERY	2	- #2550		
	21N6-21170				BRACKET-BATTERY	2	#2551 -	D	
4	21EG-30630				WASHER TANK ASSY	1			
4-1	21EG-10130				.PUMP-MOTOR	1			
4-2	21EG-10140				.TANK	1			
4-3	24L3-30660				.CAP	1			
4-4	24L3-30670				.RUBBER-BUSHING	1			
4-5	24L3-30710				.PLATE	1			
5	21E5-0003	10			RELAY-BATTERY	1			
6	21N6-10181				COVER-BATT RELAY	1			
9	21E2-60210				CABLE(BATT-BATT RY)	1	- #1825		
	21L8-10290				CABLE(BATT-BATT RY)	1	#1826 -	B	
10	21EG-10101				CABLE(BATT RY-STARTER)	1	- #1005		
	21EE-10181				CABLE START	1	#1006 - #1825	B	
	24L4-00361				CABLE(TERMINAL-RELAY)	1	#1826 -	B	
11	21EA-00220				CABLE(EARTH & M/S SW)	1			
12	21NA-10500				CABLE(MASTER SW-EARTH)	1			
13	21E2-60420				CABLE(BATT-BATT)	1			
24	21N4-01541				COVER BATT	1			
25	21N6-20321				BUZZER-TRAVEL ALARM	1	- #2078		
	21N6-20322				BUZZER-TRAVEL ALARM	1	#2079 -	D	
27	21L7-20100				SWITCH-AIR CLEANER	1			

Item	Part_No	IS	Ord	T	Description	Qty	Serial_No	ITC	Remark
28	21EH-30720				STRAP-EARTH	1	- #1234	-	
30	21EM-30570				CONNECTOR-TUBE	1			
31	21EM-30581				HOSE-RUBBER	1			
32	21N4-01502				HARNESS-EXT, TRAVEL	1			
34	25D1-10650				CLIP ASSY	1			
36	21N4-01130				PLATE-CLIP	2			
38	S035-082542				BOLT-W/WASHER	4			
39	S037-102022				BOLT-W/WASHER	19			
40	S543-220002				CLAMP-TUBE	4			
41	S543-200002				CLAMP-TUBE	4			
45	S593-000902				CLIP-HARNESS	5	- #3212		
	S593-000802				CLIP-HARNESS	5	#3213 -	B	
46	21EN-30560				WASHER-PLAIN	2			
47	S017-102602				BOLT-HEX	4	- #2550		
	S017-102502				BOLT-HEX	4	#2551 -	D	
48	S403-102002				WASHER-PLAIN	4			

BOOM ELECTRIC

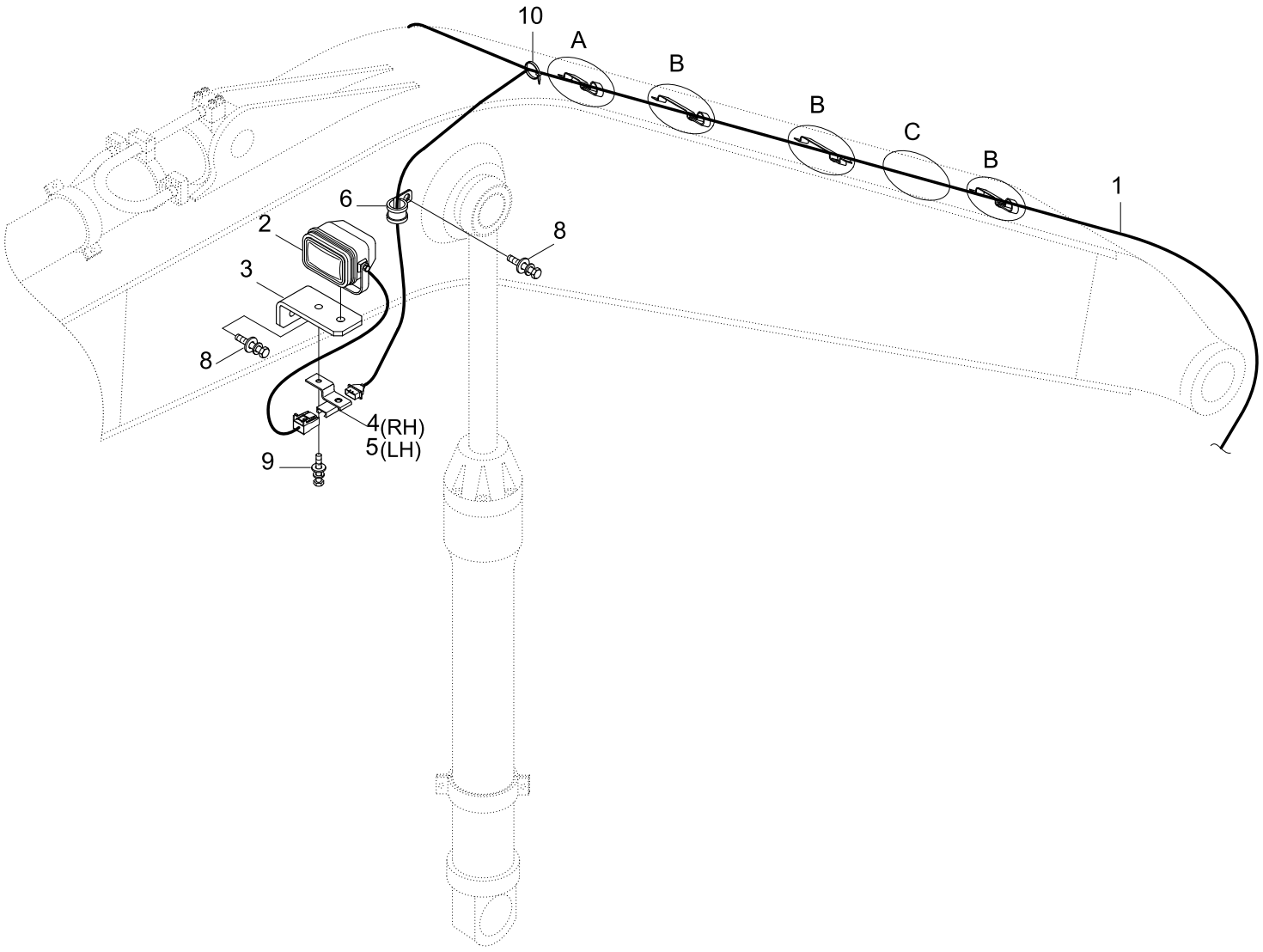

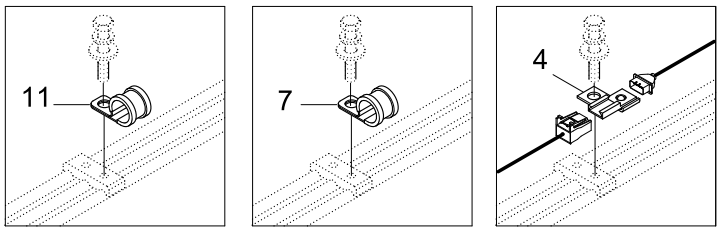

DETAIL A DETAIL B DETAIL C

Item	Part_No	IS	Ord	T	Description	Qty	Serial_No	ITC	Remark
1	21N4-10040				HARNESS-BOOM	1			
2	21N6-20211				WORK LAMP ASSY	2			
2-1	S866-240650				.BULB	1			NOT SHOWN
3	21N6-20221				BRACKET-LIGHT	2			
4	25D1-10640				CLIP ASSY	2			
5	25D1-10650				CLIP ASSY	1			
6	S593-000902				CLIP-HARNESS	2	- #3212		
	S593-000802				CLIP-HARNESS	2	#3213 -	B	
7	S593-000652				CLIP-HARNESS	3			
8	S037-102022				BOLT-W/WASHER	4			
9	S037-122522				BOLT-W/WASHER	2			
10	S552-050203				CLAMP-BAND	11			
11	S593-000752				CLIP-HARNESS	1			

BOOM ELECTRIC(#0234-, ADJUST BOOM)

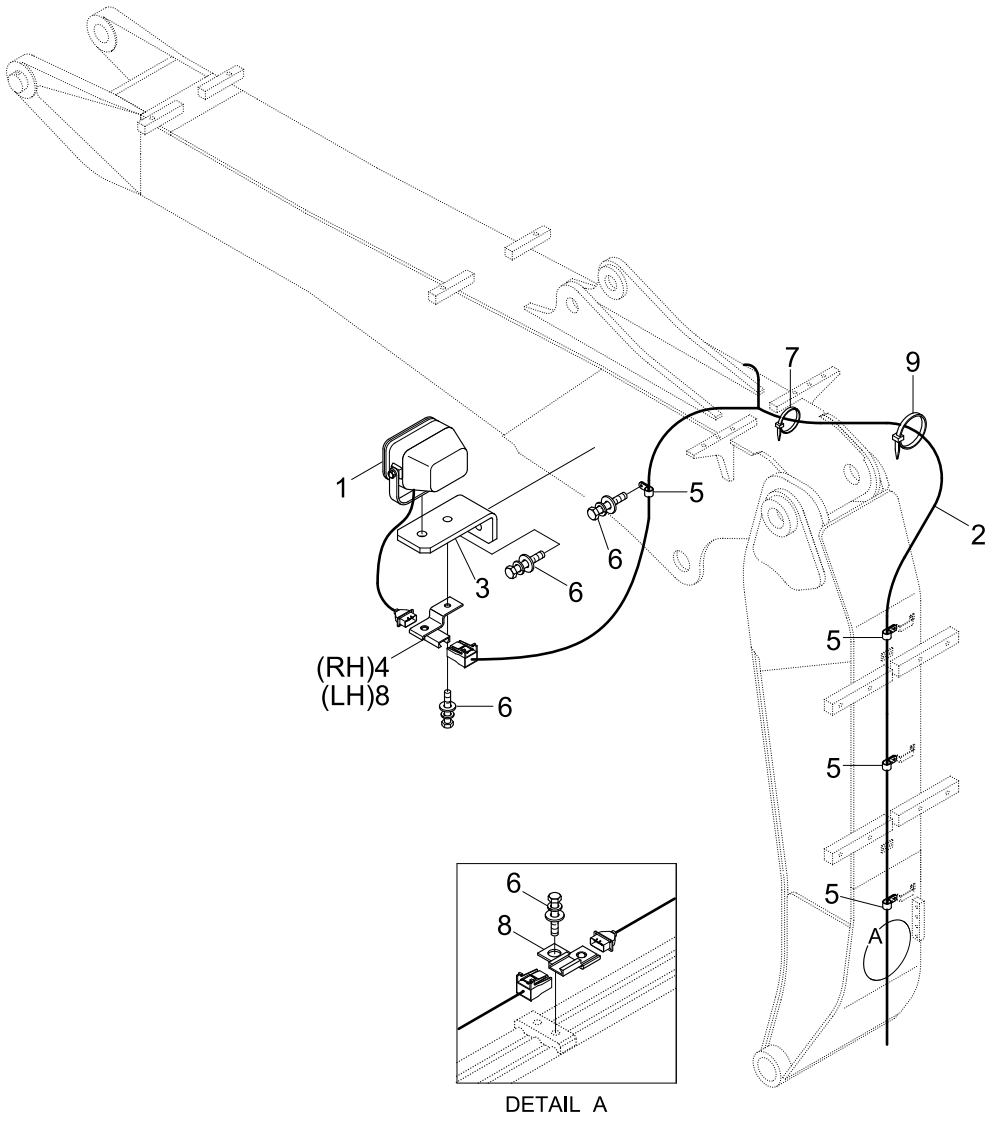

Item	Part_No	IS	Ord	T	Description	Qty	Serial_No	ITC	Remark
*	@				BOOM ELECTRIC	1	#0234 -	-	NOT
1	21N6-20211				WORK LAMP ASSY	2			
1-1	S866-240650				.BULB	1			NOT SHOWN
2	21N4-30020				HARNESS-BOOM	1			
3	21N6-20221				BRACKET-LIGHT	2			
4	25D1-10640				CLIP ASSY	1			
5	S593-000902				CLIP-HARNESS	6	- #3212		
	S593-000802				CLIP-HARNESS	6	#3213 -	B	
6	S037-102022				BOLT-W/WASHER	8			
7	S552-050203				CLAMP-BAND	10			
8	25D1-10650				CLIP ASSY	2			
9	S551-077279				CLAMP-BAND	3			

ENGINE ELECTRIC(-#1000)

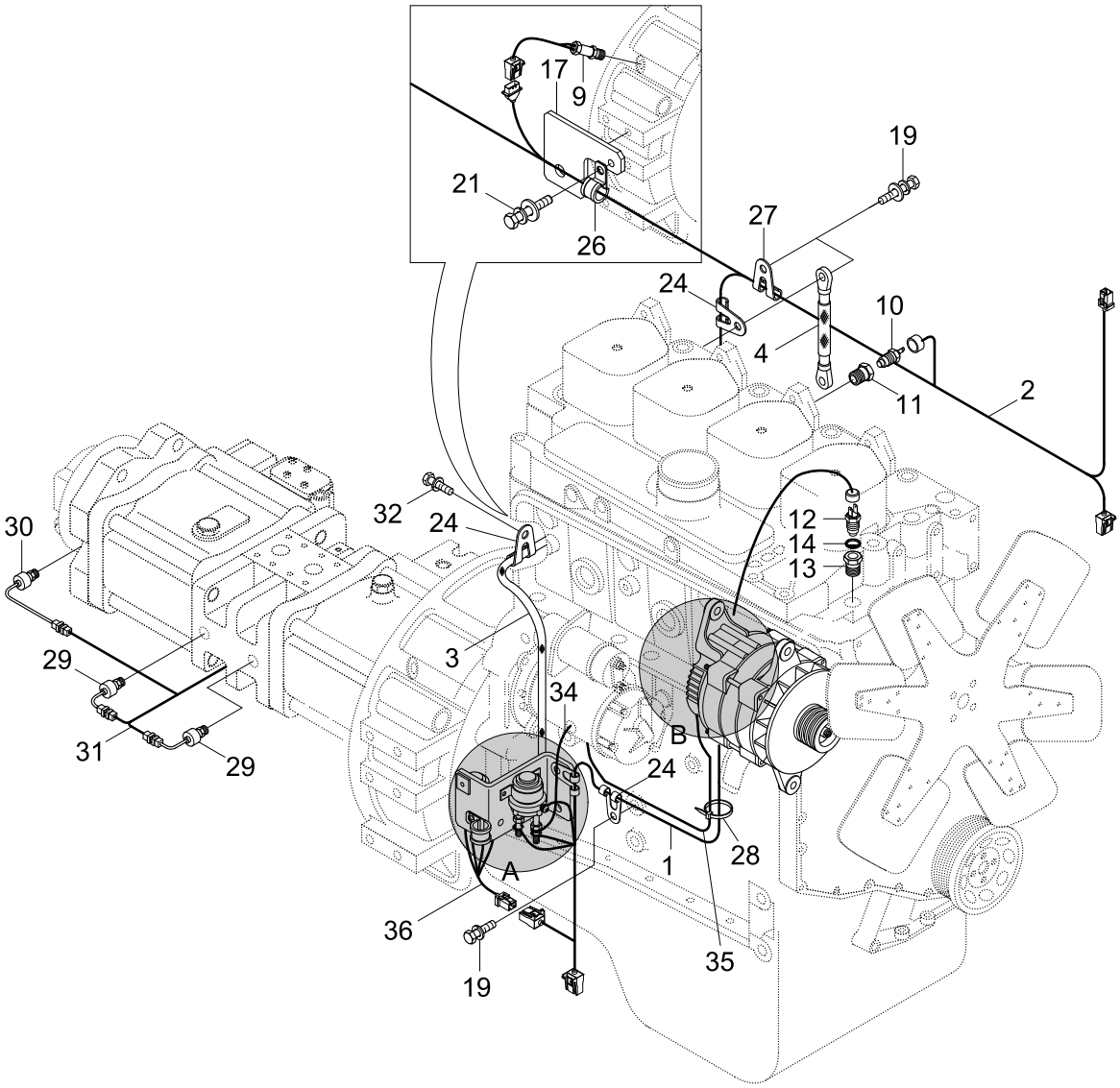

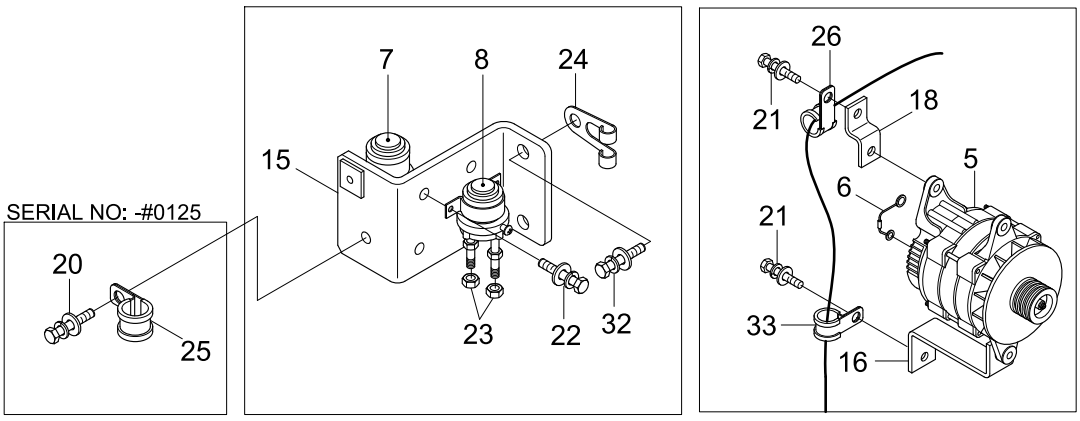

DETAIL A

DETAIL B

Item	Part_No	IS	Ord	T	Description	Qty	Serial_No	ITC	Remark
*	@				ENGINE ELECTRIC	1	- #1000		NOT
1	21N4-10022				HARNESS-ENG,FRONT	1			
2	21N4-10032				HARNESS-ENG,REAR	1			
3	21N4-20031				CABLE-PREHEATER	1			
4	21EH-30720				STRAP-EARTH	1			
5	21E6-40030				ALTERNATOR ASSY	1			
6	21E1-21120				WIRE LINK-ALTERNATOR	1			
7	21N6-30120				RELAY-START	1			
8	E225-0006	10			RELAY-HEATER	1			
9	21E3-0042	03			SENSOR-SPEED	1			
10	21E3-5001	20			SWITCH-ENG OIL PRESS	1			
11	21EN-00511				ADAPTER-OIL PRESSURE	1			
12	21EN-40100				SENDER-TEMP	1			
13	21EA-50171				FITTING-TEMP SW	1			
14	21EA-50260				PACKING-TEMP SW	1			
15	25D1-10301				BRACKET-START RY	1	- #0125		
	21N6-10190				BRACKET-START RY	1	#0126 -	B	
16	21EA-00160				PLATE	1			
17	21EA-00201				BRACKET-TACHO	1			
18	21EA-00170				PLATE	1			
19	S037-122522				BOLT-W/WASHER	2			
20	S037-102022				BOLT-W/WASHER	1	- #0125	-	
21	S035-082022				BOLT-W/WASHER	3			
22	S035-061522				BOLT-W/WASHER	4			
23	S203-061002				NUT-HEX	2			

Item	Part_No	IS	Ord	T	Description	Qty	Serial_No	ITC	Remark
24	S593-001702				CLIP-HARNESS	4			
25	S543-200002				CLAMP-TUBE	1	- #0125	-	
26	S543-080002				CLAMP-TUBE	2			
27	S593-000702				CLIP-HARNESS	1			
28	S552-035146				CLAMP-BAND	3			
29	21EG-32200				SENDER-PRESSURE	2			OPT,PUMP
30	21EG-32210				SENDER-PRESSURE	1			OPT,PILOT
31	21N8-11170				HARNESS-PUMP PS	1			OPT
32	S037-122052				BOLT-W/WASHER	6	- #0125		
					BOLT-W/WASHER	4	#0126 -	A	
33	S543-160002				CLAMP-TUBE	2			
34	21N4-01580				CABLE(STARTER-HEATER RY)	1	- #0035		
	21N4-01581				CABLE(STARTER-HEATER RY)	1	#0036 -	A	
35	21N4-01570				CABLE(ALT-STARTER)	1	- #0035		
	21N4-01571				CABLE(ALT-STARTER)	1	#0036 -	A	
36	21EA-00191				HARNESS-EXT,START RY	1			

ENGINE ELECTRIC(#1001-, TIER-II)

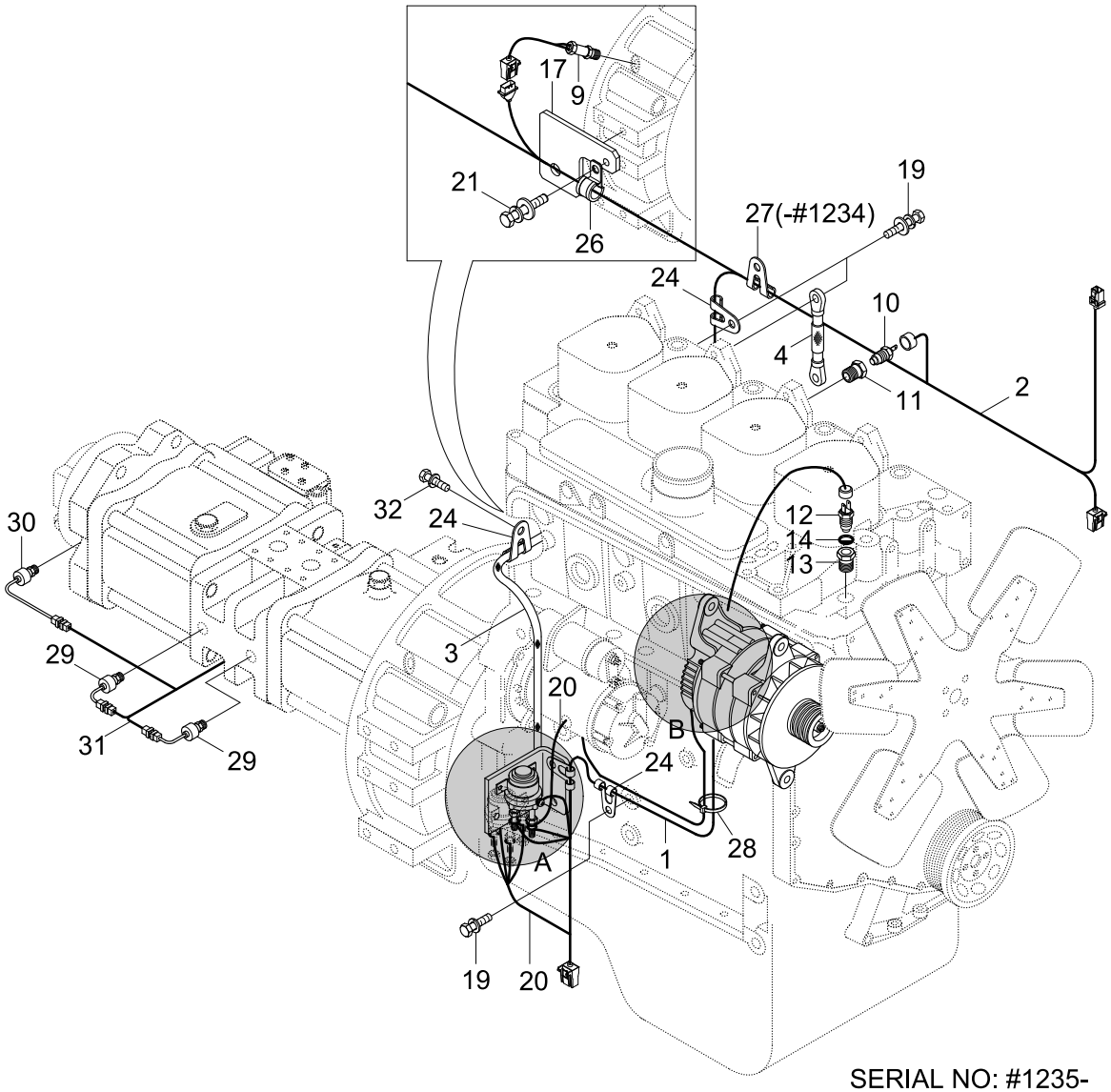

SERIAL NO: -#1234

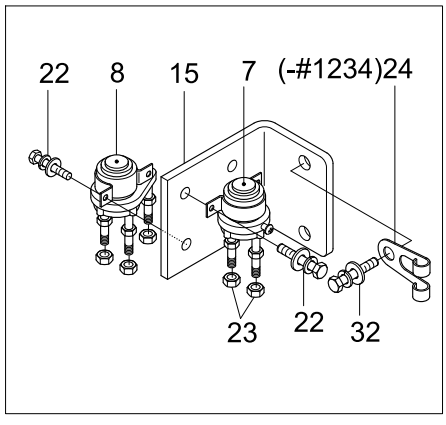

DETAIL A

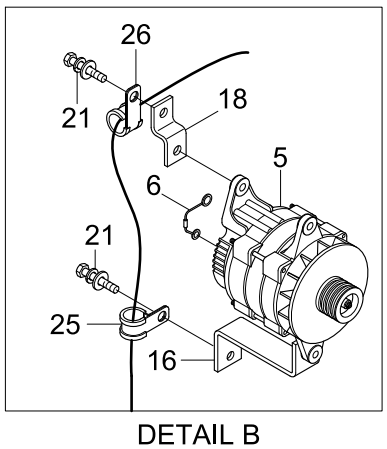

DETAIL B

SERIAL NO: #1235-

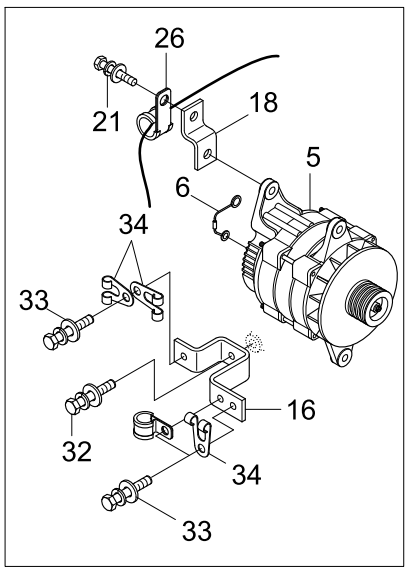

DETAIL B

Item	Part_No	IS	Ord	T	Description	Qty	Serial_No	ITC	Remark
*	@				ENGINE ELECTRIC	1	#1001 -	-	NOT
1	21N4-20020				HARNESS-ENG,FRONT	1	- #1234		
	21N4-20021				HARNESS-ENG,FRONT	1	#1235 - #3396	B	
	21N4-20022				HARNESS-ENG,FRONT	1	#3397 -	B	
2	21N4-20040				HARNESS-ENG,REAR	1	- #1234		
	21N4-20041				HARNESS-ENG,REAR	1	#1235 -	D	ROTARY PUMP
	21N4-20042				HARNESS-ENG,REAR	1	#1495 -	-	INLINE PUMP,OPT
3	21N4-20050				CABLE-PREHEATER	1	- #1234		
	21N4-20031				CABLE-PREHEATER	1	#1235 -	D	
4	21EH-30720				STRAP-EARTH	1			
5	21E6-40030				ALTERNATOR ASSY	1	- #3396		
	21Q6-41000				ALTERNATOR ASSY	1	#3397 -	B	
6	21E1-21120				WIRE LINK-ALTERNATOR	1			
7	21N6-30120				RELAY-START	1			
8	E225-0006	10			RELAY-HEATER	1			
9	21E3-0042	03			SENSOR-SPEED	1			
10	21E3-5001	20			SWITCH-ENG OIL PRESS	1			
11	21EN-00511				ADAPTER-OIL PRESSURE	1			
12	21EN-40100				SENDER-TEMP	1			
13	21EA-50171				FITTING-TEMP SW	1			
14	21EA-50260				PACKING-TEMP SW	1			
15	21N6-10190				BRACKET-START RY	1			
16	21EA-00160				PLATE	2	- #1234		
	21N4-01160				PLATE	1	#1235 -	A	
17	21EA-00201				BRACKET-TACHO	1			

Item	Part_No	IS	Ord	T	Description	Qty	Serial_No	ITC	Remark
18	21EA-00170				PLATE	1			
19	S037-122522				BOLT-W/WASHER	2			
20	21EA-00190				HARNESS-EXT,START RY	1			
21	S035-082022				BOLT-W/WASHER	3	- #1234		
					BOLT-W/WASHER	2	#1235 -	-	
22	S035-061522				BOLT-W/WASHER	4			
23	S203-061002				NUT-HEX	2			
24	S593-001702				CLIP-HARNESS	4			
25	S543-160002				CLAMP-TUBE	1	- #1234	-	
26	S543-080002				CLAMP-TUBE	2			
27	S593-000702				CLIP-HARNESS	1	- #1234	-	
28	S552-035146				CLAMP-BAND	3			
29	21EG-32200				SENDER-PRESSURE	2			OPT,PUMP
30	21EG-32210				SENDER-PRESSURE	1			OPT,PILOT
31	21N4-11170				HARNESS-PUMP PS	1			OPT
32	S037-122052				BOLT-W/WASHER	6			
33	S035-101512				BOLT-W/WASHER	2	#1235 -	-	
34	S543-240002				CLAMP-TUBE	1	#1235 -	-	

ELECTRIC BOX

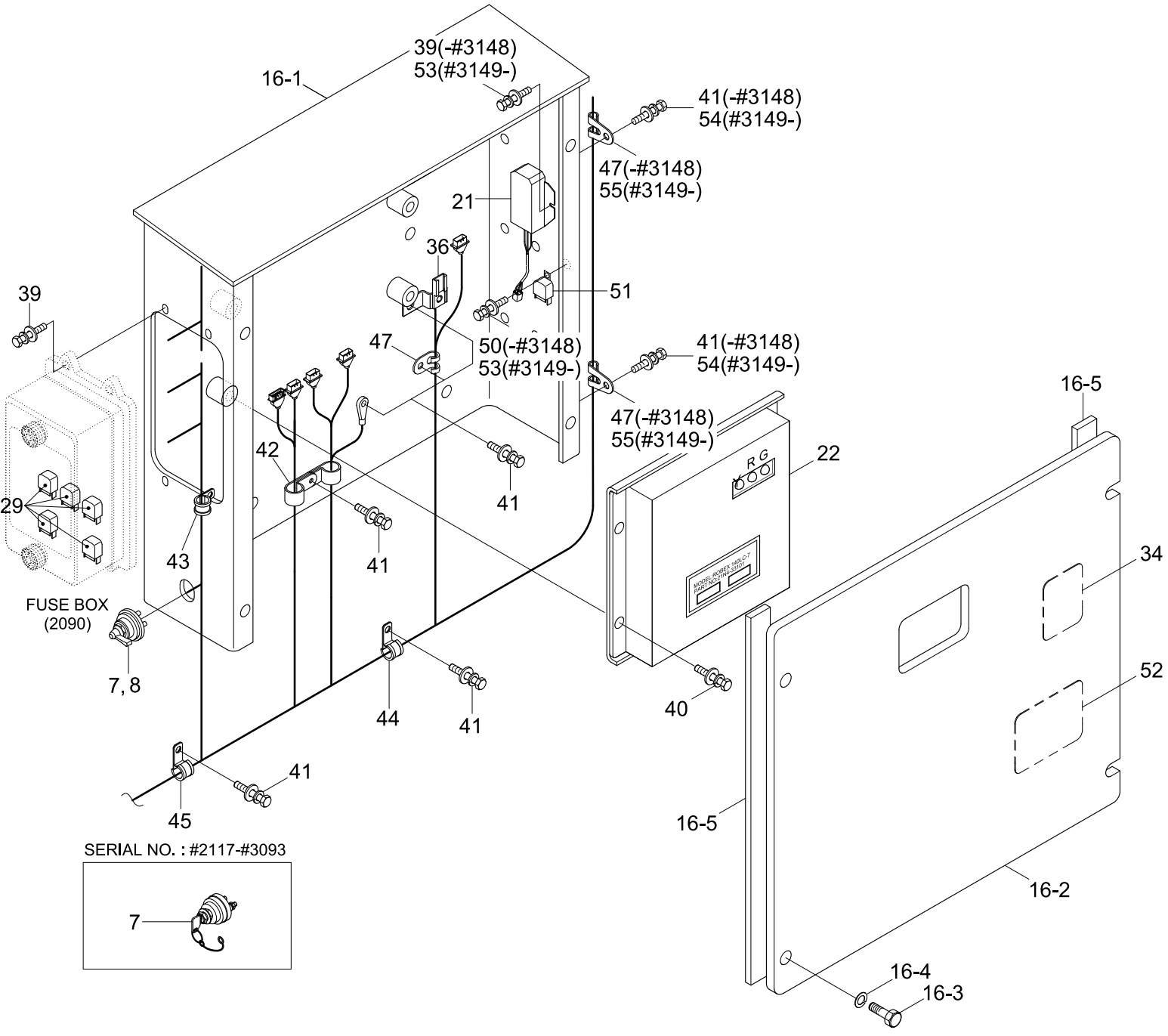

Description	Parts no	Included item
ELEC. BOX KIT ASSY	21N8-17200	7, 8, 16, 21, 34, 51, 52, 53, 54, 55

Item	Part_No	IS	Ord	T	Description	Qty	Serial_No	ITC	Remark
7	21L7-10500				SWITCH-MASTER	1	- #2116		
	21N4-10441				SWITCH-MASTER	1	#2117 - #3093	B	
K7	21L7-10500				SWITCH-MASTER	1	#3094 - #3191	A	
	21L7-10501				SWITCH-MASTER	1	#3192 -	B	
7-1	21N4-10441K				.KEY-MASTER SWITCH	2	#2117 - #3191	-	
8	21EN-00420				DECAL-MASTER SW	1	- #2116		
	21N4-10451				DECAL-MASTER SW	1	#2117 - #2069	B	
K8	21LD-34180				DECAL-MASTER SWITCH	1	#2070 -	D	
K16	21N8-00701				ELECTRIC BOX ASSY	1			
16-1	21N8-00710				.ELECTRIC BOX WA	1			
16-2	21N6-20152				.PLATE-FRONT COVER	1			
16-3	S017-100156				.BOLT-HEX	5			
16-4	S411-100006				.WASHER-SPRING	4			
16-5	21N6-20180				.PAD-RUBBER	2			
21	21E7-2000	10			RESISTER-PROLIX	1	- #3088		OPT
	21Q4-10900				RESISTOR ASSY	1	#3089 - #3148	A	OPT
K21	21Q4-20100				RESISTOR ASSY	1	#3149 -	A	OPT
22	21N4-32100				CPU CONTROLLER	1	- #1000		
	21N4-33100				CPU CONTROLLER	1	#1001 - #1145	D	
	21N4-33101				CPU CONTROLLER	1	#1146 -	B	MCV:ALP165
	21N4-33102				CPU CONTROLLER	1	#1602 -	-	UHX22-26,SCV22H
29	24L1-05100				RELAY	5			
34	21N8-00621				DECAL-EMER CONTROL	1	- #0253		OPT
K34	21N8-12040				DECAL-EMER CONTROL	1	#0254 -	D	OPT
36	25D1-10650				CLIP ASSY	1			

Item	Part_No	IS	Ord	T	Description	Qty	Serial_No	ITC	Remark
39	S035-062022				BOLT-W/WASHER	6	- #3148		
					BOLT-W/WASHER	4	#3149 -	A	
40	S035-082542				BOLT-W/WASHER	4			
41	S037-102022				BOLT-W/WASHER	12	- #3148		
					BOLT-W/WASHER	10	#3149 -	A	
42	S543-160002				CLAMP-TUBE	2	- #1000		
	S543-220002				CLAMP-TUBE	2	#1001 -	D	
43	S543-200002				CLAMP-TUBE	1	- #0035		
					CLAMP-TUBE	2	#0036 -	A	
44	S543-240002				CLAMP-TUBE	1	- #0035	-	
45	S543-280002				CLAMP-TUBE	1			
47	S593-000902				CLIP-HARNESS	3	- #3148		
					CLIP-HARNESS	1	#3149 - #3212	A	
	S593-000802				CLIP-HARNESS	1	#3213 -	B	
50	S037-061522				BOLT-W/WASHER	1	#1235 - #3148	-	
K51	21E4-0011				RELAY-4P	1	#1235 -	-	
K52	21N3-10080				DECAL-RELAY	1	#1235 -	-	
K53	S035-061526				BOLT-W/WASHER	3	#3149 -	-	
K54	S037-102026				BOLT-W/WASHER	2	#3149 -	-	
K55	S593-000902				CLIP-HARNESS	2	#3149 -	-	
K	21N8-17200				ELEC BOX KIT ASSY	1	#3149 -	-	SEE ILLUST

CAB ELECTRIC 1

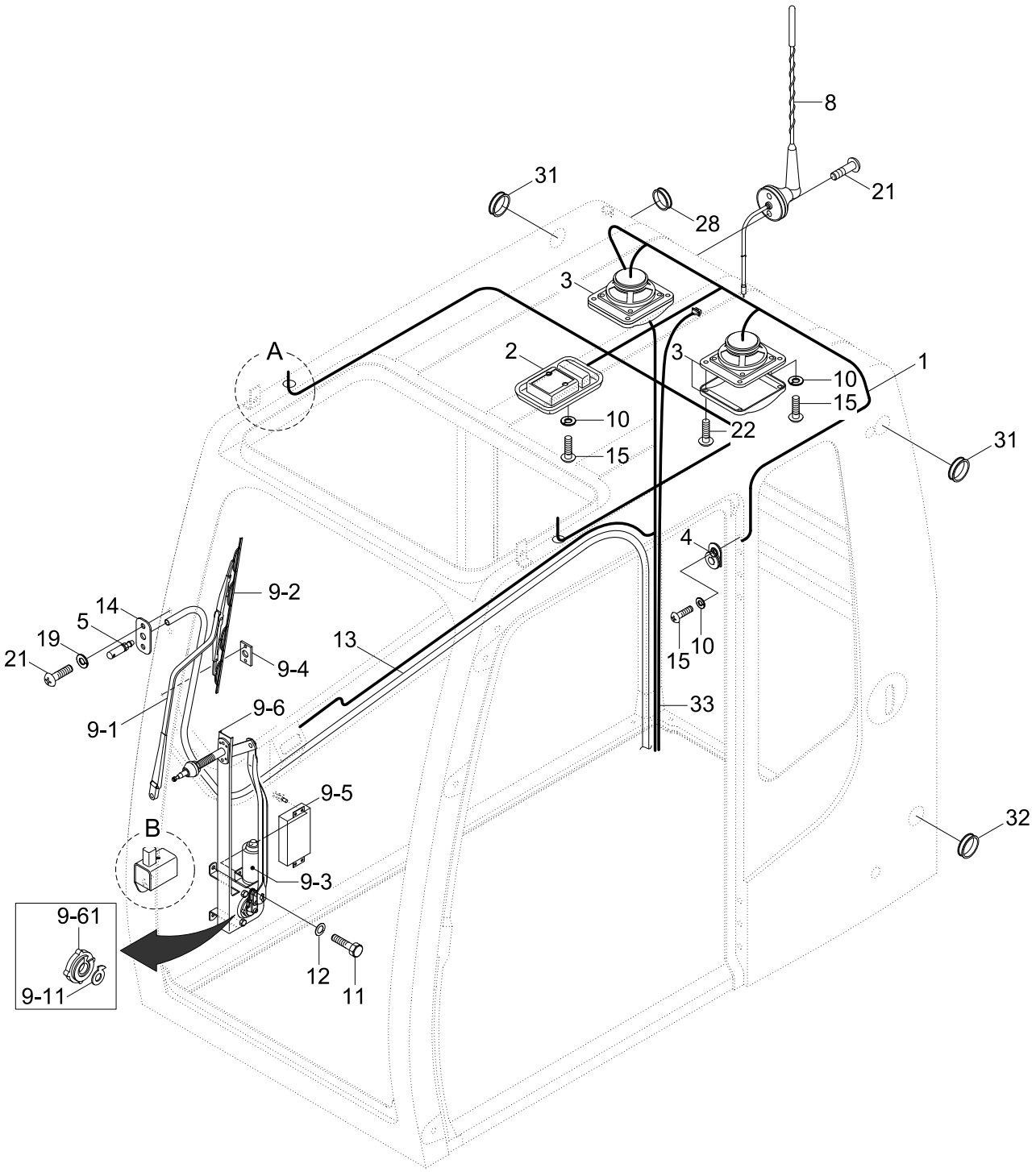

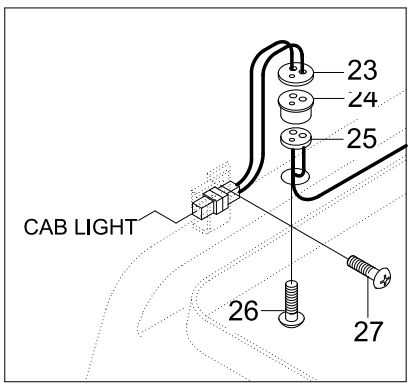

DETAIL A

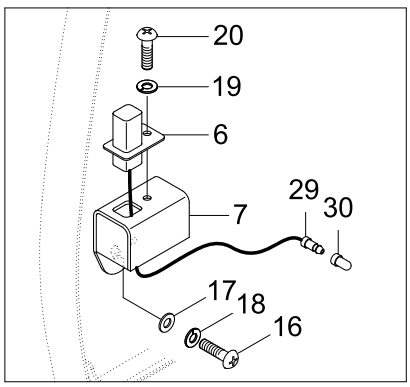

DETAIL B

Item	Part_No	IS	Ord	T	Description	Qty	Serial_No	ITC	Remark
1	21N6-00012				HARNESS-CAB	1	- #2078		
	21N6-00013				HARNESS-CAB	1	#2079 -	D	
2	21EH-0011				LAMP-ROOM	1			
3	21N6-10400				SPEAKER	2			
4	E123-3022	20			SWITCH-DOOR	1			
5	21N6-00311				NOZZLE	1			
6	21M5-50250				SWITCH ASSY	1			
7	21N6-00301				BRACKET WA	1			
8	21N6-10410				ANTENNA	1	- #3259		
	21N4-02840				ANTENNA	1	#3260 -	B	
9	21N6-00210				WIPER MOTOR KIT ASSY	1	- #2016		
	21N6-01210				WIPER MOTOR KIT ASSY	1	#2017 -	B	
9-1	21N6-00220				.ARM-WIPER	1	- #2016		
	21N6-01220				.ARM-WIPER	1	#2017 - #3116	A	
	21N6-01221				.ARM-WIPER	1	#3117 -	B	
9-12	21N6-01300				..CAM BASE-W/MOTOR	1	#0001 -	-	
9-11	21N6-01290				..MOTOR CAM	1	#0001 -	-	
9-2	21N6-00230				.BLADE-WIPER	1	- #2016		
	21N6-01230				.BLADE-WIPER	1	#2017 -	A	
9-3	21N6-00240				.MOTOR-WIPER	1	- #2016		
	21N6-01280				.MOTOR-WIPER	1	#2017 -	D	
9-4	21N6-00250				.BRACKET-PARKING	1	- #2016		
	21N6-01250				.BRACKET-PARKING	1	#2017 -	D	
9-5	21N8-21060				.CONTROLLER	1	- #2016		
	21N6-01270				.CONTROLLER-W/MOTOR	1	#2017 - #2466	A	

Item	Part_No	IS	Ord	T	Description	Qty	Serial_No	ITC	Remark
9-5	21N6-01272				.CONTROLLER-W/MOTOR	1	#2467 -	B	
N9-6	@				.BRACKET & LINK ASSY	1	- #2016	-	NOT
9-6	21N6-01260				.BRACKET & LINK ASSY	1	#2017 -	A	
9-61	21N6-01300				..CAM BASE-W/MOTOR	1	#0001 -	-	
9-7	21N6-01290				.MOTOR-CAM	1	#0001 -	-	
10	S411-050006				WASHER-SPRING	11			
11	S015-080166				BOLT-HEX	3			
12	S411-080006				WASHER-SPRING	3			
13	21EM-10890				HOSE-WASHER TANK	1			
14	E171-1185				PLATE-NOZZLE MTG	1			
15	S161-050166				SCREW-CROSS R/ROUND	11			
16	S161-060166				SCREW-CROSS R/ROUND	2			
17	S403-062006				WASHER-PLAIN	2			
18	S411-060006				WASHER-SPRING	8			
19	S411-040006				WASHER-SPRING	3			
20	S161-040106				SCREW-CROSS R/ROUND	1			
21	S151-040166				SCREW-TAPPING	4			
22	S151-050126				SCREW-TAPPING	8			
23	21N6-10420				PLATE	2			
24	21N6-10430				SEAL	2			
25	21N6-10440				PLATE	2			
26	S161-040166				SCREW-CROSS R/ROUND	2			
27	S141-040106				SCREW-FLAT HD	2			
28	21N6-00320				GROMMET	1			
29	21N8-10090				HARNESS-WIPER	1			

Item	Part_No	IS	Ord	T	Description	Qty	Serial_No	ITC	Remark
30	S890-107508				TUBE-PVC	1			
31	S681-410400				GROMMET	2	#0078 -	-	
32	S681-460400				GROMMET	1	#0078 -	-	
33	21N4-22010				EXT HARNESS-USB	1	#3375 -	-	
N	@				NOT SUPPLIED PARTS	AR			NOT

CAB ELECTRIC 2

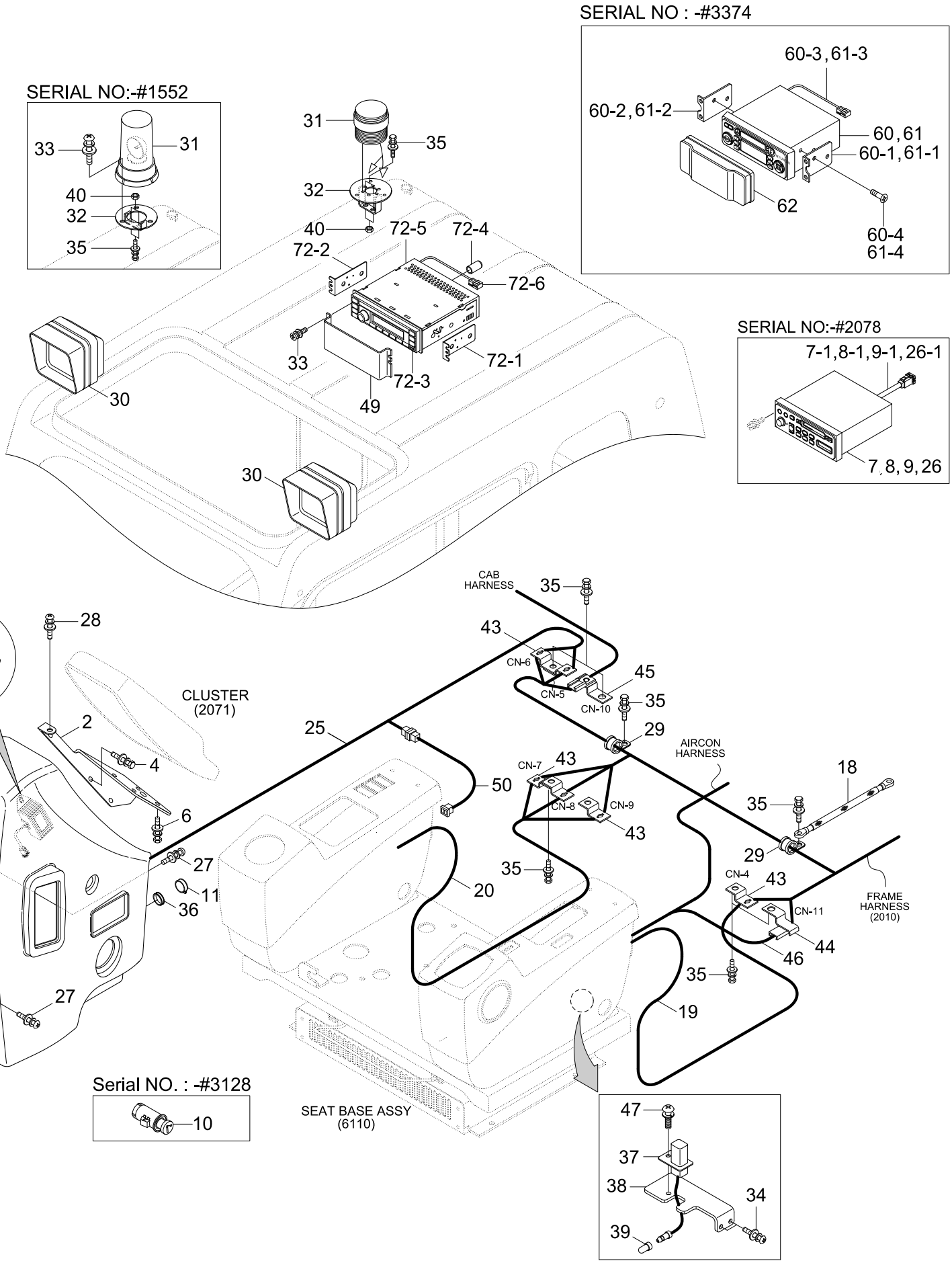

Item	Part_No	IS	Ord	T	Description	Qty	Serial_No	ITC	Remark
2	21N8-21011				BRACKET WA	1			
3	21N8-21070				BRACKET WA	1			
4	S035-061622				BOLT-W/WASHER	10			
5	21N8-21021				COVER-WIPER MOTOR	1			
6	S035-081622				BOLT-W/WASHER	4			
7	21N8-22010				CASSETTE RADIO	1	- #2078	-	USA
7-1	375500043204				.WIRE ASSY-20 H818	1	- #2078	-	
8	21N8-22020				CASSETTE RADIO	1	- #2078	-	EUROPE
8-1	375500043204				.WIRE ASSY-20 H818	1	- #2078	-	
9	21N8-22030				CASSETTE RADIO	1	- #2078	-	GENERAL
9-1	375500043204				.WIRE ASSY-20 H818	1	- #2078	-	
11	21N8-20010				SOCKET-12V	1			OPTION
17	21N8-20201				DC-DC CONVERTER ASSY	1			OPTION
18	21EH-30720				STRAP-EARTH	1			
19	21N8-11160				HARNESS-CONSOLE,LH	1			
20	21N8-11150				HARNESS-CONSOLE,RH	1	- #1000		
	21N8-11151				HARNESS-CONSOLE,RH	1	#1001 - #2550	D	
	21N4-02810				HARNESS-CONSOLE,RH	1	#2551 -	B	
25	21N8-11180				HARNESS-SIDE,RH	1	- #1000		
	21N8-11181				HARNESS-SIDE,RH	1	#1001 - #1792	D	
	21N8-40140				HARNESS-SIDE,RH	1	#1793 -	B	
26	21N8-21030				CASSETTE RADIO-KOREA	1	- #2078	-	
26-1	375500043204				.WIRE ASSY-20 H818	1	- #2078	-	
27	S132-061676				SCREW-W/WASHER	2			
28	S132-061546				SCREW-W/WASHER	1			

Item	Part_No	IS	Ord	T	Description	Qty	Serial_No	ITC	Remark
29	S543-280003				CLAMP-TUBE	2			
30	21N6-20211				WORK LAMP ASSY	2			
30-1	S866-240650				.BULB	1			NOT SHOWN
31	21EK-10420				BEACON LAMP ASSY	1	- #1552		OPTION
	F23842010				STROBE LAMP-RED	1	#1553 -	D	
31-1	21EK-10140				.LAMP-BEACON	1	#1553 -	-	NOT SHOWN
31-2	21EK-10330				.BULB-H1, 70W	1	#1553 -	-	NOT SHOWN
31-3	21EK-20240				.HARNESS-BEACON LAMP	1	#1553 -	-	NOT SHOWN
32	21N8-00580				BRACKET-BEACON LAMP	1	- #1552		
	21N8-00581				BRACKET-BEACON LAMP	1	#1553 - #2947	B	
	21N8-00581BG				BRACKET-BEACON LAMP	1	#2948 - #3027	D	
33	S131-051046				SCREW-W/WASHER	7	- #1552		
					SCREW-W/WASHER	4	#1553 -	A	
34	S131-051646				SCREW-W/WASHER	2			
35	S037-102022				BOLT-W/WASHER	9			
36	S661-260300				CAP-RUBBER	1			
37	21M5-50250				SWITCH ASSY	1			SAFETY SW
38	21N8-21080				PLATE	1			
39	S890-107508				TUBE-PVC	1			
40	S205-101002				NUT-HEX	2			
43	21N4-01130				PLATE-CLIP	6			
44	25D1-10660				CLIP ASSY	1			
45	25D1-10650				CLIP ASSY	1			
46	S591-000802				CLIP-HARNESS	2	#1001 -	-	
47	S161-040106				SCREW-CROSS R/ROUND	3	#1001 -	-	

Item	Part_No	IS	Ord	T	Description	Qty	Serial_No	ITC	Remark
49	21N6-10450				PLATE-C/RADIO COVER	1	#1001 -	-	
50	21N8-40190				EXT.HARNESS-A/RIDE SEAT	1	#1793 -	-	
60	21N8-50010				CASSETTE RADIO ASSY	1	#2079 - #3094	D	STD
	21N8-50050				CASSETTE RADIO ASSY	1	#3095 - #3374	A	STD
60-1	21N6-10480				.BRACKET-LH	1	#2079 - #3374	-	
60-2	21N6-10490				.BRACKET-RH	1	#2079 - #3374	-	
60-3	21N8-01600				.HARNESS-EXT WIRE	1	#2079 - #3374	-	
60-4	S141-050102				.SCREW-FLAT HD	4	#2079 - #3374	-	
61	21N8-40500				CD PLAYER ASSY	1	#2079 - #3374	D	OPTION
61-1	21N6-10480				.BRACKET-LH	1	#2079 - #3374	-	
61-2	21N6-10490				.BRACKET-RH	1	#2079 - #3374	-	
61-3	21N8-01600				.HARNESS-EXT WIRE	1	#2079 - #3374	-	
61-4	S141-050102				.SCREW-FLAT HD	4	#2079 - #3374	-	
62	21N8-40940				COVER-DUST	1	#2079 -	-	
72	21N8-50100				RADIO/USB PLAYER ASSY	1	#3375 -	B	
72-1	21LM-31010				.BRACKET L	1	#3375 -	-	
72-2	21LM-31020				.BRACKET R	1	#3375 -	-	
72-3	21LM-31030				.CABLE-MP3	1	#3375 -	-	
72-4	21LM-31040				.CAP	1	#3375 -	-	
72-5	21LM-31050				.RADIO/USB BODY	1	#3375 -	-	
72-6	21N8-50110				.HARNESS-EXT,WIRE	1	#3375 -	-	

CLUSTER

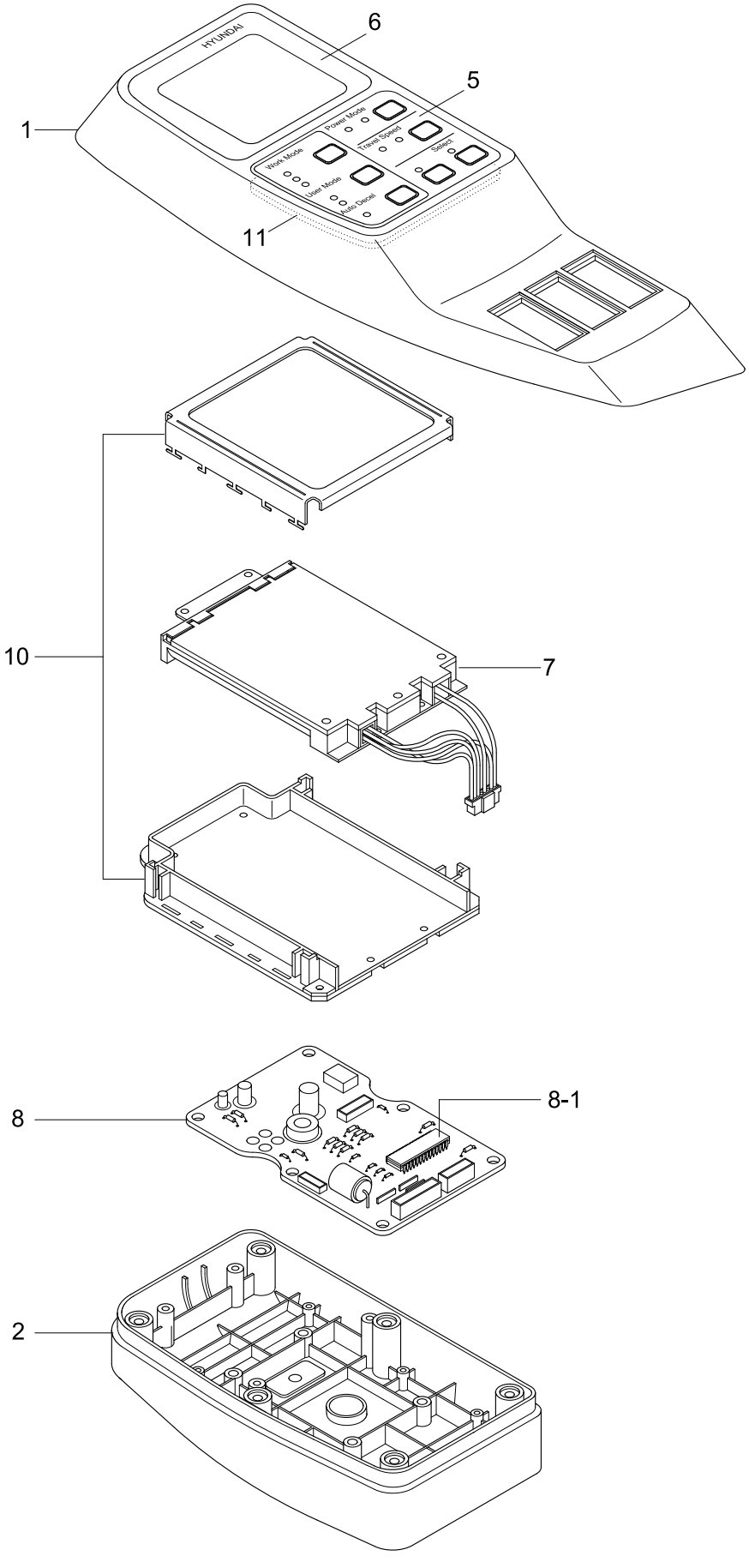
HYUNDAI
Power Mode
Travel Speed
Select
Work Mode
User Mode
Auto Decel
1
2
5
6
7
8
8-1
10
11

Item	Part_No	IS	Ord	T	Description	Qty	Serial_No	ITC	Remark
*	21N8-30012				CLUSTER ASSY	1	- #1145		
	21N8-30013				CLUSTER ASSY	1	#1146 -	B	
	21N8-36000				CLUSTER ASSY	1	#2936 - #2961	-	UPGRADE CAB
	21N8-36001				CLUSTER	1	#2962 -	B	UPGRADE CAB
1	21N8-30020				.CASE-UPPER	1			
2	21N8-30030				.CASE-LOWER	1			
5	21N8-30070				.DECAL-SWITCH	1	- #1145		
	21N8-30071				.DECAL-SWITCH	1	#1146 -	B	
6	21N8-30081				.DECAL-DISPLAY	1			
7	21N8-30090				.LIGHT UNIT-BACK	1			
8	21N8-30150				.BOARD-MAIN	1			
8-1	21N8-30160				..ROM-CLUSTER	1			
10	21N8-30180				.LCD UNIT	1			
11	21N8-30230				.SWITCH BOARD ASSY	1			

CLUSTER(OPT, #2936-)

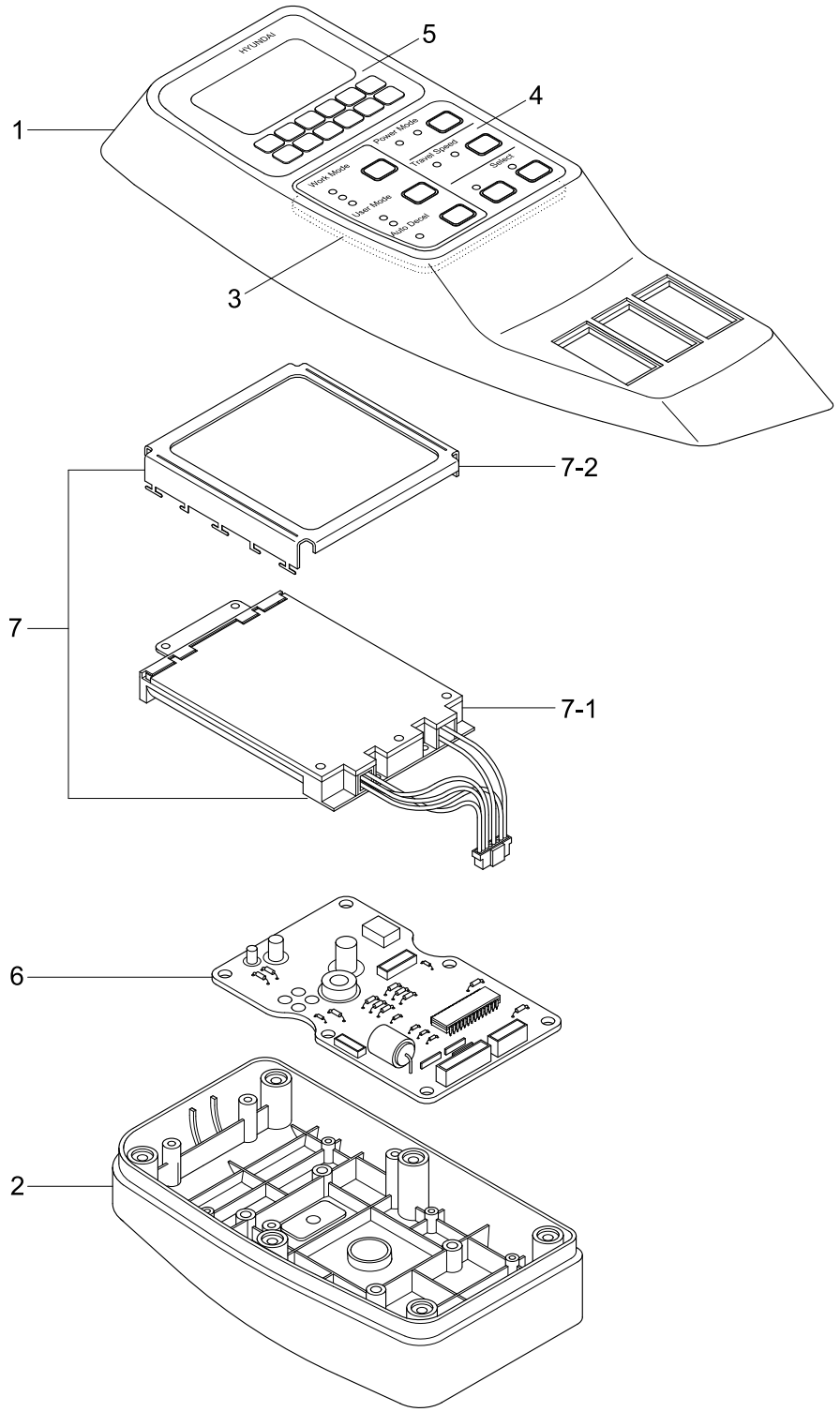

Item	Part_No	IS	Ord	T	Description	Qty	Serial_No	ITC	Remark
*	21N8-36000				CLUSTER ASSY	1	#2936 - #2961	-	UPGRADE CABIN
	21N8-36001				CLUSTER	1	#2962 -	B	UPGRADE CABIN
1	21N8-35100				.CASE-UPPER	1			
2	21N8-30030				.CASE-LOWER	1			
3	21N8-35200				.SWITCH ASSY	1			
4	21N8-35300				.DECAL-SWITCH	1			
5	21N8-35400				.DECAL-LCD	1			
6	21N8-35500				.BOARD-POWER	1			
7	21N8-35600				.MODULE-MAIN	1			
N7-1	@				..BOARD-MAIN	1			NOT
N7-2	@				..MODULE-LCD	1			NOT

CAB ELECTRIC 2(OPT, #2936-)

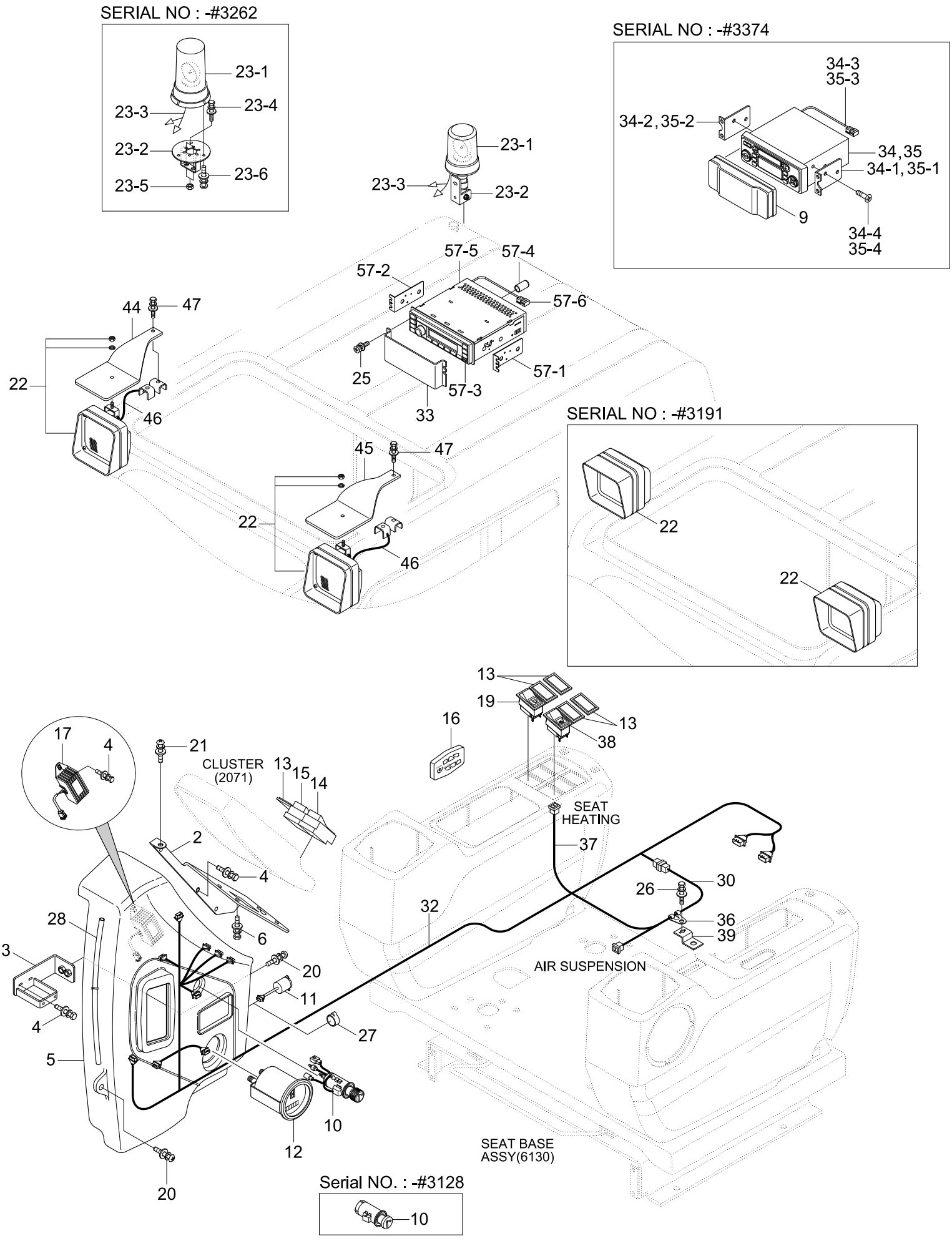

Item	Part_No	IS	Ord	T	Description	Qty	Serial_No	ITC	Remark
*	@				CAB ELECTRIC	1	#2936 -	-	NOT
2	21N6-01320				BRACKET WA	1			
3	21N6-01330				BRACKET WA	1			
4	S035-061626				BOLT-W/WASHER	5			
5	21N6-01310				COVER-WIPER MOTOR	1	- #3183		
	21N6-01311				COVER-WIPER MOTOR	1	#3184 -	B	
6	S035-081526				BOLT-W/WASHER	4			
9	21N8-40940				COVER-DUST	1			
10	21E4-0008				LIGHTER-CIGAR	1	- #3127		
	21LM-07110				LIGHTER-CIGAR	1	#3128 -	A	
11	21N8-20010				SOCKET-12V	1			
12	21N4-11070				HOUR METER ASSY	1			
13	21E6-10460				COVER	3			
14	21E6-40130				SWITCH-OVER LOAD	1			
15	21E9-20110				SW-QUICK CLAMP	1			
16	21N8-40910				SW-REMOTE CONTROL	1			
17	21N8-20201				DC-DC CONVERTER ASSY	1			
19	21E6-30440				SWITCH-BEACON	1			
20	S132-061676				SCREW-W/WASHER	2			
21	S132-061546				SCREW-W/WASHER	1			
22	21N6-20211				WORK LAMP ASSY	2			
22-1	S866-240650				.BULB	1			NOT SHOWN
23	@				BEACON LAMP SUB	1			NOT
23-1	21EK-10140				.LAMP-BEACON	1	- #3262		
	21Q4-20700				.BEACON LAMP	1	#3263 -	D	

Item	Part_No	IS	Ord	T	Description	Qty	Serial_No	ITC	Remark
23-11	21EK-10330				..BULB-H1, 70W	1	- #3262		NOT SHOWN
					.BULB-H1, 70W	1	#3263 -	A	NOT SHOWN
23-2	21N8-00581BG				.BRACKET-BEACON LAMP	1	- #3262		
	21Q4-20600				.BRACKET-TILT	1	#3263 -	D	
23-3	21EK-20240				.HARNESS-BEACON LAMP	1	- #3262		
	21N4-02830				.HARNESS-BEACON LAMP	1	#3263 -	D	
23-4	S037-102026				.BOLT-W/WASHER	2	- #3262	-	
23-5	S205-10100B				.NUT-HEX	2	- #3262	-	
23-6	S131-051546				.SCREW-W/WASHER	3	- #3262	-	
25	S131-051046				SCREW-W/WASHER	4			
26	S037-102026				BOLT-W/WASHER	1			
27	S661-260300				CAP-RUBBER	1			
28	S890-107508				TUBE-PVC	1			
30	21N8-40190				EXT.HARNESS-A/RIDE SEAT	1			
32	21N8-40140				HARNESS-SIDE,RH	1			
33	21N6-10450				PLATE-C/RADIO COVER	1			
34	21N8-50010				CASSETTE RADIO ASSY	1	- #3094		
	21N8-50050				CASSETTE RADIO ASSY	1	#3095 - #3374	A	
34-1	21N6-10480				.BRACKET-LH	1	- #3374	-	
34-2	21N6-10490				.BRACKET-RH	1	- #3374	-	
34-3	21N8-01600				.HARNESS-EXT WIRE	1	- #3374	-	
34-4	S141-050102				.SCREW-FLAT HD	4	- #3374	-	
35	21N8-40500				CD PLAYER ASSY	1	- #3374	-	
35-1	21N6-10480				.BRACKET-LH	1	- #3374	-	
35-2	21N6-10490				.BRACKET-RH	1	- #3374	-	

Item	Part_No	IS	Ord	T	Description	Qty	Serial_No	ITC	Remark
35-3	21N8-01600				.HARNESS-EXT WIRE	1	- #3374	-	
35-4	S141-050102				.SCREW-FLAT HD	4	- #3374	-	
36	S593-000902				CLIP-HARNESS	1	- #3212		
	S593-000802				CLIP-HARNESS	1	#3213 -	B	
37	21N4-43010				HARNESS-EXTENSION	1			
38	21N4-43020				SWITCH-SEAT HEAT	1			
39	21N4-01190				PLATE-CLIP	1			
44	21N4-47700BG				BRACKET-RH	1	#3192 -	-	
45	21N4-47600BG				BRACKET-LH	1	#3192 -	-	
46	20N4-47800				HARNESS	2			
47	S037-102026				BOLT-W/WASHER	2	#3192 -	-	
57	21N8-50100				RADIO/USB PLAYER ASSY	1	#3375 -	B	
57-1	21LM-31010				.BRACKET L	1	#3375 -	-	
57-2	21LM-31020				.BRACKET R	1	#3375 -	-	
57-3	21LM-31030				.CABLE-MP3	1	#3375 -	-	
57-4	21LM-31040				.CAP	1	#3375 -	-	
57-5	21LM-31050				.RADIO/USB BODY	1	#3375 -	-	
57-6	21N8-50110				.HARNESS-EXT,WIRE	1	#3375 -	-	

CAB ELECTRIC 3

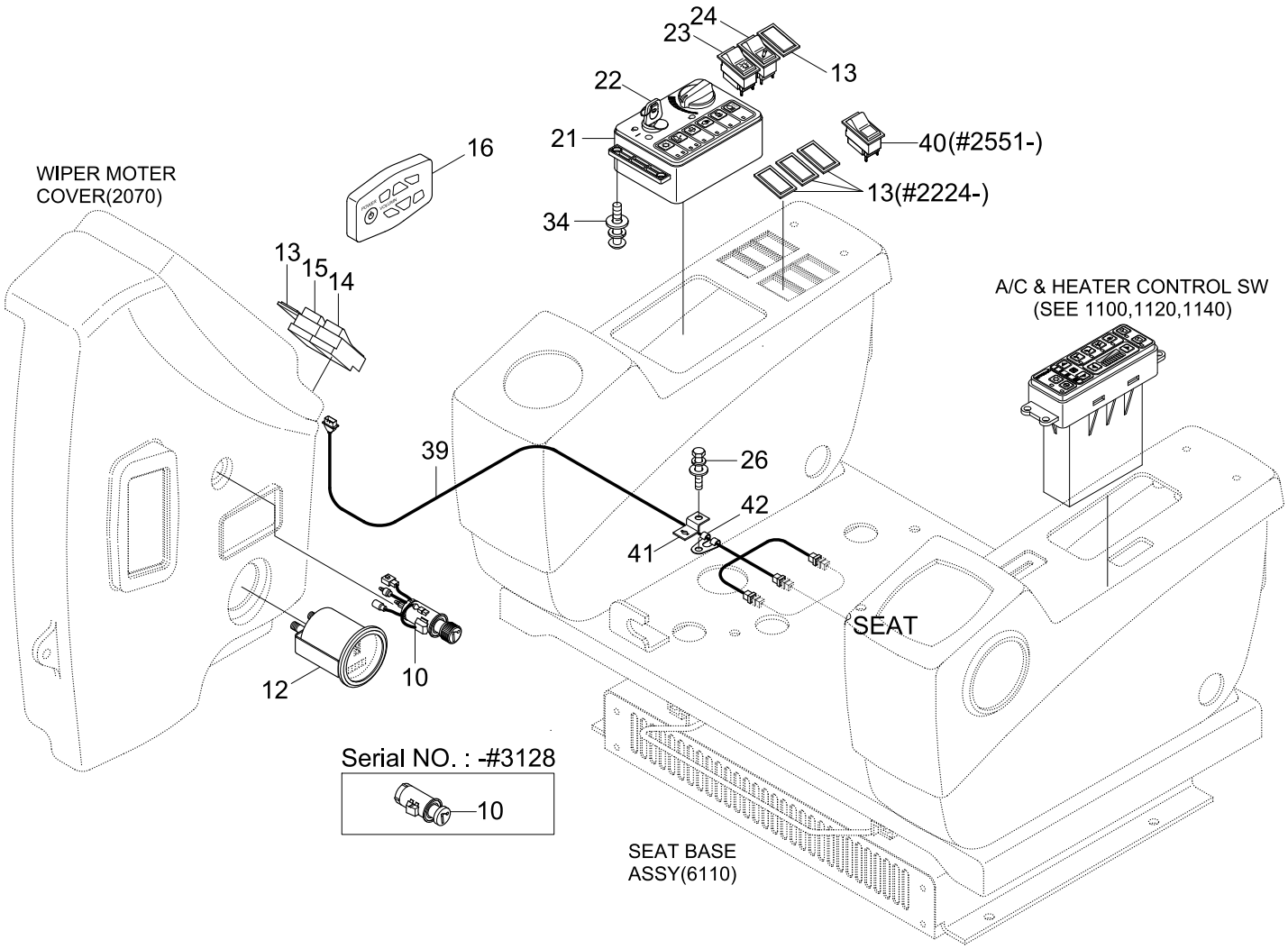

Item	Part_No	IS	Ord	T	Description	Qty	Serial_No	ITC	Remark
10	21E4-0008				LIGHTER-CIGAR	1	- #0365		
	21LM-07110				LIGHTER-CIGAR	1	#0366 -	A	
12	21L1-0010	10			HOUR METER ASSY	1	- #1000		
	21N4-11070				HOUR METER ASSY	1	#1001 -	B	
13	21E6-10460				COVER	2	- #2223		
					COVER	5	#2224 -	A	
14	21E6-40130				SWITCH-OVER LOAD	1			
15	21E9-20110				SW-QUICK CLAMP	1			
16	21N8-21050				SW-REMOTE CONTROL	1	- #2078		
	21N8-40910				SW-REMOTE CONTROL	1	#2079 -	D	
21	21N8-20502				SWITCH-MEMBRANE	1	- #1377		
	21N8-20503				SWITCH-MEMBRANE	1	#1378 - #1557	B	
	21N8-20504				SWITCH-MEMBRANE	1	#1558 - #2550	A	
	21N8-20505				SWITCH-MEMBRANE	1	#2551 -	B	
22	21E6-10430				SWITCH ASSY-INCL KEY	1	- #1000		LOCAL
	21N4-10430				SWITCH ASSY-INCL KEY	1	#1001 - #3169	D	LOCAL
	21N3-00020				SWITCH ASSY-INCL KEY	1	#3170 -	B	LOCAL
	21N4-10400				SWITCH ASSY-INCL KEY	1	#1083 -	-	EXPORT
22-1	21E6-10430-K				.KEY-START	1	- #1000		LOCAL
	21N4-10430K100				.KEY-START	1	#1001 - #3169	D	LOCAL
	21N3-00030				.KEY-START	1	#3170 -	D	LOCAL
	21N4-10400K				.KEY-START	1	#1083 -	-	EXPORT
23	21E6-30440				SWITCH-BEACON	1			
24	21E6-30540				SWITCH-BREAKER	1			
26	S037-102026				BOLT-W/WASHER	1	#2551 -	-	

Item	Part_No	IS	Ord	T	Description	Qty	Serial_No	ITC	Remark
34	S131-051546				SCREW-W/WASHER	4	#1001 -	-	
39	21N4-43010				HARNESS-EXTENSION	1	#2551 -	-	
40	21N4-43020				SWITCH-SEAT HEAT	1	#2551 -	-	
41	21N4-01190				PLATE-CLIP	1	#2551 -	-	
42	S593-000902				CLIP-HARNESS	1	#2551 - #3212	-	
	S593-000802				CLIP-HARNESS	1	#3213 -	B	

ELEC CAB LAMP SUB ASSY(OPTION, #2792-)

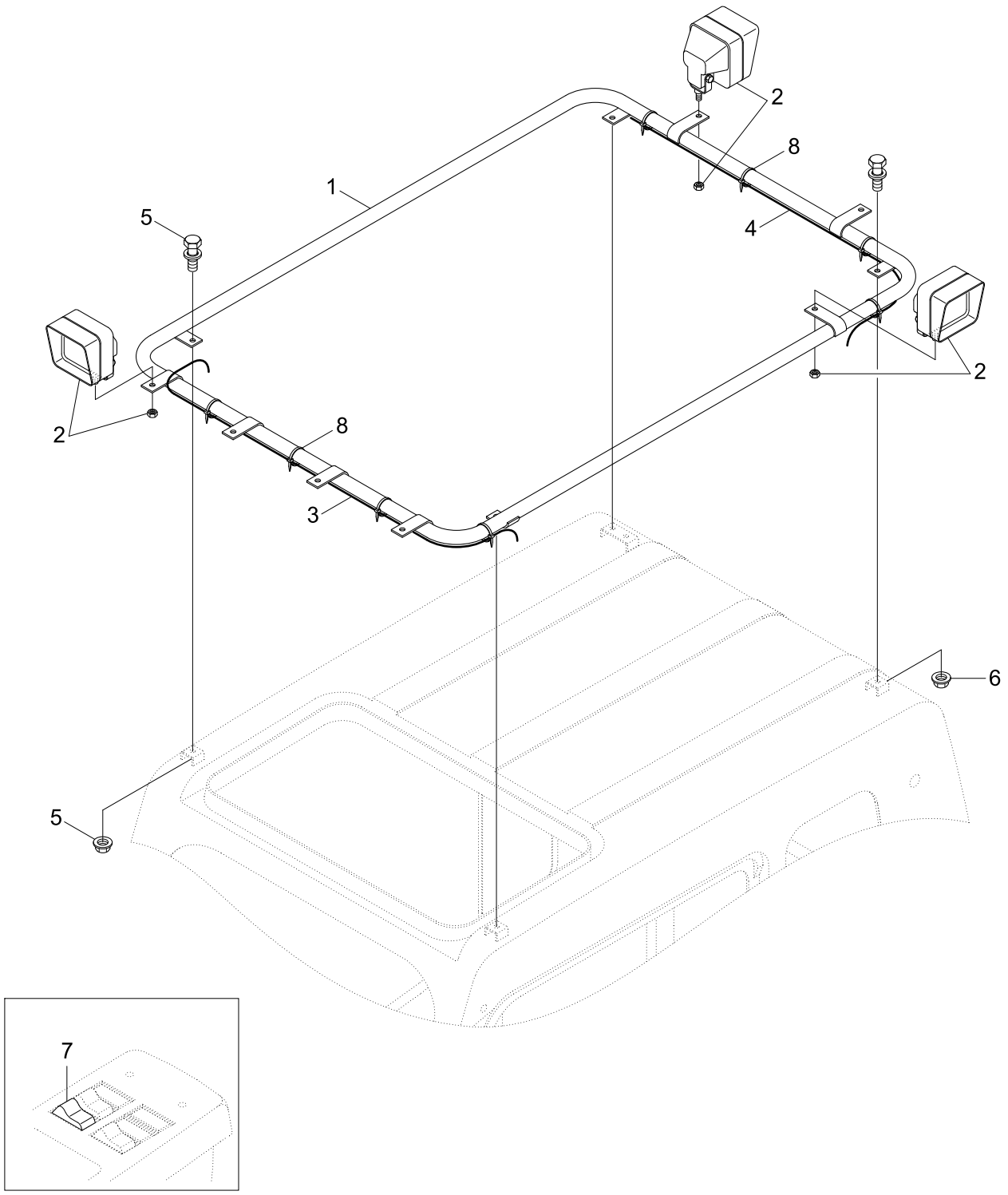

Item	Part_No	IS	Ord	T	Description	Qty	Serial_No	ITC	Remark
*	@				CABIN LAMP	1	#2792 -	-	NOT
1	21N8-43030				.GUIDE-LAMP	1			
2	21N6-20211				.WORK LAMP ASSY	7			
2-1	S866-240650				..BULB	1			NOT SHOWN
3	21N8-43010				.EXT HARNESS LAMP(1)	1			
4	21N8-43020				.EXT HARNESS LAMP(2)	1			
5	S037-102526				.BOLT-W/WASHER	4			
6	S205-101006				.NUT-HEX	4			
7	21L8-30420				.SWITCH-REAR LAMP	1			
8	S552-035146				.CLAMP-BAND	9			

FUSE BOX

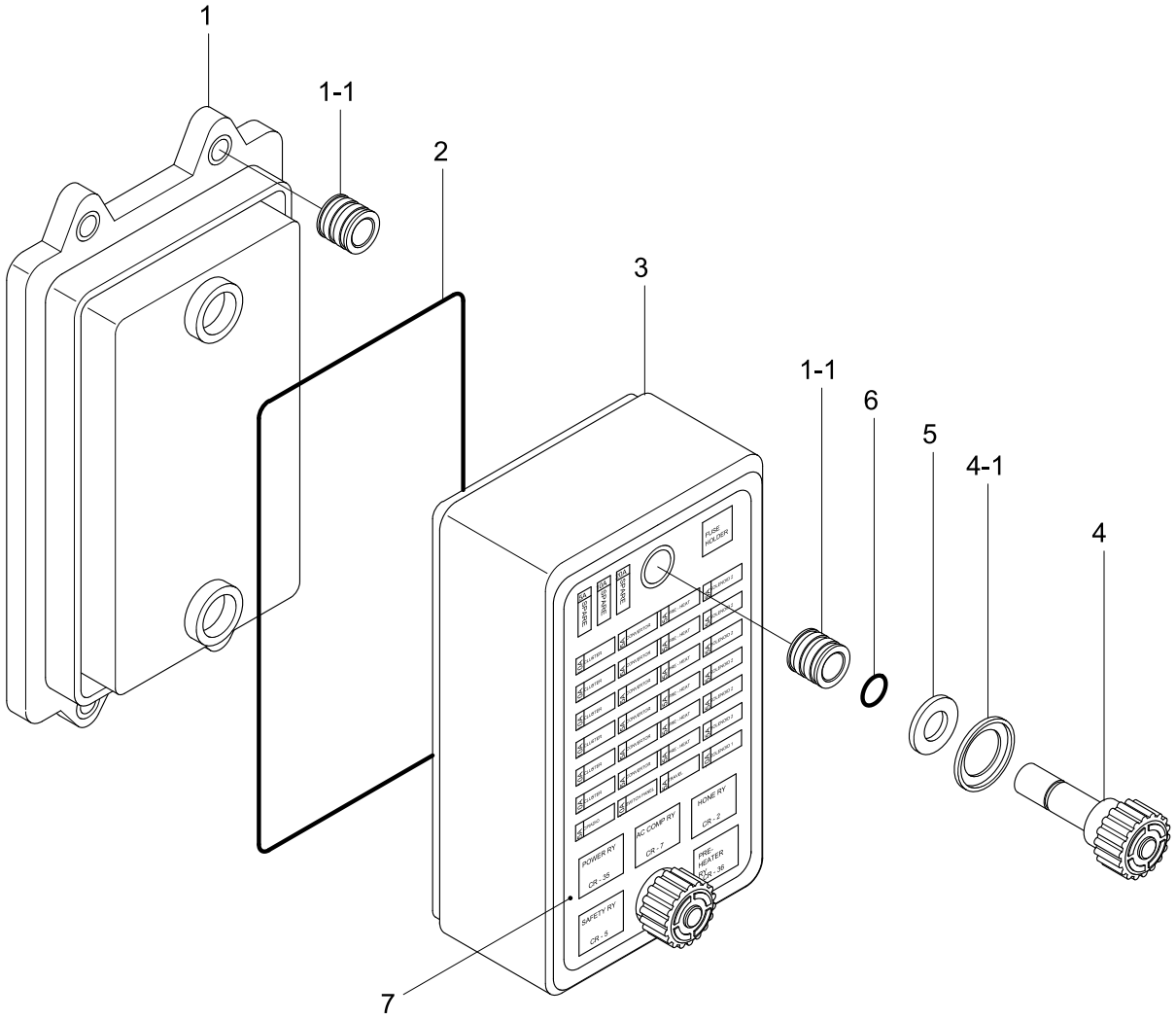
1
1-1
2
3
1-1
6
5
4-1
4
7
FUSE HOLDER
POWER RY
CR - 35
AC COMP RY
CR - 7
HORN RY
CR - 2
PRE-HEATER RLY
CR - 36
SAFETY RY
CR - 8

Item	Part_No	IS	Ord	T	Description	Qty	Serial_No	ITC	Remark
1	21N8-20041				BODY-FUSE BOX	1			
1-1	21N8-20110				.NUT-INSERT	6			
2	21N8-20120				SEAL	1			
*	21N8-20190				COVER ASSY-FUSE BOX	1			
3	21N8-20061				.COVER-FUSE BOX	1			
4	21N8-20070				.KNOB ASSY	2			
4-1	21N8-20140				..INSERT	2			
5	21N8-20080				.PAD-RUBBER	2			
6	21N8-20150				.O-RING	2			
7	21N4-00630				.DECAL-FUSE BOX	1			
8	21N4-90010				FUSE & BULB KIT	1	#0001 -	-	NOT SHOWN
8-1	@				.FUSE-5A	2			NOT
8-2	@				.FUSE-10A	2			NOT
8-3	@				.FUSE-15A	2			NOT
8-4	@				.FUSE-20A	2			NOT
8-5	@				.FUSE-30A	2			NOT
8-6	@				.BULB-H4,70/75W	2			NOT
8-7	@				.BULB-H1,70W	1			NOT
8-8	@				.BULB-5W	2			NOT
8-9	@				.BULB-5W	2			NOT
8-10	@				.BULB-21W	2			NOT
8-11	@				.BULB-10W	2			NOT
8-12	@				.BULB-10W	2			NOT
8-13	@				.BULB-H3,70W	2			NOT

FUEL FILLER PUMP(-#2998)

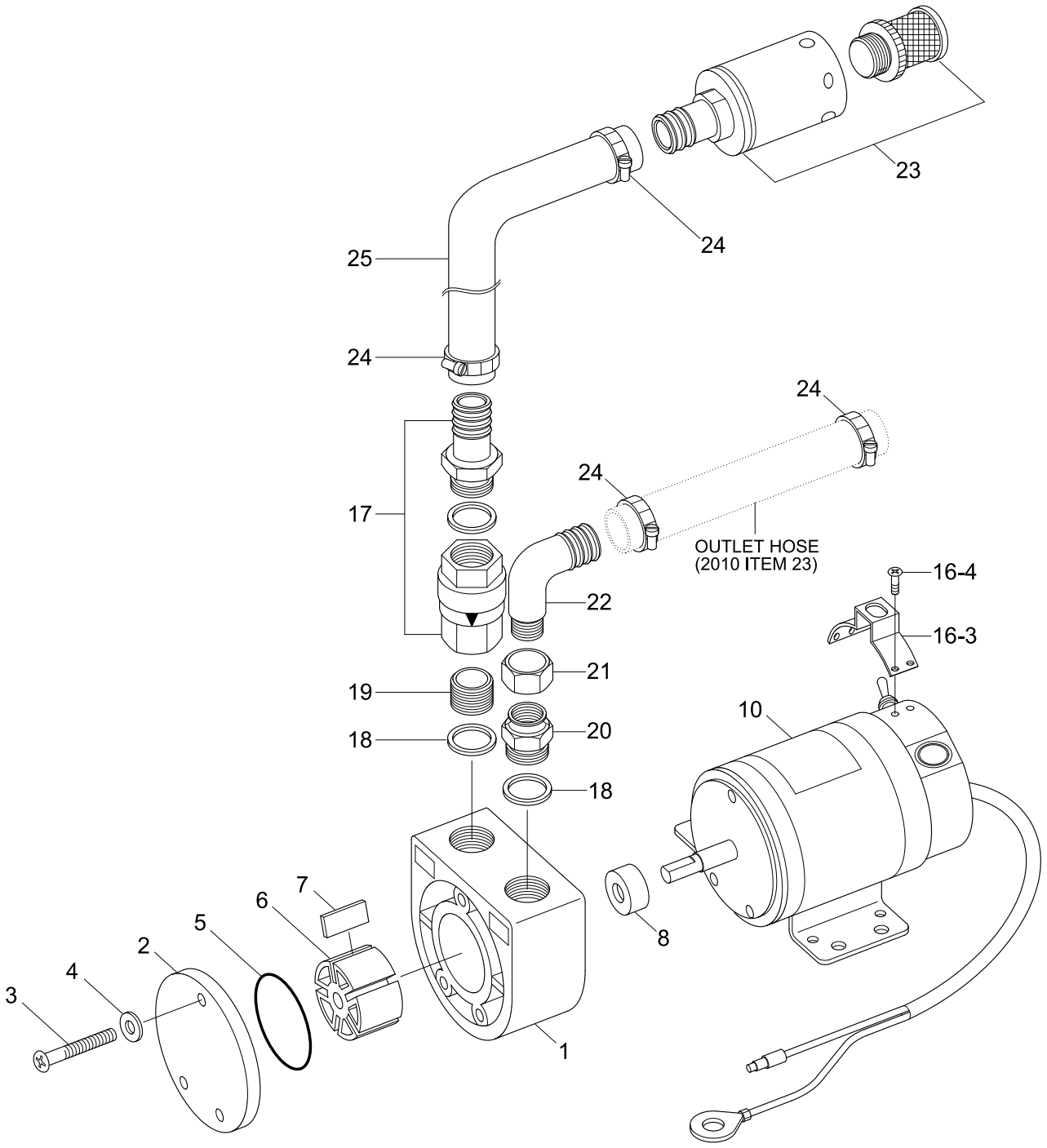

Item	Part_No	IS	Ord	T	Description	Qty	Serial_No	ITC	Remark
*	21N6-20311				FUEL FILLER PUMP	1	- #2998	-	
*-1	21N6-20301				.PUMP & MOTOR ASSY	1			
N1	@				..BODY	1			NOT
N2	@				..COVER	1			NOT
N3	@				..SCREW	3			NOT
N4	@				..WASHER-SPRING	3			NOT
K5	21EM-45050				..O-RING	1			
K6	21EM-45060				..ROTOR	1			
K7	21EM-45070				..VANE	5			
K8	21EM-45080				..SEAL-OIL	1			
N10	@				..HOUSING-MOTOR	1			NOT
N16	21EM-45100				..BOX-SWITCH	1			NOT
16-3	21EM-45300				...COVER-SWITCH	1			
16-4	S161-050166				...SCREW-CROSS R/ROUND	4			
17	21EM-45400				..CHECK VALVE ASSY	1			
18	21EM-45500				..AL WASHER	2			
19	21EM-45600				..FITTING	1			
20	21EM-45700				..FITTING	1			
21	21EM-45800				..NUT-ELBOW	1			
22	21EM-45900				..ELBOW	1			
23	21EM-46000				.STRAINER ASSY	1			
24	S520-027000				.CLAMP-HOSE	4			
25	21EM-46101				.HOSE	1			
K	21EM-46200				SERVICE KIT(5~8)	1			
N	@				NOT INDIVIDUALLY SUPPLIED	AR			NOT

FUEL FILLER PUMP(#2999-)

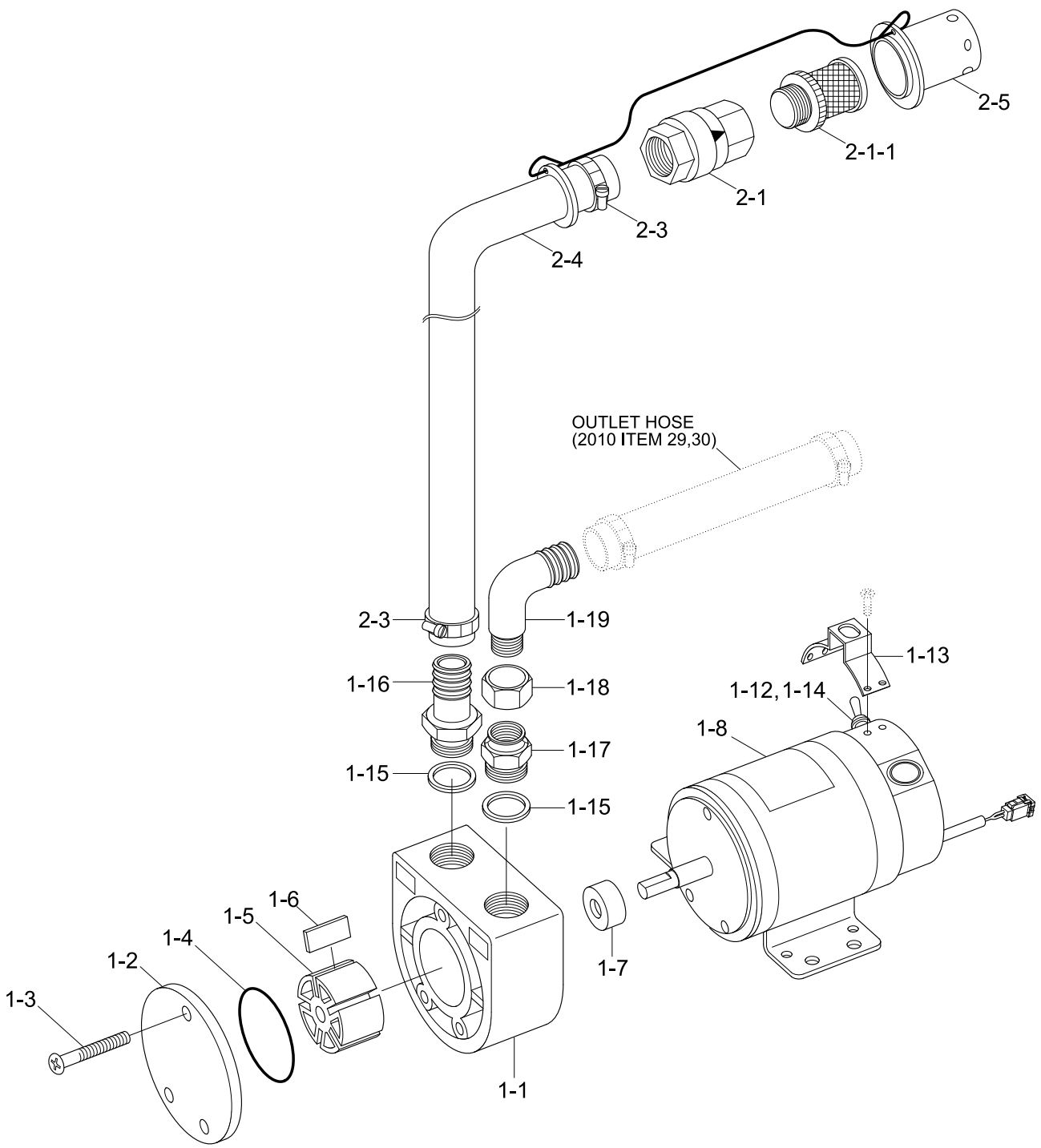

Description	Parts no	Included item
SERVICE KIT	21EM-46201	1-4, 1-5, 1-6, 1-7

Item	Part_No	IS	Ord	T	Description	Qty	Serial_No	ITC	Remark
*	21N6-20312				FUEL FILLER PUMP	1	#2999 -	B	
1	21N6-20302				.PUMP & MOTOR ASSY	1			
N1-1	@				..BODY	1			NOT
N1-2	@				..COVER-PUMP	1			NOT
N1-3	@				..SCREW	3			NOT
K1-4	21EM-45050				..O-RING	1			
K1-5	21EM-45060				..ROTOR	1			
K1-6	21EM-45070				..PLATE-VANE	5			
K1-7	21EM-45080				..SEAL-OIL	1			
1-8	21EM-45091				..DECAL	1			
N1-9	@				..COVER-FRONT	1			NOT
N1-10	@				..COVER-REAR	1			NOT
N1-11	@				..BEARING	1			NOT
1-12	21EM-45101				..BOX-SWITCH	1			
N1-13	@				..COVER-SWITCH	1			NOT
N1-14	@				..SWITCH-TOGGEL	1			NOT
1-15	21EM-45500				..WASHER-AL	3			
N1-16	@				..ADAPTER	1			NOT
1-17	21EM-45700				..FITTING	1			
1-18	21EM-45800				..NUT-ELBOW	1			
1-19	21EM-45900				..ELBOW	1			
2	21EM-46400				.HOSE ASSY	1			
2-1	21M5-50260				..VALVE-CHECK	1			
2-1-1	2P1-SP-01				...STRAINER ASSY	1			
2-3	S520-027000				..CLAMP-HOSE	1			

Item	Part_No	IS	Ord	T	Description	Qty	Serial_No	ITC	Remark
2-4	21EM-46101				..HOSE	1			
2-5	21EM-46300				..CAP ASSY	1			
K	21EM-46201				SERVICE KIT	1			SEE ILLUST
N	@				NOT SUPPLIED PARTS	AR			NOT

PUMP MOUNTING

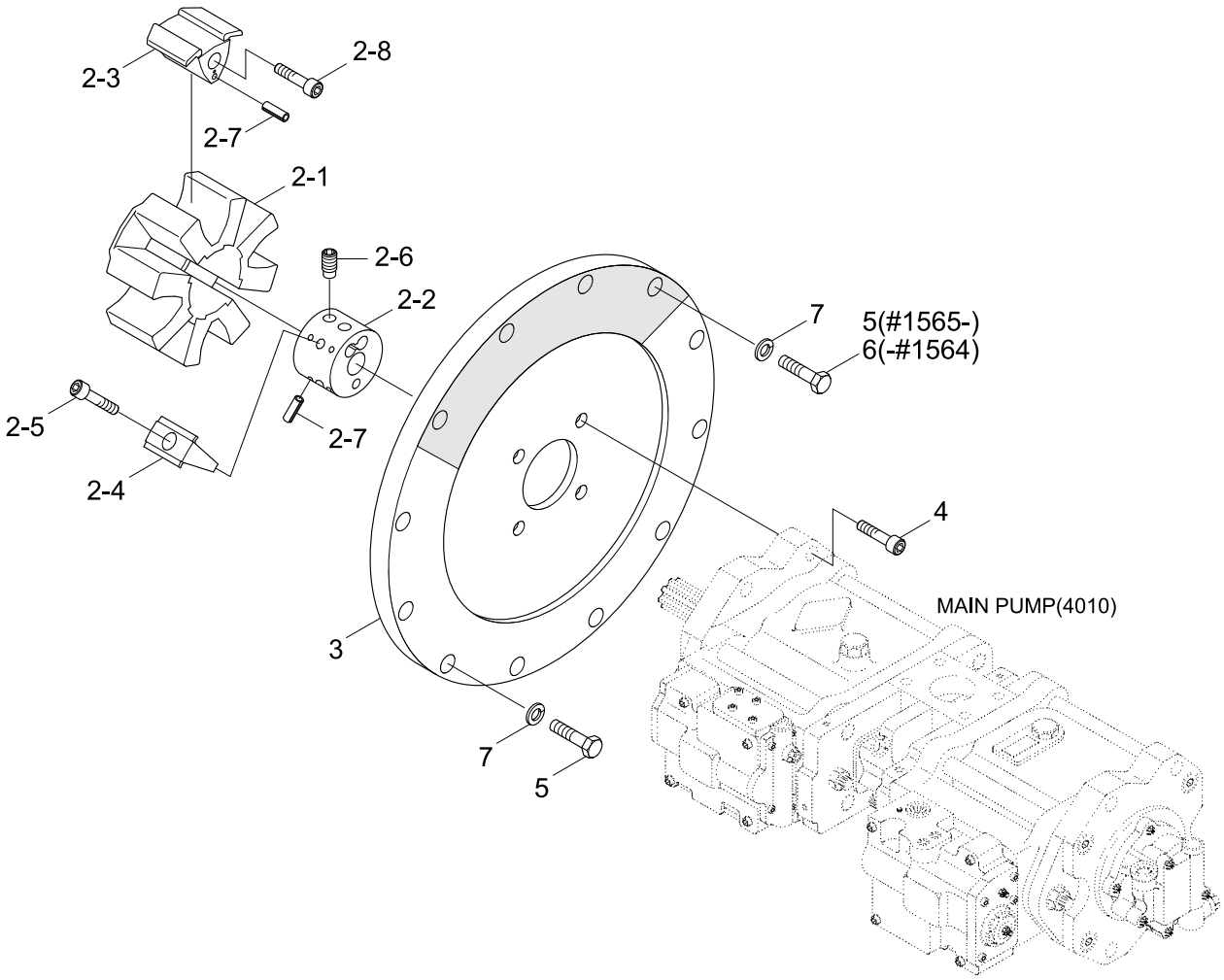

Item	Part_No	IS	Ord	T	Description	Qty	Serial_No	ITC	Remark
2	13E6-16010				COUPLING ASSY	1	- #2181		
	13E6-16030				COUPLING ASSY	1	#2182 -	A	
2-1	11E1-1507	20			.ELEMENT	1	- #2181		
	13E6-16040				.ELEMENT	1	#2182 -	D	
2-2	13E6-16020				.HUB	1			
2-3	11E1-1509	10			.INSERT-A	4	- #2181		
	13E6-16050				.INSERT-A	4	#2182 -	D	
2-4	11E1-1510	10			.INSERT-R	4	- #2181		
	13E6-16060				.INSERT-R	4	#2182 -	D	
2-5	S109-160506				.BOLT-SOCKET	4	- #2181		
	S107-160402				.BOLT-SOCKET	4	#2182 -	D	
2-6	11E1-1511	10			.BOLT-CLAMP	2			
2-7	S472-500102				.PIN-SPRING	12			
2-8	S109-160606				.BOLT-SOCKET	4	- #2181		
	S107-160602				.BOLT-SOCKET	4	#2182 -	D	
3	11E3-1503	40			HOUSING	1			
4	S107-160502				BOLT-SOCKET	4			
5	S017-100552				BOLT-HEX	8	- #1564		
					BOLT-HEX	12	#1565 -	A	
6	S017-100602				BOLT-HEX	4	- #1564	-	
7	S411-100002				WASHER-SPRING	12			

HYDRAULIC TANK

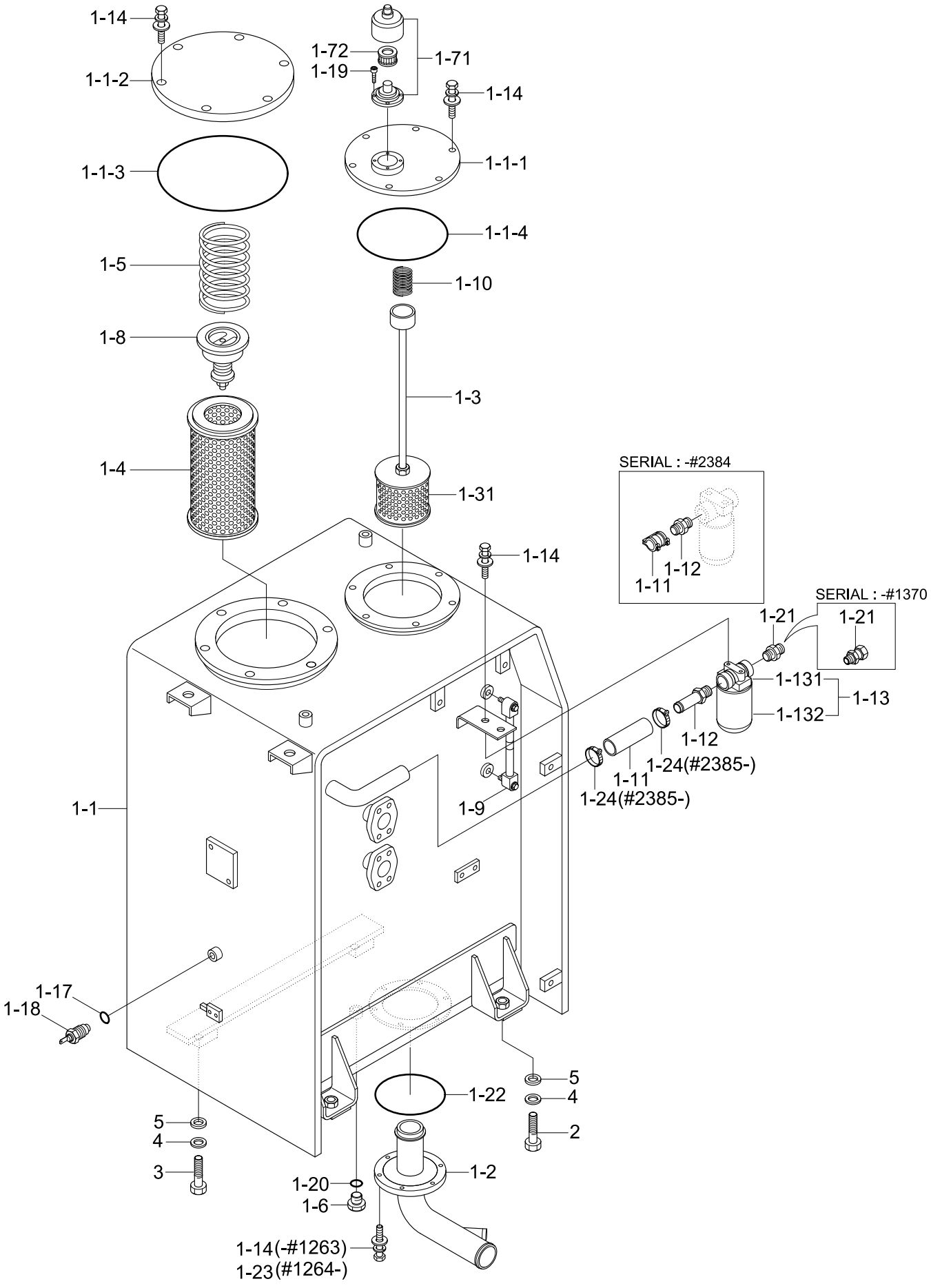

Item	Part_No	IS	Ord	T	Description	Qty	Serial_No	ITC	Remark
1	31N4-01001				HYD TANK ASSY	1			
1-1	31N4-01011				.HYD TANK WA	1	- #1818		
	31N4-01012				.HYD TANK WA	1	#1819 - #2308	A	
	31N4-01013				.HYD TANK WA	1	#2309 - #2384	D	
	31N4-01014				.HYD TANK WA	1	#2385 -	D	
1-1-1	31EG-01210				..COVER-SUCTION	1			
1-1-2	31N4-01110				..COVER-RETURN	1			
1-1-3	S632-170001				..O-RING	1	#0001 -	-	
1-1-4	S632-165001				..O-RING	1	#0001 -	-	
1-2	31N4-01130				.PIPE ASSY-SUCTION	1			
1-3	31N4-01090				.STRAINER ASSY	1			
1-31	31E3-4529	20			..ELEMENT-SUCTION	1			
1-4	E131-0212	10			.ELEMENT-RETURN	1			
1-5	E131-0220	10			.SPRING	1			
1-6	P220-110104				.PLUG-HEX	1			
1-7	31EE-02000				.AIR BREATHER	1	- #1014		
	31EE-02100				.AIR BREATHER	1	#1015 -	D	
1-71	31EE-02010				..ELEMENT	1	- #1014		
	31EE-02110				..ELEMENT	1	#1015 -	D	
1-72	Y-399200				..BODY	1	- #1014	-	
1-8	E131-0256	20			.VALVE-BYPASS	1			
1-9	E131-0473	30			.GAUGE-LEVEL	1			
1-10	E131-0594	10			.SPRING	1			
1-11	E131-0671	10			.COUPLING	1	- #2384		
	P760-052014				.HOSE-RUBBER LOW	1	#2385 -	D	

Item	Part_No	IS	Ord	T	Description	Qty	Serial_No	ITC	Remark
1-12	31E9-1051	10			.FITTING	1	- #2384		
	31N4-01210				.CONNECTOR	1	#2385 -	D	
1-13	31E9-0084	10			.FILTER-SPIN	1			
1-131	31E9-0127				..HEAD	1			
1-132	31E9-0126				..FILTER-CARTRIDGE	1			
1-14	S037-102022				.BOLT-W/WASHER	20	- #1000		
	S037-102522				.BOLT-W/WASHER	20	#1001 - #1263	D	
					.BOLT-W/WASHER	14	#1264 -	A	
1-17	21EA-50260				.PACKING-TEMP SW	1			
1-18	21EN-40100				.SENDER-TEMP	1			
1-19	S109-060156				.BOLT-SOCKET	4			
1-20	S631-018001				.O-RING	1			
1-21	P010-430019				.CONNECTOR	1	- #1370		
	31N6-03100				.CONNECTOR	1	#1371 -	D	
1-22	S632-150001				.O-RING	1			
1-23	S037-103022				.BOLT-W/WASHER	6	#1264 -	-	
1-24	S572-450006				.CLAMP-HOSE	6	#2385 -	-	
2	S017-200502				BOLT-HEX	2			
3	S017-200352				BOLT-HEX	2			
4	S441-200002				WASHER-HARDENED	4			
5	E231-0134	20			SHIM(1.0T)	5	- #0057		
	31N8-01300				SHIM(1.0T)	5	#0058 -	B	

UPPER HYDRAULIC PIPING(BASE, -#1000)

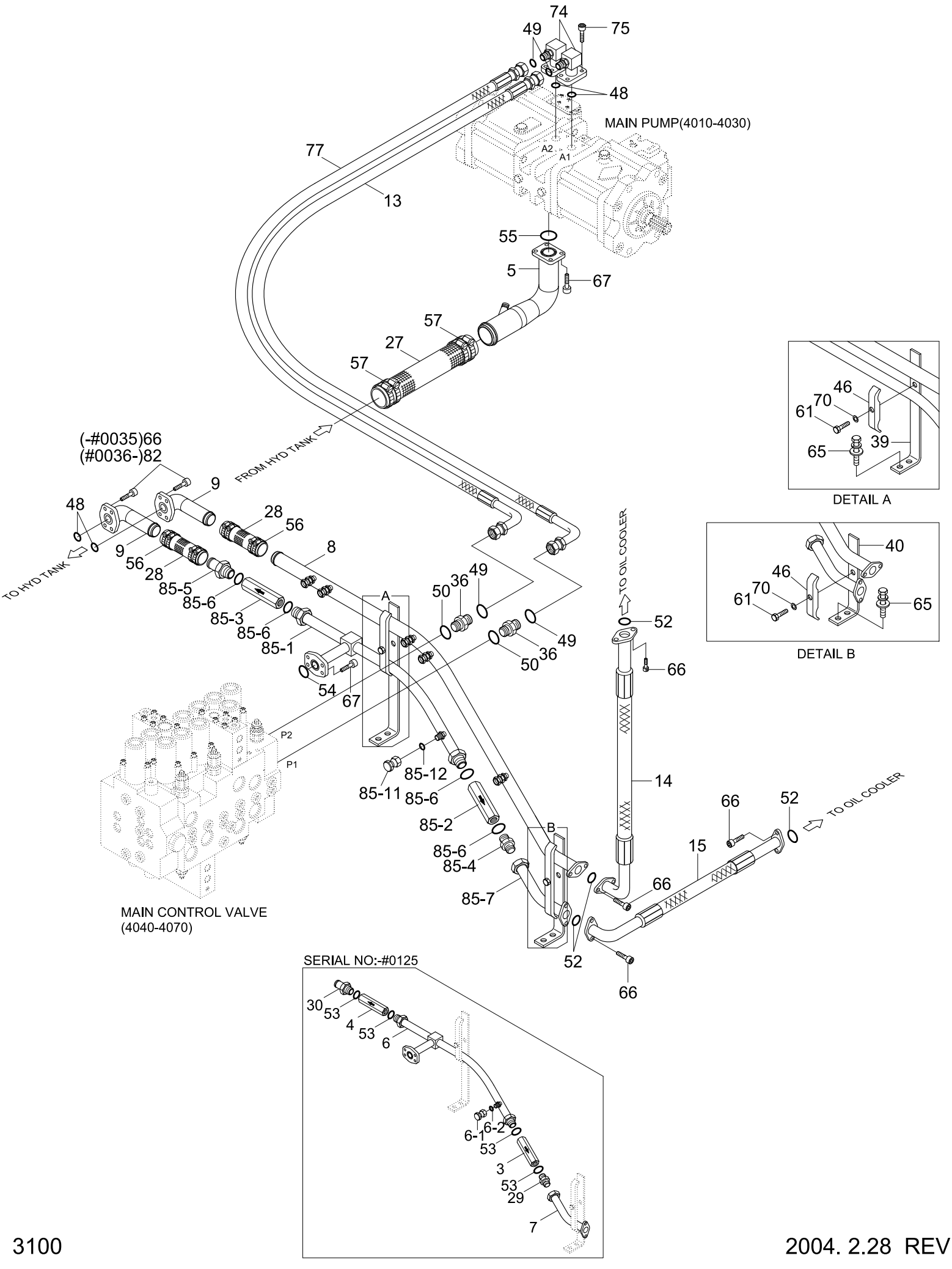

Item	Part_No	IS	Ord	T	Description	Qty	Serial_No	ITC	Remark
*	@				UPPER HYD PIPING	1	- #1000	-	NOT
3	31E9-0141	20			CHECK VALVE	1	- #0125	-	
4	31E9-0142	20			CHECK VALVE	1	- #0125	-	
5	31N4-12011				PIPE ASSY-SUCTION	1			
6	31N4-12021				PIPE ASSY	1	- #0125	-	
6-1	X710-100105				.CAP-ORFS	1	- #0125	-	
6-2	S621-018001				.O-RING,ORFS	1	- #0125	-	
7	31N4-12030				PIPE ASSY	1	- #0125	-	
8	31N4-12041				PIPE ASSY	1			
9	31EG-12200				PIPE ASSY-RETURN	2	- #0035		
	31N4-12290				PIPE WA	2	#0036 -	B	
13	P933-127020				HOSE ASSY-ORFS 0X90	2			
14	31N4-12220				HOSE ASSY-RETURN	1			
15	31N4-12231				HOSE ASSY-RETURN	1			
27	P760-093025				HOSE-RUBBER LOW	1			
28	P760-063022				HOSE-RUBBER LOW	2			
29	P010-110023				CONNECTOR	1	- #0125	-	
30	34EA-10120				CONNECTOR	1	- #0125	-	
36	X500-110004				CONNECTOR-ORFS	2			
39	31N4-12100				BRACKET-R/PIPE	1			
40	31EG-12161				BRACKET-RETURN	1	- #0035		
	31N4-12300				BRACKET-RETURN	1	#0036 -	A	
46	31EG-12190				CLAMP-PIPE	2			
48	Y171-019001				O-RING	2			
49	S621-018001				O-RING,ORFS	4			

Item	Part_No	IS	Ord	T	Description	Qty	Serial_No	ITC	Remark
50	S631-024001				O-RING	2			
52	S631-038001				O-RING	4			
53	S631-044001				O-RING	4	- #0125	-	
54	S631-048001				O-RING	1			
55	S632-070001				O-RING	1			
56	S520-055000				CLAMP-HOSE	8	- #0087		
	S572-930006				CLAMP-HOSE WIRE TYPE	8	#0088 -	B	
57	S520-085000				CLAMP-HOSE	4	- #0087		
	S572-570006				CLAMP-HOSE WIRE TYPE	4	#0088 -	B	
61	S017-120752				BOLT-HEX	2			
65	S037-103022				BOLT-W/WASHER	6			
66	S109-100306				BOLT-SOCKET	16	- #0035		
					BOLT-SOCKET	8	#0036 -	A	
67	S109-120306				BOLT-SOCKET	8			
70	S411-120002				WASHER-SPRING	2			
74	31N6-12200				PIPE ASSY	2			
75	S109-100356				BOLT-SOCKET	8			
77	P933-127019				HOSE ASSY-ORFS 0X90	1			
82	S109-100906				BOLT-SOCKET	8	#0036 -	-	
85	31N4-1202-SUB				PIPE SUB ASSY	1	#0126 -	-	
85-1	31N4-12021				.PIPE ASSY	1	#0126 -	-	
85-11	X710-100105				..CAP-ORFS	1	#0126 -	-	
85-12	S621-018001				..O-RING,ORFS	1	#0126 -	-	
85-2	31E9-0141	20			.CHECK VALVE	1	#0126 -	-	
85-3	31E9-0142	20			.CHECK VALVE	1	#0126 -	-	

Item	Part_No	IS	Ord	T	Description	Qty	Serial_No	ITC	Remark
85-4	P010-110023				.CONNECTOR	1	#0126 -	-	
85-5	34EA-10120				.CONNECTOR	1	#0126 -	-	
85-6	S631-044004				.O-RING	4	#0126 -	-	
85-7	31N4-12030				.PIPE ASSY	1	#0126 -	-	

UPPER HYDRAULIC PIPING(BASE, #1001-)

UPPER HYDRAULIC PIPING			
Serial no	M.C.V.	Machine option	Pages
-#1601	ALP165	Std, Dozer, Adjust boom	3100 - 3140
#1602-	ALP165	Dozer, Adjust boom	3100 - 3140
	UHX22-26	Standard	3160 - 3180

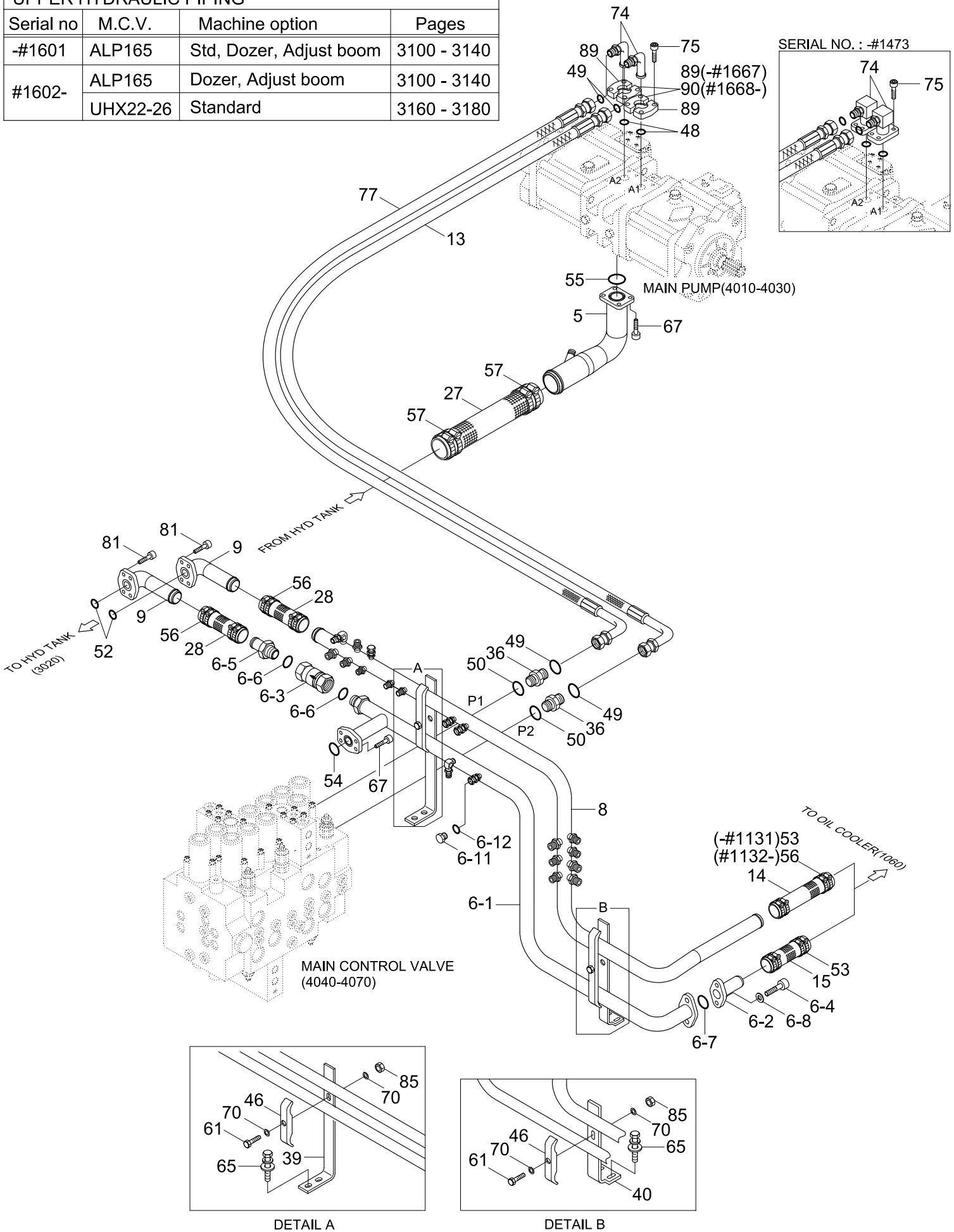

Item	Part_No	IS	Ord	T	Description	Qty	Serial_No	ITC	Remark
*	@				UPPER HYD PIPING	1	#1001 - #1601		NOT
					UPPER HYD PIPING	1	#1602 -	A	NOT
5	31N4-12011				PIPE ASSY-SUCTION	1			
6	31N4-12000				RETURN PIPE SUB ASSY	1			
6-1	31N4-12021				.PIPE ASSY	1	- #1131		
	31N4-12022				.PIPE ASSY	1	#1132 -	D	
6-11	X710-100105				..CAP-ORFS	1			
6-12	S621-018001				..O-RING,ORFS	1			
6-2	31E9-0141				.CHECK VALVE	1	- #1131		
	31ER-11111				.CHECK VALVE	1	#1132 -	D	
6-3	31E9-0142				.CHECK VALVE	1			
6-4	S109-120456				.BOLT-SOCKET	2			
6-5	34EA-10120				.CONNECTOR	1			
6-6	S631-044004				.O-RING	2			
6-7	Y172-003004				.O-RING	1			
6-8	S403-122006				.WASHER-PLAIN	2			
8	31N4-12341				PIPE ASSY	1	- #1131		
	31N4-12342				PIPE ASSY	1	#1132 - #1370	D	
	31N4-12343				PIPE ASSY	1	#1371 -	D	
9	31N4-12291				PIPE ASSY	2			
13	P933-127020				HOSE ASSY-ORFS 0X90	1			
14	31N4-12350FL				HOSE ASSY-RETURN	1	- #1131		
	P760-063035				HOSE-RUBBER LOW	1	#1132 -	D	
15	31N4-12360FL				HOSE ASSY-RETURN	1	- #1131		
	P760-073020				HOSE-RUBBER LOW	1	#1132 -	D	

Item	Part_No	IS	Ord	T	Description	Qty	Serial_No	ITC	Remark
27	P760-093025				HOSE-RUBBER LOW	1	- #1131		
	P760-093022				HOSE-RUBBER LOW	1	#1132 -	D	
28	P760-063022				HOSE-RUBBER LOW	2			
36	X500-110004				CONNECTOR-ORFS	2			
39	31N4-13120				BRACKET-R/PIPE	1			
40	31N4-12371				BRACKET-RETURN	1	- #1131		
	31N4-14160				BRACKET ASSY	1	#1132 -	D	
46	31EG-12190				CLAMP-PIPE	2			
48	Y171-019001				O-RING	2			
49	S621-018001				O-RING,ORFS	2			
50	S631-024001				O-RING	2			
52	S631-038001				O-RING	2	- #1131		
					O-RING	2	#1132 -	A	
53	S572-630006				CLAMP-HOSE WIRE TYPE	4	#1132 - #2337	-	
	S572-640006				CLAMP-HOSE WIRE TYPE	4	#2338 -	B	
54	S631-048001				O-RING	1	#1001 -	-	
55	S632-070001				O-RING	1			
56	S572-570006				CLAMP-HOSE WIRE TYPE	8	- #1131		
					CLAMP-HOSE WIRE TYPE	12	#1132 -	A	
57	S572-930006				CLAMP-HOSE WIRE TYPE	4			
61	S017-120802				BOLT-HEX	2			
65	S037-103022				BOLT-W/WASHER	4			
67	S109-120306				BOLT-SOCKET	8			
70	S403-122002				WASHER-PLAIN	4			
74	31N6-12200				PIPE ASSY	2	#1001 - #1473	-	

Item	Part_No	IS	Ord	T	Description	Qty	Serial_No	ITC	Remark
74	31N6-15200				ELBOW-90	2	#1474 -	-	
75	S109-100356				BOLT-SOCKET	8	#1001 - #1473	-	
	S109-100306				BOLT-SOCKET	8	#1474 -	-	
77	P933-127019				HOSE ASSY-ORFS 0X90	1			
81	S109-100306				BOLT-SOCKET	8			
85	S205-121002				NUT-HEX	1			
89	P174-120102				FLANGE-SPLIT	4	#1474 - #1667	-	
					FLANGE-SPLIT	2	#1668 -	A	
90	31N7-12100				FLANGE-SPLIT	2	#1668 -	-	

UPPER HYDRAULIC PIPING(TRAVEL)

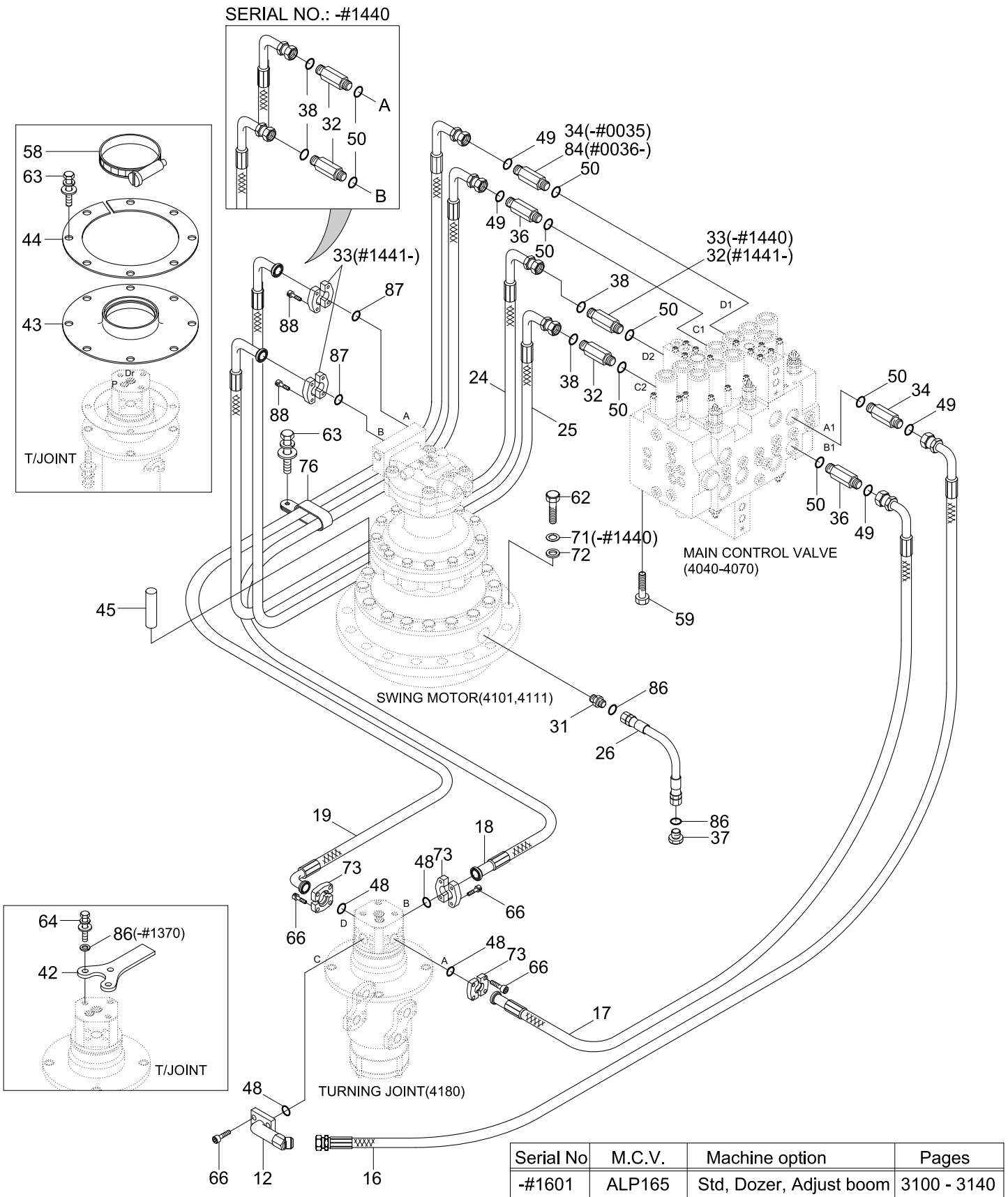

Serial No	M.C.V.	Machine option	Pages
-#1601	ALP165	Std, Dozer, Adjust boom	3100 - 3140
#1602-	ALP165	Dozer, Adjust boom	3100 - 3140
	UHX22-26	Standard	3160 - 3180

Item	Part_No	IS	Ord	T	Description	Qty	Serial_No	ITC	Remark
*	@				UPPER HYD PIPING	1	- #1601		NOT
					UPPER HYD PIPING	1	#1602 -	A	NOT
12	31N4-12071				PIPE ASSY	1			
16	P930-127023				HOSE ASSY-ORFS 0X90	1			
17	31N4-12081				HOSE ASSY	1			
18	P990-127324				HOSE ASSY-ORFSXFLG 0X90	1			
19	31N4-12091				HOSE ASSY	1			
24	31N4-12170				HOSE ASSY	1	- #1440		
	31N4-13090				HOSE ASSY	1	#1441 -	D	
25	31N4-12180				HOSE ASSY	1	- #1440		
	31N4-13100				HOSE ASSY	1	#1441 -	D	
26	P410-062010				HOSE ASSY-COMP 0X45	1	- #1370		
	P920-062010				HOSE ASSY-ORFS 0X45	1	#1371 -	D	
31	P010-430015				CONNECTOR	1	- #1370		
	31N7-12400				CONNECTOR-ORFS	1	#1371 -	D	
32	X511-112534				CONNECTOR-LONG,ORFS	3	- #1440		
					CONNECTOR-LONG,ORFS	2	#1441 -	D	
33	X511-112538				CONNECTOR-LONG,ORFS	1	- #0035		
	X511-112537				CONNECTOR-LONG,ORFS	1	#0036 - #1440	D	
	P173-080101				FLANGE-SPLIT	4	#1441 -	D	
34	X511-112546				CONNECTOR-ORFS	2	- #0035		
					CONNECTOR-ORFS	1	#0036 -	A	
36	X500-110004				CONNECTOR-ORFS	2			
37	31EM-22090				PLUG	1	- #1370		
	X700-100103				PLUG-ORFS	1	#1371 -	D	

Item	Part_No	IS	Ord	T	Description	Qty	Serial_No	ITC	Remark
38	S621-014001				O-RING	4	- #1440		
					O-RING	2	#1441 -	D	
42	31N4-12210				BRACKET-T/JOINT	1	- #0171		
	31N4-12211				BRACKET-T/JOINT	1	#0172 -	D	
43	31N1-40941				RUBBER-T/JOINT	1			
44	31N1-40951				COVER-T/JOINT	1			
45	31E3-3053	10			PIN-DOWEL	1			
48	Y171-019001				O-RING	4			
49	S621-018001				O-RING	4			
50	S631-024001				O-RING	8	- #1440		
					O-RING	6	#1441 -	D	
58	S520-130000				CLAMP-HOSE	1			
59	S037-123522				BOLT-W/WASHER	3			
62	S017-160602				BOLT-HEX	9	- #1195		
	S017-160552				BOLT-HEX	9	#1196 -	D	
63	S037-102022				BOLT-W/WASHER	9			
64	S037-102522				BOLT-W/WASHER	3	- #0171		
	S017-140302				BOLT-HEX	3	#0172 -	D	
66	S109-100306				BOLT-SOCKET	16			
71	S411-160002				WASHER-SPRING	9	- #1440	-	
72	S441-160002				WASHER-HARDENED	9			
73	P173-120102				FLANGE-SPLIT	6			
76	S543-360002				CLAMP-TUBE	2			
84	X511-112545				CONNECTOR-LONG,ORFS	1	#0036 -	-	
86	S411-140002				WASHER-SPRING	3	#0172 - #1370	-	

Item	Part_No	IS	Ord	T	Description	Qty	Serial_No	ITC	Remark
86	S621-012001				O-RING,ORFS	2	#1371 -	-	
87	Y171-015004				O-RING	2	#1441 -	-	
88	S107-080606				BOLT-SOCKET	8	#1441 -	-	

UPPER HYDRAULIC PIPING(ATTACH)

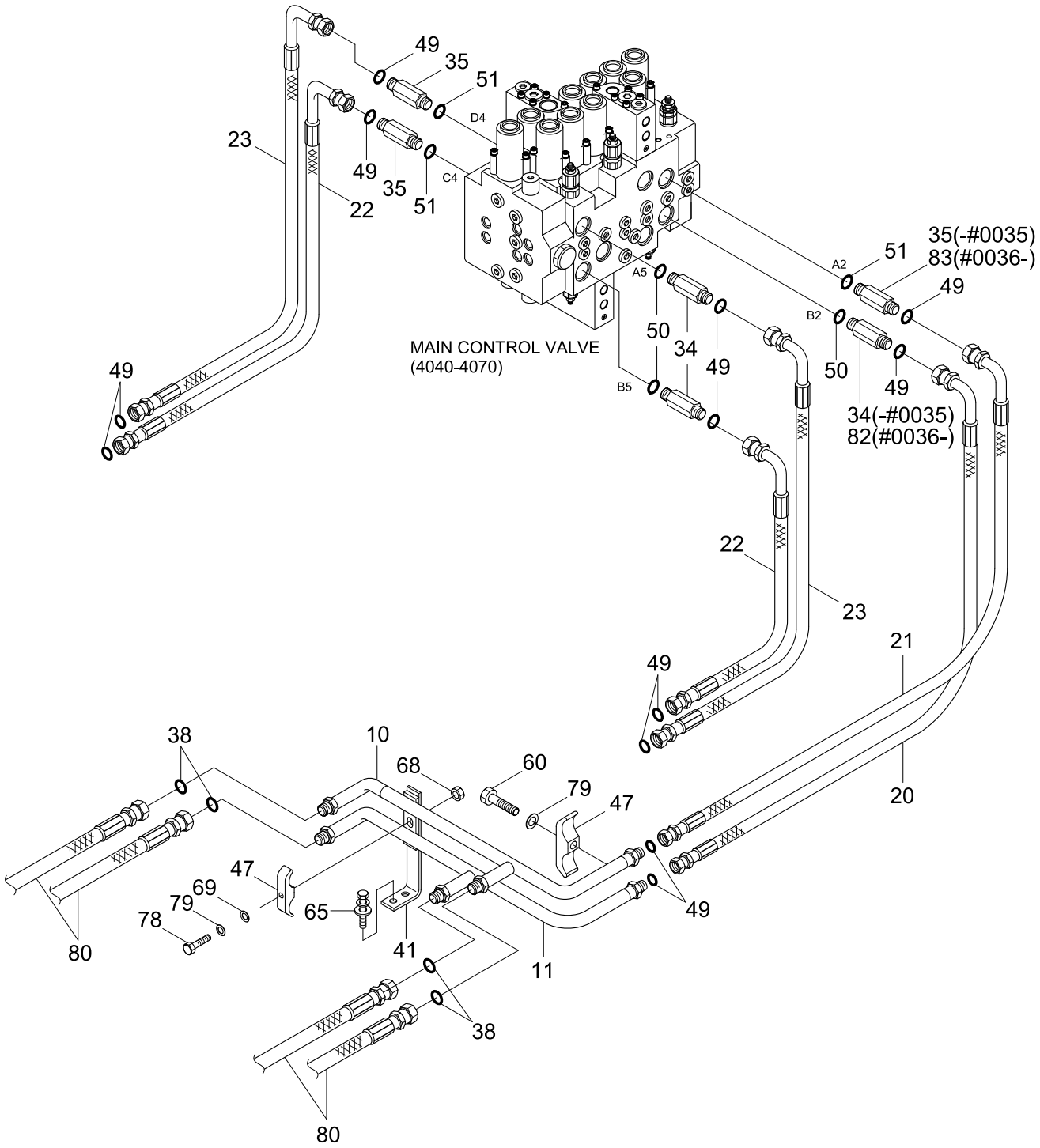

Item	Part_No	IS	Ord	T	Description	Qty	Serial_No	ITC	Remark
*	@				UPPER HYD PIPING	1	- #1601		NOT
					UPPER HYD PIPING	1	#1602 -	A	NOT
10	31N4-12051				PIPE ASSY	1			
11	31N4-12061				PIPE ASSY	1	- #0035		
	31N4-12062				PIPE ASSY	1	#0036 -	D	
20	P930-127020				HOSE ASSY-ORFS 0X90	1	- #0035		
	P930-127019				HOSE ASSY-ORFS 0X90	1	#0036 -	D	
21	P930-127021				HOSE ASSY-ORFS 0X90	1			
22	P933-127024				HOSE ASSY-ORFS 0X90	2			
23	P933-127026				HOSE ASSY-ORFS 0X90	2			
34	X511-112546				CONNECTOR-ORFS	3	- #0035		
					CONNECTOR-ORFS	2	#0036 -	A	
35	X511-116546				CONNECTOR-LONG,ORFS	3	- #0035		
					CONNECTOR-LONG,ORFS	2	#0036 -	A	
38	S621-014001				O-RING,ORFS	4			
41	34EA-10390				BRACKET-BOOM	1	- #0035		
	31N4-12310				BRACKET-RETURN	1	#0036 -	A	
47	31N4-12200				CLAMP-PIPE	2	- #0035		
	31N4-12270				CLAMP-PIPE	2	#0036 -	D	
49	S621-018001				O-RING,ORFS	12			
50	S631-024001				O-RING	3			
51	S631-029001				O-RING	3			
60	S017-100602				BOLT-HEX	1			
65	S037-103022				BOLT-W/WASHER	2			
68	S205-101002				NUT-HEX	1			

Item	Part_No	IS	Ord	T	Description	Qty	Serial_No	ITC	Remark
69	S403-102002				WASHER-PLAIN	1			
78	S017-100852				BOLT-HEX	1			
79	S411-100002				WASHER-SPRING	2			
80	31N4-50261				HOSE ASSY-ORFS 0X0	4			
82	X511-112548				CONNECTOR-LONG,ORFS	1	#0036 -	-	
83	X511-116548				CONNECTOR-LONG,ORFS	1	#0036 -	-	

UPPER HYD PIPING 1/2(#0234-, 2-BOOM)

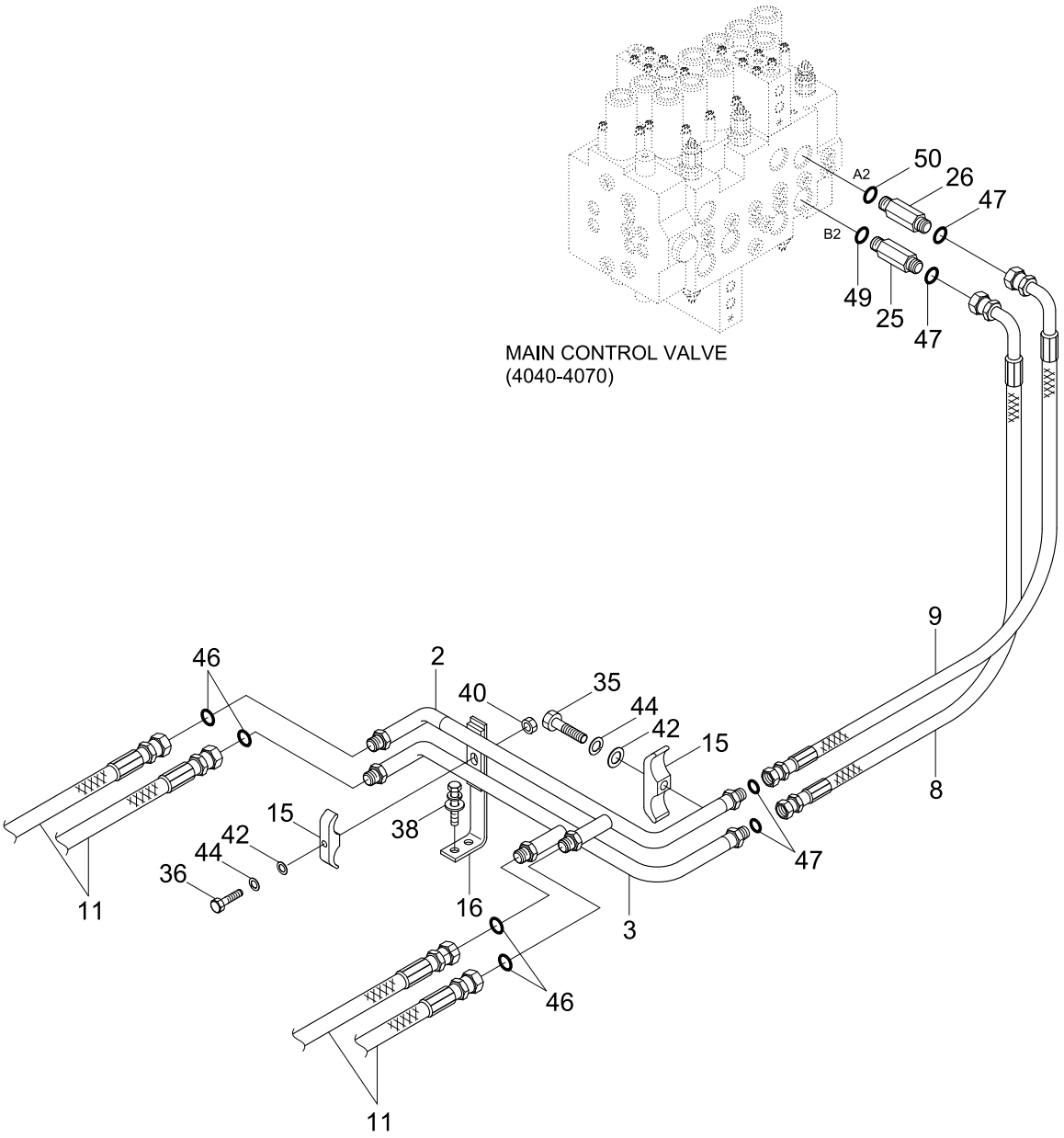

Item	Part_No	IS	Ord	T	Description	Qty	Serial_No	ITC	Remark
*	@				UPPER HYD PIPING 1/2	1	#0234 -	-	NOT
2	31N4-12051				PIPE ASSY	1			
3	31N4-12062				PIPE ASSY	1			
8	P930-127018				HOSE ASSY-ORFS 0X90	1			
9	P930-127020				HOSE ASSY-ORFS 0X90	1			
11	P913-087016				HOSE ASSY-ORFS 0X0	4	- #1961		
	31N4-13220				HOSE ASSY	4	#1962 -	B	
15	31N4-12270				CLAMP-PIPE	2			
16	31N4-12310				BRACKET-RETURN	1			
25	X511-112546				CONNECTOR-ORFS	1			
26	X511-116546				CONNECTOR-LONG,ORFS	1			
35	S017-100602				BOLT-HEX	1			
36	S017-100752				BOLT-HEX	1			
38	S037-103016				BOLT-W/WASHER	2			
40	S207-101002				NUT-HEX	1			
42	S403-101002				WASHER-PLAIN	2			
44	S411-100002				WASHER-SPRING	2			
46	S621-014001				O-RING	8			
47	S621-018001				O-RING	4			
49	S631-024004				O-RING	1			
50	S631-029004				O-RING	1			

UPPER HYD PIPING 2/2(#0234-, 2-BOOM)

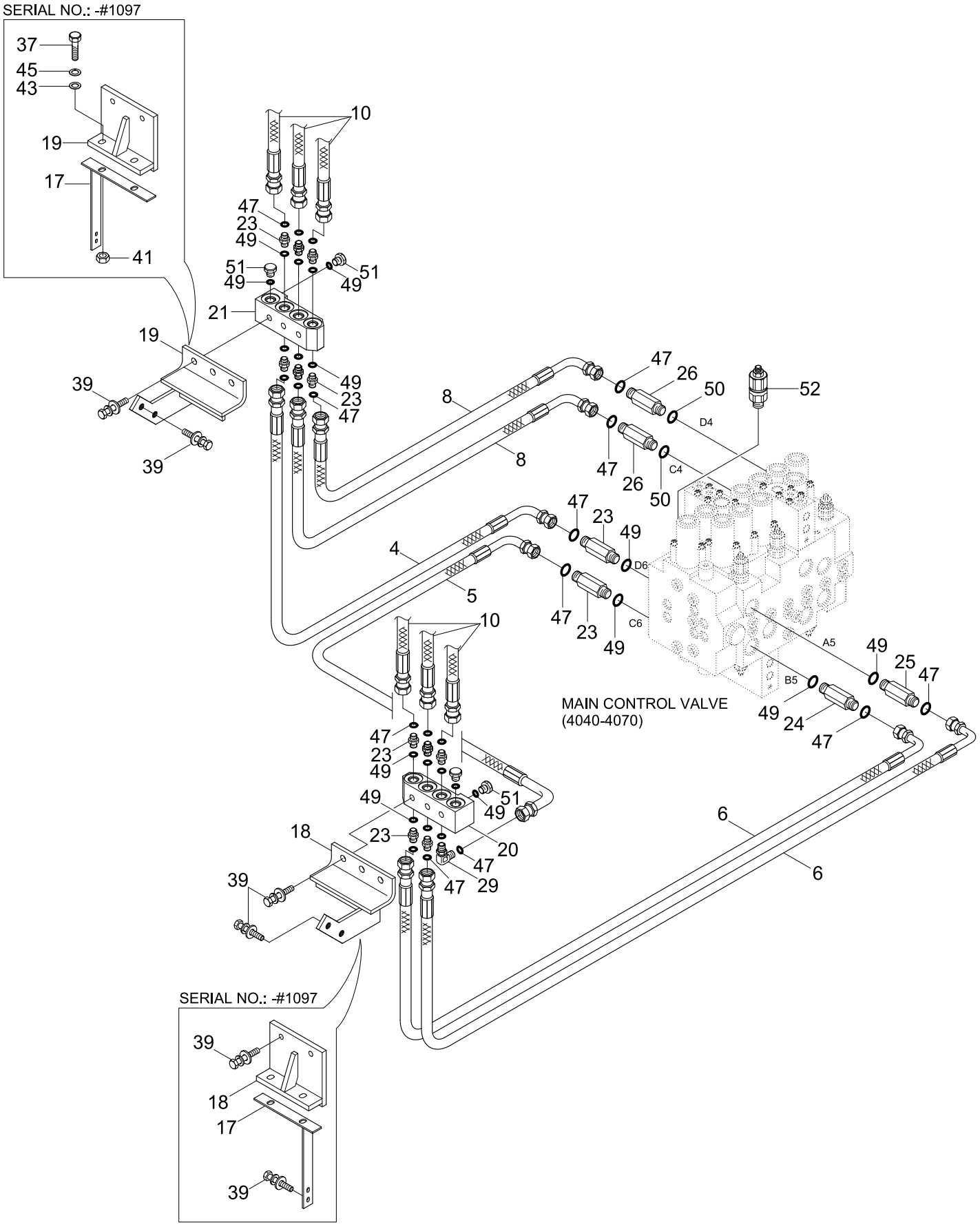

Item	Part_No	IS	Ord	T	Description	Qty	Serial_No	ITC	Remark
*	@				UPPER HYD PIPING	1	#0234 -	-	NOT
4	31N4-14410				HOSE ASSY-ORFS	1			
5	P930-127012				HOSE ASSY-ORFS 0X90	1			
6	P930-127017				HOSE ASSY-ORFS 0X90	2			
8	P930-127018				HOSE ASSY-ORFS 0X90	2			
10	P913-127035				HOSE ASSY-ORFS 0X0	6			
17	31N4-14420				BRACKET ASSY	2	- #1097	-	
18	31N4-14430				BRACKET ASSY-LH	1	- #1097		
	31N4-14431				BRACKET ASSY-LH	1	#1098 -	D	
19	31N4-14440				BRACKET ASSY-RH	1	- #1097		
	31N4-14441				BRACKET ASSY-RH	1	#1098 -	D	
20	35EA-12500				MANIFOLD-LH	1			
21	35EA-12510				MANIFOLD-RH	1			
23	X500-110004				CONNECTOR-ORFS	13			
24	X511-112543				CONNECTOR-LONG,ORFS	1			
25	X511-112546				CONNECTOR-ORFS	1			
26	X511-116546				CONNECTOR-LONG,ORFS	2			
29	X520-110004				ELBOW-90,ORFS	1			
37	S017-120502				BOLT-HEX HEAD	4	- #1097	-	
39	S037-123052				BOLT-W/WASHER	8	- #1097		
					BOLT-W/WASHER	10	#1098 -	A	
41	S207-121002				NUT-HEXAGON HEAD	4	- #1097	-	
43	S403-121002				WASHER-PLAIN	4	- #1097	-	
45	S411-120002				WASHER-SPRING	4	- #1097	-	
47	S621-018001				O-RING(SEAL LOCK TYPE)	18			

Item	Part_No	IS	Ord	T	Description	Qty	Serial_No	ITC	Remark
49	S631-024004				O-RING	20			
50	S631-029004				O-RING	2			
51	P220-110106				PLUG-HEX,HEAD	4			
52	XKBF-00095				RELIEF VALVE-OVERLOAD	2			STD, MONO
	XKBF-00486				RELIEF VALVE-OVERLOAD	2	#2859 -	-	2-BLOCK

UPPER HYD PIPING, BASE(STD, #1602-)

Serial no	MCV	Machine option	Pages
-#1601	ALP165	Std, Dozer, Adjust boom	3100~3140
#1602-	ALP165	Dozer, Adjust boom	3100~3140
	UHX22-26	Standard	3160~3180

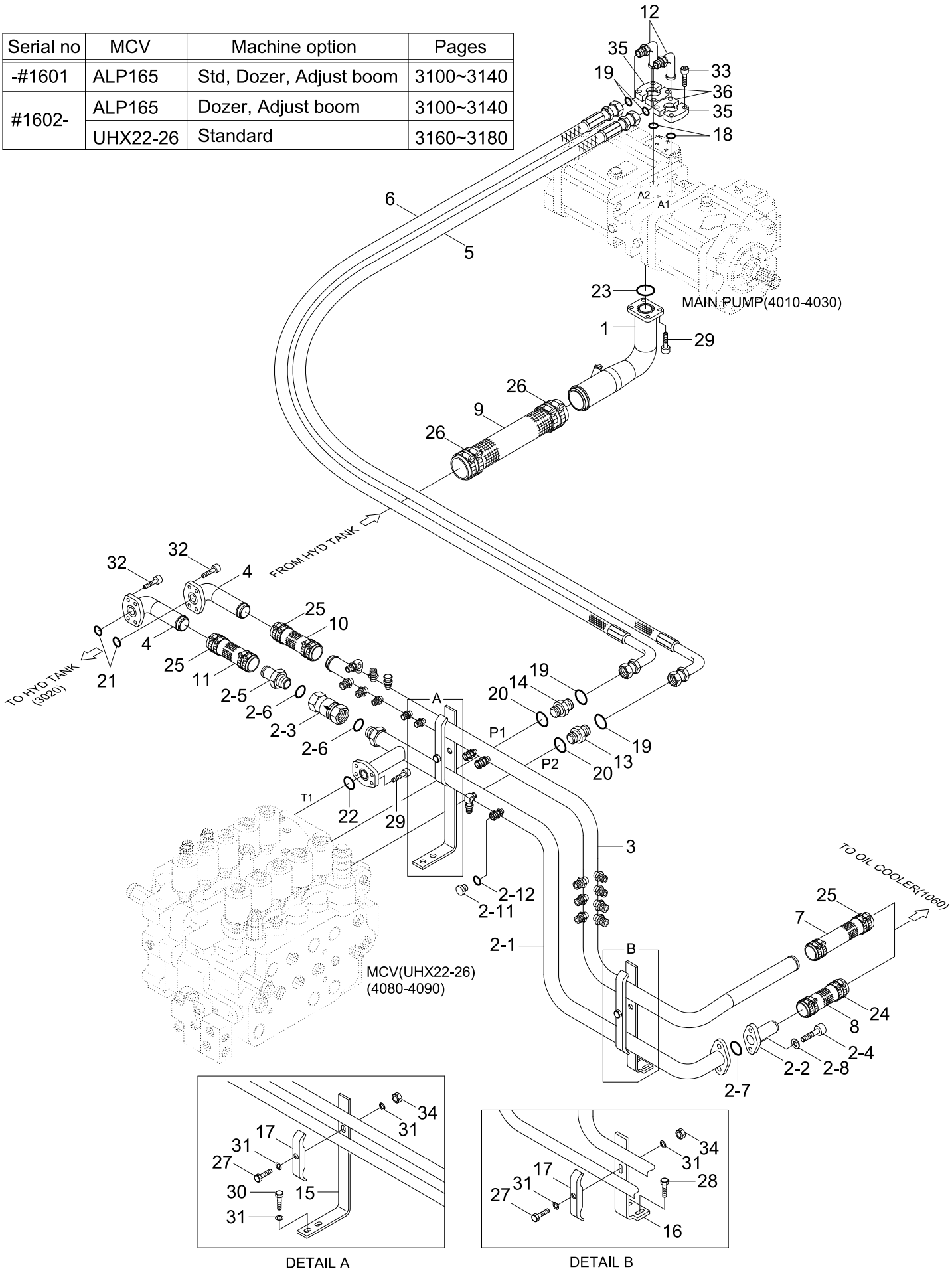

Item	Part_No	IS	Ord	T	Description	Qty	Serial_No	ITC	Remark
*	@				UPPER HYDRAULIC PIPING	1	#1602 -	-	NOT
1	31N4-12011				PIPE ASSY-SUCTION	1			
2	31N4-15200				RETURN PIPE SUB ASSY	1			
2-1	31N4-15210				.RETURN PIPE ASSY-LOWER	1			
2-11	X710-100105				..CAP,ORFS	1			
2-12	S621-018001				..O-RING	1			
2-2	31ER-11111				.VALVE-CHECK	1			
2-3	31E9-0142				.CHECK VALVE	1			
2-4	S109-120456				.BOLT-SOCKET	2			
2-5	34EA-10120				.CONNECTOR	1			
2-6	S631-044004				.O-RING	2			
2-7	Y172-003004				.O-RING	1			
2-8	S403-122006				.WASHER-PLAIN	2			
3	31N4-12343				PIPE ASSY	1			
4	31N4-12291				PIPE ASSY	2			
5	P933-127021				HOSE ASSY-ORFS 0X90	1			
6	P913-127020				HOSE ASSY-ORFS 0X0	1			
7	P760-063035				HOSE-RUBBER	1			
8	P760-073020				HOSE-RUBBER	1	- #3042		
	31N8-13080				HOSE-RUBBER	1	#3043 -	A	
9	P760-093022				HOSE-RUBBER	1			
10	P760-063022				HOSE-RUBBER	1			
11	P760-063019				HOSE-RUBBER	1			
12	31N6-15200				ELBOW-FLANGE	2			
13	X511-112544				CONNECTOR-LONG,ORFS	1			

Item	Part_No	IS	Ord	T	Description	Qty	Serial_No	ITC	Remark
14	31N5-10250				ELBOW-90,LONG,ORFS	1			
15	31N4-15230				BRACKET-RETURN	1			
16	31N4-14160				BRACKET ASSY	1			
17	31EG-12190				CLAMP-PIPE	2			
18	Y171-019001				O-RING	2			
19	S621-018001				O-RING	4			
20	S631-024004				O-RING	2			
21	S631-038001				O-RING	2			
22	S631-048001				O-RING	1			
23	S631-070001				O-RING	1			
24	S572-630006				CLAMP-HOSE WIRE TYPE	4			
	S572-640006				CLAMP-HOSE,WIRE TYPE	4	- #2337		
25	S572-570006				CLAMP-HOSE,WIRE TYPE	12	#2338 -	B	
26	S572-930006				CLAMP-HOSE,WIRE TYPE	4			
27	S017-120802				BOLT-HEX	2			
28	S037-103022				BOLT-W/WASHER	2			
29	S109-120306				BOLT-SOCKET	8			
30	S017-120306				BOLT-HEX	2			
31	S403-122002				WASHER-PLAIN	6			
32	S109-100306				BOLT-SOCKET	8			
33	S109-100306				BOLT-SOCKET	8			
34	S205-121002				NUT-HEX	2			
35	P174-120102				FLANGE-SPLIT	2			
36	31N7-12100				FLANGE-SPLIT	2			

UPPER HYD PIPING, TRAVEL(STD, #1602-)
(MCV : UHX22-26)

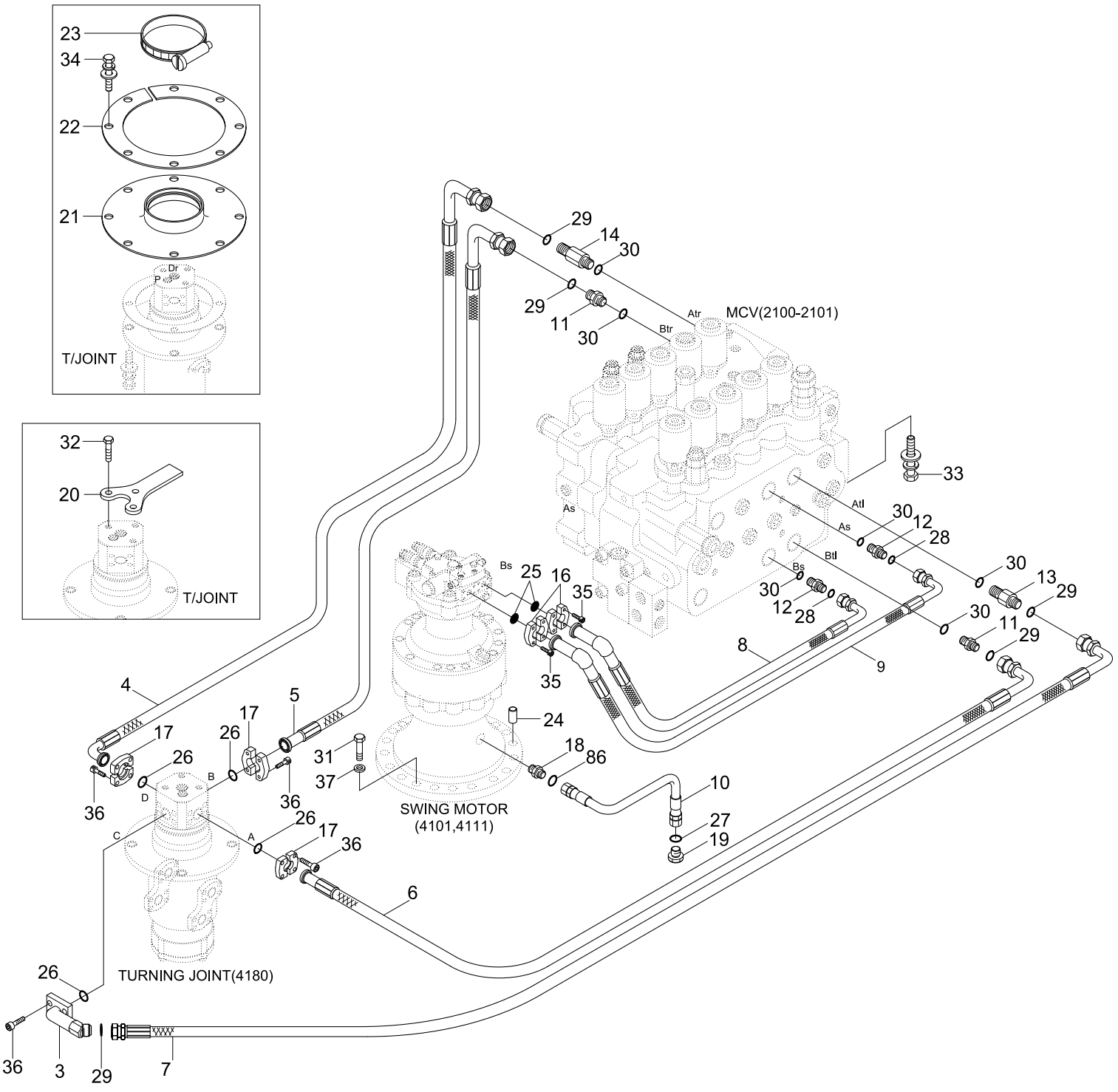

Item	Part_No	IS	Ord	T	Description	Qty	Serial_No	ITC	Remark
*	@				UPPER HYDRAULIC PIPING	1	#1602 -	-	NOT
3	31N4-12071				PIPE ASSY	1			
4	31N4-15240				HOSE ASSY	1			
5	P993-127325				HOSE ASSY-ORFSXFLG 0X90	1			
6	31N4-15280				HOSE ASSY	1			
7	P933-127021				HOSE ASSY-ORFS 0X90	1			
8	31N4-13100				HOSE ASSY	1			
9	31N4-13090				HOSE ASSY	1			
10	P920-062014				HOSE ASSY-ORFS 0X45	1			
11	X500-110004				CONNECTOR-ORFS	2			
12	X500-110017				CONNECTOR-ORFS	2			
13	X511-112543				CONNECTOR-LONG,ORFS	1			
14	X511-112546				CONNECTOR-ORFS	1			
16	P173-080101				FLANGE-SPLIT	4			
17	P173-120102				FLANGE-SPLIT	6			
18	31N7-12400				CONNECTOR-ORFS	1			
19	X700-100103				PLUG-ORFS	1			
20	31N4-12211				BRACKET-T/JOINT	1			
21	31N1-40941				RUBBER-T/JOINT	1			
22	31N1-40951				COVER-T/JOINT	1			
23	S520-130000				CLAMP-HOSE	1			
24	31E3-3053				PIN-DOWEL	1			
25	Y171-015004				O-RING	2			
26	Y171-019001				O-RING	4			
27	S621-012001				O-RING,ORFS	2			

Item	Part_No	IS	Ord	T	Description	Qty	Serial_No	ITC	Remark
28	S621-014001				O-RING,ORFS	6			
29	S621-018001				O-RING,ORFS	5			
30	S631-024001				O-RING	6			
31	S017-160552				BOLT-HEX	9			
32	S017-140302				BOLT-HEX	3			
33	S037-123522				BOLT-W/WASHER	4			
34	S037-102022				BOLT-W/WASHER	9			
35	S107-080606				BOLT-SOCKET	8			
36	S109-100306				BOLT-SOCKET	16			
37	S441-160002				WASHER-HARDENED	9			

UPPER HYD PIPING, ATTACH(STD, #1602-)

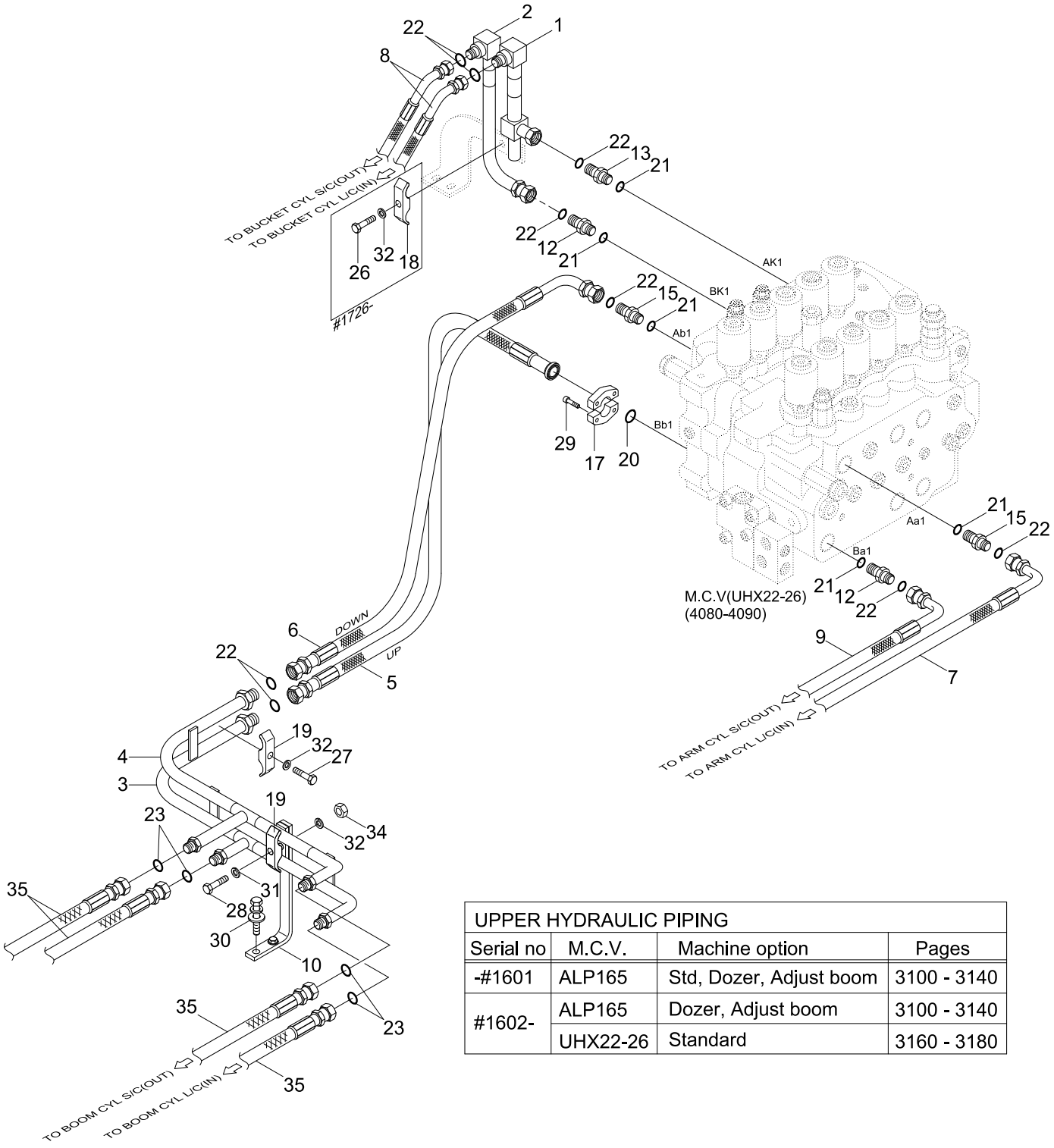

UPPER HYDRAULIC PIPING			
Serial no	M.C.V.	Machine option	Pages
-#1601	ALP165	Std, Dozer, Adjust boom	3100 - 3140
#1602-	ALP165	Dozer, Adjust boom	3100 - 3140
	UHX22-26	Standard	3160 - 3180

Item	Part_No	IS	Ord	T	Description	Qty	Serial_No	ITC	Remark
*	@				UPPER HYDRAULIC PIPING	1	#1602 -	-	NOT
1	31N4-15310				PIPE ASSY	1	- #1725		
	31N4-15311				PIPE ASSY	1	#1726 -	D	
2	31N4-15320				PIPE ASSY	1			
3	31N4-15330				PIPE ASSY	1			
4	31N4-15340				PIPE ASSY	1			
5	31N4-15350				HOSE ASSY	1	- #1725		
	31N4-15351				HOSE ASSY	1	#1726 -	D	
6	P930-127020				HOSE ASSY-ORFS 0X90	1	- #1725		
	P930-127019				HOSE ASSY-ORFS 0X90	1	#1726 -	D	
7	P933-127026				HOSE ASSY-ORFS 0X90	1			
8	P923-127026				HOSE ASSY-ORFS 0X45	2			
9	P933-127024				HOSE ASSY-ORFS 0X90	1			
10	31N4-12310				BRACKET-RETURN	1			
12	X500-110004				CONNECTOR-ORFS	2			
13	X511-112543				CONNECTOR-LONG,ORFS	1			
15	X511-112545				CONNECTOR-LONG,ORFS	2			
17	P173-160104				FLANGE-SPLIT	2			
18	31E3-3251	10			CLAMP PIPE	1	#1726 -	-	
19	31N4-12270				CLAMP-PIPE	2			
20	Y171-024004				O-RING	1			
21	S631-024001				O-RING	5			
22	S621-018001				O-RING	13			
23	S621-014001				O-RING	8			
26	S017-100502				BOLT-HEX	1	#1726 -	-	

Item	Part_No	IS	Ord	T	Description	Qty	Serial_No	ITC	Remark
27	S017-100602				BOLT-HEX	1			
28	S017-100852				BOLT-HEX	1			
29	S109-100306				BOLT-SOCKET	4			
30	S037-103022				BOLT-W/WASHER	2			
31	S403-102002				WASHER-PLAIN	1			
32	S411-100002				WASHER-SPRING	2	- #1725		
					WASHER-SPRING	3	#1726 -	A	
34	S205-101002				NUT-HEX	1			
35	31N4-50261				HOSE ASSY-ORFS 0X0	4	- #1961		
	31N4-13230				HOSE ASSY	4	#1962 -	B	

UPPER HYD PIPING(BASE, 2-BLOCK, #2680-)

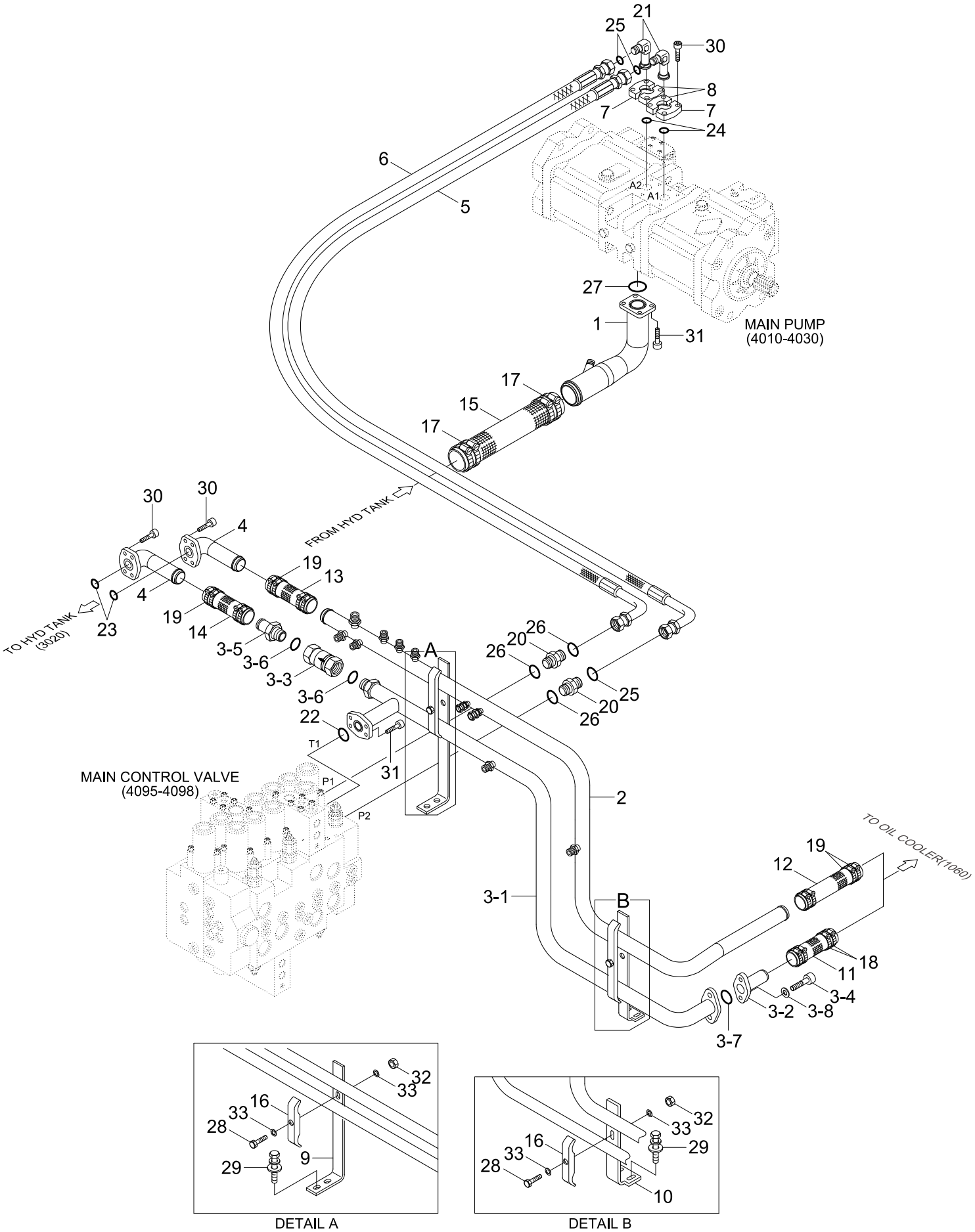

Item	Part_No	IS	Ord	T	Description	Qty	Serial_No	ITC	Remark
*	@				UPPER HYD PIPING	1	#2680 -	-	NOT
1	31N4-12011				PIPE ASSY-SUCTION	1			
2	31N4-12343				PIPE ASSY	1			
3	31N4-12410				RETURN PIPE SUB ASSY	1			
3-1	31N4-12420				.RETURN PIPE ASSY	1			
3-2	31ER-11111				.VALVE-CHECK	1			
3-3	31E9-0142	20			.CHECK VALVE	1			
3-4	S109-120456				.BOLT-SOCKET	2			
3-5	34EA-10120				.CONNECTOR	1			
3-6	S631-044004				.O-RING	2			
3-7	Y172-003004				.O-RING	1			
3-8	S403-12200B				.WASHER-PLAIN	2			
4	31N4-12291				PIPE ASSY	2			
5	P933-127020				HOSE ASSY-ORFS 0X90	1			
6	P933-127019				HOSE ASSY-ORFS 0X90	1			
7	P174-120102				FLANGE-SPLIT	2			
8	31N7-12100				FLANGE-SPLIT	2			
9	31N4-11250				BRACKET	1			
10	31N4-14160				BRACKET ASSY	1			
11	P760-073020				HOSE-RUBBER	1	- #3042		
	31N8-13080				HOSE-RUBBER	1	#3043 -	A	
12	P760-063035				HOSE-RUBBER	1			
13	P760-063022				HOSE-RUBBER	1			
14	P760-063019				HOSE-RUBBER	1			
15	P760-093022				HOSE-RUBBER	1			

Item	Part_No	IS	Ord	T	Description	Qty	Serial_No	ITC	Remark
16	31EG-12190				CLAMP-PIPE	2			
17	S572-930006				CLAMP-HOSE,WIRE TYPE	4			
18	S572-640006				CLAMP-HOSE,WIRE TYPE	4			
19	S572-570006				CLAMP-HOSE,WIRE TYPE	12			
20	X500-110004				CONNECTOR-LONG	2			
21	31N6-15200				ELBOW-FLANGE	2			
22	Y172-003004				O-RING	1			
23	Y171-027004				O-RING	2			
24	Y171-019004				O-RING	2			
25	S621-018001				O-RING	4			
26	S631-024004				O-RING	2			
27	S631-071001				O-RING	1			
28	S017-120806				BOLT-HEX	2			
29	S037-103026				BOLT-W/WASHER	4			
30	S109-100306				BOLT-SOCKET	16			
31	S109-120306				BOLT-SOCKET	8			
32	S205-121006				NUT-HEX	2			
33	S403-12200B				WASHER-PLAIN	4			

UPPER HYD PIPING(TRAVEL, 2-BLOCK, #2680-)

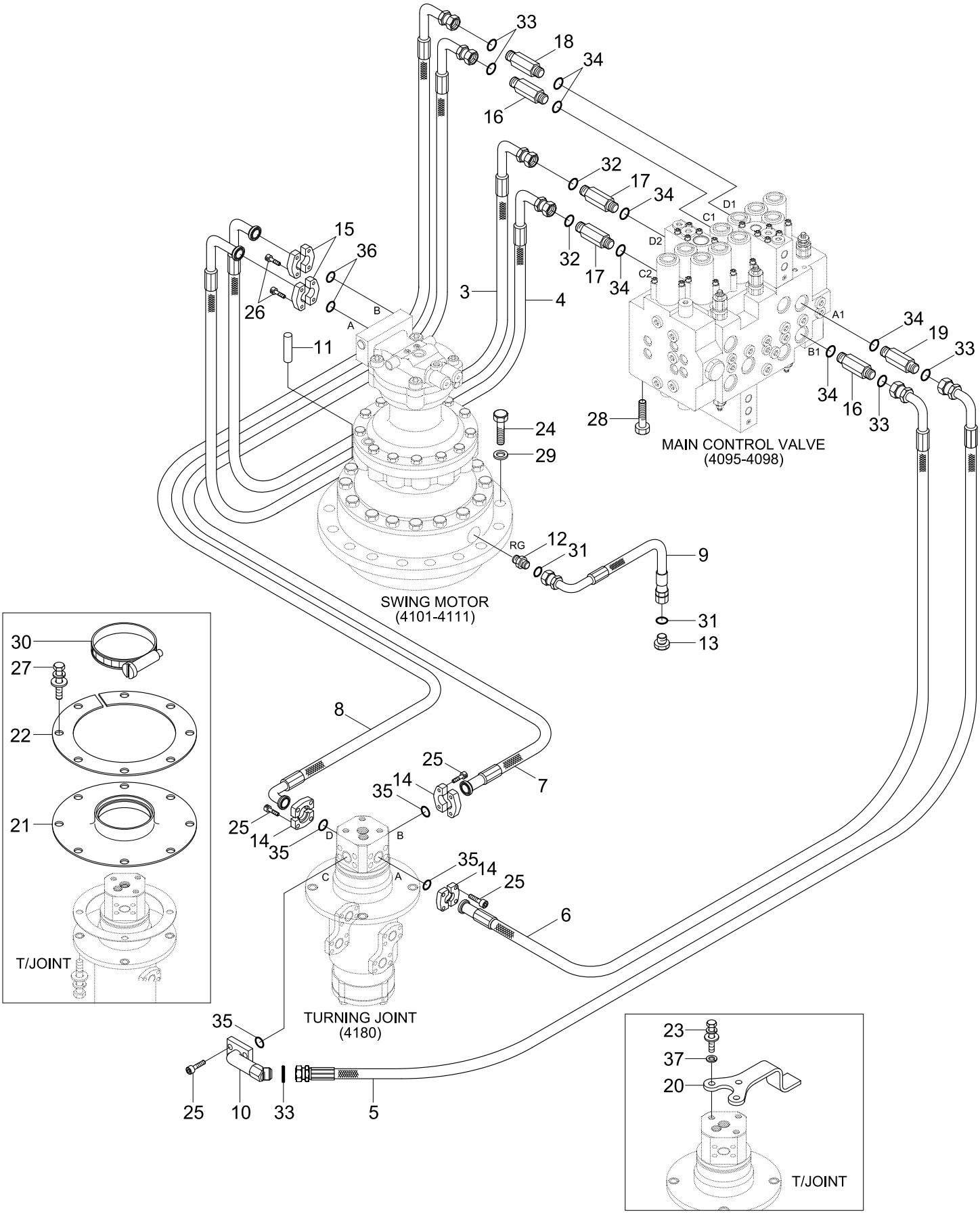

Item	Part_No	IS	Ord	T	Description	Qty	Serial_No	ITC	Remark
*	@				UPPER HYD PIPING	1	#2680 -	-	NOT
3	31N4-13090				HOSE ASSY	1			
4	31N4-13100				HOSE ASSY	1			
5	P933-127023				HOSE ASSY-ORFS 0X90	1			
6	31N4-12082				HOSE ASSY	1			
7	P993-127324				HOSE ASSY-ORFSXFLG 0X90	1			
8	31N4-12092				HOSE ASSY	1			
9	P920-062010				HOSE ASSY-ORFS 0X45	1			
10	31N4-12071				PIPE ASSY	1			
11	31E3-3053	20			PIN-DOWEL	1			
12	31N7-12400				CONNECTOR-ORFS	1			
13	X700-100103				PLUG-ORFS	1			
14	P173-120102				FLANGE-SPLIT	6			
15	P173-080101				FLANGE-SPLIT	4			
16	X500-110004				CONNECTOR-ORFS	2			
17	X511-112533				CONN-LONG,ORFS	2			
18	X511-112545				CONNECTOR-LONG,ORFS	1			
19	X511-112546				CONNECTOR-ORFS	1			
20	31N4-12211				BRACKET-T/JOINT	1			
21	31N1-40941				RUBBER-T/JOINT	1			
22	31N1-40951				COVER-T/JOINT	1			
23	S017-140306				BOLT-HEX	3			
24	S017-16055D				BOLT-HEX	9			
25	S109-100306				BOLT-SOCKET	16			
26	S109-080606				BOLT-SOCKET	8			

Item	Part_No	IS	Ord	T	Description	Qty	Serial_No	ITC	Remark
27	S037-102026				BOLT-W/WASHER	8			
28	S037-123526				BOLT-W/WASHER	3			
29	S441-160006				WASHER-HARDENED	9			
30	S520-130000				CLAMP-HOSE	1			
31	S621-012001				O-RING,ORFS	2			
32	S621-014001				O-RING,ORFS	2			
33	S621-018001				O-RING,ORFS	5			
34	S631-024004				O-RING	6			
35	Y171-019001				O-RING	4			
36	Y171-015004				O-RING	2			
37	S411-140006				WASHER-SPRING	3			

UPPER HYD PIPING(ATTACH, 2-BLOCK, #2680-)

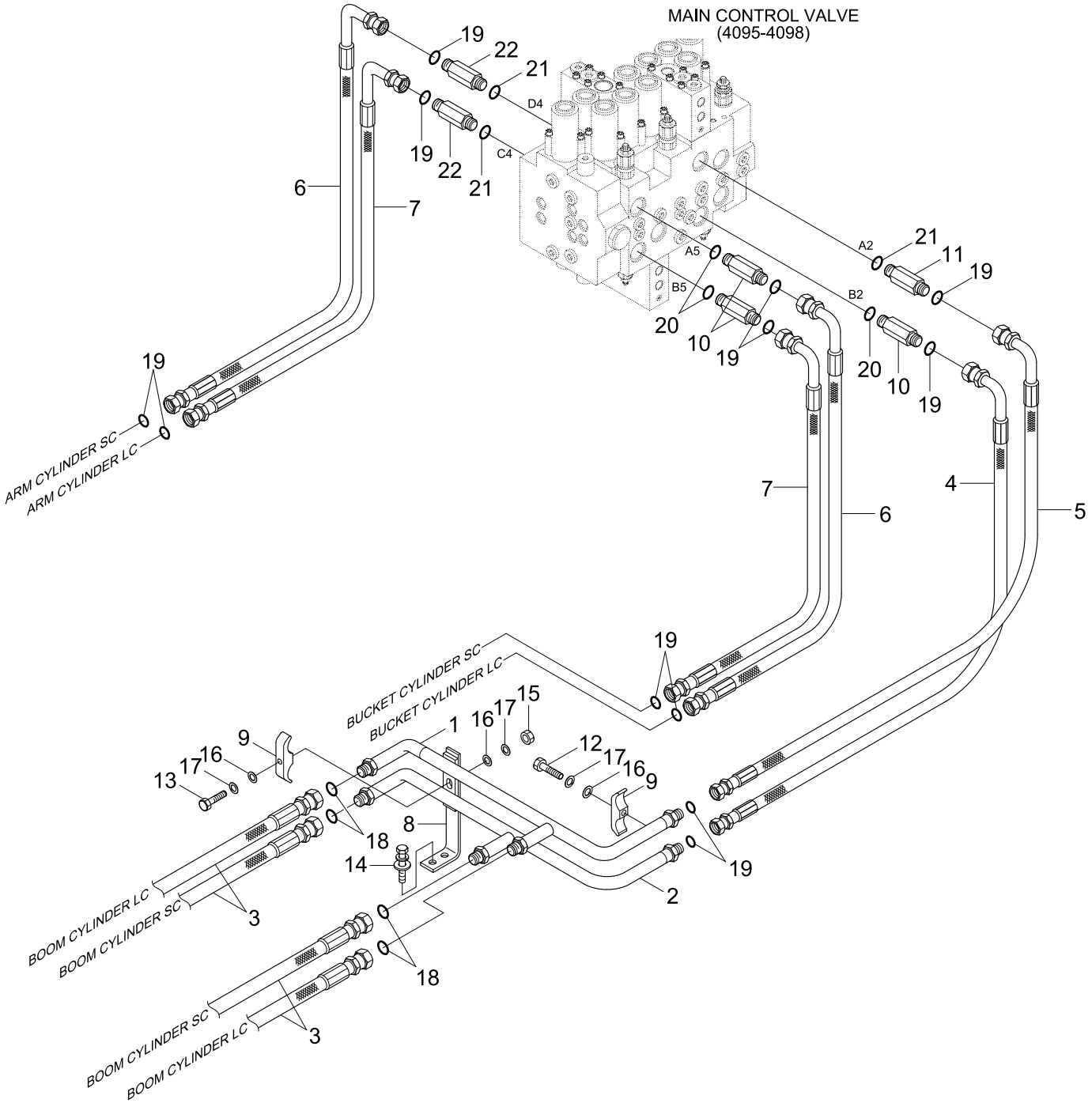

Item	Part_No	IS	Ord	T	Description	Qty	Serial_No	ITC	Remark
*	@				UPPER HYD PIPING	1	#2680 -	-	NOT
1	31N4-12051				PIPE ASSY	1			
2	31N4-12062				PIPE ASSY	1			
3	31N4-13210				HOSE ASSY	4			
4	P930-127018				HOSE ASSY-ORFS 0X90	1			
5	P930-127020				HOSE ASSY-ORFS 0X90	1			
6	P933-127024				HOSE ASSY-ORFS 0X90	2			
7	P933-127026				HOSE ASSY-ORFS 0X90	2			
8	31N4-12310				BRACKET-RETURN	1			
9	31N4-12270				CLAMP-PIPE	2			
10	X511-112545				CONNECTOR-LONG,ORFS	3			
11	X511-116544				CONNECTOR-LONG,ORFS	1			
12	S017-100606				BOLT-HEX	1			
13	S017-100756				BOLT-HEX	1			
14	S037-103026				BOLT-W/WASHER	2			
15	S205-101006				NUT-HEX	1			
16	S403-10200B				WASHER-PLAIN	3			
17	S411-100006				WASHER-SPRING	3			
18	S621-014001				O-RING,ORFS	4			
19	S621-018001				O-RING,ORFS	12			
20	S631-024004				O-RING	3			
21	S631-029004				O-RING	3			
22	X511-116546				CONNECTOR-LONG,ORFS	2			

PILOT HYD PIPING,CNTL 1(OPT)

PILOT HYDRAULIC PIPING			
Serial no	M.C.V.	Machine option	Pages
-#1601	ALP165	Std, Dozer, Adjust boom	3200 - 3260
#1602-	ALP165	Dozer, Adjust boom	3200 - 3260
	UHX22-26	Standard	3280 - 3285

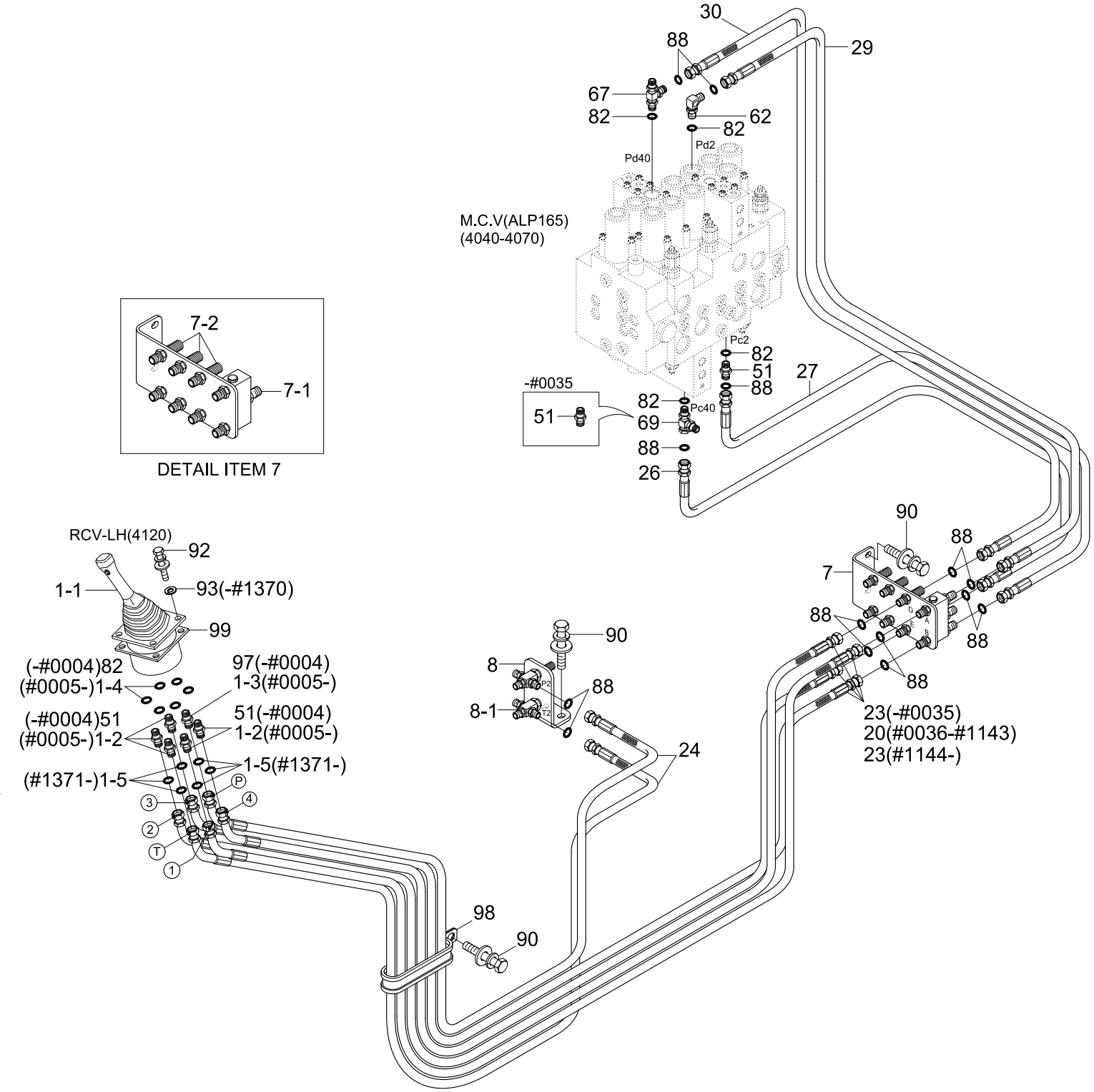

Item	Part_No	IS	Ord	T	Description	Qty	Serial_No	ITC	Remark
*	@				PILOT HYD PIPING	1	- #1601		NOT
					PILOT HYD PIPING	1	#1602 -	A	NOT
1	31N6-20150				RCV SUB ASSY-LH	1	#0005 - #0197	-	
	31N6-20200				RCV SUB ASSY-LH	1	#0198 - #1370	D	
	31N6-25200				RCV SUB ASSY-LH	1	#1371 -	D	
1-1	@				.RCV LEVER	1	#0005 -	-	NOT
1-2	P010-110002				.CONNECTOR	5	#0005 - #1370	-	
	X500-110001				.CONNECTOR-ORFS	5	#1371 -	D	
1-3	31EK-20100				.FILTER-LAST GUARD	1	#0005 - #1370	-	
	31N6-25060				.FILTER-LAST GUARD	1	#1371 -	D	
1-4	S631-011004				.O-RING	6	#0005 -	-	
1-5	S621-011001				.O-RING,ORFS	6	#1371 -	-	
7	31N6-22011				TERMINAL ASSY	1	- #1370		
	31N6-25010				TERMINAL ASSY	1	#1371 -	D	
7-1	31EK-20310				.SHUTTLE-5 PORT	1	- #1370		
	31N6-25030				.SHUTTLE-5 PORT	1	#1371 -	D	
7-2	31E4-3033	10			.CONNECTOR-2NUT	6	- #1370		
	X540-120001				.CONNECTOR-B.H TYPE	6	#1371 -	D	
8	31N4-22021				CROSS ASSY	1	- #1370		
	31N6-25100				CROSS ASSY	1	#1371 -	D	
8-1	31N6-25040				.CROSS-BULKHEAD TYPE	2	#1371 -	-	
20	P410-042036				HOSE ASSY-COMP 0X45	4	#0036 - #1143	-	
23	P410-042035				HOSE ASSY-COMP 0X45	4	- #0035	-	
	P410-042039				HOSE ASSY-COMP 0X45	4	#1144 - #1370	-	
	X410-042039				HOSE ASSY-SYNFLEX,ORFS	4	#1371 - #1601	D	

Item	Part_No	IS	Ord	T	Description	Qty	Serial_No	ITC	Remark
23	P920-042039				HOSE ASSY-ORFS 0X45	4	#1602 -	A	
24	P410-042026				HOSE ASSY-COMP 0X45	2	- #0035		
	P410-042025				HOSE ASSY-COMP 0X45	2	#0036 - #1370	D	
	X410-042025				HOSE ASSY-SYNFLEX,ORFS	2	#1371 - #1601	D	
	P920-042025				HOSE ASSY-ORFS 0X45	2	#1602 -	A	
26	P400-042021				HOSE ASSY-COMPACT	1	- #1370		
	X400-042021				HOSE ASSY-SYNFLEX,ORFS	1	#1371 - #1601	D	
	P910-042021				HOSE ASSY-ORFS 0X0	1	#1602 -	A	
27	P400-042022				HOSE ASSY-COMPACT	1	- #1370		
	X400-042022				HOSE ASSY-SYNFLEX,ORFS	1	#1371 - #1601	D	
	P910-042022				HOSE ASSY-ORFS 0X0	1	#1602 -	A	
29	P400-042029				HOSE ASSY-COMPACT	1	- #1143		
	P400-042031				HOSE ASSY-COMPACT	1	#1144 - #1370	B	
	X400-042031				HOSE ASSY-SYNFLEX,ORFS	1	#1371 - #1601	D	
	P910-042031				HOSE ASSY-ORFS 0X0	1	#1602 -	A	
30	P400-042032				HOSE ASSY-COMPACT	1	- #1370		
	X400-042032				HOSE ASSY-SYNFLEX,ORFS	1	#1371 - #1601	D	
	P910-042032				HOSE ASSY-ORFS 0X0	1	#1602 - #1601	D	
51	P010-110002				CONNECTOR	7	- #0004		
					CONNECTOR	2	#0005 - #0035	A	
					CONNECTOR	1	#0036 - #1370	A	
	X500-110001				CONNECTOR-ORFS	1	#1371 -	D	
62	P020-110001				ELBOW-90	1	- #1370		
	X520-110001				ELBOW-90,ORFS	1	#1371 -	D	
67	P320-040404				TEE-RUN TYPE	1	- #1370		

Item	Part_No	IS	Ord	T	Description	Qty	Serial_No	ITC	Remark
67	X820-045151				TEE-R/TYPE,ORFS	1	#1371 -	D	
69	32E6-10460				TEE-SWEVEL NUT	1	- #0035		
	31E6-0219	20			TEE-LONG	1	#0036 - #1370	D	
	31N4-22150				TEE-LONG,ORFS	1	#1371 -	D	
82	S631-011004				O-RING	10	- #0004		
					O-RING	4	#0005 -	A	
88	S621-011001				O-RING,ORFS	14	#1371 -	-	
90	S037-102042				BOLT-W/WASHER	5			
92	S175-060256				SCREW-SOCKET RD HD	4	- #1370		
	S035-063046				BOLT-W/WASHER	4	#1371 -	A	
93	S403-062006				WASHER-PLAIN	4	- #1370	-	
97	31EK-20100				FILTER-LAST GUARD	1	- #0004	-	
98	31E7-0312				CLAMP-HOSE	1			
99	31M6-51061				SHIM(3.2T)	1			

PILOT HYD PIPING,CNTL 2(OPT)

PILOT HYDRAULIC PIPING			
Serial no	M.C.V.	Machine option	Pages
-#1601	ALP165	Std, Dozer, Adjust boom	3200 - 3260
#1602-	ALP165	Dozer, Adjust boom	3200 - 3260
	UHX22-26	Standard	3280 - 3285

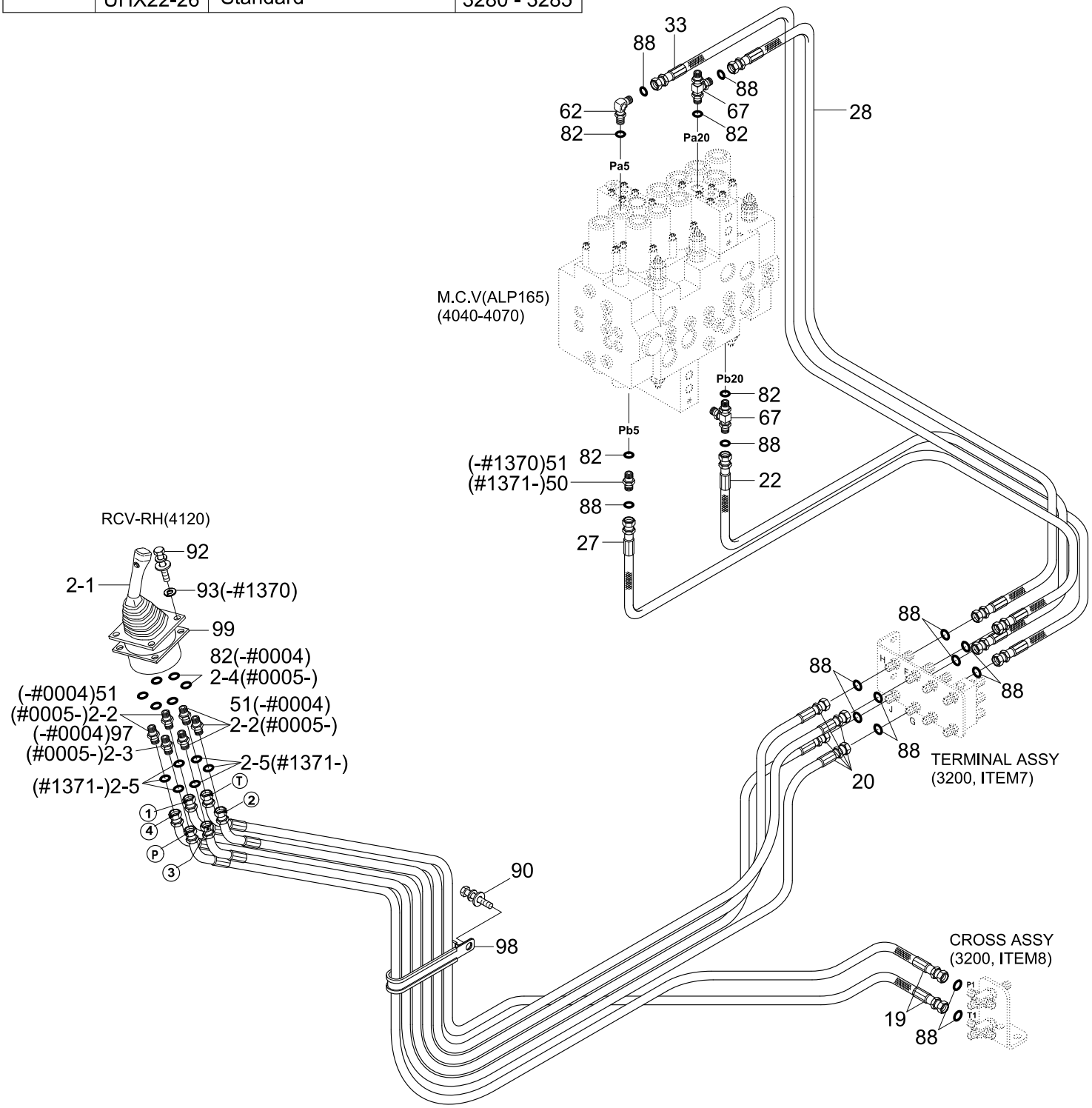

Item	Part_No	IS	Ord	T	Description	Qty	Serial_No	ITC	Remark
*	@				PILOT HYD PIPING	1	- #1601		NOT
					PILOT HYD PIPING	1	#1602 -	A	NOT
2	31N6-20160				RCV SUB ASSY-RH	1	#0005 - #0197	-	
	31N6-20210				RCV SUB ASSY-RH	1	#0198 - #1370	D	
	31N6-25210				RCV SUB ASSY-RH	1	#1371 -	D	
2-1	@				.RCV LEVER	1	#0005 -	-	NOT
2-2	P010-110002				.CONNECTOR	5	#0005 - #1370	-	
	X500-110001				.CONNECTOR-ORFS	5	#1371 -	D	
2-3	31EK-20100				.FILTER-LAST GUARD	1	#0005 - #1370	-	
	31N6-25060				.FILTER-LAST GUARD	1	#1371 -	D	
2-4	S631-011004				.O-RING	6	#0005 -	-	
2-5	S621-011001				.O-RING,ORFS	6	#1371 -	-	
19	P410-042028				HOSE ASSY-COMP 0X45	2	- #0035		
	P410-042027				HOSE ASSY-COMP 0X45	2	#0036 - #1370	D	
	X410-042027				HOSE ASSY-SYNFLEX,ORFS	2	#1371 - #1601	D	
	P920-042027				HOSE ASSY-ORFS 0X45	2	#1602 -	A	
20	P410-042036				HOSE ASSY-COMP 0X45	4	- #1370		
	X410-042036				HOSE ASSY-SYNFLEX,ORFS	4	#1371 - #1601	D	
	P920-042036				HOSE ASSY-ORFS 0X45	4	#1602 -	A	
22	P400-042019				HOSE ASSY-COMPACT	1	- #1370		
	X400-042019				HOSE ASSY-SYNFLEX,ORFS	1	#1371 - #1601	D	
	P910-042019				HOSE ASSY-ORFS 0X0	3	#1602 -	A	
27	P400-042022				HOSE ASSY-COMPACT	1	- #1370		
	X400-042022				HOSE ASSY-SYNFLEX,ORFS	1	#1371 - #1601	D	
	P910-042022				HOSE ASSY-ORFS 0X0	1	#1602 - #1601	A	

Item	Part_No	IS	Ord	T	Description	Qty	Serial_No	ITC	Remark
28	P400-042026				HOSE ASSY-COMPACT	1	- #1370		
	X400-042026				HOSE ASSY-SYNFLEX,ORFS	1	#1371 - #1601	D	
	P910-042026				HOSE ASSY-ORFS 0X0	1	#1602 -	A	
33	P400-042030				HOSE ASSY-COMPACT	1	- #1370		
	X400-042030				HOSE ASSY-SYNFLEX,ORFS	1	#1371 - #1601	D	
	P910-042030				HOSE ASSY-ORFS 0X0	1	#1602 -	A	
50	X511-104513				CONNECTOR-ORFS	1	#1371 -	-	
51	P010-110002				CONNECTOR	6	- #0004		
					CONNECTOR	1	#0005 - #1370	-	
62	P020-110001				ELBOW-90	1	- #1370		
	X520-110001				ELBOW-90,ORFS	1	#1371 -	D	
67	P320-040404				TEE-RUN TYPE	2	- #1370		
	X820-045151				TEE-R/TYPE,ORFS	2	#1371 -	D	
82	S631-011004				O-RING	10	- #0004		
					O-RING	4	#0005 -	A	
88	S621-011001				O-RING,ORFS	14	#1371 -	-	
90	S037-102042				BOLT-W/WASHER	1			
92	S175-060256				SCREW-SOCKET RD HD	4	- #1370		
	S035-063046				BOLT-W/WASHER	4	#1371 -	A	
93	S403-062006				WASHER-PLAIN	4	- #1370	-	
97	31EK-20100				FILTER-LAST GUARD	1	- #0004	-	
98	31E7-0312				CLAMP-HOSE	1			
99	31M6-51061				SHIM(3.2T)	1			

PILOT HYD PIPING,CNTL 3(OPT)

PILOT HYDRAULIC PIPING			
Serial no	M.C.V.	Machine option	Pages
-#1601	ALP165	Std, Dozer, Adjust boom	3200 - 3260
#1602-	ALP165	Dozer, Adjust boom	3200 - 3260
	UHX22-26	Standard	3280 - 3285

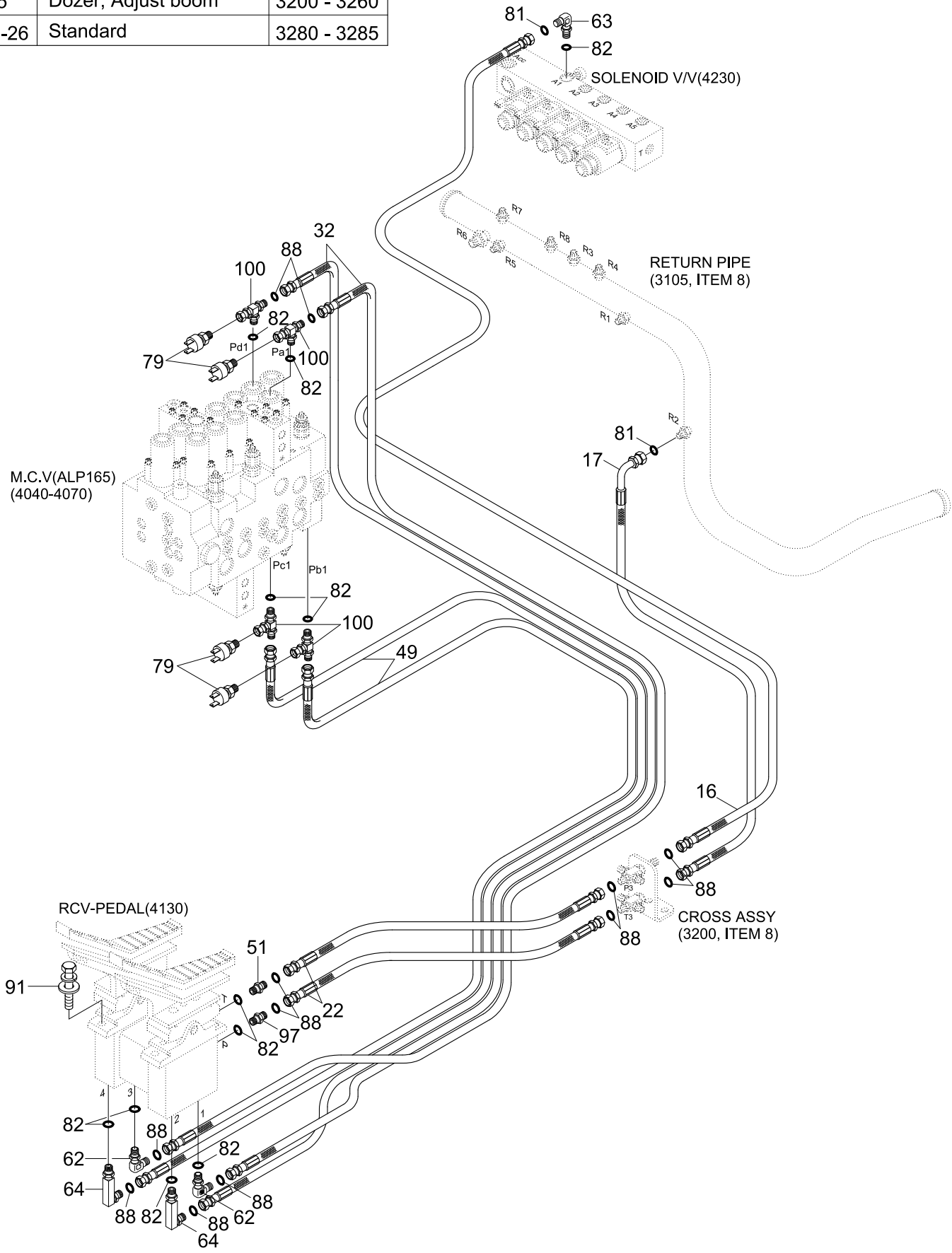

Item	Part_No	IS	Ord	T	Description	Qty	Serial_No	ITC	Remark
*	@				PILOT HYD PIPING	1	- #1601		NOT
					PILOT HYD PIPING	1	#1602 -	A	NOT
16	P400-062054				HOSE ASSY-COMPACT	1	- #1370		
	X420-062054				HOSE ASSY-SYNFLEX,ORFS	1	#1371 - #1601	D	
	P910-062054				HOSE ASSY-ORFS 0X0	1	#1602 -	A	
17	P420-062027				HOSE ASSY-COMP 0X90	1	- #1000		
	P860-062027				HOSE ASSY-SYN 0X90	1	#1001 - #1218	A	
	P860-062024				HOSE ASSY-SYN 0X90	1	#1219 - #1370	A	
	X420-062024				HOSE ASSY-SYNFLEX,ORFS	1	#1371 - #1601	D	
	P930-062024				HOSE ASSY-ORFS 0X90	1	#1602 -	A	
22	P400-042019				HOSE ASSY-COMPACT	2	- #1370		
	X400-042019				HOSE ASSY-SYNFLEX,ORFS	2	#1371 - #1601	D	
	P910-042019				HOSE ASSY-ORFS 0X0	2	#1602 -	A	
32	P400-042067				HOSE ASSY-COMPACT	2	- #1370		
	X400-042067				HOSE ASSY-SYNFLEX,ORFS	2	#1371 - #1601	D	
	P910-042067				HOSE ASSY-ORFS 0X0	2	#1602 -	A	
49	P400-042058				HOSE ASSY-COMPACT	2	- #1370		
	X400-042058				HOSE ASSY-SYNFLEX,ORFS	2	#1371 - #1601	D	
	P910-042058				HOSE ASSY-ORFS 0X0	2	#1602 -	A	
51	P010-110002				CONNECTOR	1	- #1370		
	X500-110001				CONNECTOR-ORFS	1	#1371 - #1601	D	
62	P020-110001				ELBOW-90	2	- #1370		
	X520-110001				ELBOW-90,ORFS	2	#1371 - #1601	D	
63	P020-110002				ELBOW-90	1	- #1370		
	X520-110002				ELBOW-90,ORFS	1	#1371 - #1601	D	

Item	Part_No	IS	Ord	T	Description	Qty	Serial_No	ITC	Remark
64	E131-0603				ELBOW 90-LONG	2	- #1370		
	31N6-25110				ELBOW 90-LONG,ORFS	2	#1371 -	D	
79	31E5-40540				SWITCH-PRESSURE	4			TRAVEL ALARM
81	S621-012001				O-RING,ORFS	2	#1371 -	-	
82	S631-011004				O-RING	11			
88	S621-011001				O-RING,ORFS	14	#1371 -	-	
91	S037-103022				BOLT-W/WASHER	4			
97	31EK-20100				FILTER-LAST GUARD	1	- #1370		
	31N6-25060				FILTER-LAST GUARD	1	#1371 -	D	
100	E131-0709	10			TEE	4	- #1370		
	31N1-20100				TEE	4	#1371 -	D	

PILOT HYD PIPING,BASE 1(OPT)

PILOT HYDRAULIC PIPING			
Serial no	M.C.V.	Machine option	Pages
-#1601	ALP165	Std, Dozer, Adjust boom	3200 - 3260
#1602-	ALP165	Dozer, Adjust boom	3200 - 3260
	UHX22-26	Standard	3280 - 3285

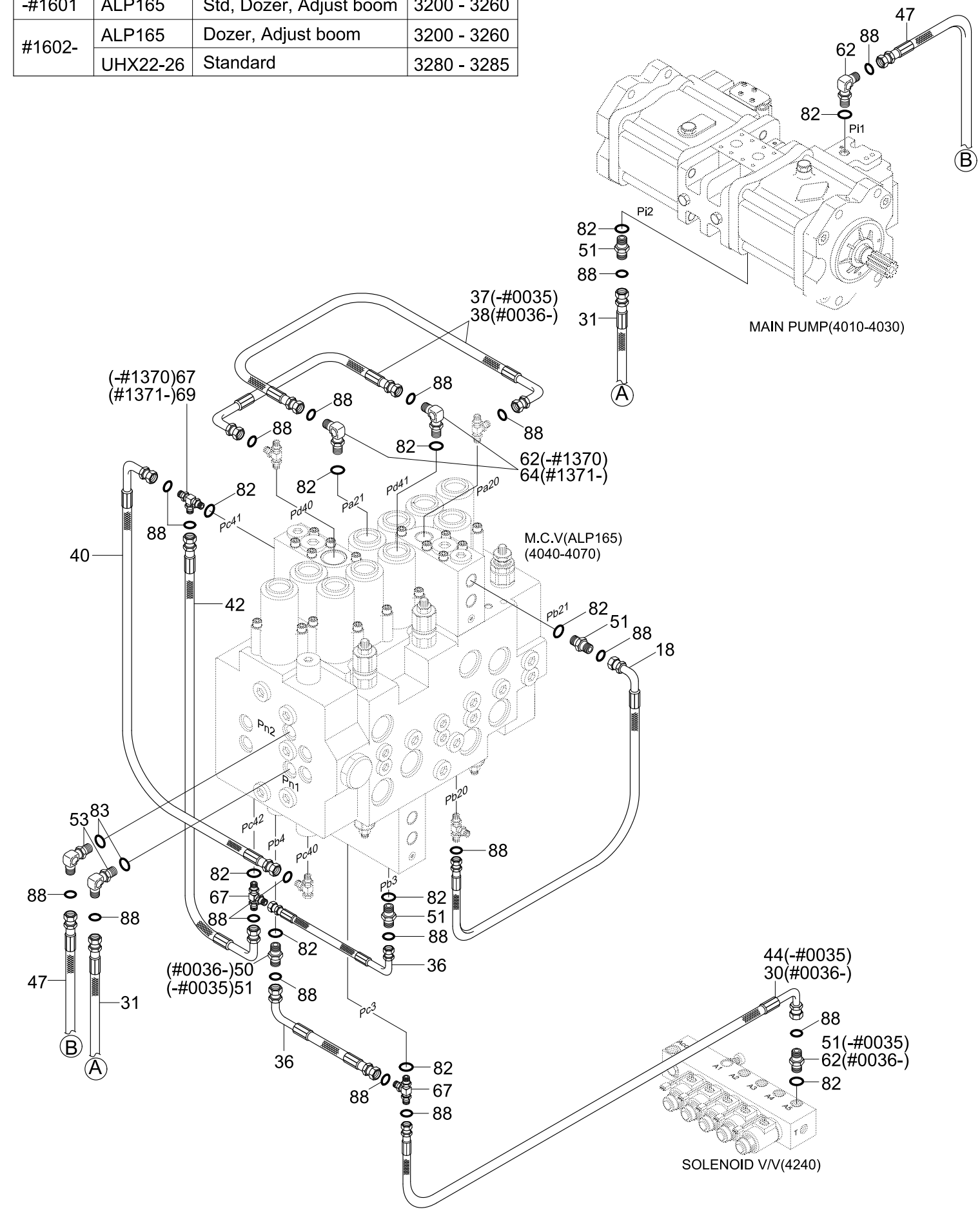

Item	Part_No	IS	Ord	T	Description	Qty	Serial_No	ITC	Remark
*	@				PILOT HYD PIPING	1	- #1601		NOT
					PILOT HYD PIPING	1	#1602 -	A	NOT
18	P410-042016				HOSE ASSY-COMP 0X45	1	- #1370		
	X420-042017				HOSE ASSY-SYNFLEX,ORFS	1	#1371 - #1601	D	
	P930-042017				HOSE ASSY-ORFS 0X90	1	#1602 -	A	
30	P400-042032				HOSE ASSY-COMPACT	1	#0036 - #1370	-	
	X400-042032				HOSE ASSY-SYNFLEX,ORFS	1	#1371 - #1601	D	
	P910-042032				HOSE ASSY-ORFS 0X0	1	#1602 -	A	
31	P400-042041				HOSE ASSY-COMPACT	1	- #1000		
	P840-042041				HOSE ASSY-SYN THD	1	#1001 - #1218	A	
	P600-043041				HOSE ASSY-THD	1	#1219 - #1370	A	
	P910-043041				HOSE ASSY-ORFS 0X0	1	#1371 -	D	
36	P420-042008				HOSE ASSY-COMP 0X90	2	- #1370		
	X420-042008				HOSE ASSY-SYNFLEX,ORFS	2	#1371 - #1601	D	
	P930-042008				HOSE ASSY-ORFS 0X90	2	#1602 -	A	
37	P420-042009				HOSE ASSY-COMP 0X90	2	- #0035	-	
38	P420-042010				HOSE ASSY-COMP 0X90	2	#0036 - #1370	-	
	X420-042010				HOSE ASSY-SYNFLEX,ORFS	2	#1371 - #1601	D	
	P930-042010				HOSE ASSY-ORFS 0X90	2	#1602 -	A	
40	P420-042015				HOSE ASSY-COMP 0X90	1	- #1370		
	X420-042015				HOSE ASSY-SYNFLEX,ORFS	1	#1371 - #1601	D	
	P930-042015				HOSE ASSY-ORFS 0X90	1	#1602 -	A	
42	P420-042019				HOSE ASSY-COMP 0X90	1	- #1370		
	X420-042019				HOSE ASSY-SYNFLEX,ORFS	1	#1371 - #1601	D	
	P930-042019				HOSE ASSY-ORFS 0X90	1	#1602 -	A	

Item	Part_No	IS	Ord	T	Description	Qty	Serial_No	ITC	Remark
44	P420-042032				HOSE ASSY-COMP 0X90	1	- #0035	-	
47	P400-042048				HOSE ASSY-COMPACT	1	- #1000		
	P840-042048				HOSE ASSY-SYN THD	1	#1001 - #1218	A	
	P600-043048				HOSE ASSY-THD	1	#1219 - #1370	A	
	P910-043048				HOSE ASSY-ORFS 0X0	1	#1371 -	D	
50	P010-110009				CONNECTOR-LONG	1	#0036 - #1370	-	
	X511-104513				CONNECTOR-ORFS	1	#1371 -	D	
51	P010-110002				CONNECTOR	5	- #0035		
					CONNECTOR	4	#0036 - #1370	A	
	X500-110001				CONNECTOR-ORFS	4	#1371 -	D	
53	P020-110012				ELBOW-90	2	- #1370		
	X520-110012				ELBOW-90,ORFS	2	#1371 -	D	
62	P020-110001				ELBOW-90	3	- #0035		
					ELBOW-90	4	#0036 - #1370	A	
	X520-110001				ELBOW-90,ORFS	2	#1371 -	D	
64	31N6-25110				ELBOW 90-LONG,ORFS	2	#1371 -	D	
67	P320-040404				TEE-RUN TYPE	3	- #1370		
	X820-045151				TEE-R/TYPE,ORFS	2	#1371 -	D	
69	31N4-22150				TEE-LONG,ORFS	1	#1371 -	D	
82	S631-011004				O-RING	11			
83	S631-014004				O-RING	2			
88	S621-011001				O-RING,ORFS	20	#1371 -	-	

PILOT HYD PIPING,BASE 2(OPT)

PILOT HYDRAULIC PIPING			
Serial no	M.C.V.	Machine option	Pages
-#1601	ALP165	Std, Dozer, Adjust boom	3200 - 3260
#1602-	ALP165	Dozer, Adjust boom	3200 - 3260
	UHX22-26	Standard	3280 - 3285

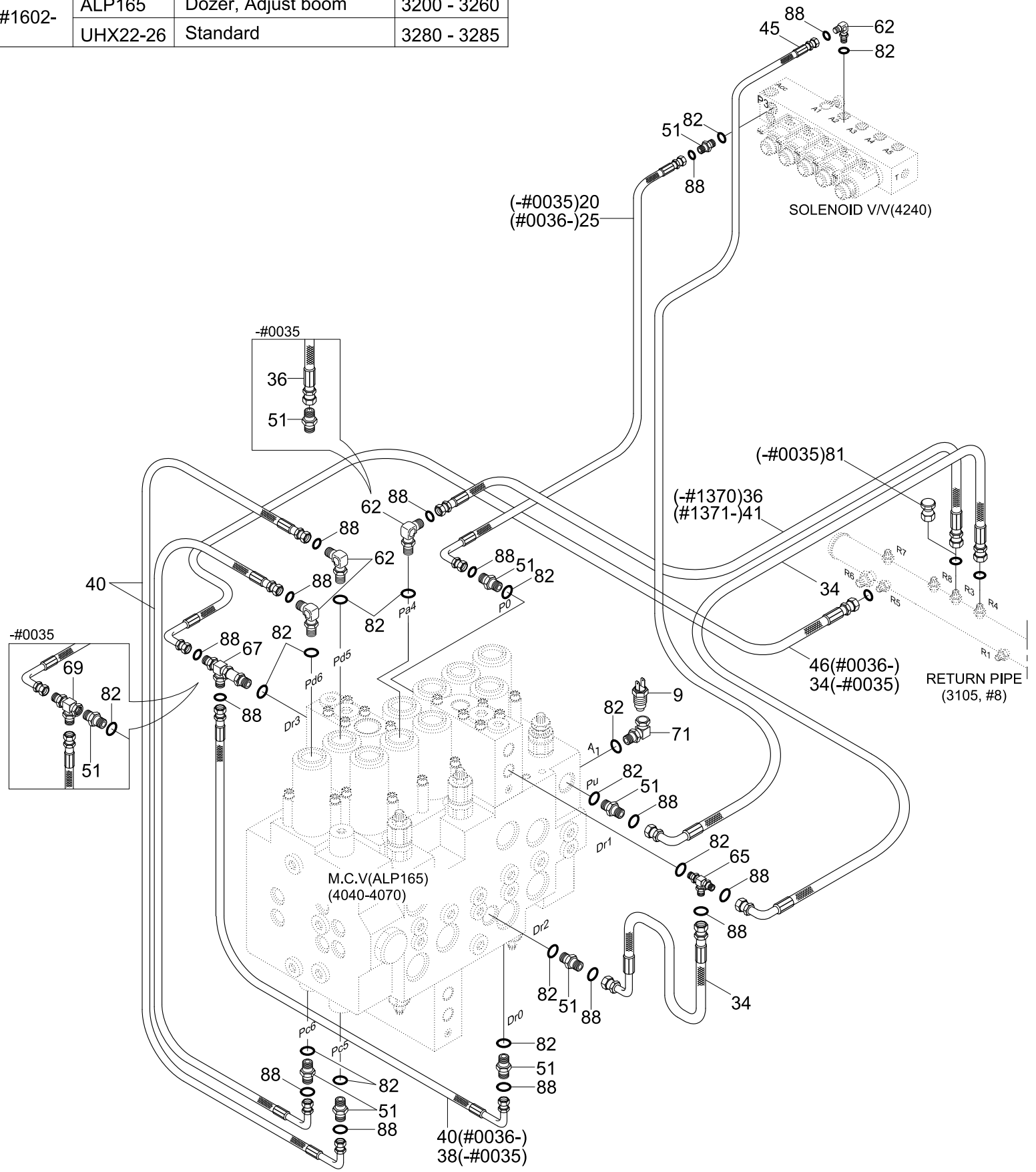

Item	Part_No	IS	Ord	T	Description	Qty	Serial_No	ITC	Remark
*	@				PILOT HYD PIPING	1	- #1601		NOT
					PILOT HYD PIPING	1	#1602 -	A	NOT
9	31E5-40560				SWITCH-PRESSURE	1			AUTO IDLE
20	P410-042036				HOSE ASSY-COMP 0X45	1	- #0035	-	
25	P400-042036				HOSE ASSY-COMPACT	1	#0036 - #1370	-	
	X400-042036				HOSE ASSY-SYNFLEX,ORFS	1	#1371 - #1601	D	
	P910-042036				HOSE ASSY-ORFS 0X0	1	#1602 -	A	
34	P420-042005				HOSE ASSY-COMP 0X90	3	- #0035		
					HOSE ASSY-COMP 0X90	2	#0036 - #1370	A	
	X420-042005				HOSE ASSY-SYNFLEX,ORFS	2	#1371 - #1601	D	
	P930-042005				HOSE ASSY-ORFS 0X90	2	#1602 -	A	
36	P420-042008				HOSE ASSY-COMP 0X90	1	- #1370	-	
38	P420-042010				HOSE ASSY-COMP 0X90	1	- #0035	-	
40	P420-042015				HOSE ASSY-COMP 0X90	2	- #0035		
					HOSE ASSY-COMP 0X90	3	#0036 - #1370	A	
	X420-042015				HOSE ASSY-SYNFLEX,ORFS	3	#1371 - #1601	D	
	P930-042015				HOSE ASSY-ORFS 0X90	3	#1602 -	A	
41	X420-042008				HOSE ASSY-SYNFLEX,ORFS	1	#1371 - #1601	-	
	P930-042008				HOSE ASSY-ORFS 0X90	1	#1602 -	A	
45	P420-042037				HOSE ASSY-COMP 0X90	1	- #1370		
	X420-042037				HOSE ASSY-SYNFLEX,ORFS	1	#1371 - #1601	D	
	P930-042037				HOSE ASSY-ORFS 0X90	1	#1602 -	A	
46	P420-042006				HOSE ASSY-COMP 0X90	1	#0036 - #1370	-	
	X420-042006				HOSE ASSY-SYNFLEX,ORFS	1	#1371 - #1601	D	
	P930-042006				HOSE ASSY-ORFS 0X90	1	#1602 -	A	

Item	Part_No	IS	Ord	T	Description	Qty	Serial_No	ITC	Remark
51	P010-110002				CONNECTOR	9	- #0035		
					CONNECTOR	7	#0036 - #1370	A	
	X500-110001				CONNECTOR-ORFS	7	#1371 -	D	
62	P020-110001				ELBOW-90	3	- #0035		
					ELBOW-90	4	#0036 - #1370	A	
	X520-110001				ELBOW-90,ORFS	4	#1371 -	D	
65	P310-040404				TEE-BRANCH TYPE	1	- #1370		
	X810-045151				TEE-B/TYPE,ORFS	1	#1371 -	D	
67	X820-045151				TEE-R/TYPE,ORFS	1	#1371 -	D	
69	32E6-10460				TEE-SWEVEL NUT	1	- #0035		
	31E6-0219	20			TEE-LONG	1	#0036 - #1370	D	
71	31E5-11110				ADAPTER	1			
81	P290-100102				CAP	1	- #0035	-	
82	S631-011004				O-RING	14			
88	S621-011001				O-RING,ORFS	18	#1371 -	-	

PILOT HYD PIPING,BASE 3(OPT)

PILOT HYDRAULIC PIPING			
Serial no	M.C.V.	Machine option	Pages
-#1601	ALP165	Std, Dozer, Adjust boom	3200 - 3260
#1602-	ALP165	Dozer, Adjust boom	3200 - 3260
	UHX22-26	Standard	3280 - 3285

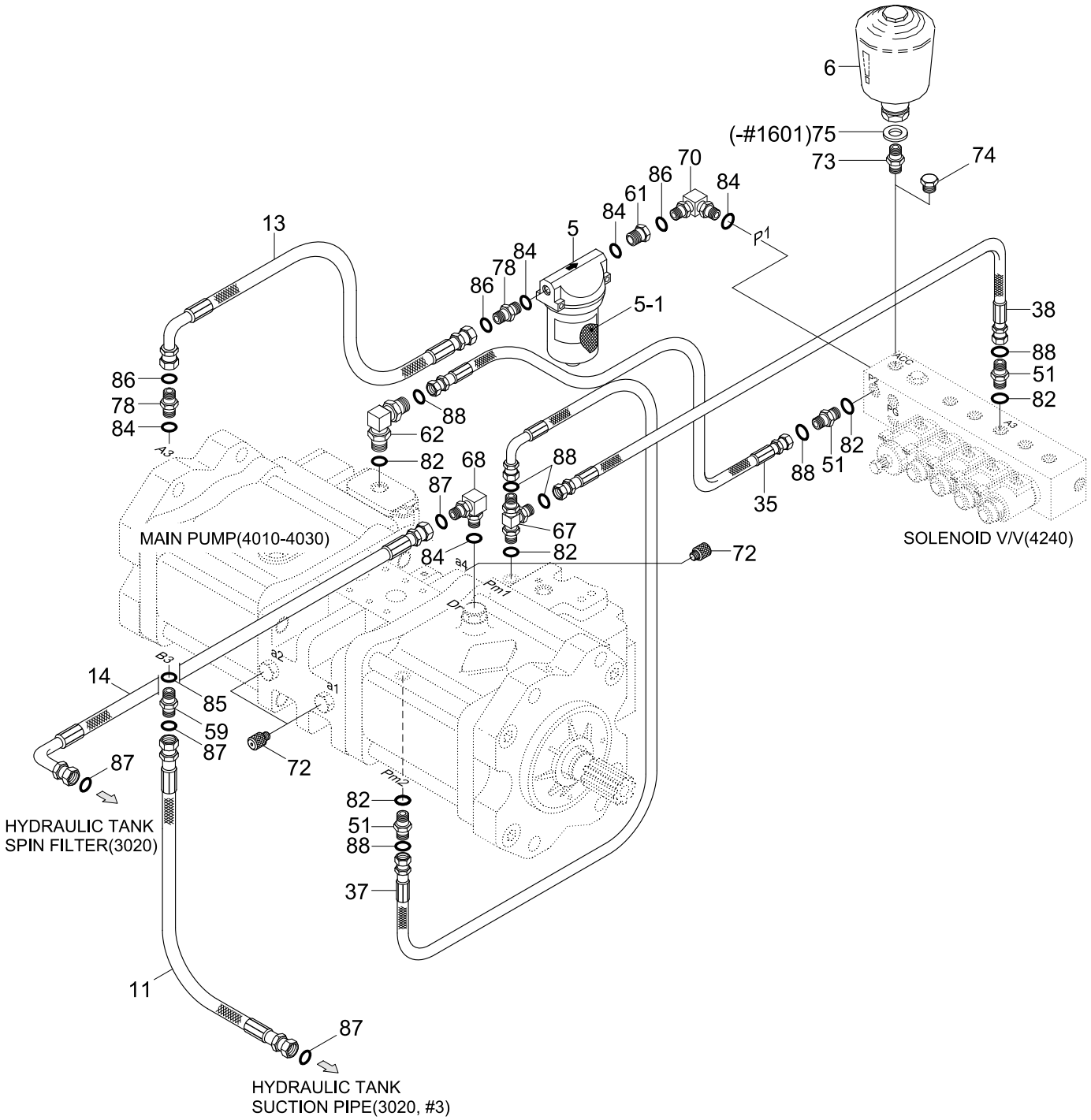

Item	Part_No	IS	Ord	T	Description	Qty	Serial_No	ITC	Remark
*	@				PILOT HYD PIPING	1	- #1601		NOT
					PILOT HYD PIPING	1	#1602 -	A	NOT
5	31E3-0017				FILTER-LINE	1			
5-1	31E3-0018	10			.ELEMENT-LINE FILTER	1			
6	31E3-3187				ACCUMULATOR	1			
11	P910-122012				HOSE ASSY-ORFS 0X0	1			
13	P930-082016				HOSE ASSY-ORFS 0X90	1			
14	P620-122015				HOSE ASSY-THD 0X90	1	- #1370		
	P930-122015				HOSE ASSY-ORFS 0X90	1	#1371 -	D	
35	P420-042007				HOSE ASSY-COMP 0X90	1	- #1370		
	X420-042007				HOSE ASSY-SYNFLEX,ORFS	1	#1371 - #1601	D	
	P930-042007				HOSE ASSY-ORFS 0X90	1	#1602 -	A	
37	P420-042009				HOSE ASSY-COMP 0X90	1	- #1370		
	X420-042009				HOSE ASSY-SYNFLEX,ORFS	1	#1371 - #1601	D	
	P930-042009				HOSE ASSY-ORFS 0X90	1	#1602 -	A	
38	P420-042010				HOSE ASSY-COMP 0X90	1	- #1370		
	X420-042010				HOSE ASSY-SYNFLEX,ORFS	1	#1371 - #1601	D	
	P930-042010				HOSE ASSY-ORFS 0X90	1	#1602 -	A	
51	P010-110002				CONNECTOR	3	- #1370		
	X500-110001				CONNECTOR-ORFS	3	#1371 -	D	
59	X500-110004				CONNECTOR-ORFS	1			
61	31EM-20160				ADAPTER	1	- #1370		
	31N6-22400				ADAPTER	1	#1371 -	D	
62	P020-110001				ELBOW-90	1	- #1370		
	X520-110001				ELBOW-90,ORFS	1	#1371 -	D	

Item	Part_No	IS	Ord	T	Description	Qty	Serial_No	ITC	Remark
67	P320-040404				TEE-RUN TYPE	1	- #1370		
	X820-045151				TEE-R/TYPE,ORFS	1	#1371 -	D	
68	P020-110015				ELBOW-90	1	- #1370		
	X520-110015				ELBOW-90,ORFS	1	#1371 -	D	
70	P020-110003				ELBOW-90	1	- #1370		
	X520-110003				ELBOW-90,ORFS	1	#1371 -	D	
72	31EK-11130				COUPLING-SCREW	3			
73	31E9-20060				FITTING	1	- #1601		
	31N6-24200				CONNECTOR	1	#1602 -	B	
74	P220-110103				PLUG-HEX	1			W/O ACCUMULATOR
75	P391-080000				WASHER-COPPER	1	- #1601	-	
78	X500-110003				CONNECTOR-ORFS	2			
82	S631-011004				O-RING	5			
84	S631-018004				O-RING	4			
85	S631-024004				O-RING	2			
86	S621-014001				O-RING,ORFS	1	- #1370		
					O-RING,ORFS	2	#1371 -	A	
87	S621-018001				O-RING,ORFS	2	- #1370		
					O-RING,ORFS	4	#1371 -	A	
88	S621-011001				O-RING,ORFS	6	#1371 -	-	

PILOT HYD PIPING,BASE 4(OPT)

PILOT HYDRAULIC PIPING			
Serial no	M.C.V.	Machine option	Pages
-#1601	ALP165	Std, Dozer, Adjust boom	3200 - 3260
#1602-	ALP165	Dozer, Adjust boom	3200 - 3260
	UHX22-26	Standard	3280 - 3285

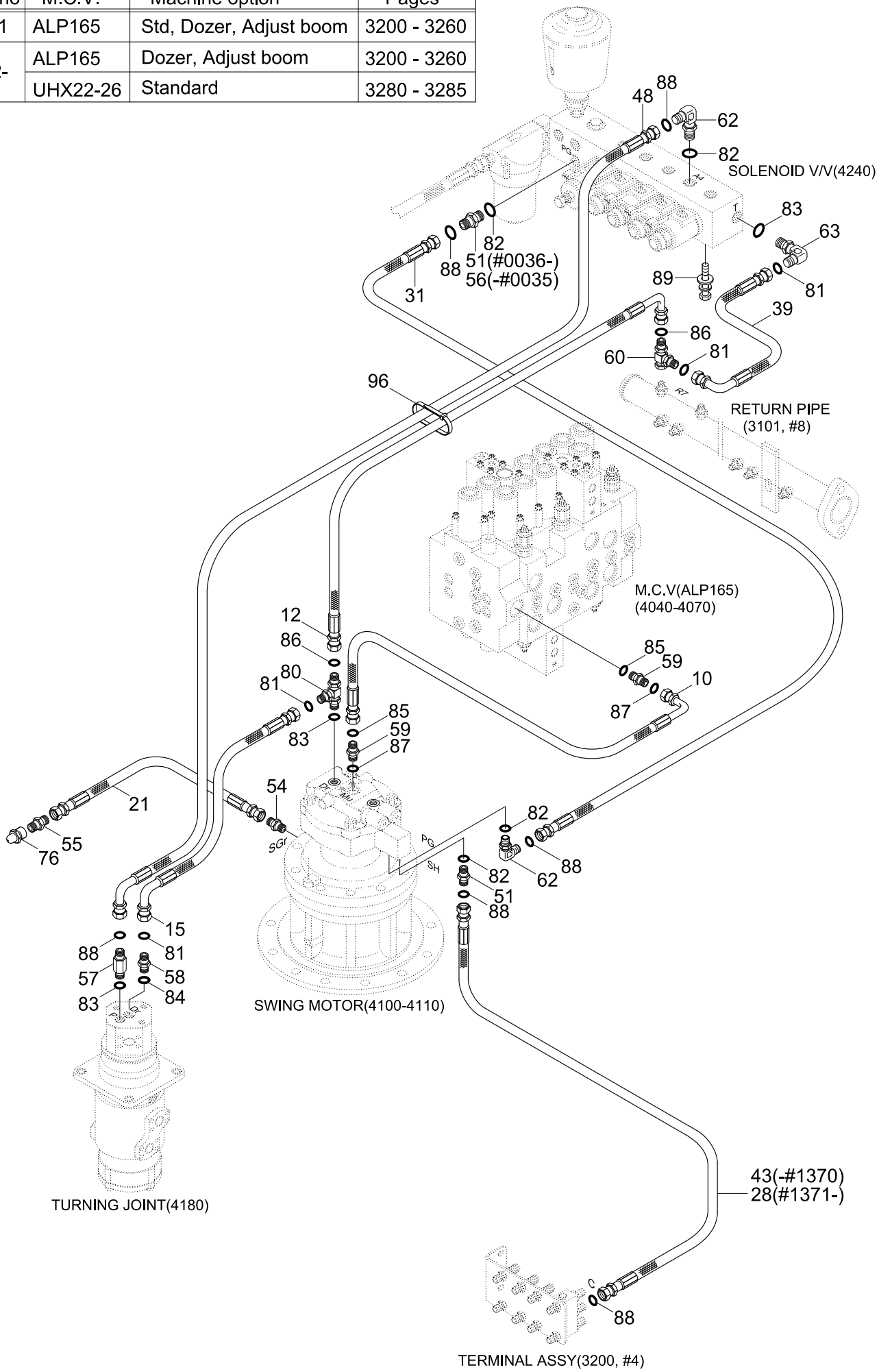

Item	Part_No	IS	Ord	T	Description	Qty	Serial_No	ITC	Remark
*	@				PILOT HYD PIPING	1	- #1601		NOT
					PILOT HYD PIPING	1	#1602 -	A	NOT
10	P930-122014				HOSE ASSY-ORFS 0X90	1			
12	P620-082018				HOSE ASSY-THD 0X90	1	- #1370		
	P930-082018				HOSE ASSY-ORFS 0X90	1	#1371 -	D	
15	P420-062013				HOSE ASSY-COMP 0X90	1	- #1370		
	X420-062013				HOSE ASSY-SYNFLEX,ORFS	1	#1371 - #1601	D	
	P930-062013				HOSE ASSY-ORFS 0X90	1	#1602 -	A	
21	P420-042018				HOSE ASSY-COMP 0X90	1	- #1370		
	P860-042018				HOSE ASSY-SYN 0X90	1	#1371 - #1601	D	
	P420-042018				HOSE ASSY-COMP 0X90	1	#1602 -	A	
28	X400-042026				HOSE ASSY-SYNFLEX,ORFS	1	#1371 - #1601	D	
	P910-042026				HOSE ASSY-ORFS 0X0	1	#1602 -	A	
31	P400-042041				HOSE ASSY-COMPACT	1	- #1370		
	P910-043041				HOSE ASSY-ORFS 0X0	1	#1371 -	D	
39	P420-062039				HOSE ASSY-COMP 0X90	1	- #1370		
	X420-062039				HOSE ASSY-SYNFLEX,ORFS	1	#1371 - #1601	D	
	P930-062039				HOSE ASSY-ORFS 0X90	1	#1602 -	A	
43	P420-042026				HOSE ASSY-COMP 0X90	1	- #1370	-	
48	P420-042050				HOSE ASSY-COMP 0X90	1	- #1370		
	X420-042050				HOSE ASSY-SYNFLEX,ORFS	1	#1371 - #1601	D	
	P930-042050				HOSE ASSY-ORFS 0X90	1	#1602 -	A	
51	P010-110002				CONNECTOR	1	- #0035		
					CONNECTOR	2	#0036 - #1370	A	
	X500-110001				CONNECTOR-ORFS	2	#1371 -	D	

Item	Part_No	IS	Ord	T	Description	Qty	Serial_No	ITC	Remark
54	P010-430002				CONNECTOR	1			
55	P010-430011				CONNECTOR	1			
56	P101-104044				CONNECTOR-LONG	1	- #0035	-	
57	P101-106044				CONNECTOR-LONG	1	- #1370		
	X511-106514				CONNECTOR-LONG,ORFS	1	#1371 -	D	
58	P010-110015				CONNECTOR	1	- #0196		
	P101-108064				CONNECTOR-LONG	1	#0197 - #1370	B	
	X511-108524				CONNECTOR-LONG,ORFS	1	#1371 -	D	
59	X500-110004				CONNECTOR-ORFS	2			
60	34EA-21320				TEE R/TYPE-S/NUT	1	- #1370		
	X840-535253				S/NUT TEE-R/TYPE,ORFS	1	#1371 -	D	
62	P020-110001				ELBOW-90	2	- #1370		
	X520-110001				ELBOW-90,ORFS	2	#1371 -	D	
63	P020-110002				ELBOW-90	1	- #1370		
	X520-110002				ELBOW-90,ORFS	1	#1371 -	D	
76	S651-810002				NIPPLE-GREASE	1			
80	34E7-04810				TEE	1	- #1370		
	31N4-22140				TEE-ORFS	1	#1371 -	D	
81	S621-012001				O-RING,ORFS	4	#1371 -	-	
82	S631-011004				O-RING	4			
83	S631-014004				O-RING	3			
84	S631-018004				O-RING	1			
85	S631-024004				O-RING	2			
86	S621-014001				O-RING,ORFS	4	#1371 -	-	
87	S621-018001				O-RING,ORFS	2			

Item	Part_No	IS	Ord	T	Description	Qty	Serial_No	ITC	Remark
89	S035-082542				BOLT-W/WASHER	4			
88	S621-011001				O-RING,ORFS	4	#1371 -	-	
89	S035-082542				BOLT-W/WASHER	4			
96	S551-050203				CLAMP-BAND	20			

PILOT HYD PIPING(#0234-, ADJUST BOOM)

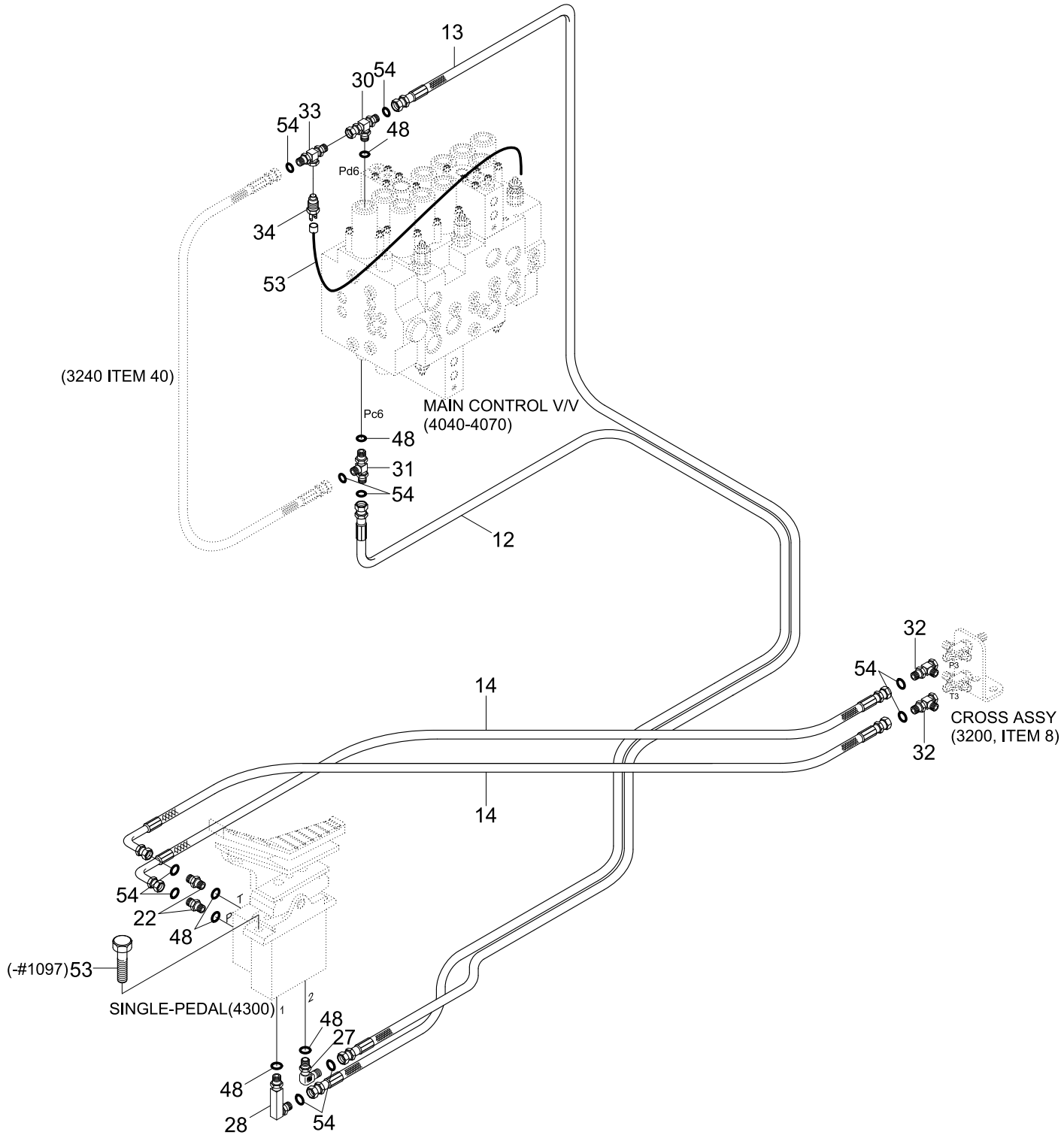

Item	Part_No	IS	Ord	T	Description	Qty	Serial_No	ITC	Remark
*	@				PILOT HYD PIPING	1	#0234 -	-	NOT
12	P400-042060				HOSE ASSY-COMPACT	1	- #1370		
	X400-042060				HOSE ASSY-SYNFLEX,ORFS	1	#1371 -	D	
13	P400-042066				HOSE ASSY-COMPACT	1	- #1370		
	X400-042066				HOSE ASSY-SYNFLEX,ORFS	1	#1371 -	D	
14	P420-042021				HOSE ASSY-COMP 0X90	2	- #1370		
	X420-042021				HOSE ASSY-SYNFLEX,ORFS	2	#1371 -	D	
22	P010-110002				CONNECTOR	2			
27	P020-110001				ELBOW-90	1	- #1370		
	X520-110001				ELBOW-90,ORFS	1	#1371 -	D	
28	E131-0603				ELBOW 90-LONG	1	- #1370		
	31N6-25110				ELBOW 90-LONG,ORFS	1	#1371 -	D	
30	P310-040404				TEE-BRANCH TYPE	1	- #1370		
	X810-045151				TEE-B/TYPE,ORFS	1	#1371 -	D	
31	P320-040404				TEE-RUN TYPE	1	- #1370		
	X820-045151				TEE-R/TYPE,ORFS	1	#1371 -	D	
32	32E6-10460				TEE-SWEVEL NUT	1	- #1370		
	X840-515151				TEE-R/TYPE,ORFS	1	#1371 -	D	
33	31N4-91430				TEE-SHUTTLE	1	- #1370		
	31N5-10410				TEE-SHUTTLE	1	#1371 -	D	
34	31E5-40520				SWITCH-PRESSURE	1			
48	S631-011004				O-RING	6			
53	S017-100252				BOLT-HEX	2	- #1097	-	
	21N4-01560				HARNESS-EXTENSION	1	#1098 -	D	
54	S621-011001				O-RING,ORFS	10	#1371 -	-	

PILOT HYD PIPING, CNTL 1(STD, #1602-)

PILOT HYDRAULIC PIPING			
Serial no	M.C.V.	Machine option	Pages
-#1601	ALP165	Std, Dozer, Adjust boom	3200 - 3260
#1602-	ALP165	Dozer, Adjust boom	3200 - 3260
	UHX22-26	Standard	3280 - 3285

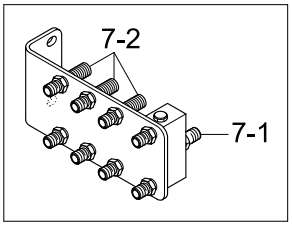

DETAIL ITEM 7

PATTERN VALVE(OPTION)

Item	Part_No	IS	Ord	T	Description	Qty	Serial_No	ITC	Remark
*	@				PILOT HYD PIPING	1	#1602 -	-	NOT
1	31N6-25200				RCV SUB ASSY-LH	1			
1-1	@				.RCV LEVER	1			NOT
1-2	X500-110001				.CONNECTOR-ORFS	5			
1-3	31N6-25060				.FILTER-LAST GUARD	1			
1-4	S631-011004				.O-RING	6			
1-5	S621-011001				.O-RING,ORFS	6			
7	31N6-25010				TERMINAL ASSY	1			
	31N4-20140				TERMINAL ASSY	1	#2631 -	-	OPTION
7-1	31N6-25030				.SHUTTLE-5 PORT	1			
7-2	X540-120001				.CONNECTOR-B.H TYPE	6			
					.CONNECTOR-B.H TYPE	2	#2631 -	-	OPTION
7-3	S621-011001				.O-RING,ORFS	5	#2631 -	-	OPTION
8	31N6-25100				CROSS ASSY	1			
8-1	31N6-25040				.CROSS-BULKHEAD TYPE	2			
19	P910-042008				HOSE ASSY-ORFS 0X0	1			
22	P910-042019				HOSE ASSY-ORFS 0X0	1			
24	P910-042022				HOSE ASSY-ORFS 0X0	1			
25	P910-042026				HOSE ASSY-ORFS 0X0	1			
26	P910-042030				HOSE ASSY-ORFS 0X0	1			
33	P920-042025				HOSE ASSY-ORFS 0X45	2			
36	P920-042039				HOSE ASSY-ORFS 0X45	4			
38	P930-042008				HOSE ASSY-ORFS 0X90	1			
61	X500-110001				CONNECTOR-ORFS	2			
65	X520-110001				ELBOW-90,ORFS	1			

Item	Part_No	IS	Ord	T	Description	Qty	Serial_No	ITC	Remark
74	X820-045151				TEE-R/TYPE,ORFS	2			
79	S631-011004				O-RING	5			
86	S037-102042				BOLT-W/WASHER	5			
88	S035-063046				BOLT-W/WASHER	4			
89	S403-062006				WASHER-PLAIN	4			
92	31E7-0312				CLAMP-HOSE	1			
93	31M6-51061				SHIM(3.2T)	1			
95	S621-011001				O-RING,ORFS	18			
98	31N6-22050				SELECTOR VLV-MULTIMODE	1	#2631 -	-	OPTION
99	X520-110001				ELBOW-90,ORFS	4	#2631 -	-	OPTION
100	S015-080806				BOLT-HEX	2	#2631 -	-	OPTION
101	S411-080006				WASHER-SPRING	2	#2631 -	-	OPTION

PILOT HYD PIPING, CNTL 2(STD, #1602-)

PILOT HYDRAULIC PIPING			
Serial no	M.C.V.	Machine option	Pages
-#1601	ALP165	Std, Dozer, Adjust boom	3200 - 3260
#1602-	ALP165	Dozer, Adjust boom	3200 - 3260
	UHX22-26	Standard	3280 - 3285

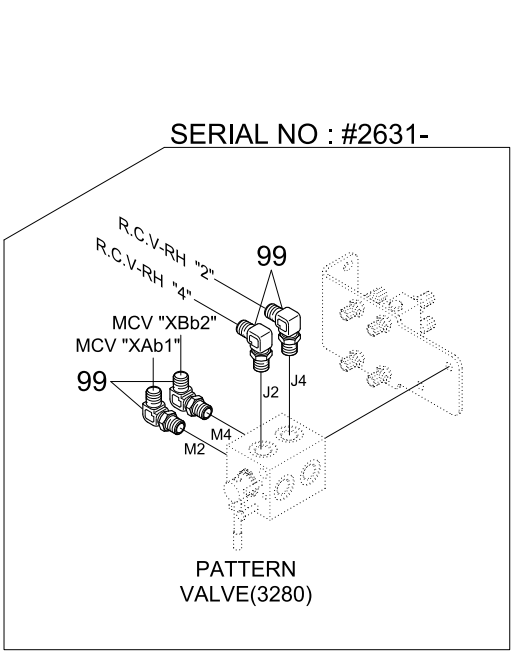

PATTERN VALVE(OPTION)

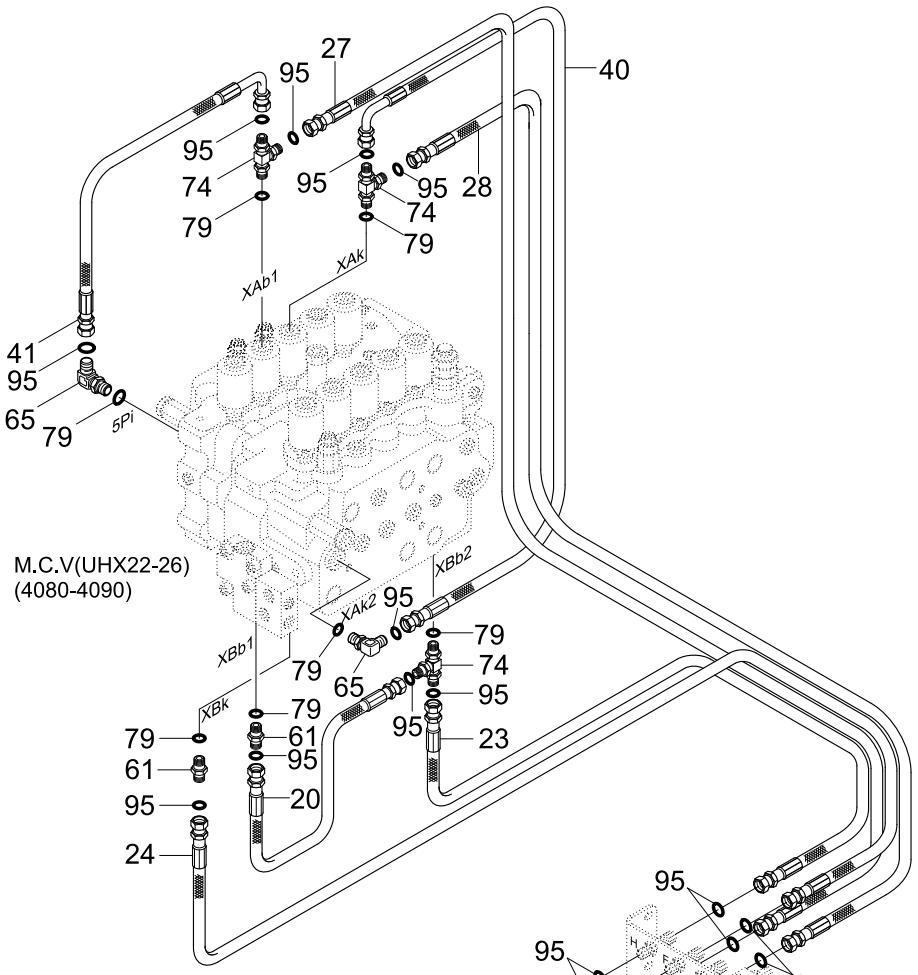

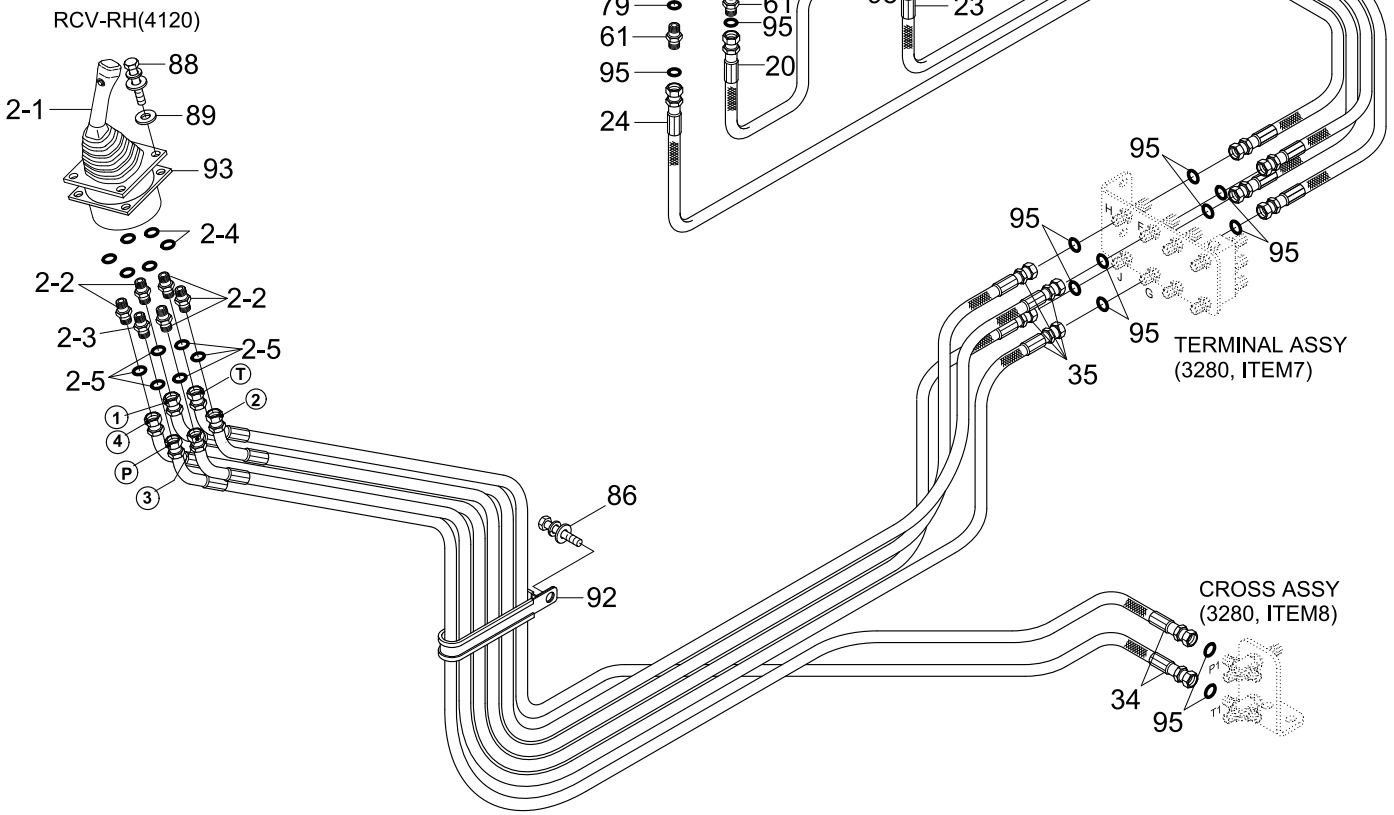

Item	Part_No	IS	Ord	T	Description	Qty	Serial_No	ITC	Remark
*	@				PILOT HYD PIPING	1	#1602 -	-	NOT
2	31N6-25210				RCV SUB ASSY-RH	1			
2-1	@				.RCV LEVER	1			NOT
2-2	X500-110001				.CONNECTOR-ORFS	5			
2-3	31N6-25060				.FILTER-LAST GUARD	1			
2-4	S631-011004				.O-RING	6			
2-5	S621-011001				.O-RING	6			
20	P910-042010				HOSE ASSY-ORFS 0X0	1			
23	P910-042020				HOSE ASSY-ORFS 0X0	1			
24	P910-042022				HOSE ASSY-ORFS 0X0	1			
27	P910-042031				HOSE ASSY-ORFS 0X0	1			
28	P910-042032				HOSE ASSY-ORFS 0X0	1			
34	P920-042027				HOSE ASSY-ORFS 0X45	2			
35	P920-042036				HOSE ASSY-ORFS 0X45	4			
40	P930-042010				HOSE ASSY-ORFS 0X90	1			
41	P930-042012				HOSE ASSY-ORFS 0X90	1			
61	X500-110001				CONNECTOR-ORFS	2			
65	X520-110001				ELBOW-90,ORFS	2			
74	X820-045151				TEE-R/TYPE,ORFS	3			
79	S631-011004				O-RING	6			
86	S037-102042				BOLT-W/WASHER	1			
88	S035-063046				BOLT-W/WASHER	4			
89	S403-062006				WASHER-PLAIN	4			
92	31E7-0312				CLAMP-HOSE	1			
93	31M6-51061				SHIM(3.2T)	1			

Item	Part_No	IS	Ord	T	Description	Qty	Serial_No	ITC	Remark
95	S621-011001				O-RING	19			
99	X520-110001				ELBOW-90,ORFS	4	#2631 -	-	OPTION

PILOT HYD PIPING, CNTL 3(STD, #1602-)

PILOT HYDRAULIC PIPING			
Serial no	M.C.V.	Machine option	Pages
-#1601	ALP165	Std, Dozer, Adjust boom	3200 - 3260
#1602-	ALP165	Dozer, Adjust boom	3200 - 3260
	UHX22-26	Standard	3280 - 3285

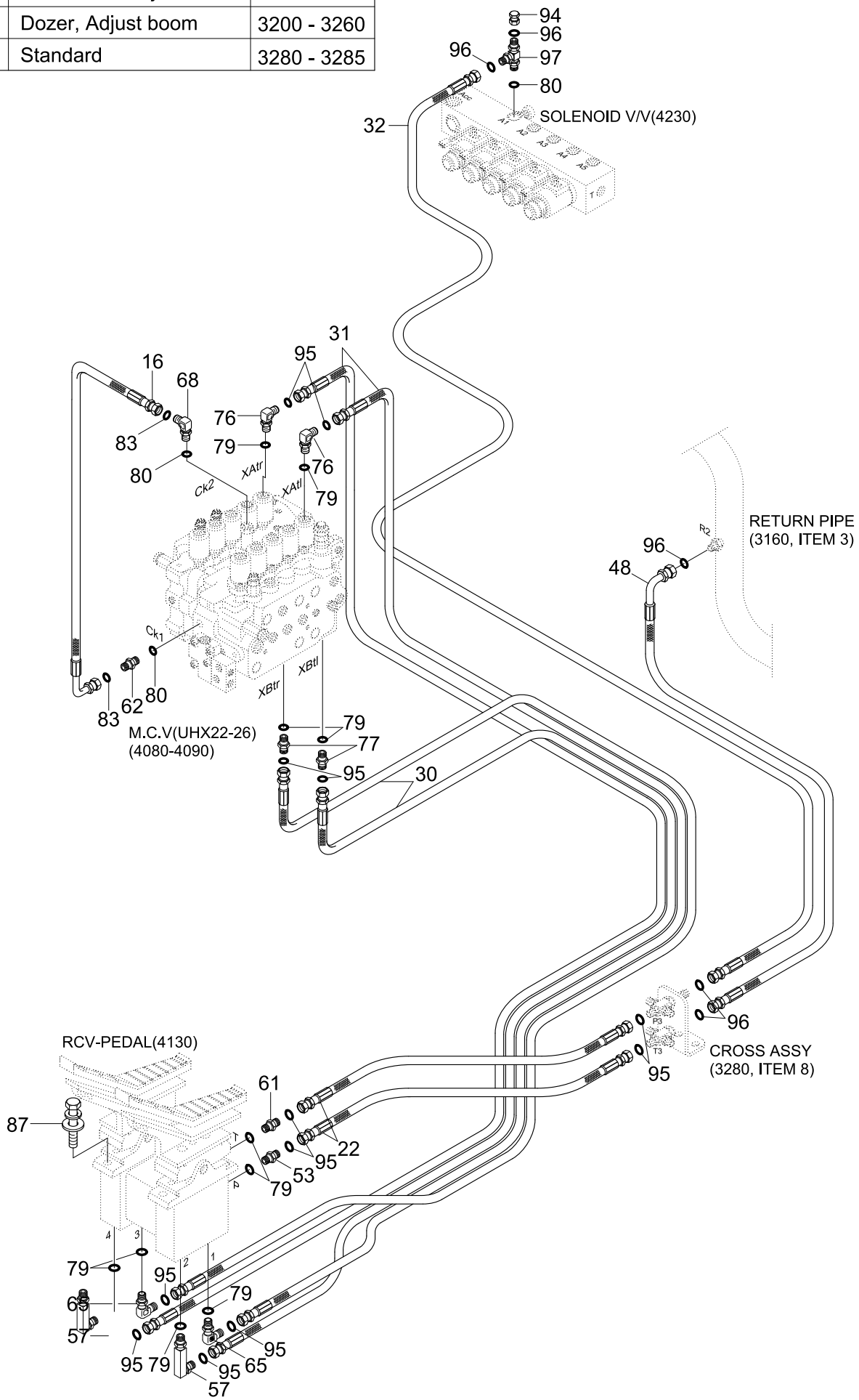

Item	Part_No	IS	Ord	T	Description	Qty	Serial_No	ITC	Remark
*	@				PILOT HYD PIPING	1	#1602 -	-	NOT
16	P930-087008				HOSE ASSY-ORFS 0X90	1			
22	P910-042019				HOSE ASSY-ORFS 0X0	2			
30	P910-042058				HOSE ASSY-ORFS 0X0	2			
31	P910-042067				HOSE ASSY-ORFS 0X0	2			
32	P910-062054				HOSE ASSY-ORFS 0X0	1			
48	P930-062024				HOSE ASSY-ORFS 0X90	1			
53	31N6-25060				FILTER-LAST GUARD	1			
57	31N6-25110				ELBOW 90-LONG,ORFS	2			
61	X500-110001				CONNECTOR-ORFS	1			
62	X500-110012				CONNECTOR-ORFS	1			
65	X520-110001				ELBOW-90,ORFS	2			
68	X520-110013				ELBOW-90,ORFS	1			
76	X520-110001				ELBOW-90,ORFS	2			
77	X511-104513				CONNECTOR-ORFS	2			
79	S631-011004				O-RING	10			
80	S631-014004				O-RING	3			
83	S621-014001				O-RING,ORFS	2			
87	S037-103022				BOLT-W/WASHER	4			
94	X710-100102				CAP-ORFS	1			
95	S621-011001				O-RING,ORFS	12			
96	S621-012001				O-RING,ORFS	8			
97	31N5-30100				TEE	1			

PILOT HYD PIPING, BASE 1(STD, #1602-)

PILOT HYDRAULIC PIPING			
Serial no	M.C.V.	Machine option	Pages
-#1601	ALP165	Std, Dozer, Adjust boom	3200 - 3260
#1602-	ALP165	Dozer, Adjust boom	3200 - 3260
	UHX22-26	Standard	3280 - 3285

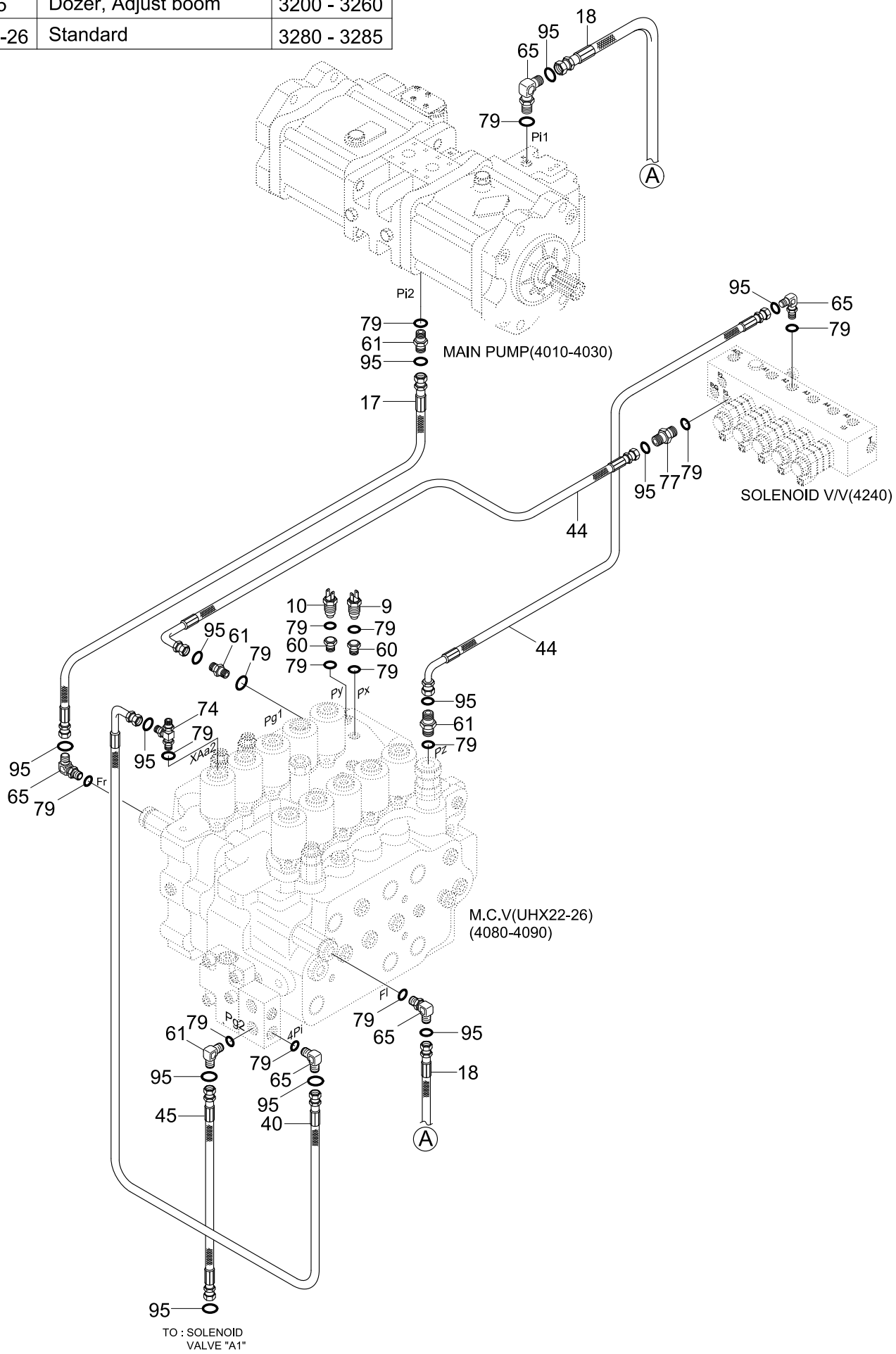

Item	Part_No	IS	Ord	T	Description	Qty	Serial_No	ITC	Remark
*	@				PILOT HYD PIPING	1	#1602 -	-	NOT
9	31E5-40560				SWITCH-PRESSURE	1			AUTO IDLE
10	31E5-40560				SWITCH-PRESSURE	1			TRAVEL P S
17	P910-043044				HOSE ASSY-ORFS 0X0	1			
18	P910-043048				HOSE ASSY-ORFS 0X0	1			
40	P930-042010				HOSE ASSY-ORFS 0X90	1			
44	P930-042040				HOSE ASSY-ORFS 0X90	2			
45	P930-042039				HOSE ASSY-ORFS 0X90	1			
60	31E5-11110				ADAPTER	2			
61	X500-110001				CONNECTOR-ORFS	4			
65	X520-110001				ELBOW-90,ORFS	5			
74	X820-045151				TEE-R/TYPE,ORFS	1			
77	X511-104513				CONNECTOR-ORFS	1			
79	S631-011004				O-RING	15			
95	S621-011001				O-RING,ORFS	11			

PILOT HYD PIPING, BASE 2(STD, #1602-)

PILOT HYDRAULIC PIPING			
Serial no	M.C.V.	Machine option	Pages
-#1601	ALP165	Std, Dozer, Adjust boom	3200 - 3260
#1602-	ALP165	Dozer, Adjust boom	3200 - 3260
	UHX22-26	Standard	3280 - 3285

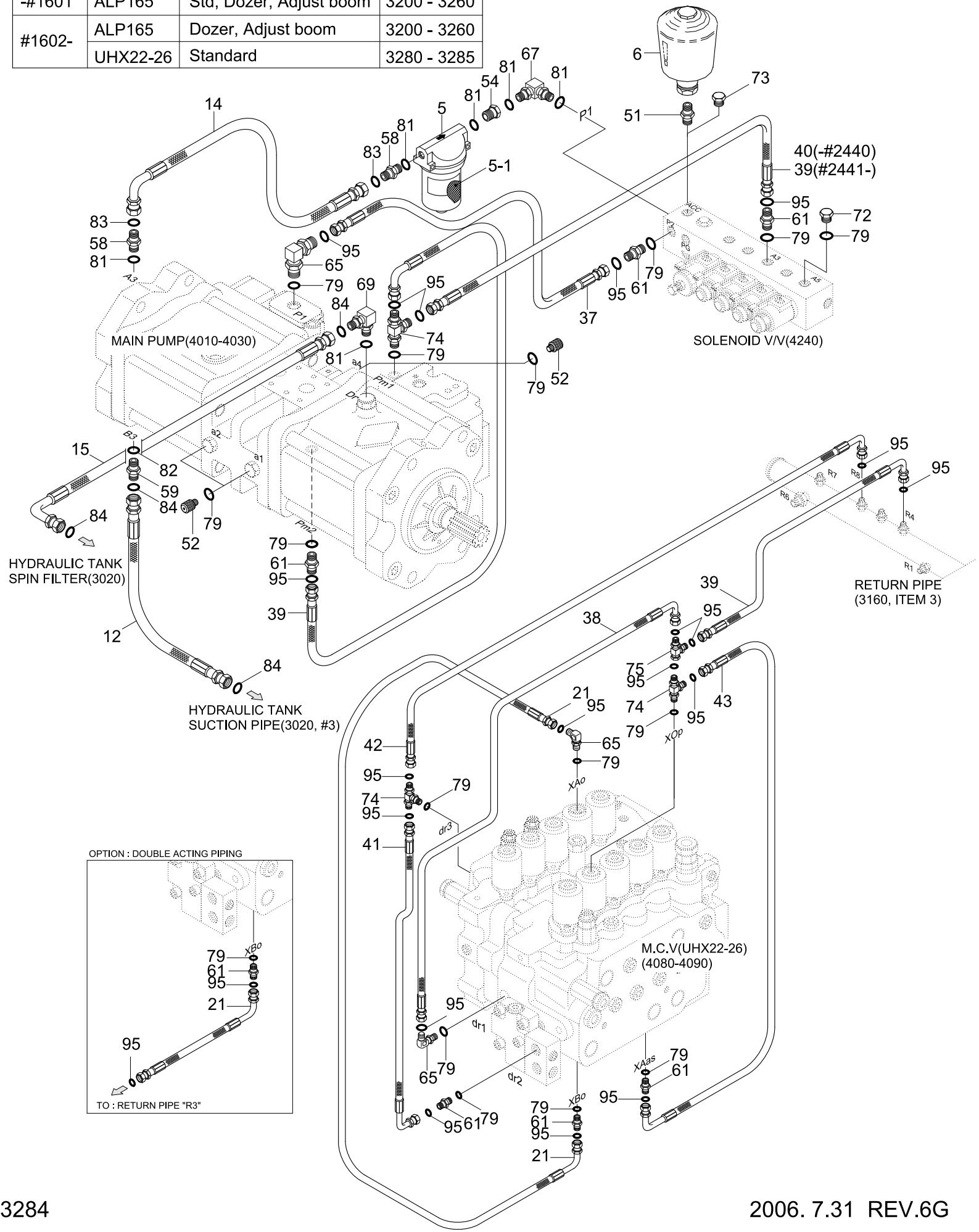

Item	Part_No	IS	Ord	T	Description	Qty	Serial_No	ITC	Remark
*	@				PILOT HYD PIPING	1	#1602 -	-	NOT
5	31E3-0017	10			FILTER-LINE	1			
5-1	31E3-0018	10			.ELEMENT-LINE FILTER	1			
6	31E3-3187				ACCUMULATOR	1			OPTION
12	P910-122012				HOSE ASSY-ORFS 0X0	1			
14	P930-082016				HOSE ASSY-ORFS 0X90	1			
15	P930-122015				HOSE ASSY-ORFS 0X90	1			
21	P910-042014				HOSE ASSY-ORFS 0X0	1			W/O BREAKER
	P930-042010				HOSE ASSY-ORFS 0X90	1			WITH BREAKER
37	P930-042007				HOSE ASSY-ORFS 0X90	1			
38	P930-042008				HOSE ASSY-ORFS 0X90	1			
39	P930-042009				HOSE ASSY-ORFS 0X90	2	- #2440		
					HOSE ASSY-ORFS 0X90	3	#2441 -	A	
40	P930-042010				HOSE ASSY-ORFS 0X90	1	- #2440	-	
41	P930-042012				HOSE ASSY-ORFS 0X90	1			
42	P930-042016				HOSE ASSY-ORFS 0X90	1			
43	P930-042020				HOSE ASSY-ORFS 0X90	1			
51	31N6-24200				CONNECTOR	1			
52	31EK-11130				COUPLING-SCREW	3			
54	31N6-22400				ADAPTER	1			
58	X500-110003				CONNECTOR-ORFS	2			
59	X500-110004				CONNECTOR-ORFS	1			
61	X500-110001				CONNECTOR-ORFS	6			
65	X520-110001				ELBOW-90,ORFS	3			
67	X520-110003				ELBOW-90,ORFS	1			

Item	Part_No	IS	Ord	T	Description	Qty	Serial_No	ITC	Remark
69	X520-110015				ELBOW-90,ORFS	1			
72	P220-110102				PLUG-HEX	1			
73	P220-110103				PLUG	1			
74	X820-045151				TEE-R/TYPE,ORFS	3			
75	X840-515151				TEE-R/TYPE,ORFS	1			
79	S631-011004				O-RING	16			
81	S631-018004				O-RING	5			
82	S631-024004				O-RING	1			
83	S621-014001				O-RING,ORFS	2			
95	S621-011001				O-RING,ORFS	19			

PILOT HYD PIPING, BASE 3(STD, #1602-)

PILOT HYDRAULIC PIPING			
Serial no	M.C.V.	Machine option	Pages
-#1601	ALP165	Std, Dozer, Adjust boom	3200 - 3260
#1602-	ALP165	Dozer, Adjust boom	3200 - 3260
	UHX22-26	Standard	3280 - 3285

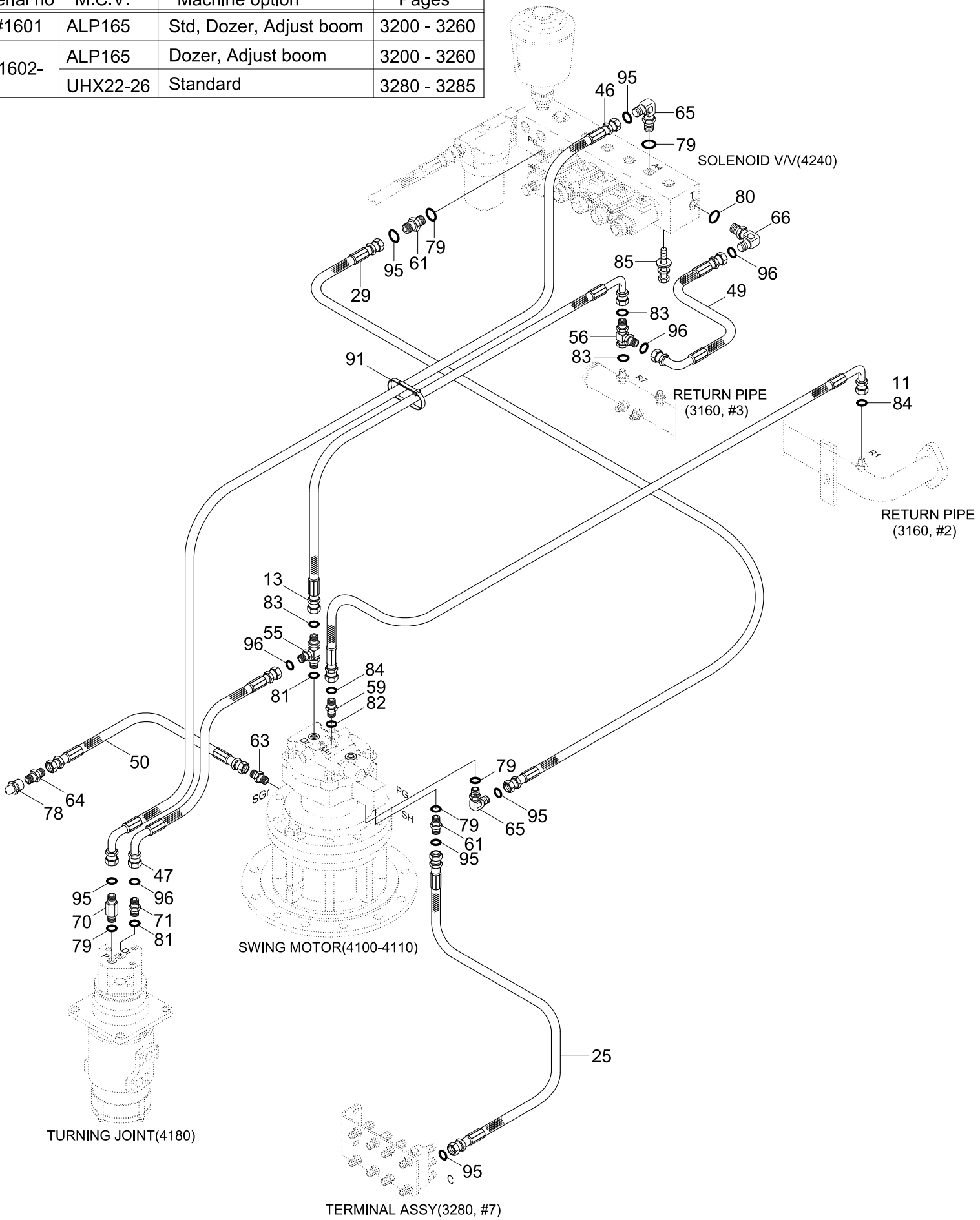

Item	Part_No	IS	Ord	T	Description	Qty	Serial_No	ITC	Remark
*	@				PILOT HYD PIPING	1	#1602 -	-	NOT
11	P930-122018				HOSE ASSY-ORFS 0X90	1			
13	P930-082018				HOSE ASSY-ORFS 0X90	1			
25	P910-042026				HOSE ASSY-ORFS 0X0	1			
29	P910-042041				HOSE ASSY-ORFS 0X0	1			
46	P930-042050				HOSE ASSY-ORFS 0X90	1			
47	P930-062013				HOSE ASSY-ORFS 0X90	1			
49	P930-062039				HOSE ASSY-ORFS 0X90	1			
50	P400-042015				HOSE ASSY-COMPACT	1			
55	31N4-22140				TEE-ORFS	1			
56	X840-535253				S/NUT TEE-R/TYPE,ORFS	1			
59	X500-110004				CONNECTOR-ORFS	1			
61	X500-110001				CONNECTOR-ORFS	2			
63	P010-430002				CONNECTOR	1			
64	P010-430011				CONNECTOR	1			
65	X520-110001				ELBOW-90,ORFS	2			
66	X520-110002				ELBOW-90,ORFS	1			
70	X511-106514				CONNECTOR-LONG,ORFS	1			
71	X511-108524				CONNECTOR-LONG,ORFS	1			
78	S651-810002				NIPPLE-GREASE	1			
79	S631-011004				O-RING	5			
80	S631-014004				O-RING	1			
81	S631-018004				O-RING	2			
82	S631-024004				O-RING	1			
83	S621-014001				O-RING,ORFS	3			

Item	Part_No	IS	Ord	T	Description	Qty	Serial_No	ITC	Remark
84	S621-018001				O-RING,ORFS	4			
85	S035-082542				BOLT-W/WASHER	4			
91	S551-050203				CLAMP-BAND	20			
95	S621-011001				O-RING,ORFS	6			
96	S621-012001				O-RING,ORFS	4			

PILOT HYD PIPING(BASE 1, 2-BLOCK, #2680-)

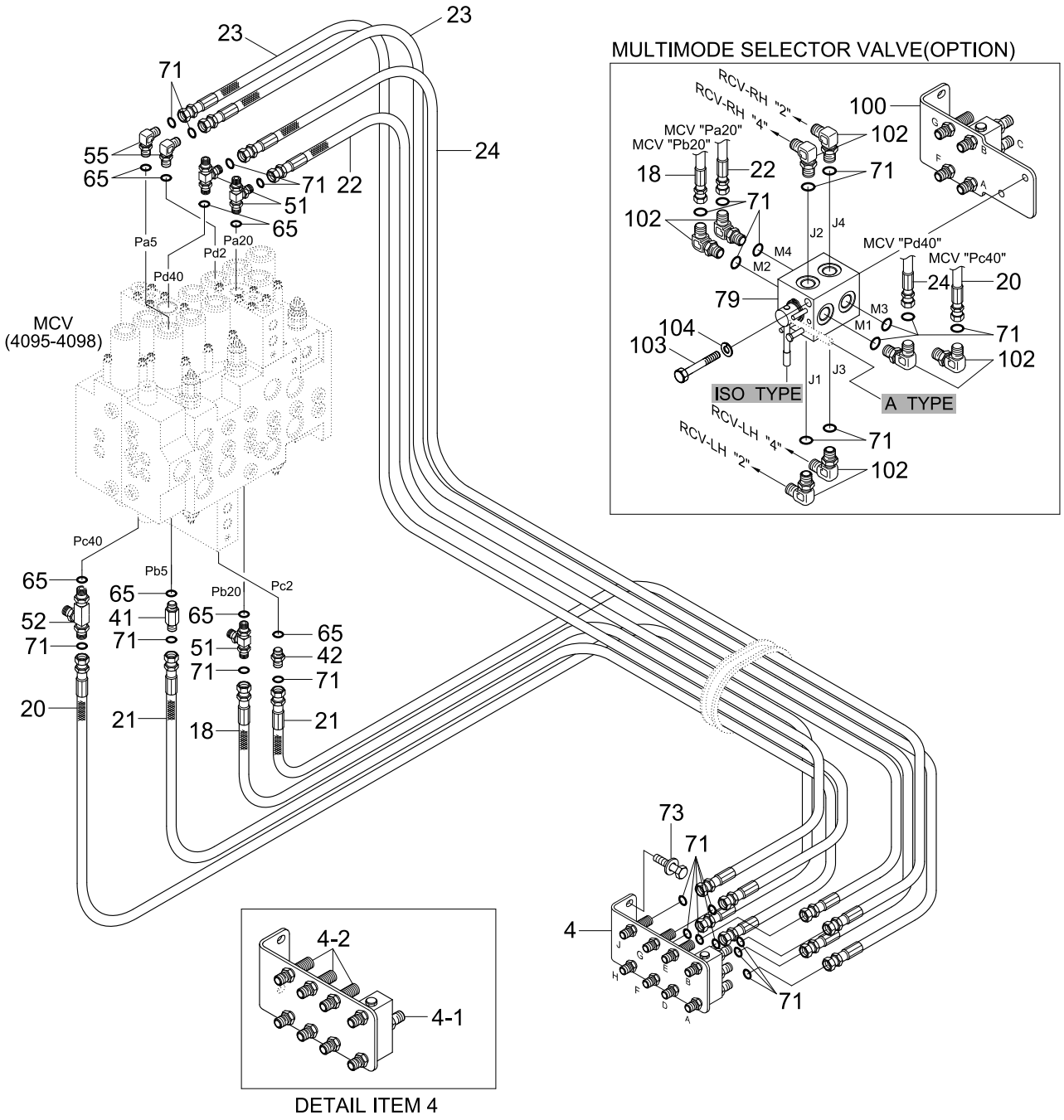

DETAIL ITEM 4

Item	Part_No	IS	Ord	T	Description	Qty	Serial_No	ITC	Remark
*	@				PILOT HYD PIPING	1	#2680 -	-	NOT
4	31N6-25010				TERMINAL ASSY	1			STD
4-1	31N6-25030				.SHUTTLE-5 PORT	1			
4-2	X540-120001				.CONNECTOR-B.H TYPE	6			
18	P910-042019				HOSE ASSY-ORFS,THD(0X0)	1			
20	P910-042021				HOSE ASSY-ORFS 0X0	1			
21	P910-042022				HOSE ASSY-ORFS 0X0	2			
22	P910-042026				HOSE ASSY-ORFS 0X0	1			
23	P910-042031				HOSE ASSY-ORFS 0X0	2			
24	P910-042032				HOSE ASSY-ORFS 0X0	1			
41	X511-104513				CONNECTOR-ORFS	1			
42	X500-110001				CONNECTOR-ORFS	1			
51	X820-045151				TEE-R/TYPE,ORFS	3			
52	31N4-22150				TEE-LONG,ORFS	1			
55	X520-110001				ELBOW-90,ORFS	2			
65	S631-011004				O-RING	8			
71	S621-011001				O-RING	8			STD
					O-RING	20			OPT, PATT VALVE
73	S037-102042				BOLT-W/WASHER	2			
100	31N4-20140				TERMINAL ASSY	1	#2719 -	-	OPT, PATT VALVE
101	31N6-22050				SELECTOR VALVE	1	#2719 -	-	OPT, PATT VALVE
102	X520-110001				ELBOW-90,ORFS	8	#2719 -	-	OPT, PATT VALVE
103	S015-080806				BOLT-HEX	2	#2719 -	-	OPT, PATT VALVE
104	S411-080006				WASHER-SPRING	2	#2719 -	-	OPT, PATT VALVE

PILOT HYD PIPING(BASE 2, 2-BLOCK, #2680-)

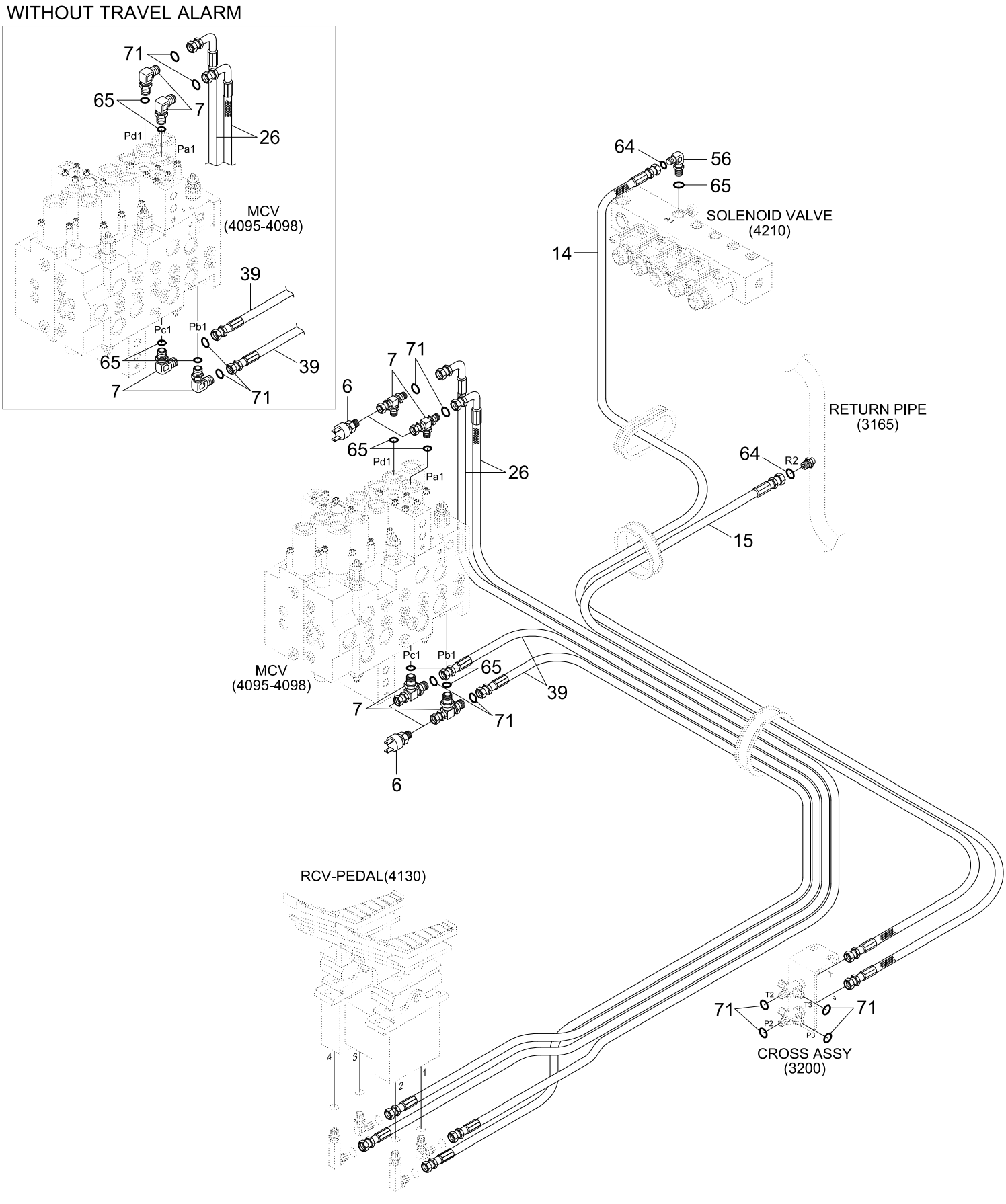

Item	Part_No	IS	Ord	T	Description	Qty	Serial_No	ITC	Remark
*	@				PILOT HYD PIPING	1	#2680 -	-	NOT
6	31E5-40540				SWITCH-PRESSURE	4			TRAVEL ALRAM
7	31N1-20100				TEE	4	#2680 -	-	W/ TR ALRAM
	X520-110001				ELBOW-90,ORFS	4	#2680 -	-	W/O TR ALRAM
14	P910-062054				HOSE ASSY-ORFS 0X0	1			
15	P930-062024				HOSE ASSY-ORFS 0X90	1			
26	P930-042067				HOSE ASSY-ORFS 0X90	2	- #2718		
	P910-042067				HOSE ASSY-ORFS 0X0	2	#2719 -	B	
39	P910-042058				HOSE ASSY-ORFS 0X0	2			
56	X520-110002				ELBOW-90,ORFS	1			
64	S621-012001				O-RING	2			
65	S631-011004				O-RING	5			
71	S621-011001				O-RING	8			

PILOT HYD PIPING(BASE 3, 2-BLOCK, #2680-)

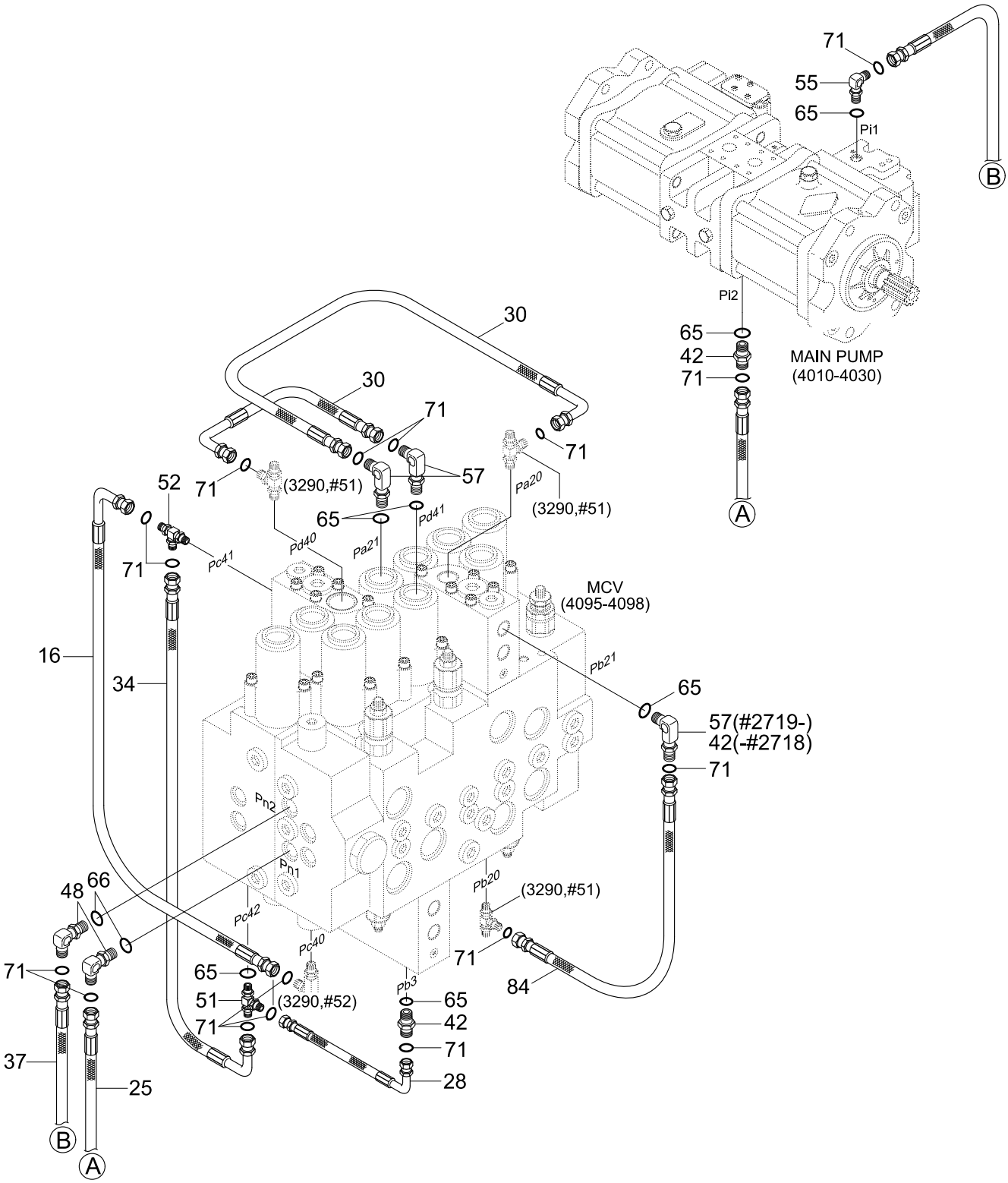

Item	Part_No	IS	Ord	T	Description	Qty	Serial_No	ITC	Remark
*6	@				PILOT HYD PIPING	1	#2680 -	-	NOT
16	P930-042017				HOSE ASSY-ORFS 0X90	1			
25	P910-043041				HOSE ASSY-ORFS 0X0	1			
28	P930-042008				HOSE ASSY-ORFS 0X90	1			
30	P930-042010				HOSE ASSY-ORFS 0X90	2			
34	P930-042019				HOSE ASSY-ORFS 0X90	1			
37	P910-043048				HOSE ASSY-ORFS 0X0	1			
42	X500-110001				CONNECTOR-ORFS	2			
48	X520-110012				ELBOW-90,ORFS	2			
51	X820-045151				TEE-R/TYPE,ORFS	1			
52	31N4-22150				TEE-LONG,ORFS	1			
55	X520-110001				ELBOW-90,ORFS	1			
57	31N6-25110				ELBOW-90,ORFS,LONG	2	- #2718		
					ELBOW-90,ORFS,LONG	3	#2719 -	A	
65	S631-011004				O-RING	7			
66	S631-014004				O-RING	2			
71	S621-011001				O-RING,ORFS	16			
84	P930-042020				HOSE ASSY-ORFS 0X90	1			

PILOT HYD PIPING(BASE 4, 2-BLOCK, #2680-)

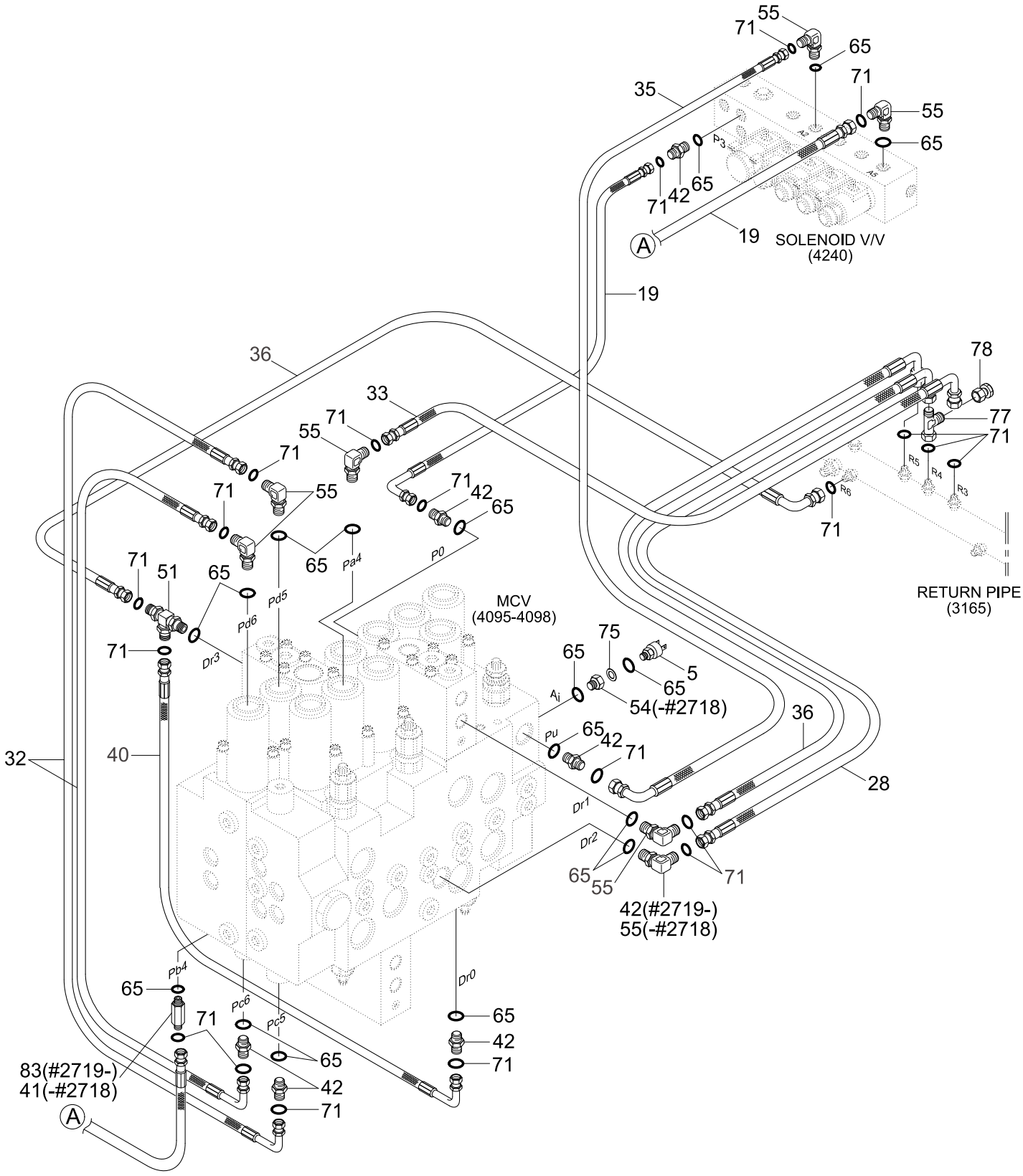

Item	Part_No	IS	Ord	T	Description	Qty	Serial_No	ITC	Remark
*	@				PILOT HYD PIPING	1	#2680 -	-	NOT
5	31E5-40560				SWITCH-PRESSURE	1			AUTO IDLE
19	P910-042036				HOSE ASSY-ORFS 0X0	2			
28	P930-042008				HOSE ASSY-ORFS 0X90	1			
32	P930-042020				HOSE ASSY-ORFS 0X90	2	- #2718		
	P910-042020				HOSE ASSY-ORFS 0X0	2	#2719 -	B	
33	P930-042010				HOSE ASSY-ORFS 0X90	1			
35	P930-042037				HOSE ASSY-ORFS 0X90	1			
36	P930-042006				HOSE ASSY-ORFS 0X90	2			
40	P930-042013				HOSE ASSY-ORFS 0X90	1	- #3042		
	P910-042018				HOSE ASSY-ORFS 0X0	1	#3043 -	B	
41	X511-104513				CONNECTOR-LONG,ORFS	1	- #2718	-	
42	X500-110001				CONNECTOR	6	- #2718		
					CONNECTOR	7	#2719 -	A	
51	X820-045151				TEE-RUN TYPE	1			
53	31N6-22400				ADAPTER	1			
54	31NB-20190				ELBOW-90,ORFS	1	- #2718	-	
55	X520-110001				ELBOW-90,ORFS	7	- #2718		
					ELBOW-90,ORFS	6	#2719 -	A	
65	S631-011004				O-RING	16			
71	S621-011001				O-RING	20			
75	P392-120000				WASHER-COPPER	1			
77	X840-515151				TEE-R/TYPE,SWIVEL,ORFS	1			
78	P220-310102				PLUG	1			
83	X511-104514				CONNECTOR-LONG,ORFS	1			

PILOT HYD PIPING(BASE 5, 2-BLOCK, #2680-)

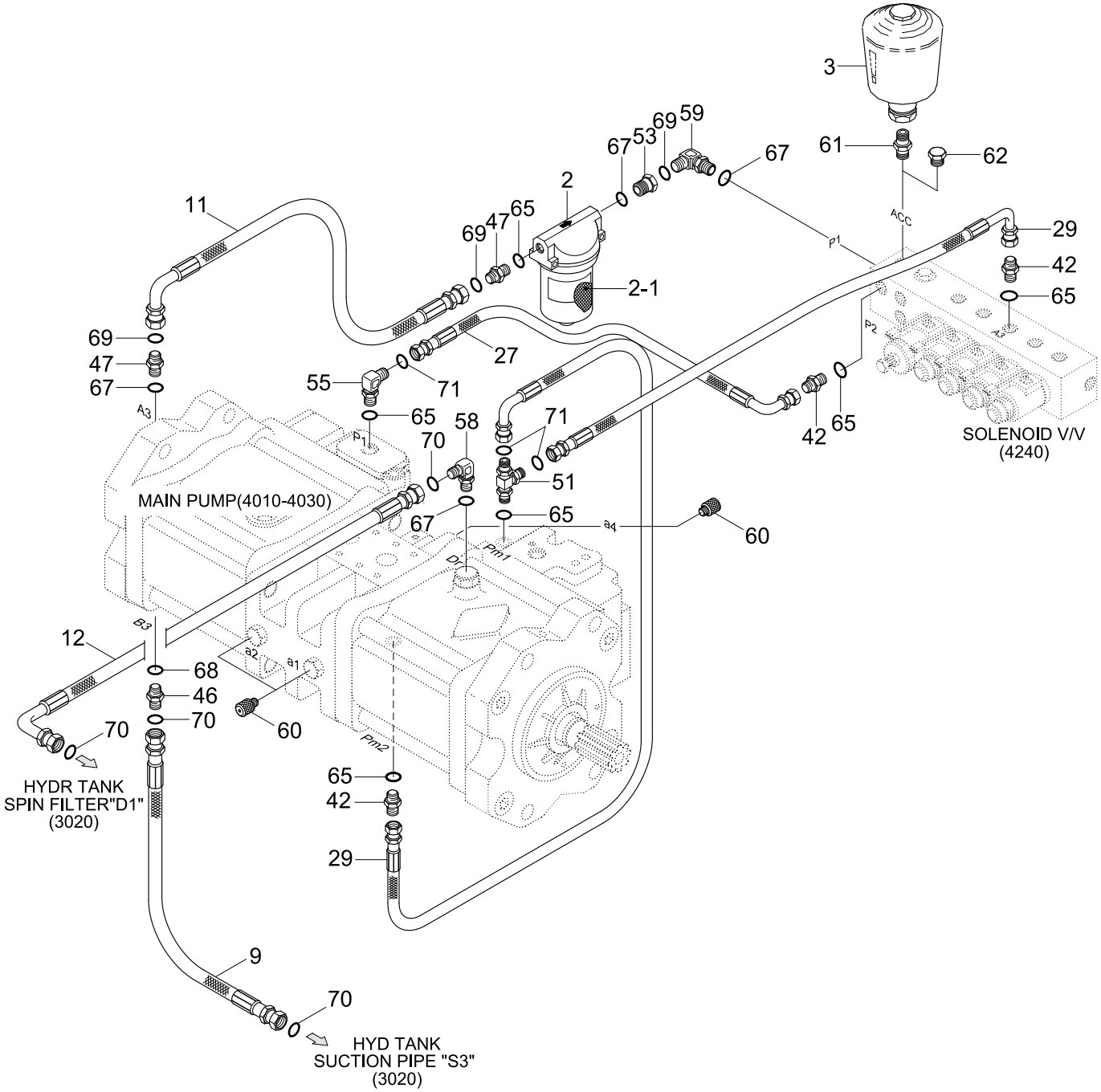

Item	Part_No	IS	Ord	T	Description	Qty	Serial_No	ITC	Remark
*	@				PILOT HYD PIPING	1	#2680 -	-	NOT
2	31E3-0017	10			FILTER-LINE	1			
2-1	31E3-0018	10			.ELEMENT-LINE FILTER	1			
3	31E3-3187				ACCUMULATOR	1			
9	P920-122012				HOSE ASSY-ORFS 0X45	1	- #2718		
	P910-122012				HOSE ASSY-ORFS 0X0	1	#2719 -	B	
11	P930-082015				HOSE ASSY-ORFS 0X90	1			
12	P930-122015				HOSE ASSY-ORFS 0X90	1			
27	P930-042007				HOSE ASSY-ORFS 0X90	1			
29	P930-042009				HOSE ASSY-ORFS 0X90	2			
42	X500-110001				CONNECTOR-ORFS	3			
46	X500-110004				CONNECTOR-ORFS	1			
47	X500-110003				CONNECTOR-ORFS	2			
51	X820-045151				TEE-R/TYPE,ORFS	1			
53	31N6-22400				ADAPTER	1			
55	X520-110001				ELBOW-90,ORFS	1			
58	X520-110015				ELBOW-90,ORFS	1			
59	X520-110003				ELBOW-90,ORFS	1			
60	31EK-11130				COUPLING-SCREW	2			
					COUPLING-SCREW	1			
61	31N6-24200				CONNECTOR	1			
62	P220-110103				PLUG	1			
65	S631-011004				O-RING	6			
67	S631-018004				O-RING	4			
68	S631-024004				O-RING	1			

Item	Part_No	IS	Ord	T	Description	Qty	Serial_No	ITC	Remark
69	S621-014001				O-RING,ORFS	3			
70	S621-018001				O-RING,ORFS	4			
71	S621-011001				O-RING,ORFS	3			

PILOT HYD PIPING(BASE 3, OPT, #2680-)

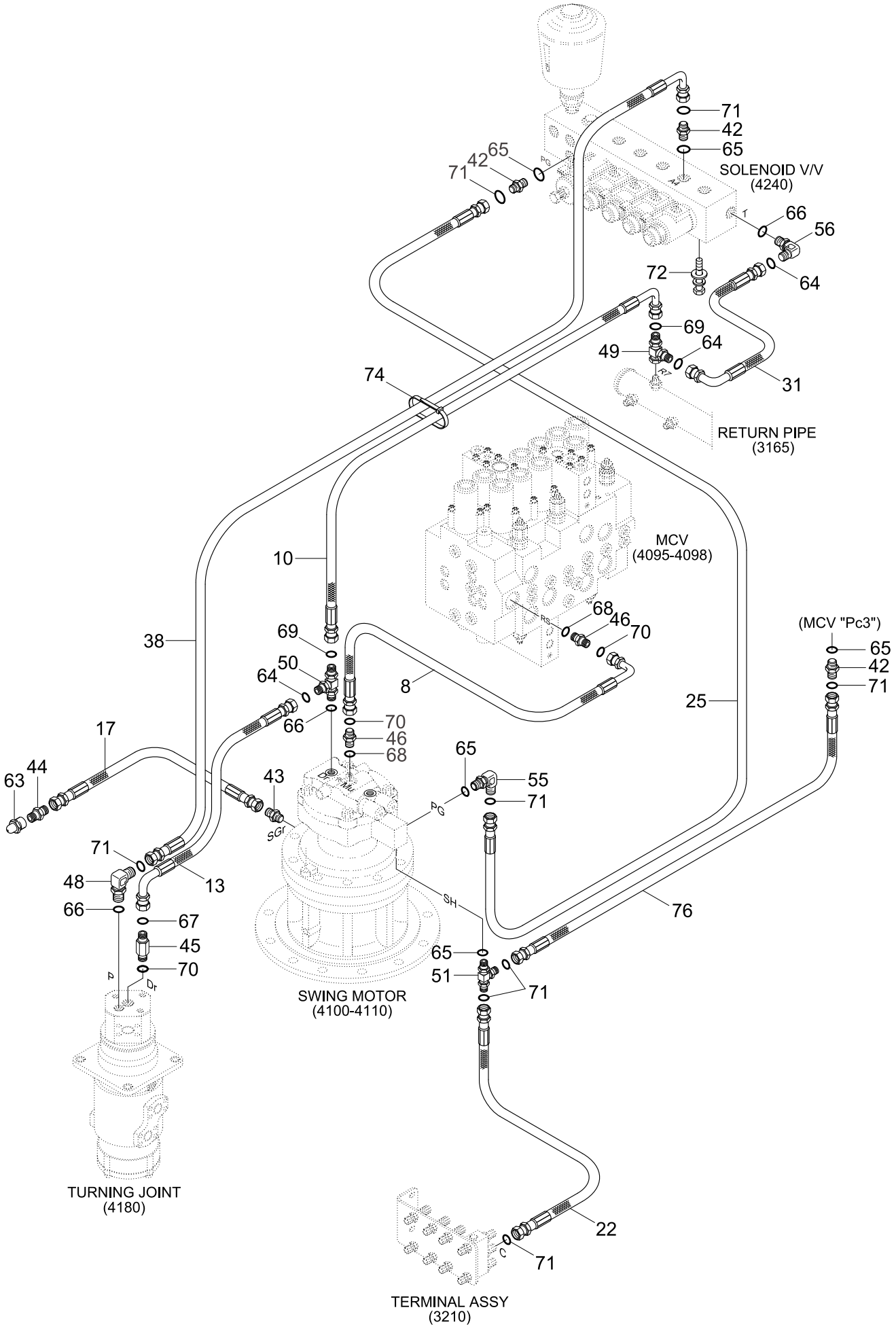

Item	Part_No	IS	Ord	T	Description	Qty	Serial_No	ITC	Remark
*	@				PILOT HYD PIPING	1	#2680 -	-	NOT
8	P930-122014				HOSE ASSY-ORFS 0X90	1			
10	P930-082018				HOSE ASSY-ORFS 0X90	1			
13	P930-062013				HOSE ASSY-ORFS 0X90	1			
17	P420-042018				HOSE ASSY-COMP 0X90	1			
22	P910-042026				HOSE ASSY-ORFS 0X0	1			
25	P910-043041				HOSE ASSY-ORFS 0X0	1			
31	P930-062039				HOSE ASSY-ORFS 0X90	1			
38	P930-042050				HOSE ASSY-ORFS 0X90	1			
42	X500-110001				CONNECTOR-ORFS	3			
43	P010-430002				CONNECTOR	1			
44	P010-430011				CONNECTOR	1			
45	X511-108524				CONNECTOR-LONG,ORFS	1			
46	X500-110004				CONNECTOR-ORFS	2			
48	X520-110012				ELBOW-90,ORFS	1			
49	X840-535253				S/NUT TEE-R/TYPE,ORFS	1			
50	31N4-22140				TEE-ORFS	1			
51	X820-045151				TEE-R/TYPE,ORFS	1			
55	X520-110001				ELBOW-90,ORFS	1			
56	X520-110002				ELBOW-90,ORFS	1			
63	S651-810002				NIPPLE-GREASE	1			
64	S621-012001				O-RING,ORFS	3			
65	S631-011004				O-RING	5			
66	S631-014004				O-RING	3			
67	S631-018004				O-RING	1			

Item	Part_No	IS	Ord	T	Description	Qty	Serial_No	ITC	Remark
68	S631-024004				O-RING	2			
69	S621-014001				O-RING,ORFS	2			
70	S621-018001				O-RING,ORFS	3			
71	S621-011001				O-RING,ORFS	8			
72	S035-082542				BOLT-W/WASHER	4			
74	S551-050203				CLAMP-BAND	20			
76	P910-042016				HOSE ASSY-ORFS 0X0	1			

TRAVEL HYDRAULIC PIPING

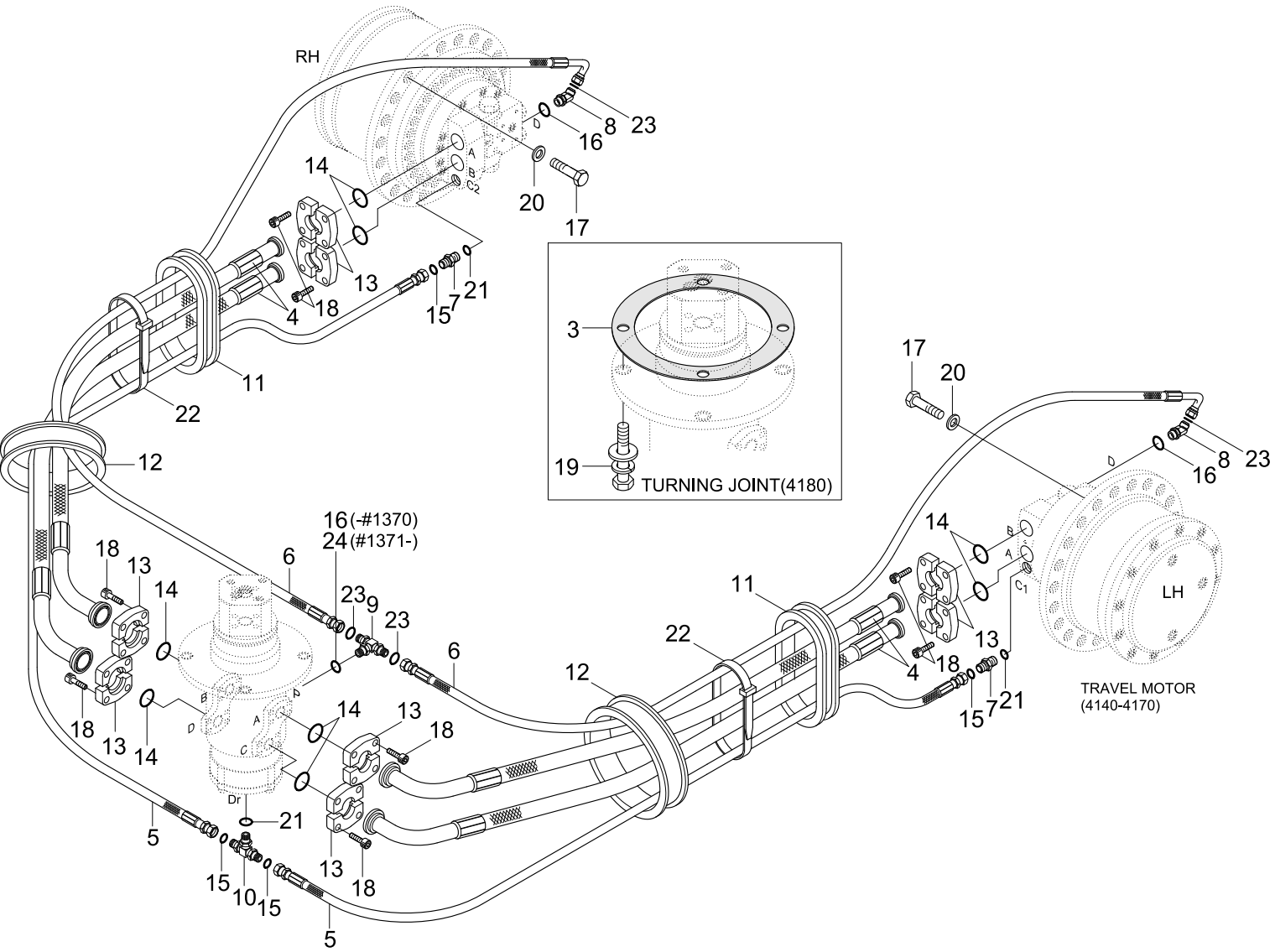

Item	Part_No	IS	Ord	T	Description	Qty	Serial_No	ITC	Remark
3	31N1-40970				GASKET	1			
4	P690-127336				HOSE ASSY-FLG 0X45	4			
5	P920-082035				HOSE ASSY-ORFS 0X45	2			
6	P620-042043				HOSE ASSY-THD 0X90	2	- #1370		
	P930-042043				HOSE ASSY-ORFS 0X90	2	#1371 -	D	
7	X500-110003				CONNECTOR-ORFS	2			
8	P030-110001				ELBOW-45	2	- #1370		
	X530-110001				ELBOW-45,ORFS	2	#1371 -	D	
9	P310-060404				TEE-BRANCH TYPE	1	- #1370		
	X810-065151				TEE-B/TYPE,ORFS	1	#1371 -	D	
10	X810-085353				TEE-B/TYPE,ORFS	1			
11	S760-141221				GROMMET	2	- #0171		
	S760-141421				GROMMET	2	#0172 -	D	
12	31E3-3118	80			GROMMET	2			
13	P173-120102				FLANGE-HYD,SPLIT	16			
14	Y171-019001				O-RING	8			
15	S621-014001				O-RING	4			
16	S631-011001				O-RING	3	- #1370		
					O-RING	2	#1371 -	A	
17	S017-160552				BOLT-HEX	60			
18	S109-100306				BOLT-SOCKET	32			
19	S037-123022				BOLT-W/WASHER	4			
20	S441-160002				WASHER-HARDENED	60			
21	S631-018001				O-RING	3			
22	S552-102370				CLAMP-BAND	6			

Item	Part_No	IS	Ord	T	Description	Qty	Serial_No	ITC	Remark
23	S621-011001				O-RING	4	#1371 -	-	
24	S621-014001				O-RING	1	#1371 -	-	

TRAVEL HYD PIPING(#0239-#1082, R140LCM-7)

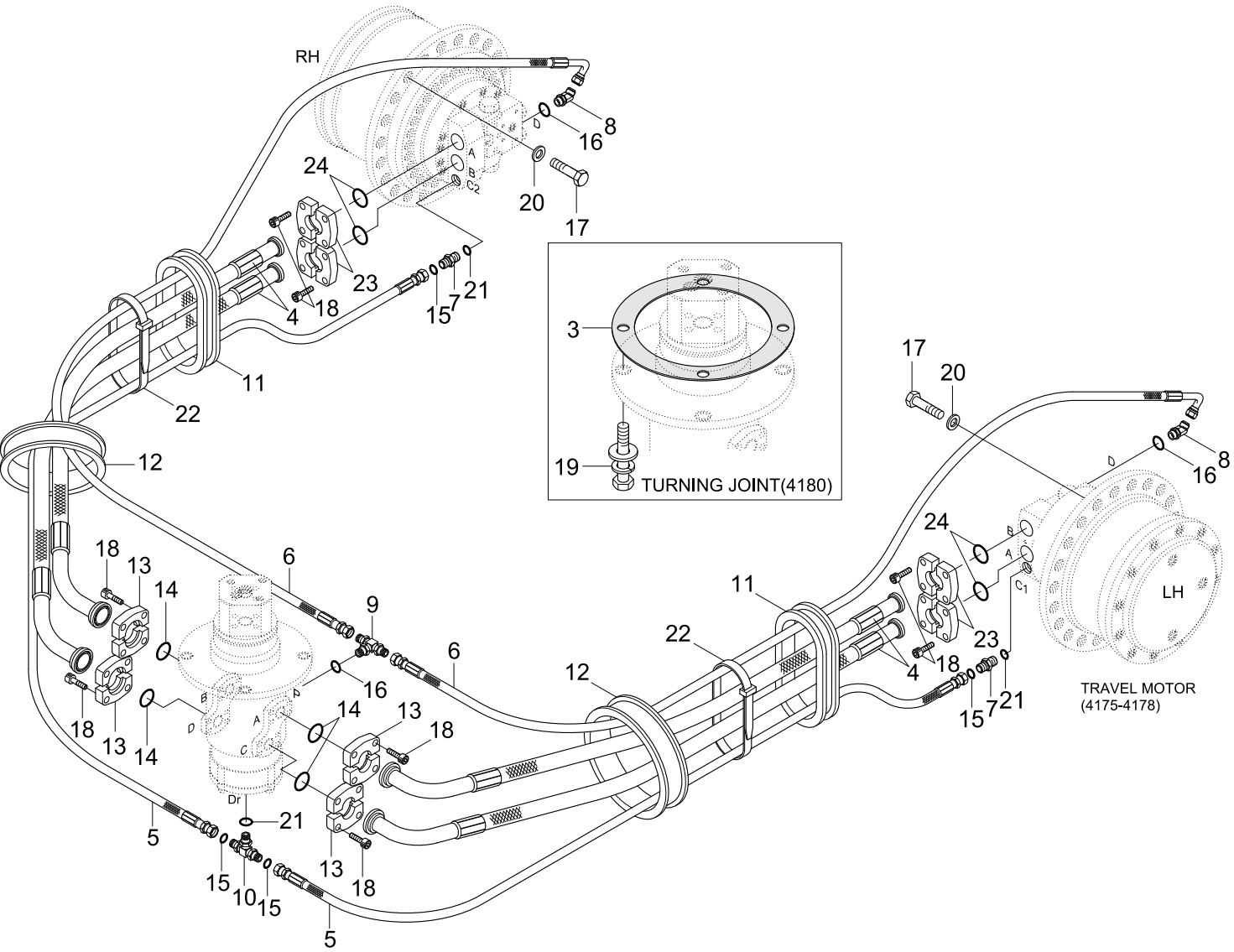

Item	Part_No	IS	Ord	T	Description	Qty	Serial_No	ITC	Remark
*	@				TRAVEL HYD PIPING	1	#0239 - #1082	-	NOT
3	31N1-40970				GASKET	1			
4	31EL-41040				HOSE ASSY	4			
5	P920-082039				HOSE ASSY-ORFS 0X45	2			
6	P850-042047				HOSE ASSY-SYN 0X45	2			
7	X500-110003				CONNECTOR-ORFS	2			
8	P101-104043				CONNECTOR-LONG	2			
9	P310-060404				TEE-BRANCH TYPE	1			
10	X810-085353				TEE-B/TYPE,ORFS	1			
11	E231-0270	30			GROMMET	2			
12	31E3-3118	80			GROMMET	2			
13	P173-120102				FLANGE-HYD,SPLIT	8			
14	Y171-019004				O-RING	4			
15	S621-014001				O-RING	4			
16	S631-011001				O-RING	3			
17	S017-160602				BOLT-HEX	60			
18	S109-100306				BOLT-SOCKET	32			
19	S037-123022				BOLT-W/WASHER	4			
20	S441-160002				WASHER-HARDENED	60			
21	S631-018001				O-RING	3			
22	S551-050203				CLAMP-BAND	6			
23	E131-0008				FLANGE-SPLIT	8			
24	Y171-024004				O-RING	4			

TRAVEL HYD PIPING(#1083-, LCM-7)

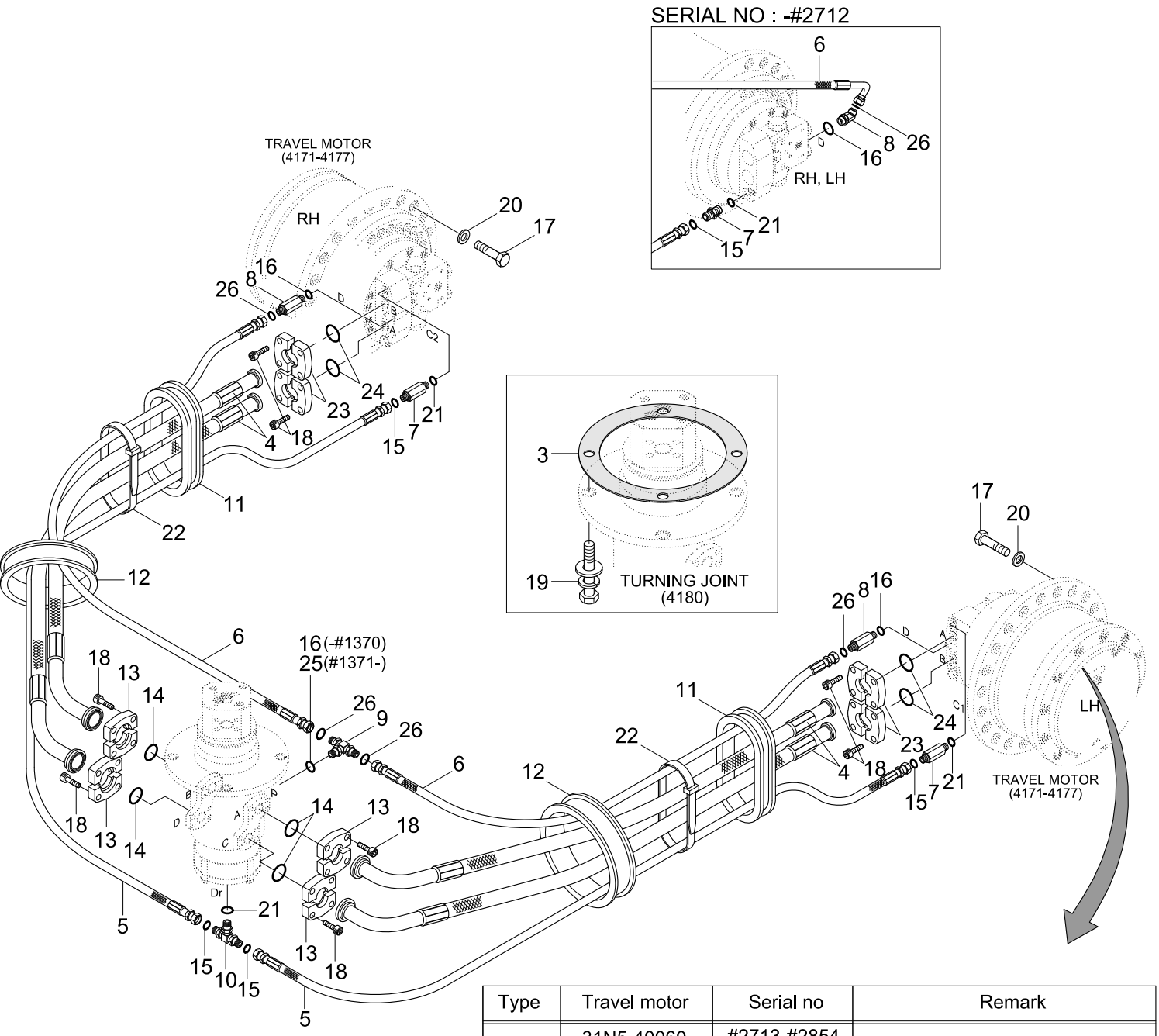

Type	Travel motor	Serial no	Remark
TYPE 1	31N5-40060	#2713-#2854	When ordering, check part no of travel motor assy on name plate.
	31N5-40061	#2855-#2947	
	31N5-40061BG	#2948-	
TYPE 2	31N5-40081BG	#3330-	

Item	Part_No	IS	Ord	T	Description	Qty	Serial_No	ITC	Remark
3	31N1-40970				GASKET	1			
4	31EL-41030				HOSE ASSY	4	- #1370		
	31N5-40031				HOSE ASSY	4	#1371 -	D	
5	P920-082039				HOSE ASSY-ORFS 0X45	2			
6	P850-042047				HOSE ASSY-SYN 0X45	2	- #1370		
	X410-042047				HOSE ASSY-ORFS 0X45	2	#1371 - #2712	D	
	P910-042040				HOSE ASSY-ORFS 0X0	2	#2713 -	B	TYPE 1
	P910-042048				HOSE ASSY-ORFS 0X0	2	#3170 -	-	TYPE 2
7	X500-110003				CONNECTOR-ORFS	2	- #2712		
	X511-108534				CONNECTOR-LONG,ORFS	2	#2713 -	B	
8	P101-104043				CONNECTOR-LONG	2	- #1370		
	X530-110001				ELBOW-45,ORFS	2	#1371 - #2712	D	
	X511-104514				CONNECTOR-LONG,ORFS	2	#2713 -	B	
9	P310-060404				TEE-BRANCH TYPE	1	- #1370		
	X810-065151				TEE-B/TYPE,ORFS	1	#1371 -	D	
10	X810-085353				TEE-B/TYPE,ORFS	1			
11	E231-0270	30			GROMMET	2	- #1370		
	S760-141221				GROMMET	2	#1371 -	D	
12	31E3-3118	80			GROMMET	2			
13	P173-120102				FLANGE-HYD,SPLIT	8			
14	Y171-019004				O-RING	4			
15	S621-014001				O-RING	4			
16	S631-011001				O-RING	3	- #1370		
	S631-011004				O-RING	2	#1371 -	A	
17	S017-160602				BOLT-HEX	60			

Item	Part_No	IS	Ord	T	Description	Qty	Serial_No	ITC	Remark
18	S109-100306				BOLT-SOCKET	32			
19	S037-123022				BOLT-W/WASHER	4			
20	S441-160002				WASHER-HARDENED	60			
21	S631-018004				O-RING	3			
22	S551-050203				CLAMP-BAND	6			
23	E131-0008				FLANGE-SPLIT	8	- #2712		
	P173-160104				FLANGE-HYD,SPLIT	8	#2713 -	A	
24	Y171-024004				O-RING	4			
25	S631-014004				O-RING	1	#1371 -	-	
26	S621-011001				O-RING	4	#1371 -	-	

BOOM HYD PIPING(4.6M, -#1000, STD)

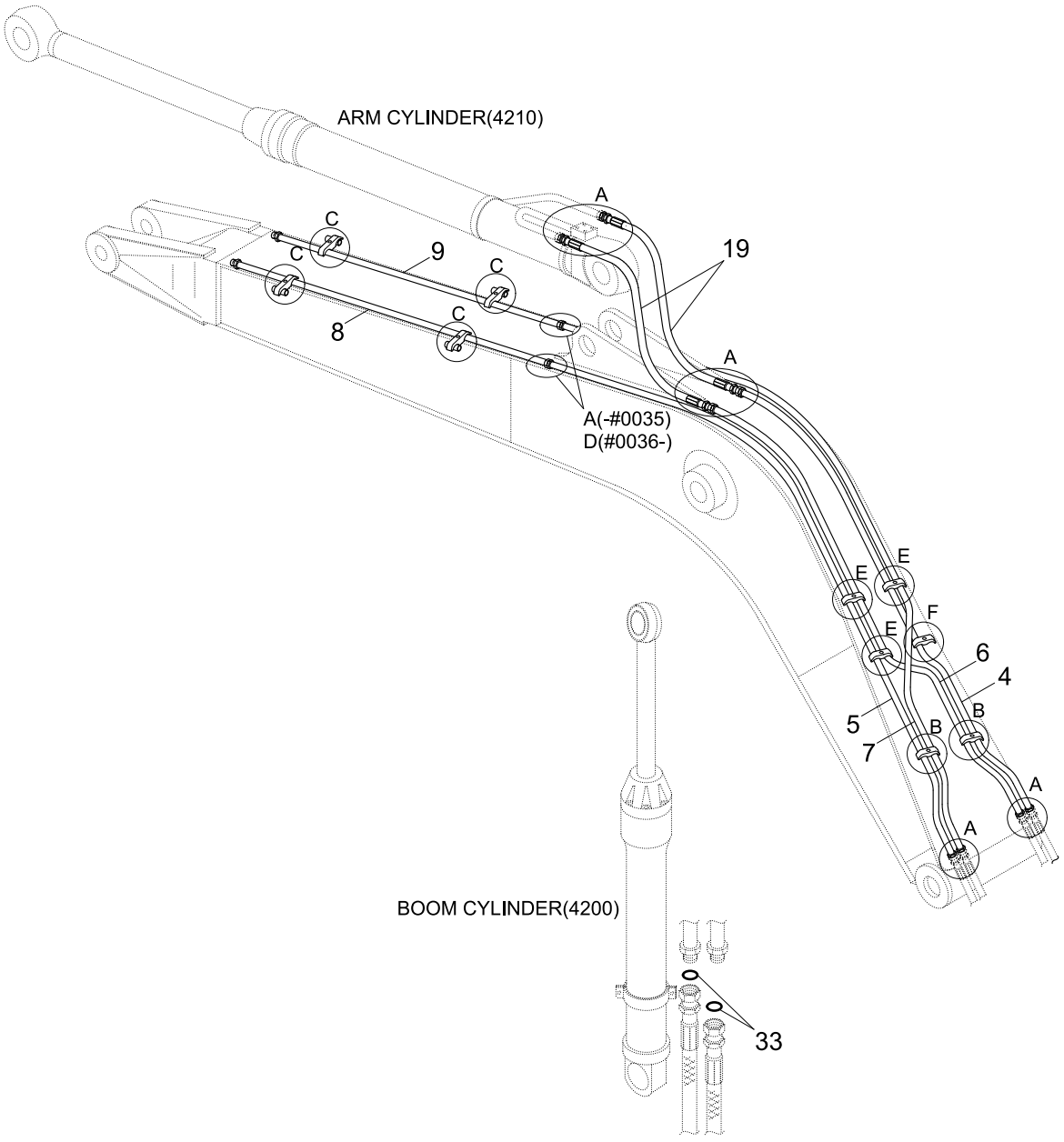

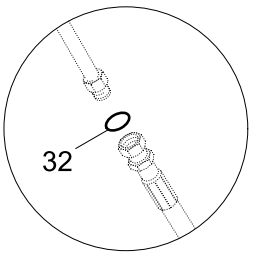

DETAIL A

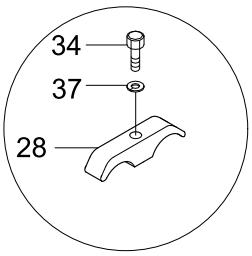

DETAIL B

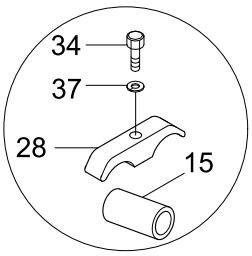

DETAIL C

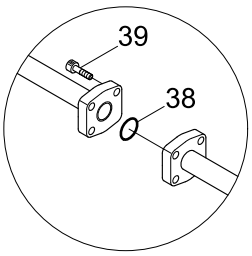

DETAIL D

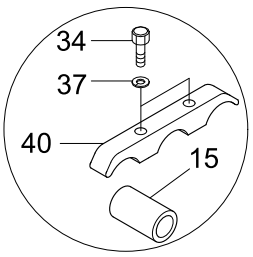

DETAIL E

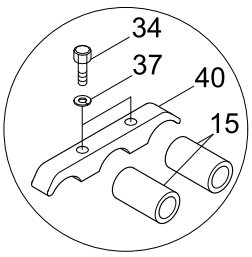

DETAIL F

Item	Part_No	IS	Ord	T	Description	Qty	Serial_No	ITC	Remark
*	@				BOOM HYD PIPING	1	- #1000	-	NOT
4	31N4-50200				PIPE ASSY	1	- #0035		
	31N4-50201				PIPE ASSY	1	#0036 -	D	
5	31N4-50210				PIPE ASSY	1	- #0035		
	31N4-50211				PIPE ASSY	1	#0036 -	D	
6	31N4-50220				PIPE ASSY	1	- #0035		
	31N4-50221				PIPE ASSY	1	#0036 -	D	
7	31N4-50230				PIPE ASSY	1	- #0035		
	31N4-50231				PIPE ASSY	1	#0036 -	D	
8	31N4-50240				PIPE ASSY	1	- #0035		
	31N4-50241				PIPE ASSY	1	#0036 -	D	
9	31N4-50251				PIPE ASSY	1	- #0035		
	31N4-50252				PIPE ASSY	1	#0036 -	D	
15	E131-0277	30			SPACER-PIPE	4	- #0035		
					SPACER-PIPE	9	#0036 -	A	
19	P910-127017				HOSE ASSY-ORFS 0X0	2			
28	31N4-12200				CLAMP-PIPE	8			
32	S621-018001				O-RING,ORFS	10	- #0035		
					O-RING,ORFS	8	#0036 -	A	
33	S621-014001				O-RING,ORFS	10	#0003 -	-	
34	S017-160702				BOLT-HEX	8	- #0035		
					BOLT-HEX	16	#0036 -	A	
37	S411-160002				WASHER-SPRING	8	- #0035		
					WASHER-SPRING	16	#0036 -	A	
38	Y171-019004				O-RING	2	#0036 -	-	

Item	Part_No	IS	Ord	T	Description	Qty	Serial_No	ITC	Remark
39	S109-100506				BOLT-SOCKET	8	#0036 -	-	
40	31N4-50400				CLAMP-PIPE	4	#0036 -	-	

BOOM HYD PIPING(4.6M, STD, #1001-)

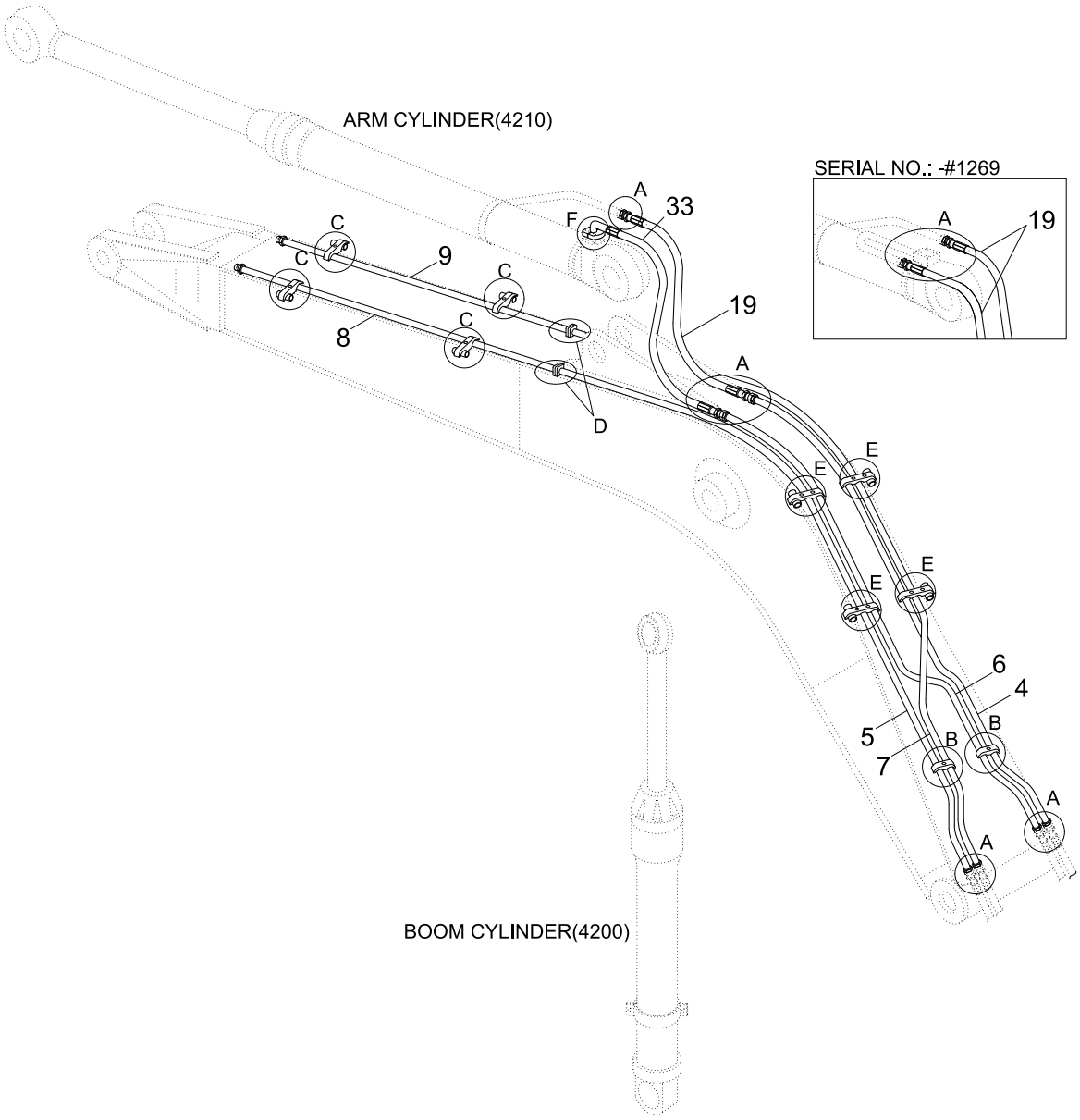

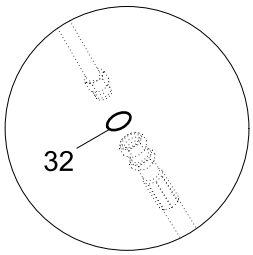

DETAIL A

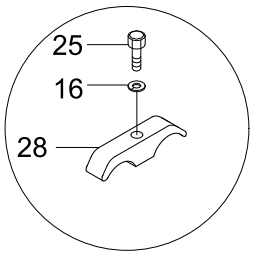

DETAIL B

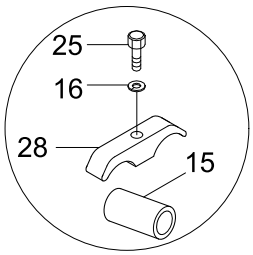

DETAIL C

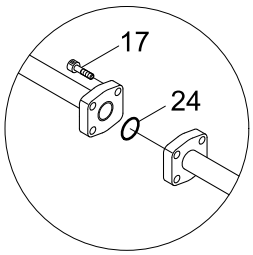

DETAIL D

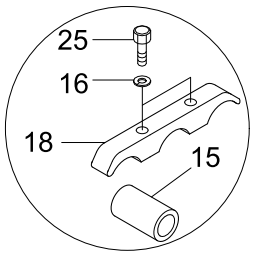

DETAIL E

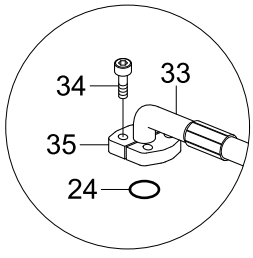

DETAIL F

BOOM HYDRAULIC PIPING(4.6M)			
Serial no	M.C.V.	Machine option	Pages
-#1601	ALP165	Std, Dozer	3405 - 3410
#1602-	ALP165	Dozer	3405 - 3410
	UHX22-26	Standard	3480 - 3485

Item	Part_No	IS	Ord	T	Description	Qty	Serial_No	ITC	Remark
*	@				BOOM HYD PIPING	1	#1001 - #1601		NOT
					BOOM HYD PIPING	1	#1602 -	A	NOT
4	31N4-55110				PIPE ASSY	1			
5	31N4-55120				PIPE ASSY	1			
6	31N4-55130				PIPE ASSY	1			
7	31N4-55140				PIPE ASSY	1			
8	31N4-51151				PIPE ASSY	1			
9	31N4-51161				PIPE ASSY	1			
15	31N5-50220				SPACER-PIPE	4			
16	S411-160002				WASHER-SPRING	14			
17	S109-100506				BOLT-SOCKET	8			
18	31N4-50400				CLAMP-PIPE	4			
19	P910-127017				HOSE ASSY-ORFS 0X0	2	- #1269		
					HOSE ASSY-ORFS 0X0	1	#1270 -	A	
24	Y171-019004				O-RING	2	- #1269		
					O-RING	3	#1270 -	A	
25	S017-160702				BOLT-HEX	14			
28	31N4-12200				CLAMP-PIPE	8			
32	S621-018001				O-RING	8	- #1269		
					O-RING	7	#1270 -	A	
33	31N4-51210				HOSE ASSY	1	#1270 -	-	
34	S109-100306				BOLT-SOCKET	4	#1270 -	-	
35	P173-120102				FLANGE-HYD,SPLIT	2	#1270 -	-	

BOOM GREASE LUB SYSTEM(4.6M)

BOOM HYDRAULIC PIPING(4.6M)			
Serial no	M.C.V.	Machine option	Pages
-#1601	ALP165	Std, Dozer	3405 - 3410
#1602-	ALP165	Dozer	3405 - 3410
	UHX22-26	Standard	3480 - 3485

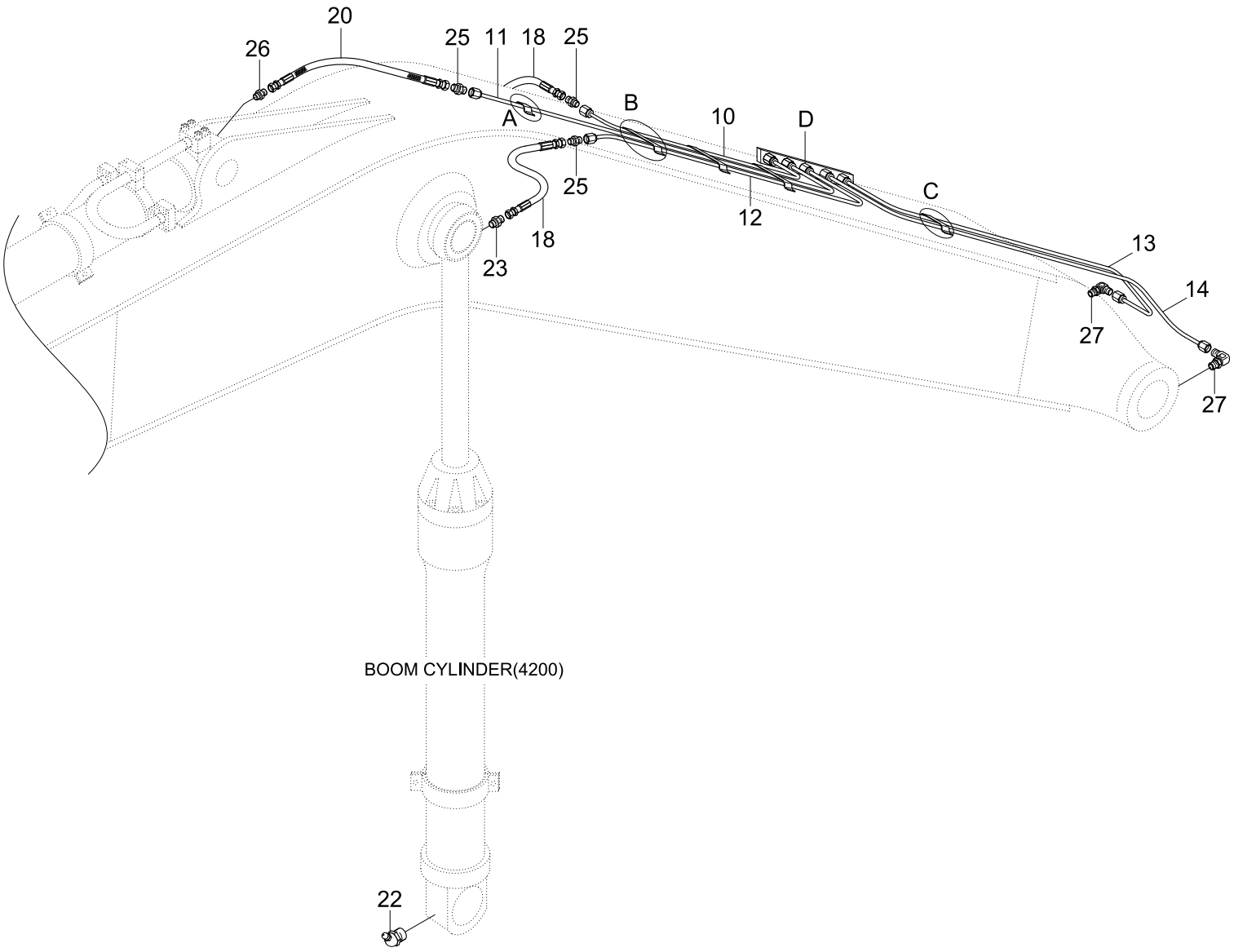

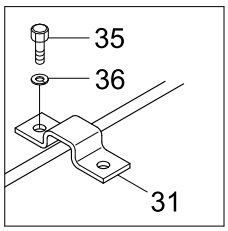

DETAIL A

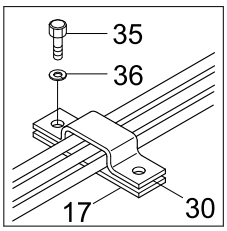

DETAIL B

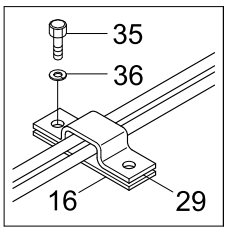

DETAIL C

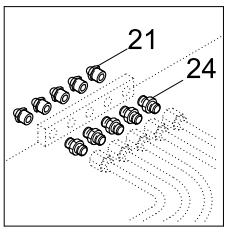

DETAIL D

Item	Part_No	IS	Ord	T	Description	Qty	Serial_No	ITC	Remark
*	@				BOOM GREASE SYS(4.1M)	1	- #1601		NOT
					BOOM GREASE SYS(4.1M)	1	#1602 -	A	NOT
10	31N4-50270				PIPE ASSY-GREASE	1			
11	31N4-50290				PIPE ASSY	1			
12	31N4-50280				PIPE ASSY-GREASE	1			
13	31N4-50300				PIPE ASSY	1			
14	31N4-50310				PIPE ASSY	1			
16	31E6-0212	10			PAD-RUBBER	1			
17	31E6-0211	10			PAD-RUBBER	2			
18	P400-042016				HOSE ASSY-COMPACT	2			
20	P400-042008				HOSE ASSY-COMPACT	1			
21	S651-810002				NIPPLE-GREASE	5			
22	S653-810002				NIPPLE-GREASE	3			
23	P010-430011				CONNECTOR	2			
24	E131-0625	10			CONNECTOR	5			
25	E131-0626	10			CONNECTOR	3			
26	E231-0207	10			ELBOW-45	1			
27	E231-0349	10			ELBOW-90	2			
29	31N6-50230				CLAMP-PIPE	1	#0003 -	-	
30	31E9-0125	20			CLAMP-PIPE	2			
31	S541-080002				CLAMP-TUBE	1			
35	S015-060152				BOLT-HEX	7			
36	S411-060002				WASHER-SPRING	7			

BOOM SAFETY LOCK SYSTEM

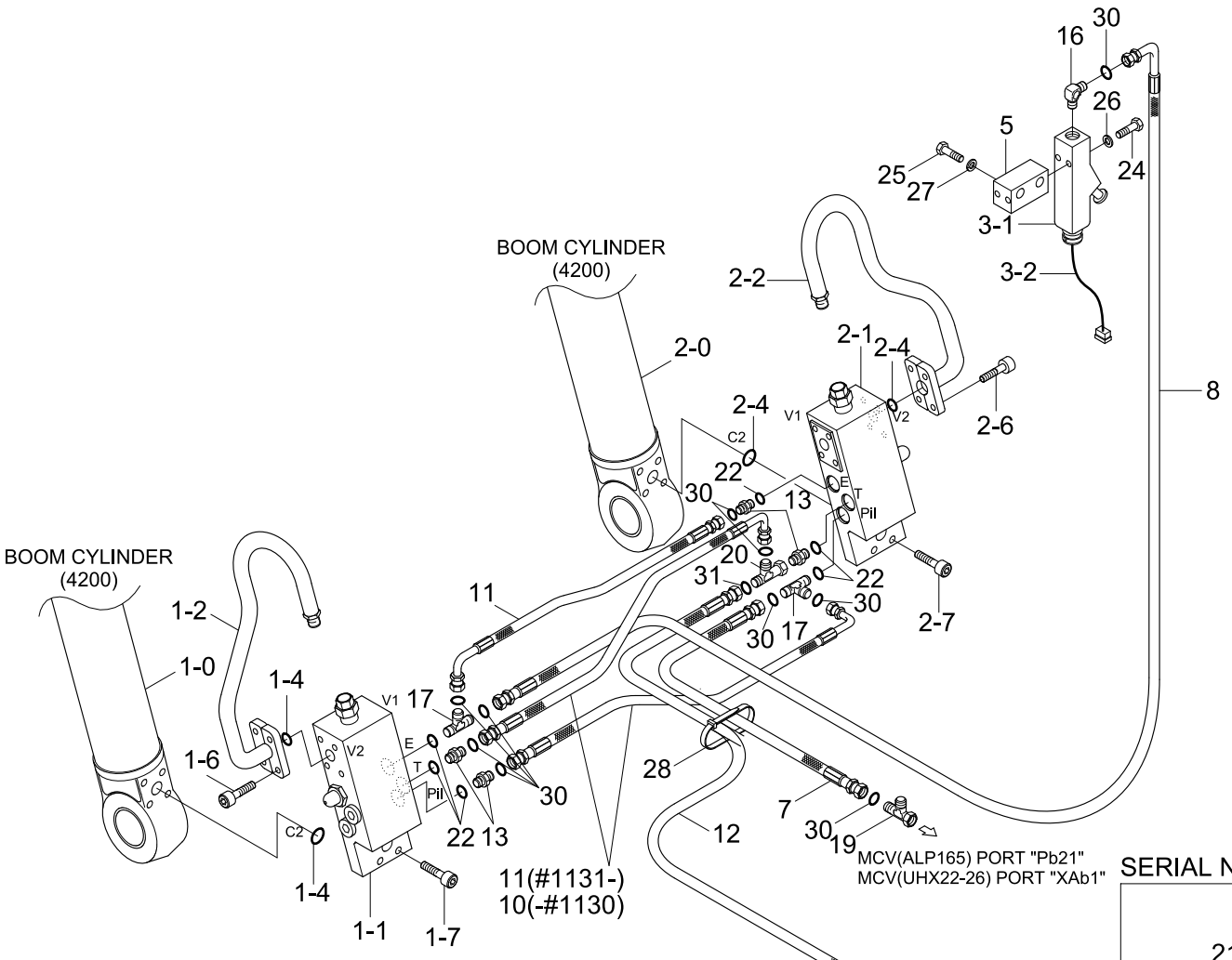

SERIAL NO : -#3088

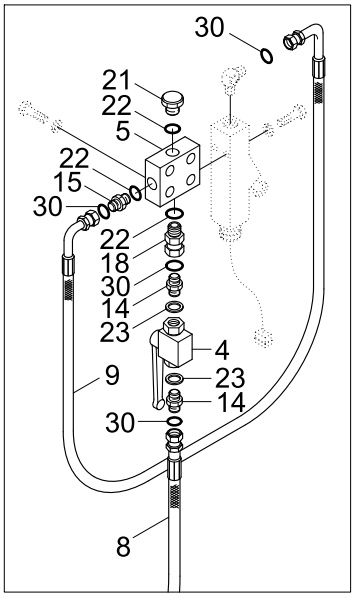

DETAIL ITEM 1-1, 2-1

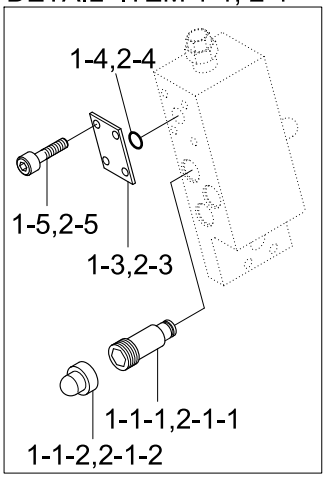

Description	Parts no	Included item
Boom safety lock seal kit	31Y1-18580	1-4, 2-4, 31Y1-18170(See 4200)

Item	Part_No	IS	Ord	T	Description	Qty	Serial_No	ITC	Remark
1	31N4-52120				BOOM SAFE LOCK CYL-LH	1			STD
	31N4-52910				BOOM SAFE LOCK CYL-LH	1	#0234 -	-	ADJUST BOOM
1-0	@				.BOOM CYL SUB ASSY	1			NOT
1-1	31N4-90510				.VALVE-SAFETY LOCK	1	- #2962		
	31NA-90550				.VALVE-SAFETY LOCK	1	#2963 -	B	
1-1-1	ZTAS-00001				..VALVE-RELIEF	1	- #2962		
	DRV-100A				..VALVE-RELIEF	1	#2963 -	B	
1-1-2	ZTAS-00002				..CAP	1	- #2962		
	DCP-001A				..CAP	1	#2963 -	B	
1-1-3	ZTAS-00003				..SEAL KIT	1	- #2962		
	AS568				..SEAL KIT	1	#2963 -	B	
1-2	31Y1-18550				.PIPE ASSY-LH	1			STD
	31Y1-21210				.PIPE ASSY-LH	1	#0234 -	-	ADJUST BOOM
1-3	P184-081112				.FLANGE-SQUARE	1			
1-4	Y171-015001				.O-RING	3			
1-5	S109-080306				.BOLT-SOCKET	4			
1-6	S109-080406				.BOLT-SOCKET	4			
1-7	S109-080456				.BOLT-SOCKET	4			
2	31N4-52110				BOOM SAFE LOCK CYL-RH	1			STD
	31N4-52920				BOOM SAFE LOCK CYL-RH	1	#0234 -	-	ADJUST BOOM
2-0	@				.BOOM CYL SUB ASSY	1			NOT
2-1	31N4-90510				.VALVE-SAFETY LOCK	1	- #2962		
	31NA-90550				.VALVE-SAFETY LOCK	1	#2963 -	B	
2-1-1	ZTAS-00001				..VALVE-RELIEF	1	- #2962		
	DRV-100A				..VALVE-RELIEF	1	#2963 -	B	

Item	Part_No	IS	Ord	T	Description	Qty	Serial_No	ITC	Remark
2-1-2	ZTAS-00002				..CAP	1	- #2962		
	DCP-001A				..CAP	1	#2963 -	B	
2-1-3	ZTAS-00003				..SEAL KIT	1	- #2962		
	AS568				..SEAL KIT	1	#2963 -	B	
2-2	31Y1-18560				.PIPE ASSY-RH	1			STD
	31Y1-21220				.PIPE ASSY-RH	1	#0234 -	-	ADJUST BOOM
2-3	P184-081112				.FLANGE-SQUARE	1			
2-4	Y171-015001				.O-RING	3			
2-5	S109-080306				.BOLT-SOCKET	4			
2-6	S109-080406				.BOLT-SOCKET	4			
2-7	S109-080456				.BOLT-SOCKET	4			
3	31E5-50325				SWITCH-PRESSURE	1			
3-1	31E5-50320				.SWITCH-PRESSURE	1			
3-2	21E5-50230				.HARNESS-EXT	1			
4	31E5-50330				VALVE-SHUT OFF	1	- #3088	-	
5	31E6-90550				BLOCK	1	- #3088		
	31E6-90551				BLOCK	1	#3089 -	D	
6	P400-042007				HOSE ASSY-COMPACT	1	- #0135	-	
7	P400-042046				HOSE ASSY-COMPACT	1	- #1370		
	P910-042046				HOSE ASSY-ORFS 0X0	1	#1371 -	D	
8	P600-047014				HOSE ASSY-THD 0X0	1	- #1370		
	P910-047014				HOSE ASSY-ORFS 0X0	1	#1371 -	D	
9	P610-047012				HOSE ASSY-THD 0X45	1	- #1370		
	P920-047012				HOSE ASSY-ORFS 0X45	1	#1371 - #3088	D	
10	P420-042008				HOSE ASSY-COMP 0X90	1	- #0135		

Item	Part_No	IS	Ord	T	Description	Qty	Serial_No	ITC	Remark
10	P420-042008				HOSE ASSY-COMP 0X90	2	#0136 - #1130	-	
11	P620-047008				HOSE ASSY-THD 0X90	1	- #1130		
					HOSE ASSY-THD 0X90	3	#1131 - #1370	A	
	P930-047008				HOSE ASSY-ORFS 0X90	3	#1371 -	D	
12	P420-062050				HOSE ASSY-COMP 0X90	1	- #1370		
	P930-062050				HOSE ASSY-ORFS 0X90	1	#1371 -	D	
13	P010-110002				CONNECTOR	4	- #1370		
	X500-110001				CONNECTOR-ORFS	4	#1371 -	D	
14	P010-120002				CONNECTOR	2	- #1370		
	X500-120001				CONNECTOR-ORFS	2	#1371 - #2367	D	
	31N5-70460				CONNECTOR-ORFS	2	#2368 - #3088	C	
15	P030-110001				ELBOW-45	1	- #1370		
	X530-110001				ELBOW-45,ORFS	1	#1371 - #3088	D	
16	31E5-50350				ELBOW-90	1	- #1370		
	31N6-90550				ELBOW-90,ORFS	1	#1371 -	D	
17	P320-040404				TEE-RUN TYPE	2	- #1370		
	X820-045151				TEE-R/TYPE,ORFS	2	#1371 -	D	
18	31E6-90560				ADAPTOR-SWIVEL NUT	1	- #1370		
	31N4-22180				ADAPTOR-SWIVEL NUT	1	#1371 - #3088	D	
19	32E6-10460				TEE-SWEVEL NUT	1	- #0035		
	31E6-0219	20			TEE-LONG	1	#0036 - #1370	D	
	31N4-22150				TEE-LONG,ORFS	1	#1371 -	D	ALP165
	X830-515151				TEE-B/TYPE,SWIVEL,ORFS	1	#1602 -	-	UHX22-26
20	31EK-20270				TEE-R/TYPE,S/NUT	1	- #0135		
	31M6-51160				TEE-R/TYPE,S/NUT	1	#0136 - #1370	D	

Item	Part_No	IS	Ord	T	Description	Qty	Serial_No	ITC	Remark
20	31N4-41140				TEE-S/NUT,ORFS	1	#1371 -	D	
21	P220-110102				PLUG	1	- #3088	-	
22	S631-014001				O-RING	9	- #3088		
					O-RING	6	#3089 -	A	
23	P391-040000				WASHER-COPPER	2	- #2367	-	
24	S015-050452				BOLT-HEX	2			
25	S017-120552				BOLT-HEX	2			
26	S411-050002				WASHER-SPRING	2			
27	S411-120002				WASHER-SPRING	2			
28	S552-020102				CLAMP-BAND	10			
29	31EG-90540				TEE-R/TYPE,S/NUT	1			
30	S621-011001				O-RING	13	#1371 -	-	
31	S621-012001				O-RING(SEAL LOCK TYPE)	2	#1371 -	-	
K	31Y1-18580				SELA KIT	1			

QUICK CLAMP HYD PIPING(-#1370)

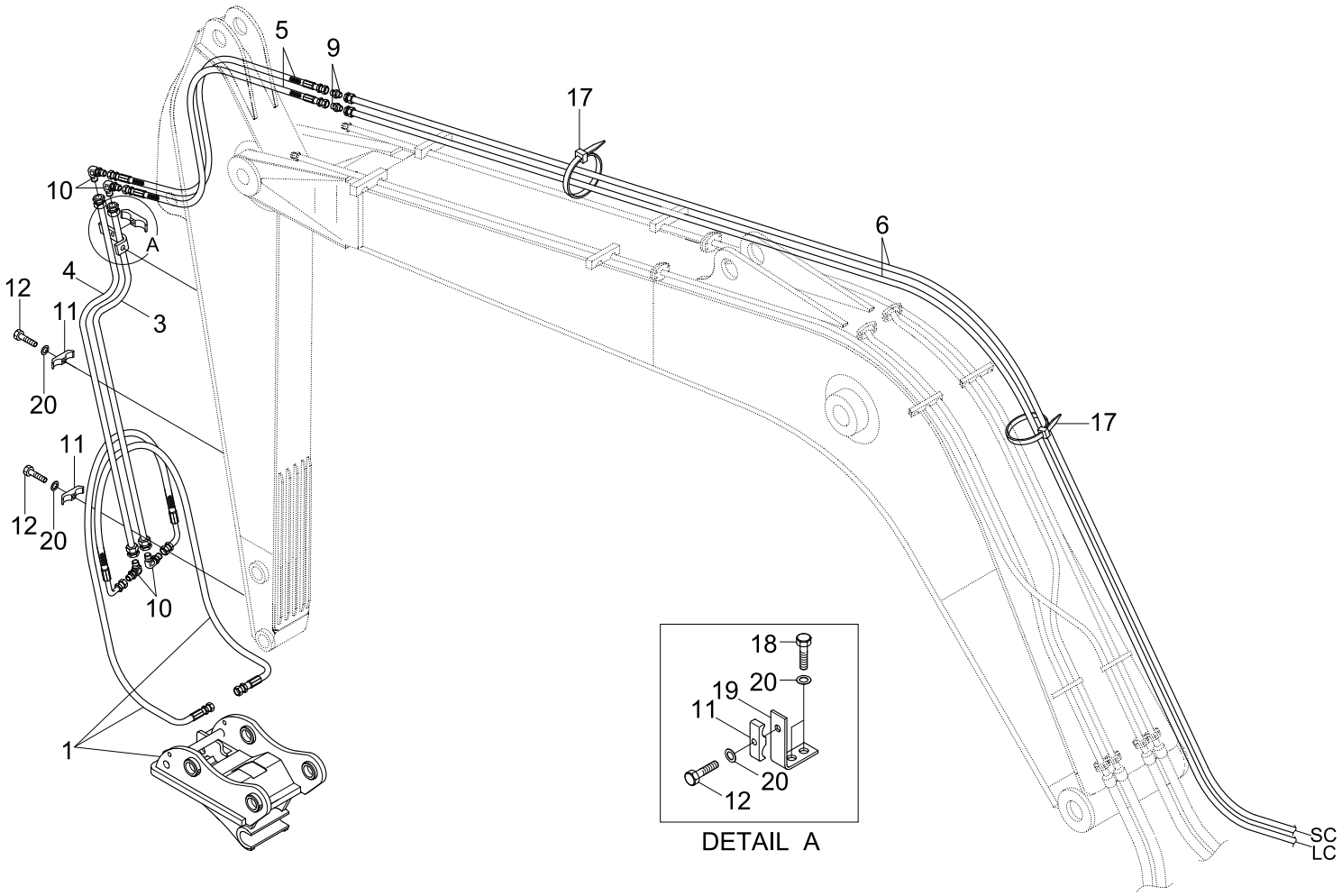

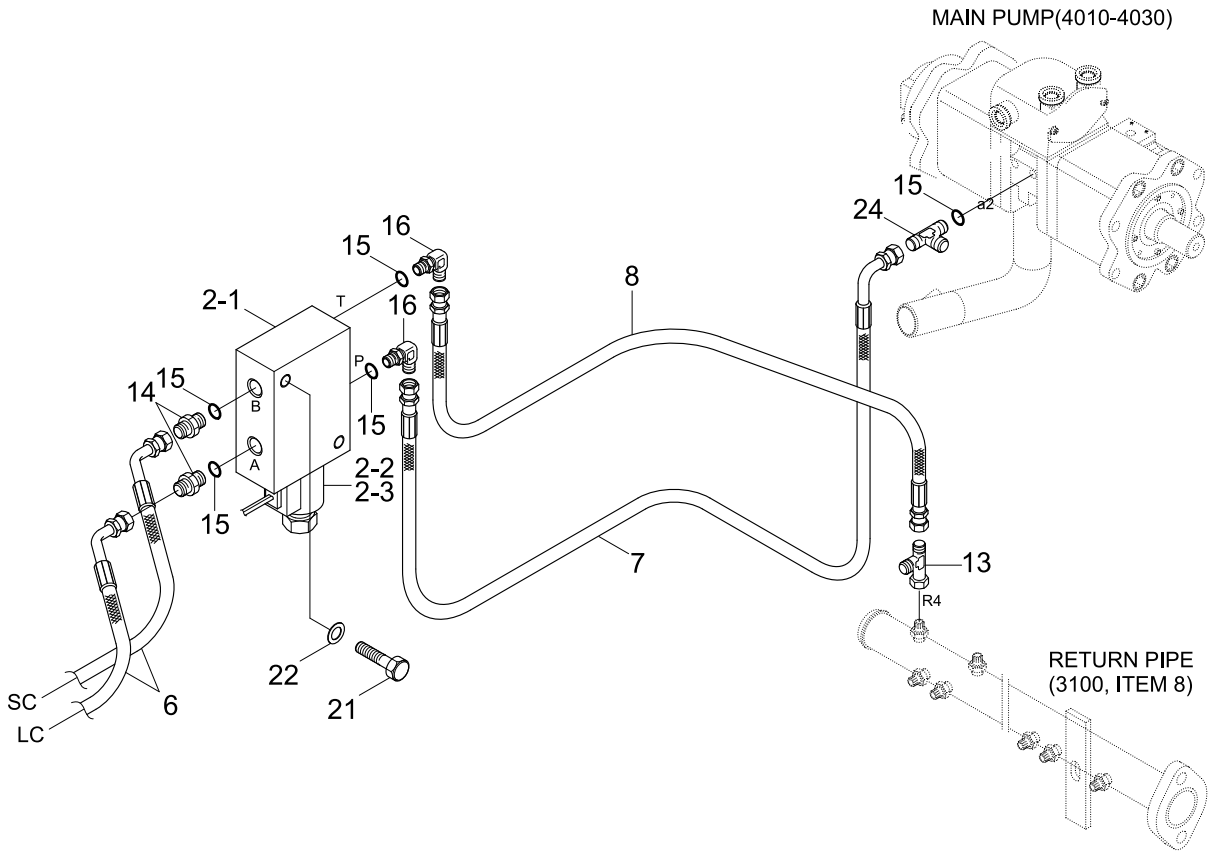

Item	Part_No	IS	Ord	T	Description	Qty	Serial_No	ITC	Remark
1	@				QUICK CLAMP HYD PIPING	1	- #1370	-	NOT
					QUICK CLAMP ASSY	1	#0001 -	-	NOT
2	34EA-91720				SOLENOID VALVE	1			
2-1	34EA-91720B				.MANIFOLD	1	#0001 -	-	
2-2	GS044200NC				.VALVE-SOLENOID	1	#0001 -	-	
2-3	CAP024L+DT				.COIL	1	#0001 -	-	
3	34EA-91741				PIPE ASSY-RH	1	- #0035		2.5M AM
	31N4-90620				PIPE ASSY	1	#0036 -	A	2.5M AM
4	34EA-91761				PIPE ASSY-LH	1	- #0035		2.5M AM
	31N4-90630				PIPE ASSY	1	#0036 -	A	2.5M AM
5	P603-047046				HOSE ASSY-THD	2			
6	P610-047113				HOSE ASSY-THD 0X45	2			
7	P600-047034				HOSE ASSY-THD 0X0	1			
8	P610-047011				HOSE ASSY-THD 0X90	1			
9	31L7-40190				CONNECTOR	2			
10	34EA-91780				ELBOW-90,MALE	4			
11	34EA-91811				CLAMP-PIPE	3			
12	S107-100302				BOLT-SOCKET	3			
13	32E6-10460				TEE-SWEVEL NUT	1			
14	P010-110002				CONNECTOR	2			
15	S631-011001				O-RING	5			
16	P020-110001				ELBOW-90	2			
17	S551-050203				CLAMP-BAND	25			
18	S017-100202				BOLT-HEX	2			
19	34EA-91801				BRACKET-CLAMP	1			

Item	Part_No	IS	Ord	T	Description	Qty	Serial_No	ITC	Remark
20	S441-100002				WASHER-HARDENED	5			
21	S017-100502				BOLT-HEX	2			
22	S411-100002				WASHER-SPRING	2			
24	31EM-94090				TEE	1			

QUICK CLAMP HYD PIPING(#1371-)

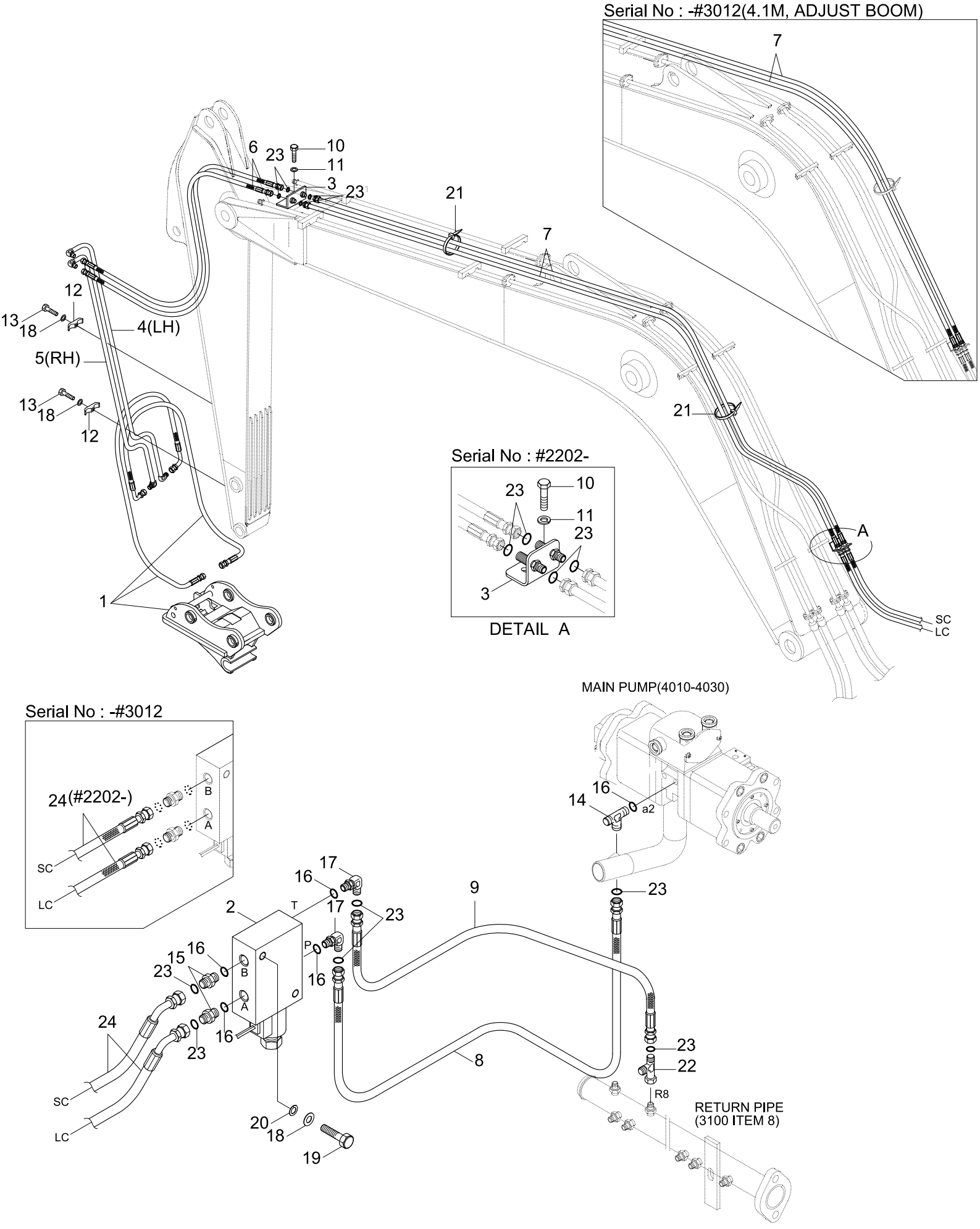

Item	Part_No	IS	Ord	T	Description	Qty	Serial_No	ITC	Remark
*	@				QUICK CLAMP HYD PIPING	1	#1371 -	D	NOT
1	@				QUICK CLAMP ASSY	1			NOT
2	34EA-91720				SOLENOID VALVE	1			
2-1	34EA-91720B				.MANIFOLD	1			
2-2	GS044200NC				.VALVE-SOLENOID	1			
2-3	CAP024L+DT				.COIL	1			
3	31N4-90680				TERMINAL-Q/CLAMP	1	- #2201		
					TERMINAL-Q/CLAMP	2	#2202 -	A	
4	31N4-90602				PIPE ASSY	1			1.9/2.1/3.0M AM
	31N4-90622				PIPE ASSY	1			2.5M AM, STD
5	31N4-90612				PIPE ASSY	1			1.9/2.1/3.0M AM
	31N4-90632				PIPE ASSY	1			2.5M AM, STD
6	P913-047026				HOSE ASSY-ORFS 0X0	2			1.9M/2.1M AM
	P913-047033				HOSE ASSY-ORFS 0X0	2			2.5M AM, STD
	P913-047050				HOSE ASSY-ORFS 0X0	2			3.0M AM
7	P910-047130				HOSE ASSY-ORFS 0X0	2	- #2201		4.6M BM, STD
	P910-047095				HOSE ASSY-ORFS 0X0	2	#2202 -	D	4.6M BM, STD
	P910-047124				HOSE ASSY-ORFS 0X0	2	- #2201		4.1M BM
	P910-047086				HOSE ASSY-ORFS 0X0	2	#2202 - #0312	D	4.1M BM
	P910-047087				HOSE ASSY-ORFS 0X0	2	#3013 -	D	4.1M BM
	P910-047135				HOSE ASSY-ORFS 0X0	2	- #2201		ADJUST BOOM
	P910-047096				HOSE ASSY-ORFS 0X0	2	#2202 - #3012	D	ADJUST BOOM
	P910-047097				HOSE ASSY-ORFS 0X0	2	#3013 -	D	ADJUST BOOM
8	P910-047030				HOSE ASSY-ORFS 0X0	1	- #2201		
	31N4-95750				HOSE ASSY	1	#2202 -	B	

Item	Part_No	IS	Ord	T	Description	Qty	Serial_No	ITC	Remark
9	P930-042008				HOSE ASSY-ORFS 0X90	1			
10	S017-160752				BOLT-HEX	1	- #2201		
					BOLT-HEX	2	#2202 -	A	
11	S411-160002				WASHER-SPRING	1	- #2201		
					WASHER-SPRING	2	#2202 -	A	
12	34EA-91811				CLAMP-PIPE	3			
13	S017-100302				BOLT-HEX	3			
14	31N4-22170				TEE-RUN TYPE	1			
15	X500-110001				CONNECTOR-ORFS	2			
16	S631-011004				O-RING	5			
17	X520-110001				ELBOW-90,ORFS	2			
18	S441-100002				WASHER-HARDENED	5			
19	S017-100502				BOLT-HEX	2			
20	S411-100002				WASHER-SPRING	2			
21	S554-054300				CLAMP-BAND	20			
22	X840-515151				TEE-R/TYPE,SWIVEL,ORFS	1			
23	S621-011001				O-RING	12			
24	P910-047038				HOSE ASSY-ORFS 0X0	2	#2202 - #3012	-	
	P920-047034				HOSE ASSY-ORFS 0X45	2	#3013 -	D	

BOOM HYDRAULIC PIPING(4.1M, -#1000)

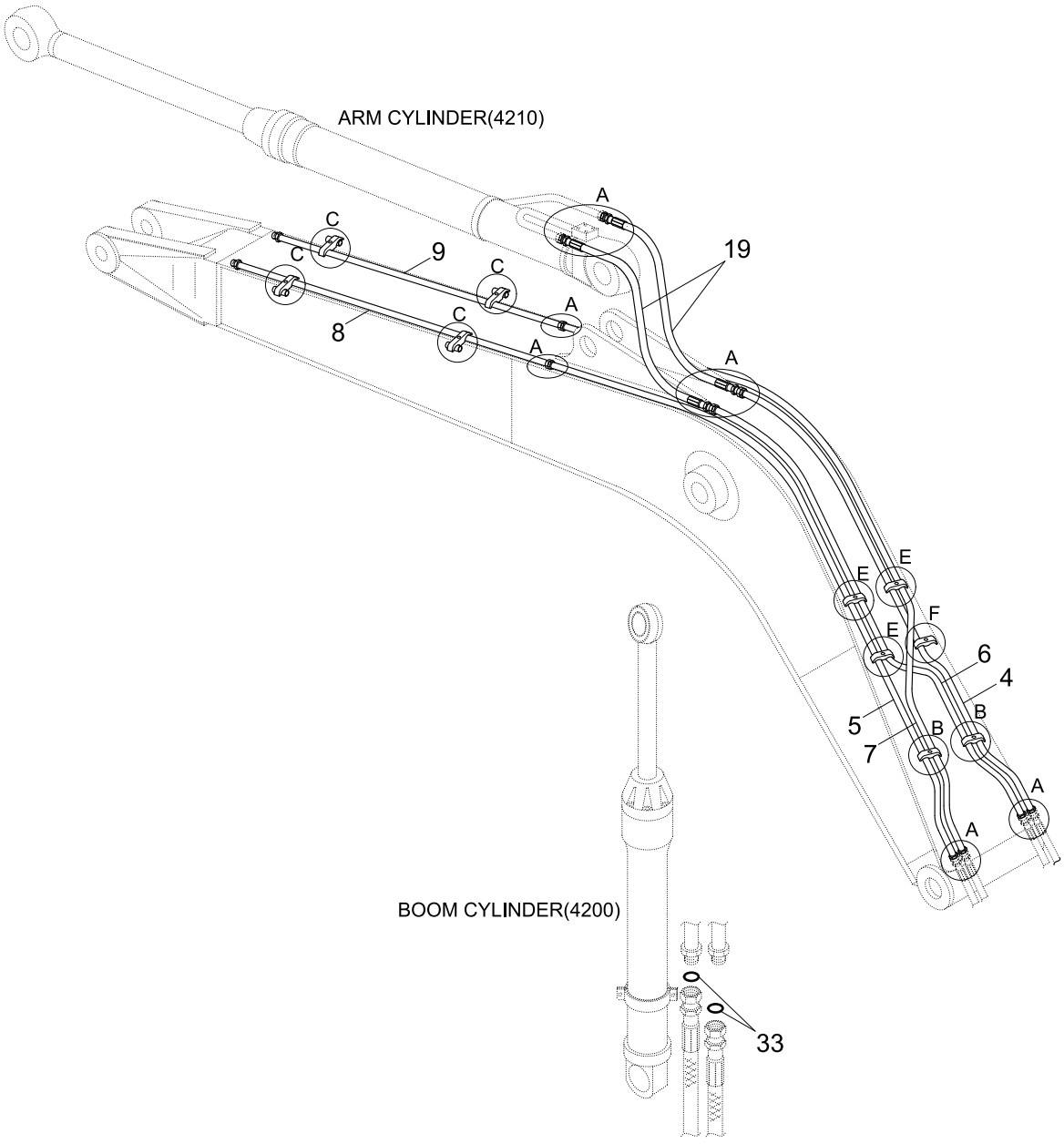

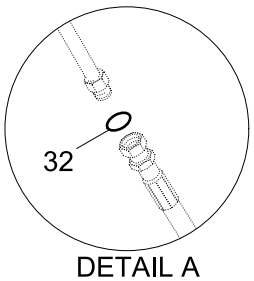

DETAIL A

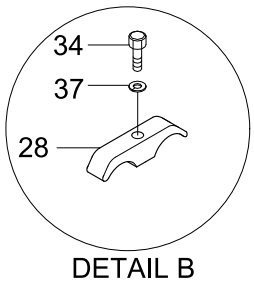

DETAIL B

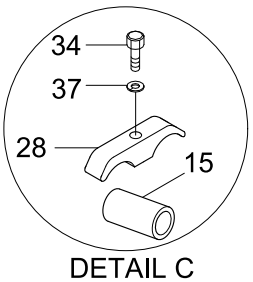

DETAIL C

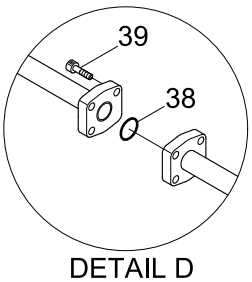

DETAIL D

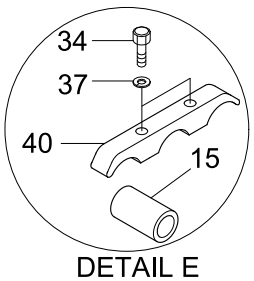

DETAIL E

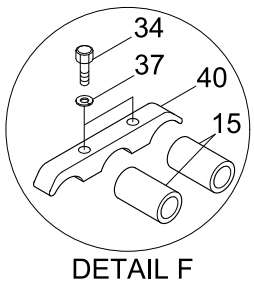

DETAIL F

Item	Part_No	IS	Ord	T	Description	Qty	Serial_No	ITC	Remark
*	@				BOOM HYD PIPING(4.1M)	1	#0063 - #1000	-	NOT
4	31N4-50410				.PIPE ASSY	1			
5	31N4-50420				.PIPE ASSY	1			
6	31N4-50430				.PIPE ASSY	1			
7	31N4-50440				.PIPE ASSY	1			
8	31N4-50450				.PIPE ASSY	1			
9	31N4-50460				.PIPE ASSY	1			
15	E131-0277	30			.SPACER-PIPE	11			
19	P910-127021				.HOSE ASSY-ORFS 0X0	2			
28	31N4-12200				.CLAMP-PIPE	8			
32	S621-018001				.O-RING	8			
33	S621-014001				.O-RING	4			
34	S017-160702				.BOLT-HEX	16			
37	S411-160002				.WASHER-SPRING	16			
38	Y171-019004				.O-RING	2			
39	S109-100506				.BOLT-SOCKET	8			
40	31N4-50400				.CLAMP-PIPE	4			

BOOM HYD PIPING(4.1M, #1001-)

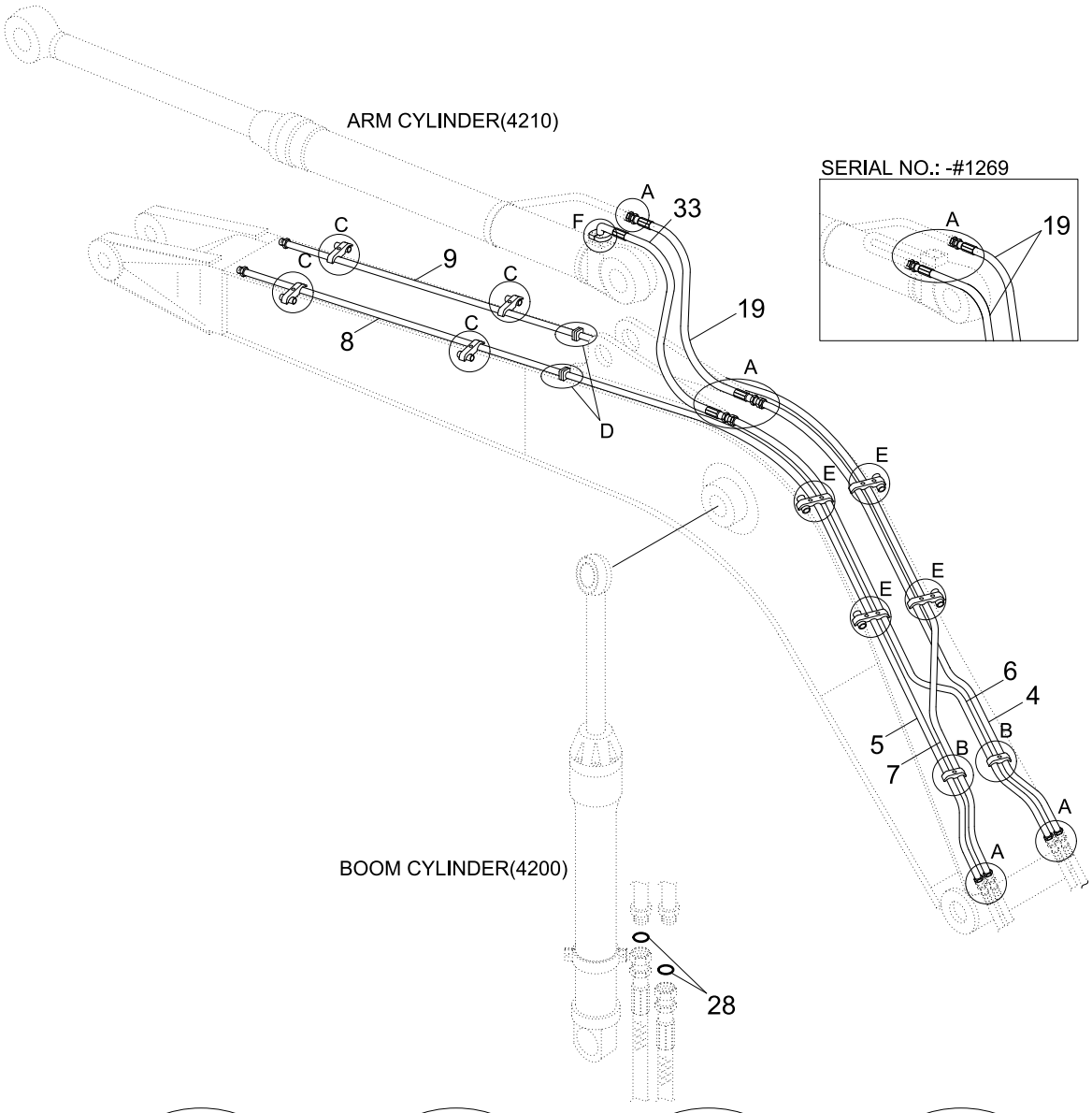

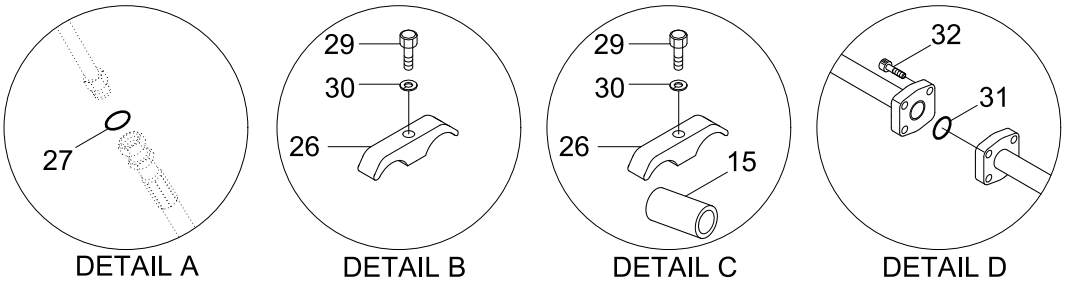

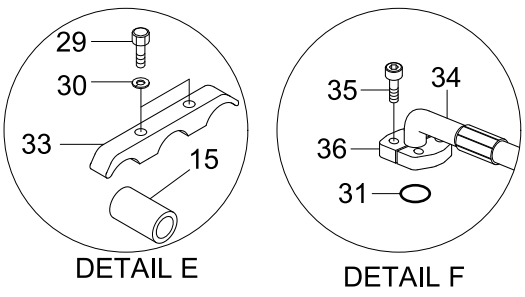

BOOM HYDRAULIC PIPING(4.1M)			
Serial no	M.C.V.	Machine option	Pages
-#1601	ALP165	Std, Dozer	3445 - 3450
#1602-	ALP165	Dozer	3445 - 3450
	UHX22-26	Standard	3490 - 3495

Item	Part_No	IS	Ord	T	Description	Qty	Serial_No	ITC	Remark
*	@				.BOOM HYD PIPING	1	#1001 - #1601		NOT
					.BOOM HYD PIPING	1	#1001 - #1601		NOT
					.BOOM HYD PIPING	1	#1602 -	A	NOT
4	31N4-55310				.PIPE ASSY	1			
5	31N4-55320				.PIPE ASSY	1			
6	31N4-55330				.PIPE ASSY	1			
7	31N4-55340				.PIPE ASSY	1			
8	31N4-50451				.PIPE ASSY	1			
9	31N4-50461				.PIPE ASSY	1			
15	31N5-50220				.SPACER-PIPE	8			
19	P910-127021				.HOSE ASSY-ORFS 0X0	2	- #1269		
					.HOSE ASSY-ORFS 0X0	1	#1270 -	A	
26	31N4-12200				.CLAMP-PIPE	8			
27	S621-018001				.O-RING	8	- #1269		
					.O-RING	7	#1270 -	A	
28	S621-014001				.O-RING	4			
29	S017-160702				.BOLT-HEX	16			
30	S411-160002				.WASHER-SPRING	16			
31	Y171-019004				.O-RING	2	- #1269		
					.O-RING	3	#1270 -	A	
32	S109-100506				.BOLT-SOCKET	8			
33	31N4-50400				.CLAMP-PIPE	4			
34	P980-127320				.HOSE ASSY-ORFS,FLG 0X90	1	#1270 - #3083	-	
	31N4-51220				.HOSE ASSY-ORFS,FLG 0X90	1	#3084 -	A	
35	S109-100306				.BOLT-SOCKET	4	#1270 -	-	

Item	Part_No	IS	Ord	T	Description	Qty	Serial_No	ITC	Remark
36	P173-120102				.FLANGE-HYD,SPLIT	2	#1270 -	-	

BOOM GREASE LUB SYSTEM(4.1M)

BOOM HYDRAULIC PIPING(4.1M)			
Serial no	M.C.V.	Machine option	Pages
-#1601	ALP165	Std, Dozer	3445 - 3450
#1602-	ALP165	Dozer	3445 - 3450
	UHX22-26	Standard	3490 - 3495

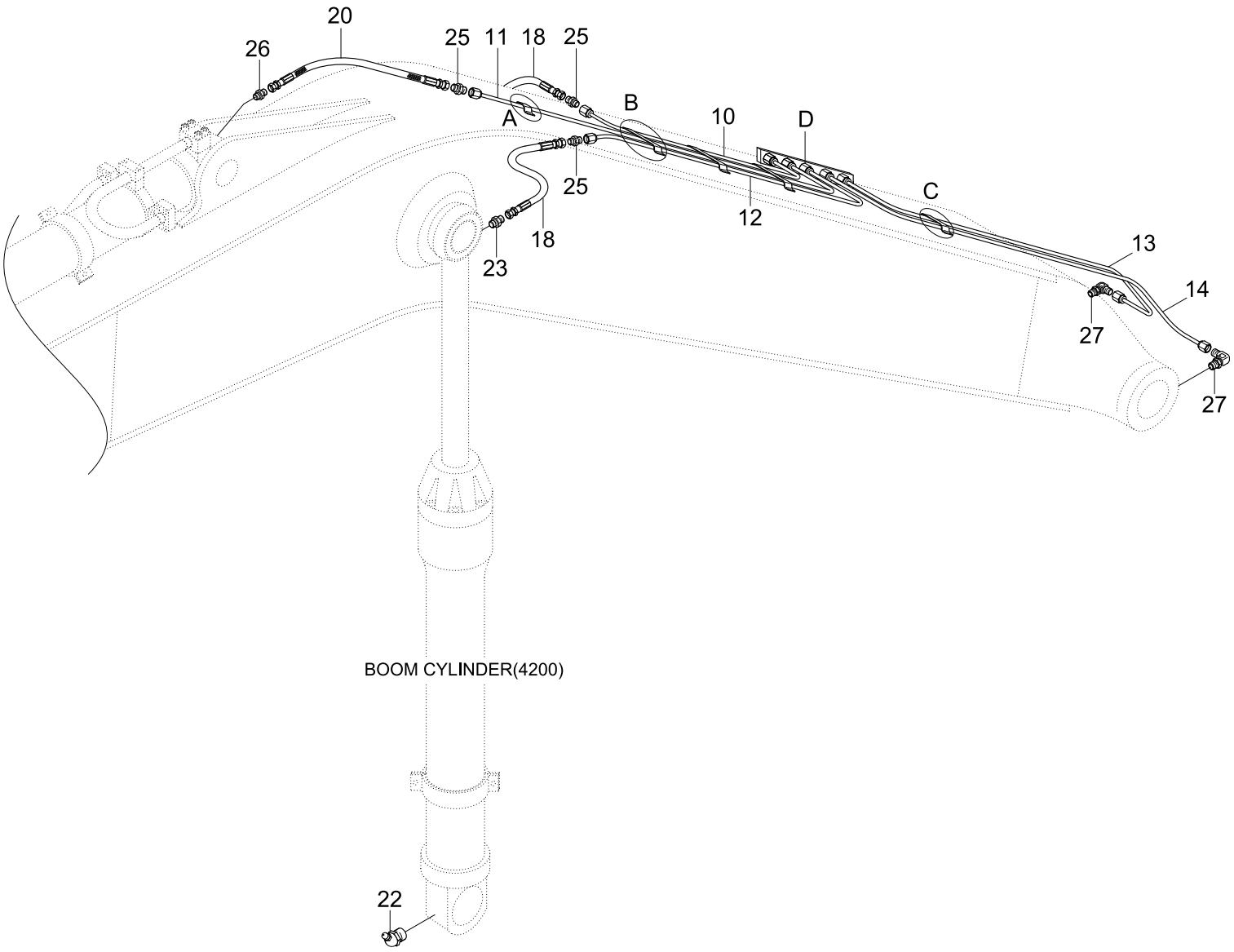

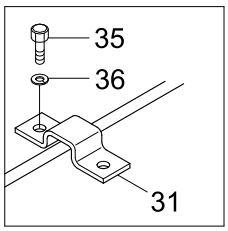

DETAIL A

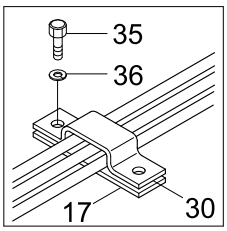

DETAIL B

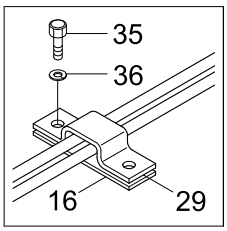

DETAIL C

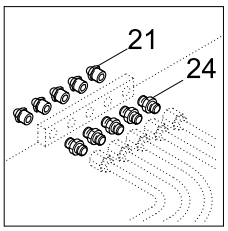

DETAIL D

Item	Part_No	IS	Ord	T	Description	Qty	Serial_No	ITC	Remark
*	@				BOOM GREASE LUB SYSTEM	1	#0063 - #1601	-	NOT
					BOOM GREASE LUB SYSTEM	1	#1602 -	A	NOT
10	31N4-50270				.PIPE ASSY-GREASE	1			
11	31N4-50470				.PIPE ASSY	1			
12	31N4-50280				.PIPE ASSY-GREASE	1			
13	31N4-50300				.PIPE ASSY	1			
14	31N4-50310				.PIPE ASSY	1			
16	31E6-0212	10			.PAD-RUBBER	1			
17	31E6-0211	10			.PAD-RUBBER	2			
18	P400-042015				.HOSE ASSY-COMPACT	2			
20	P410-042007				.HOSE ASSY-COMP 0X45	1			
21	S651-810002				.NIPPLE-GREASE	5			
22	S653-810002				.NIPPLE-GREASE	3			
23	P010-430011				.CONNECTOR	2			
24	E131-0625	10			.CONNECTOR	5			
25	E131-0626	10			.CONNECTOR	3			
26	E231-0207	10			.ELBOW-45	1			
27	E231-0349	10			.ELBOW-90	2			
29	31N6-50230				.CLAMP-PIPE	1			
30	31E9-0125	20			.CLAMP-PIPE	2			
31	S541-080002				.CLAMP-TUBE	1			
35	S015-060152				.BOLT-HEX	7			
36	S411-060002				.WASHER-SPRING	7			

BOOM HYD PIPING(#0234-, ADJUST BOOM)

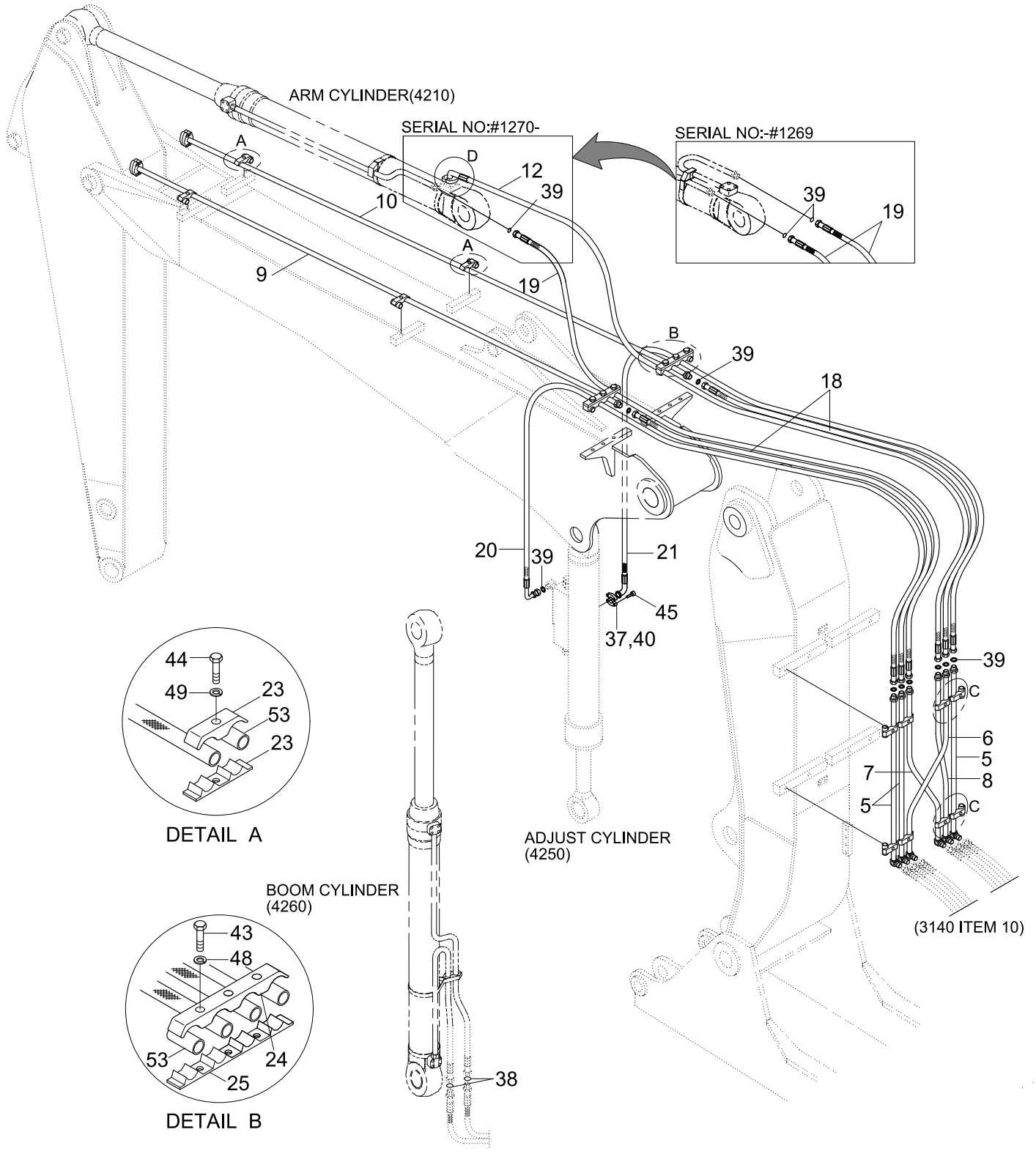

Item	Part_No	IS	Ord	T	Description	Qty	Serial_No	ITC	Remark
5	31N4-52950				PIPE ASSY	3			
6	31N4-52960				PIPE ASSY	1			
7	31N4-52970				PIPE ASSY	1			
8	31N4-52980				PIPE ASSY	1			
9	31N4-52990				PIPE ASSY	1			
10	31N4-53000				PIPE ASSY	1			
12	P980-127339				HOSE ASSY-ORFS,FLG 0X90	1	#1270 - #1370	-	
	P980-127341				HOSE ASSY-ORFS,FLG 0X90	1	#1371 - #3083	D	
	31N4-51230				HOSE ASSY-ORFS,FLG 0X90	1	#3084 -	A	
18	P910-127020				HOSE ASSY-ORFS 0X0	2			
19	P910-127039				HOSE ASSY-ORFS 0X0	2	- #1269		
					HOSE ASSY-ORFS 0X0	1	#1270 - #1370	A	
	P910-127041				HOSE ASSY-ORFS 0X0	1	#1371 -	D	
20	31N4-53120				HOSE ASSY	1			
21	31N4-53130				HOSE ASSY	1			
23	31EK-50340				CLAMP-PIPE	12	- #1370		
	31N4-12200				CLAMP-PIPE	12	#1371 -	D	
24	31N4-53140				CLAMP-HOSE	2			
25	31N4-53150				CLAMP-HOSE	2			
37	P173-120102				FLANGE-HYD,SPLIT	2	- #1269		
					FLANGE-HYD,SPLIT	4	#1270 -	A	
38	S621-014001				O-RING	4			
39	S621-018001				O-RING	17	- #1269		
					O-RING	16	#1270 -	A	
40	Y171-019004				O-RING	1	- #1269		

Item	Part_No	IS	Ord	T	Description	Qty	Serial_No	ITC	Remark
40	Y171-019004				O-RING	2	#1270 -	A	
43	S017-120702				BOLT-HEX	6			
44	S017-160702				BOLT-HEX	12			
45	S109-100306				BOLT-SOCKET	4	- #1269		
					BOLT-SOCKET	8	#1270 -	A	
48	S411-120002				WASHER-SPRING	6			
49	S411-160002				WASHER-SPRING	12			
53	E131-0277	30			SPACER-PIPE	10			

BOOM GREASE LUB SYS(#0234-, ADJUST BOOM)

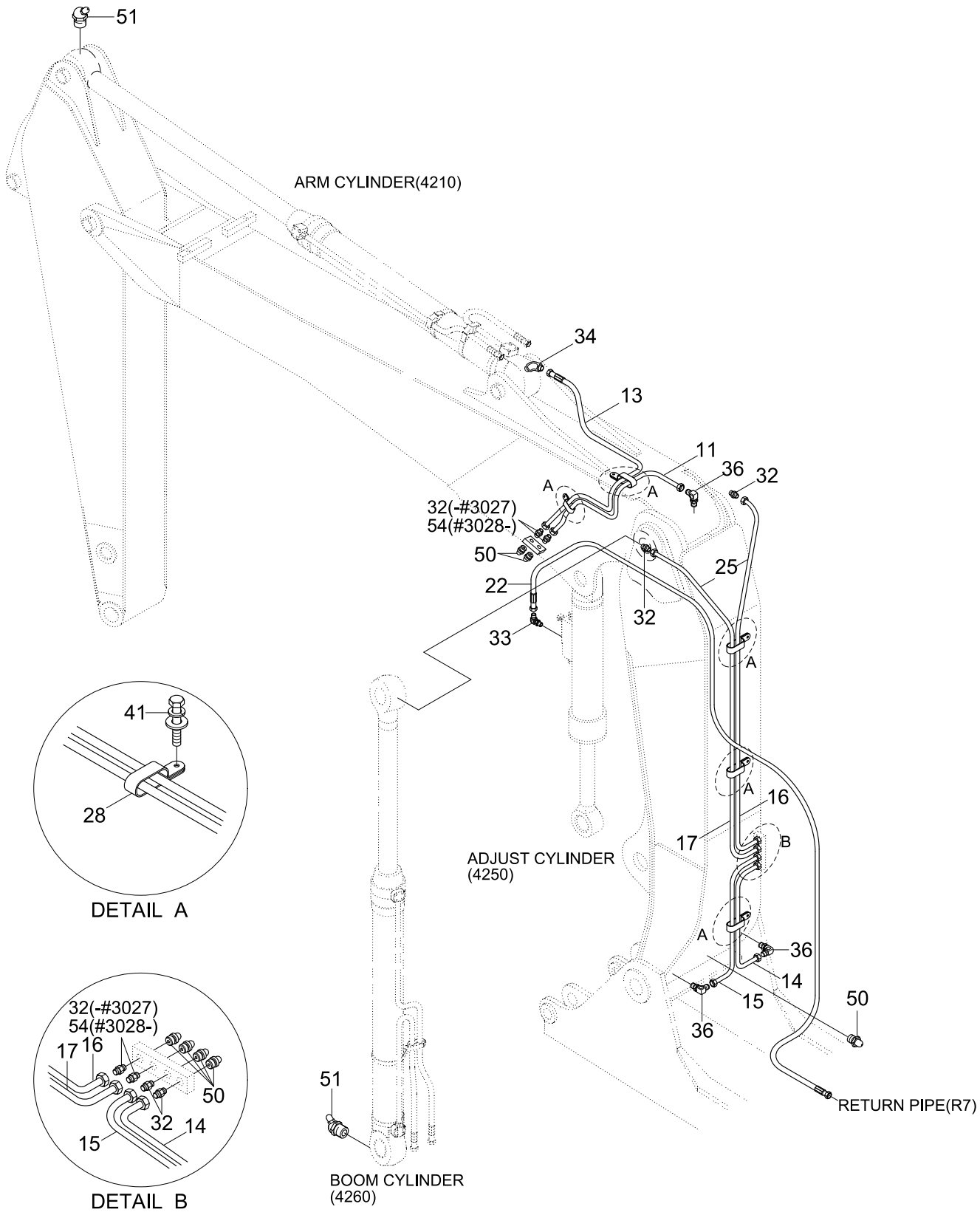

Item	Part_No	IS	Ord	T	Description	Qty	Serial_No	ITC	Remark
*	@				BOOM GREASE LUB SYS	1	#0234 -	-	NOT
11	P840-042025				HOSE ASSY-SYN THD	1			
13	P840-042028				HOSE ASSY-SYN THD	1			
14	P840-042015				HOSE ASSY-SYN THD	1			
15	P840-042016				HOSE ASSY-SYN THD	1			
16	P840-042035				HOSE ASSY-SYN THD	1			
17	P840-042036				HOSE ASSY-SYN THD	1			
22	P600-042126				HOSE ASSY-THD 0X0	1	- #1370		
	P910-042126				HOSE ASSY-ORFS 0X0	1	#1371 -	D	
28	31N8-50380				CLAMP-HOSE	5	- #3027		
	31Q6-50380				CLAMP-HOSE	5	#3028 -	D	
32	P010-430011				CONNECTOR	8	- #3027		
					CONNECTOR	2	#3028 -	A	
33	31E5-50350				ELBOW-90	1	- #3027		
	31N6-90550				ELBOW-90,ORFS	1	#3028 -	D	
34	E231-0207	10			ELBOW-45	1			
36	31NB-50280				CONNECTOR	3			
41	S035-062022				BOLT-W/WASHER	5	- #3027		
	S035-082026				BOLT-W/WASHER	5	#3028 -	D	
50	S651-810002				NIPPLE-GREASE	7			
51	S653-810002				NIPPLE-GREASE	3			
54	31W5-70060				CONNECTOR	6	#3028 -	B	

BOOM HYD PIPING(4.6M, STD, #1602-)

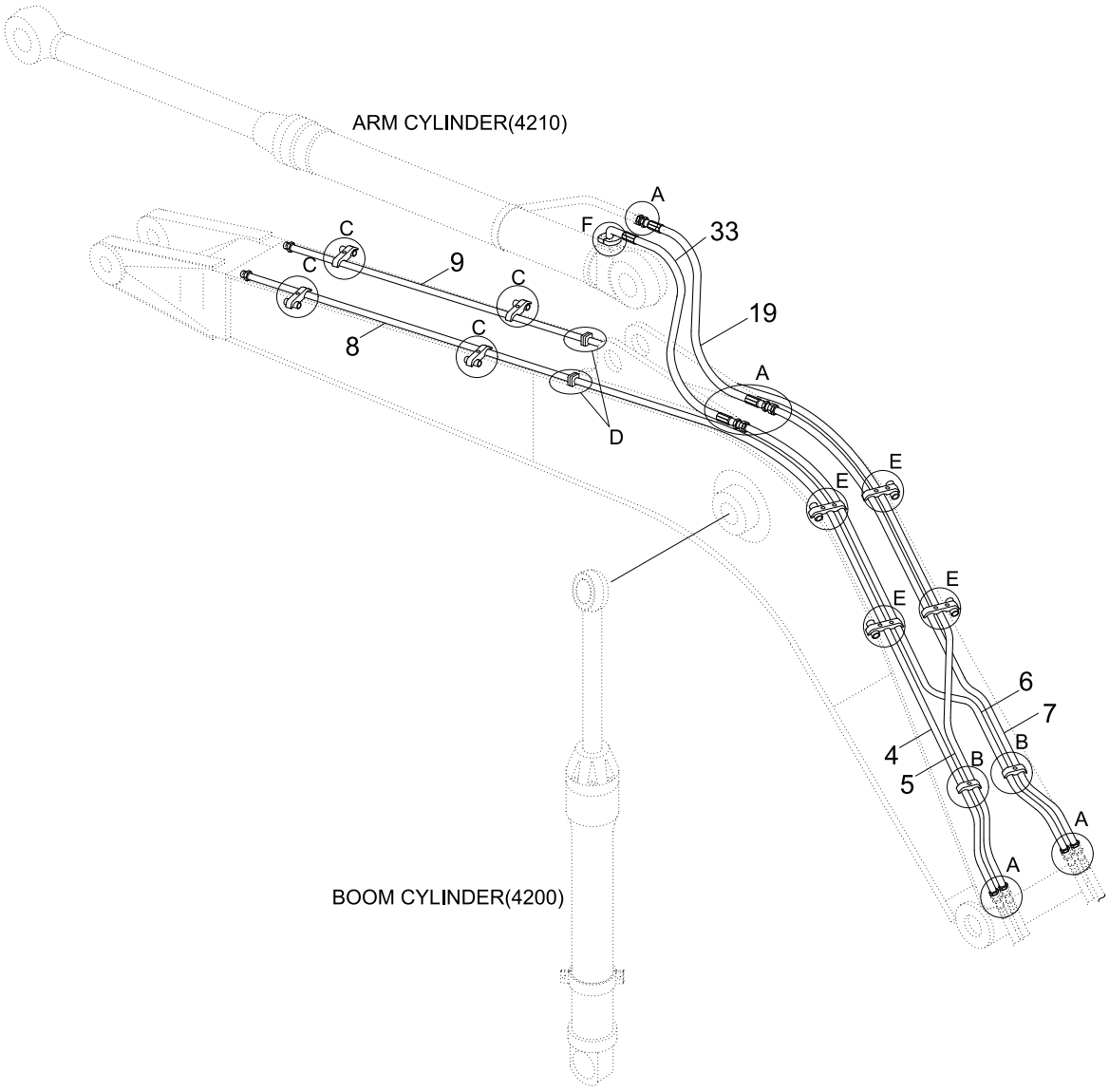

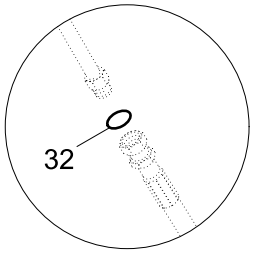

DETAIL A

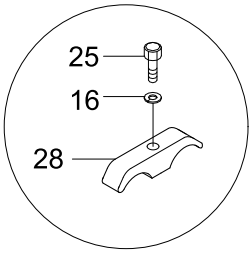

DETAIL B

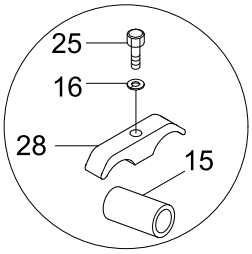

DETAIL C

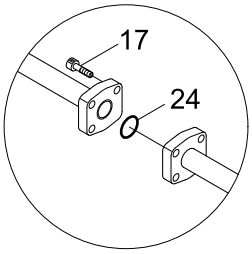

DETAIL D

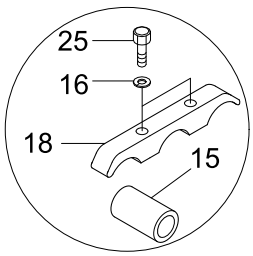

DETAIL E

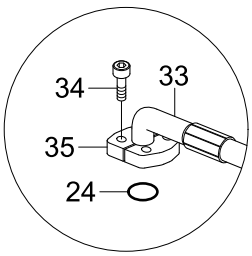

DETAIL F

BOOM HYDRAULIC PIPING(4.6M)			
Serial no	M.C.V.	Machine option	Pages
-#1601	ALP165	Std, Dozer	3405 - 3410
#1602-	ALP165	Dozer only	3405 - 3410
	UHX22-26	Standard	3480 - 3485

Item	Part_No	IS	Ord	T	Description	Qty	Serial_No	ITC	Remark
*	@				BOOM HYD PIPING	1	#1602 -	-	NOT
					BOOM HYD PIPING	1	#1602 -	-	NOT
4	31N4-51110				PIPE ASSY	1			SEE 3405
					PIPE ASSY	1			
5	31N4-51120				PIPE ASSY	1			
					PIPE ASSY	1			
6	31N4-51130				PIPE ASSY	1			
					PIPE ASSY	1			
7	31N4-51140				PIPE ASSY	1			
					PIPE ASSY	1			
8	31N4-51151				PIPE ASSY	1			
9	31N4-51161				PIPE ASSY	1			
15	31N5-50220				SPACER-PIPE	4			
16	S411-160002				WASHER-SPRING	14			
17	S109-100506				BOLT-SOCKET	8			
18	31N4-50400				CLAMP-PIPE	4			
19	P910-127017				HOSE ASSY-ORFS 0X0	1			
24	Y171-019004				O-RING	3			
25	S017-160702				BOLT-HEX	14			
28	31N4-12200				CLAMP-PIPE	8			
32	S621-018001				O-RING	7			
33	31N4-51210				HOSE ASSY	1	- #3083		
	31N4-51211				HOSE ASSY	1	#3084 -	A	
34	S109-100306				BOLT-SOCKET	4			
35	P173-120102				FLANGE-HYD,SPLIT	2			

BOOM GREASE LUB SYSTEM(4.6M, STD, #1602-)

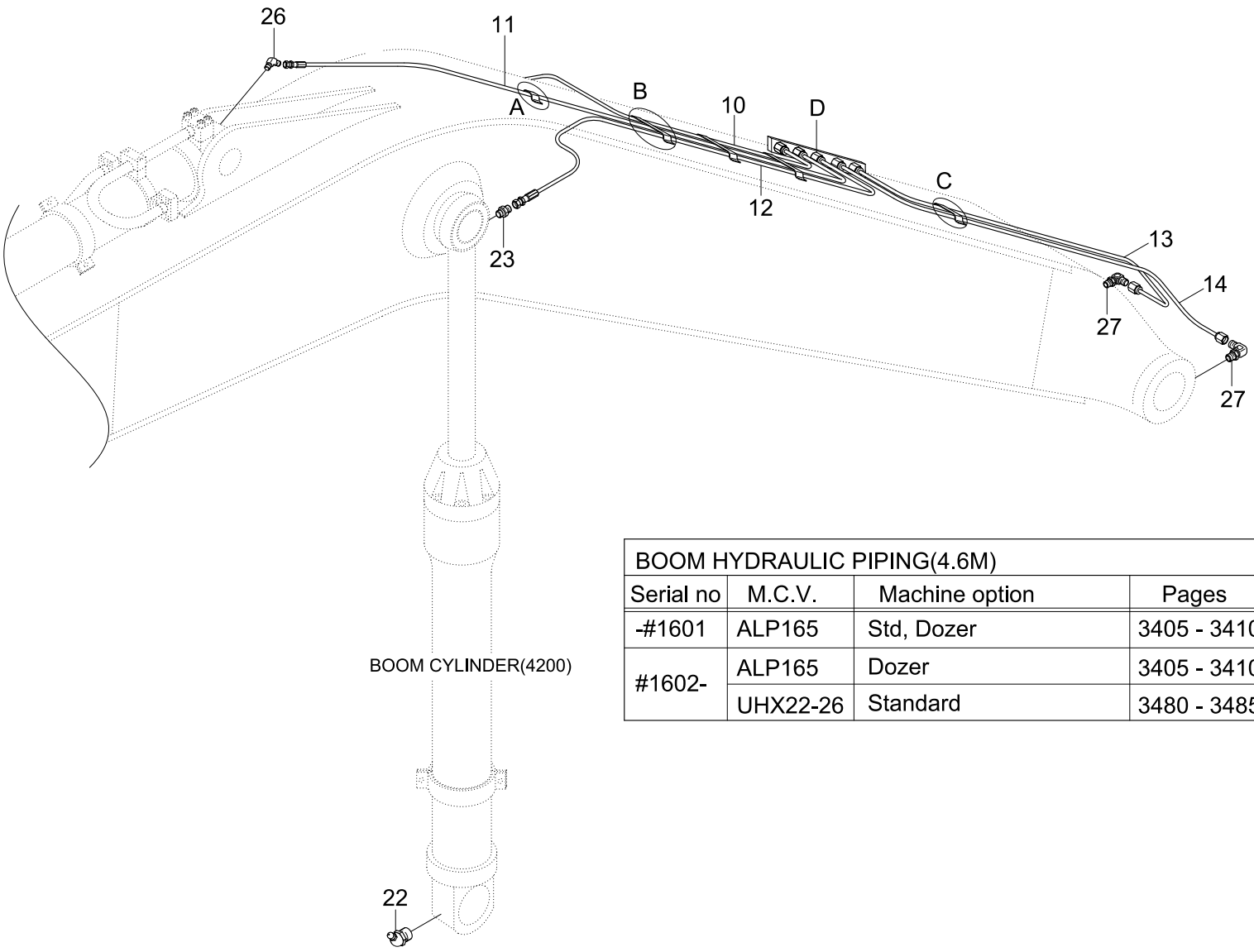

BOOM HYDRAULIC PIPING(4.6M)			
Serial no	M.C.V.	Machine option	Pages
-#1601	ALP165	Std, Dozer	3405 - 3410
#1602-	ALP165	Dozer	3405 - 3410
	UHX22-26	Standard	3480 - 3485

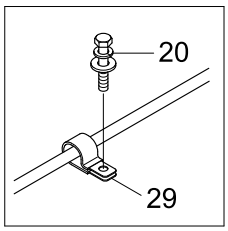

DETAIL A

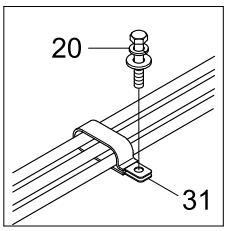

DETAIL B

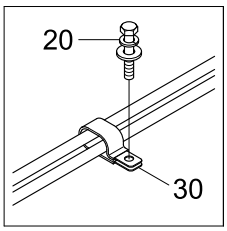

DETAIL C

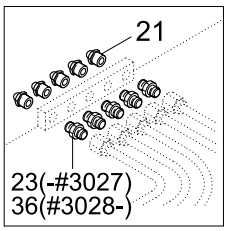

DETAIL D

Item	Part_No	IS	Ord	T	Description	Qty	Serial_No	ITC	Remark
*	@				BOOM GREASE LUB SYSTEM	1	#1602 -	-	NOT
					BOOM GREASE LUB SYSTEM	1	#1602 -	-	NOT
10	P840-042039				HOSE ASSY-SYN THD	1			
11	P840-042051				HOSE ASSY-SYN THD	1			
12	P840-042041				HOSE ASSY-SYN THD	1			
13	P840-042015				HOSE ASSY-SYN THD	1			
14	P840-042016				HOSE ASSY-SYN THD	1			
20	S035-062022				BOLT-W/WASHER	6	- #3027		
	S035-082026				BOLT-W/WASHER	6	#3028 -	D	
21	S651-810002				NIPPLE-GREASE	5			
22	S653-810002				NIPPLE-GREASE	3			
23	P010-430011				CONNECTOR	7	- #3027		
					CONNECTOR	2	#3028 -	A	
26	E231-0207				ELBOW-45	1			
27	31NB-50280				CONNECTOR	2			
29	31N8-50370				CLAMP-HOSE	1	- #3027		
	31Q6-50370				CLAMP-HOSE	1	#3028 -	D	
30	31N8-50380				CLAMP-HOSE	2	- #3027		
	31Q6-50380				CLAMP-HOSE	1	#3028 -	D	
31	31N8-50390				CLAMP-HOSE	3	- #3027		
	31Q6-50390				CLAMP-HOSE	3	#3028 -	D	
	31N8-50390				CLAMP	3			
36	31W5-70060				CONNECTOR	5	#3028 -	B	

BOOM HYD PIPING(4.1M, #1602-)

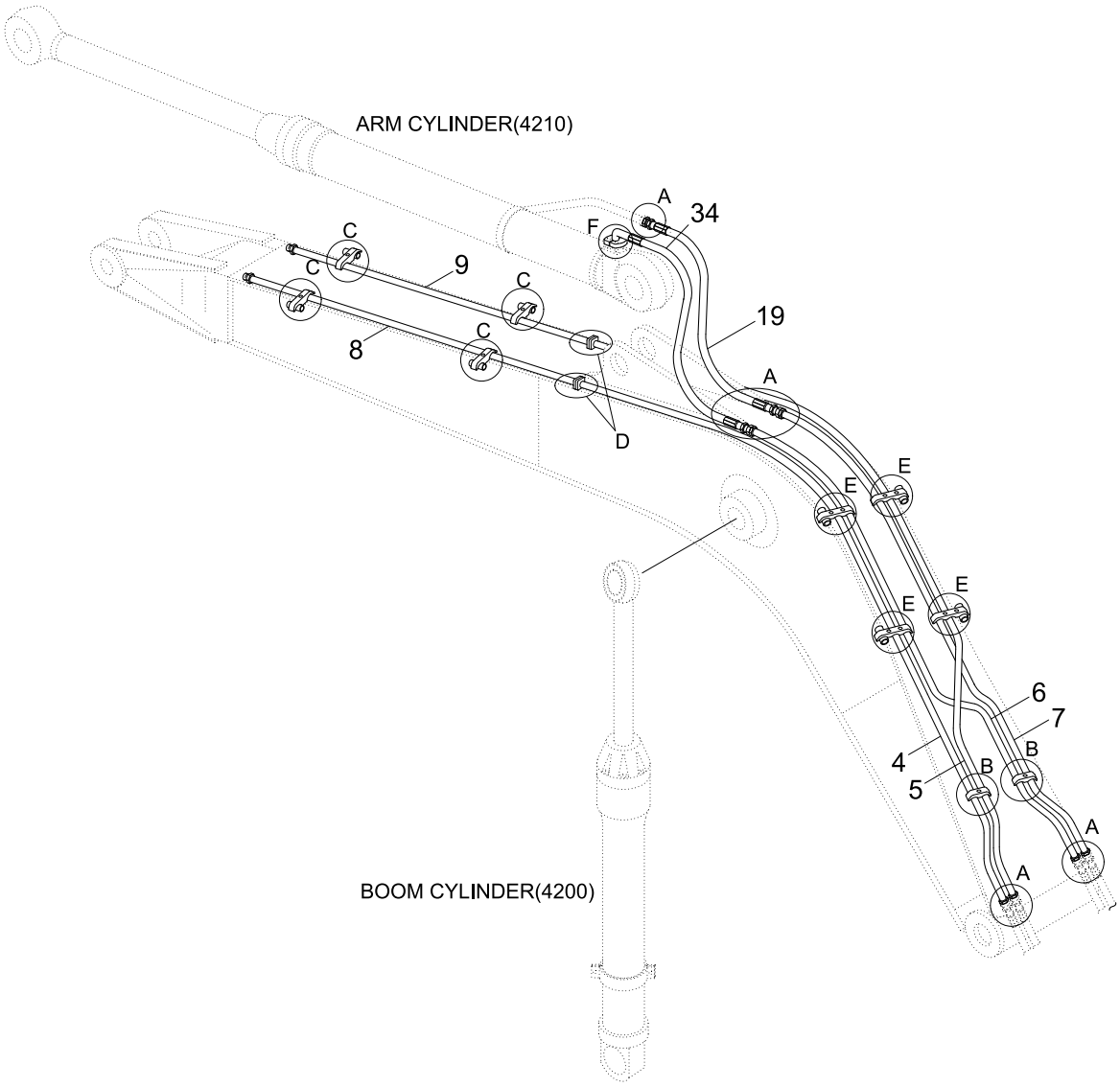

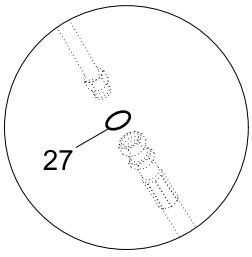

DETAIL A

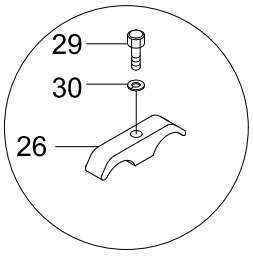

DETAIL B

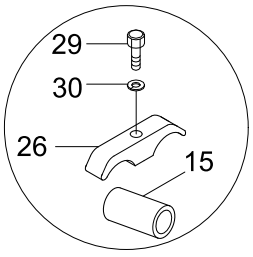

DETAIL C

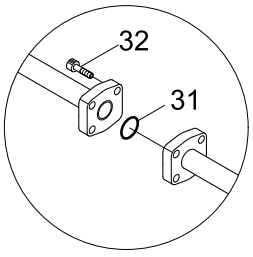

DETAIL D

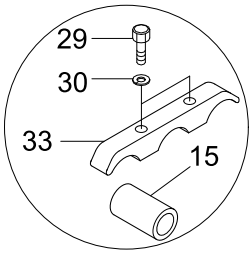

DETAIL E

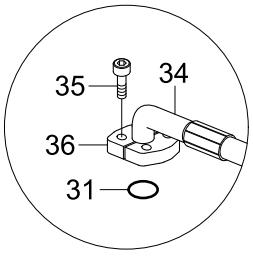

DETAIL F

BOOM HYDRAULIC PIPING(4.1M)			
Serial no	MCV	Machine option	Pages
-#1601	ALP165	Std, Dozer	3445 - 3450
#1602-	ALP165	Dozer	3445 - 3450
	UHX22-26	Standard	3490 - 3495

Item	Part_No	IS	Ord	T	Description	Qty	Serial_No	ITC	Remark
*	@				BOOM HYD PIPING	1	#1602 -	-	NOT
					BOOM HYD PIPING	1	#1602 -	-	NOT
4	31N4-50411				PIPE ASSY	1			
5	31N4-50421				PIPE ASSY	1			
6	31N4-50431				PIPE ASSY	1			
7	31N4-50441				PIPE ASSY	1			
8	31N4-50451				PIPE ASSY	1			
9	31N4-50461				PIPE ASSY	1			
15	31N5-50220				SPACER-PIPE	8			
19	P910-127021				HOSE ASSY-ORFS 0X0	1			
26	31N4-12200				CLAMP-PIPE	8			
27	S621-018001				O-RING	7			
29	S017-160702				BOLT-HEX	14			
30	S411-160002				WASHER-SPRING	14			
31	Y171-019004				O-RING	3			
32	S109-100506				BOLT-SOCKET	8			
33	31N4-50400				CLAMP-PIPE	4			
34	P980-127320				HOSE ASSY-ORFS,FLG 0X90	1	- #3083		
	31N4-51220				HOSE ASSY-ORFS,FLG 0X90	1	#3084 -	A	
35	S109-100306				BOLT-SOCKET	4			
36	P173-120102				FLANGE-HYD,SPLIT	2			

BOOM GREASE LUB SYSTEM(4.1M, #1602-)

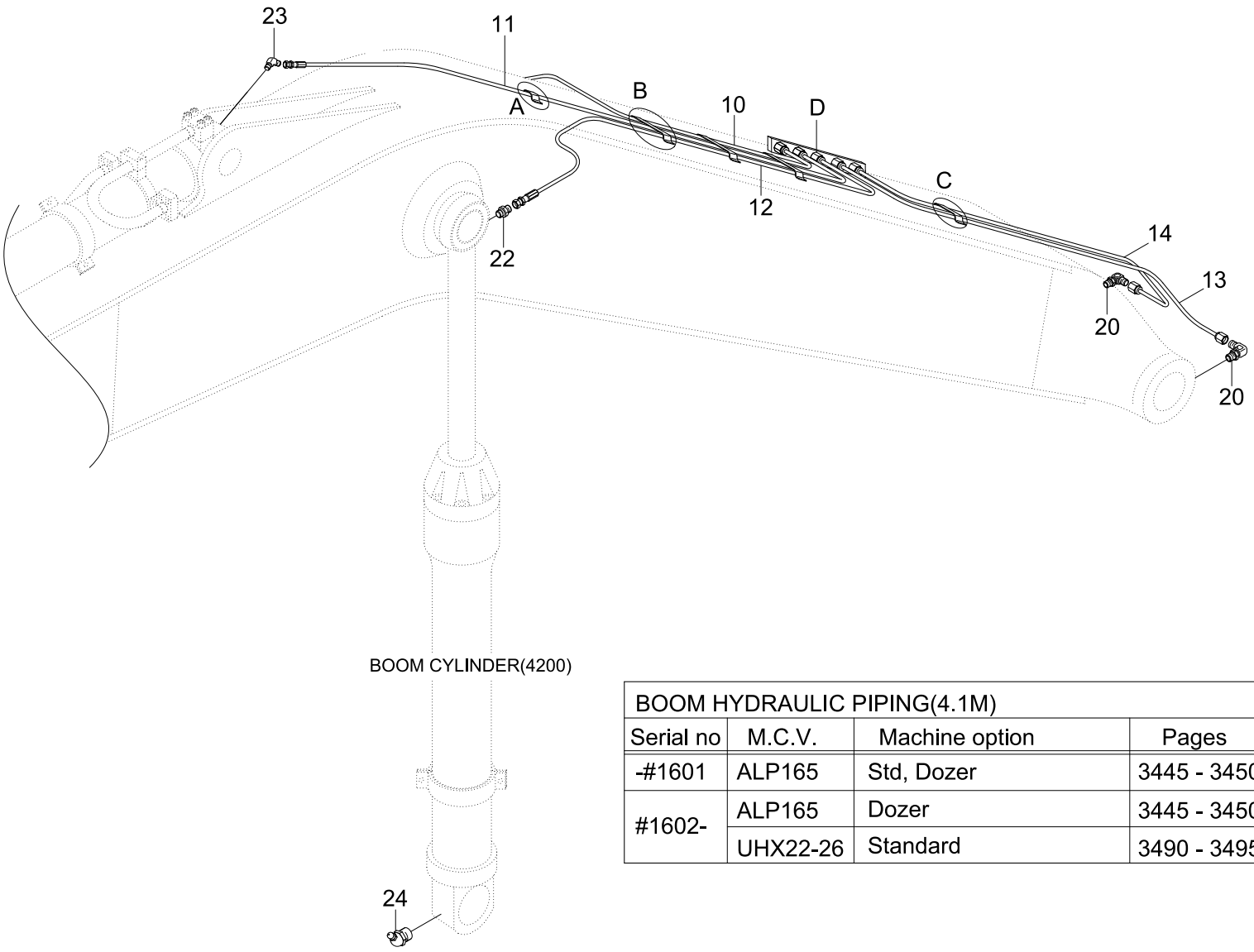

BOOM HYDRAULIC PIPING(4.1M)			
Serial no	M.C.V.	Machine option	Pages
-#1601	ALP165	Std, Dozer	3445 - 3450
#1602-	ALP165	Dozer	3445 - 3450
	UHX22-26	Standard	3490 - 3495

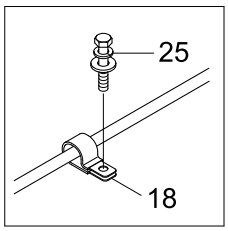

DETAIL A

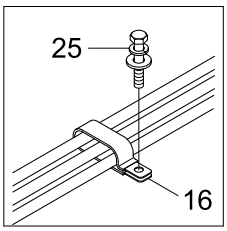

DETAIL B

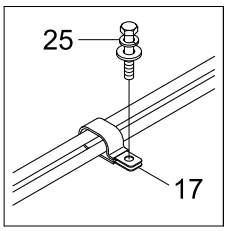

DETAIL C

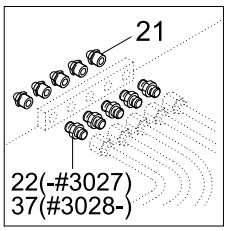

DETAIL D

Item	Part_No	IS	Ord	T	Description	Qty	Serial_No	ITC	Remark
*	@				BOOM GREASE LUB PIPING	1	#1602 -	-	NOT
					BOOM GREASE LUB PIPING	1	#1602 -	-	NOT
10	P840-042039				HOSE ASSY-SYN THD	1			
11	P840-042043				HOSE ASSY-SYN THD	1			
12	P840-042041				HOSE ASSY-SYN THD	1			
13	P840-042016				HOSE ASSY-SYN THD	1			
14	P840-042015				HOSE ASSY-SYN THD	1			
16	31N8-50390				CLAMP-HOSE	3	- #3027		
	31Q6-50390				CLAMP-HOSE	3	#3028 -	D	
17	31N8-50380				CLAMP-HOSE	2	- #3027		
	31Q6-50380				CLAMP-HOSE	2	#3028 -	D	
18	31N8-50370				CLAMP-HOSE	1			
	31Q6-50370				CLAMP-HOSE	1	#3028 -	D	
20	31NB-50280				CONNECTOR	2			
21	S651-810002				NIPPLE-GREASE	5			
22	P010-430011				CONNECTOR	7	- #3027		
					CONNECTOR	2	#3028 -	A	
23	E231-0207				ELBOW-45	1			
24	S653-810002				NIPPLE-GREASE	2			
25	S035-061522				BOLT-W/WASHER	6	- #3027		
	S035-081526				BOLT-W/WASHER	6	#3028 -	D	
37	31W5-70060				CONNECTOR	5	#3028 -	B	

Item	Part_No	IS	Ord	T	Description	Qty	Serial_No	ITC	Remark
2	P933-127034				HOSE ASSY-ORFS 0X90	2	- #1961		2.5M, STD
	31N4-60210				HOSE ASSY	2	#1962 -	B	2.5M, STD
	P933-127028				HOSE ASSY-ORFS 0X90	2	- #1961		1.9M,2.1M SHORT
	31N4-60220				HOSE ASSY	2	#1962 -	B	1.9M,2.1M SHORT
3	S621-018001				O-RING	4			
4	S651-810002				NIPPLE-GREASE	1			
5	S653-810002				NIPPLE-GREASE	1			

ARM HYD PIPING(3.0M, LONG)

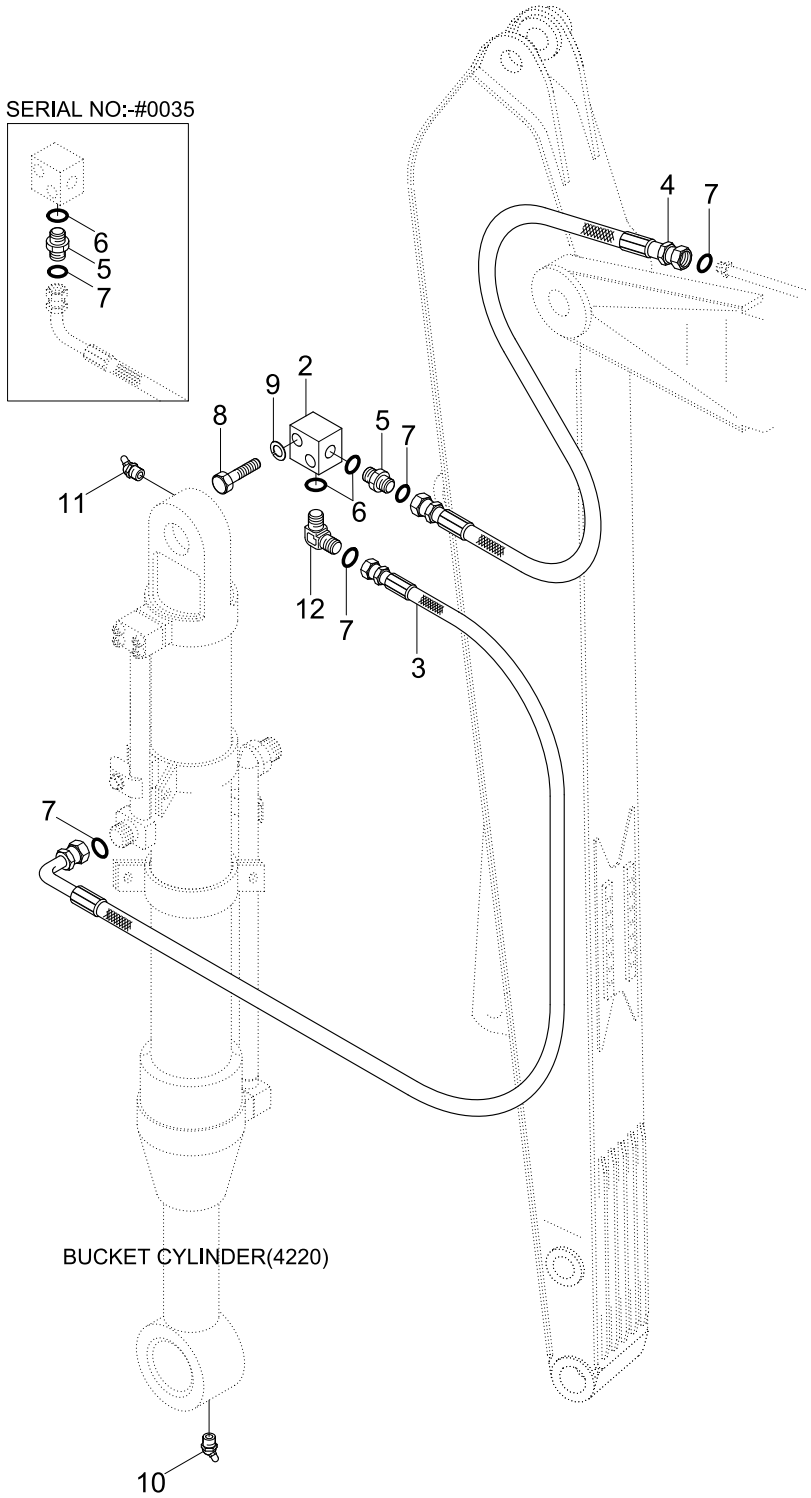

Item	Part_No	IS	Ord	T	Description	Qty	Serial_No	ITC	Remark
2	32E6-0002	20			BLOCK	2			
3	P933-127022				HOSE ASSY-ORFS 0X90	2	- #1961		
	31N4-60230				HOSE ASSY	2	#1962 -	B	
4	P913-127030				HOSE ASSY-ORFS 0X0	2	- #1961		
	31N4-60250				HOSE ASSY	2	#1962 -	B	
5	X500-110004				CONNECTOR-ORFS	4	- #0035		
					CONNECTOR-ORFS	2	#0036 -	A	
6	S631-024001				O-RING	4			
7	S621-018001				O-RING	4			
8	S017-100552				BOLT-HEX	8			
9	S411-100002				WASHER-SPRING	8			
10	S651-810002				NIPPLE-GREASE	1			
11	S653-810002				NIPPLE-GREASE	1			
12	X520-110004				ELBOW-90,ORFS	2	#0036 -	-	

ARM SAFETY LOCK SYSTEM

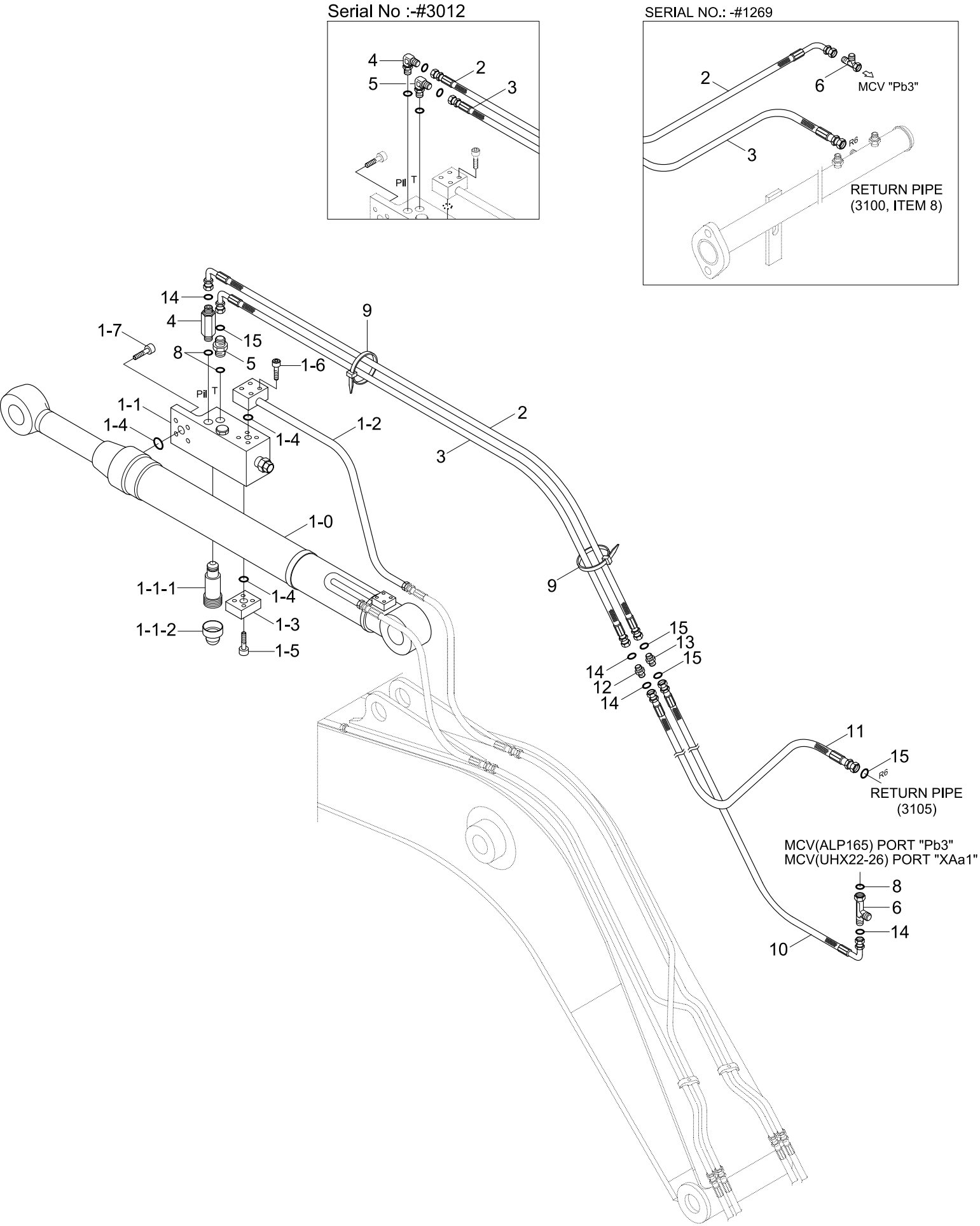

Item	Part_No	IS	Ord	T	Description	Qty	Serial_No	ITC	Remark
1	31N4-52130				ARM SAFE LOCK CYL	1	- #1249		
	31N4-52131				ARM CYL-SAFETY VLV	1	#1250 - #1269	D	
	31N4-52132				ARM SAFE LOCK CYL	1	#1270 -	D	
1-0	@				.ARM CYL SUB ASSY	1			NOT
1-1	31N6-90510				.VALVE-SAFETY LOCK	1			
1-1-1	ZTAS-00001				..VALVE-RELIEF	1			
1-1-2	ZTAS-00002				..CAP	1			
1-1-3	ZTAS-00004				..SEAL KIT	1			
1-2	31Y1-18540				.PIPE ASSY-RV	1			
1-3	P184-121112				.FLANGE-HYD,PLUGING	1			
1-4	Y171-019001				.O-RING	3			
1-5	S109-100356				.BOLT-SOCKET	4			
1-6	S109-100456				.BOLT-SOCKET	4			
1-7	S109-100506				.BOLT-SOCKET	4			
2	P420-042122				HOSE ASSY-COMP 0X90	1	- #1269		STD
	P600-042083				HOSE ASSY-THD 0X0	1	#1270 - #1370	D	STD
	P910-042083				HOSE ASSY-ORFS 0X0	1	#1371 - #3012	D	STD
	P930-042083				HOSE ASSY-ORFS 0X90	1	#3013 -	D	STD
	P420-042113				HOSE ASSY-COMP 0X90	1	#0063 - #1269	-	SHORT BOOM
	P600-042074				HOSE ASSY-THD 0X0	1	#1270 - #1370	D	SHORT BOOM
	P910-042074				HOSE ASSY-ORFS 0X0	1	#1371 - #3012	D	SHORT BOOM
	P930-042078				HOSE ASSY-ORFS 0X90	1	#3013 -	D	SHORT BOOM
	P420-042132				HOSE ASSY-COMP 0X90	1	#0234 - #1269	-	ADJUST BOOM
	P600-042093				HOSE ASSY-THD 0X0	1	#1270 - #1370	D	ADJUST BOOM
	P910-042093				HOSE ASSY-ORFS 0X0	1	#1371 - #3012	D	ADJUST BOOM

Item	Part_No	IS	Ord	T	Description	Qty	Serial_No	ITC	Remark
2	P930-042097				HOSE ASSY-ORFS 0X90	1	#3013 -	D	ADJUST BOOM
3	P420-062125				HOSE ASSY-COMP 0X90	1	- #1269		STD
	P600-062083				HOSE ASSY-THD 0X0	1	#1270 - #1370	D	STD
	P910-062083				HOSE ASSY-ORFS 0X0	1	#1371 - #3012	D	STD
	P930-062083				HOSE ASSY-ORFS 0X90	1	#3013 -	D	STD
	P420-062116				HOSE ASSY-COMP 0X90	1	#0063 - #1269	-	SHORT BOOM
	P600-062074				HOSE ASSY-THD 0X0	1	#1270 - #1370	D	SHORT BOOM
	P910-062074				HOSE ASSY-ORFS 0X0	1	#1371 - #3012	D	SHORT BOOM
	P930-062078				HOSE ASSY-ORFS 0X90	1	#3013 -	D	SHORT BOOM
	P420-062134				HOSE ASSY-COMP 0X90	1	#0234 - #1269	-	ADJUST BOOM
	P600-062093				HOSE ASSY-THD 0X0	1	#1270 - #1370	D	ADJUST BOOM
	P910-062093				HOSE ASSY-ORFS 0X0	1	#1371 - #3012	D	ADJUST BOOM
	P930-062097				HOSE ASSY-ORFS 0X90	1	#3013 -	D	ADJUST BOOM
4	P030-110001				ELBOW-45	1	- #0035		
	E131-0603				ELBOW-90,LONG	1	#0036 - #1370	D	
	31N6-25110				ELBOW-90,ORFS,LONG	1	#1371 - #3012	D	
	X511-104513				CONNECTOR-LONG,ORFS	1	#3013 -	D	
5	P010-110012				CONNECTOR	1	- #1269		
	P020-110012				ELBOW-90	1	#1270 - #1370	D	
	X520-110011				ELBOW-90,ORFS	1	#1371 - #3012	D	
	X500-110011				CONNECTOR-ORFS	1	#3013 -	D	
6	32E6-10460				TEE-SWEVEL NUT	1	- #0035		
	31E6-0219	20			TEE-LONG	1	#0036 - #1370	D	
	31N4-22150				TEE-LONG,ORFS	1	#1371 -	D	
7	P220-110102				PLUG	1			

Item	Part_No	IS	Ord	T	Description	Qty	Serial_No	ITC	Remark
8	S631-014001				O-RING	3	- #1370		
					O-RING	4	#1371 -	A	
9	S552-020102				CLAMP-BAND	10			
10	P620-042039				HOSE ASSY-THD 0X90	1	#1270 - #1370	-	
	P930-042039				HOSE ASSY-ORFS 0X90	1	#1371 -	D	STD, SHORT BOOM
	P930-042048				HOSE ASSY-ORFS 0X90	1	#1371 -	D	ADJUST BOOM
11	P600-062042				HOSE ASSY-THD 0X0	1	#1270 - #1370	-	
	P910-062042				HOSE ASSY-ORFS 0X0	1	#1371 -	D	
12	31L7-40190				CONNECTOR	1	#1270 - #1370	-	
	X540-110001				CONNECTOR-ORFS	1	#1371 -	D	
13	31L7-40180				CONNECTOR	1	#1270 - #1370	-	
	X540-110002				CONNECTOR-ORFS	1	#1371 -	D	
14	S621-011001				O-RING	4	#1371 -	-	
15	S621-012001				O-RING(SEAL LOCK TYPE)	4	#1371 -	-	

DOZER HYDRAULIC PIPING(UPPER)

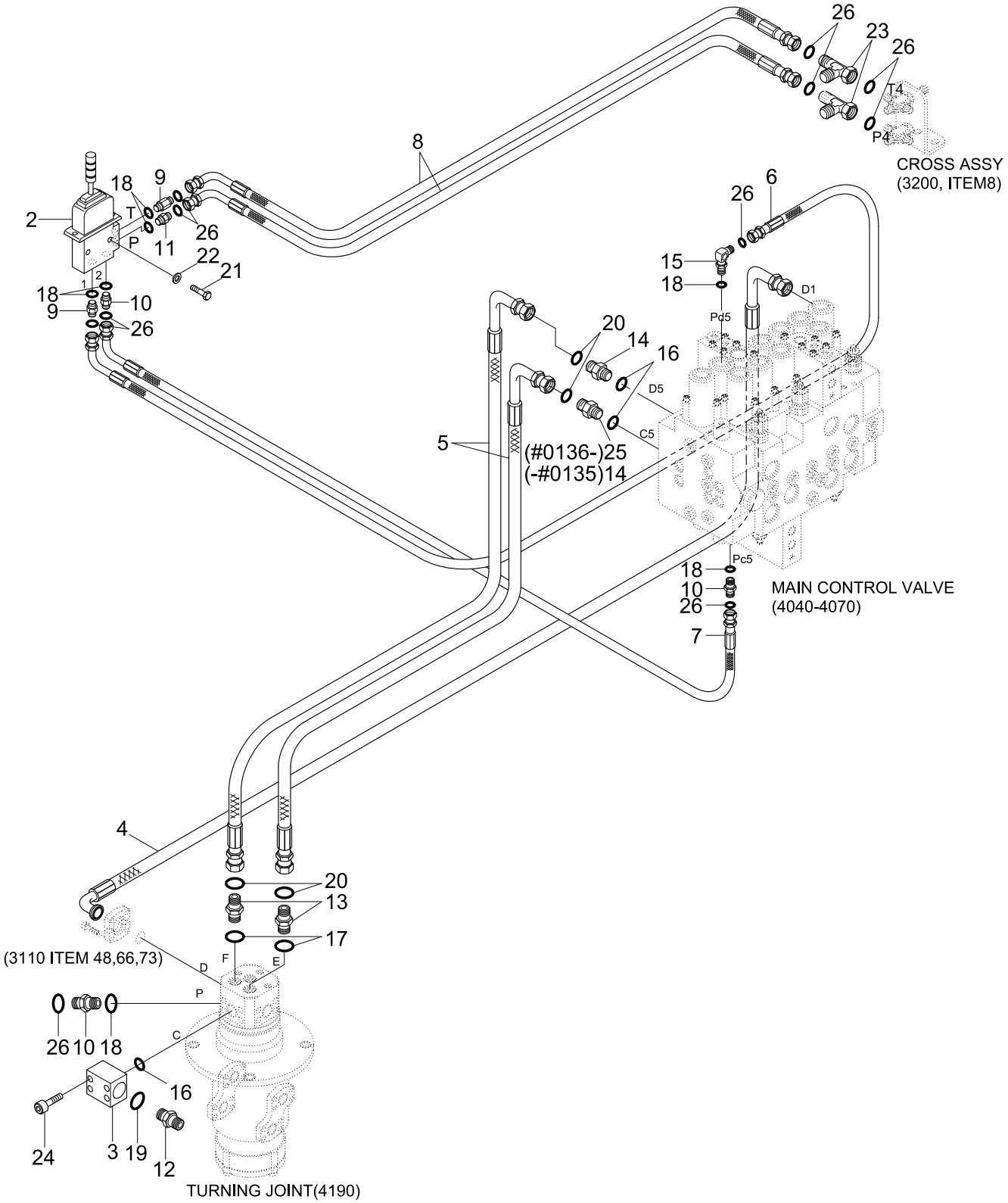

Item	Part_No	IS	Ord	T	Description	Qty	Serial_No	ITC	Remark
2	31N4-20080				LEVER-DOZER	1			
3	31N4-12240				BLOCK	1			
4	31N4-12250				HOSE ASSY	1			
5	P930-087025				HOSE ASSY-ORFS 0X90	2			
6	P420-042064				HOSE ASSY-COMP 0X90	1	- #1370		
	X420-042064				HOSE ASSY-SYNFLEX,ORFS	1	#1371 -	D	
7	P420-042060				HOSE ASSY-COMP 0X90	1	- #1370		
	X420-042060				HOSE ASSY-SYNFLEX,ORFS	1	#1371 -	D	
8	P420-042024				HOSE ASSY-COMP 0X90	2	- #1370		
	X410-042024				HOSE ASSY-SYNFLEX,ORFS	2	#1371 -	D	
9	31M5-56430				FITTING-LONG	2	- #0035		
	P010-110009				CONNECTOR-LONG	2	#0036 - #1370	D	
	X511-104513				CONNECTOR-ORFS	2	#1371 -	D	
10	P010-110002				CONNECTOR	3	- #1370		
	X500-110001				CONNECTOR-ORFS	3	#1371 -	D	
11	31EK-20100				FILTER-LAST GUARD	1	- #1370		
	31N6-25060				FILTER-LAST GUARD	1	#1371 -	D	
12	X500-110004				CONNECTOR-ORFS	1			
13	X500-110003				CONNECTOR-ORFS	2	- #0196		
	X511-108534				CONNECTOR-LONG,ORFS	2	#0197 -	B	
14	X500-110017				CONNECTOR-ORFS	2	- #0135		
					CONNECTOR-ORFS	1	#0136 -	A	
15	P020-110001				ELBOW-90	1	- #1370		
	X520-110001				ELBOW-90,ORFS	1	#1371 -	D	
16	S631-024001				O-RING	3			

Item	Part_No	IS	Ord	T	Description	Qty	Serial_No	ITC	Remark
17	S631-018001				O-RING	2			
18	S631-011001				O-RING	7			
19	S621-018001				O-RING,ORFS	1			
20	S621-014001				O-RING,ORFS	4			
21	S015-080352				BOLT-HEX	2			
22	S403-082002				WASHER-PLAIN	2			
23	32E6-10460				TEE-SWEVEL NUT	2	- #1370		
	X840-515151				TEE-R/TYPE,ORFS	2	#1371 -	D	
24	S109-100356				BOLT-SOCKET	4	- #1725	-	
	S109-100306				BOLT-SOCKET	4	#1726 -	D	
25	X511-112534				CONNECTOR-LONG,ORFS	1	#0136 -	-	
26	S621-011001				O-RING,ORFS	11	#1371 -	-	

DOZER HYD PIPING(LOWER)

SERIAL NO.: -#0232

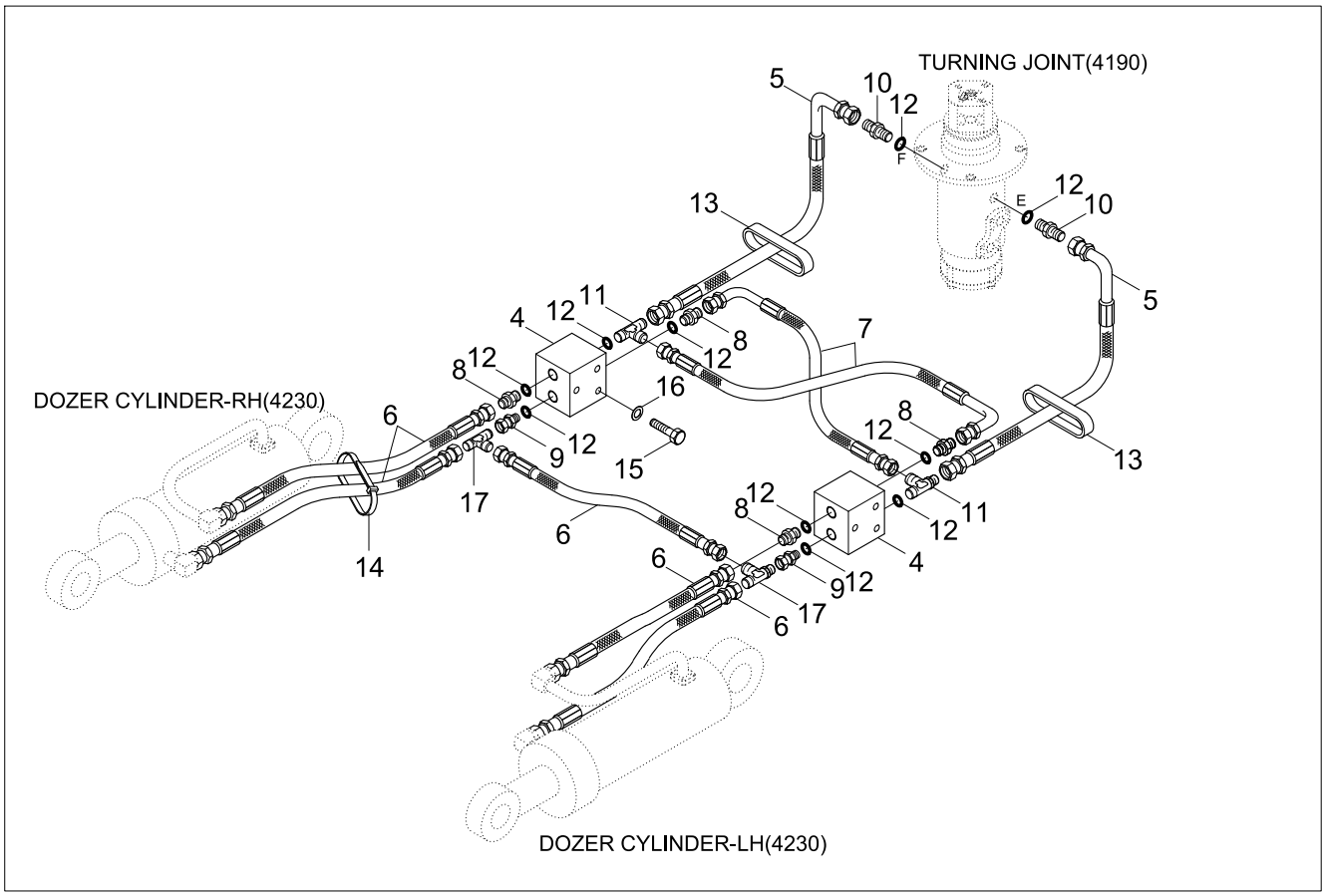

SERIAL NO.: #0233-

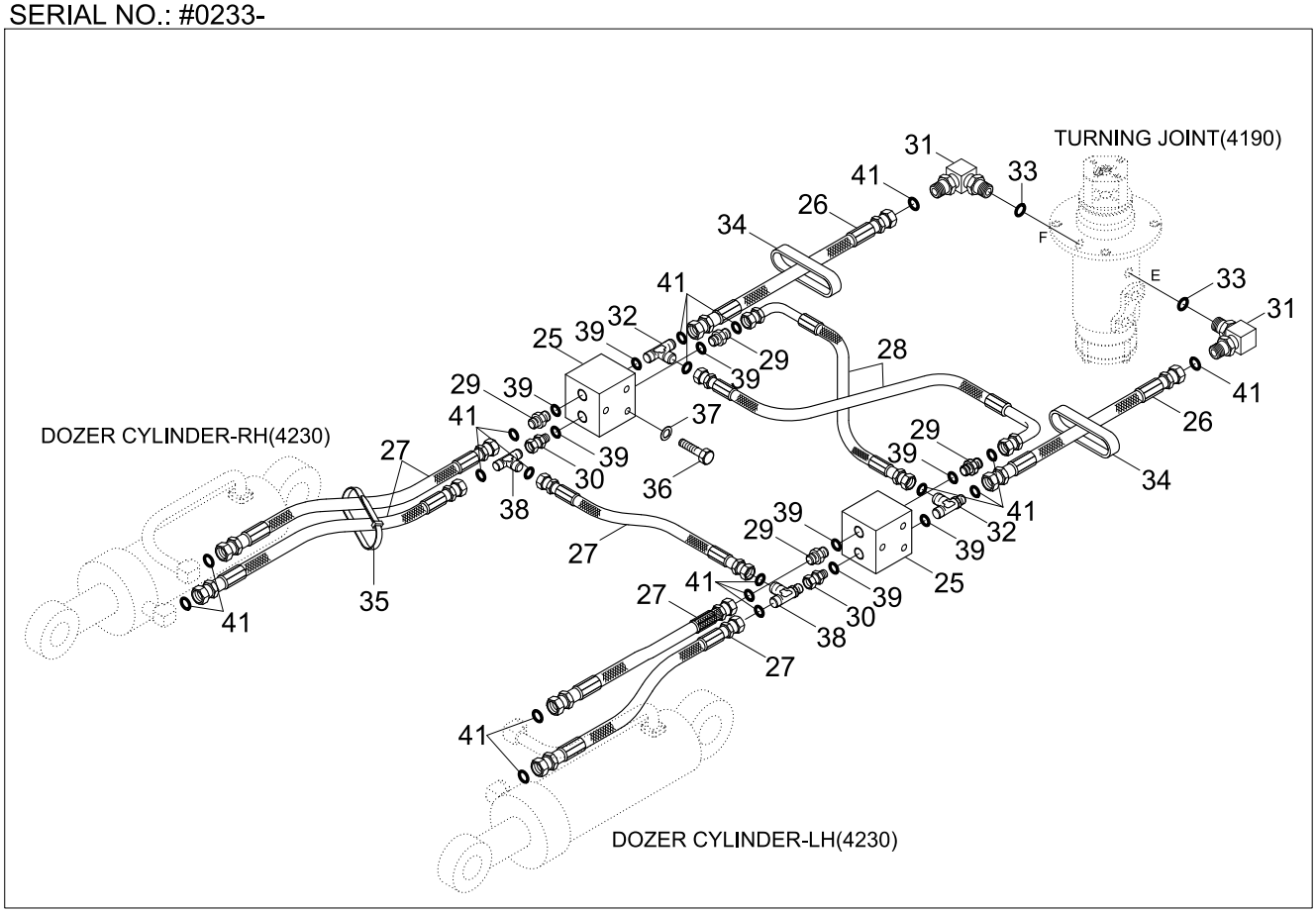

Item	Part_No	IS	Ord	T	Description	Qty	Serial_No	ITC	Remark
*	@				DOZER HYD PIPING	1	- #0232	-	NOT
4	31E4-00410				CHECK VALVE-PILOT	2	- #0232	-	
5	P603-087016				HOSE ASSY-THD	2	- #0232	-	
6	P603-087011				HOSE ASSY-THD	5	- #0232	-	
7	P623-087010				HOSE ASSY-THD 0X90	2	- #0232	-	
8	P010-110004				CONNECTOR	4	- #0232	-	
9	31E6-43010				CONNECTOR-ORIFICE	2	- #0232	-	
10	P020-110003				ELBOW-90	2	- #0232	-	
11	P320-080808				TEE-RUN TYPE	2	- #0232	-	
12	S631-018001				O-RING	10	- #0232	-	
13	32E6-10470				GROMMET	2	- #0232	-	
14	S551-050203				CLAMP-BAND	10	- #0232	-	
15	S017-100652				BOLT-HEX	6	- #0232	-	
16	S411-100002				WASHER-SPRING	6	- #0232	-	
17	31L3-0221				TEE	2	- #0232	-	
*	@				DOZER HYD PIPING	1	#0233 -	D	NOT
25	31N4-40310				CHECK VALVE-PILOT	2	#0233 - #3080	D	
	31N4-75110				CHECK VALVE-PILOT	2	#3081 -	A	
26	P603-087016				HOSE ASSY-THD	2	#0233 - #1370	D	
	P913-087016				HOSE ASSY-ORFS 0X0	2	#1371 -	D	
27	P603-087011				HOSE ASSY-THD	5	#0233 - #1370	D	
	P913-087011				HOSE ASSY-ORFS 0X0	5	#1371 -	D	
28	P623-087010				HOSE ASSY-THD 0X90	2	#0233 - #1370	D	
	P933-087010				HOSE ASSY-ORFS 0X90	2	#1371 -	D	
29	P010-110014				CONNECTOR	4	#0233 - #1370	D	

Item	Part_No	IS	Ord	T	Description	Qty	Serial_No	ITC	Remark
29	X500-110012				CONNECTOR-ORFS	4	#1371 -	D	
30	31N4-40320				CONNECTOR-ORIFICE	2	#0233 - #1370	D	
	31N4-41090				CONNECTOR-ORIFICE	2	#1371 -	D	
31	P020-110003				ELBOW-90	2	#0233 - #1370	D	
	X520-110003				ELBOW-90,ORFS	2	#1371 -	D	
32	P320-060808				TEE-RUN TYPE	2	#0233 - #1370	D	
	31N4-22160				TEE-ORFS	2	#1371 -	D	
33	S631-018004				O-RING	2	#0233 -	D	
34	32E6-10470				GROMMET	2	#0233 -	D	
35	S551-050203				CLAMP-BAND	10	#0233 -	D	
36	S017-080702				BOLT-HEX	6	#0233 -	D	
37	S411-080002				WASHER-SPRING	6	#0233 -	D	
38	31L3-0221				TEE	2	#0233 - #1370	D	
	X810-085353				TEE-B/TYPE,ORFS	2	#1371 -	D	
39	S631-014004				O-RING	8	#0233 -	D	
41	S621-014001				O-RING	18	#1371 -	-	

DOUBLE ACTING ATTACH PIPING KIT(-#1370)

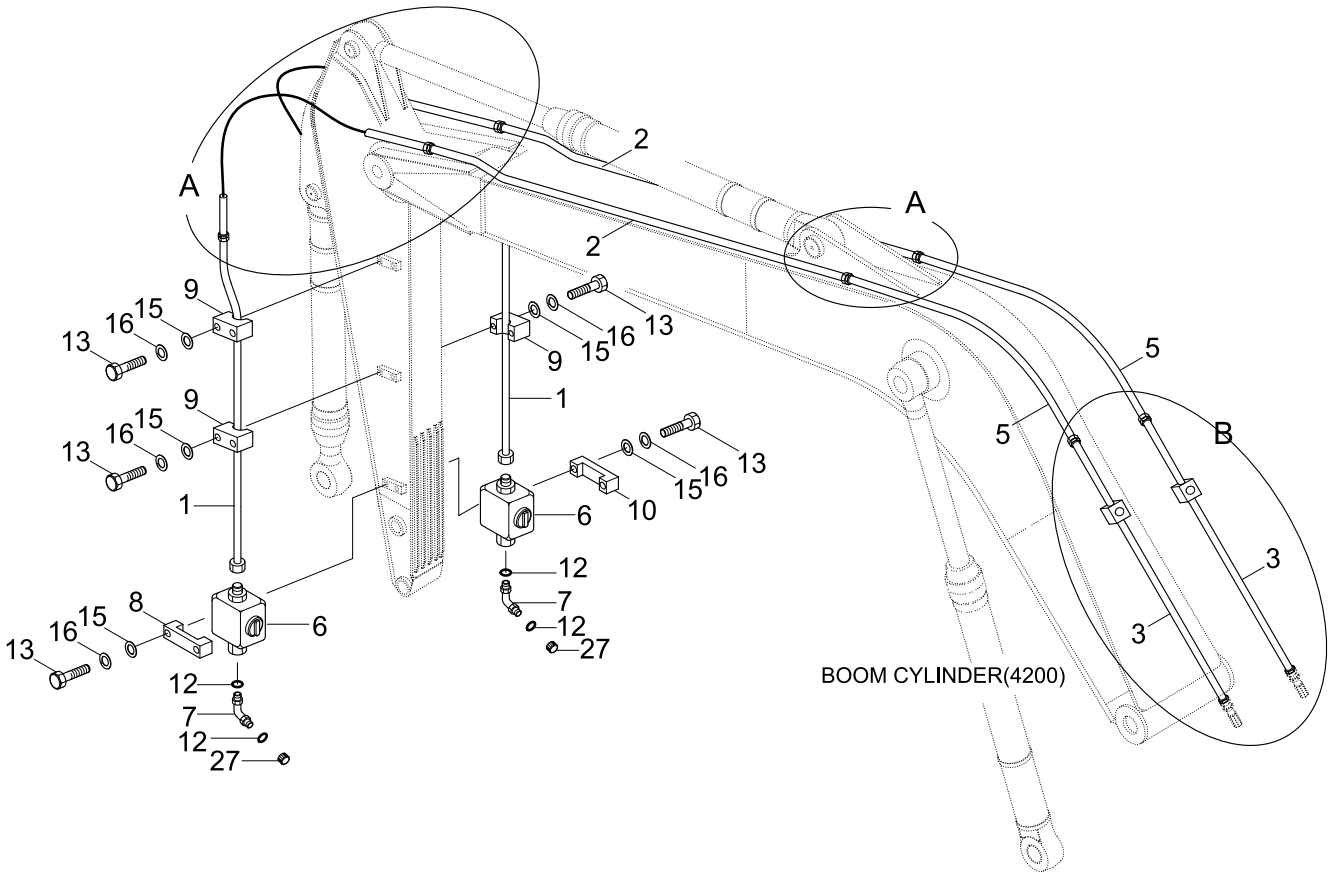

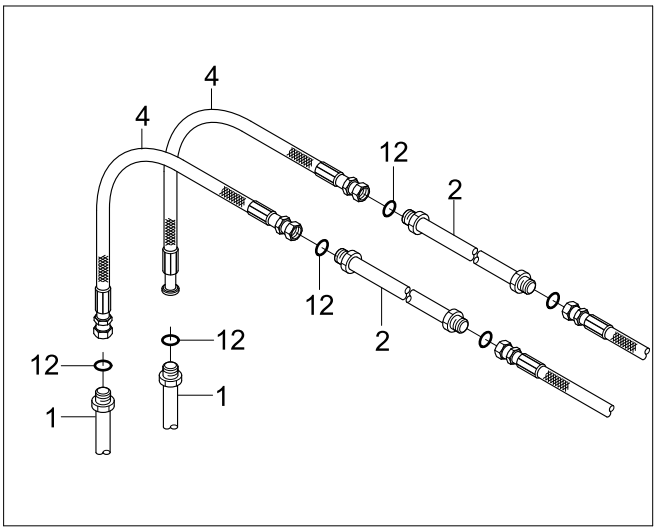

DETAIL A

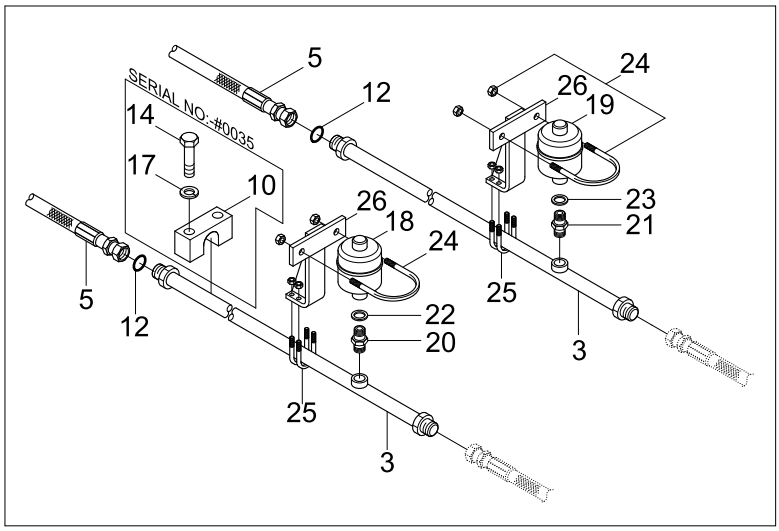

DETAIL B

Item	Part_No	IS	Ord	T	Description	Qty	Serial_No	ITC	Remark
*	@				D/ACT ATTACH PIPING KIT	1	- #1370	-	NOT
*-12	31N4-91310				..ATTACH PIPING KIT	1			4.6BM+2.5AM
	31N4-91320				..ATTACH PIPING KIT	1			4.6BM+1.9AM
	31N4-91330				..ATTACH PIPING KIT	1			4.6BM+2.1AM
	31N4-91340				..ATTACH PIPING KIT	1			4.6BM+3.0AM
	31N4-91350				..ATTACH PIPING KIT	1			4.1BM+1.9AM
	31N4-91360				..ATTACH PIPING KIT	1			4.1BM+2.1AM
1	31N4-92110				...PIPE ASSY	2			2.5M ARM ONLY
	31N4-92120				...PIPE ASSY	2	#0001 -	-	1.9,2.1M ARM
	31N4-92140				...PIPE ASSY	2			3.0M ARM ONLY
2	31N4-92151				...PIPE ASSY	2			4.6M BOOM
	31N4-92161				...PIPE ASSY	2			4.1M BOOM
3	31N4-92170				...PIPE ASSY	2			
4	P913-126026				...HOSE ASSY-ORFS 0X0	2			4.6M BOOM
	P913-126023				...HOSE ASSY-ORFS 0X0	2			4.1M BOOM
5	P913-126027				...HOSE ASSY-ORFS 0X0	2			4.6M BOOM
	P913-126024				...HOSE ASSY-ORFS 0X0	2			4.1M BOOM
6	32E6-92110				...VALVE-STOP	2			
7	X530-110004				...ELBOW-45,ORFS	2			
8	31EG-91350				...CLAMP-STOP VALVE	2			
9	31EG-91381				...CLAMP-PIPE	4	#0001 -	-	
10	31N4-12200				...CLAMP-PIPE	4	- #0035	-	
11	S631-024001				...O-RING	2			
12	S621-018001				...O-RING,ORFS	10			
13	S017-120702				...BOLT-HEX	6			

Item	Part_No	IS	Ord	T	Description	Qty	Serial_No	ITC	Remark
14	S017-160702				...BOLT-HEX	2	- #0035	-	
15	S401-120002				...WASHER-PLAIN	4			
16	S411-120002				...WASHER-SPRING	4			
17	S411-160002				...WASHER-SPRING	2	- #0035	-	
27	X710-100105				...CAP-ORFS	2			
*-2	31E6-91701				..ACCUMULATOR KIT	1			
18	32E6-92040				...ACCUMULATOR	1			SUPPLY
19	32E6-92050				...ACCUMULATOR	1			RETURN
20	32E3-2021				...FITTING	1			
21	32E3-2020	10			...FITTING	1			
22	P392-220000				...WASHER-COPPER	1			
23	P392-180000				...WASHER-COPPER	1			
24	32E6-92060				...U-BOLT	2			
25	S071-032730				...U-BOLT	4			
26	32E6-92080				...BRACKET-ACCUM	2			

DOUBLE ACTING ATTACH PIPING KIT(#1371-)

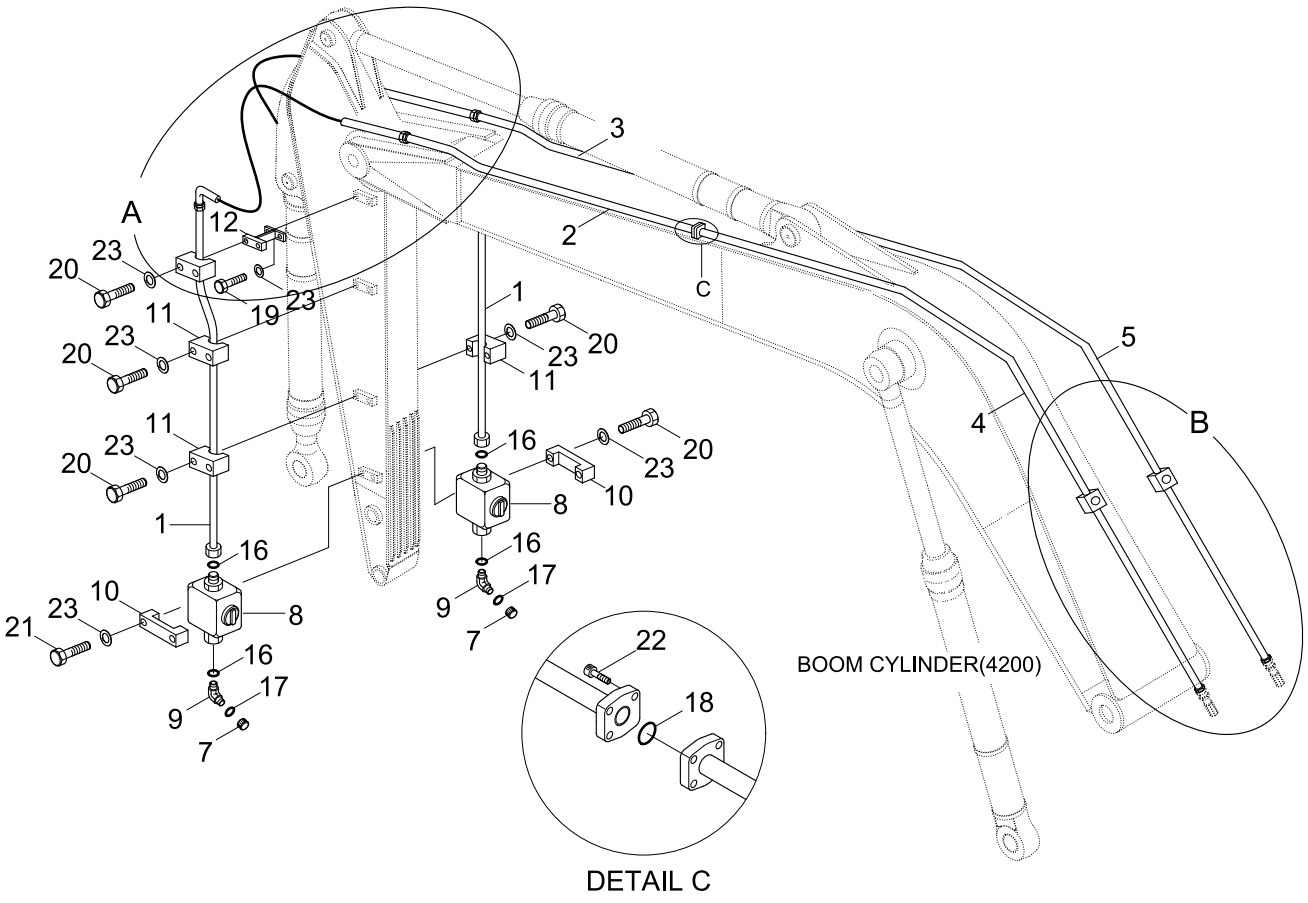

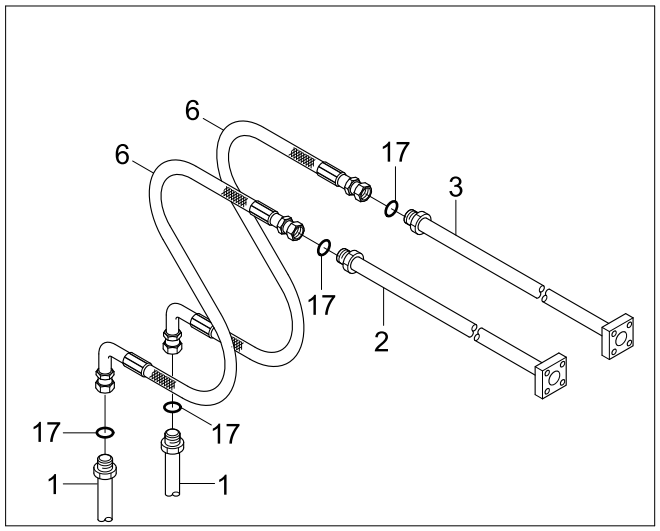

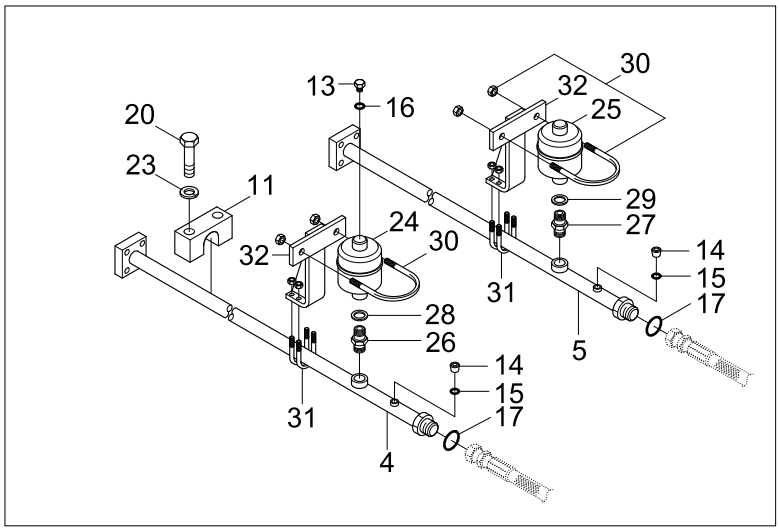

Item	Part_No	IS	Ord	T	Description	Qty	Serial_No	ITC	Remark
*	@				D/ACT ATTACH PIPING KIT	1	#1371 -	-	NOT
*-12	31N4-95351				..ATTACH PIPING KIT	1			4.6BM+2.5AM
	31N4-95341				..ATTACH PIPING KIT	1			4.6BM+1.9AM
	31N4-95331				..ATTACH PIPING KIT	1			4.6BM+2.1AM
	31N4-95361				..ATTACH PIPING KIT	1			4.6BM+3.0AM
1	31N4-92211				...PIPE ASSY	2			2.5AM
	31N4-92221				...PIPE ASSY	2			1.9AM
	31N4-92231				...PIPE ASSY	2			2.1AM
	31N4-92241				...PIPE ASSY	2			3.0AM
2	31N4-92250				...PIPE ASSY	1			
3	31N4-92260				...PIPE ASSY	1			
4	31N4-95601				...PIPE ASSY	1			
5	31N4-95630				...PIPE ASSY	1			
6	P933-126034				...HOSE ASSY-ORFS 0X90	2			2.5AM, 3.0AM
	P933-126028				...HOSE ASSY-ORFS 0X90	2			1.9AM, 2.1AM
7	X710-100105				...CAP-ORFS	2			
8	31N4-97010				...VALVE-STOP	2			
9	X530-110004				...ELBOW-45,ORFS	2			
10	31EG-91350				...CLAMP-STOP VALVE	2			
11	31EG-91381				...CLAMP-PIPE	4	#0001 -	-	2.5AM ONLY
					...CLAMP-PIPE	2	#0001 -	-	1.9AM, 2.1AM
					...CLAMP-PIPE	6	#0001 -	-	3.0AM ONLY
12	32E6-92160				...BRACKET	2			3.0AM ONLY
13	P220-110205				...PLUG-SOCKET	2			
14	31EK-11130				...COUPLING-SCREW	2			

Item	Part_No	IS	Ord	T	Description	Qty	Serial_No	ITC	Remark
15	S631-011004				...O-RING	2			
16	S631-024004				...O-RING	6			
17	S621-018001				...O-RING,ORFS	8			
18	Y171-019004				...O-RING	2			
19	S017-120256				...BOLT-HEX	4			3.0AM ONLY
20	S017-120506				...BOLT-HEX	8			2.5AM ONLY
					...BOLT-HEX	4			1.9AM, 2.1AM
					...BOLT-HEX	12			3.0AM ONLY
21	S017-120706				...BOLT-HEX	4			
22	S109-100506				...BOLT-SOCKET	8			
23	S411-120002				...WASHER-SPRING	12			2.5AM ONLY
					...WASHER-SPRING	8			1.9AM, 2.1AM
					...WASHER-SPRING	20			3.0AM ONLY
*-2	31E6-91701				..ACCUMULATOR KIT	1			
24	32E6-92040				...ACCUMULATOR	1			
25	32E6-92050				...ACCUMULATOR	1			
26	32E3-2021				...FITTING	1			
27	32E3-2020				...FITTING	1			
28	P392-220000				...WASHER-COPPER	1			
29	P392-180000				...WASHER-COPPER	1			
30	32E6-92060				...U-BOLT	2			
31	S071-032730				...U-BOLT	4			
32	32E6-92080				...BRACKET-ACCUM	2			

DOUBLE ACTING ATTACH PIPING KIT(#1371-)

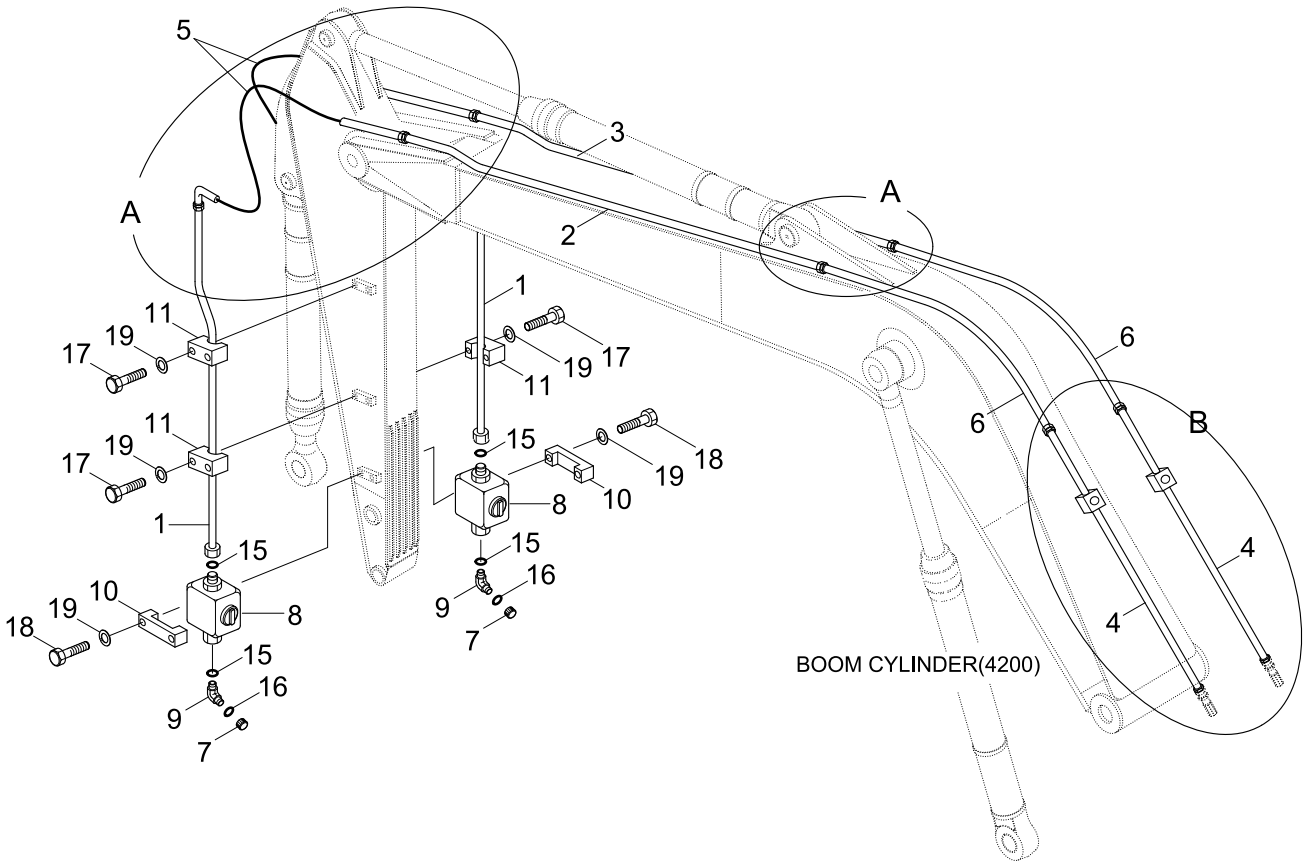

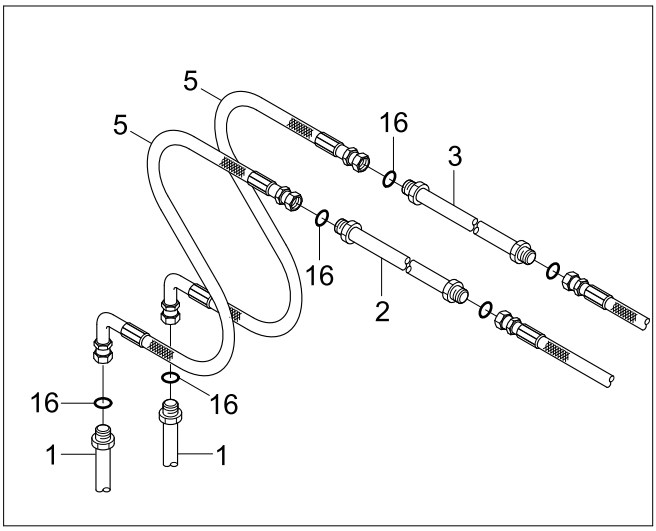

DETAIL A

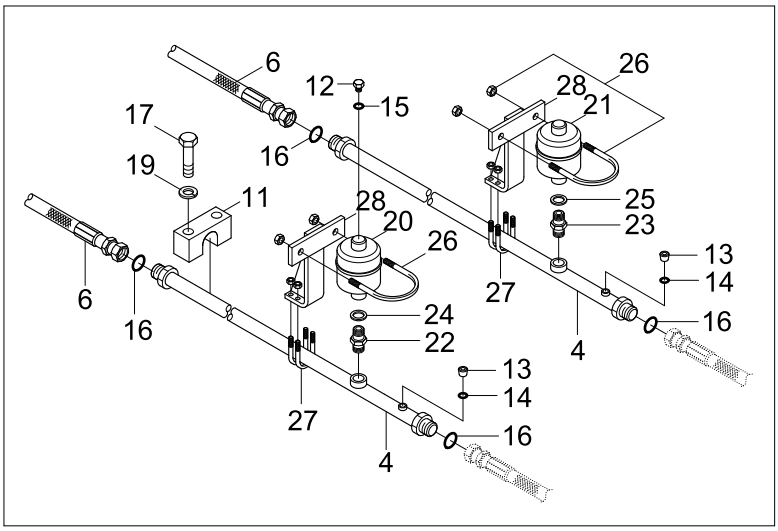

DETAIL B

Item	Part_No	IS	Ord	T	Description	Qty	Serial_No	ITC	Remark
*	@				D/ACT ATTACH PIPING KIT	1	#1371 -	-	NOT
*-12	31N4-91352				..ATTACH PIPING KIT	1	#1371 -	-	4.1BM+2.5AM
	31N4-91362				..ATTACH PIPING KIT	1	#1371 -	-	4.1BM+1.9AM
1	31N4-92221				...PIPE ASSY	2			1.9AM
	31N4-92231				...PIPE ASSY	2			2.1AM
2	31N4-92190				...PIPE ASSY	1			
3	31N4-92200				...PIPE ASSY	1			
4	31N4-92171				...PIPE ASSY	2			
5	P933-126028				...HOSE ASSY-ORFS 0X90	2			
6	P910-126026				...HOSE ASSY-ORFS 0X0	2			2.5AM, 3.0AM
7	X710-100105				...CAP-ORFS	2			
8	31N4-97010				...VALVE-STOP	2			
9	X530-110004				...ELBOW-45,ORFS	2			
10	31EG-91350				...CLAMP-STOP VALVE	2			
11	31EG-91381				...CLAMP-PIPE	2	#0001 -	-	2.5AM ONLY
12	P220-110205				...PLUG-SOCKET	2			3.0AM ONLY
13	31EK-11130				...COUPLING-SCREW	2			
14	S631-011004				...O-RING	2			
15	S631-024004				...O-RING	6			
16	S621-018001				...O-RING,ORFS	12			
17	S017-120506				...BOLT-HEX	4			2.5AM ONLY
18	S017-120706				...BOLT-HEX	4			
19	S411-120002				...WASHER-SPRING	8			3.0AM ONLY
*-2	31E6-91701				..ACCUMULATOR KIT	1			
20	32E6-92040				...ACCUMULATOR	1			

Item	Part_No	IS	Ord	T	Description	Qty	Serial_No	ITC	Remark
21	32E6-92050				...ACCUMULATOR	1			
22	32E3-2021				...FITTING	1			
23	32E3-2020				...FITTING	1			
24	P392-220000				...WASHER-COPPER	1			
25	P392-180000				...WASHER-COPPER	1			
26	32E6-92060				...U-BOLT	2			
27	S071-032730				...U-BOLT	4			
28	32E6-92080				...BRACKET-ACCUM	2			

DOUBLE ACTING MAIN PIPING KIT(-#1370)

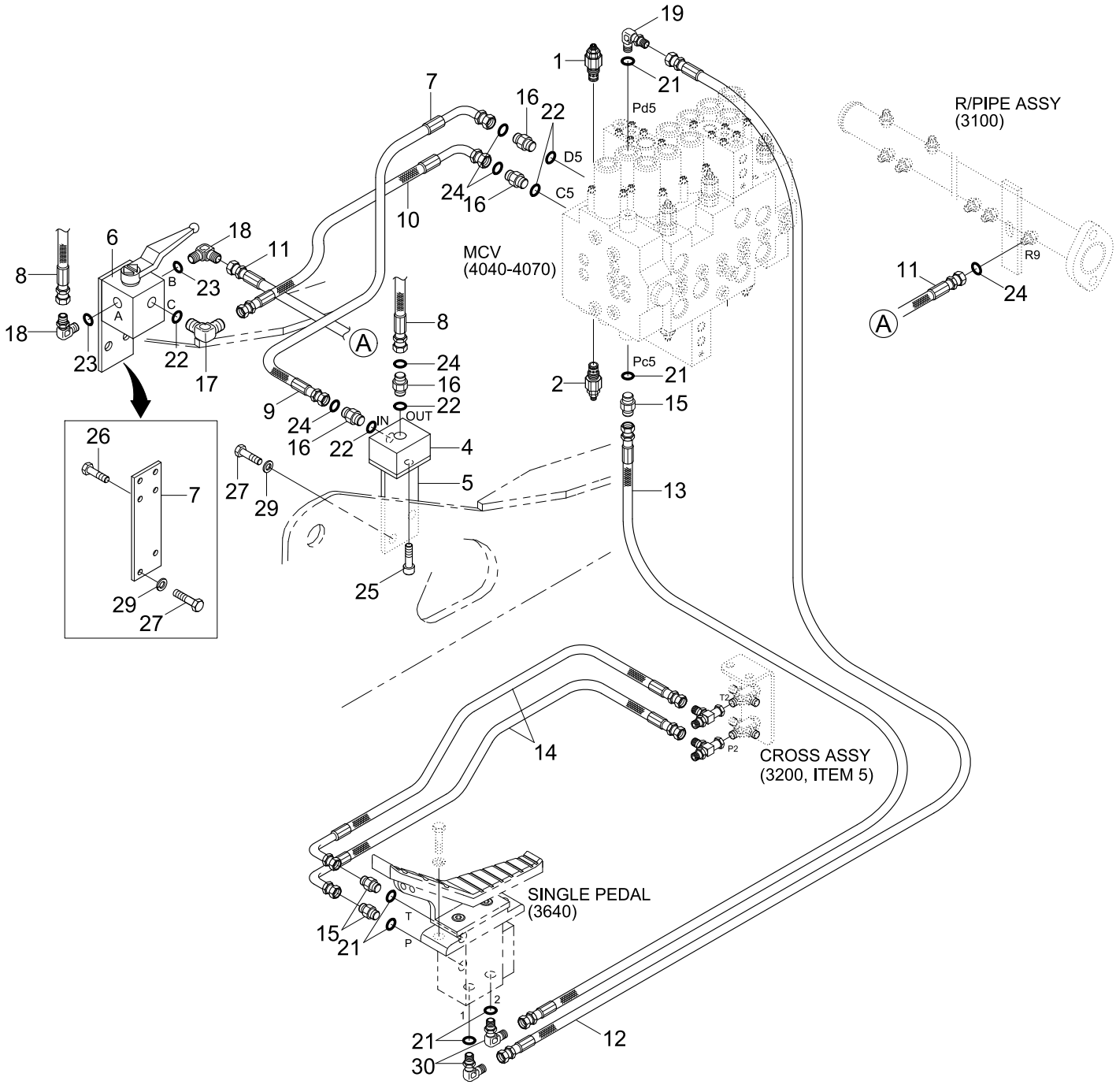

Item	Part_No	IS	Ord	T	Description	Qty	Serial_No	ITC	Remark
*	@				D/ACT MAIN PIPING KIT	1	#0001 - #1370	-	NOT
1	31N4-90560				.PORT RELIEF VALVE	1			
2	31N4-90570				.PORT RELIEF VALVE	1			
*-11	31N4-91410				..D/ACT MAIN PIPING KIT	1			
4	31EM-91410				...JOINT-HOSE	1			
5	31N4-91230				...BRACKET-HOSE JOINT	1			
6	32E6-93020				...JOINT-3 WAY	1			
7	31EM-91670				...BRACKET-3 WAY JOINT	1			
8	P913-126035				...HOSE ASSY-ORFS 0X0	2			
9	P930-126015				...HOSE ASSY-ORFS 0X90	1			
10	P930-126009				...HOSE ASSY-ORFS 0X90	1			
11	P913-123021				...HOSE ASSY-ORFS 0X0	1			
12	P400-042066				...HOSE ASSY-COMPACT	1			
13	P400-042060				...HOSE ASSY-COMPACT	1			
14	P420-042024				...HOSE ASSY-COMP 0X90	2			
15	P010-110002				...CONNECTOR	3			
16	X500-110004				...CONNECTOR-ORFS	4			
17	X520-110004				...ELBOW-90,ORFS	1			
18	X520-110018				...ELBOW-90,ORFS	2			
19	E131-0603				...ELBOW-90,LONG	1			
20	32E6-10460				...TEE-SWEVEL NUT	2			
21	S631-011001				...O-RING	7			
22	S631-024001				...O-RING	5			
23	S631-029001				...O-RING	2			
24	S621-018001				...O-RING,ORFS	8			

Item	Part_No	IS	Ord	T	Description	Qty	Serial_No	ITC	Remark
25	S109-100256				...BOLT-SOCKET	4			
26	S017-080252				...BOLT-HEX	4			
27	S017-120302				...BOLT-HEX	4			
28	S017-100252				...BOLT-HEX	2			
29	S411-120002				...WASHER-SPRING	4			
30	P020-110001				...ELBOW-90	2			

DOUBLE ACTING MAIN PIPING KIT(#1371-)

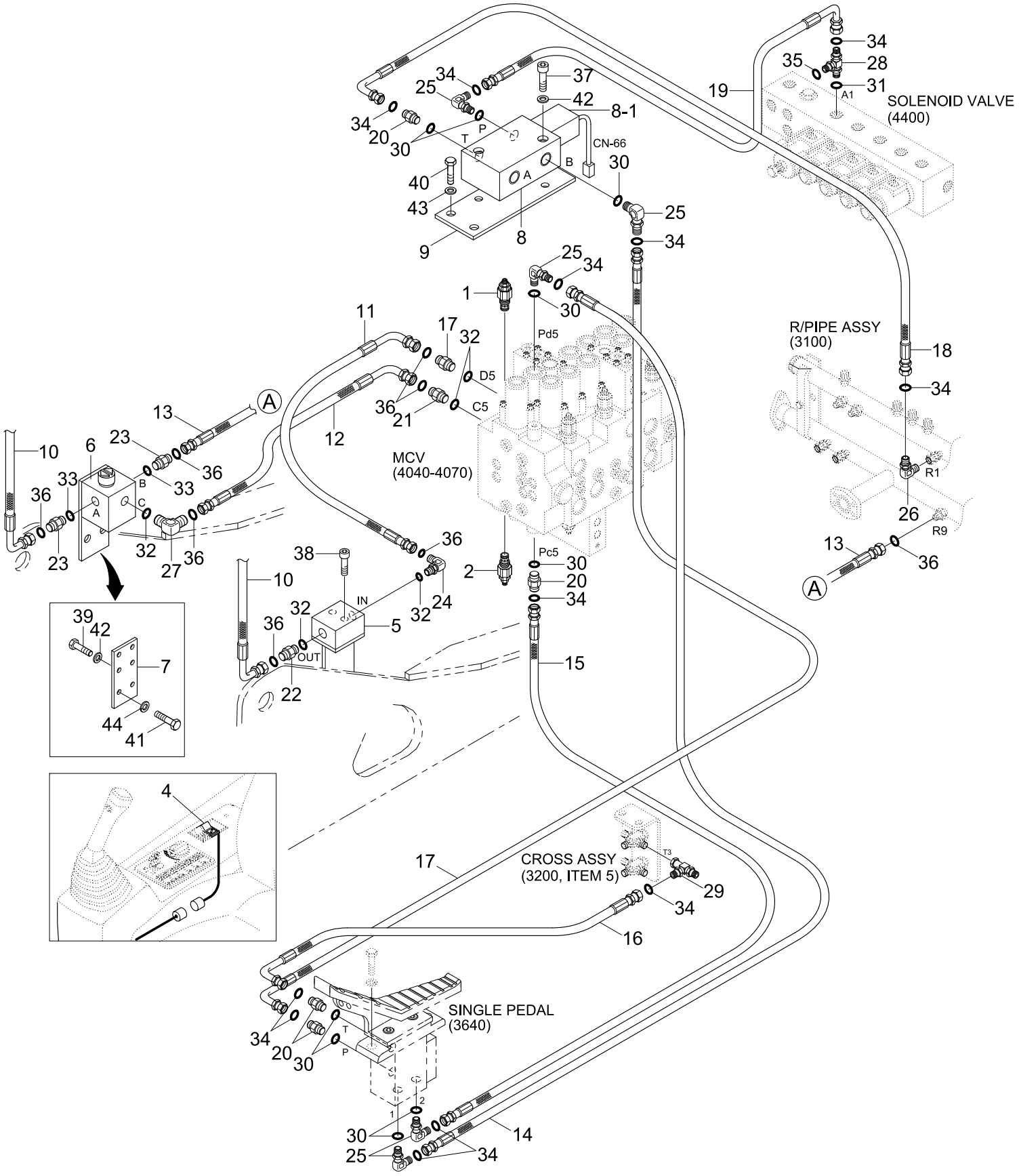

Item	Part_No	IS	Ord	T	Description	Qty	Serial_No	ITC	Remark
*	@				D/ACT MAIN PIPING KIT	1	#1371 -	-	NOT
1	31N4-90560				.PORT RELIEF VALVE	1			
2	31N4-90570				.PORT RELIEF VALVE	1			
3	34E7-04720				.PEDAL-SINGLE	1			SEE 4300
4	21E6-30540				.SWITCH-BREAKER	1			
*-11	31N4-91412				..D/ACT MAIN PIPING KIT	1			
5	31N4-95280				...BLOCK-HOSE JOINT	1			
6	31N4-95260				...JOINT-3 WAY	1			
7	31E9-95010				...BRACKET-3 WAY JOINT	1			
8	31N6-91230D				...SOLENOID VLV-BREAKER	1	#1371 -	-	
8-1	XKBN-00192				....COIL-BREAKER SOL	1	#1371 -	-	
9	31N6-91250				...BRACKET-SOL VLV	1			
10	P923-126023				...HOSE ASSY-ORFS 0X45	2			
11	P933-126016				...HOSE ASSY-ORFS 0X90	1			
12	P933-126013				...HOSE ASSY-ORFS 0X90	1			
13	P923-123026				...HOSE ASSY-ORFS	1			
14	P910-042068				...HOSE ASSY-ORFS 0X0	1			
15	P910-042060				...HOSE ASSY-ORFS 0X0	1			
16	P930-042024				...HOSE ASSY-ORFS 0X90	1			
17	P930-042072				...HOSE ASSY-ORFS 0X90	1			
18	P930-042044				...HOSE ASSY-ORFS 0X90	1			
19	P930-042018				...HOSE ASSY-ORFS 0X90	1			
20	X500-110001				...CONNECTOR-ORFS	4			
21	X500-110004				...CONNECTOR-ORFS	2			
22	X511-112533				...CONN-LONG,ORFS	1			

Item	Part_No	IS	Ord	T	Description	Qty	Serial_No	ITC	Remark
23	31N4-95290				...CONNECTOR	2			
24	X530-110004				...ELBOW-45,ORFS	1			
25	X520-110001				...ELBOW-90,ORFS	5			
26	X850-515100				...ELBOW-90/SL,ORFS	1			
27	X520-110004				...ELBOW-90,ORFS	1			
28	X820-065251				...TEE-R/TYPE,ORFS	1			
29	X840-515151				...TEE-R/TYPE,ORFS	1			
30	S631-011004				...O-RING	9			
31	S631-018004				...O-RING	1			
32	S631-024004				...O-RING	5			
33	S631-029004				...O-RING	2			
34	S621-011001				...O-RING,ORFS	14			
35	S621-012001				...O-RING,ORFS	1			
36	S621-018001				...O-RING,ORFS	8			
37	S109-080456				...BOLT-SOCKET	2			
38	S109-120556				...BOLT-SOCKET	2			
39	S017-080256				...BOLT-HEX	4			
40	S017-100256				...BOLT-HEX	2			
41	S017-120306				...BOLT-HEX	2			
42	S411-080002				...WASHER-SPRING	6			
43	S411-100002				...WASHER-SPRING	2			
44	S411-120002				...WASHER-SPRING	2			
45	21NB-00200				...HARNESS-EXT	1			

DOUBLE ACTING MAIN PIPING KIT(-#1370)

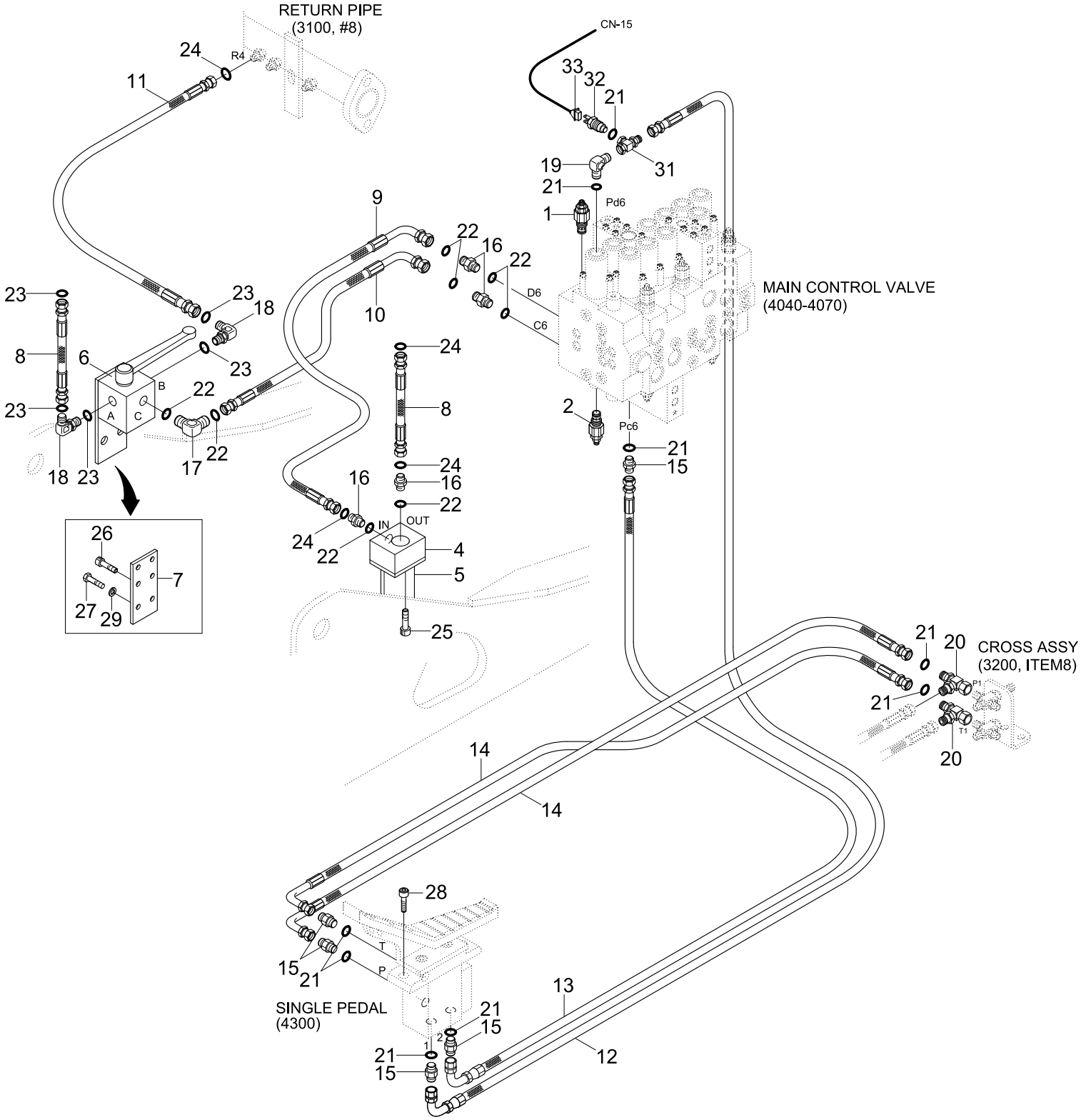

Item	Part_No	IS	Ord	T	Description	Qty	Serial_No	ITC	Remark
*	@				D/ACT MAIN PIPING KIT	1	- #1370	-	NOT
1	31N4-90580				.PORT RELIEF VALVE	1	#0001 -	-	
2	31N4-90590				.PORT RELIEF VALVE	1	#0001 -	-	
*-11	31N4-91420				..D/ACT MAIN PIPING KIT	1			
4	32E6-93010				...JOINT-HOSE	1			
5	31N4-91230				...BRACKET-HOSE JOINT	1			
6	32E6-93020				...JOINT-3 WAY	1			
7	31EM-91670				...BRACKET-3 WAY JOINT	1			
8	P913-126035				...HOSE ASSY-ORFS 0X0	2			
9	P930-126014				...HOSE ASSY-ORFS 0X90	1			
10	P930-126009				...HOSE ASSY-ORFS 0X90	1			
11	P913-123021				...HOSE ASSY-ORFS 0X0	1			
12	P420-042064				...HOSE ASSY-COMP 0X90	1			
13	P420-042060				...HOSE ASSY-COMP 0X90	1			
14	P420-042024				...HOSE ASSY-COMP 0X90	2			
15	P010-110002				...CONNECTOR	6			
16	X500-110004				...CONNECTOR-ORFS	4			
17	X520-110004				...ELBOW-90,ORFS	1			
18	X520-110018				...ELBOW-90,ORFS	2			
19	P310-040404				...TEE-BRANCH TYPE	1			
20	32E6-10460				...TEE-SWEVEL NUT	2			
21	S631-011001				...O-RING	7			
22	S631-024001				...O-RING	5			
23	S631-029001				...O-RING	2			
24	S621-018001				...O-RING,ORFS	8			

Item	Part_No	IS	Ord	T	Description	Qty	Serial_No	ITC	Remark
25	S109-100256				...BOLT-SOCKET	4			
26	S017-080252				...BOLT-HEXAGON HEAD	4			
27	S017-120302				...BOLT-HEXAGON HEAD	4			
28	S017-100252				...BOLT-HEX	2			
29	S411-120002				...WASHER-SPRING	4			
31	31EE-20050				...TEE-SHUTTLE	1			
32	31E5-40520				...SWITCH-PRESSURE	1			
33	21N4-01560				...HARNESS-EXTENSION	1			

DOUBLE ACTING MAIN PIPING KIT(#1371-)

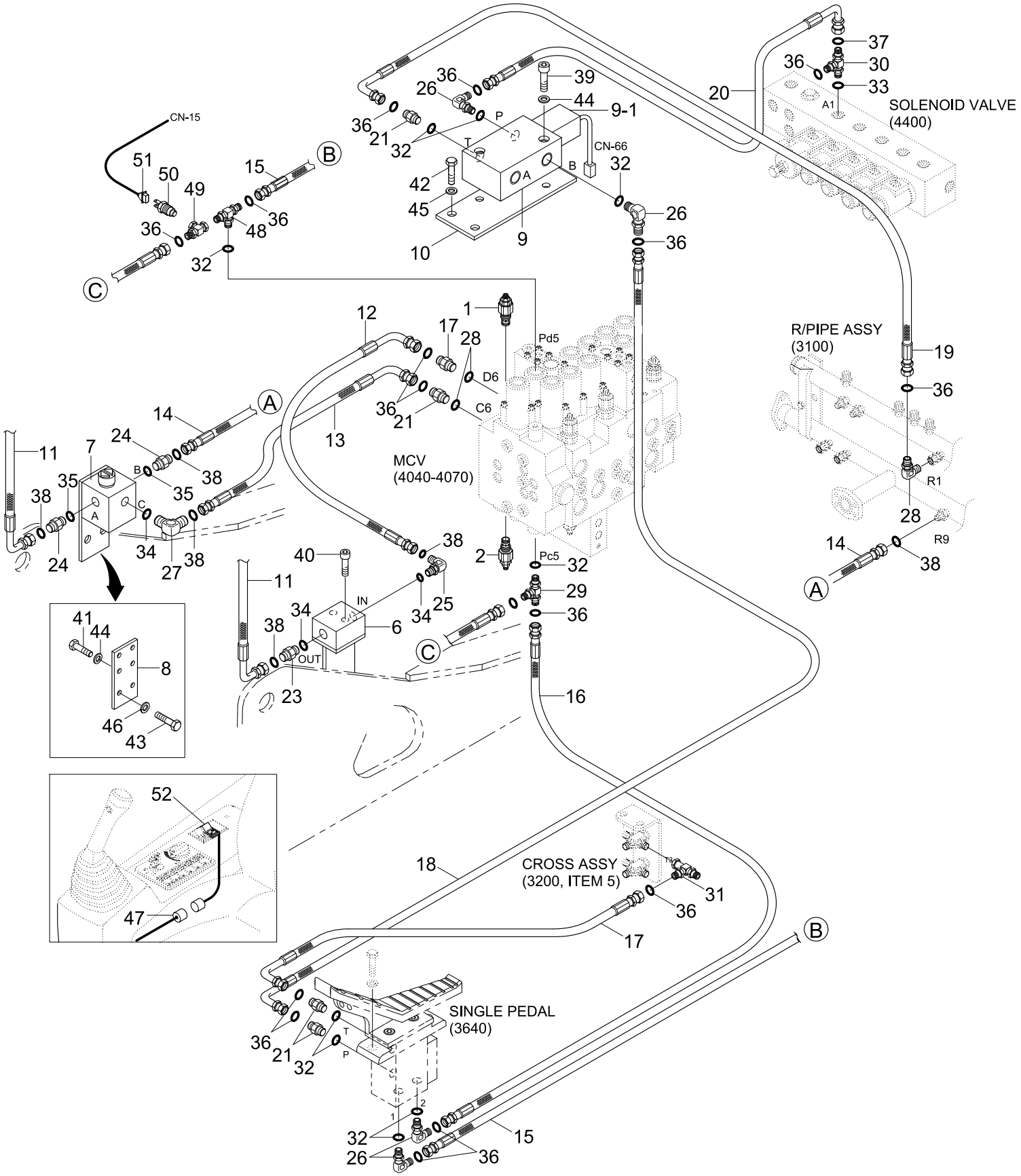

Item	Part_No	IS	Ord	T	Description	Qty	Serial_No	ITC	Remark
*	@				D/ACT MAIN PIPING KIT	1	#1371 -	-	NOT
1	31N4-90580				.PORT RELIEF VALVE	1	#0001 -	-	
2	31N4-90590				.PORT RELIEF VALVE	1	#0001 -	-	
3	34E7-04720				.PEDAL-SINGLE	1			SEE 4300
*-11	31N4-91422				..D/ACT MAIN PIPING KIT	1			
6	31N4-95280				...BLOCK-HOSE JOINT	1			
7	31N4-95260				...JOINT-3 WAY	1			
8	31E9-95010				...BRACKET-3 WAY JOINT	1			
9	31N6-91230D				...SOLENOID VLV-BREAKER	1	#1371 -	-	
9-1	XKBN-00192				....COIL-BREAKER SOL	1	#1371 -	-	
10	31N6-91250				...BRACKET-SOL VLV	1			
11	P923-126023				...HOSE ASSY-ORFS 0X45	2			
12	P933-126016				...HOSE ASSY-ORFS 0X90	1			
13	P933-126012				...HOSE ASSY-ORFS 0X90	1			
14	P923-123026				...HOSE ASSY-ORFS	1			
15	P910-042068				...HOSE ASSY-ORFS 0X0	1			
16	P910-042060				...HOSE ASSY-ORFS 0X0	1			
17	P930-042024				...HOSE ASSY-ORFS 0X90	1			
18	P930-042072				...HOSE ASSY-ORFS 0X90	1			
19	P930-042044				...HOSE ASSY-ORFS 0X90	1			
20	P930-042018				...HOSE ASSY-ORFS 0X90	1			
21	X500-110001				...CONNECTOR-ORFS	3			
22	X500-110004				...CONNECTOR-ORFS	2			
23	X511-112533				...CONNECTOR-ORFS	1			
24	31N4-95290				...CONNECTOR	2			

Item	Part_No	IS	Ord	T	Description	Qty	Serial_No	ITC	Remark
25	X530-110004				...ELBOW-45,ORFS	1			
26	X520-110001				...ELBOW-90,ORFS	4			
27	X520-110004				...ELBOW-90,ORFS	1			
28	X850-515100				...ELBOW-90/SL,ORFS	1			
29	X820-045151				...TEE-R/TYPE,ORFS	1			
30	X820-065251				...TEE-R/TYPE,ORFS	1			
31	X840-515151				...TEE-R/TYPE,ORFS	1			
32	S631-011004				...O-RING	9			
33	S631-018004				...O-RING	1			
34	S631-024004				...O-RING	5			
35	S631-029004				...O-RING	2			
36	S621-011001				...O-RING,ORFS	16			
37	S621-012001				...O-RING,ORFS	1			
38	S621-018001				...O-RING,ORFS	8			
39	S109-080456				...BOLT-SOCKET	2			
40	S109-120556				...BOLT-SOCKET	2			
41	S017-080256				...BOLT-HEX	4			
42	S017-100256				...BOLT-HEX	2			
43	S017-120306				...BOLT-HEXAGON HEAD	2			
44	S411-080002				...WASHER-SPRING	6			
45	S411-100002				...WASHER-SPRING	2			
46	S411-120002				...WASHER-SPRING	2			
47	21NB-00200				...HARNESS-EXT	1			
48	P310-040404				.TEE-BRANCH TYPE	1			
49	31EE-20050				.TEE-SHUTTLE	1			

Item	Part_No	IS	Ord	T	Description	Qty	Serial_No	ITC	Remark
50	31E5-40520				.SWITCH-PRESSURE	1			
51	21N4-01560				.HARNESS-EXTENSION	1			
52	21E6-30540				.SWITCH-BREAKER	1			

DOUBLE ACTING MAIN PIPING KIT(#1602-)

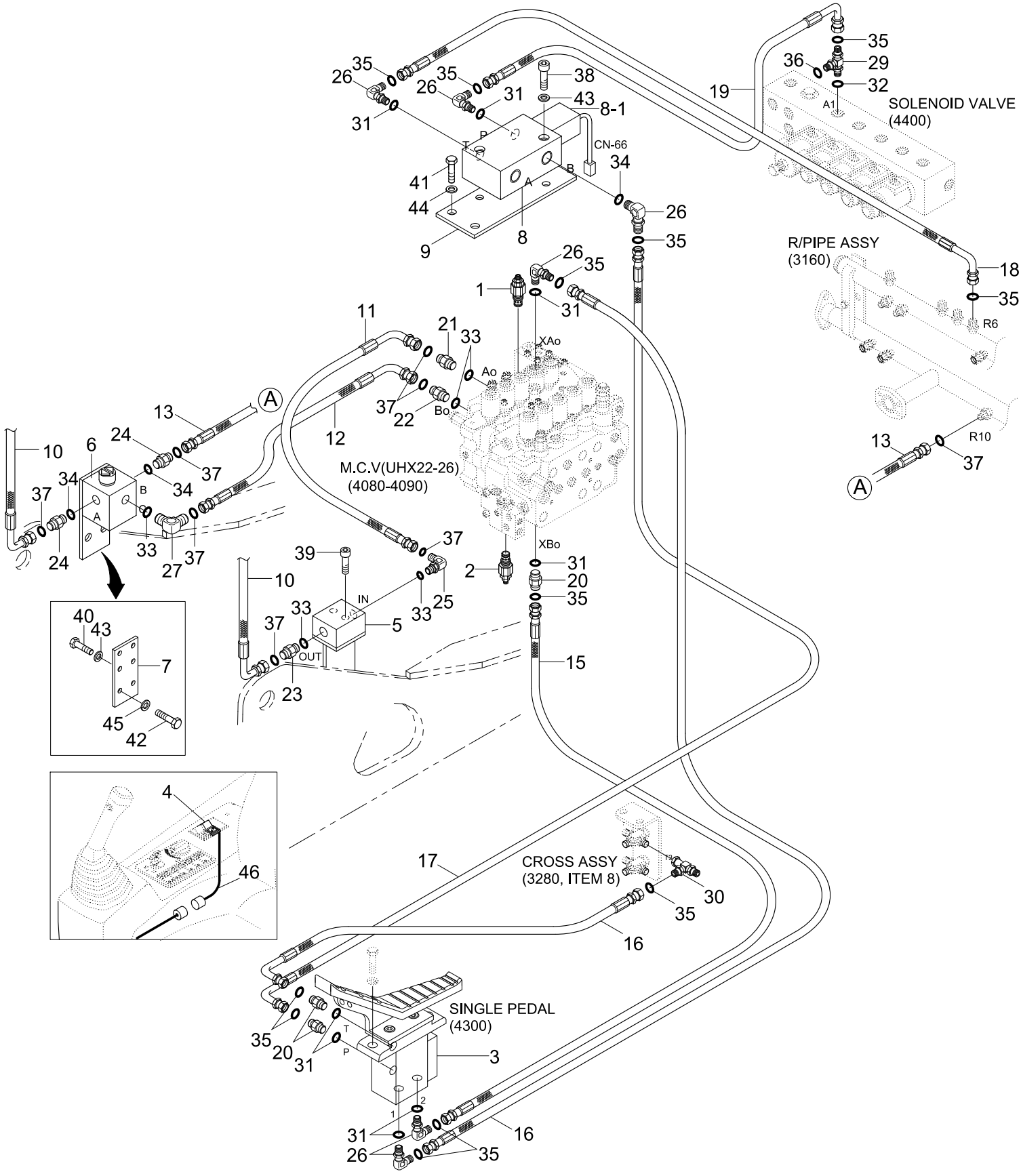

Item	Part_No	IS	Ord	T	Description	Qty	Serial_No	ITC	Remark
*	@				D/ACT MAIN PIPING KIT	1	#1602 -	-	NOT
1	31EL-91000				PORT RELIEF VALVE	1			
2	3537-369-380-30				PORT RELIEF VALVE	1			
3	34E7-04720				PEDAL-SINGLE	1			SEE 4300
4	21E6-30540				SWITCH-BREAKER	1			
*-11	31N4-93200				D/ACT MAIN PIPING KIT	1			
5	31N4-95280				.BLOCK-HOSE JOINT	2			
6	31N4-95260				.JOINT-3 WAY	1			
7	31E9-95010				.BRACKET-3 WAY JOINT	1			
8	31N6-91230D				.SOLENOID VLV-BREAKER	1	#1602 -	-	
8-1	XKBN-00192				..COIL-BREAKER SOL	1	#1602 -	-	
9	31N6-91250				.BRACKET-SOL VLV	1			
10	P923-126023				.HOSE ASSY-ORFS 0X45	2			
11	P933-126019				.HOSE ASSY-ORFS 0X90	1			
12	P933-126018				.HOSE ASSY-ORFS 0X90	1			
13	P923-123026				.HOSE ASSY-ORFS	1			
14	P910-042068				.HOSE ASSY-ORFS 0X0	1			
15	P910-042060				.HOSE ASSY-ORFS 0X0	1			
16	P930-042024				.HOSE ASSY-ORFS 0X90	1			
17	P930-042072				.HOSE ASSY-ORFS 0X90	1			
18	P930-042044				.HOSE ASSY-ORFS 0X90	1			
19	P930-042018				.HOSE ASSY-ORFS 0X90	1			
20	X500-110001				.CONNECTOR-ORFS	3			
21	X500-110004				.CONNECTOR-ORFS	4			
22	X511-112546				.CONNECTOR-ORFS	1			

Item	Part_No	IS	Ord	T	Description	Qty	Serial_No	ITC	Remark
23	X511-112533				.CONN-LONG,ORFS	1			
24	31N4-95290				.CONNECTOR	2			
25	X530-110004				.ELBOW-45,ORFS	1			
26	X520-110001				.ELBOW-90,ORFS	5			
27	X520-110004				.ELBOW-90,ORFS	1			
28	31N6-25110				.ELBOW-90,ORFS,LONG	1			
29	X820-065251				.TEE-R/TYPE,ORFS	1			
30	X840-515151				.TEE-R/TYPE,ORFS	1			
31	S631-011004				.O-RING	9			
32	S631-014004				.O-RING	1			
33	S631-024004				.O-RING	5			
34	S631-029004				.O-RING	2			
35	S621-011001				.O-RING,ORFS	14			
36	S621-012001				.O-RING,ORFS	1			
37	S621-018001				.O-RING,ORFS	8			
38	S109-080456				.BOLT-SOCKET	2			
39	S109-120556				.BOLT-SOCKET	2			
40	S017-080256				.BOLT-HEX	4			
41	S017-100256				.BOLT-HEX	2			
42	S017-120306				.BOLT-HEX	2			
43	S411-080006				.WASHER-SPRING	6			
44	S411-100006				.WASHER-SPRING	2			
45	S411-120006				.WASHER-SPRING	2			
46	21NB-00200				.HARNESS-EXT	1			

SINGLE ACTING MAIN PIPING KIT(-#1370)

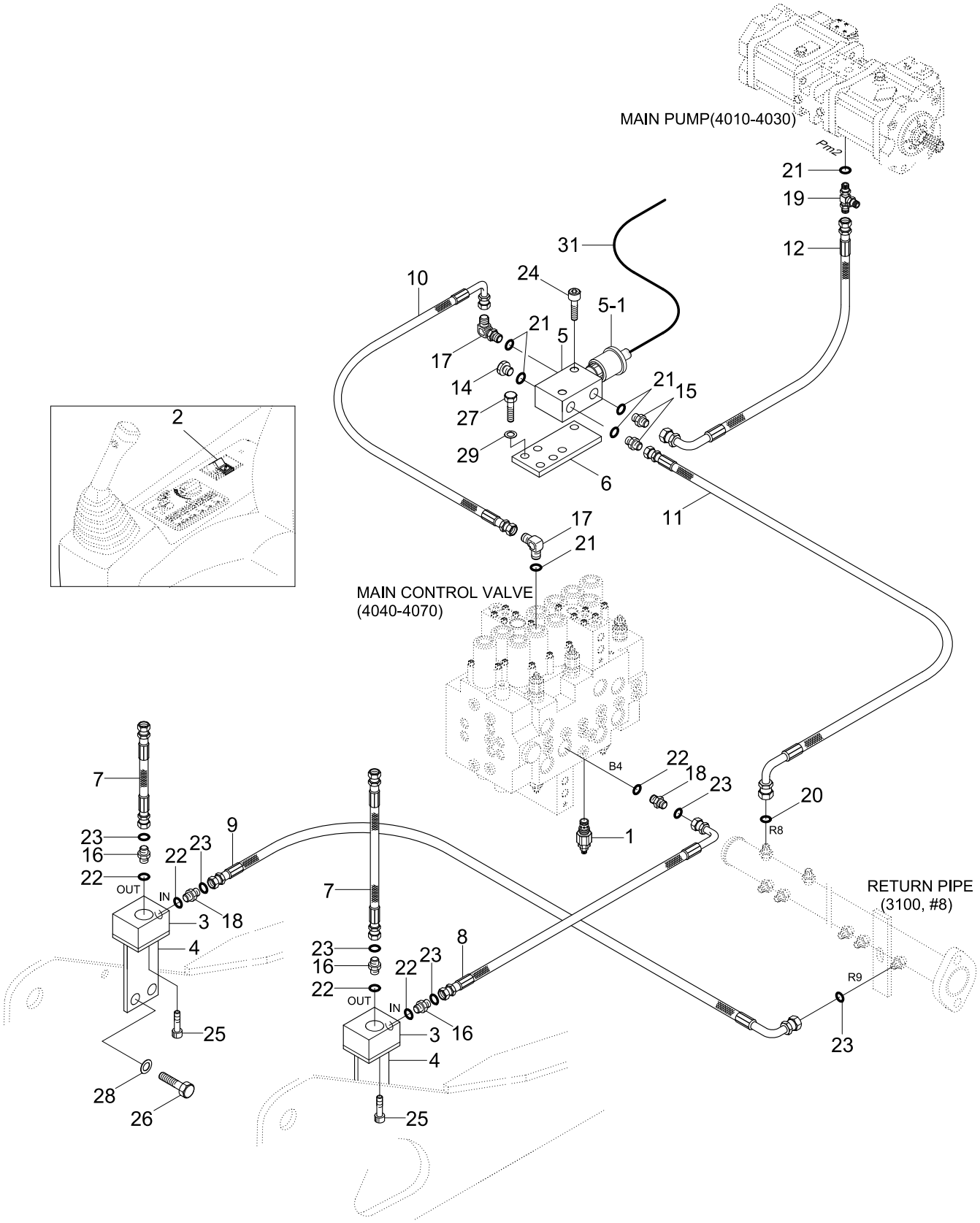

Item	Part_No	IS	Ord	T	Description	Qty	Serial_No	ITC	Remark
*	@				S/ACT MAIN PIPING KIT	1	- #1370	-	NOT
1	31N4-90530				.PORT RELIEF VALVE	1			
2	21E6-30540				.SWITCH-BREAKER	1			
*-11	31N4-91210				..S/ACT MAIN PIPING KIT	2			
3	31EM-91410				...JOINT-HOSE	2			
4	31N4-91230				...BRACKET-HOSE JOINT	2			
5	31N6-91230D				...SOLENOID VLV-BREAKER	1	- #1370	-	
5-1	XKBN-00192				....COIL-BREAKER SOL	1	- #1370	-	
6	31N6-91250				...BRACKET-SOL VLV	1			
7	P913-126035				...HOSE ASSY-ORFS 0X0	2			
8	P930-126010				...HOSE ASSY-ORFS 0X90	1	- #0035		
	P930-126012				...HOSE ASSY-ORFS 0X90	1	#0036 -	D	
9	P913-123023				...HOSE ASSY-ORFS 0X0	1			
10	P400-042038				...HOSE ASSY-COMPACT	1			
11	P420-042038				...HOSE ASSY-COMP 0X90	1			
12	P420-042016				...HOSE ASSY-COMP 0X90	1			
14	P220-110102				...PLUG-HEX	1			
15	P010-110002				...CONNECTOR	2			
16	X500-110004				...CONNECTOR-ORFS	3			
17	P020-110001				...ELBOW-90	2			
18	X520-110004				...ELBOW-90,ORFS	2			
19	P320-040404				...TEE-RUN TYPE	1			
20	31M5-56270				...ELBOW-90	2			
21	S631-011001				...O-RING	6			
22	S631-024001				...O-RING	5			

Item	Part_No	IS	Ord	T	Description	Qty	Serial_No	ITC	Remark
23	S621-018001				...O-RING,ORFS	6			
24	S109-080456				...BOLT-SOCKET	2			
25	S109-100256				...BOLT-SOCKET	8			
26	S017-120302				...BOLT-HEX	4			
27	S017-100252				...BOLT-HEX	2			
28	S411-120002				...WASHER-SPRING	4			
29	S411-100002				...WASHER-SPRING	2			
31	21N8-10160				...HARNESS-EXTENTION	1			

SINGLE ACTING MAIN PIPING KIT(#1371-)

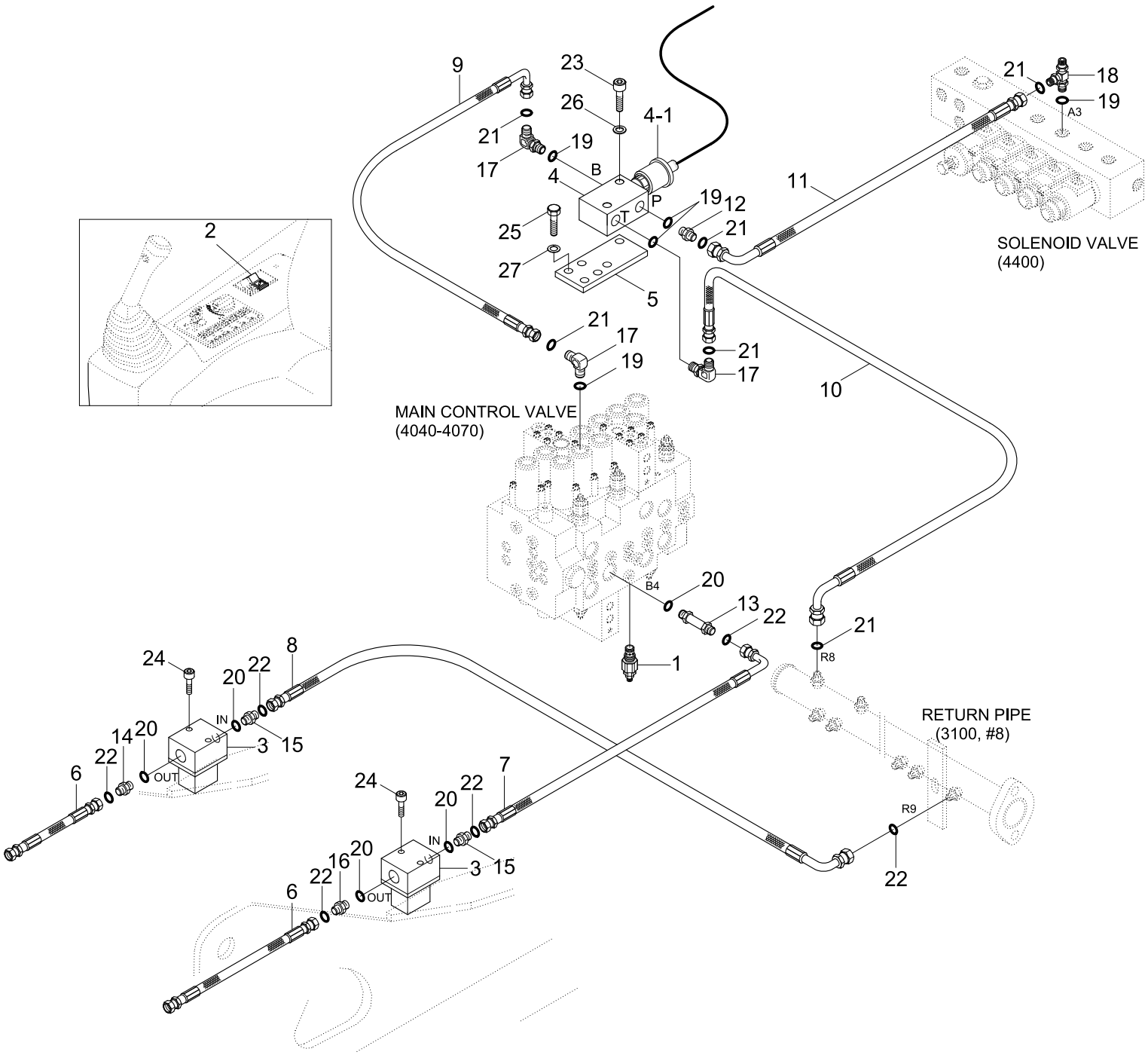

Item	Part_No	IS	Ord	T	Description	Qty	Serial_No	ITC	Remark
*	@				S/ACT MAIN PIPING KIT	1	#1371 -	-	NOT
1	31N4-90530				.PORT RELIEF VALVE	1			
2	21E6-30540				.SWITCH-BREAKER	1			
*-11	31N4-91211				..S/ACT MAIN PIPING KIT	2			
3	31N4-95280				...BLOCK-HOSE JOINT	2			
4	31N6-91230D				...SOLENOID VLV-BREAKER	1	#1371 -	-	
4-1	XKBN-00192				....COIL-BREAKER SOL	1	#1371 -	-	
5	31N6-91250				...BRACKET-SOL VLV	1			
6	P923-126023				...HOSE ASSY-ORFS 0X45	2			
7	P933-126015				...HOSE ASSY-ORFS	1			
8	P923-123026				...HOSE ASSY-ORFS	1			
9	P910-042044				...HOSE ASSY-ORFS 0X0	1			
10	P930-042038				...HOSE ASSY-ORFS 0X90	1			
11	P930-042016				...HOSE ASSY-ORFS 0X90	1			
12	X500-110001				...CONNECTOR-ORFS	1			
13	X511-112546				...CONNECTOR-ORFS	1			
14	X500-110004				...CONNECTOR-ORFS	1			
15	X511-112533				...CONN-LONG,ORFS	2			
16	X530-110004				...ELBOW-45,ORFS	1			
17	X500-110001				...CONNECTOR-ORFS	3			
18	X820-045151				...TEE-R/TYPE,ORFS	1			
19	S631-011004				...O-RING	5			
20	S631-024004				...O-RING	5			
21	S621-011001				...O-RING,ORFS	7			
22	S621-018001				...O-RING,ORFS	6			

Item	Part_No	IS	Ord	T	Description	Qty	Serial_No	ITC	Remark
23	S109-080456				...BOLT-SOCKET	2			
24	S109-120556				...BOLT-SOCKET	4			
25	S017-100256				...BOLT-HEX	2			
26	S411-080002				...WASHER-SPRING	2			
27	S411-100002				...WASHER-SPRING	2			

SINGLE ACTING MAIN PIPING KIT(#1602-)

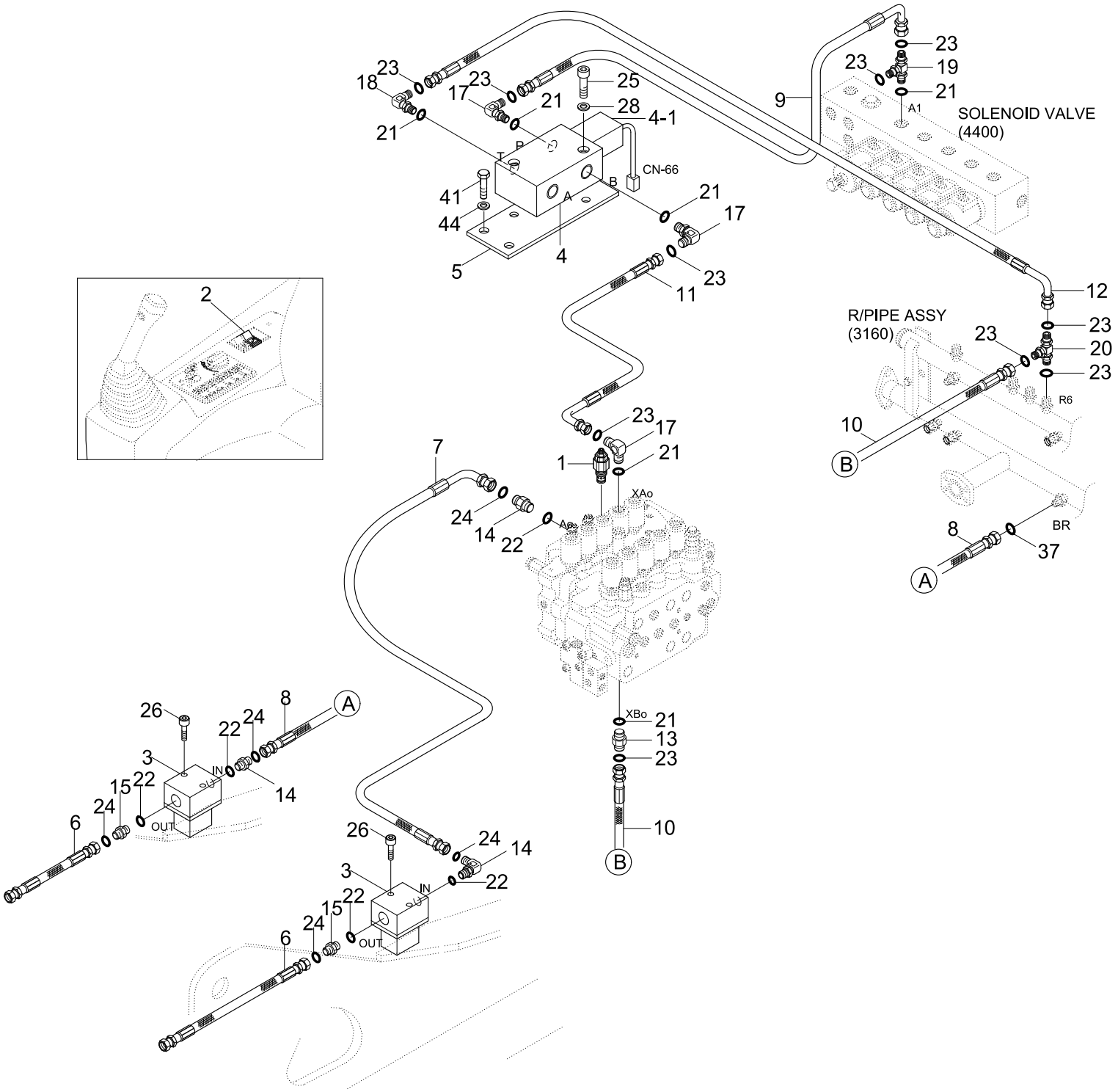

Item	Part_No	IS	Ord	T	Description	Qty	Serial_No	ITC	Remark
*	@				S/ACT MAIN PIPING KIT	1	#1602 -	-	NOT
1	31EL-91000				PORT RELIEF VALVE	1			
2	21E6-30540				SWITCH-BREAKER	1			
*-11	31N4-93100				S/ACT MAIN PIPING KIT	1			
3	31N4-95280				.BLOCK-HOSE JOINT	2			
4	31N6-91230D				.SOLENOID VLV-BREAKER	1	#1602 -	-	
4-1	XKBN-00192				..COIL-BREAKER SOL	1	#1602 -	-	
5	31N6-91250				.BRACKET-SOL VLV	1			
6	P923-126023				.HOSE ASSY-ORFS 0X45	2			
7	P933-126019				.HOSE ASSY-ORFS 0X90	1			
8	P923-123026				.HOSE ASSY-ORFS	1			
9	P910-042016				.HOSE ASSY-ORFS 0X0	1			
10	P910-042030				.HOSE ASSY-ORFS 0X0	1			
11	P910-042044				.HOSE ASSY-ORFS 0X0	1			
12	P930-042038				.HOSE ASSY-ORFS 0X90	1			
13	X500-110001				.CONNECTOR-ORFS	1			
14	X500-110004				.CONNECTOR-ORFS	2			
15	X511-112533				.CONN-LONG,ORFS	2			
16	X530-110004				.ELBOW-45,ORFS	1			
17	X520-110001				.ELBOW-90,ORFS	3			
18	31N4-95290				.CONNECTOR	1			
19	X820-045151				.TEE-R/TYPE,ORFS	1			
20	X840-515151				.TEE-R/TYPE,ORFS	1			
21	S631-011004				.O-RING	6			
22	S631-024004				.O-RING	5			

Item	Part_No	IS	Ord	T	Description	Qty	Serial_No	ITC	Remark
23	S621-011001				.O-RING,ORFS	10			
24	S621-018001				.O-RING,ORFS	6			
25	S109-080456				.BOLT-SOCKET	2			
26	S109-120556				.BOLT-SOCKET	4			
27	S017-100256				.BOLT-HEX	2			
28	S411-080006				.WASHER-SPRING	2			
29	S411-100006				.WASHER-SPRING	2			

ADJUST BOOM ATTACH PIPING KIT(#1016-)

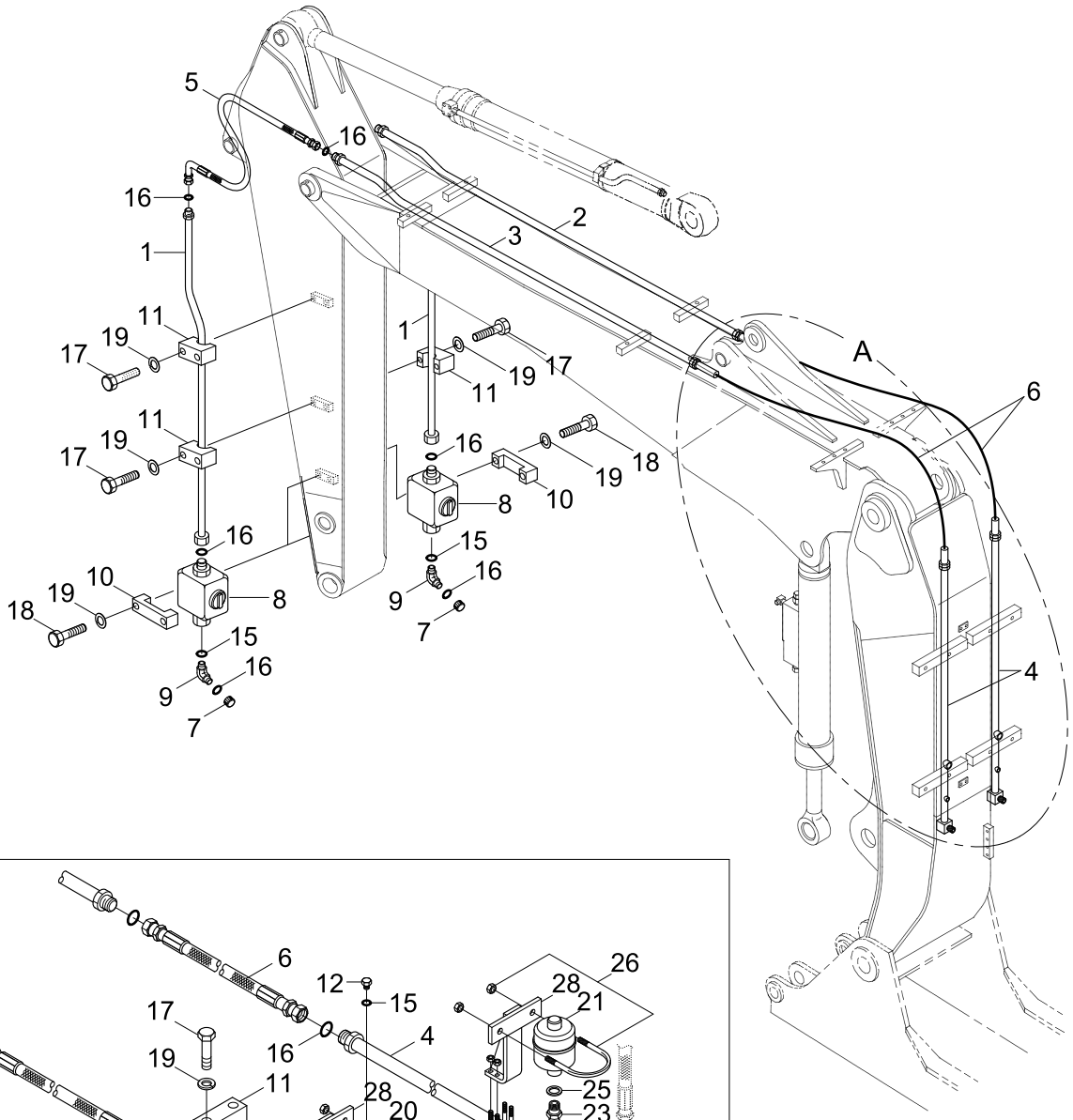

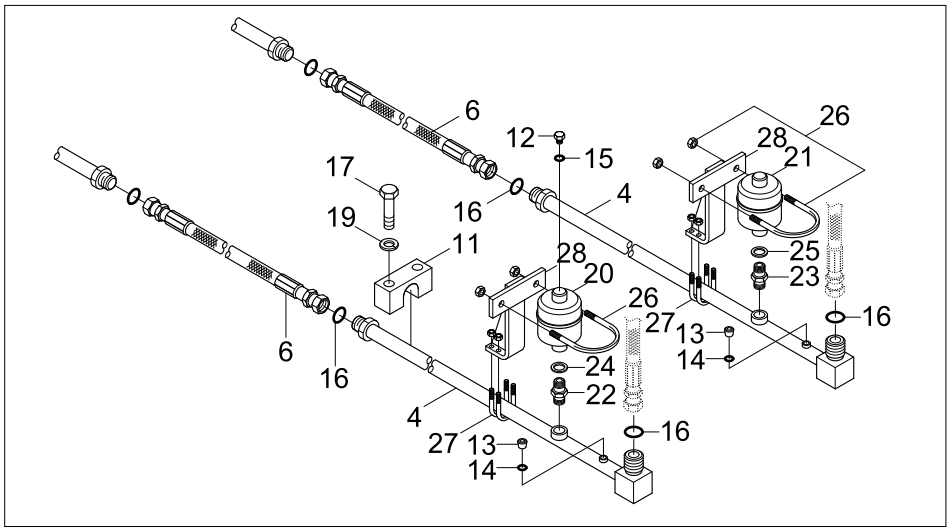

DETAIL A

Item	Part_No	IS	Ord	T	Description	Qty	Serial_No	ITC	Remark
*	@				..AD/BM PIPING KIT	1	#1016 -	-	NOT
*-12	31N4-91370				..ATTACH PIPING KIT	1	- #1370		ADJUST BM+2.5AM
	31N4-91371				..ATTACH PIPING KIT	1	#1371 -	D	ADJUST BM+2.5AM
	31N4-91380				..ATTACH PIPING KIT	1	- #1370		ADJUST BM+1.9AM
	31N4-91381				..ATTACH PIPING KIT	1	#1371 -	D	ADJUST BM+1.9AM
	31N4-91390				..ATTACH PIPING KIT	1	- #1370		ADJUST BM+2.1AM
	31N4-91391				..ATTACH PIPING KIT	1	#1371 -	D	ADJUST BM+2.1AM
1	31N4-92230				...PIPE ASSY	2	- #1370		ADJUST BM+2.1AM
	31N4-92231				...PIPE ASSY	2	#1371 -	D	ADJUST BM+2.1AM
	31N4-92220				...PIPE ASSY	2	- #1370		ADJUST BM+1.9AM
	31N4-92221				...PIPE ASSY	2	#1371 -	D	ADJUST BM+1.9AM
	31N4-92210				...PIPE ASSY	2	- #1370		ADJUST BM+2.5AM
	31N4-92211				...PIPE ASSY	2	#1371 -	D	ADJUST BM+2.5AM
2	31N4-92270				...PIPE ASSY	1			
3	31N4-92280				...PIPE ASSY	1			
4	31N4-92290				...PIPE ASSY	2			
5	P933-126028				...HOSE ASSY-ORFS 0X90	2			1.9AM,2.1AM
	P933-126034				...HOSE ASSY-ORFS 0X90	2			2.5AM
6	P910-126020				...HOSE ASSY-ORFS	2			
7	X710-100105				...CAP-ORFS	2			
8	31N4-97010				...VALVE-STOP	2			
9	X530-110004				...ELBOW-45,ORFS	2			
10	31EG-91350				...CLAMP-STOP VALVE	2			
11	31EG-91381				...CLAMP-PIPE	2	#1016 -	-	1.9AM, 2.1AM
					...CLAMP-PIPE	4	#1016 -	-	2.5AM

Item	Part_No	IS	Ord	T	Description	Qty	Serial_No	ITC	Remark
12	P220-110205				...PLUG-SOCKET	2			
13	31EK-11130				...COUPLING-SCREW	2			
14	S631-011004				...O-RING	2			
15	S631-024004				...O-RING	4	- #1370		
					...O-RING	6	#1371 -	A	
16	S621-018001				...O-RING,ORFS	12			
17	S017-120502				...BOLT-HEX	4	- #1370		1.9AM, 2.1AM
	S017-120506				...BOLT-HEX	4	#1371 -	D	1.9AM, 2.1AM
	S017-120502				...BOLT-HEX	8	- #1370		2.5AM
	S017-120506				...BOLT-HEX	8	#1371 -	D	2.5AM
18	S017-120702				...BOLT-HEX	4	- #1370		
	S017-120706				...BOLT-HEX	4	#1371 -	D	
19	S411-120002				...WASHER-SPRING	8	- #1370		1.9AM, 2.1AM
	S411-120006				...WASHER-SPRING	8	#1371 -	D	1.9AM, 2.1AM
	S411-120002				...WASHER-SPRING	12	- #1370		2.5AM
	S411-120006				...WASHER-SPRING	12	#1371 -	D	2.5AM
*-2	31E6-91701				..ACCUMULATOR KIT	1			
20	32E6-92040				...ACCUMULATOR	1			SUPPLY
21	32E6-92050				...ACCUMULATOR	1			RETURN
22	32E3-2021				...FITTING	1			
23	32E3-2020				...FITTING	1			
24	P392-220000				...WASHER-COPPER	1			
25	P392-180000				...WASHER-COPPER	1			
26	32E6-92060				...U-BOLT	1			
27	S071-032730				...U-BOLT	2			

Item	Part_No	IS	Ord	T	Description	Qty	Serial_No	ITC	Remark
28	32E6-92080				...BRACKET-ACCUM	2			

Item	Part_No	IS	Ord	T	Description	Qty	Serial_No	ITC	Remark
*	31N3-10010				MAIN PUMP	1	- #2671		
	31N3-10011				MAIN PUMP	1	#2672 -	B	
111	XJBN-00432				.SHAFT(F)-DRIVE	1			
113	XJBN-00431				.SHAFT(R)-DRIVE	1			
114	XJBN-00430				.COUPLING-SPLINE	1			
123	XJBN-00429				.BEARING-ROLLER	2			
124	XJBN-00428				.BEARING-NEEDLE	2			
127	XJBN-00427				.SPACER-BEARING	4			
N141	XJBN-00426				.BLOCK-CYLINDER	2			NOT
N151	XJBN-00425				.PISTON	18			NOT
N152	XJBN-00424				.SHOE	18			NOT
153	XJBN-00423				.PLATE-SET	2			
156	XJBN-00422				.BUSHING-SPHERICAL	2			
157	XJBN-00421				.SPRING-CYLINDER	18			
211	XJBN-00420				.PLATE-SHOE	2			
N212	XJBN-00419				.PLATE-SWASH	2			NOT
N214	XJBN-00418				.BUSHING-TILTING	2			NOT
251	XJBN-00417				.SUPPORT	2			
261	XJBN-00416				.COVER(F)-SEAL	1			
271	XJBN-00415				.CASING-PUMP	2			
312	XJBN-00414				.BLOCK-VALVE	1			
N313	XJBN-00413				.PLATE(R)-VALVE	1			NOT
N314	XJBN-00412				.PLATE(L)-VALVE	1			NOT
401	XJBN-00411				.SCREW	8			
406	XJBN-00410				.SCREW	4			

Item	Part_No	IS	Ord	T	Description	Qty	Serial_No	ITC	Remark
466	XJBN-00356				.PLUG	2			
467	XJBN-00409				.PLUG	4			
490	XJBN-00032				.PLUG	15			
N531	XJBN-00408				.PIN-TILTING	2			NOT
532	XJBN-00407				.PISTON-SERVO	2			
534	XJBN-00406				.STOPPER(L)	2			
535	XJBN-00405				.STOPPER(S)	2			
N548	XJBN-00404				.PIN-FEED BACK	2			NOT
702	XJBN-00232				.O-RING	2	- #1682		
	XJBN-00817				.O-RING	2	#1683 -	B	
710	XJBN-00387				.O-RING	1			
717	XJBN-00401				.O-RING	2			
719	XJBN-00400				.O-RING	2			
724	XJBN-00044				.O-RING	18			
725	XJBN-00045				.O-RING	2			
728	XJBN-00097				.O-RING	4			
732	XJBN-00283				.O-RING	2	- #1682		
	XJBN-00820				.O-RING	2	#1683 -	B	
774	XJBN-00399				.SEAL-OIL	1			
789	XJBN-00398				.RING-BACK UP	2			
792	XJBN-00397				.RING-BACK UP	2			
808	XJBN-00396				.NUT-HEX	4			
824	XJBN-00395				.RING-SNAP	2			
885	XJBN-00394				.PIN-VALVE PLATE	2			
886	XJBN-00365				.PIN-SPRING	4			

Item	Part_No	IS	Ord	T	Description	Qty	Serial_No	ITC	Remark
901	XJBN-00393				.BOLT-EYE	2			
953	XJBN-00105				.SCREW-SET	2			
954	XJBN-00392				.SCREW-SET	2			
981	XJBN-00391				.NAME PLATE	1	- #1683		
	XJBN-00156				.NAME PLATE	1	#1683 -	D	
983	XJBN-00341				.PIN	2			
011	XJBN-00437				PISTON SUB ASSY	18			
013	XJBN-00436				CYLINDER ASSY-RH	1			
014	XJBN-00435				CYLINDER ASSY-LH	1			
030	XJBN-00434				SWASH PLATE ASSY	2			
530	XJBN-00433				TILTING PIN ASSY	2			SEE ILLUST
N	@				NOT INDIVIDUALLY SUPPLIED	AR			NOT

MAIN PUMP

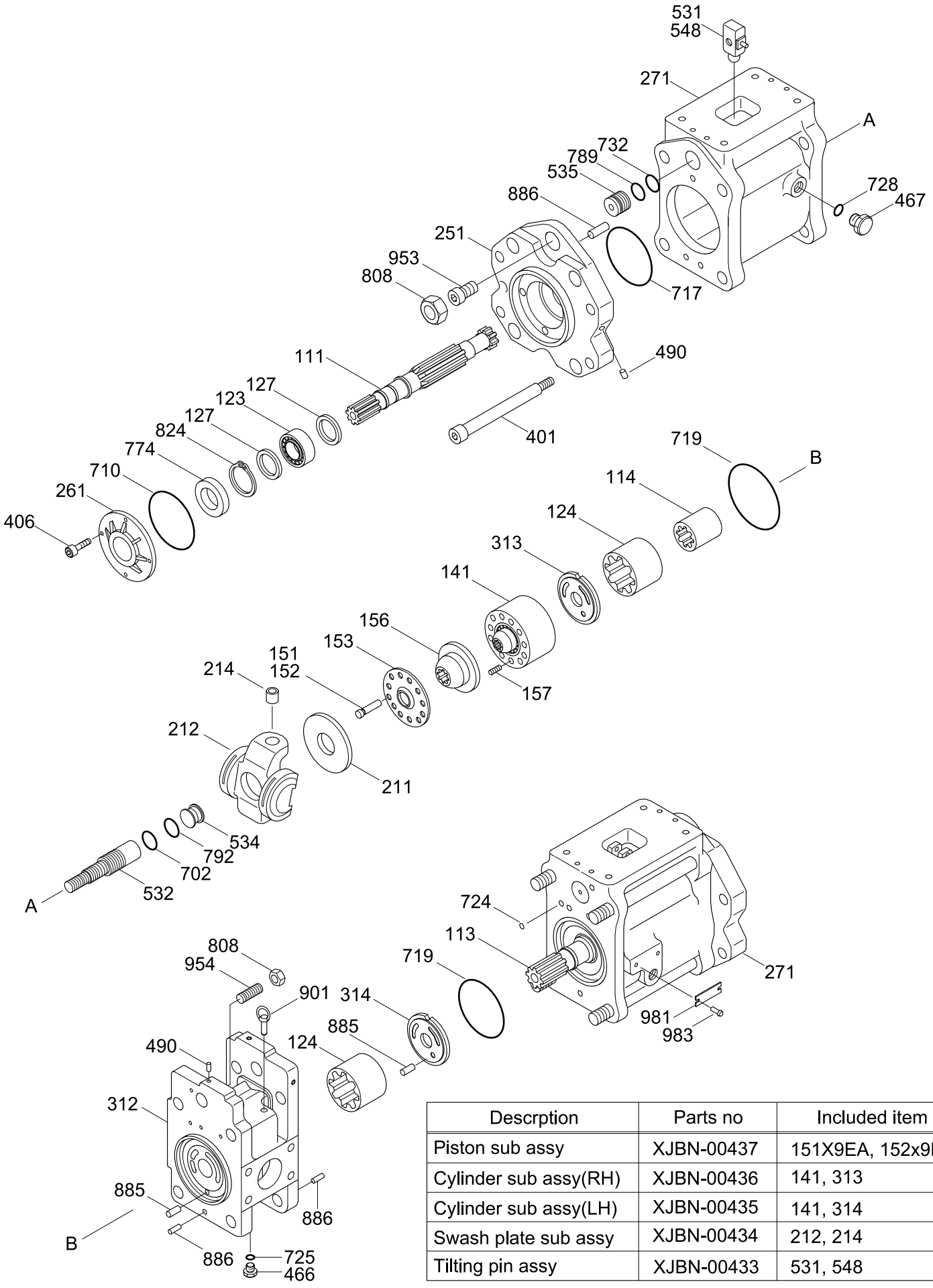

Descrption	Parts no	Included item
Piston sub assy	XJBN-00437	151X9EA, 152x9EA
Cylinder sub assy(RH)	XJBN-00436	141, 313
Cylinder sub assy(LH)	XJBN-00435	141, 314
Swash plate sub assy	XJBN-00434	212, 214
Tilting pin assy	XJBN-00433	531, 548

S/ACTING MAIN PIPING KIT(ADJUST BOOM, #1371-)

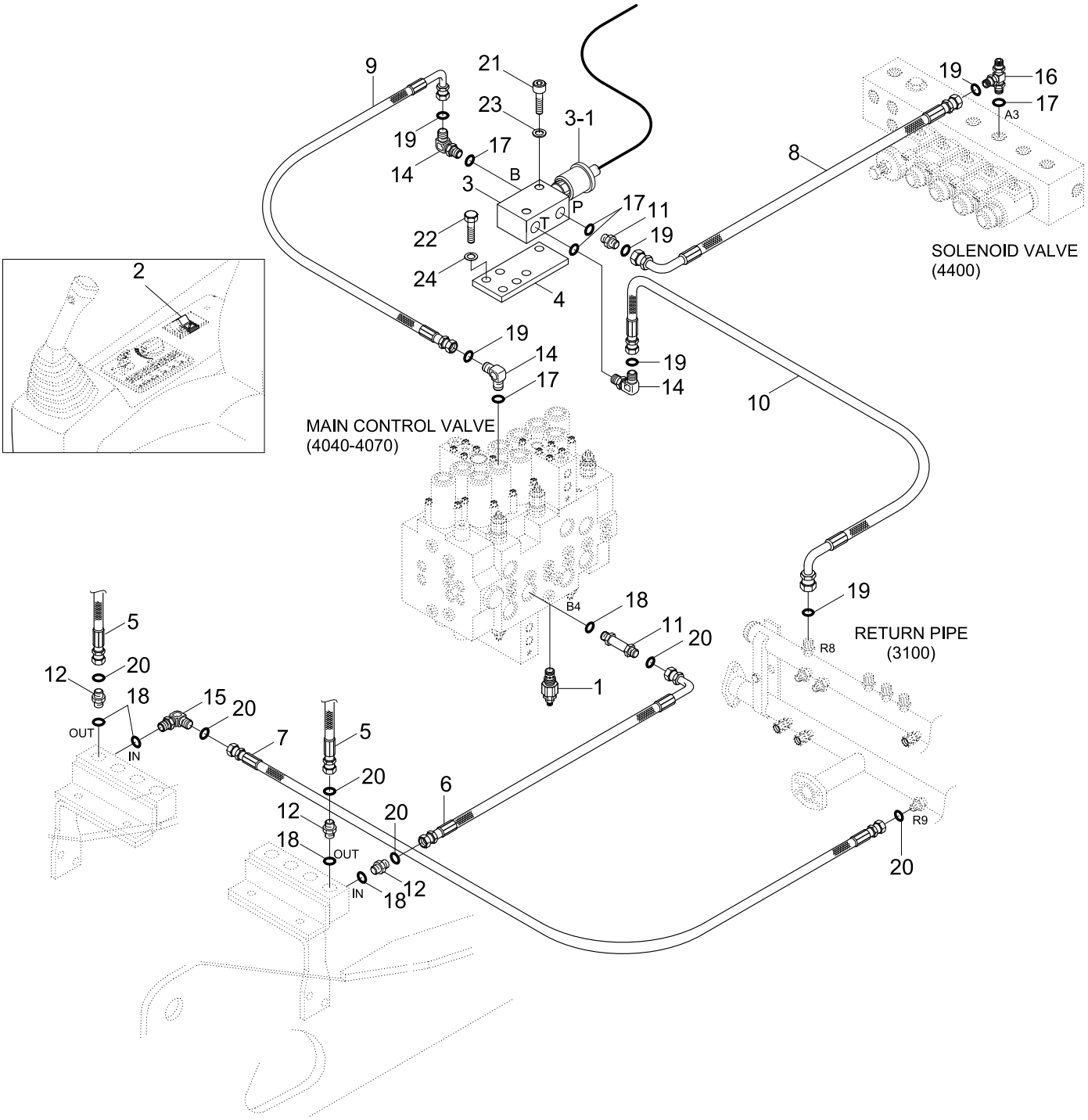

Item	Part_No	IS	Ord	T	Description	Qty	Serial_No	ITC	Remark
*	@				S/ACT MAIN PIPING KIT	1	#1371 -	-	NOT
1	31N4-90530				.PORT RELIEF VALVE	1			
2	21E6-30540				.SWITCH-BREAKER	1			
*	31N4-91401				..S/ACT MAIN PIPING KIT	2			
3	31N6-91230D				...SOLENOID VLV-BREAKER	1	#1371 -	-	
3-1	XKBN-00192				....COIL-BREAKER SOL	1	#1371 -	-	
4	31N6-91250				...BRACKET-SOL VLV	1			
5	P913-126035				...HOSE ASSY-ORFS 0X0	2			
6	P933-126015				...HOSE ASSY-ORFS	1			
7	P913-123023				...HOSE ASSY-ORFS 0X0	1			
8	P930-042018				...HOSE ASSY-ORFS 0X90	1			
9	P910-042044				...HOSE ASSY-ORFS 0X0	1			
10	P930-042044				...HOSE ASSY-ORFS 0X90	1			
11	X500-110001				...CONNECTOR-ORFS	1			
12	X500-110004				...CONNECTOR-ORFS	3			
13	X511-112546				...CONNECTOR-ORFS	1			
14	X520-110001				...ELBOW-90,ORFS	3			
15	X520-110004				...ELBOW-90,ORFS	1			
16	X820-045151				...TEE-R/TYPE,ORFS	1			
17	S631-011004				...O-RING	5			
18	S631-024004				...O-RING	5			
19	S621-011001				...O-RING,ORFS	7			
20	S621-018001				...O-RING,ORFS	6			
21	S109-080456				...BOLT-SOCKET	2			
22	S017-100256				...BOLT-HEX	2			

Item	Part_No	IS	Ord	T	Description	Qty	Serial_No	ITC	Remark
23	S411-080002				...WASHER-SPRING	2			
24	S411-100002				...WASHER-SPRING	2			

D/ACTING MAIN PIPING KIT(ADJUST BOOM, #1371-)

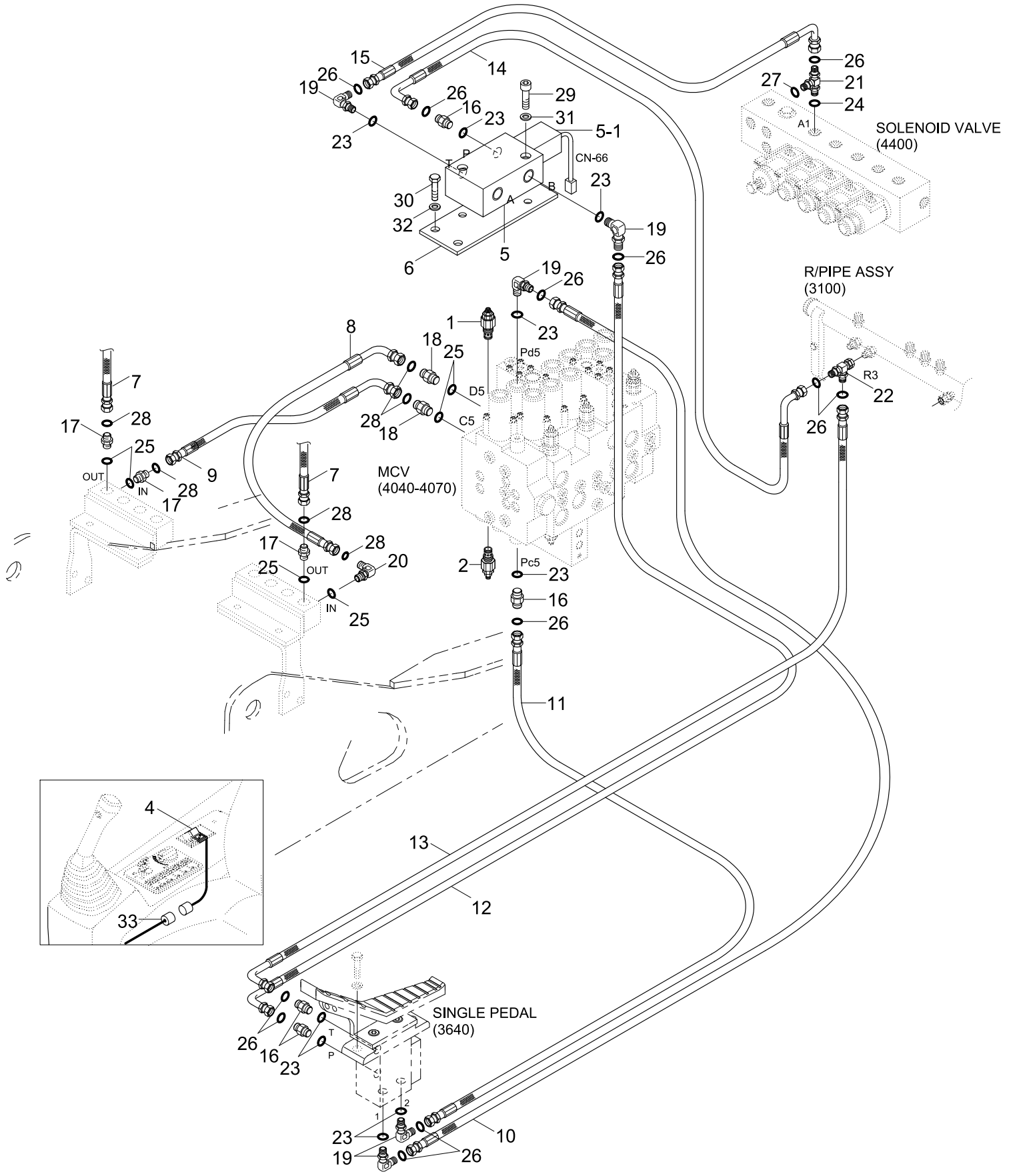

Item	Part_No	IS	Ord	T	Description	Qty	Serial_No	ITC	Remark
*	@				D/ACT MAIN PIPING KIT	1	#1371 -	-	NOT
1	31N4-90560				.PORT RELIEF VALVE	1			
2	31N4-90570				.PORT RELIEF VALVE	1			
3	34E7-04720				.PEDAL-SINGLE	1			
4	21E6-30540				.SWITCH-BREAKER	1			
*	31N4-91441				..D/ACT MAIN PIPING KIT	1			
5	31N6-91230D				...SOLENOID VLV-BREAKER	1	#1371 -	-	
5-1	XKBN-00192				....COIL-BREAKER SOL	1	#1371 -	-	
6	31N6-91250				...BRACKET-SOL VLV	1			
7	P913-126035				...HOSE ASSY-ORFS 0X0	2			
8	P933-126015				...HOSE ASSY-ORFS	1			
9	31N4-96010				...HOSE ASSY-ORFS 0X90	1			
10	P910-042068				...HOSE ASSY-ORFS 0X0	1			
11	P910-042060				...HOSE ASSY-ORFS 0X0	1			
12	P930-042072				...HOSE ASSY-ORFS 0X90	1			
13	P930-042060				...HOSE ASSY-ORFS 0X90	1			
14	P930-042044				...HOSE ASSY-ORFS 0X90	1			
15	P930-042018				...HOSE ASSY-ORFS 0X90	1			
16	X500-110001				...CONNECTOR-ORFS	4			
17	X500-110004				...CONNECTOR-ORFS	3			
18	X511-112546				...CONNECTOR-ORFS	2			
19	X520-110001				...ELBOW-90,ORFS	5			
20	X520-110004				...ELBOW-90,ORFS	1			
21	X820-045251				...CONNECTOR-TEE	1			
22	X840-515151				...TEE-R/TYPE,ORFS	1			

Item	Part_No	IS	Ord	T	Description	Qty	Serial_No	ITC	Remark
23	S631-011004				...O-RING	9			
24	S631-018004				...O-RING	1			
25	S631-024004				...O-RING	6			
26	S621-011001				...O-RING,ORFS	9			
27	S621-012001				...O-RING,ORFS	1			
28	S621-018001				...O-RING,ORFS	6			
29	S109-080456				...BOLT-SOCKET	2			
30	S017-100256				...BOLT-HEX	2			
31	S411-080002				...WASHER-SPRING	2			
32	S411-100002				...WASHER-SPRING	2			
33	21NB-00200				...HARNESS-EXT	1			

MAIN CONTROL VALVE(ALP165, 1/4)

Serial no	MCV	Machine option	Pages
-#1601	ALP165	Std, Dozer, Adjust boom	4040 - 4070
#1602-	ALP165	Dozer, Adjust boom	4040 - 4070
	UHX22-26	Standard	4080 - 4090
#2680-	SCV22H-140	Opt, 2-block	4095 - 4098

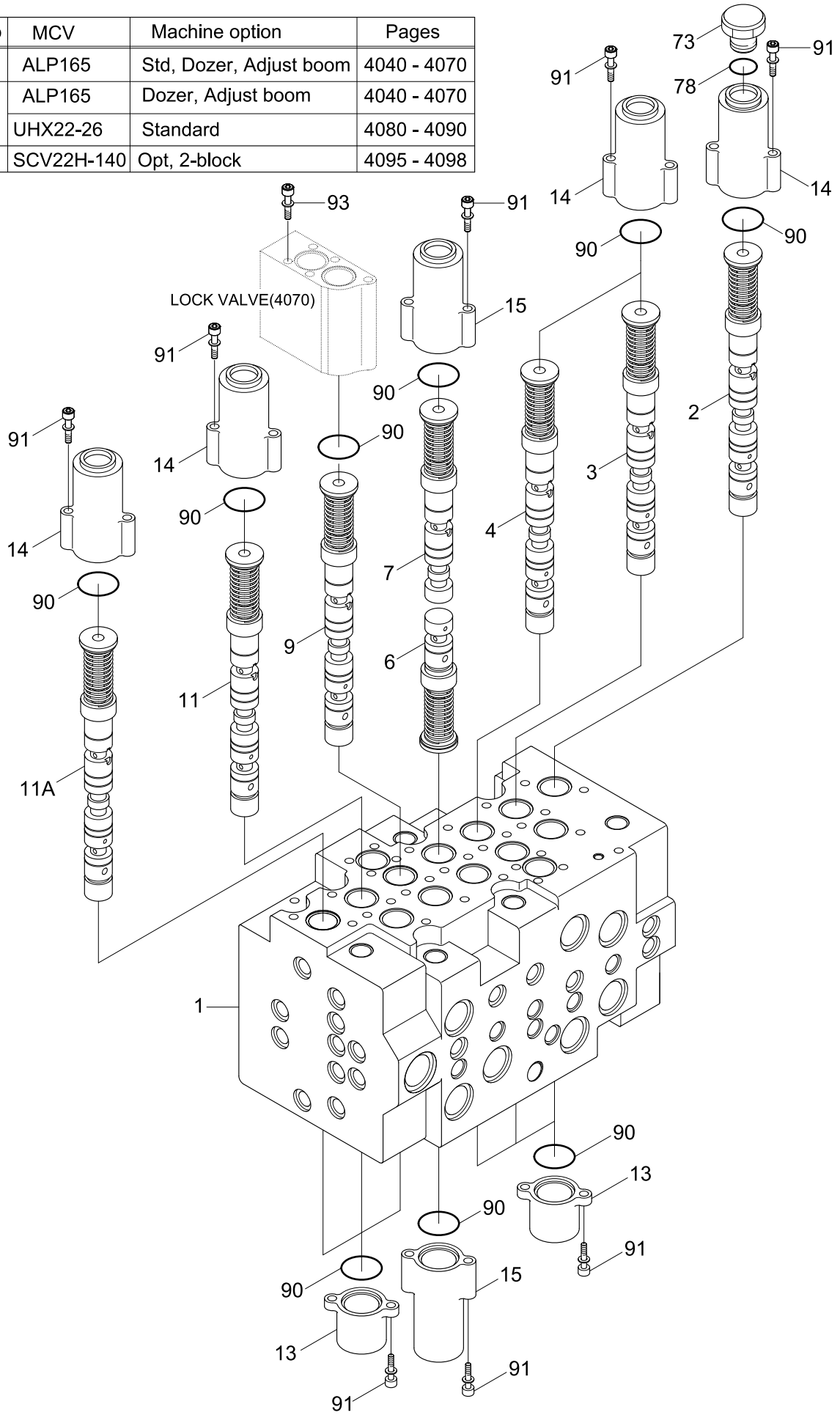

MAIN PUMP

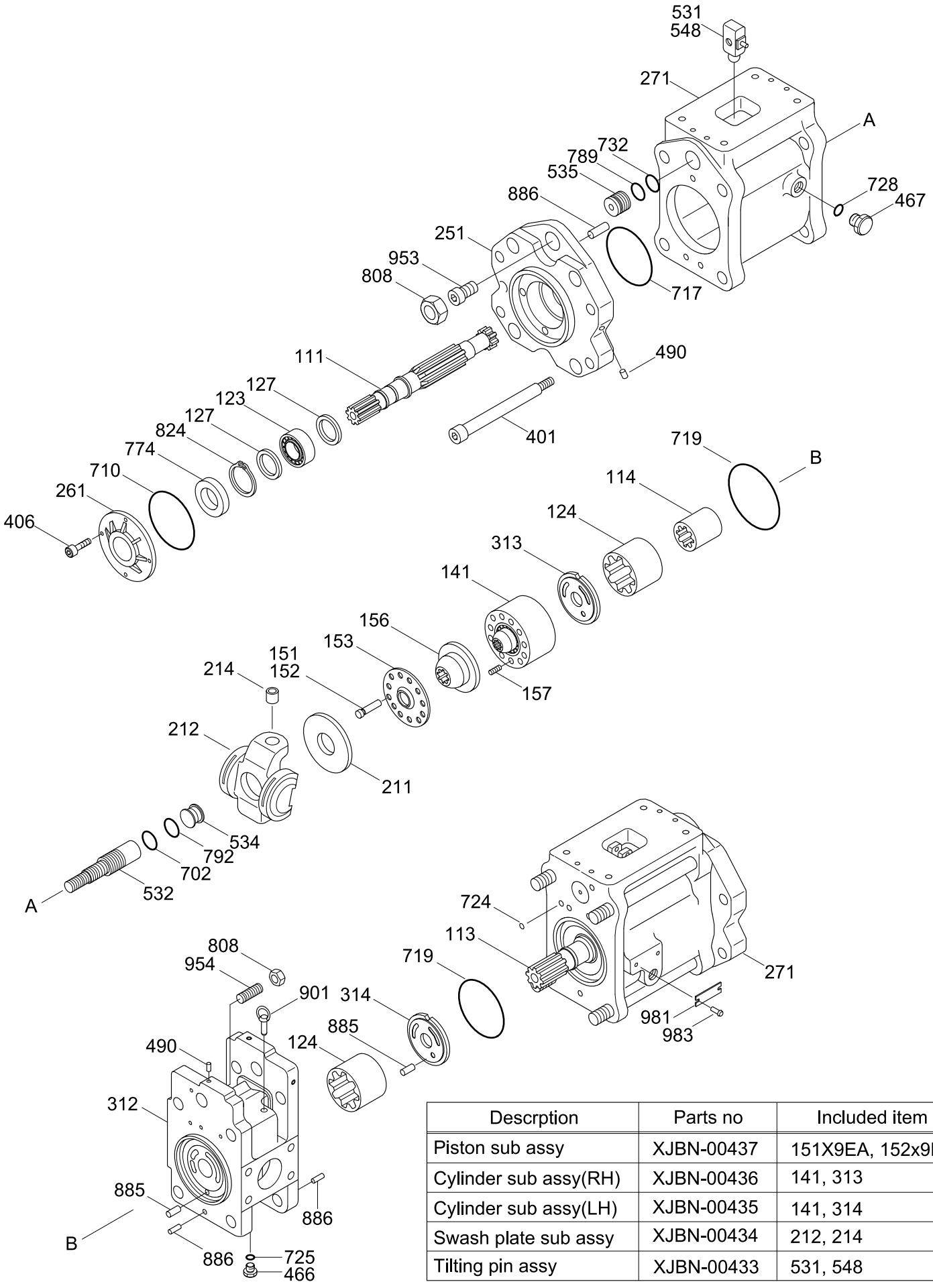

Descrption	Parts no	Included item
Piston sub assy	XJBN-00437	151X9EA, 152x9EA
Cylinder sub assy(RH)	XJBN-00436	141, 313
Cylinder sub assy(LH)	XJBN-00435	141, 314
Swash plate sub assy	XJBN-00434	212, 214
Tilting pin assy	XJBN-00433	531, 548

Item	Part_No	IS	Ord	T	Description	Qty	Serial_No	ITC	Remark
*	31N3-10010				MAIN PUMP	1	- #2671		
	31N3-10011				MAIN PUMP	1	#2672 -	B	
111	XJBN-00432				.SHAFT(F)-DRIVE	1			
113	XJBN-00431				.SHAFT(R)-DRIVE	1			
114	XJBN-00430				.COUPLING-SPLINE	1			
123	XJBN-00429				.BEARING-ROLLER	2			
124	XJBN-00428				.BEARING-NEEDLE	2			
127	XJBN-00427				.SPACER-BEARING	4			
N141	XJBN-00426				.BLOCK-CYLINDER	2			NOT
N151	XJBN-00425				.PISTON	18			NOT
N152	XJBN-00424				.SHOE	18			NOT
153	XJBN-00423				.PLATE-SET	2			
156	XJBN-00422				.BUSHING-SPHERICAL	2			
157	XJBN-00421				.SPRING-CYLINDER	18			
211	XJBN-00420				.PLATE-SHOE	2			
N212	XJBN-00419				.PLATE-SWASH	2			NOT
N214	XJBN-00418				.BUSHING-TILTING	2			NOT
251	XJBN-00417				.SUPPORT	2			
261	XJBN-00416				.COVER(F)-SEAL	1			
271	XJBN-00415				.CASING-PUMP	2			
312	XJBN-00414				.BLOCK-VALVE	1			
N313	XJBN-00413				.PLATE(R)-VALVE	1			NOT
N314	XJBN-00412				.PLATE(L)-VALVE	1			NOT
401	XJBN-00411				.SCREW	8			
406	XJBN-00410				.SCREW	4			

Item	Part_No	IS	Ord	T	Description	Qty	Serial_No	ITC	Remark
466	XJBN-00356				.PLUG	2			
467	XJBN-00409				.PLUG	4			
490	XJBN-00032				.PLUG	15			
N531	XJBN-00408				.PIN-TILTING	2			NOT
532	XJBN-00407				.PISTON-SERVO	2			
534	XJBN-00406				.STOPPER(L)	2			
535	XJBN-00405				.STOPPER(S)	2			
N548	XJBN-00404				.PIN-FEED BACK	2			NOT
702	XJBN-00232				.O-RING	2	- #1682		
	XJBN-00817				.O-RING	2	#1683 -	B	
710	XJBN-00387				.O-RING	1			
717	XJBN-00401				.O-RING	2			
719	XJBN-00400				.O-RING	2			
724	XJBN-00044				.O-RING	18			
725	XJBN-00045				.O-RING	2			
728	XJBN-00097				.O-RING	4			
732	XJBN-00283				.O-RING	2	- #1682		
	XJBN-00820				.O-RING	2	#1683 -	B	
774	XJBN-00399				.SEAL-OIL	1			
789	XJBN-00398				.RING-BACK UP	2			
792	XJBN-00397				.RING-BACK UP	2			
808	XJBN-00396				.NUT-HEX	4			
824	XJBN-00395				.RING-SNAP	2			
885	XJBN-00394				.PIN-VALVE PLATE	2			
886	XJBN-00365				.PIN-SPRING	4			

Item	Part_No	IS	Ord	T	Description	Qty	Serial_No	ITC	Remark
901	XJBN-00393				.BOLT-EYE	2			
953	XJBN-00105				.SCREW-SET	2			
954	XJBN-00392				.SCREW-SET	2			
981	XJBN-00391				.NAME PLATE	1	- #1683		
	XJBN-00156				.NAME PLATE	1	#1683 -	D	
983	XJBN-00341				.PIN	2			
011	XJBN-00437				PISTON SUB ASSY	18			
013	XJBN-00436				CYLINDER ASSY-RH	1			
014	XJBN-00435				CYLINDER ASSY-LH	1			
030	XJBN-00434				SWASH PLATE ASSY	2			
530	XJBN-00433				TILTING PIN ASSY	2			SEE ILLUST
N	@				NOT INDIVIDUALLY SUPPLIED	AR			NOT

REGULATOR

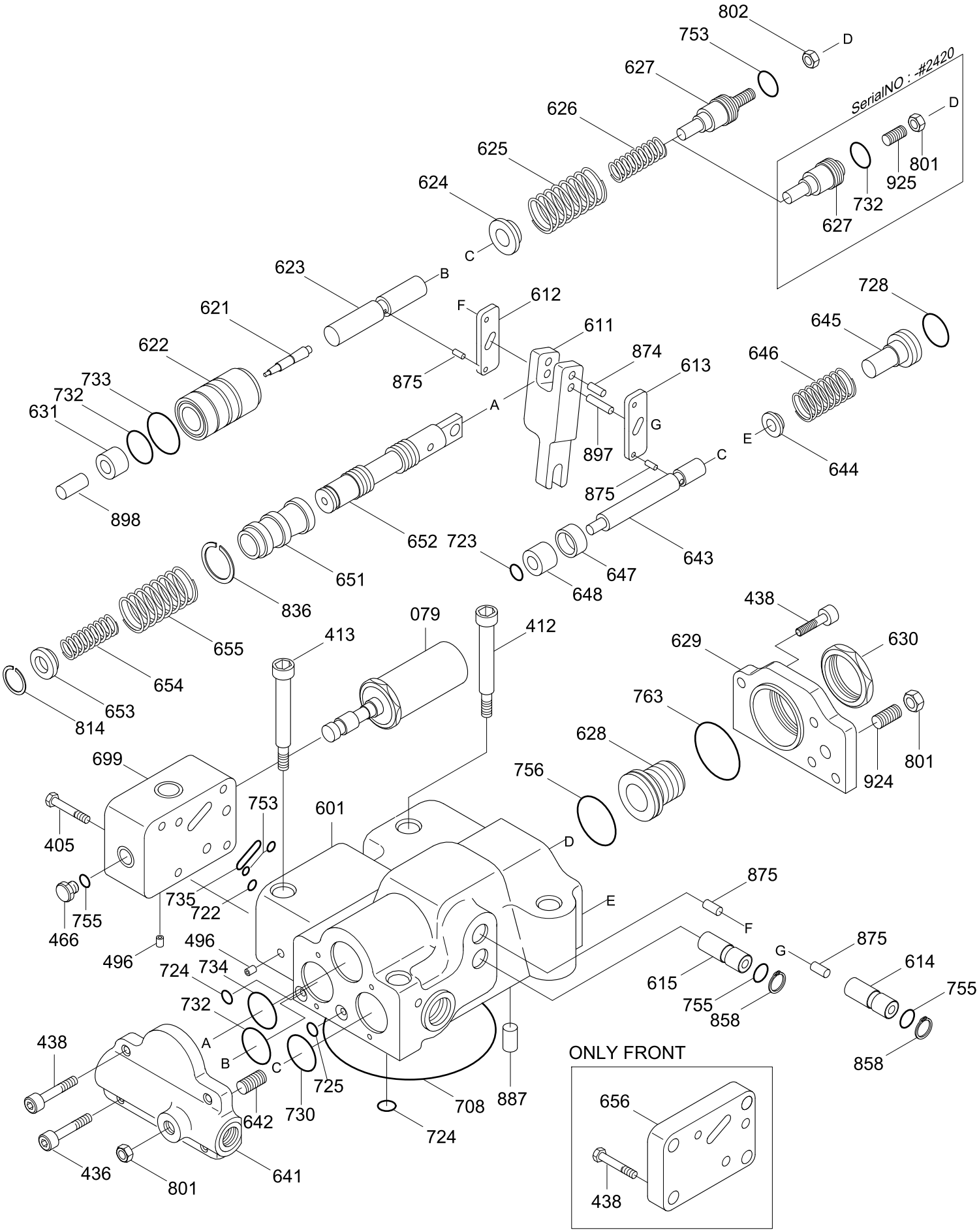
802
753
627
626
625
624
623
621
622
733
732
631
898
875
612
611
874
613
897
728
645
646
644
652
723
647
643
648
651
836
655
654
653
814
079
412
413
438
629
630
763
628
801
924
699
405
753
601
735
722
466
755
496
724
734
732
A
B
C
725
730
642
641
436
801
708
887
724
756
D
E
F
G
615
614
858
ONLY FRONT
656
438
SerialNO : -#2420
925

GEAR PUMP(-#1682)

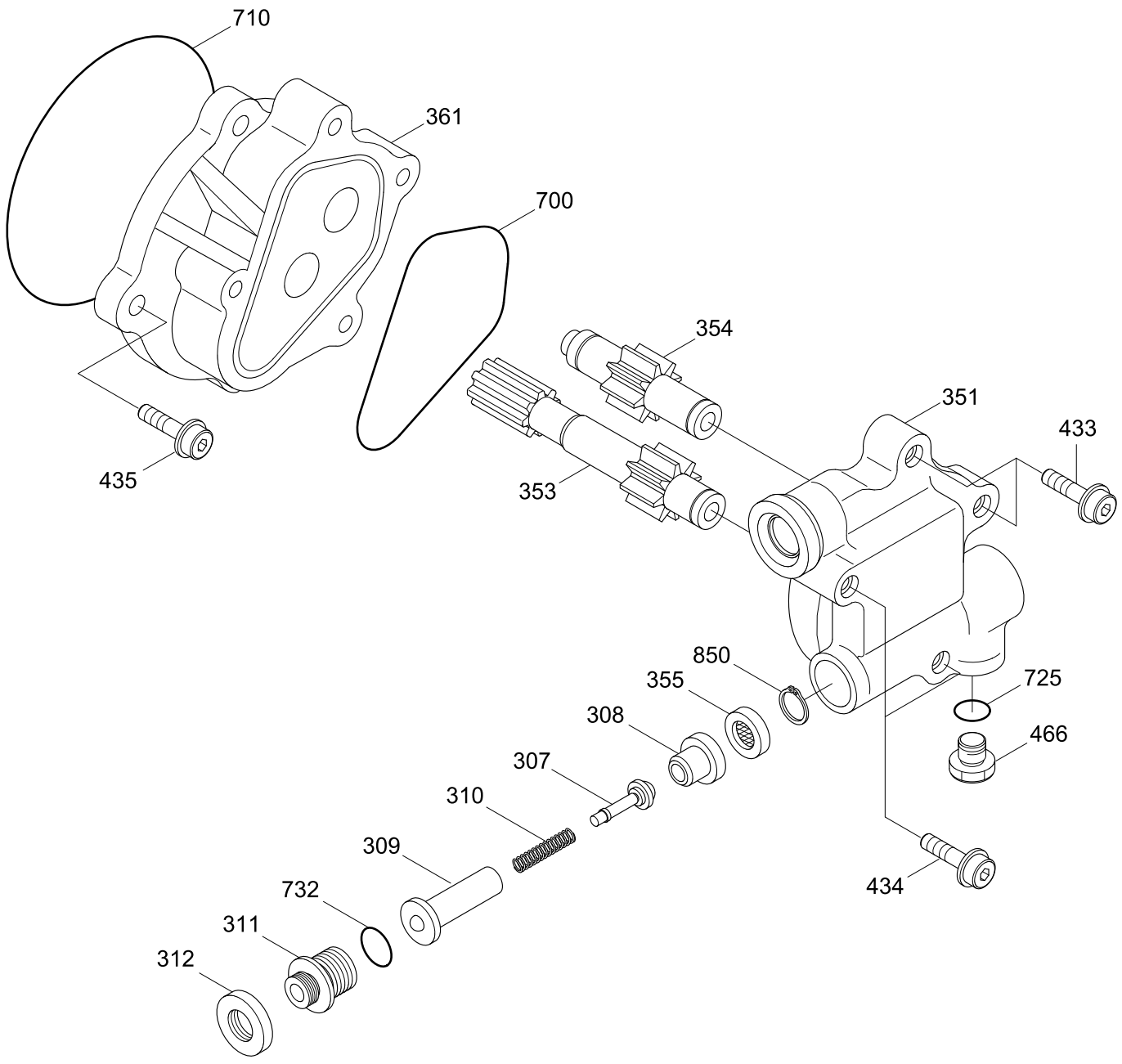

GEAR PUMP(#1683-)

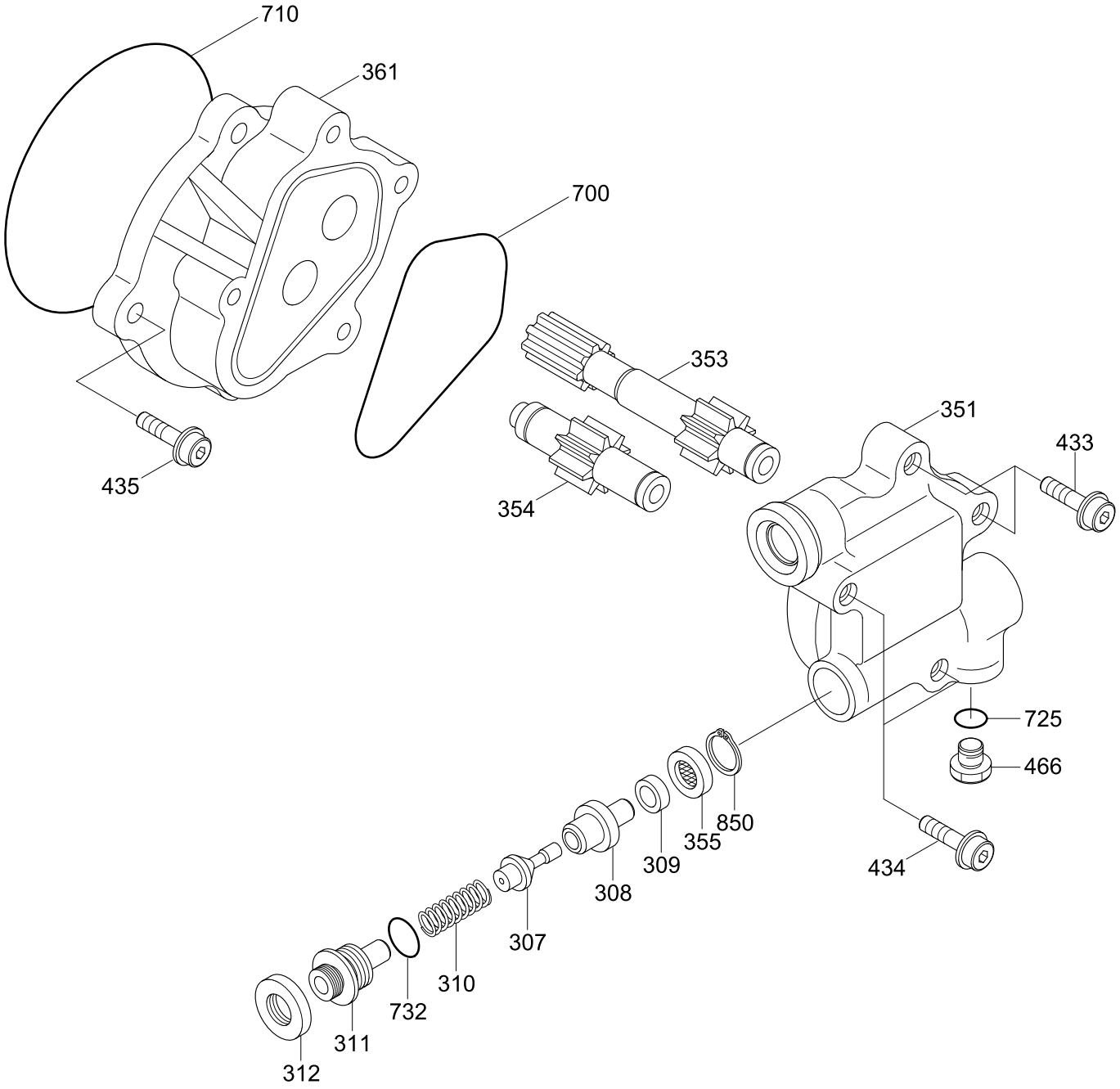

Item	Part_No	IS	Ord	T	Description	Qty	Serial_No	ITC	Remark
*-3	XJBN-00922				.GEAR PUMP	1	#1683 -	-	
307	XJBN-00521				..POPPET	1			
308	XJBN-00522				..SEAT	1			
309	XJBN-00523				..RING	1			
310	XJBN-00524				..SPRING	1			
311	XJBN-00525				..SCREW-ADJUSTING	1			
312	XJBN-00334				..NUT-LOCK	1			
351	XJBN-00526				..CASE-GEAR	1			
353	XJBN-00332				..GEAR-DRIVE	1			
354	XJBN-00331				..GEAR-DRIVEN	1			
355	XJBN-00330				..RETURN-FILTER	1			
361	XJBN-00389				..CASE-FRONT	1			
433	XJBN-00328				..SOCKET-FLANGE	2			
434	XJBN-00327				..SOCKET-FLANGE	2			
435	XJBN-00388				..SOCKET-FLANGE	2			
466	XJBN-00356				..PLUG	1			
700	XJBN-00325				..RING	1			
709	XJBN-00402				..O-RING	1			
725	XJBN-00362				..O-RING	1			
732	XJBN-00283				..O-RING	1			
850	XJBN-00386				..RING-SNAP	1			

Item	Part_No	IS	Ord	T	Description	Qty	Serial_No	ITC	Remark
*	@				MAIN CONTROL VALVE	1	#2680 -	-	NOT
N2	XKBF-00873				.HOUSING-P2	1			NOT
3	XKBF-00952				.SPOOL ASSY-TS	1			
5	XKBF-00953				.SPOOL ASSY-TRAVEL 1	1			
6	XKBF-00877				.SPOOL ASSY	1			
8	XKBF-00955				.SPOOL ASSY	1			
9	XKBF-00880				.SPOOL ASSY	1			
11	XKBF-00882				.SPOOL ASSY	1			
13	XKBF-00884				.SPOOL ASSY	1			
15	XKBF-00886				.COVER A-PILOT	5			
16	XKBF-00887				.COVER B1-PILOT	5			
17	XKBF-00888				.COVER B2-PILOT	2			
21	XKBF-00934				.PLUG	1			
K28	XKBF-00898				.LOCK VALVE KIT-A	1			
31	XKBF-00901				..BLOCK-HOLDING	1			
40	XKBF-00910				..PISTON 1	1			
41	XKBF-00911				..GUIDE-PISTON	1			
42	XKBF-00912				..SPRING 1	1			
43	XKBF-00913				..PISTON 2	1			
44	XKBF-00914				..SLEEVE	1			
45	XKBF-00915				..SPOOL	1			
46	XKBF-00916				..SPRING 2	1			
47	XKBF-00793				..STOPPER	1			
69	XKBF-00728				..PLUG	1			
71	XKBF-00845				..PLUG	1			

Item	Part_No	IS	Ord	T	Description	Qty	Serial_No	ITC	Remark
73	XKBF-00934				..PLUG	1			
76	XKBF-00937				..O-RING	1			
77	XKBF-00958				..O-RING	1			
78	XKBF-00615				..O-RING	1			
79	XKBF-00939				..O-RING	1			
82	XKBF-00618				..O-RING	1			
87	XKBF-00962				..RING-BACK UP	1			
89	XKBF-00964				..RING-BACK UP	1			
K29	XKBF-00899				.LOCK VALVE KIT-B	1			
N33	XKBF-00903				..C-RING	1			NOT
N34	XKBF-00904				..POPPET-LOCK VALVE	1			NOT
35	XKBF-00905				..RESTRICTOR-LOCK VLV	1			
N36	XKBF-00906				..SPRING	1			NOT
37	XKBF-00907				..GUIDE-POPPET	1			
38	XKBF-00908				..POPPET-PILOT	1			
39	XKBF-00909				..SEAT-POPPET	1			
77	XKBF-00958				..O-RING	1			
84	XKBF-00943				..O-RING	1			
87	XKBF-00962				..RING-BACK UP	2			
30	XKBF-00900				.BOLT-SOCKET HEAD	5			
60	3902801020				.PLUG	1			
72	3902800080				.PLUG	3			
73	3902801160				.PLUG	2			
76	XKBF-00937				.O-RING	1			
77	XKBF-00958				.O-RING	1			

Item	Part_No	IS	Ord	T	Description	Qty	Serial_No	ITC	Remark
79	XKBF-00939				.O-RING	1			
80	40110040014				.O-RING	3			
81	40110040015				.O-RING	2			
86	40050110003				.RING-BACK UP	1			
90	XKBF-00949				.O-RING	14			
91	XKBF-00950				.BOLT-SOCKET HEAD	22			
N	@				NOT INDIVIDUALLY SUPPLIED	AR			NOT

MAIN CONTROL VALVE(UHX22-26, 1/2)

Serial no	MCV	Machine option	Pages
-#1601	ALP165	Std, Dozer, Adjust boom	4040 - 4070
#1602-	ALP165	Dozer, Adjust boom	4040 - 4070
	UHX22-26	Standard	4080 - 4090
#2680-	SCV22H-140	Opt, 2-block	4095 - 4098

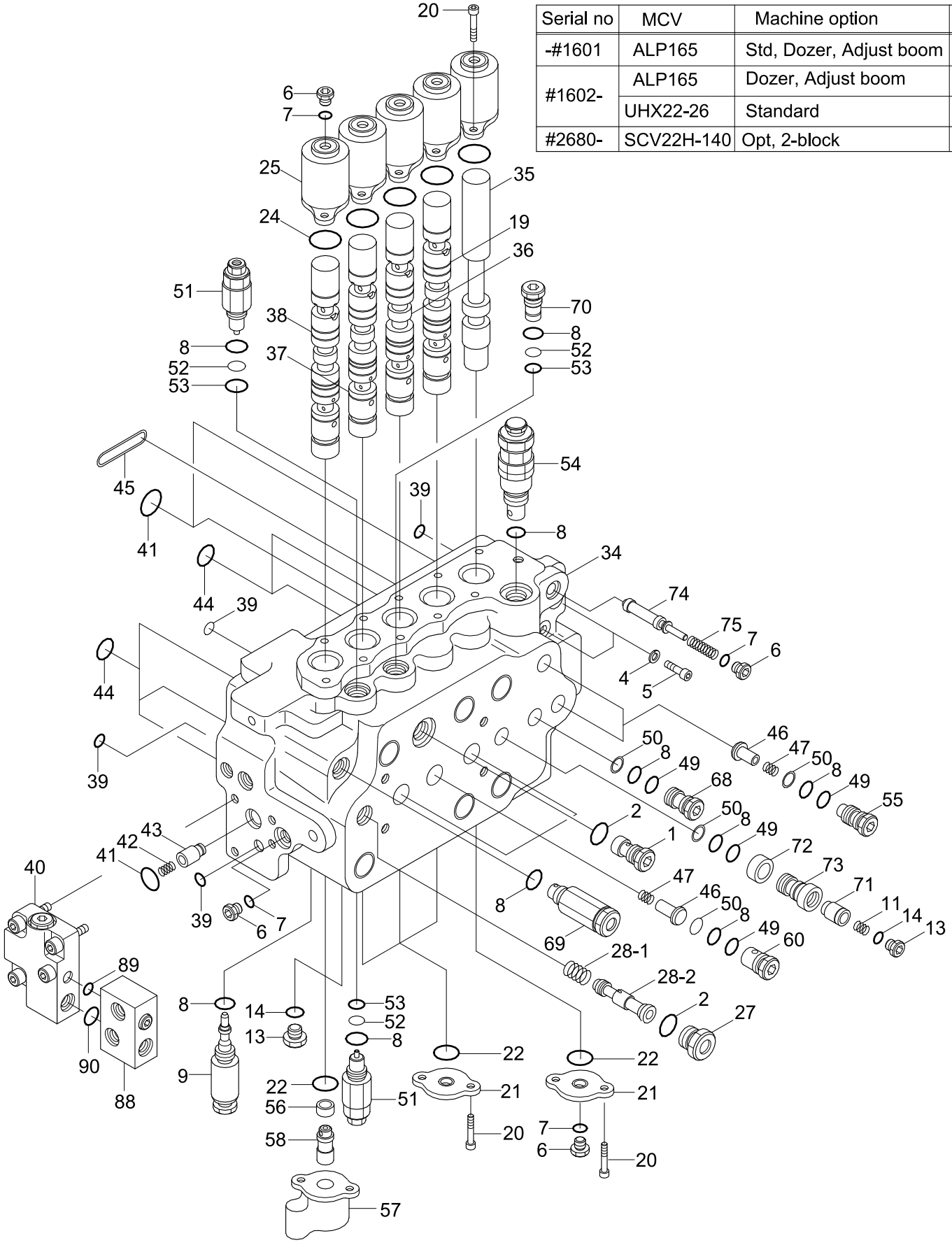

MAIN CONTROL VALVE(UHX22-26, 2/2)

Serial no	MCV	Machine option	Pages
-#1601	ALP165	Std, Dozer, Adjust boom	4040 - 4070
#1602-	ALP165	Dozer, Adjust boom	4040 - 4070
	UHX22-26	Standard	4080 - 4090
#2680-	SCV22H-140	Opt, 2-block	4095 - 4098

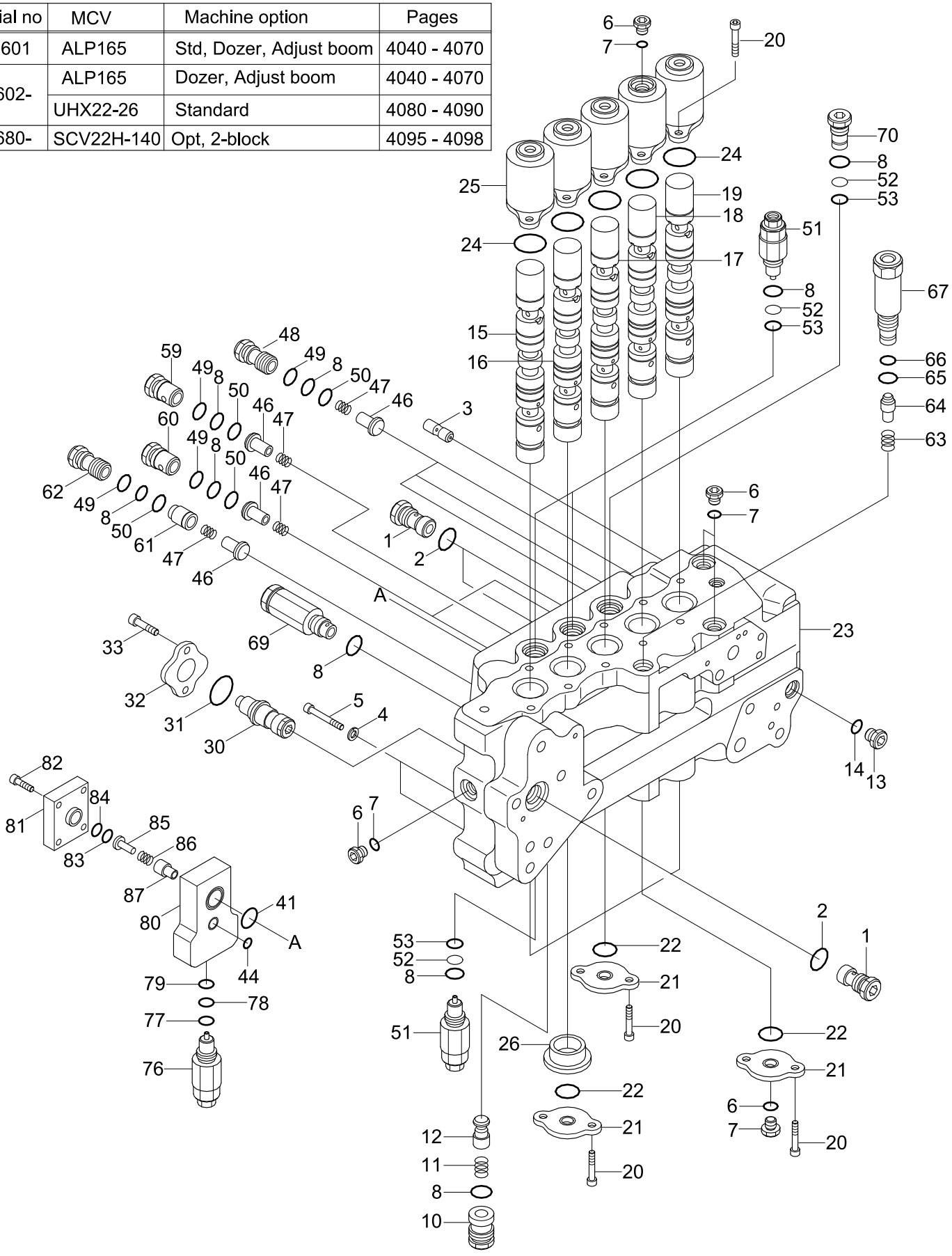

Item	Part_No	IS	Ord	T	Description	Qty	Serial_No	ITC	Remark
*	@				MAIN CONTROL VALVE		#1602 -	-	NOT
1	XJDB-00358				.CAP	3			
2	XJDB-00359				.O-RING	3			
3	XJDB-00360				.ORIFICE	1			
4	XJDB-00244				.WASHER-SPRING	4			
5	XJDB-00361				.BOLT-SOCKET	4			
6	XJDB-00017				.CAP	4			
7	XJDB-00018				.O-RING	4			
8	XJDB-00105				.O-RING	14			
10	XJDB-00363				.CAP	1			
11	XJDB-00364				.SPRING	1			
12	XJDB-00365				.CHECK	1			
13	XJDB-00127				.CAP	1			
14	XJDB-00136				.O-RING	1			
15	XJDB-00366				.PLUNGER(D11AS)	1	- #2050		
	XJDB-00420				.PLUNGER(D13AS)	1	#2051 -	B	
16	XJDB-00367				.PLUNGER(B17AS)	1	- #2050		
	XJDB-00421				.PLUNGER(B18AS)	1	#2051 -	B	
17	XJDB-00368				.PLUNGER(C8AS)	1			
18	XJDB-00369				.PLUNGER(DAS)	1			
19	XJDB-00370				.PLUNGER(M5AS)	1			
20	XJDB-00371				.BOLT-SOCKET	20			
21	XJDB-00372				.RETAINER	5			
22	XJDB-00373				.O-RING	5			
N23	XJDB-00374				.HOUSING	1			NOT

Item	Part_No	IS	Ord	T	Description	Qty	Serial_No	ITC	Remark
24	XJDB-00296				.O-RING	5			
25	XJDB-00375				.COVER	5			
26	XJDB-00376				.STOPPER	1			
30	XJDB-00380				.PLUG	1			
31	XJDB-00381				.O-RING	1			
32	XJDB-00382				.RETAINER	1			
33	XJDB-00383				.BOLT-SOCKET	2			
41	XJDB-00107				.O-RING	1			
44	XJDB-00032				.O-RING	1			
46	XJDB-00337				.CHECK	7			
47	XJDB-00311				.SPRING	7			
48	XJDB-00393				.CAP	3			
49	XJDB-00338				.RING-BACK UP	7			
50	XJDB-00309				.CHIP-NYLON	7			
51	XJDB-00394				.VALVE-OVERLOAD RELIEF	3			
52	XJDB-00395				.BACK-UP RING	5			
53	XJDB-00396				.O-RING	5			
59	XJDB-00402				.CAP	1			
60	XJDB-00403				.CAP	2			
61	XJDB-00404				.CHECK	1			
62	XJDB-00405				.CAP	1			
63	XJDB-00406				.SPRING	1			
64	XJDB-00407				.CHECK	1			
65	XJDB-00033				.O-RING	1			
66	XJDB-00408				.RING-BACK-UP	1			

Item	Part_No	IS	Ord	T	Description	Qty	Serial_No	ITC	Remark
67	XJDB-00409				.CAP	1			
69	XJDB-00411				.VALVE-FOOT RELIEF	1			
70	XJDB-00412				.PLUG(OLR)	2			
76	XJDB-00418				.VALVE-OVERLOAD RELIEF	1			
77	XJDB-00300				.O-RING	1			
78	XJDB-00301				.RING-BACK UP	1			
79	XJDB-00302				.O-RING	1			
80	XJDB-00341				.MANIFOLD	1			
81	XJDB-00343				.COVER	1			
82	XJDB-00344				.BOLT-SOCKET HEAD	4			
83	XJDB-00036				.O-RING	1			
84	XJDB-00045				.RING-BACK UP	1			
85	XJDB-00342				.GUIDE-SPRING	1			
86	XJDB-00345				.SPRING	1			
87	XJDB-00346				.POPPET	1			

Item	Part_No	IS	Ord	T	Description	Qty	Serial_No	ITC	Remark
*	31N4-17110				MAIN CONTROL VALVE	1	#2680 -	-	
N1	XKBF-00477				.HOUSING-P1	1			NOT
4	XKBF-00953				.SPOOL ASSY-TRAVEL 1	1			
7	XKBF-00878				.SPOOL ASSY	1			
10	XKBF-00881				.SPOOL ASSY	1			
12	XKBF-00883				.SPOOL ASSY	1			
14	XKBF-00885				.SPOOL ASSY	1			
15	XKBF-00886				.COVER A-PILOT	5			
16	XKBF-00887				.COVER B1-PILOT	3			
K28	XKBF-00898				.LOCK VALVE KIT-A	1			
31	XKBF-00901				..BLOCK-HOLDING	1			
40	XKBF-00910				..PISTON 1	1			
41	XKBF-00911				..GUIDE-PISTON	1			
42	XKBF-00912				..SPRING 1	1			
43	XKBF-00913				..PISTON 2	1			
44	XKBF-00914				..SLEEVE	1			
45	XKBF-00915				..SPOOL	1			
46	XKBF-00916				..SPRING 2	1			
47	XKBF-00793				..STOPPER	1			
69	XKBF-00728				..PLUG	1			
71	XKBF-00845				..PLUG	1			
73	XKBF-00934				..PLUG	1			
76	XKBF-00937				..O-RING	1			
77	XKBF-00958				..O-RING	1			
78	XKBF-00615				..O-RING	1			

Item	Part_No	IS	Ord	T	Description	Qty	Serial_No	ITC	Remark
79	XKBF-00939				..O-RING	1			
82	XKBF-00618				..O-RING	1			
87	XKBF-00962				..RING-BACK UP	1			
89	XKBF-00964				..RING-BACK UP	1			
K29	XKBF-00899				.LOCK VALVE KIT-B	1			
N33	XKBF-00903				..C-RING	1			NOT
N34	XKBF-00904				..POPPET-LOCK VALVE	1			NOT
35	XKBF-00905				..RESTRICTOR-LOCK VLV	1			
N36	XKBF-00906				..SPRING	1			NOT
37	XKBF-00907				..GUIDE-POPPET	1			
38	XKBF-00908				..POPPET-PILOT	1			
39	XKBF-00909				..SEAT-POPPET	1			
77	XKBF-00958				..O-RING	1			
84	XKBF-00943				..O-RING	1			
87	XKBF-00962				..RING-BACK UP	2			
30	XKBF-00900				.BOLT-SOCKET HEAD	5			
32	XKBF-00902				.BLOCK-REGEN	1			
48	XKBF-00917				.SPOOL-REGEN SELECTOR	1			
49	XKBF-00918				.SPRING-REGEN	1			
50	XKBF-00919				.STOPPER-REGEN	1			
51	XKBF-00920				.PISTON-CUT OFF	1			
52	XKBF-00732				.POPPET-SIGNAL	1			
53	XKBF-00733				.SPRING-CHECK	1			
54	XKBF-00921				.PLUG	1			
57	XKBF-00401				.ORIFICE-PLUG	1			

Item	Part_No	IS	Ord	T	Description	Qty	Serial_No	ITC	Remark
62	3902500970				.POPPET-NEGATIVE	2			
63	XKBF-00926				.FILTER-COIN TYPE	2			
64	XKBF-00927				.SEAT-SPRING	2			
65	XKBF-00928				.SPRING-NEGATIVE	2			
66	XKBF-00929				.PISTON-NEGATIVE	2			
67	XKBF-00930				.SOCKET-NEGATIVE	2			
68	XKBF-00931				.PLUG	2			
69	XKBF-00728				.PLUG	3			
74	XKBF-00935				.BOLT-SOCKET HEAD	3			
75	XKBF-00936				.O-RING	1			
76	XKBF-00937				.O-RING	1			
77	XKBF-00958				.O-RING	2			
79	XKBF-00939				.O-RING	1			
85	XKBF-00944				.O-RING	2			
90	XKBF-00949				.O-RING	10			
91	XKBF-00950				.BOLT-SOCKET HEAD	20			
N	@				NOT INDIVIDUALLY SUPPLIED	AR			NOT

MAIN CONTROL VALVE(ALP165, 2/4)

Serial no	MCV	Machine option	Pages
-#1601	ALP165	Std, Dozer, Adjust boom	4040 - 4070
#1602-	ALP165	Dozer, Adjust boom	4040 - 4070
	UHX22-26	Standard	4080 - 4090
#2680-	SCV22H-140	Opt, 2-block	4095 - 4098

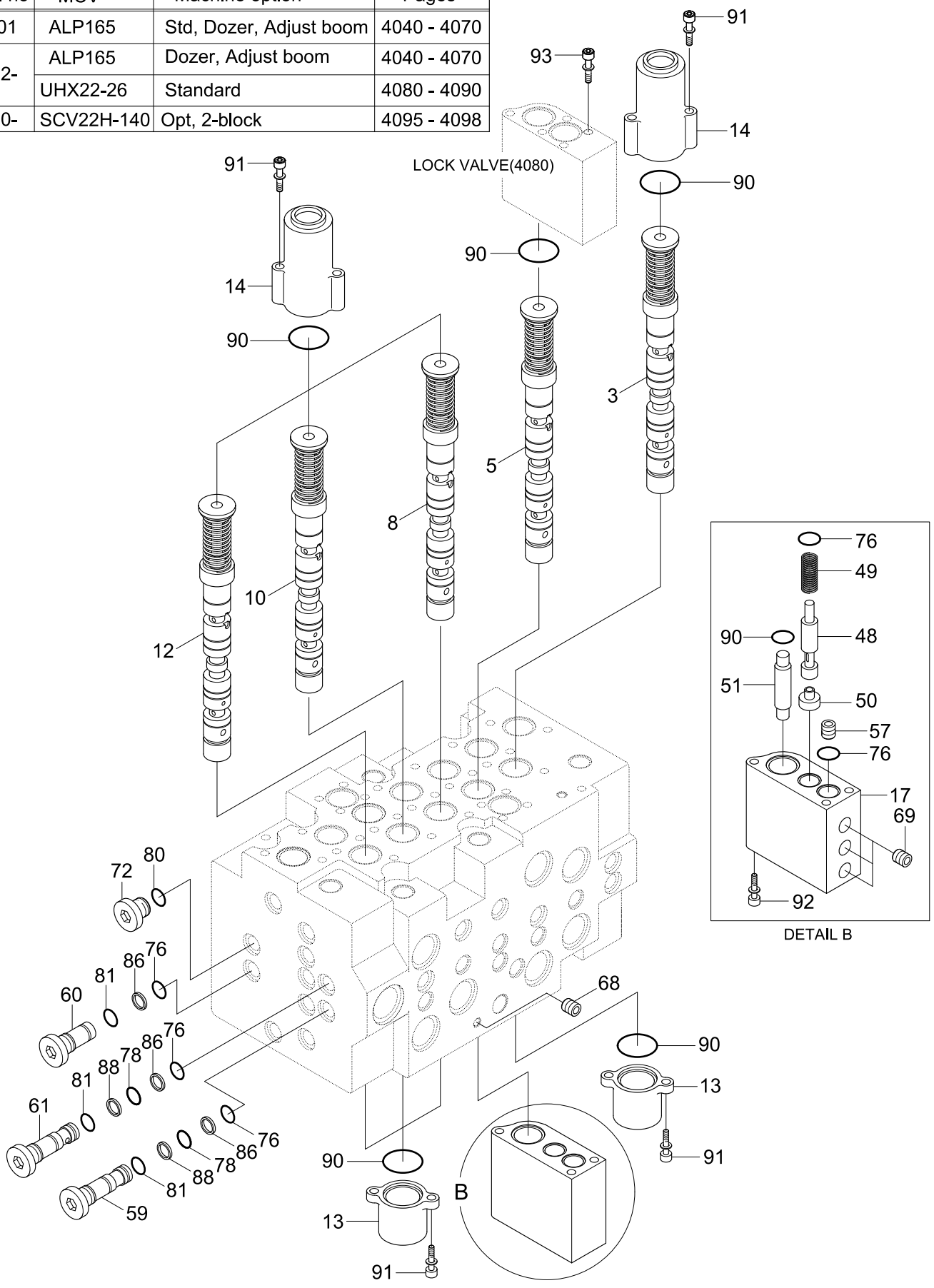

Item	Part_No	IS	Ord	T	Description	Qty	Serial_No	ITC	Remark
*	@				MAIN CONTROL VALVE	1	- #1601		NOT
					MAIN CONTROL VALVE	1	#1602 -	A	NOT
3	XKBF-00003				.SPOOL ASSY	1			TRAVEL
5	XKBF-00005				.SPOOL ASSY	1			BOOM 1
8	XKBF-00008				.SPOOL ASSY	1			ARM 2
10	XKBF-00010				.SPOOL ASSY	1			ARM REGEN
12	XKBF-00012				.SPOOL ASSY	1			BUCKET
13	XKBF-00013				.COVER-PILOT	4			
14	XKBF-00014				.COVER-PILOT	4			
17	XKBF-00017				.BLOCK-REGEN	1			
48	XKBF-00048				.SPOOL-SELECTOR	1			
49	XKBF-00049				.SPRING	1			
50	XKBF-00050				.STOPPER	1			
51	XKBF-00051				.PISTON	1			
57	XKBF-00057				.RESTRICTOR	1			
59	XKBF-00059				.PLUG	1	#0001 -	-	
60	XKBF-00060				.PLUG	1			
61	XKBF-00061				.PLUG-ORIFICE	1	#0001 -	-	
68	XKBF-00068				.PLUG-SOCKET HEAD	1			
69	XKBF-00069				.PLUG-SOCKET HEAD	3			
72	XKBF-00072				.PLUG	1			
76	XKBF-00076				.O-RING	5			
78	XKBF-00078				.O-RING	2			
80	XKBF-00080				.O-RING	1			1-53-014
81	XKBF-00081				.O-RING	3			

Item	Part_No	IS	Ord	T	Description	Qty	Serial_No	ITC	Remark
86	XKBF-00086				.BACK-UP RING	3			
88	XKBF-00088				.RING-BACK UP	2			
90	XKBF-00090				.O-RING	10			
91	XKBF-00091				.BOLT-SOCKET HEAD	16			
92	XKBF-00092				.BOLT-SOCKET HEAD	3			
93	XKBF-00093				.BOLT-SOCKET HEAD	5			

MAIN CONTROL VALVE(ALP165, 3/4)

Serial no	MCV	Machine option	Pages
-#1601	ALP165	Std, Dozer, Adjust boom	4040 - 4070
#1602-	ALP165	Dozer, Adjust boom	4040 - 4070
	UHX22-26	Standard	4080 - 4090
#2680-	SCV22H-140	Opt, 2-block	4095 - 4098

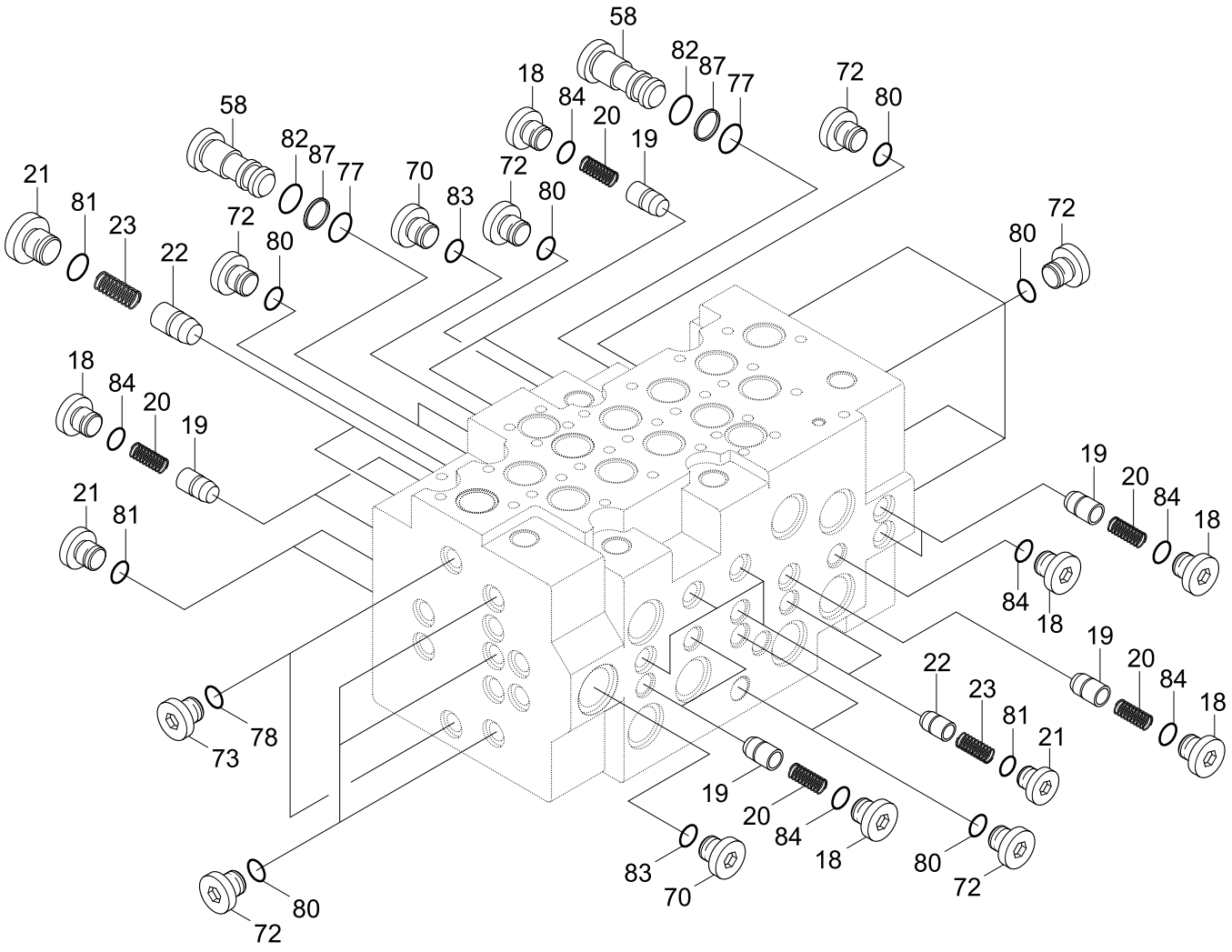

Item	Part_No	IS	Ord	T	Description	Qty	Serial_No	ITC	Remark
*	@				MAIN CONTROL VALVE	1	- #1601		NOT
					MAIN CONTROL VALVE	1	#1602 -	A	NOT
18	XKBF-00018				.PLUG	11			
19	XKBF-00019				.POPPET 1	10			
20	XKBF-00020				.SPRING	10			
21	XKBF-00021				.PLUG	9			
22	XKBF-00022				.POPPET 2	7			
23	XKBF-00023				.SPRING	7			
58	XKBF-00058				.PLUG	3			
70	XKBF-00070				.PLUG	2			
72	XKBF-00072				.PLUG	12			
73	XKBF-00073				.PLUG	2			
77	XKBF-00077				.O-RING	3			
78	XKBF-00078				.O-RING	2			
80	XKBF-00080				.O-RING	12			1-53-014
81	XKBF-00081				.O-RING	9			
82	XKBF-00082				.O-RING	3			1-53-018
83	XKBF-00083				.O-RING	2			
84	XKBF-00084				.O-RING	10			
87	XKBF-00087				.RING-BACK UP	3			

MAIN CONTROL VALVE(4/4, 2-BLOCK, #2680-)

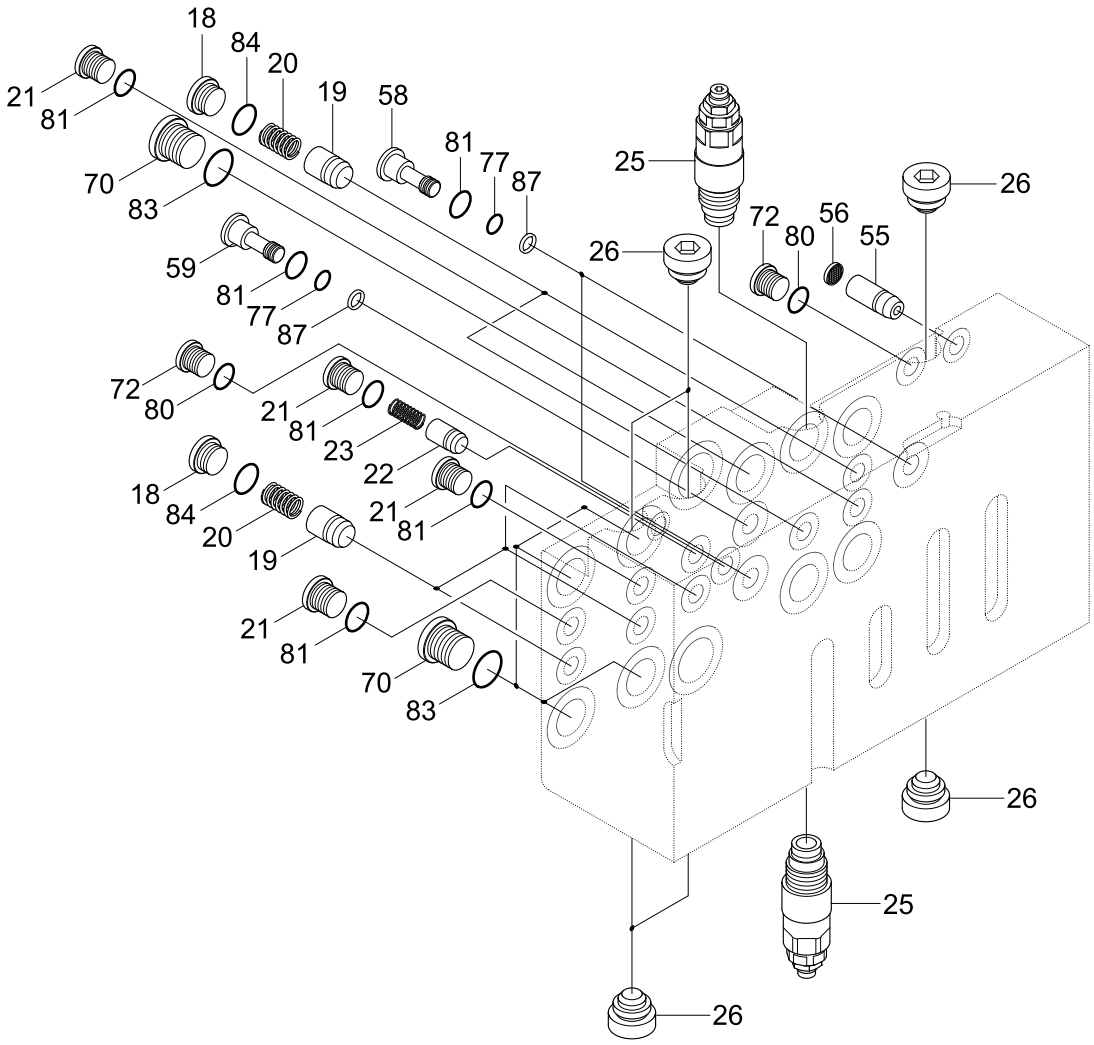

Serial no	MCV	Machine option	Pages
-#1601	ALP165	Std, Dozer, Adjust boom	4040 - 4070
#1602-	ALP165	Dozer, Adjust boom	4040 - 4070
	UHX22-26	Standard	4080 - 4090
#2680-	SCV22H-140	Opt, 2-block	4095 - 4098

Item	Part_No	IS	Ord	T	Description	Qty	Serial_No	ITC	Remark
*	@				MAIN CONTROL VALVE	1	#2680 -	-	NOT
18	XKBF-00921				.PLUG	5			
19	XKBF-00889				.POPPET 1	5			
20	XKBF-00890				.SPRING	5			
21	XKBF-00934				.PLUG	4			
22	XKBF-00893				.POPPET 2	3			
23	XKBF-00894				.SPRING	3			
25	XKBF-00486				.RELIEF VALVE-OVERLOAD	2			
26	XKBF-00487				.PLUG-RELIEF VALVE	6			
55	XKBF-00399				.ORIFICE-SIGNAL	1			
56	XKBF-00922				.FILTER-COIN TYPE	1			
58	XKBF-00488				.PLUG-PARALLEL	2			
59	XKBF-00923				.PLUG	1			
70	XKBF-00932				.PLUG	5			
72	XKBF-00933				.PLUG	2			
77	XKBF-00958				.O-RING	3			
80	XKBF-00940				.O-RING	1			
81	XKBF-00941				.O-RING	7			
83	XKBF-00942				.O-RING	5			
84	XKBF-00943				.O-RING	5			
87	XKBF-00962				.RING-BACK UP	2			

SWING MOTOR(-#1440)

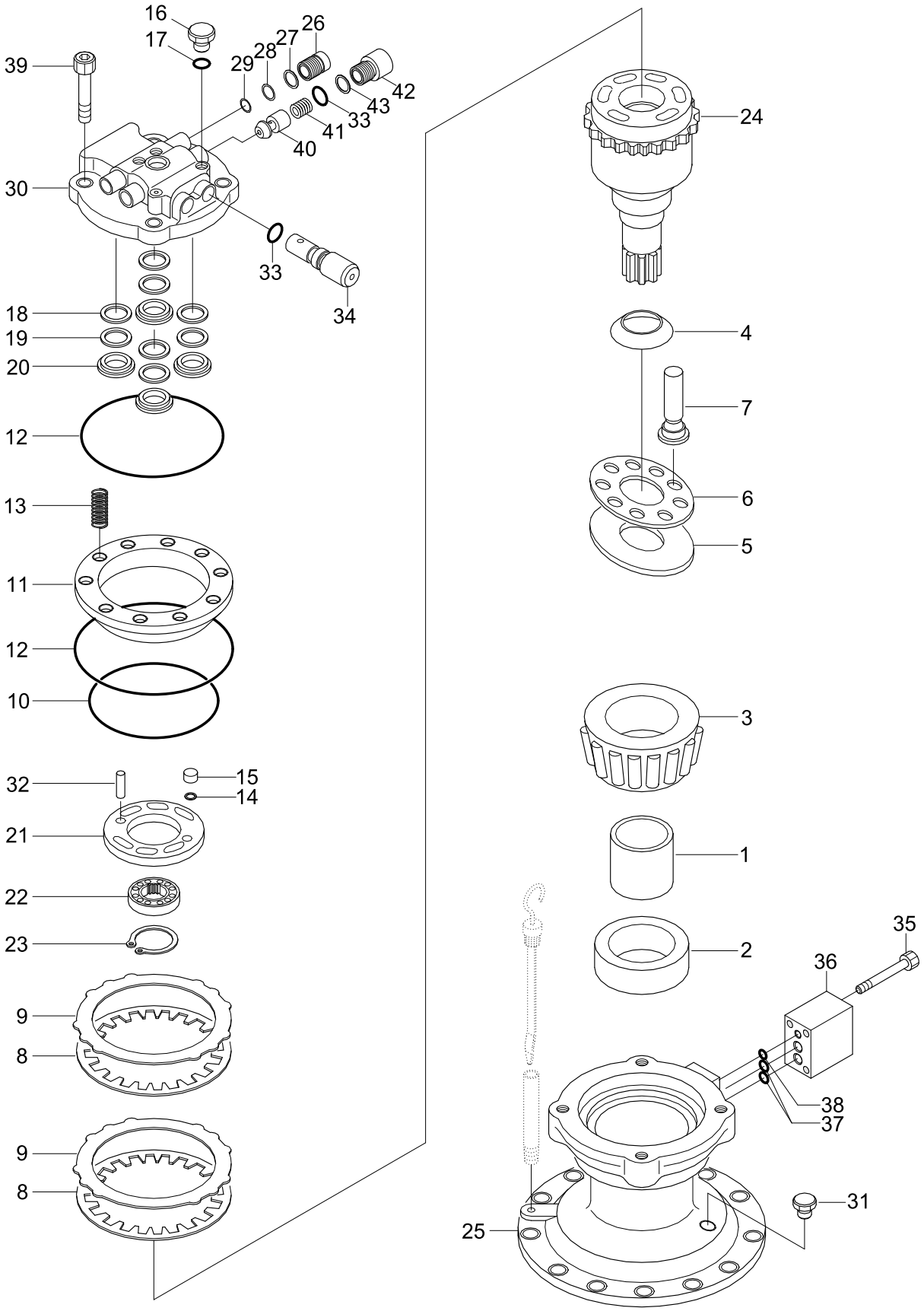

Item	Part_No	IS	Ord	T	Description	Qty	Serial_No	ITC	Remark
*	@				SWING MOTOR ASSY	1	- #1440	-	NOT
*-1	31N3-10220				.SWING MOTOR UNIT	1			
1	XJDB-00047				..RING-INNER	1			
2	XJDB-00048				..SEAL-OIL	1			
3	XJDB-00049				..BEARING-T/ROLLER	1			
4	XJDB-00050				..SPRING-BACKING	1			
5	XJDB-00051				..PLATE-CAM	1			
6	XJDB-00052				..PLATE-RETURN	1			
7	XJDB-00053				..PISTON ASSY	9			
8	XJDB-00054				..PLATE-LINING	2			
9	XJDB-00055				..PLATE	2			
10	XJDB-00056				..O-RING	1			
11	XJDB-00058				..PISTON	1			
12	XJDB-00057				..O-RING	2			
13	XJDB-00059				..SPRING	14			
14	XJDB-00060				..RING-TEFLON	2			
15	XJDB-00061				..PISTON	2			
16	XJDB-00017				..CAP	3			
17	XJDB-00018				..O-RING	3			
18	XJDB-00062				..SCROWAVE	4			
19	XJDB-00063				..RING-TEFLON	4			
20	XJDB-00064				..BUSH	4			
21	XJDB-00065				..PLATE-BALANCE	1			
22	XJDB-00066				..BEARING-NEEDLE	1			
23	XJDB-00067				..RING-SNAP	1			

Item	Part_No	IS	Ord	T	Description	Qty	Serial_No	ITC	Remark
N24	XJDB-00068				..CYLINDER ASSY	1	#0001 -	-	NOT
25	XJDB-00069				..HOUSING	1			
26	XJDB-00030				..BYPASS VALVE ASSY	2			
27	XJDB-00031				..RING-BACK UP	2			
28	XJDB-00032				..O-RING	2			
29	XJDB-00033				..O-RING	2			
30	XJDB-00070				..COVER	1			
31	XJDB-00071				..PLUG	1			
32	XJDB-00072				..PIN-PARALLEL	2			
33	XJDB-00036				..O-RING	4			
34	XJDB-00035				..RELIEF VALVE ASSY	2			
35	XJDB-00037				..BOLT-SOCKET	3			
36	XJDB-00038				..VALVE-TIME DELAY	1			
37	XJDB-00039				..O-RING	1			
38	XJDB-00040				..O-RING	2			
39	XJDB-00073				..BOLT-SOCKET	4			
40	XJDB-00042				..VALVE-CHECK	2			
41	XJDB-00043				..SPRING	2			
42	XJDB-00044				..CAP	2			
43	XJDB-00045				..RING-BACK UP	2			
*-2	@				.SWING REDUCTION GEAR	1			NOT
N	@					AR			NOT

SWING MOTOR(#1441-)

Applied machine

Part no.	Serial no.	Part no.	Serial no.
XKAY-00623 XKAY-00624 XKAY-00625	#1753, #1765, #1759, #1766, #1760, #1768, #1761, #1771~ #1763,	XKAY-00626 XKAY-00627 XKAY-00628 XKAY-00629 XKAY-00636	#1856, #1857, #1860~1863 #1865~

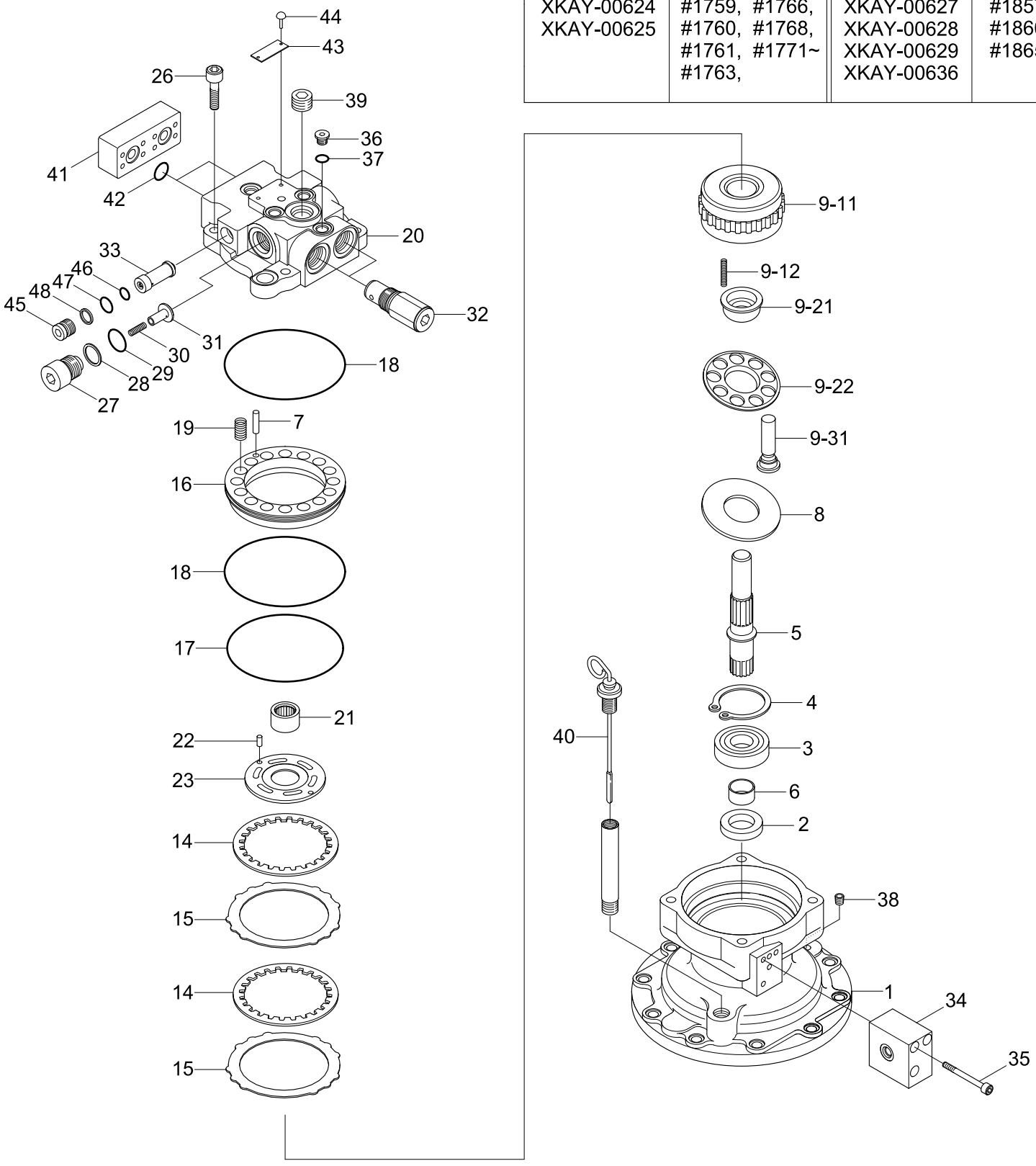

Description	Parts no	Included item
Swing motor seal kit	XKAY-00325	2, 17, 18, 28, 29, 37, 42, 46~48

Item	Part_No	IS	Ord	T	Description	Qty	Serial_No	ITC	Remark
N*	@				SWING MOTOR ASSY	1	#1441 -	-	NOT
*-1	31N4-10130				.SWING MOTOR	1			
1	XKAY-00280				..BODY	1	- #1864		
	XKAY-00636				..BODY	1	#1865 -	D	
K2	XKAY-00281				..SEAL-OIL	1			
3	XKAY-00282				..BEARING-ROLLER	1			
4	XKAY-00283				..RING-SNAP	1			
5	XKAY-00284				..SHAFT	1			
6	XKAY-00285				..BUSHING	1			
7	XKAY-00286				..PIN	1	- #1770		
	XKAY-00625				..PIN	1	#1771 -	D	
8	XKAY-00287				..PLATE-SHOE	1			
9	XKAY-00288				..ROTARY KIT	1	- #1864		
	XKAY-00629				..ROTARY KIT	1	#1865 -	B	
9-1	XKAY-00289				...CYLINDER BLOCK KIT	1	- #1864		
	XKAY-00628				...CYLINDER BLOCK KIT	1	#1865 -	B	
N9-11	XKAY-00290				....BLOCK-CYLINDER	1	- #1864		NOT
	XKAY-00627				....BLOCK-CYLINDER	1	#1865 -	B	NOT
N9-12	XKAY-00291				....SPRING	9			NOT
9-2	XKAY-00292				...RETAINER KIT	1			
N9-21	XKAY-00293				....GUIDE-BALL	1			NOT
N9-22	XKAY-00294				....PLATE-SET	1			NOT
9-3	XKAY-00295				...PISTON KIT	1			
N9-31	XKAY-00296				....PISTON ASSY	9			NOT
14	XKAY-00297				..PLATE-FRICTION	2			

Item	Part_No	IS	Ord	T	Description	Qty	Serial_No	ITC	Remark
15	XKAY-00298				..PLATE	2			
16	XKAY-00299				..PISTON-BRAKE	1	- #1770		
	XKAY-00624				..PISTON-BRAKE	1	#1771 - #1864	D	
	XKAY-00626				..PISTON-BRAKE	1	#1865 -	D	
K17	XKAY-00300				..O-RING	1			
K18	XKAY-00301				..O-RING	2			
19	XKAY-00302				..SPRING	16			
20	XKAY-00303				..COVER-REAR	1	- #1770		
	XKAY-00623				..COVER-REAR	1	#1771 -	D	
21	XKAY-00304				..BEARING-NEEDLE	1			
22	XKAY-00562				..PIN	2			
N23	XKAY-00306				..PLATE-VALVE	1			NOT
26	XKAY-00308				..BOLT-WRENCH	4			
27	XKAY-00309				..PLUG	2			
K28	XKAY-00141				..RING-BACK UP	2			
K29	XKAY-00310				..O-RING	2			
30	XKAY-00311				..SPRING	2			
31	XKAY-00312				..CHECK	2			
32	XKAY-00313				..RELIEF VALVE ASSY	2			
33	XKAY-00314				..REACTIONLESS VLV ASSY	2			
34	XKAY-00315				..TIME DELAY VALVE ASSY	1			
35	XKAY-00149				..BOLT-SOCKET	3			
36	XKAY-00150				..PLUG	3			
K37	XKAY-00256				..O-RING	3			
38	XKAY-00140				..PLUG	1			

Item	Part_No	IS	Ord	T	Description	Qty	Serial_No	ITC	Remark
39	XKAY-00317				..PLUG	1			
40	XKAY-00604				..GAUGE-LEVEL	1			
41	XKAY-00319				..FLANGE	1			
K42	XKAY-00320				..O-RING	2			
43	XKAY-00321				..NAME PLATE	1			
44	XKAY-00277				..RIVET	2			
45	XKAY-00322				..PLUG	2			
K46	XKAY-00324				..O-RING	2			
K47	XKAY-00247				..O-RING	2			
K48	XKAY-00605				..RING-BACK UP	2			
*-2	@				.SWING REDUCTION GEAR	1			NOT
K	XKAY-00325				SEAL KIT	1	#1441 -	-	SEE ILLUST
N	@				NOT INDIVIDUALLY SUPPLIED	AR			NOT

SWING REDUCTION GEAR(-#1440)

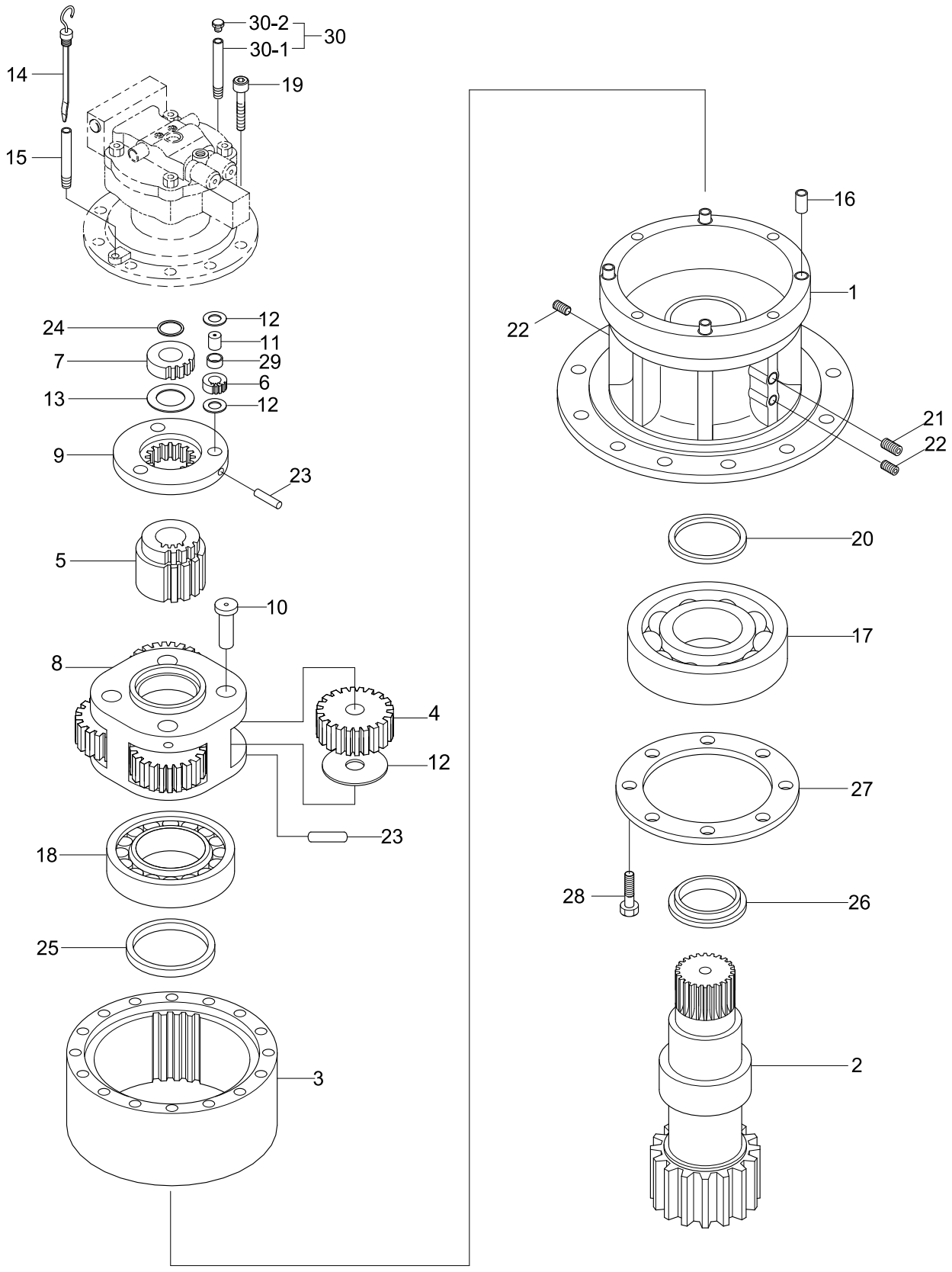

Item	Part_No	IS	Ord	T	Description	Qty	Serial_No	ITC	Remark
*	@				SWING MOTOR ASSY	1	- #1440		NOT
*-2	31E6-12030				.SWING REDUCTION GEAR	1	- #1440		
1	XKAQ-00250				..CASING	1			
2	XKAQ-00249				..SHAFT-DRIVE	1			
3	XKAQ-00102				..GEAR-RING	1			
5	XKAQ-00278				..GEAR-SUN NO.2	1			
*-21	XKAQ-00271				..CARRIER NO.1 ASSY	1	#0001 -	-	
6	XKAQ-00099				...GEAR-PLANET NO.1	3			
7	XKAQ-00277				...GEAR-SUN NO.1	1			
9	XKAQ-00096				...CARRIER NO.1	1			
11	XKAQ-00094				...PIN ASSY NO.1	3			
12	XKAQ-00093				...WASHER-THRUST(B)	6			
13	XKAQ-00057				...PLATE-SIDE 1	1			
23	XKAQ-00086				...PIN-SPRING	3			
24	XKAQ-00085				...RING-STOP	4			
29	XKAQ-00080				...CAGE-NEEDLE	3			
*-22	XKAQ-00272				..CARRIER NO.2 ASSY	1	#0001 -	-	
4	XKAQ-00101				...GEAR-PLANET NO.2	4			
8	XKAQ-00097				...CARRIER NO.2	1			
10	XKAQ-00095				...PIN ASSY NO.2	4			
12	XKAQ-00093				...WASHER-THRUST(B)	4			
23	XKAQ-00086				...PIN-SPRING	4			
14	XKAQ-00034				..BAR-GAUGE	1			
15	XKAQ-00035				..PIPE-GAUGE	1			
16	XKAQ-00091				..PIN-KNOCK	2			

Item	Part_No	IS	Ord	T	Description	Qty	Serial_No	ITC	Remark
17	XKAQ-00090				..BEARING-SPH ROLLER	1			
18	XKAQ-00089				..BEARING-CYL ROLLER	1			
19	XKAQ-00088				..BOLT-SOCKET	10			
20	XKAQ-00087				..SEAL-OIL	1			
21	XKAQ-00049				..PLUG-PRESSURE	1			
22	XKAQ-00066				..PLUG	2			
25	XKAQ-00084				..RING-STOP	1			
26	XKAQ-00083				..SPACER	1			
27	XKAQ-00082				..PLATE-COVER	1			
28	XKAQ-00081				..BOLT-HEX	6			
30	XKAQ-00142				..AIR BREATHER ASSY	1	#1312 -	-	
30-1	HHI13-WP30				...POST	1	#1312 -	-	
30-2	HHI13-WP31				...CAP-BREATHER	1	#1312 -	-	

SWING REDUCTION GEAR(#1441-)

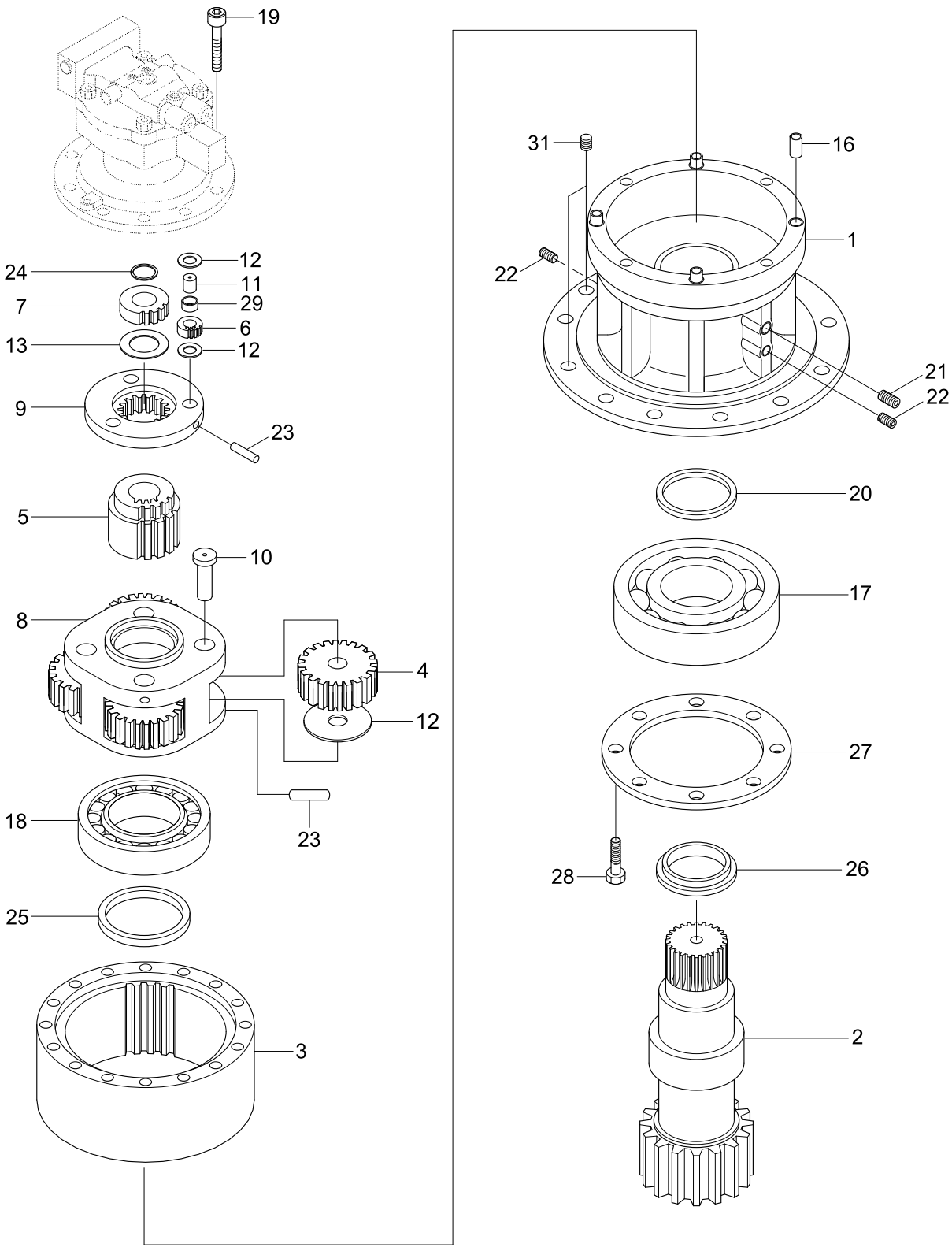

Item	Part_No	IS	Ord	T	Description	Qty	Serial_No	ITC	Remark
*	@				SWING MOTOR ASSY	1	#1441 - #2653	D	NOT
					SWING MOTOR ASSY	1	#2654 -	B	NOT
*-2	31N4-10140				.SWING REDUCTION GEAR	1	#1441 - #2653	-	
	31N4-10141				.SWING REDUCTION GEAR	1	#2654 -	B	
1	XKAQ-00134				..CASING	1	- #2653		
	XKAQ-00332				..CASING	1	#2654 -	B	
2	XKAQ-00249				..SHAFT-DRIVE	1			
3	XKAQ-00102				..GEAR-RING	1			
5	XKAQ-00278				..GEAR-SUN NO.2	1			
*-21	XKAQ-00271				..CARRIER NO.1 ASSY	1			
6	XKAQ-00099				...GEAR-PLANET NO.1	3			
7	XKAQ-00277				...GEAR-SUN NO.1	1			
9	XKAQ-00096				...CARRIER NO.1	1			
11	XKAQ-00094				...PIN ASSY NO.1	3			
12	XKAQ-00093				...WASHER-THRUST(B)	6			
13	XKAQ-00057				...PLATE-SIDE 1	1			
23	XKAQ-00086				...PIN-SPRING	3			
24	XKAQ-00085				...RING-STOP	4			
29	XKAQ-00080				...CAGE-NEEDLE	3			
*-22	XKAQ-00272				..CARRIER NO.2 ASSY	1			
4	XKAQ-00101				...GEAR-PLANET NO.2	4			
8	XKAQ-00097				...CARRIER NO.2	1			
10	XKAQ-00095				...PIN ASSY NO.2	4			
12	XKAQ-00093				...WASHER-THRUST(B)	4			
23	XKAQ-00086				...PIN-SPRING	4			

Item	Part_No	IS	Ord	T	Description	Qty	Serial_No	ITC	Remark
7	XKAQ-00277				..GEAR-SUN NO.1	1			
16	XKAQ-00091				..PIN-KNOCK	2			
17	XKAQ-00090				..BEARING-SPH ROLLER	1			
18	XKAQ-00089				..BEARING-CYL ROLLER	1			
19	XKAQ-00088				..BOLT-SOCKET	10			
20	XKAQ-00087				..SEAL-OIL	1			
21	XKAQ-00049				..PLUG-PRESSURE	1			
22	XKAQ-00066				..PLUG	2			
25	XKAQ-00084				..RING-STOP	1			
26	XKAQ-00083				..SPACER	1			
27	XKAQ-00082				..PLATE-COVER	1			
28	XKAQ-00081				..BOLT-HEX	6			
31	XKAQ-00333				..CAP-RUBBER	4	#2654 -	-	

REMOTE CONTROL LEVER

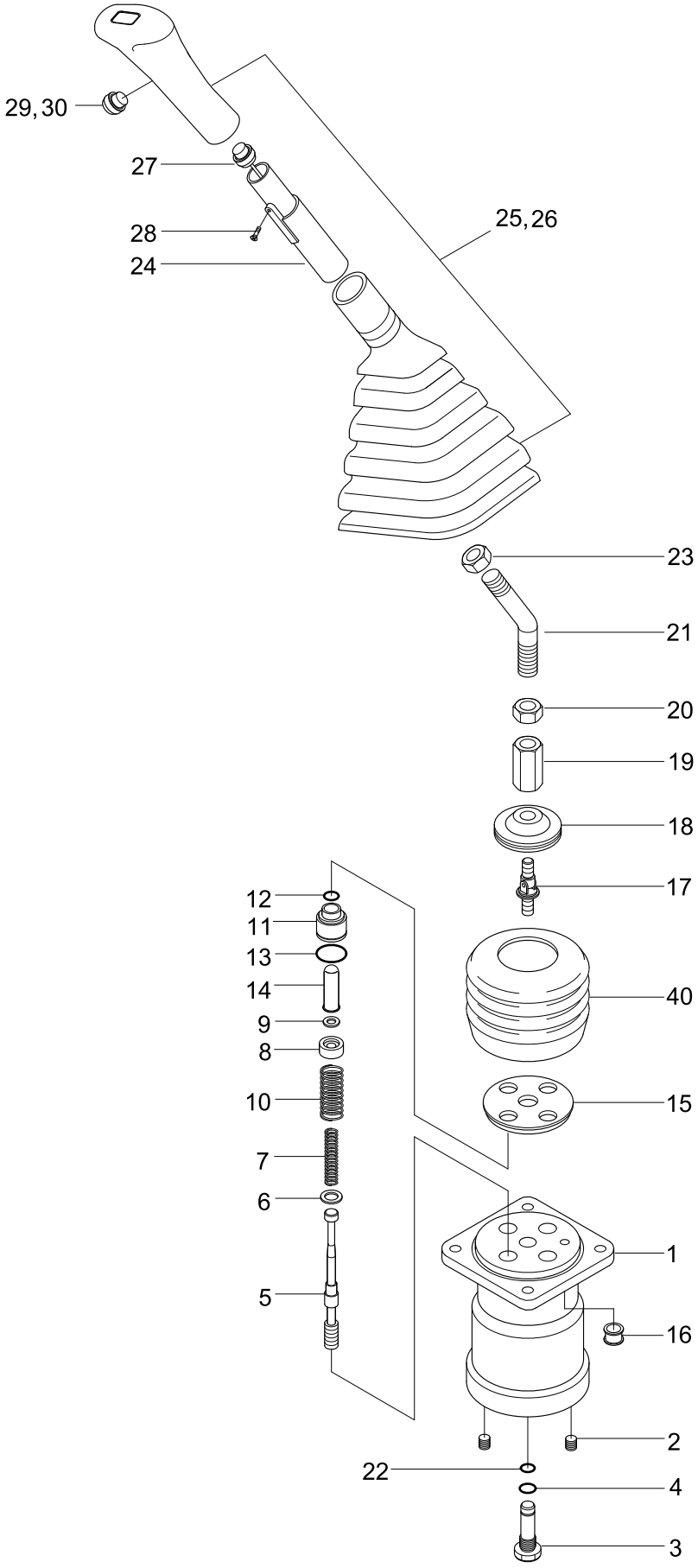

Description	Serial no	Parts no	Included item
RCV lever seal kit	-#1779	91ER-20050	4, 12, 13, 22
	#1780-	91ER-20051	4, 12, 13, 22

Item	Part_No	IS	Ord	T	Description	Qty	Serial_No	ITC	Remark
*	31N6-20060				RCV LEVER-LH	1	- #0197		
	31N6-20061				RCV LEVER-LH	1	#0198 -	D	
	31N6-20070				RCV LEVER-RH	1	- #0197		
	31N6-20071				RCV LEVER-RH	1	#0198 -	D	
1	XKAY-00066				.CASE	1	- #0197		
	XKAY-00077				.CASE	1	#0198 -	D	
2	XKAY-00065				.PLUG	4			
3	XKAY-00064				.PLUG	1			
4	XKAY-00063				.O-RING	1			
*-1	XKAY-00615				.SPOOL KIT	1	#0001 -	-	
N5	XKAY-00062				..SPOOL	4			NOT
N6	XKAY-00061				..SHIM	4			NOT
N7	XKAY-00060				..SPRING	4			NOT
N8	XKAY-00436				..SEAT-SPRING(1,3)	4	#0001 -	-	NOT
N9	XKAY-00058				..STOPPER	4			NOT
10	XKAY-00057				.SPRING	4	- #0197		
	XKAY-00078				.SPRING	4	#0198 -	D	
11	XKAY-00056				.PLUG	4	- #1779	-	
12	XKAY-00055				.SEAL-ROD	4	- #1779	-	
13	XKAY-00054				.O-RING	4	- #1779	-	
14	XKAY-00052				.ROD-PUSH	4	- #1779	-	
*-2	XKAY-00608				.PLUG KIT(1,3)	4	#1780 -	-	
11	XKAY-00610				..PLUG	4	#1780 -	D	
12	XKAY-00611				..SEAL-ROD	4	#1780 -	D	
13	XKAY-00054				..O-RING	4	#1780 -	A	

Item	Part_No	IS	Ord	T	Description	Qty	Serial_No	ITC	Remark
14	XKAY-00052				..ROD-PUSH	4	#1780 -	A	
15	XKAY-00075				.PLATE	1			
16	XKAY-00074				.BUSHING	1			
17	XKAY-00049				.JOINT ASSY	1			
18	XKAY-00073				.SWASH PLATE	1			
19	XKAY-00047				.NUT-HEX	1			
20	XKAY-00046				.NUT	1			
*-3	XKAY-00617				.HANDLE KIT(L)	1	#0001 -	-	
	XKAY-00616				.HANDLE KIT(R)	1	#0001 -	-	
N21	XKAY-00044				..CONNECTOR-HANDLE	1			NOT
N22	XKAY-00045				..O-RING	1			NOT
N23	XKAY-00043				..NUT	1			NOT
N24	XKAY-00042				..INSERT	1			NOT
N25	XKAY-00041				..BOOT	1			NOT
N26	XKAY-00040				..HANDLE-LH	1			NOT
	XKAY-00076				..HANDLE-RH	1			NOT
N27	XKAY-00039				..SWITCH ASSY	1			NOT
N28	XKAY-00038				..SCREW	1			NOT
N29	XKAY-00037				..SWITCH ASSY	1			NOT
N30	XKAY-00036				..COVER-SWITCH	1			NOT
N40	XKAY-00072				..BOOT	1			NOT
K	91ER-20050				SEAL KIT	1	- #1779		SEE ILLUST
	91ER-20051				SEAL KIT	1	#1780 -	D	SEE ILLUST
N	@				NOT INDIVIDUALLY SUPPLIED	1			NOT

REMOTE CONTROL VALVE(OPT, #2709-)

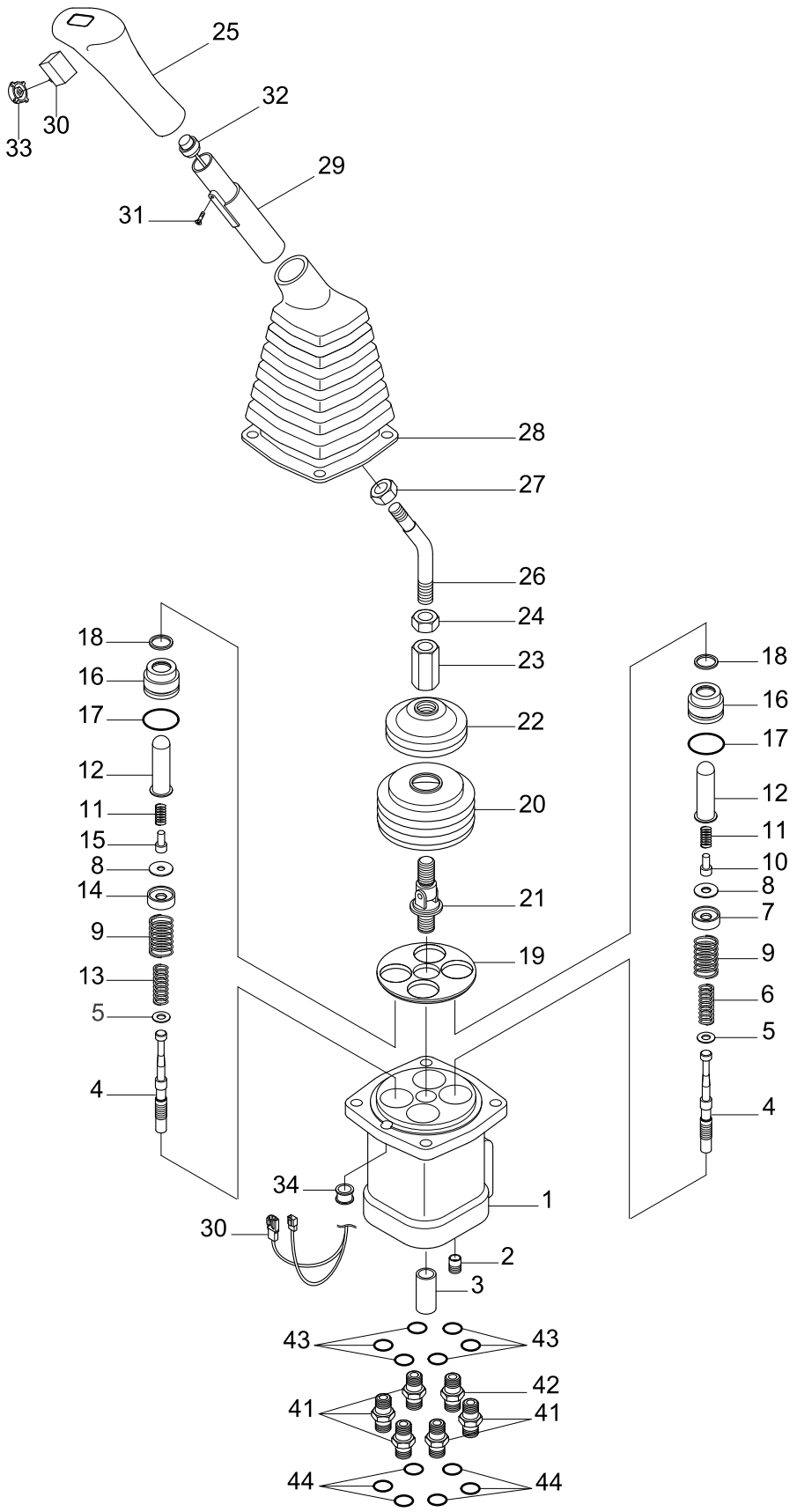

Description	Parts no	Included item
RCV lever seal kit	XKAY-00791	17, 18

Item	Part_No	IS	Ord	T	Description	Qty	Serial_No	ITC	Remark
*	31N6-27200				RCV LEVER SUB ASSY-LH	1	#2709 -	-	AUSTR/NEWZL
	31N6-27210				RCV LEVER SUB ASSY-RH	1	#2709 -	-	AUSTR/NEWZL
*A	31N6-27300				.RCV LEVER ASSY-LH	1			
*B	31N6-27310				.RCV LEVER ASSY-RH	1			
1	XKAY-00766				..CASE	1			
2	XKAY-00065				..PLUG	4			
3	XKAY-00768				..BUSHING	1			
*-1	XKAY-00769				..SPOOL KIT(1,3)	1			
	XKAY-00770				..SPOOL KIT(2,4)	1			
N4	XKAY-00771				...SPOOL	4			NOT
N5	XKAY-00772				...SHIM	AR			NOT
N6	XKAY-00773				...SPRING(1,3)	2			NOT
N7	XKAY-00774				...SPRING SEAT(1,3)	2			NOT
N8	XKAY-00058				...STOPPER	4			NOT
N13	XKAY-00781				...SPRING(2,4)	2			NOT
N14	XKAY-00782				...SPRING SEAT(2,4)	2			NOT
9	XKAY-00775				..SPRING	4			
*-2	XKAY-00776				..PLUG KIT(1,3)	1			
	XKAY-00777				..PLUG KIT(2,4)	1			
N10	XKAY-00778				...STOPPER(1,3)	2			NOT
N11	XKAY-00779				...SPRING	4			NOT
N12	XKAY-00780				...PUSH ROD	4			NOT
N15	XKAY-00783				...STOPPER(2,4)	2			NOT
N16	XKAY-00784				...PLUG	4			NOT
K17	XKAY-00438				...O-RING	4			

Item	Part_No	IS	Ord	T	Description	Qty	Serial_No	ITC	Remark
K18	XKAY-00611				...SEAL-ROD	4			
19	XKAY-00075				..PLATE	1			
20	XKAY-00786				..BOOT	1			
21	XKAY-00049				..JOINT ASSY	1			
22	XKAY-00787				..SWASH PLATE	1			
23	XKAY-00047				..NUT-HEX	1			
*-3	XKAY-00788				..HANDLE KIT-RH	1			
	XKAY-00789				..HANDLE KIT-LH	1			
N24	XKAY-00790				...NUT	1			NOT
N25	XKAY-00330				...HANDLE-RH	1			NOT
	XKAY-00328				...HANDLE-LH	1			NOT
N26	XKAY-00044				...CONNECTOR-HANDLE	1			NOT
N27	XKAY-00043				...NUT	1			NOT
N28	XKAY-00041				...BOOT	1			NOT
29	XKAY-00327				...INSERT	1			
N30	XKAY-00039				...SWITCH ASSY	1			NOT
N31	XKAY-00038				...SCREW	1			NOT
N32	XKAY-00037				...SWITCH ASSY	1			NOT
N33	XKAY-00036				...COVER-SWITCH	1			NOT
34	XKAY-00074				..BUSHING	1			
41	X500-110013				.CONNECTOR-ORFS	5			
42	31N6-22080				.FILTER-LAST GUARD	1			
43	S631-014004				.O-RING	6			
44	S621-011001				.O-RING	6			
K	XKAY-00791				SEAL KIT	1			SEE ILLUST

Item	Part_No	IS	Ord	T	Description	Qty	Serial_No	ITC	Remark
N	@				NOT INDIVIDUALLY SUPPLIED	AR			NOT

REMOTE CONTROL PEDAL

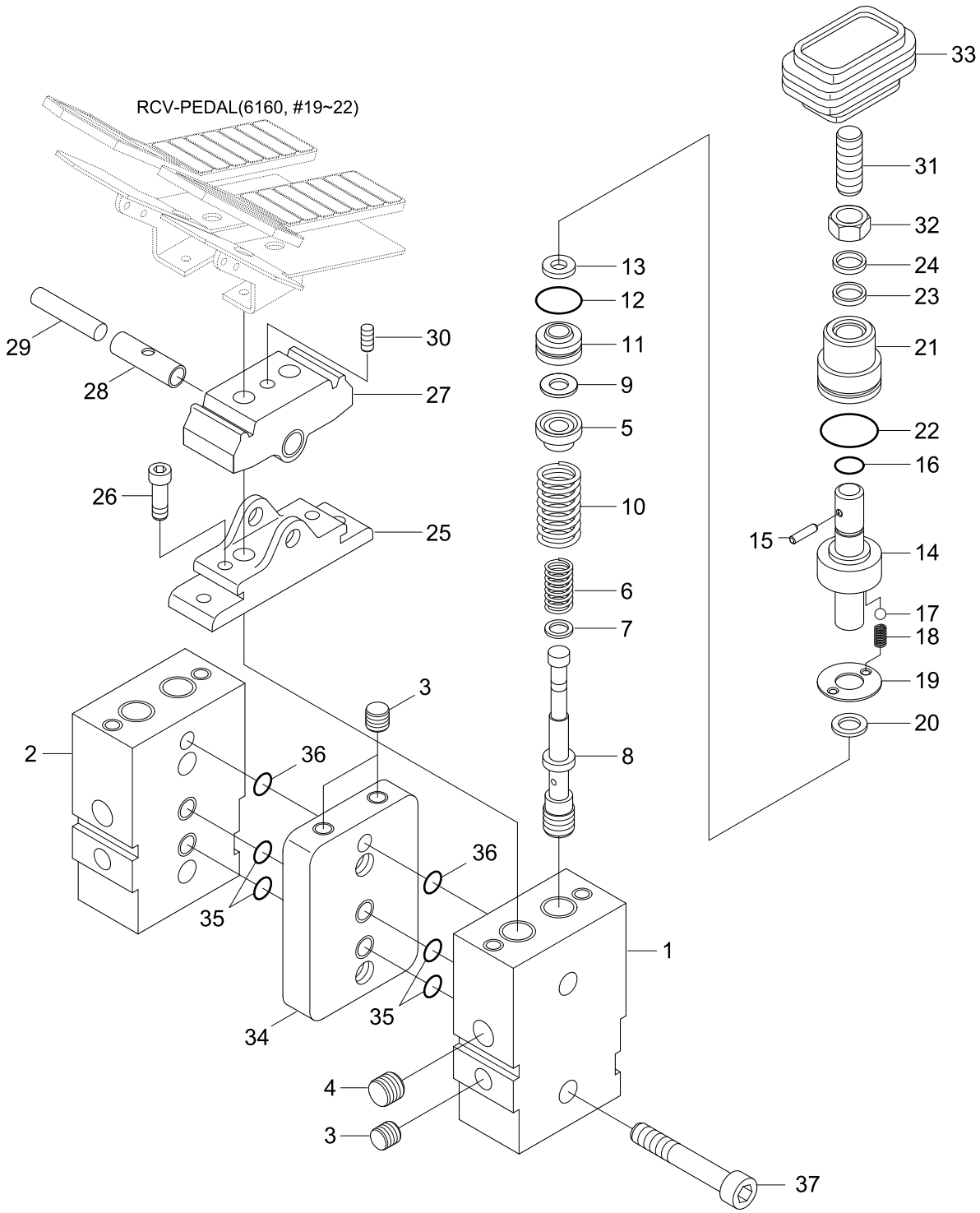

Item	Part_No	IS	Ord	T	Description	Qty	Serial_No	ITC	Remark
*	31N6-20020				RCV PEDAL	1			
1	XKAY-00035				.BODY(1)	1			
2	XKAY-00034				.BODY(2)	1			
3	XKAY-00033				.PLUG	4			
4	XKAY-00032				.PLUG	2			WPT38
5	XKAY-00031				.SEAT-SPRING	4			
6	XKAY-00030				.SPRING	4			
7	XKAY-00029				.SEAT-SPRING	4			J24D2008
8	XKAY-00028				.SPOOL	4			
9	XKAY-00027				.STOPPER	4			
10	XKAY-00026				.SPRING	4			
11	XKAY-00025				.GUIDE-ROD	4			
12	XKAY-00024				.O-RING	4			
13	XKAY-00069				.RING-SNAP	4			
14	XKAY-00023				.ROD-PUSH	4			
15	XKAY-00022				.PIN-SPRING	4			
16	XKAY-00021				.SEAL	4			
17	XKAY-00020				.BALL-STEEL	4			
18	XKAY-00019				.SPRING	4			
19	XKAY-00068				.PLATE	4			
20	XKAY-00018				.RING-SNAP	4			
21	XKAY-00017				.PLUG	4			
22	XKAY-00016				.O-RING	4			
23	XKAY-00067				.SEAL-ROD	4			
24	XKAY-00014				.SEAL-DUST	4			

Item	Part_No	IS	Ord	T	Description	Qty	Serial_No	ITC	Remark
25	XKAY-00013				.COVER	4			
26	XKAY-00012				.BOLT-SOCKET	4			
27	XKAY-00011				.CAM	2			J24D2005
28	XKAY-00010				.BUSHING	4			DU1010
29	XKAY-00009				.SHAFT-CAM	2			J24D2016
30	XKAY-00008				.SCREW-SET	2			
31	XKAY-00007				.SCREW-SET	4			J24D2015
32	XKAY-00006				.NUT-HEX	4			HNM10
33	XKAY-00005				.BELLOWS	2			J24D2006
34	XKAY-00004				.SPACER	1			
35	XKAY-00003				.O-RING	4			
36	XKAY-00002				.O-RING	2			
37	XKAY-00001				.BOLT-SOCKET	4			

TRAVEL MOTOR(1/3)

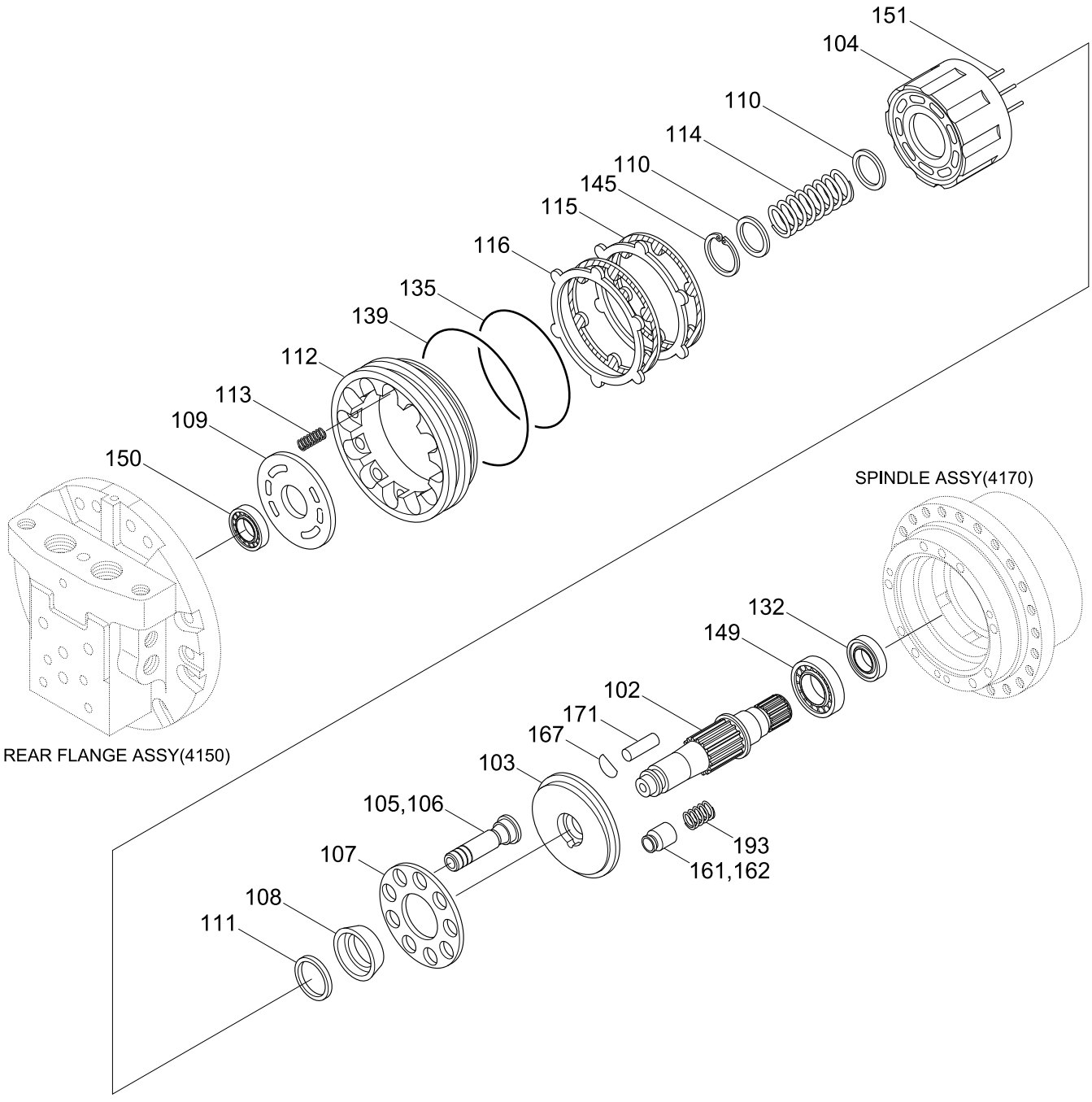

Description	Parts no	Included item
Travel motor seal kit	XKAH-00366	28, 29, 31, 40, 132, 135, 139, 208~211 217, 219, 220, 336, 337, 355, 358, 359, 383, 384

Item	Part_No	IS	Ord	T	Description	Qty	Serial_No	ITC	Remark
*	31E6-42000				TRACK MOTOR	1	- #2947		*-1,2,3,4
	31E6-42000BG				TRACK MOTOR	1	#2948 -	D	
*-3	XKAH-00322				.TRAVEL MOTOR UNIT	1			
*-30	XKAH-00321				..C/BLOCK & PISTON KIT	1			
*-31	XKAH-00068				...PISTON ASSY	1			
N105	XKAH-00069				....PISTON	9			NOT
N106	XKAH-00070				....SHOE	9			NOT
104	XKAH-00320				...BLOCK-CYLINDER	1			
107	XKAH-00072				...PLATE-RETAINER	1			
108	XKAH-00073				...BALL-THRUST	1			
110	XKAH-00074				...WASHER	2			
111	XKAH-00318				...COLLAR	1			
114	XKAH-00076				...SPRING	1			
151	XKAH-00077				...ROLLER	5			
*-32	XKAH-00078				..PISTON KIT-2 SPEED	1			
N161	XKAH-00079				...PISTON-2 SPEED	1			NOT
N162	XKAH-00080				...SHOE-2 SPEED	1			NOT
102	XKAH-00317				..SHAFT-MAIN	1			
103	XKAH-00316				..TIMING PLATE	1			
109	XKAH-00083				..PLATE-TIMING	1			
112	XKAH-00084				..PISTON-PARKING	1			
113	XKAH-00085				..SPRING	12			
115	XKAH-00086				..PLATE-FRICTION	2			
116	XKAH-00087				..PLATE-MATING	2			
K132	XKAH-00088				..SEAL-OIL	1			

Item	Part_No	IS	Ord	T	Description	Qty	Serial_No	ITC	Remark
K135	XKAH-00089				..O-RING	1			
K139	XKAH-00090				..O-RING	1			
145	XKAH-00315				..RING-SNAP	1			
149	XKAH-00314				..BEARING-BALL	1			
150	XKAH-00313				..BEARING-BALL	1			
193	XKAH-00094				..SPRING	1			
167	XKAH-00095				..PIVOT	1			
171	XKAH-00034				..PIN-PARALLEL	2			
*-1	XKAH-00367				.REDUCTION GEAR ASSY	1			
*-2	XKAH-00333				.CONTROL UNIT	1			
*-4	XKAH-00097				.RELIEF VALVE KIT	1			
K	XKAH-00366				SEAL KIT	1			SEE ILLUST
N	@				NOT INDIVIDUALLY SUPPLIED	1			NOT

TRAVEL MOTOR(2/3)

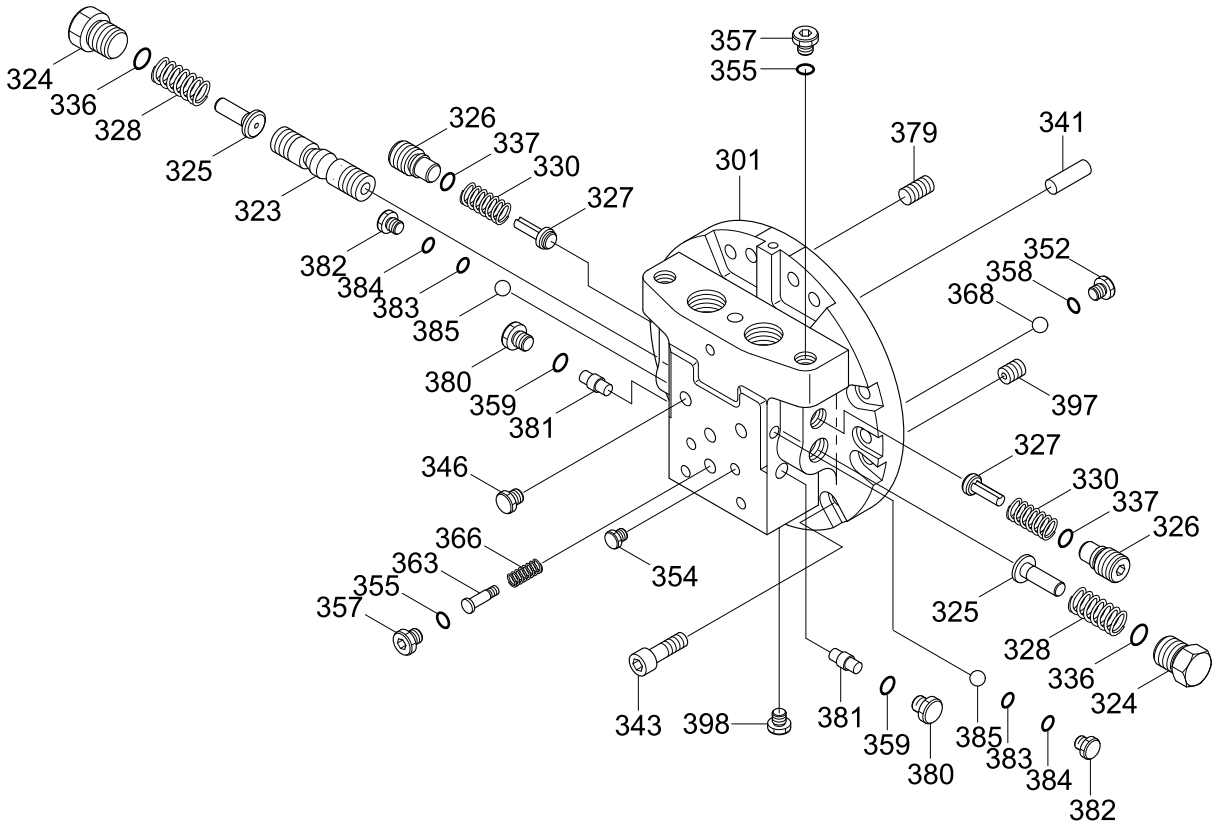

Description	Parts no	Included item
Travel motor seal kit	XKAH-00366	28, 29, 31, 40, 132, 135, 139, 208~211 217, 219, 220, 336, 337, 355, 358, 359, 383, 384

Item	Part_No	IS	Ord	T	Description	Qty	Serial_No	ITC	Remark
*	@				TRAVEL MOTOR	1			NOT
*-2	XKAH-00333				.CONTROL UNIT	1			
*-20	XKAH-00332				..REAR FLANGE ASSY	1			
*-21	XKAH-00331				...REAR FLANGE KIT	1			
N301	XKAH-00330				....FLANGE-REAR	1			NOT
N323	XKAH-00329				....SPOOL	1	- #1302		NOT
	XKAH-00636				....SPOOL	1	#1303 -	B	NOT
381	XKAH-00040				...PISTON	1	- #1302		
	XKAH-00635				...PISTON	1	#1303 -	B	
324	XKAH-00328				...PLUG	2			
325	XKAH-00042				...STOPPER	2	- #1302		
	XKAH-00634				...STOPPER	2	#1303 -	B	
326	XKAH-00043				...PLUG	2			
327	XKAH-00044				...VALVE-CHECK	2			
328	XKAH-00045				...SPRING	2			
330	XKAH-00046				...SPRING	2			
K336	XKAH-00047				...O-RING	2			
K337	XKAH-00048				...O-RING	2			
346	XKAH-00327				...PLUG-PT	2			
352	XKAH-00050				...PLUG-RO	2			
354	XKAH-00208				...PLUG-PT	8			
K355	XKAH-00035				...O-RING	2			
357	XKAH-00032				...PLUG-RO	2			
K358	XKAH-00052				...O-RING	2			
K359	XKAH-00326				...O-RING	2			

Item	Part_No	IS	Ord	T	Description	Qty	Serial_No	ITC	Remark
N363	XKAH-00054				...SPOOL-2 SPEED	1			NOT
366	XKAH-00055				...SPRING	1			
368	XKAH-00056				...BALL-STEEL	2			
379	XKAH-00057				...FILTER	1			
380	XKAH-00058				...PLUG	2			
382	XKAH-00059				...PLUG	2			
K383	XKAH-00060				...O-RING	2			
K384	XKAH-00194				...O-RING	2			
385	XKAH-00061				...BALL-STEEL	2			
397	XKAH-00062				...ORIFICE	1			
398	XKAH-00325				...PLUG	4			
399	XKAH-00324				...PLATE-NAME	1			
341	XKAH-00065				..PIN-PARALLEL	1			
343	XKAH-00066				..BOLT-SOCKET	12			
*-1	XKAH-00367				.REDUCTION GEAR ASSY	1			
*-3	XKAH-00322				.TRAVEL MOTOR UNIT	1			
*-4	XKAH-00097				.RELIEF VALVE KIT	1			
K	XKAH-00366				SEAL KIT	1			SEE ILLUST
N	@				NOT INDIVIDUALLY SUPPLIED	1			NOT

TRAVEL MOTOR(3/3)

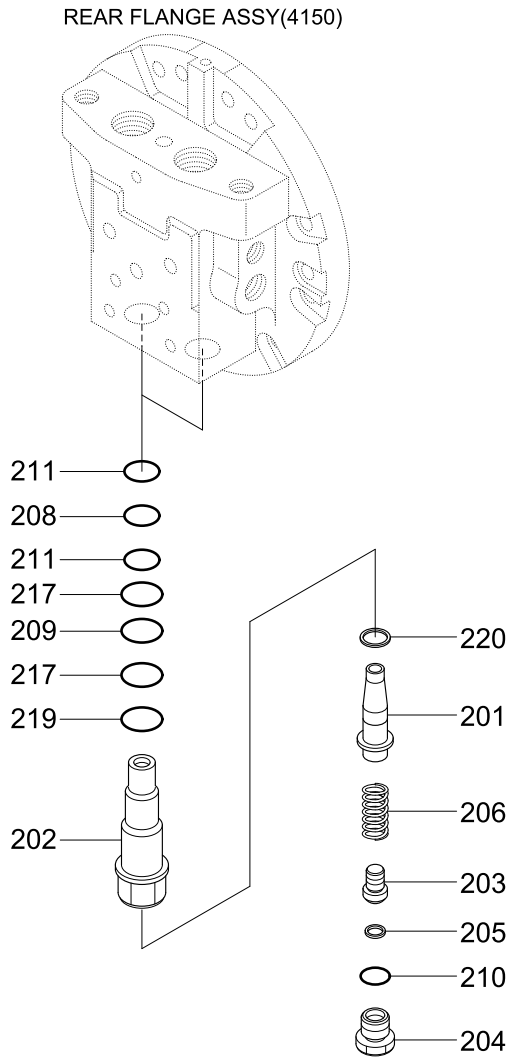

Description	Parts no	Included item
Travel motor seal kit	XKAH-00366	28, 29, 31, 40, 132, 135, 139, 208~211 217, 219, 220, 336, 337, 355, 358, 359, 383, 384

Item	Part_No	IS	Ord	T	Description	Qty	Serial_No	ITC	Remark
*	@				TRAVEL MOTOR	1			NOT
*-4	XKAH-00097				..RELIEF VALVE KIT	2			716691
N201	XKAH-00098				...VALVE	1			NOT
N202	XKAH-00099				...SLEEVE	1			NOT
N203	XKAH-00100				...RETAINER-SPRING	1			NOT
N204	XKAH-00101				...PLUG	1			NOT
N205	XKAH-00102				...SHIM	1			NOT
N206	XKAH-00103				...SPRING	1			NOT
N208	XKAH-00104				...O-RING	1			NOT
N209	XKAH-00105				...O-RING	1			NOT
N210	XKAH-00035				...O-RING	1			NOT
N211	XKAH-00106				...RING-BACK UP	2			NOT
N217	XKAH-00107				...RING-BACK UP	2			NOT
N219	XKAH-00108				...O-RING	1			NOT
N220	XKAH-00109				...SEAL-PISTON	1			NOT
*-1	XKAH-00367				.REDUCTION GEAR ASSY	1			718860
*-2	XKAH-00333				.CONTROL UNIT	1			
*-3	XKAH-00322				.HYD MOTOR	1			
K	XKAH-00366				SEAL KIT	1			SEE ILLUST
N	@				NOT INDIVIDUALLY SUPPLIED	1			NOT

TRAVEL REDUCTION GEAR

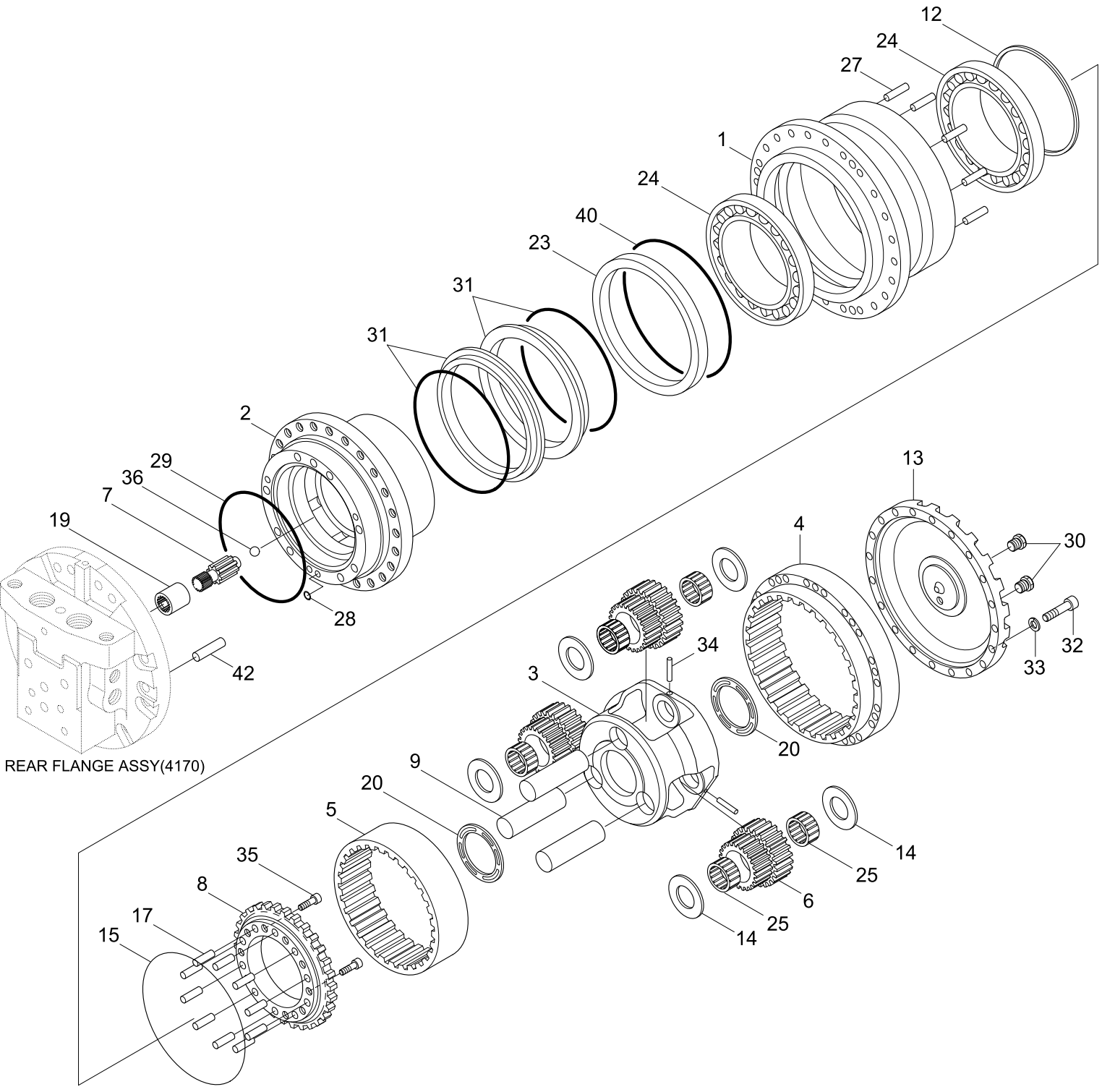

Description	Parts no	Included item
Travel motor seal kit	XKAH-00366	28, 29, 31, 40, 132, 135, 139, 208~211 217, 219, 220, 336, 337, 355, 358, 359, 383, 384

Item	Part_No	IS	Ord	T	Description	Qty	Serial_No	ITC	Remark
*	@				TRAVEL MOTOR	1			NOT
*-1	XKAH-00367				.REDUCTION GEAR ASSY	1			718860
*-11	XKAH-00368				..HUB ASSY	1			
N1	XKAH-00364				...HUB	1			NOT
N4	XKAH-00363				...GEAR-RING(A)	1			NOT
*-12	XKAH-00369				..SPINDLE KIT	1			
*-12A	XKAH-00362				...SPINDLE ASSY	1			718863
N2	XKAH-00361				....SPINDLE	1			NOT
N8	XKAH-00360				....GEAR-COUPLING	1			NOT
N17	XKAH-00334				...PIN-PARALLEL	10	#0001 -	-	NOT
N35	XKAH-00359				...BOLT-SOCKET	10			NOT
*-13	XKAH-00358				...CARRIER KIT	1			719280
*-13A	XKAH-00357				...CARRIER ASSY	1			719281
N3	XKAH-00356				....CARRIER	1			NOT
N6	XKAH-00355				....GEAR-CLUSTER	3			NOT
N9	XKAH-00354				....SHAFT-CLUSTER	3			NOT
N14	XKAH-00353				....COLLAR-THRUST	6			NOT
N25	XKAH-00352				....BEARING-NEEDLE	6			NOT
N34	XKAH-00351				....PIN-PARALLEL	3			NOT
5	XKAH-00350				..GEAR-RING(B)	1			215809A
7	XKAH-00349				..GEAR-SUN	1			215811A
12	XKAH-00348				..PIECE-DISTANCE	1			117094
13	XKAH-00347				..COVER	1			
15	XKAH-00346				..RING	1			116966
19	XKAH-00345				..COUPLING	1			116967

Item	Part_No	IS	Ord	T	Description	Qty	Serial_No	ITC	Remark
20	XKAH-00344				..PLATE-THRUST	2			215814A
N23	XKAH-00343				..RING-SEAL	1			NOT
*-14	XKAH-00342				..FLOATING SEAL KIT	1			719282
N31	XKAH-00341				...SEAL-FLOATING	2			NOT
24	XKAH-00340				..BEARING-A/BALL	2			231969
27	XKAH-00339				..PIN-PARALLEL	10			116962A
28	XKAH-00194				..O-RING	2			201765
29	XKAH-00028				..O-RING	1			204449A
30	XKAH-00338				..PLUG	3			
32	XKAH-00337				..BOLT	20			
33	XKAH-00336				..WASHER-SPRING	20			210470
36	XKAH-00033				..BALL-STEEL	1			203316
40	XKAH-00335				..O-RING	1			203361
42	XKAH-00034				..PIN-PARALLEL	2	#0001 -	-	104044A
*-2	XKAH-00333				.CONTROL UNIT	1			
*-3	XKAH-00322				.HYD MOTOR	1			
*-4	XKAH-00097				.RELIEF VALVE KIT	1			716691
K	XKAH-00366				SEAL KIT	1			SEE ILLUST
N	@				NOT INDIVIDUALLY SUPPLIED	1			NOT

TRAVEL MOTOR(1/3, #0239-#2712, LCM-7)

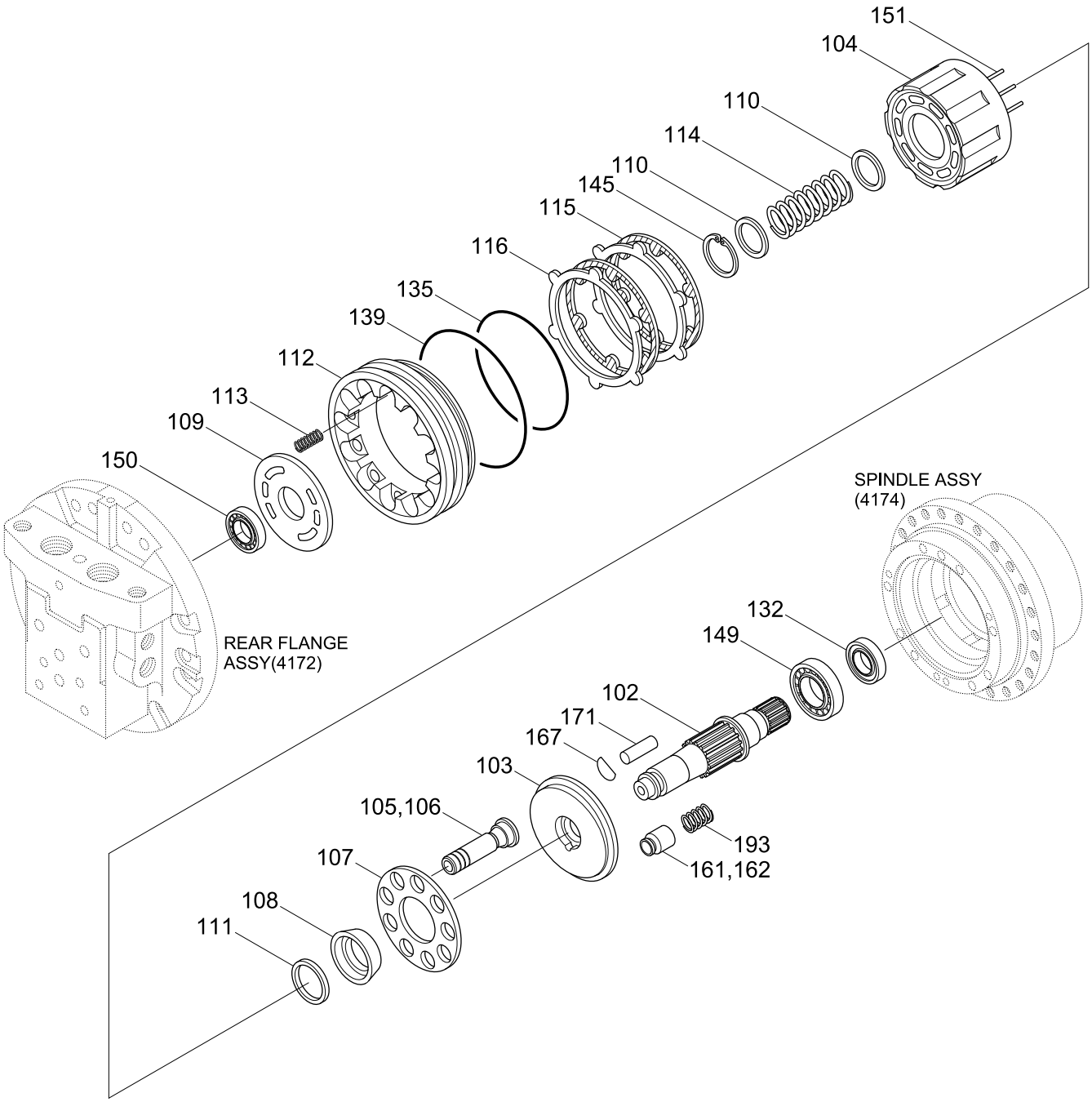

Description	Parts no	Included item
Travel motor seal kit	XKAH-00111	27, 29~31, 43, 132, 135, 139, 208~211 217, 219, 220, 336, 337, 355, 358, 359, 383, 384

Item	Part_No	IS	Ord	T	Description	Qty	Serial_No	ITC	Remark
*	31EL-40010				TRAVEL MOTOR ASSY	1	#0239 - #2712	-	*-1,*-2
*-1	XKAH-00481				.TRAVEL MOTOR UNIT	1			
*-5	XKAH-00321				..C/BLOCK & PISTON KIT	1			
*-51	XKAH-00068				...PISTON ASSY	1			
N105	XKAH-00069				....PISTON	9			NOT
N106	XKAH-00070				....SHOE	9			NOT
N104	XKAH-00071				...BLOCK-CYLINDER	1			NOT
107	XKAH-00072				...PLATE-RETAINER	1			
108	XKAH-00073				...BALL-THRUST	1			
110	XKAH-00074				...WASHER	2			
111	XKAH-00318				...COLLAR	1			
114	XKAH-00076				...SPRING	1			
151	XKAH-00077				...ROLLER	5			
*-6	XKAH-00078				..PISTON KIT-2 SPEED	1			
N161	XKAH-00079				...PISTON-2 SPEED	1			NOT
N162	XKAH-00080				...SHOE-2 SPEED	1			NOT
102	XKAH-00081				..SHAFT-MAIN	1			
103	XKAH-00467				..PLATE-SWASH	1			
109	XKAH-00468				..PLATE-TIMING	1			
112	XKAH-00084				..PISTON-PARKING	1			
113	XKAH-00085				..SPRING	12			
115	XKAH-00086				..PLATE-FRICTION	2			
116	XKAH-00087				..PLATE-MATING	2			
K132	XKAH-00088				..SEAL-OIL	1			
K135	XKAH-00089				..O-RING	1			

Item	Part_No	IS	Ord	T	Description	Qty	Serial_No	ITC	Remark
K139	XKAH-00090				..O-RING	1			
145	XKAH-00091				..RING-SNAP	1			
149	XKAH-00092				..BEARING-BALL	1			
150	XKAH-00093				..BEARING-BALL	1			
167	XKAH-00095				..PIVOT	1			
171	XKAH-00034				..PIN-PARALLEL	2			
193	XKAH-00094				..SPRING	1			
*-2	@				..REDUCTION GEAR	1			NOT
K	XKAH-00111				.SEAL KIT	1			SEE ILLUST
N	@				NOT INDIVIDUALLY SUPPLIED	AR			NOT

TRAVEL MOTOR(2/3, #0239-#2712, LCM-7)

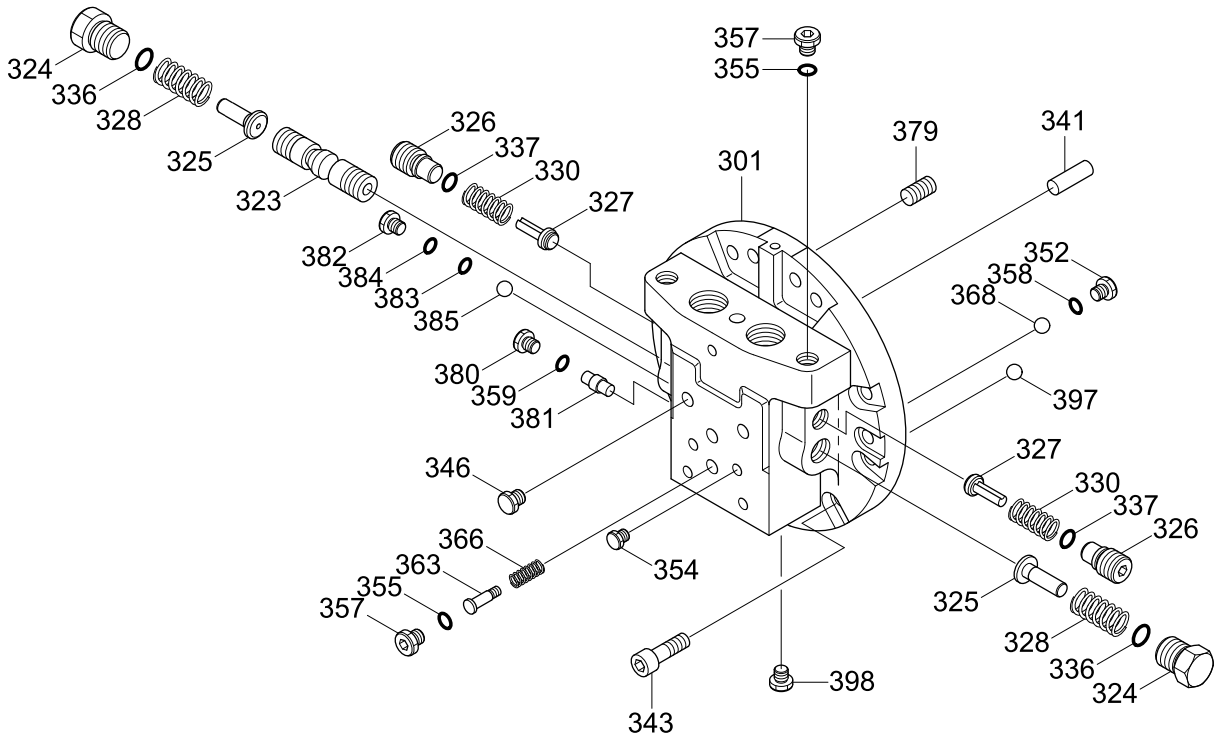

Description	Parts no	Included item
Travel motor seal kit	XKAH-00111	27, 29~31, 43, 132, 135, 139, 208~211 217, 219, 220, 336, 337, 355, 358, 359, 383, 384

Item	Part_No	IS	Ord	T	Description	Qty	Serial_No	ITC	Remark
*	@				TRAVEL MOTOR ASSY	1	#0239 - #2712	-	NOT
*-1	@				.TRAVEL MOTOR UNIT	1			NOT
*-7	XKAH-00469				..FLANGE ASSY-REAR	1			
*-71	XKAH-00470				...REAR FLANGE KIT	1			
N301	XKAH-00038				....REAR FLANGE	1			NOT
N323	XKAH-00471				....SPOOL	1			NOT
N381	XKAH-00040				....PISTON	1			NOT
324	XKAH-00041				...PLUG	2			
325	XKAH-00042				...STOPPER	2			
326	XKAH-00043				...PLUG	2			
327	XKAH-00044				...VALVE-CHECK	2			
328	XKAH-00045				...SPRING	2			
330	XKAH-00046				...SPRING	2			
K336	XKAH-00047				...O-RING	2			
K337	XKAH-00048				...O-RING	2			
346	XKAH-00049				...PLUG-PT	2			
352	XKAH-00050				...PLUG-RO	2			
354	XKAH-00051				...PLUG-NPTF	8			
K355	XKAH-00035				...O-RING	2			
357	XKAH-00032				...PLUG-RO	2			
K358	XKAH-00052				...O-RING	2			
K359	XKAH-00053				...O-RING	2			
363	XKAH-00054				...SPOOL-2 SPEED	1			
366	XKAH-00472				...SPRING	1			
368	XKAH-00056				...BALL-STEEL	2			

Item	Part_No	IS	Ord	T	Description	Qty	Serial_No	ITC	Remark
379	XKAH-00057				...FILTER	1			
380	XKAH-00058				...PLUG	2			
382	XKAH-00059				...PLUG	2			
K383	XKAH-00060				...O-RING	2			
K384	XKAH-00027				...O-RING	2			
385	XKAH-00061				...BALL-STEEL	2			
397	XKAH-00062				...ORIFICE	1			
398	XKAH-00063				...PLUG-PT	4			
N399	XKAH-00473				...NAME PLATE	1			NOT
341	XKAH-00065				..PIN-PARALLEL	1			
343	XKAH-00066				..BOLT-SOCKET	12			
*-2	@				.REDUCTION GEAR	1			NOT
K	XKAH-00111				.SEAL KIT	1			SEE ILLUST
N	@				NOT INDIVIDUALLY SUPPLIED	AR			NOT

TRAVEL MOTOR(3/3, #0239-#2712, LCM-7)

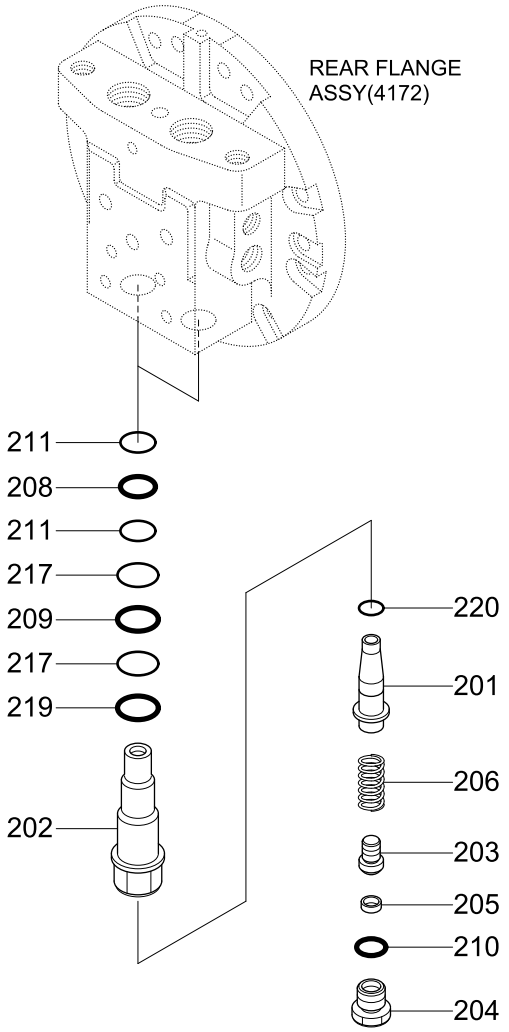

Description	Parts no	Included item
Travel motor seal kit	XKAH-00111	27, 29~31, 43, 132, 135, 139, 208~211 217, 219, 220, 336, 337, 355, 358, 359, 383, 384

Item	Part_No	IS	Ord	T	Description	Qty	Serial_No	ITC	Remark
*	@				TRAVEL MOTOR ASSY	1	#0239 - #2712	-	NOT
*-1	@				.TRAVEL MOTOR UNIT	1			NOT
*-8	XKAH-00096				..RELIEF VALVE ASSY	2			
*-81	XKAH-00097				..RELIEF VALVE KIT	1			
N201	XKAH-00098				...VALVE	1			NOT
N202	XKAH-00099				...SLEEVE	1			NOT
N203	XKAH-00100				...RETAINER-SPRING	1			NOT
N204	XKAH-00101				...PLUG	1			NOT
N205	XKAH-00102				...SHIM	1			NOT
N206	XKAH-00103				...SPRING	1			NOT
K208	XKAH-00104				...O-RING	1			
K209	XKAH-00105				...O-RING	1			
K210	XKAH-00035				...O-RING	1			
K211	XKAH-00106				...RING-BACK UP	2			
K217	XKAH-00107				...RING-BACK UP	2			
K219	XKAH-00108				...O-RING	1			
K220	XKAH-00109				...SEAL-PISTON	1			
*-2	@				.REDUCTION GEAR	1			NOT
K	XKAH-00111				.SEAL KIT	1			SEE ILLUST
N	@				NOT INDIVIDUALLY SUPPLIED	AR			NOT

TRAVEL REDUCTION GEAR(#0239-#2712, LCM-7)

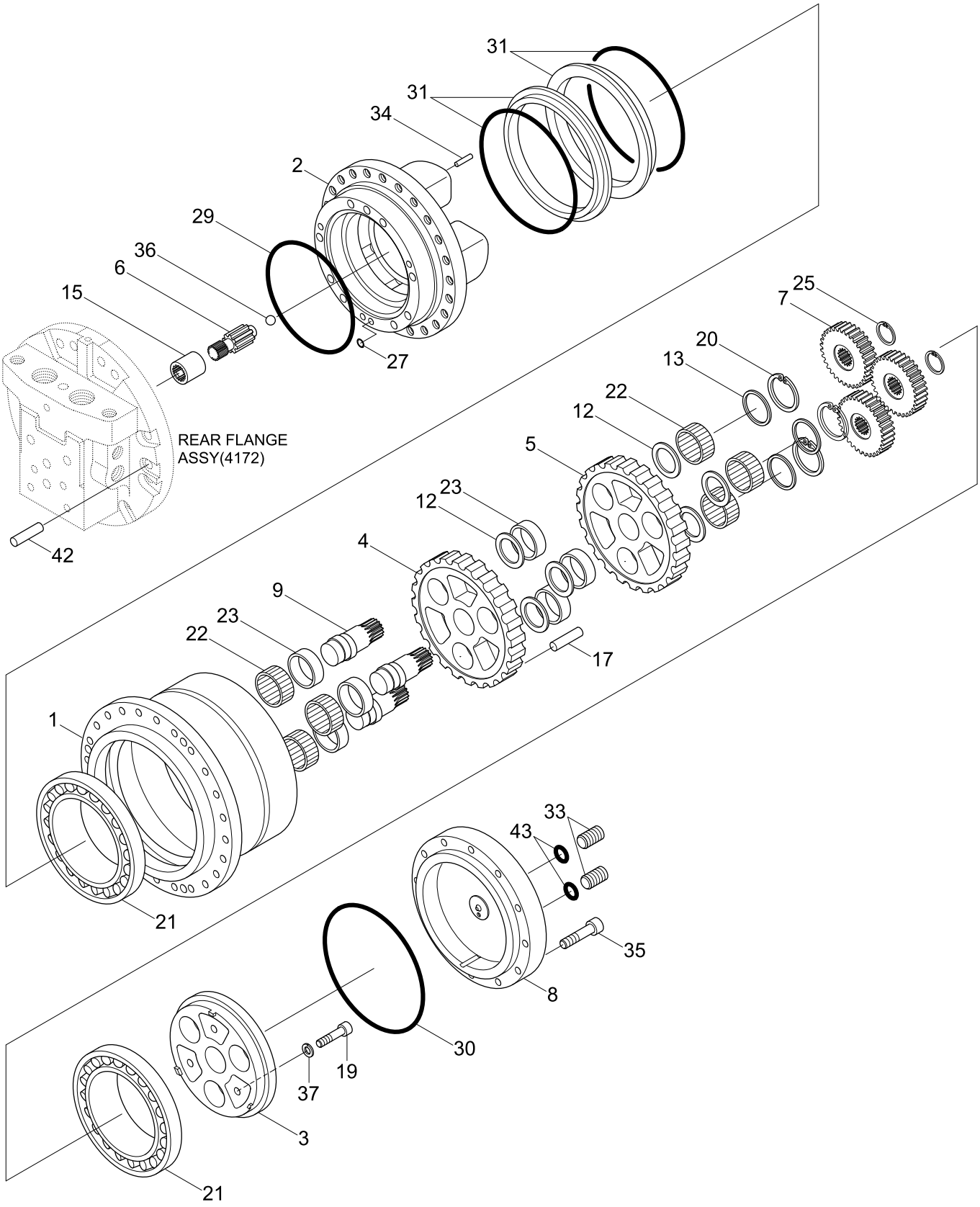

Description	Parts no	Included item
Travel motor seal kit	XKAH-00111	27, 29~31, 43, 132, 135, 139, 208~211 217, 219, 220, 336, 337, 355, 358, 359, 383, 384

Item	Part_No	IS	Ord	T	Description	Qty	Serial_No	ITC	Remark
*	@				TRAVEL MOTOR ASSY	1	#0239 - #2712	-	NOT
*-2	XKAH-00474				.T/REDUCTION GEAR	1			
1	XKAH-00001				..HUB	1			
*-9	XKAH-00002				..SPINDLE KIT	1			
*-91	XKAH-00003				...SPINDLE ASSY	1			
N2	XKAH-00004				....SPINDLE	1			NOT
N3	XKAH-00005				....HOLDER-FLANGE	1			NOT
N19	XKAH-00006				...BOLT-SOCKET	3			NOT
N34	XKAH-00007				...PIN-PARALLEL	6			NOT
N37	XKAH-00008				...WASHER-PLAIN	3			NOT
*-10	XKAH-00371				..RV GEAR ASSY	1			
*-101	XKAH-00010				...RV GEAR KIT	1			
N4	XKAH-00475				....RV GEAR(A)	1			NOT
N5	XKAH-00476				....RV GEAR(B)	1			NOT
N9	XKAH-00477				...SHAFT-CRANK	3			NOT
N12	XKAH-00014				...SPACER	6			NOT
N22	XKAH-00015				...BEARING-T/ROLLER	6			NOT
N23	XKAH-00016				...BEARING-NEEDLE	6			NOT
6	XKAH-00017				..GEAR-INPUT	1			
*-11	XKAH-00018				..GEAR-SPUR KIT	1			
7	XKAH-00019				...GEAR-SPUR	3			
8	XKAH-00480				..COVER	1			
13	XKAH-00021				..PIECE-DISTANCE	3			
15	XKAH-00022				..COUPLING	1			
17	XKAH-00023				..PIN	24			

Item	Part_No	IS	Ord	T	Description	Qty	Serial_No	ITC	Remark
20	XKAH-00024				..RING-SNAP	3			
21	XKAH-00025				..BEARING-BALL	2			
25	XKAH-00026				..RING-SNAP	3			
K27	XKAH-00027				...O-RING	2			
K29	XKAH-00028				..O-RING	1			
K30	XKAH-00029				..O-RING	1			
*-12	XKAH-00372				..FLOATING SEAL KIT	1			
KN31	XKAH-00031				...SEAL-FLOATING	2			NOT
33	XKAH-00032				..PLUG-RO	3			
35	XKAH-00110				..BOLT-SOCKET	12			
36	XKAH-00033				..BALL-STEEL	1			
42	XKAH-00034				..PIN-PARALLEL	2			
K43	XKAH-00035				..O-RING	3			
*-1	@				.TRAVEL MOTOR UNIT	1			NOT
K	XKAH-00111				.SEAL KIT	1			SEE ILLUST

TRAVEL MOTOR(#2173-, 1/2, TYPE 1, LCM-7)

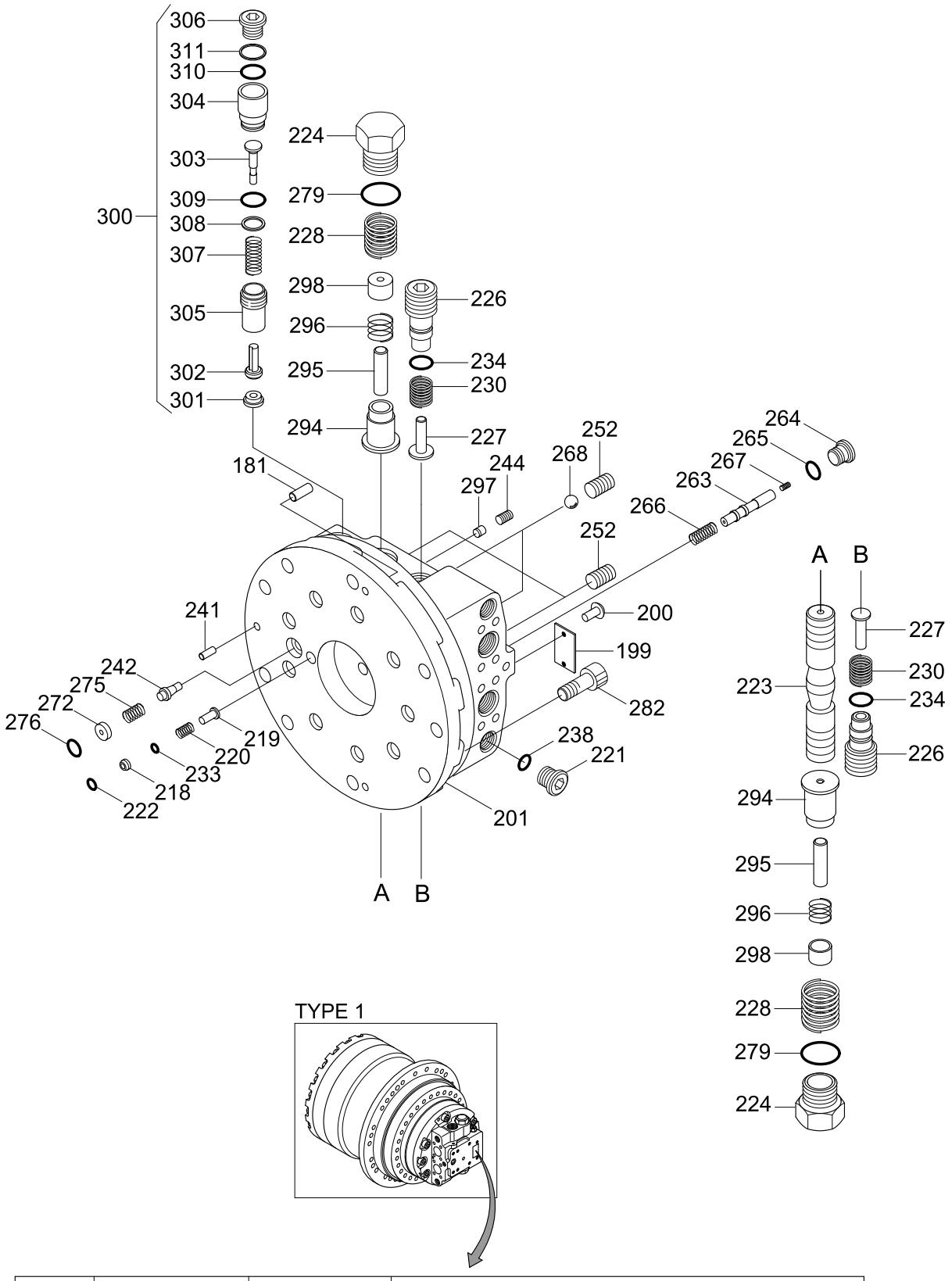

TYPE 1

Type	Travel motor	Serial no	Remark
TYPE 1	31N5-40060	#2713-#2854	When ordering, check part no of travel motor assy on name plate.
	31N5-40061	#2855-#2947	
	31N5-40061BG	#2948-	
TYPE 2	31N5-40081BG	#3330-	

Description	Parts no	Included item
Travel motor seal kit	XKAH-01074	26, 29, 39, 40, 132, 139, 178, 233, 234, 238, 265, 279, 309, 310, 311

Item	Part_No	IS	Ord	T	Description	Qty	Serial_No	ITC	Remark
*	31N5-40060				TRAVEL MOTOR ASSY	1	#2713 - #2854	B	SEE 4171
	31N5-40061				TRAVEL UNIT	1	#2855 -	B	
					TRAVEL UNIT	1	#2855 - #2947	B	
	31N5-40061BG				TRAVEL MOTOR	1	#2948 -	D	
*-2	XKAH-01067				.REAR FLANGE ASSY	1			
*-21	XKAH-01075				..REAR FLANGE KIT	1			
N201	XKAH-01069				...FLANGE-REAR	1	- #2854		NOT
	XKAH-00873				...FLANGE-REAR	1	#2885 -	D	NOT
N223	XKAH-00633				...SPOOL-MAIN	1			NOT
*-3	XKAH-00874				..STOPPER ASSY	2			
N294	XKAH-00875				...STOPPER-A	1			NOT
N298	XKAH-00876				...STOPPER-B	1			NOT
N295	XKAH-01052				...SPOOL	1			NOT
N296	XKAH-01040				...SPRING	1			NOT
224	XKAH-00328				..PLUG	2			
228	XKAH-00045				..SPRING	2			
279	XKAH-00047				..O-RING	2			
226	XKAH-00043				..PLUG	2			
227	XKAH-00879				..VALVE-CHECK	2			
230	XKAH-00046				..SPRING	2			
234	XKAH-00048				..O-RING	2			
221	XKAH-00032				..PLUG-RO	1			
238	XKAH-00035				..O-RING	1			
252	XKAH-00327				..PLUG-PT	4			
244	XKAH-00880				..PLUG	1			

Item	Part_No	IS	Ord	T	Description	Qty	Serial_No	ITC	Remark
268	XKAH-00056				..BALL-STEEL	2			
242	XKAH-00411				..VALVE	1			
272	XKAH-00462				..SEAT-VALVE	1			
276	XKAH-00382				..RING	1			
275	XKAH-00383				..SPRING	1			
218	XKAH-00881				..SEAT-VALVE	1			
219	XKAH-00392				..VALVE	1			
220	XKAH-00391				..SPRING	1			
222	XKAH-00390				..RING(FOR T-TYPE)	1			
233	XKAH-00389				..O-RING	1			
263	XKAH-00882				..SPOOL-2SPEED	1			
264	XKAH-00050				..PLUG-RO	1			
265	XKAH-00052				..O-RING	3			
266	XKAH-01068				..SPRING-2 SPEED	1			
267	XKAH-00884				..SCREW-SET	1			
241	XKAH-00065				..PIN-PARALLEL	2			
297	XKAH-00885				..ORIFICE	1			
282	XKAH-00066				..BOLT-SOCKET	9			
199	XKAH-01070				.NAME PLATE	1			
	150469				.NAME PLATE	1			
200	XKAH-00116				..SCREW-RIVET	2			
*-4	XKAH-01065				.RELIEF VALVE ASSY	2			
N301	XKAH-00888				..SEAT	1	- #2884		NOT
	XKAH-01066				..SEAT	1	#2885 -	D	NOT
N302	XKAH-00889				..PLUNGER	1	- #2884		NOT

Item	Part_No	IS	Ord	T	Description	Qty	Serial_No	ITC	Remark
N302	XKAH-01064				..PLUNGER	1	#2885 -	D	NOT
N303	XKAH-00667				..ROD	1	- #2884		NOT
	XKAH-01063				..ROD	1	#2885 -	D	NOT
N304	XKAH-00668				..PISTON	1			NOT
N305	XKAH-00670				..BODY	1			NOT
N306	XKAH-00666				..PLUG	1	- #2884		NOT
	XKAH-01062				..PLUG	1	#2885 -	D	NOT
N307	XKAH-00890				..SPRING	1	- #2884		NOT
	XKAH-00671				..SPRING	1	#2885 -	D	NOT
N308	XKAH-00669				..SHIM	1			NOT
N309	XKAH-00035				..O-RING	1			NOT
N310	XKAH-00035				..O-RING	1			NOT
N311	XKAH-00665				..RING-BACK UP	1			NOT
K	XKAH-01074				SEAL KIT	1			SEE ILLUST
N	@				NOT INDIVIDUALLY SUPPLIED	AR			NOT

TRAVEL MOTOR(#2173-, 2/2, TYPE 1, LCM-7)

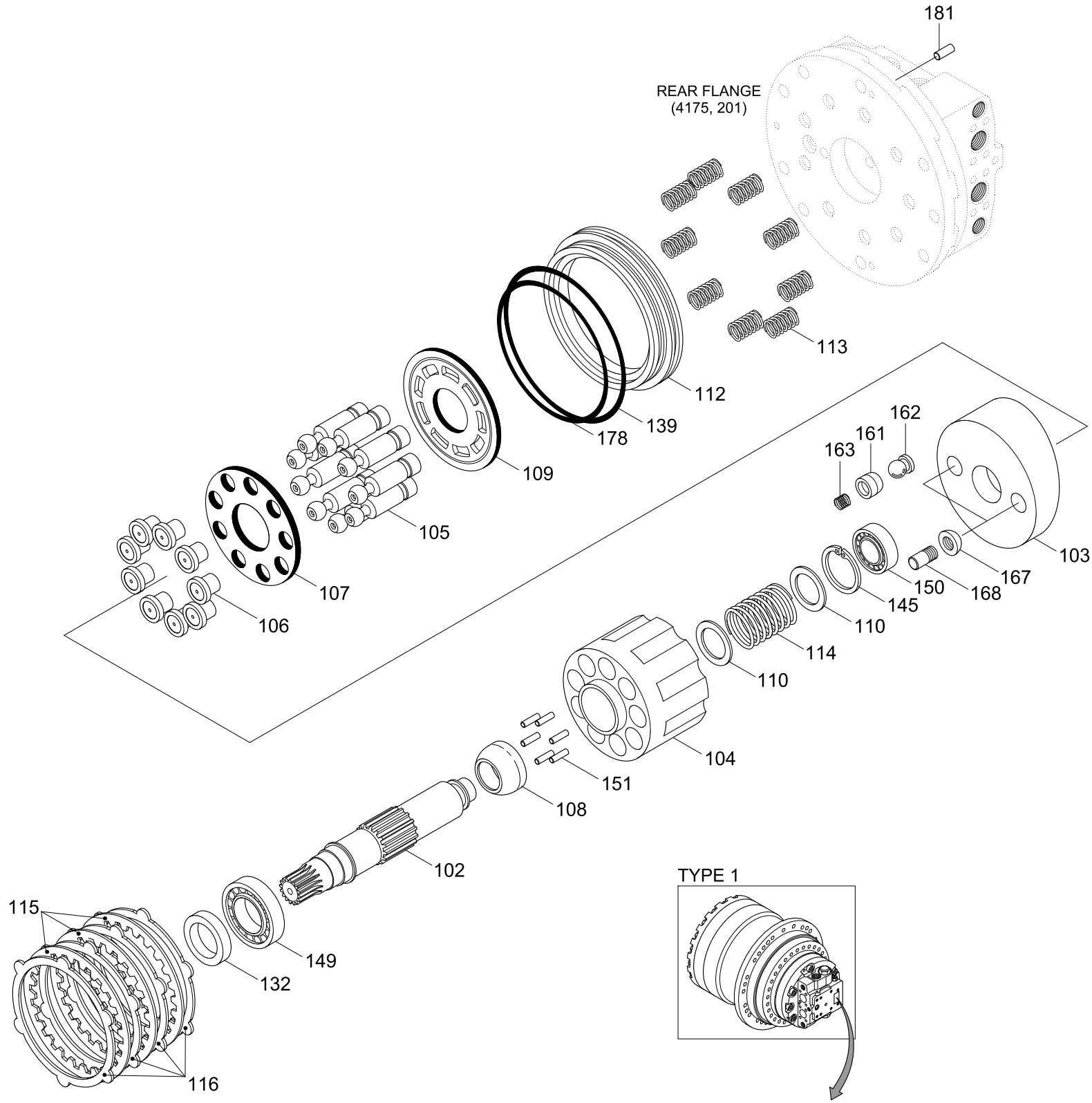

Type	Travel motor	Serial no	Remark
TYPE 1	31N5-40060	#2713-#2854	When ordering, check part no of travel motor assy on name plate.
	31N5-40061	#2855-#2947	
	31N5-40061BG	#2948-	
TYPE 2	31N5-40081BG	#3330-	

Description	Parts no	Included item
Travel motor seal kit	XKAH-01074	26, 29, 39, 40, 132, 139, 178, 233, 234, 238, 265, 279, 309, 310, 311

Item	Part_No	IS	Ord	T	Description	Qty	Serial_No	ITC	Remark
*	@				TRAVEL MOTOR ASSY	1	#2713 -	B	NOT
*-1	XKAH-00870				.TRAVEL ROTARY ASSY	1			
*-5	XKAH-00891				..C/BLOCK & PISTON KIT	1			
N104	XKAH-00892				...BLOCK-CYL	1			NOT
N110	XKAH-00407				...WASHER	2			NOT
N114	XKAH-00406				...SPRING	1			NOT
N145	XKAH-00405				...RING-SNAP	1			NOT
*-51	XKAH-00893				...PISTON ASSY	1			
N105	XKAH-00894				....PISTON	9			NOT
N106	XKAH-00419				....SHOE	9			NOT
N151	XKAH-00404				...ROLLER	6			NOT
N107	XKAH-00403				...PLATE-RETAINER	1			NOT
N108	XKAH-00402				...BALL-THRUST	1			NOT
*-52	XKAH-00895				..PISTON ASSY	1			
N161	XKAH-00422				...PISTON	1			NOT
N162	XKAH-00421				...SHOE	1			NOT
163	XKAH-00094				..SPRING	1			
102	XKAH-00410				..SHAFT-MAIN	1			
103	XKAH-00896				..PLATE-SWASH	1			
109	XKAH-00897				..PLATE-TIMING	1			
115	XKAH-00399				..PLATE-FRICTION	3			
116	XKAH-00401				..PLATE-MATING	4			
112	XKAH-00898				..PISTON-PARKING	1			
113	XKAH-00397				..SPRING	9			
132	XKAH-00388				..OIL SEAL	1			

Item	Part_No	IS	Ord	T	Description	Qty	Serial_No	ITC	Remark
149	XKAH-00899				..SLEEVE ASSY	1			
150	XKAH-00900				..BEARING-BALL	1			
139	XKAH-00396				..O-RING	1			
178	XKAH-00395				..O-RING	1			
181	XKAH-00377				..PIN-PARALLEL	2			
167	XKAH-00095				..PIVOT	2			
168	XKAH-00034				..PIN-PARALLEL	2			
K	XKAH-01074				SEAL KIT	1			SEE ILLUST
N	@				NOT INDIVIDUALLY SUPPLIED	AR			NOT

TRAVEL REDUCTION GEAR(TYPE 1, LCM-7)

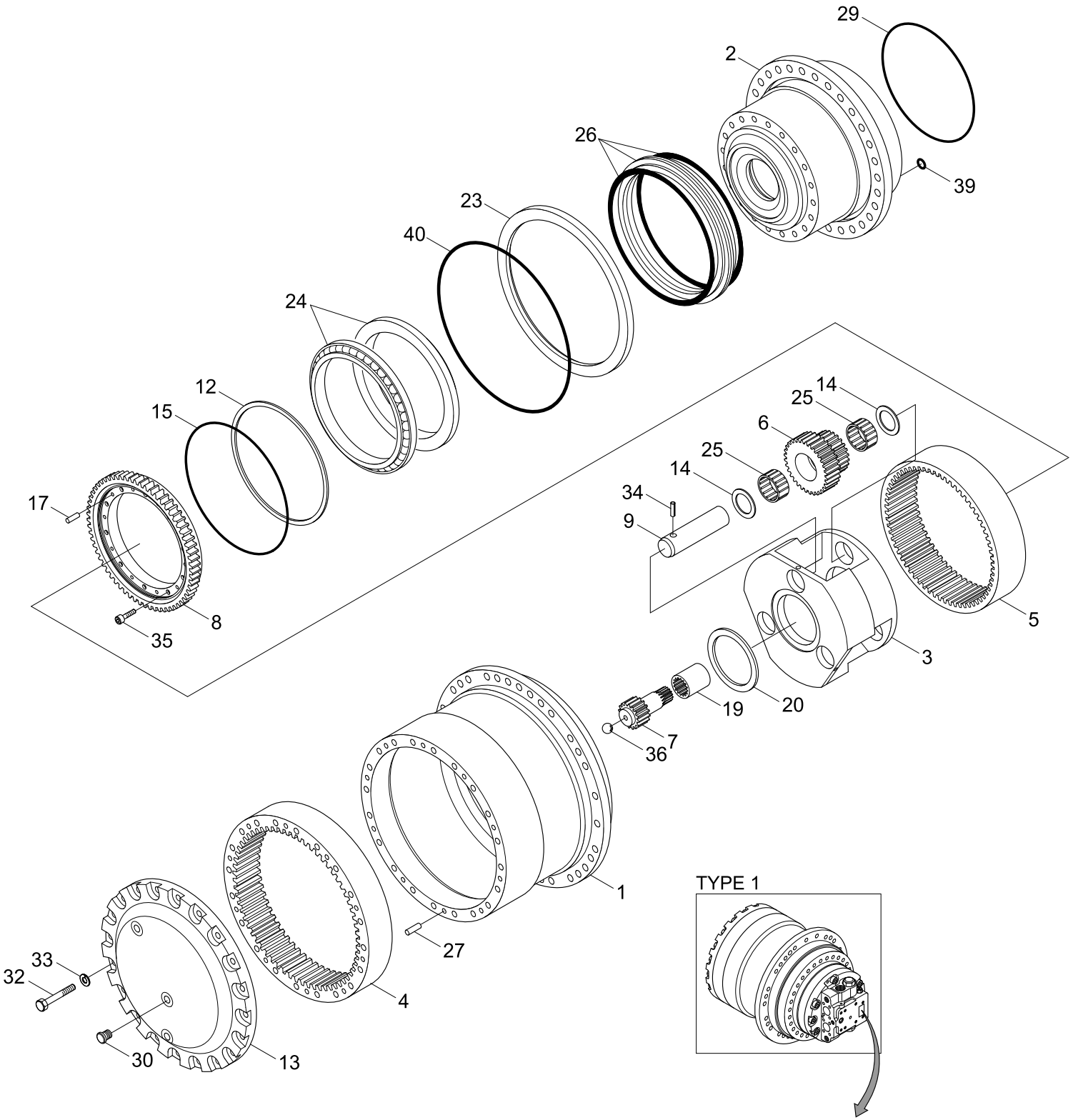

Type	Travel motor	Serial no	Remark
TYPE 1	31N5-40060	#2713-#2854	When ordering, check part no of travel motor assy on name plate.
	31N5-40061	#2855-#2947	
	31N5-40061BG	#2948-	
TYPE 2	31N5-40081BG	#3330-	

Item	Part_No	IS	Ord	T	Description	Qty	Serial_No	ITC	Remark
*	@				TRAVEL MOTOR ASSY	1	#2713 -	B	NOT
*-7	XKAH-00901				.T/REDUCTION GEAR	1			SEE 4174
*-71	XKAH-00902				..HUB ASSY	1			
N1	XKAH-00903				...HUB	1			NOT
N4	XKAH-00904				...RING GEAR(A)	1			NOT
N27	XKAH-00431				...PIN-PARALLEL	10			NOT
*-72	XKAH-00905				..SPINDLE ASSY	1			
N2	XKAH-00906				...SPINDLE	1			NOT
N8	XKAH-00907				...COUPLING GEAR	1			NOT
N35	XKAH-00428				...BOLT-SOCKET	10			NOT
N17	XKAH-00437				...PIN	10			NOT
*-73	XKAH-00908				..CARRIER ASSY	1			
N3	XKAH-00909				...CARRIER	1			NOT
N6	XKAH-00910				...CLUSTER GEAR	3			NOT
N9	XKAH-00911				...SHAFT	3			NOT
N14	XKAH-00912				...COLLAR-THRUST	6			NOT
N25	XKAH-00913				...BEARING-NEEDLE	6			NOT
5	XKAH-00914				..RING GEAR(B)	1			
7	XKAH-00445				..GEAR-SUN	1			
12	XKAH-00442				..PIECE-DISTENCE	1			
13	XKAH-00915				..COVER	1			
15	XKAH-00439				..RING	1			
19	XKAH-00022				..COUPLING	1			
20	XKAH-00436				..PLATE-THRUST	2			
23	XKAH-00435				..SEAL-RING	1			

Item	Part_No	IS	Ord	T	Description	Qty	Serial_No	ITC	Remark
24	XKAH-00434				..BEARING-BALL	2			
26	XKAH-00916				..SEAL-FLOATING	2			
29	XKAH-00028				..O-RING	1			
30	XKAH-00338				..PLUG-PT	3			
32	XKAH-00430				..BOLT-HEX	20			
33	XKAH-00336				..WASHER-SPRING	20			
34	XKAH-00429				..PIN-PARALLEL	3			
36	XKAH-00033				..BALL-STEEL	1			
39	XKAH-00194				..O-RING	2			
40	XKAH-00427				..O-RING	1			
K	XKAH-01074				SEAL KIT	1			SEE ILLUST
N	@				NOT INDIVIDUALLY SUPPLIED	AR			NOT

TRAVEL MOTOR(#3330-, 1/2, TYPE 2, LCM-7A)

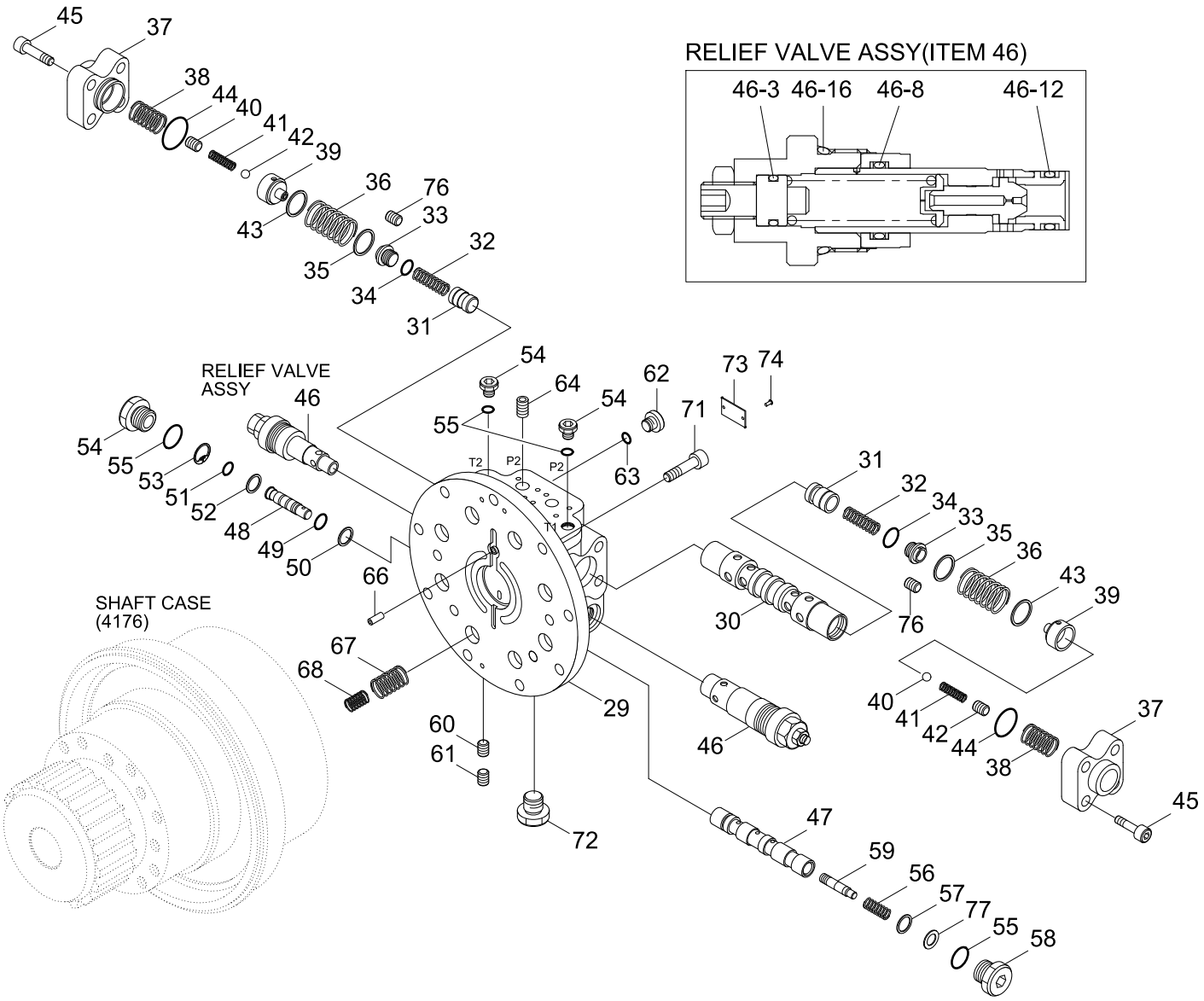

TYPE 2

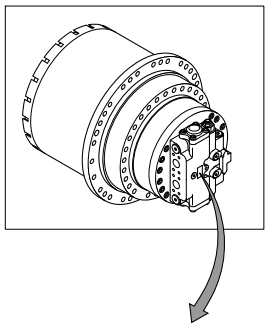

Type	Travel motor	Serial no	Remark
TYPE 1	31N5-40060	#2713-#2854	When ordering, check part no of travel motor assy on name plate.
	31N5-40061	#2855-#2947	
	31N5-40061BG	#2948-	
TYPE 2	31N5-40081BG	#3330-	

Description	Parts no	Included item
Travel motor seal kit	XKAY-00518	3, 22, 23, 24, 25, 27, 28, 33, 44, 46-3, 46-8, 46-12, 46-16, 49, 50, 51, 52, 55, 63

Item	Part_No	IS	Ord	T	Description	Qty	Serial_No	ITC	Remark
*	31N5-40081BG				TRAVEL MOTOR ASSY	1	#3330 -	-	*-1, *-2
*-1	31N5-40071BG				.TRAVEL MOTOR	1			
29	XKAY-00475				..REAR COVER	1			
C	XKAY-00476				..SPOOL KIT	1			INCL 30-34
N30	XKAY-00477				...SPOOL	1			NOT
N31	XKAY-00478				...CHECK	2			NOT
N32	XKAY-00479				...SPRING	2			NOT
N33	XKAY-00480				...PLUG	2			NOT
N34	XKAY-00481				...O-RING	2			NOT
35	XKAY-00482				..SEAT-SPRING	2			
36	XKAY-00483				..SPRING	2			
37	XKAY-00484				..COVER	2			
38	XKAY-00485				..SPRING	2			
39	XKAY-00486				..SPOOL	2			
40	XKAY-00487				..BALL-STEEL	2			
41	XKAY-00488				..SPRING	2			
42	XKAY-00489				..PLUG	2			
43	XKAY-00490				..SEAT-SPRING	2			
K44	XKAY-00825				..O-RING	2			
45	XKAY-00492				..BOLT-WRENCH	8			
46	XKAY-00493				..RELIEF VALVE ASSY	2			
46-3	XKAY-00670				...O-RING	1			
46-8	XKAY-00669				...O-RING	1			
46-12	XKAY-00671				...O-RING	1			
46-16	XKAY-00668				...O-RING	1			

Item	Part_No	IS	Ord	T	Description	Qty	Serial_No	ITC	Remark
47	XKAY-00494				..SPOOL	1			
48	XKAY-00826				..GUIDE	1			
K49	XKAY-00827				..O-RING	1			
K50	XKAY-00497				..RING-BACK UP	1			
K51	XKAY-00828				..O-RING	1			
K52	XKAY-00499				..RING-BACK UP	1			
53	XKAY-00500				..RING-SNAP	1			
54	XKAY-00501				..PLUG	3			
K55	XKAY-00247				..O-RING	4			
56	XKAY-00502				..SPRING	1			
57	XKAY-00503				..SEAT-SPRING	1			
58	XKAY-00504				..PLUG	1			
59	XKAY-00505				..SPOOL	1			
60	XKAY-00506				..ORIFICE	2			
61	XKAY-00507				..ORIFICE	2			
62	XKAY-00508				..PLUG	3			
K63	XKAY-00256				..O-RING	3			
64	XKAY-00032				..PLUG	1			
66	XKAY-00510				..PIN	1			
67	XKAY-00511				..SPRING	8			
68	XKAY-00512				..SPRING	8			
71	XKAY-00385				..BOLT-WRENCH	16			
72	XKAY-00515				..PLUG	1			
73	XKAY-00830				..NAME PLATE	1			
74	XKAY-00517				..RIVET	2			

Item	Part_No	IS	Ord	T	Description	Qty	Serial_No	ITC	Remark
76	XKAY-00519				..ORIFICE	2			
77	XKAY-01097				..SHIM	AR			
*-2	@				.T/REDUCTION GEAR	2			NOT
K	XKAY-00518				SEAL KIT	1			SEE ILLUST
N	@				NOT INDIVIDUALLY SUPPLIED	AR			NOT

TRAVEL MOTOR(#3330-, 2/2, TYPE 2, LCM-7A)

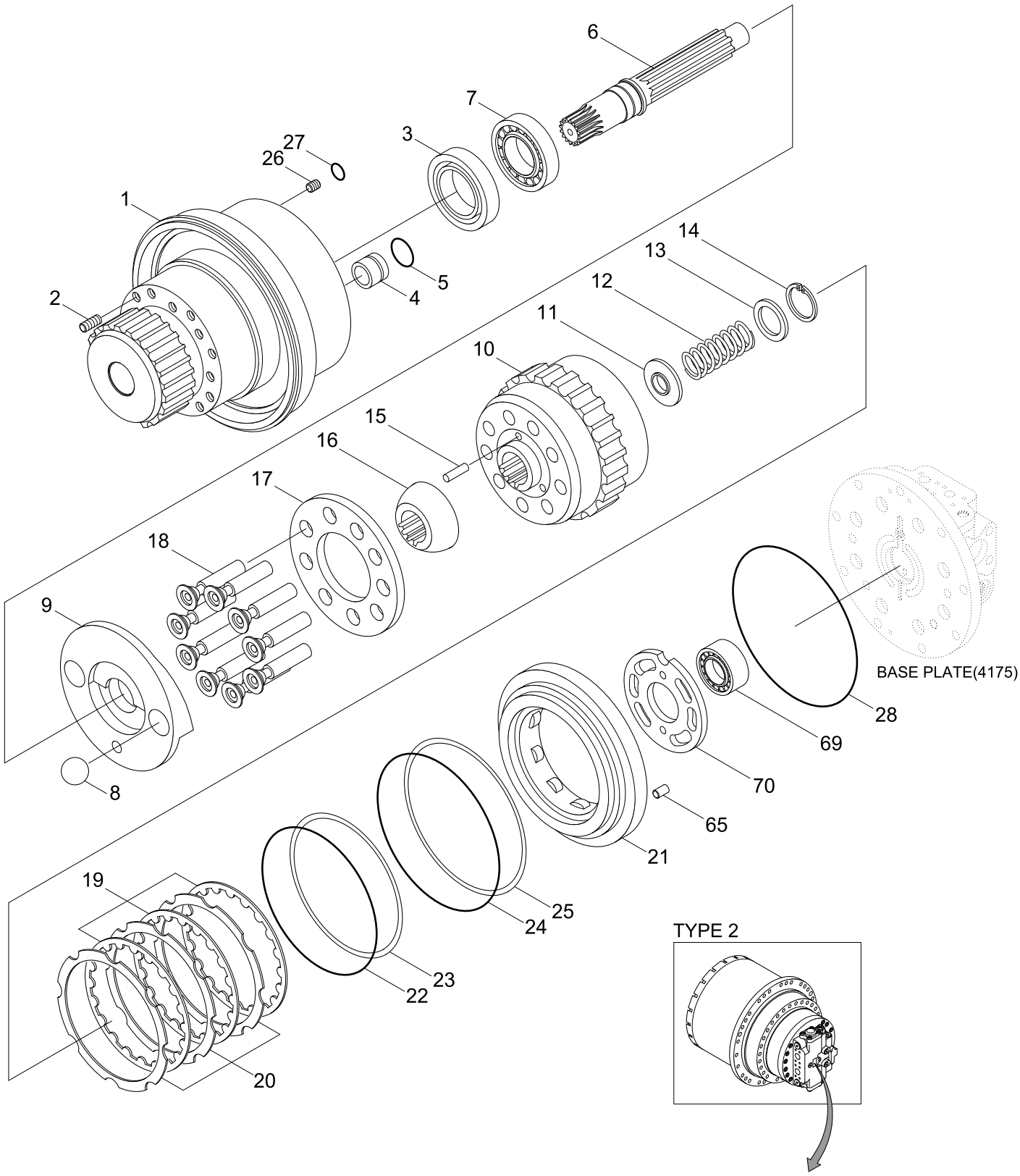

Type	Travel motor	Serial no	Remark
TYPE 1	31N5-40060	#2713-#2854	When ordering, check part no of travel motor assy on name plate.
	31N5-40061	#2855-#2947	
	31N5-40061BG	#2948-	
TYPE 2	31N5-40081BG	#3330-	

Description	Parts no	Included item
Travel motor seal kit	XKAY-00518	3, 22, 23, 24, 25, 27, 28, 33, 44, 46-3, 46-8, 46-12, 46-16, 49, 50, 51, 52, 55, 63

Item	Part_No	IS	Ord	T	Description	Qty	Serial_No	ITC	Remark
*	@				TRAVEL MOTOR ASSY	1	#3330 -	-	NOT
*-1	@				.TRAVEL MOTOR UNIT	1			NOT
1	XKAY-00965				..CASING-SHAFT	1			
2	XKAY-00443				..PLUG	10			
K3	XKAY-00444				..SEAL-OIL	1			
A	XKAY-00445				..SWASH PISTON KIT	2			INCL 4,5
N4	XKAY-00446				...SWASH PISTON	1			NOT
N5	XKAY-00447				...RING-PISTON	1			NOT
6	XKAY-00448				..SHAFT	1			
7	XKAY-00449				..BEARING	1			
8	XKAY-00450				..BALL-STEEL	2			
9	XKAY-01320				..SWASH PLATE	1			
B	XKAY-00452				..ROTARY KIT	1			INCL B-A,B,C
B-A	XKAY-00453				...CYLINDER BLOCK KIT	1			INCL 10-15,70
N10	XKAY-00824				....CYLINDER BLOCK	1			NOT
N11	XKAY-00455				....SEAT-SPRING	1			NOT
N12	XKAY-00456				....SPRING	1			NOT
N13	XKAY-00457				....PLATE-END	1			NOT
N14	XKAY-00458				....RING-SNAP	1			NOT
N15	XKAY-00459				....PIN	3			NOT
B-B	XKAY-00460				...RETAINER KIT	1			INCL 16,17
N16	XKAY-00461				....GUIDE-BALL	1			NOT
N17	XKAY-00462				....PLATE-SET	1			NOT
B-C	XKAY-00463				...PISTON KIT	1			INCL 18
N18	XKAY-00464				....PISTON ASSY	9			NOT

Item	Part_No	IS	Ord	T	Description	Qty	Serial_No	ITC	Remark
19	XKAY-00465				..PLATE-FRICTION	3			
20	XKAY-00466				..PLATE	3			
21	XKAY-00467				..PISTON-PARKING	1			
K22	XKAY-00468				..O-RING	1			
K23	XKAY-00469				..RING-BACK UP	1			
K24	XKAY-00470				..O-RING	1			
K25	XKAY-00471				..RING-BACK UP	1			
26	XKAY-00472				..ORIFICE	1			
K27	XKAY-00473				..O-RING	3			
K28	XKAY-00474				..O-RING	1			
65	XKAY-00509				..PIN	4			
69	XKAY-00513				..BEARING	1			
70	XKAY-00964				..PLATE-VALVE	1			
K	XKAY-00518				SEAL KIT	1			SEE ILLUST
N	@				NOT INDIVIDUALLY SUPPLIED	AR			NOT

TRAVEL REDUCTION GEAR(TYPE 2, LCM-7A)

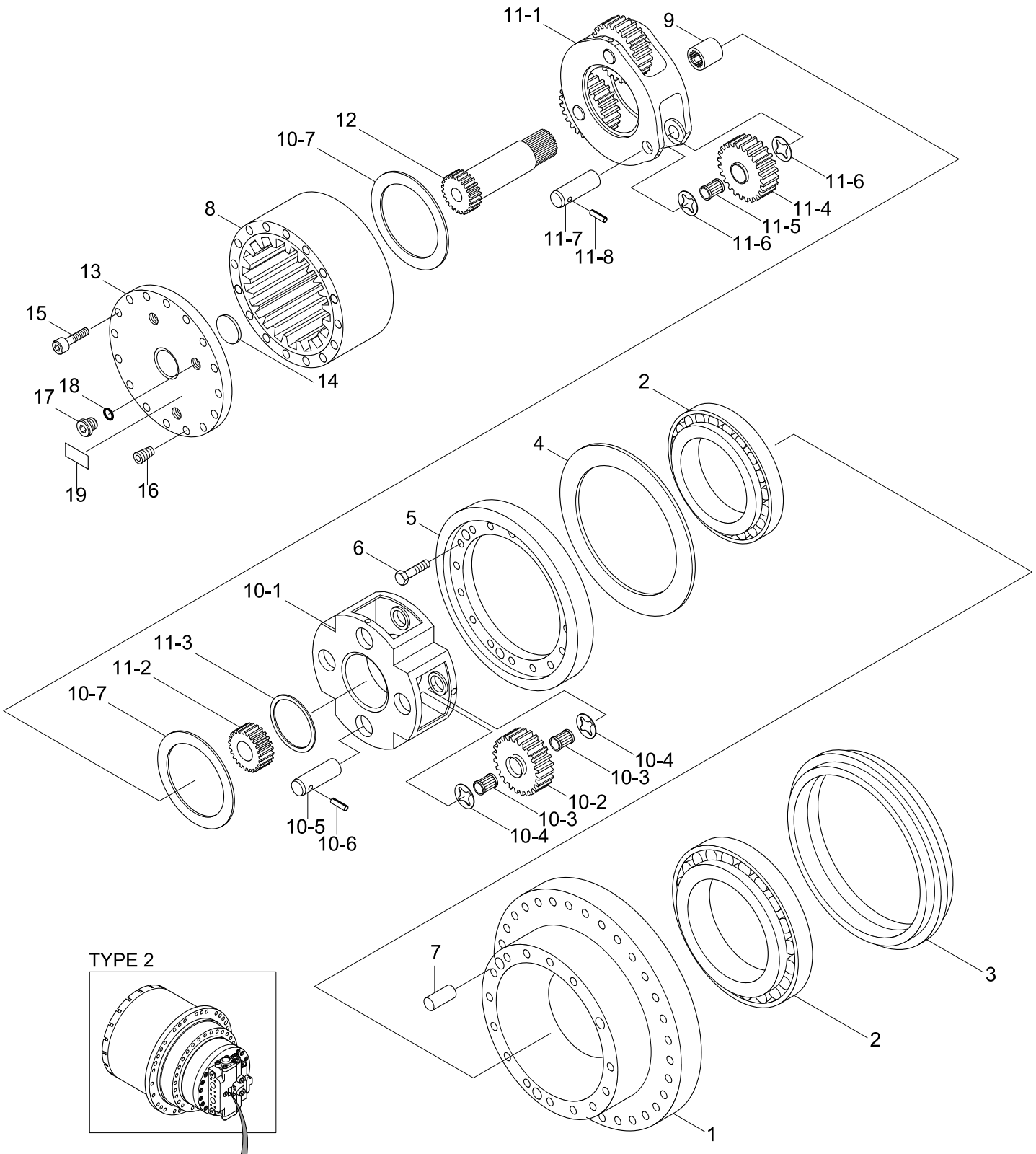

TYPE 2

Type	Travel motor	Serial no	Remark
TYPE 1	31N5-40060	#2713-#2854	When ordering, check part no of travel motor assy on name plate.
	31N5-40061	#2855-#2947	
	31N5-40061BG	#2948-	
TYPE 2	31N5-40081BG	#3330-	

Item	Part_No	IS	Ord	T	Description	Qty	Serial_No	ITC	Remark
	31N2-40020				TURNING JOINT	1	- #0171		
*	31N2-40021				TURNING JOINT	1	#0172 -	D	
	@				TRAVEL MOTOR ASSY	1	#3330 -	-	NOT
1	31N2-40911				.HUB	1	#0172 -	D	
*-2	31N6-40041BG				.T/REDUCTION GEAR	1			
2	31N2-40921				.SHAFT	1	#0172 -	D	
N1	XKAQ-00217				..HOUSING	1			NOT
2	XKAQ-00218				..BEARING-MAIN	2			
3	XKAQ-00219				..SEAL-FLOATING	1			
4	XKAQ-00220				..SHIM	1			
5	XKAQ-00221				..RETAINER	1			
6	XKAQ-00222				..BOLT-HEX	12			
7	XKAQ-00223				..PIN-PARALLEL	2			
N8	XKAQ-00224				..GEAR-RING	1			NOT
9	XKAQ-00225				..COUPLING	1			
10	XKAQ-00226				..CARRIER ASSY 2	1			
10-1	XKAQ-00227				...CARRIER 2	1			
10-2	XKAQ-00228				...GEAR PLANET 2	4			
10-3	XKAQ-00229				...BEARING-NEEDLE 2	8			
10-4	XKAQ-00230				...WASHER-THRUST	8			
10-5	XKAQ-00231				...PIN 2	4			
10-6	XKAQ-00232				...PIN-SPRING	4			
10-7	XKAQ-00208				...RING-THRUST	2			
11	XKAQ-00233				..CARRIER ASSY 1	1			
11-1	XKAQ-00234				...CARRIER 1	1			

Item	Part_No	IS	Ord	T	Description	Qty	Serial_No	ITC	Remark
11-2	XKAQ-00235				...GEAR-SUN 2	1			
11-3	XKAQ-00236				...RING-RETAINING	1			
11-4	XKAQ-00237				...GEAR-PLANET 1	3			
11-5	XKAQ-00238				...BEARNG-NEEDLE 1	3			
11-6	XKAQ-00239				...WASHER-THRUST	6			
11-7	XKAQ-00240				...PIN 1	3			
11-8	XKAQ-00241				...PIN-SPRING	3			
12	XKAQ-00402				..GEAR-SUN 1	1			
13	XKAQ-00243				..COVER	1			
14	XKAQ-00214				..PAD	1			
15	XKAQ-00244				..BOLT-HEX SOCKET	20			
16	XKAQ-00245				..SCREW-HEX SOCKET	2			
17	XKAQ-00246				..PLUG-HYDRAULIC	3			
18	XKAQ-00247				..O-RING	3			
19	XKAQ-00248				..NAME PLATE	1			
K	XKAY-00518				SEAL KIT	1			SEE ILLUST
N	@				NOT INDIVIDUALLY SUPPLIED	AR			NOT

TURNING JOINT

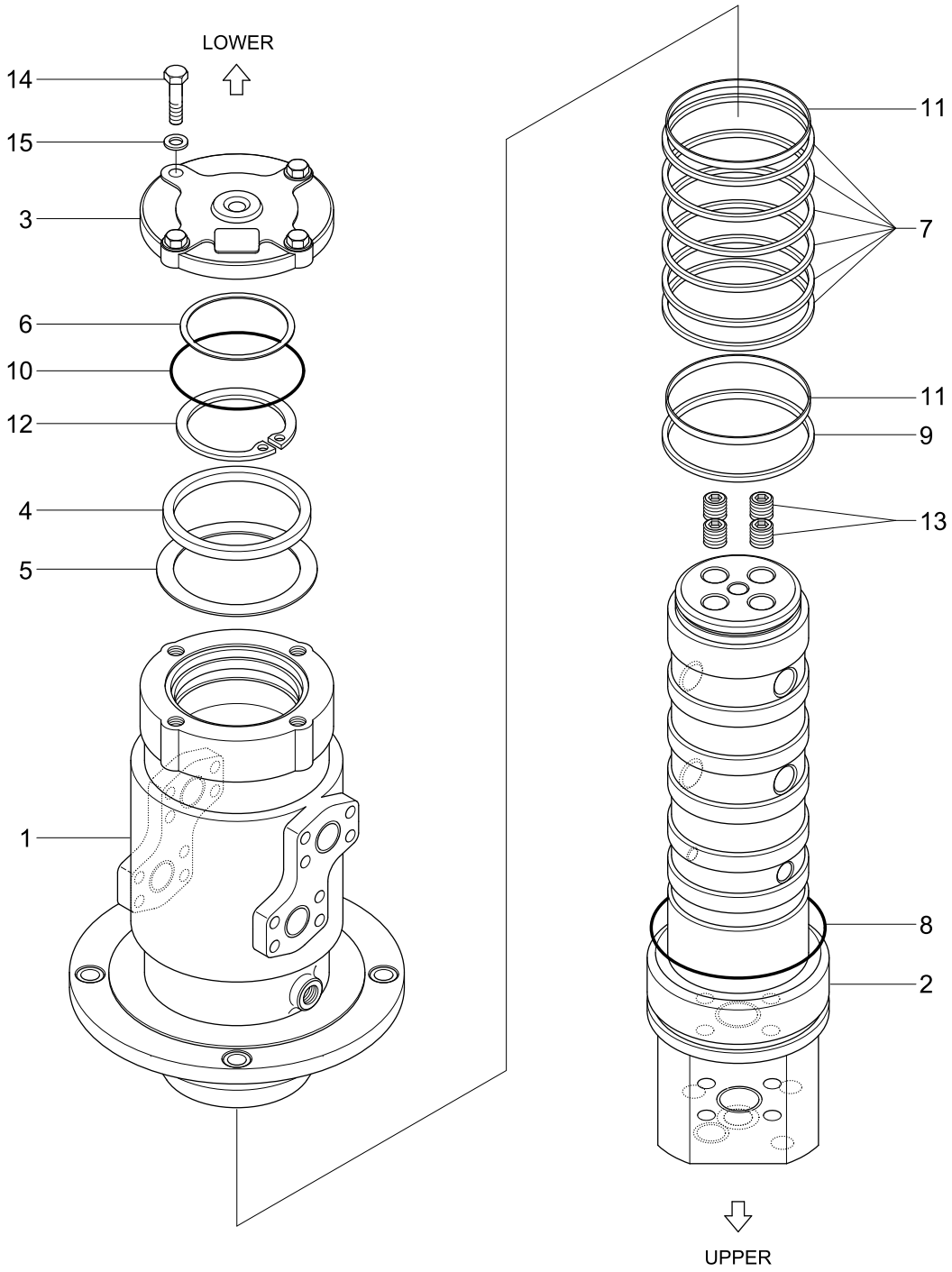

Description	Parts no	Included item
Turning joint seal kit	31N6-40950	7, 8, 9, 10, 11

Item	Part_No	IS	Ord	T	Description	Qty	Serial_No	ITC	Remark
*	31N3-40020				TURNING JOINT-DOZER	1	- #0171		
	31N3-40021				TURNING JOINT-DOZER	1	#0172 -	D	
	31N2-40020				TURNING JOINT	1	- #0171		
1	31N3-40911				.HUB	1	#0172 -	D	
*	31N2-40021				TURNING JOINT	1	#0172 -	D	
2	31N3-40921				.SHAFT	1	#0172 -	D	
1	31N2-40910				.HUB	1	- #0171		
	31N2-40911				.HUB	1	#0172 -	D	
2	31N2-40920				.SHAFT	1	- #0171		
	31N2-40921				.SHAFT	1	#0172 -	D	
3	31N2-40930				.COVER	1			
4	31E3-0035				.SPACER	1			
5	31E3-0036				.SHIM	1			
6	31E3-0037				.SHIM	1			
K7	31N6-40990				.SEAL-SLIPPER	6			
K8	CO0071A				.O-RING	1			
K9	CO0067B				.O-RING	1			
K10	CO0219B				.O-RING	1			
K11	Y320-100011				.RING-WEAR	2			
12	S601-090004				.RING-RETAINING	1			
13	P220-430204				.PLUG-HEX	4			
14	S017-120352				.BOLT-HEX	4			
15	S411-120002				.WASHER-SPRING	4			
K	31N6-40950				SEAL KIT	1	#0001 -	-	SEE ILLUST
	31N3-40950				SEAL KIT	1	#0001 -	-	SEE ILLUST

TURNING JOINT(R140LCD-7)

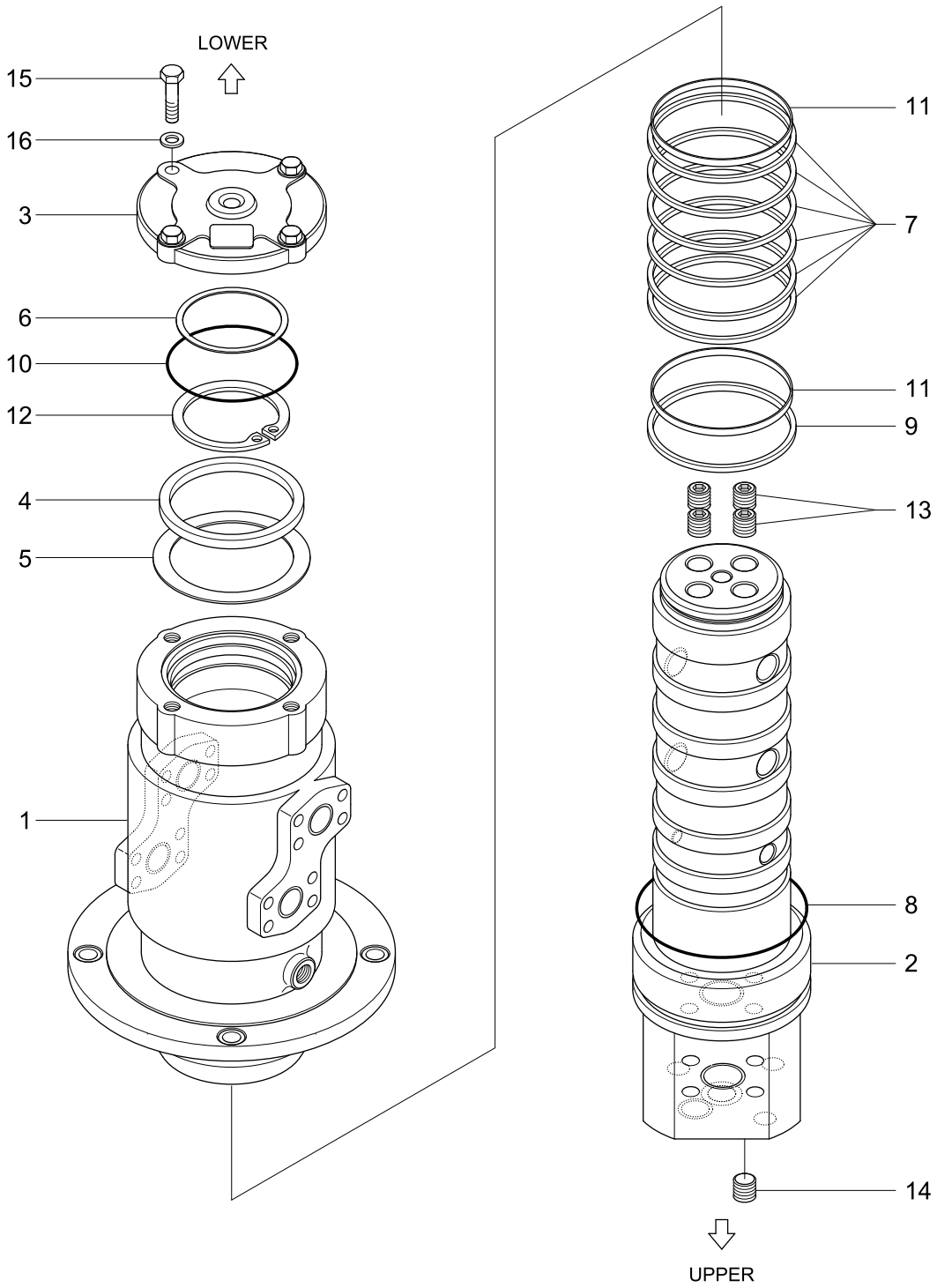

Description	Parts no	Included item
Turning joint seal kit	31N3-40950	7, 8, 9, 10, 11

Item	Part_No	IS	Ord	T	Description	Qty	Serial_No	ITC	Remark
*	31N3-40020				TURNING JOINT-DOZER	1	- #0171		
	31N3-40021				TURNING JOINT-DOZER	1	#0172 -	D	
1	31N3-40910				.HUB	1	- #0171		
	31N3-40911				.HUB	1	#0172 -	D	
2	31N3-40920				.SHAFT	1	- #0171		
	31N3-40921				.SHAFT	1	#0172 -	D	
3	31N2-40930				.COVER	1			
4	31E3-0035				.SPACER	1			
5	31E3-0036				.SHIM	1			
6	31E3-0037				.SHIM	1			
K7	31N6-40990				.SEAL-SLIPPER	8			
K8	CO0071A				.O-RING	1			
K9	CO0067B				.O-RING	1			
K10	CO0219B				.O-RING	1			
K11	Y320-100011				.RING-WEAR	2			
K12	S601-090004				.RING-RETAINING	1			
13	P220-430204				.PLUG-HEX	4			
14	P220-430202				.PLUG-HEX	1			
15	S017-120352				.BOLT-HEX	4			
16	S411-120002				.WASHER-SPRING	4			
K	31N3-40950				SEAL KIT	1	#0001 -	-	SEE ILLUST

BOOM CYLINDER

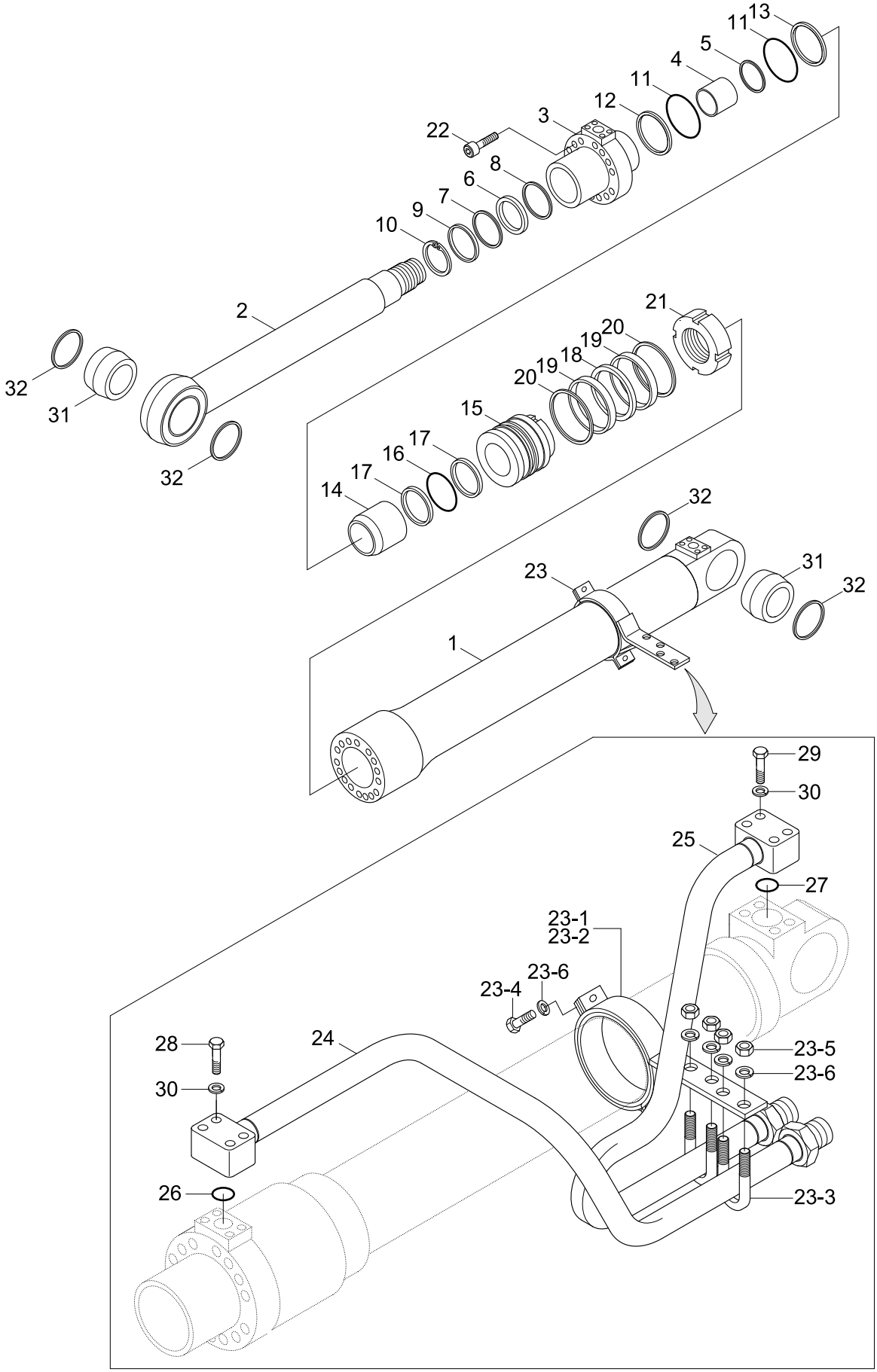

Description	Parts no	Included item
Boom cylinder seal kit	31Y1-18170	6~9, 11~13, 16~20, 26, 27

Item	Part_No	IS	Ord	T	Description	Qty	Serial_No	ITC	Remark
*	31N4-50110				BOOM CYLINDER-LH	1			
	31N4-50120				BOOM CYLINDER-RH	1			
*-1	31Y1-18120				.BOOM CYL SUB ASSY	1			WITHOUT PIPE
1	31Y1-18510				..TUBE ASSY	1			
2	31Y1-03450				..ROD ASSY	1			
3	31Y1-14710				..GLAND	1			
4	S732-075040				..BUSHING-DD2	1			
5	Y191-081000				..RING-SNAP	1			
K6	Y220-075011				..SEAL-ROD	1			
K7	Y180-075020				..RING-BACK UP	1			
K8	Y240-075013				..RING-BUFFER	1			
K9	Y110-075011				..WIPER-DUST	1			
10	Y190-089000				..RING-SNAP	1			
K11	S631-095004				..O-RING	2			
K12	S641-095002				..RING-BACK UP	1			
K13	S641-095003				..RING-BACK UP	1			
14	31YC-21040				..RING-CUSHION	1			
15	31Y1-03490				..PISTON	1			
K16	S632-065004				..O-RING	1			
K17	S642-065003				..RING-BACK UP	2			
K18	Y420-105000				..SEAL-PISTON	1			
K19	Y310-105000				..RING-WEAR	2			
K20	Y440-105000				..RING-DUST	2			
21	31YC-61040				..NUT-LOCK	1			
22	S109-160554				..BOLT-SOCKET	9			

Item	Part_No	IS	Ord	T	Description	Qty	Serial_No	ITC	Remark
31	31YC-11055				..BUSHING-PIN	2			
32	Y000-070200				..SEAL-DUST	4	#0001 -	-	
23	31Y1-03500				.BAND ASSY	1			
23-1	31Y1-03510				..BAND SUB ASSY	1			
23-2	31YC-32010				..BAND	1			
23-3	S071-022230				..U-BOLT	2			
23-4	S011-100352				..BOLT-HEX	4			
23-5	S201-101002				..NUT-HEX	4			
23-6	S411-100002				..WASHER-SPRING	8			
24	31Y1-18130				.PIPE ASSY-LH	1			
	31Y1-18140				.PIPE ASSY-RH	1			
25	31Y1-18150				.PIPE ASSY-LH	1			
	31Y1-18160				.PIPE ASSY-RH	1			
K26	S631-25S004				.O-RING	1			
K27	Y171-015004				.O-RING	1			
28	S017-080502				.BOLT-HEX	4			
29	S017-080402				.BOLT-HEX	4			
30	S411-080002				.WASHER-SPRING	8			
K	31Y1-18170				SEAL KIT	1			SEE ILLUST

ARM CYLINDER

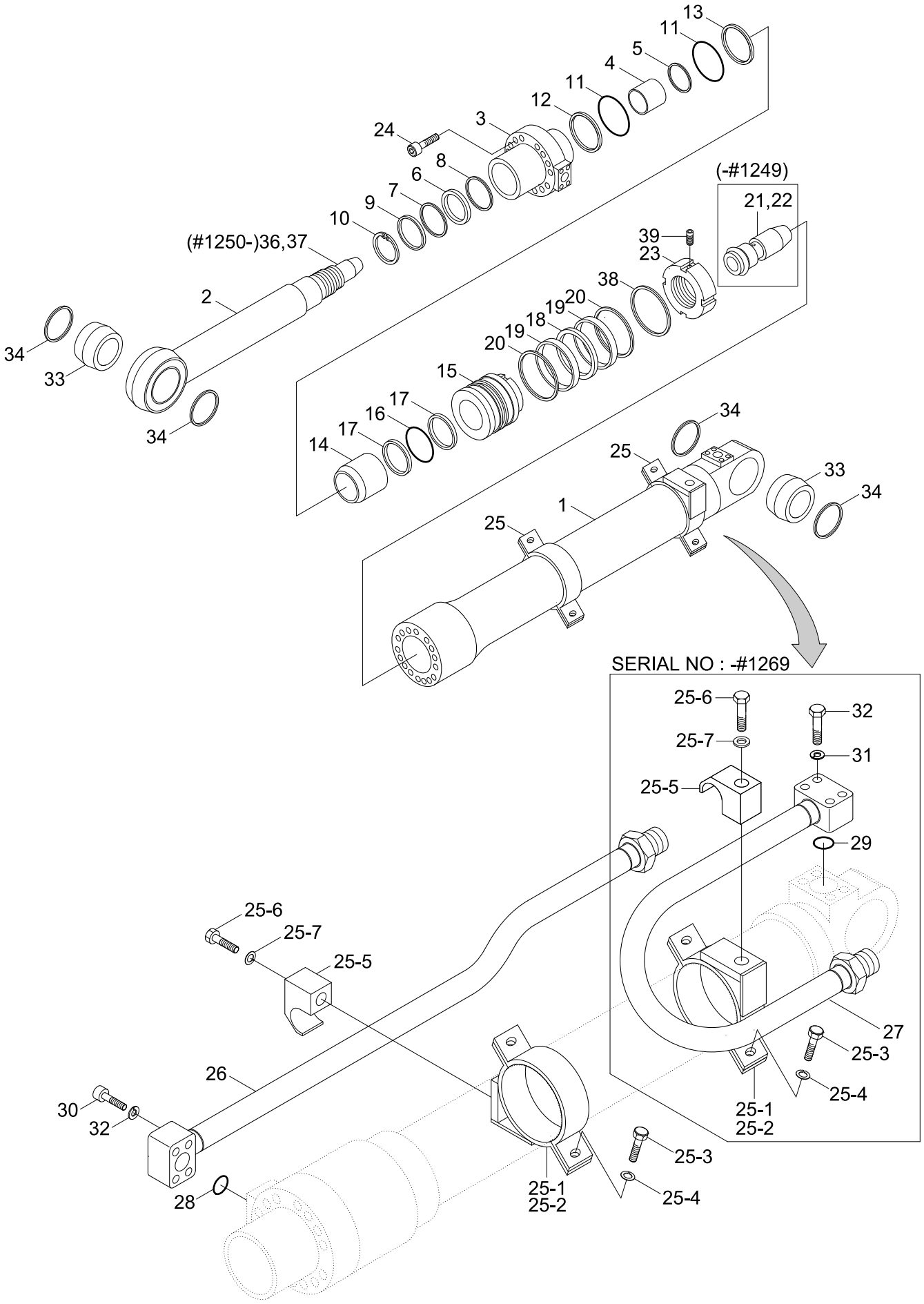

Description	Parts no	Included item
Arm cylinder seal kit	31Y1-18110	6~9, 11~13, 16~20, 28, 29

Item	Part_No	IS	Ord	T	Description	Qty	Serial_No	ITC	Remark
*	31N4-50130				ARM CYLINDER	1	- #1249		
	31N4-50131				ARM CYLINDER	1	#1250 - #1269	D	
	31N4-50132				CYLINDER ASS'Y	1	#1270 -	D	
	31N4-50130				ARM CYLINDER	1	- #1249		
*-1	31Y1-18081				.ARM CYL SUB ASSY	1	#1250 -	D	
*	31N4-50131				ARM CYLINDER	1	#1250 - #1269	D	
	31N4-50132				ARM CYLINDER	1	#1270 - #3049	D	
	31N4-50133				ARM CYLINDER	1	#3050 -	B	
*-1	31Y1-18080				.ARM CYL SUB ASSY	1	- #1249		WITHOUT PIPE
	31Y1-18081				.ARM CYL SUB ASSY	1	#1250 - #3049	D	WITHOUT PIPE
	31Y1-18082				.ARM CYL SUB ASSY	1	#3050 -	B	WITHOUT PIPE
1	31Y1-18260				..TUBE ASSY	1			
2	31Y1-03620				..ROD ASSY	1	- #1249		
	31Y1-03621				..ROD ASSY	1	#1250 - #3049	D	
	31Y1-03622				..ROD ASS'Y	1	#3050 -	B	
N36	@				...SPEAR-CUSHION	1	#1250 -	-	NOT
N37	@				...RING-STOP	1	#1250 -	-	NOT
3	31Y1-19640				..GLAND	1			
4	S732-080040				..BUSHING-DD2	1			
5	Y191-086000				..RING-SNAP	1			
K6	Y220-080011				..SEAL-ROD	1			
K7	Y180-080020				..RING-BACK UP	1			
K8	Y240-080013				..RING-BUFFER	1			
K9	Y110-080011				..WIPER-DUST	1			
10	Y190-094000				..RING-SNAP	1			

Item	Part_No	IS	Ord	T	Description	Qty	Serial_No	ITC	Remark
K11	S631-105004				..O-RING	2			
K12	S641-105002				..RING-BACK UP	1			
K13	S641-105003				..RING-BACK UP	1			
14	31YC-21050				..RING-CUSHION	1			
15	31Y1-03660				..PISTON	1	- #3049		
	31Y1-03661				..PISTON	1	#3050 -	D	
K16	S632-070004				..O-RING	1			
K17	S642-070003				..RING-BACK UP	2			
K18	Y420-115000				..SEAL-PISTON	1			
K19	Y310-115003				..RING-WEAR	2			
K20	Y440-115000				..RING-DUST	2			
21	31YC-29070				..SPEAR-CUSHION	1	- #1249	-	
22	Y890-015011				..BALL-STEEL	1	- #1249	-	
23	31YC-61050				..NUT-LOCK	1	- #3049		
	31YC-61174				..NUT-LOCK	1	#3050 -	D	
24	S109-180604				..BOLT-SOCKET	9			
25	31Y1-03670				.BAND ASSY	2	- #1269		
					.BAND ASSY	1	#1270 -	A	
25-1	31Y1-03680				..BAND SUB ASSY	1			
25-2	31YC-31060				..BAND	1			
25-3	S011-100352				..BOLT-HEX	2			
25-4	S411-100002				..WASHER-SPRING	2			
25-5	31YC-36010				..CLAMP-PIPE	1			
25-6	S015-120502				..BOLT-HEX	1			
25-7	S411-120002				..WASHER-SPRING	1			

Item	Part_No	IS	Ord	T	Description	Qty	Serial_No	ITC	Remark
26	31Y1-18090				.PIPE ASSY	1			
27	31Y1-18100				.PIPE ASSY-B	1	- #1269	-	
K28	Y171-019004				.O-RING	1			
K29	S631-026004				.O-RING	1	- #1269	-	
30	S037-104512				.BOLT-W/WASHER	4			
31	S017-100602				.BOLT-HEX	4	- #1269	-	
32	S411-100002				.WASHER-SPRING	8	- #1269	-	
33	31YC-11081				.BUSHING-PIN	2	#0001 -	-	
34	Y000-070200				.SEAL-DUST	4	#0001 -	-	
38	31YC-66031				.WASHER-LOCK	1	#3050 -	-	
39	S112-080164				.SCREW-SET,HEX SOCKET	1	#3050 -	-	
K	31Y1-18110				SEAL KIT	1			SEE ILLUST

BUCKET CYLINDER

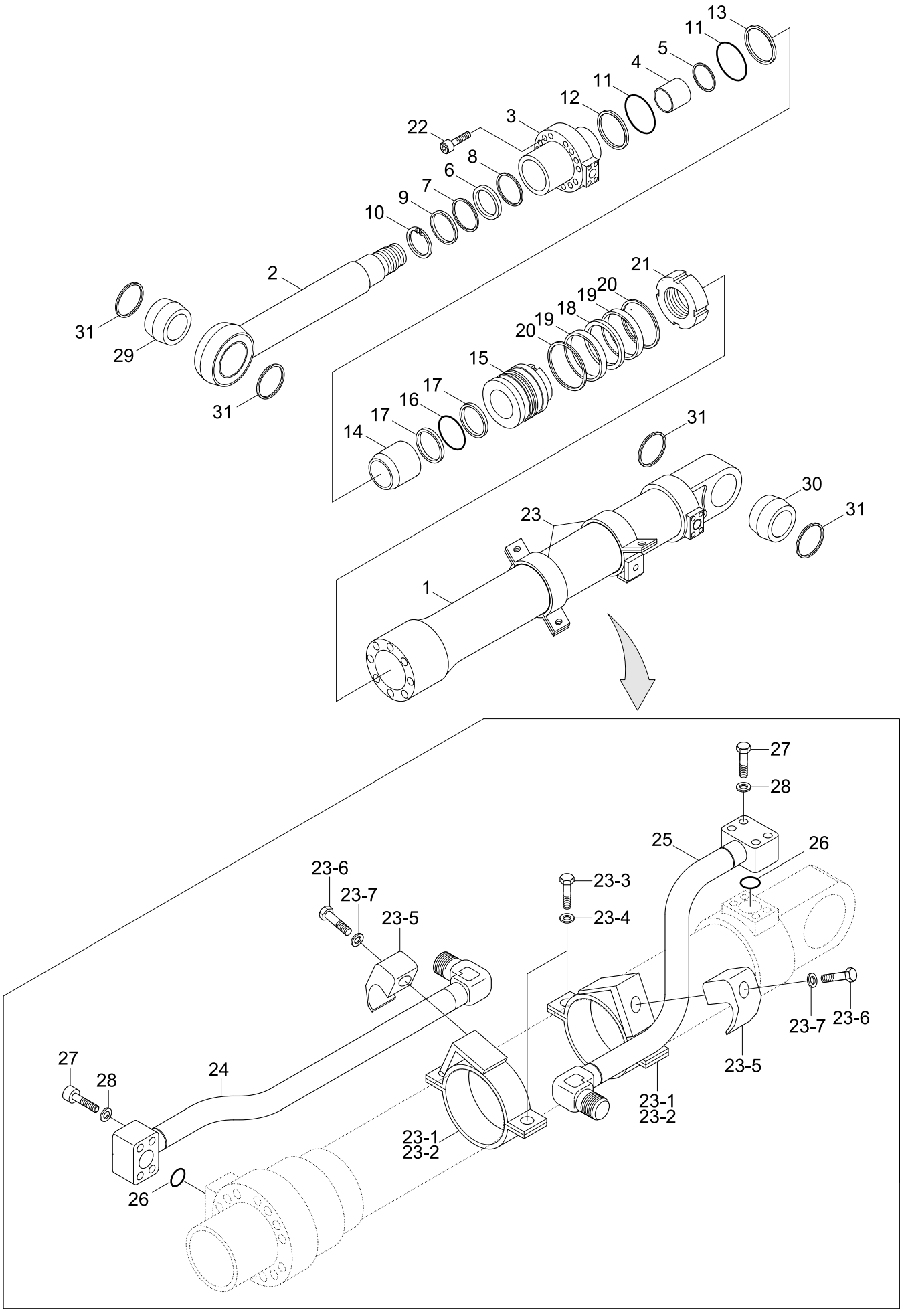

Description	Parts no	Included item
Bucket cylinder seal kit	31Y1-18210	6~9, 10~13, 16~20, 26

Item	Part_No	IS	Ord	T	Description	Qty	Serial_No	ITC	Remark
*	31N4-60110				CYLINDER ASS'Y	1			
*-1	31Y1-18180				.BUCKET CYL SUB ASSY	1			WITHOUT PIPE
1	31Y1-03720				..TUBE ASSY	1			
2	31Y1-03770				..ROD ASS'Y	1			
3	31Y1-19650				..GLAND	1			
4	S732-070040				..BUSHING-DU	1			
5	Y191-076000				..RING-SNAP	1			
K6	Y220-070011				..SEAL-ROD	1			
K7	Y180-070020				..RING-BACK UP	1			
K8	Y240-070013				..RING-BUFFER	1			
K9	Y110-070011				..WIPER-DUST	1			
10	Y190-084000				..RING-SNAP	1			
K11	S631-090004				..O-RING	2			
K12	S641-090002				..RING-BACK UP	1			
K13	S641-090003				..RING-BACK UP	1			
14	31YC-21030				..RING-CUSHION	1			
15	31Y1-03810				..PISTON	1			
K16	S632-060004				..O-RING	1			
K17	S642-060003				..RING-BACK UP	2			
K18	Y420-100000				..SEAL-PISTON	1			
K19	Y310-100200				..RING-WEAR	2			
K20	Y440-100000				..RING-DUST	2			
21	31YC-61020				..NUT-LOCK	1			
22	S109-160554				..BOLT-SOCKET	9			
29	31YC-11040				..BUSHING-PIN	1			

Item	Part_No	IS	Ord	T	Description	Qty	Serial_No	ITC	Remark
30	31YC-11050				..BUSHING-PIN	1			
31	Y000-070200				..SEAL-DUST	4	#0001 -	-	
23	31Y1-03820				.BAND ASSY	2			
23-1	31Y1-03830				..BAND SUB ASS'Y	1			
23-2	31YC-31040				..BAND	1			
23-3	S011-100352				..BOLT-HEX	2			
23-4	S411-100002				..WASHER-SPRING	2			
23-5	31YC-36010				..CLAMP-PIPE	1			
23-6	S015-120502				..BOLT-HEX	1			
23-7	S411-120002				..WASHER-SPRING	1			
24	31Y1-18190				.PIPE ASSY	1			
25	31Y1-18200				.PIPE ASSY	1			
K26	S631-026004				.O-RING	2			
27	S017-100602				.BOLT-HEXAGON HEAD	8			
28	S411-100002				.WASHER-SPRING	8			
K	31Y1-18210				SEAL KIT	1			SEE ILLUST

DOZER BLADE CYLINDER(R140LCD-7)

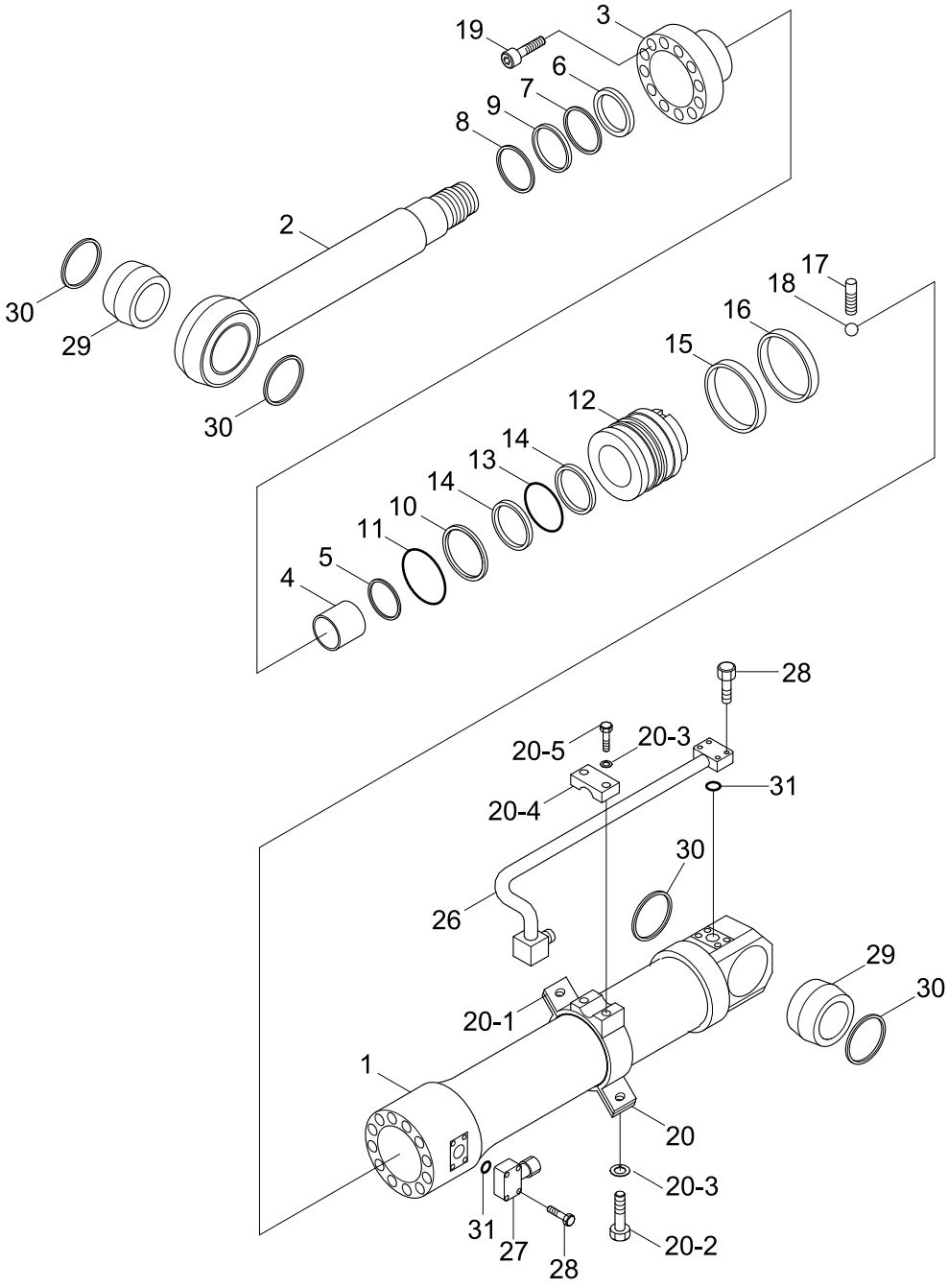

Description	Parts no	Included item
Dozer blade cylinder seal kit	31Y1-04032(#1371-)	5~8, 10, 11, 13~16
	31Y1-04031(-#1370)	

Item	Part_No	IS	Ord	T	Description	Qty	Serial_No	ITC	Remark
*	31E6-70020				DOZER CYLINDER-LH	1	- #1370		
	31N4-70010				DOZER BLADE CYL-LH	1	#1371 -	D	
	31E6-70010				DOZER CYLINDER-RH	1	- #1370		
	31N4-70020				DOZER BLADE CYL-RH	1	#1371 -	D	
*-1	31E6-75010				.DOZER CYL SUB ASSY-RH	1	#1371 -	-	
	31E6-75020				.DOZER CYL SUB ASSY-LH	1	#1371 -	-	
1	31Y1-03880				..TUBE ASSY-RH	1			
	31Y1-03870				..TUBE ASSY-LH	1			
2	31Y1-03930				..ROD ASSY	1			
3	31Y1-03960				..GLAND	1	- #1370		
	31Y1-03961				..GLAND	1	#1371 -	D	
4	S731-070040				..BUSHING-DU	1			
K5	Y260-070000				..SEAL-STEP	1	- #1370		
	Y240-070011				..RING-BUFFER	1	#1371 -	D	
K6	Y200-070011				..SEAL-ROD	1			
K7	Y180-070020				..RING-BACK UP	1			
K8	Y110-070011				..WIPER-DUST	1			
9	Y190-084000				..RING-SNAP	1			
K10	S631-090004				..O-RING	1			
K11	S641-090003				..RING-BACK UP	1			
12	31Y1-03970				..PISTON	1			
K13	S632-055004				..O-RING	1			
K14	S642-055003				..RING-BACK UP	2			
K15	Y420-100000				..SEAL-PISTON	1			
K16	Y310-100400				..RING-WEAR	1			

Item	Part_No	IS	Ord	T	Description	Qty	Serial_No	ITC	Remark
17	S113-080104				..SCREW-SET	1			
18	Y890-015011				..BALL-STEEL	1			
19	S109-160554				..BOLT-SOCKET	8			
29	31YC-12080				..BUSHING-PIN	2			
30	Y000-070200				..SEAL-DUST	4			
20	31Y1-03980				.BAND ASSY	1			
20-1	31Y1-03990				..BAND SUB ASSY	1			
20-2	S011-100352				..BOLT-HEX	2			
20-3	S411-100002				..WASHER-SPRING	4			
20-4	31YC-37010				..CLAMP-PIPE	1			
20-5	S011-100502				..BOLT-HEX	2			
26	31Y1-04010				.PIPE ASSY-RH	1	- #1370		
	31Y1-25000				.PIPE ASSY-RH	1	#1371 -	D	
	31Y1-04000				.PIPE ASSY-LH	1	- #1370		
	31Y1-24990				.PIPE ASSY-LH	1	#1371 -	D	
27	31YC-49060				.PORT-FLANGE	1	- #1370		
	31YC-49200				.PORT-FLANGE	1	#1371 -	D	
28	S107-080404				.BOLT-SOCKET	8			
K	31Y1-04031				SEAL KIT	1	- #1370		SEE ILLUST
	31Y1-04032				SEAL KIT	1	#1371 -	D	

SOLENOID VALVE

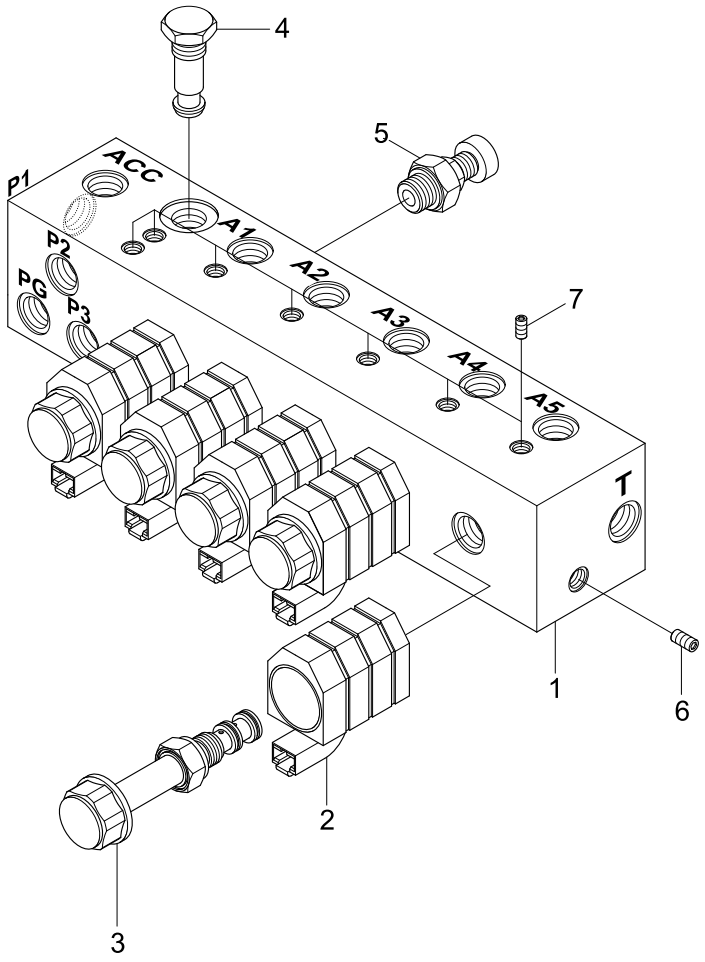

Item	Part_No	IS	Ord	T	Description	Qty	Serial_No	ITC	Remark
*	31N6-20142				SOLENOID VALVE	1	- #0135		
	31N4-22030				SOLENOID VALVE	1	#0136 -	B	
1	XKBL-00002				.BODY	1	- #0135		
	XKBL-00009				.BODY	1	#0136 -	B	
2	XKBL-00004				.COIL	5			
3	XKBL-00003				.VALVE-SOLENOID	5			
4	XKBL-00005				.VALVE-CHECK	1			
5	XKBL-00006				.OVERLOAD-MANUAL	1			
6	P220-430202				.PLUG	4	- #0135		
					.PLUG	5	#0136 -	A	
7	P220-430201				.PLUG	11			

ADJUCT CYLINDER(#0234-, ADJUST BOOM)

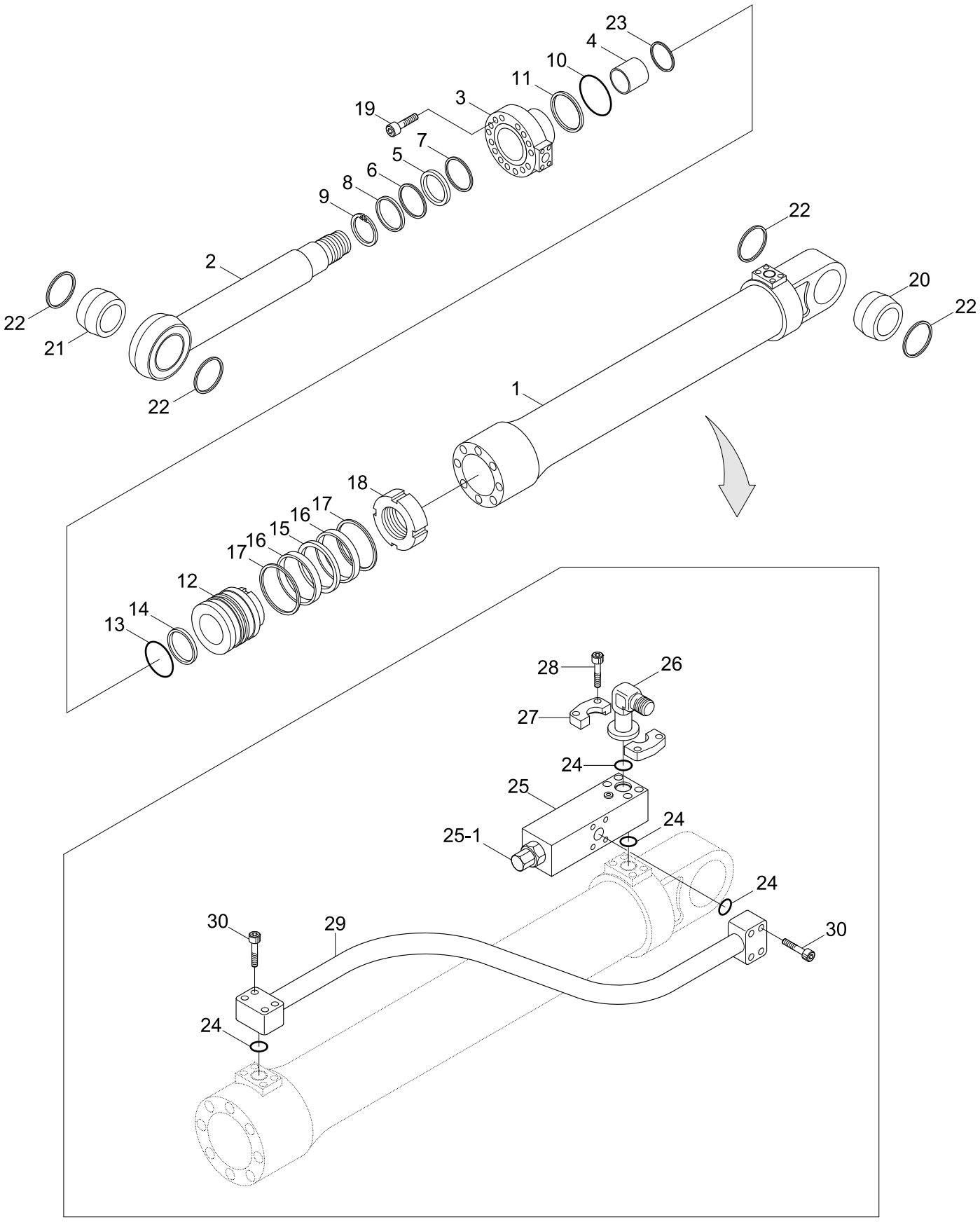

Description	Parts no	Included item
Adjust cylinder seal kit	31Y1-16170	5~11, 13~17

Item	Part_No	IS	Ord	T	Description	Qty	Serial_No	ITC	Remark
*	31N4-52940				ADJUST CYL-SAFETY VLV	1	#0234 -	-	
*-1	35EA-50150				.ADJUST CYL SUB ASSY	1			WITHOUT PIPE
1	31Y1-12380				..TUBE ASSY	1			
2	31Y1-12430				..ROD ASSY	1			
3	31Y1-12460				..GLAND	1			
4	S732-090040				..BUSHING-DD2	1			
K5	Y220-090011				..SEAL-ROD	1			
K6	Y180-090020				..RING-BACK UP	1			
K7	Y240-090011				..RING-BUFFER	1			
K8	Y110-090011				..WIPER-DUST	1			
9	Y190-104000				..RING-SNAP	1			
K10	S631-135004				..O-RING	1			
K11	S641-135003				..RING-BACK UP	1			
12	31Y1-12470				..PISTON	1			
K13	S632-090004				..O-RING	1			
K14	S642-090003				..RING-BACK UP	2			
K15	Y420-145000				..SEAL-PISTON	1			
K16	Y310-145100				..RING-WEAR	2			
K17	Y440-145002				..RING-DUST	2			
18	31YC-61151				..NUT-LOCK	1			
19	S109-200654				..BOLT-SOCKET	12			
20	31YC-11511				..BUSHING-PIN	1			
21	31YC-11521				..BUSHING-PIN	1			
22	S700-095208				..DUST SEAL-DKIY TYPE	4	#0234 -	-	
23	Y191-097000				..RING-SNAP	1			

Item	Part_No	IS	Ord	T	Description	Qty	Serial_No	ITC	Remark
24	Y171-019004				.O-RING	4			
25	31E4-95610				.VALVE-SAFETY LOCK	1	- #3021		
	31NA-90590				.VALVE-SAFETY LOCK	1	#3022 -	B	
25-1	DCP-001A				..CAP	1	#3022 -	-	
25-2	XKCH-00007				..SEAL-KIT	1	#3022 -	-	NOT SHOWN
26	31Y1-21230				.ELBOW-90	1			
27	P174-120102				.FLANGE-HYD,SPLIT	2			
28	S107-101004				.BOLT-SOCKET	4			
29	31Y1-21240				.PIPE ASSY-V	1			
30	S107-100454				.BOLT-SOCKET	8			
K	31Y1-16170				SEAL KIT	1			SEE ILLUST

BOOM CYLINDER(#0234-, ADJUST BOOM)

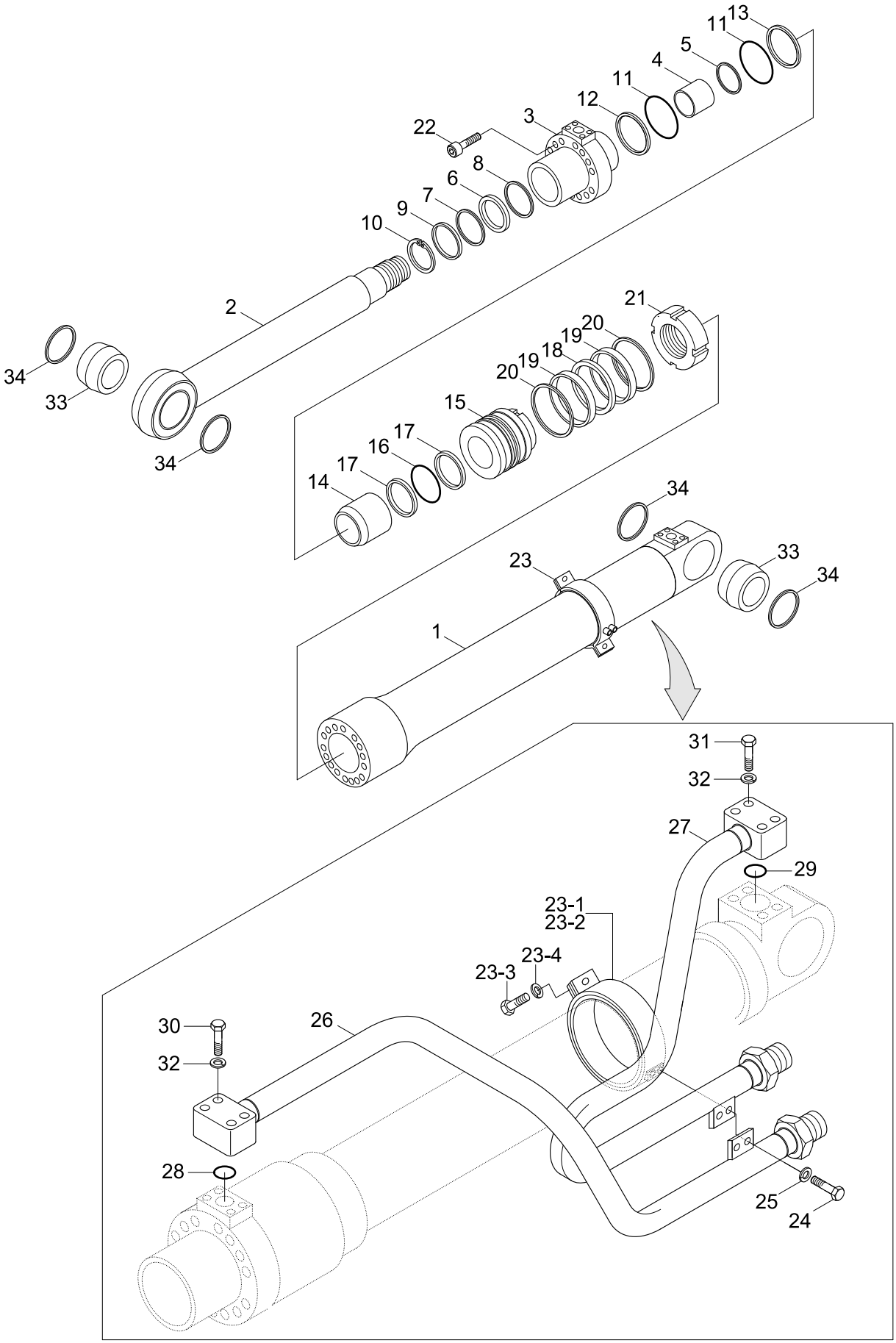

Description	Parts no	Included item
2 Piece boom cylinder seal kit	31Y1-21200	6~9, 11~13, 16~20, 28, 29

Item	Part_No	IS	Ord	T	Description	Qty	Serial_No	ITC	Remark
*	31N4-50910				BOOM CYL-LH/SAFETY VLV	1	#0234 -	-	
	31N4-50920				BOOM CYL-RH/SAFETY VLV	1	#0234 -	-	
*-1	31Y1-21140				.BOOM CYL SUB ASSY	1			WITHOUT PIPE
1	31Y1-21150				..TUBE ASSY	1			
2	31Y1-12320				..ROD ASSY	1			
3	31Y1-14710				..GLAND	1			
4	S732-075040				..BUSHING	1			
5	Y191-081000				..RING-SNAP	1			
K6	Y220-075011				..SEAL-ROD	1			
K7	Y180-075020				..RING-BACK UP	1			
K8	Y240-075013				..RING-BUFFER	1			
K9	Y110-075011				..WIPER-DUST	1			
10	Y190-089000				..RING-SNAP	1			
K11	S631-095004				..O-RING	2			
K12	S641-095002				..RING-BACK UP	1			
K13	S641-095003				..RING-BACK UP	1			
14	31YC-21040				..RING-CUSHION	1			
15	31Y1-03490				..PISTON	1			
K16	S632-065004				..O-RING	1			
K17	S642-065003				..RING-BACK UP	2			
K18	Y420-105000				..SEAL-PISTON	1			
K19	Y310-105000				..RING-WEAR	2			
K20	Y440-105000				..RING-DUST	2			
21	31YC-61040				..NUT-LOCK	1			
22	S109-160554				..BOLT-SOCKET	9			

Item	Part_No	IS	Ord	T	Description	Qty	Serial_No	ITC	Remark
23	S981-202500				..PLUG	1			
24	31YC-11055				..BUSHING-PIN	2			
25	Y000-070200				..SEAL-DUST	4			
23	31Y1-13050				.BAND ASSY	1			
23-1	31Y1-13060				..BAND SUB ASSY	1			
23-2	31Y1-13110				..BAND SUB ASSY	1			
23-3	S011-100352				..BOLT-HEX	4			
23-4	S411-100002				..WASHER-SPRING	4			
24	S017-100202				.BOLT-HEXAGON HEAD	2			
25	S411-100002				.WASHER-SPRING	2			
26	31Y1-21160				.PIPE ASSY-R,LH	1			
	31Y1-21170				.PIPE ASSY-R,RH	1			
27	31Y1-21180				.PIPE ASSY-B,LH	1			
	31Y1-21190				.PIPE ASSY-B,RH	1			
K28	S631-25S004				.O-RING	1			
K29	Y171-015004				.O-RING	1			
30	S017-080502				.BOLT-HEX	4			
31	S017-080402				.BOLT-HEXAGON HEAD	4			
32	S411-080002				.WASHER-SPRING	8			
33	Y000-070200				.SEAL-DUST	2			
34	31YC-11055				.BUSHING-PIN	2	#0234 -	-	
K	31Y1-21200				SEAL KIT	1			SEE ILLUST

SINGLE PEDAL(DOUBLE ACTING)

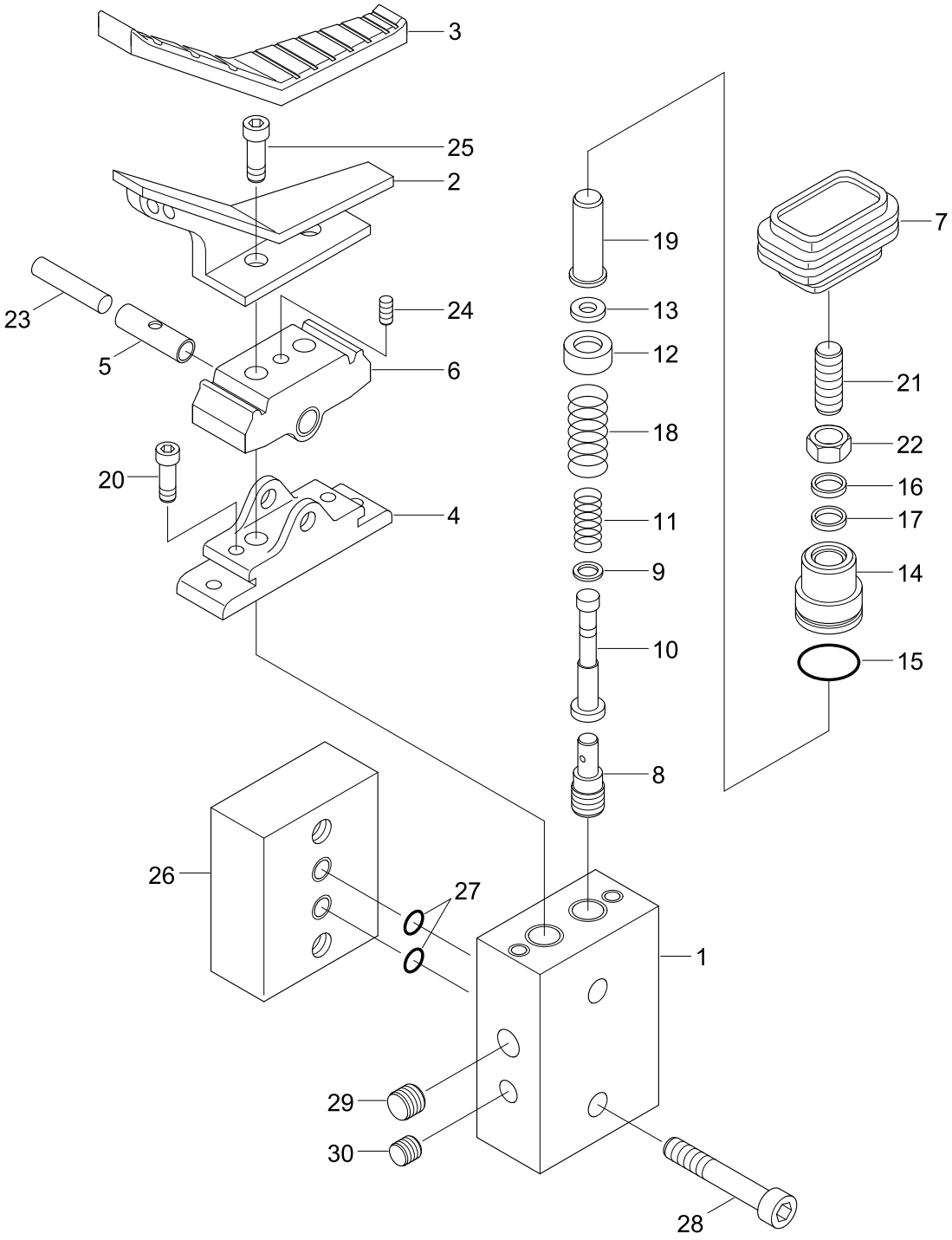

Item	Part_No	IS	Ord	T	Description	Qty	Serial_No	ITC	Remark
*	34E7-04720				PEDAL-SINGLE	1			
1	J24D2001				.CASE	1			
2	J24D2002				.PEDAL	1			
3	J24D2003				.COVER-PEDAL	1			
4	J24D2004				.COVER	1			
5	DU1010				.BUSHING	2			
6	J24D2005				.CAM	1			
7	J24D2006				.BELLOWS	1			
8	J24D2007				.SPOOL	2			
9	S090601				.SHIM(1.0T)	2			
10	J24D2008				.SEAT-SPRING	2			
11	J97C1001				.SPRING	2			
12	J24D2010				.SEAT-SPRING	2			
13	J24D2011				.STOPPER	2			
14	J24D2012				.PLUG	2			
15	PO020				.O-RING	2			
16	DSP10				.SEAL-DUST	2			
17	RSY10				.SEAL-ROD	2			
18	J98H2001				.SPRING	2			
19	J24D2014				.ROD-PUSH	2			
20	WBM0830				.BOLT-SOCKET	2			
21	J24D2015				.SCREW-SET	2			
22	HNM10				.NUT-HEX	2			
23	J24D2016				.SHAFT-CAM	1			
24	SBM0812				.SCREW-SET	1			

Item	Part_No	IS	Ord	T	Description	Qty	Serial_No	ITC	Remark
25	WBM1015				.BOLT-SOCKET	2			
26	J2J1002				.BLOCK	1			
27	PO012				.O-RING	2			
28	WBM0840				.BOLT-SOCKET	2			
29	WPT38				.PLUG	1			
30	WPT18				.PLUG	1			

QUICK CLAMP ASSY

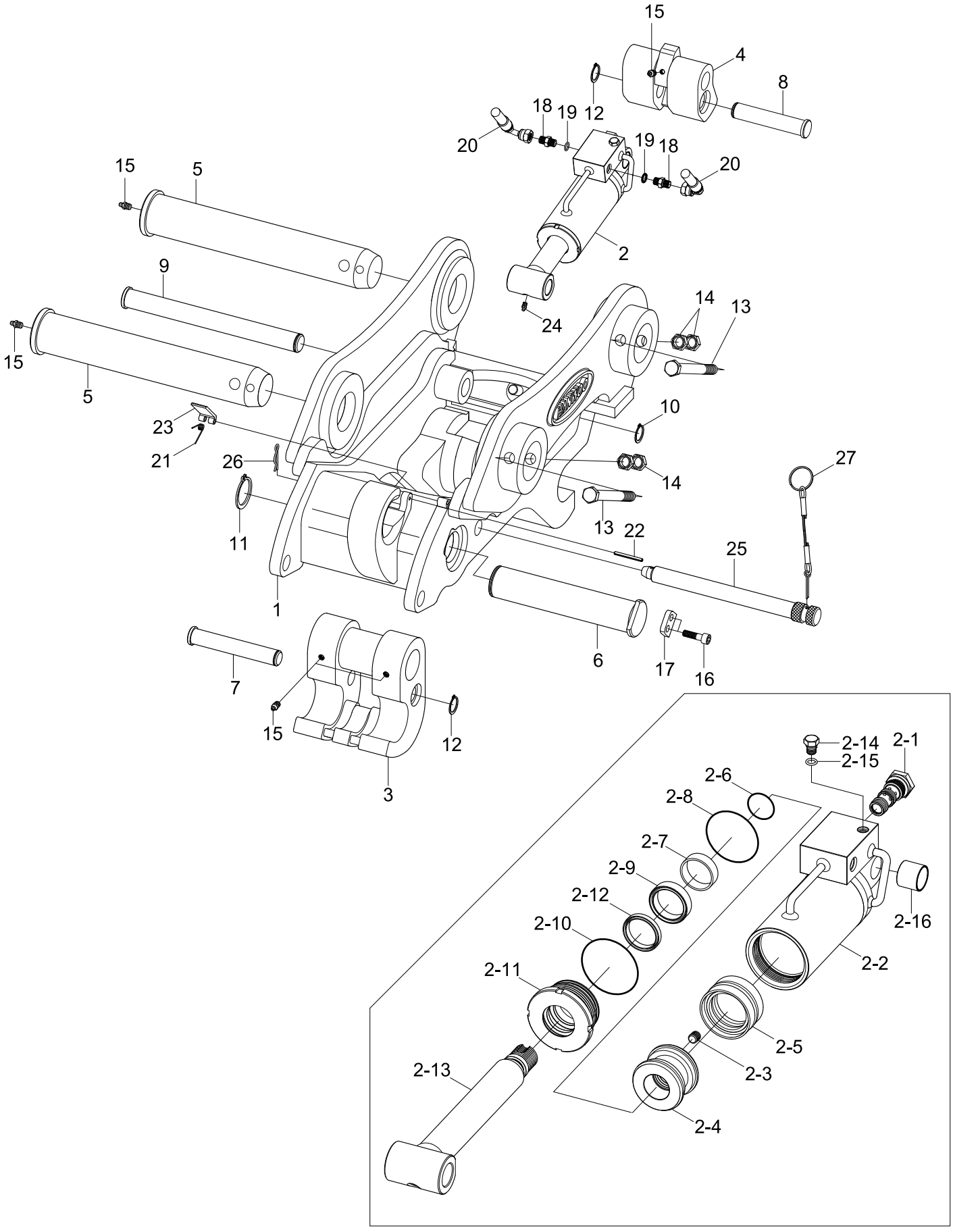

Item	Part_No	IS	Ord	T	Description	Qty	Serial_No	ITC	Remark
*	31N4-95710				QUICK CLAMP ASSY	1	- #2384	-	HOOK TYPE
	31N4-95711				QUICK CLAMP ASSY	1	#2385 -	B	
1	XKBP-00001				.BODY	1			
2	XKBP-00002				.CYLINDER ASSY	1			
2-1	XKBP-00028				..VALVE-CHECK	1			
2-2	XKBP-00029				..CYLINDER	1			
2-3	XKBP-00030				..SCREW-SET	1			
2-4	XKBP-00031				..PISTON	1			
2-5	XKBP-00032				..SEAL-PISTON	1			
2-6	XKBP-00033				..O-RING	1			
2-7	XKBP-00034				..BUSHING-DU	1			
2-8	XKBP-00035				..O-RING	1			
2-9	XKBP-00036				..SEAL-ROD	1			
2-10	XKBP-00037				..O-RING	1			
2-11	XKBP-00038				..COVER	1			
2-12	XKBP-00039				..SEAL-DUST	1			
2-13	XKBP-00040				..ROD	1			
2-14	XKBP-00041				..PLUG	1			
2-15	XKBP-00042				..O-RING	1			
2-16	XKBP-00043				..BUSHING-DU	1			
3	XKBP-00003				.HOOK	1			
4	XKBP-00004				.LOCK	1			
5	XKBP-00005				.PIN-BRACKET	2			
6	XKBP-00006				.PIN-HOOK	1			
7	XKBP-00007				.PIN-JOINT	1			

Item	Part_No	IS	Ord	T	Description	Qty	Serial_No	ITC	Remark
8	XKBP-00008				.PIN-JOINT	1			
9	XKBP-00009				.PIN-LOCK	1			
10	XKBP-00010				.RING-SNAP	1			
11	XKBP-00011				.RING-SNAP	1			
12	XKBP-00012				.RING-SNAP	2			
13	XKBP-00013				.BOLT-HEX	2			
14	XKBP-00014				.NUT-HEX	4			
15	XKBP-00015				.NIPPLE-GREASE	5			
16	XKBP-00016				.BOLT-SOCKET	2			
17	XKBP-00017				.PLATE-COVER	1			
18	XKBP-00018				.ELBOW-90	2			
19	XKBP-00019				.O-RING	2			S8000111
20	XKBP-00020				.HOSE ASSY	2			
21	XKBP-00021				.SPRING	1			
22	XKBP-00022				.PIN-SPRING	1			
23	XKBP-00023				.STOPPER	1			
24	XKBP-00024				.NIPPLE-GREASE	1			
25	XKBP-00025				.PIN-STOPPER	1	- #2384		
	XKBP-00104				.PIN-STOPPER	1	#2385 -	B	
26	XKBP-00026				.PIN-SNAP	1			
27	XKBP-00027				.WIRE ASSY	1	- #2384		
	XKBP-00106				.WIRE ASSY	1	#2385 -	B	

QUICK CLAMP ASSY(#2295-)

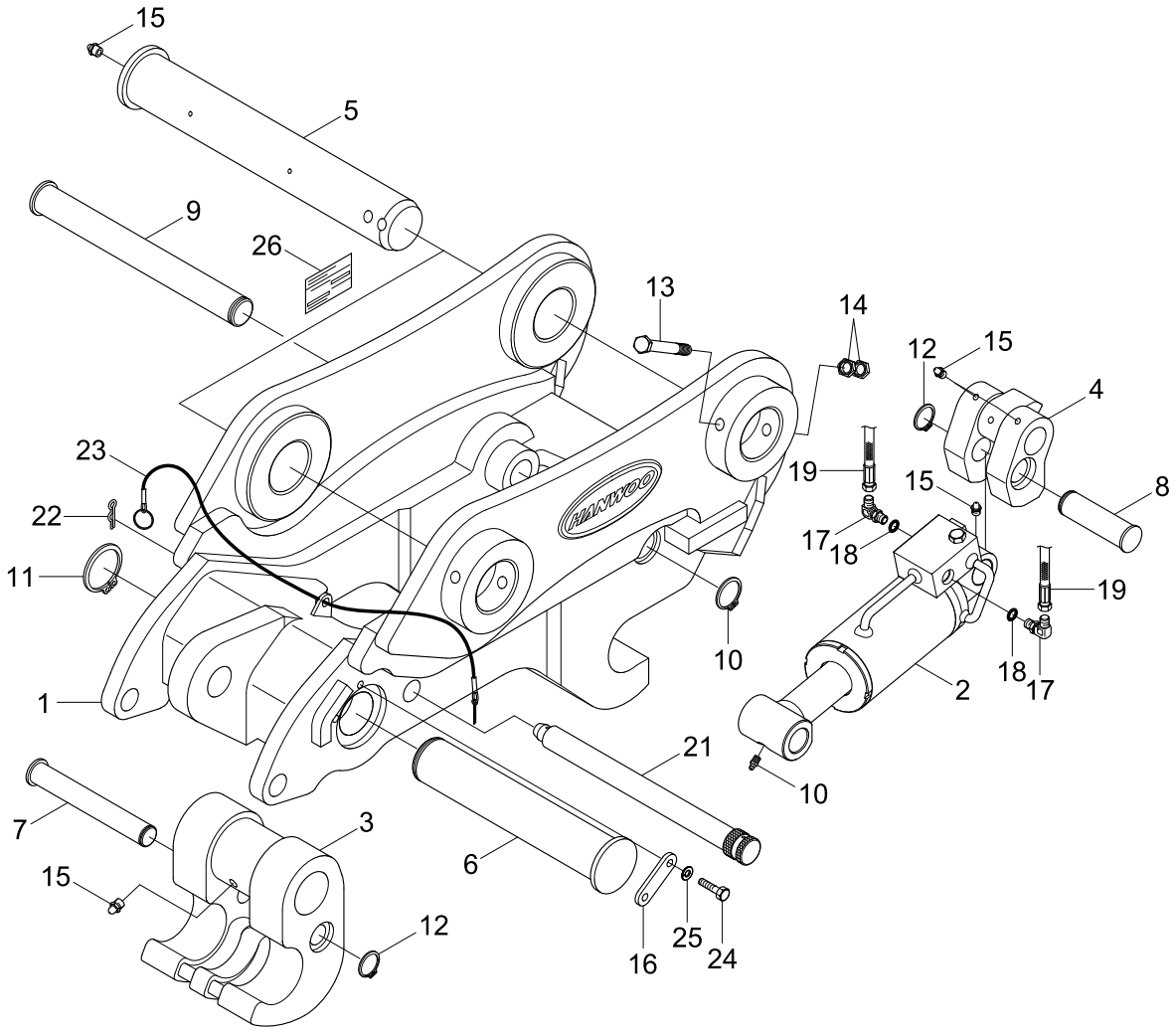

Item	Part_No	IS	Ord	T	Description	Qty	Serial_No	ITC	Remark
*	31N4-95720				QUICK CLAMP ASSY	1	#2295 -	-	CLOSED TYPE
1	XKBP-00103				.BODY ASSY	1			
2	XKBP-00094				.CYLINDER ASSY	1			
3	XKBP-00003				.HOOK	1			
4	XKBP-00095				.LOCK ASY	1			
5	XKBP-00005				.PIN-BRACKET	2			
6	XKBP-00096				.PIN-HOOK	1			
7	XKBP-00007				.PIN-JOINT	1			
8	XKBP-00008				.PIN-JOINT	1			
9	XKBP-00009				.PIN-LOCK	1			
10	XKBP-00010				.RING-SNAP	1			
11	XKBP-00011				.RING-SNAP	1			
12	XKBP-00012				.RING-SNAP	2			
13	XKBP-00097				.BOLT-HEX	2			
14	XKBP-00014				.NUT-HEX	4			
15	XKBP-00015				.NIPPLE-GREASE	6			
16	XKBP-00098				.PLATE-COVER	1			
17	XKBP-00018				.ELBOW-90	2			
18	XKBP-00019				.O-RING	2			
19	XKBP-00020				.HOSE ASSY	2			
20	XKBP-00024				.NIPPLE-GREASE	1			
21	XKBP-00104				.PIN-STOPPER	1			
22	XKBP-00105				.PIN-SNAP	1			
23	XKBP-00106				.WIRE ASSY	1			
24	XKBP-00100				.BOLT-HEX	2			

Item	Part_No	IS	Ord	T	Description	Qty	Serial_No	ITC	Remark
25	XKBP-00101				.WASHER-SPRING	2			
26	XKBP-00107				.NAME PLATE	1			

QUICK CLAMP ASSY 3(#2515-)

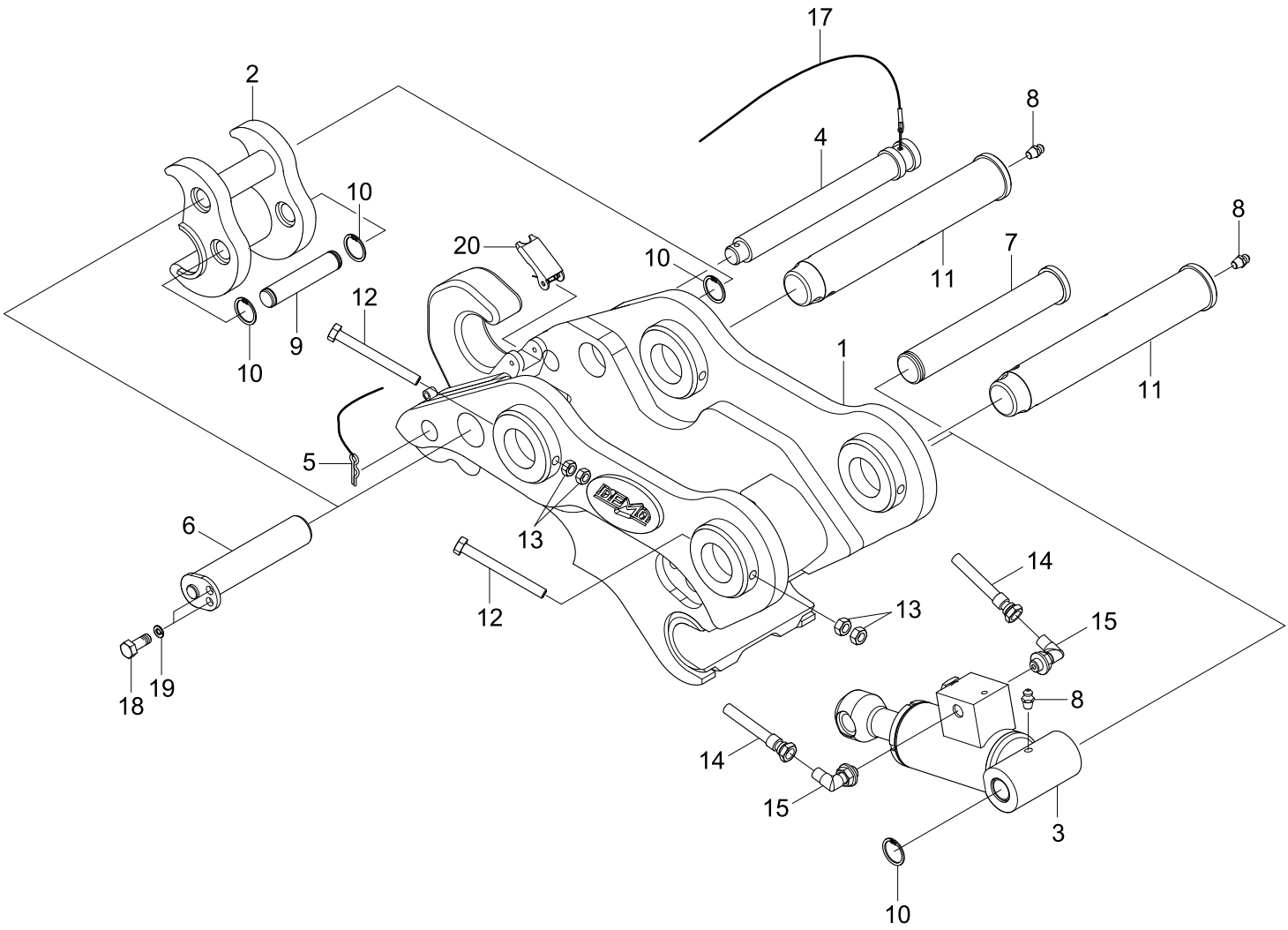

Item	Part_No	IS	Ord	T	Description	Qty	Serial_No	ITC	Remark
*	31N4-95810				QUICK CLAMP ASSY-HOOK		#2515 -	-	
1	XKBN-00069				.BODY-HOOK TYPE	1			
2	XKBN-00070				.HITCH	1			
3	XKBN-00071				.CYLINDER ASSY	1			
4	XKBN-00072				.PIN-SAFETY	1			
5	XKBN-00105				.PIN-SNAP	1			
6	XKBN-00074				.PIN-HITCH	1			
7	XKBN-00075				.PIN-FRAME	2			
8	XKBN-00009				.NIPPLE-GREASE	3			
9	XKBN-00076				.PIN-CYLINDER	1			
10	XKBN-00077				.RING-SNAP	4			
11	XKBN-00078				.PIN-BRACKET	2			
12	XKBN-00199				.BOLT-HEX	2			
13	XKBN-00196				.NUT-HEX	4			
14	XKBN-00081				.HOSE-PROTECTOR	2			
15	XKBN-00016				.ELBOW-90	2			
17	XKBN-00083				.WIRE ASSY	1			
18	XKBN-00084				.BOLT-HEX	2			
19	XKBN-00085				.WASHER-SPRING	2			
20	XKBN-00086				.LATCH WITH SPRING	1			

QUICK CLAMP ASSY 4(#2515-)

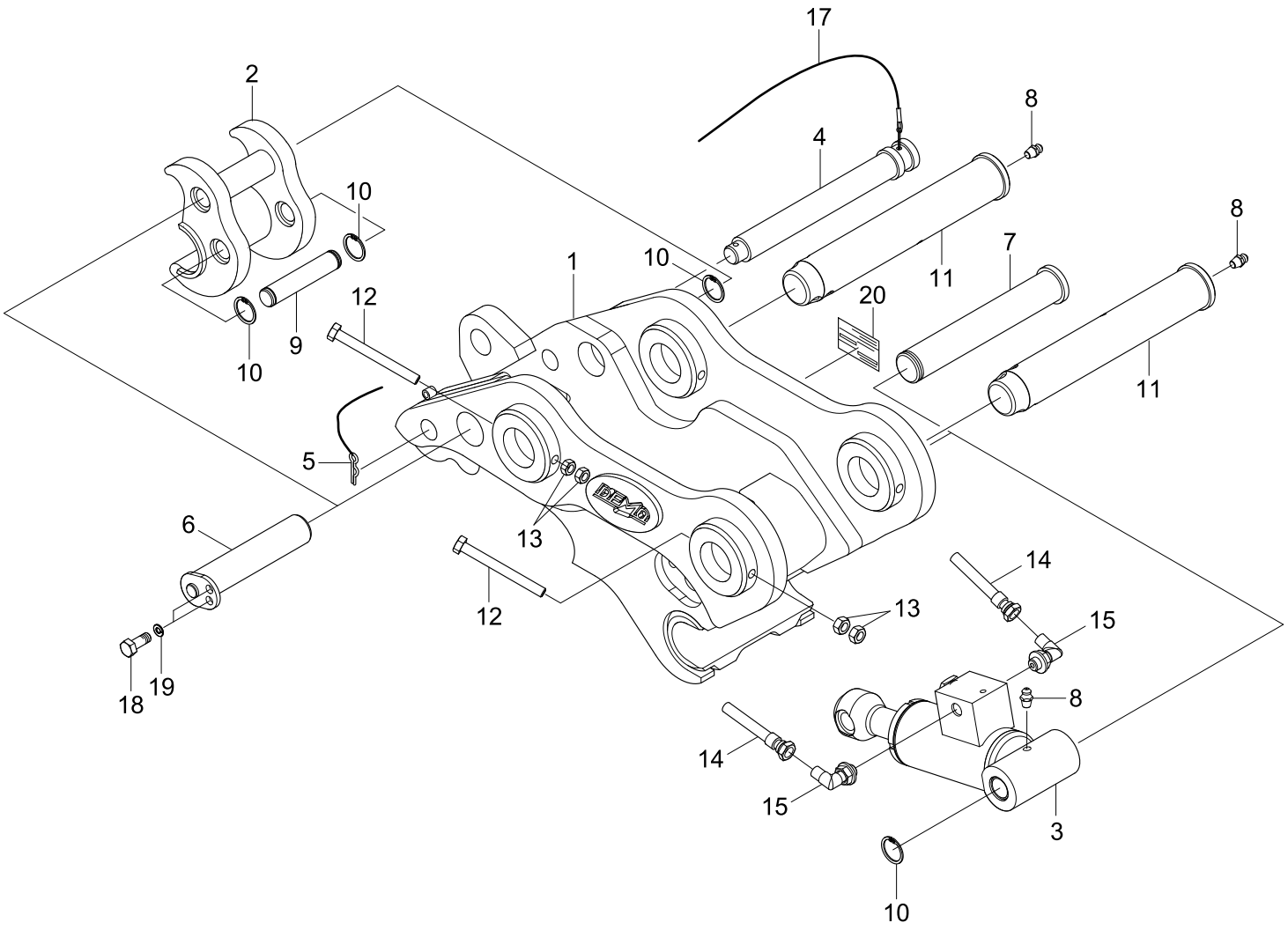

Item	Part_No	IS	Ord	T	Description	Qty	Serial_No	ITC	Remark
*	31N4-95820				QUICK CLAMP ASSY-CLOSE		#2515 -	-	
1	XKBN-00187				.BODY-CLOSE TYPE	1			
2	XKBN-00070				.HITCH	1			
3	XKBN-00071				.CYLINDER ASSY	1			
4	XKBN-00072				.PIN-SAFETY	1			
5	XKBN-00105				.PIN-SNAP	1			
6	XKBN-00074				.PIN-HITCH	1			
7	XKBN-00075				.PIN-FRAME	2			
8	XKBN-00009				.NIPPLE-GREASE	3			
9	XKBN-00076				.PIN-CYLINDER	1			
10	XKBN-00077				.RING-SNAP	4			
11	XKBN-00078				.PIN-BRACKET	2			
12	XKBN-00199				.BOLT-HEX	2			
13	XKBN-00196				.NUT-HEX	4			
14	XKBN-00081				.HOSE-PROTECTOR	2			
15	P020-110001				.ELBOW-90	2			
17	XKBN-00083				.WIRE ASSY	1			
18	XKBN-00084				.BOLT-HEX	2			
19	XKBN-00085				.WASHER-SPRING	2			

QUICK CLAMP CYLINDER(#2515-)

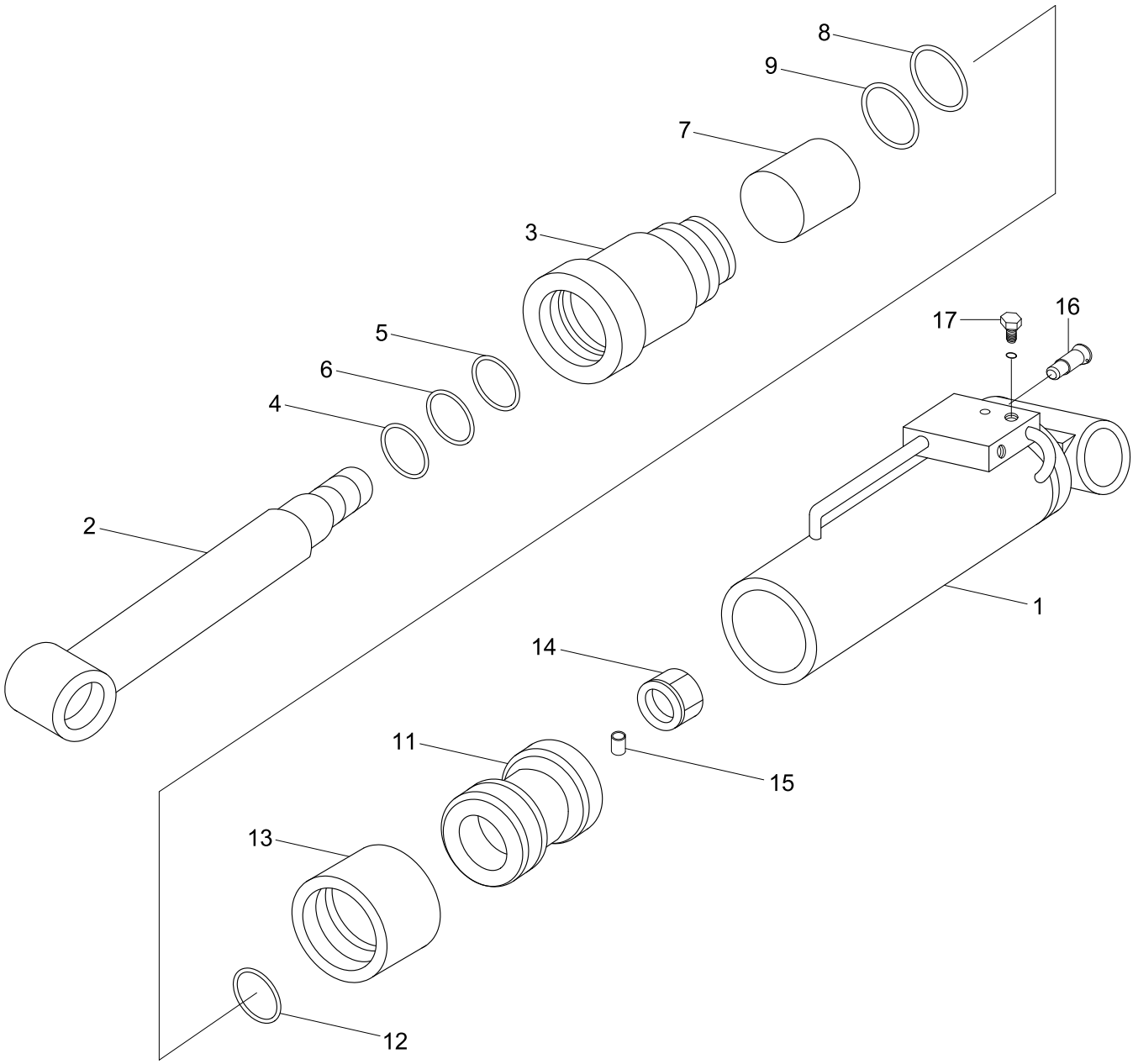

Item	Part_No	IS	Ord	T	Description	Qty	Serial_No	ITC	Remark
*	@				CYLINDER-QUICK CALMP	1	#2515 -	-	NOT
1	XKBN-00117				.TUBE	1			
2	XKBN-00118				.ROD	1			
3	XKBN-00119				.COVER-ROD	1			
4	XKBN-00120				.WIPER-DUST	1			
5	XKBN-00121				.U-PACKING	1			
6	XKBN-00122				.RING-BACK UP	1			
7	XKBN-00123				.BUSH-DU	1			
8	XKBN-00124				.O-RING	1			
9	XKBN-00125				.RING-BACK UP	1			
11	XKBN-00126				.PISTON	1			
12	XKBN-00127				.O-RING	1			
13	XKBN-00128				.SEAL-COMPACT	1			
14	XKBN-00129				.NUT-TEFRON	1			
15	XKBN-00130				.PIN-SPRING	1			
16	XKBN-00131				.CHECK VALVE-PILOT	1			
17	XKBN-00132				.BOLT-SOCKET PLUG	2			

UNDERCARRIAGE MOUNTING

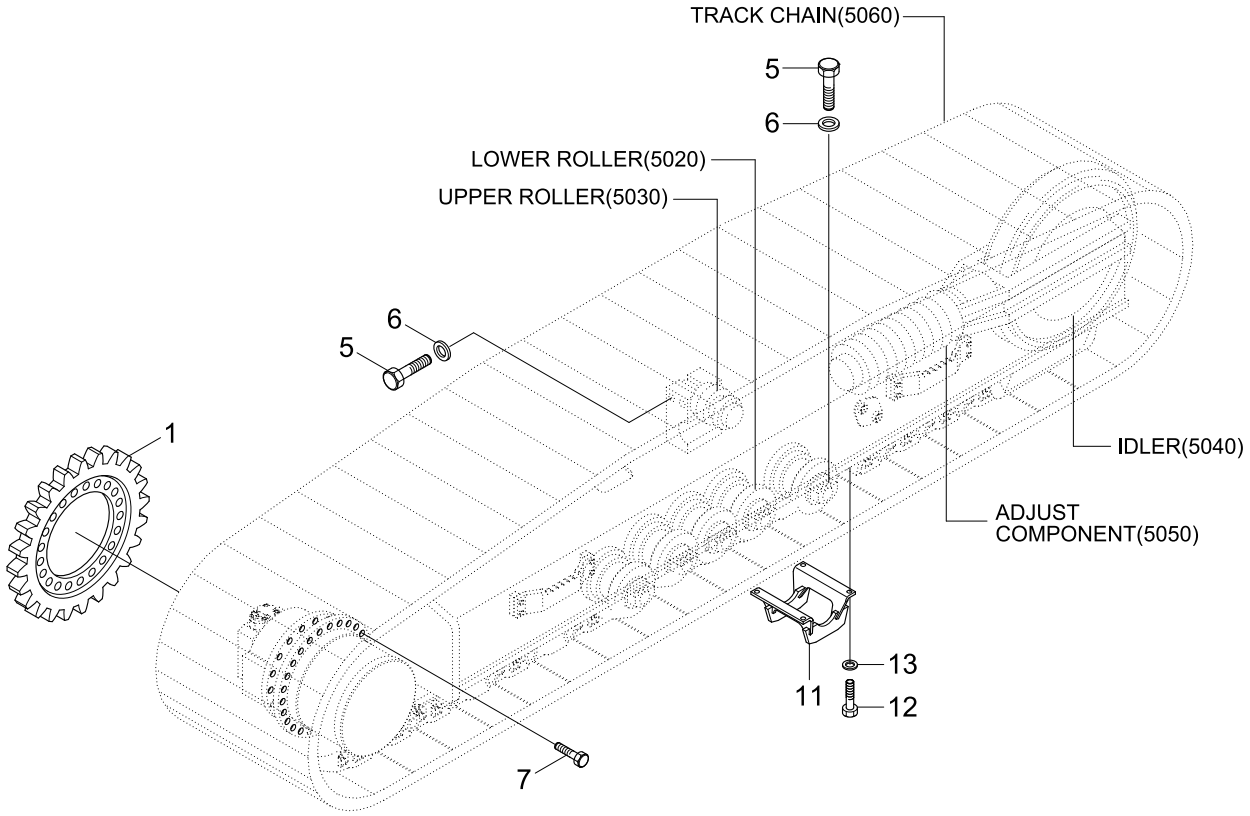

Item	Part_No	IS	Ord	T	Description	Qty	Serial_No	ITC	Remark
1	81E6-10052				SPROCKET	2	- #2416		
	81E6-10053				SPROCKET	2	#2417 - #2947	B	
	81E6-10053BG				SPROCKET	2	#2948 -	D	
5	S017-160906				BOLT-HEX	60			
6	S441-160006				WASHER-HARDENED	60			
7	81E1-19540				BOLT-SPROCKET	42	- #2337		
	81E1-19630				BOLT-SPROCKET	42	#2338 -	B	
11	81E6-2020	10			GUARD-TRACK	2	- #2947		
	81E6-2020BG				GUARD-TRACK	2	#2948 -	D	
12	S017-160506				BOLT-HEX	8			
13	S441-160006				WASHER-HARDENED	8			

LOWER ROLLER

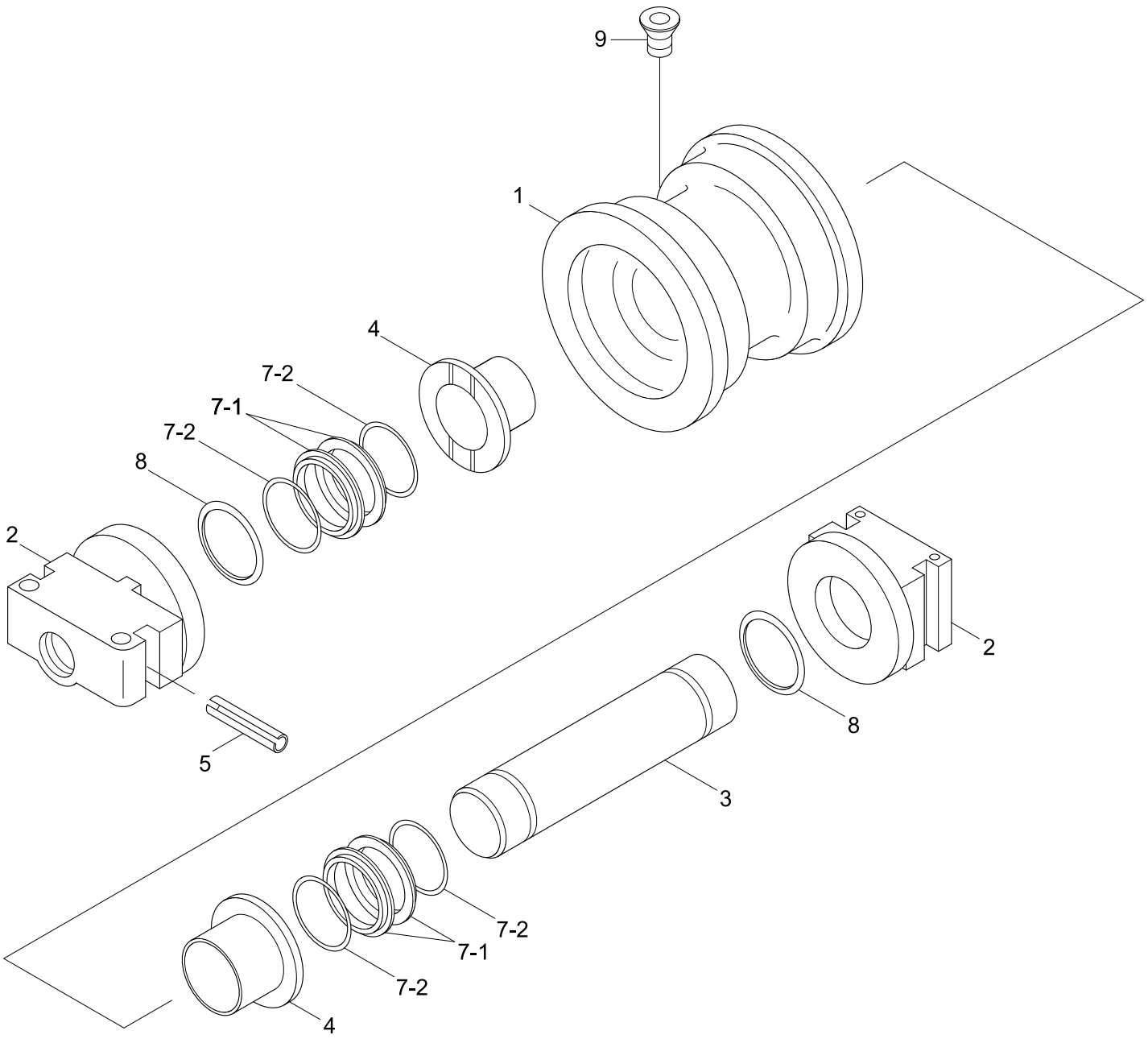

Item	Part_No	IS	Ord	T	Description	Qty	Serial_No	ITC	Remark
*	81E6-2002	20			ROLLER-LOWER	14	- #2947		
	81E6-2002BG	20			ROLLER-LOWER	14	#2948 -	D	
1	82E6-22010				.ROLLER WA	1			
2	82E6-22020				.COLLAR	2			
3	82E6-2203				.SHAFT	1			
4	82E6-2204				.BUSHING	2			
5	82E6-2205				.PIN-SPRING	2			
7	82E6-22060				.SEAL ASSY	2			
7-1	82E6-22090				..SEAL	4			
7-2	81E6-22100				..O-RING	4			
8	82E6-2208				.O-RING	2			
9	82E5-2402	10			.PLUG	1			

UPPER ROLLER

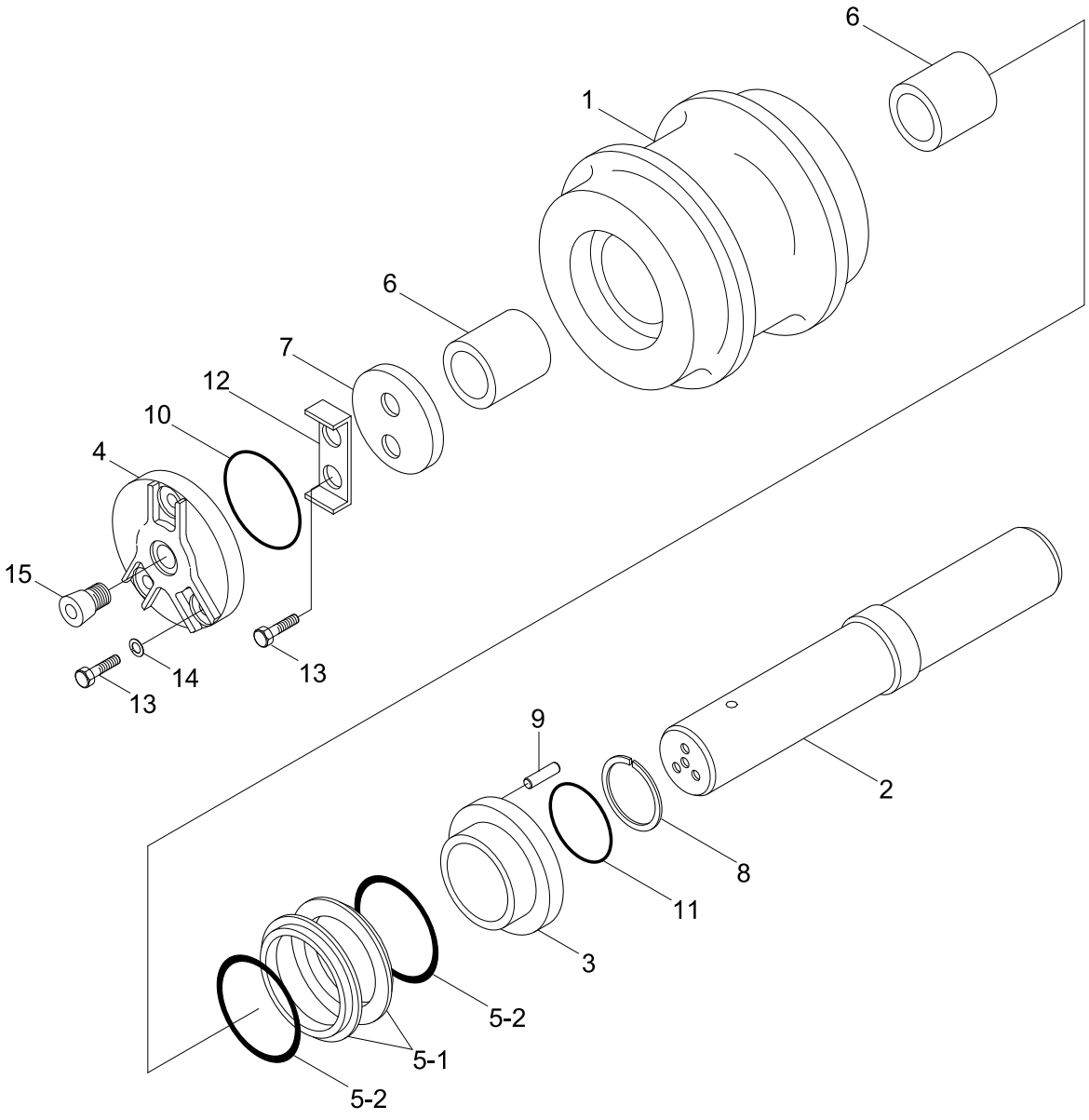

Item	Part_No	IS	Ord	T	Description	Qty	Serial_No	ITC	Remark
*	81E6-2003	30			ROLLER-UPPER	1	- #2947		
	81E6-2003BG	30			ROLLER-UPPER	1	#2948 - #3130	D	
	81E6-20031BG	30			UPPER ROLLER	1	#3131 -	B	
1	82E6-2301				.ROLLER WA	1			
2	82E6-2303				.SHAFT	1	- #3130		
	82E6-23031				.SHAFT	1	#3131 -	B	
3	82E6-2304				.COLLAR	1			
4	82E6-2302				.COVER	1			
5	82E6-23090				.SEAL ASSY	2			
5-1	82E6-23130				..SEAL	2			
5-2	82E6-23140				..O-RING	2			
6	82E6-2305				.BEARING	2			
					.BEARING	2			
7	82E6-2307				.PLATE	1			
8	82E6-2311				.RING-SNAP	1			
9	82E6-2306				.PIN-STOP	2			
10	82E6-2407				.O-RING-COVER	1			
11	82E6-2312				.O-RING-SHAFT	1			
12	82E6-2308				.PLATE-LOCK	1			
13	S018-100352				.BOLT-HEX	5			
14	S411-100002				.WASHER-SPRING	3			
15	82E6-2402				.PLUG	1			

IDLER

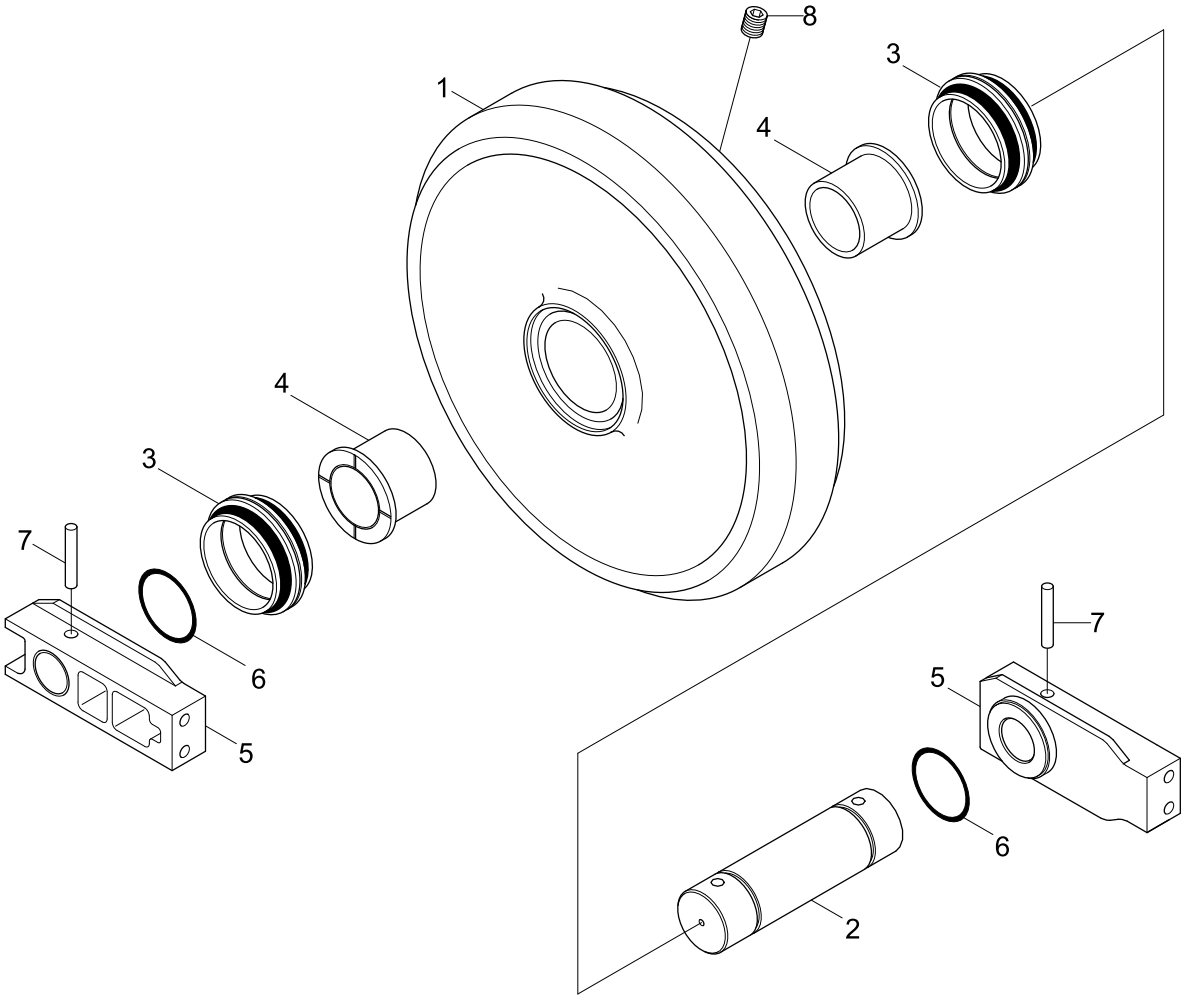

Item	Part_No	IS	Ord	T	Description	Qty	Serial_No	ITC	Remark
*	81N4-13010				IDLER ASSY	1			
1	81N4-13100				.SHELL-IDLER	1			
2	81N4-13110				.SHAFT-IDLER	1			
3	81N4-13140				.SEAL ASSY	2			
4	81N4-13120				.BUSHING-IDLER	2			
5	81N4-13130				.BRACKET-IDLER	2			
6	81N4-13170				.O-RING	2			
7	81N4-13180				.SPRING PIN	2			
8	82E5-2402	10			.PLUG	1			

ADJUST COMPONENT

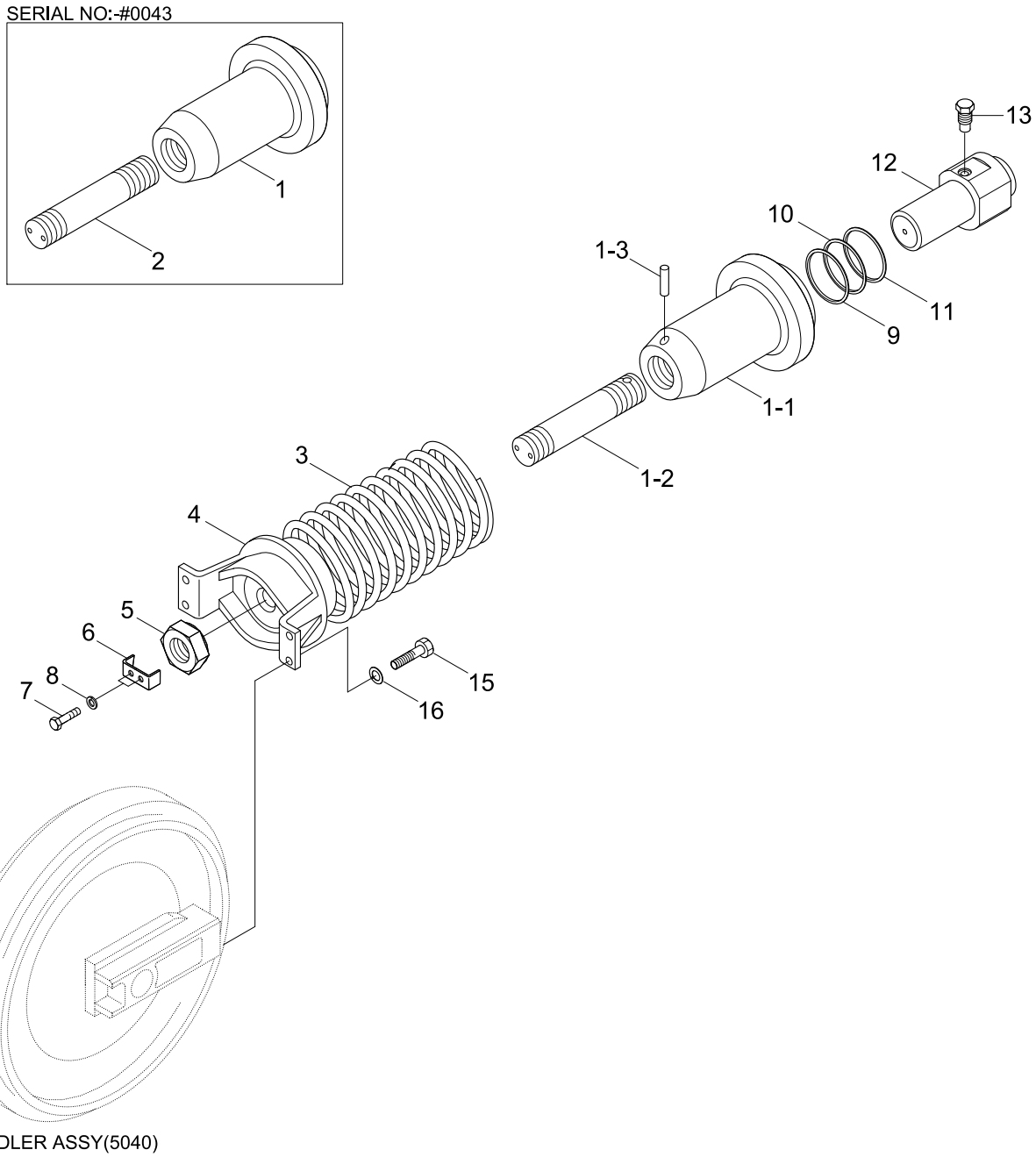

IDLER ASSY(5040)

Item	Part_No	IS	Ord	T	Description	Qty	Serial_No	ITC	Remark
*	81N4-15010				ADJUST COMP	1	- #2947		
	81N4-15010BG				ADJUST COMP	1	#2948 -	D	
*-1	@				.IDLER ASSY	1			NOT
*-2	81N4-14010				.T/CYLINDER ASSY	1	- #0043		
	81N4-14011				.T/CYLINDER ASSY	1	#0044 -	B	
1	81E6-20080				..BODY WA	1	- #0043		W/O PIN-HOLE
	81E6-20300				..BODY ASSY	1	#0044 -	B	
1-1	81E6-20080				...BODY WA	1	#0044 -	-	W/O PIN-HOLE
1-2	81E6-20180				...BAR-TIE	1	#0044 -	-	W/O PIN-HOLE
1-3	81E6-20190				...PIN-SPRING	1	#0044 -	-	
2	81E6-20180				..BAR-TIE	1	- #0043	-	W/O PIN-HOLE
3	81E6-2012	10			..SPRING	1			
4	81E6-2013	10			..BRACKET	1			
5	81E6-2015	10			..NUT-LOCK	1			
6	81E6-2016	10			..PLATE-LOCK	1			
7	S018-080252				..BOLT-HEX	2			
8	S411-080002				..WASHER-SPRING	2			
9	81E1-3101				..PACKING-ROD	1			
10	81E1-3201				..RING-BACK UP	1			
11	81E1-3301				..SEAL-DUST	1			
12	81N4-14210				..ROD-T/CYLINDER	1			
13	E181-2013	30			..VALVE-GREASE	1			
15	S017-160402				.BOLT-HEX	2			
16	S411-160002				.WASHER-SPRING	2			

TRACK CHAIN

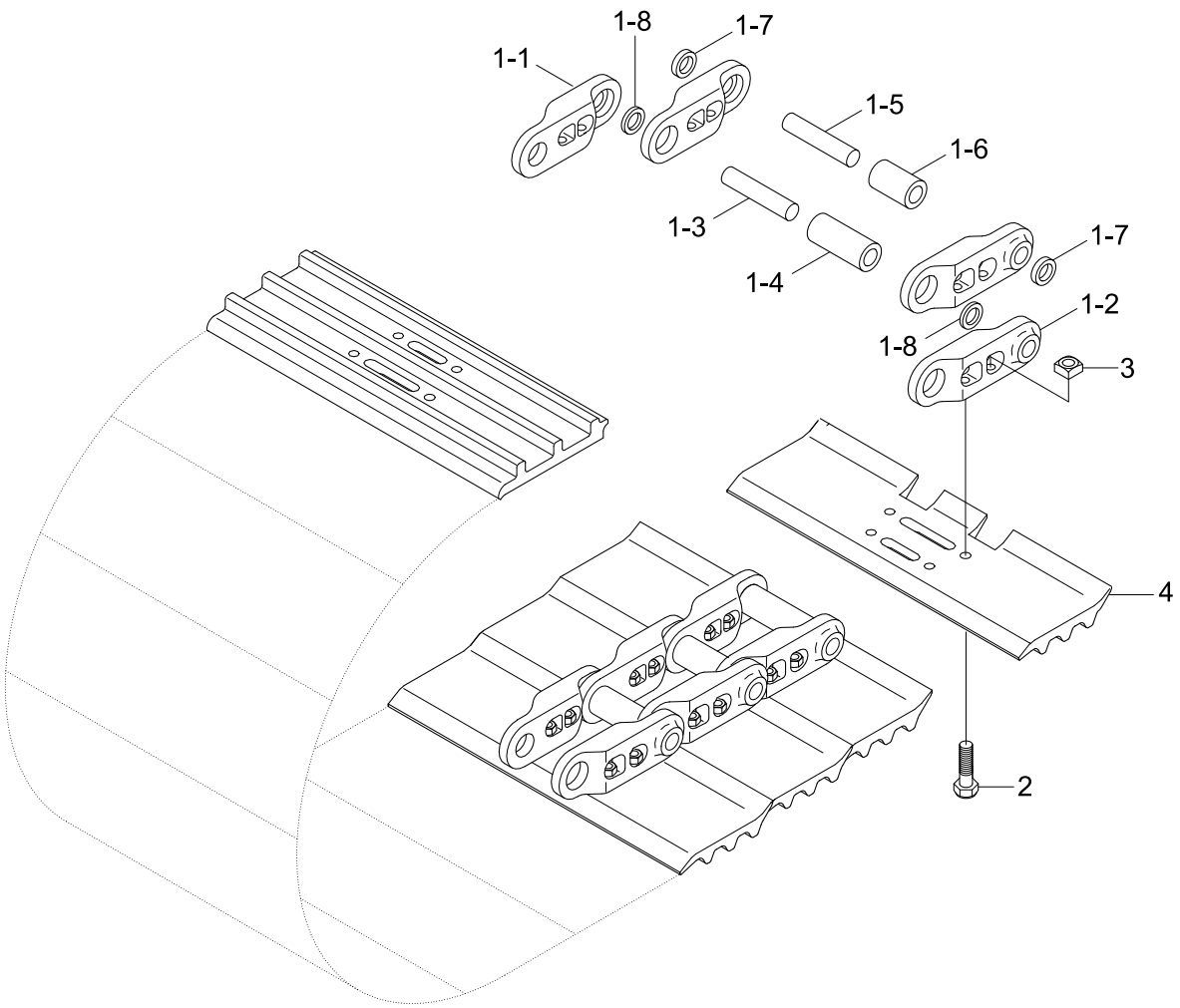

Item	Part_No	IS	Ord	T	Description	Qty	Serial_No	ITC	Remark
	81N4-26020				TRACK CHAIN ASSY	2	- #2935		500MM, INI
	81N4-26020BG				TRACK CHAIN ASSY	2	#2936 -	D	
*	81N4-24020BG				TRACK CHAIN ASSY	2	#3149 -	-	500MM, DCF
	81N4-26020BG				TRACK CHAIN ASSY	2	#2936 - #3417	D	500MM, INI
	81N4-24020BG				TRACK CHAIN ASSY	2	#3149 -		500MM, DCF
1	81N4-26600				.TRACK LINK ASSY	1			
1-1	81E6-26520				..TRACK LINK-RH	46			
1-2	81E6-26510				..TRACK LINK-LH	46			
1-3	81E6-26530				..PIN-TRACK	45			
1-4	81N4-26150				..BUSHING-TRACK	45			
1-5	81E6-26550				..PIN-MASTER	1			
1-6	81E6-26560				..BUSHING-MASTER	1			
1-7	81N4-26210				..SEAL-URETHANE	90			
2	81E6-26060				..BOLT-SHOE	1			
1-8	81E6-26570				..SPACER	2			
*-1	81E6-T0000				.TRACK BOLT & NUT KIT	184	#0001 -		
4	81N4-24520				.SHOE-TRACK	46	#3149 -	-	500MM, DCF
2	81E6-26060				..BOLT-SHOE	1			
*	81N4-26030BG				TRACK CHAIN ASSY	2	#2936 -	D	
	81N4-24030BG				TRACK CHAIN ASSY	2	#3149 -	-	600MM, DCF
3	E181-2505				..NUT-TRACK	1			
4	81E6-26011				.SHOE-TRACK	46	- #2935		500MM, INI
	81E6-26011BG				.SHOE-TRACK	46	#2936 - #3417	D	500MM, INI
	81N4-24520BG				.SHOE-TRACK	46	#3149 -		500MM, DCF
*	81N4-26030				TRACK CHAIN ASSY	2	- #2935		600MM, INI

Item	Part_No	IS	Ord	T	Description	Qty	Serial_No	ITC	Remark
*	81N4-26030BG				TRACK CHAIN ASSY	2	#2936 - #3417	D	600MM, INI
	81N4-24030BG				TRACK CHAIN ASSY	2	#3149 -		600MM, DCF
1	81N4-26600				.TRACK LINK ASSY	1			
1-1	81E6-26520				..TRACK LINK-RH	46			
1-2	81E6-26510				..TRACK LINK-LH	46			
2	81E6-26060				..BOLT-SHOE	1			
1-3	81E6-26530				..PIN-TRACK	45			
1-4	81N4-26150				..BUSHING-TRACK	45			
4	81N4-24530				.SHOE-TRACK	46	#3149 -	-	600MM, DCF
1-5	81E6-26550				..PIN-MASTER	1			
*	81N4-26040BG				TRACK CHAIN ASSY	2	#2936 -	D	
	81N4-24040BG				TRACK CHAIN ASSY	2	#3149 -	-	700MM, DCF
1-6	81E6-26560				..BUSHING-MASTER	1			
1-7	81N4-26210				..SEAL-URETHANE	90			
1-8	81E6-26570				..SPACER	2			
*-1	81E6-T0000				.TRACK BOLT & NUT KIT	184	#0001 -		
2	81E6-26060				..BOLT-SHOE	1			
3	E181-2505				..NUT-TRACK	1			
4	81E6-26021				.SHOE-TRACK	46	- #2935		600MM, INI
	81E6-26021BG				.SHOE-TRACK	46	#2936 - #3417	D	600MM, INI
	81N4-24530BG				.SHOE-TRACK	46	#3149 -		600MM, DCF
*	81N4-26040				TRACK CHAIN ASSY	2	- #2935		700MM, INI
2	81E6-26060				..BOLT-SHOE	1			
*	81N4-26040BG				TRACK CHAIN ASSY	2	#2936 - #3417	D	700MM, INI
	81N4-24040BG				TRACK CHAIN ASSY	2	#3149 -		700MM, DCF

Item	Part_No	IS	Ord	T	Description	Qty	Serial_No	ITC	Remark
4	81N4-24540				.SHOE-TRACK	46	#3149 -	-	700MM, DCF
1	81N4-26600				.TRACK LINK ASSY	1			
1-1	81E6-26520				..TRACK LINK-RH	46			
1-2	81E6-26510				..TRACK LINK-LH	46			
1-3	81E6-26530				..PIN-TRACK	45			
1-4	81N4-26150				..BUSHING-TRACK	45			
1-5	81E6-26550				..PIN-MASTER	1			
1-6	81E6-26560				..BUSHING-MASTER	1			
1-7	81N4-26210				..SEAL-URETHANE	90			
1-8	81E6-26570				..SPACER	2			
*-1	81E6-T0000				.TRACK BOLT & NUT KIT	184	#0001 -		
2	81E6-26060				..BOLT-SHOE	1			
					..BOLT-SHOE	1			
3	E181-2505				..NUT-TRACK	1			
4	81E6-26031				.SHOE-TRACK	46	- #2935		700MM, INI
	81E6-26031BG				.SHOE-TRACK	46	#2936 - #3417	D	700MM, INI
	81N4-24540BG				.SHOE-TRACK	46	#3149 -		700MM, DCF
*	81N4-26060				TRACK CHAIN ASSY	2	- #0142		800MM, INI
1	81N4-26600				.TRACK LINK ASSY	1	- #0142		
1-1	81E6-26520				..TRACK LINK-RH	46	- #0142		
1-2	81E6-26510				..TRACK LINK-LH	46	- #0142		
1-3	81E6-26530				..PIN-TRACK	45	- #0142		
1-4	81N4-26150				..BUSHING-TRACK	45	- #0142		
*	81N4-25060BG				TRACK CHAIN ASSY	2	#3149 -	-	800MM, LCM, DCF
1-5	81E6-26550				..PIN-MASTER	1	- #0142		

Item	Part_No	IS	Ord	T	Description	Qty	Serial_No	ITC	Remark
1-6	81E6-26560				..BUSHING-MASTER	1	- #0142		
1-7	81N4-26210				..SEAL-URETHANE	90	- #0142		
1-8	81E6-26570				..SPACER	2	- #0142		
*-1	81E6-T0000				.TRACK BOLT & NUT KIT	184	- #0142		
2	81E6-26060				..BOLT-SHOE	1	- #0142		
3	E181-2505				..NUT-TRACK	1	- #0142		
4	81E6-26041				.SHOE-TRACK	46	- #0142		800MM, INI
*	81E6-27601				TRACK CHAIN ASSY	2	#0239 - #1083		800MM, LCM, INI
*-2	E181-T0000				.TRACK BOLT & NUT KIT	188	#0239 -	-	
2	E181-2504	10			..BOLT-TRACK	1			
*	81N4-25060BG				TRACK CHAIN ASSY	2	#3149 - #3407		800MM, LCM, DCF
1	81E6-27010				.LINK ASSY	1	- #3407		
1-1	E181-2532				..TRACK LINK-RH	47	- #3407		
1-2	E181-2531				..TRACK LINK-LH	47	- #3407		
1-3	E181-2533				..PIN-TRACK	46	- #3407		
1-4	E181-2534				..BUSHING-TRACK	46	- #3407		
1-5	E181-2535				..PIN-MASTER	1	- #3407		
1-6	E181-2536				..BUSHING-MASTER	1	- #3407		
1-8	E181-2537				..SPACER-MASTER	2	- #3407		
*-2	E181-T0000				.TRACK BOLT & NUT KIT	188	#0239 - #3407		
*	81N4-28040BG				TRACK CHAIN ASSY	2	#2936 -	D	
	81N4-25040BG				TRACK CHAIN ASSY	2	#3149 -	-	710MM, H/W, DCF
2	E181-2504				..BOLT-TRACK	1	- #3407		
3	E181-2505				..NUT-TRACK	1	- #3407		
4	E181-25081				.SHOE-TRACK	47	- #1083		800MM, LCM, INI

Item	Part_No	IS	Ord	T	Description	Qty	Serial_No	ITC	Remark
1-3	E181-2533				..PIN-TRACK	46			
4	81N5-24560BG				.SHOE-TRACK	47	#3149 - #3407		800MM, LCM, DCF
*	81N4-28040				TRACK CHAIN ASSY	2	#1371 - #2935		710MM, H/W, INI
	81N4-28040BG				TRACK CHAIN ASSY	2	#2936 -	D	710MM, H/W, INI
	81N4-25040BG				TRACK CHAIN ASSY	2	#3149 - #3407		710MM, H/W, DCF
1	81N4-27600				.TRACK LINK ASSY	1			
1-1	E181-2532				..TRACK LINK-RH	47			
2	E181-2504				..BOLT-TRACK	1			
1-2	E181-2531				..TRACK LINK-LH	47			
1-3	E181-2533				..PIN-TRACK	46			
1-4	81N5-26140				..BUSHING-TRACK	46			
1-5	E181-2535				..PIN-MASTER	1			
1-6	E181-2536				..BUSHING-MASTER	1			
1-7	81N4-26210				..SEAL-URETHANE	92			
1-8	E181-2537				..SPACER-MASTER	2			
*-2	E181-T0000				.TRACK BOLT & NUT KIT	188	#1371 -		
2	E181-2504				..BOLT-TRACK	1			
3	E181-2505				..NUT-TRACK	1			
4	81N4-28540				.SHOE-TRACK	47	- #2935		710MM, H/W, INI
	81N4-28540BG				.SHOE-TRACK	47	#2936 -	D	710MM, H/W, INI
	81N5-24540BG				.SHOE-TRACK	47	#3149 - #3407		710MM, H/W, DCF

UNDERCARRIAGE(#0239-, R140LCM-7)

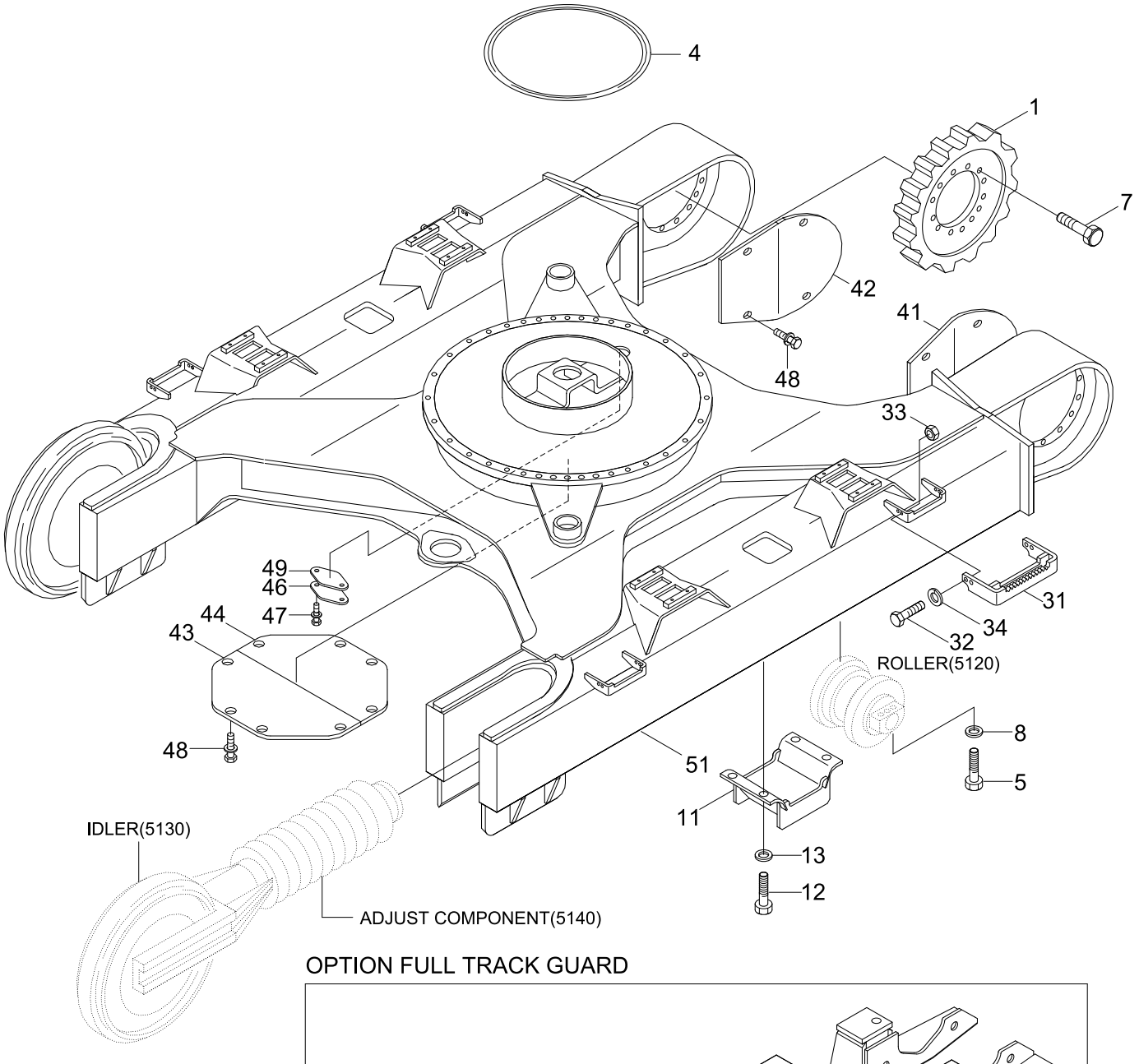

OPTION FULL TRACK GUARD

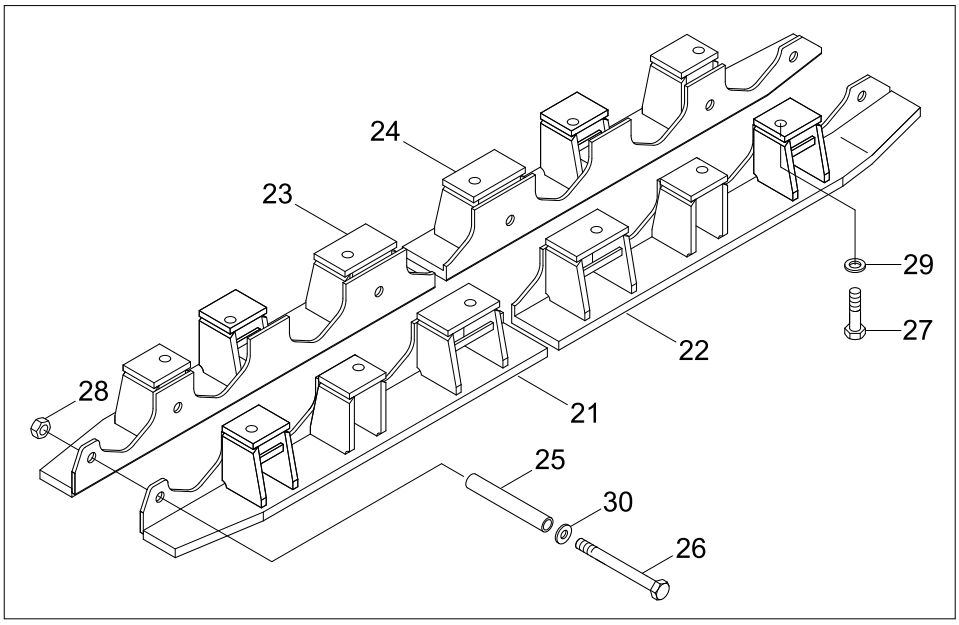

Item	Part_No	IS	Ord	T	Description	Qty	Serial_No	ITC	Remark
*	@				UNDERCARRIAGE	1	#0239 -	-	NOT
1	E181-20012				SPROCKET	2	- #2416		
	E181-20013				SPROCKET	2	#2417 - #2947	B	
	E181-20013BG				SPROCKET	2	#2948 -	D	
4	81E6-30010				SEAL-GREASE	1			
5	S017-201002				BOLT-HEX	72			
7	81E1-19540				BOLT-SPROCKET	44	- #2337		
	81E1-19630				BOLT-SPROCKET	44	#2338 -	B	
8	S441-200004				WASHER-HARDENED	72			
11	81E1-20200				GUARD-TRACK WA	6			
12	S017-200502				BOLT-HEX	24			
13	S441-200004				WASHER-HARDENED	24			
21	81E6-36100				T/GUARD WA(A)-LH	2			
22	81E6-36300				T/GUARD WA(B)-LH	2			
23	81E6-36200				T/GUARD WA(A)-RH	2			
24	81E6-36400				T/GUARD WA(B)-RH	2			
25	81E6-36510				SPACER	12			
26	S017-243352				BOLT-HEX	12			
27	S017-200502				BOLT-HEX	24			
28	S207-241002				NUT-HEX	12			
29	S441-200002				WASHER-HARDENED	24			
30	S441-240002				WASHER-HARDENED	24			
31	51N4-21040				BOARD-FOOT	4			
32	S017-160552				BOLT-HEX	16			
33	S207-161002				NUT-HEX	16			

Item	Part_No	IS	Ord	T	Description	Qty	Serial_No	ITC	Remark
34	S441-160002				WASHER-HARDENED	32			
41	56E6-10011				COVER-T/MOTOR-LH	1			
42	56E6-10021				COVER-T/MOTOR-RH	1			
43	56E6-10050				COVER WA-BOTTOM	1			
44	56E6-10060				COVER-BOTTOM	1			
46	E141-1305	40			COVER	1			
47	S037-102552				BOLT-W/WASHER	2			
48	S037-123552				BOLT-W/WASHER	16			
49	41E9-1306	10			SEAL	1			
51	51N4-06010				LOWER FRAME WA	1			

ROLLER(#0239-, R140LCM-7)

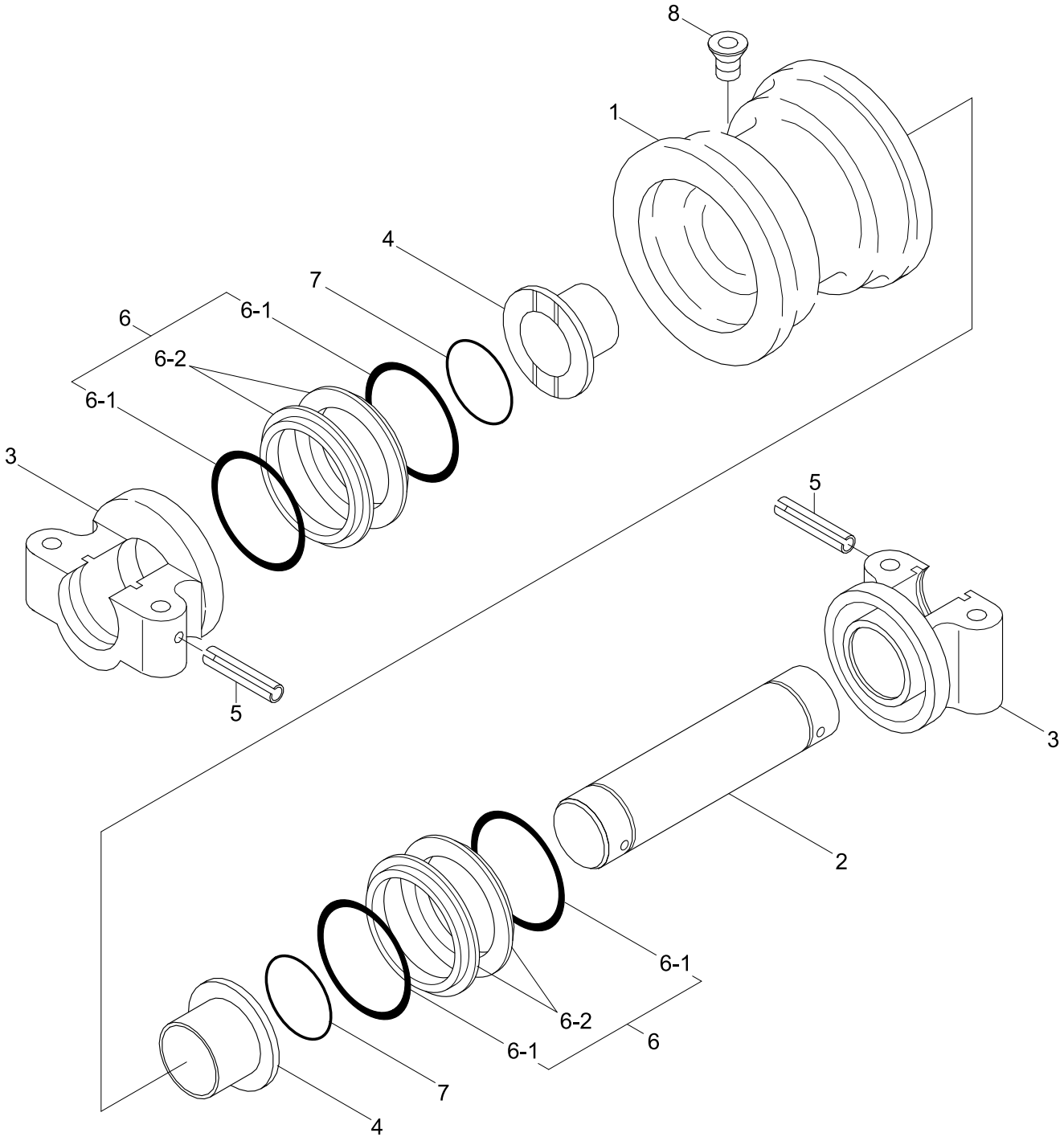

Item	Part_No	IS	Ord	T	Description	Qty	Serial_No	ITC	Remark
*	E181-2002	40			LOWER ROLLER ASSY	1	#0239 - #2947	-	
	E181-2002BG	40			LOWER ROLLER ASSY	1	#2948 -	D	
1	E181-22010				.ROLLER WA	1			
2	E181-2205	20			.SHAFT	1			
3	E181-22070				.COLLAR	2			
4	E181-2202	20			.BUSHING	2			
5	E181-2206	20			.PIN-SPRING	2			
6	E181-22030				.SEAL ASSY	2			
N6-1	E181-22080				..SEAL	4			NOT
N6-2	E181-22090				..O-RING	4			NOT
7	E181-2204	20			.O-RING	2			
8	E282-2407	20			.PLUG	1			
N	@				NOT INDIVIDUALLY SUPPLIED	AR			NOT

IDLER(#0239-, R140LCM-7)

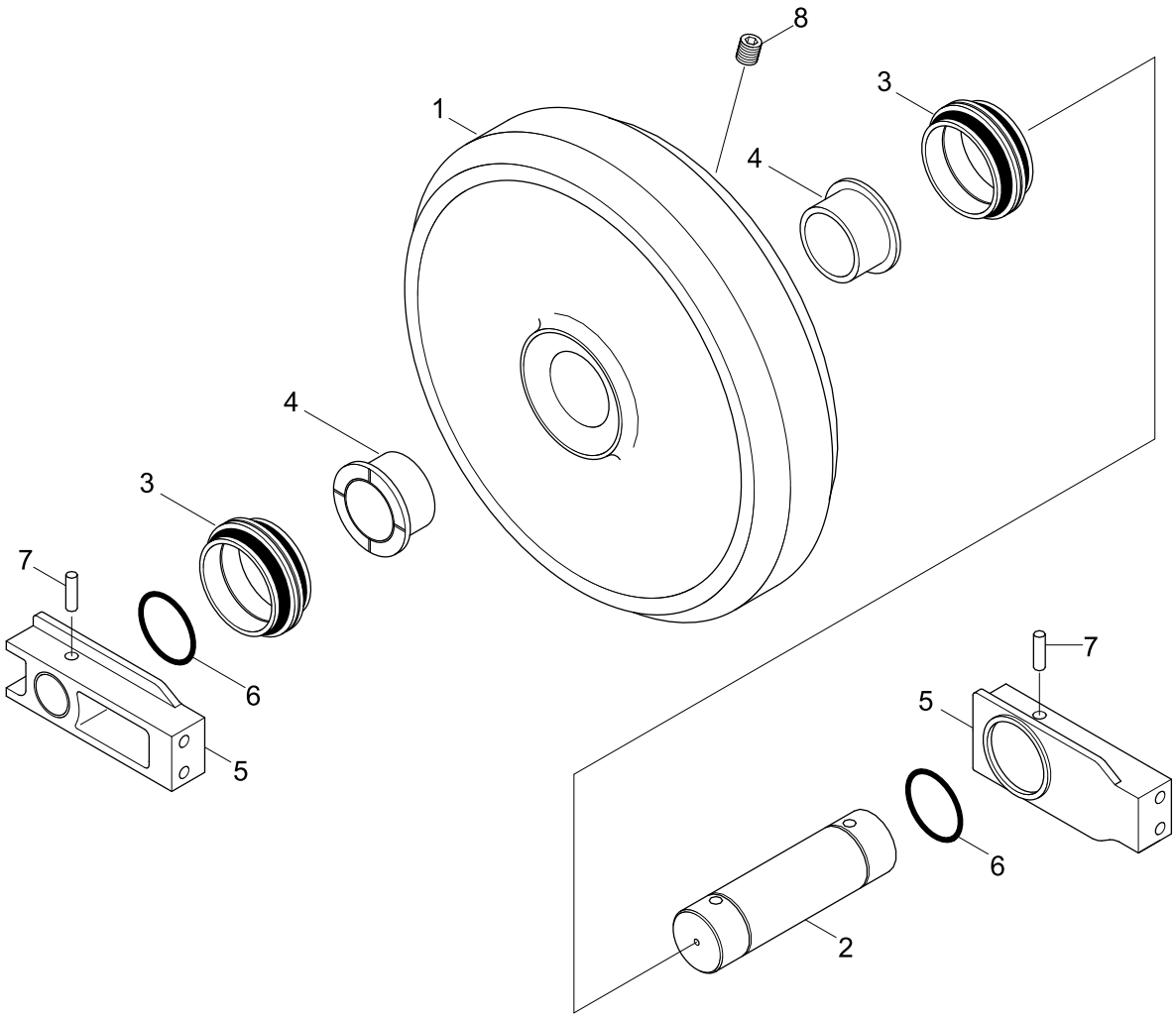

Item	Part_No	IS	Ord	T	Description	Qty	Serial_No	ITC	Remark
*	81EM-10040				ADJUST COMPONENT	1	#0239 -	-	SEE 5140
*-1	81EM-14010				IDLER ASSY	1			
1	81EM-14231				.SHELL-IDLER	1			
2	81EM-14140				.SHAFT	2			
3	81E6-2206	10			.SEAL ASSY	2			
4	81EM-14150				.BUSHING	2			
5	81EM-14161				.BRACKET	2			
6	81EM-14201				.O-RING	2			
7	81EM-14070				.PIN-SPRING	2			
8	P220-430202				.PLUG	1			

ADJUST COMPNENT(#0239-, R140LCM-7)

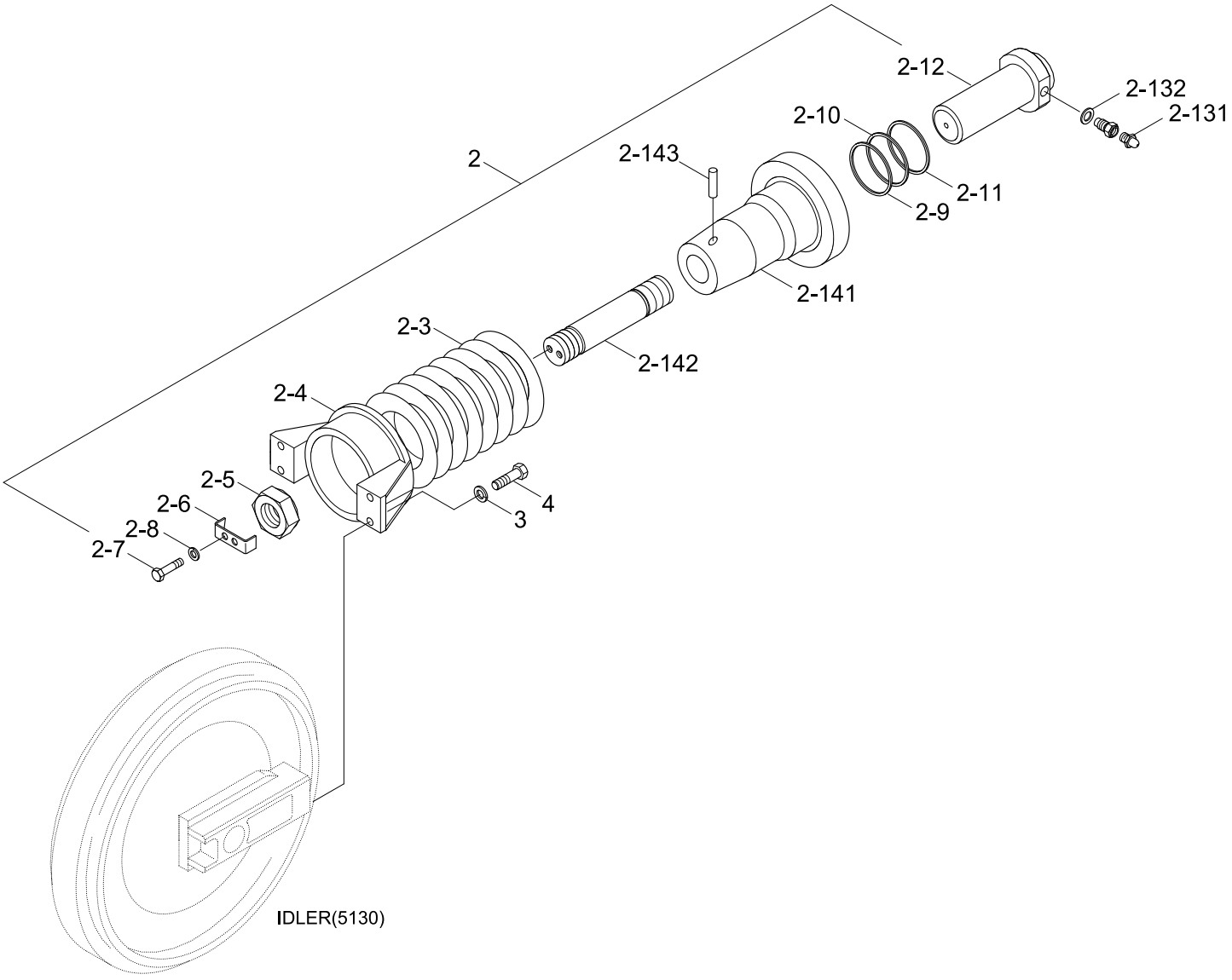

Item	Part_No	IS	Ord	T	Description	Qty	Serial_No	ITC	Remark
*	@				ADJUST COMPONENT	1	#0239 -	-	NOT
2	81EM-14021				.ADJUST CYLINDER	1			
2-3	81EM-14100				..SPRING	1			
2-4	81EM-14111				..BRACKET	1			
2-5	81EM-14121				..NUT-LOCK	1			
2-6	81EM-14130				..PLATE-LOCK	1			
2-7	S018-120252				..BOLT-HEX	2			
2-8	S411-120002				..WASHER-SPRING	2			
2-9	FU0862FO				..SEAL-ROD	1			
2-10	GN0910FO				..RING-BACK UP	1			
2-11	FD3493IO				..SEAL-DUST	1			
2-12	81EM-14171				..ROD ASSY	1			
2-13	E181-2013	30			..VALVE-GREASE	1			
2-131	S651-810001				...NIPPLE-GREASE	1			
2-132	E181-21131				...SEAL-ELASTOMERIC	1			
2-14	81EM-14300				..BODY ASSY	1			
2-141	81EM-14081				...BODY	1			W/O PIN-HOLE
2-142	81EM-14091				...BAR-TIE	1			W/O PIN-HOLE
2-143	81EM-14210				...PIN-SPRING	1			
3	S411-160002				.WASHER-SPRING	4			
4	S017-160502				.BOLT-HEX	4			

CAB MOUNTING

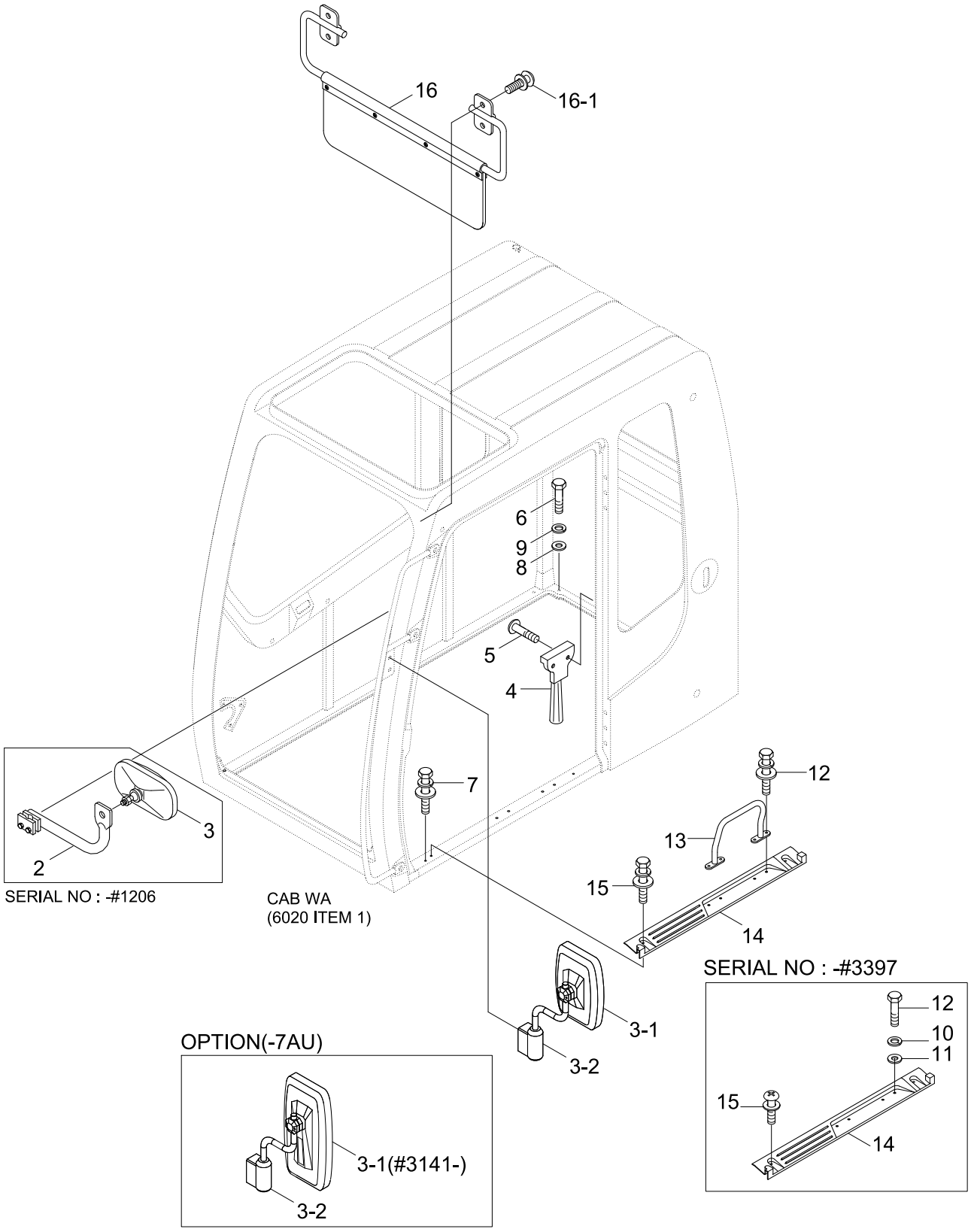

Item	Part_No	IS	Ord	T	Description	Qty	Serial_No	ITC	Remark
2	71N6-03551				STAY-CAB	1	- #0046		
	71N6-03552				STAY-CAB	1	#0047 - #1206	D	
3	E129-2000	20			MIRROR	1	- #0046		
	71N8-46000				MIRROR	1	#0047 - #1206	D	
	71N8-47000				MIRROR & STAY ASSY-LH	1	#1207 - #2947	D	
	71N8-47000BG				MIRROR & STAY ASSY-LH	1	#2948 - #3097	D	
	71N8-47001BG				MIRROR & STAY ASSY-LH	1	#3098 -	B	STD
	71N8-46000				MIRROR	1	#0047 - #1206	D	
	71N8-47001BG				MIRROR & STAY ASSY-LH	1	#3098 - #3140	B	-7AU
	71N8-47301BG				MIRROR & STAY ASSY-LH	1	#3141 -	D	-7AU
3-1	71N8-47100				.MIRROR	1	#1207 - #3097	-	
	71N8-47101				.MIRROR	1	#3098 -	B	
					.MIRROR	1	#3098 -	B	STD
					.MIRROR	1	#3098 - #3140	B	-7AU
	71M8-12001				.MIRROR	1	#3141 -	B	-7AU
3-2	71N8-47200				.STAY ASSY-LH	1	#1207 - #2947	-	
	71N8-47200BG				.STAY ASSY	1	#2948 -	D	
3	71N8-47000BG				MIRROR & STAY ASSY-LH	1	#2936 - #3097	-	UPGRADE CAB
	71N8-47001BG				MIRROR & STAY ASSY-LH	1	#3098 -	B	UPGRADE CAB
3-1	71N8-47100				.MIRROR	1	#2936 - #3097	-	OPT-UPGRADE CAB
	71N8-47101				.MIRROR	1	#3098 -	B	OPT-UPGRADE CAB
	71N8-47100				.MIRROR	1	#2936 - #3097	-	UPGRADE CAB
	71N8-47101				.MIRROR	1	#3098 -	B	UPGRADE CAB
3-2	71N8-47200BG				.STAY ASSY	1	#3936 -	-	UPGRADE CAB
4	71E1-60340				HAMMER-SAFETY	1			

Item	Part_No	IS	Ord	T	Description	Qty	Serial_No	ITC	Remark
5	S161-040106				SCREW-CROSS R/ROUND	2	- #0046		
	S141-040166				SCREW-FLAT HD	2	#0047 -	D	
6	S017-120706				BOLT-HEX	8			
7	S037-122526				BOLT-W/WASHER	1			
8	S403-12200B				WASHER-PLAIN	8			
9	S411-120006				WASHER-SPRING	8			
10	S411-100006				WASHER-SPRING	4	- #3397	-	
11	S403-10200B				WASHER-PLAIN	4	- #3397	-	
12	S017-100256				BOLT-HEX	4	- #3397		
	S037-102526				BOLT-W/WASHER	4	#3398 -	A	
13	71N6-03560				RAIL-HAND	1			
14	71N6-10270				PLATE	1	- #3397		
	71N6-10271				PLATE	1	#3398 -	B	
15	S131-051646				SCREW-W/WASHER	2	- #3397		
	S037-101526				BOLT-W/WASHER	2	#3398 -	D	
16	71N6-03632				SUN VISOR ASSY	1			
16-1	S132-060856				.SCREW-W/WASHER	4			

CAB ASSY(1/6, STD & FOG TYPE)

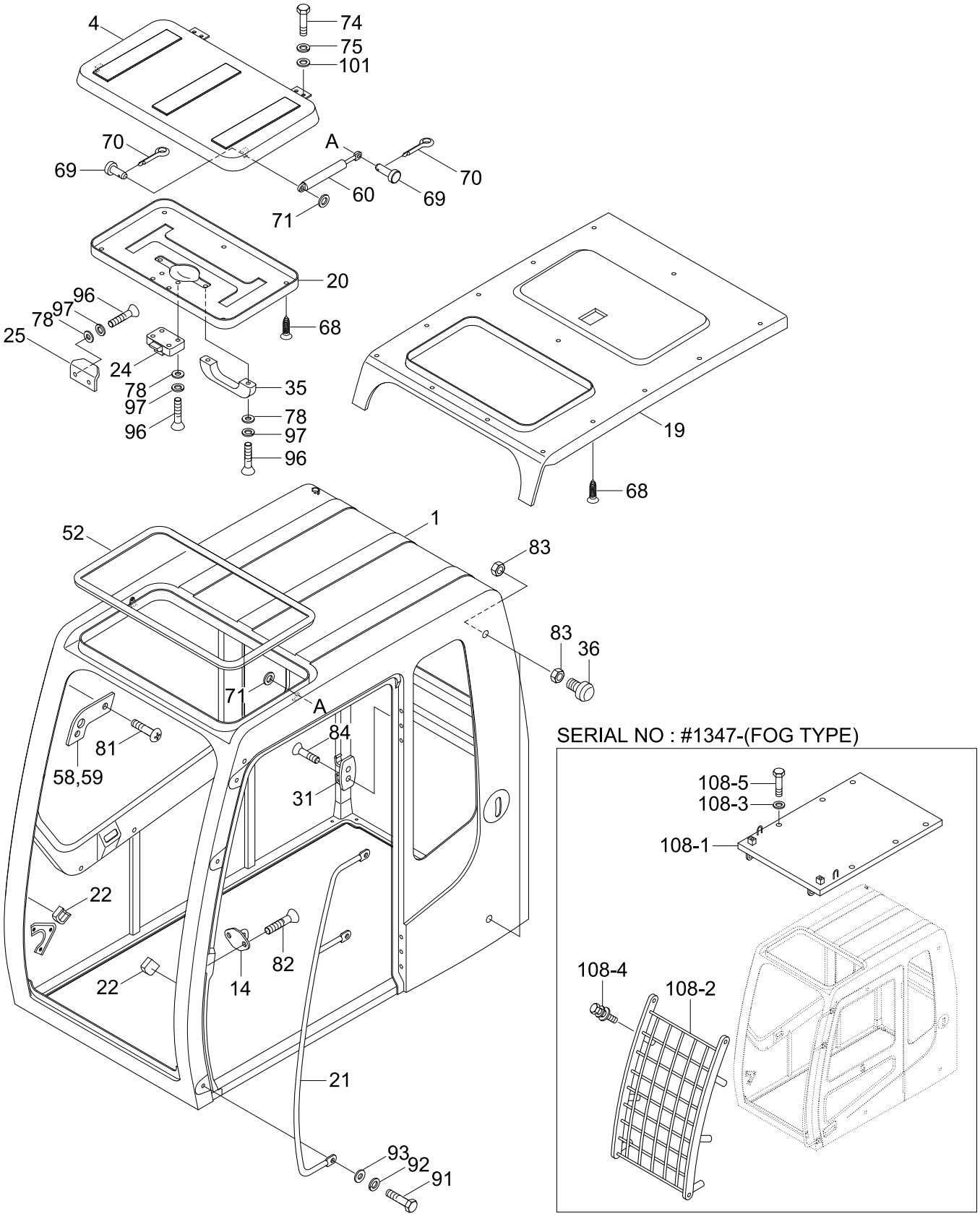

Item	Part_No	IS	Ord	T	Description	Qty	Serial_No	ITC	Remark
*	71N6-10001				CAB ASSY	1	- #2016		STD
	71N6-10002				CAB ASSY	1	#2017 - #2947	B	STD
	71N6-10002BG				CAB ASSY	1	#2948 -	D	
	73N6-10000				CAB ASSY	1	#1347 - #2016	-	FOG TYPE
	73N6-10001				CAB ASSY	1	#2017 - #2947	B	FOG TYPE
	73N6-10001BG				CAB ASSY	1	#2948 -	D	
1	71N6-00011				.CAB WA	1	- #2947		STD
	71N6-00011BG				.CAB WA	1	#2948 -	D	
	73N6-00010				.CAB WA	1	#1347 - #2947	-	FOG TYPE
	73N6-00010BG				.CAB WA	1	#2948 -	D	
4	71N6-02400				.SUN ROOF WA	1	- #2947		
	71N6-02400BG				.SUN ROOF WA	1	#2948 -	D	
14	71N6-02770				.STRIKER	1			
19	71N6-02810				.LINING(1)-HEAD	1			
20	71N6-02820				.LINING(2)-HEAD	1			
21	71N6-02830				.RAIL-HAND	1	- #1206		
	71N6-02831				.RAIL-HAND	1	#1207 - #2947	D	
	71N6-02831BG				.RAIL-HAND	1	#2948 -	D	
22	71N6-02841				.STOPPER	2			
24	71N6-02860				.LATCH-ROOF	1			
25	71N6-02870				.BRACKET-ROOF	1			
31	71N6-02920				.HOOK-COAT	1			
35	E171-1147				.HANDLE	1			
36	71EH-13150				.BUMPER-RUBBER	2			
52	S772-020300				.WEATHER STRIP	1			

Item	Part_No	IS	Ord	T	Description	Qty	Serial_No	ITC	Remark
58	71N6-03181				.STOPPER-LH	1			
59	71N6-03191				.STOPPER-RH	1			
60	71N6-03201				.SPRING-GAS	2	- #3403		
	71N6-03202				.SPRING-GAS	2	#3404 -	B	
68	E171-1310	10			.PLUG-HEADLINER	18			
69	S491-080162				.PIN-CLEVIS	4	- #3403		
	71Q6-03160				.PIN-CLEVIS	4	#3404 -	B	
70	S461-200162				.PIN-SPLIT	4	- #3403		
	S501-070006				.PIN-SELF LOCKING	4	#3404 -	B	
71	S403-08200B				.WASHER-PLAIN	4			
74	S015-080206				.BOLT-HEX	4			
75	S411-080006				.WASHER-SPRING	4			
78	S403-05200B				.WASHER-PLAIN	8			
81	S141-060206				.SCREW-FLAT HD	4			
82	S145-080166				.SCREW-FLAT HD	2			
83	S203-101006				.NUT-HEX	4			
84	S141-040206				.SCREW-FLAT HD	2			
91	S017-160206				.BOLT-HEX	3			
92	S411-160006				.WASHER-SPRING	3			
93	S403-162006				.WASHER-PLAIN	3			
96	S161-050166				.SCREW-CROSS R/ROUND	8			
97	S411-050006				.WASHER-SPRING	8			
101	S403-08200B				.WASHER-PLAIN	4			
108	73N6-05000				.GUARD ASSY	1	#1347 - #2947	-	
	73N6-05000BG				.GUARD ASSY	1	#2948 -	D	

Item	Part_No	IS	Ord	T	Description	Qty	Serial_No	ITC	Remark
108-1	73N6-05010				..GUARD WA-TOP	1	#1347 - #2497	-	
	73N6-05010BG				..GUARD WA-TOP	1	#2498 -	D	
108-2	73N6-05020				..GUARD WA-FRONT	1	#1347 - #2497	-	
	73N6-05020BG				..GUARD WA-FRONT	1	#2498 -	D	
108-3	S441-120006				..WASHER-HARDENED	6	#1347 -	-	
108-4	S037-122526				..BOLT-W/WASHER	8	#1347 -	-	
108-5	S017-120306				..BOLT-HEX	6	#1347 -	-	

CAB ASSY(1/6, STD & FOG TYPE, #2936-)

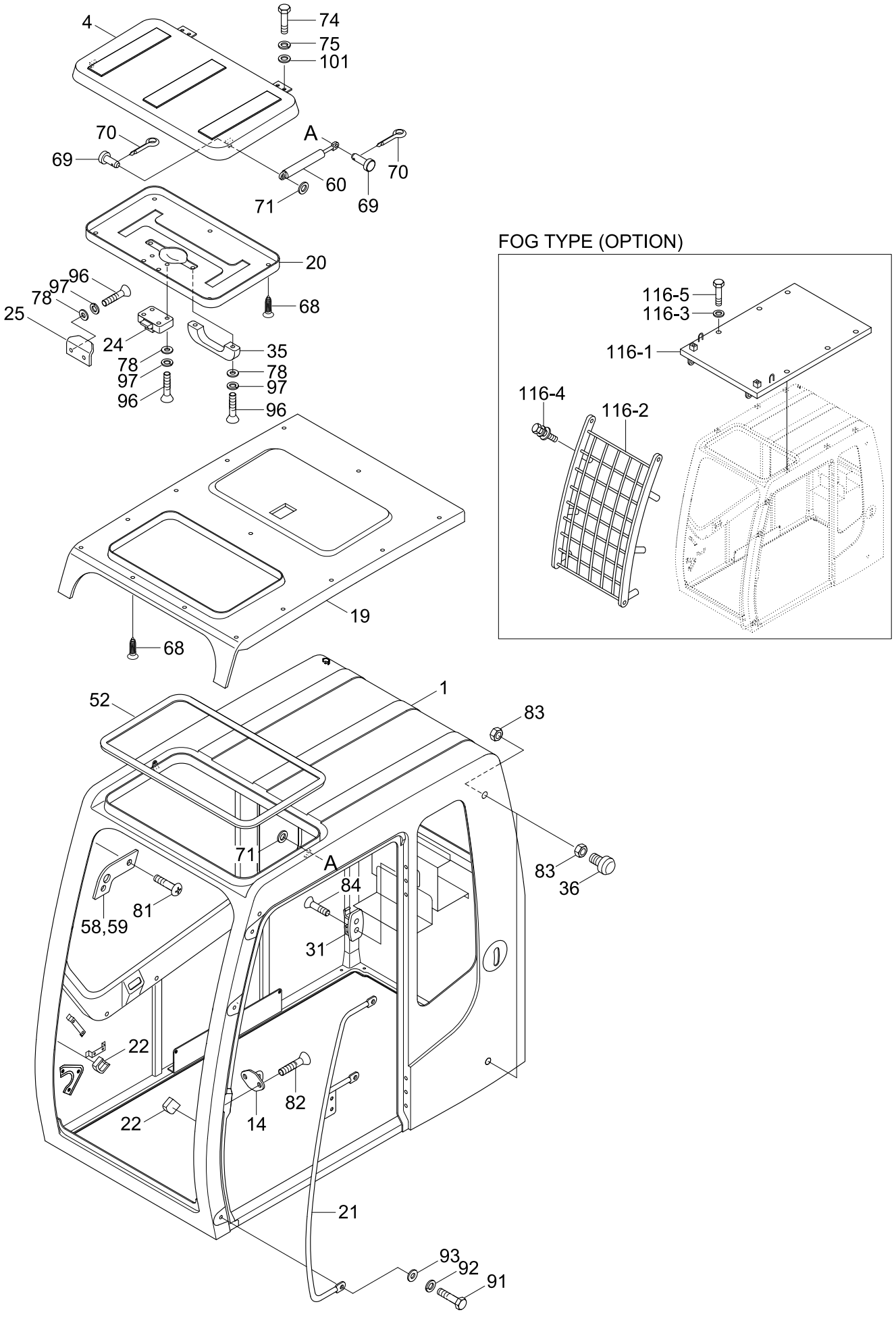

Item	Part_No	IS	Ord	T	Description	Qty	Serial_No	ITC	Remark
*	76N4-10000				CAB ASSY	1	#2936 -	-	UPGRADE CABIN
	76N4-19000				CAB ASSY	1	#2936 -	-	UPGRADE-FOG
1	76N6-00010				.CAB WA	1			UPGRADE-CABIN
	76N6-05010				.CAB WA	1			UPGRADE-FOG
4	71N6-02400BG				.SUN ROOF WA	1			
14	71N6-02770				.STRIKER	1			
19	71N6-02810				.LINING(1)-HEAD	1			
20	71N6-02820				.LINING(2)-HEAD	1			
21	71N6-02831BG				.RAIL-HAND	1			
22	71N6-02841				.STOPPER	2			
24	71N6-02860				.LATCH-ROOF	1			
25	71N6-02870				.BRACKET-ROOF	1			
31	71N6-02920				.HOOK-COAT	1			
35	E171-1147				.HANDLE	1			
36	71EH-13150				.BUMPER-RUBBER	2			
52	S772-020300				.WEATHER STRIP	1			
58	71N6-03181				.STOPPER-LH	1			
59	71N6-03191				.STOPPER-RH	1			
60	71N6-03201				.SPRING-GAS	2	- #3403		
	71N6-03202				.SPRING-GAS	2	#3404 -	B	
68	E171-1310	10			.PLUG-HEADLINER	18			
69	S491-080162				.PIN-CLEVIS	4	- #3403		
	71Q6-03160				.PIN-CLEVIS	4	#3404 -	B	
70	S461-200162				.PIN-SPLIT	4	- #3403		
	S501-070006				.PIN-SELF LOCKING	4	#3404 -	B	

Item	Part_No	IS	Ord	T	Description	Qty	Serial_No	ITC	Remark
71	S403-08200B				.WASHER-PLAIN	4			
74	S015-080206				.BOLT-HEX	4			
75	S411-080006				.WASHER-SPRING	4			
78	S403-05200B				.WASHER-PLAIN	8			
81	S141-060206				.SCREW-FLAT HD	4			
82	S145-080166				.SCREW-FLAT HD	2			
83	S203-101006				.NUT-HEX	4			
84	S141-040206				.SCREW-FLAT HD	2			
91	S017-160206				.BOLT-HEX	3			
92	S411-160006				.WASHER-SPRING	3			
93	S403-162006				.WASHER-PLAIN	3			
96	S161-050166				.SCREW-CROSS R/ROUND	8			
97	S411-050006				.WASHER-SPRING	8			
101	S403-08200B				.WASHER-PLAIN	4			
116	73N6-05000BG				.GUARD ASSY	1			FOG TYPE
116-1	73N6-05010BG				..GUARD WA-TOP	1			FOG TYPE
116-2	73N6-05020BG				..GUARD WA-FRONT	1			FOG TYPE
116-3	S441-12000B				..WASHER-HARDENED	6			FOG TYPE
116-4	S037-122526				..BOLT-W/WASHER	8			FOG TYPE
116-5	S017-120306				..BOLT-HEX	6			FOG TYPE

CAB ASSY(1/6, ROOF TYPE, #1347-)

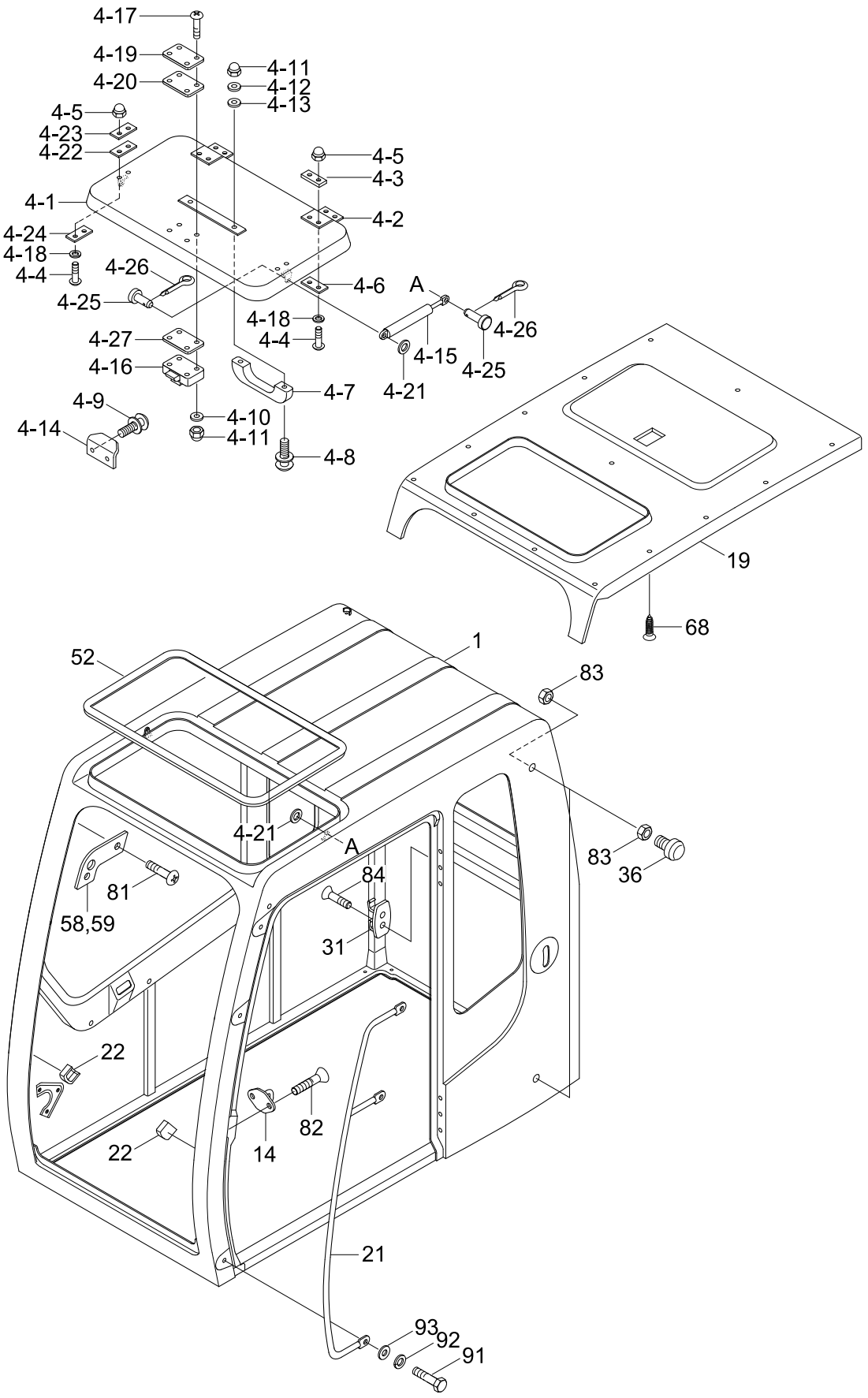

Item	Part_No	IS	Ord	T	Description	Qty	Serial_No	ITC	Remark
*	72N6-10000				CAB ASSY	1	#1347 - #2016	-	
	72N6-10001				CAB ASSY	1	#2017 - #2947	B	
	72N6-10001BG				CAB ASSY	1	#2948 -	B	
1	71N6-00011				.CAB WA	1	- #2947		
	71N6-00011BG				.CAB WA	1	#2948 -	D	
4	72N6-05000				.COVER-SUN ROOF ASSY	1			
4-1	72N6-05010				..COVER-ROOF	1			
4-2	72N6-05020				..HINGE	2			
4-3	72N6-05030				..PAD-RUBBER	2			
4-4	S175-060206				..SCREW-SOCKET RD HD	8			
4-5	S291-060006				..CAP NUT-DOMED	8			
4-6	72N6-05040				..PLATE-HINGE	2			
4-7	E171-1147				..HANDLE	1			
4-8	S131-052046				..SCREW-W/WASHER	2			
4-9	S131-051556				..SCREW-W/WASHER	2			
4-10	S411-050006				..WASHER-SPRING	4			
4-11	S291-050006				..CAP NUT-DOMED	6			
4-12	72N6-05050				..PLATE-HANDLE	2			
4-13	72N6-05060				..PAD-RUBBER	2			
4-14	72N6-05070				..PLATE	1			
4-15	71N6-03201				..SPRING-GAS	2	- #3403		
	71N6-03202				..SPRING-GAS	2	#3404 -	B	
4-16	71N6-02860				..LATCH-ROOF	1			
4-17	S175-050256				..SCREW-SOCKET RD HD	4			
4-18	S411-060006				..WASHER-SPRING	8			

Item	Part_No	IS	Ord	T	Description	Qty	Serial_No	ITC	Remark
4-19	72N6-05080				..PAD-RUBBER	1			
4-20	72N6-05090				..PLATE	1			
4-21	S403-082006				..WASHER-PLAIN	4			
4-22	72N6-05110				..PLATE-GAS SPRING	2			
4-23	72N6-05120				..PAD-RUBBER	2			
4-24	72N6-05130				..PLATE-GAS SPRING	2			
4-25	S491-080162				..PIN-CLEVIS	4	- #3403		
	71Q6-03160				..PIN-CLEVIS	4	#3404 -	B	
4-26	S461-200162				..PIN-SPLIT	4	- #3403		
	S501-070006				..PIN-SELF LOCKING	4	#3404 -	B	
4-27	72N6-05100				..PAD-RUBBER	1			
14	71N6-02770				.STRIKER	1			
19	71N6-02810				.LINING(1)-HEAD	1			
21	71N6-02831				.RAIL-HAND	1	- #2947		
	71N6-02831BG				.RAIL-HAND	1	#2948 -	D	
22	71N6-02841				.STOPPER	2			
31	71N6-02920				.HOOK-COAT	1			
36	71EH-13150				.BUMPER-RUBBER	2			
52	S772-020300				.WEATHER STRIP	1			
58	71N6-03181				.STOPPER-LH	1			
59	71N6-03191				.STOPPER-RH	1			
68	E171-1310	10			.PLUG-HEADLINER	18			
81	S141-060206				.SCREW-FLAT HD	4			
82	S145-080166				.SCREW-FLAT HD	2			
83	S203-101006				.NUT-HEX	4			

Item	Part_No	IS	Ord	T	Description	Qty	Serial_No	ITC	Remark
84	S141-040206				.SCREW-FLAT HD	2			
91	S017-160206				.BOLT-HEX	3			
92	S411-160006				.WASHER-SPRING	3			
93	S403-162006				.WASHER-PLAIN	3			

CAB ASSY(1/6, ROOF TYPE, OPT, #2936-)

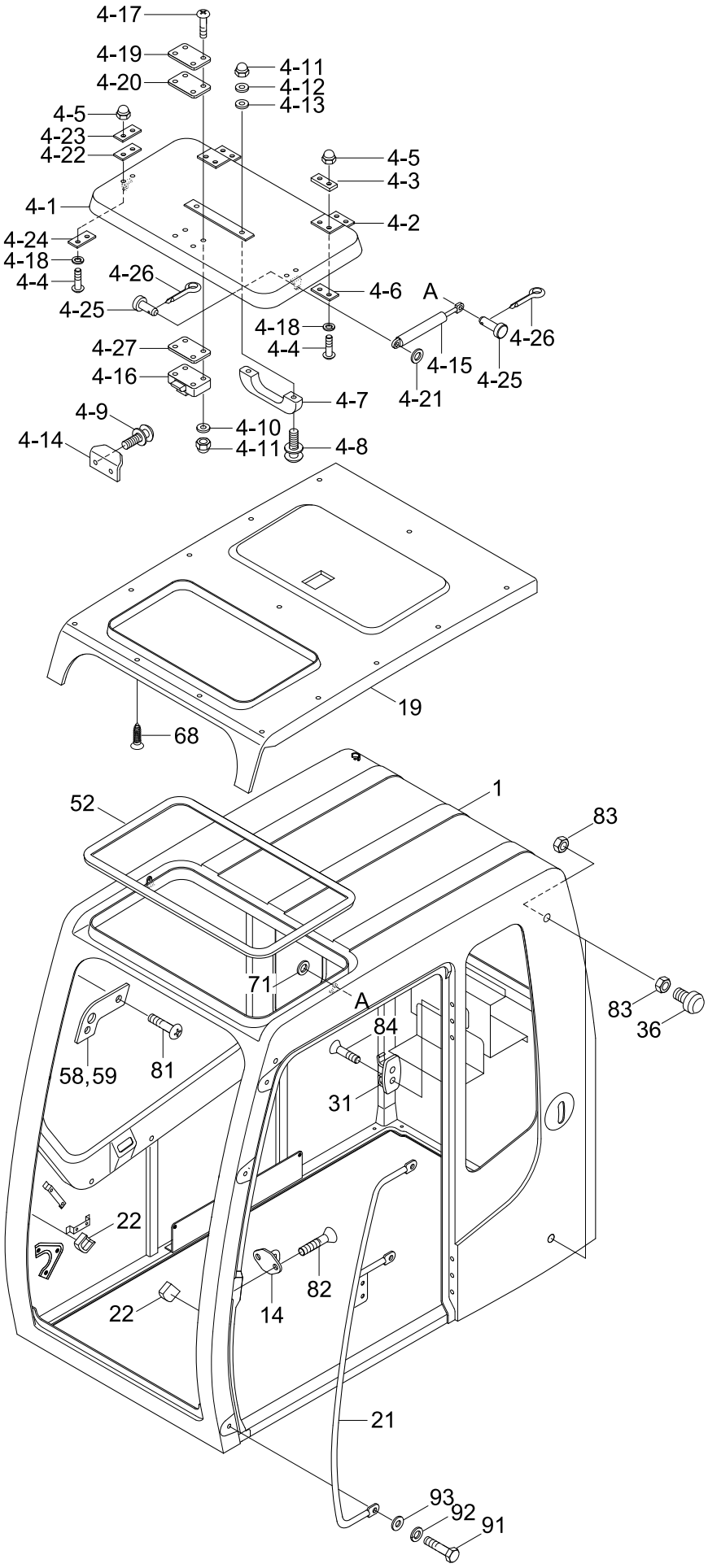

Item	Part_No	IS	Ord	T	Description	Qty	Serial_No	ITC	Remark
*	76N4-18000				CABIN ASSY	1	#2936 -	-	UPGRADE CABIN
1	76N6-00010				.CAB WA	1			
4	72N6-05000				.COVER-SUN ROOF ASSY	1			
4-1	72N6-05010				..COVER-ROOF	1			
4-2	72N6-05020				..HINGE	2			
4-3	72N6-05030				..PAD-RUBBER	2			
4-4	S175-060206				..SCREW-SOCKET RD HD	8			
4-5	S291-060006				..CAP NUT-DOMED	8			
4-6	72N6-05040				..PLATE-HINGE	2			
4-7	E171-1147				..HANDLE	1			
4-8	S131-052046				..SCREW-W/WASHER	2			
4-9	S131-051556				..SCREW-W/WASHER	2			
4-10	S411-050006				..WASHER-SPRING	4			
4-11	S291-050006				..CAP NUT-DOMED	6			
4-12	72N6-05050				..PLATE-HANDLE	2			
4-13	72N6-05060				..PAD-RUBBER	2			
4-14	72N6-05070				..PLATE	1			
4-15	71N6-03201				..SPRING-GAS	2	- #3403		
	71N6-03202				..SPRING-GAS	2	#3404 -	B	
4-16	71N6-02860				..LATCH-ROOF	1			
4-17	S175-050256				..SCREW-SOCKET RD HD	4			
4-18	S411-060006				..WASHER-SPRING	8			
4-19	72N6-05080				..PAD-RUBBER	1			
4-20	72N6-05090				..PLATE	1			
4-21	S403-08200B				..WASHER-PLAIN	4			

Item	Part_No	IS	Ord	T	Description	Qty	Serial_No	ITC	Remark
4-22	72N6-05110				..PLATE-GAS SPRING	2			
4-23	72N6-05120				..PAD-RUBBER	2			
4-24	72N6-05130				..PLATE-GAS SPRING	2			
4-25	S491-080162				..PIN-CLEVIS	4	- #3403		
	71Q6-03160				..PIN-CLEVIS	4	#3404 -	B	
4-26	S461-200162				..PIN-SPLIT	4	- #3403		
	S501-070006				..PIN-SELF LOCKING	4	#3404 -	B	
4-27	72N6-05100				..PAD-RUBBER	1			
14	71N6-02770				.STRIKER	1			
19	71N6-02810				.LINING(1)-HEAD	1			
21	71N6-02831BG				.RAIL-HAND	1			
22	71N6-02841				.STOPPER	2			
31	71N6-02920				.HOOK-COAT	1			
36	71EH-13150				.BUMPER-RUBBER	2			
52	S772-020300				.WEATHER STRIP	1			
58	71N6-03181				.STOPPER-LH	1			
59	71N6-03191				.STOPPER-RH	1			
68	E171-1310	10			.PLUG-HEADLINER	18			
81	S141-060206				.SCREW-FLAT HD	4			
82	S145-080166				.SCREW-FLAT HD	2			
83	S203-101006				.NUT-HEX	4			
84	S141-040206				.SCREW-FLAT HD	2			
91	S017-160206				.BOLT-HEX	3			
92	S411-160006				.WASHER-SPRING	3			
93	S403-162006				.WASHER-PLAIN	3			

CAB ASSY(2/6)

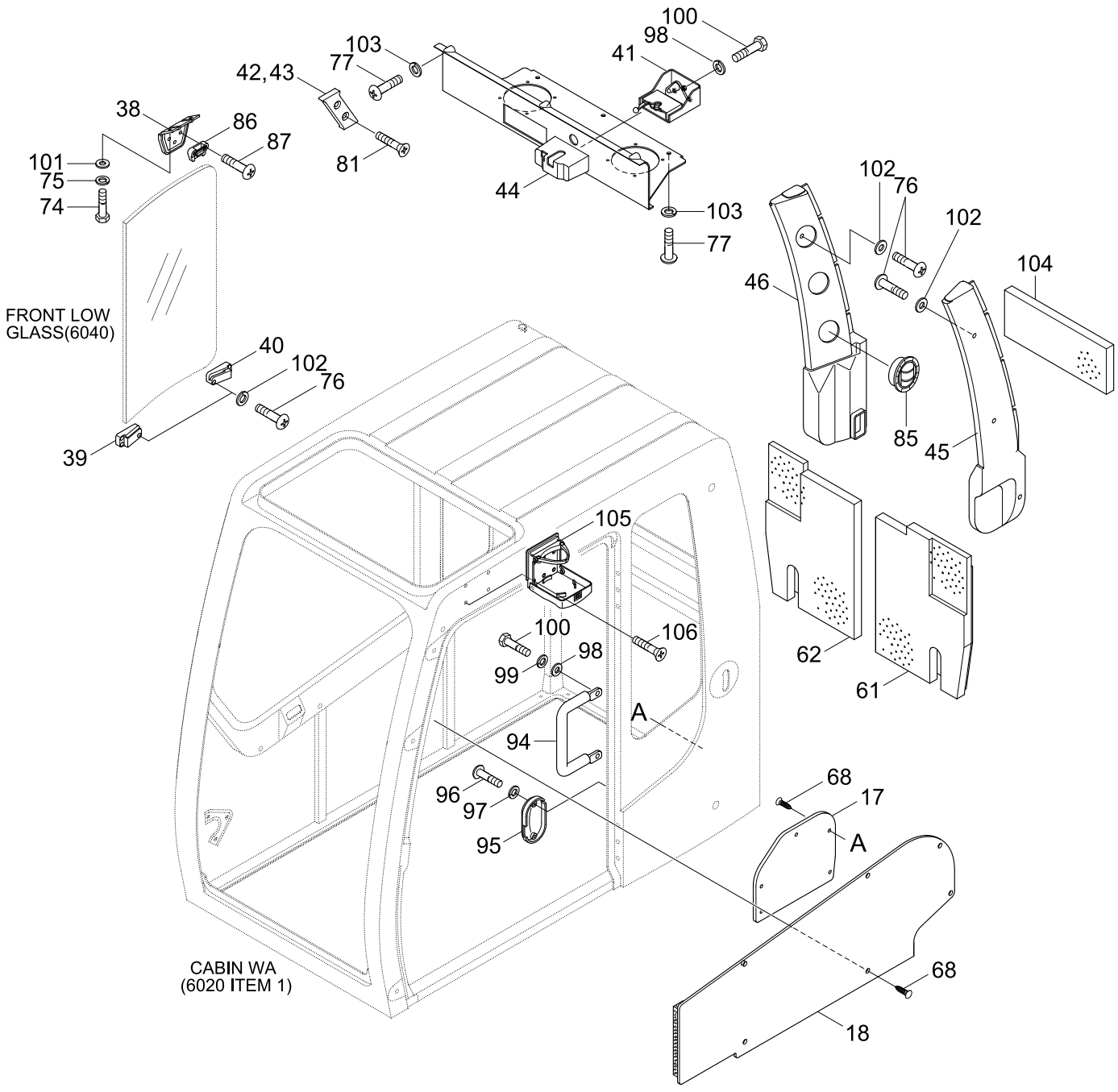
100
98
41
103
77
42,43
81
44
103
77
38
86
87
101
75
74
FRONT LOW
GLASS(6040)
40
102
76
39
102
76
46
104
85
45
105
100
106
98
99
A
94
96
97
95
68
17
A
68
18
62
61
CABIN WA
(6020 ITEM 1)

Item	Part_No	IS	Ord	T	Description	Qty	Serial_No	ITC	Remark
*	@				CAB ASSY	1			NOT
					CAB ASSY	1			NOT
17	71N6-02790				.WALL TRIM-LH	1			
18	71N6-02801				.WALL TRIM-RH	1			
38	71N6-03060				.HOLDER	1	- #1473		
	71N6-03061				.HOLDER	1	#1474 -	D	
39	71N6-03071				.HOLDER	1			
40	71N6-03081				.HOLDER	1			
41	71N6-03091				.LATCH ASSY	1			
42	71N6-03101				.STOPPER-LH	1			
43	71N6-03111				.STOPPER-RH	1			
44	71N6-03121				.COVER-REAR	1			
45	71N6-03131				.DUCT ASSY-LH	1			
46	71N6-03141				.DUCT ASSY-RH	1			
61	71N6-03210				.INSULATION FOAM	1			
62	71N6-03220				.INSULATION FOAM	1			
68	E171-1310	10			.PLUG-HEADLINER	11			
74	S015-080206				.BOLT-HEX	2			
75	S411-080006				.WASHER-SPRING	2			
76	S162-060206				.SCREW-CROSS R/ROUND	12			
77	S162-060166				.SCREW-CROSS R/ROUND	6			
81	S141-060206				.SCREW-FLAT HD	4			
85	71N6-03300				.AIR VENT	6			
86	71N6-03311				.HOLDER	1			
87	S161-080256				.SCREW-RD HD	3			

Item	Part_No	IS	Ord	T	Description	Qty	Serial_No	ITC	Remark
94	71N6-20341				.RAIL-HAND	1			
95	71N6-03601				.COVER-BACK LATCH	1			
96	S161-050166				.SCREW-CROSS R/ROUND	2			
97	S411-050006				.WASHER-SPRING	2			
98	S411-100006				.WASHER-SPRING	5			
99	S403-10200B				.WASHER-PLAIN	2			
100	S017-100206				.BOLT-HEX	5			
101	S403-08200B				.WASHER-PLAIN	2			
102	S403-06200B				.WASHER-PLAIN	12			
103	S411-060006				.WASHER-SPRING	6			
104	71N6-03660				.SPONGE	1	#1159 -	-	
105	71M8-20870				.HOLDER-CUP	1	#1159 -	-	
106	S141-040166				.SCREW-FLAT HD	4	#1159 -	-	

CAB ASSY(2/6, OPT, #2936-)

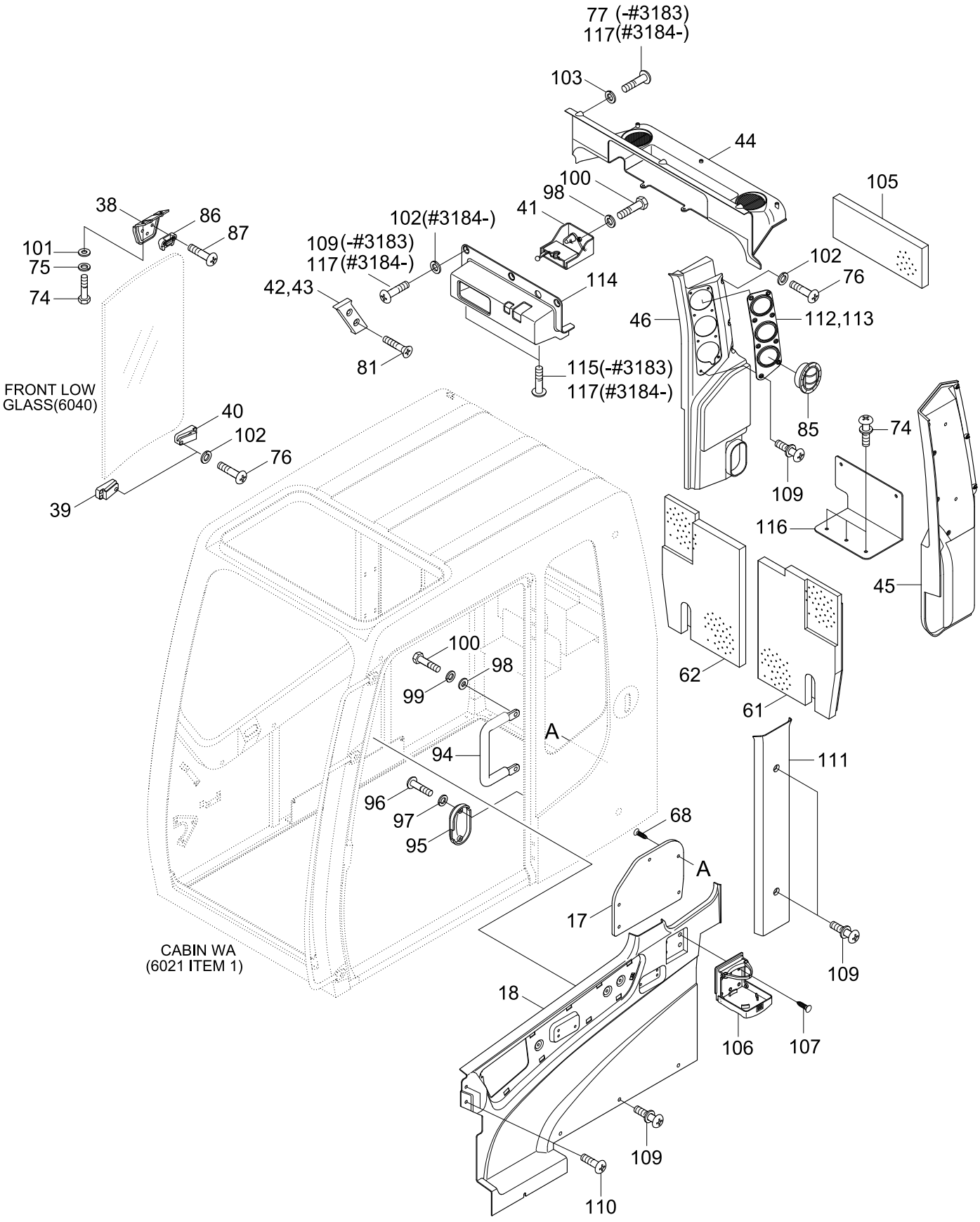

Item	Part_No	IS	Ord	T	Description	Qty	Serial_No	ITC	Remark
*	@				CAB ASSY	1	#2936 -	-	NOT
					CAB ASSY	1	#2936 -	-	NOT
17	71N6-02790				.WALL TRIM-LH	1			
18	76N6-02800				.WALL TRIM-RH	1			
38	71N6-03061				.HOLDER	1			
39	71N6-03071				.HOLDER	1			
40	71N6-03081				.HOLDER	1			
41	71N6-03091				.LATCH ASSY	1			
42	71N6-03101				.STOPPER-LH	1			
43	71N6-03111				.STOPPER-RH	1			
44	73N6-20060				.SPEAKER COVER	1			
45	76N6-03130				.DUCT ASSY-LH	1			
46	76N6-03140				.DUCT ASSY-RH	1			
61	71N6-03210				.INSULATION FOAM	1			
62	71N6-03220				.INSULATION FOAM	1			
68	E171-1310				.PLUG	11			
74	S035-082026				.BOLT-W/WASHER	2	- #3183		
					.BOLT-W/WASHER	5	#3184 -	A	
75	S411-080006				.WASHER-SPRING	2			
76	S161-060206				.SCREW-CROSS R/ROUND	12			
77	S161-060166				.SCREW-CROSS ROUND	6	- #3183	-	
81	S141-060206				.SCREW-FLAT HD	4			
85	71N6-03300				.AIR VENT	6			
86	71N6-03311				.HOLDER	1			
87	S161-080256				.SCREW-CROSS R/ROUND	3			

Item	Part_No	IS	Ord	T	Description	Qty	Serial_No	ITC	Remark
94	71N6-20341				.RAIL-HAND	1			
95	71N6-03601				.COVER-BACK LATCH	1			
96	S161-050166				.SCREW-CROSS R/ROUND	2			
97	S411-050006				.WASHER-SPRING	2			
98	S411-100006				.WASHER-SPRING	5			
99	S403-10200B				.WASHER-PLAIN	2			
100	S017-100206				.BOLT-HEXAGON HEAD	5			
101	S403-08200B				.WASHER-PLAIN	2			
102	S403-06200B				.WASHER-PLAIN	12	- #3183		
					.WASHER-PLAIN	15	#3184 -	A	
103	S411-060006				.WASHER-SPRING	6			
105	71N6-03660				.SPONGE	1			
106	71M8-20870				.HOLDER-CUP	1			
107	S141-040166				.SCREW-FLAT HD	4			
38	71N6-03061				.HOLDER	1			
109	S132-061256				.SCREW-W/WASHER	27			
110	S151-050126				.SCREW-TAPPING	2			
111	73N6-20050				.PILLAR COVER-RH	1			
112	73N6-20220				.REAR DUCT COVER-LH	1			
113	73N6-20210				.REAR DUCT COVER-RH	1			
114	73N6-20070				.RADIO COVER	1			
115	76N6-03160				.FASTENER ASSY	2			
116	76N6-00021				.BRACKET	1	#3184 -	-	
117	S002-06015B				.SCREW-TRUS HEAD	11	#3184 -	-	
61	71N6-03210				.INSULATION FOAM	1			

Item	Part_No	IS	Ord	T	Description	Qty	Serial_No	ITC	Remark
62	71N6-03220				.INSULATION FOAM	1			
68	E171-1310	10			.PLUG-HEADLINER	11			
74	S015-080206				.BOLT-HEX	2			
75	S411-080006				.WASHER-SPRING	2			
76	S162-060206				.SCREW-CROSS R/ROUND	12			
77	S162-060166				.SCREW-CROSS R/ROUND	6			
81	S141-060206				.SCREW-FLAT HD	4			
85	71N6-03300				.AIR VENT	6			
86	71N6-03311				.HOLDER	1			
87	S161-080256				.SCREW-RD HD	3			
90	E371-1128	10			.MIRROR-ROOM	1			
94	71N6-20341				.RAIL-HAND	1			
95	71N6-03601				.COVER-BACK LATCH	1			
96	S161-050166				.SCREW-CROSS R/ROUND	2			
97	S411-050006				.WASHER-SPRING	2			
98	S411-100006				.WASHER-SPRING	5			
99	S403-10200B				.WASHER-PLAIN	2			
100	S017-100206				.BOLT-HEX	5			
101	S403-08200B				.WASHER-PLAIN	2			
102	S403-06200B				.WASHER-PLAIN	12			
103	S411-060006				.WASHER-SPRING	6			
104	71N6-03660				.SPONGE	1			
105	71M8-20870				.HOLDER-CUP	1			
106	S141-040166				.SCREW-FLAT HD	4			
109	S132-061256				.SCREW-W/WASHER	27			

Item	Part_No	IS	Ord	T	Description	Qty	Serial_No	ITC	Remark
110	S151-050126				.SCREW-TAPPING	1			
111	73N6-20050				.PILLAR COVER-RH	1			
112	73N6-20220				.REAR DUCT COVER-LH	1			
113	73N6-20210				.REAR DUCT COVER-RH	1			
114	73N6-20070				.RADIO COVER	1			
115	76N6-03160				.FASTENER	2			

CAB ASSY(3/6)

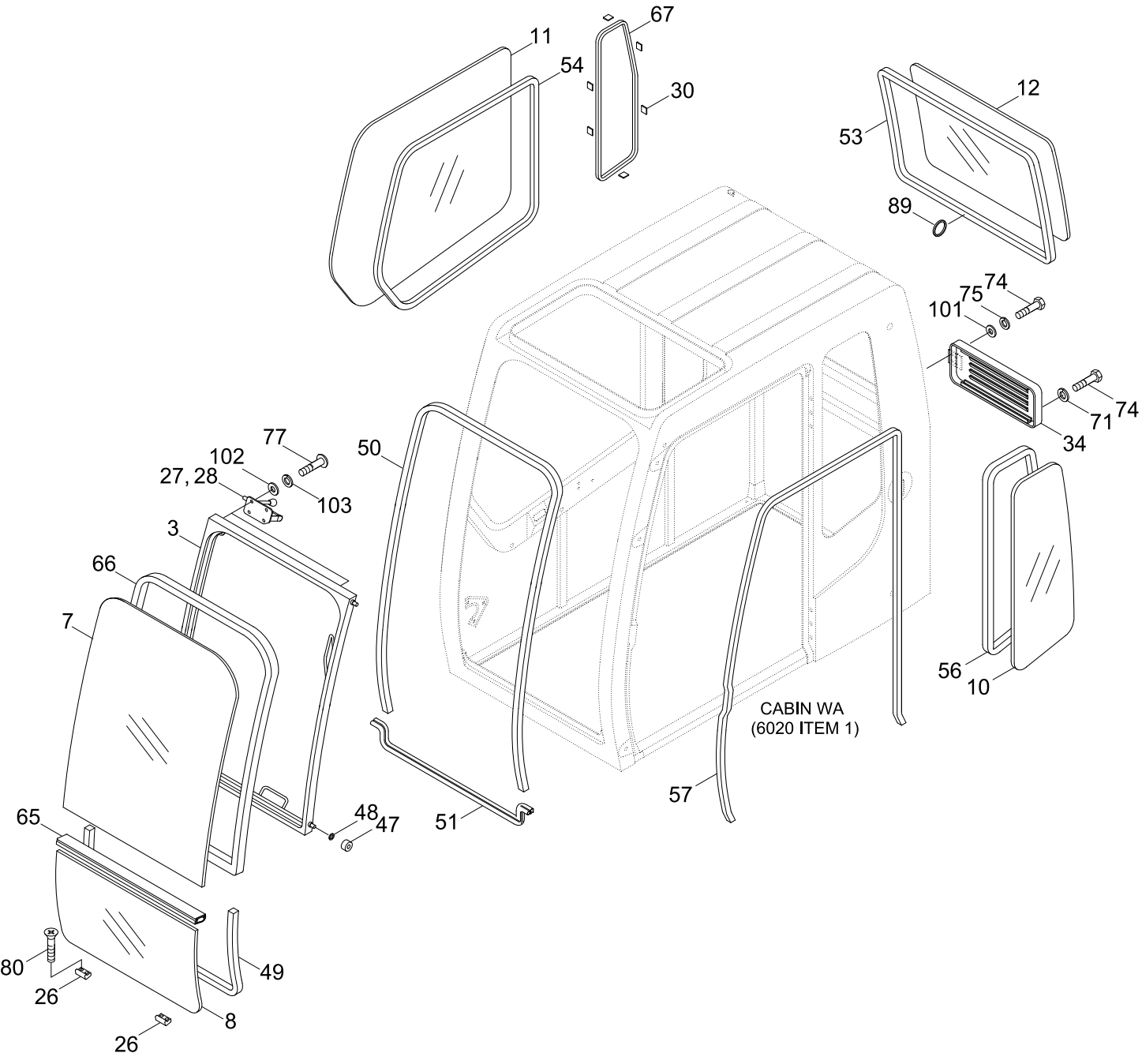
11
67
54
30
12
53
89
74
75
101
74
71
34
77
102
27, 28
103
50
3
66
7
56
10
CABIN WA
(6020 ITEM 1)
57
65
48
47
51
80
49
26
8
26

Item	Part_No	IS	Ord	T	Description	Qty	Serial_No	ITC	Remark
*	@				CAB ASSY	1			NOT
3	71N6-02201				.FRONT WINDOW WA	1	- #2947		
	71N6-02201BG				.FRONT WINDOW WA	1	#2948 -	D	
7	71N6-02700				.GLASS	1			TEMPERED GLASS
8	71N6-02710				.GLASS	1	- #1473		
	71N6-02711				.GLASS	1	#1474 -	D	
10	71N6-02731				.GLASS	1			
11	71N6-02740				.GLASS	1			
12	71N6-02750				.GLASS	1			
26	71N6-02880				.INSULATOR	2			
27	71N6-02891				.LATCH ASSY	1			
28	71N6-02901				.LATCH ASSY	1			
30	71EH-10430				.RUBBER	6			
34	71N6-02950				.COVER-AIR VENT	1	- #2947		
	71N6-02950BG				.COVER-AIR VENT	1	#2948 -	D	
47	71N6-03150				.ROLLER	4			
48	S403-10100B				.WASHER-PLAIN	4			
49	71N6-03160				.SEAL	1			
50	71N6-03480				.SEAL-FRONT	1			
51	71N6-03171				.WEATHER STRIP	1	- #0077		
	71N6-03172				.WEATHER STRIP	1	#0078 - #1473	B	
	71N6-03173				.WEATHER STRIP	1	#1474 -	D	
53	S781-124602				.SEAL	1			
54	71N6-03010				.WEATHER STRIP	1			
56	71N6-03030				.WEATHER STRIP	1			

Item	Part_No	IS	Ord	T	Description	Qty	Serial_No	ITC	Remark
57	S771-036500				.WEATHER STRIP	1			
65	71N6-03250				.SEAL	1			
66	71N6-03261				.SEAL-FRONT GLASS	1			TEMPERED GLASS
	71N4-03260				.SEAL-FRONT GLASS	1	#0001 -	-	LAMINATED GLASS
67	71N6-03040				.SEAL	1			
71	S403-08200B				.WASHER-PLAIN	1			
74	S015-080206				.BOLT-HEX	3			
75	S411-080006				.WASHER-SPRING	2			
77	S162-060166				.SCREW-CROSS R/ROUND	8			
80	S141-050206				.SCREW-FLAT HD	4			
89	71N6-03320				.RING	1			
101	S403-08200B				.WASHER-PLAIN	2			
102	S403-06200B				.WASHER-PLAIN	8			
103	S411-060006				.WASHER-SPRING	8			

CAB ASSY(3/6, OPT, #2936-)

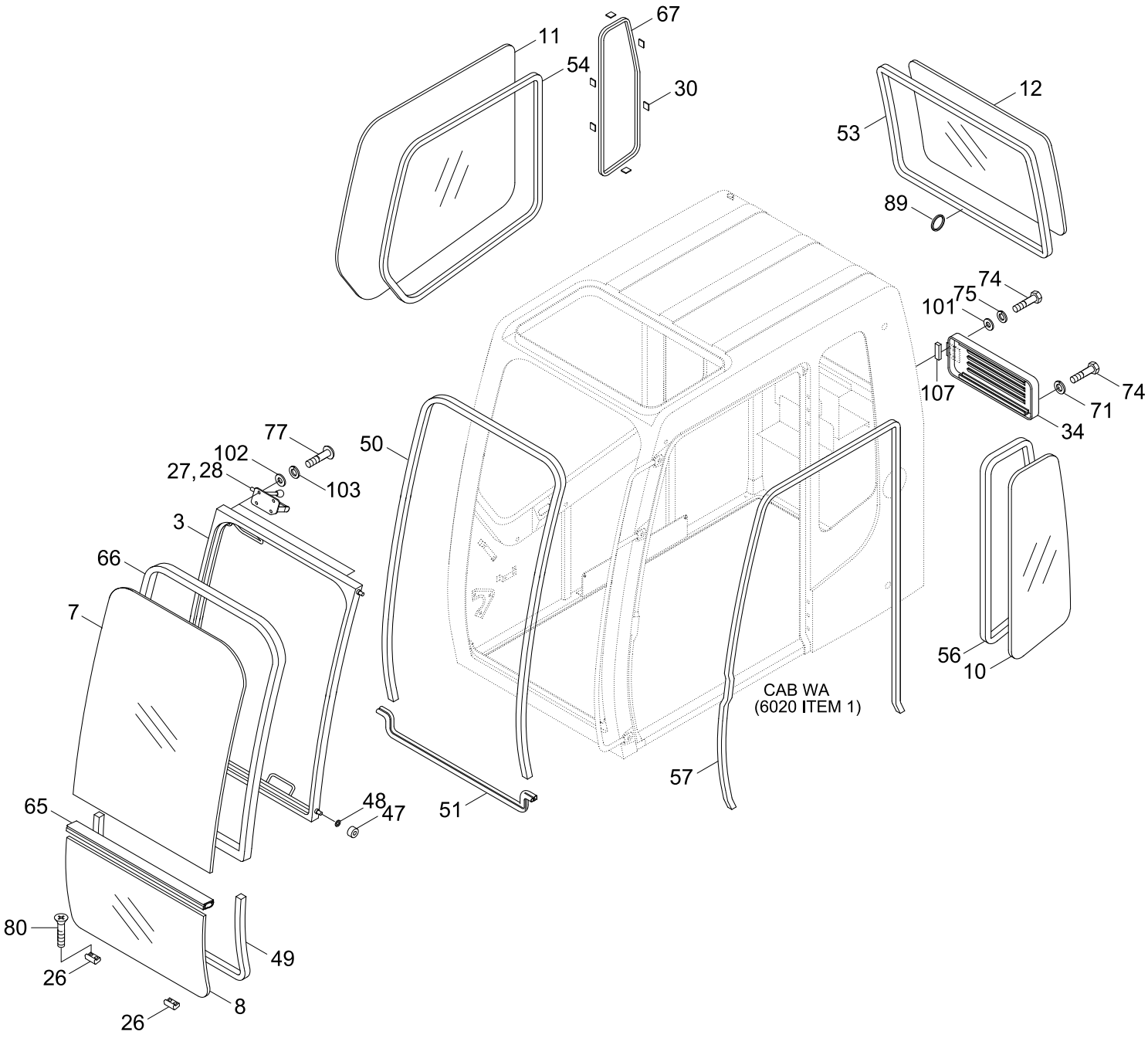

Item	Part_No	IS	Ord	T	Description	Qty	Serial_No	ITC	Remark
*	@				CAB ASSY	1	#2936 -	-	NOT
3	71N4-02200BG				.FRONT WINDOW WA	1			
7	71N4-02700				.GLASS	1			LAMINATED GLASS
8	71N6-02711				.GLASS	1			
10	71N6-02731				.GLASS	1			
11	71N6-02740				.GLASS	1			
12	71N6-02750				.GLASS	1			
26	71N6-02880				.INSULATOR	2			
27	71N6-02891				.LATCH ASSY	1			
28	71N6-02901				.LATCH ASSY	1			
30	71EH-10430				.RUBBER	6			
34	71N6-02950BG				.COVER-AIR VENT	1			
47	71N6-03150				.ROLLER	4			
48	S403-10100B				.WASHER-PLAIN	4			
49	71N6-03160				.SEAL	1			
50	71N6-03480				.SEAL-FRONT	1			
51	71N6-03173				.WEATHER STRIP	1			
53	S781-124602				.SEAL	1			
54	71N6-03010				.WEATHER STRIP	1			
56	71N6-03030				.WEATHER STRIP	1			
57	S771-036500				.WEATHER STRIP	1			
65	71N6-03250				.SEAL	1			
66	71N4-03260				.SEAL-FRONT GLASS	1			
67	71N6-03040				.SEAL	1			
71	S403-08200B				.WASHER-PLAIN	1			

Item	Part_No	IS	Ord	T	Description	Qty	Serial_No	ITC	Remark
74	S015-080206				.BOLT-HEX	3			
75	S411-080006				.WASHER-SPRING	2			
77	S161-060166				.SCREW-CROSS R/ROUND	8			
80	S141-050206				.SCREW-FLAT HD	4			
89	71N6-03320				.RING	1			
101	S403-08200B				.WASHER-PLAIN	2			
102	S403-06200B				.WASHER-PLAIN	8			
103	S411-060006				.WASHER-SPRING	8			
107	71N6-02960				.RUBBER	1			

CAB ASSY(4/6, DOOR)

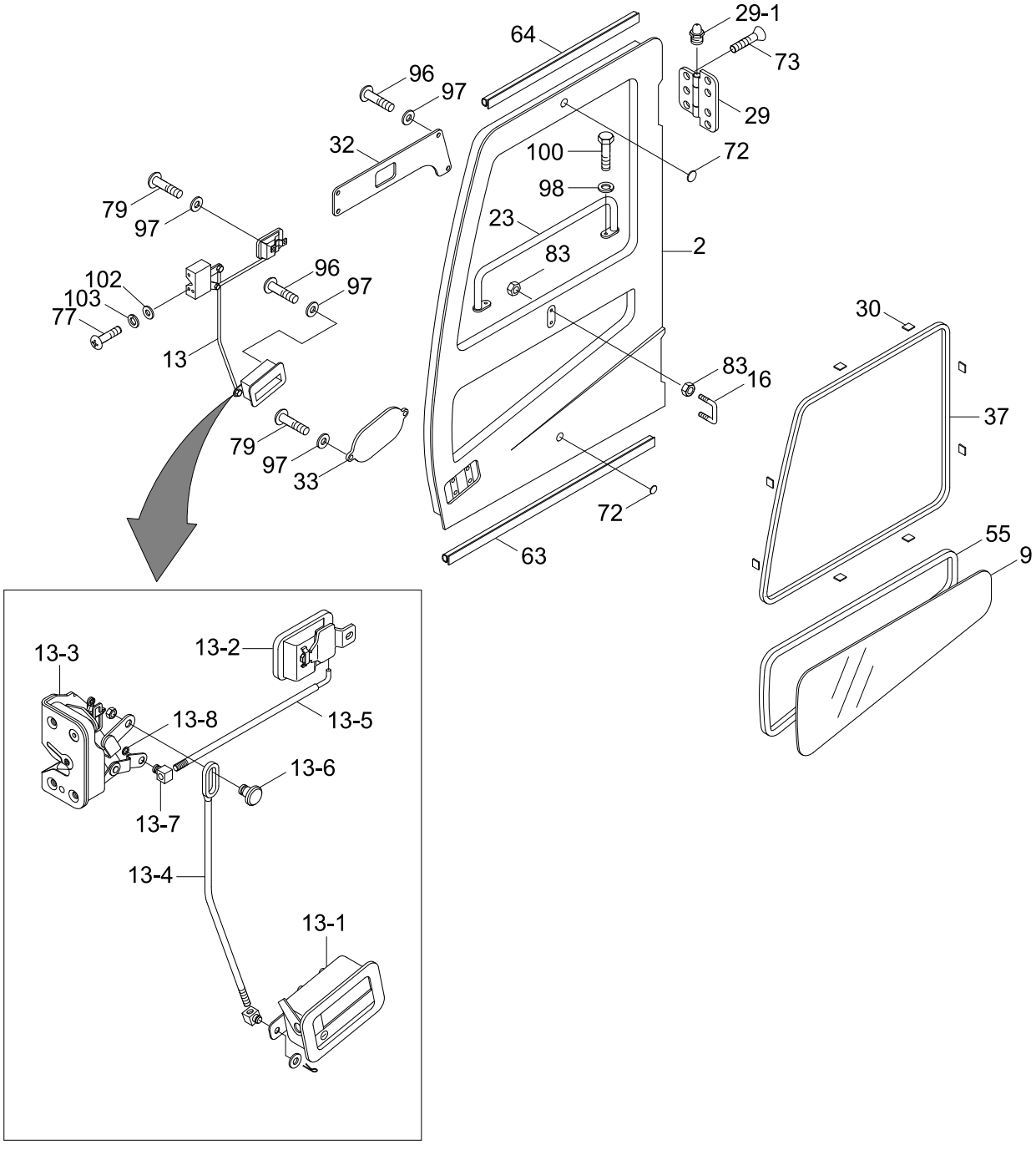

Item	Part_No	IS	Ord	T	Description	Qty	Serial_No	ITC	Remark
*	@				CAB ASSY	1	#0001 -	-	NOT
*-1	71N6-04000				.SIDE DOOR ASSY	1	- #2947		
	71N6-04000BG				.SIDE DOOR ASSY	1	#2948 -	D	
2	71N6-02000				..SIDE DOOR WA	1	- #2947		
	71N6-02000BG				..SIDE DOOR WA	1	#2948 -	D	
					..SIDE DOOR WA	1	#2936 -	-	UPGRADE CABIN
9	71N6-02720				..GLASS-DOOR	1			
13	71N6-02761				..HANDLE ASSY	1			
13-1	71N6-03390				...HANDLE	1			
13-2	71N6-03400				...HANDLE-INNER	1			
13-3	71N6-03410				...LATCH	1			
13-4	71N6-03420				...ROD ASSY-1	1			
13-5	71N6-03430				...ROD ASSY-2	1			
13-6	71N6-03440				...PIN-1	1			
13-7	71N6-03450				...PIN	2			
13-8	P560-050006				...E-RING	1			
16	71N6-03650				..STRIKER	1			
23	71N6-02850				..HANDLE	1			
29	71N6-02910				..HINGE	2	- #2947		
	71N6-02910BG				..HINGE	2	#2948 -	D	
29-1	S651-060006				...NIPPLE-GREASE	1	- #3183		
	S651-060002				...NIPPLE-GREASE	1	#3184 -	B	
30	71EH-10430				..RUBBER	8			
32	71N6-02930				..COVER	1			
33	71N6-02940				..COVER	1			

Item	Part_No	IS	Ord	T	Description	Qty	Serial_No	ITC	Remark
37	71N6-03000				..WEATHER STRIP	1			
55	71N6-03020				..WEATHER STRIP	1			
63	71N6-03230				..SEAL	1			
64	71N6-03240				..SEAL	1			
72	17E1-5146				..BUMPER-DOOR	2			
73	71EH-10400				..SCREW	14			
77	S161-060166				..SCREW-CROSS R/ROUND	3			
79	S161-050206				..SCREW-CROSS R/ROUND	4			
83	S203-101006				..NUT-HEX	4			
96	S161-050166				..SCREW-CROSS R/ROUND	6			
97	S411-050006				..WASHER-SPRING	10			
98	S411-100006				..WASHER-SPRING	2			
100	S017-100206				..BOLT-HEX	2			
102	S403-06200B				..WASHER-PLAIN	3			
103	S411-060006				..WASHER-SPRING	3			

CAB ASSY(5/6, SASH ASSY)

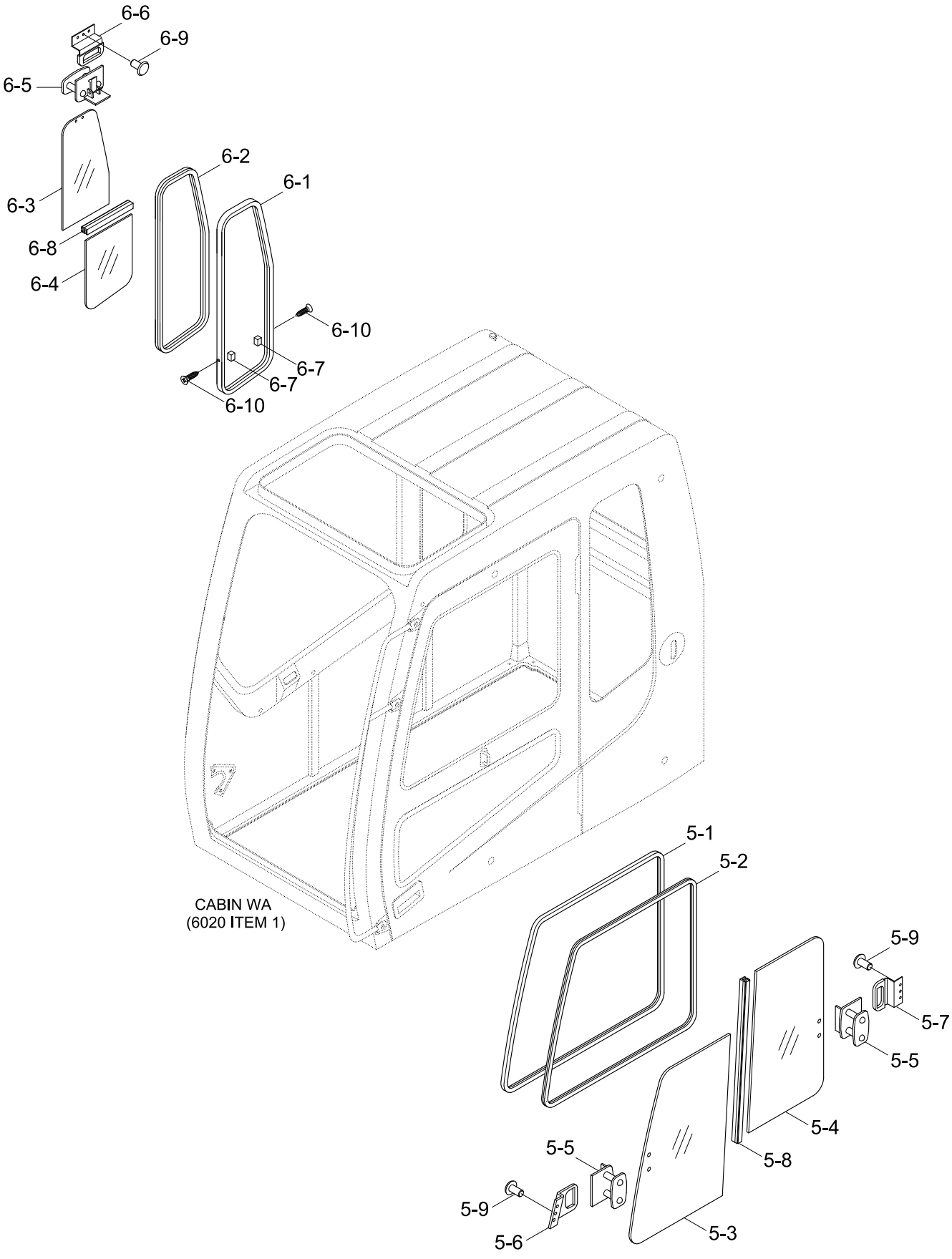

Item	Part_No	IS	Ord	T	Description	Qty	Serial_No	ITC	Remark
*	@				CAB ASSY	1			NOT
					CAB ASSY	1			NOT
5	71N6-02500				.SASH ASSY-DOOR	1			
5-1	71N6-02510				..SASH	1			
5-2	71N6-02520				..SEAL	1			
5-3	71N6-02530				..GLASS	1			
5-4	71N6-02540				..GLASS	1			
5-5	71N6-02550				..LOCK ASSY	2			
5-6	71N6-02560				..HOOK	1			
5-7	71N6-02570				..HOOK	1			
5-8	71N6-02580				..SASH	1			
5-9	D19227C1				..RIVET-BLIND	6			
6	71N6-02600				.SASH ASSY-LH	1			
6-1	71N6-02610				..SASH	1			
6-2	71N6-02620				..SEAL	1			
6-3	71N6-02630				..GLASS(UPPER)	1			
6-4	71N6-02640				..GLASS(LOWER)	1			
6-5	71N6-02550				..LOCK ASSY	1			
6-6	71N6-02570				..HOOK	1			
6-7	71N6-02650				..STOPPER	2			
6-8	71N6-02660				..SASH	1			
6-9	D19227C1				..RIVET-BLIND	3			
6-10	S151-030126				..SCREW-TAPPING	2			

CAB ASSY(6/6, DOOR LATCH ASSY)

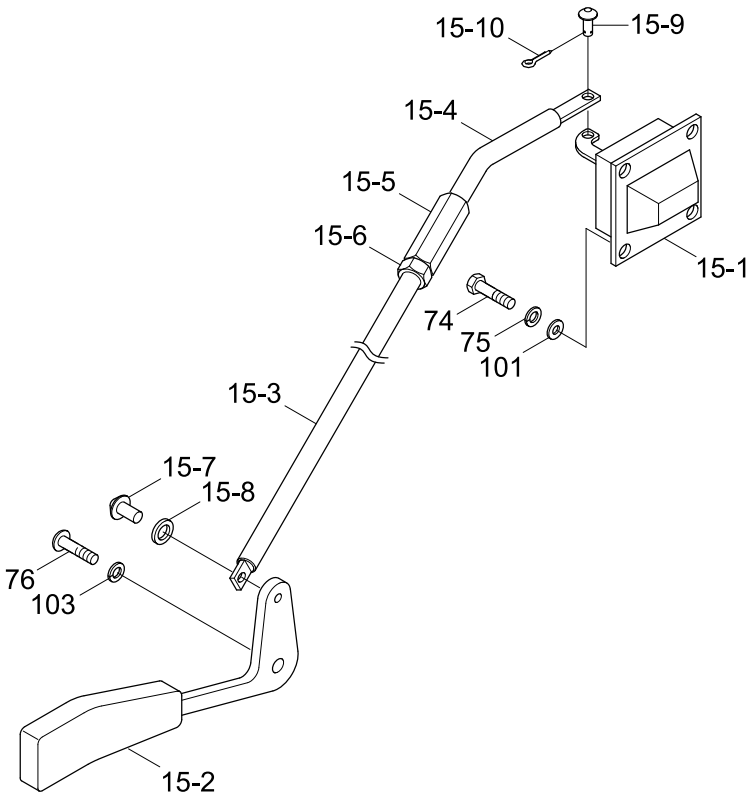

Item	Part_No	IS	Ord	T	Description	Qty	Serial_No	ITC	Remark
*	@				CAB ASSY	1			NOT
15	71N6-02781				.LATCH ASSY-BACK	1			
15-1	71EH-11260				..LATCH ASSY	1			
15-2	71N6-03571				..LEVER ASSY	1			
15-3	71N6-03580				..ROD	1			
15-4	71N6-03590				..ROD	1			
15-5	71EH-11210				..NUT	1			
15-6	S205-081006				..NUT-HEX	1			
15-7	71EH-11250				..PIN-ROUND	1			
15-8	S431-040002				..WASHER-LOCK	1			
15-9	71EH-11240				..PIN-ROUND	1			
15-10	S461-050152				..PIN-SPLIT	1			
74	S015-080206				.BOLT-HEX	4			
75	S411-080006				.WASHER-SPRING	4			
76	S161-060206				.SCREW	1			
101	S403-082006				.WASHER-PLAIN	4			
103	S411-060006				.WASHER-SPRING	1			

CAB INTERIOR 1

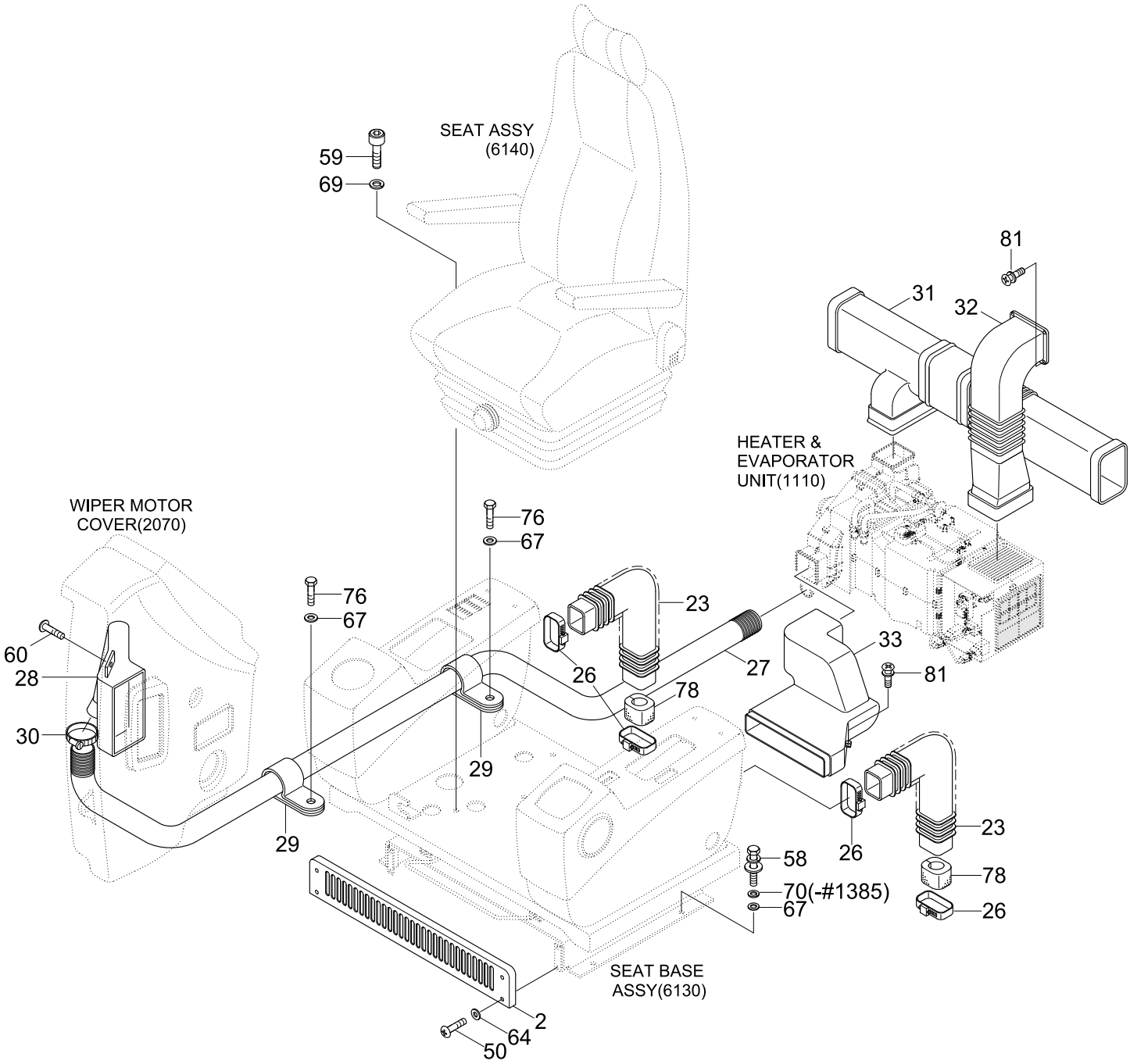

Item	Part_No	IS	Ord	T	Description	Qty	Serial_No	ITC	Remark
2	71N6-20020				COVER-SEAT BASE	1			
23	71N6-20181				TUBE	2			
26	S520-115000				CLAMP-HOSE	4			
27	71N6-20210				HOSE-DEFROSTER	1			
28	71N6-20221				DUCT-DEFROSTER	1			
29	71N6-20230				CLAMP-TUBE	2			
30	S520-055000				CLAMP-HOSE	1			
31	71N6-20241				DUCT-VENT	1			
32	71N6-20251				DUCT-INLET	1			
33	71N6-20261				DUCT-FOOT	1			
50	S179-06015B				SCREW-SOCKET RD HD	4	#1001 -	-	
58	S037-102516				BOLT-W/WASHER	4	#1001 -	-	
59	S109-080306				BOLT-SOCKET	4			
60	S161-040086				SCREW-RD HD	2	- #1263		
	S131-040826				SCREW-W/WASHER	2	#1264 -	B	
64	S403-052006				WASHER-PLAIN	4			
67	S403-102006				WASHER-PLAIN	6			
70	S411-100006				WASHER-SPRING	4	- #1385	-	
76	S017-100156				BOLT-HEX	2			
78	71N6-20450				FILTER-SPONGE	2			
81	S131-061646				SCREW-W/WASHER	7			

CAB INTERIOR 2

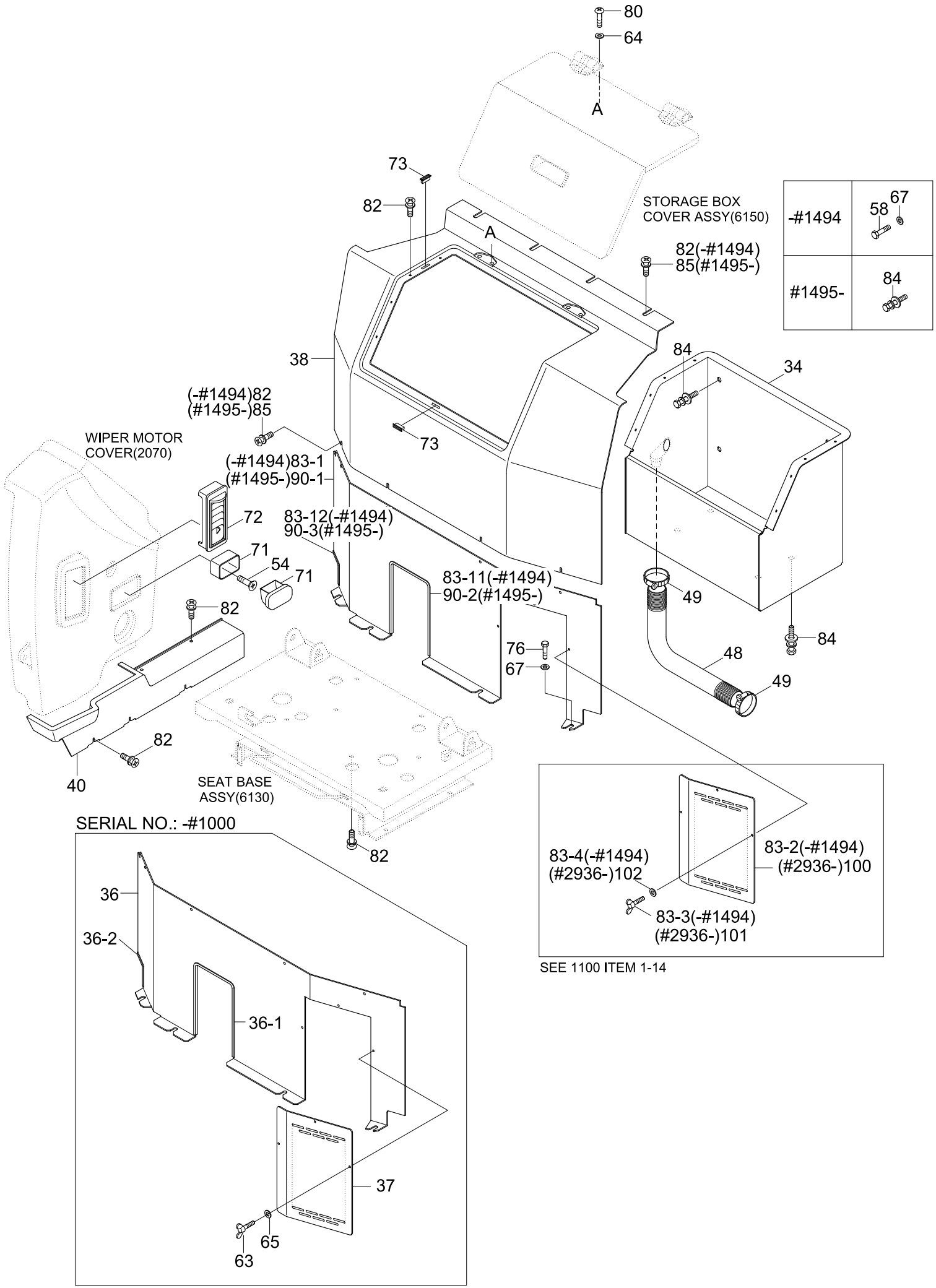

Item	Part_No	IS	Ord	T	Description	Qty	Serial_No	ITC	Remark
34	71N6-20271				STORAGE BOX WA	1	- #1385		
	71N6-20470				STORAGE BOX ASSY	1	#1386 -	D	
36	71N6-20291				AIRCON COVER-LOW	1	- #1000	-	
36-1	S791-016054				.GROMMET-PLATE	1	- #1000	-	
36-2	S791-016010				.GROMMET-PLATE	1	- #1000	-	
37	71N6-20301				COVER-FILTER	1	- #1000	-	
38	71N6-20311				AIRCON COVER-UP	1			
40	71N6-20331				COVER-DEF,HOSE	1			
48	71N6-20360				HOSE-STORAGE BOX	1			
49	71N6-20370				CLIP-HOSE	2			
54	S141-040166				SCREW-FLAT HD	2			
58	S017-100256				BOLT-HEX	4	#1001 - #1385	-	
63	S091-060166				BOLT-WING	3	- #1000	-	
64	S403-052006				WASHER-PLAIN	4			
65	S403-062006				WASHER-PLAIN	3	- #1000	-	
67	S403-102006				WASHER-PLAIN	8	- #1385		
					WASHER-PLAIN	4	#1386 -	A	
71	E171-1176				ASHTRAY	1			
72	71N6-20380				AIR NOZZLE	1			
73	71N6-20390				MAGNETIC	3			
76	S017-100156				BOLT-HEX	4	#1001 -	-	
80	S161-050206				SCREW-CROSS R/ROUND	4			
82	S132-061676				SCREW-W/WASHER	21	- #1385		
					SCREW-W/WASHER	17	#1386 -	A	
83	71N6-20460				A/CON COVER-LOW ASSY	1	#1001 - #1385	-	

Item	Part_No	IS	Ord	T	Description	Qty	Serial_No	ITC	Remark
83	71N6-20461				A/CON COVER-LOW ASSY	1	#1386 - #1494	D	
83-1	71N6-20291				.AIRCON COVER-LOW	1	#1001 - #1385	-	
	71N6-20292				.AIRCON COVER-LOW	1	#1386 - #1494	D	
83-11	S791-016054				..GROMMET-PLATE	1	#1001 - #1494	-	
83-12	S791-016010				..GROMMET-PLATE	1	#1001 - #1494	-	
83-2	71N6-20301				.COVER-FILTER	1	#1001 - #1494	-	
83-3	S091-060156				.BOLT-WING	3	#1001 - #1494	-	
83-4	S403-062006				.WASHER-PLAIN	3	#1001 - #1494	-	
84	S037-102026				BOLT-W/WASHER	4	#1386 -	-	
85	S132-062546				SCREW-W/WASHER	8	#1495 - #1691	-	
	S132-062076				SCREW-W/WASHER	8	#1692 -	B	
90	71N6-20292				AIRCON COVER-LOW	1	#1495 -	D	
90-1	71N6-21760				.PLATE	1	#1495 -	D	
90-2	S791-016054				.GROMMET-PLATE	1	#1495 -	D	
90-3	S791-016010				.GROMMET-PLATE	1	#1495 -	D	
100	11N6-90340				FILTER-REC	1	#2936 -	-	
101	S091-060166				BOLT-WING	3	#2936 -	-	
102	S403-06200B				WASHER-PLAIN	1	#2936 -	-	

CAB INTERIOR 1(OPT, #2936-)

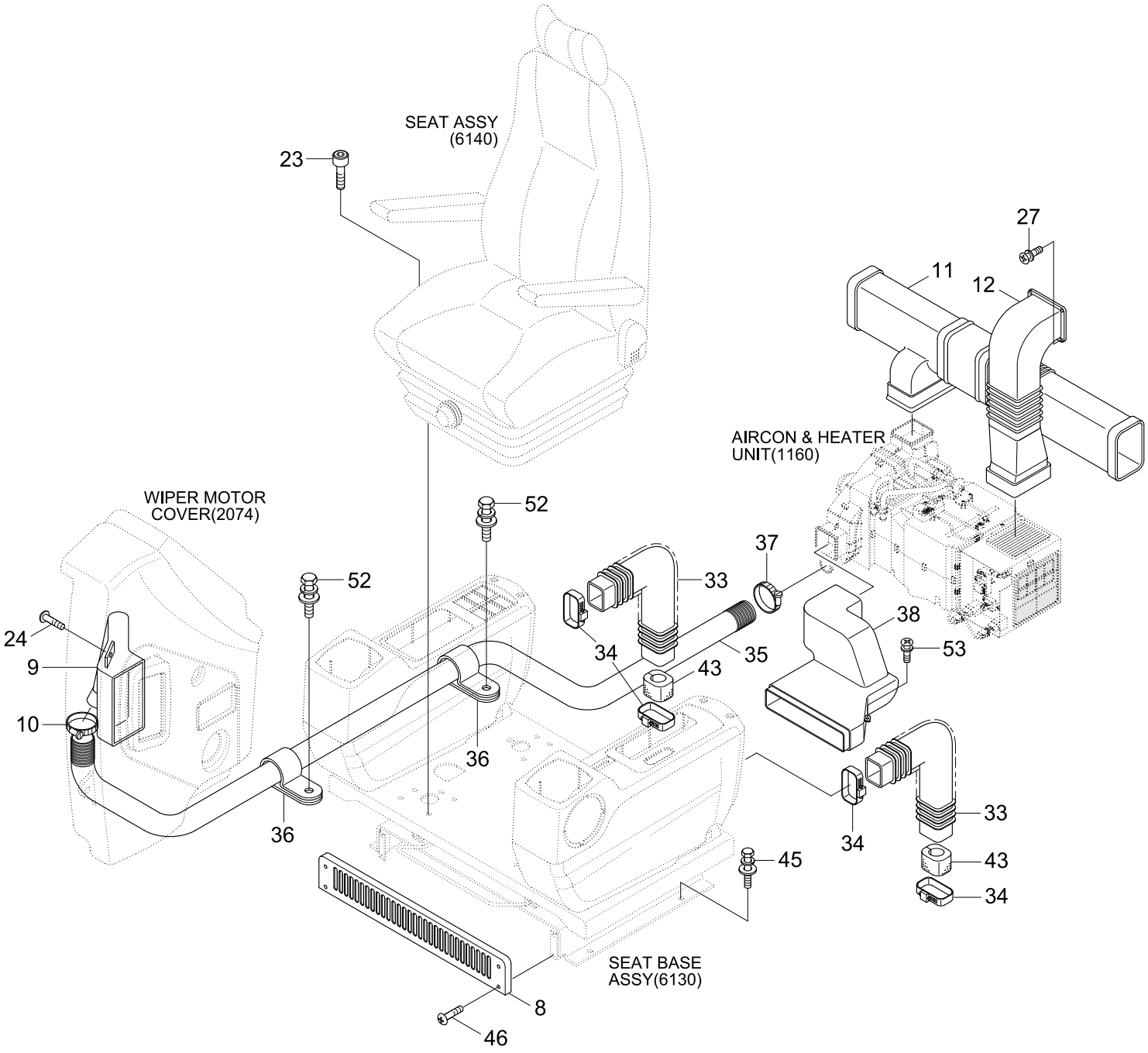

Item	Part_No	IS	Ord	T	Description	Qty	Serial_No	ITC	Remark
*	@				CAB INTERIOR	1	#2936 -	-	NOT
9	71N6-20221				DUCT-DEFROSTER	1			
10	S520-055000				CLAMP-HOSE	1			
11	71N6-20241				DUCT-VENT	1			
12	71N6-20251				DUCT-INLET	1			
20	71N6-20020				COVER-SEAT BASE	1			
23	S109-080306				BOLT-SOCKET	4			
24	S131-040826				SCREW-W/WASHER	2			
27	S132-061546				SCREW-W/WASHER	4			
33	71N6-20181				TUBE	2			
34	S520-115000				CLAMP-HOSE	4			
35	71N6-20210				HOSE-DEFROSTER	1			
36	71N6-20230				CLAMP-HOSE	2			
37	S520-055000				CLAMP-HOSE	1			
38	71N6-20261				DUCT-FOOT	1			
43	71N6-20450				FILTER-SPONGE	2			
45	S037-102526				BOLT-W/WASHER	4			
46	S131-051546				SCREW-W/WASHER	4			
52	S037-102026				BOLT-W/WASHER	2			
53	S132-061676				SCREW-W/WASHER	3			
34	71N6-20271				STORAGE BOX WA	1	- #1385		
	71N6-20470				STORAGE BOX ASSY	1	#1386 -	D	
36	71N6-20291				AIRCON COVER-LOW	1	- #1000	-	
36-1	S791-016054				.GROMMET	1	- #1000	-	
36-2	S791-016010				.GROMMET	1	- #1000	-	

Item	Part_No	IS	Ord	T	Description	Qty	Serial_No	ITC	Remark
37	71N6-20301				COVER-FILTER	1	- #1000	-	
38	71N6-20311				AIRCON COVER-UP	1			
40	71N6-20331				COVER-DEF. HOSE	1			
48	71N6-20360				HOSE-STORAGE BOX	1			
49	71N6-20370				CLIP-HOSE	2			
54	S141-040166				SCREW-FLAT HD	2			
58	S017-100256				BOLT-HEX	4	#1001 - #1385	-	
63	S091-060166				BOLT-WING	3	- #1000	-	
64	S403-052006				WASHER-PLAIN	4			
65	S403-062006				WASHER-PLAIN	3	- #1000	-	
67	S403-102006				WASHER-PLAIN	8	- #1385		
					WASHER-PLAIN	4	#1386 -	A	
71	E171-1176				ASHTRAY	1			
72	71N6-20380				AIR NOZZLE	1			
73	71N6-20390				MAGNETIC	3			
76	S017-100156				BOLT-HEX	4	#1001 -	-	
80	S161-050206				SCREW-RD HD	4			
82	S132-061676				SCREW-W/WASHER C/RD	21	- #1385		
					SCREW-W/WASHER C/RD	17	#1386 -	A	
83	71N6-20460				A/CON COVER-LOW ASSY	1	#1001 - #1385	-	
	71N6-20461				A/CON COVER-LOW ASSY	1	#1386 - #1494	D	
83-1	71N6-20291				.AIRCON COVER-LOW	1	#1001 - #1385	-	
	71N6-20292				.AIRCON COVER-LOW	1	#1386 - #1494	D	
83-11	S791-016054				..GROMMET	1	#1001 - #1494	-	
83-12	S791-016010				..GROMMET	1	#1001 - #1494	-	

Item	Part_No	IS	Ord	T	Description	Qty	Serial_No	ITC	Remark
83-2	71N6-20301				.COVER-FILTER	1	#1001 - #1494	-	
83-3	S091-060156				.BOLT-WING	3	#1001 - #1494	-	
83-4	S403-062006				.WASHER-PLAIN	3	#1001 - #1494	-	
84	S037-102026				BOLT-W/WASHER	4	#1386 -	-	
85	S132-062546				SCREW-W/WASHER C/RD	8	#1495 - #1691	-	
	S132-062076				SCREW-W/WASHER C/RD	8	#1692 -	B	
90	71N6-20292				AIRCON COVER-LOW	1	#1495 -	D	
90-1	71N6-21760				.PLATE	1	#1495 -	D	
90-2	S791-016054				.GROMMET	1	#1495 -	D	
90-3	S791-016010				.GROMMET	1	#1495 -	D	

CAB INTERIOR 2(OPT, #2936-)

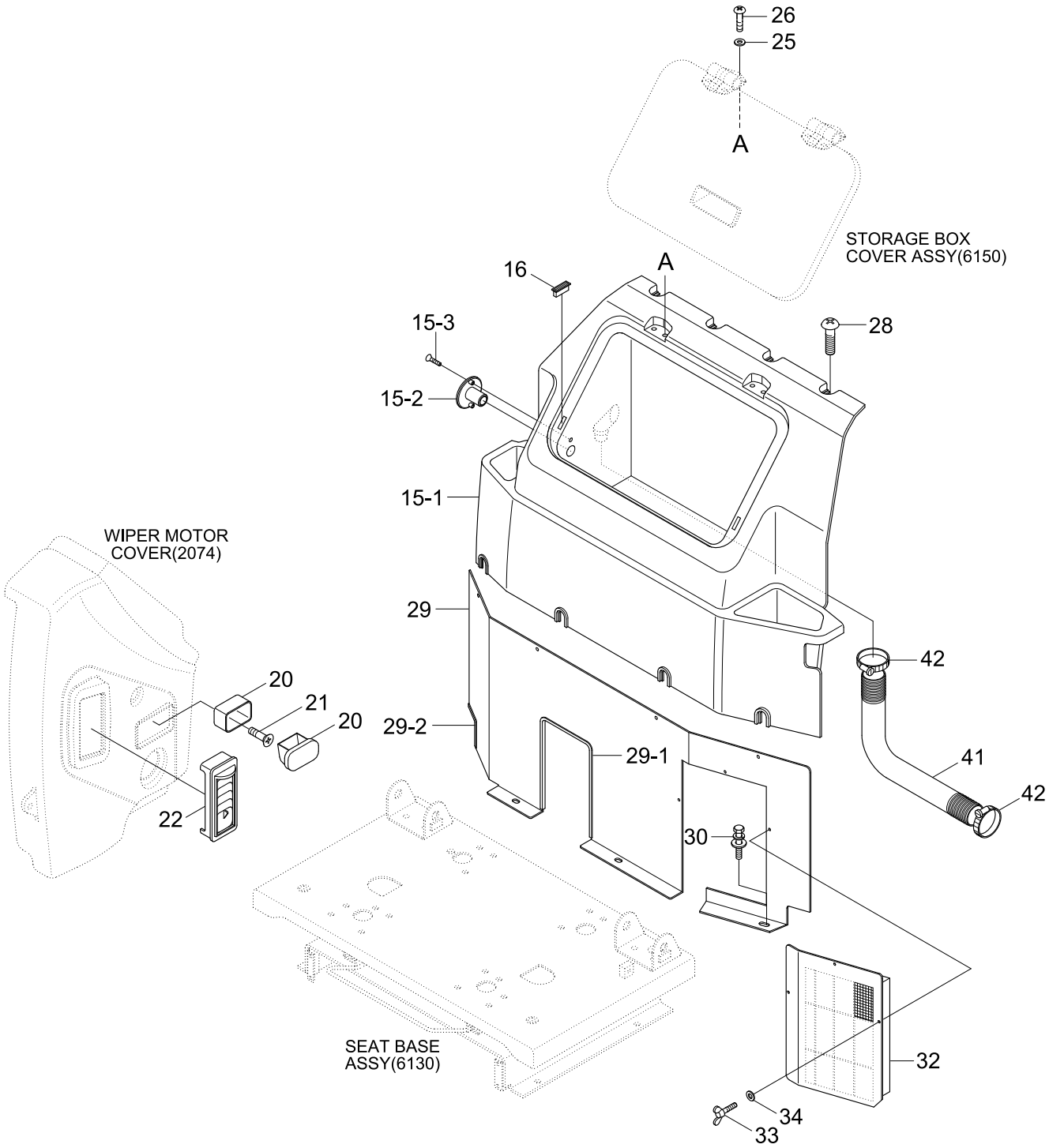

Item	Part_No	IS	Ord	T	Description	Qty	Serial_No	ITC	Remark
*	70N6-21310				CABIN INTERIOR GROUP	1	#2936 -	-	UPGRADE CABIN
15	73N6-21060				AIRCON COVER ASSY	1			
15-1	73N6-20080				.AIRCON COVER	1			
15-2	73N6-20280				.HOSE CAP-AC	1			
15-3	S151-040156				.SCREW-TAPPING	2			
16	71N6-20390				MAGNETIC	2			
20	E171-1176				ASHTRAY	1			
21	S151-040166				SCREW-TAPPING	2			
22	71N6-20380				AIR NOZZLE	1			
25	S403-05200B				WASHER-PLAIN	4			
26	S161-050206				SCREW-CROSS R/ROUND	4			
28	S002-06015B				SCREW-TRUS HEAD	13			
29	73N6-21050				AIRCON COVER LOW	1			
29-1	S791-020055				.GROMMET-PLATE	1			
29-2	S791-020012				.GROMMET-PLATE	1			
30	S037-102026				BOLT-W/WASHER	3			
32	11N6-91340				FILTER-REC	1			
33	S091-060156				BOLT-WING	3			
34	S403-06200B				WASHER-PLAIN	3			
41	71N6-20360				HOSE-STORAGE BOX	1			
42	71N6-20370				CLIP-HOSE	2			

CONSOLE BOX 1(LH)

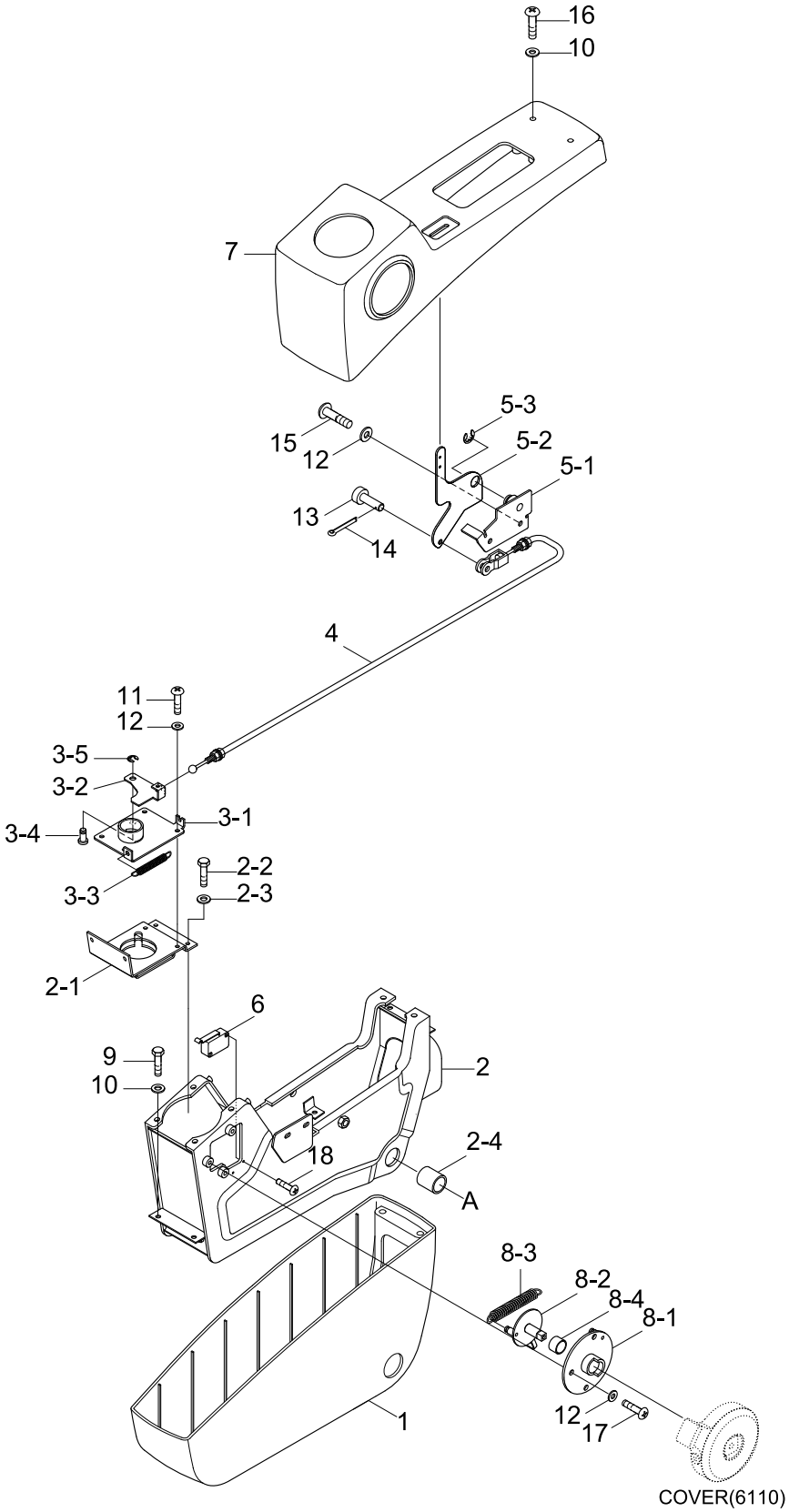

Item	Part_No	IS	Ord	T	Description	Qty	Serial_No	ITC	Remark
*	71N6-20430				CONSOLE BOX ASSY-LH	1			
1	71N6-20071				.CONSOLE BOX-LOW	1			
2	71N6-20051				.C/BOX FRAME WA-LH	1			
2-1	71N6-21320				..BRACKET-TILT	1			
2-2	S015-060146				..BOLT-HEX	4			
2-3	S403-062006				..WASHER-PLAIN	4			
2-4	S731-020025				..BUSHING-DU	2			
3	71N6-20091				.TILT CATCH ASSY	1			
3-1	71N6-21420				..TILT CATCH-LOW	1			
3-2	71N6-21451				..TILT CATCH-UP	1			
3-3	71N6-21460				..SPRING	1			
3-4	71N6-21470				..PIN	1			
3-5	P560-090002				..RETAINING RING-E TYPE	1			
4	71N6-20100				.CABLE-PULL	1			
5	71N6-20120				.TILT LEVER ASSY	1			
5-1	71N6-21480				..BRACKET-LOW	1			
5-2	71N6-21510				..BRACKET-UP	1			
5-3	P560-100006				..RETAINING RING-E TYPE	1			
6	21N8-20300				.SWITCH-MICRO	1			
7	71N6-20131				.CONSOLE BOX-UP(LH)	1			
8	71N6-20141				.SAFETY BRACKET ASSY	1			
8-1	71N6-21521				..BRACKET-LOW	1			
8-2	71N6-21560				..BRACKET-UP	1			
8-3	71N6-21610				..SPRING	1			
8-4	S731-020010				..BUSHING-DU	1			

Item	Part_No	IS	Ord	T	Description	Qty	Serial_No	ITC	Remark
9	S015-050206				.BOLT-HEX	4			
10	S403-052006				.WASHER-PLAIN	8			
11	S161-060126				.SCREW-CROSS R/ROUND	4			
12	S403-062006				.WASHER-PLAIN	9			
13	S491-060156				.PIN-CLEVIS	1			
14	S461-080202				.PIN-SPLIT	1			
15	S161-060166				.SCREW-CROSS ROUND	2			
16	S161-050166				.SCREW-CROSS R/ROUND	4			
17	S175-060162				.SCREW-SOCKET RD HD	3			
18	S161-030162				.SCREW-CROSS R/ROUND	2			

CONSOLE BOX 1(LH, OPT, 2936-)

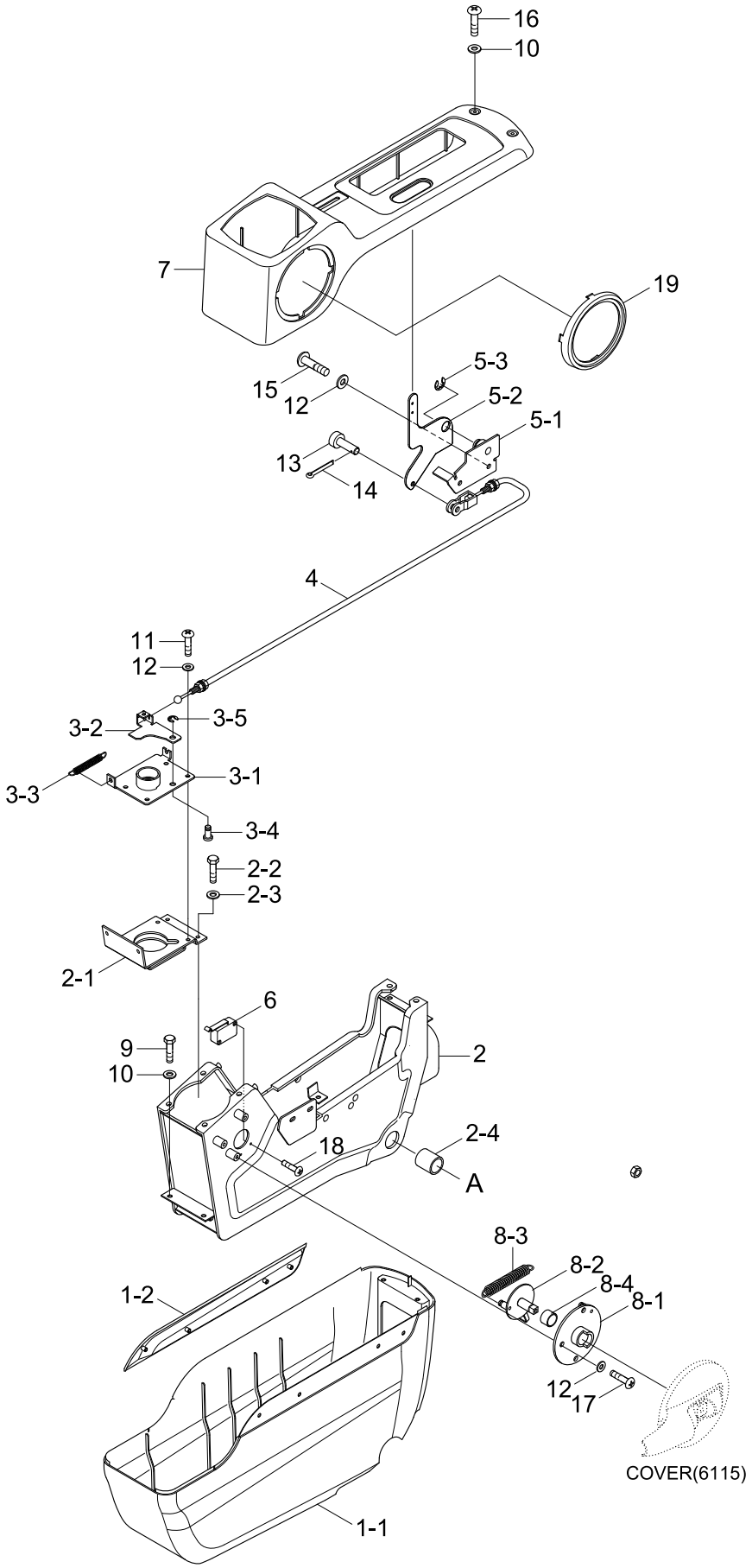

Item	Part_No	IS	Ord	T	Description	Qty	Serial_No	ITC	Remark
*	73N6-21010				CONSOLE BOX ASSY(LH)	1	#2936 -	-	OPT-UPGRADE CAB
1	73N6-21020				COVER-C/LOW ASSY	1			
1-1	73N6-20160				.CONSOLE BOX-LOW	1			
1-2	73N6-20230				.PANEL-CONSOLE DECO	1			
2	73N6-21030				FRAME-C/BOX(LH)	1			
2-1	71N4-21320				.PLATE-TILT	1			
2-2	S015-060146				.BOLT-HEX	4			
2-3	S403-06200B				.WASHER-PLAIN	4			
2-4	S731-020025				.BUSHING-DU	2			
3	71N4-20090				TILT CATCH ASSY	1			
3-1	71N4-21420				.TILT CATCH-LOW	1			
3-2	71N4-21450				.TILT CATCH-UP	1			
3-3	71N6-21460				.SPRING	1			
3-4	71N6-21470				.PIN	1			
3-5	P560-090002				.RETAINING RING-E TYPE	1			
4	71N6-20100				PULL CABLE	1			
5	71N4-20120				TILT LEVER ASSY	1			
5-1	71N4-21480				.BRACKET-LOW	1			
5-2	71N6-21510				.BRACKET-UP	1			
5-3	P560-100006				.RETAINING RING-E TYPE	1			
6	21N8-20300				SWITCH-MICRO	1			
7	73N6-20140				CONSOLE BOX UP-LH	1			
8	71N6-20141				SAFETY BRACKET ASSY	1			
8-1	71N6-21521				.BRACKET-LOW	1			
8-2	71N6-21560				.BRACKET-UP	1			

Item	Part_No	IS	Ord	T	Description	Qty	Serial_No	ITC	Remark
8-3	71N6-21610				.SPRING	1			
8-4	S731-020010				.BUSHING-DU	1			
9	S015-050206				BOLT-HEX	4			
10	S403-05200B				WASHER-PLAIN	8			
11	S161-060136				SCREW-CROSS R/ROUND	4			
12	S403-06200B				WASHER-PLAIN	9			
13	S491-060156				PIN-CLEVIS	1			
14	S461-080202				PIN-SPLIT	1			
15	S161-060166				SCREW-CROSS R/ROUND	2			
16	S161-050166				SCREW-CROSS R/ROUND	4			
17	S175-060162				SCREW-SOCKET RD HD	3			
18	S161-030162				SCREW-CROSS R/ROUND	2			
19	73N6-20200				RING-SAFETY LEVER	1			

CONSOLE BOX 1(LH, R140LCD-7)

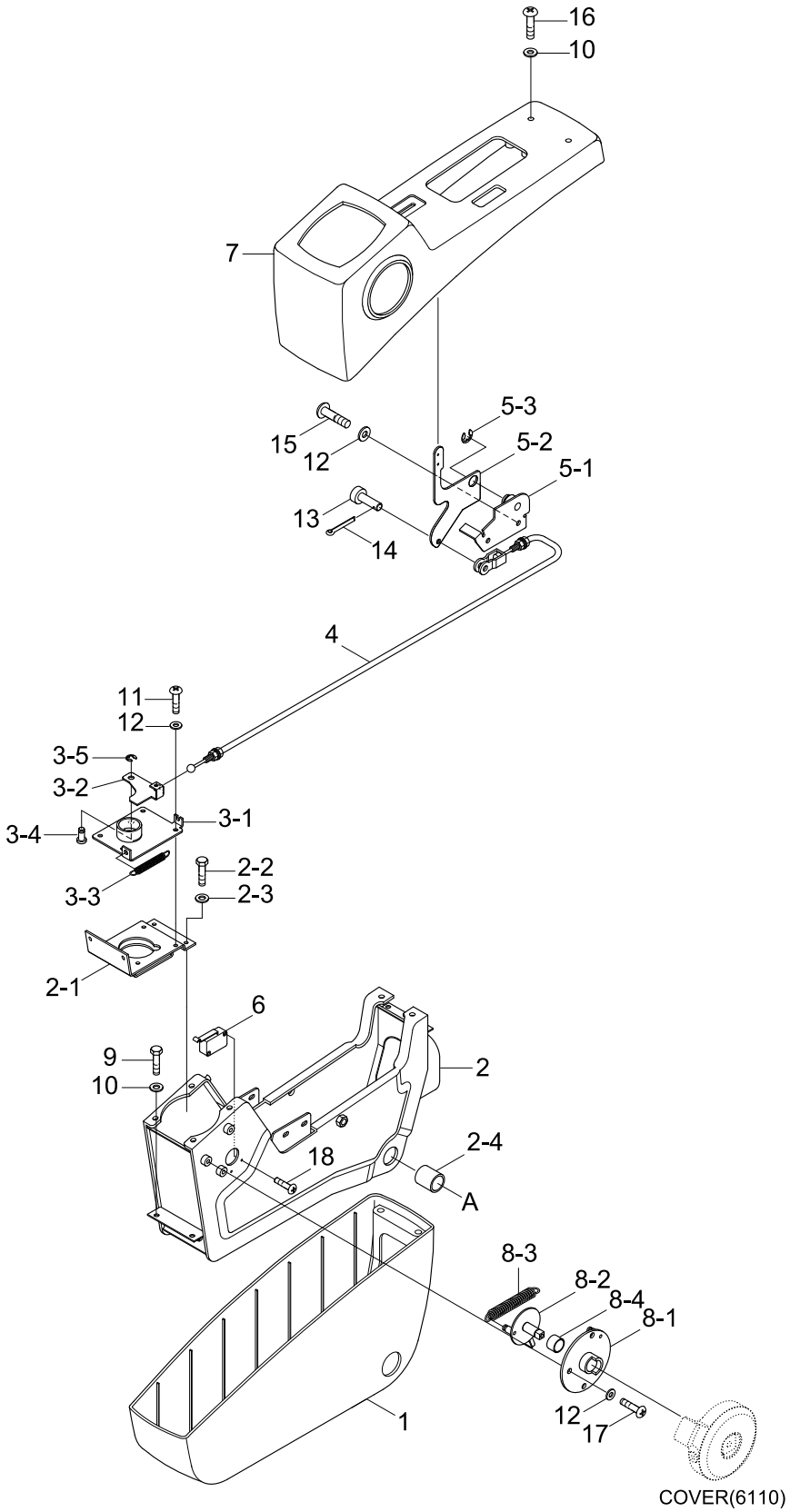

Item	Part_No	IS	Ord	T	Description	Qty	Serial_No	ITC	Remark
*	71N4-20430				CONSOLE BOX ASSY-LH	1			
1	71N6-20071				.CONSOLE BOX-LOW	1			
2	71N4-20050				.C/BOX FRAME WA-LH	1			
2-1	71N4-21320				..PLATE-TILT	1			
2-2	S015-060146				..BOLT-HEX	4			
2-3	S403-062006				..WASHER-PLAIN	4			
2-4	S731-020025				..BUSHING-DU	2			
3	71N4-20090				.TILT CATCH ASSY	1			
3-1	71N4-21420				..TILT CATCH-LOW	1			
3-2	71N4-21450				..TILT CATCH-UP	1			
3-3	71N6-21460				..SPRING	1			
3-4	71N6-21470				..PIN	1			
3-5	P560-090002				..RETAINING RING-E TYPE	1			
4	71N6-20100				.CABLE-PULL	1			
5	71N4-20120				.TILT LEVER ASSY	1			
5-1	71N4-21480				..BRACKET-LOW	1			
5-2	71N4-21510				..BRACKET-UP	1			
5-3	P560-100006				..RETAINING RING-E TYPE	1			
6	21N8-20300				.SWITCH-MICRO	1			
7	71N4-20130				.CONSOLE BOX-UP(LH)	1			
8	71N6-20141				.SAFETY BRACKET ASSY	1			
8-1	71N6-21521				..BRACKET-LOW	1			
8-2	71N6-21560				..BRACKET-UP	1			
8-3	71N6-21610				..SPRING	1			
8-4	S731-020010				..BUSHING-DU	1			

Item	Part_No	IS	Ord	T	Description	Qty	Serial_No	ITC	Remark
9	S015-050206				.BOLT-HEX	4			
10	S403-052006				.WASHER-PLAIN	8			
11	S161-060136				.SCREW-CROSS R/ROUND	4			
12	S403-062006				.WASHER-PLAIN	9			
13	S491-060156				.PIN-CLEVIS	1			
14	S461-080202				.PIN-SPLIT	1			
15	S161-060166				.SCREW-CROSS ROUND	2			
16	S161-050166				.SCREW-CROSS R/ROUND	4			
17	S175-060162				.SCREW-SOCKET RD HD	3			
18	S161-030162				.SCREW-CROSS R/ROUND	2			

CONSOLE BOX 2(LH)

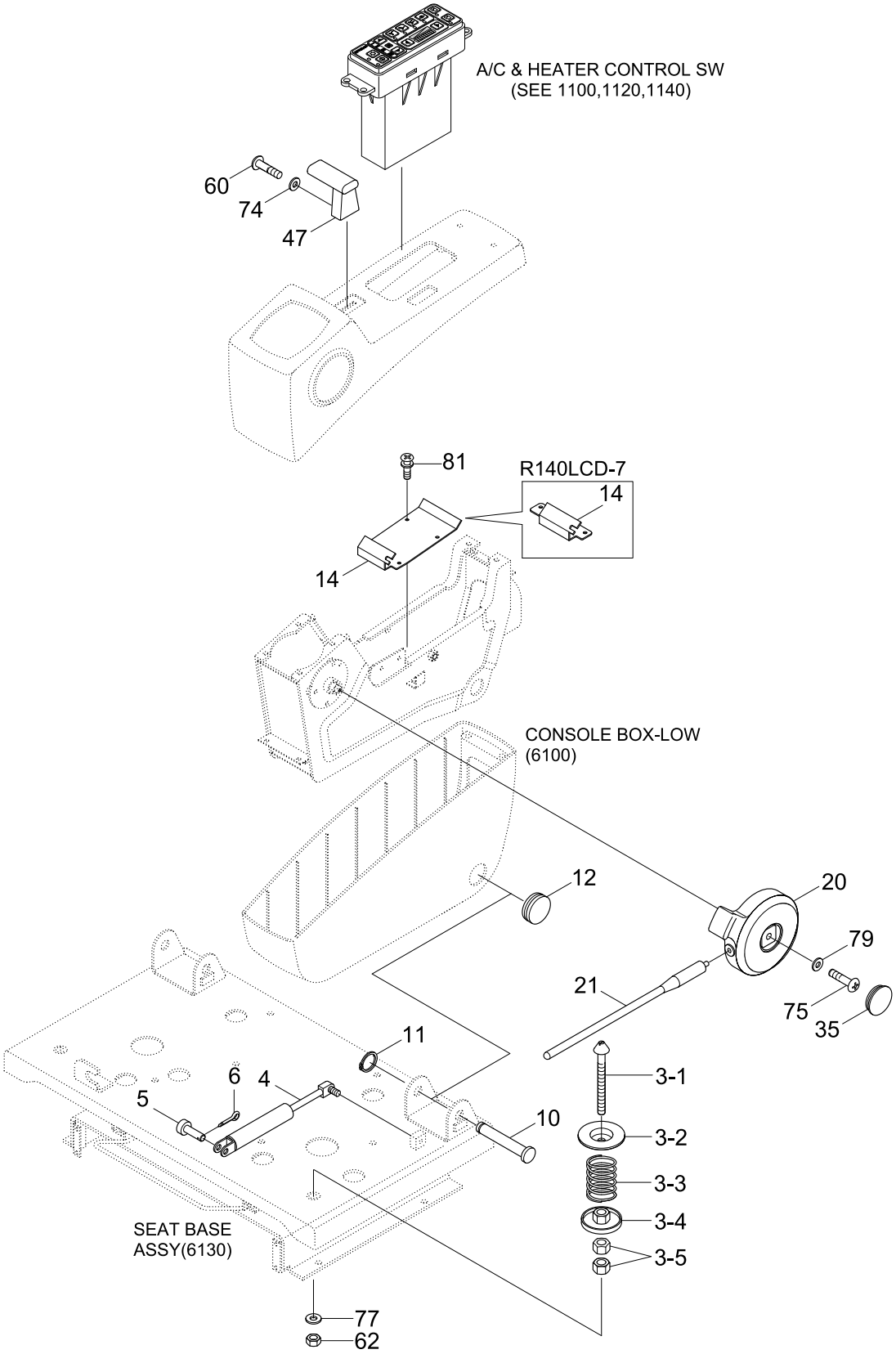

Item	Part_No	IS	Ord	T	Description	Qty	Serial_No	ITC	Remark
3	71N6-20031				TILT LOCKER ASSY	1			
3-1	71N6-21151				.SHAFT	1			
3-2	71N6-21160				.PLATE	1			
3-3	71N6-21170				.SPRING	1			
3-4	71N6-21180				.PLATE WA	1			
3-5	S207-161006				.NUT-HEX	2			
4	71N6-20040				GAS SPRING	1			
5	S491-080256				PIN-CLEVIS	1			
6	S461-160256				PIN-SPLIT	1			
10	71N6-20081				SHAFT	1			
11	S601-020004				RING-RETAINING	1			
12	S661-360400				CAP-RUBBER	1			
14	71N6-20111				PLATE-CABLE	1			
	71N4-20110				PLATE-CABLE	1			R140LCD-7
20	71N6-20151				COVER-S/LEVER	1			
21	71N6-20161				ROD-SAFETY	1			
35	71N6-20281				CAP-S/LEVER	1			
47	71N6-20351				KNOB-TILT	1			
60	S161-040086				SCREW-RD HD	2	- #1263		
	S131-040826				SCREW-W/WASHER	2	#1264 -	B	
62	S205-161006				NUT-HEX	1			
74	S403-042006				WASHER-PLAIN	2	- #1263	-	
75	S175-060166				SCREW-SOCKET RD HD	1			
77	S403-162006				WASHER-PLAIN	1			
79	S403-065006				WASHER-PLAIN	1			

Item	Part_No	IS	Ord	T	Description	Qty	Serial_No	ITC	Remark
81	S131-061646				SCREW W/WASHER	4			

CONSOLE BOX 2(LH, OPT, #2936-)

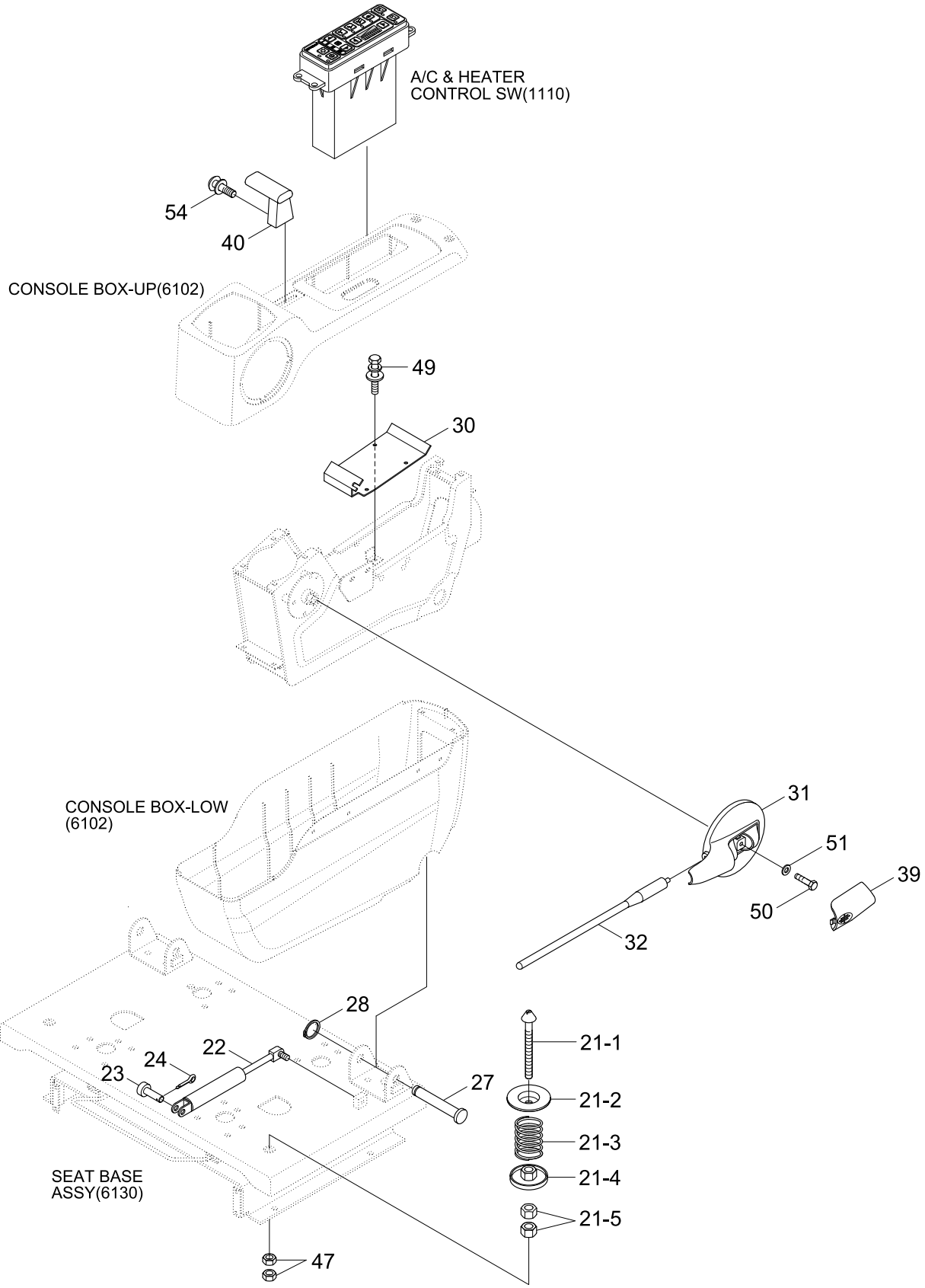

Item	Part_No	IS	Ord	T	Description	Qty	Serial_No	ITC	Remark
*	@				CONSOLE BOX(2/2, LH)	1	#2936 -	-	NOT
21	71N6-20031				TILT LOCKER ASSY	1			
21-1	71N6-21151				.SHAFT	1			
21-2	71N6-21160				.PLATE	1			
21-3	71N6-21170				.SPRING	1			
21-4	71N6-21180				.PLATE WA	1			
21-5	S205-16100B				.NUT-HEX	2			
22	71N6-20040				SPRING-GAS	1			
23	S491-080252				PIN-CLEVIS	1			
24	S461-160252				PIN-SPLIT	1			
27	71N6-20082				SHAFT	1			
28	S601-020004				RING-RETAINING	1			
30	71N4-20110				PLATE-CABLE	1			
31	73N6-20180				KNOB -SAFETY LEVER	1			
32	71N6-20161				ROD-SAFETY	1			
39	73N6-20190				CAP-SAFETY LEVER	1			
40	71N6-20351				KNOB-TILT	1			
47	S205-16100B				NUT-HEX	2			
49	S035-061526				BOLT-W/WASHER	3			
50	S015-060156				BOLT-HEX	4			
51	S403-06500B				WASHER-PLAIN	4			
54	S131-040826				SCREW-W/WASHER	2			

CONSOLE BOX(RH)

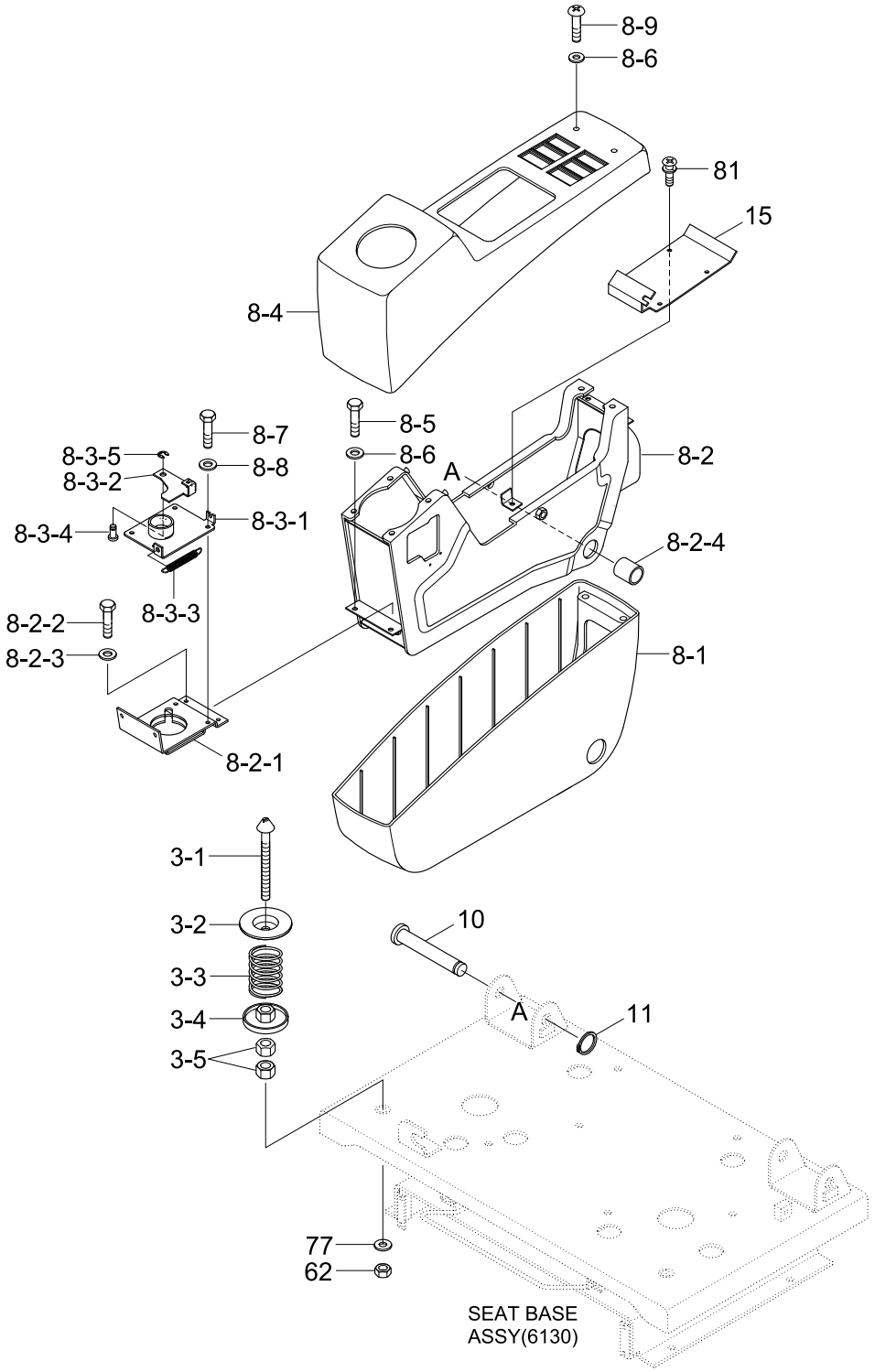

Item	Part_No	IS	Ord	T	Description	Qty	Serial_No	ITC	Remark
3	71N6-20031				TILT LOCKER ASSY	1			
3-1	71N6-21151				.SHAFT	1			
3-2	71N6-21160				.PLATE	1			
3-3	71N6-21170				.SPRING	1			
3-4	71N6-21180				.PLATE WA	1			
3-5	S207-161006				.NUT-HEX	2			
8	71N6-20440				CONSOLE BOX ASSY-RH	1			
8-1	71N6-20071				.CONSOLE BOX-LOW	1			
8-2	71N6-20061				.C/BOX FRAME WA-RH	1			
8-2-1	71N6-21320				..BRACKET-TILT	1			
8-2-2	S015-060146				..BOLT-HEX	4			
8-2-3	S403-062006				..WASHER-PLAIN	4			
8-2-4	S731-020025				..BUSHING-DU	2			
8-3	71N6-20091				.TILT CATCH ASSY	1			
8-3-1	71N6-21420				..TILT CATCH-LOW	1			
8-3-2	71N6-21451				..TILT CATCH-UP	1			
8-3-3	71N6-21460				..SPRING	1			
8-3-4	71N6-21470				..PIN	1			
8-3-5	P560-090002				..RING-SNAP	1			
8-4	71N6-20171				.CONSOLE BOX-UP(RH)	1	- #2223		
	71N6-20172				.CONSOLE BOX-UP(RH)	1	#2224 -	B	
8-5	S015-050206				.BOLT-HEX	4			
8-6	S403-052006				.WASHER-PLAIN	8			
8-7	S161-060126				.SCREW-CROSS R/ROUND	4			
8-8	S403-062006				.WASHER-PLAIN	4			

Item	Part_No	IS	Ord	T	Description	Qty	Serial_No	ITC	Remark
8-9	S161-050166				.SCREW-RD HD	4			
10	71N6-20081				SHAFT	1	- #1263		
	71N6-20082				SHAFT	1	#1264 -	D	
11	S601-020004				RING-RETAINING	1			
15	71N6-20111				PLATE-CABLE	1			
62	S205-161006				NUT-HEX	1			
77	S403-162006				WASHER-PLAIN	1			
81	S131-061646				SCREW W/WASHER	4			

CONSOLE BOX(RH, OPT, #2936-)

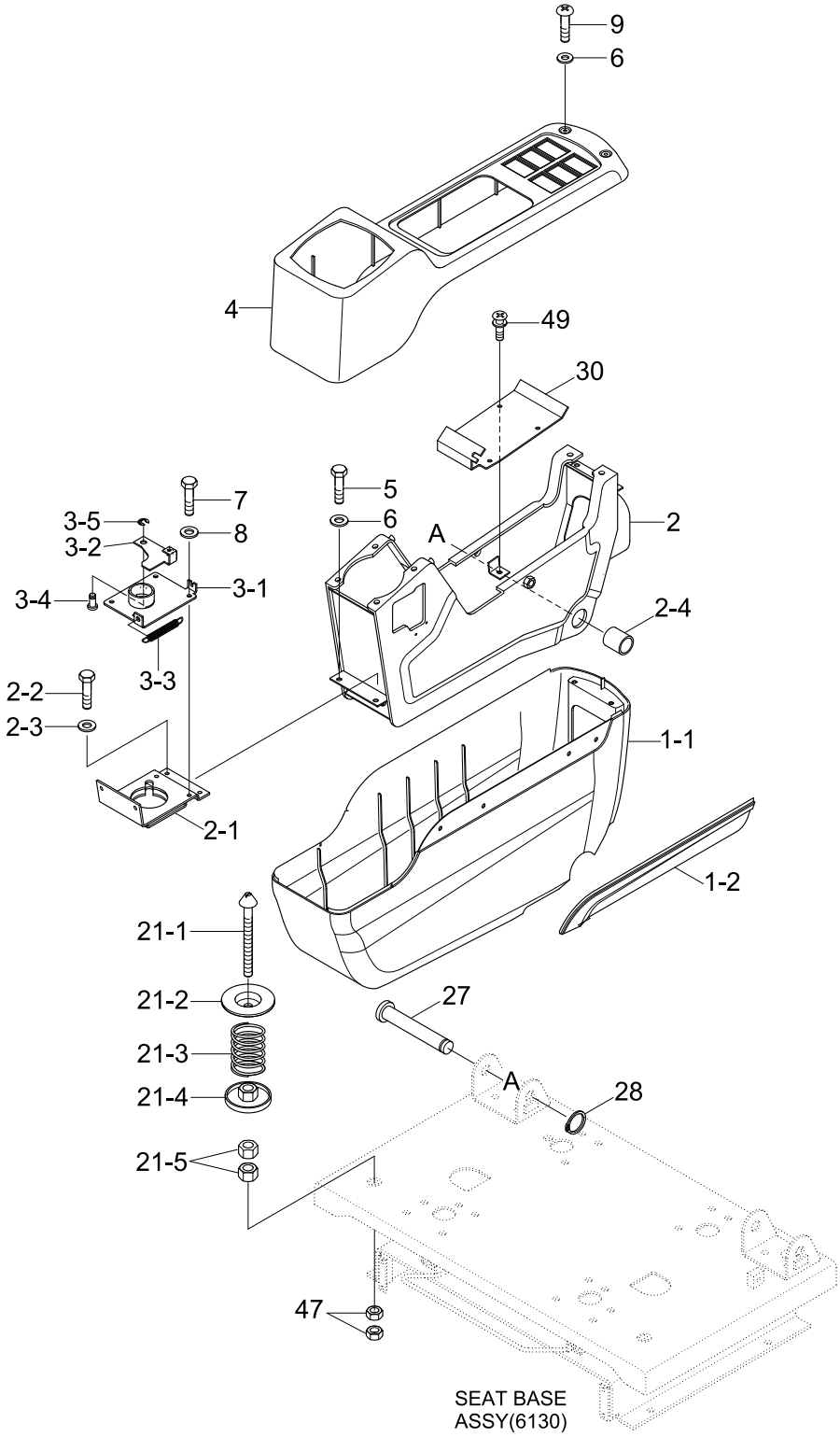

Item	Part_No	IS	Ord	T	Description	Qty	Serial_No	ITC	Remark
*	73N6-21040				CONSOLE BOX ASSY(RH)	1	#2936 -	-	OPT-UPGRADE CAB
1	73N6-21020				.COVER-C/LOW ASSY	1			
1-1	73N6-20160				..CONSOLE BOX-LOW	1			
1-2	73N6-20230				..PANEL-CONSOLE DECO	1			
2	71N6-20061				.C/BOX FRAME WA-RH	1			
2-1	71N6-21320				..BRACKET-TILT	1			
2-2	S015-060156				..BOLT-HEX	4			
2-3	S403-06200B				..WASHER-PLAIN	4			
2-4	S731-020025				..BUSHING-DU	2			
3	71N6-20091				.TILT CATCH ASSY	1			
3-1	71N6-21420				..TILT CATCH-LOW	1			
3-2	71N6-21451				..TILT CATCH-UP	1			
3-3	71N6-21460				..SPRING	1			
3-4	71N6-21470				..PIN	1			
3-5	P560-090002				..RETAINING RING-E TYPE	1			
4	73N6-20150				.CONSOLE BOX UP-RH	1			
5	S015-050206				.BOLT-HEX	4			
6	S403-052006				.WASHER-PLAIN	8			
7	S161-060136				.SCREW-CROSS R/ROUND	4			
8	S403-06200B				.WASHER-PLAIN	4			
9	S161-050166				.SCREW-CROSS R/ROUND	4			
21	71N6-20031				TILT LOCKER ASSY	1			
21-1	71N6-21151				.SHAFT	1			
21-2	71N6-21160				.PLATE	1			
21-3	71N6-21170				.SPRING	1			

Item	Part_No	IS	Ord	T	Description	Qty	Serial_No	ITC	Remark
21-4	71N6-21180				.PLATE WA	1			
21-5	S207-161006				.NUT-HEX	2			
27	71N6-20082				SHAFT	1			
28	S601-020004				RING-RETAINING	1			
30	71N6-20111				PLATE-CABLE	1			
47	S205-16100B				NUT-HEX	2			
49	S035-061526				BOLT-W/WASHER	3			

SEAT BASE ASSY

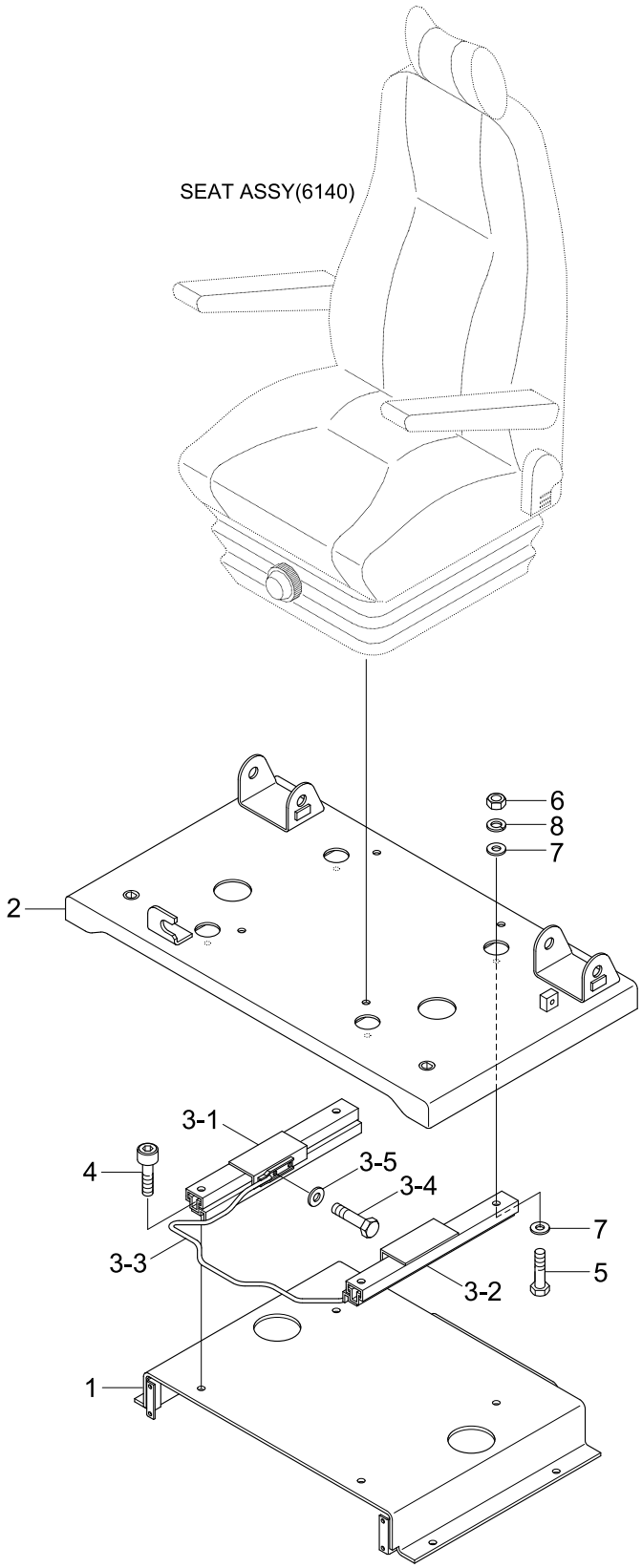

Item	Part_No	IS	Ord	T	Description	Qty	Serial_No	ITC	Remark
*	71N6-20011				SEAT BASE ASSY	1	- #1000		
	71N4-20011				SEAT BASE ASSY	1	#1001 - #1263	D	
	71N4-20012				SEAT BASE ASSY	1	#1264 -	D	
1	71N6-21011				.SEAT BASE-LOW	1			
2	71N6-21071				.SEAT BASE-UP	1	- #1000		
	71N6-21072				.SEAT BASE-UP	1	#1001 - #1263	D	
	71N6-21073				.SEAT BASE-UP	1	#1264 - #2205	D	
	71N6-21074				.SEAT BASE-UP	1	#2206 -	B	
3	71N6-21620				.SLIDING RAIL ASSY	1			
3-1	71N6-21670				.SLIDE ASSY-RH	1			
3-2	71N6-21680				.SLIDE ASSY-LH	1			
3-3	71N6-21690				.LEVER ASSY	1			
3-4	S015-060126				.BOLT-HEX	4			
3-5	S403-062006				.WASHER-PLAIN	4			
4	S107-080306				.BOLT-SOCKET	4			
5	S017-080256				.BOLT-HEX	4			
6	S205-081006				.NUT-HEX	4			
7	S403-082006				.WASHER-PLAIN	8			
8	S411-080006				.WASHER-SPRING	4			

SEAT(-#1119)

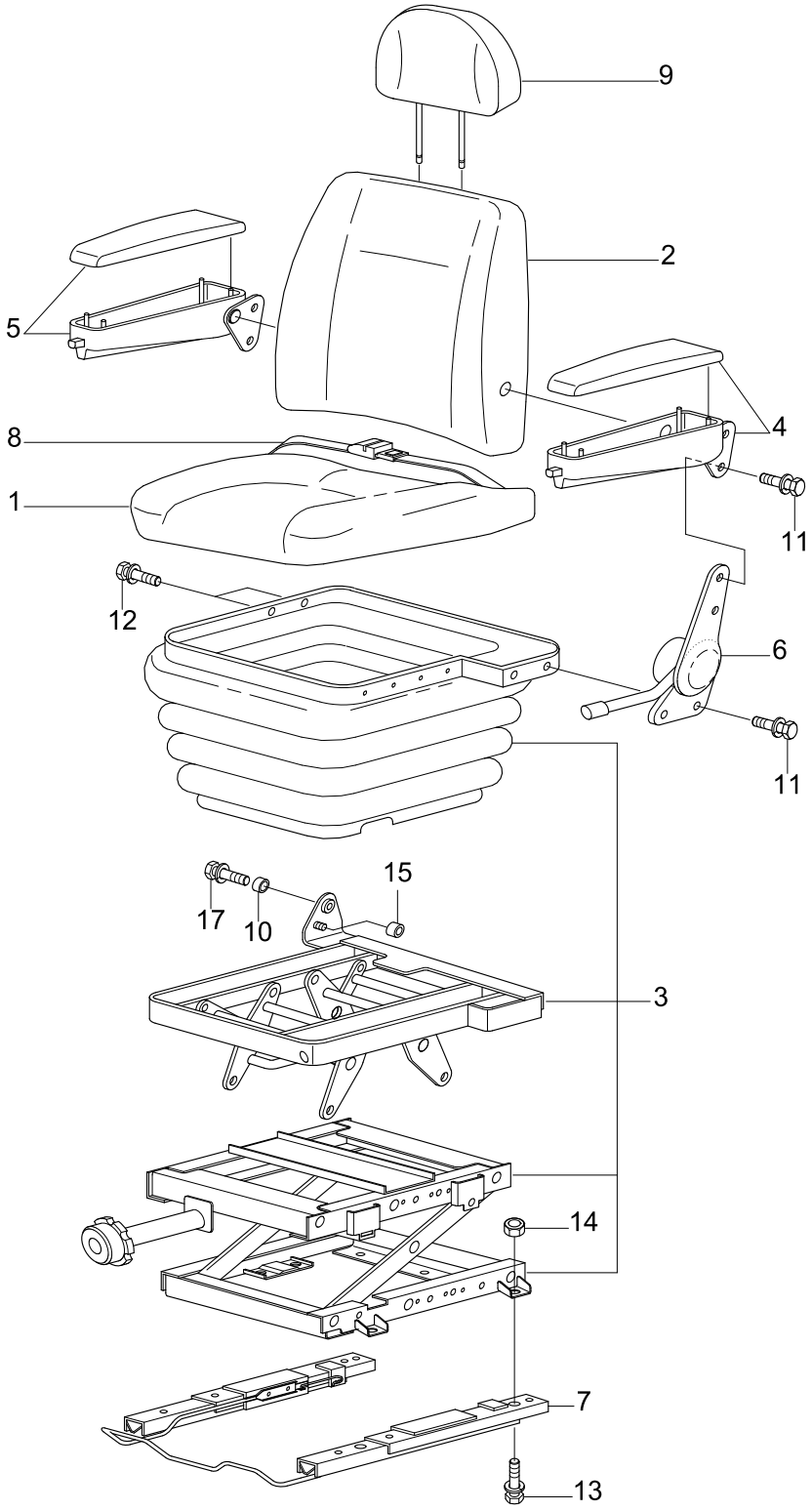

Item	Part_No	IS	Ord	T	Description	Qty	Serial_No	ITC	Remark
*	71EH-30500				SEAT ASSY	1	- #1119	-	
1	H28004-100D				.CUSHION ASSY	1			
2	H28004-200E				.BACK SEAT ASSY	1			
3	H28004-300D				.LEG ASSY	1			
4	H28001-500C				.ARM REST ASSY-LH	1			
5	H28002-500C				.ARM REST ASSY-RH	1			
6	H28003-240C				.RECLINER ASSY	1			
7	H28004-400				.TRACK ASSY	1			
8	H28003-600				.SEAT BELT ASSY	1			
9	H28004-800				.HEAD REST ASSY	1			
10	H95003-906				.BUSHING-NYLON	1			
11	W11230-10303				.BOLT	5			
12	W11286-06203				.BOLT-W/WASHER	2			
13	W11230-08183				.BOLT-W/WASHER	4			
14	W13395-08003				.NUT-FLANGE	4			
15	H95003-3462				.NUT-BUSHING	1			
17	W11226-06123				.BOLT-W/WASHER	1			

SEAT(#1120-1779)

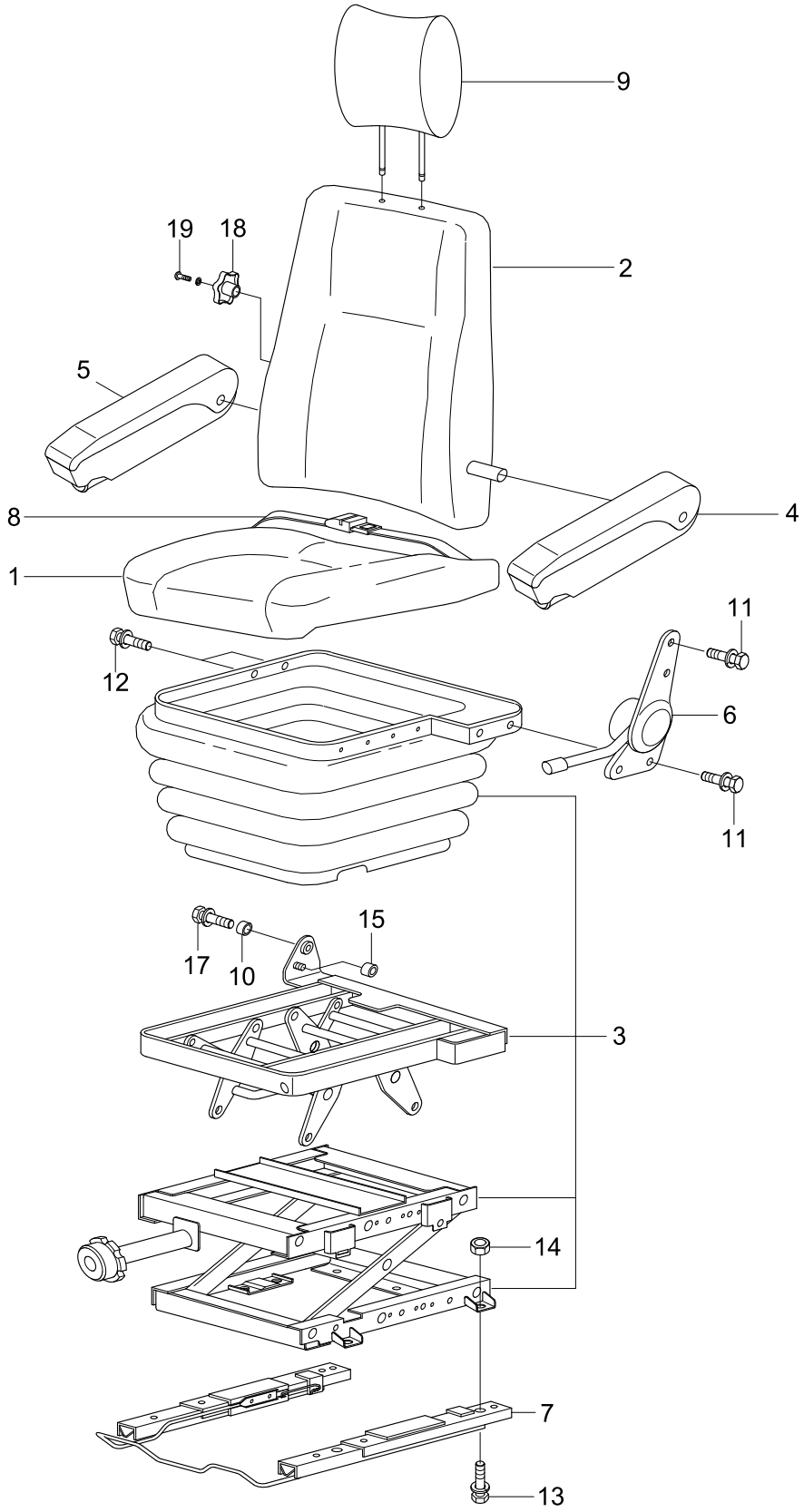

Item	Part_No	IS	Ord	T	Description	Qty	Serial_No	ITC	Remark
*	71N6-30500				SEAT ASSY	1	#1120 - #1779	B	
1	H28303-100				.CUSHION ASSY	1			
2	H28313-200				.BACK ASSY	1			
3	H28303-300				.LEG ASSY	1			
3-1	H28003-350				..DAMPER	1	#1120 -	-	NOT SHOWN
4	H28300-700				.ARM REST ASSY-LH	1			
5	H28005-700A				.ARM REST ASSY-RH	1			
6	H28003-2400				.RECLINER ASSY	1			
7	H28213-400				.TRACK ASSY	1			
8	H28003-600				.SEAT BELT ASSY	1			
9	H28303-800				.HEAD REST ASSY	1			
10	H95003-906				.BUSHING-NYLON	1			
11	W11230-10303				.BOLT	5			
12	W11286-06203				.BOLT-W/WASHER	2			
13	W11230-08183				.BOLT-W/WASHER	4			
14	W13395-08003				.NUT-FLANGE	4			
15	H95003-3462				.NUT-BUSHING	1			
17	W11226-06123				.BOLT-W/WASHER	1			
18	H29313-901A				.KNOB	1			
19	W12310-05123				.BOLT & S/WASHER	1			

SEAT(#1780-)

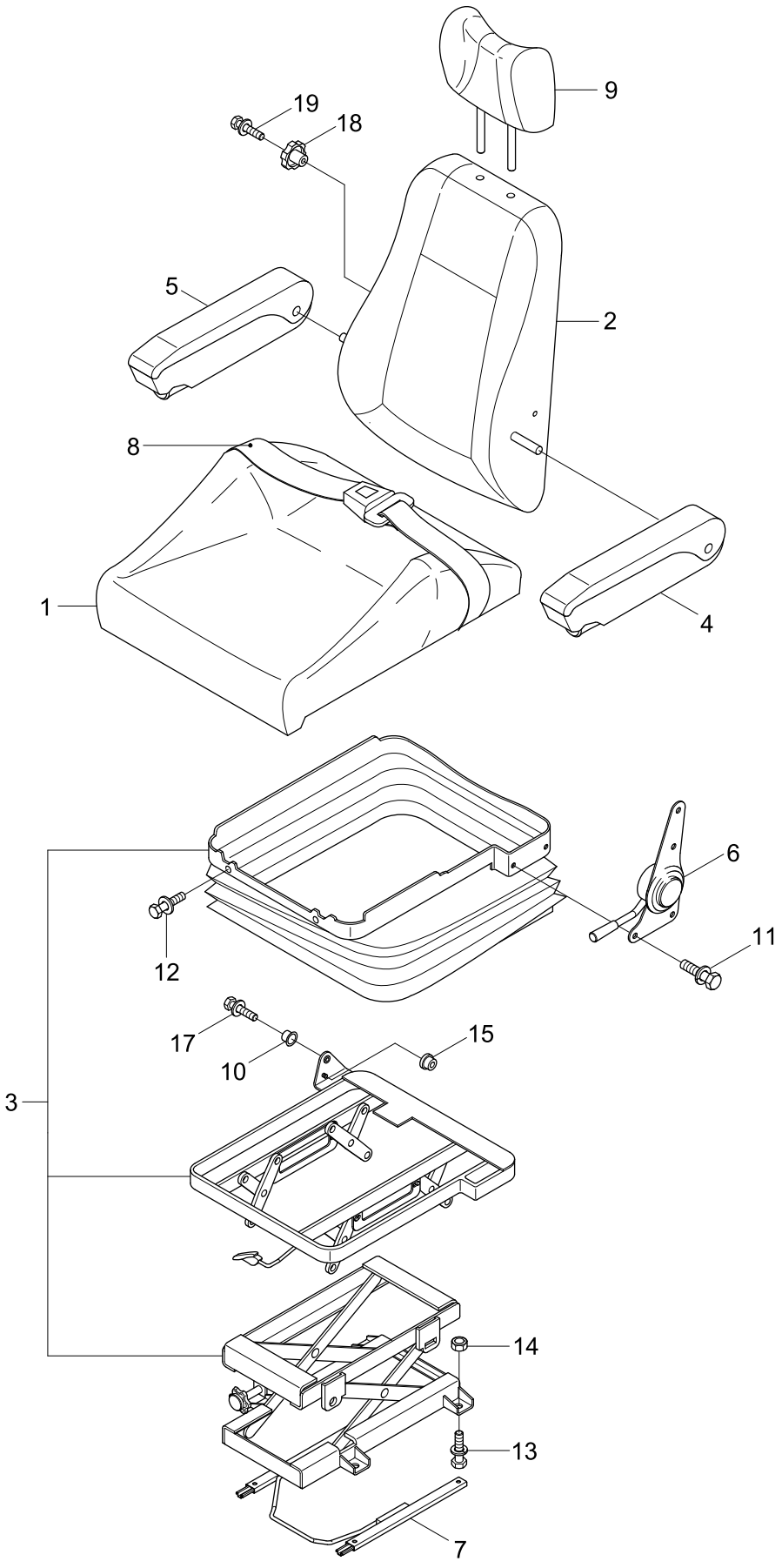

Item	Part_No	IS	Ord	T	Description	Qty	Serial_No	ITC	Remark
*	71N6-30700				SEAT ASSY	1	#1780 -	B	
1	H28333-100				.CUSHION ASSY	1			
2	H28333-200				.BACK ASSY	1			
3	H28333-300				.LEG ASSY	1			
3-1	H28333-350				..DAMPER	1			NOT SHOWN
4	H28300-700A				.ARM REST ASSY-LH	1			
5	H28305-700B				.ARM REST ASSY-RH	1			
6	H28003-240D				.RECLINER ASSY	1			
7	H28334-400				.TRACK ASSY	1	#1780 -	-	
8	H28003-600				.SEAT BELT ASSY	1			
9	H28333-800				.HEAD REST ASSY	1			
10	H95003-906				.BUSHING-NYLON	1			
11	W11230-10303				.BOLT	6			
12	W11286-06203				.BOLT-W/WASHER	2			
13	W11230-08183				.BOLT-W/WASHER	4			
14	W13395-08003				.NUT-FLANGE	4			
15	H95003-3462				.NUT-BUSHING	1			
17	W11226-06123				.BOLT-W/WASHER	1			
18	H29313-901A				.KNOB	1			
19	W12310-05123				.BOLT & S/WASHER	1			

SEAT 2(#1709-)

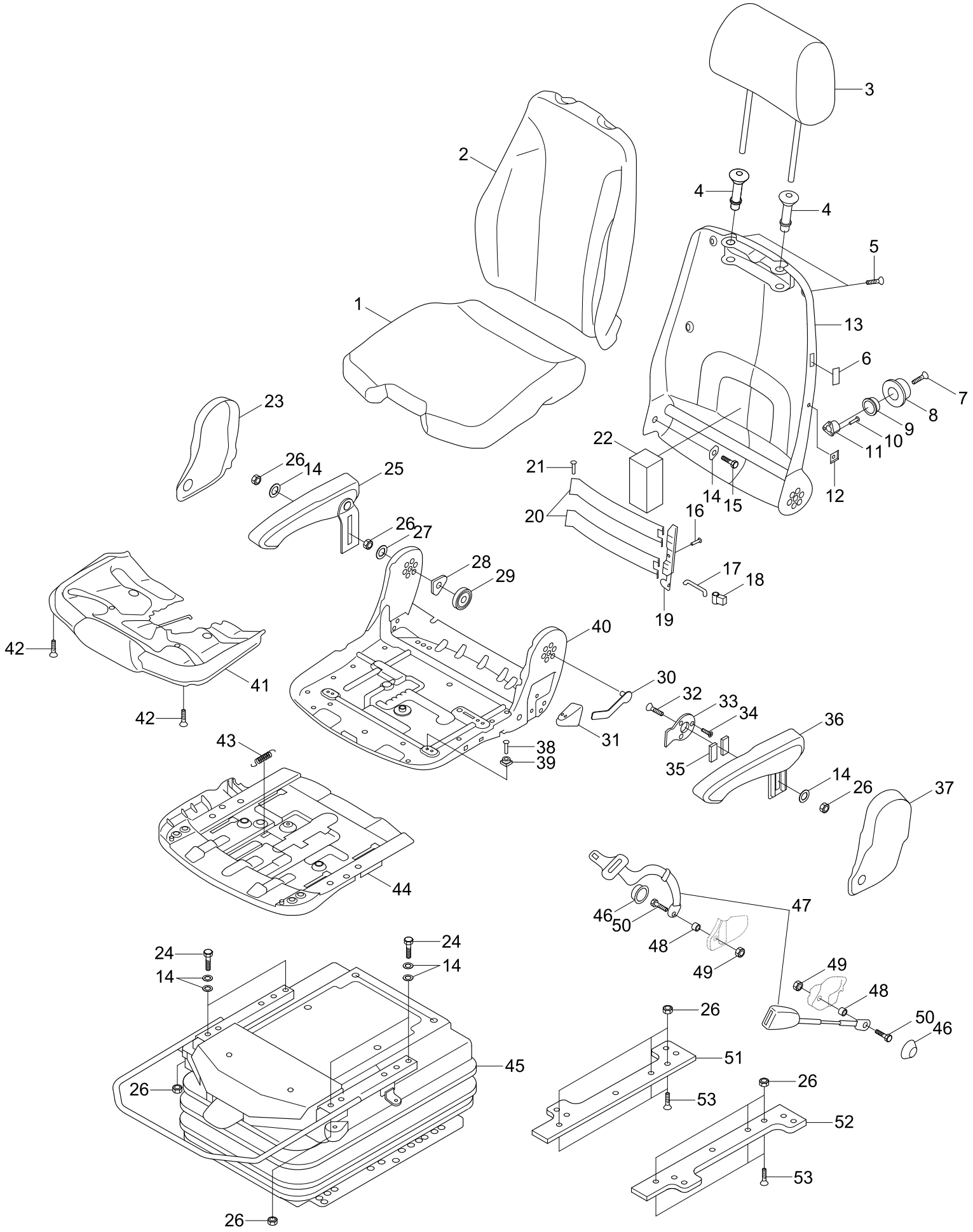
3
2
4
4
5
1
13
6
7
8
9
10
11
12
23
22
21
20
14
15
16
17
18
19
26
14
25
26
27
28
29
40
30
32
33
34
36
31
38
39
35
14
26
37
42
41
42
43
44
46
50
47
48
49
49
48
50
46
24
14
24
14
45
26
26
26
51
53
26
52
53

Item	Part_No	IS	Ord	T	Description	Qty	Serial_No	ITC	Remark
*	71N6-30600				SEAT ASSY	1	#1709 -	-	2" AIR RIDE
1	140907				.CUSHION-SEAT	1			
2	140908				.BACKREST-CUSHION	1			
3	140912				.HEADREST	1			
4	138691				.BUSHING	2			
5	200936				.SCREW-SELF TAPPING	6			
6	140226				.COVER-PLASTIC	1			
7	138758				.SCREW	1			
8	141064				.HANDLE-LUMBAR	1			
9	138747				.TOOLHEAD WHEEL	1			
10	135786				.RIVET-BLIND	3			
11	138634				.SLING SPRING BRAKE	1			
12	138785				.STICKER	1			
13	2048229				.BACKREST-GS.SCR	1			
14	113290				.WASHER-FLAT	11			
15	118558				.SCREW-HEX	1			
16	104551				.RIVET-POP	1			
17	138559				.RODS	1			
18	138655				.CARRIER	1			
19	138614				.WINKEL	1			
20	141004				.PLATE-LUMBAR	2			
21	2048616				.RIVET	2			
22	1027240				.SPONGE	1			
23	140458				.COVER-RH	1			
24	2048504				.SCREW-HEXAGON HEAD	4			

Item	Part_No	IS	Ord	T	Description	Qty	Serial_No	ITC	Remark
25	1026762				.ARM REST ASSY-RH	1			
26	110291				.NUT-HEXAGON	11			
27	110489				.WASHER-BLACK	1			
28	140684				.HODER-SPRING	1			
29	131517				.SPRING-LEG	1			
30	140695				.LEVER	1			
31	140694				.HANDLE	1			
32	140697				.SCREW-M8*18	1			
33	140696				.PLATE	1			
34	136122				.SCREW-M6*10	3			
35	107719				.PLATE-RUBBER	1			
36	1026763				.ARMREST-LH	1			
37	140457				.COVER-LH	1			
38	2048610				.RIVET	4			
39	138835				.PROFILE-GLIDING	4			
40	86601108				.SEAT PLATE-GS.LA	1			
41	1077064				.ADJUSTMENT-TILTING	1			
42	1054392				.SCREW-SELF TAPPING	4			
43	116226				.SPRING	1			
44	1101294				.ADJUSTMENT-SEAT DEPTH	1			
45	1053742				.SUSPENSION SYSTEM	1			
46	132909				.COVER	2			
47	902172				.SEAT BELT	1			
48	115419				.BUSHING	2			
49	113354				.NUT	2			

Item	Part_No	IS	Ord	T	Description	Qty	Serial_No	ITC	Remark
50	113771				.SCREW-7/16 INCH	2			
51	S0051				.BOTTOM PLATE-GS.LA.	1			
52	S0070				.BOTTOM PLATE-GS.LA.	1			
53	2048654				.SCREW-COUNTERSUNK	6			

SEAT(#1120-1779)

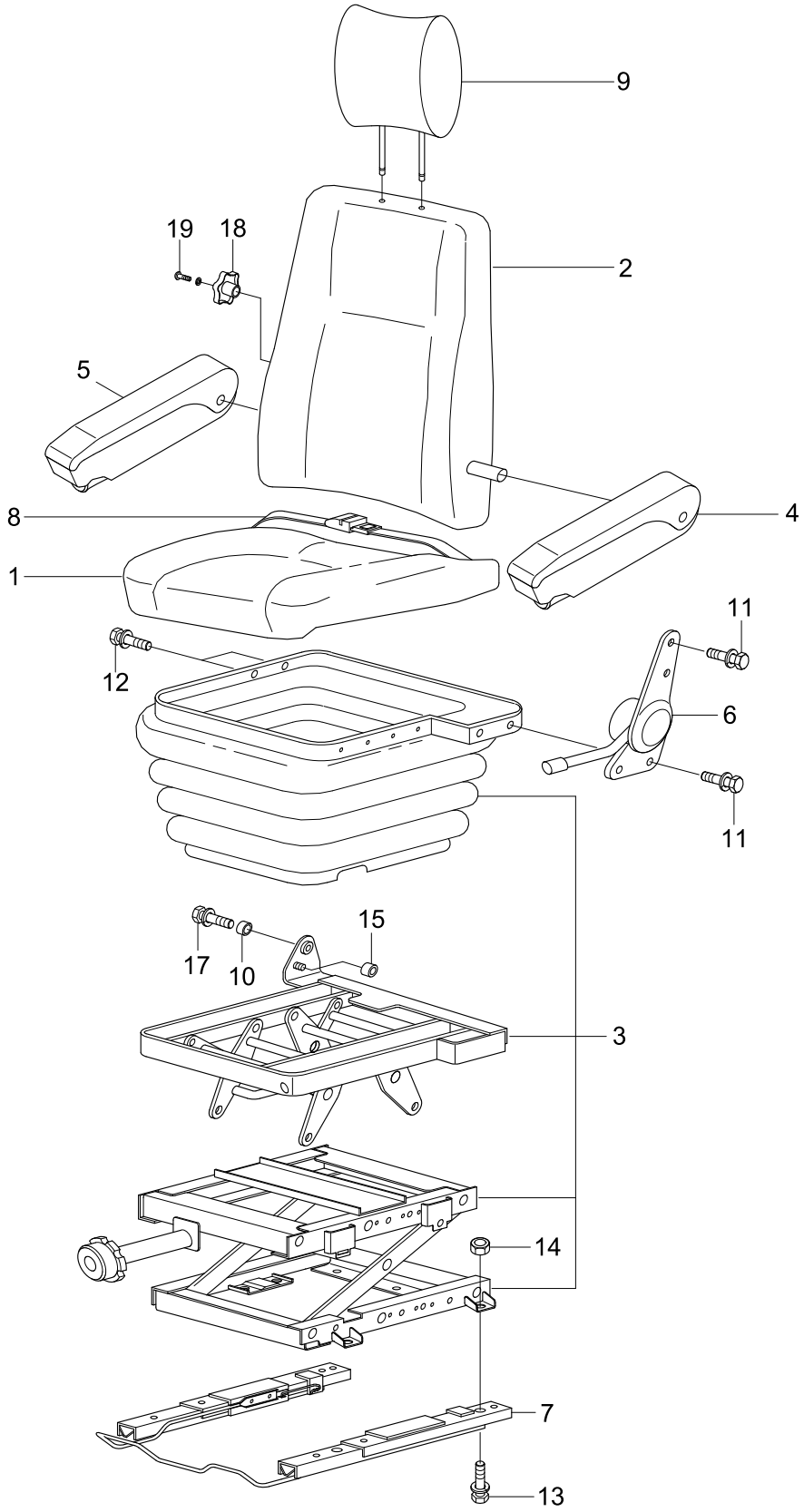

Item	Part_No	IS	Ord	T	Description	Qty	Serial_No	ITC	Remark
*	71N6-30500				SEAT ASSY	1	#1120 - #1779	B	
1	H28303-100				.CUSHION ASSY	1			
2	H28313-200				.BACK ASSY	1			
3	H28303-300				.LEG ASSY	1			
3-1	H28003-350				..DAMPER	1	#1120 -	-	NOT SHOWN
4	H28300-700				.ARM REST ASSY-LH	1			
5	H28005-700A				.ARM REST ASSY-RH	1			
6	H28003-2400				.RECLINER ASSY	1			
7	H28213-400				.TRACK ASSY	1			
8	H28003-600				.SEAT BELT ASSY	1			
9	H28303-800				.HEAD REST ASSY	1			
10	H95003-906				.BUSHING-NYLON	1			
11	W11230-10303				.BOLT	5			
12	W11286-06203				.BOLT-W/WASHER	2			
13	W11230-08183				.BOLT-W/WASHER	4			
14	W13395-08003				.NUT-FLANGE	4			
15	H95003-3462				.NUT-BUSH	1			
17	W11226-06123				.BOLT-W/WASHER	1			
18	H29313-901A				.KNOB	1			
19	W12310-05123				.BOLT & S/WASHER	1			

SEAT 3(#2551-)

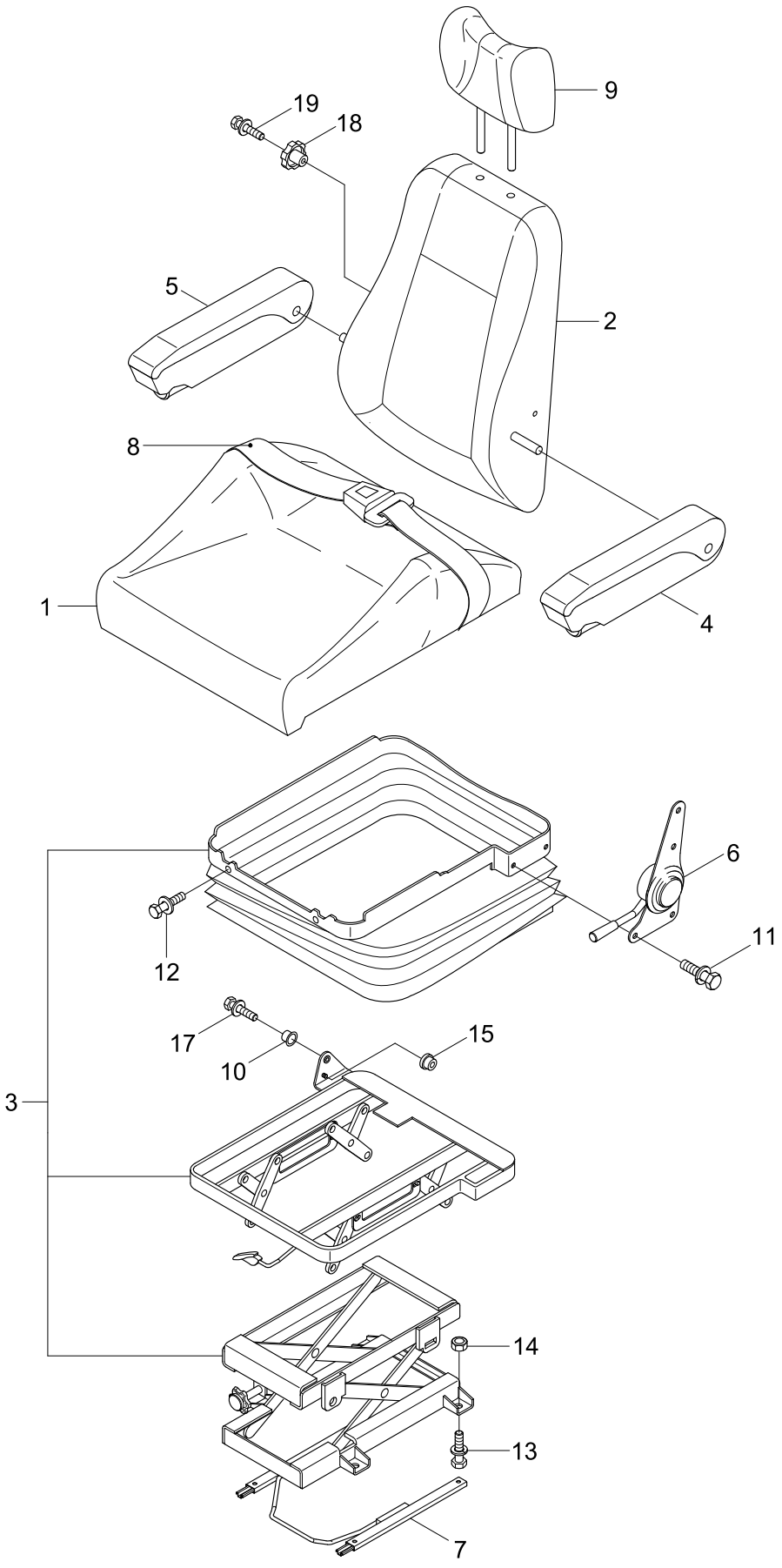

Item	Part_No	IS	Ord	T	Description	Qty	Serial_No	ITC	Remark
*	71N6-30800				SEAT ASSY	1	#2551 -	-	SUSPENSION&HEAT
1	H28335-100				.CUSHION ASSY	1			
2	H28335-200				.BACK ASSY	1			
3	H28333-300				.LEG ASSY	1			
3-1	H28333-350				..DAMPER	1			NOT SHOWN
4	H28300-700A				.ARM REST ASSY-LH	1			
5	H28305-700B				.ARM REST ASSY-RH	1			
6	H28003-240D				.RECLINER ASSY	1			
7	H28213-400B				.TRACK ASSY	1			
8	H28003-600				.SEAT BELT ASSY	1			
9	H28333-800				.HEAD REST ASSY	1			
10	H95003-906				.BUSHING-NYLON	1			
11	W11230-10303				.BOLT	6			
12	W11286-06203				.BOLT-W/WASHER	2			
13	W11230-08183				.BOLT-W/WASHER	4			
14	W13395-08003				.NUT-FLANGE	4			
15	H95003-3462				.NUT-BUSHING	1			
17	W11226-06123				.BOLT-W/WASHER	1			
18	H29313-901A				.KNOB	1			
19	W12310-05123				.BOLT & S/WASHER	1			

SEAT 4 (#2844-)

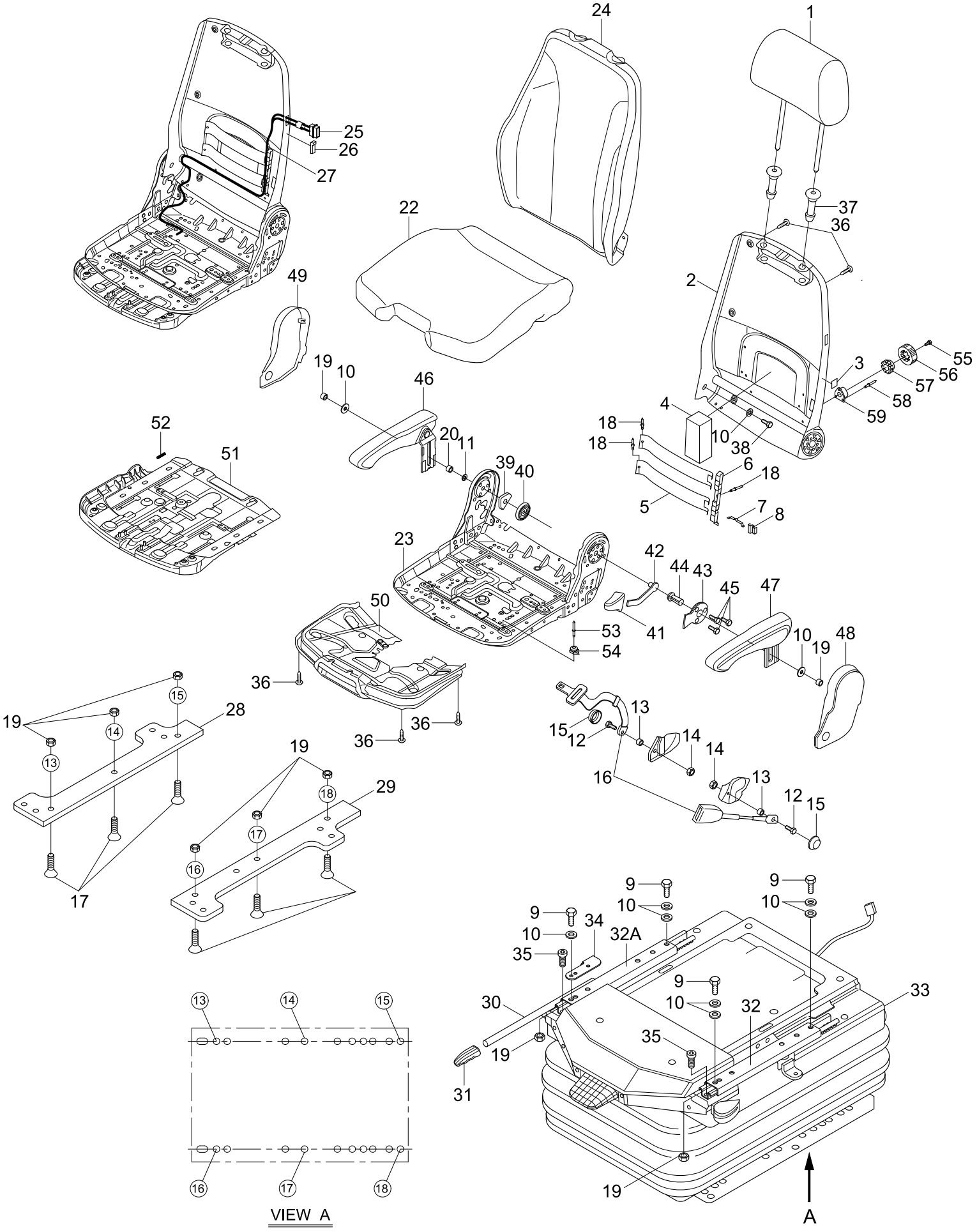
1
2
3
4
5
6
7
8
9
10
11
12
13
14
15
16
17
18
19
20
22
23
24
25
26
27
28
29
30
31
32
32A
33
34
35
36
37
38
39
40
41
42
43
44
45
46
47
48
49
50
51
52
53
54
55
56
57
58
59
A
VIEW A

Item	Part_No	IS	Ord	T	Description	Qty	Serial_No	ITC	Remark
*	71N6-30600				SEAT ASSY	1	#1709 -	-	2" AIR RIDE
	71N6-30900				SEAT ASSY	1	#2844 -	-	AIR SUSP&HEATED
1	ZGBH-00165				.HEADREST	1			
2	ZGBH-00166				.BACKREST-GS.SCR	1			
3	ZGBH-00012				.STICKER	1			
4	ZGBH-00016				.SPONGE	1			
5	ZGBH-00021				.PLATE	2			
6	ZGBH-00017				.WINKEL	1			
7	ZGBH-00019				.RODS	1			
8	ZGBH-00020				.CARRIER	1			
9	ZGBH-00042				.SCREW-HEX HEAD	4			
10	ZGBH-00015				.WASHER	10			
11	ZGBH-00024				.WASHER-BLACK	1			
12	ZGBH-00053				.SCREW	2			
13	ZGBH-00051				.BUSH	2			
14	ZGBH-00052				.NUT	2			
15	ZGBH-00050				.COVER	2			
16	ZGBH-00167				.SEAT BELT	1			
17	ZGBH-00168				.SCREW-COUNTERSUNK	6			
18	ZGBH-00107				.RIVET	3			
19	ZGBH-00023				.HEX NUT-BLACK	11			
20	ZGBH-00109				.SELF LOCK NUT	1			
21	ZGBH-00169				.WASHER	2			
22	ZGBH-00170				.CUSHION-SEAT	1			
23	ZGBH-00110				.SEAT PLATE GS	1			

Item	Part_No	IS	Ord	T	Description	Qty	Serial_No	ITC	Remark
24	ZGBH-00171				.CUSHION	1			
N25	ZGBH-00172				.SWITCH-HEATER	1			NOT
27	110489				.WASHER-BLACK	1			
26	ZGBH-00173				.STICKER	1			
27	ZGBH-00174				.HARNESS-WIRING	1			
28	ZGBH-00175				.PLATE-ADAPTER,RH	1			
29	ZGBH-00176				.PLATE-ADAPTER,LH	1			
30	ZGBH-00177				.HANDLE-LA	1			
31	ZGBH-00049				.KNOB-PLASTIC	1			
32	ZGBH-00178				.RAIL ADDITIONAL-LH	1			
32A	ZGBH-00236				.RAIL ADDITIONAL-RH	1	#2844 -	-	
33	ZGBH-00179				.SUSPENSION-MSG95G	1			
34	ZGBH-00180				.BRACKET-LA	1			
35	ZGBH-00115				.CYLINDRIC HEAD SCREW	3			
36	ZGBH-00037				.SCREW-SELF TAPPING	10			
37	ZGBH-00004				.BUSH	2			
38	ZGBH-00014				.SCREW-HEX HEAD	1			
39	ZGBH-00025				.SPRING HOLDER	1			
40	ZGBH-00026				.SPRING-LEG	1			
41	ZGBH-00033				.HANDLE	1			
42	ZGBH-00027				.LEVER	1			
43	ZGBH-00113				.PLATE	1			
44	ZGBH-00112				.SCREW	1			
45	ZGBH-00029				.SCREW	3			
46	ZGBH-00108				.ARM REST-RH	1			

Item	Part_No	IS	Ord	T	Description	Qty	Serial_No	ITC	Remark
49	113354				.NUT	2			
47	ZGBH-00030				.ARM REST-LH	1			
48	ZGBH-00181				.COVER-LH	1			
49	ZGBH-00182				.COVER-RH	1			
50	ZGBH-00038				.ADJUSTMENT-TILTING	1			
51	ZGBH-00114				.ADJUSTMENT-SEAT	1			
52	ZGBH-00039				.SPRING	1			
53	ZGBH-00034				.RIVET	4			
54	ZGBH-00035				.PROFILE-GLIDING	4			
55	ZGBH-00055				.SCREW	1			
56	ZGBH-00007				.HANDLE	1			
57	ZGBH-00008				.WHEEL-TOOLHEAD	1			
58	ZGBH-00010				.RIVET-BLIND	3			
59	ZGBH-00011				.BRAKE-SLING SPRING	1			

SEAT 3(#2551-)

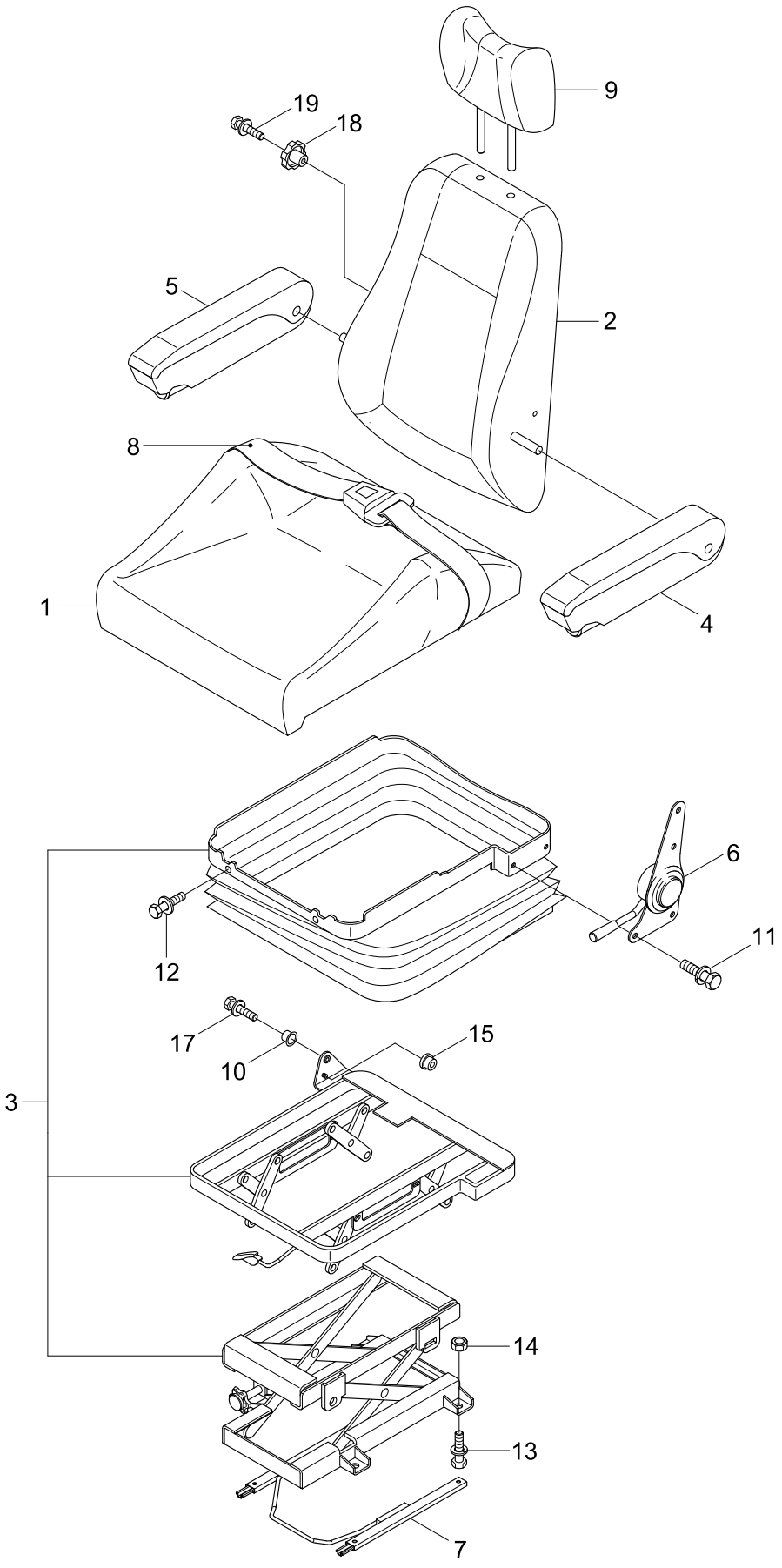

Item	Part_No	IS	Ord	T	Description	Qty	Serial_No	ITC	Remark
*	71N6-30800				SEAT ASSY	1	#2551 -	-	SUSPENSION&HEAT
1	H28335-100				.CUSHION ASSY	1			
2	H28335-200				.BACK ASSY	1			
3	H28333-300				.LEG ASSY	1			
3-1	H28333-350				..DAMPER	1			NOT SHOWN
4	H28300-700A				.ARM REST ASSY-LH	1			
5	H28305-700B				.ARM REST ASSY-RH	1			
6	H28003-240D				.RECLINER ASSY	1			
7	H28213-400B				.TRACK ASSY	1			
8	H28003-600				.SEAT BELT ASSY	1			
9	H28333-800				.HEAD REST ASSY	1			
10	H95003-906				.BUSHING-NYLON	1			
11	W11230-10303				.BOLT	6			
12	W11286-06203				.BOLT-W/WASHER	2			
13	W11230-08183				.BOLT-W/WASHER	4			
14	W13395-08003				.NUT-FLANGE	4			
15	H95003-3462				.NUT-BUSH	1			
17	W11226-06123				.BOLT-W/WASHER	1			
18	H29313-901A				.KNOB	1			
19	W12310-05123				.BOLT & S/WASHER	1			

STORAGE BOX COVER ASSY

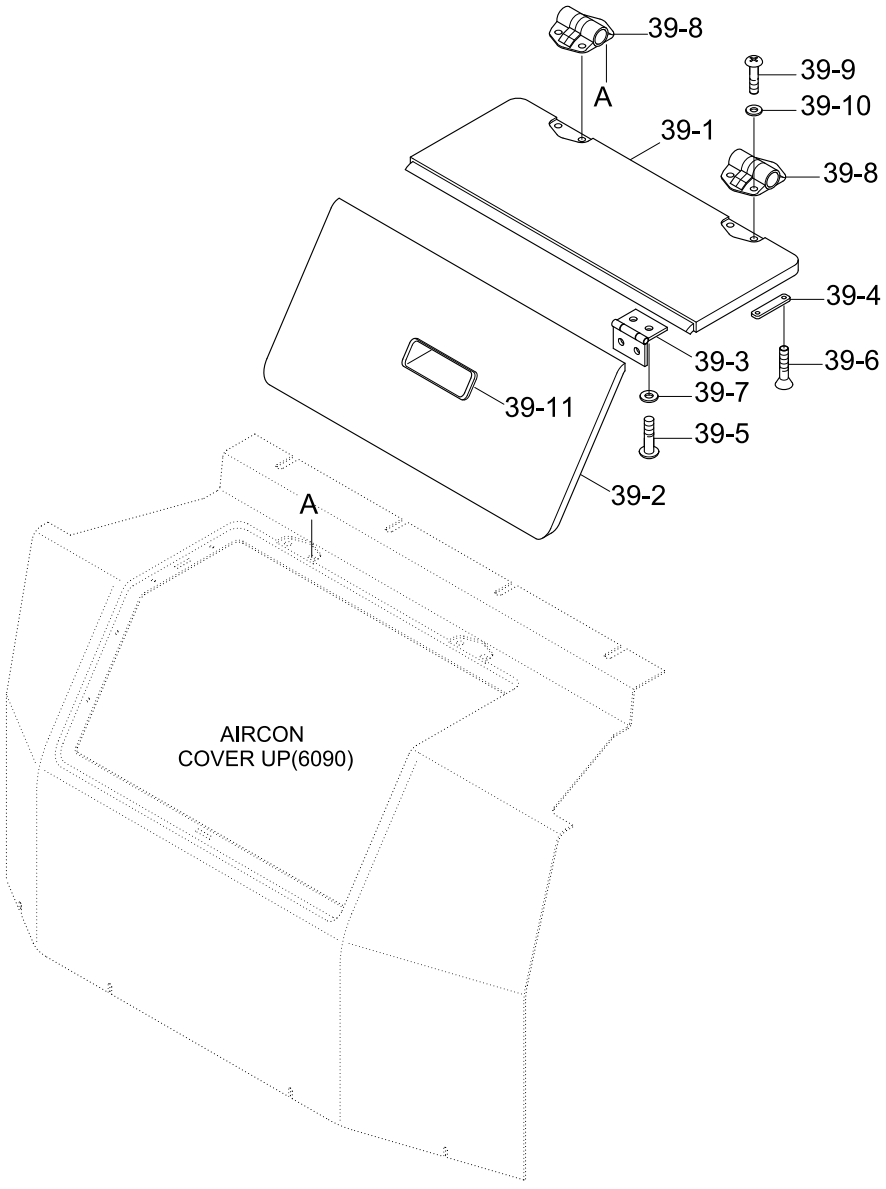

Item	Part_No	IS	Ord	T	Description	Qty	Serial_No	ITC	Remark
39	71N6-20320				S/BOX COVER ASSY	1			
39-1	71N6-21721				.S/BOX COVER-UP	1			
39-2	71N6-21731				.S/BOX COVER-LOW	1			
39-3	71N6-21740				.HINGE	2			
39-4	71N6-21750				.PLATE	3			
39-5	S161-060146				.SCREW	8			
39-6	S141-050106				.SCREW	4			
39-7	S403-062006				.WASHER-PLAIN	8			
39-8	71N6-21900				.HINGE	2			
39-9	S161-050126				.SCREW	4			
39-10	S403-052006				.WASHER-PLAIN	4			
39-11	71N6-21920				.DOOR-PULL	1			

BOTTOM PLATE MOUNTING

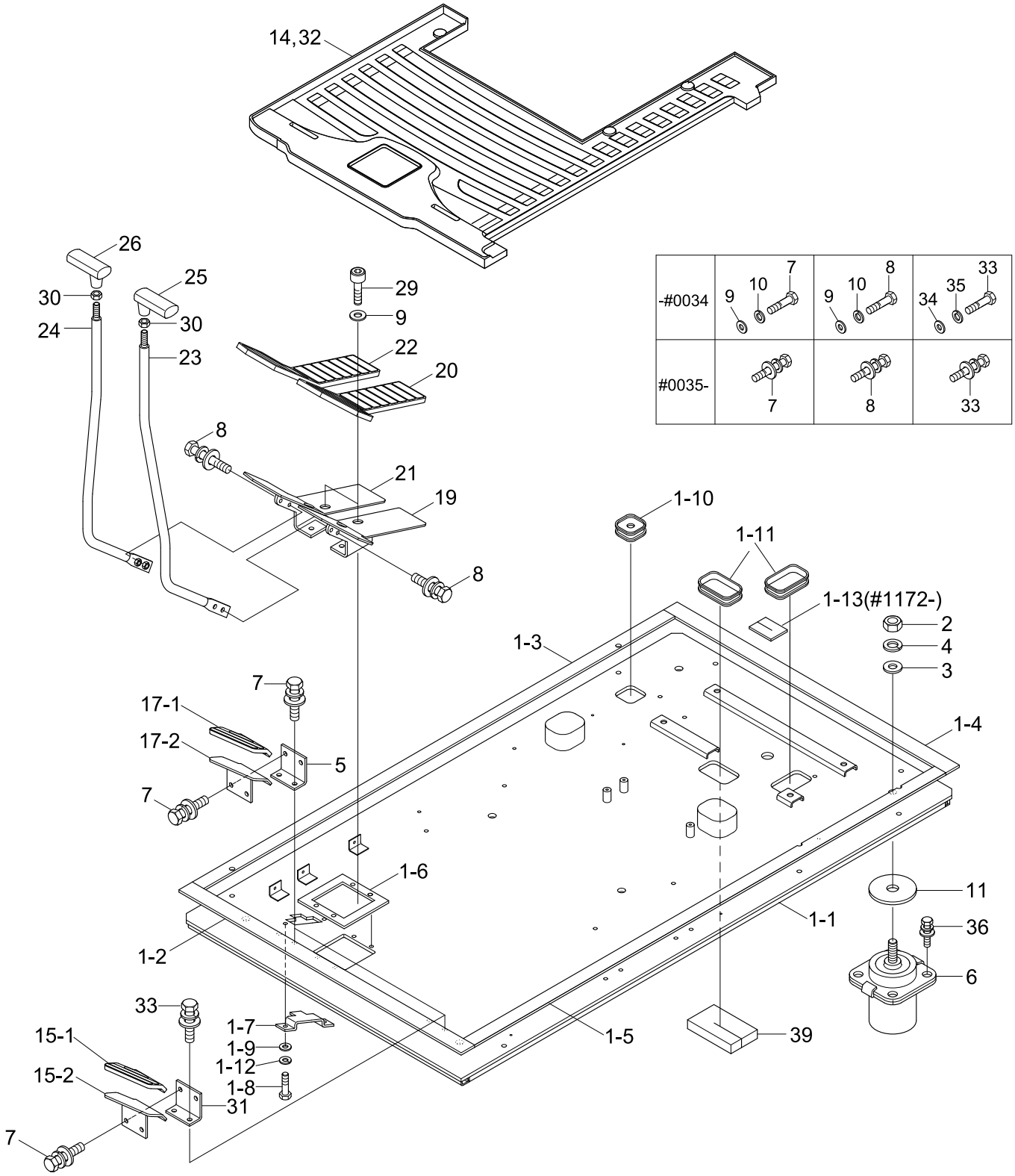

Item	Part_No	IS	Ord	T	Description	Qty	Serial_No	ITC	Remark
1	71N6-10103				BOTTOM PLATE ASSY	1	- #1129		
	71N6-10104				BOTTOM PLATE ASSY	1	#1130 - #1171	B	
	71N6-10105				BOTTOM PLATE ASSY	1	#1172 -	B	
1-1	71N6-10112				.BOTTOM PLATE WA	1	- #1129		
	71N6-10113				.BOTTOM PLATE WA	1	#1130 -	B	
1-2	71N6-11100				.RUBBER PAD	1			
1-3	71N6-11110				.RUBBER PAD	1			
1-4	71N6-11120				.RUBBER PAD	1			
1-5	71N6-11130				.RUBBER PAD	1			
1-6	71N6-11140				.RUBBER PAD	1			
1-7	71E9-10660				.COVER	1	- #1129		
	71E9-10661				.COVER	1	#1130 -	B	
1-8	S017-100166				.BOLT-HEX	2	- #1129		
	S017-100156				.BOLT-HEX	2	#1130 -	B	
1-9	S403-102006				.WASHER-PLAIN	2			
1-10	71E9-10630				.GROMMET	1			
1-11	71E9-10640				.GROMMET-A/C	2			
1-12	S411-100006				.WASHER-SPRING	4			
1-13	71N4-10940				.PAD-TRAVEL LINK	1	#1172 -	-	
2	S207-161006				NUT-HEX	6			
3	S403-162006				WASHER-PLAIN	6			
4	S411-160006				WASHER-SPRING	6			
5	71N6-10130				BRACKET-FOOT REST	1			STD
6	71N6-10300				MOUNT-VISCOUS	6			
7	S017-100256				BOLT-HEX	8	- #1000		STD

Item	Part_No	IS	Ord	T	Description	Qty	Serial_No	ITC	Remark
7	S037-102516				BOLT-W/WASHER	8	#1001 - #1263	D	
	S037-102526				BOLT-W/WASHER	8	#1264 -	D	
8	S017-100306				BOLT-HEX	4	- #1000		
	S037-103016				BOLT-W/WASHER	4	#1001 - #1263	D	
	S037-103026				BOLT-W/WASHER	4	#1264 -	D	
9	S403-102006				WASHER-PLAIN	16	- #1263		
					WASHER-PLAIN	4	#1264 -	A	
10	S411-100002				WASHER-SPRING	12	- #1263	-	STD
11	71E9-10650				WASHER-REBOUND	6			
14	71N6-10141				MAT-FLOOR	1			STD
15	71N6-10310				FOOT REST ASSY-LH	1	#0001 -	-	
15-1	71N6-10150				.BRACKET-FOOT REST,LH	1	#0001 -	-	
15-2	71N6-10161				.RUBBER-FOOT REST,LH	1	#0001 -	-	
17	71N6-10320				FOOT REST ASSY-RH	1	#0001 -	-	STD
17-1	71N6-10170				.BRACKET-FOOT REST,RH	1	#0001 -	-	STD
17-2	71N6-10181				.RUBBER-FOOT REST,RH	1	#0001 -	-	STD
19	71N6-10190				BRACKET-PEDAL,LH	1			
20	71N6-10201				RUBBER-PEDAL,LH	1			
21	71N6-10210				BRACKET-PEDAL,RH	1			
22	71N6-10221				RUBBER-PEDAL,RH	1			
23	71N6-10230				LEVER-TRAVEL,LH	1			
24	71N6-10240				LEVER-TRAVEL,RH	1			
25	71N6-10251				KNOB-LEVER,LH	1			
26	71N6-10261				KNOB-LEVER,RH	1			
29	S109-100206				BOLT-SOCKET	4			

Item	Part_No	IS	Ord	T	Description	Qty	Serial_No	ITC	Remark
30	S206-101006				NUT-HEX	2			
31	71N6-10130				BRACKET-FOOT REST	1			
32	71N6-10280				MAT-FLOOR	1			ADJUST OR 2WAY
	71N6-10290				MAT-FLOOR	1			ADJUST & 2WAY
33	S017-100256				BOLT-HEX	4	- #1000		
	S037-102516				BOLT-W/WASHER	4	#1001 - #1263	D	
	S037-102526				BOLT-W/WASHER	4	#1264 -	D	
34	S403-102006				WASHER-PLAIN	12	- #1263	-	
35	S411-100002				WASHER-SPRING	8	- #1263	-	
36	S037-103022				BOLT-W/WASHER	24			
39	71N4-10970				SPONGE-INSULATION	1	#1172 -	-	

BOTTOM PLATE MOUNTING(OPT, #2936-)

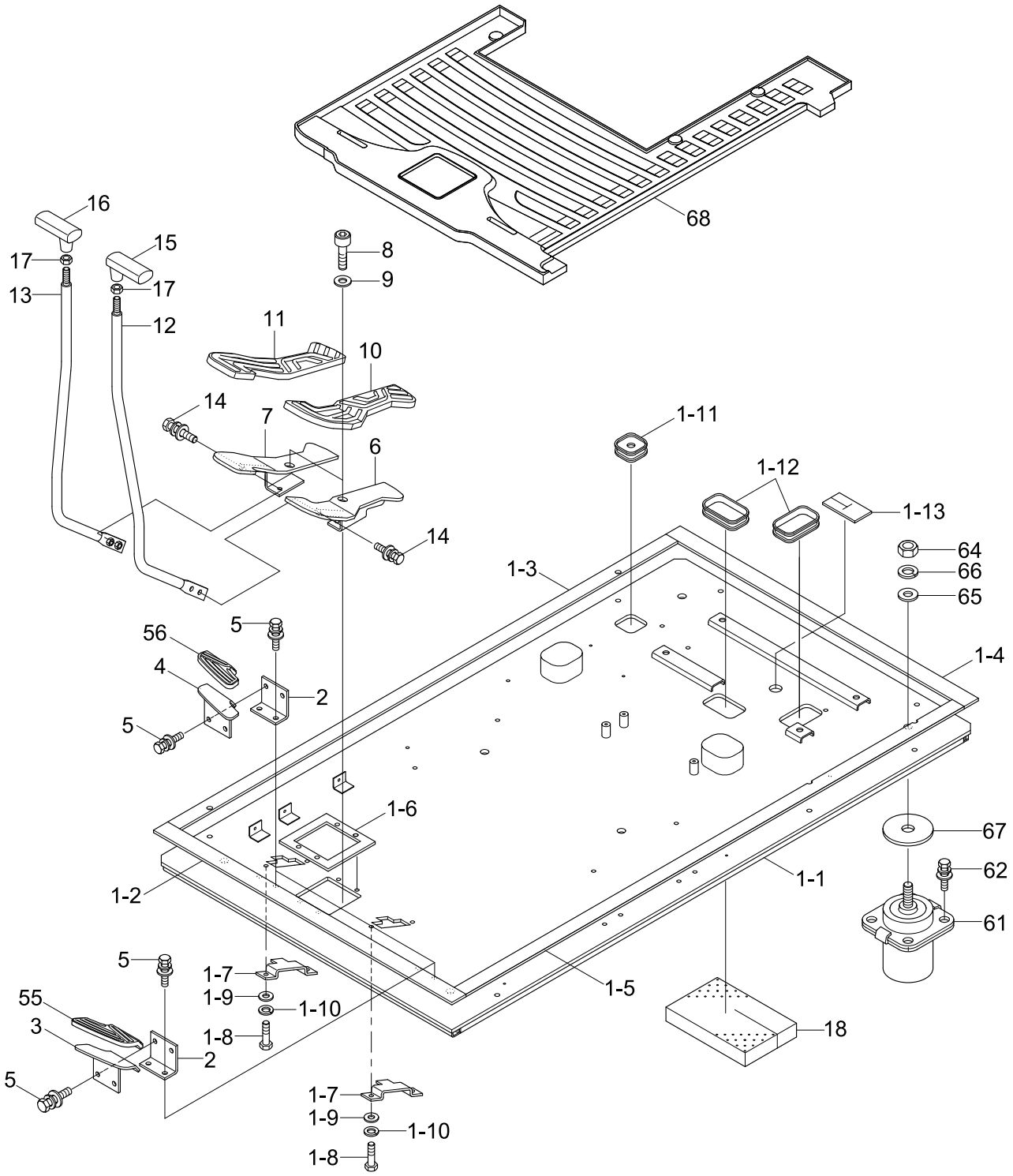

Item	Part_No	IS	Ord	T	Description	Qty	Serial_No	ITC	Remark
*	@				BOTTOM PLATE SUB ASSY	1	#2936 -	-	NOT
1	71N6-10105				BOTTOM PLATE ASSY	1			
1-1	71N6-10113				.BOTTOM PLATE WA	1			
1-2	71N6-11100				.PAD-RUBBER	1			
1-3	71N6-11110				.PAD-RUBBER	1			
1-4	71N6-11120				.PAD-RUBBER	1			
1-5	71N6-11130				.PAD-RUBBER	1			
1-6	71N6-11140				.RUBBER PAD	1			
1-7	71E9-10661				.COVER	1			
1-8	S017-100156				.BOLT-HEX	4			
1-9	S403-10200B				.WASHER-PLAIN	4			
1-10	S411-100006				.WASHER-SPRING	4			
1-11	71E9-10630				.GROMMET	1			
1-12	71E9-10640				.GROMMET	2			
1-13	71N4-10940				.PAD-TRAVEL LINK	1			
2	71N6-10130				BRACKET-FOOT REST	2			
					BRACKET-FOOT REST	1			W/PEDAL,BREAKER
3	73N6-10310				FOOT REST-LH	1			
4	73N6-10320				FOOT REST-RH	1			
5	S037-102526				BOLT-W/WASHER	8			
					BOLT-W/WASHER	4			W/PEDAL,BREAKER
6	73N6-10190				BRACKET-PADAL(LH)	1			
7	73N6-10210				BRACKET-PEDAL(RH)	1			
8	S109-100206				BOLT-SOCKET	4			
9	S403-10200B				WASHER-PLAIN	4			

Item	Part_No	IS	Ord	T	Description	Qty	Serial_No	ITC	Remark
10	73N6-20260				PEDAL RUBBER-LH	1			
11	73N6-20270				PEDAL RUBBER-RH	1			
12	71N6-10230				LEVER-TRAVEL,LH	1			
13	71N6-10240				LEVER-TRAVEL,RH	1			
14	S037-103026				BOLT W/WASHER-HEX	4			
15	71N6-10251				KNOB-LEVER,LH	1			
16	71N6-10261				KNOB-LEVER,RH	1			
17	S206-10100B				NUT-HEX	2			
18	71N4-10970				SPONGE-INSULATION	1			
55	73N6-20240				RUBBER-FOOT REST(LH)	1			
56	73N6-20250				RUBBER-FOOT REST(RH)	1			
61	71N6-10300				VISCOUS MOUNT	6			
62	S037-103026				BOLT W/WASHER-HEX	24			
64	S205-16100B				NUT-HEX	6			
65	S403-162006				WASHER-PLAIN	6			
66	S411-160006				WASHER-SPRING	6			
67	71E9-10650				WASHER-REBOUND	6			
68	71N6-10141				MAT-FLOOR	1			
	71N6-10280				MAT-FLOOR	1			BREAKER
	71N6-10290				MAT-FLOOR	1			2 WAY

PROTECTOR(R140LCM-7)

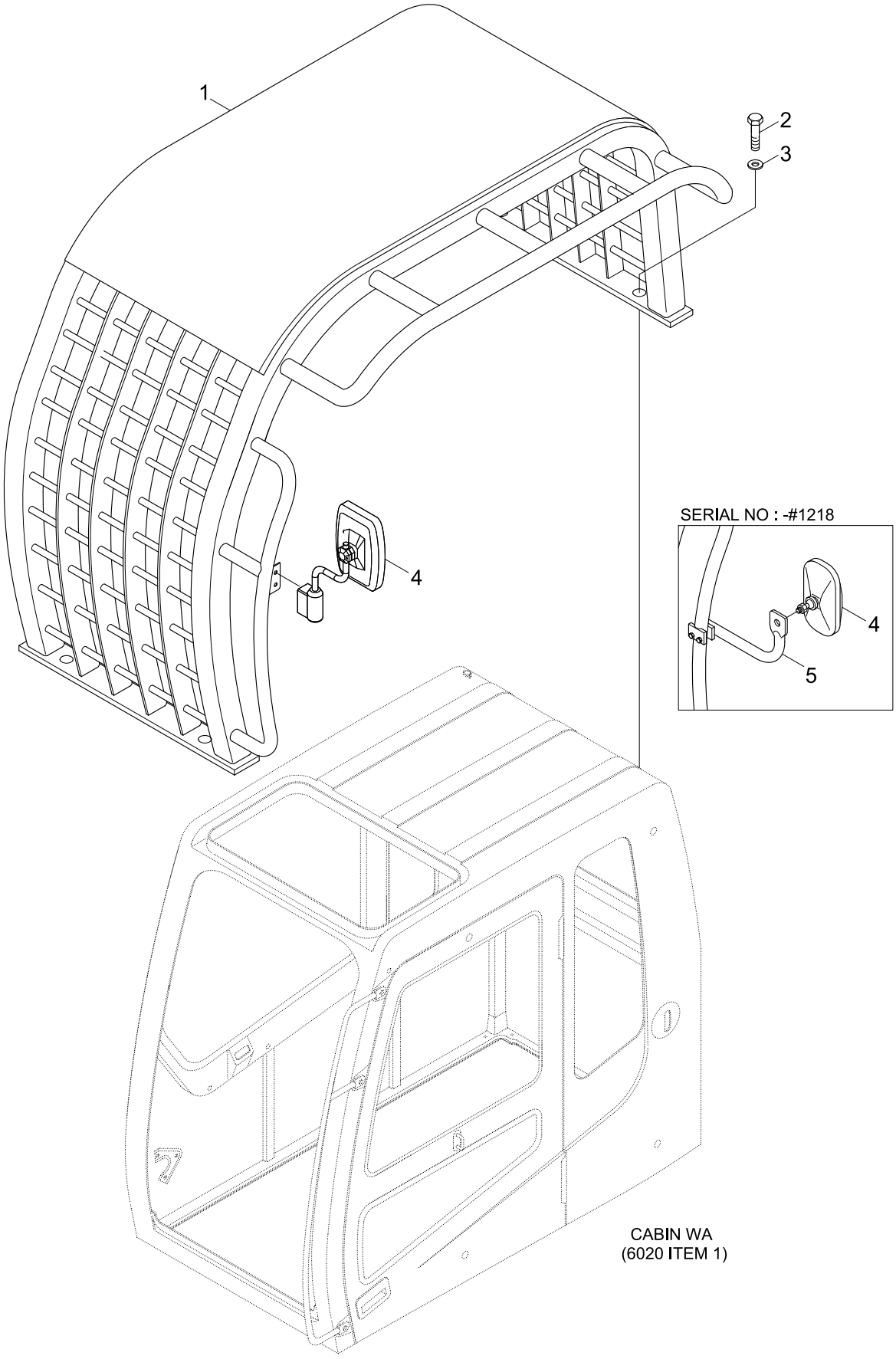

Item	Part_No	IS	Ord	T	Description	Qty	Serial_No	ITC	Remark
*	@				PROTECTOR GROUP		#1083 -	-	NOT
1	71N6-90110				PROTECTOR WA	1			
2	S017-200502				BOLT-HEX	4			
3	S441-200002				WASHER-HARDENED	4			
4	71N8-46000				MIRROR	1	- #1218		
	71N8-47000				MIRROR & STAY ASSY-LH	1	#1219 - #2947	D	
	71N8-47000BG				MIRROR & STAY ASSY-LH	1	#2948 -	D	
5	71N6-03552				STAY-CAB	1	- #1218	-	

COWLING(-#1000)

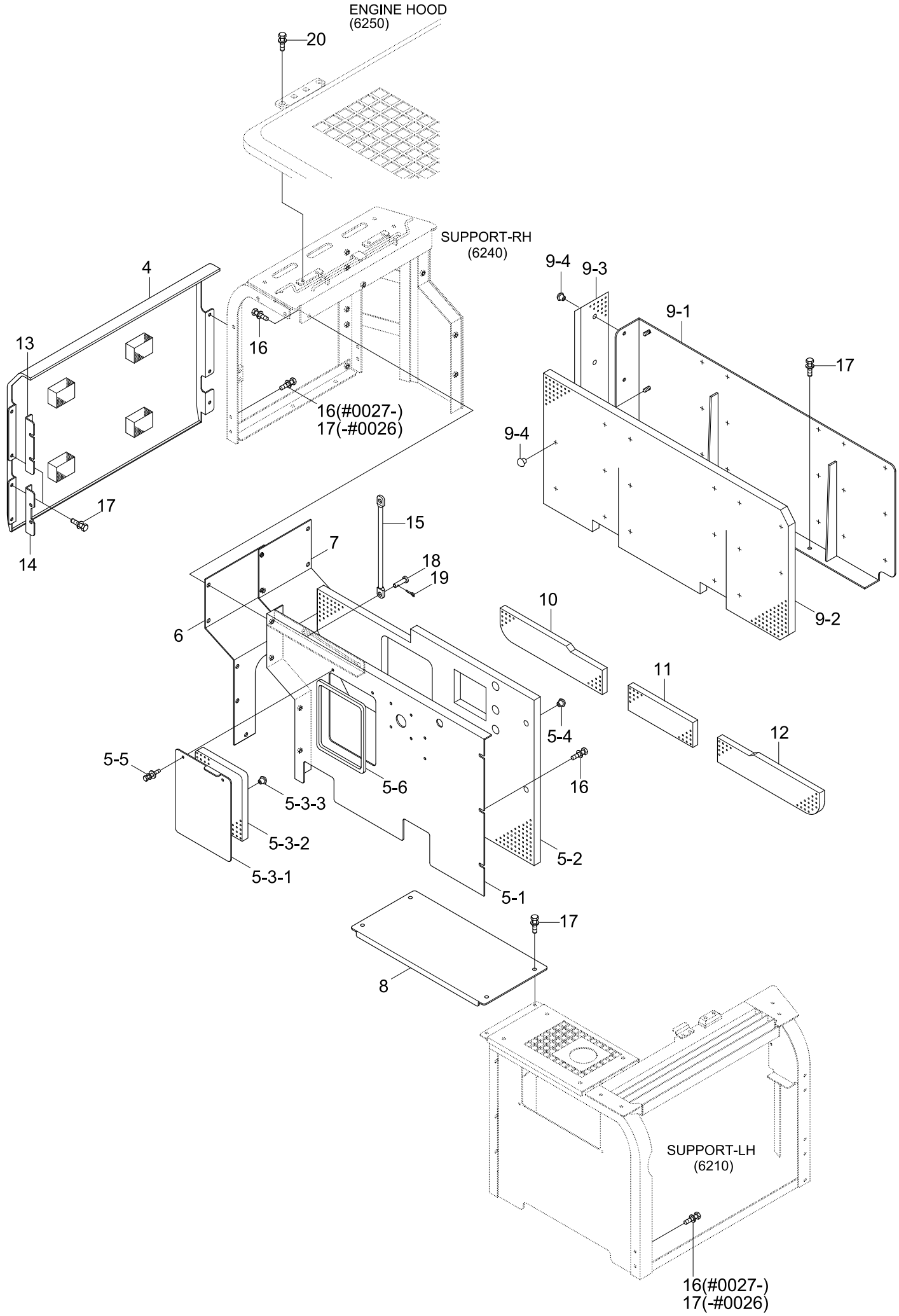

Item	Part_No	IS	Ord	T	Description	Qty	Serial_No	ITC	Remark
*	@				COWLING	1	- #1000	-	NOT
4	71N4-53160				COVER ASSY-TANK	1			
5	71N4-54102				SCREEN ASSY	1			
5-1	71N4-54112				.SCREEN WA	1			
5-2	71N4-54122				.SPONGE	1			
5-3	71N4-54131				.COVER ASSY-SCREEN	1			
5-3-1	71N4-54140				..COVER WA-SCREEN	1			
5-3-2	71N4-54150				..SPONGE-S/COVER	1			
5-3-3	71EM-51580				..CAP-STUD BOLT	4			
5-4	71EM-51580				.CAP-STUD BOLT	17			
5-5	S037-122022				.BOLT-W/WASHER	2			
5-6	S791-016014				.GROMMET-PLATE	1			
6	71N4-54202				SCREEN-PUMP(FR)	1			
7	71N4-54302				SCREEN-PUMP(RR)	1			
8	71N4-55200				HOOD ASSY-MCV	1			
9	71N4-56101				SCREEN ASSY-CWT	1	- #0026		
	71N4-56102				SCREEN ASSY-CWT	1	#0027 -	D	
9-1	71N4-56111				.SCREEN WA-CWT	1	- #0026		
	71N4-56112				.SCREEN WA-CWT	1	#0027 -	D	
9-2	71N4-56161				.SPONGE-CWT	1	- #0026		
	71N4-56162				.SPONGE-CWT	1	#0027 -	D	
9-3	71N4-56170				.SPONGE-PUMP	1	- #0026		
	71N4-56171				.SPONGE-PUMP	1	#0027 -	D	
9-4	71EM-51580				.CAP-STUD BOLT	21			
10	71N4-56200				SPONGE-UPPER(RH)	1			

Item	Part_No	IS	Ord	T	Description	Qty	Serial_No	ITC	Remark
11	71N4-56300				SPONGE-UPPER(CENTER)	1			
12	71N4-56400				SPONGE-UPPER(LH)	1			
13	71N8-57101				SUPPORT-T/COVER	1			
14	71N8-57200				SUPPORT-T/COVER	1			
15	71EM-55150				STAY	1			
16	S037-122052				BOLT-W/WASHER	24	- #0026		
					BOLT-W/WASHER	32	#0027 -	A	
17	S037-122552				BOLT-W/WASHER	22	- #0026		
					BOLT-W/WASHER	14	#0027 -	A	
18	S491-080302				PIN-CLEVIS	1			
19	S501-080002				PIN-SELF LOCKING	2			
20	S037-123052				BOLT-W/WASHER	8	#0226 -	-	

COWLING

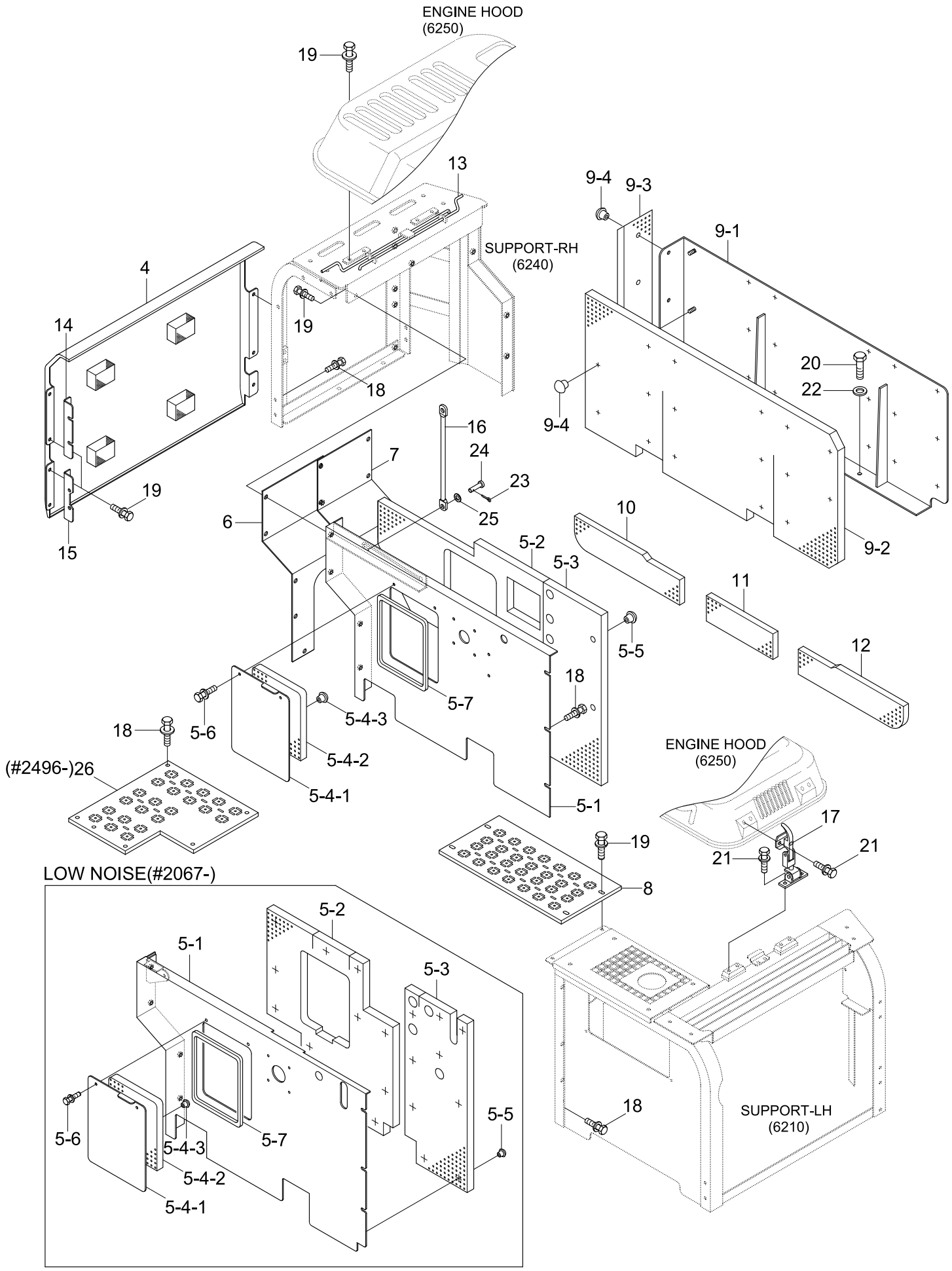
ENGINE HOOD
(6250)
19
13
SUPPORT-RH
(6240)
4
14
19
18
16
24
23
25
7
6
19
15
9-4
9-3
9-1
20
22
9-4
9-2
10
5-2
5-3
11
5-5
12
18
5-7
5-6
5-4-3
5-4-2
5-4-1
18
(#2496-)26
5-1
ENGINE HOOD
(6250)
17
21
21
19
8
LOW NOISE(#2067-)
5-2
5-1
5-3
5-6
5-4-3
5-7
5-5
5-4-2
5-4-1
18
SUPPORT-LH
(6210)

Item	Part_No	IS	Ord	T	Description	Qty	Serial_No	ITC	Remark
*	@				COWLING	1	#1001 -	D	NOT
4	71N4-53160				COVER ASSY-TANK	1			
5	72N4-54101				SCREEN ASSY-MAIN	1			ROTARY PUMP
5-1	72N4-54111				.SCREEN WA	1			
5-2	72N4-54121				.SPONGE	1			
5-3	72N4-54140				.SPONGE	1			
5-4	71N4-54131				.COVER ASSY-SCREEN	1			
5-4-1	71N4-54140				..COVER WA-SCREEN	1			
5-4-2	71N4-54150				..SPONGE-S/COVER	1			
5-4-3	71EM-51580				..CAP-STUD BOLT	4			
5-5	71EM-51580				.CAP-STUD BOLT	17			
5-6	S037-122056				.BOLT-W/WASHER,HEX	2			
5-7	S791-016014				.GROMMET-PLATE	1			
6	72N4-54300				SCREEN-PUMP(FR)	1	- #1005		
	72N4-54200				SCREEN-PUMP(FR)	1	#1006 -	B	
7	72N4-54301				SCREEN-PUMP(RR)	1			
8	72N4-55200				HOOD WA-MCV	1	- #2308		STD
	72N4-55300				HOOD WA-MCV	1	#2309 - #2494	D	STD
	72N4-55301				HOOD WA-MCV	1	#2495 -	D	STD
	73N4-55200				HOOD WA-MCV	1	#1083 - #2494	-	HIGH WALKER
	73N4-55201				HOOD WA-MCV	1	#2495 -	D	HIGH WALKER
9	71N4-56102				SCREEN ASSY-CWT	1			
9-1	71N4-56112				.SCREEN WA-CWT	1			
9-2	71N4-56162				.SPONGE-CWT	1			
9-3	71N4-56171				.SPONGE-PUMP	1			

Item	Part_No	IS	Ord	T	Description	Qty	Serial_No	ITC	Remark
9-4	71EM-51580				.CAP-STUD BOLT	21			
10	71N4-56200				SPONGE-UPPER(RH)	1			
11	71N4-56300				SPONGE-UPPER(CENTER)	1			
12	72N4-56400				SPONGE-UPPER(LH)	1			
13	72N4-56500				TORSION BAR	1	- #2947		
	72N4-56500BG				TORSION BAR	1	#2948 -	D	
14	71N8-57101				SUPPORT-T/COVER	1			
15	71N8-57200				SUPPORT-T/COVER	1			
16	71EG-54960				STAY-ENG HOOD	1	- #2947		
	71EG-54960BG				STAY-ENG HOOD	1	#2948 -	D	
17	71N6-56400				CATCH ASSY	2	- #2947		
	71N6-56400BG				CATCH ASSY	2	#2948 -	D	
18	S037-122056				BOLT-W/WASHER,HEX	34	- #2494		
					BOLT-W/WASHER,HEX	39	#2495 -	A	
19	S037-122556				BOLT W/WASHER-HEX	21			
20	S017-16025D				BOLT-HEX	2			
21	S035-082526				BOLT W/WASHER-HEX	8			
22	S403-162006				WASHER-PLAIN	4			
23	S491-100252				PIN-CLEVIS	2			
24	S501-100002				PIN-SELF LOCKING	2			
25	S441-120002				WASHER-HARDENED	4	#1006 -	-	
26	74N4-59100				FOOT BOARD WA(B)	1	#2495 -	-	
5	72N4-59100				SCREEN ASSY	1	#1495 -	-	INLINE PUMP
5-1	72N4-59110				.SCREEN WA	1	#1495 -	-	
5-2	72N4-59120				.SPONGE	1	#1495 - #2066	-	

Item	Part_No	IS	Ord	T	Description	Qty	Serial_No	ITC	Remark
5-2	72N4-59121				.SPONGE	1	#2067 -	D	
5-3	72N4-54140				.SPONGE	1	#1495 - #2066	-	
	72N4-54141				.SPONGE	1	#2067 -	D	
5-4	72N4-59130				.COVER ASSY	1	#1495 -	-	
5-4-1	72N4-59140				..COVER WA	1	#1495 -	-	
5-4-2	72N4-59150				..SPONGE	1	#1495 -	-	
5-4-3	71EM-51580				..CAP-STUD BOLT	4	#1495 -	-	
5-5	71EM-51580				.CAP-STUD BOLT	20	#1495 -	-	
5-6	S037-122056				.BOLT-W/WASHER,HEX	2	#1495 -	-	
5-7	S791-016014				.GROMMET-PLATE	1	#1495 -	-	

SIDE COWL ASSY LH(-#1000)

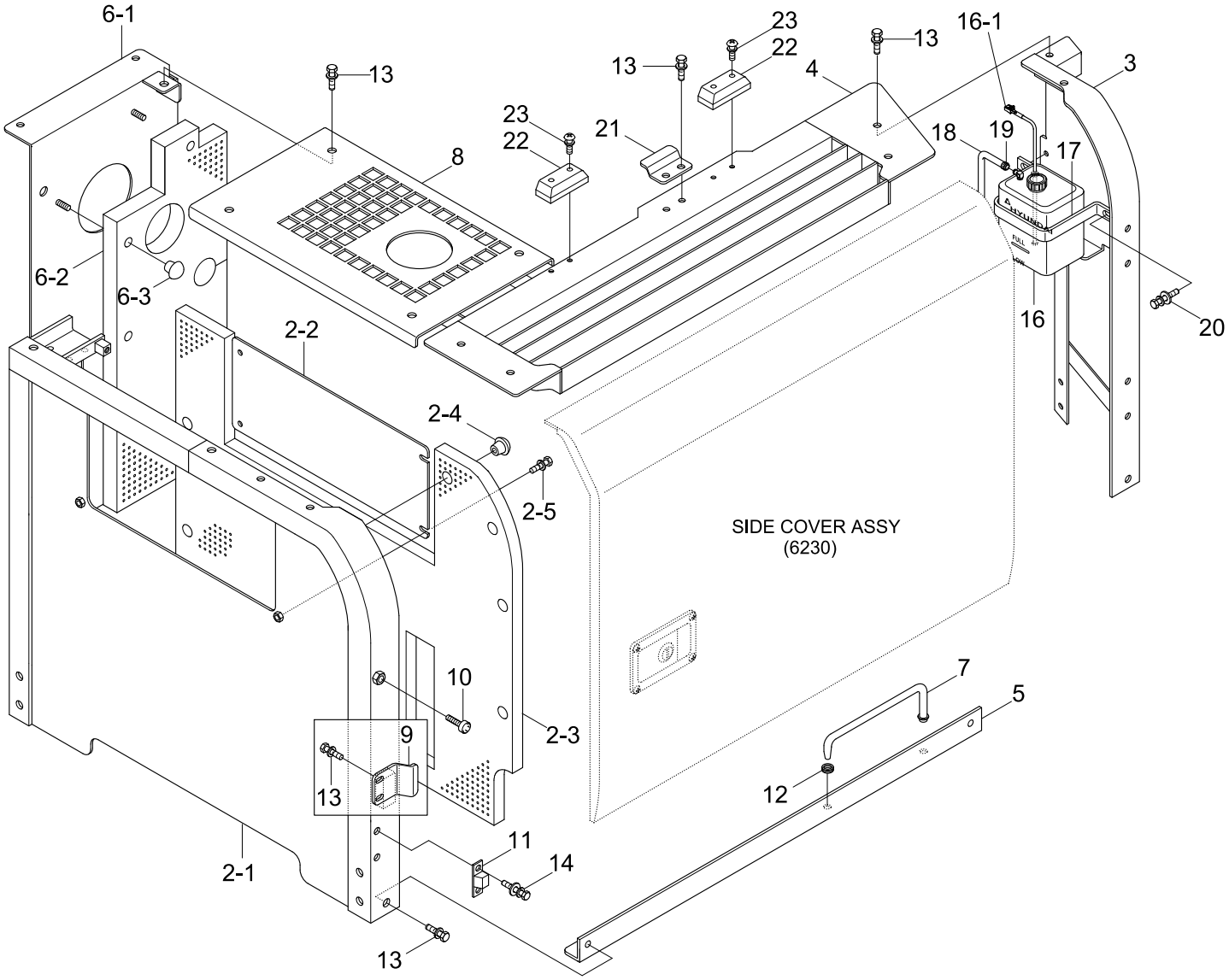

Item	Part_No	IS	Ord	T	Description	Qty	Serial_No	ITC	Remark
*	71N4-52002				SIDE COWL ASSY-LH	1	- #0053		STD
	71N4-52003				SIDE COWL ASSY-LH	1	#0054 - #1000	D	STD
	71N4-57000				SIDE COWL ASSY-LH	1	#0094 - #1000	-	SMALL CLEANER
	71N4-82000				SIDE COWL ASSY-LH	1	#0226 - #1000	-	AIR VENT TYPE
1	@				.SIDE COVER ASSY-LH	1			NOT
2	71N4-52300				.SUPPORT ASSY-LH(FR)	1			
2-1	71N4-52310				..SUPPORT WA-LH(FR)	1			
2-2	71N8-52322				..COVER-PLATE	1			
2-3	71N4-52330				..SPONGE	1	- #0026		
	71N4-52331				..SPONGE	1	#0027 -	A	
2-4	71EM-51580				..CAP-STUD BOLT	10			
2-5	S037-122552				..BOLT-W/WASHER	4	- #0026		
	S037-122052				..BOLT-W/WASHER	4	#0027 -	B	
3	71N4-52502				.SUPPORT WA-LH(RR)	1			
4	71N4-52602				.HOOD WA-R/D	1	- #0053		
	71N4-52603				.HOOD WA-R/D	1	#0054 -	D	
5	71N4-52702				.SUPPORT-LH/BOTTOM	1			
6	71N4-52901				.SCREEN ASSY-MCV	1			
6-1	71N4-52911				..SCREEN-MCV	1			
6-2	71N4-52921				..SPONGE	1			
6-3	71EM-51580				..CAP-STUD BOLT	8			
7	71N8-52950				.STAY-SIDE COVER	1			
8	71N4-55101				.HOOD-A/C	1			
9	71N8-52492				.PLATE-LOCK	1			
10	71EH-13150				.RUBBER-BUMPER	1			

Item	Part_No	IS	Ord	T	Description	Qty	Serial_No	ITC	Remark
11	71EE-53540				.STOPPER-B	1			
12	S681-100400				.GROMMET	1			
13	S037-122552				.BOLT-W/WASHER	21			
14	S035-062022				.BOLT-W/WASHER	2			
15	@				.AIR CLEANER ASSY	1			NOT
16	11EN-42330				.TANK-RESERVOIR	1			
16-1	11EN-42400				..SENSOR-RESERVOIR	1			
17	11ER-42530				.PLATE-CLAMP	2	- #0026		
					.PLATE-CLAMP	1	#0027 -	A	
18	11E3-4011	10			.HOSE	1			
19	S520-015000				.CLAMP-HOSE	1			
20	S035-082022				.BOLT-W/WASHER	2			STD
21	71N4-52930				.PLATE-LOCK	1			
22	71N6-51140				.STOPPER-A	1	- #0053		
					.STOPPER-A	2	#0054 -	A	
23	S132-063052				.SCREW-W/WASHER	2	- #0053		
					.SCREW-W/WASHER	4	#0054 -	A	

SIDE COWL ASSY-LH(#1001-, TIER II)

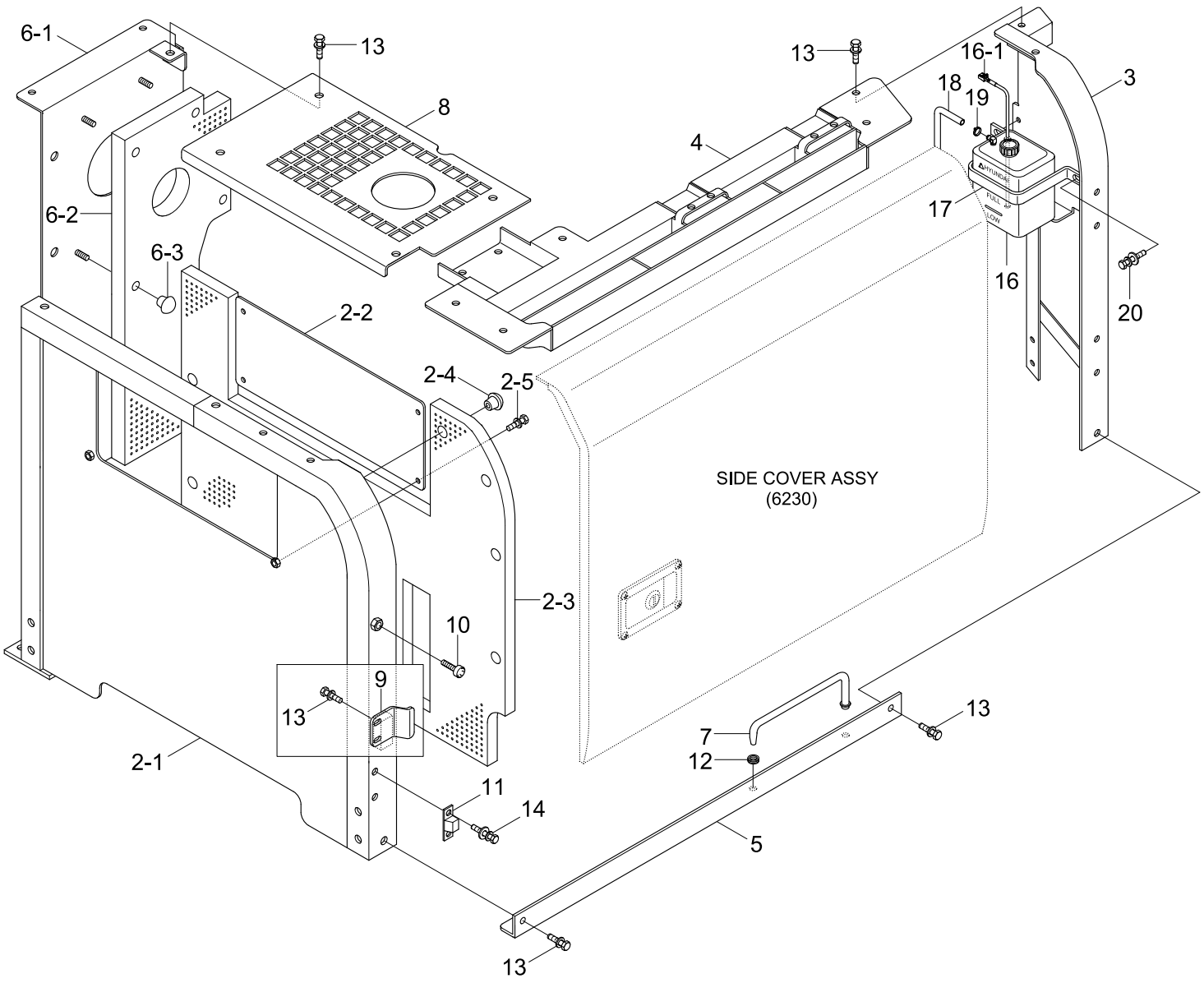

Item	Part_No	IS	Ord	T	Description	Qty	Serial_No	ITC	Remark
	72N4-52001				SIDE COWL ASSY-LH	1	#1001 - #1005	D	STD
	72N4-52002				SIDE COWL ASSY-LH	1	#1006 - #2308	D	STD
	72N4-52003				SIDE COWL ASSY-LH	1	#2309 - #2416	D	STD
	72N4-52003Y				SIDE COWL ASSY-LH	1	#2417 - #2607	D	STD
	72N4-52004				SIDE COWL ASSY-LH	1	#2608 -	B	STD
	72N4-57000				SIDE COWL ASSY-LH	1	#1006 - #2308	-	SMALL CLEANER
	72N4-57001				SIDE COWL ASSY-LH	1	#2309 - #2416	D	SMALL CLEANER
	72N4-57001Y				SIDE COWL ASSY-LH	1	#2417 -	D	SMALL CLEANER
	72N4-82000				SIDE COWL ASSY-LH	1	#1006 - #2308	-	AIR VENT TYPE
	72N4-82001				SIDE COWL ASSY-LH	1	#2309 - #2416	D	AIR VENT TYPE
*	72N4-82001Y				SIDE COWL ASSY-LH	1	#2417 - #2607	D	AIR VENT TYPE
	72N4-82002				SIDE COWL ASSY-LH	1	#2608 -	B	AIR VENT TYPE
	73N4-52000				SIDE COWL ASSY-LH	1	#1083 - #2607	-	HIGH WALKER
	73N4-52001				SIDE COWL ASSY-LH	1	#2608 -	B	HIGH WALKER
	72N4-82100				SIDE COWL ASSY-LH	1	#1340 - #2308	-	A/VENT,SMALL
	72N4-82101				SIDE COWL ASSY-LH	1	#2309 - #2416	D	A/VENT,SMALL
	72N4-82101Y				SIDE COWL ASSY-LH	1	#2417 -	D	A/VENT,SMALL
	72N4-85000				SIDE COWL ASSY-LH	1	#2067 - #2308	-	LOUVER TYPE
	72N4-85001				SIDE COWL ASSY-LH	1	#2309 - #2416	D	LOUVER TYPE
	72N4-85001Y				SIDE COWL ASSY-LH	1	#2417 - #2607	D	LOUVER TYPE
	72N4-85002				SIDE COWL ASSY-LH	1	#2608 -	B	LOUVER TYPE
1	@				.SIDE COVER ASSY-LH	1			NOT
2	72N4-52300				.SUPPORT ASSY-LH(FR)	1	- #1005		STD
	72N4-62300				.SUPPORT ASSY-LH(FR)	1	#1006 -	B	STD
2-1	72N4-52310				..SUPPORT WA-LH(FR)	1	- #1005		

Item	Part_No	IS	Ord	T	Description	Qty	Serial_No	ITC	Remark
2-1	72N4-62310				..SUPPORT WA-LH(FR)	1	#1006 -	B	
2-2	71N8-52322				..PLATE-COVER	1			
2-3	72N4-52330				..SPONGE	1	- #1005		
	72N4-62330				..SPONGE	1	#1006 -	B	
2-4	71EM-51580				..CAP-STUD BOLT	12			
2-5	S037-122052				..BOLT-W/WASHER	4			
2	73N4-52310				.SUPPORT WA-LH(FR)	1	#1083 -	-	HIGH WALKER
3	72N4-52500				.SUPPORT WA-LH(RR)	1			
4	72N4-52601				.HOOD WA-R/D	1	- #2308		STD
	72N4-52602				.HOOD WA-R/D	1	#2309 -	D	STD
	73N4-52600				.HOOD WA-R/D	1	#1083 -	-	HIGH WALKER
5	71N4-52702				.SUPPORT-LH/BOTTOM	1	- #1005		STD
	71N4-62700				.SUPPORT-LH/BOTTOM	1	#1006 -	B	STD
	73N4-52700				.SUPPORT-LH/BOTTOM	1	#1083 -	-	HIGH WALKER
6	72N4-52900				.SCREEN ASSY-MCV	1	- #1005		STD
	72N4-52901				.SCREEN ASSY-MCV	1	#1006 - #2308	B	STD
	72N4-52902				.SCREEN ASSY-MCV	1	#2309 -	D	STD
6-1	72N4-52910				..SCREEN-MCV	1	- #1005		
	72N4-52911				..SCREEN-MCV	1	#1006 - #2308	B	
	72N4-52912				..SCREEN-MCV	1	#2309 -	D	
6-2	72N4-52920				..SPONGE	1	- #1005		
	72N4-52921				..SPONGE	1	#1006 - #2308	B	
	72N4-52922				..SPONGE	1	#2309 -	D	
6-3	71EM-51580				..CAP-STUD BOLT	7			
6	73N4-52910				.SCREEN-MCV	1	#1083 -	-	HIGH WALKER

Item	Part_No	IS	Ord	T	Description	Qty	Serial_No	ITC	Remark
7	71N8-52950				.STAY-SIDE COVER	1			
8	72N4-55100				.HOOD-A/C	1	- #2308		STD
	72N4-55101				.HOOD-A/C	1	#2309 -	D	STD
	73N4-55100				.HOOD-A/C	1	#1083 -	-	HIGH WALKER
9	71N8-52492				.PLATE-LOCK	1			STD
	73N4-52490				.PLATE-LOCK	1	#1083 -	-	HIGH WALKER
10	71EH-13150				.BUMPER-RUBBER	1			
11	71EE-53540				.STOPPER-B	1			
12	S681-100400				.GROMMET	1			
13	S037-122552				.BOLT-W/WASHER	19			
14	S035-062022				.BOLT-W/WASHER	2			
15	@				.AIR CLEANER ASSY	1	#1001 -	-	NOT
16	11EN-42330				.TANK-RESERVOIR	1	- #2308		
	11N4-47010				.TANK-RESERVOIR	1	#2309 -	A	
16-1	11EN-42400				..SENSOR-RESERVOIR	1			
17	11ER-42530				.PLATE-CLAMP	2			
18	11E3-4011	10			.HOSE	1			
19	S520-015000				.CLAMP-HOSE	1			
20	S035-082022				.BOLT-W/WASHER	2			

AIR CLEANER ASSY

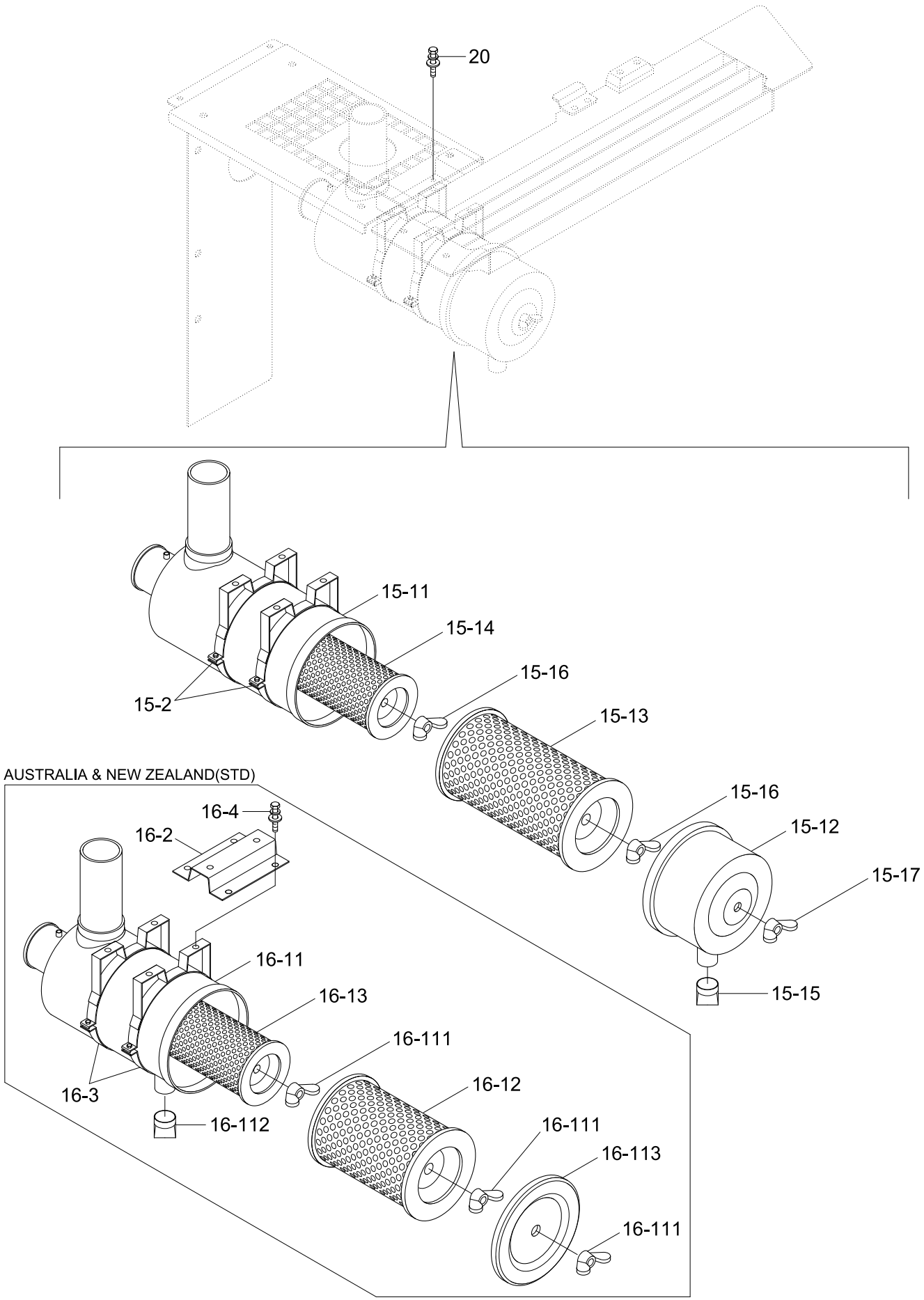

Item	Part_No	IS	Ord	T	Description	Qty	Serial_No	ITC	Remark
15	11N6-20010				AIR CLEANER SUB ASSY	1	- #2607		STD
	11N6-20011				AIR CLEANER SUB ASSY	1	#2608 -	B	STD
15-1	11N6-20100				.AIR CLEANER ASSY	1	- #2607		
	11N6-20102				.AIR CLEANER ASSY	1	#2608 -	B	
15-11	11N6-20110				..BODY-AIR CLEANER	1	- #2607		
	11N6-20112				..BODY-AIR CLEANER	1	#2608 -	B	
15-12	11N6-20120				..CAP-AIR CLEANER	1	- #2607		
	11LD-40180				..CAP-AIR CLEANER	1	#2608 -	B	
15-13	11EM-21041				..ELEMENT-PRIMARY	1	- #2607		
	11N6-24520				..ELEMENT-PRIMARY	1	#2608 -	B	
15-14	11EM-21051				..ELEMENT-SAFETY	1	- #2607		
	11N6-24530				..ELEMENT-SAFETY	1	#2608 -	B	
15-15	E211-2105				..VALVE-VACUUM	1			
15-16	11EM-21060				..NUT-WING	2			
15-17	11EM-21070				..NUT-WING	1			
15-2	14EA-23060				.CLAMP-BAND	2			
20	S035-082026				BOLT-W/WASHER	4			STD
16	11N4-21010				AIR CLEANER ASSY	1	#0094 -	-	AUST/NEWZEALAND
16-1	11N4-21100				.AIR CLEANER	1			
16-11	11N4-21110				..HOUSING	1			
16-111	11E6-21281				...NUT-WING	3			
16-112	E211-2105	10			...VALVE-VACUUM	1			
16-113	11N4-21130				...CAP-AIR CLEANER	1	#0094 -	-	
16-12	E111-2009	20			..ELEMENT-OUTER	1			
16-13	11E3-2006	20			..ELEMENT-INNER	1			

Item	Part_No	IS	Ord	T	Description	Qty	Serial_No	ITC	Remark
16-2	11N4-21120				.BRACKET	1			
16-3	11E6-2002	10			.CLAMP-BAND	2			
16-4	S035-082026				.BOLT-W/WASHER	4			
20	S035-082026				BOLT-W/WASHER	2	#0094 -	-	AUST/NEWZEALAND

SIDE COVER ASSY(LH)

STANDARD, HIGH WALKER(OPTION, #1083-)

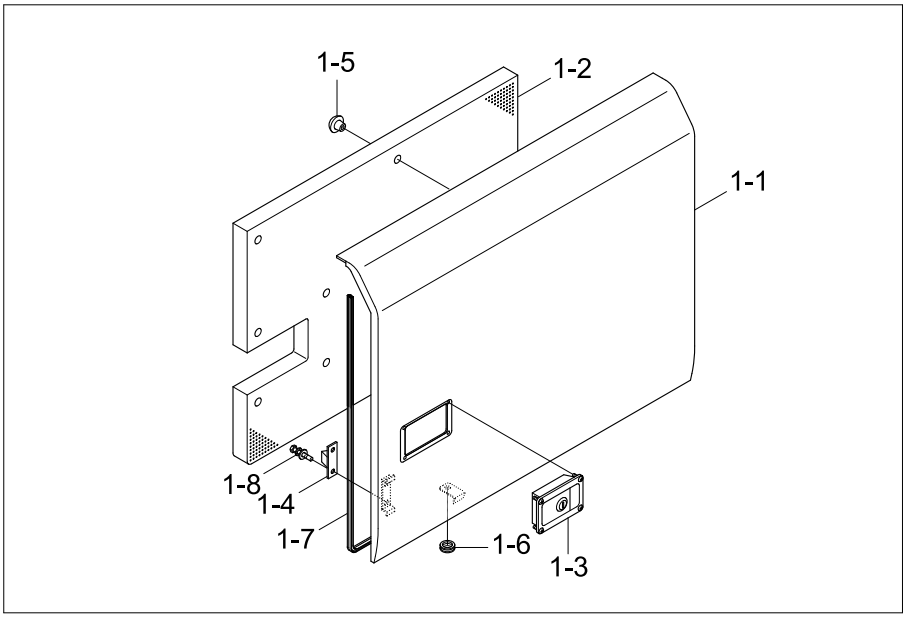

AIR VENT TYPE(OPTION, #0226-)

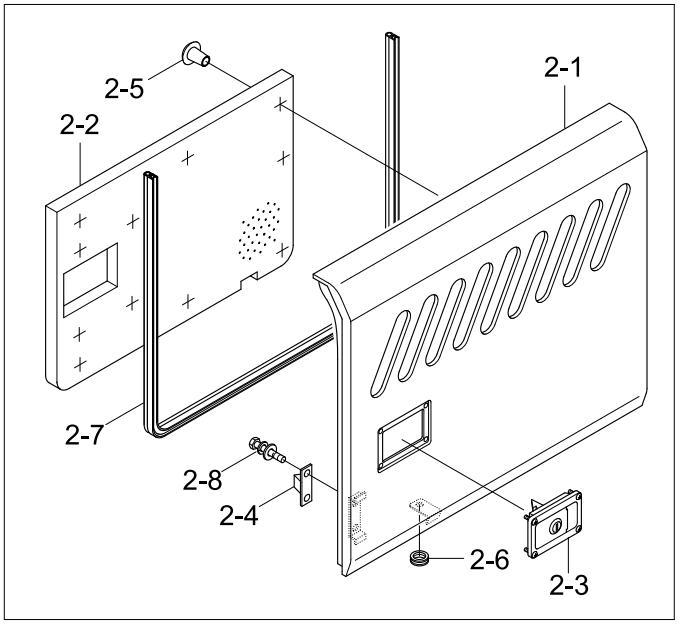

LOUVER TYPE(OPTION, #2067-)

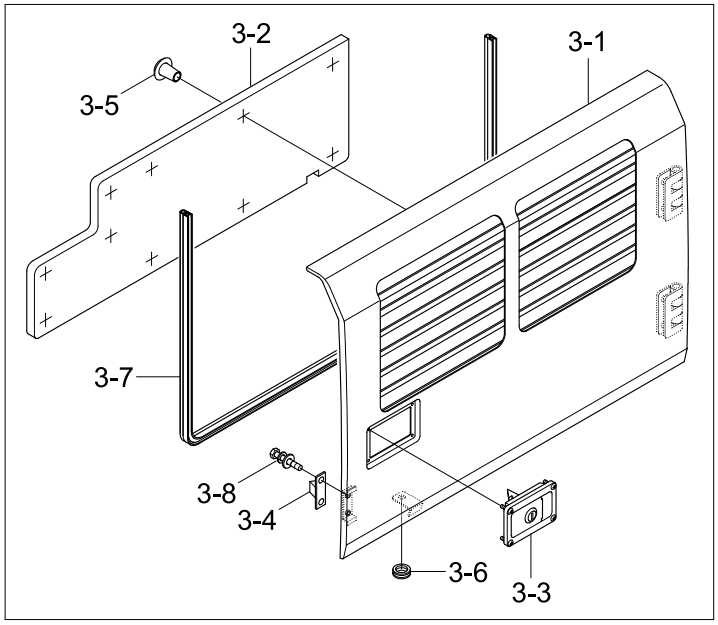

Item	Part_No	IS	Ord	T	Description	Qty	Serial_No	ITC	Remark
1	71N4-52102				SIDE COVER ASSY-LH	1	- #2416		STD
	71N4-52102Y				SIDE COVER ASSY-LH	1	#2417 -	D	STD
	73N4-52100				SIDE COVER ASSY-LH	1	#1083 -	-	HIGH WALKER
1-1	71N4-52112				.SIDE COVER WA-LH	1			STD
	73N4-52110				.SIDE COVER WA-LH	1			HIGH WALKER
1-2	71N4-52182				.SPONGE	1			
1-3	71EE-52520				.CATCH ASSY	1	- #2416		BLACK
	74N8-52520				.CATCH ASSY	1	#2417 -	D	YELLOW
1-4	71EE-53530				.STOPPER-A	1			
1-5	71EM-51580				.CAP-STUD BOLT	12			
1-6	S681-100400				.GROMMET	1			
1-7	S772-026000				.WEATHER STRIP	1			STD
	S772-025000				.WEATHER STRIP	1	#1083 -	-	HIGH WALKER
1-8	S035-061522				.BOLT-W/WASHER	2			
2	71N4-72101				SIDE COVER ASSY-LH	1	#0226 - #2416	-	A/VENT,SMALL
	71N4-72101Y				SIDE COVER ASSY-LH	1	#2417 -	D	A/VENT,SMALL
2-1	71N4-72111				.SIDE COVER WA-LH	1	#0226 -	-	
2-2	71N4-72181				.SPONGE	1	#0226 -	-	
2-3	71EE-52520				.CATCH ASSY	1	- #2416		BLACK
	74N8-52520				.CATCH ASSY	1	#2417 -	D	YELLOW
2-4	71EE-53530				.STOPPER-A	1			
2-5	71EM-51580				.CAP-STUD BOLT	9	#0226 -	-	
2-6	S681-100400				.GROMMET	1			
2-7	S772-026000				.WEATHER STRIP	1			
2-8	S035-061522				.BOLT-W/WASHER	2			

Item	Part_No	IS	Ord	T	Description	Qty	Serial_No	ITC	Remark
3	72N4-85100				SIDE COVER ASSY-LH	1	#2067 - #2416	-	LOUVER TYPE
	72N4-85100Y				SIDE COVER ASSY-LH	1	#2417 -	D	LOUVER TYPE
3-1	72N4-85110				.SIDE COVER WA-LH	1	#2067 -	-	
3-2	72N4-85130				.SPONGE	1	#2067 -	-	
3-3	71EE-52520				.CATCH ASSY	1	#2067 - #2416	-	BLACK
	74N8-52520				.CATCH ASSY	1	#2417 -	D	YELLOW
3-4	71EE-53530				.STOPPER-A	1	#2067 -	-	
3-5	71EM-51580				.CAP-STUD BOLT	8	#2067 -	-	
3-6	S681-100400				.GROMMET	1	#2067 -	-	
3-7	S772-026000				.WEATHER STRIP	1	#2067 -	-	
3-8	S035-061522				.BOLT-W/WASHER	2	#2067 -	-	

SIDE COWL ASSY(RH)

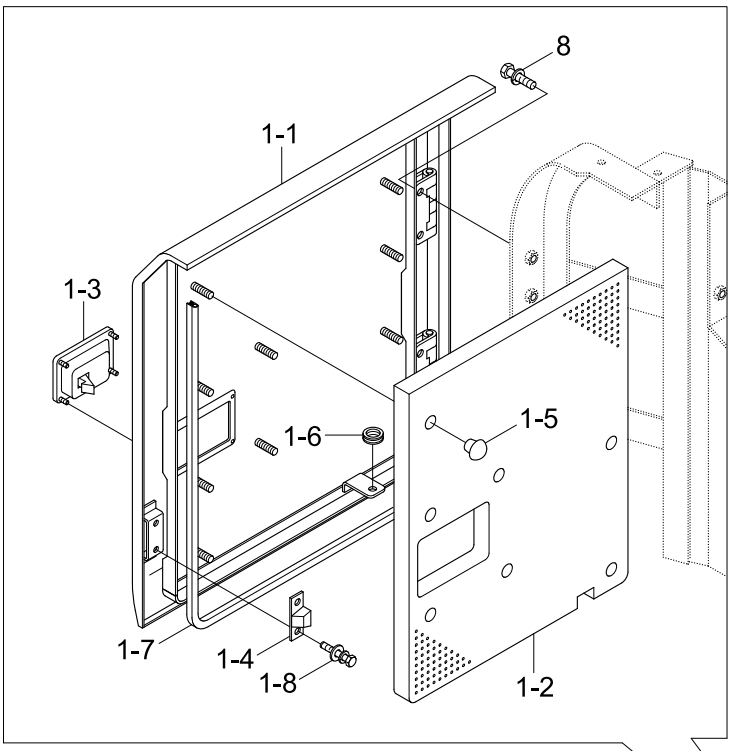

AIR VENT TYPE(OPTION, #0266-)

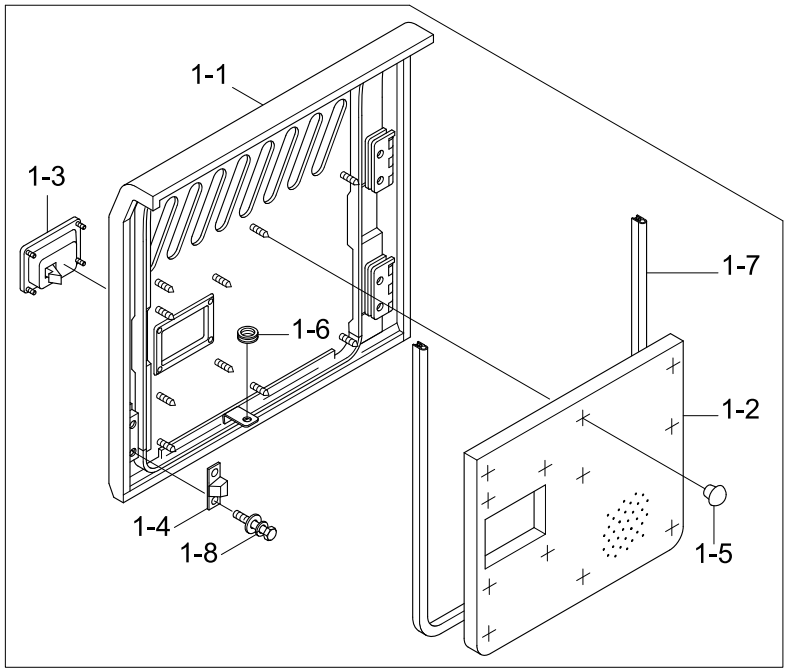

SERIAL NO : -#2308

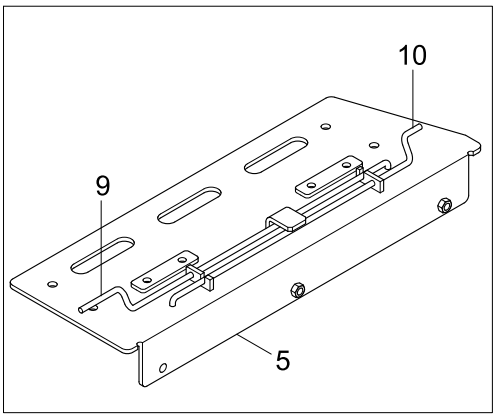

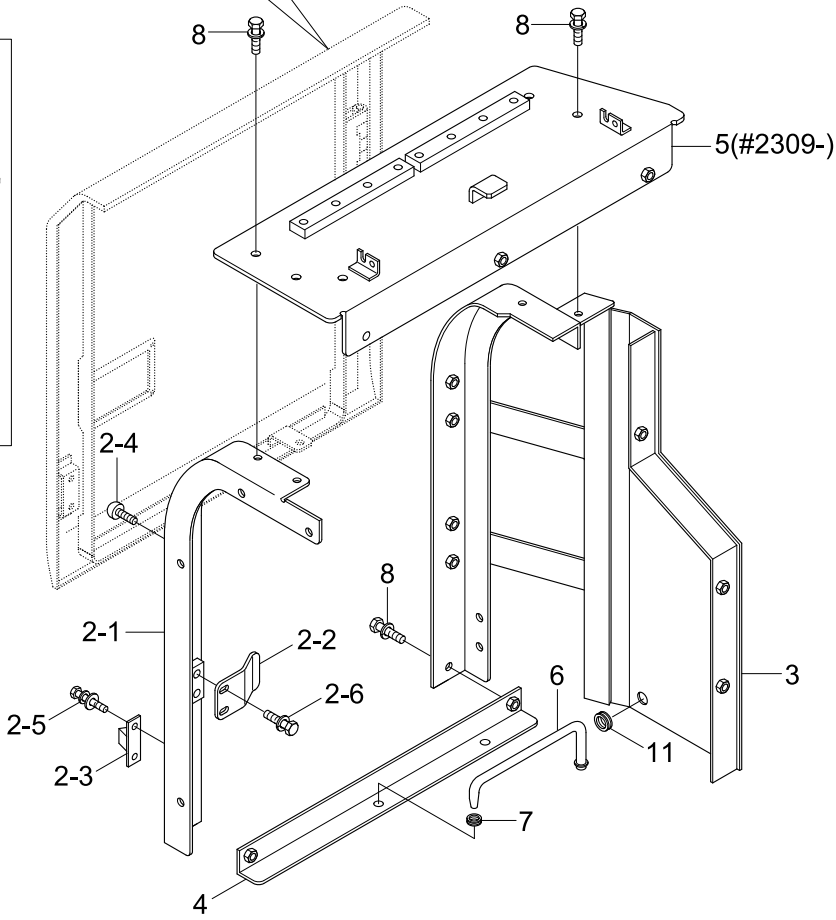

Item	Part_No	IS	Ord	T	Description	Qty	Serial_No	ITC	Remark
*	71N4-53002				SIDE COWL ASSY-RH	1	- #0225		STD
	71N4-53003				SIDE COWL ASSY-RH	1	#0226 - #1000	D	STD
	72N4-53000				SIDE COWL ASSY-RH	1	#1001 - #2308	D	STD
	72N4-53001				SIDE COWL ASSY-RH	1	#2309 - #2416	D	STD
	72N4-53001Y				SIDE COWL ASSY-RH	1	#2417 -	D	STD
	71N4-83000				SIDE COWL ASSY-RH	1	#0226 - #1005	-	AIR VENT TYPE
	72N4-83000				SIDE COWL ASSY-RH	1	#1006 - #2308	D	AIR VENT TYPE
	72N4-83001				SIDE COWL ASSY-RH	1	#2309 - #2416	D	AIR VENT TYPE
	72N4-83001Y				SIDE COWL ASSY-RH	1	#2417 -	D	AIR VENT TYPE
	72N4-58000				SIDE COWL ASSY-RH	1	#2735 -	-	PRE HEATER
1	71N4-53102				.SIDE COVER ASSY-RH	1	- #2416		STD
	71N4-53102Y				.SIDE COVER ASSY-RH	1	#2417 -	D	STD, PRE HEATER
	71N4-73100				.SIDE COVER ASSY-RH	1	#0226 - #2416	-	AIR VENT TYPE
	71N4-73100Y				.SIDE COVER ASSY-RH	1	#2417 -	D	AIR VENT TYPE
1-1	71N4-53112				..SIDE COVER WA	1			STD
	71N4-73110				..SIDE COVER WA	1	#0226 -	-	AIR VENT TYPE
1-2	71N4-53132				..SPONGE-SIDE COVER	1			STD
	71N4-73130				..SPONGE-SIDE COVER	1	#0226 -	-	AIR VENT TYPE
1-3	71EE-52520				..CATCH ASSY	1	- #2416		BLACK
	74N8-52520				..CATCH ASSY	1	#2417 -	B	YELLOW
1-4	71EE-53530				..STOPPER-A	1	#0001 -	-	
1-5	71EM-51580				..CAP-STUD BOLT	9			
1-6	S681-100400				..GROMMET	1			
1-7	S772-022630				..WEATHER STRIP	1			
1-8	S035-061526				..BOLT-W/WASHER	2			

Item	Part_No	IS	Ord	T	Description	Qty	Serial_No	ITC	Remark
2	71N4-53281				.SUPPORT ASSY-RH(FR)	1			
2-1	71N4-53271				..SUPPOTR WA-RH(FR)	1			
2-2	71N8-52492				..PLATE-LOCK	1			
2-3	71EE-53540				..STOPPER-B	1			
2-4	71EH-13150				..RUBBER-BUMPER	1			
2-5	S035-062026				..BOLT-W/WASHER	2			
2-6	S037-122056				..BOLT-W/WASHER	2			
3	71N4-53202				.SUPPORT WA-RH(RR)	1	- #1000		STD, AIR VENT
	72N4-53200				.SUPPORT WA-RH(RR)	1	#1001 - #1005	D	STD, AIR VENT
	72N4-53201				.SUPPORT WA-RH(RR)	1	#1006 -	D	STD, AIR VENT
	72N4-58200				.SUPPORT WA-RH(RR)	1	#2735 -	-	PRE HEATER
4	71N4-53302				.SUPPORT-BOTTOM	1			
5	71N4-53402				.HOOD WA-PUMP	1	- #0225		
	71N4-53403				.HOOD WA-PUMP	1	#0226 - #1000	D	
	72N4-53400				.HOOD WA-PUMP	1	#1001 - #2308	D	
	72N4-53401				.HOOD WA-PUMP	1	#2309 -	D	
6	71N8-52950				.STAY-SIDE COVER	1			
7	S681-100400				.GROMMET	1			
8	S037-122556				.BOLT-W/WASHER	10			
9	71N4-53810				.BAR-TORSION	1	- #1000	-	
10	71N4-53820				.BAR-TORSION	1	- #1000	-	
11	S681-290400				.GROMMET	1	#1006 -	-	

ENGINE HOOD(-#1000)

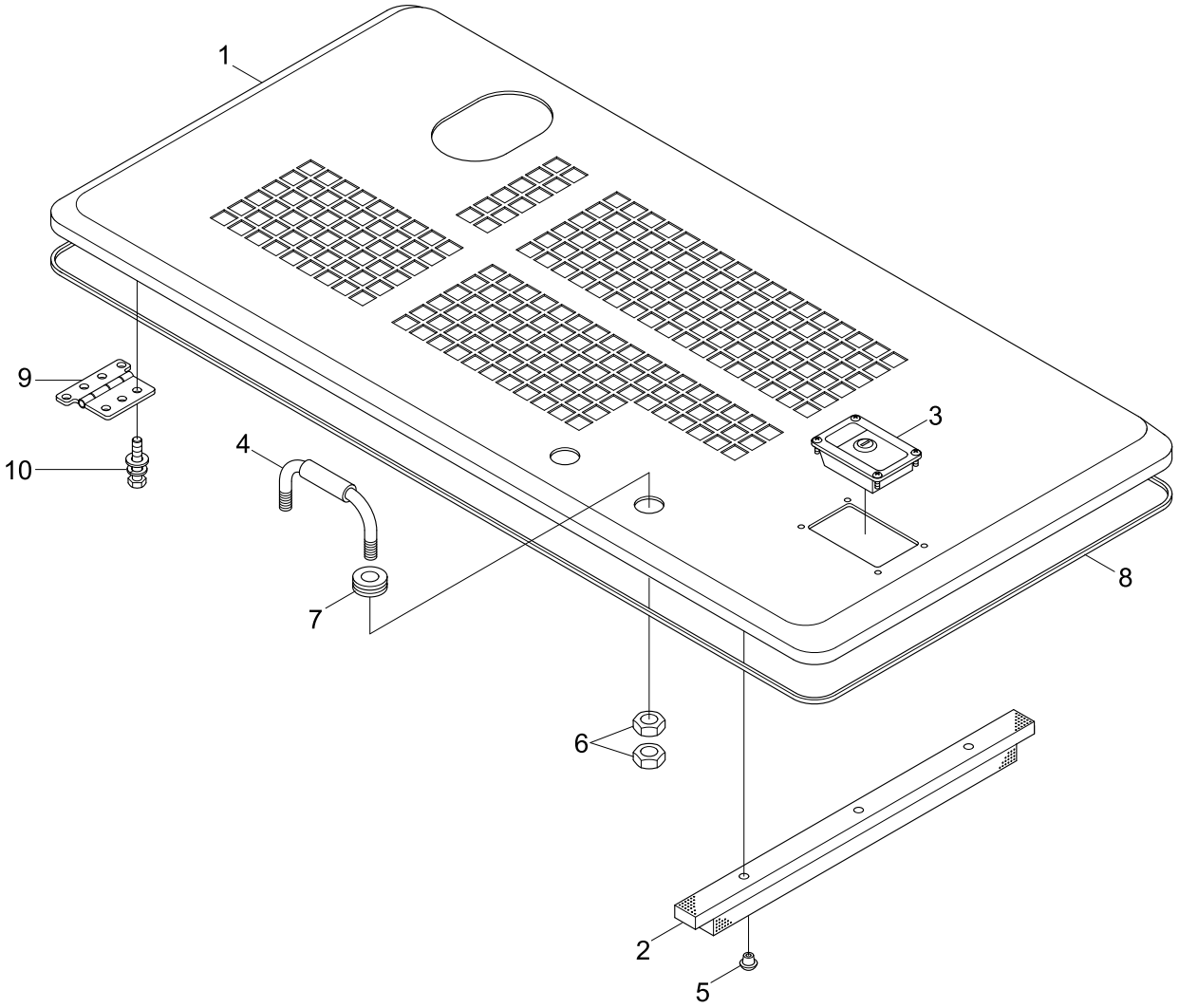

Item	Part_No	IS	Ord	T	Description	Qty	Serial_No	ITC	Remark
*	71N4-51001				ENGINE HOOD ASSY	1	- #0053		
	71N4-51002				ENGINE HOOD ASSY	1	#0054 - #0225	B	
	71N4-51003				ENGINE HOOD ASSY	1	#0226 - #1000	D	
1	71N4-51011				.ENGINE HOOD WA	1	- #0053		
	71N4-51012				.ENGINE HOOD WA	1	#0054 - #0225	D	
	71N4-51013				.ENGINE HOOD WA	1	#0226 -	D	
2	71N4-51102				.SPONGE-E/G HOOD	1			
3	71EE-52520				.CATCH ASSY	1			
4	71E9-54150				.HANDLE	1			
5	71EM-51580				.CAP-STUD BOLT	3	- #0225		
					.CAP-STUD BOLT	4	#0226 -	A	
6	S205-161002				.NUT-HEX	4			
7	S681-190400				.GROMMET	2			
8	S772-054000				.WEATHER STRIP	1	- #0225		
	S772-047500				.WEATHER STRIP	1	#0226 -	D	
9	71N6-51101				.HINGE-ENG HOOD	2	#0226 -	-	
10	S037-122052				.BOLT-W/WASHER	6	#0226 -	-	

ENGINE HOOD(#1001-, TIER-II)

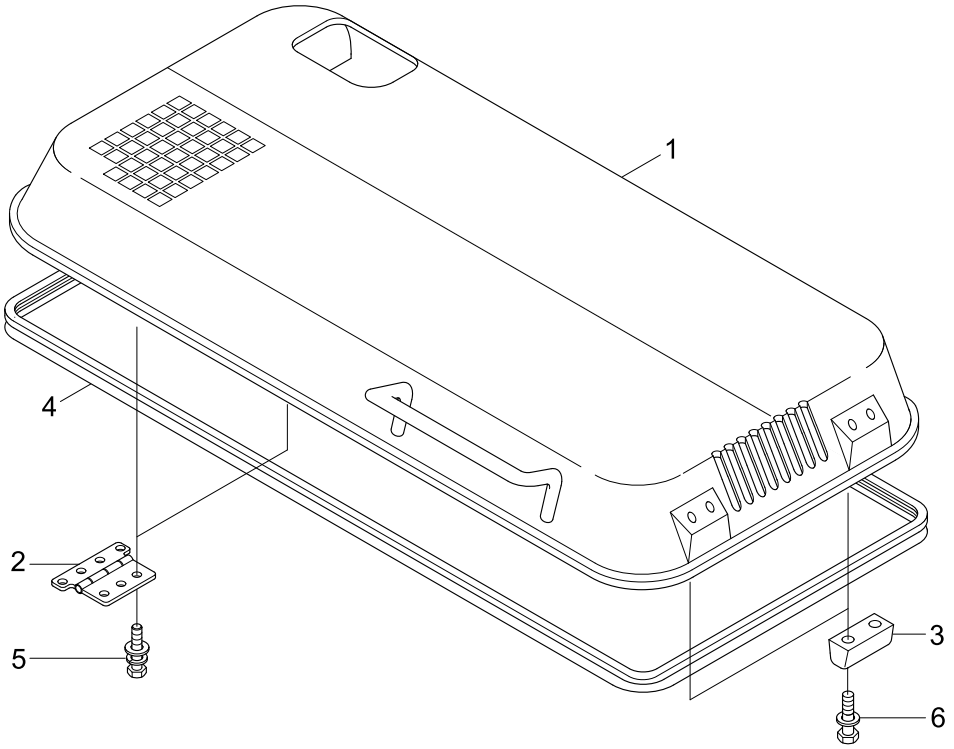

LOW NOISE(#2067-)

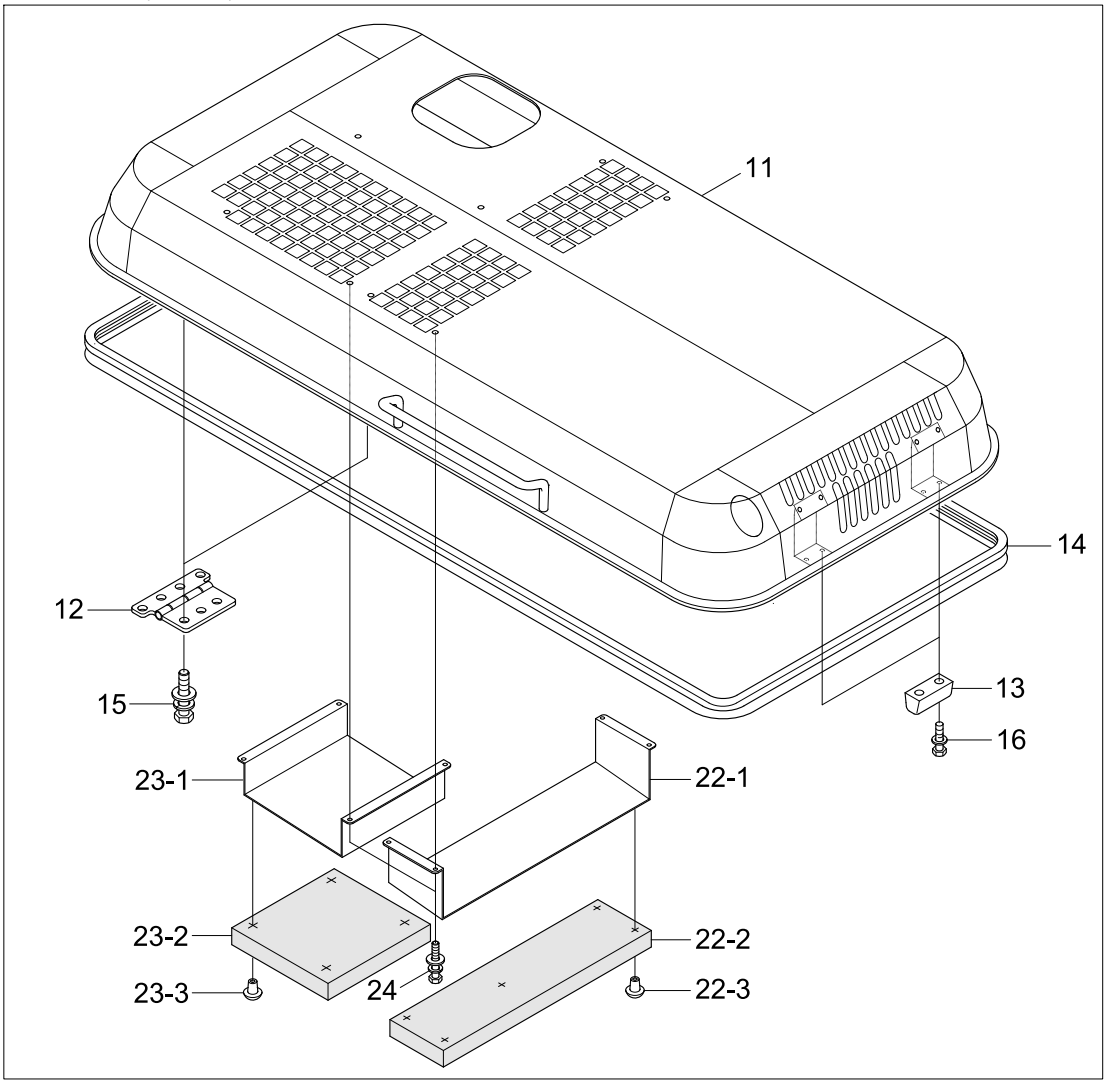

Item	Part_No	IS	Ord	T	Description	Qty	Serial_No	ITC	Remark
*	72N4-51001				ENGINE HOOD ASSY	1	#1001 - #2066	D	EXCEPT KOREA
	72N4-51002				ENGINE HOOD ASSY	1	#2067 - #2308	A	EXCEPT KOREA
	72N4-51003				ENGINE HOOD ASSY	1	#2309 - #2947	D	EXCEPT KOREA
	72N4-51003BG				ENGINE HOOD ASSY	1	#2948 -	D	
	72N4-61000				ENGINE HOOD ASSY	1	#1042 - #2308	-	KOREA
	72N4-61001				ENGINE HOOD ASSY	1	#2309 -	D	KOREA
1	72N4-51011				.ENGINE HOOD WA	1	- #2066		EXCEPT KOREA
	72N4-51012				.ENGINE HOOD WA	1	#2067 - #2308	D	EXCEPT KOREA
	72N4-51013				.ENGINE HOOD WA	1	#2309 -	D	EXCEPT KOREA
	72N4-61010				.ENGINE HOOD WA	1	#1042 - #2308	-	KOREA
	72N4-61011				.ENGINE HOOD WA	1	#2309 -	D	KOREA
2	71N6-51101				.HINGE-ENG HOOD	2			
	71N6-51101BG				.HINGE-ENG HOOD	2	#2948 -	D	
3	71N6-51140				.STOPPER-A	2			
4	S771-057000				.WEATHER STRIP	1			
5	S037-122556				.BOLT W/WASHER-HEX	6			
6	S132-063056				.SCREW W/WASHER CR RH	4			
*	72N4-65000				ENGINE HOOD ASSY	1	#2067 - #2308	-	LOW NOISE, OPT
	72N4-65001				ENGINE HOOD ASSY	1	#2309 - #2947	D	LOW NOISE, OPT
	72N4-65001BG				ENGINE HOOD ASSY	1	#2948 -	D	
*-1	72N4-51002				.ENGINE HOOD ASSY	1	#2067 - #2308	-	LOW NOISE, OPT
	72N4-51003				.ENGINE HOOD ASSY	1	#2309 - #2947	D	LOW NOISE, OPT
	72N4-51003BG				.ENGINE HOOD ASSY	1	#2948 -	D	
11	72N4-51012				..ENGINE HOOD WA	1	#2067 - #2308	-	LOW NOISE, OPT
	72N4-51013				..ENGINE HOOD WA	1	#2309 -	D	LOW NOISE, OPT

Item	Part_No	IS	Ord	T	Description	Qty	Serial_No	ITC	Remark
12	71N6-51101				..HINGE-ENG HOOD	2	#2067 -	-	LOW NOISE, OPT
	71N6-51101BG				..HINGE-ENG HOOD	2	#2948 -	D	
13	71N6-51140				..STOPPER-A	2	#2067 -	-	LOW NOISE, OPT
14	S771-057000				..WEATHER STRIP	1	#2067 -	-	LOW NOISE, OPT
15	S037-122556				..BOLT W/WASHER-HEX	6	#2067 -	-	LOW NOISE, OPT
16	S132-063056				..SCREW W/WASHER CR RH	4	#2067 -	-	LOW NOISE, OPT
22	72N4-65500				.BAFFLE ASSY-A	1	#2067 -	-	LOW NOISE, OPT
22-1	72N4-65510				..BAFFLE WA-A	1	#2067 -	-	LOW NOISE, OPT
22-2	72N4-65520				..SPONGE	1	#2067 -	-	LOW NOISE, OPT
22-3	71EM-51580				..CAP-STUD BOLT	5	#2067 -	-	LOW NOISE, OPT
23	72N4-65600				.BAFFLE ASSY-B	1	#2067 -	-	LOW NOISE, OPT
23-1	72N4-65610				..BAFFLE WA-B	1	#2067 -	-	LOW NOISE, OPT
23-2	72N4-65620				..SPONGE	1	#2067 -	-	LOW NOISE, OPT
23-3	71EM-51580				..CAP-STUD BOLT	5	#2067 -	-	LOW NOISE, OPT
24	S035-082026				.BOLT W/WASHER-HEX	8	#2067 -	-	LOW NOISE, OPT

UNDER COVER

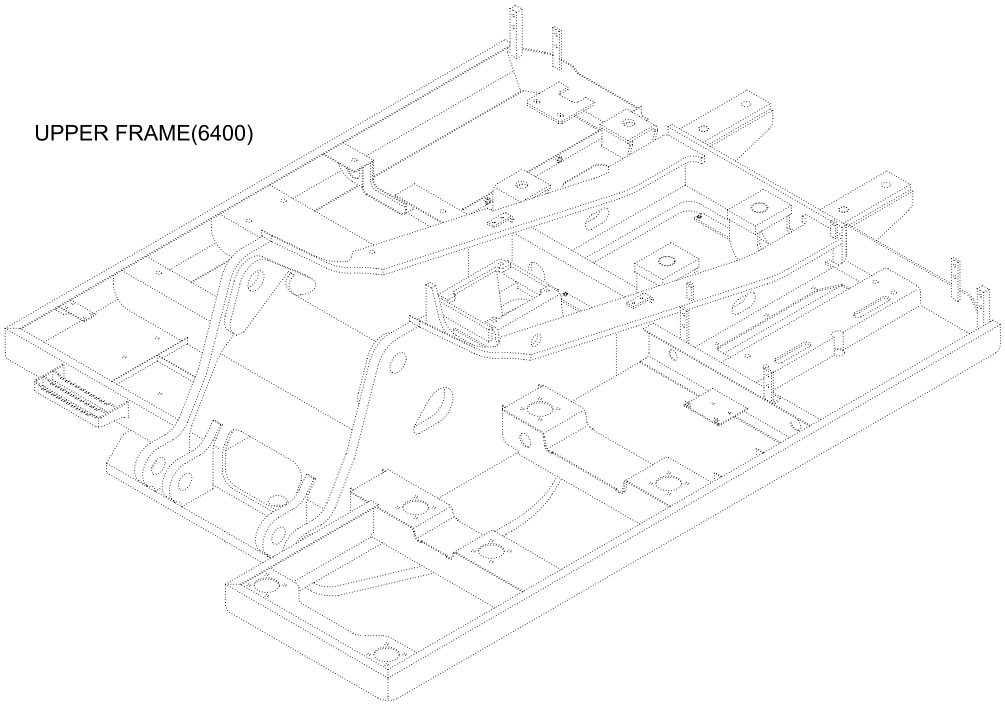

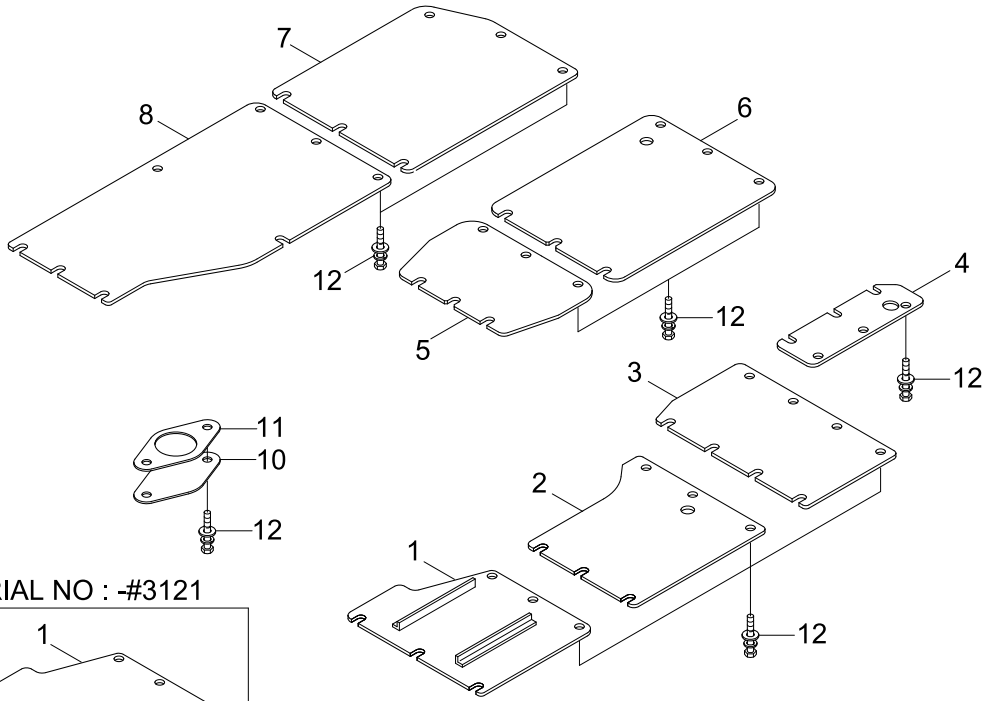

SERIAL NO : -#3121

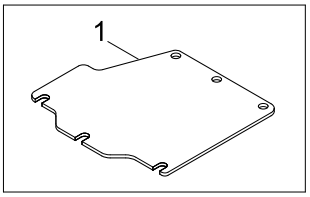

Item	Part_No	IS	Ord	T	Description	Qty	Serial_No	ITC	Remark
1	41N4-10010				UNDER COVER-CAB(A)	1	- #1883		
	41N4-10011				UNDER COVER-CAB(A)	1	#1884 - #2947	D	
	43N4-10010				UNDER COVER-CAB(A)	1	#2948 - #3121	D	
	43N4-10011				UNDER COVER-CAB(A)	1	#3122 -	D	
2	41N4-10020				UNDER COVER-CAB(B)	1			
	43N4-10020				UNDER COVER-CAB(B)	1			
3	41N4-10031				UNDER COVER-CAB(C)	1	- #1000		
	41N4-10330				UNDER COVER-CAB(C)	1	#1001 - #2947	D	
	43N4-10330				UNDER COVER-CAB(C)	1	#2948 -	D	
4	41N4-10040				UNDER COVER-RAD(A)	1	- #1000		
	41N4-10340				UNDER COVER-RAD(A)	1	#1001 - #2947	D	
	43N4-10340				UNDER COVER-RAD(A)	1	#2948 -	D	
5	41N4-10050				UNDER COVER-MCV	1	- #2947		
	43N4-10051				UNDER COVER-MCV	1	#2948 -	D	
6	41N4-10061				UNDER COVER-ENGINE	1	- #1183		
	41N4-10062				UNDER COVER-ENGINE	1	#1184 - #2947	D	
	41N4-10062BG				UNDER COVER-ENGINE	1	#2948 -	D	
7	41N4-10071				UNDER COVER-PUMP	1	- #2947		
	41N4-10071BG				UNDER COVER-PUMP	1	#2948 -	D	
8	41N4-10081				UNDER COVER-H/TANK	1	- #0049		
	41N4-10082				UNDER COVER-H/TANK	1	#0050 - #2947	B	
	43N4-10090				UNDER COVER-TANK	1	#2948 -	D	
10	41N6-10100BG				COVER	1	- #0152		
	41N6-10100				COVER	1	#0153 -	D	
11	41E9-1306	10			SEAL	1	- #2947		

Item	Part_No	IS	Ord	T	Description	Qty	Serial_No	ITC	Remark
12	S037-102562				BOLT-W/WASHER	53			

TOOL BOX MOUNTING(-#1000)

SERIAL NO:-#0040

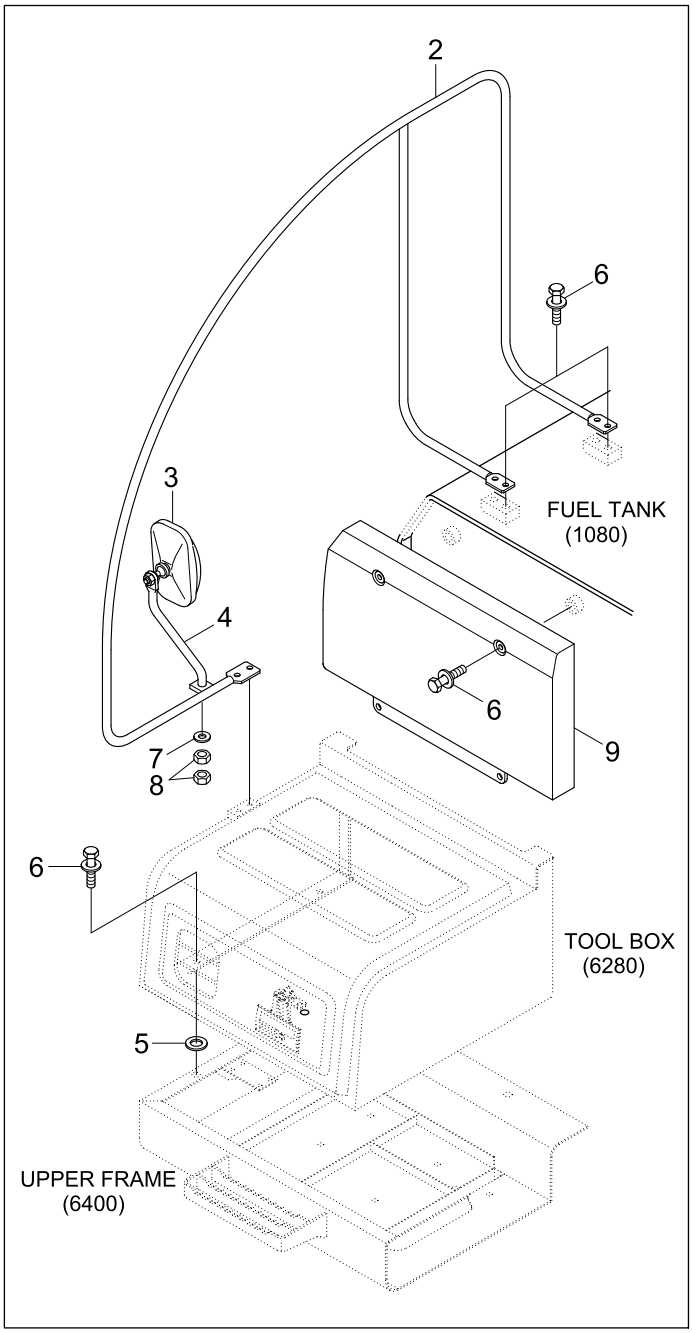

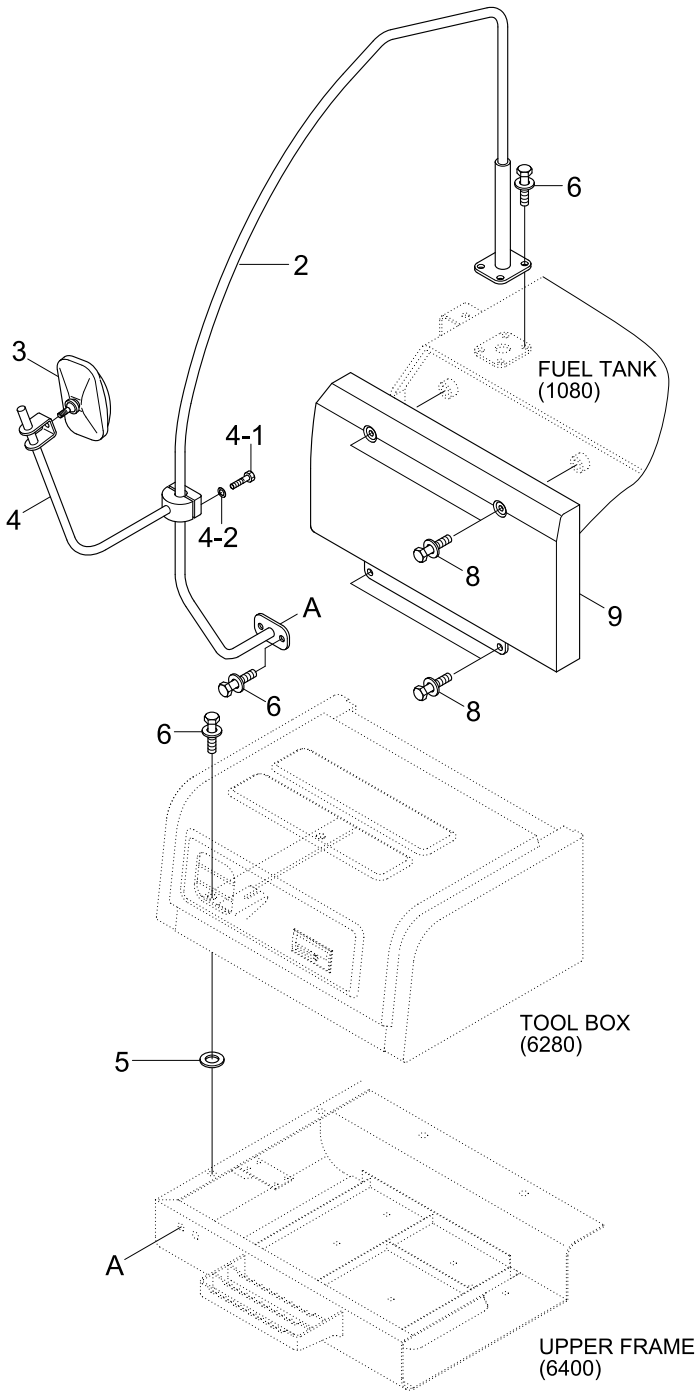

Item	Part_No	IS	Ord	T	Description	Qty	Serial_No	ITC	Remark
*	@				TOOL BOX MOUNTING	1	- #1000	-	NOT
2	71N4-42301				PIPE WA	1	- #0040		
	71N8-42005				PIPE WA	1	#0041 -	D	
	71N8-42005BG				PIPE WA	1		D	
3	E129-2000	20			MIRROR	1	- #0040		
	71N8-46000				MIRROR	1	#0041 -	D	
4	71N4-41300				STAY-MIRROR	1	- #0040		
	71N8-45000				STAY-MIRROR	1	#0041 -	D	
4-1	S015-080402				.BOLT-HEX	2	#0041 -	-	
4-2	S411-080002				.WASHER-SPRING	2	#0041 -	-	
5	S390-015040				SHIM-ROUND(0.5T)	4			
6	S037-122552				BOLT-W/WASHER	14	- #0040		
					BOLT-W/WASHER	10	#0041 -	A	
7	S441-120006				WASHER-HARDENED	2	- #0040	-	
8	S205-121002				NUT-HEX	2	- #0040		
	S037-122052				BOLT-W/WASHER	4	#0041 -	D	
9	71N4-44100				COVER-F/TANK	1			
	71N4-44200				COVER-F/TANK	1	- #1000	-	LOCAL

TOOL BOX MOUNTING(#1001-, TIER II)

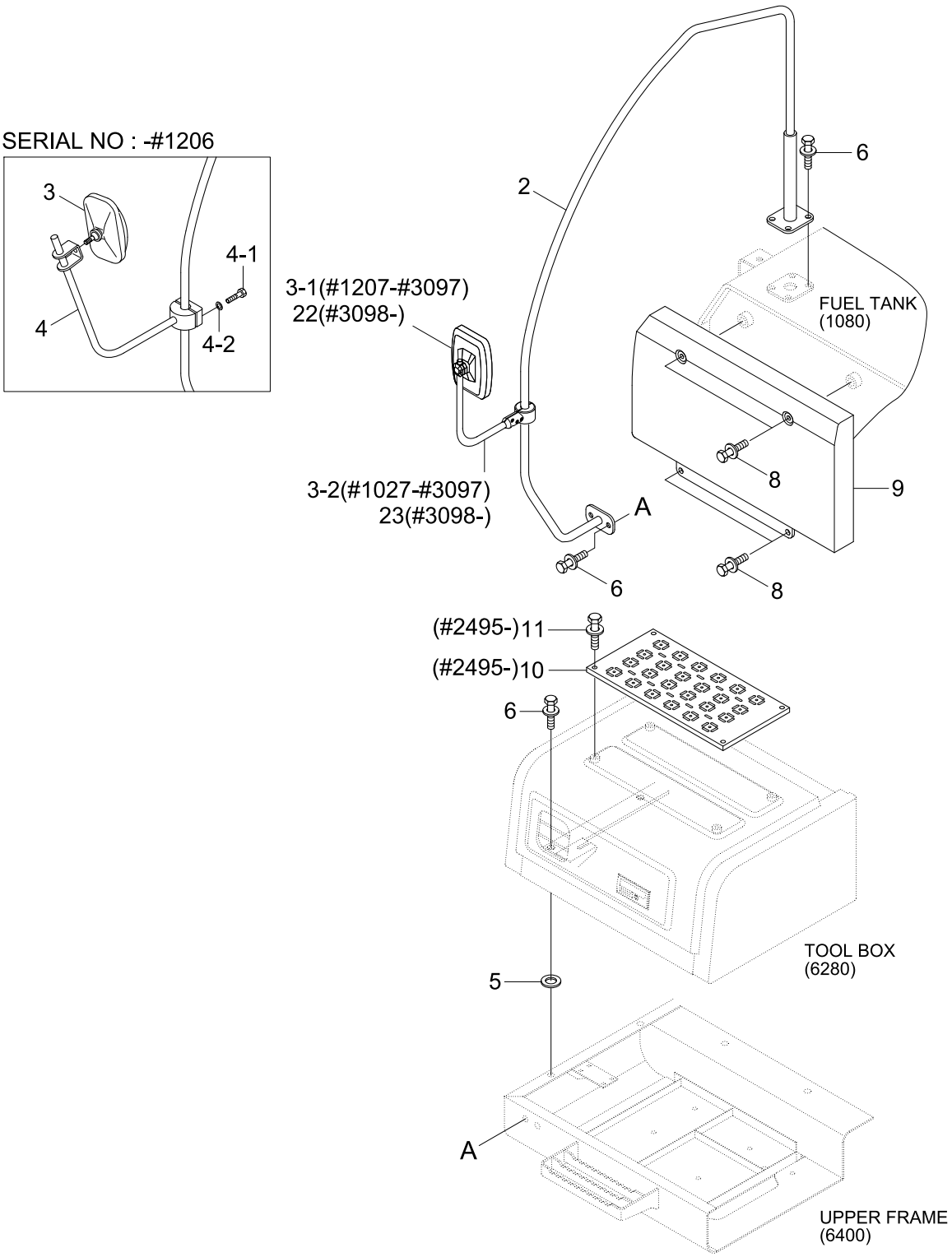

Item	Part_No	IS	Ord	T	Description	Qty	Serial_No	ITC	Remark
*	@				TOOL BOX MOUNTING	1	#1001 -	D	NOT
2	71N8-42005				PIPE WA	1	- #2947		
	71N8-42005BG				PIPE WA	1	#2948 -	D	
3	71N8-46000				MIRROR	1	- #1206		
	71N8-48000				MIRROR & STAY ASSY-RH	1	#1207 - #1277	D	
	71N8-48001				MIRROR & STAY ASSY-RH	1	#1278 - #2947	D	
	71N8-48001BG				MIRROR & STAY ASSY-RH	1	#2948 -	D	
					MIRROR & STAY ASSY-RH	1	#2948 - #3097	D	
3-1	71N8-47100				.MIRROR	1	#1207 - #3097	-	
3-2	71N8-48100				.STAY ASSY-RH	1	#1207 - #1277	-	
	71N8-48101				.STAY ASSY-RH	1	#1278 - #2947	D	
	71N8-48101BG				.STAY ASSY-RH	1	#2948 - #3097	D	
4	71N8-45000				STAY-MIRROR	1	- #1206	-	
4-1	S015-080406				.BOLT-HEX	2	- #1206	-	
4-2	S411-080006				.WASHER-SPRING	2	- #1206	-	
5	S390-015040				SHIM-ROUND(0.5T)	4			
6	S037-122556				BOLT-W/WASHER	10			
8	S037-122526				BOLT-W/WASHER	4			
9	71N4-44100				COVER-F/TANK	1			
	71N4-44200				COVER-F/TANK	1	#1001 -	-	LOCAL
10	74N4-47100				FOOT BOARD WA(A)	1	#2495 -	-	
11	S037-121556				BOLT-W/WASHER	4	#2495 -	-	
22	71N8-47101				MIRROR	1	#3098 -	-	
23	71N8-48102BG				STAY ASSY-RH	1	#3098 -	-	

TOOL BOX

SERIAL NO : -#2682

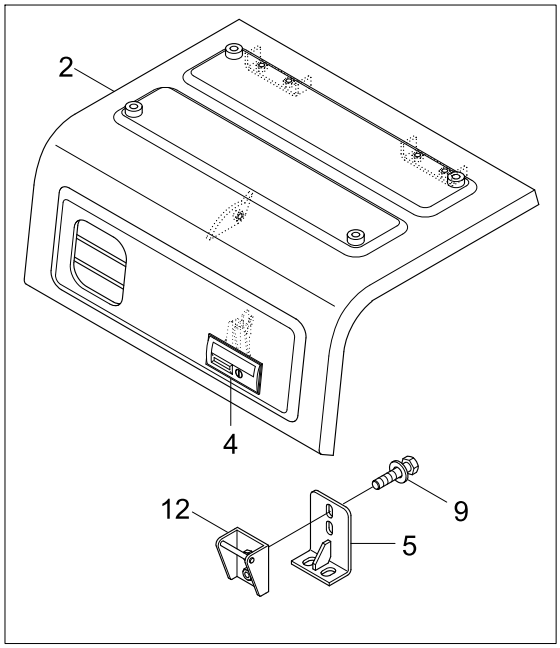

SERIAL NO.: -#1097

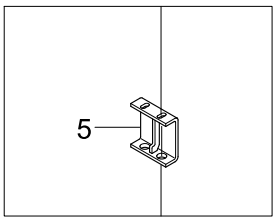

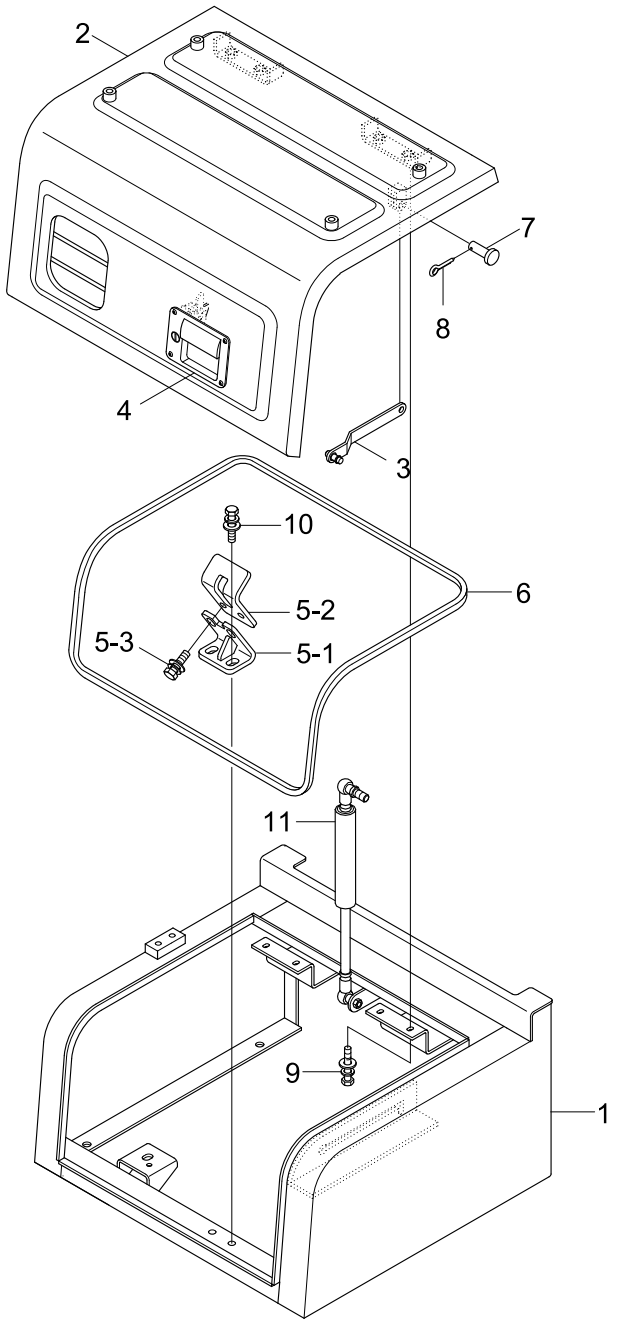

Item	Part_No	IS	Ord	T	Description	Qty	Serial_No	ITC	Remark
*	71N4-41001				TOOL BOX ASSY	1	- #2494		
	71N4-41002				TOOL BOX ASSY	1	#2495 - #2707	D	
	71N4-41003				TOOL BOX ASSY	1	#2708 -	D	
1	71N4-42101				.TOOL BOX WA	1	- #1097		
	71N4-42102				.TOOL BOX WA	1	#1098 - #1887	D	
	71N4-42103				.TOOL BOX WA	1	#1888 -	B	
2	71N4-41201				.COVER WA	1	- #1097		
	71N4-41202				.COVER WA	1	#1098 - #2494	D	
	71N4-41203				.COVER WA	1	#2495 - #2707	D	
	71N4-41204				.COVER WA	1	#2708 -	D	
3	71N8-41300				.STAY WA	1			
4	71N8-41700				.CATCH ASSY	1	- #1097		
	71N8-41701				.CATCH ASSY	1	#1098 - #1277	D	
	71N8-41702				.CATCH ASSY	1	#1278 - #2707	D	
	74N8-41700				.CATCH ASSY	1	#2708 -	D	
5	71N8-41501				.BRACKET	1	- #1097		
	71N8-41502				.BRACKET	1	#1098 - #2707	D	
	74N8-41500				.STRIKER ASSY	1	#2708 -	D	
5-1	74N8-41560				..BRACKET WA	1	#2708 -	-	
5-2	74N8-41570				..BRACKET WA	1	#2708 -	-	
5-3	S035-082526				..BOLT-W/WASHER	2	#2708 -	-	
6	S791-030210				.GROMMET-PLATE	1	- #1097		
	S772-026300				.WEATHER STRIP	1	#1098 -	D	
7	S491-100252				.PIN-CLEVIS	1			
8	S461-320252				.PIN-SPLIT	1			

Item	Part_No	IS	Ord	T	Description	Qty	Serial_No	ITC	Remark
9	S035-082022				.BOLT-W/WASHER	4	- #1097		
	S035-082026				.BOLT-W/WASHER	6	#1098 - #2707	A	
					.BOLT-W/WASHER	4	#2708 -	A	
10	S037-102052				.BOLT-W/WASHER	2			
11	71EN-52640				.GAS SPRING	1			
12	71N8-41721				.BRACKET	1	#1098 - #2707	-	

GROMMET GROUP

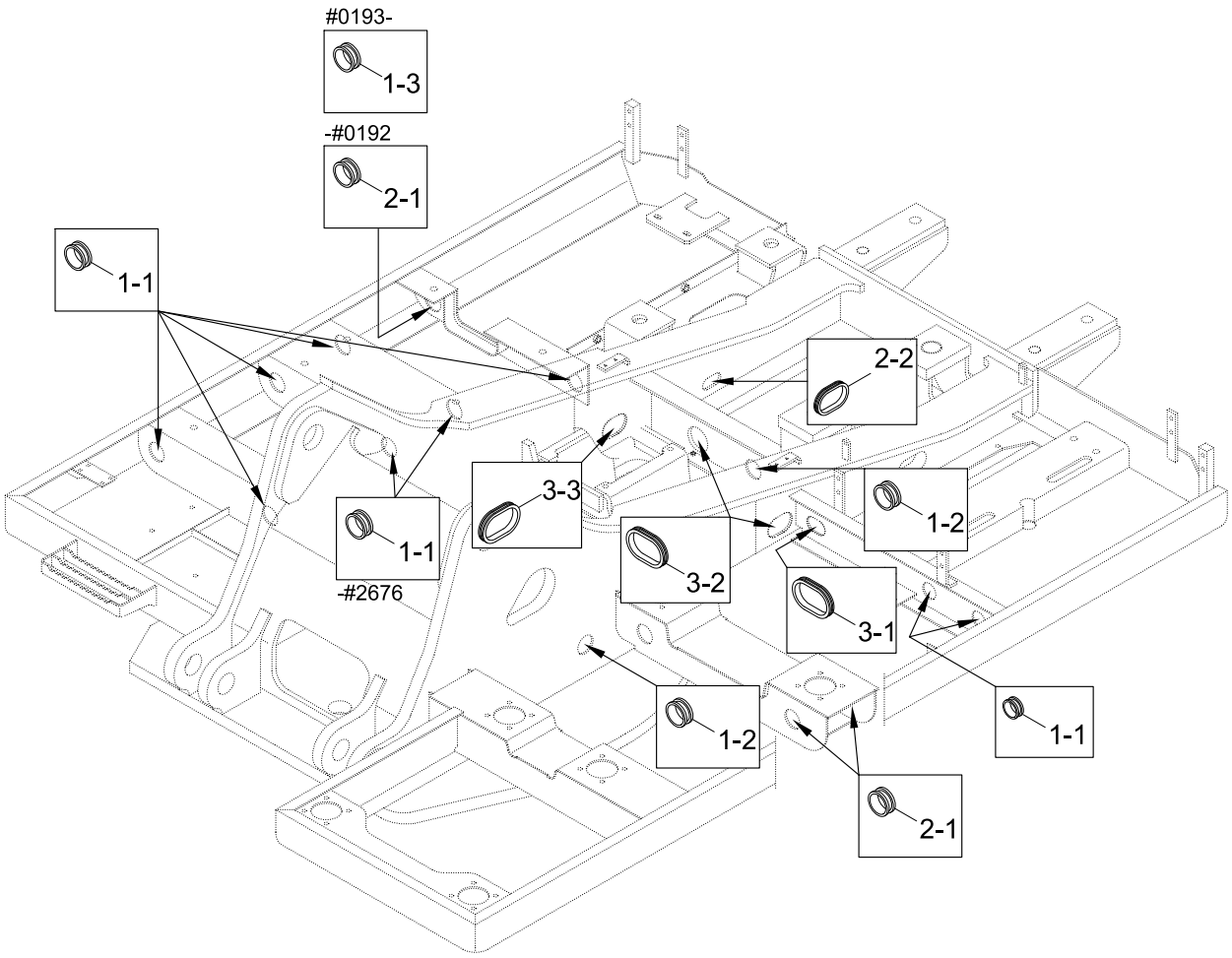

Item	Part_No	IS	Ord	T	Description	Qty	Serial_No	ITC	Remark
1	41N4-50010				GROMMET KIT(A)	1	- #0192		
	41N4-50011				GROMMET KIT(A)	1	#0193 - #2676	B	
	41N4-50012				GROMMET KIT(A)	1	#2677 -	D	
1-1	S760-041000				.GROMMET	9	- #2676		
					.GROMMET	7	#2677 -	A	
1-2	S760-091400				.GROMMET	3			
1-3	S760-071800				.GROMMET	1	#0193 -	-	
2	41N4-50020				GROMMET KIT(B)	1	- #0192		
	41N4-50021				GROMMET KIT(B)	1	#0193 -	B	
2-1	S760-031800				.GROMMET	3	- #0192		
					.GROMMET	2	#0193 -	A	
2-2	S760-081012				.GROMMET	1			
3	41N4-50031				GROMMET KIT(C)	1			
3-1	S760-031406				.GROMMET	1			
3-2	S760-081807				.GROMMET	2			
3-3	S760-081800				.GROMMET	1			

UPPER FRAME & COUNTERWEIGHT

OPTION CWT(-#3014)

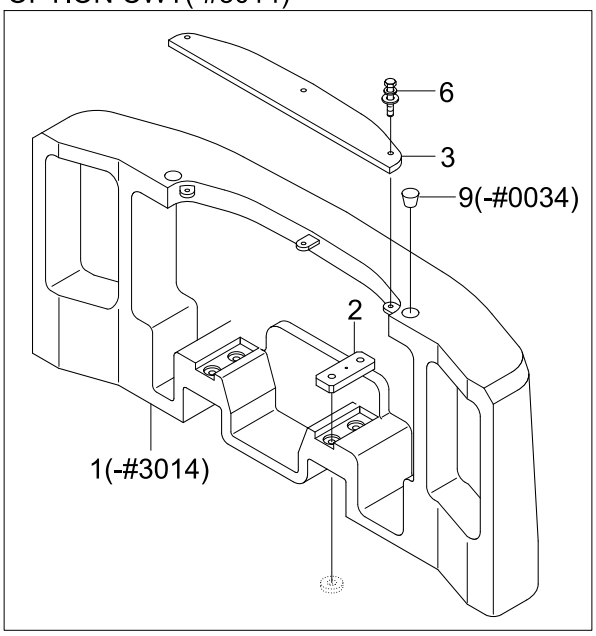

OPTION COUNTERWEIGHT

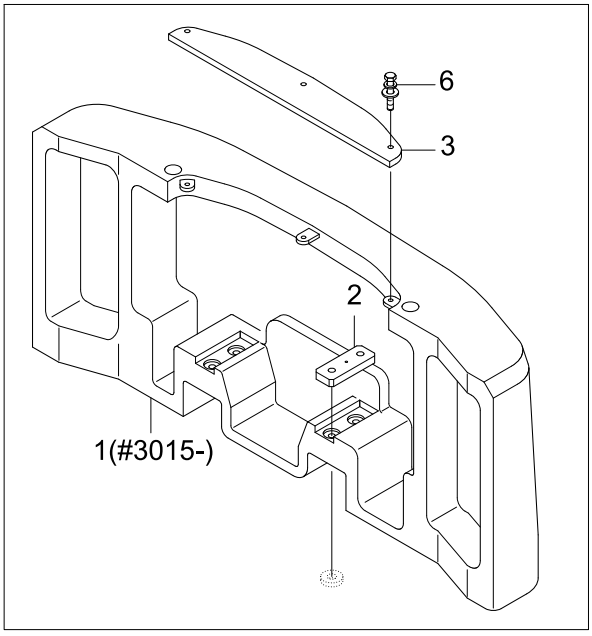

Item	Part_No	IS	Ord	T	Description	Qty	Serial_No	ITC	Remark
1	41N4-21001				COUNTERWEIGHT	1	- #0034		OPTION
	41N4-21002				COUNTERWEIGHT	1	#0035 - #0049	B	OPTION
	41N4-21003				COUNTERWEIGHT	1	#0050 - #3014	B	OPTION
	41N4-21004				COUNTERWEIGHT	1	#3015 -	B	OPTION
2	41N4-21111				BLOCK	2			OPTION
3	41N4-21200				COVER-CWT	1	- #0049		OPTION
	41N4-21201				COVER WA-CWT	1	#0050 -	D	OPTION
4	41N4-22200				SPACER	4	- #2086		
	41N4-22201				SPACER	4	#2087 - #2384	A	
	41N4-22202				SPACER	4	#2385 -	B	
5	S017-27220D				BOLT-HEX	4			OPTION
6	S037-102566				BOLT-W/WASHER	3	- #0225		OPTION
	S037-104556				BOLT-W/WASHER	3	#0226 -	B	OPTION
7	S391-040065				SHIM-ROUND(1.0T)	5			
8	S392-040065				SHIM-ROUND(2.0T)	5			
9	S981-202500				PLUG	2	- #0034	-	
10	41N4-00012				UPPER FRAME WA	1	- #0049		STD,TOSHI MCV
	41N4-00013				UPPER FRAME WA	1	#0050 - #0253	A	STD,TOSHI MCV
	41N4-00014				UPPER FRAME WA	1	#0254 - #1000	B	STD,TOSHI MCV
	41N4-30011				UPPER FRAME WA	1	#1001 - #1145	D	STD,TOSHI MCV
	41N4-30012				UPPER FRAME WA	1	#1146 - #1195	A	STD,TOSHI MCV
	41N4-30013				UPPER FRAME WA	1	#1196 - #1601	A	STD,TOSHI MCV
	41N4-35010				UPPER FRAME WA	1	#1602 - #2947	D	STD,TOSHI MCV
	41N4-35010BG				UPPER FRAME WA	1	#2948 -	D	STD,TOSHI MCV
11	42N4-00010				UPPER FRAME WA	1	- #1177		LCM,1-BLK MCV

Item	Part_No	IS	Ord	T	Description	Qty	Serial_No	ITC	Remark
11	42N4-00011				UPPER FRAME WA	1	#1178 - #2947	D	LCM,1-BLK MCV
	42N4-00011BG				UPPER FRAME WA	1	#2948 -	D	LCM,1-BLK MCV
12	41N4-30013				UPPER FRAME WA	1	#1602 - #2947	-	1-BLOCK MCV
	41N4-30013BG				UPPER FRAME WA	1	#2948 -	D	1-BLOCK MCV
13	41N4-36010				UPPER FRAME WA	1	#2680 - #2947	-	2-BLOCK MCV
	41N4-36010BG				UPPER FRAME WA	1	#2948 -	D	2-BLOCK MCV
14	42N4-36000				UPPER FRAME WA	1	#3417 -	-	LCM,2-BLK MCV
15	42N4-40010BG				UPPER FRAME WA	1	#3419 -	-	SPEC,2-BLK MCV
21	41N4-26000				COUNTERWEIGHT ASSY	1	#2042 -	-	STD(2200KG)
	41N4-27000				COUNTERWEIGHT ASSY	1	#2260 -	-	OPT(2500KG)
21-1	41N4-26010				.COUNTERWEIGHT WA	1	#2042 - #2128	-	STD(2200KG)
	41N4-26011				.COUNTERWEIGHT WA	1	#2129 -	A	STD(2200KG)
	41N4-27010				.COUNTERWEIGHT WA	1	#2260 -	-	OPT(2500Kg)
21-2	41N4-24320				.SPONGE(A)	1	#2042 -	-	
21-3	41N4-24330				.SPONGE(B)	1	#2042 - #2259	-	
	41N4-24331				.SPONGE(B)	1	#2260 -	A	
21-4	41N4-24340				.SPONGE(C)	1	#2042 - #2259	-	
	41N4-24341				.SPONGE(C)	1	#2260 -	A	
21-5	41N4-24350				.SPONGE(D)	1	#2042 - #2259	-	
	41N4-24351				.SPONGE(D)	1	#2260 -	B	
21-6	41N4-24360				.SPONGE(E)	1	#2042 - #2259	-	
	41N4-24361				.SPONGE(E)	1	#2260 - #2774	B	
	41N4-24380				.SPONGE(E)	1	#2775 -	B	
21-7	41N4-24370				.SPONGE(F)	1	#2042 - #2259	-	
	41N4-24371				.SPONGE(F)	1	#2260 -	B	

Item	Part_No	IS	Ord	T	Description	Qty	Serial_No	ITC	Remark
21-8	S037-102526				.BOLT-W/WASHER	8	#2042 -	-	
21-9	61L1-2037				.WASHER-HARDENED	8	#2042 -	-	
23	S390-040065				SHIM-ROUND(0.5T)	5	#2042 -	-	STD
25	S017-27120D				BOLT-HEX	4	#2042 - #2384	-	STD
	S017-27130D				BOLT-HEX	4	#2385 -	B	STD

LOWER FRAME & COVER

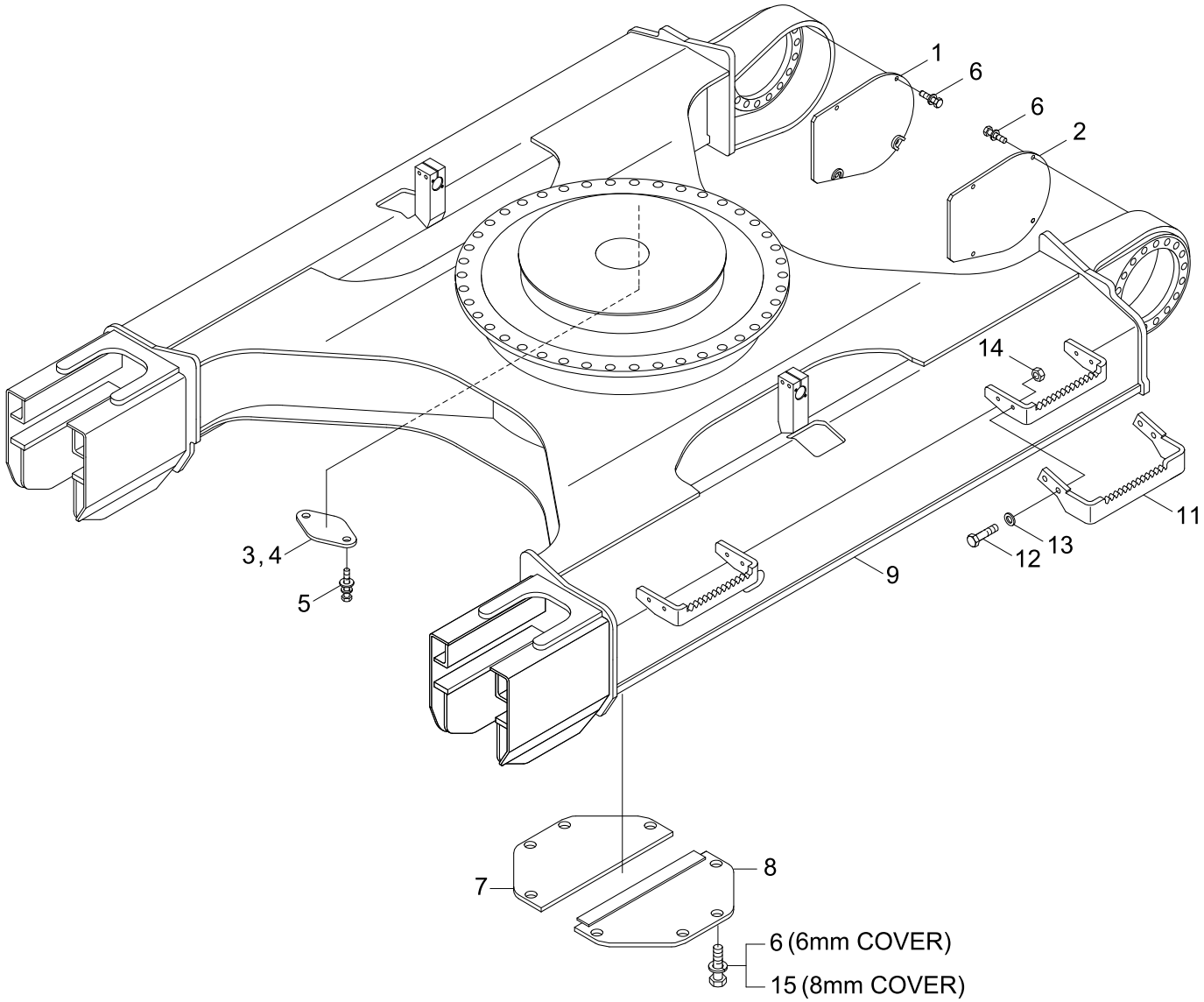

R140LCD-7

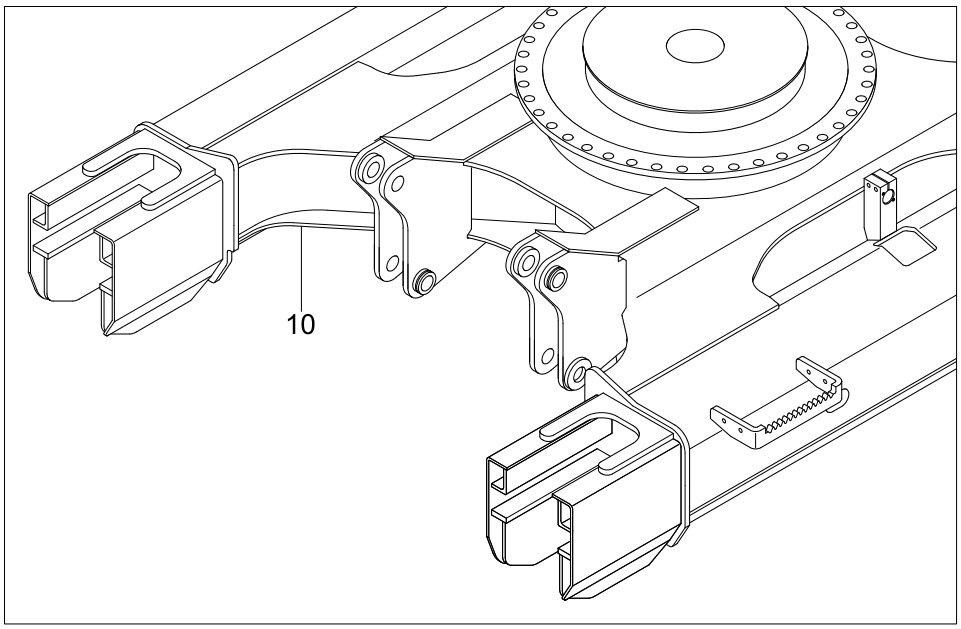

SERIAL NO : -#3418

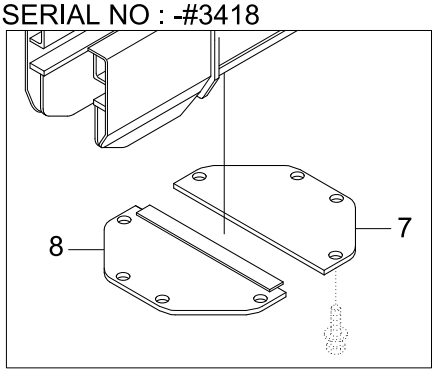

Item	Part_No	IS	Ord	T	Description	Qty	Serial_No	ITC	Remark
1	51N4-11111				COVER PLATE-T/M,RH	1			
2	51N4-11121				COVER PLATE-T/M,LH	1			
3	E141-1305	40			COVER	1			
4	41E9-1306	10			SEAL	1			
5	S037-102566				BOLT-W/WASHER	2			
6	S037-123556				BOLT-W/WASHER	16			
	S037-124556				BOLT-W/WASHER	8	#2849 -	-	OPT, ADDITION
7	51N6-11211				COVER-BOTTOM(A)	1	- #2947		STD, 6MM
	51N6-11211BG				COVER-BOTTOM(A)	1	#2948 -	D	STD. 6MM
	51N6-11230				COVER-BOTTOM(A)	1	#2849 - #2947	-	OPT, 8MM
	51N6-11230BG				COVER-BOTTOM(A)	1	#2948 -	D	OPT, 8MM
8	51N6-11221				COVER-BOTTOM(B)	1	- #2947		STD, 6MM
	51N6-11221BG				COVER-BOTTOM(B)	1	#2948 -	D	STD, 6MMM
	51N6-11240				COVER-BOTTOM(B)	1	#2849 - #2947	-	OPT, 8MM
	51N6-11240BG				COVER-BOTTOM(B)	1	#2948 -	D	OPT, 8MM
9	51N4-02011				LOWER FRAME WA	1			R140LC-7
10	51N4-04010				LOWER FRAME WA	1			R140LCD-7
11	51N4-20010				BOARD-FOOT	4			600MM SHOE
	51N4-20050				BOARD-FOOT	4			700MM SHOE
	51N4-20080				BOARD-FOOT	4			800MM SHOE
12	S017-16055D				BOLT-HEX	16			
13	S441-160006				WASHER-HARDENED	32			
14	S207-161002				NUT-HEX	16			
15	S037-124556				BOLT-W/WASHER	8	#2849 -	-	

SWING RING GREASE LUB SYSTEM

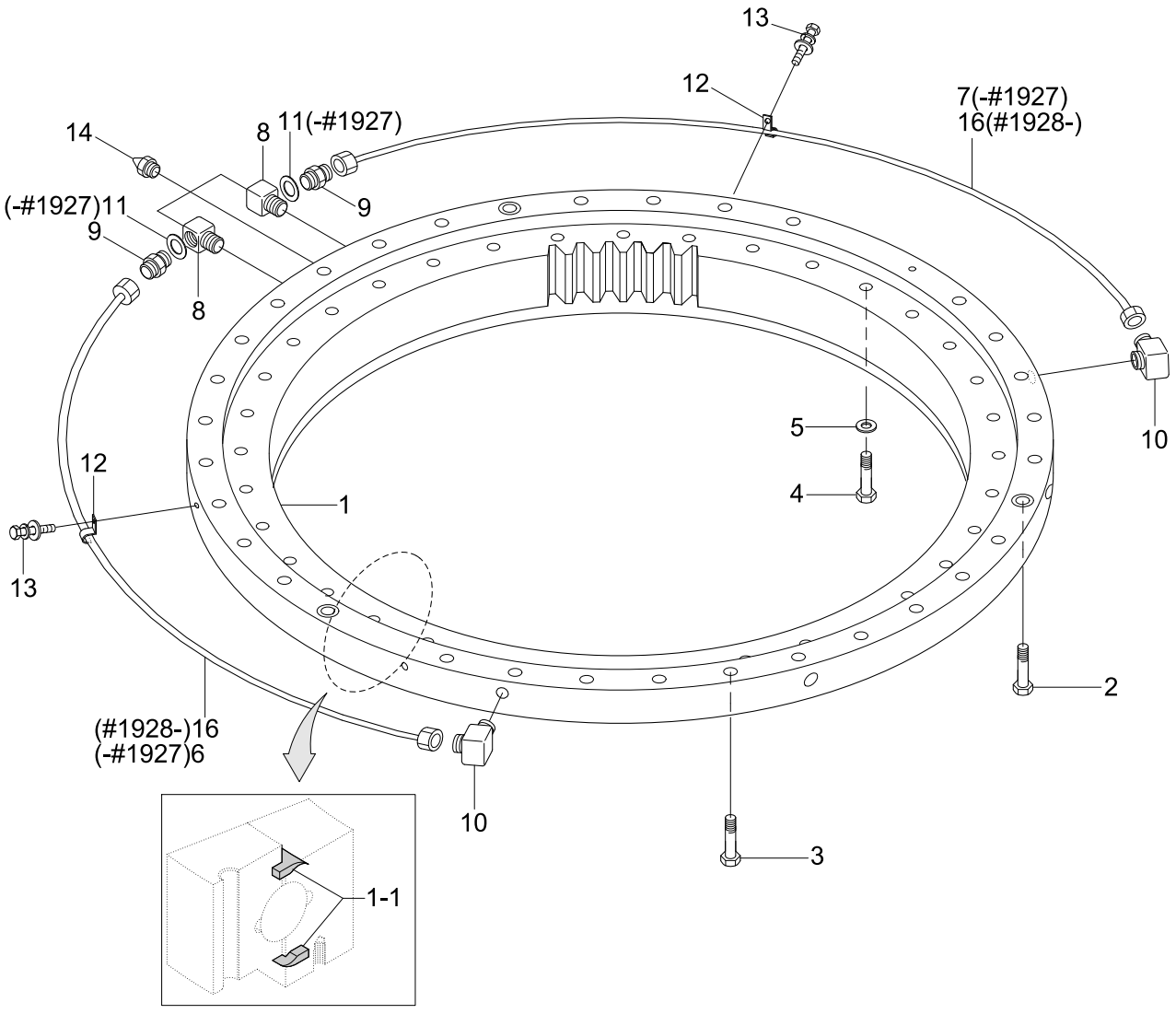

Item	Part_No	IS	Ord	T	Description	Qty	Serial_No	ITC	Remark
1	81E3-10010				BEARING-SWING	1	- #1195		
	81N4-01020				BEARING-SWING	1	#1196 - #2440	D	
	81N4-01021				BEARING-SWING	1	#2441 - #2947	B	
	81N4-01021BG				BEARING-SWING	1	#2948 -	D	
1-1	82E3-10040				.SEAL-SWING BEARING	2	#0001 -	-	
2	81E3-3010				BOLT-REAMER	3	- #1195		
	81N4-66100				BOLT-REAMER	3	#1196 - #1218	D	
	81N4-66200				BOLT-REAMER	3	#1219 - #3432	D	
	81N4-66201				BOLT-REAMER	3	#3433 -	D	
3	S017-181002				BOLT-HEX	32	- #1195		
	S017-18105D				BOLT-HEX	32	#1196 - #3432	A	
	S017-181056				BOLT-HEX	32	#3433 -	D	
4	S018-16060D				BOLT-HEX	36	- #3432		
	S018-160606				BOLT-HEX	36	#3433 -	D	
	S018-16065D				BOLT-HEX	36	- #3432		LCM ONLY
	S018-160656				BOLT-HEX	36	#3433 -	D	LCM ONLY
5	S441-160002				WASHER-HARDENED	36			
6	81EA-26010				PIPE COMP-LH	1	- #1927	-	
7	81EA-26020				PIPE COMP-RH	1	- #1927	-	
8	31EH-00610				FITTING	2	- #1927		
	81N6-00110				ELBOW-90	2	#1928 -	D	
9	E131-0626	10			CONNECTOR	2	- #1927		
	81N6-00120				CONNECTOR	2	#1928 -	D	
10	E231-0349	10			ELBOW-90	2	- #1927		
	81N6-00130				ELBOW-90	2	#1928 -	D	

Item	Part_No	IS	Ord	T	Description	Qty	Serial_No	ITC	Remark
11	P391-040000				WASHER-COPPER	2	- #1927	-	
12	E241-2603	10			CLAMP	2	- #1927		
	S543-120002				CLAMP-TUBE	2	#1928 -	D	
13	S037-101552				BOLT-W/WASHER	2	#0001 -	-	
14	S651-810008				NIPPLE-GREASE	3			
16	81N6-00210				TUBE-NYLON	2	#1928 -	-	

DOZER BLADE(R140LCD-7)

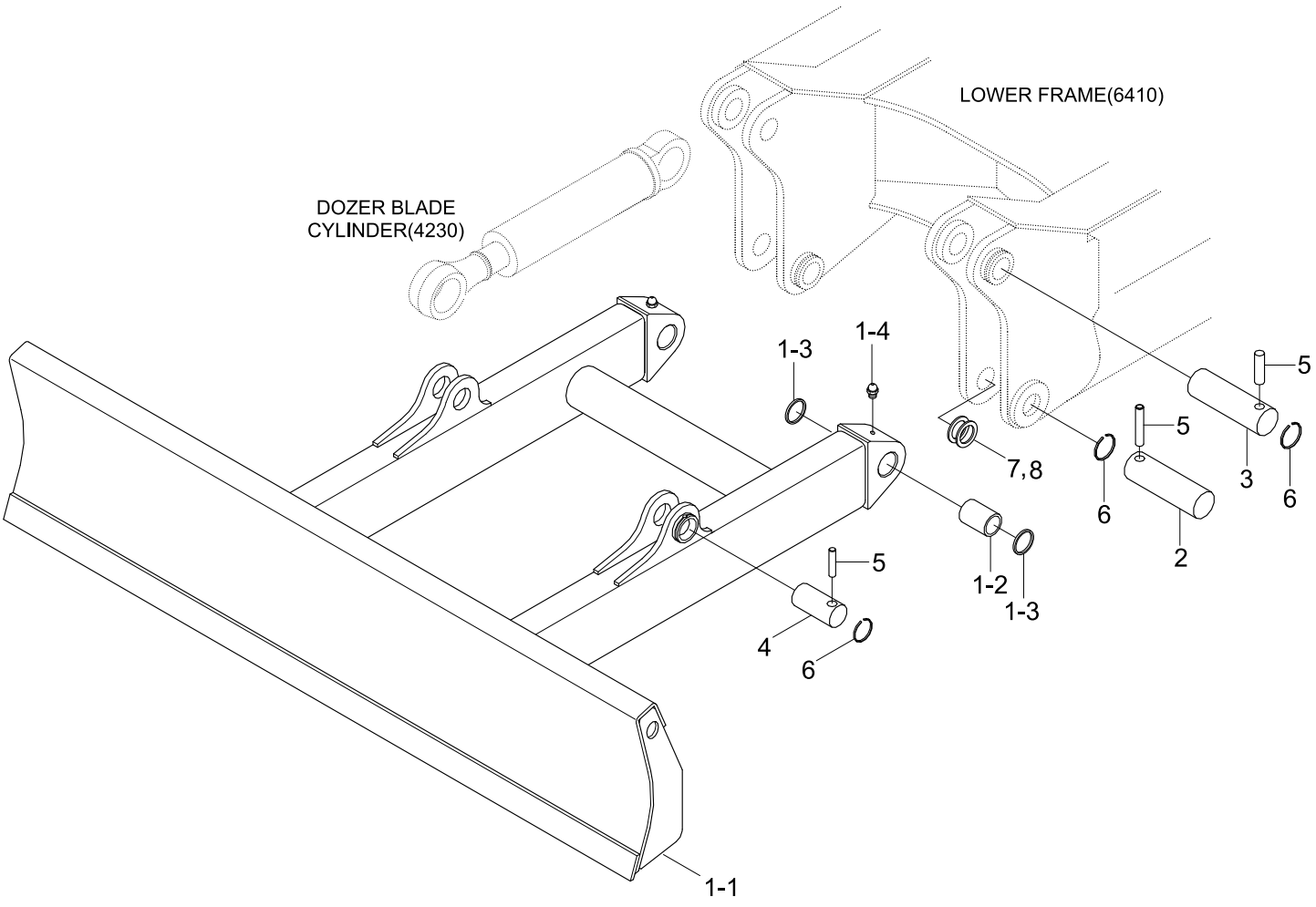

Item	Part_No	IS	Ord	T	Description	Qty	Serial_No	ITC	Remark
1	51E6-51010				DOZER BLADE ASSY	1			500MM SHOE
	51E6-52010				DOZER BLADE ASSY	1			600MM SHOE
1-1	51E6-51020				.DOZER BLADE WA	1			500MM SHOE
	51E6-52020				.DOZER BLADE WA	1			600MM SHOE
1-2	51E6-51200				.BUSHING	2			
1-3	S700-070206				.SEAL-DUST	4			
1-4	S653-810002				.NIPPLE-GREASE	2			
2	51E6-51310				PIN-BLADE	2	- #2708		
	51E6-51311				PIN-BLADE	2	#2709 -	B	
3	51E6-51320				PIN-CYLINDER HEAD	2	- #2708		
	51E6-51321				PIN-CYLINDER HEAD	2	#2709 -	B	
4	51E6-51330				PIN-CYLINDER ROD	2	- #2708		
	51E6-51331				PIN-CYLINDER ROD	2	#2709 -	B	
5	61E3-1190	20			PIN-STOP	6			
6	61E3-1191	20			SPRING-LOCK	6			
7	S391-070120				SHIM-ROUND(1.0T)	6			
8	S390-070120				SHIM-ROUND(0.5T)	6			

CAB PROTECTOR ASSY(OPTION, #2792-)

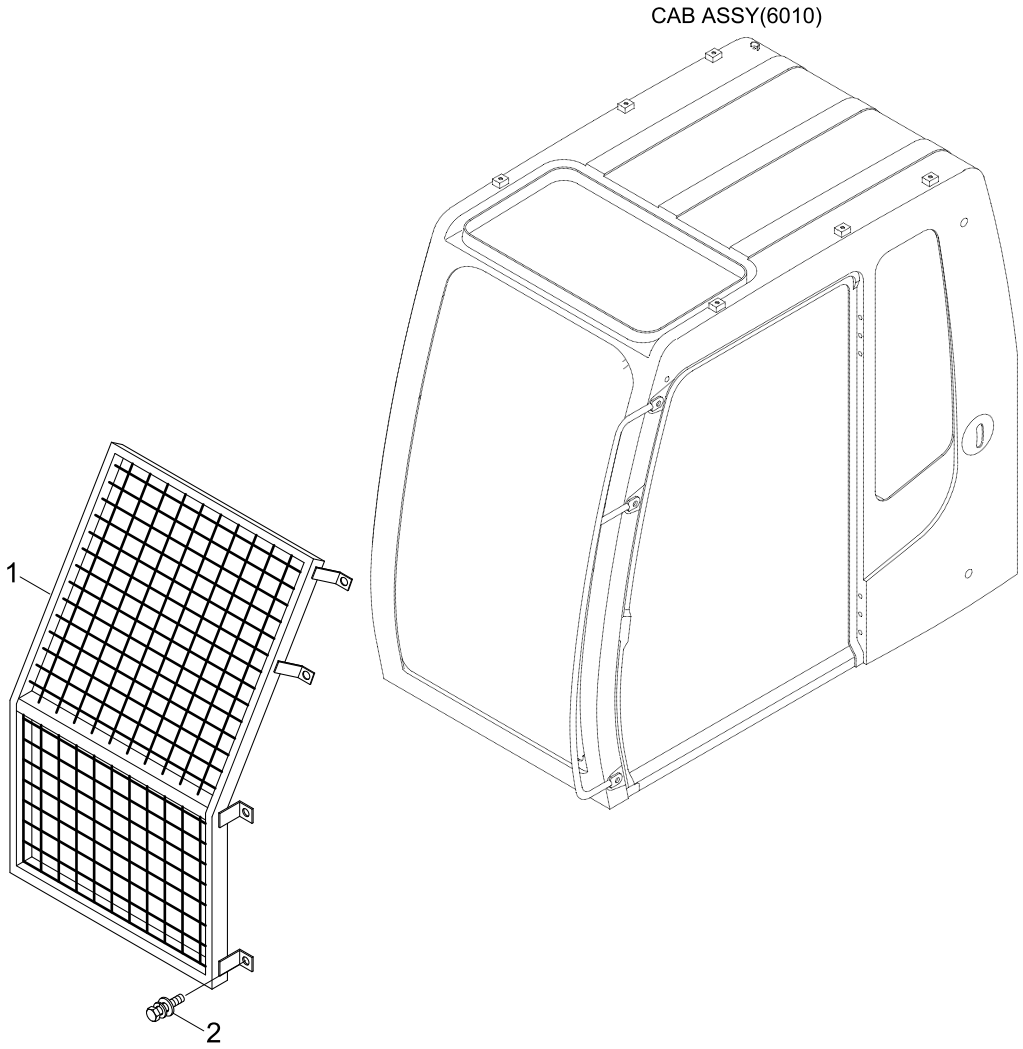

Item	Part_No	IS	Ord	T	Description	Qty	Serial_No	ITC	Remark
*	@				CABIN-PROTECTOR	1	#2792 -	-	NOT
1	71N6-90300				PROTECTOR WA	1	- #3262		
	71N6-90301				PROTECTOR WA	1	#3263 -	D	
2	S037-122556				BOLT-W/WASHER	8			

BOOM MOUNTING

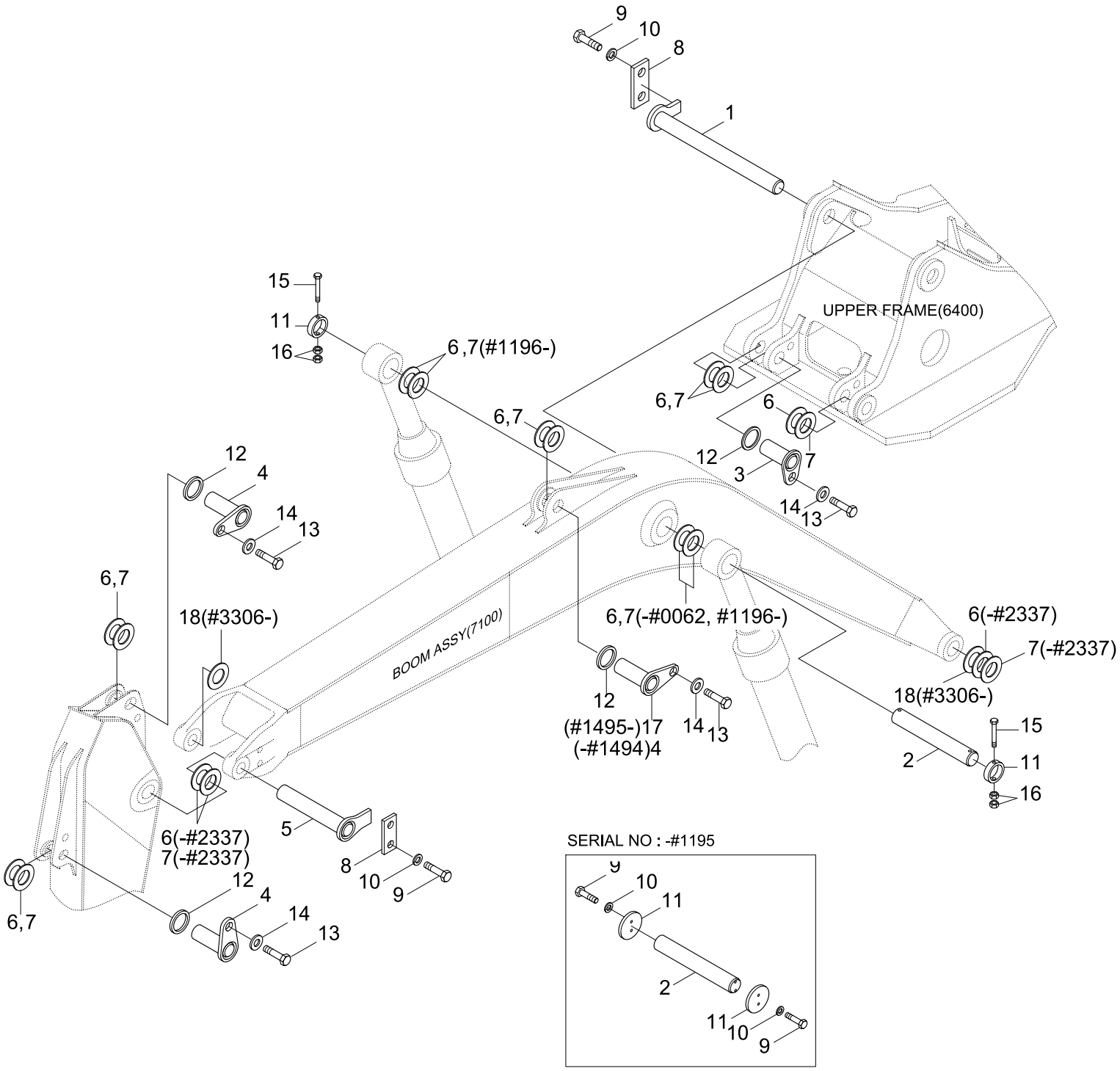

Item	Part_No	IS	Ord	T	Description	Qty	Serial_No	ITC	Remark
1	61N4-11010				PIN ASSY	1	- #1491		
	61N4-11011				PIN ASSY	1	#1492 - #1494	B	
	61N4-11012				PIN ASSY	1	#1495 -	B	
2	61N4-11020				PIN ASSY	1	- #1195		
	61E6-1102				PIN ASSY	1	#1196 - #2619	D	
	61E6-11021				PIN ASSY	1	#2620 -	B	
	61E6-11021-AS				PIN ASSY	1	#0001 -	-	FOR AS ONLY
3	61N8-01400				PIN ASSY	2	- #2619		
	61N8-01400-AS				PIN ASSY	2	- #2619		
	61N8-01401				PIN ASSY	2	#2620 -	B	
	61N8-01401-AS				PIN ASSY	2	#2620 -	-	FOR AS ONLY
4	61N8-01410				PIN ASSY	3	- #1494		
					PIN ASSY	2	#1495 - #2619	A	
	61N8-01410-AS				PIN ASSY	2	- #2619		
	61N8-01411				PIN ASSY	2	#2620 -	B	
	61N8-01411-AS				PIN ASSY	2	#2620 -	-	FOR AS ONLY
5	65EA-11030				PIN ASSY	1	- #0034		
	61N4-11120				PIN ASSY	1	#0035 - #1491	B	
	61N4-11121				PIN ASSY	1	#1492 -	B	
	61N4-11121-AS				PIN ASSY	1	#0001 -	-	FOR AS ONLY
6	S391-070120				SHIM-ROUND(1.0T)	8	- #0034		
					SHIM-ROUND(1.0T)	7	#0036 - #1195	A	
					SHIM-ROUND(1.0T)	9	#1196 - #2337	A	
					SHIM-ROUND(1.0T)	7	#2338 -	A	
7	S392-070120				SHIM-ROUND(2.0T)	8	- #0034		

Item	Part_No	IS	Ord	T	Description	Qty	Serial_No	ITC	Remark
7	S392-070120				SHIM-ROUND(2.0T)	7	#0036 - #1195	A	
					SHIM-ROUND(2.0T)	9	#1196 - #2337	A	
					SHIM-ROUND(2.0T)	7	#2338 -	A	
8	65EA-10710				PLATE	2	- #0034		
	61N4-10700				PLATE	2	#0035 -	B	
9	S017-120252				BOLT-HEX	8	- #1195		
					BOLT-HEX	4	#1196 -	A	
10	S411-120002				WASHER-SPRING	8	- #1195		
					WASHER-SPRING	4	#1196 -	A	
11	61N4-10500				PLATE-STOP	2	- #1195		
	61N8-19010				PIN STOPPER	2	#1196 -	D	
12	61N8-00140				SPACER-PIN	5			
13	S017-160252				BOLT-HEX	5			
14	61N8-00310				WASHER-HARDENED	5			
15	S017-161602				BOLT-HEX	2	#1196 -	-	
16	S205-161002				NUT-HEX	4	#1196 -	-	
17	61N8-01420				PIN ASSY	1	#1495 - #2619	D	
	61N8-01421				PIN ASSY	1	#2620 -	B	
	61N8-01421-AS				PIN ASSY	1	#0001 -	-	FOR AS ONLY
18	S390-070140A				SHIM-ROUND(0.5T)	2	#3306 -	-	

BOOM MOUNTING(ADJUST BOOM, #0234-)

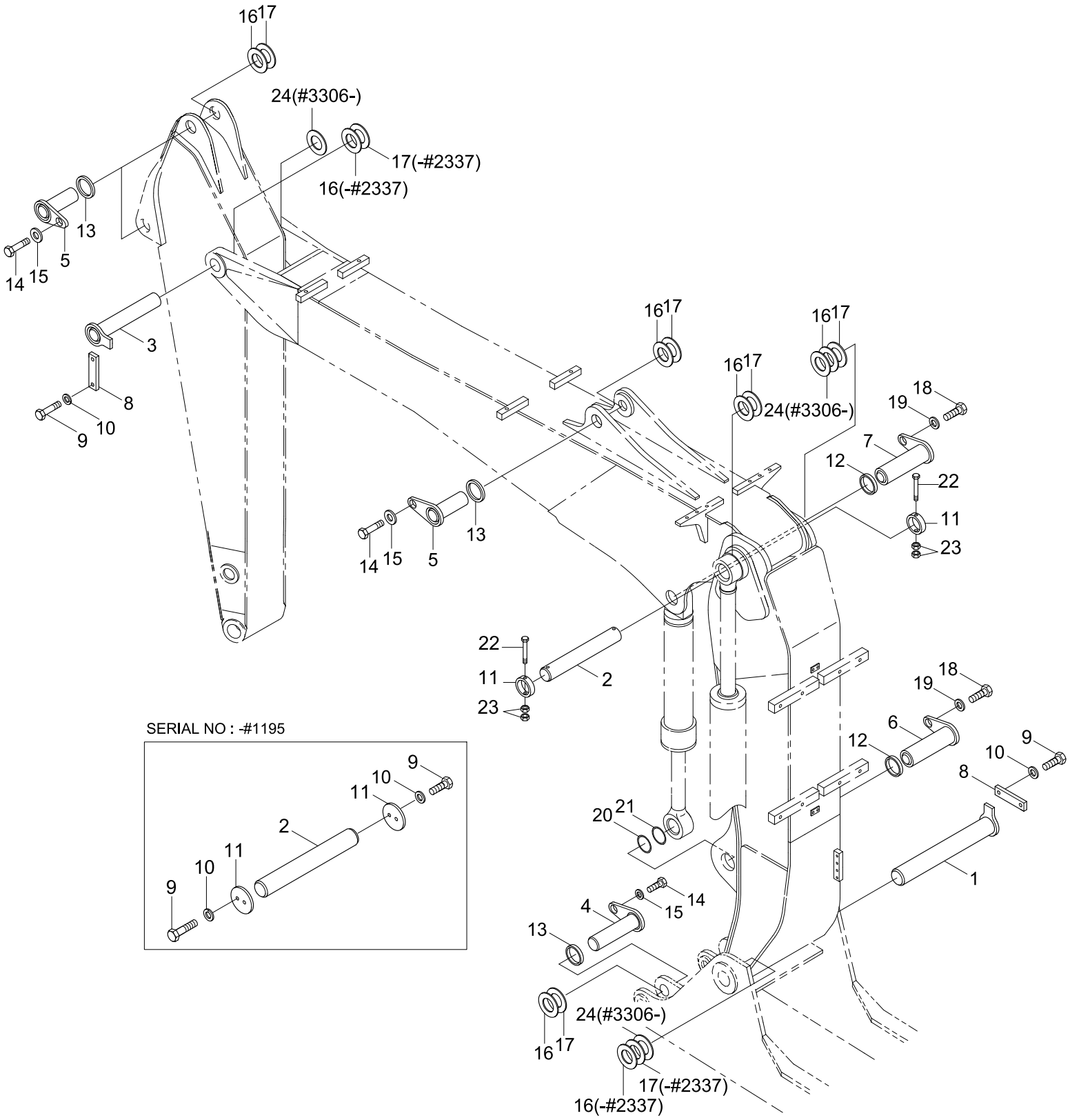

Item	Part_No	IS	Ord	T	Description	Qty	Serial_No	ITC	Remark
*	@				BOOM MOUNTING	1	#0234 -	-	NOT
1	61N4-11010				PIN ASSY	1	- #1491		
	61N4-11011				PIN ASSY	1	#1492 - #1494	B	
	61N4-11012				PIN ASSY	1	#1495 -	B	
2	61N4-11020				PIN ASSY	1	- #1195		
	61E6-1102				PIN ASSY	1	#1196 - #2619	D	
	61E6-11021				PIN ASSY	1	#2620 -	B	
	61E6-11021-AS				PIN ASSY	1	#0001 -	-	FOR AS ONLY
3	61N4-11120				PIN ASSY	1	- #1491		
	61N4-11121				PIN ASSY	1	#1492 -	B	
	61N4-11121-AS				PIN ASSY	1	#0001 -	-	FOR AS ONLY
4	61N8-01400				PIN ASSY	2	- #2619		
	61N8-01400-AS				PIN ASSY	2	- #2619		
	61N8-01401				PIN ASSY	2	#2620 -	B	
	61N8-01401-AS				PIN ASSY	2	#2620 -	-	FOR AS ONLY
5	61N8-01410				PIN ASSY	3	- #2619		
	61N8-01410-AS				PIN ASSY	3	- #2619		
	61N8-01411				PIN ASSY	3	#2620 -	B	
	61N8-01411-AS				PIN ASSY	3	#2620 -	-	FOR AS ONLY
6	61N8-04010				PIN ASSY	1	- #2619		
	61N8-04011				PIN ASSY	1	#2620 -	B	
7	61N8-04000				PIN ASSY	1	- #2619		
	61N8-04001				PIN ASSY	1	#2620 -	B	
8	61N4-10700				PLATE	2			
9	S017-120252				BOLT-HEX	8	- #1195		

Item	Part_No	IS	Ord	T	Description	Qty	Serial_No	ITC	Remark
9	S017-120252				BOLT-HEX	6	#1196 -	A	
10	S411-120002				WASHER-SPRING	6	- #1195		
					WASHER-SPRING	4	#1196 -	A	
11	61N4-10500				PLATE-STOP	2	- #1195		
	61N8-19010				PIN STOPPER	2	#1196 -	D	
12	61N8-00090				SPACER-PIN	2			
13	61N8-00140				SPACER-PIN	5			
14	S017-160252				BOLT-HEX	5			
15	61N8-00310				WASHER-HARDENED	5			
16	S391-070120				SHIM-ROUND(1.0T)	7	- #1195		
					SHIM-ROUND(1.0T)	9	#1196 - #2337	A	
					SHIM-ROUND(1.0T)	7	#2338 -	A	
17	S392-070120				SHIM-ROUND(2.0T)	7	- #1195		
					SHIM-ROUND(2.0T)	9	#1196 - #2337	A	
					SHIM-ROUND(2.0T)	7	#2338 -	A	
18	S017-200302				BOLT-HEX	2			
19	61N8-00320				WASHER-HARDENED	2			
20	S391-095160				SHIM-ROUND(1.0T)	2			
21	S392-095160				SHIM-ROUND(2.0T)	2			
22	S017-161602				BOLT-HEX	2	#1196 -	-	
23	S205-161002				NUT-HEX	4	#1196 -	-	
24	S390-070140A				SHIM-ROUND(0.5T)	3	#3306 -	-	

BOOM(4.6M, STD)

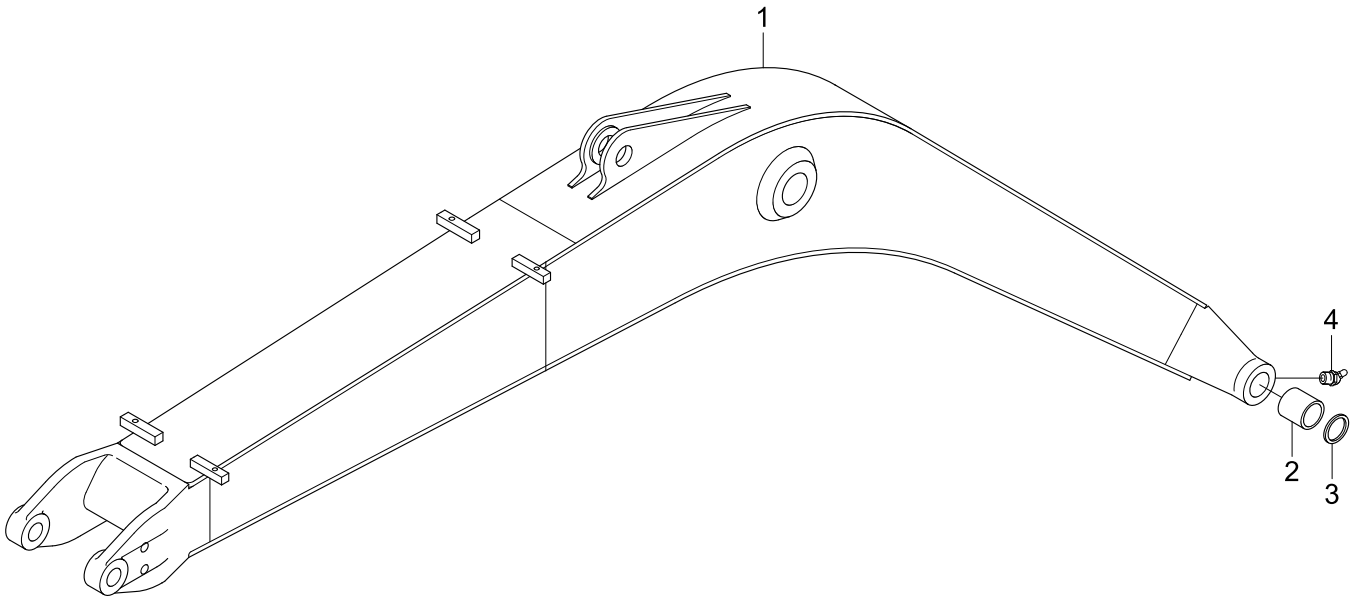

Item	Part_No	IS	Ord	T	Description	Qty	Serial_No	ITC	Remark
*	61N4-10000				BOOM ASSY	1	- #1014		
	61N4-12000				BOOM ASSY	1	#1015 - #1494	D	
	61N4-12001				.BOOM ASSY	1	#1495 - #3418	D	
	61N4-12002				.BOOM ASSY	1	#3419 -	B	
1	61N4-10010				.BOOM WA	1	- #1014		
	61N4-12010				.BOOM WA	1	#1015 - #1494	D	
	61N4-12011				.BOOM WA	1	#1495 - #3418	D	
	61N4-12012				.BOOM WA	1	#3419 -	B	
2	61EN-12010				.BUSHING-BRONZE	2			
3	S700-070206				.DUST SEAL-DKIY TYPE	2			
4	S651-810002				.NIPPLE-GREASE	1			

BOOM(4.1M)

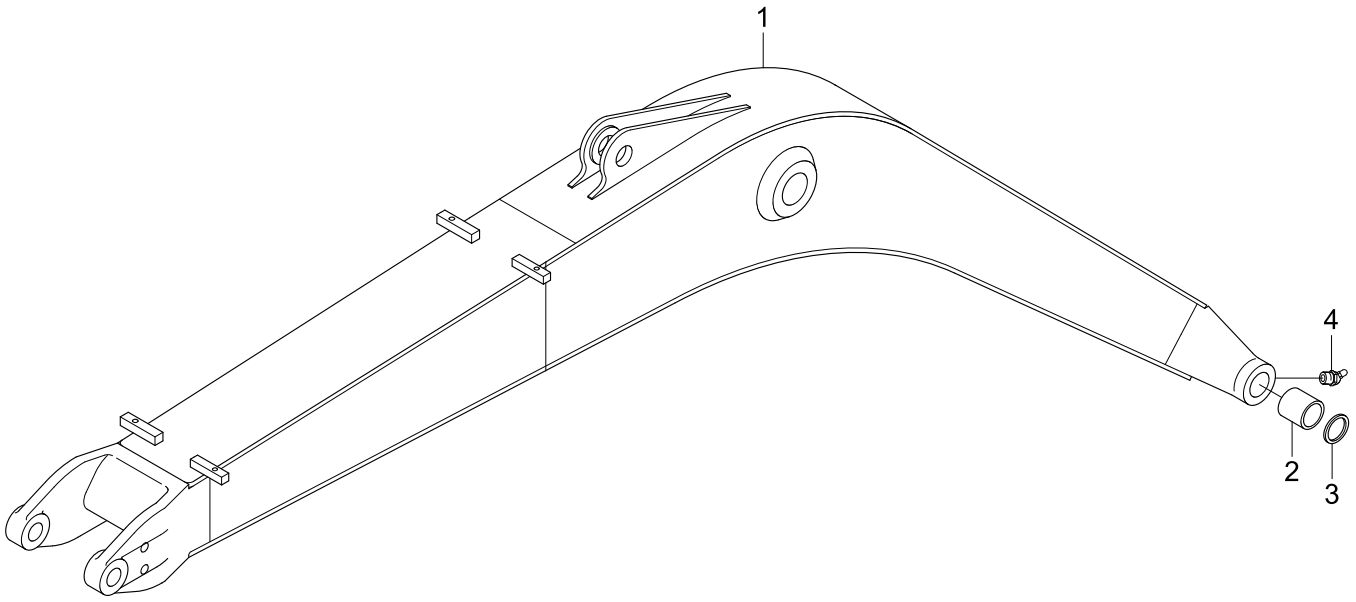

Item	Part_No	IS	Ord	T	Description	Qty	Serial_No	ITC	Remark
	@				ILL.CHANGE	1	#0001 -	-	NOT
	61N4-14000				BOOM ASSY	1	#0063 - #1014	-	
*	61N4-14001				BOOM ASSY	1	#1015 - #1494	B	
	61N4-14002				BOOM ASSY	1	#1495 - #3418	D	
	61N4-14003				BOOM ASSY	1	#3419 -	B	
	61N4-14010				.BOOM WA	1	- #1014		
1	61N4-14011				.BOOM WA	1	#1015 - #1494	B	
	61N4-14012				.BOOM WA	1	#1495 - #3418	D	
	61N4-14013				.BOOM WA	1	#3419 -	B	
2	61EN-12010				.BUSHING-BRONZE	2			
3	S700-070206				.DUST SEAL-DKIY TYPE	2			
4	S651-810002				.NIPPLE-GREASE	1			

BOOM(2 PIECE BOOM, #0234-)

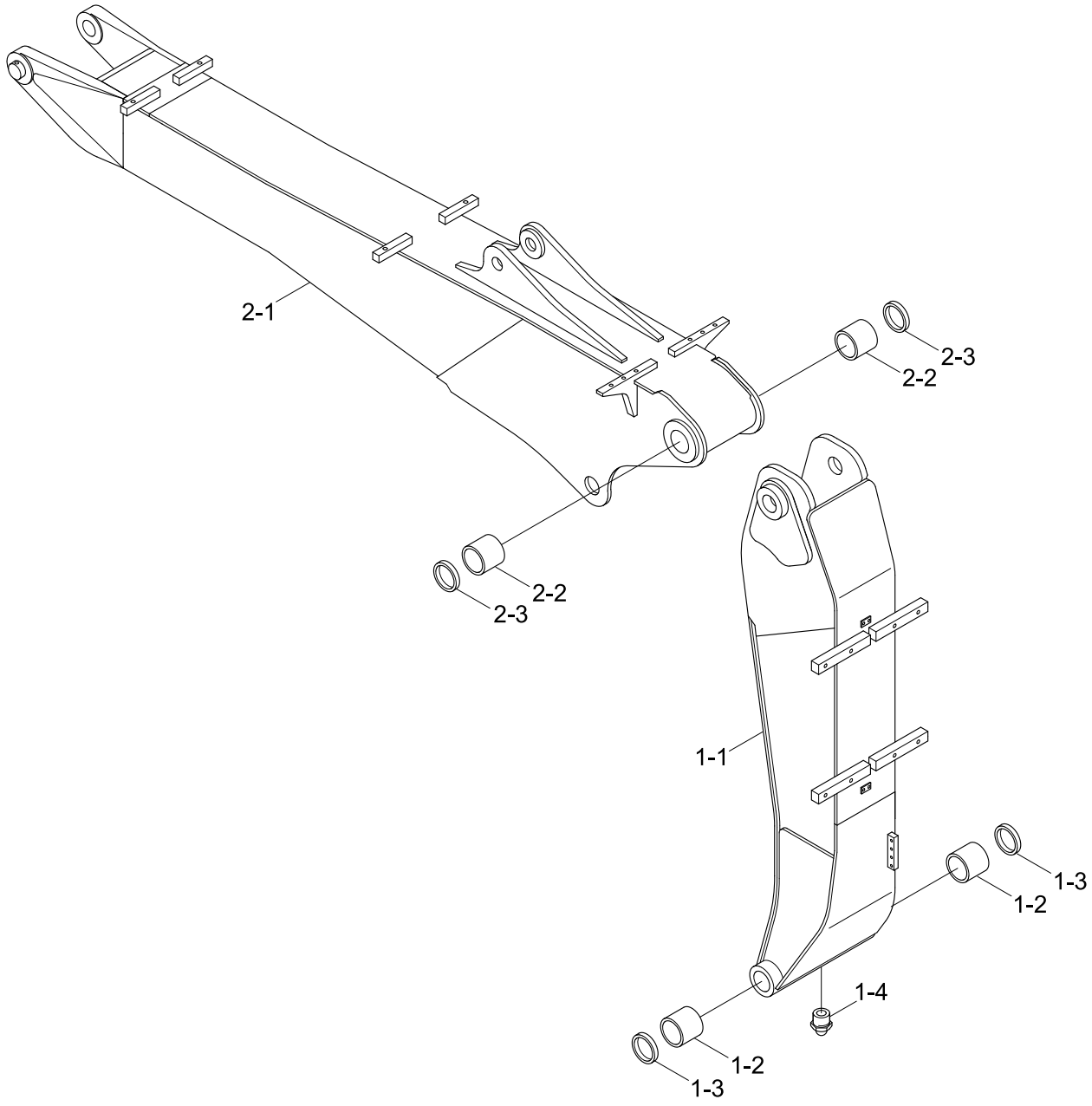

Item	Part_No	IS	Ord	T	Description	Qty	Serial_No	ITC	Remark
*	61N4-19000				BOOM ASSY(2-PCS 1ST)	1	#0234 -	-	
1-1	61N4-19010				.BOOM WA(2-PCS 1ST)	1			
1-2	61EN-12010				.BUSHING	2			
1-3	S700-070206				.DUST SEAL-DKIY TYPE	2			
1-4	S651-810002				.NIPPLE-GREASE	1			
*	61N4-19500				BOOM ASSY(2-PCS 2ND)	1	#0234 -	-	
2-1	61N4-19510				.BOOM WA(2-PCS 2ND)	1			
2-2	X122-702090				.BUSHING	2			
2-3	S700-070206				.DUST SEAL-DKIY TYPE	2			

ARM(2.5M, STD)

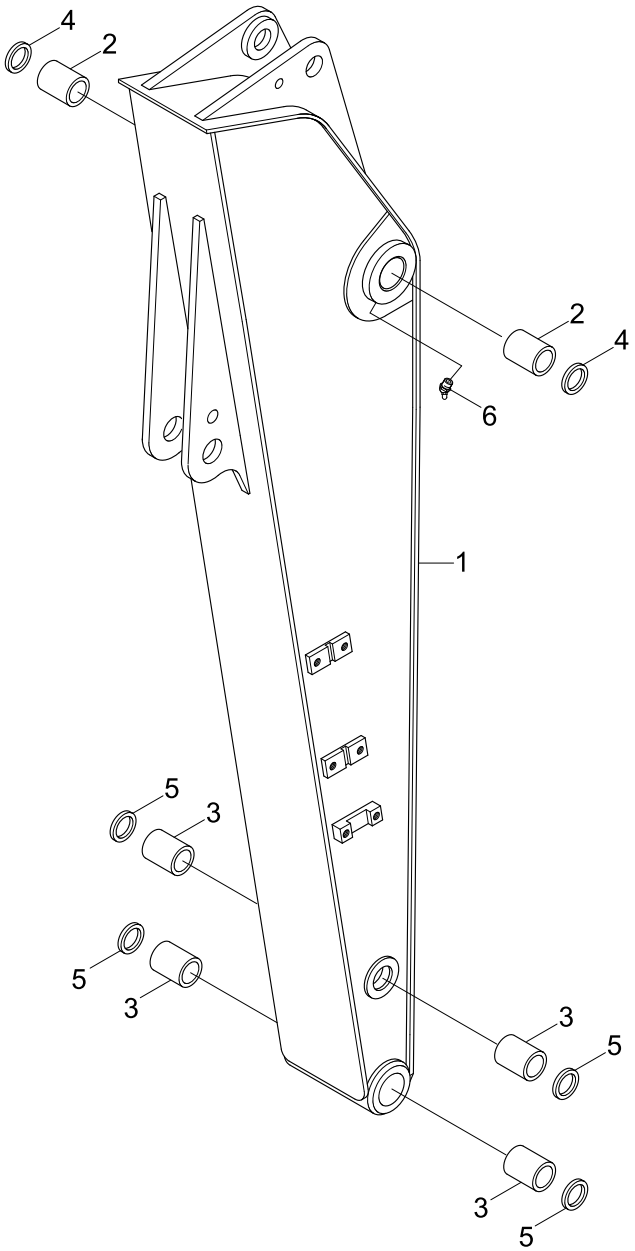

Item	Part_No	IS	Ord	T	Description	Qty	Serial_No	ITC	Remark
*	61N4-20001				ARM ASSY(2.5M)	1	- #0034		
	61N4-20002				ARM ASSY(2.5M)	1	#0035 -	A	
1	61N4-20010				.ARM WA	1	- #0034		
	61N4-20011				.ARM WA	1	#0035 -	A	
2	61EN-12300				.BUSHING-BRONZE	2			
3	61EN-13300				.BUSHING	4			
4	S700-070206				.DUST SEAL-DKIY TYPE	2			
5	S700-065206				.DUST SEAL-DKIY TYPE	4			
6	S651-810002				.NIPPLE-GREASE	1			

ARM(3.0M)

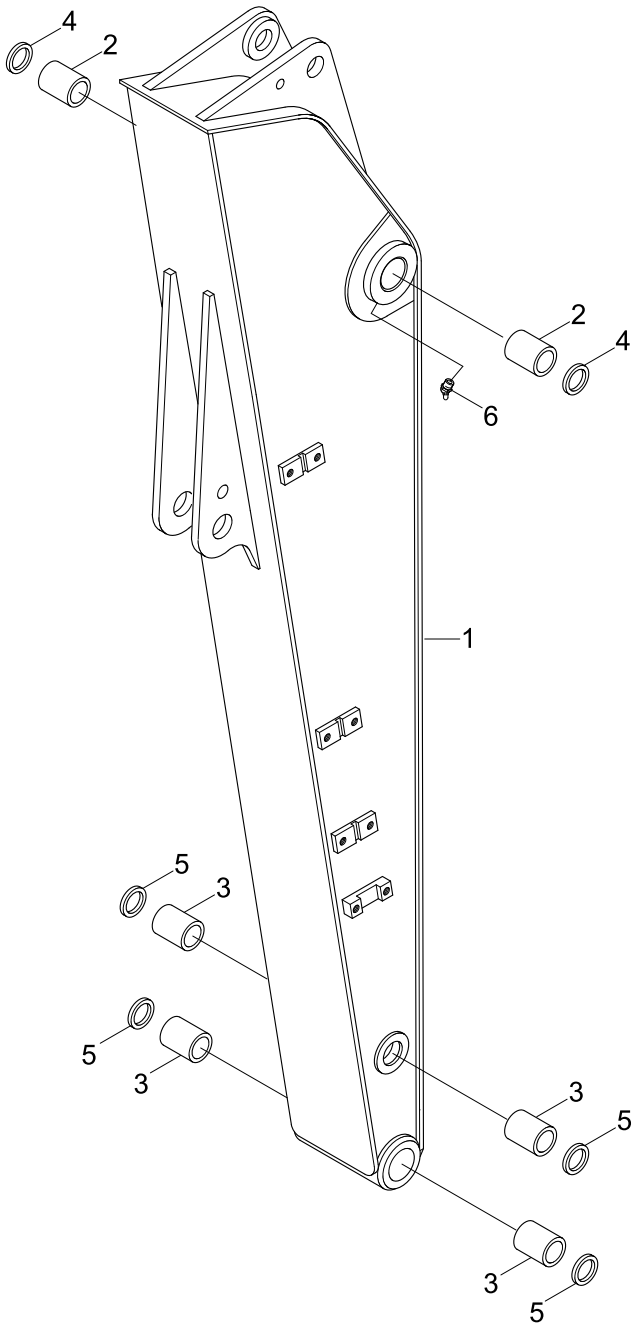

Item	Part_No	IS	Ord	T	Description	Qty	Serial_No	ITC	Remark
*	61N4-24000				ARM ASSY(3.0M)	1	- #0034		
	61N4-24001				ARM ASSY(3.0M)	1	#0035 -	A	
1	61N4-24010				.ARM WA	1	- #0034		
	61N4-24011				.ARM WA	1	#0035 -	A	
2	61EN-12300				.BUSHING-BRONZE	2			
3	61EN-13300				.BUSHING	4			
4	S700-070206				.DUST SEAL-DKIY TYPE	2			
5	S700-065206				.DUST SEAL-DKIY TYPE	4			
6	S651-810002				.NIPPLE-GREASE	1			

ARM(2.1M)

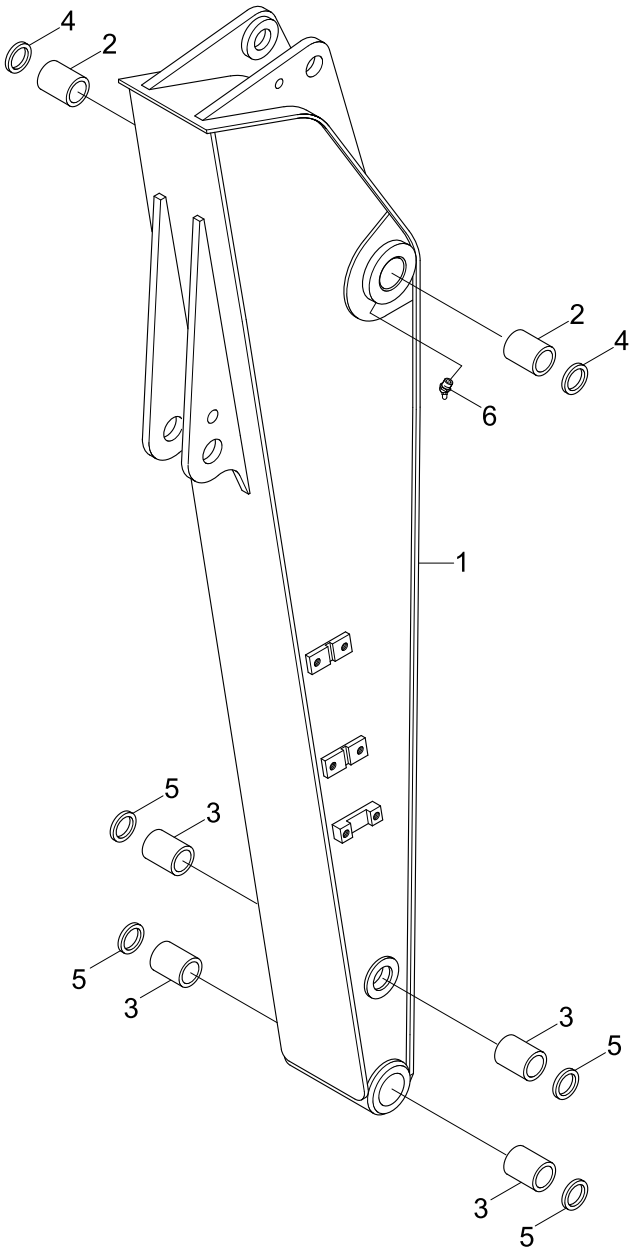

Item	Part_No	IS	Ord	T	Description	Qty	Serial_No	ITC	Remark
*	61N4-23001				ARM ASSY(2.1M)	1	#0035 -	-	
1	61N4-23011				.ARM WA	1			
2	61EN-12300				.BUSHING-BRONZE	2			
3	61EN-13300				.BUSHING	4			
4	S700-070206				.DUST SEAL-DKIY TYPE	2			
5	S700-065206				.DUST SEAL-DKIY TYPE	4			
6	S651-810002				.NIPPLE-GREASE	1			

ARM(1.9M)

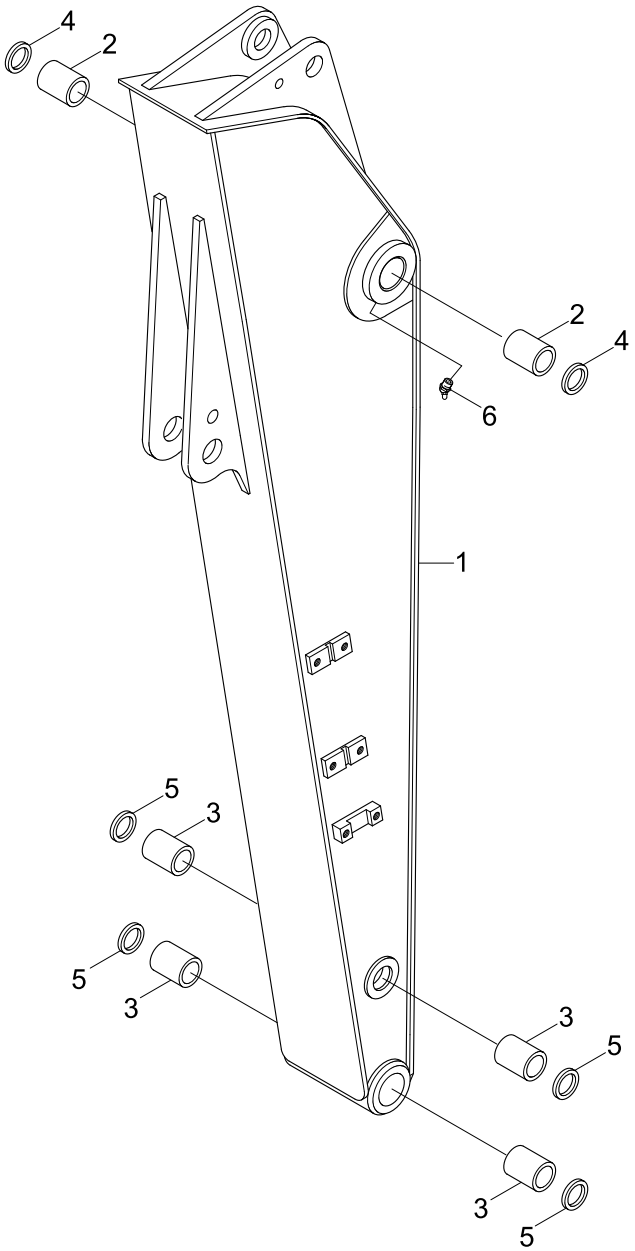

Item	Part_No	IS	Ord	T	Description	Qty	Serial_No	ITC	Remark
*	61N4-22001				ARM ASSY(1.9M)	1	#0035 -	-	
1	61N4-22011				.ARM WA	1			
2	61EN-12300				.BUSHING-BRONZE	2			
3	61EN-13300				.BUSHING	4			
4	S700-070206				.DUST SEAL-DKIY TYPE	2			
5	S700-065206				.DUST SEAL-DKIY TYPE	4			
6	S651-810002				.NIPPLE-GREASE	1			

BUCKET CONTROL GROUP

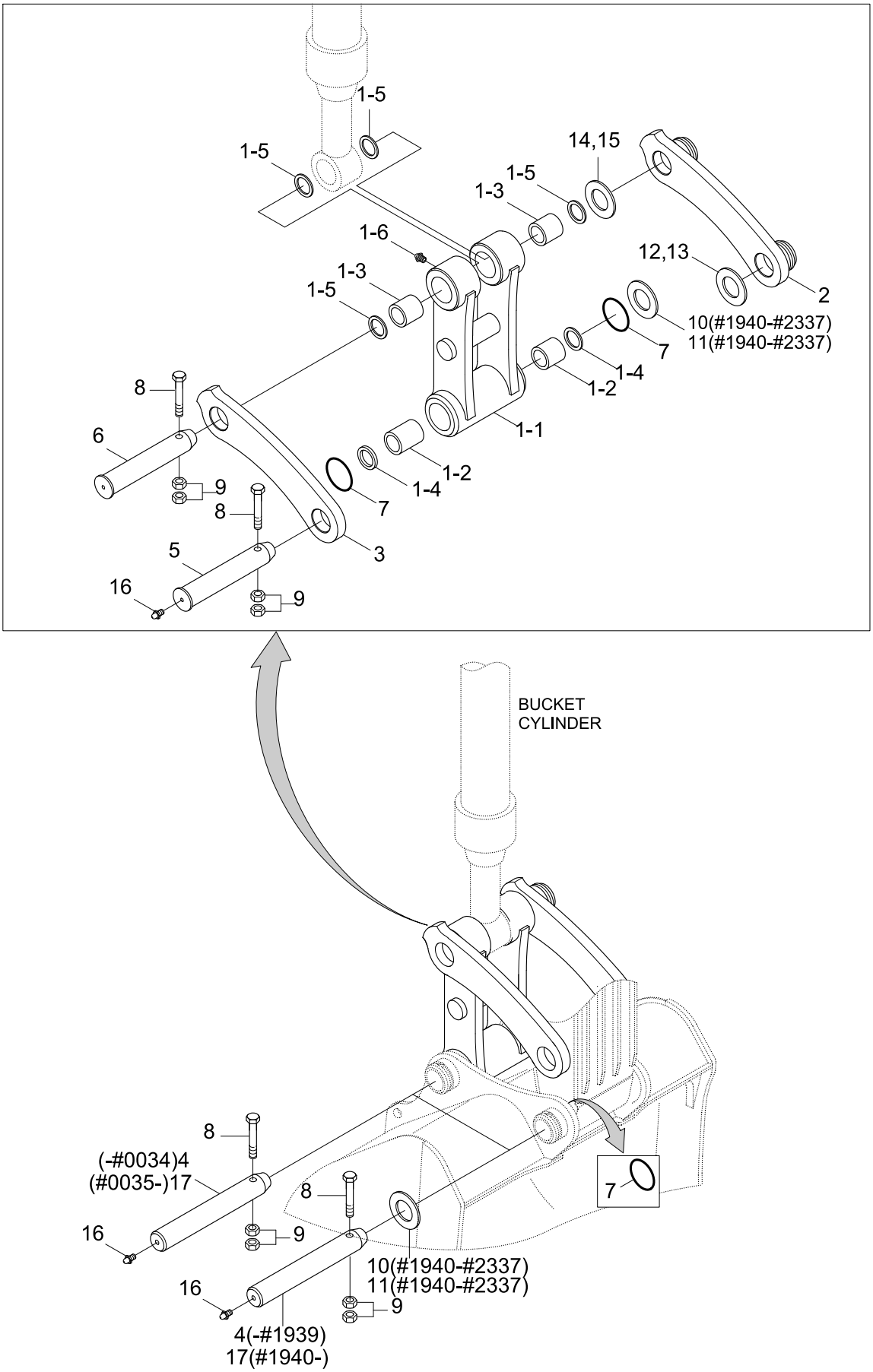

Item	Part_No	IS	Ord	T	Description	Qty	Serial_No	ITC	Remark
1	61N4-40011				CONTROL ROD ASSY	1			
1-1	61N4-40101				.CONTROL ROD WA	1			
1-2	61EN-13300				.BUSHING	2			
1-3	61E6-1128	20			.BUSHING	2			
1-4	S700-065206				.DUST SEAL-DKIY TYPE	2			
1-5	S700-070206				.SEAL-DUST	4			
1-6	S651-810002				.NIPPLE-GREASE	2			
2	61N4-40020				CONTROL LINK-RH	1	- #0067		
	61N4-40021				CONTROL LINK-RH	1	#0068 -	D	
3	61N4-40030				CONTROL LINK-LH	1	- #0067		
	61N4-40031				CONTROL LINK-LH	1	#0068 -	D	
4	61N4-11110				PIN	2	- #0034		
	61E3-1108	40			PIN-ATTACH	1	#0035 - #1491	B	
	61E3-11081				PIN-ATTACH	1	#1492 - #1939	B	
5	61N4-11090				PIN-ATTACH	1	- #2619		
	61N4-11091				PIN-ATTACH	1	#2620 -	D	
	61N4-11091-AS				PIN ASSY	1	#0001 -	-	FOR AS ONLY
6	61N4-11100				PIN	1	- #2619		
	61N4-11100-AS				PIN	1	- #2619		
	61N4-11101				PIN	1	#2620 -	B	
	61N4-11101-AS				PIN	1	#2620 -	-	FOR AS ONLY
7	E161-3052	10			O-RING	4			
8	S017-161302				BOLT-HEX	4	#0001 -	-	
9	S205-161002				NUT-HEX	8			
10	S391-065110				SHIM-ROUND(1.0T)	1	- #1939		

Item	Part_No	IS	Ord	T	Description	Qty	Serial_No	ITC	Remark
10	S391-065110				SHIM-ROUND(1.0T)	2	#1940 - #2337	A	
11	S392-065110				SHIM-ROUND(2.0T)	1	- #1939		
					SHIM-ROUND(2.0T)	2	#1940 - #2337	A	
12	S391-065120				SHIM-ROUND(1.0T)	1			
13	S392-065120				SHIM-ROUND(2.0T)	1			
14	S391-070120				SHIM-ROUND(1.0T)	1			
15	S392-070120				SHIM-ROUND(2.0T)	1			
16	S651-810002				NIPPLE-GREASE	3			
17	61E3-12060				PIN	1	#0035 - #1491	-	
	61E3-12061				PIN	1	#1492 - #1939	B	
					PIN	2	#1940 -	A	
	61E3-12061-AS				PIN	2	#0001 -	-	FOR AS ONLY

BUCKET(0.58m^3 SAE HEAPED, STD)

SERIAL NO : -#1939

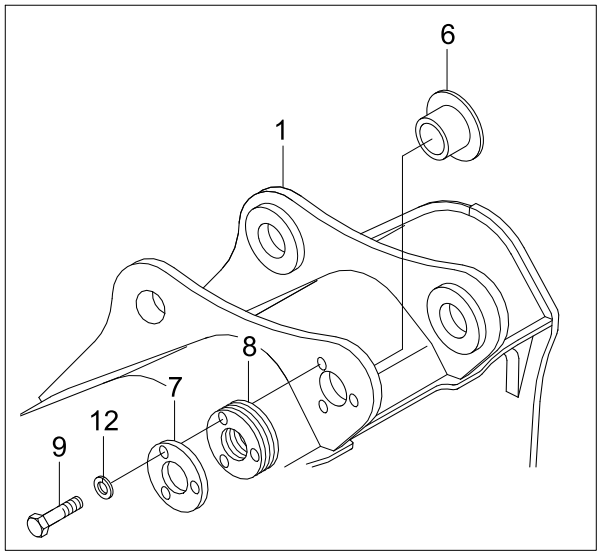

SERIAL NO : -#2800

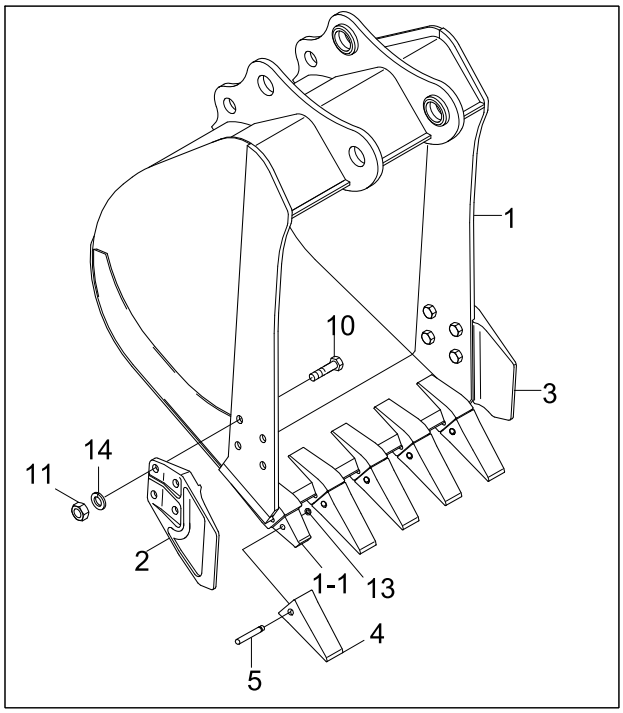

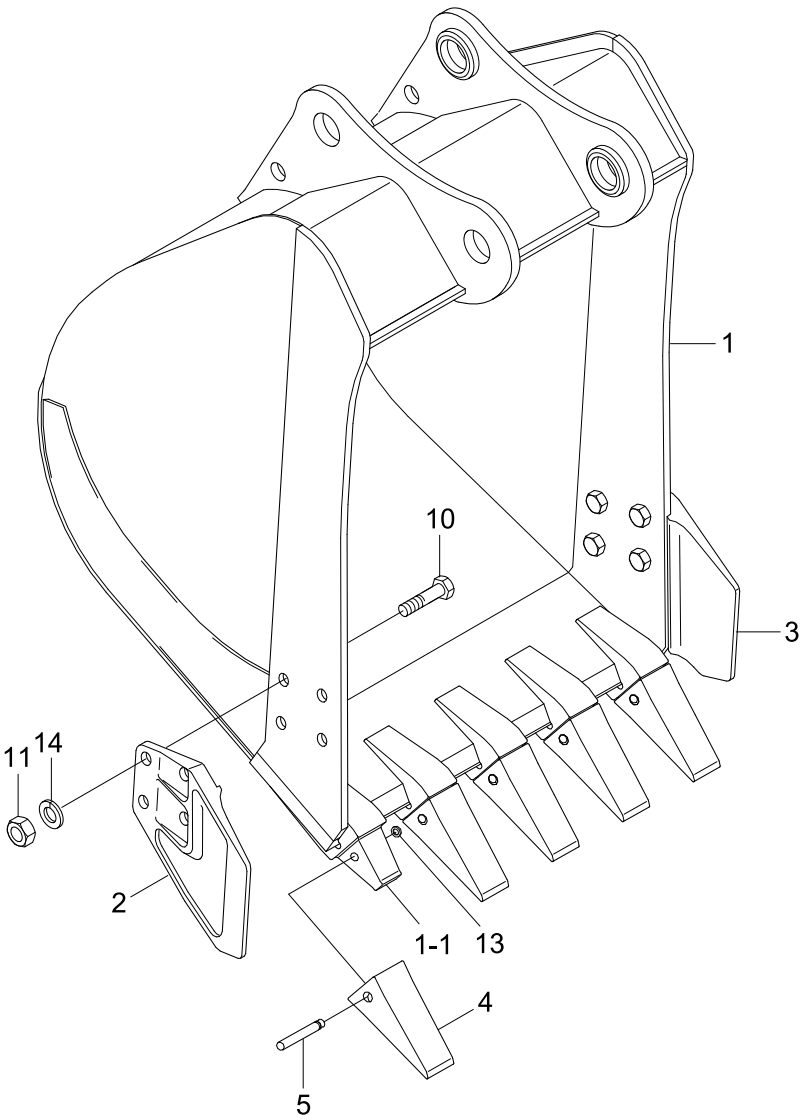

SERIAL NO : -#2947

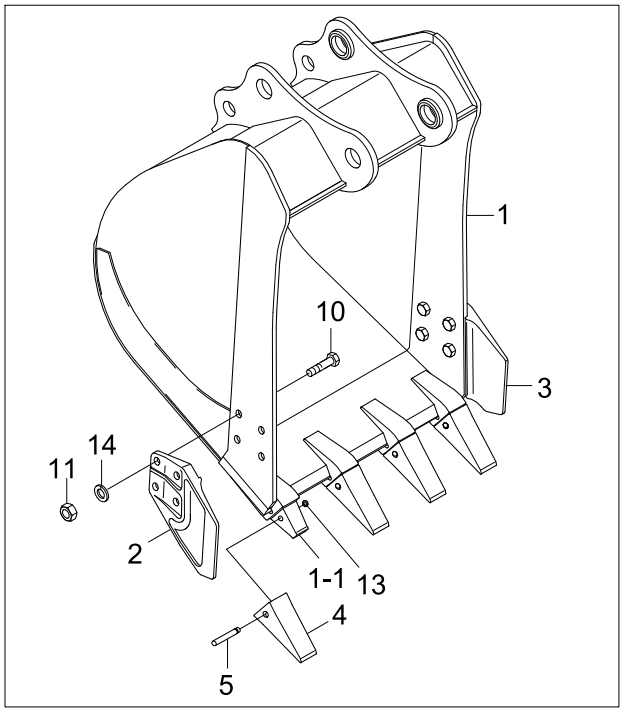

Item	Part_No	IS	Ord	T	Description	Qty	Serial_No	ITC	Remark
*	61N4-31000				BUCKET ASSY	1	- #1939		
	61N4-31001				BUCKET ASSY	1	#1940 - #2800	B	
	61N4-31002				BUCKET ASSY	1	#2801 - #2947	A	
	66N4-31000				BUCKET ASSY	1	#2948 -	A	
1	61N4-31010				.BUCKET WA	1	- #1939		
	61N4-31011				.BUCKET WA	1	#1940 - #2800	D	
	61N4-31012				.BUCKET WA	1	#2801 - #2947	D	
	66N4-31010				.BUCKET WA	1	#2948 -	D	
1-1	E161-3017	10			..ADAPTER-TOOTH	5	- #2800		
	61N4-31200				..ADAPTOR-TOOTH	4	#2801 - #2947	D	
					..ADAPTOR-TOOTH	5	#2948 -	A	
2	61E3-3033	20			.SIDE CUTTER-LH	1	- #2947		
	61E3-3033BG	20			.SIDE CUTTER-LH	1	#2948 -	D	
3	61E3-3034	20			.SIDE CUTTER-RH	1	- #2947		
	61E3-3034BG	20			.SIDE CUTTER-RH	1	#2948 -	A	
4	E161-3027	10			.POINT-TOOTH	5	- #2800		
	61N4-31210				.POINT-TOOTH	4	#2801 - #2947	D	
	61N4-31210BG				.POINT-TOOTH	4	#2948 -	D	
					.POINT-TOOTH	5	#2948 -	D	
K5	E161-3035	20			.PIN-TOOTH	5	- #2800		
5	66N4-30350				.PIN-TOOTH	4	#2801 - #2947	D	
					.PIN-TOOTH	5	#2948 -	D	
6	61E3-1126	20			.BUSHING	1	- #1939	-	
7	61E3-3036	10			.PLATE-COVER	1	- #1939	-	
8	61E3-3041	10			.SHIM(1.0T)	5	- #1939	-	

Item	Part_No	IS	Ord	T	Description	Qty	Serial_No	ITC	Remark
9	S017-160452				.BOLT-HEX	3	- #1939	-	
10	S017-200552				.BOLT-HEX	8	#0001 -	-	
11	S205-201002				.NUT-HEX	8			
12	S403-162002				.WASHER-PLAIN	3	- #1939	-	
K13	61E5-11150				.WASHER-LOCK	5	- #2800		
13	66N4-11150				.WASHER-LOCK	4	#2801 - #2947	D	
					.WASHER-LOCK	5	#2948 - #2966	D	
	61E5-11150				.WASHER-LOCK	5	#2967 -	D	
14	S411-200002				.WASHER-SPRING	8			
K	E161-3035-S				TOOTH PIN KIT	1	#0001 - #2800	-	INCL 5, 13

BUCKET(0.23m^3 SAE HEAPED)

SERIAL NO : -#1939

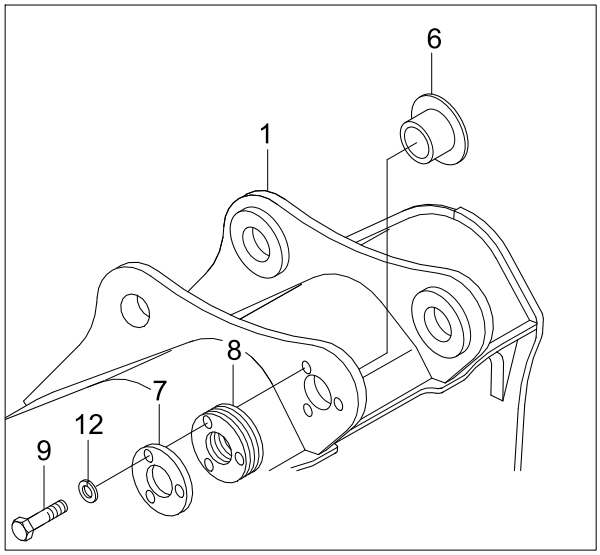

SERIAL NO : -#2800

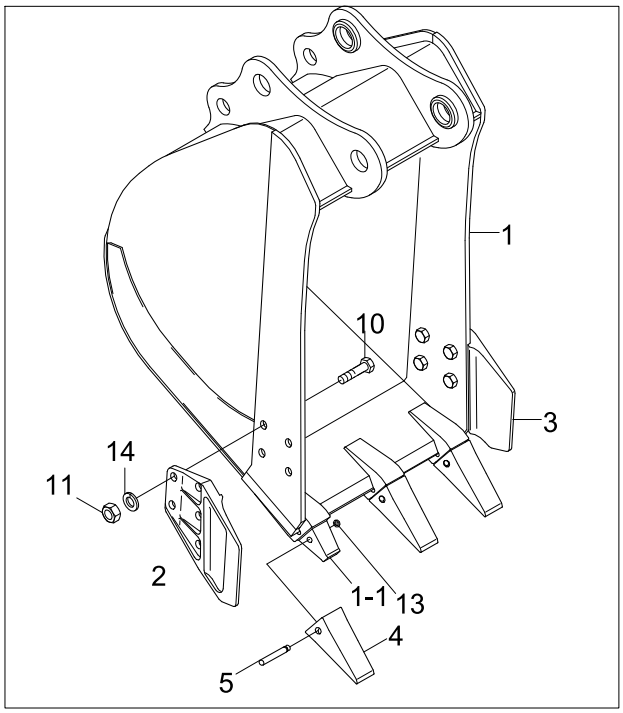

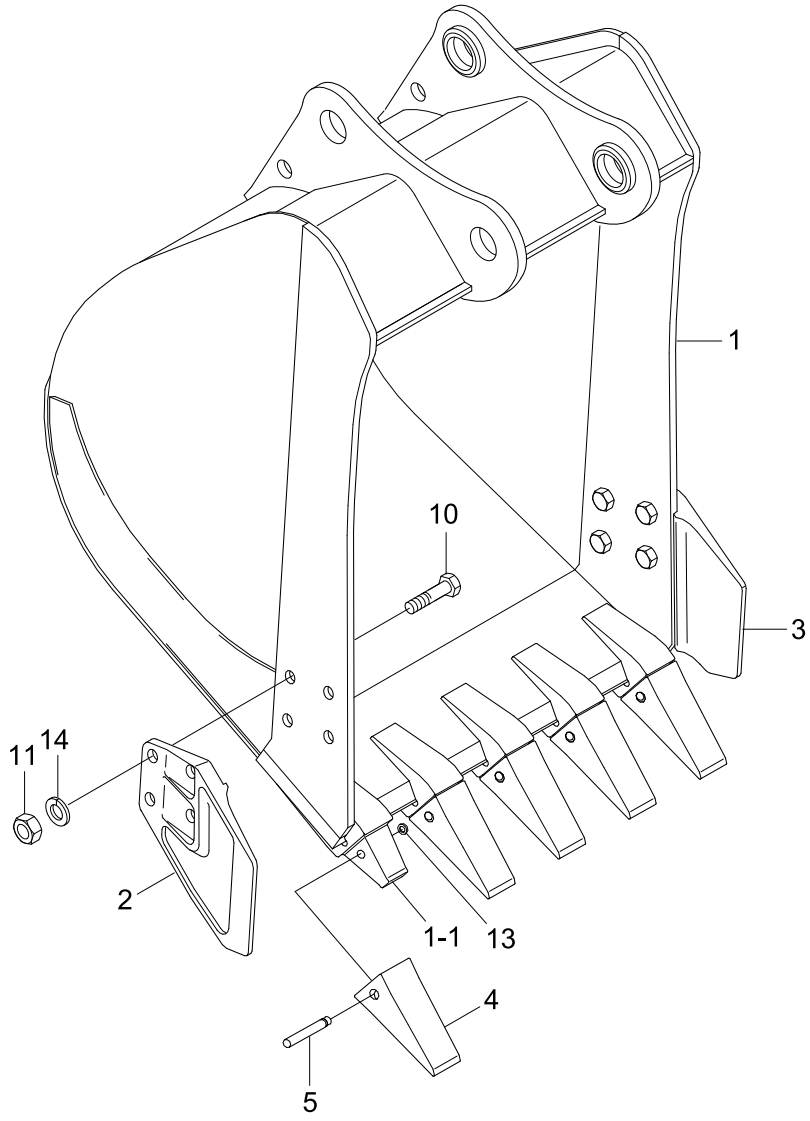

SERIAL NO : -#2947

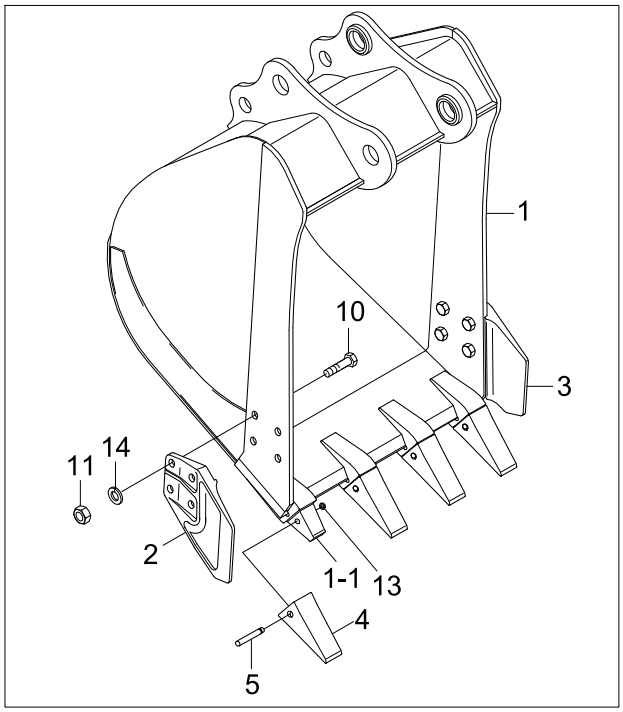

Item	Part_No	IS	Ord	T	Description	Qty	Serial_No	ITC	Remark
*	61N4-32000				BUCKET ASSY	1	- #1939		
	61N4-32001				BUCKET ASSY	1	#1940 - #2800	B	
	61N4-32002				BUCKET ASSY	1	#2801 - #2947	A	
	66N4-32000				BUCKET ASSY	1	#2948 -	A	
1	61N4-32010				.BUCKET WA	1	- #1939		
	61N4-32011				.BUCKET WA	1	#1940 - #2800	D	
	61N4-32012				.BUCKET WA	1	#2801 - #2947	D	
	66N4-32010				.BUCKET WA	1	#2948 -	D	
1-1	E161-3017	10			..ADAPTER-TOOTH	3	- #2800		
	61N4-31200				..ADAPTOR-TOOTH	4	#2801 - #2947	D	
					..ADAPTOR-TOOTH	5	#2948 -	D	
2	61E3-3033	20			.SIDE CUTTER-LH	1	- #2947		
	61E3-3033BG	20			.SIDE CUTTER-LH	1	#2948 -	D	
3	61E3-3034	20			.SIDE CUTTER-RH	1	- #2947		
	61E3-3034BG	20			.SIDE CUTTER-RH	1	#2948 -	S	
4	E161-3027	10			.POINT-TOOTH	3	- #2800		
	61N4-31210				.POINT-TOOTH	4	#2801 - #2947	D	
	61N4-31210BG				.POINT-TOOTH	3	#2948 -	D	
5	E161-3035	20			.PIN-TOOTH	3	- #2800		
K5	66N4-30350				.PIN-TOOTH	4	#2801 - #2947	D	
5	66N4-30350				.PIN-TOOTH	3	#2948 -	D	
6	61E3-1126	20			.BUSHING	1	- #1939	-	
7	61E3-3036	10			.PLATE-COVER	1	- #1939	-	
8	61E3-3041	10			.SHIM(1.0T)	5	- #1939	-	
9	S017-160452				.BOLT-HEX	3	- #1939	-	

Item	Part_No	IS	Ord	T	Description	Qty	Serial_No	ITC	Remark
10	S017-200552				.BOLT-HEX	8	#0001 -	-	
11	S205-201002				.NUT-HEX	8			
12	S403-162002				.WASHER-PLAIN	3	- #1939	-	
K13	61E5-11150				.WASHER-LOCK	3	- #2800		
13	66N4-11150				.WASHER-LOCK	4	#2801 - #2947	D	
					.WASHER-LOCK	3	#2948 - #2966	D	
	61E5-11150				.WASHER-LOCK	3	#2967 -	D	
14	S411-200002				.WASHER-SPRING	8			
K	E161-3035-S				TOOTH PIN KIT	1	#0001 - #2800	-	INCL 5, 13

BUCKET(0.40m^3 SAE HEAPED)

SERIAL NO : -#1939

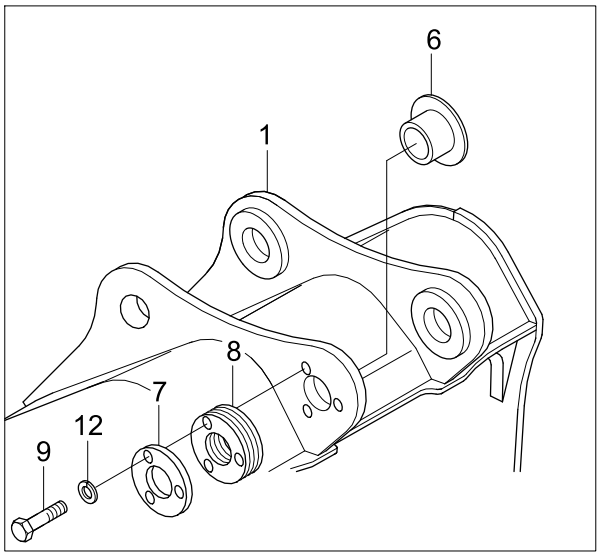

SERIAL NO : -#2947

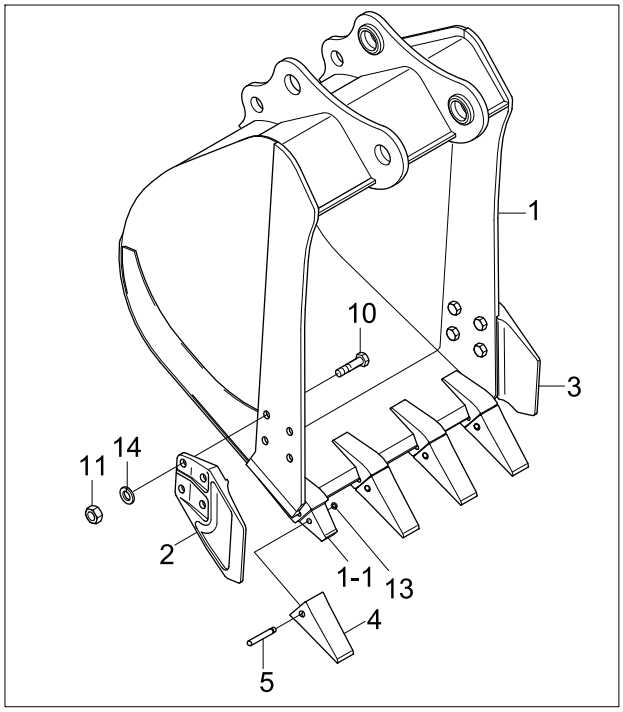

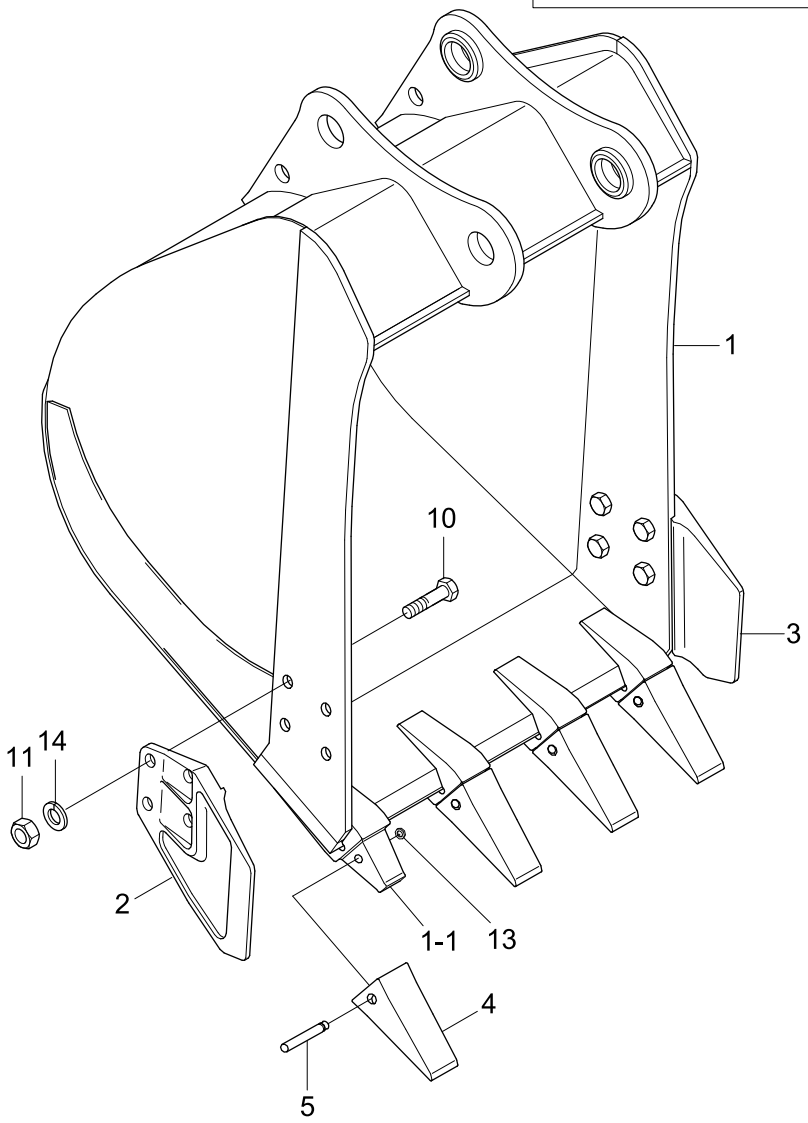

Item	Part_No	IS	Ord	T	Description	Qty	Serial_No	ITC	Remark
*	61N4-33000				BUCKET ASSY	1	- #1939		
	61N4-33001				BUCKET ASSY	1	#1940 - #2800	B	
	61N4-33002				BUCKET ASSY	1	#2801 - #2947	A	
	66N4-33000				BUCKET ASSY	1	#2948 -	A	
1	61N4-33010				.BUCKET WA	1	- #1939		
	61N4-33011				.BUCKET WA	1	#1940 - #2800	D	
	61N4-33012				.BUCKET WA	1	#2801 - #2947	D	
	66N4-33010				.BUCKET WA	1	#2948 -	D	
1-1	E161-3017	10			..ADAPTER-TOOTH	4	- #2800		
	61N4-31200				..ADAPTOR-TOOTH	4	#2801 -	D	
2	61E3-3033	20			.SIDE CUTTER-LH	1	- #2947		
	61E3-3033BG	20			.SIDE CUTTER-LH	1	#2948 -	D	
3	61E3-3034	20			.SIDE CUTTER-RH	1	- #2947		
	61E3-3034BG	20			.SIDE CUTTER-RH	1	#2948 -	D	
4	E161-3027	10			.POINT-TOOTH	4	- #2800		
	61N4-31210				.POINT-TOOTH	4	#2801 - #2947	D	
	61N4-31210BG				.POINT-TOOTH	4	#2948 -	D	
K5	E161-3035	20			.PIN-TOOTH	4	- #2800		
5	66N4-30350				.PIN-TOOTH	4	#2801 -	D	
6	61E3-1126	20			.BUSHING	1	- #1939	-	
7	61E3-3036	10			.PLATE-COVER	1	- #1939	-	
8	61E3-3041	10			.SHIM(1.0T)	5	- #1939	-	
9	S017-160452				.BOLT-HEX	3	- #1939	-	
10	S017-200552				.BOLT-HEX	8	#0001 -	-	
11	S205-201002				.NUT-HEX	8			

Item	Part_No	IS	Ord	T	Description	Qty	Serial_No	ITC	Remark
12	S403-162002				.WASHER-PLAIN	3	- #1939	-	
K13	61E5-11150				.WASHER-LOCK	4	- #2800		
13	66N4-11150				.WASHER-LOCK	4	#2801 - #2966	D	
	61E5-11150				.WASHER-LOCK	4	#2967 -	D	
14	S411-200002				.WASHER-SPRING	8			
K	E161-3035-S				TOOTH PIN KIT	1	#0001 - #2800	-	INCL 5, 13

BUCKET(0.46m^3 SAE HEAPED)

SERIAL NO : -#1939

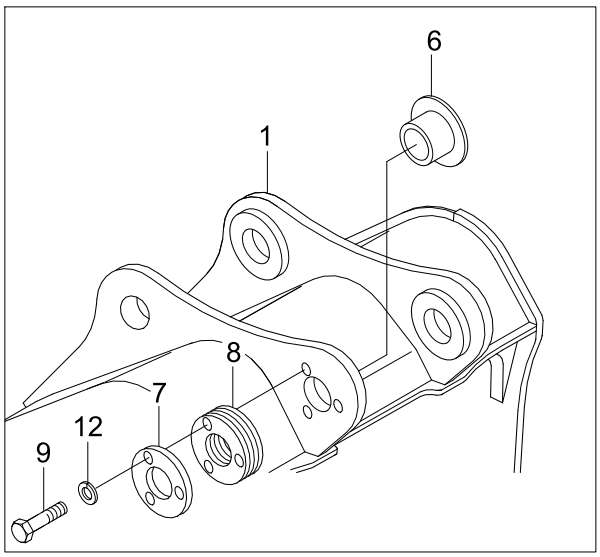

SERIAL NO : -#2947

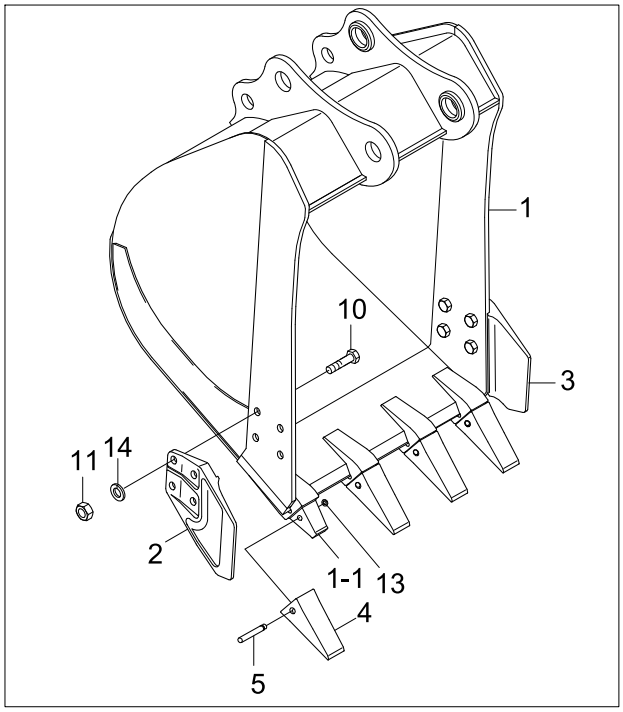

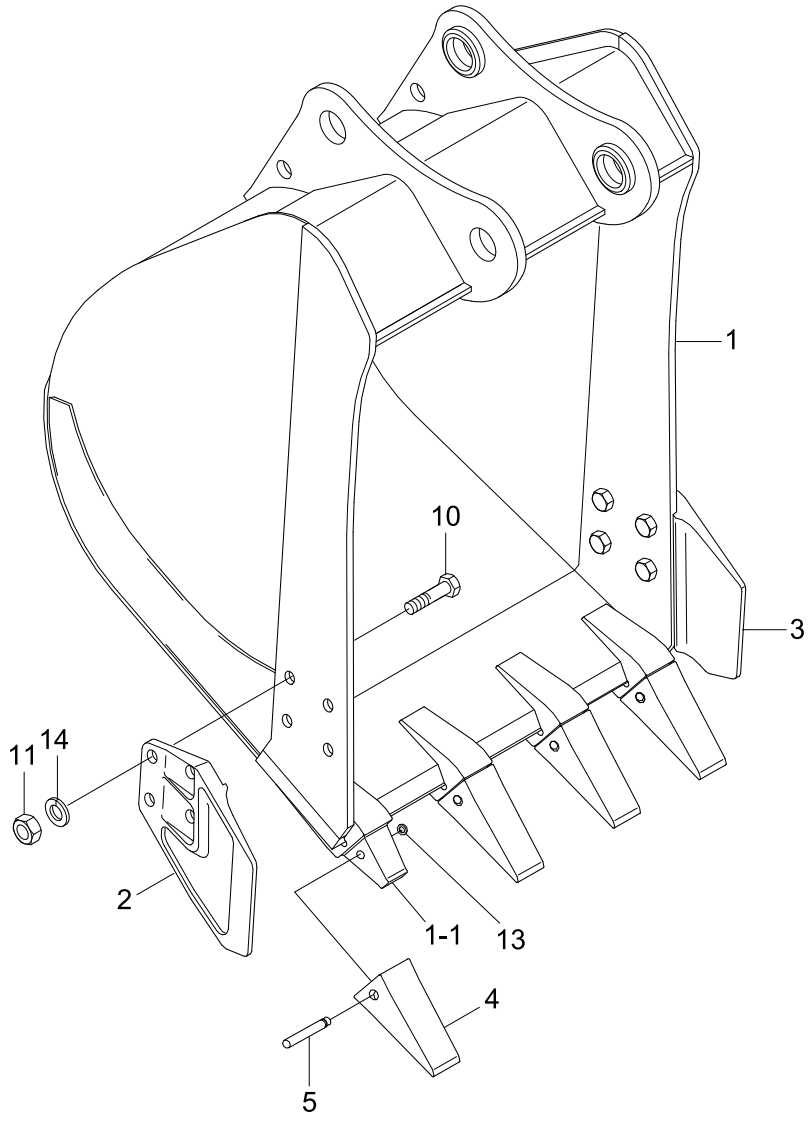

Item	Part_No	IS	Ord	T	Description	Qty	Serial_No	ITC	Remark
*	61N4-34000				BUCKET ASSY	1	- #1939		
	61N4-34001				BUCKET ASSY	1	#1940 - #2800	D	
	61N4-34002				BUCKET ASSY	1	#2801 - #2947	A	
	66N4-34000				BUCKET ASSY	1	#2948 -	A	
1	61N4-34010				.BUCKET WA	1	- #1939		
	61N4-34011				.BUCKET WA	1	#1940 - #2800	D	
	61N4-34012				.BUCKET WA	1	#2801 - #2947	D	
	66N4-34010				.BUCKET WA	1	#2948 -	D	
1-1	E161-3017	10			..ADAPTER-TOOTH	4	- #2800		
	61N4-31200				..ADAPTOR-TOOTH	4	#2801 -	D	
2	61E3-3033	20			.SIDE CUTTER-LH	1	- #2947		
	61E3-3033BG	20			.SIDE CUTTER-LH	1	#2948 -	D	
3	61E3-3034	20			.SIDE CUTTER-RH	1	- #2947		
	61E3-3034BG	20			.SIDE CUTTER-RH	1	#2948 -	D	
4	E161-3027	10			.POINT-TOOTH	4	- #2800		
	61N4-31210				.POINT-TOOTH	4	#2801 - #2947	D	
	61N4-31210BG				.POINT-TOOTH	4	#2948 -	D	
K5	E161-3035	20			.PIN-TOOTH	4	- #2800		
5	66N4-30350				.PIN-TOOTH	4	#2801 -	D	
6	61E3-1126	20			.BUSHING	1	- #1939	-	
7	61E3-3036	10			.PLATE-COVER	1	- #1939	-	
8	61E3-3041	10			.SHIM(1.0T)	5	- #1939	-	
9	S017-160452				.BOLT-HEX	3	- #1939	-	
10	S017-200552				.BOLT-HEX	8	#0001 -	-	
11	S205-201002				.NUT-HEX	8			

Item	Part_No	IS	Ord	T	Description	Qty	Serial_No	ITC	Remark
12	S403-162002				.WASHER-PLAIN	3	- #1939	-	
K13	61E5-11150				.WASHER-LOCK	4	- #2800		
13	66N4-11150				.WASHER-LOCK	4	#2801 - #2966	D	
	61E5-11150				.WASHER-LOCK	4	#2967 -	D	
14	S411-200002				.WASHER-SPRING	8			
K	E161-3035-S				TOOTH PIN KIT	1	#0001 - #2800	-	INCL 5, 13

BUCKET(0.52m^3 SAE HEAPED)

SERIAL NO : -#1939

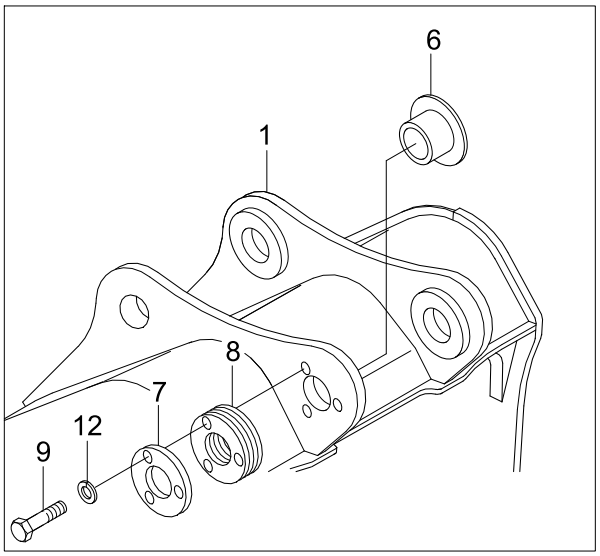

SERIAL NO : -#2800

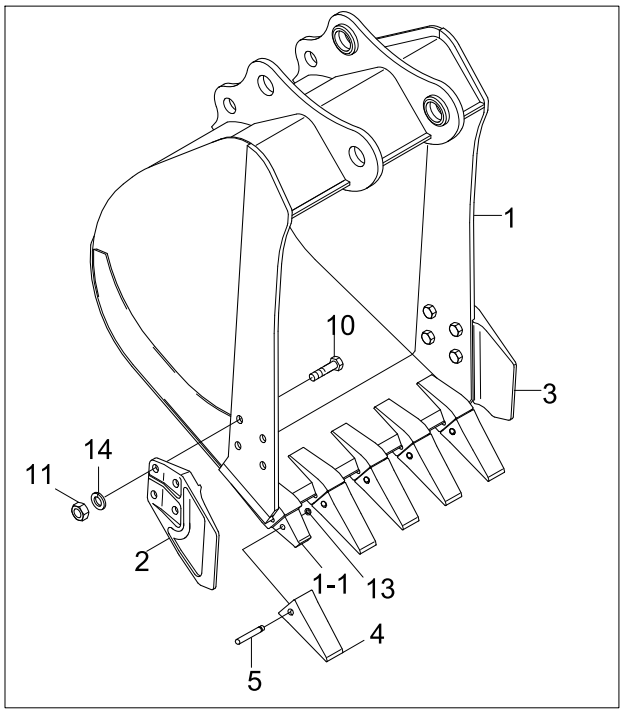

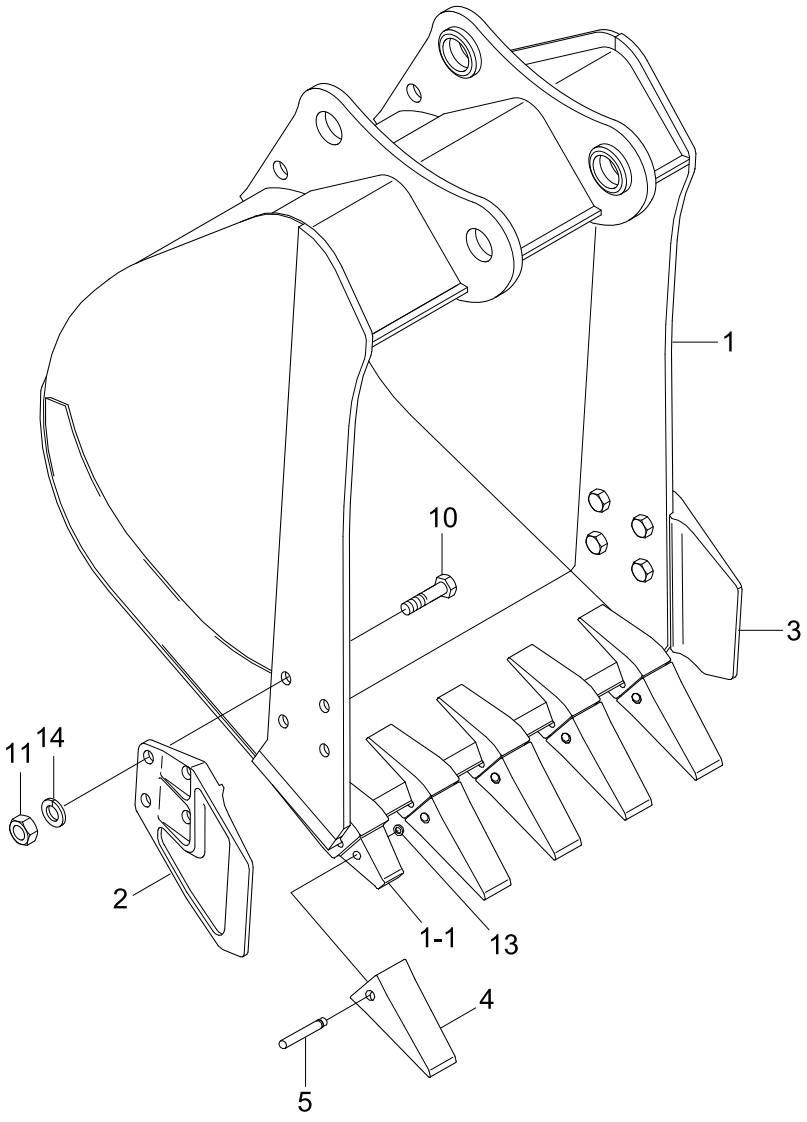

SERIAL NO : -#2947

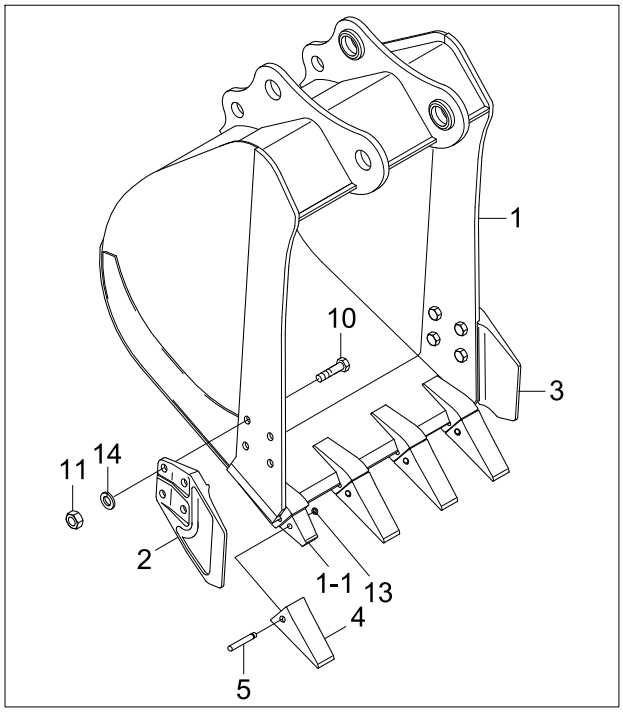

Item	Part_No	IS	Ord	T	Description	Qty	Serial_No	ITC	Remark
*	61N4-35000				BUCKET ASSY	1	- #1939		
	61N4-35001				BUCKET ASSY	1	#1940 - #2800	B	
	61N4-35002				BUCKET ASSY	1	#2801 - #2947	A	
	66N4-35000				BUCKET ASSY	1	#2948 -	A	
1	61N4-35010				.BUCKET WA	1	- #1939		
	61N4-35011				.BUCKET WA	1	#1940 - #2800	D	
	61N4-35012				.BUCKET WA	1	#2801 - #2947	D	
	66N4-35010				.BUCKET WA	1	#2948 -	D	
1-1	E161-3017	10			..ADAPTER-TOOTH	5	- #2800		
	61N4-31200				..ADAPTOR-TOOTH	4	#2801 - #2947	D	
					..ADAPTOR-TOOTH	5	#2948 -	D	
2	61E3-3033	20			.SIDE CUTTER-LH	1	- #2947		
	61E3-3033BG	20			.SIDE CUTTER-LH	1	#2948 -	D	
3	61E3-3034	20			.SIDE CUTTER-RH	1	- #2947		
	61E3-3034BG	20			.SIDE CUTTER-RH	1	#2948 -	D	
4	E161-3027	10			.POINT-TOOTH	5	- #2800		
	61N4-31210				.POINT-TOOTH	4	#2801 - #2947	D	
	61N4-31210BG				.POINT-TOOTH	5	#2948 -	D	
K5	E161-3035	20			.PIN-TOOTH	5	- #2800		
5	66N4-30350				.PIN-TOOTH	4	#2801 - #2947	D	
					.PIN-TOOTH	5	#2948 -	D	
6	61E3-1126	20			.BUSHING	1	- #1939	-	
7	61E3-3036	10			.PLATE-COVER	1	- #1939	-	
8	61E3-3041	10			.SHIM(1.0T)	5	- #1939	-	
9	S017-160452				.BOLT-HEX	3	- #1939	-	

Item	Part_No	IS	Ord	T	Description	Qty	Serial_No	ITC	Remark
10	S017-200552				.BOLT-HEX	8	#0001 -	-	
11	S205-201002				.NUT-HEX	8			
12	S403-162002				.WASHER-PLAIN	3	- #1939	-	
K13	61E5-11150				.WASHER-LOCK	5	- #2800		
13	66N4-11150				.WASHER-LOCK	4	#2801 - #2947	D	
					.WASHER-LOCK	5	#2948 - #2966	D	
	61E5-11150				.WASHER-LOCK	5	#2967 -	D	
14	S411-200002				.WASHER-SPRING	8			
K	E161-3035-S				TOOTH PIN KIT	1	#0001 - #2800	-	INCL 5, 13

BUCKET(0.65m^3 SAE HEAPED)

SERIAL NO : -#1939

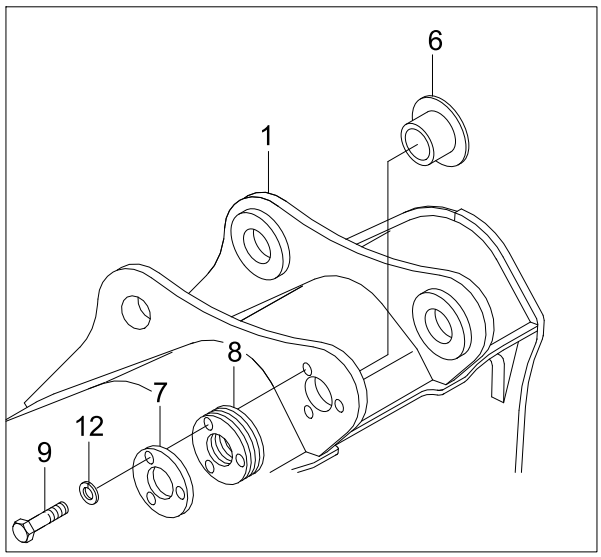

SERIAL NO : -#2800

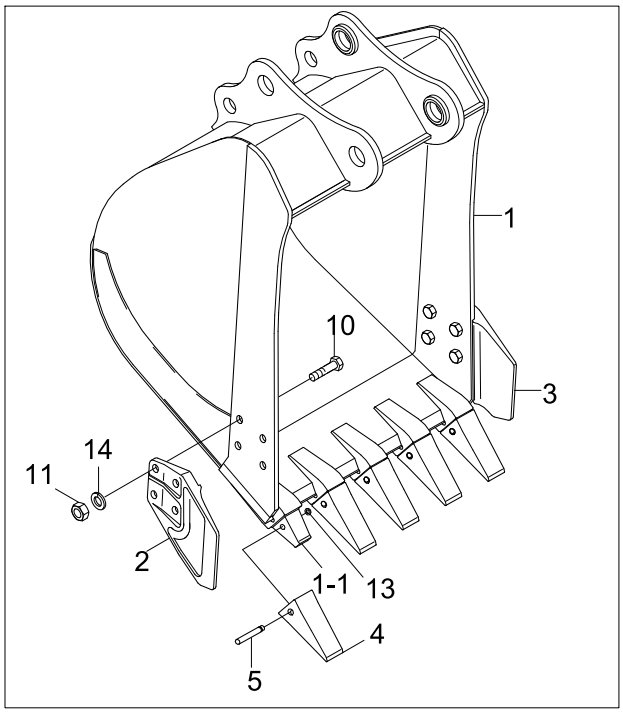

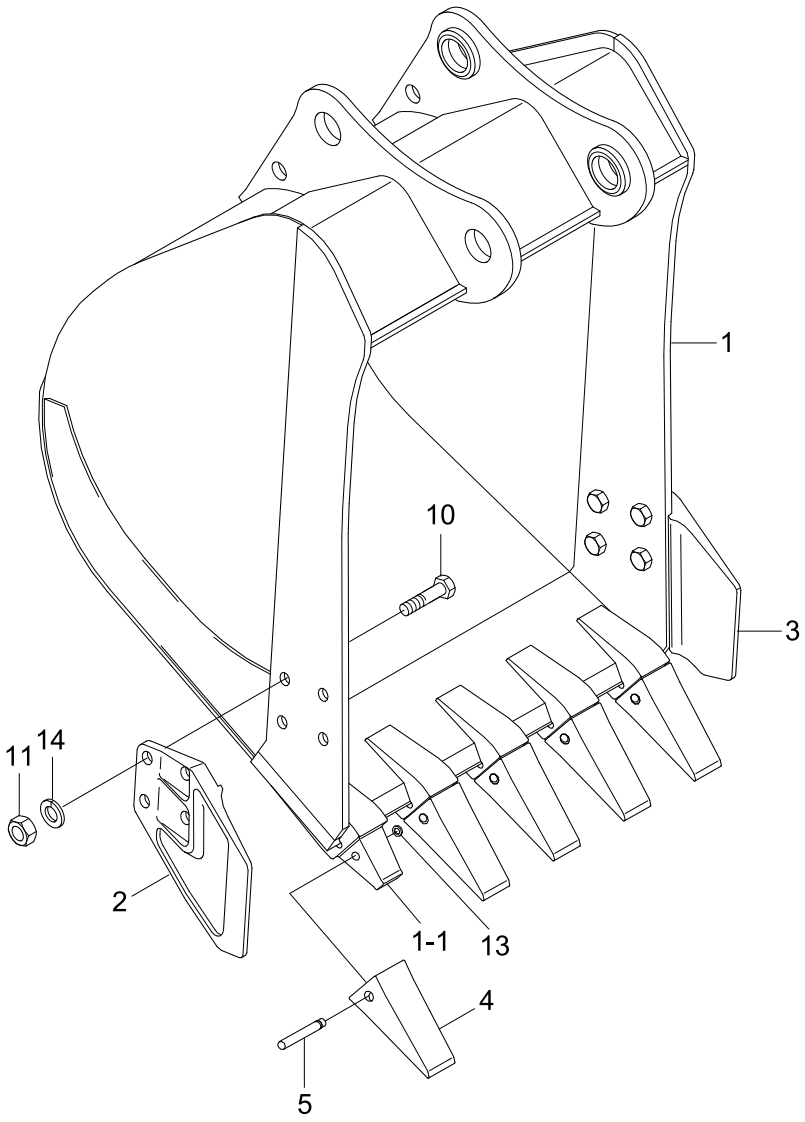

SERIAL NO : -#2947

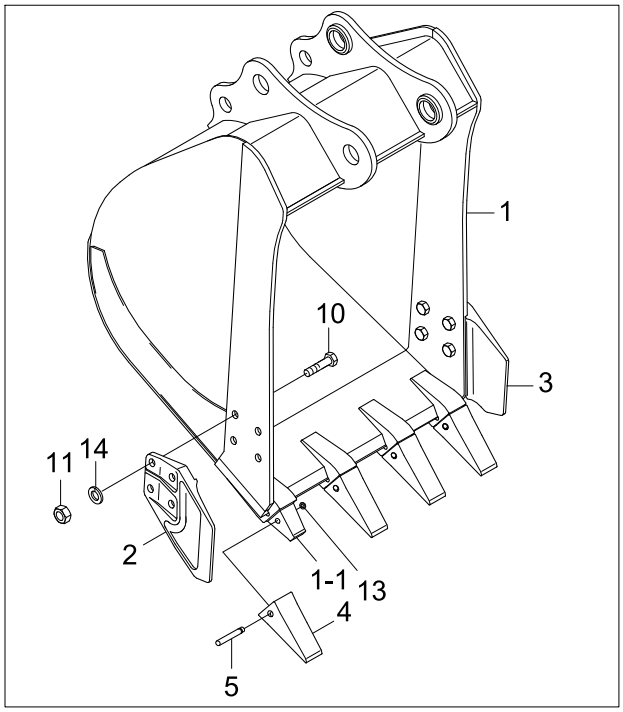

Item	Part_No	IS	Ord	T	Description	Qty	Serial_No	ITC	Remark
*	61N4-36000				BUCKET ASSY	1	- #1939		
	61N4-36001				BUCKET ASSY	1	#1940 - #2800	B	
	61N4-36002				BUCKET ASSY	1	#2801 - #2947	A	
	66N4-36000				BUCKET ASSY	1	#2948 -	A	
1	61N4-36010				.BUCKET WA	1	- #1939		
	61N4-36011				.BUCKET WA	1	#1940 - #2800	D	
	61N4-36012				.BUCKET WA	1	#2801 - #2947	D	
	66N4-36010				.BUCKET WA	1	#2948 -	D	
1-1	E161-3017	10			..ADAPTER-TOOTH	5	- #2800		
	61N4-31200				..ADAPTOR-TOOTH	4	#2801 - #2947	D	
					..ADAPTOR-TOOTH	5	#2948 -	D	
2	61E3-3033	20			.SIDE CUTTER-LH	1	- #2947		
	61E3-3033BG	20			.SIDE CUTTER-LH	1	#2948 -	D	
3	61E3-3034	20			.SIDE CUTTER-RH	1	- #2947		
	61E3-3034BG	20			.SIDE CUTTER-RH	1	#2948 -	D	
4	E161-3027	10			.POINT-TOOTH	5	- #2800		
	61N4-31210				.POINT-TOOTH	4	#2801 - #2947	D	
	61N4-31210BG				.POINT-TOOTH	5	#2948 -	D	
K5	E161-3035	20			.PIN-TOOTH	5	- #2800		
5	66N4-30350				.PIN-TOOTH	4	#2801 - #2947	D	
					.PIN-TOOTH	5	#2948 -	D	
6	61E3-1126	20			.BUSHING	1	- #1939	-	
7	61E3-3036	10			.PLATE-COVER	1	- #1939	-	
8	61E3-3041	10			.SHIM(1.0T)	5	- #1939	-	
9	S017-160452				.BOLT-HEX	3	- #1939	-	

Item	Part_No	IS	Ord	T	Description	Qty	Serial_No	ITC	Remark
10	S017-200552				.BOLT-HEX	8	#0001 -	-	
11	S205-201002				.NUT-HEX	8			
12	S403-162002				.WASHER-PLAIN	3	- #1939	-	
K13	61E5-11150				.WASHER-LOCK	5	- #2800		
13	66N4-11150				.WASHER-LOCK	4	#2801 - #2947	D	
					.WASHER-LOCK	5	#2948 - #2966	D	
	61E5-11150				.WASHER-LOCK	5	#2967 -	D	
14	S411-200002				.WASHER-SPRING	8			
K	E161-3035-S				TOOTH PIN KIT	1	#0001 - #2800	-	INCL 5, 13

BUCKET(0.71m^3 SAE HEAPED)

SERIAL NO : -#1939

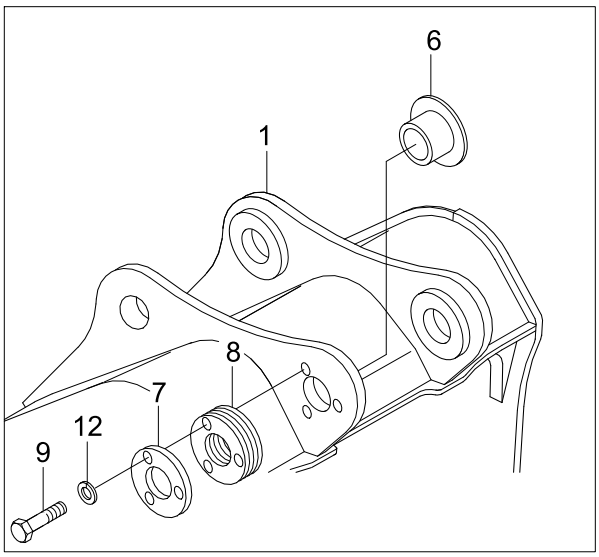

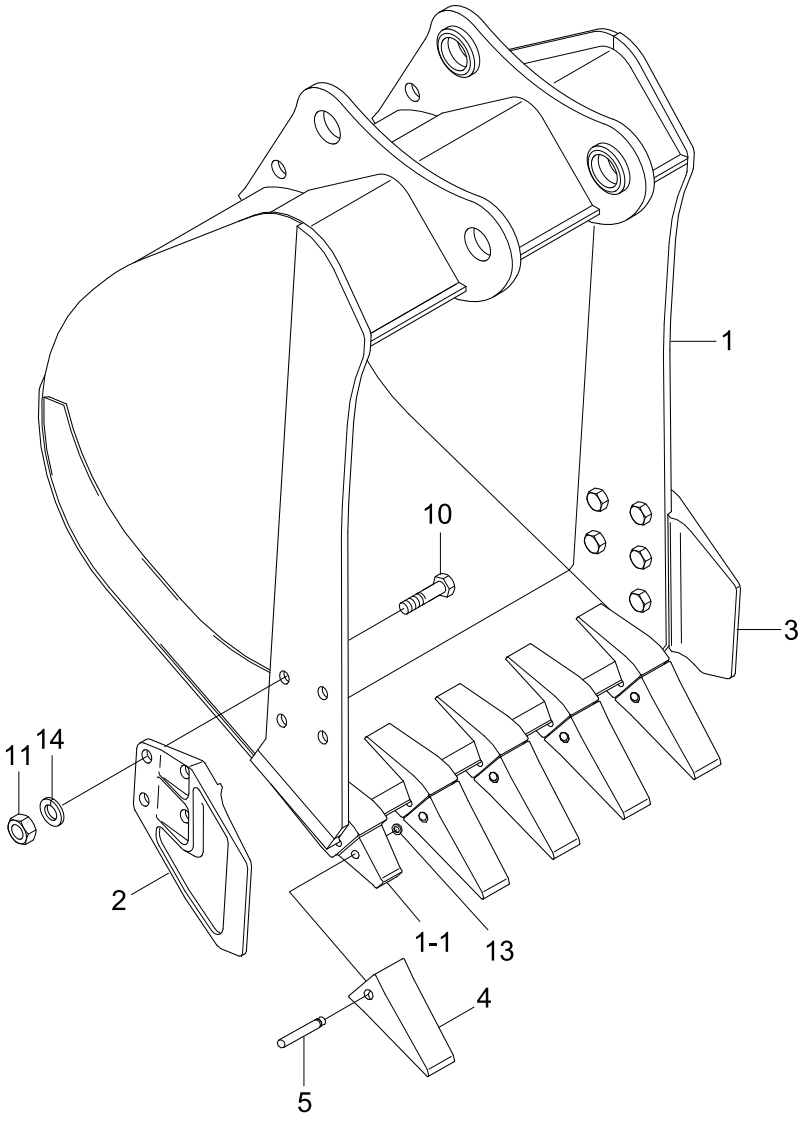

SERIAL NO : -#2800

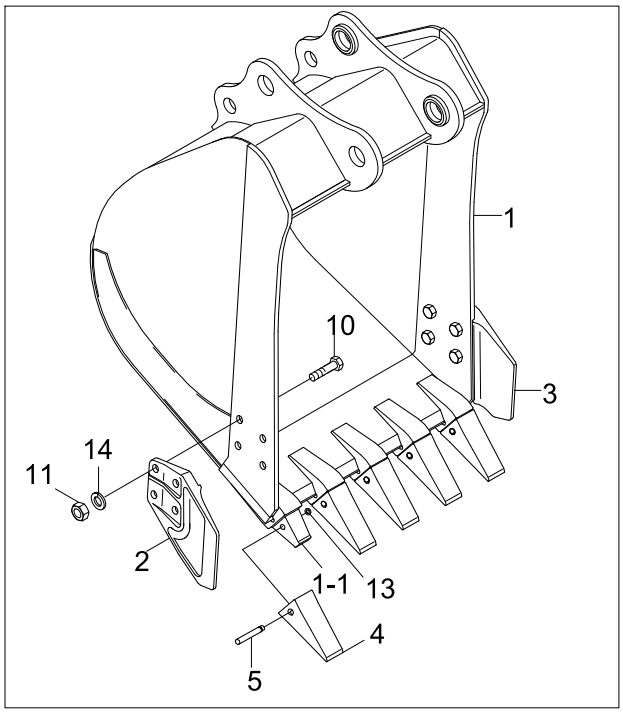

SERIAL NO : -#2947

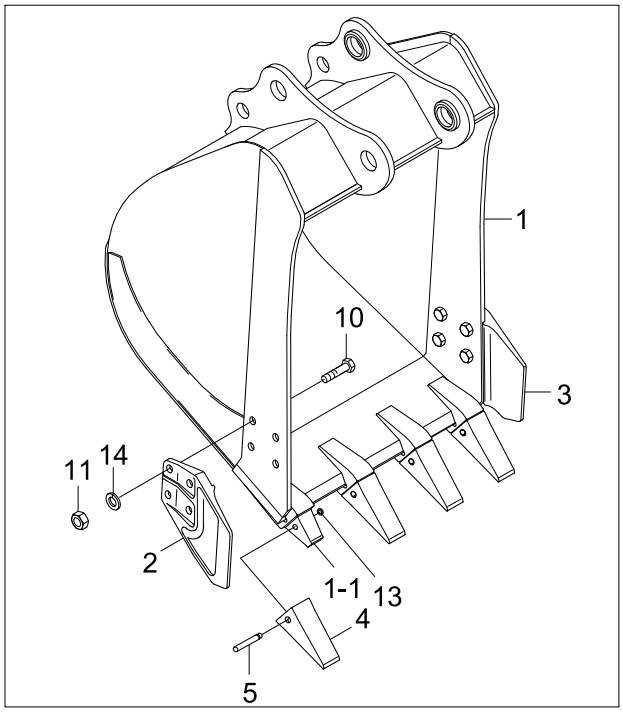

Item	Part_No	IS	Ord	T	Description	Qty	Serial_No	ITC	Remark
*	61N4-37000				BUCKET ASSY	1	- #1939		
	61N4-37001				BUCKET ASSY	1	#1940 - #2800	B	
	61N4-37002				BUCKET ASSY	1	#2801 - #2947	A	
	66N4-37000				BUCKET ASSY	1	#2948 -	A	
1	61N4-37010				.BUCKET WA	1	- #1939		
	61N4-37011				.BUCKET WA	1	#1940 - #2800	D	
	61N4-37012				.BUCKET WA	1	#2801 - #2947	D	
	61N4-37010				.BUCKET WA	1	#2948 -	D	
1-1	E161-3017	10			..ADAPTER-TOOTH	5	- #2800		
	61N4-31200				..ADAPTOR-TOOTH	4	#2801 - #2947	D	
					..ADAPTOR-TOOTH	5	#2948 -	D	
2	61E3-3033	20			.SIDE CUTTER-LH	1	- #2947		
	61E3-3033BG	20			.SIDE CUTTER-LH	1	#2948 -	D	
3	61E3-3034	20			.SIDE CUTTER-RH	1	- #2947		
	61E3-3034BG	20			.SIDE CUTTER-RH	1	#2948 -	D	
4	E161-3027	10			.POINT-TOOTH	5	- #2800		
	61N4-31210				.POINT-TOOTH	4	#2801 - #2947	D	
	61N4-31210BG				.POINT-TOOTH	5	#2948 -	D	
K5	E161-3035	20			.PIN-TOOTH	5	- #2800		
5	66N4-30350				.PIN-TOOTH	4	#2801 - #2947	D	
					.PIN-TOOTH	5	#2948 -	D	
6	61E3-1126	20			.BUSHING	1	- #1939	-	
7	61E3-3036	10			.PLATE-COVER	1	- #1939	-	
8	61E3-3041	10			.SHIM(1.0T)	5	- #1939	-	
9	S017-160452				.BOLT-HEX	3	- #1939	-	

Item	Part_No	IS	Ord	T	Description	Qty	Serial_No	ITC	Remark
10	S017-200552				.BOLT-HEX	8	#0001 -	-	
11	S205-201002				.NUT-HEX	8			
12	S403-162002				.WASHER-PLAIN	3	- #1939	-	
K13	61E5-11150				.WASHER-LOCK	5	- #2800		
13	66N4-11150				.WASHER-LOCK	4	#2801 - #2947	D	
					.WASHER-LOCK	5	#2948 - #2966	D	
	61E5-11150				.WASHER-LOCK	5	#2967 -	D	
14	S411-200002				.WASHER-SPRING	8			
K	E161-3035-S				TOOTH PIN KIT	1	#0001 - #2800	-	INCL 5, 13

BUCKET(0.45m^3 SAE HEAPED, D/CLEANING)

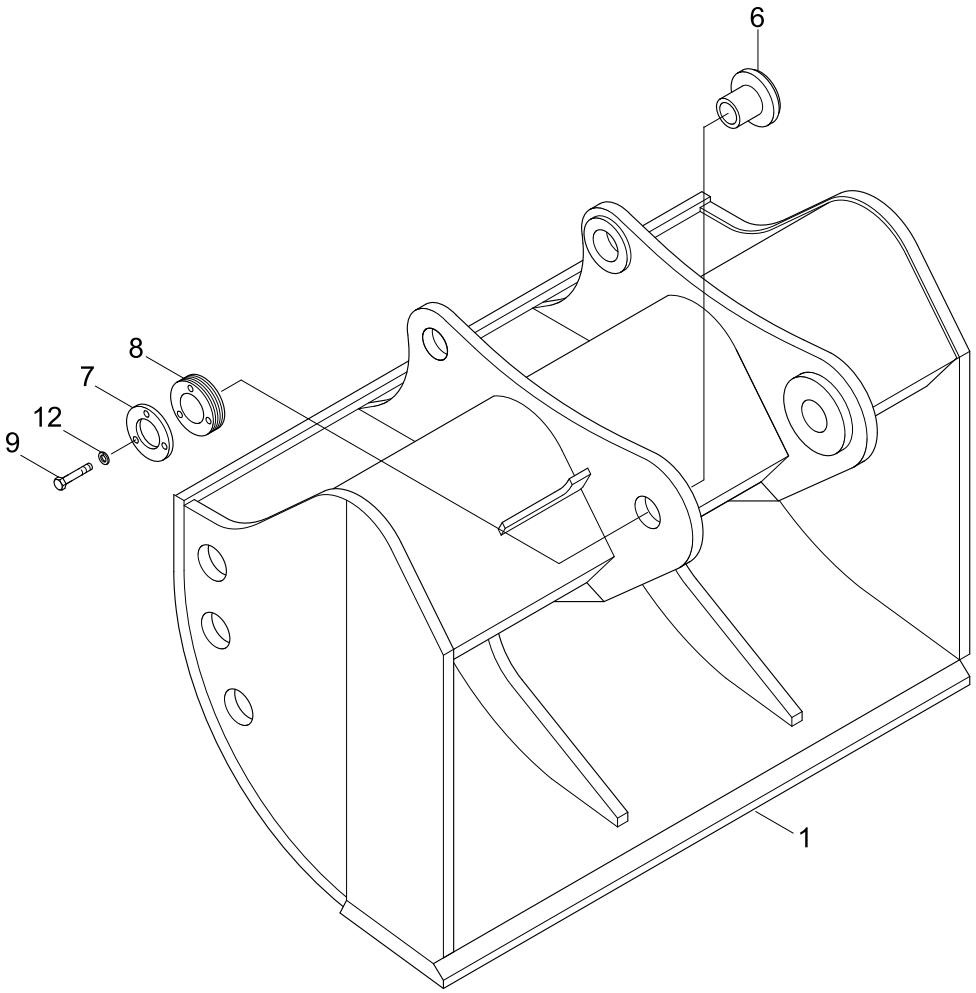

Item	Part_No	IS	Ord	T	Description	Qty	Serial_No	ITC	Remark
*	61N4-38000				BUCKET ASSY	1	- #1939		
	61N4-38001				BUCKET ASSY	1	#1940 - #2947	B	
	66N4-38000				BUCKET ASSY	1	#2948 -	B	
1	61N4-38010				.BUCKET WA	1	- #1939		
	61N4-38011				.BUCKET WA	1	#1940 - #2947	D	
	66N4-38010				.BUCKET WA	1	#2948 -	D	
6	61E3-1126	20			.BUSHING	1			
7	61E3-3036	10			.PLATE-COVER	1			
8	61E3-3041	10			.SHIM(1.0T)	5			
9	S017-160452				.BOLT-HEX	3			
12	S403-162002				.WASHER-PLAIN	3			

BUCKET(0.55m^3 SAE HEAPED, S/FINISHING)

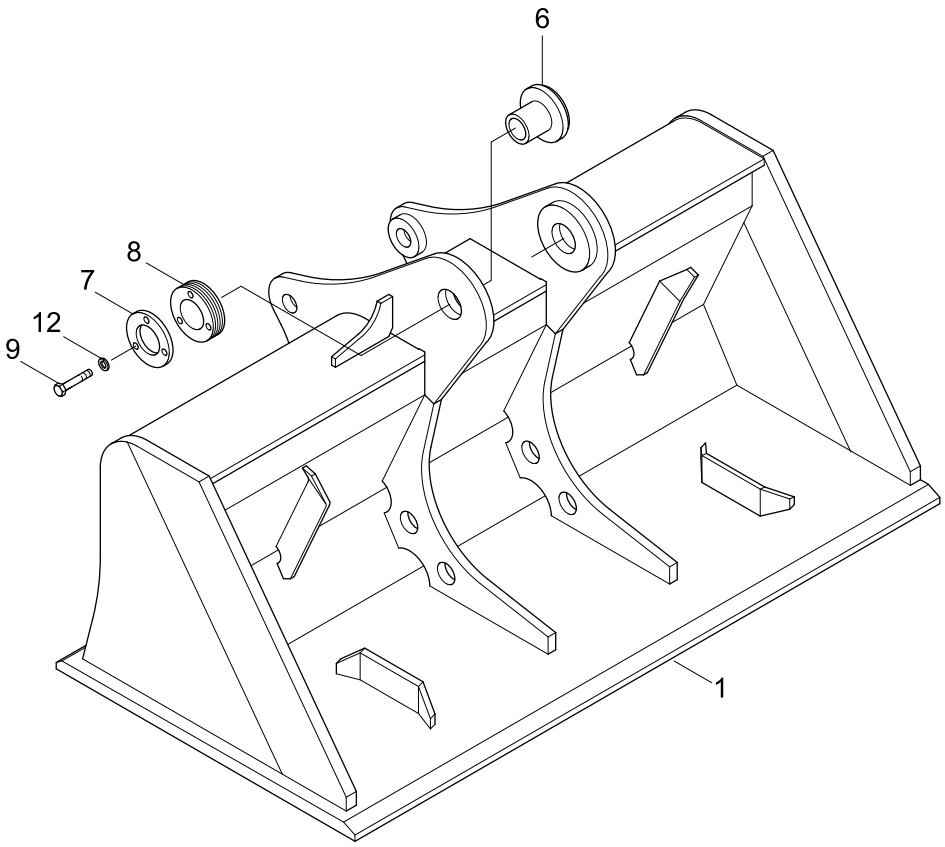

Item	Part_No	IS	Ord	T	Description	Qty	Serial_No	ITC	Remark
*	61N4-39000				BUCKET ASSY	1	- #1939		
	61N4-39001				BUCKET ASSY	1	#1940 - #2947	B	
	66N4-39000				BUCKET ASSY	1	#2948 -	B	
1	61N4-39010				.BUCKET WA	1	- #1939		
	61N4-39011				.BUCKET WA	1	#1940 - #2947	D	
	66N4-39010				.BUCKET WA	1	#2948 -	D	
6	61E3-1126	20			.BUSHING	1			
7	61E3-3036	10			.PLATE-COVER	1			
8	61E3-3041	10			.SHIM(1.0T)	5			
9	S017-160452				.BOLT-HEX	3			
12	S403-162002				.WASHER-PLAIN	3			

TOOLS(-#1161)

1

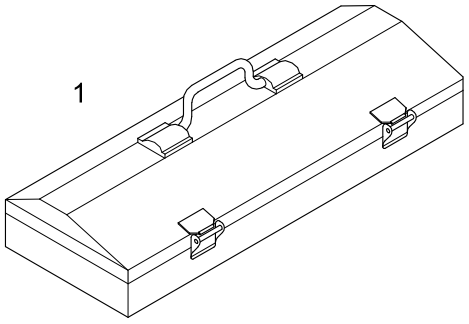

2, 3, 4 ,5 ,6, 7, 8, 9,10,
11,12,13,14,15,16



47

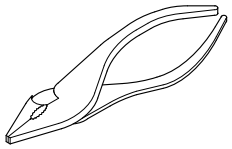

54



62

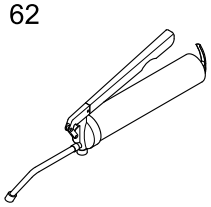

17,18,19,20,21,22,23,24,
25,26,27,28,29,30,31,32

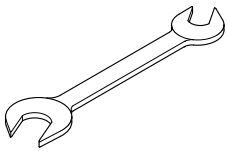

48,49

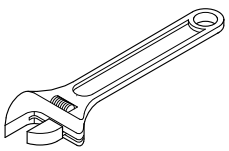

55,56,57

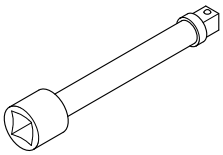

63

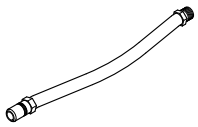

33,34,35,36,
37,38,39,40

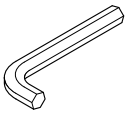

50

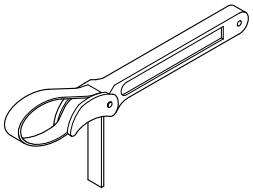

58,59

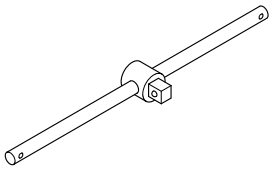

64,65,66

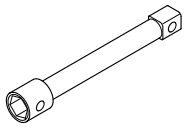

41,42,43,44,45

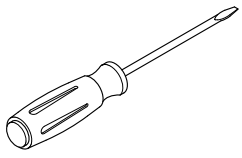

51,52

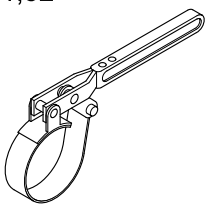

60

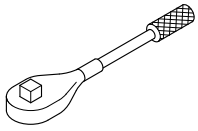

67,68

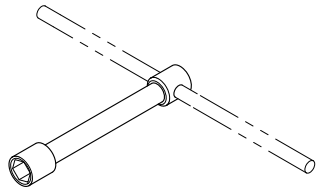

46

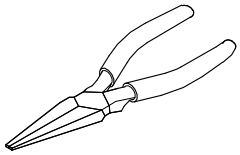

53

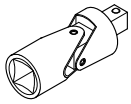

61

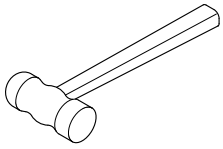

69

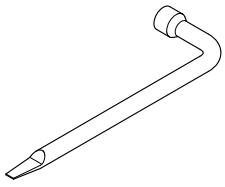

Item	Part_No	IS	Ord	T	Description	Qty	Serial_No	ITC	Remark
*	91E9-20110				TOOL KIT ASSY	1	- #1161	-	
1	E191-2000	10			.TOOL BOX	1			
2	S953-127100				.SOCKET-1/2"X10MM	1			
4	S953-127140				.SOCKET-1/2"X14MM	1			
5	S953-127170				.SOCKET-1/2"X17MM	1			
6	S953-127190				.SOCKET-1/2"X19MM	1			
8	S953-127240				.SOCKET-1/2"X24MM	1			
9	S953-127300				.SOCKET-1/2"X30MM	1			
10	S953-190320				.SOCKET-3/4"X32MM	1			
11	S953-190360				.SOCKET-3/4"X36MM	1			
12	S953-190460				.SOCKET-3/4"X46MM	1			
19	S962-080902				.WRENCH-DOUBLE,8X9	1			
21	S962-101202				.WRENCH-DOUBLE,10X12	1			
23	S962-131702				.WRENCH-DOUBLE,13X17	1			
26	S962-192202				.WRENCH-DOUBLE,19X22	1			
27	S962-222402				.WRENCH-DOUBLE,22X24	1			
28	S962-242702				.WRENCH-DOUBLE,24X27	1			
29	S962-303202				.WRENCH-DOUBLE,30X32	1			
30	S962-364102				.WRENCH-DOUBLE,36X41	1			
33	91E1-2308				.L-WRENCH,14MM	1			
34	S967-040025				.L-WRENCH,4MM	1			
35	S967-050028				.L-WRENCH,5MM	1			
36	S967-060032				.L-WRENCH,6MM	1			
37	S967-080036				.L-WRENCH,8MM	1			
38	S967-100040				.L-WRENCH,10MM	1			

Item	Part_No	IS	Ord	T	Description	Qty	Serial_No	ITC	Remark
39	S967-120045				.L-WRENCH,12MM	1			
40	S967-170060				.L-WRENCH,17MM	1			
41	S959-061012				.DRIVER(-)	1			
43	S959-061022				.DRIVER(+)	1			
47	S960-150020				.PLIER-SLIP JOINTS	1			
48	S963-200024				.WRENCH-ADJ ANGLE,8"	1			
51	70-623				.STEEL-WRENCH,70-623	1			
52	70-625				.STEEL-WRENCH,70-625	1			
53	S954-127080				.UNIVERSAL JOINT-1/2"	1			
54	91EM-20600				.ADAPTOR-1/2"-3/8"	1			
55	S955-127075				.EXTENSION BAR-1/2"X5"	1			
56	S955-127125				.EXTENSION BAR-1/2"X10"	1			
57	S955-190200				.EXTENSION BAR-3/4"X8"	1			
58	E191-2048				.HANDLE-SLIDING,1/2"X10"	1			
59	E191-2049				.HANDLE-SLIDING,3/4"X20"	1			
60	S958-127250				.HANDLE-RATCHET 1/2"	1			
61	S964-100290				.HAMMER-HAND,1LB	1			
62	E191-2053				.GUN-GREASE,500CC	1			
63	E191-2054				.TIP-HOSE,RUBBER	1			
70	E191-20571				.TOOL LIST	1			

TOOLS(#1162-)

1

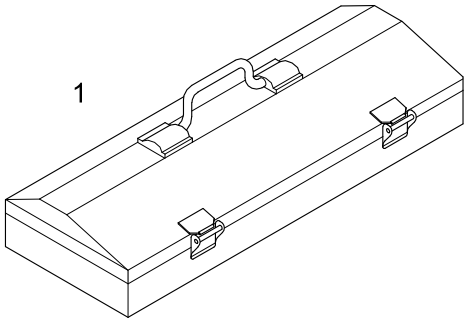

2, 3, 4 ,5 ,6, 7, 8, 9,10,
11,12,13,14,15,16



47

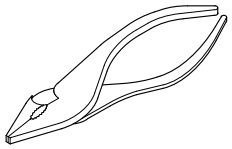

54



62

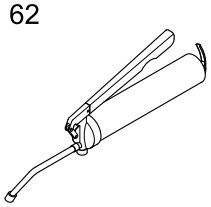

17,18,19,20,21,22,23,24,
25,26,27,28,29,30,31,32

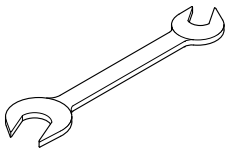

48,49

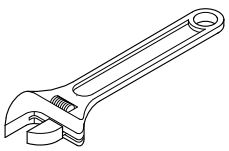

55,56,57

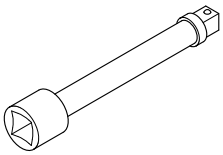

63

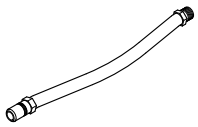

33,34,35,36,
37,38,39,40

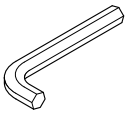

50

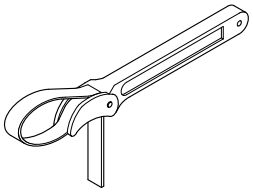

58,59

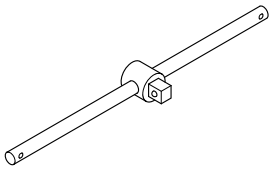

64,65,66

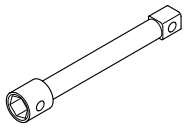

41,42,43,44,45

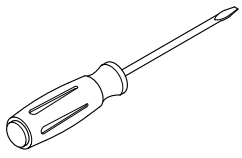

51,52

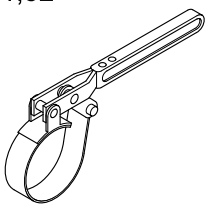

60

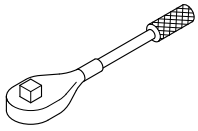

67,68

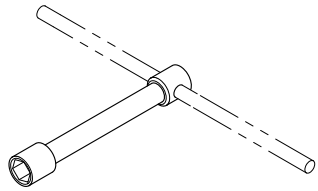

46

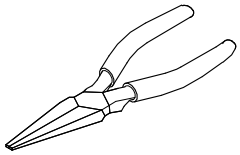

53

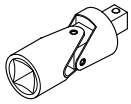

61

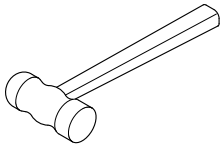

69

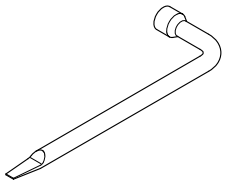

Item	Part_No	IS	Ord	T	Description	Qty	Serial_No	ITC	Remark
*	91E9-20121				TOOL KIT ASSY	1	#1162 -	B	
1	E191-2000				.TOOL BOX	1			
2	S953-127100				.SOCKET-1/2"X10MM	1			
3	S953-127130				.SOCKET-1/2"X13MM	1			
4	S953-127140				.SOCKET-1/2"X14MM	1			
5	S953-127170				.SOCKET-1/2"X17MM	1			
6	S953-127190				.SOCKET-1/2"X19MM	1			
7	S953-127220				.SOCKET-1/2"X22MM	1			
8	S953-127240				.SOCKET-1/2"X24MM	1			
9	S953-127270				.SOCKET-1/2"X27MM	1			
10	S953-127300				.SOCKET-1/2"X30MM	1			
11	S953-190320				.SOCKET-3/4"X32MM	1			
12	S953-190360				.SOCKET-3/4"X36MM	1			
17	S962-100003				.WRENCH-COMBINATION	1			
18	S962-130003				.WRENCH-COMBINATION	1			
19	S962-170003				.WRENCH-COMBINATION	1			
20	S962-190003				.WRENCH-COMBINATION	1			
21	S962-220003				.WRENCH-COMBINATION	1			
22	S962-240003				.WRENCH-COMBINATION	1			
23	S962-270003				.WRENCH-COMBINATION	1			
29	S962-303202				.WRENCH-DOUBLE,30X32	1			
30	S962-364102				.WRENCH-DOUBLE,36X41	1			
33	S967-040025				.L-WRENCH,4MM	1			
34	S967-050028				.L-WRENCH,5MM	1			
35	S967-060032				.L-WRENCH,6MM	1			

Item	Part_No	IS	Ord	T	Description	Qty	Serial_No	ITC	Remark
36	S967-080036				.L-WRENCH,8MM	1			
37	S967-100040				.L-WRENCH,10MM	1			
38	S967-120045				.L-WRENCH,12MM	1			
39	S967-140055				.L-WRENCH,14MM	1			
40	S967-170060				.L-WRENCH,17MM	1			
41	S959-061012				.DRIVER(-)	1			
43	S959-061022				.DRIVER(+)	1			
47	S960-150020				.PLIER-SLIP JOINTS	1			
48	S963-200024				.WRENCH-ADJ ANGLE,8"	1			
49	S963-300034				.WRENCH-ADJ ANGLE,12"	1			
50	E191-2043				.WRENCH-FILTER,300MM	1			
53	S954-127080				.UNIVERSAL JOINT-1/2"	1			
54	91EM-20600				.ADAPTOR-1/2"-3/8"	1			
55	S955-127075				.EXTENSION BAR-1/2"X5"	1			
56	S955-127125				.EXTENSION BAR-1/2"X10"	1			
57	S955-190200				.EXTENSION BAR-3/4"X8"	1			
58	E191-2048				.HANDLE-SLIDING,1/2"X10"	1			
59	E191-2049				.HANDLE-SLIDING,3/4"X20"	1			
60	S958-127250				.HANDLE-RATCHET 1/2"	1			
61	S964-200340				.HAMMER-HAND	1			
62	E191-2053				.GUN-GREASE,500CC	1			
63	E191-2054				.TIP-HOSE,RUBBER	1			
70	E191-20572				.TOOL LIST	1			

HRDT 2.0 TOOL KIT

1

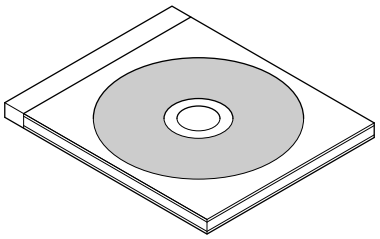

2

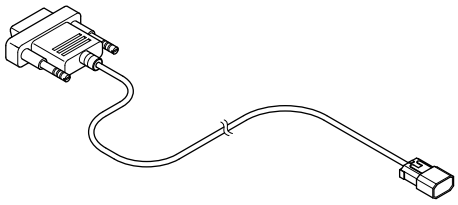

3 PART NO : PMCE0500BDFB
4 PART NO : PMCE0050BDFB

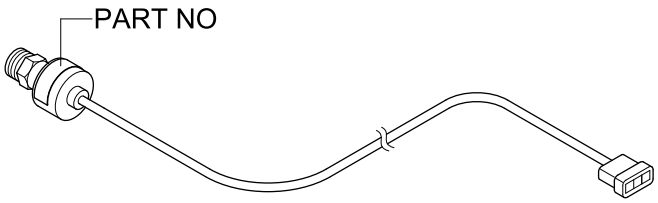

5

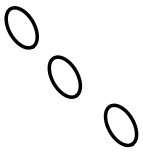

6

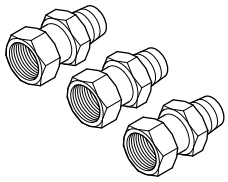

7 ,8

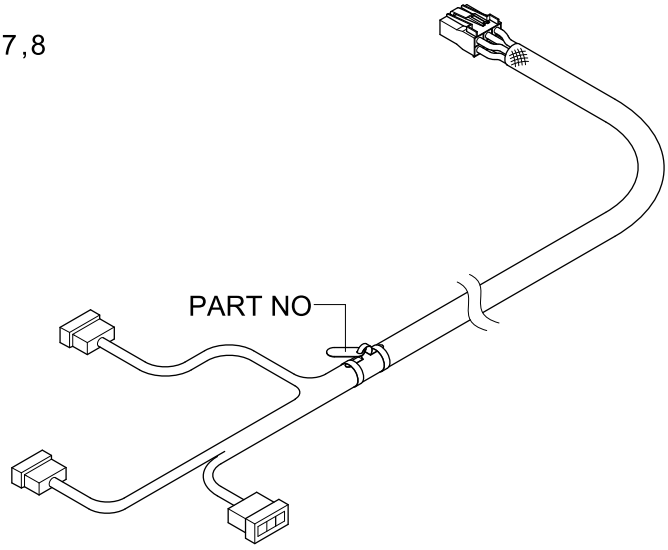

Item	Part_No	IS	Ord	T	Description	Qty	Serial_No	ITC	Remark
*	21N6-32230				HRDT 2.0 TOOL KIT	1	#0001 -	-	
1	21N6-32211				.CD-HRDT 2.0 SOFTWARE	1			
2	21N6-32200				.CABLE-RS232(CPU-PC)	1			
3	21EG-32200				.SENDER-PRESSURE	2			
4	21EG-32210				.SENDER-PRESSURE	1			
5	S631-011004				.O-RING	3			
6	31E9-22120				.CONNECTOR	3			
7	21N8-11170				.HARNESS-PUMP PS	1			
8	21N8-10071				.HARNESS-PUMP	1			

DECALS

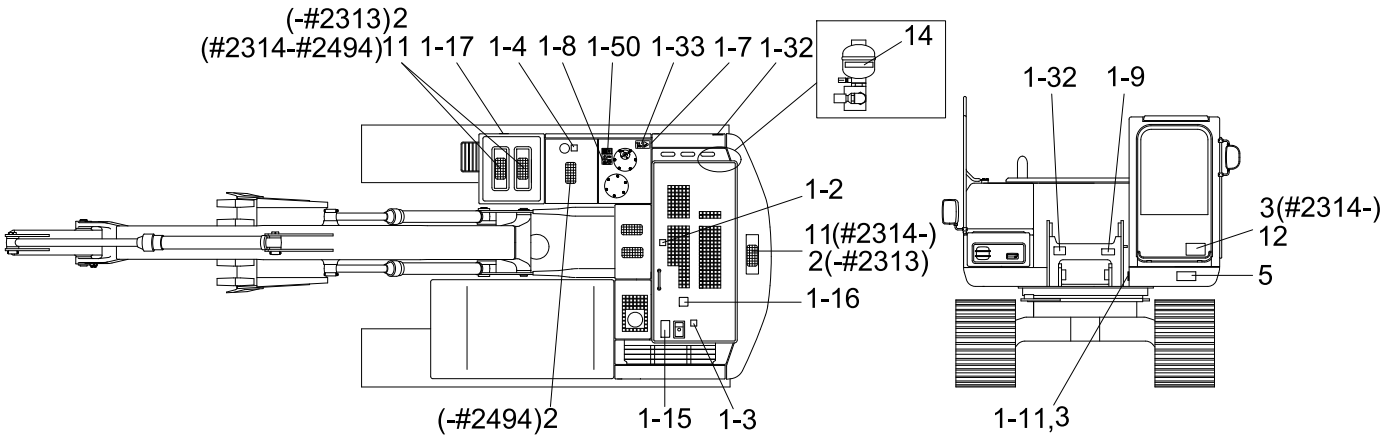

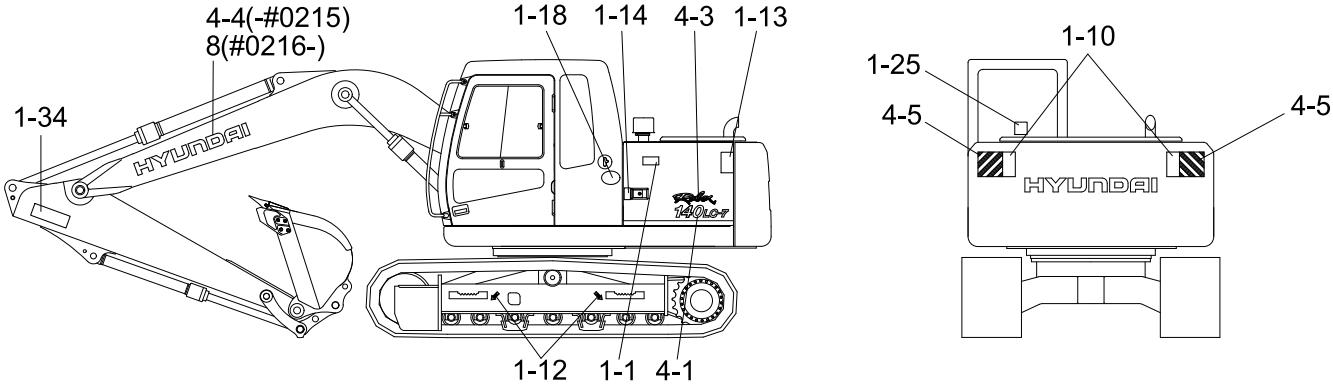

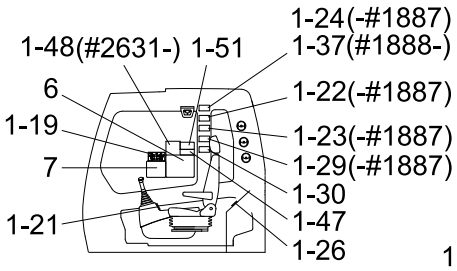

CABIN INSIDE-RH

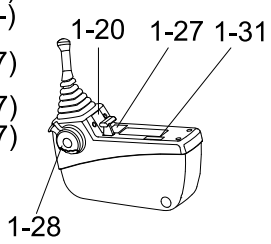

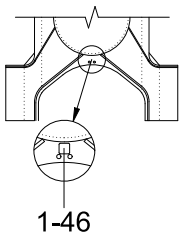

LOWER FRAME

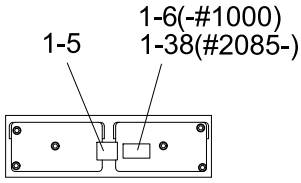

BATTERY COVER

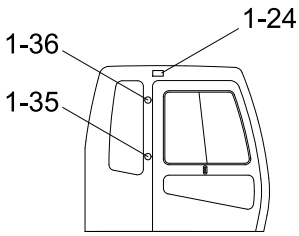

CABIN INSIDE-LH

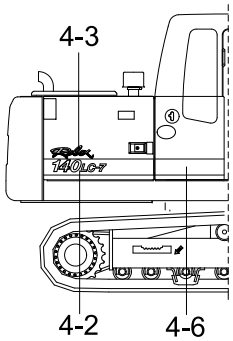

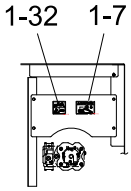

PUMP SCREEN

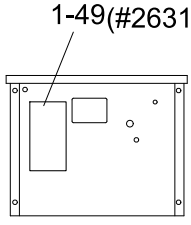

ELECTRIC BOX

Item	Part_No	IS	Ord	T	Description	Qty	Serial_No	ITC	Remark
1	91N4-00100				DECAL KIT	1	- #0032		
	91N4-00101				DECAL KIT	1	#0033 - #1000	B	
	91N4-00102				DECAL KIT	1	#1001 - #1886	B	
	91N4-00104				DECAL KIT	1	#1887 - #2084	B	
	91N4-00105				DECAL KIT	1	#2085 - #2313	B	
	91N4-00106				DECAL KIT	1	#2314 - #2494	B	
	91N4-00107				DECAL KIT	1	#2495 - #2630	B	
	91N4-00108				DECAL KIT	1	#2631 - #3418	B	
	91N4-00109				DECAL KIT	1	#3419 -	B	
	91N4-00300				DECAL KIT	1	#2936 - #3290		UPGRADE CAB
	91N4-00301				DECAL KIT	1	#3291 - #3418	B	UPGRADE CAB
	91N4-00302				DECAL KIT	1	#3419 - #3469	B	UPGRADE CAB
	91N4-00303				DECAL KIT	1	#3470 -	B	UPGRADE CAB
1-1	91N6-01102				.DECAL-A/CLEANER FILTER	1			
1-2	91N6-01111				.DECAL-TURBO COVER	1			
1-3	91N6-01121				.DECAL-RADIATOR CAP	1			
1-4	91N6-01131				.FUELING	1	- #2494		
	91M8-01140				.DECAL-FUELING	1	#2495 -	B	
1-5	91N6-02102				.BATTERY CORROSIVE	1	- #1000		
	91N6-02120				.DECAL-BATT ACCIDENT	1	#1001 -	D	
1-6	91N6-02112				.BATTERY EXPLOSION	1	- #1000		
1-7	91N6-03102				.DECAL-HYD OIL LEVEL	1			
1-8	91N6-03111				.DECAL-OIL LUBRICATION	1			
1-9	91N6-03121				.DECAL-RED GEAR GREASE	1			
1-10	91N6-04122				.KEEP CLEAR/RR	2			

Item	Part_No	IS	Ord	T	Description	Qty	Serial_No	ITC	Remark
1-11	91E1-14110				.NAME PLATE	1	- #3469		
	91LM-14110				.DECAL-PIN PLATE	1	#3470 -	B	
	91E1-14130				.NAME PLATE	1			EUROPE
1-12	91N6-05110				.DECAL-SLING IDEOGRAM	4			
1-13	91N6-07102				.DECAL-KEEP CLEAR	2			
1-14	91N6-07112				.DECAL-STAY FIX	2			
1-15	91N6-07121				.DECAL-SHEARING	1			
1-16	91N6-07131				.DECAL-NO STEP	1			
1-17	91N6-07141				.DECAL-TRANSPORTING	1			
1-18	91E1-27110				.DECAL-LOW EMI ENGINE	1			
1-19	91N6-07201				.DECAL-CNTL IDEOGRAM	1			
1-20	91N6-07212				.DECAL-CNTL IDEOGRAM,LH	1			
	92N6-07210				.CONTROL IDEOGRAM-LH	1	#2936 -		UPGRADE CAB
1-21	91N6-07221				.DECAL-CNTL IDEOGRAM,RH	1			
	92N6-07220				.CONTROL IDEOGRAM-RH	1	#2936 -		UPGRADE CAB
1-22	91N6-07231				.REF OPERATOR MANUAL	1	- #1887		
1-23	91N6-07241				.MAX HEIGHT	1	- #1887		
1-24	91N6-07252				.DECAL-SAFETY FR WINDOW	2	- #1887		
					.DECAL-SAFETY FR WINDOW	1	#1888 -	A	
1-25	91N6-07261				.DECAL-ALTERNATE EXIT	1			
1-26	91N6-07272				.DECAL-AIRCON FILTER	1			
1-27	91N6-07301				.CONSOLE BOX TILTING	1			
	92N6-07510				.CONSOLE BOX TILTING	1	#2936 - #3290		UPGRADE CAB
	92N6-07300				.CONSOLE BOX TILTING	1	#3291 -	B	UPGRADE CAB
1-28	91N6-07311				.DECAL-SAFETY LEVER	1			

Item	Part_No	IS	Ord	T	Description	Qty	Serial_No	ITC	Remark
1-28	92N6-07310				.DECAL-SAFETY LEVER	1	#2936 -		UPGRADE CAB
1-29	91N6-07320				.INTERFERENCE	1	- #1887		
1-30	91N6-07330				.DECAL-LOCKING CLAMP	1			
1-31	91N6-07340				.IDEOGRAM	1	#0033 -		DOZER
1-32	91N6-03130				.DECAL-HIGH PRESS HOSE	2	#1001 -		
1-33	91N6-03140				.DECAL-FALLING	1	#1001 -		
1-34	91N6-06110				.DECAL-KEEP CLEAR-ATT	1	#1001 -		
1-35	91N6-07280				.DECAL-HAMMER	1	#1001 -		
1-36	91N6-07290				.DECAL-FIRE	1	#1001 -		
1-37	91N6-07370				.DECAL-CABIN RH PILLAR	1	#1888 -		
1-38	91LB-01350				.DECAL-ECM CONNECTOR	1	#2085 -		
1-46	91N6-05120				.DECAL-TIE	2	#2314 -		
1-47	91N6-07390				.DECAL-TURBOCHARGER	1	#2314 -		
1-48	91N6-07400				.DECAL-M/CONTROL,CAB	1	#2631 -		
1-49	91N6-07410				.DECAL-MACHINE CNTL	1	#2631 -		
1-50	91Q6-03230				.DECAL-FUEL SHUT OFF	1	#3419 -		
1-51	91Q4-07180				.DECAL-WATER SEPARATOR	1	#3419 -		
2	91E1-26300				DECAL-STEP TREAD	8	- #2313		
					DECAL-STEP TREAD	3	#2314 - #2494	A	
3	91EK-12010				RIVET	4	- #2313		
					RIVET	8	#2314 -	A	
4	91N4-10100				TRADE MARK KIT	1	- #0215		
	91N4-10101				TRADE MARK KIT	1	#0216 - #1218		
4-1	91N4-17110				.DECAL-MODEL NAME-LH	1	- #2947		
4-2	91N4-17120				.DECAL-MODEL NAME-RH	1	- #1218		

Item	Part_No	IS	Ord	T	Description	Qty	Serial_No	ITC	Remark
4-2	91N4-17121				.MODEL NAME-RH/REAR	1	#1219 - #2947	D	
4-3	91N4-17140				.DECAL-ROBEX LOGO	2			
4-4	91N6-21070				.DECAL-TRADE MARK	2	- #0215		
4-5	91N6-04101				.KEEP CLEAR-REF	2	- #2587		
	91N6-04170				.REFLECTING	2	#2588 -	B	
4-6	91N4-17220				.DECAL-M/NAME,RH/FR	1	#1219 - #2947		
4-7	91N4-17310				.DECAL-MODEL NAME	2	#2948 -		
4	91N4-10300				TRADE MARK KIT	1	#0033 - #0215		DOZER
	91N4-10301				TRADE MARK KIT	1	#0216 - #1218		DOZER
4-1	91N4-19110				.DECAL-MODEL NAME-LH	1	#0033 - #2947		
4-2	91N4-19120				.DECAL-MODEL NAME-RH	1	#0033 - #1218		
	91N4-19121				.MODEL NAME-RH/REAR	1	#1219 - #2947	D	
4-3	91N4-17140				.DECAL-ROBEX LOGO	2			
4-4	91N6-21070				.DECAL-TRADE MARK	2	#0033 - #0215		
4-5	91N6-04101				.KEEP CLEAR-REF	2	#0033 - #2587		
	91N6-04170				.REFLECTING	2	#2588 -	B	
4-6	91N4-17220				.DECAL-M/NAME,RH/FR	2	#1219 - #2947		
4-7	91N4-19310				.DECAL-MODEL NAME	2	#2948 -		
4	91N4-10101				TRADE MARK KIT	1	#1001 - #1082		LCM
	91N4-10400				TRADE MARK KIT	1	#1083 - #1218		LCM
4-1	91N4-18110				.DECAL-MODEL NAME-LH	1	#1001 - #2947		
4-2	91N4-18120				.DECAL-MODEL NAME-RH	1	#1001 - #1218		
	91N4-18121				.MODEL NAME-RH/REAR	1	#1219 - #2947	D	
4-3	91N4-17140				.DECAL-ROBEX LOGO	2			
4-5	91N6-04101				.KEEP CLEAR-REF	2	#1083 - #2587		

Item	Part_No	IS	Ord	T	Description	Qty	Serial_No	ITC	Remark
4-5	91N6-04170				.REFLECTING	2	#2588 -	B	
4-6	91N4-17220				.DECAL-M/NAME,RH/FR	2	#1219 - #2947		
4-7	91N4-18310				.DECAL-MODEL NAME	2	#2948 -		
5	91N6-22140				DECAL-NOISE LWA/104DB	1	- #1158		
	91N6-22120				NOISE LEVEL-LWA	1	#1159 - #2066	D	
	91N6-22110				DECAL-NOISE LWA/101DB	1	#2067 -	D	
6	91N4-17160				SERVICE INSTRUCTION	1	- #1000		STD
	91N4-17260				SERVICE INSTRUCTION	1	#1001 - #1158	D	STD
	91N4-17261				SERVICE INSTRUCTION	1	#1159 - #1406	D	STD
	91N4-17262				SERVICE INSTRUCTION	1	#1407 - #1916	B	STD
	91N4-17263				SERVICE INSTRUCTION	1	#1917 - #3290	D	STD
	91N4-17264				SERVICE INSTRUCTION	1	#3291 -	B	STD
	91N4-19160				SERVICE INSTRUCTION	1	#0033 - #1000		DOZER
	91N4-19260				SERVICE INSTRUCTION	1	#1001 - #1158	D	DOZER
	91N4-19261				SERVICE INSTRUCTION	1	#1159 - #1406	D	DOZER
	91N4-17262				SERVICE INSTRUCTION	1	#1407 - #1916	B	DOZER
	91N4-17263				SERVICE INSTRUCTION	1	#1917 - #3290	D	DOZER
	91N4-17264				SERVICE INSTRUCTION	1	#3291 -	B	DOZER
	91N4-17270				SERVICE INSTRUCTION	1	#1001 - #1158		ADJUST BM
	91N4-17271				SERVICE INSTRUCTION	1	#1159 - #1406	D	ADJUST BM
	91N4-17262				SERVICE INSTRUCTION	1	#1407 - #1916	B	ADJUST BM
	91N4-17263				SERVICE INSTRUCTION	1	#1917 - #3290	D	ADJUST BM
	91N4-17264				SERVICE INSTRUCTION	1	#3291 -	B	ADJUST BM
7-1	91N4-17410				DECAL-LIFTING CHART	1	#0001 -		4.6BM+2.5AM
7-2	91N4-17420				DECAL-LIFTING CHART	1	#0001 -		4.6BM+1.9AM

Item	Part_No	IS	Ord	T	Description	Qty	Serial_No	ITC	Remark
7-3	91N4-17430				DECAL-LIFTING CHART	1	#0001 -		4.6BM+2.1AM
7-4	91N4-17440				DECAL-LIFTING CHART	1	#0001 -		4.6BM+3.0AM
7-5	91N4-17450				DECAL-LIFTING CHART	1	#0001 -		4.1BM+1.9AM
7-6	91N4-17460				DECAL-LIFTING CHART	1	#0001 -		4.1BM+2.1AM
7-7	91N4-17510				DECAL-LIFTING CHART	1	#1001 -		4.9A/BM+2.5AM
7-8	91N4-17520				DECAL-LIFTING CHART	1	#1001 -		4.9A/BM+1.9AM
7-9	91N4-17530				DECAL-LIFTING CHART	1	#1001 -		4.9A/BM+2.1AM
7-10	91N4-18410				LIFTING CHART(LCM)	1	#0234 - #1082		4.6BM+2.5AM
	91N4-18510				LIFTING CHART(LCM)	1	#1083 -	D	4.6BM+2.5AM
7-11	91N4-18510				LIFTING CHART(LCM)	1	#0283 - #1082		4.6BM+1.9AM
	91N4-18520				LIFTING CHART(LCM)	1	#1083 -	D	4.6BM+1.9AM
7-12	91N4-18430				LIFTING CHART(LCM)	1	#0283 - #1082		4.6BM+2.1AM
	91N4-18530				LIFTING CHART(LCM)	1	#1083 -	D	4.6BM+2.1AM
7-13	91N4-18440				LIFTING CHART(LCM)	1	#0283 - #1082		4.6BM+3.0AM
	91N4-18540				LIFTING CHART(LCM)	1	#1083 -	D	4.6BM+3.0AM
7-14	91N4-19410				LIFTING CHART(DOZER)	1	#0033 -		4.6BM+2.5AM
7-15	91N4-19420				LIFTING CHART(DOZER)	1	#0033 -		4.6BM+1.9AM
7-16	91N4-19430				LIFTING CHART(DOZER)	1	#0033 -		4.6BM+2.1AM
7-17	91N4-19440				LIFTING CHART(DOZER)	1	#0033 -		4.6BM+3.0AM
7-18	91N4-19450				LIFTING CHART(DOZER)	1	#0033 -		4.1BM+1.9AM
7-19	91N4-19460				LIFTING CHART(DOZER)	1	#0033 -		4.1BM+2.1AM
8	91N6-21070				DECAL-TRADE MARK	2	#0216 -		4.6M BM
	91N6-21060				TRADE MARK	2	#0216 -		4.1M BM
11	91N6-27510				DECAL-SAFETY	3	#2314 - #2494		
					DECAL-SAFETY	1	#2495 -	A	

Item	Part_No	IS	Ord	T	Description	Qty	Serial_No	ITC	Remark
12	91N6-01280				FOPS FOG PLATE	1	#2314 -		
13	91N6-21090				DECAL-TRADE MARK	1	#1917 -		
14	91N6-03200				DECAL-ACCUMULATOR	1	#3015 -		

MANUALS

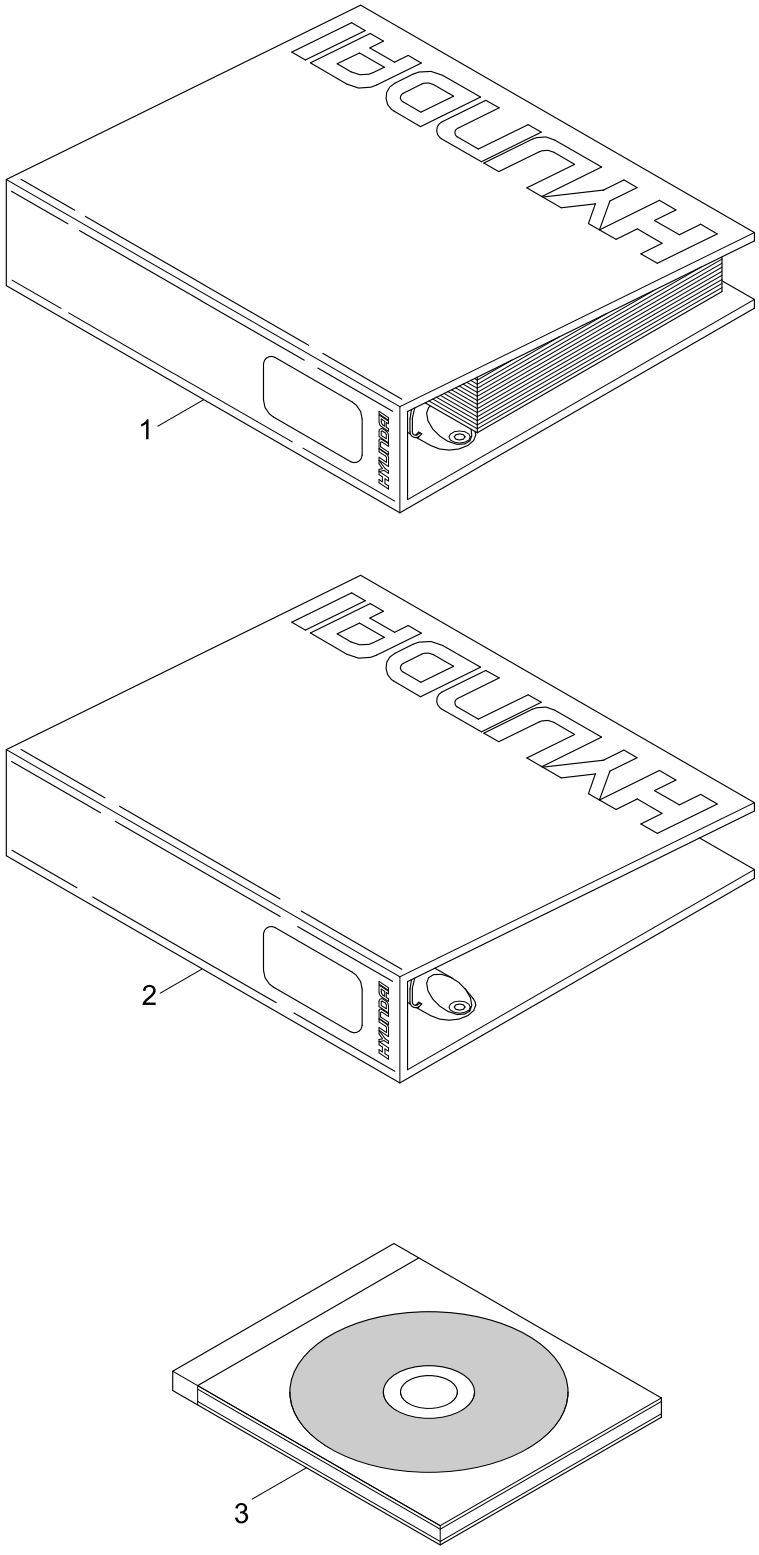

Item	Part_No	IS	Ord	T	Description	Qty	Serial_No	ITC	Remark
1	91N4-30030				PARTS MANUAL-EXPORT	1	- #1000		
	91N4-30031				PARTS MANUAL-EXPORT	1	#1001 - #1494	B	
	91N4-30032				PARTS MANUAL-EXPORT	1	#1495 -	B	
	91N4-30041				OPERATORS MANUAL-EXPORT	1	#0001 -	-	
	91N4-30051				SERVICE MANUAL	1	#0001 -	-	
2	91N4-30940				BINDER & STICKER	1			P/MANUAL
	91N4-30950				BINDER & STICKER	1			S/MANUAL
3	HECD-30000				CD-PARTS MANUAL	1			EXCAVATOR
	HACD-30000				CD-PARTS MANUAL	1			ALL MODEL
	HEDV-30000				DVD-PARTS MANUAL	1			EXCAVATOR
	HADV-30000				DVD-PARTS MANUAL	1			ALL MODEL

FRONT DRIVE ADAPTER(-#1000)

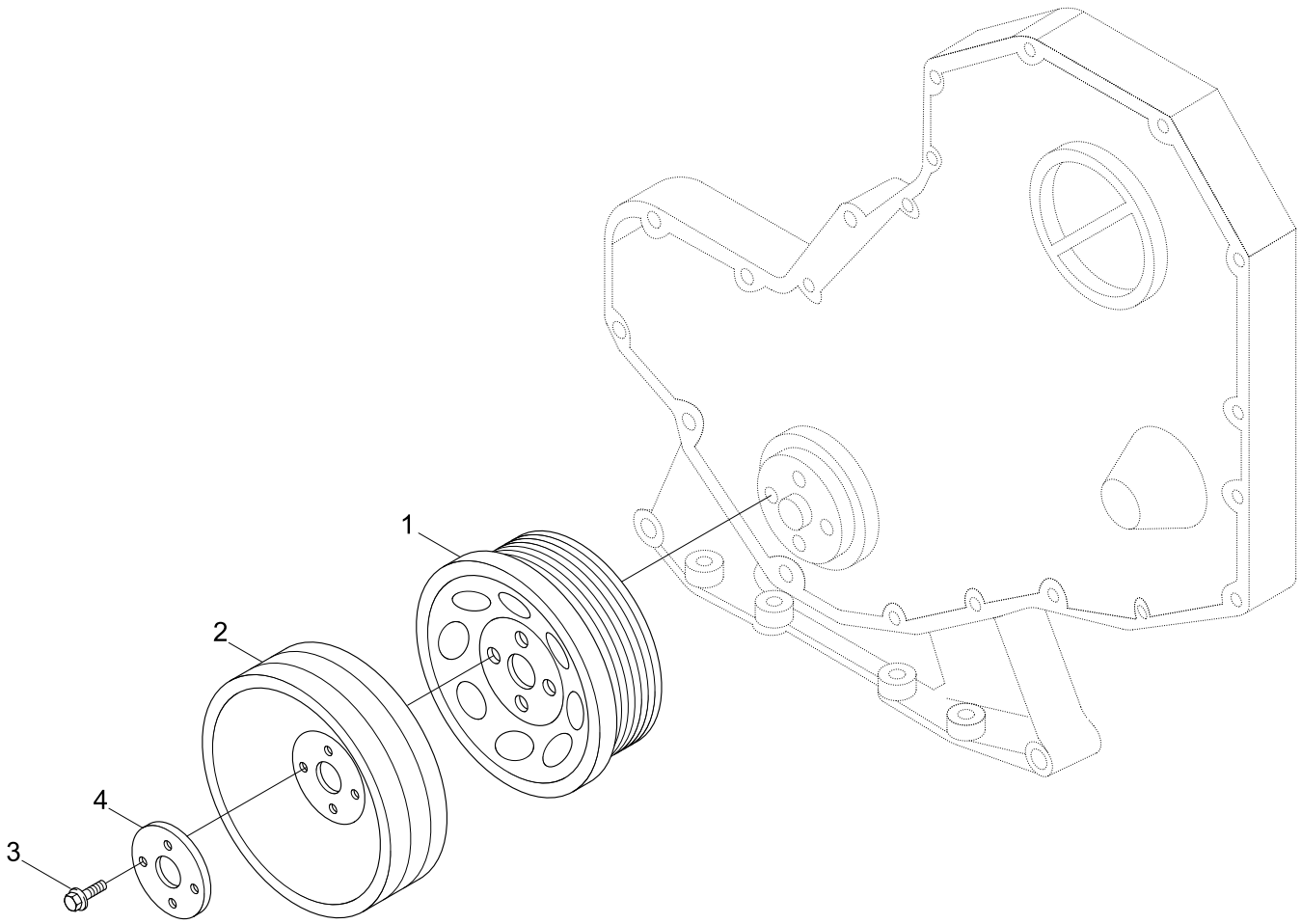

Item	Part_No	IS	Ord	T	Description	Qty	Serial_No	ITC	Remark
*	@				FRONT DRIVE ADAPTER	1	- #1000	-	NOT
1	3914494				PULLEY-CRANKSHAFT	1			AF9007-02
2	3903826				PULLEY-ACC	1			
3	3903857				SCREW	4			
4	3917639				PLATE-CLAMPING	1			

AIR INTAKE HEATER(-#1000)

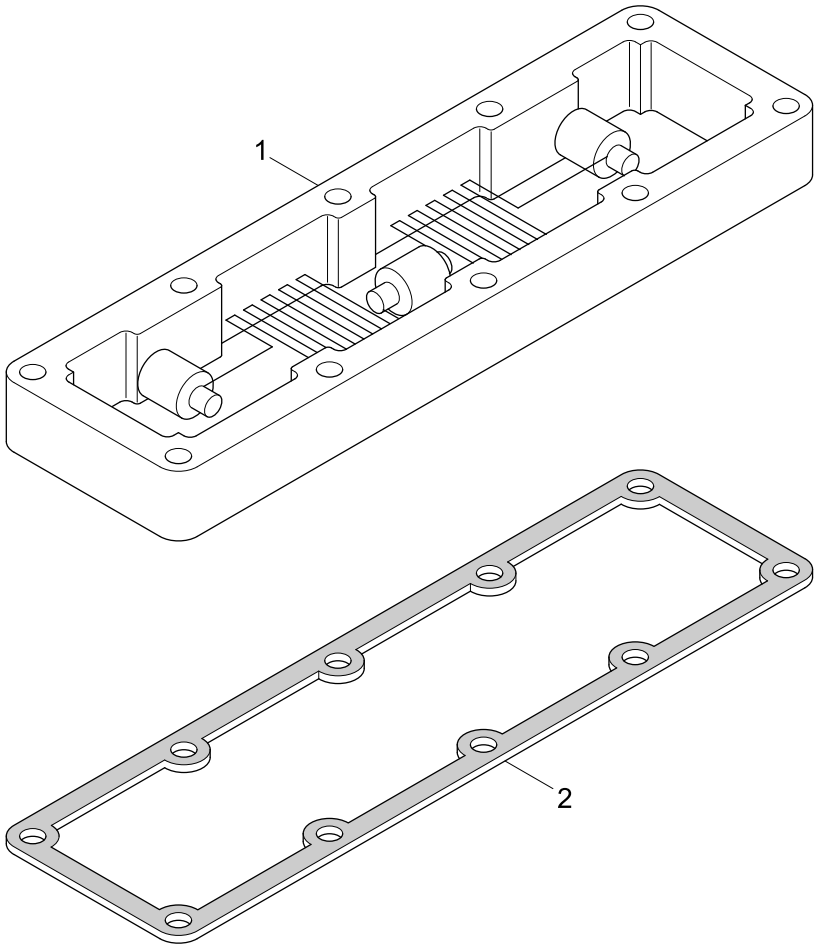

Item	Part_No	IS	Ord	T	Description	Qty	Serial_No	ITC	Remark
*	@				AIR INTAKE HEATER	1	- #1000	-	NOT
1	3929335				HEATER-ENGINE	1			AH9061-01
2	3938153				GASKET-INT MANI CVR	1			

DATAPLATE(-#1000)

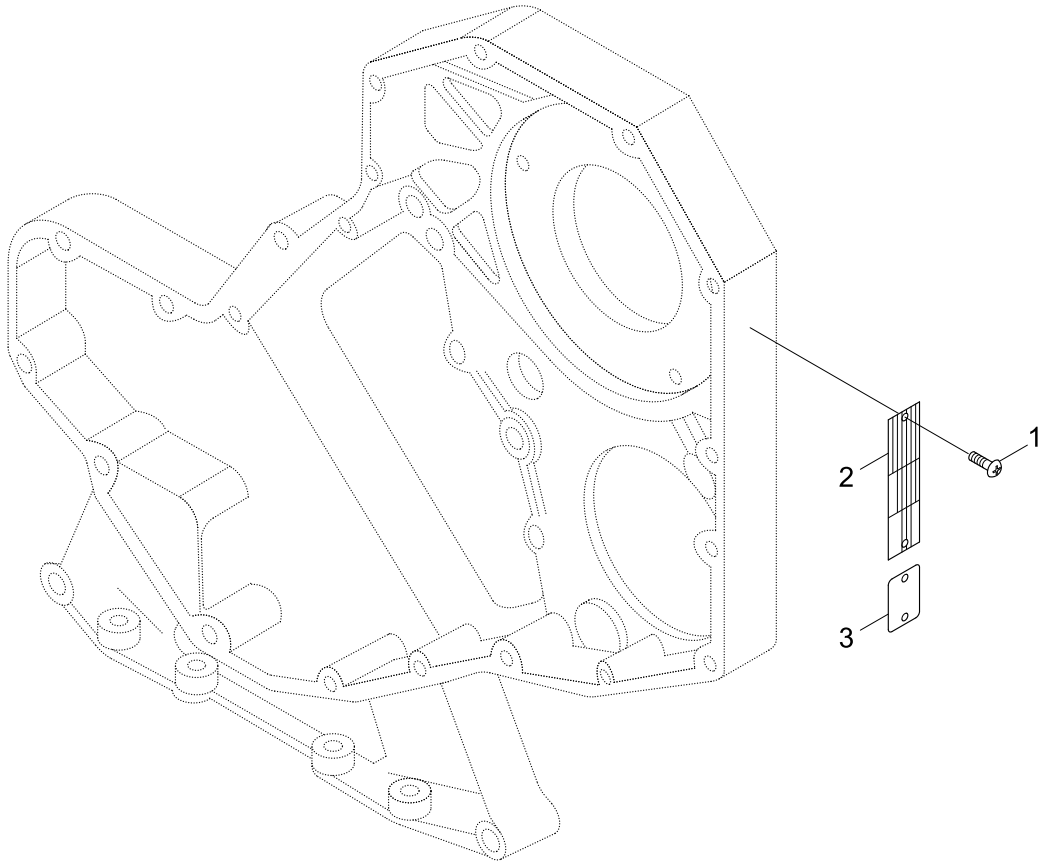

Item	Part_No	IS	Ord	T	Description	Qty	Serial_No	ITC	Remark
*	@				DATAPLATE	1	- #1000	-	NOT
1	3908612				SCREW	2			AP9118-04
N2	3284906				DATAPLATE	1			NOT
N3	3939196				DECAL	1			NOT
N	@				NOT INDIVIDUALLY SUPPLIED	AR			NOT

ROCKER LEVERS(-#1000)

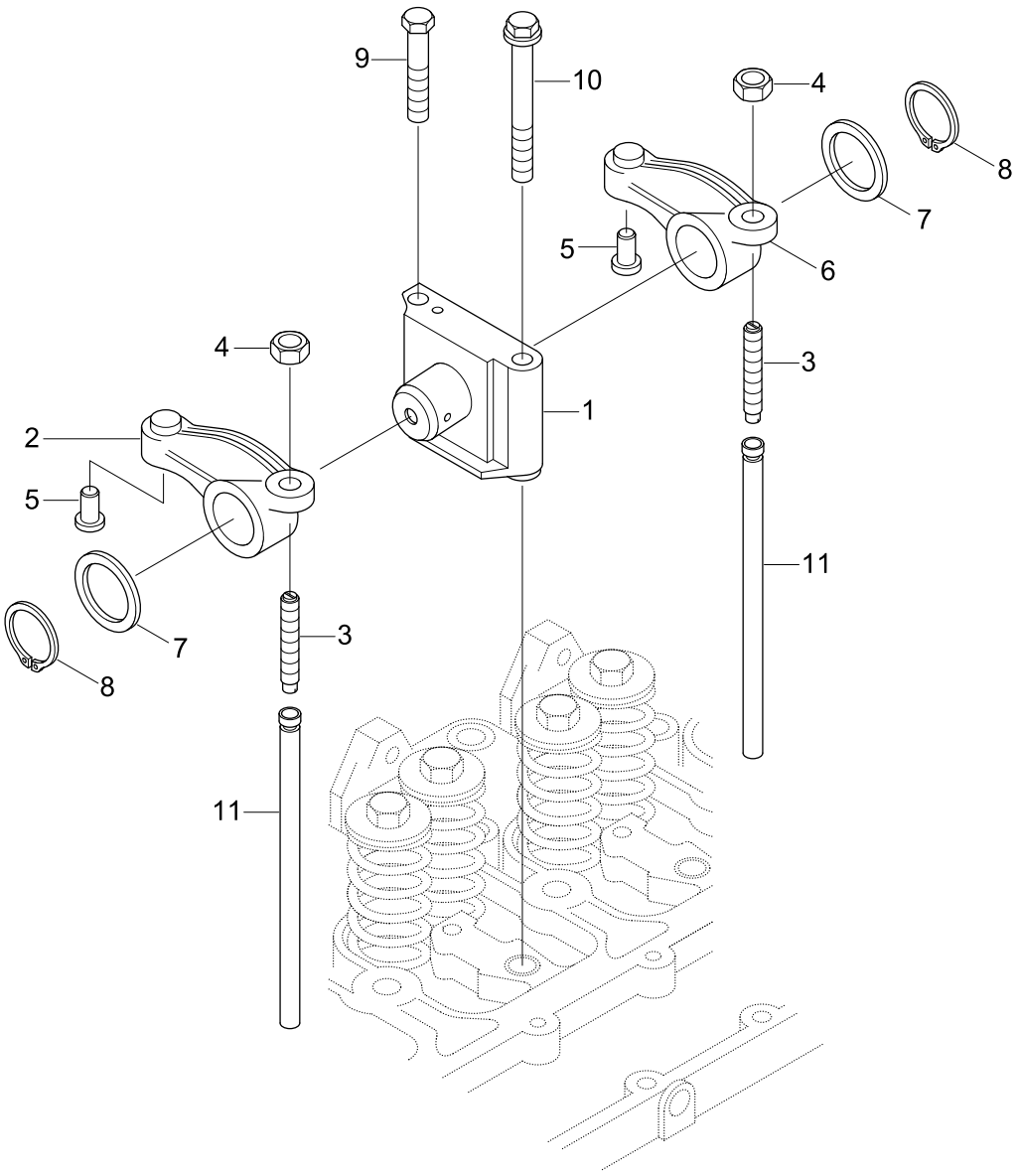

Item	Part_No	IS	Ord	T	Description	Qty	Serial_No	ITC	Remark
*	@				ROCKER LEVERS	1	- #1000	-	NOT
	3922488				SHAFT-R/LEVER	4			BP9704-03
N1	3911423				.SUPPORT-R/LEVER	1			NOT
	3922487				.SHAFT-R/LEVER	1			NOT
2	3910811				LEVER-ROCKER	4			
N2	3910809				.LEVER-ROCKER	1			NOT
N3	3900706				.SCREW	1			NOT
4	3927692				.NUT-HEAVY HEX	1			
N5	3900705				.INSERT-R/LEVER	1			NOT
6	3910810				LEVER-ROCKER	4			
N6	3910808				.LEVER-ROCKER	1			NOT
N3	3900706				.SCREW	1			NOT
4	3927692				.NUT-HEAVY HEX	1			
N5	3900705				.INSERT-R/LEVER	1			NOT
7	3900245				WASHER-PLAIN	8			
8	3900242				RING-RETAINING	8			
9	3901221				SCREW	4			
10	3920781				SCREW	4			
11	3284377				ROD-PUSH	8			
N	@				NOT INDIVIDUALLY SUPPLIED	AR			NOT

VALVE TAPPET(-#1000)

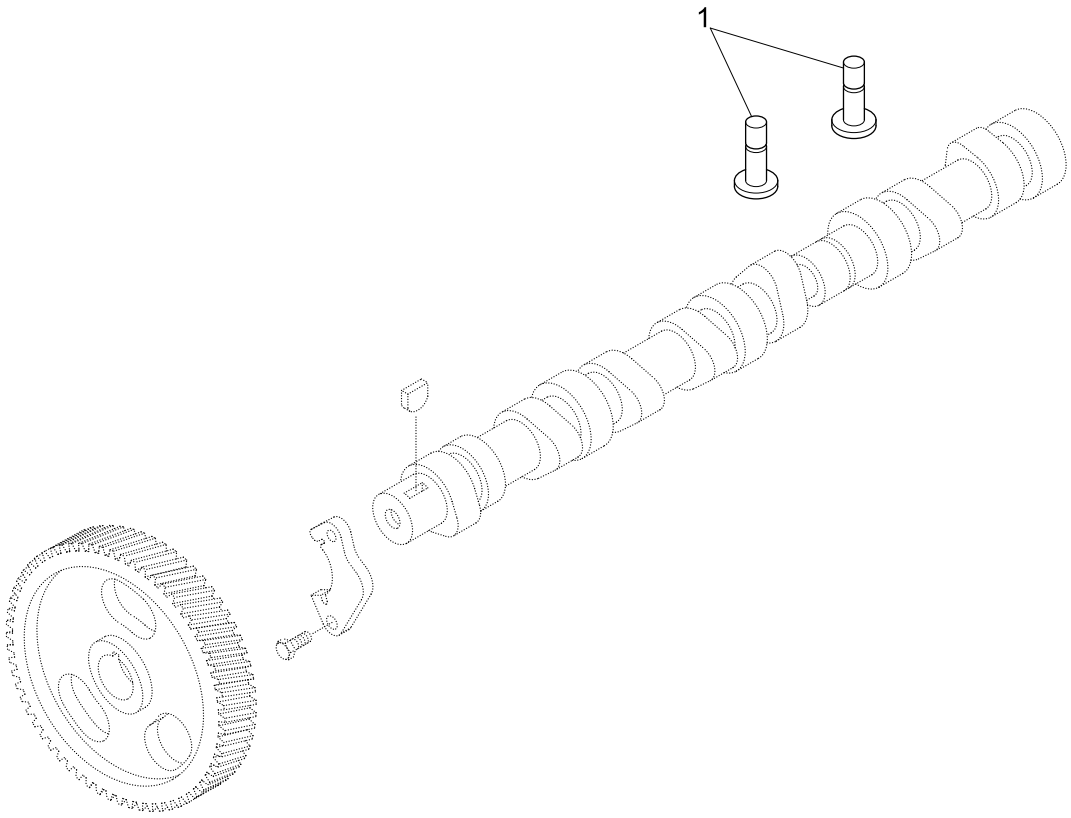

Item	Part_No	IS	Ord	T	Description	Qty	Serial_No	ITC	Remark
*	@				VALVE TAPPET	1	- #1000	-	NOT
1	3931623				TAPPET-VALVE	8			BP9705

FRONT GEAR COVER(-#1000)

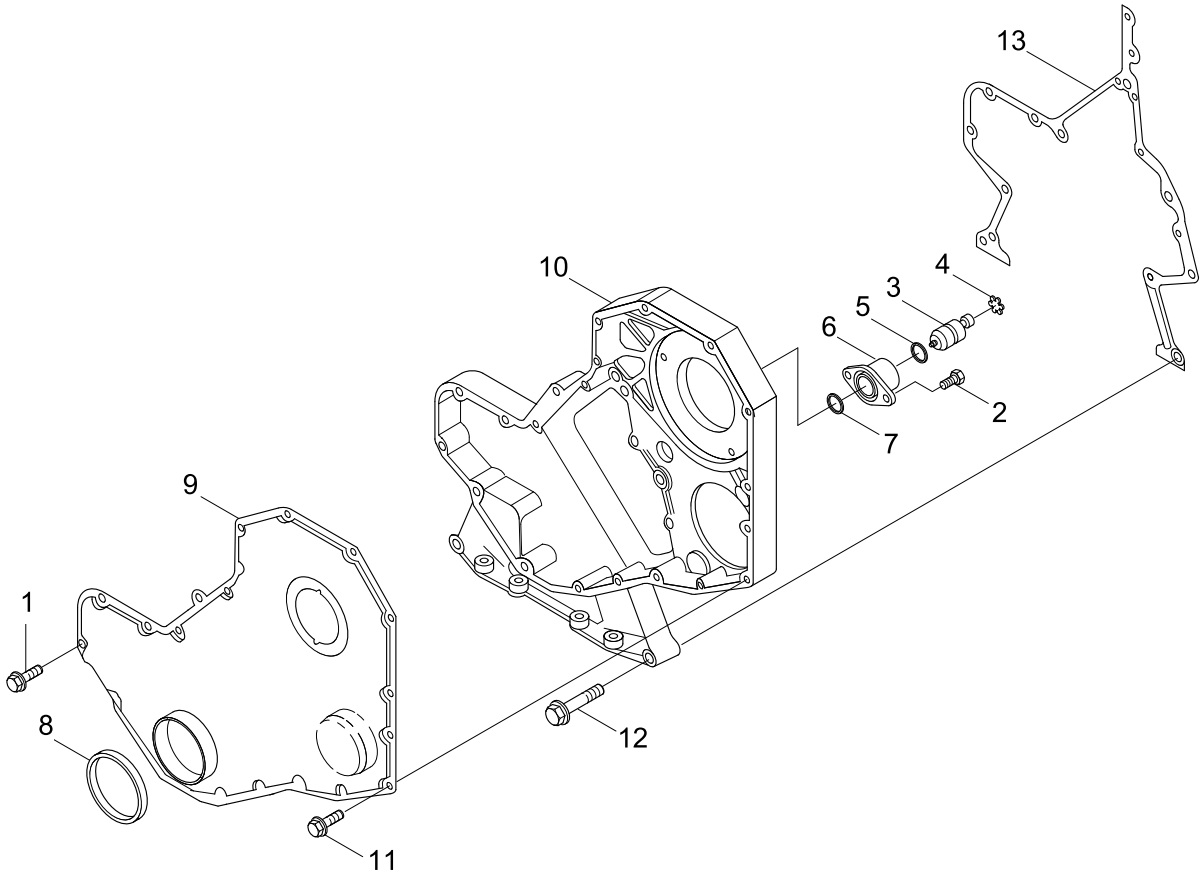

Item	Part_No	IS	Ord	T	Description	Qty	Serial_No	ITC	Remark
*	@				FRONT GEAR COVER	1	- #1000	-	NOT
1	3926846				SCREW-HEX HEAD CAP	5			BP97034-05
2	3907998				SCREW-RD HD CAP	2			
3	3903924				PIN-TIMING	1			
4	3904849				RING-RETAINING	1			
5	3913994				O-RING	1			
6	3919683				HOUSING-TIMING PIN	1			
7	3915772				SEAL-RECT RING	1			
N7	3904353				.SEAL KIT-FRONT	1			NOT
N8	3935959				..SEAL-OIL	1			NOT
9	3935582				COVER-GEAR	1			
10	3936257				HOUSING-GEAR	1			
11	3924962				SCREW	11			
12	3900633				SCREW-HEX HD CAP	11			
13	3938156				GASKET-GEAR HSG	13			
N	@				NOT INDIVIDUALLY SUPPLIED	AR			NOT

CYLINDER BLOCK(-#1000)

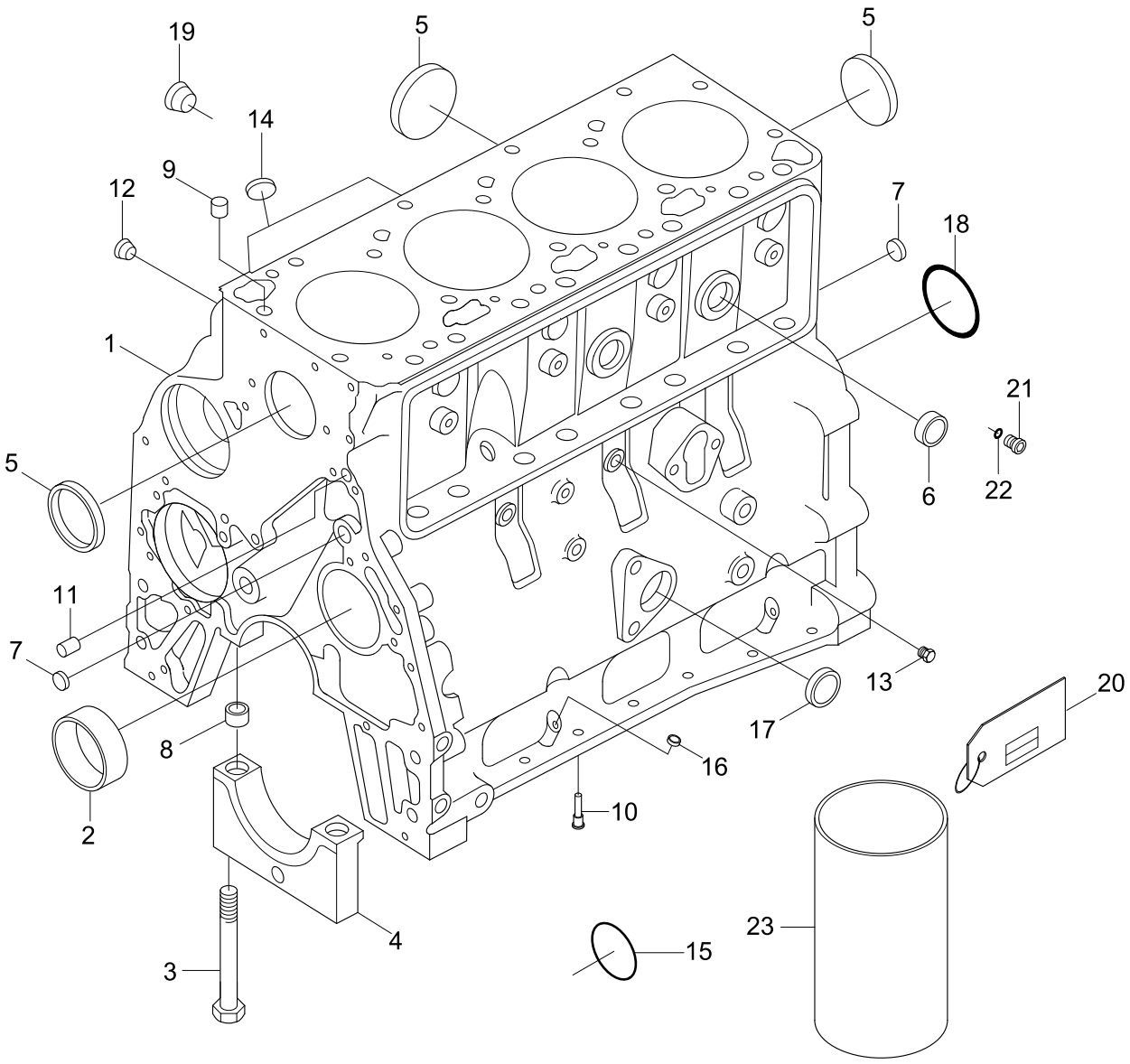

Item	Part_No	IS	Ord	T	Description	Qty	Serial_No	ITC	Remark
*	@				CYLINDER BLOCK	1	- #1000	-	NOT
	3933223				CYLINDER BLOCK	1			BP97114-04
N1	3932012				.BLOCK-CYLINDER	1			NOT
2	3940059				.BUSHING	1			
3	3927948				.SCREW	10			
4	3936791				.CAP-MAIN BEARING	7			
5	3922072				.PLUG-EXPANSION	3			
N6	3914035				.PLUG-EXPANSION	2			NOT
7	3900956				.PLUG-EXPANSION	3			
8	3900068				.DOWEL-RING	2			
*	3933224				KIT-CYL BLOCK HW				
8	3900068				.DOWEL-RING	2			
9	3902343				.DOWEL-RING	2			
10	3937214				.NOZZLE	4			
11	3900257				.DOWEL-PIN	2			
12	3008468				.PLUG-PIPE	1			
13	3906619				.PLUG-PIPE	2			
14	3920706				.PLUG-EXPANSION	2			
15	3900687				.PLUG-EXPANSION	1			
16	3900955				.PLUG-EXPANSION	2			
17	3900958				.PLUG-EXPANSION	1			
18	3926047				.SEAL/O-RING	1			
19	3008469				.PLUG-PIPE	1			
N20	3933613				TAG	1			NOT
*	3678923				PLUG-THREADED	2			

Item	Part_No	IS	Ord	T	Description	Qty	Serial_No	ITC	Remark
N21	3678924				.PLUG-THREADED	1			NOT
22	3678925				.SEAL/O-RING	1			
23	3904166				SLEEVE-SALVAGE	1			SERVICE PARTS
N	@				NOT INDIVIDUALLY SUPPLIED	AR			NOT

CRANKSHAFT & M/BEARINGS(-#1000)

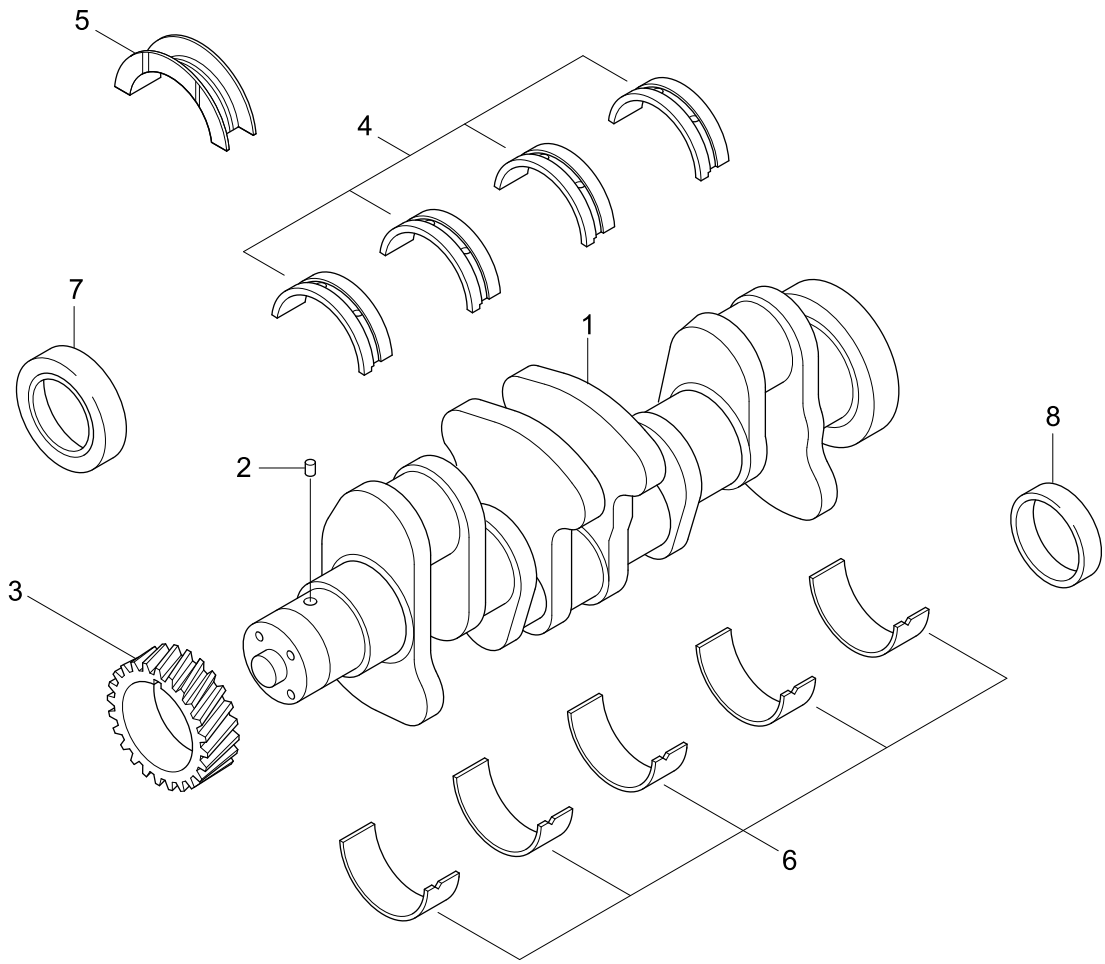

Item	Part_No	IS	Ord	T	Description	Qty	Serial_No	ITC	Remark
*	@				CRANKSHAFT & M/BEARING	1	- #1000	-	NOT
	3908031				CRANKSHAFT-ENGINE	1			BP97114
N1	3929036				CRANKSHAFT-ENGINE	1			NOT
2	3904483				PIN-DOWEL	1			
3	3929027				GEAR-CRANKSHAFT	1			
*	3802010				SET-MAIN BEARING(STD)	1			
N4	3929016				.BEARING-MAIN	4			NOT
N5	3927772				.BEARING-C/SHAFT THRUST	1			NOT
N6	3929021				.BEARING-MAIN	5			NOT
*	3802011				SET-M/BRG(0.25 O/S)	1			
N4	3929017				.BEARING-MAIN	4			NOT
5	3927773				.BEARING-THRUST	1			
N6	3929022				.BEARING-MAIN	5			NOT
*	3802012				SET-M/BRG(0.5 O/S)	1			
N4	3929018				.BEARING-MAIN	4			NOT
5	3927774				.BEARING-C/SHAFT THRUST	1			
N6	3929023				.BEARING-MAIN	5			NOT
*	3802013				SET-M/BRG(0.75 O/S)	1			
N4	3929019				.BEARING-MAIN	4			NOT
5	3927775				.BEARING-C/SHAFT THRUST	1			
N6	3929024				.BEARING-MAIN	5			NOT
*	3802014				SET-M/BRG(1.0 O/S)	1			
N4	3929020				.BEARING-MAIN	4			NOT
5	3927776				.BEARING-C/SHAFT THRUST	1			
N6	3929025				.BEARING-MAIN	5			NOT

Item	Part_No	IS	Ord	T	Description	Qty	Serial_No	ITC	Remark
*	3802082				BRG-C/SHAFT(0.5 O/S)	1			
5	3927770				.BEARING-C/SHAFT THRUST	1			
N6	3929023				.BEARING-MAIN	1			NOT
*	3802084				BRG-C/SHAFT(1.0 O/S)	1			
5	3927771				.BEARING-C/SHAFT THRUST	1			
N6	3929025				.BEARING-MAIN	1			NOT
7	3906080				SLEEVE-WEAR,FR	1			SERVICE PARTS
8	3906081				SLEEVE-WEAR,RR	1			SERVICE PARTS

CAM FOLLOWER COVER(-#1000)

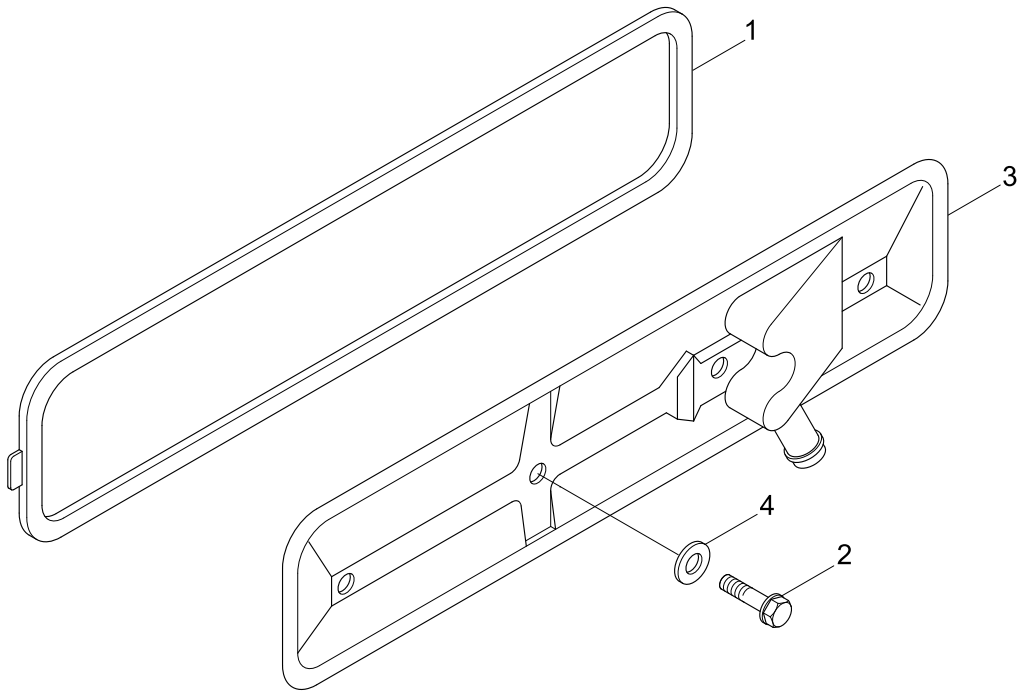

Item	Part_No	IS	Ord	T	Description	Qty	Serial_No	ITC	Remark
*	@				CAM FOLLOWER COVER	1	- #1000	-	NOT
1	3283767				GASKET-P/ROD COVER	1			CM9024-02
2	3900629				SCREW-H/FLANGE CAP	2			
3	3936186				COVER-PUSH ROD	1			
4	3928759				SEAL-GROMMET	2			

FRONT GEAR TRAIN ACCESSORY(-#1000)

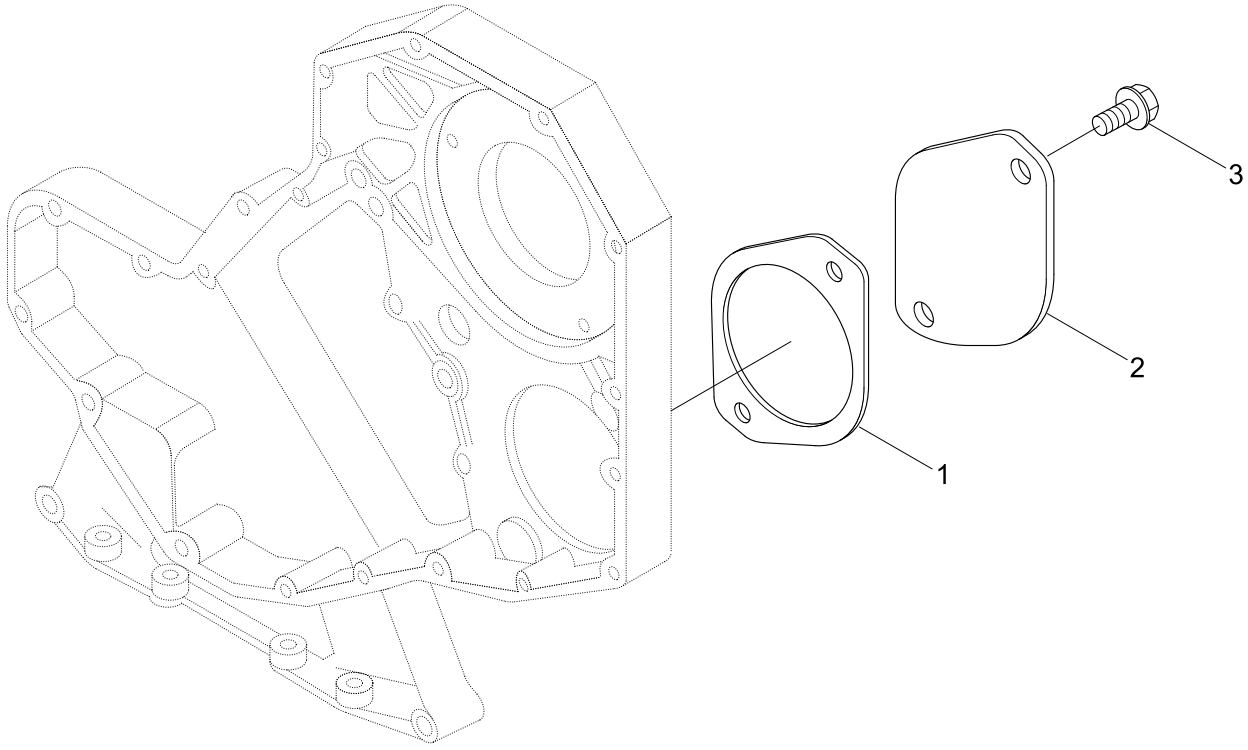

Item	Part_No	IS	Ord	T	Description	Qty	Serial_No	ITC	Remark
*	@				FR GEAR TRAIN ACCESS	1	- #1000	-	NOT
1	3929751				GASKET-ACC DRIVE CVR	1			DF9051
2	3914868				PLATE-COVER	1			
3	3901249				SCREW	2			

FUEL DRAIN LOCATION(-#1000)

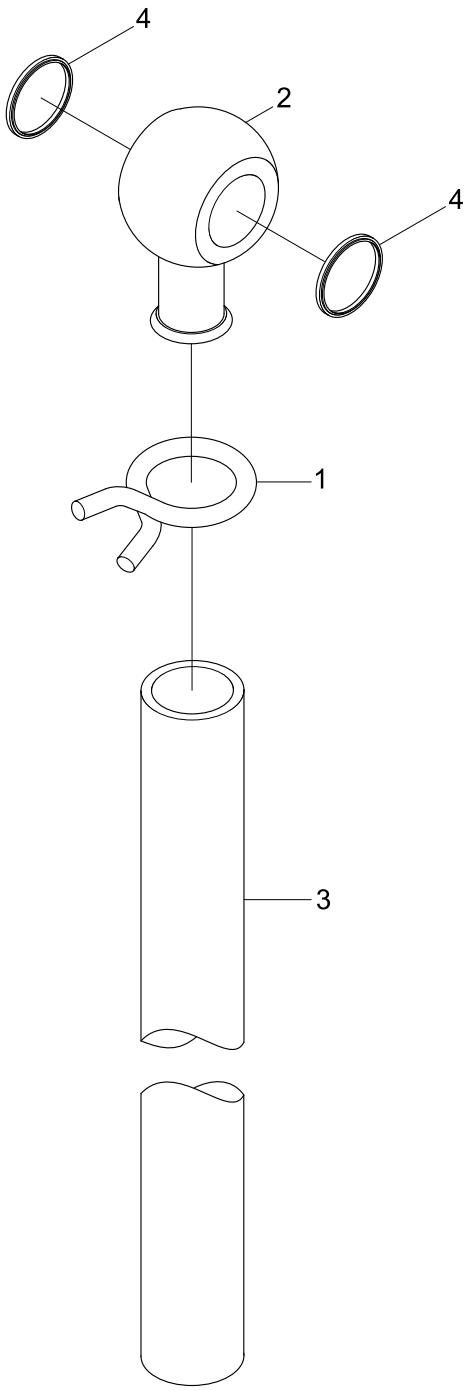

Item	Part_No	IS	Ord	T	Description	Qty	Serial_No	ITC	Remark
*	@				FUEL DRAIN LOCATION	1	- #1000	-	NOT
1	3909395				CLAMP	1			DL9043-02
2	3911447				CONNECTOR	1			
3	3918176				HOSE	1			
4	3863988				WASHER-SEALING	2			

THERMOSTAT & HOUSING(-#1000)

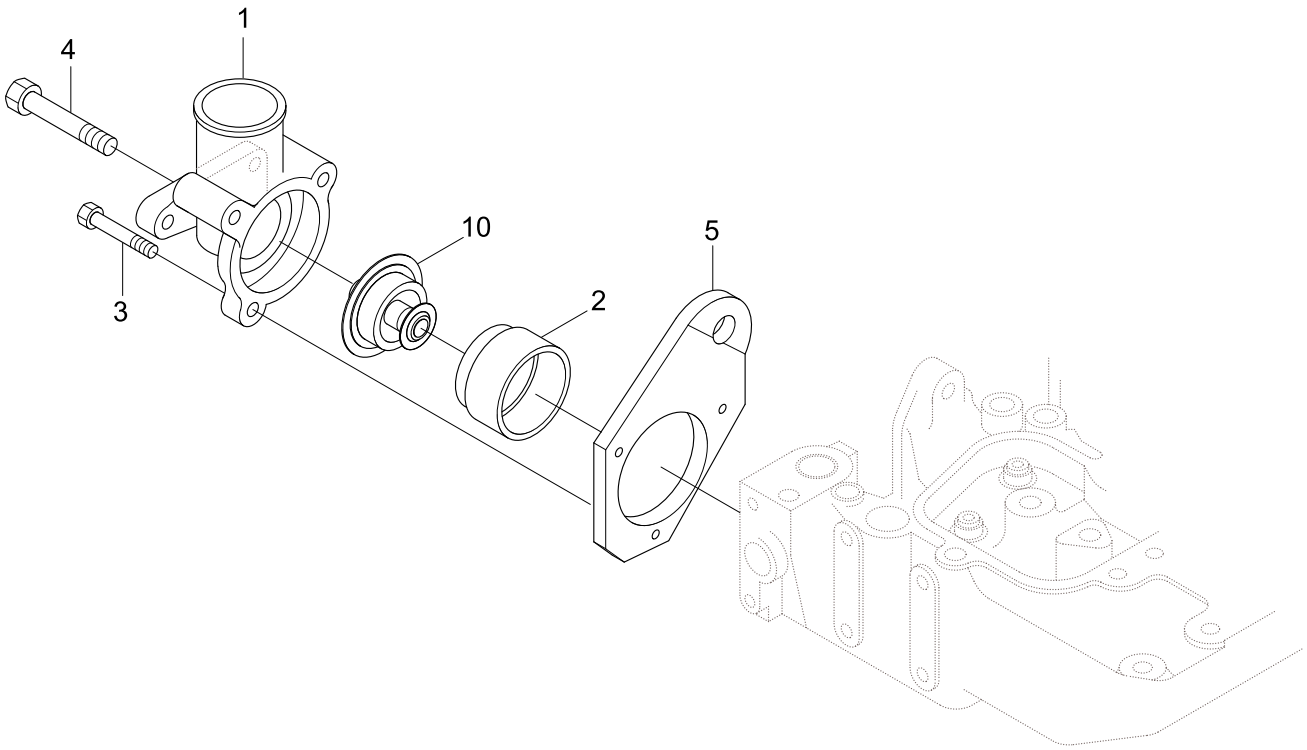

Item	Part_No	IS	Ord	T	Description	Qty	Serial_No	ITC	Remark
*	@				THERMOSTAT	1	- #1000	-	NOT
1	3285102				HOUSING-THERMOSTAT	1			TH9001-03
2	3923331				GASKET-THM HSG CVR	1			
3	3900632				SCREW	1			
4	3926972				SCREW	2			
5	3903757				BRACKET-LIFTING	1			
*	3802968				THERMOSTAT KIT	1			EC9001-05
10	3917324				THERMOSTAT	1			
N	3920336				.THERMOSTAT TEMPLATE	1			NOT
	3923331				.GASKET-THM HSG CVR	1			

ALTERNATOR LOCATION(-#1000)

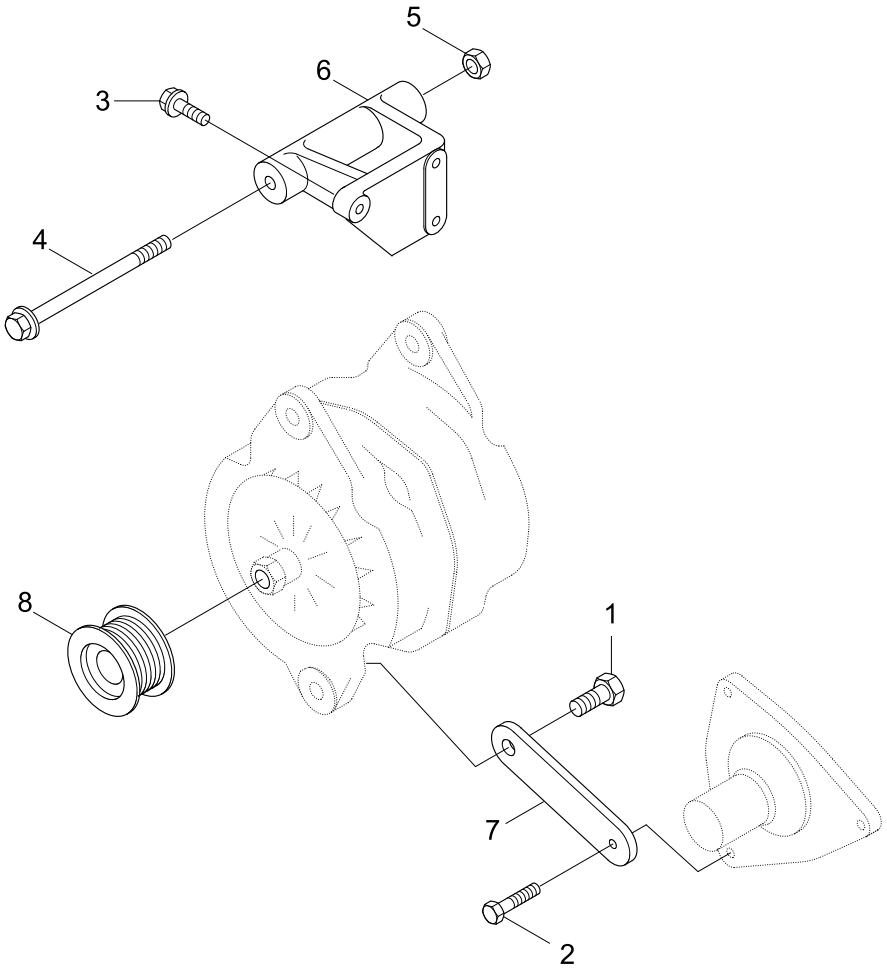

Item	Part_No	IS	Ord	T	Description	Qty	Serial_No	ITC	Remark
*	@				ALTERNATOR LOCATION	1	- #1000	-	NOT
1	3052061				SCREW	1			EH9029-03
2	3900630				SCREW-HEX HEAD CAP	1			
3	3900631				SCREW	3			
4	3903105				SCREW-HEX HEAD CAP	1			
5	3903210				NUT	1			
6	3910923				SUPPORT-ALTERNATOR	1			
7	3910924				BRACE-ALTERNATOR	1			
8	3918275				PULLEY-ALTERNATOR	1			

ALTERNATOR DRIVE(-#1000)

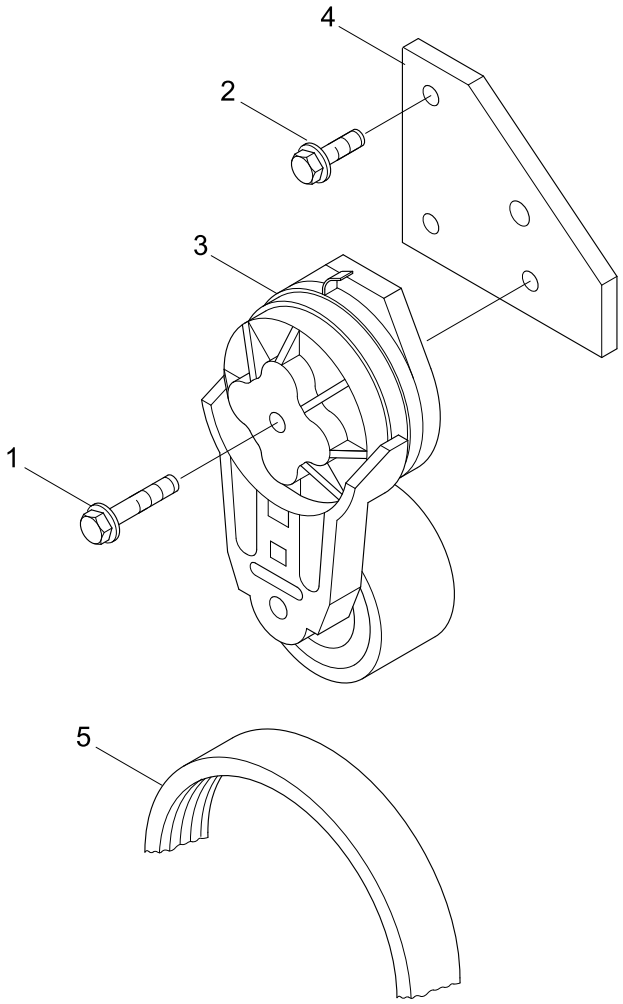

Item	Part_No	IS	Ord	T	Description	Qty	Serial_No	ITC	Remark
*	@				ALTERNATOR DRIVE	1	- #1000	-	NOT
1	3282081				SCREW	1			EH97116-03
2	3900631				SCREW	2			
3	3936202				TENSIONER-BELT	1			
4	3284932				BRACKET	1			
5	3929330				BELT-V RIBBED	1			

MECHANICAL TACHOMETER DRIVE(-#1000)

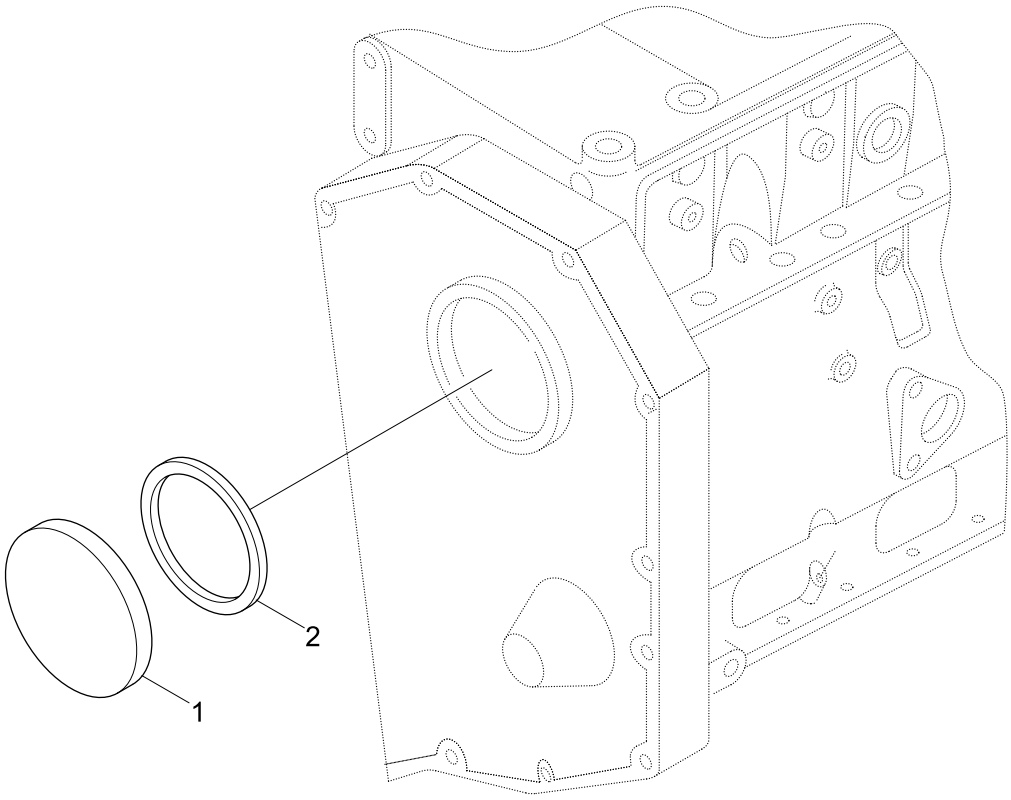

Item	Part_No	IS	Ord	T	Description	Qty	Serial_No	ITC	Remark
*	@				TACHOMETER DRIVE	1	- #1000	-	NOT
1	3903463				COVER-ACCESS HOLE	1			EI9000
2	3903475				SEAL-RECT RING	1			

FAN DRIVE(-#1000)

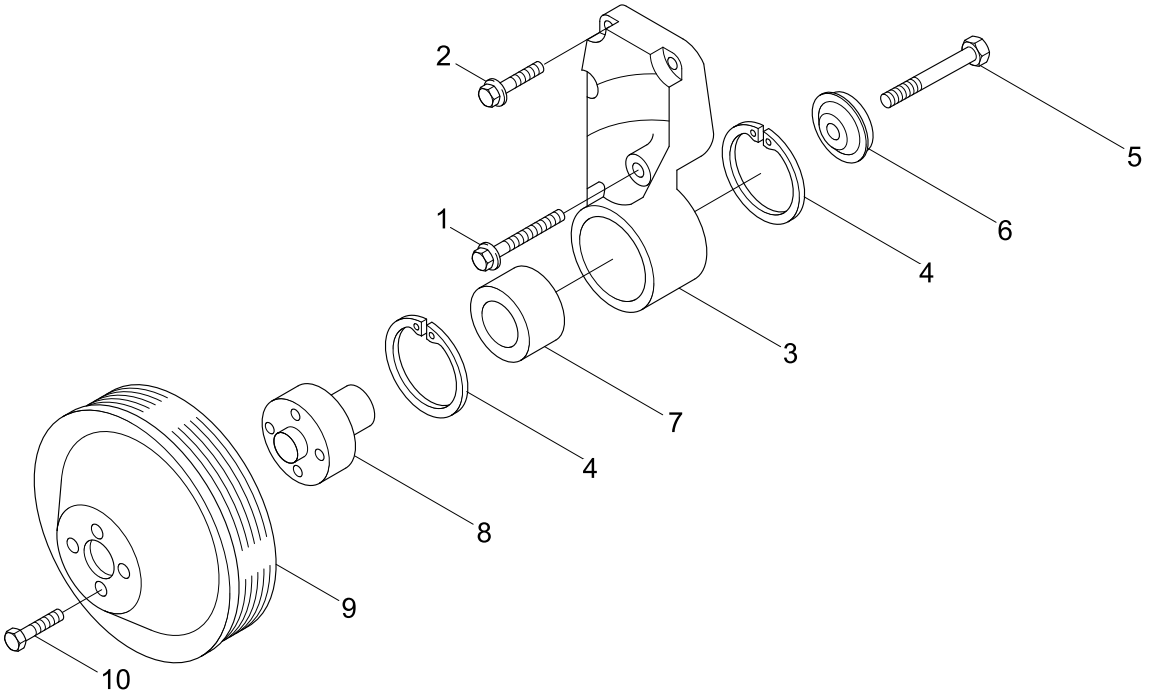

Item	Part_No	IS	Ord	T	Description	Qty	Serial_No	ITC	Remark
*	@				FAN DRIVE	1	- #1000	-	NOT
1	3901447				SCREW-HEX F/HEAD CAP	1			FA9268-01
2	3902114				SCREW-HEX F/HEAD CAP	3			
*	3285948				SUPPORT-FAN	1			
N3	3285946				.SUPPORT-FAN	1			NOT
4	3035960				.RING-RETAINING	2			
5	3907769				.SCREW	1			
6	3923044				.RETAINER-FAN HUB	1			
7	3910739				.BEARING-BALL	1			
8	3285954				.HUB-FAN	1			
9	3929269				PULLEY-FAN	1			
10	3902460				SCREW-HEX F/HEAD CAP	4			FA9726
N	@				NOT INDIVIDUALLY SUPPLIED	AR			NOT

AIR FUEL CONTROL PLUMBING(-#1000)

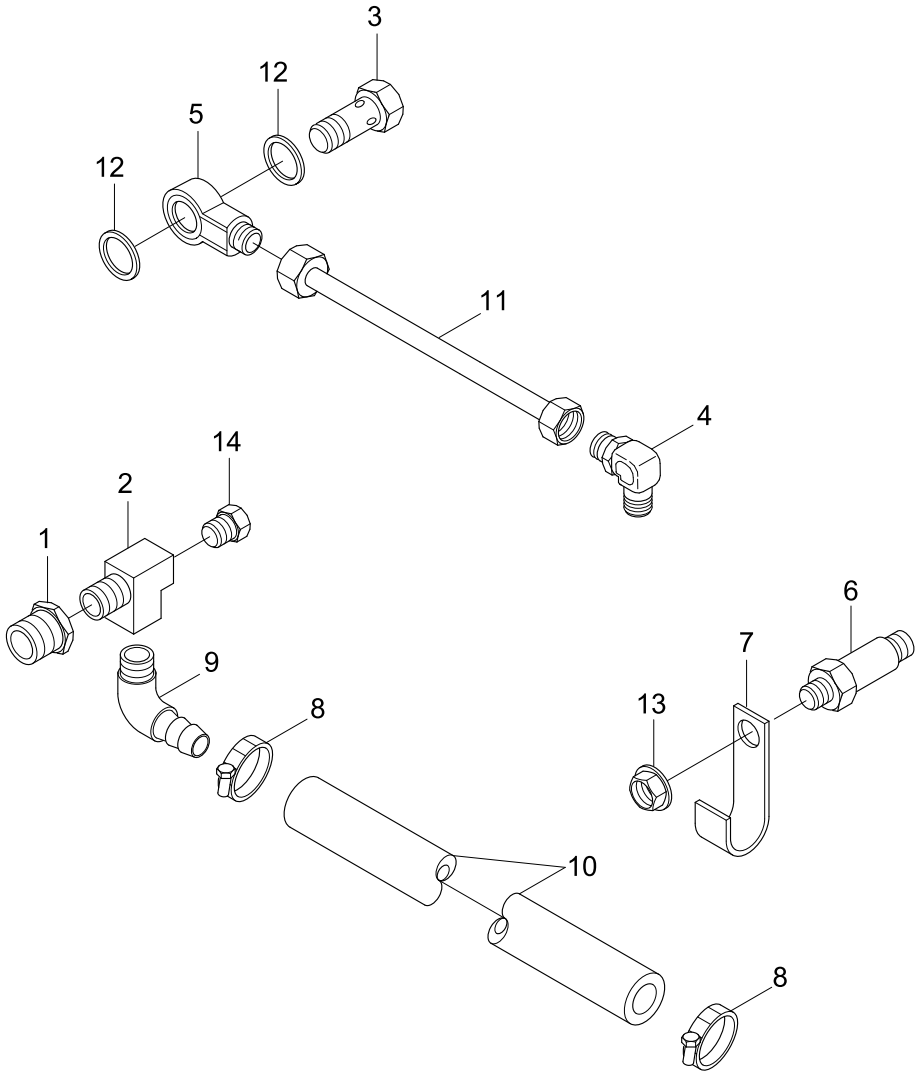

Item	Part_No	IS	Ord	T	Description	Qty	Serial_No	ITC	Remark
*	@				AIR FUEL CONT PLUMBING	1	- #1000	-	NOT
1	S-931-C				BUSHING-REDUCING PIPE	1			FE9817-09
2	3282406				TEE-STREET PIPE	1			
3	3903035				SCREW	1			
4	3910265				ELBOW-MALE ADAPTER	1			
5	3919644				CONNECTOR-BANJO	1			
6	3920344				SCREW-HEX	1			
7	3920348				CLIP	1			
8	3931547				CLAMP-HOSE	2			
9	3927317				COUPLING	1			
10	3930166				HOSE-PLAIN	1			
11	3934602				TUBE-AIR FUEL CONTROL	1			
12	3935171				WASHER-SEALING	2			
13	3900589				NUT-HEX FLANGE	1			
14	3906619				PLUG-PIPE	1			

FUEL FILTER(-#1000)

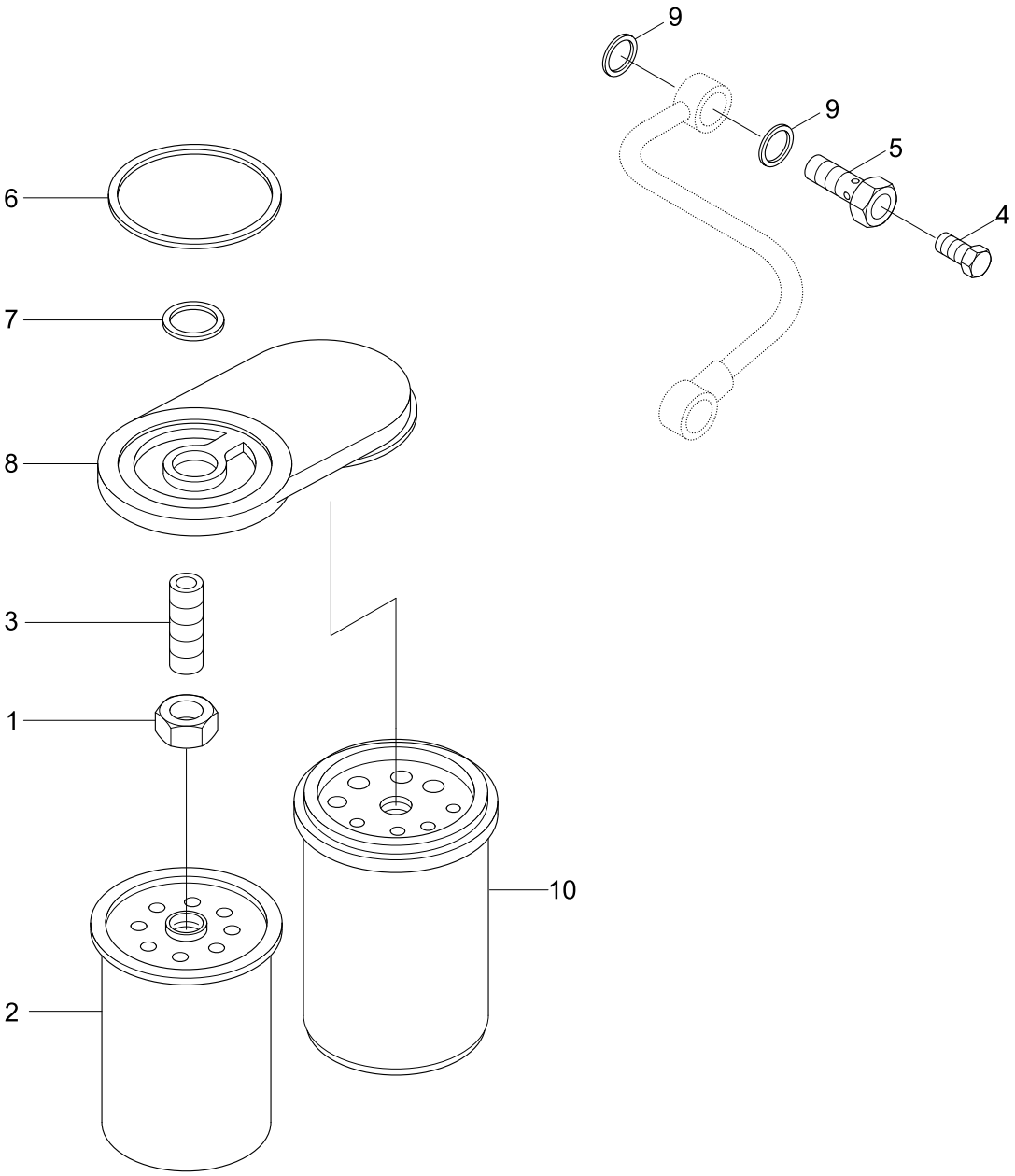

Item	Part_No	IS	Ord	T	Description	Qty	Serial_No	ITC	Remark
*	@				FUEL FILTER	1	- #1000	-	NOT
1	3903293				NUT	1			FF9007-07
2	3931063				FILTER-FUEL	1			
3	3925955				ADAPTER-FILTER HEAD	1			
N*	3905860				SCREW	1			NOT
4	3939570				.SCREW	1			
5	3911446				.SCREW	1			
6	3906694				SEAL-RECT RING	1			
7	3906695				SEAL	1			
8	3936315				HEAD-FUEL FILTER	1			
N	3936313				.HEAD-FUEL FILTER	1			NOT
*	3897329				.BALL	1			
N	3936337				.ADAPTER-FILTER HEAD	1			NOT
9	3935171				WASHER-SEALING	2			
10	3930942				FILTER-FUEL	1			
N	@				NOT INDIVIDUALLY SUPPLIED	AR			NOT

FUEL FILTER PLUMBING(-#1000)

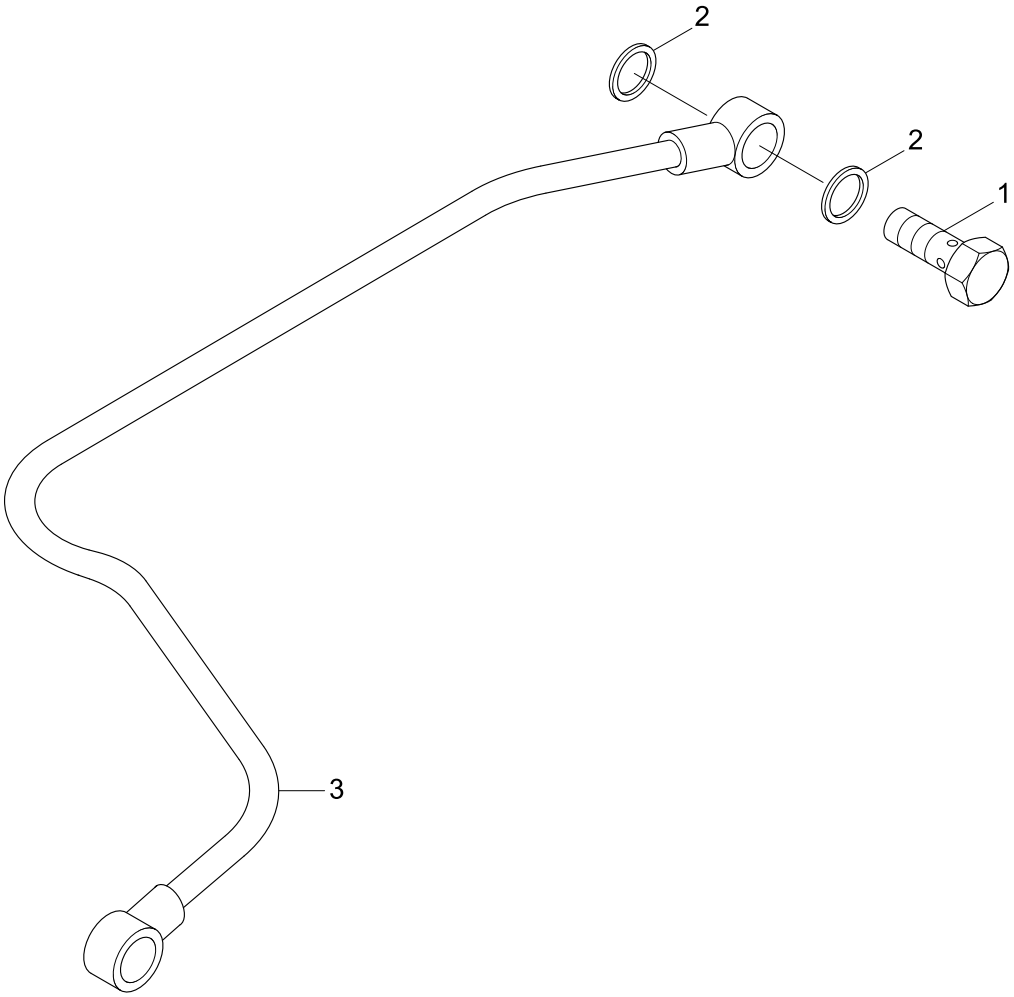

Item	Part_No	IS	Ord	T	Description	Qty	Serial_No	ITC	Remark
*	@				FUEL FILTER PLUMBING	1	- #1000	-	NOT
1	3924725				SCREW	1			FF9797-05
2	3863988				WASHER-SEALING	2			
3	3936348				TUBE-FUEL SUPPLY	1			

FLYWHEEL HOUSING(-#1000)

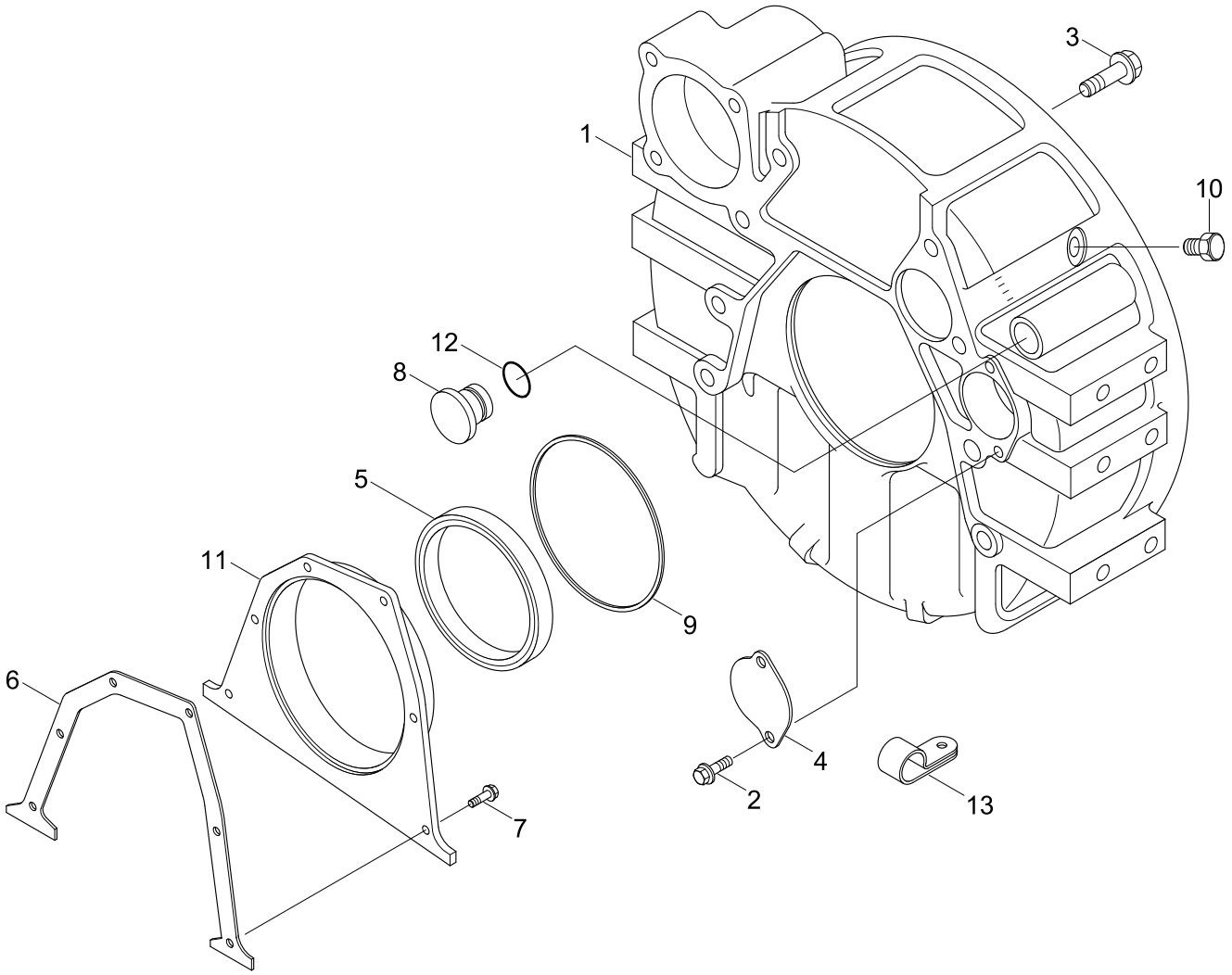

Item	Part_No	IS	Ord	T	Description	Qty	Serial_No	ITC	Remark
*	@				FLYWHEEL HOUSING	1	- #1000	-	NOT
1	3937426				FLYWHEEL HOUSING	1			FH9002-05
2	3912072				SCREW	2			
3	3920447				SCREW-HEX F/HEAD CAP	8			
4	3925234				PLATE-COVER	1			
N*	3934486				KIT-SEAL	1			NOT
N5	3933262				.SEAL-OIL	1			NOT
6	3938159				GASKET-REAR COVER	1			
7	3991306				SCREW-HEX F/HEAD CAP	6			
8	3910248				PLUG	1			
9	3912473				SEAL-RECT RING	1			
10	3904181				PLUG-THREADED	1			
N11	3936895				COVER-REAR	1			NOT
12	3910260				O-RING	1			
13	3928989				CLIP	1			
N	@				NOT INDIVIDUALLY SUPPLIED	AR			NOT

INJECTION PUMP & ACCESSORIES(-#1000)

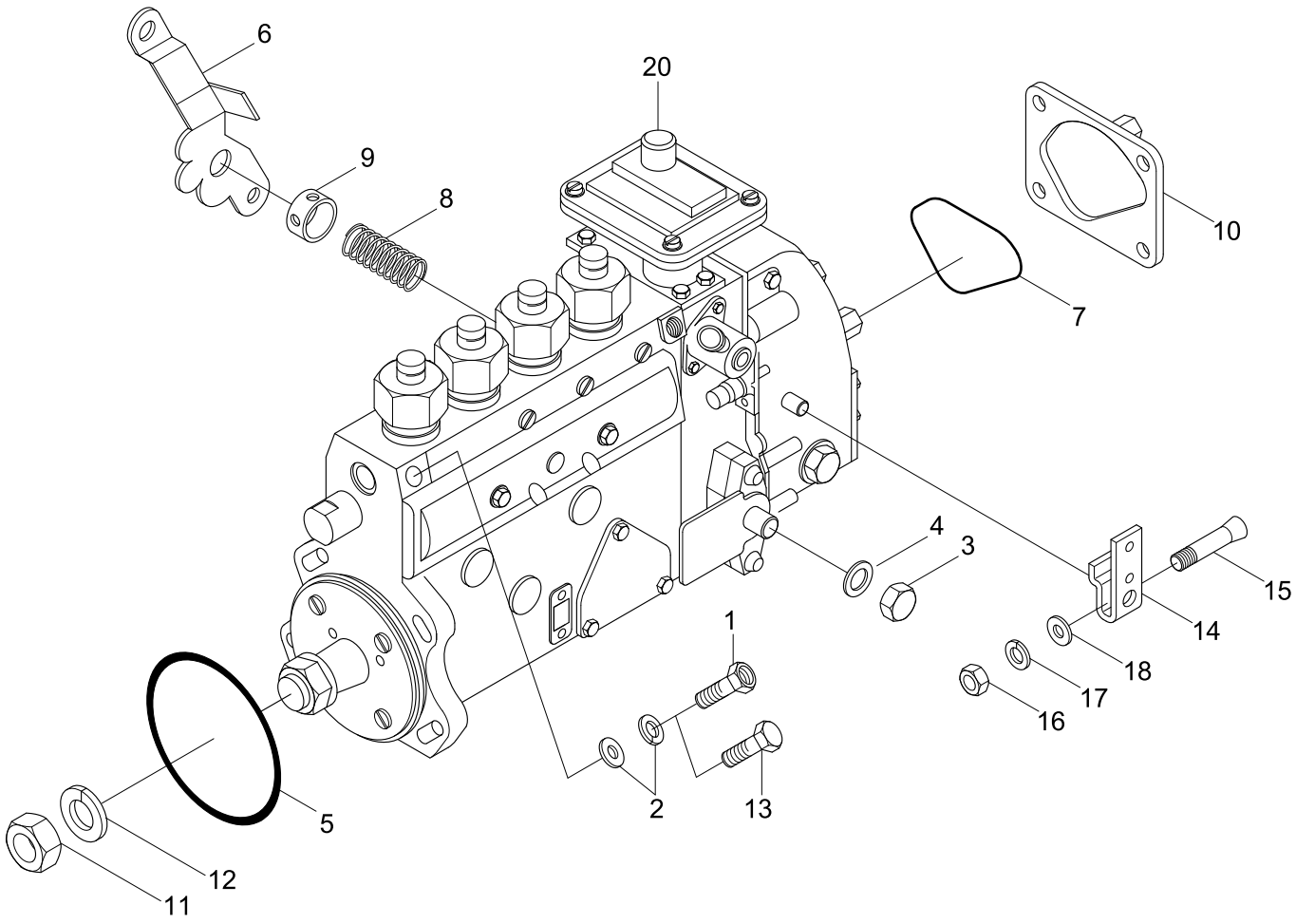

Item	Part_No	IS	Ord	T	Description	Qty	Serial_No	ITC	Remark
*	@				INJECTION PUMP	1	- #1000	-	NOT
N1	3912886				VALVE	1			NOT
2	3912887				WASHER	2			
3	3912888				PLUG	1			
4	3912889				WASHER	1			
5	3910503				O-RING/SEAL	1			
6	3910979				LEVER-SHAFT	1			
7	3919286				O-RING/SEAL	1			
8	3912890				SPRING	1			
9	3912891				HOUSING	1			
10	3915169				COVER-FUEL PUMP	1			
11	3912894				NUT	1			
12	3912895				WASHER-LOCK	1			
13	3913681				SCREW	1			
14	3913327				LEVER-CONTROL	1			
15	3920929				BOLT	1			
16	3920930				NUT-HEX	1			
17	3907478				WASHER-LOCKING	1			
18	3920931				WASHER-FLAT	1			
20	3283921				PUMP-FUEL INJECTION	1			FP98188-01
N	3284030				SPECIFICATION	1			NOT
	@				NOT INDIVIDUALLY SUPPLIED	AR			NOT

FUEL PUMP COUPLING(-#1000)

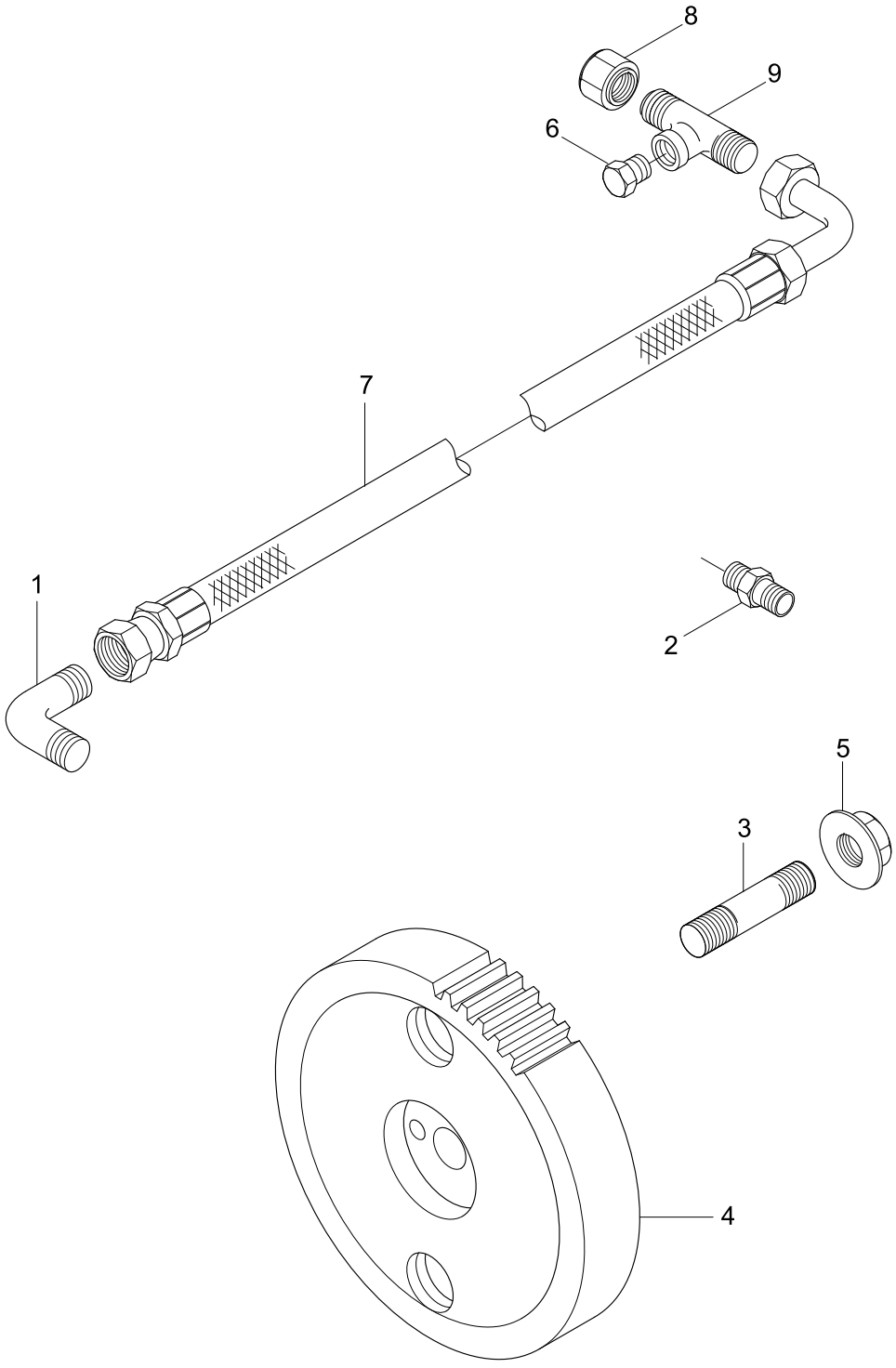

Item	Part_No	IS	Ord	T	Description	Qty	Serial_No	ITC	Remark
*	@				FUEL PU MP COUPLING	1	- #1000	-	NOT
1	68139				ELBOW-MALE ADAPTER	1			FP98189-02
2	139969				NIPPLE	1			
3	3282371				STUD	4			
4	3934636				GEAR-FUEL PUMP	1			
5	3902662				NUT-HEX FLANGE	4			
6	3906619				PLUG-PIPE	1			
7	3918536				HOSE-FLEXIBLE	1			
8	3921556				CAP	1			
9	3924346				TEE	1			

FUEL SYSTEM ACCESSORIES (-#1000)

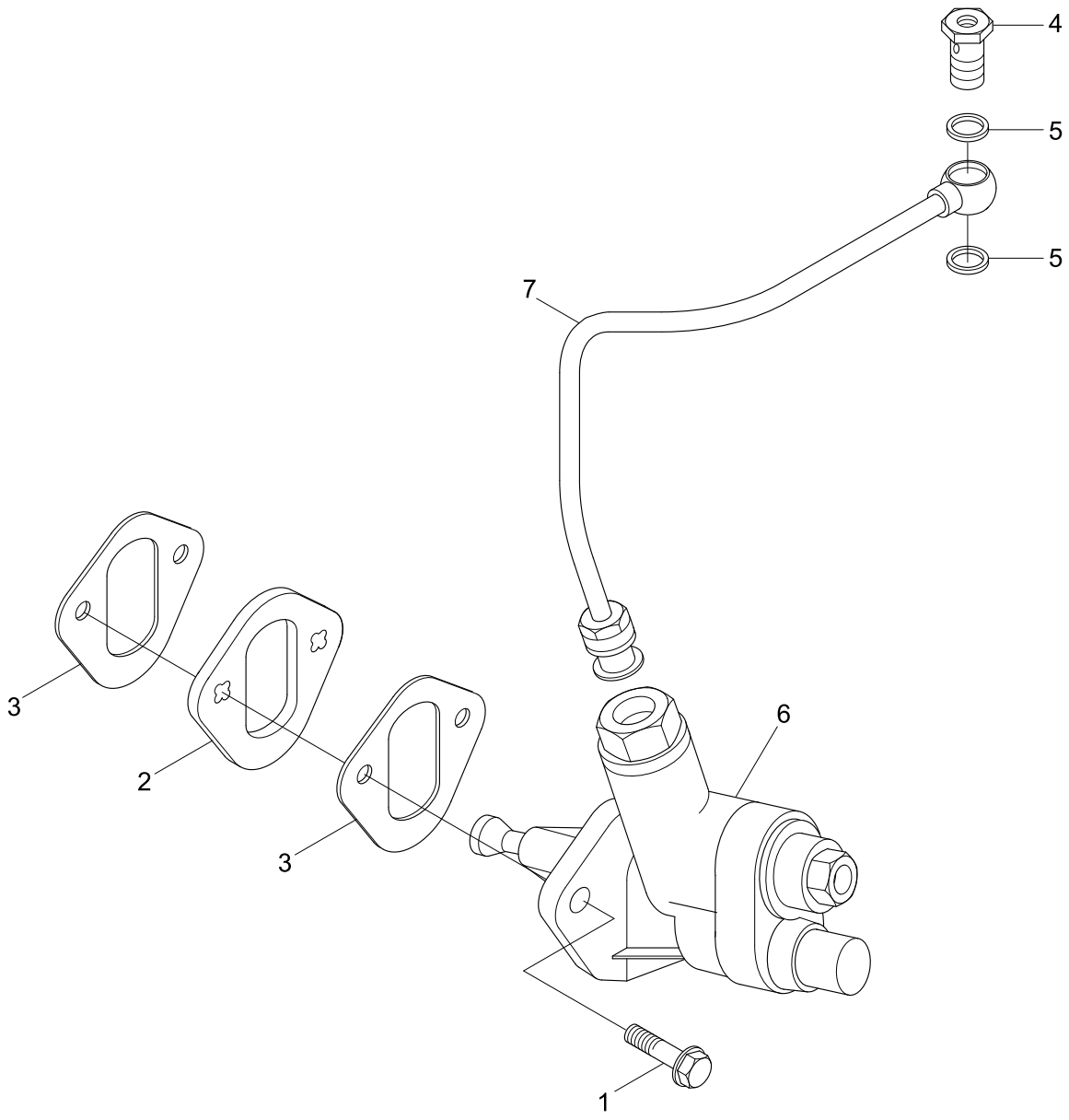

Item	Part_No	IS	Ord	T	Description	Qty	Serial_No	ITC	Remark
*	@				FUEL SYSTEM ACCESS	1	- #1000	-	NOT
1	3900631				SCREW	2			FS9170-04
2	3914284				SPACER-MOUNTING	1			
3	3931059				GASKET-COVER PLATE	2			
4	3916361				SCREW	1			
5	3935171				WASHER-SEALING	2			
6	3936318				PUMP-FUEL TRANSFER	1			
7	3917280				TUBE-FUEL SUPPLY	1			

FUEL PLUMBING(-#1000)

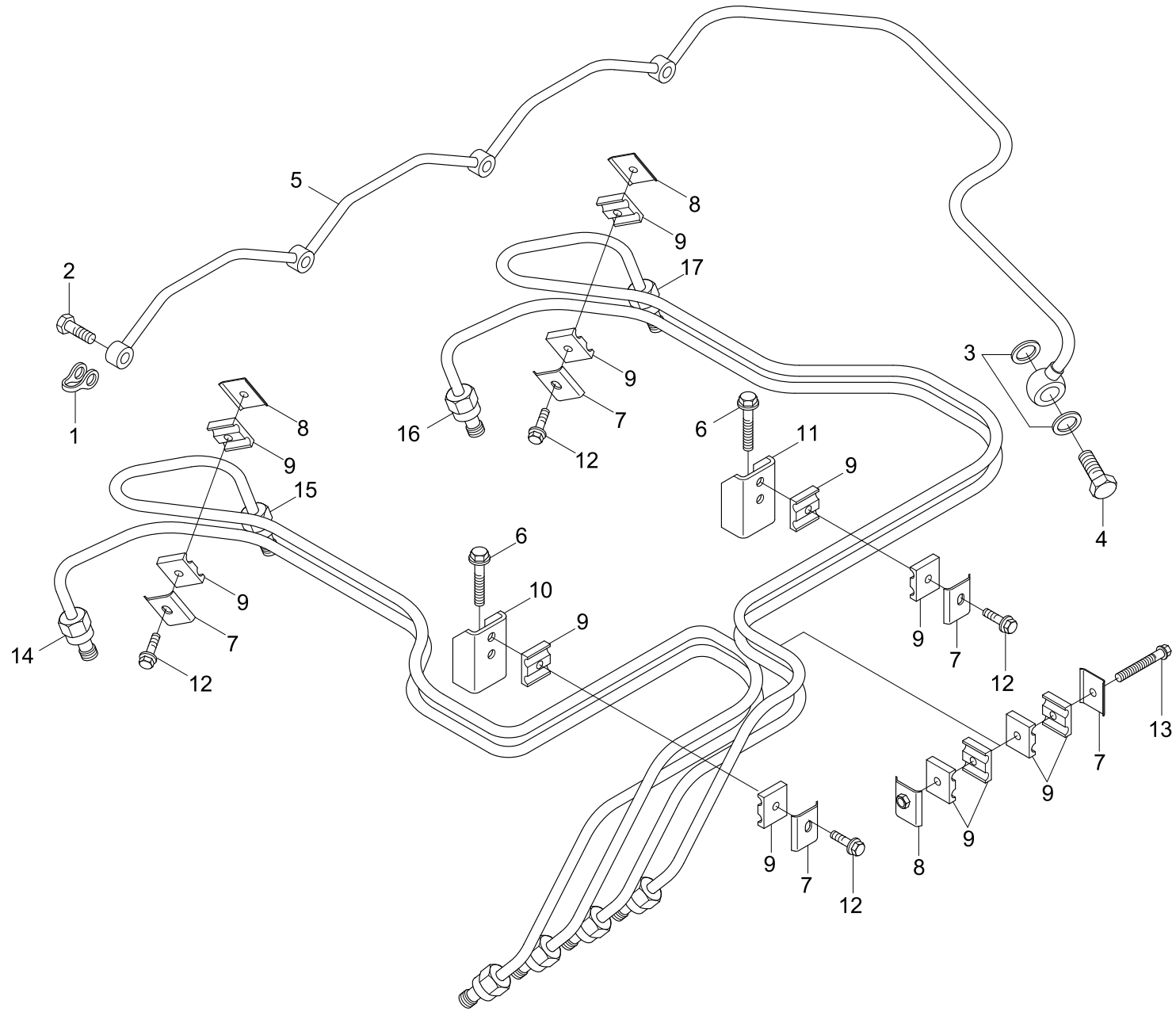

Item	Part_No	IS	Ord	T	Description	Qty	Serial_No	ITC	Remark
*	@				FUEL PLUMBING	1	- #1000	-	NOT
1	3903380				SEAL-BANJO CONN	4			FT9969-03
2	3905307				SCREW-BANJO CONN	4			
3	3918188				WASHER-SEALING	2			
4	3924726				VALVE-CHECK	1			
N5	3284575				MANIFOLD-FUEL	1			NOT
6	3930837				SCREW	4			
7	3904711				BRACE-TUBE	5			
8	3917717				BRACE-TUBE	3			
9	3917746				ISOLATOR-VIBRATION	12			
10	3282942				BRACE-TUBE	1			
N11	3919086				BRACE-TUBE	1			NOT
12	3920854				SCREW	4			
13	3920855				SCREW	1			
14	3932147				TUBE-INJ FUEL SUPPLY	1			
15	3932148				TUBE-INJ FUEL SUPPLY	1			
16	3932149				TUBE-INJ FUEL SUPPLY	1			
17	3932150				TUBE-INJ FUEL SUPPLY	1			
N	@				NOT INDIVIDUALLY SUPPLIED	AR			NOT

FUEL SHUTOFF VALVE(-#1000)

SERIAL NO:-#0157

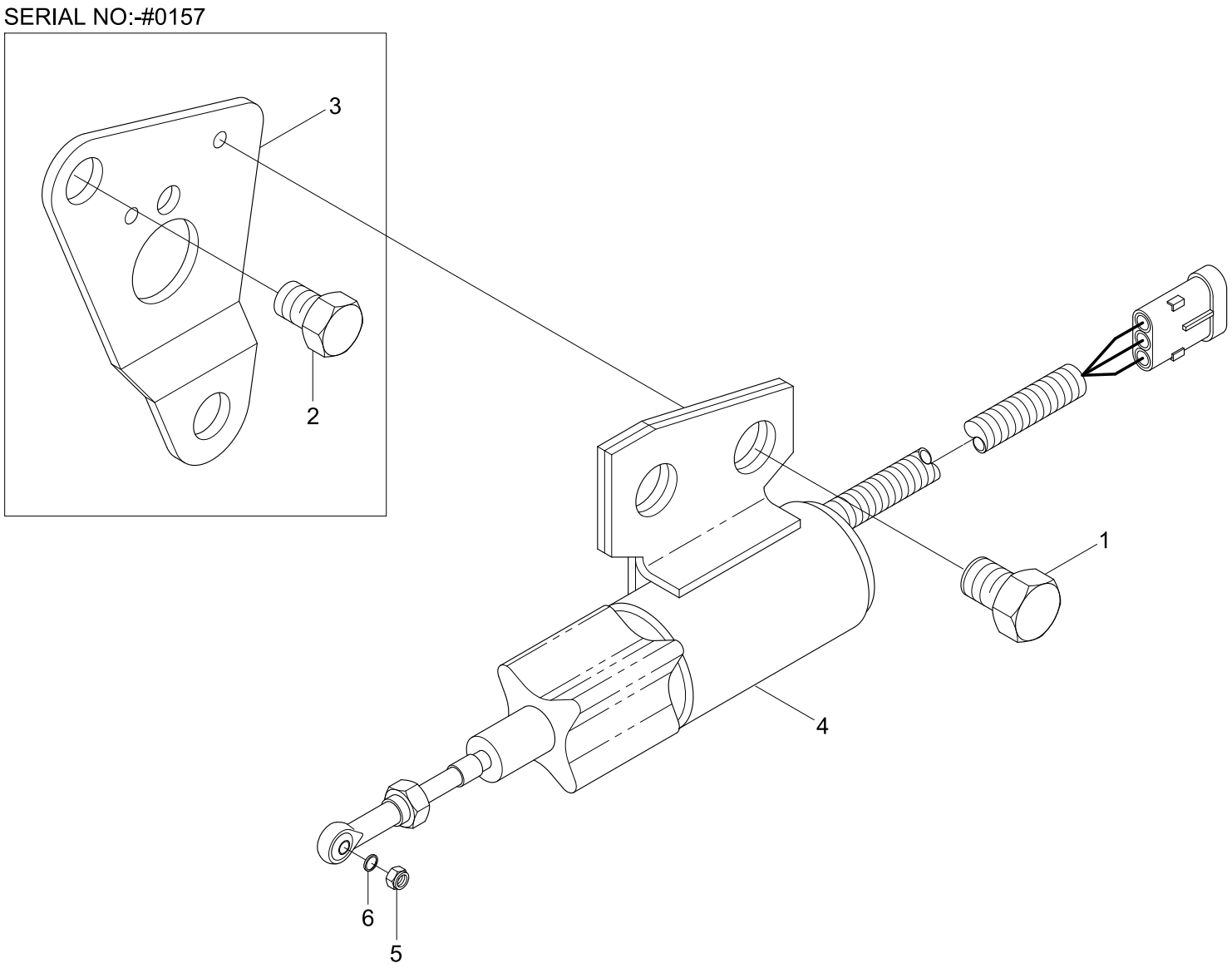

Item	Part_No	IS	Ord	T	Description	Qty	Serial_No	ITC	Remark
*	@				FUEL SHUTOFF VALVE	1	- #1000	-	NOT
1	3900626				SCREW-HEX F/HEAD CAP	2	- #0157		FV9188-02
	3991132				SCREW-HEX CAP	2	#0158 -	D	
2	3991132				SCREW-HEX CAP	2	- #0157	-	
3	3930590				BRACKET-SOLENOID	1	- #0157	-	
N4	3932530				SOLENOID-FUEL PUMP	1	- #0157		NOT
4	3991168				SOLENOID-FUEL PUMP	1	#0158 -	D	
5	3934021				NUT-LOCK	1			
6	3934022				WASHER-PLAIN	1			
N	@				NOT INDIVIDUALLY SUPPLIED	AR			NOT

FLYWHEEL(-#1000)

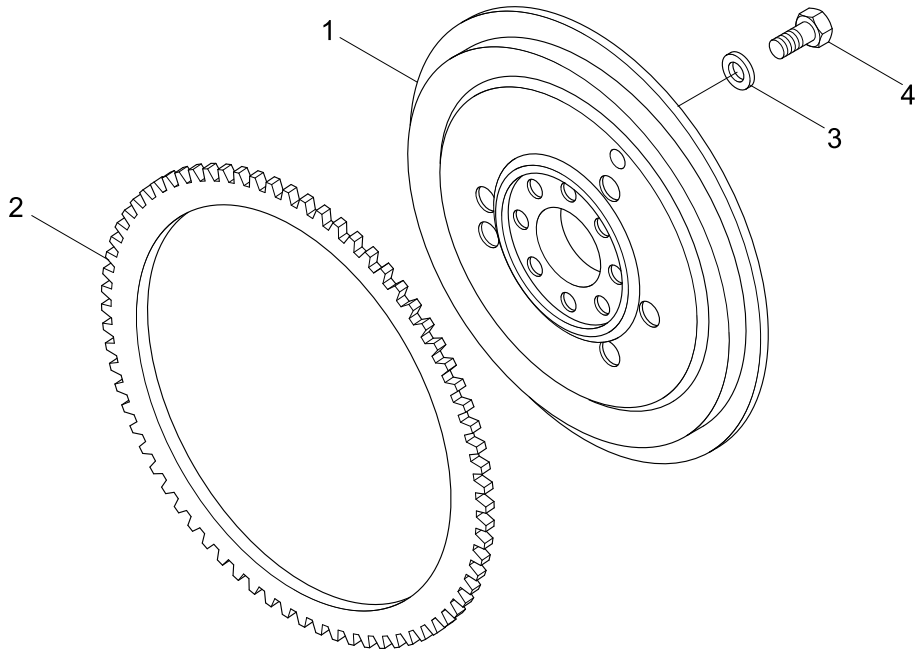

Item	Part_No	IS	Ord	T	Description	Qty	Serial_No	ITC	Remark
*	@				FLYWHEEL	1	- #1000	-	NOT
	3282053				FLYWHEEL	1			FW9222
N1	3282051				.FLYWHEEL	1			NOT
2	3905427				.GEAR-FLYWHEEL RING	1			
3	3900269				WASHER-PLAIN	8			
4	3901395				SCREW	8			
N	@				NOT INDIVIDUALLY SUPPLIED	AR			NOT

LIFTING BRACKET(-#1000)

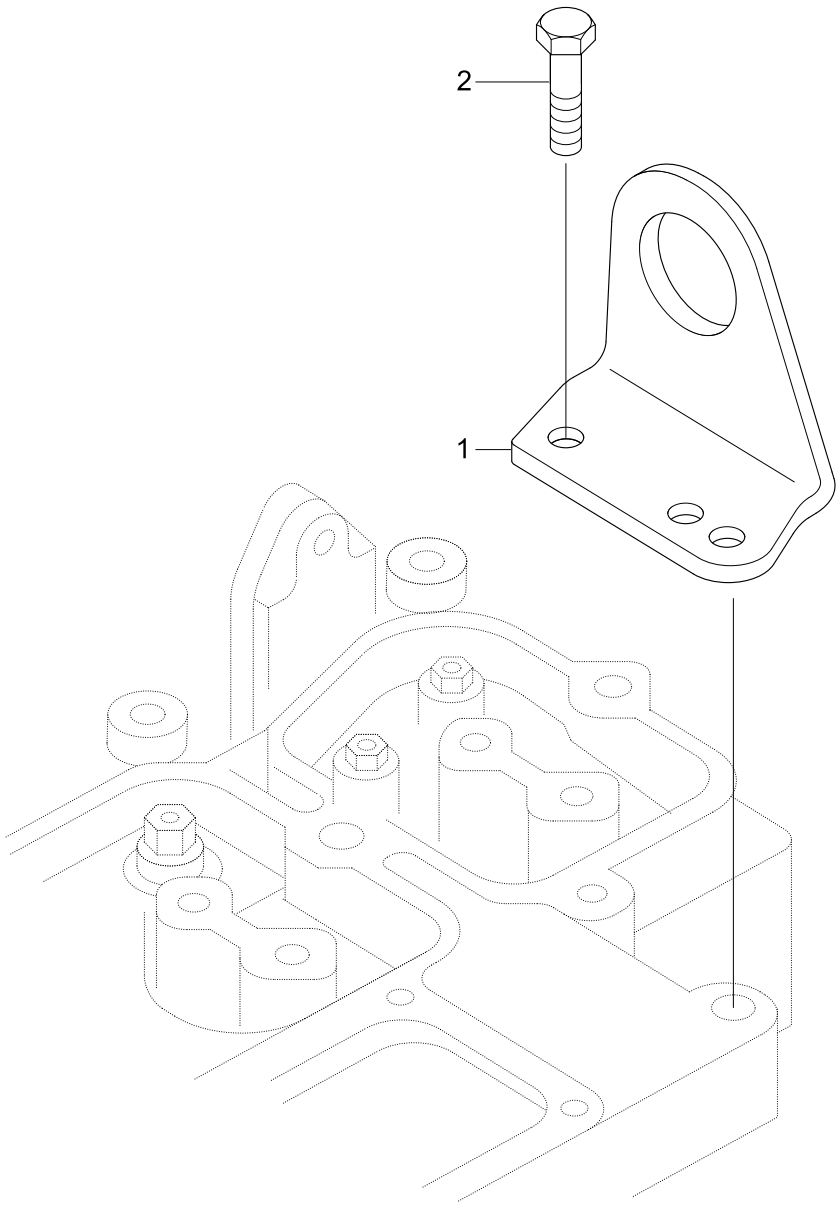

Item	Part_No	IS	Ord	T	Description	Qty	Serial_No	ITC	Remark
*	@				LIFTING BRACKET	1	- #1000	-	NOT
1	3908118				BRACKET-LIFTING	1			LA9007-01
2	3910495				SCREW	2			

LUBRICATING OIL COOLER(-#1000)

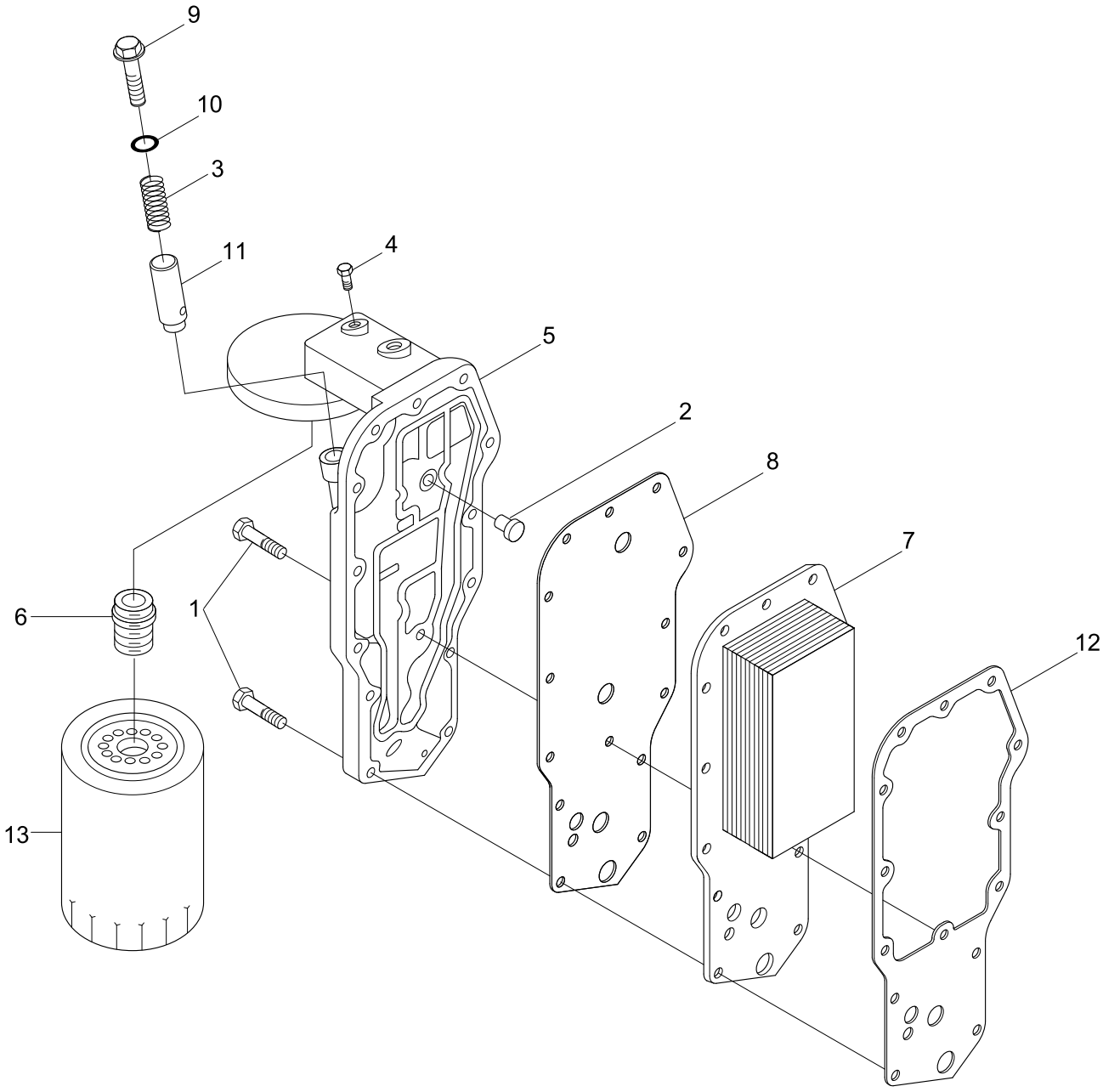

Item	Part_No	IS	Ord	T	Description	Qty	Serial_No	ITC	Remark
*	@				LUBRICATING OIL COOLER	1	- #1000	-	NOT
1	3900632				SCREW	14			LC9018-03
2	3936365				VALVE	1			
3	3918427				SPRING-CMPR	1			
4	3906619				PLUG-PIPE	1			
*	3918954				HEAD-LUB OIL FILTER	1			
N5	3924338				.HEAD-LUB OIL FILTER	1			NOT
6	3909355				.ADAPTER-FILTER HEAD	1			
7	3921557				CORE-COOLER	1			
8	3942915				GASKET-FILTER HEAD	1			
9	3915787				PLUG-THREADED	1			
10	3929457				SEAL/O-RING	1			
11	3918428				PLUNGER	1			
12	3942914				GASKET-O/COOLER CORE	1			
13	3908616				CARTRIDGE-OIL FILTER	1			
N	@				NOT INDIVIDUALLY SUPPLIED	AR			NOT

OIL LEVEL GAUGE(-#1000)

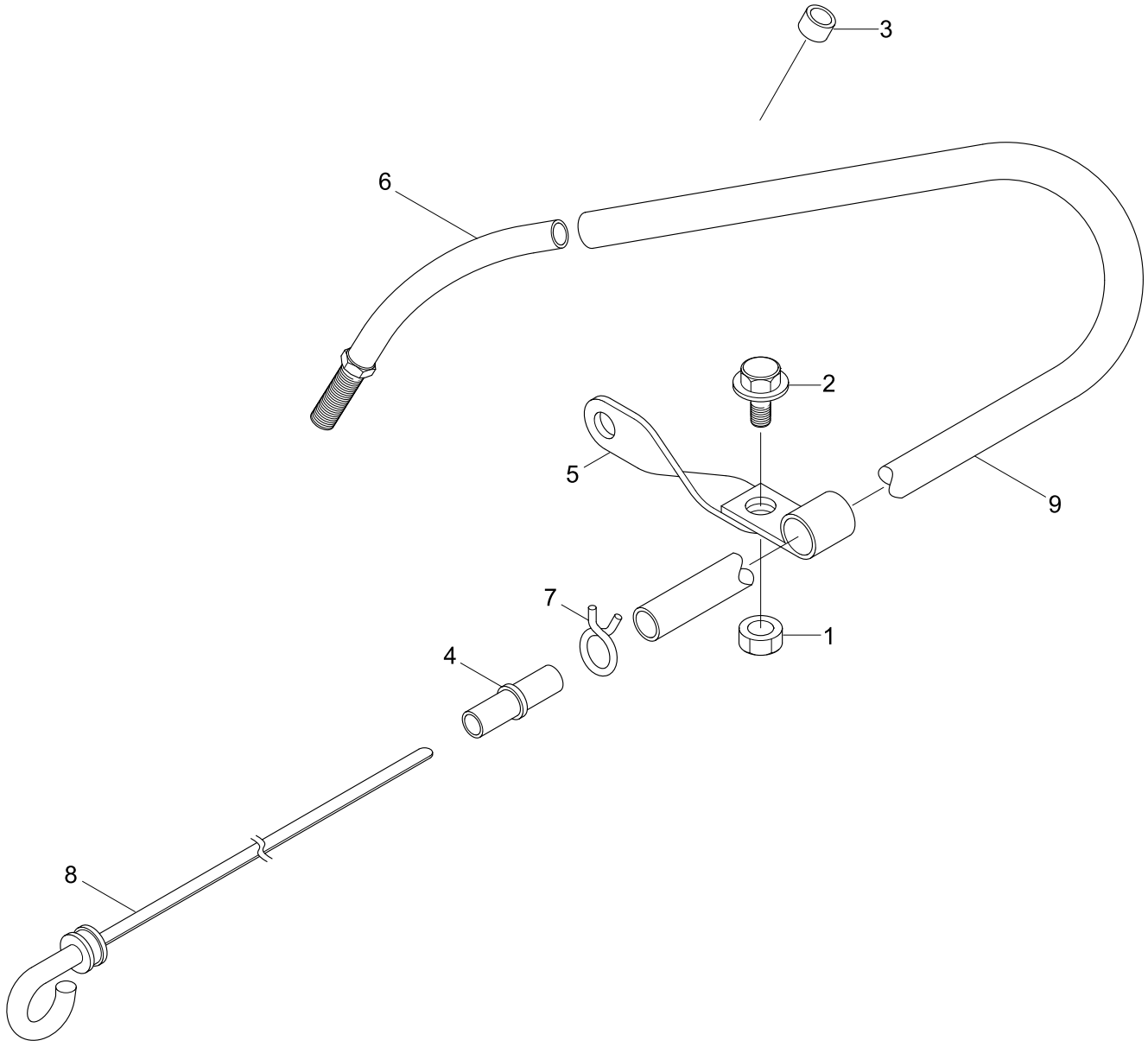

Item	Part_No	IS	Ord	T	Description	Qty	Serial_No	ITC	Remark
*	@				OIL LEVEL GAUGE	1	- #1000	-	NOT
1	3900240				NUT	1			LG9218-03
2	3925883				SCREW-HEX HEAD CAP	1			
3	3900955				PLUG-EXPANSION	1			
4	3905802				END-TUBE	1			
5	3920495				BRACE-TUBE	1			
6	3279104				TUBE	1			
7	3909395				CLAMP	1			
8	3281712				DIPSITCK	1			
9	3914396				TUBE-OIL GAUGE	1			

INJECTION PUMP GENERAL

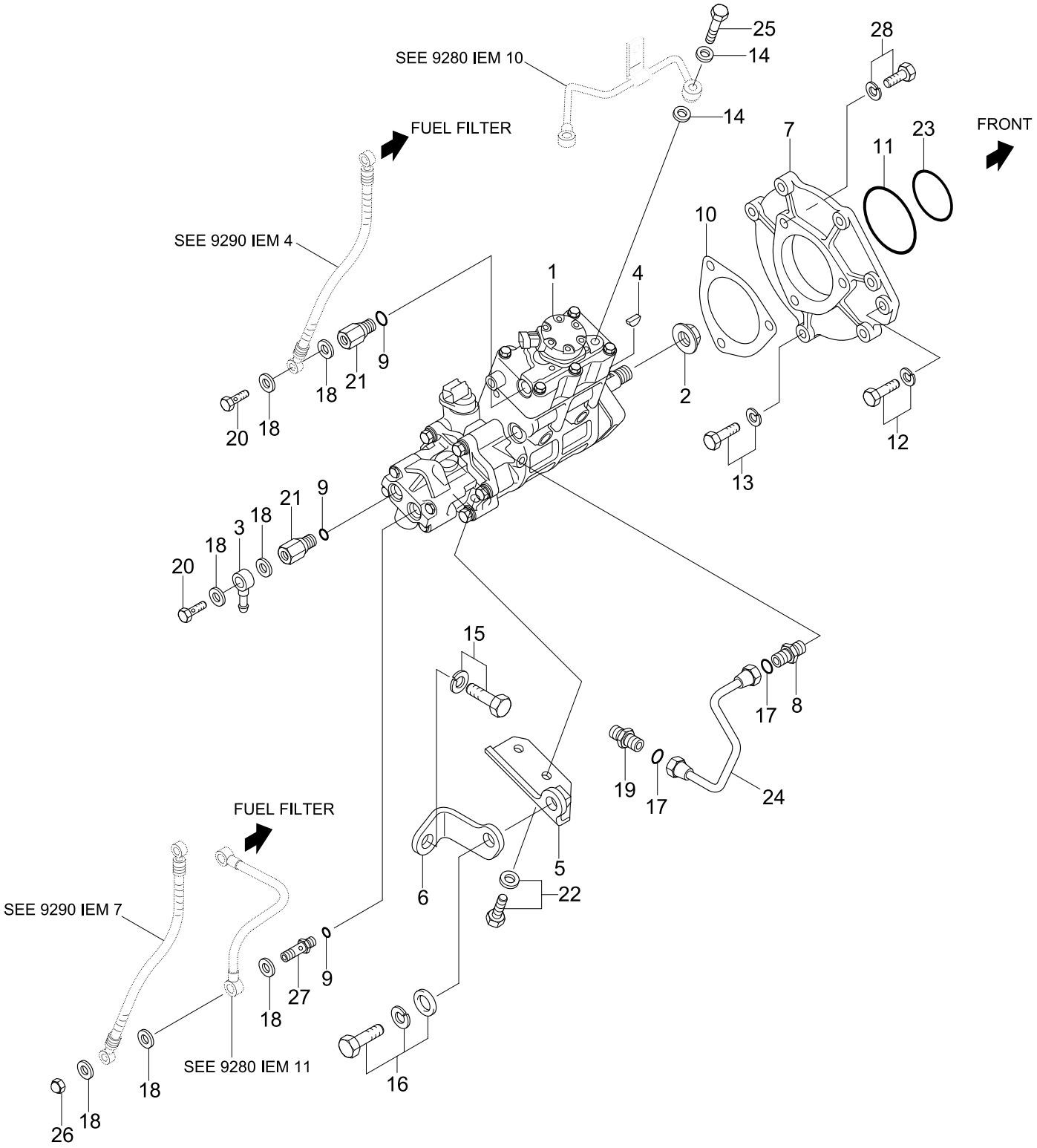

Item	Part_No	IS	Ord	T	Description	Qty	Serial_No	ITC	Remark
*	@				LUBRICATING OIL PUMP	1	- #1000	-	NOT
1	3937027				PUMP-LUB OIL	1			LP9711-01
2	3900677				SCREW-HEX HEAD CAP	4			

CYLINDER BLOCK COVER(-#1000)

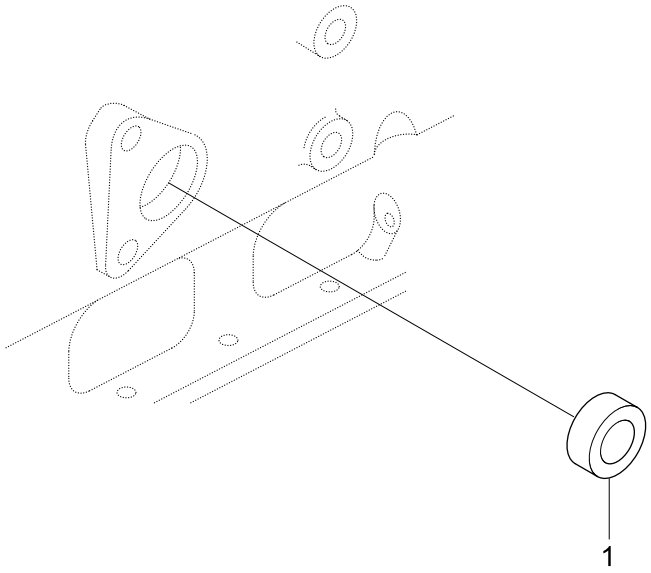

Item	Part_No	IS	Ord	T	Description	Qty	Serial_No	ITC	Remark
*	@				CYLINDER BLOCK COVER	1	- #1000	-	NOT
1	3900958				PLUG-EXPANSION	1			OB9704

OIL PAN(-#1000)

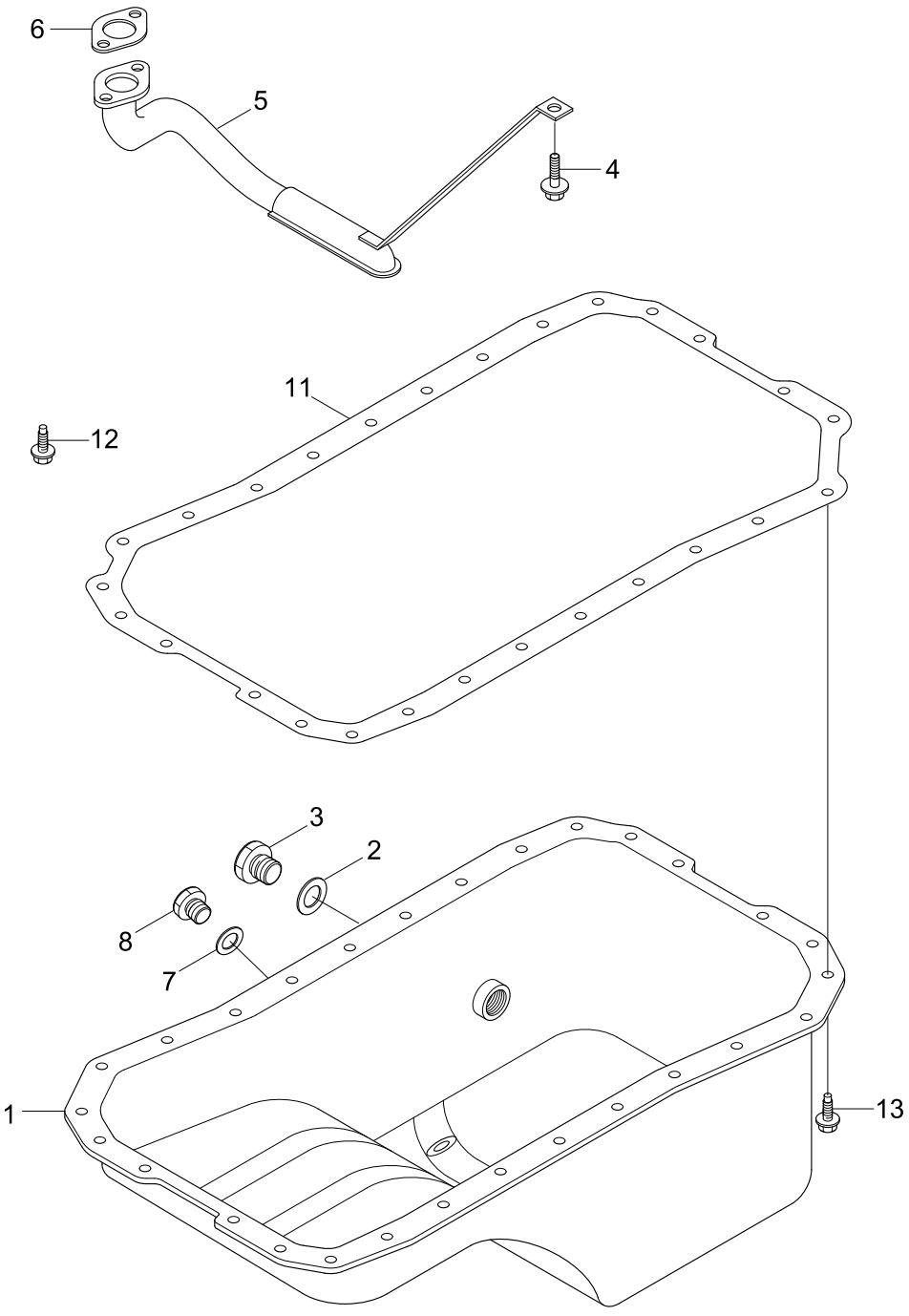

Item	Part_No	IS	Ord	T	Description	Qty	Serial_No	ITC	Remark
*	@				OIL PAN	1	- #1000	-	NOT
1	3901049				PAN-OIL	1			OP9003-08
2	3902425				WASHER-SEALING	1			
3	3924148				PLUG	1			
4	3900630				SCREW-HEX HEAD CAP	1			
5	3920795				CONNECTION	1			
6	3938157				GASKET-FLANGE	1			
7	3920773				WASHER-SEALING	1			
8	3924147				PLUG	1			
11	3938162				GASKET-OIL PAN	1			OP9704-04
12	3900630				SCREW-HEX HEAD CAP	2			
13	3920400				SCREW	28			

CONNECTING ROD & PISTON(-#1000)

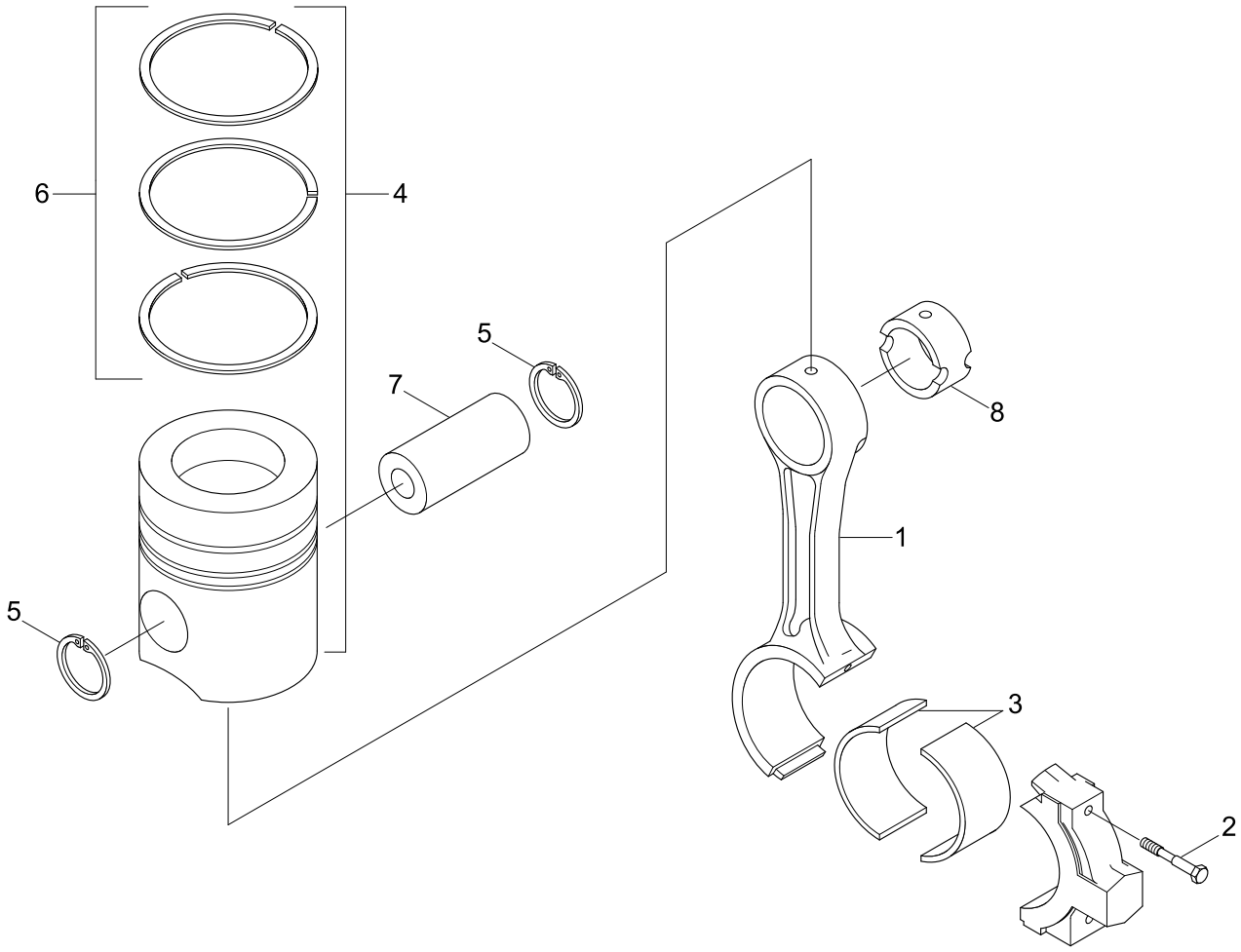

Item	Part_No	IS	Ord	T	Description	Qty	Serial_No	ITC	Remark
*	@				CONNECT ROD & PISTON	4	- #1000	-	NOT
1	3942581				ROD-ENG CONNECTING	4			PP2109-03
N*	3942580				.ROD-ENG CONNECTING	1			NOT
2	3900919				.SCREW	2			
8	3941476				.BUSHING	1			
3	3901170				BEARING-CONN ROD	2			STD
4	3802747				KIT-ENGINE PISTON	4			STD
N*	3928673				.PISTON-ENGINE	1			NOT
5	3920691				.RING-RETAINING	2			
6	3802421				.SET-PISTON RING	1			STD
7	3934047				PIN-PISTON	4			
3	3901171				BRG-CONN ROD(0.25 OS)	AR			
	3901172				BRG-CONN ROD(0.50 OS)	AR			
	3901173				BRG-CONN ROD(0.75 OS)	AR			
	3901174				BRG-CONN ROD(1.00 OS)	AR			
4	3802764				KIT-ENG PISTON	4			
*	3928674				.PISTON-ENGINE	1			
5	3920691				.RING-RETAINING	2			
6	3802422				.SET-P/RING(0.50 O/S)	1			
4	3802765				KIT-ENG PISTON	4			
N*	3928675				.PISTON-ENGINE	1			NOT
5	3920691				.RING-RETAINING	2			
6	3802423				.SET-PISTON RING	1			
N	@				NOT INDIVIDUALLY SUPPLIED	AR			NOT

CAMSHAFT(-#1000)

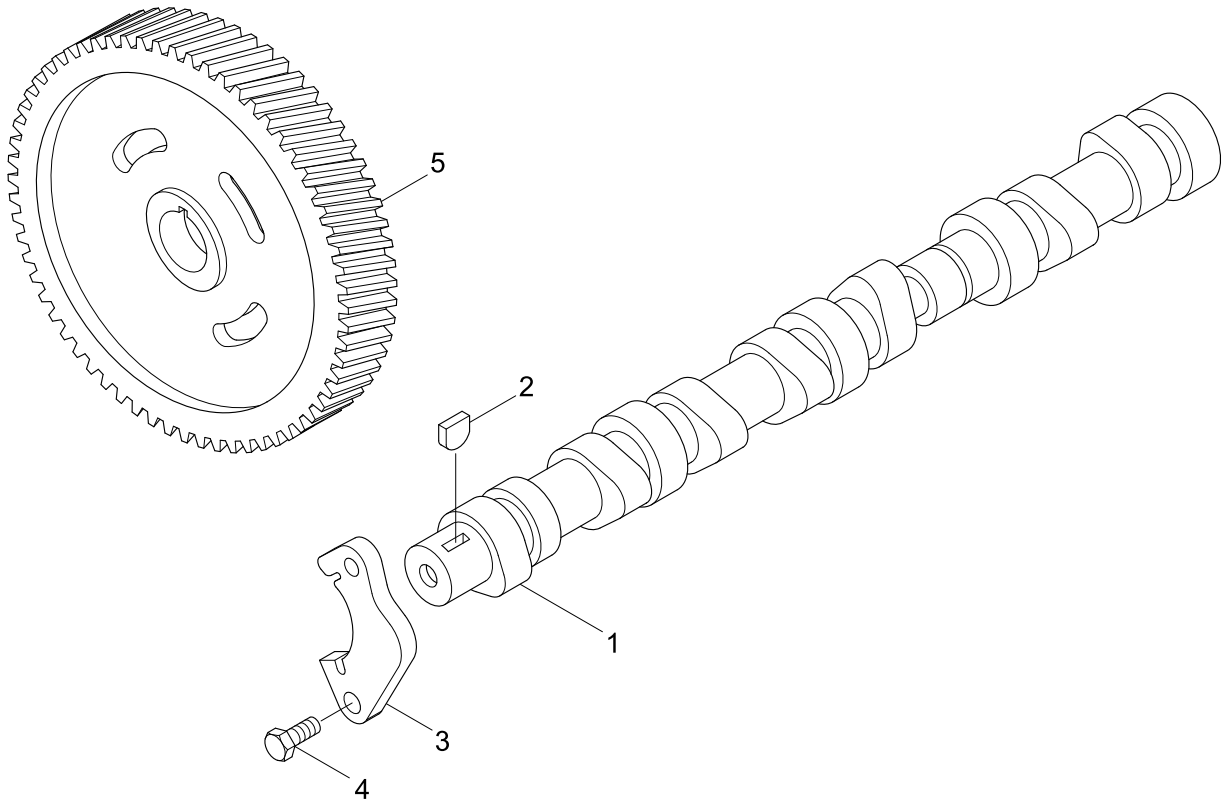

Item	Part_No	IS	Ord	T	Description	Qty	Serial_No	ITC	Remark
*	@				CAMSHAFT	1	- #1000	-	NOT
1	3929885				CAMSHAFT	1			PP2109-01
2	3902332				KEY-PLAIN WOODRUFF	1			
3	3927155				SUPPORT	1			
4	3900227				SCREW	2			
5	3929028				GEAR-CAMSHAFT	1			PP97634

FUEL INJECTOR(-#1000)

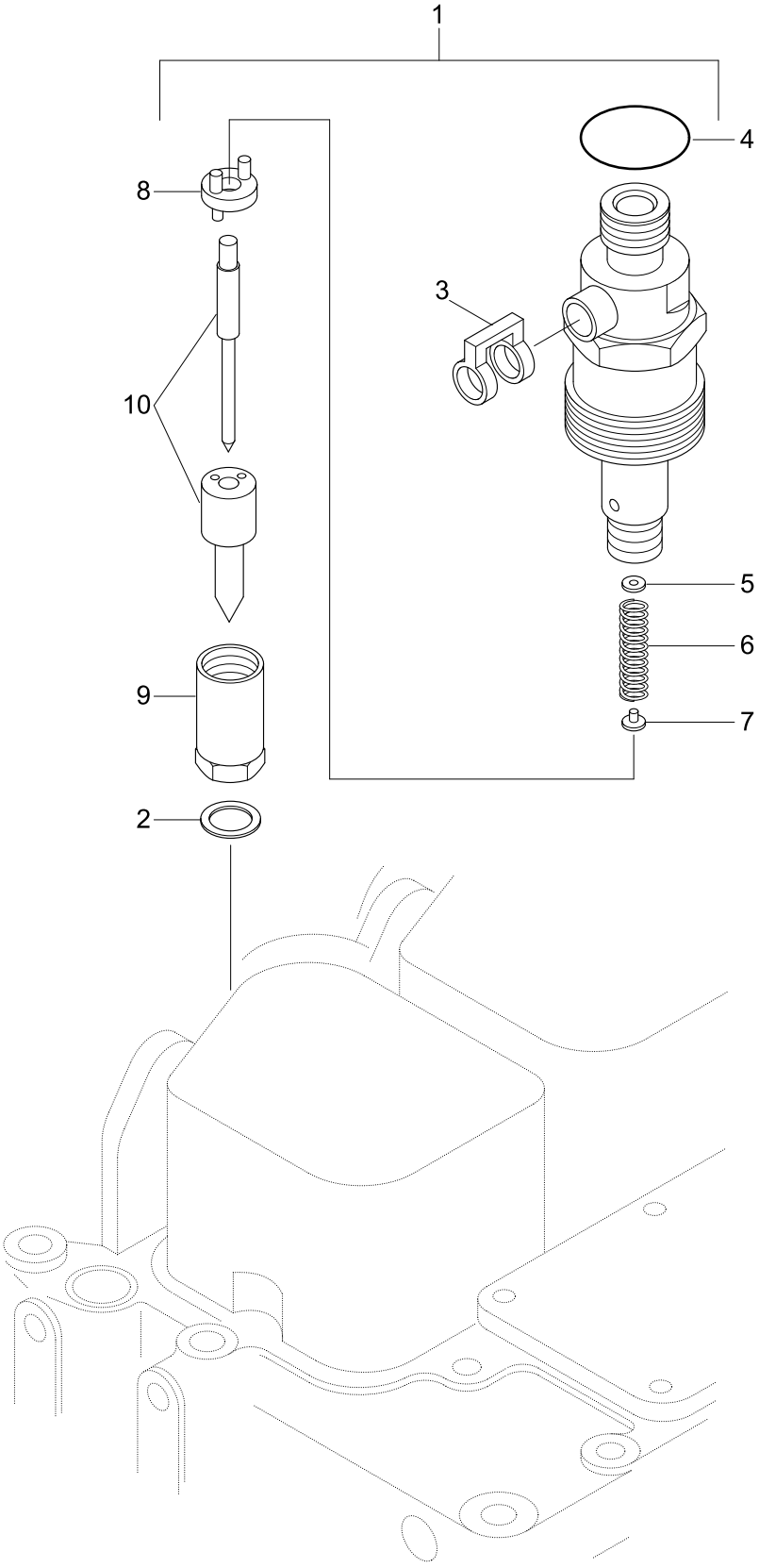

Item	Part_No	IS	Ord	T	Description	Qty	Serial_No	ITC	Remark
*	@				FUEL INJECTOR	1	- #1000	-	NOT
1	3802677				FUEL INJECTOR	4			PP2109
N	3929490				.INJECTOR	1			NOT
2	3906659				.SEAL-INJECTOR	1			
3	3903380				.SEAL-BANJO CONN	1			
4	3909356				.SEAL-RECT RING	1			
	3905156				SHIM(1.00T)	AR			
	3905157				SHIM(1.04T)	AR			
	3905158				SHIM(1.08T)	AR			
	3905159				SHIM(1.10T)	AR			
	3905160				SHIM(1.14T)	AR			
	3905161				SHIM(1.18T)	AR			
	3905162				SHIM(1.20T)	AR			
	3905163				SHIM(1.24T)	AR			
	3905164				SHIM(1.28T)	AR			
5	3905165				SHIM(1.30T)	AR			
	3905166				SHIM(1.34T)	AR			
	3905167				SHIM(1.38T)	AR			
	3905168				SHIM(1.40T)	AR			
	3905169				SHIM(1.44T)	AR			
	3905170				SHIM(1.48T)	AR			
	3905171				SHIM(1.50T)	AR			
	3905172				SHIM(1.54T)	AR			
	3905173				SHIM(1.58T)	AR			
	3905174				SHIM(1.60T)	AR			

Item	Part_No	IS	Ord	T	Description	Qty	Serial_No	ITC	Remark
	3905175				SHIM(1.64T)	AR			
	3905176				SHIM(1.68T)	AR			
	3905177				SHIM(1.70T)	AR			
	3905178				SHIM(1.74T)	AR			
	3905180				SHIM(1.78T)	AR			
5	3905181				SHIM(1.80T)	AR			
	3905182				SHIM(1.84T)	AR			
	3905183				SHIM(1.88T)	AR			
	3905184				SHIM(1.90T)	AR			
	3905185				SHIM(1.94T)	AR			
	3905186				SHIM(1.98T)	AR			
6	3905152				SPRING-COMPRESSION	4			
7	3917945				SPINDLE	4			
8	3917946				DISC	4			
9	3905155				RETAINER-INJ NOZZLE	4			
10	3929492				NOZZLE-INJECTOR	4			
N	@				NOT INDIVIDUALLY SUPPLIED	AR			NOT

INSTRUMENT 1

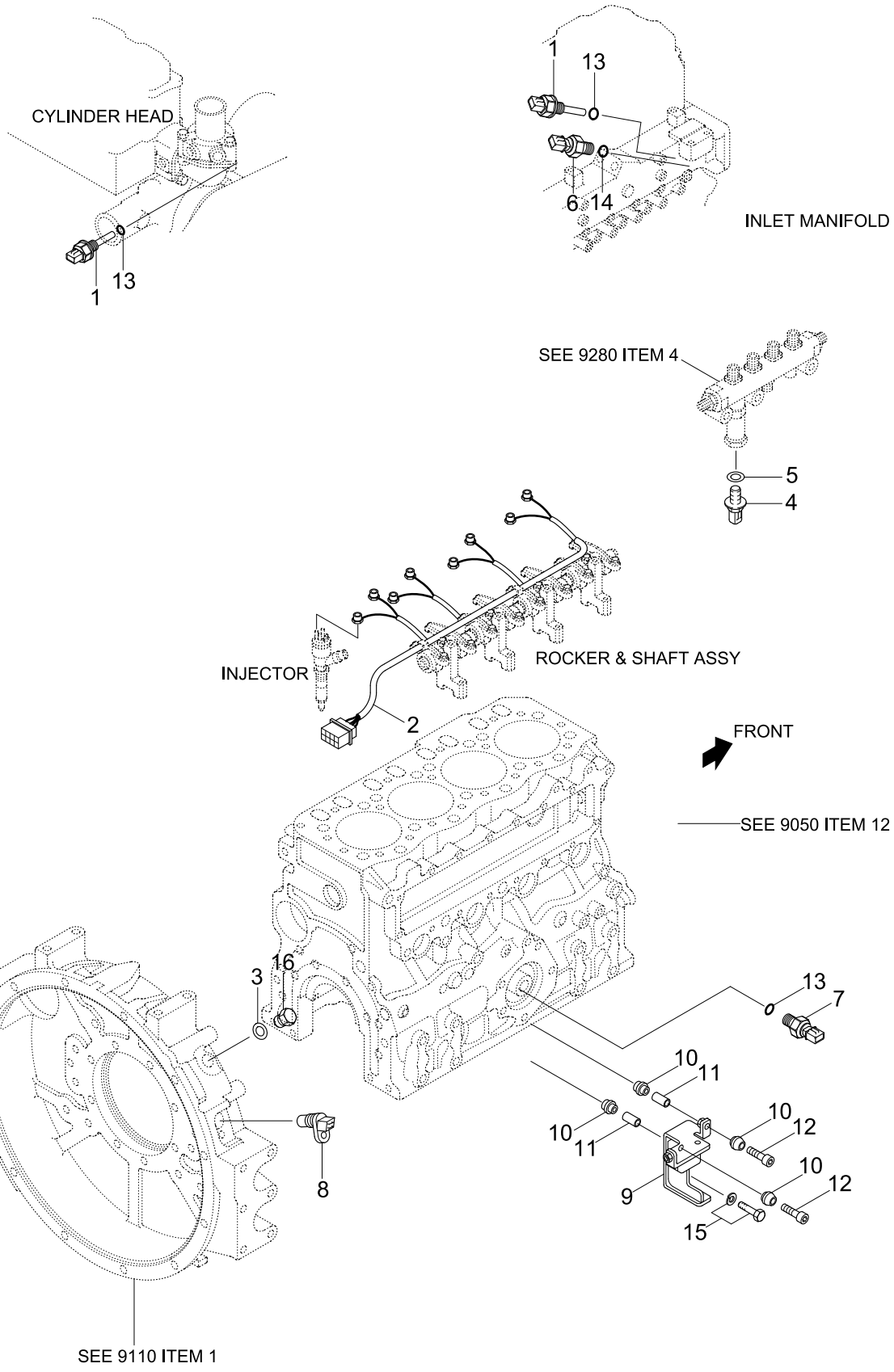

Item	Part_No	IS	Ord	T	Description	Qty	Serial_No	ITC	Remark
*	@				.CYLINDER HEAD	1	- #1000	-	NOT
	3938660				HEAD-CYLINDER	1			PP97173-05
N1	3933422				.HEAD-CYLINDER	1			NOT
N2	3812092				.PLUG-EXPANSION	2			NOT
3	3906619				.PLUG-PIPE	1			
4	3008468				.PLUG-PIPE	5			
*	3802355				.VALVE-INTAKE	4			
N10	3920867				..VALVE-INTAKE	4			NOT
5	3900250				..COLLET-VALVE	8			
*	3802356				.VALVE-EXHAUST	4			
N11	3920868				..VALVE-EXHAUST	4			NOT
5	3900250				..COLLET-VALVE	8			
6	3932453				.SPRING-VALVE	8			
7	3935038				.RETAINER	8			
8	3921640				.SEAL-VALVE STEM	4			
9	3921640				.SEAL-VALVE STEM	4			
12	3920779				SCREW	4			
13	3920780				SCREW	10			
14	3934712				TUBE-AFTERCOOLER	1			
15	3925176				INSERT-VALVE, EXHAUST	AR			EXHAUST
16	3925177				INSERT-VALVE, INTAKE	AR			INTAKE
17	3904408				GUIDE-V/STEM, 60.5	AR			60.50mm INT
18	3904409				GUIDE-V/STEM, 51.75	AR			51.75mm EXH
19	3906206				GUIDE-V/STEM, THIN WALL	AR			INT & EXH
N	@				NOT INDIVIDUALLY SUPPLIED	AR			NOT

INSTRUMENT 2

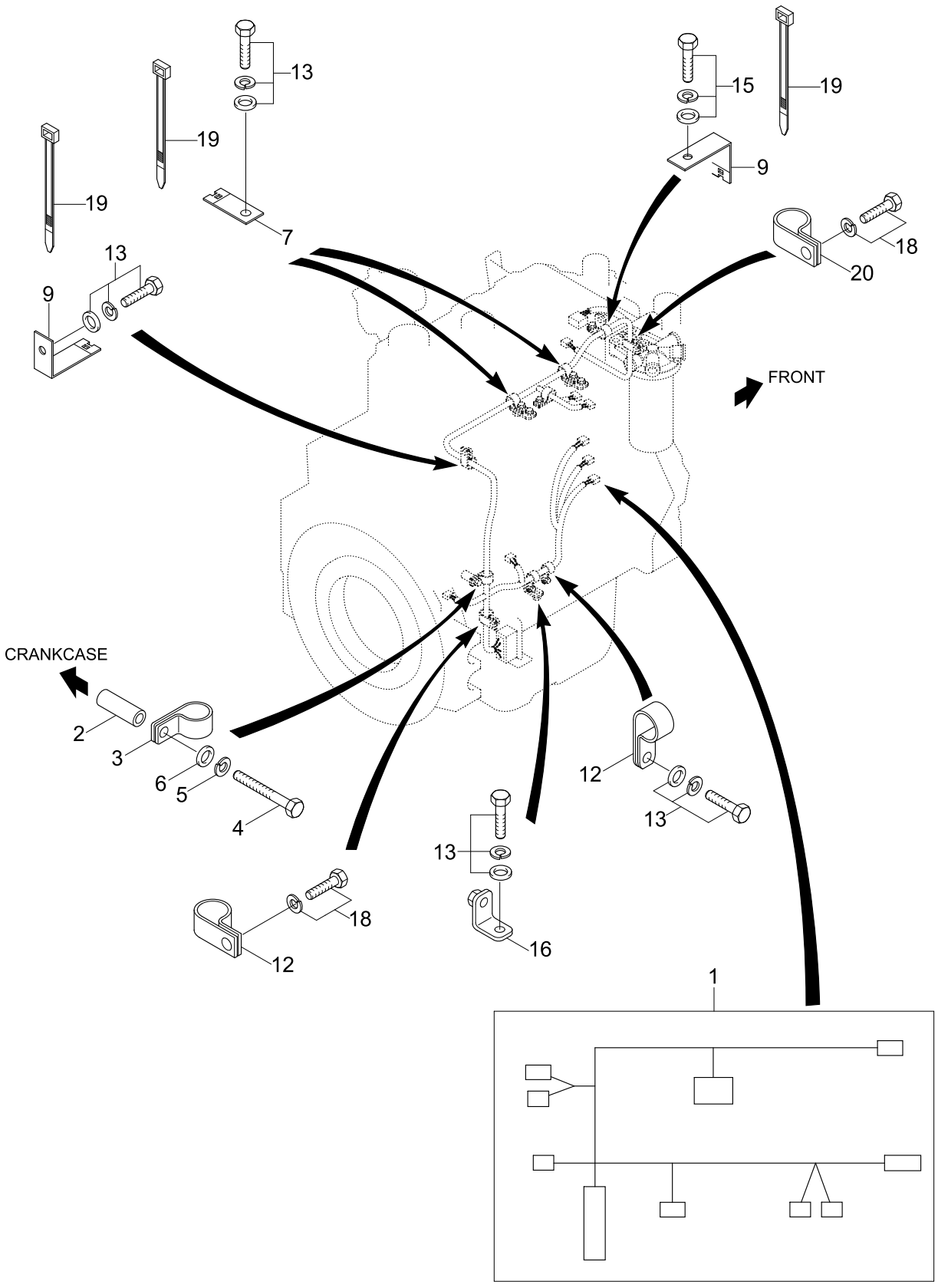

Item	Part_No	IS	Ord	T	Description	Qty	Serial_No	ITC	Remark
*	@				TURBOCHARGER 1	4	- #1000	-	NOT
	3800709				KIT-TURBOCHARGER	1			PP97224-03
N4	3592015				.TURBOCHARGER	1			NOT
3	3901356				.GASKET-TURBOCHARGER	1			
5	3931350				.GASKET-OIL DRAIN	1			
1	3818823				STUD	4			
2	3818824				NUT-HEX FLANGE	4			

INSTRUMENT 3

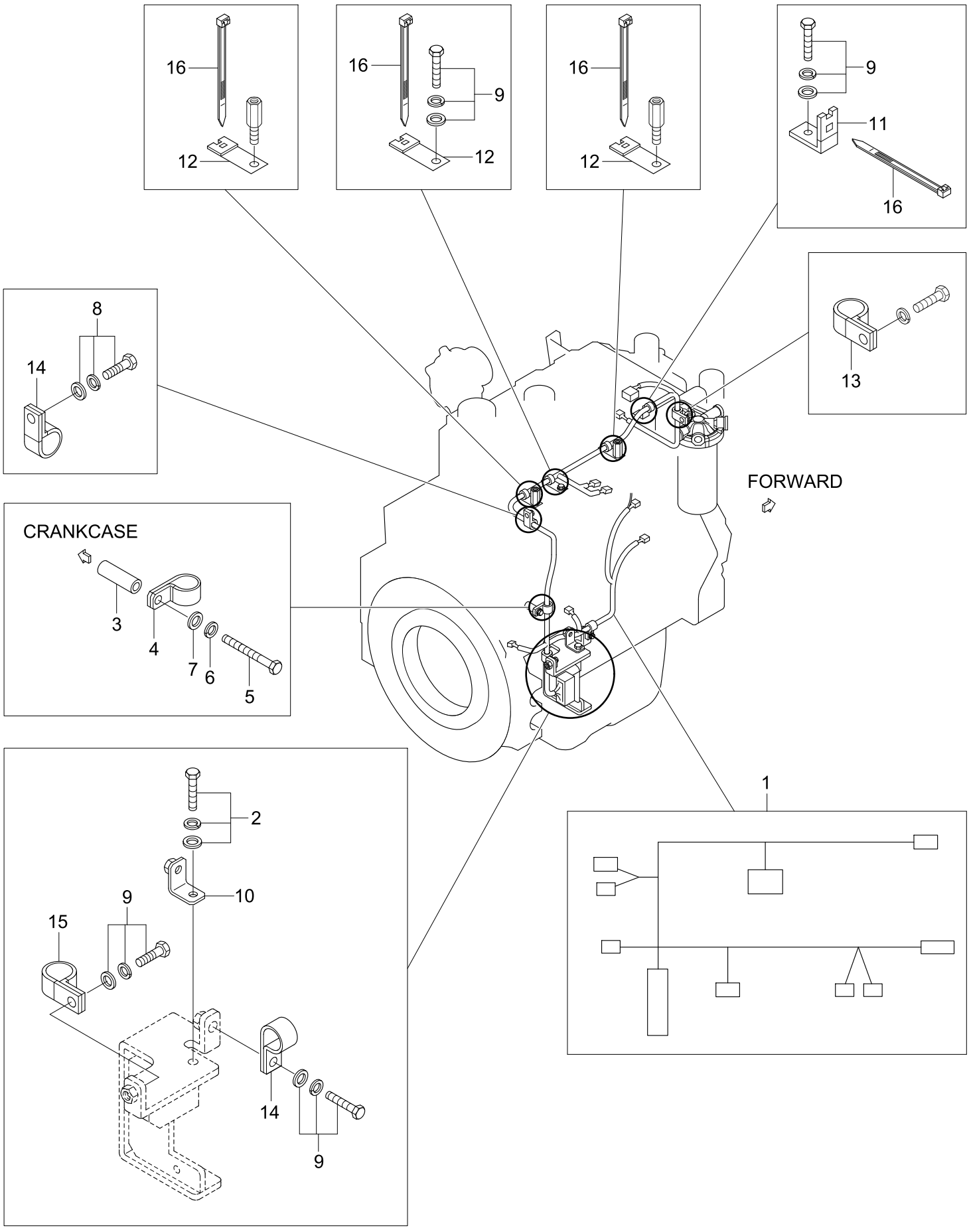

Item	Part_No	IS	Ord	T	Description	Qty	Serial_No	ITC	Remark
*	@				TURBOCHARGER 2	1	- #1000	-	NOT
1	3931350				GASKET-OIL DRAIN	1			PP97224-06
*	3800709				KIT-TURBOCHARGER	1			
N	3592015				.TURBOCHARGER	1			NOT
2	3503100				.BEARING-TURBO	2			
3	3590306				.NUT-LOCK	1			
4	3504967				.WASHER-PLAIN	3			
5	3519163				.SCREW-DRIVE	2			
6	3519304				.SHIELD	1			
7	3527566				.RING-RETAINING	1			
8	3525562				.DATAPLATE	1			
9	3528104				.BAFFLE-OIL	1			
10	3528177				.END-ADJUSTING LINK	1			
N11	3592050				.NUT-HEX FLANGE	2			NOT
12	3528221				.RING-RETAING	1			
13	3528933				.SEAL/O-RING	1			
14	3539805				.SHAFT & WHEEL	1			
15	3530556				.SCREW	7			
16	3530923				.PLATE-OIL SEAL	1			
17	3530924				.SLINGER-OIL	1			
18	3531419				.BEARING	1			
19	3522597				.PIN-ROLL	2			
N20	3539224				.HOUSING-TUR THRUST	1			NOT
21	3531582				.NUT-HEX	1			
22	3590296				.BOLT-T	1			

Item	Part_No	IS	Ord	T	Description	Qty	Serial_No	ITC	Remark
23	3590606				.CLAMP-V BAND	1			
24	3532195				.SPACER-MOUNTING	1			
25	3527759				.CONNECTION-ADAPT	1			
26	3534291				.SCREW-HEX HD SET	1			
27	3534451				.COLLAR-THRUST	1			
28	3539806				.HOUSING-COMPRESSOR	1			
N29	3592013				.IMPELLER-TUR COMP	1			NOT
30	3535001				.GASKET-TUBOCHARGER	1			
31	3535203				.BRACKET-ACTUATOR	1			
32	3535656				.HOUSING	1			
N33	3594347				.ACTUATOR-TUR	1			NOT
34	3535800				.RING-RETAINER	1			
35	3535971				.WASHER-PLAIN	1			
36	3756754				.SEAL-SPLIT RING	1			
37	3758848				.SEAL-SPLIT RING	1			
38	3762259				.RING-RETAINING	4			
39	3901356				GASKET-TURBOCHARGER	1			
N	@				NOT INDIVIDUALLY SUPPLIED	AR			NOT

CYLINDER HEAD GASKET(-#1000)

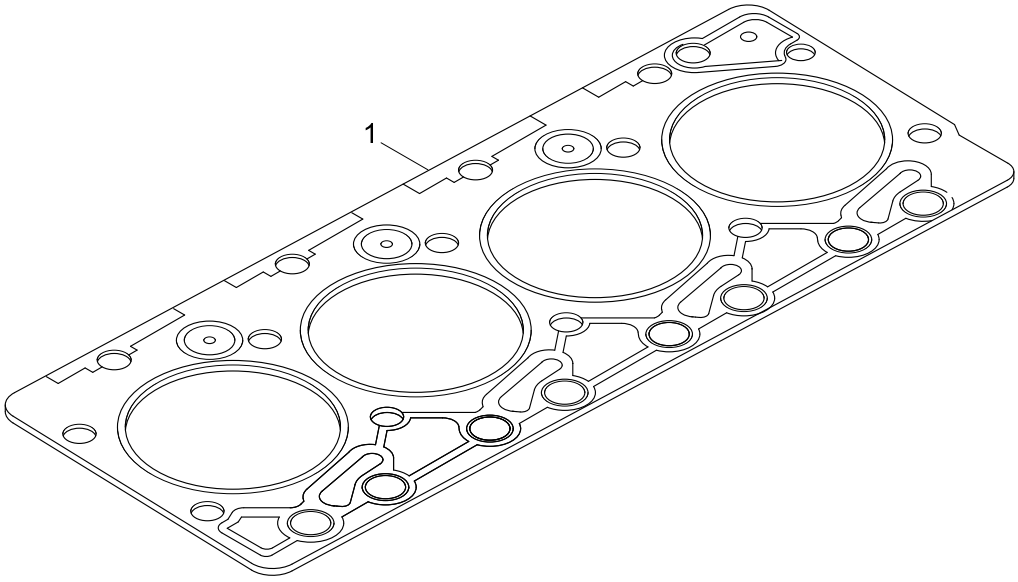

Item	Part_No	IS	Ord	T	Description	Qty	Serial_No	ITC	Remark
*	@				CYLINDER HEAD GASKET		- #1000	-	NOT
1	3283333				GASKET-CYLINDER HEAD	1			PP97300

STARTING MOTOR AND MOUNTING(-#1000)

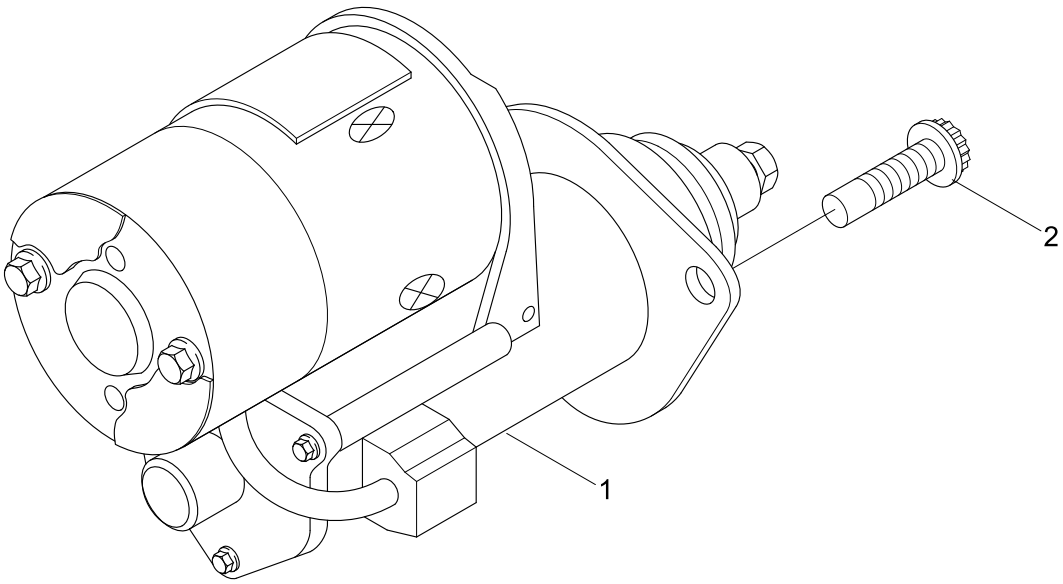

Item	Part_No	IS	Ord	T	Description	Qty	Serial_No	ITC	Remark
*	@				STARTING MOTOR MTG	1	- #1000	-	NOT
1	3922474				MOTOR-STARTING	1			ST9066-02
2	3903834				SCREW-TWELVE P/CAP	2			SM9701-01

FAN PILOT SPACER(-#1000)

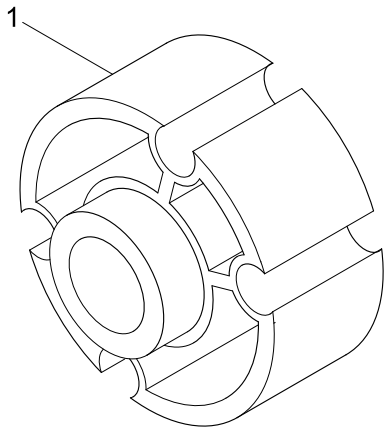

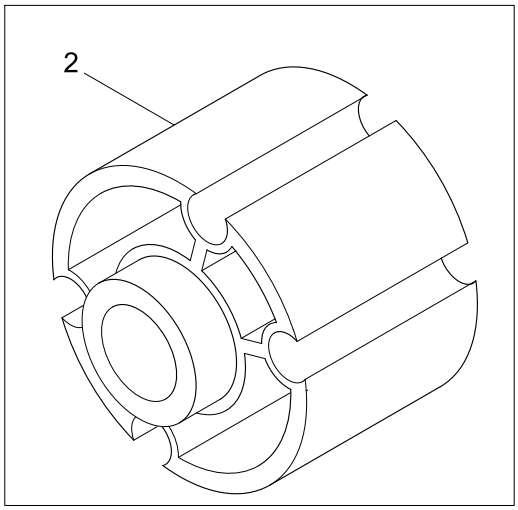

Item	Part_No	IS	Ord	T	Description	Qty	Serial_No	ITC	Remark
*	@				FAN PILOT SPACER	1	- #1000	-	NOT
1	3910128				SPACER-FAN(1")	1			SP9019
2	3910131				SPACER	1			SP9022, STD
	3910130				SPACER-FAN(2")	1			SP9021, L/NOISE

TURBOCHARGER LOCATION(-#1000)

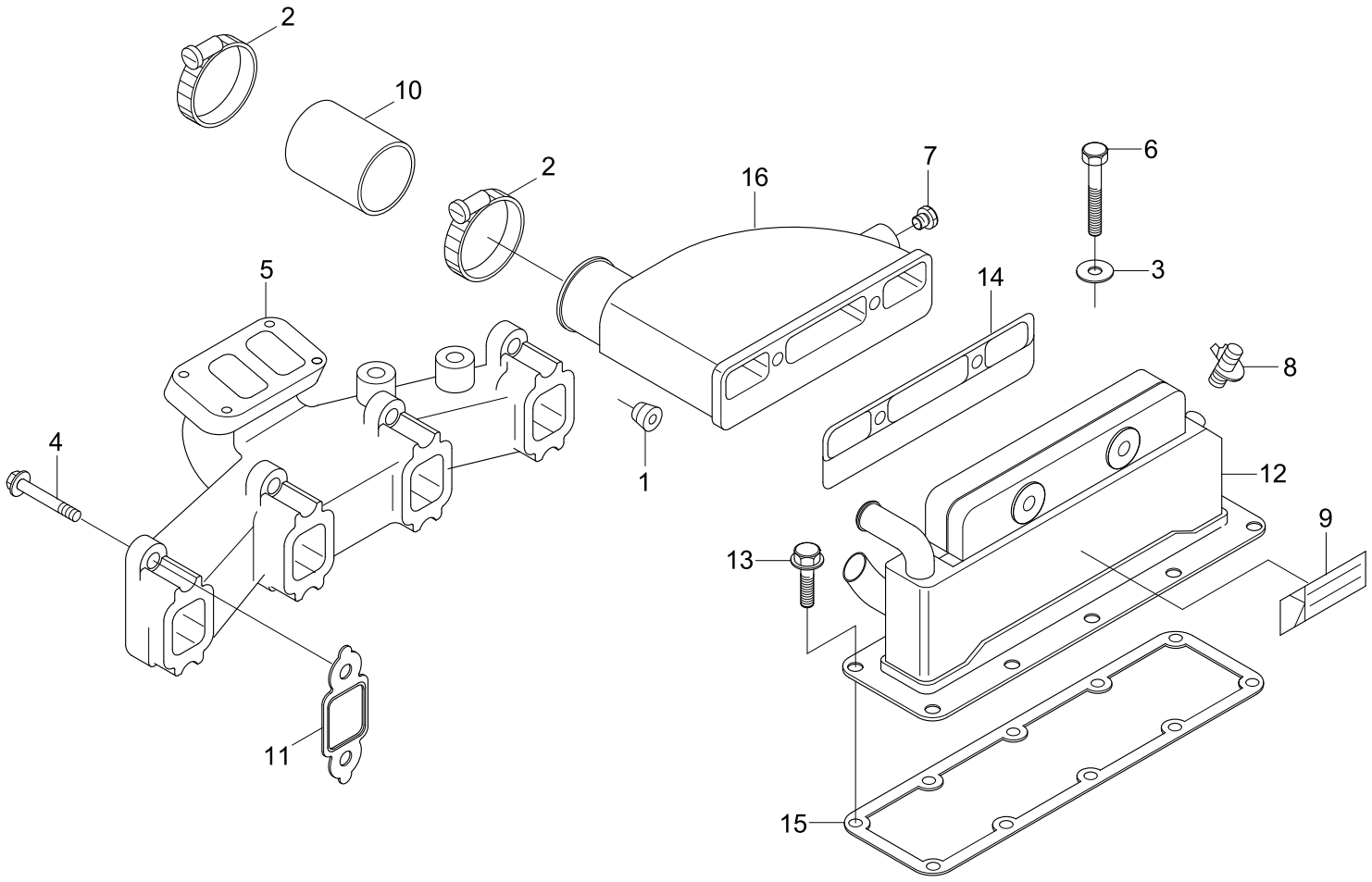

Item	Part_No	IS	Ord	T	Description	Qty	Serial_No	ITC	Remark
*	@				TURBOCHARGER LOCATION	1	- #1000	-	NOT
1	3008468				PLUG-PIPE	1			TB9397-04
2	3033033				CLAMP-HOSE	2			
3	3278499				WASHER-PLAIN	2			
4	3901448				SCREW	8			
5	3901635				MANIFOLD-EXH	1			
6	3901447				SCREW	2			
7	3906619				PLUG-PIPE	1			
8	3909394				DRAINCOCK	1			
9	3910778				DECAL	1			
10	3916166				HOSE-PLAIN	1			
11	3927154				GASKET-EXH MANIFOLD	4			
12	3929333				AFTERCOOLER	1			
13	3930837				SCREW	6			
14	3931264				GASKET	1			
15	3938153				GASKET-INT MANI CVR	1			
16	3931997				CONNECTION	1			

TURBOCHARGER PLUMBING(-#1000)

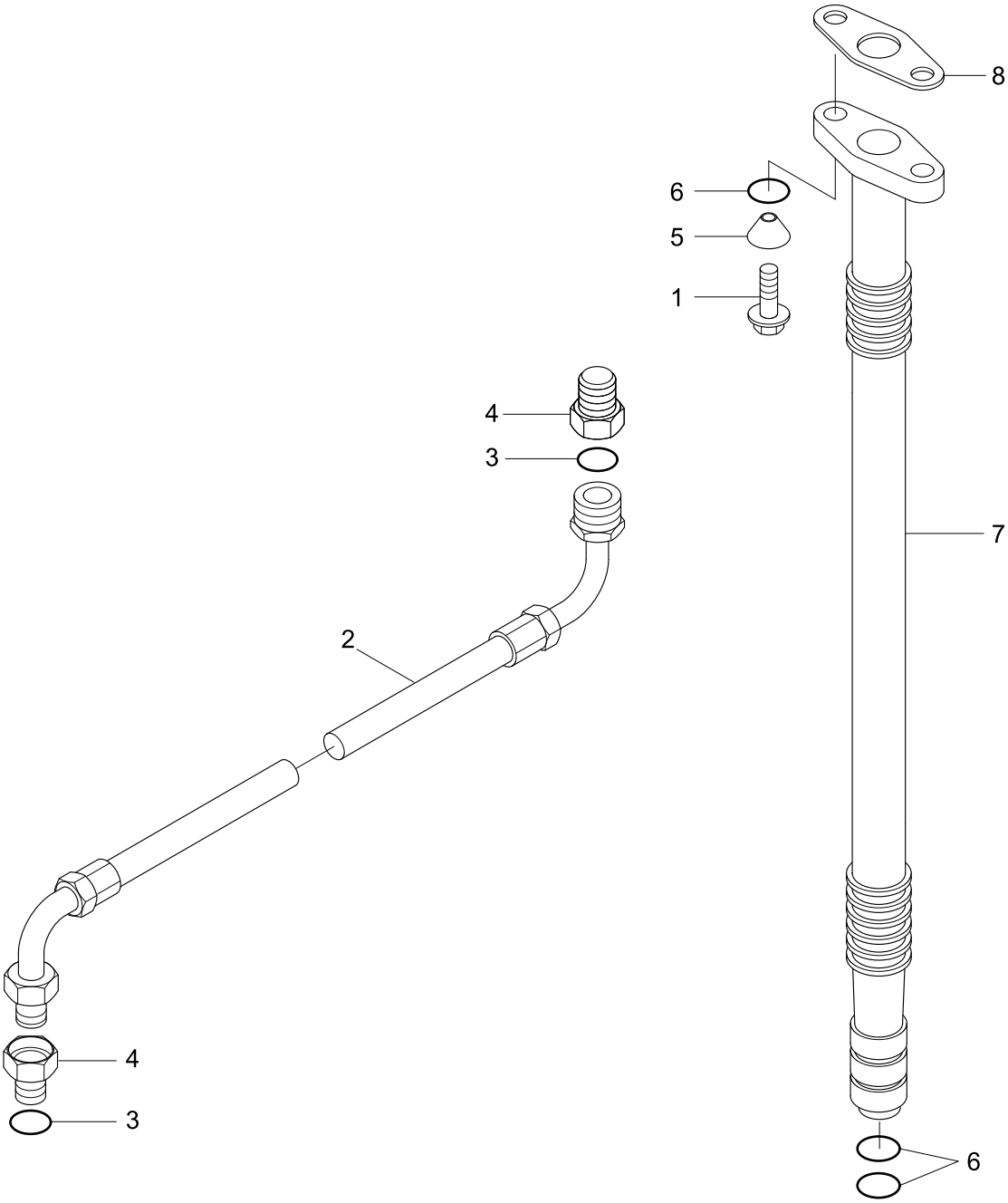

Item	Part_No	IS	Ord	T	Description	Qty	Serial_No	ITC	Remark
*	@				TURBOCHARGER PLUMBING	1	- #1000	-	NOT
1	3900630				SCREW-HEX HEAD CAP	2			TP9702-07
2	3909545				HOSE-FLEXIBLE	1			
*	3919687				CONNECTOR-FEMALE	2			
3	3037236				.SEAL/O-RING	1			
N4	3284244				.CONNECTOR	1			NOT
5	3924389				WASHER	2			
6	3928624				SEAL/O-RING	2			
*	3934084				CONNECTION-TUR DRAIN	1			
6	3928624				.SEAL/O-RING	2			
N7	3934091				.CONNECTION-TUR DRAIN	1			NOT
8	3937706				GASKET-OIL DRAIN	1			
N	@				NOT INDIVIDUALLY SUPPLIED	AR			NOT

VALVE COVER(-#1000)

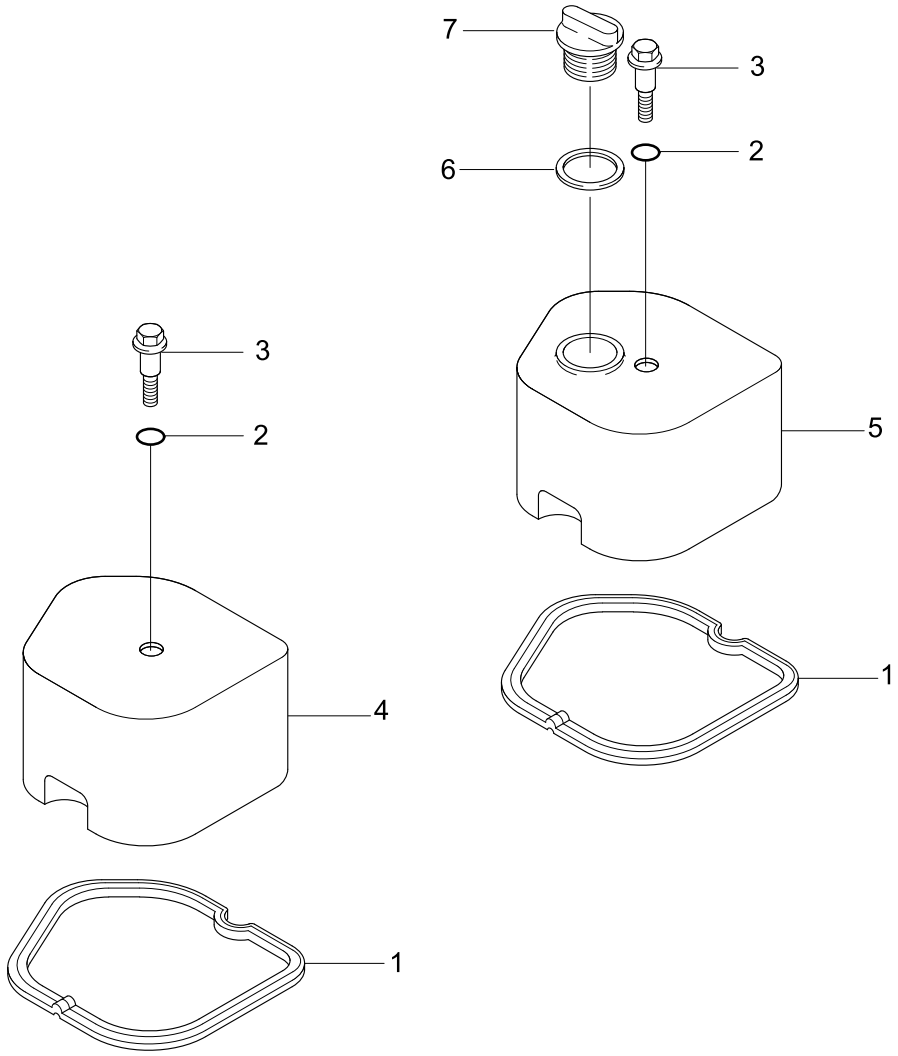

Item	Part_No	IS	Ord	T	Description	Qty	Serial_No	ITC	Remark
*	@				VALVE COVER	1	- #1000	-	NOT
1	3930906				GASKET-VALVE COVER	4			VC9012-04
2	3935449				ISOLATOR	4			
3	3907049				SCREW	4			
4	3928404				COVER-VALVE	3			
5	3928405				COVER-VALVE	1			
6	3936876				SEAL-RECT RING	1			
7	3901895				CAP-FILLER	1			

AFTERCOOLER PLUMBING(-#1000)

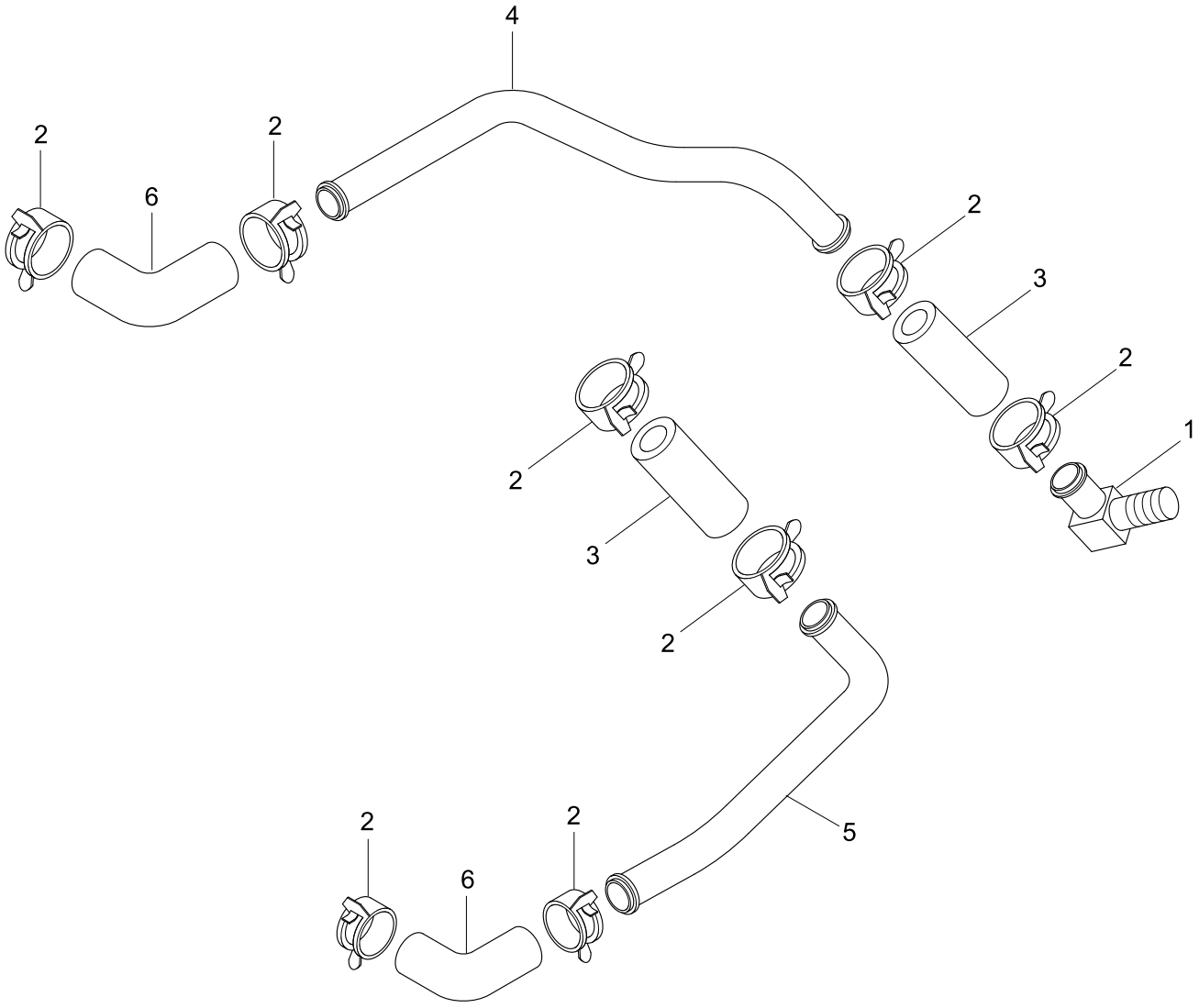

Item	Part_No	IS	Ord	T	Description	Qty	Serial_No	ITC	Remark
*	@				AFTERCOOLER PLUMBING	1	- #1000	-	NOT
1	3282444				COUPLING-ELBOW HOSE	1			WA9739-02
2	3937613				CLAMP-HOSE	8			
3	3918611				HOSE	2			
4	3284880				TUBE-AFTERCOOLER	1			
5	3933606				TUBE-AFTERCOOLER	1			
6	3934720				HOSE-ELBOW	2			

ENGINE VENT PLUMBING(-#1000)

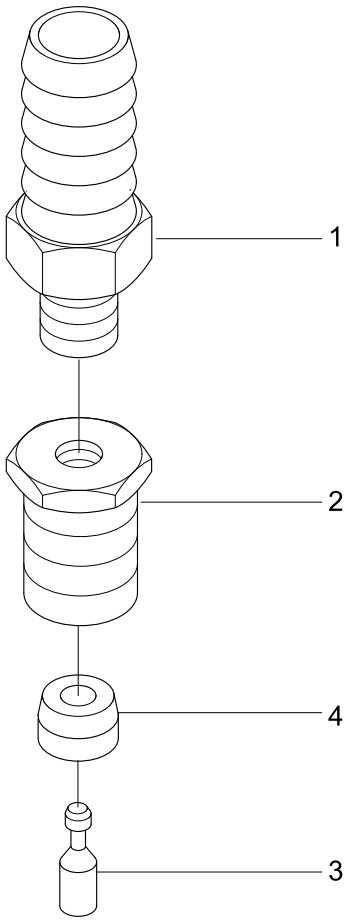

Item	Part_No	IS	Ord	T	Description	Qty	Serial_No	ITC	Remark
*	@				ENGINE VENT PLUMBING	1	- #1000	-	NOT
	3935152				VALVE	1			WH9010-04
1	3922503				.COUPLING	1			
2	3935153				.BUSHING	1			
N3	3935182				.PLUNGER	1			NOT
N4	3935183				.BUSHING	1			NOT
N	@				NOT INDIVIDUALLY SUPPLIED	AR			NOT

WATER INLET CONNECTION(-#1000)

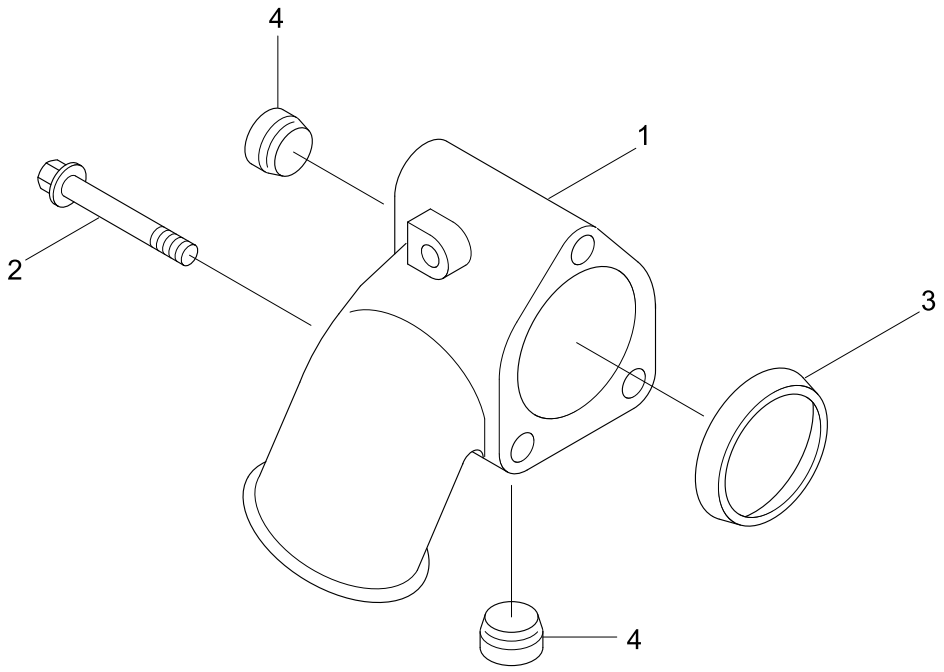

Item	Part_No	IS	Ord	T	Description	Qty	Serial_No	ITC	Remark
*	@				WATER INLET CONNECTION	1	- #1000	-	NOT
1	3934878				CONN-WATER INLET	1			WI9002-02
2	3901757				SCREW	3			
3	3906697				SEAL-RECT RING	1			
4	3008468				PLUG-PIPE	2			WI9701

WATER PUMP(-#1000)

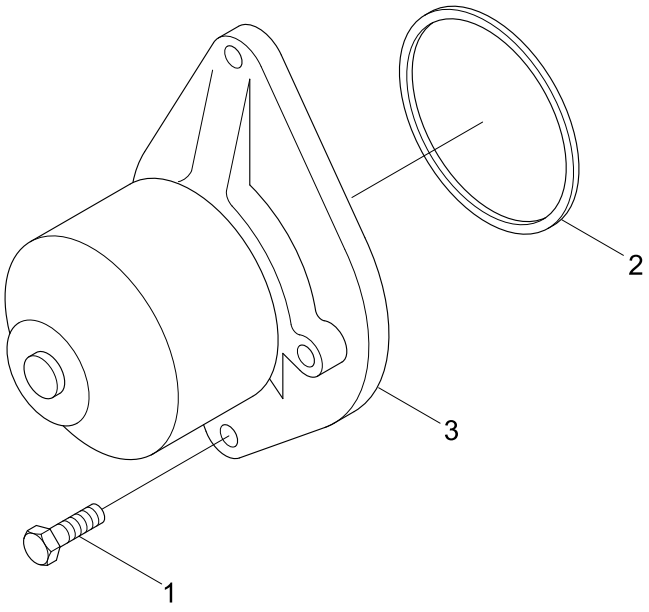

Item	Part_No	IS	Ord	T	Description	Qty	Serial_No	ITC	Remark
*	@				WATER PUMP	1	- #1000	-	NOT
1	3941981				SCREW	2			WP9033
*	3286277				KIT-WATER PUMP	1			
2	3906698				.SEAL-RECT RING	1			
N3	3285411				.PUMP-WATER	1			NOT
N	@				NOT INDIVIDUALLY SUPPLIED	AR			NOT

EXHAUST PLUMBING(-#1000)

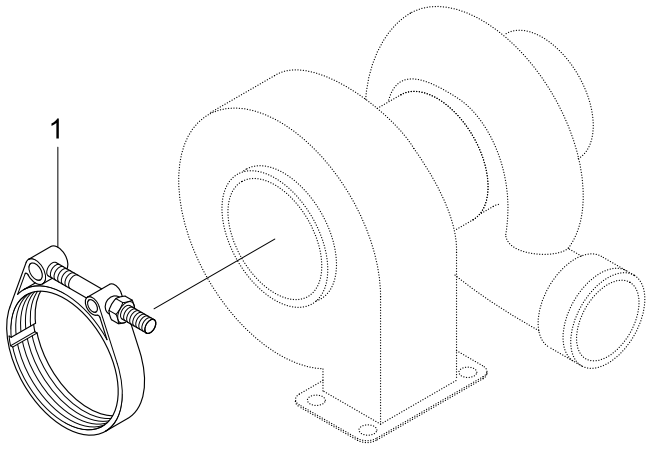

Item	Part_No	IS	Ord	T	Description	Qty	Serial_No	ITC	Remark
*	@				EXHAUST PLUMBING		- #1000	-	NOT
1	3903652				CLAMP-V BAND	1			XS9009

FRONT DRIVE ADAPTER(#1001-#1494)

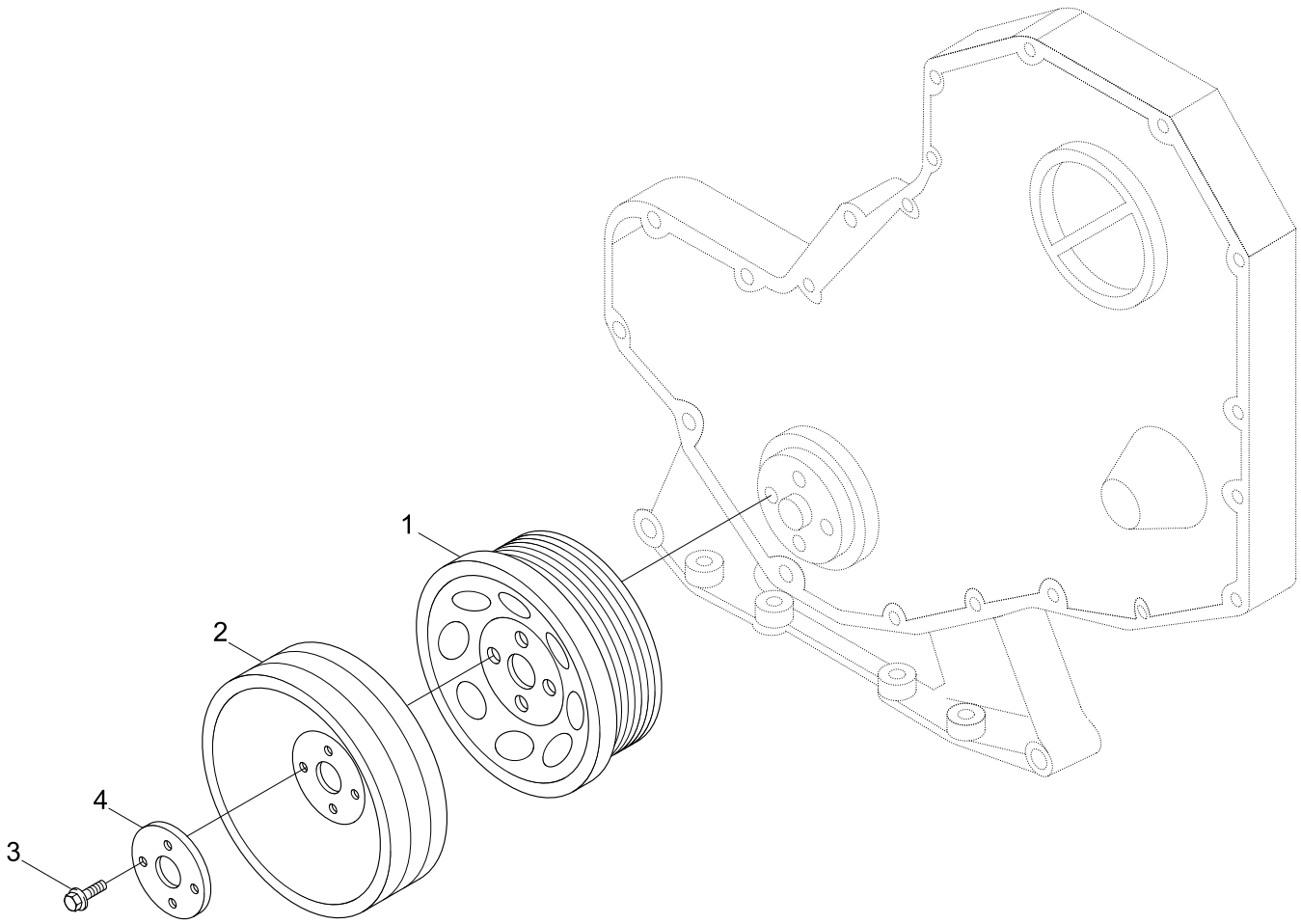

Item	Part_No	IS	Ord	T	Description	Qty	Serial_No	ITC	Remark
*	@				FRONT DRIVE ADAPTER	1	#1001 - #1494	-	NOT
1	3914494				PULLEY-CRANKSHAFT	1			DA9752
2	3903826				PULLEY-ACC	1			
3	3903857				SCREW	4			
4	3917639				PLATE-CLAMPING	1			

AIR INTAKE HEATER(#1001-#1494)

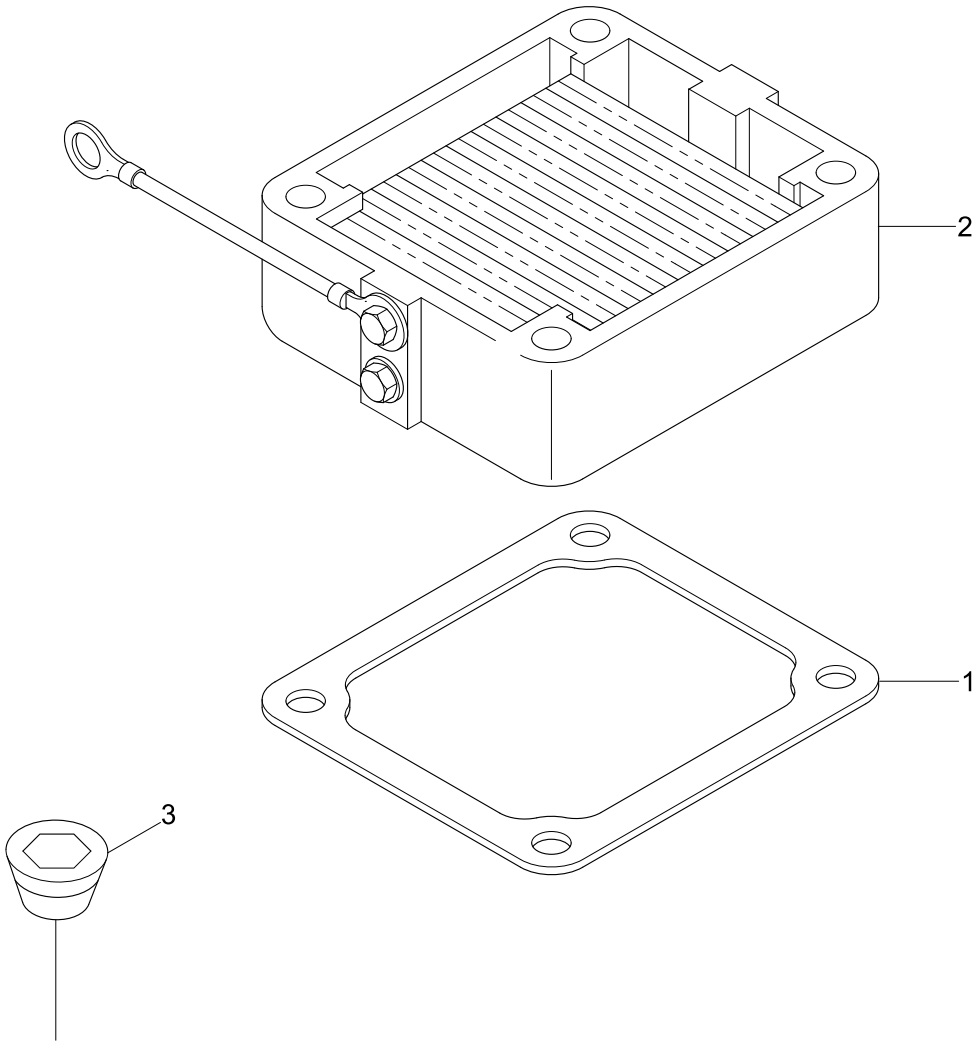

Item	Part_No	IS	Ord	T	Description	Qty	Serial_No	ITC	Remark
*	@				AIR INTAKE HEATER	1	#1001 - #1494	-	NOT
1	3938158				GASKET-CONNECTION	1			AH9126
2	3939914				HEATER-INTAKE AIR	1			
	3927335				TAG-INSTRUCTION	1			
3	3008469				PLUG-PIPE	1			CH9071

DATAPLATE(#1001-#1494)

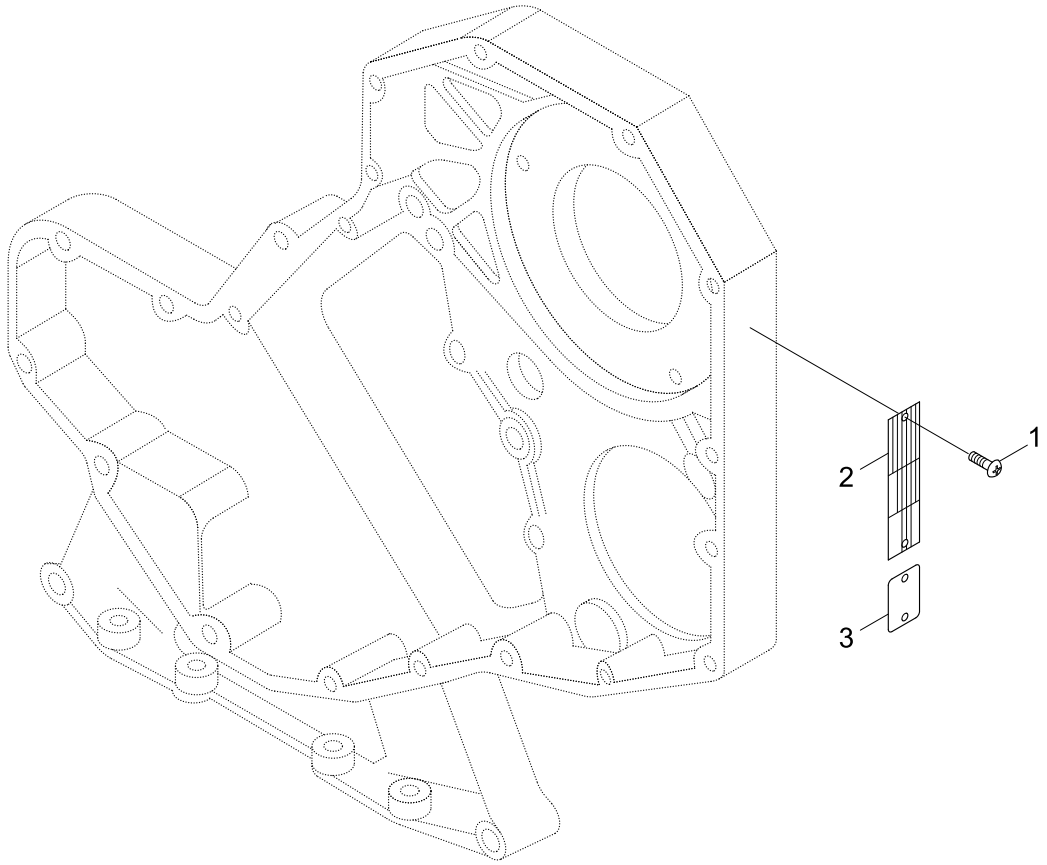

Item	Part_No	IS	Ord	T	Description	Qty	Serial_No	ITC	Remark
*	@				DATAPLATE	1	#1001 - #1494	-	NOT
1	3908612				SCREW	2			AP9239
2	3284906				DATAPLATE	1			
N2	3285694				DATAPLATE	1			NOT
N3	3966565				DATAPLATE	1			NOT
N	@				NOT INDIVIDUALLY SUPPLIED	AR			NOT

ROCKER LEVERS(#1001-#1494)

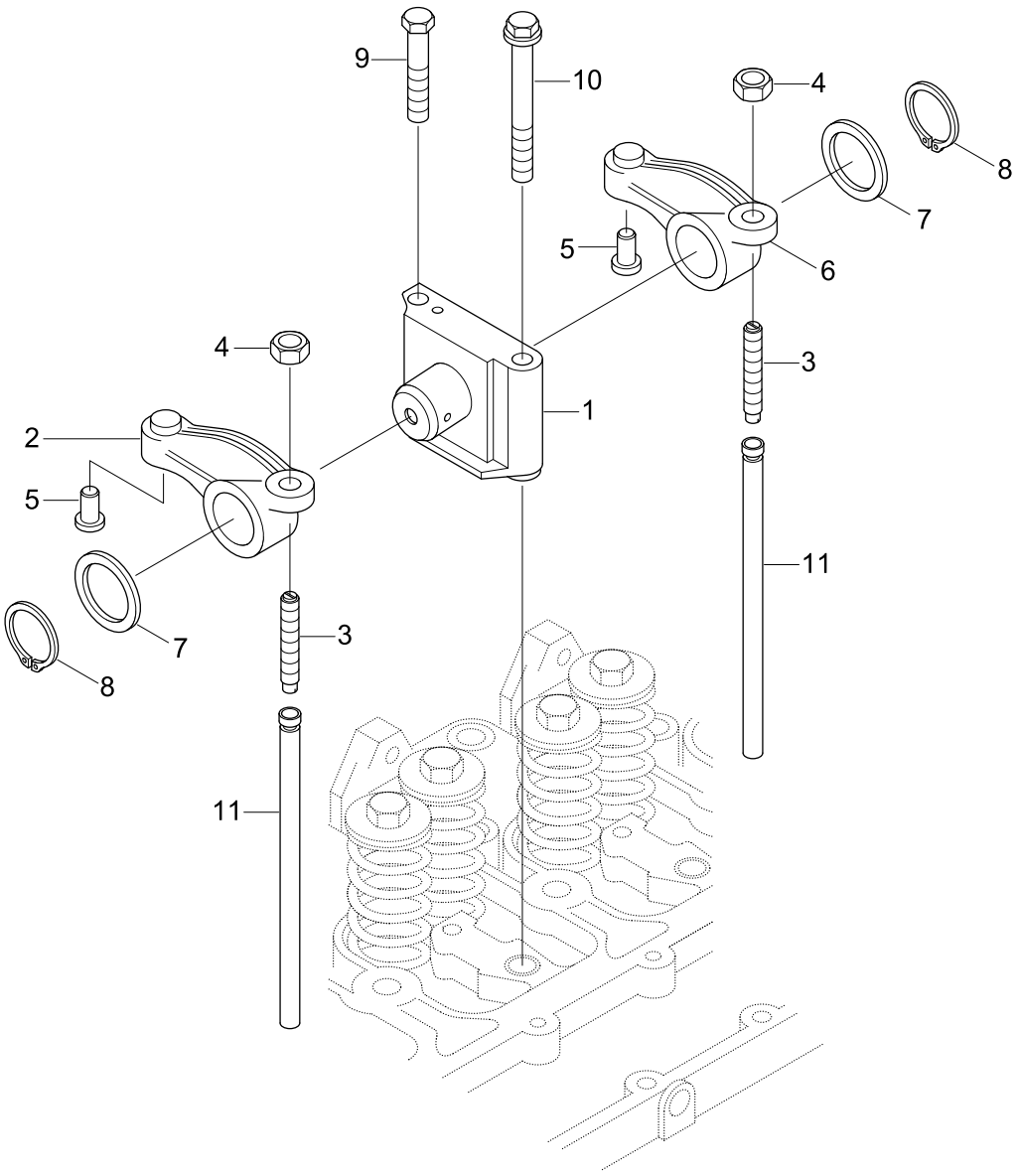

Item	Part_No	IS	Ord	T	Description	Qty	Serial_No	ITC	Remark
*	@				ROCKER LEVERS	1	#1001 - #1494	-	NOT
*N	3922486				SHAFT-R/LEVER	4			NOT
*	3922488				SHAFT-R/LEVER	4			
N1	3911423				.SUPPORT-R/LEVER	1			NOT
	3922487				.SHAFT-R/LEVER	1			NOT
2	3910811				LEVER-ROCKER	4			
N2	3910809				.LEVER-ROCKER	1			NOT
N3	3937438				.SCREW	1			NOT
4	3927692				.NUT-HEAVY HEX	1			
N5	3900705				.INSERT-R/LEVER	1			NOT
6	3910810				LEVER-ROCKER	4			
N6	3910808				.LEVER-ROCKER	1			NOT
3	3937438				.SCREW	1			
4	3927692				.NUT-HEAVY HEX	1			
N5	3900705				.INSERT-R/LEVER	1			NOT
7	3900245				WASHER-PLAIN	8			
8	3900242				RING-RETAINING	8			
9	3901221				SCREW	4			
10	3920781				SCREW	4			
11	3284377				ROD-PUSH	8			
*	3919434				RIVET	1			NOT SHOWN
N	@				NOT INDIVIDUALLY SUPPLIED	AR			NOT

VALVE TAPPET(#1001-#1494)

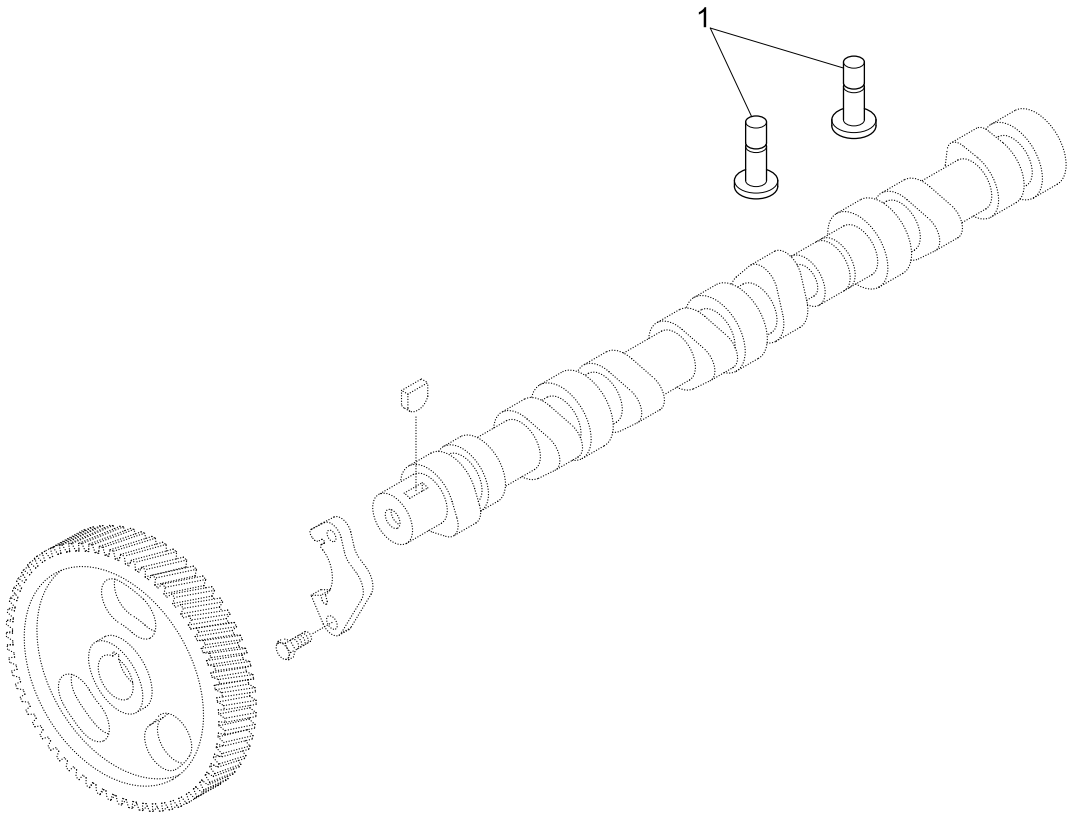

Item	Part_No	IS	Ord	T	Description	Qty	Serial_No	ITC	Remark
*	@				VALVE TAPPET	1	#1001 - #1494	-	NOT
1	3931623				TAPPET-VALVE	8			BB9795

FRONT GEAR COVER(#1001-#1494)

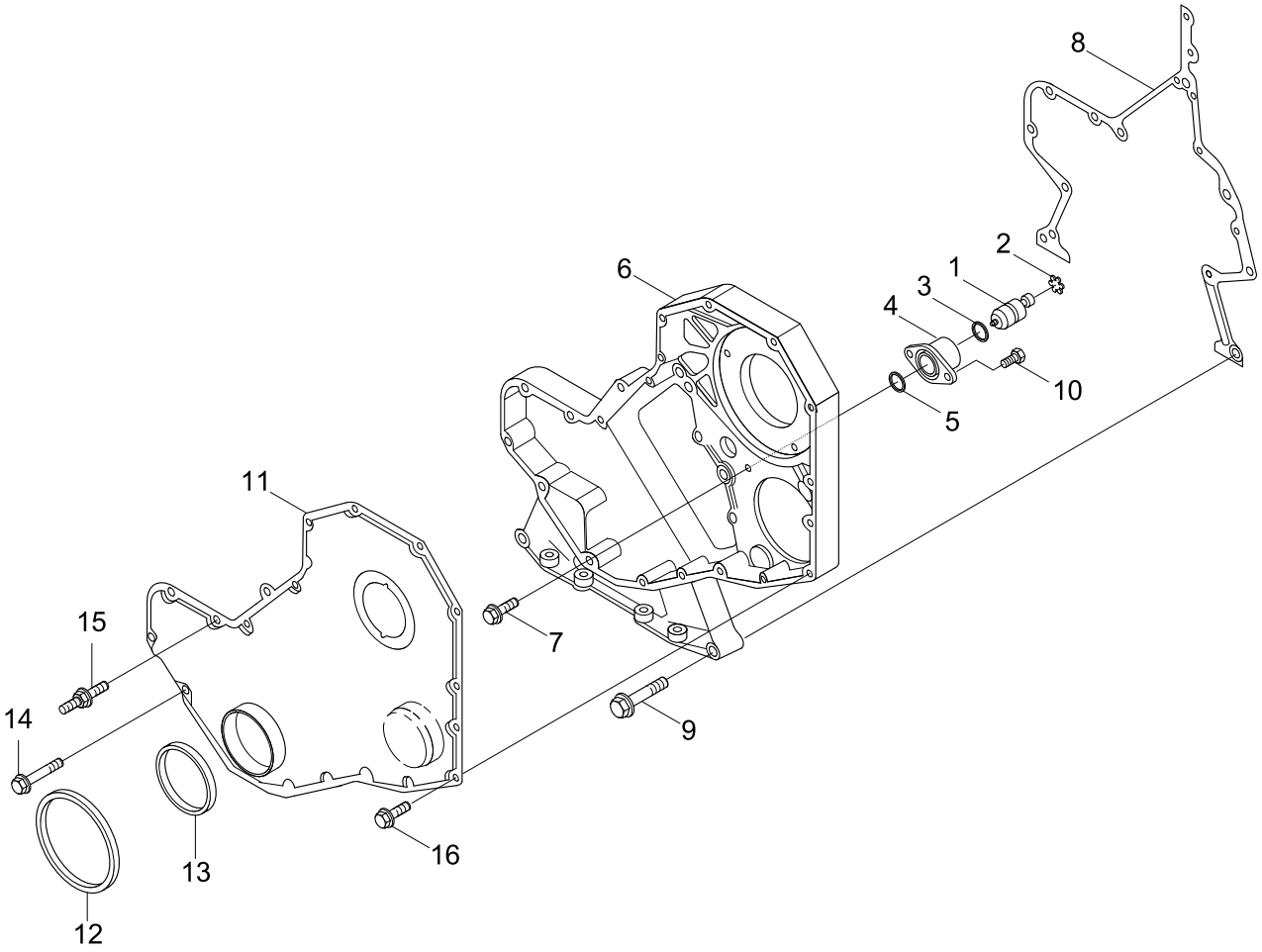

Item	Part_No	IS	Ord	T	Description	Qty	Serial_No	ITC	Remark
*	@				FRONT GEAR COVER	1	#1001 - #1494	-	NOT
*N	3913995				HOUSING-TIMING PIN	1			NOT
1	3903924				.PIN-TIMING	1			
2	3904849				.RING-RETAINING	1			
3	3913994				.O-RING	1			
4	3919683				.HOUSING-TIMING PIN	1			
5	3915772				SEAL-RECT RING	1			
6	3920758				HOUSING-GEAR	1			
7	3926846				SCREW-HEX HEAD CAP	5			
8	3938156				GASKET-GEAR HSG	1			
9	3900633				SCREW-HEX HD CAP	2			
10	3907998				SCREW-RD HD CAP	2			
*	3287075				COVER-GEAR	1			GG9785
N11	3286312				.COVER-GEAR	1			NOT
*	3804899				SEAL KIT-FRONT	1			
*N	3937111				.SEAL KIT-FRONT	1			NOT
12	3933261				.SHIELD-DUST	1			
N13	3935959				.SEAL-OIL	1			NOT
14	3900633				SCREW-HEX HD CAP	9			
15	3921816				SCREW	2			
16	3924962				SCREW	9			
N	@				NOT INDIVIDUALLY SUPPLIED	AR			NOT

CYLINDER BLOCK(#1001-#1494)

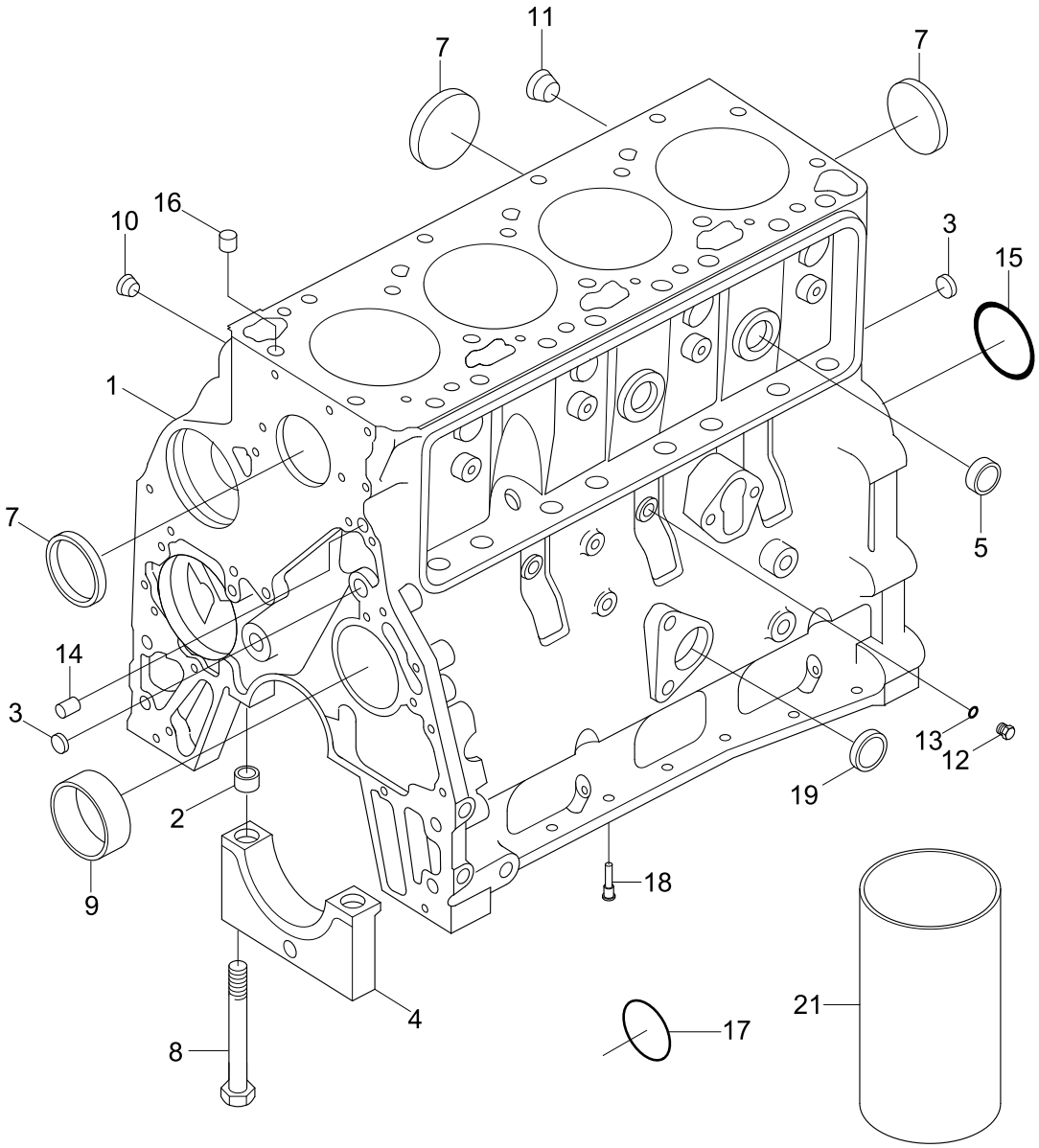

Item	Part_No	IS	Ord	T	Description	Qty	Serial_No	ITC	Remark
*	4089546				CYLINDER BLOCK	1	#1001 - #1494	-	BB9795-03
N1	3932012				.BLOCK-CYLINDER	1			NOT
3	3900956				.PLUG-EXPANSION	3			
4	3936791				.CAP-MAIN BEARING	7			
5	3914035				.PLUG-EXPANSION	2			
7	3922072				.PLUG-EXPANSION	3			
8	3927948				.SCREW	10			
9	3940059				.BUSHING	1			
*	3933224				KIT-CYL BLOCK HW				
2	3900068				.DOWEL-RING	2			
6	3920706				.PLUG-EXPANSION	2			
10	3008468				.PLUG-PIPE	2			
11	3008469				.PLUG-PIPE	1			
*	3678923				.PLUG-THREADED	2			
N12	3678924				..PLUG-THREADED	1			NOT
13	3678925				..SEAL/O-RING	1			
14	3900257				.DOWEL-PIN	2			
15	3900687				.PLUG-EXPANSION	1			
16	3902343				.DOWEL-RING	2			
17	3926047				.SEAL/O-RING	1			
18	3937214				NOZZLE	4			
19	3900958				.PLUG-EXPANSION	1			
21	3904166				.SLEEVE-SALVAGE	1			SERVICE PARTS
N	@				NOT INDIVIDUALLY SUPPLIED	AR			NOT

CRANKSHAFT & M/BEARINGS(#1001-#1494)

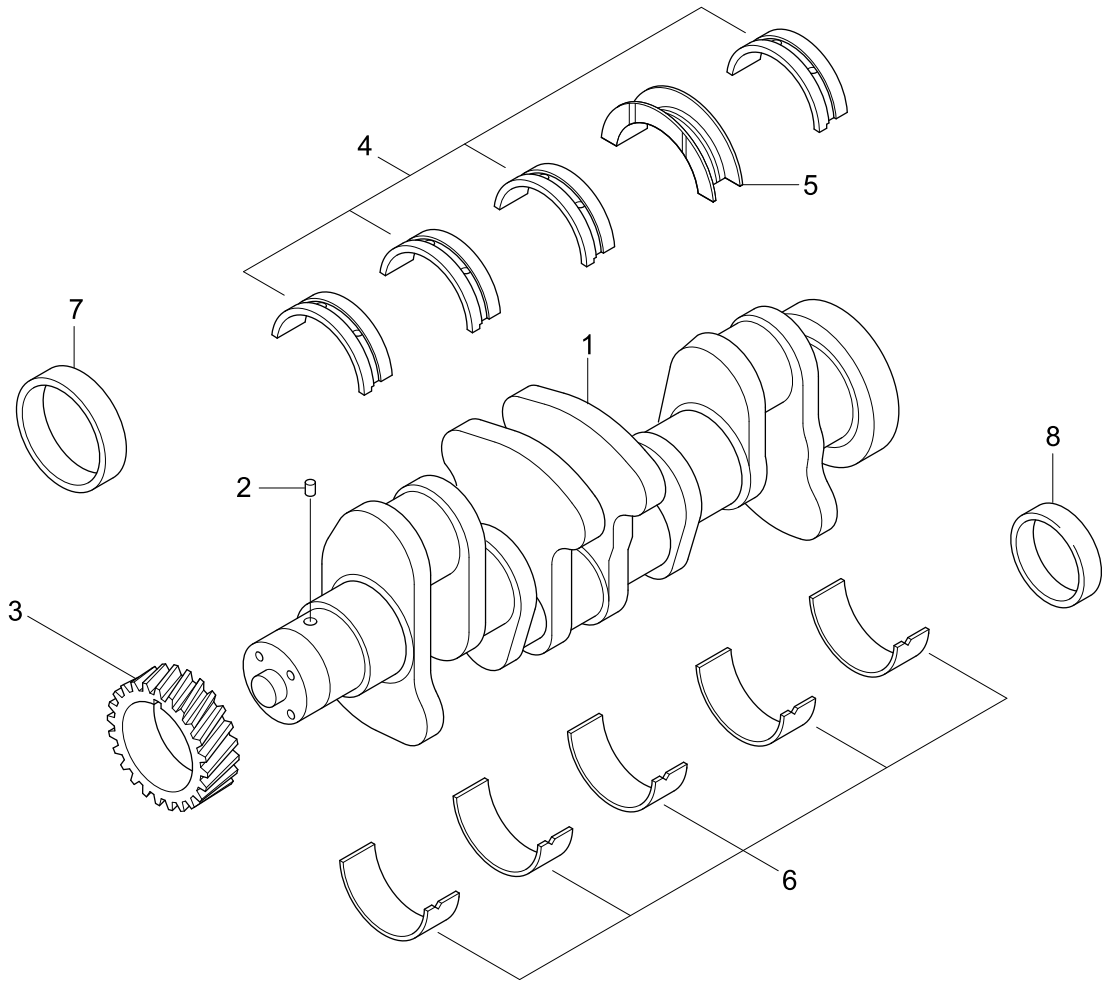

Item	Part_No	IS	Ord	T	Description	Qty	Serial_No	ITC	Remark
*	@				C/SHAFT & M/BEARING	1	- #1494	-	NOT
	3908031				CRANKSHAFT-ENGINE	1			BB9795
N1	3929036				CRANKSHAFT-ENGINE	1			NOT
2	3904483				DOWEL-PIN	1			
3	3929027				GEAR-CRANKSHAFT	1			
*	3802010				SET-MAIN BEARING(STD)	1			
N4	3929016				.BEARING-MAIN	4			NOT
N5	3927772				.BEARING-C/SHAFT THRUST	1	#1001 -	-	NOT
N6	3929021				.BEARING-MAIN	5			NOT
*	3802011				SET-M/BRG(0.25 O/S)	1			
N4	3929017				.BEARING-MAIN	4			NOT
N5	3927773				.BEARING-THRUST	1	#1001 -	-	NOT
N6	3929022				.BEARING-MAIN	5			NOT
*	3802012				SET-M/BRG(0.5 O/S)	1			
N4	3929018				.BEARING-MAIN	4			NOT
N5	3927774				.BEARING-C/SHAFT THRUST	1	#1001 -	-	NOT
N6	3929023				.BEARING-MAIN	5			NOT
*	3802013				SET-M/BRG(0.75 O/S)	1			
N4	3929019				.BEARING-MAIN	4			NOT
N5	3927775				.BEARING-C/SHAFT THRUST	1	#1001 -	-	NOT
N6	3929024				.BEARING-MAIN	5			NOT
*	3802014				SET-M/BRG(1.0 O/S)	1			
N4	3929020				.BEARING-MAIN	4			NOT
N5	3927776				.BEARING-C/SHAFT THRUST	1	#1001 -	-	NOT
N6	3929025				.BEARING-MAIN	5			NOT

Item	Part_No	IS	Ord	T	Description	Qty	Serial_No	ITC	Remark
*	3800330				BRG-C/SHAFT(0.5 O/S)	1	#1001 -	-	
N5	3283063				.BEARING-C/SHAFT THRUST	1			NOT
N6	3929023				.BEARING-MAIN	1			NOT
*	3800331				BRG-C/SHAFT(1.0 O/S)	1	#1001 -	-	
N5	3283064				.BEARING-THRUST	1			NOT
N6	3929025				.BEARING-MAIN	1			NOT
7	3802820				SEAL-W/SLEEVE KIT	1	#1001 -	-	SERVICE PARTS
8	3926126				SEAL-W/SLEEVE KIT	1	#1001 -	-	SERVICE PARTS

CAM FOLLOWER COVER(#1001-#1494)

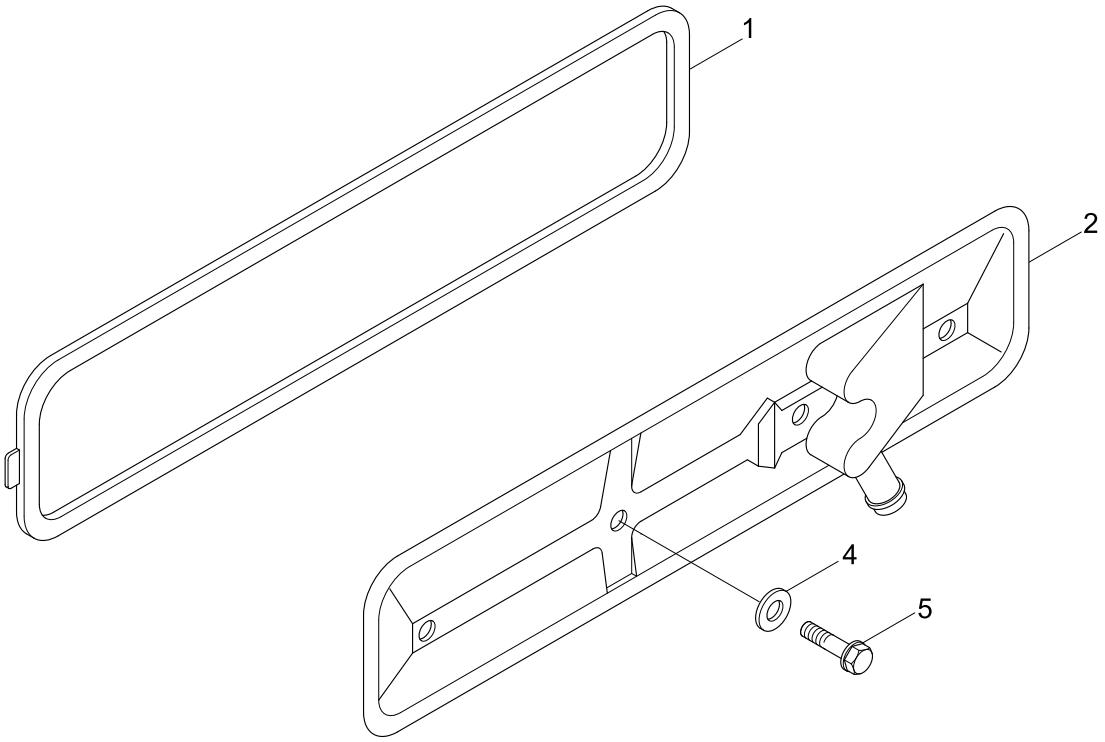

Item	Part_No	IS	Ord	T	Description	Qty	Serial_No	ITC	Remark
*	@				CAM FOLLOWER COVER	1	#1001 - #1494	-	NOT
1	3283767				GASKET-P/ROD COVER	1			CM9710
N2	3936188				COVER-PUSH ROD	1			NOT
3	3907586				BAFFLE-BREATHER	1			NOT USED
4	3928759				SEAL-GROMMET	4			
5	3900629				SCREW-H/FLANGE CAP	4			
N	@				NOT INDIVIDUALLY SUPPLIED	AR			NOT

FRONT GEAR TRAIN ACCESSORY(#1001-#1494)

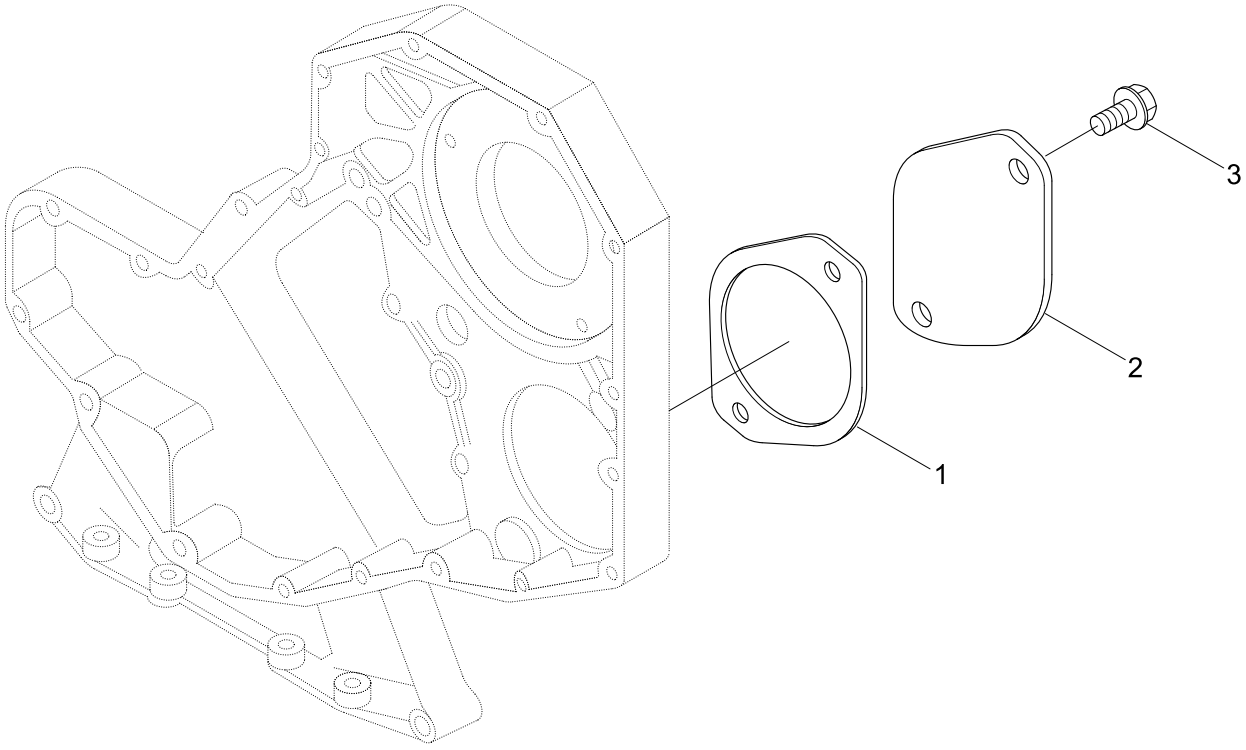

Item	Part_No	IS	Ord	T	Description	Qty	Serial_No	ITC	Remark
*	@				F/GEAR TRAIN ACCESSORY	1	- #1494	-	NOT
1	3938655				GASKET-ACC DRIVE CVR	1	#1001 -	-	DF9713-01
2	3914868				PLATE-COVER	1			
3	3901249				SCREW	2			

FAN PILOT SPACER(#1001-#1494)

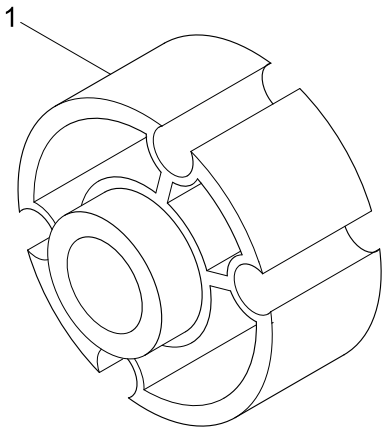

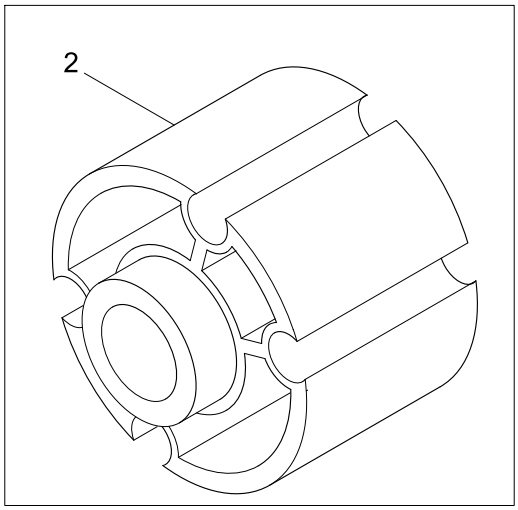

Item	Part_No	IS	Ord	T	Description	Qty	Serial_No	ITC	Remark
*	@				FAN PILOT SPACER	1	#1001 - #1494	-	NOT
1	3910128				SPACER-FAN(1")	1			SP9080
2	3910131				SPACER-FAN(2.5")	1			SP9077

THERMOSTAT & HOUSING(#1001-#1494)

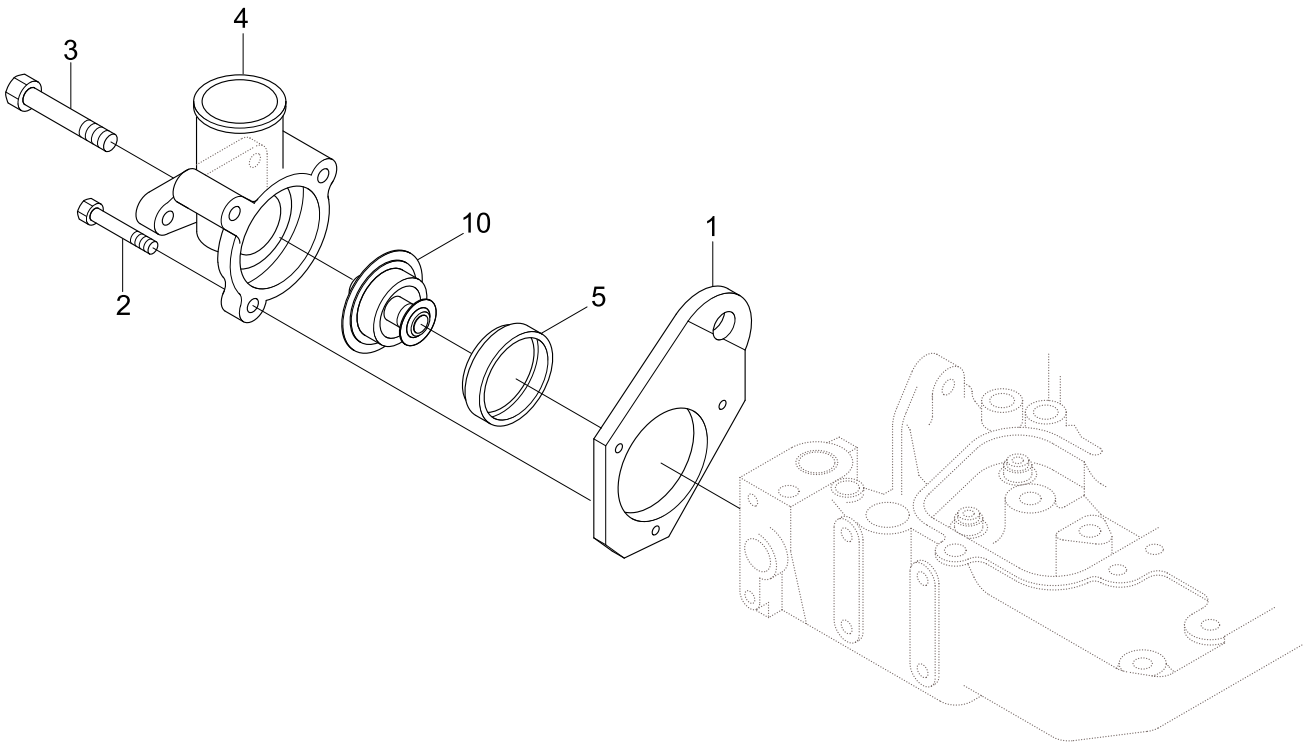

2004.10.10 REV.5

Item	Part_No	IS	Ord	T	Description	Qty	Serial_No	ITC	Remark
*	@				THERMOSTAT HOUSING	1	#1001 - #1494	-	NOT
1	3903757				BRACKET-LIFTING	1			TH9701
2	3900632				SCREW	1			
3	3926972				SCREW	1			
4	3285102				HOUSING-THERMOSTAT	2			
5	3923331				GASKET-THM HSG CVR	1			
10	3917324				THERMOSTAT	1			EC9706

ALTERNATOR LOCATION(#1001-#1494)

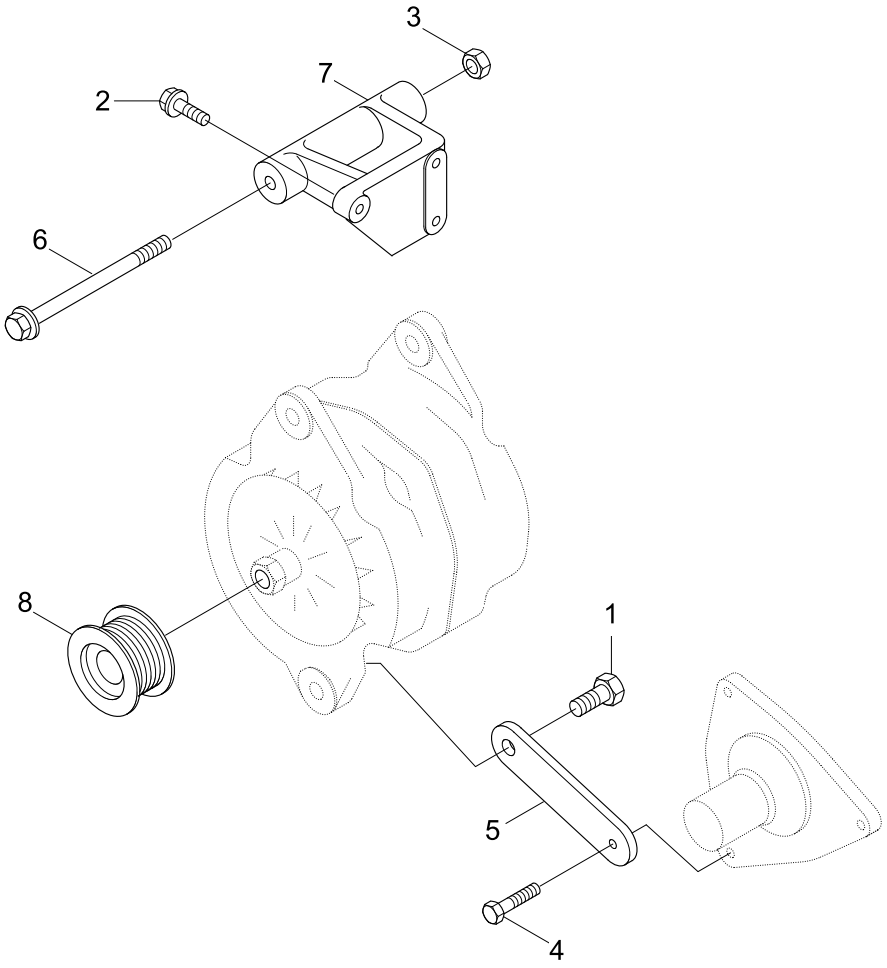

Item	Part_No	IS	Ord	T	Description	Qty	Serial_No	ITC	Remark
*	@				ALTERNATOR LOCATION	1	#1001 - #1494	-	NOT
1	3052061				SCREW	1			EH9465
2	3900631				SCREW-HEX HEAD CAP	3			
3	3903210				NUT	1			
4	3902460				SCREW-HEX HEAD CAP	1			
N5	3939905				BRACE-ALTERNATOR	1			NOT
6	3903105				SCREW-HEX HEAD CAP	1			
7	3921737				SUPPORT-ALTERNATOR	1			
8	3925852				PULLEY	1			

ALTERNATOR DRIVE(#1001-#1494)

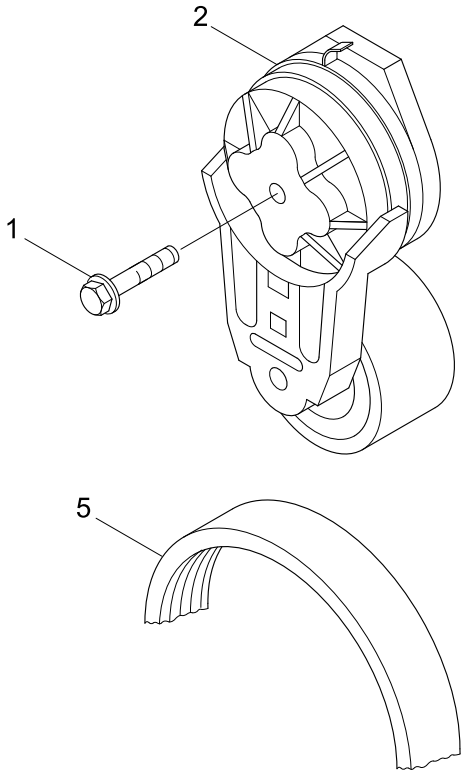

Item	Part_No	IS	Ord	T	Description	Qty	Serial_No	ITC	Remark
*	@				ALTERNATOR DRIVE	1	- #1494	-	NOT
1	3282081				SCREW	1			WP9949
2	3936213				TENSIONER-BELT	1			
5	3289135				BELT-V RIBBED	1	#1001 -	-	WP97035-01

CABIN HEATER PLUMBING(#1001-#1494)

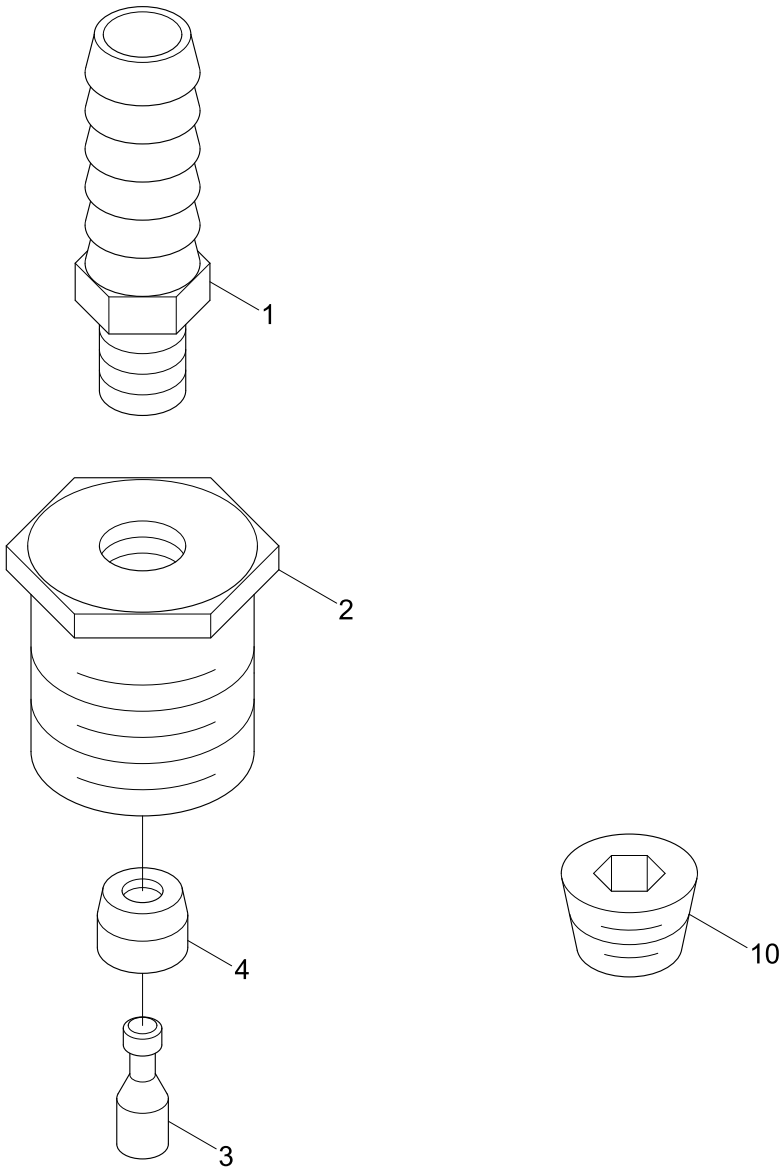

Item	Part_No	IS	Ord	T	Description	Qty	Serial_No	ITC	Remark
*	@				CABIN HEATER PLUMBING	1	#1001 - #1494	-	NOT
	3935152				VALVE	1			RP9035
1	3922503				.COUPLING	1			
2	3935153				.BUSHING	1			
N3	3935182				.PLUNGER	1			NOT
N4	3935183				.BUSHING	1			NOT
10	3008468				PLUG-PIPE	2			HC9035

FAN DRIVE(#1001-#1494)

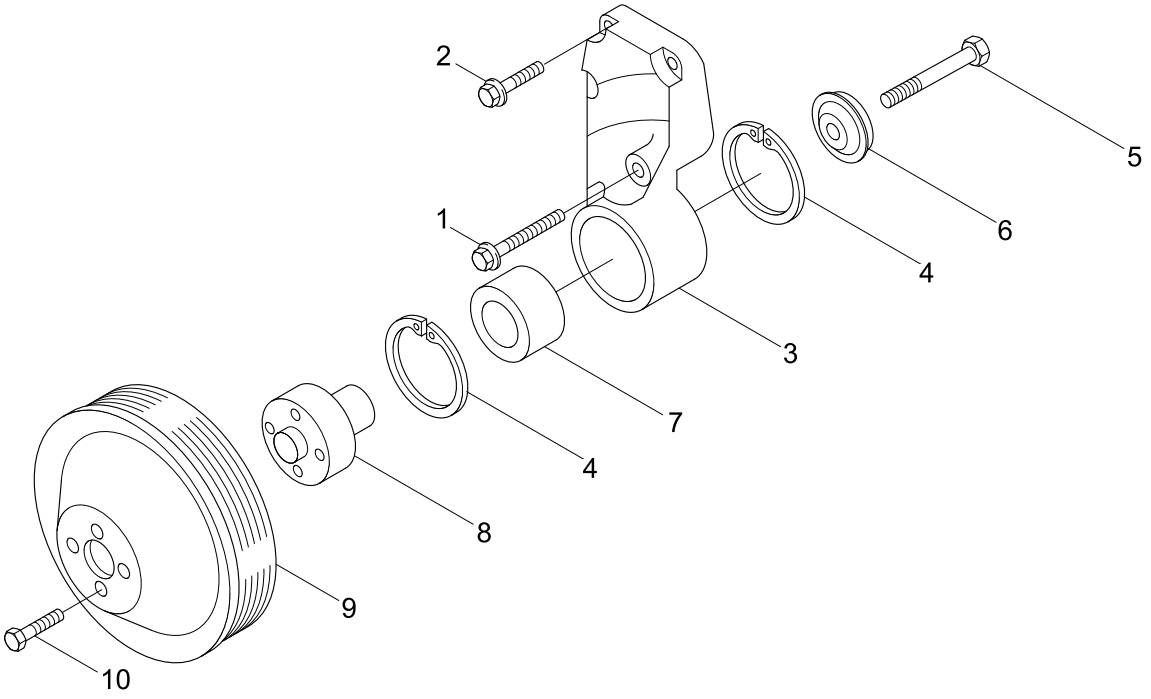

Item	Part_No	IS	Ord	T	Description	Qty	Serial_No	ITC	Remark
*	@				FAN DRIVE	1	#1001 - #1494	-	NOT
1	3901447				SCREW	1			FA9352
2	3902114				SCREW-HEX HEAD CAP	3			
*N	3285949				SUPPORT-FAN	1			NOT
N3	3285946				.SUPPORT-FAN	1			NOT
4	3035960				.RING-RETAINING	2			
5	3907769				.SCREW	1			
6	3923044				.RETAINER-FAN HUB	1			
7	3910739				.BEARING-BALL	1			
8	3911924				.HUB-FAN	1			
9	3929269				PULLEY-FAN	1			
10	3902460				SCREW-HEX HEAD CAP	4			FA9742
N	@				NOT INDIVIDUALLY SUPPLIED	AR			NOT

INJECTION PUMP 1(#1001-#1494)

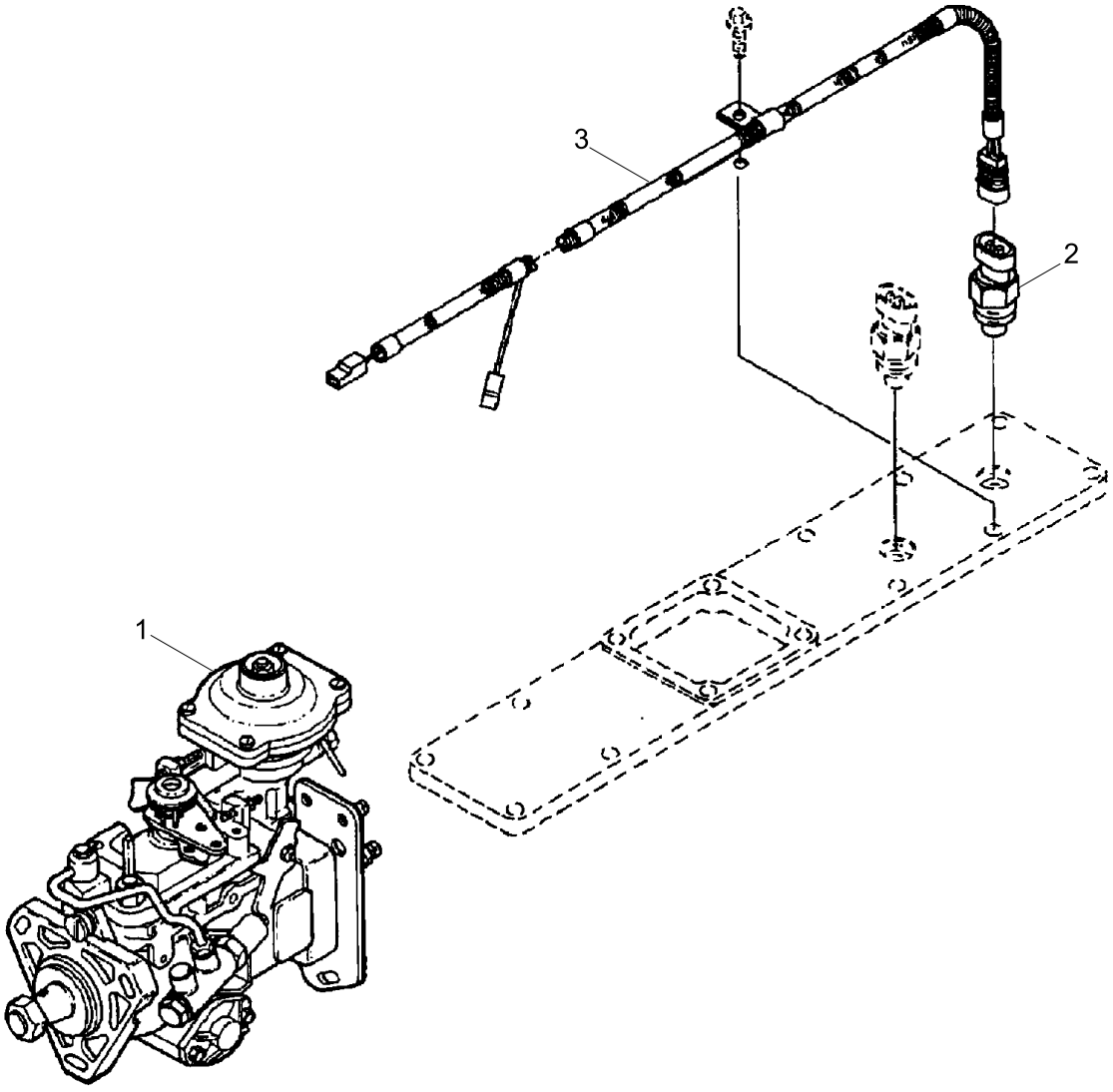

Item	Part_No	IS	Ord	T	Description	Qty	Serial_No	ITC	Remark
*	@				INJECTION PUMP 1	1	#1001 - #1494	-	NOT
1	3963966				PUMP-FUEL INJECTION	1			FP9092
2	3921642				SWITCH-THERMO	1			
3	3923303				HARNESS-WIRING	1			

INJECTION PUMP 2(#1001-#1494)

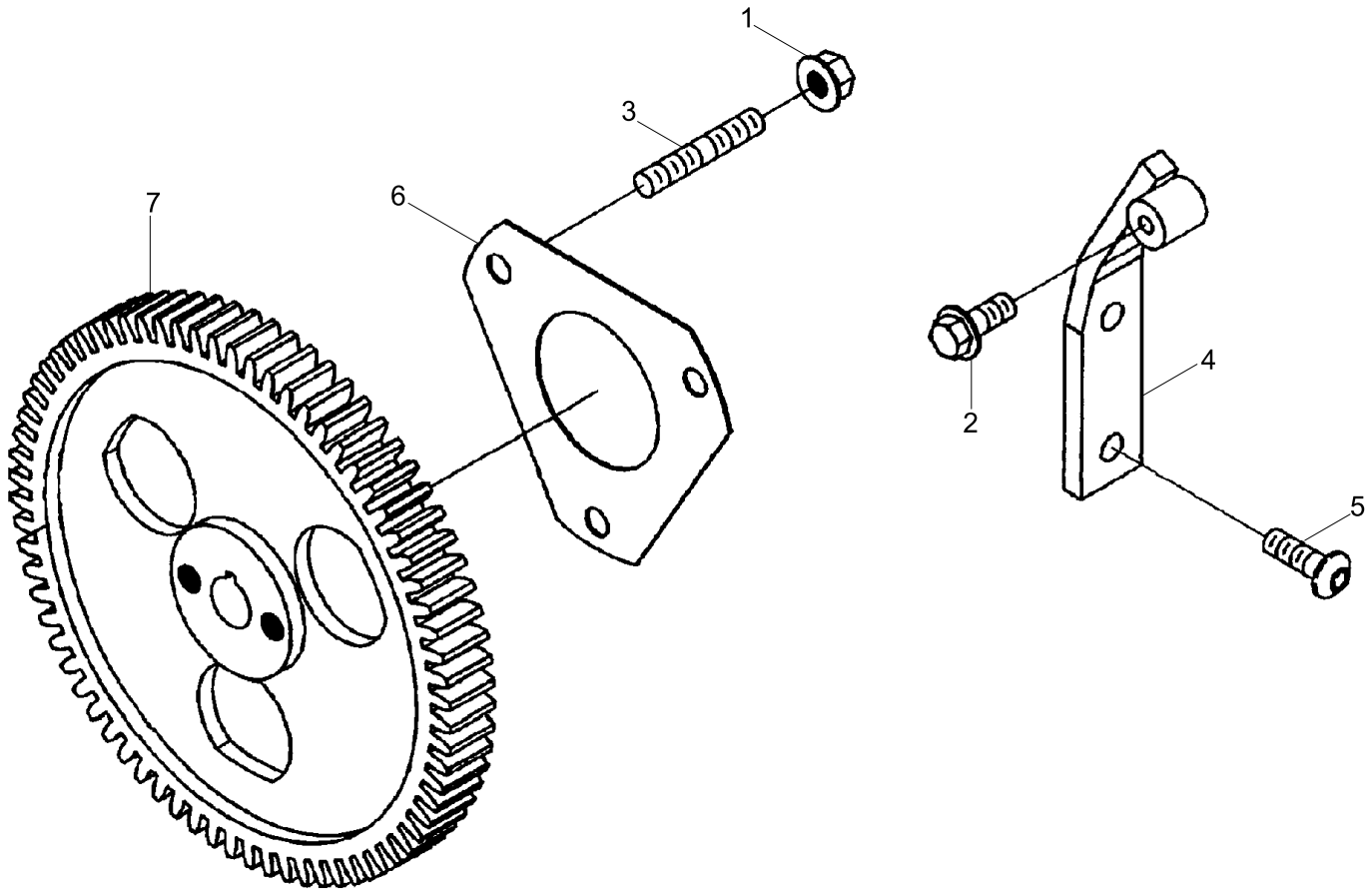

Item	Part_No	IS	Ord	T	Description	Qty	Serial_No	ITC	Remark
*	@				INJECTION PUMP	1	- #1494	-	NOT
1	3900589				NUT-HEX FLANGE	3			FP99110
2	3900630				SCREW-HEX HEAD CAP	1			
3	3902501				STUD	3			
4	3905313				BRACE-FUEL PUMP	1			
5	3900631				SCREW-HEX HEAD CAP	2	#1001 -	-	
6	3939355				GASKET-FUEL PUMP	1	#1001 -	-	
7	3936021				GEAR-FUEL PUMP	1			

FUEL CLEANER(#1001-#1494)

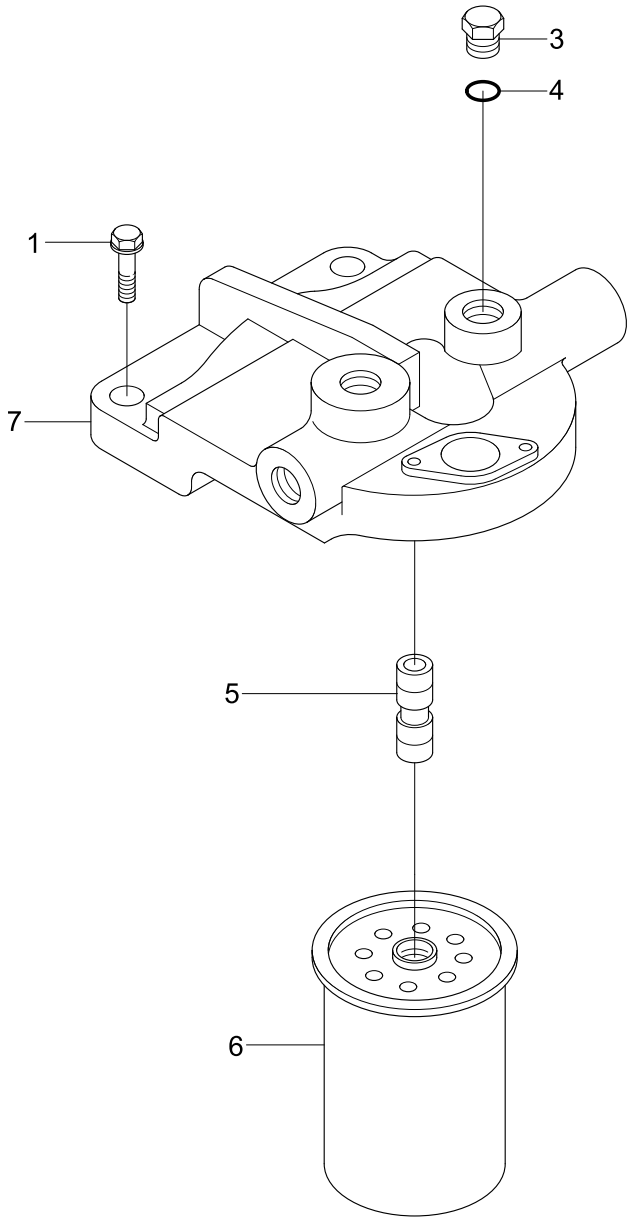

Item	Part_No	IS	Ord	T	Description	Qty	Serial_No	ITC	Remark
*	@				FUEL CLEANER	1	- #1494	-	NOT
					FUEL CLEANER	1	#1001 - #1494	d	NOT
1	3900632				SCREW-HEX F/HEAD CAP	2			FF9413
*	3966139				FILTER-FUEL	1	#1001 -	-	
*-1	3678923				PLUG-THREADED	2			
N3	3678924				.PLUG-THREADED	1			NOT
4	3678925				.O-RING	1			
5	3942453				ADAPTER	1			
6	11N4-70210				FUEL FILTER	1			
	11E1-70010				FILTER-FUEL	1	#1495 -	D	
	11E1-70210				FILTER-FUEL W/S	1	#1495 -	D	
7	3942627				HEAD-FUEL FILTER	1			

FLYWHEEL HOUSING(#1001-#1494)

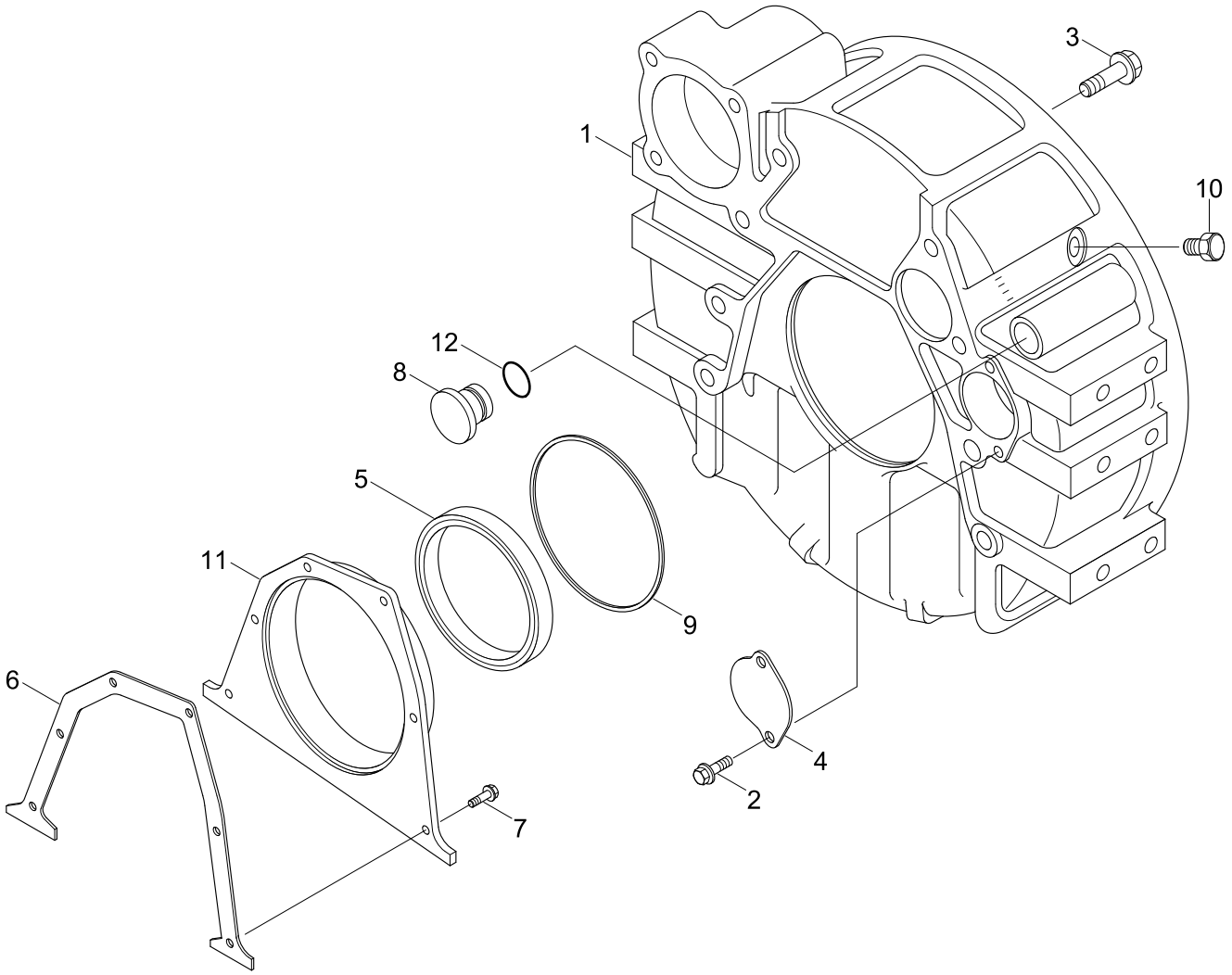

Item	Part_No	IS	Ord	T	Description	Qty	Serial_No	ITC	Remark
*	@				FLYWHEEL HOUSING	1	- #1494	-	NOT
1	3937426				FLYWHEEL HOUSING	1			FH9343
2	3912072				SCREW	2			
3	3920447				SCREW-HEX HEAD CAP	8			
4	3925234				PLATE-COVER	1			
N*	3934486				KIT-SEAL	1			NOT
N5	3933262				.SEAL-OIL	1			NOT
6	3938159				GASKET-REAR COVER	1			
7	3991306				SCREW-FLANGE HEAD CAP	6	#1001 -	-	
8	3910248				PLUG/O-RING	1			
9	3912473				SEAL-RECT RING	1			
10	3904181				PLUG-THREADED	1			
N11	3936895				COVER-REAR	1			NOT
12	3910260				SEAL/O-RING	1			
N	@				NOT INDIVIDUALLY SUPPLIED	AR			NOT

AIR INTAKE MANIFOLD(#1001-#1494)

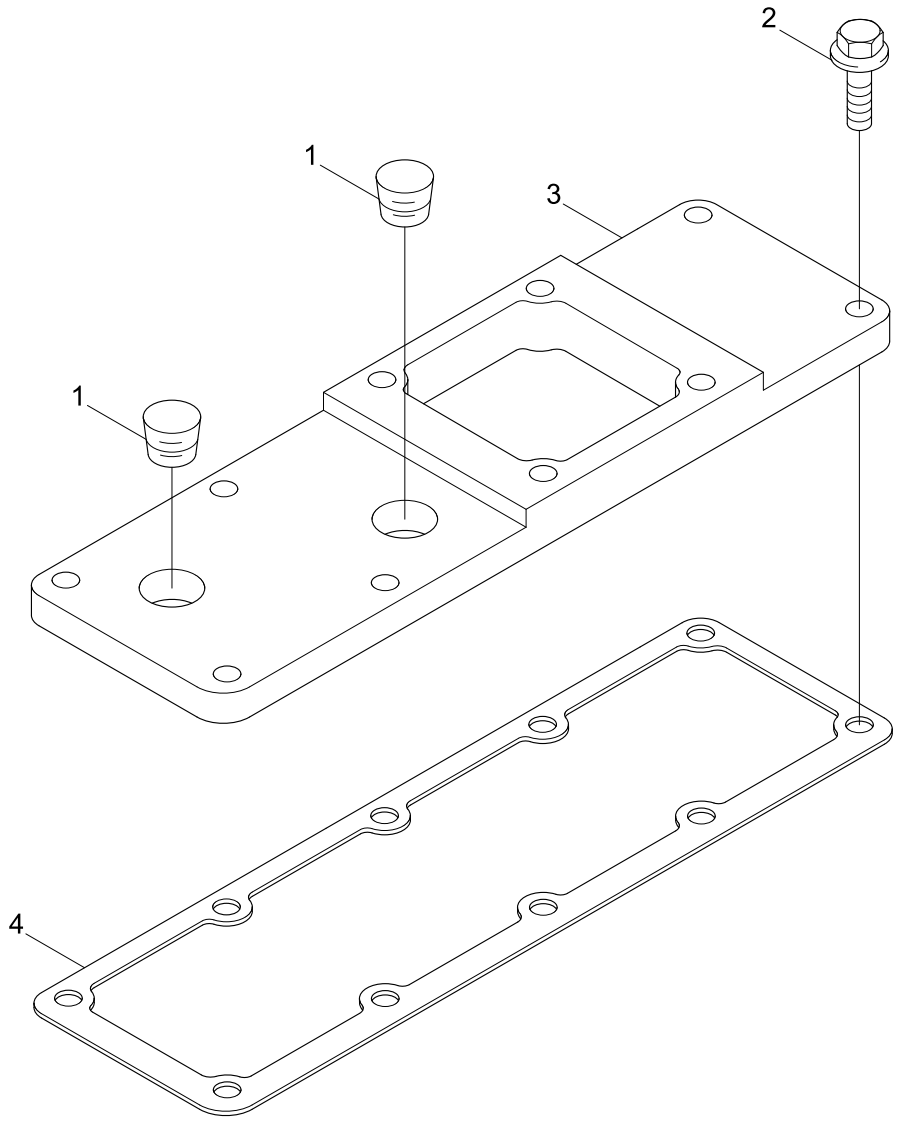

Item	Part_No	IS	Ord	T	Description	Qty	Serial_No	ITC	Remark
*	@				AIR INTAKE MANIFOLD	1	#1001 - #1494	-	NOT
1	3008468				PLUG-PIPE	1			IM9715-02
2	3918109				SCREW	3			
3	3921500				COVER-INT MANIFOLD	1			
4	3938153				GASKET-INT MANI CVR	1			

INJECTOR PLUMBING(#1001-#1494)

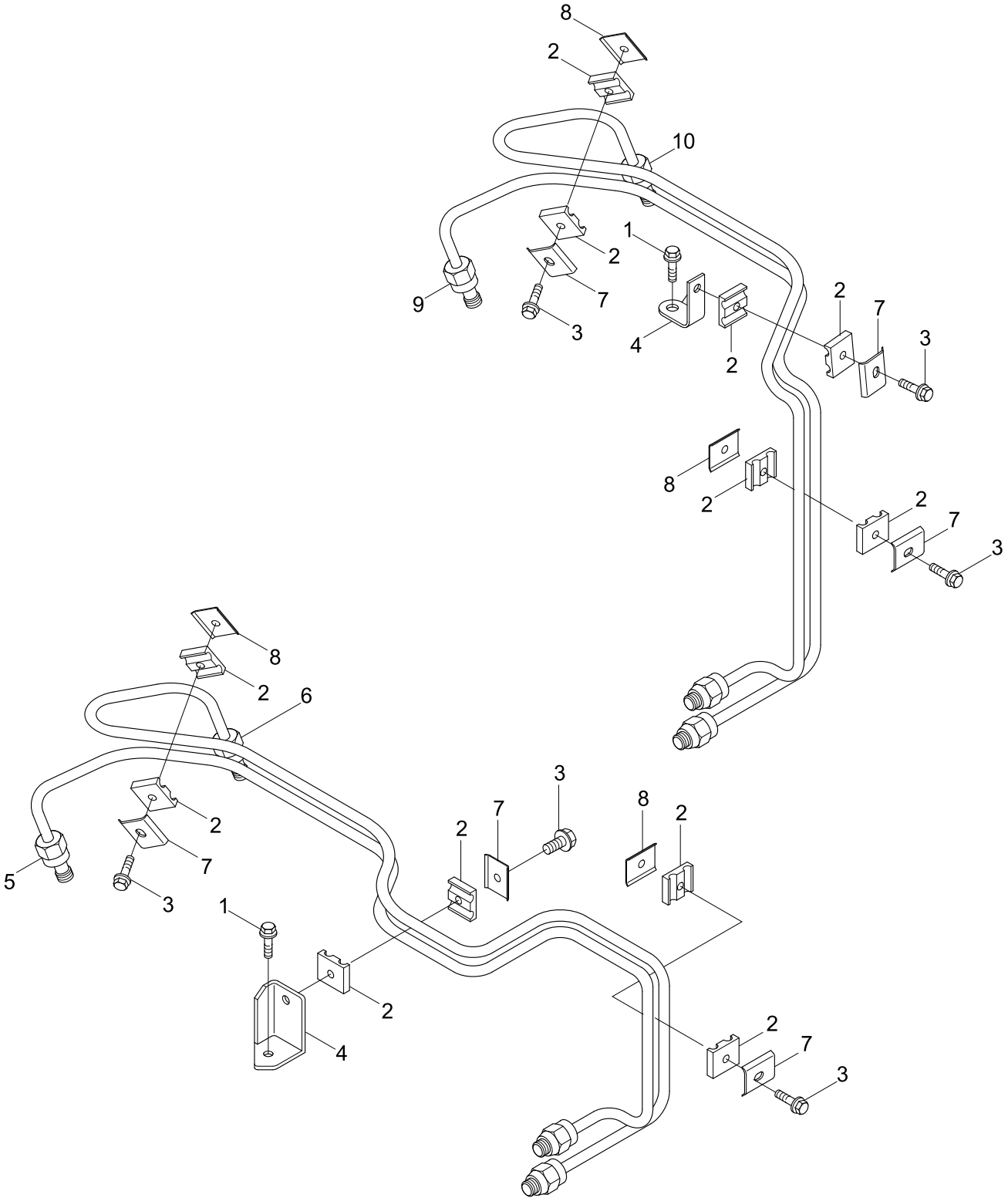

Item	Part_No	IS	Ord	T	Description	Qty	Serial_No	ITC	Remark
*	@				INJECTOR PLUMBING	1	#1001 - #1494	-	NOT
1	3918109				SCREW	2			PP98369
*	3964262				TUBE-INJ FUEL SUPPLY	1			
2	3917746				.ISOLATOR-VIBRATION	6			
3	3920854				.SCREW	3			
4	3935746				.BRACE-TUBE	1			
5	3964259				.TUBE	1			
6	3964261				.TUBE	1			
7	3991276				.BRACE-TUBE	3			
8	3991277				.BRACE-TUBE	2			
*	3964263				TUBE-INJ FUEL SUPPLY	1			
2	3917746				.ISOLATOR-VIBRATION	6			
3	3920854				.SCREW	3			
4	3935746				.BRACE-TUBE	1			
9	3964264				.TUBE	1			
10	3964266				.TUBE	1			
7	3991276				.BRACE-TUBE	3			
8	3991277				.BRACE-TUBE	2			

AIR INTAKE CONNECTION 1(#1001-#1494)

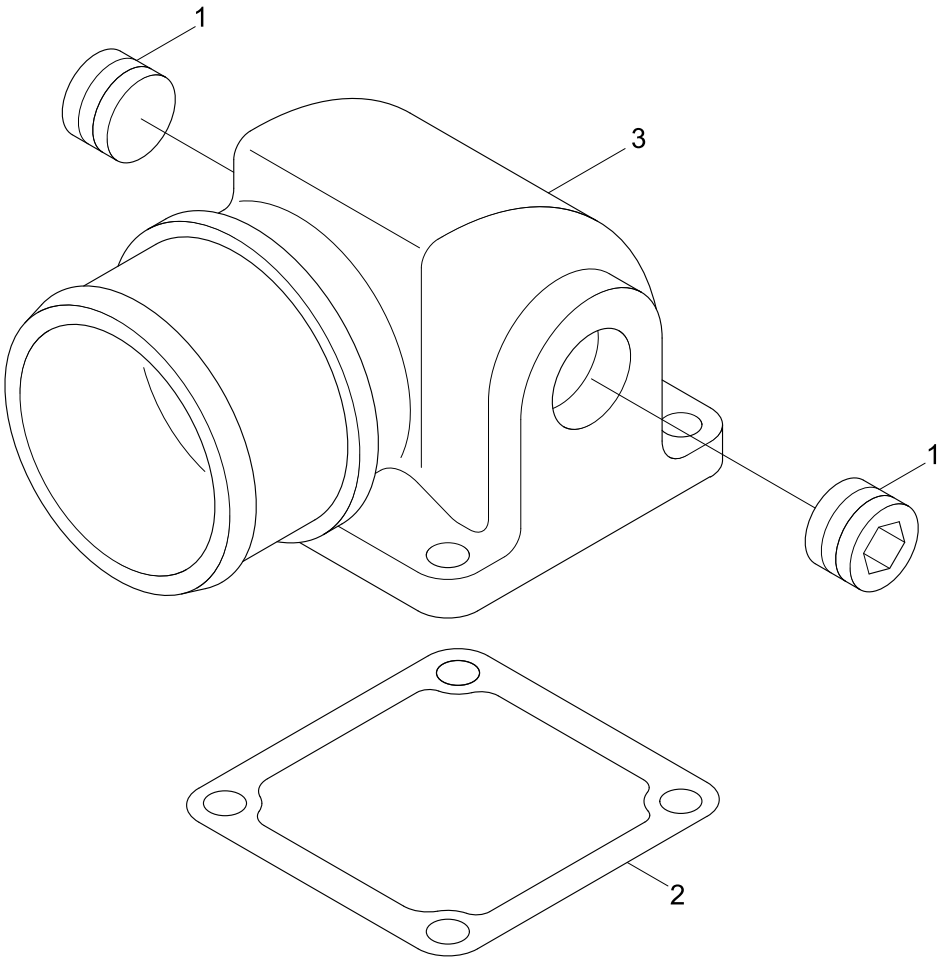

Item	Part_No	IS	Ord	T	Description	Qty	Serial_No	ITC	Remark
*	@				AIR INTAKE CONNECTION 1	1	#1001 - #1494	-	NOT
1	3008469				PLUG-PIPE	2			IC9323
2	3938158				GASKET-CONNECTION	1			
3	3924990				CONNECTION-AIR INTAKE	1			

AIR INTAKE CONNECTION 2(#1001-#1494)

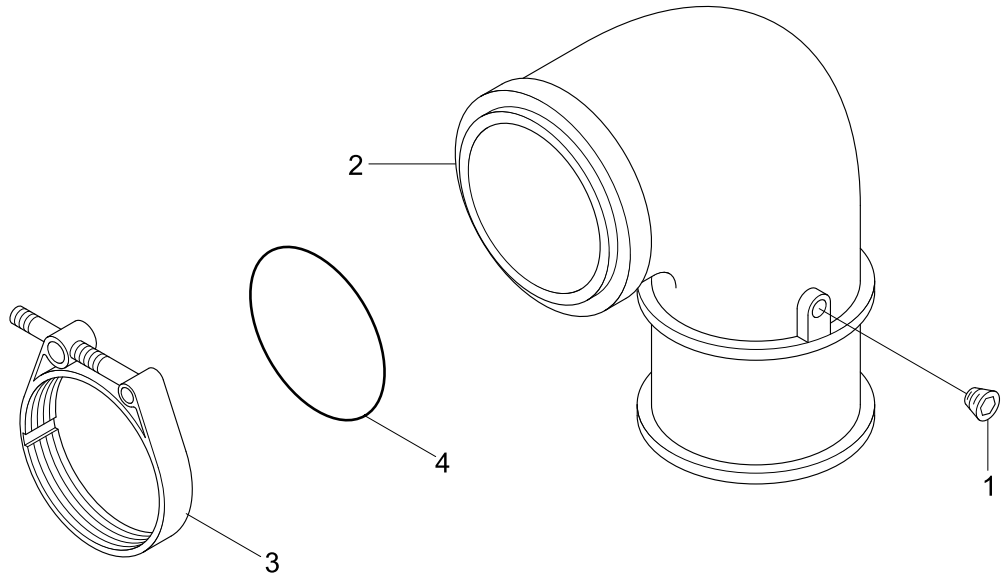

Item	Part_No	IS	Ord	T	Description	Qty	Serial_No	ITC	Remark
*	@				AIR INTAKE CONNECTION 2	1	#1001 - #1494	-	NOT
1	3008465				PLUG-PIPE	1			IT9056
2	3958958				PIPE-AIR TRANSFER	1			
3	3918951				CLAMP-V BAND	1			
4	3918952				O-RING	1			

AIR INTAKE CONNECTION 3(#1001-#1494)

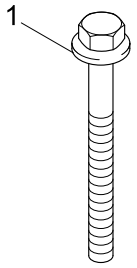

Item	Part_No	IS	Ord	T	Description	Qty	Serial_No	ITC	Remark
*	@				AIR INTAKE CONNECTION 3	1	#1001 - #1494	-	NOT
1	3919864				SCREW-HEX FLANGE	4			IC9736

FLYWHEEL(#1001-#1494)

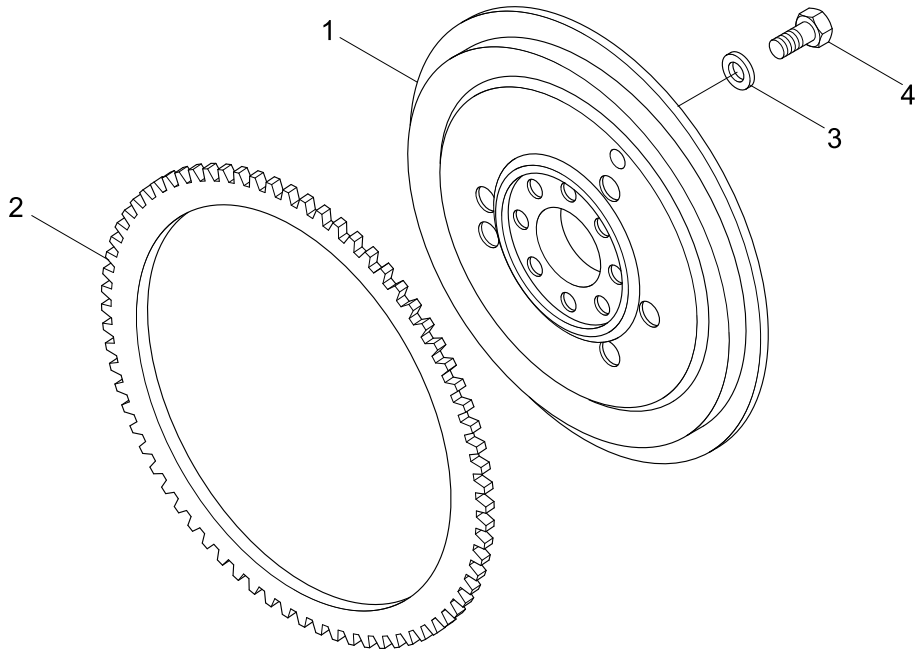

Item	Part_No	IS	Ord	T	Description	Qty	Serial_No	ITC	Remark
*	3282053				FLYWHEEL	1	#1001 - #1494	-	FW9601
N1	3282051				.FLYWHEEL	1	#1001 -	-	NOT
2	3905427				.GEAR-FLYWHEEL RING	1			
3	3900269				WASHER-PLAIN	8			FW9704
4	3901395				SCREW	8			
N	@				NOT INDIVIDUALLY SUPPLIED	AR			NOT

LIFTING BRACKET(#1001-#1494)

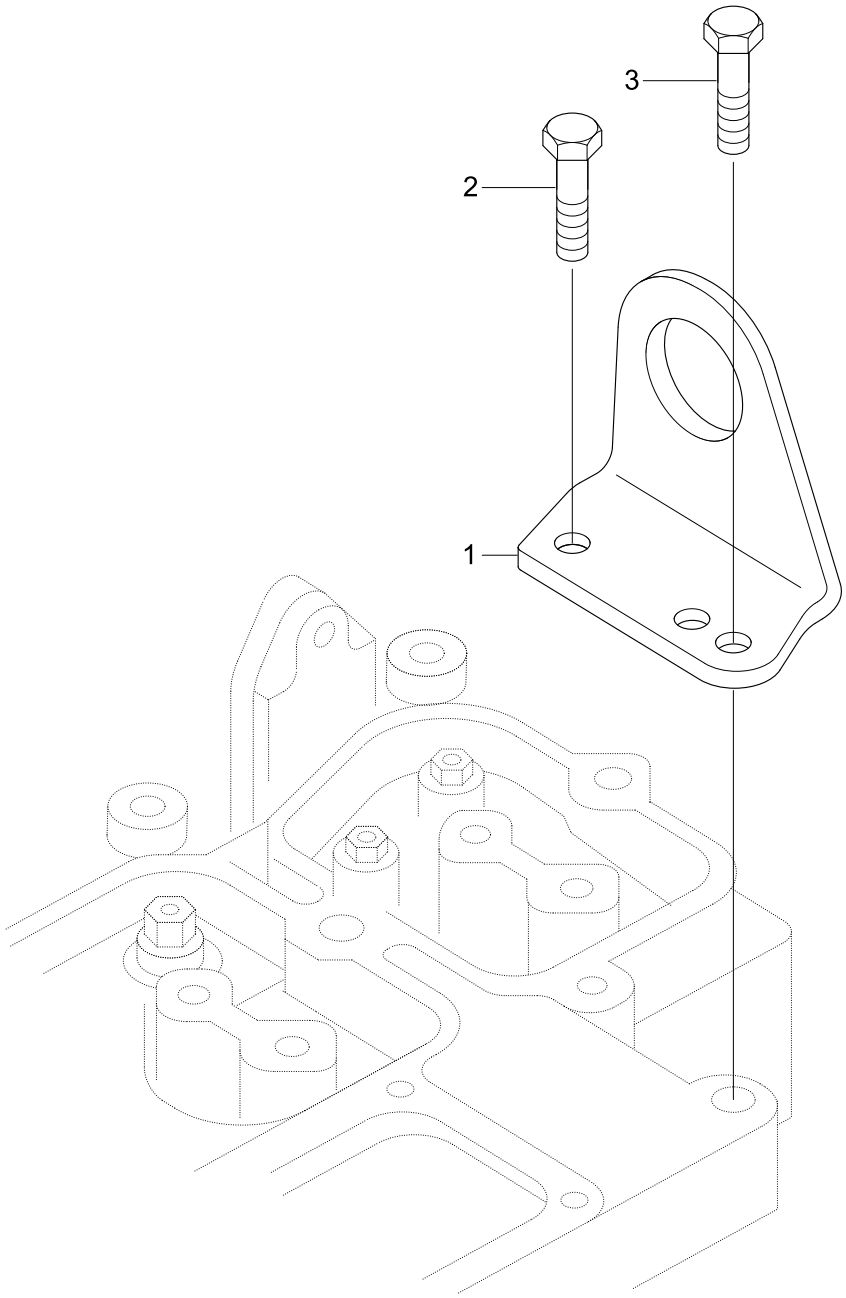

Item	Part_No	IS	Ord	T	Description	Qty	Serial_No	ITC	Remark
*	@				LIFTING BRACKET	1	- #1494	-	NOT
1	3908118				BRACKET-LIFTING	1			LA9082-01
2	3910495				SCREW	1			
3	3944061				SCREW-HEX F/HD CAP	1	#1001 -	-	

LUBRICATING OIL COOLER(#1001-#1494)

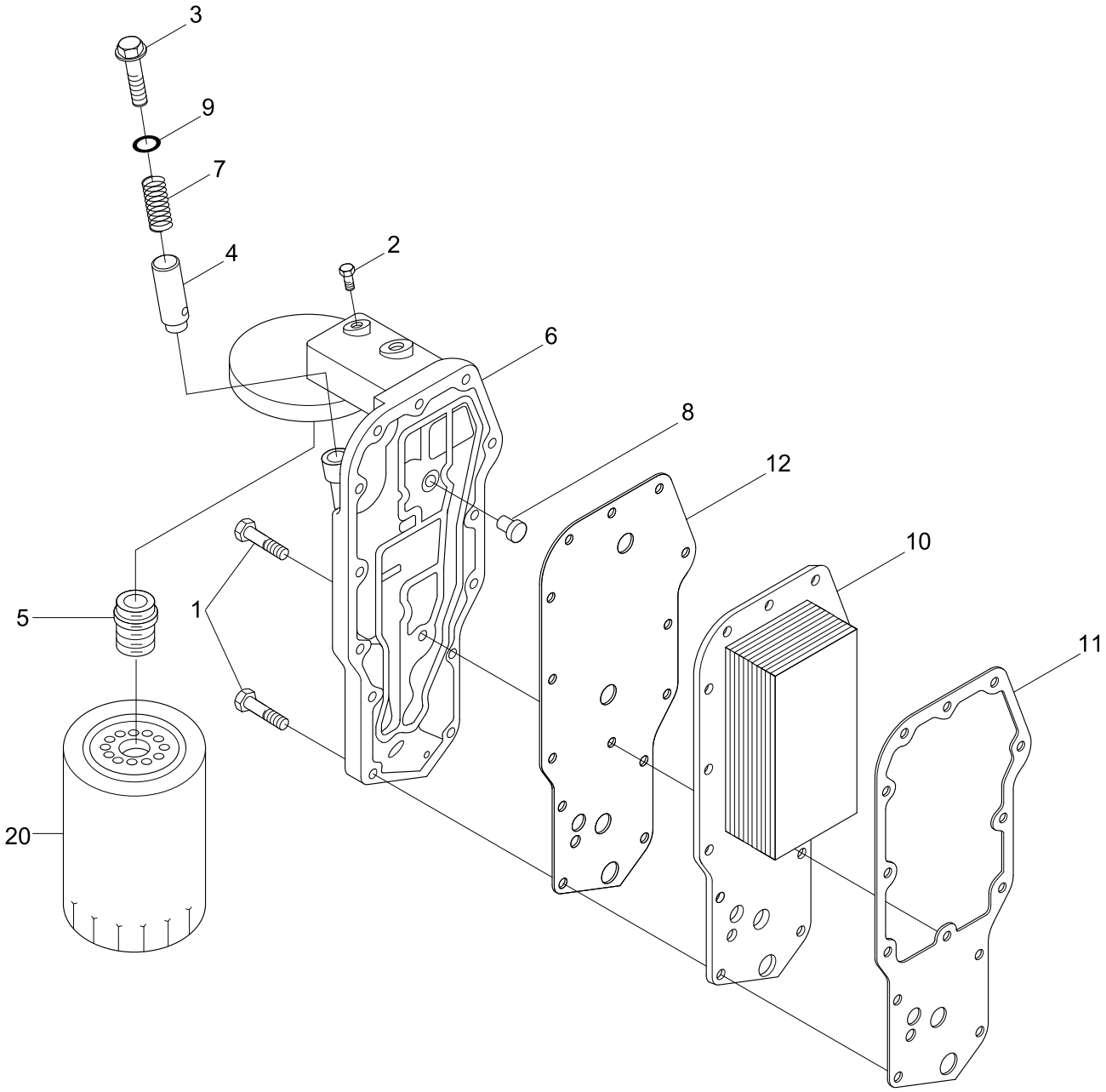

Item	Part_No	IS	Ord	T	Description	Qty	Serial_No	ITC	Remark
*	@				LUBRICATING OIL COOLER	1	- #1494	-	NOT
1	3900632				SCREW	14			LC9372-01
2	3906619				PLUG-PIPE	1			
3	3915787				PLUG-THREADED	1			
4	3918428				PLUNGER	1			
*	3918954				HEAD-LUB OIL FILTER	1			
5	3909355				.ADAPTER-FILTER HEAD	1			
N6	3924338				.HEAD-LUB OIL FILTER	1			NOT
7	3918427				SPRING-CMPR	1			
8	3936365				VALVE	1			
9	3929457				SEAL/O-RING	1			
N10	3957543				CORE-COOLER	1	#1001 -	-	NOT
11	3942914				GASKET-O/COOLER CORE	1			
12	3942915				GASKET-FILTER HEAD	1			
20	3934429				ELEMENT-LUB OIL FILTER	1			LF9100
N	@				NOT INDIVIDUALLY SUPPLIED	AR			NOT

OIL LEVEL GAUGE(#1001-#1494)

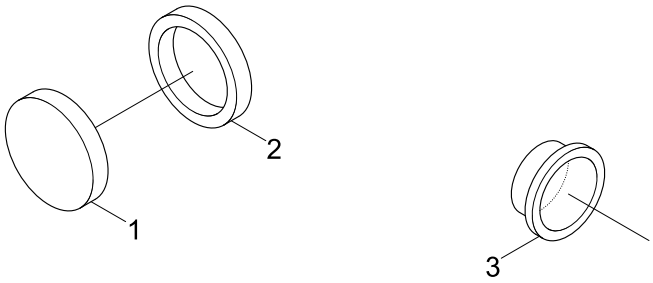

Item	Part_No	IS	Ord	T	Description	Qty	Serial_No	ITC	Remark
*	@				OIL LEVEL GAUGE	1	#1001 - #1494	-	NOT
1	3903463				COVER	1			OB9719
2	3903475				SEAL-RECT RING	1			
3	3900958				PLUG-EXPANSION	1			

LUBRICATING OIL PUMP(#1001-#1494)

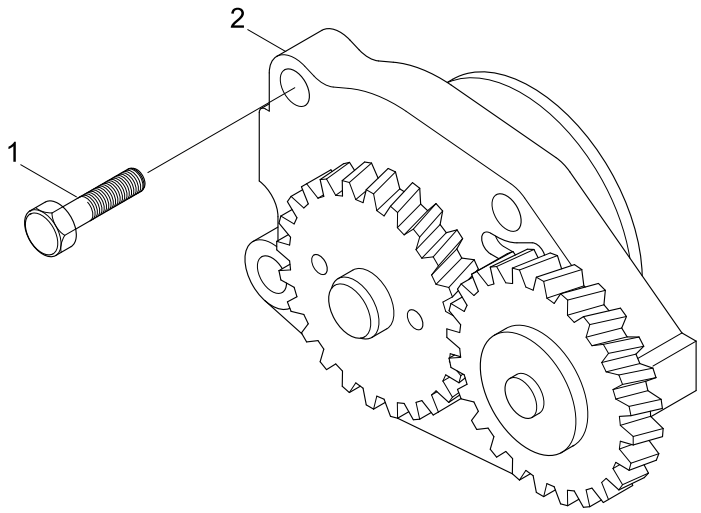

Item	Part_No	IS	Ord	T	Description	Qty	Serial_No	ITC	Remark
*	@				LUBRICATING OIL PUMP	1	#1001 - #1494	-	NOT
1	3937027				PUMP-LUB OIL	1			LP9728
2	3900677				SCREW	4			

FUEL CONTROL PLUMBING(#1001-#1494)

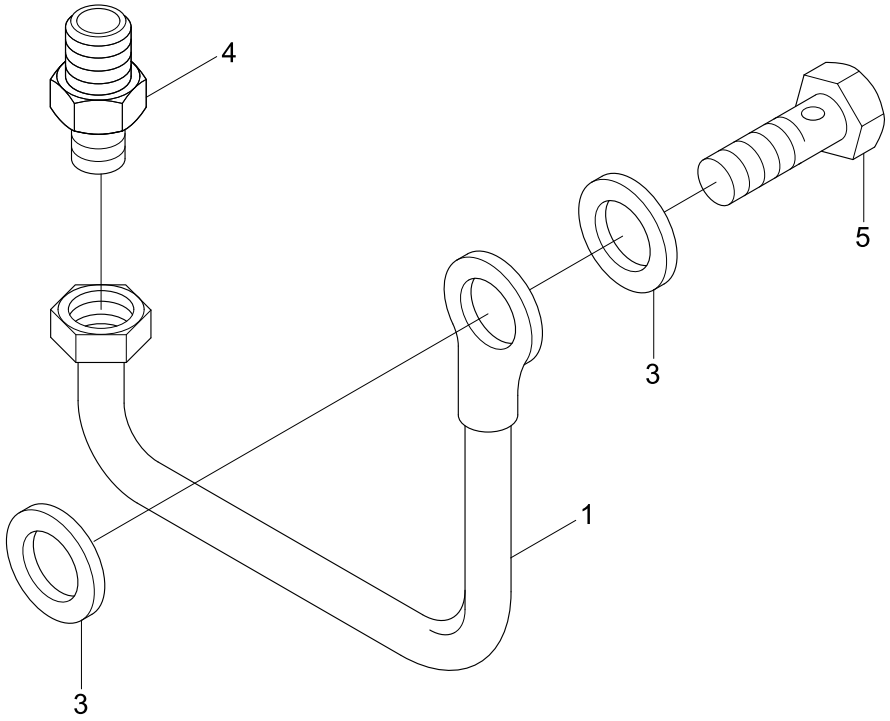

Item	Part_No	IS	Ord	T	Description	Qty	Serial_No	ITC	Remark
*	@				FUEL PLUMBING	1	#1001 - #1494	-	NOT
1	3968150				TUBE-CIR FUEL CONTORL	1			FE9949-03
3	3918188				WASHER-SEALING	2			
4	3920803				CONNECTOR	1			
5	3924724				SCREW	1			

OIL PAN(#1001-#1494)

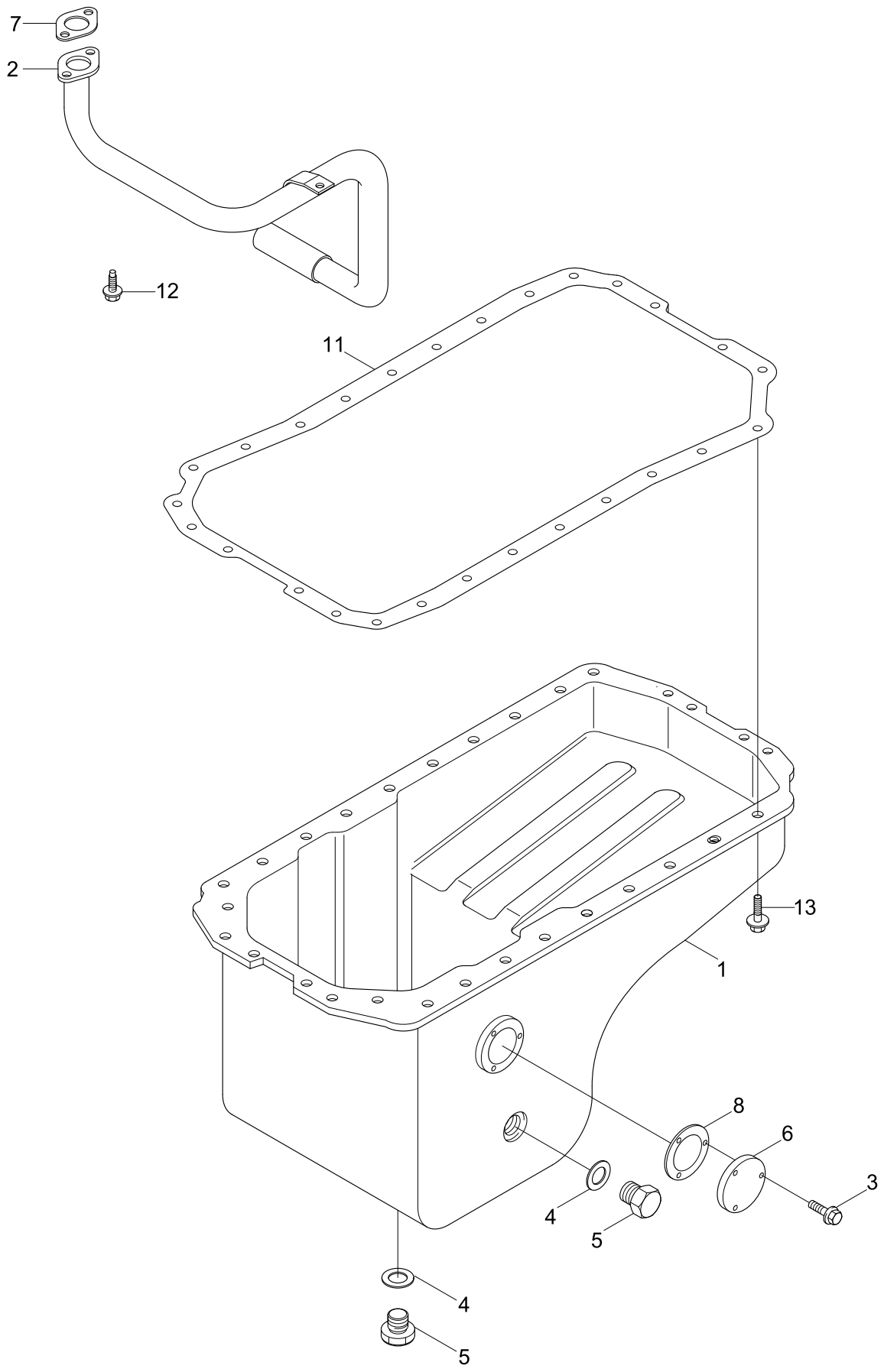

2004.10.10 REV.5

A320

Item	Part_No	IS	Ord	T	Description	Qty	Serial_No	ITC	Remark
*	@				OIL PAN	1	#1001 - #1494	-	NOT
1	3863222				PAN-OIL	1			OP9356-01
2	3863416				CONNECTION-O/SUCTION	1			
3	3900626				SCREW	3			
4	3902425				WASHER-SEALING	2			
5	3924148				PLUG	2			
6	3932513				PLATE-COVER	1			
7	3938157				GASKET-FLANGE	1			
8	3939357				GASKET-COVER	1			
11	3938162				GASKET-OIL PAN	1			OP9749
12	3900630				SCREW-HEX HEAD CAP	1			
13	3920400				SCREW	28			

CONNECTING ROD & PISTON(#1001-#1494)

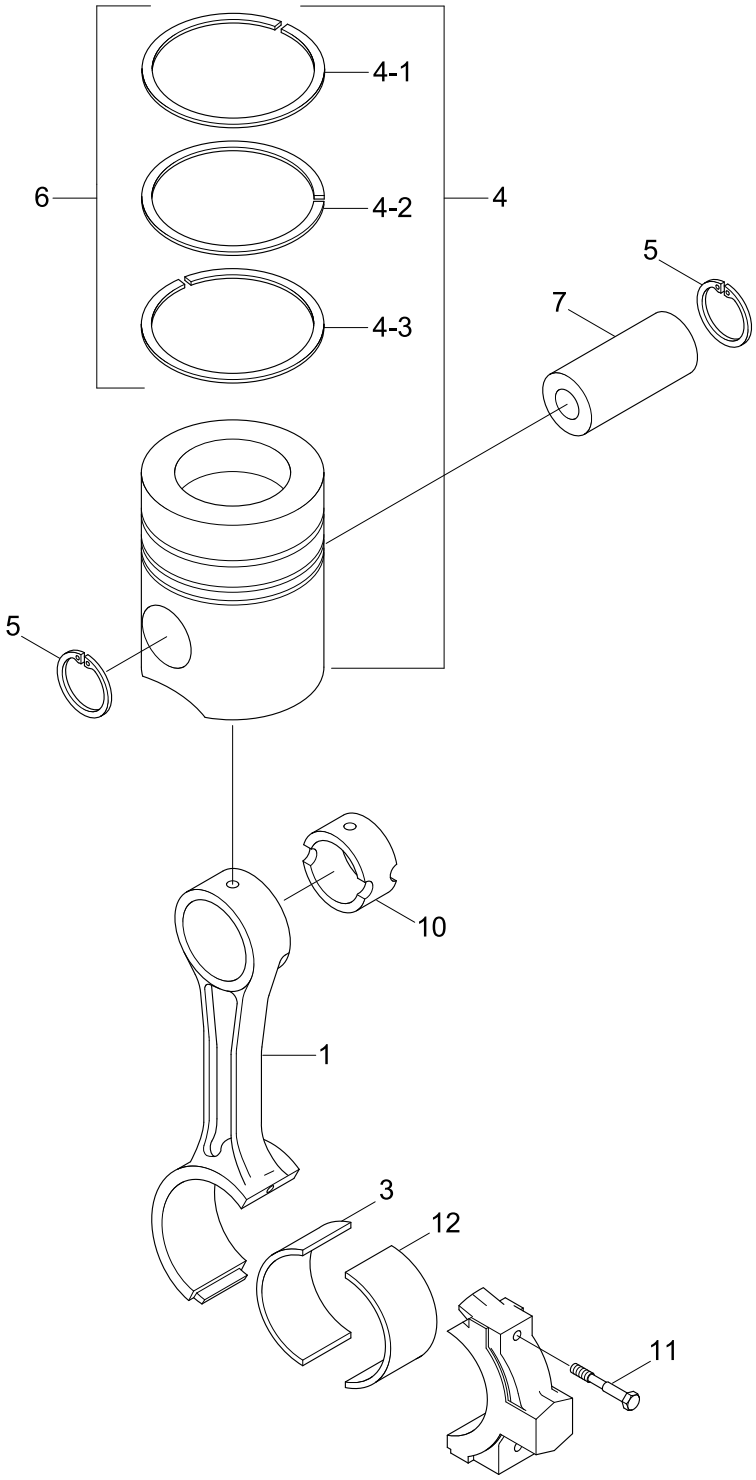

Item	Part_No	IS	Ord	T	Description	Qty	Serial_No	ITC	Remark
*	@				CONNECT ROD & PISTON	1	#1001 - #1494	-	NOT
1	3954658				ROD-CONNECTING	4			PP8239
N*	3954657				.ROD-CONNECTING	1			NOT
3	3939859				BEARING-C/ROD(STD)	2			
	3901171				BEARING-C/ROD(0.25)	AR			
	3901172				BEARING-C/ROD(0.50)	AR			
	3901173				BEARING-C/ROD(0.75)	AR			
	3901174				BEARING-C/ROD(1.00)	AR			
4	3802747				KIT-ENGINE PISTON	4			
N*	3928674				.PISTON-ENGINE	1			NOT
4-1	3902286				.RING-COMPRESSION	1			
4-2	3937392				.RING-COMPRESSION	1			
4-3	3932520				.RING-OIL PISTON	1			
5	3920691				.RING-RETAINING	2			
6	3802421				.SET-PISTON RING	1			
7	3934047				PIN-PISTON	4			
4	3802764				KIT-ENG PISTON	4			
*N	3928674				.PISTON-ENGINE	1			NOT
5	3920691				.RING-RETAINING	2			
6	3802422				.SET-P/RING(0.50 O/S)	1			
4	3802765				KIT-ENG PISTON	4			
*N	3928675				.PISTON-ENGINE	1			NOT
5	3920691				.RING-RETAINING	2			
6	3802423				.SET-PISTON RING	1			
10	4891178				BUSHING	1			

Item	Part_No	IS	Ord	T	Description	Qty	Serial_No	ITC	Remark
11	4891179				SCREW	2			
12	4893693				BEARING-C/ROD(STD)	4			

CAMSHAFT(#1001-#1494)

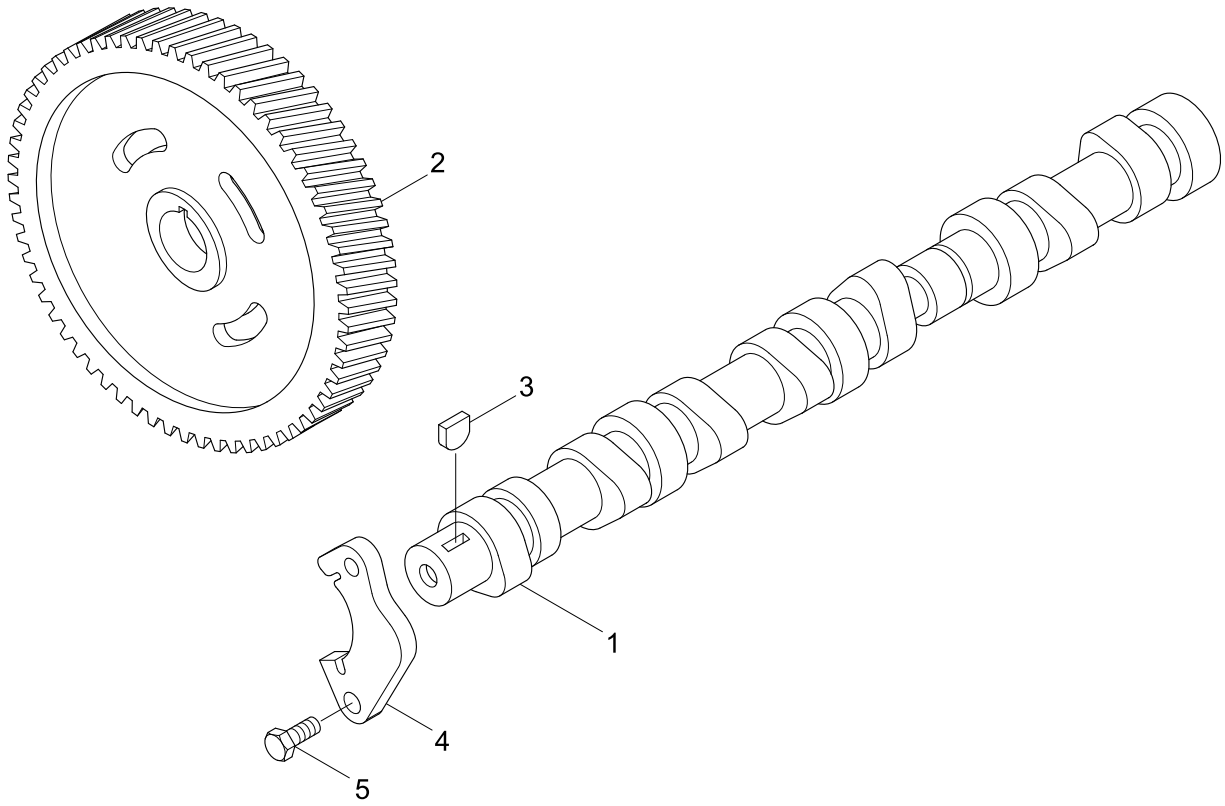

Item	Part_No	IS	Ord	T	Description	Qty	Serial_No	ITC	Remark
*	@				CAMSHAFT	1	#1001 - #1494	-	NOT
N1	3929885				CAMSHAFT	1			NOT
2	3929028				GEAR-CAMSHAFT	1			
3	3902332				KEY-PLAIN WOODRUFF	1			
4	3927155				SUPPORT	1			
5	3900227				SCREW	2			
N	@				NOT INDIVIDUALLY SUPPLIED	AR			NOT

FUEL INJECTOR(#1001-#1494)

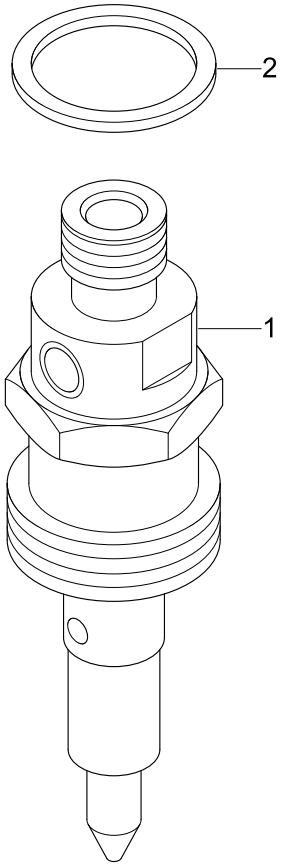

Item	Part_No	IS	Ord	T	Description	Qty	Serial_No	ITC	Remark
*	@				FUEL INJECTOR	1	#1001 - #1494	-	NOT
1	3957729				INJECTOR-FUEL	4			PP8239
2	3909356				SEAL-RECT RING	1			

CYLINDER HEAD(#1001-#1494)

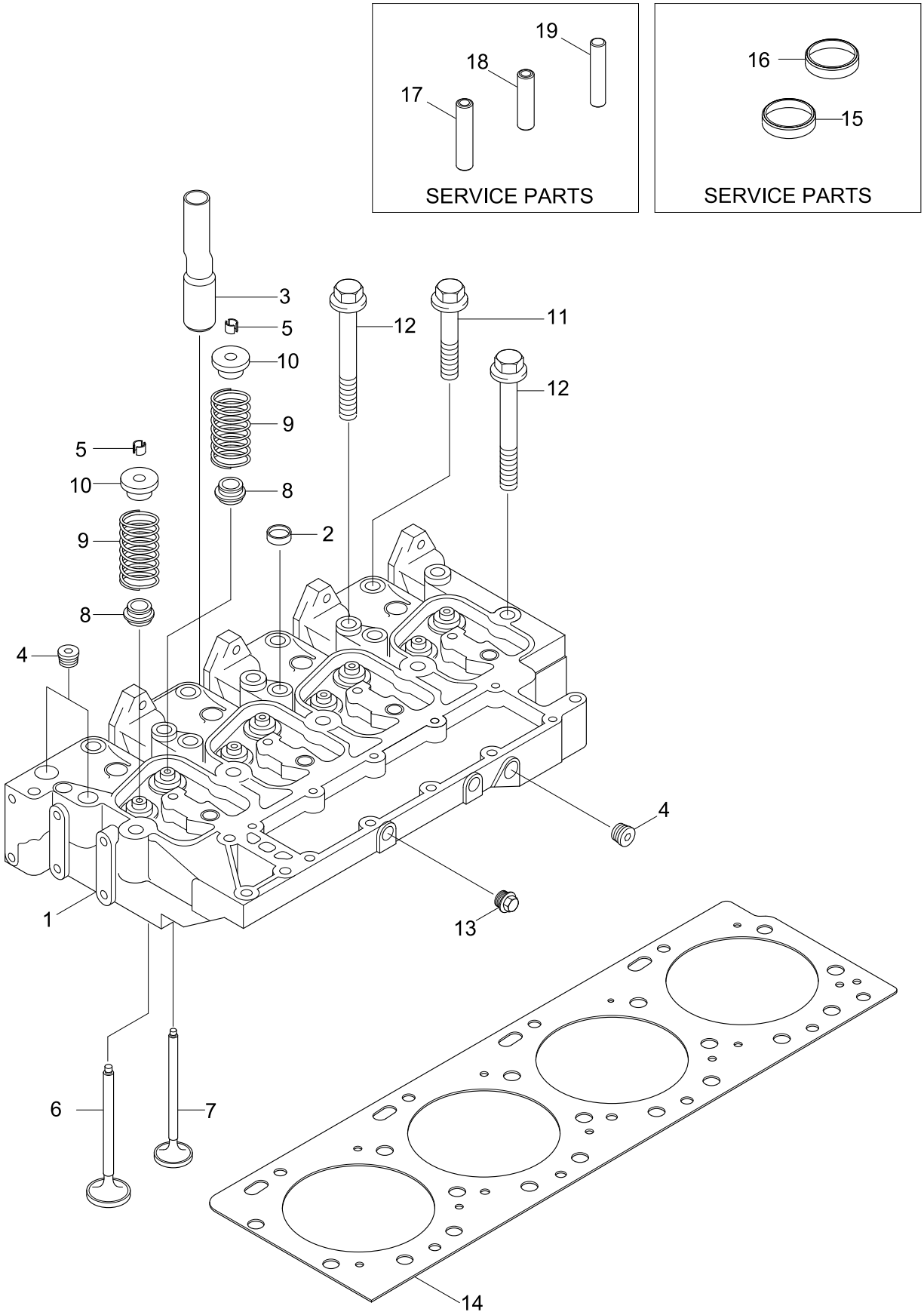

Item	Part_No	IS	Ord	T	Description	Qty	Serial_No	ITC	Remark
*	@				CYLINDER HEAD	1	#1001 - #1494	-	NOT
*N	3966448				HEAD-CYLINDER	1			NOT
N1	3966447				.HEAD-CYLINDER	1			NOT
2	3812092				..PLUG-EXPANSION	3			
3	3934712				.TUBE-AFTERCOOLER	1			
4	3008468				PLUG-PIPE	4			
*	3802355				VALVE-INTAKE	4			
5	3900250				.COLLET-VALVE	8			
N6	3920867				.VALVE-INTAKE	4			NOT
*	3802356				VALVE-EXHAUST	4			
5	3900250				.COLLET-VALVE	8			
7	3920868				.VALVE-EXHAUST	4			
8	3957912				SEAL-VALVE	8			
9	3932453				SPRING-VALVE	8			
10	3957913				RETAINER-VALVE SPRING	8			
11	3920779				SCREW	4			
12	3920780				SCREW	10			
13	3906619				PLUG-PIPE	2			
14	3283569				GASKET-CYL HEAD	1			
15	3925176				INSERT-VALVE, EXHAUST	AR			SERVICE PART
16	3925177				INSERT-VALVE, INTAKE	AR			SERVICE PART
17	3904408				GUIDE-V/STEM, 60.5	AR			SERVICE PART
18	3904409				GUIDE-V/STEM, 51.75	AR			SERVICE PART
19	3906206				GUIDE-V/STEM, THIN WALL	AR			SERVICE PART

STARTING MOTOR AND MOUNTING(#1001-#1494)

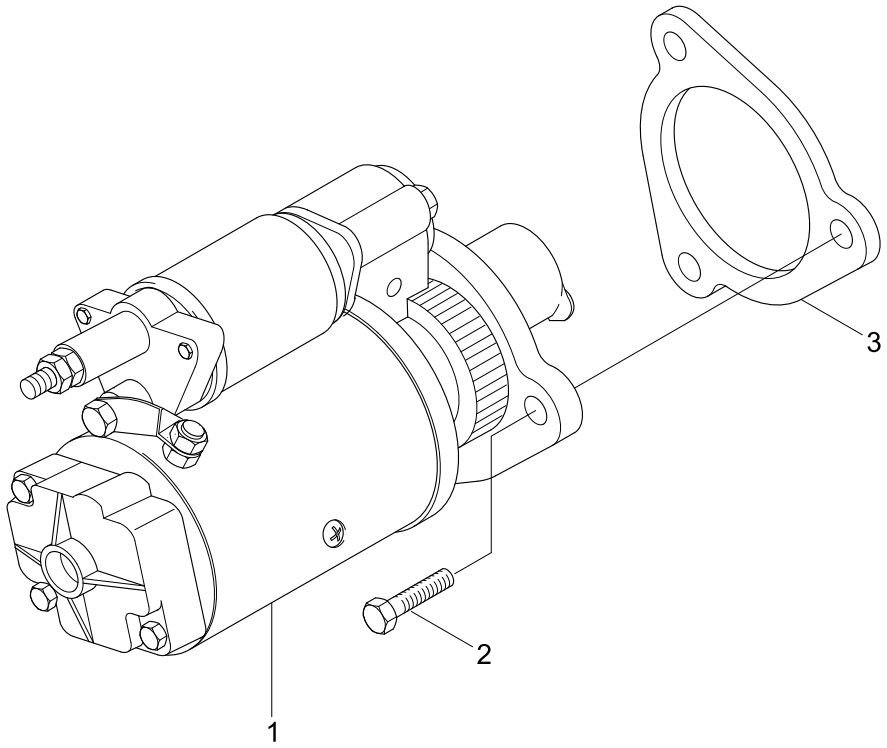

Item	Part_No	IS	Ord	T	Description	Qty	Serial_No	ITC	Remark
*	@				S/MOTOR & MOUNTING	1	- #1494	-	NOT
1	3957593				MOTOR-STARTING	1			ST9265
2	3903834				SCREW-TWELVE P/CAP	2			SM9792
3	3965057				SPACER-STARTING MOTOR	1	#1001 -	-	

VALVE COVER(#1001-#1494)

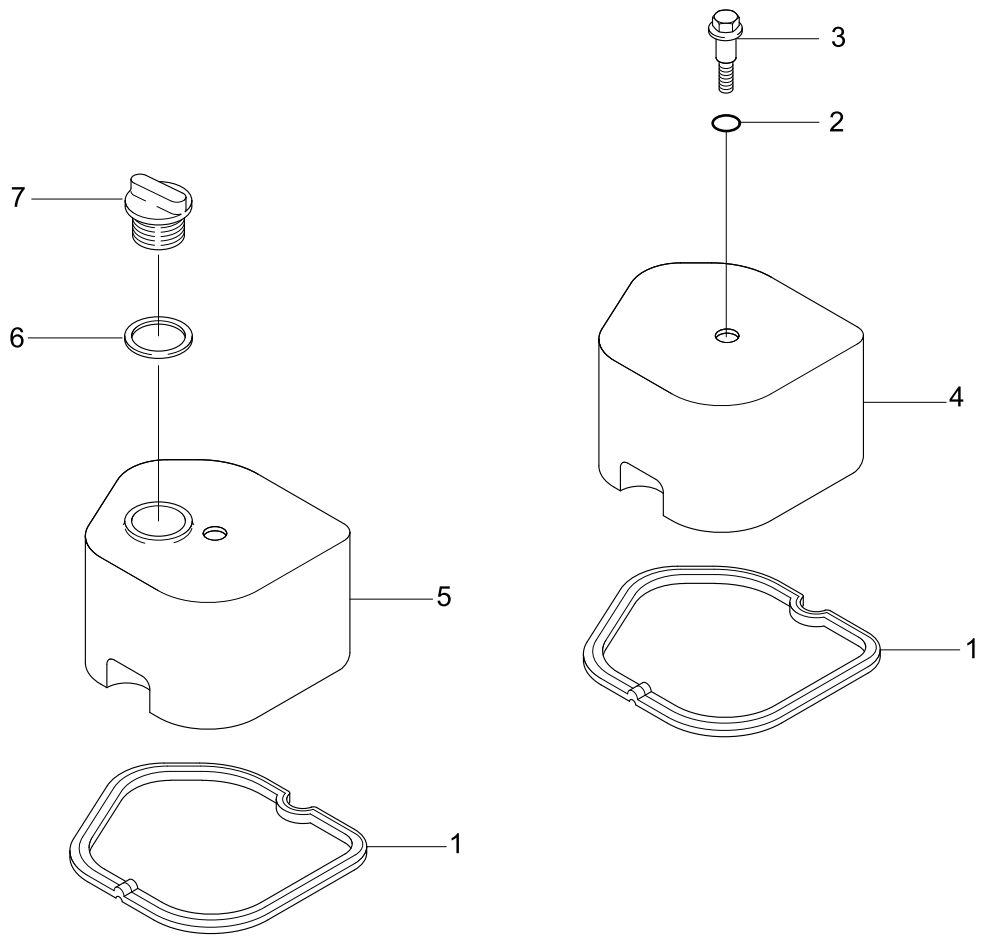

Item	Part_No	IS	Ord	T	Description	Qty	Serial_No	ITC	Remark
*	@				VALVE COVER	1	#1001 - #1494	-	NOT
1	3930906				GASKET-VALVE COVER	4			VC9781
2	3935449				ISOLATOR	4			
3	3907049				SCREW	4			
4	3928404				COVER-VALVE	3			
5	3928405				COVER-VALVE	1			
6	3936876				SEAL-RECT RING	1			
7	3901895				CAP-FILLER	1			

EXHAUST PLUMBING(#1001-#1494)

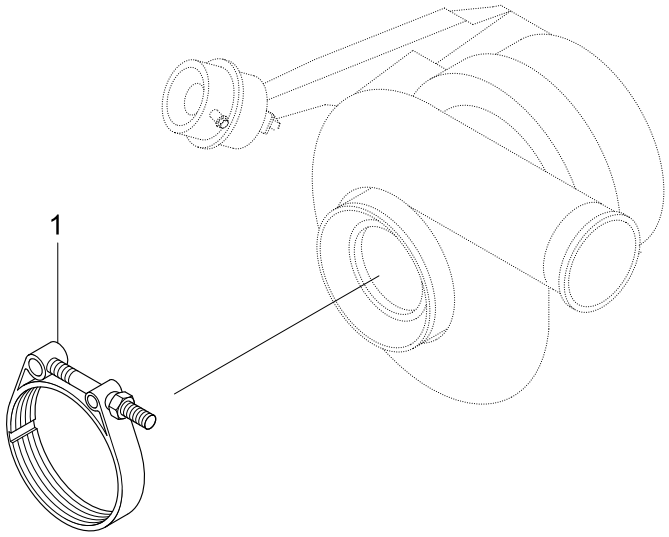

Item	Part_No	IS	Ord	T	Description	Qty	Serial_No	ITC	Remark
*	@				EXHAUST PLUMBING	1	#1001 - #1494	-	NOT
1	3903652				CLAMP-V BAND	1			XS9254

TURBOCHARGER(#1001-#1494)

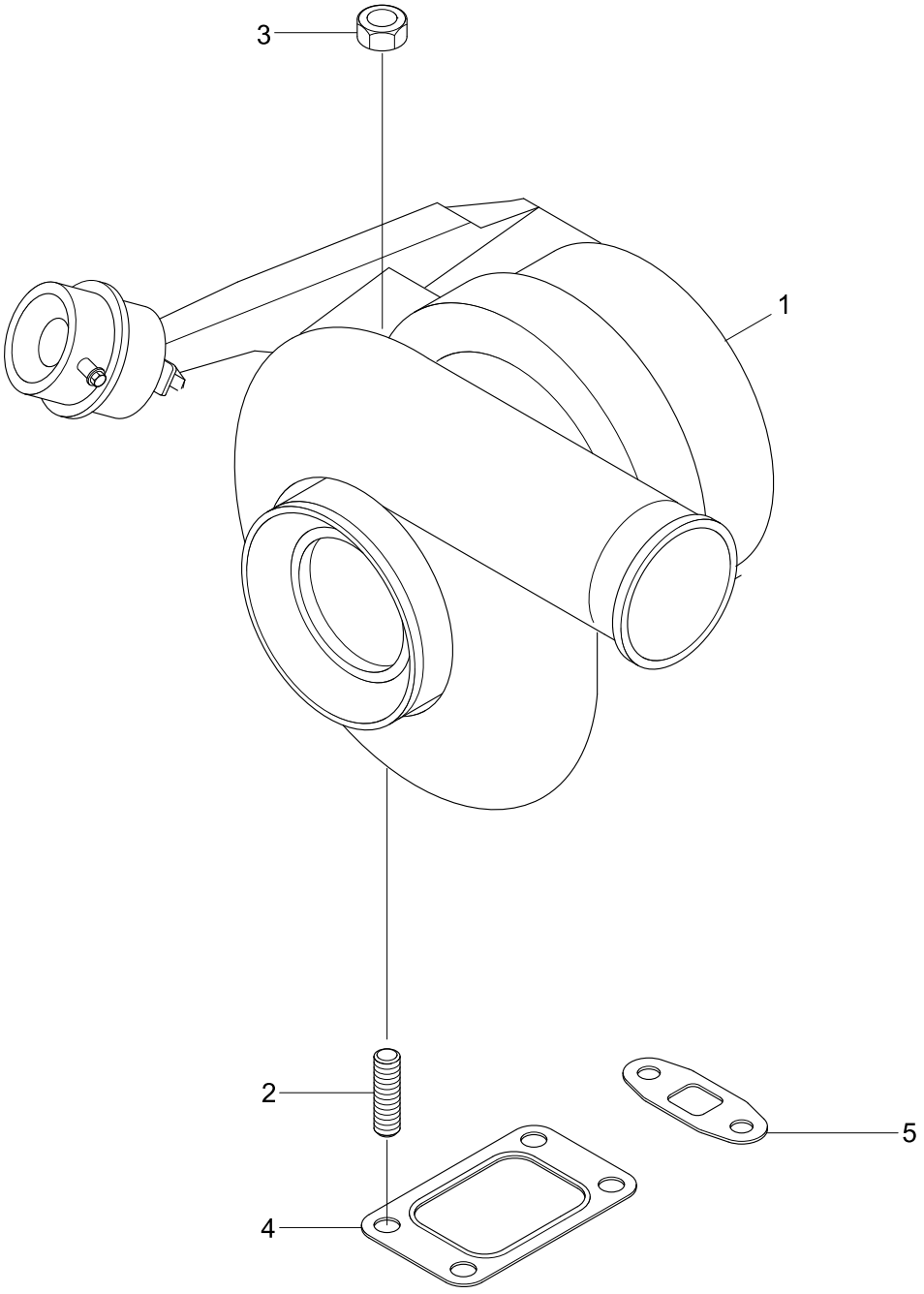

Item	Part_No	IS	Ord	T	Description	Qty	Serial_No	ITC	Remark
*	@				TURBOCHARGER	1	#1001 - #1494	-	NOT
	4089320				KIT-TURBOCHARGER	1			PP98300
N1	3598543				TURBOCHARGER	1			NOT
2	3818823				STUD	4			
3	3818824				NUT	4			
4	3919369				GASKET-TURBOCHARGER	1			
5	3937706				GASKET-OIL DRAIN	1			

TURBOCHARGER LOCATION 1(#1001-#1494)

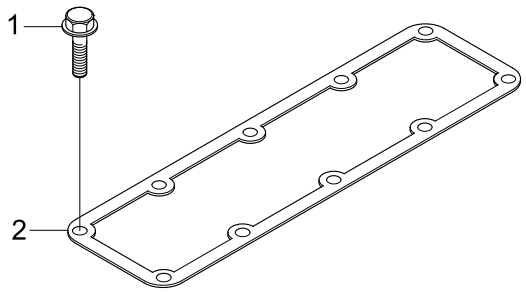

Item	Part_No	IS	Ord	T	Description	Qty	Serial_No	ITC	Remark
*	@				TURBOCHARGER	1	#1001 - #1494	-	NOT
1	3930249				SCREW	8			TB97053-01
2	3927154				GASKET-EXH MANIFOLD	4			

TURBOCHARGER LOCATION 2(#1001-#1494)

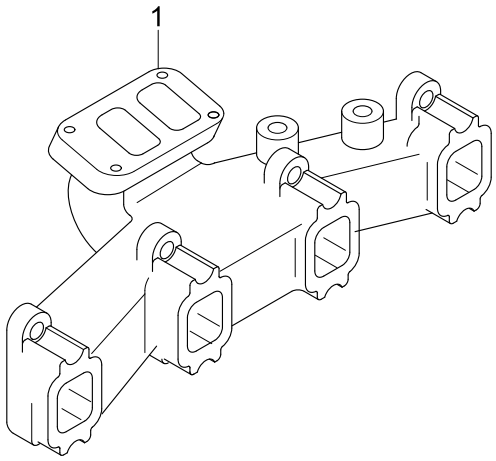

Item	Part_No	IS	Ord	T	Description	Qty	Serial_No	ITC	Remark
*	@				TURBOCHARGER	1	#1001 - #1494	-	NOT
1	3901635				MANIFOLD-EXH	1			TB97054

TURBOCHARGER PLUMBING(#1001-#1494)

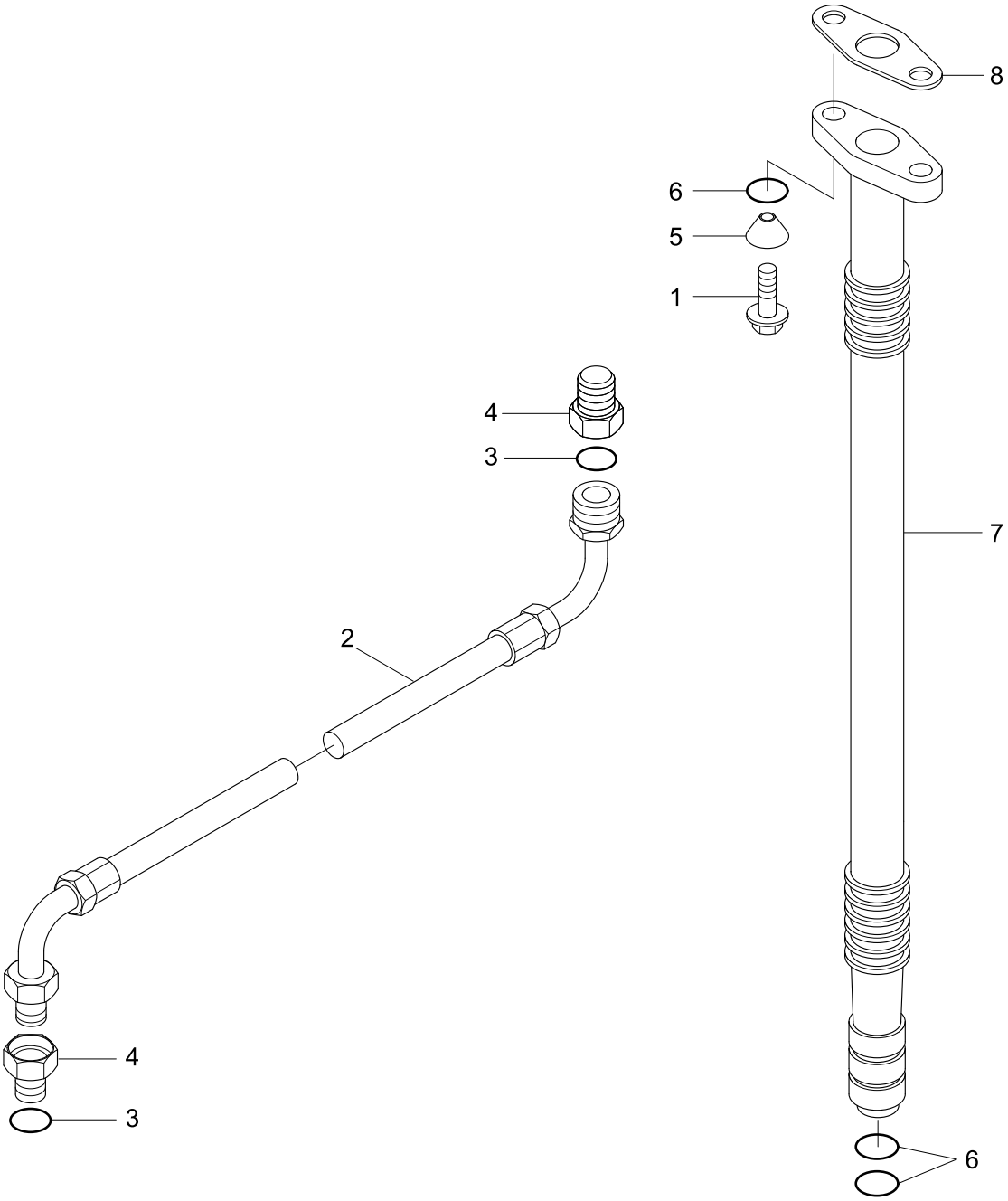

Item	Part_No	IS	Ord	T	Description	Qty	Serial_No	ITC	Remark
*	@				TURBOCHARGER PLUMBING	1	#1001 - #1494	-	NOT
1	3900630				SCREW-HEX HEAD CAP	2			TP97168
2	3909545				HOSE-FLEXIBLE	1			
*	3919687				CONNECTOR-FEMALE	2			
3	3037236				.SEAL/O-RING	1			
N4	3284244				.CONNECTOR	1			NOT
5	3924389				WASHER	2			
*	3934084				CONNECTION-TUR DRAIN	1			
6	3928624				.SEAL/O-RING	2			
N7	3934091				.CONNECTION-TUR DRAIN	1			NOT
8	3937706				GASKET-OIL DRAIN	1			
N	@				NOT INDIVIDUALLY SUPPLIED	AR			NOT

WATER PUMP(#1001-#1494)

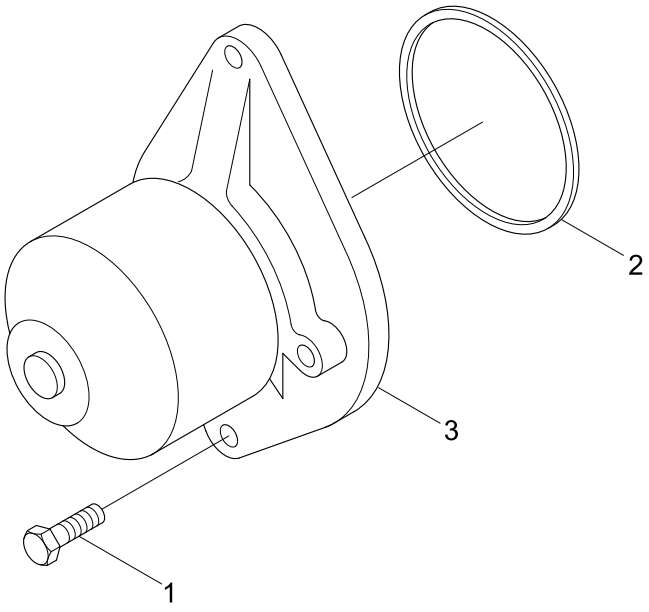

Item	Part_No	IS	Ord	T	Description	Qty	Serial_No	ITC	Remark
*	@				WATER PUMP	1	#1001 - #1494	-	NOT
1	3941981				SCREW	2			WP9950
*	3286277				KIT-WATER PUMP	1			
2	3906698				.SEAL-RECT RING	1			
N3	3285411				.PUMP-WATER	1			NOT
N	@				NOT INDIVIDUALLY SUPPLIED	AR			NOT

WATER INLET CONNECTION(#1001-#1494)

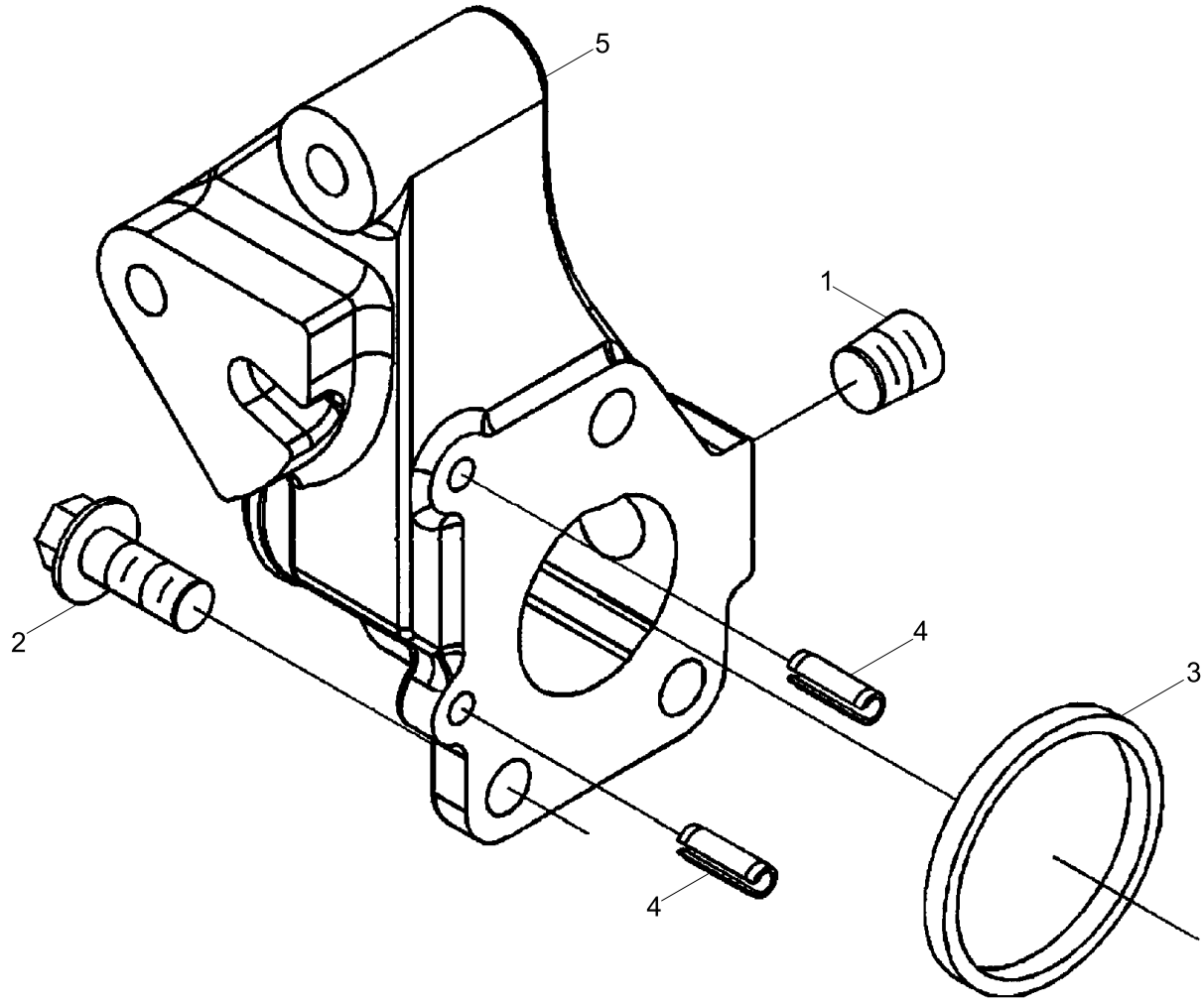

Item	Part_No	IS	Ord	T	Description	Qty	Serial_No	ITC	Remark
*	@				WATER INLET CONNECTION	1	#1001 - #1494	-	NOT
1	3008468				PLUG-PIPE	1			WI9178
2	3902460				SCREW-HEX HEAD CAP	3			
3	3906697				SEAL-RECT RING	1			
*	3943990				CONNECTION	1			
4	131584				.PIN-ROLL	2			
N5	3943991				.CONNECTION	1			NOT
N	@				NOT INDIVIDUALLY SUPPLIED	AR			NOT

OIL LEVEL GAUGE(#1001-#1494)

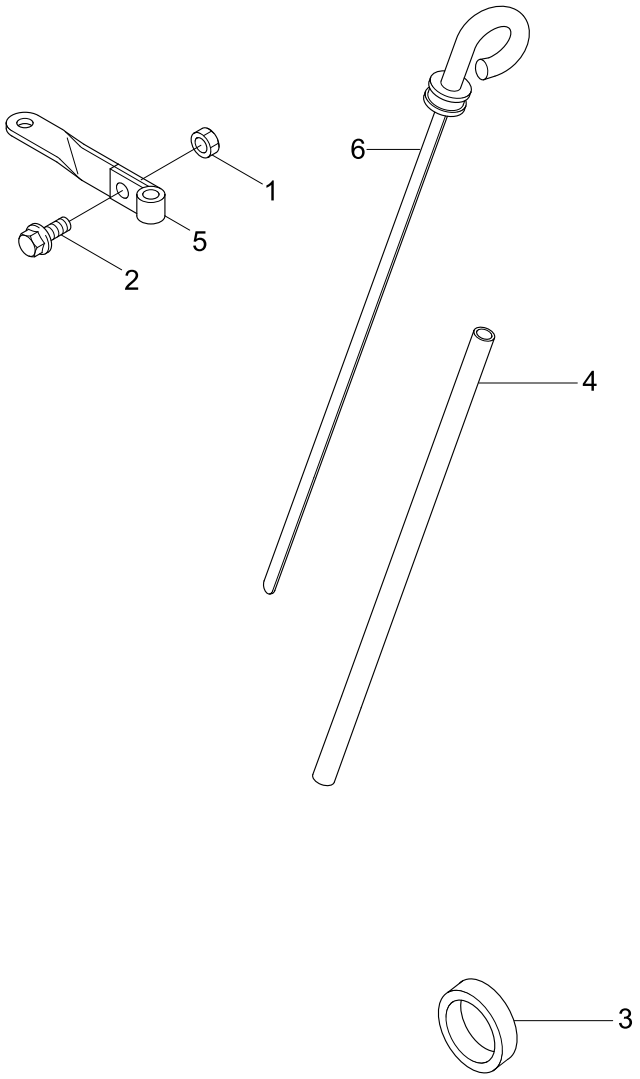

Item	Part_No	IS	Ord	T	Description	Qty	Serial_No	ITC	Remark
*	@				OIL LEVEL GAUGE	1	#1001 - #1494	-	NOT
1	3900240				NUT	1			LG9458
2	3925883				SCREW-HEX HEAD CAP	1			
3	3900955				PLUG-EXPANSION	1			
4	3283538				TUBE-OIL GAUGE	1			
5	3284320				BRACE-TUBE	1			
6	3283804				DIPSTICK	1			

FUEL SHUTOFF VALVE(#1001-#1494)

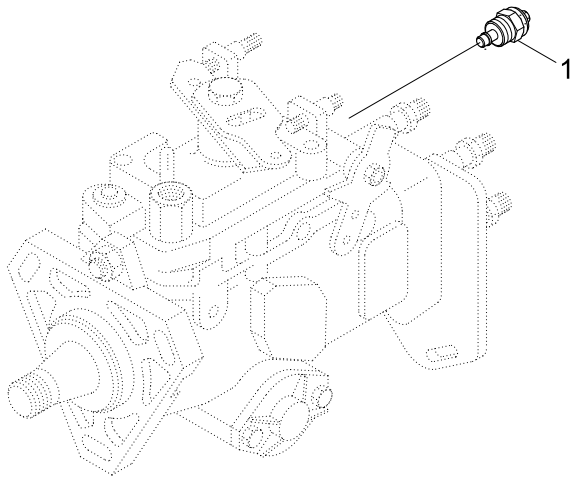

Item	Part_No	IS	Ord	T	Description	Qty	Serial_No	ITC	Remark
*	@				FUEL SHUTOFF VALVE	1	#1001 - #1494	-	NOT
1	3903576				KIT-SOLENOID	1			FV9294

FUEL TRANSFER PUMP(#1001-#1494)

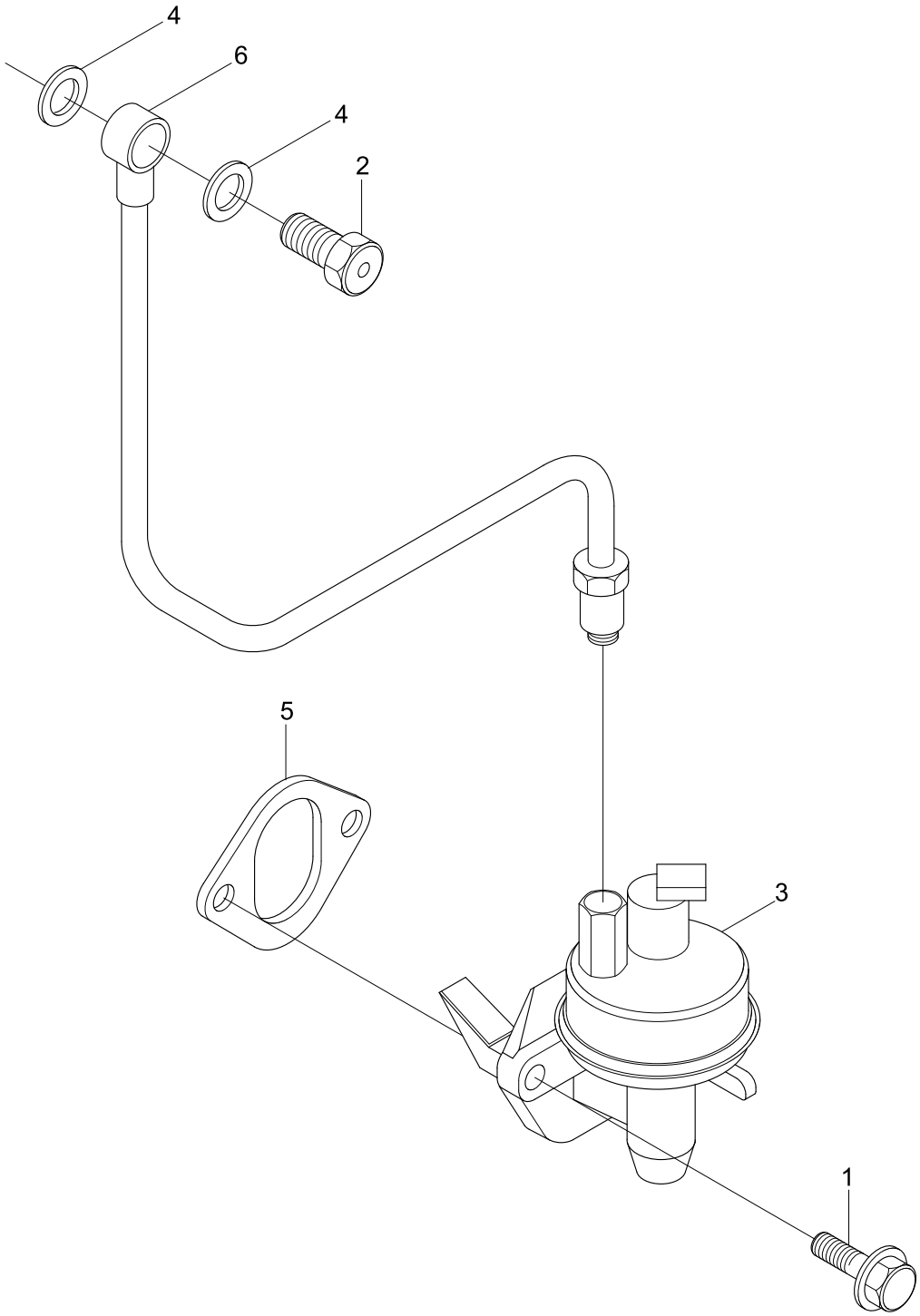

Item	Part_No	IS	Ord	T	Description	Qty	Serial_No	ITC	Remark
*	@				FUEL TANSFER PUMP	1	#1001 - #1494	-	NOT
1	3900631				SCREW-HEX HEAD CAP	2			FS9752-02
2	3916361				SCREW	1			
3	3966154				PUMP-FUEL TRANSPER	1			
4	3963983				WASHER-SEALING	2			
5	3939258				GASKET-COVER PLATE	1			
6	3964473				TUBE-FUEL	1			

FUEL PLUMBING(#1001-#1494)

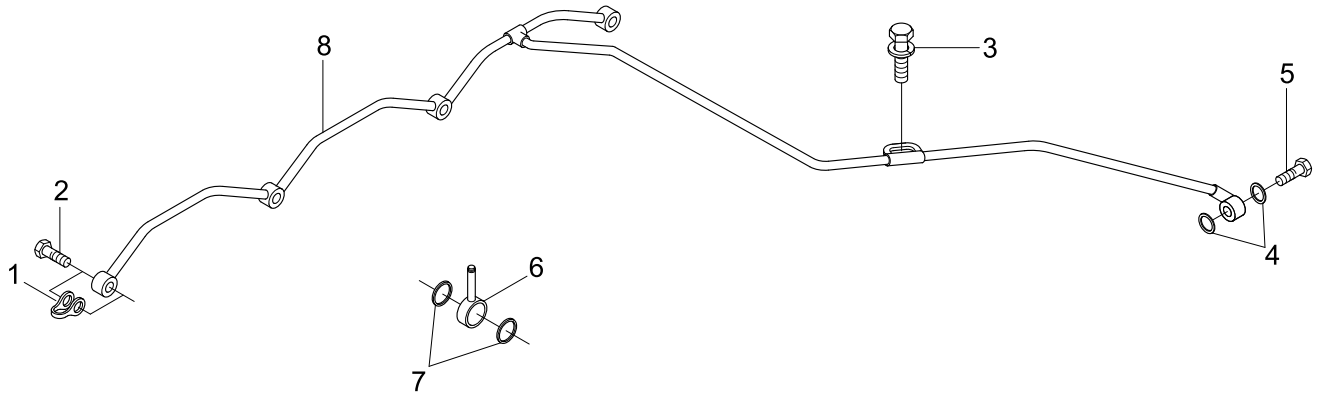

Item	Part_No	IS	Ord	T	Description	Qty	Serial_No	ITC	Remark
*	@				FUEL PLUMBING	1	#1001 - #1494	-	NOT
1	3903380				SEAL-BANJO CONN	4			FT9023-01
2	3905307				SCREW-BANJO CONN	4			
3	3918109				SCREW	1			
4	3918188				WASHER-SEALING	2			
5	3924726				VALVE-CHECK	1			
6	3934476				CONNECTOR-BANJO	1			
7	3935171				WASHER-SEALING	2			
8	3966863				MANIFOLD-FUEL	1			

FUEL FILTER PLUMBING(#1001-#1494)

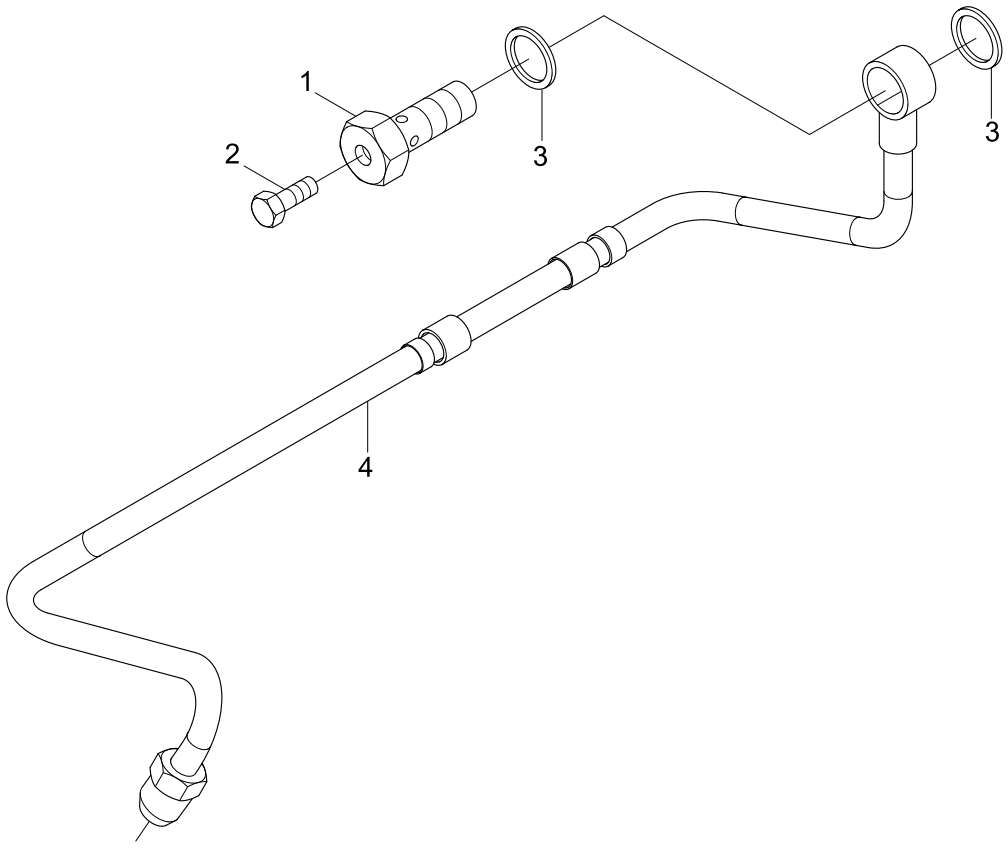

Item	Part_No	IS	Ord	T	Description	Qty	Serial_No	ITC	Remark
*	@				FUEL FILTER PLUMBING	1	#1001 - #1494	-	NOT
N*	3905860				SCREW	1			NOT
1	3911446				.SCREW	1			
2	3939570				.SCREW	1			
3	3963983				WASHER-SEALING	2			
4	3967674				TUBE-FUEL	1			

FRONT DRIVE ADAPTER(#1495-)

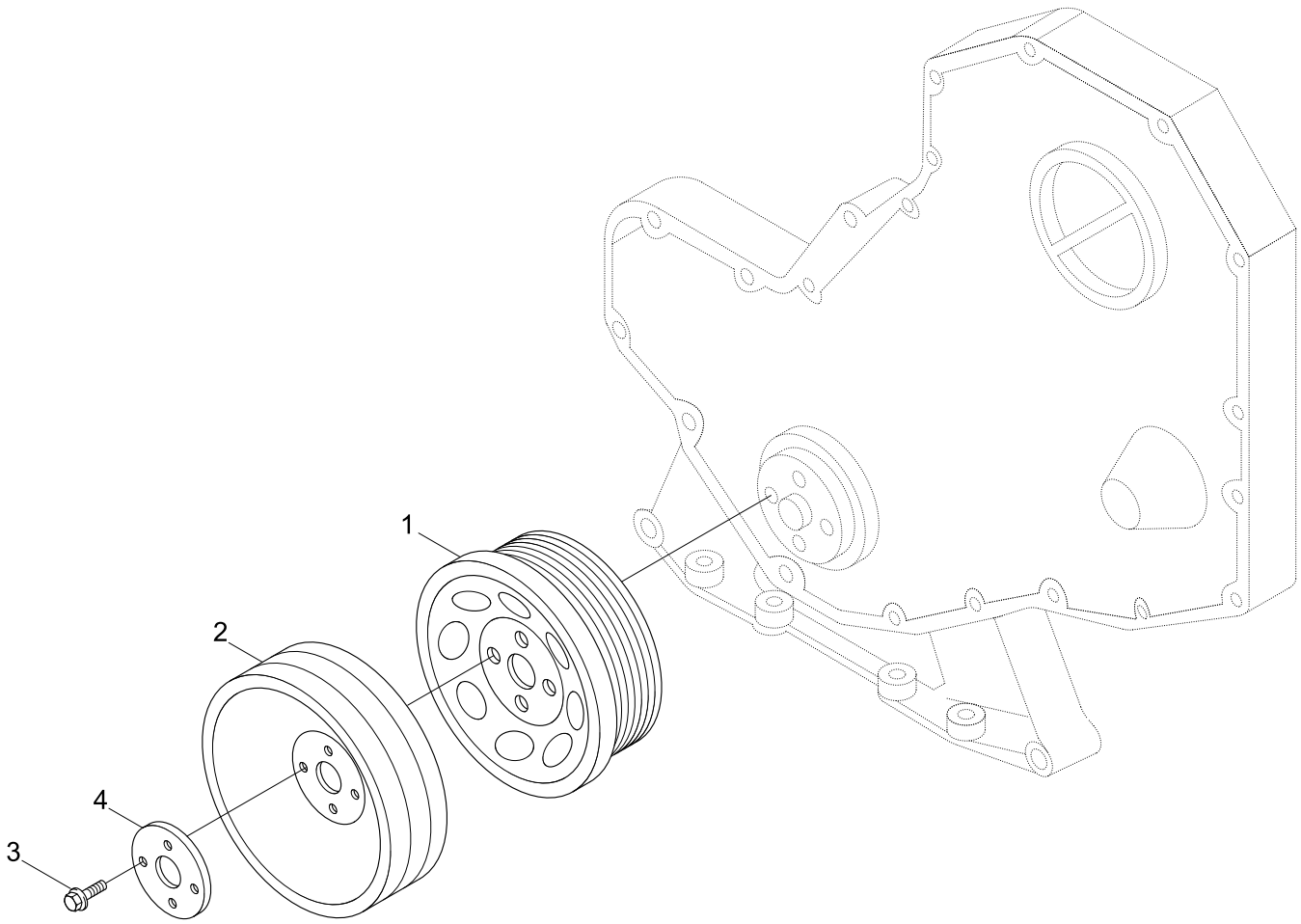

Item	Part_No	IS	Ord	T	Description	Qty	Serial_No	ITC	Remark
*	@				FRONT DRIVE ADAPTER	1	#1495 -	-	NOT
1	3914494				PULLEY-CRANKSHAFT	1			
2	3903826				PULLEY-ACC	1			
3	3903857				SCREW	4			
4	3917639				PLATE-CLAMPING	1			

AIR INTAKE HEATER(#1495-)

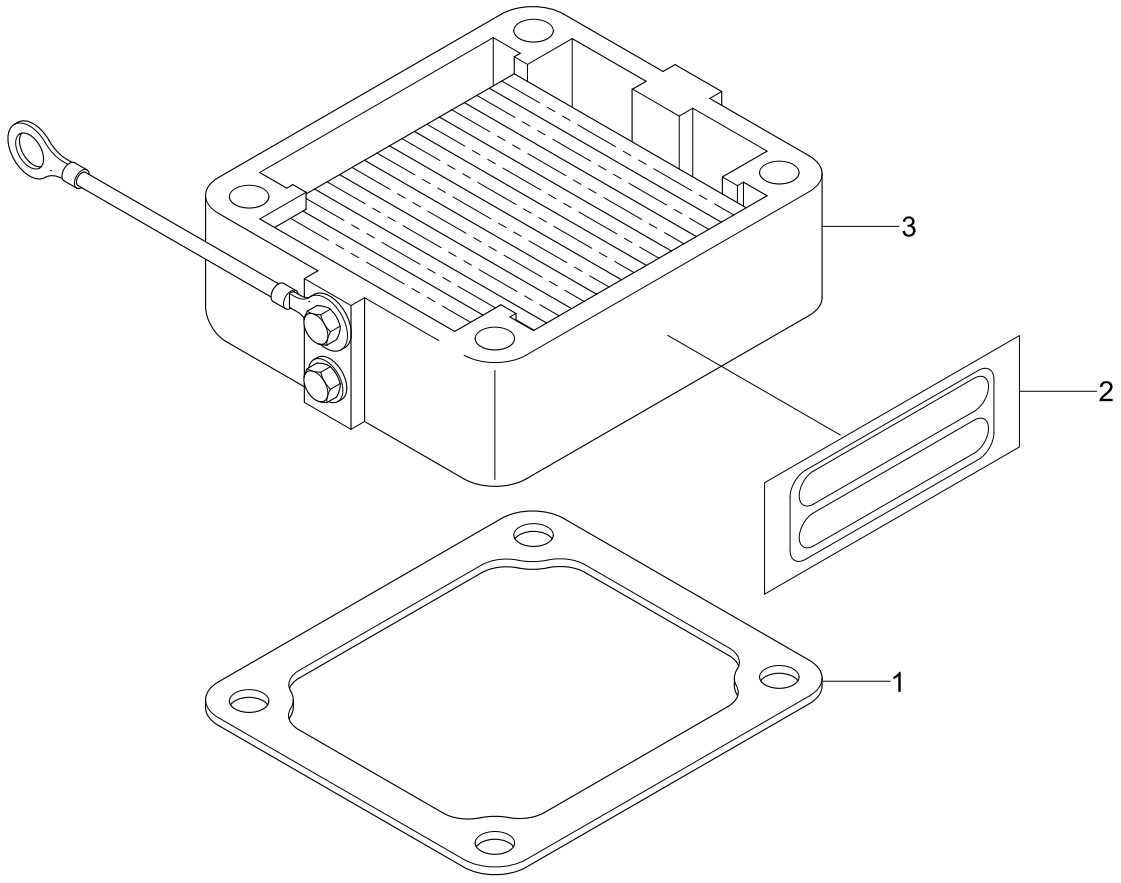

Item	Part_No	IS	Ord	T	Description	Qty	Serial_No	ITC	Remark
*	@				AIR INTAKE HEATER	1	#1495 -	-	NOT
1	3931604				GASKET-CONNECTION	1			
2	3927335				TAG-INSTRUCTION	1			
3	3929015				HEATER-INTAKE AIR	1			

DATAPLATE(#1495-)

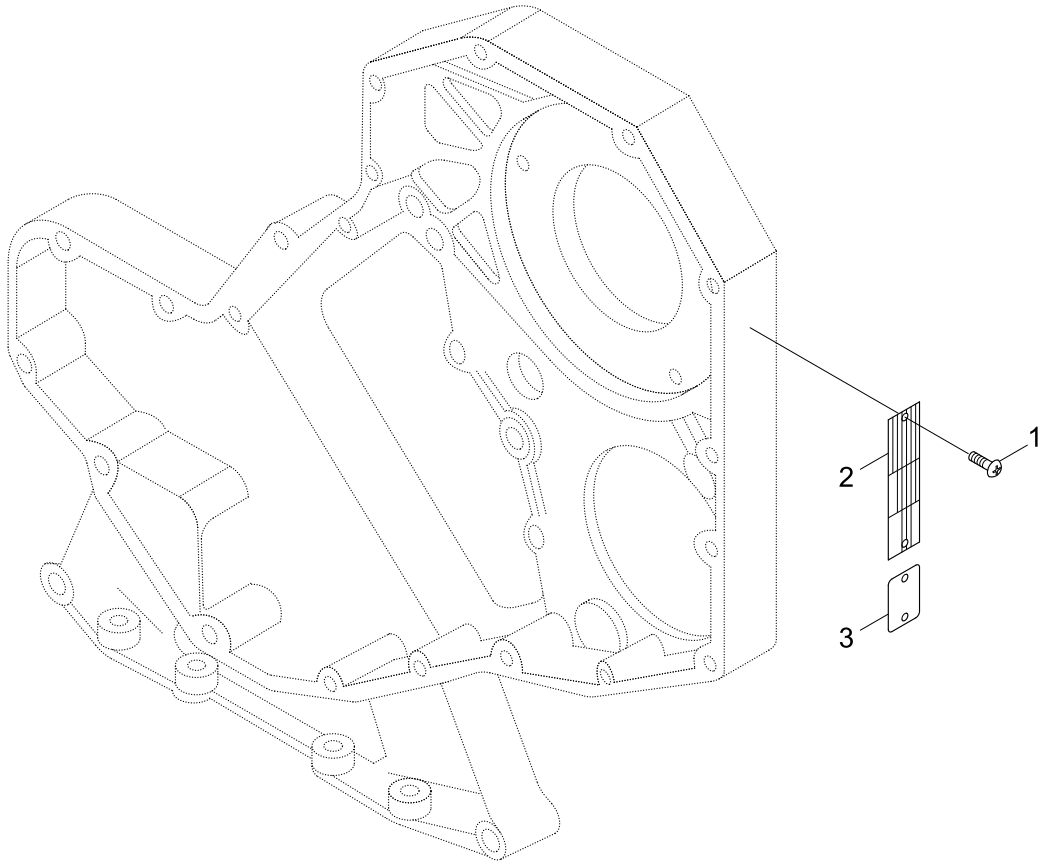

Item	Part_No	IS	Ord	T	Description	Qty	Serial_No	ITC	Remark
*	@				DATAPLATE	1	#1495 -	-	NOT
1	3908612				SCREW	2			
2	3284906				DATAPLATE	1			
3	3966565				DATAPLATE	1			

ROCKER LEVERS(#1495-)

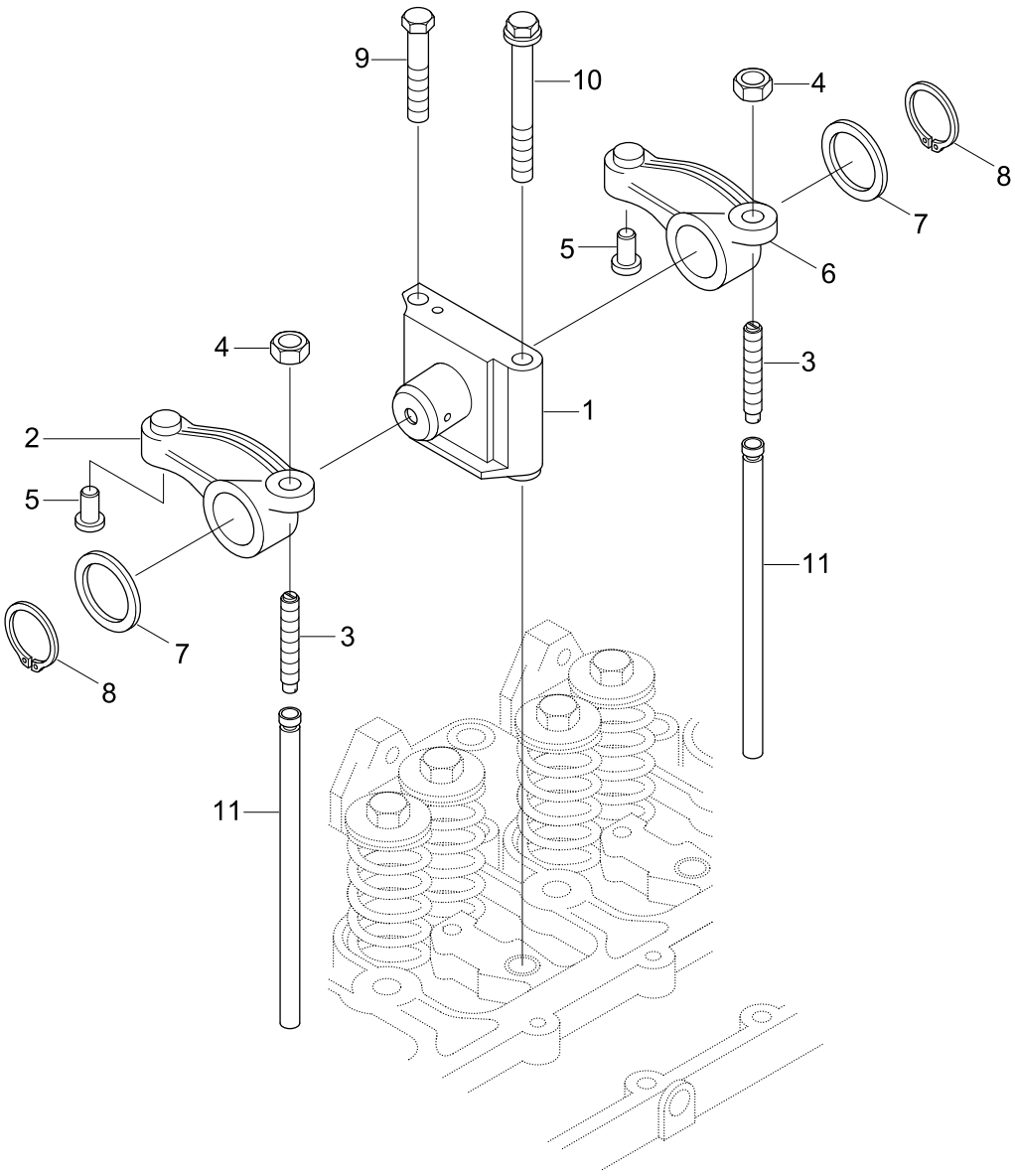

Item	Part_No	IS	Ord	T	Description	Qty	Serial_No	ITC	Remark
*	@				ROCKER LEVERS	1	#1495 -	-	NOT
	3922488				SHAFT-R/LEVER	4			
N1	3911423				.SUPPORT-R/LEVER	1			NOT
	3922487				.SHAFT-R/LEVER	1			NOT
2	3910811				LEVER-ROCKER	4			
N2	3910809				.LEVER-ROCKER	1			NOT
N3	3937438				.SCREW	1			NOT
4	3927692				.NUT-HEAVY HEX	1			
N5	3900705				.INSERT-R/LEVER	1			NOT
6	3910810				LEVER-ROCKER	4			
N6	3910808				.LEVER-ROCKER	1			NOT
3	3937438				.SCREW	1			
4	3927692				.NUT-HEAVY HEX	1			
N5	3900705				.INSERT-R/LEVER	1			NOT
7	3900245				WASHER-PLAIN	8			
8	3900242				RING-RETAINING	8			
9	3901221				SCREW	4			
10	3920781				SCREW	4			
11	3284377				ROD-PUSH	8			
N	@				NOT INDIVIDUALLY SUPPLIED	AR			NOT

VALVE TAPPET(#1495-)

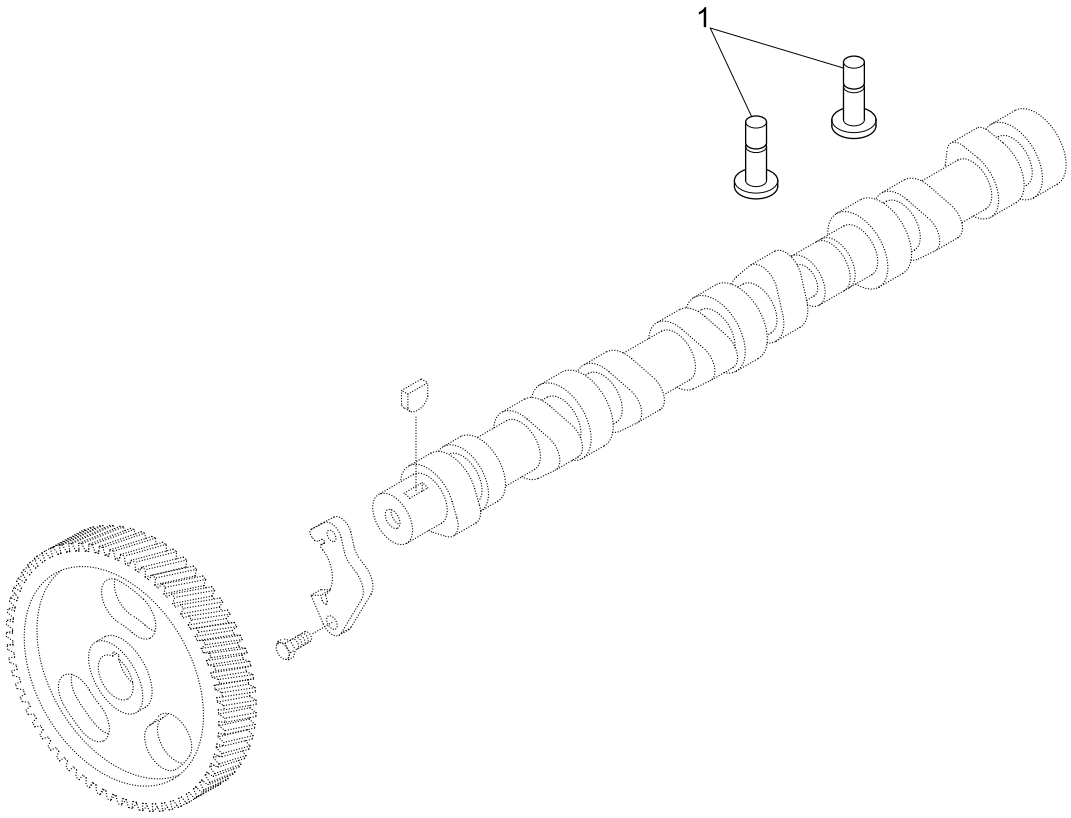

Item	Part_No	IS	Ord	T	Description	Qty	Serial_No	ITC	Remark
*	@				VAVLE TAPPET	1	#1495 -	-	NOT
1	3931623				TAPPET-VALVE	8			

FRONT GEAR COVER(#1495-)

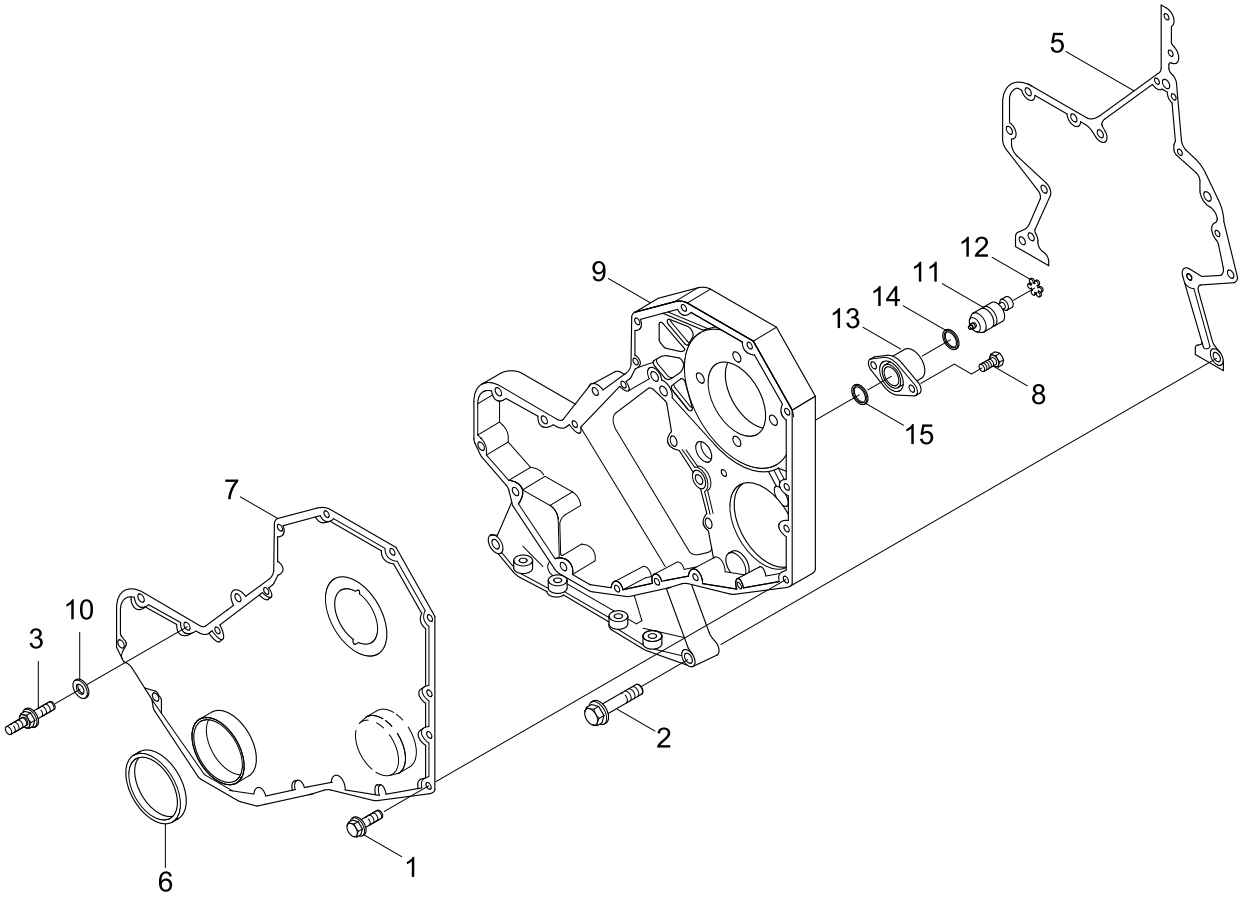

Item	Part_No	IS	Ord	T	Description	Qty	Serial_No	ITC	Remark
*	@				FRONT GEAR COVER	1	#1495 -	-	NOT
1	3925883				SCREW-HEX HEAD CAP	15			
2	3900633				SCREW-HEX HD CAP	11			
3	3863993				SCREW	1			
5	3931351				GASKET-GEAR HOUSING	1			
N6	3935959				SEAL-OIL	1			NOT
7	3935582				COVER-GEAR	1			
8	3907998				SCREW-RD HD CAP	2			
N9	3964422				HOUSING-GEAR	1			NOT
10	3863140				WASHER	1			
*N	3913995				HOUSING-TIMING PIN	1			NOT
11	3903924				.PIN-TIMING	1			
12	3904849				.RING-RETAINING	1			
13	3919683				.HOUSING-TIMING PIN	1			
14	3913994				.O-RING	1			
15	3915772				SEAL-RECT RING	1			
N	@				NOT INDIVIDUALLY SUPPLIED	AR			NOT

CYLINDER BLOCK(#1495-)

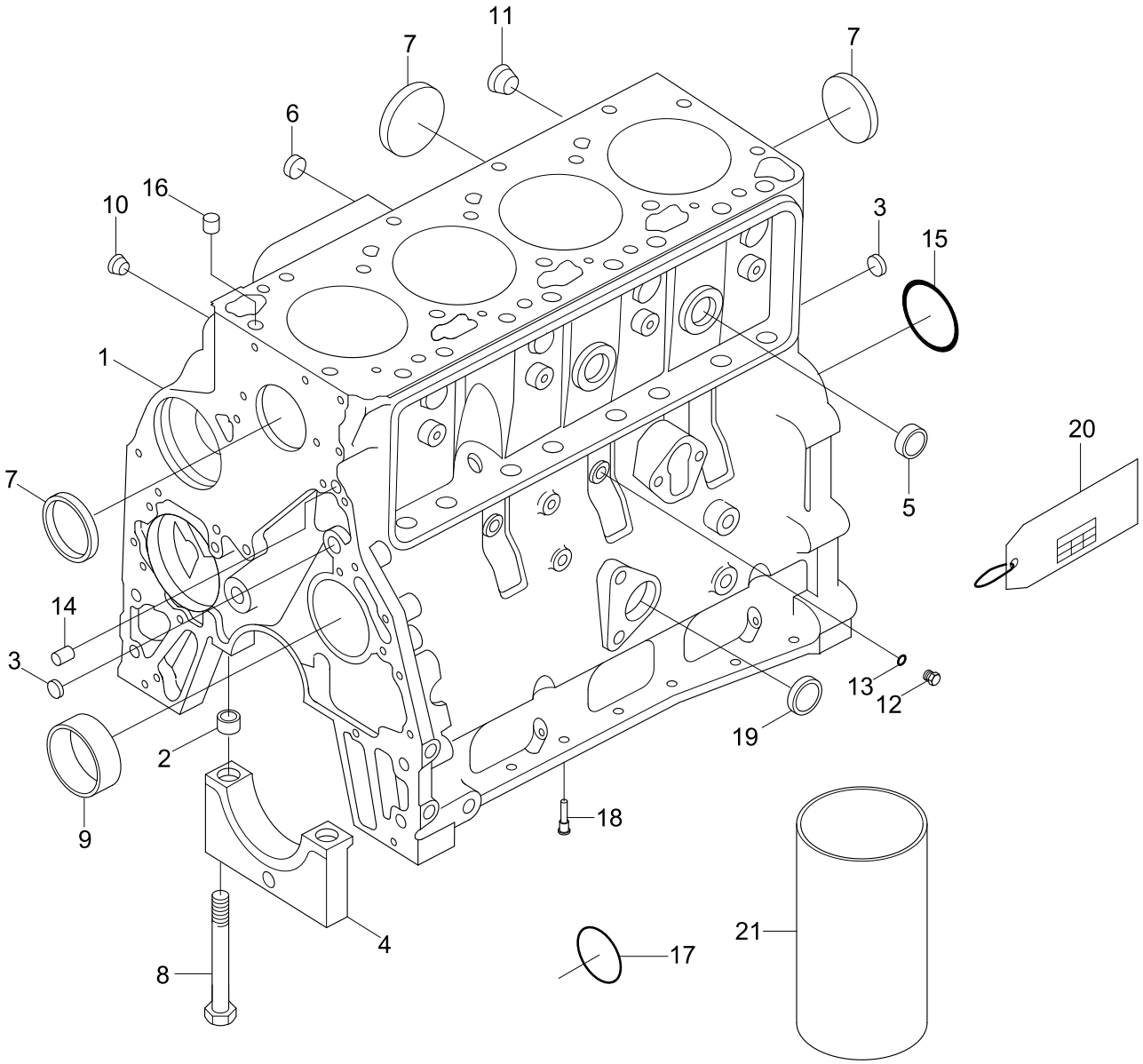

Item	Part_No	IS	Ord	T	Description	Qty	Serial_No	ITC	Remark
*	@				CYLINDER BLOCK	1	#1495 -	-	NOT
	4089546				CYLINDER BLOCK	1			
N1	3938366				.BLOCK-CYLINDER	1			NOT
3	3900956				..PLUG-EXPANSION	3			
4	3936791				..CAP-MAIN BEARING	5			
5	3914035				..PLUG-EXPANSION	2			
7	3922072				..PLUG-EXPANSION	3			
8	3927948				..SCREW	10			
9	3940059				..BUSHING	1			
*	3933224				.KIT-CYL BLOCK HW	1			
2	3900068				..DOWEL-RING	2			
6	3920706				..PLUG-EXPANSION	2			
10	3008468				..PLUG-PIPE	1			
11	3008469				..PLUG-PIPE	1			
*	3678923				..PLUG-THREADED	2			
N12	3678924				...PLUG-THREADED	1			NOT
13	3678925				...SEAL/O-RING	1			
14	3900257				..DOWEL-PIN	2			
15	3900687				..PLUG-EXPANSION	1			
16	3902343				..DOWEL-RING	2			
17	3926047				..SEAL/O-RING	1			
18	3937214				..NOZZLE	4			
19	3900958				..PLUG-EXPANSION	1			
N20	3933613				.TAG	1			NOT
21	3904166				.SLEEVE-SALVAGE	1			SERVICE PARTS

Item	Part_No	IS	Ord	T	Description	Qty	Serial_No	ITC	Remark
N	@				NOT INDIVIDUALLY SUPPLIED	AR			NOT

CRANKSHAFT & M/BEARINGS(#1495-)

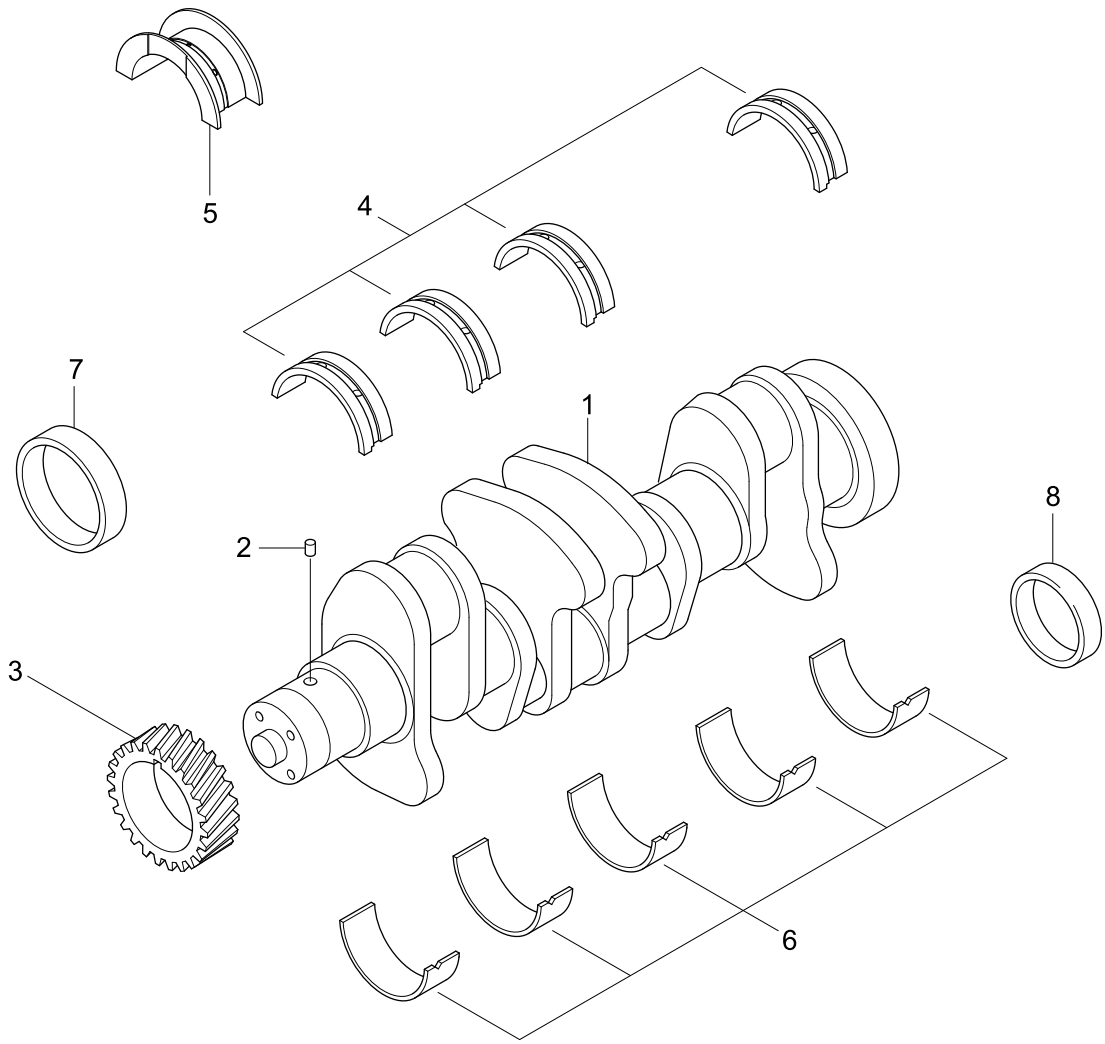

Item	Part_No	IS	Ord	T	Description	Qty	Serial_No	ITC	Remark
*	@				C/SHAFT & M/BEARING	1	#1495 -	-	NOT
	3908031				CRANKSHAFT-ENGINE	1			BP97112-01
N1	3929036				.CRANKSHAFT-ENGINE	1			NOT
2	3904483				.DOWEL-PIN	1			
3	3929027				.GEAR-CRANKSHAFT	1			
*	3802010				SET-MAIN BEARING(STD)	1			
N4	3929016				.BEARING-MAIN	4			NOT
N5	3926723				.BEARING-C/SHAFT THRUST	1			NOT
N6	3929021				.BEARING-MAIN	5			NOT
*	3802011				SET-M/BRG(0.25 O/S)	1			
N4	3929017				.BEARING-MAIN	4			NOT
N5	3283065				.BEARING-C/SHAFT THRUST	1			NOT
N6	3929022				.BEARING-MAIN	5			NOT
*	3802012				SET-M/BRG(0.5 O/S)	1			
N4	3929018				.BEARING-MAIN	4			NOT
N5	3283066				.BEARING-C/SHAFT THRUST	1			NOT
N6	3929023				.BEARING-MAIN	5			NOT
*	3802013				SET-M/BRG(0.75 O/S)	1			
N4	3929019				.BEARING-MAIN	4			NOT
N5	3283067				.BEARING-C/SHAFT THRUST	1			NOT
N6	3929024				.BEARING-MAIN	5			NOT
*	3802014				SET-M/BRG(1.0 O/S)	1			
N4	3929020				.BEARING-MAIN	4			NOT
N5	3283068				.BEARING-C/SHAFT THRUST	1			NOT
N6	3929025				.BEARING-MAIN	5			NOT

Item	Part_No	IS	Ord	T	Description	Qty	Serial_No	ITC	Remark
*	3800330				BRG-C/SHAFT(0.5 O/S)	1			
N5	3283063				.BEARING-C/SHAFT THRUST	1			NOT
N6	3929023				.BEARING-MAIN	1			NOT
*	3800331				BRG-C/SHAFT(1.0 O/S)	1			
N5	3283064				.BEARING-THRUST	1			NOT
N6	3929025				.BEARING-MAIN	1			NOT
7	3802820				SEAL-W/SLEEVE KIT	1			
8	3926126				SEAL-W/SLEEVE KIT	1			

CAM FOLLOWER COVER(#1495-)

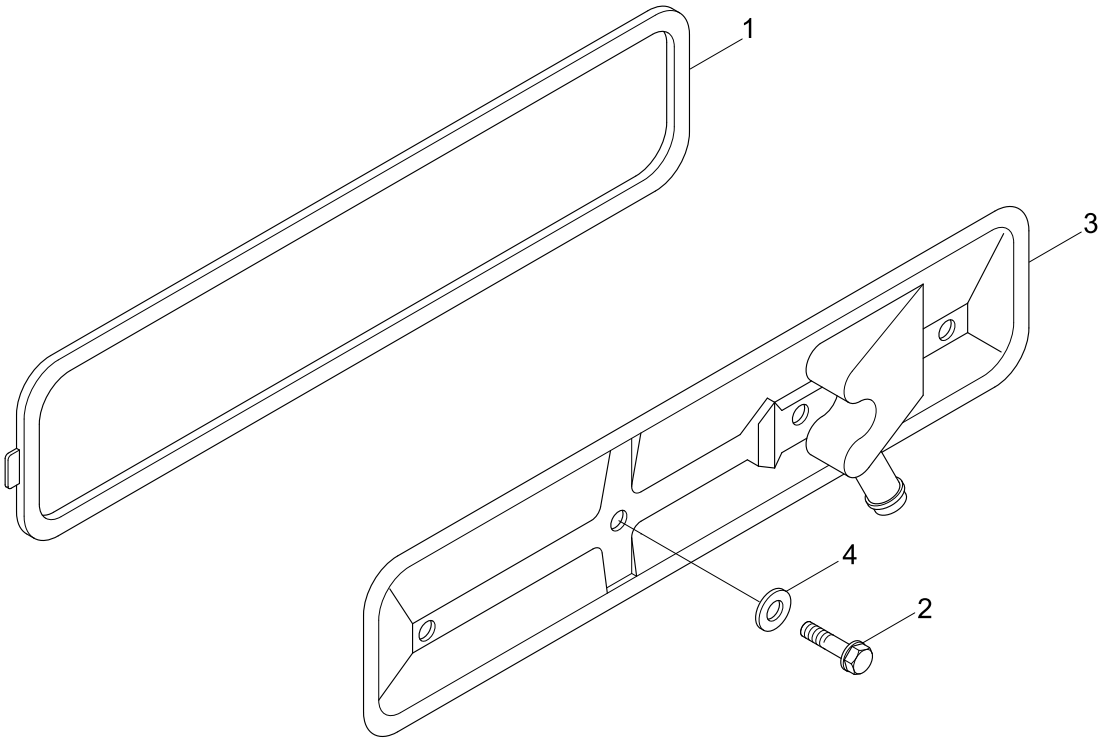

Item	Part_No	IS	Ord	T	Description	Qty	Serial_No	ITC	Remark
*	@				CAM FOLLOWER COVER	1	#1495 -	-	NOT
1	3283767				GASKET-P/ROD COVER	1			
2	3900629				SCREW-H/FLANGE CAP	2			
3	3936186				COVER-PUSH ROD	1			
4	3928759				SEAL-GROMMET	2			

FRONT GEAR TRAIN ACCESSORY(#1495-)

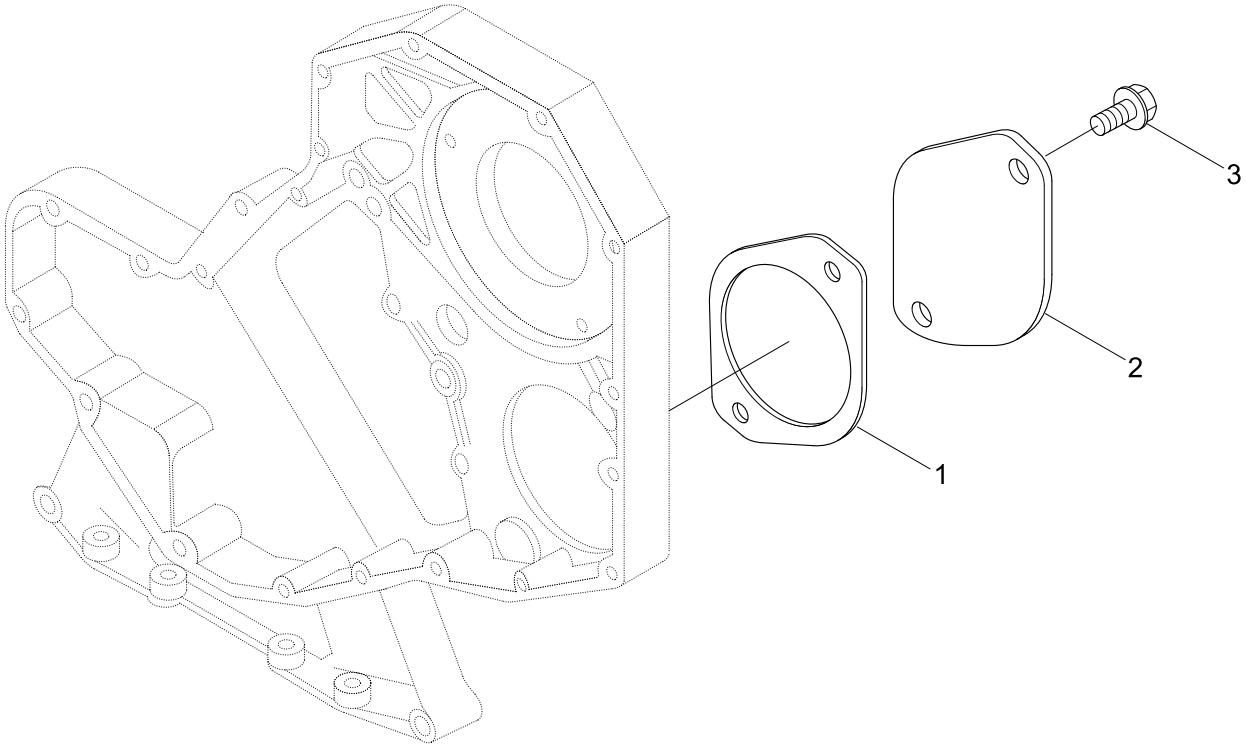

Item	Part_No	IS	Ord	T	Description	Qty	Serial_No	ITC	Remark
*	@				FRONT GEAR TRAIN ACCESSORY	1	#1495 -	-	NOT
1	3094818				SEAL/O-RING	1			
2	3863865				COVER	1			
3	3901249				SCREW	2			

FAN PILOT SPACER(#1495-)

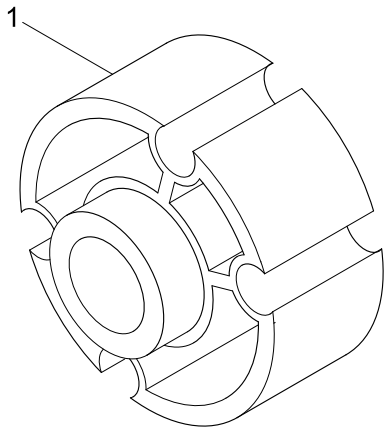

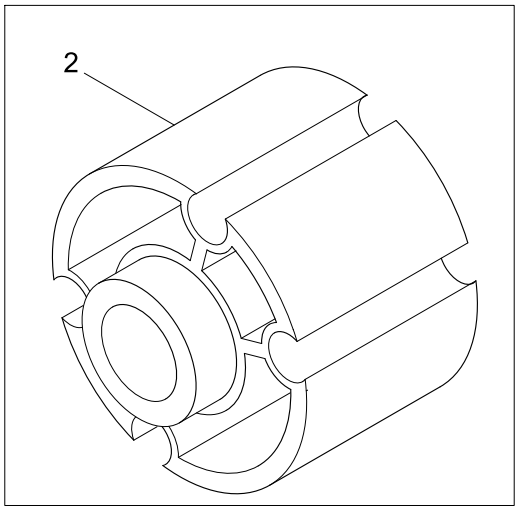

Item	Part_No	IS	Ord	T	Description	Qty	Serial_No	ITC	Remark
*	@				FAN PILOT SPACER	1	#1495 -	-	NOT
1	3910128				SPACER-FAN(1")	1			SP9019
2	3910131				SPACER-FAN(2.5")	1			SP9022

THERMOSTAT & HOUSING(#1495-)

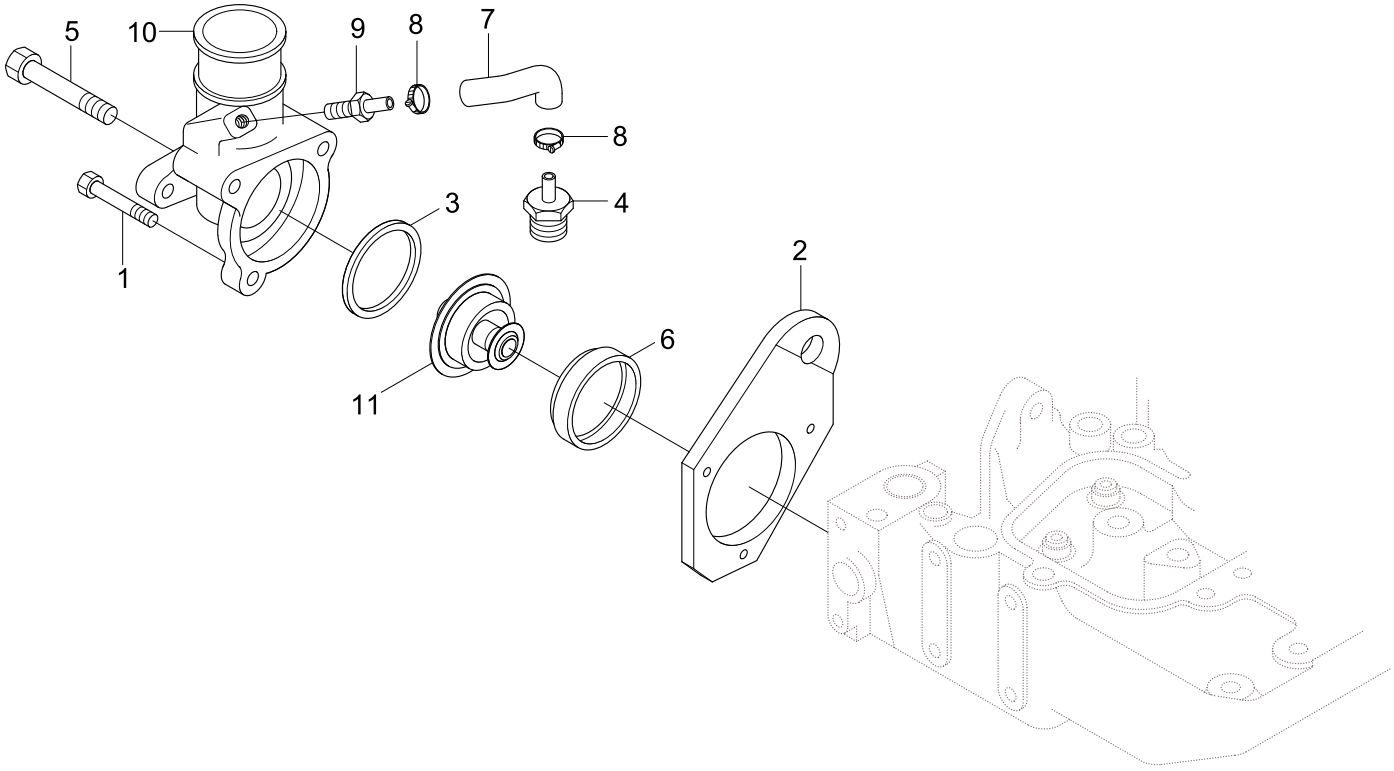

Item	Part_No	IS	Ord	T	Description	Qty	Serial_No	ITC	Remark
*	@				THERMOSTAT & HOUSING		#1495 -	-	NOT
1	3900632				SCREW	1			
2	3903757				BRACKET-LIFTING	1			
3	3925466				SEAL-RECT RING	1			
4	3926761				VALVE-CHECK	1			
5	3926972				SCREW	2			
6	3927305				GASKET-THM HOUS COVER	1			
7	3930565				HOSE-MOLDED	1			
8	3945819				CLAMP-HOSE	2			
9	3931793				COUPLING-PLAIN HOSE	1			
10	3931794				HOUSING-THERMOSTAT	1			
11	3864178				THERMOSTAT	1			EC9009-02

ALTERNATOR LOCATION(#1495-)

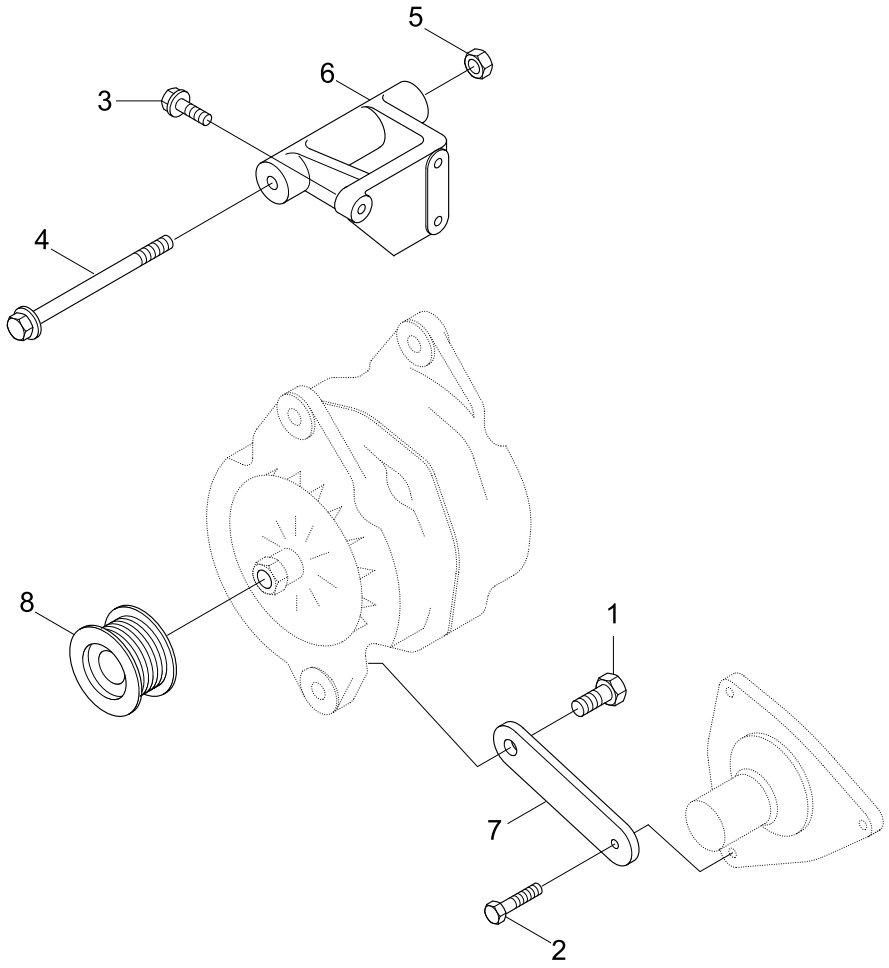

Item	Part_No	IS	Ord	T	Description	Qty	Serial_No	ITC	Remark
*	@				ALTERNATOR LOCATION	1	#1495 -	-	NOT
1	3052061				SCREW	1			
2	3900630				SCREW-HEX HEAD CAP	1			
3	3900631				SCREW-HEX HEAD CAP	3			
4	3903105				SCREW-HEX HEAD CAP	1			
5	3903210				NUT	1			
6	3910923				SUPPORT-ALTERNATOR	1			
7	3910924				BRACE-ALTERNATOR	1			
8	3918275				PULLEY-ALTERNATOR	1			

ALTERNATOR DRIVE(#1495-)

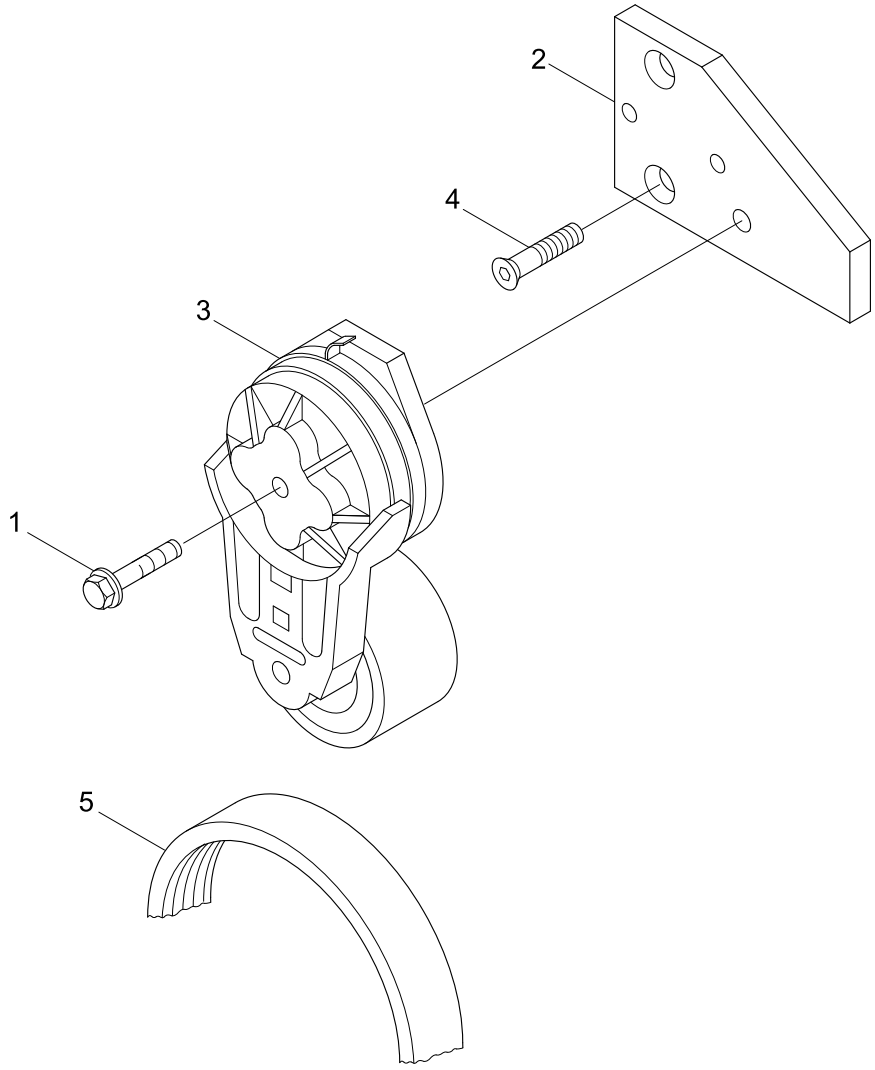

Item	Part_No	IS	Ord	T	Description	Qty	Serial_No	ITC	Remark
*	@				ALTERNATOR DRIVE	1	#1495 -	-	NOT
1	3282699				SCREW	1			
2	3286907				BRACKET	1			
3	3937553				TENSIONER-BELT	1			
4	3925186				SCREW	2			
5	3929330				BELT-V RIBBED	1			

MECHANICAL TACHOMETER DRIVE(#1495-)

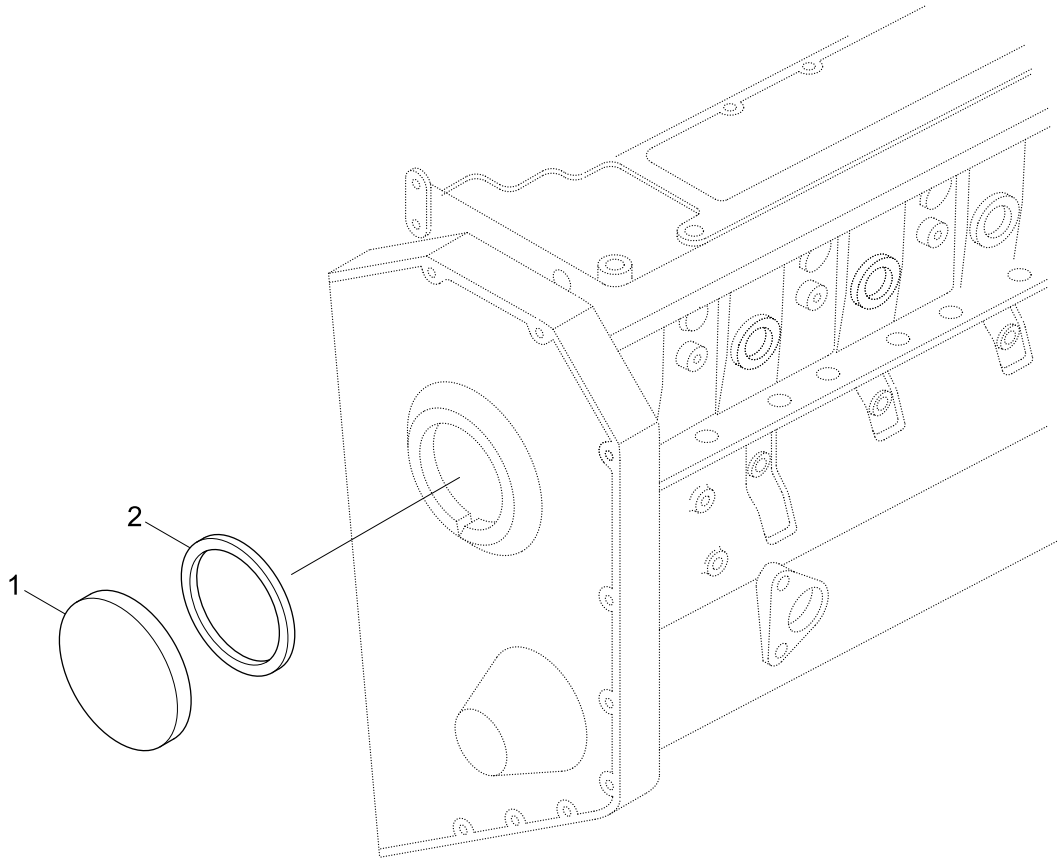

Item	Part_No	IS	Ord	T	Description	Qty	Serial_No	ITC	Remark
*	@				M/TACHOMETER DRIVE	1	#1495 -	-	NOT
1	3903463				COVER	1			
2	3903475				SEAL-RECT RING	1			

FAN DRIVE(#1495-)

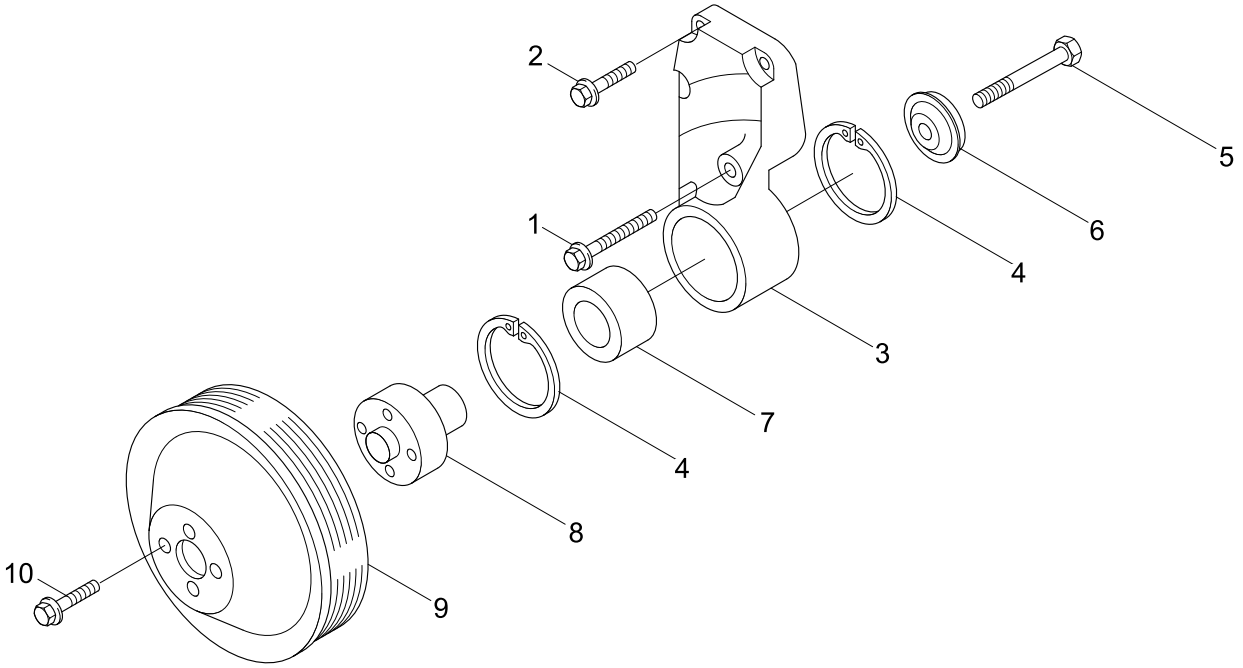

Item	Part_No	IS	Ord	T	Description	Qty	Serial_No	ITC	Remark
*	@				FAN DRIVE	1	#1495 -	-	NOT
1	3863344				SCREW	1			
2	3863343				SCREW	3			
*	3911203				SUPPORT-FAN	1			
N3	3281875				.SUPPORT-FAN	1			NOT
4	3035960				.RING-RETAINING	2			
5	3907769				.SCREW	1			
6	3923044				.RETAINER-FAN HUB	1			
7	3910739				.BEARING-BALL	1			
8	3911924				.HUB-FAN	1			
9	3918204				PULLEY-FAN	1			
10	3903990				SCREW-HEX HEAD CAP	4			FA9706

INJECTION PUMP 1(#1495-)

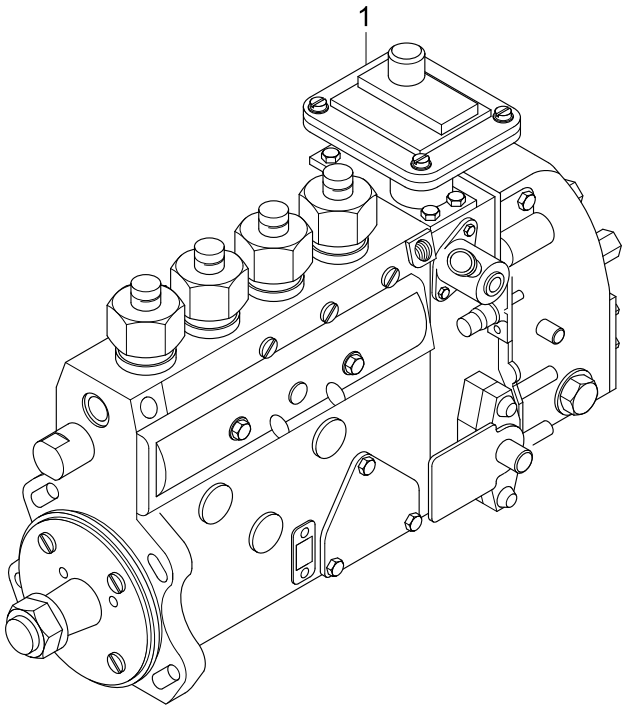

Item	Part_No	IS	Ord	T	Description	Qty	Serial_No	ITC	Remark
*	@				INJECTION PUMP	1	#1495 -	-	NOT
1	4063968				PUMP-FUEL INJECTION	1			

INJECTION PUMP 2(#1495-)

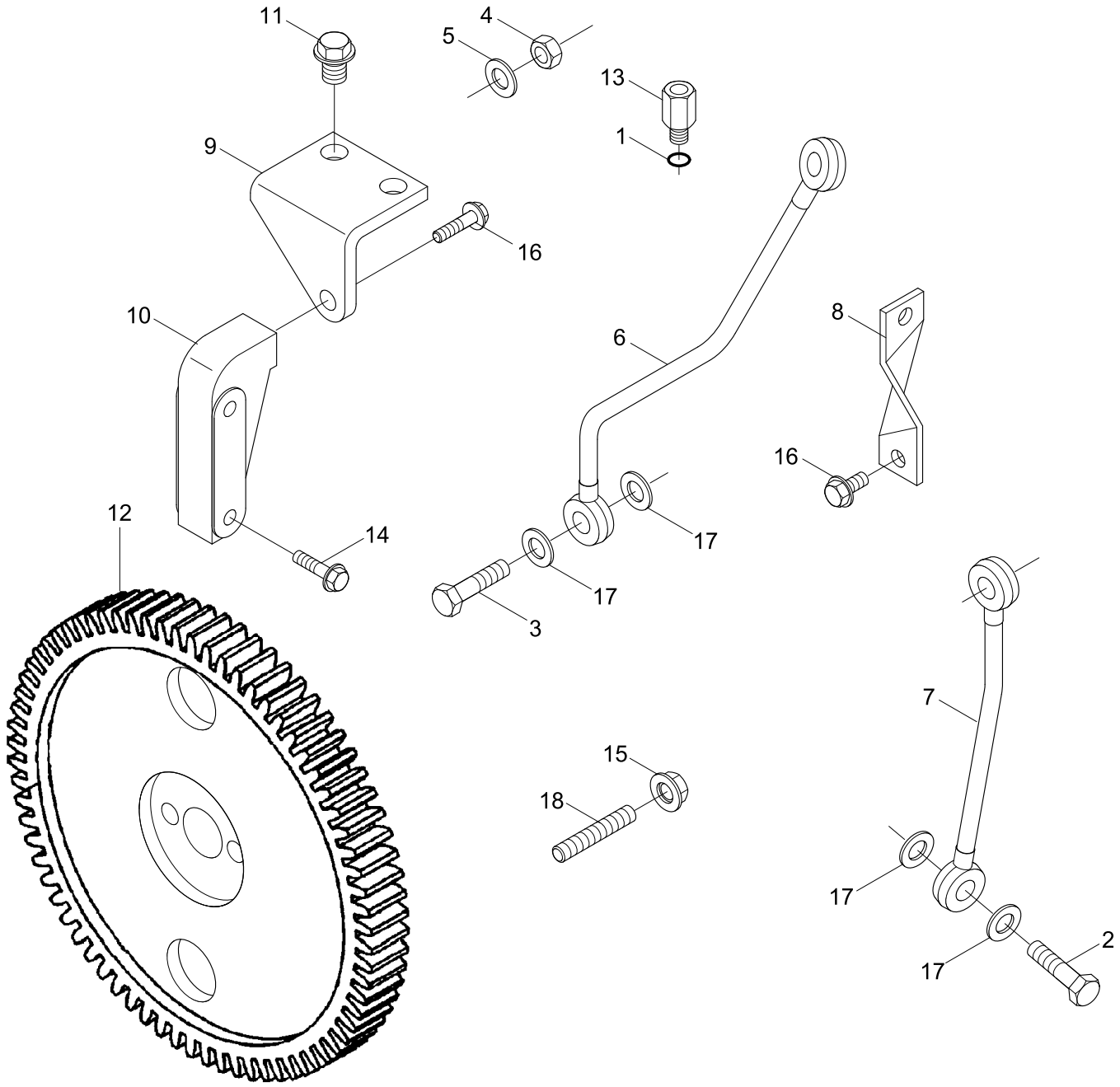

Item	Part_No	IS	Ord	T	Description	Qty	Serial_No	ITC	Remark
*	@				INJECTION PUMP	1	#1495 -	-	NOT
1	3678925				SEAL/O-RING	1			
2	3863131				SCREW	1			
3	3863187				SCREW	1			
4	3863271				NUT	1			
5	3863272				WASHER	1			
6	3863306				TUBE-FUEL SUPPLY	1			
7	3863307				TUBE-FUEL SUPPLY	1			
8	3863309				BRACKET-FUEL PUMP	1			
9	3863311				BRACKET-FUEL PUMP	1			
10	3863919				BRACKET-FUEL PUMP	1			
11	3863324				SCREW-HEX HEAD CAP	2			
12	3863589				GESR-FUEL PUMP	1			
13	3863672				CONNECTOR-FEMALE	1			
14	3900631				SCREW-HEX HEAD CAP	3			
15	3902662				NUT-HEX FLANGE	5			
16	3903990				SCREW-HEX HEAD CAP	1			
17	3093950				WASHER	4			
18	3937123				STUD	4			

FUEL CLEANER(#1495-)

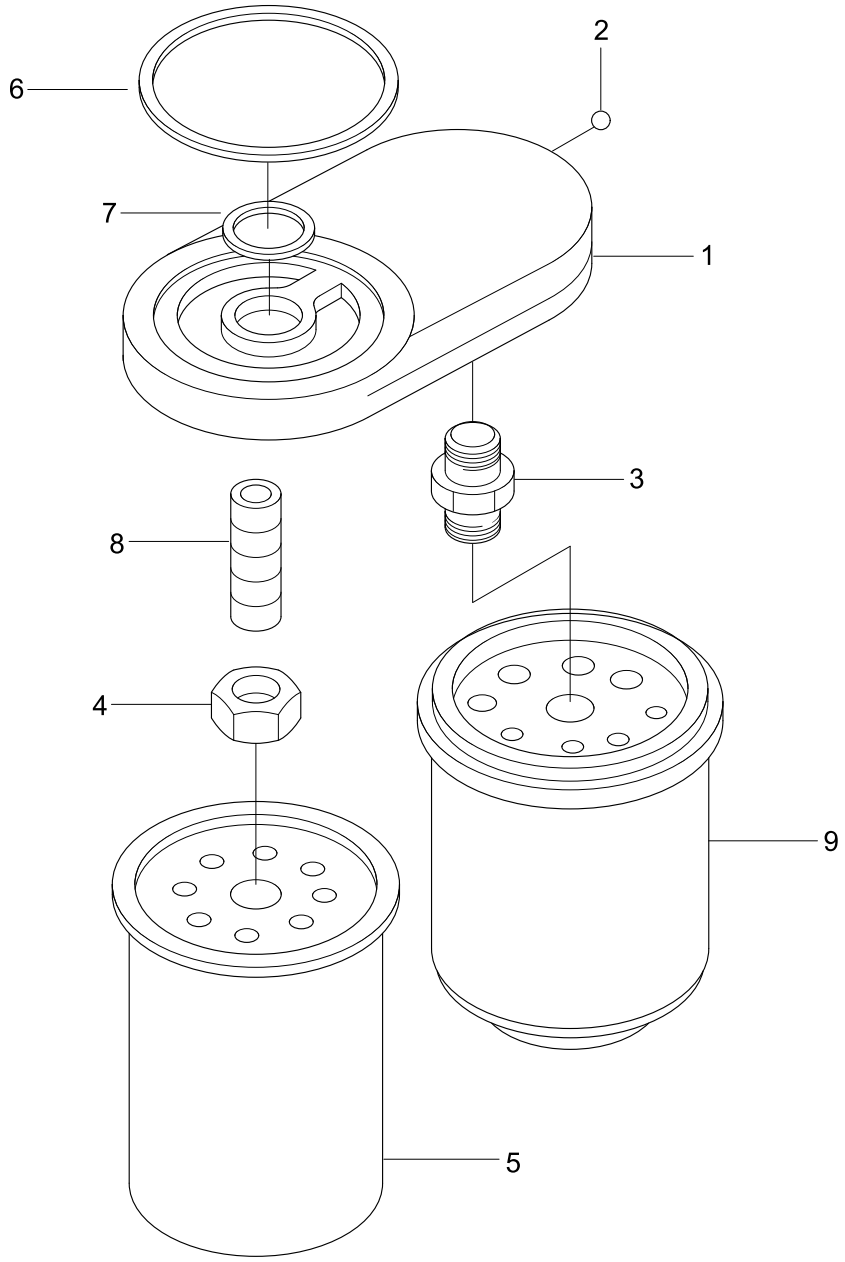

Item	Part_No	IS	Ord	T	Description	Qty	Serial_No	ITC	Remark
*	@				FUEL CLEANER	1	#1495 -	-	NOT
	3936315				HEAD-FUEL FILTER	1			
N1	3936313				.HEAD-FUEL FILTER	1			NOT
2	3897329				.BALL	1			
N3	3936337				.ADAPTER-FILTER HEAD	1			NOT
4	3903293				NUT	1			
5	11E1-70010				FILTER-FUEL	1			
6	3906694				SEAL-RECT RING	1			
7	3906695				SEAL	1			
8	3925955				ADAPTER-FILTER HEAD	1			
9	11E1-70210				FILTER-FUEL W/S	1			

FLYWHEEL HOUSING(#1495-)

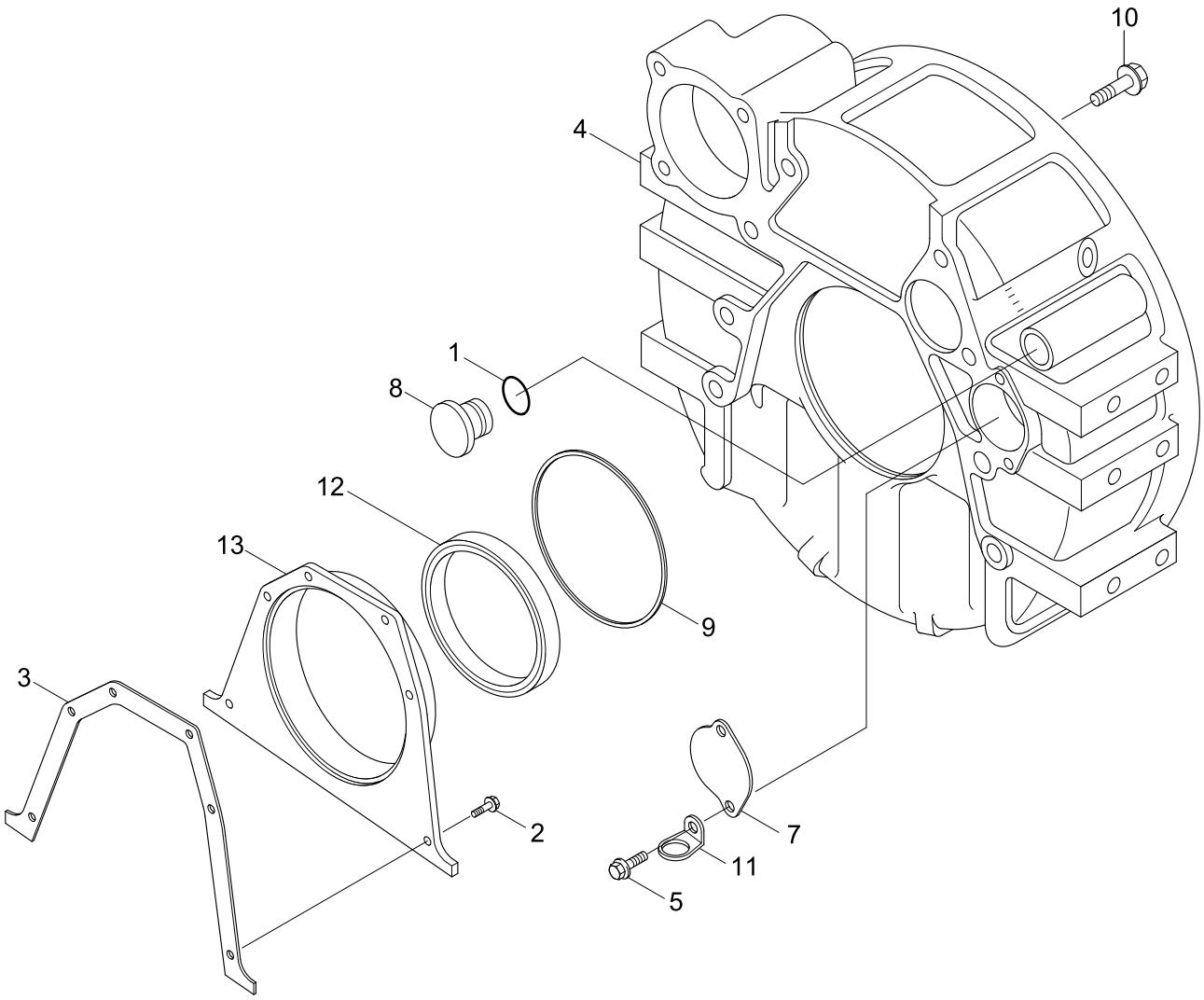

Item	Part_No	IS	Ord	T	Description	Qty	Serial_No	ITC	Remark
1	3863488				SEAL,O-RING	1			
2	3863794				SCREW-HEX FLANGE HEAD	6			
3	3863864				GASKET-COVER PLATE	1			
4	3863940				HOUSING-FLYWHE	1			
5	3900225				SCREW-HEX HEAD CAP	2			
6	3904181				PLUG-THREADED	1			
7	3908095				PLATE-COVER	1			
8	3910248				PLUG/O-RING	1			
9	3912473				SEAL-RECT RING	1			
10	3920447				SCREW-HEX F/HEAD CAP	8			
11	3928989				CLIP	1			
N*	3946090				COVER-REAR	1			NOT
12	3933262				SEAL-OIL	1			
13	3936895				COVER-REAR	1			
N	@				NOT INDIVIDUALLY SUPPLIED	AR			NOT

AIR INTAKE MANIFOLD(#1495-)

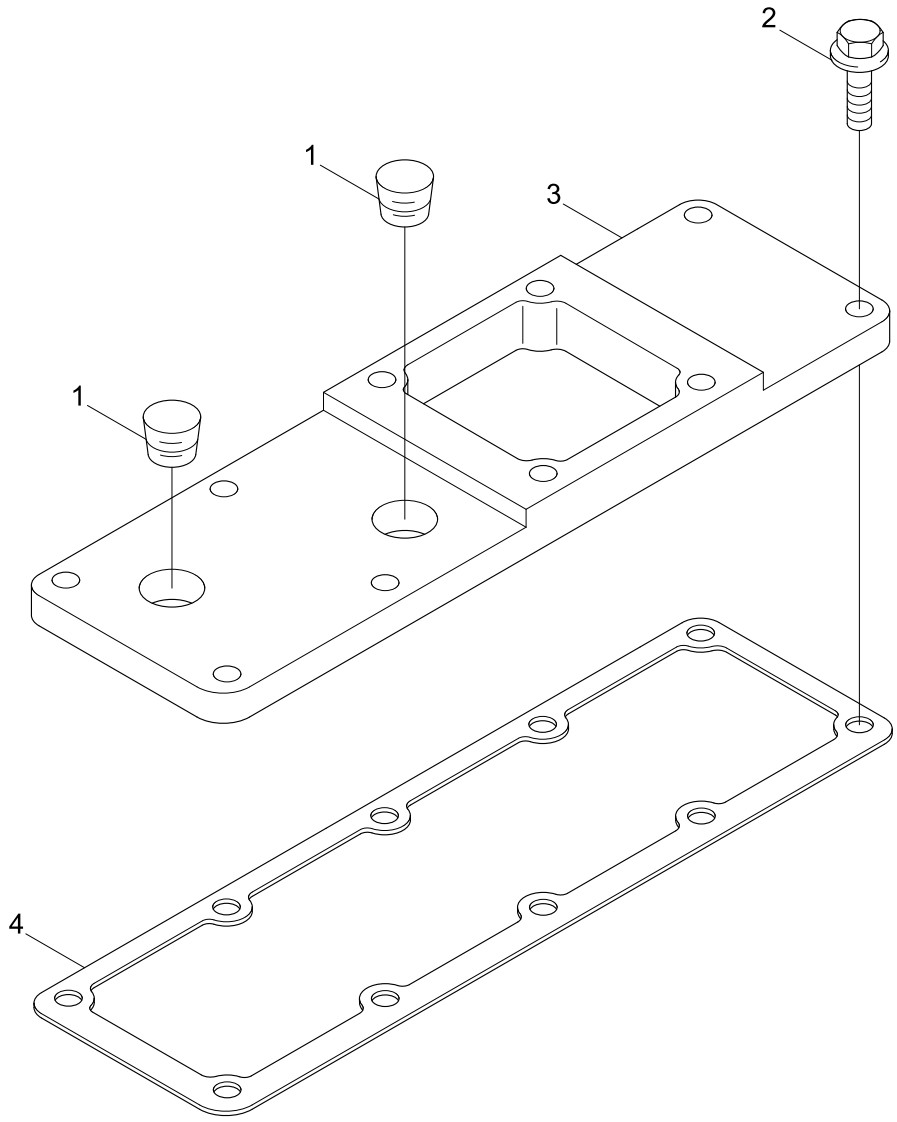

Item	Part_No	IS	Ord	T	Description	Qty	Serial_No	ITC	Remark
*	@				AIR INTAKE MANIFOLD	1	#1495 -	-	NOT
1	3008468				PLUG-PIPE	2			
2	3918109				SCREW	4			
3	3921500				COVER-INT MANIFOLD	1			
4	3938153				GASKET-INT MANI CVR	1			

INJECTOR PLUMBING(#1495-)

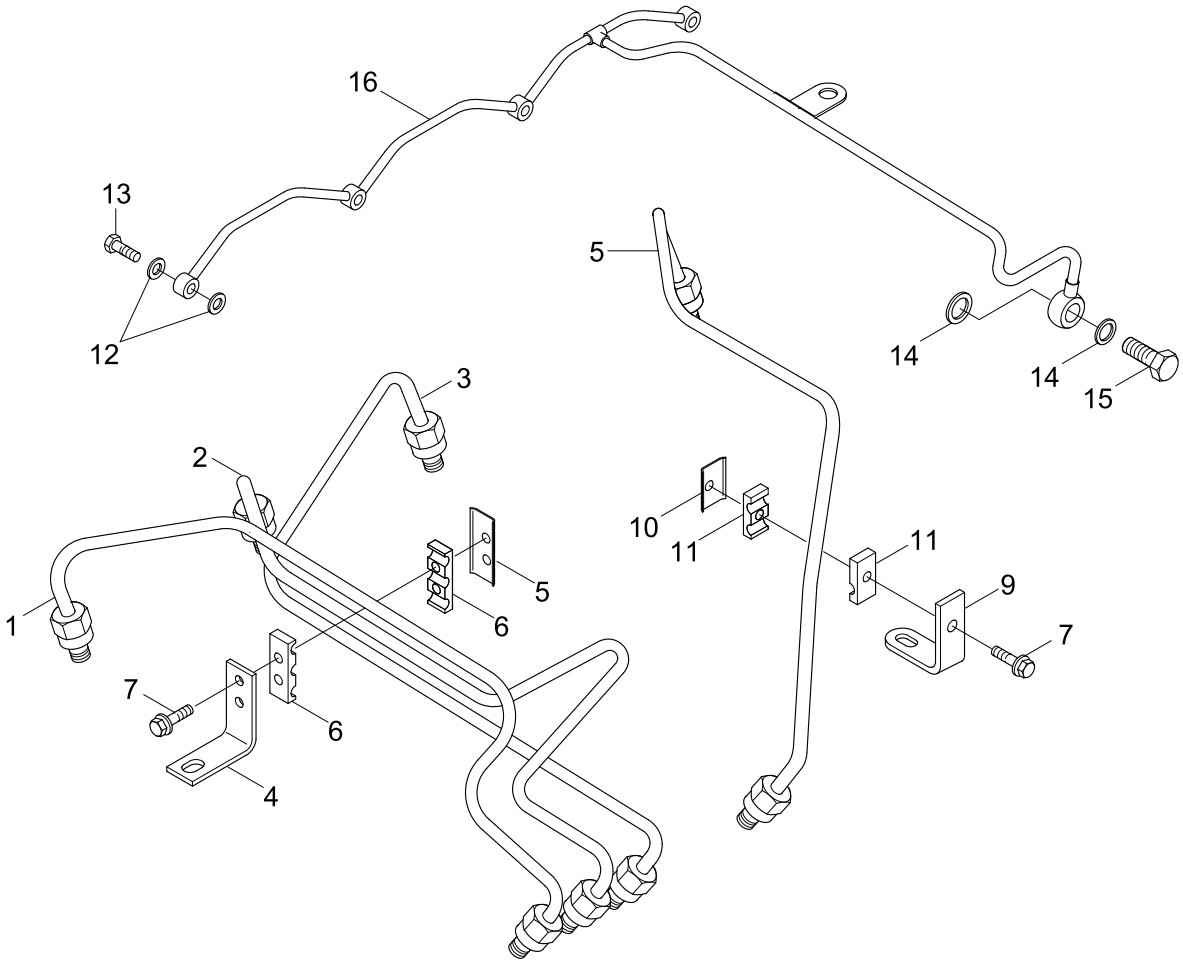

Item	Part_No	IS	Ord	T	Description	Qty	Serial_No	ITC	Remark
*	@				INJECTOR PLUMBING	1	#1495 -	-	NOT
1	3863212				TUBE-INJECTOR FUEL SUPPLY	1			
2	3863213				TUBE-INJECTOR FUEL SUPPLY	1			
3	3863214				TUBE-INJECTOR FUEL SUPPLY	1			
4	3863235				BRACE-FUEL PUMP	1			
5	3917716				BRACE-TUBE	1			
6	3917747				ISOLATOR-VIBRATION	2			
7	3920854				SCREW	3			
8	3863215				TUBE-INJECTOR FUEL SUPPLY	1			
9	3863236				BRACE-TUBE	1			
10	3917717				BRACE-TUBE	1			
11	3917746				ISOLATOR-VIBRATION	2			
12	3863755				SEAL-INJECTOR	8			
13	3905307				SCREW-BANJO CONN	4			
14	3918188				WASHER-SEALING	2			
15	3924726				VALVE-CHECK	1			
16	3927633				MANIFOLD-FUEL	1			

AIR INTAKE CONNECTION(#1495-)

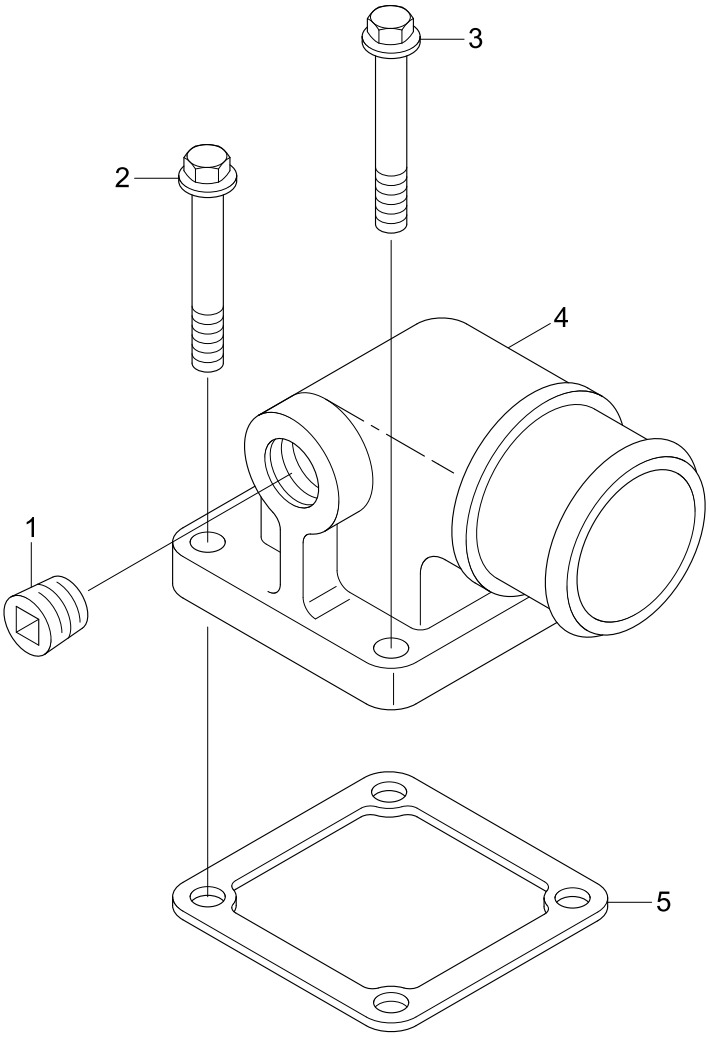

Item	Part_No	IS	Ord	T	Description	Qty	Serial_No	ITC	Remark
*	@				AIR INTAKE CONNECTION	1	#1495 -	-	NOT
1	3008469				PLUG-PIPE	1			
2	3902112				SCREW	2			
3	3919864				SCREW-HEX FLANGE	2			
4	3924990				CONNECTION-AIR INTAKE	1			
5	3931604				GASKET-CONNECTION	1			

EXHAUST CONNECTION(#1495-)

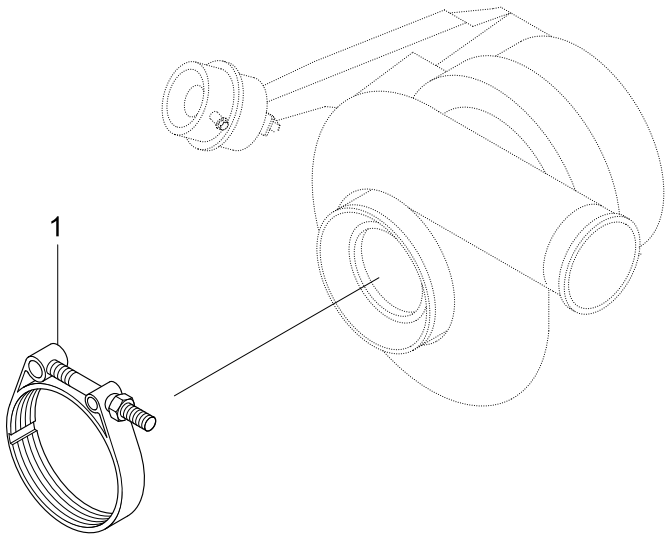

Item	Part_No	IS	Ord	T	Description	Qty	Serial_No	ITC	Remark
*	@				EXHAUST CONNECTION	1	#1495 -	-	NOT
1	3903652				CLAMP-V BAND	1			

OIL FAN MOUNT(#1495-)

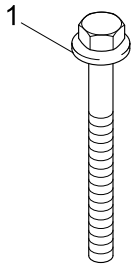

Item	Part_No	IS	Ord	T	Description	Qty	Serial_No	ITC	Remark
*	@				OIL PAN MOUNT	1	#1495 -	-	NOT
1	3907860				SCREW	28			

FLYWHEEL(#1495-)

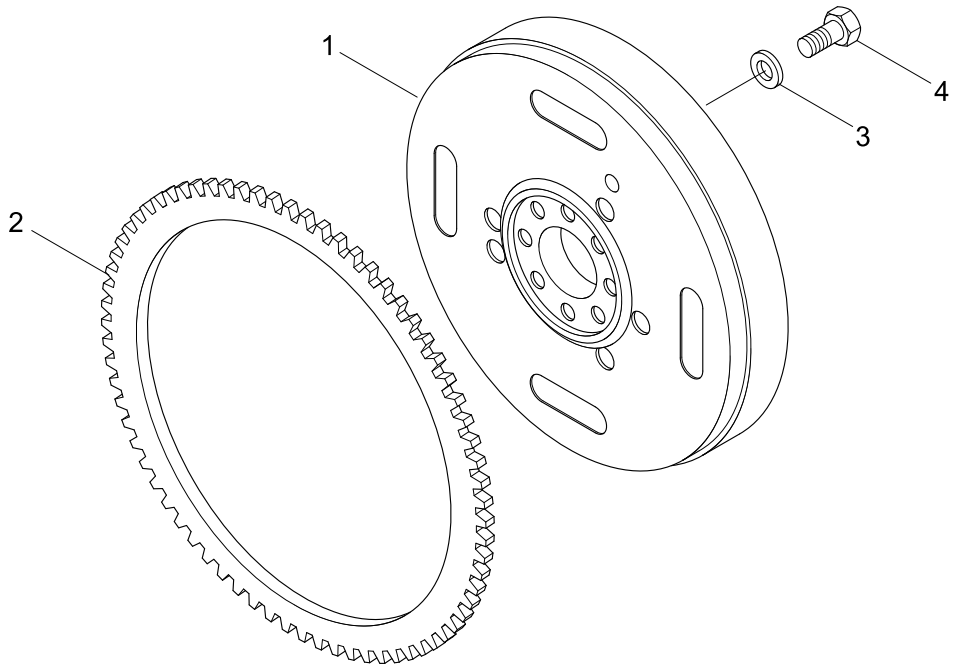

Item	Part_No	IS	Ord	T	Description	Qty	Serial_No	ITC	Remark
*	@				FLYWHEEL	1	#1495 -	-	NOT
	3673363				FLYWHEEL	1			
N1	3673362				.FLYWHEEL	1			NOT
2	3905427				.GEAR-FLYWHEEL RING	1			
3	3900269				WASHER-PLAIN	8			
4	3901395				SCREW	8			
N	@				NOT INDIVIDUALLY SUPPLIED	AR			NOT

LIFTING BRACKET(#1495-)

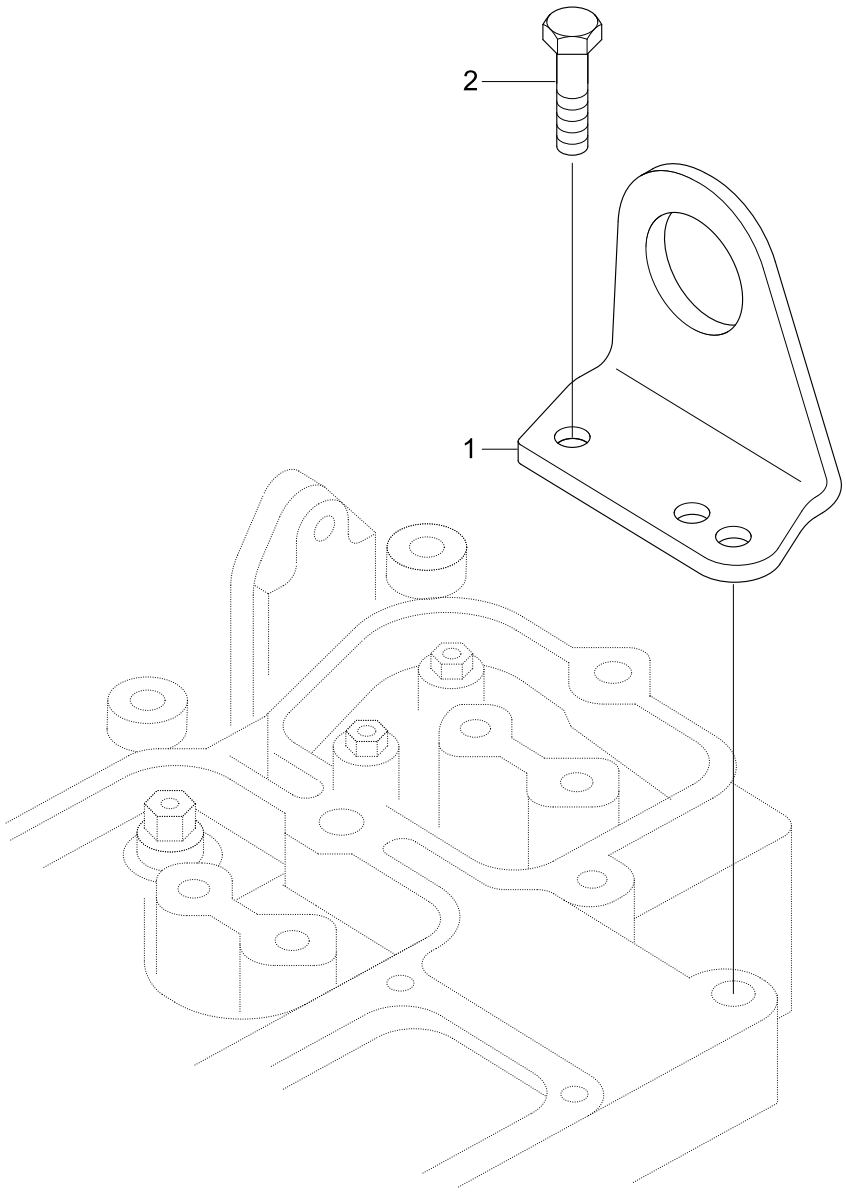

Item	Part_No	IS	Ord	T	Description	Qty	Serial_No	ITC	Remark
*	@				LIFTING BRACKET	1	#1495 -	-	NOT
1	3908118				BRACKET-LIFTING	1			
2	3910495				SCREW	1			

LUBRICATING OIL COOLER(#1495-)

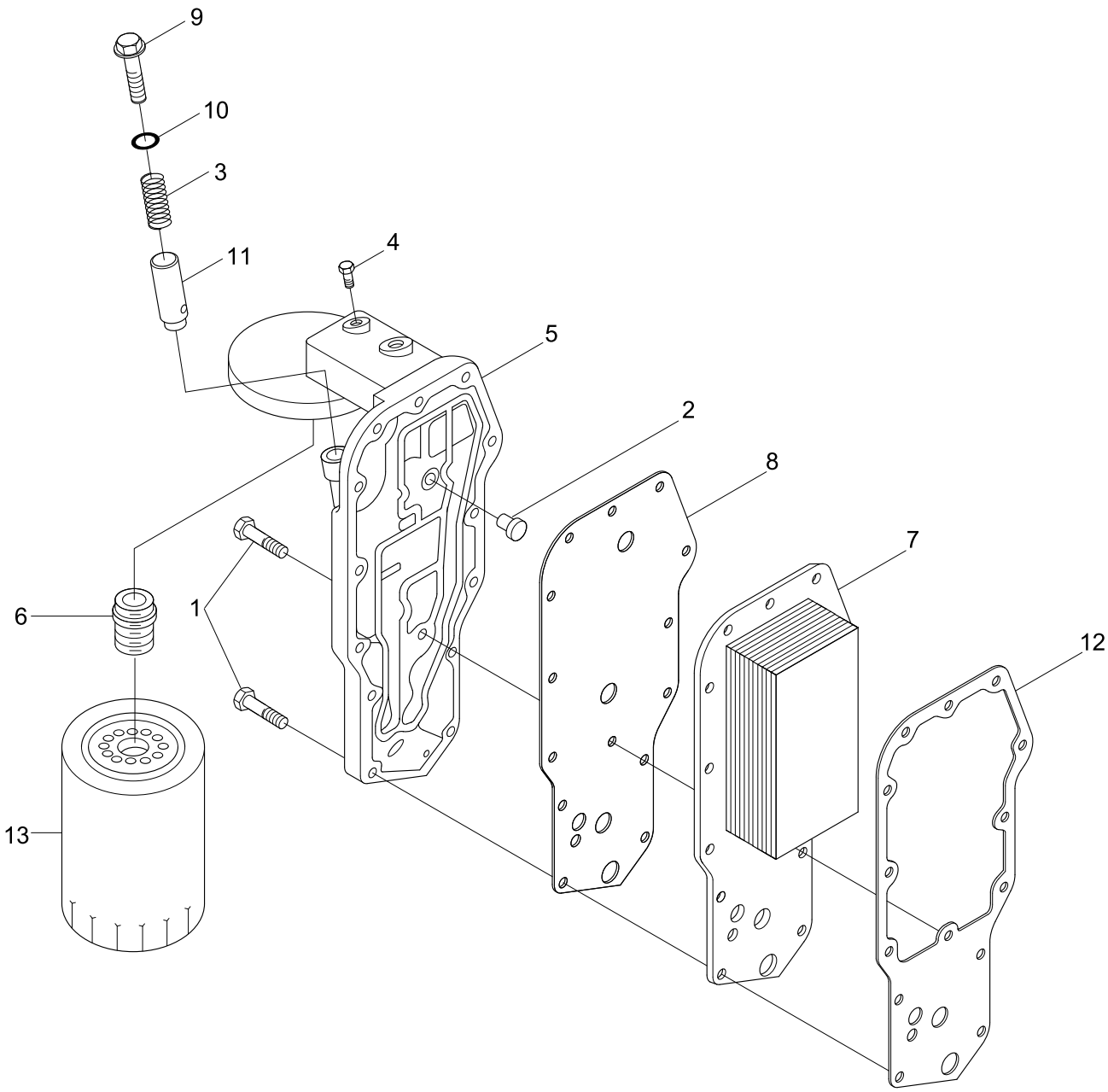

Item	Part_No	IS	Ord	T	Description	Qty	Serial_No	ITC	Remark
*	@				LUBRICATING OIL COOLER	1	#1495 -	-	NOT
1	3900632				SCREW	14			
2	3936365				VALVE	1			
3	3925009				SPRING-COMPRESSION	1			
4	3906619				PLUG-PIPE	1			
*	3918954				HEAD-LUB OIL FILTER	1			
5	3924338				.HEAD-LUB OIL FILTER	1			
6	3909355				.ADAPTER-FILTER HEAD	1			
7	3957543				CORE-COOLER	1			
8	3942915				GASKET-FILTER HEAD	1			
9	3915787				PLUG-THREADED	1			
10	3929457				SEAL/O-RING	1			
11	3918428				PLUNGER	1			
12	3942914				GASKET-O/COOLER CORE	1			
13	11N4-70110				FILTER-LUB OIL	1			

OIL LEVEL GAUGE(#1495-)

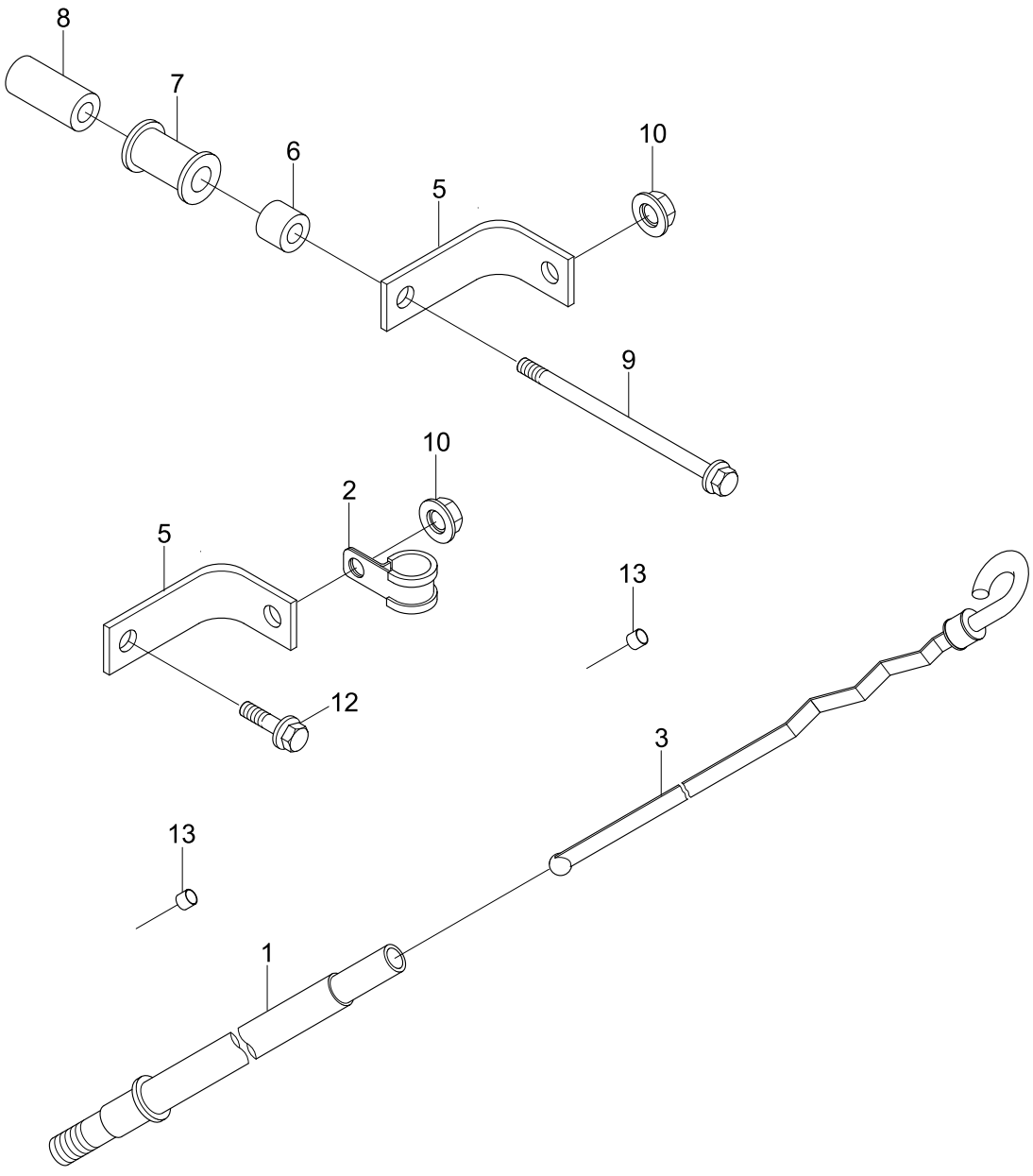

Item	Part_No	IS	Ord	T	Description	Qty	Serial_No	ITC	Remark
*	@				OIL LEVEL GAUGE	1	#1495 -	-	NOT
1	3283354				TUBE-OIL GAUGE	1			
N2	3863405				CLIP	1			NOT
N3	3863630				DIPSTICK	1			NOT
N5	3864013				BRACKET-CONNECTION	2			NOT
N6	3864014				SPACER-MOUNTING	1			NOT
N7	3864015				ISOLATOR-VIBRATION	1			NOT
N8	3864016				SPACER-MOUNTING	1			NOT
N9	3864018				SCREW	1			NOT
10	3900589				NUT-HEX FLANGE	2			
12	3900632				SCREW	1			
13	3900955				PLUG-EXPANSION	3			
N	@				NOT INDIVIDUALLY SUPPLIED	AR			NOT

LUBRICATING OIL PUMP(#1495-)

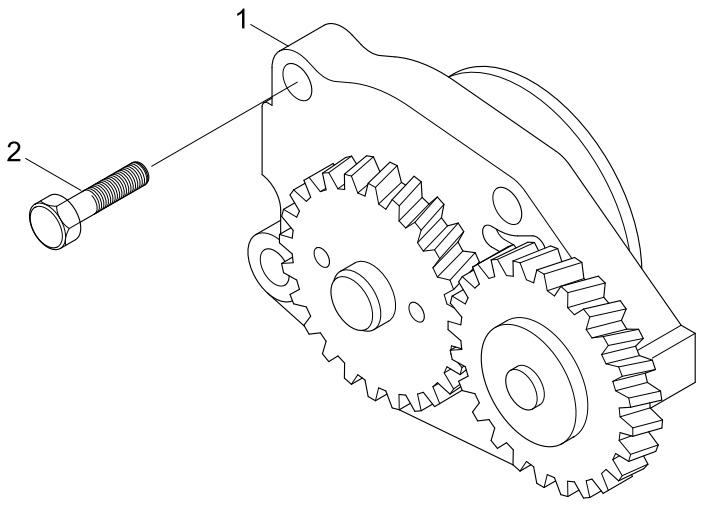

Item	Part_No	IS	Ord	T	Description	Qty	Serial_No	ITC	Remark
*	@				LUBRICATING OIL PUMP	1	#1495 -	-	NOT
1	3937027				PUMP-LUB OIL	1			
2	3900677				SCREW	4			

AIR FUEL CONTROL(#1495-)

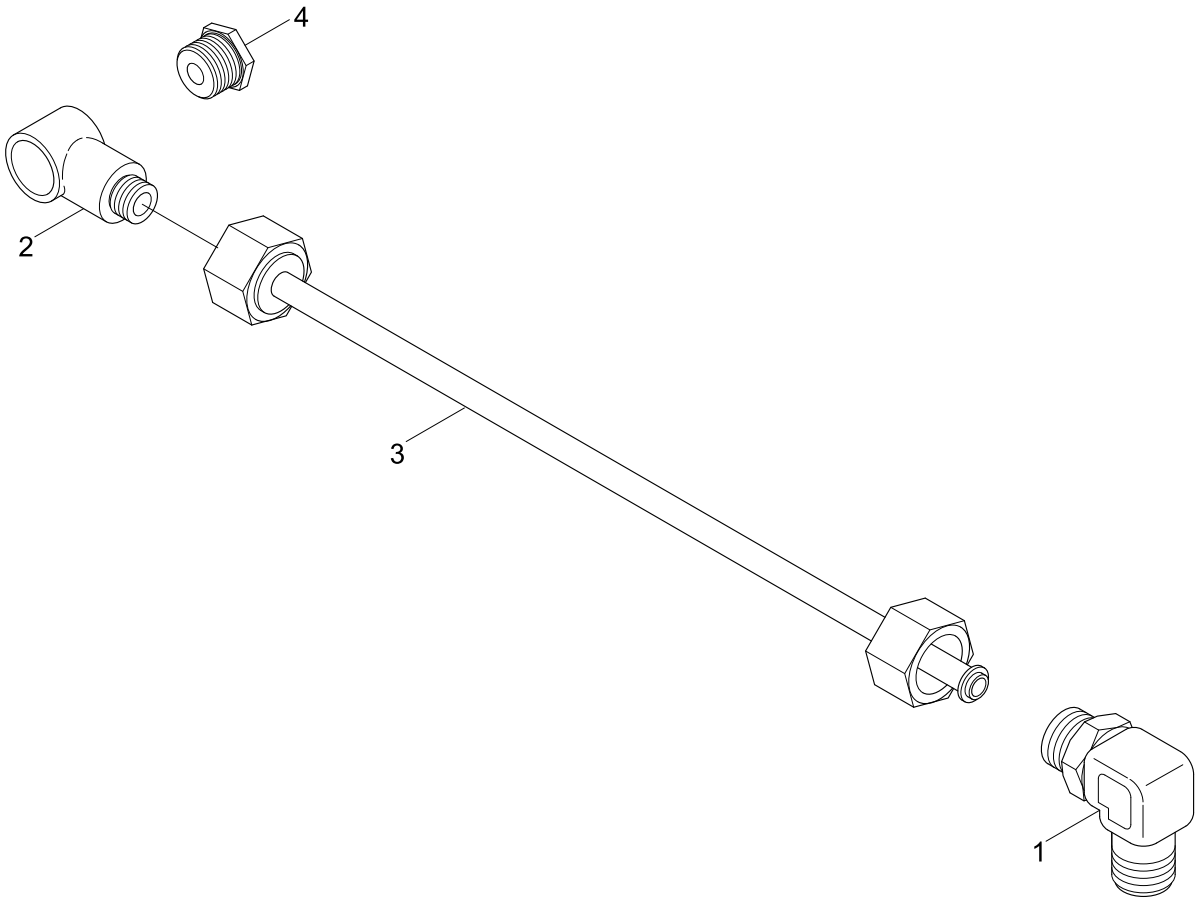

Item	Part_No	IS	Ord	T	Description	Qty	Serial_No	ITC	Remark
*	@				AIR FUEL CONTROL	1	#1495 -	-	NOT
1	3910265				ELBOW-MALE ADAPTER	1			
N2	3864301				CONNECTOR-BANJO	1			NOT
3	3991513				TUBE-AIR FUEL CONTROL	1			
4	S931C				BUSHING-REDUCING PIPE	1			
N	@				NOT INDIVIDUALLY SUPPLIED	AR			NOT

OIL PAN(#1435-)

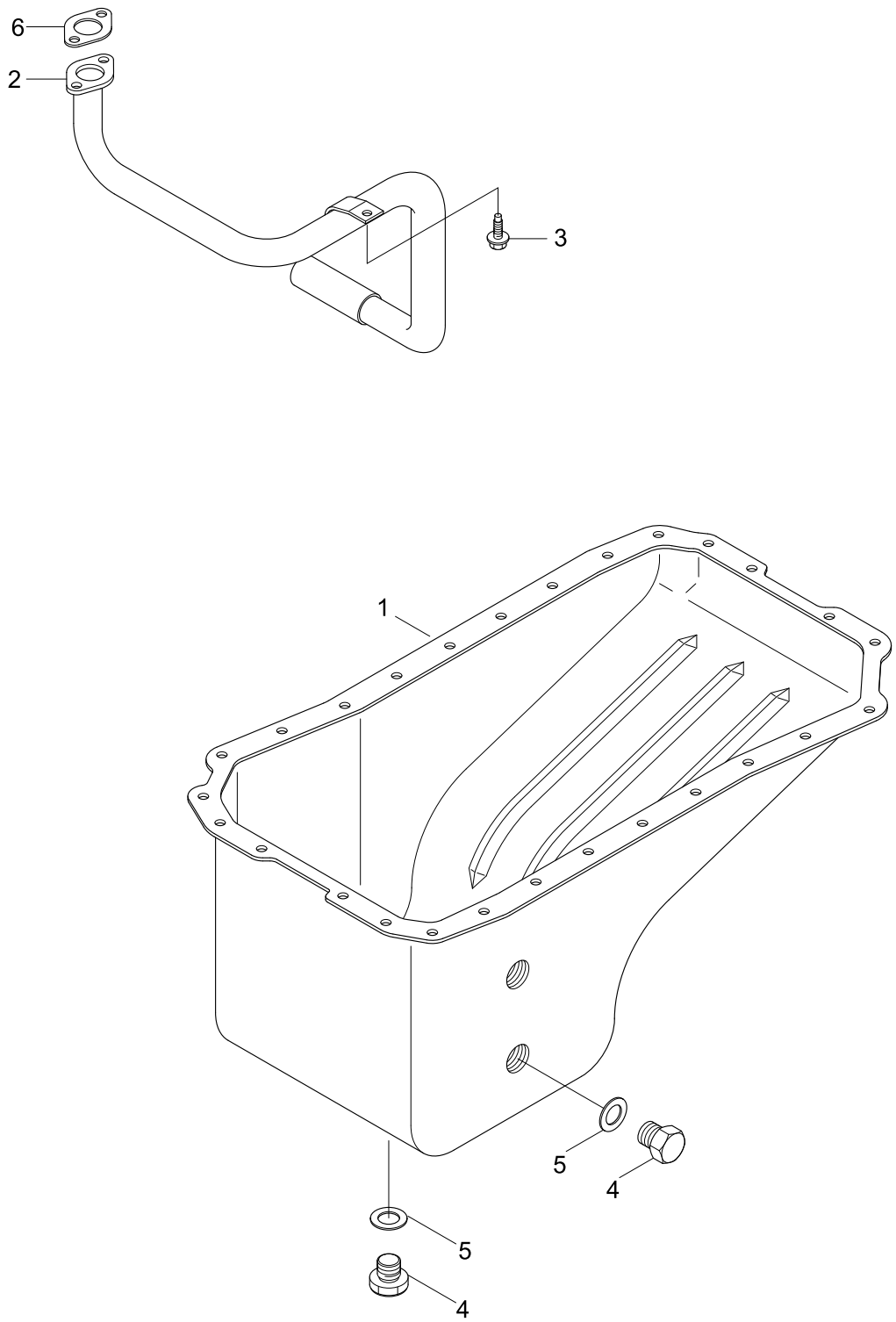

Item	Part_No	IS	Ord	T	Description	Qty	Serial_No	ITC	Remark
*	@				OIL PAN	1	#1495 -	-	NOT
1	3863222				PAN-OIL	1			
2	3863416				CONNECTION-O/SUCTION	1			
3	3900630				SCREW-HEX HEAD CAP	1			
4	3938157				GASKET-FLANGE	1			
5	3093844				WASHER-SEALING	2			
6	3924148				PLUG	2			

CONNECTING ROD & PISTON(#1495-)

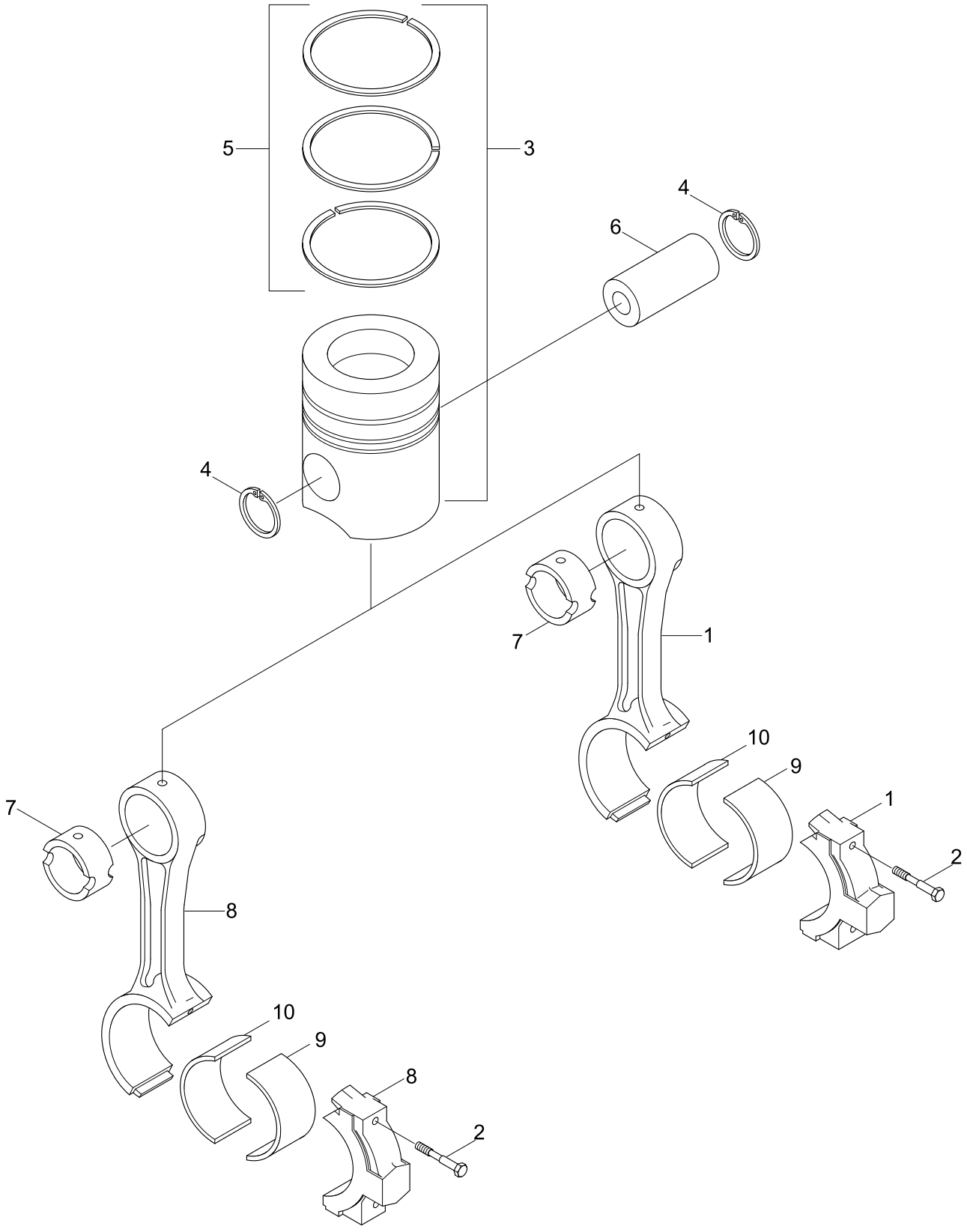

Item	Part_No	IS	Ord	T	Description	Qty	Serial_No	ITC	Remark
*	@				CONNECTING ROD & PST	1	#1495 -	-	NOT
1	3954658				ROD-CONNECTING	4			
*N	3954657				.ROD-CONNECTING	1			NOT
2	4891179				..SCREW	2			
7	4891178				..BUSHING	1			
3	3957797				KIT-ENGINE PISTON	4			
*N	3957795				.PISTON-ENGINE	1			NOT
4	3901706				.RING-RETAINING	2			
5	3938177				.SET-PISTON RING	1			
6	3934047				PIN-PISTON	4			
8	4891176				ROAD-ENGINE CONNECTING	4			
*N	4891177				.ROD-ENG CONNECTING	1			NOT
2	4891179				..SCREW	2			
7	4891178				..BUSHING	1			
9	4893693				BEARING-C/ROD(STD)	4			LOWER
	4892795				BEARING-C/ROD(0.25)	4			
	4892796				BEARING-C/ROD(0.50)	4			
	4892797				BEARING-C/ROD(0.75)	4			
	4892798				BEARING-C/ROD(1.00)	4			
10	3939859				BEARING-C/ROD(STD)	4			UPPER
	3901171				BEARING-C/ROD(0.25)	4			
	3901172				BEARING-C/ROD(0.50)	4			
	3901173				BEARING-C/ROD(0.75)	4			
	3901174				BEARING-C/ROD(1.00)	4			
N	@				NOT INDIVIDUALLY SUPPLIED	AR			NOT

CAMSHAFT(#1495-)

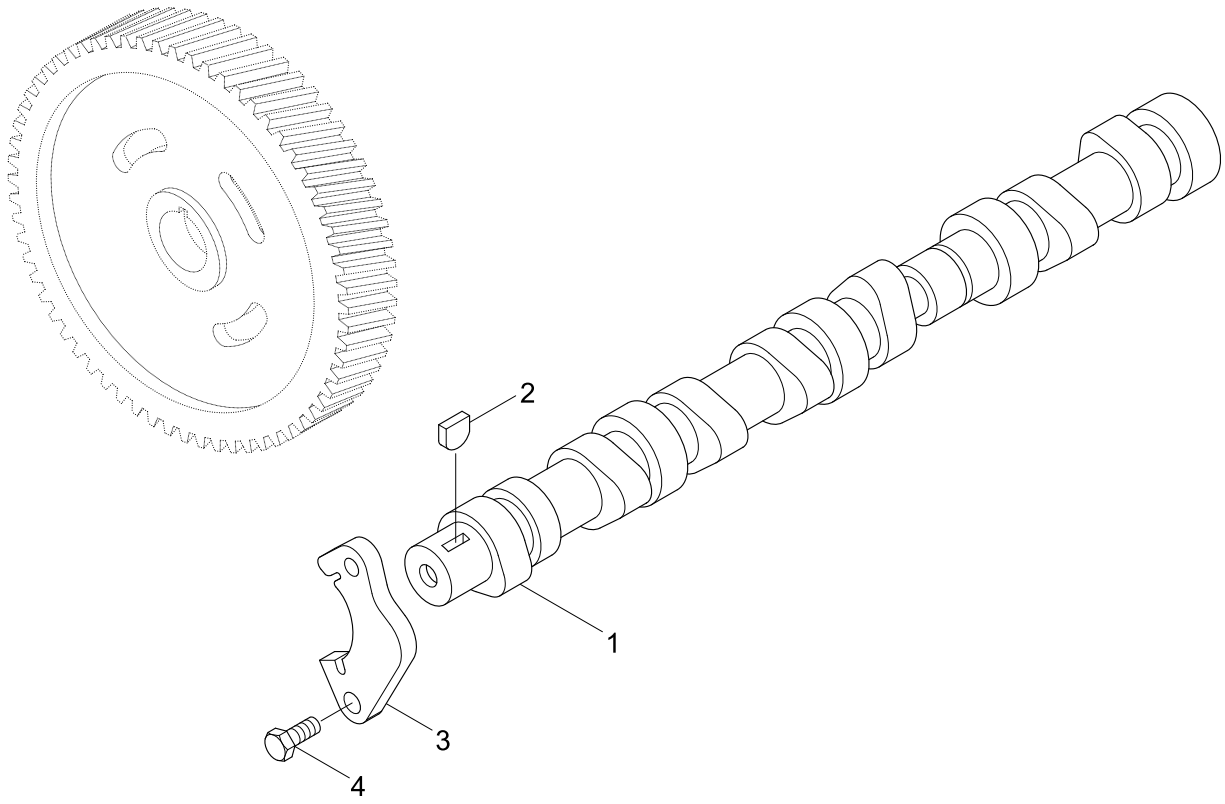

Item	Part_No	IS	Ord	T	Description	Qty	Serial_No	ITC	Remark
*	@				CAMSHAFT	1	#1495 -	-	NOT
1	3929885				CAMSHAFT	1			
2	3902332				KEY-PLAIN WOODRUFF	1			
3	3927155				SUPPORT	1			
4	3900227				SCREW	2			

FUEL INJECTOR(#1495-)

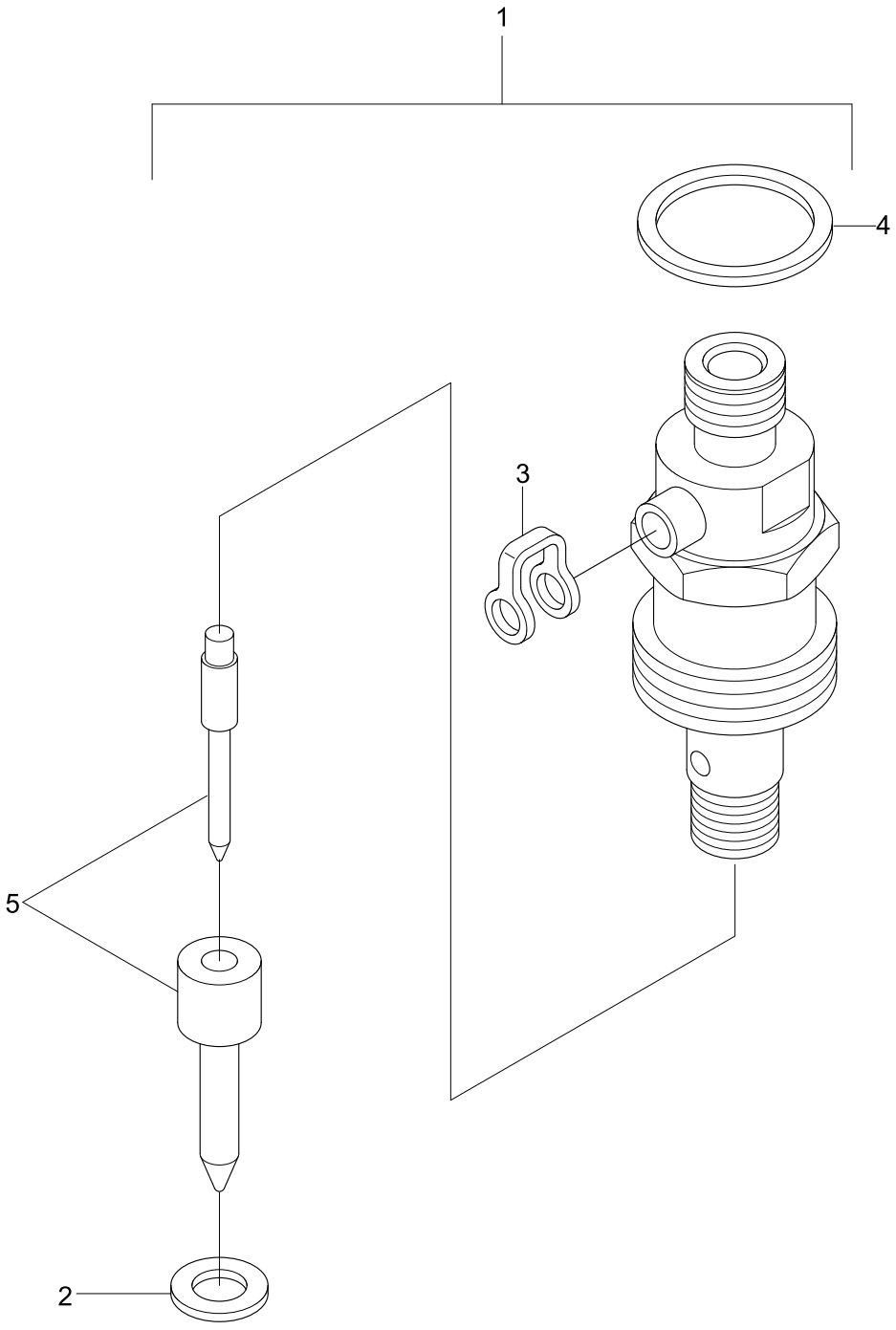

Item	Part_No	IS	Ord	T	Description	Qty	Serial_No	ITC	Remark
*	@				FUEL INJECTOR	1	#1495 -	-	NOT
1	4025334				FUEL INJECTOR	1			
*	4063212				.INJECTOR	1			
2	3863755				.SEAL-INJECTOR	1			
3	3903380				.BANJO CONN-SEAL	1			
4	3909356				.SEAL-RECT RING	1			
N5	4063321				.NOZZLE-INJECTOR	1			NOT
N	@				NOT INDIVIDUALLY SUPPLIED	AR			NOT

CYLINDER HEAD(#1495-)

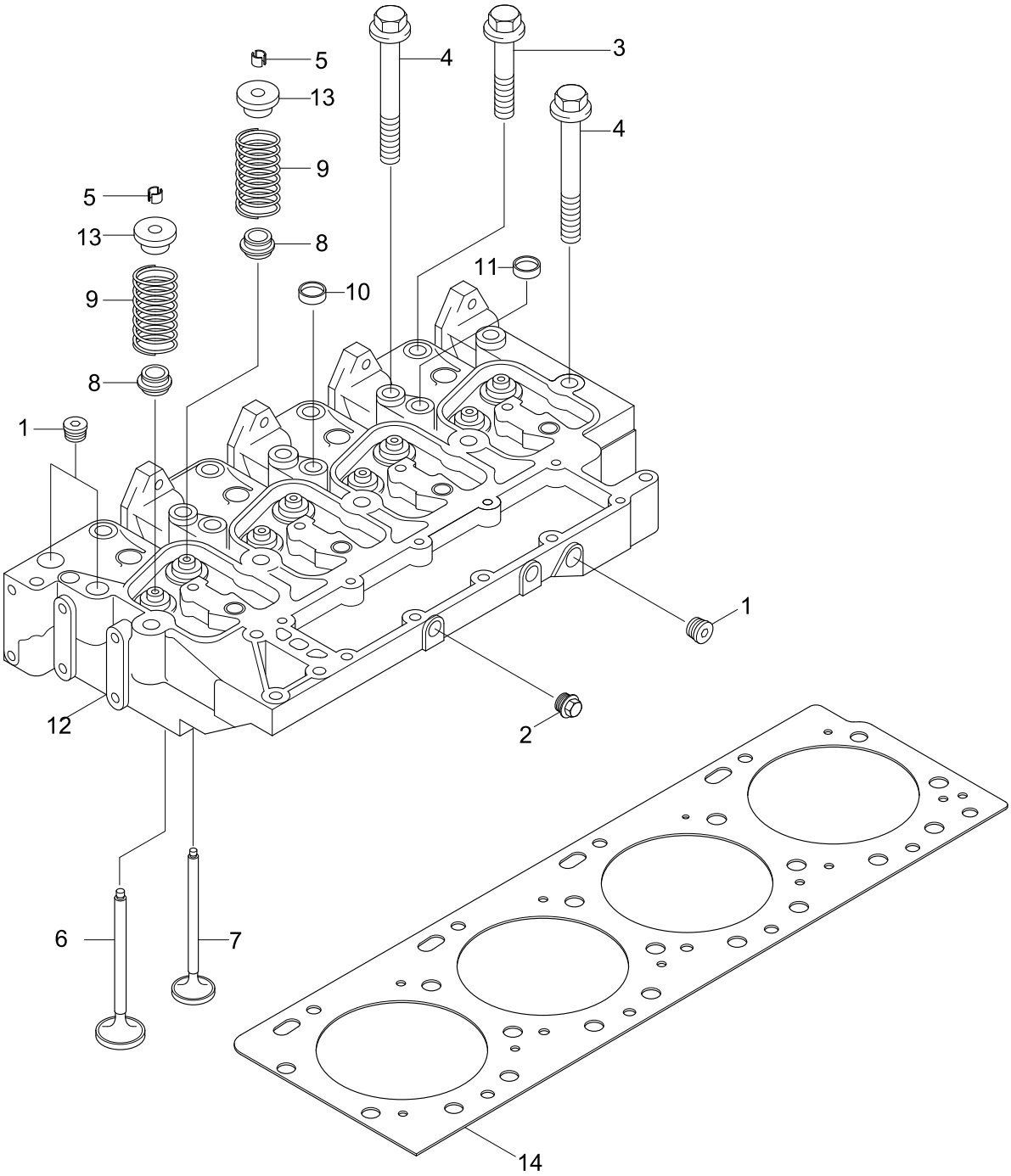

Item	Part_No	IS	Ord	T	Description	Qty	Serial_No	ITC	Remark
*	@				CYLINDER HEAD	1	#1495 -	-	NOT
1	3008468				PLUG-PIPE	5			
2	3906619				PLUG-PIPE	2			
3	3920779				SCREW	4			
4	3920780				SCREW	10			
*	3802355				VALVE-INTAKE	4			
5	3900250				.COLLET-VALVE	8			
N6	3920867				.VALVE-INTAKE	4			NOT
*	3802356				VALVE-EXHAUST	4			
5	3900250				.COLLET-VALVE	4			
N7	3920868				.VALVE-EXHAUST	4			NOT
8	3957912				SEAL-VALVE	8			
9	3932453				SPRING-VALVE	8			
*N	3966448				HEAD-CYLINDER	1			NOT
10	3812092				.PLUG-EXPANSION	3			
11	3922073				.PLUG	3			
N12	3966447				.HEAD-CYLINDER	1			NOT
13	3957913				RETAINER-VALVE SPRING	8			
14	3283333				GASKET-CYLINDER HEAD	1			PP97342

STARTING MOTOR(#1495-)

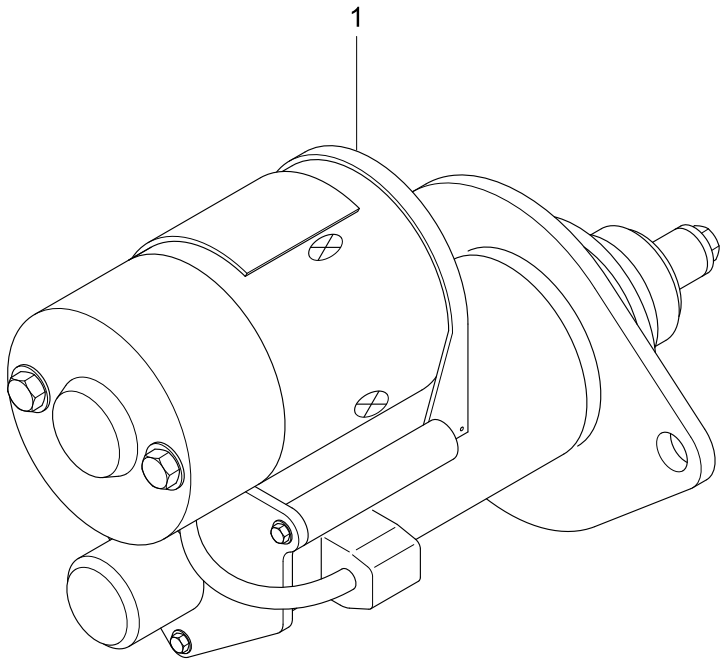

Item	Part_No	IS	Ord	T	Description	Qty	Serial_No	ITC	Remark
*	@				STARTING MOTOR	1	#1495 -	-	NOT
N1	3864298				MOTOR-STARTING	1			NOT

VALVE COVER(#1495-)

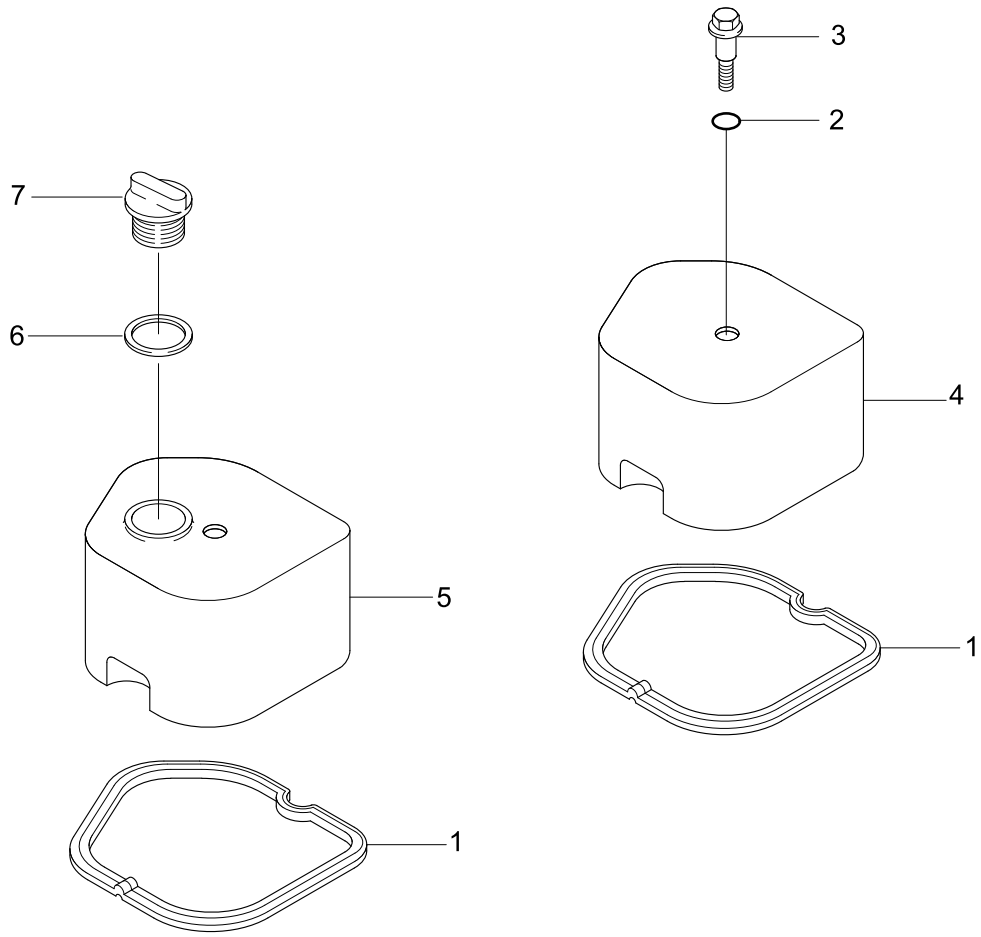

Item	Part_No	IS	Ord	T	Description	Qty	Serial_No	ITC	Remark
*	@				VALVE COVER	1	#1495 -	-	NOT
1	3930906				GASKET-VALVE COVER	4			
2	3935449				ISOLATOR	4			
3	3907049				SCREW	4			
4	3928404				COVER-VALVE	3			
5	3928405				COVER-VALVE	1			
6	3936876				SEAL-RECT RING	1			
7	3901895				CAP-FILLER	1			

LIFT PUMP(#1495-)

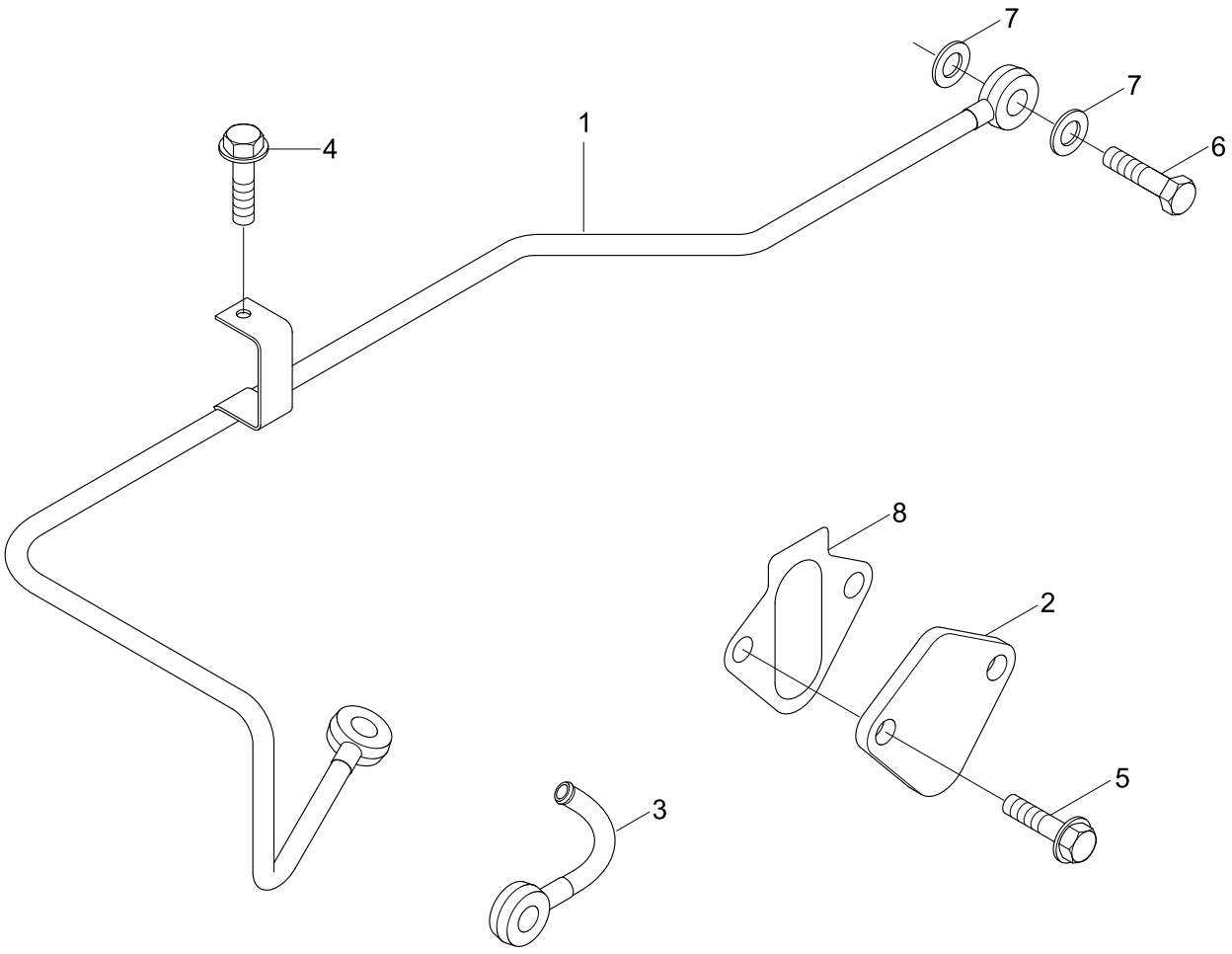

Item	Part_No	IS	Ord	T	Description	Qty	Serial_No	ITC	Remark
*	@				LIFT PUMP	1	#1495 -	-	NOT
1	3863427				TUBE-FUEL SUPPLY	1			
2	3863441				PLATE-COVER	1			
3	3863453				CONNECTOR-BANJO	1			
4	3900630				SCREW-HEX HEAD CAP	1			
5	3900631				SCREW-HEX HEAD CAP	1			
6	3916361				SCREW	1			
7	3963983				WASHER-SEALING	2			
8	3931059				GASKET-COVER PLATE	1			

TURBOCHARGER(#1495-)

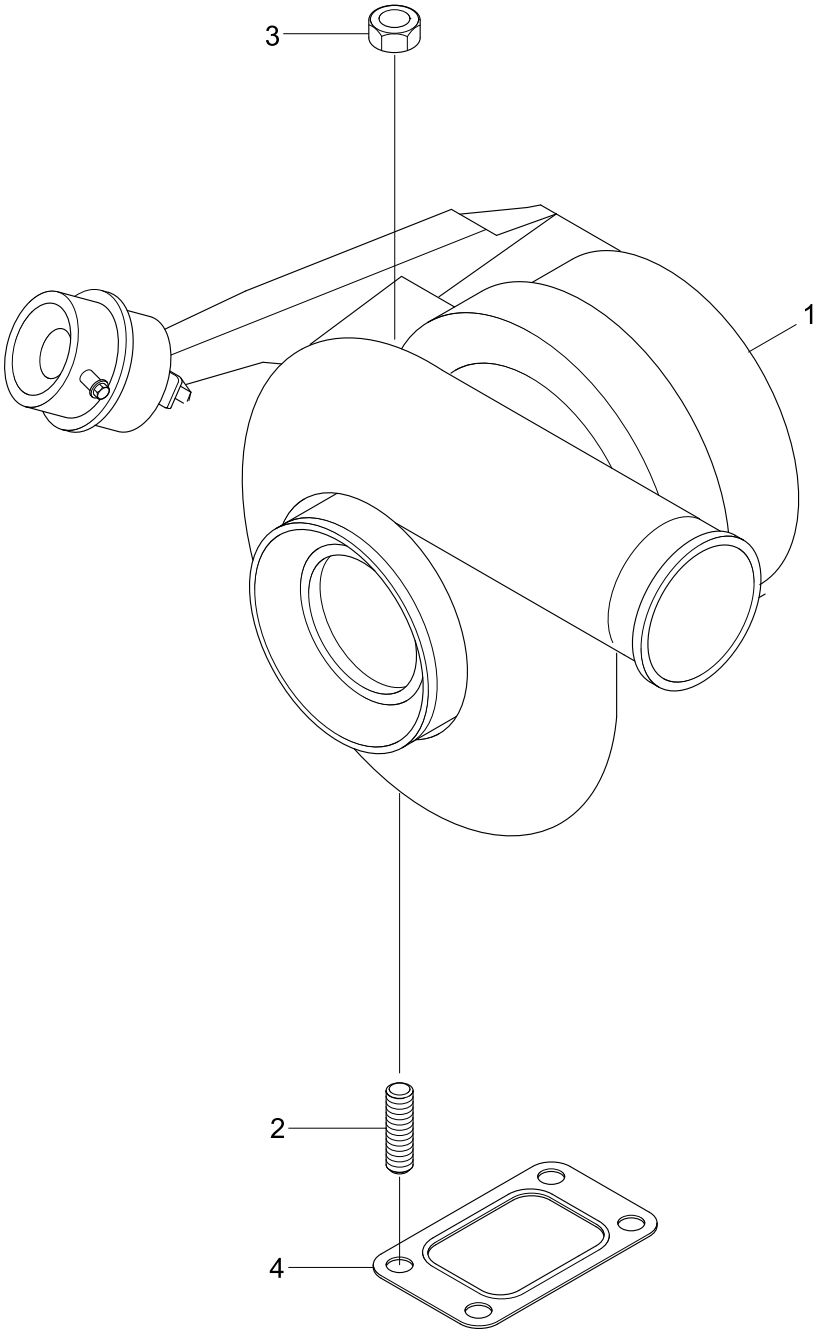

Item	Part_No	IS	Ord	T	Description	Qty	Serial_No	ITC	Remark
*	@				TURBOCHARGER	1	#1495 -	-	NOT
*N	3599356				TURBOCHARGER	1			NOT
N1	3599355				.TURBOCHARGER	1			NOT
2	3863791				STUD	4			
3	3863792				NUT-HEXAGON	4			
4	3864271				GASKET-TURBOCHARGER	1			

FLUID LEVEL SENSOR(#1495-)

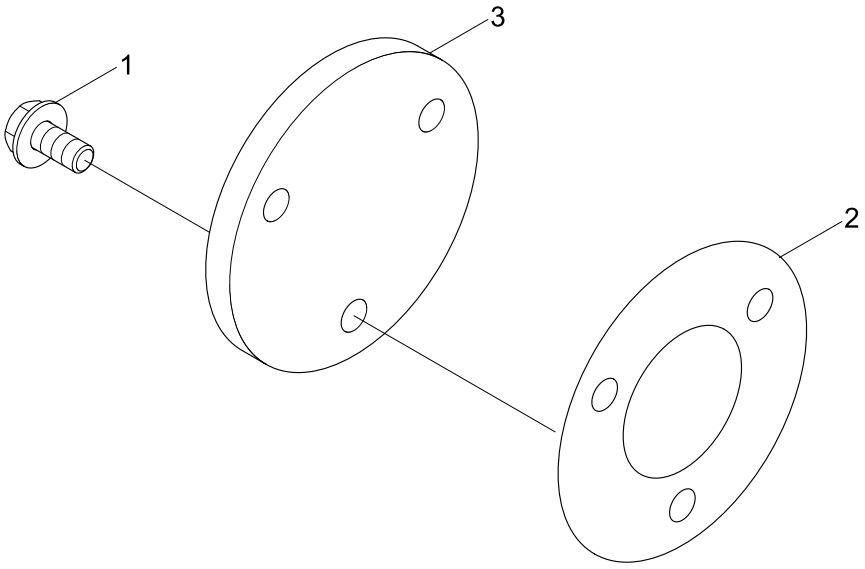

Item	Part_No	IS	Ord	T	Description	Qty	Serial_No	ITC	Remark
*	@				FLUID LEVEL SENSOR	1	#1495 -	-	NOT
1	3900626				SCREW	3			
N2	3939357				GASKET-COVER	1			NOT
3	3932513				PLATE-COVER	1			
N	@				NOT INDIVIDUALLY SUPPLIED	AR			NOT

ENGINE OIL DRAIN VALVE(#1495-)

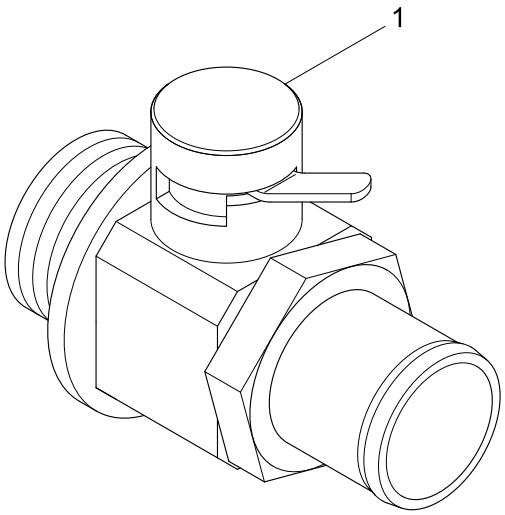

Item	Part_No	IS	Ord	T	Description	Qty	Serial_No	ITC	Remark
*	@				ENGINE OIL D/VALVE	1	#1495 -	-	NOT
1	11N8-00210				ENGINE OIL D/VALVE	1			

TURBOCHARGER PLUMBING(#1495-)

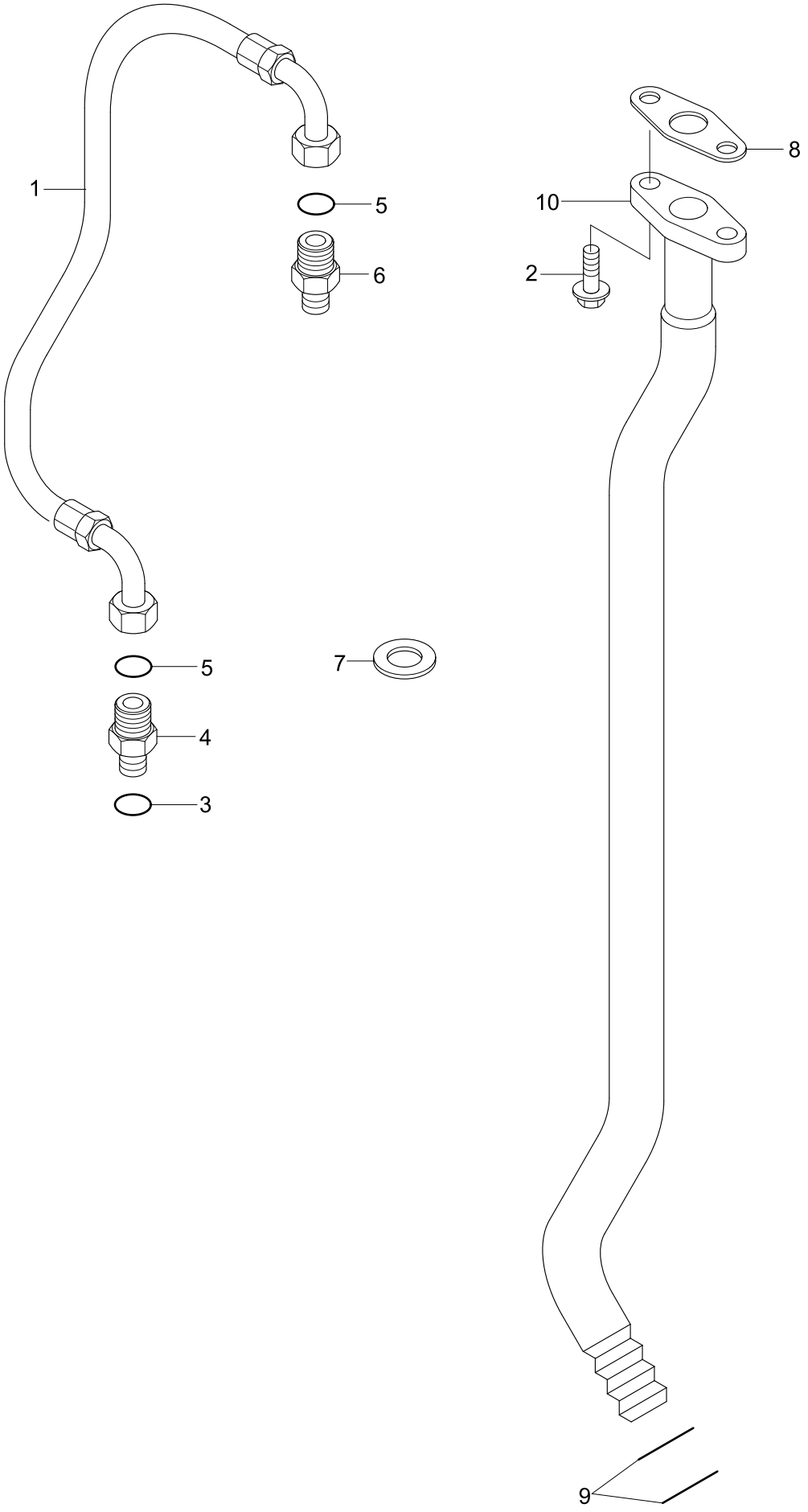

Item	Part_No	IS	Ord	T	Description	Qty	Serial_No	ITC	Remark
*	@				T/CHARGER PLUMBING	1	#1495 -	-	NOT
1	3282159				HOSE-FLEXIBLE	1			
2	3901865				SCREW	2			
*	3922789				CONNECTOR	1			
3	3037236				.SEAL/O-RING	1			
N4	3922790				.CONNECTOR	1			NOT
5	3922794				.SEAL/O-RING	2			
N6	3864382				.CONNECTOR-MALE	1			NOT
7	3932484				.WASHER-SEALING	1			
8	3863787				GASKET-OIL DRAIN	1			
9	3928624				.SEAL/O-RING	2			
10	3863754				.CONN-TUR OIL DRAIN	1			

WATER PUMP(#1495-)

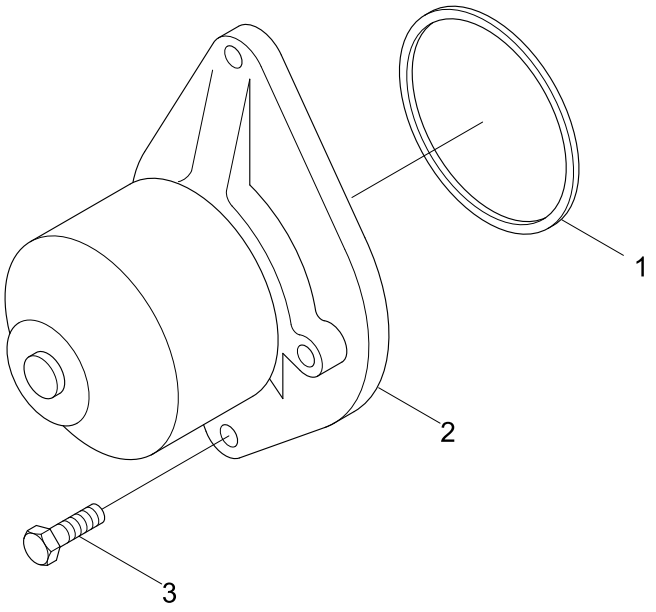

Item	Part_No	IS	Ord	T	Description	Qty	Serial_No	ITC	Remark
*	@				WATER PUMP	1	#1495 -	-	NOT
	3286275				KIT-WATER PUMP	1			
1	3906698				.SEAL-RECT RING	1			
2	3285410				.PUMP-WATER	1			
3	3941981				SCREW	2			

WATER INLET CONNECTION(#1495-)

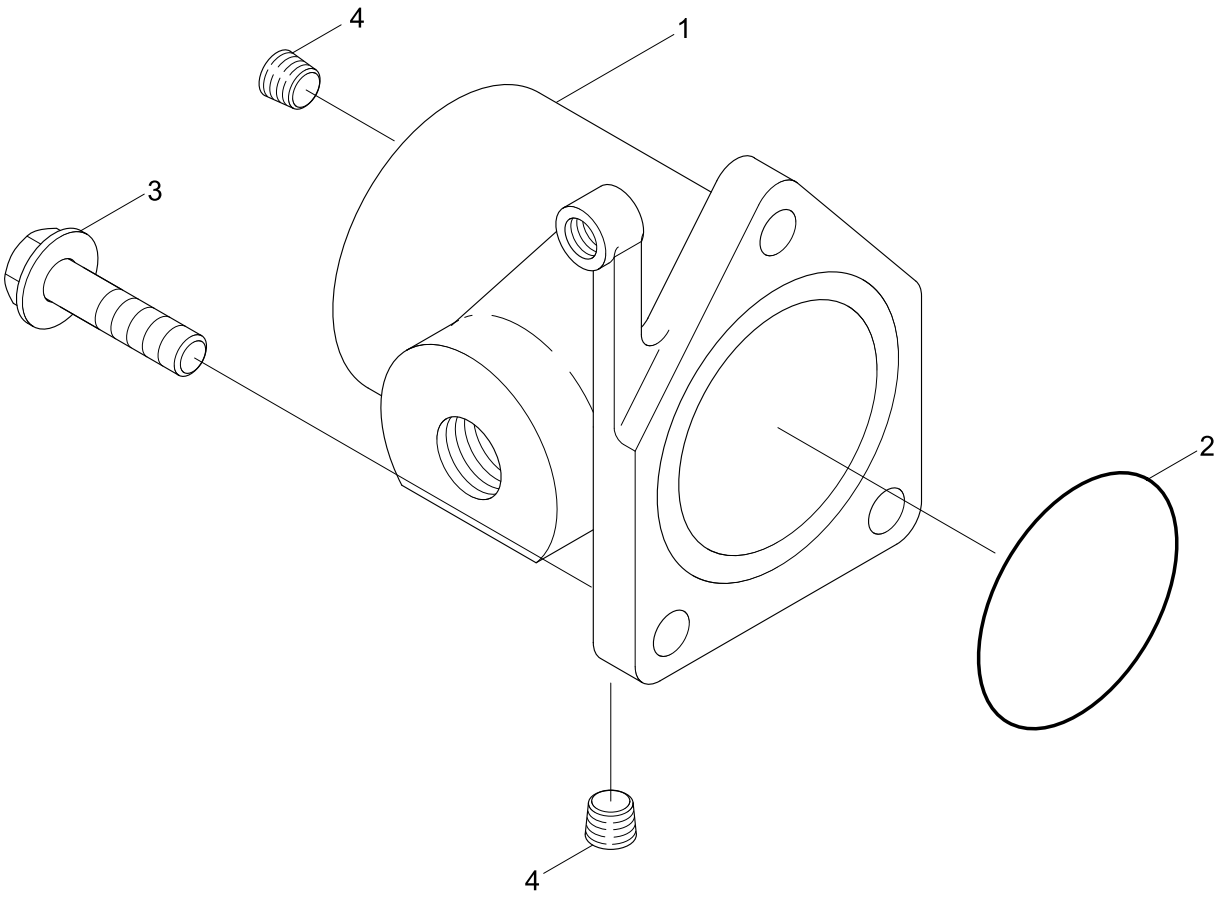

Item	Part_No	IS	Ord	T	Description	Qty	Serial_No	ITC	Remark
*	@				WATER INLET CONNECTION	1	#1495 -	-	NOT
1	3916625				CONN-WATER INLET	1			
2	3906697				SEAL-RECT RING	1			
3	3902460				SCREW-HEX HEAD CAP	3			
4	3008468				PLUG-PIPE	2			WI9701

FUEL DRAIN LOCATION(#1495-)

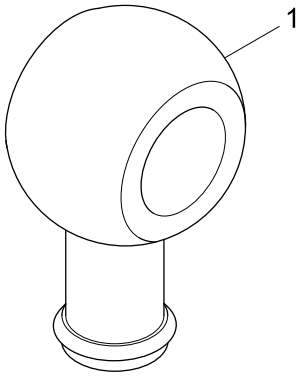

Item	Part_No	IS	Ord	T	Description	Qty	Serial_No	ITC	Remark
*	@				FUEL DRAIN LOCATION	1	#1495 -	-	NOT
N1	3864002				CONNECTOR	1			NOT
N	@				NOT INDIVIDUALLY SUPPLIED	AR			NOT

FUEL SHUTOFF VALVE(#1495-)

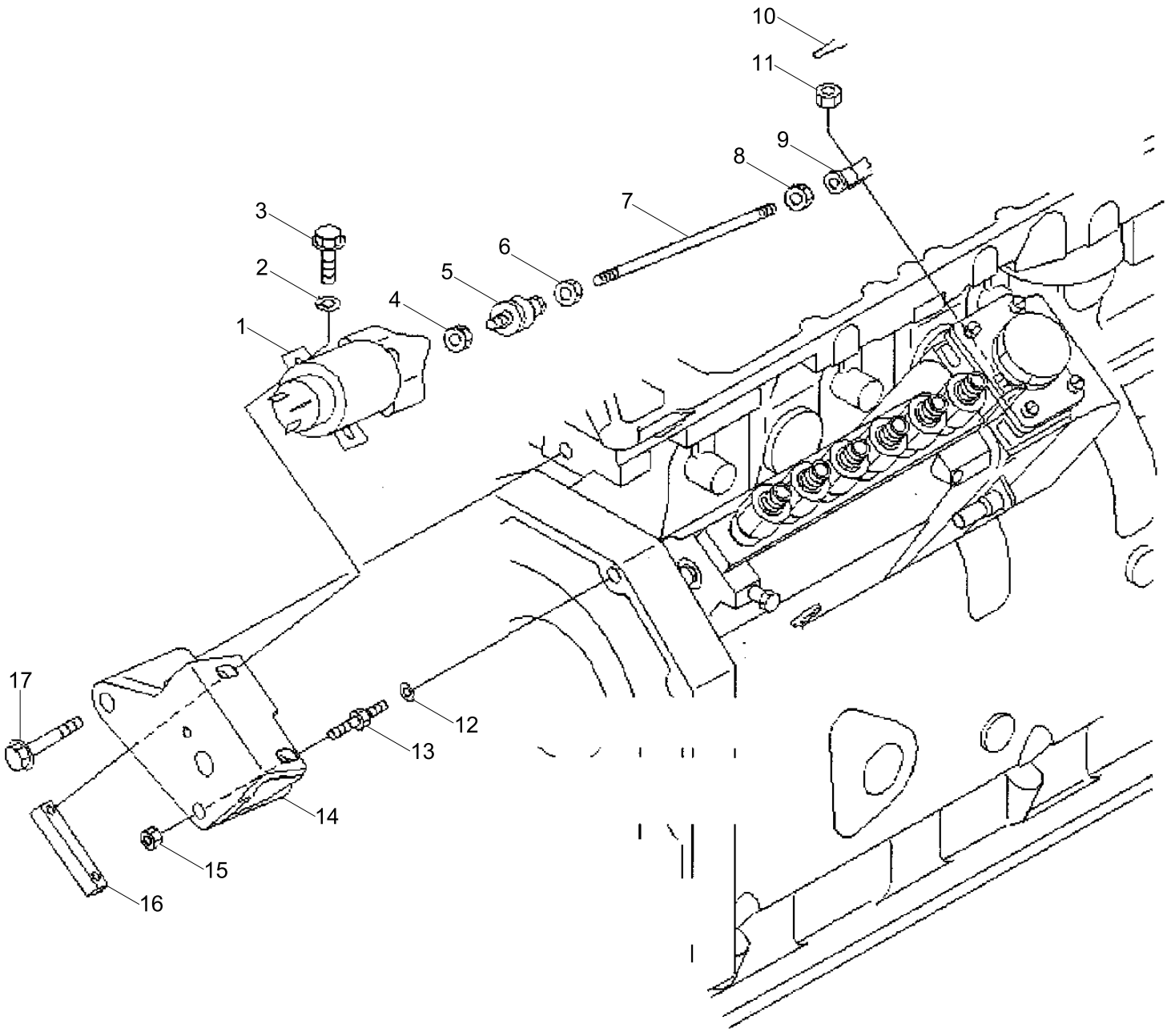

Item	Part_No	IS	Ord	T	Description	Qty	Serial_No	ITC	Remark
*	@				FUEL SHUTOFF VALVE	1	#1495 -	-	NOT
1	3864274				SOLENOID	1			
2	3094023				WASHER	2			
3	3863996				SCREW	2			
4	3093946				NUT	1			
5	3863152				ROD	1			
6	3093946				NUT	2			
7	3863999				ROD	1			
8	3863154				NUT	1			
9	3863155				END	1			
10	3863156				PIN-COTTER	1			
11	3863157				NUT-HEX SLOTTED	1			
12	3863995				WASHER	1			
13	3863993				SCREW	1			
14	3863992				BRACKET	1			
15	3863994				NUT	1			
16	3863997				BRACE	1			
17	3863998				SCREW	1			

STARTER MOUNTING(#1495-)

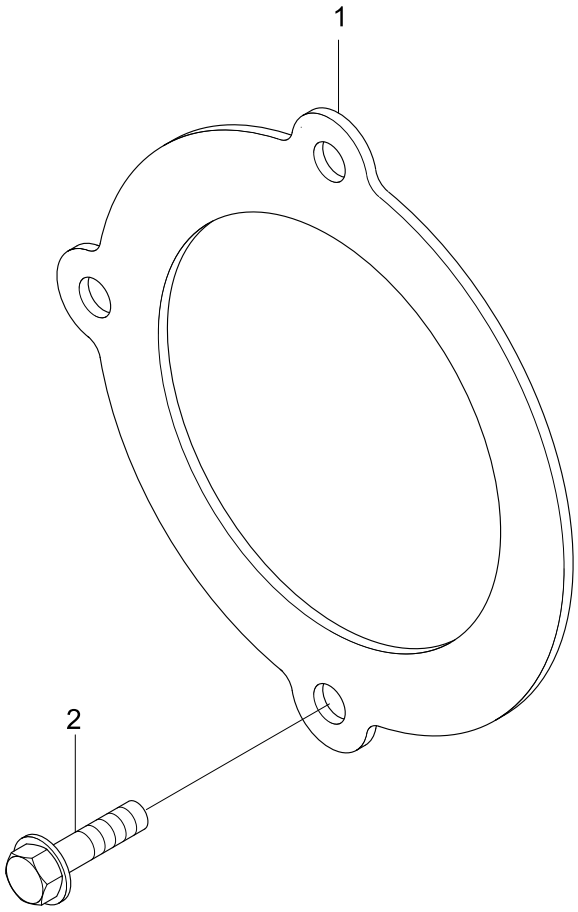

Item	Part_No	IS	Ord	T	Description	Qty	Serial_No	ITC	Remark
*	@				STARTER MOUNTING	1	#1495 -	-	NOT
1	3354514				SPACER	1			
2	3903834				SCREW-TWELVE P/CAP	2			

NOISE PANEL(#1495-)

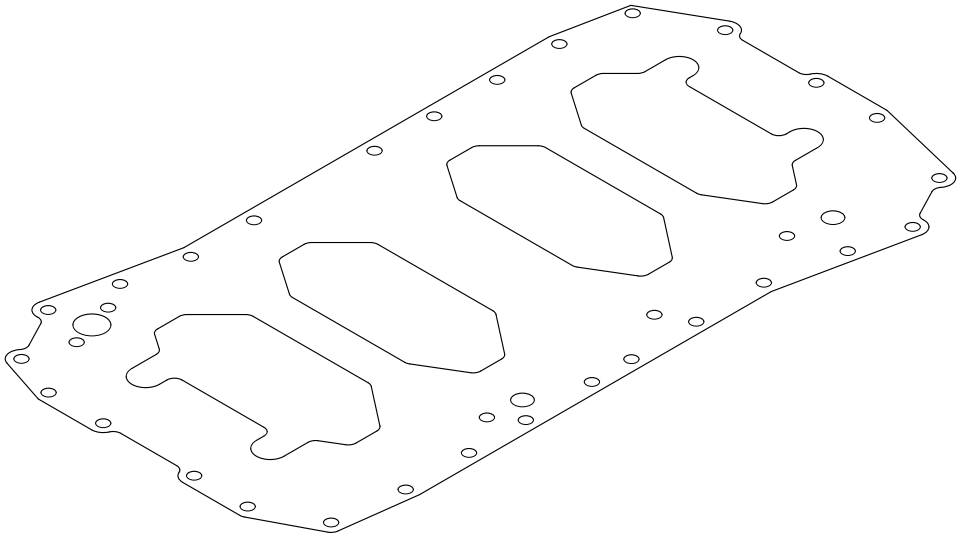

Item	Part_No	IS	Ord	T	Description	Qty	Serial_No	ITC	Remark
*	@				NOISE PANEL	1	#1495 -	-	NOT
1	3929093				PALTE-CYL BLOCK STIFFEN	1			

FUEL FILTER PLUMBING(#1495-)

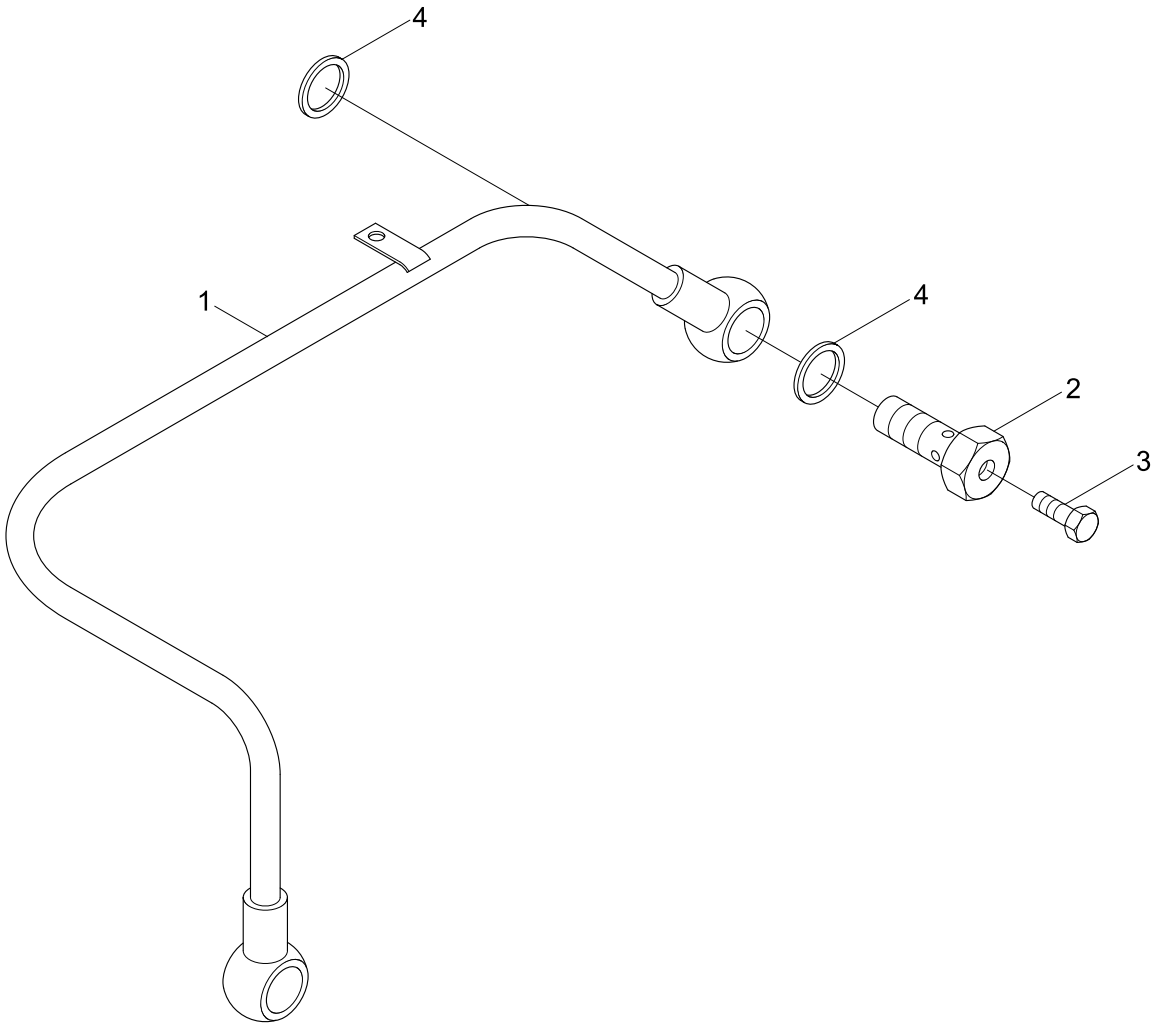

Item	Part_No	IS	Ord	T	Description	Qty	Serial_No	ITC	Remark
*	@				FUEL FILTER PLUMBING	1	#1495 -	-	NOT
1	3863180				TUBE-FUEL SUPPLY	1			
N*	3905860				SCREW	1			NOT
2	3911446				.SCREW	1			
3	3939570				.SCREW	1			
4	3963983				WASHER-SEALING	2			

EXHAUST MANIFOLD(#1495-)

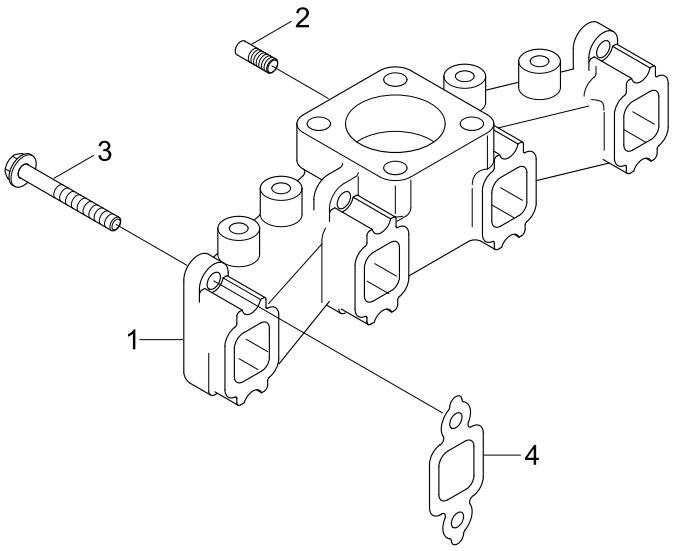

Item	Part_No	IS	Ord	T	Description	Qty	Serial_No	ITC	Remark
*	@				MANIFOLD-EXHAUST	1	#1495 -	-	NOT
1	3863720				MANIFOLD-EXHAUST	1			
2	3863363				PLUG-PIPE	1			
3	3930249				SCREW	8			
4	3864337				GASKET-EXHAUST	4			

CAM FOLLOWER COVER MOUNTING(#1495-)

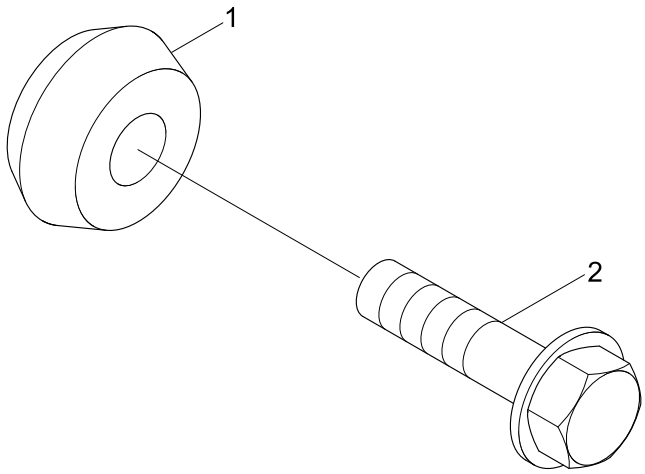

Item	Part_No	IS	Ord	T	Description	Qty	Serial_No	ITC	Remark
*	@				CAM FOLLOWER C/MOUNT	1	#1495 -	-	NOT
1	3928759				SEAL-GROMMET	2			
2	3900629				SCREW-H/FLANGE CAP	2			