ENGINE MOUNTING

RUTHZIL TRATOR COMERCIAL DE PEÇAS LTDA 11 97083-6812 ROLANDO CITRANGULO

R140W-7 HYUNDAI

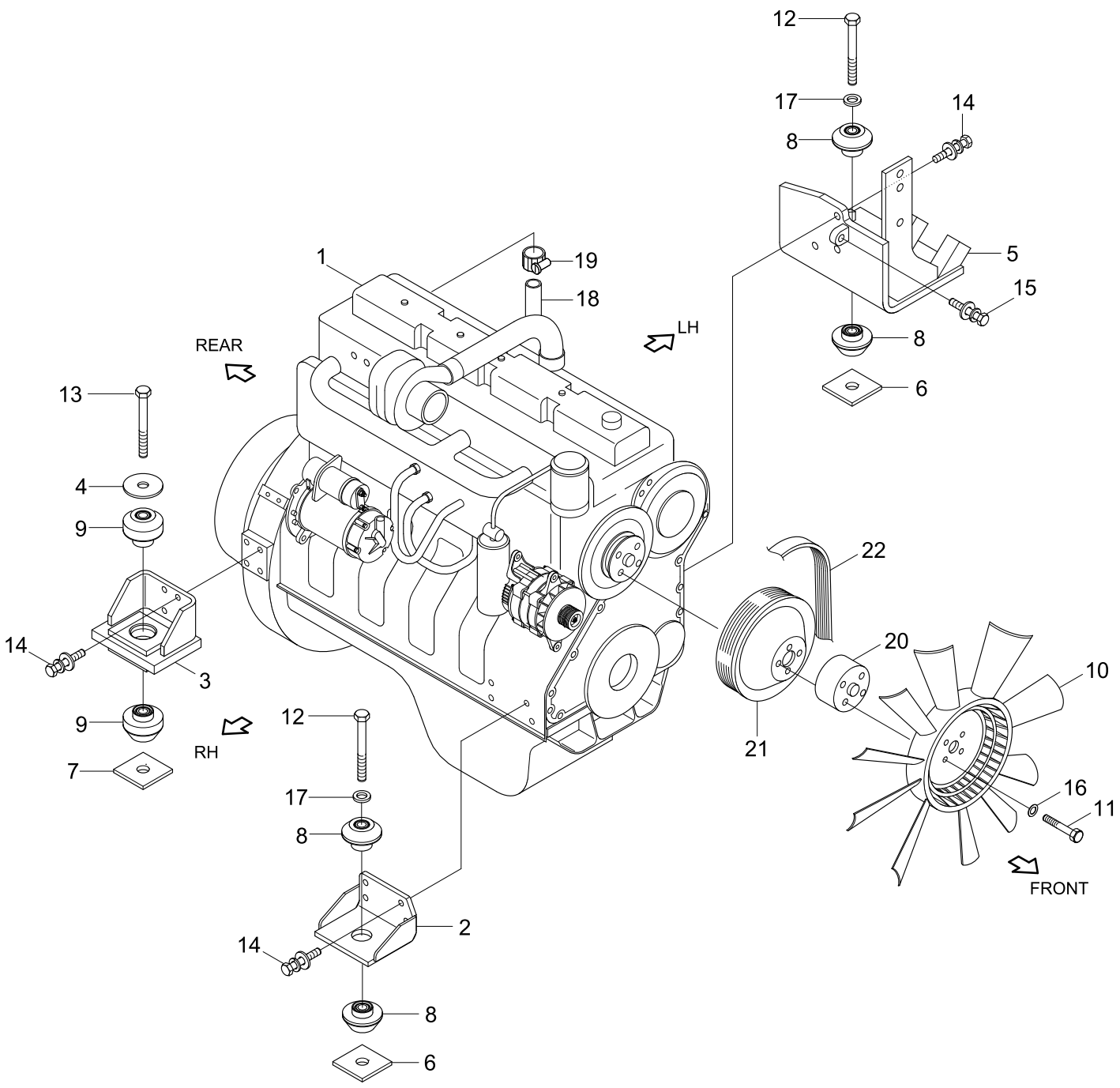

ENGINE ASSY : ITEM #1			
Serial No	Part No.	Pages	Remark
-#0071	11N4-03010	9010 - 9500	Ceres only
#0072-	11N4-06010	A010 - A570	This book

Item	Part_No	IS	Ord	T	Description	Qty	Serial_No	ITC	Remark
1	11N4-03010				ENGINE ASSY	1	- #0071		9010-9500
	11N4-06010				ENGINE ASSY	1	#0072 -	D	
2	11N4-00020				BRACKET-FRONT	1			
3	11N4-00040				BRACKET-REAR	2			
4	11N4-00060				WASHER-MOUNT	2			
5	11N4-00200				BRACKET-ENGINE & COMP	1	- #1003		
	11N4-00201				BRACKET-ENGINE & COMP	1	#1004 -	B	
6	11N4-00150				NUT-STOPPER	2			
7	11N4-00160				NUT-STOPPER	2			
8	11N6-08255				RUBBER-MOUNT	4	- #0071		
	11N6-08250				RUBBER-MOUNT	4	#0072 -	D	
9	11N6-10450				RUBBER-MOUNT	4			
10	11EK-02320				FAN(24")	1			STD
	11N4-00180				FAN-RING	1			RING FAN TYPE
11	S017-101202				BOLT-HEX	4			STD
	S017-101002				BOLT-HEX	4			RING FAN TYPE
12	S017-161352				BOLT-HEX	2			
13	S017-201452				BOLT-HEX	2			
14	S037-123022				BOLT-W/WASHER	14			
15	S037-125522				BOLT-W/WASHER	1			
16	S403-102002				WASHER-PLAIN	4			
17	S441-160002				WASHER-HARDENED	2			
18	11E9-02080				HOSE-BREATHER	1			
19	S520-027000				CLAMP-HOSE,SCREW TYPE	1			
20	@				SPACER-FAN	1			NOT

Item	Part_No	IS	Ord	T	Description	Qty	Serial_No	ITC	Remark
21	3918204				PULLEY-FAN	1	#0266 -	-	STD
	3914462				PULLEY-FAN	1	#0266 -	-	TROPICAL REGION
22	3929330				V-BELT	1	#0266 -	-	STD
	3288746				V-BELT	1	#0266 -	-	TROPICAL REGION

ENGINE CONTROL SYSTEM(-#0071)

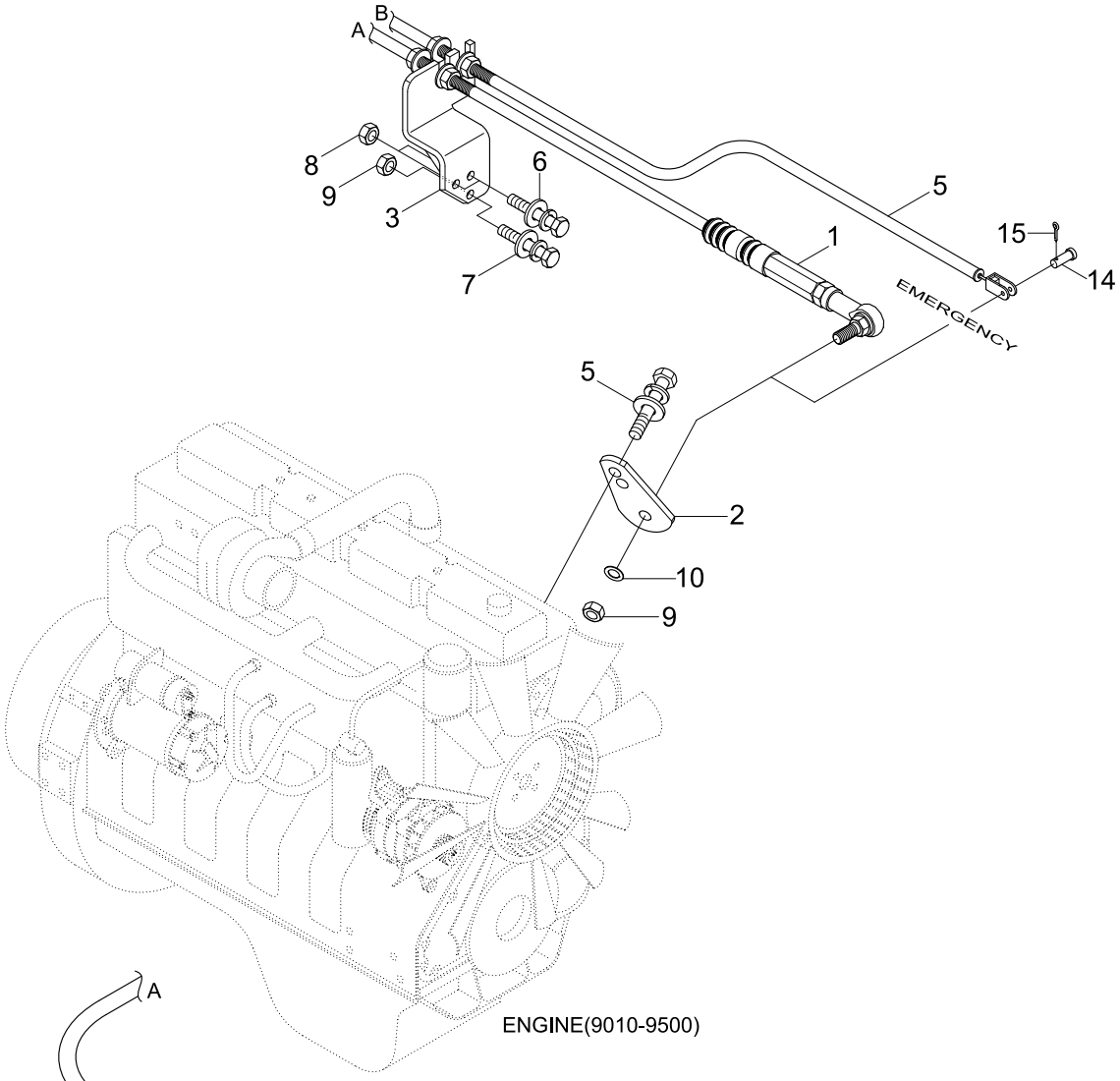

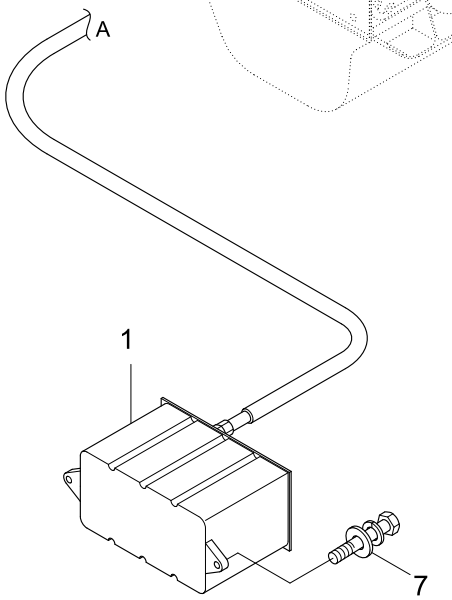

CAB

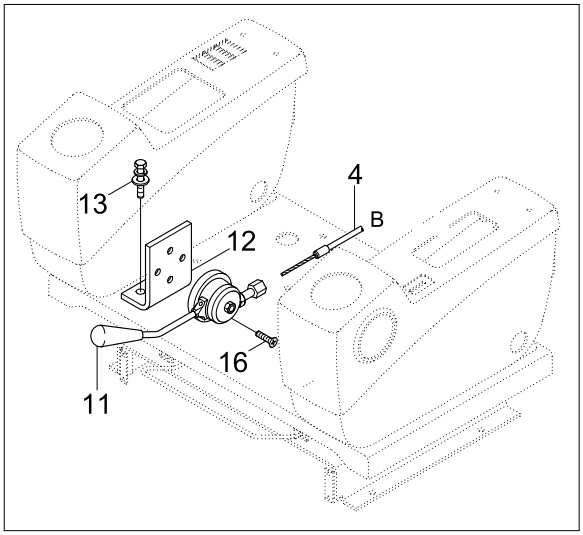

Item	Part_No	IS	Ord	T	Description	Qty	Serial_No	ITC	Remark
*	@				ENGINE CONTROL SYSTEM	1	- #0071	-	NOT
1	21EN-32260				ACCEL ACTUATOR	1			
2	11N4-63011				LEVER	1			
3	11N4-63022				BRACKET	1			
4	11N8-60190				CABLE-THROTTLE	1			
5	S035-061522				BOLT-W/WASHER	2			
6	S035-062552				BOLT-W/WASHER	2			
7	S035-082052				BOLT-W/WASHER	2			
8	S205-061002				NUT-HEX	2			
9	S205-061002				NUT-HEX	2			
10	S403-081002				WASHER-PLAIN	1			
11	11N6-63040				LEVER-EMERGENCY	1			
12	11N6-63050				BRACKET	1			
13	S037-102522				BOLT-W/WASHER	2			
14	S491-060252				PIN-CLEVIS	1			
15	S461-160152				PIN-SPLIT	1			
16	S141-080142				SCREW-FLAT HD	4			

ENGINE CONTROL SYSTEM(#0072-)

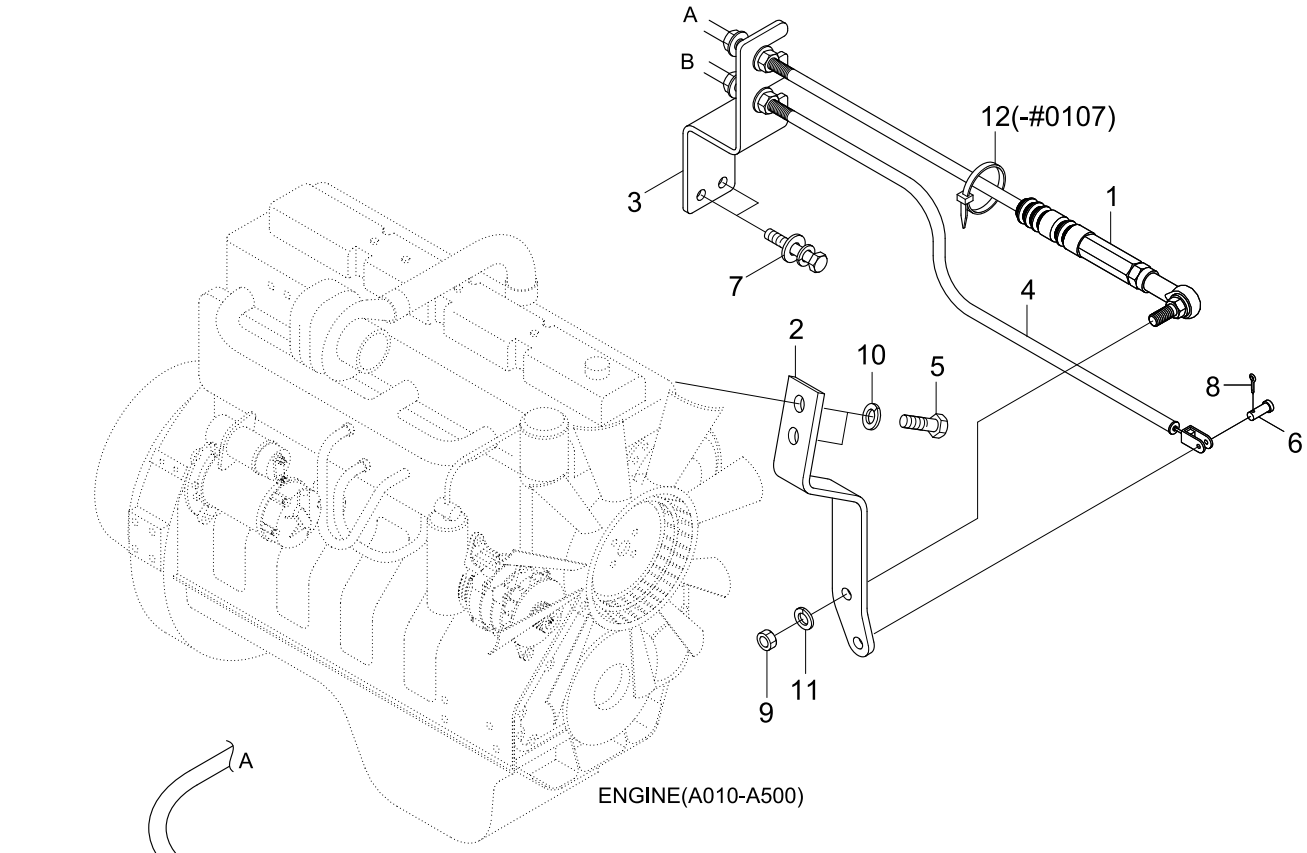

ENGINE(A010-A500)

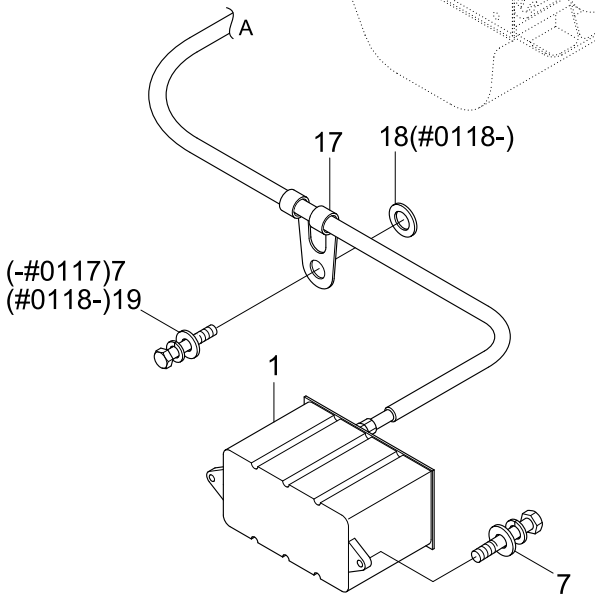

CAB

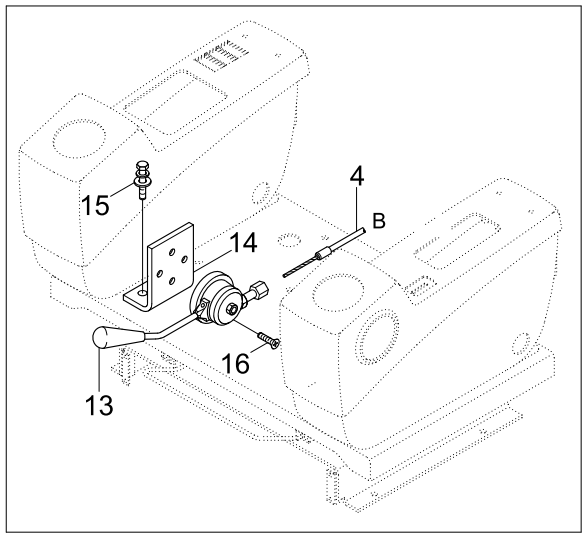

Item	Part_No	IS	Ord	T	Description	Qty	Serial_No	ITC	Remark
*	@				ENGINE CONTROL SYS	1	#0072 -	-	NOT
1	21EN-32260				ACCEL ACTUATOR	1			
2	11EG-60012				LEVER WA	1			
3	11N4-66010				BRACKET-CABLE	1			
4	11N8-60191				CABLE-THROTTLE	1			
5	S015-060152				BOLT-HEX	2			
6	S491-060252				PIN-CLEVIS	1			
7	S035-082012				BOLT-W/WASHER	5	- #0117		
					BOLT-W/WASHER	4	#0118 -	A	
8	S461-160152				PIN-SPLIT	1			
9	S205-08100B				NUT-HEX	1	- #0935		
	S275-08000B				NUT-SELF LOCKING	1	#0936 -	B	
10	S411-060002				WASHER-SPRING	2			
11	S411-080002				WASHER-SPRING	1			
12	S551-020102				CLAMP-BAND	3	- #0117	-	
13	11N6-63041				LEVER-EMERGENCY	1			
14	11N6-63050				BRACKET	1			
15	S037-102522				BOLT-W/WASHER	2			
16	S141-080142				SCREW-FLAT HD	4			
17	S593-000902				CLIP-HARNESS	1			
18	S035-082022				BOLT-W/WASHER	1	#0118 -	-	
19	11EM-02030				SPACER	1	#0118 -	-	

AIR INTAKE SYSTEM

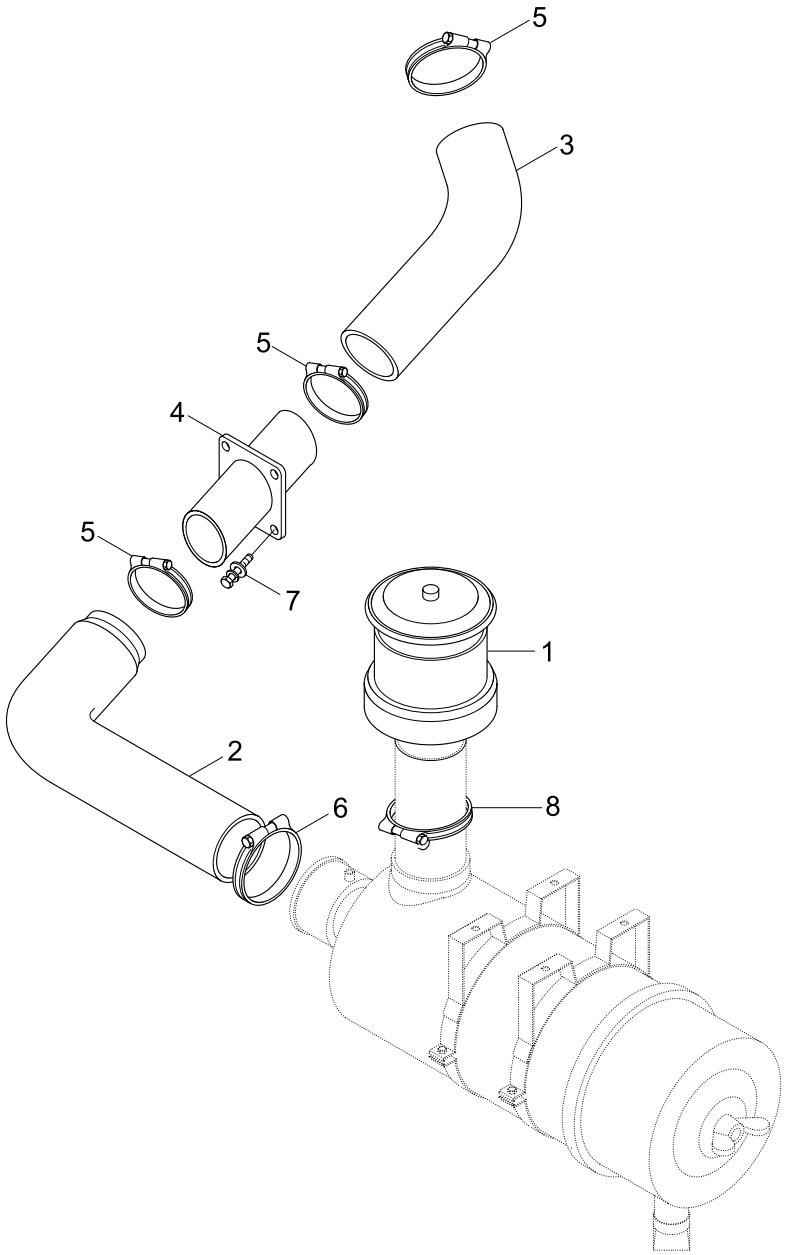

AIR CLEANER ASSY(6220)

Item	Part_No	IS	Ord	T	Description	Qty	Serial_No	ITC	Remark
1	11N6-23060				PRECLEANER	1	- #0137		
	11N6-23061				PRECLEANER	1	#0138 -	B	
2	11N4-20021				HOSE(B)-AIR CLEANER	1			
3	11EG-20023				HOSE	1			
4	11N4-20030				PIPE WA-A/C HOSE	1			
5	11E6-21230				CLAMP-HOSE	3	- #0272		
	11LB-40210				CLAMP-HOSE	3	#0273 -	A	
6	11E6-21240				CLAMP-HOSE	1	- #0272		
	11LB-40310				CLAMP-T/BOLT	1	#0273 -	A	
7	S035-082522				BOLT-W/WASHER	4			
8	11LB-40180				CLAMP-HOSE	1	#0458 -	-	

EXHAUST SYSTEM(-#0071)

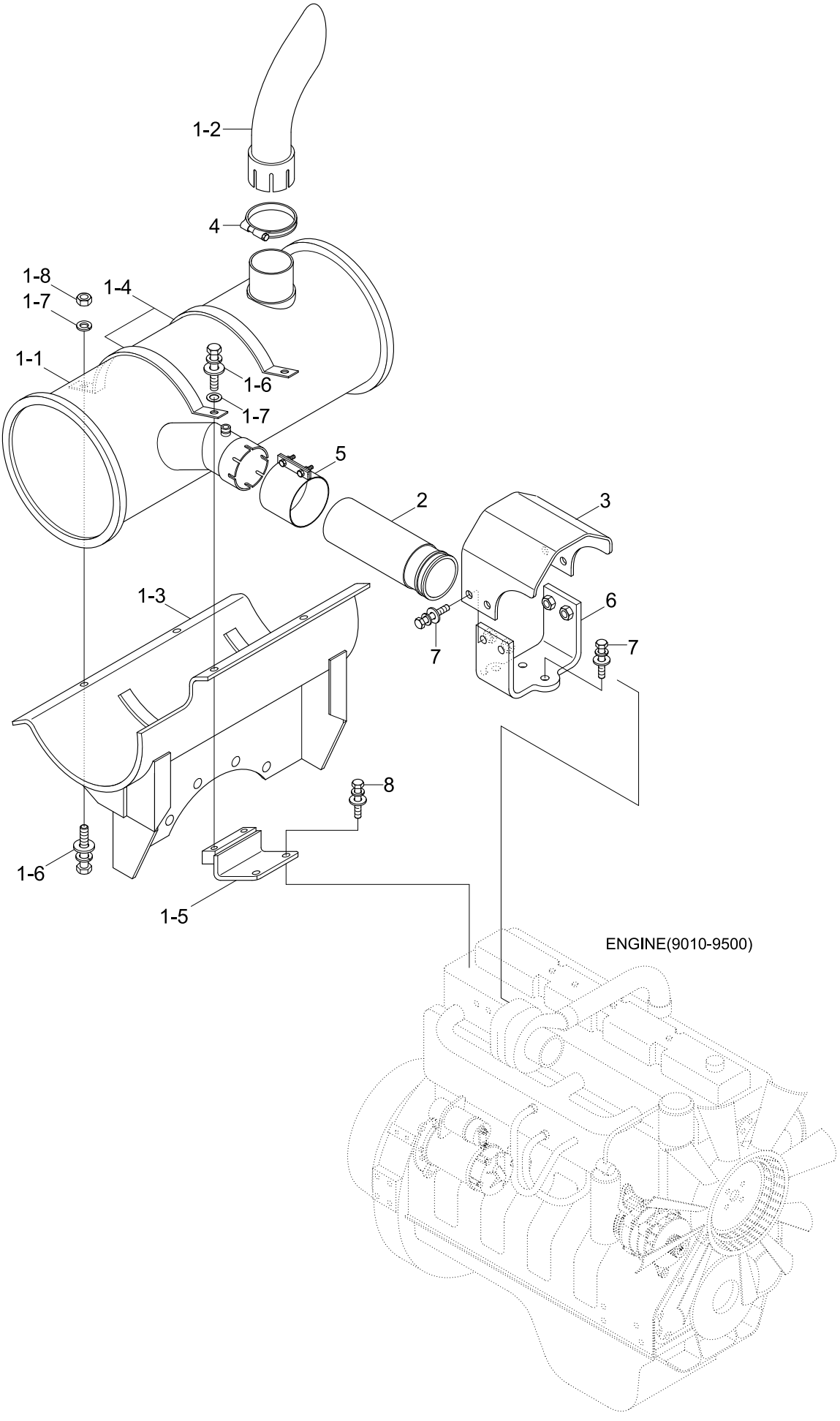

Item	Part_No	IS	Ord	T	Description	Qty	Serial_No	ITC	Remark
*	@				EXHAUST SYSTEM	1	- #0071	-	NOT
1	11N4-33000				MUFFLER SUB ASSY	1			
1-1	11N4-30020				.MUFFLER WA	1			
1-2	11N4-33010				.PIPE-TAIL	1			
1-3	15EA-30032				.BRACKET-MUFFLER	1			
1-4	11EM-30130				.CLAMP-BAND	2			
1-5	15EA-30040				.BRACKET	1			
1-6	S037-103022				.BOLT-W/WASHER	5			
1-7	S403-102002				.WASHER-PLAIN	5			
1-8	S203-101002				.NUT-HEX	3			
2	11N4-30030				CONNECTOR-PIPE	1			
3	11N4-30070				COVER	1			
4	11E6-32070				CLAMP-EXHAUST PIPE	1			
5	11N6-30040				SEAL CLAMP ASSY	1			
6	11N6-30060				BARCKET	1			
7	S037-102522				BOLT-W/WASHER	6			
8	S037-123522				BOLT-W/WASHER	2			

EXHAUST SYSTEM(#0072-)

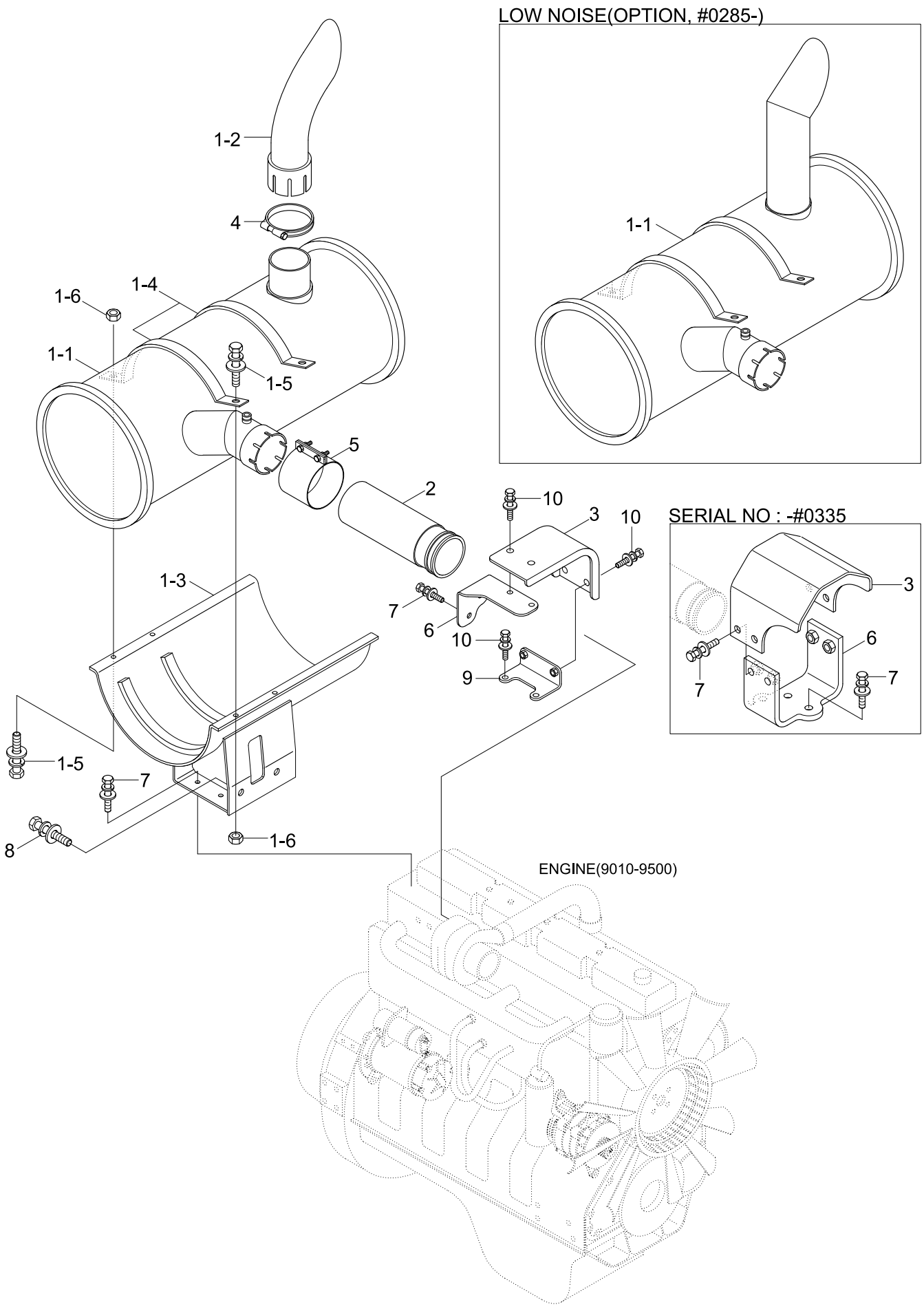

Item	Part_No	IS	Ord	T	Description	Qty	Serial_No	ITC	Remark
*	@				EXHAUST SYSTEM	1	#0072 -	-	NOT
1	11N4-36002				MUFFLER SUB ASSY	1			STD
	11N4-37001				MUFFLER SUB ASSY	1	#0285 -	-	LOW NOISE
1-1	11N4-36010				.MUFFLER WA	1			STD
	11N4-37011				.MUFFLER WA	1	#0285 -	-	LOW NOISE
1-2	11N4-33010				.PIPE-TAIL	1			STD
1-3	11N4-36020				.BRACKET-MUFFLER	1			
1-4	11EM-30130				.CLAMP-BAND	2			
1-5	S037-103052				.BOLT-W/WASHER	4			
1-6	S205-101002				.NUT-HEX	4			
2	11N4-30030				CONNECTOR-PIPE	1			
3	11N4-30070				COVER	1	- #0335		
	11N4-37330				COVER	1	#0336 -	D	
4	11E6-32070				CLAMP-EXHAUST PIPE	1			STD
5	11N6-30040				SEAL CLAMP ASSY	1			
6	11N6-30060				BARCKET	1	- #0335		
	11N4-37310				BRACKET	1	#0336 -	D	
7	S037-102022				BOLT-W/WASHER	10	- #0335		
					BOLT-W/WASHER	6	#0336 -	A	
8	S037-122522				BOLT-W/WASHER	2			
9	11N4-37300				BRACKET	1	#0336 -	-	
10	S035-083022				BOLT-W/WASHER	6	#0336 -	-	

COOLING SYSTEM(-#0071)

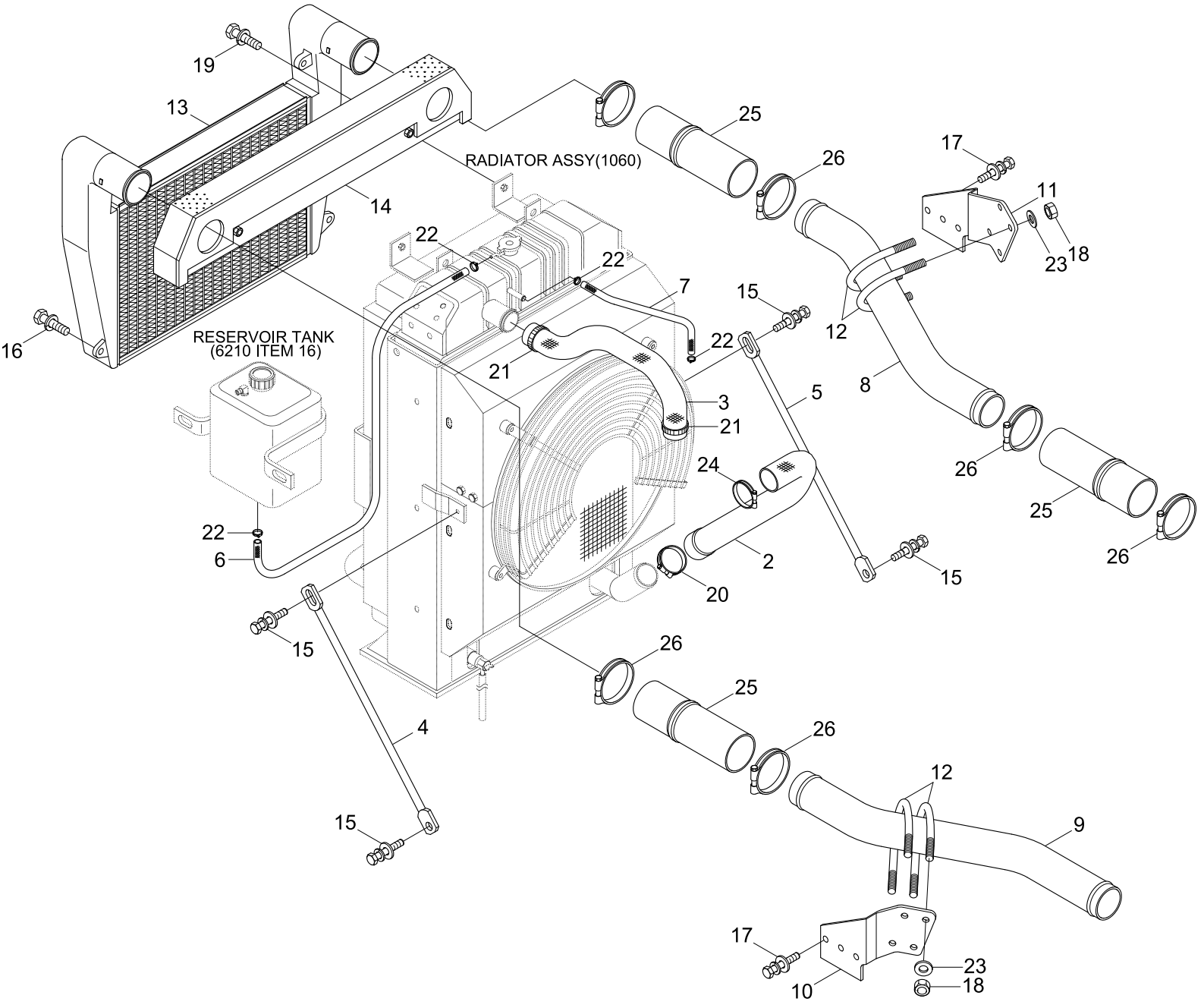

Item	Part_No	IS	Ord	T	Description	Qty	Serial_No	ITC	Remark
*	@				COOLING SYSTEM	1	- #0071	-	NOT
2	11N4-43390				HOSE	1			
3	11N4-43300				HOSE	1			
4	11N4-40130				ROD ASSY	1			
5	11N4-40140				ROD ASSY	1			
6	11EG-40400				HOSE-INLET	1			
7	11E9-4107	20			HOSE-VENT	1			
8	11N4-43330				PIPE WA	1			
9	11N4-43341				PIPE WA	1			
10	11N4-43363				BRACKET	1			
11	11N4-43372				BRACKET	1			
12	S070-037663				U-BOLT	4			
13	11N4-43401				AIR COOLER-CHARGE	1			
14	11N4-43530				SCREEN ASSY	1			
15	S037-123022				BOLT-W/WASHER	8			
16	S037-104052				BOLT-W/WASHER	4			
17	S037-102022				BOLT-W/WASHER	6			
18	S205-101002				NUT-HEX	16			
19	S037-102022				BOLT-W/WASHER	2			
20	S572-720006				CLAMP-HOSE,WIRE TYPE	1			
21	S572-590006				CLAMP-HOSE,WIRE TYPE	2			
22	S520-015000				CLAMP-HOSE	4			
23	S441-100002				WASHER-HARDENED	8			
24	S572-650006				CLAMP-HOSE,WIRE TYPE	1			
25	11N4-43410				HOSE-CHARGED AIR	3			

Item	Part_No	IS	Ord	T	Description	Qty	Serial_No	ITC	Remark
26	11N6-20340				CLAMP-T/BOLT	6			

COOLING SYSTEM(#0072-)

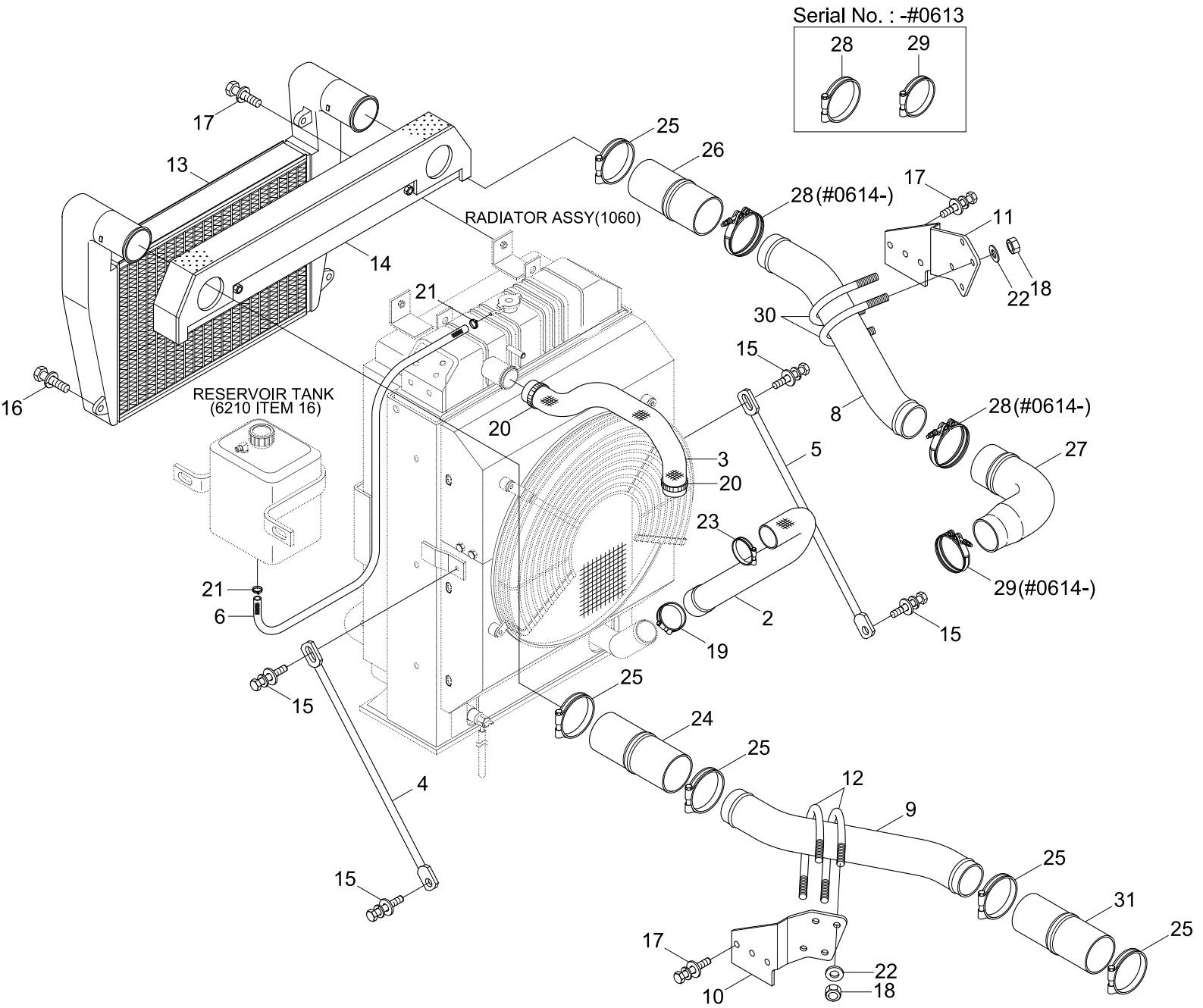

Item	Part_No	IS	Ord	T	Description	Qty	Serial_No	ITC	Remark
*	@				COOLING SYSTEM	1	#0072 -	-	NOT
2	11N4-46010				HOSE	1			
3	11N4-43300				HOSE	1			
4	11N4-40130				ROD ASSY	1			
5	11N4-40140				ROD ASSY	1			
6	11EG-40400				HOSE-INLET	1			
8	11N4-46020				PIPE WA	1			
9	11N4-43341				PIPE WA	1			
10	11N4-43363				BRACKET	1			
11	11N4-46040				BRACKET	1			
12	S070-037663				U-BOLT	2	- #0524		
	11N4-46060				U-BOLT	2	#0525 -	B	
13	11N4-43401				AIR COOLER-CHARGE	1			
14	11N4-46050				SCREEN ASSY	1			
15	S037-123022				BOLT-W/WASHER	8			
16	S037-104052				BOLT-W/WASHER	4			
17	S037-102022				BOLT-W/WASHER	8			
18	S205-101002				NUT-HEX	16	- #0668		
	S275-100006				NUT-SELF LOCKING	8	#0669 -	B	
19	S572-720006				CLAMP-HOSE,WIRE TYPE	1			
20	S572-590006				CLAMP-HOSE,WIRE TYPE	2			
21	S520-015000				CLAMP-HOSE	2			
22	S441-100002				WASHER-HARDENED	8			
23	S572-750006				CLAMP-HOSE WIRE TYPE	1			
24	11N4-43410				HOSE-CHARGED AIR	1			

Item	Part_No	IS	Ord	T	Description	Qty	Serial_No	ITC	Remark
25	11N6-20340				CLAMP-T/BOLT	5			
26	11N5-40211				HOSE-CHARGE AIR	1			
27	11N4-46030				HOSE-CAC	1			
28	11N6-20380				CLAMP-T/BOLT	2	- #0613		
	11N6-20381				CLAMP-T/BOLT	2	#0614 -	B	
29	11N6-20370				CLAMP-T/BOLT	1	- #0613		
	11N6-20371				CLAMP-T/BOLT	1	#0614 -	B	
30	S071-036130				U-BOLT	2	- #0524		
	11N5-43190				U-BOLT	2	#0525 -	B	
31	11N4-43730				HOSE-CAC	1			

RADIATOR ASSY(-#0071)

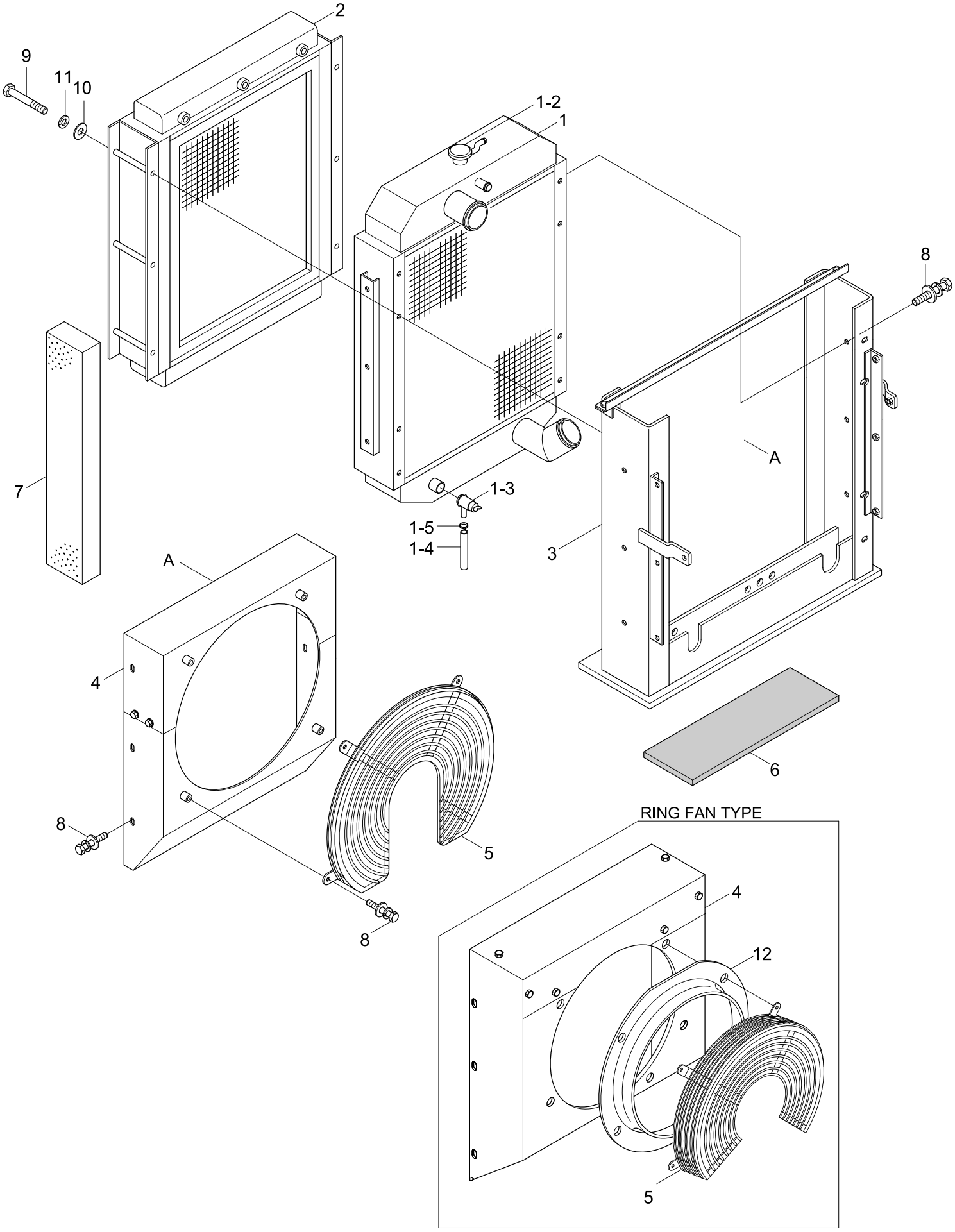

Item	Part_No	IS	Ord	T	Description	Qty	Serial_No	ITC	Remark
*	11N4-43510				RADIATOR TOTAL ASSY	1	- #0071	-	GENERAL
	11N4-43610				RADIATOR TOTAL ASSY	1	- #0071	-	RING FAN, OPT
1	11N4-43110				.RADIATOR ASSY	1			
1-2	11EK-42200				..CAP-PRESSURE	1			
1-3	11EK-42210				..COCK-DARIN	1			
1-4	11EK-42220				..HOSE-DRAIN	1			
1-5	S520-015000				..CLAMP-HOSE	1			
2	11N4-43520				.OIL COOLER ASSY	1			
3	11N4-43131				.FRAME ASSY	1			
4	11N4-43140				.SHROUD ASSY	1			GENERAL
	11N4-43210				.SHROUD ASSY	1			RING FAN, OPT
5	11N4-40050				.GUARD-FAN	1			
6	11N4-43150				.PAD-RUBBER	1			
7	11N4-43160				.SPONGE	1			
8	S035-082022				.BOLT-W/WASHER	24			GENERAL
					.BOLT-W/WASHER	29			RING FAN, OPT
9	S017-121305				.BOLT-HEX	6			
10	S403-121002				.WASHER-PLAIN	6			
11	S411-120002				.WASHER-SPRING	6			
12	11N4-41060				.BELL MOUTH	1			RING FAN, OPT

RADIATOR ASSY(#0072-)

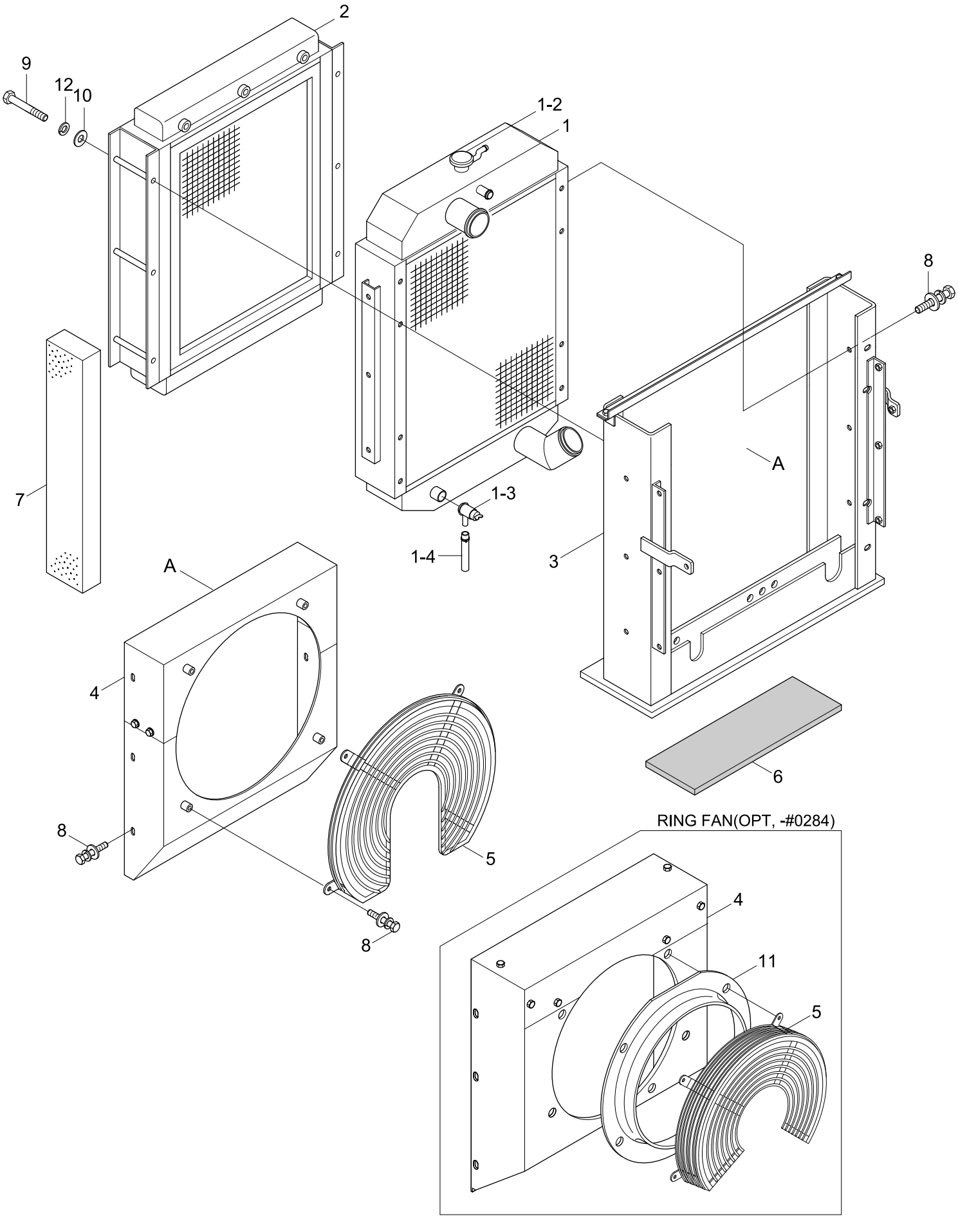

Item	Part_No	IS	Ord	T	Description	Qty	Serial_No	ITC	Remark
*	11N4-43710				RADIATOR TOTAL ASSY	1	#0072 - #0284	D	GENARAL
	11N4-43810				RADIATOR TOTAL ASSY	1	#0072 - #0284	D	RING FAN, OPT
1	11N4-43720				.RADIATOR ASSY	1			
1-2	11EK-42200				..CAP-PRESSURE	1			
1-3	11EK-42210				..COCK-DARIN	1			
1-4	11EK-42220				..HOSE-DRAIN	1			
2	11N4-43520				.OIL COOLER ASSY	1			
3	11N4-43131				.FRAME ASSY	1			
4	11N4-43140				.SHROUD ASSY	1	- #0284		GENARAL
	11N4-43141				.SHROUD ASSY	1	#0285 -	B	LOW NOISE
	11N4-43210				.SHROUD ASSY	1	- #0284	-	RING FAN, OPT
5	11N4-40050				.FAN GUARD	1			GENARAL
	11N4-41050				.FAN GUARD	1	- #0284	-	RING FAN, OPT
6	11N4-43150				.RUBBER PAD	1			
7	11N4-43160				.SPONGE	1			
8	S035-082022				.BOLT-W/WASHER	24			GENARAL
					.BOLT-W/WASHER	29	- #0284	-	RING FAN, OPT
9	S017-121305				.BOLT-HEX	6			
10	S403-121002				.WASHER-PLAIN	6			
11	11N4-41060				.BELL MOUTH	1	- #0284	-	INLINE
12	S411-120002				.WASHER-SPRING	6			

FUEL SYSTEM

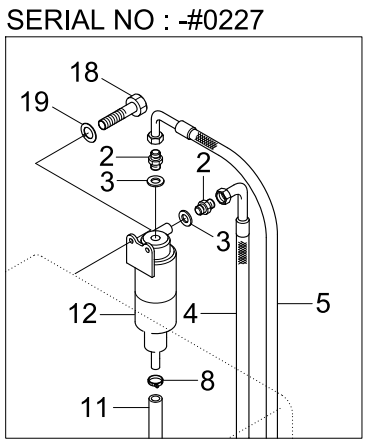
SERIAL NO : -#0227
18
19
2
3
2
3
12
4
5
8
11

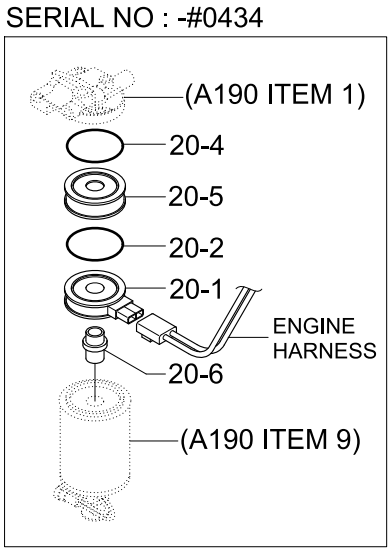
SERIAL NO : -#0434
(A190 ITEM 1)
20-4
20-5
20-2
20-1
ENGINE HARNESS
20-6
(A190 ITEM 9)
#20 FUEL WARMER KIT(OPT)

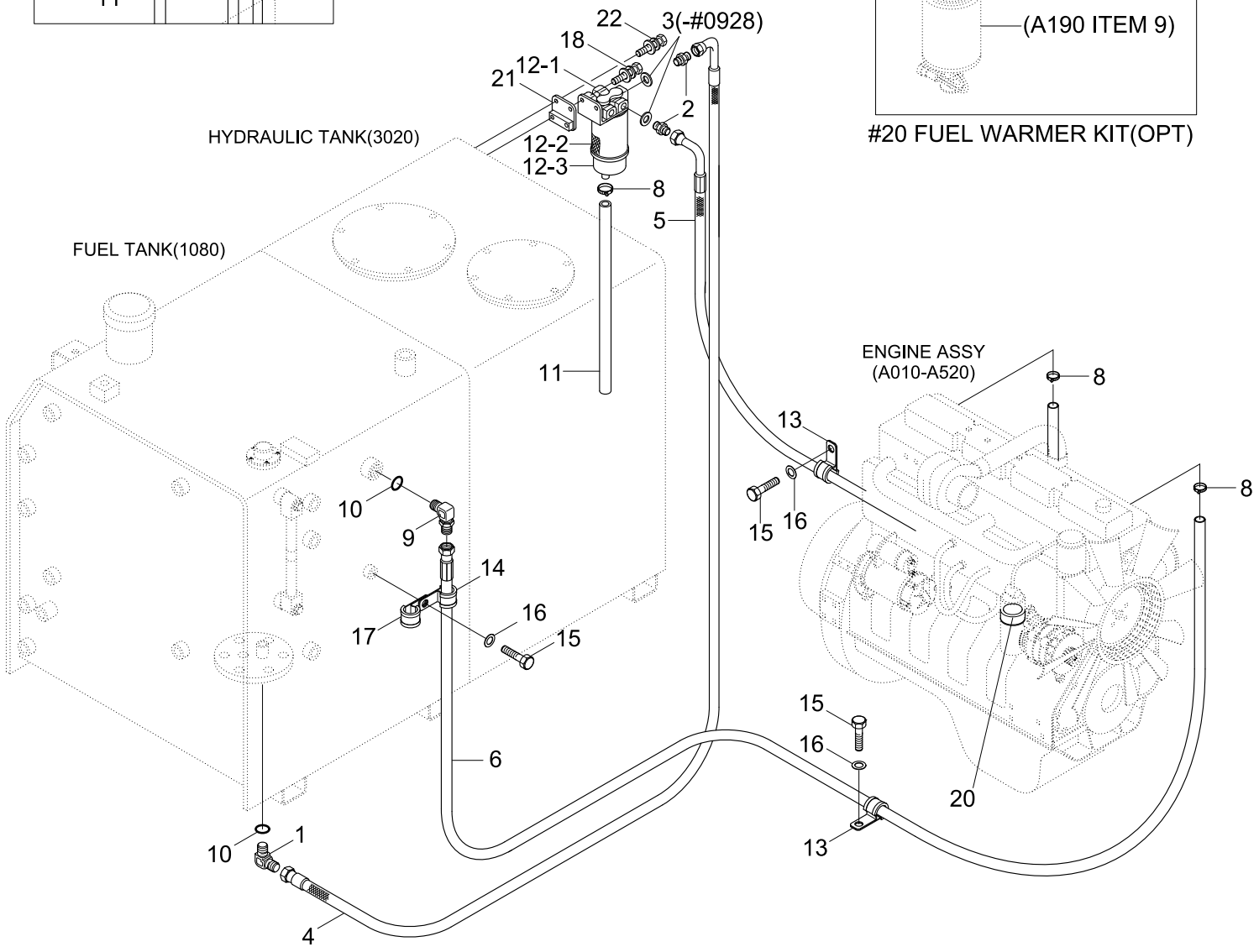
22
3(-#0928)
18
12-1
21
2
HYDRAULIC TANK(3020)
12-2
12-3
8
5
FUEL TANK(1080)
11
ENGINE ASSY
(A010-A520)
8
13
8
10
9
14
15
16
16
17
15
15
16
6
20
10
1
13
4

Item	Part_No	IS	Ord	T	Description	Qty	Serial_No	ITC	Remark
1	P020-110003				ELBOW-90	1			
2	11N6-50010				CONNECTOR	2	- #0227		
	11NA-50040				CONNECTOR	2	#0228 - #0928	D	
	11QB-50040				CONNECTOR	2	#0929 -	B	
3	P392-140000				WASHER-COPPER	2	- #0227		
	P392-160000				WASHER-COPPER	2	#0228 - #0928	D	
4	11N4-50010				HOSE-FUEL	1			
5	11N4-56011				HOSE-FUEL	1			
6	11N4-56020				HOSE-FUEL	1			
8	S520-015000				CLAMP-HOSE	3			
9	P020-110014				ELBOW-90	1			
10	S631-018001				O-RING	2			
11	11N8-50111				HOSE ASSY	1	- #0092		
	11N8-50112				HOSE ASSY	1	#0093 - #0227	B	
	11N1-50020				HOSE ASSY	1	#0228 - #0269	D	
	11M8-50030				HOSE ASSY	1	#0270 -	A	
12	11EM-52320				WATER SEPARATOR	1	- #0227		
	11LB-20300				PRE FILTER ASSY	1	#0228 - #0436	D	
	11NB-70400				PREFILTER ASSY	1	#0437 -	D	
12-1	11LD-20240				.HEAD-FILTER	1	#0228 -	-	
12-2	11LB-20310				.ELEMENT ASSY-F/FILTER	1	#0228 -	-	
12-3	11LD-20260				.BOWL ASSY-W/KNOB	1	#0228 - #0436	-	
	11NB-70410				.BOWL ASSY-W/HEATER	1	#0437 -	D	
12-3-1	11NB-70420				..GASKET-DRAIN KNOB	1	#0001 -	-	NOT SHOWN
13	S543-400002				CLAMP-TUBE	2			

Item	Part_No	IS	Ord	T	Description	Qty	Serial_No	ITC	Remark
14	S543-200002				CLAMP-TUBE	1			
15	S017-100152				BOLT-HEX	3			
16	S403-101002				WASHER-PLAIN	3			
17	S543-120002				CLAMP-TUBE	1			
18	S015-080202				BOLT-HEX	2	- #0227		
	S035-083022				BOLT-W/WASHER	2	#0228 -	D	
19	S403-082002				WASHER-PLAIN	2	- #0227	-	
20	11N9-70410				FUEL WARMER KIT	1	#0003 - #0436	-	
20-1	392702300				.HEATER	1	#0003 - #0436	-	
20-2	392666000				.O-RING	1	#0003 - #0436	-	
20-4	391902500				.GASKET	1	#0003 - #0436	-	
20-5	393458800				.ADAPTER	1	#0003 - #0436	-	
20-6	@				.INSERT	1	#0003 - #0436	-	NOT
21	11N8-53040				BRACKET	1	#0228 - #0269	-	
22	S035-082022				BOLT-W/WASHER	2	#0228 - #0269	-	

FUEL TANK

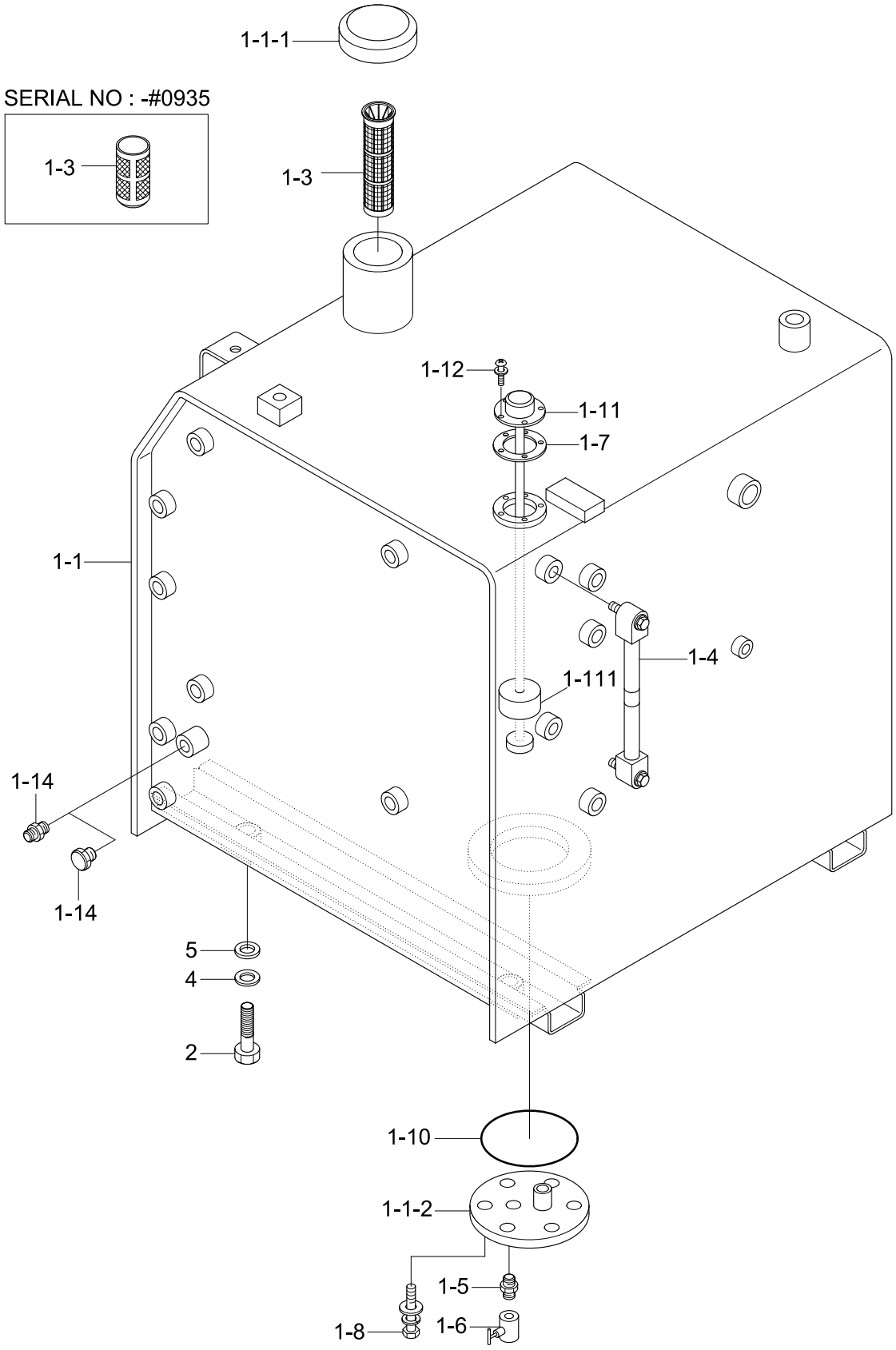
1-1-1
SERIAL NO : -#0935
1-3
1-3
1-12
1-11
1-7
1-1
1-4
1-111
1-14
1-14
5
4
2
1-10
1-1-2
1-5
1-8
1-6

Item	Part_No	IS	Ord	T	Description	Qty	Serial_No	ITC	Remark
1	@				FUEL TANK ASSY	1			NOT
1-1	31N4-02013				.FUEL TANK WA	1	- #0186		
	31N4-02014				.FUEL TANK WA	1	#0187 - #0356	A	
	31N4-02015				.FUEL TANK WA	1	#0357 - #0422	B	
	31N4-02150				.FUEL TANK WA	1	#0423 -	D	
1-1-1	E131-1038	10			..CAP-FILLER	1	- #0356		
	31N4-02120				..FUEL CAP ASSY	1	#0357 -	B	
1-1-2	31N4-02110				..COVER-DRAIN	1			
1-3	31E1-10300				.STRAINER	1	- #0935		
	31QA-02080				.STRAINER	1	#0936 -	B	
1-4	31N6-02600				.GAUGE-LEVEL	1			
1-5	31E5-3049	10			.FITTING	1			
1-6	E131-1006	10			.VALVE-NEEDLE	1			
1-7	E128-1053	10			.GASKET	1			
1-8	S037-103022				.BOLT-W/WASHER	6			
1-10	S632-170001				.O-RING	1			
1-11	21N6-10701				.SENDER-FUEL	1	- #0969		
	21Q4-10700				.SENDER-FUEL	1	#0970 -	B	
1-111	21N6-10710				..FLOAT	1	#0174 -	-	
1-12	21E4-1104-DA	10			.SCREW-CROSS R/ROUND	5	- #0659		
	S131-051546				.SCREW-W/WASHER	5	#0660 -	A	
1-14	P220-430204				.PLUG-HEX	1			
	P090-101008				.CONNECTOR-HOSE	1			F/FILLER PUMP
2	S017-200352				BOLT-HEX	4	- #0356		
	S017-200502				BOLT-HEX	4	#0357 -	C	

Item	Part_No	IS	Ord	T	Description	Qty	Serial_No	ITC	Remark
4	91E6-60200				WASHER-HARDENED	4			
5	31N8-01300				SHIM(1.0T)	5			

AIRCON & HEATER MOUNTING

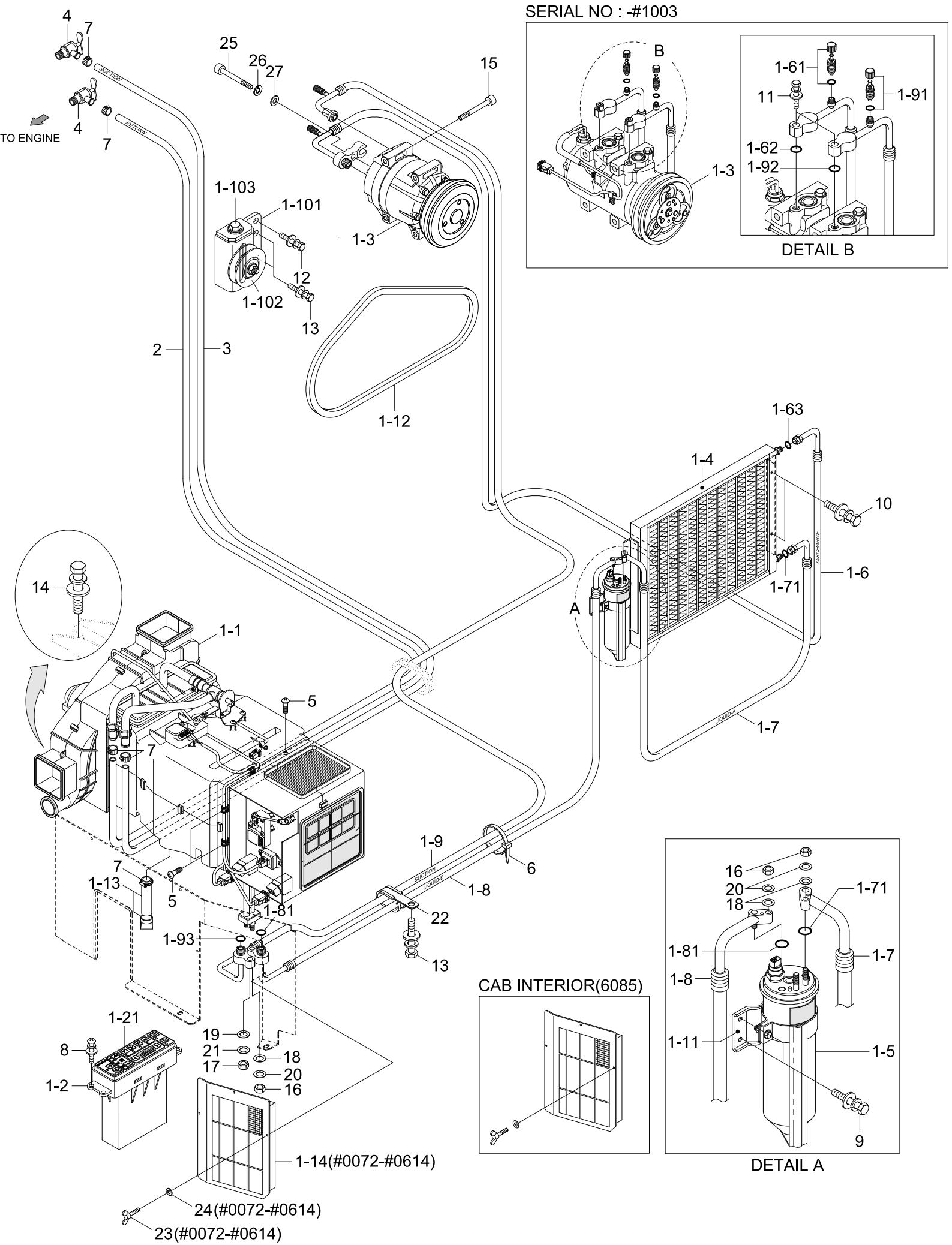

Item	Part_No	IS	Ord	T	Description	Qty	Serial_No	ITC	Remark
1	11N4-90010				AIRCON & HEATER ASSY	1			
1-1	11N6-90020				.AIRCON & HEATER UNIT	1	- #0007		
	11N6-90021				.AIRCON & HEATER UNIT	1	#0008 -	A	
1-2	11N6-90031				.CONTROL ASSY-SEMI	1			
1-21	11N6-90850				..DECAL-A/C & HEATER	1			
1-3	11N6-90040				.COMPRESSOR ASSY	1	- #1003		
	11Q6-90040				.COMPRESSOR ASSY	1	#1004 -	D	
1-4	11EM-90050				.CONDENSER ASSY	1			
1-5	11N6-90060				.DRIER-RECEIVER	1			
1-6	11N4-90190				.HOSE-DISCHARGE	1	- #1003		
	11N4-90191				.HOSE-DISCHARGE	1	#1004 -	D	
1-61	A304000301-4				..CHARGE VALVE ASSY	1	- #1003		
1-62	A305000206-2				..O-RING	1	- #1003		
1-63	A305000205-2				..O-RING	1	- #1003		
1-7	11N4-90080				.HOSE(A)-LIQUID	1			
1-71	A305000209-2				..O-RING	2			
1-8	11N4-90090				.HOSE(B)-LIQUID	1			
1-81	A305000209-2				.O-RING	2			
1-9	11N4-90100				.HOSE-SUCTION	1	- #1003		
	11N4-90101				.HOSE-SUCTION	1	#1004 -	D	
1-91	A304000401-4				..CHARGE VALVE ASSY	1	- #1003		
1-92	A310069299-2				..O-RING	1	- #1003		
1-93	A305000203-2				..O-RING	1	- #1003		
1-10	11N6-90110				.PULLEY-IDLE	1			
1-101	A4760-508-00-2				..BRACKET-PULLEY	1			

Item	Part_No	IS	Ord	T	Description	Qty	Serial_No	ITC	Remark
1-102	A4700-511-01-2				..PULLEY-IDLE	1			
1-103	A8900-518-03-3				...BOLT-TENSION	1			
1-11	11N6-90120				.BRACKET-R/DRIER	1			
1-12	12E2-3505				.V-BELT	1			
1-13	11EK-92090				.HOSE-DRAIN	1			
1-14	11N6-90340				.FILTER-REC	1	#0072 - #0614	D	SEE 6085
2	11E6-92070				HOSE-DRAIN	1			
3	11E6-92080				HOSE	1			
4	14L1-01350				VALVE-HEATER	2			
5	S152-040122				SCREW-TAPPING	4			
6	S551-035146				TIE-WIRE	2			
7	S520-020000				CLAMP-HOSE	5			
8	S131-051546				SCREW-W/WASHER	4			
9	S035-062022				BOLT-W/WASHER	2			
10	S035-082022				BOLT-W/WASHER	4			
11	S035-083022				BOLT-W/WASHER	2	- #1003		
12	S037-101552				BOLT-W/WASHER	1			
13	S037-102022				BOLT-W/WASHER	3			
14	S037-123522				BOLT-W/WASHER	4			
15	S109-080956				BOLT-SOCKET	3	- #1003		
	S109-080856				BOLT-SOCKET	3	#1004 -	D	
16	S205-061002				NUT-HEX	3			
17	S205-081002				NUT-HEX	1			
18	S403-062002				WASHER-PLAIN	3			
19	S403-082002				WASHER-PLAIN	1			

Item	Part_No	IS	Ord	T	Description	Qty	Serial_No	ITC	Remark
20	S411-060002				WASHER-SPRING	3			
21	S411-080002				WASHER-SPRING	1			
22	S543-400002				CLAMP-TUBE	1			
23	S091-060156				BOLT-WING	3	#0072 - #0614		
24	S403-062006				WASHER-PLAIN	3	#0072 - #0614		
25	S018-100356				BOLT-HEX	1	#1004 -		
26	S411-100006				WASHER-SPRING	1	#1004 -		
27	S403-10200B				WASHER-PLAIN	1	#1004 -		

AIR CON & HEATER UNIT(-#0007)

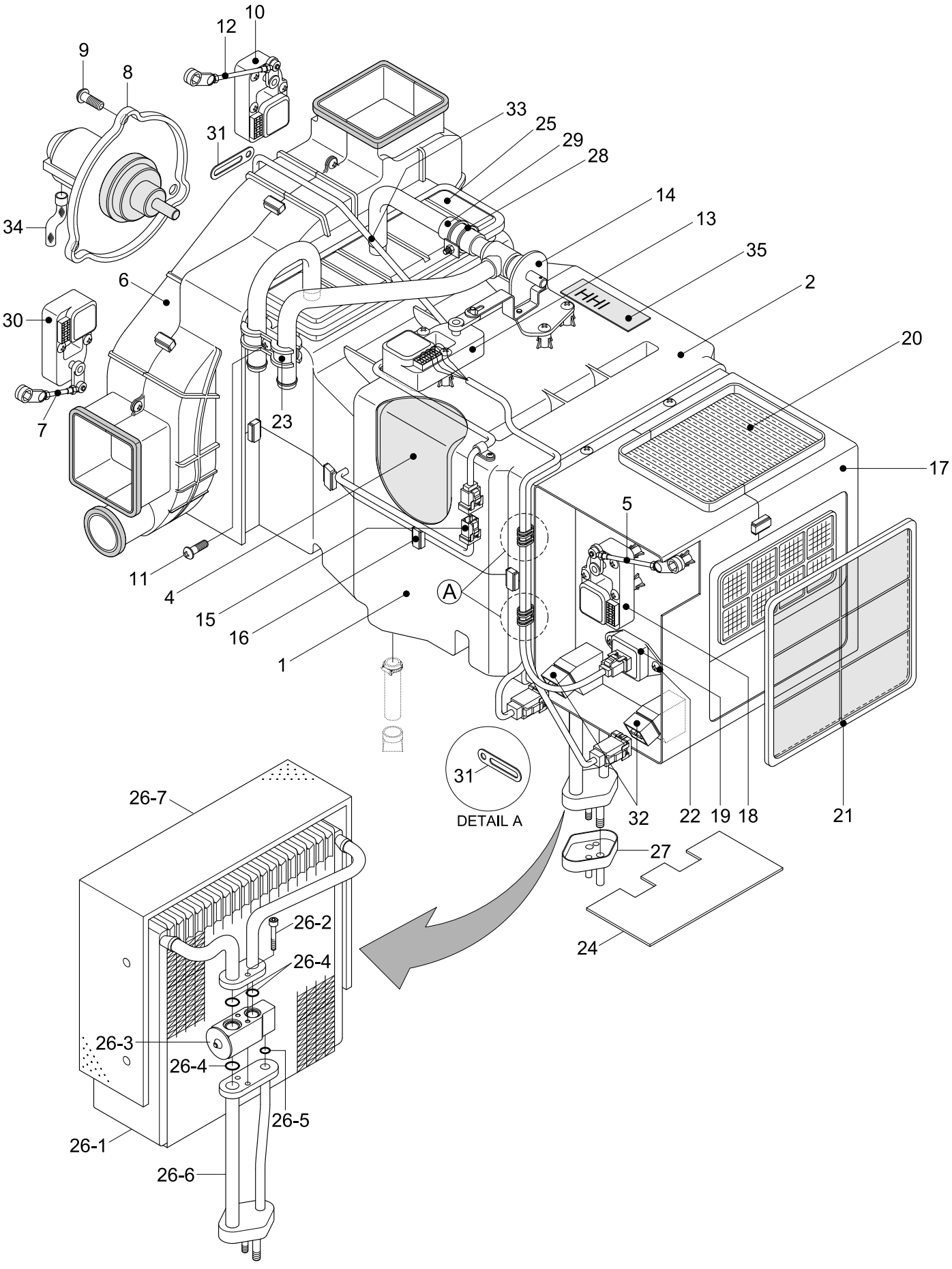

Item	Part_No	IS	Ord	T	Description	Qty	Serial_No	ITC	Remark
*	11N6-90020				.AIRCON & HEATER UNIT	1	- #0007	-	SEE 1111
1	AM12101400-0				..HVAC CASE-LOW	1			
2	AH000089				..HVAC CASE-UPP	1			
4	AM75001000-2				..EVAC INSULATION-LOW	1			
5	AM52300100-4				..ROD-INTAKE	1			
6	AW10001400-2				..BLOWER CASE ASSY	1			
7	AW70002400-4				..ROD-DEF/FOOT	1			
8	11N6-90700				..FAN & MOTOR	1			
8-1	AW22000800-2				...FAN	1			
8-2	AW21002500-1				...MOTOR	1			
9	4AH-0886				..SCREW	3			
10	11N6-90710				..MOTOR ACT-VENT	1			
11	K500531				..SCREW	29			
12	AW70002300-4				..ROD-VENT	1			
13	11N6-90720				..MOTOR ACT-TEMP	1			
14	11N6-90730				..VALVE ASSY-WATER	1			
15	A165400100-2				..SENSOR-DUCT	1			ILL. CHANGE
16	4AH-0688				..CLIP-CASE	9			
17	AM13000203-2				..INTAKE CASE ASSY	1			
18	11N6-90740				..MOTOR ACT-INTAKE	1			
19	11N6-90750				..RESISTOR ASSY	1			
20	11N6-90760				..AIR FILTER-FRESH	1			
21	11N6-90770				..AIR FILTER-REFRESH	1			
22	K500533				..SCREW	2			
23	3AH-0770				..CLAMP-PIPE	1			

Item	Part_No	IS	Ord	T	Description	Qty	Serial_No	ITC	Remark
24	A112050700-3				..PLATE-SIDE	1			
25	11N6-90780				..HEATER CORE	1			
26	11N6-90790				..EVAP CORE ASSY	1			
26-1	A111056400-1				...CORE ASSY-LAMI	1			
26-2	A111750100-4				...BOLT-WRENCH,HEX	2			
26-3	11N6-90800				...VALVE-EXPANSION	1			
26-4	A305000212-2				...O-RING	3			
26-5	A305000211-2				...O-RING	1			
26-6	A112059600-2				...PIPE ASSY	1			
26-7	A115004900-2				...INSULATION-CORE	1			
27	A306201301-3				..CAP-FLANGE	1			
28	4AH-0929				..CLAMP ASSY-HOSE	1			
29	3AH-1007				..HOSE-WATER	1			
30	11N6-90810				..MOTOR ACT-FOOT/DEF	1			
31	4AH-0643				..HOLDER-WIRE	6			
32	11N6-90820				..RELAY	2			
33	11N6-90830				..WIRING ASSY	1			
34	A710051601-3				..HOSE-DRAIN	1			
35	AE73000400Z2				..PLATE-NAME	1			

AIR CON & HEATER UNIT(#0008-)

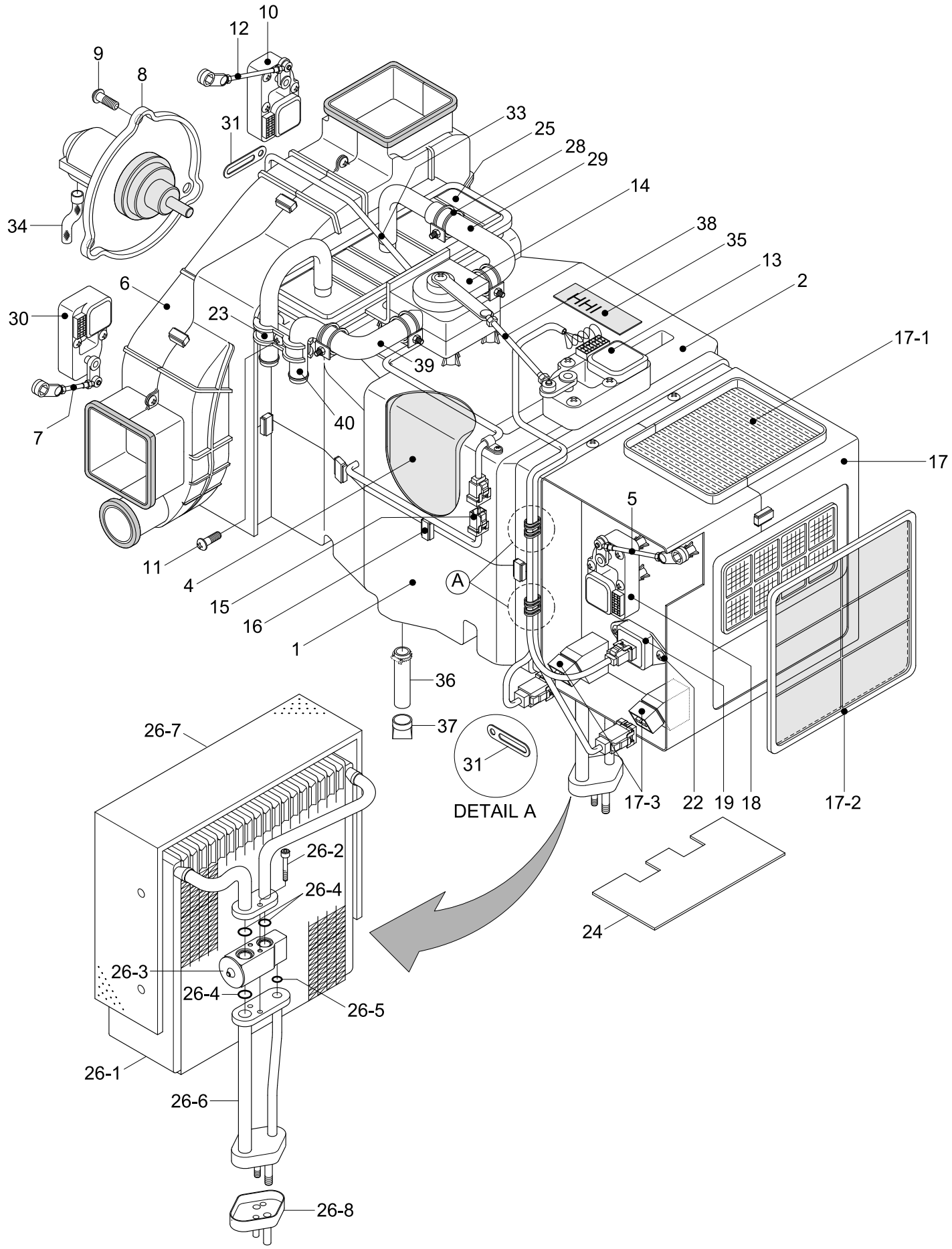

Item	Part_No	IS	Ord	T	Description	Qty	Serial_No	ITC	Remark
*	11N6-90021				.AIRCON & HEATER UNIT	1	#0008 -	A	SEE 1110
1	AM12101400-0				..HVAC CASE-LOW	1			
2	AH000089				..HVAC CASE-UPP	1			
4	AM75001000-2				..EVAC INSULATION-LOW	1			
5	AM52300100-4				..ROD-INTAKE	1			
6	AH000106				..BLOWER CASE ASSY	1			
7	AW70002400-4				..ROD-DEF/FOOT	1			
8	11N6-90700				..FAN & MOTOR	1			
8-1	AW22000800-2				...FAN	1			
8-2	AW21002500-1				...MOTOR	1			
9	AH000866				..SCREW	3			
10	11N6-90710				..MOTOR ACT-VENT	1			
11	K500531				..SCREW	28			
12	AW70002300-4				..ROD-VENT	1			
13	AH100311				..MOTOR ACT-TEMP	1			
14	AH001160				..VLAVE-WATER	1			
15	A165400100-2				..SENSOR-DUCT	1			ILL. CHANGE
16	4AH-0688				..CLIP-CASE	9			
17	AH000055				..INTAKE CASE ASSY	1			
17-1	11N6-90760				...AIR FILTER-FRESH	1			
17-2	11N6-90770				...AIR FILTER-REFRESH	1			
17-3	11N6-90820				...RELAY	1			
18	11N6-90740				..MOTOR ACT-INTAKE	1			
19	AM86000601-2				..RESISTOR ASSY	1			
22	K500533				..SCREW	2			

Item	Part_No	IS	Ord	T	Description	Qty	Serial_No	ITC	Remark
23	AH000314				..CLAMP-H/RAD PIPE	1			
24	A112050700-3				..PLATE-SIDE	1			
25	11N6-90780				..HEATER CORE	1			
26	11N6-90790				..EVAP CORE ASSY	1	- #1003		
	11N6-90791				..EVAP CORE ASSY	1	#1004 -	B	
26-1	A111056400-1				...CORE ASSY-LAMI	1	- #1003		
26-2	A111750100-4				...BOLT-WRENCH,HEX	2	- #1003		
26-3	11N6-90800				...VALVE-EXPANSION	1	- #1003		
26-4	A305000212-2				...O-RING	3	- #1003		
26-5	A305000211-2				...O-RING	1	- #1003		
26-6	A112059600-2				...PIPE ASSY	1	- #1003		
26-7	A115004900-2				...INSULATION-CORE	1	- #1003		
26-8	A306201301-3				...CAP-FLANGE	1	- #1003		
28	AM27000201-3				..CLAMP-WATER HOSE	4			
29	AH001288				..HOSE-OUTLET,WATER	1			
30	11N6-90810				..MOTOR ACT-FOOT/DEF	1			
31	4AH-0643				..HOLDER-WIRE	6			
33	11N6-90830				..WIRING ASSY	1			
34	A710051601-3				..HOSE-DRAIN	1			
35	AM99001201-3				..NAME PLATE	1			
36	AM800-001-04-3				..HOSE-DRAIN	1			
37	4CC-3354Z				..VALVE-VACUUM	1			
38	AH000856				..ROD-TEMP	1			
39	AH001287				..HOSE-INLET,WATER	1			
40	AH001415				..HEATER PIPE-INLET	1			

AIR CONDITIONER MOUNTING

SERIAL NO : -#1003

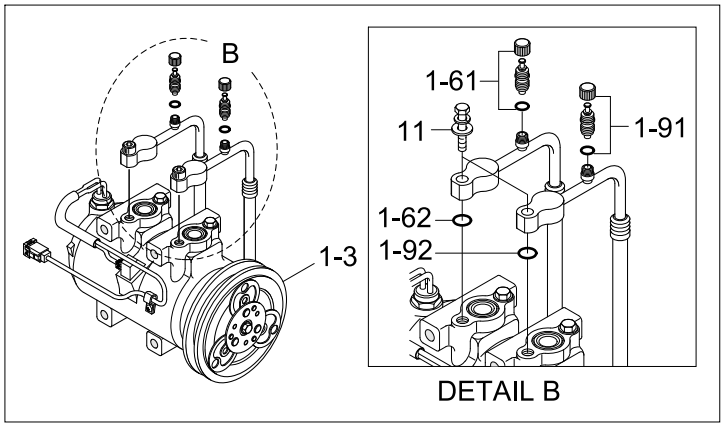

Item	Part_No	IS	Ord	T	Description	Qty	Serial_No	ITC	Remark
1	11N4-90210				AIR CON ASSY	1			
1-1	11N6-90220				.AIR CON UNIT	1			
1-2	11N6-90031				.CONTROL ASSY-SEMI	1			
1-21	11N6-90850				..DECAL-A/C & HEATER	1			
1-3	11N6-90040				.COMPRESSOR ASSY	1	- #1003		
	11Q6-90040				.COMPRESSOR ASSY	1	#1004 -	D	
1-4	11EM-90050				.CONDENSER ASSY	1			
1-5	11N6-90060				.DRIER-RECEIVER	1			
1-6	11N4-90190				.HOSE-DISCHARGE	1	- #1003		
	11N4-90191				.HOSE-DISCHARGE	1	#1004 -	D	
1-61	A304000301-4				..CHARGE VALVE ASSY	1	- #1003		
1-62	A305000206-2				..O-RING	1	- #1003		
1-63	A305000205-2				..O-RING	1	- #1003		
1-7	11N4-90080				.HOSE(A)-LIQUID	1			
1-71	A305000209-2				..O-RING	2			
1-8	11N4-90090				.HOSE(B)-LIQUID	1			
1-81	A305000209-2				.O-RING	2			
1-9	11N4-90100				.HOSE-SUCTION	1	- #1003		
	11N4-90101				.HOSE-SUCTION	1	#1004 -	D	
1-91	A304000401-4				..CHARGE VALVE ASSY	1	- #1003		
1-92	A310069299-2				..O-RING	1	- #1003		
1-93	A305000203-2				..O-RING	1	- #1003		
1-10	11N6-90110				.PULLEY-IDLE	1			
1-101	A4760-508-00-2				..BRACKET-PULLEY	1			
1-102	A4700-511-01-2				..PULLEY-IDLE	1			

Item	Part_No	IS	Ord	T	Description	Qty	Serial_No	ITC	Remark
1-103	A8900-518-03-3				...BOLT-TENSION	1			
1-11	11N6-90120				.BRACKET-R/DRIER	1			
1-12	12E2-3505				.V-BELT	1			
1-13	11EK-92090				.HOSE-DRAIN	1			
1-14	11N6-90340				.FILTER-REC	1	#0072 - #0614	D	SEE 6085
5	S152-040122				SCREW-TAPPING	4			
6	S551-035146				TIE-WIRE	2			
7	S520-020000				CLAMP-HOSE	1			
8	S131-051546				SCREW-W/WASHER	4			
9	S035-062022				BOLT-W/WASHER	2			
10	S035-082022				BOLT-W/WASHER	4			
11	S035-083022				BOLT-W/WASHER	2	- #1003		
12	S037-101552				BOLT-W/WASHER	1			
13	S037-102022				BOLT-W/WASHER	3			
14	S037-123522				BOLT-W/WASHER	4			
15	S109-080956				BOLT-SOCKET	3	- #1003		
	S109-080856				BOLT-SOCKET	3	#1004 -	D	
16	S205-061002				NUT-HEX	3			
17	S205-081002				NUT-HEX	1			
18	S403-062002				WASHER-PLAIN	3			
19	S403-082002				WASHER-PLAIN	1			
20	S411-060002				WASHER-SPRING	3			
21	S411-080002				WASHER-SPRING	1			
22	S543-400002				CLAMP-TUBE	1			
23	S091-060156				BOLT-WING	3	#0072 - #0614	-	

Item	Part_No	IS	Ord	T	Description	Qty	Serial_No	ITC	Remark
24	S403-062006				WASHER-PLAIN	3	#0072 - #0614	-	
25	S018-100356				BOLT-HEX	1	#1004 -		
26	S411-100006				WASHER-SPRING	1	#1004 -		
27	S403-10200B				WASHER-PLAIN	1	#1004 -		

AIR CONDITIONER UNIT

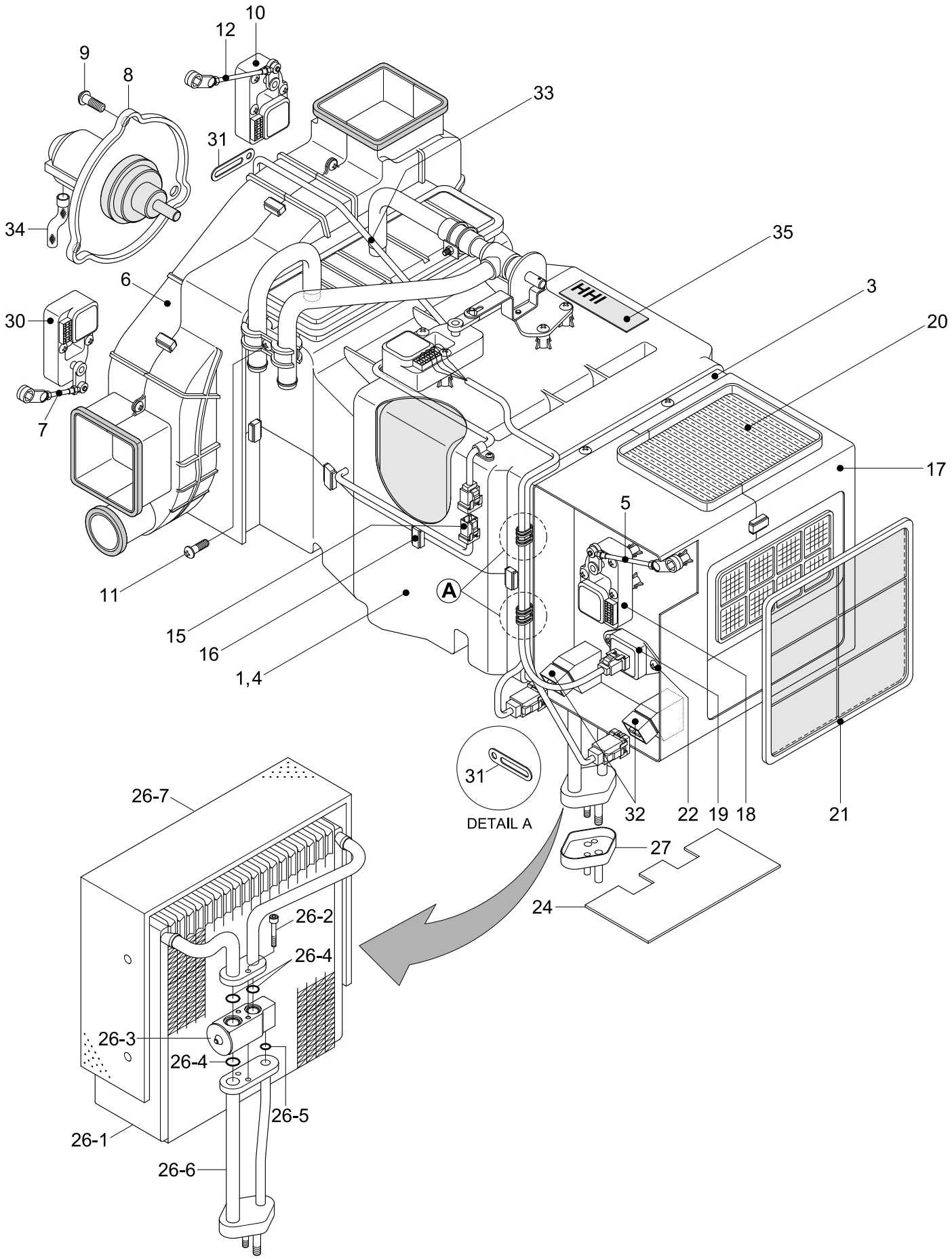

Item	Part_No	IS	Ord	T	Description	Qty	Serial_No	ITC	Remark
*	11N6-90220				.AIR CON UNIT	1			
1	AM12101400-0				..HVAC CASE-LOW	1			
3	AM11101602-0				..HVAC CASE-UPP	1			
4	AM75001000-2				..EVAC INSULATION-LOW	1			
5	AM52300100-4				..ROD-INTAKE	1			
6	AW10001400-2				..BLOWER CASE ASSY	1			
7	AW70002400-4				..ROD-DEF/FOOT	1			
8	11N6-90700				..FAN & MOTOR	1			
9	4AH-0886				..SCREW	3			
10	11N6-90710				..MOTOR ACT-VENT	1			
11	K500531				..SCREW	29			
12	AW70002300-4				..ROD-VENT	1			
15	A165400100-2				..SENSOR-DUCT	1			
16	4AH-0688				..CLIP-CASE	9			
17	AM13000203-2				..INTAKE CASE ASSY	1			
18	11N6-90740				..MOTOR ACT-INTAKE	1			
19	11N6-90750				..RESISTOR ASSY	1			
20	11N6-90760				..AIR FILTER-FRESH	1			
21	11N6-90770				..AIR FILTER-REFRESH	1			
22	K500533				..SCREW	2			
24	A112050700-3				..PLATE-SIDE	1			
26	11N6-90790				..EVAP CORE ASSY	1	- #1003		
	11N6-90791				..EVAP CORE ASSY	1	#1004 -	B	
26-1	A111056400-1				...CORE ASSY-LAMI	1	- #1003		
26-2	A111750100-4				...BOLT-WRENCH,HEX	2	- #1003		

Item	Part_No	IS	Ord	T	Description	Qty	Serial_No	ITC	Remark
26-3	11N6-90800				...VALVE-EXPANSION	1	- #1003		
26-4	A305000212-2				...O-RING	3	- #1003		
26-5	A305000211-2				...O-RING	1	- #1003		
26-6	A112059600-2				...PIPE ASSY	1	- #1003		
26-7	A115004900-2				...INSULATION-CORE	1	- #1003		
27	A306201301-3				..CAP-FLANGE	1			
30	11N6-90810				..MOTOR ACT-FOOT/DEF	1			
31	4AH-0643				..HOLDER-WIRE	6			
32	11N6-90820				..RELAY	2			
33	11N6-90830				..WIRING ASSY	1			
34	A710051601-3				..HOSE-DRAIN	1			
35	AE73000400Z2				..PLATE-NAME	1			

HEATER MOUNTING

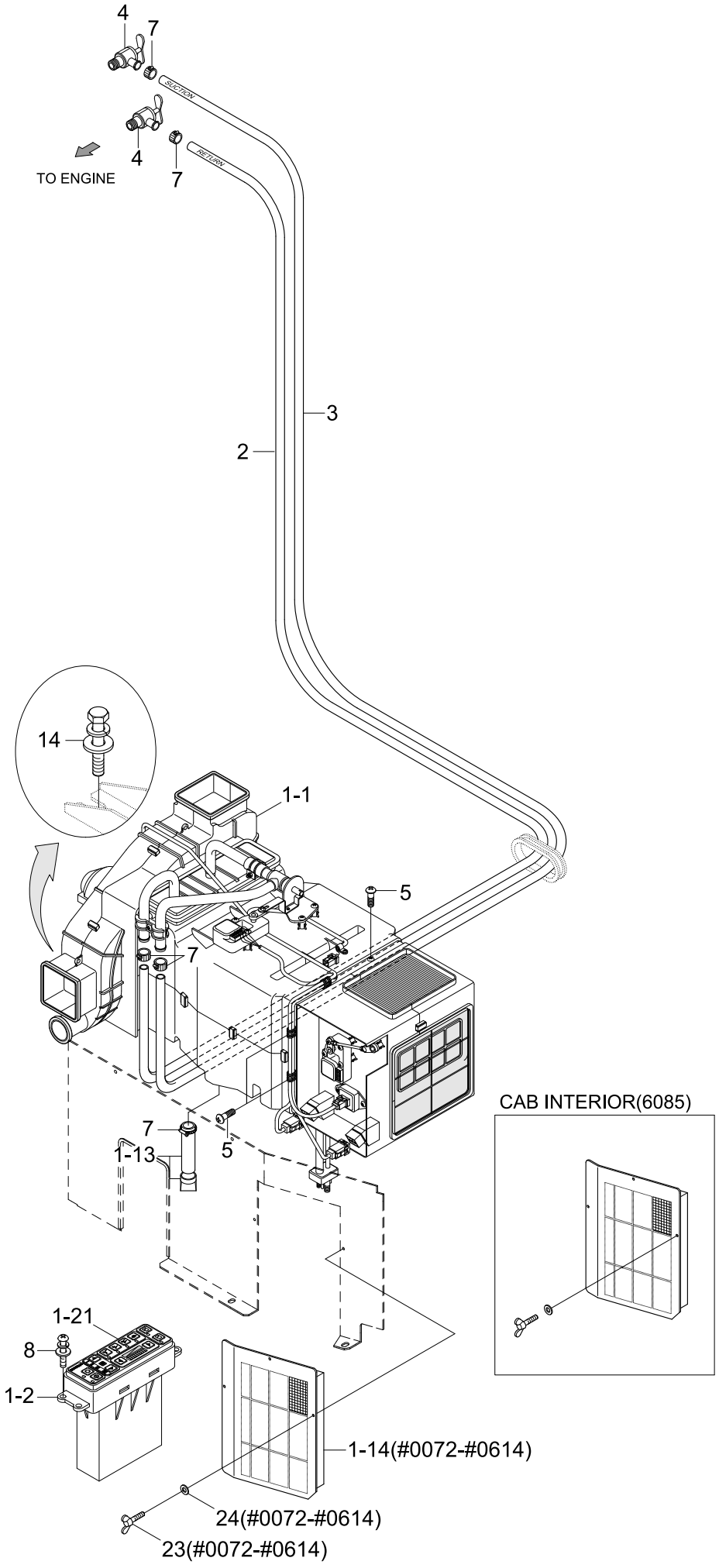

Item	Part_No	IS	Ord	T	Description	Qty	Serial_No	ITC	Remark
1	11N6-90310				HEATER ASSY	1			
1-1	11N6-90320				.HEATER UNIT	1	- #0007		
	11N6-90321				.HEATER UNIT	1	#0008 -	A	
1-2	11N6-90331				.CONTROL ASSY	1			
1-21	11N6-90860				..DECAL-HEATER	1			
1-13	11EK-92090				.HOSE-DRAIN	1			
1-14	11N6-90340				.FILTER-REC	1	#0072 - #0614	D	SEE 6085
2	11E6-92070				HOSE-DRAIN	1			
3	11E6-92080				HOSE	1			
4	14L1-01350				VALVE-HEATER	2			
5	S152-040122				SCREW-TAPPING	4			
7	S520-020000				CLAMP-HOSE	5			
8	S131-051546				SCREW-W/WASHER	4			
14	S037-123522				BOLT-W/WASHER	4			
23	S091-060156				BOLT-WING	3	#0072 - #0614	-	
24	S403-062006				WASHER-PLAIN	3	#0072 - #0614	-	

HEATER UNIT(-#0007)

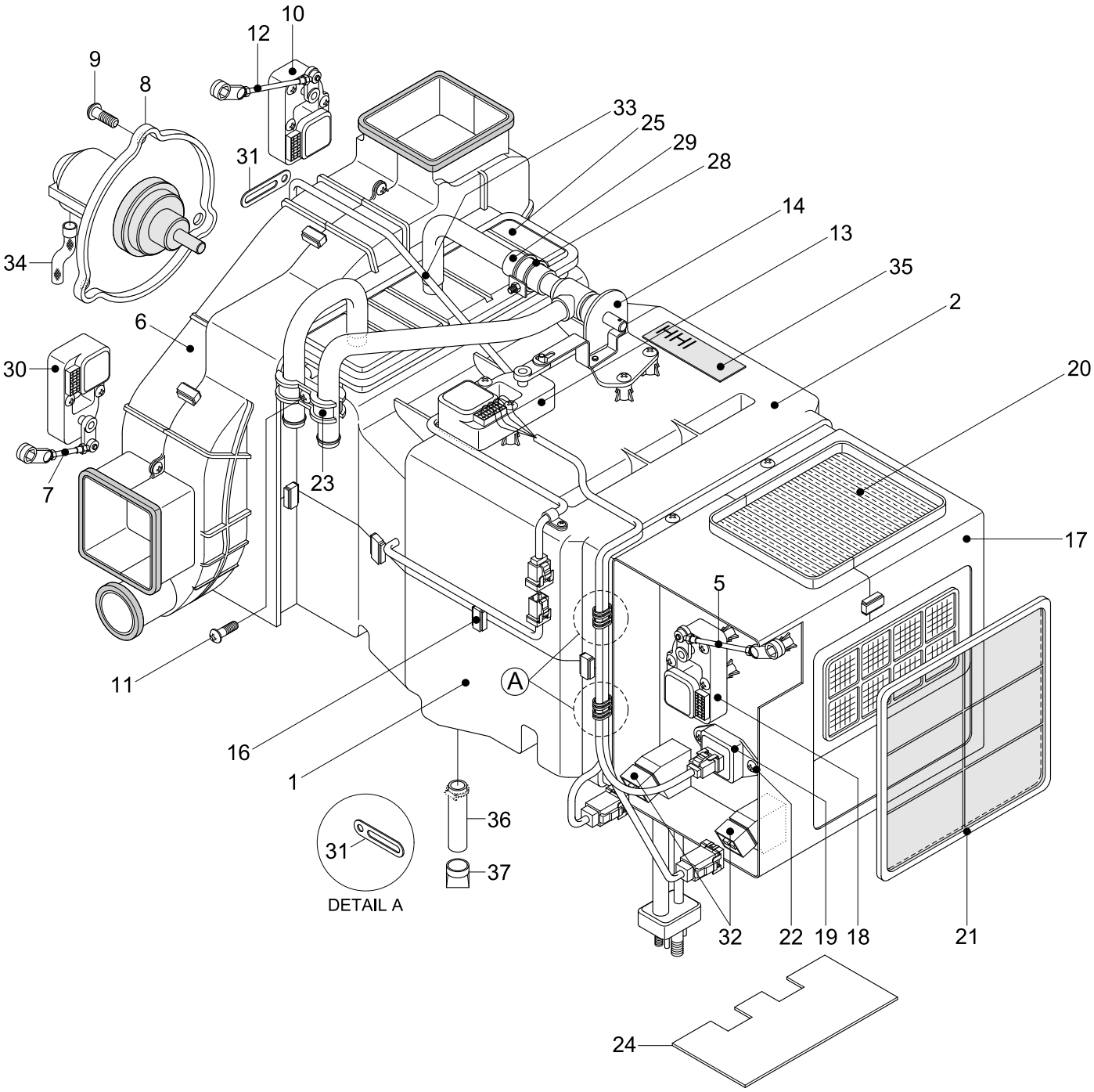

Item	Part_No	IS	Ord	T	Description	Qty	Serial_No	ITC	Remark
*	11N6-90320				.HEATER UNIT	1	- #0007	-	SEE 1151
1	AM12101400-0				..HVAC CASE-LOW	1			
2	AH000089				..HVAC CASE-UPP	1			
5	AM52300100-4				..ROD-INTAKE	1			
6	AW10001400-2				..BLOWER CASE ASSY	1			
7	AW70002400-4				..ROD-DEF/FOOT	1			
8	11N6-90700				..FAN & MOTOR	1			
8-1	AW22000800-2				...FAN	1			
8-2	AW21002500-1				...MOTOR	1			
9	4AH-0886				..SCREW	3			
10	11N6-90710				..MOTOR ACT-VENT	1			
11	K500531				..SCREW	29			
12	AW70002300-4				..ROD-VENT	1			
13	11N6-90720				..MOTOR ACT-TEMP	1			
14	11N6-90730				..WATER VALVE	1			
16	4AH-0688				..CLIP-CASE	9			
17	AM13000203-2				..INTAKE CASE ASSY	1			
18	11N6-90740				..MOTOR ACT-INTAKE	1			
19	11N6-90750				..RESISTOR ASSY	1			
20	11N6-90760				..AIR FILTER-FRESH	1			
21	11N6-90770				..AIR FILTER-RE	1			
22	K500533				..SCREW	2			
23	3AH-0770				..CLAMP-PIPE	1			
24	A112050700-3				..PLATE-SIDE	1			
25	11N6-90780				..HEATER CORE	1			

Item	Part_No	IS	Ord	T	Description	Qty	Serial_No	ITC	Remark
28	4AH-0929				..CLAMP ASSY-HOSE	1			
29	3AH-1007				..HOSE-WATER	1			
30	11N6-90810				..MOTOR ACT-FOOT/DEF	1			
31	4AH-0643				..HOLDER-WIRE	6			
32	11N6-90820				..RELAY	2			
33	11N6-90830				..WIRING ASSY	1			
34	A710051601-3				..HOSE-DRAIN	1			
35	AE73000400Z2				..PLATE-NAME	1			

HEATER UNIT(#0008-)

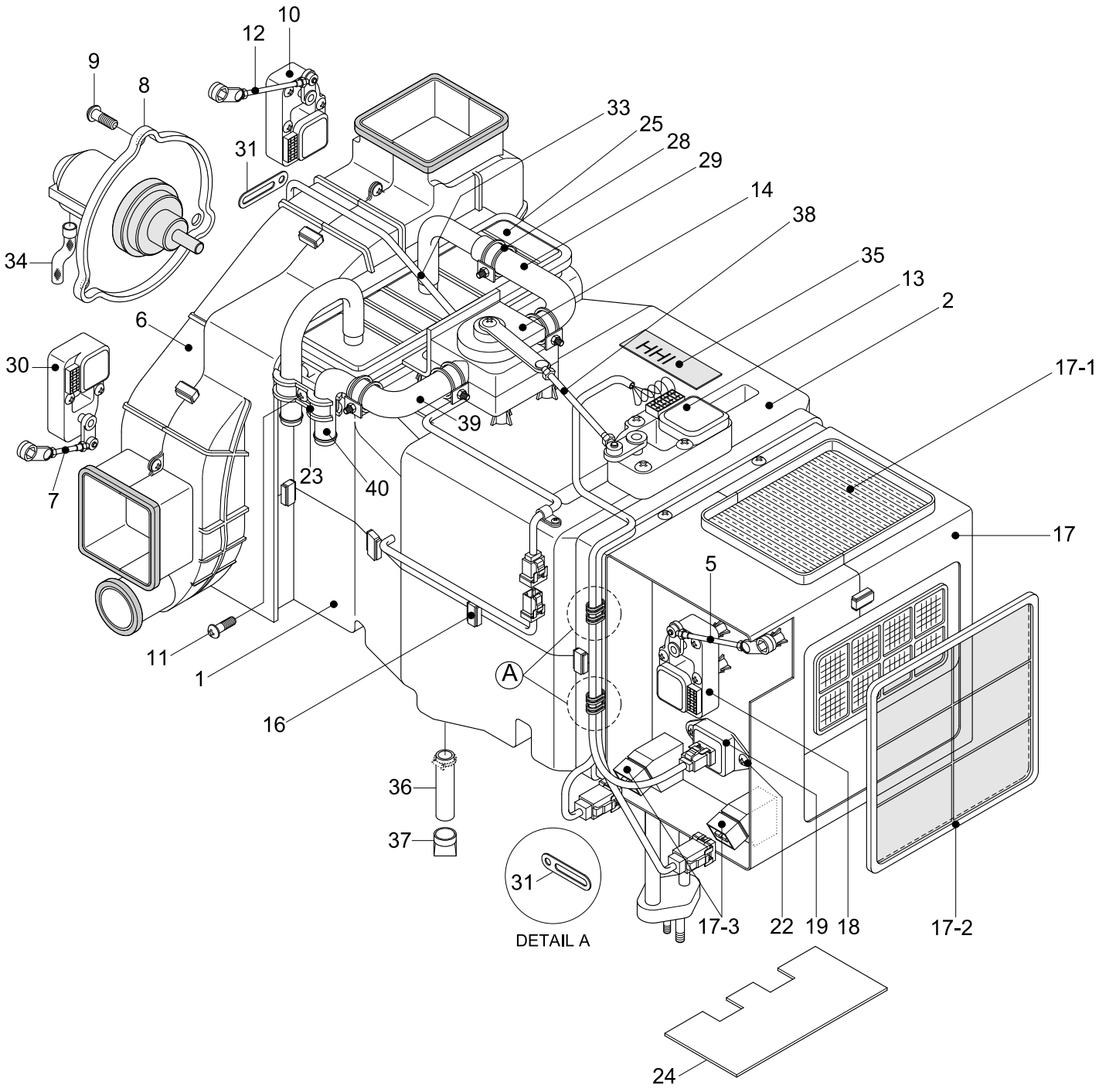

Item	Part_No	IS	Ord	T	Description	Qty	Serial_No	ITC	Remark
*	11N6-90321				.HEATER UNIT	1	#0008 -	A	SEE 1150
1	AM12101400-0				..HVAC CASE-LOW	1			
2	AH000086				..HVAC CASE UPP ASSY	1			
5	AM52300100-4				..ROD-INTAKE	1			
6	AH000106				..BLOWER CASE ASSY	1			
7	AW70002400-4				..ROD-DEF/FOOT	1			
8	11N6-90700				..FAN & MOTOR	1			
8-1	AW22000800-2				...FAN	1			
8-2	AW21002500-1				...MOTOR	1			
9	AH000866				..SCREW	3			
10	11N6-90710				..MOTOR ACT-VENT	1			
11	K500531				..SCREW	28			
12	AW70002300-4				..ROD-VENT	1			
13	AH100311				..MOTOR ACT-TEMP	1			
14	AH001160				..WATER VLAVE	1			
16	4AH-0688				..CLIP-CASE	9			
17	AH000055				..INTAKE CASE ASSY	1			
17-1	11N6-90760				...AIR FILTER-FRESH	1			
17-2	11N6-90770				...AIR FILTER-RE	1			
17-3	11N6-90820				...RELAY	1			
18	11N6-90740				..MOTOR ACT-INTAKE	1			
19	AM86000601-2				..RESISTOR ASSY	1			
22	K500533				..SCREW	2			
23	AH000314				..H/RAD PIPE CLAMP	1			
24	A112050700-3				..PLATE-SIDE	1			

Item	Part_No	IS	Ord	T	Description	Qty	Serial_No	ITC	Remark
25	11N6-90780				..HEATER CORE	1			
28	AM27000201-3				..CLAMP-WATER HOSE	4			
29	AH001288				..HOSE,OUTLET-WATER	1			
30	11N6-90810				..MOTOR ACT-FOOT/DEF	1			
31	4AH-0643				..HOLDER-WIRE	6			
33	11N6-90830				..WIRING ASSY	1			
34	A710051601-3				..HOSE-DRAIN	1			
35	AM99001201-3				..NAME PLATE	1			
36	AM800-001-04-3				..HOSE-DRAIN	1			
37	4CC-3354Z				..VALVE-VACUUM	1			
38	AH000856				..ROD-TEMP	1			
39	AH001287				..HOSE,INLET-WATER	1			
40	AH001415				..HEATER PIPE-INLET	1			

AIRCON & HEATER MOUNTING(AUTO)

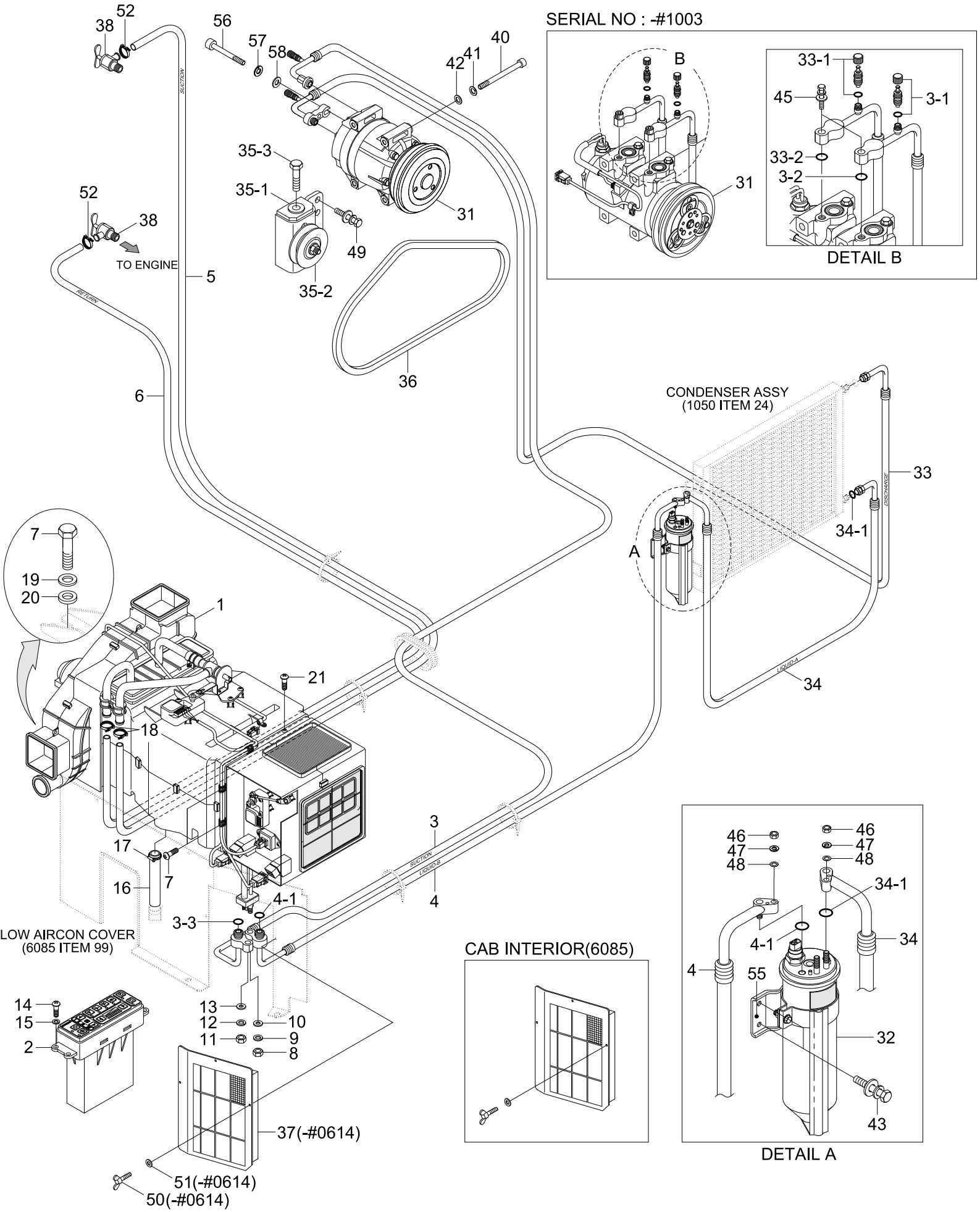

Item	Part_No	IS	Ord	T	Description	Qty	Serial_No	ITC	Remark
*	@				AIRCON & HEATER MTG	1	#0001 -		NOT
1	11N6-90420				AIR CON UNIT	1			SEE 1170
2	11N6-90430				CONTROL ASSY-FATC	1	- #0645		
	11N6-90431				CONTROL ASSY-FATC	1	#0646 -	B	
3	11N4-90100				HOSE-SUCTION	1	- #1003		
	11N4-90101				HOSE-SUCTION	1	#1004 -	D	
3-1	A304000401-4				.CHARGE VALVE ASSY	1	- #1003		
3-2	A310069299-2				.O-RING	1	- #1003		
3-3	A305000203-2				.O-RING	1	- #1003		
4	11N4-90090				HOSE(B)-LIQUID	1			
4-1	A305000209-2				.O-RING	2			
5	11E6-92080				HOSE	1			
6	11E6-92070				HOSE-DRAIN	1			
7	S017-120256				BOLT-HEX	4			
8	S201-061002				NUT-HEX	1			
9	S411-060002				WASHER-SPRING	1			
10	S403-061002				WASHER-PLAIN	1			
11	S201-081002				NUT-HEX	1			
12	S411-080002				WASHER-SPRING	1			
13	S403-081002				WASHER-PLAIN	1			
14	S175-050206				SCREW-SOCKET RD HD	4			
15	S403-052006				WASHER-PLAIN	4			
16	11EK-92090				HOSE-DRAIN	1			
17	S520-020000				CLAMP-HOSE	1			
18	S572-220006				CLAMP-HOSE,WIRE TYPE	2			

Item	Part_No	IS	Ord	T	Description	Qty	Serial_No	ITC	Remark
19	S441-120006				WASHER-HARDENED	4			
20	73NB-56400				SHIM	4			
21	S152-040122				SCREW-TAPPING	4			
31	11N6-90040				COMPRESSOR ASSY	1	- #1003		
	11Q6-90040				COMPRESSOR ASSY	1	#1004 -	D	
32	11N6-90060				DRIER-RECEIVER	1			
33	11N6-90070				HOSE-DISCHARGE	1	- #1003		
	11N6-90191				HOSE-DISCHARGE	1	#1004 -	D	
33-1	A304000301-4				.CHARGE VALVE ASSY	1	- #1003		
33-2	A305000206-2				.O-RING	1	- #1003		
33-3	A305000205-2				.O-RING	1	- #1003		
34	11NA-90220				HOSE(A)-LIQUID	1			
34-1	A305000209-2				.O-RING	2			
35	11N6-90110				PULLEY-IDLE	1			
35-1	A4760-508-00-2				.BRACKET-PULLEY	1			
35-2	A4700-511-01-2				.PULLEY-IDLE	1			
35-3	A8900-518-03-3				..BOLT-TENSION	1			
36	11N8-00130				V-BELT	1			
37	11N6-90340				FILTER-REC	1	- #0614		SEE 6085
38	11L7-90150				VALVE-HEATER	2			
40	S109-080956				BOLT-SOCKET	4	- #1003		
	S109-080856				BOLT-SOCKET	4	#1004 -	D	
41	S403-081006				WASHER-PLAIN	4			
42	S411-080006				WASHER-SPRING	4			
43	S035-061522				BOLT-W/WASHER	2			

Item	Part_No	IS	Ord	T	Description	Qty	Serial_No	ITC	Remark
45	S035-083522				BOLT-W/WASHER	2	- #1003		
46	S205-062002				NUT-HEX	2			
47	S411-060002				WASHER-SPRING	2			
48	S403-062002				WASHER-PLAIN	2			
49	S037-102022				BOLT-W/WASHER	3			
50	S091-060156				BOLT-WING	3	- #0614		
51	S403-061006				WASHER-PLAIN	3	- #0614		
52	S572-220006				CLAMP-HOSE,WIRE TYPE	2			
55	11N6-90120				BRACKET-R/DRIER	1			
56	S018-100356				BOLT-HEX	1	#1004 -		
57	S411-100006				WASHER-SPRING	1	#1004 -		
58	S403-10200B				WASHER-PLAIN	1	#1004 -		

AIRCON & HEATER UNIT-FATC

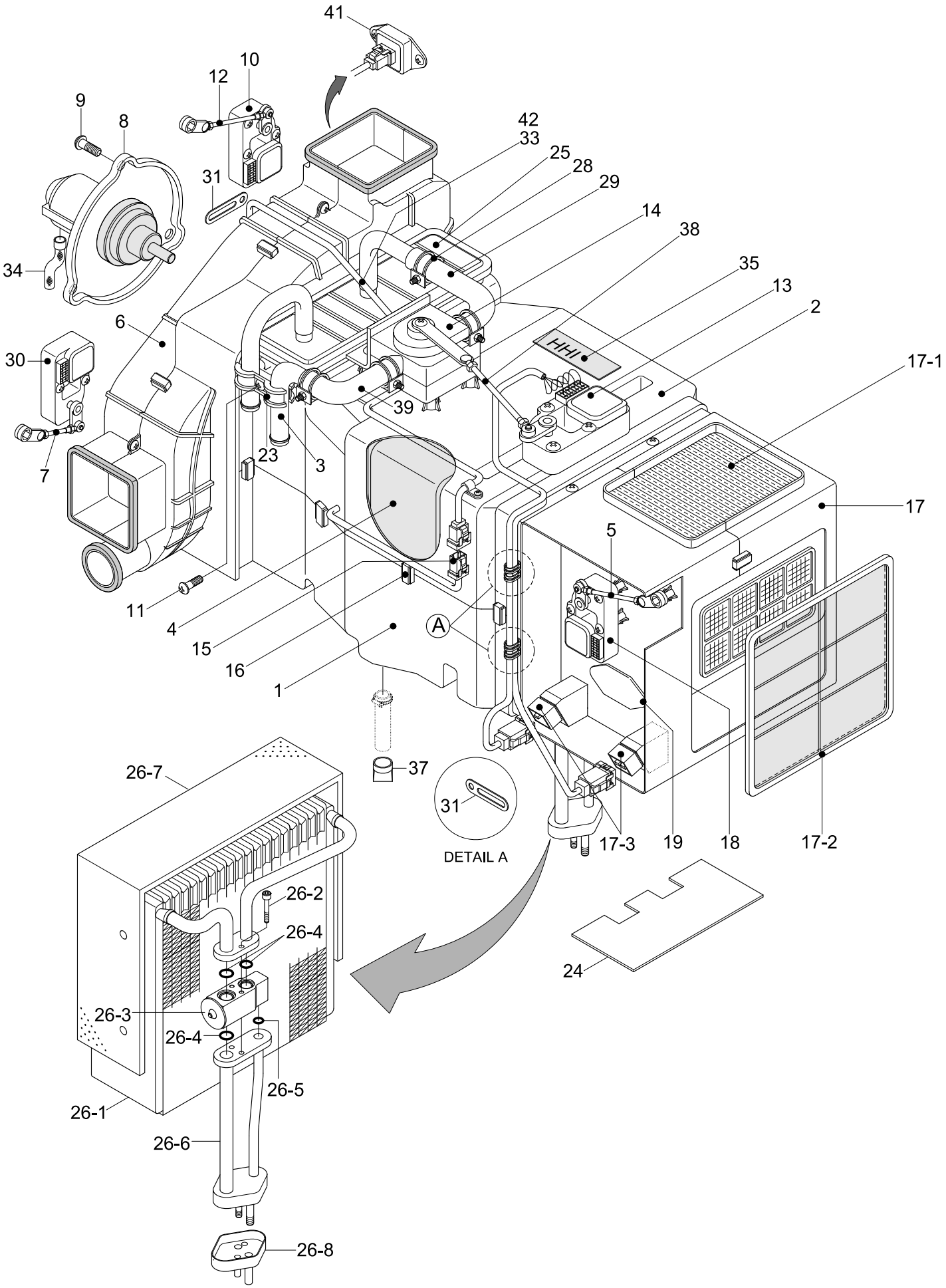

Item	Part_No	IS	Ord	T	Description	Qty	Serial_No	ITC	Remark
*	11N6-90420				AIR CON UNIT	1	#0001 -	-	
1	AM12101400-0				.HVAC CASE-LOW	1			
2	AH000089				.HVAC CASE-UPP	1			
3	AH000854				.I/PIPE & T/SENSOR	1			
4	AM75001000-2				.EVAC INSULATION-LOW	1			
5	AM52300100-4				.ROD-INTAKE	1			
6	AH001694				.BLOWER CASE ASSY	1			
7	AW70002400-4				.ROD-DEF/FOOT	1			
8	11N6-90700				.FAN & MOTOR	1			
8-1	AH001412				..FAN	1			
8-2	AW21002500-1				..MOTOR	1			
9	AH000866				.SCREW	3			
10	11N6-90710				.MOTOR ACT-VENT	1			
11	K500531				.SCREW	28			
12	AW70002300-4				.ROD-VENT	1			
13	AH100311				.MOTOR ACT-TEMP	1			
14	AH001160				.VLAVE-WATER	1			
15	A165400100-2				.SENSOR-DUCT	1			
16	4AH-0688				.CLIP-CASE	9			
17	AH000055				.INTAKE CASE ASSY	1			
17-1	11N6-90760				..AIR FILTER-FRESH	1			
17-2	11N6-90770				..AIR FILTER-REFRESH	1			
17-3	11N6-90820				..RELAY	1			
18	11N6-90740				.MOTOR ACT-INTAKE	1			
19	AH001617				.SEAL-SPONGE	1			

Item	Part_No	IS	Ord	T	Description	Qty	Serial_No	ITC	Remark
23	AH000314				.CLAMP-H/RAD PIPE	1			
24	A120150700-3				.PLATE-SIDE	1			
25	11N6-90780				.HEATER CORE	1			
26	11N6-90790				.EVAP CORE ASSY	1	- #1003		
	11N6-90791				.EVAP CORE ASSY	1	#1004 -	B	
26-1	A111056400-1				..CORE ASSY-LAMI	1	- #1003		
26-2	A111750100-4				..BOLT-WRENCH,HEX	2	- #1003		
26-3	11N6-90800				..VALVE-EXPANSION	1	- #1003		
26-4	A305000212-2				..O-RING	3	- #1003		
26-5	A305000211-2				..O-RING	1	- #1003		
26-6	A112059600-2				..PIPE ASSY	1	- #1003		
26-7	A115004900-2				..INSULATION-CORE	1	- #1003		
26-8	A306201301-3				..CAP-FLANGE	1	- #1003		
28	AH001853				.CLAMP-WATER HOSE	4			
29	AH001288				.HOSE-OUTLET,WATER	1			
30	11N6-90810				.MOTOR ACT-FOOT/DEF	1			
31	4AH-0643				.HOLDER-WIRE	6			
33	AH100268				.WIRING ASSY	1			
34	A710051601-3				.HOSE-DRAIN	1			
35	AH001161				.NAME PLATE	1			
37	4CC-3354Z				.VALVE-VACUUM	1			
38	AH000856				.ROD-TEMP	1			
39	AH001287				.HOSE-INLET,WATER	1			
41	AW92000200-2				.POWER TR	1			
42	AH100312				.SENSOR-AMBIENT	2			

PRE HEATING GROUP(#0525-)

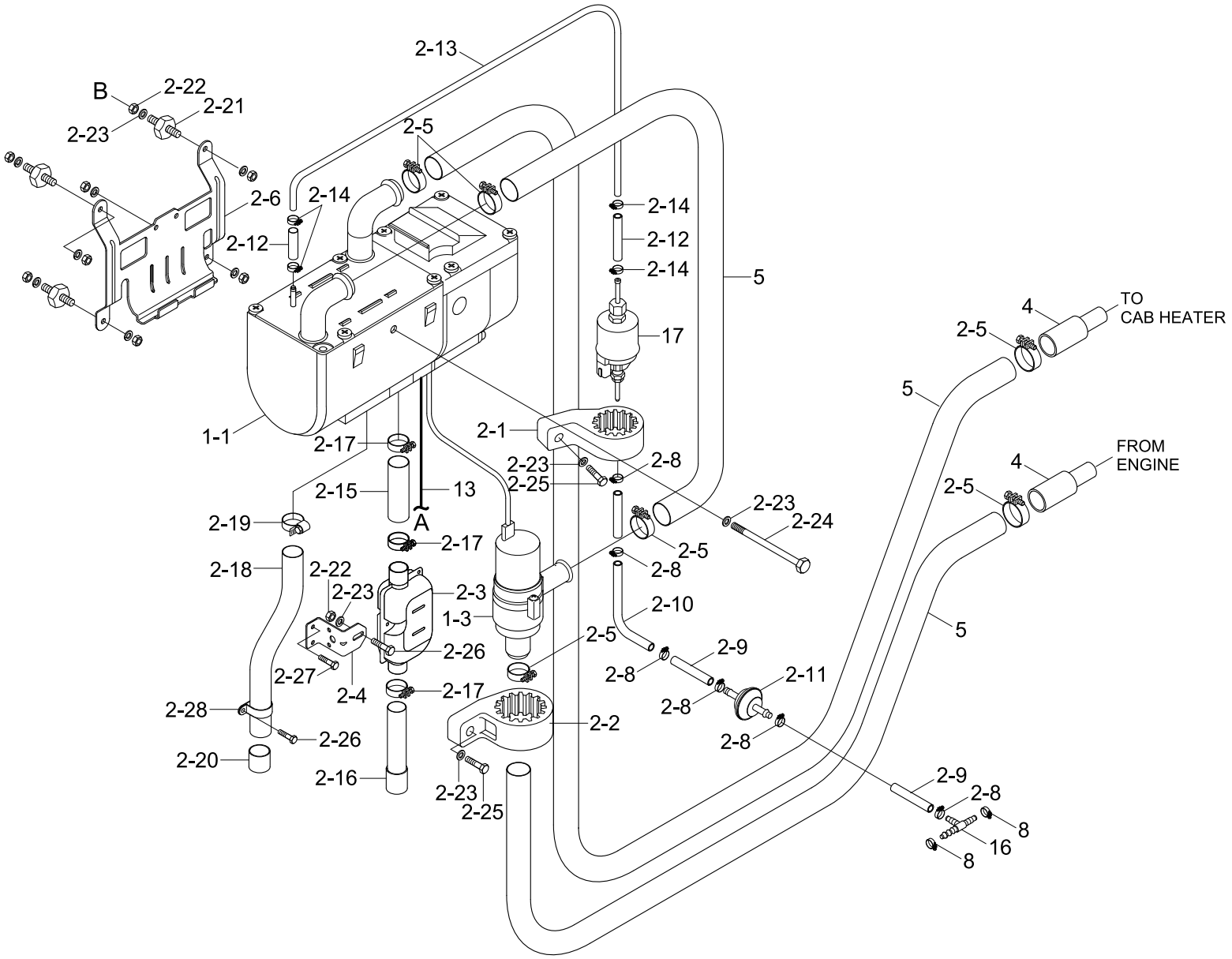

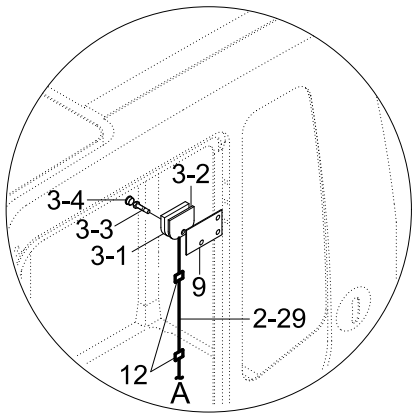

CAB

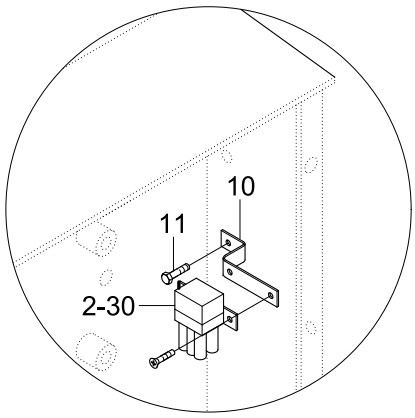

ELECTRIC BOX

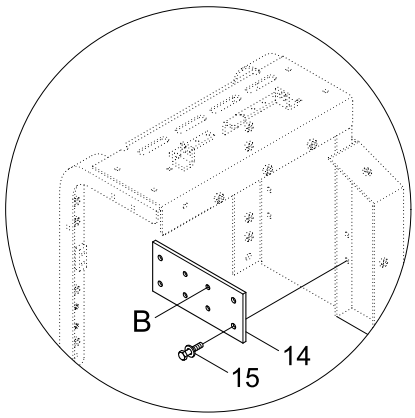

SIDE COWL ASSY-RH

Item	Part_No	IS	Ord	T	Description	Qty	Serial_No	ITC	Remark
*	@				PRE HEATING GROUP	1	#0525 -	-	NOT
1	11N8-90500				HYDRONIC D5WS-24V	1			
N1-1	11N8-94100				.PRE HEATER	1	#0525 -	-	NOT
1-3	11N8-94120				.PUMP-COOLANT	1			
2	11N8-90510				UNIVERSAL KIT D5WS-24V	1			
2-1	11N8-94130				.CLAMP-RUBBER	1			
2-2	11N8-94140				.CLAMP-RUBBER	1			
2-3	11N8-94160				.MUFFLER	1			
2-4	11N8-94170				.BRKT-MUFFLER	1			
2-5	@				.HOSE-CLAMP	10			NOT
2-6	11N8-94150				.BRKT-HEATER	1			
2-8	@				.CLAMP-HOSE	6			NOT
2-9	@				.HOSE	3			NOT
2-10	@				.HOSE-PLASTIC	1			NOT
2-11	11N8-94190				.FILTER FUEL	1			
2-12	@				.HOSE	2			NOT
2-13	@				.HOSE-PLASTIC	1			NOT
2-14	@				.CLAMP-HOSE	4			NOT
2-15	@				.HOSE-EXHAUST	1			NOT
2-16	@				.HOSE-EXHAUST	1			NOT
2-17	@				.CLAMP-EXHAST	3			NOT
2-18	@				.HOSE-INTAKE	1			NOT
2-19	@				.CLAMP-INTAKE	1			NOT
2-20	@				.END CAP	1			NOT
2-21	@				.STUD BOLT	4			NOT

Item	Part_No	IS	Ord	T	Description	Qty	Serial_No	ITC	Remark
2-22	@				.NUT	5			NOT
2-23	@				.WASHER	9			NOT
2-24	@				.BOLT-HEX	1			NOT
2-25	@				.BOLT-HEX	2			NOT
2-26	@				.BOLT-HEX	3			NOT
2-27	@				.BOLT SCREW	2			NOT
2-28	@				.CLAMP	1			NOT
2-30	11N8-94260				.FUSE BOX-P/HEATER	1			
3	11N8-90520				MINI TIMER 12/24V	1			
3-1	@				.TIMER	1			NOT
3-2	@				.CUSHION	1			NOT
3-3	@				.BOLT SCREW	1			NOT
3-4	@				.CAP	1			NOT
4	11N8-94320				REDUCER	2			
5	11N8-94211				HOSE	3			
8	S520-020000				CLAMP-HOSE	2			
9	11N8-94240				PLATE	1			
10	11N8-94270				BRACKET-F/BOX	1			
11	S131-043046				SCREW-W/WASHER	1			
12	21E9-06230				CLAMP-QUICK	2			
13	11N8-94250				HARNESS-P/HEATER	1			
14	11N8-94350				BRACKET	1			
15	S037-101552				BOLT-W/WASHER	4			
16	11N8-94180				TEE-FUEL	1			
17	11N8-94110				PUMP-FUEL	1	#0525 -	-	

RH ELECTRIC

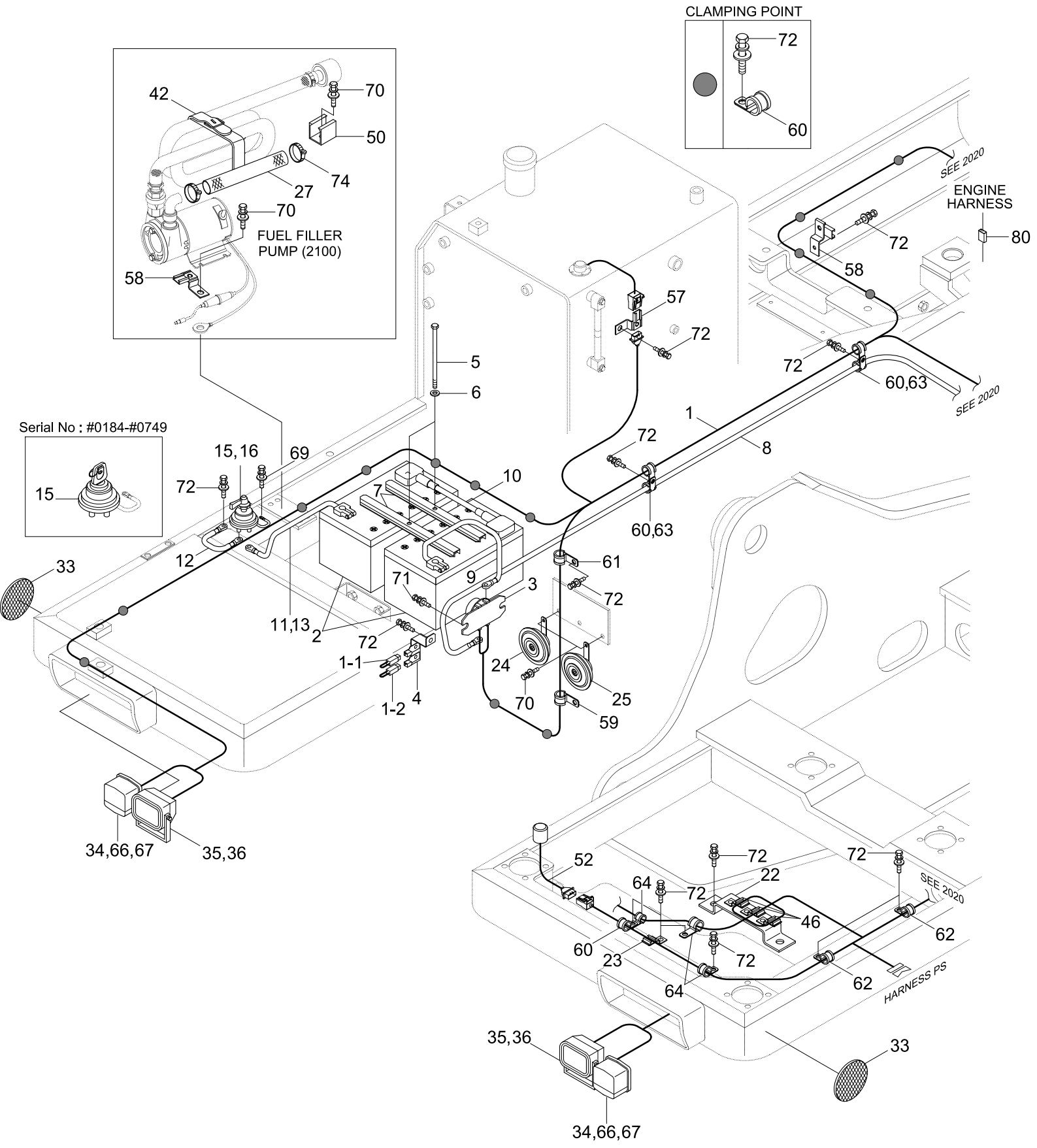
CLAMPING POINT
72
60
42
70
50
74
27
70
FUEL FILLER
PUMP (2100)
58
SEE 2020
ENGINE
HARNESS
80
72
58
57
72
5
6
72
60,63
SEE 2020
1
8
72
60,63
Serial No : #0184-#0749
15
15,16
69
72
10
7
12
33
61
72
71
9
3
11,13
2
72
1-1
1-2
4
24
70
25
59
34,66,67
35,36
52
72
72
22
64
72
SEE 2020
46
62
60
23
72
64
62
HARNESS PS
35,36
33
34,66,67

Item	Part_No	IS	Ord	T	Description	Qty	Serial_No	ITC	Remark
1	21N4-30012				HARNESS-FRAME	1	- #0071		STD
	21N4-30013				HARNESS-FRAME	1	#0072 - #0079	B	STD
	21N4-30014				HARNESS-FRAME	1	#0080 - #0294	D	STD
	21N4-30015				HARNESS-FRAME	1	#0295 - #0350	D	STD
	21N4-45100				HARNESS-FRAME	1	#0285 - #0350	-	LOW NOISE
					HARNESS-FRAME	1	#0351 - #0436	B	STD, LOW NOISE
	21N4-45101				HARNESS-FRAME	1	#0437 - #0452	B	STD, LOW NOISE
	21N4-45102				HARNESS-FRAME	1	#0453 -	D	
	21N4-45103				HARNESS FRAME	1	#0453 - #0932	D	
	21N4-45104				HARNESS FRAME	1	#0933 -	D	
1-1	21N4-01310				.LINK-FUSIBLE(1.25)	1	- #0071		
	21N4-01311				.LINK-FUSIBLE(0.85)	1	#0072 - #0932	B	
1-2	21N4-01320				.LINK-FUSIBLE	1	- #0932	-	
1-3	21EA-50550				.DIODE	1			NOT SHOWN
2	21E6-20270				BATTERY	2			
3	21E5-0003	10			RELAY-BATTERY	1			
4	21N4-01140				PLATE	1			
5	S017-102502				BOLT-HEX	2			
6	S403-102002				WASHER-PLAIN	2			
7	25D1-10150				BAR-BATTERY	2			
8	21E2-60031				CABLE(BATT RY-STARTER)	1			
9	21EA-60490				CABLE(BATT-BATT RY)	1			
10	21N4-01400				CABLE(BATT-BATT)	1			
11	21L7-20430				CABLE(BATT-SW&EARTH)	1			
12	21NA-10600				STRAP-EARTH	1	- #0932	-	

Item	Part_No	IS	Ord	T	Description	Qty	Serial_No	ITC	Remark
13	24L3-01120				CABLE(BATT-EARTH)	1			W/O MASTER SW
15	21L7-10500				SWITCH-MASTER	1	- #0183		
	21N4-10441				SWITCH-MASTER	1	#0184 - #0749	B	
	21L7-10500				SWITCH-MASTER	1	#0750 - #0932	A	SEE 2070, 2075
15-1	21N4-10441K				.KEY-MASTER SWITCH	2	#0184 - #0932	-	
16	21EN-00420				DECAL-MASTER SW	1	- #0183		
	21N4-10450				DECAL-MASTER SW	1	#0184 - #0204	D	
	21N4-10451				DECAL-MASTER SW	1	#0205 - #0737	B	
	21LD-34180				DECAL-MASTER SWITCH	1	#0738 - #0932	D	
22	21N4-01100				PLATE-STEERING	1			
23	21N4-01130				PLATE-CLIP	1			
24	21N5-10050				HORN-LOW	1			
25	21N5-10060				HORN-HIGH	1			
27	21N4-20550				HOSE-OUTLET	1			
33	21EK-10150				REFLECTOR-SIDE	2			
34	21EK-10350				LAMP-FLASHER POSITION	2	- #0459		
	21EK-10351				LAMP-FLASHER POSITION	2	#0460 -	B	
35	21EK-10120				LAMP-HEAD	2			
36	21EK-10130				BULB-H4, 70/75W	2	- #0079		
	21EK-10131				BULB	2	#0080 -	B	
42	E127-3158	20			BAND-FUEL PUMP	1			
46	21N4-01111				CLIP-ECONO SEAL	3			
50	21N4-00770				CLIP	1			
52	21N4-11090				HARNESS-STOP LAMP	1	- #0436		
	21N4-12010				HARNESS-EXT,STOP LAMP	1	#0437 -	D	

Item	Part_No	IS	Ord	T	Description	Qty	Serial_No	ITC	Remark
57	25D1-10640				CLIP ASSY	1			
58	25D1-10650				CLIP ASSY	2			
59	21E9-00170				CLIP-HARNESS	1			
60	S593-000902				CLIP-HARNESS	14			
61	S543-120002				CLAMP-TUBE	1			
62	S543-160002				CLAMP-TUBE	2			
63	S543-240002				CLAMP-TUBE	2			
64	S543-280002				CLAMP-TUBE	4			
66	S411-040002				WASHER-SPRING	4			
67	S161-040152				SCREW-CROSS R/ROUND	4			
69	S035-062022				BOLT-W/WASHER	1	#0184 -	-	
70	S035-082022				BOLT-W/WASHER	8			
71	S035-082022				BOLT-W/WASHER	2			
72	S037-102022				BOLT-W/WASHER	27			
74	S520-032000				CLAMP-HOSE	3			
80	21N5-20190				PROTECTOR	1	#0936 -	-	

LH ELECTRIC

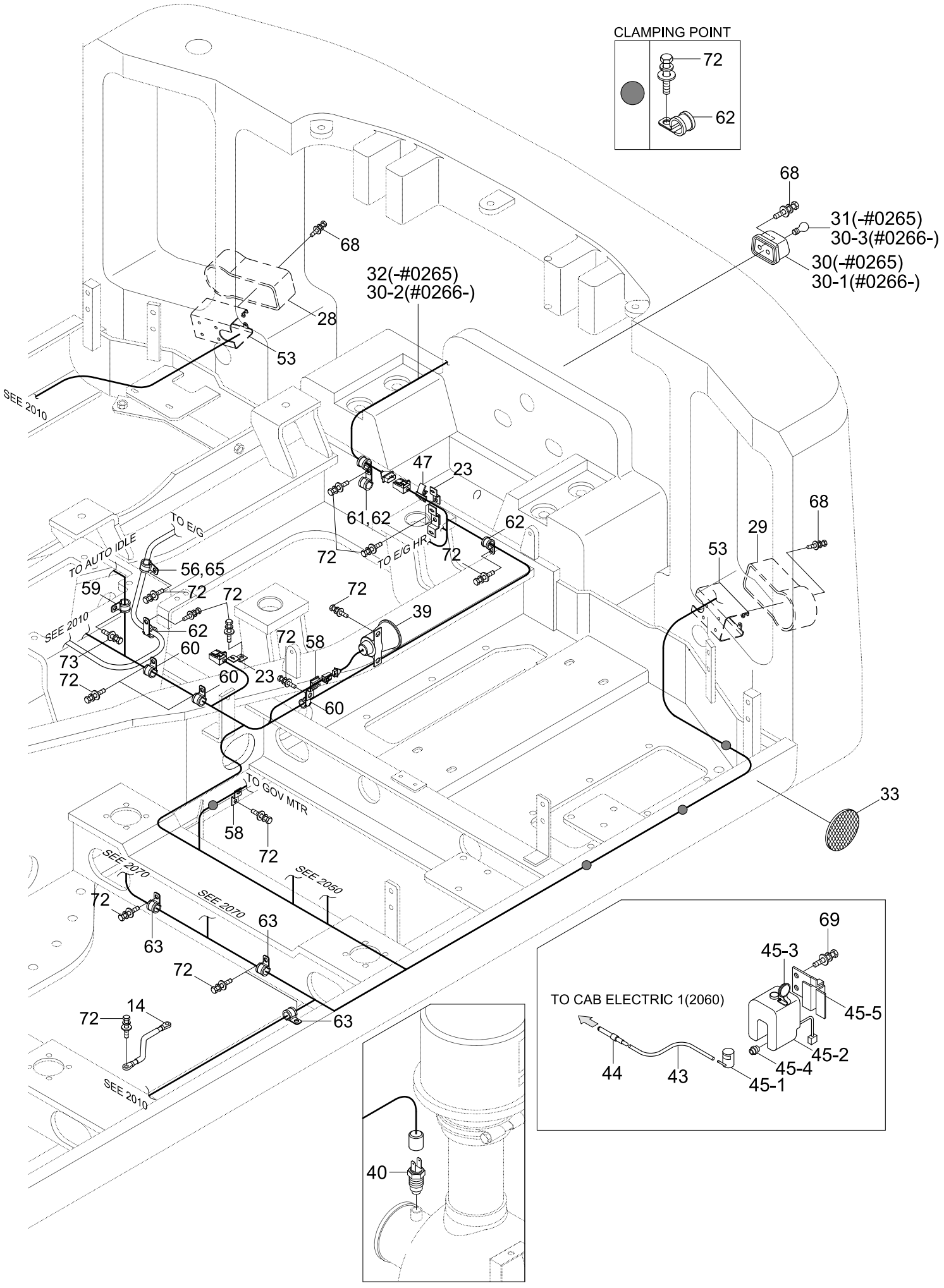
CLAMPING POINT
72
62
68
31(-#0265)
30-3(#0266-)
30(-#0265)
30-1(#0266-)
32(-#0265)
30-2(#0266-)
28
53
SEE 2010
47
23
61,62
72
TO E/G HR
62
TO E/G
TO AUTO IDLE
56,65
59
72
72
72
39
SEE 2010
62
72
58
60
73
60
23
72
60
68
29
53
TO GOV MTR
58
72
33
SEE 2070
SEE 2070
SEE 2050
72
63
63
72
72
14
63
SEE 2010
40
69
45-3
TO CAB ELECTRIC 1(2060)
45-5
45-2
45-4
44
43
45-1

Item	Part_No	IS	Ord	T	Description	Qty	Serial_No	ITC	Remark
14	24L1-30720				STRAP-EARTH	1			
23	21N4-01130				PLATE-CLIP	4			
28	21EA-30460				LAMP ASSY-COMB,RR,RH	1			
14	24L1-30720				STRAP-EARTH	1			
30	21EK-10160				LAMP-NUMBER PLATE	1	- #0265		
	21LB-34250				LAMP SUB ASSY(N/PLATE)	1	#0266 -	B	
30-1	21EK-10160				.LAMP-NUMBER PLATE	1	#0266 -	A	
30-2	21N4-11040				.HARNESS-EXT	1	#0266 -	A	
30-3	21EK-10260				.BULB	1	#0266 -	A	
31	21EK-10260				BULB	1	- #0265	-	
32	21N4-11040				HARNESS-EXT	1	- #0265	-	
33	21EK-10150				REFLECTOR-SIDE	2			
39	21N6-20321				BUZZER-TRAVEL ALARM	1	- #0292		
	21N6-20322				BUZZER-TRAVEL ALARM	1	#0293 -	D	
40	21L7-20100				SWITCH-AIR CLEANER	1			
43	21EM-30581				HOSE-RUBBER	1			
44	21EM-30570				CONNECTOR-TUBE	1			
45	21EG-30630				WASHER TANK ASSY	1			
45-1	21EG-10130				.MOTOR PUMP ASSY	1			
45-2	21EG-10140				.TANK	1			
45-3	24L3-30660				.CAP	1			
45-4	24L3-30670				.RUBBER-BUSH	1			
45-5	24L3-30710				.PLATE	1			
47	21E9-06160				CLIP	1			
23	21N4-01130				PLATE-CLIP	4			

Item	Part_No	IS	Ord	T	Description	Qty	Serial_No	ITC	Remark
53	21EA-30380				BRACKET-COMBI LAMP	2			
56	S690-022100				GROMMET	1			
58	25D1-10650				CLIP ASSY	2			
59	21E9-00170				CLIP-HARNESS	1			
60	S593-000902				CLIP-HARNESS	5			
61	S543-120002				CLAMP-TUBE	1			
62	S543-160002				CLAMP-TUBE	3			
63	S543-240002				CLAMP-TUBE	3			
65	S543-360002				CLAMP-TUBE	1			
68	S035-052036				BOLT-W/WASHER	10			
69	S035-062022				BOLT-W/WASHER	2			
72	S037-102022				BOLT-W/WASHER	16			
73	S037-122052				BOLT-W/WASHER	1			
28	21EA-30460				LAMP ASSY-COMB,RR,RH	1			
29	21EA-30450				LAMP ASSY-COMB,RR,LH	1			
30	21EK-10160				LAMP-NUMBER PLATE	1	- #0265	-	
	21LB-34250				LAMP SUB-NUMBER PLATE	1	#0266 -	A	
30-1	21EK-10160				.LAMP-NUMBER PLATE	1	#0266 -	A	
30-2	21N4-11040				.HARNESS-EXT	1	#0266 -	A	
30-3	21EK-10260				.BULB-10W	1	#0266 -	A	
31	21EK-10260				BULB-10W	1	- #0265	-	
32	21N4-11040				HARNESS-EXT	1	- #0265	-	
33	21EK-10150				REFLECTOR-SIDE	2			
39	21N6-20321				BUZZER-TRAVEL ALARM	1	- #0292		
	21N6-20322				BUZZER-TRAVEL ALARM	1	#0293 -	D	

Item	Part_No	IS	Ord	T	Description	Qty	Serial_No	ITC	Remark
40	21L7-20100				SWITCH-AIR CLEANER	1			
43	21EM-30581				HOSE-RUBBER	1			
44	21EM-30570				CONNECTOR-TUBE	1			
45	21EG-30630				WASHER TANK ASSY	1			
45-1	21EG-10130				.PUMP-MOTOR	1			
45-2	21EG-10140				.TANK	1			
45-3	24L3-30660				.CAP	1			
45-4	24L3-30670				.RUBBER-BUSHING	1			
45-5	24L3-30710				.PLATE	1			
47	21E9-06160				CLIP	1			
53	21EA-30380				BRACKET-COMBI LAMP	2			
56	S690-022100				GROMMET(FOR ONE LINE)	1			
58	25D1-10650				CLIP ASSY	2			
59	21E9-00170				CLIP-HARNESS	1			
60	S593-000902				CLIP-HARNESS	5			
61	S543-120002				CLAMP-TUBE	1			
62	S543-160002				CLAMP-TUBE	3			
63	S543-240002				CLAMP-TUBE	3			
65	S543-360002				CLAMP-TUBE	1			
68	S035-052036				BOLT-W/WASHER	10			
69	S035-062022				BOLT-W/WASHER	2			
72	S037-102022				BOLT-W/WASHER	16			
73	S037-122052				BOLT-W/WASHER	1			

BOOM ELECTRIC

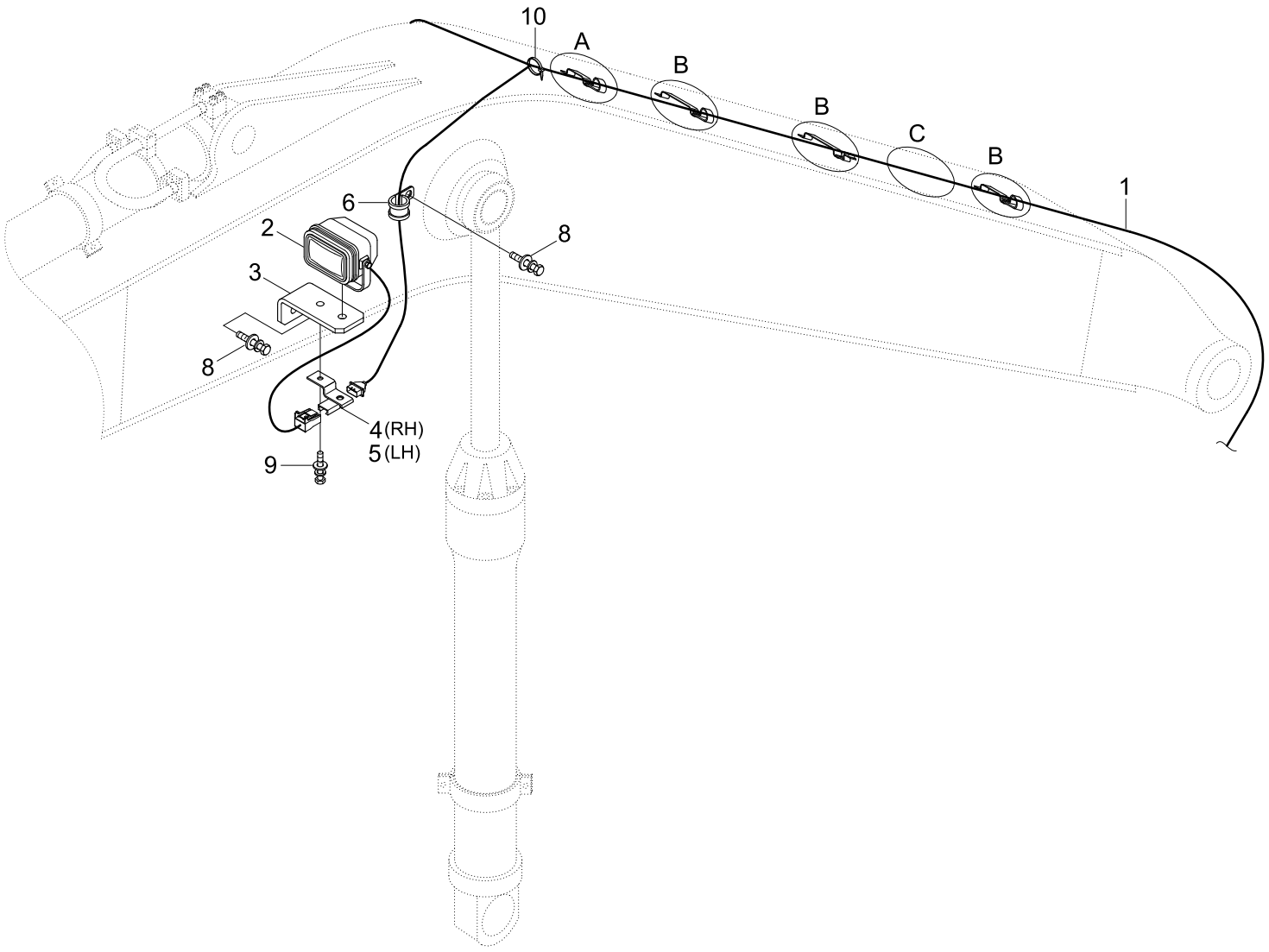

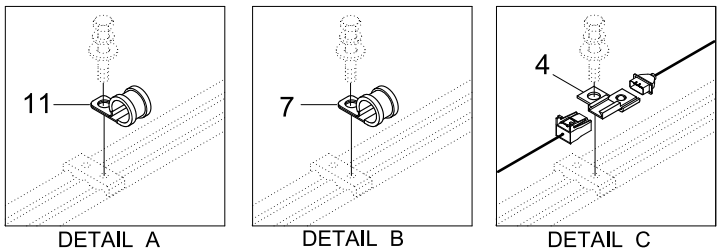

DETAIL A　DETAIL B　DETAIL C

Item	Part_No	IS	Ord	T	Description	Qty	Serial_No	ITC	Remark
1	21N4-10040				HARNESS-BOOM	1			
2	21N6-20211				WORK LAMP ASSY	2			
2-1	S866-240650				.BULB	1			NOT SHOWN
3	21N6-20221				BRACKET-LIGHT	2			
4	25D1-10640				CLIP ASSY	2			
5	25D1-10650				CLIP ASSY	1			
6	S593-000902				CLIP-HARNESS	2			
7	S593-000652				CLIP-HARNESS	3			
8	S037-102022				BOLT-W/WASHER	4			
9	S037-122522				BOLT-W/WASHER	2			
10	S552-050203				CLAMP-BAND	11			
11	S593-000752				CLIP-HARNESS	1			

ENGINE ELECTRIC

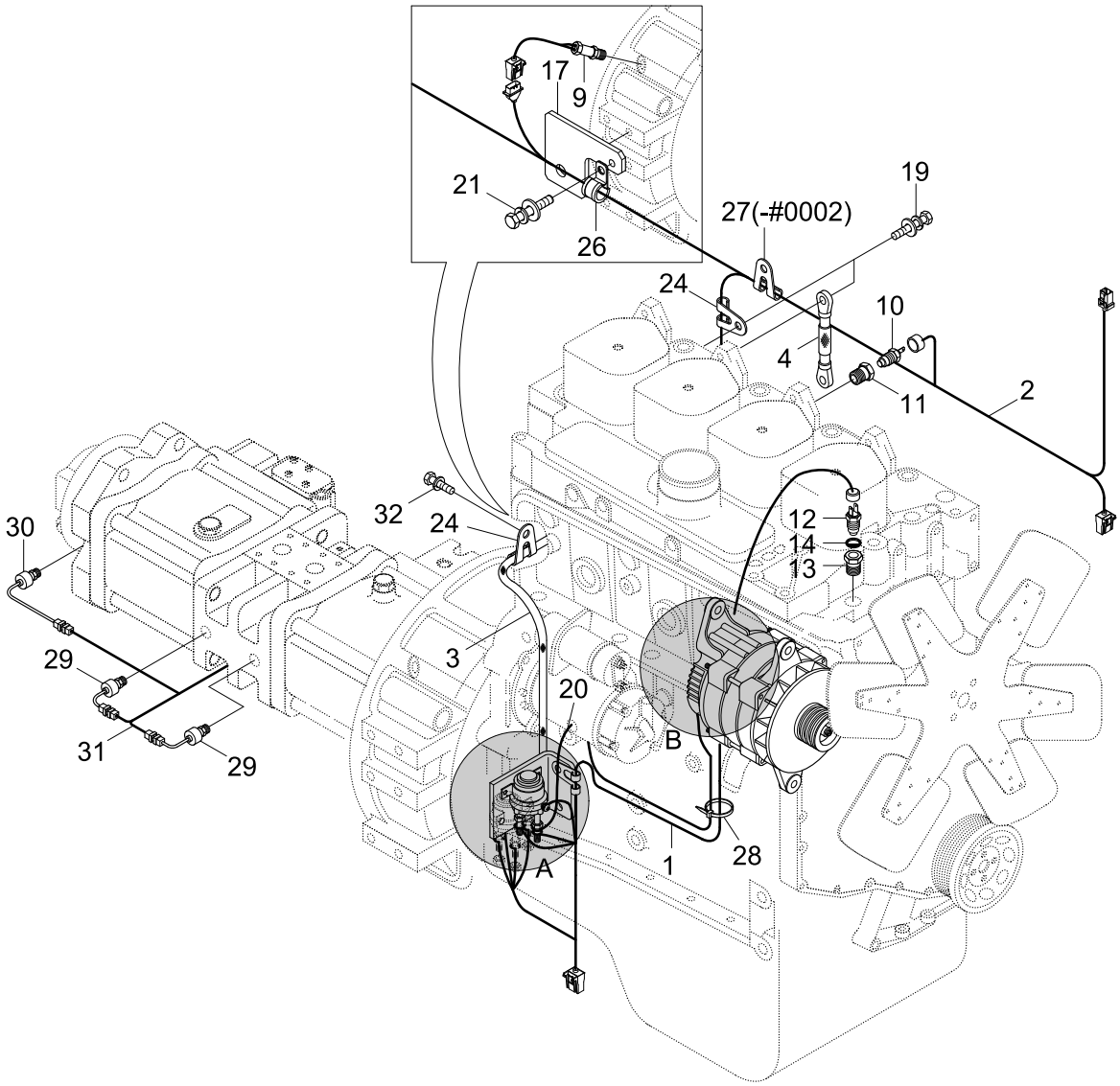

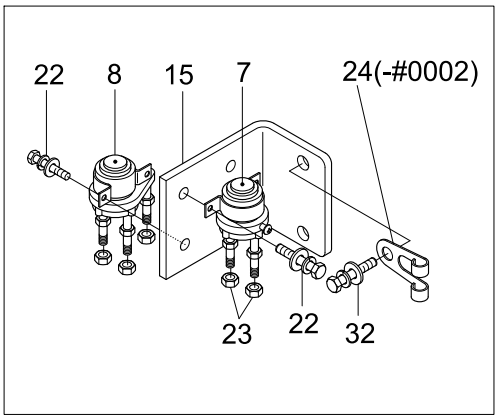

DETAIL A

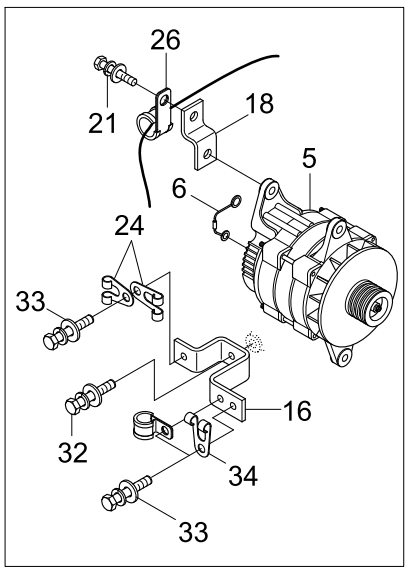

DETAIL B

Item	Part_No	IS	Ord	T	Description	Qty	Serial_No	ITC	Remark
*	@				ENGINE ELECTRIC	1	#0001 -	-	NOT
1	21N4-20021				HARNESS-ENG,FRONT	1	- #0980		
	21N4-20022				HARNESS-ENG,FRONT	1	#0981 -	B	
2	21N4-20041				HARNESS-ENG,REAR	1			ROTARY PUMP
	21N4-20042				HARNESS-ENG,REAR	1	#0072 -	-	INLINE PUMP,OPT
3	21N4-20031				CABLE-PREHEATER	1			
4	21EH-30720				STRAP-EARTH	1			
5	21E6-40030				ALTERNATOR ASSY	1	- #0980		
	21Q6-41000				ALTERNATOR ASSY	1	#0981 -	B	
6	21E1-21120				WIRE LINK-ALTERNATOR	1			
7	21N6-30120				RELAY-START	1			
8	E225-0006	10			RELAY-HEATER	1			
9	21E3-0042	03			SENSOR-SPEED	1			
10	21E3-5001	20			SWITCH-ENG OIL PRESS	1			
11	21EN-00511				ADAPTER-OIL PRESSURE	1			
12	21EN-40100				SENDER-TEMP	1			
13	21EA-50171				FITTING-TEMP SW	1			
14	21EA-50260				PACKING-TEMP SW	1			
15	21N6-10190				BRACKET-START RY	1			
16	21N4-01160				PLATE	2			
17	21EA-00201				BRACKET-TACHO	1			
18	21EA-00170				PLATE	1			
19	S037-122522				BOLT-W/WASHER	2			
20	21EA-00190				HARNESS-EXT,START RY	1			
21	S035-082022				BOLT-W/WASHER	2			

Item	Part_No	IS	Ord	T	Description	Qty	Serial_No	ITC	Remark
22	S035-061522				BOLT-W/WASHER	4			
23	S203-061002				NUT-HEX	2			
24	S593-001702				CLIP-HARNESS	4			
26	S543-080002				CLAMP-TUBE	2			
28	S552-035146				CLAMP-BAND	3			
29	21EG-32200				SENDER-PRESSURE	2			OPT,PUMP
30	21EG-32210				SENDER-PRESSURE	1			OPT,PILOT
31	21N4-11170				HARNESS-PUMP PS	1			OPT
32	S037-122052				BOLT-W/WASHER	6			
33	S035-101512				BOLT-W/WASHER	2			
34	S543-240002				CLAMP-TUBE	1			

ELECTRIC BOX

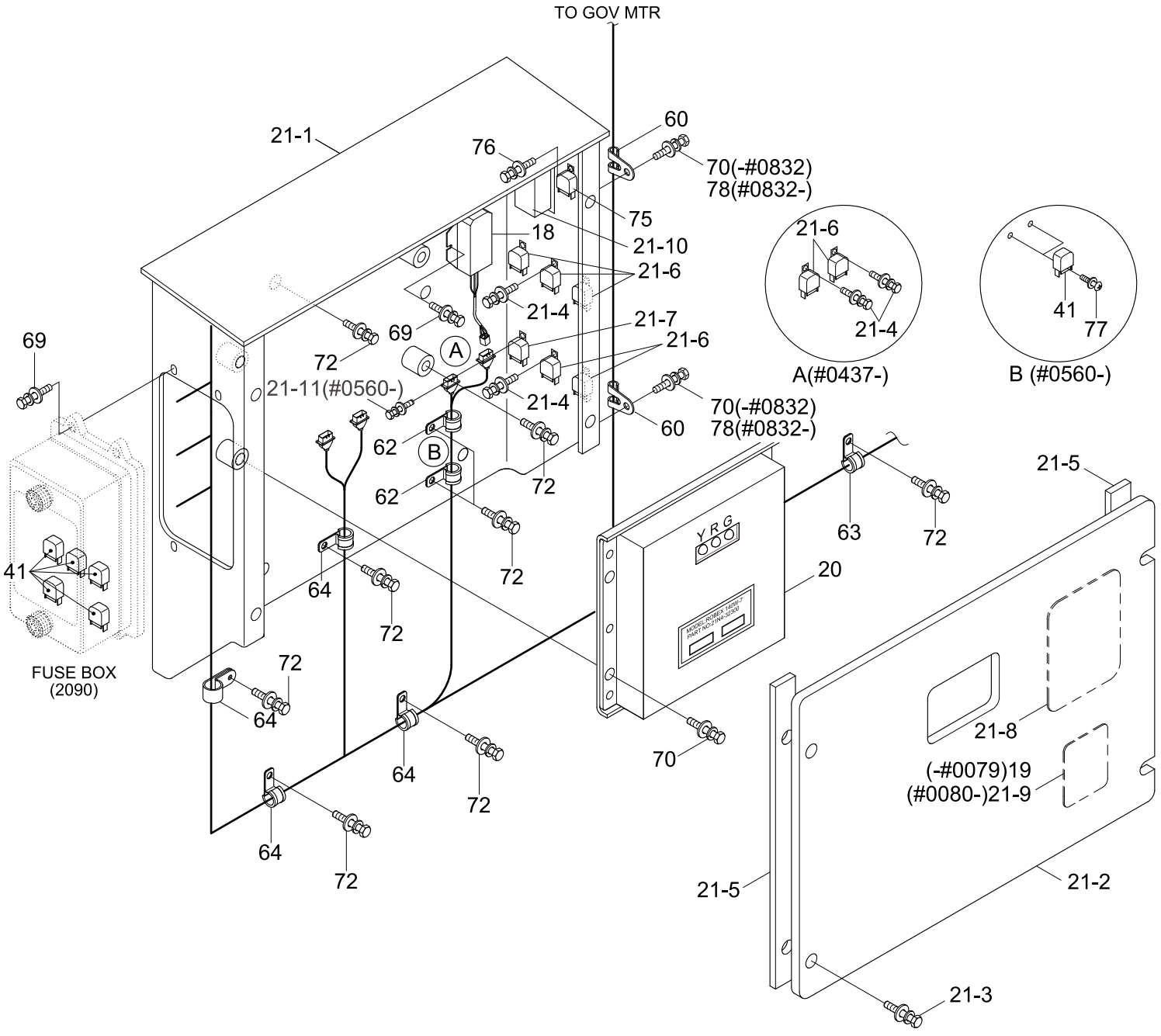

Description	Parts no	Included item
ELEC. BOX KIT ASSY	21N8-18200	18, 21-1~21-11, 60

Item	Part_No	IS	Ord	T	Description	Qty	Serial_No	ITC	Remark
18	21E9-4018				PROLIX RESISTOR	1	- #0737		
K18	21Q4-20100				RESISTOR ASSY	1	#0738 -	A	
19	21N8-12040				DECAL-EMER CONTROL	1	- #0079	-	
20	21N4-32300				CPU CONTROLLER	1			STD
	21N4-43200				MCU(MACHINE CNTL UNIT)	1	#0285 -	-	LOW NOISE
21	21N4-00700				ELECTRIC BOX ASSY	1	- #0079		
	21N4-00701				ELECTRIC BOX ASSY	1	#0080 - #0436	B	
	21N4-00702				ELECTRIC BOX ASSY	1	#0437 - #0559	B	
	21N4-00703				ELECTRIC BOX ASSY	1	#0560 - #0749	D	
21-1	21N4-00710				.ELECTRIC BOX WA	1	- #0079		
	21N4-00711				.ELECTRIC BOX WA	1	#0080 - #0436	B	
	21N4-00712				.ELECTRIC BOX WA	1	#0437 - #0559	B	
K21-1	21N4-00713				.ELECTRIC BOX WA	1	#0560 -	D	
K21-2	21N4-00730				.COVER ASSY	1			
K21-3	S037-101526				.BOLT-W/WASHER	4			
21-4	S035-061526				.BOLT-W/WASHER	4	- #0079		
					.BOLT-W/WASHER	7	#0080 - #0436		
					.BOLT-W/WASHER	9	#0437 - #0559	A	
K21-4	S035-061526				.BOLT-W/WASHER	8	#0560 -	A	
K21-5	21N4-00740				.PAD-RUBBER	2			
21-6	21E4-0011	20			.RELAY-4P	3	- #0079		
					.RELAY-4P	5	#0080 - #0436	A	
K21-6	21E4-0011	20			.RELAY-4P	7	#0437 -	A	
21-7	E125-2545	10			.RELAY-5P	1	- #0559		
K21-7	21N4-46900				.RELAY-5P	1	#0560 -	D	

Item	Part_No	IS	Ord	T	Description	Qty	Serial_No	ITC	Remark
21-8	21N4-00750				.DECAL-RELAY	1	- #0079		
	21N4-00752				.DECAL-RELAY	1	#0080 - #0436	D	
	21N4-00754				.DECAL-RELAY	1	#0437 - #0559	D	
K21-8	21N4-00755				.DECAL-RELAY	1	#0560 -	D	
K21-9	21N8-12040				.DECAL-EMER CONTROL	1	#0080 -	A	
K21-10	21N4-00780				.TIMER-STOP LAMP	1	#0080 -	-	
K21-11	S035-051526				.BOLT-W/WASHER	1	#0560 -	-	
41	24L1-05100				RELAY	5	- #0559		
					RELAY	7	#0560 -	A	
K60	S593-000902				CLIP-HARNESS	2			
62	S543-160002				CLAMP-TUBE	2			
63	S543-240002				CLAMP-TUBE	1			
64	S543-280002				CLAMP-TUBE	4			
69	S035-062022				BOLT-W/WASHER	6			
70	S035-082022				BOLT-W/WASHER	6	- #0832		
					BOLT-W/WASHER	4	#0833 -	A	
72	S037-102022				BOLT-W/WASHER	8			
75	21E4-0011	20			RELAY-4P	1			
76	S035-061522				BOLT-W/WASHER	1			
77	S131-051546				SCREW-W/WASHER	2	#0560 -	-	
78	S035-081526				BOLT-W/WASHER	2	#0833 -	-	
K	21N8-18200				ELEC. BOX KIT ASSY	1	#0833 -	-	SEE ILLUST

CAB ELECTRIC 1

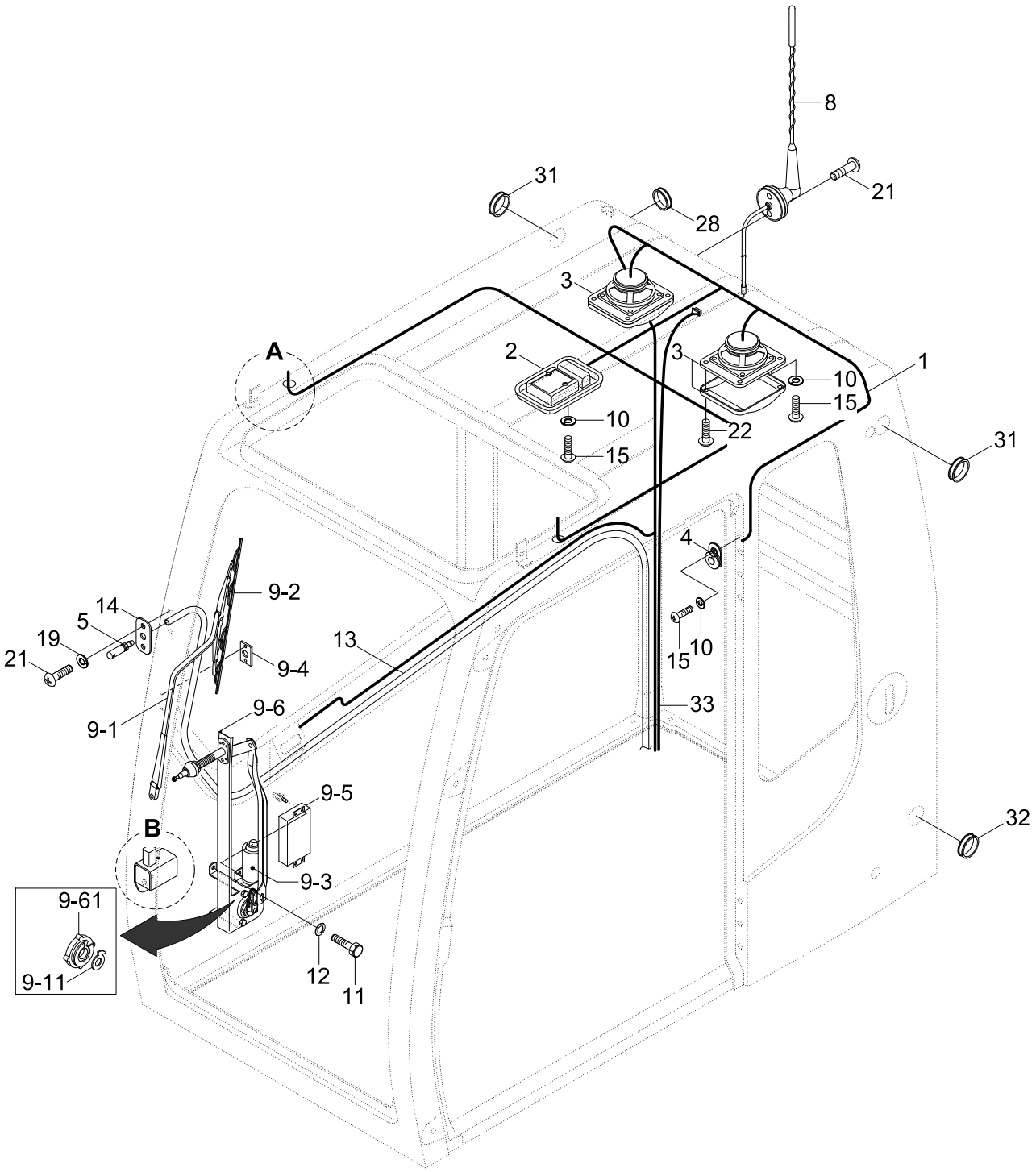

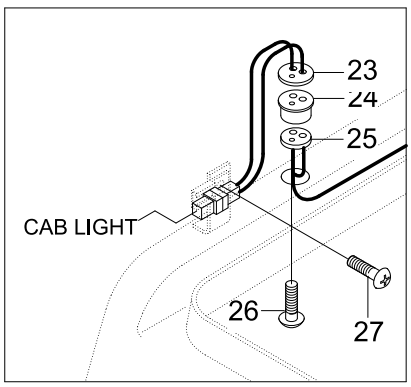

DETAIL A

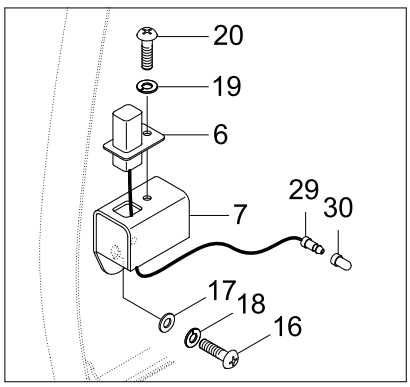

DETAIL B

Item	Part_No	IS	Ord	T	Description	Qty	Serial_No	ITC	Remark
1	21N6-00012				HARNESS-CAB	1	- #0292		
	21N6-00013				HARNESS-CAB	1	#0293 -	D	
2	21EH-0011				LAMP-ROOM	1			
3	21N6-10400				SPEAKER	2			
4	E123-3022	20			SWITCH-DOOR	1			
5	21N6-00311				NOZZLE	1			
6	21M5-50250				SWITCH ASSY	1			
7	21N6-00301				BRACKET WA	1			
8	21N6-10410				ANTENNA	1	- #0918		
	21N4-02840				ANTENNA	1	#0919 -	B	
9	21N6-00210				WIPER MOTOR KIT ASSY	1	- #0140		
	21N6-01210				WIPER MOTOR KIT ASSY	1	#0141 -	B	
9-1	21N6-00220				.ARM-WIPER	1	- #0140		
	21N6-01220				.ARM-WIPER	1	#0141 - #0794	A	
	21N6-01221				.ARM-WIPER	1	#0795 -	B	
9-12	21N6-01300				..CAM BASE-W/MOTOR	1	#0001 -	-	
9-11	21N6-01290				..MOTOR CAM	1	#0001 -	-	
9-2	21N6-00230				.BLADE-WIPER	1	- #0140		
	21N6-01230				.BLADE-WIPER	1	#0141 -	A	
9-3	21N6-00240				.MOTOR-WIPER	1	- #0140		
	21N6-01280				.MOTOR-WIPER	1	#0141 -	D	
9-4	21N6-00250				.BRACKET-PARKING	1	- #0140		
	21N6-01250				.BRACKET-PARKING	1	#0141 -	D	
9-5	21N8-21060				.CONTROLLER	1	- #0140		
	21N6-01270				.CONTROLLER-W/MOTOR	1	#0141 - #0409	A	

Item	Part_No	IS	Ord	T	Description	Qty	Serial_No	ITC	Remark
9-5	21N6-01272				.CONTROLLER-W/MOTOR	1	#0410 -	B	
N9-6	@				.BRACKET & LINK ASSY	1	- #0140	-	NOT
9-6	21N6-01260				.BRACKET & LINK ASSY	1	#0141 -	A	
9-61	21N6-01300				..CAM BASE-W/MOTOR	1	#0001 -	-	
9-7	21N6-01290				.MOTOR-CAM	1	#0001 -	-	
10	S411-050006				WASHER-SPRING	11			
11	S015-080166				BOLT-HEX	3			
12	S411-080006				WASHER-SPRING	3			
13	21EM-10890				HOSE-WASHER TANK	1			
14	E171-1185				PLATE-NOZZLE MTG	1			
15	S161-050166				SCREW-CROSS R/ROUND	11			
16	S161-060166				SCREW-CROSS R/ROUND	2			
17	S403-062006				WASHER-PLAIN	2			
18	S411-060006				WASHER-SPRING	8			
19	S411-040006				WASHER-SPRING	3			
20	S161-040106				SCREW-CROSS R/ROUND	1			
21	S151-040166				SCREW-TAPPING	4			
22	S151-050126				SCREW-TAPPING	8			
23	21N6-10420				PLATE	2			
24	21N6-10430				SEAL	2			
25	21N6-10440				PLATE	2			
26	S161-040166				SCREW-CROSS R/ROUND	2			
27	S141-040106				SCREW-FLAT HD	2			
28	21N6-00320				GROMMET	1			
29	21N8-10090				HARNESS-WIPER	1			

Item	Part_No	IS	Ord	T	Description	Qty	Serial_No	ITC	Remark
30	S890-107508				TUBE-PVC	1			
31	S681-410400				GROMMET	2			
32	S681-460400				GROMMET	1			
33	21N4-22010				EXT HARNESS-USB	1	#0980 -	-	
N	@				NOT SUPPLIED PARTS	AR			NOT

CAB ELECTRIC 2

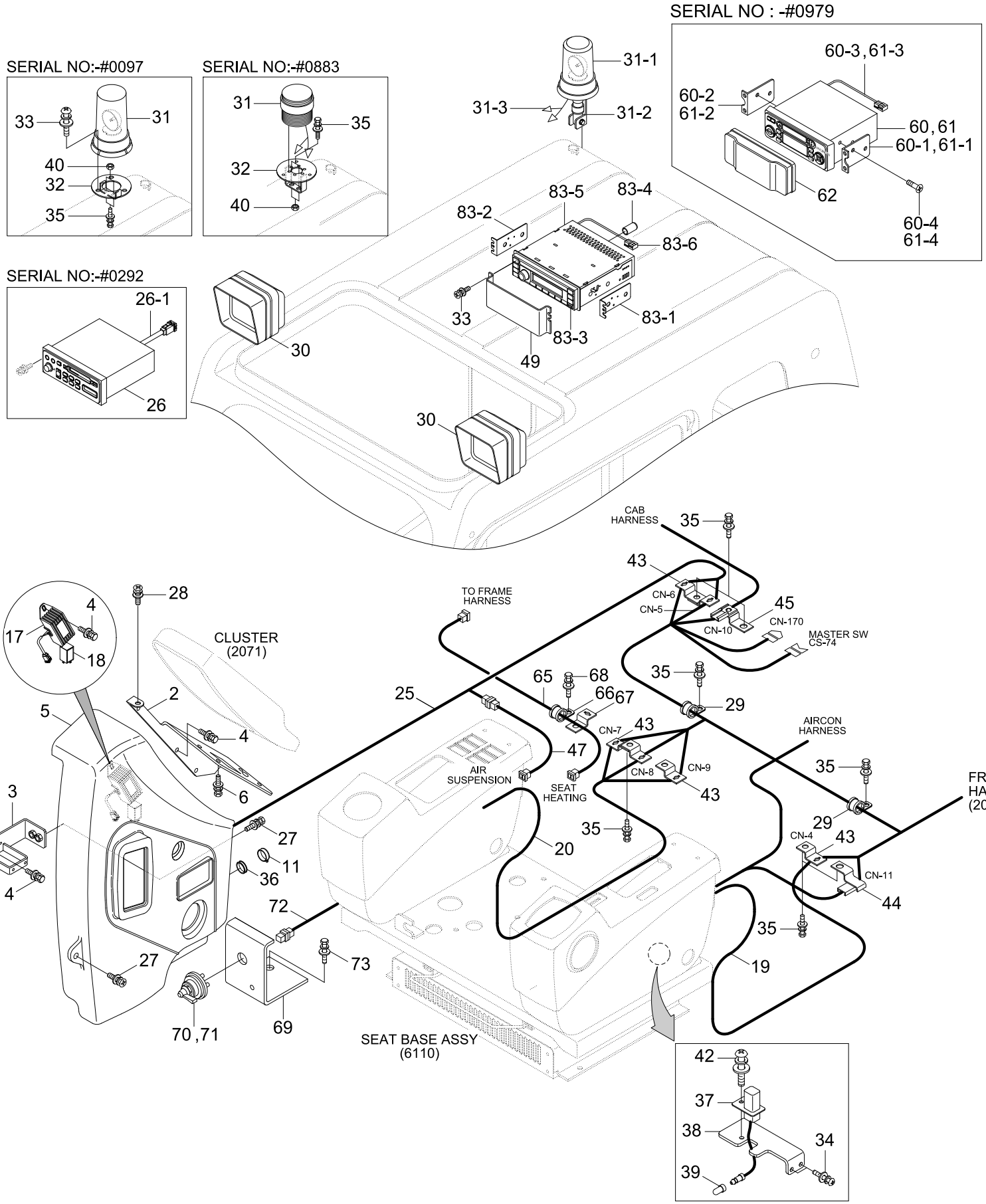

Item	Part_No	IS	Ord	T	Description	Qty	Serial_No	ITC	Remark
2	21N8-21011				BRACKET WA	1			
3	21N8-21070				BRACKET WA	1			
4	S035-061522				BOLT-W/WASHER	5			
5	21N8-21021				COVER-WIPER MOTOR	1			
6	S035-081522				BOLT-W/WASHER	4			
11	21N8-20010				SOCKET-12V	1			
17	21N8-20201				DC-DC CONVERTER ASSY	1			
18	21ER-60701				FLASHER UNIT ASSY	1	- #0140		
	21ER-60702				FLASHER UNIT ASSY	1	#0141 -	B	
19	21N8-11160				HARNESS-CONSOLE,LH	1			
20	21N8-11151				HARNESS-CONSOLE,RH	1	- #0436		
	21N4-02810				HARNESS-CONSOLE,RH	1	#0437 -	B	
25	21N4-11052				HARNESS-SIDE,RH	1	- #0181		STD
	21N4-11053				HARNESS-SIDE,RH	1	#0182 - #0350	B	STD
	21N4-10050				HARNESS-SIDE,RH	1	#0285 - #0350	-	LOW NOISE
					HARNESS-SIDE,RH	1	#0351 - #0932	A	STD, LOW NOISE
	21N4-21110				HARNESS-SIDE,RH	1	#0933 -	D	STD, LOW NOISE
26	21N8-22010				CASSETTE RADIO	1	- #0292	-	USA
	21N8-22020				CASSETTE RADIO	1	- #0292	-	EU
	21N8-22030				CASSETTE RADIO	1	- #0292	-	OTHER
26-1	375500043204				.WIRE ASSY-20 H818	1	- #0292	-	
27	S132-061676				SCREW-W/WASHER	2			
28	S132-061546				SCREW-W/WASHER	1			
29	S543-280003				CLAMP-TUBE	2			
30	21N6-20211				WORK LAMP ASSY	2			

Item	Part_No	IS	Ord	T	Description	Qty	Serial_No	ITC	Remark
30-1	S866-240650				.BULB	1			NOT SHOWN
31	21EK-10420				BEACON LAMP ASSY	1	- #0097		
	F23842010				STROBE LAMP-RED	1	#0098 -	D	
32	21N8-00580				BRACKET-BEACON LAMP	1	- #0097		
	21N8-00581				BRACKET-BEACON LAMP	1	#0098 - #0618	B	
	21N8-00581BG				BRACKET-BEACON LAMP	1	#0619 -	D	
33	S131-051046				SCREW-W/WASHER	7	- #0097		
					SCREW-W/WASHER	4	#0098 -	A	
34	S131-051646				SCREW-W/WASHER	2			
35	S037-102022				BOLT-W/WASHER	9			
36	S661-260300				CAP-RUBBER	1			
37	21M5-50250				SWITCH ASSY	1			
38	21N8-21080				PLATE	1			
39	S890-107508				TUBE-PVC	1			
40	S205-101002				NUT-HEX	2			
42	S131-041026				SCREW-W/WASHER	1			
43	21N4-01130				PLATE-CLIP	4			
44	25D1-10660				CLIP ASSY	1			
45	25D1-10650				CLIP ASSY	1			
47	21N8-40190				EXT.HARNESS-A/RIDE SEAT	1	#0182 -	-	
49	21N6-10450				PLATE-C/RADIO COVER	1			
60	21N8-50010				CASSETTE RADIO ASSY	1	#0293 - #0749	D	STD
	21N8-50050				CASSETTE RADIO ASSY	1	#0750 - #0979	A	STD
60-1	21N6-10480				.BRACKET-LH	1	#0293 - #0979	-	
60-2	21N6-10490				.BRACKET-RH	1	#0293 - #0979	-	

Item	Part_No	IS	Ord	T	Description	Qty	Serial_No	ITC	Remark
60-3	21N8-01600				.HARNESS-EXT WIRE	1	#0293 - #0979	-	
60-4	S141-050102				.SCREW-FLAT HD	4	#0293 - #0979	-	
61	21N8-40500				CD PLAYER ASSY	1	#0293 - #0979	D	OPTION
61-1	21N6-10480				.BRACKET-LH	1	#0293 - #0979	-	
61-2	21N6-10490				.BRACKET-RH	1	#0293 - #0979	-	
61-3	21N8-01600				.HARNESS-EXT WIRE	1	#0293 - #0979	-	
61-4	S141-050102				.SCREW-FLAT HD	4	#0293 - #0979	-	
62	21N8-40940				COVER-DUST	1	#0293 -	-	
65	21N4-02820				HARNESS-SEAT HEATING	1	#0437 -	-	
66	S593-000902				CLIP-HARNESS	1	#0437 -	-	
67	21N4-01190				PLATE-CLIP	1	#0437 -	-	
68	S037-102026				BOLT-W/WASHER	1	#0437 -	-	
69	21N4-47300				BRACKET-MASTER SW	1	#0933 -	-	
70	21L7-10501				SWITCH-MASTER	1	#0933 -	-	
71	21LD-34180				DECAL-MASTER SWITCH	1	#0933 -	-	
72	21N8-40170				HARNESS-EXTENSION	1	#0933 -	-	
73	S037-102026				BOLT-W/WASHER	2	#0933 -	-	
83	21N8-50100				RADIO/USB PLAYER ASSY	1	#0980 -	B	
83-1	21LM-31010				.BRACKET L	1	#0980 -	-	
83-2	21LM-31020				.BRACKET R	1	#0980 -	-	
83-3	21LM-31030				.CABLE-MP3	1	#0980 -	-	
83-4	21LM-31040				.CAP	1	#0980 -	-	
83-5	21LM-31050				.RADIO/USB BODY	1	#0980 -	-	
83-6	21N8-50110				.HARNESS-EXT,WIRE	1	#0980 -	-	

CLUSTER

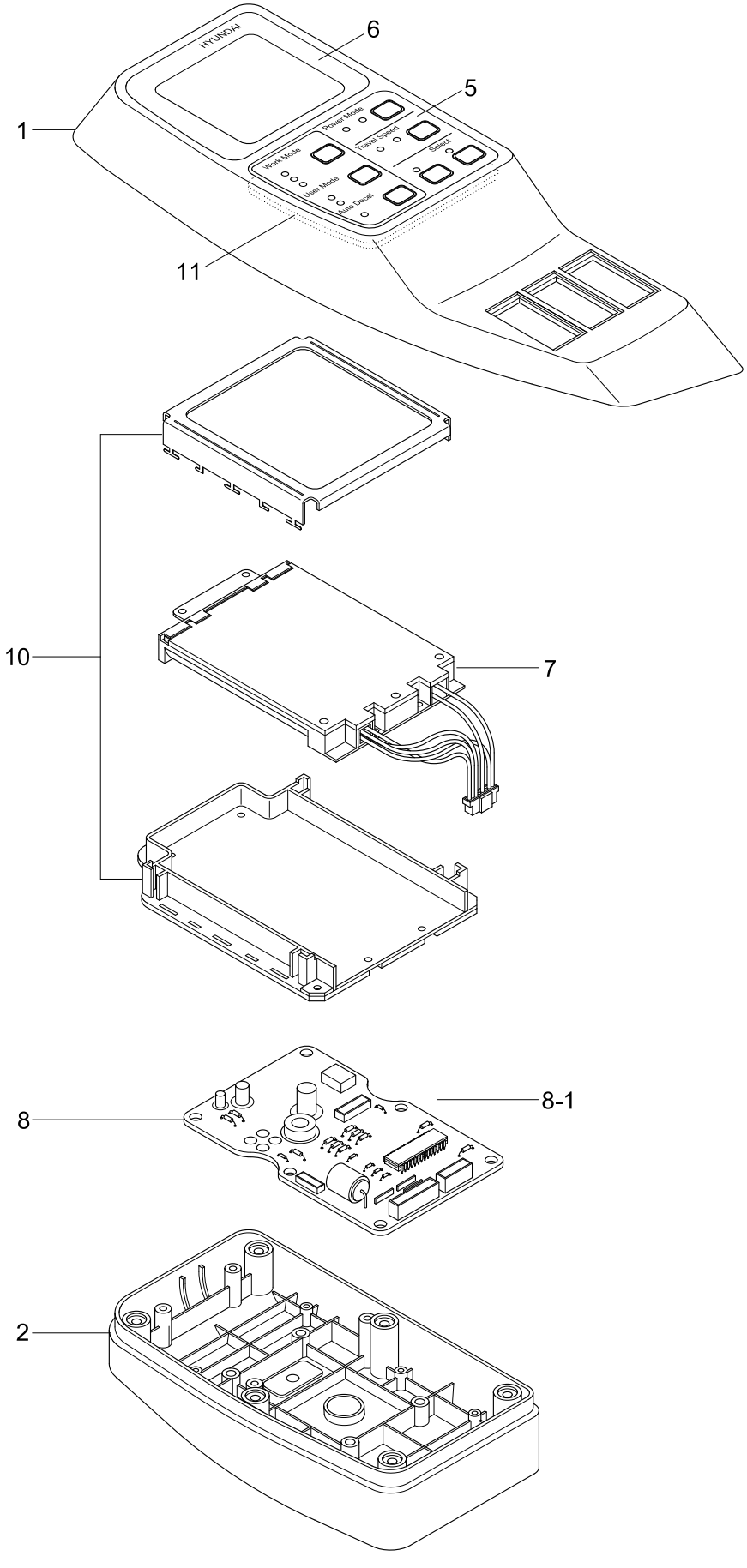
HYUNDAI
Power Mode
Travel Speed
Select
Work Mode
User Mode
Auto Decel
1
2
5
6
7
8
8-1
10
11

Item	Part_No	IS	Ord	T	Description	Qty	Serial_No	ITC	Remark
*	21N8-30013				CLUSTER ASSY	1			
	21N8-36000				CLUSTER ASSY	1	#0615 - #0627	-	UPGRADE CAB
	21N8-36001				CLUSTER	1	#0628 -	B	UPGRADE CAB
1	21N8-30020				.CASE-UPPER	1			
2	21N8-30030				.CASE-LOWER	1			
5	21N8-30071				.DECAL-SWITCH	1			
6	21N8-30081				.DECAL-DISPLAY	1			
7	21N8-30090				.LIGHT UNIT-BACK	1			
8	21N8-30150				.BOARD-MAIN	1			
8-1	21N8-30160				..ROM-CLUSTER	1			
10	21N8-30180				.LCD UNIT	1			
11	21N8-30230				.SWITCH BOARD ASSY	1			

CLUSTER(OPT, #0615-)

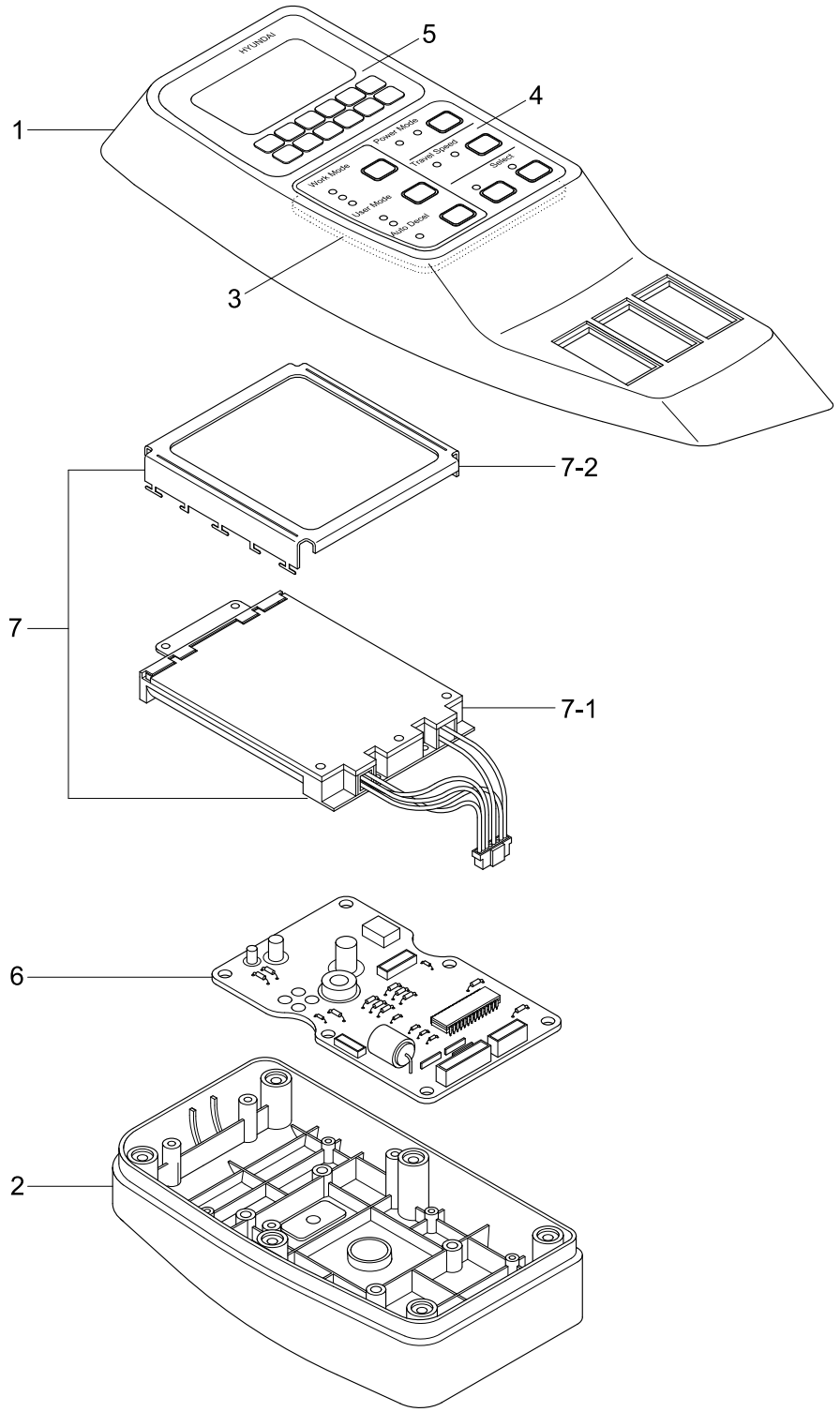

Item	Part_No	IS	Ord	T	Description	Qty	Serial_No	ITC	Remark
*	21N8-36000				CLUSTER ASSY	1	#0615 - #0627	-	UPGRADE CABIN
	21N8-36001				CLUSTER	1	#0628 -	B	UPGRADE CABIN
1	21N8-35100				.CASE-UPPER	1			
2	21N8-30030				.CASE-LOWER	1			
3	21N8-35200				.SWITCH ASSY	1			
4	21N8-35300				.DECAL-SWITCH	1			
5	21N8-35400				.DECAL-LCD	1			
6	21N8-35500				.BOARD-POWER	1			
7	21N8-35600				.MODULE-MAIN	1			
N7-1	@				..BOARD-MAIN	1			NOT
N7-2	@				..MODULE-LCD	1			NOT

CAB ELECTRIC 2(OPT, #0165-)

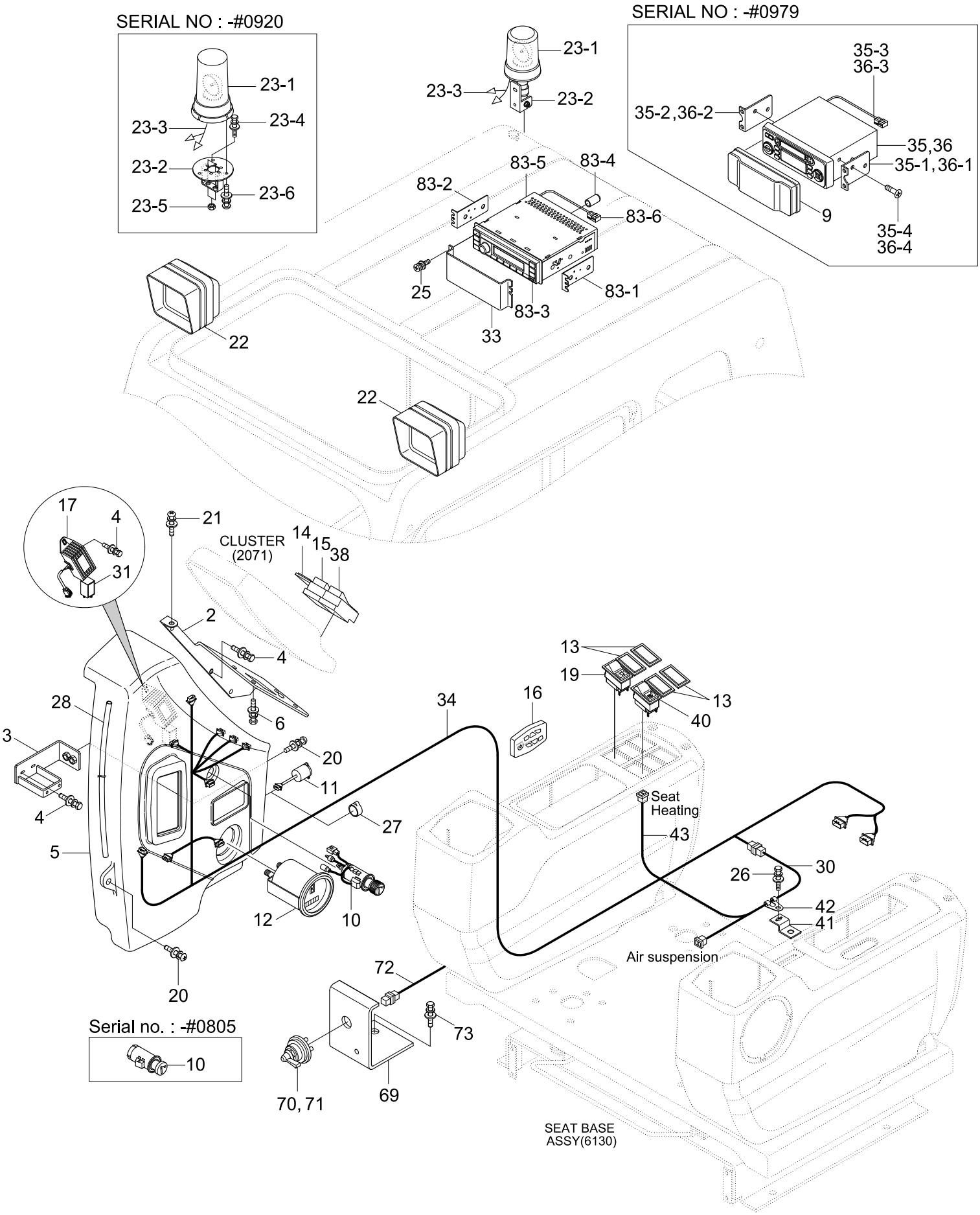

Item	Part_No	IS	Ord	T	Description	Qty	Serial_No	ITC	Remark
*	@				CAB ELECTRIC	1	#0615 -	-	NOT
2	21N6-01320				BRACKET WA	1			
3	21N6-01330				BRACKET WA	1			
4	S035-061626				BOLT-W/WASHER	5			
5	21N6-01310				COVER-WIPER MOTOR	1	- #0877		
	21N6-01311				COVER-WIPER MOTOR	1	#0878 -	B	
6	S035-081526				BOLT-W/WASHER	4			
9	21N8-40940				COVER-DUST	1			
10	21E4-0008				LIGHTER-CIGAR	1	- #0805		
	21LM-07110				LIGHTER-CIGAR	1	#0806 -	A	
11	21N8-20010				SOCKET-12V	1			
12	21N4-11070				HOUR METER ASSY	1			
13	21E6-10460				COVER	5			
14	21E6-40130				SWITCH-OVER LOAD	1			
15	21E9-20110				SW-QUICK CLAMP	1			
16	21N8-40910				SW-REMOTE CONTROL	1			
17	21N8-20201				DC-DC CONVERTER ASSY	1			
19	21E6-30440				SWITCH-BEACON	1			
20	S132-061676				SCREW-W/WASHER	2			
21	S132-061546				SCREW-W/WASHER	1			
22	21N6-20211				WORK LAMP ASSY	2			
22-1	S866-240650				BULB	1			NOT SHOWN
23	@				BEACON LAMP SUB	1			NOT
23-1	21EK-10140				.LAMP-BEACON	1	- #0920		
	21Q4-20700				.BEACON LAMP	1	#0921 -	D	

Item	Part_No	IS	Ord	T	Description	Qty	Serial_No	ITC	Remark
23-11	21EK-10330				..BULB-H1, 70W	1	- #0920		NOT SHOWN
					.BULB-H1, 70W	1	#0921 -	A	NOT SHOWN
23-2	21N8-00581BG				.BRACKET-BEACON LAMP	1	- #0920		
	21Q4-20600				.BRACKET-TILT	1	#0921 -	D	
23-3	21EK-20240				.HARNESS-BEACON LAMP	1	- #0920		
	21N4-02830				.HARNESS-BEACON LAMP	1	#0921 -	D	
23-4	S037-102026				.BOLT-W/WASHER	2	- #0920	-	
23-5	S205-10100B				.NUT-HEX	2	- #0920	-	
23-6	S131-051546				.SCREW-W/WASHER	3	- #0920	-	
25	S131-051046				SCREW-W/WASHER	4			
26	S037-102026				BOLT-W/WASHER	2			
27	S661-260300				CAP-RUBBER	1			
28	S890-107508				TUBE-PVC	1			
30	21N8-40190				EXT.HARNESS-A/RIDE SEAT	1			
31	21ER-60702				FLASHER UNIT ASSY	1	- #0686		
	21ER-60703				FLASHER UNIT	1	#0687 -	B	
33	21N6-10450				PLATE-C/RADIO COVER	1			
34	21N4-10050				HARNESS-SIDE,RH	1	- #0932		
	21N4-21110				HARNESS-SIDE,RH	1	#0933 -	D	
35	21N8-50010				CASSETTE RADIO ASSY	1	- #0749	A	
	21N8-50050				CASSETTE RADIO ASSY	1	#0750 - #0979	-	
35-1	21N6-10480				.BRACKET-LH	1	- #0979	-	
35-2	21N6-10490				.BRACKET-RH	1	- #0979	-	
35-3	21N8-01600				.HARNESS-EXT WIRE	1	- #0979	-	
35-4	S141-050106				.SCREW-FLAT HD	4	- #0979	-	

Item	Part_No	IS	Ord	T	Description	Qty	Serial_No	ITC	Remark
36	21N8-40500				CD PLAYER ASSY	1	- #0979	-	
36-1	21N6-10480				.BRACKET-LH	1	- #0979	-	
36-2	21N6-10490				.BRACKET-RH	1	- #0979	-	
36-3	21N8-01600				.HARNESS-EXT WIRE	1	- #0979	-	
36-4	S141-050106				.SCREW-FLAT HD	4	- #0979	-	
38	21N6-30100				SW-WORK & TRAVEL	1			
40	21N4-43020				SWITCH-SEAT HEAT	1			
41	21N4-01190				PLATE-CLIP	1			
42	S593-000902				CLIP-HARNESS	1			
43	21N4-43010				HARNESS-EXTENSION	1			
69	21N4-47300				BRACKET-MASTER SW	1	#0933 -	-	
70	21L7-10501				SWITCH-MASTER	1	#0933 -	-	
71	21LD-34180				DECAL-MASTER SWITCH	1	#0933 -	-	
72	21N8-40170				HARNESS-EXTENSION	1	#0933 -	-	
73	S037-102026				BOLT-W/WASHER	2	#0933 -	-	
83	21N8-50100				RADIO/USB PLAYER ASSY	1	#0980 -	B	
83-1	21LM-31010				.BRACKET L	1	#0980 -	-	
83-2	21LM-31020				.BRACKET R	1	#0980 -	-	
83-3	21LM-31030				.CABLE-MP3	1	#0980 -	-	
83-4	21LM-31040				.CAP	1	#0980 -	-	
83-5	21LM-31050				.RADIO/USB BODY	1	#0980 -	-	
83-6	21N8-50110				.HARNESS-EXT,WIRE	1	#0980 -	-	

CAB ELECTRIC 3

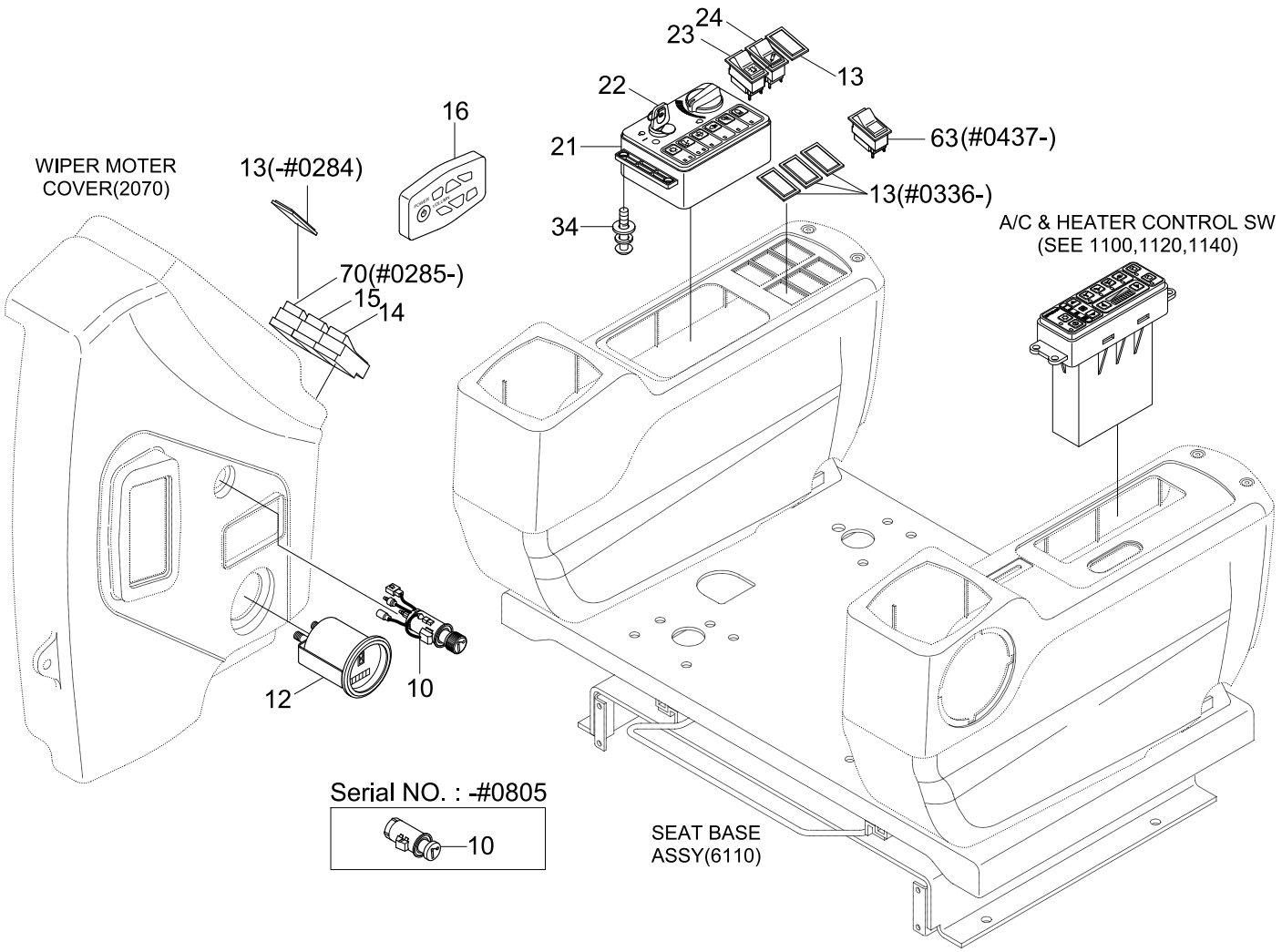

Item	Part_No	IS	Ord	T	Description	Qty	Serial_No	ITC	Remark
10	21E4-0008	30			LIGHTER-CIGAR	1	- #0805		
	21LM-07110				LIGHTER-CIGAR	1	#0806 -	A	
12	21N4-11070				HOUR METER ASSY	1			
13	21E6-10460				COVER	2	- #0284		
					COVER	1	#0285 - #0335	A	
					COVER	4	#0336 -	A	
14	21E6-40130				SWITCH-OVER LOAD	1			OPTION
15	21E9-20110				SW-QUICK CLAMP	1			OPTION
16	21N8-21050				SW-REMOTE CONTROL	1	- #0292		
	21N8-40910				SW-REMOTE CONTROL	1	#0293 -	D	
21	21N4-20500				SWITCH ASSY-MEMBRANE	1	- #0042		
	21N4-20501				SWITCH ASSY-MEMBRANE	1	#0043 - #0097	D	
	21N4-20502				SWITCH ASSY-MEMBRANE	1	#0098 - #0436	B	
	21N4-20503				SWITCH ASSY-MEMBRANE	1	#0437 -	B	
22	21N4-10400				SWITCH ASSY-INCL KEY	1	#0001 -	-	
22-1	21N4-10430K100				.KEY-START	1	#0001 -	-	
23	21E6-30440				SWITCH-BEACON	1			OPTION
24	21E6-30540				SWITCH-BREAKER	1			OPTION
34	S131-051546				SCREW-W/WASHER	4			
63	21N4-43020				SWITCH-SEAT HEAT	1	#0437 -	-	
70	21N6-30100				SW-WORK & TRAVEL	1	#0285 -	-	OPTION

ELEC CAB LAMP SUB ASSY(OPTION, #0539-)

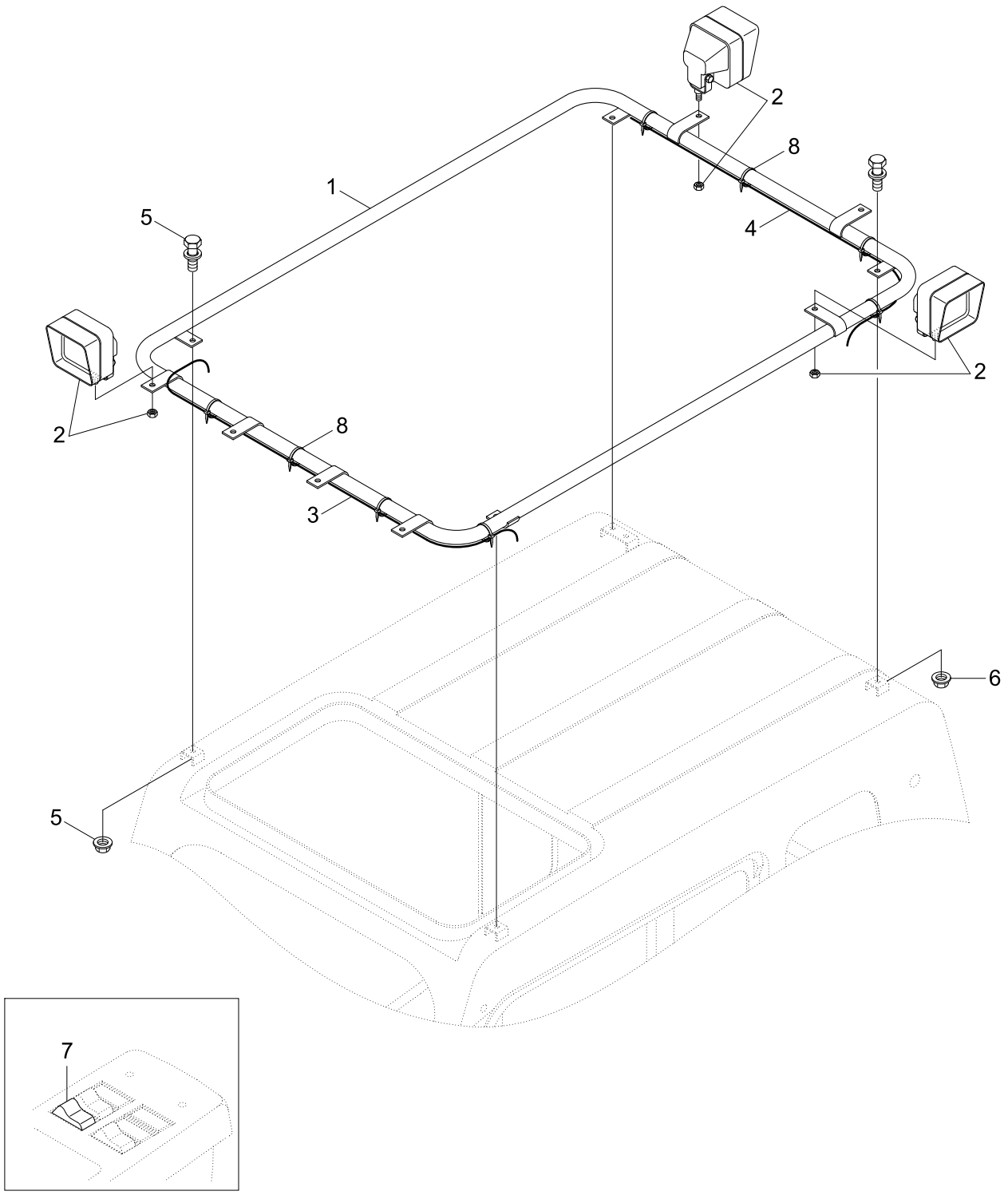

Item	Part_No	IS	Ord	T	Description	Qty	Serial_No	ITC	Remark
*	@				CABIN LAMP	1	#0539 -	-	NOT
1	21N8-43030				.GUIDE-LAMP	1			
2	21N6-20211				.WORK LAMP ASSY	7			
2-1	S866-240650				..BULB	1			NOT SHOWN
3	21N8-43010				.EXT HARNESS LAMP(1)	1			
4	21N8-43020				.EXT HARNESS LAMP(2)	1			
5	S037-102526				.BOLT-W/WASHER	4			
6	S205-101006				.NUT-HEX	4			
7	21L8-30420				.SWITCH-REAR LAMP	1			
8	S552-035146				.CLAMP-BAND	9			

FUSE BOX

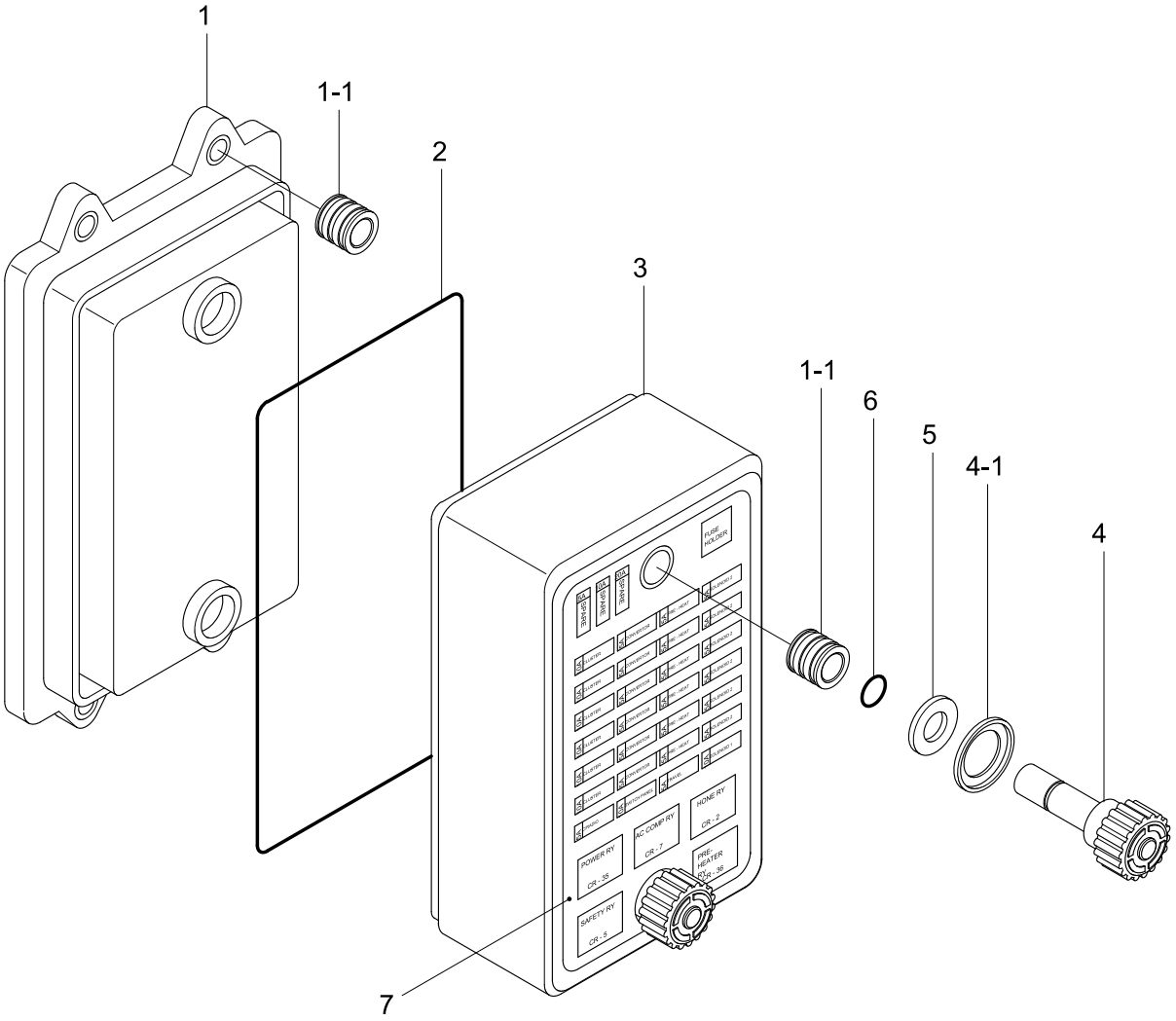
1
1-1
2
3
1-1
6
5
4-1
4
7
FUSE HOLDER
POWER RY
CR - 35
AC COMP RY
CR - 7
HOME RY
CR - 2
PRE HEATER RLY
RLY - 36
SAFETY RY
CR - 8

Item	Part_No	IS	Ord	T	Description	Qty	Serial_No	ITC	Remark
1	21N8-20041				BODY-FUSE BOX	1	#0001 -	-	
1-1	21N8-20110				.NUT-INSERT	6	#0001 -	-	
2	21N8-20120				SEAL	1			
*	21N4-01301				COVER ASSY-FUSE BOX	1			
3	21N8-20061				.COVER-FUSE BOX	1			
4	21N8-20070				.KNOB ASSY	2			
4-1	21N8-20140				..INSERT	2	#0001 -	-	
5	21N8-20080				.PAD-RUBBER	2			
6	21N8-20150				.O-RING	2			
7	21N4-00630				.DECAL-FUSE BOX	1			
	21N4-01332				.DECAL-FUSE BOX	1			
8	21N4-90010				FUSE & BULB KIT	1	#0001 -	-	NOT SHOWN
8-1	@				.FUSE-5A	2			NOT
8-2	@				.FUSE-10A	2			NOT
8-3	@				.FUSE-15A	2			NOT
8-4	@				.FUSE-20A	2			NOT
8-5	@				.FUSE-30A	2			NOT
8-6	@				.BULB-H4,70/75W	2			NOT
8-7	@				.BULB-H1,70W	1			NOT
8-8	@				.BULB-5W	2			NOT
8-9	@				.BULB-5W	2			NOT
8-10	@				.BULB-21W	2			NOT
8-11	@				.BULB-10W	2			NOT
8-12	@				.BULB-10W	2			NOT
8-13	@				.BULB-H3,70W	2			NOT

FUEL FILLER PUMP(-#0645)

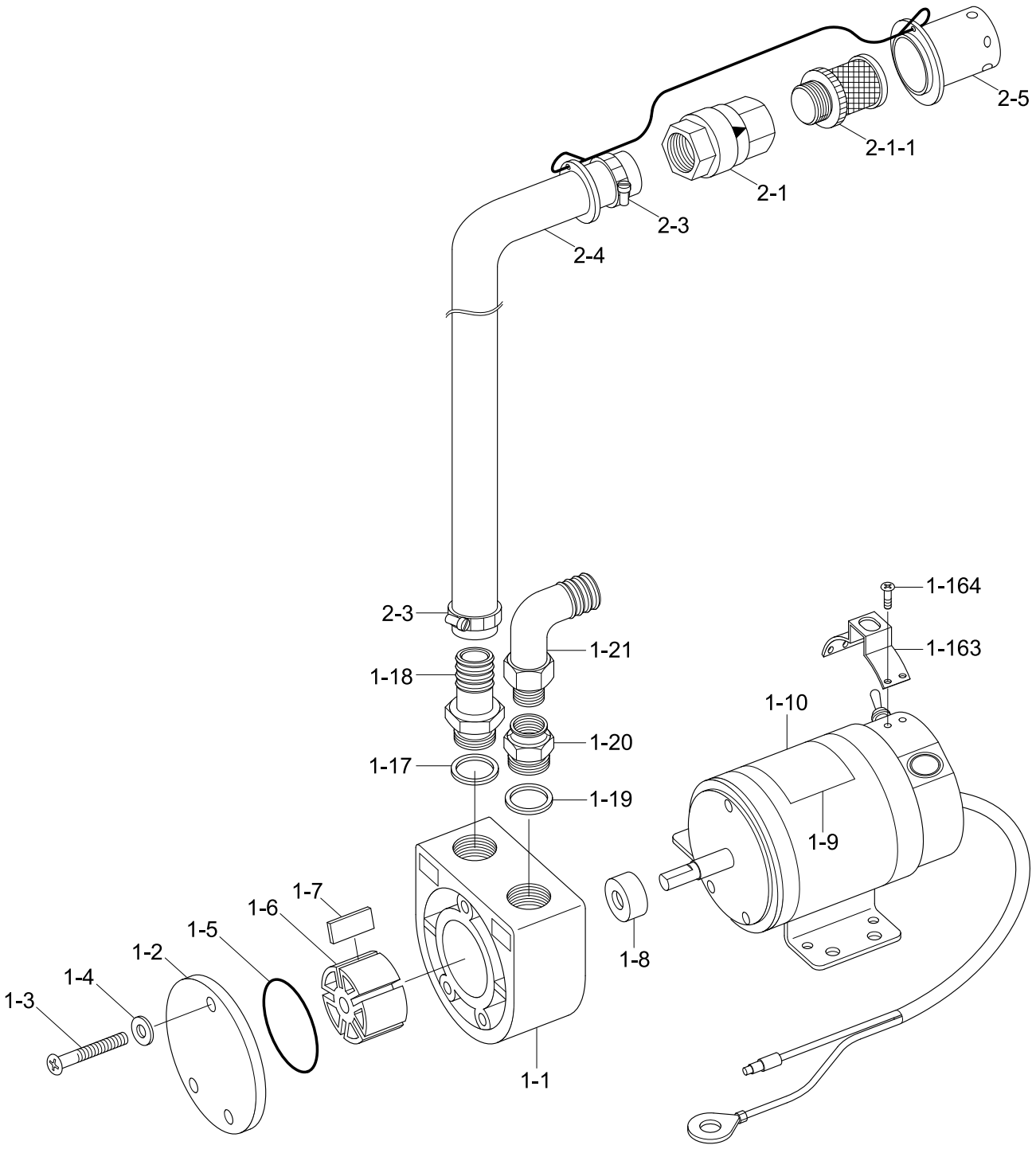

Item	Part_No	IS	Ord	T	Description	Qty	Serial_No	ITC	Remark
*	21N6-20311				FUEL FILLER PUMP	1	- #0645	-	
1	21N6-20301				.PUMP & MOTOR ASSY	1			
N1-1	@				..BODY	1			NOT
N1-2	@				..COVER	1			NOT
N1-3	@				..SCREW	3			NOT
N1-4	@				..WASHER-SPRING	3			NOT
K1-5	21EM-45050				..O-RING	1			
K1-6	21EM-45060				..ROTOR	1			
K1-7	21EM-45070				..PLATE-VANE	5			
K1-8	21EM-45080				..SEAL-OIL	1			
N1-9	21EM-45090				..DECAL	1			NOT
N1-10	@				..HOUSING-MOTOR	1			NOT
N1-16	21EM-45100				..BOX-SWITCH	1			NOT
1-163	21EM-45300				...COVER-SWITCH	1			
1-164	S161-050166				...SCREW-CROSS R/ROUND	4			
1-17	21EM-45500				..WASHER-AL	2			
1-18	21EM-45600				..FITTING	1			
1-19	21EM-45700				..FITTING	1			
1-20	21EM-45800				..NUT-ELBOW	1			
1-21	21EM-45900				..ELBOW	1			
2	21EM-46400				.HOSE ASSY	1			
2-1	21M5-50260				..VALVE-CHECK	4			
2-1-1	2P1-SP-01				...STRAINER ASSY	1			
2-3	S520-027000				..CLAMP-HOSE	1			
2-4	21EM-46101				..HOSE	1			

Item	Part_No	IS	Ord	T	Description	Qty	Serial_No	ITC	Remark
2-5	21EM-46300				..CAP ASSY	1			
K	21EM-46201				SERVICE KIT	1			SEE ILLUST
N	@				NOT INDIVIDUALLY SUPPLIED	AR			NOT

Item	Part_No	IS	Ord	T	Description	Qty	Serial_No	ITC	Remark
*	21N6-20312				FUEL FILLER PUMP	1	#0646 -	B	
1	21N6-20302				.PUMP & MOTOR ASSY	1			
N1-1	@				..BODY	1			NOT
N1-2	@				..COVER-PUMP	1			NOT
N1-3	@				..SCREW	3			NOT
K1-4	21EM-45050				..O-RING	1			
K1-5	21EM-45060				..ROTOR	1			
K1-6	21EM-45070				..PLATE-VANE	5			
K1-7	21EM-45080				..SEAL-OIL	1			
1-8	21EM-45091				..DECAL	1			
N1-9	@				..COVER-FRONT	1			NOT
N1-10	@				..COVER-REAR	1			NOT
N1-11	@				..BEARING	1			NOT
1-12	21EM-45101				..BOX-SWITCH	1			
N1-13	@				..COVER-SWITCH	1			NOT
N1-14	@				..SWITCH-TOGGEL	1			NOT
1-15	21EM-45500				..WASHER-AL	3			
N1-16	@				..ADAPTER	1			NOT
1-17	21EM-45700				..FITTING	1			
1-18	21EM-45800				..NUT-ELBOW	1			
1-19	21EM-45900				..ELBOW	1			
2	21EM-46400				.HOSE ASSY	1			
2-1	21M5-50260				..VALVE-CHECK	1			
2-1-1	2P1-SP-01				...STRAINER ASSY	1			
2-3	S520-027000				..CLAMP-HOSE	1			

Item	Part_No	IS	Ord	T	Description	Qty	Serial_No	ITC	Remark
2-4	21EM-46101				..HOSE	1			
2-5	21EM-46300				..CAP ASSY	1			
K	21EM-46201				SERVICE KIT	1			SEE ILLUST
N	@				NOT SUPPLIED PARTS	AR			NOT

PUMP MOUNTING

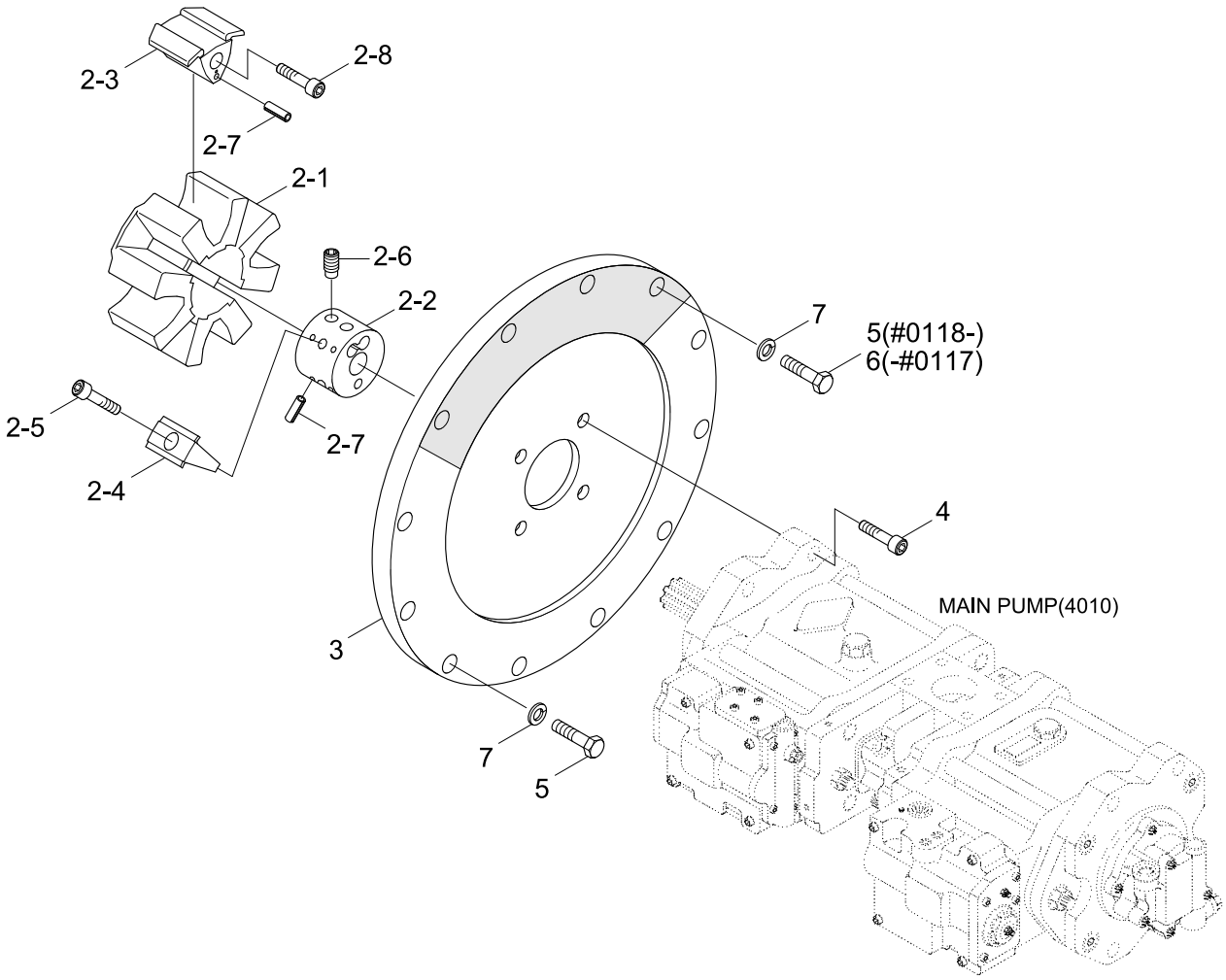

Item	Part_No	IS	Ord	T	Description	Qty	Serial_No	ITC	Remark
2	13E6-16010				COUPLING ASSY	1	- #0315		
	13E6-16030				COUPLING ASSY	1	#0316 -	A	
2-1	11E1-1507	20			.ELEMENT	1	- #0315		
	13E6-16040				.ELEMENT	1	#0316 -	D	
2-2	13E6-16020				.HUB	1			
2-3	11E1-1509	10			.INSERT-A	4	- #0315		
	13E6-16050				.INSERT-A	4	#0316 -	D	
2-4	11E1-1510	10			.INSERT-R	4	- #0315		
	13E6-16060				.INSERT-R	4	#0316 -	D	
2-5	S109-160506				.BOLT-SOCKET	4	- #0315		
	S107-160402				.BOLT-SOCKET	4	#0316 -	D	
2-6	11E1-1511	10			.BOLT-CLAMP	2			
2-7	S472-500102				.PIN-SPRING	12			
2-8	S109-160606				.BOLT-SOCKET	4	- #0315		
	S107-160602				.BOLT-SOCKET	4	#0316 -	D	
3	11E3-1503	40			HOUSING	1			
4	S107-160502				BOLT-SOCKET	4			
5	S017-100552				BOLT-HEX	8	- #0117		
					BOLT-HEX	12	#0118 -	A	
6	S017-100602				BOLT-HEX	4	- #0117	-	
7	S411-100002				WASHER-SPRING	12			

HYDRAULIC TANK

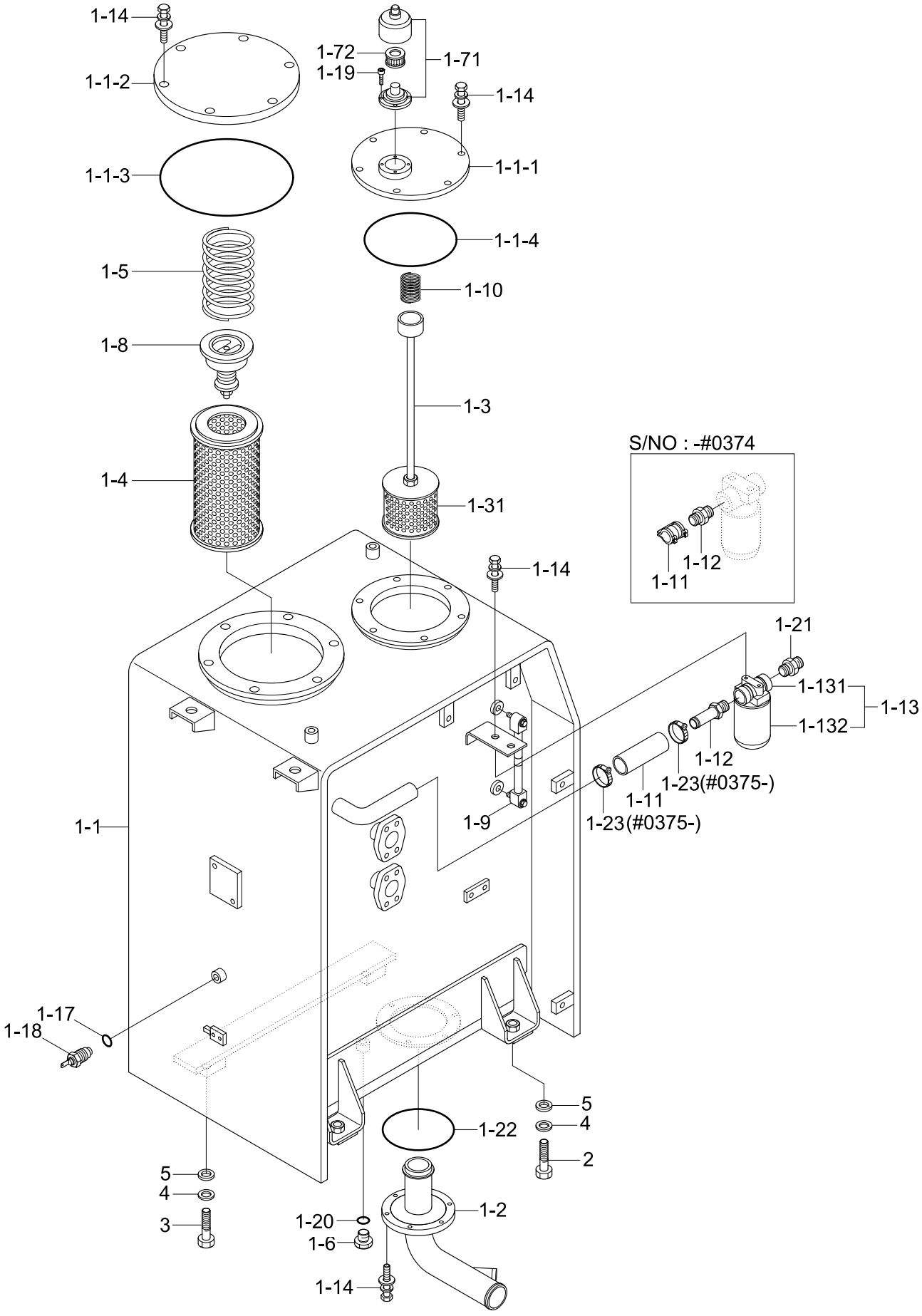

Item	Part_No	IS	Ord	T	Description	Qty	Serial_No	ITC	Remark
1	@				HYD TANK ASSY	1			NOT
1-1	31N4-01011				.HYD TANK WA	1	- #0186		
	31N4-01012				.HYD TANK WA	1	#0187 - #0350	A	
	31N4-01013				.HYD TANK WA	1	#0351 - #0374	D	
	31N4-01015				.HYD TANK WA	1	#0375 -	D	
1-1-1	31EG-01210				..COVER-SUCTION	1			
1-1-2	31N4-01110				..COVER-RETURN	1			
1-1-3	S632-170001				..O-RING	1	#0001 -	-	
1-1-4	S632-165001				..O-RING	1	#0001 -	-	
1-2	31N4-01510				.PIPE ASSY-SUCTION	1			
1-3	31N4-01090				.STRAINER ASSY	1			
1-31	31E3-4529	20			..ELEMENT-SUCTION	1			
1-4	E131-0212	10			.ELEMENT-RETURN	1			
1-5	E131-0220	20			.SPRING	1			
1-6	P220-110104				.PLUG-HEX	1			
1-7	31EE-02100				.AIR BREATHER	1			
1-71	Y-399200				..BODY	1			
1-72	31EE-02110				..ELEMENT	1			
1-8	E131-0256	20			.VALVE-BYPASS	1			
1-9	E131-0473	30			.GAUGE-LEVEL	1			
1-10	E131-0594	20			.SPRING	1			
1-11	E131-0671	10			.COUPLING	1	- #0374		
	P760-052014				.HOSE-RUBBER LOW	1	#0375 -	D	
1-12	31E9-1051	10			.FITTING	1	- #0374		
	31N4-01210				.CONNECTOR	1	#0375 -	D	

Item	Part_No	IS	Ord	T	Description	Qty	Serial_No	ITC	Remark
1-13	31E9-0084	10			.FILTER-SPIN	1			
1-131	31E9-0127				..HEAD	1			
1-132	31E9-0126				..FILTER-CARTRIDGE	1			
1-14	S037-102522				.BOLT-W/WASHER	20			
1-17	21EA-50260				.PACKING-TEMP SW	1			
1-18	21EN-40100				.SENDER-TEMP	1			
1-19	S109-060156				.BOLT-SOCKET	4			
1-20	S631-018001				.O-RING	1			
1-21	P010-430019				.CONNECTOR	1	- #0036		
	31N6-03100				.CONNECTOR	1	#0037 -	D	
1-22	S632-150001				.O-RING	1			
1-23	S572-450006				.CLAMP-HOSE	1	#0375 -	-	
2	S017-200502				BOLT-HEX	2			
3	S017-200352				BOLT-HEX	2			
4	S441-200002				WASHER-HARDENED	4			
5	31N8-01300				SHIM(1.0T)	5			

UPPER HYD PIPING(BASE)

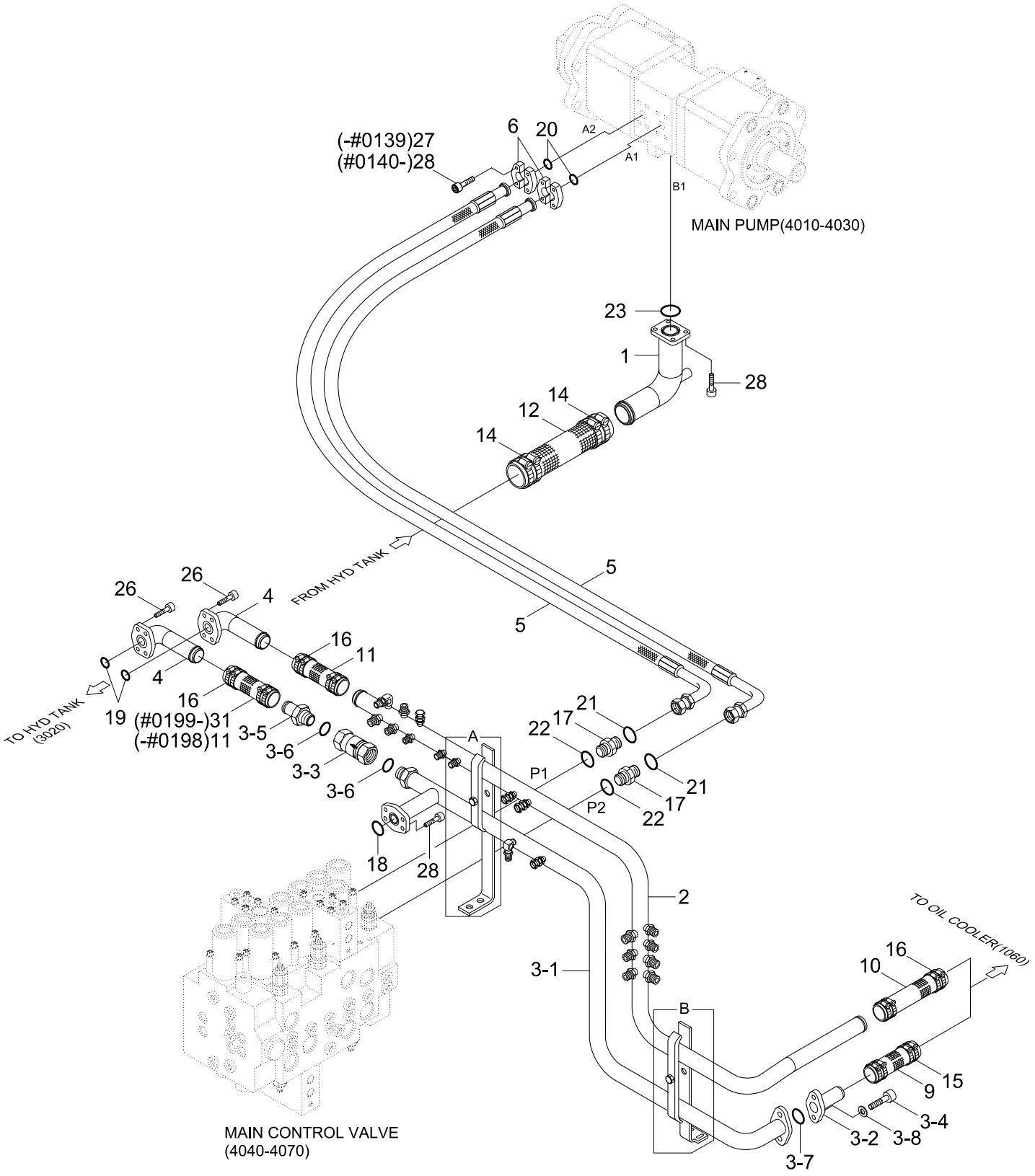

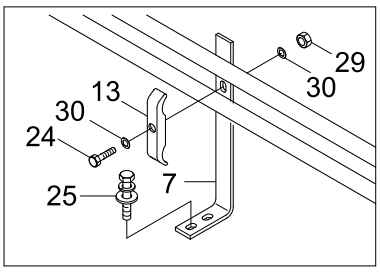

DETAIL A

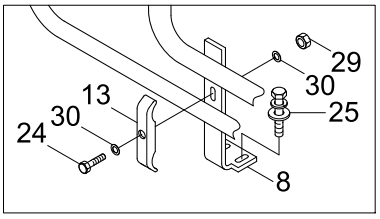

DETAIL B

Item	Part_No	IS	Ord	T	Description	Qty	Serial_No	ITC	Remark
1	31N4-14101				PIPE ASSY-SUCTION	1			
2	31N4-14111				PIPE ASSY-RETURN	1	- #0036		
	31N4-14112				PIPE ASSY-RETURN	1	#0037 -	D	
3	31N4-14150				RETURN PIPE SUB ASSY	1	- #0198		
	31N4-14210				RETURN PIPE SUB ASSY	1	#0199 -	D	
3-1	31N4-14121				.PIPE ASSY-RETURN	1	- #0198		
	31N4-14220				.PIPE ASSY	1	#0199 -	D	
3-2	31ER-11121				.VALVE-CHECK	1			
3-3	31E9-0143	20			.VALVE-CHECK	1			
3-4	S109-120456				.BOLT-SOCKET	2			
3-5	34EA-10120				.CONNECTOR	1			
3-6	S631-044004				.O-RING	2			
3-7	Y172-003004				.O-RING	1			
3-8	S403-122006				.WASHER-PLAIN	2			
4	31N4-12291				PIPE ASSY	2			
5	P993-127419				HOSE ASSY-ORFS,FLG 0X90	2			
6	P174-120102				FLANGE-SPLIT	4			
7	31N4-13120				BRACKET-R/PIPE	1			
8	31N4-14160				BRACKET ASSY	1			
9	P760-073020				HOSE-RUBBER	1			
10	P760-063035				HOSE-RUBBER	1			
11	P760-063022				HOSE-RUBBER	2	- #0198		
					HOSE-RUBBER	1	#0199 - #0678	A	
	31N8-13080				HOSE-RUBBER	1	#0679 -	A	
12	P760-093022				HOSE-RUBBER	1	- #0140		

Item	Part_No	IS	Ord	T	Description	Qty	Serial_No	ITC	Remark
12	P760-093018				HOSE-RUBBER	1	#0141 -	B	
13	31EG-12190				CLAMP-PIPE	2			
14	S572-930006				CLAMP-HOSE,WIRE TYPE	4			
15	S572-650006				CLAMP-HOSE,WIRE TYPE	4			
	P760-093021				HOSE-RUBBER	4	#0076 -	B	
16	S572-570006				CLAMP-HOSE,WIRE TYPE	12			
17	X500-110004				CONNECTOR-LONG	2			
18	Y172-003004				O-RING	1			
19	Y171-027004				O-RING	2			
20	Y171-019004				O-RING	2			
21	S621-018001				O-RING	2			
22	S631-024004				O-RING	2			
23	S631-071001				O-RING	1			
24	S017-120802				BOLT-HEX	2			
25	S037-103022				BOLT-W/WASHER	4			
26	S109-100306				BOLT-SOCKET	8			
27	S109-100356				BOLT-SOCKET	8	- #0139	-	
28	S109-120306				BOLT-SOCKET	8	- #0139		
					BOLT-SOCKET	16	#0140 -	A	
29	S205-121002				NUT-HEX	2			
30	S403-122002				WASHER-PLAIN	4			
31	P760-063019				HOSE-RUBBER	1	#0199 -	-	

UPPER HYDRAULIC PIPING(TRAVEL)

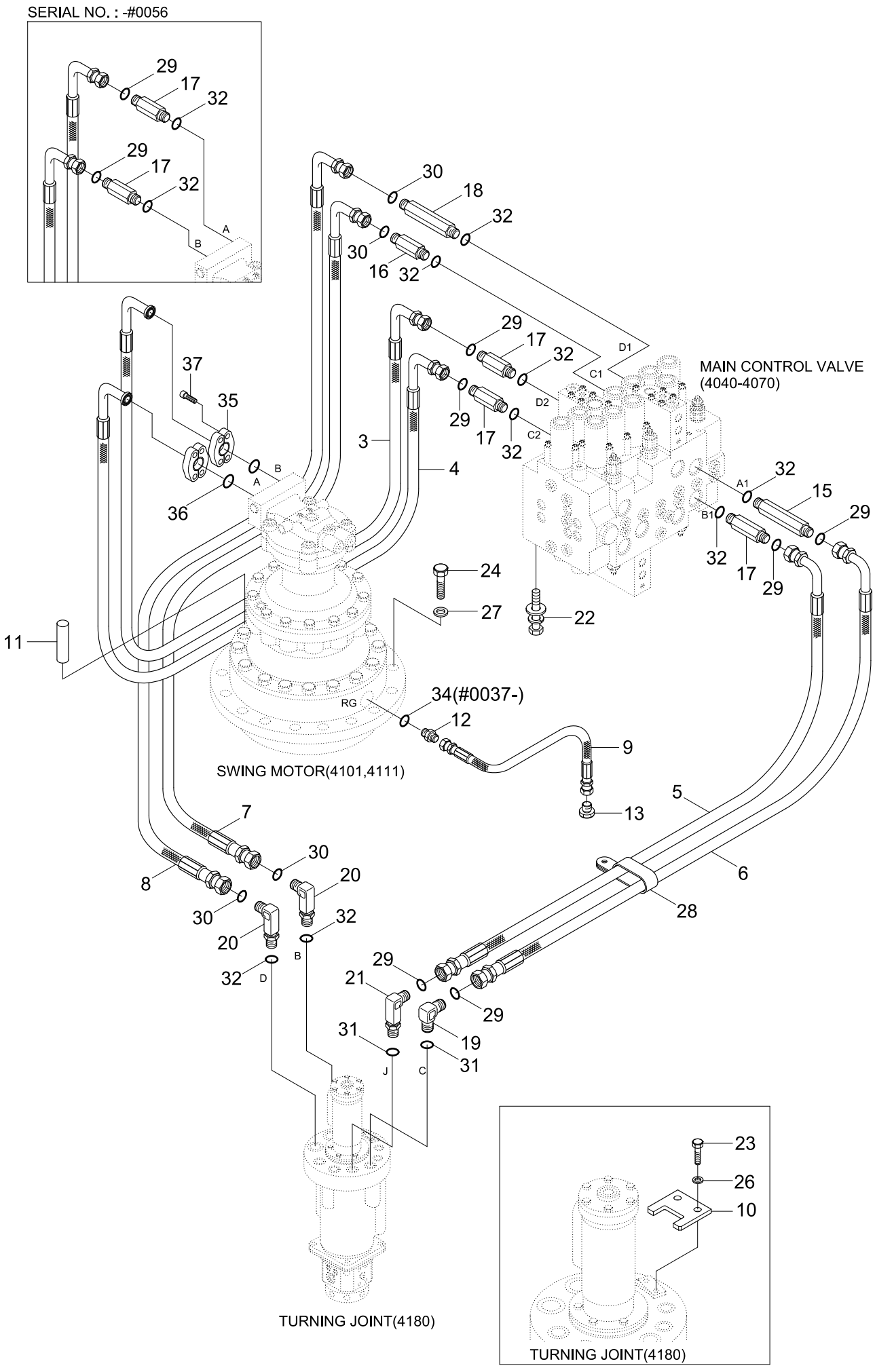

Item	Part_No	IS	Ord	T	Description	Qty	Serial_No	ITC	Remark
3	31N4-12170				HOSE ASSY	1	- #0056		
	31N4-13090				HOSE ASSY	1	#0057 -	D	
4	31N4-12180				HOSE ASSY	1	- #0056		
	31N4-13100				HOSE ASSY	1	#0057 -	D	
5	P930-087023				HOSE ASSY-ORFS 0X90	1	- #0139		
	P933-087023				HOSE ASSY-ORFS 0X90	1	#0140 -	B	
6	P930-087025				HOSE ASSY-ORFS 0X90	1	- #0139		
	P933-087025				HOSE ASSY-ORFS 0X90	1	#0140 -	B	
7	P930-127024				HOSE ASSY-ORFS 0X90	1	- #0139		
	P933-127023				HOSE ASSY-ORFS 0X90	1	#0140 -	B	
8	P930-127026				HOSE ASSY-ORFS 0X90	1	- #0139		
	P933-127025				HOSE ASSY-ORFS 0X90	1	#0140 -	B	
9	P610-062010				HOSE ASSY-THD 0X45	1	- #0036		
	P920-062010				HOSE ASSY-ORFS 0X45	1	#0037 -	D	
10	31N4-13080				PLATE-LOCK	1			
11	31E3-3053	20			PIN-DOWEL	1			
12	P010-430015				CONNECTOR	1	- #0036		
	31N7-12400				CONNECTOR-ORFS	1	#0037 -	D	
13	31EM-22090				PLUG	1	- #0036		
	X700-100103				PLUG-ORFS	1	#0037 -	D	
15	X511-112538				CONNECTOR-LONG,ORFS	1	- #0198		
	X511-112537				CONNECTOR-LONG,ORFS	1	#0199 -	D	
16	X500-110004				CONNECTOR-ORFS	1			
17	X511-112534				CONNECTOR-LONG,ORFS	5	- #0056		
					CONNECTOR-LONG,ORFS	3	#0057 - #0198	A	

Item	Part_No	IS	Ord	T	Description	Qty	Serial_No	ITC	Remark
17	X511-112533				CONNECTOR-LONG,ORFS	3	#0199 -	D	
18	X511-112546				CONNECTOR-LONG,ORFS	1	- #0198		
	X511-112545				CONNECTOR-LONG,ORFS	1	#0199 -	D	
19	X520-110003				ELBOW-90,ORFS	1			
20	31N5-10250				ELBOW-90,LONG,ORFS	2			
21	31N8-40310				ELBOW-90,ORFS,LONG	1			
22	S037-123522				BOLT-W/WASHER	4			
23	S017-160402				BOLT-HEX	2			
24	S017-160552				BOLT-HEX	9			
26	S411-160002				WASHER-SPRING	2			
27	S441-160002				WASHER-HARDENED	9			
28	S552-102370				CLAMP-BAND	10			
29	S621-014001				O-RING	8	- #0056		
					O-RING	6	#0057 -	A	
30	S621-018001				O-RING	4			
31	S631-018004				O-RING	2			
32	S631-024004				O-RING	10	- #0056		
					O-RING	8	#0057 -	A	
34	S621-012001				O-RING	1	#0037 -	-	
35	P173-080101				FLANGE-SPLIT	4	#0057 -	-	
36	Y171-015004				O-RING	2	#0057 -	-	
37	S107-080606				BOLT-SOCKET	8	#0057 -	-	

UPPER HYDRAULIC PIPING(ATTACH)

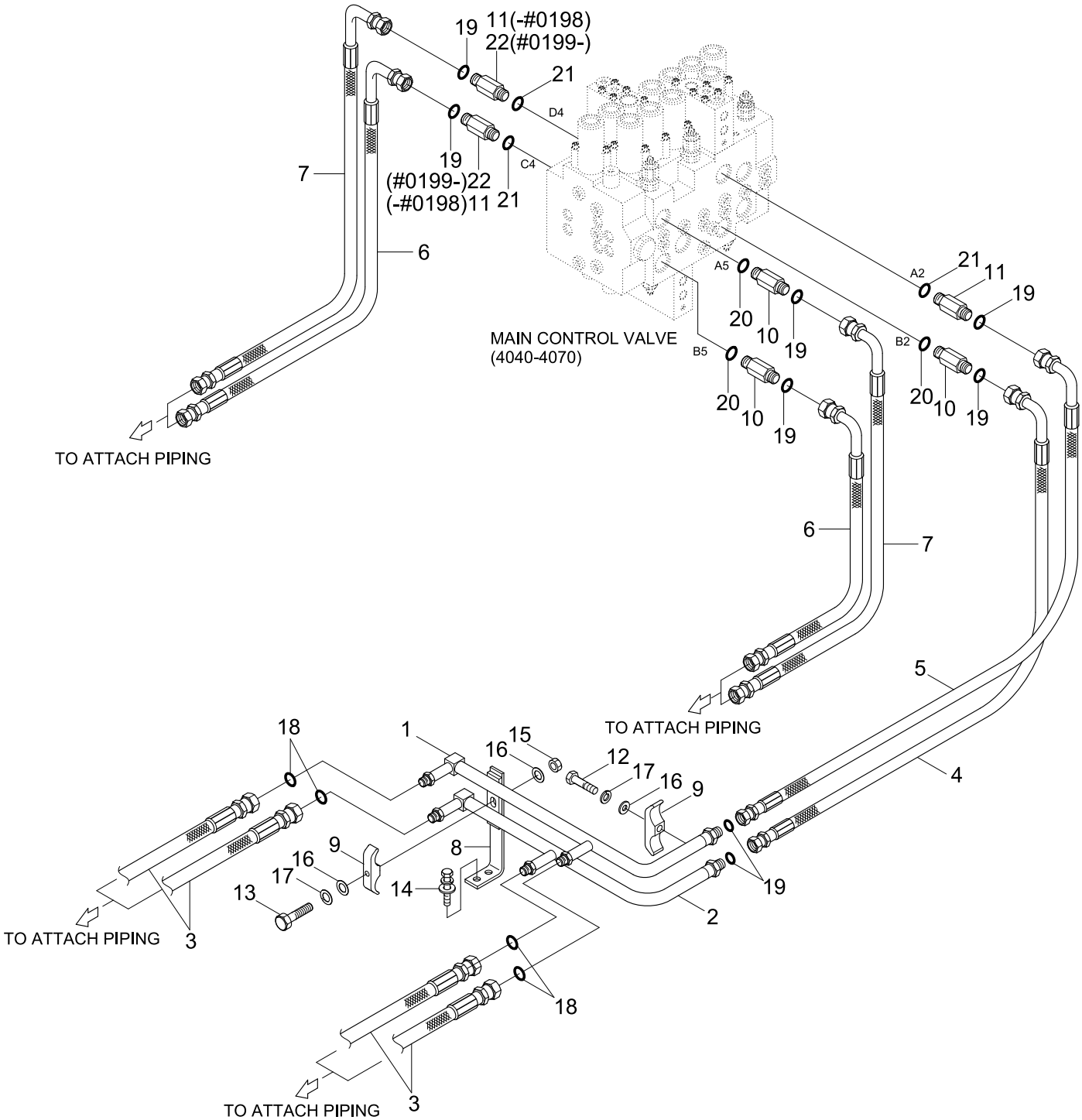

Item	Part_No	IS	Ord	T	Description	Qty	Serial_No	ITC	Remark
1	31N4-12051				PIPE ASSY	1			
2	31N4-12062				PIPE ASSY	1			
3	P913-087015				HOSE ASSY-ORFS 0X0	4	- #0247		
	31N4-13210				HOSE ASSY	4	#0248 -	B	
4	P930-127018				HOSE ASSY-ORFS 0X90	1			
5	P930-127020				HOSE ASSY-ORFS 0X90	1			
6	P933-127024				HOSE ASSY-ORFS 0X90	2			
7	P933-127026				HOSE ASSY-ORFS 0X90	2			
8	31N4-12310				BRACKET-RETURN	1			
9	31N4-12270				CLAMP-PIPE	2			
10	X511-112546				CONNECTOR-LONG,ORFS	3	- #0198		
	X511-112545				CONNECTOR-LONG,ORFS	3	#0199 -	D	
11	X511-116546				CONNECTOR-LONG,ORFS	3	- #0198		
	X511-116544				CONNECTOR-LONG,ORFS	1	#0199 -	D	
12	S017-100602				BOLT-HEX	1			
13	S017-100752				BOLT-HEX	1			
14	S037-103022				BOLT-W/WASHER	2			
15	S207-101002				NUT-HEX	1			
16	S403-102002				WASHER-PLAIN	3			
17	S411-100002				WASHER-SPRING	3			
18	S621-014001				O-RING	4			
19	S621-018001				O-RING	12			
20	S631-024004				O-RING	3			
21	S631-029004				O-RING	3			
22	X511-116546				CONNECTOR-LONG,ORFS	3	#0199 -	D	

UPPER HYD PIPING(1/2, ADJUST BOOM)

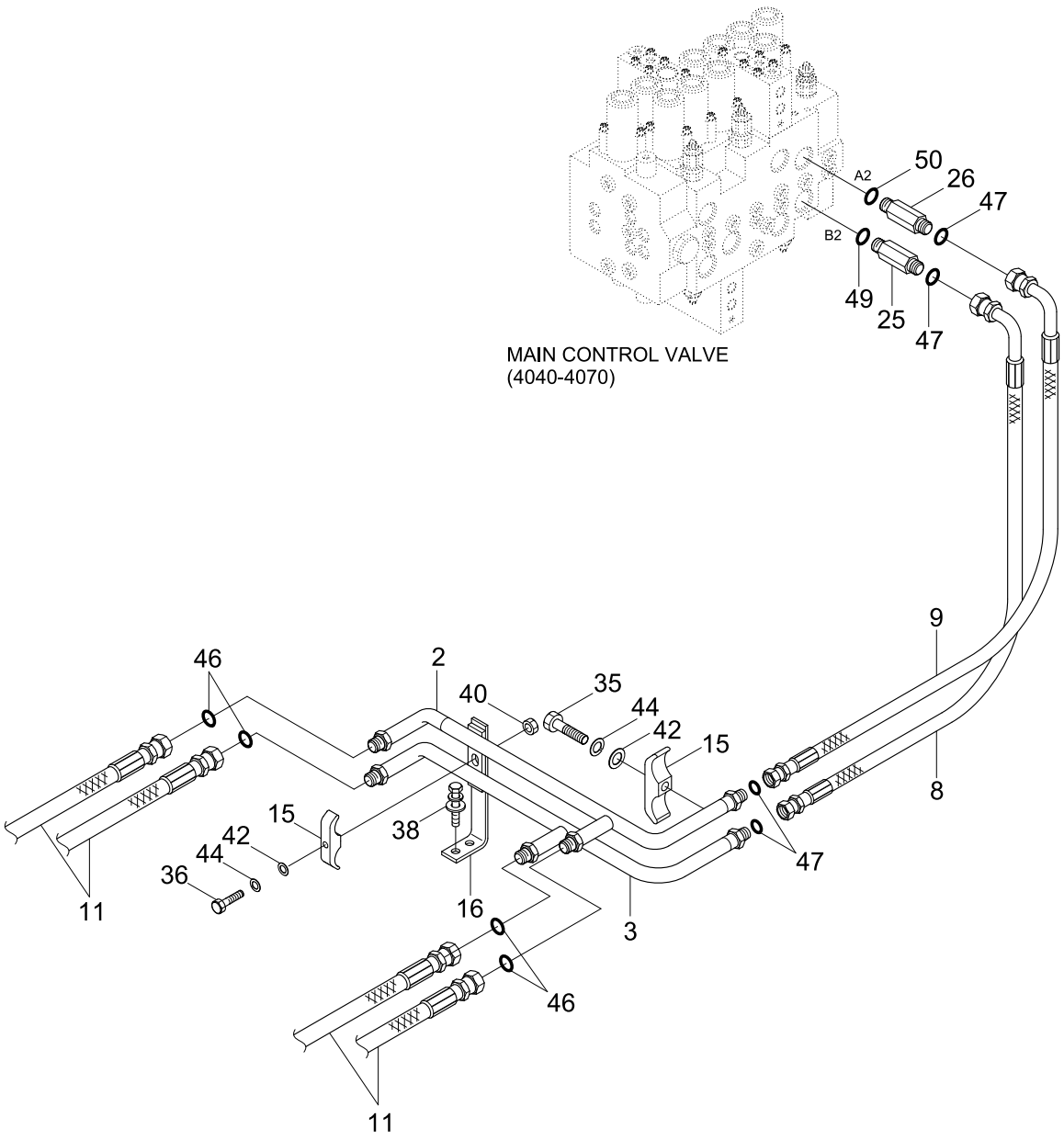

Item	Part_No	IS	Ord	T	Description	Qty	Serial_No	ITC	Remark
*	@				UPPER HYD PIPING 1/2	1	#0001 -	-	NOT
2	31N4-12051				PIPE ASSY	1			
3	31N4-12062				PIPE ASSY	1			
8	P930-127018				HOSE ASSY-ORFS 0X90	1			
9	P930-127020				HOSE ASSY-ORFS 0X90	1			
11	P913-087016				HOSE ASSY-ORFS 0X0	4	- #0247		
	31N4-13220				HOSE ASSY	4	#0248 -	B	
15	31N4-12270				CLAMP-PIPE	2			
16	31N4-12310				BRACKET-RETURN	1			
25	X511-112546				CONNECTOR-ORFS	1			
26	X511-116546				CONNECTOR-LONG,ORFS	1	- #0198		
	X511-116544				CONNECTOR-LONG,ORFS	1	#0199 -	D	
35	S017-100602				BOLT-HEX	1			
36	S017-100752				BOLT-HEX	1			
38	S037-103016				BOLT-W/WASHER	2			
40	S207-101002				NUT-HEX	1			
42	S403-101002				WASHER-PLAIN	2			
44	S411-100002				WASHER-SPRING	2			
46	S621-014001				O-RING	8			
47	S621-018001				O-RING	4			
49	S631-024004				O-RING	1			
50	S631-029004				O-RING	1			

UPPER HYD PIPING(2/2, ADJUST BOOM)

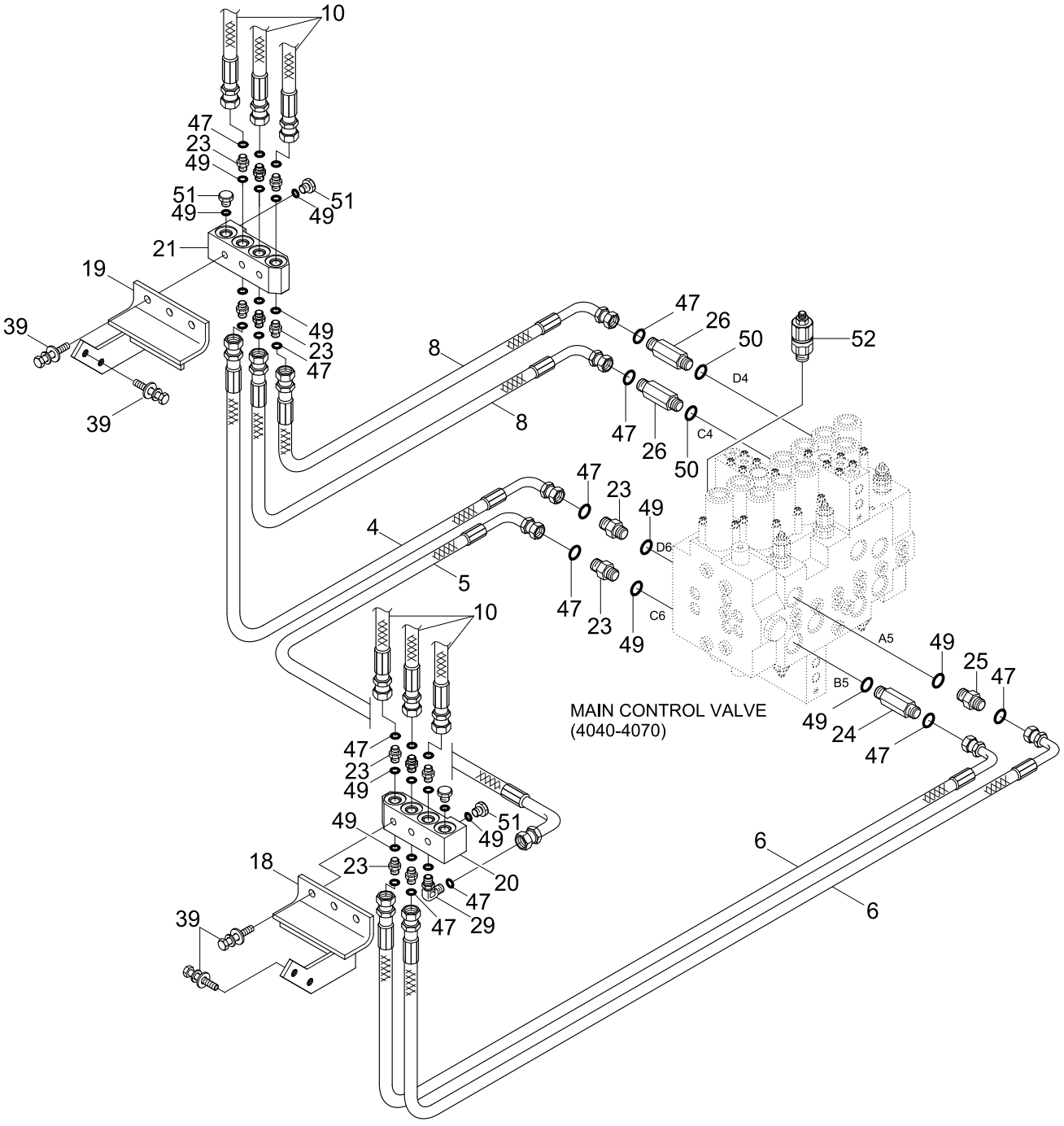

Item	Part_No	IS	Ord	T	Description	Qty	Serial_No	ITC	Remark
*	@				UPPER HYD PIPING 2/2	1	#0001 -	-	NOT
4	31N4-14410				HOSE ASSY-ORFS	1			
5	P930-127012				HOSE ASSY-ORFS 0X90	1			
6	P930-127017				HOSE ASSY-ORFS 0X90	2			
8	P930-127018				HOSE ASSY-ORFS 0X90	2			
10	P913-127035				HOSE ASSY-ORFS 0X0	6			
18	31N4-14431				BRACKET ASSY-LH	1			
19	31N4-14441				BRACKET ASSY-RH	1			
20	35EA-12500				MANIFOLD-LH	1			
21	35EA-12510				MANIFOLD-RH	1			
23	X500-110004				CONNECTOR-ORFS	13			
24	X511-112543				CONNECTOR-LONG,ORFS	1			
25	X511-112546				CONNECTOR-ORFS	1			
26	X511-116546				CONNECTOR-LONG,ORFS	2			
29	X520-110004				ELBOW-90,ORFS	1			
39	S037-123052				BOLT-W/WASHER	10			
47	S621-018001				O-RING,ORFS	18			
49	S631-024004				O-RING	20			
50	S631-029004				O-RING	2			
51	P220-110106				PLUG-HEX	4			
52	XKBF-00095				RELIEF VALVE-OVERLOAD	2	- #0198		
	XKBF-00486				RELIEF VALVE-OVERLOAD	2	#0199 -	D	

PILOT HYD PIPING(ADJUST BOOM)

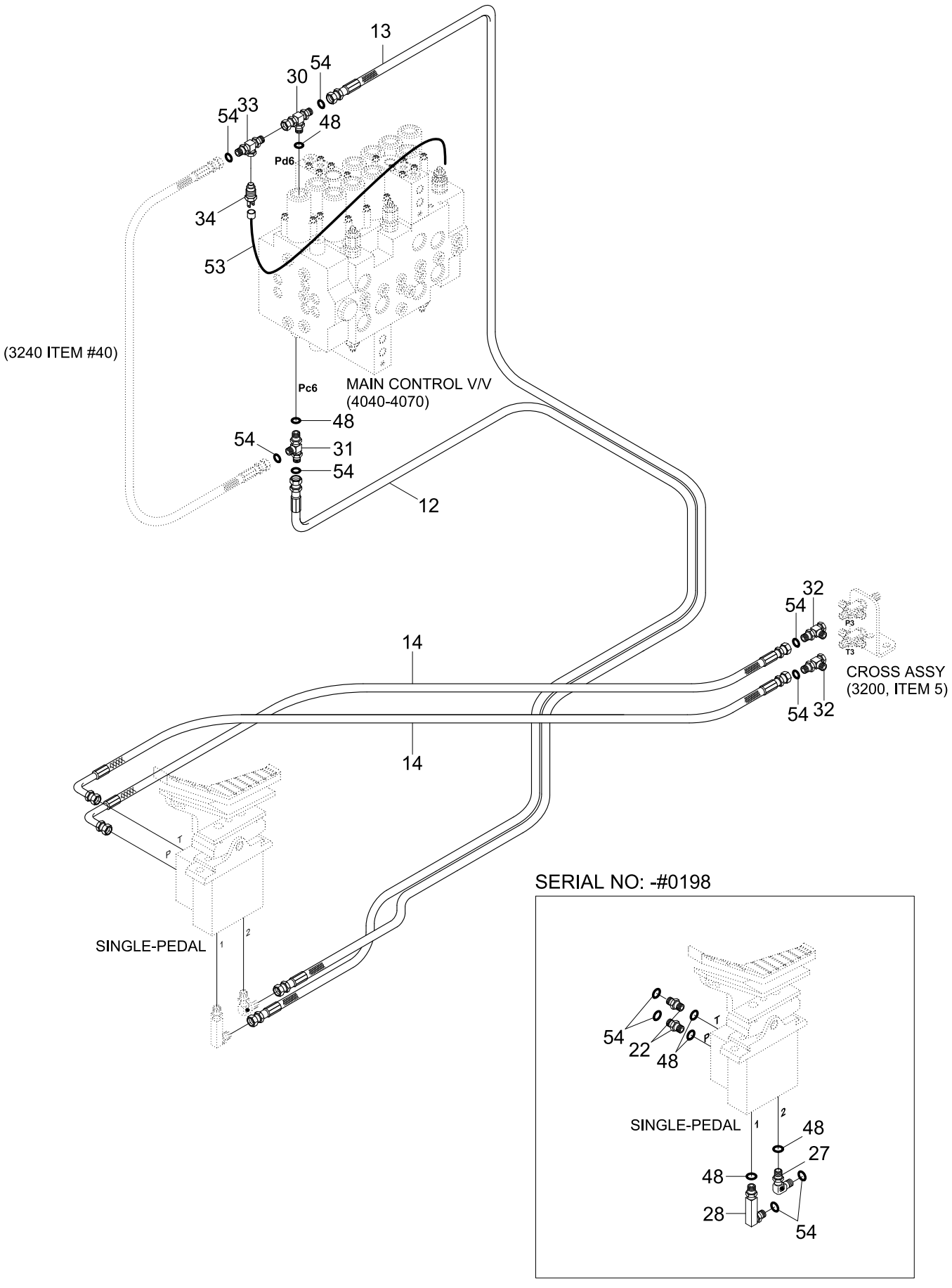

Item	Part_No	IS	Ord	T	Description	Qty	Serial_No	ITC	Remark
*	@				PILOT HYD PIPING	1	#0001 -	-	NOT
12	P400-042060				HOSE ASSY-COMPACT	1	- #0036		
	X400-042060				HOSE ASSY-SYNFLEX,ORFS	1	#0037 -	D	
13	P400-042066				HOSE ASSY-COMPACT	1	- #0036		
	X400-042066				HOSE ASSY-SYNFLEX,ORFS	1	#0037 -	D	
14	P420-042021				HOSE ASSY-COMP 0X90	2	- #0036		
	X420-042021				HOSE ASSY-SYNFLEX,ORFS	2	#0037 -	D	
22	P010-110002				CONNECTOR	2	- #0198	-	
27	P020-110001				ELBOW-90	1	- #0036		
	X520-110001				ELBOW-90,ORFS	1	#0037 - #0198	D	
28	E131-0603				ELBOW-90,LONG	1	- #0036		
	31N6-25110				ELBOW-90,ORFS,LONG	1	#0037 - #0198	D	
30	P310-040404				TEE-BRANCH TYPE	1	- #0036		
	X810-045151				TEE-B/TYPE,ORFS	1	#0037 -	D	
31	P320-040404				TEE-RUN TYPE	1	- #0036		
	X820-045151				TEE-R/TYPE,ORFS	1	#0037 -	D	
32	32E6-10460				TEE-SWEVEL NUT	1	- #0036		
	X840-515151				TEE-R/TYPE,ORFS	1	#0037 -	D	
33	31N4-91430				TEE-SHUTTLE	1	- #0036		
	31N5-10410				TEE-SHUTTLE	1	#0037 -	D	
34	31E5-40520				SWITCH-PRESSURE	1			ADJUST ALARM
48	S631-011004				O-RING	6	- #0198		
					O-RING	2	#0199 -	A	
53	21N4-01560				HARNESS-EXTENSION	1			
54	S621-011001				O-RING,ORFS	10	#0037 - #0198	-	

Item	Part_No	IS	Ord	T	Description	Qty	Serial_No	ITC	Remark
54	S621-011001				O-RING,ORFS	6	#0199 -	A	

PILOT HYD PIPING(CNTL 1, -#0198)

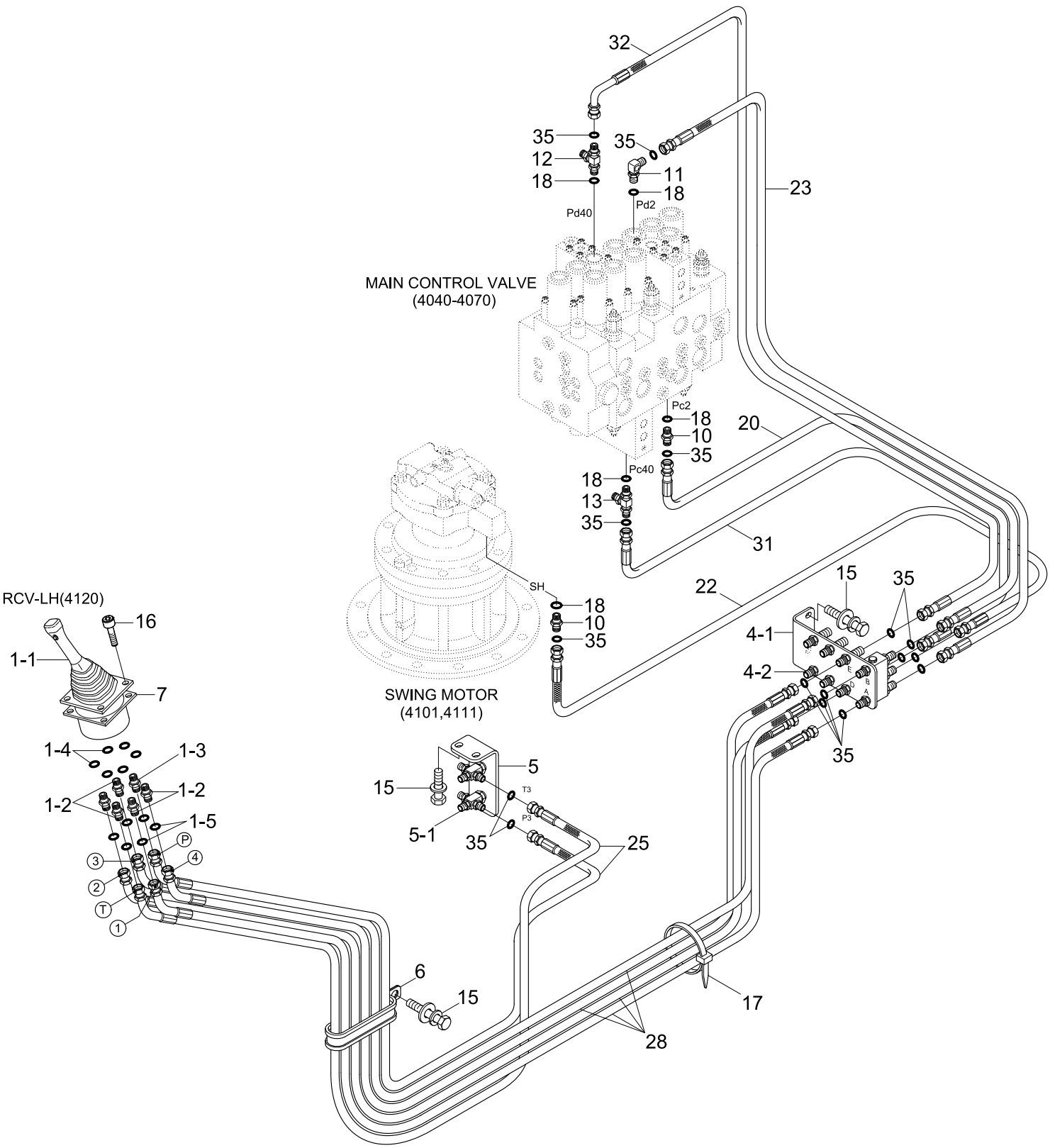

Item	Part_No	IS	Ord	T	Description	Qty	Serial_No	ITC	Remark
*	@				PILOT HYD PIPING	1	- #0198	-	NOT
1	31N6-20200				RCV SUB ASSY-LH	1	- #0036		
	31N6-25200				RCV SUB ASSY-LH	1	#0037 -	D	
1-1	@				.RCV LEVER	1			NOT
1-2	P010-110002				.CONNECTOR	5	- #0036		
	X500-110001				.CONNECTOR-ORFS	5	#0037 -	D	
1-3	31EK-20100				.FILTER-LAST GUARD	1	- #0036		
	31N6-25060				.FILTER-LAST GUARD	1	#0037 -	D	
1-4	S631-011004				.O-RING	6			
1-5	S621-011001				.O-RING,ORFS	6	#0037 -	-	
4	31N6-22011				TERMINAL ASSY	1	- #0036		
	31N6-25010				TERMINAL ASSY	1	#0037 -	D	
4-1	31EK-20310				.SHUTTLE-5 PORT	1	- #0036	-	
	31N6-25030				.SHUTTLE-5 PORT	1	#0037 -	D	
4-2	31E4-3033	10			.CONNECTOR-2NUT	6	- #0036	-	
	X540-120001				.CONNECTOR-B.H TYPE	6	#0037 -	D	
5	31N4-22021				CROSS ASSY	1	- #0036		
	31N6-25100				CROSS ASSY	1	#0037 -	D	
5-1	31N6-25040				.CROSS-BULKHEAD TYPE	2	#0037 -	-	
6	31E7-0312				CLAMP-HOSE	1			
7	31M6-51061				SHIM(3.2T)	1			
10	P010-110002				CONNECTOR	2	- #0036		
	X500-110001				CONNECTOR-ORFS	2	#0037 -	D	
11	P020-110001				ELBOW-90	2	- #0036		
	X520-110001				ELBOW-90,ORFS	1	#0037 -	D	

Item	Part_No	IS	Ord	T	Description	Qty	Serial_No	ITC	Remark
12	P320-040404				TEE-RUN TYPE	1	- #0036		
	X820-045151				TEE-R/TYPE,ORFS	1	#0037 -	D	
13	31E6-0219	20			TEE-LONG	1	- #0036		
	31N4-22150				TEE-LONG,ORFS	1	#0037 -	D	
15	S037-102042				BOLT-W/WASHER	5			
16	Z175-063036				SCREW-W/WASHER	4	- #0036		
	S035-063046				BOLT-W/WASHER	4	#0037 -	D	
17	S551-050203				CLAMP-BAND	5			
18	S631-011004				O-RING	5			
20	P840-042020				HOSE ASSY-SYN THD	1	- #0036		
	X400-042020				HOSE ASSY-SYNFLEX,ORFS	1	#0037 -	D	
22	P840-042026				HOSE ASSY-SYN THD	1	- #0036		
	X400-042026				HOSE ASSY-SYNFLEX,ORFS	1	#0037 -	D	
23	P840-042033				HOSE ASSY-SYN THD	1	- #0036		
	X400-042033				HOSE ASSY-SYNFLEX,ORFS	1	#0037 -	D	
25	P850-042026				HOSE ASSY-SYN 0X45	2	- #0036		
	X410-042026				HOSE ASSY-SYNFLEX,ORFS	2	#0037 -	D	
28	P860-042009				HOSE ASSY-SYN 0X90	3	- #0036		
	X410-042039				HOSE ASSY-SYNFLEX,ORFS	3	#0037 -	D	
31	P860-042024				HOSE ASSY-SYN 0X90	1	- #0036		
	X420-042024				HOSE ASSY-SYNFLEX,ORFS	1	#0037 -	D	
32	P860-042029				HOSE ASSY-SYN 0X90	1	- #0036		
	X420-042029				HOSE ASSY-SYNFLEX,ORFS	1	#0037 -	D	
35	S621-011001				O-RING,ORFS	16	#0037 -	-	

PILOT HYD PIPING(CNTL 2, -#0198)

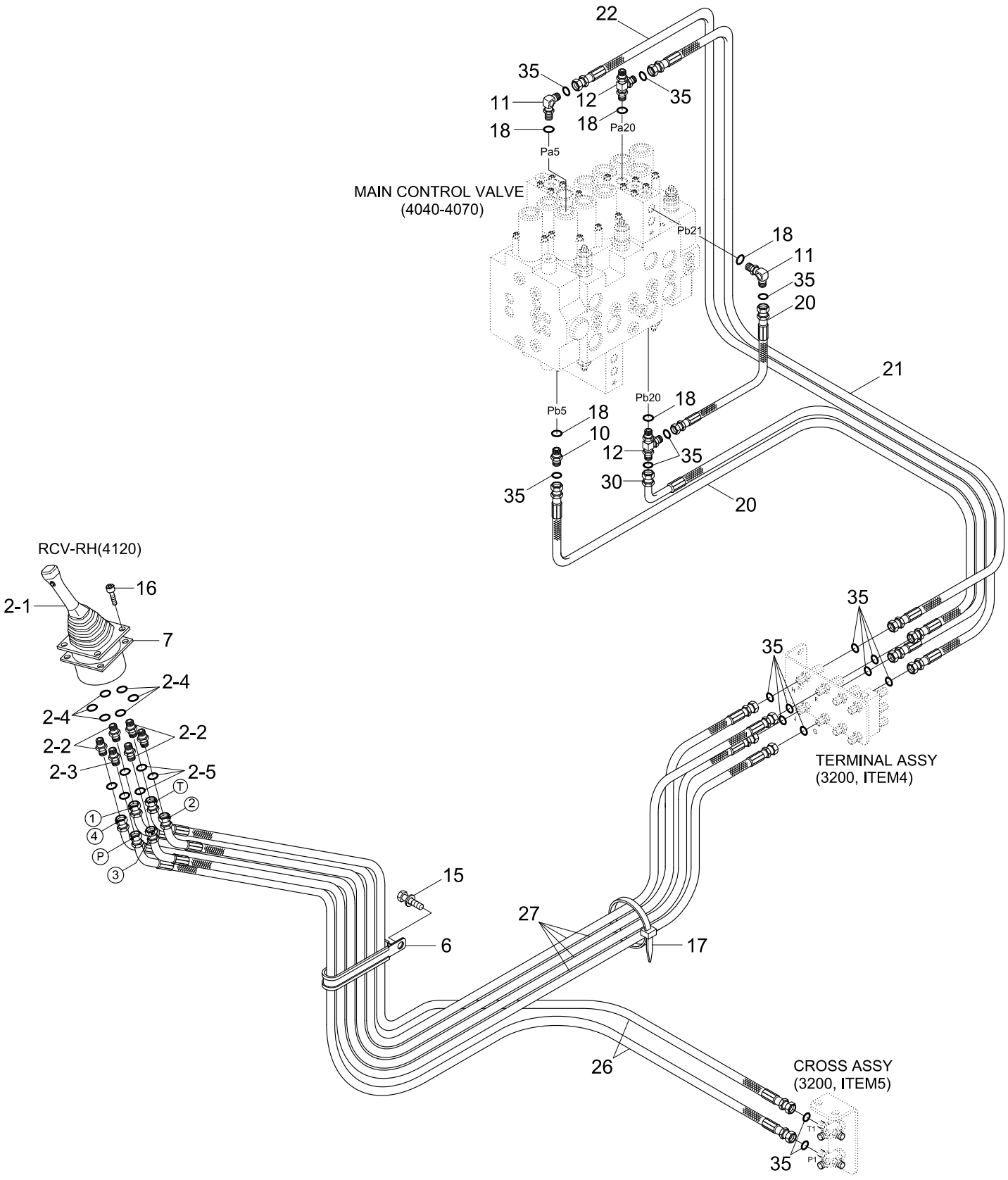

Item	Part_No	IS	Ord	T	Description	Qty	Serial_No	ITC	Remark
*	@				PILOT HYD PIPING	1	- #0198	-	NOT
2	31N6-20210				RCV SUB ASSY-RH	1	- #0036		
	31N6-25210				RCV SUB ASSY-RH	1	#0037 -	D	
2-1	@				.RCV LEVER	1			NOT
2-2	P010-110002				.CONNECTOR	5	- #0036		
	X500-110001				.CONNECTOR-ORFS	5	#0037 -	D	
2-3	31EK-20100				.FILTER-LAST GUARD	1	- #0036		
	31N6-25060				.FILTER-LAST GUARD	1	#0037 -	D	
2-4	S631-011004				.O-RING	6			
2-5	S621-011001				.O-RING,ORFS	6	#0037 -	-	
6	31E7-0312				CLAMP-HOSE	1			
7	31M6-51061				SHIM(3.2T)	1			
10	P010-110002				CONNECTOR	1	- #0036		
	X500-110001				CONNECTOR-ORFS	1	#0037 -	D	
11	P020-110001				ELBOW-90	2	- #0036		
	X520-110001				ELBOW-90,ORFS	2	#0037 -	D	
12	P320-040404				TEE-RUN TYPE	2	- #0036		
	X820-045151				TEE-R/TYPE,ORFS	2	#0037 -	D	
15	S037-102042				BOLT-W/WASHER	1			
16	Z175-063036				SCREW-W/WASHER	4	- #0036		
	S035-063046				BOLT-W/WASHER	4	#0037 -	D	
17	S551-050203				CLAMP-BAND	5			
18	S631-011004				O-RING	4			
20	P840-042020				HOSE ASSY-SYN THD	2	- #0036		
	X400-042020				HOSE ASSY-SYNFLEX,ORFS	2	#0037 -	D	

Item	Part_No	IS	Ord	T	Description	Qty	Serial_No	ITC	Remark
21	P840-042025				HOSE ASSY-SYN THD	1	- #0036		
	X400-042025				HOSE ASSY-SYNFLEX,ORFS	1	#0037 -	D	
22	P840-042026				HOSE ASSY-SYN THD	1	- #0036		
	X400-042026				HOSE ASSY-SYNFLEX,ORFS	1	#0037 -	D	
26	P850-042036				HOSE ASSY-SYN 0X45	2	- #0036		
	X410-042028				HOSE ASSY-SYNFLEX,ORFS	2	#0037 -	D	
27	P850-042039				HOSE ASSY-SYN 0X45	4	- #0036		
	X410-042036				HOSE ASSY-SYNFLEX,ORFS	4	#0037 -	D	
30	P860-042018				HOSE ASSY-SYN 0X90	1	- #0036		
	X420-042018				HOSE ASSY-SYNFLEX,ORFS	1	#0037 -	D	
35	S621-011001				O-RING,ORFS	16	#0037 -	-	

PILOT HYD PIPING(CNTL 3, -#0198)

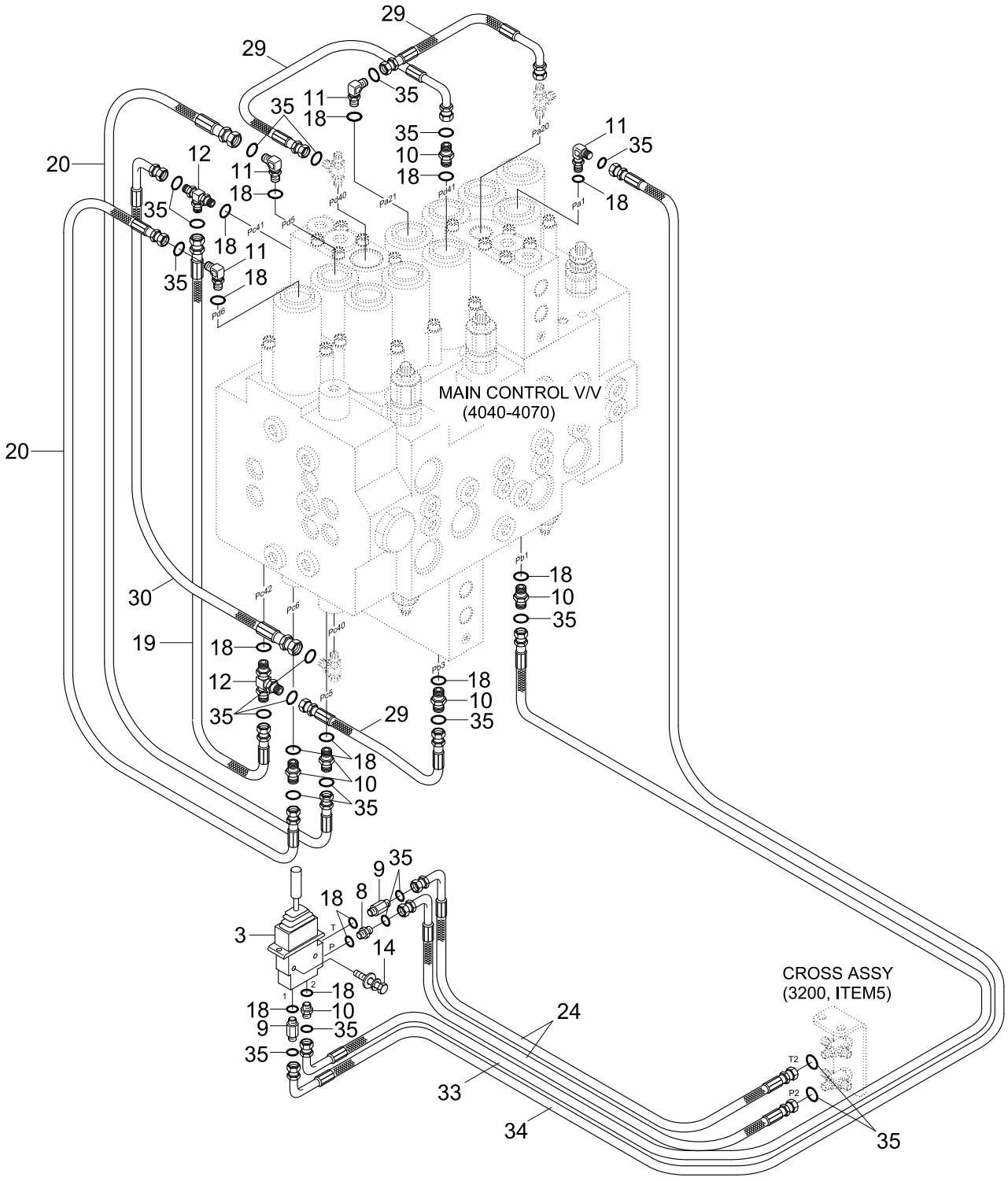

Item	Part_No	IS	Ord	T	Description	Qty	Serial_No	ITC	Remark
*	@				PILOT HYD PIPING	1	- #0198	-	NOT
3	31N4-20080				LEVER-DOZER	1			
8	31EK-20100				FILTER-LAST GUARD	1	- #0036		
	31N6-25060				FILTER-LAST GUARD	1	#0037 -	D	
9	31M5-56430				FITTING-LONG	2	- #0036		
	X511-104513				CONNECTOR-ORFS	2	#0037 -	D	
10	P010-110002				CONNECTOR	7	- #0036		
	X500-110001				CONNECTOR-ORFS	7	#0037 -	D	
11	P020-110001				ELBOW-90	3	- #0036		
	X520-110001				ELBOW-90,ORFS	4	#0037 -	D	
12	P320-040404				TEE-RUN TYPE	2	- #0036		
	X820-045151				TEE-R/TYPE,ORFS	2	#0037 -	D	
14	S035-083526				BOLT-W/WASHER	2			
18	S631-011004				O-RING	15			
19	P840-042017				HOSE ASSY-SYN THD	1	- #0036		
	X400-042017				HOSE ASSY-SYNFLEX,ORFS	1	#0037 -	D	
20	P840-042020				HOSE ASSY-SYN THD	2	- #0036		
	X400-042020				HOSE ASSY-SYNFLEX,ORFS	2	#0037 -	D	
24	P850-042024				HOSE ASSY-SYN 0X45	2	- #0036		
	X410-042024				HOSE ASSY-SYNFLEX,ORFS	2	#0037 -	D	
29	P860-042018				HOSE ASSY-SYN 0X90	3	- #0036		
	X420-042009				HOSE ASSY-SYNFLEX,ORFS	3	#0037 -	D	
30	P860-042018				HOSE ASSY-SYN 0X90	1	- #0036		
	X420-042018				HOSE ASSY-SYNFLEX,ORFS	1	#0037 -	D	
33	P860-042055				HOSE ASSY-SYN 0X90	1	- #0036		

Item	Part_No	IS	Ord	T	Description	Qty	Serial_No	ITC	Remark
33	X420-042055				HOSE ASSY-SYNFLEX,ORFS	1	#0037 -	D	
34	P860-042062				HOSE ASSY-SYN 0X90	1	- #0036		
	X420-042062				HOSE ASSY-SYNFLEX,ORFS	1	#0037 -	D	
35	S621-011001				O-RING,ORFS	22	#0037 -	-	

PILOT HYD PIPING(BASE 1, -#0198)

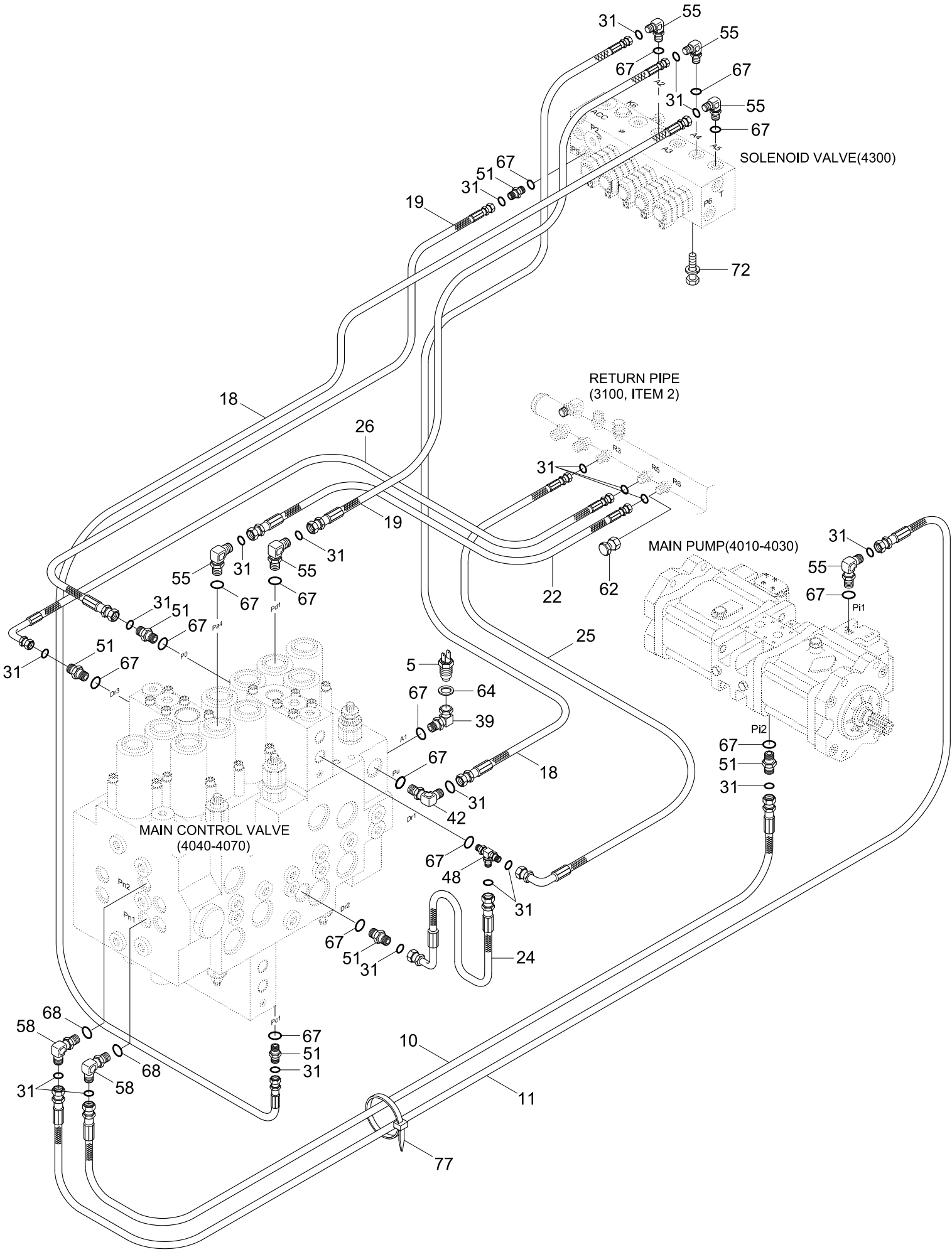

Item	Part_No	IS	Ord	T	Description	Qty	Serial_No	ITC	Remark
*	@				PILOT HYD PIPING	1	- #0198	-	NOT
5	31E9-20080				SWITCH-PRESSURE	1			AUTO IDLE
10	P600-043044				HOSE ASSY-THD 0X0	1	- #0036		
	P910-043044				HOSE ASSY-ORFS 0X0	1	#0037 -	D	
11	P600-043049				HOSE ASSY-THD 0X0	1	- #0036		
	P910-043049				HOSE ASSY-ORFS 0X0	1	#0037 -	D	
18	P840-042036				HOSE ASSY-SYN THD	2	- #0036		
	X400-042036				HOSE ASSY-SYNFLEX,ORFS	2	#0037 -	D	
19	P840-042041				HOSE ASSY-SYN THD	2	- #0036		
	X400-042041				HOSE ASSY-SYNFLEX,ORFS	2	#0037 -	D	
22	P850-042008				HOSE ASSY-SYN 0X45	1	- #0036		
	X410-042008				HOSE ASSY-ORFS 0X45	1	#0037 -	D	
24	P860-042006				HOSE ASSY-SYN 0X90	1	- #0036		
	X420-042005				HOSE ASSY-ORFS 0X90	1	#0037 -	D	
25	P860-042007				HOSE ASSY-SYN 0X90	1	- #0036		
	X420-042007				HOSE ASSY-ORFS 0X90	1	#0037 -	D	
26	P860-042008				HOSE ASSY-SYN 0X90	1	- #0036		
	X420-042008				HOSE ASSY-ORFS 0X90	1	#0037 -	D	
31	S621-012001				O-RING	20	#0037 -	-	
39	31EM-20110				ADAPTER	1			
42	E131-0603				ELBOW-90,LONG	1	- #0036		
	31N6-25110				ELBOW-90,ORFS,LONG	1	#0037 -	D	
48	P320-040404				TEE-RUN TYPE	1	- #0036		
	X820-045151				TEE-R/TYPE,ORFS	1	#0037 -	D	
51	P010-110002				CONNECTOR	5	- #0036		

Item	Part_No	IS	Ord	T	Description	Qty	Serial_No	ITC	Remark
51	X500-110001				CONNECTOR-ORFS	5	#0037 -	D	
55	P020-110001				ELBOW-90	6	- #0036		
	X520-110001				ELBOW-90,ORFS	6	#0037 -	D	
58	P020-110012				ELBOW-90	2	- #0036		
	X520-110012				ELBOW-90,ORFS	2	#0037 -	D	
62	P290-100102				PLUG-CAP	1	- #0036		
	X710-100102				CAP-DUST	1	#0037 -	D	
64	P392-120000				WASHER-COPPER	1			
67	S631-011004				O-RING	15			
68	S631-014004				O-RING	2			
72	S035-082542				BOLT-W/WASHER	2			
77	S551-050203				CLAMP-BAND	10			

PILOT HYD PIPING(BASE 2, -#0198)

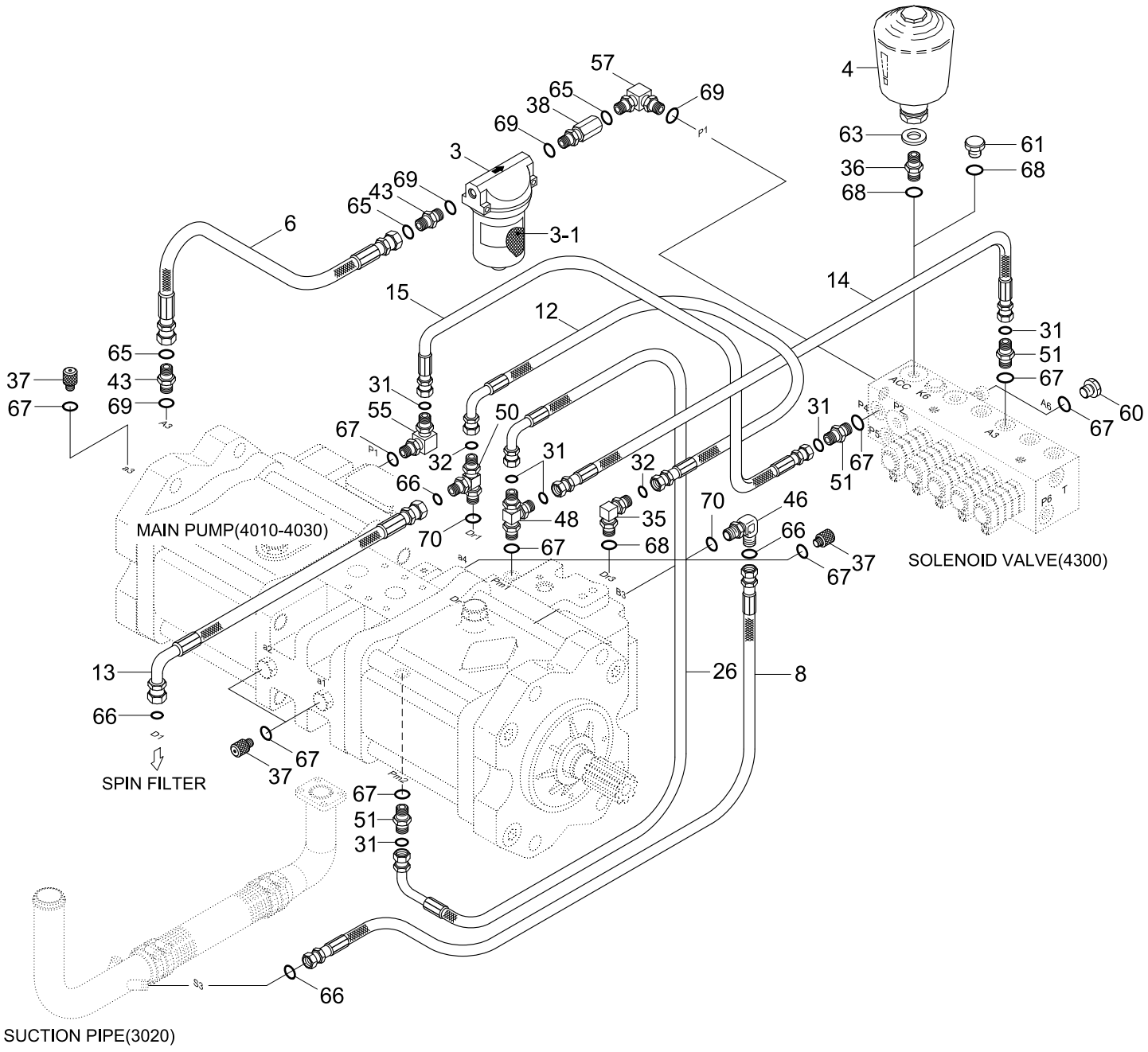

Item	Part_No	IS	Ord	T	Description	Qty	Serial_No	ITC	Remark
*	@				PILOT HYD PIPING	1	- #0198	-	NOT
3	31E3-0017				FILTER-LINE	1			
3-1	31E3-0018	10			.ELEMENT-LINE FILTER	1			
4	31E3-3187				ACCUMULATOR	1			
6	P930-082014				HOSE ASSY-ORFS 0X90	1	- #0036		
	P910-082021				HOSE ASSY-ORFS 0X0	1	#0037 -	D	
8	P930-122014				HOSE ASSY-ORFS 0X90	1			
12	P620-062008				HOSE ASSY-THD 0X90	1	- #0036		
	P930-062008				HOSE ASSY-ORFS 0X90	1	#0037 -	D	
13	P620-122011				HOSE ASSY-THD 0X90	1	- #0036		
	P930-122012				HOSE ASSY-ORFS 0X90	1	#0037 -	D	
14	P840-042008				HOSE ASSY-SYN THD	1	- #0036		
	X400-042008				HOSE ASSY-ORFS 0X0	1	#0037 -	D	
15	P840-042009				HOSE ASSY-SYN THD	1	- #0036		
	X400-042009				HOSE ASSY-SYNF,ORFS	1	#0037 -	D	
26	P860-042008				HOSE ASSY-SYN 0X90	1	- #0036		
	X420-042008				HOSE ASSY-ORFS 0X90	1	#0037 -	D	
31	S621-011001				O-RING	6	#0037 -	-	
32	S621-012001				O-RING	2	#0037 -	-	
35	P030-110002				ELBOW-45	1	- #0036		
	X530-110002				ELBOW-45,ORFS	1	#0037 -	D	
36	31E9-20060				FITTING	1	- #0117		
	31N6-24200				CONNECTOR	1	#0118 -	B	
37	31EK-11130				COUPLING-SCREW	4			
38	31EM-20160				ADAPTER	1	- #0036		

Item	Part_No	IS	Ord	T	Description	Qty	Serial_No	ITC	Remark
38	31N6-22400				ADAPTER	1	#0037 -	D	
43	X500-110003				CONNECTOR-ORFS	2			
46	X530-110004				ELBOW-45,ORFS	1			
48	P320-040404				TEE-RUN TYPE	1	- #0036		
	X820-045151				TEE-R/TYPE,ORFS	1	#0037 -	D	
50	P320-121206				TEE-RUN TYPE	1	- #0036		
	X820-125452				TEE-R/TYPE,ORFS	1	#0037 -	D	
51	P010-110002				CONNECTOR	3	- #0036		
	X500-110001				CONNECTOR-ORFS	3	#0037 -	D	
55	P020-110001				ELBOW-90	1	- #0036		
	X520-110001				ELBOW-90,ORFS	1	#0037 -	D	
57	P020-110003				ELBOW-90	1	- #0036		
	X520-110003				ELBOW-90,ORFS	1	#0037 -	D	
60	P220-110102				PLUG	1			
61	P220-110103				PLUG-HEX,HEAD	1			
63	P391-080000				WASHER-COPPER	1	- #0117	-	
65	S621-014001				O-RING	2			
66	S621-018001				O-RING	2			
67	S631-011004				O-RING	10			
68	S631-014004				O-RING	2			
69	S631-018004				O-RING	4			
70	S631-024004				O-RING	2			

PILOT HYD PIPING(BASE 3, -#0198)

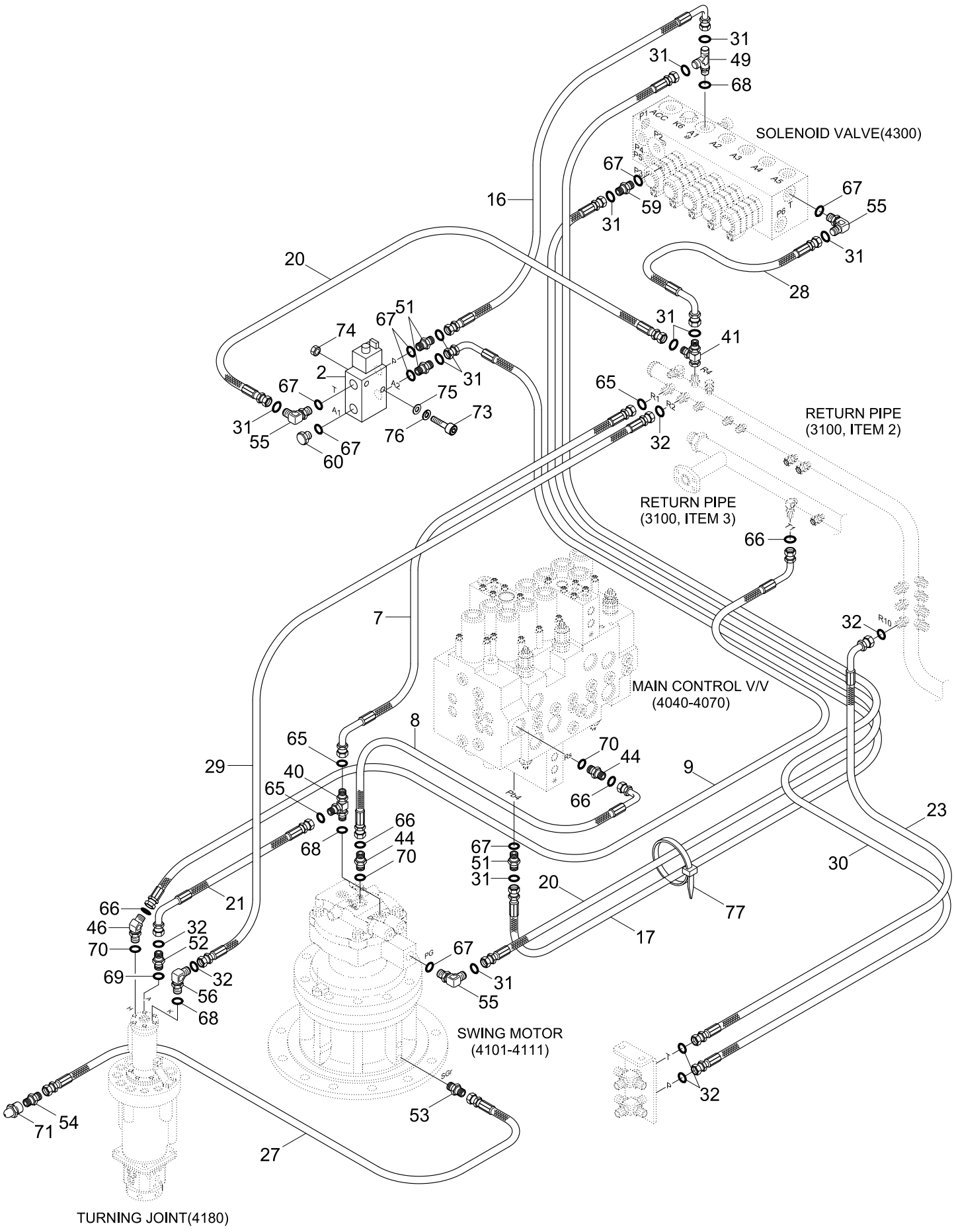

Item	Part_No	IS	Ord	T	Description	Qty	Serial_No	ITC	Remark
*	@				PILOT HYD PIPING	1	- #0198	-	NOT
2	31N6-91230				SOLENOID VLV-BREAKER	1			
7	P930-082015				HOSE ASSY-ORFS 0X90	1			
8	P930-122014				HOSE ASSY-ORFS 0X90	1			
9	P933-122039				HOSE ASSY-ORFS 0X90	1			
16	P840-042014				HOSE ASSY-SYN THD	1	- #0036		
	X400-042014				HOSE ASSY-ORFS 0X0	1	#0037 -	D	
17	P840-062031				HOSE ASSY-SYN THD	1	- #0036		
	X400-042031				HOSE ASSY-SYNFLEX,ORFS	1	#0037 -	D	
20	P840-042044				HOSE ASSY-SYN THD	2	- #0036		
	X400-042044				HOSE ASSY-ORFS 0X0	2	#0037 -	D	
21	P840-062016				HOSE ASSY-SYN THD	1	- #0036		
	X400-062016				HOSE ASSY-SYNFLEX,ORFS	1	#0037 -	D	
23	P850-062022				HOSE ASSY-SYN 0X45	2	- #0036		
	X410-062022				HOSE ASSY-ORFS 0X45	2	#0037 -	D	
27	P860-042021				HOSE ASSY-SYN 0X90	1			
28	P860-042041				HOSE ASSY-SYN 0X90	1	- #0036		
	X420-042041				HOSE ASSY-ORFS 0X90	1	#0037 -	D	
29	P860-062030				HOSE ASSY-SYN 0X90	1	- #0036		
	X420-062030				HOSE ASSY-ORFS 0X90	1	#0037 -	D	
30	P860-062056				HOSE ASSY-SYN 0X90	1	- #0036		
	X420-062056				HOSE ASSY-ORFS 0X90	1	#0037 -	D	
31	S621-011001				O-RING	10	#0037 -	-	
32	S621-012001				O-RING	8	#0037 -	-	
40	31N4-22130				TEE	1	- #0036		

Item	Part_No	IS	Ord	T	Description	Qty	Serial_No	ITC	Remark
40	31N4-22140				TEE-ORFS	1	#0037 -	D	
41	31N6-22030				TEE-SWIVEL NUT	1	- #0036		
	X840-525151				TEE-R/TYPE,SWIVEL,ORFS	1	#0037 -	D	
44	X500-110004				CONNECTOR-ORFS	2			
46	X530-110004				ELBOW-45,ORFS	1			
49	P320-060406				TEE-RUN TYPE	1	- #0036		
	X820-065152				TEE-R/TYPE,ORFS	1	#0037 -	D	
51	P010-110002				CONNECTOR	3	- #0036		
	X500-110001				CONNECTOR-ORFS	3	#0037 -	D	
52	P010-110015				CONNECTOR	1	- #0036		
	X500-110015				CONNECTOR-ORFS	1	#0037 -	D	
53	P010-430002				CONNECTOR	1			
54	P010-430011				CONNECTOR	1			
55	P020-110001				ELBOW-90	3	- #0036		
	X520-110001				ELBOW-90,ORFS	3	#0037 -	D	
56	P020-110002				ELBOW-90	1	- #0036		
	X520-110002				ELBOW-90,ORFS	1	#0037 -	D	
59	P101-104043				CONNECTOR-LONG	1	- #0036		
	X511-104513				CONNECTOR-LONG,ORFS	1	#0037 -	D	
60	P220-110102				PLUG	1			
65	S621-014001				O-RING	3	- #0036		
					O-RING	2	#0037 -	A	
66	S621-018001				O-RING	4			
67	S631-011004				O-RING	7			
68	S631-014004				O-RING	3			

Item	Part_No	IS	Ord	T	Description	Qty	Serial_No	ITC	Remark
69	S631-018004				O-RING	1			
70	S631-024004				O-RING	3			
71	S651-810002				NIPPLE-GREASE	1			
73	S109-080556				BOLT-SOCKET	2			
74	S205-081002				NUT-HEX	2			
75	S403-082002				WASHER-PLAIN	2			
76	S411-080002				WASHER-SPRING	2			
77	S551-050203				CLAMP-BAND	10			

PILOT HYD PIPING(4 OUTRIGGER)

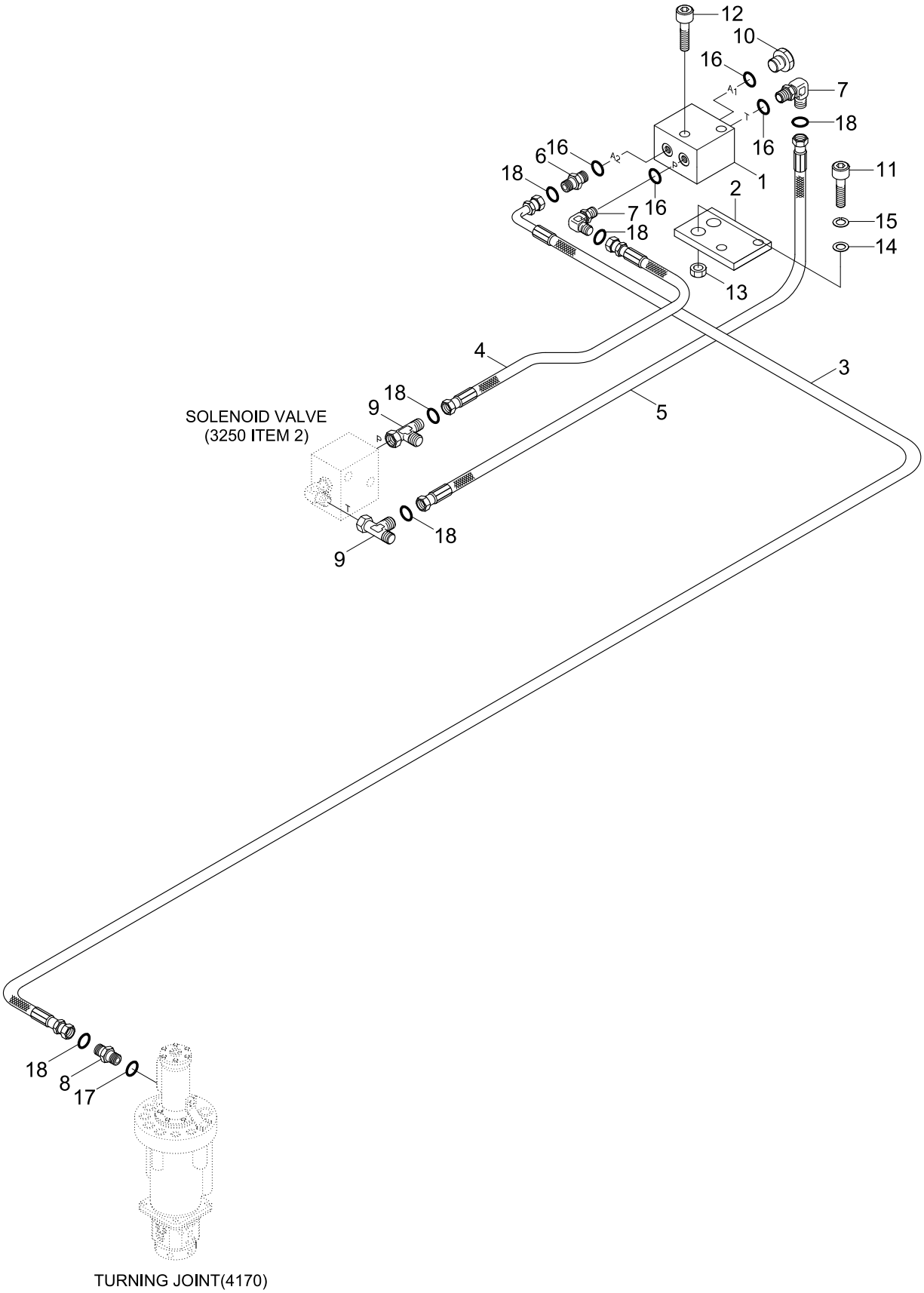

Item	Part_No	IS	Ord	T	Description	Qty	Serial_No	ITC	Remark
*	@				PILOT HYD PIPING	1	#0001 -	-	NOT
1	31N6-91230				SOLENOID VLV-BREAKER	1			
2	31N5-20030				BRACKET	1			
3	P860-042051				HOSE ASSY-SYN 0X90	1	- #0036		
	X420-042051				HOSE ASSY-SYNFLEX,ORFS	1	#0037 -	D	
4	P860-042006				HOSE ASSY-SYN 0X90	1	- #0036		
	X420-042006				HOSE ASSY-SYNFLEX,ORFS	1	#0037 -	D	
5	P840-042008				HOSE ASSY-SYN THD	1	- #0036		
	X400-042008				HOSE ASSY-SYNFLEX,ORFS	1	#0037 -	D	
6	P010-110002				CONNECTOR	1	- #0036		
	X500-110001				CONNECTOR-ORFS	1	#0037 -	D	
7	P020-110001				ELBOW-90	2	- #0036		
	X520-110001				ELBOW-90,ORFS	2	#0037 -	D	
8	P010-110013				CONNECTOR	1	- #0036		
	X500-110013				CONNECTOR-ORFS	1	#0037 -	D	
9	32E6-10460				TEE-SWEVEL NUT	2	- #0036		
	X840-515151				TEE-R/TYPE,ORFS	2	#0037 -	D	
10	P220-110102				PLUG-HEX	1			
11	S109-080256				BOLT-SOCKET	2			
12	S109-080456				BOLT-SOCKET	2			
13	S205-081002				NUT-HEX	2			
14	S403-082002				WASHER-PLAIN	4			
15	S411-080002				WASHER-SPRING	2			
16	S631-011004				O-RING	4			
17	S631-014004				O-RING	1			

Item	Part_No	IS	Ord	T	Description	Qty	Serial_No	ITC	Remark
18	S621-011001				O-RING,ORFS	6	#0037 -	-	

Item	Part_No	IS	Ord	T	Description	Qty	Serial_No	ITC	Remark
*	@				PILOT HYD PIPING	1	#0199 -	-	NOT
1	31N6-25200				RCV SUB ASSY-LH	1			
1-1	31N6-20061				.RCV LEVER-LH	1			
1-2	X500-110001				.CONNECTOR-ORFS	5			
1-3	S631-011004				.O-RING	6			
1-4	31N6-25060				.FILTER-LAST GUARD	1			
1-5	S621-011001				.O-RING,ORFS	6			
4	31N4-20080				LEVER-DOZER	1			
5	31N6-25100				CROSS ASSY	1			
5-1	31N6-25040				.CROSS-BULKHEAD TYPE	2			
10	X410-042024				HOSE ASSY-SYNFLEX,ORFS	2			
11	X410-042026				HOSE ASSY-SYNFLEX,ORFS	2			
14	X410-042039				HOSE ASSY-SYNFLEX,ORFS	4			
15	X420-042055				HOSE ASSY-SYNFLEX,ORFS	1			
16	X420-042062				HOSE ASSY-SYNFLEX,ORFS	1			
17	31E7-0309				CLAMP-HOSE	1			
19	31M6-51061				SHIM(3.2T)	1			
20	31N6-25060				FILTER-LAST GUARD	1			
21	X511-104513				CONNECTOR-ORFS	2			
22	X500-110001				CONNECTOR-ORFS	1			
29	S631-011004				O-RING	4			
32	S621-011001				O-RING,ORFS	12			
35	S035-083526				BOLT-W/WASHER	2			
37	S035-063046				BOLT-W/WASHER	4			
39	S037-102042				BOLT-W/WASHER	3			

PILOT HYD PIPING(CNTL 2, #0199-)

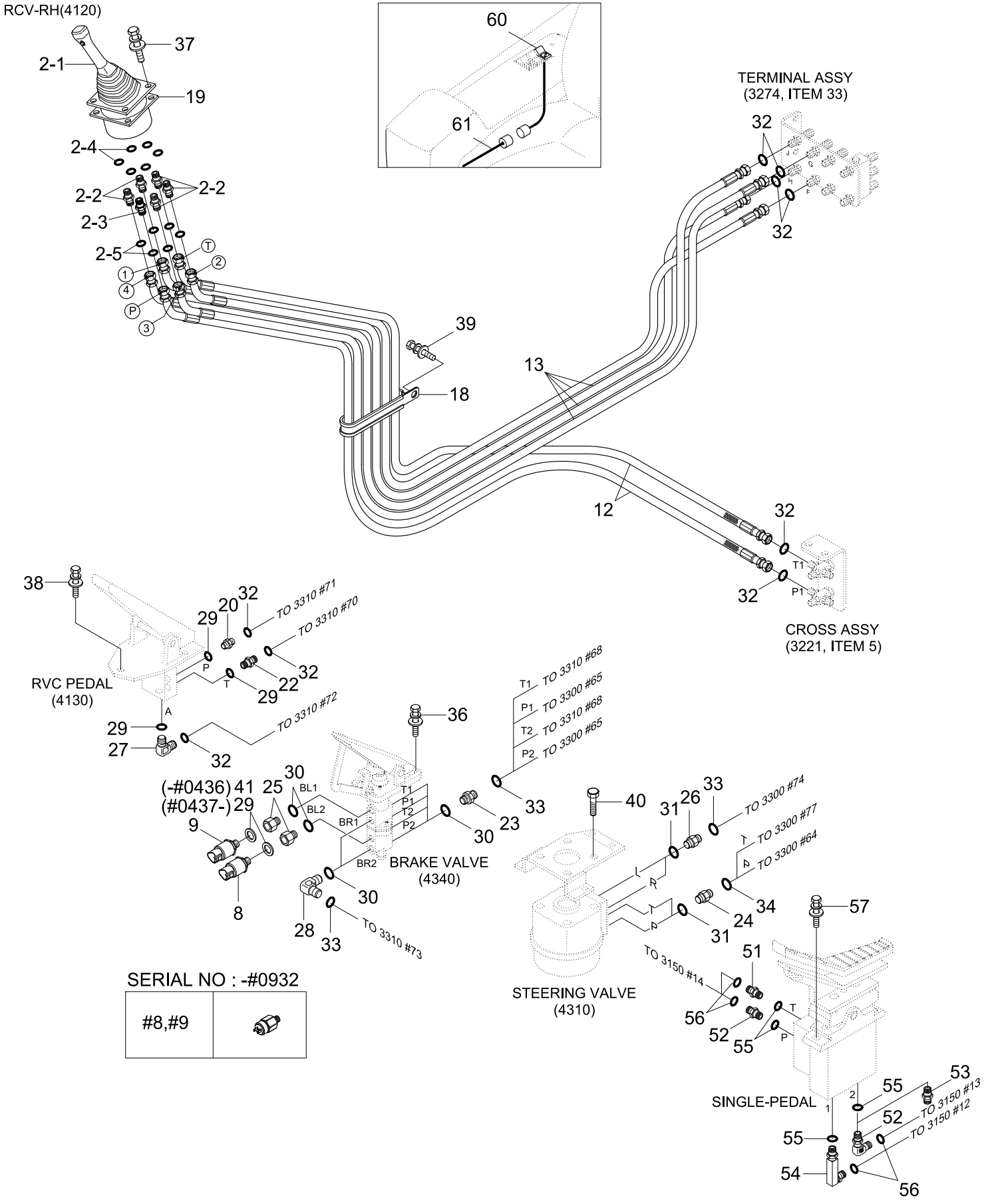

SERIAL NO : -#0932

#8,#9	

Item	Part_No	IS	Ord	T	Description	Qty	Serial_No	ITC	Remark
*	@				PILOT HYD PIPING	1	#0199 -	-	NOT
2	31N6-25210				RCV SUB ASSY-RH	1			
2-1	31N6-20071				.RCV LEVER-RH	1			
2-2	X500-110001				.CONNECTOR-ORFS	5			
2-3	S631-011004				.O-RING	6			
2-4	31N6-25060				.FILTER-LAST GUARD	1			
2-5	S621-011001				.O-RING	6			
8	31N4-30250				SWITCH-PRESSURE	1	- #0436		
	31N4-31250				SWITCH-PRESSURE	1	#0437 - #0932	D	
	31N4-30160				SWITCH-PRESSURE	1	#0933 -	D	
9	31L7-40030				SWITCH-PRESSURE	1	- #0436		
	31L7-41030				SWITCH-PRESSURE	1	#0437 - #0932	D	
	31Q4-40560				PRESSURE SENSOR	1	#0933 -	D	
12	X410-042028				HOSE ASSY-ORFS 0X45	2			
13	X410-042036				HOSE ASSY-ORFS 0X45	4			
18	31E7-0312				CLAMP-HOSE	1			
19	31M6-51061				SHIM(3.2T)	1			
20	31N6-25060				FILTER-LAST GUARD	1			
21	X511-104513				CONNECTOR-LONG,ORFS	2			
22	X500-110001				CONNECTOR-ORFS	1			
25	31EE-30061				CONNECTOR	2	- #0436		
	31N6-39130				CONNECTOR-TEST	2	#0437 -	D	
29	S631-011004				O-RING	4	- #0436		
					O-RING	6	#0437 -	A	
32	S621-011001				O-RING	10			

Item	Part_No	IS	Ord	T	Description	Qty	Serial_No	ITC	Remark
35	S035-083526				BOLT-W/WASHER	2			
37	S035-063046				BOLT-W/WASHER	4			
39	S037-102042				BOLT-W/WASHER	3			
41	P392-120000				WASHER-COPPER	2	- #0436	-	
50	34E7-04720				PEDAL-SINGLE	1			
51	X500-110001				CONNECTOR-ORFS	1			
52	31N6-25060				FILTER-LAST GUARD	1			
53	X520-110001				ELBOW-90,ORFS	1			
54	31N6-25110				ELBOW-90,ORFS,LONG	1			
55	S631-011004				O-RING	4			
56	S621-011001				O-RING	4			
57	S037-102522				BOLT-W/WASHER	2			

PILOT HYD PIPING(BASE 1, #0199-)

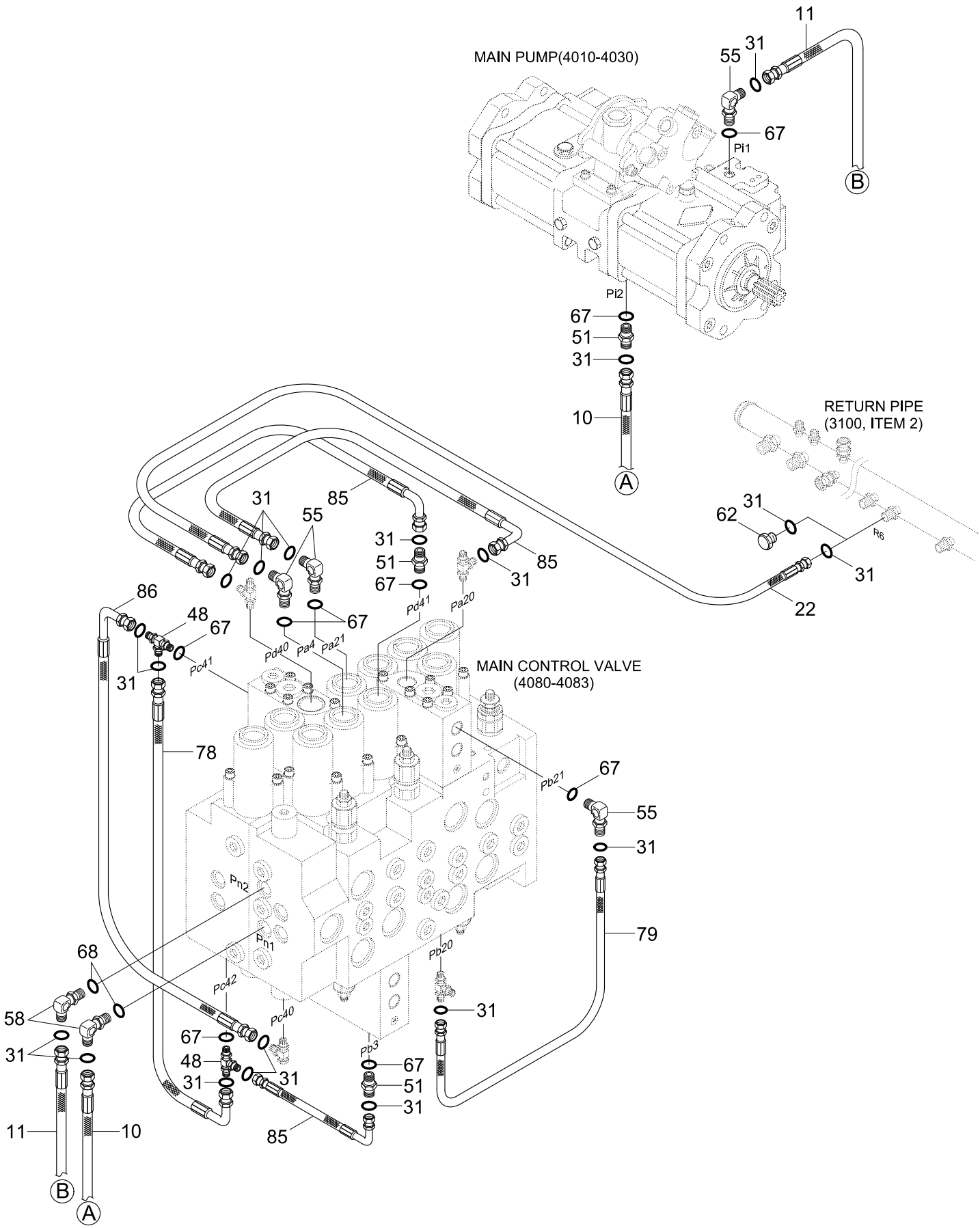

Item	Part_No	IS	Ord	T	Description	Qty	Serial_No	ITC	Remark
*	@				PILOT HYD PIPING	1	#0199 -	-	NOT
10	P910-043044				HOSE ASSY-ORFS 0X0	1			
11	P910-043049				HOSE ASSY-ORFS 0X0	1			
22	X410-042008				HOSE ASSY-SYNFLEX,ORFS	1			
31	S621-011001				O-RING,ORFS	18			
48	X820-045151				TEE-R/TYPE,ORFS	2			
51	X500-110001				CONNECTOR-ORFS	3			
55	X520-110001				ELBOW-90,ORFS	4			
58	X520-110012				ELBOW-90,ORFS	2			
62	X710-100102				CAP-ORFS	1			
67	S631-011004				O-RING	9			
68	S631-014004				O-RING	2			
78	X400-042017				HOSE ASSY-SYNFLEX,ORFS	1			
79	X400-042020				HOSE ASSY-SYNFLEX,ORFS	1			
85	X420-042009				HOSE ASSY-SYNFLEX,ORFS	3			
86	X420-042018				HOSE ASSY-SYNFLEX,ORFS	1			

PILOT HYDRAULIC PIPING(BASE 2, #0199-)

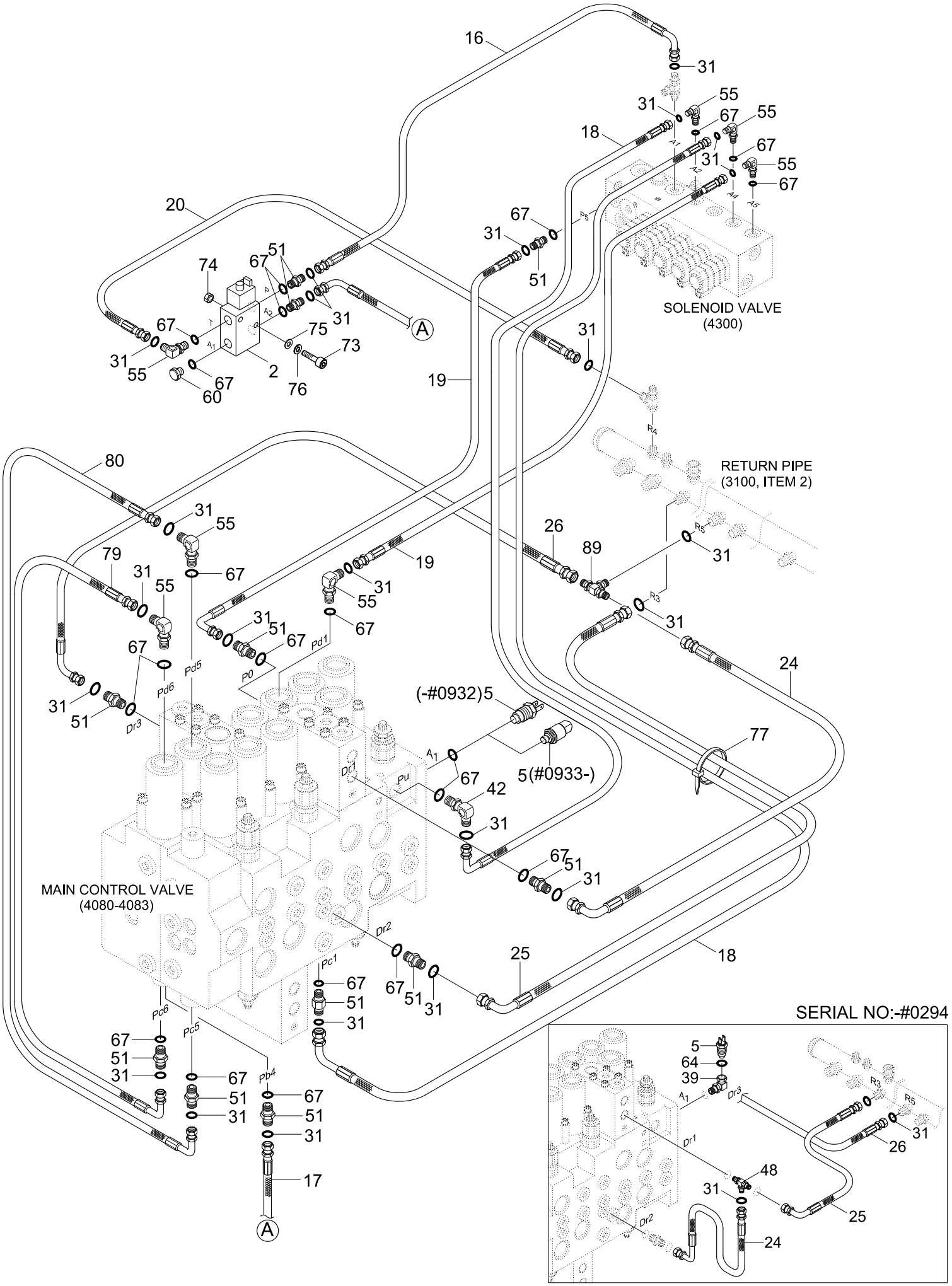

Item	Part_No	IS	Ord	T	Description	Qty	Serial_No	ITC	Remark
*	@				PILOT HYD PIPING	1	#0199 -	-	NOT
2	31N6-91230				SOLENOID VLV-BREAKER	1			
5	31E9-20080				SWITCH-PRESSURE	1	- #0294		AUTO IDLE
	31N5-20080				SWITCH-PRESSURE	1	#0295 - #0932	D	AUTO IDLE
	31N4-20100				SWITCH-PRESSURE	1	#0933 -	D	AUTO IDLE
16	X400-042014				HOSE ASSY-SYNF,ORFS	1			
17	X400-042031				HOSE ASSY-SYNFLEX,ORFS	1			
18	X400-042036				HOSE ASSY-SYNFLEX,ORFS	2			
19	X400-042041				HOSE ASSY-SYNFLEX,ORFS	2			
20	X400-042044				HOSE ASSY-ORFS 0X0	1			
24	X420-042005				HOSE ASSY-ORFS 0X90	1	#0295 -	D	
25	X420-042007				HOSE ASSY-ORFS 0X90	1	#0295 -	D	
26	X420-042008				HOSE ASSY-ORFS 0X90	1			
31	S621-011001				O-RING	24			
39	31L7-30170				CONNECTOR	1	- #0294	-	
42	31N6-25110				ELBOW-90,ORFS,LONG	1			
48	X820-045151				TEE-R/TYPE,ORFS	1	- #0294	-	
51	X500-110001				CONNECTOR-ORFS	10	- #0294		
					CONNECTOR-ORFS	11	#0295 -	A	
55	X520-110001				ELBOW-90,ORFS	7			
60	P220-110102				PLUG	1			
64	P392-120000				WASHER-COPPER	1	- #0294	-	
67	S631-011004				O-RING	21	- #0294		
					O-RING	22	#0295 -	A	
73	S109-080556				BOLT-SOCKET	2			

Item	Part_No	IS	Ord	T	Description	Qty	Serial_No	ITC	Remark
74	S205-081002				NUT-HEX	2			
75	S403-082002				WASHER-PLAIN	2			
76	S411-080002				WASHER-SPRING	2			
77	S551-050203				CLAMP-BAND	20			
79	X400-042020				HOSE ASSY-SYNFLEX,ORFS	1			
80	X400-042020				HOSE ASSY-SYNFLEX,ORFS	1			
89	X840-515151				TEE-R/TYPE,SWIVEL,ORFS	1	#0295 -	-	

PILOT HYD PIPING(BASE 3, #0199-)

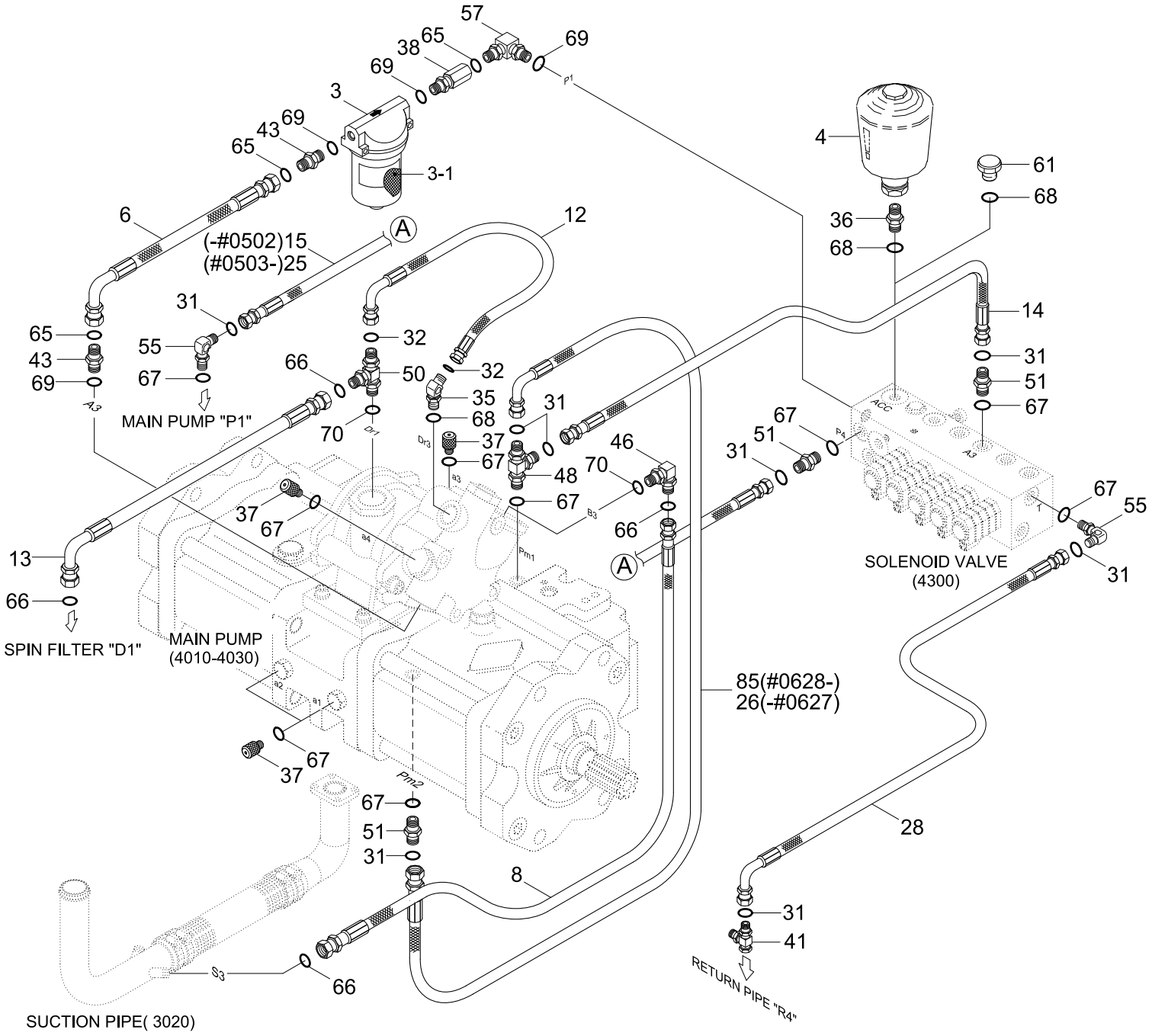

Item	Part_No	IS	Ord	T	Description	Qty	Serial_No	ITC	Remark
*	@				PILOT HYD PIPING	1	#0199 -	-	NOT
3	31E3-0017	10			FILTER-LINE	1			
3-1	31E3-0018	10			.ELEMENT-LINE FILTER	1			
4	31E3-3187				ACCUMULATOR	1	- #0888		W/ACCUMULATOR
					ACCUMULATOR	1	#0889 -	A	
6	P910-082021				HOSE ASSY-ORFS 0X0	1			
8	P930-122014				HOSE ASSY-ORFS 0X90	1			
12	P930-062008				HOSE ASSY-ORFS 0X90	1			
13	P930-122012				HOSE ASSY-ORFS 0X90	1			
14	X400-042008				HOSE ASSY-ORFS 0X0	1			
15	X400-042009				HOSE ASSY-SYNF,ORFS	1	- #0502	-	
25	X420-042007				HOSE ASSY-ORFS 0X90	1	#0503 -	B	
26	X420-042008				HOSE ASSY-ORFS 0X90	1	- #0627	-	
28	X420-042041				HOSE ASSY-ORFS 0X90	1			
31	S621-011001				O-RING	8			
32	S621-012001				O-RING	2			
35	X530-110002				ELBOW-45,ORFS	1			
36	31N6-24200				CONNECTOR	1			
37	31EK-11130				COUPLING-SCREW	4			
38	31N6-22400				ADAPTER	1	- #0888		W/ACCUMULATOR
					ADAPTER	1	#0889 -	A	
41	X840-525151				TEE-R/TYPE,SWIVEL,ORFS	1			
43	X500-110003				CONNECTOR-ORFS	2			
46	X530-110004				ELBOW-45,ORFS	1			
48	X820-045151				TEE-R/TYPE,ORFS	1			

Item	Part_No	IS	Ord	T	Description	Qty	Serial_No	ITC	Remark
50	X820-125452				TEE-R/TYPE,ORFS	1			
51	X500-110001				CONNECTOR-ORFS	3			
55	X520-110001				ELBOW-90,ORFS	2			
57	X520-110003				ELBOW-90,ORFS	1			
61	P220-110103				PLUG-HEX,HEAD	1	- #0888	-	
65	S621-014001				O-RING	3			
66	S621-018001				O-RING	4			
67	S631-011004				O-RING	10			
68	S631-014004				O-RING	2			
69	S631-018004				O-RING	4			
70	S631-024004				O-RING	2			
85	X420-042009				HOSE ASSY-ORFS 0X90	1	#0628 -	B	

PILOT HYDRAULIC PIPING(BASE 4, #0199-)

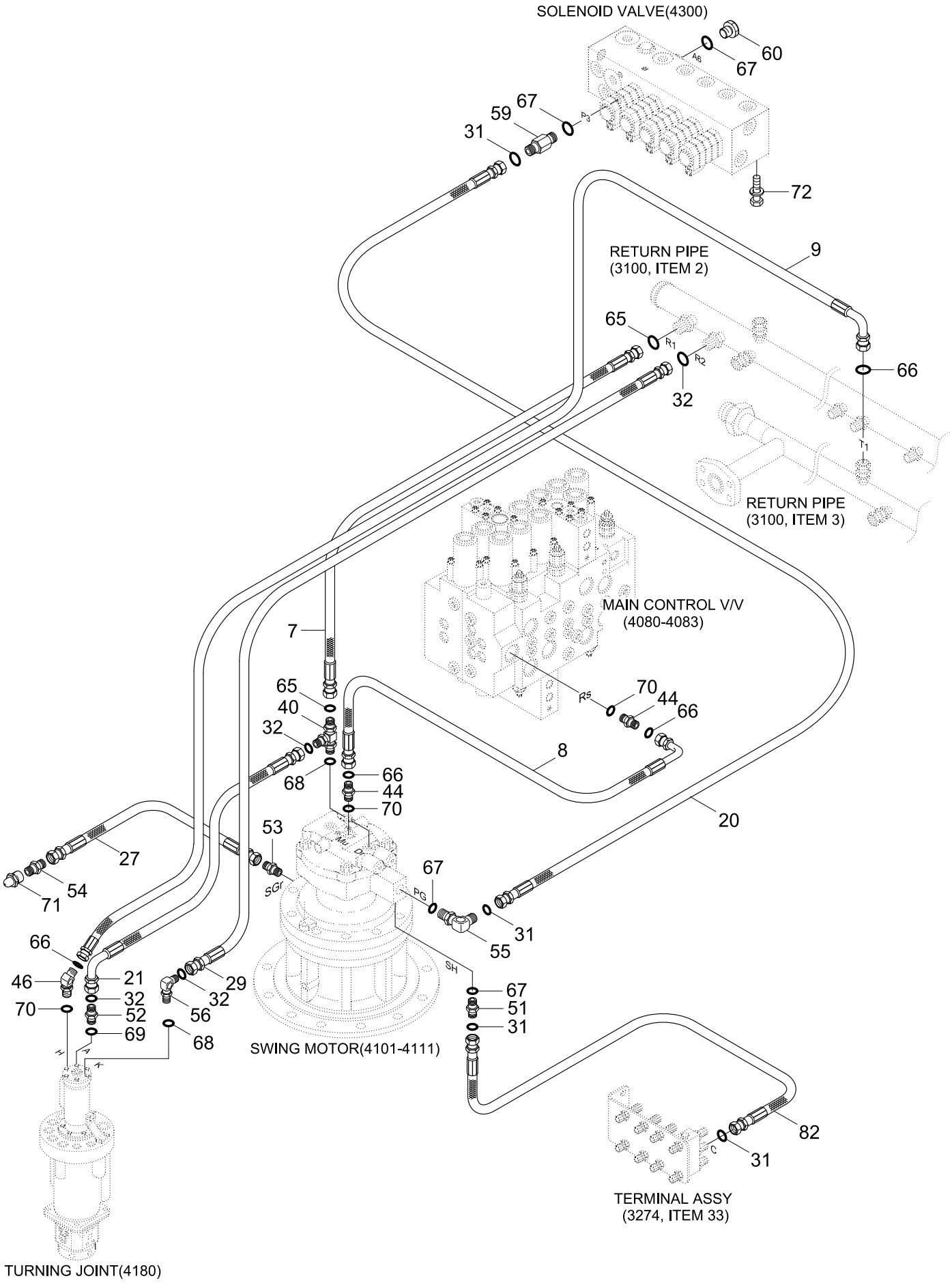

Item	Part_No	IS	Ord	T	Description	Qty	Serial_No	ITC	Remark
*	@				PILOT HYD PIPING	1	#0199 -	-	NOT
7	P930-082015				HOSE ASSY-ORFS 0X90	1			
8	P930-122014				HOSE ASSY-ORFS 0X90	1			
9	P933-122039				HOSE ASSY-ORFS 0X90	1			
20	X400-042044				HOSE ASSY-SYNFLEX,ORFS	1			
21	X400-062016				HOSE ASSY-SYNFLEX,ORFS	1			
27	P860-042021				HOSE ASSY-SYN 0X90	1			STD
	P860-042017				HOSE ASSY-SYN 0X90	1	#2338 -	-	ADJUST BOOM
29	X420-062030				HOSE ASSY-SYNFLEX,ORFS	1			
31	S621-011001				O-RING,ORFS	4			
32	S621-012001				O-RING,ORFS	4			
40	31N4-22140				TEE-ORFS	1			
44	X500-110004				CONNECTOR-ORFS	2			
46	X530-110004				ELBOW-45,ORFS	1			
51	X500-110001				CONNECTOR-ORFS	1			
52	X500-110015				CONNECTOR-ORFS	1			
53	P010-430002				CONNECTOR	1			
54	P010-430011				CONNECTOR	1			
55	X520-110001				ELBOW-90,ORFS	1			
56	X520-110002				ELBOW-90,ORFS	1			
59	X511-104513				CONNECTOR-ORFS	1			
60	P220-110102				PLUG-HEX	1			
65	S621-014001				O-RING,ORFS	2			
66	S621-018001				O-RING,ORFS	4			
67	S631-011004				O-RING	4			

Item	Part_No	IS	Ord	T	Description	Qty	Serial_No	ITC	Remark
68	S631-014004				O-RING	2			
69	S631-018004				O-RING	1			
70	S631-024004				O-RING	3			
71	S651-810002				NIPPLE-GREASE	1			
72	S035-082542				BOLT-W/WASHER	2			
82	X400-042026				HOSE ASSY-SYNFLEX,ORFS	1			

PILOT HYDRAULIC PIPING(BASE 5, #0199-)

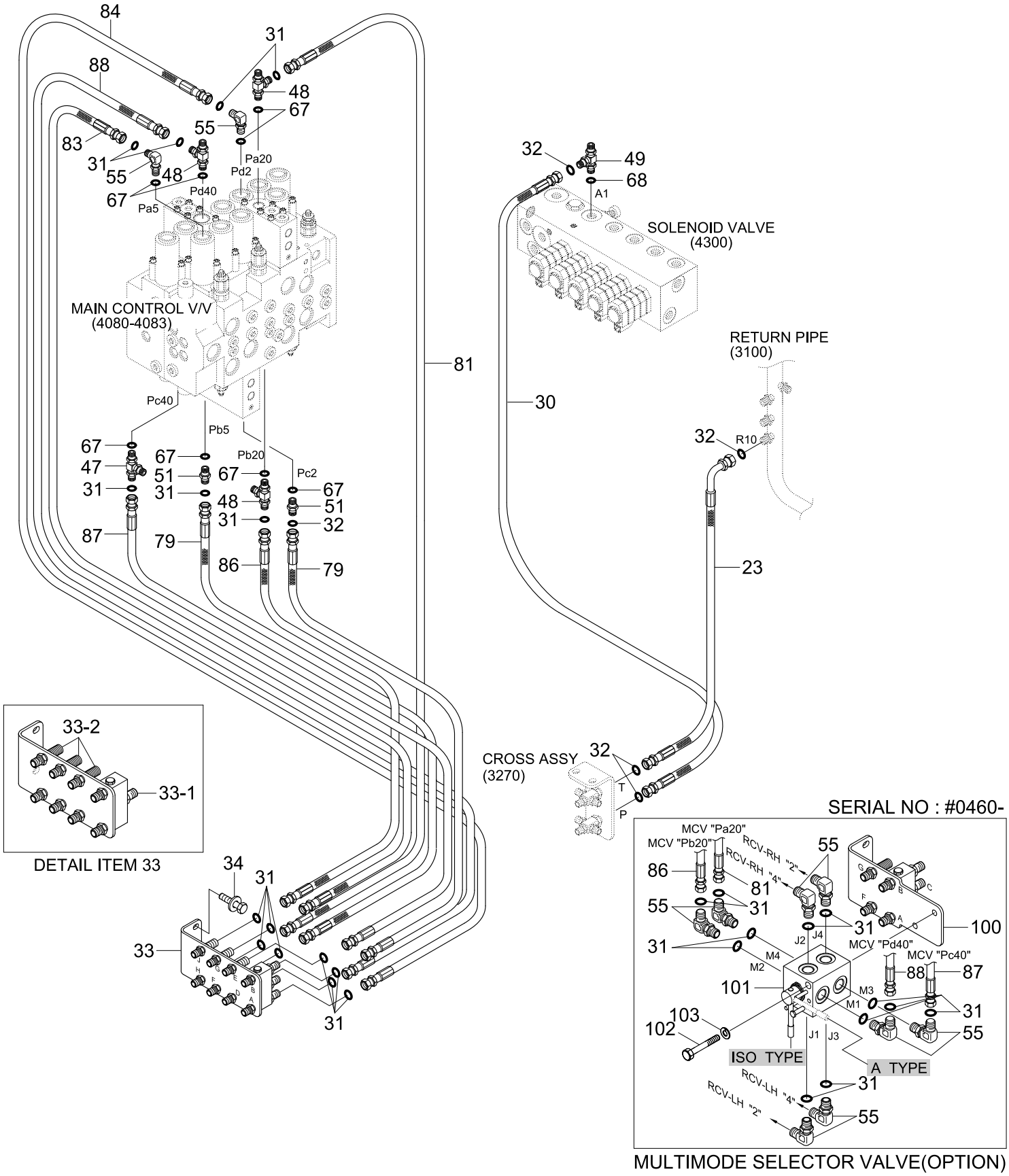

Item	Part_No	IS	Ord	T	Description	Qty	Serial_No	ITC	Remark
*	@				PILOT HYD PIPING	1	#0199 -	-	NOT
23	X410-062022				HOSE ASSY-SYNFLEX,ORFS	1			
30	X420-062056				HOSE ASSY-SYNFLEX,ORFS	1			
31	S621-011001				O-RING,ORFS	15			
32	S621-012001				O-RING,ORFS	4			
33	31N6-25010				TERMINAL ASSY	1			STD
33-1	31N6-25030				.SHUTTLE-5 PORT	1			
33-2	X540-120001				.CONNECTOR-B.H TYPE	6			
34	S037-102042				BOLT-W/WASHER	2			
47	31N4-22150				TEE-LONG,ORFS	1			
48	X820-045151				TEE-R/TYPE,ORFS	3			
49	X820-065152				TEE-R/TYPE,ORFS	1			
	31N5-30100				TEE	1			
50	X820-125452				TEE-R/TYPE,ORFS	1			
51	X500-110001				CONNECTOR-ORFS	2			
55	X520-110001				ELBOW-90,ORFS	2			STD
					ELBOW-90,ORFS	10	#0460 -	-	OPT, PATT VLV
67	S631-011004				O-RING	8			
68	S631-014004				O-RING	1			
77	S551-050203				CLAMP-BAND	20			
79	X400-042020				HOSE ASSY-SYNFLEX,ORFS	2			
81	X400-042025				HOSE ASSY-SYNFLEX,ORFS	1			
83	X400-042030				HOSE ASSY-SYNFLEX,ORFS	1			
84	X400-042033				HOSE ASSY-SYNFLEX,ORFS	1			
86	X420-042018				HOSE ASSY-SYNFLEX,ORFS	1			

Item	Part_No	IS	Ord	T	Description	Qty	Serial_No	ITC	Remark
87	X420-042024				HOSE ASSY-SYNFLEX,ORFS	1			
88	X420-042029				HOSE ASSY-SYNFLEX,ORFS	1			
100	31N4-20140				TERMINAL ASSY	1	#0460 -	-	OPT, PATT VLV
101	31N6-22050				SELECTOR VLV-MULTIMODE	1	#0460 -	-	OPT, PATT VLV
102	S015-080806				BOLT-HEX	2	#0460 -	-	OPT, PATT VLV
103	S411-080006				WASHER-SPRING	2	#0460 -	-	OPT, PATT VLV

POWER TRAIN HYD PIPING 1(-#0559)

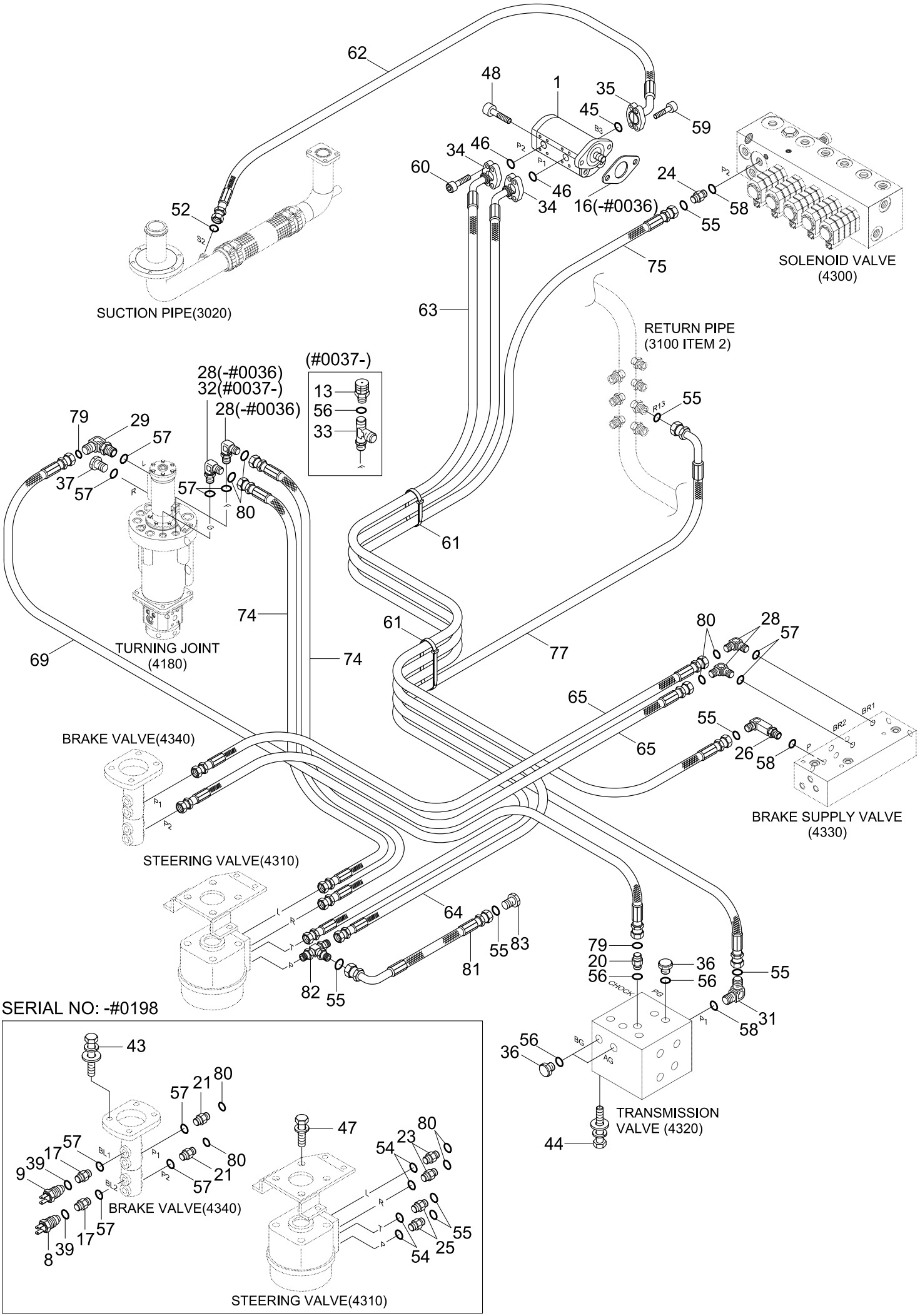

Item	Part_No	IS	Ord	T	Description	Qty	Serial_No	ITC	Remark
1	31N5-30020				GEAR PUMP	1			
8	31N4-30250				SWITCH-PRESSURE	1	- #0198	-	WORKING BRAKE
9	31L7-40030				SWITCH-PRESSURE	1	- #0198	-	BRAKE LAMP
16	154916				GASKET-GEAR PUMP	1	- #0036	-	
17	31EE-30061				CONNECTOR	2	- #0198	-	
20	P010-110002				CONNECTOR	1	- #0036		
	X500-110001				CONNECTOR-ORFS	1	#0037 -	D	
21	P010-110003				CONNECTOR	2	- #0036		
	X500-110002				CONNECTOR-ORFS	2	#0037 - #0198	D	
23	P010-310005				CONNECTOR	2	- #0036		
	31N5-30050				CONNECTOR	2	#0037 - #0198	D	
24	X500-110003				CONNECTOR-ORFS	1			
25	X500-310003				CONNECTOR-ORFS	2	- #0198	-	
26	X511-108534				CONNECTOR-LONG,ORFS	1			
28	P020-110002				ELBOW-90	4	- #0036		
	X520-110002				ELBOW-90,ORFS	2	#0037 -	D	
29	P020-110012				ELBOW-90	1	- #0036		
	X520-110012				O-RING	1	#0037 -	D	
31	X520-110003				ELBOW-90,ORFS	1			
32	X511-106523				CONNECTOR-LONG,ORFS	1	#0037 -	-	
33	31N5-30040				TEE	1	#0037 -	-	
34	P173-080101				FLANGE-SPLIT	4			
35	31E3-3141				FLANGE-SQUARE	2			
36	P220-110102				PLUG	3			
37	P220-110103				PLUG-HEX,HEAD	1			

Item	Part_No	IS	Ord	T	Description	Qty	Serial_No	ITC	Remark
39	P392-120000				WASHER-COPPER	2	- #0198	-	
43	S035-083026				BOLT-W/WASHER	4	- #0198	-	
44	S037-122522				BOLT-W/WASHER	3			
45	S631-025001				O-RING	1			
46	Y171-015004				O-RING	2			
47	S109-100256				BOLT-SOCKET	4	- #0198	-	
48	S109-100406				BOLT-SOCKET	2			
52	S621-021001				O-RING	1			
54	S611-016001				O-RING	4	- #0198	-	
55	S621-014001				O-RING	6	- #0198		
					O-RING	4	#0199 - #0457	A	
					O-RING	6	#0458 -	A	
56	S631-011004				O-RING	4			
57	S631-014004				O-RING	10	- #0198		
					O-RING	6	#0199 -	A	
58	S631-018004				O-RING	3			
59	S105-060256				BOLT-SOCKET	4			
60	S105-080256				BOLT-SOCKET	8			
61	S551-050203				CLAMP-BAND	8			
62	31N4-20110				HOSE ASSY	1			
63	31N4-30240				HOSE ASSY	1			
64	P950-087381				HOSE ASSY-ORFS,FLG 0X45	1			
65	P600-062051				HOSE ASSY-THD 0X0	2	- #0036		
	P910-062051				HOSE ASSY-ORFS 0X0	2	#0037 -	D	
69	P860-042048				HOSE ASSY-SYN 0X90	1	- #0036		

Item	Part_No	IS	Ord	T	Description	Qty	Serial_No	ITC	Remark
69	X420-042048				HOSE ASSY-ORFS 0X90	1	#0037 -	D	
74	P620-066038				HOSE ASSY-THD 0X90	2	- #0036		
	P930-066038				HOSE ASSY-ORFS 0X90	2	#0037 -	D	
75	P910-082047				HOSE ASSY-ORFS 0X0	1			
77	P920-082043				HOSE ASSY-ORFS 0X45	1			
79	S621-011001				O-RING	2	#0037 -	-	
80	S621-012001				O-RING(SEAL LOCK TYPE)	8	#0037 - #0198	-	
					O-RING(SEAL LOCK TYPE)	4	#0199 -	A	
81	P930-087008				HOSE ASSY-ORFS 0X90	1	#0458 -	-	
82	X840-535353				TEE-R/TYPE,SWIVEL,ORFS	1	#0458 -	-	
83	X700-100104				PLUG-ORFS	1	#0458 -	-	

POWER TRAIN HYD PIPING 2(-#0559)

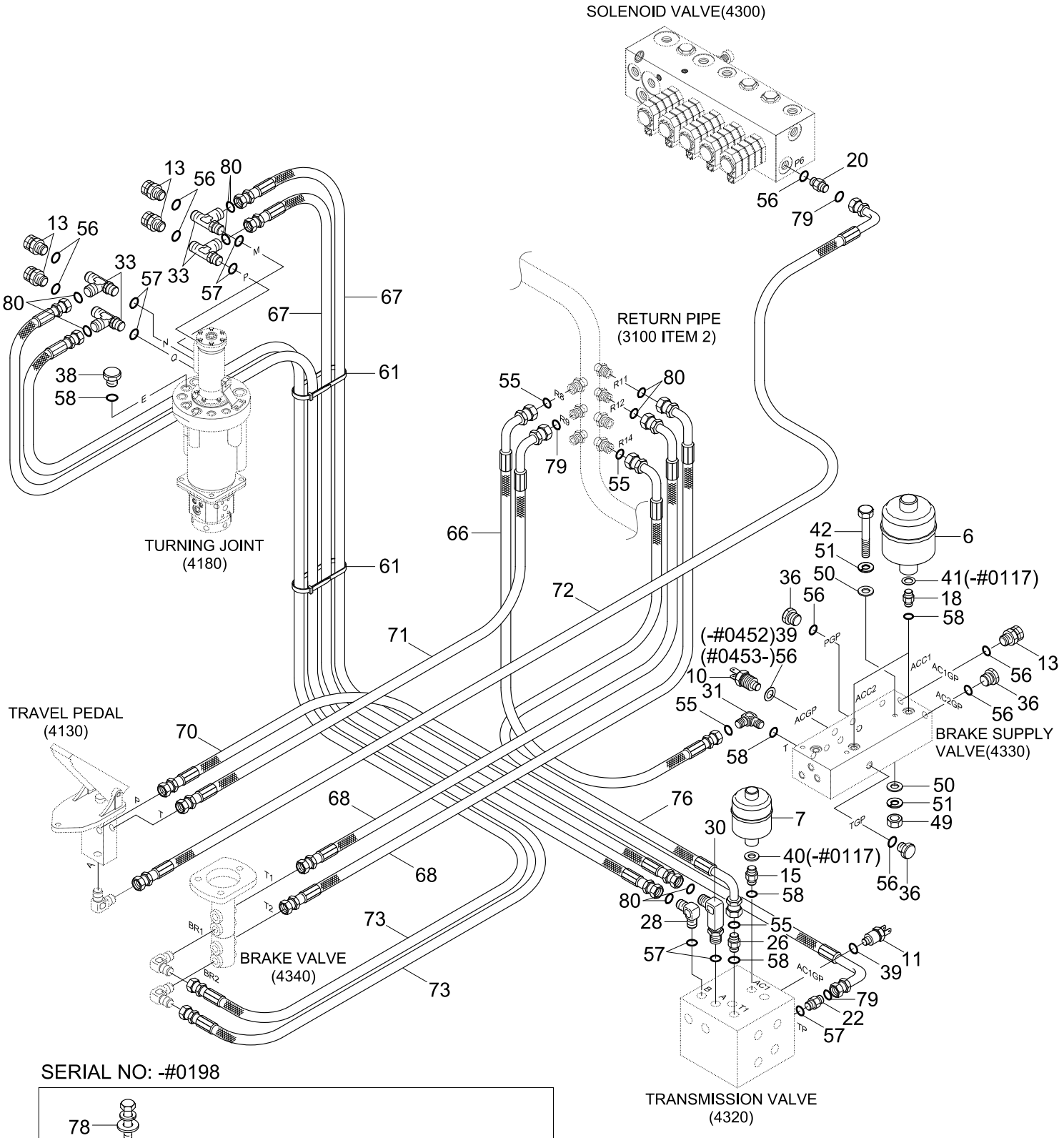

SERIAL NO: -#0198

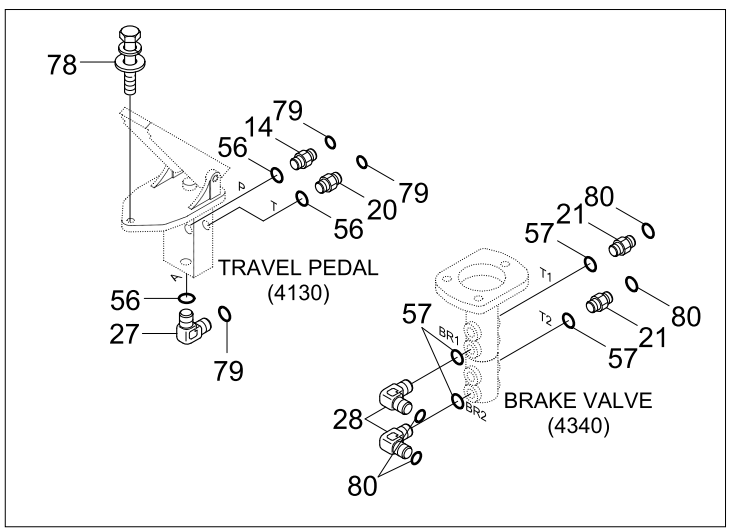

Item	Part_No	IS	Ord	T	Description	Qty	Serial_No	ITC	Remark
6	81L1-0003	01			ACCUMULATOR	2			
7	31EC-02190				ACCUMULATOR	1			
10	31L1-0095				SWITCH-PRESSURE	1	- #0452		BRAKE FAILURE
	31LF-00500				SWITCH-PRESSURE	1	#0453 -	D	
11	31N4-30150				SWITCH-PRESSURE	1			T/M WARNING
13	31EK-11130				COUPLING-SCREW	5			
14	31EK-20110				FILTER-LAST GUARD	1	- #0036		
	31N6-25060				FILTER-LAST GUARD	1	#0037 - #0198	D	
15	31EM-30140				CONNECTOR-LONG	1	- #0117		
	31N6-30120				CONNECTOR	1	#0118 -	B	
18	34EA-20340				CONNECTOR	2	- #0117		
	31N6-30110				CONNECTOR	2	#0118 -	B	
20	P010-110002				CONNECTOR	2	- #0036		
	X500-110001				CONNECTOR-ORFS	2	#0037 - #0198	D	
					CONNECTOR-ORFS	1	#0199 -	A	
21	P010-110003				CONNECTOR	2	- #0036		
	X500-110002				CONNECTOR-ORFS	2	#0037 - #0198	D	
22	P010-110013				CONNECTOR	1	- #0036		
	X500-110013				CONNECTOR-ORFS	1	#0037 -	D	
26	X511-108534				CONNECTOR-LONG,ORFS	1			
27	P020-110001				ELBOW-90	1	- #0036		
	X520-110001				ELBOW-90,ORFS	1	#0037 - #0198	D	
28	P020-110002				ELBOW-90	3	- #0036		
	X520-110002				ELBOW-90,ORFS	3	#0037 - #0198	D	
					ELBOW-90,ORFS	1	#0199 -	A	

Item	Part_No	IS	Ord	T	Description	Qty	Serial_No	ITC	Remark
30	31L7-20430				ELBOW-90	1	- #0036		
	31N5-30030				ELBOW-90,ORFS,LONG	1	#0037 -	D	
31	X520-110003				ELBOW-90,ORFS	1			
33	31N4-22110				TEE	4	- #0036		
	31N5-30040				TEE	4	#0037 -	D	
36	P220-110102				PLUG	3			
38	P220-110103				PLUG-HEX,HEAD	1	- #0036		
	P220-110104				PLUG-HEX,HEAD	1	#0037 -	D	
39	P392-120000				WASHER-COPPER	2	- #0452		
					WASHER-COPPER	1	#0453 -	A	
40	P392-180000				WASHER-COPPER	1	- #0117	-	
41	P392-220000				WASHER-COPPER	2	- #0117	-	
42	S017-100902				BOLT-HEX	3			
49	S205-101002				NUT-HEX	3			
50	S403-102002				WASHER-PLAIN	6			
51	S411-100002				WASHER-SPRING	6			
55	S621-014001				O-RING	4			
56	S631-011004				O-RING	12	- #0198		
					O-RING	9	#0199 - #0452	A	
					O-RING	10	#0453 -	A	
57	S631-014004				O-RING	15	- #0198		
					O-RING	11	#0199 -	A	
58	S631-018004				O-RING	6			
61	S551-050203				CLAMP-BAND	7			
66	P930-082023				HOSE ASSY-ORFS 0X90	1			

Item	Part_No	IS	Ord	T	Description	Qty	Serial_No	ITC	Remark
67	P840-062046				HOSE ASSY-SYN THD	2	- #0036		
	X400-062046				HOSE ASSY-SYNFLEX,ORFS	2	#0037 -	D	
68	P850-062046				HOSE ASSY-SYN 0X45	2	- #0036		
	X410-062046				HOSE ASSY-ORFS 0X45	2	#0037 -	D	
70	P860-042043				HOSE ASSY-SYN 0X90	1	- #0036		
	X420-042043				HOSE ASSY-ORFS 0X90	1	#0037 -	D	
71	P860-042045				HOSE ASSY-SYN 0X90	1	- #0036		
	X420-042045				HOSE ASSY-ORFS 0X90	1	#0037 -	D	
72	P860-042076				HOSE ASSY-SYN 0X90	1	- #0036		
	X420-042076				HOSE ASSY-ORFS 0X90	1	#0037 -	D	
73	P620-066050				HOSE ASSY-THD 0X90	2	- #0036		
	P930-066050				HOSE ASSY-ORFS 0X90	2	#0037 -	D	
76	P920-082013				HOSE ASSY-ORFS 0X45	1			
78	S035-062026				BOLT-W/WASHER	3	- #0198	-	
79	S621-011001				O-RING	6	#0037 - #0198	-	
					O-RING	3	#0199 -	A	
80	S621-012001				O-RING(SEAL LOCK TYPE)	12	#0037 - #0198	-	
					O-RING(SEAL LOCK TYPE)	8	#0199 -	A	

POWER TRAIN HYD PIPING 1(#0560-)

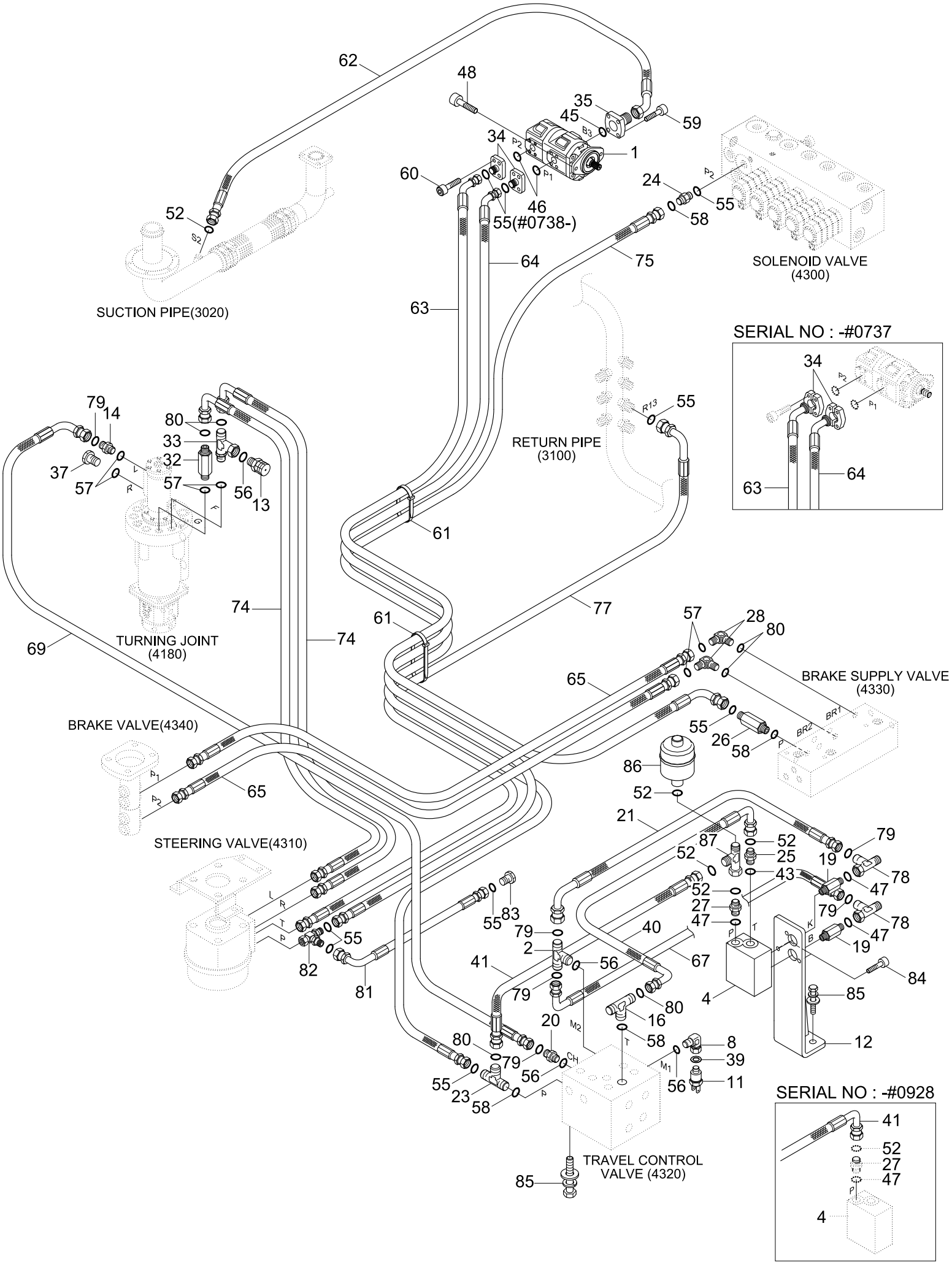

Item	Part_No	IS	Ord	T	Description	Qty	Serial_No	ITC	Remark
*	@				POWER TRAIN PIPING	1	#0560 -	-	NOT
1	31N5-30020				POWER TRAIN PUMP	1	- #1015		
	31Q5-30020				POWER TRAIN PUMP	1	#1016 -	B	
K1-1	ZTAV-00035				SEAL KIT	1	#0560 - #1015	-	NOT SHOWN
2	31N6-24120				TEE-SHUTTLE	1			
3	31N4-30120				.TRAVEL CONTROL VALVE	1			
4	31N4-30130				TCV VALVE	1			
8	31EM-20110				ADAPTER	1			
11	31N4-30150				SWITCH-PRESSURE	1			
12	31N4-31291				BRACKET-TCV	1			
13	31EK-11130				COUPLING-SCREW	1			
14	X500-110013				CONNECTOR-ORFS	1			
16	X810-085253				TEE-B/TYPE,ORFS	1			
19	31N4-31280				CONNECTOR	1			
20	X500-110001				CONNECTOR-ORFS	1			
21	X420-042014				HOSE ASSY-ORFS 0X90	1	- #0627		
	P930-042014				HOSE ASSY-ORFS 0X90	1	#0628 -	B	
23	X820-085253				TEE-R/TYPE,ORFS	1			
24	X500-110003				CONNECTOR-ORFS	1			
25	X500-210006				CONNECTOR-ORFS	1			
26	X511-108534				CONNECTOR-LONG,ORFS	1			
27	X500-210005				CONNECTOR-ORFS	1			
28	X520-110002				ELBOW-90,ORFS	2			
32	X511-106523				CONNECTOR-LONG,ORFS	1			
33	31N4-22310				TEE-RUN TYPE/TEST	3			

Item	Part_No	IS	Ord	T	Description	Qty	Serial_No	ITC	Remark
34	P173-080101				FLANGE-SPLIT	4	- #0737		
	31N4-30290				FLANGE-PIPE	2	#0738 -	D	
35	31E3-3141				FLANGE-SQUARE	1			
37	P220-110103				PLUG-HEX	1			
39	P392-120000				WASHER-COPPER	1			
40	P930-062012				HOSE ASSY-ORFS 0X90	1	- #0570		
	31N4-30310				HOSE ASSY-90X90	1	#0571 - #0754	B	
	31N4-30320				HOSE ASSY-ORFS 90X90	1	#0755 -	B	
41	P930-062011				HOSE ASSY-ORFS 0X90	1	- #0570		
	P930-062010				HOSE ASSY-ORFS 0X90	1	#0571 - #0754	B	
	P930-062009				HOSE ASSY-ORFS 0X90	1	#0755 - #0928	B	
	P910-062008				HOSE ASSY-ORFS 0X0	1	#0929 -	D	
43	Y161-018001				O-RING	3			
45	S631-025001				O-RING	1			
46	Y171-015004				O-RING	2	- #0737		
	S631-022001				O-RING	2	#0738 -	D	
47	Y161-016001				O-RING	3			
48	S109-100406				BOLT-SOCKET	2			
52	S621-021001				O-RING	1	- #0928		
					O-RING	3	#0929 -	A	
55	S621-014001				O-RING	7	- #0737		
					O-RING	9	#0738 -	A	
56	S631-011004				O-RING	11			
57	S631-014004				O-RING	11			
58	S631-018004				O-RING	8			

Item	Part_No	IS	Ord	T	Description	Qty	Serial_No	ITC	Remark
59	S105-060256				BOLT-SOCKET	4			
60	S105-080256				BOLT-SOCKET	8			
61	S551-050203				CLAMP-BAND	15			
62	31N4-20110				HOSE ASSY	1			
63	31N4-30240				HOSE ASSY	1	- #0737		
	31N4-30241				HOSE ASSY	1	#0738 -	D	
64	P950-087381				HOSE ASSY-ORFS,FLG 0X45	1	- #0737		
	P920-087081				HOSE ASSY-ORFS 0X45	1	#0738 -	D	
65	P910-062051				HOSE ASSY-ORFS 0X0	2	- #0878		
	P910-064051				HOSE ASSY-ORFS 0X0	2	#0879 -	B	
67	X420-042012				HOSE ASSY-ORFS 0X90	1	- #0627		
	P930-042012				HOSE ASSY-ORFS 0X90	1	#0628 -	B	
69	X420-042048				HOSE ASSY-ORFS 0X90	1	- #0627		
	X400-042048				HOSE ASSY-SYNFLEX,ORFS	1	#0628 -	B	
74	P930-066038				HOSE ASSY-ORFS 0X90	2			
75	P910-082047				HOSE ASSY-ORFS 0X0	1			
77	P920-082043				HOSE ASSY-ORFS 0X45	1			
78	X840-525152				TEE-R/TYPE,SWIVEL,ORFS	1			
79	S621-011001				O-RING	5			
80	S621-012001				O-RING	4			
81	P930-087008				HOSE ASSY-ORFS 0X90	1			
82	X840-535353				TEE-R/TYPE,SWIVEL,ORFS	1			
83	X700-100104				PLUG-ORFS	1			
84	S109-080456				BOLT-SOCKET	2			
85	S037-122526				BOLT-W/WASHER	3			

Item	Part_No	IS	Ord	T	Description	Qty	Serial_No	ITC	Remark
86	31E3-3187				ACCUMULATOR	1	#0929 -	-	
87	31N4-22330				TEE-R/TYPE,SWIVEL	1	#0929 -	-	

POWER TRAIN HYD PIPING 2(#0560-)

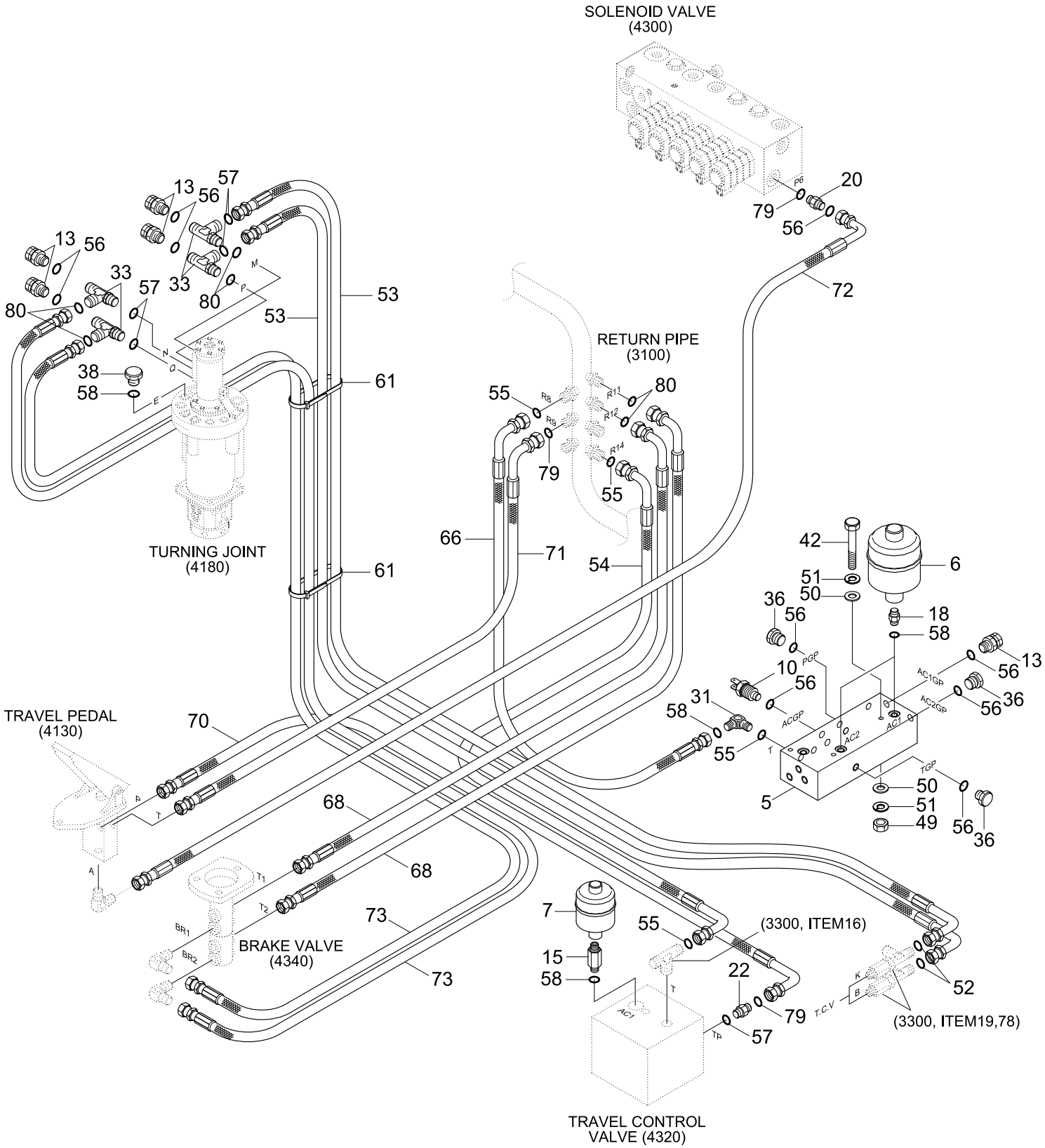

Item	Part_No	IS	Ord	T	Description	Qty	Serial_No	ITC	Remark
*	@				POWER TRAIN PIPING	1	#0560 -	-	NOT
5	31EA-30150				BRAKE SUPPLY VALVE	1			
6	81L1-0003				ACCUMULATOR	2			
7	31EC-02190				ACCUMULATOR	1			
10	31LF-00500				SWITCH-PRESSURE	1			
13	31EK-11130				COUPLING-SCREW	5			
15	31N6-30120				CONNECTOR	1			
18	31N6-30110				CONNECTOR	2			
20	X500-110001				CONNECTOR-ORFS	1			
22	X511-106513				CONNECTOR-LONG,ORFS	1			
31	X520-110003				ELBOW-90,ORFS	1			
33	31N4-22310				TEE-RUN TYPE/TEST	2			
36	P220-110102				PLUG	3			
38	P220-110104				PLUG-HEX,HEAD	1			
42	S017-100902				BOLT-HEX	3			
49	S205-101002				NUT-HEX	3			
50	S403-102002				WASHER-PLAIN	6			
51	S411-100002				WASHER-SPRING	6			
52	S621-021001				O-RING	2			
53	X420-062056				HOSE ASSY-ORFS 0X90	2			
54	P930-082013				HOSE ASSY-ORFS 0X90	1			
55	S621-014001				O-RING	4			
56	S631-011004				O-RING	8			
57	S631-014004				O-RING	5			
58	S631-018004				O-RING	4			

Item	Part_No	IS	Ord	T	Description	Qty	Serial_No	ITC	Remark
61	S551-050203				CLAMP-BAND	2			
66	P930-082023				HOSE ASSY-ORFS 0X90	1			
68	X410-062046				HOSE ASSY-ORFS 0X45	2			
70	X420-042044				HOSE ASSY-ORFS 0X90	1			
71	X420-042045				HOSE ASSY-ORFS 0X90	1			
72	X420-042076				HOSE ASSY-ORFS 0X90	1			
73	P930-066050				HOSE ASSY-ORFS 0X90	2			
79	S621-011001				O-RING	3			
80	S621-012001				O-RING(SEAL LOCK TYPE)	6			

LOWER HYDRAULIC PIPING 1(-#0559)

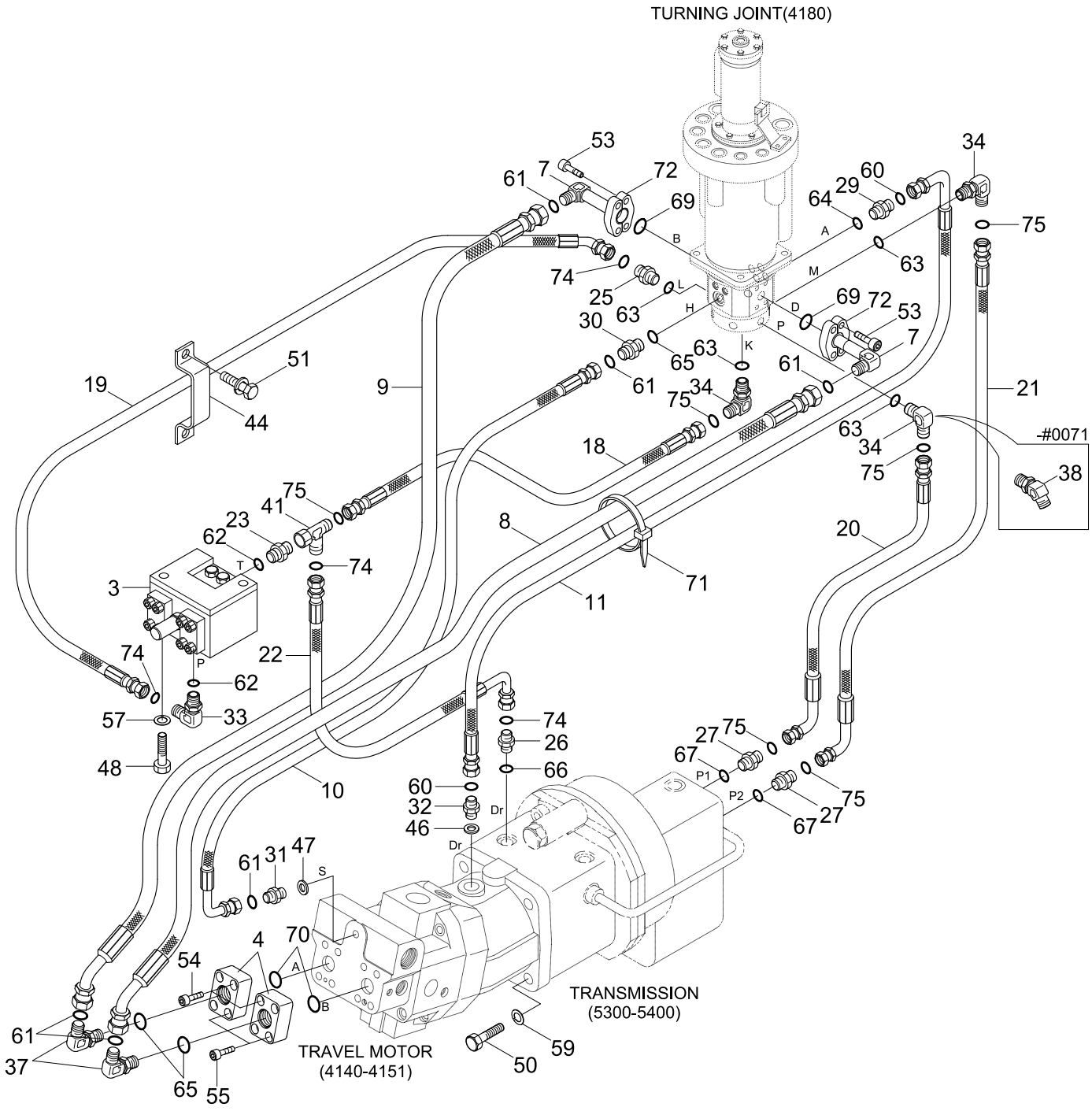

Item	Part_No	IS	Ord	T	Description	Qty	Serial_No	ITC	Remark
3	81E3-0014				VALVE-LOCKING	1			
4	31N4-44010				BLOCK	2			
7	31N8-12521				ELBOW-ORFS	2			
8	P923-127021				HOSE ASSY-ORFS 0X45	1	- #0186		
	P920-127021				HOSE ASSY-ORFS 0X45	1	#0187 -	B	
9	P923-127022				HOSE ASSY-ORFS 0X45	1	- #0186		
	P920-127022				HOSE ASSY-ORFS 0X45	1	#0187 -	B	
10	P933-122021				HOSE ASSY-ORFS 0X90	1	- #0036		
	P933-122022				HOSE ASSY-ORFS 0X90	1	#0037 - #0186	D	
	P930-122022				HOSE ASSY-ORFS 0X90	1	#0187 -	B	
11	P933-082023				HOSE ASSY-ORFS 0X90	1	- #0186		
	P930-082023				HOSE ASSY-ORFS 0X90	1	#0187 -	B	
18	P603-062019				HOSE ASSY-THD	1	- #0036		
	P913-062019				HOSE ASSY-ORFS 0X0	1	#0037 -	D	
19	P613-042026				HOSE ASSY-THD 0X45	1	- #0036		
	P923-042026				HOSE ASSY-ORFS 0X45	1	#0037 -	D	
20	P613-062009				HOSE ASSY-THD 0X45	1	- #0036		
	P923-062009				HOSE ASSY-ORFS 0X45	1	#0037 -	D	
21	P613-062011				HOSE ASSY-THD 0X45	1	- #0036		
	P923-062011				HOSE ASSY-ORFS 0X45	1	#0037 -	D	
22	P623-042012				HOSE ASSY-THD 0X90	1	- #0036		
	P933-042012				HOSE ASSY-ORFS 0X90	1	#0037 -	D	
23	P010-110002				CONNECTOR	1	- #0036		
	X500-110001				CONNECTOR-ORFS	1	#0037 -	D	
25	P010-110013				CONNECTOR	1	- #0036		

Item	Part_No	IS	Ord	T	Description	Qty	Serial_No	ITC	Remark
25	X500-110013				CONNECTOR-ORFS	1	#0037 -	D	
26	P010-210002				CONNECTOR	1	- #0036		
	X500-210002				CONNECTOR-ORFS	1	#0037 -	D	
27	P010-210005				CONNECTOR	2	- #0036		
	X500-210005				CONNECTOR-ORFS	2	#0037 -	D	
29	X500-110003				CONNECTOR-ORFS	1			
30	X500-110004				CONNECTOR-ORFS	1			
31	31N4-41080				CONNECTOR-ORFS	1			
32	X500-220007				CONNECTOR-ORFS	1			
33	P020-110001				ELBOW-90	1	- #0036		
	X520-110001				ELBOW-90,ORFS	1	#0037 -	D	
34	P020-110002				ELBOW-90	2	- #0036		
	X520-110002				ELBOW-90,ORFS	2	#0037 - #0071	D	
					ELBOW-90,ORFS	3	#0072 -	A	
37	X520-110004				ELBOW-90,ORFS	2			
38	P030-110002				ELBOW-45	1	- #0036		
	X530-110002				ELBOW-45,ORFS	1	#0037 - #0071	D	
41	31M6-51160				TEE-R/TYPE,S/NUT	1	- #0036		
	31N4-41140				TEE-S/NUT,ORFS	1	#0037 -	D	
44	31E4-3146				STRAP	2			
46	P392-180000				WASHER-COPPER	1			
47	P392-270000				WASHER-COPPER	1			
48	S015-080802				BOLT-HEX	2			
50	S017-160502				BOLT-HEX	4			
51	S035-081512				BOLT-W/WASHER	4			

Item	Part_No	IS	Ord	T	Description	Qty	Serial_No	ITC	Remark
53	S109-100306				BOLT-SOCKET	8			
54	S109-120356				BOLT-SOCKET	2			
55	S109-120956				BOLT-SOCKET	6			
57	S411-080006				WASHER-SPRING	2			
59	S411-160006				WASHER-SPRING	4			
60	S621-014001				O-RING(SEAL LOCK TYPE)	2			
61	S621-018001				O-RING(SEAL LOCK TYPE)	6			
62	S631-011004				O-RING	2			
63	S631-014004				O-RING	4			
64	S631-018004				O-RING	1			
65	S631-024004				O-RING	3			
66	Y161-014001				O-RING	1			
67	Y161-016001				O-RING	2			
69	Y171-019004				O-RING	2			
70	Y171-024004				O-RING	2			
71	S552-102370				CLAMP-BAND	10			
72	P173-120102				FLANGE-HYD,SPLIT	4			
74	S621-011001				O-RING(SEAL LOCK TYPE)	4	#0037 -	-	
75	S621-012001				O-RING(SEAL LOCK TYPE)	6	#0037 -	-	

LOWER HYDRAULIC PIPING 2(-#0559)

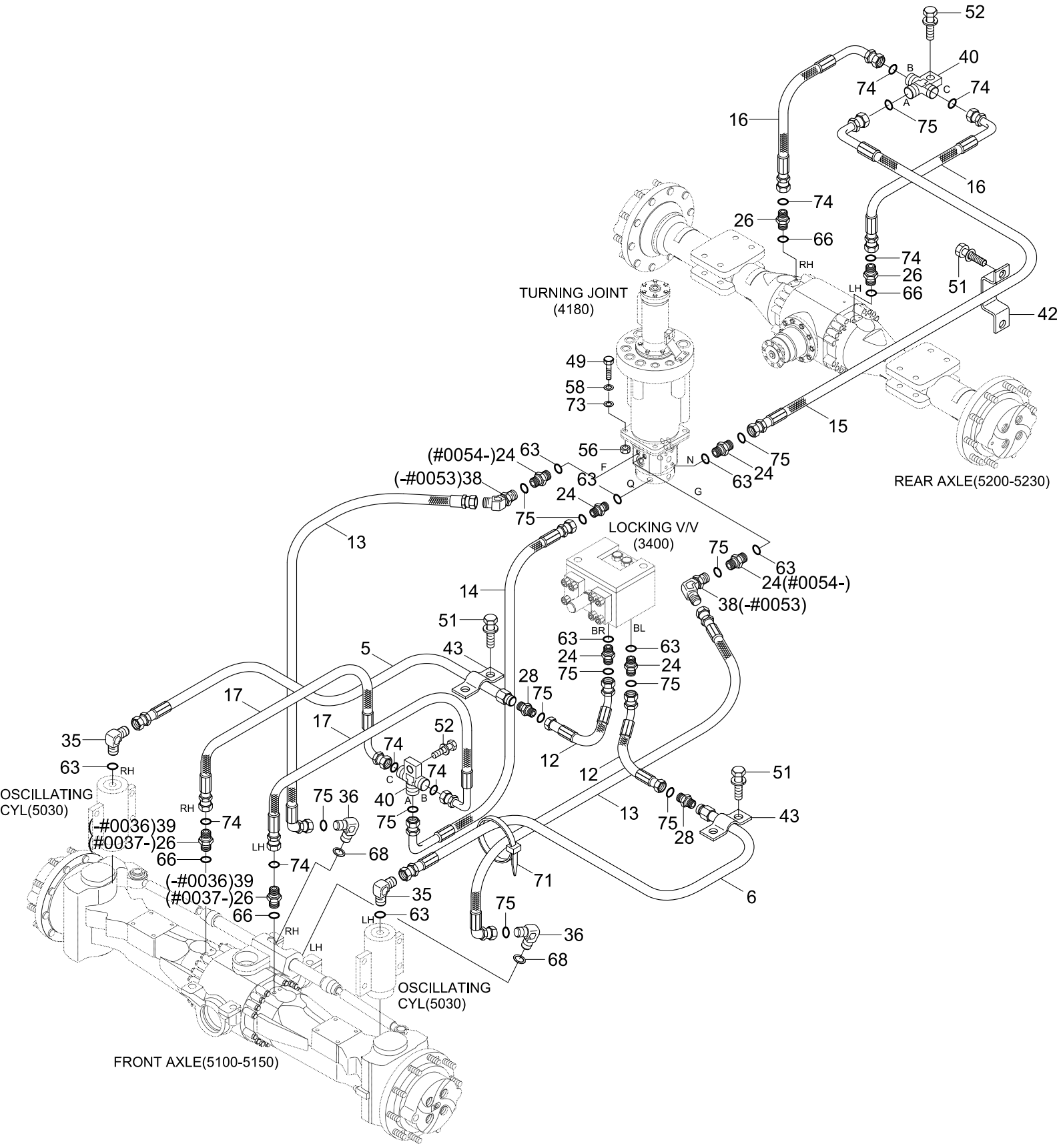

Item	Part_No	IS	Ord	T	Description	Qty	Serial_No	ITC	Remark
5	31N4-41061				PIPE ASSY	1			
6	31N4-41071				PIPE ASSY	1			
12	P613-067007				HOSE ASSY-THD 0X45	2	- #0036		
	P923-067007				HOSE ASSY-ORFS 0X45	2	#0037 -	D	
13	P613-066034				HOSE ASSY-THD 0X45	2	- #0036		
	P923-066034				HOSE ASSY-ORFS 0X45	2	#0037 - #0053	D	
	P933-066034				HOSE ASSY-ORFS 0X90	2	#0054 - #0071	D	
	P923-066032				HOSE ASSY-ORFS 0X45	2	#0072 -	D	
14	P623-066029				HOSE ASSY-THD 0X90	1	- #0036		
	P933-066029				HOSE ASSY-ORFS 0X90	1	#0037 -	D	
15	P623-066030				HOSE ASSY-THD 0X90	1	- #0036		
	P933-066030				HOSE ASSY-ORFS 0X90	1	#0037 -	D	
16	P623-042009				HOSE ASSY-THD 0X90	2	- #0036		
	P933-042009				HOSE ASSY-ORFS 0X90	2	#0037 -	D	
17	P613-042017				HOSE ASSY-THD 0X45	2	- #0036		
	P923-042017				HOSE ASSY-ORFS 0X45	2	#0037 - #0071	D	
	P923-042015				HOSE ASSY-ORFS 0X45	2	#0072 -	D	
24	P010-110003				CONNECTOR	4	- #0036		
	X500-110002				CONNECTOR-ORFS	4	#0037 - #0053	D	
					CONNECTOR-ORFS	6	#0054 -	A	
26	P010-210002				CONNECTOR	2	- #0036		
	X500-210002				CONNECTOR-ORFS	2	#0037 -	D	
28	31N4-41050				CONNECTOR	2	- #0036		
	31N4-41130				CONNECTOR-ORFS	2	#0037 -	D	
35	31E3-3175				ELBOW-90	2			

Item	Part_No	IS	Ord	T	Description	Qty	Serial_No	ITC	Remark
36	34EA-40150				ELBOW	2	- #0036		
	31N4-41150				ELBOW-90,ORFS	2	#0037 - #0053	D	
	X500-220006				CONNECTOR-ORFS	2	#0054 -	D	
38	P030-110002				ELBOW-45	2	- #0036		
	X530-110002				ELBOW-45,ORFS	2	#0037 - #0053	D	
39	P010-210002				CONNECTOR	2	- #0036	-	
40	31EM-45430				TEE-BRAKE	2	- #0036		
	31N5-41030				TEE-MTG	2	#0037 -	D	
42	31E4-3095	10			STRAP	1			
43	31E4-3097				STRAP	2			
49	S017-120452				BOLT-HEXAGON HEAD	4			
51	S035-081512				BOLT-W/WASHER	6			
52	S037-103542				BOLT-W/WASHER	2			
56	S207-121002				NUT-HEXAGON HEAD	4			
58	S411-120006				WASHER-SPRING	4			
63	S631-014004				O-RING	8			
66	Y161-014001				O-RING	4			
68	Y161-018001				O-RING	2	- #0053		
	P392-180000				WASHER-COPPER	2	#0054 -	D	
71	S552-102370				CLAMP-BAND	10			
73	S403-121002				WASHER-PLAIN	4			
74	S621-011001				O-RING(SEAL LOCK TYPE)	8	#0037 -	-	
75	S621-012001				O-RING(SEAL LOCK TYPE)	10	#0037 -	-	

LOWER HYD PIPING 1(#0560-)

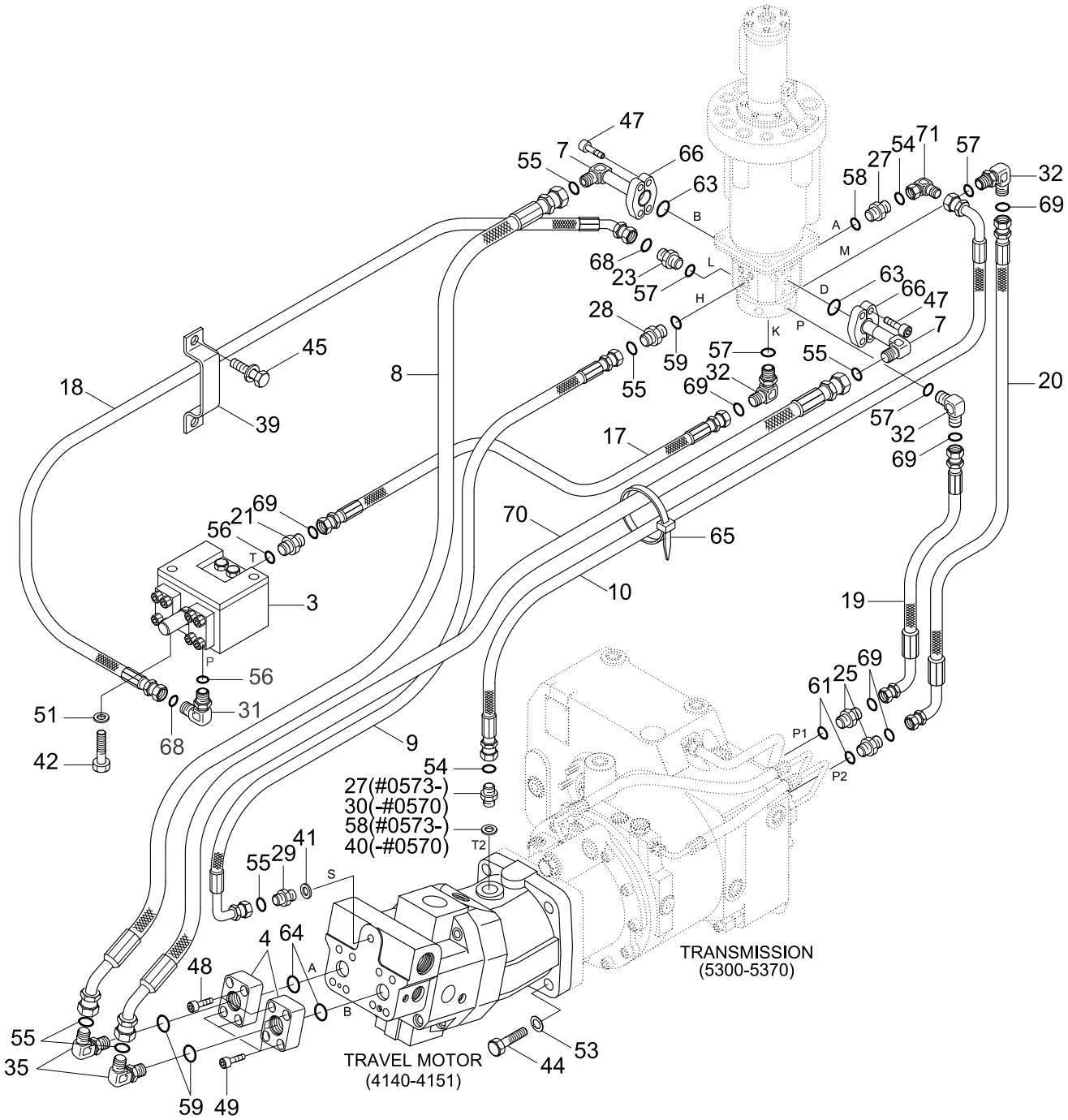

Item	Part_No	IS	Ord	T	Description	Qty	Serial_No	ITC	Remark
*	@				LOWER PIPING INSTALL	1	#0560 -	-	NOT
1	31N4-45012				.TRAVEL MOTOR	1			
3	81E3-0014				LOCKING VALVE	1			
4	31N4-44010				BLOCK	2			
7	31N8-12521				ELBOW-ORFS	2			
8	P923-127020				HOSE ASSY-ORFS 0X45	1			
9	P933-122020				HOSE ASSY-ORFS 0X90	1			
10	P930-082025				HOSE ASSY-ORFS 0X90	1			
17	P913-062020				HOSE ASSY-ORFS 0X0	1			
18	P923-042026				HOSE ASSY-ORFS 0X45	1			
19	P923-062009				HOSE ASSY-ORFS 0X45	1			
20	P923-062011				HOSE ASSY-ORFS 0X45	1			
21	X500-110011				CONNECTOR-ORFS	1			
23	X500-110013				CONNECTOR-ORFS	1			
25	X500-210005				CONNECTOR-ORFS	2			
27	X500-110003				CONNECTOR-ORFS	1	- #0572		
					CONNECTOR-ORFS	2	#0573 -	A	
28	X500-110004				CONNECTOR-LONG	1			
29	31N4-41080				CONNECTOR-ORFS	1			
30	X500-220007				CONNECTOR-ORFS	1	- #0572	-	
31	X520-110001				ELBOW-90,ORFS	1			
32	X520-110002				ELBOW-90,ORFS	3			
35	X520-110004				ELBOW-90,ORFS	2			
39	31E4-3146				STRAP	2			
40	P392-180000				WASHER-COPPER	1	- #0572	-	

Item	Part_No	IS	Ord	T	Description	Qty	Serial_No	ITC	Remark
41	P392-270000				WASHER-COPPER	1			
42	S015-080806				BOLT-HEX	2			
44	S017-16050D				BOLT-HEX	4			
45	S035-081516				BOLT-W/WASHER	10			
47	S109-100306				BOLT-SOCKET	8			
48	S109-120356				BOLT-SOCKET	2			
49	S109-120956				BOLT-SOCKET	6			
51	S411-080006				WASHER-SPRING	2			
53	S411-160006				WASHER-SPRING	4			
54	S621-014001				O-RING	2			
55	S621-018001				O-RING	6			
56	S631-011004				O-RING	2			
57	S631-014004				O-RING	3			
58	S631-018004				O-RING	1	- #0572		
					O-RING	2	#0573 -	A	
59	S631-024004				O-RING	3			
61	Y161-016001				O-RING	2			
63	Y171-019004				O-RING	2			
64	Y171-024004				O-RING	2			
65	S552-102370				CLAMP-BAND	20			
66	P173-120102				FLANGE-HYD,SPLIT	4			
68	S621-011001				O-RING	2			
69	S621-012001				O-RING	6			
70	P923-127019				HOSE ASSY-ORFS 0X45	1			
71	X850-535300				ELBOW-90,SWIVEL,ORFS	1			

LOWER HYDRAULIC PIPING 2(#0560-)

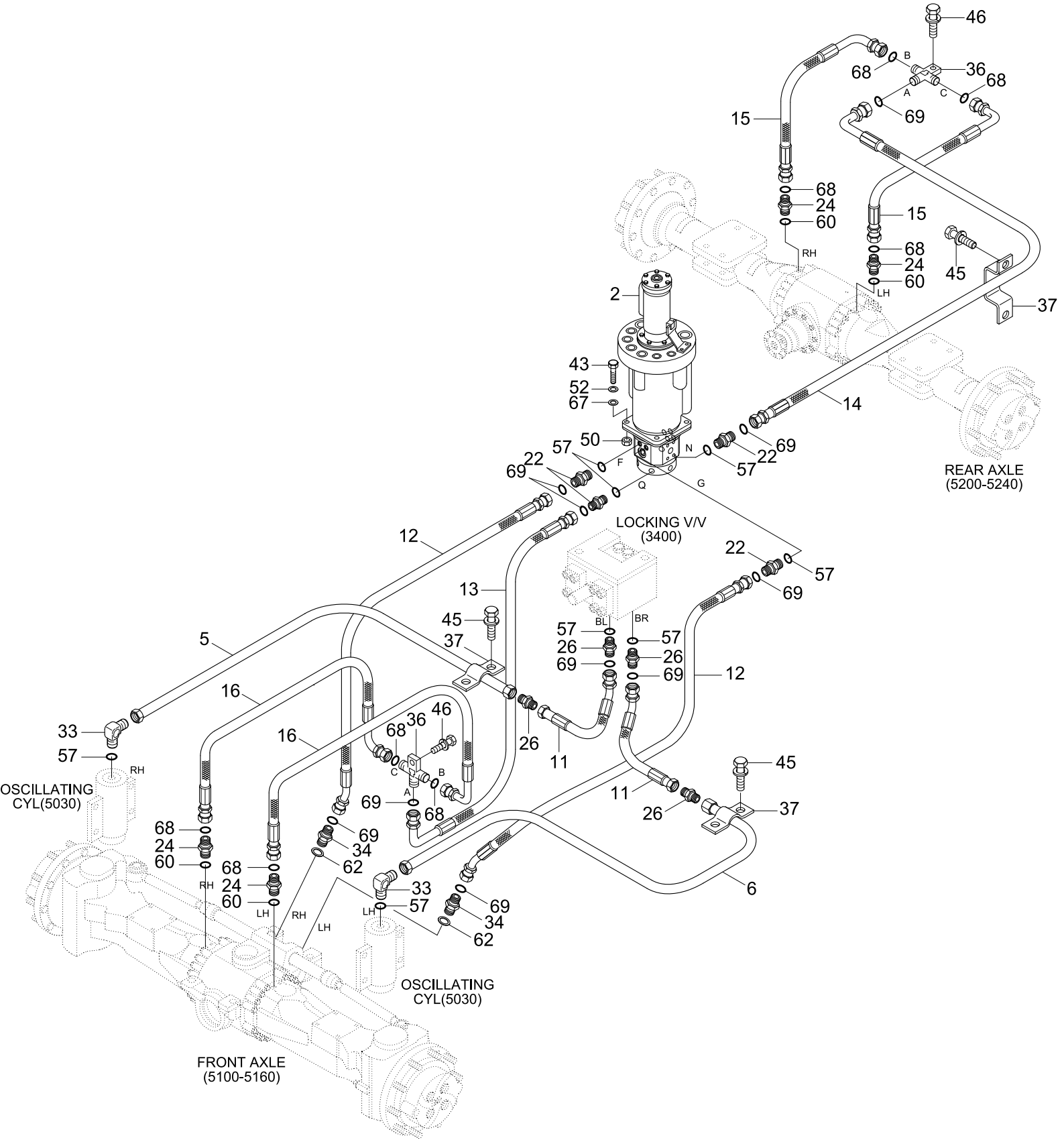

Item	Part_No	IS	Ord	T	Description	Qty	Serial_No	ITC	Remark
*	@				LOWER PIPING INSTALL	1	#0560 -	-	NOT
2	31N4-40011				.TURNING JOINT	1			
5	31N4-41061				.PIPE ASSY	1			
6	31N4-41071				.PIPE ASSY	1			
11	P923-067007				.HOSE ASSY-ORFS 0X45	2			
12	P923-066032				.HOSE ASSY-ORFS 0X45	2			
13	P933-066029				.HOSE ASSY-ORFS 0X90	1			
14	P933-066030				.HOSE ASSY-ORFS 0X90	1			
15	P933-042009				.HOSE ASSY-ORFS 0X90	2			
16	P923-042015				.HOSE ASSY-ORFS 0X45	2			
22	X500-110002				.CONNECTOR-ORFS	6			
24	X500-210002				.CONNECTOR-ORFS	4			
26	31E3-3113	20			.CONNECTOR	2			
33	31E3-3175	10			.ELBOW-90	2			
34	X500-220006				.CONNECTOR-ORFS	2			
36	31N5-41030				.TEE-MTG	2			
37	31E4-3095	10			.STRAP	1			
43	S017-120456				.BOLT-HEX	4			
45	S035-081516				.BOLT-W/WASHER,HEX	10			
46	S037-103546				.BOLT-W/WASHER	2			
49	S109-120956				.BOLT-SOCKET	6			
50	S207-121006				.NUT-HEX	4			
52	S411-120006				.WASHER-SPRING	4			
57	S631-014004				.O-RING	9			
60	Y161-014001				.O-RING	4			

Item	Part_No	IS	Ord	T	Description	Qty	Serial_No	ITC	Remark
62	P392-180000				.WASHER-COPPER	2			
67	S403-12100B				.WASHER-PLAIN	4			
68	S621-011001				.O-RING(SEAL LOCK TYPE)	8			
69	S621-012001				.O-RING(SEAL LOCK TYPE)	10			

LOWER HYD PIPING(REAR BLADE)

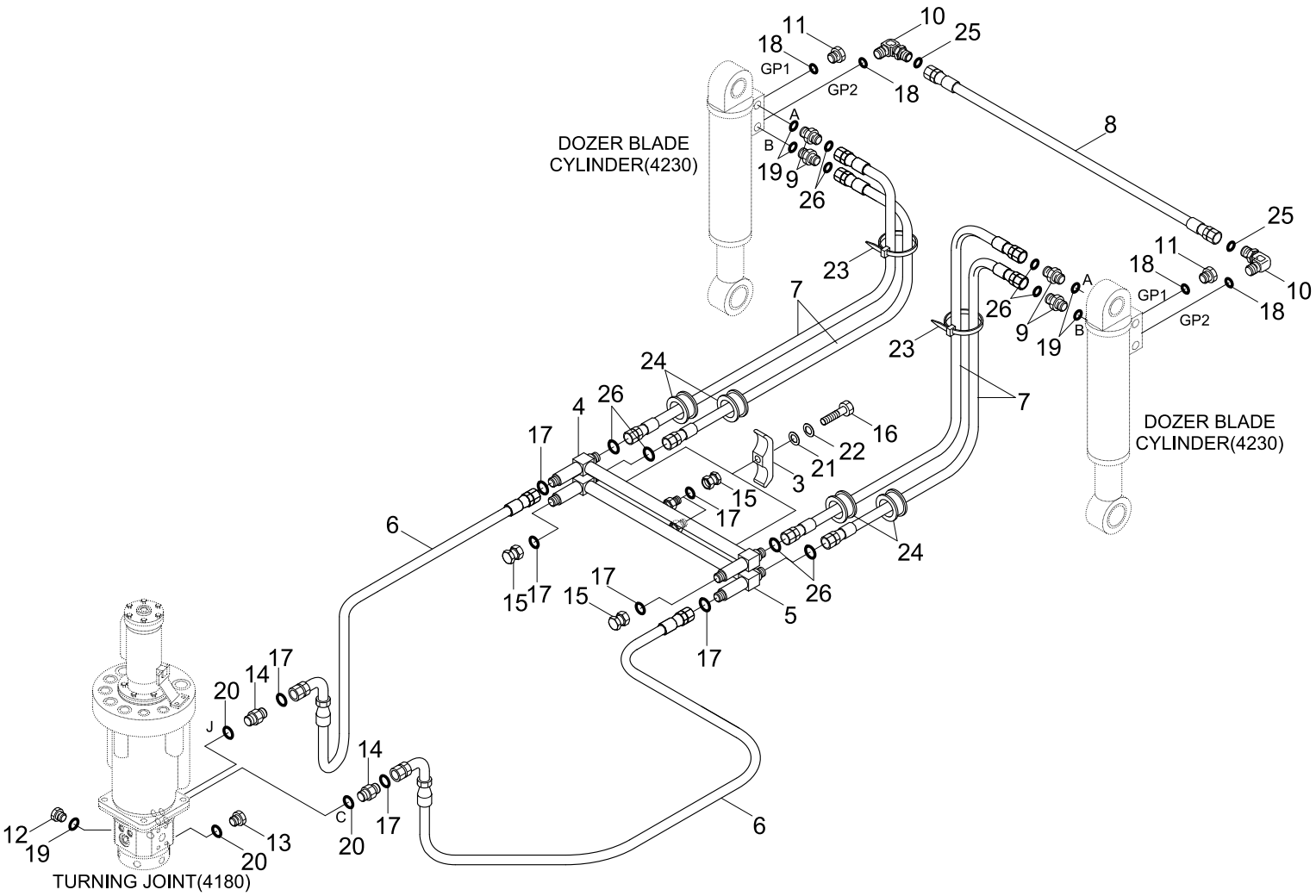

Item	Part_No	IS	Ord	T	Description	Qty	Serial_No	ITC	Remark
3	34EA-10250				CLAMP-PIPE	2			
4	31N5-70111				PIPE ASSY	1			
5	31N5-70121				PIPE ASSY	1			
6	P913-087011				HOSE ASSY-ORFS 0X0	2			
7	P603-067024				HOSE ASSY-THD	4	- #0036		
	P913-067024				HOSE ASSY-ORFS 0X0	4	#0037 -	D	
8	P603-047018				HOSE ASSY-THD	1	- #0036		
	P913-047018				HOSE ASSY-ORFS 0X0	1	#0037 -	D	
9	P010-110003				CONNECTOR	4	- #0036		
	X500-110002				CONNECTOR-ORFS	4	#0037 -	D	
10	P020-110001				ELBOW-90	2	- #0036		
	X520-110001				ELBOW-90,ORFS	2	#0037 -	D	
11	P220-110102				PLUG	2			
12	P220-110103				PLUG-HEX,HEAD	1			
13	P220-110104				PLUG-HEX,HEAD	1			
14	X500-110003				CONNECTOR-ORFS	2			
15	X710-100104				CAP-HYD,ORFS	4			
16	S017-100606				BOLT-HEX	2			
17	S621-014001				O-RING	8			
18	S631-011004				O-RING	4			
19	S631-014004				O-RING	5			
20	S631-018004				O-RING	3			
21	S403-10100B				WASHER-PLAIN	2			
22	S411-100006				WASHER-SPRING	2			
23	S552-102370				CLAMP-BAND	10			

Item	Part_No	IS	Ord	T	Description	Qty	Serial_No	ITC	Remark
24	S760-100800				GROMMET	4			
25	S621-011001				O-RING	2	#0037 -	-	
26	S621-012001				O-RING(SEAL LOCK TYPE)	8	#0037 -	-	

LOWER HYD PIPING(REAR OUTRIGGER)

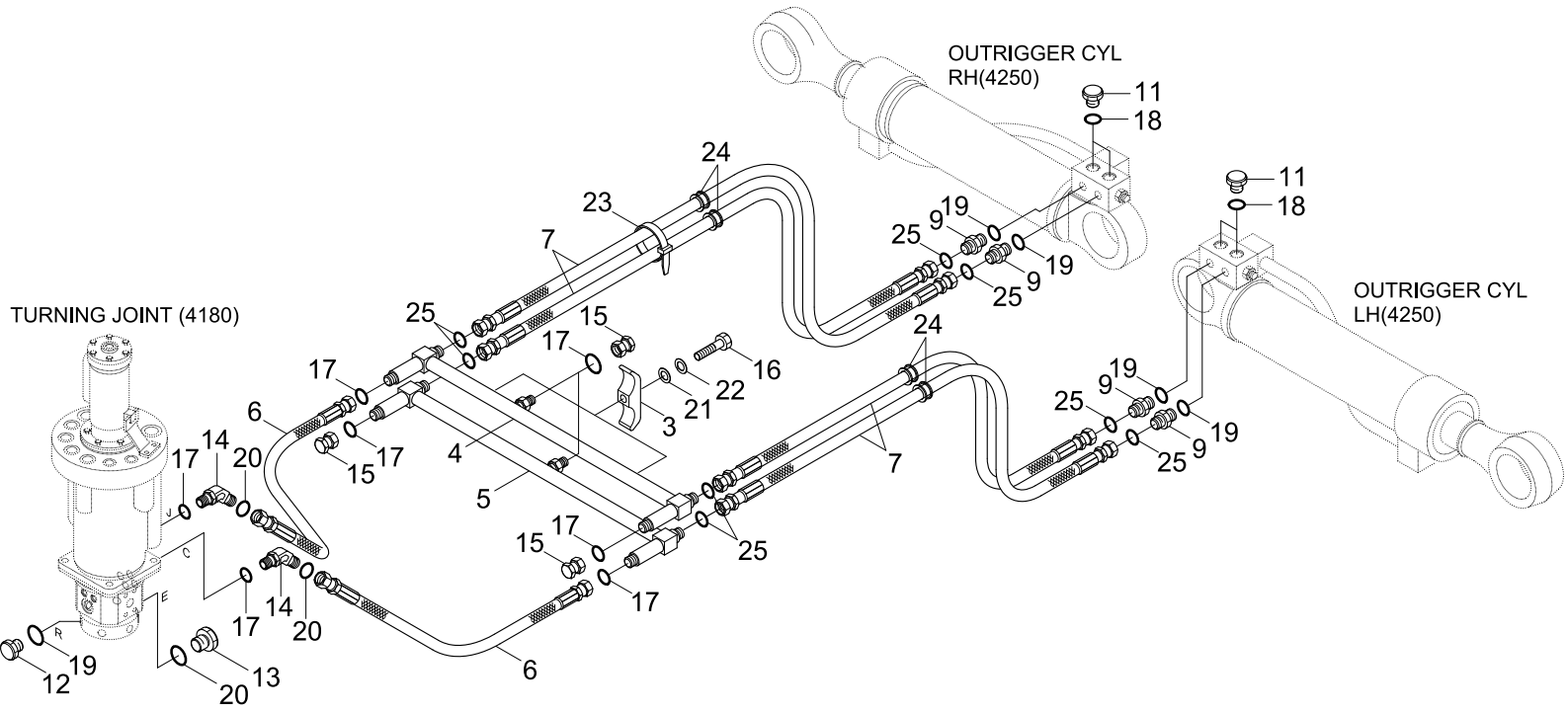

Item	Part_No	IS	Ord	T	Description	Qty	Serial_No	ITC	Remark
3	34EA-10250				CLAMP-PIPE	2			
4	31N5-70111				PIPE ASSY	1			
5	31N5-70121				PIPE ASSY	1			
6	P913-087011				HOSE ASSY-ORFS 0X0	2			
7	P603-067024				HOSE ASSY-THD	4	- #0036		
	P913-067027				HOSE ASSY-ORFS 0X0	4	#0037 -	D	
9	P010-110003				CONNECTOR	4	- #0036		
	X500-110002				CONNECTOR-ORFS	4	#0037 -	D	
11	P220-110102				PLUG-CAP	4			
12	P220-110103				PLUG-HEX,HEAD	1			
13	P220-110104				PLUG-HEX,HEAD	1			
14	X500-110003				CONNECTOR-ORFS	2			
15	X710-100104				CAP-HYD,ORFS	4			
16	S017-100606				BOLT-HEX	2			
17	S621-014001				O-RING	8			
18	S631-011004				O-RING	4			
19	S631-014004				O-RING	5			
20	S631-018004				O-RING	3			
21	S403-10100B				WASHER-PLAIN	2			
22	S411-100006				WASHER-PLAIN	2			
23	S552-102370				CLAMP-BAND	10			
24	S760-100800				GROMMET	4			
25	S621-012001				O-RING(SEAL LOCK TYPE)	8	#0037 -	-	

LOWER HYD PIPING 1(F/OUT R/BLD)

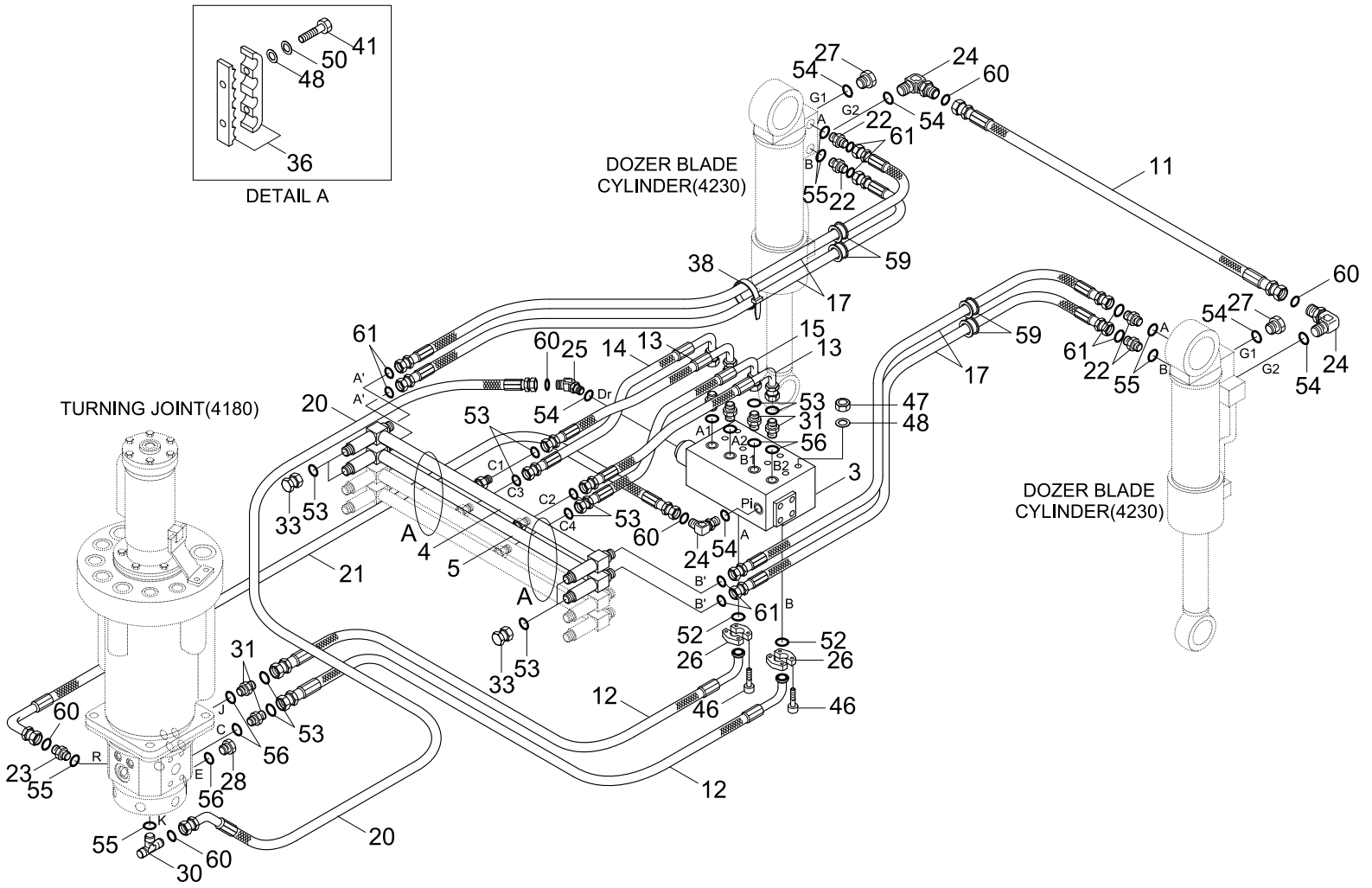

Item	Part_No	IS	Ord	T	Description	Qty	Serial_No	ITC	Remark
3	31ER-12010				SELECTOR VALVE	1			
4	31N5-70110				PIPE ASSY	1	- #0036		
	31N5-70111				PIPE ASSY	1	#0037 -	D	
5	31N5-70120				PIPE ASSY	1	- #0036		
	31N5-70121				PIPE ASSY	1	#0037 -	D	
11	P603-047012				HOSE ASSY-THD	1	- #0036		
	P913-047018				HOSE ASSY-ORFS 0X0	1	#0037 -	D	
12	31N5-70370				HOSE ASS-ORFS	2	- #0186		
	31N5-70371				HOSE ASS-ORFS	2	#0187 -	B	
13	31N4-70340				HOSE ASSY	2	- #0186		
	31N4-70341				HOSE ASSY	2	#0187 -	B	
14	31N4-70350				HOSE ASSY	1	- #0186		
	31N4-70351				HOSE ASSY	1	#0187 -	B	
15	P933-087010				HOSE ASSY-ORFS 0X90	1	- #0186		
	P930-087010				HOSE ASSY-ORFS 0X90	1	#0187 -	B	
17	P603-067026				HOSE ASSY-THD	4	- #0036		
	P913-067024				HOSE ASSY-ORFS 0X0	4	#0037 -	D	
20	P613-042024				HOSE ASSY-THD 0X45	1	- #0036		
	P923-042024				HOSE ASSY-ORFS 0X45	1	#0037 - #0186	D	
	P920-042024				HOSE ASSY-ORFS 0X45	1	#0187 -	A	
21	P623-042029				HOSE ASSY-THD 0X90	1	- #0036		
	P933-042029				HOSE ASSY-ORFS 0X90	1	#0037 - #0186	D	
	P930-042029				HOSE ASSY-ORFS 0X90	1	#0187 -	B	
22	P010-110003				CONNECTOR	4	- #0036		
	X500-110002				CONNECTOR-ORFS	4	#0037 -	D	

Item	Part_No	IS	Ord	T	Description	Qty	Serial_No	ITC	Remark
23	P010-110013				CONNECTOR	1	- #0036		
	X500-110013				CONNECTOR-ORFS	1	#0037 -	D	
24	P020-110001				ELBOW-90	3	- #0036		
	X520-110001				ELBOW-90,ORFS	3	#0037 -	D	
25	P030-110001				ELBOW-45	1	- #0036		
	X530-110001				ELBOW-45,ORFS	1	#0037 -	D	
26	P173-160104				FLANGE-HYD,SPLIT	4			
27	P220-110102				PLUG	2			
28	P220-110104				PLUG-HEX,HEAD	1			
30	P310-060604				TEE-BRANCH TYPE	1	- #0036		
	X810-065251				TEE-B/TYPE,ORFS	1	#0037 -	D	
31	X500-110003				CONNECTOR-ORFS	6			
33	X710-100104				CAP-HYD,ORFS	4			
36	31EK-70370				CLAMP-PIPE	2			
38	S552-102370				CLAMP-BAND	10			
41	S017-100506				BOLT-HEX	4			
46	S109-101306				BOLT-SOCKET	8			
47	S205-101006				NUT-HEX	8			
48	S403-10100B				WASHER-PLAIN	12			
50	S411-100006				WASHER-SPRING	4			
52	Y171-024004				O-RING	2			
53	S621-014001				O-RING	14			
54	S631-011004				O-RING	8			
55	S631-014004				O-RING	6			
56	S631-018004				O-RING	7			

Item	Part_No	IS	Ord	T	Description	Qty	Serial_No	ITC	Remark
59	S760-100800				GROMMET	4			
60	S621-011001				O-RING	6	#0037 -	-	
61	S621-012001				O-RING(SEAL LOCK TYPE)	8	#0037 -	-	

LOWER HYD PIPING 2(F/OUT R/BLD)

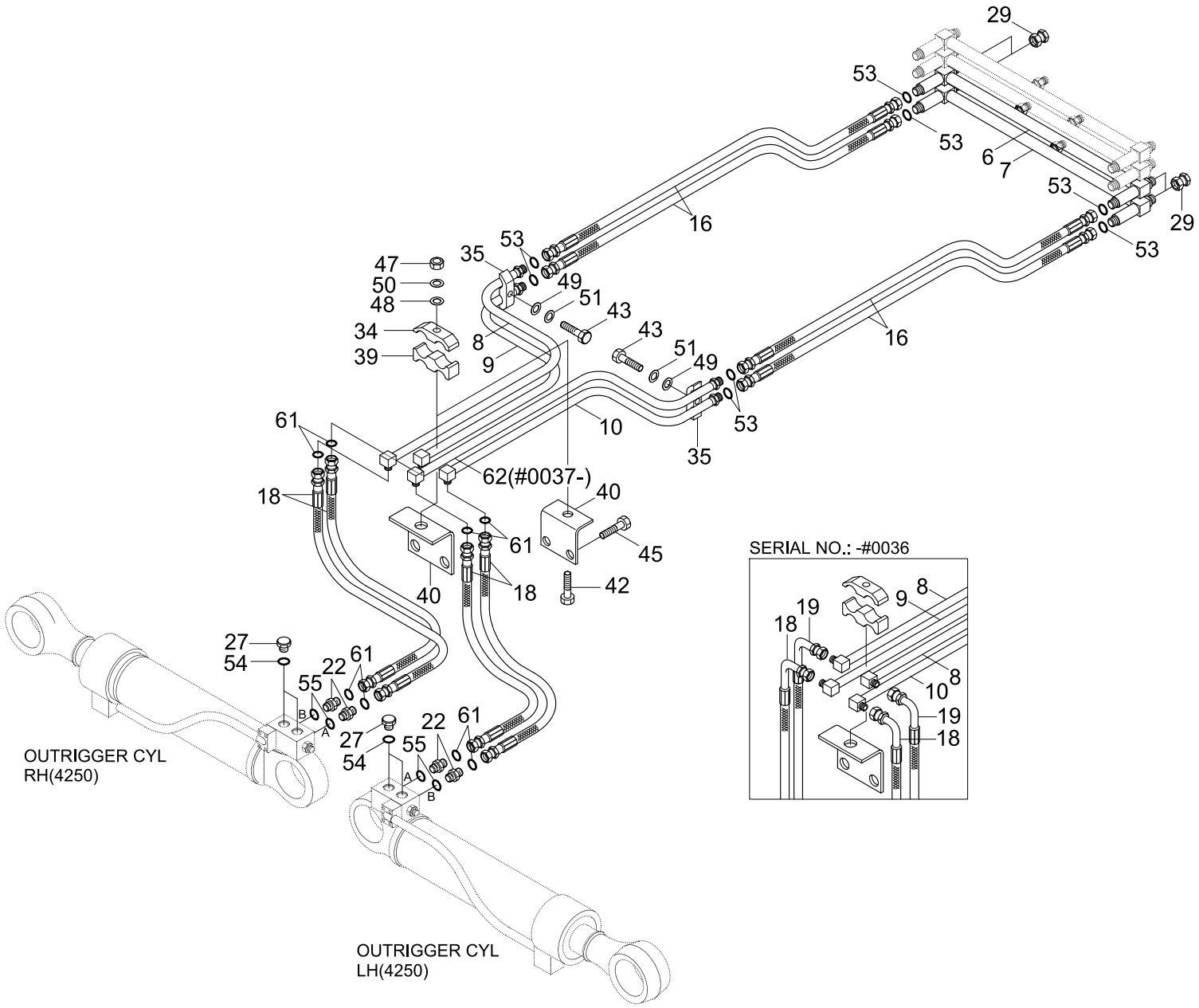

Item	Part_No	IS	Ord	T	Description	Qty	Serial_No	ITC	Remark
6	31N5-70310				PIPE ASSY	1	- #0036		
	31N5-70311				PIPE ASSY	1	#0037 -	D	
7	31N5-70320				PIPE ASSY	1	- #0036		
	31N5-70321				PIPE ASSY	1	#0037 -	D	
8	31N4-70310				PIPE ASSY	2	- #0036		
	31N4-70311				PIPE ASSY	1	#0037 -	B	
9	31N4-70320				PIPE ASSY	1	- #0036		
	31N4-70321				PIPE ASSY	1	#0037 -	D	
10	31N4-70330				PIPE ASSY	1	- #0036		
	31N4-70331				PIPE ASSY	1	#0037 -	D	
16	P913-087029				HOSE ASSY-ORFS 0X0	4	- #0186		
	P910-087029				HOSE ASSY-ORFS 0X0	4	#0187 -	A	
18	P613-067015				HOSE ASSY-THD 0X45	2	- #0036		
	P913-067013				HOSE ASSY-ORFS 0X0	4	#0037 -	D	
19	P613-067016				HOSE ASSY-THD 0X45	2	- #0036	-	
22	P010-110003				CONNECTOR	4	- #0036		
	X500-110002				CONNECTOR-ORFS	4	#0037 -	D	
27	P220-110102				PLUG	4			
29	P290-100103				PLUG-CAP	4	- #0036		
	X710-100103				CAP-DUST	4	#0037 -	D	
34	31E4-3030	20			CLAMP-PIPE	2			
35	31EE-50180				CLAMP ASSY	2			
39	31E4-31430				SPACER-CLAMP	2			
40	31E4-31440				BRACKET-PIPE	2			
42	S017-101006				BOLT-HEX	2			

Item	Part_No	IS	Ord	T	Description	Qty	Serial_No	ITC	Remark
43	S017-120606				BOLT-HEX	2			
45	S037-102526				BOLT-W/WASHER	4			
47	S205-101006				NUT-HEX	2			
48	S403-10100B				WASHER-PLAIN	12	- #0036		
	S403-101006				WASHER-PLAIN	2	#0037 -	A	
49	S403-12100B				WASHER-PLAIN	2			
50	S411-100006				WASHER-SPRING	2			
51	S411-120006				WASHER-SPRING	2			
53	S621-014001				O-RING	8			
54	S631-011004				O-RING	4			
55	S631-014004				O-RING	4			
61	S621-012001				O-RING	8	#0037 -	-	
62	31N4-70380				PIPE ASSY	1	#0037 -	-	

LOWER HYD PIPING 1(4 OUTRIGGER)

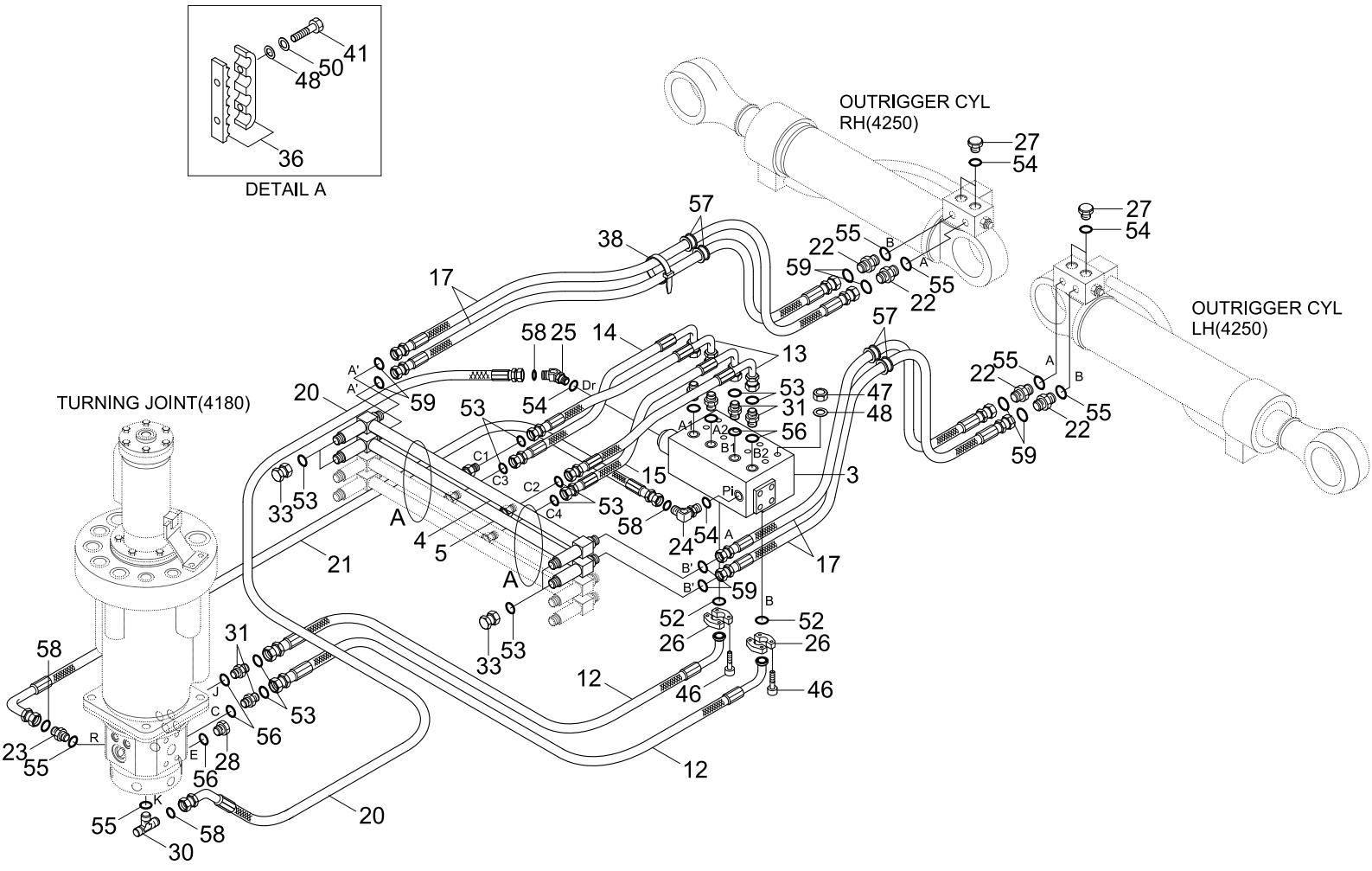

Item	Part_No	IS	Ord	T	Description	Qty	Serial_No	ITC	Remark
3	31ER-12010				SELECTOR VALVE	1			
4	31N5-70110				PIPE ASSY	1	- #0036		
	31N5-70111				PIPE ASSY	1	#0037 -	D	
5	31N5-70120				PIPE ASSY	1	- #0036		
	31N5-70121				PIPE ASSY	1	#0037 -	D	
12	31N5-70370				HOSE ASS-ORFS	2	- #0186		
	31N5-70371				HOSE ASS-ORFS	2	#0187 -	B	
13	31N4-70340				HOSE ASSY	2	- #0186		
	31N4-70341				HOSE ASSY	2	#0187 -	B	
14	31N4-70350				HOSE ASSY	1	- #0186		
	31N4-70351				HOSE ASSY	1	#0187 -	B	
15	P933-087010				HOSE ASSY-ORFS 0X90	1	- #0186		
	P930-087010				HOSE ASSY-ORFS 0X90	1	#0187 -	B	
17	P603-067027				HOSE ASSY-THD	4	- #0036		
	P913-067027				HOSE ASSY-ORFS 0X0	4	#0037 -	D	
20	P613-042024				HOSE ASSY-THD 0X45	1	- #0036		
	P923-042024				HOSE ASSY-ORFS 0X45	1	#0037 - #0186	D	
	P920-042024				HOSE ASSY-ORFS 0X45	1	#0187 -	B	
21	P623-042029				HOSE ASSY-THD 0X90	1	- #0036		
	P933-042029				HOSE ASSY-ORFS 0X90	1	#0037 - #0186	D	
	P930-042029				HOSE ASSY-ORFS 0X90	1	#0187 -	B	
22	P010-110003				CONNECTOR	4	- #0036		
	X500-110002				CONNECTOR-ORFS	4	#0037 -	D	
23	P010-110013				CONNECTOR	1	- #0036		
	X500-110013				CONNECTOR-ORFS	1	#0037 -	D	

Item	Part_No	IS	Ord	T	Description	Qty	Serial_No	ITC	Remark
24	P020-110001				ELBOW-90	1	- #0036		
	X520-110001				ELBOW-90,ORFS	1	#0037 -	D	
25	P030-110001				ELBOW-45	1	- #0036		
	X530-110001				ELBOW-45,ORFS	1	#0037 -	D	
26	P173-160104				FLANGE-HYD,SPLIT	4			
27	P220-110102				PLUG-CAP	4			
28	P220-110104				PLUG-HEX,HEAD	1			
30	P310-060604				TEE-BRANCH TYPE	1	- #0036		
	X810-065251				TEE-B/TYPE,ORFS	1	#0037 -	D	
31	X500-110003				CONNECTOR-ORFS	6			
33	X710-100104				CAP-HYD,ORFS	4			
36	31EK-70370				CLAMP-PIPE	2			
38	S552-102370				CLAMP-BAND	10			
41	S017-100506				BOLT-HEX	4			
46	S109-101306				BOLT-SOCKET	8			
47	S205-101006				NUT-HEX	8			
48	S403-10100B				WASHER-PLAIN	12			
50	S411-100006				WASHER-PLAIN	4			
52	Y171-024004				O-RING	2			
53	S621-014001				O-RING	14			
54	S631-011004				O-RING	8			
55	S631-014004				O-RING	6			
56	S631-018004				O-RING	7			
57	S760-100800				GROMMET	4			
58	S621-011001				O-RING	4	#0037 -	-	

Item	Part_No	IS	Ord	T	Description	Qty	Serial_No	ITC	Remark
59	S621-012001				O-RING(SEAL LOCK TYPE)	8	#0037 -	-	

LOWER HYD PIPING 2(4 OUTRIGGER)

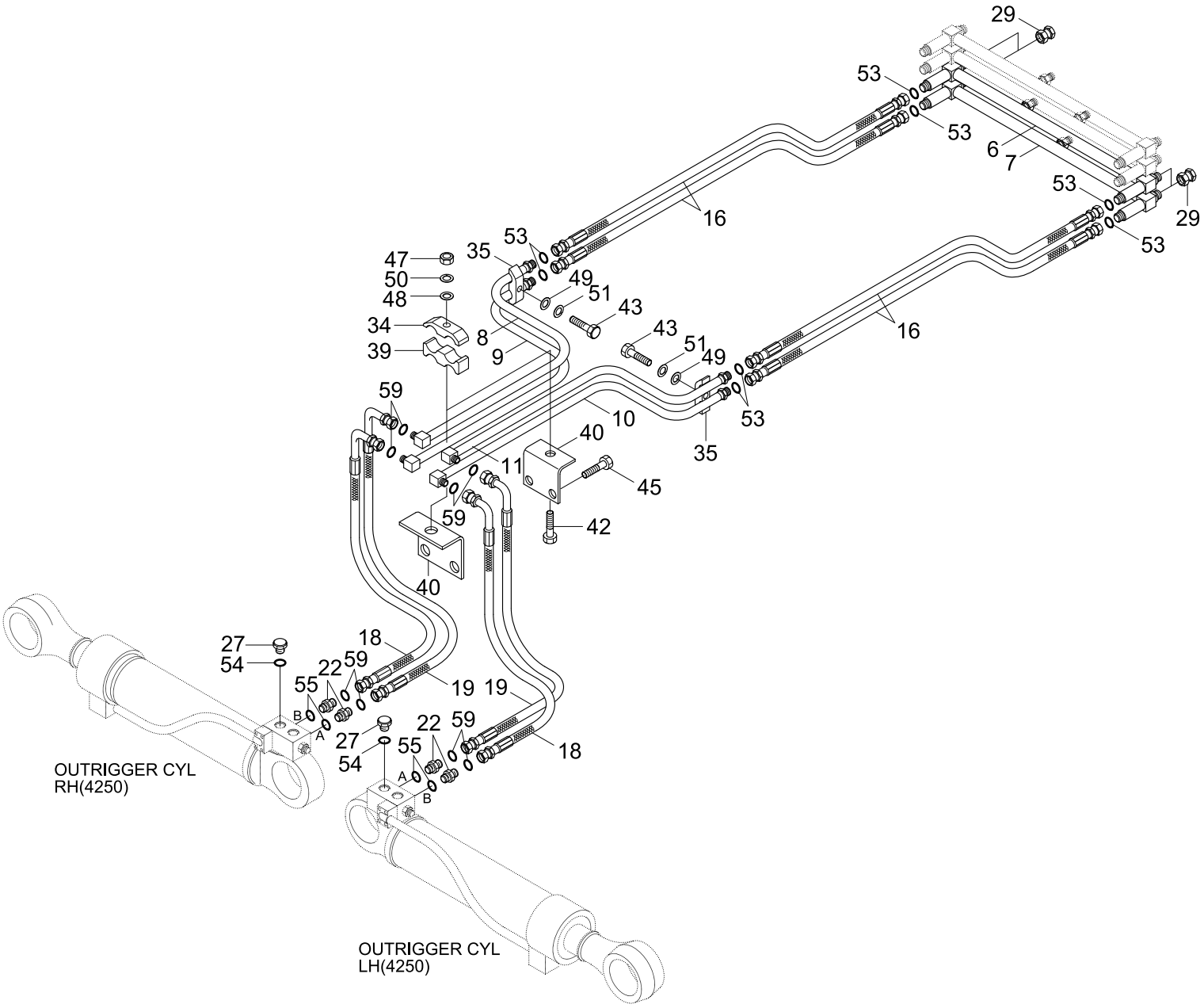

Item	Part_No	IS	Ord	T	Description	Qty	Serial_No	ITC	Remark
6	31N5-70310				PIPE ASSY	1	- #0036		
	31N5-70311				PIPE ASSY	1	#0037 -	D	
7	31N5-70320				PIPE ASSY	1	- #0036		
	31N5-70321				PIPE ASSY	1	#0037 -	D	
8	31N4-70310				PIPE ASSY	2	- #0036		
	31N4-70311				PIPE ASSY	1	#0037 -	B	
9	31N4-70320				PIPE ASSY	1	- #0036		
	31N4-70321				PIPE ASSY	1	#0037 -	D	
10	31N4-70330				PIPE ASSY	1	- #0036		
	31N4-70331				PIPE ASSY	1	#0037 -	D	
11	31N4-70380				PIPE ASSY	1			
16	P913-087029				HOSE ASSY-ORFS 0X0	4	- #0186		
	P910-087029				HOSE ASSY-ORFS 0X0	4	#0187 -	B	
18	P613-067015				HOSE ASSY-THD 0X45	2	- #0036		
	P913-067013				HOSE ASSY-ORFS 0X0	4	#0037 -	D	
19	P613-067016				HOSE ASSY-THD 0X45	2	- #0036	-	
22	P010-110003				CONNECTOR	4	- #0036		
	X500-110002				CONNECTOR-ORFS	4	#0037 -	D	
27	P220-110102				PLUG	4			
29	P290-100103				PLUG-CAP	4	- #0036		
	X710-100103				CAP-DUST	4	#0037 -	D	
34	31E4-3030	20			CLAMP-PIPE	2			
35	31EE-50180				CLAMP ASSY	2			
39	31E4-31430				SPACER-CLAMP	2			
40	31E4-31440				BRACKET-PIPE	2			

Item	Part_No	IS	Ord	T	Description	Qty	Serial_No	ITC	Remark
42	S017-101006				BOLT-HEX	2			
43	S017-120606				BOLT-HEX	2			
45	S037-102526				BOLT-W/WASHER	4			
47	S205-101006				NUT-HEX	2			
48	S403-10100B				WASHER-PLAIN	12			
49	S403-12100B				WASHER-PLAIN	2			
50	S411-100006				WASHER-SPRING	2			
51	S411-120006				WASHER-SPRING	2			
53	S621-014001				O-RING	8			
54	S631-011004				O-RING	4			
55	S631-014004				O-RING	4			
59	S621-012001				O-RING	8	#0037 -	-	

LOWER HYD PIPING 1(F/BLD R/OUT)

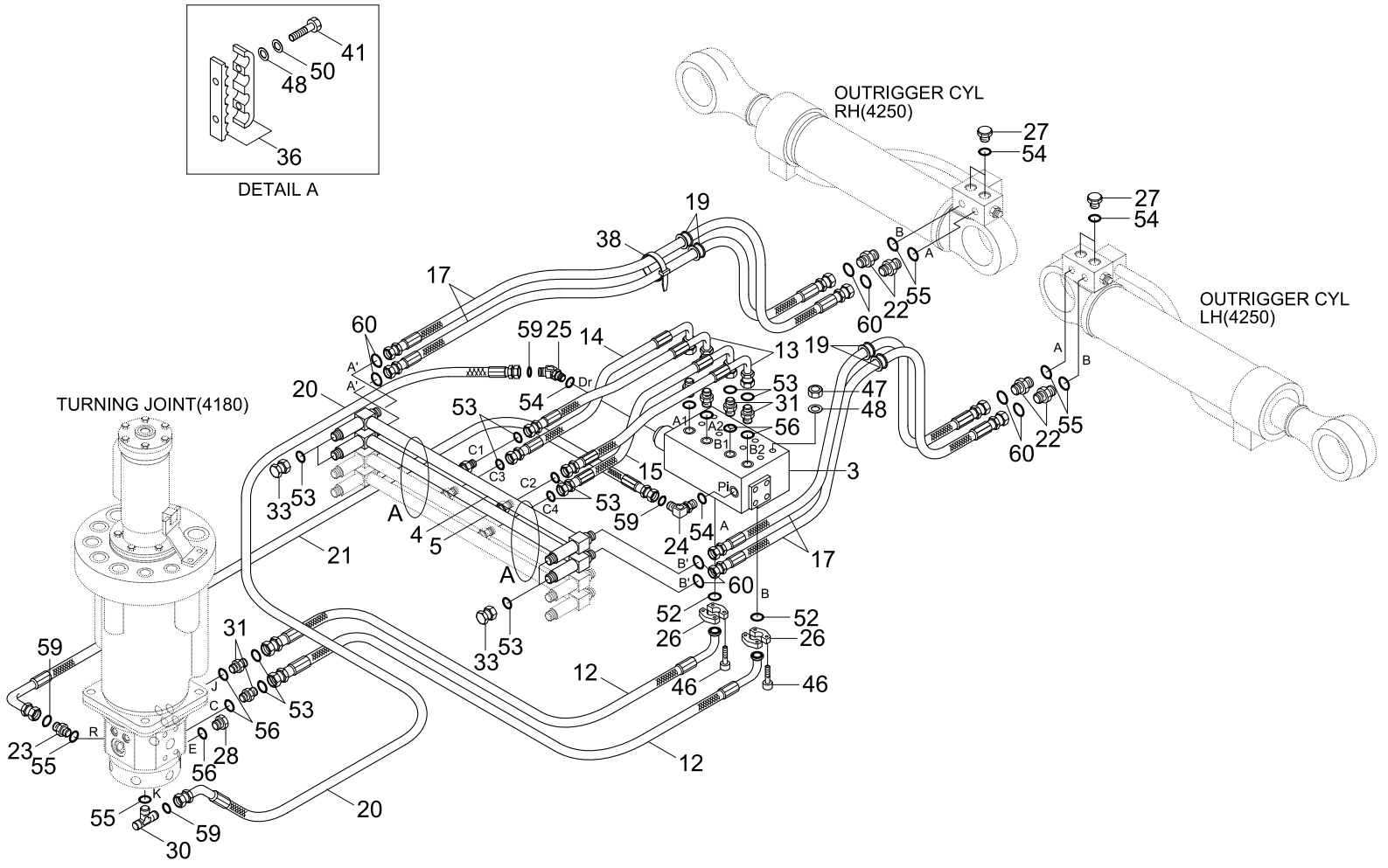

Item	Part_No	IS	Ord	T	Description	Qty	Serial_No	ITC	Remark
3	31ER-12010				SELECTOR VALVE	1			
4	31N5-70110				PIPE ASSY	1	- #0036		
	31N5-70111				PIPE ASSY	1	#0037 -	D	
5	31N5-70120				PIPE ASSY	1	- #0036		
	31N5-70121				PIPE ASSY	1	#0037 -	D	
12	31N5-70370				HOSE ASS-ORFS	2	- #0186		
	31N5-70371				HOSE ASS-ORFS	2	#0187 -	B	
13	31N4-70340				HOSE ASSY	2	- #0186		
	31N4-70341				HOSE ASSY	2	#0187 -	B	
14	31N4-70350				HOSE ASSY	1	- #0186		
	31N4-70351				HOSE ASSY	1	#0187 -	B	
15	P933-087010				HOSE ASSY-ORFS 0X90	1	- #0186		
	P930-087010				HOSE ASSY-ORFS 0X90	1	#0187 -	B	
17	P603-067027				HOSE ASSY-THD	4	- #0036		
	P913-067027				HOSE ASSY-ORFS 0X0	4	#0037 -	D	
19	S760-100800				GROMMET	4			
20	P613-042024				HOSE ASSY-THD 0X45	1	- #0036		
	P923-042024				HOSE ASSY-ORFS 0X45	1	#0037 - #0186	D	
	P920-042024				HOSE ASSY-ORFS 0X45	1	#0187 -	B	
21	P623-042029				HOSE ASSY-THD 0X90	1	- #0036		
	P933-042029				HOSE ASSY-ORFS 0X90	1	#0037 - #0186	D	
	P930-042029				HOSE ASSY-ORFS 0X90	1	#0187 -	B	
22	P010-110003				CONNECTOR	4	- #0036		
	X500-110002				CONNECTOR-ORFS	4	#0037 -	D	
23	P010-110013				CONNECTOR	1	- #0036		

Item	Part_No	IS	Ord	T	Description	Qty	Serial_No	ITC	Remark
23	X500-110013				CONNECTOR-ORFS	1	#0037 -	D	
24	P020-110001				ELBOW-90	3	- #0036		
	X520-110001				ELBOW-90,ORFS	1	#0037 -	D	
25	P030-110001				ELBOW-45	1	- #0036		
	X530-110001				ELBOW-45,ORFS	1	#0037 -	D	
26	P173-160104				FLANGE-SPLIT	4			
27	P220-110102				PLUG	2			
28	P220-110104				PLUG-HEX	1			
30	P310-060604				TEE-BRANCH TYPE	1	- #0036		
	X810-065251				TEE-B/TYPE,ORFS	1	#0037 -	D	
31	X500-110003				CONNECTOR-ORFS	6			
33	X710-100104				CAP-DUST	4			
36	31EK-70370				CLAMP-PIPE	2			
38	S552-102370				CLAMP-BAND	10			
41	S017-100506				BOLT-HEX	4			
46	S109-101306				BOLT-SOCKET	8			
47	S205-101006				NUT-HEX	8			
48	S403-10100B				WASHER-PLAIN	12			
50	S411-100006				WASHER-SPRING	4			
52	Y171-024004				O-RING	2			
53	S621-014001				O-RING	14			
54	S631-011004				O-RING	8			
55	S631-014004				O-RING	6			
56	S631-018004				O-RING	7			
59	S621-011001				O-RING	4	#0037 -	-	

Item	Part_No	IS	Ord	T	Description	Qty	Serial_No	ITC	Remark
60	S621-012001				O-RING	8	#0037 -	-	

LOWER HYD PIPING 2(F/BLD R/OUT)

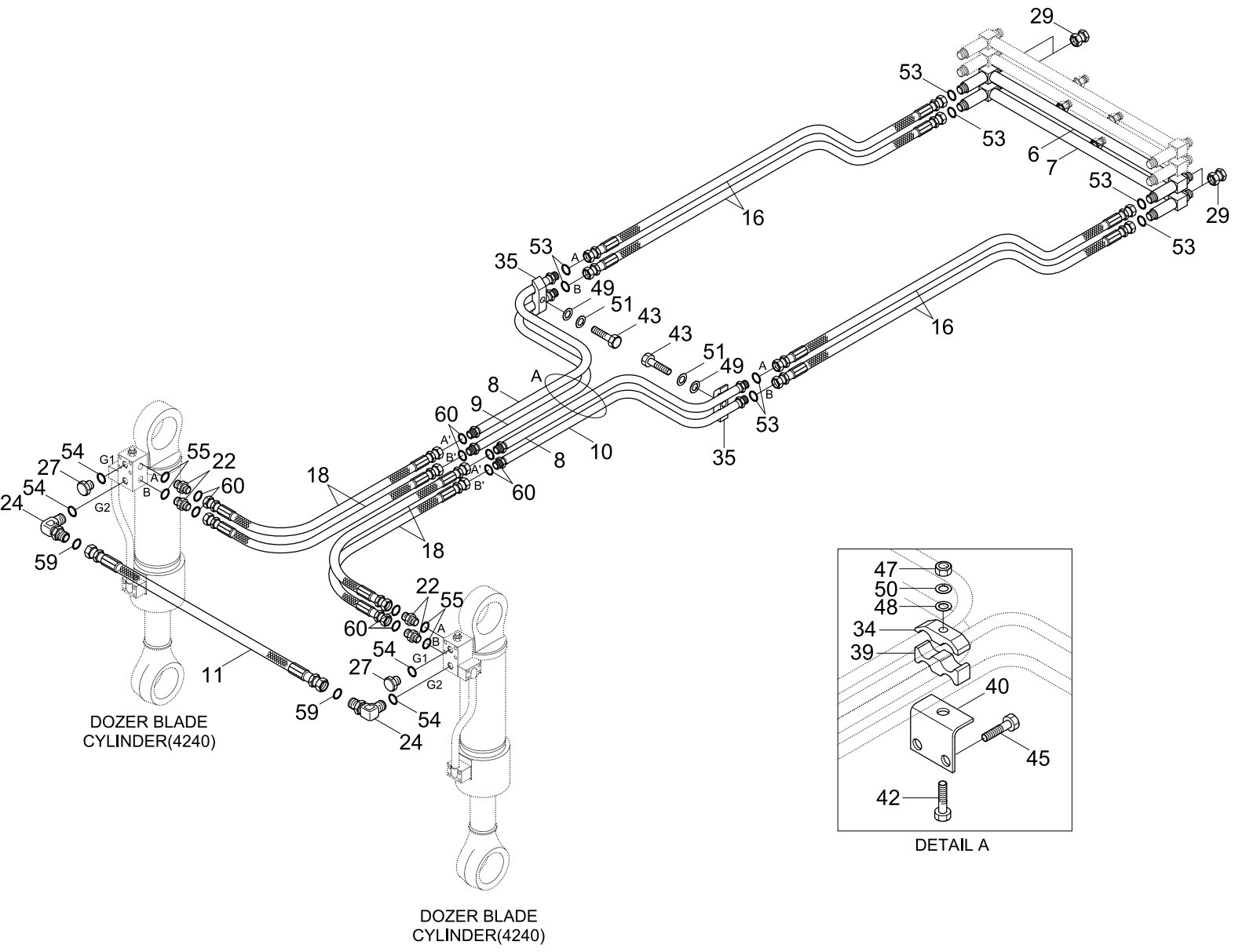

Item	Part_No	IS	Ord	T	Description	Qty	Serial_No	ITC	Remark
6	31N5-70310				PIPE ASSY	1	- #0036		
	31N5-70311				PIPE ASSY	1	#0037 -	D	
7	31N5-70320				PIPE ASSY	1	- #0036		
	31N5-70321				PIPE ASSY	1	#0037 -	D	
8	31N4-70510				PIPE ASSY	2	- #0036		
	31N4-70511				PIPE ASSY	2	#0037 -	D	
9	31N4-70520				PIPE ASSY	1	- #0036		
	31N4-70521				PIPE ASSY	1	#0037 -	D	
10	31N4-70530				PIPE ASSY	1	- #0036		
	31N4-70531				PIPE ASSY	1	#0037 -	D	
11	P603-047012				HOSE ASSY-THD	1	- #0036		
	P913-047014				HOSE ASSY-ORFS 0X0	1	#0037 -	D	
16	P913-087029				HOSE ASSY-ORFS 0X0	4	- #0186		
	P910-087029				HOSE ASSY-ORFS 0X0	4	#0187 -	B	
18	P613-067016				HOSE ASSY-THD 0X45	4	- #0036		
	P913-067016				HOSE ASSY-ORFS 0X0	4	#0037 -	D	
22	P010-110003				CONNECTOR	4	- #0036		
	X500-110002				CONNECTOR-ORFS	4	#0037 -	D	
24	X520-110001				ELBOW-90,ORFS	2	#0037 -	-	
27	P220-110102				PLUG	4			
29	P290-100103				PLUG-CAP	4	- #0036		
	X710-100103				CAP-DUST	4	#0037 -	D	
34	31E4-3030	20			CLAMP-PIPE	2			
35	31EE-50180				CLAMP ASSY	2			
39	31E4-31430				SPACER-CLAMP	2			

Item	Part_No	IS	Ord	T	Description	Qty	Serial_No	ITC	Remark
40	31E4-31440				BRACKET-PIPE	2			
42	S017-101006				BOLT-HEX	2			
43	S017-120606				BOLT-HEX	2			
45	S037-102526				BOLT-W/WASHER	4			
47	S205-101006				NUT-HEX	2			
48	S403-10100B				WASHER-PLAIN	12			
49	S403-12100B				WASHER-PLAIN	2			
50	S411-100006				WASHER-SPRING	2			
51	S411-120006				WASHER-SPRING	2			
53	S621-014001				O-RING	8			
54	S631-011004				O-RING	4			
55	S631-014004				O-RING	4			
59	S621-011001				O-RING	2	#0037 -	-	
60	S621-012001				O-RING	8	#0037 -	-	

LOWER HYD PIPING 1(F/BLD R/BLD)

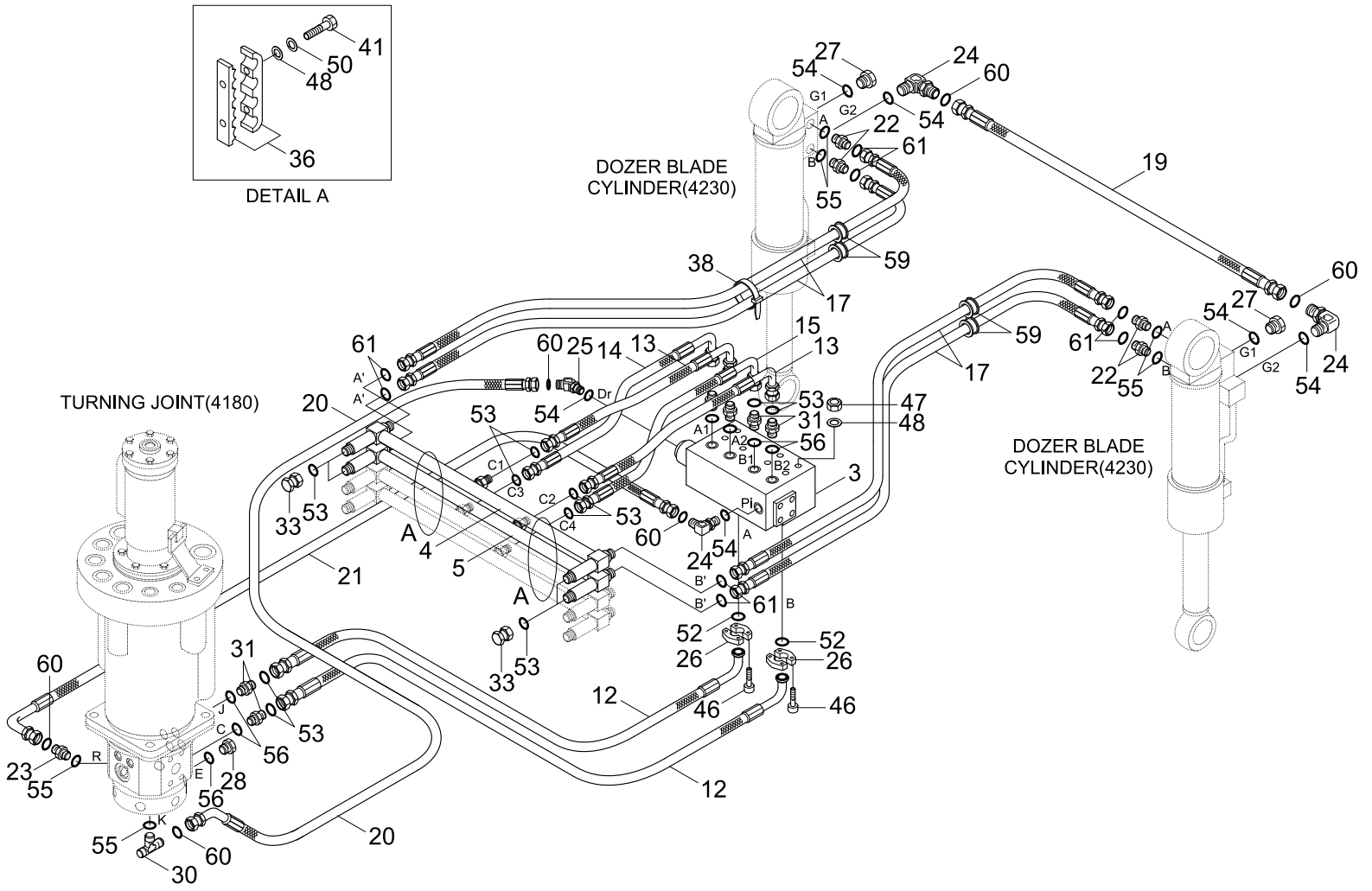

Item	Part_No	IS	Ord	T	Description	Qty	Serial_No	ITC	Remark
3	31ER-12010				SELECTOR VALVE	1			
4	31N5-70110				PIPE ASSY	1	- #0036		
	31N5-70111				PIPE ASSY	1	#0037 -	D	
5	31N5-70120				PIPE ASSY	1	- #0036		
	31N5-70121				PIPE ASSY	1	#0037 -	D	
12	31N5-70371				HOSE ASS-ORFS	2	#0187 -	B	
13	31N4-70341				HOSE ASSY	2	#0187 -	B	
14	31N4-70351				HOSE ASSY	1	#0187 -	B	
15	P930-087010				HOSE ASSY-ORFS 0X90	1	#0187 -	B	
17	P603-067026				HOSE ASSY-THD	4	- #0036		
	P913-067024				HOSE ASSY-ORFS 0X0	4	#0037 -	D	
19	P603-047018				HOSE ASSY-THD	1	- #0036		
	P913-047018				HOSE ASSY-ORFS 0X0	1	#0037 -	D	
20	P613-042024				HOSE ASSY-THD 0X45	1	- #0036		
	P923-042024				HOSE ASSY-ORFS 0X45	1	#0037 - #0186	D	
	P920-042024				HOSE ASSY-ORFS 0X45	1	#0187 -	B	
21	P623-042029				HOSE ASSY-THD 0X90	1	- #0036		
	P933-042029				HOSE ASSY-ORFS 0X90	1	#0037 - #0186	D	
	P930-042029				HOSE ASSY-ORFS 0X90	1	#0187 -	B	
22	P010-110003				CONNECTOR	4	- #0036		
	X500-110002				CONNECTOR-ORFS	4	#0037 -	D	
23	P010-110013				CONNECTOR	1	- #0036		
	X500-110013				CONNECTOR-ORFS	1	#0037 -	D	
24	P020-110001				ELBOW-90	3	- #0036		
	X520-110001				ELBOW-90,ORFS	3	#0037 -	D	

Item	Part_No	IS	Ord	T	Description	Qty	Serial_No	ITC	Remark
25	P030-110001				ELBOW-45	1	- #0036		
	X530-110001				ELBOW-45,ORFS	1	#0037 -	D	
26	P173-160104				FLANGE-SPLIT	4			
27	P220-110102				PLUG	2			
28	P220-110104				PLUG-HEX	1			
30	P310-060604				TEE-BRANCH TYPE	1	- #0036		
	X810-065251				TEE-B/TYPE,ORFS	1	#0037 -	D	
31	X500-110003				CONNECTOR-ORFS	6			
33	X710-100104				CAP-DUST	4			
36	31EK-70370				CLAMP-PIPE	2			
38	S552-102370				CLAMP-BAND	10			
41	S017-100506				BOLT-HEX	4			
46	S109-101306				BOLT-SOCKET	8			
47	S205-101006				NUT-HEX	8			
48	S403-10100B				WASHER-PLAIN	12			
50	S411-100006				WASHER-SPRING	4			
52	Y171-024004				O-RING	2			
53	S621-014001				O-RING	14			
54	S631-011004				O-RING	8			
55	S631-014004				O-RING	6			
56	S631-018004				O-RING	7			
59	S760-100800				GROMMET	4			
60	S621-011001				O-RING	6	#0037 -	-	
61	S621-012001				O-RING	8	#0037 -	-	

LOWER HYD PIPING 2(F/BLD R/BLD)

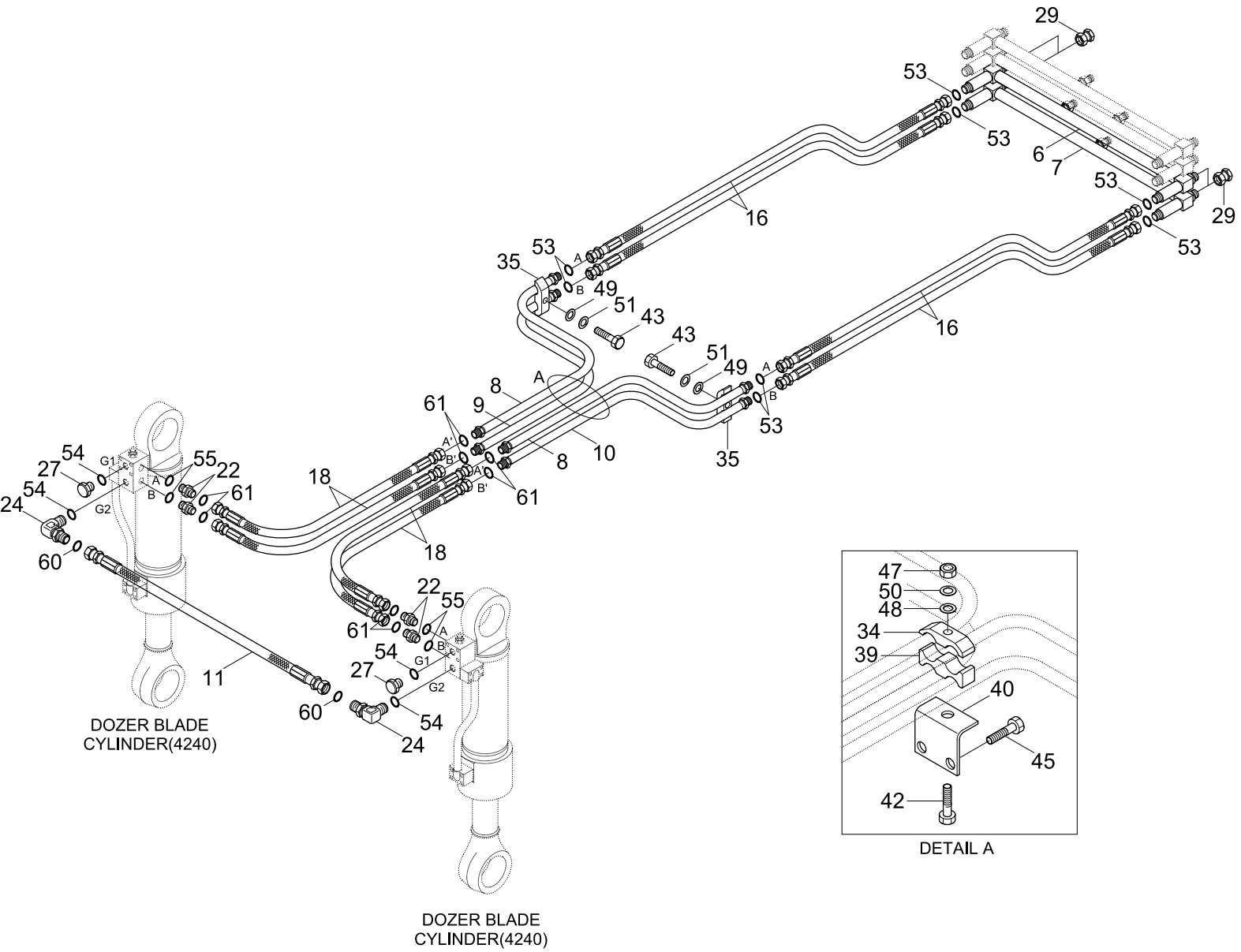

Item	Part_No	IS	Ord	T	Description	Qty	Serial_No	ITC	Remark
6	31N5-70310				PIPE ASSY	1	- #0036		
	31N5-70311				PIPE ASSY	1	#0037 -	D	
7	31N5-70320				PIPE ASSY	1	- #0036		
	31N5-70321				PIPE ASSY	1	#0037 -	D	
8	31N4-70510				PIPE ASSY	2	- #0036		
	31N4-70511				PIPE ASSY	2	#0037 -	D	
9	31N4-70520				PIPE ASSY	1	- #0036		
	31N4-70521				PIPE ASSY	1	#0037 -	D	
10	31N4-70530				PIPE ASSY	1	- #0036		
	31N4-70531				PIPE ASSY	1	#0037 -	D	
11	P603-047012				HOSE ASSY-THD	1	- #0036		
	P913-047014				HOSE ASSY-ORFS 0X0	1	#0037 -	D	
16	P913-087029				HOSE ASSY-ORFS 0X0	4	- #0186		
	P910-087029				HOSE ASSY-ORFS 0X0	4	#0187 -	B	
18	P613-067016				HOSE ASSY-THD 0X45	4	- #0036		
	P913-067016				HOSE ASSY-ORFS 0X0	4	#0037 -	D	
22	P010-110003				CONNECTOR	4	- #0036		
	X500-110002				CONNECTOR-ORFS	4	#0037 -	D	
24	P020-110001				ELBOW-90	2	- #0036		
	X520-110001				ELBOW-90,ORFS	2	#0037 -	D	
27	P220-110102				PLUG	2			
29	P290-100103				PLUG-CAP	4	- #0036		
	X710-100103				CAP-DUST	4	#0037 -	D	
34	31E4-3030	20			CLAMP-PIPE	2			
35	31EE-50180				CLAMP ASSY	2			

Item	Part_No	IS	Ord	T	Description	Qty	Serial_No	ITC	Remark
39	31E4-31430				SPACER-CLAMP	2			
40	31E4-31440				BRACKET-PIPE	2			
42	S017-101006				BOLT-HEX	2			
43	S017-120606				BOLT-HEX	2			
45	S037-102526				BOLT-W/WASHER	4			
47	S205-101006				NUT-HEX	2			
48	S403-10100B				WASHER-PLAIN	12			
49	S403-12100B				WASHER-PLAIN	2			
50	S411-100006				WASHER-SPRING	2			
51	S411-120006				WASHER-SPRING	2			
53	S621-014001				O-RING	8			
54	S631-011004				O-RING	4			
55	S631-014004				O-RING	4			
60	S621-011001				O-RING	2	#0037 -	-	
61	S621-012001				O-RING	8	#0037 -	-	

FRONT BLADE PIPING(#0340-)

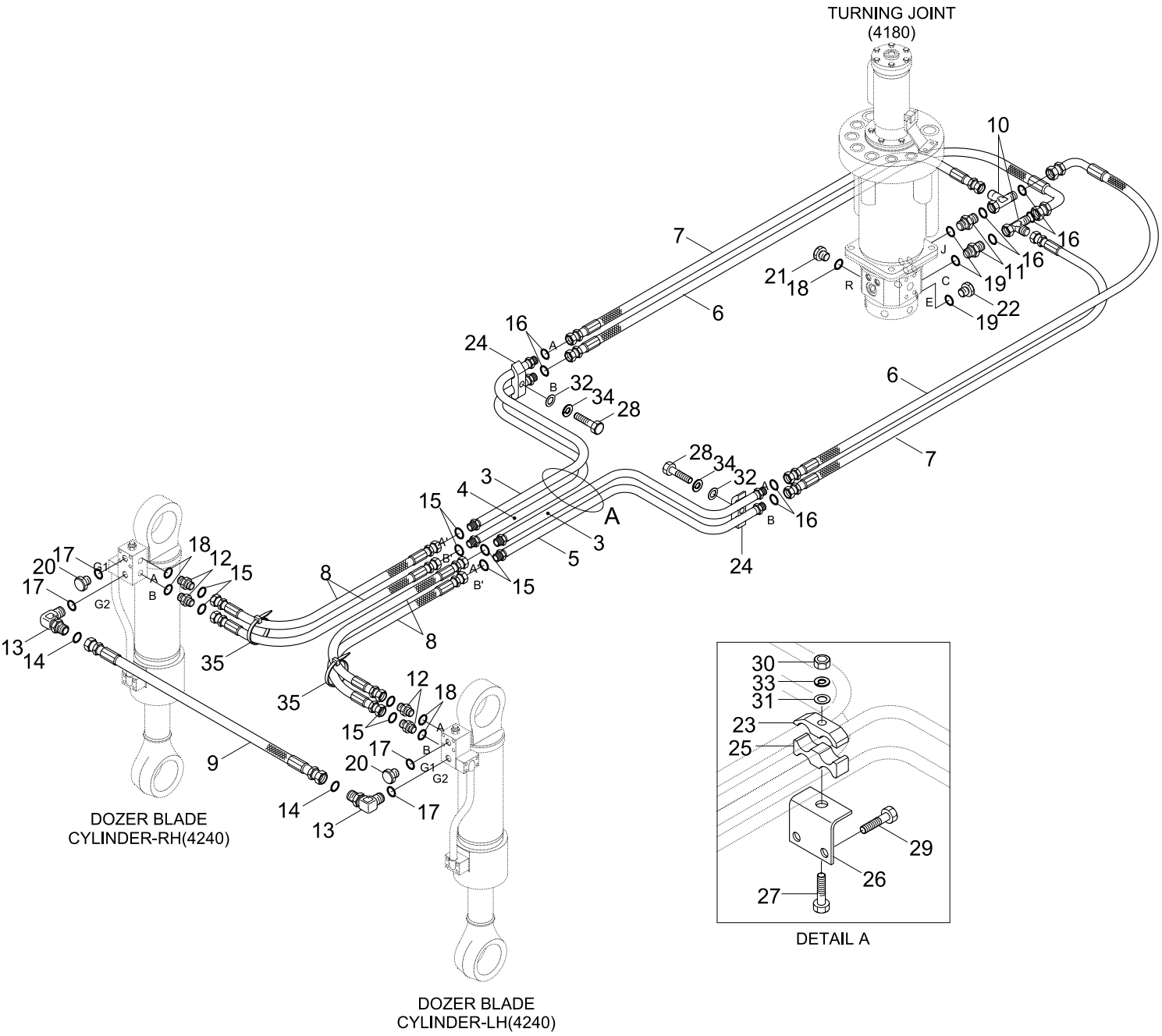

Item	Part_No	IS	Ord	T	Description	Qty	Serial_No	ITC	Remark
*	@				FRONT DOZER BLADE PIPING	1	#0340 -	-	NOT
3	31N4-70511				PIPE ASSY	2			
4	31N4-70521				PIPE ASSY	1			
5	31N4-70531				PIPE ASSY	1			
6	P933-087028				HOSE ASSY-ORFS 0X90	2			
7	P933-087011				HOSE ASSY-ORFS 0X90	2			
8	P913-067016				HOSE ASSY-ORFS 0X0	4			
9	P913-047014				HOSE ASSY-ORFS 0X0	1			
10	X840-535353				S/NUT TEE-R/TYPE,ORFS	2			
11	X500-110003				CONNECTOR-ORFS	2			
12	X500-110002				CONNECTOR-ORFS	4			
13	X520-110001				ELBOW-90,ORFS	2			
14	S621-011001				O-RING,ORFS	2			
15	S621-012001				O-RING,ORFS	8			
16	S621-014001				O-RING,ORFS	10			
17	S631-011004				O-RING	4			
18	S631-014004				O-RING	4			
19	S631-018004				O-RING	3			
20	P220-110102				PLUG-HEX	2			
21	P220-110103				PLUG	1			
22	P220-110104				PLUG-HEX	1			
23	31E4-3030	20			CLAMP-PIPE	1			
24	31EE-50180				CLAMP ASSY	2			
25	31E4-31430				SPACER-CLAMP	1			
26	31E4-31440				BRACKET-PIPE	1			

Item	Part_No	IS	Ord	T	Description	Qty	Serial_No	ITC	Remark
27	S017-101002				BOLT-HEX	1			
28	S017-120602				BOLT-HEX	2			
29	S037-102522				BOLT-W/WASHER	2			
30	S205-101002				NUT-HEX	1			
31	S403-101006				WASHER-PLAIN	1			
32	S403-121002				WASHER-PLAIN	2			
33	S411-100002				WASHER-SPRING	6			
34	S411-120002				WASHER-SPRING	2			
35	S552-102370				CLAMP-BAND	10			

BOOM HYD PIPING(4.6M, STD)

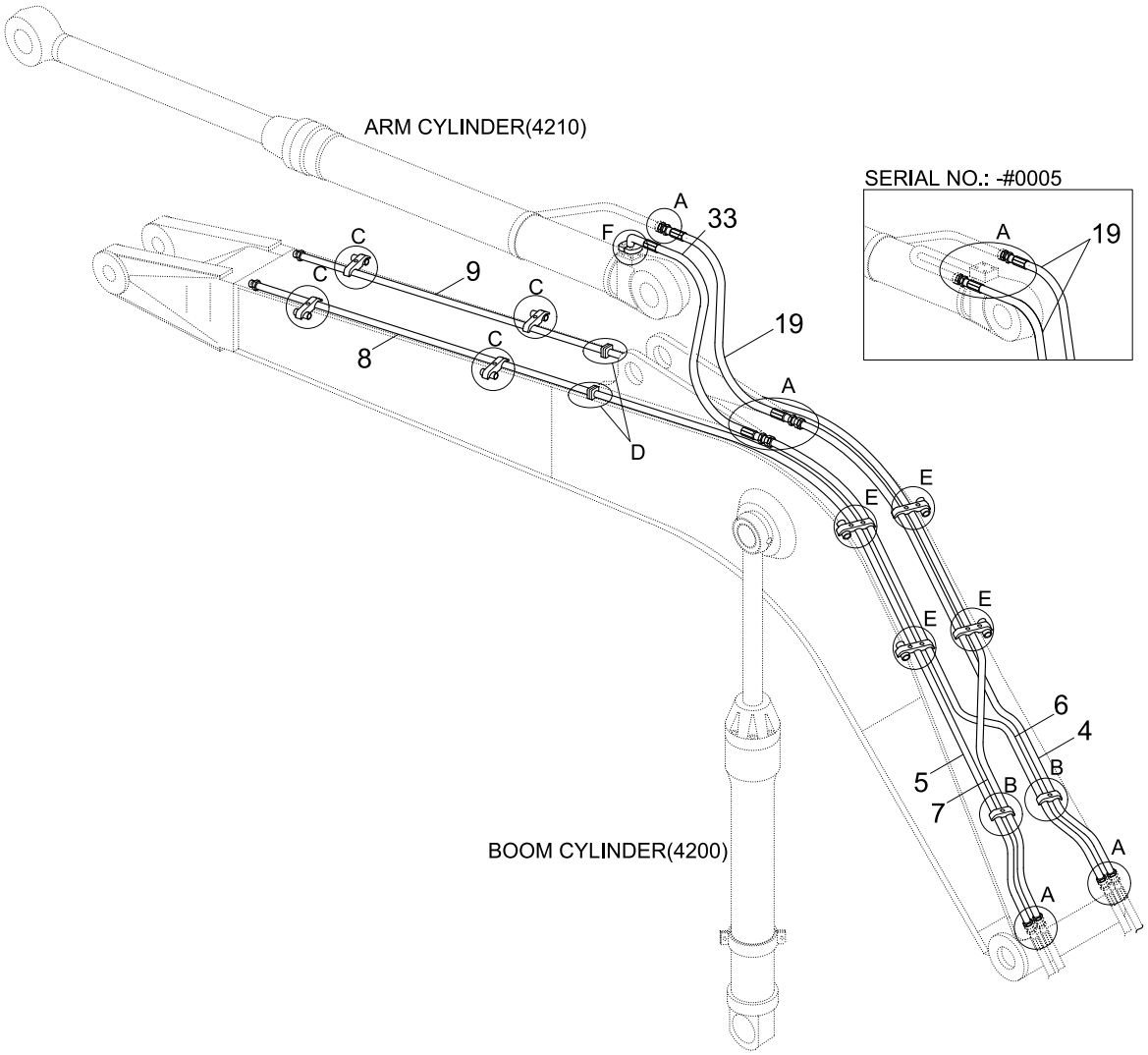

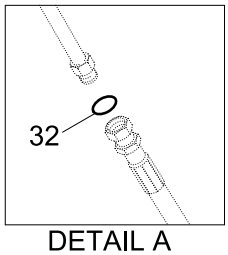

DETAIL A

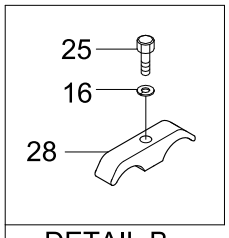

DETAIL B

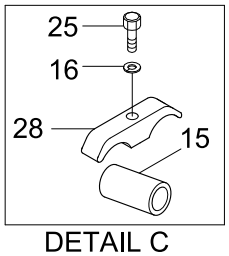

DETAIL C

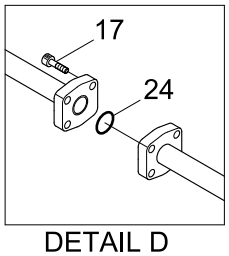

DETAIL D

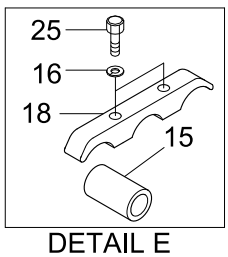

DETAIL E

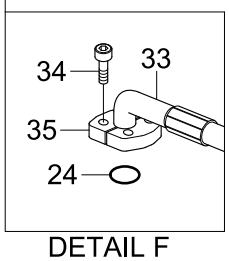

DETAIL F

Item	Part_No	IS	Ord	T	Description	Qty	Serial_No	ITC	Remark
4	31N4-51110				PIPE ASSY	1			
5	31N4-51120				PIPE ASSY	1			
6	31N4-51130				PIPE ASSY	1			
7	31N4-51140				PIPE ASSY	1			
8	31N4-51151				PIPE ASSY	1			
9	31N4-51161				PIPE ASSY	1			
15	31N5-50220				SPACER-PIPE	4			
16	S411-160006				WASHER-SPRING	14			
17	S109-100506				BOLT-SOCKET	8			
18	31N4-50400				CLAMP-PIPE	4			
19	P910-127017				HOSE ASSY-ORFS 0X0	2	- #0005		
					HOSE ASSY-ORFS 0X0	1	#0006 -	A	
24	Y171-019004				O-RING	2	- #0005		
					O-RING	3	#0006 -	A	
25	S017-16070D				BOLT-HEX	14			
28	31N4-12200				CLAMP-PIPE	8			
32	S621-018001				O-RING	8	- #0005		
					O-RING	7	#0006 -	A	
33	31N4-51210				HOSE ASSY	1	#0006 - #0728	D	
	31N4-51211				HOSE ASSY	1	#0729 -	A	
34	S109-100306				BOLT-SOCKET	4	#0006 -	-	
35	P173-120102				FLANGE-HYD,SPLIT	2	#0006 -	-	

BOOM GREASE LUB SYSTEM(4.6M, STD)

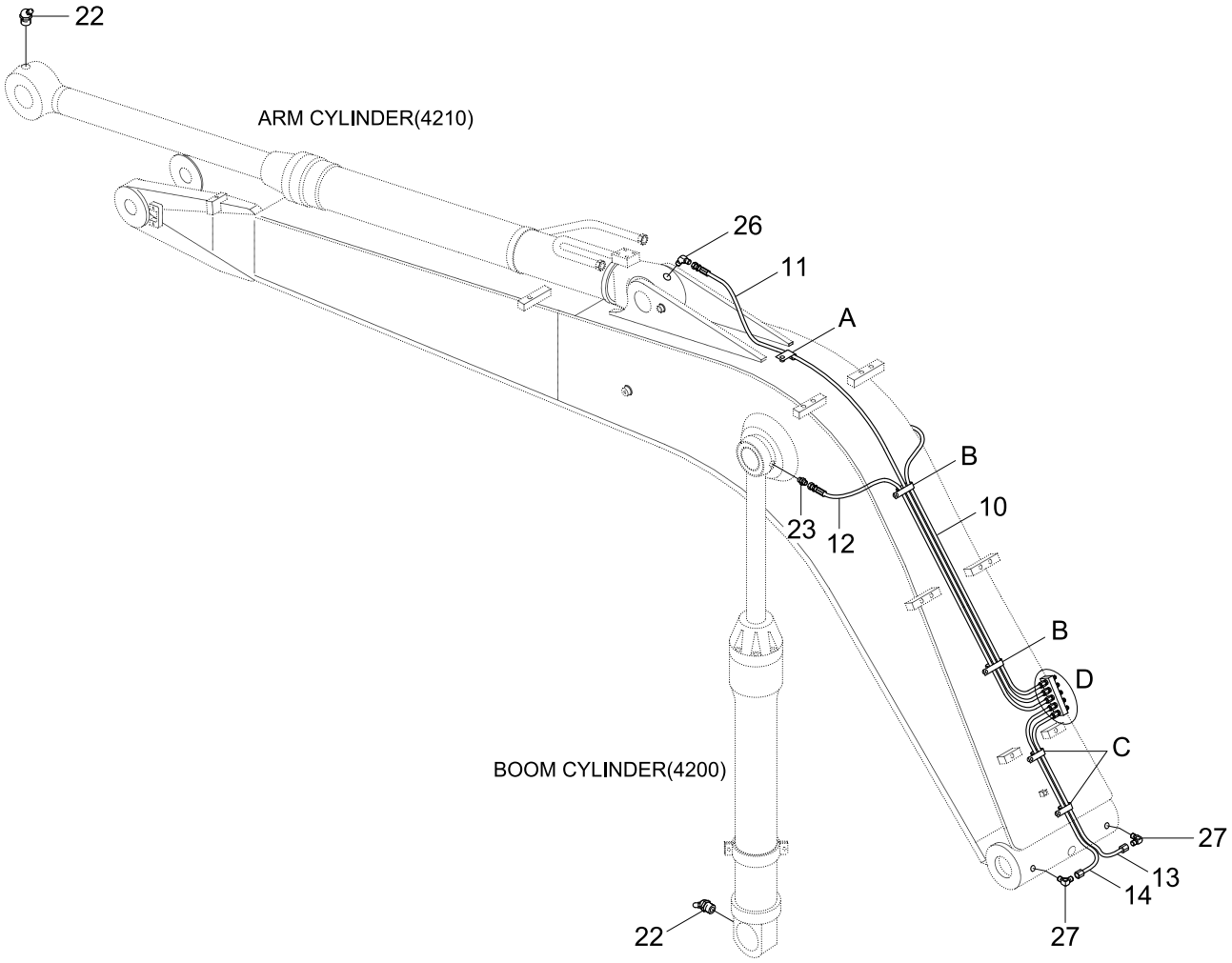

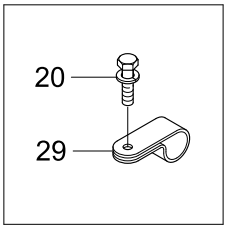

DETAIL A

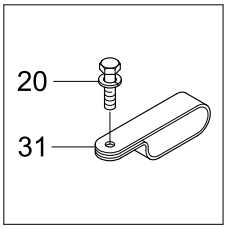

DETAIL B

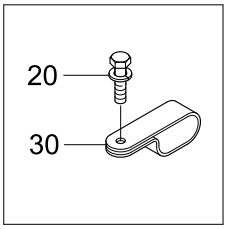

DETAIL C

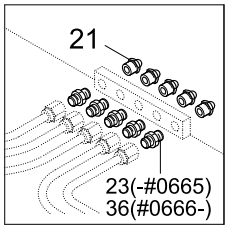

DETAIL D

Item	Part_No	IS	Ord	T	Description	Qty	Serial_No	ITC	Remark
10	P840-042040				HOSE ASSY-SYN THD	1			
11	P840-042050				HOSE ASSY-SYN THD	1			
12	P840-042042				HOSE ASSY-SYN THD	1			
13	P840-042015				HOSE ASSY-SYN THD	1			
14	P840-042016				HOSE ASSY-SYN THD	1			
20	S035-062026				BOLT-W/WASHER	6			
21	S651-810002				NIPPLE-GREASE	5			
22	S653-810002				NIPPLE-GREASE	3			
23	P010-430001				CONNECTOR	7			
26	E231-0207	10			ELBOW-45	1			
27	31NB-50280				ELBOW-90	2			
29	31N8-50370				CLAMP-HOSE	1			
30	31N8-50380				CLAMP-HOSE	2			
31	31N8-50390				CLAMP-HOSE	3			

BOOM HYD PIPING(ADJUST BOOM)

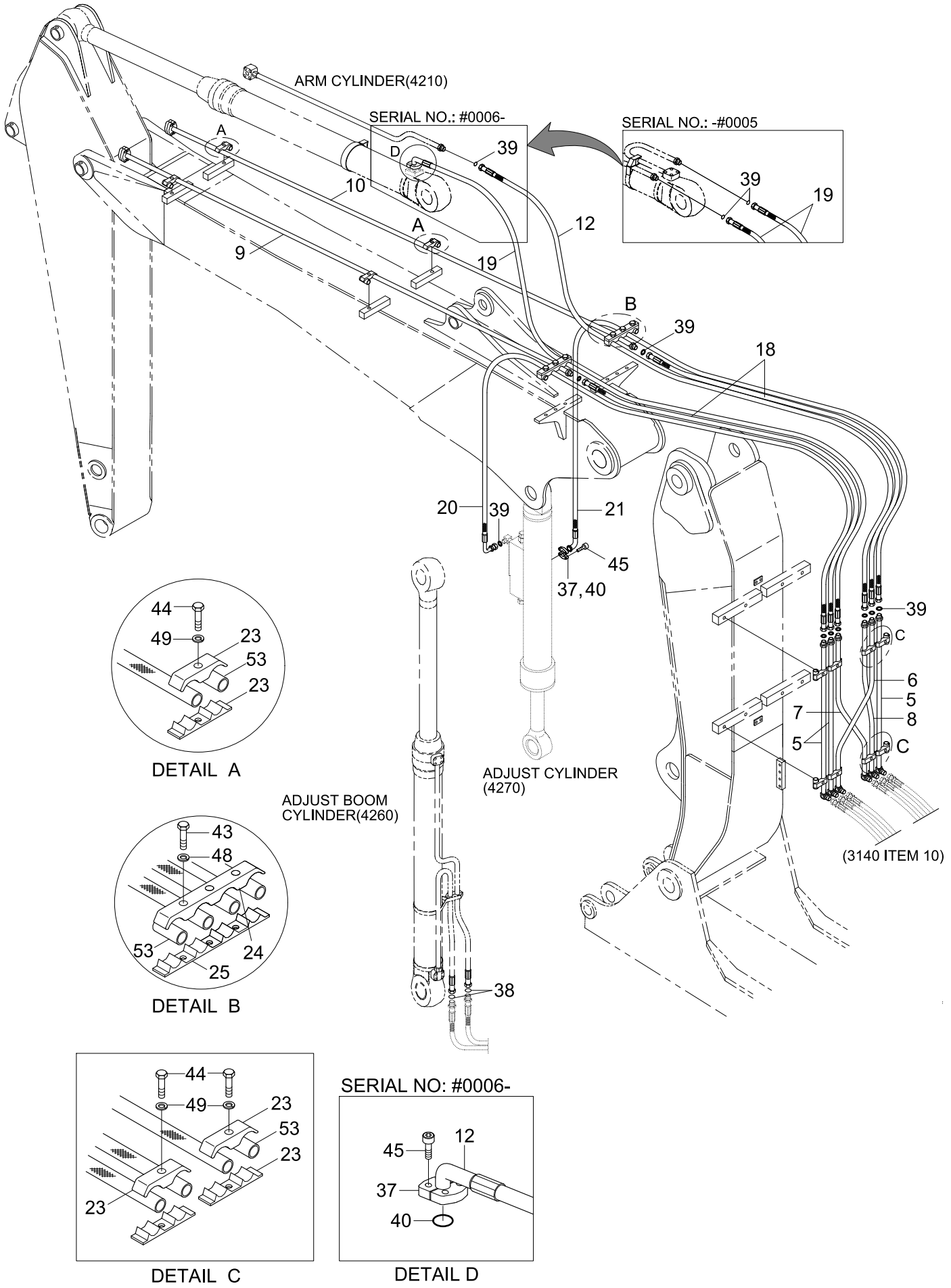

Item	Part_No	IS	Ord	T	Description	Qty	Serial_No	ITC	Remark
5	31N4-52950				PIPE ASSY	3			
6	31N4-52960				PIPE ASSY	1			
7	31N4-52970				PIPE ASSY	1			
8	31N4-52980				PIPE ASSY	1			
9	31N4-52990				PIPE ASSY	1			
10	31N4-53000				PIPE ASSY	1			
12	P980-127339				HOSE ASSY-ORFS,FLG 0X90	1	#0006 - #0036	D	
	P980-127341				HOSE ASSY-ORFS,FLG 0X90	1	#0037 -	D	
18	P910-127020				HOSE ASSY-ORFS 0X0	2			
19	P910-127039				HOSE ASSY-ORFS 0X0	2	- #0005		
					HOSE ASSY-ORFS 0X0	1	#0006 - #0036	A	
	P910-127041				HOSE ASSY-ORFS 0X0	1	#0037 -	D	
20	31N4-53120				HOSE ASSY	1			
21	31N4-53130				HOSE ASSY	1			
23	31EK-50340				CLAMP-PIPE	12	- #0036		
	31N4-12200				CLAMP-PIPE	12	#0037 -	D	
24	31N4-53140				CLAMP-HOSE	2			
25	31N4-53150				CLAMP-HOSE	2			
37	P173-120102				FLANGE-HYD,SPLIT	2	- #0005		
					FLANGE-HYD,SPLIT	4	#0006 -	A	
38	S621-014001				O-RING	4			
39	S621-018001				O-RING	17	- #0005		
					O-RING	16	#0006 -	A	
40	Y171-019004				O-RING	1	- #0005		
					O-RING	2	#0006 -	A	

Item	Part_No	IS	Ord	T	Description	Qty	Serial_No	ITC	Remark
43	S017-120706				BOLT-HEX	6			
44	S017-16070D				BOLT-HEX	12			
45	S109-100306				BOLT-SOCKET	4	- #0005		
					BOLT-SOCKET	8	#0006 -	A	
48	S411-120006				WASHER-SPRING	6			
49	S411-160006				WASHER-SPRING	12			
53	E131-0277	30			SPACER-PIPE	10			

BOOM GREASE LUB SYSTEM(ADJUST BOOM)

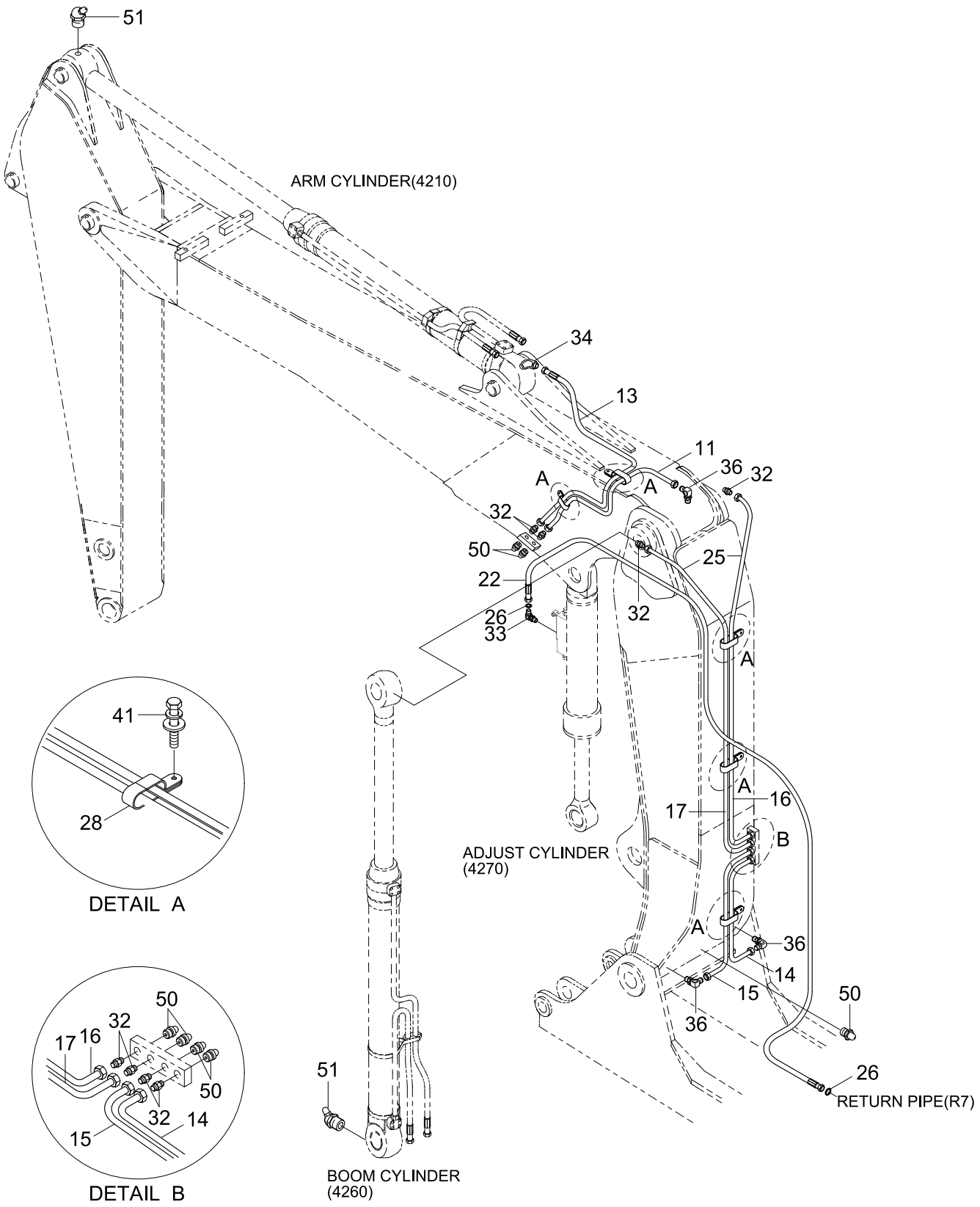

Item	Part_No	IS	Ord	T	Description	Qty	Serial_No	ITC	Remark
11	P840-042025				HOSE ASSY-SYN THD	1			
13	P840-042028				HOSE ASSY-SYN THD	1			
14	P840-042015				HOSE ASSY-SYN THD	1			
15	P840-042016				HOSE ASSY-SYN THD	1			
16	P840-042035				HOSE ASSY-SYN THD	1			
17	P840-042036				HOSE ASSY-SYN THD	1			
22	P600-042126				HOSE ASSY-THD 0X0	1	#0006 - #0036	-	
	P910-042126				HOSE ASSY-ORFS 0X0	1	#0037 -	D	
26	S621-011001				O-RING	2	#0037 -	-	
28	31N8-50380				CLAMP-HOSE	5			
32	P010-430011				CONNECTOR	8			
33	31E5-50350				ELBOW-90	1	- #0036		
	31N6-90550				ELBOW-90,ORFS	1	#0037 -	D	
34	E231-0207	10			ELBOW-45	1			
36	31NB-50280				CONNECTOR	3			
41	S035-062026				BOLT-W/WASHER	5			
50	S651-810002				NIPPLE-GREASE	7			
51	S653-810002				NIPPLE-GREASE	3			

BOOM SAFETY LOCK SYSTEM

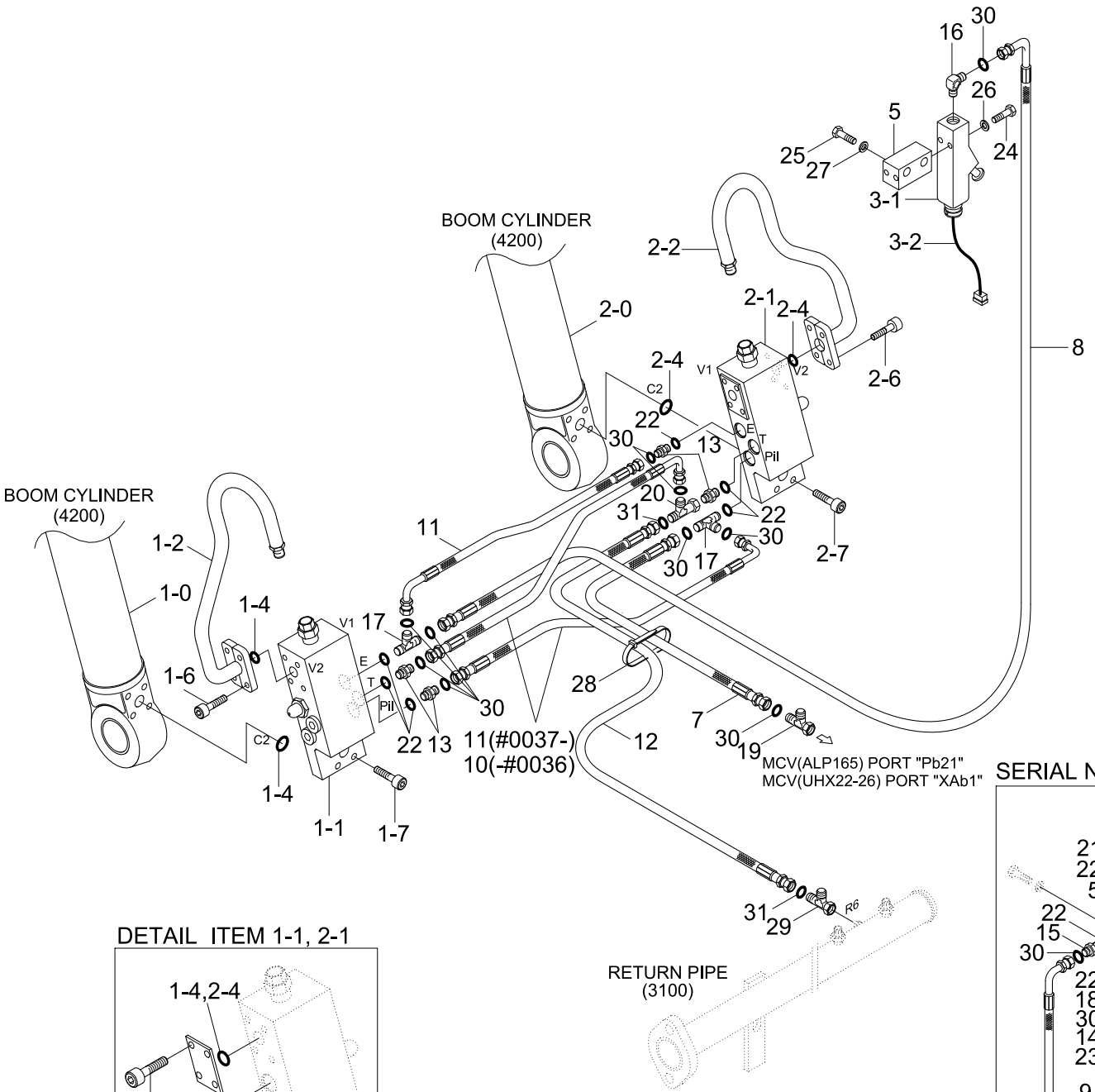

DETAIL ITEM 1-1, 2-1

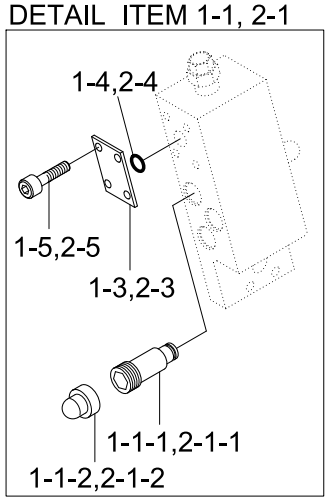

SERIAL NO : -#0737

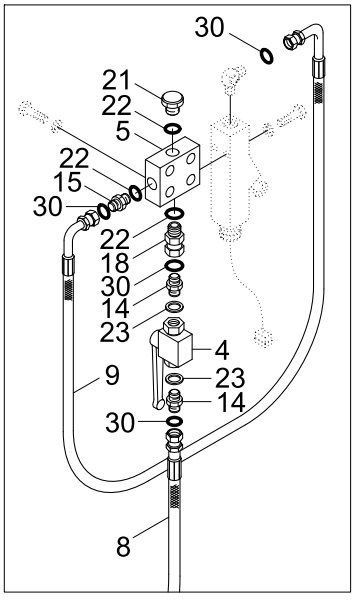

Description	Parts no	Included item
Boom safety lock seal kit	31Y1-18580	1-4, 2-4, 31Y1-18170(See 4200)

Item	Part_No	IS	Ord	T	Description	Qty	Serial_No	ITC	Remark
1	31N4-52120				BOOM SAFE LOCK CYL-LH	1			STD
	31N4-52910				BOOM SAFE LOCK CYL-LH	1			ADJUST BOOM
1-0	@				.BOOM CYL SUB ASSY	1			NOT
1-1	31N4-90510				.VALVE-SAFETY LOCK	1	- #0625		
	31NA-90550				.VALVE-SAFETY LOCK	1	#0626 -	B	
1-1-1	ZTAS-00001				..VALVE-RELIEF	1	- #0625		
	DRV-100A				..VALVE-RELIEF	1	#0626 -	B	
1-1-2	ZTAS-00002				..CAP	1	- #0625		
	DCP-001A				..CAP	1	#0626 -	B	
1-1-3	ZTAS-00003				..SEAL KIT	1	- #0625		
	AS568				..SEAL KIT	1	#0626 -	B	
1-2	31Y1-18550				.PIPE ASSY-LH	1			STD
	31Y1-21210				.PIPE ASSY-LH	1			ADJUST BOOM
1-3	P184-081112				.FLANGE-SQUARE	1			
K1-4	Y171-015001				.O-RING	3			
1-5	S109-080306				.BOLT-SOCKET	4			
1-6	S109-080406				.BOLT-SOCKET	4			
1-7	S109-080456				.BOLT-SOCKET	4			
2	31N4-52110				BOOM SAFE LOCK CYL-RH	1			STD
	31N4-52920				BOOM SAFE LOCK CYL-RH	1			ADJUST BOOM
2-0	@				.BOOM CYL SUB ASSY	1			NOT
2-1	31N4-90510				.VALVE-SAFETY LOCK	1	- #0625		
	31NA-90550				.VALVE-SAFETY LOCK	1	#0626 -	B	
2-1-1	ZTAS-00001				..VALVE-RELIEF	1	- #0625		
	DRV-100A				..VALVE-RELIEF	1	#0626 -	B	

Item	Part_No	IS	Ord	T	Description	Qty	Serial_No	ITC	Remark
2-1-2	ZTAS-00002				..CAP	1	- #0625		
	DCP-001A				..CAP	1	#0626 -	B	
2-1-3	ZTAS-00003				..SEAL KIT	1	- #0625		
	AS568				..SEAL KIT	1	#0626 -	B	
2-2	31Y1-18560				.PIPE ASSY-RH	1			STD
	31Y1-21220				.PIPE ASSY-RH	1			ADJUST BOOM
2-3	P184-081112				.FLANGE-SQUARE	1			
K2-4	Y171-015001				.O-RING	3			
2-5	S109-080306				.BOLT-SOCKET	4			
2-6	S109-080406				.BOLT-SOCKET	4			
2-7	S109-080456				.BOLT-SOCKET	4			
3	31E5-50325				SWITCH-PRESSURE	1			
3-1	31E5-50320				.SWITCH-PRESSURE	1			
3-2	21E5-50230				.HARNESS-EXT	1			
4	31E5-50330				VALVE-SHUT OFF	1	- #0737	-	
5	31E6-90550				BLOCK	1	- #0737		
	31E6-90551				BLOCK	1	#0738 -	D	
7	P400-042046				HOSE ASSY-COMPACT	1	- #0036		
	P930-042046				HOSE ASSY-ORFS 0X90	1	#0037 -	D	
8	P600-047014				HOSE ASSY-THD 0X0	1	- #0036		
	P930-047014				HOSE ASSY-ORFS 0X90	1	#0037 -	D	
9	P610-047012				HOSE ASSY-THD 0X45	1	- #0036		
	P920-047012				HOSE ASSY-ORFS 0X45	1	#0037 - #0737	D	
10	P420-042008				HOSE ASSY-COMP 0X90	2	- #0036	-	
11	P620-047008				HOSE ASSY-THD 0X90	1	- #0036		

Item	Part_No	IS	Ord	T	Description	Qty	Serial_No	ITC	Remark
11	P930-047008				HOSE ASSY-ORFS 0X90	3	#0037 -	D	
12	P420-062050				HOSE ASSY-COMP 0X90	1	- #0036		
	P930-062050				HOSE ASSY-ORFS 0X90	1	#0037 -	D	
13	P010-110002				CONNECTOR	4	- #0036		
	X500-110001				CONNECTOR-ORFS	4	#0037 -	D	
14	P010-120002				CONNECTOR	2	- #0036		
	X500-120001				CONNECTOR-ORFS	2	#0037 - #0367	D	
	31N5-70460				CONNECTOR-ORFS	2	#0368 - #0737	C	
15	P030-110001				ELBOW-45	1	- #0036		
	X530-110001				ELBOW-45,ORFS	1	#0037 - #0737	D	
16	31E5-50350				ELBOW-90	1	- #0036		
	31N6-90550				ELBOW-90,ORFS	1	#0037 -	D	
17	P320-040404				TEE-RUN TYPE	2	- #0036		
	X820-045151				TEE-R/TYPE,ORFS	2	#0037 -	D	
18	31E6-90560				ADAPTOR-SWIVEL NUT	1	- #0036		
	31N4-22180				ADAPTOR-SWIVEL NUT	1	#0037 - #0737	D	
19	31E6-0219	20			TEE-LONG	1	- #0036		
	31N4-22150				TEE-LONG,ORFS	1	#0037 -	D	
20	31M6-51160				TEE-R/TYPE,S/NUT	1	- #0036		
	31N4-41140				TEE-S/NUT,ORFS	1	#0037 -	D	
21	P220-110102				PLUG	1	- #0737	-	
22	S631-011004				O-RING	9	- #0737		
					O-RING	6	#0738 -	A	
23	P391-040000				WASHER-COPPER	2	- #0367	-	
24	S015-050456				BOLT-HEX	2			

Item	Part_No	IS	Ord	T	Description	Qty	Serial_No	ITC	Remark
25	S017-120606				BOLT-HEX	2			
26	S411-050006				WASHER-SPRING	2			
27	S411-120006				WASHER-SPRING	2			
28	S552-020102				CLAMP-BAND	10			
29	31EG-90540				TEE-R/TYPE,S/NUT	1	- #0036		
	X840-525252				TEE-R/TYPE,SWIVEL,ORFS	1	#0037 -	D	
30	S621-011001				O-RING	13	#0037 -	-	
31	S621-012001				O-RING(SEAL LOCK TYPE)	2	#0037 -	-	
K	31Y1-18580				SELA KIT	1			SEE ILLUST

QUICK CLAMP HYDRAULIC PIPING(-#0036)

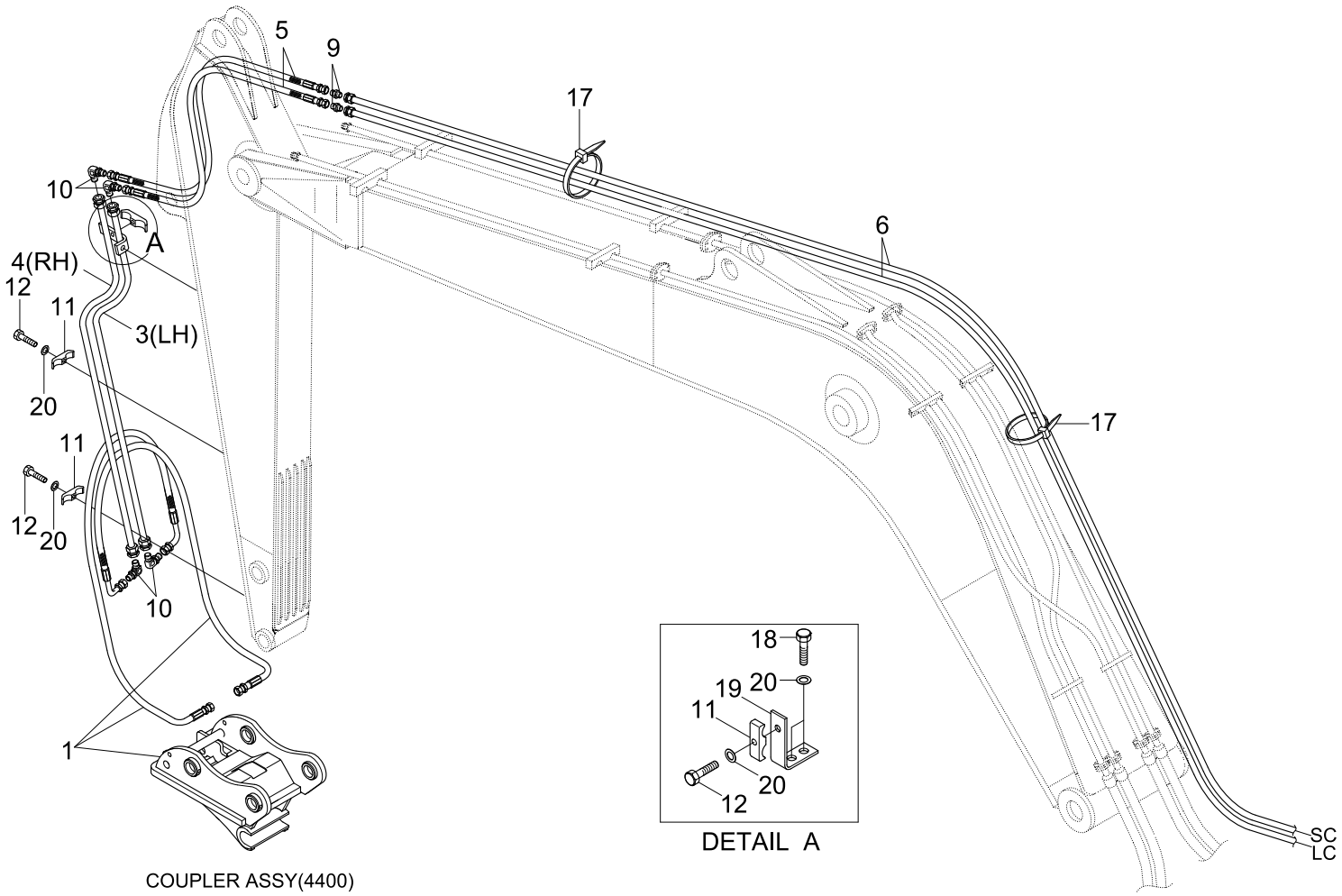

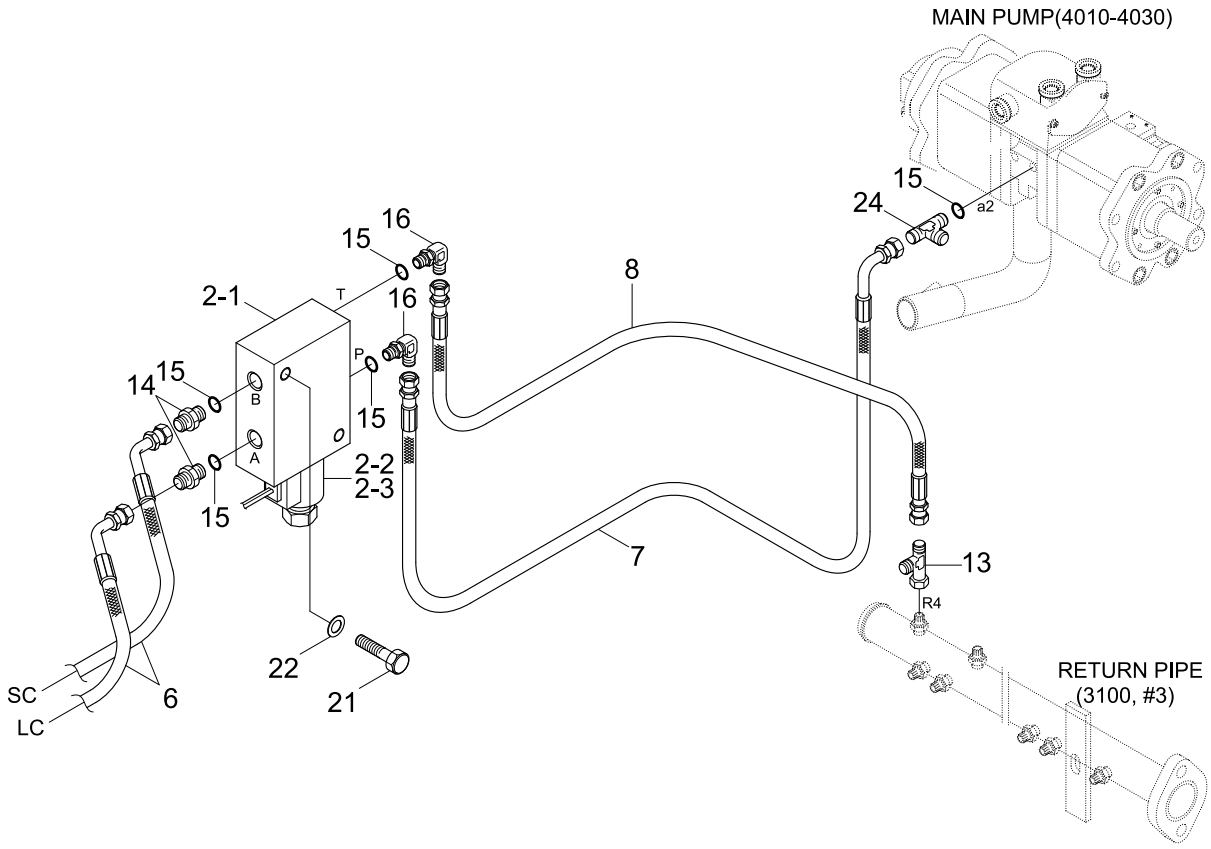

Item	Part_No	IS	Ord	T	Description	Qty	Serial_No	ITC	Remark
*	@				QUICK CLAMP HYD PIPING	1	- #0036	-	NOT
1	@				QUICK CLAMP ASSY	1			NOT
2	34EA-91720				SOLENOID VALVE	1			
2-1	34EA-91720B				.MANIFOLD	1	- #0036	-	
2-2	GS044200NC				.VALVE-SOLENOID	1	- #0036	-	
2-3	CAP024L+DT				.COIL	1	- #0036	-	
3	31N4-90620				PIPE ASSY	1			LH
4	31N4-90630				PIPE ASSY	1			RH
5	P603-047046				HOSE ASSY-THD	2			
6	P610-047113				HOSE ASSY-THD 0X45	2			
7	P600-047034				HOSE ASSY-THD 0X0	1			
8	P610-047011				HOSE ASSY-THD 0X90	1			
9	31L7-40190				CONNECTOR	2			
10	34EA-91780				ELBOW-90,MALE	4			
11	34EA-91811				CLAMP-PIPE	3			
12	S107-100302				BOLT-SOCKET	3			
13	32E6-10460				TEE-SWEVEL NUT	1			
14	P010-110002				CONNECTOR	2			
15	S631-011001				O-RING	5			
16	P020-110001				ELBOW-90	2			
17	S551-050203				CLAMP-BAND	25			
18	S017-100202				BOLT-HEX	2			
19	34EA-91801				BRACKET-CLAMP	1			
20	S441-100002				WASHER-HARDENED	5			
21	S017-100502				BOLT-HEX	2			

Item	Part_No	IS	Ord	T	Description	Qty	Serial_No	ITC	Remark
22	S411-100002				WASHER-SPRING	2			
24	31EM-94090				TEE	1			

QUICK CLAMP HYD PIPING(#0037-)

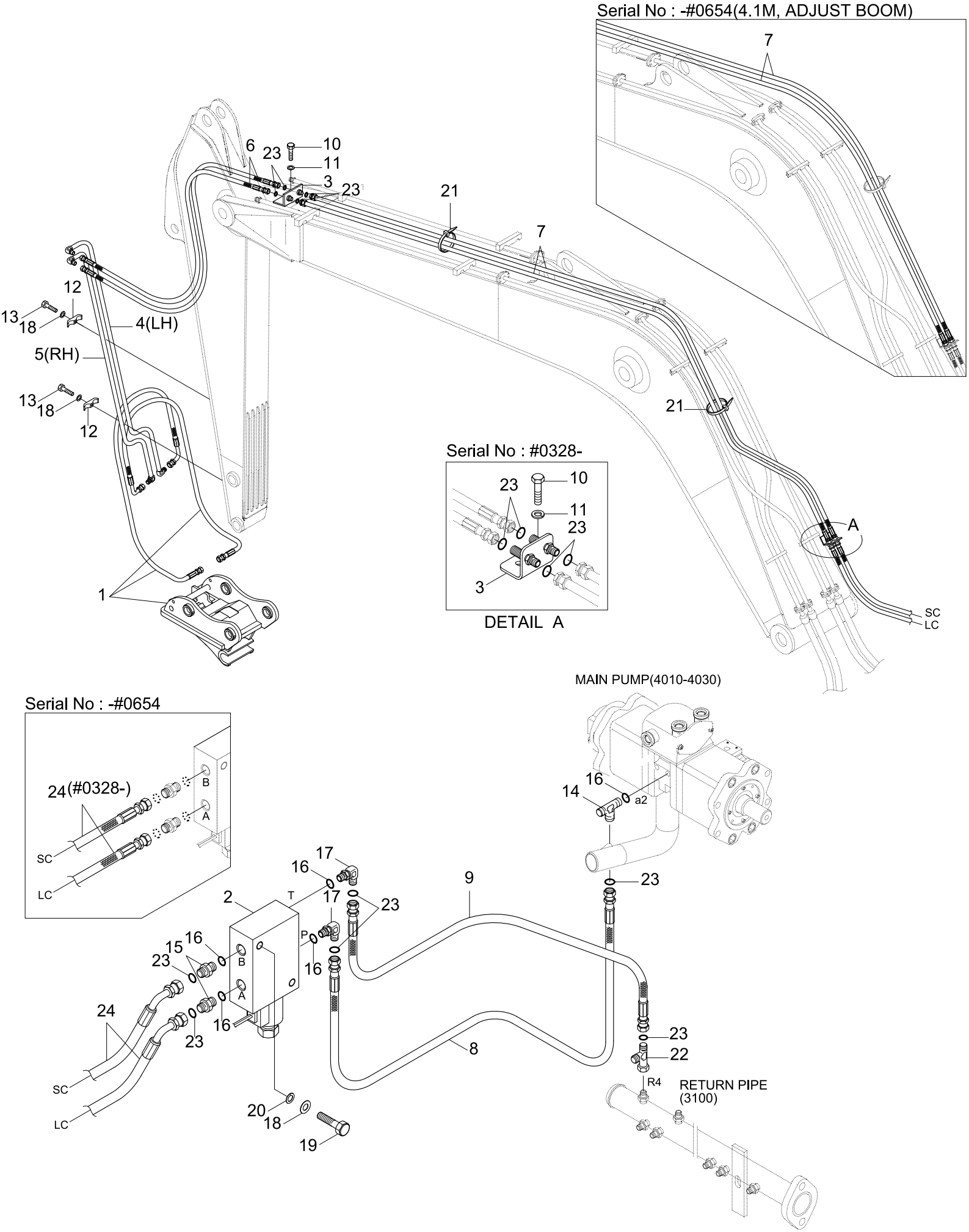

Item	Part_No	IS	Ord	T	Description	Qty	Serial_No	ITC	Remark
*	@				QUICK CLAMP HYD PIPING	1	#0037 -	D	NOT
1	@				QUICK CLAMP ASSY	1			NOT
2	34EA-91720				SOLENOID VALVE	1			
2-1	34EA-91720B				.MANIFOLD	1	#0037 -	-	
2-2	GS044200NC				.VALVE-SOLENOID	1	#0037 -	-	
2-3	CAP024L+DT				.COIL	1	#0037 -	-	
3	31N4-90680				TERMINAL-Q/CLAMP	1	- #0327		
					TERMINAL-Q/CLAMP	2	#0328 -	A	
4	31N4-90602				PIPE ASSY	1			1.9/2.1/3.0M AM
	31N4-90622				PIPE ASSY	1			2.5M AM, LH
5	31N4-90612				PIPE ASSY	1			1.9/2.1/3.0M AM
	31N4-90632				PIPE ASSY	1			2.5M AM, RH
6	P913-047026				HOSE ASSY-ORFS 0X0	2			1.9M/2.1M AM
	P913-047033				HOSE ASSY-ORFS 0X0	2			2.5M AM
	P913-047050				HOSE ASSY-ORFS 0X0	2			3.0M AM
7	P910-047130				HOSE ASSY-ORFS 0X0	2	- #0327		4.6M BM, STD
	P910-047095				HOSE ASSY-ORFS 0X0	2	#0328 -	D	4.6M BM, STD
	P910-047124				HOSE ASSY-ORFS 0X0	2	- #0327		4.1M BM
	P910-047086				HOSE ASSY-ORFS 0X0	2	#0328 - #0654	D	4.1M BM
	P910-047087				HOSE ASSY-ORFS 0X0	2	#0655 -	D	4.1M BM
	P910-047135				HOSE ASSY-ORFS 0X0	2	- #0327		ADJUST BOOM
	P910-047096				HOSE ASSY-ORFS 0X0	2	#0328 - #0654	D	ADJUST BOOM
	P910-047097				HOSE ASSY-ORFS 0X0	2	#0655 -	D	ADJUST BOOM
8	P910-047030				HOSE ASSY-ORFS 0X0	1	- #0327		
	31N4-95750				HOSE ASSY	1	#0328 -	B	

Item	Part_No	IS	Ord	T	Description	Qty	Serial_No	ITC	Remark
9	P930-042008				HOSE ASSY-ORFS 0X90	1			
10	S017-160752				BOLT-HEX	1	- #0327		
					BOLT-HEX	2	#0328 -	A	
11	S411-160002				WASHER-SPRING	1	- #0327		
					WASHER-SPRING	2	#0328 -	A	
12	34EA-91811				CLAMP-PIPE	3			
13	S017-100302				BOLT-HEX	3			
14	31N4-22170				TEE-RUN TYPE	1			
15	X500-110001				CONNECTOR-ORFS	2			
16	S631-011004				O-RING	5			
17	X520-110001				ELBOW-90,ORFS	2			
18	S441-100002				WASHER-HARDENED	5			
19	S017-100502				BOLT-HEX	2			
20	S411-100002				WASHER-SPRING	2			
21	S554-054300				CLAMP-BAND	20			
22	X840-515151				TEE-R/TYPE,SWIVEL,ORFS	1			
23	S621-011001				O-RING	12			
24	P910-047038				HOSE ASSY-ORFS 0X0	2	#0328 - #0654	-	
	P920-047034				HOSE ASSY-ORFS 0X45	2	#0655 -	D	

ARM HYDRAULIC PIPING

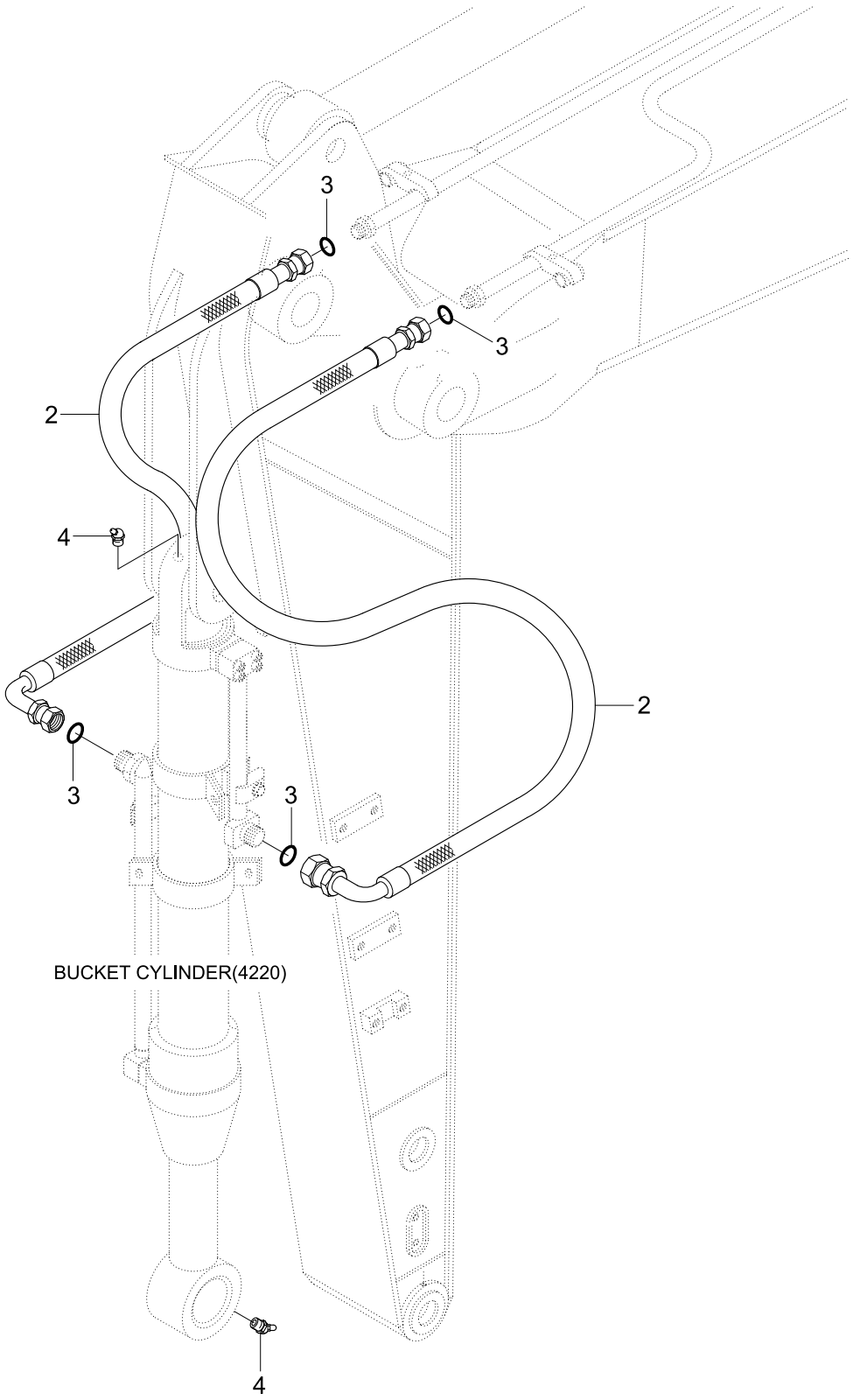

Item	Part_No	IS	Ord	T	Description	Qty	Serial_No	ITC	Remark
2	P933-127034				HOSE ASSY-ORFS 0X90	2	- #0247		2.5M
	31N4-60210				HOSE ASSY	2	#0248 -	B	2.5M
	P933-127028				HOSE ASSY-ORFS 0X90	2	- #0247		1.9M, 2.1M
	31N4-60220				HOSE ASSY	2	#0248 -	B	1.9M, 2.1M
3	S621-018001				O-RING,ORFS	4			
4	S651-810002				NIPPLE-GREASE	2			

ARM HYDRAULIC PIPING(3.0M)

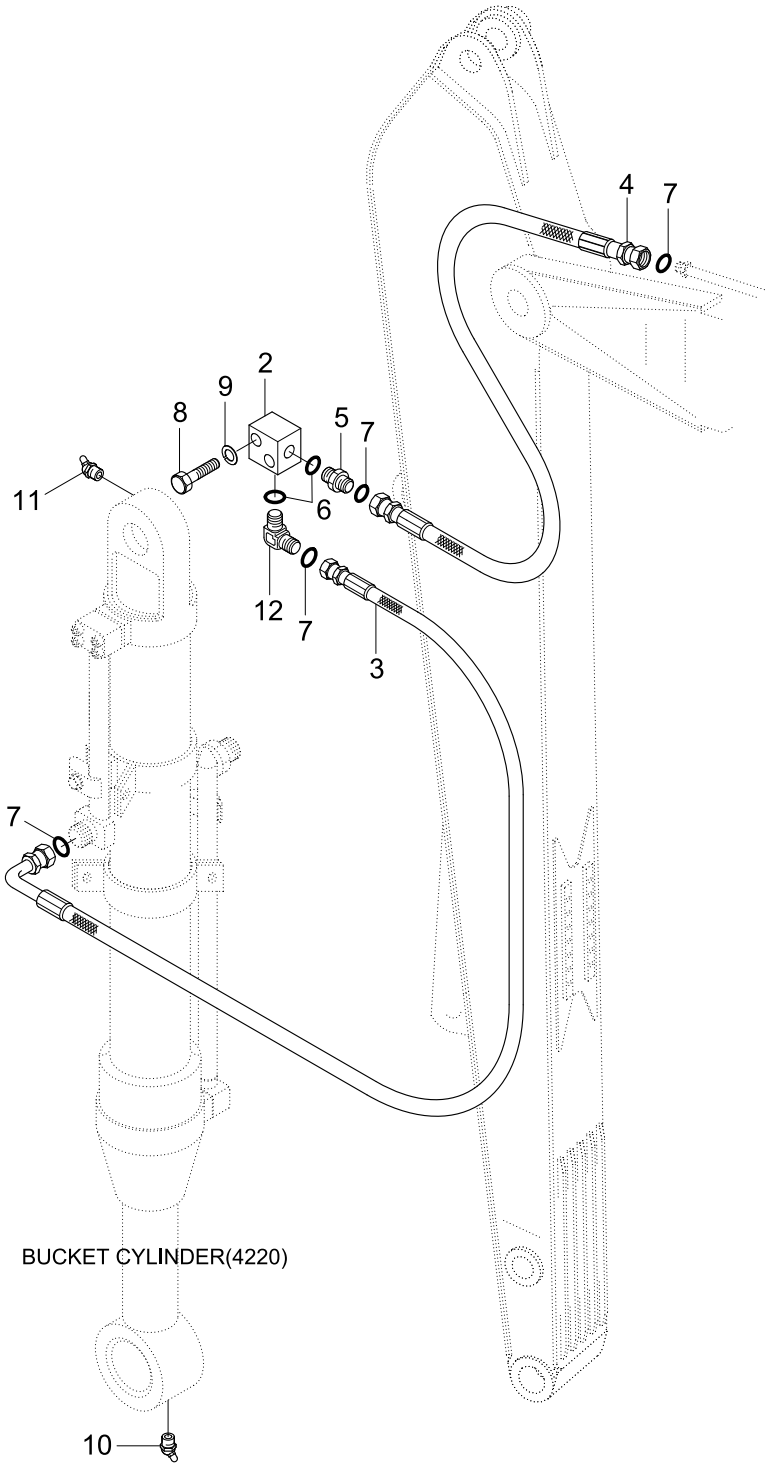

Item	Part_No	IS	Ord	T	Description	Qty	Serial_No	ITC	Remark
2	32E6-0002	20			BLOCK	2			
3	31N4-60230				HOSE ASSY	2			
4	31N4-60250				HOSE ASSY	2			
5	X500-110004				CONNECTOR-ORFS	2			
6	S631-024001				O-RING	4			
7	S621-018001				O-RING	4			
8	S017-100556				BOLT-HEX	8			
9	S411-100006				WASHER-SPRING	8			
10	S651-810002				NIPPLE-GREASE	1			
11	S653-810002				NIPPLE-GREASE	1			
12	X520-110004				ELBOW-90,ORFS	2			

ARM SAFETY LOCK SYSTEM

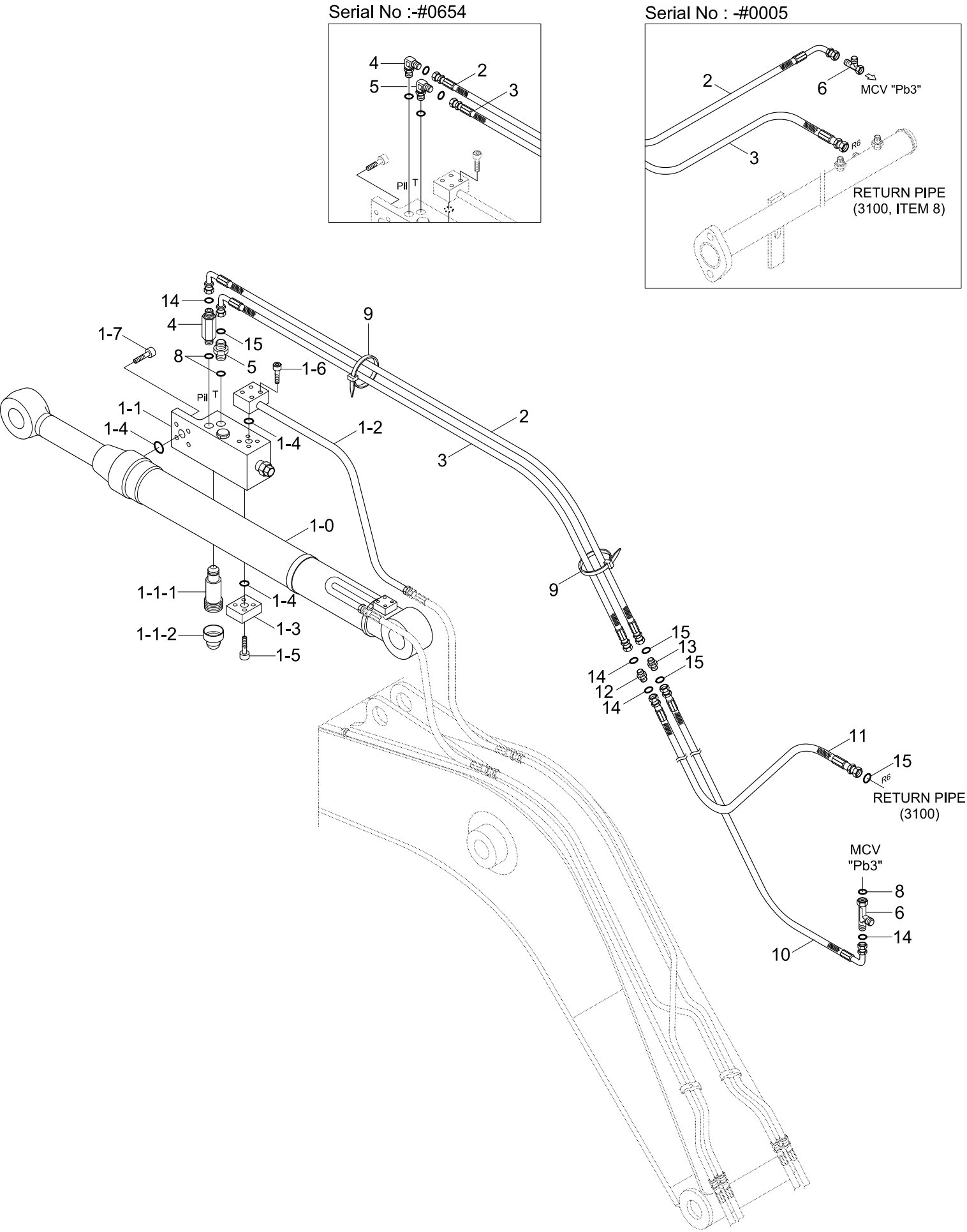

Item	Part_No	IS	Ord	T	Description	Qty	Serial_No	ITC	Remark
1	31N4-52130				ARM SAFE LOCK CYL	1	- #0005		
	31N4-52132				ARM SAFE LOCK CYL	1	#0006 -	D	
1-0	@				.ARM CYL SUB ASSY	1			NOT
1-1	31N6-90510				.VALVE-SAFETY LOCK	1			
1-1-1	ZTAS-00001				..VALVE-RELIEF	1			
1-1-2	ZTAS-00002				..CAP	1			
1-1-3	ZTAS-00004				..SEAL KIT	1			
1-2	31Y1-18540				.PIPE ASSY-RV	1			
1-3	P184-121112				.FLANGE-HYD,PLUGING	1			
K1-4	Y171-019001				.O-RING	3			
1-5	S109-100356				.BOLT-SOCKET	4			
1-6	S109-100456				.BOLT-SOCKET	4			
1-7	S109-100506				.BOLT-SOCKET	4			
2	P420-042122				HOSE ASSY-COMP 0X90	1	- #0005		STD
	P600-042083				HOSE ASSY-THD 0X0	1	#0006 - #0036	D	STD
	P910-042083				HOSE ASSY-ORFS 0X0	1	#0037 - #0654	D	STD
	P930-042083				HOSE ASSY-ORFS 0X90	1	#0655 -	D	STD
	P420-042113				HOSE ASSY-COMP 0X90	1	- #0005		SHORT BOOM
	P600-042074				HOSE ASSY-THD 0X0	1	#0006 - #0036	D	SHORT BOOM
	P910-042074				HOSE ASSY-ORFS 0X0	1	#0037 - #0654	D	SHORT BOOM
	P930-042078				HOSE ASSY-ORFS 0X90	1	#0655 -	D	SHORT BOOM
	P420-042132				HOSE ASSY-COMP 0X90	1	- #0005		ADJUST BOOM
	P600-042093				HOSE ASSY-THD 0X0	1	#0006 - #0036	D	ADJUST BOOM
	P910-042093				HOSE ASSY-ORFS 0X0	1	#0037 - #0654	D	ADJUST BOOM
	P930-042097				HOSE ASSY-ORFS 0X90	1	#0655 -	D	ADJUST BOOM

Item	Part_No	IS	Ord	T	Description	Qty	Serial_No	ITC	Remark
3	P420-062125				HOSE ASSY-COMP 0X90	1	- #0005		STD
	P600-062083				HOSE ASSY-THD 0X0	1	#0006 - #0036	D	STD
	P910-062083				HOSE ASSY-ORFS 0X0	1	#0037 - #0654	D	ADJUST BOOM
	P930-062083				HOSE ASSY-ORFS 0X90	1	#0655 -	D	ADJUST BOOM
	P420-062116				HOSE ASSY-COMP 0X90	1	- #0005		SHORT BOOM
	P600-062074				HOSE ASSY-THD 0X0	1	#0006 - #0036	D	SHORT BOOM
	P910-062074				HOSE ASSY-ORFS 0X0	1	#0037 - #0654	D	SHORT BOOM
	P930-062078				HOSE ASSY-ORFS 0X90	1	#0655 -	D	SHORT BOOM
	P420-062134				HOSE ASSY-COMP 0X90	1	- #0005		ADJUST BOOM
	P600-062093				HOSE ASSY-THD 0X0	1	#0006 - #0036	D	ADJUST BOOM
	P910-062093				HOSE ASSY-ORFS 0X0	1	#0037 - #0654	D	ADJUST BOOM
	P930-062097				HOSE ASSY-ORFS 0X90	1	#0655 -	D	ADJUST BOOM
4	E131-0603				ELBOW-90,LONG	1	- #0036		
	31N6-25110				ELBOW-90,ORFS,LONG	1	#0037 - #0654	D	
	X511-104513				CONNECTOR-LONG,ORFS	1	#0655 -	D	
5	P010-110012				CONNECTOR	1	- #0005		
	P020-110012				ELBOW-90	1	#0006 - #0036	D	
	X520-110011				ELBOW-90,ORFS	1	#0037 - #0654	D	
	X500-110011				CONNECTOR-ORFS	1	#0655 -	D	
6	31E6-0219	20			TEE-LONG	1	- #0036		
	31N4-22150				TEE-LONG,ORFS	1	#0037 -	D	
7	P220-110102				PLUG-CAP	1			
8	S631-014001				O-RING	3	- #0036		
					O-RING	4	#0037 -	A	
9	S552-020102				CLAMP-BAND	10			

Item	Part_No	IS	Ord	T	Description	Qty	Serial_No	ITC	Remark
10	P620-042039				HOSE ASSY-THD 0X90	1	#0006 - #0036	-	
	P930-042039				HOSE ASSY-ORFS 0X90	1	#0037 -	D	
11	P600-062042				HOSE ASSY-THD 0X0	1	#0006 - #0036	-	
	P910-062042				HOSE ASSY-ORFS 0X0	1	#0037 -	D	
12	31L7-40190				CONNECTOR	1	#0006 - #0036	-	
	X540-110001				CONNECTOR-ORFS	1	#0037 -	D	
13	31L7-40180				CONNECTOR	1	#0006 - #0036	-	
	X540-110002				CONNECTOR-ORFS	1	#0037 -	D	
14	S621-011001				O-RING	4	#0037 -	-	
15	S621-012001				O-RING(SEAL LOCK TYPE)	4	#0037 -	-	
K	31Y1-18590				SEAL KIT	1			SEE ILLUST

DOUBLE ACTING ATTACH PIPING KIT(-#0036)

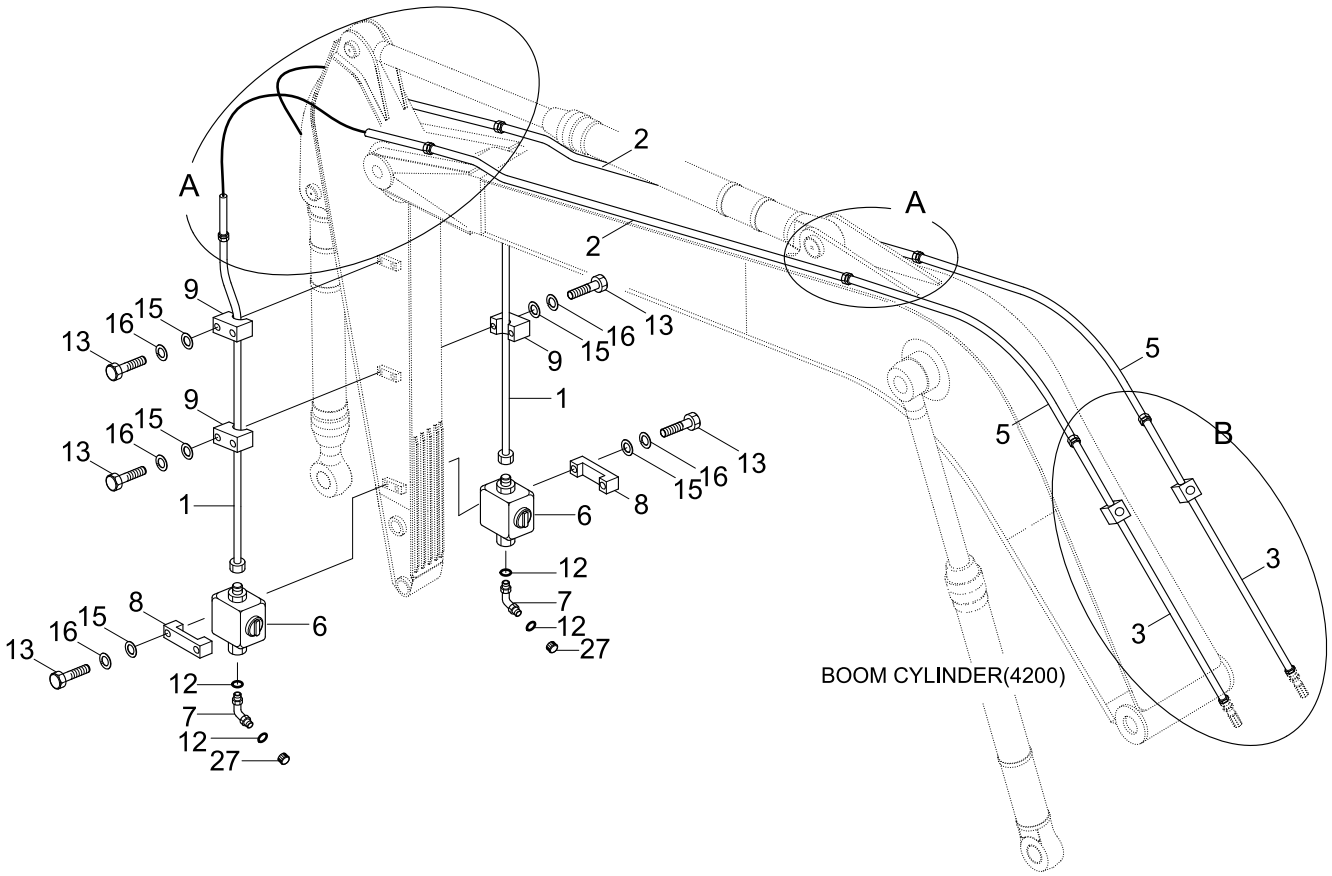

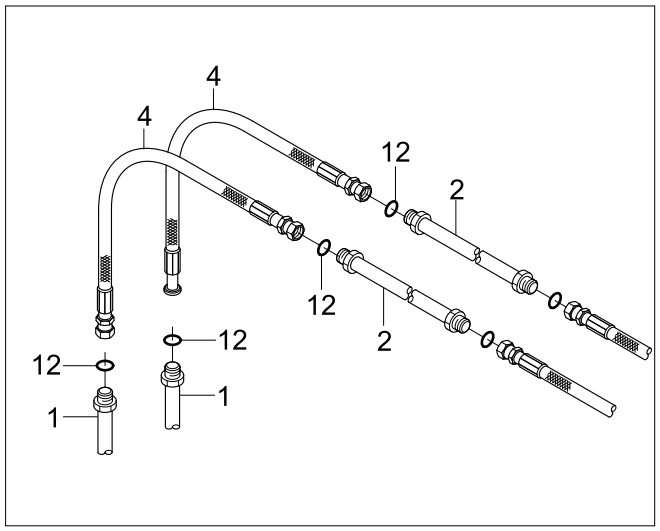

DETAIL A

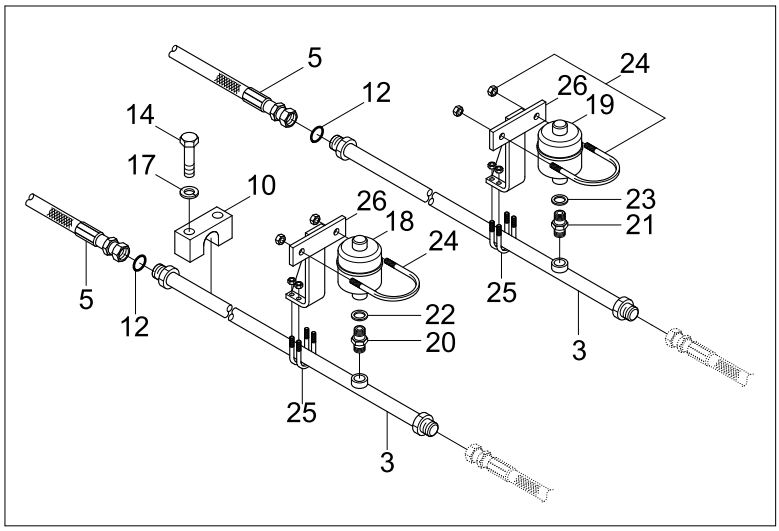

DETAIL B

Item	Part_No	IS	Ord	T	Description	Qty	Serial_No	ITC	Remark
*	@				D/ACT ATTACH PIPING KIT	1	- #0036	-	NOT
*-12	31N4-91310				..ATTACH PIPING KIT	1			4.6BM+2.5AM
	31N4-91320				..ATTACH PIPING KIT	1			4.6BM+1.9AM
	31N4-91330				..ATTACH PIPING KIT	1			4.6BM+2.1AM
	31N4-91340				..ATTACH PIPING KIT	1			4.6BM+3.0AM
1	31N4-92110				...PIPE ASSY	2			2.5M ARM ONLY
	31N4-92120				...PIPE ASSY	2			1.9,2.1M ARM
	31N4-92140				...PIPE ASSY	2			3.0M ARM ONLY
2	31N4-92151				...PIPE ASSY	2			
3	31N4-92170				...PIPE ASSY	2			
4	P913-126026				...HOSE ASSY-ORFS 0X0	2			
5	P913-126027				...HOSE ASSY-ORFS 0X0	2			
6	32E6-92110				...VALVE-STOP	2			
7	X530-110004				...ELBOW-45,ORFS	2			
8	31EG-91350				...CLAMP-STOP VALVE	2			
9	31EG-91381				...CLAMP-PIPE	4	#0001 -	-	
10	31N4-12200				...CLAMP-PIPE	4			
11	S631-024001				...O-RING	2			
12	S621-018001				...O-RING	10			
13	S017-120702				...BOLT-HEXAGON HEAD	6			
14	S017-160702				...BOLT-HEX	2			
15	S401-120002				...WASHER-PLAIN	4			
16	S411-120002				...WASHER-SPRING	4			
17	S411-160002				...WASHER-SPRING	2			
27	X710-100105				...CAP-DUST	2			

Item	Part_No	IS	Ord	T	Description	Qty	Serial_No	ITC	Remark
*-2	31E6-91701				..ACCUMULATOR KIT	1			
18	32E6-92040				...ACCUMULATOR	1			SUPPLY
19	32E6-92050				...ACCUMULATOR	1			RETURN
20	32E3-2021				...FITTING	1			
21	32E3-2020	10			...FITTING	1			
22	P392-220000				...WASHER-COPPER	1			
23	P392-180000				...WASHER-COPPER	1			
24	32E6-92060				...U-BOLT	2			
25	S071-032730				...U-BOLT	4			
26	32E6-92080				...BRACKET-ACCUM	2			

DOUBLE ACTING ATTACH PIPING KIT(#0037-)

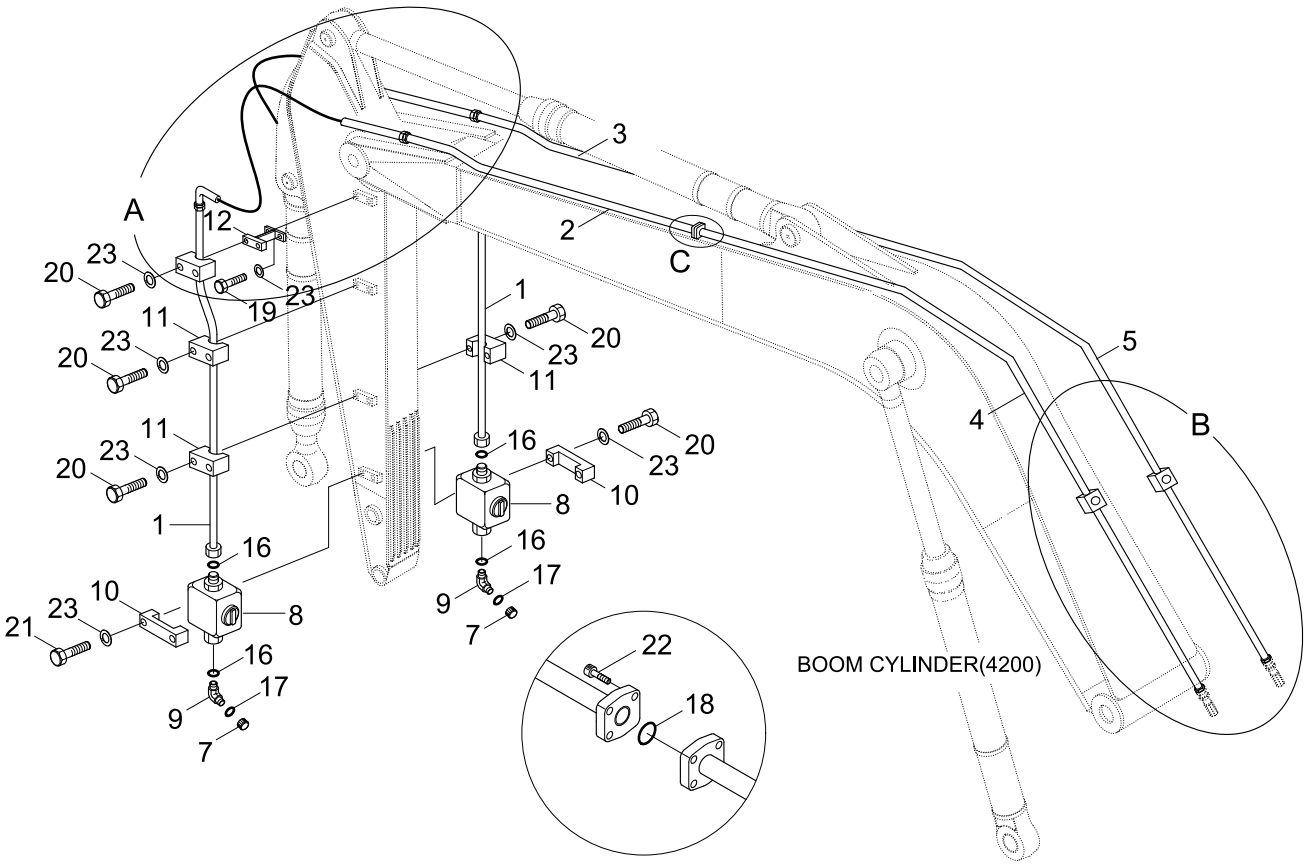

DETAIL C

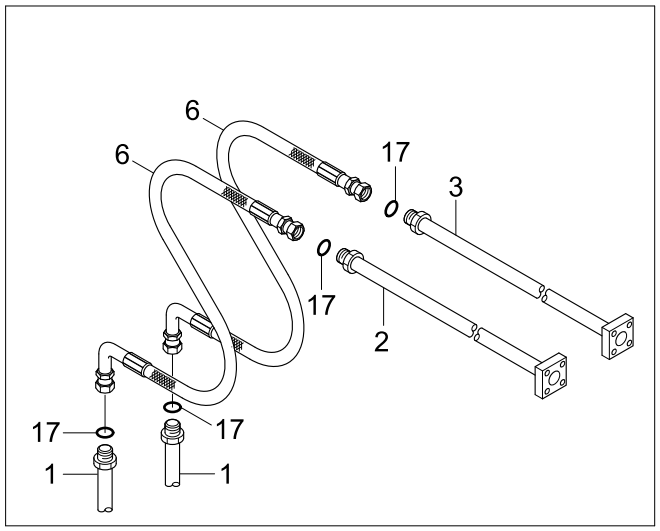

DETAIL A

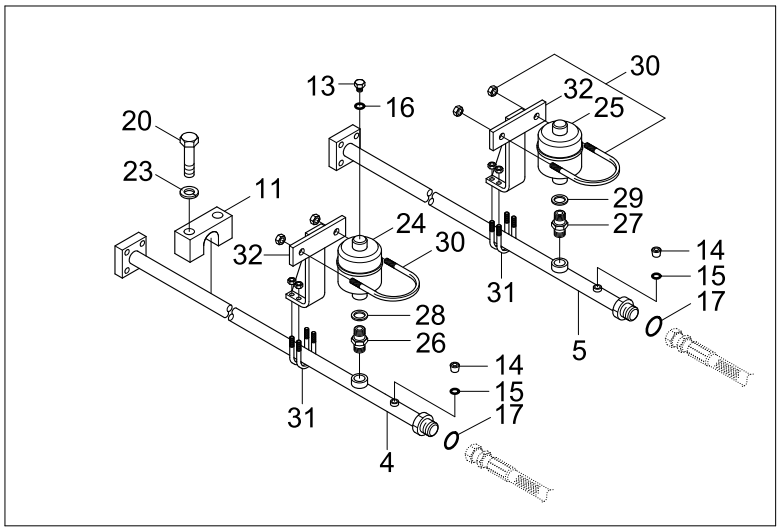

DETAIL B

Item	Part_No	IS	Ord	T	Description	Qty	Serial_No	ITC	Remark
*	@				D/ACT ATTACH PIPING KIT	1	#0037 -	D	NOT
*-12	31N4-95331				..ATTACH PIPING KIT	1			4.6BM+2.1AM
	31N4-95341				..ATTACH PIPING KIT	1			4.6BM+1.9AM
	31N4-95351				..ATTACH PIPING KIT	1			4.6BM+2.5AM
	31N4-95361				..ATTACH PIPING KIT	1			4.6BM+3.0AM
1	31N4-92231				...PIPE ASSY	2			2.1AM
	31N4-92221				...PIPE ASSY	2			1.9AM
	31N4-92211				...PIPE ASSY	2			2.5AM
	31N4-92241				...PIPE ASSY	2			3.0AM
2	31N4-92250				...PIPE ASSY	1			
3	31N4-92260				...PIPE ASSY	1			
4	31N4-95601				...PIPE ASSY	1			
5	31N4-95630				...PIPE ASSY	1			
6	P933-126034				...HOSE ASSY-ORFS 0X90	2			2.5AM, 3.0AM
	P933-126028				...HOSE ASSY-ORFS 0X90	2			1.9AM, 2.1AM
7	X710-100105				...CAP-DUST	2			
8	31N4-97010				...VALVE-STOP	2			
9	X530-110004				...ELBOW-45,ORFS	2			
10	31EG-91350				...CLAMP-STOP VALVE	2			
11	31EG-91381				...CLAMP-PIPE	4	#0037 -	-	2.5AM ONLY
					...CLAMP-PIPE	2	#0037 -	-	1.9AM, 2.1AM
					...CLAMP-PIPE	6	#0037 -	-	3.0AM ONLY
12	32E6-92160				...BRACKET	2			3.0AM ONLY
13	P220-110205				...PLUG-SOCKET	2			
14	31EK-11130				...COUPLING-SCREW	2			

Item	Part_No	IS	Ord	T	Description	Qty	Serial_No	ITC	Remark
15	S631-011004				...O-RING	2			
16	S631-024004				...O-RING	6			
17	S621-018001				...O-RING	8			
18	Y171-019004				...O-RING	2			
19	S017-120256				...BOLT-HEX	4			3.0AM ONLY
20	S017-120506				...BOLT-HEX	8			2.5AM ONLY
					...BOLT-HEX	4			1.9AM, 2.1AM
					...BOLT-HEX	12			3.0AM ONLY
21	S017-120706				...BOLT-HEX	4			
22	S109-100506				...BOLT-SOCKET	8			
23	S411-120002				...WASHER-SPRING	12			2.5AM ONLY
					...WASHER-SPRING	8			1.9AM, 2.1AM
					...WASHER-SPRING	20			3.0AM ONLY
*-2	31E6-91701				..ACCUMULATOR KIT	1			
24	32E6-92040				...ACCUMULATOR	1			
25	32E6-92050				...ACCUMULATOR	1			
26	32E3-2021				...FITTING	1			
27	32E3-2020				...FITTING	1			
28	P392-220000				...WASHER-COPPER	1			
29	P392-180000				...WASHER-COPPER	1			
30	32E6-92060				...U-BOLT	2			
31	S071-032730				...U-BOLT	4			
32	32E6-92080				...BRACKET-ACCUM	2			

ADJUST BOOM ATTACH PIPING KIT(#0037-)

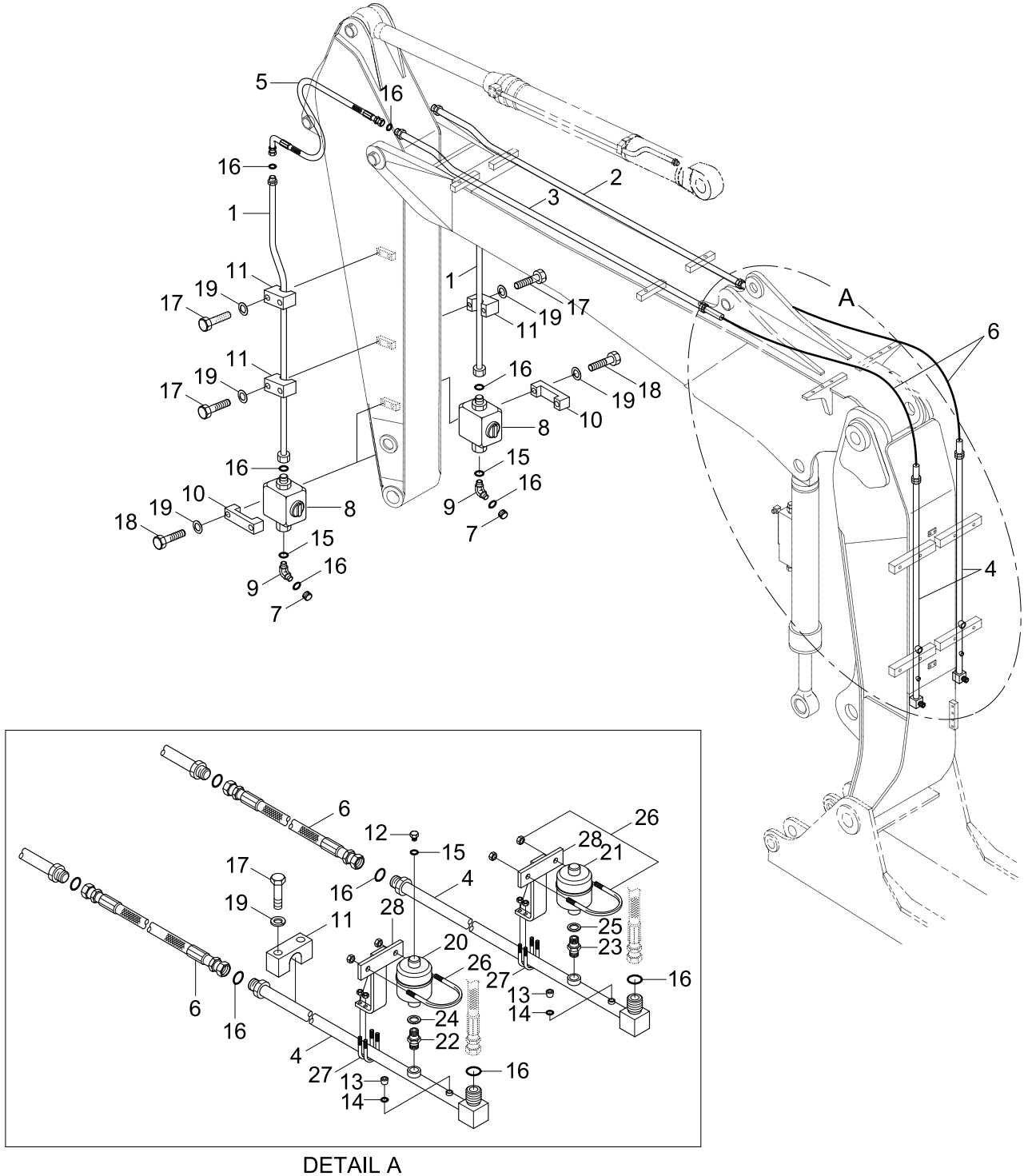

DETAIL A

Item	Part_No	IS	Ord	T	Description	Qty	Serial_No	ITC	Remark
*	@				.ADJ/BM PIPING KIT	1	#0037 -	-	NOT
*-12	31N4-91371				..ATTACH PIPING KIT	1			ADJUST BM+2.5AM
	31N4-91381				..ATTACH PIPING KIT	1			ADJUST BM+1.9AM
	31N4-91391				..ATTACH PIPING KIT	1			ADJUST BM+2.1AM
1	31N4-92231				...PIPE ASSY	2			ADJUST BM+2.1AM
	31N4-92221				...PIPE ASSY	2			ADJUST BM+1.9AM
	31N4-92211				...PIPE ASSY	2			ADJUST BM+2.5AM
2	31N4-92270				...PIPE ASSY	1			
3	31N4-92280				...PIPE ASSY	1			
4	31N4-92290				...PIPE ASSY	2			
5	P933-126028				...HOSE ASSY-ORFS 0X90	2			1.9AM,2.1AM
	P933-126034				...HOSE ASSY-ORFS 0X90	2			2.5AM
6	P910-126020				...HOSE ASSY-ORFS	2			
7	X710-100105				...CAP-DUST	2			
8	31N4-97010				...VALVE-STOP	2			
9	X530-110004				...ELBOW-45,ORFS	2			
10	31EG-91350				...CLAMP-STOP VALVE	2			
11	31EG-91381				...CLAMP-PIPE	2	#0037 -	-	1.9AM, 2.1AM
					...CLAMP-PIPE	4	#0037 -	-	2.5AM
12	P220-110205				...PLUG-SOCKET	2			
13	31EK-11130				...COUPLING-SCREW	2			
14	S631-011004				...O-RING	2			
15	S631-024004				...O-RING	6			
16	S621-018001				...O-RING	12			
17	S017-120506				...BOLT-HEX	4			1.9AM, 2.1AM

Item	Part_No	IS	Ord	T	Description	Qty	Serial_No	ITC	Remark
17	S017-120506				...BOLT-HEX	8			2.5AM
18	S017-120706				...BOLT-HEX	4			
19	S411-120006				...WASHER-SPRING	8			1.9AM, 2.1AM
					...WASHER-SPRING	12			2.5AM
*-2	31E6-91701				..ACCUMULATOR KIT	1			
20	32E6-92040				...ACCUMULATOR	1			SUPPLY
21	32E6-92050				...ACCUMULATOR	1			RETURN
22	32E3-2021				...FITTING	1			
23	32E3-2020				...FITTING	1			
24	P392-220000				...WASHER-COPPER	1			
25	P392-180000				...WASHER-COPPER	1			
26	32E6-92060				...U-BOLT	1			
27	S071-032730				...U-BOLT	2			
28	32E6-92080				...BRACKET-ACCUM	2			

SINGLE ACTING MAIN PIPING KIT(#0037-)

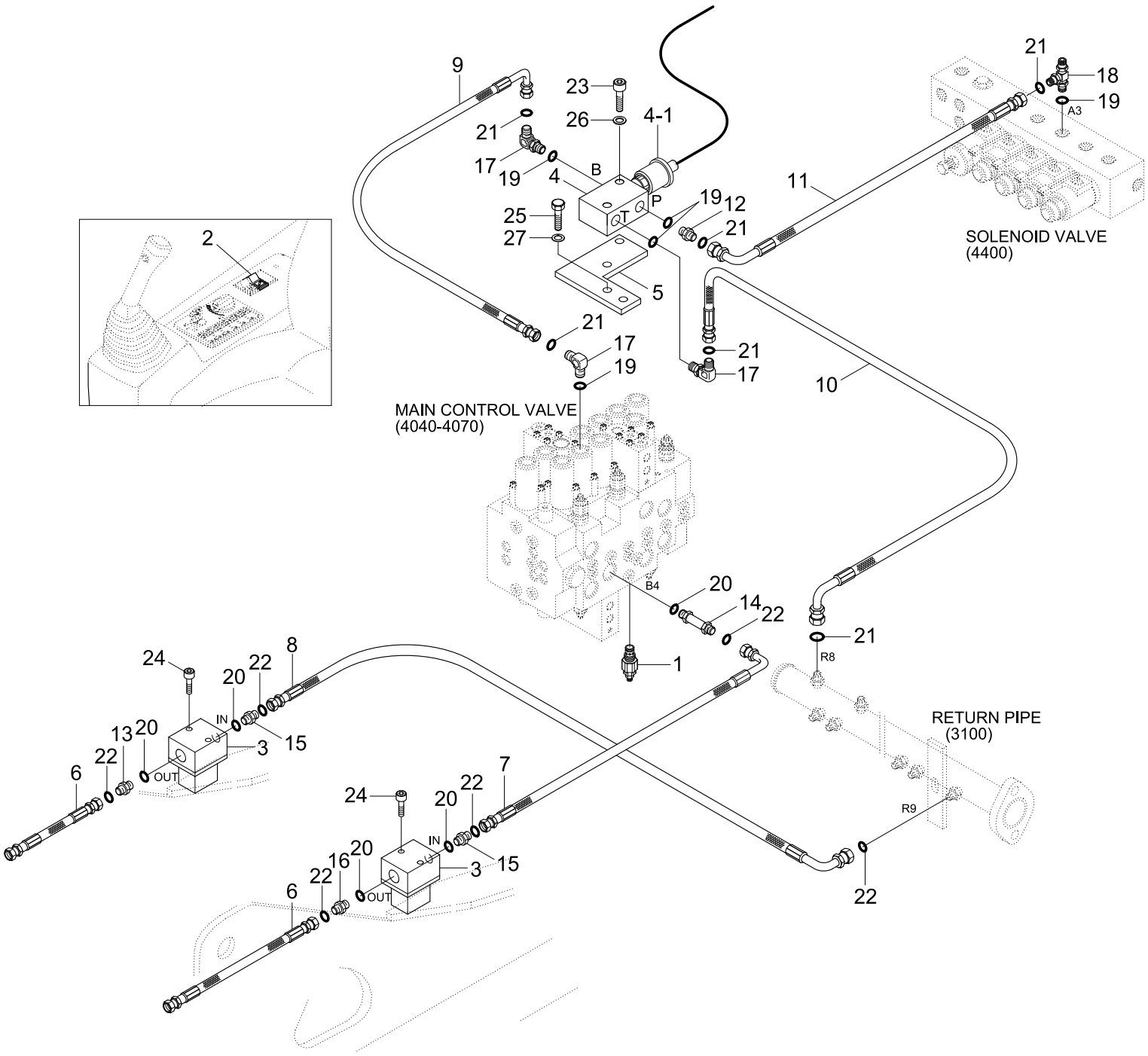

Item	Part_No	IS	Ord	T	Description	Qty	Serial_No	ITC	Remark
*	@				S/ACT MAIN PIPING KIT	1	#0037 -	-	NOT
1	31N4-90530				.PORT RELIEF VALVE	1			
2	21E6-30540				.SWITCH-BREAKER	1			
*-11	31N4-94101				..S/ACT MAIN PIPING KIT	2			
3	31N4-95280				...BLOCK-HOSE JOINT	2			
4	31N6-91230D				...SOLENOID VLV-BREAKER	1	#0037 -	-	
4-1	XKBN-00192				....COIL-BREAKER SOL	1	#0037 -	-	
5	31N4-95270				...BRACKET-SOL VLV	1			
6	P923-126023				...HOSE ASSY-ORFS 0X45	2			
7	P933-126015				...HOSE ASSY-ORFS	1			
8	P923-123026				...HOSE ASSY-ORFS	1			
9	P910-042044				...HOSE ASSY-ORFS 0X0	1			
10	P930-042038				...HOSE ASSY-ORFS 0X90	1			
11	P930-042016				...HOSE ASSY-ORFS 0X90	1			
12	X500-110001				...CONNECTOR-ORFS	1			
13	X500-110004				...CONNECTOR-ORFS	1			
14	X511-112546				...CONNECTOR-ORFS	1			
15	X511-112533				...CONNECTOR-ORFS	2			
16	X530-110004				...ELBOW-45,ORFS	1			
17	X500-110001				...CONNECTOR-ORFS	3			
18	X820-045151				...TEE-R/TYPE,ORFS	1			
19	S631-011004				...O-RING	5			
20	S631-024004				...O-RING	5			
21	S621-011001				...O-RING	7			
22	S621-018001				...O-RING	6			

Item	Part_No	IS	Ord	T	Description	Qty	Serial_No	ITC	Remark
23	S109-080456				...BOLT-SOCKET	2			
24	S109-120556				...BOLT-SOCKET	4			
25	S017-100256				...BOLT-HEX	2			
26	S411-080002				...WASHER-SPRING	2			
27	S411-100002				...WASHER-SPRING	2			

SINGLE ACTING MAIN PIPING KIT(ADJUST BOOM, #0037-)

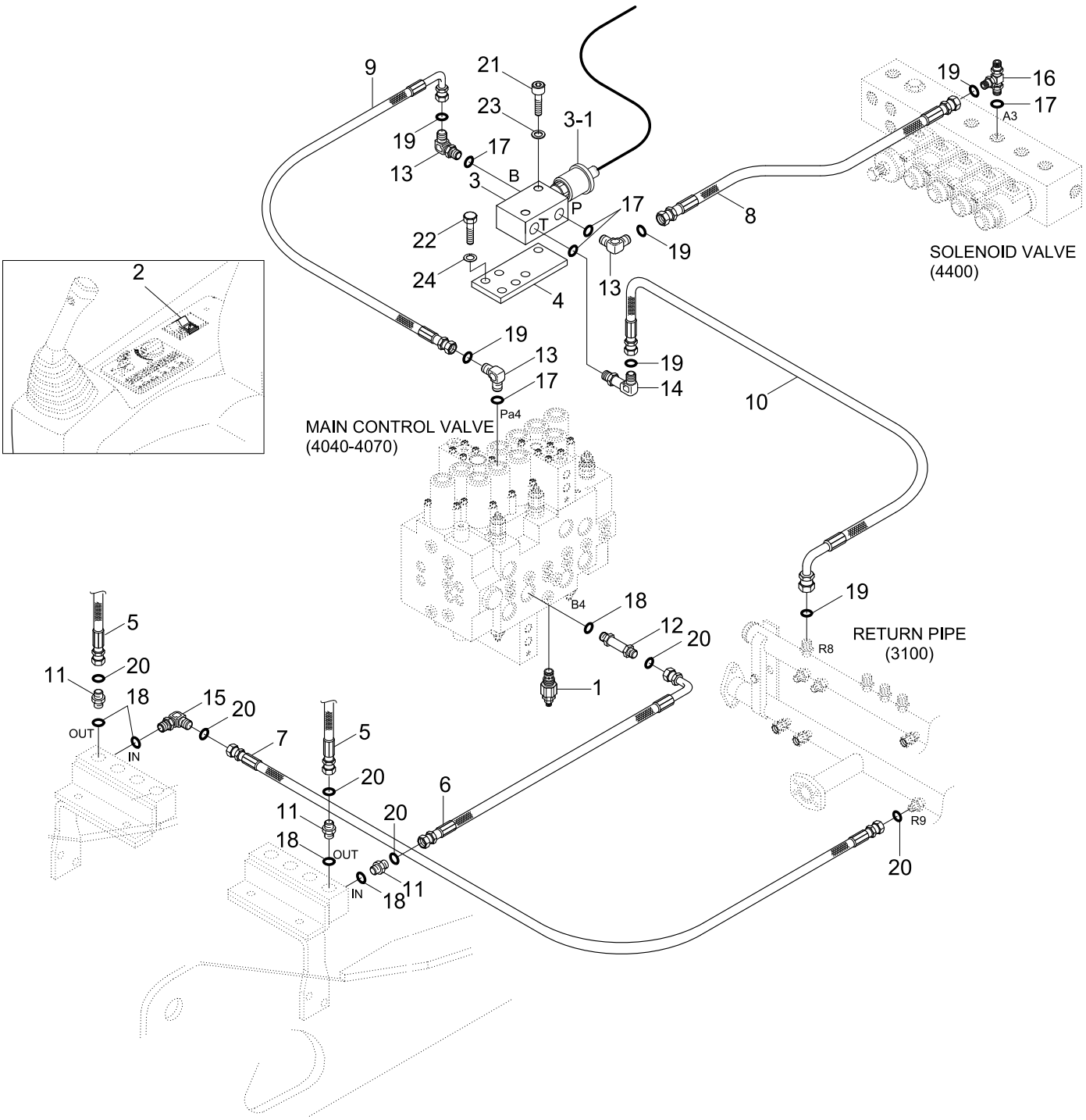

Item	Part_No	IS	Ord	T	Description	Qty	Serial_No	ITC	Remark
*	@				S/ACT MAIN PIPING KIT	1	#0037 -	-	NOT
1	31N4-90530				.PORT RELIEF VALVE	1			
2	21E6-30540				.SWITCH-BREAKER	1			
*	31N4-91401				..S/ACT MAIN PIPING KIT	2			
3	31N6-91230D				...SOLENOID VLV-BREAKER	1	#0037 -	-	
3-1	XKBN-00192				....COIL-BREAKER SOL	1	#0037 -	-	
4	31N6-91250				...BRACKET-SOL VLV	1			
5	P913-126035				...HOSE ASSY-ORFS 0X0	2			
6	P933-126015				...HOSE ASSY-ORFS	1			
7	P913-123023				...HOSE ASSY-ORFS 0X0	1			
8	P930-042018				...HOSE ASSY-ORFS 0X90	1			
9	P910-042044				...HOSE ASSY-ORFS 0X0	1			
10	P930-042044				...HOSE ASSY-ORFS 0X90	1			
11	X500-110004				...CONNECTOR-ORFS	3			
12	X511-112546				...CONNECTOR-ORFS	1			
13	X520-110001				...ELBOW-90,ORFS	2			
14	31N6-25110				...ELBOW-90,ORFS,LONG	1			
15	X520-110004				...ELBOW-90,ORFS	1			
16	X820-045151				...TEE-R/TYPE,ORFS	1			
17	S631-011004				...O-RING	5			
18	S631-024004				...O-RING	5			
19	S621-011001				...O-RING,ORFS	7			
20	S621-018001				...O-RING,ORFS	6			
21	S109-080456				...BOLT-SOCKET	2			
22	S017-100256				...BOLT-HEX	2			

Item	Part_No	IS	Ord	T	Description	Qty	Serial_No	ITC	Remark
23	S411-080002				...WASHER-SPRING	2			
24	S411-100002				...WASHER-SPRING	2			

DOUBLE ACTING MAIN PIPING KIT(#0037-)

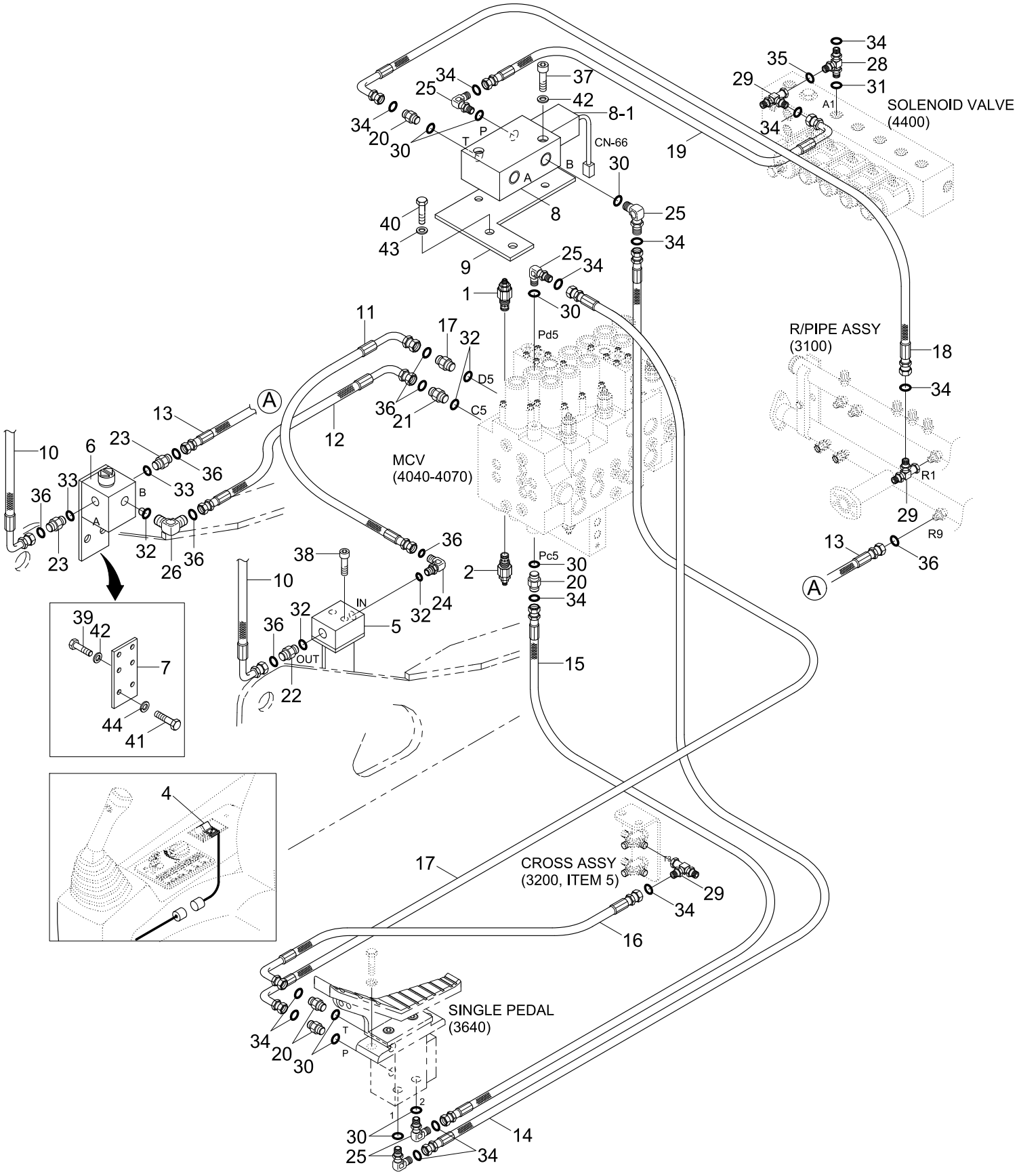

Item	Part_No	IS	Ord	T	Description	Qty	Serial_No	ITC	Remark
*	@				D/ACT MAIN PIPING KIT	1	#0037 -	-	NOT
1	31N4-90560				.PORT RELIEF VALVE	1	- #0198		
	31N4-90580				.PORT RELIEF VALVE	1	#0199 -	B	
2	31N4-90570				.PORT RELIEF VALVE	1	- #0198		
	31N4-90590				.PORT RELIEF VALVE	1	#0199 -	B	
3	34E7-04720				.PEDAL-SINGLE	1			
4	21E6-30540				.SWITCH-BREAKER	1			
*	31N4-94201				..D/ACT MAIN PIPING KIT	1			
5	31N4-95280				...BLOCK-HOSE JOINT	1			
6	31N4-95260				...JOINT-3 WAY	1			
7	31E9-95010				...BRACKET-3 WAY JOINT	1			
8	31N6-91230D				...SOLENOID VLV-BREAKER	1	#0037 -	-	
8-1	XKBN-00192				....COIL-BREAKER SOL	1	#0037 -	-	
9	31N6-91250				...BRACKET-SOL VLV	1	#0001 -	-	
10	P923-126023				...HOSE ASSY-ORFS 0X45	2			
11	P933-126016				...HOSE ASSY-ORFS 0X90	1			
12	P933-126013				...HOSE ASSY-ORFS 0X90	1			
13	P923-123026				...HOSE ASSY-ORFS 0X45	1			
14	P910-042068				...HOSE ASSY-ORFS 0X0	1			
15	P910-042060				...HOSE ASSY-ORFS 0X0	1			
16	P930-042024				...HOSE ASSY-ORFS 0X90	1			
17	P930-042072				...HOSE ASSY-ORFS 0X90	1			
18	P930-042044				...HOSE ASSY-ORFS 0X90	1			
19	P930-042018				...HOSE ASSY-ORFS,THD(0X90)	1			
20	X500-110001				...CONNECTOR-ORFS	4			

Item	Part_No	IS	Ord	T	Description	Qty	Serial_No	ITC	Remark
21	X500-110004				...CONNECTOR-ORFS	2			
22	X511-112533				...CONNECTOR-LONG,ORFS	1			
23	31N4-95290				...CONNECTOR	2			
24	X530-110004				...ELBOW-45,ORFS	1			
25	X520-110001				...ELBOW-90,ORFS	5			
26	X520-110004				...ELBOW-90,ORFS	1			
28	X820-065152				...TEE-R/TYPE,ORFS	1			
29	X840-515151				...TEE-R/TYPE,SWIVEL,ORFS	3			
30	S631-011004				...O-RING	9			
31	S631-018004				...O-RING	1			
32	S631-024004				...O-RING	5			
33	S631-029004				...O-RING	2			
34	S621-011001				...O-RING(SEAL LOCK TYPE)	16			
35	S621-012001				...O-RING(SEAL LOCK TYPE)	1			
36	S621-018001				...O-RING(SEAL LOCK TYPE)	8			
37	S109-080456				...BOLT-SOCKET	2			
38	S109-120556				...BOLT-SOCKET	2			
39	S017-080256				...BOLT-HEX	4			
40	S017-100256				...BOLT-HEX	2			
41	S017-120306				...BOLT-HEX	2			
42	S411-080002				...WASHER-SPRING	6			
43	S411-100002				...WASHER-SPRING	2			
44	S411-120002				...WASHER-SPRING	2			
45	21NB-00200				...HARNESS-EXT	1			

D/ACT MAIN PIPING KIT(ADJUST BOOM, #0037-)

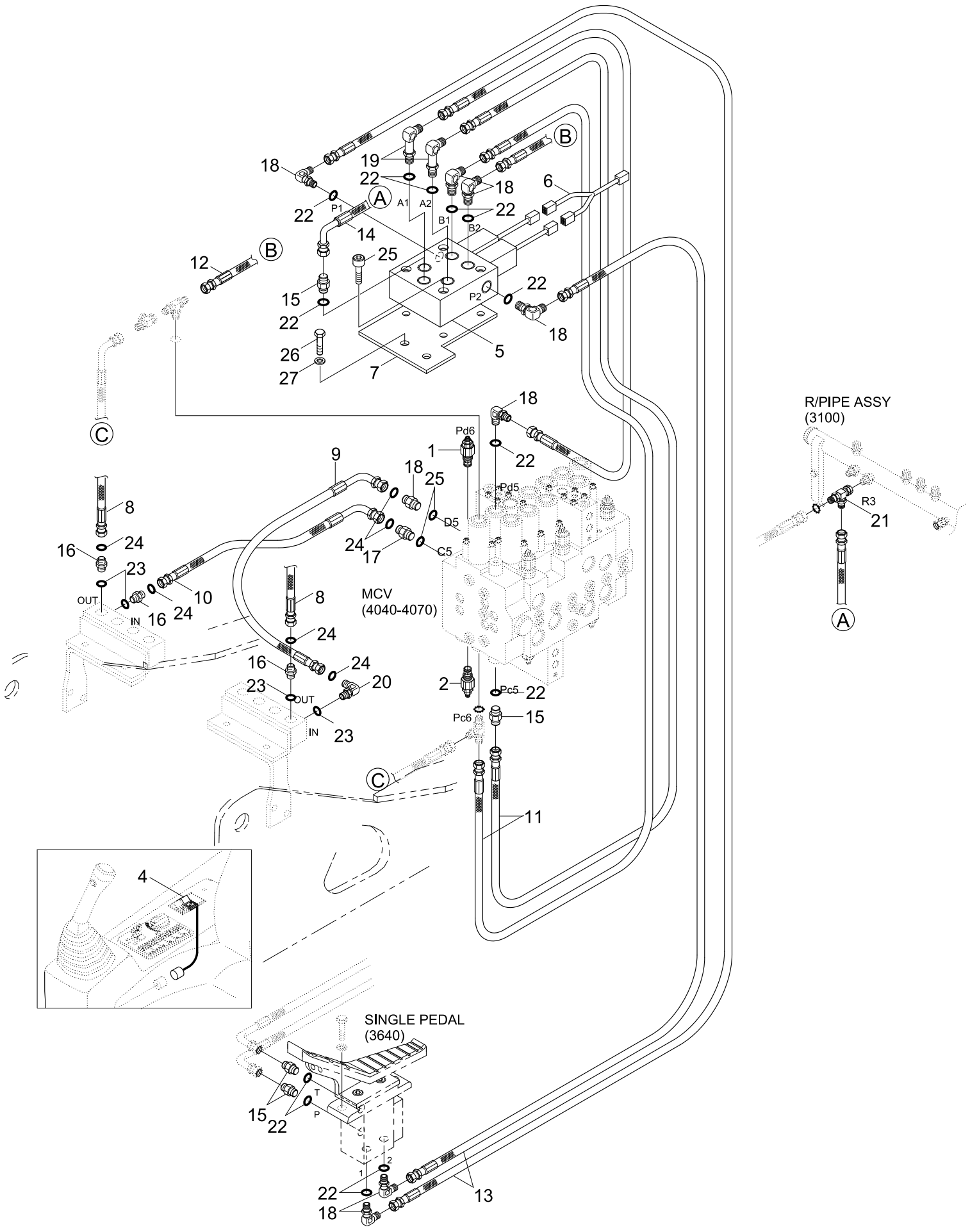

Item	Part_No	IS	Ord	T	Description	Qty	Serial_No	ITC	Remark
*	@				D/ACT MAIN PIPING KIT	1	#0037 -	-	NOT
1	31N4-90540				.PORT RELIEF VALVE	1	- #0198		
	31N4-90580				.PORT RELIEF VALVE	1	#0199 -	B	
2	31N4-90550				.PORT RELIEF VALVE	1	- #0198		
	31N4-90590				.PORT RELIEF VALVE	1	#0199 -	B	
4	21E6-30540				.SWITCH-BREAKER	1			
5	31N4-20050				.2-SOLENOID VALVE	1			
6	21N5-10180				.HARNESS-EXT	1			
*	31N4-94500				..D/ACT MAIN PIPING	1			
7	31N4-91260				...BRACKET-2SOL, MTG	1			
8	P913-126035				...HOSE ASSY-ORFS 0X0	2			
9	P933-126015				...HOSE ASSY-ORFS	1			
10	31N4-96010				...HOSE ASSY-ORFS 0X90	1			
11	P400-042040				...HOSE ASSY-COMPACT	2			
12	P400-042050				...HOSE ASSY-COMPACT	2			
13	P400-042072				...HOSE ASSY-COMPACT	2			
14	P400-042043				...HOSE ASSY-COMPACT	1			
15	P010-110002				...CONNECTOR	4			
16	X500-110004				...CONNECTOR-ORFS	3			
17	X511-112546				...CONNECTOR-ORFS	2			
18	P020-110001				...ELBOW-90	7			
19	E131-0603				...ELBOW-90,LONG	2			
20	X520-110004				...ELBOW-90,ORFS	1			
21	32E6-10460				...TEE-SWEVEL NUT	1			
22	S631-011004				...O-RING	13			

Item	Part_No	IS	Ord	T	Description	Qty	Serial_No	ITC	Remark
23	S631-024004				...O-RING	6			
24	S621-018001				...O-RING,ORFS	6			
25	S109-100556				...BOLT-SOCKET	4			
26	S017-100252				...BOLT-HEX	2			
27	S411-100002				...WASHER-SPRING	2			

MAIN PUMP

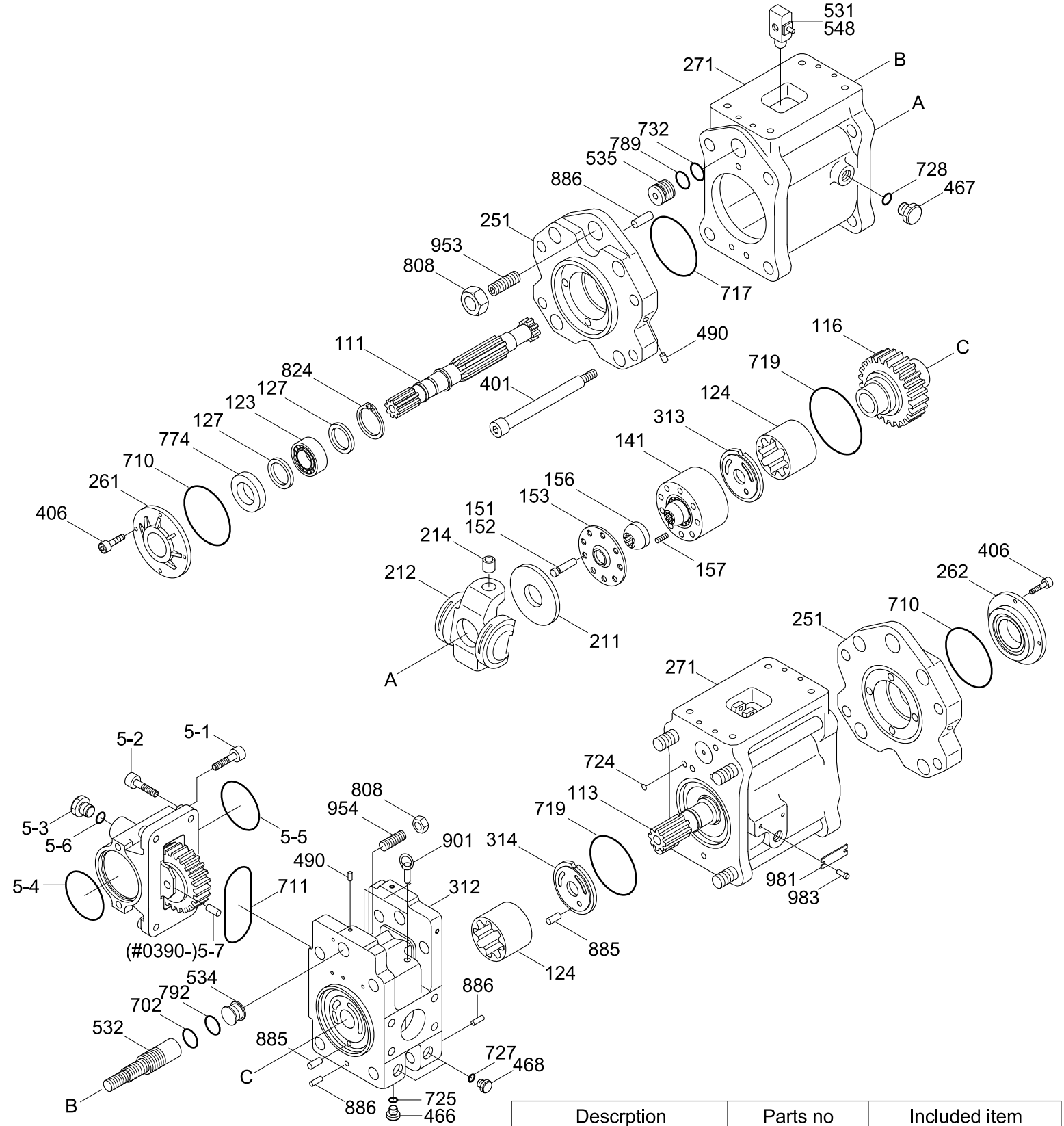

Descrption	Parts no	Included item
Piston sub assy	XJBN-00437	151X9EA, 152x9EA
Cylinder sub assy(RH)	XJBN-00798	141, 313
Cylinder sub assy(LH)	XJBN-00799	141, 314
Swash plate sub assy	XJBN-00434	212, 214
Tilting pin assy	XJBN-00433	531, 548

Item	Part_No	IS	Ord	T	Description	Qty	Serial_No	ITC	Remark
*	31N4-15011				MAIN PUMP	1	- #0540		STD
	31N4-15012				MAIN PUMP	1	#0541 -	B	STD
	31N4-15030				MAIN PUMP	1	#0285 -	-	LOW NOISE
*-1	XJBN-00848				.MAIN PUMP UNIT	1	- #0389		STD
	XJBN-01028				.MAIN PUMP UNIT	1	#0390 -	D	
	XJBN-00927				.MAIN PUMP UNIT	1	#0285 -	-	LOW NOISE
111	XJBN-00432				..SHAFT(F)-DRIVE	1			
113	XJBN-00431				..SHAFT(R)-DRIVE	1			
116	XJBN-00804				..GEAR-1ST	1			
123	XJBN-00429				..BEARING-ROLLER	2			
124	XJBN-00428				..BEARING-NEEDLE	2			
127	XJBN-00806				..SPACER-BEARING	4			
S141	XJBN-00807				..BLOCK	2			
S151	XJBN-00425				..PISTON	18			
S152	XJBN-00424				..SHOE	18			
153	XJBN-00423				..PLATE-SET	2			
156	XJBN-00422				..BUSHING-SPHERICAL	2			
157	XJBN-00421				..SPRING-CYLINDER	18			
211	XJBN-00420				..PLATE-SHOE	2			
S212	XJBN-00419				..PLATE-SWASH	2			
S214	XJBN-00418				..BUSHING-TILTING	2			
251	XJBN-00417				..SUPPORT	2			
261	XJBN-00416				..COVER(F)-SEAL	1			
262	XJBN-00810				..COVER-RR	1			
271	XJBN-00415				..CASING-PUMP	2			

Item	Part_No	IS	Ord	T	Description	Qty	Serial_No	ITC	Remark
312	XJBN-00812				..BLOCK-VALVE	1			
S313	XJBN-00413				..PLATE(R)-VALVE	1			
S314	XJBN-00412				..PLATE(L)-VALVE	1			
401	XJBN-00411				..SCREW	8			
406	XJBN-00410				..SCREW	8			
466	XJBN-00356				..PLUG	2			
467	XJBN-00409				..PLUG	4			
468	XJBN-00237				..PLUG	2			
490	XJBN-00032				..PLUG	15			
S531	XJBN-00408				..PIN-TILTING	2			
532	XJBN-00407				..PISTON-SERVO	2			
534	XJBN-00406				..STOPPER(L)	2			
535	XJBN-00405				..STOPPER(S)	2			
S548	XJBN-00404				..PIN-FEED BACK	2			
702	XJBN-00403				..O-RING	2			STD
	XJBN-00888				..O-RING	2	#0285 -	-	LOW NOISE
710	XJBN-00402				..O-RING	2			
711	XJBN-00095				..O-RING	1			
717	XJBN-00401				..O-RING	2			
719	XJBN-00400				..O-RING	2			
724	XJBN-00361				..O-RING	18			
725	XJBN-00362				..O-RING	2			
727	XJBN-00233				..O-RING	2			
728	XJBN-00097				..O-RING	4			
732	XJBN-00879				..O-RING	2			STD

Item	Part_No	IS	Ord	T	Description	Qty	Serial_No	ITC	Remark
732	XJBN-00820				..O-RING	2	#0285 -	-	LOW NOISE
774	XJBN-00399				..SEAL-OIL	1			
789	XJBN-00398				..RING-BACK UP	2			
792	XJBN-00397				..RING-BACK UP	2			
808	XJBN-00396				..NUT-HEX	4			
824	XJBN-00395				..RING-SNAP	2			
885	XJBN-00394				..PIN-VALVE PLATE	2			
886	XJBN-00365				..PIN-SPRING	4			
901	XJBN-00393				..BOLT-EYE	2			
953	XJBN-00105				..SCREW-SET	2			
954	XJBN-00392				..SCREW-SET	2			
981	XJBN-00156				..NAME PLATE	1			STD
	XJBN-00867				..NAME PLATE	1	#0285 -	-	LOW NOISE
983	XJBN-00341				..PIN	2			
*-2	@				.REGULATOR ASSY	1			NOT
					.REGULATOR ASSY	1			NOT
*-5	XJBN-00975				.PTO UNIT	1	- #0389		STD
	XJBN-01018				.PTO UNIT	1	#0390 -	D	STD
	XJBN-00926				.PTO UNIT	1	#0285 -	-	LOW NOISE
5	XJBN-00828				..PTO ASSY	1	- #0389		STD/LOW NOISE
	XJBN-01020				..PTO ASSY	1	#0390 -	D	STD
	XJBN-00828				..PTO ASSY	1	#0390 -	A	LOW NOISE
5-1	XJBN-00160				...SCREW-SOCKET	2			
5-2	XJBN-00725				...SOCKET-FLANGE	4			
5-3	XJBN-00357				...PLUG	1			

Item	Part_No	IS	Ord	T	Description	Qty	Serial_No	ITC	Remark
5-4	XJBN-00837				...O-RING	1			
5-5	XJBN-00402				...O-RING	1			
5-6	XJBN-00363				...O-RING	1			
5-7	XJBN-01023				...PIN-SPRING	1	#0390 -	-	STD
*-51	@				..GEAR PUMP	1	#0001 -	-	NOT
S	XJBN-00437				PISTON SUB ASSY	1			
	XJBN-00798				CYLINDER SUB ASSY-RH	1			SEE ILLUST
	XJBN-00799				CYLINDER SUB ASSY-LH	1			SEE ILLUST
	XJBN-00434				SWASH PLATE ASSY	1			SEE ILLUST
	XJBN-00433				TILTING PIN ASSY	1			SEE ILLUST

REGULATOR

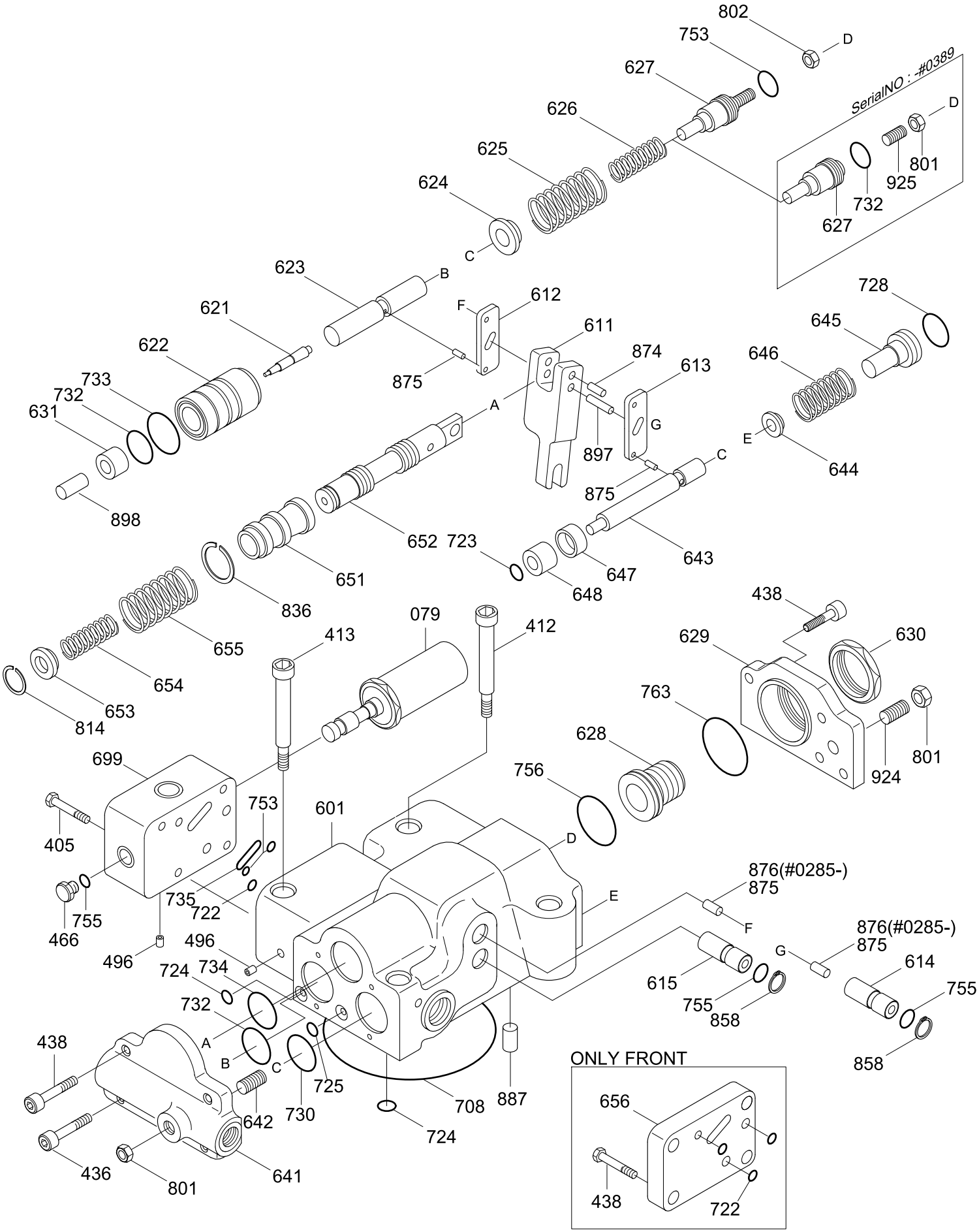
802
753
627
626
625
624
623
621
622
733
732
631
898
875
612
611
874
613
897
645
646
644
728
652
651
836
655
654
653
814
723
647
648
643
438
629
630
763
628
924
801
756
079
412
413
699
405
753
601
735
722
755
466
496
724
734
732
A
B
C
D
E
F
G
876(#0285-)
615
614
858
438
436
801
641
642
730
725
708
887
656
722
ONLY FRONT
SerialNO : -#0389

Item	Part_No	IS	Ord	T	Description	Qty	Serial_No	ITC	Remark
*-2	XJBN-00453				.REGULATOR(R) ASSY	1			REAR
	XJBN-00452				.REGULATOR(F) ASSY	1			FRONT
405	XJBN-00449				..SCREW	4			REAR
412	XJBN-00448				..SCREW	2			
413	XJBN-00447				..SCREW	2			
436	XJBN-00446				..SCREW	2			
438	XJBN-00445				..SCREW	6			REAR
					..SCREW	10			FRONT
466	XJBN-00356				..PLUG	1			REAR
496	XJBN-00032				..PLUG	6			
					..PLUG	5			
N601	XJBN-00317				..CASING	1			NOT
N611	XJBN-00444				..LEVER-FEED BACK	1			NOT
N612	XJBN-00315				..LEVER-1	1			NOT
N613	XJBN-00314				..LEVER-2	1			NOT
N614	XJBN-00313				..PLUG-CENTER	1			NOT
N615	XJBN-00312				..PLUG-ADJUST	1			NOT
N621	XJBN-00311				..PISTON-COMPENSATOR	1			NOT
N622	XJBN-00310				..CASE-PISTON	1			NOT
N623	XJBN-00309				..ROD-COMPENSATOR	1			NOT
N624	XJBN-00308				..SEAT(C)-SPRING	1			NOT
N625	XJBN-00307				..SPRING-OUTER	1			NOT
N626	XJBN-00306				..SPRING-INNER	1			NOT
N627	XJBN-00305				..STEM(C)-ADJUST	1	- #0389		NOT
	XJBN-01024				..STEM(C)-ADJUST	1	#0390 -	D	NOT

Item	Part_No	IS	Ord	T	Description	Qty	Serial_No	ITC	Remark
N628	XJBN-00304				..SCREW(C)-ADJUST	1	- #0389		NOT
	XJBN-01025				..SCREW(C)-ADJUST	1	#0390 -	D	NOT
N629	XJBN-00303				..COVER(C)	1			NOT
N630	XJBN-00302				..NUT-LOCK	1			NOT
N631	XJBN-00301				..SLEEVE	1			NOT
N641	XJBN-00300				..COVER-PILOT	1			NOT
N642	XJBN-00299				..SCREW(QMC)-ADJUST	1			NOT
N643	XJBN-00298				..PISTON-PILOT	1			NOT
N644	XJBN-00297				..SEAT(Q)-SPRING	1			NOT
N645	XJBN-00296				..STEM(Q)-ADJUST	1			NOT
N646	XJBN-00295				..SPRING-PILOT	1			NOT
N647	XJBN-00294				..STOPPER	1			NOT
N648	XJBN-00293				..PISTON(QMC)	1			NOT
N651	XJBN-00443				..SLEEVE	1			NOT
N652	XJBN-00291				..SPOOL	1			NOT
N653	XJBN-00290				..SEAT-SPRING	1			NOT
N654	XJBN-00289				..SPRING-RETURN	1			NOT
N655	XJBN-00288				..SPRING-SET	1			NOT
N656	XJBN-00287				..COVER-BLOCK	1			NOT
N699	XJBN-00442				..CASING	1			NOT
708	XJBN-00286				..O-RING	1			
722	XJBN-00285				..O-RING	3			FRONT
					..O-RING	1			REAR
723	XJBN-00284				..O-RING	1			
724	XJBN-00361				..O-RING	9			

Item	Part_No	IS	Ord	T	Description	Qty	Serial_No	ITC	Remark
725	XJBN-00231				..O-RING	1			
728	XJBN-00097				..O-RING	1			
730	XJBN-00230				..O-RING	1			
732	XJBN-00283				..O-RING	2	- #0097		STD
	XJBN-00820				..O-RING	2	#0098 - #0389	B	STD
					..O-RING	1	#0390 -	A	LOW NOISE
733	XJBN-00282				..O-RING	1			
734	XJBN-00281				..O-RING	1			
735	XJBN-00280				..O-RING	1			
753	XJBN-00441				..O-RING	2	- #0389		
	XJBN-01026				..O-RING	3	#0390 -	A	
755	XJBN-00045				..O-RING	2			
	XJBN-00362				..O-RING	3			
756	XJBN-00279				..O-RING	1			
763	XJBN-00094				..O-RING	1			
801	XJBN-00440				..NUT	3	- #0389		
					..NUT	2	#0390 -	A	
802	XJBN-01027				..NUT	1	#0390 -	A	
814	XJBN-00439				..RING-SNAP	1			
N836	XJBN-00276				..RING-SNAP	1			NOT
858	XJBN-00438				..RING-SNAP	2			
N874	XJBN-00344				..PIN	1			NOT
N875	XJBN-00273				..PIN	4			NOT
					..PIN	2	#0285 -	-	NOT
N876	XJBN-00794				..PIN	2	#0285 -	-	NOT

Item	Part_No	IS	Ord	T	Description	Qty	Serial_No	ITC	Remark
N887	XJBN-00272				..PIN	1			NOT
N897	XJBN-00343				..PIN	1			NOT
	XJBN-00795				..PIN	1	#0285 -	-	NOT
N898	XJBN-00270				..PIN	1			NOT
924	XJBN-00269				..SCREW-SET	1			
N925	XJBN-00268				..SCREW(QI)-ADJUST	1	#0389 -	-	NOT
079	XJBN-00382				.EPPR VALVE ASSY	1			
N	@				NOT INDIVIDUALLY SUPPLIED	AR			NOT

GEAR PUMP

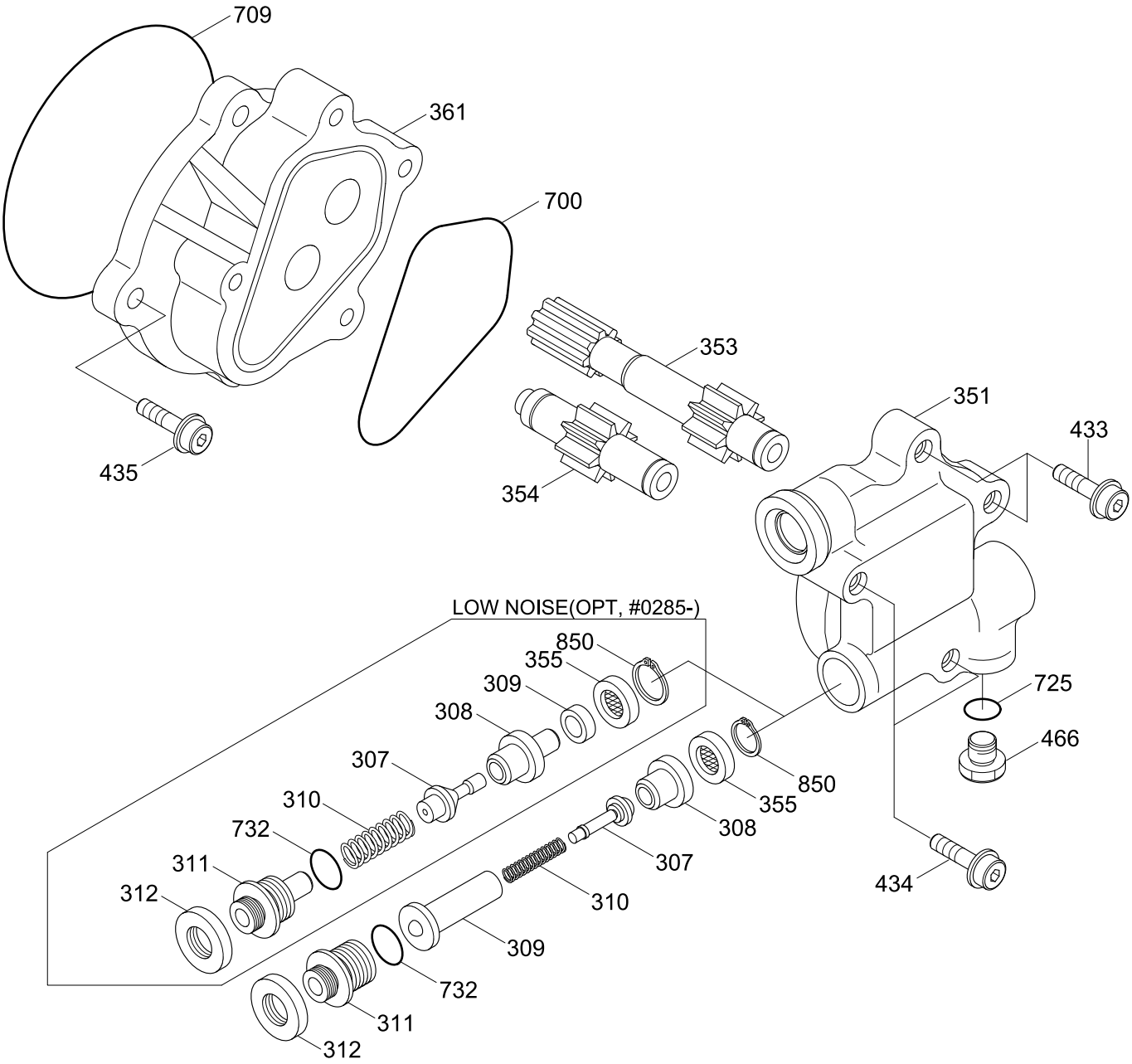

Description	Parts no	Included item
Poppet sub assy(-#0091)	XJBN-00753	307, 309
Gear case sub assy(-#0091)	XJBN-00752	308, 351, 353, 354, 361
Gear case sub assy(#0092-)	XJBN-00924	307, 308, 351, 353, 354, 361

Item	Part_No	IS	Ord	T	Description	Qty	Serial_No	ITC	Remark
*-3	XJBN-00895				.GEAR PUMP ASSY	1	#0001 - #0389	-	STD
S307	XJBN-00339				..POPPET	1			
S308	XJBN-00338				..SEAT	1			
S309	XJBN-00337				..SEAT-SPRING	1			
310	XJBN-00336				..SPRING	1			
311	XJBN-00722				..SCREW-ADJUST	1			
312	XJBN-00334				..NUT-LOCK	1			
S351	XJBN-00723				..CASE-GEAR	1			
S353	XJBN-00332				..GEAR-DRIVE	1			
S354	XJBN-00331				..GEAR-DRIVEN	1			
355	XJBN-00330				..FILTER-RETURN	1			
S361	XJBN-00724				..CASE-FRONT	1			
433	XJBN-00328				..SOCKET-FLANGE	2			
434	XJBN-00327				..SOCKET-FLANGE	2			
435	XJBN-00925				..SOCKET-FLANGE	2	#0001 -	-	
466	XJBN-00356				..PLUG	1			
700	XJBN-00325				..RING	1			
709	XJBN-00402				..O-RING	1			
725	XJBN-00362				..O-RING	1			
732	XJBN-00283				..O-RING	1			
850	XJBN-00386				..RING-SNAP	1			
S	XJBN-00753				POPPET SUB ASSY	1			SEE ILLUST
	XJBN-00752				GEAR CASE ASSY	1	- #0091		SEE ILLUST
	XJBN-00924				GEAR CASE SUB ASSY	1	#0092 -	-	SEE ILLUST
*-3	XJBN-00923				.GEAR PUMP ASSY	1	#0285 -	-	LOW NOISE

Item	Part_No	IS	Ord	T	Description	Qty	Serial_No	ITC	Remark
S307	XJBN-00521				..POPPET	1			
S308	XJBN-00522				..SEAT	1			
309	XJBN-00523				..RING	1			
310	XJBN-00524				..SPRING	1			
311	XJBN-00525				..SCREW-ADJUST	1			
312	XJBN-00334				..NUT-LOCK	1			
S351	XJBN-00660				..CASE-GEAR	1			
S353	XJBN-00332				..GEAR-DRIVE	1			
S354	XJBN-00331				..GEAR-DRIVEN	1			
355	XJBN-00330				..FILTER-RETURN	1			
S361	XJBN-00724				..CASE-FRONT	1			
433	XJBN-00328				..SOCKET-FLANGE	2			
434	XJBN-00327				..SOCKET-FLANGE	2			
435	XJBN-00925				..SOCKET-FLANGE	2			
466	XJBN-00356				..PLUG	1			
700	XJBN-00325				..RING	1			
709	XJBN-00402				..O-RING	1			
725	XJBN-00362				..O-RING	1			
732	XJBN-00283				..O-RING	1			
850	XJBN-00386				..RING-SNAP	1			
S	XJBN-00924				GEAR CASE SUB ASSY	1			SEE ILLUST

GEAR PUMP

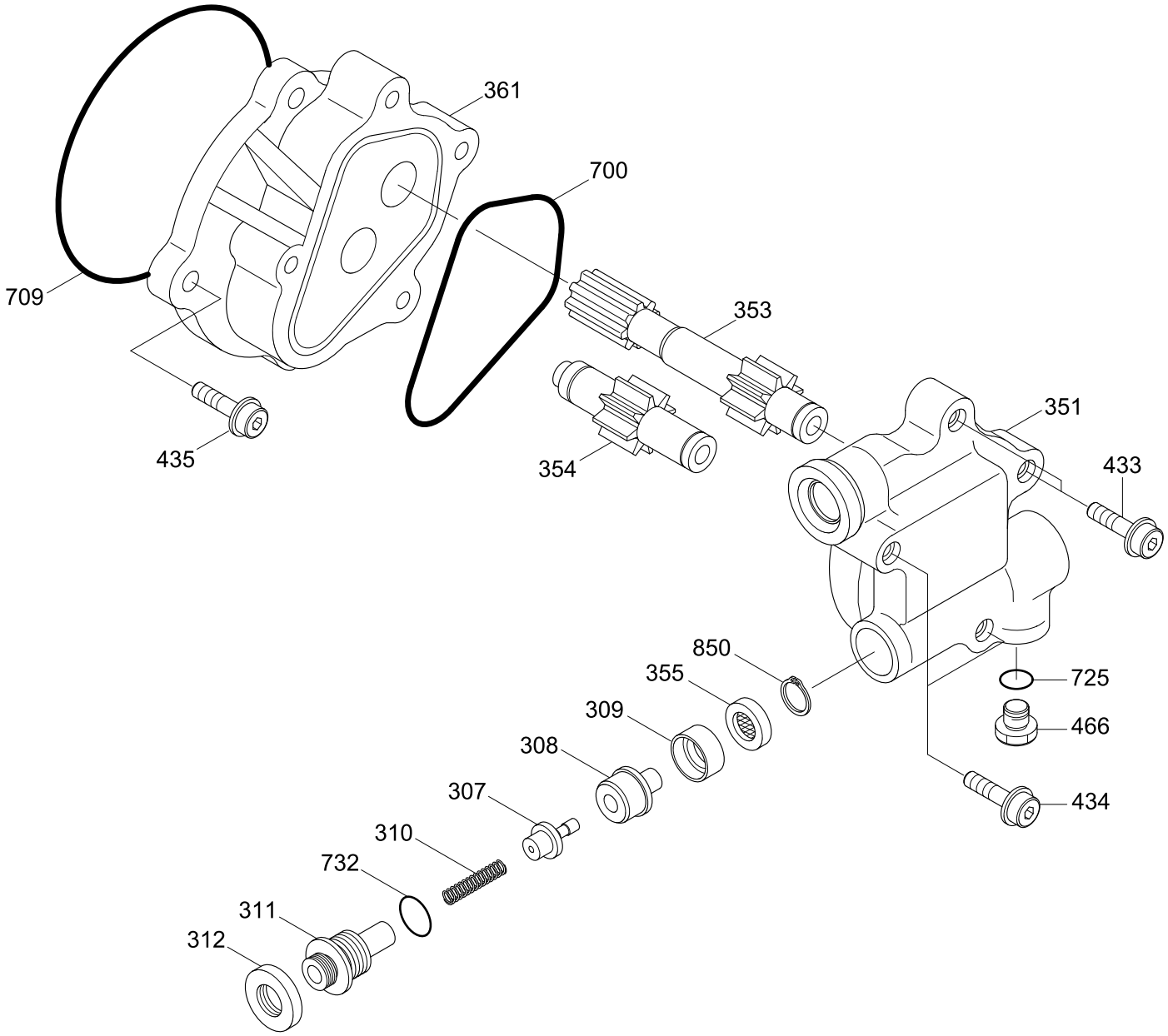

Descrption	Parts no	Included item
Gear case assy	XJBN-00924	307, 308, 351, 353, 354, 361

Item	Part_No	IS	Ord	T	Description	Qty	Serial_No	ITC	Remark
*-51	XJBN-00923				.GEAR PUMP ASSY	1	#0390 -	-	STD
S307	XJBN-00521				..POPPET	1			
S308	XJBN-00522				..SEAT	1			
S309	XJBN-00523				..RING	1			
310	XJBN-00524				..SPRING	1			
311	XJBN-00525				..SCREW-ADJUST	1			
312	XJBN-00334				..NUT-LOCK	1			
S351	XJBN-00660				..CASE-GEAR	1			
S353	XJBN-00332				..GEAR-DRIVE	1			
S354	XJBN-00331				..GEAR-DRIVEN	1			
355	XJBN-00330				..RETURN-FILTER	1			
S361	XJBN-00724				..CASE-FRONT	1			
433	XJBN-00328				..SOCKET-FLANGE	2			
434	XJBN-00327				..SOCKET-FLANGE	2			
435	XJBN-00925				..SOCKET-FLANGE	2			
466	XJBN-00356				..PLUG	1			
700	XJBN-00325				..RING	1			
709	XJBN-00402				..O-RING	1			
725	XJBN-00362				..O-RING	1			
732	XJBN-00283				..O-RING	1			
850	XJBN-00386				..RING-SNAP	1			
S	XJBN-00924				GEAR CASE ASSY	1			SEE ILLUST

MAIN CONTROL VALVE(1/4, -#0198)

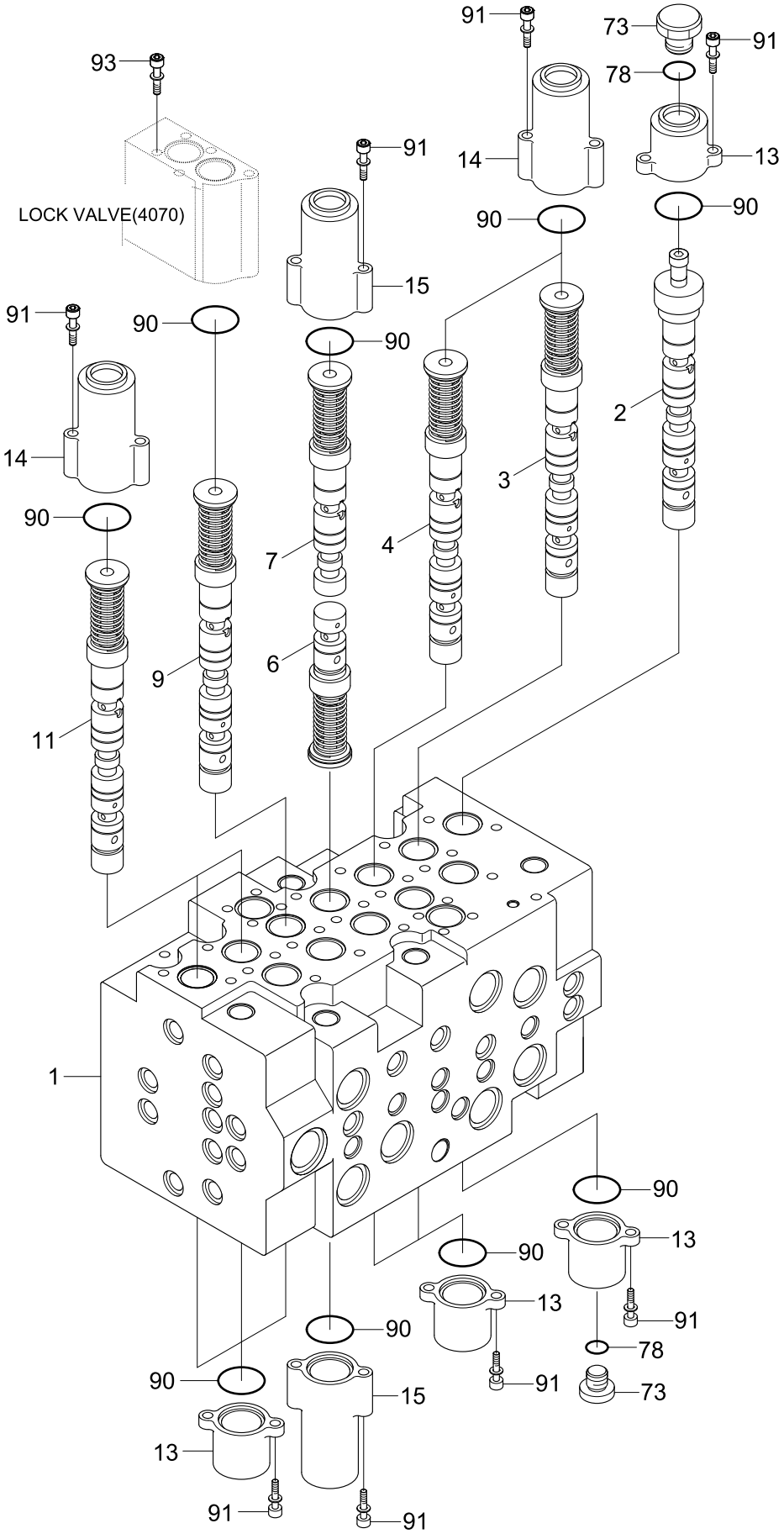

Parts name	Parts no	Applied machine serial no.
MCV	31N4-15110	~#0181, #0184~#0198

Item	Part_No	IS	Ord	T	Description	Qty	Serial_No	ITC	Remark
*	31N4-15110				MAIN CONTROL VALVE	1	- #0198	-	
N1	XKBF-00001				.BODY	1			NOT
2	XKBF-00104				.SPOOL ASSY	1			TRAVEL STRAIGHT
3	XKBF-00105				.SPOOL ASSY	1			TRAVEL 1
4	XKBF-00106				.SPOOL ASSY	1			SWING
6	XKBF-00006				.SPOOL ASSY	1	- #0198	-	SW PRIORITY
7	XKBF-00121				.SPOOL ASSY	1			BOOM 2
9	XKBF-00111				.SPOOL ASSY	1			ARM 1
11	XKBF-00011				.SPOOL ASSY	2			OPTION
13	XKBF-00013				.COVER-PILOT	7			
14	XKBF-00014				.COVER-PILOT	3			
15	XKBF-00015				.COVER-PILOT	2			
73	XKBF-00073				.PLUG	1			
78	XKBF-00078				.O-RING	1			
90	XKBF-00090				.O-RING	14			
91	XKBF-00091				.BOLT-SOCKET HEAD	26			
93	XKBF-00093				.BOLT-SOCKET HEAD	5			
N	@				NOT INDIVIDUALLY SUPPLIED	AR			NOT

MAIN CONTROL VALVE(2/4, -#0198)

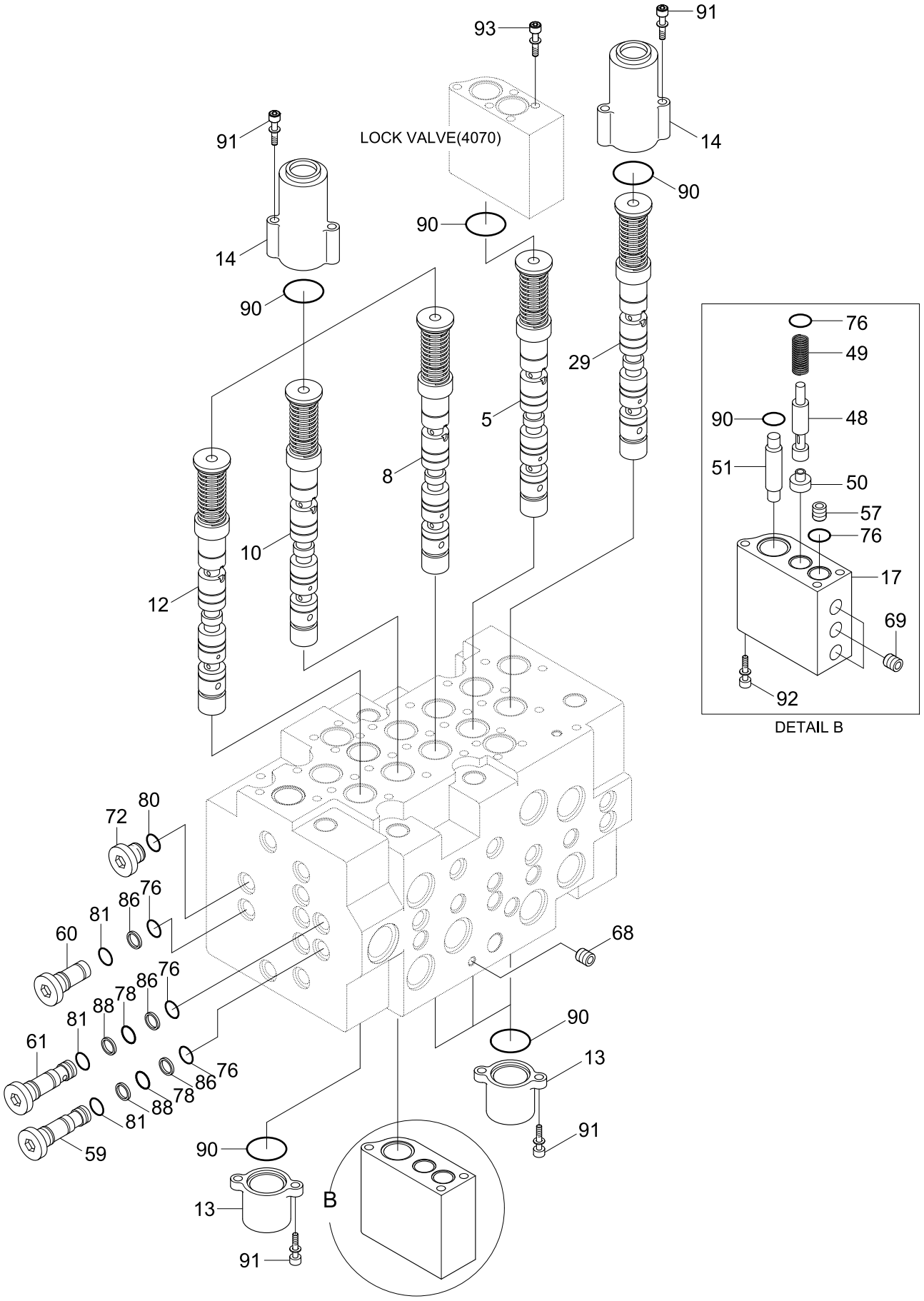

Parts name	Parts no	Applied machine serial no.
MCV	31N4-15110	~#0181, #0184~#0198

Item	Part_No	IS	Ord	T	Description	Qty	Serial_No	ITC	Remark
*	@				MAIN CONTROL VALVE	1	- #0198	-	NOT
5	XKBF-00107				.SPOOL ASSY	1			BOOM 1
8	XKBF-00110				.SPOOL ASSY	1			ARM 2
10	XKBF-00112				.SPOOL ASSY	1			ARM REGEN
12	XKBF-00012				.SPOOL ASSY	1	- #0198	-	BUCKET
13	XKBF-00013				.COVER-PILOT	4			
14	XKBF-00014				.COVER-PILOT	4			
17	XKBF-00017				.BLOCK-REGEN	1			
29	XKBF-00114				.SPOOL ASSY	1			DOZER
48	XKBF-00048				.SPOOL-SELECTOR	1			
49	XKBF-00049				.SPRING	1			
50	XKBF-00050				.STOPPER	1			
51	XKBF-00051				.PISTON	1			
57	XKBF-00057				.RESTRICTOR	1			
59	XKBF-00059				.PLUG	1	#0001 -	-	
60	XKBF-00060				.PLUG	1			
61	XKBF-00115				.PLUG-ORIFICE	1	#0001 -	-	
68	XKBF-00068				.PLUG-SOCKET HEAD	1			
69	XKBF-00069				.PLUG-SOCKET HEAD	3			
72	XKBF-00072				.PLUG	1			
76	XKBF-00076				.O-RING	5			
78	XKBF-00078				.O-RING	4			
80	XKBF-00080				.O-RING	1			
81	XKBF-00081				.O-RING	3			
86	XKBF-00086				.BACK-UP RING	3			

Item	Part_No	IS	Ord	T	Description	Qty	Serial_No	ITC	Remark
88	XKBF-00088				.RING-BACK UP	2			
90	XKBF-00090				.O-RING	10			
91	XKBF-00091				.BOLT-SOCKET HEAD	16			
92	XKBF-00092				.BOLT-SOCKET HEAD	3			
93	XKBF-00093				.BOLT-SOCKET HEAD	5			

MAIN CONTROL VALVE(3/4, -#0198)

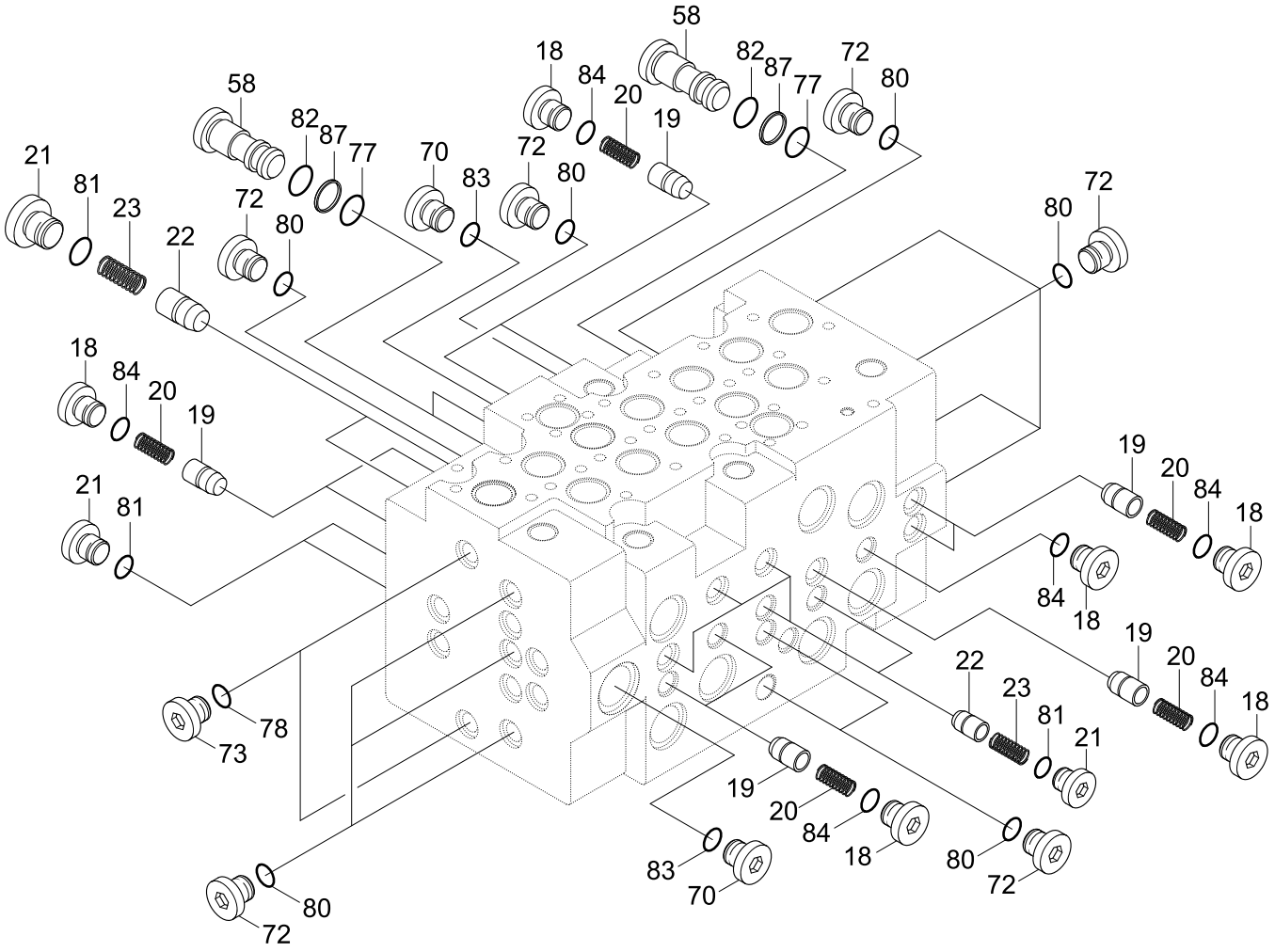

Parts name	Parts no	Applied machine serial no.
MCV	31N4-15110	~#0181, #0184~#0198

Item	Part_No	IS	Ord	T	Description	Qty	Serial_No	ITC	Remark
*	@				MAIN CONTROL VALVE	1	- #0198	-	NOT
18	XKBF-00018				.PLUG	11			
19	XKBF-00019				.POPPET 1	10			
20	XKBF-00020				.SPRING	10			
21	XKBF-00021				.PLUG	9			
22	XKBF-00022				.POPPET 2	7			
23	XKBF-00023				.SPRING	7			
58	XKBF-00058				.PLUG	3			
70	XKBF-00070				.PLUG	2			
72	XKBF-00072				.PLUG	12			
73	XKBF-00073				.PLUG	2			
77	XKBF-00077				.O-RING	3			
78	XKBF-00078				.O-RING	2			
80	XKBF-00080				.O-RING	12			
81	XKBF-00081				.O-RING	9			
82	XKBF-00082				.O-RING	3			
83	XKBF-00083				.O-RING	2			
84	XKBF-00084				.O-RING	10			
87	XKBF-00087				.RING-BACK UP	3			

MAIN CONTROL VALVE(4/4, -#0198)

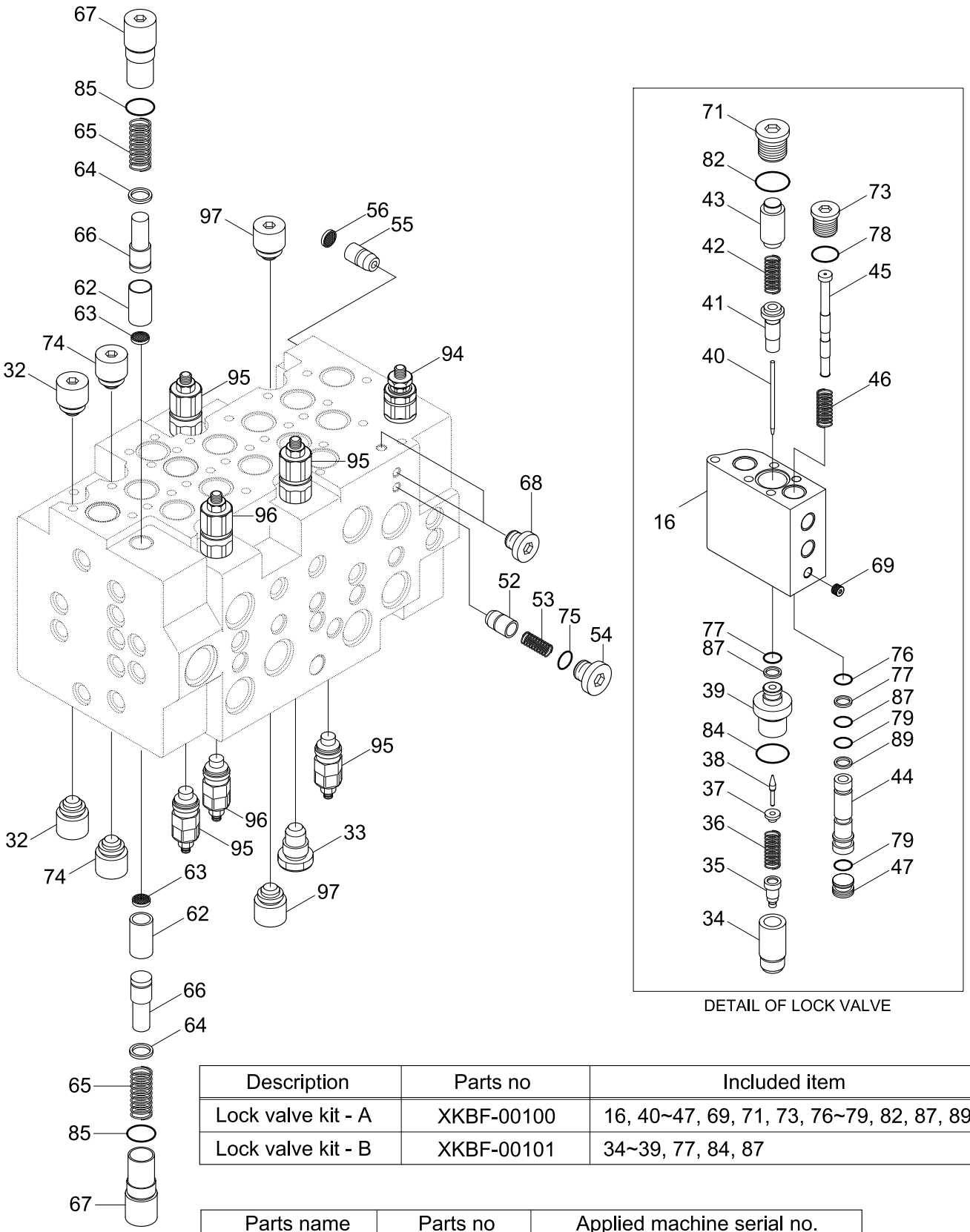

DETAIL OF LOCK VALVE

Description	Parts no	Included item
Lock valve kit - A	XKBF-00100	16, 40~47, 69, 71, 73, 76~79, 82, 87, 89
Lock valve kit - B	XKBF-00101	34~39, 77, 84, 87

Parts name	Parts no	Applied machine serial no.
MCV	31N4-15110	~#0181, #0184~#0198

Item	Part_No	IS	Ord	T	Description	Qty	Serial_No	ITC	Remark
*	@				MAIN CONTROL VALVE	1	- #0198	-	NOT
K16	XKBF-00016				.BLOCK-HOLDING	2			
32	XKBF-00096				.PLUG-RELIEF VALVE	2			
33	XKBF-00097				.PLUG-RELIEF VALVE	1			
KN34	XKBF-00034				.VALVE-LOCK	2			NOT
K35	XKBF-00035				.RESTRICTOR-LOCK VLV	2			
KN36	XKBF-00036				.SPRING-LOCK VALVE	2			NOT
K37	XKBF-00037				.HOLDER-SPRING	2			
K38	XKBF-00908				.POPPET-PILOT	2			
K39	XKBF-00909				.SEAT-POPPET	2			
K40	XKBF-00040				.PISTON 1	2			
K41	XKBF-00041				.GUIDE-PISTON	2			
K42	XKBF-00042				.SPRING-LOCK VALVE	2			
K43	XKBF-00043				.PISTON 2	2			
K44	XKBF-00044				.SOCKET-LOCK VALVE	2			
K45	XKBF-00045				.SPOOL-LOCK VALVE	2			
K46	XKBF-00046				.SPRING-LOCK VALVE	2			
K47	XKBF-00047				.PLUG-LOCK VALVE	2			
52	XKBF-00052				.VALVE-CHECK	1			
53	XKBF-00053				.SPRING-CHECK VALVE	1			
54	XKBF-00054				.PLUG	1			
55	XKBF-00055				.RESTRICTOR	1			
56	XKBF-00056				.FILTER-COIN TYPE	1			
62	XKBF-00062				.POPPET-NEGATIVE	2			
63	XKBF-00063				.FILTER-COIN TYPE	2			

Item	Part_No	IS	Ord	T	Description	Qty	Serial_No	ITC	Remark
64	XKBF-00064				.HOLDER-SPRING	2			
65	XKBF-00065				.SPRING-NEGATIVE	2			
66	XKBF-00066				.PISTON-NEGATIVE	2			
67	XKBF-00067				.SOCKET-NEGATIVE	2			
68	XKBF-00068				.PLUG-SOCKET HEAD	2			
K69	XKBF-00069				.PLUG-SOCKET HEAD	2			
K71	XKBF-00071				.PLUG	2			
K73	XKBF-00073				.PLUG	2			
74	XKBF-00098				.PLUG-RELIEF VALVE	2			
75	XKBF-00075				.O-RING	1			
K76	XKBF-00076				.O-RING	2			
K77	XKBF-00077				.O-RING	4			
K78	XKBF-00077				.O-RING	2			
K79	XKBF-00079				.O-RING	4			
K82	XKBF-00082				.O-RING	2			
K84	XKBF-00084				.O-RING	2			
85	XKBF-00085				.O-RING	2			
K87	XKBF-00087				.RING-BACK UP	4			
K89	XKBF-00089				.RING-BACK UP	2			
94	XKBF-00094				.RELIEF VALVE-MAIN	1			
95	XKBF-00095				.RELIEF VALVE-OVERLOAD	4			
96	XKBF-00099				.RELIEF VALVE-OVERLOAD	2			
97	XKBF-00116				.ACV COMP	2			
K	XKBF-00100				LOCK VALVE KIT-A	1			SEE ILLUST
	XKBF-00101				LOCK VALVE KIT-B	1			SEE ILLUST

Item	Part_No	IS	Ord	T	Description	Qty	Serial_No	ITC	Remark
N	@				NOT INDIVIDUALLY SUPPLIED	AR			NOT

MAIN CONTROL VALVE(1/4, #0199-)

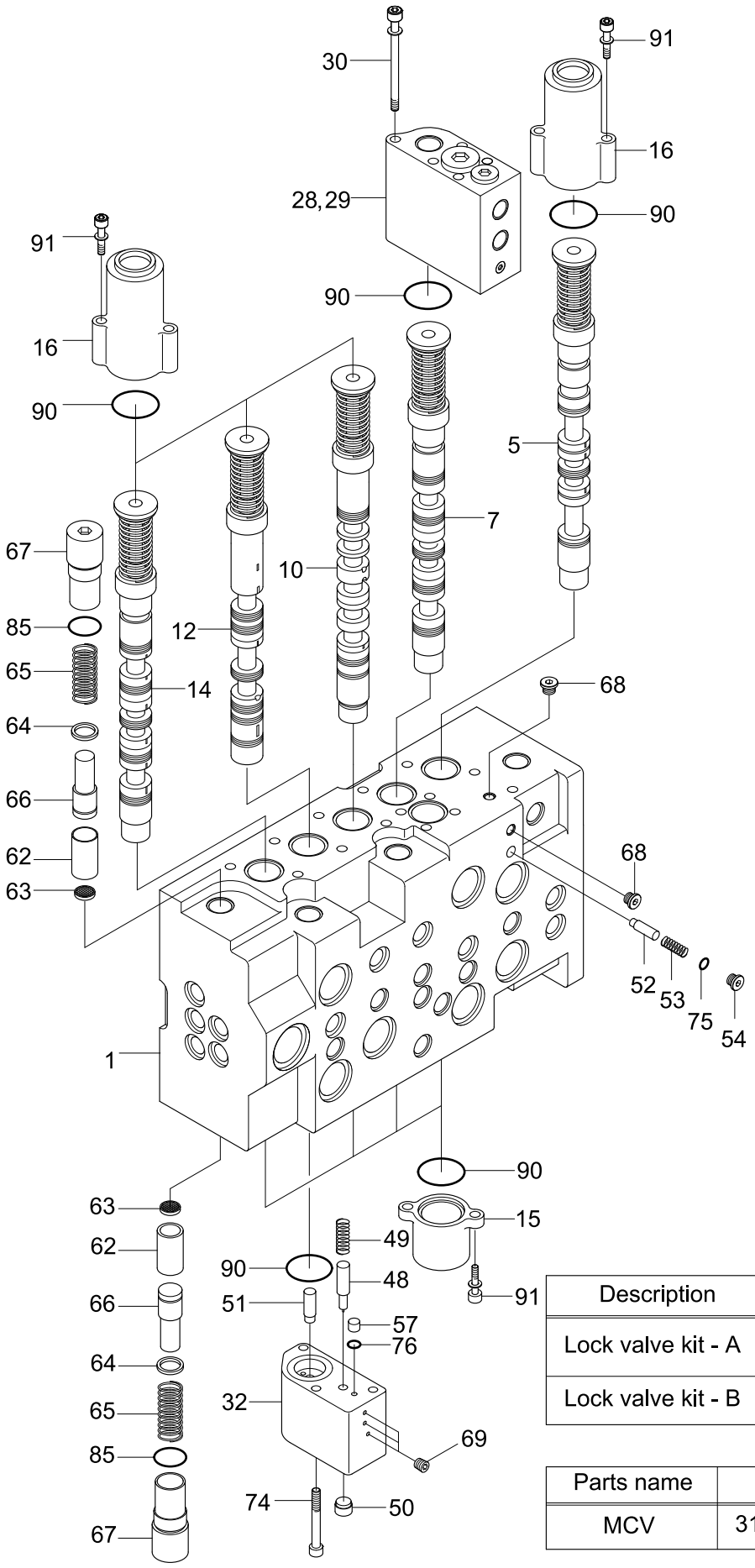

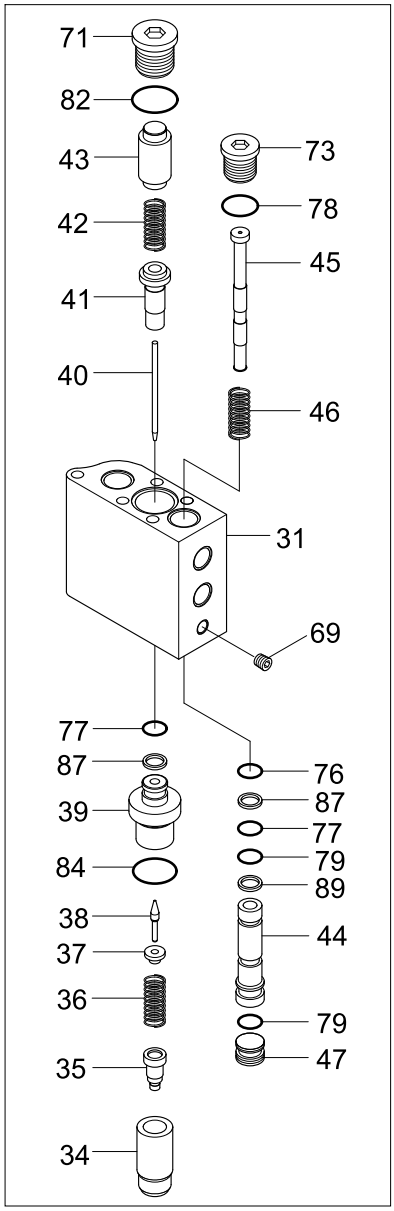

DETAIL OF LOCK VALVE

Description	Parts no	item	Included item
Lock valve kit - A	XKBF-00100	28	31, 40~47, 69, 71, 73 76~79, 82, 87, 89
Lock valve kit - B	XKBF-00101	29	34~39, 77, 84, 87

Parts name	Parts no	Applied machine serial no.
MCV	31N4-15120	#0182~#0183, #0199~

Item	Part_No	IS	Ord	T	Description	Qty	Serial_No	ITC	Remark
*	31N4-15120				MAIN CONTROL VALVE	1	#0199 -	D	STD
	31N4-15130				MAIN CONTROL VALVE	1	#0357 -	-	ADJUST BOOM
N1	XKBF-00477				.HOUSING-P1	1			NOT
5	XKBF-00481				.SPOOL ASSY	1			DOZER
7	XKBF-00553				.SPOOL ASSY	1			BOOM 1
10	XKBF-00482				.SPOOL ASSY	1			ARM 2
12	XKBF-00484				.SPOOL ASSY	1			ARM REGEN
14	XKBF-00485				.SPOOL ASSY	1			BUCKET
15	XKBF-00013				.COVER-PILOT	4			
16	XKBF-00014				.COVER-PILOT	3			
K28	XKBF-00100				.LOCK VALVE KIT-A	1			
31	XKBF-00016				..BLOCK-HOLDING	1			
40	XKBF-00040				..PISTON 1	1			
41	XKBF-00041				..GUIDE-PISTON	1			
42	XKBF-00042				..SPRING-LOCK VALVE	1			
43	XKBF-00043				..PISTON 2	1			
44	XKBF-00044				..SOCKET-LOCK VALVE	1			
45	XKBF-00700				..SPOOL-LOCK VALVE	1	#0199 -	-	
46	XKBF-00046				..SPRING-LOCK VALVE	1			
47	XKBF-00047				..PLUG-LOCK VALVE	1			
69	XKBF-00069				..PLUG-SOCKET HEAD	1			
71	XKBF-00060				..PLUG	1			
73	XKBF-00021				..PLUG	1			
76	XKBF-00076				..O-RING	1			
77	XKBF-00077				..O-RING	1			

Item	Part_No	IS	Ord	T	Description	Qty	Serial_No	ITC	Remark
78	XKBF-00078				..O-RING	1			
79	XKBF-00079				..O-RING	1			
82	XKBF-00082				..O-RING	1			
87	XKBF-00087				..RING-BACK UP	1			
89	XKBF-00089				..RING-BACK UP	1			
K29	XKBF-00101				.LOCK VALVE KIT-B	1			
N34	XKBF-00034				..VALVE-LOCK	1			NOT
35	XKBF-00035				..RESTRICTOR-LOCK VLV	1			
N36	XKBF-00036				..SPRING-LOCK VALVE	1			NOT
37	XKBF-00037				..HOLDER-SPRING	1			
38	XKBF-00908				..POPPET-PILOT	1			
39	XKBF-00907				..GUIDE-POPPET	1			
77	XKBF-00077				..O-RING	1			
84	XKBF-00084				..O-RING	1			
87	XKBF-00087				..RING-BACK UP	1			
30	XKBF-00093				.BOLT-SOCKET HEAD	5			
32	XKBF-00017				.BLOCK-REGEN	1			
48	XKBF-00048				.SPOOL-SELECTOR	1			
49	XKBF-00049				.SPRING	1			
50	XKBF-00050				.STOPPER	1			
51	XKBF-00051				.PISTON	1			
52	XKBF-00052				.VALVE-CHECK	1			
53	XKBF-00053				.SPRING-CHECK VALVE	1			
54	XKBF-00054				.PLUG	1			
57	XKBF-00057				.RESTRICTOR	1			

Item	Part_No	IS	Ord	T	Description	Qty	Serial_No	ITC	Remark
62	XKBF-00062				.POPPET-NEGATIVE	1			
63	XKBF-00063				.FILTER-COIN TYPE	2			
64	XKBF-00064				.HOLDER-SPRING	2			
65	XKBF-00065				.SPRING-NEGATIVE	2			
66	XKBF-00066				.PISTON-NEGATIVE	2			
67	XKBF-00067				.SOCKET-NEGATIVE	2			
68	XKBF-00068				.PLUG-SOCKET HEAD	2			
69	XKBF-00069				.PLUG-SOCKET HEAD	3			
74	XKBF-00092				.BOLT-SOCKET HEAD	3			
75	XKBF-00075				.O-RING	1			
76	XKBF-00076				.O-RING	1			
85	XKBF-00085				.O-RING	2			
90	XKBF-00090				.O-RING	10			
91	XKBF-00091				.BOLT-SOCKET HEAD	14			
N	@				NOT INDIVIDUALLY SUPPLIED	AR			NOT

MAIN CONTROL VALVE(2/4, #0199-)

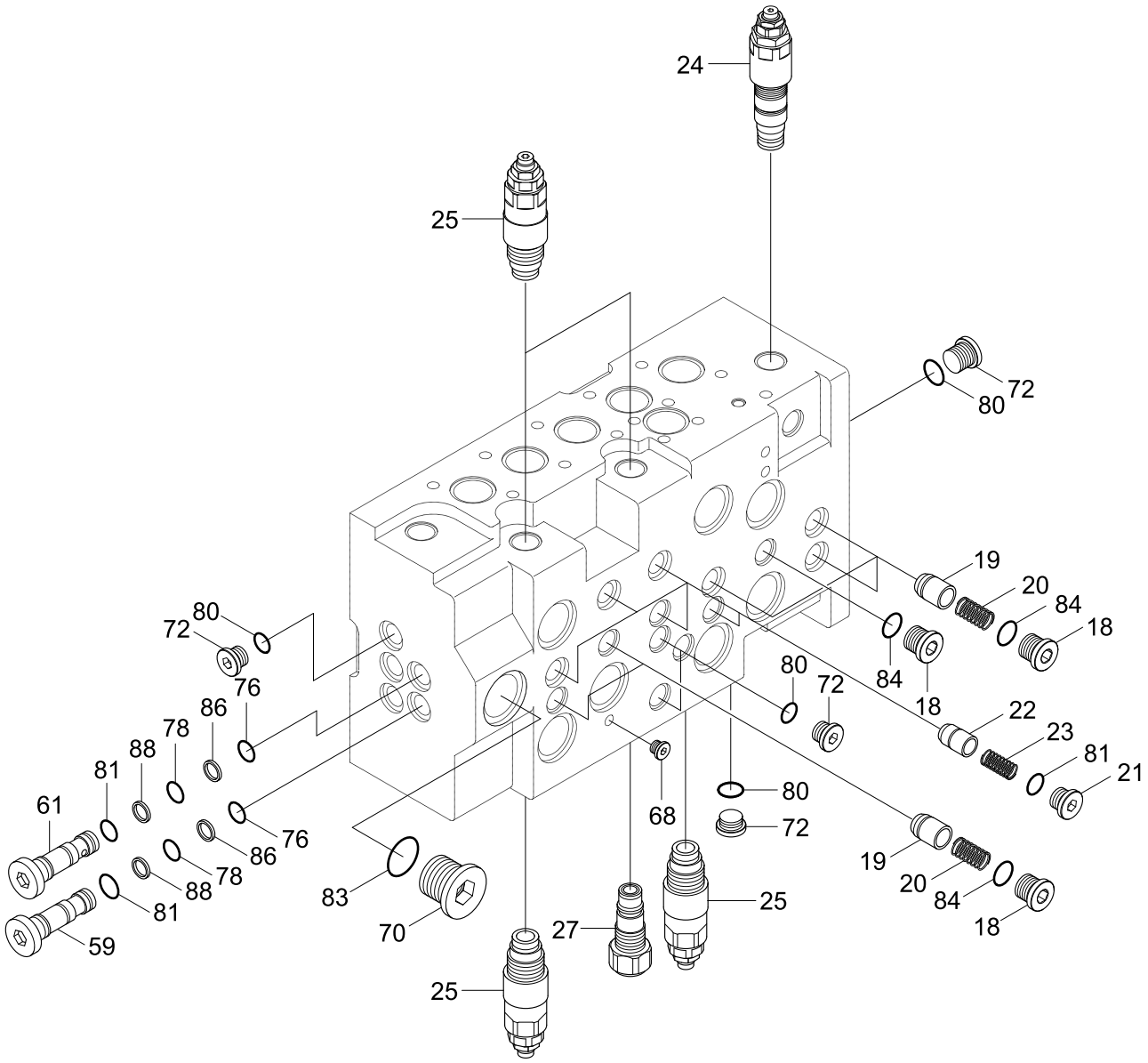

Parts name	Parts no	Applied machine serial no.
MCV	31N4-15120	#0182~#0183, #0199~

Item	Part_No	IS	Ord	T	Description	Qty	Serial_No	ITC	Remark
*	@				MAIN CONTROL VALVE	1	#0199 -	D	NOT
18	XKBF-00018				.PLUG	6			
19	XKBF-00019				.POPPET 1	5			
20	XKBF-00020				.SPRING	5			
21	XKBF-00021				.PLUG	5			
22	XKBF-00022				.POPPET 2	5			
23	XKBF-00023				.SPRING	5			
24	XKBF-00094				.RELIEF VALVE-MAIN	1	#0199 -	-	
25	XKBF-00486				.RELIEF VALVE-OVERLOAD	4			
27	XKBF-00487				.PLUG-RELIEF VALVE	1			
59	XKBF-00488				.PLUG-PARALLEL	1			
61	XKBF-00489				.PLUG-ORIFICE	1			
68	XKBF-00068				.PLUG-SOCKET HEAD	1			
70	XKBF-00061				.PLUG-ORIFICE	1			
72	XKBF-00058				.PLUG	5			
76	XKBF-00076				.O-RING	2			
78	XKBF-00078				.O-RING	2			
80	XKBF-00080				.O-RING	5			
81	XKBF-00081				.O-RING	7			
83	XKBF-00083				.O-RING	1			
84	XKBF-00084				.O-RING	6			
86	XKBF-00086				.BACK-UP RING	2			
88	XKBF-00088				.RING-BACK UP	2			

MAIN CONTROL VALVE(3/4, #0199-)

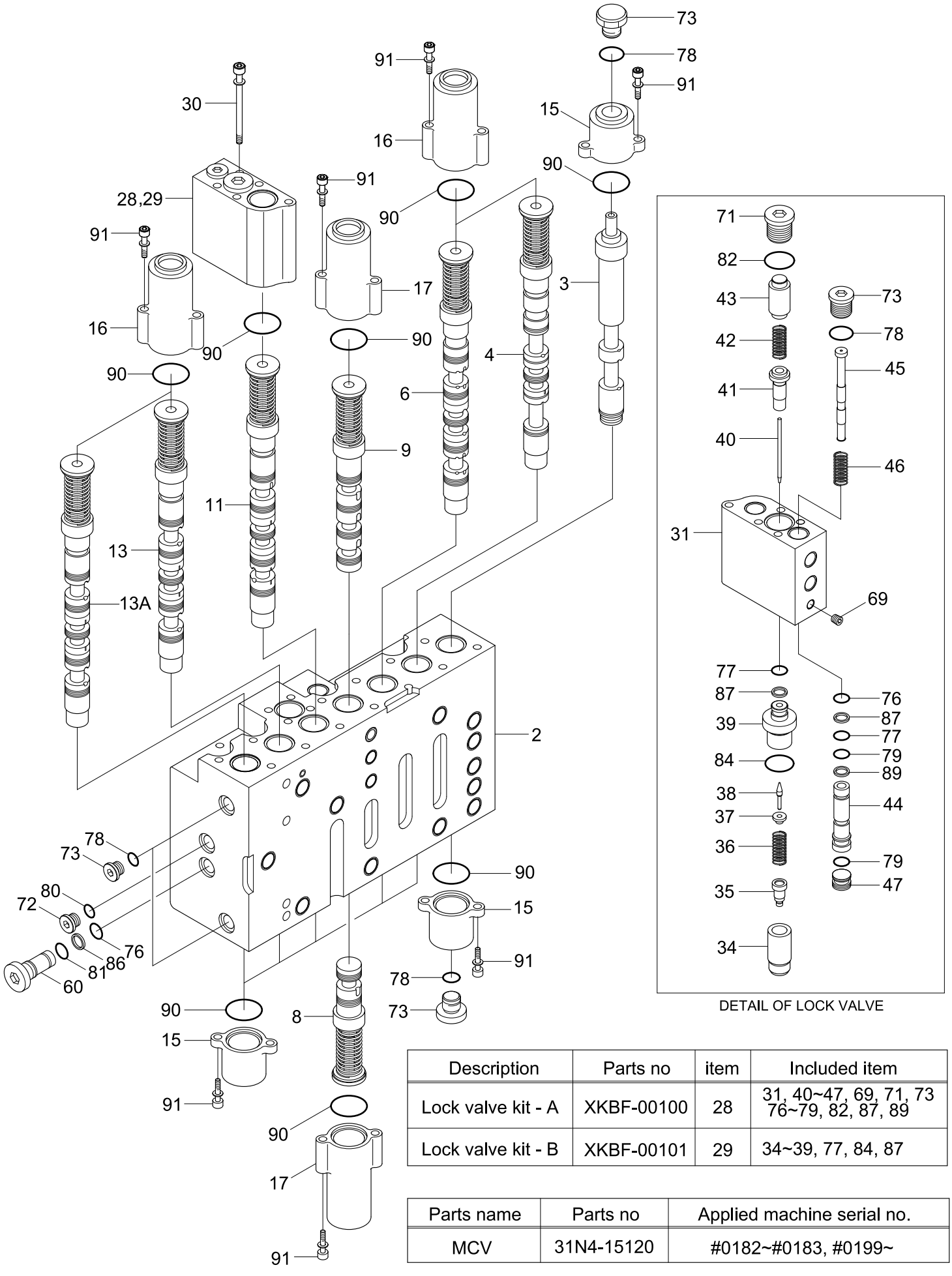

DETAIL OF LOCK VALVE

Description	Parts no	item	Included item
Lock valve kit - A	XKBF-00100	28	31, 40~47, 69, 71, 73 76~79, 82, 87, 89
Lock valve kit - B	XKBF-00101	29	34~39, 77, 84, 87

Parts name	Parts no	Applied machine serial no.
MCV	31N4-15120	#0182~#0183, #0199~

Item	Part_No	IS	Ord	T	Description	Qty	Serial_No	ITC	Remark
*	@				MAIN CONTROL VALVE		#0199 -	D	NOT
N2	XKBF-00478				.HOUSING-P2	1			NOT
3	XKBF-00479				.SPOOL ASSY	1			NULL
4	XKBF-00480				.SPOOL ASSY	1			TRAVEL
6	XKBF-00354				.SPOOL ASSY	1			SWING
8	XKBF-00355				.SPOOL ASSY	1			SW PRIORITY
9	XKBF-00356				.SPOOL ASSY	1			BOOM 2
11	XKBF-00483				.SPOOL ASSY	1			ARM 1
13	XKBF-00011				.SPOOL ASSY	1	#0001 -	-	OPTION
13A	XKBF-00011				.SPOOL ASSY	1	#0001 -	-	OPTION
	XKBF-00699				.SPOOL ASSY	1	#0357 -	-	ADJUST BOOM
15	XKBF-00013				.COVER-PILOT	7			
16	XKBF-00014				.COVER-PILOT	4			
17	XKBF-00015				.COVER-PILOT	2			
K28	XKBF-00100				.LOCK VALVE KIT-A	1			
31	XKBF-00016				..BLOCK-HOLDING	1			
40	XKBF-00040				..PISTON 1	1			
41	XKBF-00041				..GUIDE-PISTON	1			
42	XKBF-00042				..SPRING-LOCK VALVE	1			
43	XKBF-00043				..PISTON 2	1			
44	XKBF-00044				..SOCKET-LOCK VALVE	1			
45	XKBF-00700				..SPOOL-LOCK VALVE	1	#0199 -	-	
46	XKBF-00046				..SPRING-LOCK VALVE	1			
47	XKBF-00047				..PLUG-LOCK VALVE	1			
69	XKBF-00069				..PLUG-SOCKET HEAD	1			

Item	Part_No	IS	Ord	T	Description	Qty	Serial_No	ITC	Remark
71	XKBF-00060				..PLUG	1			
73	XKBF-00021				..PLUG	1			
76	XKBF-00076				..O-RING	1			
77	XKBF-00077				..O-RING	1			
78	XKBF-00078				..O-RING	1			
79	XKBF-00079				..O-RING	1			
82	XKBF-00082				..O-RING	1			
87	XKBF-00087				..RING-BACK UP	1			
89	XKBF-00089				..RING-BACK UP	1			
K29	XKBF-00101				.LOCK VALVE KIT-B	1			
N34	XKBF-00034				..VALVE-LOCK	1			NOT
35	XKBF-00035				..RESTRICTOR-LOCK VLV	1			
N36	XKBF-00036				..SPRING-LOCK VALVE	1			NOT
37	XKBF-00037				..HOLDER-SPRING	1			
38	XKBF-00908				..POPPET-PILOT	1			
39	XKBF-00909				..SEAT-POPPET	1			
77	XKBF-00077				..O-RING	1			
84	XKBF-00084				..O-RING	1			
87	XKBF-00087				..RING-BACK UP	1			
60	XKBF-00071				.PLUG	1			
72	XKBF-00058				.PLUG	1			
73	XKBF-00021				.PLUG	4			
76	XKBF-00076				.O-RING	1			
78	XKBF-00078				.O-RING	4			
80	XKBF-00080				.O-RING	1			

Item	Part_No	IS	Ord	T	Description	Qty	Serial_No	ITC	Remark
81	XKBF-00081				.O-RING	1			
86	XKBF-00086				.BACK-UP RING	1			
90	XKBF-00090				.O-RING	14			
91	XKBF-00091				.BOLT-SOCKET HEAD	26			
N	@				NOT INDIVIDUALLY SUPPLIED	AR			NOT

MAIN CONTROL VALVE(4/4, #0199-)

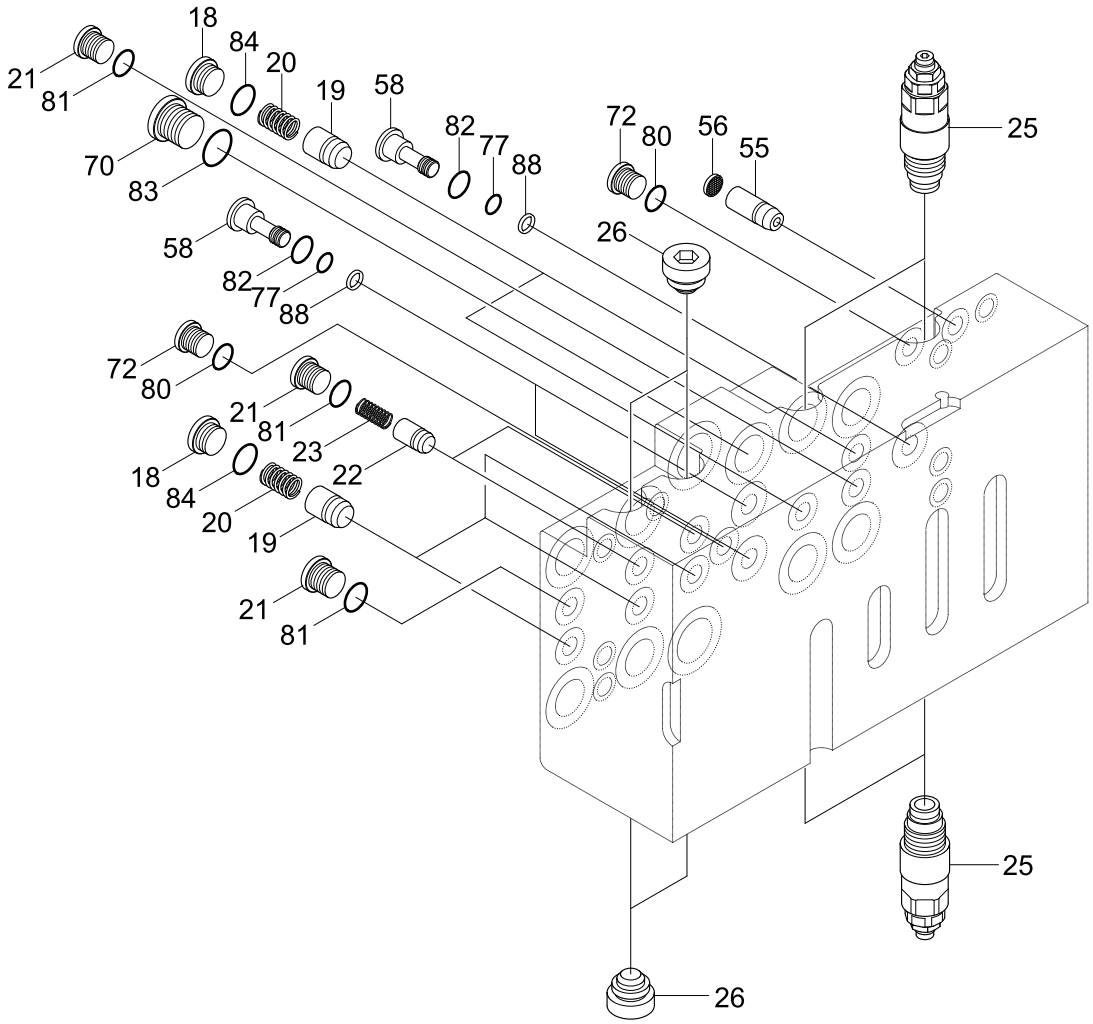

Parts name	Parts no	Applied machine serial no.
MCV	31N4-15120	#0182~#0183, #0199~

Item	Part_No	IS	Ord	T	Description	Qty	Serial_No	ITC	Remark
*	@				MAIN CONTROL VALVE	1	#0199 -	D	NOT
18	XKBF-00018				.PLUG	5			
19	XKBF-00019				.POPPET 1	5			
20	XKBF-00020				.SPRING	5			
21	XKBF-00021				.PLUG	4			
22	XKBF-00022				.POPPET 2	2			
23	XKBF-00023				.SPRING	2			
25	XKBF-00486				.RELIEF VALVE-OVERLOAD	4			
26	XKBF-00487				.PLUG-RELIEF VALVE	4			
55	XKBF-00055				.RESTRICTOR	1			
56	XKBF-00056				.FILTER-COIN TYPE	1			
58	XKBF-00058				.PLUG	3			
70	XKBF-00061				.PLUG-ORIFICE	1			
72	XKBF-00058				.PLUG	2			
77	XKBF-00077				.O-RING	3			
80	XKBF-00080				.O-RING	2			
81	XKBF-00081				.O-RING	4			
82	XKBF-00082				.O-RING	3			
83	XKBF-00083				.O-RING	1			
84	XKBF-00084				.O-RING	5			
88	XKBF-00088				.BACK-UP RING	3			

Item	Part_No	IS	Ord	T	Description	Qty	Serial_No	ITC	Remark
*	@				SWING MOTOR ASSY	1	- #0056	-	NOT
*-1	31N3-10220				.SWING MOTOR UNIT	1			
1	XJDB-00047				..RING-INNER	1			
2	XJDB-00048				..SEAL-OIL	1			
3	XJDB-00049				..BEARING-T/ROLLER	1			
4	XJDB-00050				..SPRING-BACKING	1			
5	XJDB-00051				..PLATE-CAM	1			
6	XJDB-00052				..PLATE-RETURN	1			
7	XJDB-00053				..PISTON ASSY	9			1321-132
8	XJDB-00054				..PLATE-LINING	2			
9	XJDB-00055				..PLATE	2			
10	XJDB-00056				..O-RING	1			
11	XJDB-00058				..PISTON	1			
12	XJDB-00057				..O-RING	2			
13	XJDB-00059				..SPRING	14			1390-162
14	XJDB-00060				..RING-TEFLON	2			
15	XJDB-00061				..PISTON	2			
16	XJDB-00017				..CAP	3			0824-051
17	XJDB-00018				..O-RING	3			8202-009
18	XJDB-00062				..SCROWAVE	4			
19	XJDB-00063				..RING-TEFLON	4			
20	XJDB-00064				..BUSH	4			
21	XJDB-00065				..PLATE-BALANCE	1			
22	XJDB-00066				..BEARING-NEEDLE	1			
23	XJDB-00067				..RING-SNAP	1			

Item	Part_No	IS	Ord	T	Description	Qty	Serial_No	ITC	Remark
N24	XJDB-00068				..CYLINDER ASSY	1	#0001 -	-	NOT
25	XJDB-00069				..HOUSING	1			
26	XJDB-00030				..BYPASS VALVE ASSY	2			3537-252
27	XJDB-00031				..RING-BACK UP	2			0859-320
28	XJDB-00032				..O-RING	2			8202-014
29	XJDB-00033				..O-RING	2			8202-010
30	XJDB-00070				..COVER	1			
31	XJDB-00071				..PLUG	1			8320-003
32	XJDB-00072				..PIN-PARALLEL	2			8022-101
33	XJDB-00036				..O-RING	4			8202-021
34	XJDB-00035				..RELIEF VALVE ASSY	2			3537-194
35	XJDB-00037				..BOLT-SOCKET	3			0576-054
36	XJDB-00038				..VALVE-TIME DELAY	1			1329-111
37	XJDB-00039				..O-RING	1			0200-010
38	XJDB-00040				..O-RING	2			0200-049
39	XJDB-00073				..BOLT-SOCKET	4			0576-034
40	XJDB-00042				..VALVE-CHECK	2			3513-154
41	XJDB-00043				..SPRING	2			3590-288
42	XJDB-00044				..CAP	2			3526-327
43	XJDB-00045				..RING-BACK UP	2			0859-229
*-2	@				.SWING REDUCTION GEAR	1			NOT
N	@					AR			NOT

SWING MOTOR(#0057-)

Applied machine

Part no.	Serial no.	Part no.	Serial no.
XKAY-00623 XKAY-00624 XKAY-00625	#0167, #0168, #0169, #0171~	XKAY-00626 XKAY-00627 XKAY-00628 XKAY-00629 XKAY-00636	#0208, #0209, #0211~

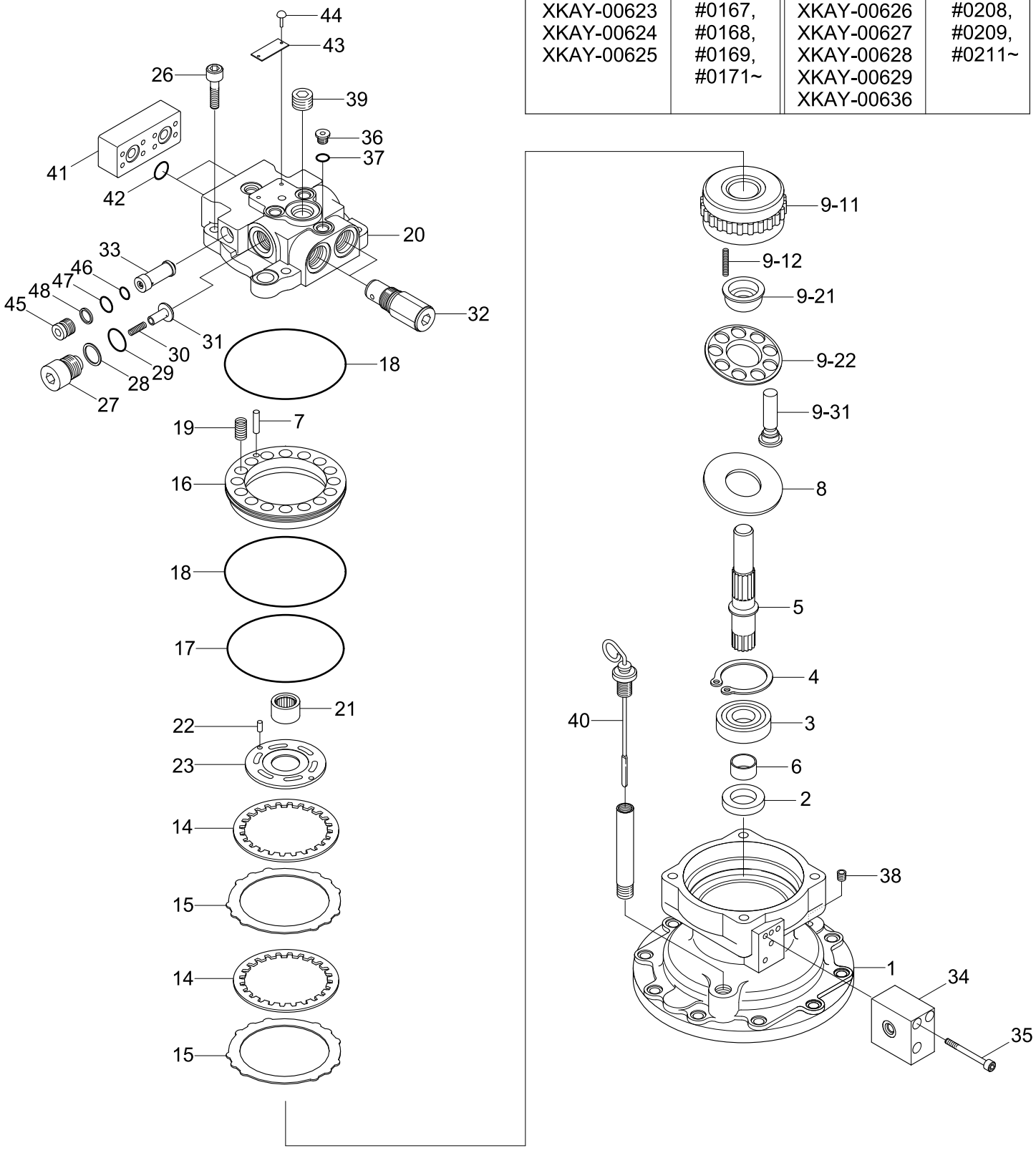

Description	Parts no	Included item
Swing motor seal kit	XKAY-00325	2, 17, 18, 28, 29, 37, 42, 46~48

Parts name	Parts no	Applied machine serial no.
SWING MOTOR UNIT	31N4-10130	#0057~#0112, #0166~

Item	Part_No	IS	Ord	T	Description	Qty	Serial_No	ITC	Remark
N*	@				SWING MOTOR ASSY	1	#0057 -	D	NOT
*-1	31N4-10130				.SWING MOTOR	1			
1	XKAY-00280				..BODY	1	- #0210		
	XKAY-00636				..BODY	1	#0211 -	D	
K2	XKAY-00281				..SEAL-OIL	1			
3	XKAY-00282				..BEARING-ROLLER	1			
4	XKAY-00283				..RING-SNAP	1			
5	XKAY-00284				..SHAFT	1			
6	XKAY-00285				..BUSHING	1			
7	XKAY-00286				..PIN	1	- #0170		
	XKAY-00625				..PIN	1	#0171 -	D	
8	XKAY-00287				..PLATE-SHOE	1			
9	XKAY-00288				..ROTARY KIT	1	- #0210		
	XKAY-00629				..ROTARY KIT	1	#0211 -	B	
9-1	XKAY-00289				...CYLINDER BLOCK KIT	1	- #0210		
	XKAY-00628				...CYLINDER BLOCK KIT	1	#0211 -	B	
N9-11	XKAY-00290				....BLOCK-CYLINDER	1	- #0210		NOT
	XKAY-00627				....BLOCK-CYLINDER	1	#0211 -	B	NOT
N9-12	XKAY-00291				....SPRING	9			NOT
9-2	XKAY-00292				...RETAINER KIT	1			
N9-21	XKAY-00293				....GUIDE-BALL	1			NOT
N9-22	XKAY-00294				....PLATE-SET	1			NOT
9-3	XKAY-00295				...PISTON KIT	1			
N9-31	XKAY-00296				....PISTON ASSY	9			NOT
14	XKAY-00297				..PLATE-FRICTION	2			

Item	Part_No	IS	Ord	T	Description	Qty	Serial_No	ITC	Remark
15	XKAY-00298				..PLATE	2			
16	XKAY-00299				..PISTON-BRAKE	1	- #0170		
	XKAY-00624				..PISTON-BRAKE	1	#0171 - #0210	D	
	XKAY-00626				..PISTON-BRAKE	1	#0211 -	D	
K17	XKAY-00300				..O-RING	1			
K18	XKAY-00301				..O-RING	2			
19	XKAY-00302				..SPRING	16			
20	XKAY-00303				..COVER-REAR	1	- #0170		
	XKAY-00623				..COVER-REAR	1	#0171 -	D	
21	XKAY-00304				..BEARING-NEEDLE	1			
22	XKAY-00562				..PIN	2			
N23	XKAY-00306				..PLATE-VALVE	1			NOT
26	XKAY-00308				..BOLT-WRENCH	4			
27	XKAY-00309				..PLUG	2			
K28	XKAY-00141				..RING-BACK UP	2			
K29	XKAY-00310				..O-RING	2			
30	XKAY-00311				..SPRING	2			
31	XKAY-00312				..CHECK	2			
32	XKAY-00313				..RELIEF VALVE ASSY	2			
33	XKAY-00314				..REACTIONLESS V/V ASSY	2			
34	XKAY-00315				..TIME DELAY VALVE ASSY	1			
35	XKAY-00149				..BOLT-SOCKET	3			
36	XKAY-00150				..PLUG	3			
K37	XKAY-00256				..O-RING	3			
38	XKAY-00140				..PLUG	1			

Item	Part_No	IS	Ord	T	Description	Qty	Serial_No	ITC	Remark
39	XKAY-00317				..PLUG	1			
40	XKAY-00604				..GAUGE-LEVEL	1			
41	XKAY-00319				..FLANGE	1			
K42	XKAY-00320				..O-RING	2			
43	XKAY-00321				..NAME PLATE	1			
44	XKAY-00277				..RIVET	2			
45	XKAY-00322				..PLUG	2			
K46	XKAY-00324				..O-RING	2			
K47	XKAY-00247				..O-RING	2			
K48	XKAY-00605				..RING-BACK UP	2			
*-2	@				.SWING REDUCTION GEAR	1			NOT
K	XKAY-00325				SEAL KIT	1	#0057 -	-	SEE ILLUST
N	@				NOT INDIVIDUALLY SUPPLIED	AR			NOT

SWING REDUCTION GEAR(-#0056)

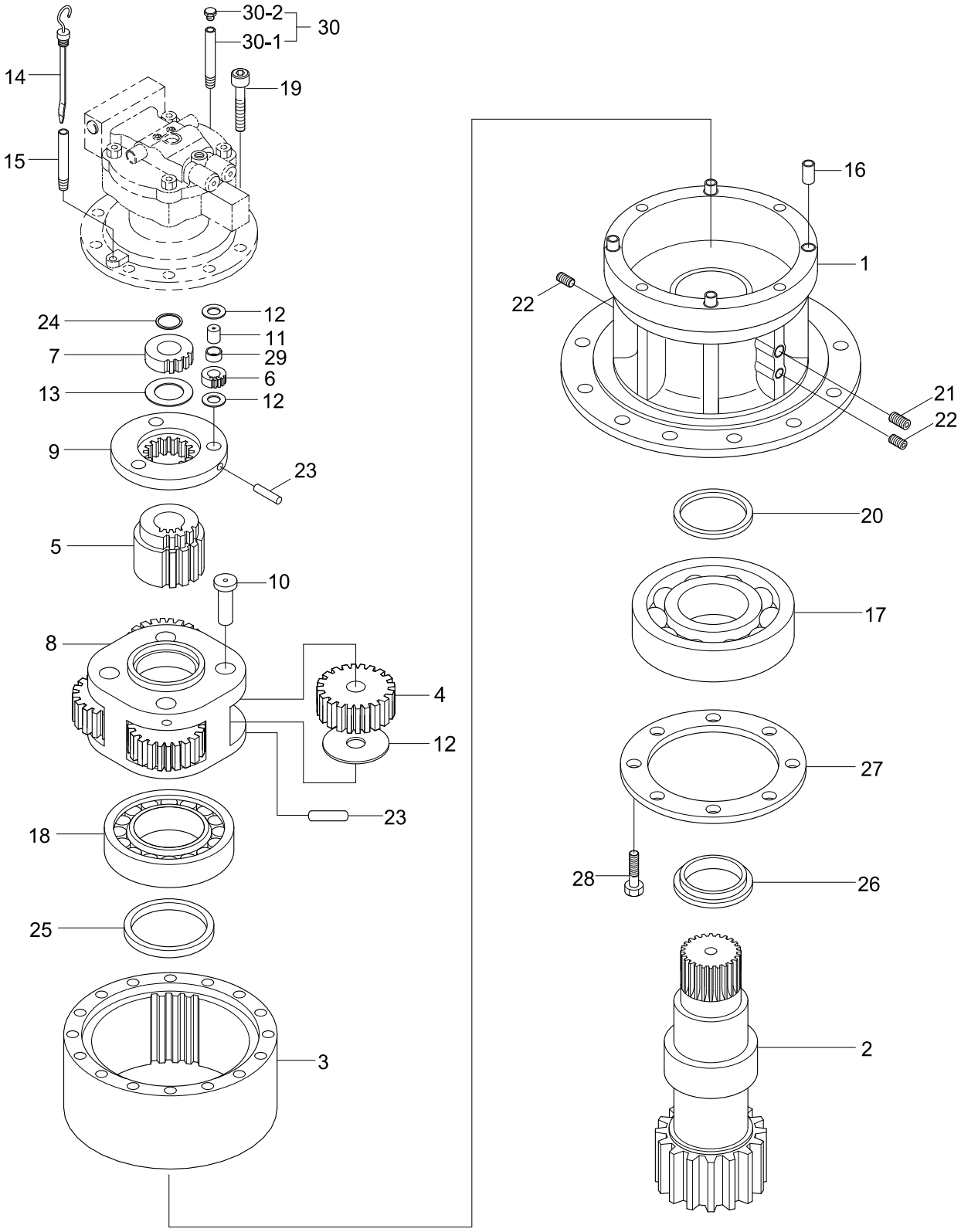

Parts name	Parts no	Applied machine serial no.
SWING REDUCTION GEAR	31E6-12030	~#0056, #0113~#0165

2006. 9.30 REV.6J

Item	Part_No	IS	Ord	T	Description	Qty	Serial_No	ITC	Remark
*	@				SWING MOTOR ASSY	1	- #0056	-	NOT
*-2	31E6-12030				.SWING REDUCTION GEAR	1			
1	XKAQ-00250				..CASING	1			
2	XKAQ-00249				..SHAFT-DRIVE	1			
3	XKAQ-00102				..GEAR-RING	1			
5	XKAQ-00278				..GEAR-SUN NO.2	1			
*-21	XKAQ-00271				..CARRIER NO.1 ASSY	1	#0001 -	-	
6	XKAQ-00099				...GEAR-PLANET NO.1	3			
7	XKAQ-00277				...GEAR-SUN NO.1	1			
9	XKAQ-00096				...CARRIER NO.1	1			
11	XKAQ-00094				...PIN ASSY NO.1	3			
12	XKAQ-00093				...WASHER-THRUST(B)	6			
13	XKAQ-00057				...PLATE-SIDE 1	1			
23	XKAQ-00086				...PIN-SPRING	3			
24	XKAQ-00085				...RING-STOP	4			
29	XKAQ-00080				...CAGE-NEEDLE	3			
*-22	XKAQ-00272				..CARRIER NO.2 ASSY	1	#0001 -	-	
4	XKAQ-00101				...GEAR-PLANET NO.2	4			
8	XKAQ-00097				...CARRIER NO.2	1			
10	XKAQ-00095				...PIN ASSY NO.2	4			
12	XKAQ-00093				...WASHER-THRUST(B)	4			
23	XKAQ-00086				...PIN-SPRING	4			
14	XKAQ-00034				..BAR-GAUGE	1			
15	XKAQ-00035				..PIPE-GAUGE	1			
16	XKAQ-00091				..PIN-KNOCK	2			

Item	Part_No	IS	Ord	T	Description	Qty	Serial_No	ITC	Remark
17	XKAQ-00090				..BEARING-SPH ROLLER	1			
18	XKAQ-00089				..BEARING-CYL ROLLER	1			
19	XKAQ-00088				..BOLT-SOCKET	10			
20	XKAQ-00087				..SEAL-OIL	1			
21	XKAQ-00049				..PLUG-PRESSURE	1			
22	XKAQ-00066				..PLUG	2			
25	XKAQ-00084				..RING-STOP	1			
26	XKAQ-00083				..SPACER	1			
27	XKAQ-00082				..PLATE-COVER	1			
28	XKAQ-00081				..BOLT-HEX	6			
30	XKAQ-00142				..AIR BREATHER ASSY	1	#0012 -	-	
30-1	HHI13-WP30				...POST	1	#0012 -	-	
30-2	HHI13-WP31				...CAP-BREATHER	1	#0012 -	-	

SWING REDUCTION GEAR(#0057-)

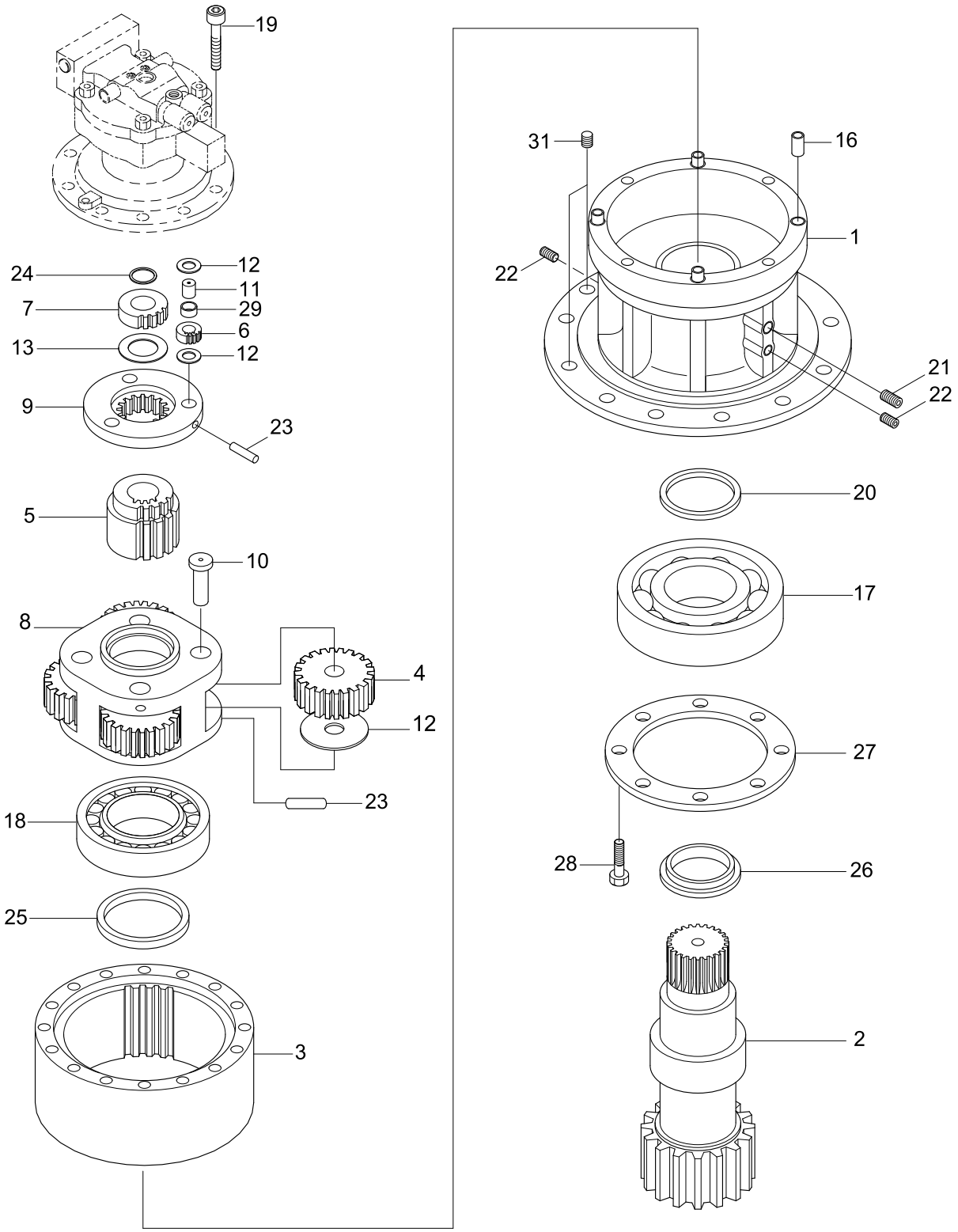

Description	Parts no	Applied machine serial no.
SWING REDUCTION GEAR	31N4-10140	#0057~#0112, #0166~#0473
	31N4-10141	#0474~

Item	Part_No	IS	Ord	T	Description	Qty	Serial_No	ITC	Remark
*	@				SWING MOTOR ASSY	1	#0057 - #0473	D	NOT
					SWING MOTOR ASSY	1	#0474 -	B	NOT
*-2	31N4-10140				.SWING REDUCTION GEAR	1	- #0473		
	31N4-10141				.SWING REDUCTION GEAR	1	#0474 -	B	
1	XKAQ-00134				..CASING	1	- #0473		
	XKAQ-00332				..CASING	1	#0474 -	B	
2	XKAQ-00249				..SHAFT-DRIVE	1			
3	XKAQ-00102				..GEAR-RING	1			
5	XKAQ-00278				..GEAR-SUN NO.2	1			
*-21	XKAQ-00271				..CARRIER NO.1 ASSY	1			
6	XKAQ-00099				...GEAR-PLANET NO.1	3			
7	XKAQ-00277				...GEAR-SUN NO.1	1			
9	XKAQ-00096				...CARRIER NO.1	1			
11	XKAQ-00094				...PIN ASSY NO.1	3			
12	XKAQ-00093				...WASHER-THRUST(B)	6			
13	XKAQ-00057				...PLATE-SIDE 1	1			
23	XKAQ-00086				...PIN-SPRING	3			
24	XKAQ-00085				...RING-STOP	4			
29	XKAQ-00080				...CAGE-NEEDLE	3			
*-22	XKAQ-00272				..CARRIER NO.2 ASSY	1			
4	XKAQ-00101				...GEAR-PLANET NO.2	4			
8	XKAQ-00097				...CARRIER NO.2	1			
10	XKAQ-00095				...PIN ASSY NO.2	4			
12	XKAQ-00093				...WASHER-THRUST(B)	4			
23	XKAQ-00086				...PIN-SPRING	4			

Item	Part_No	IS	Ord	T	Description	Qty	Serial_No	ITC	Remark
16	XKAQ-00091				..PIN-KNOCK	2			
17	XKAQ-00090				..BEARING-SPH ROLLER	1			
18	XKAQ-00089				..BEARING-CYL ROLLER	1			
19	XKAQ-00088				..BOLT-SOCKET	10			
20	XKAQ-00087				..SEAL-OIL	1			
21	XKAQ-00049				..PLUG-PRESSURE	1			
22	XKAQ-00066				..PLUG	2			
25	XKAQ-00084				..RING-STOP	1			
26	XKAQ-00083				..SPACER	1			
27	XKAQ-00082				..PLATE-COVER	1			
28	XKAQ-00081				..BOLT-HEX	6			
31	XKAQ-00333				..CAP-RUBBER	4	#0474 -	-	

REMOTE CONTROL LEVER

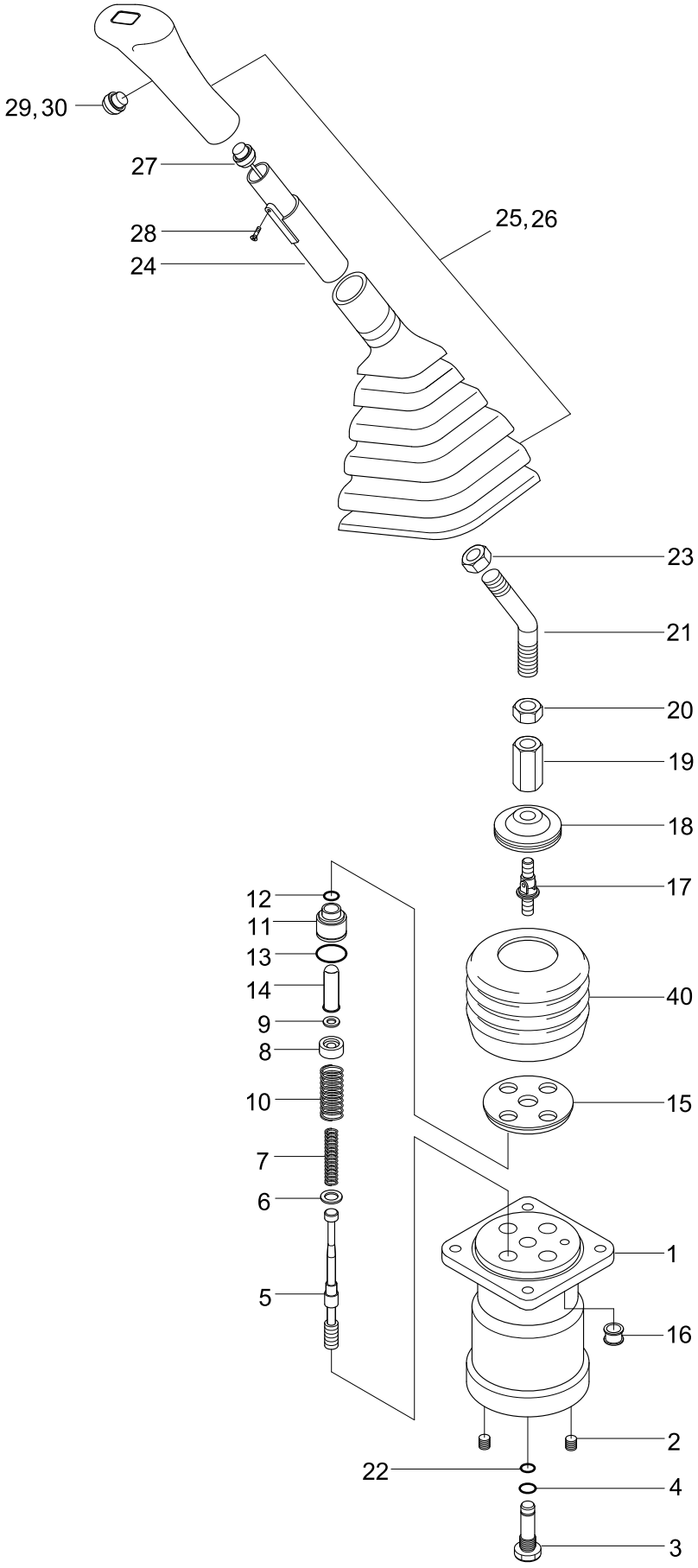

Description	Serial no	Parts no	Included item
RCV lever seal kit	-#0172	91ER-20050	4, 12, 13, 22
	#0173-	91ER-20051	4, 12, 13, 22

Item	Part_No	IS	Ord	T	Description	Qty	Serial_No	ITC	Remark
*	31N6-20061				RCV LEVER-LH	1			
	31N6-20071				RCV LEVER-RH	1			
1	XKAY-00077				.CASE	1			
2	XKAY-00065				.PLUG	4			
3	XKAY-00064				.PLUG	1			
4	XKAY-00063				.O-RING	1			
*-1	XKAY-00615				.SPOOL KIT	1	#0001 -	-	
N5	XKAY-00062				..SPOOL	4			NOT
N6	XKAY-00061				..SHIM	4			NOT
N7	XKAY-00060				..SPRING	4			NOT
N8	XKAY-00436				..SEAT-SPRING(1,3)	4	#0001 -	-	NOT
N9	XKAY-00058				..STOPPER	4			NOT
10	XKAY-00078				.SPRING	4			
11	XKAY-00056				.PLUG	4	- #0172	-	
12	XKAY-00055				.SEAL-ROD	4	- #0172	-	
13	XKAY-00054				.O-RING	4	- #0172	-	
14	XKAY-00052				.ROD-PUSH	4	- #0172	-	
*-2	XKAY-00608				.PLUG KIT(1,3)	4	#0173 -	-	
11	XKAY-00610				..PLUG	4	#0173 -	D	
12	XKAY-00611				..SEAL-ROD	4	#0173 -	D	
13	XKAY-00054				..O-RING	4	#0173 -	A	
14	XKAY-00052				..ROD-PUSH	4	#0173 -	A	
15	XKAY-00075				.PLATE	1			
16	XKAY-00074				.BUSHING	1			
17	XKAY-00049				.JOINT ASSY	1			

Item	Part_No	IS	Ord	T	Description	Qty	Serial_No	ITC	Remark
18	XKAY-00073				.SWASH PLATE	1			
19	XKAY-00047				.NUT-HEX	1			
20	XKAY-00046				.NUT	1			
*-3	XKAY-00617				.HANDLE KIT(L)	1	#0001 -	-	
	XKAY-00616				.HANDLE KIT(R)	1	#0001 -	-	
N21	XKAY-00044				..CONNECTOR-HANDLE	1			NOT
N22	XKAY-00045				..O-RING	1			NOT
N23	XKAY-00043				..NUT	1			NOT
N24	XKAY-00042				..INSERT	1			NOT
N25	XKAY-00041				..BOOT	1			NOT
N26	XKAY-00040				..HANDLE-LH	1			NOT
	XKAY-00076				..HANDLE-RH	1			NOT
N27	XKAY-00039				..SWITCH ASSY	1			NOT
N28	XKAY-00038				..SCREW	1			NOT
N29	XKAY-00037				..SWITCH ASSY	1			NOT
N30	XKAY-00036				..COVER-SWITCH	1			NOT
N40	XKAY-00072				..BOOT	1			NOT
K	91ER-20050				SEAL KIT	1	- #0172		SEE ILLUST
	91ER-20051				SEAL KIT	1	#0173 -	D	SEE ILLUST
N	@				NOT INDIVIDUALLY SUPPLIED	1			NOT

REMOTE CONTROL VALVE(OPT, #0487-)

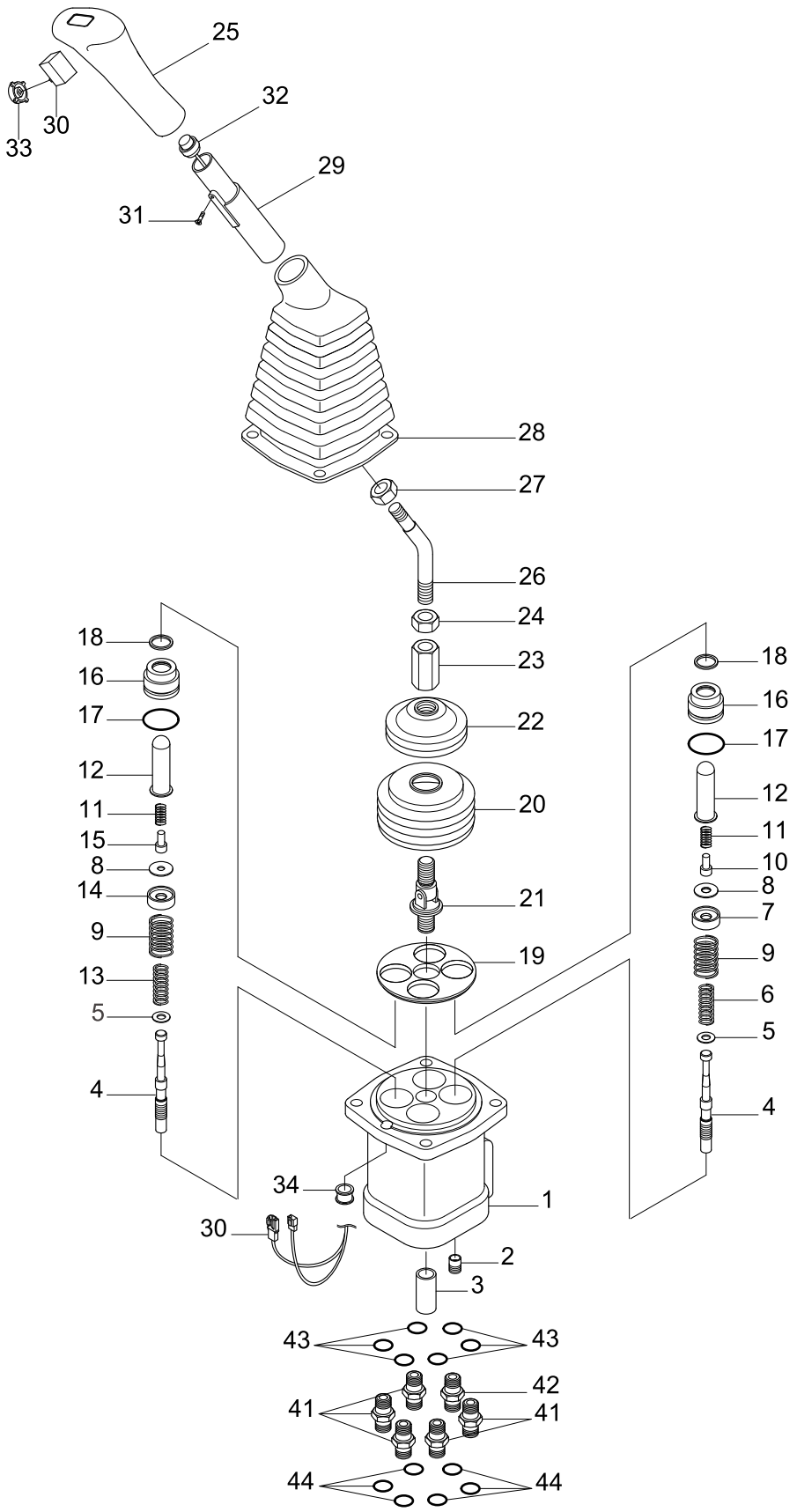

Description	Parts no	Included item
RCV lever seal kit	XKAY-00791	17, 18

Item	Part_No	IS	Ord	T	Description	Qty	Serial_No	ITC	Remark
*	31N6-27200				RCV LEVER SUB ASSY-LH	1	#0487 -	-	AUSTR/NEWZL
	31N6-27210				RCV LEVER SUB ASSY-RH	1	#0487 -	-	AUSTR/NEWZL
*A	31N6-27300				.RCV LEVER ASSY-LH	1			
*B	31N6-27310				.RCV LEVER ASSY-RH	1			
1	XKAY-00766				..CASE	1			
2	XKAY-00065				..PLUG	4			
3	XKAY-00768				..BUSHING	1			
*-1	XKAY-00769				..SPOOL KIT(1,3)	1			
	XKAY-00770				..SPOOL KIT(2,4)	1			
N4	XKAY-00771				...SPOOL	4			NOT
N5	XKAY-00772				...SHIM	AR			NOT
N6	XKAY-00773				...SPRING(1,3)	2			NOT
N7	XKAY-00774				...SPRING SEAT(1,3)	2			NOT
N8	XKAY-00058				...STOPPER	4			NOT
N13	XKAY-00781				...SPRING(2,4)	2			NOT
N14	XKAY-00782				...SPRING SEAT(2,4)	2			NOT
9	XKAY-00775				..SPRING	4			
*-2	XKAY-00776				..PLUG KIT(1,3)	1			
	XKAY-00777				..PLUG KIT(2,4)	1			
N10	XKAY-00778				...STOPPER(1,3)	2			NOT
N11	XKAY-00779				...SPRING	4			NOT
N12	XKAY-00780				...PUSH ROD	4			NOT
N15	XKAY-00783				...STOPPER(2,4)	2			NOT
N16	XKAY-00784				...PLUG	4			NOT
K17	XKAY-00438				...O-RING	4			

Item	Part_No	IS	Ord	T	Description	Qty	Serial_No	ITC	Remark
K18	XKAY-00611				...SEAL-ROD	4			
19	XKAY-00075				..PLATE	1			
20	XKAY-00786				..BOOT	1			
21	XKAY-00049				..JOINT ASSY	1			
22	XKAY-00787				..SWASH PLATE	1			
23	XKAY-00047				..NUT-HEX	1			
*-3	XKAY-00788				..HANDLE KIT-RH	1			
	XKAY-00789				..HANDLE KIT-LH	1			
N24	XKAY-00790				...NUT	1			NOT
N25	XKAY-00330				...HANDLE-RH	1			NOT
	XKAY-00328				...HANDLE-LH	1			NOT
N26	XKAY-00044				...CONNECTOR-HANDLE	1			NOT
N27	XKAY-00043				...NUT	1			NOT
N28	XKAY-00041				...BOOT	1			NOT
29	XKAY-00327				...INSERT	1			
N30	XKAY-00039				...SWITCH ASSY	1			NOT
N31	XKAY-00038				...SCREW	1			NOT
N32	XKAY-00037				...SWITCH ASSY	1			NOT
N33	XKAY-00036				...COVER-SWITCH	1			NOT
34	XKAY-00074				..BUSHING	1			
41	X500-110013				.CONNECTOR-ORFS	5			
42	31N6-22080				.FILTER-LAST GUARD	1			
43	S631-014004				.O-RING	6			
44	S621-011001				.O-RING(SEAL LOCK TYPE)	6			
K	XKAY-00791				SEAL KIT	1			SEE ILLUST

Item	Part_No	IS	Ord	T	Description	Qty	Serial_No	ITC	Remark
N	@				NOT INDIVIDUALLY SUPPLIED	AR			NOT

REMOTE CONTROL PEDAL

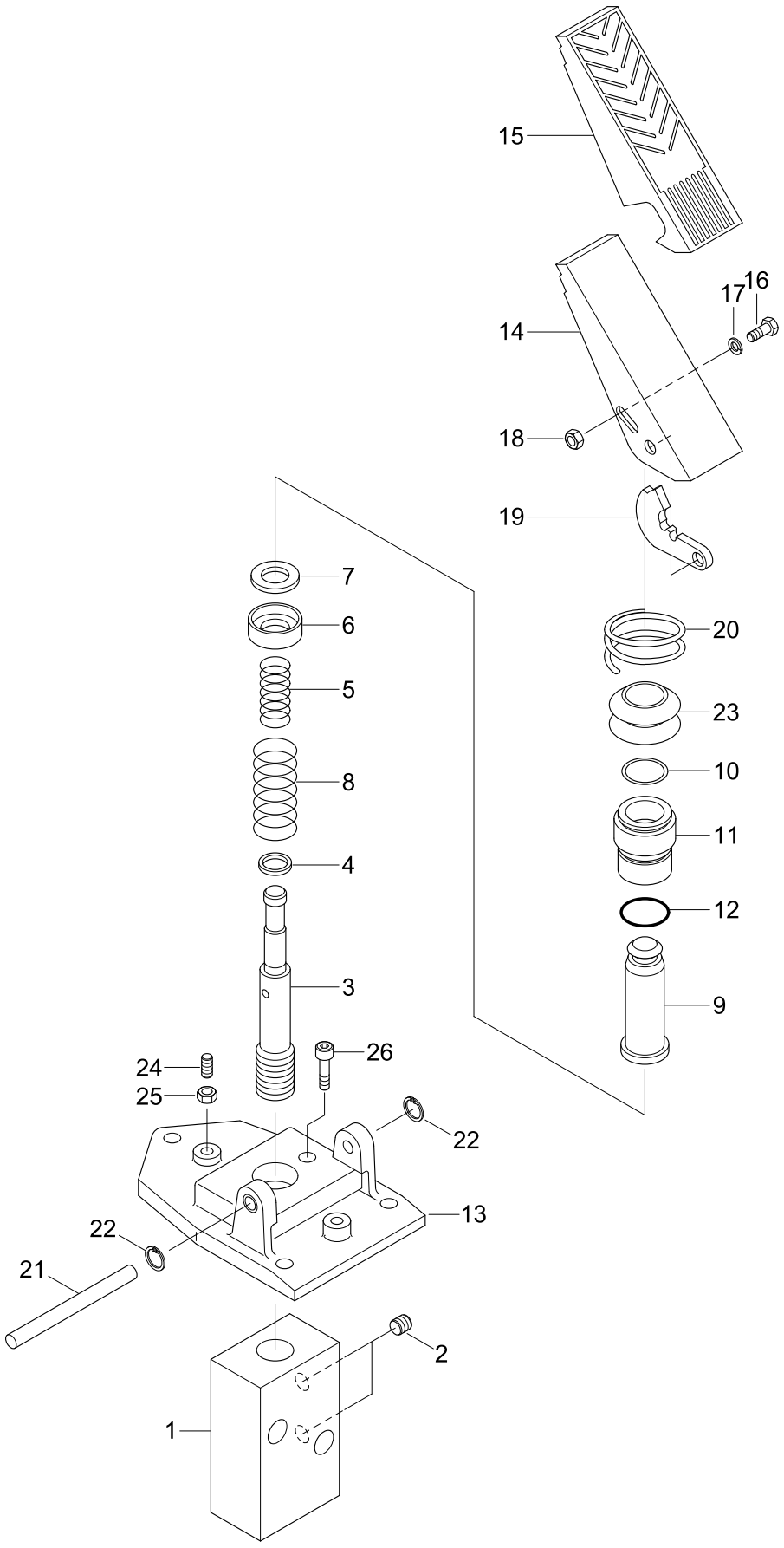

Item	Part_No	IS	Ord	T	Description	Qty	Serial_No	ITC	Remark
*	31N5-20020				RCV PEDAL	1			
1	XKAY-00079				.BODY	1			
2	XKAY-00065				.PLUG	2			
3	XKAY-00080				.SPOOL	1			
4	XKAY-00081				.SEAT-SPRING	1			
5	XKAY-00082				.SPRING	1			
6	XKAY-00083				.SEAT-SPRING	1			
7	XKAY-00084				.STOPPER	1			
8	XKAY-00085				.SPRING	1			
9	XKAY-00113				.PUSH ROD	1			
10	XKAY-00055				.SEAL-ROD	1			
11	XKAY-00114				.PLUG	1			
12	XKAY-00100				.O-RING	1			
13	XKAY-00112				.PLATE	1			
14	XKAY-00111				.PEDAL	1			
15	XKAY-00110				.PEDAL COVER	1			
16	XKAY-00109				.HEX BOLT	1			
17	XKAY-00108				.WASHER	1			
18	XKAY-00107				.NUT	1			
19	XKAY-00106				.YOKE	1			
20	XKAY-00105				.SPRING	1			
21	XKAY-00104				.GUIDE PIN	1			
22	XKAY-00103				.SNAP RING	2			
23	XKAY-00102				.BELLOWS	1			
24	XKAY-00101				.SET SCREW	2			

Item	Part_No	IS	Ord	T	Description	Qty	Serial_No	ITC	Remark
25	XKAY-00006				.NUT-HEX	1			
26	XKAY-00096				.BOLT-SOCKET	2			

TRAVEL MOTOR(1/2, -#0130)

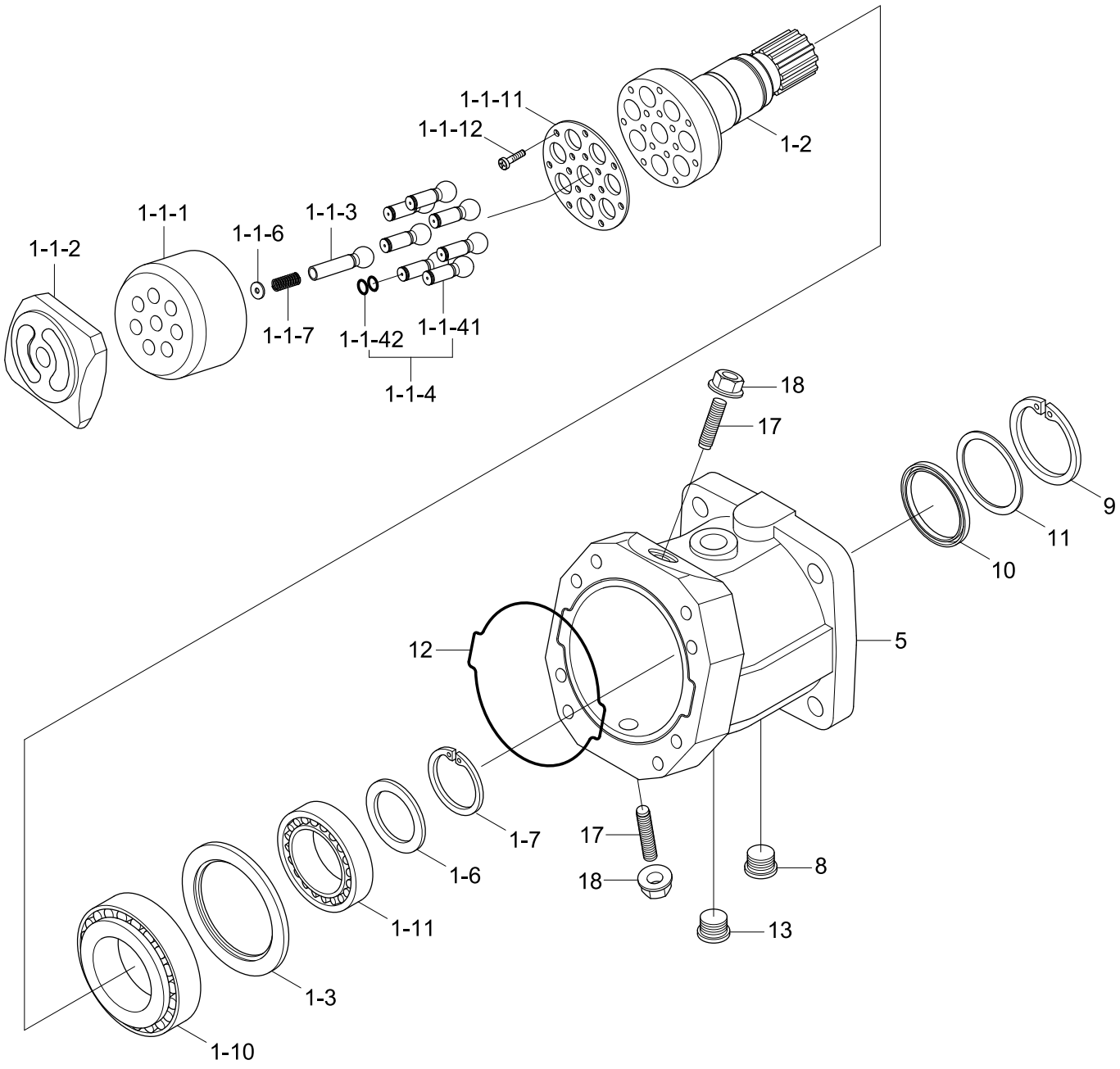

Description	Parts no	Included item
Travel motor seal kit	XJDD-00683	1-14,1-21,2-11,10,12,18,19,20,21,22,51-7,73,74,75

Item	Part_No	IS	Ord	T	Description	Qty	Serial_No	ITC	Remark
*	31N4-45010				TRAVEL MOTOR	1	- #0130	-	
1	ZGAR-00399				.ROTARY GROUP	1			
1-1	ZGAR-00406				..ROTARY-HYD SECTION	1			
1-1-1	ZGAR-00421				...CYLINDER	1			
1-1-2	ZGAR-00422				...CONTROL LENS	1			
1-1-3	ZGAR-00423				...CENTER PIN	1			
1-1-4	ZGAR-00424				...PISTON WITH P/RINGS	7			
1-1-41	ZGAR-00434				....PISTON	1			
1-1-42	ZGAR-00435				....SEALING RING-STEEL	2			
1-1-6	ZGAR-00425				...ADJUST SHIM	1			
	ZGAR-00426				...ADJUST SHIM	1			
	ZGAR-00427				...ADJUST SHIM	1			
	ZGAR-00428				...ADJUST SHIM	1			
	ZGAR-00429				...ADJUST SHIM	1			
	ZGAR-00430				...ADJUST SHIM	1			
1-1-7	ZGAR-00431				...SPRING-PRESSURE	1			
1-1-11	ZGAR-00432				...RETAINING PLATE	1			
1-1-12	ZGAR-00433				...SCREW	14			
1-2	ZGAR-00407				..SHAFT-DRIVE	1			
1-3	ZGAR-00408				..SHIM	1			
1-6	ZGAR-00409				..PLATE-BACK UP	1			
	ZGAR-00410				..PLATE-BACK UP	1			
	ZGAR-00411				..PLATE-BACK UP	1			
	ZGAR-00412				..PLATE-BACK UP	1			
	ZGAR-00413				..PLATE-BACK UP	1			

Item	Part_No	IS	Ord	T	Description	Qty	Serial_No	ITC	Remark
1-6	ZGAR-00414				..PLATE-BACK UP	1			
	ZGAR-00415				..PLATE-BACK UP	1			
	ZGAR-00416				..PLATE-BACK UP	1			
	ZGAR-00417				..PLATE-BACK UP	1			
1-7	ZGAR-00418				..RING-RETAINING	1			
1-10	ZGAR-00419				..BEARING-ROLLER	1			
1-11	ZGAR-00420				..BEARING-ROLLER	1			
5	ZGAR-00401				.HOUSING	1			
8	ZGAR-00332				.SCREW-LOCKING	1			
9	ZGAR-00402				.RING-RETAINING	1			
K10	XJDD-00212				SEAL RING-SHAFT	AR			
11	ZGAR-00404				.PLATE-BACK UP	1			
K12	XJDD-00214				O-RING	AR			
13	ZGAR-00332				.SCREW-LOCKING	1			
17	ZGAR-00280				.PIN-THREADED	2			
K18	XJDD-00120				NUT-SEAL LOCK	AR			
*-1	@				.CONTROL	1			NOT
*-2	@				.COUNTER BALANCE VLV	1			NOT
K	XJDD-00683				SEAL KIT	1	#0001 -	-	SEE ILLUST

TRAVEL MOTOR(1/2, #0131-)

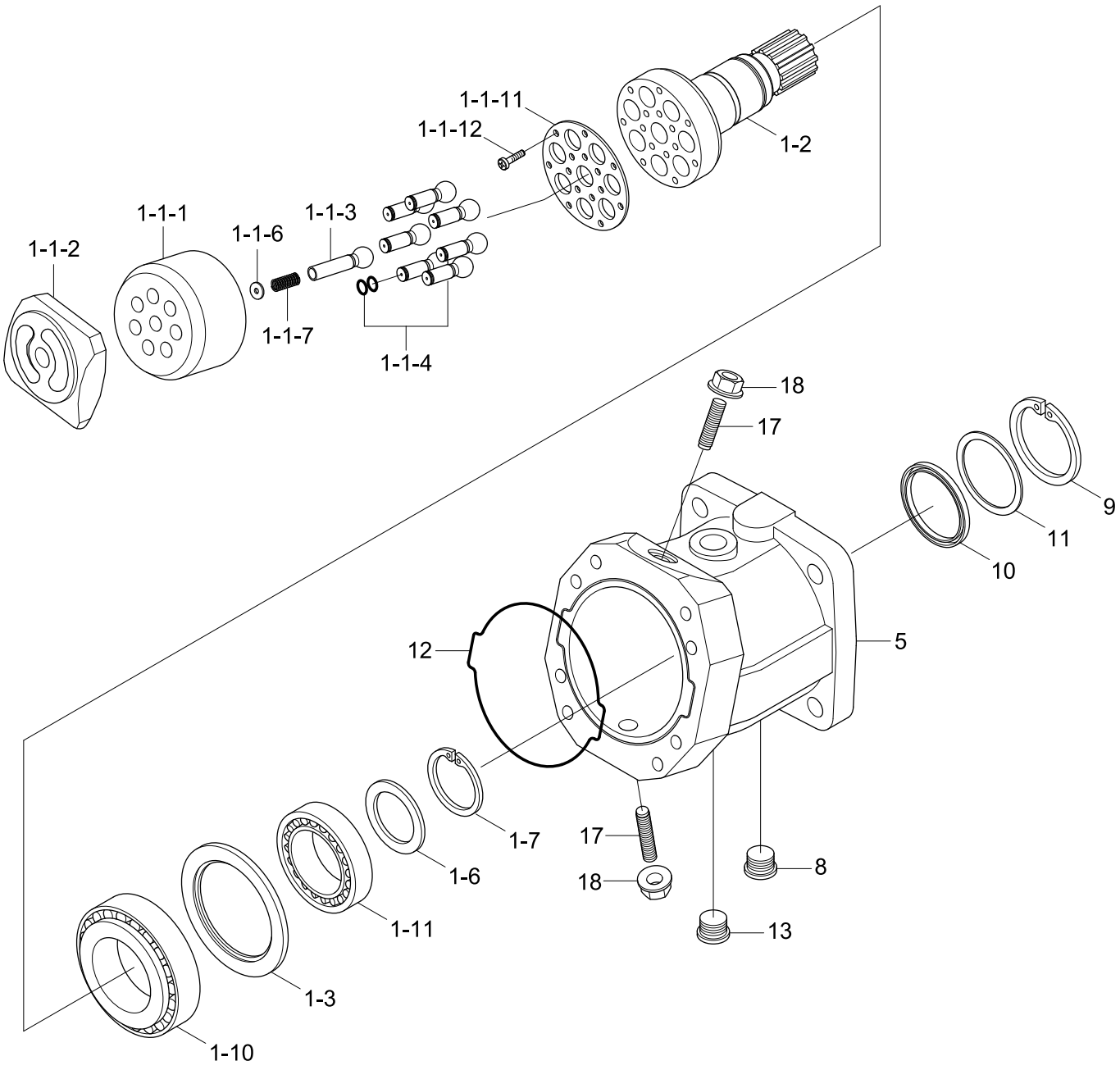

Description	Parts no	Included item
Travel motor seal kit	XJDD-00683	1-14,1-21,2-11,10,12,18,19,20,21,22,51-7,73,74,75

Item	Part_No	IS	Ord	T	Description	Qty	Serial_No	ITC	Remark
*	31N4-45011				TRAVEL MOTOR	1	#0131 - #0572	A	
	31N4-45012				TRAVEL MOTOR	1	#0573 -	B	
1	XJDD-00336				.ROTARY GROUP	1			
1-1	XJDD-00337				..ROTARY-HYD SECTION	1			
1-1-1	XJDD-00230				...CYLINDER	1			
1-1-2	XJDD-00231				...CONTROL LENS	1			
1-1-3	XJDD-00232				...PIN-CENTER	1			
1-1-4	XJDD-00233				...PISTON ASSY	7			
1-1-6	XJDD-00234				...SHIM(3.5T)-ADJUST	1			
	XJDD-00235				...SHIM(3.6T)-ADJUST	1			
	XJDD-00236				...SHIM(3.7T)-ADJUST	1			
	XJDD-00237				...SHIM(3.8T)-ADJUST	1			
	XJDD-00238				...SHIM(3.9T)-ADJUST	1			
	XJDD-00239				...SHIM(4.0T)-ADJUST	1			
1-1-7	XJDD-00240				...SPRING-PRESSURE	1			
1-1-11	XJDD-00241				...PLATE-RETAINING	1			
1-1-12	XJDD-00674				...SCREW-PAN HEAD	14			
1-2	XJDD-00216				..SHAFT-DRIVE	1			
1-3	XJDD-00217				..SHIM(5.9T)	1			
1-6	XJDD-00218				..PLATE(3.1T)-BACK UP	1			
	XJDD-00219				..PLATE(3.5T)-BACK UP	1			
	XJDD-00220				..PLATE(3.45T)-BACK UP	1			
	XJDD-00221				..PLATE(3.4T)-BACK UP	1			
	XJDD-00222				..PLATE(3.35T)-BACK UP	1			
	XJDD-00223				..PLATE(3.3T)-BACK UP	1			

Item	Part_No	IS	Ord	T	Description	Qty	Serial_No	ITC	Remark
1-6	XJDD-00224				..PLATE(3.25T)-BACK UP	1			
	XJDD-00225				..PLATE(3.2T)-BACK UP	1			
	XJDD-00226				..PLATE(3.15T)-BACK UP	1			
1-7	XJDD-00227				..RING-RETAINING	1			
1-10	XJDD-00228				..BEARING-ROLLER	1			
1-11	XJDD-00229				..BEARING-ROLLER	1			
5	XJDD-00209				.HOUSING	1			
8	XJDD-00210				.SCREW-LOCKING	1			
9	XJDD-00211				.RING-RETAINING	1			
K10	XJDD-00212				.SEAL RING-SHAFT	1			
11	XJDD-00213				.PLATE-BACK UP	1			
K12	XJDD-00214				.O-RING	1			
13	XJDD-00210				.SCREW-LOCKING	1			
17	XJDD-00211				.RING-RETAINING	2			
K18	XJDD-00120				.NUT-SEAL LOCK	2			
*-1	@				.CONTROL PART	1			NOT
*-2	@				.COUNTER BALANCE VALVE	1			NOT
K	XJDD-00683				SEAL KIT	1			SEE ILLUST

TRAVEL MOTOR(2/2, -#0130)

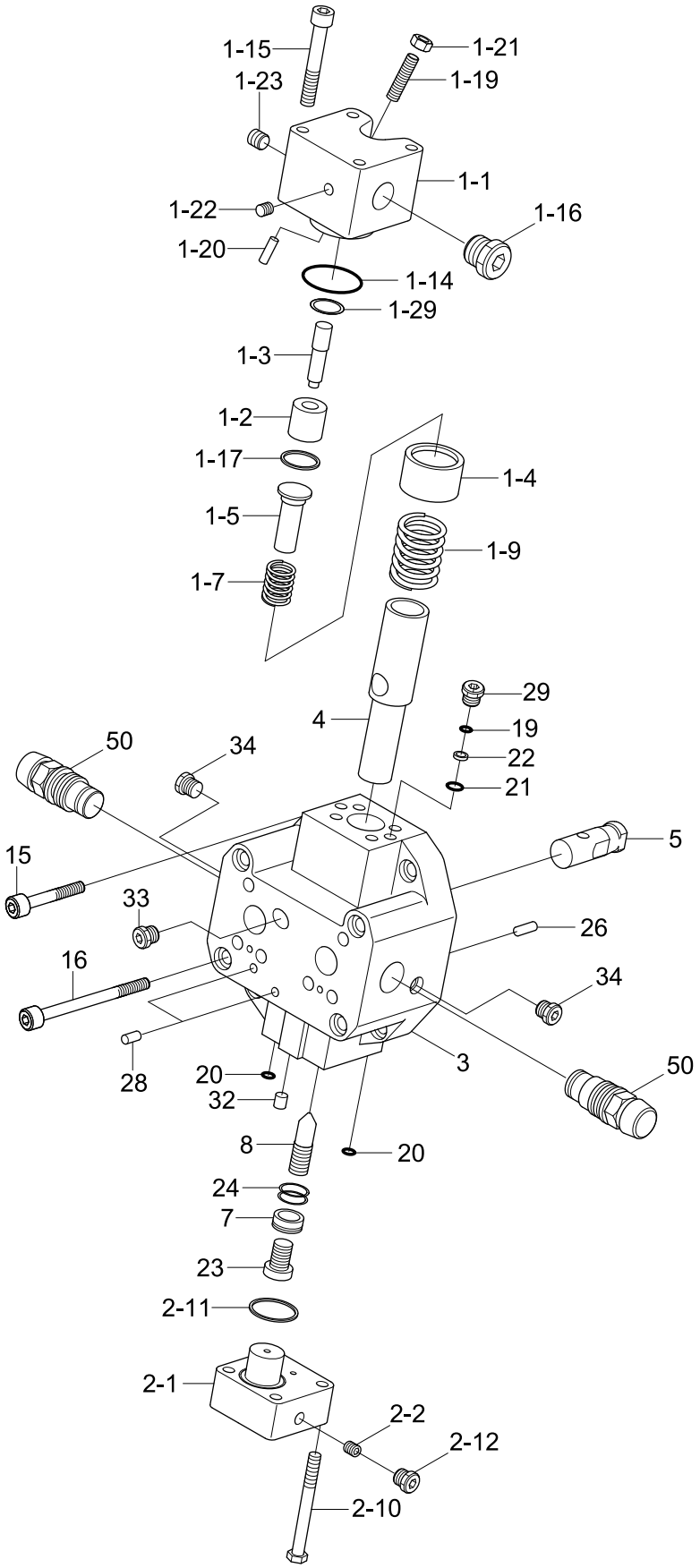

Description	Parts no	Included item
Travel motor seal kit	XJDD-00683	1-14,1-21,2-11,10,12,18,19,20,21,22,51-7,73,74,75

Item	Part_No	IS	Ord	T	Description	Qty	Serial_No	ITC	Remark
*-1	ZGAR-00400				CONTROL	1	- #0130	-	
1	ZGAR-00313				.CONTROL PART	1			
1-1	ZGAR-00334				..HOUSING-CONTROL	1			
1-2	ZGAR-00335				..BUSHING-CONTROL	1			
1-3	ZGAR-00336				..PISTON-CONTROL	1			
1-4	ZGAR-00337				..BUSHING-ADJUSTING	1			
1-5	ZGAR-00338				..COLLAR-SPRING	1			
1-7	ZGAR-00339				..SPRING-PRESSURE	1			
1-9	ZGAR-00340				..SPRING-PRESSURE	1			
K1-14	XJDD-00271				..O-RING	1			
1-15	ZGAR-00342				..SCREW-SOCKET HEAD	4			
1-16	ZGAR-00343				..SCREW-LOCKING	2			
1-17	ZGAR-00344				..RING-RETAINING	1			
1-19	ZGAR-00345				..PIN-THREADED	1			
1-20	ZGAR-00346				..PIN-CYLINDER	1			
K1-21	XJDD-00276				..NUT-SEAL LOCK	1			
1-22	ZGAR-00348				..PIN-D/BREAK OFF	2			
1-23	ZGAR-00330				..PIN-D/BREAK OFF	1			
1-29	ZGAR-00349				..DISC-RETAINING	1			
2	ZGAR-00436				.COVER	1			
2-1	ZGAR-00449				..COVER	1			
2-2	ZGAR-00351				..SCREW-THROTTLE	1			
2-10	ZGAR-00450				..SOCKET-HEAD SCREW	4			
K2-11	XJDD-00284				..O-RING	1			
2-12	ZGAR-00343				..SCREW-LOCKING	1			

Item	Part_No	IS	Ord	T	Description	Qty	Serial_No	ITC	Remark
3	ZGAR-00437				.PORT PLATE	1			
4	ZGAR-00438				.PISTON-POSITIONING	1			
5	ZGAR-00439				.TRUNNION-POSITIONING	1			
7	ZGAR-00440				.PISTON	1			
8	ZGAR-00441				.THREADED PIN	1			
15	ZGAR-00442				.SCREW-SOCKET HEAD	4			
16	ZGAR-00443				.SCREW-SOCKET HEAD	4			
K19	XJDD-00620				.O-RING	2			
K20	XJDD-00258				.O-RING	7			
K21	XJDD-00259				.O-RING	2			
K22	XJDD-00329				.RING-BACK UP	2			
23	ZGAR-00445				.SCREW-SOCKET HEAD	1			
24	ZGAR-00446				.RING-SQUARE	3			
26	ZGAR-00447				.PIN-CYLINDER	2			
28	ZGAR-00328				.PIN-D/BREAK OFF	2			
29	ZGAR-00329				.PLUG	2			
32	ZGAR-00330				.PIN-D/BREAK OFF	1			
33	ZGAR-00448				.SCREW-LOCKING	1			
34	ZGAR-00332				.SCREW-LOCKING	2			
50	ZGAR-00333				.RELIEF VALVE	2			
K	XJDD-00683				SEAL KIT	1	#0001 -	-	SEE ILLUST

TRAVEL MOTOR(2/2, #0131-)

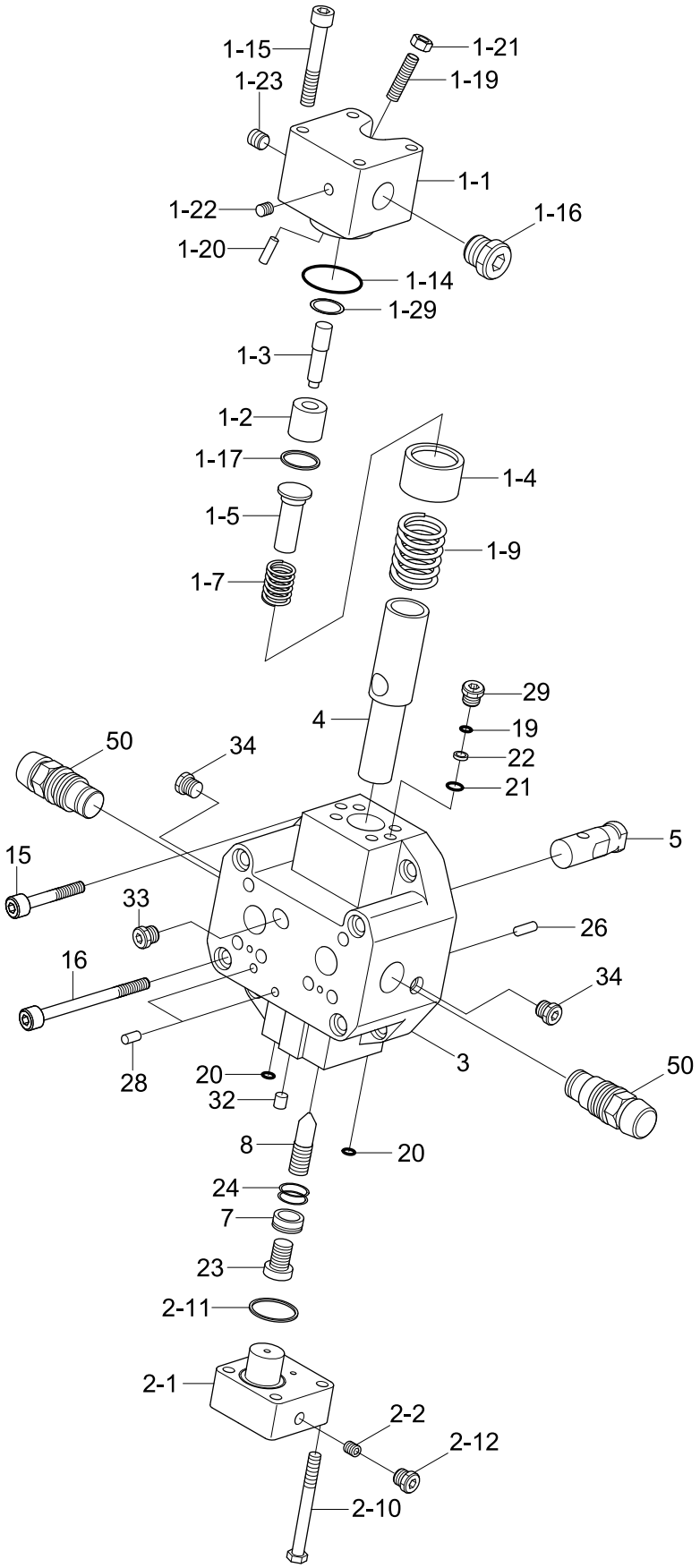

Description	Parts no	Included item
Travel motor seal kit	XJDD-00683	1-14,1-21,2-11,10,12,18,19,20,21,22,51-7,73,74,75

Item	Part_No	IS	Ord	T	Description	Qty	Serial_No	ITC	Remark
*-1	XJDD-00625				CONTROL	1	#0131 -	A	
1	XJDD-00383				.CONTROL PART	1			
1-1	XJDD-00404				..HOUSING-CONTROL	1			
1-2	XJDD-00593				..BUSHING-CONTROL	1			
1-3	XJDD-00594				..PISTON-CONTROL	1			
1-4	XJDD-00267				..BUSHING-ADJUSTING	1			
1-5	XJDD-00268				..COLLAR-SPRING	1			
1-7	XJDD-00269				..SPRING-PRESSURE	1			
1-9	XJDD-00270				..SPRING-PRESSURE	1			
K1-14	XJDD-00271				..O-RING	1			
1-15	XJDD-00412				..SCREW-SOCKET HEAD	4			
1-16	XJDD-00174				..SCREW-LOCKING	2			
1-17	XJDD-00273				..RING-RETAINING	1			
1-19	XJDD-00274				..PIN-THREADED	1			
1-20	XJDD-00275				..PIN-CYLINDER	1			
K1-21	XJDD-00276				..NUT-SEAL LOCK	1			
1-22	XJDD-00277				..PIN-D/BREAK OFF	2			
1-23	XJDD-00181				..PIN-D/BREAK OFF	1			
1-29	XJDD-00278				..DISC-RETAINING	1			
2	XJDD-00581				.COVER	1			
2-1	XJDD-00600				..COVER	1			
2-2	XJDD-00601				..SCREW-THROTTLE	1			
2-10	XJDD-00602				..SCREW-SOCKET HEAD	4			
K2-11	XJDD-00284				..O-RING	1			
2-12	XJDD-00174				..SCREW-LOCKING	1			

Item	Part_No	IS	Ord	T	Description	Qty	Serial_No	ITC	Remark
3	XJDD-00507				.PORT PLATE	1			
4	XJDD-00248				.PISTON-POSITIONING	1			
5	XJDD-00249				.TRUNNION	1			
7	XJDD-00250				.PISTON	1			
8	XJDD-00251				.PIN-THREADED	1			
15	XJDD-00255				.SCREW-SOCKET HEAD	4			
16	XJDD-00256				.SCREW-SOCKET HEAD	4			
K19	XJDD-00620				.O-RING	2			
K20	XJDD-00258				.O-RING	7			
K21	XJDD-00259				.O-RING	2			
K22	XJDD-00329				.RING-BACK UP	2			
23	XJDD-00260				.SCREW-SOCKET HEAD	1			
24	XJDD-00261				.RING-SQUARE	3			
26	XJDD-00262				.PIN-CYLINDER	2			
28	XJDD-00178				.PIN-D/BREAK OFF	2			
29	XJDD-00621				.PLUG	2			
32	XJDD-00181				.PIN-D/BREAK OFF	1			
33	XJDD-00175				.SCREW-LOCKING	1			
34	XJDD-00210				.SCREW-LOCKING	2			
50	XJDD-00622				.RELIEF VALVE	2			
K	XJDD-00683				SEAL KIT	1			SEE ILLUST

COUNTER BALANCE VALVE(-#0130)

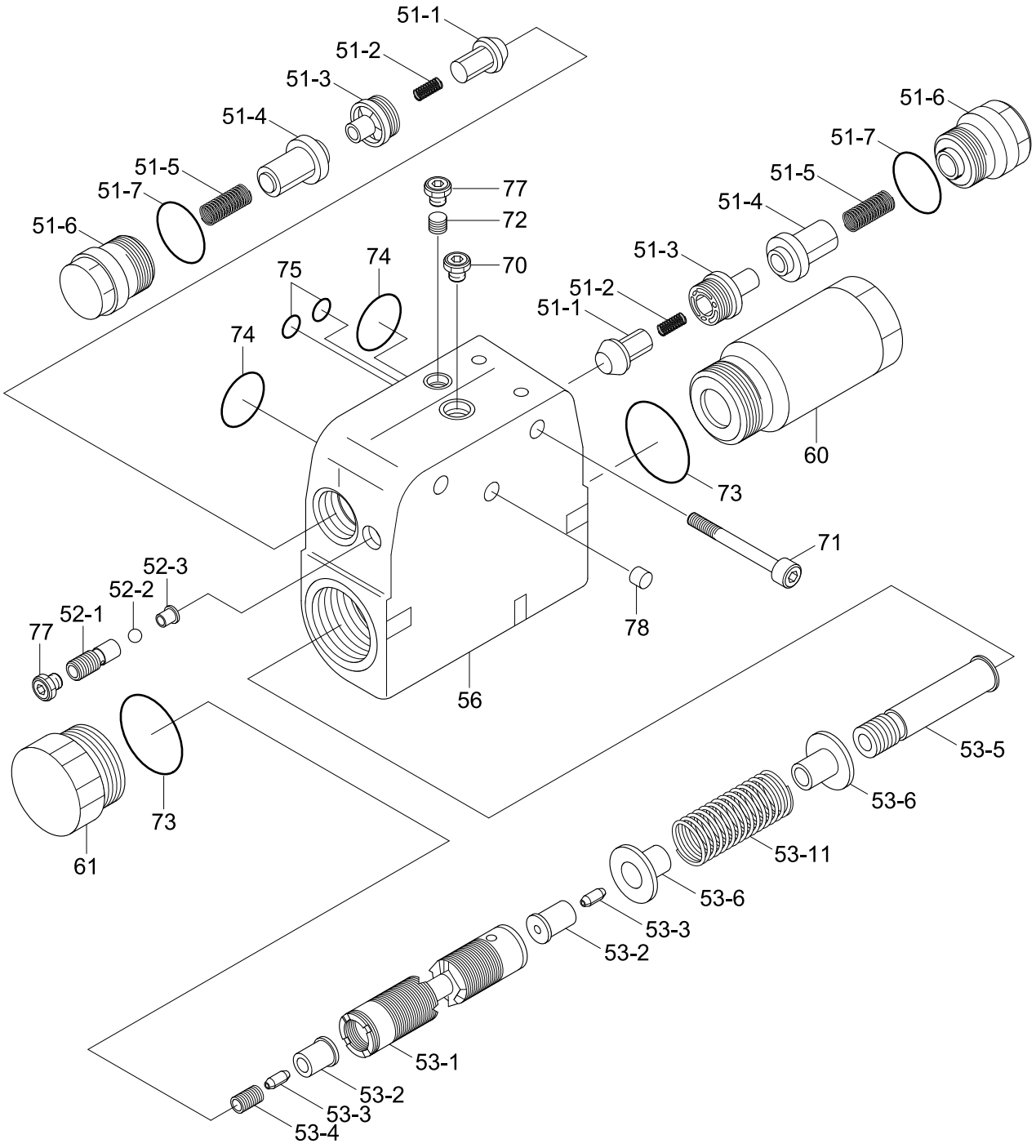

Description	Parts no	Included item
Travel motor seal kit	XJDD-00683	1-14,1-21,2-11,10,12,18,19,20,21,22,51-7,73,74,75

Item	Part_No	IS	Ord	T	Description	Qty	Serial_No	ITC	Remark
*-2	ZGAR-00397				COUNTER BALANCE VLV	1	- #0130	-	
51	ZGAR-00452				.VALVE	2			
51-1	ZGAR-00459				..POPPET-VALVE	1			
51-2	ZGAR-00460				..SPRING-PRESSURE	1			
51-3	ZGAR-00461				..SEAT-POPPET	1			
51-4	ZGAR-00462				..POPPET-VALVE	1			
51-5	ZGAR-00472				..SPRING-PRESSURE	1			
51-6	ZGAR-00464				..SCREW-LOCKING	1			
K51-7	ZGAR-00465				..O-RING	1			
52	ZGAR-00364				.VALVE-SHUTTLE	1			
52-1	ZGAR-00386				..SCREW-VALVE	1			
52-2	ZGAR-00387				..BALL	1			
52-3	ZGAR-00388				..BUSHING	1			
53	ZGAR-00453				.SPOOL	1			
53-1	ZGAR-00467				..PISTON-BRAKE	1			
53-2	ZGAR-00390				..BUSHING-VALVE	2			
53-3	ZGAR-00468				..PIN-THROTTLE	2			
53-4	ZGAR-00392				..SCREW-VALVE	1			
53-5	ZGAR-00469				..BOLT	1			
53-6	ZGAR-00470				..COLLAR-SPRING	2			
53-11	ZGAR-00471				..SPRING-PRESSURE	1			
56	ZGAR-00454				.HOUSING	1			
60	ZGAR-00455				.SCREW-LOCKING	1			
61	ZGAR-00456				.SCREW-LOCKING	1			
70	ZGAR-00369				.SCREW-LOCKING	1			

Item	Part_No	IS	Ord	T	Description	Qty	Serial_No	ITC	Remark
71	ZGAR-00457				.SCREW-SOCKET	2			
72	ZGAR-00371				.PLUG	1			
K73	XJDD-00306				.O-RING	2			
K74	XJDD-00284				.O-RING	2			
K75	XJDD-00307				.O-RING	2			
77	ZGAR-00375				.SCREW-LOCKING	2			
78	ZGAR-00348				.PIN-D/BREAK OFF	1			
K	XJDD-00683				SEAL KIT	1	#0001 -	-	SEE ILLUST

COUNTER BALANCE VALVE(#0131-)

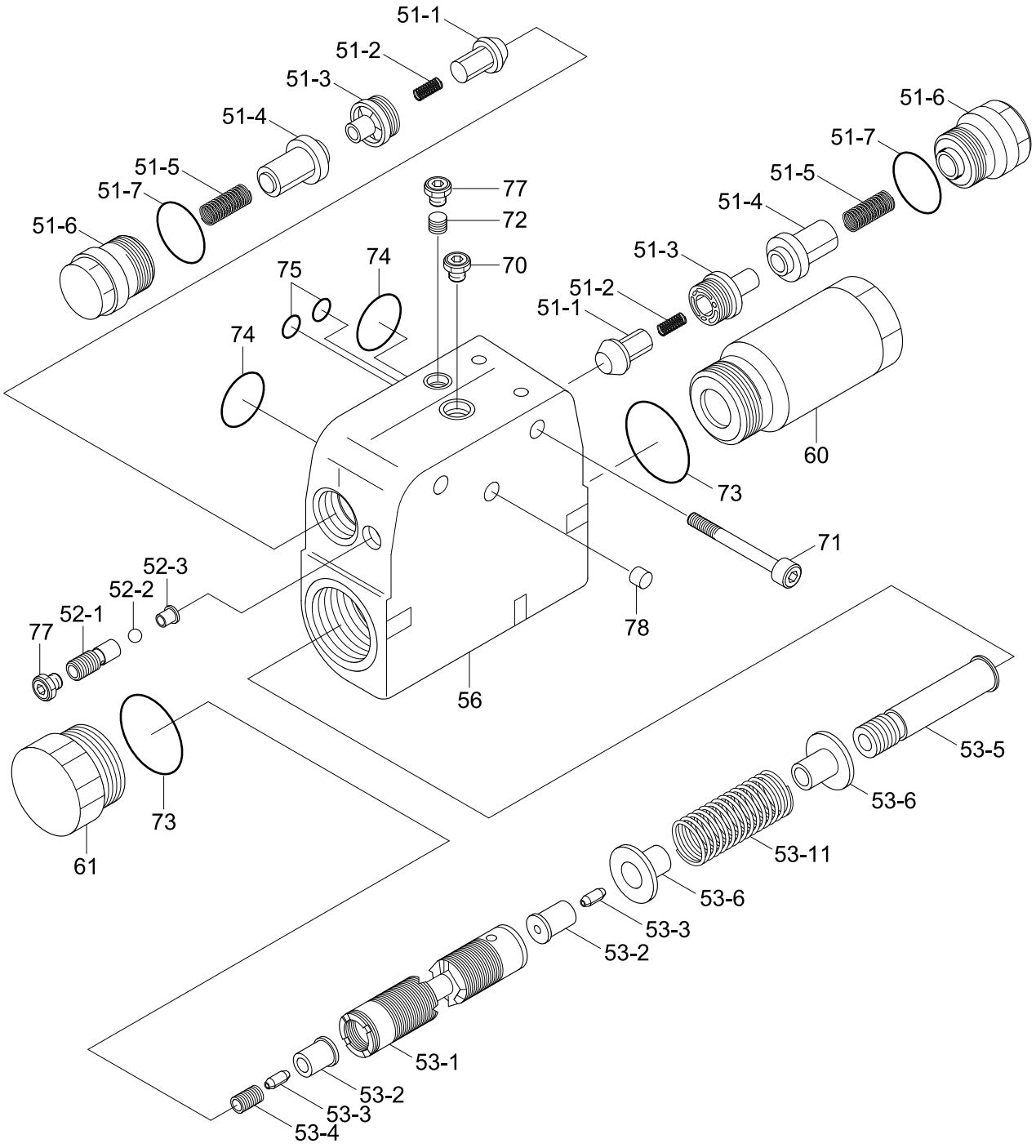

Description	Parts no	Included item
Travel motor seal kit	XJDD-00683	1-14,1-21,2-11,10,12,18,19,20,21,22,51-7,73,74,75

Item	Part_No	IS	Ord	T	Description	Qty	Serial_No	ITC	Remark
*-2	XJDD-00325				COUNTER BALANCE VLV	1	#0131 -	A	
51	XJDD-00297				.VALVE	2			
51-1	XJDD-00310				..POPPET-VALVE	1			
51-2	XJDD-00311				..SPRING-PRESSURE	1			
51-3	XJDD-00312				..SEAT-POPPET	1			
51-4	XJDD-00313				..POPPET-VALVE	1			
51-5	XJDD-00314				..SPRING-PRESSURE	1			
51-6	XJDD-00315				..SCREW-LOCKING	1			
K51-7	XJDD-00316				..O-RING	1			
52	XJDD-00298				.VALVE-SHUTTLE	1			
52-1	XJDD-00169				..SCREW-VALVE	1			
52-2	XJDD-00179				..BALL	1			
52-3	XJDD-00170				..BUSHING	1			
53	XJDD-00299				.SPOOL	1			
53-1	XJDD-00317				..PISTON-BRAKE	1			
53-2	XJDD-00318				..BUSHING-VALVE	2			
53-3	XJDD-00319				..PIN-THROTTLE	2			
53-4	XJDD-00632				..SCREW-VALVE	1			
53-5	XJDD-00676				..BOLT	1			
53-6	XJDD-00322				..COLLAR-SPRING	2			
53-11	XJDD-00323				..SPRING	1			
56	XJDD-00334				.HOUSING	1			
60	XJDD-00301				.SCREW-LOCKING	1			
61	XJDD-00302				.SCREW-LOCKING	1			
70	XJDD-00303				.SCREW-LOCKING	1			

Item	Part_No	IS	Ord	T	Description	Qty	Serial_No	ITC	Remark
71	XJDD-00304				.SCREW-SOCKET	2			
72	XJDD-00305				.PLUG	1			
K73	XJDD-00306				.O-RING	2			
K74	XJDD-00284				.O-RING	2			
K75	XJDD-00307				.O-RING	2			
77	XJDD-00309				.SCREW-LOCKING	2			
78	XJDD-00277				.PIN-D/BREAK OFF	1			
K	XJDD-00683				SEAL KIT	1			SEE ILLUST

TURNING JOINT

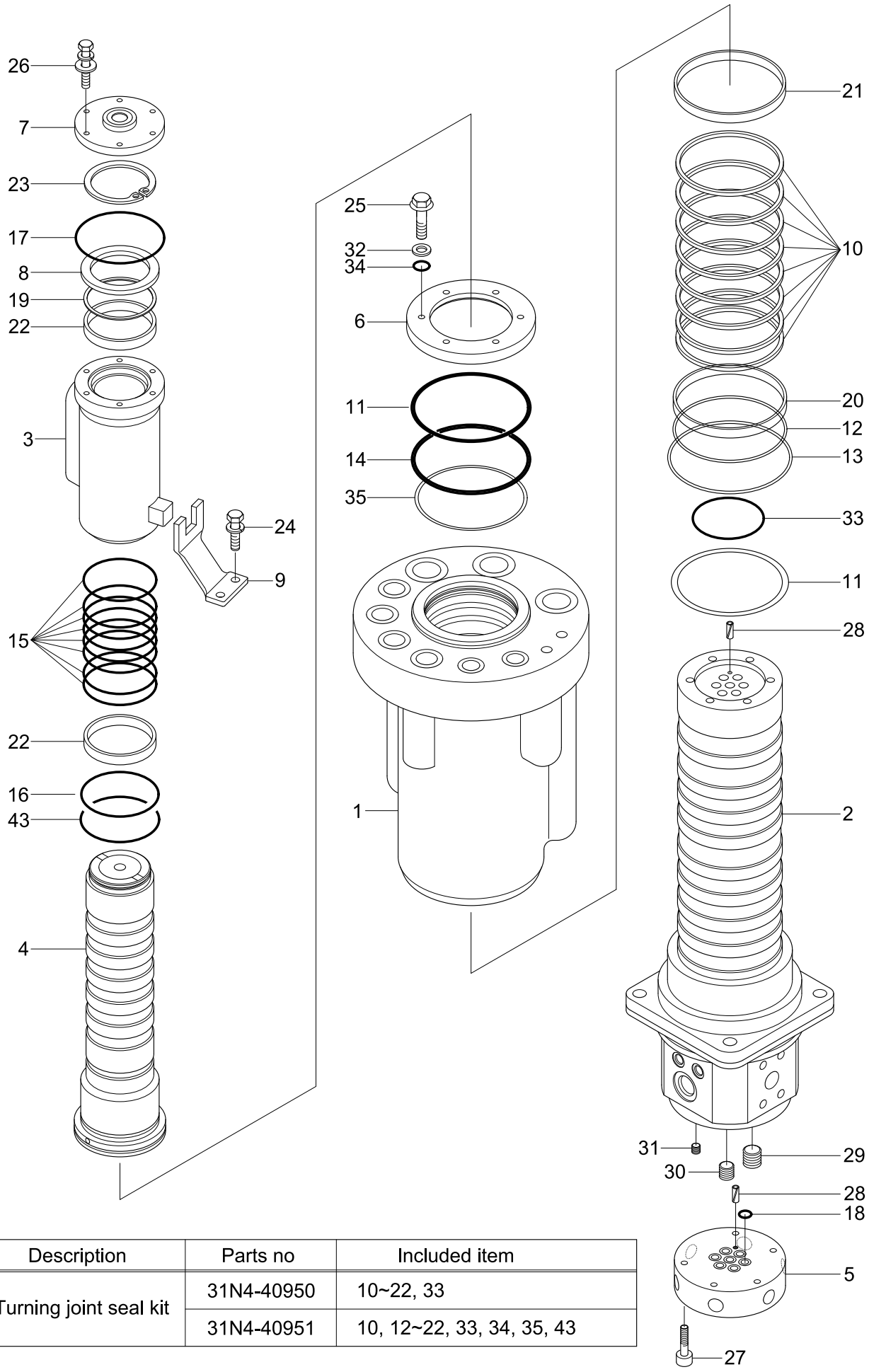

Description	Parts no	Included item
Turning joint seal kit	31N4-40950	10~22, 33
	31N4-40951	10, 12~22, 33, 34, 35, 43

Item	Part_No	IS	Ord	T	Description	Qty	Serial_No	ITC	Remark
*	31N4-40010				TURNING JOINT	1	- #0140		
	31N4-40011				TURNING JOINT	1	#0141 -	B	
1	31N4-40020				.HUB-MAIN	1	- #0140		
	31N4-40021				.HUB-MAIN	1	#0141 -	D	
2	31N4-40030				.SHAFT-MAIN	1			
3	31N4-40040				.HUB-TOP	1			
4	31N4-40050				.SHAFT-TOP	1	- #0140		
	31N4-40051				.SHAFT-TOP	1	#0141 -	D	
5	31N4-40060				.ADAPTOR	1			
6	31N4-40070				.COVER-MAIN	1	- #0140		
	31N4-40071				.COVER-MAIN	1	#0141 -	D	
7	31N4-40080				.COVER-TOP	1			
8	31N4-40090				.SPACER	1			
9	31N4-40100				.BRACKET	1	- #0140		
	31N4-40101				.BRACKET	1	#0141 -	A	
K10	31E6-40500				.SEAL-SLIPPER	9			
K11	S631-100004				.O-RING	1	- #0140		
11	31N4-40110				.SHIM	2	#0141 -	D	
K12	S631-120004				.O-RING	1			
K13	S631-140001				.O-RING	1			
K14	S631-112001				.O-RING	1	- #0140		
	S632-115001				.O-RING	1	#0141 -	D	
K15	S631-050004				.O-RING	8			
K16	S631-050001				.O-RING	1	- #0140		
	S631-048001				.O-RING	1	#0141 -	D	

Item	Part_No	IS	Ord	T	Description	Qty	Serial_No	ITC	Remark
K17	S632-065004				.O-RING	1			
K18	S631-010004				.O-RING	14			
K19	S642-050002				.RING-BACK UP	1			
K20	Y320-120011				.RING-WEAR	1			
K21	Y320-100011				.RING-WEAR	1			
K22	Y320-050011				.RING-WEAR	2			
23	S601-045004				.RING-RETAINING	1			
24	S035-102012				.BOLT-W/WASHER	2			
25	S017-080252				.BOLT-HEX	6	- #0140		
	31N4-40120				.BOLT-HEX,FLANGE	6	#0141 -	D	
26	S035-062022				.BOLT-W/WASHER	6			
27	S109-080406				.BOLT-SOCKET	5			
28	S471-080162				.PIN-SPRING	2			
29	P220-430204				.PLUG	3			
30	P220-430203				.PLUG	4			
31	P220-430202				.PLUG	2			
32	S403-082002				.WASHER-PLAIN	6	- #0140	-	
K33	CO0544A				.O-RING	1			
K34	S631-008001				.O-RING	6	#0141 -	-	
K35	S642-115002				.RING-BACK UP	1	#0141 -	-	
K43	CO0540A				.O-RING	1	#0141 -	-	
K	31N4-40950				.SEAL KIT	1	- #0140		SEE ILLUST
	31N4-40951				.SEAL KIT	1	#0141 -	D	

Item	Part_No	IS	Ord	T	Description	Qty	Serial_No	ITC	Remark
*	31N4-50110				BOOM CYLINDER-LH	1			
	31N4-50120				BOOM CYLINDER-RH	1			
*-1	31Y1-18120				.BOOM CYL SUB ASSY	1			WITHOUT PIPE
1	31Y1-18510				..TUBE ASSY	1			
2	31Y1-03450				..ROD ASSY	1			
3	31Y1-14710				..GLAND	1			
4	S732-075040				..BUSHING-DD2	1			
5	Y191-081000				..RING-SNAP	1			
K6	Y220-075011				..SEAL-ROD	1			
K7	Y180-075020				..RING-BACK UP	1			
K8	Y240-075013				..RING-BUFFER	1			
K9	Y110-075011				..WIPER-DUST	1			
10	Y190-089000				..RING-SNAP	1			
K11	S631-095004				..O-RING	2			
K12	S641-095002				..RING-BACK UP	1			
K13	S641-095003				..RING-BACK UP	1			
14	31YC-21040				..RING-CUSHION	1			
15	31Y1-03490				..PISTON	1			
K16	S632-065004				..O-RING	1			
K17	S642-065003				..RING-BACK UP	2			
K18	Y420-105000				..SEAL-PISTON	1			
K19	Y310-105000				..RING-WEAR	2			
K20	Y440-105000				..RING-DUST	2			
21	31YC-61040				..NUT-LOCK	1			
22	S109-160554				..BOLT-SOCKET	9			

Item	Part_No	IS	Ord	T	Description	Qty	Serial_No	ITC	Remark
31	31YC-11055				..BUSHING-PIN	2			
32	Y000-070200				..SEAL-DUST	4	#0001 -	-	
23	31Y1-03500				.BAND ASSY	1			
23-1	31Y1-03510				..BAND SUB ASSY	1			
23-2	31YC-32010				..BAND	1			
23-3	S071-022230				..U-BOLT	2			
23-4	S011-100352				..BOLT-HEX	4			
23-5	S201-101002				..NUT-HEX	4			
23-6	S411-100002				..WASHER-SPRING	8			
24	31Y1-18130				.PIPE ASSY-LH	1			
	31Y1-18140				.PIPE ASSY-RH	1			
25	31Y1-18150				.PIPE ASSY-LH	1			
	31Y1-18160				.PIPE ASSY-RH	1			
K26	S631-25S004				.O-RING	1			
K27	Y171-015004				.O-RING	1			
28	S017-080502				.BOLT-HEX	4			
29	S017-080402				.BOLT-HEX	4			
30	S411-080002				.WASHER-SPRING	8			
K	31Y1-18170				SEAL KIT	1			SEE ILLUST

ARM CYLINDER

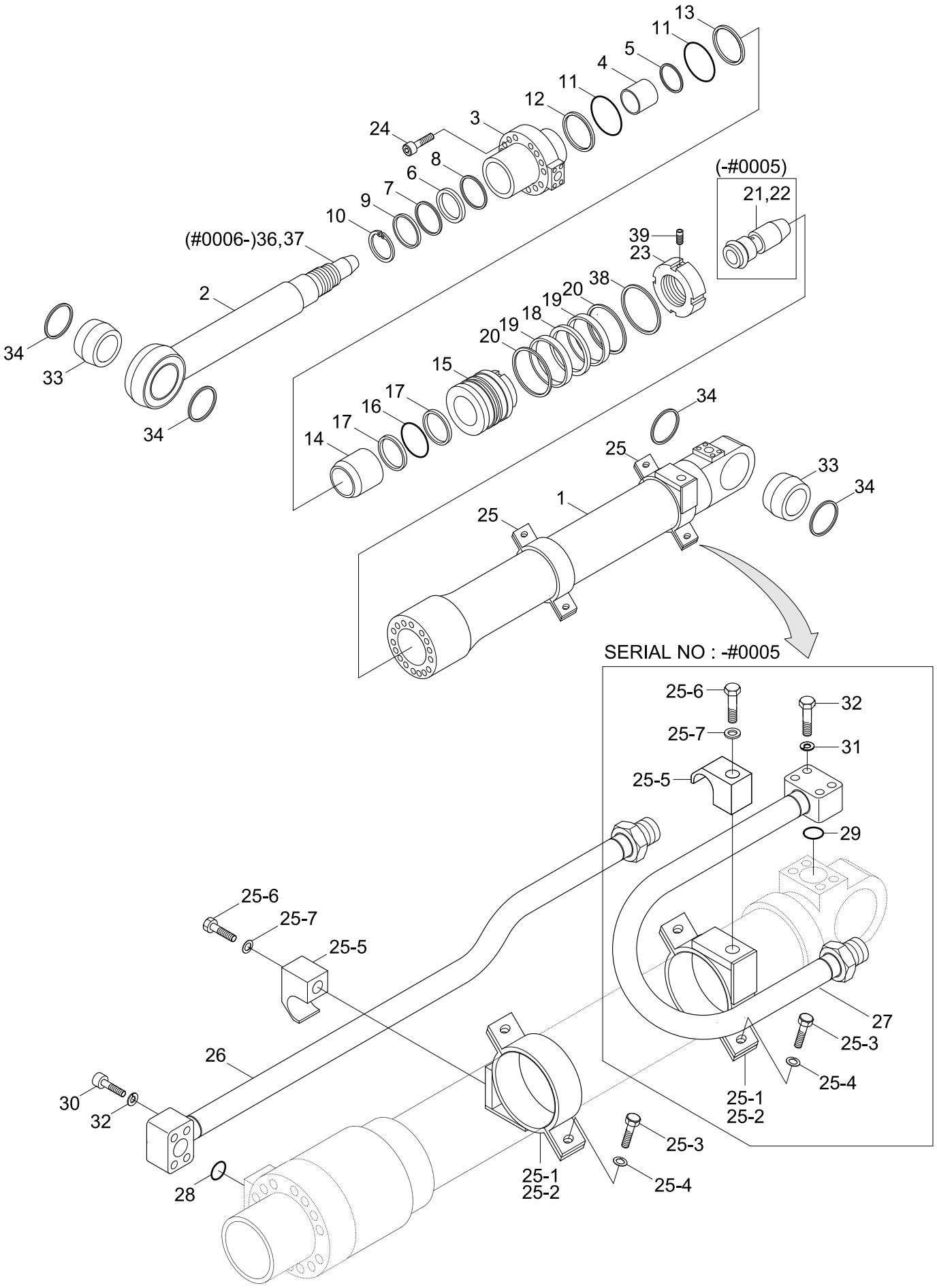

Description	Parts no	Included item
Arm cylinder seal kit	31Y1-18110	6~9, 11~13, 16~20, 28, 29

Item	Part_No	IS	Ord	T	Description	Qty	Serial_No	ITC	Remark
	31N4-50130				ARM CYLINDER	1	- #0005		
	31N4-50132				CYLINDER ASS'Y	1	#0006 -	D	
*	31N4-50130				ARM CYLINDER	1	- #0005		
	31N4-50132				ARM CYLINDER	1	#0006 - #0684	D	
	31N4-50133				ARM CYLINDER		#0685 -	B	
	31Y1-18080				.ARM CYL SUB ASSY	1	- #0005		WITHOUT PIPE
*-1	31Y1-18081				.ARM CYL SUB ASSY	1	#0006 - #0684	D	WITHOUT PIPE
	31Y1-18082				.ARM CYL SUB ASSY	1	#0685 -	B	WITHOUT PIPE
1	31Y1-18260				..TUBE ASSY	1			
	31Y1-03620				..ROD ASSY	1	- #0005		
2	31Y1-03621				..ROD ASSY	1	#0006 - #0684	D	
	31Y1-03622				..ROD ASS'Y	1	#0685 -	B	
N36	@				..SPEAR-CUSHION	1	#0006 -	-	NOT
N37	@				..RING-STOP	1	#0006 -	-	NOT
3	31Y1-19640				..GLAND	1			
4	S732-080040				..BUSHING-DD2	1			
5	Y191-086000				..RING-SNAP	1			
K6	Y220-080011				..SEAL-ROD	1			
K7	Y180-080020				..RING-BACK UP	1			
K8	Y240-080013				..RING-BUFFER	1			
K9	Y110-080011				..WIPER-DUST	1			
10	Y190-094000				..RING-SNAP	1			
K11	S631-105004				..O-RING	2			
K12	S641-105002				..RING-BACK UP	1			
K13	S641-105003				..RING-BACK UP	1			

Item	Part_No	IS	Ord	T	Description	Qty	Serial_No	ITC	Remark
14	31YC-21050				..RING-CUSHION	1			
15	31Y1-03660				..PISTON	1	- #0684		
	31Y1-03661				..PISTON	1	#0685 -	D	
K16	S632-070004				..O-RING	1			
K17	S642-070003				..RING-BACK UP	2			
K18	Y420-115000				..SEAL-PISTON	1			
K19	Y310-115003				..RING-WEAR	2			
K20	Y440-115000				..RING-DUST	2			
21	31YC-29070				..SPEAR-CUSHION	1	- #0005	-	
22	Y890-015011				..BALL-STEEL	12	- #0005	-	
23	31YC-61050				..NUT-LOCK	1	- #0684		
	31YC-61174				..NUT-LOCK	1	#0685 -	D	
24	S109-180604				..BOLT-SOCKET	9			
33	31YC-11081				..BUSHING-PIN	2			
34	Y000-070200				..SEAL-DUST	4	#0001 -	-	
25	31Y1-03670				.BAND ASSY	2			
25-1	31Y1-03680				..BAND SUB ASSY	2	- #0005		
					..BAND SUB ASSY	1	#0006 -	A	
25-2	31YC-31060				..BAND	2	- #0005		
					..BAND	1	#0006 -	A	
25-3	S011-100352				..BOLT-HEX	4	- #0005		
					..BOLT-HEX	2	#0006 -	A	
25-4	S411-100002				..WASHER-SPRING	4	- #0005		
					..WASHER-SPRING	2	#0006 -	A	
25-5	31YC-36010				..CLAMP-PIPE	2	- #0005		

Item	Part_No	IS	Ord	T	Description	Qty	Serial_No	ITC	Remark
25-5	31YC-36010				..CLAMP-PIPE	1	#0006 -	A	
25-6	S015-120502				..BOLT-HEX	2	- #0005		
					..BOLT-HEX	1	#0006 -	A	
25-7	S411-120002				..WASHER-SPRING	2	- #0005		
					..WASHER-SPRING	1	#0006 -	A	
26	31Y1-18090				.PIPE ASSY	1			
27	31Y1-18100				.PIPE ASSY-B	1	- #0005	-	
K28	Y171-019004				.O-RING	1			
K29	S631-026004				.O-RING	1	- #0005	-	
30	S017-100452				.BOLT-HEX	4			
31	S017-100602				.BOLT-HEX	4	- #0005	-	
32	S411-100002				.WASHER-SPRING	8	- #0005	-	
33	31YC-11081				.BUSHING-PIN	2			
34	Y000-070200				.SEAL-DUST	4	#0001 -	-	
38	31YC-66031				.WASHER-LOCK	1	#0685 -	-	
39	S112-080164				.SCREW-SET,HEX SOCKET	1	#0685 -	-	
K	31Y1-18110				SEAL KIT	1			SEE ILLUST

BUCKET CYLINDER

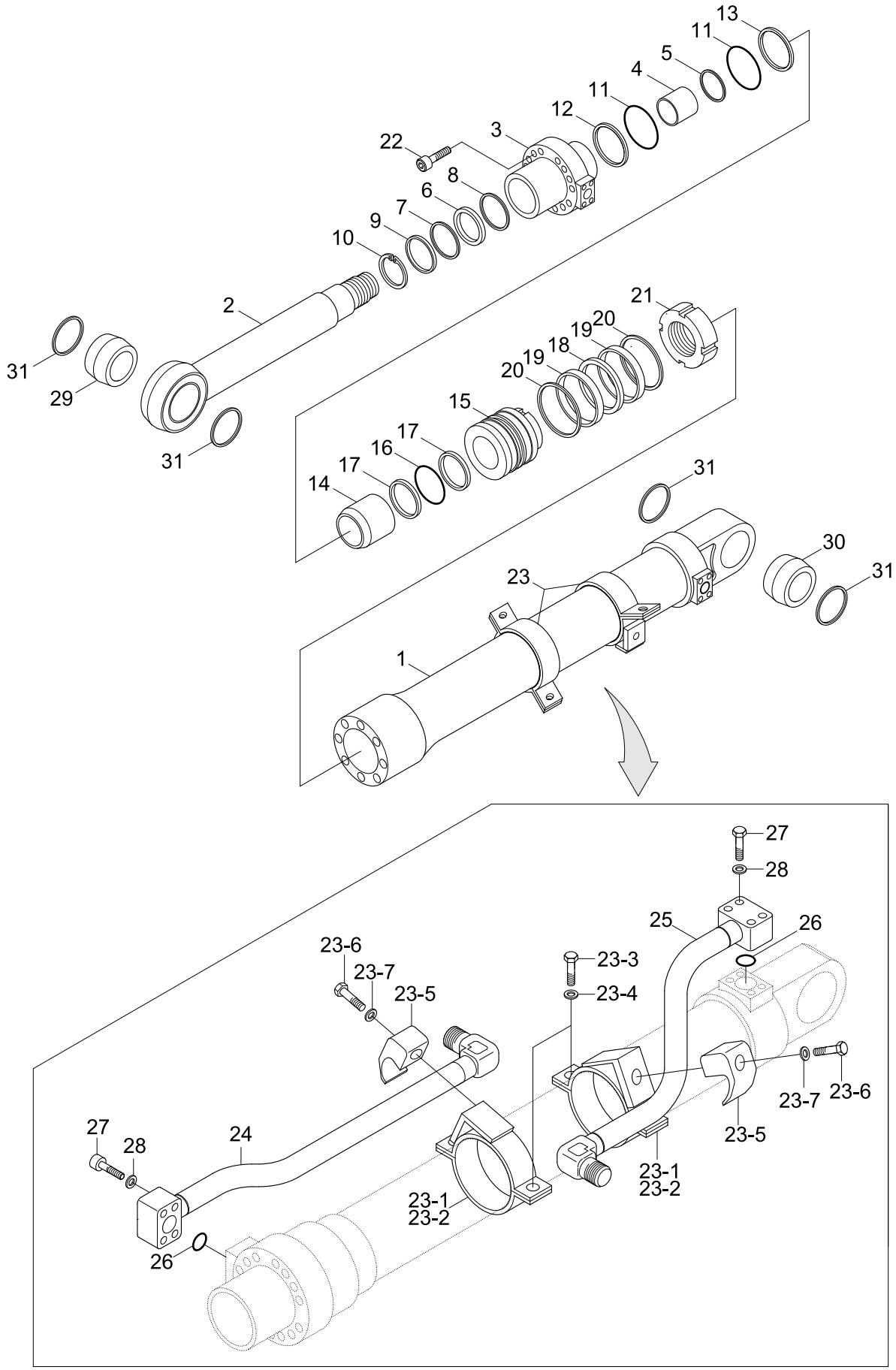

Description	Parts no	Included item
Bucket cylinder seal kit	31Y1-18210	6~9, 11~13, 16~20, 26

Item	Part_No	IS	Ord	T	Description	Qty	Serial_No	ITC	Remark
*	31N4-60110				BUCKET CYLINDER	1			
*-1	31Y1-18180				.BUCKET CYL SUB ASSY	1			WITHOUT PIPE
1	31Y1-03720				..TUBE ASSY	1			
2	31Y1-03770				..ROD ASSY	1			
3	31Y1-19650				..GLAND	1			
4	S732-070040				..BUSHING-DD2	1			
5	Y191-076000				..RING-SNAP	1			
K6	Y220-070011				..SEAL-ROD	1			
K7	Y180-070020				..RING-BACK UP	1			
K8	Y240-070013				..RING-BUFFER	1			
K9	Y110-070011				..WIPER-DUST	1			
10	Y190-084000				..RING-SNAP	1			
K11	S631-090004				..O-RING	2			
K12	S641-090002				..RING-BACK UP	1			
K13	S641-090003				..RING-BACK UP	1			
14	31YC-21030				..RING-CUSHION	1			
15	31Y1-03810				..PISTON	1			
K16	S632-060004				..O-RING	1			
K17	S642-060003				..RING-BACKUP,O-RING	2			
K18	Y420-100000				..SEAL-PISTON	1			
K19	Y310-100200				..RING-WEAR	2			
K20	Y440-100000				..RING-DUST	2			
21	31YC-61020				..NUT-LOCK	1			
22	S109-160554				..BOLT-SOCKET	9			
29	31YC-11040				..BUSHING-PIN	1			

Item	Part_No	IS	Ord	T	Description	Qty	Serial_No	ITC	Remark
30	31YC-11050				..BUSHING-PIN	1			
31	Y000-070200				..SEAL-DUST	4	#0001 -	-	
23	31Y1-03820				.BAND ASSY	2			
23-1	31Y1-03830				..BAND SUB ASSY	1			
23-2	31YC-31040				..BAND	1			
23-3	S011-100352				..BOLT-HEX	2			
23-4	S411-100002				..WASHER-SPRING	2			
23-5	31YC-36010				..CLAMP-PIPE	1			
23-6	S015-120502				..BOLT-HEX	1			
23-7	S411-120002				..WASHER-SPRING	1			
24	31Y1-18190				.PIPE ASSY	1			
25	31Y1-18200				.PIPE ASSY	1			
K26	S631-026004				.O-RING	2			
27	S017-100602				.BOLT-HEX	8			
28	S411-100002				.WASHER-SPRING	8			
K	31Y1-18210				SEAL KIT	1			SEE ILLUST

DOZER BLADE CYLINDER-REAR

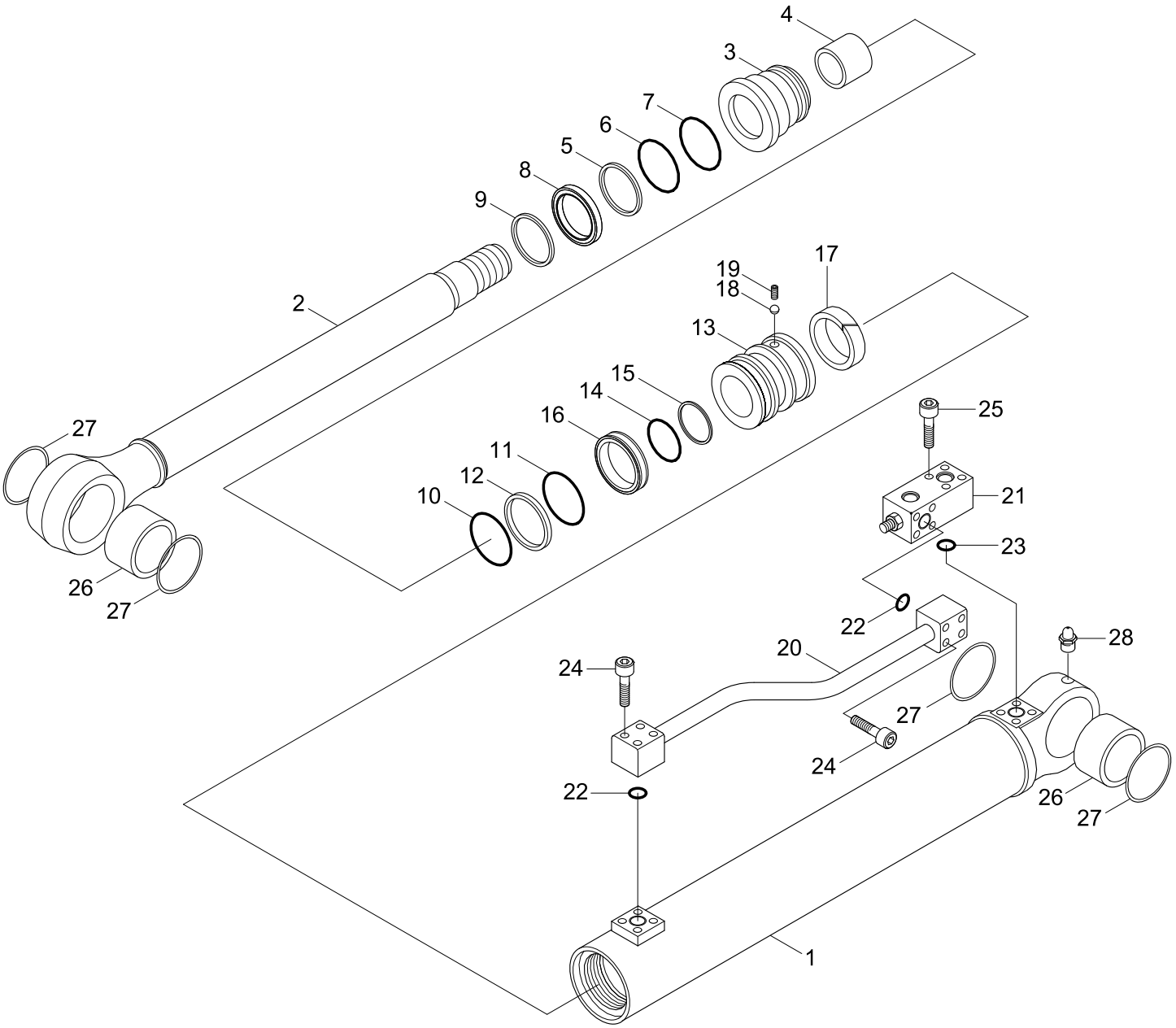

Description	Parts no	Included item
Dozer blade cylinder seal kit-Rear	31Y1-23860	5~8, 10~12, 14~17, 22, 23

Item	Part_No	IS	Ord	T	Description	Qty	Serial_No	ITC	Remark
*	31N4-70110				DOZER BLADE CYL-LH	1			
	31N4-70120				DOZER BLADE CYL-RH	1			
*-1	31Y1-23770				.BLADE CYL SUB ASSY	1			WITHOUT PIPE
1	31Y1-23780				..TUBE ASSY	1			
2	31Y1-23810				..ROD ASSY	1			
3	31Y1-17500				..GLAND	1			
4	S732-065030				..BUSHING-DD2	1			
K5	Y220-065011				..SEAL-ROD	1			
K6	Y180-065020				..RING-BACK UP	1			
K7	Y240-065011				..RING-BUFFER	1			
K8	Y110-065011				..WIPER-DUST	1			
9	Y190-079000				..RING-SNAP	1			
K10	S632-100001				..O-RING	1			
K11	S632-095004				..O-RING	1			
K12	S642-095003				..RING-BACK UP	1			
13	31Y1-23830				..PISTON	1			
K14	S632-050004				..O-RING	1			
K15	S642-050003				..RING-BACK UP	2			
K16	Y420-100000				..SEAL-PISTON	1			
K17	Y300-100100				..RING-WEAR	1			
18	Y890-015011				..BALL-STEEL	1			
19	S113-080104				..SCREW-SET	1			
20	31Y1-23840				.PIPE ASSY-LH	1			
	31Y1-23850				.PIPE ASSY-RH	1			
21	35EA-70320				.CHECK VALVE-DOUBLE,LH	1	- #0001		PAKA

Item	Part_No	IS	Ord	T	Description	Qty	Serial_No	ITC	Remark
21	31N4-75010				.CHECK VALVE-DOUBLE,LH	1	#0002 -	A	DAEJIN
	35EA-70310				.CHECK VALVE-DOUBLE,RH	1	- #0001		PAKA
	31N4-75020				.CHECK VALVE-DOUBLE,RH	1	#0002 -	A	DAEJIN
K22	Y171-015004				.O-RING	2			
K23	S631-014004				.O-RING	1			
24	S107-080404				.BOLT-SOCKET	8			
25	S107-100604				.BOLT-SOCKET	4			
26	31YC-12210				..BUSHING-PIN	2			
27	Y010-065080				..SEAL-DUST	4			
28	S651-810002				..NIPPLE-GREASE	1			
K	31Y1-23860				SEAL KIT	1			SEE ILLUST

DOZER BLADE CYLINDER-FRONT

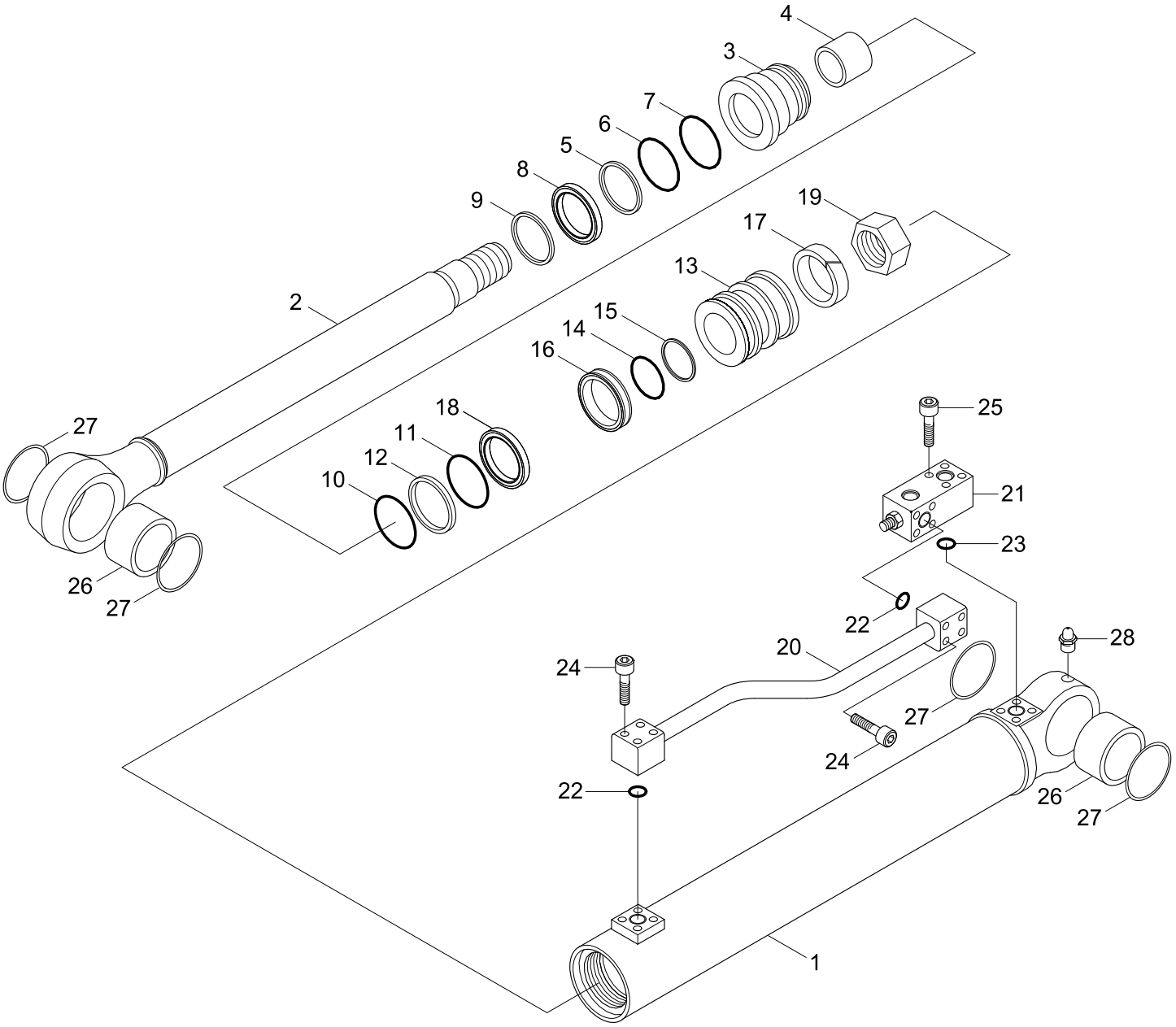

Description	Parts no	Included item
Dozer blade cylinder seal kit-Front	31Y1-17660	5~8, 10~12, 14~17, 22, 23

Item	Part_No	IS	Ord	T	Description	Qty	Serial_No	ITC	Remark
*	35EA-70350				DOZER BLADE CYLINDER	1			LH SIDE
	35EA-70360				DOZER BLADE CYLINDER	1			RH SIDE
*-1	31Y1-18661				.BLADE CYL SUB ASSY	1			WITHOUT PIPE
1	31Y1-18671				..TUBE ASSY	1			
2	31Y1-18000				..ROD ASSY	1			
3	31Y1-17500				..GLAND	1			
4	S732-065030				..BUSHING-DD2	1			
K5	Y220-065011				..SEAL-ROD	1			
K6	Y180-065020				..RING-BACK UP	1			
K7	Y240-065011				..RING-BUFFER	1			
K8	Y110-065011				..WIPER-DUST	1			
9	Y190-079000				..RING-SNAP	1			
K10	S632-100001				..O-RING	1			
K11	S632-095004				..O-RING	1			
K12	S642-095003				..RING-BACK UP	1			
13	31Y1-10460				..PISTON	1			
NK14	31YC-99370				..O-RING	1			NOT
K15	31YC-99390				..RING-BACK UP	2			
K16	Y420-100000				..SEAL-PISTON	1			
K17	Y300-100000				..RING-WEAR	1			
K18	Y440-100000				..RING-DUST	1			
19	31YC-65340				..NUT-NYLON	1			
20	31Y1-18700				.PIPE ASSY-LH	1			
	31Y1-18710				.PIPE ASSY-RH	1			
21	35EA-70320				.CHECK VALVE-DOUBLE,LH	1	- #0001		PAKA

Item	Part_No	IS	Ord	T	Description	Qty	Serial_No	ITC	Remark
21	31N4-75010				.CHECK VALVE-DOUBLE,LH	1	#0002 -	A	DAEJIN
	35EA-70310				.CHECK VALVE-DOUBLE,RH	1	- #0001		PAKA
	31N4-75020				.CHECK VALVE-DOUBLE,RH	1	#0002 -	A	DAEJIN
K22	Y171-015004				.O-RING	2			
K23	S631-014004				.O-RING	1			
24	S107-080404				.BOLT-SOCKET	8			
25	S107-100554				.BOLT-SOCKET	4			
26	31YC-12210				..BUSHING-PIN	2			
27	Y010-065080				..SEAL-DUST	4	#0001 -	-	
28	S651-810002				..NIPPLE-GREASE	1			
K	31Y1-17660				SEAL KIT	1			SEE ILLUST

OUTRIGGER CYLINDER

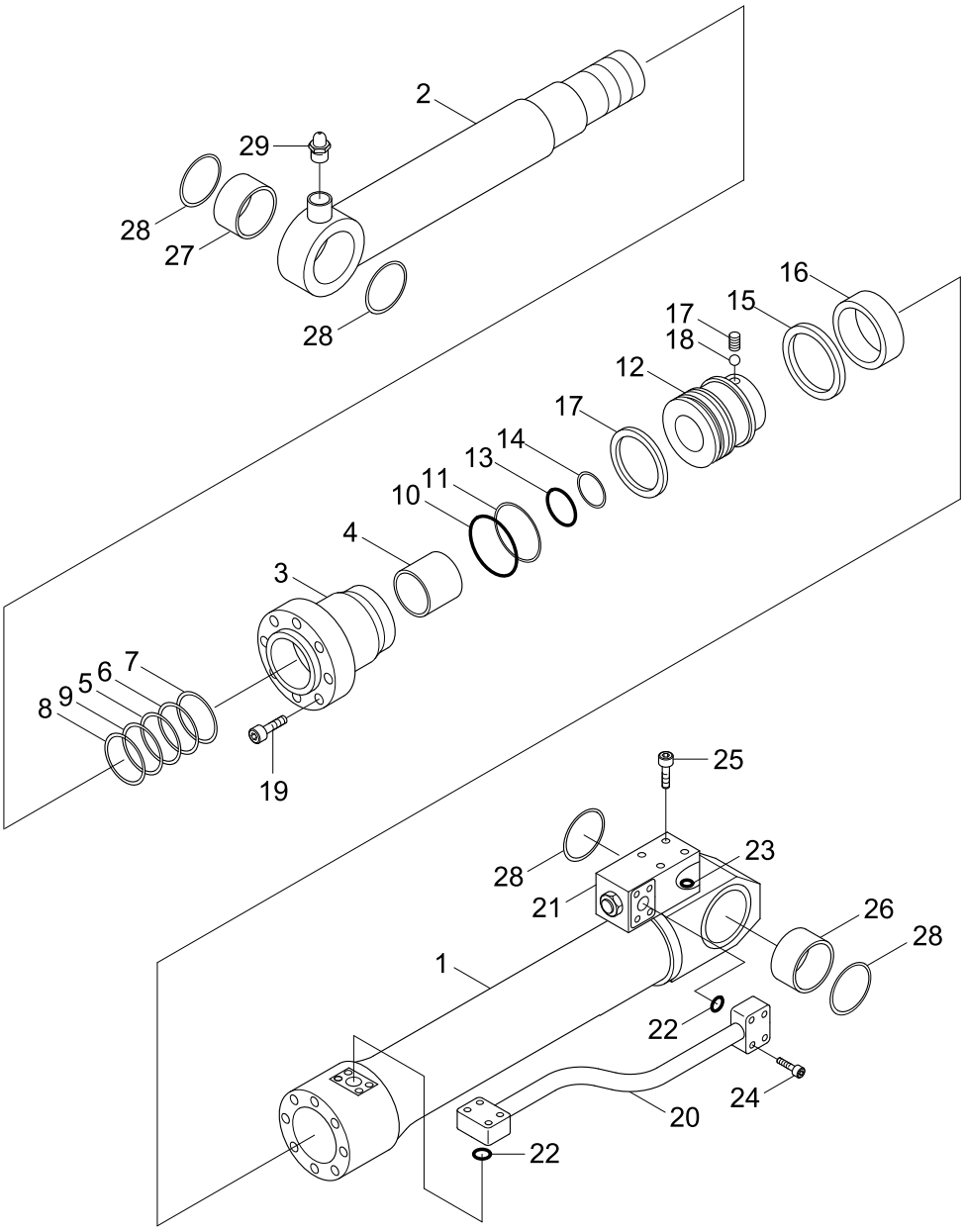

Description	Parts no	Included item
Outrigger cylinder seal kit	31Y1-14050	5~8, 10, 11, 13~17

Item	Part_No	IS	Ord	T	Description	Qty	Serial_No	ITC	Remark
*	35EA-70170				OUTRIGGER CYL-LH	1			
	35EA-70180				OUTRIGGER CYL-RH	1			
*-1	31Y1-14070				.O/RIGGER CYLINDER	1			WITHOUT PIPE
1	31Y1-14080				..TUBE ASSY	1			
2	31Y1-14110				..ROD ASSY	1			
3	31Y1-12930				..GLAND	1			
4	S731-075040				..BUSHING-DU	1			
K5	Y200-075011				..SEAL-ROD	1			
K6	Y180-075020				..RING-BACK UP	1			
K7	Y240-075011				..RING-BUFFER	1			
K8	Y110-075011				..WIPER-DUST	1			
9	Y190-089000				..RING-SNAP	1			
K10	S631-100004				..O-RING	1			
K11	S641-100003				..RING-BACK UP	1			
12	31Y1-04560				..PISTON	1			
K13	S632-060004				..O-RING	1			
K14	S642-060003				..RING-BACKUP	2			
K15	Y420-110000				..SEAL-PISTON	1			
K16	Y310-110200				..RING-WEAR	1			
K17	S113-080104				..SCREW-SET	1			
18	Y890-015011				..BALL-STEEL	1			
19	S109-160604				..BOLT-SOCKET	8			
26	31YC-12070				..BUSHING-PIN	1			
27	31YC-12060				..BUSHING-PIN	1			
28	Y000-070200				..SEAL-DUST	4			

Item	Part_No	IS	Ord	T	Description	Qty	Serial_No	ITC	Remark
29	S651-810002				..NIPPLE-GREASE	1			
20	31Y1-14130				.PIPE ASSY-LH	1			
	31Y1-14140				.PIPE ASSY-RH	1			
21	35EA-70320				.CHECK VALVE-DOUBLE,LH	1	- #0001		PAKA
	31N4-75010				.CHECK VALVE-DOUBLE,LH	1	#0001 -	A	DAEJIN
	35EA-70310				.CHECK VALVE-DOUBLE,RH	1	- #0001		PAKA
	31N4-75020				.CHECK VALVE-DOUBLE,RH	1	#0001 -	A	DAEJIN
22	Y171-015004				.O-RING	2			
23	S631-014004				.O-RING	1			
24	S107-080404				.BOLT-SOCKET	8			
25	S107-100604				.BOLT-SOCKET	4			
K	31Y1-14050				SEAL KIT	1			SEE ILLUST

BOOM CYLINDER(2-PIECE BOOM)

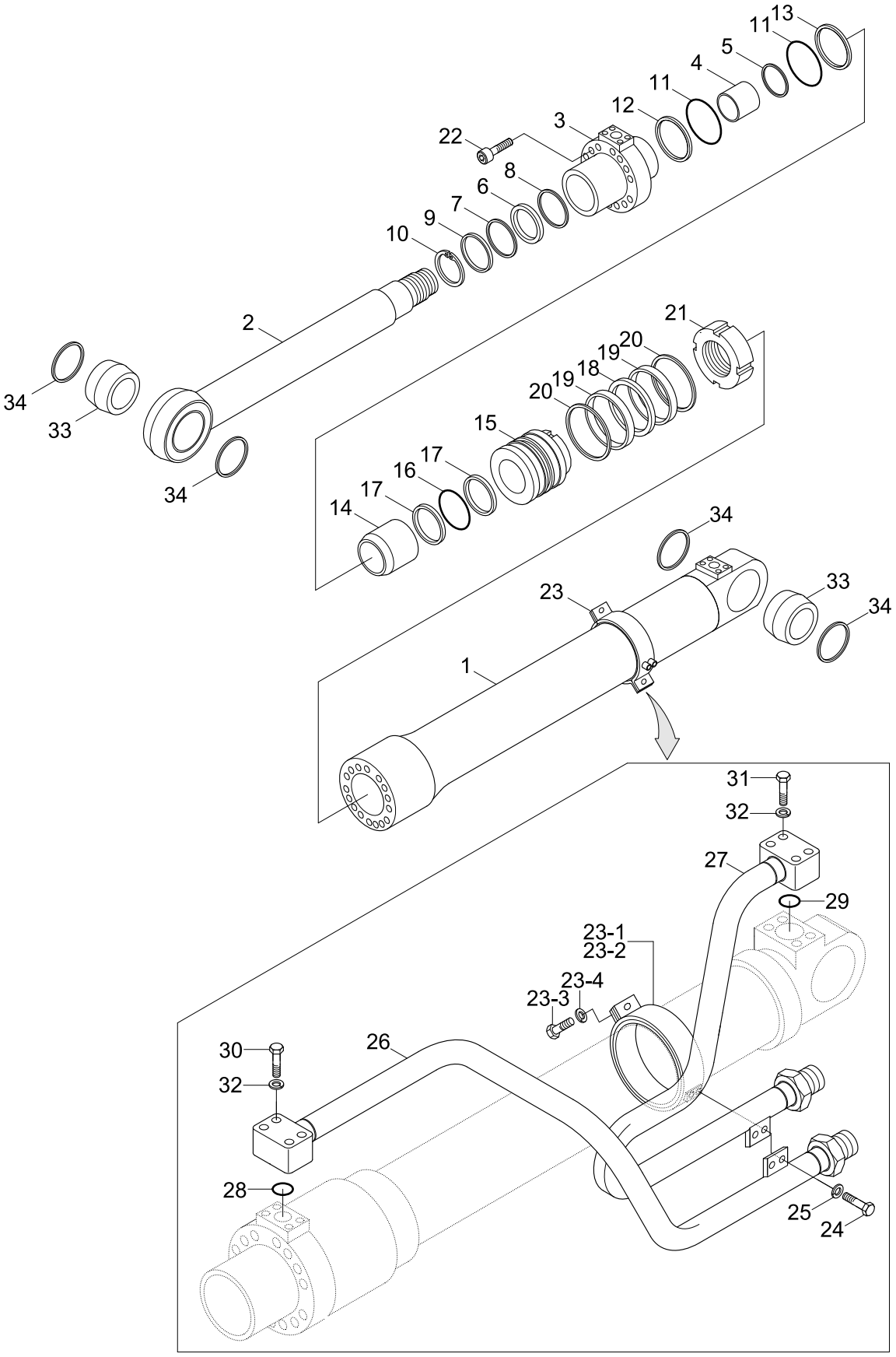

Description	Parts no	Included item
2-Piece boom cylinder seal kit	31Y1-21200	6~9, 11~13, 16~20, 28, 29

Item	Part_No	IS	Ord	T	Description	Qty	Serial_No	ITC	Remark
*	31N4-50910				BOOM CYL-LH/SAFETY VLV	1			
	31N4-50920				BOOM CYL-RH/SAFETY VLV	1			
*-1	31Y1-21140				.BOOM CYL SUB ASSY	1			WITHOUT PIPE
1	31Y1-21150				..TUBE ASSY	1			
2	31Y1-12320				..ROD ASSY	1			
3	31Y1-14710				..GLAND	1			
4	S732-075040				..BUSHING	1			
5	Y191-081000				..RING-SNAP	1			
K6	Y220-075011				..SEAL-ROD	1			
K7	Y180-075020				..RING-BACK UP	1			
K8	Y240-075013				..RING-BUFFER	1			
K9	Y110-075011				..WIPER-DUST	1			
10	Y190-089000				..RING-SNAP	1			
K11	S631-095004				..O-RING	2			
K12	S641-095002				..RING-BACK UP	1			
K13	S641-095003				..RING-BACK UP	1			
14	31YC-21040				..RING-CUSHION	1			
15	31Y1-03490				..PISTON	1			
K16	S632-065004				..O-RING	1			
K17	S642-065003				..RING-BACK UP	2			
K18	Y420-105000				..SEAL-PISTON	1			
K19	Y310-105000				..RING-WEAR	2			
K20	Y440-105000				..RING-DUST	2			
21	31YC-61040				..NUT-LOCK	1			
22	S109-160554				..BOLT-SOCKET	9			

Item	Part_No	IS	Ord	T	Description	Qty	Serial_No	ITC	Remark
23	S981-202500				..PLUG	1			
24	31YC-11055				..BUSHING-PIN	2			
25	Y000-070200				..SEAL-DUST	4			
23	31Y1-13050				.BAND ASSY	1			
23-1	31Y1-13060				..BAND SUB ASSY	1			
23-2	31Y1-13110				..BAND SUB ASSY	1			
23-3	S011-100352				..BOLT-HEX	4			
23-4	S411-100002				..WASHER-SPRING	4			
24	S017-100202				.BOLT-HEXAGON HEAD	2			
25	S411-100002				.WASHER-SPRING	2			
26	31Y1-21160				.PIPE ASSY-R,LH	1			
	31Y1-21170				.PIPE ASSY-R,RH	1			
27	31Y1-21180				.PIPE ASSY-B,LH	1			
	31Y1-21190				.PIPE ASSY-B,RH	1			
K28	S631-25S004				.O-RING	1			
K29	Y171-015004				.O-RING	1			
30	S017-080502				.BOLT-HEX	4			
31	S017-080402				.BOLT-HEXAGON HEAD	4			
32	S411-080002				.WASHER-SPRING	8			
33	Y000-070200				.SEAL-DUST	2			
34	31YC-11055				.BUSHING-PIN	2	#0001 -	-	
K	31Y1-21200				SEAL KIT	1			SEE ILLUST

ADJUST CYLINDER

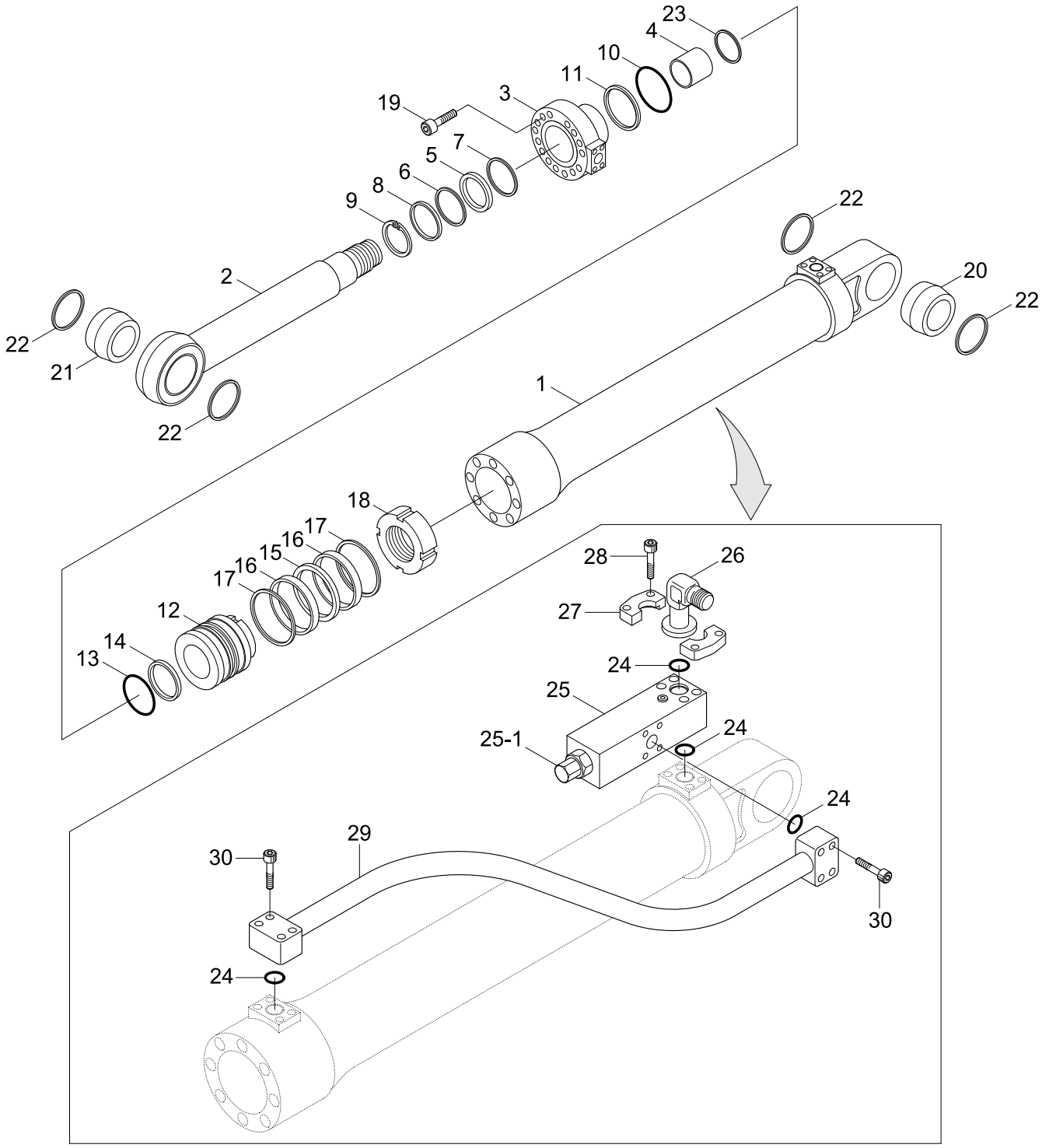

Description	Parts no	Included item
Adjust cylinder seal kit	31Y1-16170	5~8, 10, 11, 13~17

Item	Part_No	IS	Ord	T	Description	Qty	Serial_No	ITC	Remark
*	31N4-52940				ADJUST CYL-SAFETY VLV	1			
*-1	35EA-50150				.ADJUST CYL SUB ASSY	1			WITHOUT PIPE
1	31Y1-12380				..TUBE ASSY	1			
2	31Y1-12430				..ROD ASSY	1			
3	31Y1-12460				..GLAND	1			
4	S732-090040				..BUSHING-DD2	1			
K5	Y220-090011				..SEAL-ROD	1			
K6	Y180-090020				..RING-BACK UP	1			
K7	Y240-090011				..RING-BUFFER	1			
K8	Y110-090011				..WIPER-DUST	1			
9	Y190-104000				..RING-SNAP	1			
K10	S631-135004				..O-RING	1			
K11	S641-135003				..RING-BACK UP	1			
12	31Y1-12470				..PISTON	1			
K13	S632-090004				..O-RING	1			
K14	S642-090003				..RING-BACK UP	2			
K15	Y420-145000				..SEAL-PISTON	1			
K16	Y310-145100				..RING-WEAR	2			
K17	Y440-145002				..RING-DUST	2			
18	31YC-61151				..NUT-LOCK	1			
19	S109-200654				..BOLT-SOCKET	12			
20	31YC-11511				..BUSHING-PIN	1			
21	31YC-11521				..BUSHING-PIN	1			
22	S700-095208				..DUST SEAL-DKIY TYPE	4	#0001 -	-	
23	Y191-097000				..RING-SNAP	1			

Item	Part_No	IS	Ord	T	Description	Qty	Serial_No	ITC	Remark
24	Y171-019004				.O-RING	4			
25	31E4-95610				.VALVE-SAFETY LOCK	1	- #0658		
	31NA-90590				.VALVE-SAFETY LOCK	1	#0659 -	B	
25-1	DCP-001A				..CAP	1	#0659 -	-	
25-2	XKCH-00007				..SEAL-KIT	1	#0659 -	-	NOT SHOWN
26	31Y1-21230				.ELBOW-90	1			
27	P174-120102				.FLANGE-HYD,SPLIT	2			
28	S107-101004				.BOLT-SOCKET	4			
29	31Y1-21240				.PIPE ASSY-V	1			
30	S107-100454				.BOLT-SOCKET	8			
K	31Y1-16170				SEAL KIT	1			SEE ILLUST

SOLENOID VALVE

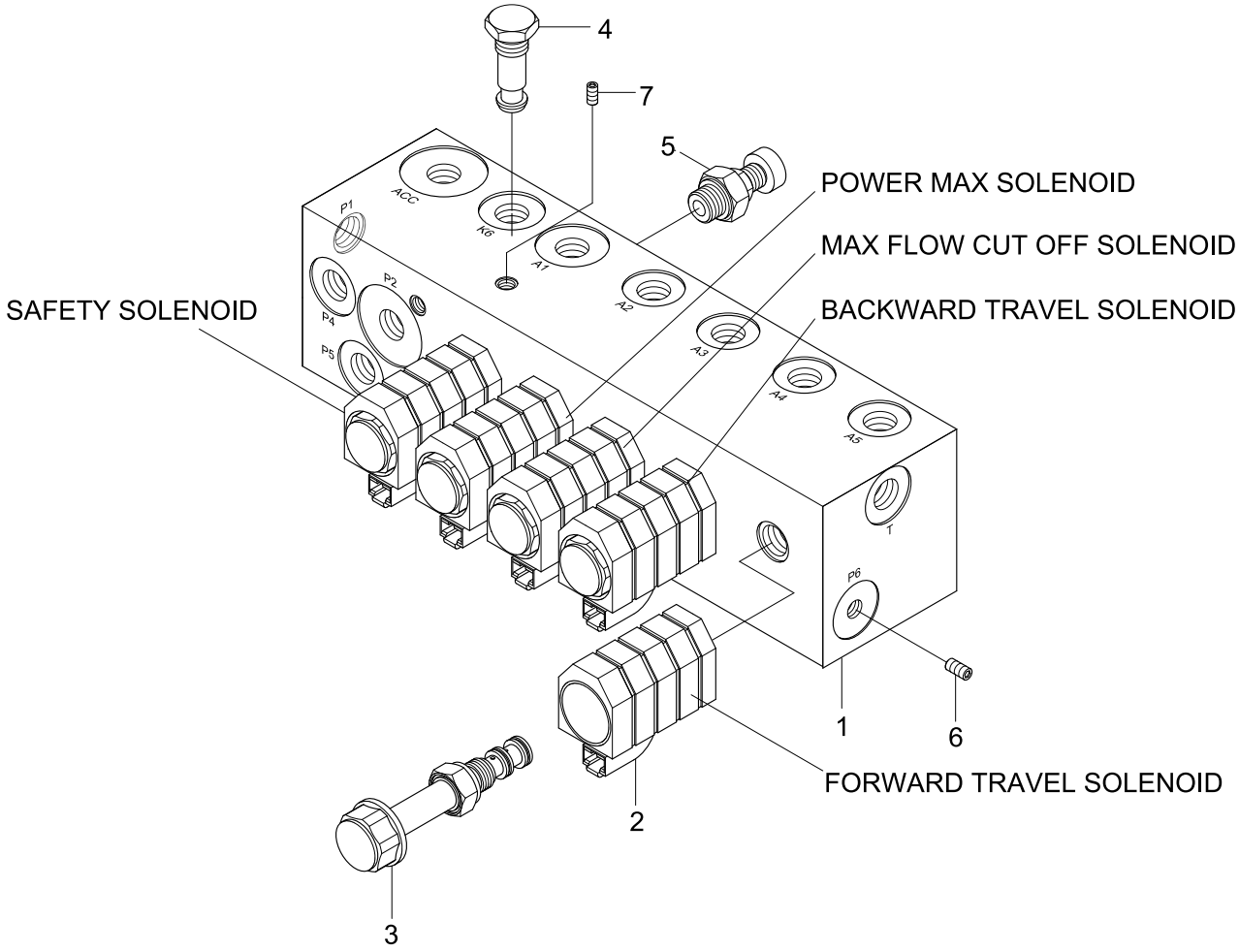

Item	Part_No	IS	Ord	T	Description	Qty	Serial_No	ITC	Remark
*	31N4-20040				5-SOLENOID VALVE	1			
1	XKBL-00025				.BODY	1			
2	XKBL-00004				.COIL	5	#0001 -	-	
3	XKBL-00003				.VALVE-SOLENOID	5	#0001 -	-	
4	XKBL-00005				.VALVE-CHECK	1			
5	XKBL-00006				.OVERLOAD-MANUAL	1			
6	P220-430202				.PLUG	8			
7	P220-430201				.PLUG	9			

Item	Part_No	IS	Ord	T	Description	Qty	Serial_No	ITC	Remark
*	81EK-00010				STEERING VALVE	1			
K1	YUBS-00001				.SEAL-DUST	1			
N2	@				.HSG,SPOOL,SLEEVE	1			NOT
3	YUBS-00002				.BALL	1			
4	YUBS-00003				.BUSHING-THREAD	1			
K5	YUBS-00056				.O-RING	1			
K6	YUBS-00057				.RING-KING	1			
7	YUBS-00005				.BEARING ASSY	1			
8	YUBS-00006				.RING	1			
9	YUBS-00007				.PIN-CROSS	1			
11	YUBS-00008				.SHAFT-CARDAN	1			
12	YUBS-00058				.SPRING SET	1			
K13	YUBS-00010				.O-RING	1			
14	YUBS-00011				.PLATE-DISTRIBUTOR	1			
15	YUBS-00059				.SET-GEAR WHEEL	1			
K16	YUBS-00013				.O-RING	2			
17	YUBS-00014				.COVER-END	1			
K18	YUBS-00015				.WASHER	7			
20	YUBS-00060				.SCREW-PIN	1			
21	YUBS-00061				.SCREW	6			
22	YUBS-00062				.PLATE-NAME	1			
23	YUBS-00037				.SCREW-DRIVE	2			
24	YUBS-00063				.RELIEF VALVE ASSY	1			
25	YUBS-00064				.SPRING-WIRE	1			
26	YUBS-00065				.VLV-SHOCK,COMPLETE	2			

Item	Part_No	IS	Ord	T	Description	Qty	Serial_No	ITC	Remark
27	YUBS-00066				.BALL	2			
29	YUBS-00067				.BUSHING-W/PIN	2			
K	YUBS-00068				SEAL KIT	1			
N	@				NOT INDIVIDUALLY SUPPLIED	AR			NOT

TRANSMISSION VALVE(-#0559)

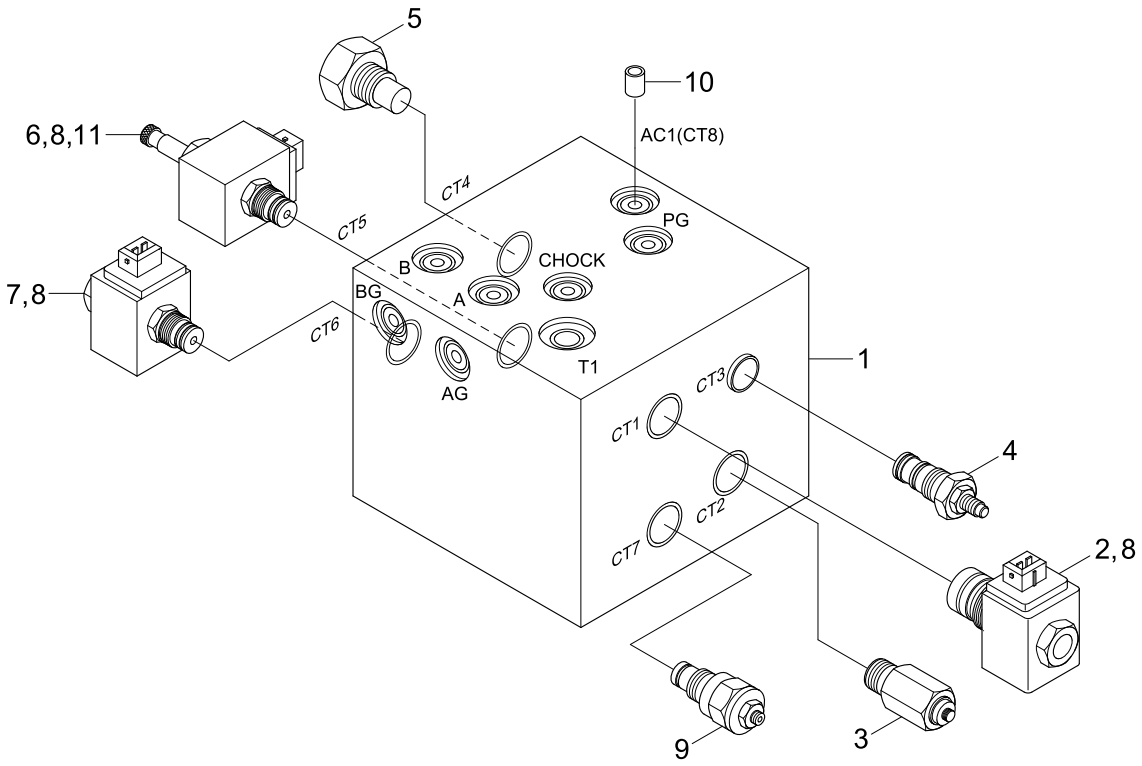

Item	Part_No	IS	Ord	T	Description	Qty	Serial_No	ITC	Remark
*	31N4-30040				T/M CONTROL VALVE	1	- #0559	-	ILL CHANGE
1	XKBL-00010				.BODY	1			
2	XKBL-00003				.VALVE-SOLENOID	1			RAM LOCK
3	XKBL-00011				.VALVE-POD	1			
4	XKBL-00012				.VALVE-REDUCING	1			
5	XKBL-00013				.VALVE-CHECK	1			
6	XKBL-00014				.3-2 SOL VALVE	1			PARKING
7	XKBL-00015				.4-2 SOL VALVE	1			TRAVEL SPEED
8	XKBL-00004				.COIL	3			
9	XKBL-00017				.RELIEF VALVE	1			
10	XKBL-00018				.ORIFICE	1			
11	XKBL-00019				.LOCK NUT	1			

TRAVEL CONTROL VALVE(#0560-)

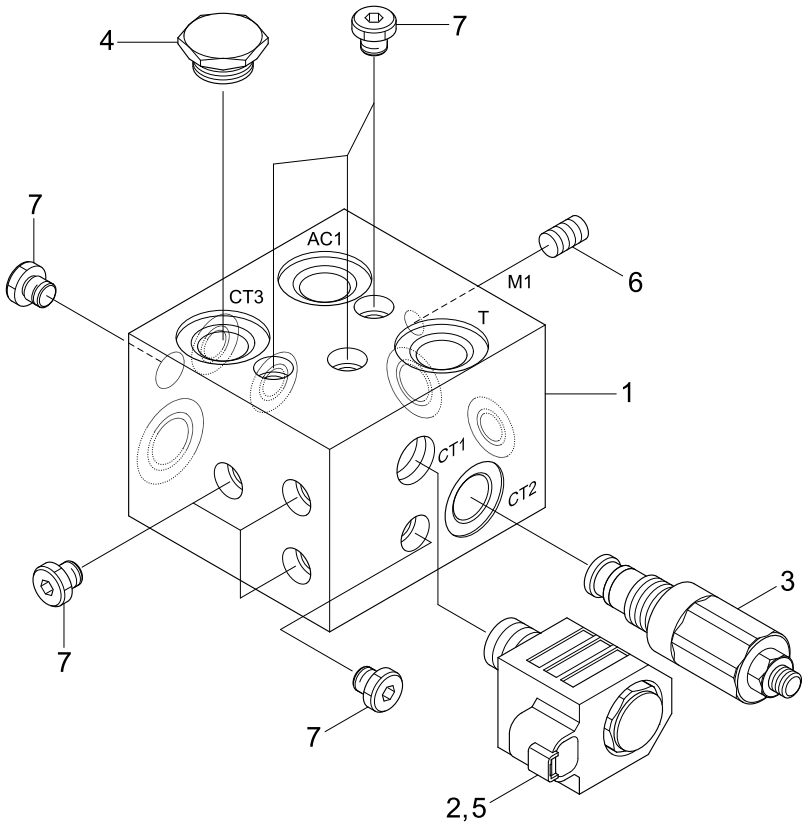

Item	Part_No	IS	Ord	T	Description	Qty	Serial_No	ITC	Remark
*	31N4-30120				TRAVEL CONTROL VALVE	1	#0560 -	D	SEE 4320
1	2-A11524-06-0				.BODY	1			
2	TF-S3A-00				.VALVE-SOLENOID	1			RAM LOCK
3	XKBL-00011				.VALVE-POD	1			
4	FD-DCP-0-B				.VALVE-CHECK	1			
5	XKBL-00004				.COIL	1			
6	XKBL-00018				.ORIFICE	1			PARKING
7	PF1/8				.PLUG	1			TRAVEL SPEED

BRAKE SUPPLY VALVE

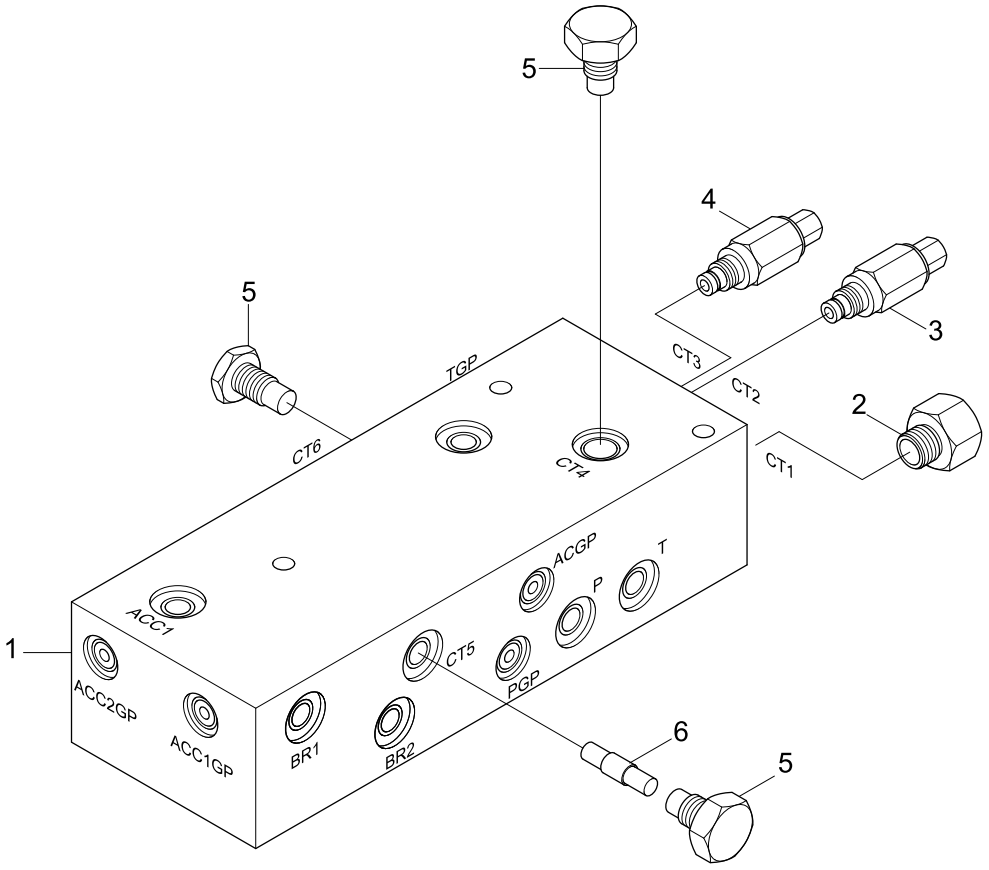

Item	Part_No	IS	Ord	T	Description	Qty	Serial_No	ITC	Remark
*	31N4-30050				BRAKE SUPPLY VALVE	1	- #0452		
	31EA-30150				BRAKE SUPPLY VALVE	1	#0453 -	D	
1	XKBL-00020				.BODY	1	- #0452		
	XKBL-00043				.BODY	1	#0453 -	D	
2	XKBL-00021				.PRIORITY VALVE	1	- #0452		
	XKBL-00044				.PRIORITY VALV	1	#0453 -	D	
3	XKBL-00022				.VALVE-UNLOAD	1			
4	XKBL-00023				.VALVE-RELIEF	1			
5	XKBL-00013				.VALVE-CHECK	3			
6	XKBL-00024				.BAR	1			

BRAKE VALVE(-#0572)

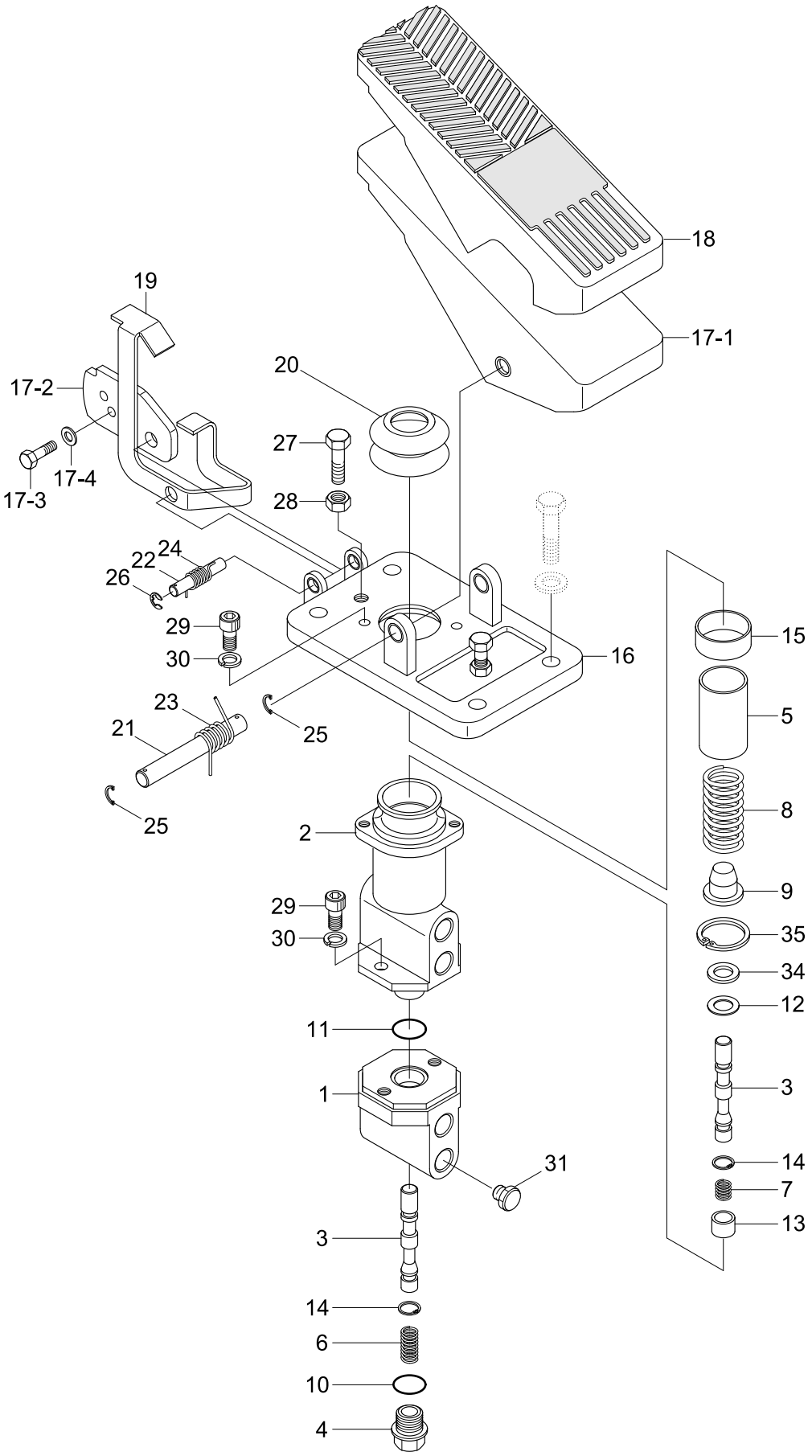

Item	Part_No	IS	Ord	T	Description	Qty	Serial_No	ITC	Remark
*	31N4-30110				BRAKE VALVE ASSY	1			
1	XKAK-00001				.BODY-LOWER	1			
2	XKAK-00002				.BODY-UPPER	1			
3	XKAK-00021				.SPOOL	2			
4	XKAK-00004				.PLUG	1			
5	XKAK-00005				.HOLDER	1			
6	XKAK-00006				.SPRING-LOWER	1			
7	XKAK-00007				.SPRING-UPPER	1			
8	XKAK-00022				.SPRING-MAIN	1			
9	XKAK-00023				.RETAINER-SPRING	1			
10	S631-011004				.O-RING	1			
11	XKAK-00035				.O-RING	1			
12	XKAK-00034				.SEAL-OIL	1			
13	XKAK-00010				.GUIDE	1			
14	S602-008004				.RING-RETAINER	2			
15	S731-025030				.BUSHING-DU	1			
16	XKAK-00024				.PLATE-PEDAL	1			
17	XKAK-00012				.PEDAL ASSY	1			
17-1	XKAK-00013				..PEDAL	1			
17-2	XKAK-00014				..PLATE-LOCK	1			
17-3	S017-080202				..BOLT-HEX	1			
17-4	S403-080002				..WASHER-PLAIN	1			
18	XKAK-00015				.COVER-PEDAL	1			
19	XKAK-00025				.LATCH	1			
20	XKAK-00016				.BELLOWS	1			

Item	Part_No	IS	Ord	T	Description	Qty	Serial_No	ITC	Remark
21	XKAK-00017				.PIN 1-LOCK	1			
22	XKAK-00026				.PIN 2-LOCK	1			
23	XKAK-00018				.SPRING 1	1			
24	XKAK-00027				.SPRING 2	1			
25	S601-012004				.RING-RETAINING	2			
26	P560-050002				.E-RING	2			
27	S017-080302				.BOLT-HEX	2			
28	S207-081002				.NUT-HEX	2			
29	S107-080252				.BOLT-SOCKET	2			
30	S411-080002				.WASHER-SPRING	4			
N31	@				.PLUG	7			NOT
N34	@				.WASHER-PLATE	1			NOT
35	S602-026004				.RING-RETAINING	1			
N	@					AR			NOT

BRAKE VALVE(#0573-)

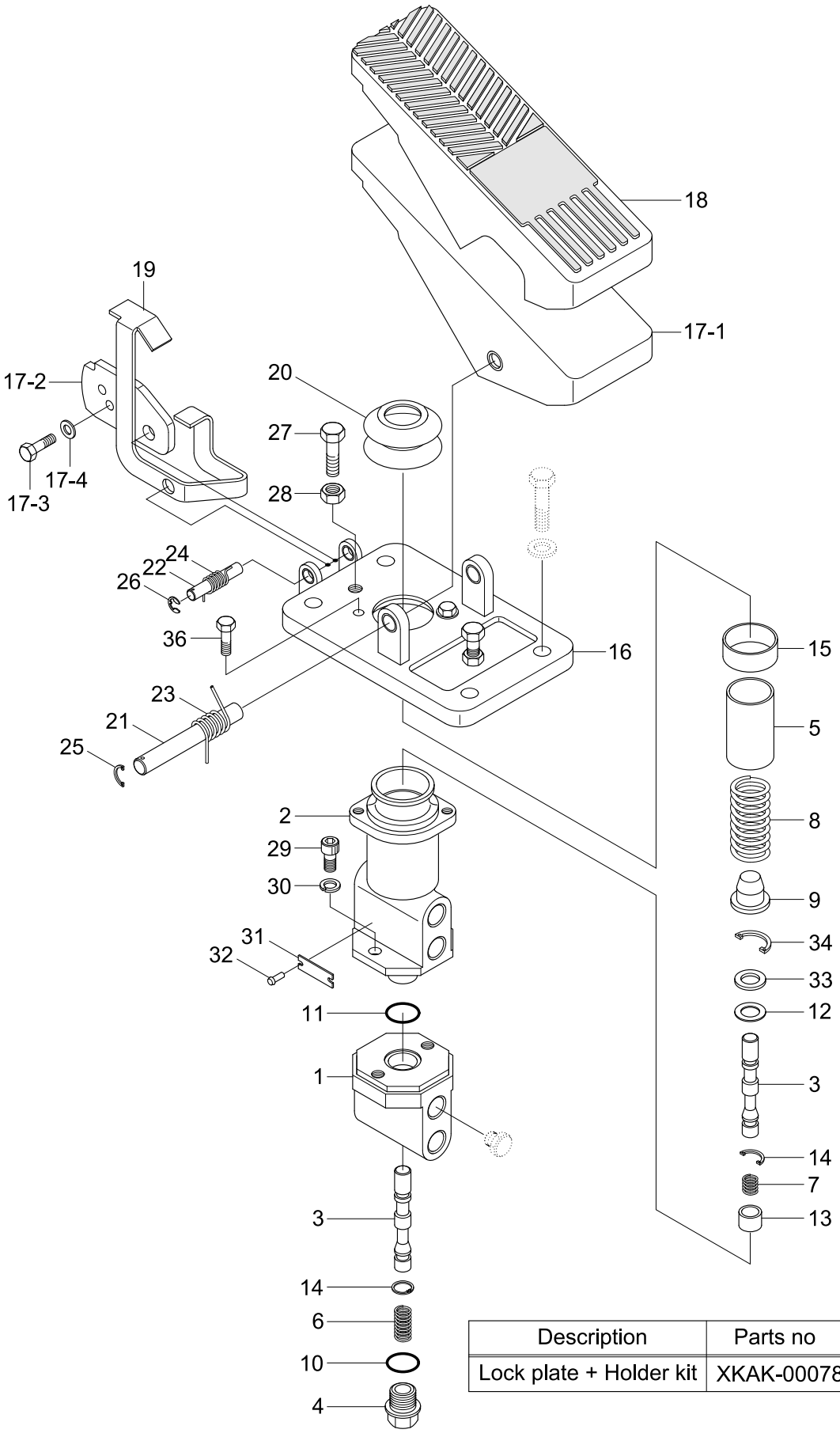

Description	Parts no	Included item
Lock plate + Holder kit	XKAK-00078	5, 17-2

Item	Part_No	IS	Ord	T	Description	Qty	Serial_No	ITC	Remark
*	31N3-30110				BRAKE VALVE ASSY	1	#0573 -	-	
1	XKAK-00001				.BODY-LOWER	1			
2	XKAK-00002				.BODY-UPPER	1			
3	XKAK-00021				.SPOOL	2			
4	XKAK-00004				.PLUG	1			
K5	XKAK-00053				.HOLDER	1			
6	XKAK-00006				.SPRING-LOWER	1			
7	XKAK-00007				.SPRING-UPPER	1			
8	XKAK-00081				.SPRING-MAIN	1			
9	XKAK-00080				.RETAINER-SPRING	1			
N10	@				.O-RING	1			NOT
N11	@				.O-RING	1			NOT
N12	@				.SEAL-OIL	1			NOT
13	XKAK-00010				.GUIDE	1			
14	XKAK-00059				.RING-SNAP	2			
15	@				.BUSHING-DU	1			NOT
16	XKAK-00079				.PLATE-PEDAL	1			
17	XKAK-00012				.PEDAL ASSY	1			
17-1	XKAK-00013				..PEDAL	1			
K17-2	XKAK-00014				..PLATE-LOCK	1			
17-3	S017-080206				..BOLT-HEX	1			
N17-4	@				..WASHER-PLATE	1			NOT
18	XKAK-00015				.COVER-PEDAL	1			
19	XKAK-00025				.LATCH	1			
20	XKAK-00048				.COVER-RUBBER	1			

Item	Part_No	IS	Ord	T	Description	Qty	Serial_No	ITC	Remark
21	XKAK-00017				.PIN 1-LOCK	1			
22	XKAK-00026				.PIN 2-LOCK	1			
23	XKAK-00018				.SPRING 1	1			
24	XKAK-00082				.SPRING 2	1			
N25	@				.RING-RETAINING	1			NOT
26	@				.E-RING	1			NOT
27	S017-080306				.BOLT-HEX	2			
28	S205-08100B				.NUT-HEX	2			
29	S107-080256				.BOLT-SOCKET	2			
30	S411-080006				.WASHER-SPRING	4			
31	XKAK-00051				.NAME PLATE	7			
N32	@				.SCREW-DRIVE	2			NOT
N33	@				.WASHER-PLATE	1			NOT
N34	@				.RING-RETAINING	1			NOT
N	@				NOT INDIVIDUALLY SUPPLIED	AR			NOT

SINGLE PEDAL(DOUBLE ACTING)

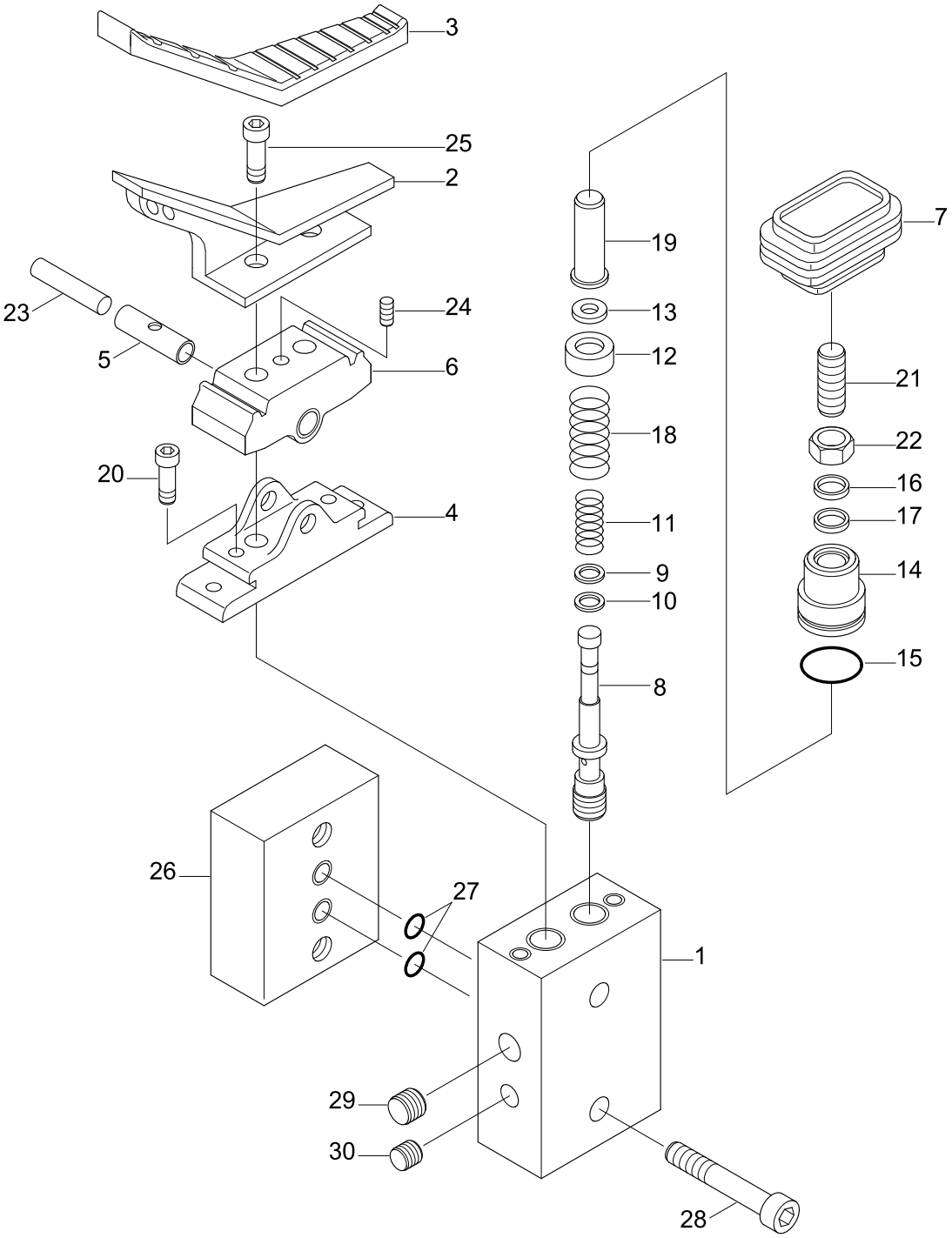

Item	Part_No	IS	Ord	T	Description	Qty	Serial_No	ITC	Remark
*	34E7-04720				PEDAL-SINGLE	1	#0001 -	-	
1	XKAY-00596				.CASE	1			
2	XKAY-00597				.PEDAL	1			
3	XKAY-00598				.COVER-PEDAL	1			
4	XKAY-00554				.COVER	1			
5	XKAY-00010				.BUSHING	2			
6	XKAY-00011				.CAM	1			
7	XKAY-00005				.BELLOWS	1			
8	XKAY-00555				.SPOOL	2			
9	XKAY-00556				.SHIM(1.0T)	2			
10	XKAY-00029				.SEAT-SPRING	2			
11	XKAY-00557				.SPRING	2			
12	XKAY-00558				.SEAT-SPRING	2			
13	XKAY-00058				.STOPPER	2			
14	XKAY-00559				.PLUG	2			
15	XKAY-00438				.O-RING	2			
16	XKAY-00097				.SEAL-DUST	2			
17	XKAY-00055				.SEAL-ROD	2			
18	J98H2001				.SPRING	2			
19	XKAY-00430				.PUSH ROD	2			
20	XKAY-00431				.BOLT-SOCKET	2			
21	XKAY-00007				.SCREW-SET	2			
22	XKAY-00006				.NUT-HEX	2			
23	XKAY-00009				.SHAFT-CAM	1			
24	XKAY-00560				.SCREW-SET	1			

Item	Part_No	IS	Ord	T	Description	Qty	Serial_No	ITC	Remark
25	XKAY-00434				.BOLT-SOCKET	2			
26	XKAY-00601				.BLOCK	1			
27	XKAY-00323				.O-RING	2			
28	XKAY-00602				.BOLT-SOCKET	2			
29	XKAY-00032				.PLUG	1			
30	XKAY-00065				.PLUG	1			

QUICK CLAMP ASSY

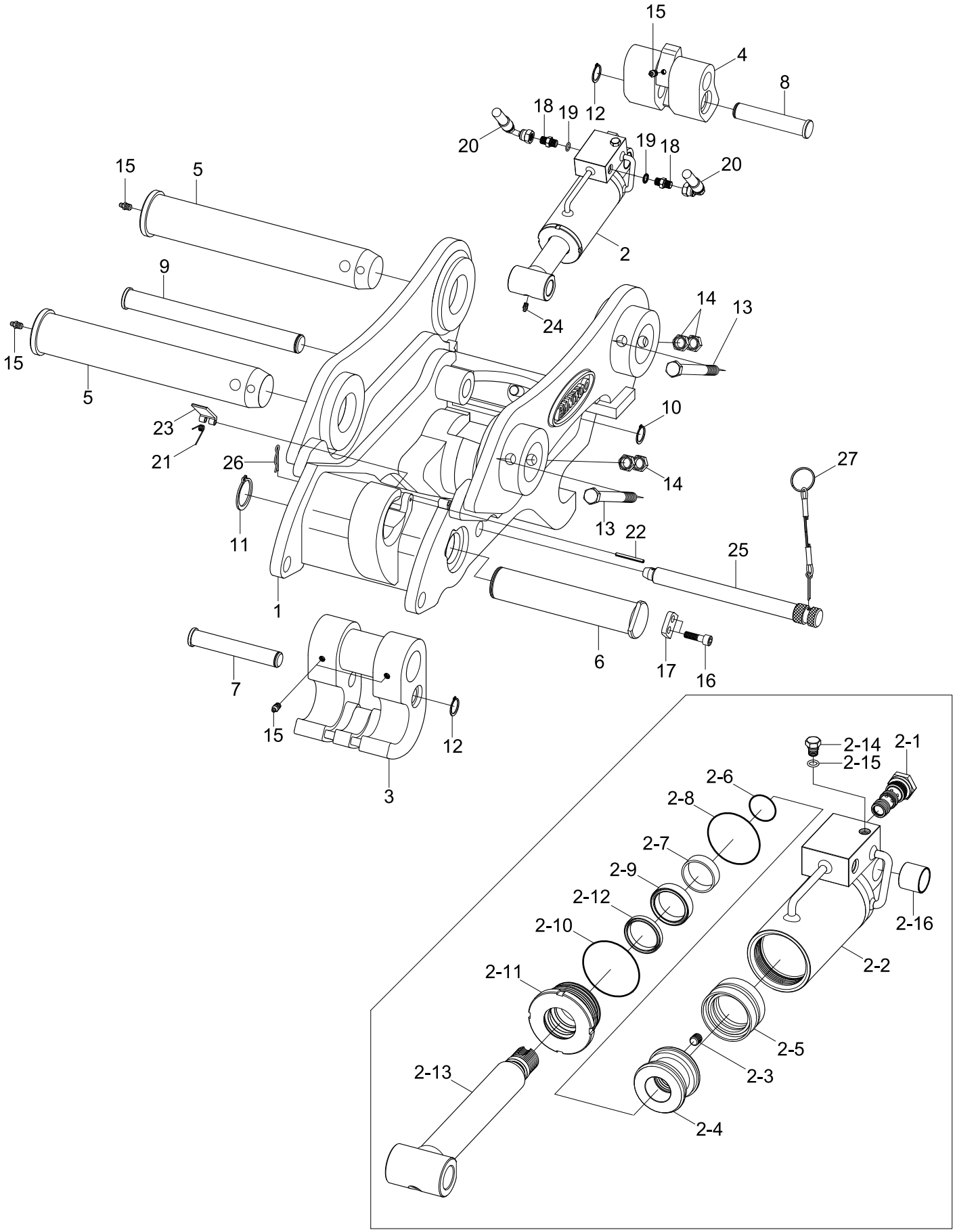

Item	Part_No	IS	Ord	T	Description	Qty	Serial_No	ITC	Remark
*	31N4-95710				QUICK CLAMP ASSY	1	- #0374		HOOK TYPE
	31N4-95711				QUICK CLAMP ASSY	1	#0375 -	B	
1	XKBP-00001				.BODY	1			
2	XKBP-00002				.CYLINDER ASSY	1			
2-1	XKBP-00028				..VALVE-CHECK	1			
2-2	XKBP-00029				..CYLINDER	1			
2-3	XKBP-00030				..SCREW-SET	1			
2-4	XKBP-00031				..PISTON	1			
2-5	XKBP-00032				..SEAL-PISTON	1			
2-6	XKBP-00033				..O-RING	1			
2-7	XKBP-00034				..BUSH-DU	1			
2-8	XKBP-00035				..O-RING	1			
2-9	XKBP-00036				..SEAL-ROD	1			
2-10	XKBP-00037				..O-RING	1			
2-11	XKBP-00038				..COVER	1			
2-12	XKBP-00039				..SEAL-DUST	1			
2-13	XKBP-00040				..ROD	1			
2-14	XKBP-00041				..PLUG	1			
2-15	XKBP-00042				..O-RING	1			
2-16	XKBP-00043				..BUSH-DU	1			
3	XKBP-00003				.HOOK	1			
4	XKBP-00004				.LOCK	1			
5	XKBP-00005				.PIN-BRACKET	2			
6	XKBP-00006				.PIN-HOOK	1			
7	XKBP-00007				.PIN-JOINT	1			

Item	Part_No	IS	Ord	T	Description	Qty	Serial_No	ITC	Remark
8	XKBP-00008				.PIN-JOINT	1			
9	XKBP-00009				.PIN-LOCK	1			
10	XKBP-00010				.RING-SNAP	1			
11	XKBP-00011				.RING-SNAP	1			
12	XKBP-00012				.RING-SNAP	2			
13	XKBP-00013				.BOLT-HEX	2			
14	XKBP-00014				.NUT-HEX	4			
15	XKBP-00015				.NIPPLE-GREASE	5			
16	XKBP-00016				.BOLT-SOCKET	2			
17	XKBP-00017				.PLATE-COVER	1			
18	XKBP-00018				.ELBOW-90	2			
19	XKBP-00019				.O-RING	2			
20	XKBP-00020				.HOSE ASSY	2			
21	XKBP-00021				.SPRING	1			
22	XKBP-00022				.PIN-SPRING	1			
23	XKBP-00023				.STOPPER	1			
24	XKBP-00024				.NIPPLE-GREASE	1			
25	XKBP-00025				.PIN-STOPPER	1	- #0374		
	XKBP-00104				.PIN-STOPPER	1	#0375 -	B	
26	XKBP-00026				.PIN-SNAP	1			
27	XKBP-00027				.WIRE ASSY	1	- #0374		
	XKBP-00106				.WIRE ASSY	1	#0375 -	B	

QUICK CLAMP ASSY(#0345-)

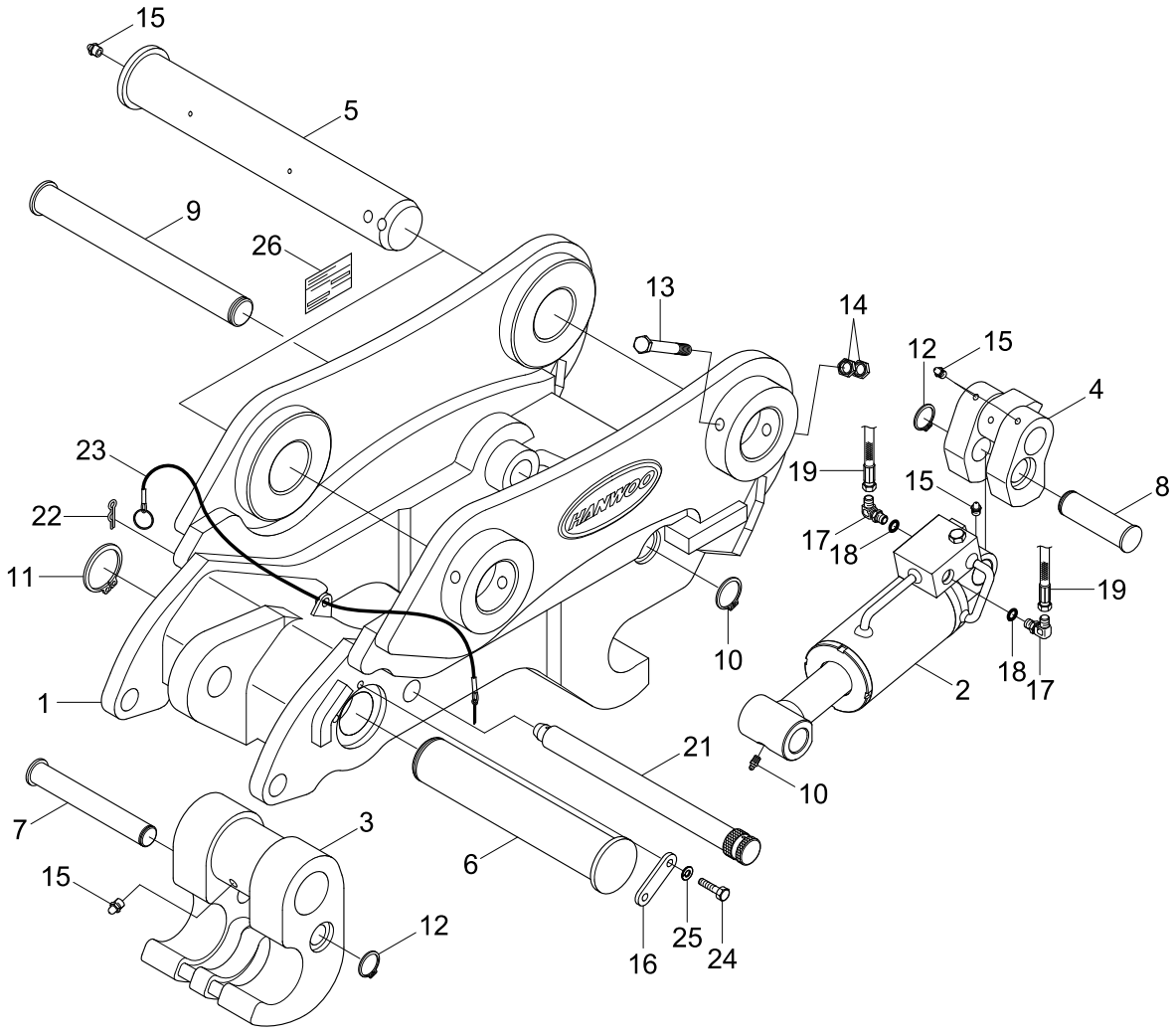

Item	Part_No	IS	Ord	T	Description	Qty	Serial_No	ITC	Remark
*	31N4-95720				QUICK CLAMP ASSY	1	#0345 -	-	CLOSED TYPE
1	XKBP-00103				.BODY ASSY	1			
2	XKBP-00094				.CYLINDER ASSY	1			
3	XKBP-00003				.HOOK	1			
4	XKBP-00095				.LOCK ASY	1			
5	XKBP-00005				.PIN-BRACKET	2			
6	XKBP-00096				.PIN-HOOK	1			
7	XKBP-00007				.PIN-JOINT	1			
8	XKBP-00008				.PIN-JOINT	1			
9	XKBP-00009				.PIN-LOCK	1			
10	XKBP-00010				.RING-SNAP	1			
11	XKBP-00011				.RING-SNAP	1			
12	XKBP-00012				.RING-SNAP	2			
13	XKBP-00097				.BOLT-HEX	2			
14	XKBP-00014				.NUT-HEX	4			
15	XKBP-00015				.NIPPLE-GREASE	6			
16	XKBP-00098				.PLATE-COVER	1			
17	XKBP-00018				.ELBOW-90	2			
18	XKBP-00019				.O-RING	2			
19	XKBP-00020				.HOSE ASSY	2			
20	XKBP-00024				.NIPPLE-GREASE	1			
21	XKBP-00104				.PIN-STOPPER	1			
22	XKBP-00105				.PIN-SNAP	1			
23	XKBP-00106				.WIRE ASSY	1			
24	XKBP-00100				.BOLT-HEX	2			

Item	Part_No	IS	Ord	T	Description	Qty	Serial_No	ITC	Remark
25	XKBP-00101				.WASHER-SPRING	2			
26	XKBP-00107				.NAME PLATE	1			

QUICK CLAMP ASSY 3(#0329-)

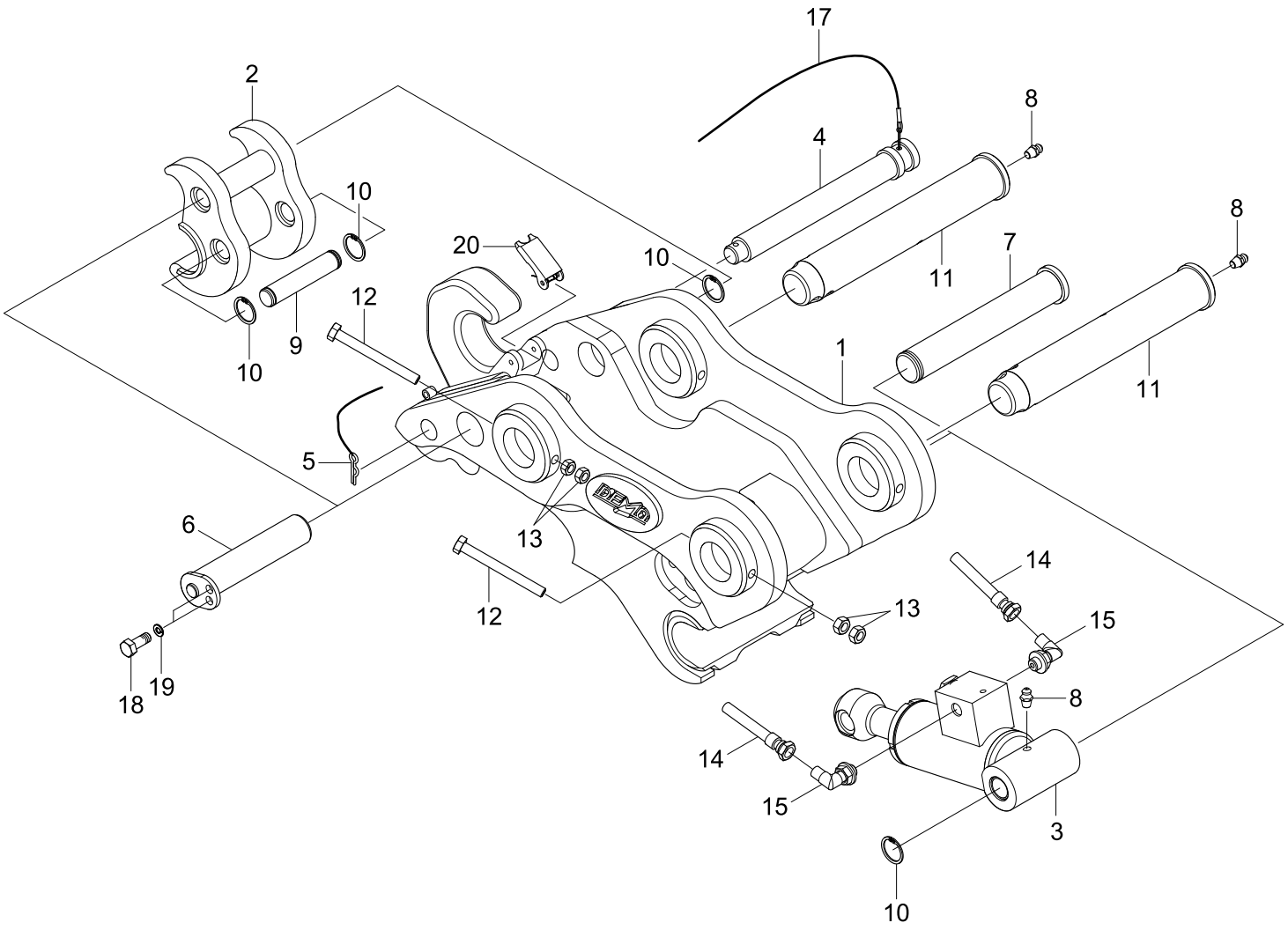

Item	Part_No	IS	Ord	T	Description	Qty	Serial_No	ITC	Remark
*	31N4-95810				QUICK CLAMP ASSY-HOOK		#0429 -	-	
1	XKBN-00069				.BODY-HOOK TYPE	1			
2	XKBN-00070				.HITCH	1			
3	XKBN-00071				.CYLINDER ASSY	1			
4	XKBN-00072				.PIN-SAFETY	1			
5	XKBN-00105				.PIN-SNAP	1			
6	XKBN-00074				.PIN-HITCH	1			
7	XKBN-00075				.PIN-FRAME	2			
8	XKBN-00009				.NIPPLE-GREASE	3			
9	XKBN-00076				.PIN-CYLINDER	1			
10	XKBN-00077				.RING-SNAP	4			
11	XKBN-00078				.PIN-BRACKET	2			
12	XKBN-00199				.BOLT-HEX	2			
13	XKBN-00196				.NUT-HEX	4			
14	XKBN-00081				.HOSE-PROTECTOR	2			
15	XKBN-00016				.ELBOW-90	2			
17	XKBN-00083				.WIRE ASSY	1			
18	XKBN-00084				.BOLT-HEX	2			
19	XKBN-00085				.WASHER-SPRING	2			
20	XKBN-00086				.LATCH WITH SPRING	1			

Item	Part_No	IS	Ord	T	Description	Qty	Serial_No	ITC	Remark
*	31N4-95820				QUICK CLAMP ASSY-CLOSE		#0429 -	-	
1	XKBN-00187				.BODY-CLOSE TYPE	1			
2	XKBN-00070				.HITCH	1			
3	XKBN-00071				.CYLINDER ASSY	1			
4	XKBN-00072				.PIN-SAFETY	1			
5	XKBN-00105				.PIN-SNAP	1			
6	XKBN-00074				.PIN-HITCH	1			
7	XKBN-00075				.PIN-FRAME	2			
8	XKBN-00009				.NIPPLE-GREASE	3			
9	XKBN-00076				.PIN-CYLINDER	1			
10	XKBN-00077				.RING-SNAP	4			
11	XKBN-00078				.PIN-BRACKET	2			
12	XKBN-00199				.BOLT-HEX	2			
13	XKBN-00196				.NUT-HEX	4			
14	XKBN-00081				.HOSE-PROTECTOR	2			
15	P020-110001				.ELBOW-90	2			
17	XKBN-00083				.WIRE ASSY	1			
18	XKBN-00084				.BOLT-HEX	2			
19	XKBN-00085				.WASHER-SPRING	2			

QUICK CLAMP CYLINDER(#0429-)

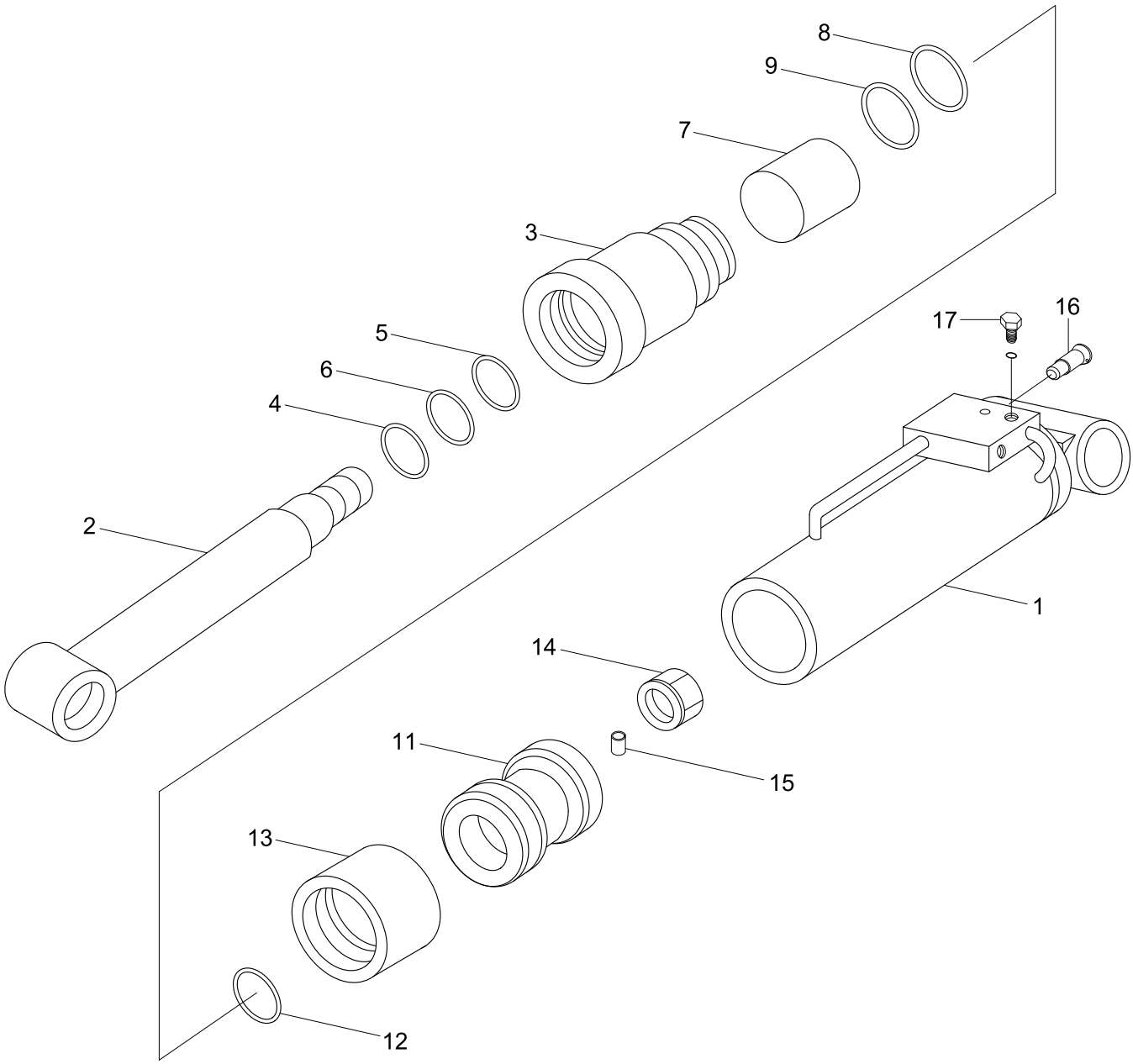

Item	Part_No	IS	Ord	T	Description	Qty	Serial_No	ITC	Remark
*	@				CYLINDER-QUICK CALMP	1	#0439 -	-	NOT
1	XKBN-00117				.TUBE	1			
2	XKBN-00118				.ROD	1			
3	XKBN-00119				.COVER-ROD	1			
4	XKBN-00120				.WIPER-DUST	1			
5	XKBN-00121				.U-PACKING	1			
6	XKBN-00122				.RING-BACK UP	1			
7	XKBN-00123				.BUSH-DU	1			
8	XKBN-00124				.O-RING	1			
9	XKBN-00125				.RING-BACK UP	1			
11	XKBN-00126				.PISTON	1			
12	XKBN-00127				.O-RING	1			
13	XKBN-00128				.SEAL-COMPACT	1			
14	XKBN-00129				.NUT-TEFRON	1			
15	XKBN-00130				.PIN-SPRING	1			
16	XKBN-00131				.CHECK VALVE-PILOT	1			
17	XKBN-00132				.BOLT-SOCKET PLUG	2			

POWER TRAIN MOUNTING

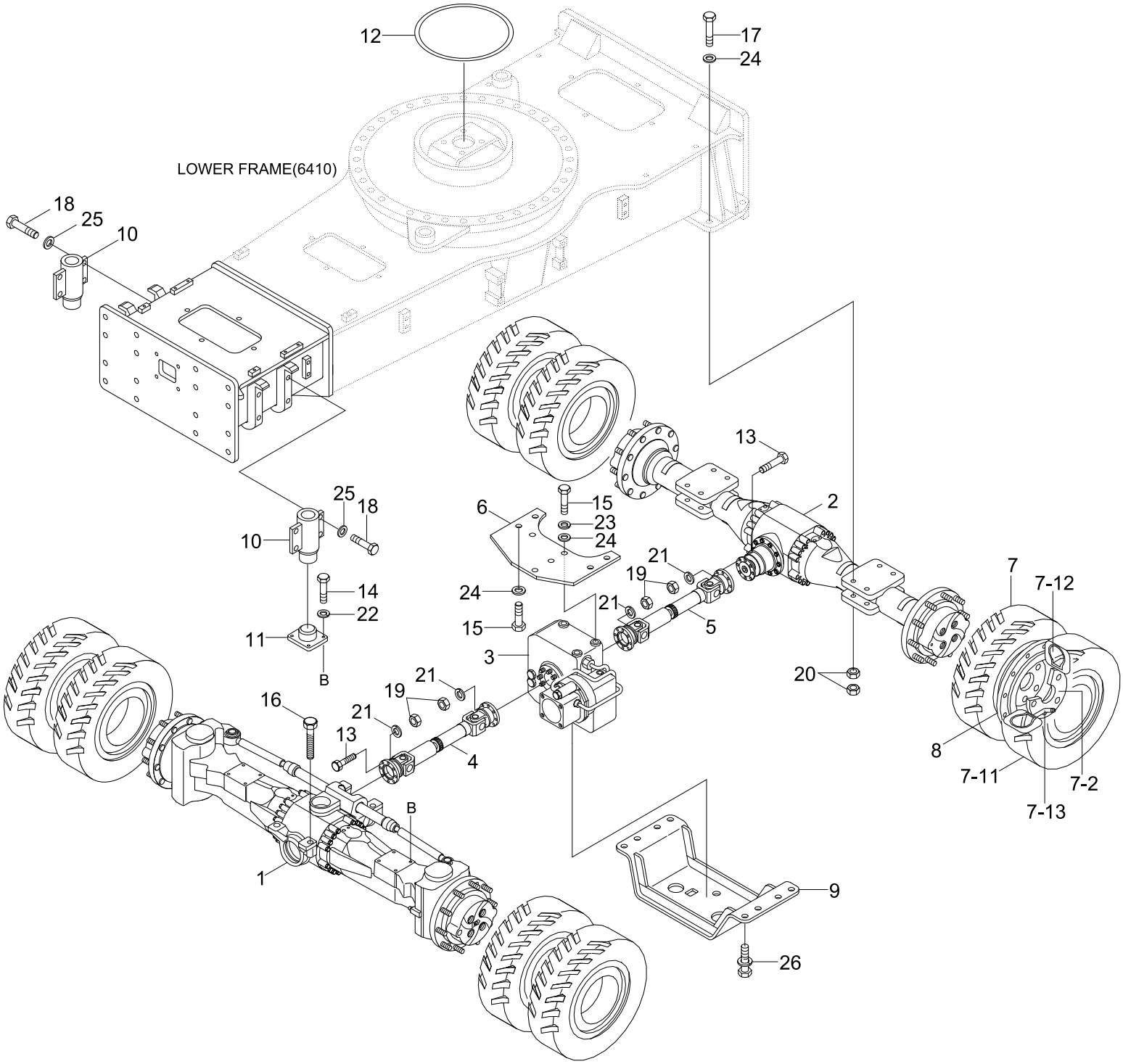

Item	Part_No	IS	Ord	T	Description	Qty	Serial_No	ITC	Remark
1	@				AXLE-FRONT	1			NOT
2	@				AXLE-REAR	1			NOT
3	@				TRANSMISSION	1			NOT
4	@				PROPELLER SHAFT	1			NOT
5	@				PROPELLER SHAFT	1			NOT
6	81EA-32060				BRACKET-TRANSMISSION	1	- #0619		
	81EA-32060BG				BRACKET-TRANSMISSION	1	#0620 -	D	
7	81EA-32070				TIRE & WHEEL ASSY	8	- #0619		
	81EA-32070BG				TIRE & WHEEL ASSY	8	#0620 - #0940	D	
	81EA-32071BG				TIRE & WHEEL ASSY	8	#0941 -	D	
7-1	81E3-20200				.TIRE ASSY(KUMHO)	1			KUMHO
	81E3-20200H				.TIRE ASSY(HANKOOK)	1			HANKOOK
7-11	81E3-2001				..TIRE(KUMHO)	1			KUMHO
	81E3-2001H				..TIRE(HANKOOK)	1	#0001 -	-	HANKOOK
7-12	81E3-2002				..TUBE(KUMHO)	1			
7-13	81E3-2003				..FLAP(KUMHO)	1			
7-2	81EA-32090				.WHEEL WA	1	- #0619		
	81EA-32090BG				.WHEEL WA	1	#0620 - #0940	D	
	81EA-32091BG				.WHEEL WA	1	#0941 -	D	
8	81E3-2005				RING-STONE RESISTER	4	- #0645		
	81E3-20051				RING-STONE REGISTER	4	#0646 - #0940	D	
	81E3-20052				RING-STONE REGISTER	4	#0941 -	D	
9	81EA-30111				PLATE-T/M GUARD	1	- #0619		
	81EA-30111BG				PLATE-T/M GUARD	1	#0620 -	D	
10	@				CYLINDER-OSCILLATING	2			NOT

Item	Part_No	IS	Ord	T	Description	Qty	Serial_No	ITC	Remark
11	81EA-32080				SUPPORT-OSCIL CYL	2	- #0065		
	81N4-40100				SUPPORT-OSCIL CYL	2	#0066 - #0178	D	
	81N4-40101				SUPPORT-OSCIL CYL	2	#0179 - #0619	D	
	81N4-40101BG				SUPPORT-OSCIL CYL	2	#0620 -	D	
12	81E6-30010				SEAL-GREASE	1			
13	81E3-30071				BOLT-HEX	16			
14	S017-120456				BOLT-HEX	8	- #0178		
	S017-120406				BOLT-HEX	8	#0179 -	D	
15	S017-20050D				BOLT-HEX	7			
16	S017-20135D				BOLT-HEX	4			
17	S017-20180D				BOLT-HEX	8			
18	S018-22075D				BOLT-HEX	8			
19	81E4-3007	10			NUT-HEX	32			
20	S205-201006				NUT-HEX	16			
21	S411-100006				WASHER-SPRING	32			
22	S411-120006				WASHER-SPRING	8			
23	S411-200006				WASHER-SPRING	3			
24	S441-200006				WASHER-HARDENED	15			
25	S441-220006				WASHER-HARDENED	8			
26	S037-123056				BOLT-W/WASHER	8			

PROPELLER SHAFT

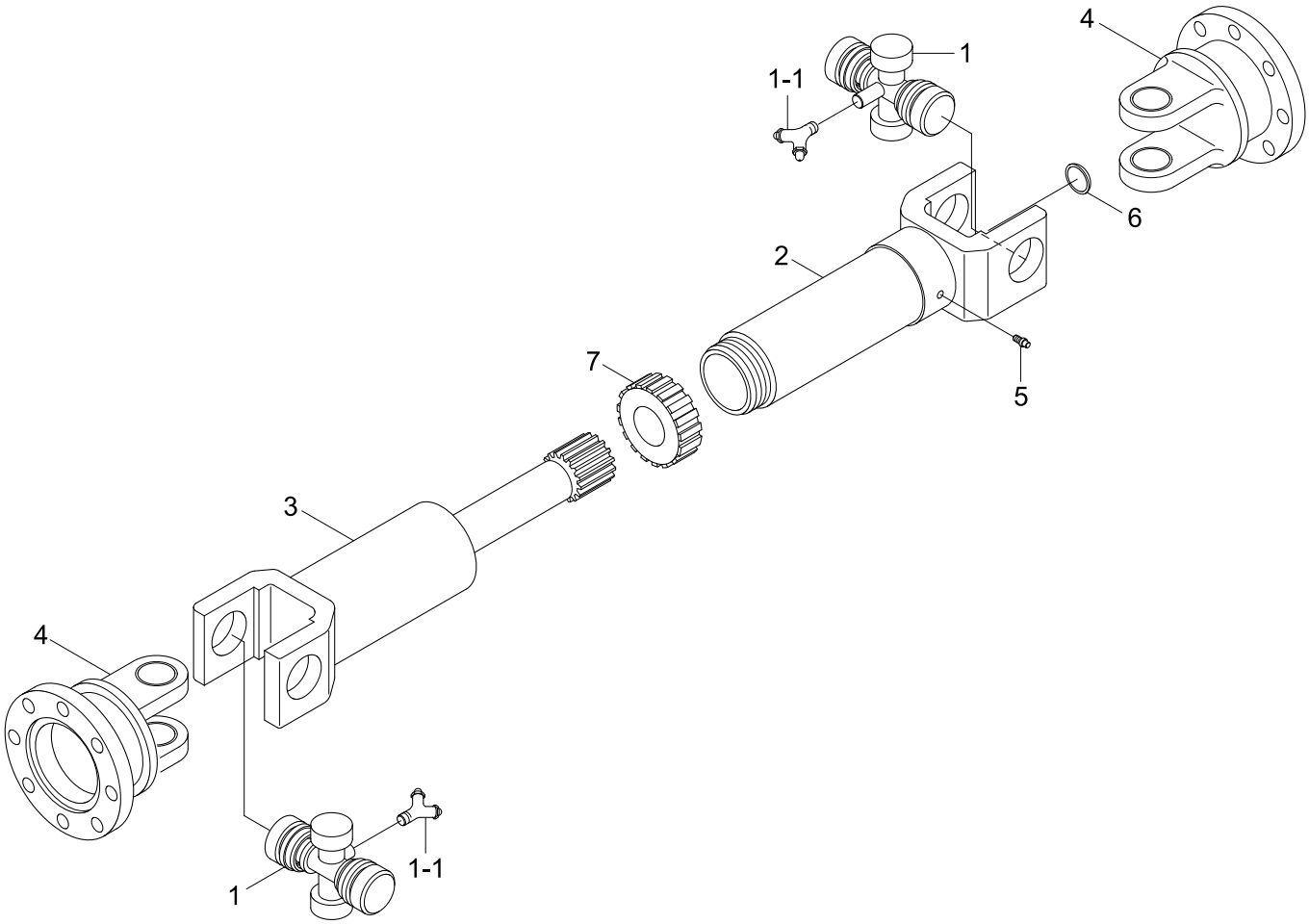

Item	Part_No	IS	Ord	T	Description	Qty	Serial_No	ITC	Remark
*	81EA-30052				PROPELLER SHAFT	1	- #0619		FRONT
	81EA-30052BG				PROPELLER SHAFT-FR	1	#0620 -	D	
	81EA-33050				PROPELLER SHAFT	1	- #0619		REAR
	81EA-33050BG				PROPELLER SHAFT-RR	1	#0620 -	D	
1	100-GUMZ8				.U/JOINT ASSY	2			
1-1	102-PT81Y				..NIPPLE-GREASE	2	#0001 -	-	
2	200-170				.OUTER-SLIDING	1			
3	40AF-13003L				.SHAFT-SLIP,FR	1			FRONT
	40AF-37/615L				.SHAFT-SLIP,RR	1			REAR
4	600-170				.YOKE-FLANGE	2			
5	810-PT81				.NIPPLE-GREASE	1			
6	910-52A				.PLUG-EXP	1			
7	800-415JS				.SEAL-JOINT	1			

OSCILLATING CYLINDER

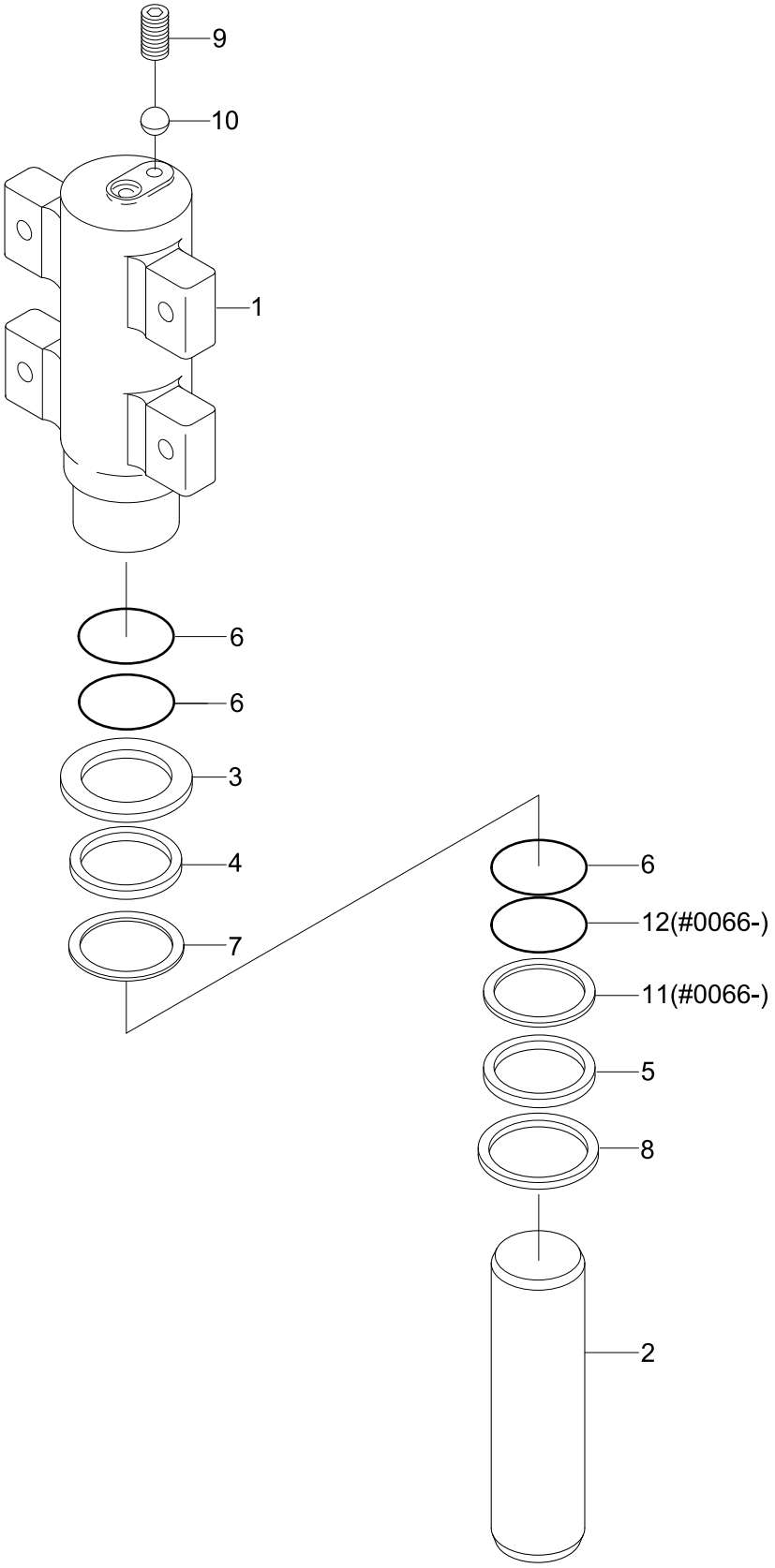

Descrption	Parts no	Included item
Oscillating cylinder seal kit (-#0034)	31E3-00211	3, 4, 5, 6, 7
Oscillating cylinder seal kit (#0035-0065)	31EM-00540	3, 4, 5, 6, 7
Oscillating cylinder seal kit (#0066-)	31EM-00545	3, 4, 5, 6, 7, 11, 12

Item	Part_No	IS	Ord	T	Description	Qty	Serial_No	ITC	Remark
*	31E3-00215				CYLINDER-OSCILLATING	1	- #0034		
	31EM-00550				CYLINDER-OSCILLATING	1	#0035 - #0065	D	
1	31E3-00225				.BODY-CYLINDER	1	- #0034		
	31EM-00560				.BODY-CYLINDER	1	#0035 - #0065	D	
2	31E3-0023				.ROD-CYLINDER	1	- #0034		
	31EM-00570				.ROD-CYLINDER	1	#0035 - #0065	D	
K3	Y240-090011				.RING-BUFFER	1	- #0034		
	Y240-110011				.RING-BUFFER	1	#0035 - #0065	D	
K4	Y200-090011				.SEAL-ROD	1	- #0034		
	Y200-110011				.SEAL-ROD	1	#0035 - #0065	D	
K5	Y110-090011				.WIPER-DUST	1	- #0034		
	Y110-110011				.WIPER-DUST	1	#0035 - #0065	D	
K6	Y320-090004				.RING-WEAR	3	- #0034		
	Y320-110004				.RING-WEAR	3	#0035 - #0065	D	
K7	Y180-090020				.RING-BACK UP	1	- #0034		
	Y180-110020				.RING-BACK UP	1	#0035 - #0065	D	
8	31E3-0024				.RETAINER RING	1	- #0034		
	Y190-126000				.RING-SNAP	1	#0035 - #0065	D	
9	31E3-0038	10			.SCREW-SET	1			
10	31E3-0039				.BALL-STEEL	1			
K	31E3-00211				SEAL KIT	1	- #0034		SEE ILLUST
	31EM-00540				SEAL KIT	1	#0035 - #0065	D	SEE ILLUST
*	31E3-00251				CYLINDER-OSCILLATING	1	#0066 - #0178	-	
	31E3-00252				CYLINDER-OSCILLATING	1	#0179 - #0227	D	
	31E3-00253				CYLINDER-OSCILLATING	1	#0228 - #0619	A	

Item	Part_No	IS	Ord	T	Description	Qty	Serial_No	ITC	Remark
*	31E3-00253BG				CYLINDER-OSCILLATING	1	#0620 -	D	
1	31E3-00261				.BODY-CYLINDER	1	#0066 - #0227	-	
	31E3-00262				.BODY-CYLINDER	1	#0228 -	B	
2	31E3-00271				.ROD-CYLINDER	1	#0066 - #0178	-	
	31E3-00272				.ROD-CYLINDER	1	#0179 -	D	
K3	Y240-110011				.RING-BUFFER	1	#0066 -	-	
K4	Y200-110011				.SEAL-ROD	1	#0066 -	-	
K5	Y110-110011				.WIPER-DUST	1	#0066 -	-	
K6	Y320-110004				.RING-WEAR	3	#0066 -	-	
K7	Y180-110020				.RING-BACK UP	1	#0066 -	-	
8	Y190-126000				.RING-SNAP	1	#0066 -	-	
9	31E3-0038				.SCREW-SET	1	#0066 -	-	
10	31E3-0039				.BALL-STEEL	1	#0066 -	-	
11	S641-110002				.RING-BACK UP	1	#0066 -	-	
12	S631-110001				.O-RING	1	#0066 -	-	
K	31EM-00545				SEAL KIT	1	#0066 -	-	SEE ILLUST

FRONT AXLE HOUSING(-#0559)

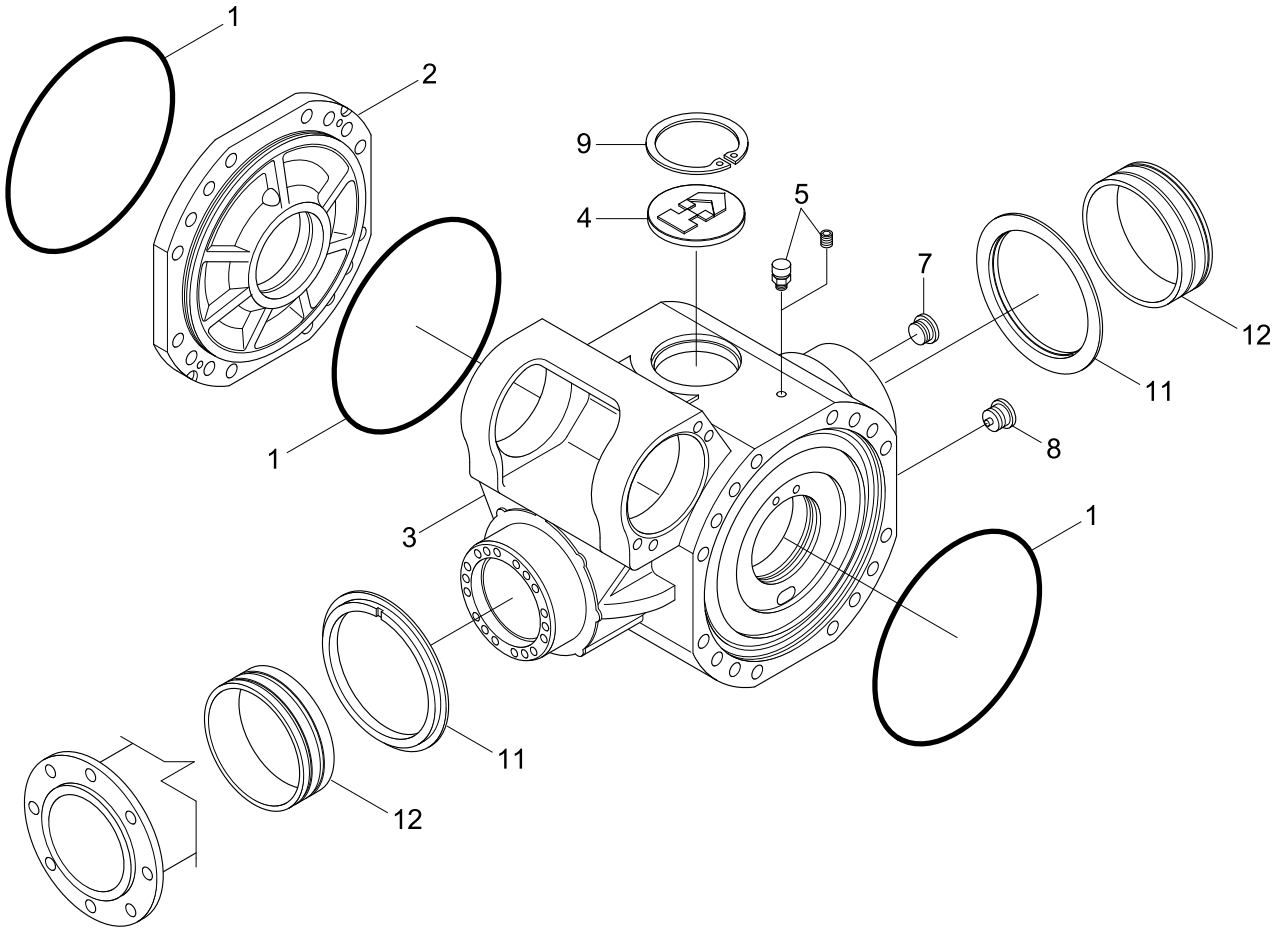

Item	Part_No	IS	Ord	T	Description	Qty	Serial_No	ITC	Remark
*	81N4-40011				AXLE-FRONT	1	- #0089		
	81N4-40012				AXLE-FRONT	1	#0090 -	D	
1	ZTAM-00001				.O-RING	3			
2	ZTAM-00002				.COVER-INTERMEDIATE	1			
3	ZTAM-00003				.HOUSING	1			
4	ZTAM-00004				.PLUG	1			
5	ZTAM-00005				.VENT	1			
7	ZTAM-00006				.PLUG	1			
8	ZTAM-00570				.PLUG-MAGNET	1	#0001 -	-	
9	ZTAM-00008				.CIRCLIP	1			
11	ZTAM-00594				.WASHER-RACEWAY	2	#0090 -	-	
12	ZTAM-00593				.BUSHING	2	#0090 -	-	

FRONT AXLE DIFFERENTIAL(-#0559)

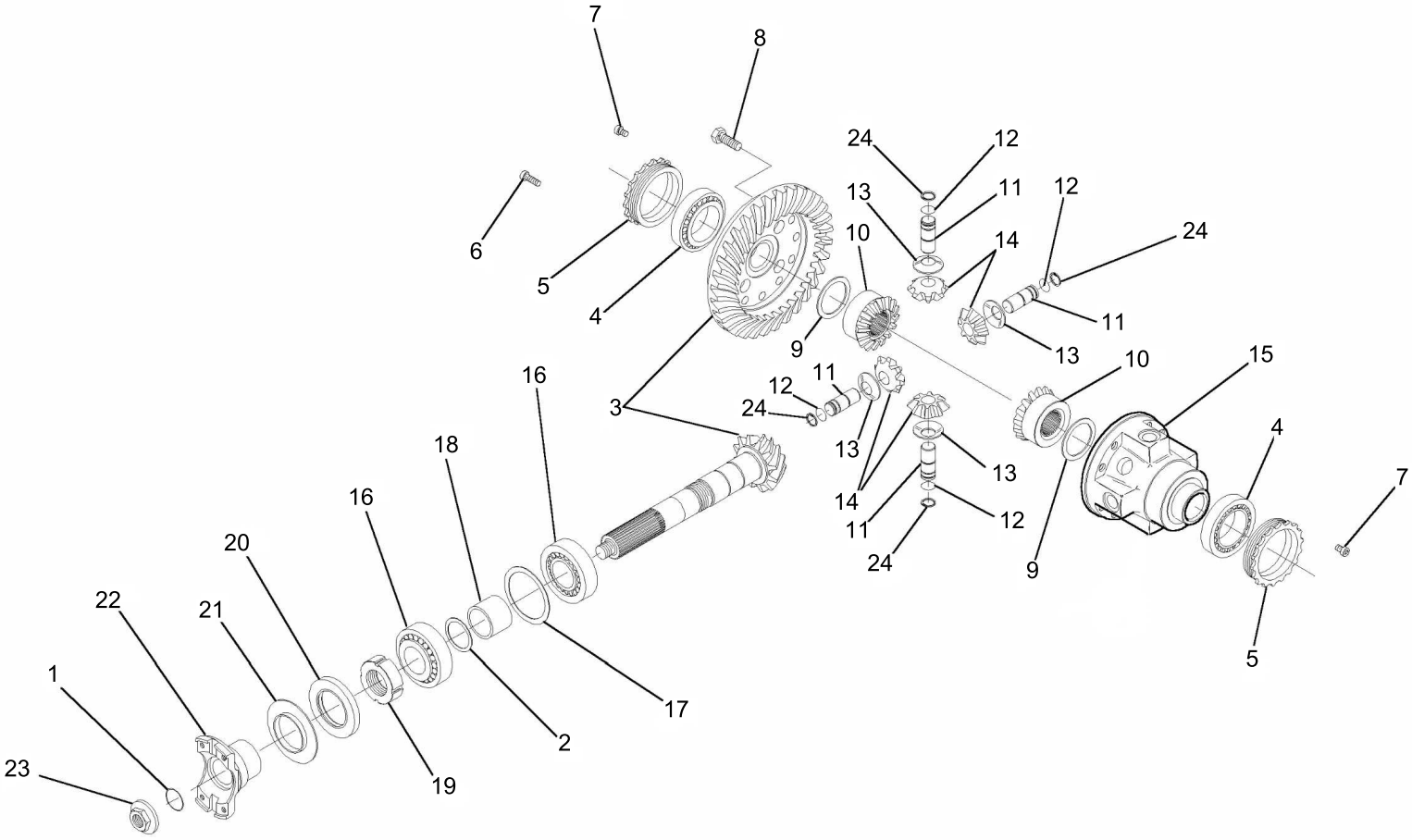

Part no.	Description	Included item no.
ZATM-00039	Differential kit	9,10,11,12,13,14,15,24

Item	Part_No	IS	Ord	T	Description	Qty	Serial_No	ITC	Remark
*	@				FRONT AXLE	1			NOT
1	ZTAM-00009				.O-RING	1			
2	ZTAM-00010				.SHIM(0.15T)	1			
	ZTAM-00011				.SHIM(0.20T)	1			
	ZTAM-00012				.SHIM(0.40T)	1			
	ZTAM-00013				.SHIM(0.50T)	1			
3	ZTAM-00014				.GEAR SET-BEVEL	1			
4	ZTAM-00015				.BEARING-TAPER ROLLER	2			
5	ZTAM-00016				.NUT-RING	2			
6	ZTAM-00017				.BOLT-CYLINDER	4			
7	ZTAM-00018				.BOLT-CYLINDER	2			
8	ZTAM-00019				.BOLT	12			
K9	ZTAM-00020				.WASHER-FRICTION	2			
K10	ZTAM-00021				.GEAR-DIFFERENTIAL SIDE	2			
K11	ZTAM-00022				.PIN	4			
K12	ZTAM-00023				.CIRCLIP	4			
K13	ZTAM-00024				.WASHER-FRICTION	4			
K14	ZTAM-00025				.PINION-DIFFERENTIAL	4			
K15	ZTAM-00026				.CARRIER-DIFFERENTIAL	1			
16	ZTAM-00027				.BEARING-TAPER ROLLER	2			
17	ZTAM-00028				.SHIM(0.20T)	1			
	ZTAM-00029				.SHIM(0.30T)	1			
	ZTAM-00030				.SHIM(0.15T)	1			
	ZTAM-00031				.SHIM(0.10T)	1			
18	ZTAM-00032				.SPACER	1			

Item	Part_No	IS	Ord	T	Description	Qty	Serial_No	ITC	Remark
19	ZTAM-00033				.NUT-RING	1			
20	ZTAM-00118				.SEAL	1			
21	ZTAM-00035				.PLATE-COVER	1	- #0089		
22	ZTAM-00036				.FLANGE	1	- #0089		
	ZTAM-00571				.FLANGE	1	#0090 -	B	
23	ZTAM-00037				.NUT	1			
24	ZTAM-00038				.CIRCLIP	4			
K	ZTAM-00039				DIFFERENTIAL KIT	1			

FRONT AXLE WHEEL HUB(-#0559)

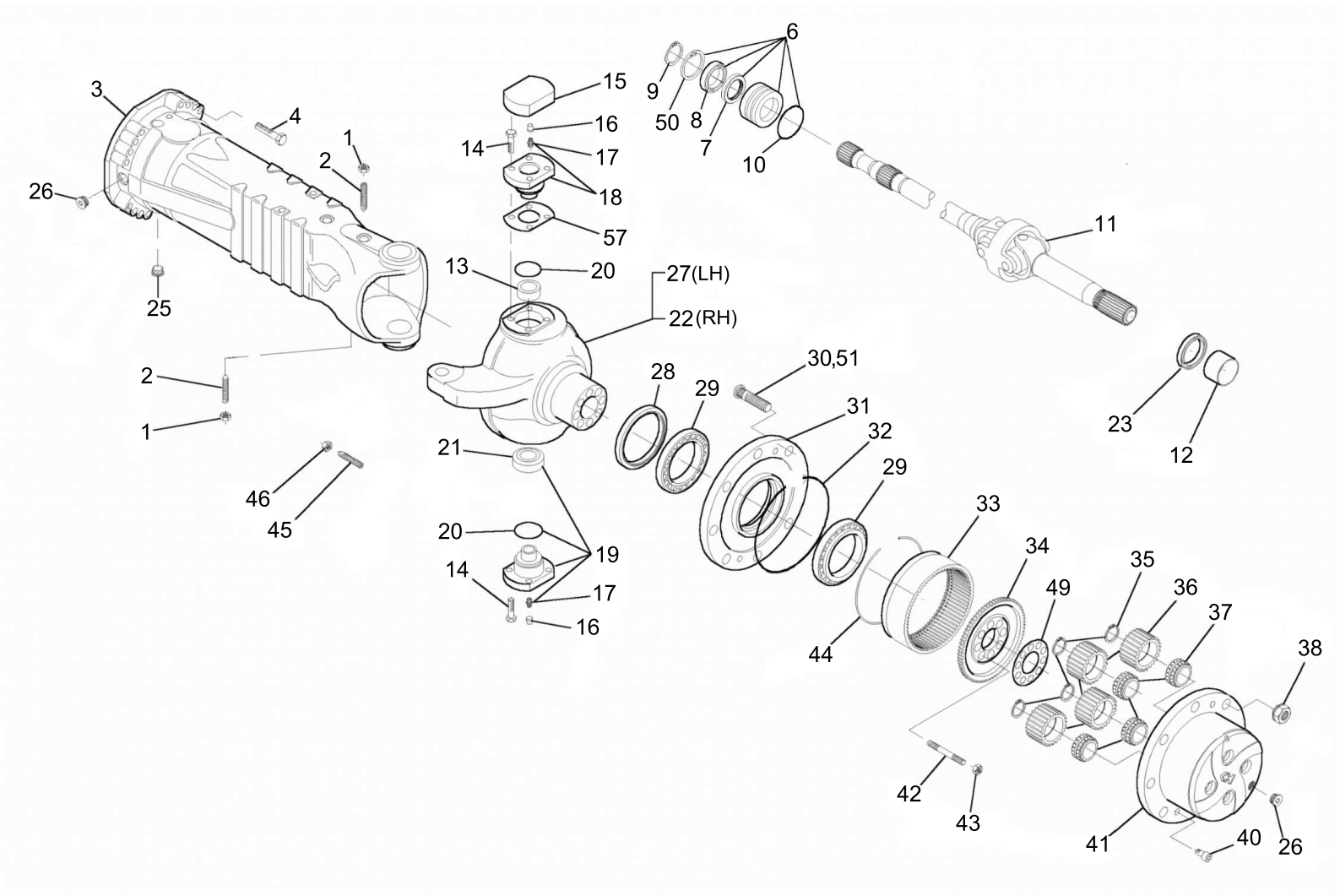

	Part no.	Description	Included item no.
-#0021	ZTAM-00087	Planet gear carrier kit	33,34,35,36,37,41,44
#0022-	ZTAM-00583	Planet gear carrier kit	33,34,35,36,37,41,44
	ZTAM-00088	Steering case kit-RH	12,22
	ZTAM-00089	Steering case kit-LH	12,27

Item	Part_No	IS	Ord	T	Description	Qty	Serial_No	ITC	Remark
*	@				FRONT AXLE	1			NOT
1	ZTAM-00040				.CASE-AXLE	2			
2	ZTAM-00041				.BOLT	2			
3	ZTAM-00043				.CASE-AXLE	2			
4	ZTAM-00044				.NUT	32			
6	ZTAM-00045				.BUSHING-REDUCTION	2			
7	ZTAM-00046				.SEAL	2			
8	ZTAM-00049				.BEARING-BALL	2			
9	ZTAM-00048				.CIRCLIP	2			
10	ZTAM-00050				.O-RING	2			
11	ZTAM-00509				.UNIVERSAL JOINT	2			
K12	@				.BUSHING-THRUST	2			NOT
13	ZTAM-00053				.BUSHING	2	- #0021		
	ZTAM-00575				.BUSHING	2	#0022 -	B	
14	ZTAM-00054				.BOLT	24			
15	ZTAM-00055				.COVER	2			
17	ZTAM-00056				.FITTING-GREASE	2			
18	ZTAM-00057				.PIN-PIVOT	2			
19	ZTAM-00058				.PIN-PIVOT	2			
20	ZTAM-00059				.SEAL	2			
21	ZTAM-00060				.BEARING	2			
KN22	@				.CASE-STEERING,RH	1	#0001 -	-	NOT
23	ZTAM-00062				.SEAL	2			
25	ZTAM-00570				.PLUG-MAGNET	2	#0001 -	-	
26	ZTAM-00006				.PLUG	4			

Item	Part_No	IS	Ord	T	Description	Qty	Serial_No	ITC	Remark
KN27	@				.CASE-STEERING,LH	1	#0001 -	-	NOT
28	ZTAM-00064				.SEAL	2			
29	ZTAM-00065				.BEARING	4			
30	ZTAM-00066				.STUD-WHEEL	16			
31	ZTAM-00067				.HUB-WHEEL	2			
32	ZTAM-00068				.O-RING	2			
K33	ZTAM-00069				.GEAR-RING	2			
K34	ZTAM-00070				.SUPPORT	2			
K35	ZTAM-00071				.CIRCLIP	8			
K36	ZTAM-00072				.GEAR-PLANET	8			
K37	ZTAM-00073				.BEARING	8			
38	ZTAM-00074				.NUT	20			
40	ZTAM-00075				.BOLT-COUNTERSUNK	4			
K41	ZTAM-00076				.CARRIER-PLANET GEAR	2	- #0021		
	ZTAM-00579				.CARRIER-PLANET GEAR	2	#0022 -	B	
42	ZTAM-00077				.STUD	16			
43	ZTAM-00078				.NUT	16			
K44	ZTAM-00079				.CIRCLIP	2			
45	ZTAM-00080				.BOLT	4			
46	ZTAM-00081				.NUT	2			
49	ZTAM-00082				.PLATE-LOCKING	2			
50	ZTAM-00008				.CIRCLIP	2			
51	ZTAM-00083				.STUD-WHEEL	2			
57	ZTAM-00580				.SHIM(0.15T)	2	#0001 -	-	
	ZTAM-00581				.SHIM(0.20T)	2	#0001 -	-	

Item	Part_No	IS	Ord	T	Description	Qty	Serial_No	ITC	Remark
57	ZTAM-00582				.SHIM(0.50T)	2	#0001 -	-	
K	ZTAM-00087				CARRIER KIT	2	- #0021		
	ZTAM-00583				CARRIER KIT	2	#0022 -	B	SEE ILLUST
	ZTAM-00088				STEERING CASE KIT-RH	1			
	ZTAM-00089				STEERING CASE KIT-LH	1			

FRONT AXLE BRAKE DISC(-#0559)

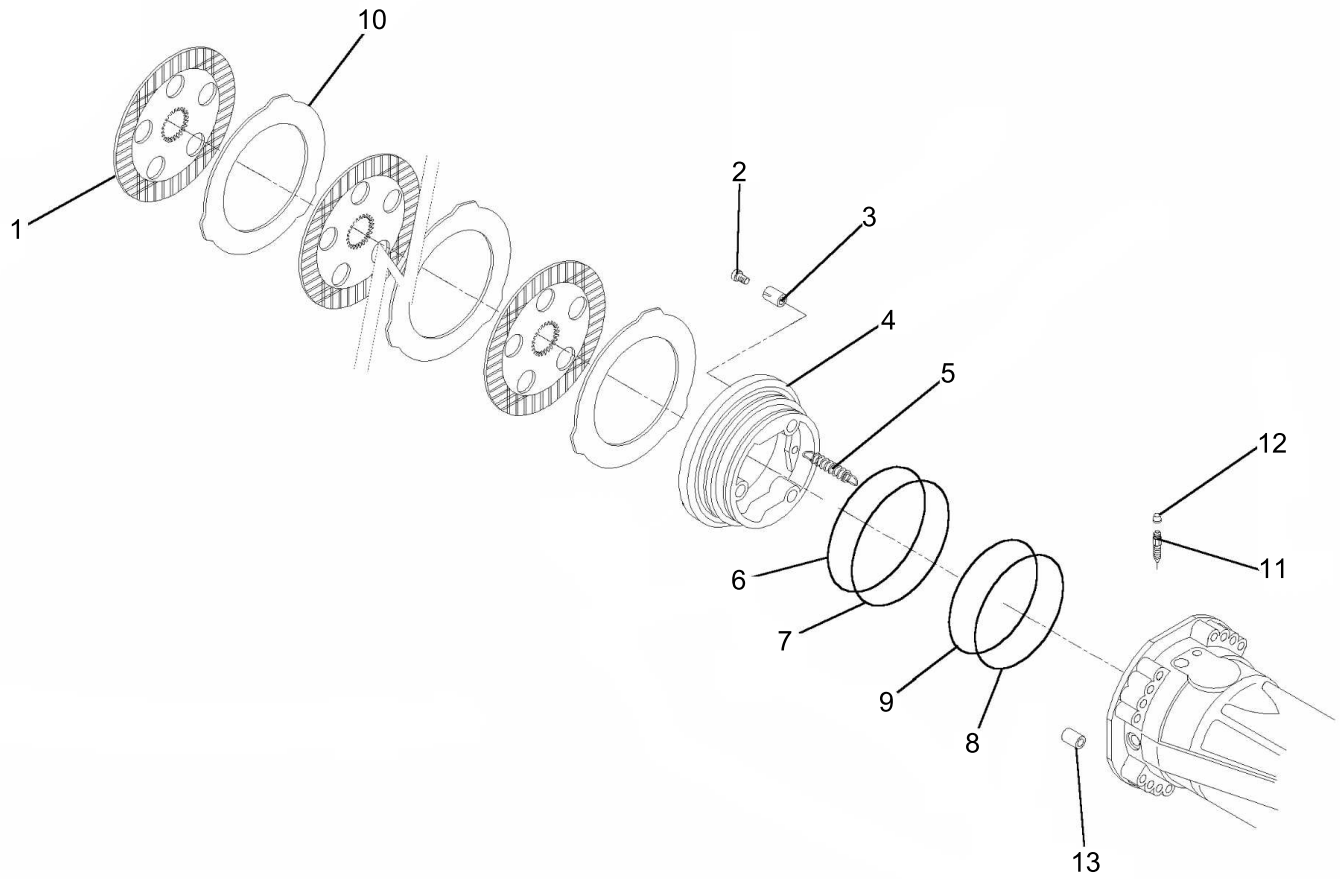

	Part no.	Description	Included item no.
-#0007	ZTAM-00103	Piston kit	4,5,6,7,8,9
#0008-	ZTAM-00591	Piston kit	4,5,6,7,8,9

Item	Part_No	IS	Ord	T	Description	Qty	Serial_No	ITC	Remark
*	@				FRONT AXLE	1			NOT
1	ZTAM-00090				.DISC-BRAKE	8			
2	ZTAM-00091				.BOLT-ADJUSTING	6			
3	ZTAM-00092				.SPRING	6			
K4	ZTAM-00093				.PISTON	2			
K5	ZTAM-00094				.SPRING	6			
K6	ZTAM-00095				.RING-BACK UP	2	- #0007		
	ZTAM-00586				.RING-BACK UP	2	#0008 -	D	
K7	ZTAM-00096				.O-RING	2	- #0007		
	ZTAM-00587				.O-RING	2	#0008 -	D	
K8	ZTAM-00097				.RING-BACK UP	2	- #0007		
	ZTAM-00588				.RING-BACK UP	2	#0008 -	D	
K9	ZTAM-00098				.O-RING	2	- #0007		
	ZTAM-00589				.O-RING	2	#0008 -	D	
10	ZTAM-00099				.INTER DISC-BRAKE	10			
11	ZTAM-00100				.BOLT-BLEEDING	2			
12	ZTAM-00101				.PLUG	2			
13	ZTAM-00102				.BOLT-PILOT	2			
K	ZTAM-00103				PISTON KIT	2	- #0007		
	ZTAM-00591				PISTON KIT	2	#0008 -	B	SEE ILLUST

FRONT AXLE CYLINDER(-#0559)

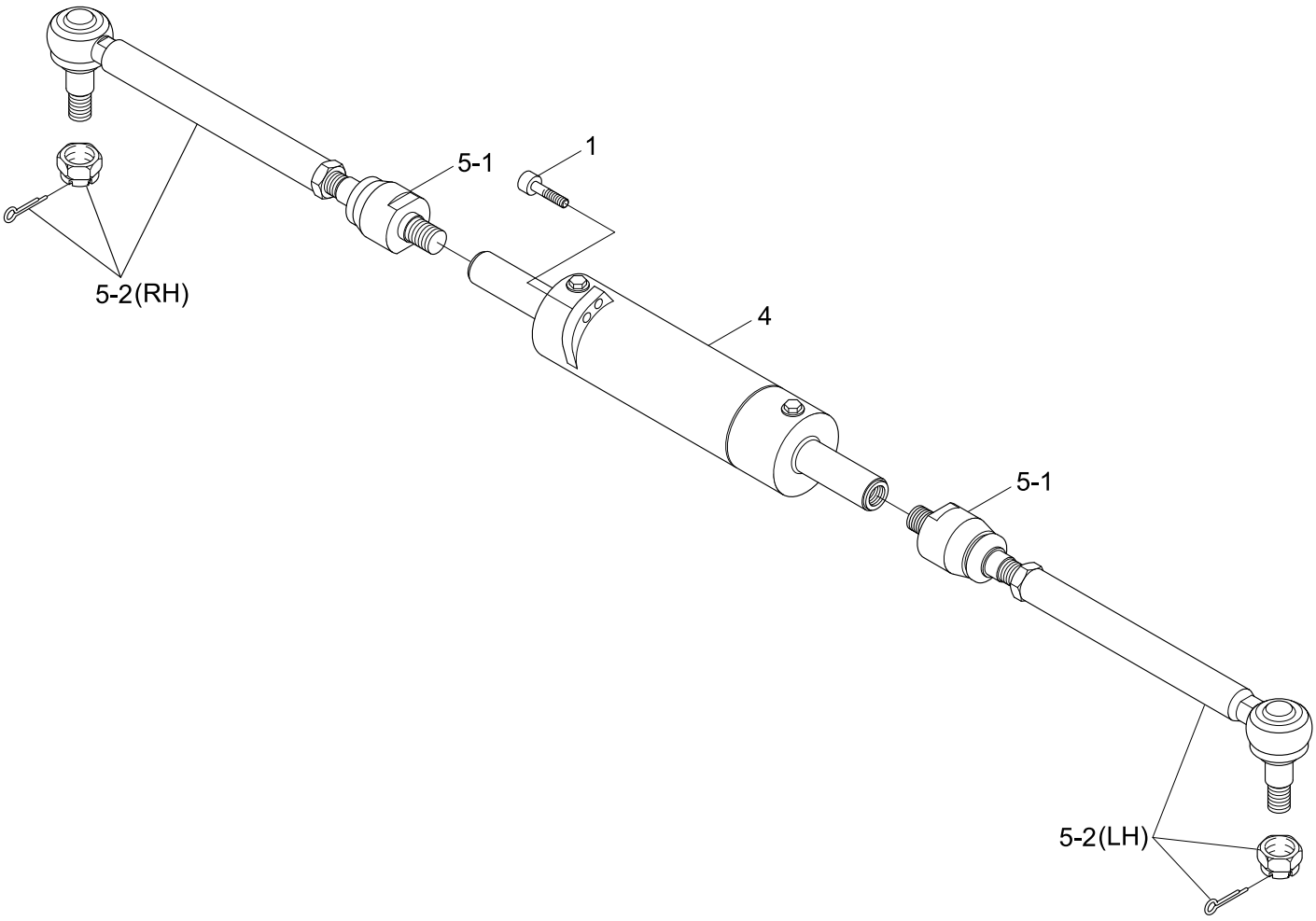

Item	Part_No	IS	Ord	T	Description	Qty	Serial_No	ITC	Remark
*	@				FRONT AXLE	1			NOT
1	ZTAM-00104				.BOLT-CYLINDER	4			
4	ZTAM-00105				.CYLINDER	1	- #0089		
	ZTAM-00592				.CYLINDER	1	#0090 -	B	
4-1	ZTAM-00601				..SEAL KIT	1	- #0089		
	ZTAM-00600				..SEAL KIT	1	#0090 -	D	
5	ZTAM-00106				.TIE ROD-ARTICULATED	2			
5-1	ZTAM-00505				..JOINT-AXIAL	1	#0001 -	-	
5-2	ZTAM-00504				..JOINT-90°	1	#0001 -	-	

FRONT AXLE OSCILLATING SUPPORT(-#0559)

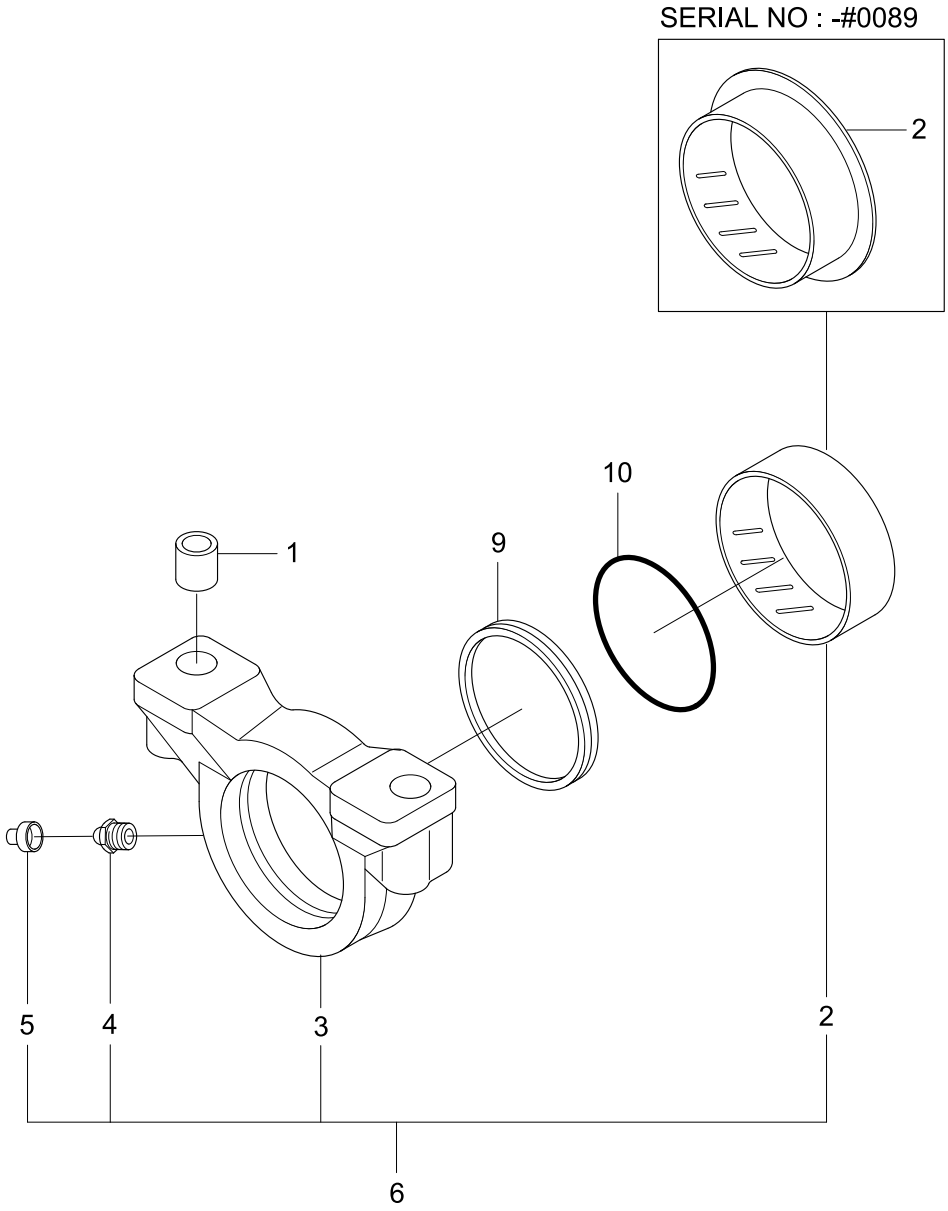

Item	Part_No	IS	Ord	T	Description	Qty	Serial_No	ITC	Remark
*	@				FRONT AXLE	1			NOT
6	ZTAM-00111				.SUPPORT KIT	2	- #0089		
	ZTAM-00598				.SUPPORT KIT	2	#0090 -	D	
1	ZTAM-00107				..BUSHING-REDUCTION	4			
2	ZTAM-00108				..BUSHING-THRUST	2	- #0089		
N2	@				..BUSHING	2	#0090 -	D	NOT
3	ZTAM-00109				..SUPPORT	2	- #0089		
N3	@				..SUPPORT	2	#0090 -	D	NOT
4	ZTAM-00110				..FITTING-GREASE	2			
5	ZTAM-00101				..PLUG	2			
6	ZTAM-00111				.SUPPORT KIT	2	- #0089		
	ZTAM-00598				.SUPPORT KIT	2	#0090 -	D	
9	ZTAM-00599				.SEAL	2	#0090 -	-	
10	ZTAM-00235				.O-RING	2	#0090 -	-	

REAR AXLE HOUSING(-#0559)

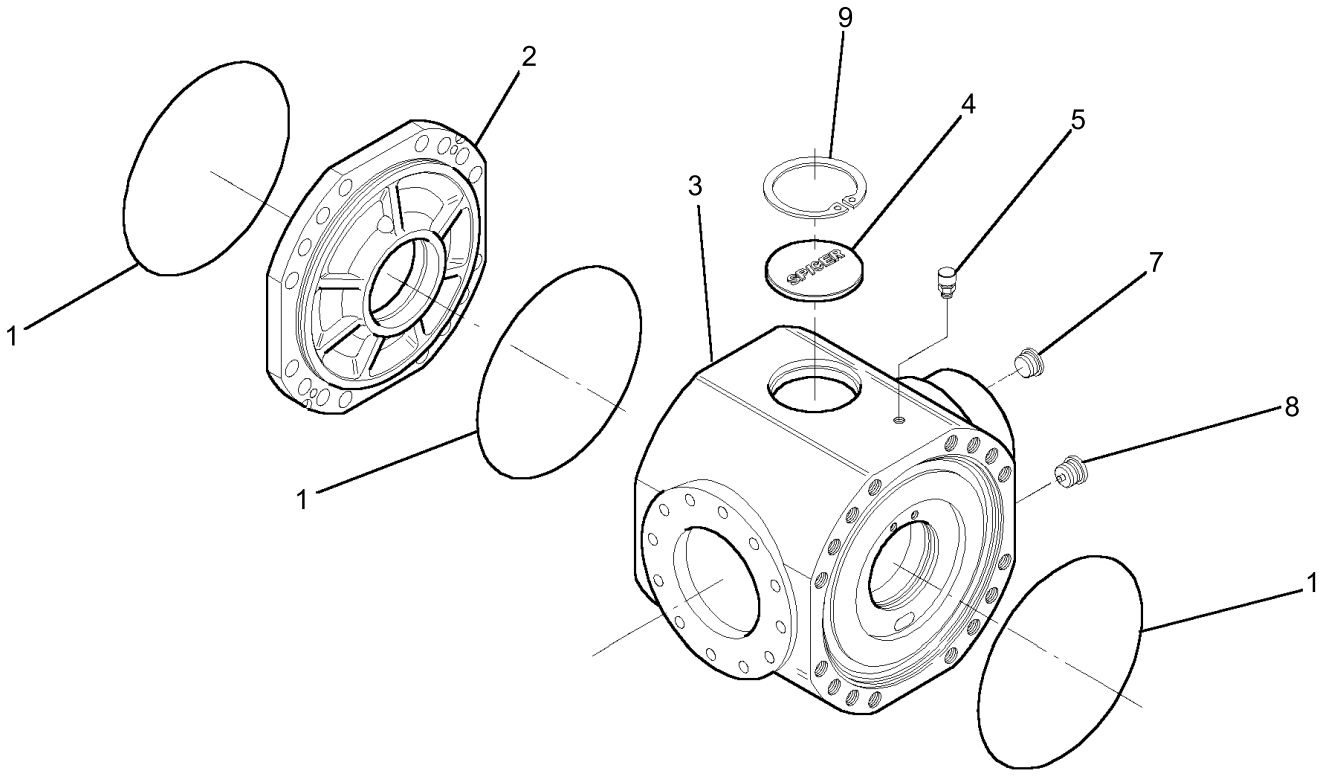

Item	Part_No	IS	Ord	T	Description	Qty	Serial_No	ITC	Remark
*	81N4-40020				AXLE-REAR	1			
1	ZTAM-00001				.O-RING	3			
2	ZTAM-00002				.COVER-INTERMEDIATE	1			
3	ZTAM-00112				.HOUSING	1			
4	ZTAM-00004				.PLUG	1			
5	ZTAM-00005				.VENT	1			
7	ZTAM-00006				.PLUG	1			
8	ZTAM-00570				.PLUG-MAGNET	1	#0001 -	-	
9	ZTAM-00008				.CIRCLIP	1			

REAR AXLE DIFFERENTIAL(-#0559)

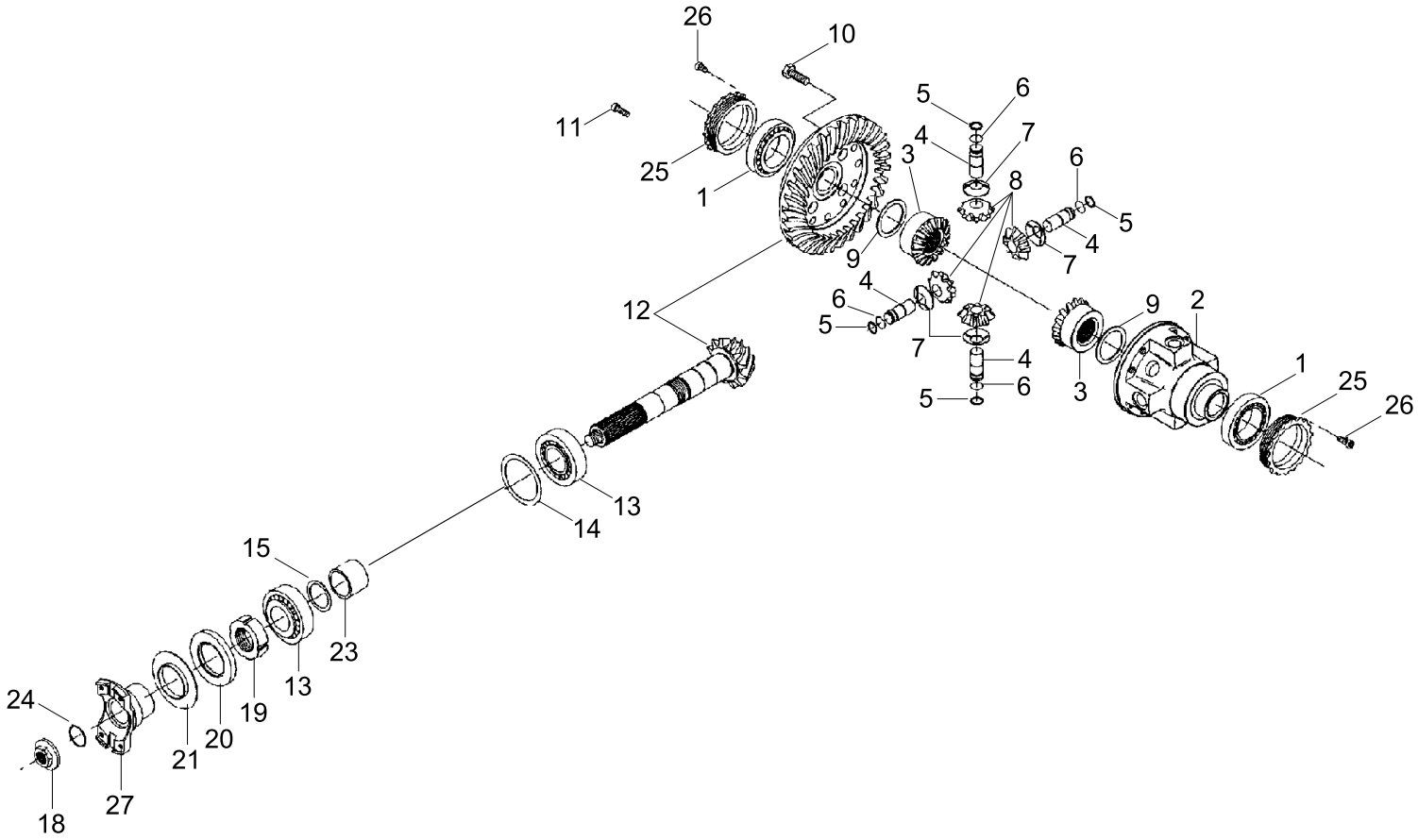

Description	Part no.	Included item no.
Differential kit	ZTAM-00039	2, 3, 4, 5, 6, 7, 8, 9

Item	Part_No	IS	Ord	T	Description	Qty	Serial_No	ITC	Remark
*	@				REAR AXLE	1			NOT
1	ZTAM-00015				.BEARING-TAPER ROLLER	2			
K2	ZTAM-00026				.CARRIER-DIFFERENTIAL	1			
K3	ZTAM-00021				.GEAR-DIFFERENTIAL SIDE	2			
K4	ZTAM-00022				.PIN	4			
K5	ZTAM-00038				.CIRCLIP	4			
K6	ZTAM-00023				.CIRCLIP	4			
K7	ZTAM-00024				.WASHER-FRICTION	4			
K8	ZTAM-00025				.PINION-DIFFERENTIAL	4			
K9	ZTAM-00020				.WASHER-FRICTION	2			
10	ZTAM-00019				.BOLT	12			
11	ZTAM-00017				.BOLT-CYLINDER	4			
12	ZTAM-00014				.GEAR SET-BEVEL	1			
13	ZTAM-00027				.BEARING-TAPER ROLLER	2			
14	ZTAM-00028				.SHIM(0.20T)	1			
	ZTAM-00029				.SHIM(0.30T)	1			
	ZTAM-00030				.SHIM(0.15T)	1			
	ZTAM-00031				.SHIM(0.10T)	1			
15	ZTAM-00010				.SHIM(0.15T)	1			
	ZTAM-00011				.SHIM(0.20T)	1			
	ZTAM-00012				.SHIM(0.40T)	1			
	ZTAM-00013				.SHIM(0.50T)	1			
18	ZTAM-00037				.NUT	1			
19	ZTAM-00033				.NUT-RING	1			
20	ZTAM-00118				.SEAL	1			

Item	Part_No	IS	Ord	T	Description	Qty	Serial_No	ITC	Remark
21	ZTAM-00035				.PLATE-COVER	1	- #0071	-	
23	ZTAM-00032				.SPACER	1			
24	ZTAM-00009				.O-RING	1			
25	ZTAM-00016				.NUT-RING	2			
26	ZTAM-00018				.BOLT-CYLINDER	2			
27	ZTAM-00036				.FLANGE	1	- #0071		
	ZTAM-00571				.FLANGE	1	#0072 -	D	
K	ZTAM-00039				DIFFERENTIAL KIT	1			

REAR AXLE WHEEL HUB(-#0559)

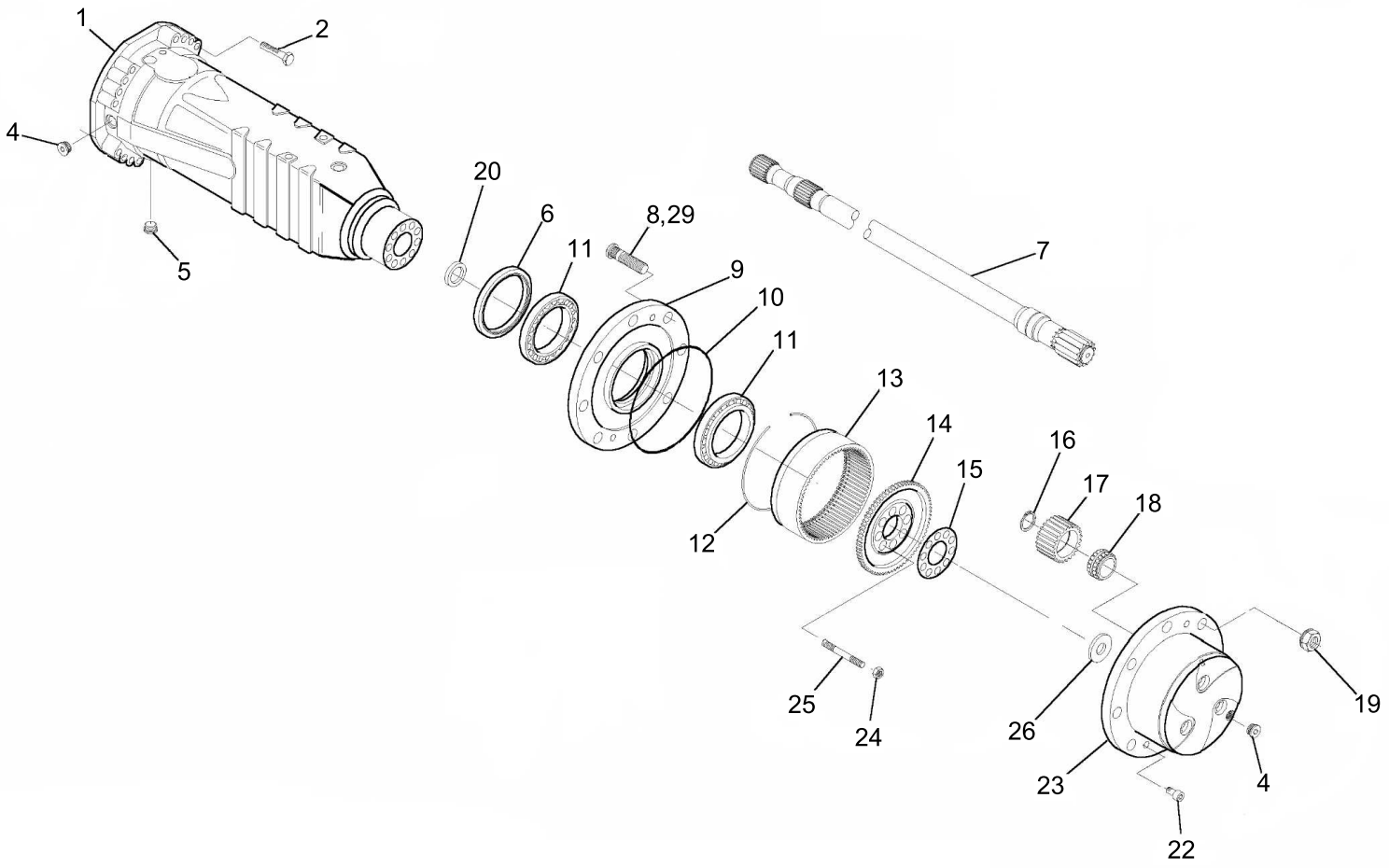

Part no.	Description	Included item no.
ZTAM-00583	Planet gear carrier kit	12,13,14,16,17,23,26

Item	Part_No	IS	Ord	T	Description	Qty	Serial_No	ITC	Remark
*	@				REAR AXLE	1			NOT
1	ZTAM-00113				.CASE-AXLE	2			
2	ZTAM-00044				.BOLT	32			
4	ZTAM-00006				.PLUG	4			
5	ZTAM-00570				.PLUG-MAGNET	2	#0001 -	-	
6	ZTAM-00064				.SEAL	2			
7	ZTAM-00114				.SHAFT-HALF	2			
8	ZTAM-00066				.STUD-WHEEL	16			
9	ZTAM-00067				.HUB-WHEEL	2			
10	ZTAM-00068				.O-RING	2			
11	ZTAM-00065				.BEARING	4			
K12	ZTAM-00079				.CIRCLIP	2			
K13	ZTAM-00069				.GEAR-RING	2			
K14	ZTAM-00070				.SUPPORT	2			
15	ZTAM-00082				.PLATE-LOCKING	2			
K16	ZTAM-00071				.CIRCLIP	8			
K17	ZTAM-00072				.GEAR-PLANET	8			
K18	ZTAM-00073				.BEARING	8			
19	ZTAM-00074				.NUT	20			
20	ZTAM-00115				.SEAL	2			
22	ZTAM-00075				.BOLT-COUNTERSUNK	4			
K23	ZTAM-00579				.CARRIER-PLANET GEAR	2	#0001 -	-	
24	ZTAM-00078				.NUT	16			
25	ZTAM-00077				.STUD	16			
K26	ZTAM-00116				.WASHER-FRICTION	2			

Item	Part_No	IS	Ord	T	Description	Qty	Serial_No	ITC	Remark
29	ZTAM-00083				.STUD-WHEEL	4			
K	ZTAM-00583				CARRIER KIT	2	#0001 -	-	SEE ILLUST

Item	Part_No	IS	Ord	T	Description	Qty	Serial_No	ITC	Remark
*	@				REAR AXLE	1			NOT
1	ZTAM-00090				.DISC-BRAKE	8			
2	ZTAM-00091				.BOLT-ADJUSTING	6			
3	ZTAM-00092				.SPRING	6			
K4	ZTAM-00093				.PISTON	2			
K5	ZTAM-00094				.SPRING	6			
K6	ZTAM-00095				.RING-BACK UP	2	- #0007		
	ZTAM-00586				.RING-BACK UP	2	#0008 -	D	
K7	ZTAM-00096				.O-RING	2	- #0007		
	ZTAM-00587				.O-RING	2	#0008 -	D	
K8	ZTAM-00097				.RING-BACK UP	2	- #0007		
	ZTAM-00588				.RING-BACK UP	2	#0008 -	D	
K9	ZTAM-00098				.O-RING	2	- #0007		
	ZTAM-00589				.O-RING	2	#0008 -	D	
10	ZTAM-00099				.INTER DISC-BRAKE	10			
11	ZTAM-00100				.BOLT-BLEEDING	2			
12	ZTAM-00101				.PLUG	2			
13	ZTAM-00102				.BOLT-PILOT	2			
K	ZTAM-00103				.PISTON KIT	2	- #0007		
	ZTAM-00591				.PISTON KIT	2	#0008 -	B	SEE ILLUST

TRANSMISSION INPUT HOUSING(-#0559)

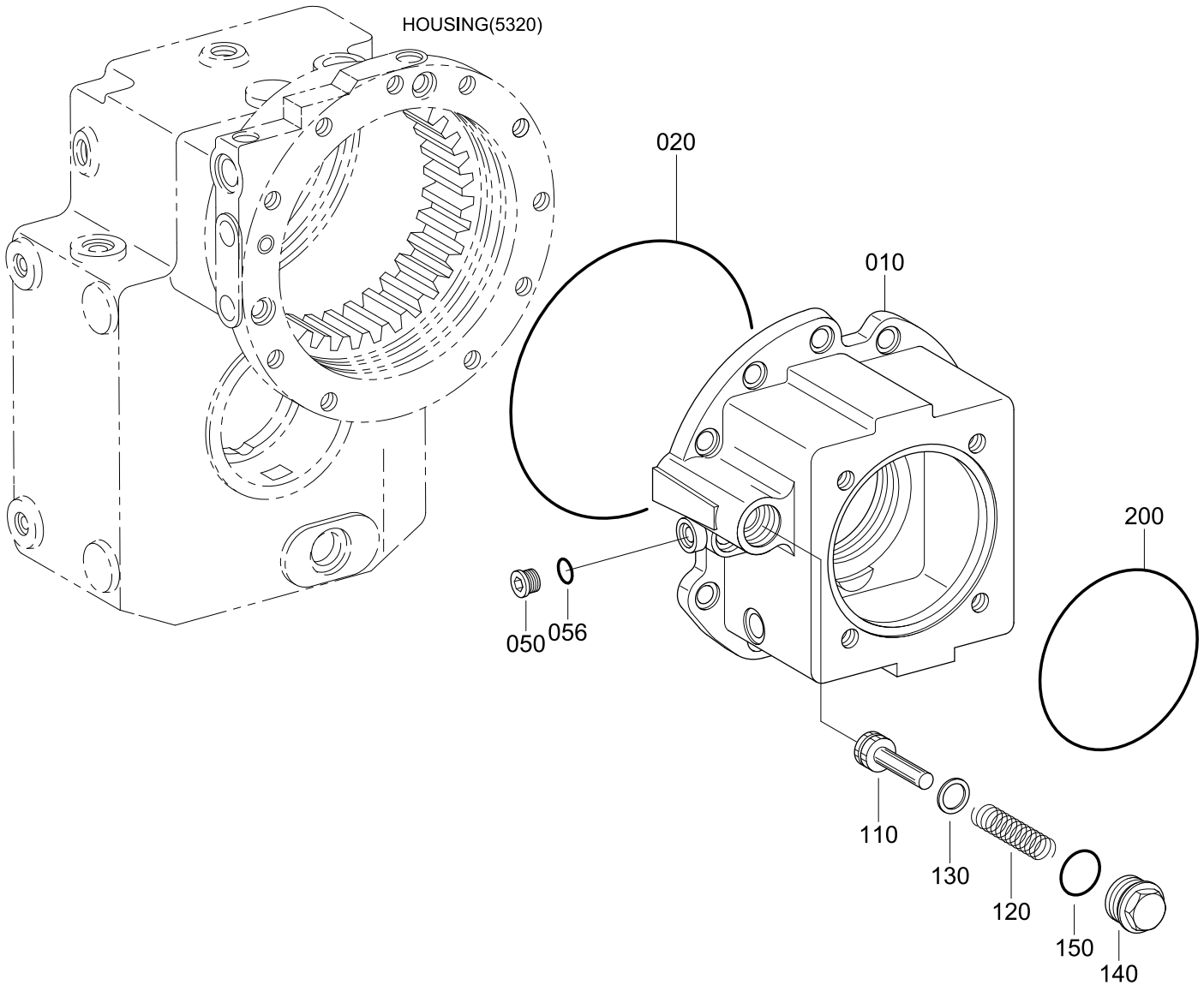

Item	Part_No	IS	Ord	T	Description	Qty	Serial_No	ITC	Remark
*	81EA-30031				TRANSMISSION	1			
010	ZGAQ-00927				.HOUSING-INPUT	1			
020	ZGAQ-00928				.O-RING	1			
050	ZGAQ-00929				.PLUG-SCREW	1			
056	ZGAQ-00670				.O-RING	1			
110	ZGAQ-00930				.PISTON	1			
120	ZGAQ-00931				.SPRING-COMPRESSION	1			
130	ZGAQ-00932				.GASKET	1			
140	ZGAQ-00933				.PLUG-SCREW	1			
150	ZGAQ-00255				.O-RING	1			
200	ZGAQ-00934				.O-RING	1			

TRANSMISSION INPUT GROUP(-#0559)

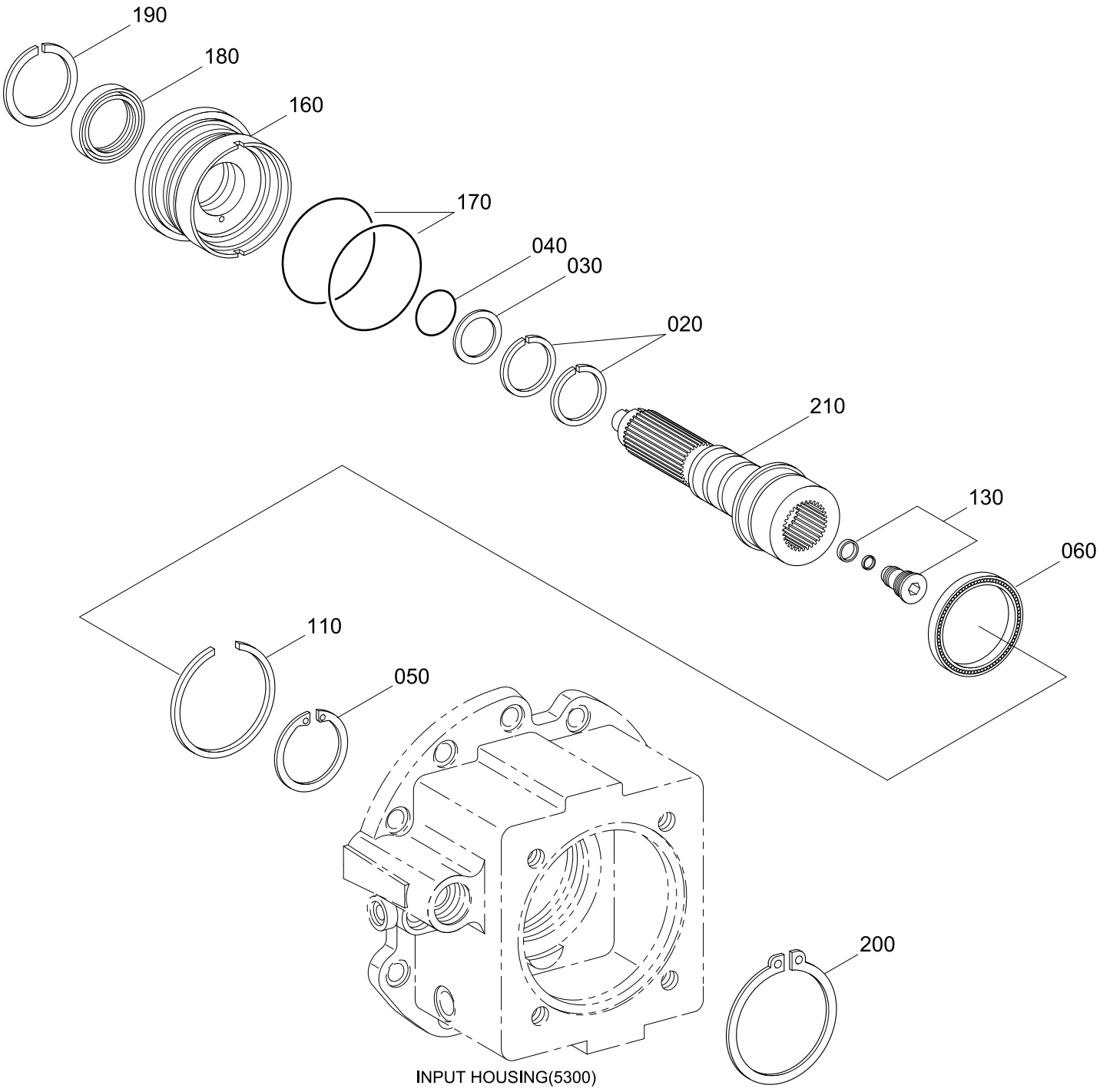

Item	Part_No	IS	Ord	T	Description	Qty	Serial_No	ITC	Remark
*	@				TRANSMISSION	1			NOT
020	ZGAQ-00935				.RING-PISTON	2			
030	ZGAQ-00936				.GASKET	1			
040	ZGAQ-00937				.O-RING	1			
050	ZGAQ-00938				.V-RING	1			
060	ZGAQ-00939				.BEARING-BALL	1			
110	ZGAQ-00940				.V-RING	1			
130	ZGAQ-00941				.VALVE-THROTTLE	1			
160	ZGAQ-00942				.BUSHING-GUIDE	1			
170	ZGAQ-00943				.O-RING	2			
180	ZGAQ-00944				.SEAL-SHAFT	1			
190	ZGAQ-00945				.RING-SNAP	1			
200	ZGAQ-00946				.RETAINER RING	1			
210	ZGAQ-00947				.SHAFT-INPUT	1			

TRANSMISSION HOUSING(-#0559)

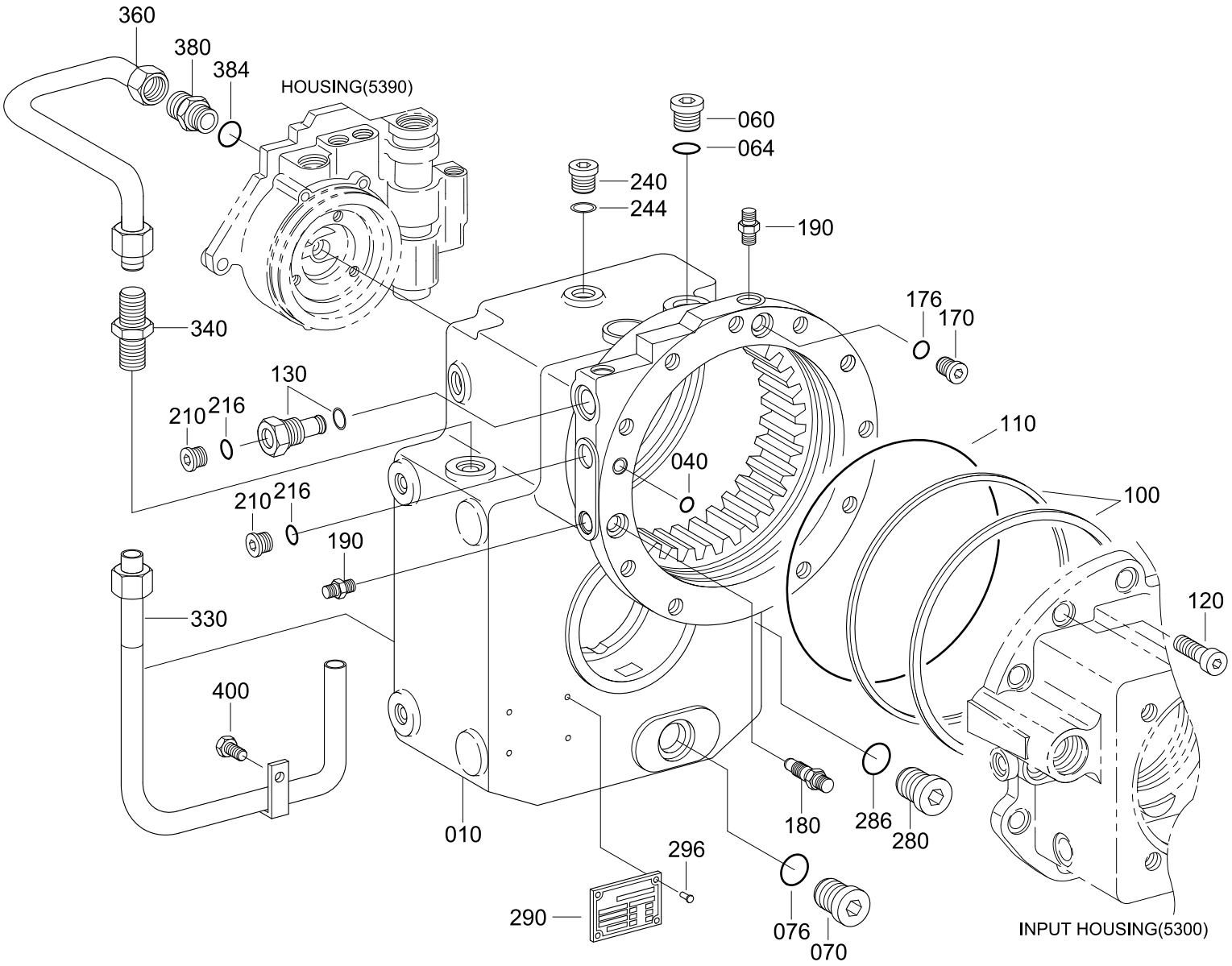

Item	Part_No	IS	Ord	T	Description	Qty	Serial_No	ITC	Remark
*	@				TRANSMISSION	1			NOT
010	ZGAQ-00948				.HOUSING	1			
040	ZGAQ-00949				.O-RING	1			
060	ZGAQ-00950				.PLUG-SCREW	1			
064	ZGAQ-00680				.O-RING	1			
070	ZGAQ-00236				.PLUG-SCREW	1			
076	ZGAQ-00237				.O-RING	1			
100	ZGAQ-00951				.GASKET	1			
110	ZGAQ-00952				.O-RING	1			
120	ZGAQ-00953				.SCREW-CAP	10			
130	ZGAQ-00954				.VALVE-THROTTLE	1			
170	ZGAQ-00955				.PLUG-SCREW	2			
176	ZGAQ-00231				.O-RING	1			
180	ZGAQ-00956				.VALVE-VENT	1			
190	ZGAQ-00957				.PLUG	1			
210	ZGAQ-00929				.PLUG-SCREW	2			
216	ZGAQ-00670				.O-RING	2			
240	ZGAQ-00958				.PLUG-SCREW	2			
244	ZGAQ-00959				.RING-SEALING	2			
280	ZGAQ-00236				.PLUG-SCREW	1			
286	ZGAQ-00237				.O-RING	1			
290	ZGAQ-00086				.PLATE-TYPE	1			
296	ZGAQ-00087				.STUD-GROOVED	4			
330	ZGAQ-00960				.TUBE-SUCTION	1			
340	ZGAQ-00961				.NIPPLE	1			

Item	Part_No	IS	Ord	T	Description	Qty	Serial_No	ITC	Remark
360	ZGAQ-00962				.PIPE	1			
380	ZGAQ-00963				.SCREW IN SLEEVE	1			
384	ZGAQ-00964				.O-RING	1			
400	ZGAQ-00965				.SCREW	1			

TRANSMISSION OIL PIPE(-#0559)

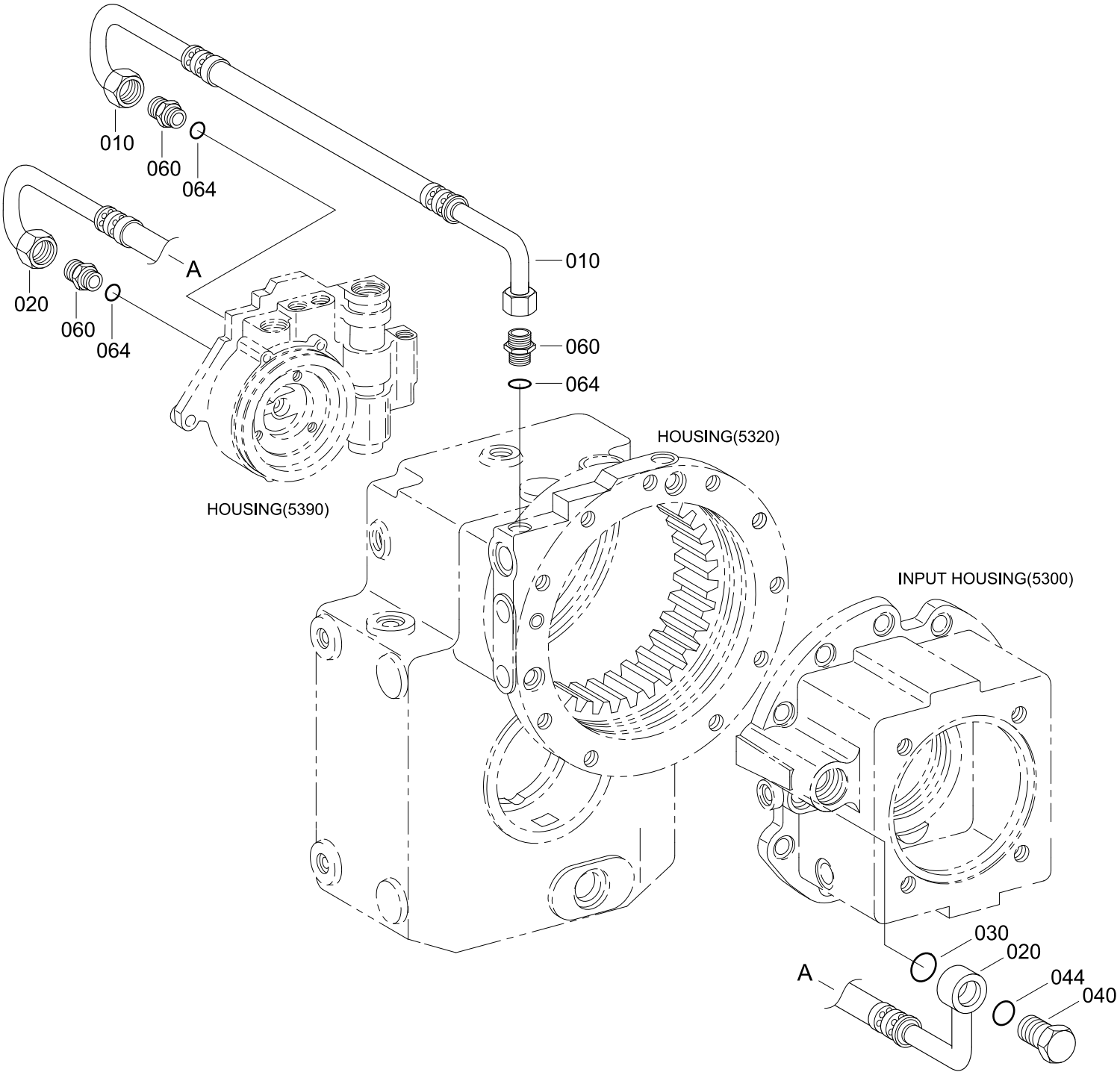

Item	Part_No	IS	Ord	T	Description	Qty	Serial_No	ITC	Remark
*	@				TRANSMISSION	1			NOT
010	ZGAQ-00966				.PIPE-HOSE	1			
020	ZGAQ-00967				.PIPE-HOSE	1			
030	ZGAQ-00968				.O-RING	1			
040	ZGAQ-00969				.SCREW-UNION	1			
044	ZGAQ-00670				.O-RING	1			
060	ZGAQ-00970				.SCREW-IN SLEEVE	3			
064	ZGAQ-00971				.O-RING	3			

TRANSMISSION COUPLING(-#0559)

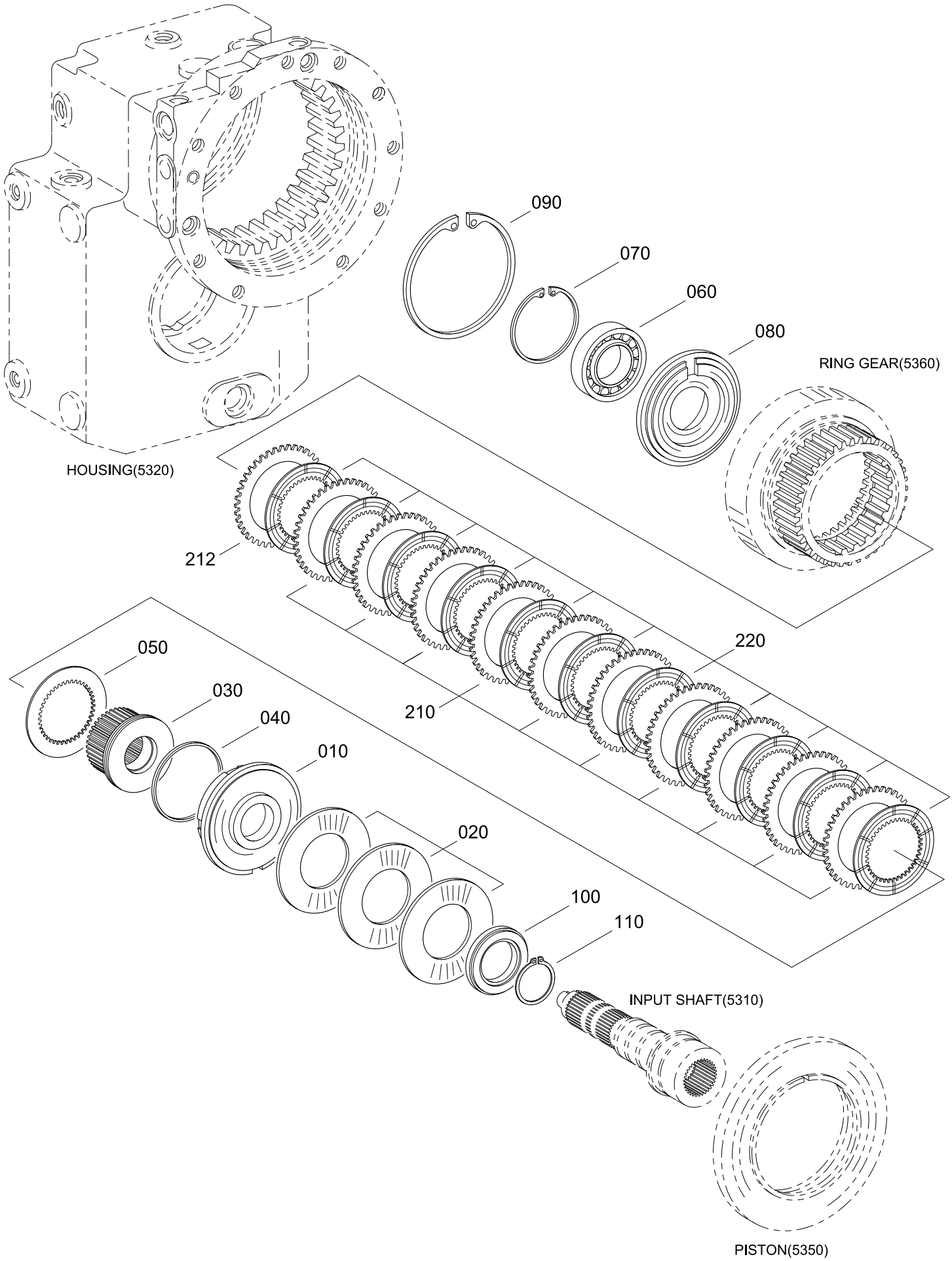

Item	Part_No	IS	Ord	T	Description	Qty	Serial_No	ITC	Remark
*	@				TRANSMISSION	1			NOT
010	ZGAQ-00972				.PISTON	1			
020	ZGAQ-00973				.SPRING-CUP	1			
030	ZGAQ-00974				.CARRIER-DISC	1			
040	ZGAQ-00975				.GASKET	1			
050	ZGAQ-00976				.SHEET	1			
060	ZGAQ-00977				.BEARING-BALL	1			
070	ZGAQ-00978				.RETAINER RING	1			
080	ZGAQ-00979				.DISC-CENTERING	1			
090	ZGAQ-00499				.RING-RETAINING	1			
100	ZGAQ-00980				.SHIM-SUPPORT	1			
110	ZGAQ-00981				.RETAINER RING	1			
210	ZGAQ-00982				.DISC-O/CLUTCH(1.2)	10			
212	ZGAQ-00983				.DISC-O/CLUTCH(1.4)	1			
	ZGAQ-00984				.DISC-O/CLUTCH(1.0)	1			
	ZGAQ-00982				.DISC-O/CLUTCH(1.2)	1			
	ZGAQ-00985				.DISC-O/CLUTCH(1.8)	1			
220	ZGAQ-00986				.DISC-CLUTCH	11			

TRANSMISSION MULTI-DISC BRAKE(-#0559)

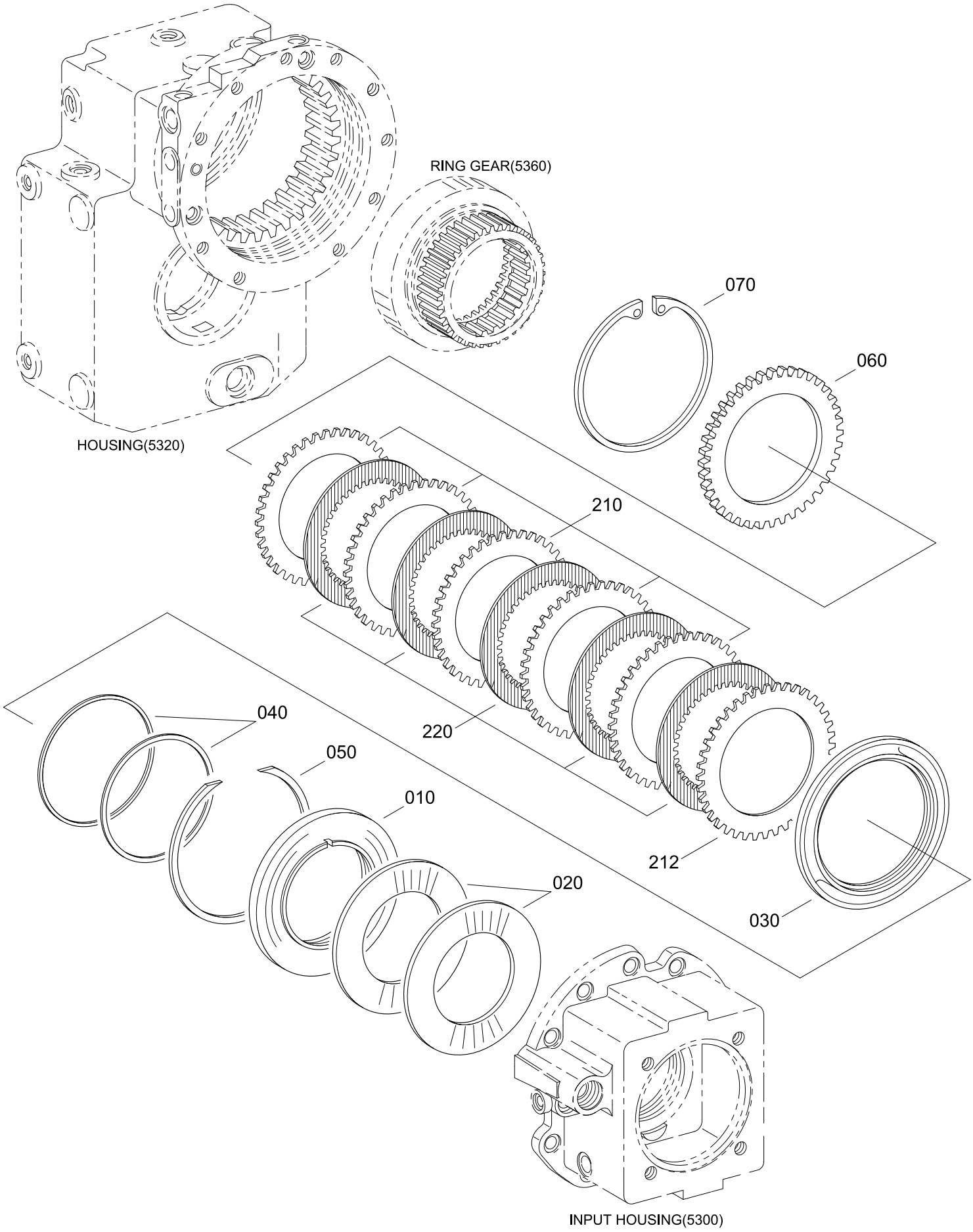

Item	Part_No	IS	Ord	T	Description	Qty	Serial_No	ITC	Remark
*	@				TRANSMISSION	1			NOT
010	ZGAQ-00987				.PISTON	1			
020	ZGAQ-00988				.SPRING-CUP	1			
030	ZGAQ-00989				.WASHER	1			
040	ZGAQ-00990				.GASKET	1			
050	ZGAQ-00991				.RING-SNAP	1			
060	ZGAQ-00992				.SHIM-END	1			
070	ZGAQ-00993				.RING-RETAINER	1			
210	ZGAQ-00994				.DISC-O/CLUTCH(3.0)	5			
212	ZGAQ-00995				.DISC-O/CLUTCH(3.5)	1			
	ZGAQ-00996				.DISC-O/CLUTCH(3.3)	1			
	ZGAQ-00997				.DISC-O/CLUTCH(3.4)	1			
	ZGAQ-00998				.DISC-O/CLUTCH(3.7)	1			
	ZGAQ-00999				.DISC-O/CLUTCH(3.8)	1			
	ZGAQ-01000				.DISC-O/CLUTCH(3.9)	1			
220	ZGAQ-01001				.DISC-I/CLUTCH	5			

TRANSMISSION PLANETARY DRIVE(-#0559)

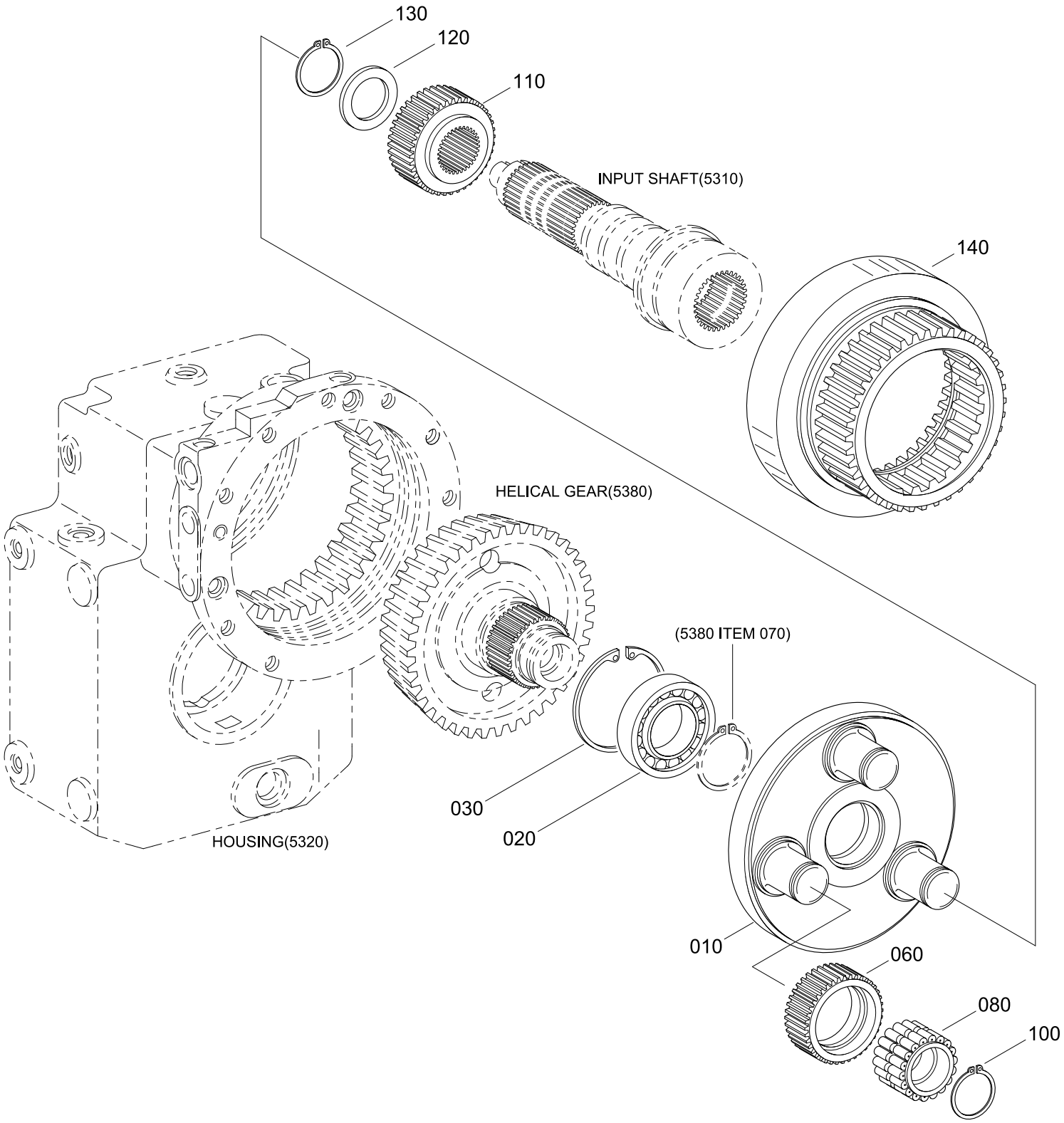

Item	Part_No	IS	Ord	T	Description	Qty	Serial_No	ITC	Remark
*	@				TRANSMISSION	1			NOT
010	ZGAQ-01002				.CARRIER-PLANET	1			
020	ZGAQ-01003				.BEARING-BALL	1			
030	ZGAQ-01004				.RING-RETAINER	1			
060	ZGAQ-01005				.GEAR-PLANET	3			
080	ZGAQ-01006				.BEARING-ROLLER	3			
100	ZGAQ-01007				.RING-RETAINER	3			
110	ZGAQ-01008				.GEAR-SUN	1			
120	ZGAQ-01009				.WASHER(3.0)	1			
	ZGAQ-01010				.WASHER(3.05)	1			
	ZGAQ-01011				.WASHER(3.15)	1			
	ZGAQ-01012				.WASHER(3.2)	1			
	ZGAQ-01013				.WASHER(3.25)	1			
	ZGAQ-01014				.WASHER(3.35)	1			
	ZGAQ-01015				.WASHER(3.4)	1			
	ZGAQ-01016				.WASHER(3.5)	1			
	ZGAQ-01017				.WASHER(3.6)	1			
	ZGAQ-01018				.WASHER(3.7)	1			
130	ZGAQ-01019				.RING-RETAINER	1			
140	ZGAQ-01020				.GEAR-RING	1			

TRANSMISSION DISCONNECTION(-#0559)

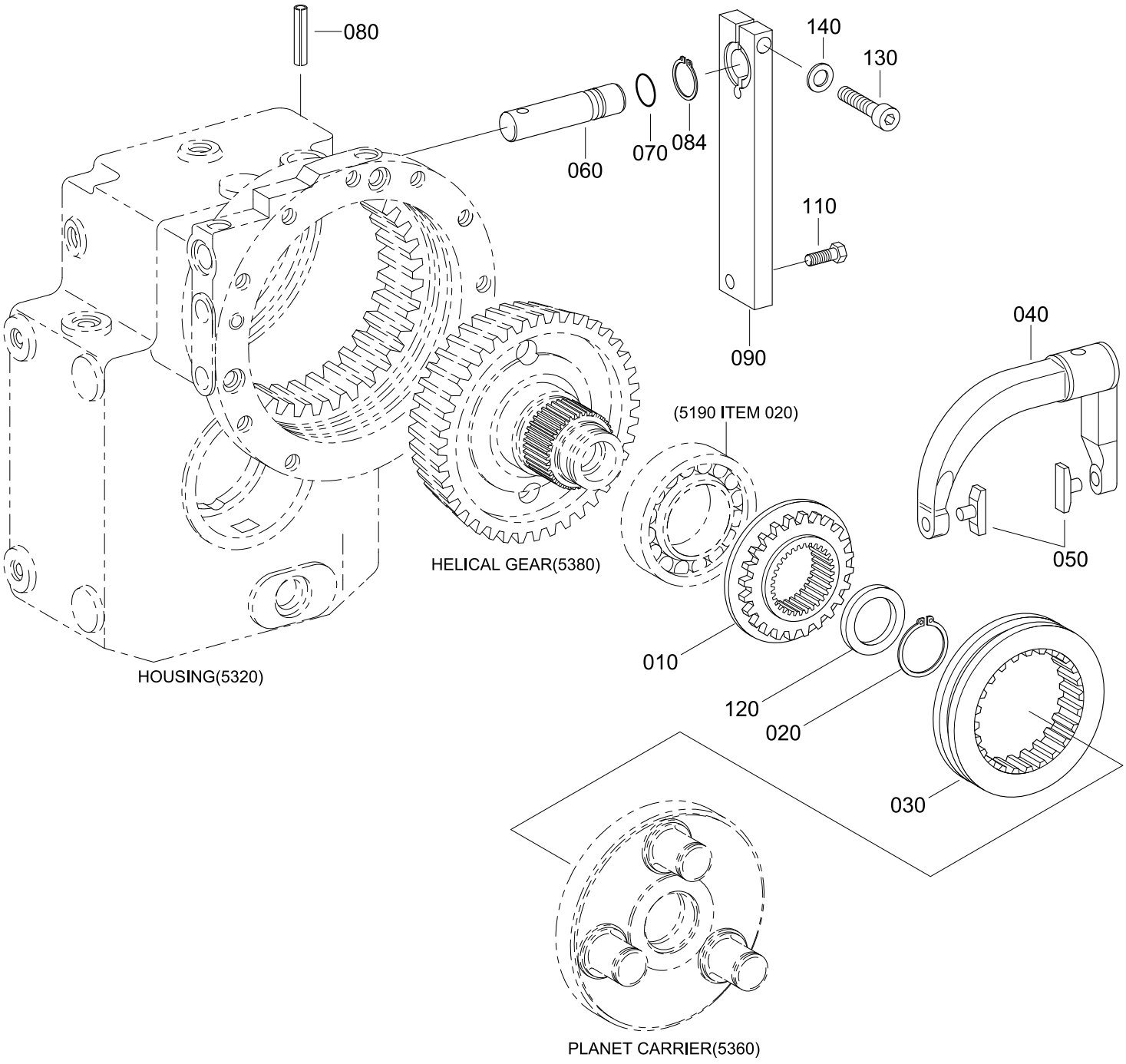

Item	Part_No	IS	Ord	T	Description	Qty	Serial_No	ITC	Remark
*	@				TRANSMISSION	1			NOT
010	ZGAQ-01021				.DOG-SHIFTING	1			
020	ZGAQ-00879				.RING-RETAINER	1			
030	ZGAQ-01022				.SLEEVE-SLIDING	1			
040	ZGAQ-01023				.FORK-GEAR SHIFT	1			
050	ZGAQ-01024				.PAD-SLIDING	2			
060	ZGAQ-01025				.PIN	1			
070	ZGAQ-01026				.O-RING	1			
080	ZGAQ-01027				.SLEEVE-ADAPTOR	1			
084	ZGAQ-01028				.RING-RETAINER	1			
090	ZGAQ-01029				.LEVER	1			
110	ZGAQ-00473				.SCREW-HEX	1			
120	ZGAQ-01030				.WASHER-INTERM(2.6)	1			
	ZGAQ-01031				.WASHER-INTERM(2.2)	1			
	ZGAQ-01032				.WASHER-INTERM(2.5)	1			
	ZGAQ-01033				.WASHER-INTERM(2.4)	1			
	ZGAQ-01034				.WASHER-INTERM(2.2)	1			
	ZGAQ-01035				.WASHER-INTERM(2.0)	1			
	ZGAQ-01036				.WASHER-INTERM(2.8)	1			
130	ZGAQ-01037				.SCREW-CAP	1			
140	ZGAQ-01038				.WASHER	1			

TRANSMISSION SPUR GEAR DRIVE(-#0559)

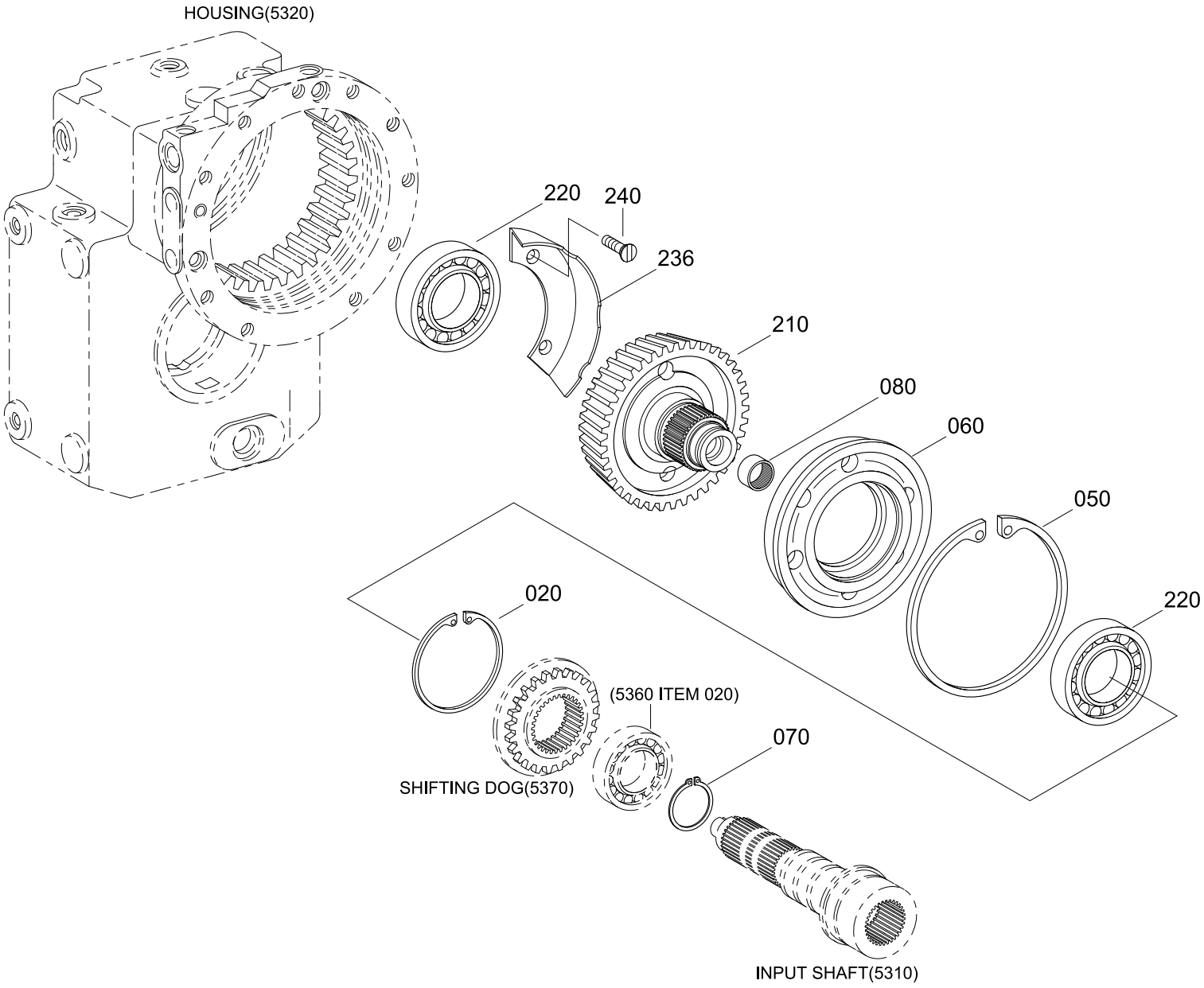

Item	Part_No	IS	Ord	T	Description	Qty	Serial_No	ITC	Remark
*	@				TRANSMISSION	1			NOT
020	ZGAQ-01039				.RING-RETAINER	1			
050	ZGAQ-00993				.RING-RETAINER	1			
060	ZGAQ-01040				.COVER-BEARING	1			
070	ZGAQ-01041				.RING-RETAINER	1			
080	ZGAQ-01042				.SLEEVE-NEEDLE	1			
210	ZGAQ-01043				.GEAR-HELICAL	1			
220	ZGAQ-01044				.BEARING-BALL	2			
236	ZGAQ-01045				.SHEET-SCREEN	1			
240	ZGAQ-01046				.SCREW-COUNTERS	2			

TRANSMISSION GEAR SHIFT SENSOR(-#0559)

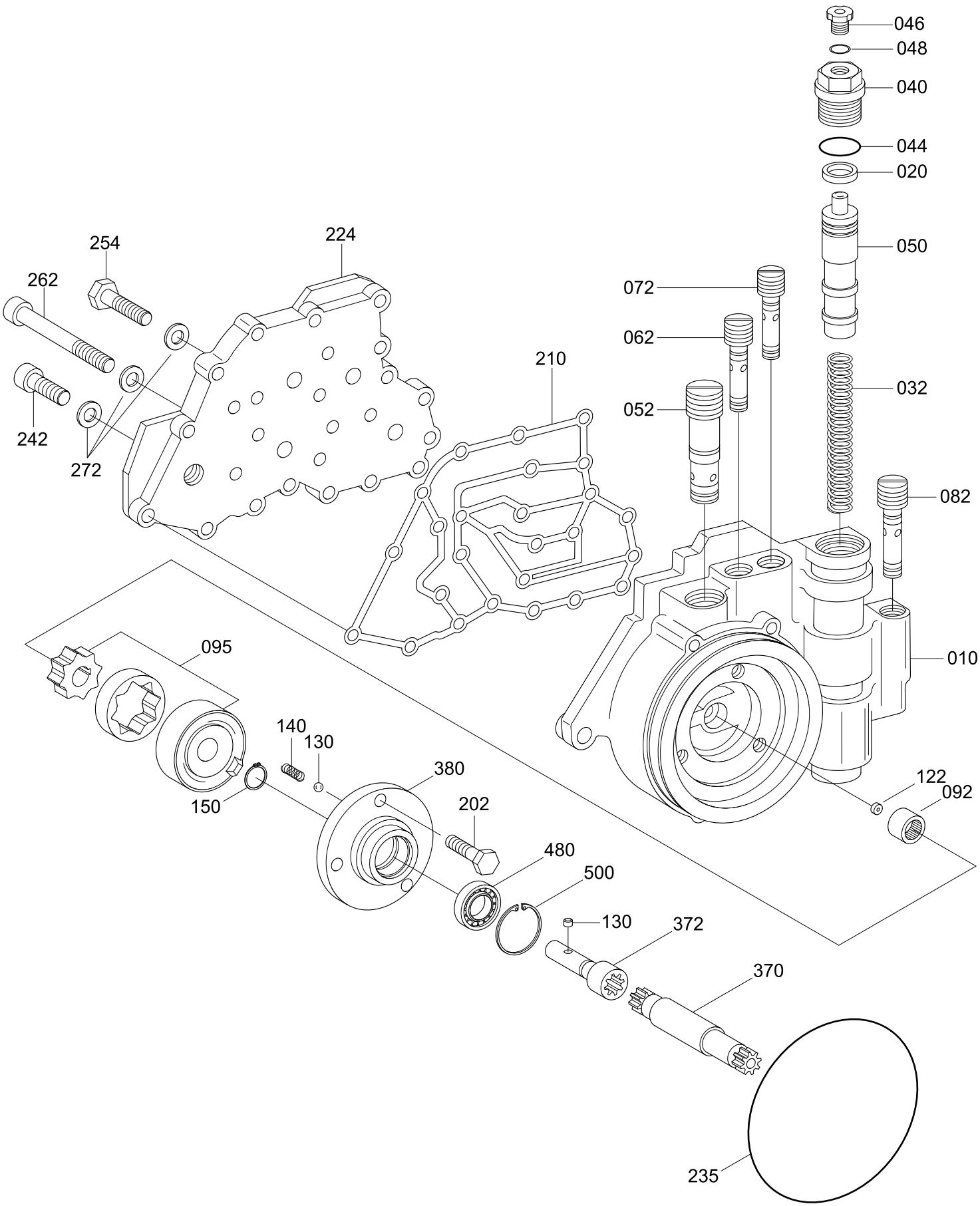

Item	Part_No	IS	Ord	T	Description	Qty	Serial_No	ITC	Remark
*	@				TRANSMISSION	1			NOT
*-1	ZGAQ-01047				.GOVERNOR ASSY	1			
010	ZGAQ-01048				.HOUSING	1			
020	ZGAQ-01049				.GASKET	1			
032	ZGAQ-01050				.SPRING-COMPRESSURE	1			
040	ZGAQ-01051				.PLUG-SCREW	1			
044	ZGAQ-01052				.O-RING	1			
046	ZGAQ-00955				.PLUG-SCREW	1			
048	ZGAQ-01053				.RING-SEALING	1			
050	ZGAQ-01054				.PISTON	1			
052	ZGAQ-01055				.VALVE-RELIEF	1			
054	ZGAQ-01056				..O-RING	1			
056	ZGAQ-01057				..O-RING	1			
062	ZGAQ-01058				.VALVE-CHECK	1			
072	ZGAQ-01059				.VALVE-CHECK	1			
082	ZGAQ-01060				.VALVE-CHECK	1			
092	ZGAQ-01061				.SLEEVE-NEEDLE	1			
095	ZGAQ-01062				.SET-ROTOR	1			
110	ZGAQ-01063				.FILTER-SCREEN	1			
130	ZGAQ-01064				.BALL	4			
140	ZGAQ-01065				.SPRING-COMPRESSURE	3			
150	ZGAQ-01066				.RING-RETAINER	1			
202	ZGAQ-01067				.SCREW-HEX	3			
210	ZGAQ-01068				.GASKET	1			
224	ZGAQ-01069				.COVER	1			

Item	Part_No	IS	Ord	T	Description	Qty	Serial_No	ITC	Remark
235	ZGAQ-01070				.O-RING	1			
242	ZGAQ-01071				.SCREW-CAP	2			
254	ZGAQ-01072				.SCREW-HEX	23			
262	ZGAQ-01073				.SCREW-CAP	2			
272	ZGAQ-01074				.WASHER	27			
370	ZGAQ-01075				.SHAFT-PUMP	1			
372	ZGAQ-01076				.SHAFT-PUMP	1			
380	ZGAQ-01077				.COVER-PUMP	1			
480	ZGAQ-01078				.BEARING-BALL	1			
500	ZGAQ-01079				.RING-RETAINER	1			

TRANSMISSION OUTPUT GROUP(-#0559)

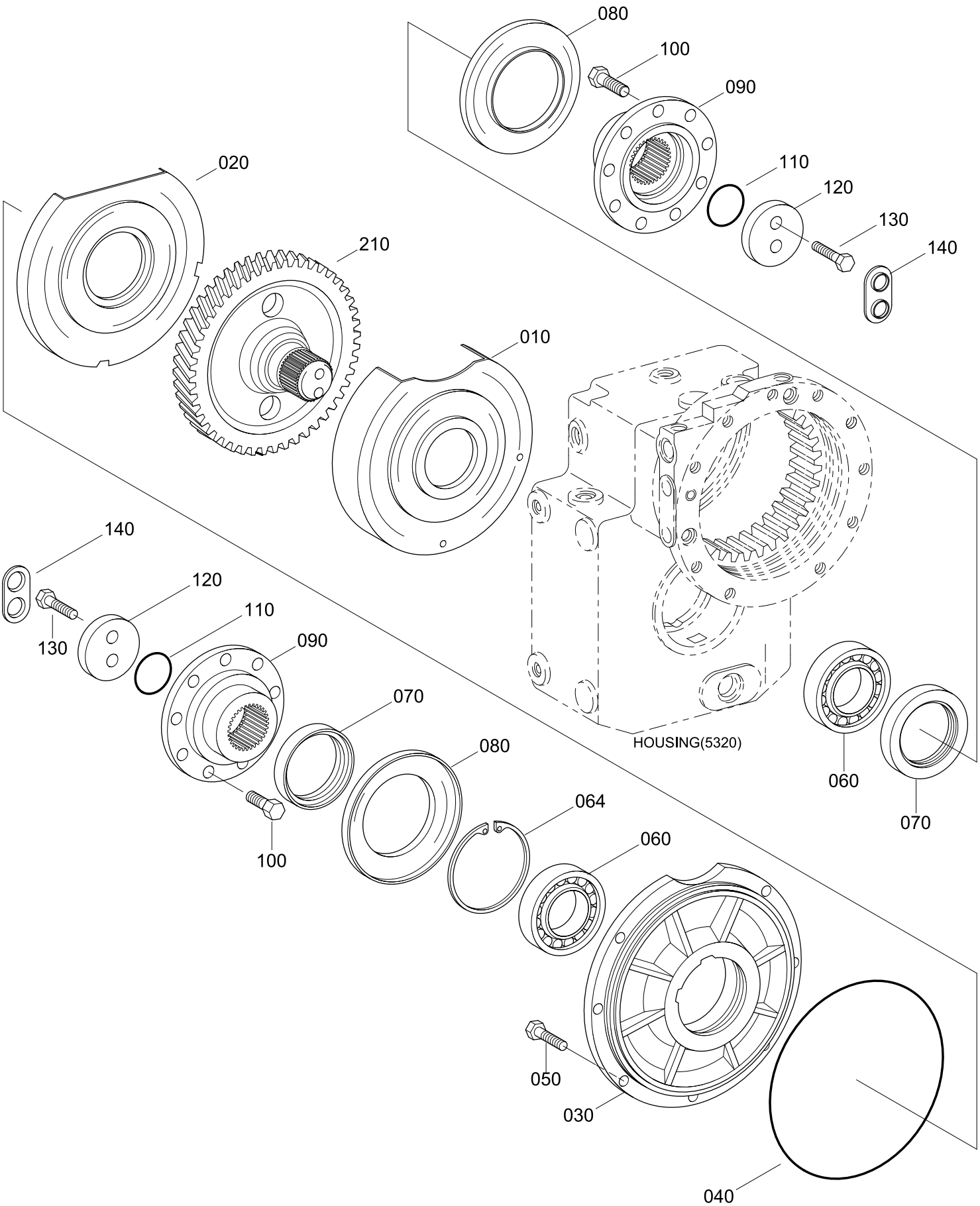

Item	Part_No	IS	Ord	T	Description	Qty	Serial_No	ITC	Remark
*	@				TRANSMISSION	1			NOT
010	ZGAQ-01080				.SHEET-SCREEN	1			
020	ZGAQ-01082				.DEFLECTOR-OIL	1			
030	ZGAQ-01083				.COVER	1			
040	ZGAQ-01084				.O-RING	1			
050	ZGAQ-01085				.SCREW	7			
060	ZGAQ-01086				.BEARING-BALL	2			
064	ZGAQ-01039				.RING-RETAINER	1			
070	ZGAQ-01088				.SEAL-SHAFT	2			
080	ZGAQ-01081				.PLATE-DEFLECTOR	2			
090	ZGAQ-01091				.FLANGE-OUTPUT	2			
100	ZGAQ-01093				.STUD	16			
110	ZGAQ-01094				.O-RING	2			
120	ZGAQ-01095				.WASHER	2			
130	ZGAQ-00447				.SCREW-HEX	4			
140	ZGAQ-00196				.WASHER-TAB	2			
210	ZGAQ-01096				.GEAR-HELICAL	1			

FRONT AXLE HOUSING(#0560-)

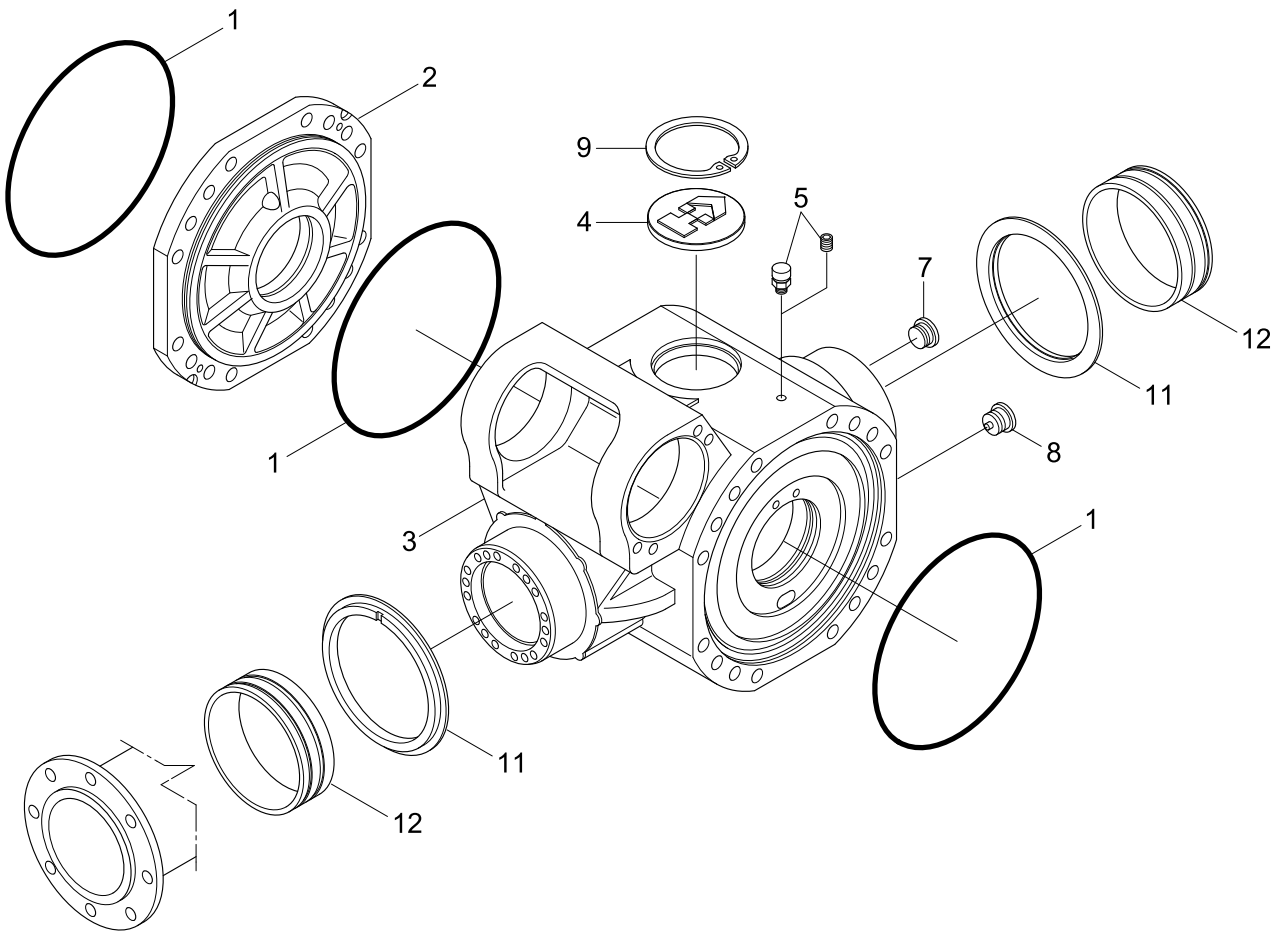

Item	Part_No	IS	Ord	T	Description	Qty	Serial_No	ITC	Remark
*	81N4-40013				AXLE-FRONT	1	#0560 -	-	
1	ZTAM-00001				.O-RING	3			
2	ZTAM-00002				.COVER-INTERMEDIATE	1			
3	ZTAM-00003				.HOUSING	1			
4	ZTAM-00004				.PLUG	1			
5	ZTAM-00005				.VENT	1			
7	ZTAM-00006				.PLUG	1			
8	ZTAM-00570				.PLUG-MAGNET	1			
9	ZTAM-00008				.CIRCLIP	1			
11	ZTAM-00594				.WASHER-RACEWAY	2			
12	ZTAM-00593				.BUSHING	2			

FRONT AXLE DIFFERENTIAL(#0560-)

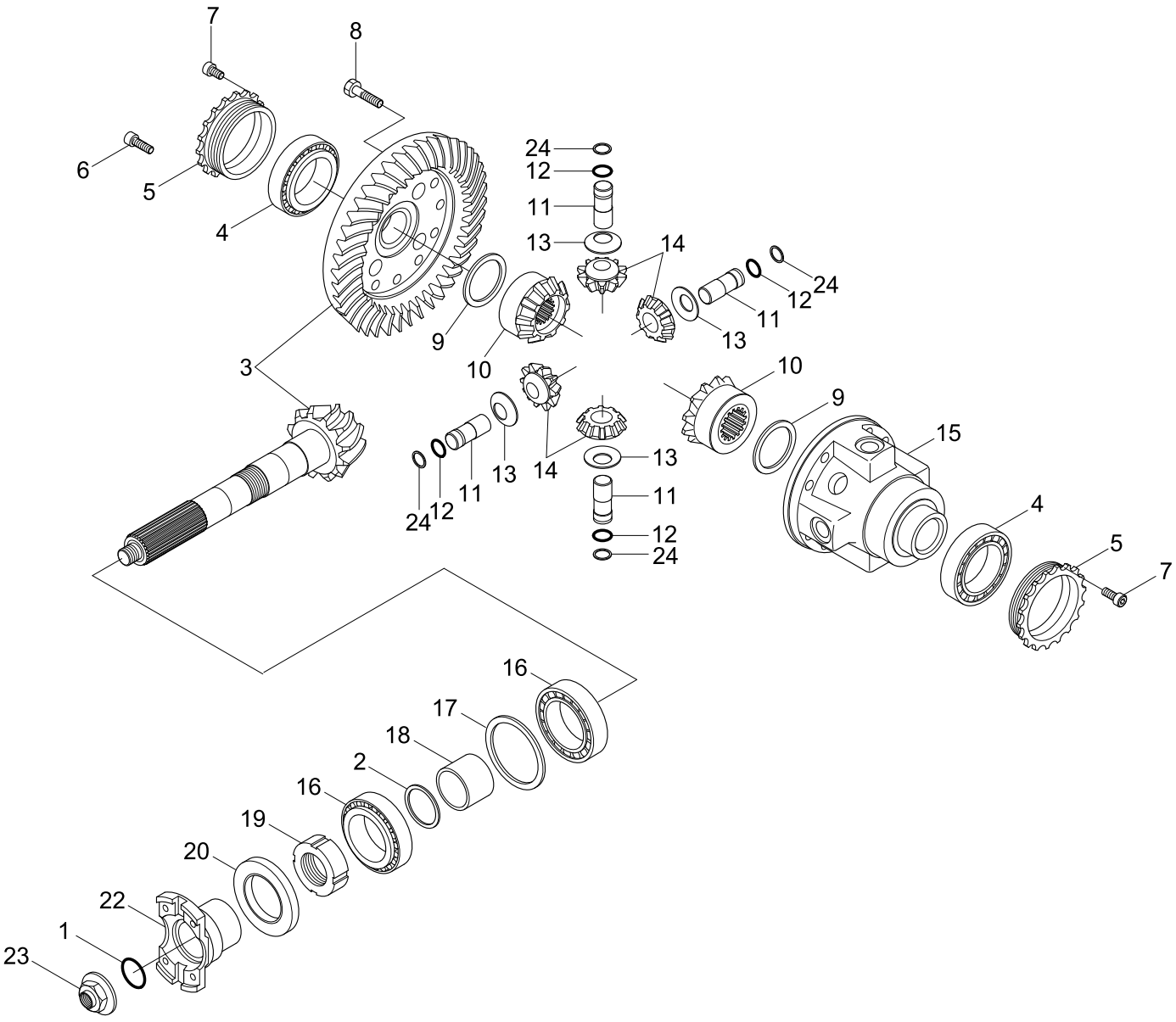

Description	Parts no	Included item
Front axle differential kit	ZTAM-00039	9, 10, 11, 12, 13, 14, 15, 24

Item	Part_No	IS	Ord	T	Description	Qty	Serial_No	ITC	Remark
*	@				FRONT AXLE	1	#0560 -	-	NOT
1	ZTAM-00009				.O-RING	1			
2	ZTAM-00010				.SHIM(0.15T)	1			
	ZTAM-00011				.SHIM(0.20T)	1			
	ZTAM-00012				.SHIM(0.40T)	1			
	ZTAM-00013				.SHIM(0.50T)	1			
3	ZTAM-00619				.GEAR SET-BEVEL	1			
4	ZTAM-00015				.BEARING-TAPER ROLLER	2			
5	ZTAM-00016				.NUT-RING	2			
6	ZTAM-00017				.BOLT-CYLINDER	4			
7	ZTAM-00018				.BOLT-CYLINDER	2			
8	ZTAM-00019				.BOLT	12			
K9	ZTAM-00020				.WASHER-FRICTION	2			
K10	ZTAM-00021				.GEAR-DIFFERENTIAL SIDE	2			
K11	ZTAM-00610				.PIN	4			
K12	ZTAM-00023				.CIRCLIP	4			
K13	ZTAM-00024				.WASHER-FRICTION	4			
K14	ZTAM-00611				.PINION-DIFFERENTIAL	4			
K15	ZTAM-00026				.CARRIER-DIFFERENTIAL	1			
16	ZTAM-00027				.BEARING-TAPER ROLLER	2			
17	ZTAM-00028				.SHIM(0.20T)	1			
	ZTAM-00029				.SHIM(0.30T)	1			
	ZTAM-00030				.SHIM(0.15T)	1			
	ZTAM-00031				.SHIM(0.10T)	1			
18	ZTAM-00032				.SPACER	1			

Item	Part_No	IS	Ord	T	Description	Qty	Serial_No	ITC	Remark
19	ZTAM-00033				.NUT-RING	1			
20	ZTAM-00118				.SEAL	1			
22	ZTAM-00571				.FLANGE	1			
23	ZTAM-00037				.NUT	1			
K24	ZTAM-00038				.CIRCLIP	4			
K	ZTAM-00039				DIFFERENTIAL KIT	1			SEE ILLUST

FRONT AXLE HUB REDUCTION(#0560-)

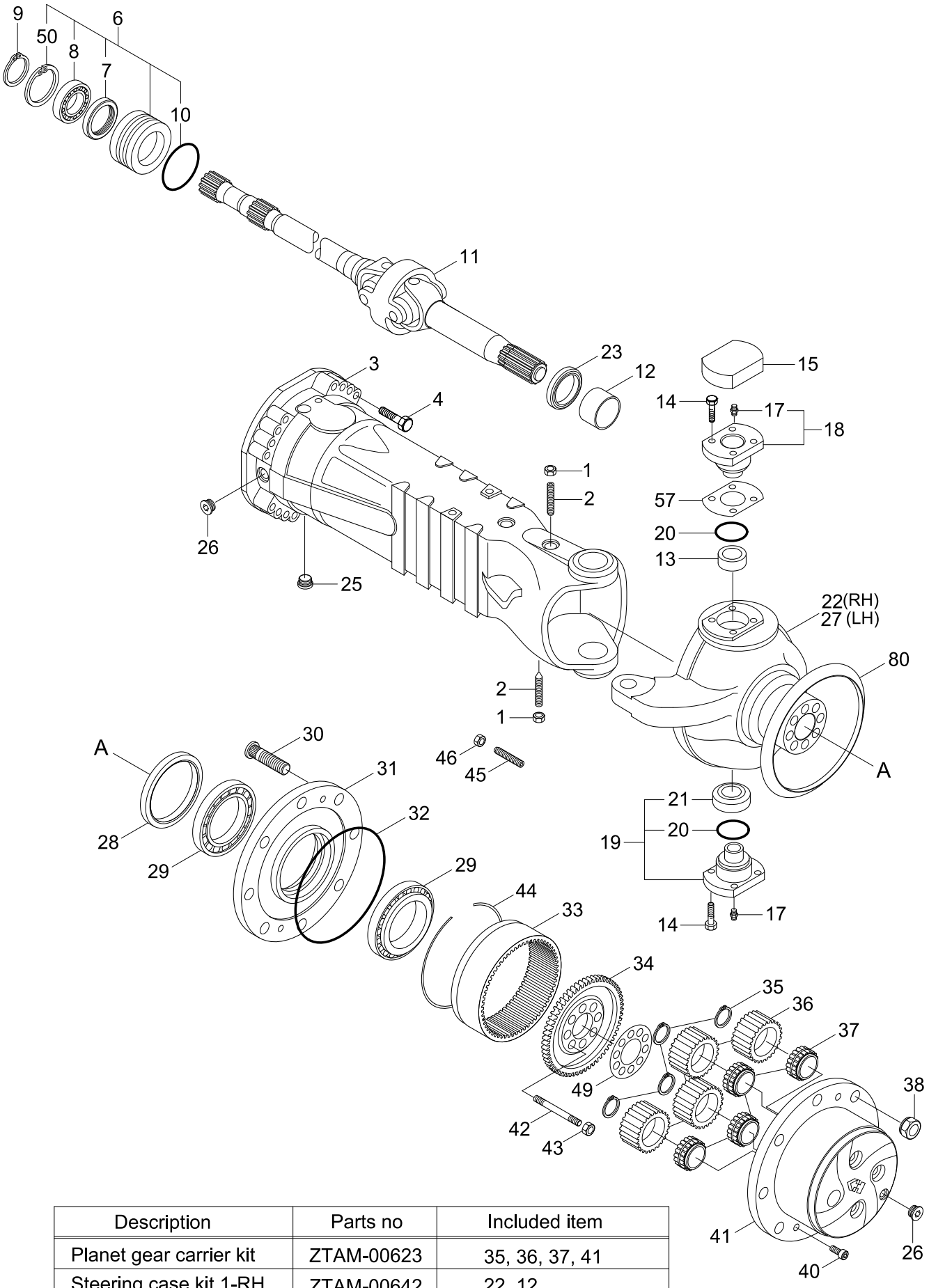

Description	Parts no	Included item
Planet gear carrier kit	ZTAM-00623	35, 36, 37, 41
Steering case kit 1-RH	ZTAM-00642	22, 12
Steering case kit 2-LH	ZTAM-00622	27. 12
Steering adjust bolt kit	ZTAM-00628	45, 46
Ring gear support kit	ZTAM-00615	33, 34, 44

Item	Part_No	IS	Ord	T	Description	Qty	Serial_No	ITC	Remark
*	@				FRONT AXLE	1	#0560 -	-	NOT
1	ZTAM-00040				.NUT	2			
2	ZTAM-00041				.ADJUST BOLT-STEERING	2			
3	ZTAM-00043				.CASE-AXLE	2			
4	ZTAM-00044				.BOLT	32			
6	ZTAM-00045				.BUSHING-REDUCTION	2			INCL 7~10, 50
7	ZTAM-00046				.SEAL	2			
8	ZTAM-00049				.BEARING-BALL	2			
9	ZTAM-00048				.CIRCLIP	2			
10	ZTAM-00050				.O-RING	2			
11	ZTAM-00509				.UNIVERSAL JOINT	2			
K12	ZTAM-00052				.BUSHING-THRUST	1			
13	ZTAM-00575				.BUSHING	2			
14	ZTAM-00054				.BOLT	24			
15	ZTAM-00055				.COVER	2			
17	ZTAM-00056				.FITTING-GREASE	2			
18	ZTAM-00057				.PIN-PIVOT	2			
19	ZTAM-00058				.PIN-PIVOT	2			
20	ZTAM-00059				.SEAL	2			
21	ZTAM-00060				.BEARING	2			
KN22	@				.CASE-STEERING,RH	1	#0560 -	-	NOT
23	ZTAM-00062				.SEAL	2			
25	ZTAM-00570				.PLUG-MAGNET	2			
26	ZTAM-00006				.PLUG	4			
KN27	@				.CASE-STEERING,LH	1	#0560 -	-	NOT

Item	Part_No	IS	Ord	T	Description	Qty	Serial_No	ITC	Remark
28	ZTAM-00064				.SEAL	2			
29	ZTAM-00065				.BEARING	4			
30	ZTAM-00066				.STUD-WHEEL	16			
31	ZTAM-00614				.HUB-WHEEL	2			
32	ZTAM-00068				.O-RING	2			
K33	ZTAM-00069				.GEAR-RING	2			
K34	ZTAM-00070				.SUPPORT	2			
K35	ZTAM-00071				.CIRCLIP	8			
K36	ZTAM-00072				.GEAR-PLANET	8			
K37	ZTAM-00073				.BEARING	8			
38	ZTAM-00074				.NUT	20			
40	ZTAM-00075				.BOLT-COUNTERSUNK	4			
K41	ZTAM-00579				.CARRIER-PLANET GEAR	2			
42	ZTAM-00077				.STUD	16			
43	ZTAM-00078				.NUT	16			
K44	ZTAM-00079				.CIRCLIP	2			
45	ZTAM-00080				.BOLT	4			
46	ZTAM-00081				.NUT	2			
49	ZTAM-00082				.PLATE-LOCKING	2			
50	ZTAM-00008				.CIRCLIP	2			
57	ZTAM-00580				.SHIM(0.15T)	2			
	ZTAM-00581				.SHIM(0.20T)	2			
	ZTAM-00582				.SHIM(0.50T)	2			
80	ZTAM-00624				.PLATE-COVER	2			
K	ZTAM-00623				CARRIER KIT	2			SEE ILLUST

Item	Part_No	IS	Ord	T	Description	Qty	Serial_No	ITC	Remark
K	ZTAM-00642				STEERING CASE KIT 1-RH	1			SEE ILLUST
	ZTAM-00622				STEERING CASE KIT 2-LH	1			SEE ILLUST
	ZTAM-00628				ADJUSTING BOLT KIT	4			SEE ILLUST
	ZTAM-00615				RING GEAR SUPPORT KIT	2			SEE ILLUST

FRONT AXLE BRAKE DISC(#0560-)

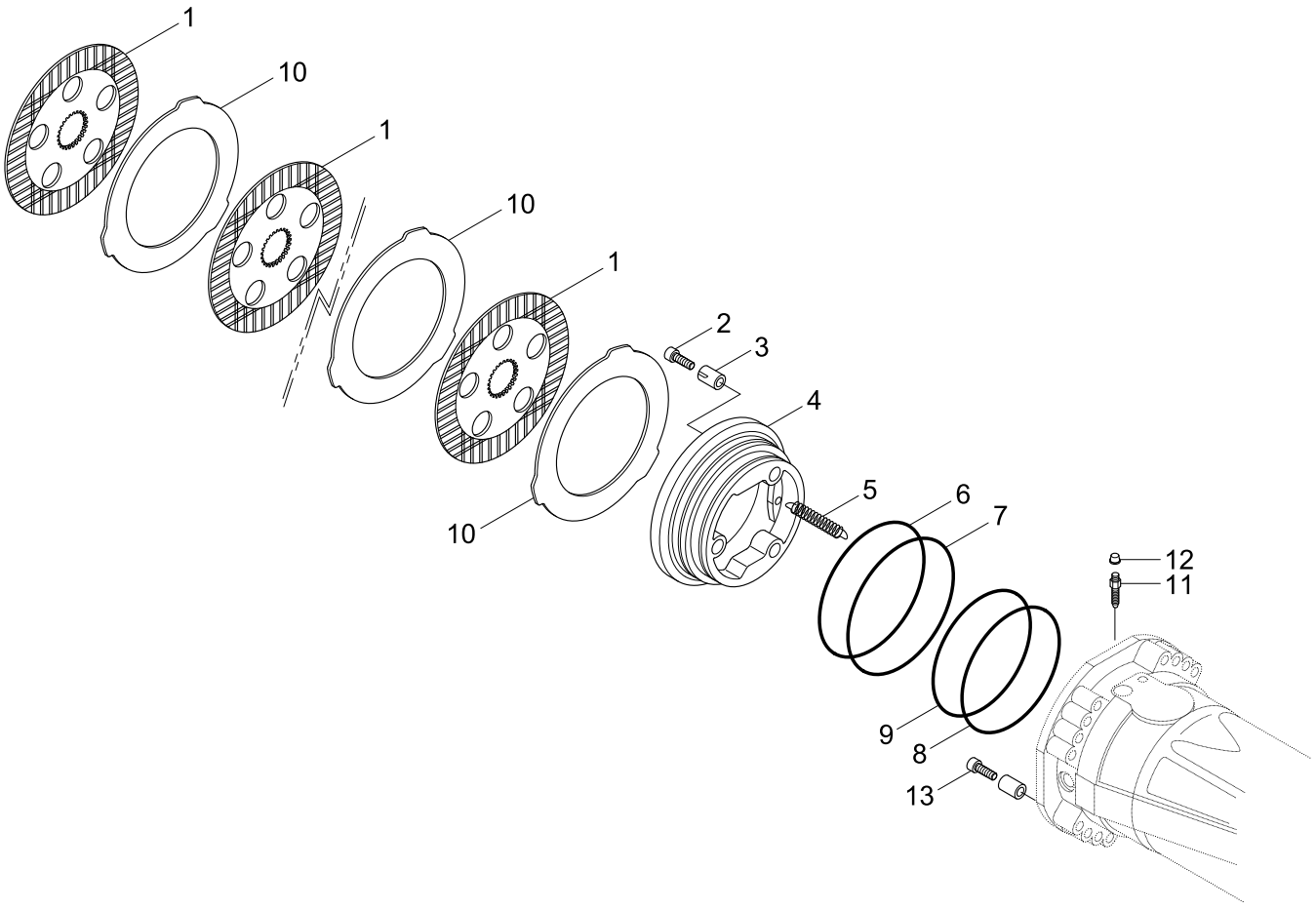

Description	Parts no	Included item
Rear axle piston kit	ZTAM-00591	3, 4, 6, 7, 8, 9

Item	Part_No	IS	Ord	T	Description	Qty	Serial_No	ITC	Remark
*	@				FRONT AXLE	1	#0560 -	-	NOT
1	ZTAM-00090				.DISC-BRAKE	8			
2	ZTAM-00617				.BOLT-ADJUSTING	6			
K3	ZTAM-00092				.SPRING	6			
K4	ZTAM-00093				.PISTON	2			
5	ZTAM-00094				.SPRING	6			
K6	ZTAM-00586				.RING-BACK UP	2			
K7	ZTAM-00587				.O-RING	2			
K8	ZTAM-00588				.RING-BACK UP	2			
K9	ZTAM-00589				.O-RING	2			
10	ZTAM-00099				.INTER DISC-BRAKE	10			
11	ZTAM-00100				.BOLT-BLEEDING	2			
12	ZTAM-00101				.PLUG	2			
13	ZTAM-00618				.BOLT-PILOT	2			
K	ZTAM-00591				PISTON KIT	2			SEE ILLUST

FRONT AXLE CYLINDER(#0560-)

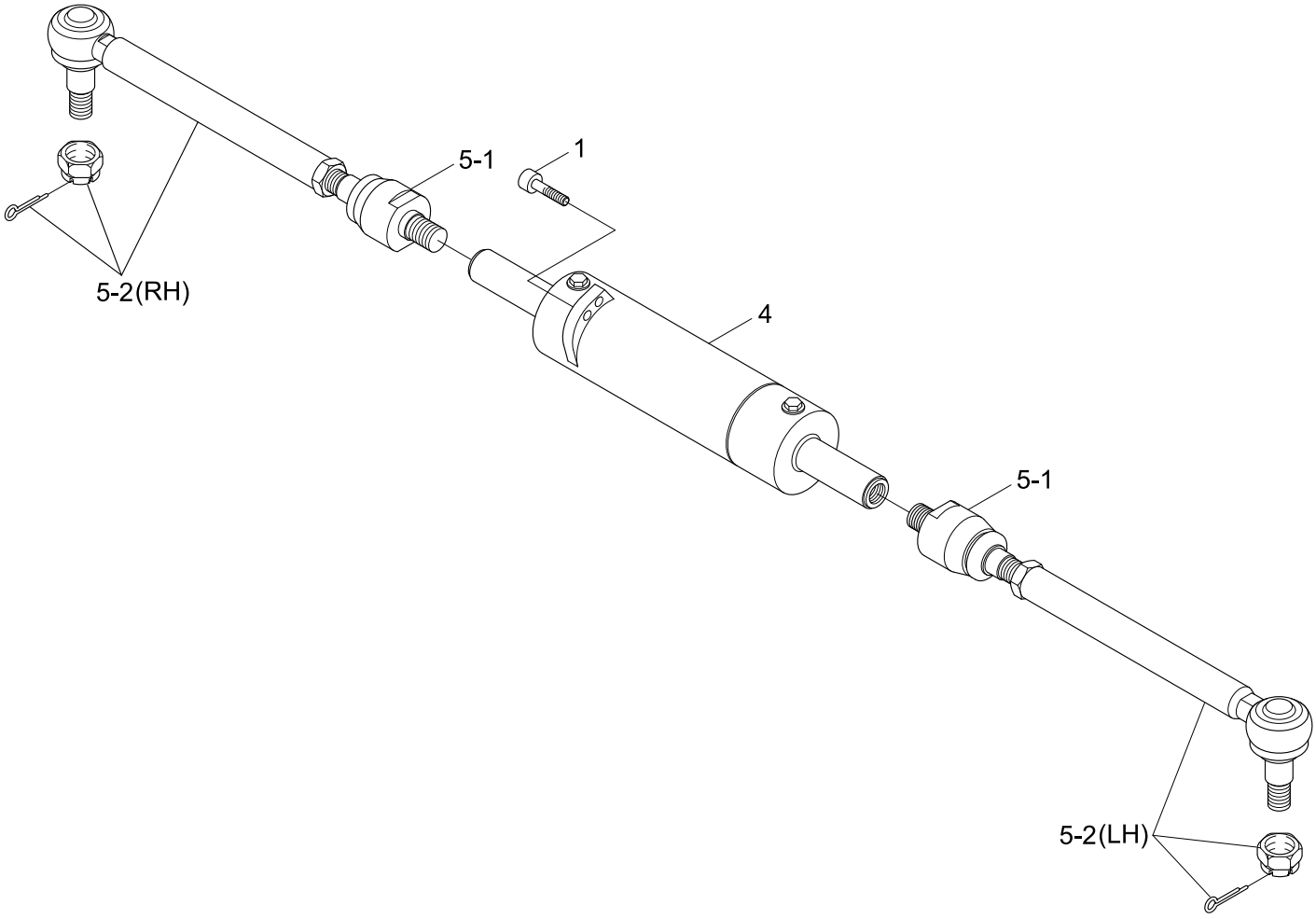

Item	Part_No	IS	Ord	T	Description	Qty	Serial_No	ITC	Remark
*	@				FRONT AXLE	1	#0560 -	-	NOT
1	ZTAM-00104				.BOLT-CYLINDER	4			
4	ZTAM-00592				.CYLINDER	1			
4-1	ZTAM-00600				..SEAL KIT	1			NOT SHOWN
5	ZTAM-00106				.TIE ROD-ARTICULATED	2			
5-1	ZTAM-00505				..JOINT-AXIAL	1			
5-2	ZTAM-00504				..JOINT-90°	1			

FRONT AXLE OSCILLATING SUPPORT(#0560-)

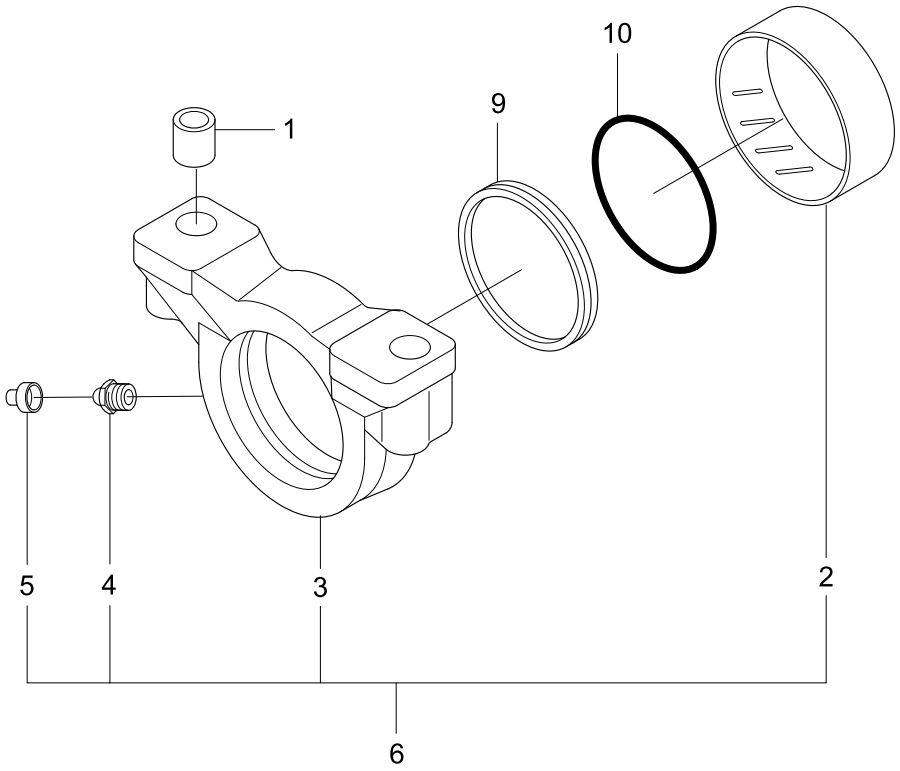

Item	Part_No	IS	Ord	T	Description	Qty	Serial_No	ITC	Remark
*	@				FRONT AXLE	1	#0560 -	-	NOT
6	ZTAM-00626				.SUPPORT KIT	2			
1	ZTAM-00107				..BUSHING-REDUCTION	4			
N2	@				..BUSHING	2			NOT
N3	@				..SUPPORT	2			NOT
4	ZTAM-00110				..FITTING-GREASE	2			
5	ZTAM-00101				..PLUG	2			
6	ZTAM-00626				SUPPORT KIT	2			
9	ZTAM-00599				.SEAL	2			
10	ZTAM-00235				.O-RING	2			

REAR AXLE HOUSING(#0560-)

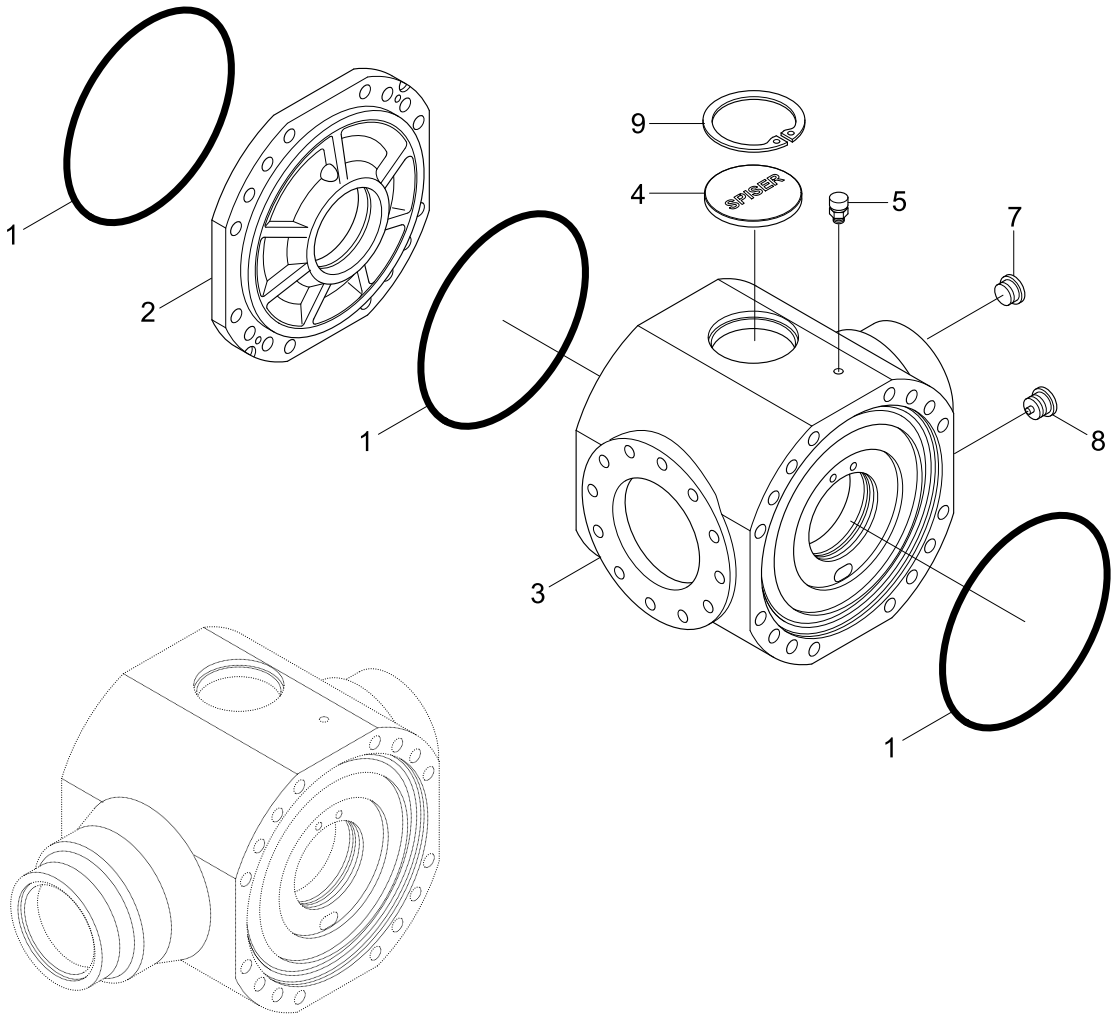

Item	Part_No	IS	Ord	T	Description	Qty	Serial_No	ITC	Remark
*	81N4-40021				AXLE-REAR	1	#0560 -	-	
1	ZTAM-00001				.O-RING	3			
2	ZTAM-00002				.COVER-INTERMEDIATE	1			
3	ZTAM-00112				.HOUSING	1			
4	ZTAM-00004				.PLUG	1			
5	ZTAM-00005				.VENT	1			
7	ZTAM-00006				.PLUG	1			
8	ZTAM-00570				.PLUG-MAGNET	1			
9	ZTAM-00008				.CIRCLIP	1			

REAR AXLE DIFFERENTIAL(#0560-)

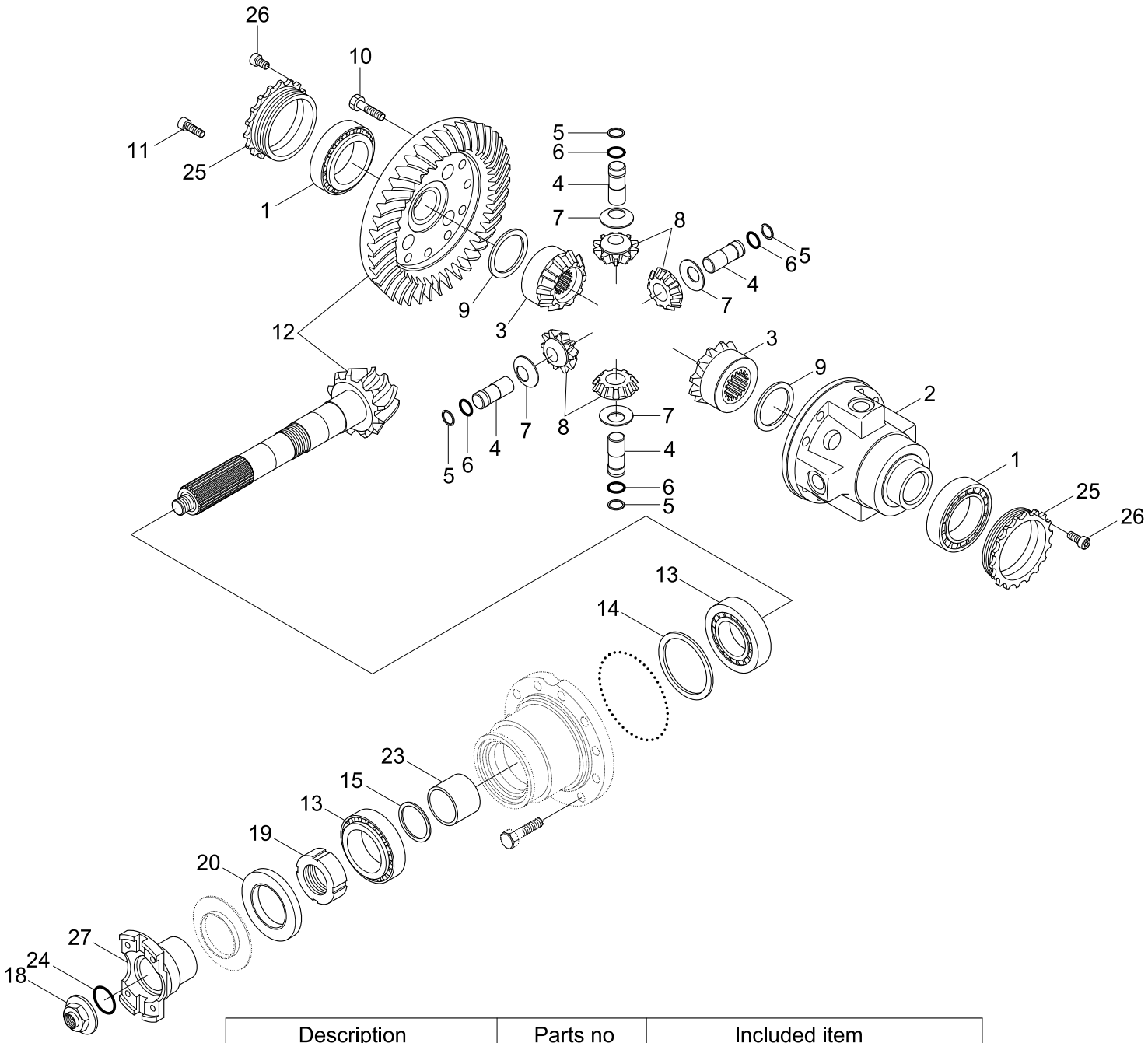

Description	Parts no	Included item
Rear axle differential kit	ZTAM-00039	2, 3, 4, 5, 6, 7, 8, 9

Item	Part_No	IS	Ord	T	Description	Qty	Serial_No	ITC	Remark
*	@				REAR AXLE	1	#0560 -	-	NOT
1	ZTAM-00015				.BEARING-TAPER ROLLER	2			
K2	ZTAM-00026				.CARRIER-DIFFERENTIAL	1			
K3	ZTAM-00021				.GEAR-DIFFERENTIAL SIDE	2			
K4	ZTAM-00610				.PIN	4			
K5	ZTAM-00038				.CIRCLIP	4			
K6	ZTAM-00023				.CIRCLIP	4			
K7	ZTAM-00024				.WASHER-FRICTION	4			
K8	1120400404				.PINION-DIFFERENTIAL	4			
K9	ZTAM-00020				.WASHER-FRICTION	2			
10	ZTAM-00019				.BOLT	12			
11	ZTAM-00017				.BOLT-CYLINDER	4			
12	ZTAM-00612				.GEAR SET-BEVEL	1			
13	ZTAM-00027				.BEARING-TAPER ROLLER	2			
14	ZTAM-00028				.SHIM(0.20T)	1			
	ZTAM-00029				.SHIM(0.30T)	1			
	ZTAM-00030				.SHIM(0.15T)	1			
	ZTAM-00031				.SHIM(0.10T)	1			
15	ZTAM-00010				.SHIM(0.15T)	1			
	ZTAM-00011				.SHIM(0.20T)	1			
	ZTAM-00012				.SHIM(0.40T)	1			
	ZTAM-00013				.SHIM(0.50T)	1			
18	ZTAM-00037				.NUT	1			
19	ZTAM-00033				.NUT-RING	1			
20	ZTAM-00118				.SEAL	1			

Item	Part_No	IS	Ord	T	Description	Qty	Serial_No	ITC	Remark
23	ZTAM-00032				.SPACER	1			
24	ZTAM-00009				.O-RING	1			
25	ZTAM-00016				.NUT-RING	2			
26	ZTAM-00018				.BOLT-CYLINDER	2			
27	ZTAM-00571				.FLANGE	1			
K	ZTAM-00039				DIFFERENTIAL KIT	1			SEE ILLUST

REAR AXLE HUB REDUCTION(#0560-)

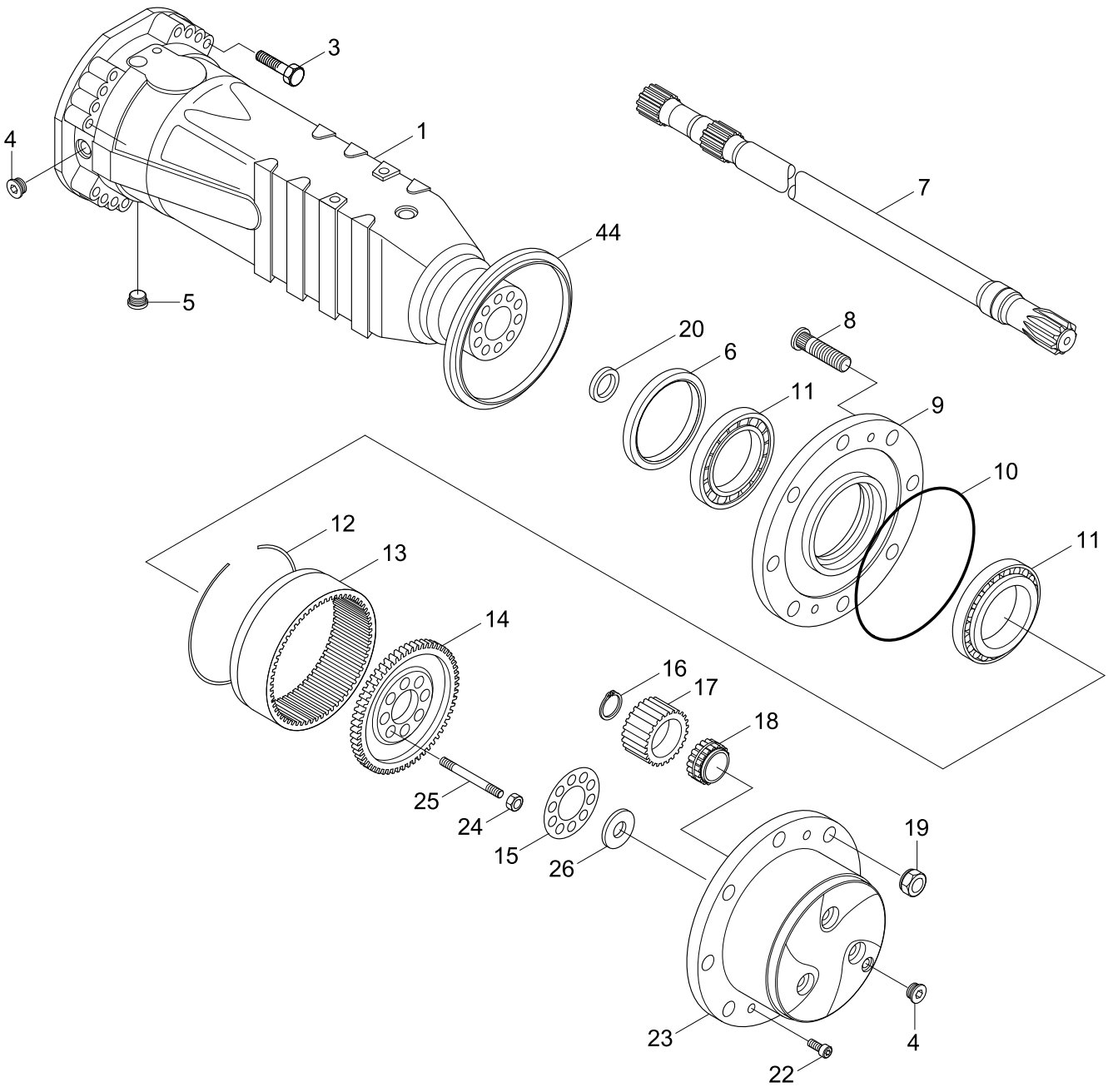

Description	Parts no	Included item
Planet gear carrier kit	ZTAM-00641	16, 17, 18, 23, 26
Ring gear support kit	ZTAM-00615	12, 13, 14

Item	Part_No	IS	Ord	T	Description	Qty	Serial_No	ITC	Remark
*	@				REAR AXLE	1	#0560 -	-	NOT
1	ZTAM-00613				.CASE-AXLE	2			
3	ZTAM-00044				.NUT	32			
4	ZTAM-00006				.PLUG	4			
5	ZTAM-00570				.PLUG-MAGNET	2			
6	ZTAM-00064				.SEAL	2			
7	ZTAM-00114				.SHAFT-HALF	2			
8	ZTAM-00066				.STUD-WHEEL	16			
9	ZTAM-00614				.HUB-WHEEL	2			
10	ZTAM-00068				.O-RING	2			
11	ZTAM-00065				.BEARING	4			
K12	ZTAM-00079				.CIRCLIP	2			
K13	ZTAM-00069				.GEAR-RING	2			
K14	ZTAM-00070				.SUPPORT	2			
15	ZTAM-00082				.PLATE-LOCKING	2			
K16	ZTAM-00071				.CIRCLIP	8			
K17	ZTAM-00072				.GEAR-PLANET	8			
K18	ZTAM-00073				.BEARING	8			
19	ZTAM-00074				.NUT	20			
20	ZTAM-00115				.SEAL	2			
22	ZTAM-00075				.BOLT-COUNTERSUNK	4			
K23	ZTAM-00579				.CARRIER-PLANET GEAR	2			
24	ZTAM-00078				.NUT	16			
25	ZTAM-00077				.STUD	16			
K26	ZTAM-00116				.WASHER-FRICTION	2			

Item	Part_No	IS	Ord	T	Description	Qty	Serial_No	ITC	Remark
29	ZTAM-00083				.STUD-WHEEL	4			
44	ZTAM-00616				.PLATE-COVER	2			
K	ZTAM-00641				CARRIER KIT	2			SEE ILLUST
	ZTAM-00615				RING GEAR SUPPORT KIT	2			SEE ILLUST

REAR AXLE BRAKE DISC(#0560-)

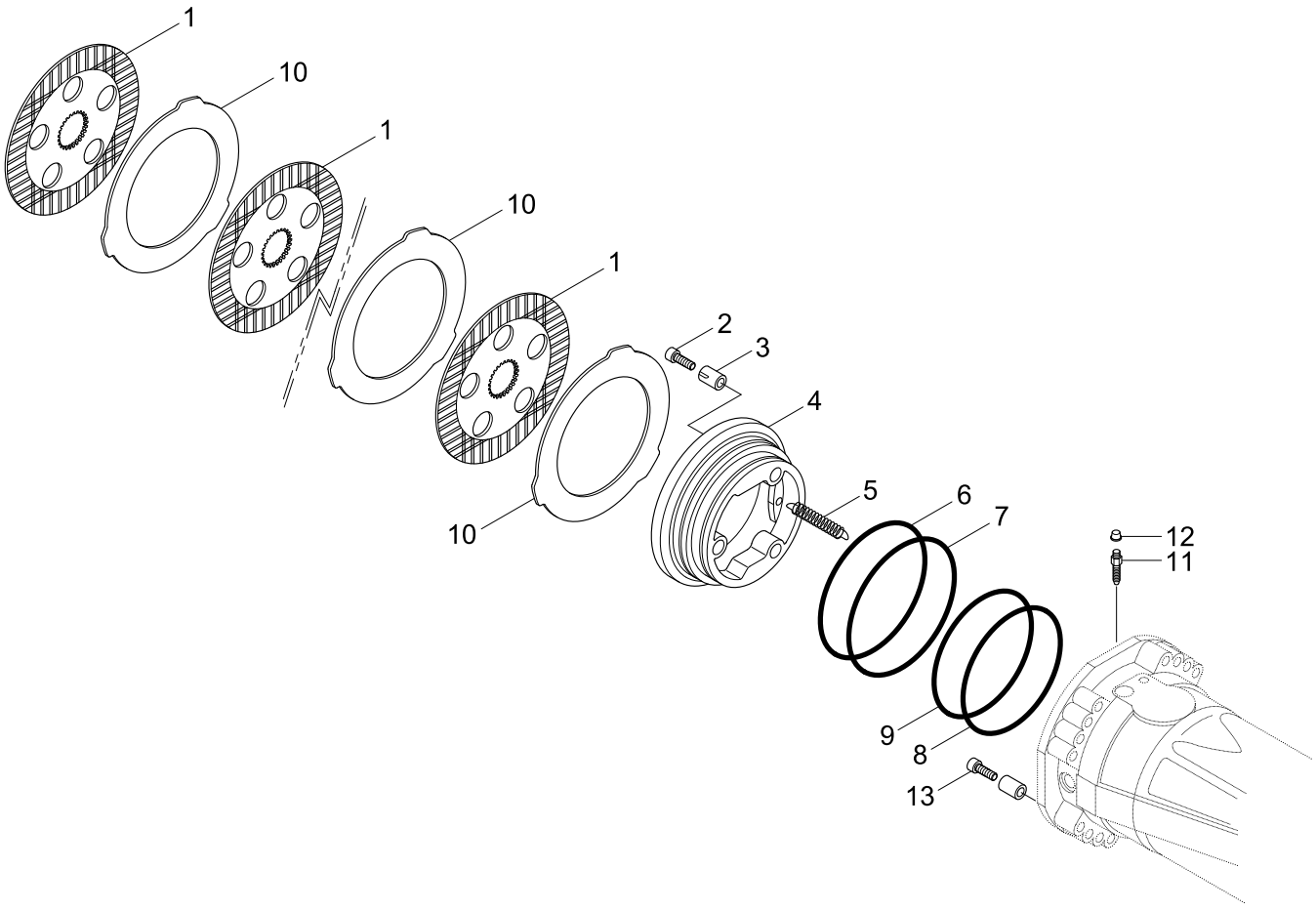

Description	Parts no	Included item
Rear axle piston kit	ZTAM-00591	3, 4, 6, 7, 8, 9

Item	Part_No	IS	Ord	T	Description	Qty	Serial_No	ITC	Remark
*	@				REAR AXLE	1	#0560 -	-	NOT
1	ZTAM-00090				.DISC-BRAKE	8			
2	ZTAM-00617				.BOLT-ADJUSTING	6			
K3	ZTAM-00092				.SPRING	6			
K4	ZTAM-00093				.PISTON	2			
5	ZTAM-00094				.SPRING	6			
K6	ZTAM-00586				.RING-BACK UP	2			
K7	ZTAM-00587				.O-RING	2			
K8	ZTAM-00588				.RING-BACK UP	2			
K9	ZTAM-00589				.O-RING	2			
10	ZTAM-00099				.INTER DISC-BRAKE	10			
11	ZTAM-00100				.BOLT-BLEEDING	2			
12	ZTAM-00101				.PLUG	2			
13	ZTAM-00618				.BOLT-PILOT	2			
K	ZTAM-00591				PISTON KIT	2			SEE ILLUST

TRANSMISSION INPUT HOUSING(#0560-)

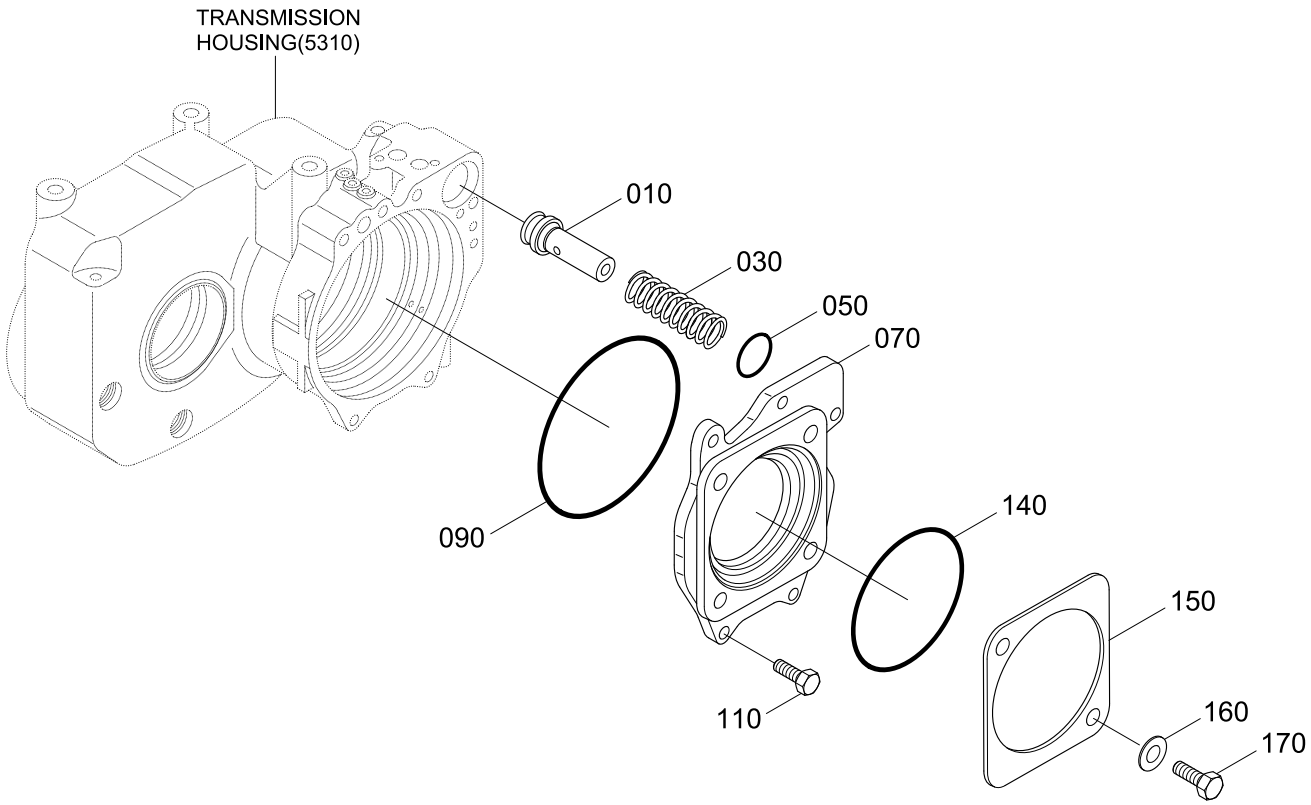

Item	Part_No	IS	Ord	T	Description	Qty	Serial_No	ITC	Remark
*	81N4-40030				TRANSMISSION	1	#0560 -	-	
010	ZGAQ-01980				.PISTON	1			
030	ZGAQ-01981				.SPRING-COMPRESSURE	1			
050	ZGAQ-01995				.O-RING	1			
070	ZGAQ-01996				.HOUSING-INPUT	1			
090	ZGAQ-01997				.O-RING	1			
110	ZGAQ-01998				.SCREW-HEX	5			
140	ZGAQ-00934				.O-RING	1			
150	ZGAQ-01999				.COVER	1			
160	ZGAQ-02000				.WASHER	2			
170	ZGAQ-00754				.SCREW-HEX	2			

TRANSMISSION HOUSING(#0560-)

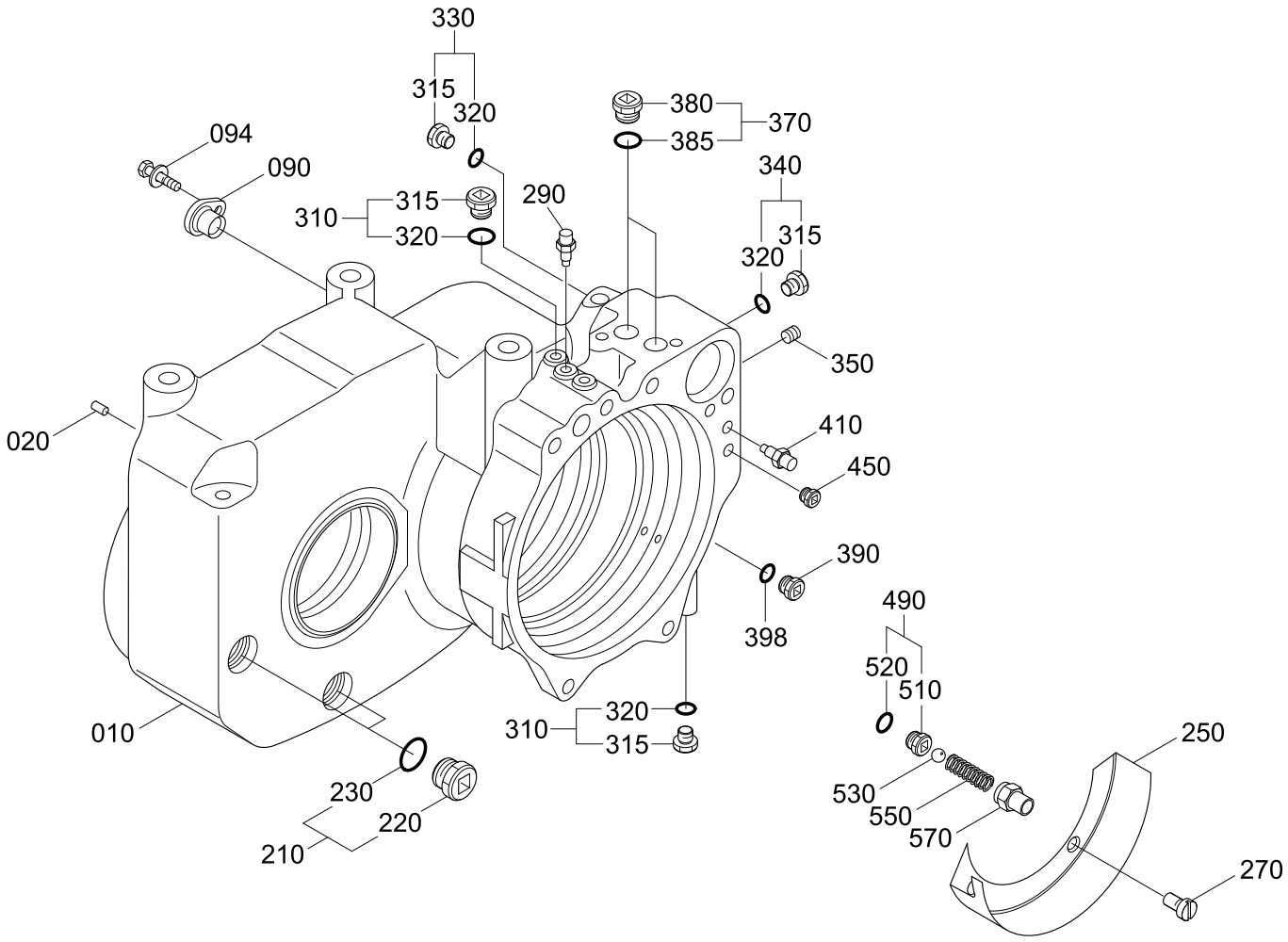

Item	Part_No	IS	Ord	T	Description	Qty	Serial_No	ITC	Remark
*	@				TRANSMISSION	1	#0560 -	-	NOT
010	ZGAQ-02001				.HOUSING	1			
020	ZGAQ-02002				.PIN-SLOT	1			
090	ZGAQ-02003				.COVER-SPLIT	1			
094	ZGAQ-00090				.SCREW-CAP	1			
210	@				.PLUG-SCREW	2			NOT
220	ZGAQ-02004				..PLUG-SCREW	1			
230	ZGAQ-00085				..O-RING	1			
250	ZGAQ-02005				.SHEET-SCREEN	1			
270	ZGAQ-02006				.SCREW-COUNTERS	2			
290	ZGAQ-00956				.PLUG-SCREW	2			
310	@				.PLUG-SCREW	3			NOT
315	ZGAQ-00230				..PLUG-SCREW	1			
320	ZGAQ-00231				..O-RING	1			
330	@				.PLUG-SCREW	2			NOT
315	ZGAQ-00230				..PLUG-SCREW	1			
320	ZGAQ-00231				..O-RING	1			
340	@				.PLUG-SCREW	1			NOT
315	ZGAQ-00230				..PLUG-SCREW	1			
320	ZGAQ-00231				..O-RING	1			
350	ZGAQ-02007				.PLUG	8			
370	@				.PLUG-SCREW	2			NOT
380	ZGAQ-00098				..PLUG-SCREW	1			
385	ZGAQ-00099				..O-RING	1			
390	ZGAQ-00955				.PLUG-SCREW	1			

Item	Part_No	IS	Ord	T	Description	Qty	Serial_No	ITC	Remark
398	ZGAQ-01053				.RING-SEALING	1			
410	ZGAQ-00956				.PLUG-SCREW	1			
450	ZGAQ-02008				.PLUG	1			
490	@				.PIECE-THREADED	1			NOT
510	ZGAQ-02009				..PIECE-THREADED	1			
520	ZGAQ-02010				..O-RING	1			
530	ZGAQ-02011				.BALL	1			
550	ZGAQ-02012				.SPRING-COMPRESSURE	1			
570	ZGAQ-02013				.BREATHER	1			

TRANSMISSION MULTI-DISC BRAKE(#0560-)

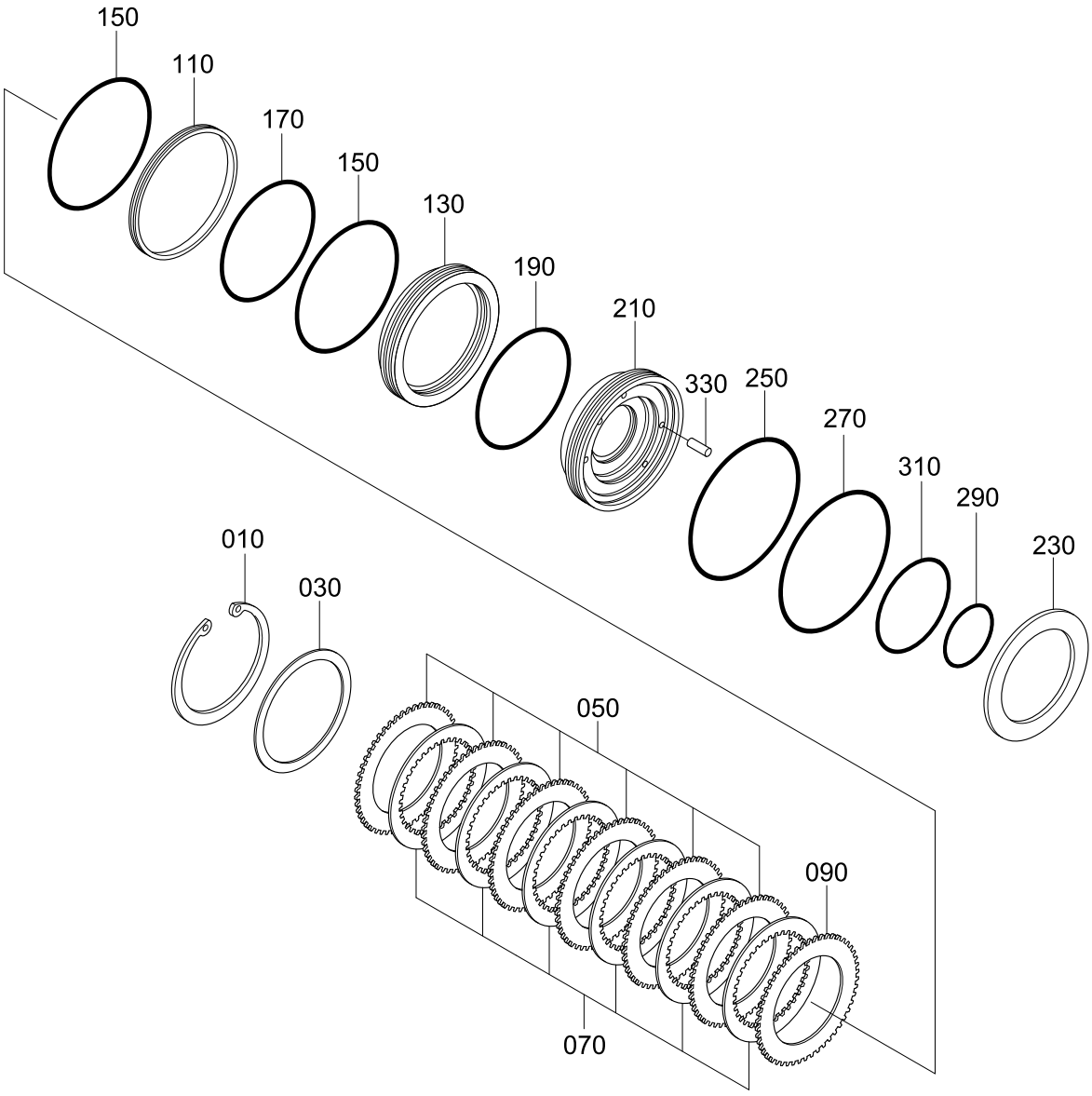

Item	Part_No	IS	Ord	T	Description	Qty	Serial_No	ITC	Remark
*	@				TRANSMISSION	1	#0560 -	-	NOT
010	ZGAQ-00993				.RING-RETAINER	1			
030	ZGAQ-00992				.SHIM-END	1			
050	ZGAQ-01374				.DISC-O/CLUTCH(2.9)	6			
070	ZGAQ-01001				.DISC-I/CLUTCH	6			
090	ZGAQ-00994				.DISC-O/CLUTCH(3.0)	1			
	ZGAQ-00996				.DISC-O/CLUTCH(3.3)	1			
	ZGAQ-01374				.DISC-O/CLUTCH(2.9)	1			
	ZGAQ-01375				.DISC-O/CLUTCH(2.8)	1			
	ZGAQ-00995				.DISC-O/CLUTCH(3.5)	1			
	ZGAQ-00997				.DISC-O/CLUTCH(3.4)	1			
	ZGAQ-00998				.DISC-O/CLUTCH(3.7)	1			
110	ZGAQ-02014				.RING	1			
130	ZGAQ-02015				.RING-PRESSURE	1			
150	ZGAQ-02016				.O-RING	2			
170	ZGAQ-01367				.O-RING	1			
190	ZGAQ-02017				.GASKET	1			
210	ZGAQ-02018				.PISTON	1			
230	ZGAQ-02019				.SET-SPRING	1			
250	ZGAQ-02020				.GASKET	1			
270	ZGAQ-02021				.GASKET	1			
290	ZGAQ-02022				.GASKET	1			
310	ZGAQ-02023				.GASKET	1			
330	ZGAQ-02024				.PIN	2			

TRANSMISSION COUPLING(#0560-)

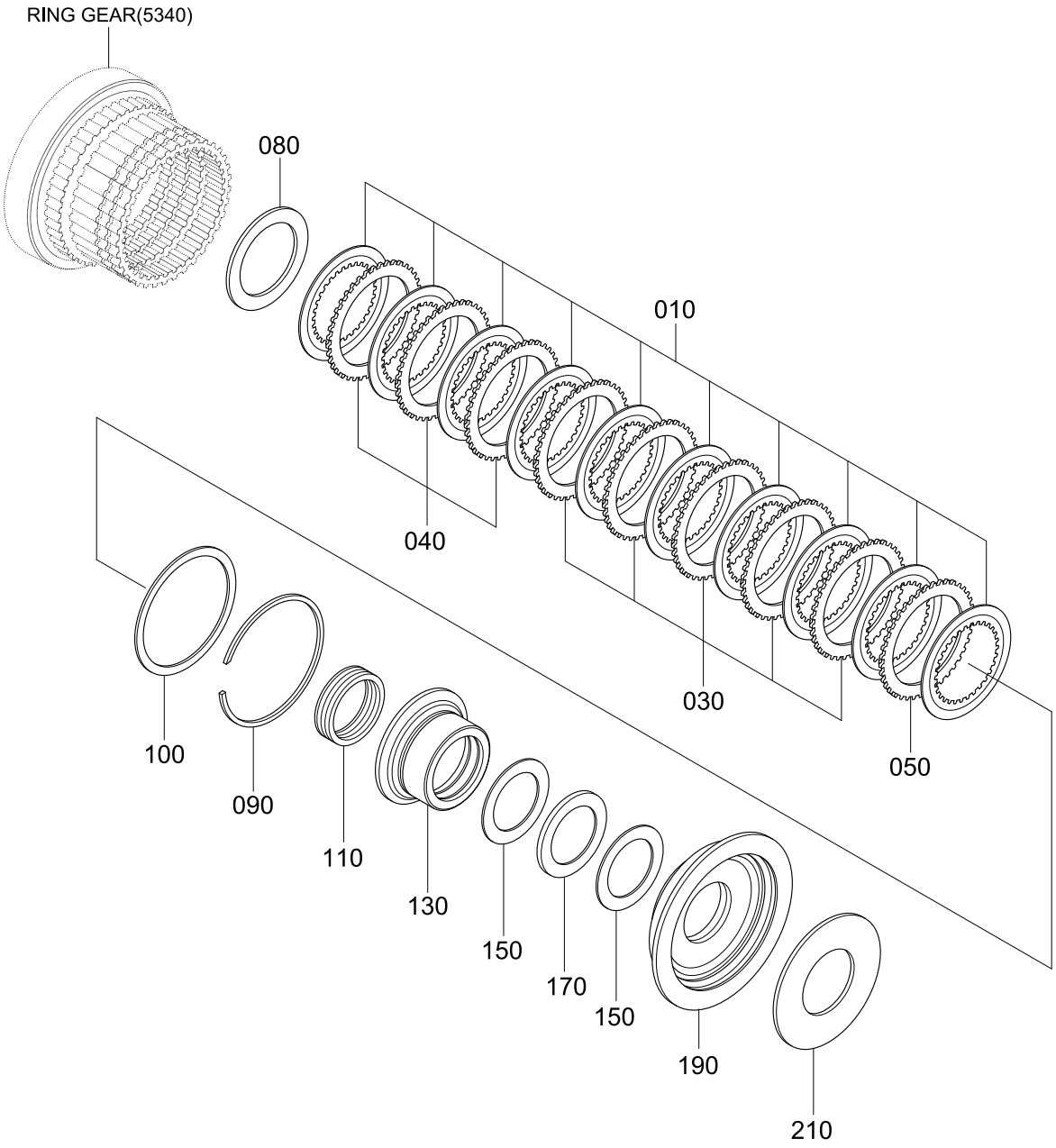

Item	Part_No	IS	Ord	T	Description	Qty	Serial_No	ITC	Remark
*	@				TRANSMISSION	1	#0560 -	-	NOT
010	ZGAQ-02025				.DISC-CLUTCH	10			
030	ZGAQ-02026				.DISC-O/CLUTCH(1.4)	5			
040	ZGAQ-02027				.DISC-O/CLUTCH(1.2)	3			
050	ZGAQ-02027				.DISC-O/CLUTCH(1.2)	1			
	ZGAQ-02026				.DISC-O/CLUTCH(1.4)	1			
	ZGAQ-02028				.DISC-O/CLUTCH(1.6)	1			
080	ZGAQ-02029				.WASHER	1			
090	ZGAQ-02030				.RING-SNAP	1			
100	ZGAQ-02031				.SHIM(1.0T)	1			
110	ZGAQ-02032				.SPRING-COMPRESSURE	1			
130	ZGAQ-02033				.PIECE-THRUST	1			
150	ZGAQ-00826				.WASHER-AXIAL	2			
170	ZGAQ-02034				.CAGE-ROLLER	1			
190	ZGAQ-02035				.PISTON	1			
210	ZGAQ-02036				.SET-SPRING	1			

Item	Part_No	IS	Ord	T	Description	Qty	Serial_No	ITC	Remark
*	@				TRANSMISSION	1	#0560 -	-	NOT
010	ZGAQ-02037				.GEAR-PLANET	3			
030	ZGAQ-02038				.BEARING-ROLLER	3			
050	ZGAQ-02051				.CARRIER-PLANET	1			
060	ZGAQ-02039				.PIN-SLOT	6			
070	ZGAQ-02040				.BEARING-ROLLER	1			
090	ZGAQ-02041				.RING-RETAINER	3			
110	ZGAQ-02042				.GEAR-RING	1			
130	ZGAQ-02043				.BEARING-BALL	1			
150	ZGAQ-02044				.RING-RETAINER	1			
170	ZGAQ-02052				.SHAFT-INPUT	1			
190	ZGAQ-02045				.DISC-CENTERING	1			
210	ZGAQ-02046				.RING-RETAINER	1			
230	ZGAQ-02047				.RING-RETAINER	1			
270	ZGAQ-02040				.BEARING-ROLLER	1			
290	ZGAQ-02048				.WASHER	1			
310	ZGAQ-02049				.SCREW-HEX	4			
350	ZGAQ-02050				.CAGE-NEEDLE	1			

TRANSMISSION OUTPUT GROUP(#0560-)

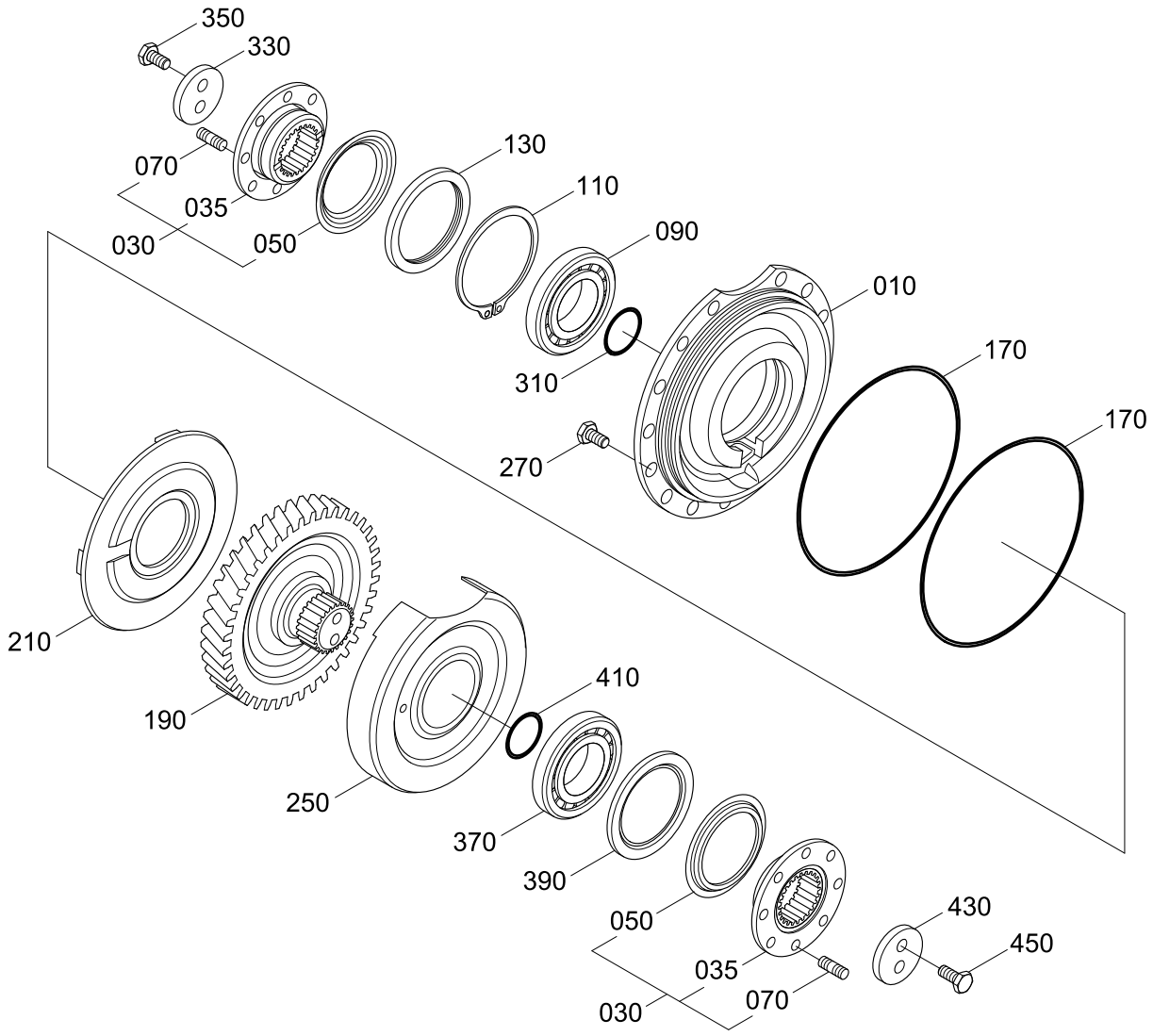

Item	Part_No	IS	Ord	T	Description	Qty	Serial_No	ITC	Remark
*	@				TRANSMISSION	1	#0560 -	-	NOT
010	ZGAQ-02056				.COVER	1			
030	ZGAQ-02053				.FLANGE-OUTPUT	2			
035	ZGAQ-01091				..FLANGE-OUTPUT	1			
050	ZGAQ-02054				..SHEET	1			
070	ZGAQ-01093				..STUD	8			
090	ZGAQ-01086				.BEARING-BALL	1			
110	ZGAQ-01039				.RING-RETAINER	1			
130	ZGAQ-02057				.SEAL-SHAFT	1			
170	ZGAQ-01997				.O-RING	2			
190	ZGAQ-02058				.GEAR-OUTPUT	1			
210	ZGAQ-02059				.DEFLECTOR-OIL	1			
250	ZGAQ-02060				.SHEET-SCREEN	1			
270	ZGAQ-02061				.SCREW-HEX	5			
310	ZGAQ-01094				.O-RING	1			
330	ZGAQ-02062				.WASHER	1			
350	ZGAQ-00447				.SCREW-HEX	2			
370	ZGAQ-01086				.BEARING-BALL	1			
390	ZGAQ-02057				.SEAL-SHAFT	1			
410	ZGAQ-01094				.O-RING	1			
430	ZGAQ-01095				.WASHER	1			
450	ZGAQ-00447				.SCREW-HEX	2			

TRANSMISSION GEAR SHIFT SENSOR(#0560-)

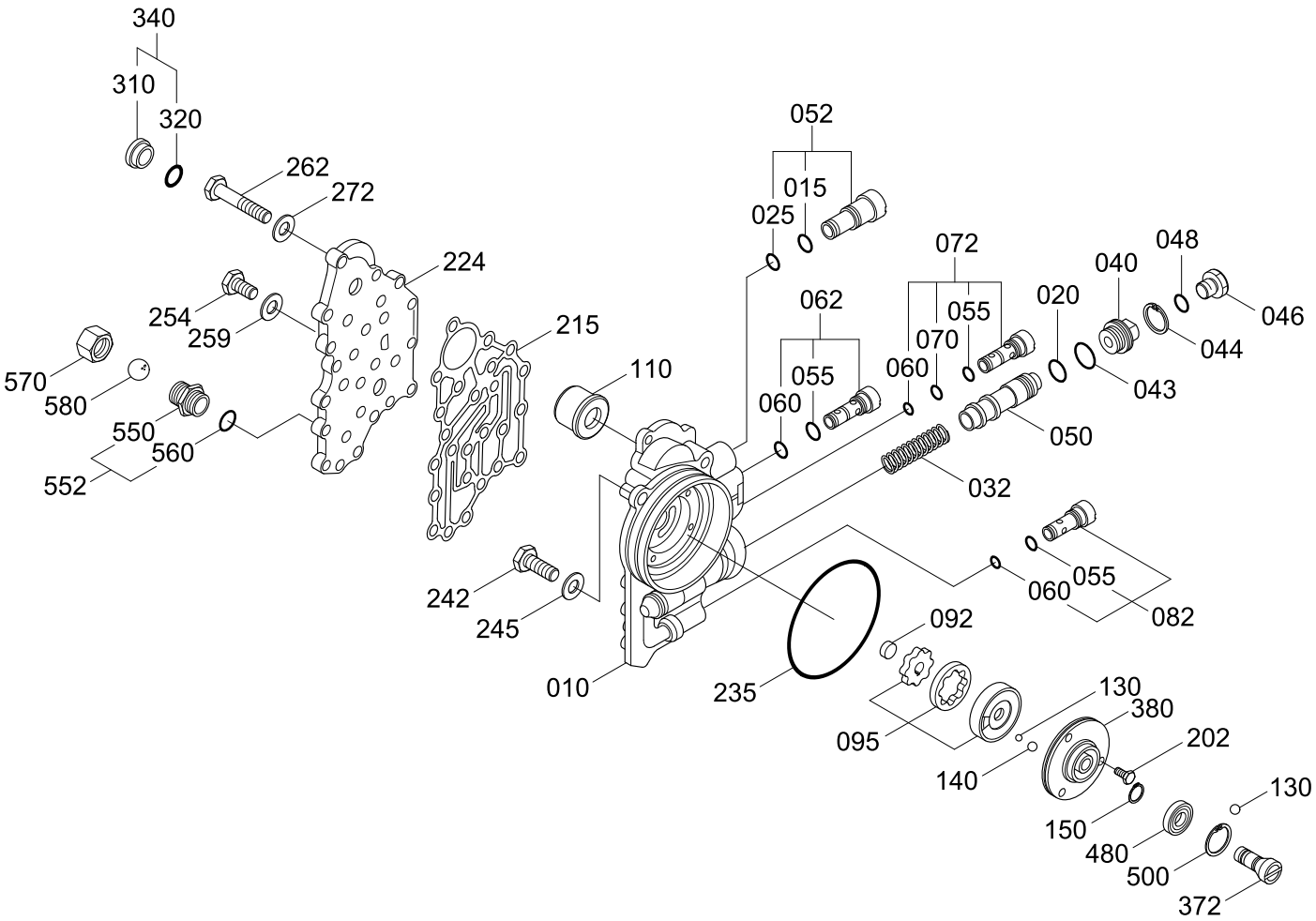

Item	Part_No	IS	Ord	T	Description	Qty	Serial_No	ITC	Remark
*	@				TRANSMISSION	1	#0560 -	-	NOT
010	ZGAQ-02063				.HOUSING	1			
020	ZGAQ-02064				.GASKET	1			
032	ZGAQ-01050				.SPRING-COMPRESSURE	1			
040	ZGAQ-02065				.PLUG	1			
043	ZGAQ-00680				.O-RING	1			
044	ZGAQ-01079				.RING-RETAINER	1			
046	ZGAQ-00955				.PLUG-SCREW	1			
048	ZGAQ-01053				.RING-SEALING	1			
050	ZGAQ-01054				.PISTON	1			
052	ZGAQ-01055				.VALVE-RELIEF	1			
015	ZGAQ-01056				..O-RING	1			
025	ZGAQ-01057				..O-RING	1			
062	ZGAQ-01058				.VALVE-CHECK	1			
055	ZGAQ-02066				..O-RING	1			
060	ZGAQ-02067				..O-RING	1			
072	ZGAQ-01059				.VALVE-CHECK	1			
055	ZGAQ-02066				..O-RING	1			
060	ZGAQ-02067				..O-RING	1			
070	ZGAQ-00231				..O-RING	1			
082	ZGAQ-01060				.VALVE-CHECK	1			
055	ZGAQ-02066				..O-RING	1			
060	ZGAQ-02067				..O-RING	1			
092	ZGAQ-01061				.SLEEVE-NEEDLE	1			
095	ZGAQ-02068				.SET-ROTOR	1			

Item	Part_No	IS	Ord	T	Description	Qty	Serial_No	ITC	Remark
110	ZGAQ-01063				.FILTER-SCREEN	1			
130	ZGAQ-01064				.BALL	4			
140	ZGAQ-01065				.SPRING-COMPRESSURE	3			
150	ZGAQ-01066				.RING-RETAINER	1			
202	ZGAQ-01067				.SCREW-HEX	3			
215	ZGAQ-02070				.GASKET	1			
224	ZGAQ-01069				.COVER	1			
235	ZGAQ-01070				.O-RING	2			
242	ZGAQ-01071				.SCREW-CAP	1			
245	ZGAQ-01074				.WASHER	1			
254	ZGAQ-01072				.SCREW-HEX	23			
259	ZGAQ-01074				.WASHER	23			
262	ZGAQ-01073				.SCREW-CAP	2			
272	ZGAQ-01074				.WASHER	2			
340	@				.PLUG-SCREW	1			NOT
310	ZGAQ-00924				..PLUG	1			
320	ZGAQ-00652				..O-RING	1			
372	ZGAQ-02071				.SHAFT-PUMP	1			
380	ZGAQ-01077				.COVER-PUMP	1			
480	ZGAQ-01078				.BEARING-BALL	1			
500	ZGAQ-01079				.RING-RETAINER	1			
552	@				.SCREW-IN SLEEVE	2			NOT
550	ZGAQ-00682				..SOCKET	1			
560	ZGAQ-00099				..O-RING	1			
570	ZGAQ-02072				.NUT-UNION	2			

Item	Part_No	IS	Ord	T	Description	Qty	Serial_No	ITC	Remark
580	ZGAQ-02073				.BALL	2			

TRANSMISSION OIL PIPE(#0560-)

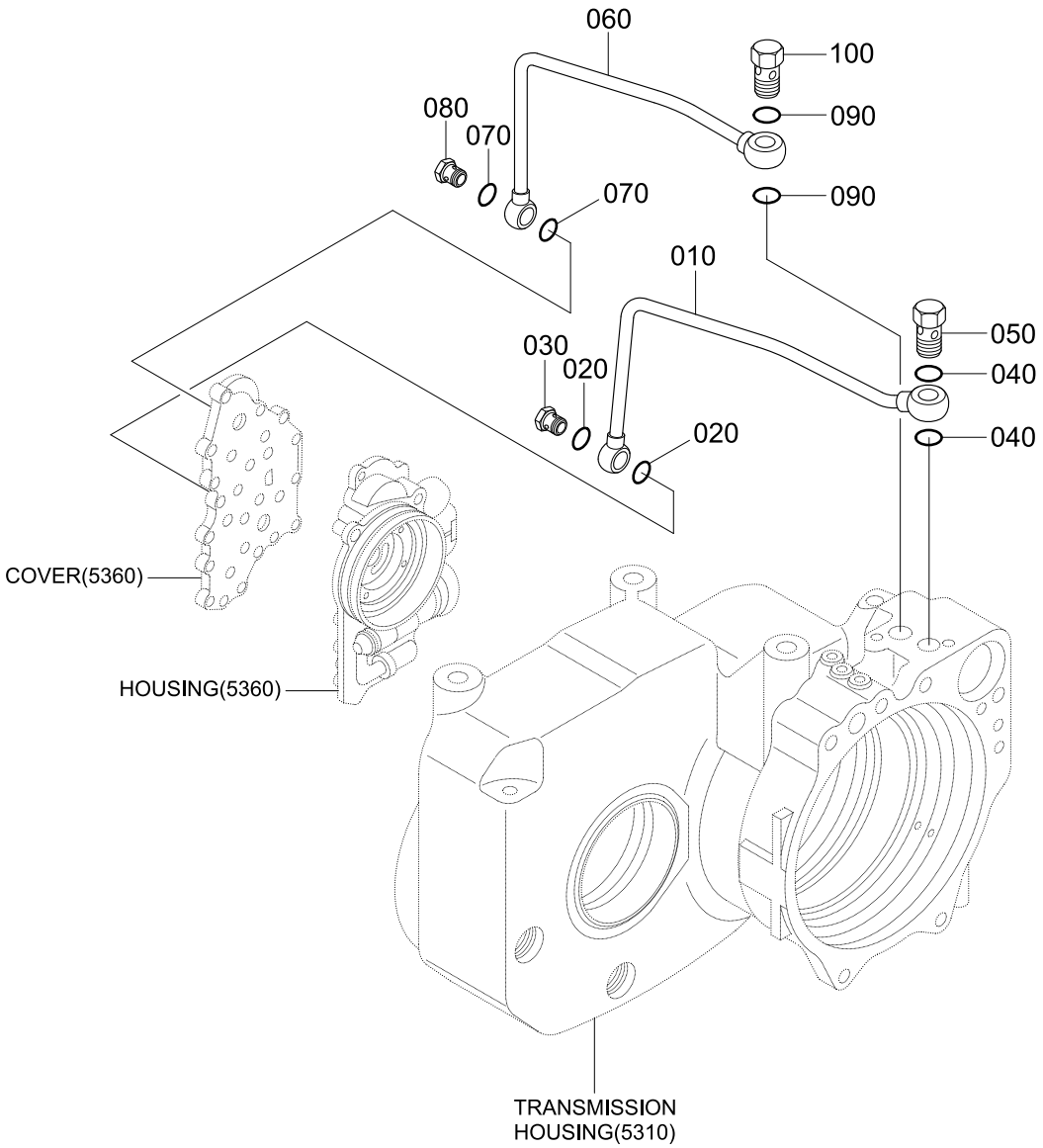

Item	Part_No	IS	Ord	T	Description	Qty	Serial_No	ITC	Remark
*	@				TRANSMISSION	1	#0560 -	-	NOT
010	ZGAQ-02074				.TUBE-OIL	1			
020	ZGAQ-02075				.RING-SEALING	2			
030	ZGAQ-02076				.SCREW-UNION	1			
040	ZGAQ-02077				.RING-SEALING	2			
050	ZGAQ-02078				.SCREW-UNION	1			
060	ZGAQ-02079				.TUBE-OIL	1			
070	ZGAQ-02075				.RING-SEALING	2			
080	ZGAQ-02076				.SCREW-UNION	1			
090	ZGAQ-02077				.RING-SEALING	2			
100	ZGAQ-02078				.SCREW-UNION	1			

CAB MOUNTING

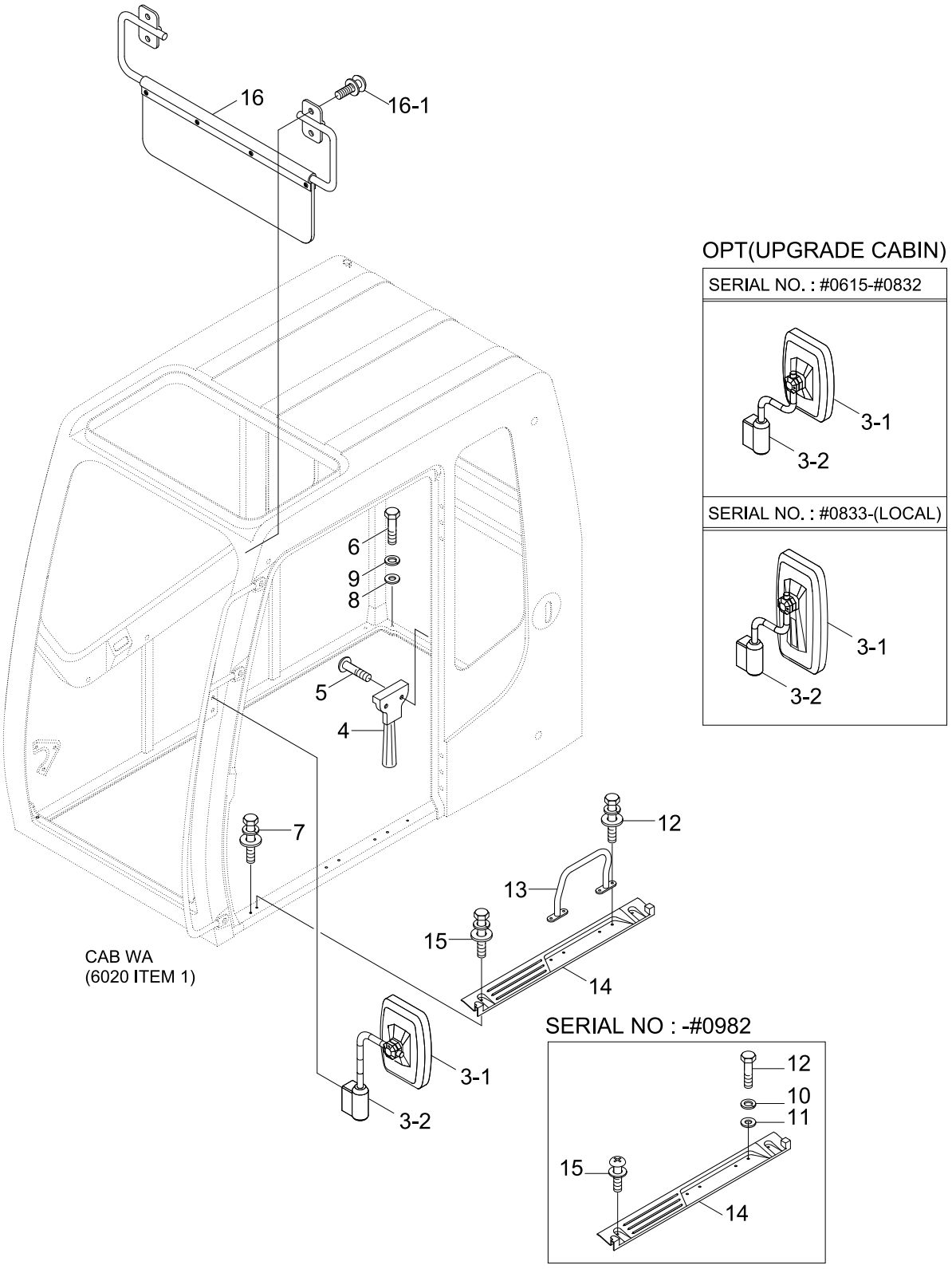

Item	Part_No	IS	Ord	T	Description	Qty	Serial_No	ITC	Remark
3	71N8-46000				MIRROR	1	- #0247		
	71N6-47000				MIRROR & STAY ASSY-LH	1	#0248 - #0619	A	
	71N6-47000BG				MIRROR & STAY ASSY-LH	1	#0620 - #0750	D	
	71N6-47001BG				MIRROR & STAY ASSY-LH	1	#0751 -	B	
	71N8-47000BG				MIRROR & STAY ASSY-LH	1	#0615 - #0750	-	UPGRADE CABIN
	71N8-47001BG				MIRROR & STAY ASSY-LH	1	#0751 -	B	UPGRADE,EXPORT
					MIRROR & STAY ASSY-LH	1	#0751 - #0832	B	UPGRADE,LOCAL
	71N8-47301BG				MIRROR & STAY ASSY-LH	1	#0833 -	B	UPGRADE,LOCAL
3-1	71N8-47100				.MIRROR	1	#0248 - #0750	-	UPGRADE CABIN
	71N8-47101				.MIRROR	1	#0751 -	B	UPGRADE,EXPORT
					.MIRROR	1	#0751 - #0832	B	UPGRADE,LOCAL
	71M8-12001				.MIRROR	1	#0833 -	B	UPGRADE,LOCAL
3-2	71N8-47200				.STAY ASSY-LH	1	#0248 - #0619	-	
	71N8-47200BG				.STAY ASSY	1	#0620 -	D	
4	71E1-60340				HAMMER-SAFETY	1			
5	S141-040166				SCREW-FLAT HD	2			
6	S017-120706				BOLT-HEX	8			
7	S037-122526				BOLT-W/WASHER	1			
8	S403-122006				WASHER-PLAIN	8			
9	S411-120006				WASHER-SPRING	8			
10	S411-100006				WASHER-SPRING	4	- #0982	-	
11	S403-102006				WASHER-PLAIN	4	- #0982	-	
12	S017-100256				BOLT-HEX	4	- #0982		
	S037-102526				BOLT-W/WASHER	4	#0983 -	A	
13	71N6-03560				RAIL-HAND	1			

Item	Part_No	IS	Ord	T	Description	Qty	Serial_No	ITC	Remark
14	71N6-10270				PLATE	1	- #0982		
	71N6-10271				PLATE	1	#0983 -	B	
15	S131-051546				SCREW-W/WASHER	2	- #0982		
	S037-101526				BOLT-W/WASHER	2	#0983 -	D	
16	71N6-03632				SUN VISOR ASSY	1			
16-1	S132-060856				SCREW-W/WASHER	4			

CAB ASSY(1/6)

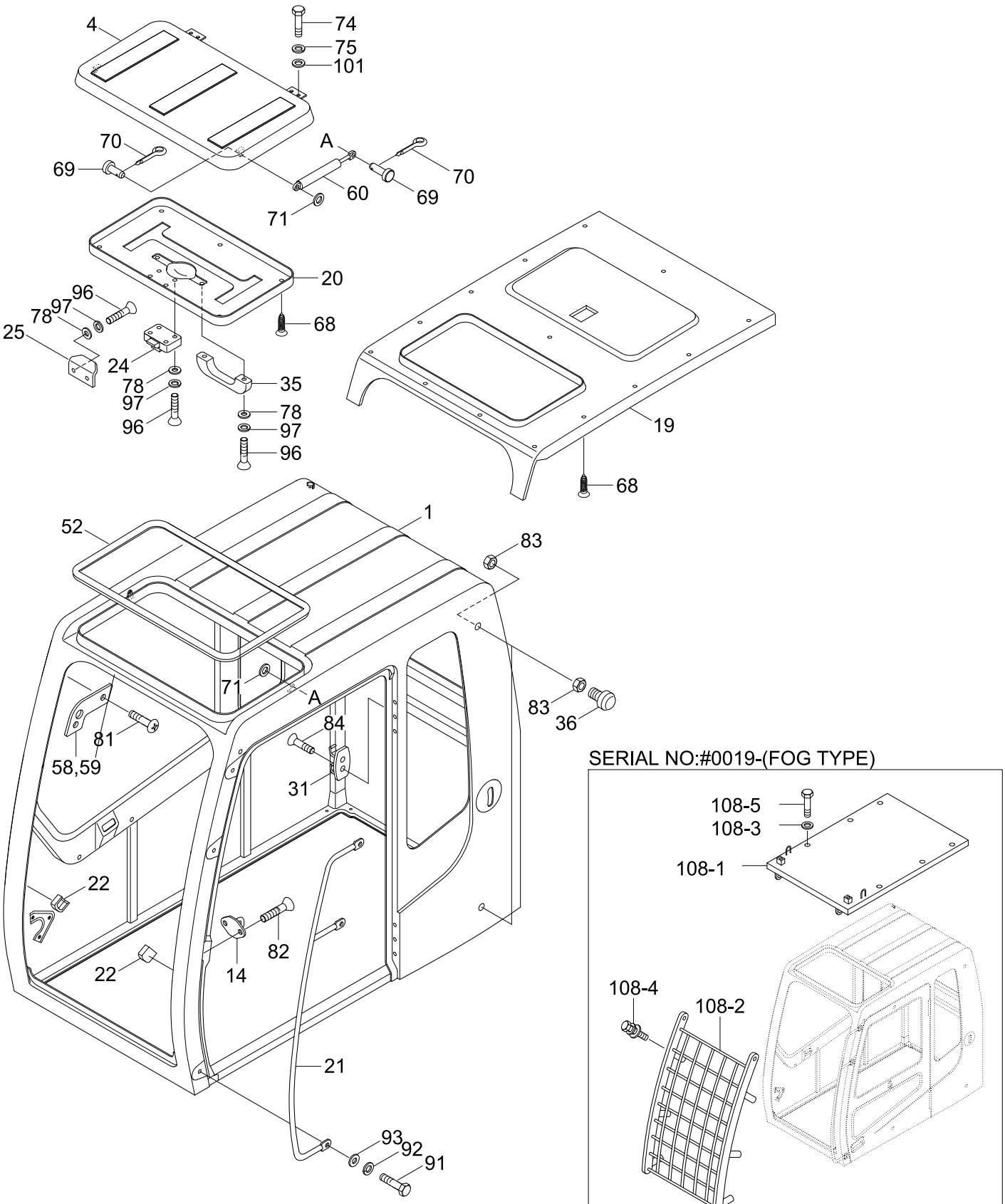
4
74
75
101
70
69
A
70
60
69
71
20
68
96
97
78
25
24
78
97
96
35
78
97
96
19
68
52
1
83
71
A
83
36
84
81
58,59
31
22
22
14
82
21
93
92
91
SERIAL NO:#0019-(FOG TYPE)
108-5
108-3
108-1
108-4
108-2

Item	Part_No	IS	Ord	T	Description	Qty	Serial_No	ITC	Remark
*	71N4-10000				CAB ASSY	1	- #0619		
	71N4-10000BG				CAB ASSY	1	#0620 -	D	
	73N4-10000				CAB ASSY	1	#0019 - #0619	-	
	73N4-10000BG				CAB ASSY	1	#0620 -	D	
1	71N6-00011				.CAB WA	1	- #0619		
	71N6-00011BG				.CAB WA	1	#0620 -	D	
	73N6-00010				.CAB WA	1	#0019 - #0619	-	
	73N6-00010BG				.CAB WA	1	#0620 -	D	
4	71N6-02400				.SUN ROOF WA	1	- #0619		
	71N6-02400BG				.SUN ROOF WA	1	#0620 -	D	
14	71N6-02770				.STRIKER	1			
19	71N6-02810				.LINING(1)-HEAD	1			
20	71N6-02820				.LINING(2)-HEAD	1			
21	71N6-02831				.RAIL-HAND	1	#0001 - #0619	-	
	71N6-02831BG				.RAIL-HAND	1	#0620 -	D	
22	71N6-02841				.STOPPER	2			
24	71N6-02860				.LATCH-ROOF	1			
25	71N6-02870				.BRACKET-ROOF	1			
31	71N6-02920				.HOOK-COAT	1			
35	E171-1147				.HANDLE	1			
36	71EH-13150				.BUMPER-RUBBER	2			
52	S772-020300				.WEATHER STRIP	1			
58	71N6-03181				.STOPPER-LH	1			
59	71N6-03191				.STOPPER-RH	1			
60	71N6-03201				.SPRING-GAS	2	- #0982		

Item	Part_No	IS	Ord	T	Description	Qty	Serial_No	ITC	Remark
60	71N6-03202				.SPRING-GAS	2	#0983 -	B	
68	E171-1310	10			.PLUG-HEADLINER	18			
69	S491-080162				.PIN-CLEVIS	4	- #0982		
	71Q6-03160				.PIN-CLEVIS	4	#0983 -	B	
70	S461-200162				.PIN-SPLIT	4	- #0982		
	S501-070006				.PIN-SELF LOCKING	4	#0983 -	B	
71	S403-082006				.WASHER-PLAIN	4			
74	S015-080206				.BOLT-HEX	4			
75	S411-080006				.WASHER-SPRING	4			
78	S403-052006				.WASHER-PLAIN	8			
81	S141-060206				.SCREW-FLAT HD	4			
82	S145-080166				.SCREW-FLAT HD	2			
83	S203-101006				.NUT-HEX	4			
84	S141-040206				.SCREW-FLAT HD	2			
91	S017-160206				.BOLT-HEX	3			
92	S411-160006				.WASHER-SPRING	3			
93	S403-162006				.WASHER-PLAIN	3			
96	S161-050166				.SCREW-CROSS R/ROUND	8			
97	S411-050006				.WASHER-SPRING	8			
101	S403-082006				.WASHER-PLAIN	4			
108	73N6-05000				.GUARD ASSY	1	#0019 - #0619	-	FOG TYPE
	73N6-05000BG				.GUARD ASSY	1	#0620 -	D	
108-1	73N6-05010				..GUARD WA-TOP	1	#0019 - #0619	-	FOG TYPE
	73N6-05010BG				..GUARD WA-TOP	1	#0620 -	D	
108-2	73N6-05020				..GUARD WA-FRONT	1	#0019 - #0619	-	FOG TYPE

Item	Part_No	IS	Ord	T	Description	Qty	Serial_No	ITC	Remark
108-2	73N6-05020BG				..GUARD WA-FRONT	1	#0620 -	D	
108-3	S441-120006				..WASHER-HARDENED	6	#0019 -	-	FOG TYPE
108-4	S037-122526				..BOLT-W/WASHER	8	#0019 -	-	FOG TYPE
108-5	S017-120306				..BOLT-HEX	6	#0019 -	-	FOG TYPE

CAB ASSY(1/6, STD & FOG TYPE, #0615-)

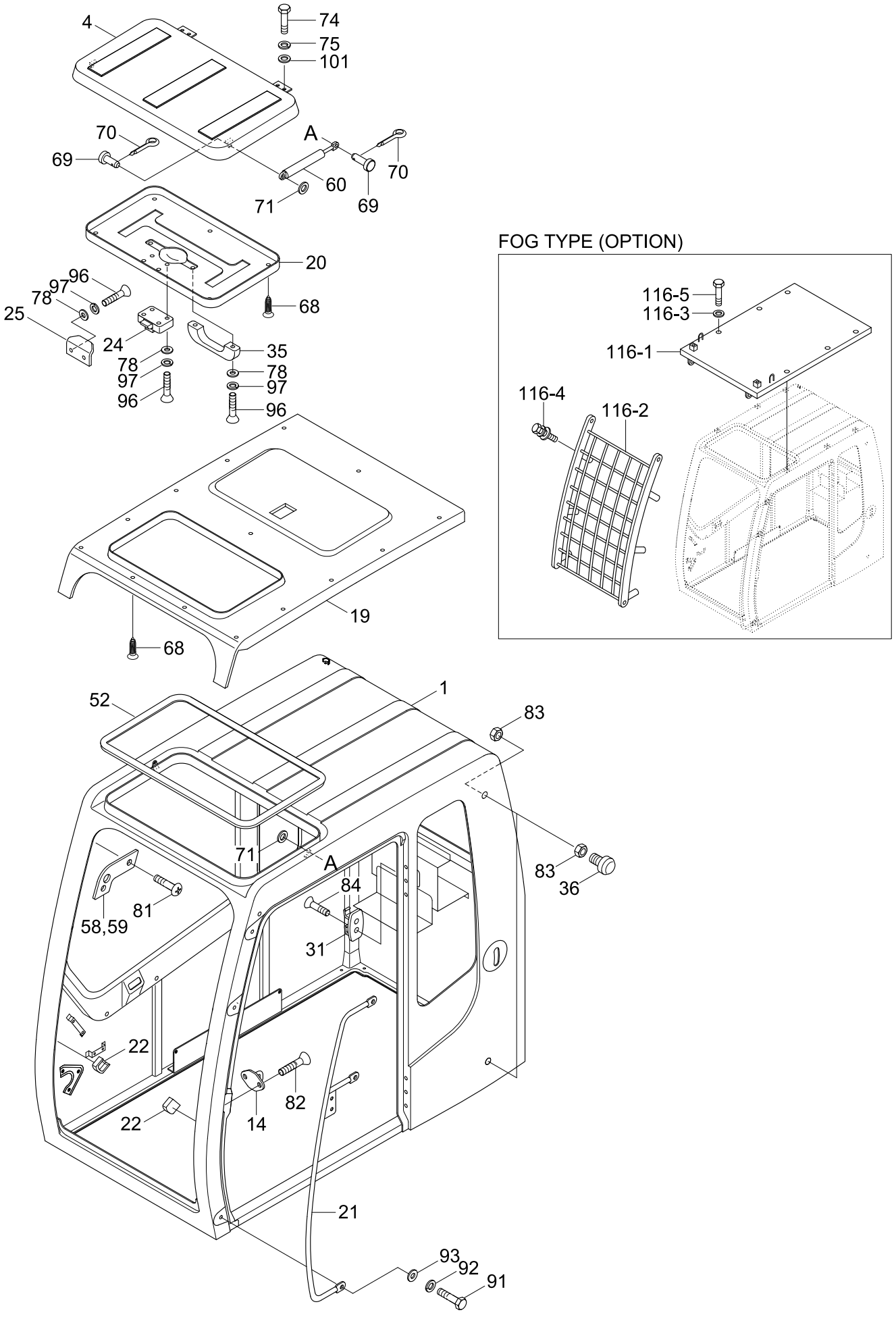

Item	Part_No	IS	Ord	T	Description	Qty	Serial_No	ITC	Remark
*	76N4-10000				CAB ASSY	1	#0615 -	-	STD
	76N4-19000				CAB ASSY	1	#0615 -	-	FOG TYPE
1	76N6-00010				.CAB WA	1			STD
	76N6-05010				.CAB WA	1			FOG TYPE
4	71N6-02400BG				.SUN ROOF WA	1			
14	71N6-02770				.STRIKER	1			
19	71N6-02810				.LINING(1)-HEAD	1			
20	71N6-02820				.LINING(2)-HEAD	1			
21	71N6-02831BG				.RAIL-HAND	1			
22	71N6-02841				.STOPPER	2			
24	71N6-02860				.LATCH-ROOF	1			
25	71N6-02870				.BRACKET-ROOF	1			
31	71N6-02920				.HOOK-COAT	1			
35	E171-1147				.HANDLE	1			
36	71EH-13150				.BUMPER-RUBBER	2			
52	S772-020300				.WEATHER STRIP	1			
58	71N6-03181				.STOPPER-LH	1			
59	71N6-03191				.STOPPER-RH	1			
60	71N6-03201				.SPRING-GAS	2	- #0982		
	71N6-03202				.SPRING-GAS	2	#0983 -	B	
68	E171-1310	10			.PLUG-HEADLINER	18			
69	S491-080162				.PIN-CLEVIS	4	- #0982		
	71Q6-03160				.PIN-CLEVIS	4	#0983 -	B	
70	S461-200162				.PIN-SPLIT	4	- #0982		
	S501-070006				.PIN-SELF LOCKING	4	#0983 -	B	

Item	Part_No	IS	Ord	T	Description	Qty	Serial_No	ITC	Remark
71	S403-08200B				.WASHER-PLAIN	4			
74	S015-080206				.BOLT-HEX	4			
75	S411-080006				.WASHER-SPRING	4			
78	S403-05200B				.WASHER-PLAIN	8			
81	S141-060206				.SCREW-FLAT HD	4			
82	S145-080166				.SCREW-FLAT HD	2			
83	S203-101006				.NUT-HEX	4			
84	S141-040206				.SCREW-FLAT HD	2			
91	S017-160206				.BOLT-HEX	3			
92	S411-160006				.WASHER-SPRING	3			
93	S403-162006				.WASHER-PLAIN	3			
96	S161-050166				.SCREW-CROSS R/ROUND	8			
97	S411-050006				.WASHER-SPRING	8			
101	S403-08200B				.WASHER-PLAIN	4			
116	73N6-05000BG				.GUARD ASSY	1			FOG TYPE
116-1	73N6-05010BG				..GUARD WA-TOP	1			FOG TYPE
116-2	73N6-05020BG				..GUARD WA-FRONT	1			FOG TYPE
116-3	S441-12000B				..WASHER-HARDENED	6			FOG TYPE
116-4	S037-122526				..BOLT-W/WASHER	8			FOG TYPE
116-5	S017-120306				..BOLT-HEX	6			FOG TYPE

CAB ASSY(1/6, ROOF TYPE, #0019-)

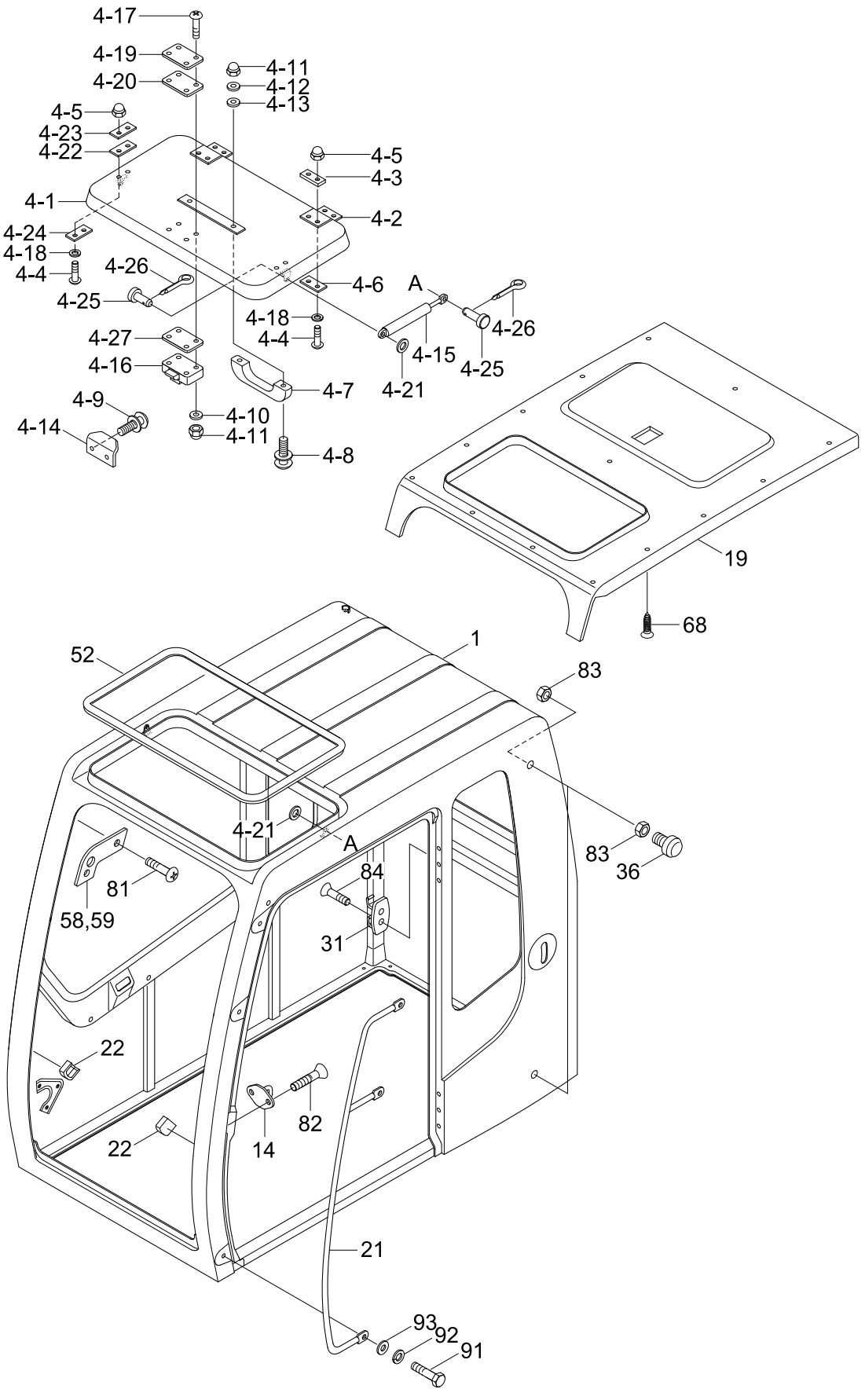

Item	Part_No	IS	Ord	T	Description	Qty	Serial_No	ITC	Remark
*	72N4-10000				CAB ASSY	1	#0019 - #0619	-	
	72N4-10000BG				CAB ASSY	1	#0620 -	D	
1	71N6-00011				.CAB WA	1	- #0619		
	71N6-00011BG				.CAB WA	1	#0620 -	D	
4	72N6-05000				.COVER-SUN ROOF ASSY	1			
4-1	72N6-05010				..COVER-ROOF	1			
4-2	72N6-05020				..HINGE	2			
4-3	72N6-05030				..PAD-RUBBER	2			
4-4	S175-060206				..SCREW-SOCKET RD HD	8			
4-5	S291-060006				..CAP NUT-DOMED	8			
4-6	72N6-05040				..PLATE-HINGE	2			
4-7	E171-1147				..HANDLE	1			
4-8	S131-052046				..SCREW-W/WASHER	2			
4-9	S131-051556				..SCREW-W/WASHER	2			
4-10	S411-050006				..WASHER-SPRING	4			
4-11	S291-050006				..CAP NUT-DOMED	6			
4-12	72N6-05050				..PLATE-HANDLE	2			
4-13	72N6-05060				..PAD-RUBBER	2			
4-14	72N6-05070				..PLATE	1			
4-15	71N6-03201				..SPRING-GAS	2	- #0982		
	71N6-03202				..SPRING-GAS	2	#0983 -	B	
4-16	71N6-02860				..LATCH-ROOF	1			
4-17	S175-050256				..SCREW-SOCKET RD HD	4			
4-18	S411-060006				..WASHER-SPRING	8			
4-19	72N6-05080				..PAD-RUBBER	1			

Item	Part_No	IS	Ord	T	Description	Qty	Serial_No	ITC	Remark
4-20	72N6-05090				..PLATE	1			
4-21	S403-082006				..WASHER-PLAIN	4			
4-22	72N6-05110				..PLATE-GAS SPRING	2			
4-23	72N6-05120				..PAD-RUBBER	2			
4-24	72N6-05130				..PLATE-GAS SPRING	2			
4-25	S491-080162				..PIN-CLEVIS	4	- #0982		
	71Q6-03160				..PIN-CLEVIS	4	#0983 -	B	
4-26	S461-200162				..PIN-SPLIT	4	- #0982		
	S501-070006				..PIN-SELF LOCKING	4	#0983 -	B	
4-27	72N6-05100				..PAD-RUBBER	1			
14	71N6-02770				.STRIKER	1			
19	71N6-02810				.LINING(1)-HEAD	1			
21	71N6-02831				.RAIL-HAND	1	- #0619		
	71N6-02831BG				.RAIL-HAND	1	#0620 -	D	
22	71N6-02841				.STOPPER	2			
31	71N6-02920				.HOOK-COAT	1			
36	71EH-13150				.BUMPER-RUBBER	2			
52	S772-020300				.WEATHER STRIP	1			
58	71N6-03181				.STOPPER-LH	1			
59	71N6-03191				.STOPPER-RH	1			
68	E171-1310	10			.PLUG-HEADLINER	18			
81	S141-060206				.SCREW-FLAT HD	4			
82	S145-080166				.SCREW-FLAT HD	2			
83	S203-101006				.NUT-HEX	4			
84	S141-040206				.SCREW-FLAT HD	2			

Item	Part_No	IS	Ord	T	Description	Qty	Serial_No	ITC	Remark
91	S017-160206				.BOLT-HEX	3			
92	S411-160006				.WASHER-SPRING	3			
93	S403-162006				.WASHER-PLAIN	3			

CAB ASSY(1/6, ROOF TYPE, OPT, #0615-)

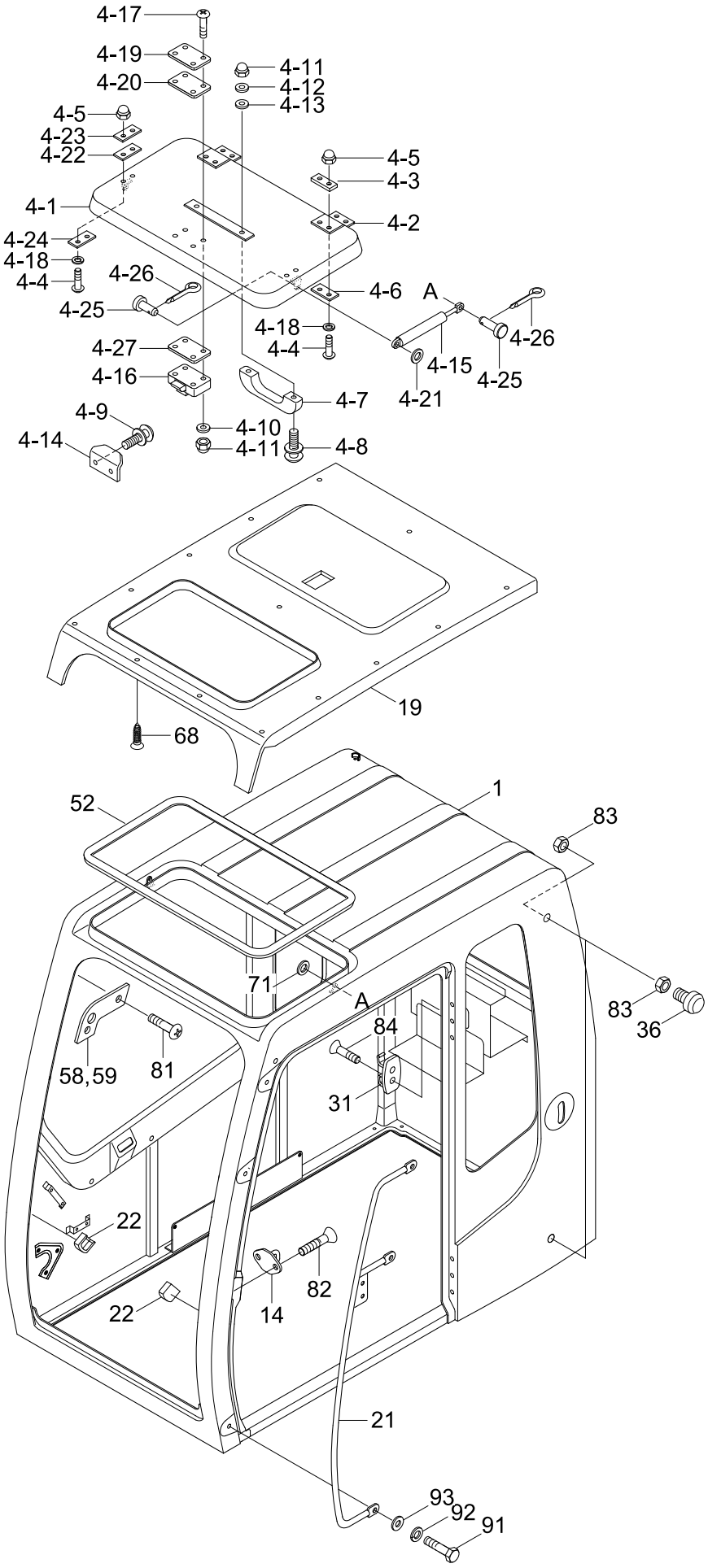

Item	Part_No	IS	Ord	T	Description	Qty	Serial_No	ITC	Remark
*	76N4-18000				CABIN ASSY	1	#0615 -	-	UPGRADE CABIN
1	76N6-00010				.CAB WA	1			
4	72N6-05000				.COVER-SUN ROOF ASSY	1			
4-1	72N6-05010				..COVER-ROOF	1			
4-2	72N6-05020				..HINGE	2			
4-3	72N6-05030				..PAD-RUBBER	2			
4-4	S175-060206				..SCREW-SOCKET RD HD	8			
4-5	S291-060006				..CAP NUT-DOMED	8			
4-6	72N6-05040				..PLATE-HINGE	2			
4-7	E171-1147				..HANDLE	1			
4-8	S131-052046				..SCREW-W/WASHER	2			
4-9	S131-051556				..SCREW-W/WASHER	2			
4-10	S411-050006				..WASHER-SPRING	4			
4-11	S291-050006				..CAP NUT-DOMED	6			
4-12	72N6-05050				..PLATE-HANDLE	2			
4-13	72N6-05060				..PAD-RUBBER	2			
4-14	72N6-05070				..PLATE	1			
4-15	71N6-03201				..SPRING-GAS	2	- #0982		
	71N6-03202				..SPRING-GAS	2	#0983 -	B	
4-16	71N6-02860				..LATCH-ROOF	1			
4-17	S175-050256				..SCREW-SOCKET RD HD	4			
4-18	S411-060006				..WASHER-SPRING	8			
4-19	72N6-05080				..PAD-RUBBER	1			
4-20	72N6-05090				..PLATE	1			
4-21	S403-08200B				..WASHER-PLAIN	4			

Item	Part_No	IS	Ord	T	Description	Qty	Serial_No	ITC	Remark
4-22	72N6-05110				..PLATE-GAS SPRING	2			
4-23	72N6-05120				..PAD-RUBBER	2			
4-24	72N6-05130				..PLATE-GAS SPRING	2			
4-25	S491-080162				..PIN-CLEVIS	4	- #0982		
	71Q6-03160				..PIN-CLEVIS	4	#0983 -	B	
4-26	S461-200162				..PIN-SPLIT	4	- #0982		
	S501-070006				..PIN-SELF LOCKING	4	#0983 -	B	
4-27	72N6-05100				..PAD-RUBBER	1			
14	71N6-02770				.STRIKER	1			
19	71N6-02810				.LINING(1)-HEAD	1			
21	71N6-02831BG				.RAIL-HAND	1			
22	71N6-02841				.STOPPER	2			
31	71N6-02920				.HOOK-COAT	1			
36	71EH-13150				.BUMPER-RUBBER	2			
52	S772-020300				.WEATHER STRIP	1			
58	71N6-03181				.STOPPER-LH	1			
59	71N6-03191				.STOPPER-RH	1			
68	E171-1310	10			.PLUG-HEADLINER	18			
81	S141-060206				.SCREW-FLAT HD	4			
82	S145-080166				.SCREW-FLAT HD	2			
83	S203-101006				.NUT-HEX	4			
84	S141-040206				.SCREW-FLAT HD	2			
91	S017-160206				.BOLT-HEX	3			
92	S411-160006				.WASHER-SPRING	3			
93	S403-162006				.WASHER-PLAIN	3			

CAB ASSY(2/6)

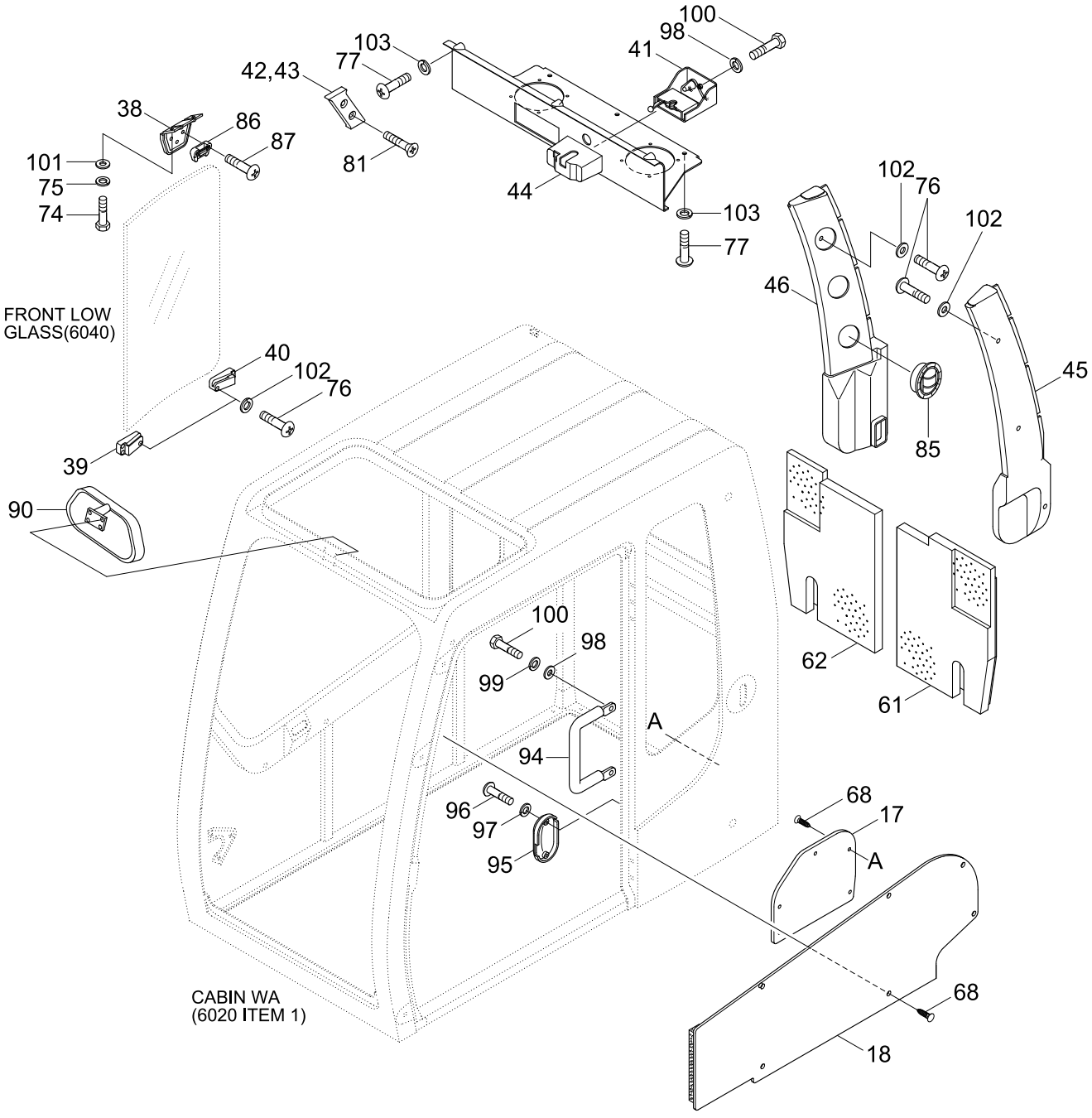
100
98
41
103
77
42,43
38
86
87
101
75
74
81
44
103
77
102
76
102
46
45
85
FRONT LOW
GLASS(6040)
40
102
76
39
90
62
61
100
98
99
A
94
96
97
95
68
17
A
68
18
CABIN WA
(6020 ITEM 1)

Item	Part_No	IS	Ord	T	Description	Qty	Serial_No	ITC	Remark
*	@				CAB ASSY	1			NOT
17	71N6-02790				.WALL TRIM-LH	1			
18	71N6-02801				.WALL TRIM-RH	1			
38	71N6-03060				.HOLDER	1	- #0071		
	71N6-03061				.HOLDER	1	#0072 -	D	
39	71N6-03071				.HOLDER	1			
40	71N6-03081				.HOLDER	1			
41	71N6-03091				.LATCH ASSY	1			
42	71N6-03101				.STOPPER-LH	1			
43	71N6-03111				.STOPPER-RH	1			
44	71N6-03121				.COVER-REAR	1			
45	71N6-03131				.DUCT ASSY-LH	1			
46	71N6-03141				.DUCT ASSY-RH	1			
61	71N6-03210				.INSULATION FOAM	1			
62	71N6-03220				.INSULATION FOAM	1			
68	E171-1310	10			.PLUG-HEADLINER	11			
74	S015-080206				.BOLT-HEX	2			
75	S411-080006				.WASHER-SPRING	2			
76	S161-060206				.SCREW-CROSS R/ROUND	12			
77	S161-060166				.SCREW-CROSS R/ROUND	6			
81	S141-060206				.SCREW-FLAT HD	4			
85	71N6-03300				.AIR VENT	6			
86	71N6-03311				.HOLDER	1			
87	S161-080256				.SCREW-RD HD	3			
90	E371-1128	10			.MIRROR-ROOM	1	#0001 -	-	

Item	Part_No	IS	Ord	T	Description	Qty	Serial_No	ITC	Remark
94	71N6-20341				.RAIL-HAND	1			
95	71N6-03601				.COVER-BACK LATCH	1			
96	S161-050166				.SCREW-CROSS R/ROUND	2			
97	S411-050006				.WASHER-SPRING	2			
98	S411-100006				.WASHER-SPRING	5			
99	S403-102006				.WASHER-PLAIN	2			
100	S017-100206				.BOLT-HEX	5			
101	S403-082006				.WASHER-PLAIN	2			
102	S403-062006				.WASHER-PLAIN	12			
103	S411-060006				.WASHER-SPRING	6			
115	76N6-03160				.FASTENER	2	#0001 -	-	

CAB ASSY(2/6, OPT, #0615-)

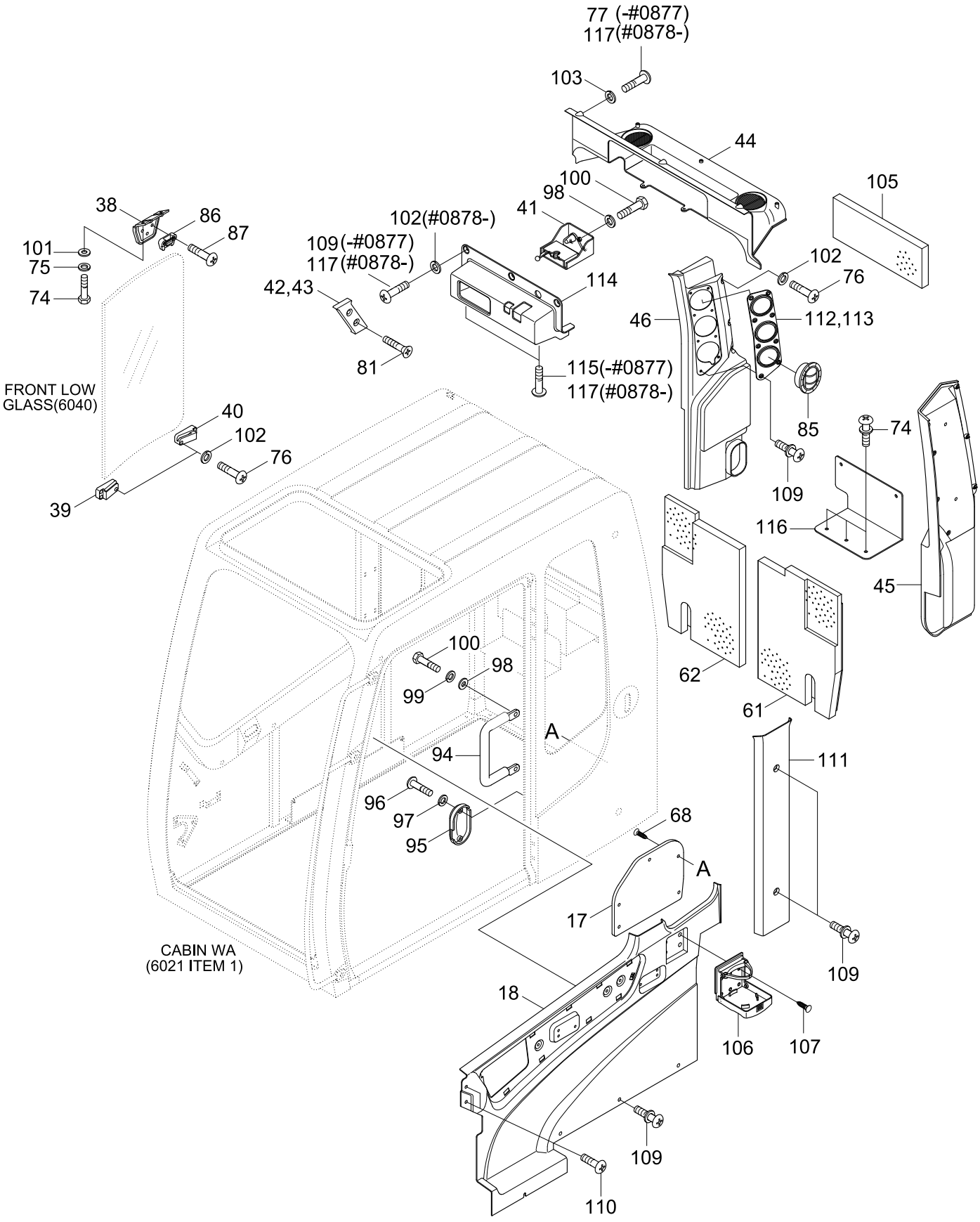

Item	Part_No	IS	Ord	T	Description	Qty	Serial_No	ITC	Remark
*	@				CAB ASSY	1	#0615 -	-	NOT
					CAB ASSY	1	#0615 -	-	NOT
17	71N6-02790				.WALL TRIM-LH	1			
18	76N6-02800				.WALL TRIM-RH	1			
38	71N6-03061				.HOLDER	1			
39	71N6-03071				.HOLDER	1			
40	71N6-03081				.HOLDER	1			
41	71N6-03091				.LATCH ASSY	1			
42	71N6-03101				.STOPPER-LH	1			
43	71N6-03111				.STOPPER-RH	1			
44	73N6-20060				.SPEAKER COVER	1			
45	76N6-03130				.DUCT ASSY-LH	1			
46	76N6-03140				.DUCT ASSY-RH	1			
61	71N6-03210				.INSULATION FOAM	1			
62	71N6-03220				.INSULATION FOAM	1			
68	E171-1310				.PLUG	11			
74	S035-082026				.BOLT-W/WASHER	2	- #0877		
					.BOLT-W/WASHER	5	#0878 -	A	
75	S411-080006				.WASHER-SPRING	2			
76	S161-060206				.SCREW-CROSS R/ROUND	12			
77	S161-060166				.SCREW-CROSS ROUND	6	- #0877	-	
81	S141-060206				.SCREW-FLAT HD	4			
85	71N6-03300				.AIR VENT	6			
86	71N6-03311				.HOLDER	1			
87	S161-080256				.SCREW-CROSS R/ROUND	3			

Item	Part_No	IS	Ord	T	Description	Qty	Serial_No	ITC	Remark
94	71N6-20341				.RAIL-HAND	1			
95	71N6-03601				.COVER-BACK LATCH	1			
96	S161-050166				.SCREW-CROSS R/ROUND	2			
97	S411-050006				.WASHER-SPRING	2			
98	S411-100006				.WASHER-SPRING	5			
99	S403-10200B				.WASHER-PLAIN	2			
100	S017-100206				.BOLT-HEXAGON HEAD	5			
101	S403-08200B				.WASHER-PLAIN	2			
102	S403-06200B				.WASHER-PLAIN	12	- #0877		
					.WASHER-PLAIN	15	#0878 -	A	
103	S411-060006				.WASHER-SPRING	6			
105	71N6-03660				.SPONGE	1			
106	71M8-20870				.HOLDER-CUP	1			
107	S141-040166				.SCREW-FLAT HD	4			
38	71N6-03061				.HOLDER	1			
109	S132-061256				.SCREW-W/WASHER	27			
110	S151-050126				.SCREW-TAPPING	2			
111	73N6-20050				.PILLAR COVER-RH	1			
112	73N6-20220				.REAR DUCT COVER-LH	1			
113	73N6-20210				.REAR DUCT COVER-RH	1			
114	73N6-20070				.RADIO COVER	1			
115	76N6-03160				.FASTENER ASSY	2			
116	76N6-00021				.BRACKET	1	#0878 -	-	
117	S002-06015B				.SCREW-TRUS HEAD	11	#0878 -	-	
61	71N6-03210				.INSULATION FOAM	1			

Item	Part_No	IS	Ord	T	Description	Qty	Serial_No	ITC	Remark
62	71N6-03220				.INSULATION FOAM	1			
68	E171-1310	10			.PLUG-HEADLINER	11			
74	S015-080206				.BOLT-HEX	2			
75	S411-080006				.WASHER-SPRING	2			
76	S162-060206				.SCREW-CROSS R/ROUND	12			
77	S162-060166				.SCREW-CROSS R/ROUND	6			
81	S141-060206				.SCREW-FLAT HD	4			
85	71N6-03300				.AIR VENT	6			
86	71N6-03311				.HOLDER	1			
87	S161-080256				.SCREW-RD HD	3			
90	E371-1128	10			.MIRROR-ROOM	1			
94	71N6-20341				.RAIL-HAND	1			
95	71N6-03601				.COVER-BACK LATCH	1			
96	S161-050166				.SCREW-CROSS R/ROUND	2			
97	S411-050006				.WASHER-SPRING	2			
98	S411-100006				.WASHER-SPRING	5			
99	S403-10200B				.WASHER-PLAIN	2			
100	S017-100206				.BOLT-HEX	5			
101	S403-08200B				.WASHER-PLAIN	2			
102	S403-06200B				.WASHER-PLAIN	12			
103	S411-060006				.WASHER-SPRING	6			
104	71N6-03660				.SPONGE	1			
105	71M8-20870				.HOLDER-CUP	1			
106	S141-040166				.SCREW-FLAT HD	4			
109	S132-061256				.SCREW-W/WASHER	27			

Item	Part_No	IS	Ord	T	Description	Qty	Serial_No	ITC	Remark
110	S151-050126				.SCREW-TAPPING	1			
111	73N6-20050				.PILLAR COVER-RH	1			
112	73N6-20220				.REAR DUCT COVER-LH	1			
113	73N6-20210				.REAR DUCT COVER-RH	1			
114	73N6-20070				.RADIO COVER	1			
115	76N6-03160				.FASTENER	2			

CAB ASSY(3/6)

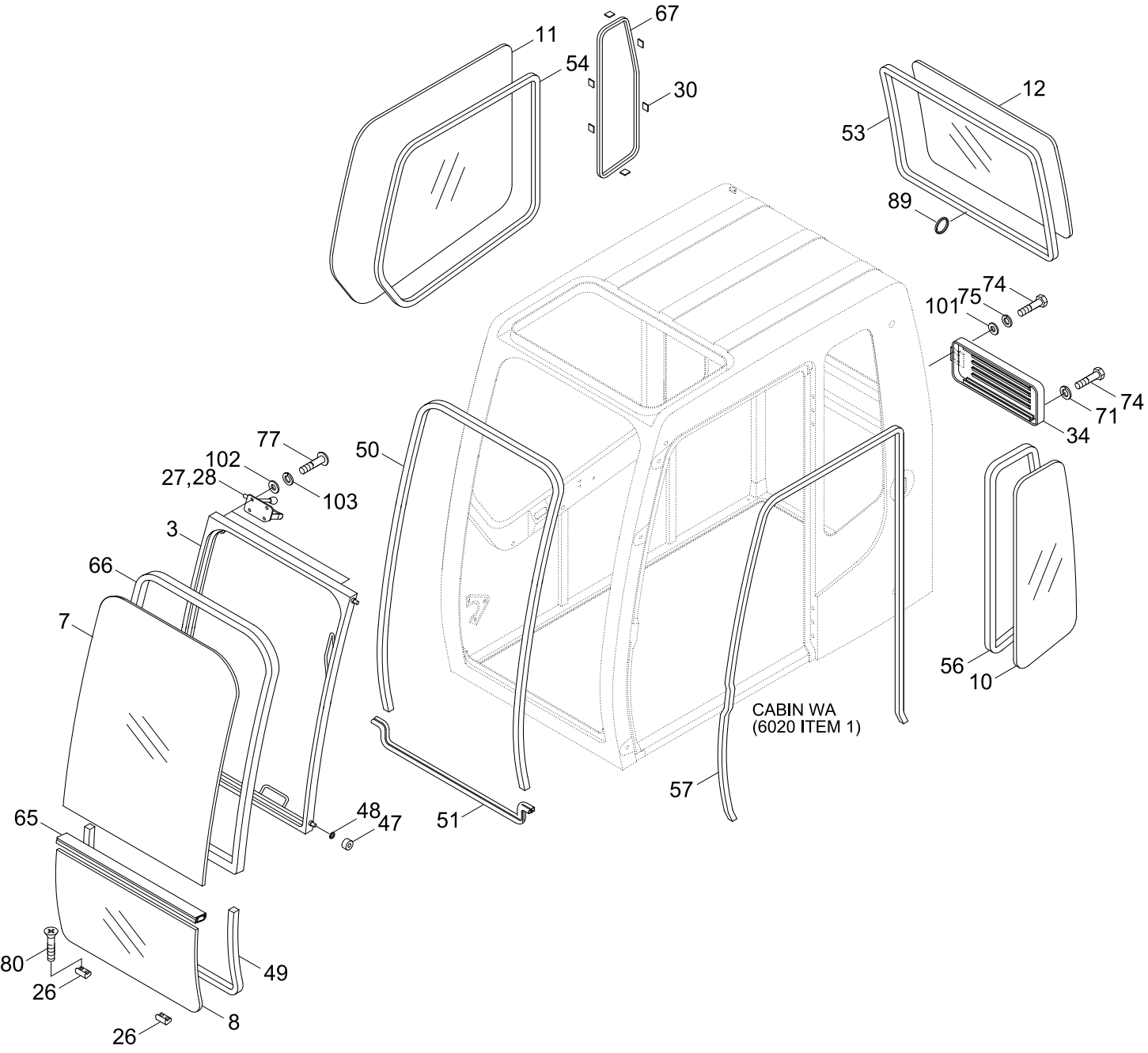
11
54
67
30
12
53
89
74
101
75
74
71
34
77
102
27,28
103
3
66
7
50
56
10
CABIN WA
(6020 ITEM 1)
57
65
48
47
51
80
26
49
8
26

Item	Part_No	IS	Ord	T	Description	Qty	Serial_No	ITC	Remark
*	@				CAB ASSY	1			NOT
3	71N4-02200				.FRONT WINDOW WA	1	- #0619		
	71N4-02200BG				.FRONT WINDOW WA	1	#0620 -	D	
7	71N4-02700				.GLASS	1			LAMINATED GLASS
8	71N6-02710				.GLASS	1	- #0071		
	71N6-02711				.GLASS	1	#0072 -	D	
10	71N6-02731				.GLASS	1			
11	71N6-02740				.GLASS	1			
12	71N6-02750				.GLASS	1			
26	71N6-02880				.INSULATOR	2			
27	71N6-02891				.LATCH ASSY	1			
28	71N6-02901				.LATCH ASSY	1			
30	71EH-10430				.RUBBER	6			
34	71N6-02950				.COVER-AIR VENT	1	- #0619		
	71N6-02950BG				.COVER-AIR VENT	1	#0620 -	D	
47	71N6-03150				.ROLLER	4			
48	S403-101002				.WASHER-PLAIN	4			
49	71N6-03160				.SEAL	1			
50	71N6-03480				.SEAL-FRONT	1			
51	71N6-03172				.WEATHER STRIP	1	- #0071		
	71N6-03173				.WEATHER STRIP	1	#0072 -	D	
53	S781-124602				.SEAL	1			
54	71N6-03010				.WEATHER STRIP	1			
56	71N6-03030				.WEATHER STRIP	1			
57	S771-036500				.WEATHER STRIP	1			

Item	Part_No	IS	Ord	T	Description	Qty	Serial_No	ITC	Remark
65	71N6-03250				.SEAL	1			
66	71N4-03260				.SEAL-FRONT GLASS	1			
67	71N6-03040				.SEAL	1			
71	S403-082006				.WASHER-PLAIN	1			
74	S015-080206				.BOLT-HEX	3			
75	S411-080006				.WASHER-SPRING	2			
77	S161-060166				.SCREW-CROSS R/ROUND	8			
80	S141-050206				.SCREW-FLAT HD	4			
89	71N6-03320				.RING	1			
101	S403-082006				.WASHER-PLAIN	2			
102	S403-062006				.WASHER-PLAIN	8			
103	S411-060006				.WASHER-SPRING	8			

CAB ASSY(3/6, OPT, #0615-)

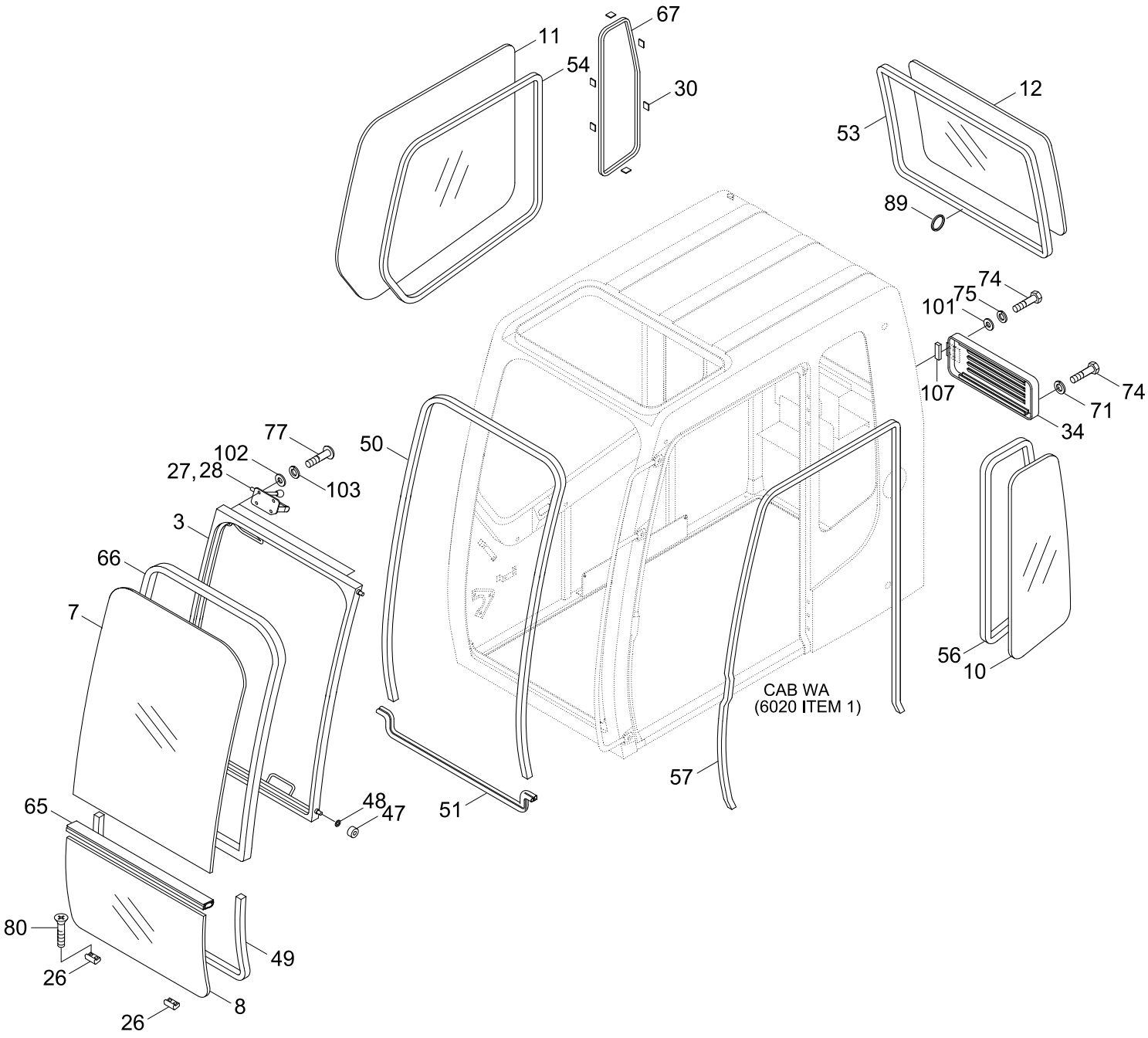

Item	Part_No	IS	Ord	T	Description	Qty	Serial_No	ITC	Remark
*	@				CAB ASSY	1	#0615 -	-	NOT
3	71N4-02200BG				.FRONT WINDOW WA	1			
7	71N4-02700				.GLASS	1			LAMINATED GLASS
8	71N6-02711				.GLASS	1			
10	71N6-02731				.GLASS	1			
11	71N6-02740				.GLASS	1			
12	71N6-02750				.GLASS	1			
26	71N6-02880				.INSULATOR	2			
27	71N6-02891				.LATCH ASSY	1			
28	71N6-02901				.LATCH ASSY	1			
30	71EH-10430				.RUBBER	6			
34	71N6-02950BG				.COVER-AIR VENT	1			
47	71N6-03150				.ROLLER	4			
48	S403-10100B				.WASHER-PLAIN	4			
49	71N6-03160				.SEAL	1			
50	71N6-03480				.SEAL-FRONT	1			
51	71N6-03173				.WEATHER STRIP	1			
53	S781-124602				.SEAL	1			
54	71N6-03010				.WEATHER STRIP	1			
56	71N6-03030				.WEATHER STRIP	1			
57	S771-036500				.WEATHER STRIP	1			
65	71N6-03250				.SEAL	1			
66	71N4-03260				.SEAL-FRONT GLASS	1			
67	71N6-03040				.SEAL	1			
71	S403-08200B				.WASHER-PLAIN	1			

Item	Part_No	IS	Ord	T	Description	Qty	Serial_No	ITC	Remark
74	S015-080206				.BOLT-HEX	3			
75	S411-080006				.WASHER-SPRING	2			
77	S161-060166				.SCREW-CROSS R/ROUND	8			
80	S141-050206				.SCREW-FLAT HD	4			
89	71N6-03320				.RING	1			
101	S403-08200B				.WASHER-PLAIN	2			
102	S403-06200B				.WASHER-PLAIN	8			
103	S411-060006				.WASHER-SPRING	8			
107	71N6-02960				.RUBBER	1			

CAB ASSY(4/6, DOOR)

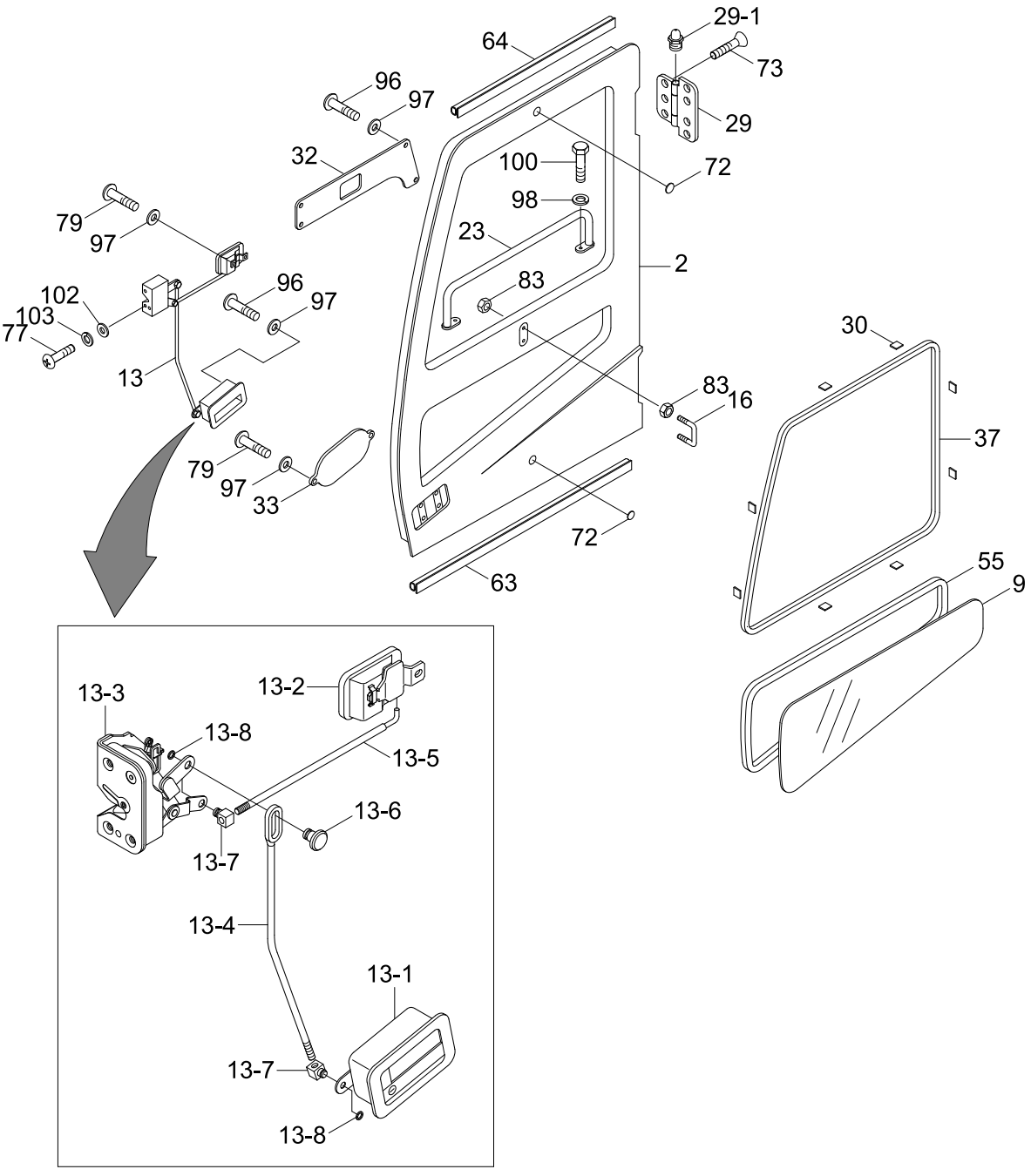

Item	Part_No	IS	Ord	T	Description	Qty	Serial_No	ITC	Remark
*	@				CAB ASSY	1			NOT
*-1	71N6-04000				.SIDE DOOR ASSY	1	- #0619		
	71N6-04000BG				.SIDE DOOR ASSY	1	#0620 -	D	
2	71N6-02000				..SIDE DOOR WA	1	- #0619		
	71N6-02000BG				..SIDE DOOR WA	1	#0620 -	D	
					..SIDE DOOR WA	1	#0615 -	-	UPGRADE CABIN
9	71N6-02720				..GLASS-DOOR	1			
13	71N6-02761				..HANDLE ASSY	1			
13-1	71N6-03390				...HANDLE	1			
13-2	71N6-03400				...HANDLE-INNER	1			
13-3	71N6-03410				...LATCH	1			
13-4	71N6-03420				...ROD ASSY-1	1			
13-5	71N6-03430				...ROD ASSY-2	1			
13-6	71N6-03440				...PIN-1	1			
13-7	71N6-03450				...PIN	2			
13-8	P560-050006				...E-RING	3			
16	71N6-03650				..STRIKER	1			
23	71N6-02850				..HANDLE	1			
29	71N6-02910				..HINGE	2	- #0619		
	71N6-02910BG				..HINGE	2	#0620 -	D	
29-1	S651-060006				...NIPPLE-GREASE	1	- #0877		
	S651-060002				...NIPPLE-GREASE	1	#0878 -	B	
30	71EH-10430				..RUBBER	8			
32	71N6-02930				..COVER	1			
33	71N6-02940				..COVER	1			

Item	Part_No	IS	Ord	T	Description	Qty	Serial_No	ITC	Remark
37	71N6-03000				..WEATHER STRIP	1			
55	71N6-03020				..WEATHER STRIP	1			
63	71N6-03230				..SEAL	1			
64	71N6-03240				..SEAL	1			
72	17E1-5146				..BUMPER-DOOR	2			
73	71EH-10400				..SCREW	14			
77	S161-060166				..SCREW-CROSS R/ROUND	3			
79	S161-050206				..SCREW-CROSS R/ROUND	4			
83	S203-101006				..NUT-HEX	4			
96	S161-050166				..SCREW-CROSS R/ROUND	6			
97	S411-050006				..WASHER-SPRING	10			
98	S411-100006				..WASHER-SPRING	2			
100	S017-100206				..BOLT-HEX	2			
102	S403-062006				..WASHER-PLAIN	3			
103	S411-060006				..WASHER-SPRING	3			

CAB ASSY(5/6, SASH ASSY)

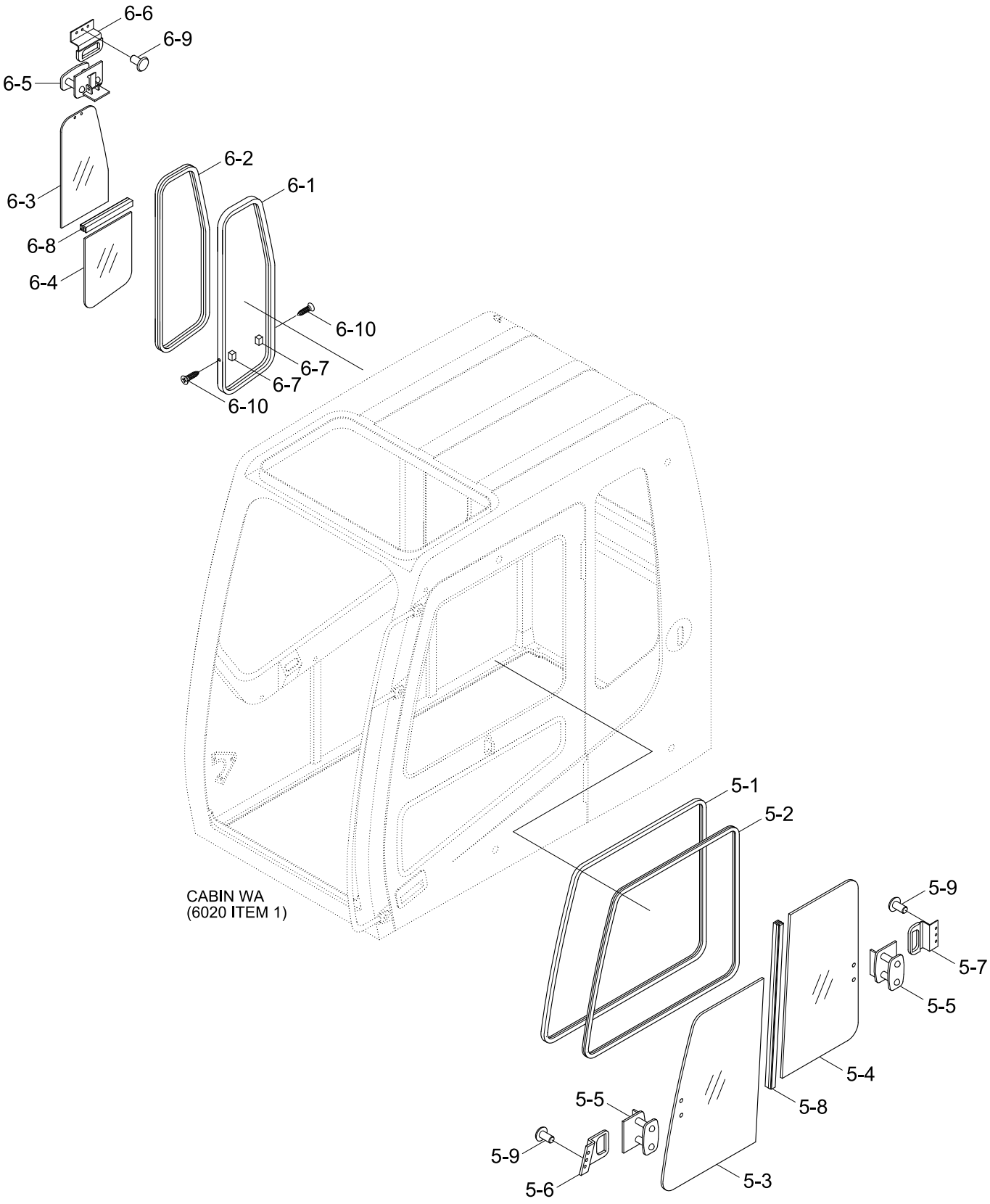

Item	Part_No	IS	Ord	T	Description	Qty	Serial_No	ITC	Remark
*	@				CAB ASSY	1			NOT
5	71N6-02500				.SASH ASSY-DOOR	1			
5-1	71N6-02510				..SASH	1			
5-2	71N6-02520				..SEAL	1			
5-3	71N6-02530				..GLASS	1			
5-4	71N6-02540				..GLASS	1			
5-5	71N6-02550				..LOCK ASSY	2			
5-6	71N6-02560				..HOOK	1			
5-7	71N6-02570				..HOOK	1			
5-8	71N6-02580				..SASH	1			
5-9	D19227C1				..RIVET-BLIND	6			
6	71N6-02600				.SASH ASSY-LH	1			
6-1	71N6-02610				..SASH	1			
6-2	71N6-02620				..SEAL	1			
6-3	71N6-02630				..GLASS(UPPER)	1			
6-4	71N6-02640				..GLASS(LOWER)	1			
6-5	71N6-02550				..LOCK ASSY	1			
6-6	71N6-02570				..HOOK	1			
6-7	71N6-02650				..STOPPER	2			
6-8	71N6-02660				..SASH	1			
6-9	D19227C1				..RIVET-BLIND	3			
6-10	S151-030126				..SCREW-TAPPING	2			

CAB ASSY(6/6, DOOR LATCH ASSY)

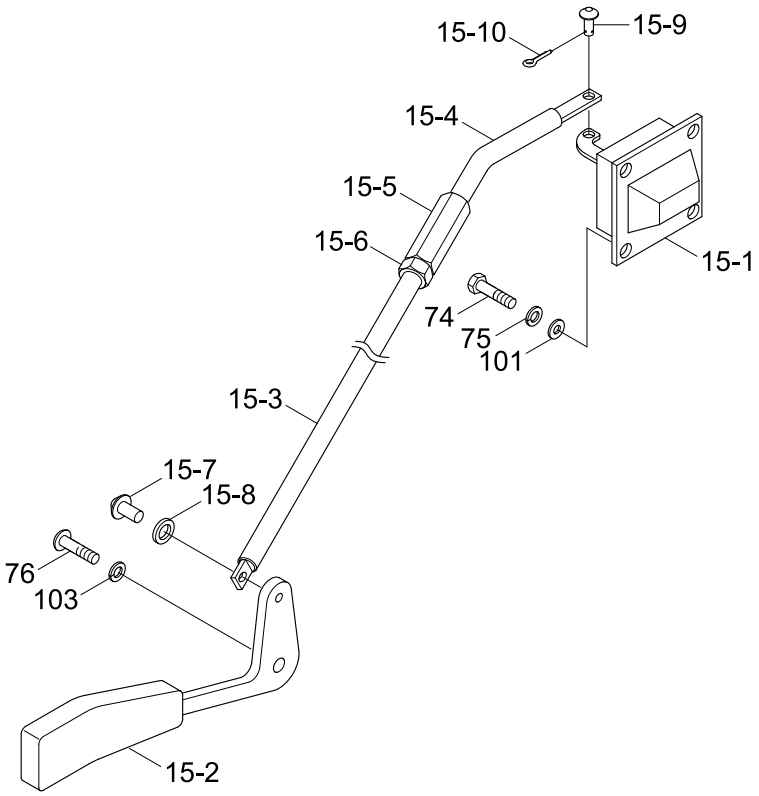

Item	Part_No	IS	Ord	T	Description	Qty	Serial_No	ITC	Remark
*	@				CAB ASSY	1			NOT
15	71N6-02781				.LATCH ASSY-BACK	1			
15-1	71EH-11260				..LOCK ASSY-LH	1			
15-2	71N6-03571				..LEVER ASSY	1			
15-3	71N6-03580				..ROD	1			
15-4	71N6-03590				..ROD	1			
15-5	71EH-11210				..NUT	1			
15-6	S205-081006				..NUT-HEX	1			
15-7	71EH-11250				..PIN-ROUND	1			
15-8	S431-040002				..WASHER-LOCK	1			
15-9	71EH-11240				..PIN-ROUND	1			
15-10	S461-050152				..PIN-SPLIT	1			
74	S015-080206				.BOLT-HEX	4			
75	S411-080006				.WASHER-SPRING	4			
76	S161-060206				.SCREW-RD HD	1			
101	S403-082006				.WASHER-PLAIN	4			
103	S411-060006				.WASHER-SPRING	1			

CAB INTERIOR 1

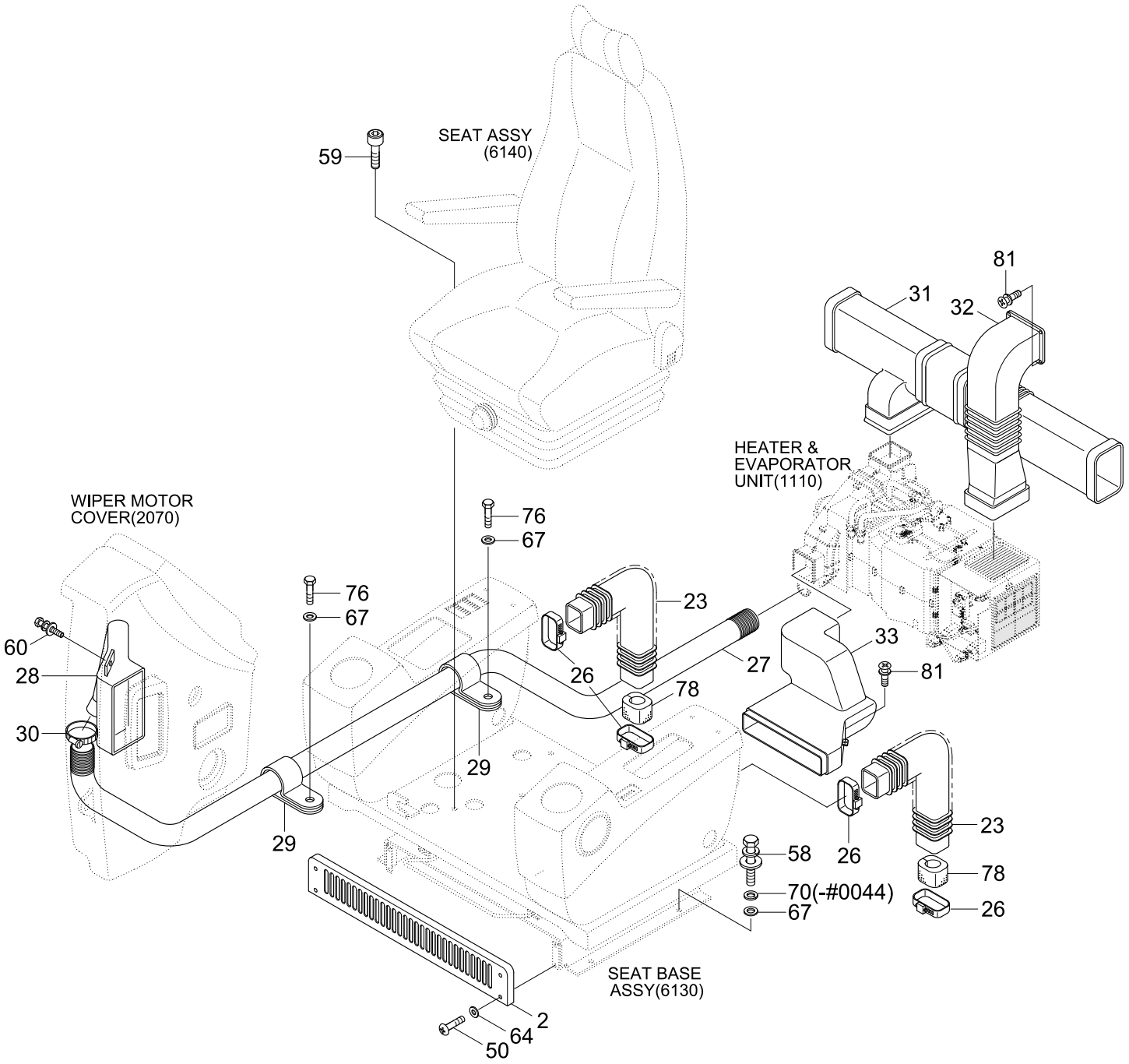

Item	Part_No	IS	Ord	T	Description	Qty	Serial_No	ITC	Remark
2	71N6-20020				COVER-SEAT BASE	1			
23	71N6-20181				TUBE	2			
26	S520-115000				CLAMP-HOSE	4			
27	71N6-20210				HOSE-DEFROSTER	1			
28	71N6-20221				DUCT-DEFROSTER	1			
29	71N6-20230				CLAMP-HOSE	2			
30	S520-055000				CLAMP-HOSE	1			
31	71N6-20241				DUCT-VENT	1			
32	71N6-20251				DUCT-INLET	1			
33	71N6-20261				DUCT-FOOT	1			
50	S179-05015B				SCREW-SOCKET RD HD	4	#0001 -	-	
58	S037-102516				BOLT-W/WASHER	4	#0001 -	-	
59	S109-080306				BOLT-SOCKET	4			
60	S161-040086				SCREW-CROSS R/ROUND	2	- #0005		
	S131-040826				SCREW-W/WASHER	2	#0006 -	D	
64	S403-052006				WASHER-PLAIN	4			
67	S403-102006				WASHER-PLAIN	6			
70	S411-100006				WASHER-SPRING	4	- #0044	-	
76	S017-100156				BOLT-HEX	2	#0001 -	-	
78	71N6-20450				FILTER-SPONGE	2			
81	S131-061556				SCREW-W/WASHER	7	#0001 -	-	

CAB INTERIOR 2

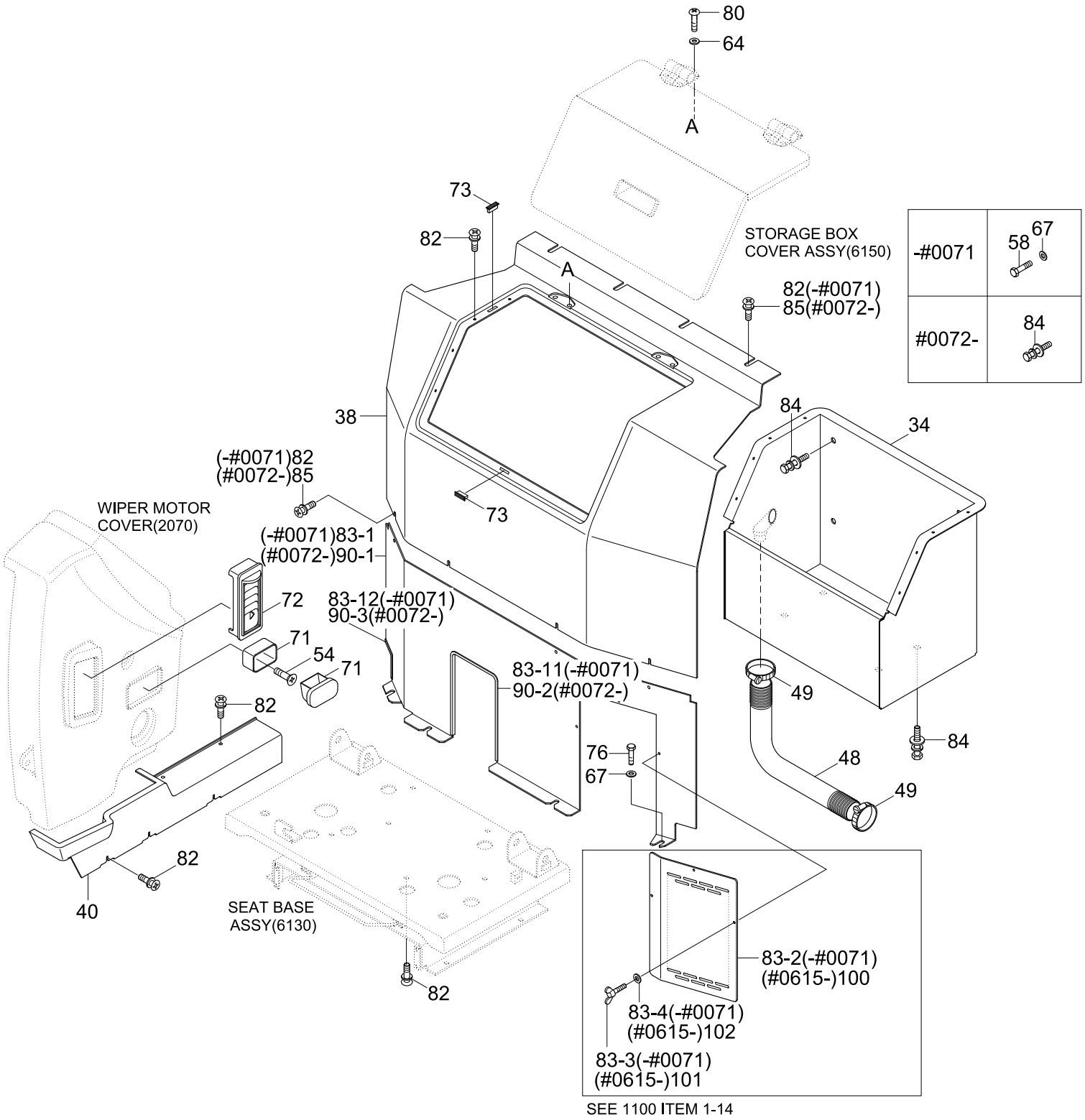

Item	Part_No	IS	Ord	T	Description	Qty	Serial_No	ITC	Remark
34	71N6-20271				STORAGE BOX WA	1	- #0044		
	71N6-20470				STORAGE BOX ASSY	1	#0045 -	D	
38	71N6-20311				AIRCON COVER-UP	1			
40	71N6-20331				COVER-DEF,HOSE	1			
48	71N6-20360				HOSE-STORAGE BOX	1			
49	71N6-20370				CLIP-HOSE	2			
54	S141-040166				SCREW-FLAT HD	2			
58	S037-102516				BOLT-W/WASHER	4	#0001 -	-	
64	S403-052006				WASHER-PLAIN	4			
67	S403-102006				WASHER-PLAIN	8			
71	E171-1176				ASHTRAY	1			
72	71N6-20380				AIR NOZZLE	1			
73	71N6-20390				MAGNETIC	3			
76	S017-100156				BOLT-HEX	4	#0001 -	-	
80	S161-050206				SCREW-CROSS R/ROUND	4			
82	S132-061676				SCREW-W/WASHER	21			
83	71N6-20460				A/CON COVER-LOW ASSY	1	- #0044		
	71N6-20461				A/CON COVER-LOW ASSY	1	#0045 - #0071	D	
83-1	71N6-20291				.AIRCON COVER-LOW	1	- #0044		
	71N6-20292				.AIRCON COVER-LOW	1	#0045 - #0071	D	
83-11	S791-016054				..GROMMET-PLATE	1	- #0071	-	
83-12	S791-016010				..GROMMET-PLATE	1	- #0071	-	
83-2	71N6-20301				.COVER-FILTER	1	- #0071	-	SEE 1100
83-3	S091-060166				.BOLT-WING	3	- #0044		
	S091-060156				.BOLT-WING	3	#0045 - #0071	D	

Item	Part_No	IS	Ord	T	Description	Qty	Serial_No	ITC	Remark
83-4	S403-062006				.WASHER-PLAIN	3	- #0071	-	
84	S037-102026				BOLT-W/WASHER	4	#0045 -	-	
85	S132-062546				SCREW-W/WASHER	8	#0072 - #0129	-	
	S132-062076				SCREW-W/WASHER	8	#0130 -	B	
90	71N6-20292				AIRCON COVER-LOW	1	#0072 -	D	
90-1	71N6-21760				.PLATE	1	#0072 -	D	
90-2	S791-016054				.GROMMET-PLATE	1	#0072 -	D	
90-3	S791-016010				.GROMMET-PLATE	1	#0072 -	D	
100	11N6-90340				FILTER-REC	1	#0615 -	-	
101	S091-060156				BOLT-WING	3	#0615 -	-	
102	S403-06200B				WASHER-PLAIN	1	#0615 -	-	

CAB INTERIOR 1(OPT, #0615-)

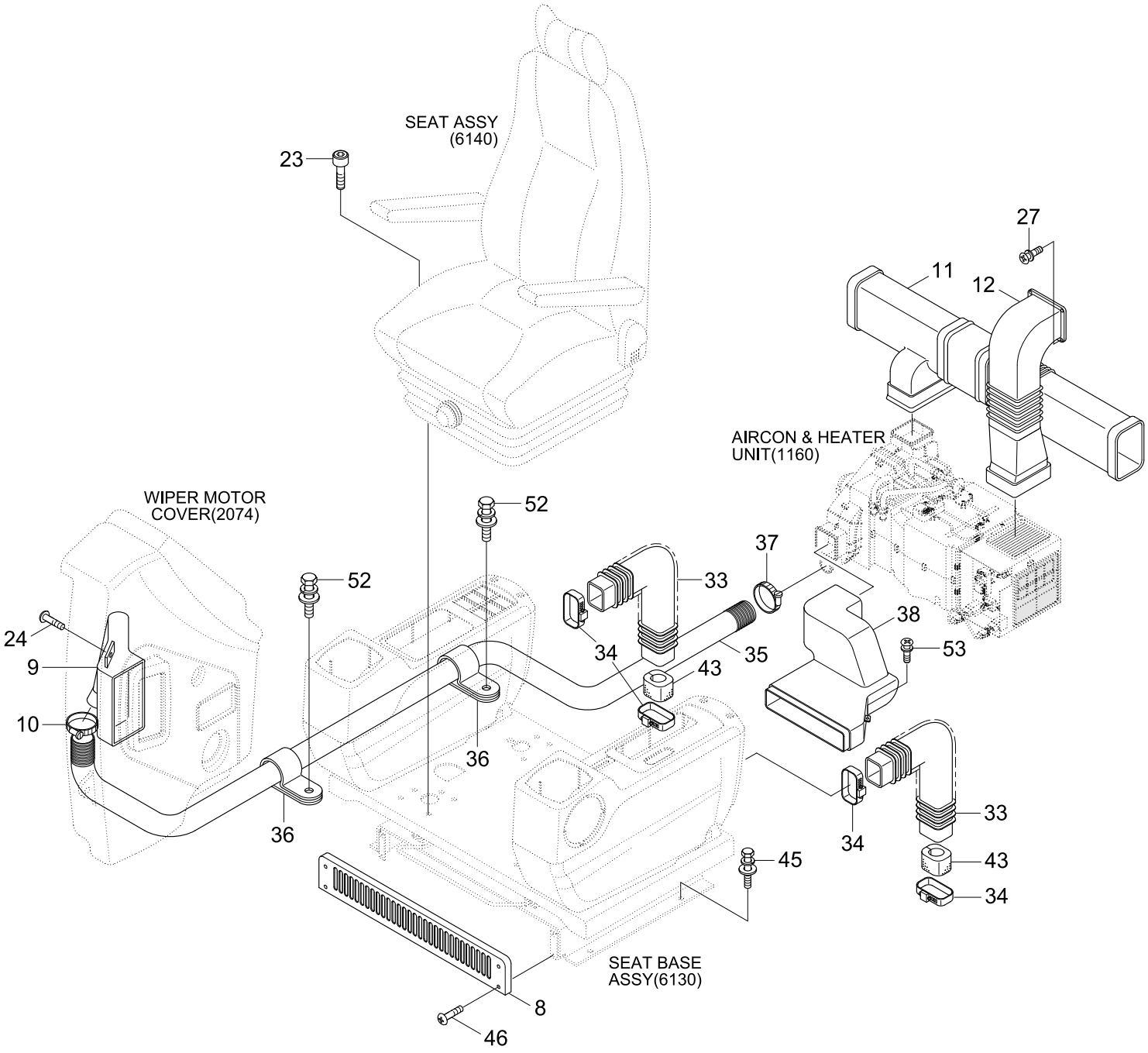

Item	Part_No	IS	Ord	T	Description	Qty	Serial_No	ITC	Remark
*	@				CAB INTERIOR	1	#0615 -	-	NOT
9	71N6-20221				DUCT-DEFROSTER	1			
10	S520-055000				CLAMP-HOSE	1			
11	71N6-20241				DUCT-VENT	1			
12	71N6-20251				DUCT-INLET	1			
20	71N6-20020				COVER-SEAT BASE	1			
23	S109-080306				BOLT-SOCKET	4			
24	S131-040826				SCREW-W/WASHER	2			
27	S132-061546				SCREW-W/WASHER	4			
33	71N6-20181				TUBE	2			
34	S520-115000				CLAMP-HOSE	4			
35	71N6-20210				HOSE-DEFROSTER	1			
36	71N6-20230				CLAMP-HOSE	2			
37	S520-055000				CLAMP-HOSE	1			
38	71N6-20261				DUCT-FOOT	1			
43	71N6-20450				FILTER-SPONGE	2			
45	S037-102526				BOLT-W/WASHER	4			
46	S131-051546				SCREW-W/WASHER	4			
52	S037-102026				BOLT-W/WASHER	2			
53	S132-061676				SCREW-W/WASHER	3			
34	71N6-20271				STORAGE BOX WA	1	- #0044		
	71N6-20470				STORAGE BOX ASSY	1	#0045 -	D	
38	71N6-20311				AIRCON COVER-UP	1			
40	71N6-20331				COVER-DEF. HOSE	1			
48	71N6-20360				HOSE-STORAGE BOX	1			

Item	Part_No	IS	Ord	T	Description	Qty	Serial_No	ITC	Remark
49	71N6-20370				CLIP-HOSE	2			
54	S141-040166				SCREW-FLAT HD	2			
58	S037-102516				BOLT-W/WASHER	4	#0001 -	-	
64	S403-052006				WASHER-PLAIN	4			
67	S403-102006				WASHER-PLAIN	8			
71	E171-1176				ASHTRAY	1			
72	71N6-20380				AIR NOZZLE	1			
73	71N6-20390				MAGNETIC	3			
76	S017-100156				BOLT-HEX	4	#0001 -	-	
80	S161-050206				SCREW-RD HD	4			
82	S132-061676				SCREW-W/WASHER C/RD	21			
83	71N6-20460				A/CON COVER-LOW ASSY	1	- #0044		
	71N6-20461				A/CON COVER-LOW ASSY	1	#0045 - #0071	D	
83-1	71N6-20291				.AIRCON COVER-LOW	1	- #0044		
	71N6-20292				.AIRCON COVER-LOW	1	#0045 - #0071	D	
83-11	S791-016054				..GROMMET	1	- #0071	-	
83-12	S791-016010				..GROMMET	1	- #0071	-	
83-2	71N6-20301				.COVER-FILTER	1	- #0071	-	SEE 1100
83-3	S091-060166				.BOLT-WING	3	- #0044		
	S091-060156				.BOLT-WING	3	#0045 - #0071	D	
83-4	S403-062006				.WASHER-PLAIN	3	- #0071	-	
84	S037-102026				BOLT-W/WASHER	4	#0045 -	-	
85	S132-062546				SCREW-W/WASHER C/RD	8	#0072 - #0129	-	
	S132-062076				SCREW-W/WASHER C/RD	8	#0130 -	B	
90	71N6-20292				AIRCON COVER-LOW	1	#0072 -	D	

Item	Part_No	IS	Ord	T	Description	Qty	Serial_No	ITC	Remark
90-1	71N6-21760				.PLATE	1	#0072 -	D	
90-2	S791-016054				.GROMMET	1	#0072 -	D	
90-3	S791-016010				.GROMMET	1	#0072 -	D	

CAB INTERIOR 2(OPT, #0615-)

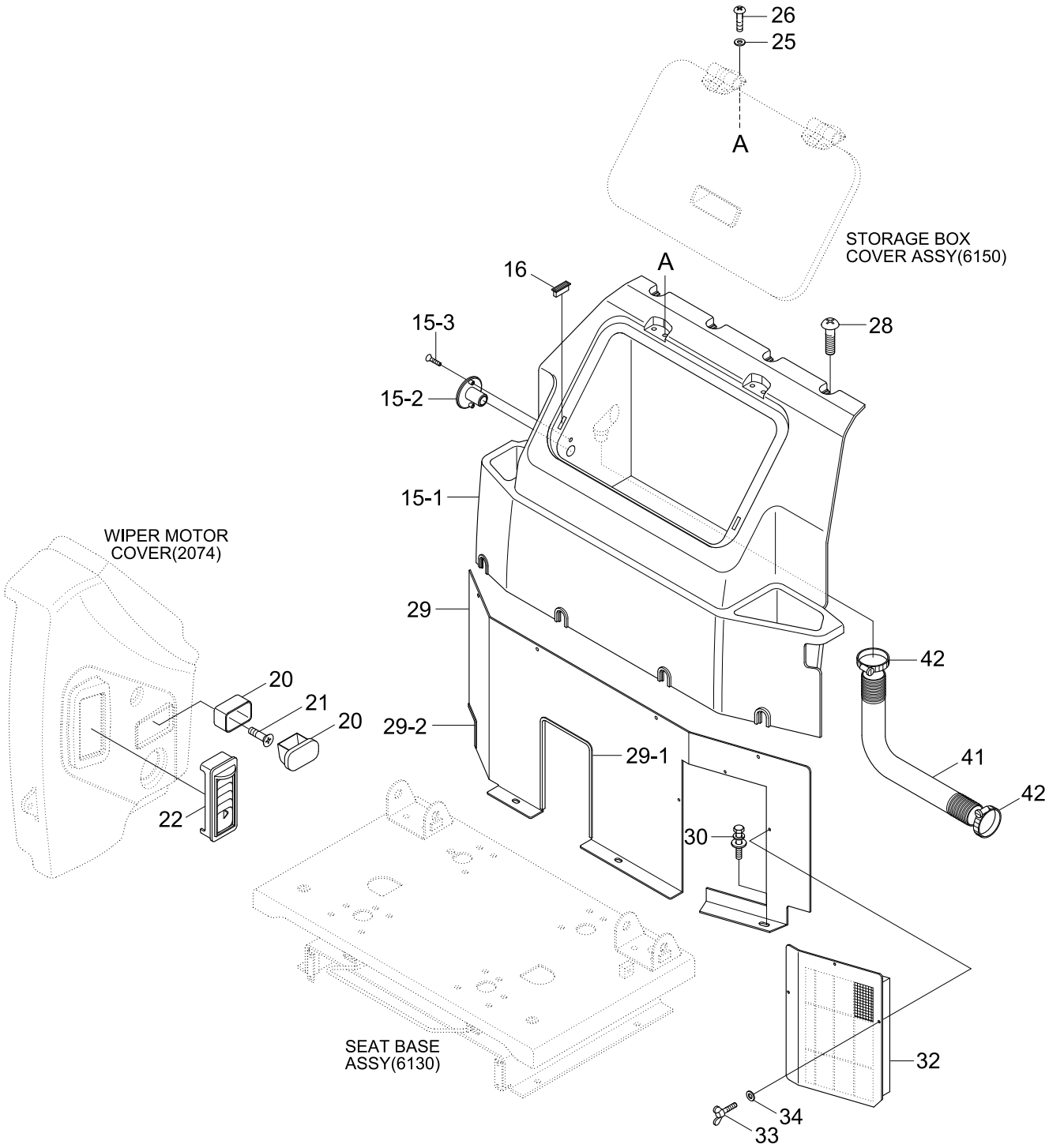

Item	Part_No	IS	Ord	T	Description	Qty	Serial_No	ITC	Remark
*	70N6-21310				CABIN INTERIOR GROUP	1	#0615 -	-	UPGRADE CABIN
15	73N6-21060				AIRCON COVER ASSY	1			
15-1	73N6-20080				.AIRCON COVER	1			
15-2	73N6-20280				.HOSE CAP-AC	1			
15-3	S151-040156				.SCREW-TAPPING	2			
16	71N6-20390				MAGNETIC	2			
20	E171-1176				ASHTRAY	1			
21	S151-040166				SCREW-TAPPING	2			
22	71N6-20380				AIR NOZZLE	1			
25	S403-05200B				WASHER-PLAIN	4			
26	S161-050206				SCREW-CROSS R/ROUND	4			
28	S002-06015B				SCREW-TRUS HEAD	13			
29	73N6-21050				AIRCON COVER LOW	1			
29-1	S791-020055				.GROMMET-PLATE	1			
29-2	S791-020012				.GROMMET-PLATE	1			
30	S037-102026				BOLT-W/WASHER	3			
32	11N6-91340				FILTER-REC	1			
33	S091-060156				BOLT-WING	3			
34	S403-06200B				WASHER-PLAIN	3			
41	71N6-20360				HOSE-STORAGE BOX	1			
42	71N6-20370				CLIP-HOSE	2			

CONSOLE BOX 1(LH)

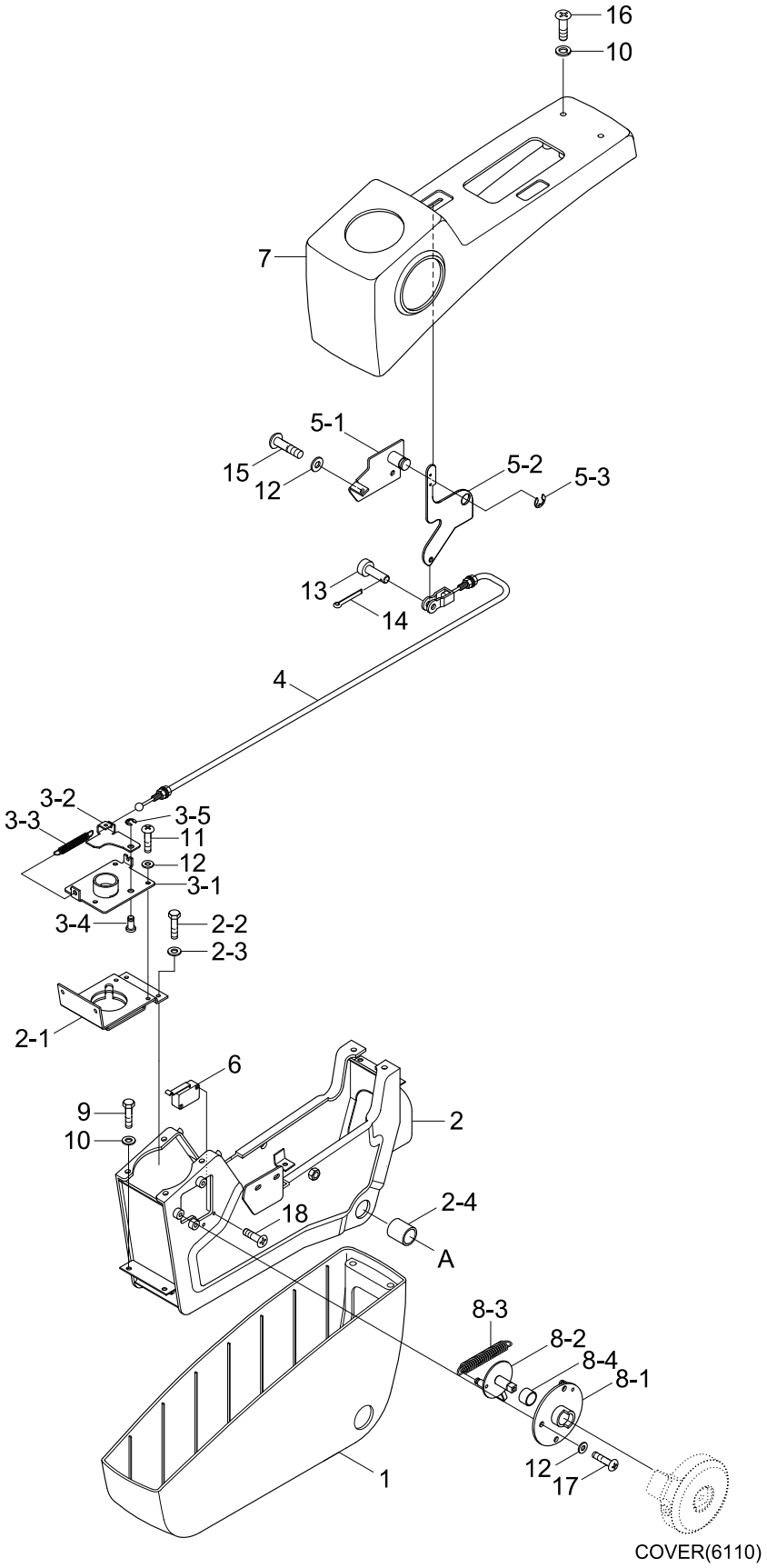

Item	Part_No	IS	Ord	T	Description	Qty	Serial_No	ITC	Remark
*	71N4-20430				CONSOLE BOX ASSY-LH	1			
1	71N6-20071				.CONSOLE BOX-LOW	1			
2	71N4-20050				.C/BOX FRAME WA-LH	1			
2-1	71N4-21320				..PLATE-TILT	1			
2-2	S015-060146				..BOLT-HEX	4			
2-3	S403-062006				..WASHER-PLAIN	4			
2-4	S731-020025				..BUSHING-DU	2			
3	71N4-20090				.TILT CATCH ASSY	1			
3-1	71N4-21420				..TILT CATCH-LOW	1			
3-2	71N4-21450				..TILT CATCH-UP	1			
3-3	71N6-21460				..SPRING	1			
3-4	71N6-21470				..PIN	1			
3-5	P560-090002				..RETAINING RING-E TYPE	1			
4	71N6-20100				.CABLE-PULL	1			
5	71N4-20120				.TILT LEVER ASSY	1			
5-1	71N4-21480				..BRACKET-LOW	1			
5-2	71N4-21510				..BRACKET-UP	1			
5-3	P560-100006				..RETAINING RING-E TYPE	1			
6	21N8-20300				.SWITCH-MICRO	1			
7	71N4-20130				.CONSOLE BOX-UP(LH)	1			
8	71N6-20141				.SAFETY BRACKET ASSY	1			
8-1	71N6-21521				..BRACKET-LOW	1			
8-2	71N6-21560				..BRACKET-UP	1			
8-3	71N6-21610				..SPRING	1			
8-4	S731-020010				..BUSHING-DU	1			

Item	Part_No	IS	Ord	T	Description	Qty	Serial_No	ITC	Remark
9	S015-050206				.BOLT-HEX	4			
10	S403-052006				.WASHER-PLAIN	8			
11	S161-060136				.SCREW-CROSS R/ROUND	4			
12	S403-062006				.WASHER-PLAIN	9			
13	S491-060156				.PIN-CLEVIS	1			
14	S461-080202				.PIN-SPLIT	1			
15	S161-060166				.SCREW-CROSS R/ROUND	2			
16	S161-050166				.SCREW-CROSS R/ROUND	4			
17	S175-060162				.SCREW-SOCKET RD HD	3			
18	S161-030162				.SCREW-CROSS R/ROUND	2			

CONSOLE BOX 2(LH)

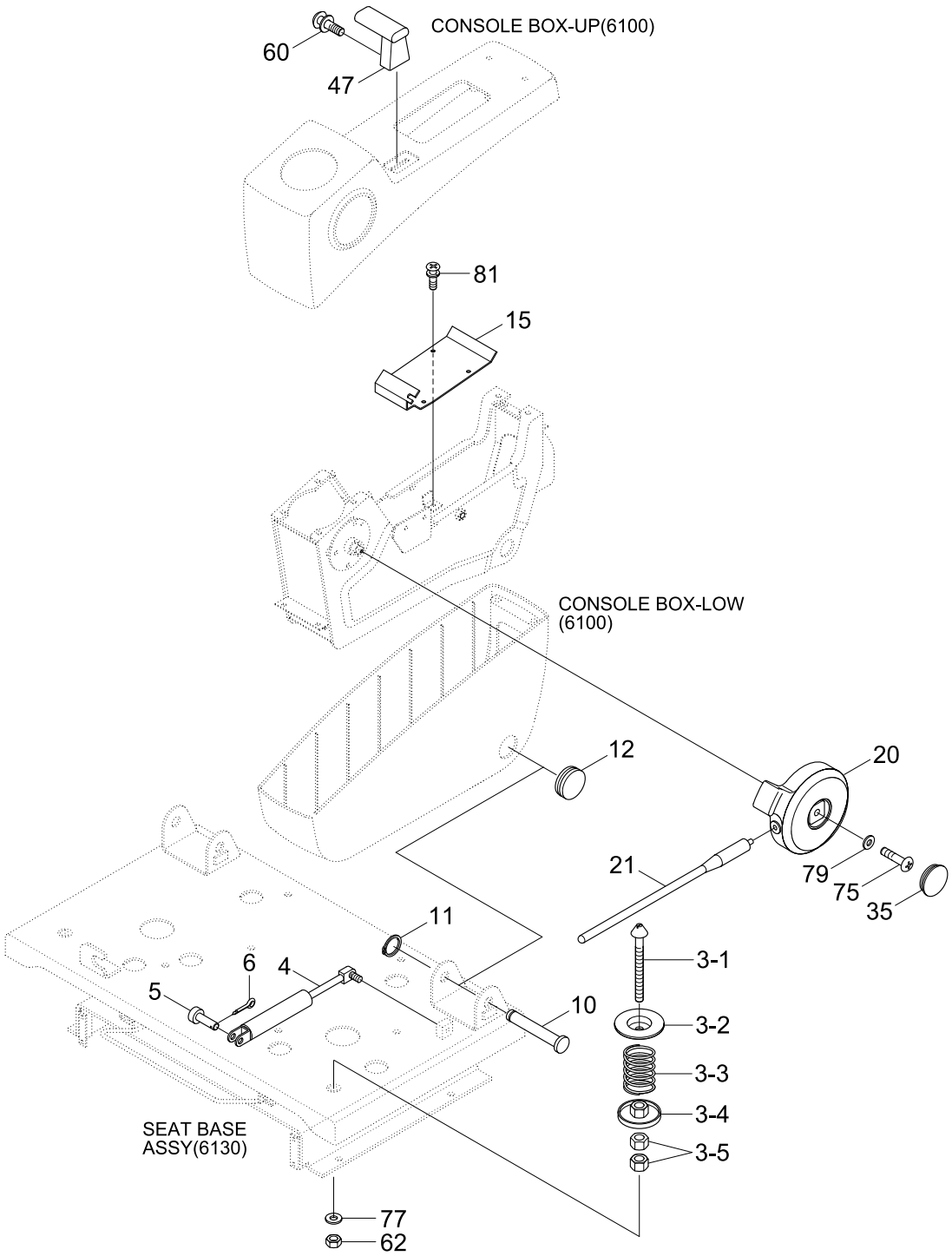

Item	Part_No	IS	Ord	T	Description	Qty	Serial_No	ITC	Remark
3	71N6-20031				TILT LOCKER ASSY	1			
3-1	71N6-21151				.SHAFT	1			
3-2	71N6-21160				.PLATE	1			
3-3	71N6-21170				.SPRING	1			
3-4	71N6-21180				.PLATE WA	1			
3-5	S207-161006				.NUT-HEX	2			
4	71N6-20040				SPRING-GAS	1			
5	S491-080256				PIN-CLEVIS	1			
6	S461-160256				PIN-SPLIT	1			
10	71N6-20081				SHAFT	1			
11	S601-020004				RING-RETAINING	1			
12	S661-360400				CAP-RUBBER	1			
15	71N4-20110				PLATE-CABLE	1	#0001 -	-	
20	71N6-20151				COVER-S/LEVER	1			
21	71N6-20161				ROD-SAFETY	1			
35	71N6-20281				CAP-S/LEVER	1			
47	71N6-20351				KNOB-TILT	1			
60	S131-040826				SCREW-W/WASHER	2			
62	S205-161006				NUT-HEX	1			
75	S175-060166				SCREW-SOCKET RD HD	1			
77	S403-162006				WASHER-PLAIN	1			
79	S403-065006				WASHER-PLAIN	1			
81	S131-061646				SCREW-W/WASHER	4			

CONSOLE BOX(RH)

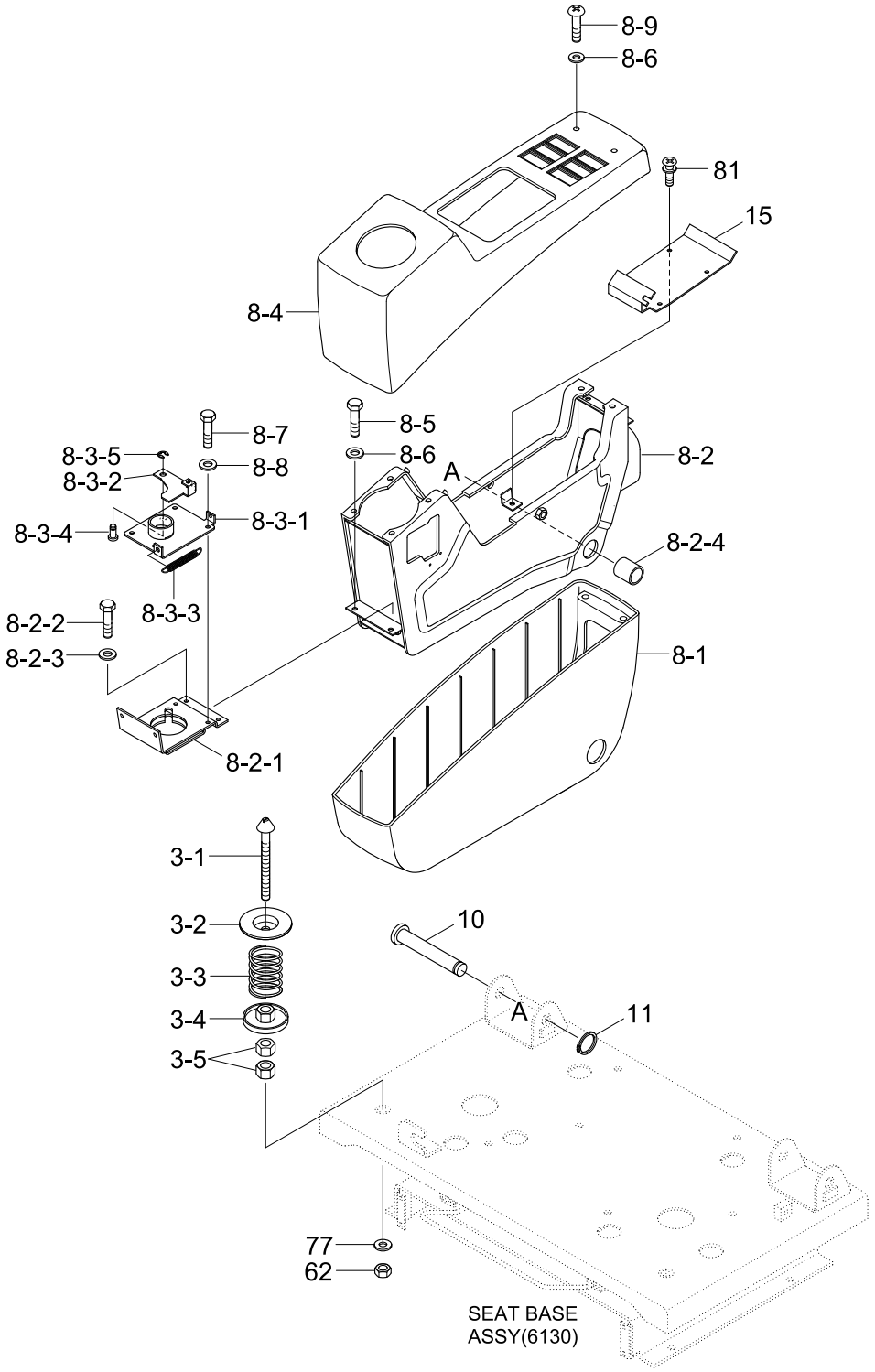

Item	Part_No	IS	Ord	T	Description	Qty	Serial_No	ITC	Remark
3	71N6-20031				TILT LOCKER ASSY	1			
3-1	71N6-21151				.SHAFT	1			
3-2	71N6-21160				.PLATE	1			
3-3	71N6-21170				.SPRING	1			
3-4	71N6-21180				.PLATE WA	1			
3-5	S207-161006				.NUT-HEX	2			
8	71N6-20440				CONSOLE BOX ASSY-RH	1			
8-1	71N6-20071				.CONSOLE BOX-LOW	1			
8-2	71N6-20061				.C/BOX FRAME WA-RH	1			
3-1	71N6-21151				.SHAFT	1			
3-2	71N6-21160				.PLATE	1			
3-3	71N6-21170				.SPRING	1			
3-4	71N6-21180				.PLATE WA	1			
3-5	S207-161006				.NUT-HEX	2			
8-2-1	71N6-21320				..BRACKET-TILT	1			
8-2-2	S015-060146				..BOLT-HEX	4			
8-2-3	S403-062006				..WASHER-PLAIN	4			
8-2-4	S731-020025				..BUSHING-DU	2			
8-3	71N6-20091				.TILT CATCH ASSY	1			
8-3-1	71N6-21420				..TILT CATCH-LOW	1			
8-3-2	71N6-21451				..TILT CATCH-UP	1			
8-3-3	71N6-21460				..SPRING	1			
8-3-4	71N6-21470				..PIN	1			
8-3-5	P560-090002				..RETAINING RING-E TYPE	1			
8-4	71N6-20171				.CONSOLE BOX-UP(RH)	1	- #0335		

Item	Part_No	IS	Ord	T	Description	Qty	Serial_No	ITC	Remark
8-4	71N6-20172				.CONSOLE BOX-UP(RH)	1	#0336 -	B	
8-5	S015-050206				.BOLT-HEX	4			
8-6	S403-052006				.WASHER-PLAIN	8			
8-7	S161-060126				.SCREW-CROSS R/ROUND	4			
8-8	S403-062006				.WASHER-PLAIN	4			
8-9	S161-050166				.SCREW-CROSS R/ROUND	4			
10	71N6-20081				SHAFT	1			
11	S601-020004				RING-RETAINING	1			
15	71N6-20111				PLATE-CABLE	1			
62	S205-161006				NUT-HEX	1			
77	S403-162006				WASHER-PLAIN	1			
35	71N6-20281				CAP-S/LEVER	1			
47	71N6-20351				KNOB-TILT	1			
60	S161-040086				SCREW-RD HD	2			
62	S205-161006				NUT-HEX	1			
74	S403-042006				WASHER-PLAIN	2			
75	S175-060166				SCREW-SOCKET RD HD	1			
77	S403-162006				WASHER-PLAIN	1			
79	S403-065006				WASHER-PLAIN	1			
81	S132-061656				SCREW-W/WASHER	4			

CONSOLE BOX 1(LH, OPT, 0615-)

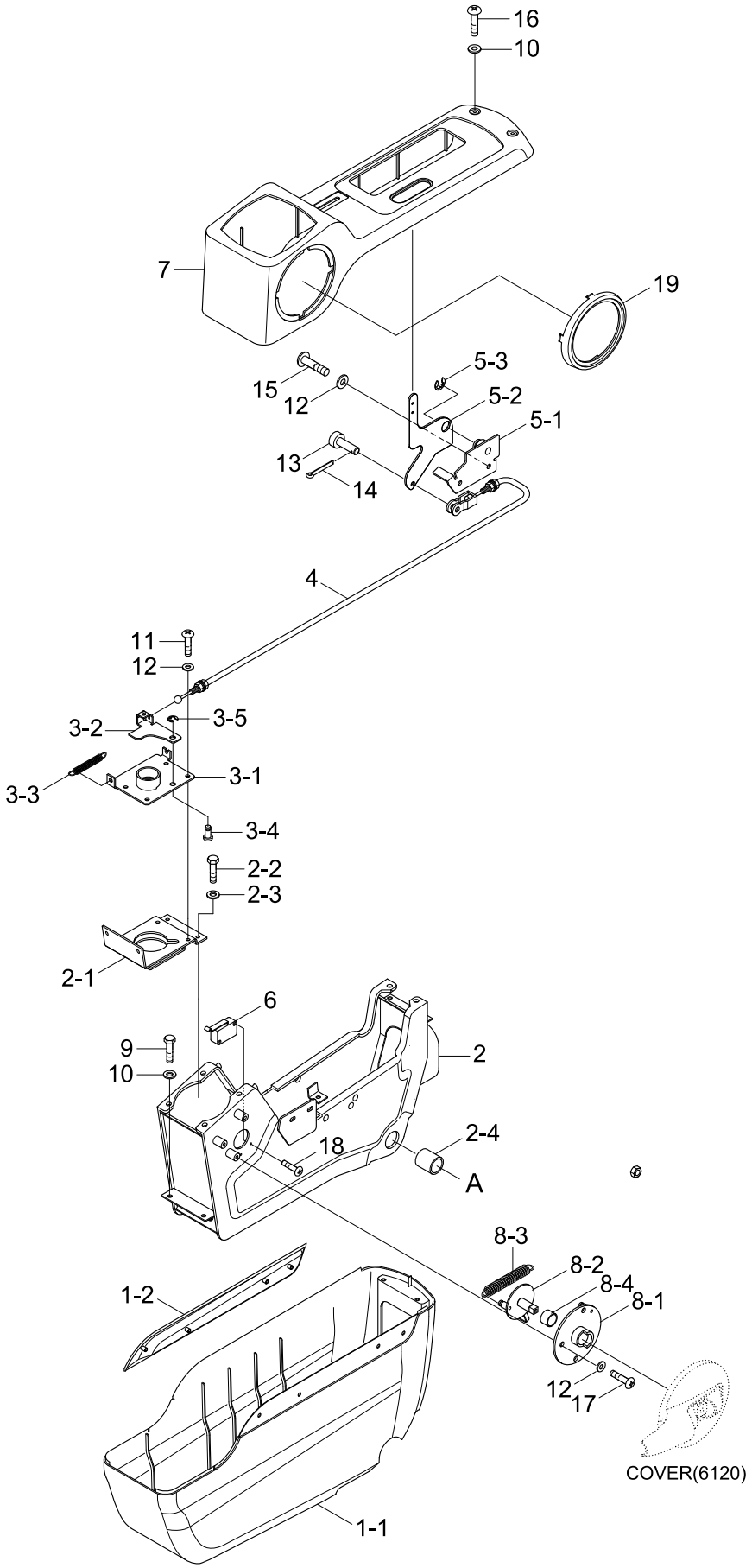

Item	Part_No	IS	Ord	T	Description	Qty	Serial_No	ITC	Remark
*	73N4-21010				CONSOLE BOX ASSY(LH)	1	#0615 -	-	
1	73N6-21020				.COVER-C/LOW ASSY	1			
1-1	73N6-20160				..CONSOLE BOX-LOW	1			
1-2	73N6-20230				..PANEL-CONSOLE DECO	1			
2	73N4-21030				.FRAME-C/BOX(LH)	1			
2-1	71N4-21320				..PLATE-TILT	1			
2-2	S015-060146				..BOLT-HEX	4			
2-3	S403-06200B				..WASHER-PLAIN	4			
2-4	S731-020025				..BUSHING-DU	2			
3	71N4-20090				.TILT CATCH ASSY	1			
3-1	71N4-21420				..TILT CATCH-LOW	1			
3-2	71N4-21450				..TILT CATCH-UP	1			
3-3	71N6-21460				..SPRING	1			
3-4	71N6-21470				..PIN	1			
3-5	P560-090002				..RETAINING RING-E TYPE	1			
4	71N6-20100				.PULL CABLE	1			
5	71N4-20120				.TILT LEVER ASSY	1			
5-1	71N4-21480				..BRACKET-LOW	1			
5-2	71N6-21510				..BRACKET-UP	1			
5-3	P560-100006				..RETAINING RING-E TYPE	1			
6	21N8-20300				.SWITCH-MICRO	1			
7	73N6-20140				.CONSOLE BOX UP-LH	1			
8	71N6-20141				.SAFETY BRACKET ASSY	1			
8-1	71N6-21521				..BRACKET-LOW	1			
8-2	71N6-21560				..BRACKET-UP	1			

Item	Part_No	IS	Ord	T	Description	Qty	Serial_No	ITC	Remark
8-3	71N6-21610				..SPRING	1			
8-4	S731-020010				..BUSHING-DU	1			
9	S015-050206				.BOLT-HEX	4			
10	S403-05200B				.WASHER-PLAIN	8			
11	S161-060136				.SCREW-CROSS R/ROUND	4			
12	S403-06200B				.WASHER-PLAIN	9			
13	S491-060156				.PIN-CLEVIS	1			
14	S461-080202				.PIN-SPLIT	1			
15	S161-060166				.SCREW-CROSS R/ROUND	2			
16	S161-050166				.SCREW-CROSS R/ROUND	4			
17	S175-060162				.SCREW-SOCKET RD HD	3			
18	S161-030162				.SCREW-CROSS R/ROUND	2			
19	73N6-20200				.RING-SAFETY LEVER	1			

CONSOLE BOX 2(LH, OPT, #0615-)

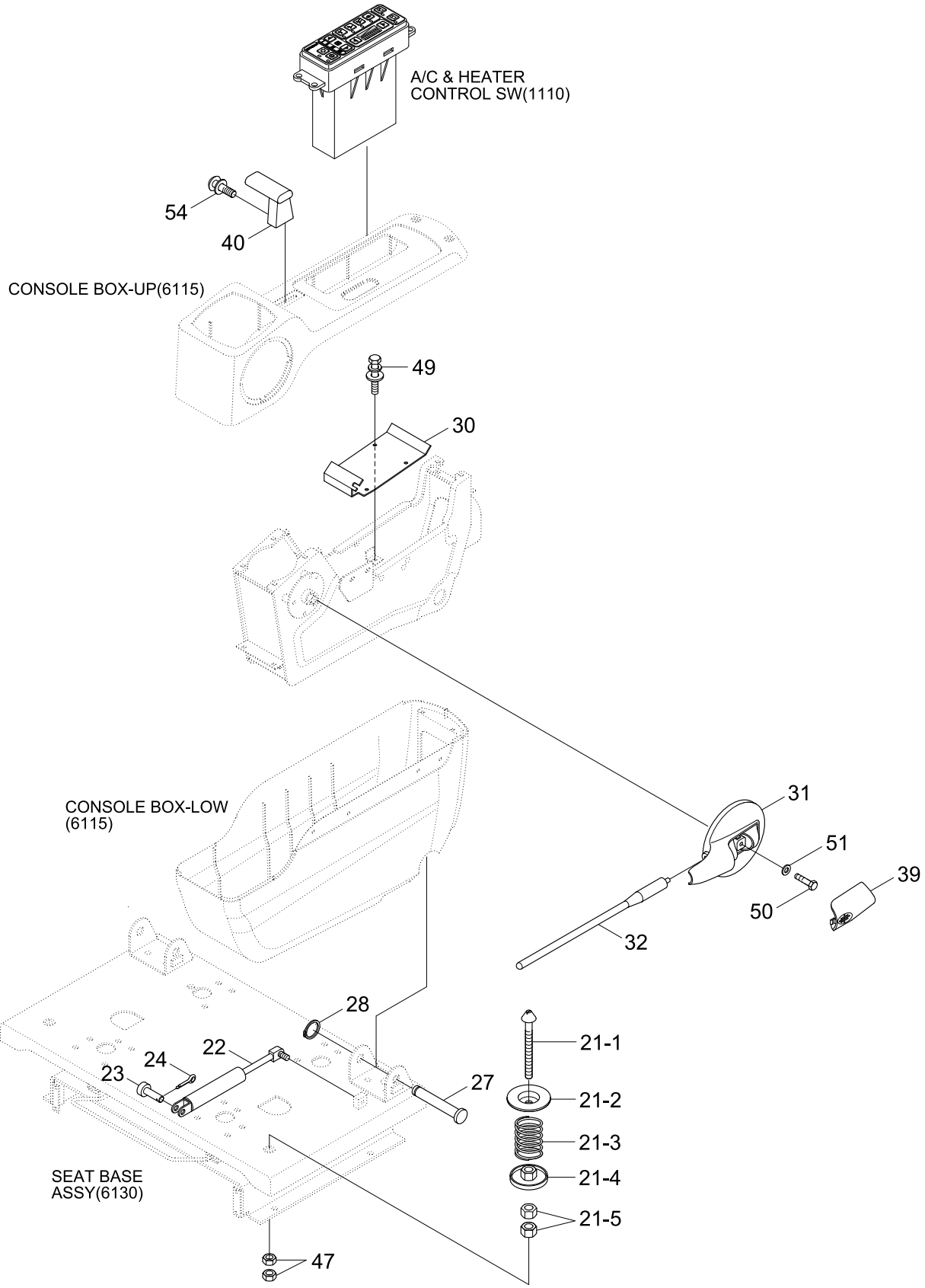

Item	Part_No	IS	Ord	T	Description	Qty	Serial_No	ITC	Remark
*	@				CONSOLE BOX	1	#0615 -	-	NOT
3	71N6-20031				TILT LOCKER ASSY	1			
3-1	71N6-21151				.SHAFT	1			
3-2	71N6-21160				.PLATE	1			
3-3	71N6-21170				.SPRING	1			
3-4	71N6-21180				.PLATE WA	1			
3-5	S207-161006				.NUT-HEX	2			
8	71N6-20440				CONSOLE BOX ASSY-RH	1			
8-1	71N6-20071				.CONSOLE BOX-LOW	1			
21	71N6-20031				TILT LOCKER ASSY	1			
21-1	71N6-21151				.SHAFT	1			
21-2	71N6-21160				.PLATE	1			
21-3	71N6-21170				.SPRING	1			
21-4	71N6-21180				.PLATE WA	1			
21-5	S205-16100B				.NUT-HEX	2			
22	71N6-20040				SPRING-GAS	1			
23	S491-080252				PIN-CLEVIS	1			
24	S461-160252				PIN-SPLIT	1			
8-2-4	S731-020025				..BUSHING-DU	2			
27	71N6-20082				SHAFT	1			
28	S601-020004				RING-RETAINING	1			
8-3-1	71N6-21420				..TILT CATCH-LOW	1			
8-3-2	71N6-21451				..TILT CATCH-UP	1			
8-3-3	71N6-21460				..SPRING	1			
8-3-4	71N6-21470				..PIN	1			

Item	Part_No	IS	Ord	T	Description	Qty	Serial_No	ITC	Remark
8-3-5	P560-090002				..RING-SNAP	1			
8-4	71N6-20171				.CONSOLE BOX-UP(RH)	1	- #0335		
	71N6-20172				.CONSOLE BOX-UP(RH)	1	#0336 -	B	
30	71N6-20110				PLATE-CABLE	1			
8-6	S403-052006				.WASHER-PLAIN	8			
8-7	S161-060126				.SCREW-CROSS R/ROUND	4			
8-8	S403-062006				.WASHER-PLAIN	4			
8-9	S161-050166				.SCREW-RD HD	4			
31	73N6-20180				KNOB -SAFETY LEVER	1			
32	71N6-20161				ROD-SAFETY	1			
15	71N6-20111				PLATE-CABLE	1			
62	S205-161006				NUT-HEX	1			
77	S403-162006				WASHER-PLAIN	1			
39	73N6-20190				CAP-SAFETY LEVER	1			
40	71N6-20351				KNOB-TILT	1			
47	S205-16100B				NUT-HEX	2			
49	S035-061526				BOLT-W/WASHER	3			
50	S015-060156				BOLT-HEX	4			
51	S403-06500B				WASHER-PLAIN	4			
54	S131-040826				SCREW-W/WASHER	2			
81	S132-061656				SCREW-W/WASHER	4			

CONSOLE BOX(RH, OPT, #0615-)

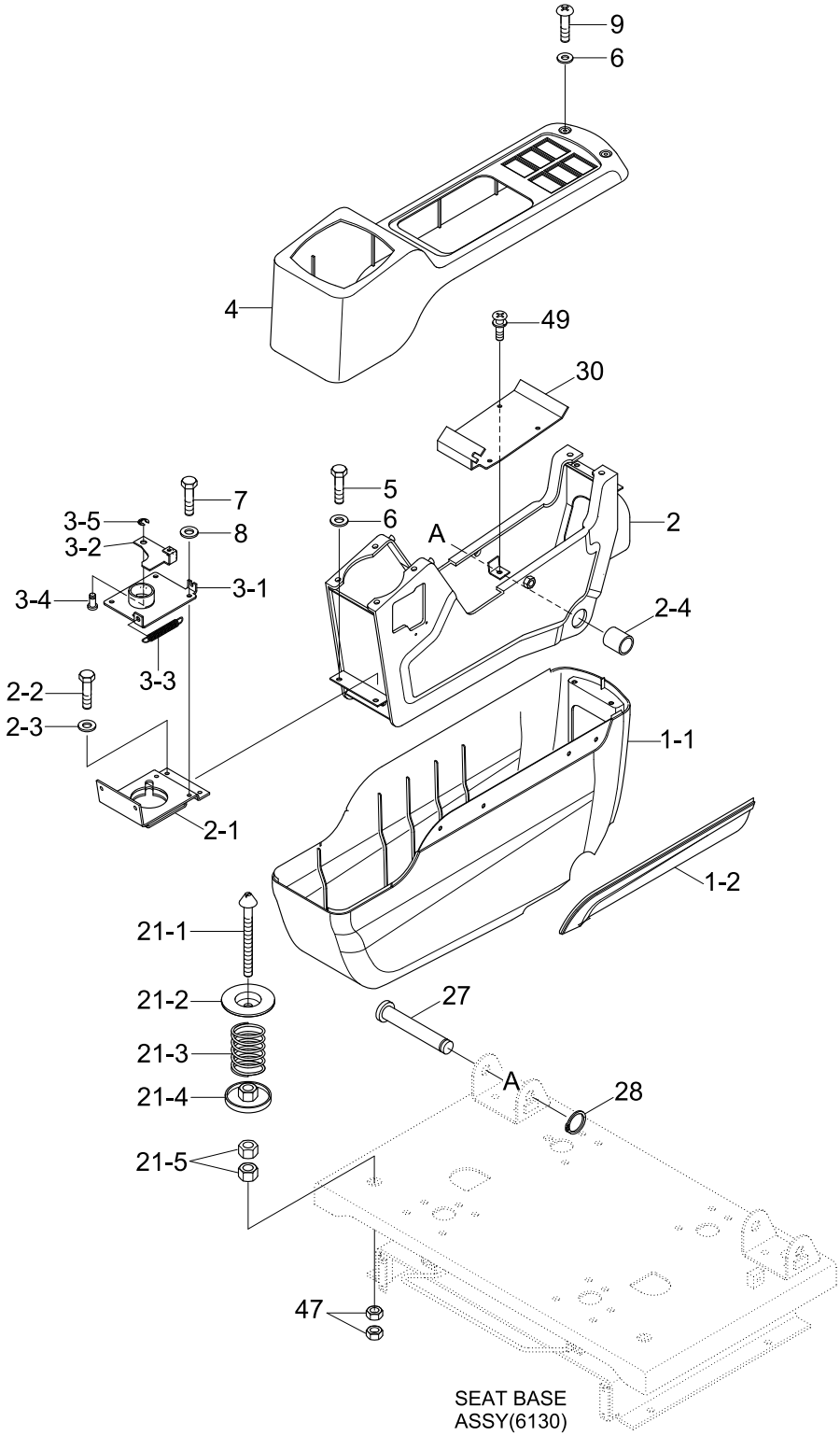

Item	Part_No	IS	Ord	T	Description	Qty	Serial_No	ITC	Remark
*	73N6-21040				CONSOLE BOX ASSY(RH)	1	#0615 -	-	
1	73N6-21020				.COVER-C/LOW ASSY	1			
1-1	73N6-20160				..CONSOLE BOX-LOW	1			
1-2	73N6-20230				..PANEL-CONSOLE DECO	1			
2	71N6-20061				.C/BOX FRAME WA-RH	1			
2-1	71N6-21320				..BRACKET-TILT	1			
2-2	S015-060156				..BOLT-HEX	4			
2-3	S403-06200B				..WASHER-PLAIN	4			
2-4	S731-020025				..BUSHING-DU	2			
3	71N6-20091				.TILT CATCH ASSY	1			
3-1	71N6-21420				..TILT CATCH-LOW	1			
3-2	71N6-21451				..TILT CATCH-UP	1			
3-3	71N6-21460				..SPRING	1			
3-4	71N6-21470				..PIN	1			
3-5	P560-090002				..RETAINING RING-E TYPE	1			
4	73N6-20150				.CONSOLE BOX UP-RH	1			
5	S015-050206				.BOLT-HEX	4			
6	S403-05200B				.WASHER-PLAIN	8			
7	S161-060136				.SCREW-CROSS R/ROUND	4			
8	S403-06200B				.WASHER-PLAIN	4			
9	S161-050166				.SCREW-CROSS R/ROUND	4			
21	71N6-20031				TILT LOCKER ASSY	1			
21-1	71N6-21151				.SHAFT	1			
21-2	71N6-21160				.PLATE	1			
21-3	71N6-21170				.SPRING	1			

Item	Part_No	IS	Ord	T	Description	Qty	Serial_No	ITC	Remark
21-4	71N6-21180				.PLATE WA	1			
21-5	S207-161006				.NUT-HEX	2			
27	71N6-20082				SHAFT	1			
28	S601-020004				RING-RETAINING	1			
30	71N6-20111				PLATE-CABLE	1			
47	S205-16100B				NUT-HEX	2			
49	S035-061526				BOLT-W/WASHER	3			

SEAT BASE ASSY

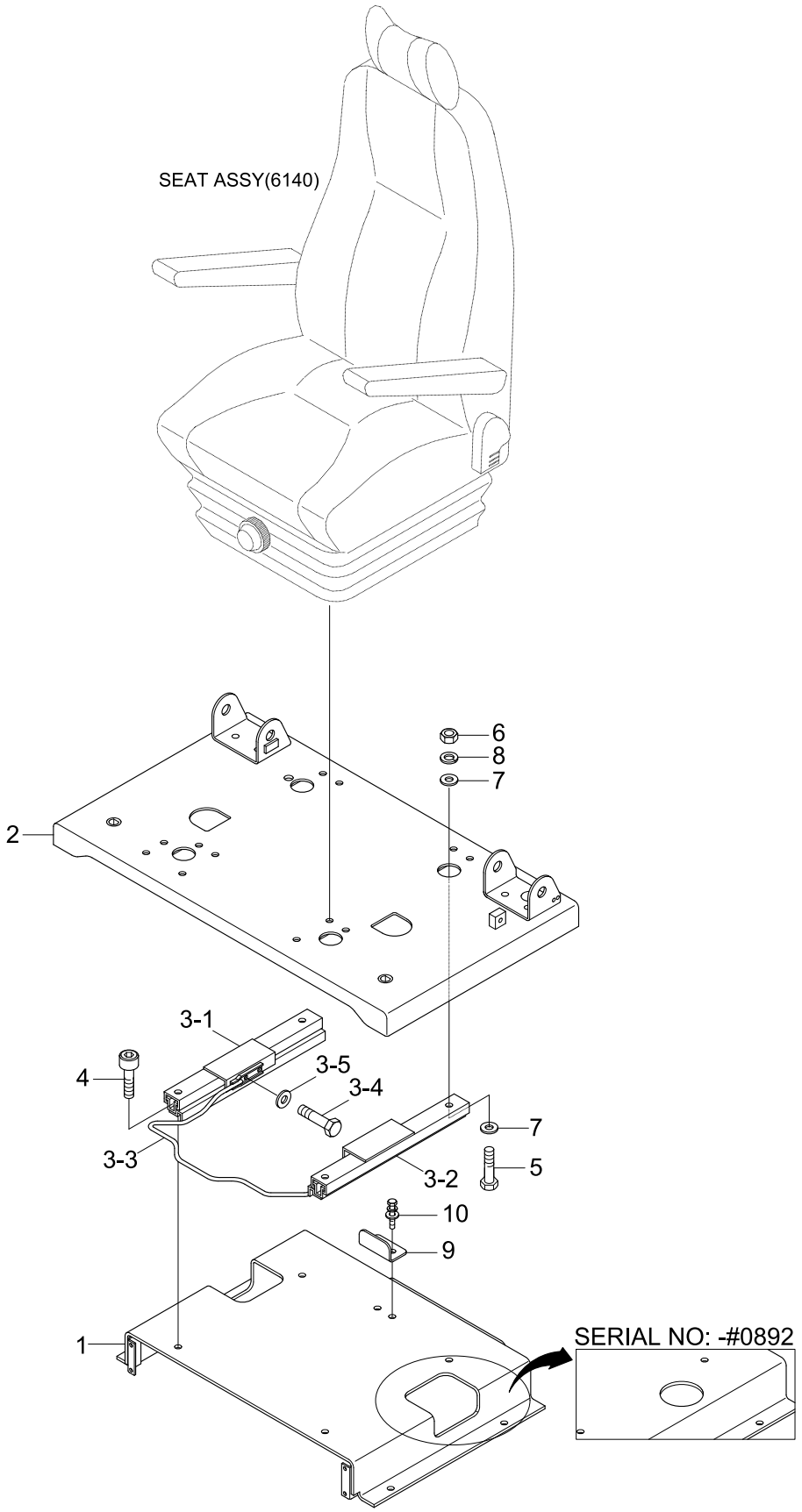

Item	Part_No	IS	Ord	T	Description	Qty	Serial_No	ITC	Remark
*	71N4-20011				SEAT BASE ASSY	1	- #0005		
	71N4-20012				SEAT BASE ASSY	1	#0006 - #0892	D	
	71N4-20140				SEAT BASE ASSY	1	#0893 -	D	
1	71N6-21011				.SEAT BASE-LOW	1	- #0892		
	71N4-20150				.SEAT BASE-LOW	1	#0893 -	D	
2	71N6-21072				.SEAT BASE-UP	1	- #0005		
	71N6-21073				.SEAT BASE-UP	1	#0006 - #0321	D	
	71N6-21074				.SEAT BASE-UP	1	#0322 -	B	
3	71N4-21720				.SLIDING RAIL ASSY	1	#0001 -	-	
3-1	71N6-21670				..SLIDE ASSY-RH	1			
3-2	71N6-21680				..SLIDE ASSY-LH	1			
3-3	71N4-21690				..LEVER ASSY	1			
3-4	S015-060126				..BOLT-HEX	4			
3-5	S403-062006				..WASHER-PLAIN	4			
4	S109-080306				.BOLT-SOCKET	4			
5	S017-080256				.BOLT-HEX	4			
6	S205-081006				.NUT-HEX	4			
7	S403-082006				.WASHER-PLAIN	8			
8	S411-080006				.WASHER-SPRING	4			
9	71N4-20160				.BRACKET	1	#0893 -	-	
10	S035-082526				.BOLT-W/WASHER	2	#0893 -	-	

SEAT(-#0172)

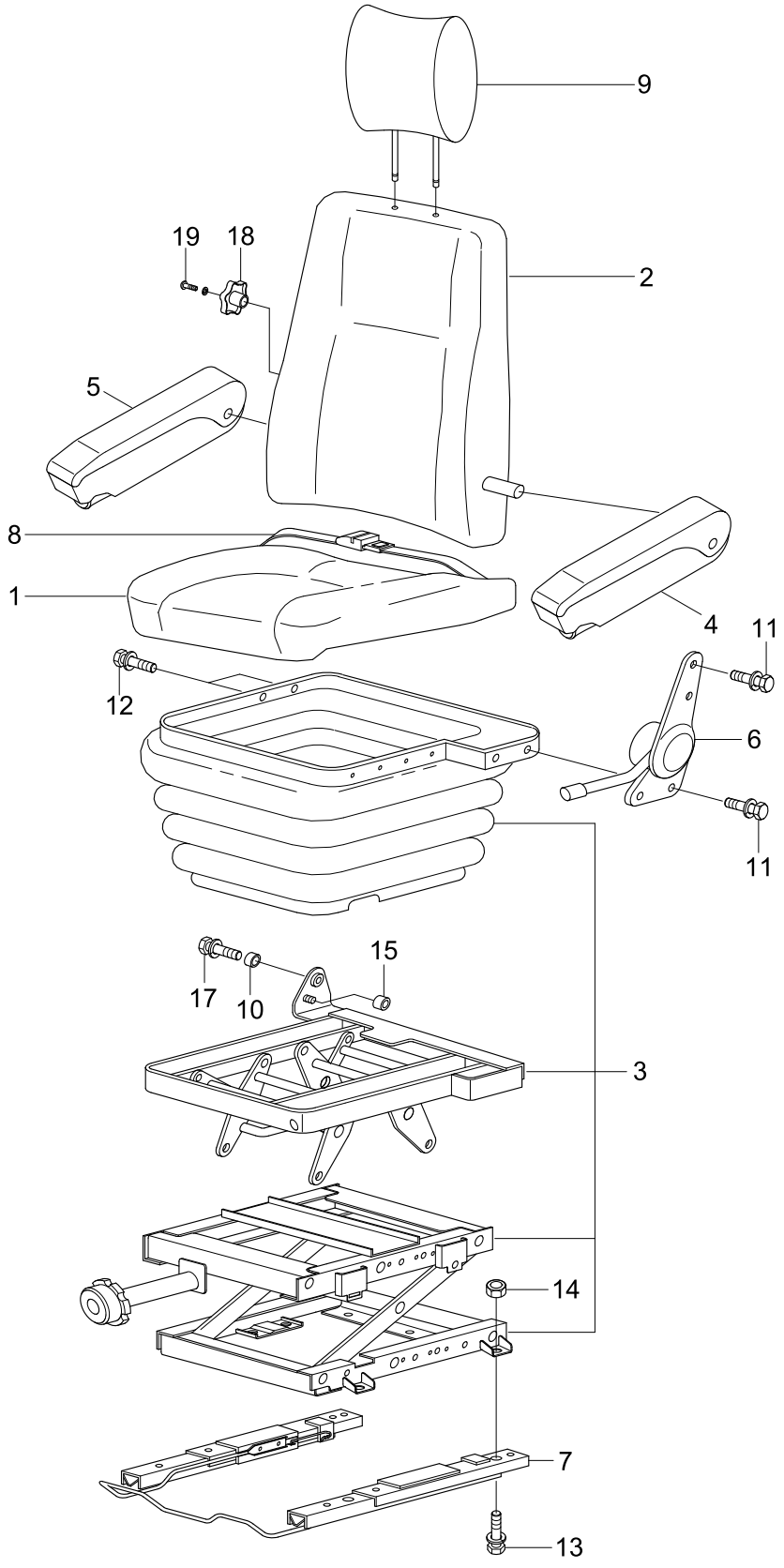

Item	Part_No	IS	Ord	T	Description	Qty	Serial_No	ITC	Remark
*	71N6-30500				SEAT ASSY	1	- #0172	-	
1	H28303-100				.CUSHION ASSY	1			
2	H28313-200				.BACK ASSY	1			
3	H28303-300				.LEG ASSY	1			
3-1	H28003-350				..DAMPER	1	#0001 -	-	NOT SHOWN
4	H28300-700				.ARM REST ASSY-LH	1			
5	H28005-700A				.ARM REST ASSY-RH	1			
6	H28003-2400				.RECLINER ASSY	1			
7	H28213-400				.TRACK ASSY	1			
8	H28003-600				.SEAT BELT ASSY	1			
9	H28303-800				.HEAD REST ASSY	1			
10	H95003-906				.BUSHING-NYLON	1			
11	W11230-10303				.BOLT	5			
12	W11286-06203				.BOLT-W/WASHER	2			
13	W11230-08183				.BOLT-W/WASHER	4			
14	W13395-08003				.NUT-FLANGE	4			
15	H95003-3462				.NUT-BUSH	1			
17	W11226-06123				.BOLT-W/WASHER	1			
18	H29313-901A				.KNOB	1			
19	W12310-05123				.BOLT & S/WASHER	1			

SEAT(#0173-)

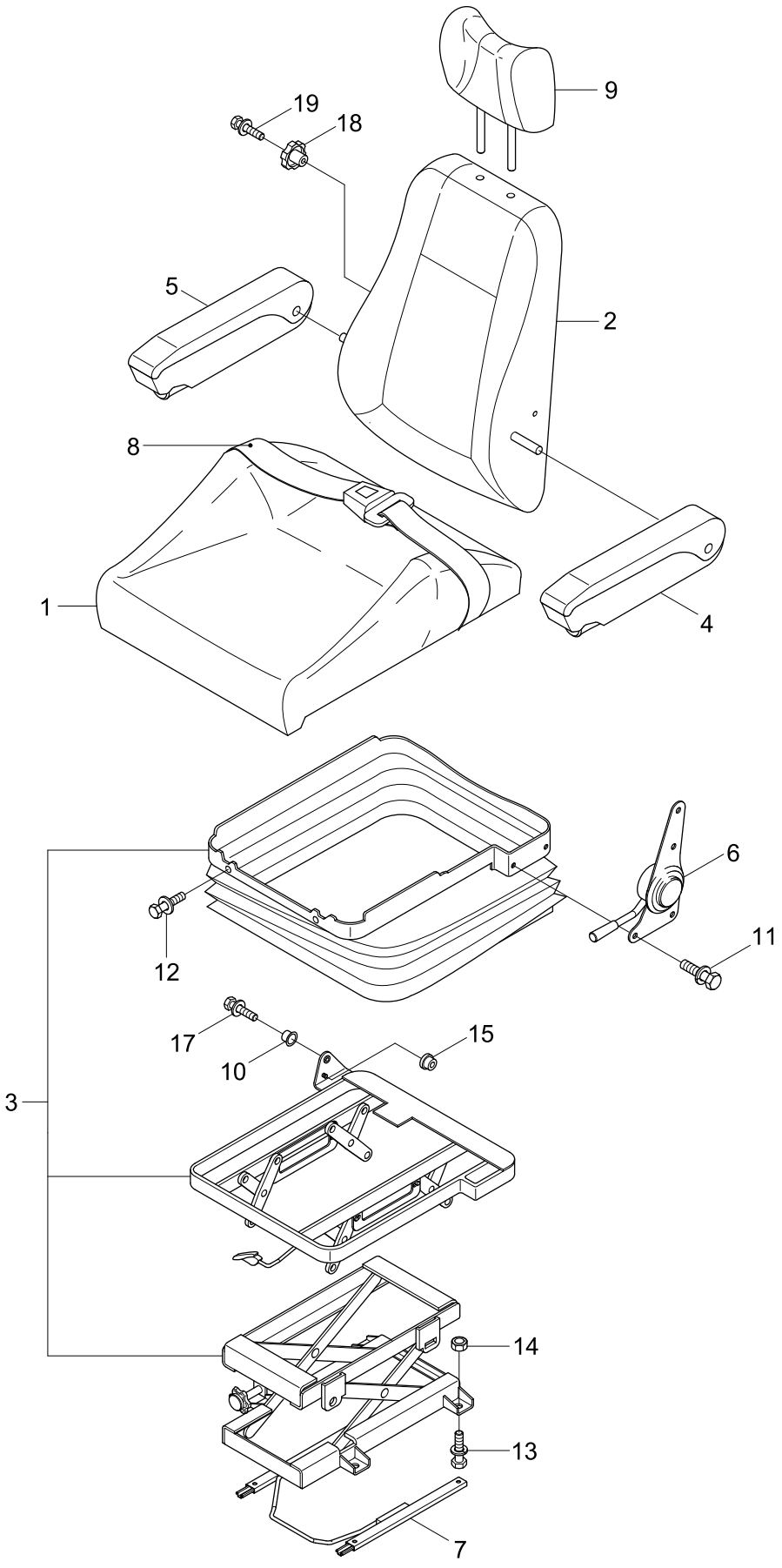

Item	Part_No	IS	Ord	T	Description	Qty	Serial_No	ITC	Remark
*	71N6-30700				SEAT ASSY	1	#0173 -	B	
1	H28333-100				.CUSHION ASSY	1			
2	H28333-200				.BACK ASSY	1			
3	H28333-300				.LEG ASSY	1			
3-1	H28333-350				..DAMPER	1			NOT SHOWN
4	H28300-700A				.ARM REST ASSY-LH	1			
5	H28305-700B				.ARM REST ASSY-RH	1			
6	H28003-240D				.RECLINER ASSY	1			
7	H28334-400				.TRACK ASSY	1	#0173 -	-	
8	H28003-600				.SEAT BELT ASSY	1			
9	H28333-800				.HEAD REST ASSY	1			
10	H95003-906				.BUSHING-NYLON	1			
11	W11230-10303				.BOLT	6			
12	W11286-06203				.BOLT-W/WASHER	2			
13	W11230-08183				.BOLT-W/WASHER	4			
14	W13395-08003				.NUT-FLANGE	4			
15	H95003-3462				.NUT-BUSH	1			
17	W11226-06123				.BOLT-W/WASHER	1			
18	H29313-901A				.KNOB	1			
19	W12310-05123				.BOLT & S/WASHER	1			

SEAT(#0132-)

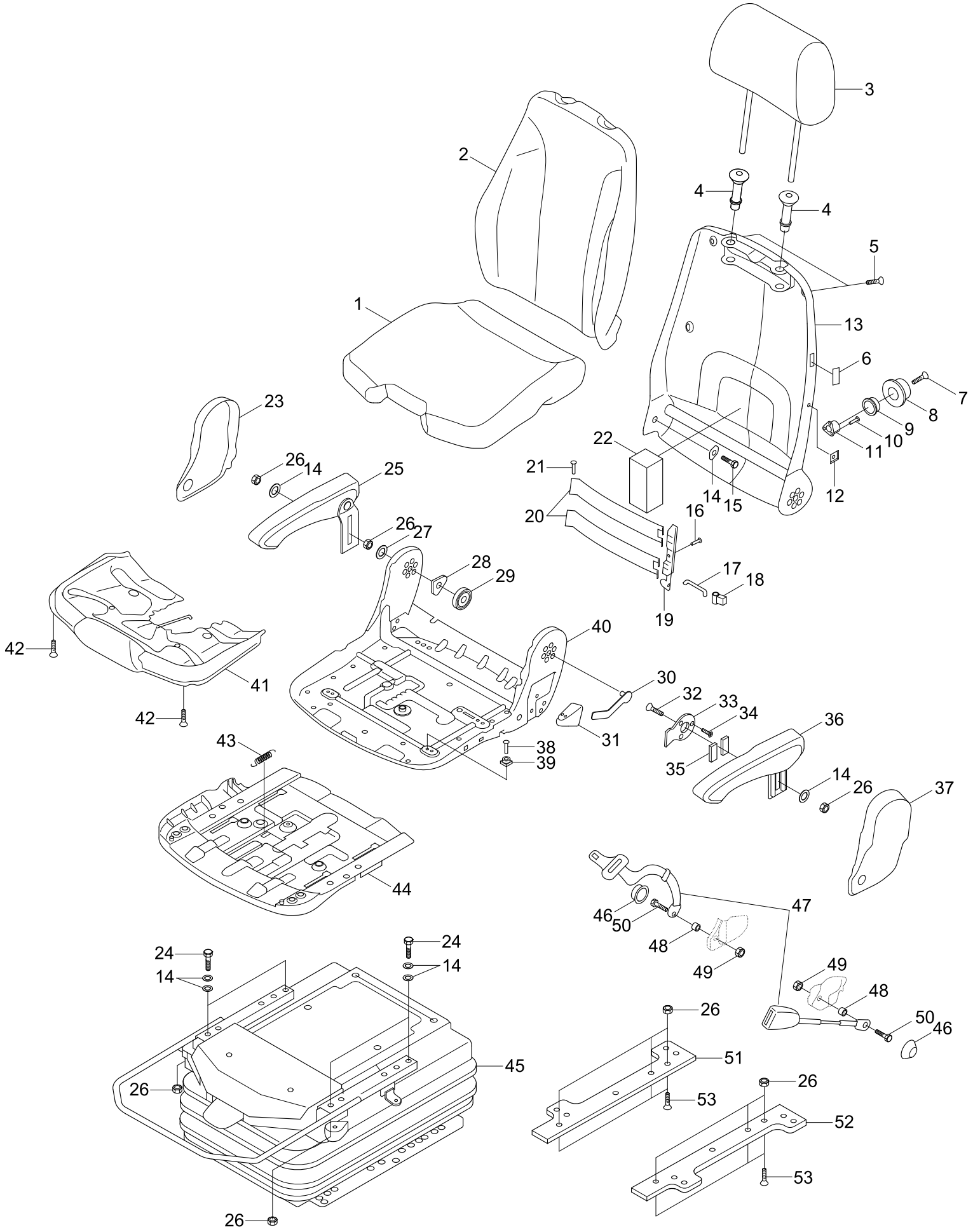
3
2
4
4
5
1
13
6
7
8
9
10
11
12
23
26
14
25
22
21
14
15
20
16
26
27
28
29
17
18
19
42
40
41
42
30
32
33
34
36
31
38
39
35
14
26
37
43
44
46
50
47
48
49
49
48
50
46
24
14
24
14
45
26
26
51
53
26
52
53

Item	Part_No	IS	Ord	T	Description	Qty	Serial_No	ITC	Remark
*	71N6-30600				SEAT ASSY	1	#0132 -	-	2" AIR RIDE
1	140907				.CUSHION-SEAT	1			
2	140908				.BACKREST-CUSHION	1			
3	140912				.HEADREST	1			
4	138691				.BUSHING	2			
5	200936				.SCREW-SELF TAPPING	6			
6	140226				.COVER-PLASTIC	1			
7	138758				.SCREW	1			
8	141064				.HANDLE-LUMBAR SUPPORT	1			
9	138747				.TOOLHEAD WHEEL	1			
10	135786				.RIVET-BLIND	3			
11	138634				.SLING SPRING BRAKE	1			
12	138785				.STICKER	1			
13	2048229				.BACKREST-GS.SCR	1			
14	113290				.WASHER	11			
15	118558				.SCREW-HEXAGON	1			
16	104551				.RIVET-POP	1			
17	138559				.RODS	1			
18	138655				.CARRIER	1			
19	138614				.WINKEL	1			
20	141004				.PLATE	2			
21	2048616				.RIVET	2			
22	1027240				.SPONGE	1			
23	140458				.COVER-RH	1			
24	2048504				.SCREW-HEXAGON HEAD	4			

Item	Part_No	IS	Ord	T	Description	Qty	Serial_No	ITC	Remark
25	1026762				.ARM REST ASSY-RH	1			
26	110291				.NUT-HEXAGON	11			
27	110489				.WASHER-BLACK	1			
28	140684				.HODER-SPRING	1			
29	131517				.SPRING-LEG	1			
30	140695				.LEVER	1			
31	140694				.HANDLE	1			
32	140697				.SCREW-M8*18	1			
33	140696				.PLATE	1			
34	136122				.SCREW-M6*10	3			
35	107719				.PLATE-RUBBER	1			
36	1026763				.ARMREST-LH	1			
37	140457				.COVER-LH	1			
38	2048610				.RIVET	4			
39	138835				.PROFILE-GLIDING	4			
40	86601108				.SEAT PLATE-GS.LA	1			
41	1077064				.ADJUSTMENT-TILTING	1			
42	1054392				.SCREW-SELF TAPPING	4			
43	116226				.SPRING	1			
44	1101294				.ADJUSTMENT-SEAT DEPTH	1			
45	1053742				.SUSPENSION SYSTEM	1			
46	132909				.COVER	2			
47	902172				.SEAT BELT	1			
48	115419				.BUSHING	2			
49	113354				.NUT	2			

Item	Part_No	IS	Ord	T	Description	Qty	Serial_No	ITC	Remark
50	113771				.SCREW-7/16 INCH	2			
51	S0051				.BOTTOM PLATE-GS.LA.	1			
52	S0070				.BOTTOM PLATE-GS.LA.	1			
53	2048654				.SCREW-COUNTERSUNK	6			

SEAT 3(#0437-)

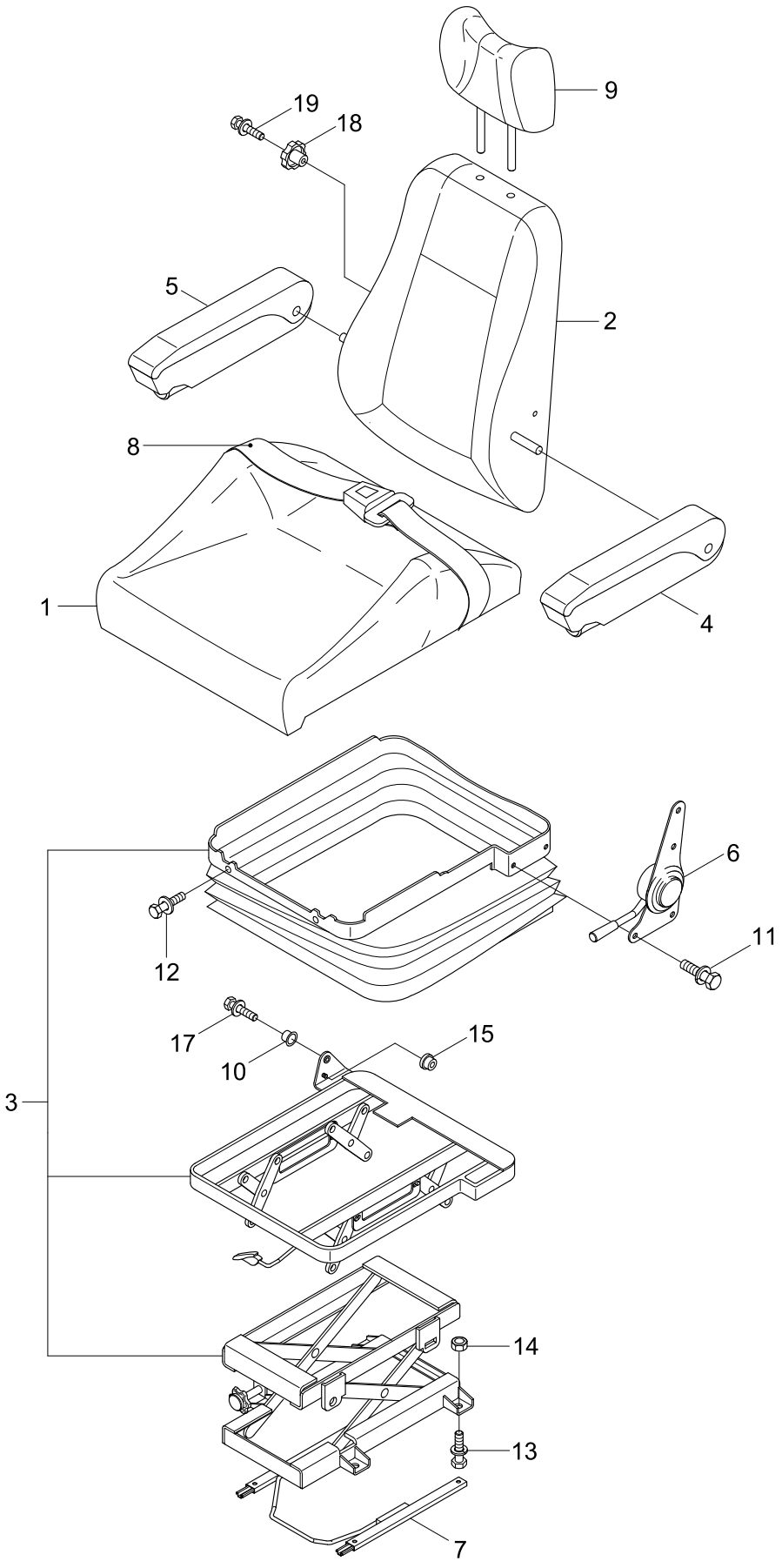

Item	Part_No	IS	Ord	T	Description	Qty	Serial_No	ITC	Remark
*	71N6-30800				SEAT ASSY	1	#0437 -	-	SUSPENSION&HEAT
1	H28335-100				.CUSHION ASSY	1			
2	H28335-200				.BACK ASSY	1			
3	H28333-300				.LEG ASSY	1			
3-1	H28333-350				..DAMPER	1			NOT SHOWN
4	H28300-700A				.ARM REST ASSY-LH	1			
5	H28305-700B				.ARM REST ASSY-RH	1			
6	H28003-240D				.RECLINER ASSY	1			
7	H28213-400B				.TRACK ASSY	1			
8	H28003-600				.SEAT BELT ASSY	1			
9	H28333-800				.HEAD REST ASSY	1			
10	H95003-906				.BUSHING-NYLON	1			
11	W11230-10303				.BOLT	6			
12	W11286-06203				.BOLT-W/WASHER	2			
13	W11230-08183				.BOLT-W/WASHER	4			
14	W13395-08003				.NUT-FLANGE	4			
15	H95003-3462				.NUT-BUSH	1			
17	W11226-06123				.BOLT-W/WASHER	1			
18	H29313-901A				.KNOB	1			
19	W12310-05123				.BOLT & S/WASHER	1			

SEAT 4 (#0562-)

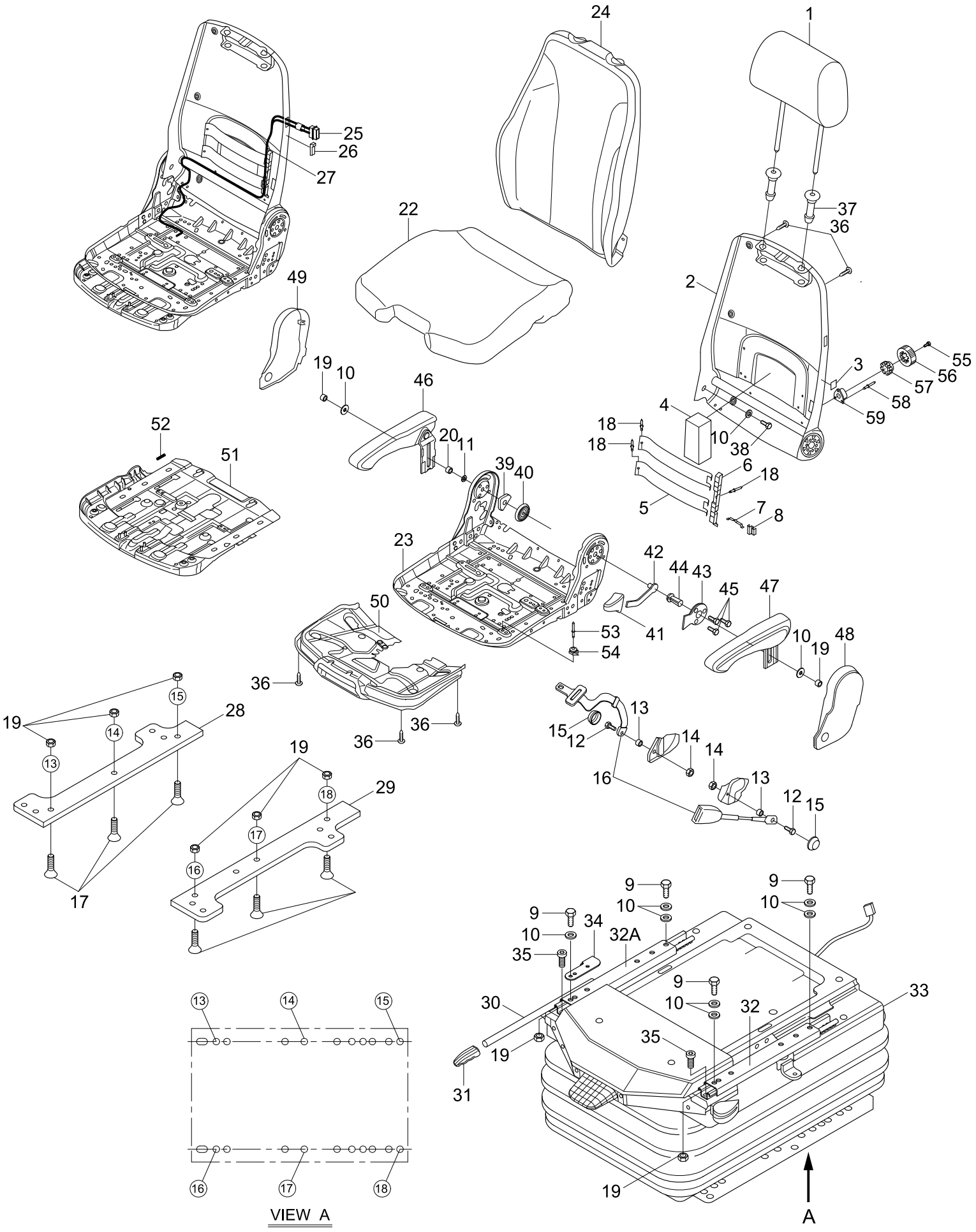
24
1
25
26
27
22
37
36
49
2
19
10
46
3
55
56
57
58
59
4
18
18
10
38
52
51
20
11
39
40
6
18
5
7
8
23
42
44
43
45
47
50
53
54
41
10
19
48
36
36
36
15
19
28
14
13
17
19
18
29
17
16
15
12
13
14
14
16
13
12
15
9
10
9
10
34
32A
35
9
10
33
30
32
35
19
31
19
A
13
14
15
16
17
18
VIEW A

Item	Part_No	IS	Ord	T	Description	Qty	Serial_No	ITC	Remark
*	71N6-30900				SEAT ASSY	1	#0562 -	-	AIR SUSP&HEATED
1	ZGBH-00165				.HEADREST	1			
2	ZGBH-00166				.BACKREST-GS.SCR	1			
3	ZGBH-00012				.STICKER	1			
4	ZGBH-00016				.SPONGE	1			
5	ZGBH-00021				.PLATE	2			
6	ZGBH-00017				.WINKEL	1			
7	ZGBH-00019				.RODS	1			
8	ZGBH-00020				.CARRIER	1			
9	ZGBH-00042				.SCREW-HEX HEAD	4			
10	ZGBH-00015				.WASHER	10			
11	ZGBH-00024				.WASHER-BLACK	1			
12	ZGBH-00053				.SCREW	2			
13	ZGBH-00051				.BUSH	2			
14	ZGBH-00052				.NUT	2			
15	ZGBH-00050				.COVER	2			
16	ZGBH-00167				.SEAT BELT	1			
17	ZGBH-00168				.SCREW-COUNTERSUNK	6			
18	ZGBH-00107				.RIVET	3			
19	ZGBH-00023				.HEX NUT-BLACK	11			
20	ZGBH-00109				.SELF LOCK NUT	1			
21	ZGBH-00169				.WASHER	2			
22	ZGBH-00170				.CUSHION-SEAT	1			
23	ZGBH-00110				.SEAT PLATE GS	1			
24	ZGBH-00171				.CUSHION	1			

Item	Part_No	IS	Ord	T	Description	Qty	Serial_No	ITC	Remark
N25	ZGBH-00172				.SWITCH-HEATER	1			NOT
26	ZGBH-00173				.STICKER	1			
27	ZGBH-00174				.HARNESS-WIRING	1			
28	ZGBH-00175				.PLATE-ADAPTER,RH	1			
29	ZGBH-00176				.PLATE-ADAPTER,LH	1			
30	ZGBH-00177				.HANDLE-LA	1			
31	ZGBH-00049				.KNOB-PLASTIC	1			
32	ZGBH-00178				.RAIL ADDITIONAL-LH	1			
32A	ZGBH-00236				.RAIL ADDITIONAL-RH	1	#0562 -	-	
33	ZGBH-00179				.SUSPENSION-MSG95G	1			
34	ZGBH-00180				.BRACKET-LA	1			
35	ZGBH-00115				.CYLINDRIC HEAD SCREW	3			
36	ZGBH-00037				.SCREW-SELF TAPPING	10			
37	ZGBH-00004				.BUSH	2			
38	ZGBH-00014				.SCREW-HEX HEAD	1			
39	ZGBH-00025				.SPRING HOLDER	1			
40	ZGBH-00026				.SPRING-LEG	1			
41	ZGBH-00033				.HANDLE	1			
42	ZGBH-00027				.LEVER	1			
43	ZGBH-00113				.PLATE	1			
44	ZGBH-00112				.SCREW	1			
45	ZGBH-00029				.SCREW	3			
46	ZGBH-00108				.ARM REST-RH	1			
47	ZGBH-00030				.ARM REST-LH	1			
48	ZGBH-00181				.COVER-LH	1			

Item	Part_No	IS	Ord	T	Description	Qty	Serial_No	ITC	Remark
49	ZGBH-00182				.COVER-RH	1			
50	ZGBH-00038				.ADJUSTMENT-TILTING	1			
51	ZGBH-00114				.ADJUSTMENT-SEAT	1			
52	ZGBH-00039				.SPRING	1			
53	ZGBH-00034				.RIVET	4			
54	ZGBH-00035				.PROFILE-GLIDING	4			
55	ZGBH-00055				.SCREW	1			
56	ZGBH-00007				.HANDLE	1			
57	ZGBH-00008				.WHEEL-TOOLHEAD	1			
58	ZGBH-00010				.RIVET-BLIND	3			
59	ZGBH-00011				.BRAKE-SLING SPRING	1			

STORAGE BOX COVER ASSY

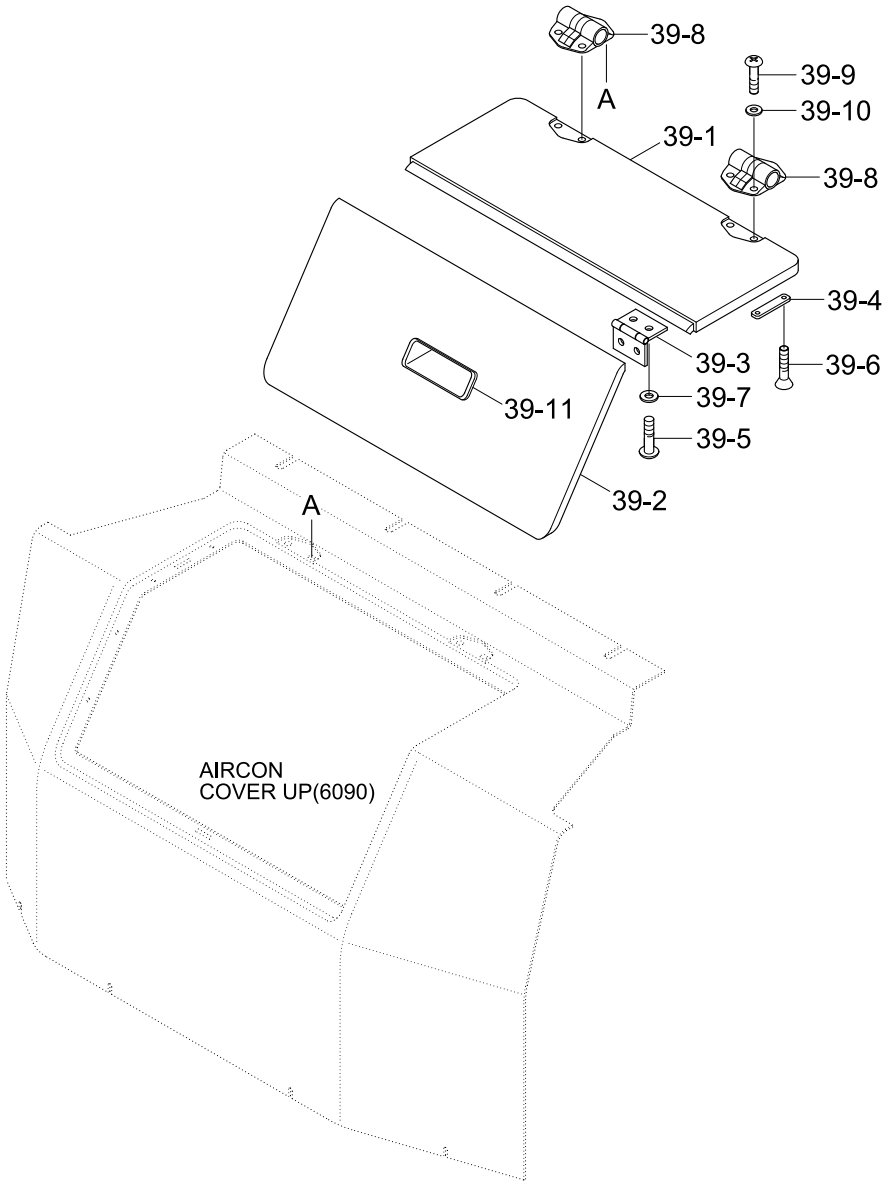

Item	Part_No	IS	Ord	T	Description	Qty	Serial_No	ITC	Remark
39	71N6-20320				S/BOX COVER ASSY	1			
39-1	71N6-21721				.S/BOX COVER-UP	1			
39-2	71N6-21731				.S/BOX COVER-LOW	1			
39-3	71N6-21740				.HINGE	2			
39-4	71N6-21750				.PLATE	3			
39-5	S161-060146				.SCREW	8			
39-6	S141-050106				.SCREW	4			
39-7	S403-062006				.WASHER-PLAIN	8			
39-8	71N6-21900				.HINGE	2			
39-9	S161-050126				.SCREW	4			
39-10	S403-052006				.WASHER-PLAIN	4			
39-11	71N6-21920				.DOOR-PULL	1			

BOTTOM PLATE MOUNTING

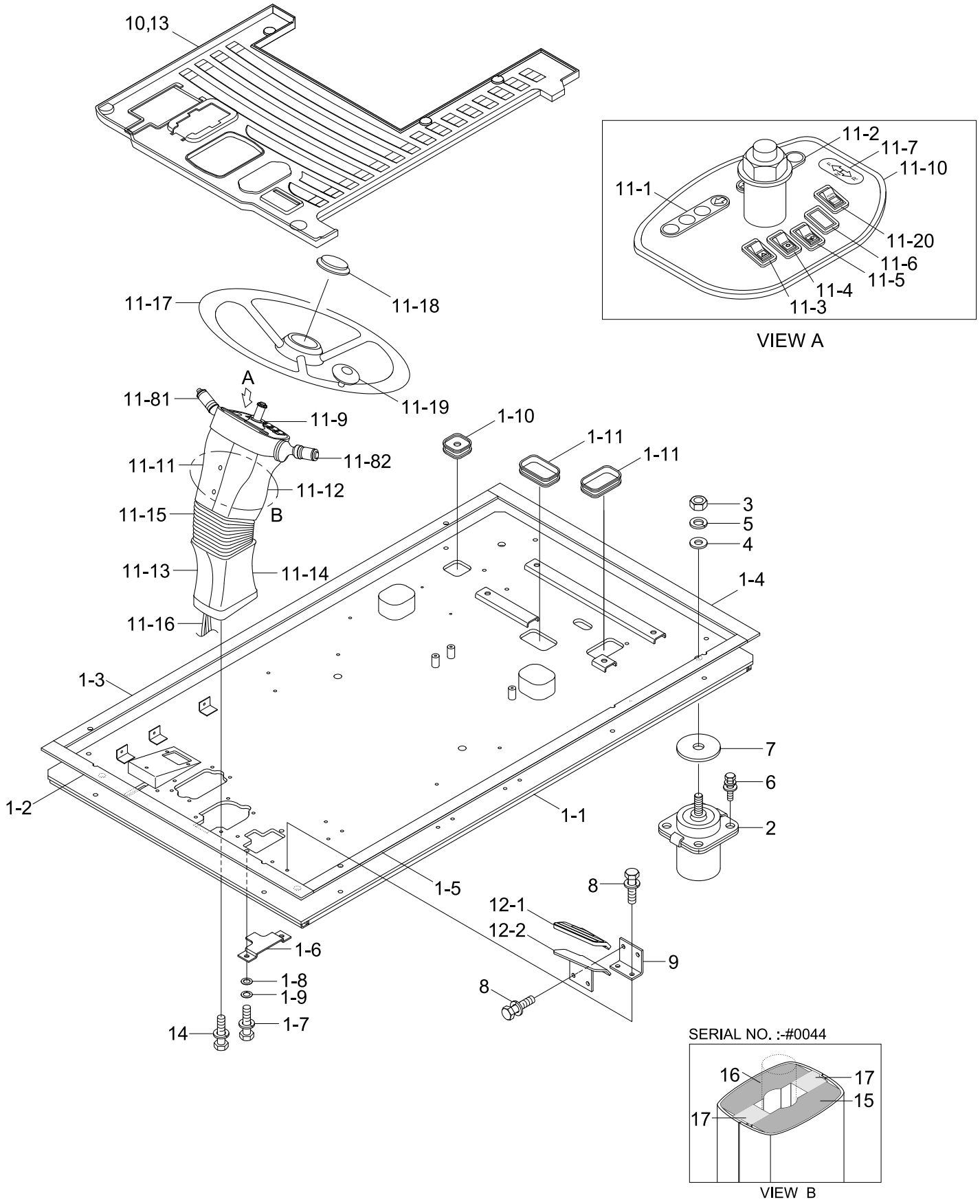

Item	Part_No	IS	Ord	T	Description	Qty	Serial_No	ITC	Remark
1	71N6-15001				BOTTOM PLATE ASSY	1			
1-1	71N6-15010				.BOTTOM PLATE WA	1			
1-2	71N6-11100				.PAD-RUBBER	1			
1-3	71N6-11110				.PAD-RUBBER	1			
1-4	71N6-11120				.PAD-RUBBER	1			
1-5	71N6-11130				.PAD-RUBBER	1			
1-6	71E9-10660				.COVER	1			
1-7	S017-100166				.BOLT-HEX	2			
1-8	S403-102006				.WASHER-PLAIN	2			
1-9	S411-100006				.WASHER-SPRING	2			
1-10	71E9-10630				.GROMMET	1			
1-11	71E9-10640				.GROMMET	2			
2	71N6-10300				VISCOUS MOUNT	6			
3	S207-161006				NUT-HEX	6			
4	S403-162006				WASHER-PLAIN	6			
5	S411-160006				WASHER-SPRING	6			
6	S037-103022				BOLT-W/WASHER	24			
7	71E9-10650				WASHER-REBOUND	6			
8	S037-102516				BOLT-W/WASHER	4	- #0005		
	S037-102526				BOLT-W/WASHER	4	#0006 -	D	
9	71N6-10130				BRACKET-FOOT REST	1			
10	71N6-15030				MAT-FLOOR	1			STD
11	71N4-10300				STEERING COLUMN ASSY	1	- #0284		
	71N4-10231				SREERING COLUMN ASSY	1	#0425 -	D	
11-1	0002.0823				.LIGHTS-WARNING	1			

Item	Part_No	IS	Ord	T	Description	Qty	Serial_No	ITC	Remark
11-2	0002.0822				.LIGHTS-WARNING	1			
11-3	21N4-01210				.SWITCH-HARZARD	1			
11-4	21N4-01220				.SWITCH-PARKING	1			
11-5	21N4-01230				.SWITCH-RAMLOCK	1			
11-6	0062.0047				.CAP	1			STD
	21N4-01250				.SW-OUTRIGGER/DOZER	1	#0425 -	-	OPT
	21N4-01240				.SW-4 OUTRIGGER	1	#0425 -	-	OPT
	21N4-01270				.SW-DOZER/OUTRIGGER	1	#0425 -	-	OPT
	21N6-30090				.SW-4 OUTRIGGER FR,RR	1	#0425 -	-	OPT
	21N4-10460				.SWITCH-DOZZER&DOZZER	1	#0795 -	-	OPT
11-7	0030.0219				.LABEL	1			
11-8	0034.0866				.STEERING COLUMN SW	1			
11-81	01.0704.0600				..S/COLUMN SW-RH	1	#0001 -	-	
11-82	01.0652.0500				..S/COLUMN SW-LH	1	#0001 -	-	
11-9	@				.COLUMN-STEERING	1	#0001 -	-	NOT
11-10	0052.1221				.DASH BOARD	1			
11-11	0052.1222				.COVER-LH,UP	1			
11-12	0052.1223				.COVER-RH,UP	1			
11-13	0052.1224				.COVER-LH,LOW	1			
11-14	0052.1225				.COVER-RH,LOW	1			
11-15	0046.0130				.BELLOW-RUBBER	1			
11-16	HY04.C501				.HARNESS	1			
11-17	0032.0293				.STEERING WHEEL	1			
11-18	0047.0064				.CAP-CENTER	1			
11-19	0034.0869				.KNOB	1			

Item	Part_No	IS	Ord	T	Description	Qty	Serial_No	ITC	Remark
11-20	0062.0047				.CAP	1			STD
	21N4-01260				.SWITCH-WORK/TRAVEL	1	#0425 -	-	OPT
	21N6-30140				.SW-4 OUTRIGGER RH,LH	1	#0425 -	-	OPT
12	71N6-10310				FOOT REST ASSY-LH	1			
12-1	71N6-10161				.RUBBER-FOOT REST,LH	1			
12-2	71N6-10150				.BRACKET-FOOT REST	1			
13	71N6-15040				MAT-FLOOR	1			2PCS, 2WAY PIP
14	S037-102516				BOLT-W/WASHER	4	- #0005		
	S037-102526				BOLT-W/WASHER	4	#0006 -	D	
15	71N4-10910				SPONGE-COLUMN(LH)	1	#0006 - #0044	-	
16	71N4-10920				SPONGE-COLUMN(RH)	1	#0006 - #0044	-	
17	71N4-10930				SPONGE-COLUMN(MID)	1	#0006 - #0044	-	

BOTTOM PLATE MOUNTING(OPT, #0615-)

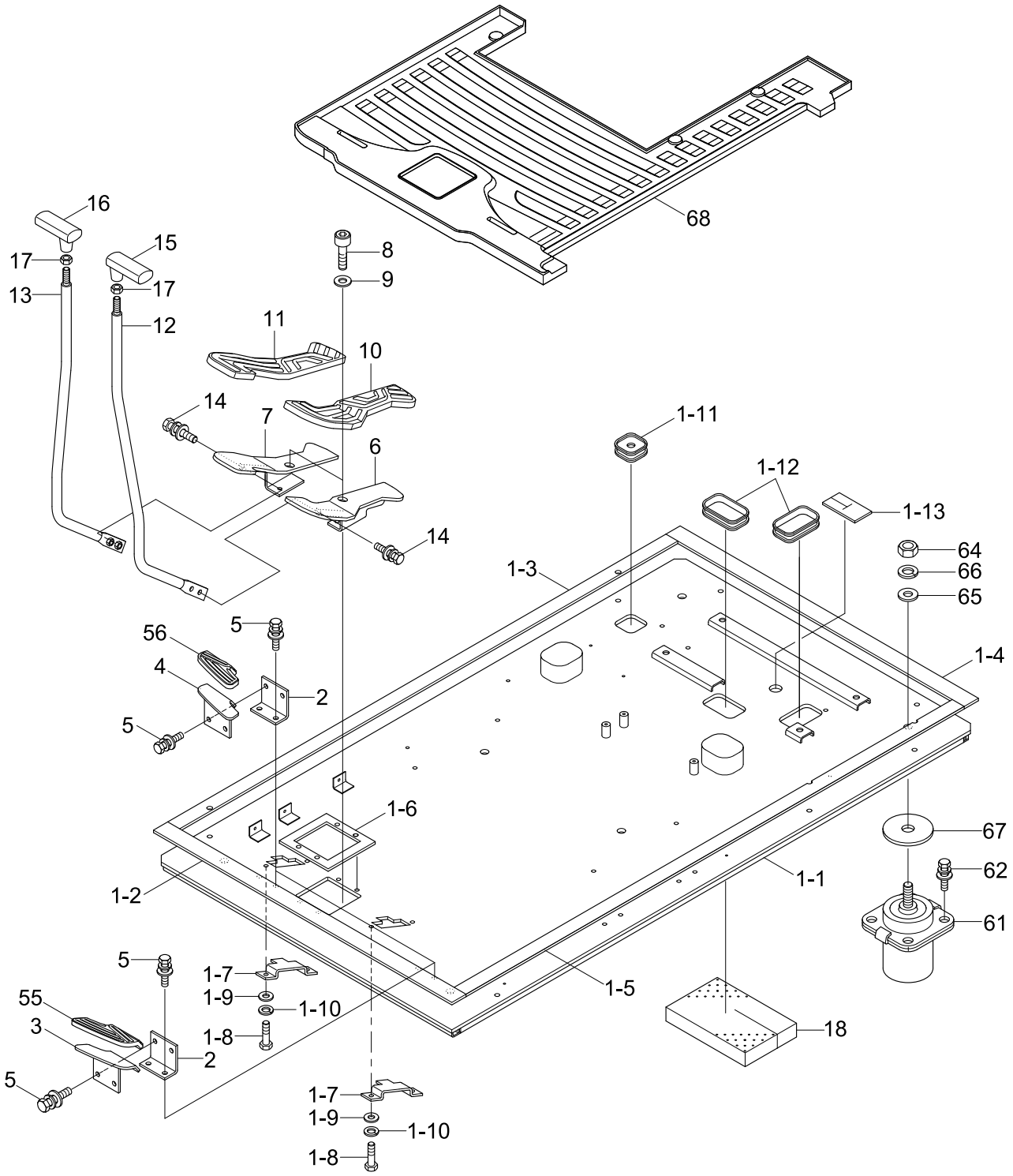

Item	Part_No	IS	Ord	T	Description	Qty	Serial_No	ITC	Remark
*	@				BOTTOM PLATE SUB ASSY	1	#0615 -	-	NOT
1	71N6-10105				BOTTOM PLATE ASSY	1			
1-1	71N6-10113				.BOTTOM PLATE WA	1			
1-2	71N6-11100				.PAD-RUBBER	1			
1-3	71N6-11110				.PAD-RUBBER	1			
1-4	71N6-11120				.PAD-RUBBER	1			
1-5	71N6-11130				.PAD-RUBBER	1			
1-6	71N6-11140				.RUBBER PAD	1			
1-7	71E9-10661				.COVER	1			
1-8	S017-100156				.BOLT-HEX	4			
1-9	S403-10200B				.WASHER-PLAIN	4			
1-10	S411-100006				.WASHER-SPRING	4			
1-11	71E9-10630				.GROMMET	1			
1-12	71E9-10640				.GROMMET	2			
1-13	71N4-10940				.PAD-TRAVEL LINK	1			
2	71N6-10130				BRACKET-FOOT REST	2			
					BRACKET-FOOT REST	1			W/PEDAL,BREAKER
3	73N6-10310				FOOT REST-LH	1			
4	73N6-10320				FOOT REST-RH	1			
5	S037-102526				BOLT-W/WASHER	8			
					BOLT-W/WASHER	4			W/PEDAL,BREAKER
6	73N6-10190				BRACKET-PADAL(LH)	1			
7	73N6-10210				BRACKET-PEDAL(RH)	1			
8	S109-100206				BOLT-SOCKET	4			
9	S403-10200B				WASHER-PLAIN	4			

Item	Part_No	IS	Ord	T	Description	Qty	Serial_No	ITC	Remark
10	73N6-20260				PEDAL RUBBER-LH	1			
11	73N6-20270				PEDAL RUBBER-RH	1			
12	71N6-10230				LEVER-TRAVEL,LH	1			
13	71N6-10240				LEVER-TRAVEL,RH	1			
14	S037-103026				BOLT W/WASHER-HEX	4			
15	71N6-10251				KNOB-LEVER,LH	1			
16	71N6-10261				KNOB-LEVER,RH	1			
17	S206-10100B				NUT-HEX	2			
18	71N4-10970				SPONGE-INSULATION	1			
55	73N6-20240				RUBBER-FOOT REST(LH)	1			
56	73N6-20250				RUBBER-FOOT REST(RH)	1			
61	71N6-10300				VISCOUS MOUNT	6			
62	S037-103026				BOLT W/WASHER-HEX	24			
64	S205-16100B				NUT-HEX	6			
65	S403-162006				WASHER-PLAIN	6			
66	S411-160006				WASHER-SPRING	6			
67	71E9-10650				WASHER-REBOUND	6			
68	71N6-10141				MAT-FLOOR	1			
	71N6-10280				MAT-FLOOR	1			BREAKER
	71N6-10290				MAT-FLOOR	1			2 WAY

STEERING COLUMN(-#0389)

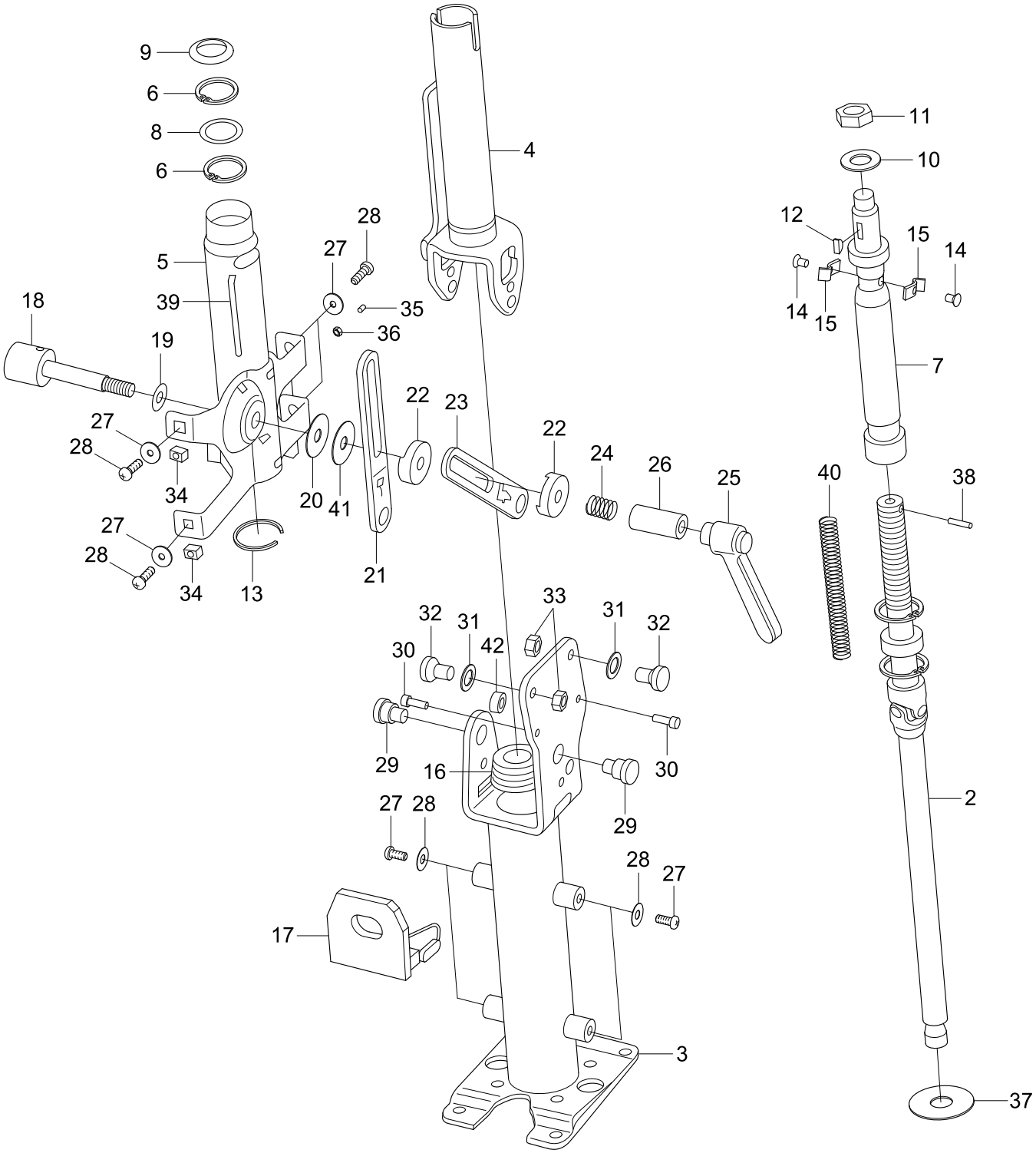

Item	Part_No	IS	Ord	T	Description	Qty	Serial_No	ITC	Remark
*	PR-000-234				STEERING COLUMN	1	- #0389	-	
2	041-02-379				.SHAFT-CARDIN	1			
3	PR-003-234				.TUBE-LOWER	1			
4	041-002-379				.TUBE-UPPER	1			
5	041-002-422				.TUBE-UPPER UNIT	1			
6	011-005-001				.RING-SAFETY	4			
7	041-010-379				.SHAFT-UPPER	1			
8	002-007-001				.BASE	1			
9	002-004-001				.CAP-RUBBER	1			
10	04-007-001				.WASHER	1			
11	04-006-001				.NUT	1			
12	04-008-001				.KEY-SLOT	1			
13	04-005-021				.RING-SAFETY	1			
14	041-009-060				.SCREEN	2			
15	041-019-397				.SWITCH	2			
16	041-014-104				.PROTECTION-TUBE	1			
17	041-010-045				.PROTECTION-C/SHAFT	1			
18	041-006-379				.TILT UNIT	1			
19	04-050-001				.RING	1			
20	023-026-983				.SHIM(1.0T)	1			
21	041-011-064				.LEVER-FRONT	1			
22	041-012-084				.NUT-RING	2			
23	041-010-084				.LEVER-REAR	1			
24	041-016-084				.SPRING	1	- #0389	-	
25	04-010-002				.LEVER	1			

Item	Part_No	IS	Ord	T	Description	Qty	Serial_No	ITC	Remark
26	041-004-356				.SPACER	1	- #0389	-	
27	04-007-007				.WASHER	8			
28	04-021-004				.SCREW	8			
29	041-017-006				.SCREW-FULCRUM	2			
30	04-014-005				.SCREW	2			
31	04-034-003				.RING-ELASTIC	2			
32	041-013-084				.SCREW	2			
33	04-006-014				.NUT	2			
34	04-031-001				.NUT	4			
35	04-009-04				.PEA	1			
36	04-006-007				.NUT	1			
37	041-001-10				.SUPPORT-CARDAN	1			
38	04-013-001				.PIN-ELASTIC	1			
39	04-041-001				.PIN-SPLIT	1			
40	041-021-007				.SPRING	1			
41	023-025-983				.SHIM(0.5T)	1			
42	041-003-422				.SPACER	1			

STEERING COLUMN(#0390-)

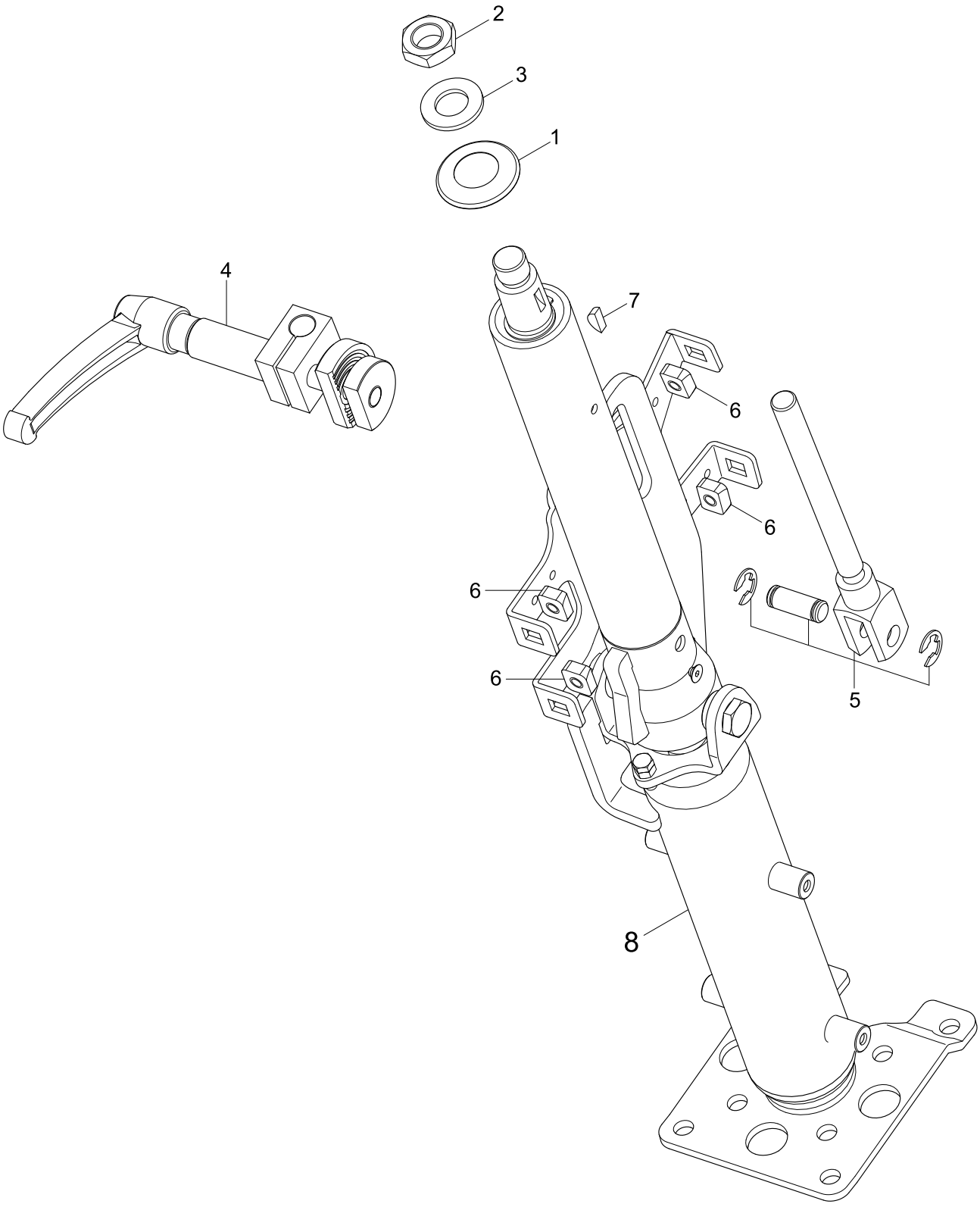

Item	Part_No	IS	Ord	T	Description	Qty	Serial_No	ITC	Remark
*	PTIM0004				STEERING COLUMN	1	#0390 -	B	
1	0240.0083				.CAP FOR BEARING	1			
2	0026.0702				.NUT	1			
3	0026.0751				.WASHER	1			
4	0220.0388				.LOCKING HANDLE KIT	1			
5	0220.0387				.TELESCOPIC PIN KIT	1			
6	0026.0705				.NUT	4			
7	0026.0725				.KEY	1			
N8	0026.1735				.SHAFT-COLUMN	1			NOT
N	@				NOT INDIVIDUALLY SUPPLIED	AR			NOT

COWLING

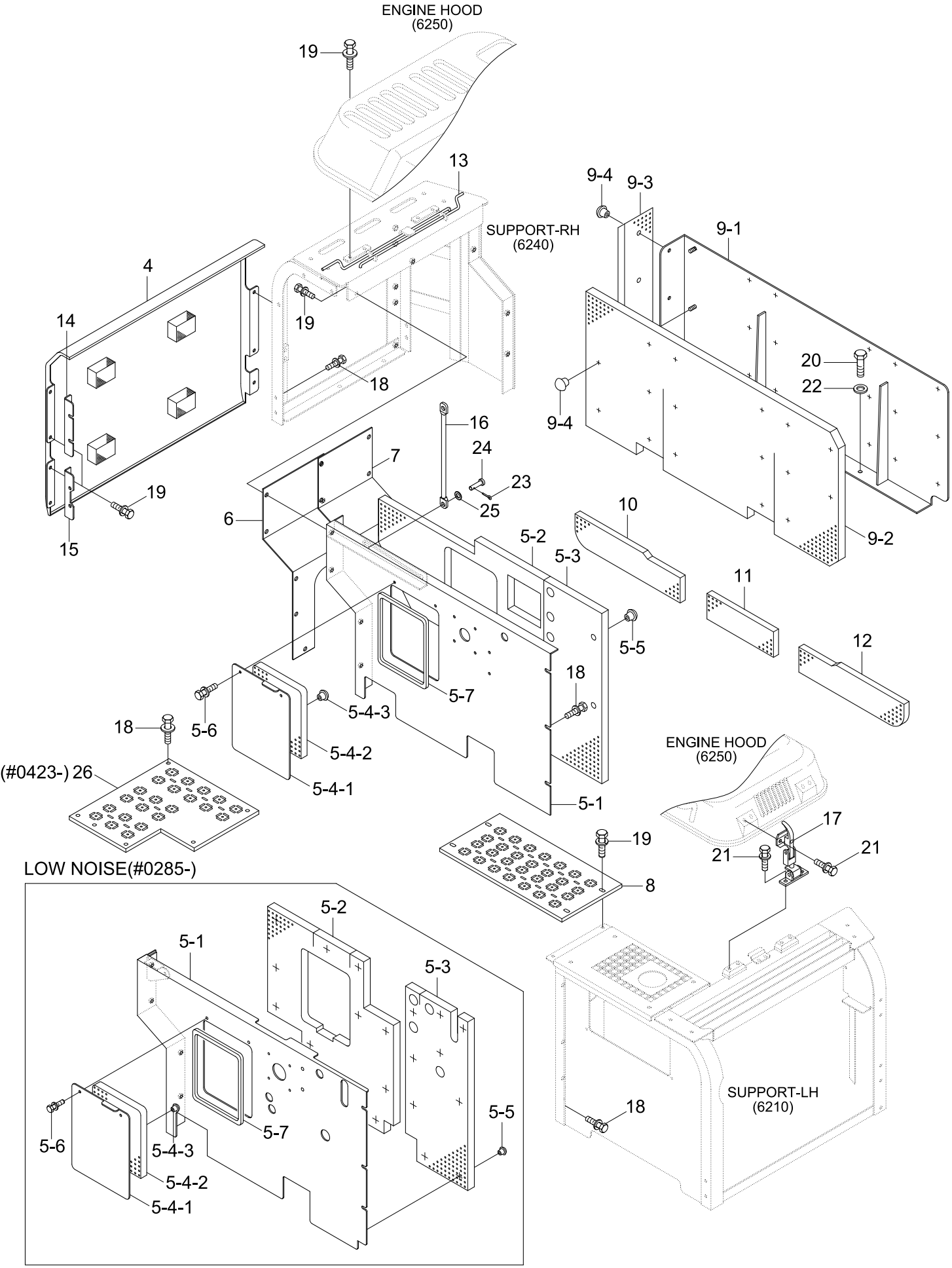
ENGINE HOOD
(6250)
19
13
SUPPORT-RH
(6240)
9-4
9-3
9-1
4
14
19
18
20
22
9-4
16
24
7
23
25
6
10
5-2
5-3
9-2
15
19
11
5-5
12
18
5-7
5-4-3
5-6
18
5-4-2
(#0423-) 26
5-4-1
5-1
ENGINE HOOD
(6250)
17
19
21
21
8
LOW NOISE(#0285-)
5-2
5-1
5-3
5-7
5-5
5-6
5-4-3
5-4-2
5-4-1
SUPPORT-LH
(6210)
18

Item	Part_No	IS	Ord	T	Description	Qty	Serial_No	ITC	Remark
4	71N4-53160				COVER ASSY-TANK	1			
5	72N4-54101				SCREEN ASSY-MAIN	1			
5-1	72N4-54111				.SCREEN WA	1			
5-2	72N4-54121				.SPONGE	1			
5-3	72N4-54140				.SPONGE	1			
5-4	71N4-54131				.COVER ASSY-SCREEN	1			
5-4-1	71N4-54140				..COVER WA-SCREEN	1			
5-4-2	71N4-54150				..SPONGE-S/COVER	1			
5-4-3	71EM-51580				..CAP-STUD BOLT	4			
5-5	71EM-51580				.CAP-STUD BOLT	17			
5-6	S037-122052				.BOLT-W/WASHER	2			
5-7	S791-016014				.GROMMET-PLATE	1			
6	72N4-54200				SCREEN-PUMP(FR)	1			
7	72N4-54301				SCREEN-PUMP(RR)	1			
8	72N4-55200				HOOD WA-MCV	1	- #0350		
	72N4-55300				HOOD WA-MCV	1	#0351 - #0422	D	
	72N4-55301				HOOD WA-MCV	1	#0423 -	D	
9	71N4-56102				SCREEN ASSY-CWT	1			
9-1	71N4-56112				.SCREEN WA-CWT	1			
9-2	71N4-56162				.SPONGE-CWT	1			
9-3	71N4-56171				.SPONGE-PUMP	1			
9-4	71EM-51580				.CAP-STUD BOLT	21			
10	71N4-56200				SPONGE-UPPER(RH)	1			
11	71N4-56300				SPONGE-UPPER(CENTER)	1			
12	72N4-56400				SPONGE-UPPER(LH)	1			

Item	Part_No	IS	Ord	T	Description	Qty	Serial_No	ITC	Remark
13	72N4-56500				TORSION BAR	1	- #0619		
	72N4-56500BG				TORSION BAR	1	#0620 -	D	
14	71N8-57101				SUPPORT-T/COVER	1			
15	71N8-57200				SUPPORT-T/COVER	1			
16	71EG-54960				STAY-ENG HOOD	1	- #0619		
	71EG-54960BG				STAY-ENG HOOD	1	#0620 -	D	
17	71N6-56400				CATCH ASSY	2	- #0619		
	71N6-56400BG				CATCH ASSY	2	#0620 -	D	
18	S037-122052				BOLT-W/WASHER	34	- #0422		
					BOLT-W/WASHER	39	#0423 -	A	
19	S037-122552				BOLT-W/WASHER	21			
20	S017-160252				BOLT-HEX	2			
21	S035-082522				BOLT-W/WASHER	8			
22	S403-162002				WASHER-PLAIN	4			
23	S491-100252				PIN-CLEVIS	2			
24	S501-100002				PIN-SELF LOCKING	2			
25	S441-120002				WASHER-HARDENED	4	#0042 -	-	
26	74N4-59100				FOOT BOARD WA(B)	1	#0422 -	-	
5	72N4-59100				SCREEN ASSY	1	#0072 -	-	INLINE
5-1	72N4-59110				.SCREEN WA	1			
5-2	72N4-59120				.SPONGE	1	- #0284		
	72N4-59121				.SPONGE	1	#0285 -	D	
5-3	72N4-54140				.SPONGE	1	- #0284		
	72N4-54141				.SPONGE	1	#0285 -	D	
5-4	72N4-59130				.COVER ASSY	1			

Item	Part_No	IS	Ord	T	Description	Qty	Serial_No	ITC	Remark
5-4-1	72N4-59140				..COVER WA	1			
5-4-2	72N4-59150				..SPONGE	1			
5-4-3	71EM-51580				..CAP-STUD BOLT	4			
5-5	71EM-51580				.CAP-STUD BOLT	20			
5-6	S037-122052				.BOLT-W/WASHER	2			
5-7	S791-016014				.GROMMET-PLATE	1			

SIDE COWL ASSY(LH)

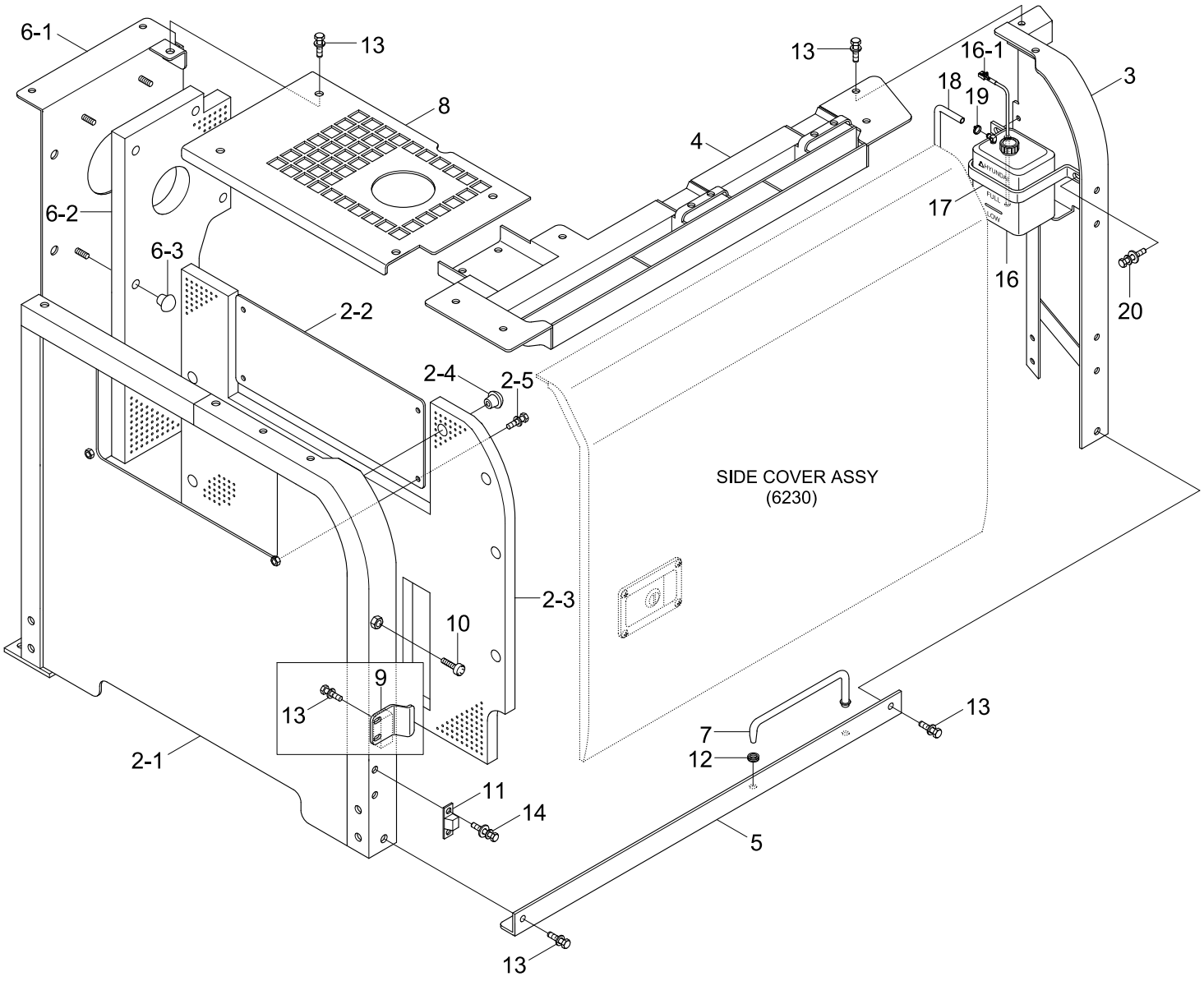

Item	Part_No	IS	Ord	T	Description	Qty	Serial_No	ITC	Remark
*	72N4-52002				SIDE COWL ASSY-LH	1	- #0350		STD
	72N4-52003				SIDE COWL ASSY-LH	1	#0351 - #0381	D	STD
	72N4-52003Y				SIDE COWL ASSY-LH	1	#0382 - #0452	D	STD
	72N4-52004				SIDE COWL ASSY-LH	1	#0453 -	B	
	72N4-57000				SIDE COWL ASSY-LH	1	- #0350		SMALL CLEANER
	72N4-57001				SIDE COWL ASSY-LH	1	#0351 - #0381	D	SMALL CLEANER
	72N4-57001Y				SIDE COWL ASSY-LH	1	#0382 -	D	SMALL CLEANER
	72N4-82000				SIDE COWL ASSY-LH	1	- #0350		AIR VENT TYPE
	72N4-82001				SIDE COWL ASSY-LH	1	#0351 - #0381	D	AIR VENT TYPE
	72N4-82001Y				SIDE COWL ASSY-LH	1	#0382 - #0452	D	AIR VENT TYPE
	72N4-82002				SIDE COWL ASSY-LH	1	#0453 -	B	
	72N4-82100				SIDE COWL ASSY-LH	1	- #0350		A/VENT,SMALL
	72N4-82101				SIDE COWL ASSY-LH	1	#0351 - #0381	D	A/VENT,SMALL
	72N4-82101Y				SIDE COWL ASSY-LH	1	#0382 -	D	A/VENT,SMALL
	72N4-85000				SIDE COWL ASSY-LH	1	#0285 - #0350	-	LOUVER TYPE
	72N4-85001				SIDE COWL ASSY-LH	1	#0351 - #0381	D	LOUVER TYPE
	72N4-85001Y				SIDE COWL ASSY-LH	1	#0382 - #0452	D	LOUVER TYPE
	72N4-85002				SIDE COWL ASSY-LH	1	#0453 -	B	
1	@				.SIDE COVER ASSY-LH	1			NOT
2	72N4-52300				.SUPPORT ASSY-LH(FR)	1	- #0024		SMALL CLEANER
	72N4-62300				.SUPPORT ASSY-LH(FR)	1	#0025 -	B	
2-1	72N4-52310				..SUPPORT WA-LH(FR)	1	- #0024		SMALL CLEANER
	72N4-62310				..SUPPORT WA-LH(FR)	1	#0025 -	B	
2-2	71N8-52322				..COVER-PLATE	1			
2-3	72N4-52330				..SPONGE	1	- #0024		SMALL CLEANER

Item	Part_No	IS	Ord	T	Description	Qty	Serial_No	ITC	Remark
2-3	72N4-62330				..SPONGE	1	#0025 -	B	
2-4	71EM-51580				..CAP-STUD BOLT	12			
2-5	S037-122052				..BOLT-W/WASHER	4			
3	72N4-52500				.SUPPORT WA-LH(RR)	1			
4	72N4-52601				.HOOD WA-R/D	1	- #0350		
	72N4-52602				.HOOD WA-R/D	1	#0351 -	D	
5	71N4-62700				.SUPPORT-LH/BOTTOM	1	#0025 -	-	
6	72N4-52901				.SCREEN ASSY-MCV	1	#0025 - #0350	-	
	72N4-52902				.SCREEN ASSY-MCV	1	#0351 -	D	
6-1	72N4-52910				..SCREEN-MCV	1	- #0024		
	72N4-52911				..SCREEN-MCV	1	#0025 - #0350	B	
	72N4-52912				..SCREEN-MCV	1	#0351 -	B	
6-2	72N4-52920				..SPONGE	1	- #0024		
	72N4-52921				..SPONGE	1	#0025 - #0350	B	
	72N4-52922				..SPONGE	1	#0351 -	D	
6-3	71EM-51580				..CAP-STUD BOLT	8			
7	71N8-52950				.STAY-SIDE COVER	1			
8	72N4-55100				.HOOD-AIR CLEANER	1	- #0350		
	72N4-55101				.HOOD-AIR CLEANER	1	#0351 -	D	
9	71N8-52492				.PLATE-LOCK	1			
10	71EH-13150				.RUBBER-BUMPER	1			
11	71EE-53540				.STOPPER-B	1			
12	S681-100400				.GROMMET	1			
13	S037-122552				.BOLT-W/WASHER	19			
14	S035-062022				.BOLT-W/WASHER	2			

Item	Part_No	IS	Ord	T	Description	Qty	Serial_No	ITC	Remark
15	@				.AIR CLEANER ASSY	1			NOT
16	11EN-42330				.TANK-RESERVOIR	1	- #0350		
	11N4-47010				.TANK-RESERVOIR	1	#0351 -	A	
16-1	11EN-42400				..SENSOR-RESERVOIR	1			
17	11ER-42530				.PLATE-CLAMP	2			
18	11E3-4011	10			.HOSE	1			
19	S520-015000				.CLAMP-HOSE	1			
20	S035-082022				.BOLT-W/WASHER	2			

AIR CLEANER ASSY

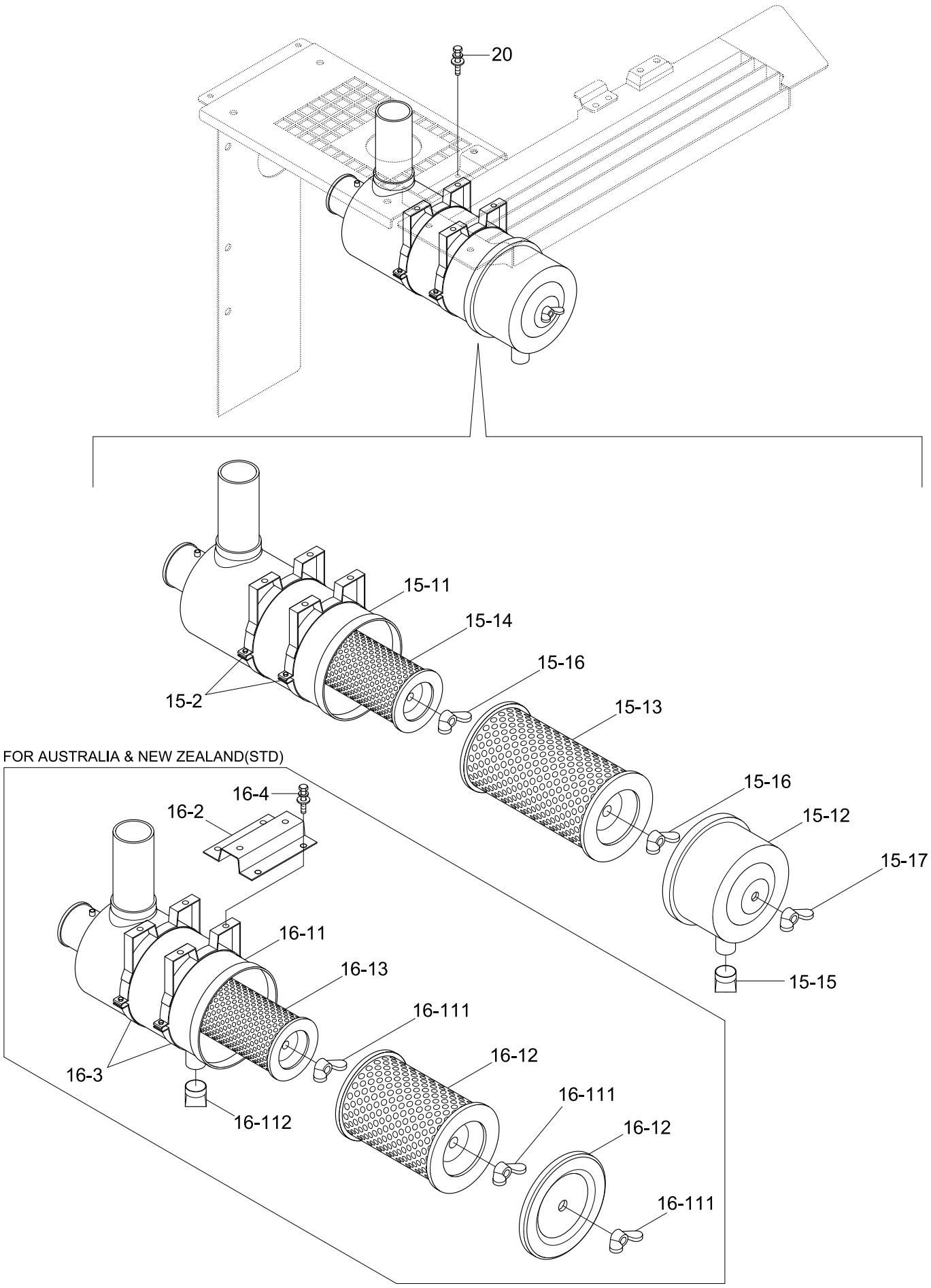

Item	Part_No	IS	Ord	T	Description	Qty	Serial_No	ITC	Remark
*	@				SIDE COWL ASSY-LH	1			NOT
15	11N6-20010				.AIR CLEANER SUB ASSY	1	- #0452		STD
	11N6-20011				.AIR CLEANER SUB ASSY	1	#0453 -	B	
15-1	11N6-20100				..AIR CLEANER ASSY	1	- #0452		
	11N6-20102				..AIR CLEANER ASSY	1	#0453 -	B	
15-11	11N6-20110				...BODY-AIR CLEANER	1	- #0452		
	11N6-20112				...BODY-AIR CLEANER	1	#0453 -	B	
15-12	11N6-20120				...CAP-AIR CLEANER	1	- #0452		
	11LD-40180				...CAP-AIR CLEANER	1	#0453 -	B	
15-13	11EM-21041				...ELEMENT-PRIMARY	1	- #0452		
	11N6-24520				...ELEMENT-PRIMARY	1	#0453 -	B	
15-14	11EM-21051				...ELEMENT-SAFETY	1	- #0452		
	11N6-24530				...ELEMENT-SAFETY	1	#0453 -	B	
15-15	E211-2105				...VALVE-VACUUM	1			
15-16	11EM-21060				...NUT-WING	2			
15-17	11EM-21070				...NUT-WING	1			
15-2	14EA-23060				..CLAMP-BAND	2			
20	S035-082002				BOLT-W/WASHER	4			STD
16	11N4-21010				AIR CLEANER ASSY	1			AUST/NEWZEALAND
16-1	11N4-21100				.AIR CLEANER	1			
16-11	11N4-21110				..HOUSING	1			
16-111	11E6-21281				...NUT-WING	3			
16-112	E211-2105	10			...VALVE-VACUUM	1			
16-12	E111-2009	20			..ELEMENT-OUTER	1			
16-13	11E3-2006	20			..ELEMENT-INNER	1			

Item	Part_No	IS	Ord	T	Description	Qty	Serial_No	ITC	Remark
16-2	11N4-21120				.BRACKET	1			
16-3	11E6-2002	10			.CLAMP-BAND	2			
16-4	S035-082022				.BOLT-W/WASHER	4			
20	S035-082002				BOLT-W/WASHER	2			AUST/NEWZEALAND

SIDE COVER ASSY(LH)

STANDARD

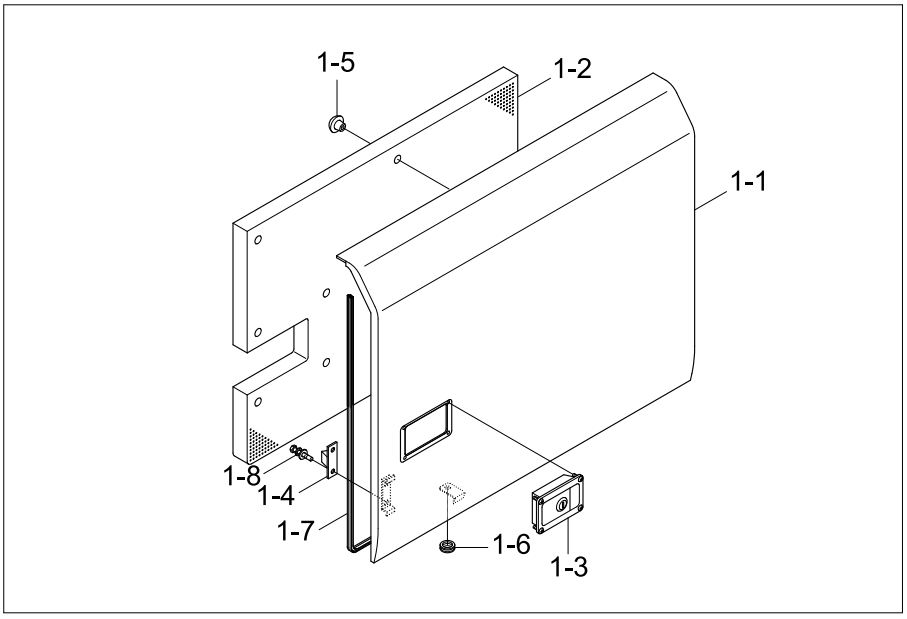

AIR VENT TYPE(OPTION)

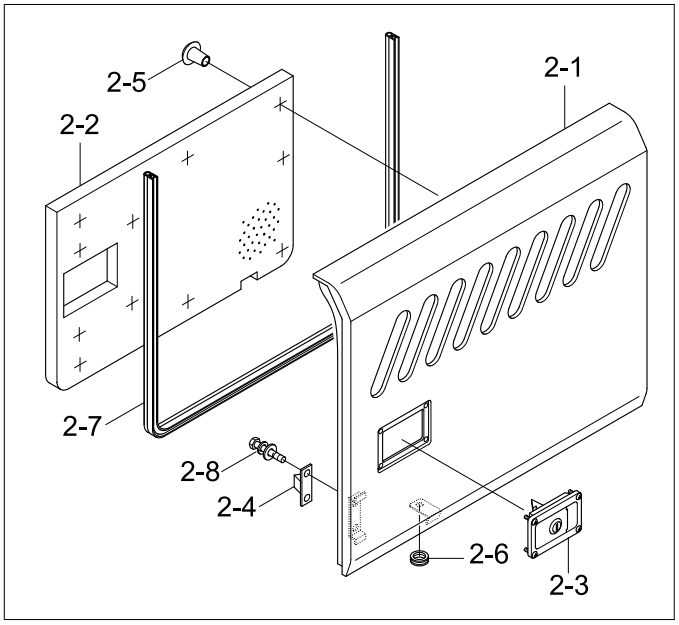

LOUVER TYPE(OPTION, #0285-)

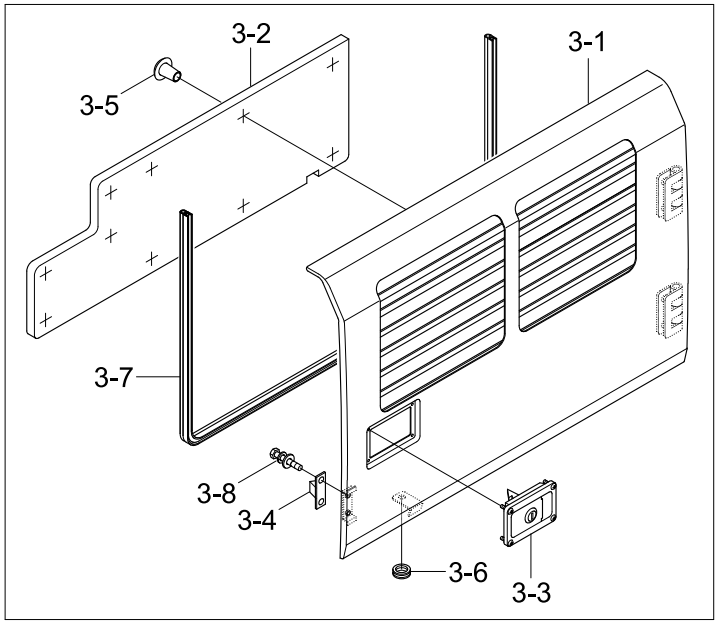

Item	Part_No	IS	Ord	T	Description	Qty	Serial_No	ITC	Remark
1	71N4-52102				SIDE COVER ASSY-LH	1	- #0381		STD
	71N4-52102Y				SIDE COVER ASSY-LH	1	#0382 -	D	STD
1-1	71N4-52112				.SIDE COVER WA-LH	1			
1-2	71N4-52182				.SPONGE	1			
1-3	71EE-52520				.CATCH ASSY	1	- #0381		BLACK
	74N8-52520				.CATCH ASSY	1	#0382 -	D	YELLOW
1-4	71EE-53530				.STOPPER-A	1			
1-5	71EM-51580				.CAP-STUD BOLT	12			
1-6	S681-100400				.GROMMET	1			
1-7	S772-026000				.WEATHER STRIP	1			
1-8	S035-061522				.BOLT-W/WASHER	2			
2	71N4-72101				SIDE COVER ASSY-LH	1	- #0381		AIR VENT TYPE
	71N4-72101Y				SIDE COVER ASSY-LH	1	#0382 -	D	LOUVER TYPE
2-1	71N4-72111				.SIDE COVER WA-LH	1			
2-2	71N4-72181				.SPONGE	1			
2-3	71EE-52520				.CATCH ASSY	1	- #0381		BLACK
	74N8-52520				.CATCH ASSY	1	#0382 -	D	YELLOW
2-4	71EE-53530				.STOPPER-A	1			
2-5	71EM-51580				.CAP-STUD BOLT	9			
2-6	S681-100400				.GROMMET	1			
2-7	S772-026000				.WEATHER STRIP	1			
2-8	S035-061522				.BOLT-W/WASHER	2			
3	72N4-85100				SIDE COVER ASSY-LH	1	#0285 - #0381	-	LOUVER TYPE
	72N4-85100Y				SIDE COVER ASSY-LH	1	#0382 -	D	LOUVER TYPE
3-1	72N4-85110				.SIDE COVER WA-LH	1	#0285 -	-	

Item	Part_No	IS	Ord	T	Description	Qty	Serial_No	ITC	Remark
3-2	72N4-85130				.SPONGE	1	#0285 -	-	
3-3	71EE-52520				.CATCH ASSY	1	#0285 - #0381	-	BLACK
	74N8-52520				.CATCH ASSY	1	#0382 -	D	YELLOW
3-4	71EE-53530				.STOPPER-A	1	#0285 -	-	
3-5	71EM-51580				.CAP-STUD BOLT	8	#0285 -	-	
3-6	S681-100400				.GROMMET	1	#0285 -	-	
3-7	S772-026000				.WEATHER STRIP	1	#0285 -	-	
3-8	S035-061522				.BOLT-W/WASHER	2	#0285 -	-	

SIDE COWL ASSY(RH)

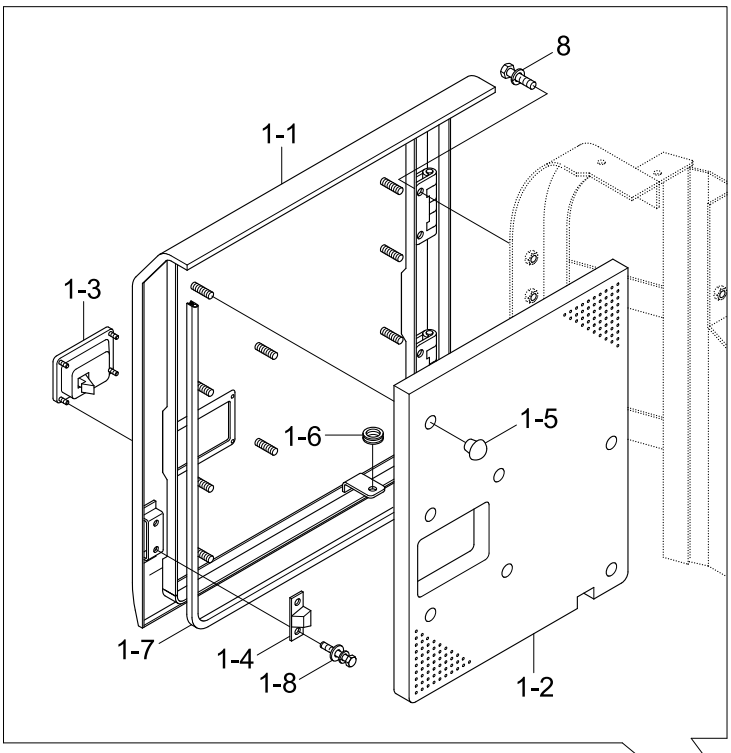

AIR VENT TYPE(OPTION)

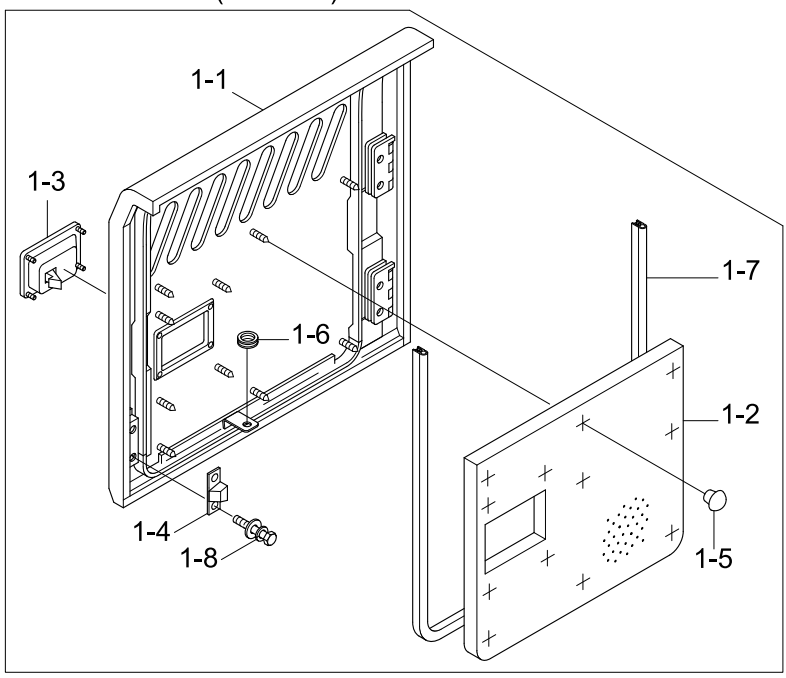

SERIAL NO : -#0350

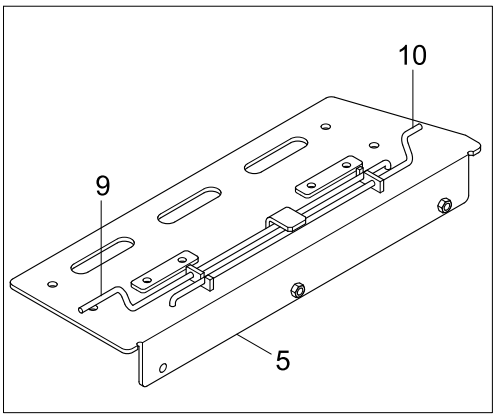

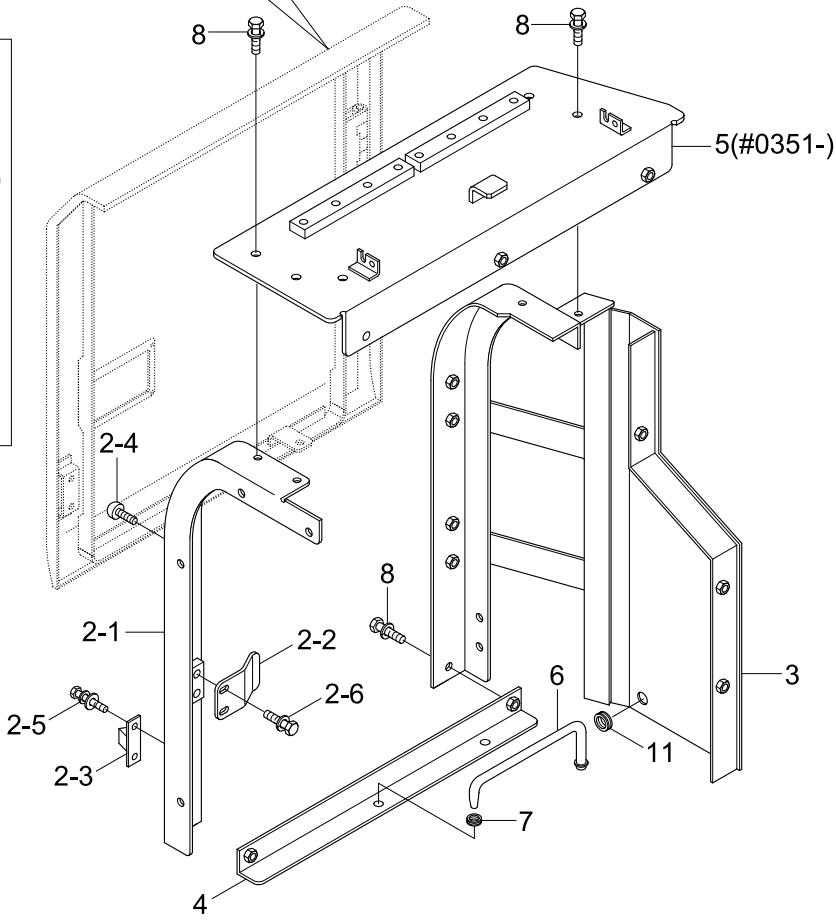

Item	Part_No	IS	Ord	T	Description	Qty	Serial_No	ITC	Remark
*	72N4-53000				SIDE COWL ASSY-RH	1	- #0350		STD
	72N4-53001				SIDE COWL ASSY-RH	1	#0351 - #0381	D	STD
	72N4-53001Y				SIDE COWL ASSY-RH	1	#0382 -	D	STD
	72N4-83000				SIDE COWL ASSY-RH	1	- #0350		AIR VENT TYPE
	72N4-83001				SIDE COWL ASSY-RH	1	#0351 - #0381	D	AIR VENT TYPE
	72N4-83001Y				SIDE COWL ASSY-RH	1	#0382 -	D	AIR VENT TYPE
	72N4-58000				SIDE COWL ASSY-RH	1	#0525 -	-	PRE HEATING
1	71N4-53102				.SIDE COVER ASSY-RH	1	- #0381		STD
	71N4-53102Y				.SIDE COVER ASSY-RH	1	#0382 -	D	STD
	71N4-73100				.SIDE COVER ASSY-RH	1	- #0381		AIR VENT TYPE
	71N4-73100Y				.SIDE COVER ASSY-RH	1	#0382 -	D	AIR VENT TYPE
1-1	71N4-53112				..SIDE COVER WA	1			STD
	71N4-73110				..SIDE COVER WA	1			AIR VENT TYPE
1-2	71N4-53132				..SPONGE-SIDE COVER	1			STD
	71N4-73130				..SPONGE-SIDE COVER	1			AIR VENT TYPE
1-3	71EE-52520				..CATCH ASSY	1	- #0381		BLACK
	74N8-52520				..CATCH ASSY	1	#0382 -	D	YELLOW
1-4	71EE-53530				..STOPPER-A	1	#0001 -	-	
1-5	71EM-51580				..CAP-STUD BOLT	9			
1-6	S681-100400				..GROMMET	1			
1-7	S772-022630				..WEATHER STRIP	1			
1-8	S035-061522				..BOLT-W/WASHER	2			
2	71N4-53281				.SUPPORT ASSY-RH(FR)	1			
2-1	71N4-53271				..SUPPOTR WA-RH(FR)	1			
2-2	71N8-52492				..PLATE-LOCK	1			

Item	Part_No	IS	Ord	T	Description	Qty	Serial_No	ITC	Remark
2-3	71EE-53540				..STOPPER-B	1			
2-4	71EH-13150				..BUMPER-RUBBER	1			
2-5	S035-062022				..BOLT-W/WASHER	2			
2-6	S037-122052				..BOLT-W/WASHER	2			
3	72N4-53201				.SUPPORT WA-RH(RR)	1			STD, AIR VENT
	72N4-58200				.SUPPORT WA-RH(RR)	1	#0525 -	-	PRE HEATING
4	71N4-53302				.SUPPORT-BOTTOM	1			
5	72N4-53400				.HOOD WA-PUMP	1	- #0350		
	72N4-53401				.HOOD WA-PUMP	1	#0351 -	D	
6	71N8-52950				.STAY-SIDE COVER	1			
7	S681-100400				.GROMMET	1			
8	S037-122552				.BOLT-W/WASHER	10			

ENGINE HOOD

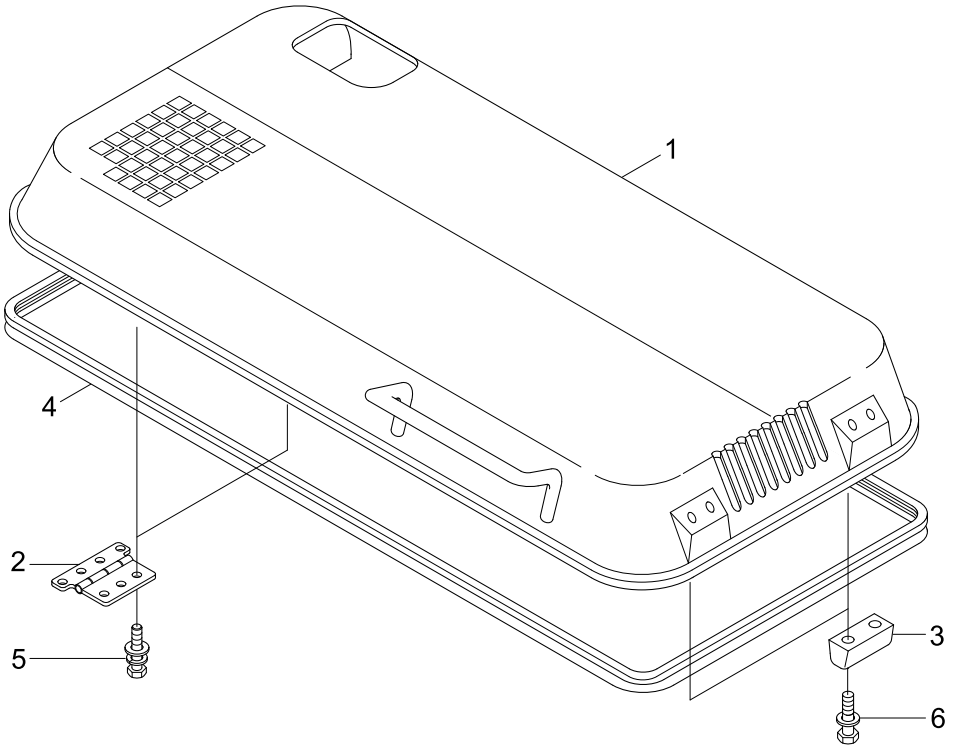

LOW NOISE(#0285-)

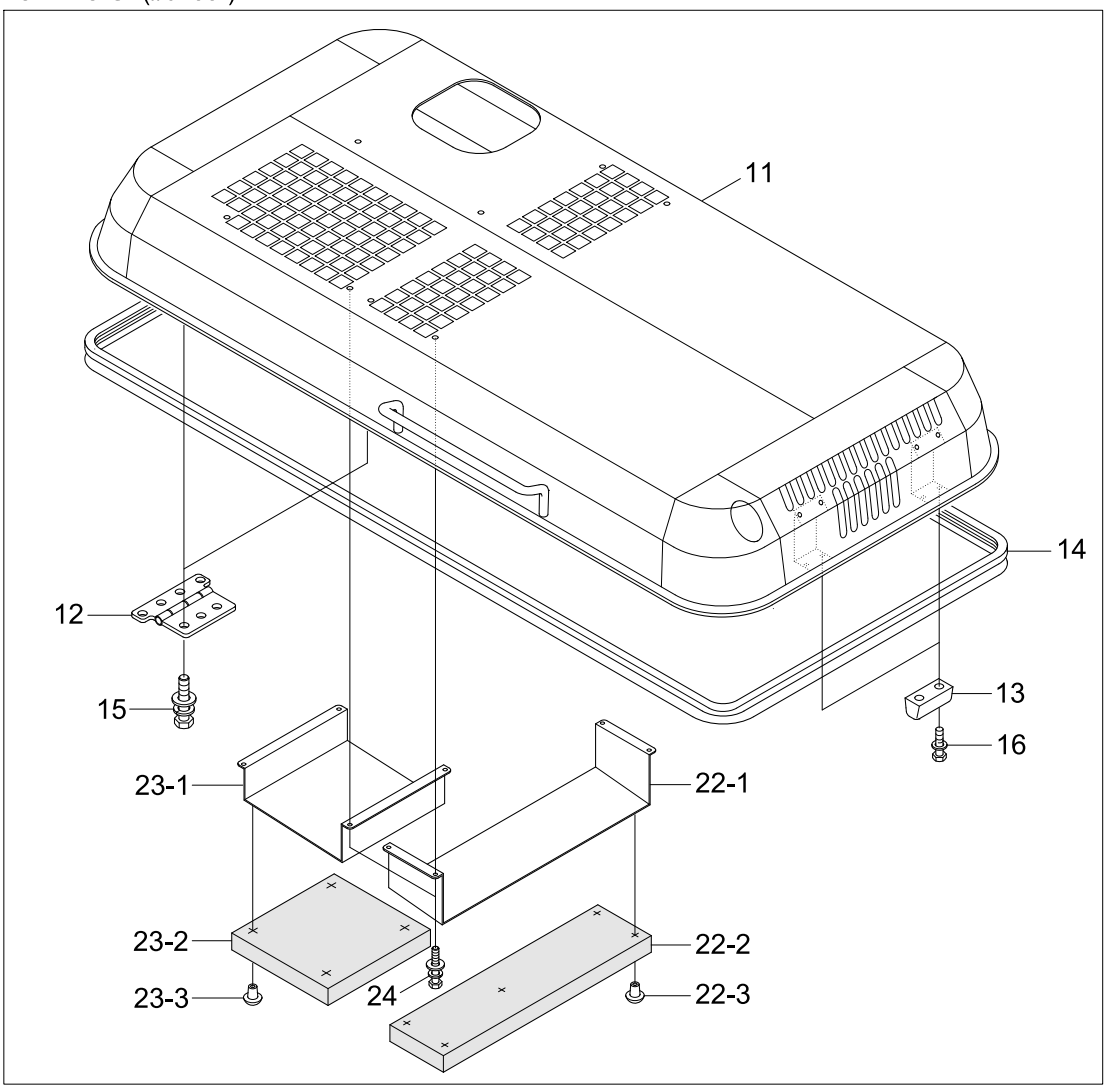

Item	Part_No	IS	Ord	T	Description	Qty	Serial_No	ITC	Remark
*	72N4-51001				ENGINE HOOD ASSY	1	- #0284		STD
	72N4-51002				ENGINE HOOD ASSY	1	#0285 - #0350	A	STD
	72N4-51003				ENGINE HOOD ASSY	1	#0351 - #0619	D	STD
	72N4-51003BG				ENGINE HOOD ASSY	1	#0620 -	D	
1	72N4-51011				.ENGINE HOOD WA	1	- #0284		STD
	72N4-51012				.ENGINE HOOD WA	1	#0285 - #0350	D	STD
	72N4-51013				.ENGINE HOOD WA	1	#0351 -	D	STD
2	71N6-51101				.HINGE-ENG HOOD	2			STD
	71N6-51101BG				.HINGE-ENG HOOD	2	#0620 -	D	
3	71N6-51140				.STOPPER-A	2			STD
4	S771-057000				.WEATHER STRIP	1			STD
5	S037-122552				.BOLT W/WASHER-HEX	6			STD
6	S132-063052				.SCREW-W/WASHER	4			STD
*	72N4-65000				ENGINE HOOD ASSY	1	#0285 - #0350	-	LOW NOISE
	72N4-65001				ENGINE HOOD ASSY	1	#0351 - #0619	D	LOW NOISE
	72N4-65001BG				ENGINE HOOD ASSY	1	#0620 -	D	
*-1	72N4-51002				.ENGINE HOOD ASSY	1	#0285 - #0350	-	LOW NOISE
	72N4-51003				.ENGINE HOOD ASSY	1	#0351 - #0619	D	LOW NOISE
	72N4-51003BG				.ENGINE HOOD ASSY	1	#0620 -	D	
11	72N4-51012				..ENGINE HOOD WA	1	#0285 - #0350	-	LOW NOISE
	72N4-51013				..ENGINE HOOD WA	1	#0351 -	D	LOW NOISE
12	71N6-51101				..HINGE-ENG HOOD	2	#0285 -	-	LOW NOISE
	71N6-51101BG				..HINGE-ENG HOOD	2	#0620 -	D	
13	71N6-51140				..STOPPER-A	2	#0285 -	-	LOW NOISE
14	S771-057000				..WEATHER STRIP	1	#0285 -	-	LOW NOISE

Item	Part_No	IS	Ord	T	Description	Qty	Serial_No	ITC	Remark
15	S037-122552				..BOLT W/WASHER-HEX	6	#0285 -	-	LOW NOISE
16	S132-063052				..SCREW-W/WASHER	4	#0285 -	-	LOW NOISE
22	72N4-65500				..BAFFLE ASSY-A	1	#0285 -	-	LOW NOISE
22-1	72N4-65510				...BAFFLE WA-A	1	#0285 -	-	LOW NOISE
22-2	72N4-65520				...SPONGE	1	#0285 -	-	LOW NOISE
22-3	71EM-51580				...CAP-STUD BOLT	5	#0285 -	-	LOW NOISE
23	72N4-65600				..BAFFLE ASSY-B	1	#0285 -	-	LOW NOISE
23-1	72N4-65610				...BAFFLE WA-B	1	#0285 -	-	LOW NOISE
23-2	72N4-65620				...SPONGE	1	#0285 -	-	LOW NOISE
23-3	71EM-51580				...CAP-STUD BOLT	5	#0285 -	-	LOW NOISE
24	S035-082022				..BOLT-W/WASHER	8	#0285 -	-	LOW NOISE

Item	Part_No	IS	Ord	T	Description	Qty	Serial_No	ITC	Remark
1	41N4-10010				UNDER COVER-CAB(A)	1	- #0619		
	43N4-10210				UNDER COVER-CAB(A)	1	#0620 - #0796	D	
	43N4-10211				UNDER COVER-CAB(A)	1	#0797 -	D	
2	41N4-10020				UNDER COVER-CAB(B)	1	- #0619		
	43N4-10020				UNDER COVER-CAB(B)	1	#0620 -	D	
3	41N4-10330				UNDER COVER-CAB(C)	1	- #0619		
	43N4-10330				UNDER COVER-CAB(C)	1	#0620 -	D	
4	41N4-10340				UNDER COVER-RAD(A)	1	- #0619		
	43N4-10340				UNDER COVER-RAD(A)	1	#0620 -	D	
5	41N4-10050				UNDER COVER-MCV	1	- #0619		
	43N4-10051				UNDER COVER-MCV	1	#0620 -	D	
6	41N4-10061				UNDER COVER-ENGINE	1	- #0048		
	41N4-10062				UNDER COVER-ENGINE	1	#0047 - #0619	D	
	41N4-10062BG				UNDER COVER-ENGINE	1	#0620 -	D	
7	41N4-10071				UNDER COVER-PUMP	1	- #0619		
	41N4-10071BG				UNDER COVER-PUMP	1	#0620 -	D	
8	41N4-10082				UNDER COVER-H/TANK	1	- #0619		
	43N4-10090				UNDER COVER-TANK	1	#0620 -	D	
9	41N4-10290				UNDER COVER-RAD(B)	1	- #0619		
	43N4-10290				UNDER COVER-RAD(B)	1	#0620 -	D	
10	41N6-10100				COVER	1			
11	41E9-1306	10			SEAL	1			
12	S037-102562				BOLT-W/WASHER	53			

TOOL BOX MOUNTING

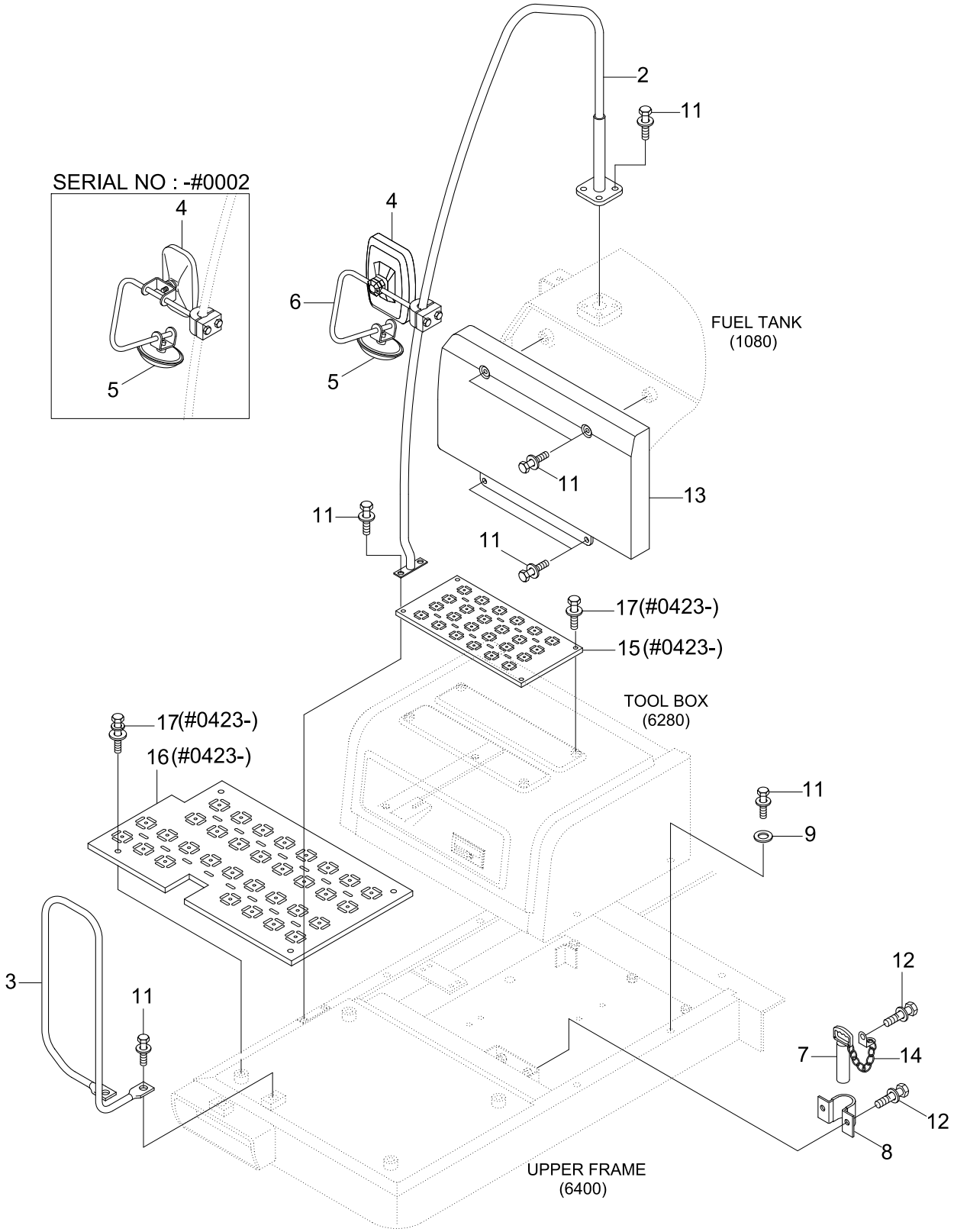

Item	Part_No	IS	Ord	T	Description	Qty	Serial_No	ITC	Remark
2	71N4-42400				PIPE WA	1	- #0619		
	71N4-42400BG				PIPE WA	1	#0620 -	D	
3	71N4-42500				PIPE WA	1	- #0619		
	71N4-42500BG				PIPE WA	1	#0620 -	D	
4	71N8-46000				MIRROR	1	- #0002		
	71N8-47100				MIRROR	1	#0003 - #0750	D	
	71N8-47101				MIRROR	1	#0751 -	B	
5	71E4-3004				MIRROR	1	- #0750		
	71N4-46100				MIRROR	1	#0751 -	B	
6	71N4-42601				STAY-MIRROR	1	- #0002		
	71N4-42900				STAY WA-MIRROR	1	#0003 - #0619	D	
	71N4-42900BG				STAY WA-MIRROR	1	#0620 -	D	
7	71N4-42700				PIN-SWING LOCK	1			
8	71N4-42800				CLAMP ASSY-SW LOCK PIN	1			
9	S390-015040				SHIM-ROUND(0.5T)	4			
11	S037-122552				BOLT-W/WASHER	16			
12	S037-102552				BOLT-W/WASHER	3			
13	71N4-44100				COVER-F/TANK	1			
14	71W1-54020				CHAIN ASSY	1			
15	74N4-47100				FOOT BOARD WA(A)	1	#0423 -	-	
16	74N4-47200				FOOT BOARD WA(C)	1	#0423 - #0619	-	
	74N4-47200BG				FOOT BOARD WA(C)	1	#0620 -	D	
17	S037-121552				BOLT-W/WASHER	8	#0423 -	-	
3	71N8-46000				MIRROR	1	- #0247		
	71N6-47000				MIRROR & STAY ASSY-LH	1	#0248 - #0619	A	

Item	Part_No	IS	Ord	T	Description	Qty	Serial_No	ITC	Remark
3	71N6-47000BG				MIRROR & STAY ASSY-LH	1	#0620 - #0750	D	
	71N6-47001BG				MIRROR & STAY ASSY-LH	1	#0751 -	B	
	71N6-47000BG				MIRROR & STAY ASSY-LH	1	#0615 - #0750	-	UPGRADE CABIN
	71N6-47001BG				MIRROR & STAY ASSY-LH	1	#0751 -	B	UPGRADE CABIN
4	71E1-60340				HAMMER-SAFETY	1			
5	S141-040166				SCREW-FLAT HD	2			
6	S017-120706				BOLT-HEX	8			
7	S037-122526				BOLT-W/WASHER	1			
8	S403-122006				WASHER-PLAIN	8			
9	S411-120006				WASHER-SPRING	8			
10	S411-100006				WASHER-SPRING	4			
11	S403-102006				WASHER-PLAIN	4			
12	S017-100256				BOLT-HEX	4			
13	71N6-03560				RAIL-HAND	1			
14	71N6-10270				PLATE	1			
15	S131-051546				SCREW-W/WASHER	2			
16	71N6-03632				SUN VISOR ASSY	1			
16-1	S132-060856				SCREW-W/WASHER	4			

TOOL BOX

SERIAL NO : -#0471

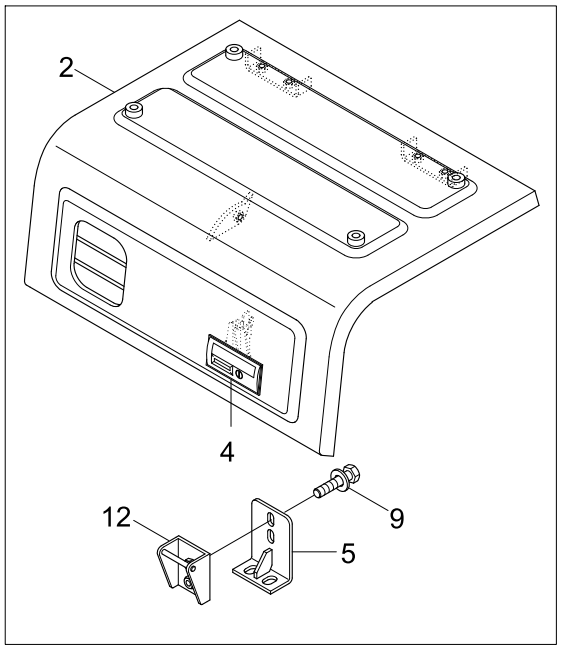

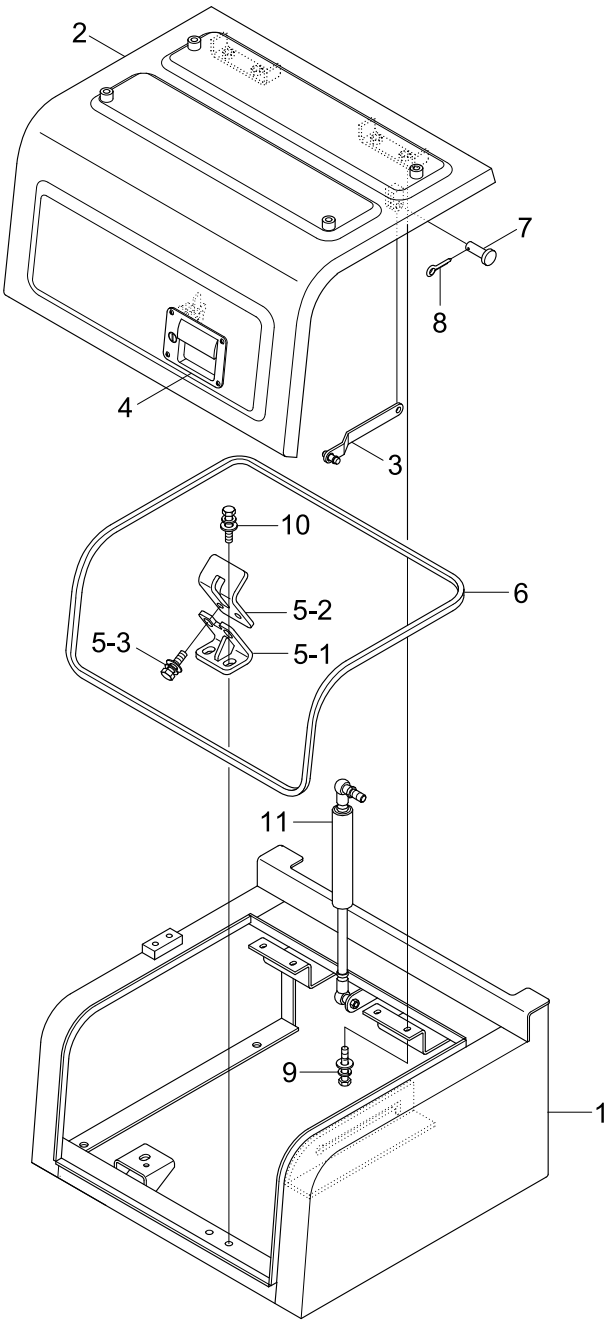

Item	Part_No	IS	Ord	T	Description	Qty	Serial_No	ITC	Remark
*	71N4-42001				TOOL BOX ASSY	1	- #0422		
	74N4-42000				TOOL BOX ASSY	1	#0423 - #0483	D	
	74N4-42001				TOOL BOX ASSY	1	#0484 -	D	
1	71N4-42102				.TOOL BOX WA	1	- #0222	-	
	71N4-42103				.TOOL BOX WA	1	#0223 -	B	
2	71N4-42201				.COVER WA	1	- #0422	-	
	74N4-42200				.COVER WA	1	#0423 - #0483	D	
	74N4-42201				.COVER WA	1	#0484 -	D	
3	71N8-41300				.STAY WA	1			
4	71N8-41702				.CATCH ASSY	1	- #0483	-	
	74N8-41700				.CATCH ASSY	1	#0484 -	D	
5	71N8-41502				.BRACKET	1	- #0483		
	74N8-41500				.BRACKET	1	#0484 -	D	
5-1	74N8-41560				..BRACKET WA	1	#0484 -	-	
5-2	74N8-41570				..BRACKET WA	1	#0484 -	-	
5-3	S035-082526				..BOLT-W/WASHER	2	#0484 -	-	
6	S772-026300				.WEATHER STRIP	1			
7	S491-100252				.PIN-CLEVIS	1			
8	S461-320252				.PIN-SPLIT	1			
9	S035-082026				.BOLT-W/WASHER	6	- #0483		
					.BOLT-W/WASHER	4	#0484 -	A	
10	S037-102052				.BOLT-W/WASHER	2			
11	71EN-52640				.GAS SPRING	1			
12	71N8-41721				.BRACKET	1	- #0483	-	

GROMMET GROUP

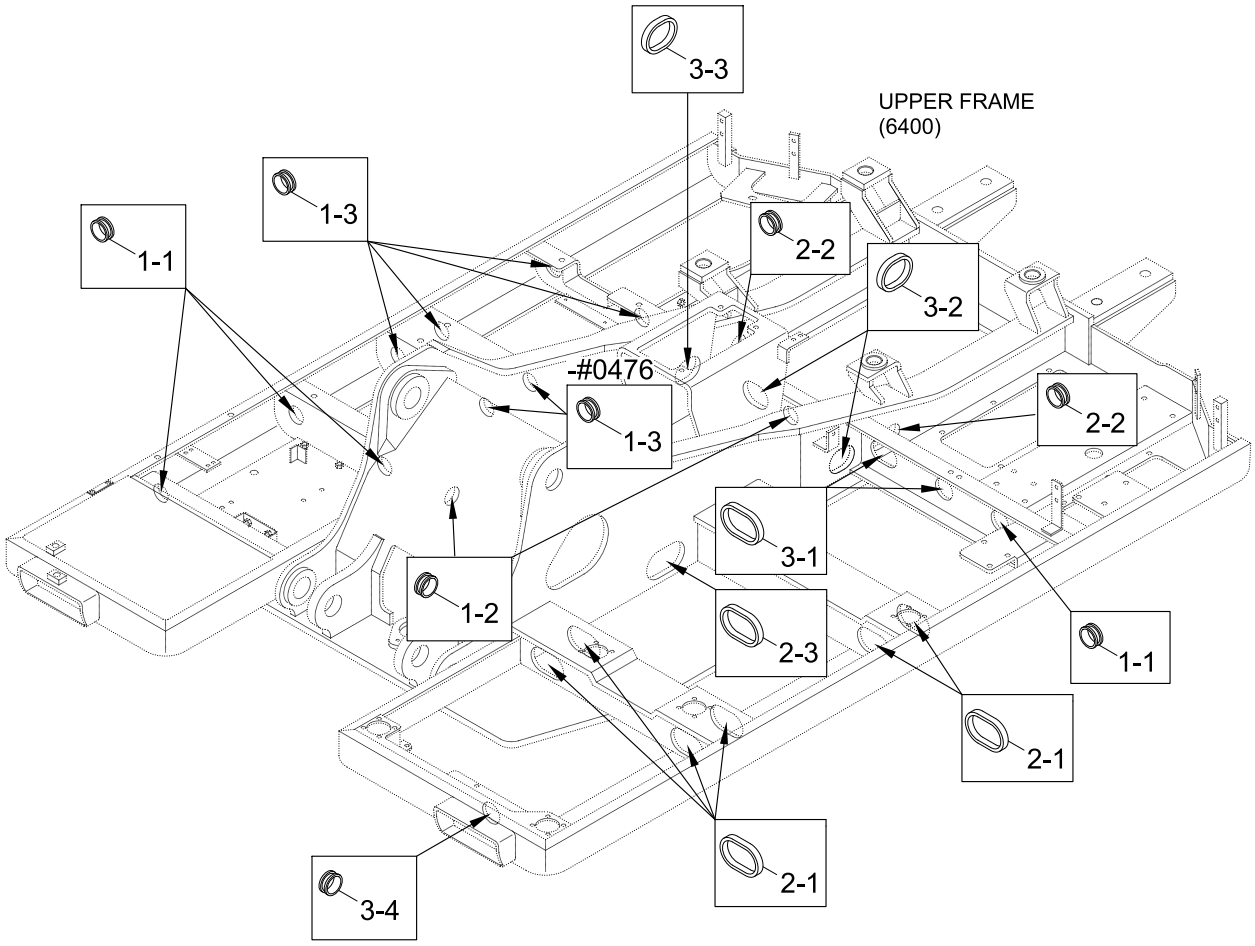

Item	Part_No	IS	Ord	T	Description	Qty	Serial_No	ITC	Remark
1	41N4-50112				GROMMET KIT(A)	1	- #0476		
	41N4-50113				GROMMET KIT(A)	1	#0477 -	D	
1-1	S760-041000				.GROMMET	4			
1-2	S760-091400				.GROMMET	2			
1-3	S760-041400				.GROMMET	6	- #0476		
					.GROMMET	4	#0477 -	A	
2	41N4-50122				GROMMET KIT(B)	1			
2-1	S760-031800				.GROMMET	6			
2-2	S760-091408				.GROMMET	2			
2-3	S760-091812				.GROMMET	1			
3	41N4-50131				GROMMET KIT(C)	1			
3-1	S760-031406				.GROMMET	2			
3-2	S760-081807				.GROMMET	2			
3-3	S760-081800				.GROMMET	1			
3-4	S760-031400				.GROMMET	1			

UPPER FRAME & COUNTERWEIGHT

OPTION

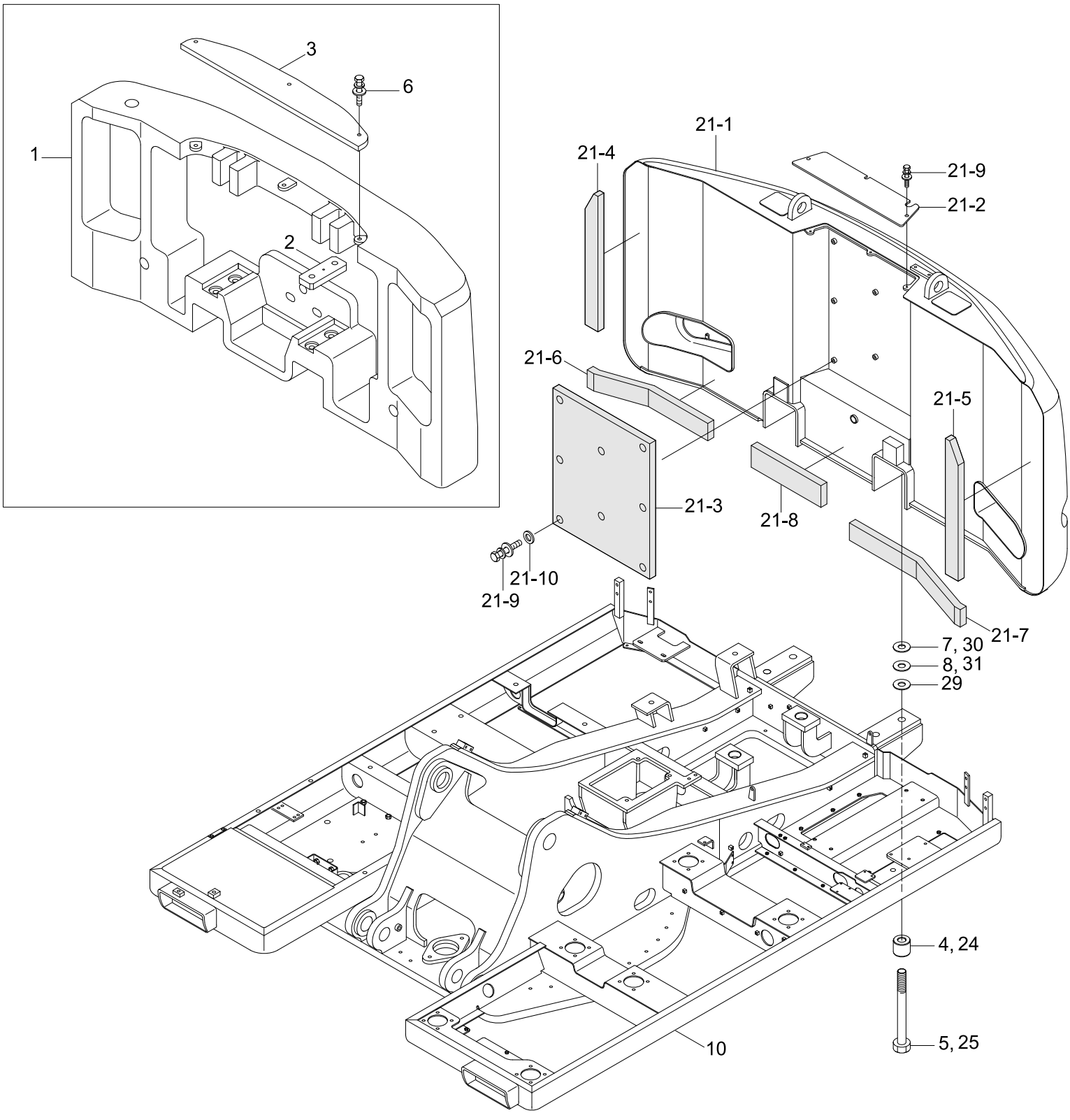

Item	Part_No	IS	Ord	T	Description	Qty	Serial_No	ITC	Remark
1	41N4-23001				COUNTERWEIGHT	1			OPTION
2	41N4-21111				BLOCK	2			OPTION
3	41N4-21201				COVER WA-CWT	1			OPTION
4	41N4-22200				SPACER	4	- #0293		OPTION
	41N4-22201				SPACER	4	#0294 - #0374	A	OPTION
	41N4-22202				SPACER	4	#0375 -	B	OPTION
5	S017-272202				BOLT-HEX	4			OPTION
6	S037-104552				BOLT-W/WASHER	3			OPTION
7	S391-040065				SHIM-ROUND(1.0T)	5			
8	S392-040065				SHIM-ROUND(2.0T)	5			
10	41N4-40011				UPPER FRAME WA	1	- #0198		
	41N4-45010				UPPER FRAME WA	1	#0199 - #0559	D	
	41N4-45011				UPPER FRAME WA	1	#0560 - #0619	D	
	41N4-45011BG				UPPER FRAME WA	1	#0620 -	D	
21	41N4-24001				COUNTERWEIGHT ASSY	1	#0266 - #0536	-	STD
	41N4-24500				COUNTERWEIGHT ASSY	1	#0537 -	B	
21-1	41N4-24011				.COUNTERWEIGHT WA	1	#0266 - #0302	-	
	41N4-24012				.COUNTERWEIGHT WA	1	#0303 -	A	
21-2	41N4-24310				.COVER-CWT	1	#0266 -	-	
21-3	41N4-24320				.SPONGE(A)	1	#0266 -	-	
21-4	41N4-24330				.SPONGE(B)	1	#0266 - #0302	-	
	41N4-24331				.SPONGE(B)	1	#0303 -	A	
21-5	41N4-24340				.SPONGE(C)	1	#0266 - #0302	-	
	41N4-24341				.SPONGE(C)	1	#0303 -	A	
21-6	41N4-24350				.SPONGE(D)	1	#0266 - #0302	-	

Item	Part_No	IS	Ord	T	Description	Qty	Serial_No	ITC	Remark
21-6	41N4-24351				.SPONGE(D)	1	#0303 -	A	
21-7	41N4-24360				.SPONGE(E)	1	#0266 - #0302	-	
	41N4-24361				.SPONGE(E)	1	#0303 - #0535	A	
	41N4-24380				.SPONGE(E)	1	#0536 -	B	
21-8	41N4-24370				.SPONGE(F)	1	#0266 - #0302	-	
	41N4-24371				.SPONGE(F)	1	#0303 -	A	
21-9	S037-102556				.BOLT-W/WASHER	11	#0266 -	-	
21-10	61L1-2037				.WASHER-HARDENED	8	#0266 -	-	
24	41N4-22200				SPACER	4	#0266 - #0293	-	STD
	41N4-22201				SPACER	4	#0294 - #0374	B	STD
	41N4-22202				SPACER	4	#0375 -	B	STD
25	S017-271202				BOLT-HEX	4	#0266 - #0374	-	STD
	S017-27130D				BOLT-HEX	4	#0375 -	B	STD
29	S390-040065				SHIM-ROUND(0.5T)	5	#0266 -	-	STD
30	S391-040065				SHIM-ROUND(1.0T)	5	#0536 -	B	STD
31	S392-040065				SHIM-ROUND(2.0T)	5	#0536 -	B	STD

LOWER FRAME & FENDER

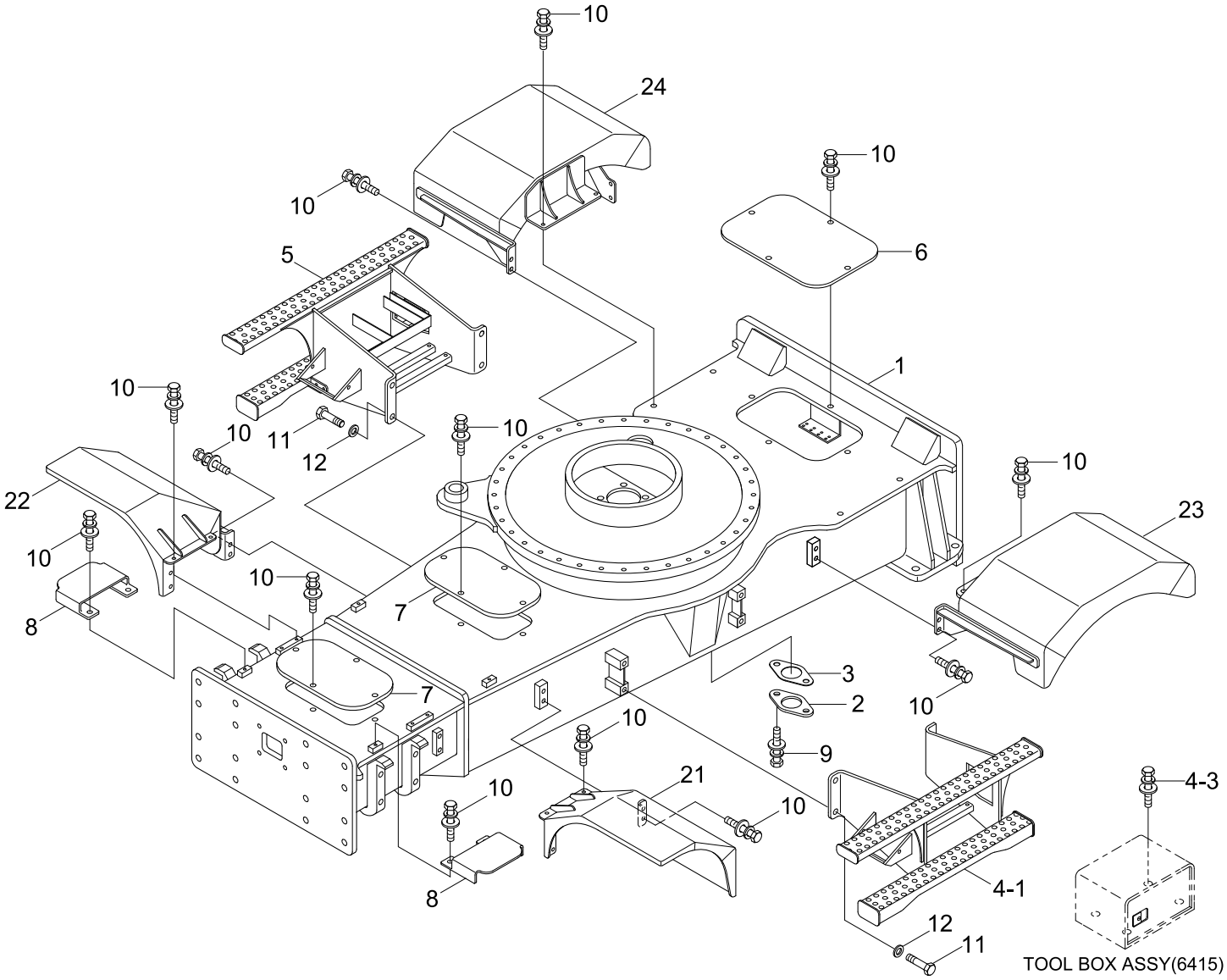

Item	Part_No	IS	Ord	T	Description	Qty	Serial_No	ITC	Remark
1	51N4-01012				LOWER FRAME WA	1			
	53N4-01010				LOWER FRAME WA	1	- #0984		
	53N4-01011				LOWER FRAME WA	1	#0985 -	B	
2	41N6-10100				COVER	1			
3	41E9-1306	10			SEAL	1			
4	51N4-33000				FOOT BOARD ASSY-LH	1	- #0619		
	53N4-33000				FOOT BOARD ASSY-LH	1	#0620 -	B	
4-1	51EA-34010				.FOOT BOARD WA-LH	1	- #0619		
	53N4-33010				.FOOT BOARD WA-LH	1	#0620 - #0686	B	
	53N4-33011				.FOOT BOARD WA-LH	1	#0687 -	A	
4-2	@				.TOOL BOX ASSY	1			NOT
4-3	S037-122552				.BOLT-W/WASHER	4			
5	51EA-34020				FOOT BOARD WA-RH	1	- #0619		
	53N4-34010				FOOT BOARD WA-RH	1	#0620 -	B	
6	51EA-20830				COVER-A	1	- #0619		
	53N4-20830				COVER(A)	1	#0620 -	B	
7	51EA-20820				COVER-B	2	- #0619		
	53N4-20820				COVER(B)	2	#0620 -	B	
8	51EK-21011				COVER-O/CYLINDER	2	- #0619		
	51EK-21011BG				COVER-O/CYLINDER	2	#0620 -	D	
9	S037-102556				BOLT-W/WASHER	2			
10	S037-122556				BOLT-W/WASHER	34			
11	S017-20040D				BOLT-HEX	8			
12	S441-200006				WASHER-HARDENED	8			
21	51N4-40210				FENDER WA-LH,FRONT	1	- #0011		

Item	Part_No	IS	Ord	T	Description	Qty	Serial_No	ITC	Remark
21	51N4-40211	01			FENDER WA-FRONT,LH	1	#0012 - #0563	D	
	51N4-40212				FENDER WA-FRONT,LH	1	#0564 - #0659	B	
	53N4-40212				FENDER WA-FRONT, LH	1	#0660 -	B	
22	51N4-40220				FENDER WA-RH,FRONT	1	- #0011		
	51N4-40221	01			FENDER WA-FRONT,RH	1	#0012 - #0563	D	
	51N4-40222				FENDER WA-FRONT,RH	1	#0564 - #0659	B	
	53N4-40222				FENDER WA-FRONT, RH	1	#0660 -	B	
23	51EA-40111				FENDER WA-REAR,LH	1	- #0011		
	51N4-40110				FENDER WA-REAR,LH	1	#0012 - #0563	D	
	51N4-40111				FENDER WA-REAR,LH	1	#0564 -	B	
24	51EA-40121				FENDER WA-REAR,RH	1	- #0011		
	51N4-40120				FENDER WA-REAR,RH	1	#0012 - #0563	D	
	51N4-40121				FENDER WA-REAR,RH	1	#0564 -	B	

TOOL BOX ASSY

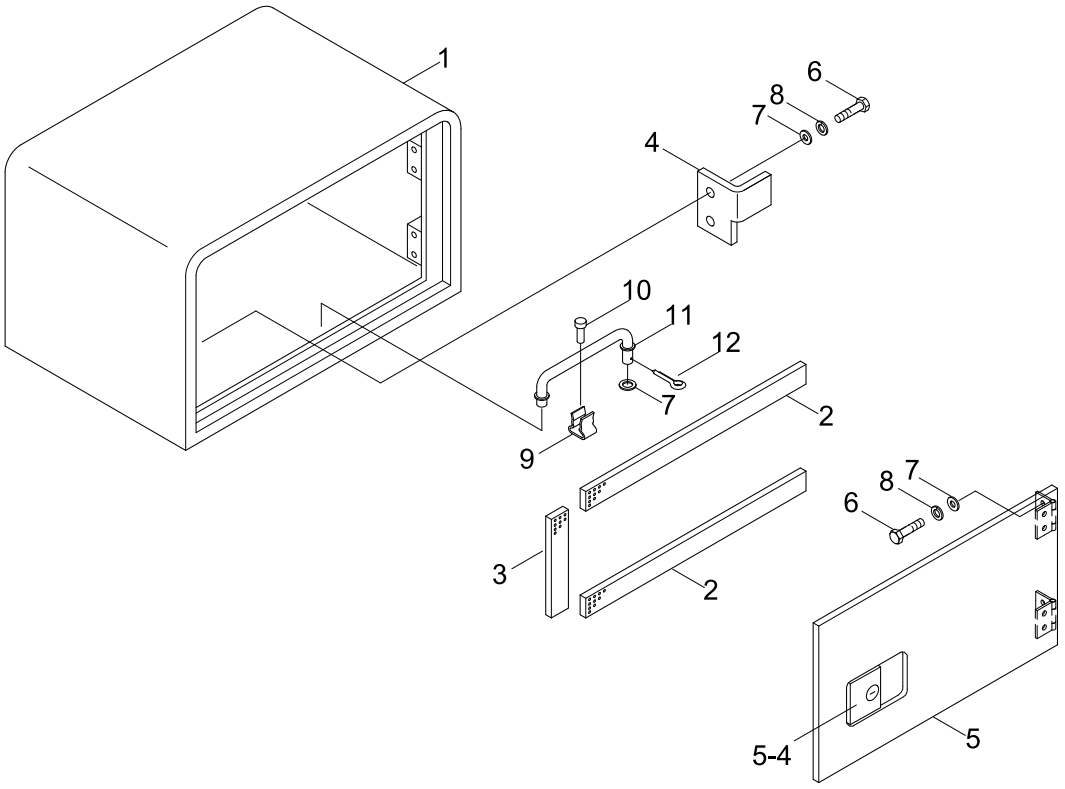

Item	Part_No	IS	Ord	T	Description	Qty	Serial_No	ITC	Remark
*	51N4-31310				TOOL BOX ASSY	1			
1	51N4-31320				.TOOL BOX WA	1			
2	51EM-23210				.PAD-RUBBER	2			
3	51EM-23220				.PAD-RUBBER	1			
4	E271-3063				.BRACKET	1	- #0619		
	E271-3063BG				.BRACKET	1	#0620 -	D	
5	51EM-23101				.SIDE DOOR WA	1	- #0619		
	51EM-23101BG				.SIDE DOOR WA	1	#0620 -	D	
5-4	E171-3006				.LOCK-COVER	1			
6	S015-080302				.BOLT-HEX	6			
7	S403-085002				.WASHER-PLAIN	7			
8	S411-080002				.WASHER-SPRING	6			
9	71EM-51571				.HOLDER-ROD	1	- #0619		
	71EM-51571BG				.HOLDER-ROD	1	#0620 -	D	
10	S151-030061				.SCREW-TAPPING	2			
11	51EA-23150				.STAY	1			
12	S461-160152				.PIN-SPLIT	1			

Item	Part_No	IS	Ord	T	Description	Qty	Serial_No	ITC	Remark
1	81N4-01020				BEARING-SWING	1	- #0395	D	
	81N4-01021				BEARING-SWING	1	#0396 - #0619	B	
	81N4-01021BG				BEARING-SWING	1	#0620 -	D	
1-1	82E3-10040				.SEAL-SWING BEARING	2	#0001 -	-	
2	81N4-66200				BOLT-REAMER	3	#0001 - #0997	D	
	81N4-66201				BOLT-REAMER	3	#0998 -	D	
3	S017-18105D				BOLT-HEX	32	#0001 - #0997	A	
	S017-181056				BOLT-HEX	32	#0998 -	D	
4	S018-16060D				BOLT-HEX	36	- #0997		
	S018-160606				BOLT-HEX	36	#0998 -	D	
5	S441-160002				WASHER-HARDENED	36			
6	81EA-26010				PIPE COMP-LH	1	- #0229	-	
7	81EA-26020				PIPE COMP-RH	1	- #0229	-	
8	31EH-00610				FITTING	2	- #0229		
	81N6-00110				ELBOW-90	2	#0230 -	D	
9	E131-0626	10			CONNECTOR	2	- #0229		
	81N6-00120				CONNECTOR	2	#0230 -	D	
10	E231-0349	10			ELBOW-90	2	- #0229		
	81N6-00130				ELBOW-90	2	#0230 -	D	
11	P391-040000				WASHER-COPPER	2	- #0229	-	
12	E241-2603	10			CLAMP	2	- #0229		
	S543-120002				CLAMP-TUBE	2	#0230 -	D	
13	S037-101552				BOLT-W/WASHER	2	#0001 -	-	
14	S651-810008				NIPPLE-GREASE	3			
16	81N6-00210				TUBE-NYLON	2	#0230 -	-	

DOZER BLADE(REAR)

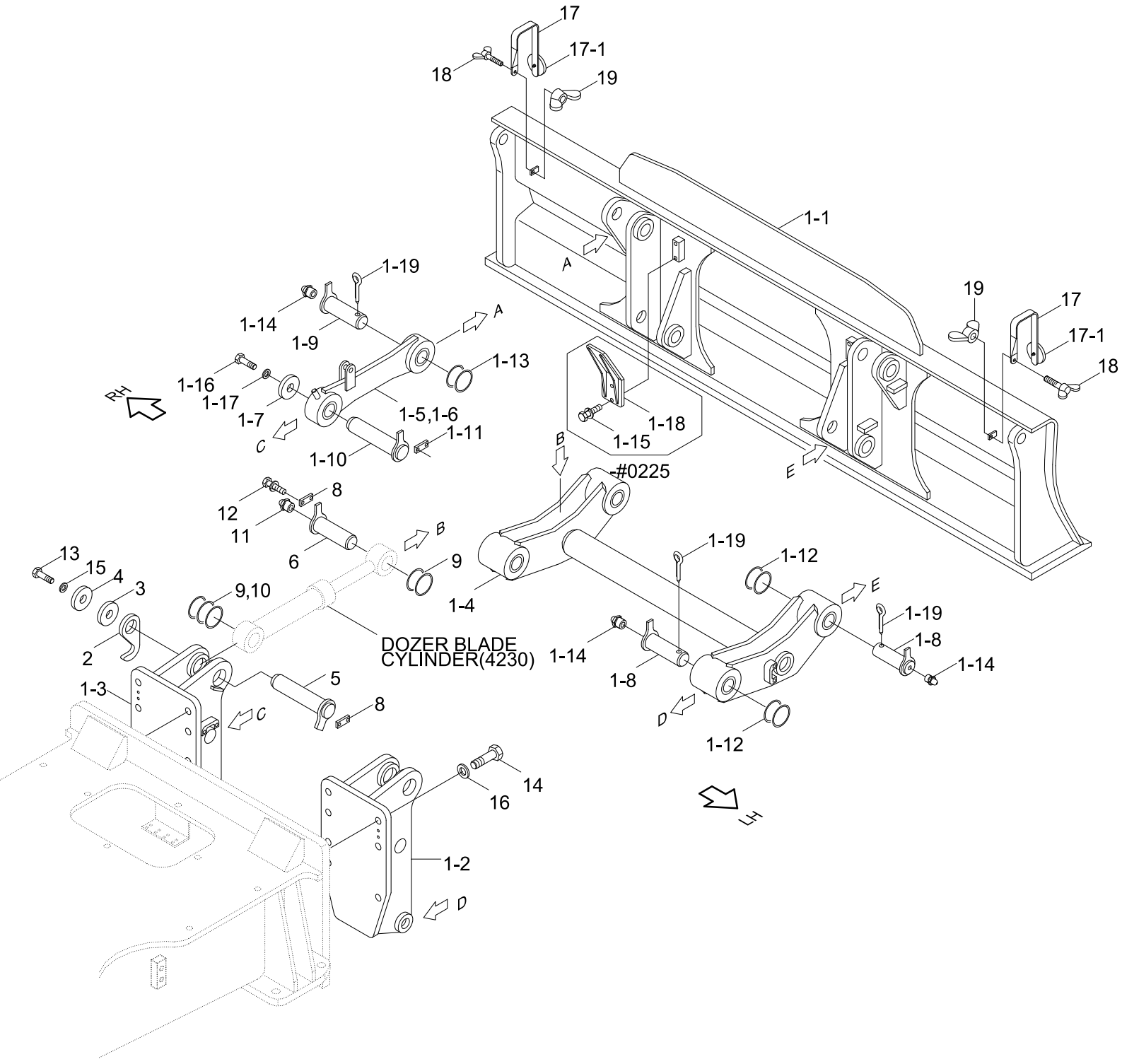

Item	Part_No	IS	Ord	T	Description	Qty	Serial_No	ITC	Remark
1	51N4-50001				BLADE ASSY	1			
1-1	51N4-50011				.BLADE WA	1	- #0034		
	51N4-51010				.BLADE WA	1	#0035 - #0225	B	
	51N4-51011				.BLADE WA	1	#0226 -	B	
1-2	51N4-50111				.BRACKET WA-LH	1			
1-3	51N4-50121				.BRACKET WA-RH	1			
1-4	51EA-3131	30			.LINK(A) ASSY	1			
1-5	51EA-3141	10			.LINK(B)-LH	1			
1-6	51EA-3142	10			.LINK(B)-RH	1			
1-7	51E3-3143	10			.WASHER-LOCK	2			
1-8	51N4-55210				.PIN ASSY	4	- #0486		
	51N4-55211				.PIN ASSY	4	#0487 -	B	
1-9	51N4-55220				.PIN ASSY	2	- #0486		
	51N4-55221				.PIN ASSY	2	#0487 -	B	
1-10	51N4-55230				.PIN ASSY	2	- #0486		
	51N4-55231				.PIN ASSY	2	#0487 -	B	
1-11	51E3-3164				.PLATE-LOCK	2			
	51E3-3164BG				.PLATE-LOCK	2	#0620 -	D	
1-12	S391-055095				.SHIM-ROUND(1.0T)	12			
1-13	S392-055095				.SHIM-ROUND(2.0T)	4			
1-14	S651-810002				.NIPPLE-GREASE	6			
1-15	S037-122552				.BOLT W/WASHER-HEX	8	- #0225		
					.BOLT W/WASHER-HEX	4	#0226 -	A	
1-16	S017-120402				.BOLT-HEX	2			
1-17	S441-120006				.WASHER-HARDENED	2			

Item	Part_No	IS	Ord	T	Description	Qty	Serial_No	ITC	Remark
1-18	51N4-50410				.COVER WA	2	- #0225	-	
1-19	S461-800902				.PIN-SPLIT	6			
2	51N4-50510				PLATE-HOOK	2			
3	51N4-50520				SPACER	2			
4	51E3-3143	10			WASHER-LOCK	2			
5	51N4-55430				PIN ASSY	2	- #0486		
	51N4-55431				PIN ASSY	2	#0487 -	B	
6	51N4-55420				PIN ASSY	2	- #0486		
	51N4-55421				PIN ASSY	2	#0487 -	B	
8	51E3-3164				PLATE-LOCK	4			
9	S391-065110				SHIM-ROUND(1.0T)	6			
10	S392-065110				SHIM-ROUND(2.0T)	4			
11	S651-810002				NIPPLE-GREASE	2			
12	S037-122552				BOLT W/WASHER-HEX	8			
13	S017-120402				BOLT-HEX	2			
14	S018-240502				BOLT-HEX	14			
15	S441-120006				WASHER-HARDENED	2			
16	S441-240002				WASHER-HARDENED	14			
17	51N6-30500				REFLECTOR ASSY	2	- #0619		
	51N6-30500BG				REFLECTOR ASSY	2	#0620 -	D	
17-1	51EK-52990				.REFLECTOR-REAR	2			
18	S091-100302				BOLT-WING	2			
19	S261-100002				NUT-WING	2			

DOZER BLADE(FRONT)

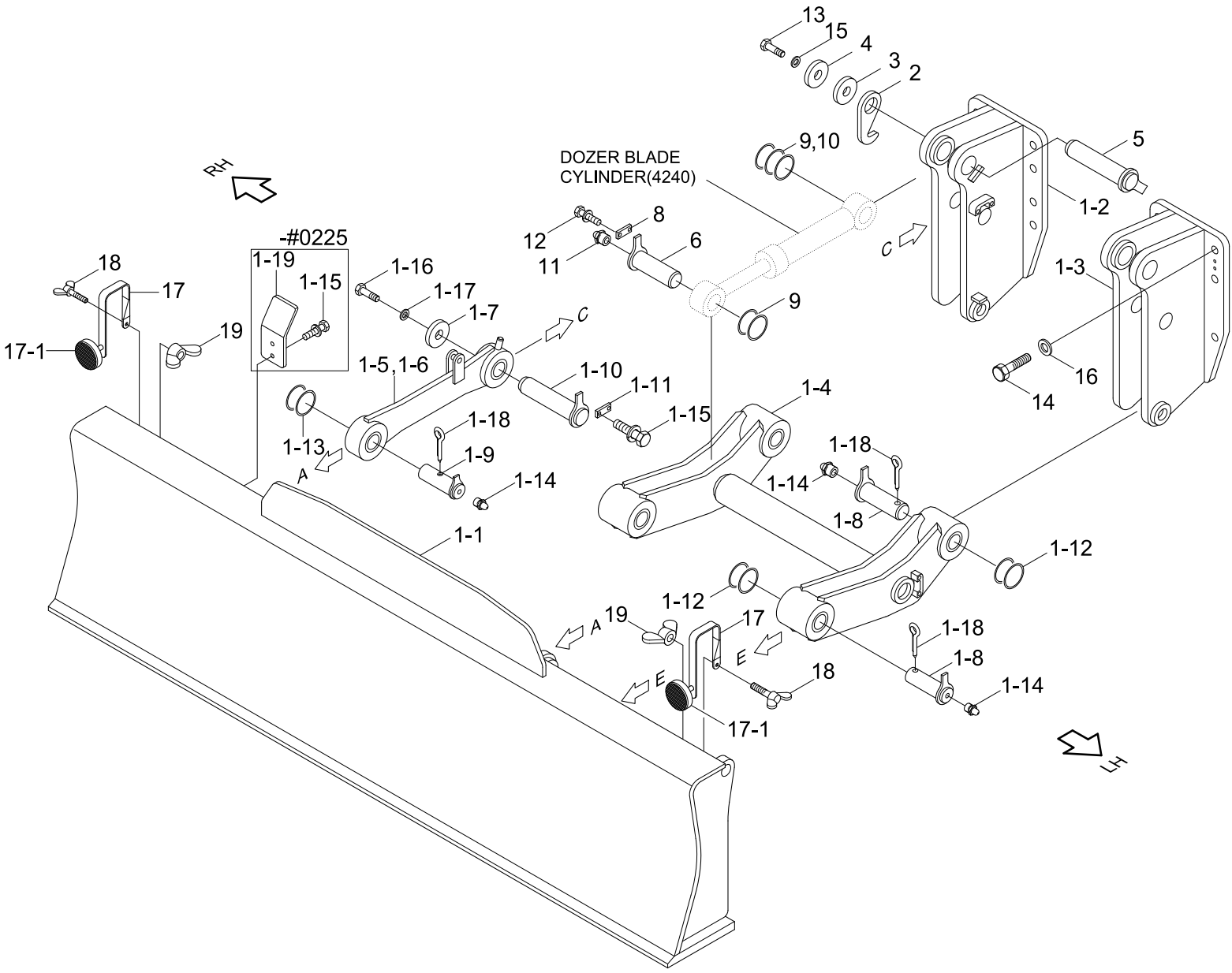

Item	Part_No	IS	Ord	T	Description	Qty	Serial_No	ITC	Remark
1	51N4-52001				BLADE ASSY	1			
1-1	51N4-52011				.BLADE WA	1			
1-2	51N4-50121				.BRACKET WA-RH	1			
1-3	51N4-50111				.BRACKET WA-LH	1			
1-4	51EA-54200				.LINK(A) ASSY	1			
1-5	51N4-52310				.LINK ASSY(B)-LH	1			
1-6	51N4-52320				.LINK ASSY(B)-RH	1			
1-8	51N4-55210				.PIN ASSY	4	- #0486		
	51N4-55211				.PIN ASSY	4	#0487 -	B	
1-9	51N4-55220				.PIN ASSY	2	- #0486		
	51N4-55221				.PIN ASSY	2	#0487 -	B	
1-10	51N4-55230				.PIN ASSY	2	- #0486		
	51N4-55231				.PIN ASSY	2	#0487 -	B	
1-11	51E3-3164				.PLATE-LOCK	2	- #0619		
	51E3-3164BG				.PLATE-LOCK	2	#0620 -	D	
1-12	S391-055095				.SHIM-ROUND(1.0T)	12			
1-13	S392-055095				.SHIM-ROUND(2.0T)	4			
1-14	S651-810002				.NIPPLE-GREASE	6			
1-15	S037-122552				.BOLT-W/WASHER	8	- #0225		
					.BOLT-W/WASHER	4	#0226 -	A	
1-16	S017-120402				.BOLT-HEX	2			
1-17	S441-120002				.WASHER-HAR DENED	2			
1-18	S461-800902				.PIN-SPLIT	6			
1-19	51N4-50410				.COVER WA	2	- #0225	-	
2	51N4-50510				PLATE-HOOK	2			

Item	Part_No	IS	Ord	T	Description	Qty	Serial_No	ITC	Remark
3	51N4-50520				SPACER	2			
4	51E3-3143	10			WASHER-LOCK	2			
5	51N4-55430				PIN ASSY	2	- #0486		
	51N4-55431				PIN ASSY	2	#0487 -	B	
6	51N4-55420				PIN ASSY	2	- #0486		
	51N4-55421				PIN ASSY	2	#0487 -	B	
8	51E3-3164				PLATE-LOCK	4	- #0619		
	51E3-3164BG				PLATE-LOCK	4	#0620 -	D	
9	S391-065110				SHIM-ROUND(1.0T)	6			
10	S392-065110				SHIM-ROUND(2.0T)	4			
11	S651-810002				NIPPLE-GREASE	2			
12	S037-122552				BOLT-W/WASHER	8			
13	S017-120402				BOLT-HEX	2			
14	S018-240502				BOLT-HEX	14			
15	S441-120002				WASHER-HARDENED	2			
16	S441-240002				WASHER-HARDENED	14			
17	51N6-30500				REFLECTOR ASSY	2	- #0619		
	51N6-30500BG				REFLECTOR ASSY	2	#0620 -	D	
17-1	51EK-52990				.REFLECTOR-REAR	2			
18	S091-100302				BOLT-WING	2			
19	S261-100002				NUT-WING	2			

OUTRIGGER MOUNTING(FRONT)

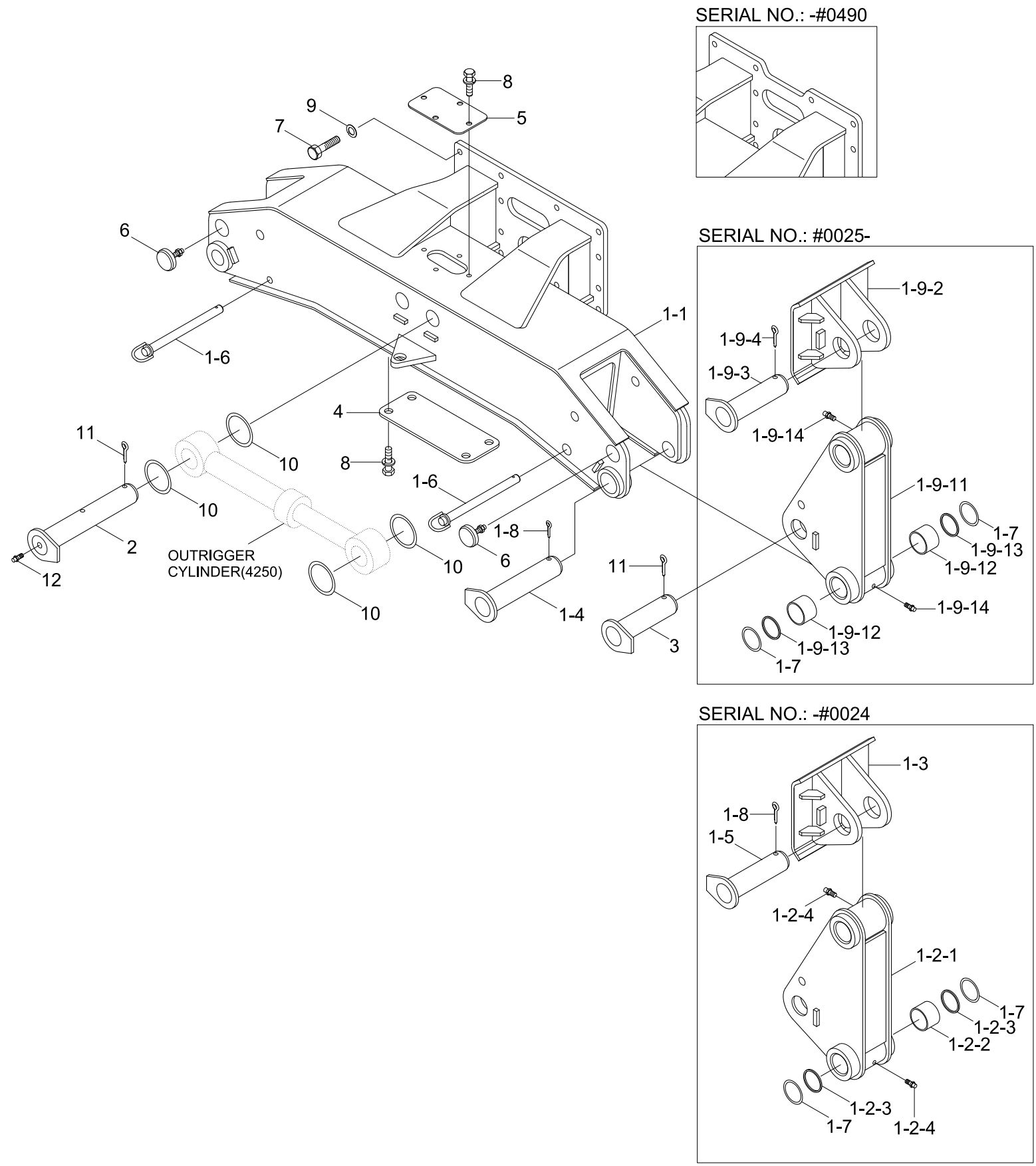

Item	Part_No	IS	Ord	T	Description	Qty	Serial_No	ITC	Remark
1	51N4-54000				OUTRIGGER ASSY-FRONT	1	- #0490		
	51N4-54001				OUTRIGGER ASSY-FRONT	1	#0491 -	B	
1-1	51N4-54010				.FRAME WA-FRONT O/R	1	- #0490		
	51N4-54011				.FRAME WA-FRONT O/R	1	#0491 -	B	
1-2	51N4-53200				.LEG ASSY	2	- #0024	-	
1-2-1	51N4-53210				..LEG WA	1	- #0024	-	
1-2-2	51EK-52550				..BUSHING	4	- #0024	-	
1-2-3	S700-070206				..DUST SEAL-DKIY TYPE	4	- #0024	-	
1-2-4	S651-810002				..NIPPLE-GREASE	2	- #0024	-	
1-3	51N4-53300				.FOOT WA	2	- #0024	-	
1-4	51N4-55510				.PIN ASSY	2	- #0486		
	51N4-55511				.PIN ASSY	2	#0487 -	B	
1-5	51N4-55520				.PIN ASSY	2	- #0024	-	
1-6	51EK-52542				.PIN-SAFETY	2	- #0619		
	51EK-52542BG				.PIN-SAFETY	2	#0620 -	D	
1-7	S391-070120				.SHIM-ROUND(1.0T)	4			
1-8	S461-800902				.PIN-SPLIT	4	- #0024		
					.PIN-SPLIT	2	#0025 -	A	
1-9	51N4-53100				.LEG & FOOT ASSY	2	#0025 -	-	
1-9-1	51N4-53200				..LEG ASSY	1	#0025 -	-	
1-9-11	51N4-53210				...LEG WA	1	#0025 -	-	
1-9-12	51EK-52550				...BUSHING	4	#0025 -	-	
1-9-13	S700-070206				...DUST SEAL-DKIY TYPE	4	#0025 -	-	
1-9-14	S651-810002				...NIPPLE-GREASE	2	#0025 -	-	
1-9-2	51N4-53300				..FOOT WA	1	#0025 -	-	

Item	Part_No	IS	Ord	T	Description	Qty	Serial_No	ITC	Remark
1-9-3	51N4-55520				..PIN ASSY	1	#0025 - #0486	-	
	51N4-55521				..PIN ASSY	1	#0487 -	B	
1-9-4	S461-800902				..PIN-SPLIT	1	#0025 -	-	
2	51N4-55530				PIN ASSY	2	- #0486		
	51N4-55531				PIN ASSY	2	#0487 -	B	
3	51N4-55540				PIN ASSY	2	- #0486		
	51N4-55541				PIN ASSY	2	#0487 -	B	
4	51EK-52570				PLATE-COVER	1			
5	51E4-2712	10			COVER	1			
6	51EK-52990				REFLECTOR-REAR	2			
7	S018-240502				BOLT-HEX	16			
8	S037-122552				BOLT-W/WASHER	8			
9	S441-240002				WASHER-HARDENED	16			
10	S391-070130				SHIM-ROUND(1.0T)	8			
11	S461-800902				PIN-SPLIT	4			
12	S651-810002				NIPPLE-GREASE	2			

OUTRIGGER MOUNTING(REAR)

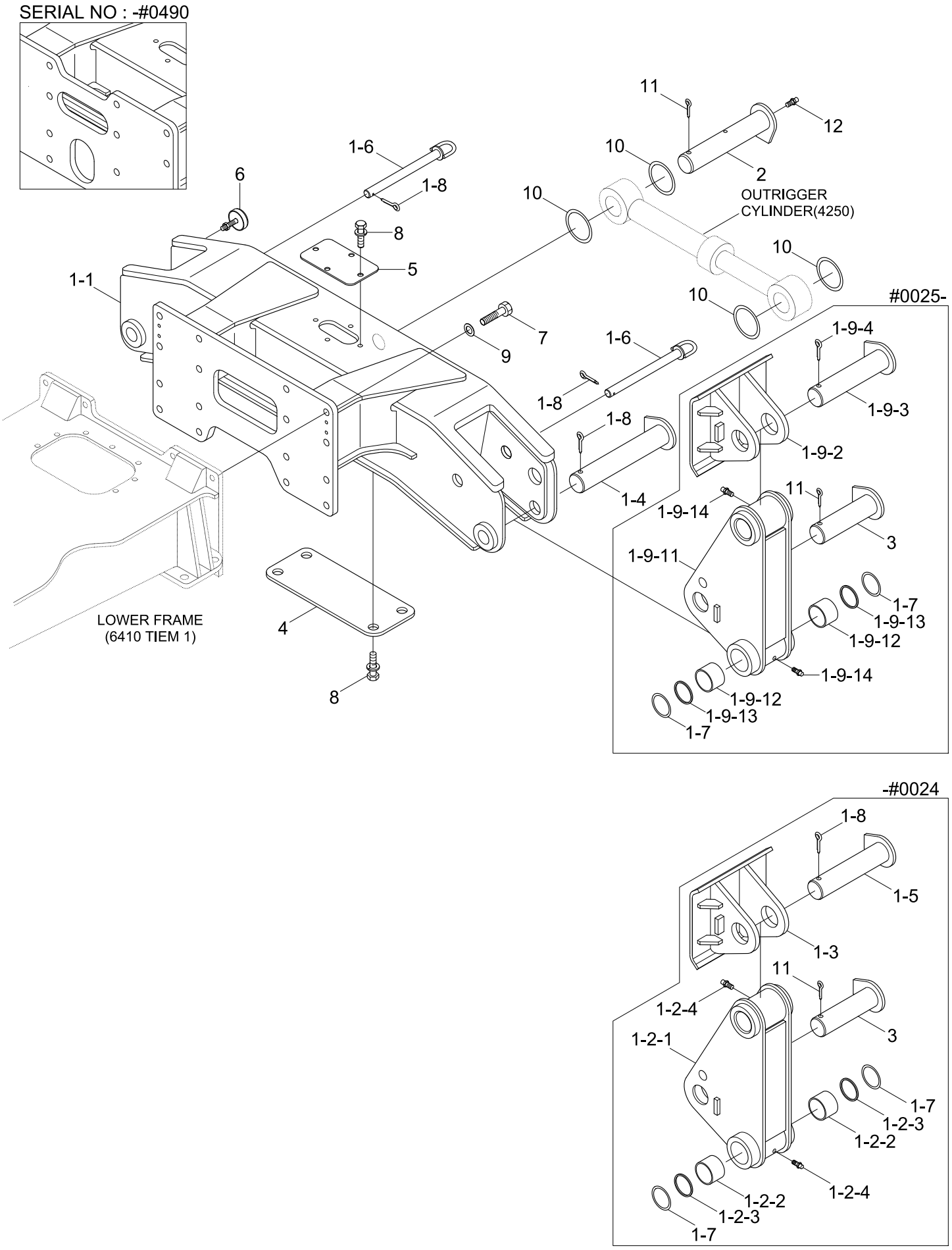

Item	Part_No	IS	Ord	T	Description	Qty	Serial_No	ITC	Remark
1	51N4-53000				OUTRIGGER ASSY-REAR	1	- #0490		
	51N4-53001				OUTRIGGER ASSY-REAR	1	#0491 -	B	
1-1	51N4-53010				.FRAME WA-REAR O/R	1	- #0490		
	51N4-53011				.FRAME WA-REAR O/R	1	#0491 -	B	
1-2	51N4-53200				.LEG ASSY	2	- #0024	-	
1-2-1	51N4-53210				..LEG WA	1	- #0024	-	
1-2-2	51EK-52550				..BUSHING	4	- #0024	-	
1-2-3	S700-070206				..DUST SEAL-DKIY TYPE	4	- #0024	-	
1-2-4	S651-810002				..NIPPLE-GREASE	2	- #0024	-	
1-3	51N4-53300				.FOOT WA	2	- #0024	-	
1-4	51N4-55510				.PIN ASSY	2	- #0486		
	51N4-55511				.PIN ASSY	2	#0487 -	B	
1-5	51N4-55520				.PIN ASSY	2	- #0024	-	
1-6	51EK-52542				.PIN-SAFETY	2	- #0619		
	51EK-52542BG				.PIN-SAFETY	2	#0620 -	D	
1-7	S391-070120				.SHIM-ROUND(1.0T)	4			
1-8	S461-800902				.PIN-SPLIT	4	- #0024		
					.PIN-SPLIT	2	#0025 -	A	
1-9	51N4-53100				.LEG & FOOT ASSY	2	#0025 -	-	
1-9-1	51N4-53200				..LEG ASSY	1	#0025 -	-	
1-9-11	51N4-53210				...LEG WA	1	#0025 -	-	
1-9-12	51EK-52550				...BUSHING	4	#0025 -	-	
1-9-13	S700-070206				...DUST SEAL-DKIY TYPE	4	#0025 -	-	
1-9-14	S651-810002				...NIPPLE-GREASE	2	#0025 -	-	
1-9-2	51N4-53300				..FOOT WA	1	#0025 -	-	

Item	Part_No	IS	Ord	T	Description	Qty	Serial_No	ITC	Remark
1-9-3	51N4-55520				..PIN ASSY	1	#0025 - #0486	-	
	51N4-55521				..PIN ASSY	1	#0487 -	B	
1-9-4	S461-800902				..PIN-SPLIT	1	#0025 -	-	
2	51N4-55530				PIN ASSY	2	- #0486		
	51N4-55531				PIN ASSY	2	#0487 -	B	
3	51N4-55540				PIN ASSY	2	- #0486		
	51N4-55541				PIN ASSY	2	#0487 -	B	
4	51EK-52570				PLATE-COVER	1			
5	51E4-2712	10			COVER	1			
6	51EK-52990				REFLECTOR-REAR	2			
7	S018-240502				BOLT-HEX	16			
8	S037-122552				BOLT-W/WASHER	8			
9	S441-240002				WASHER-HARDENED	16			
10	S391-070130				SHIM-ROUND(1.0T)	8			
11	S461-800902				PIN-SPLIT	4			
12	S651-810002				NIPPLE-GREASE	2			

CAB PROTECTOR ASSY(OPTION, #0539-)

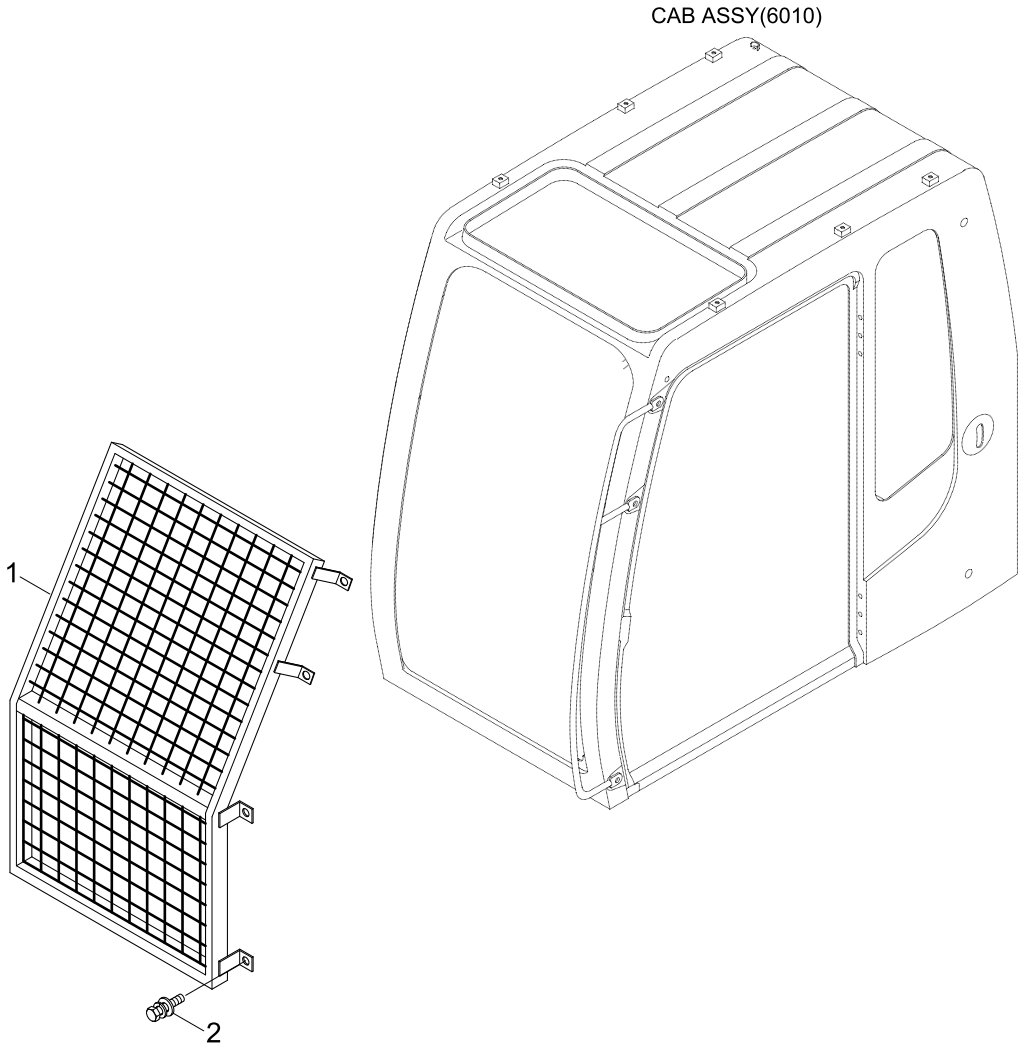

Item	Part_No	IS	Ord	T	Description	Qty	Serial_No	ITC	Remark
*	@				CABIN-PROTECTOR	1	#0539 -	-	NOT
1	71N6-90300				PROTECTOR WA	1	- #0920		
	71N6-90301				PROTECTOR WA	1	#0921 -	D	
2	S037-122556				BOLT-W/WASHER	8			

Item	Part_No	IS	Ord	T	Description	Qty	Serial_No	ITC	Remark
1	61N4-11010				PIN ASSY	1	- #0071		
	61N4-11012				PIN ASSY	1	#0072 -	B	
2	61E6-1102				PIN ASSY	1	- #0457	-	
	61E6-11021				PIN ASSY	1	#0458 -	B	
3	61N8-01400				PIN ASSY	2	- #0457		
	61N8-01400-AS				PIN ASSY	2	- #0457		
	61N8-01401				PIN ASSY	2	#0458 -	B	
	61N8-01401-AS				PIN ASSY	2	#0458 -	-	
4	61N8-01410				PIN ASSY	3	- #0071		
					PIN ASSY	2	#0072 - #0457	A	
	61N8-01410-AS				PIN ASSY	2	- #0457		
	61N8-01411				PIN ASSY	2	#0458 -	B	
	61N8-01411-AS				PIN ASSY	2	#0458 -	-	
5	61N4-11120				PIN ASSY	1	- #0071		
	61N4-11121				PIN ASSY	1	#0072 -	B	
6	S391-070120				SHIM-ROUND(1.0T)	9	- #0356	-	
					SHIM-ROUND(1.0T)	7	#0357 -	A	
7	S392-070120				SHIM-ROUND(2.0T)	9	- #0356	-	
					SHIM-ROUND(2.0T)	7	#0357 -	A	
8	61N4-10700				PLATE	2			
9	S017-120252				BOLT-HEX	4	#0001 -	-	
10	S411-120002				WASHER-SPRING	4	#0001 -	-	
11	61N8-19010				PIN STOPPER	2	#0001 -	-	
12	61N8-00140				SPACER-PIN	5			
13	S017-160252				BOLT-HEX	5			

Item	Part_No	IS	Ord	T	Description	Qty	Serial_No	ITC	Remark
14	61N8-00310				WASHER-HARDENED	5			
15	S017-161602				BOLT-HEX	2	#0001 -	-	
16	S205-161002				NUT-HEX	4	#0001 -	-	
17	61N8-01420				PIN ASSY	1	#0072 - #0457	-	
	61N8-01421				PIN ASSY	1	#0458 -	B	
18	S390-070140A				SHIM-ROUND(0.5T)	2	#0935 -	-	

BOOM MOUNTING(ADJUST BOOM)

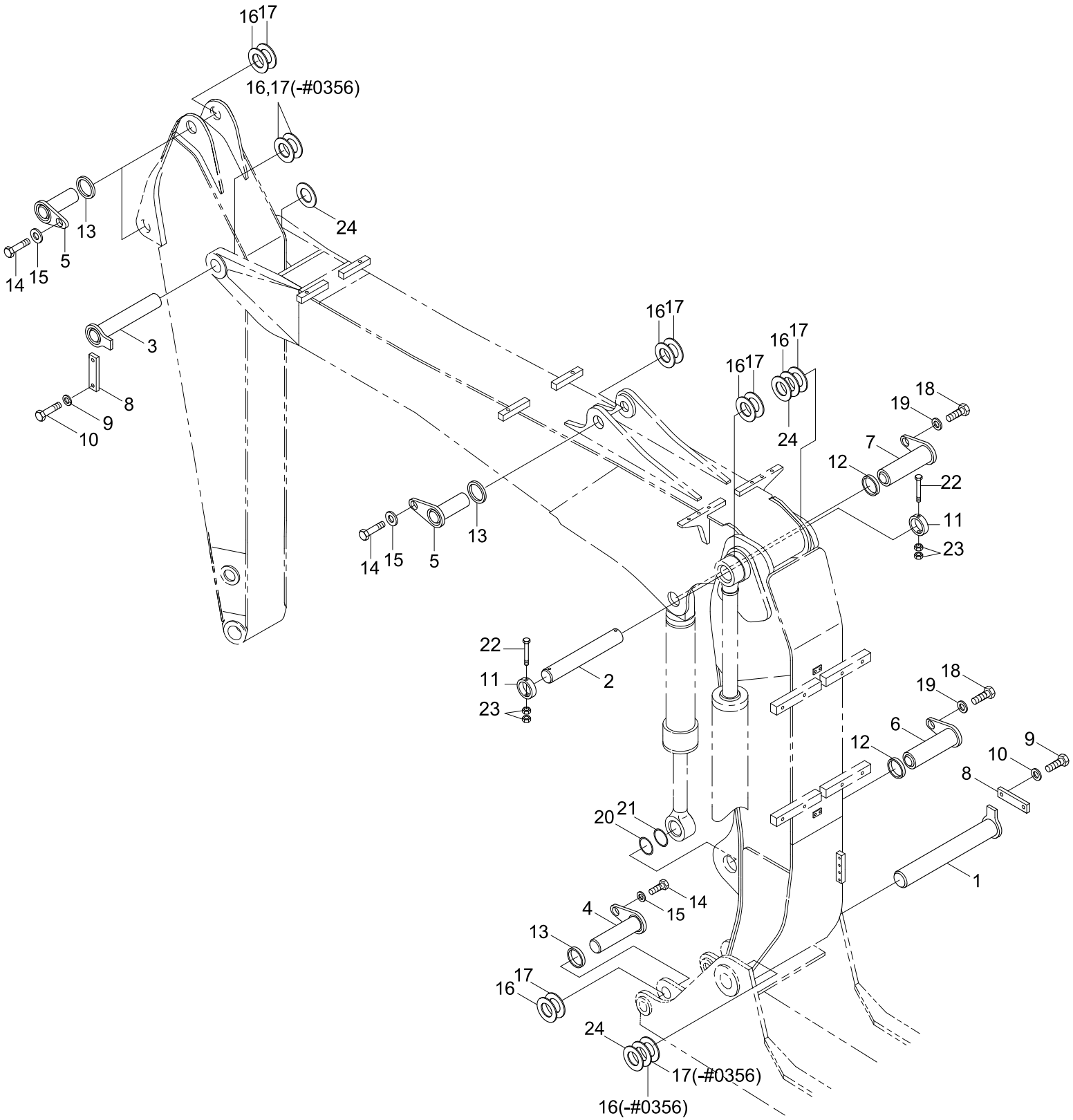

Item	Part_No	IS	Ord	T	Description	Qty	Serial_No	ITC	Remark
1	61N4-11010				PIN ASSY	1	- #0071		
	61N4-11012				PIN ASSY	1	#0072 -	B	
2	61E6-1102				PIN ASSY	1	- #0457	-	
	61E6-11021				PIN ASSY	1	#0458 -	B	
3	61N4-11120				PIN ASSY	1	- #0071		
	61N4-11121				PIN ASSY	1	#0072 -	B	
4	61N8-01400				PIN ASSY	2	- #0457		
	61N8-01401				PIN ASSY	2	#0458 -	B	
5	61N8-01410				PIN ASSY	3	- #0457		
	61N8-01410-AS				PIN ASSY	3	- #0457		
	61N8-01411				PIN ASSY	3	#0458 -	B	
	61N8-01411-AS				PIN ASSY	3	#0458 -	-	
6	61N8-04010				PIN ASSY	1	- #0457		
	61N8-04011				PIN ASSY	1	#0458 -	B	
7	61N8-04000				PIN ASSY	1	- #0457		
	61N8-04001				PIN ASSY	1	#0458 -	B	
8	61N4-10700				PLATE	2			
9	S017-120252				BOLT-HEX	4	#0001 -	-	
10	S411-120002				WASHER-SPRING	4			
11	61N8-19010				PIN STOPPER	2	#0001 -	-	
12	61N8-00090				SPACER-PIN	2			
13	61N8-00140				SPACER-PIN	5			
14	S017-160252				BOLT-HEX	5			
15	61N8-00310				WASHER-HARDENED	5			
16	S391-070120				SHIM-ROUND(1.0T)	9	- #0356		

Item	Part_No	IS	Ord	T	Description	Qty	Serial_No	ITC	Remark
16	S391-070120				SHIM-ROUND(1.0T)	7	#0357 -	A	
17	S392-070120				SHIM-ROUND(2.0T)	9	- #0356		
					SHIM-ROUND(2.0T)	7	#0357 -	A	
18	S017-200302				BOLT-HEX	2			
19	61N8-00320				WASHER-HARDENED	2			
20	S391-095160				SHIM-ROUND(1.0T)	2			
21	S392-095160				SHIM-ROUND(2.0T)	2			
22	S017-161002				BOLT-HEX	2	#0001 -	-	
23	S205-161002				NUT-HEX	4	#0001 -	-	
24	S390-070140A				SHIM-ROUND(0.5T)	3	#0935 -	-	

BOOM(4.6M, STD)

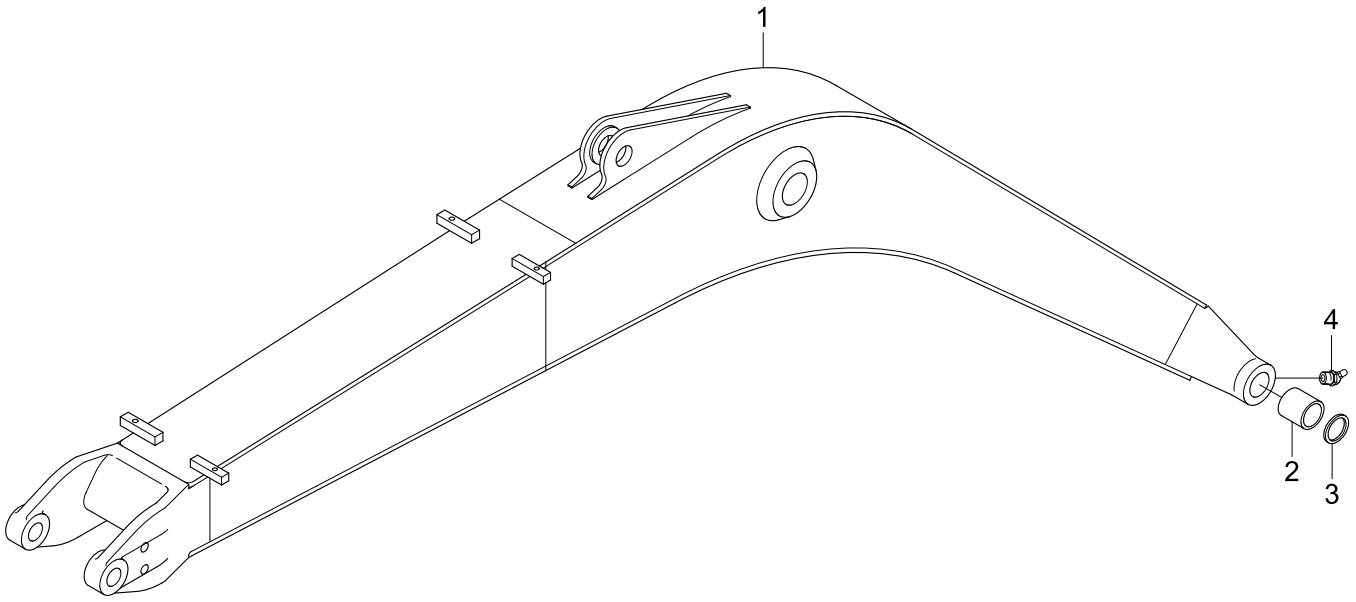

Item	Part_No	IS	Ord	T	Description	Qty	Serial_No	ITC	Remark
*	61N4-12000				BOOM ASSY	1	#0001 - #0071	-	
	61N4-12001				BOOM ASSY	1	#0072 - #0997	B	
	61N4-12002				BOOM ASSY	1	#0998 -	B	
1	61N4-12010				.BOOM WA	1	#0001 - #0071	-	
	61N4-12011				.BOOM WA	1	#0072 - #0997	B	
	61N4-12012				.BOOM WA	1	#0998 -	B	
2	61EN-12010				.BUSHING-BRONZE	2			
3	S700-070206				.DUST SEAL-DKIY TYPE	2			
4	S651-810002				.NIPPLE-GREASE	1			

BOOM(2-PIECE BOOM)

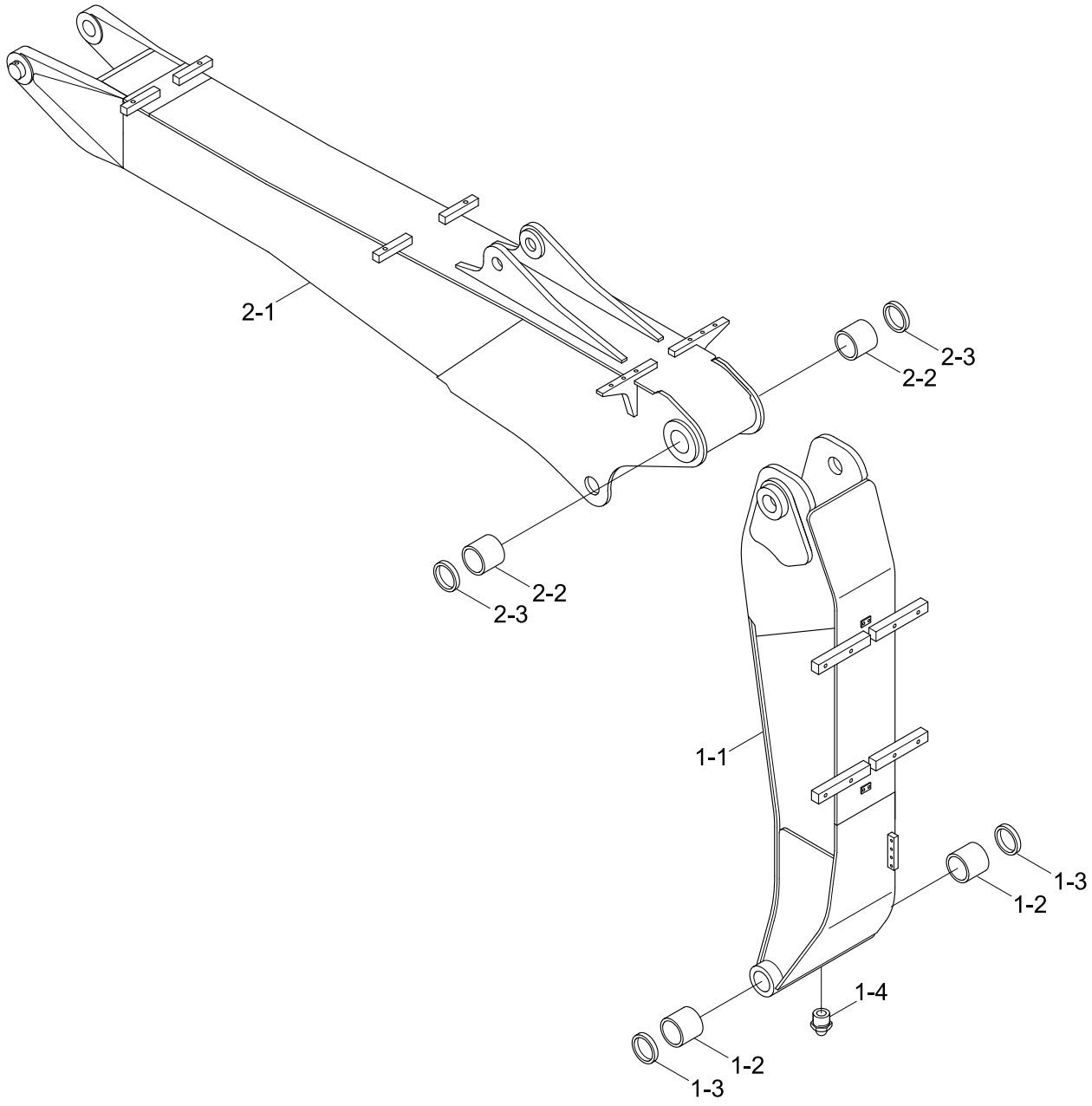

Item	Part_No	IS	Ord	T	Description	Qty	Serial_No	ITC	Remark
*	61N4-19000				BOOM ASSY(ADJUST-1ST)	1			
1-1	61N4-19010				.BOOM WA-1ST	1			
1-2	61EN-12010				.BUSHING-BRONZE	2			
1-3	S700-070206				.DUST SEAL-DKIY TYPE	2			
1-4	S651-810002				.NIPPLE-GREASE	1			
*	61N4-19500				BOOM ASSY(ADJUST-2ND)	1			
2-1	61N4-19510				.BOOM WA-2ND	1			
2-2	X122-702090				.BUSHING	2			
2-3	S700-070206				.DUST SEAL-DKIY TYPE	2			

ARM(2.1M, STD)

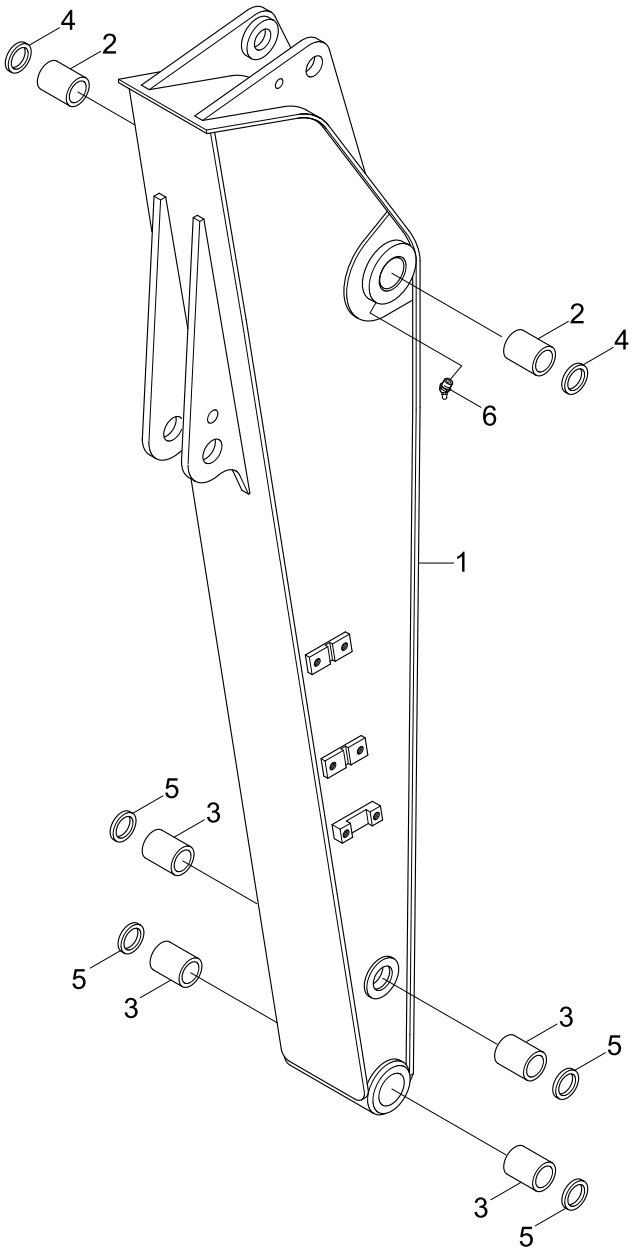

Item	Part_No	IS	Ord	T	Description	Qty	Serial_No	ITC	Remark
*	61N4-23001				ARM ASSY(2.1M)	1			
1	61N4-23011				.ARM WA	1			
2	61EN-12300				.BUSHING-BRONZE	2			
3	61EN-13300				.BUSHING	4			
4	S700-070206				.DUST SEAL	2			
5	S700-065206				.DUST SEAL-DKIY TYPE	4			
6	S651-810002				.NIPPLE-GREASE	1			

ARM(3.0M)

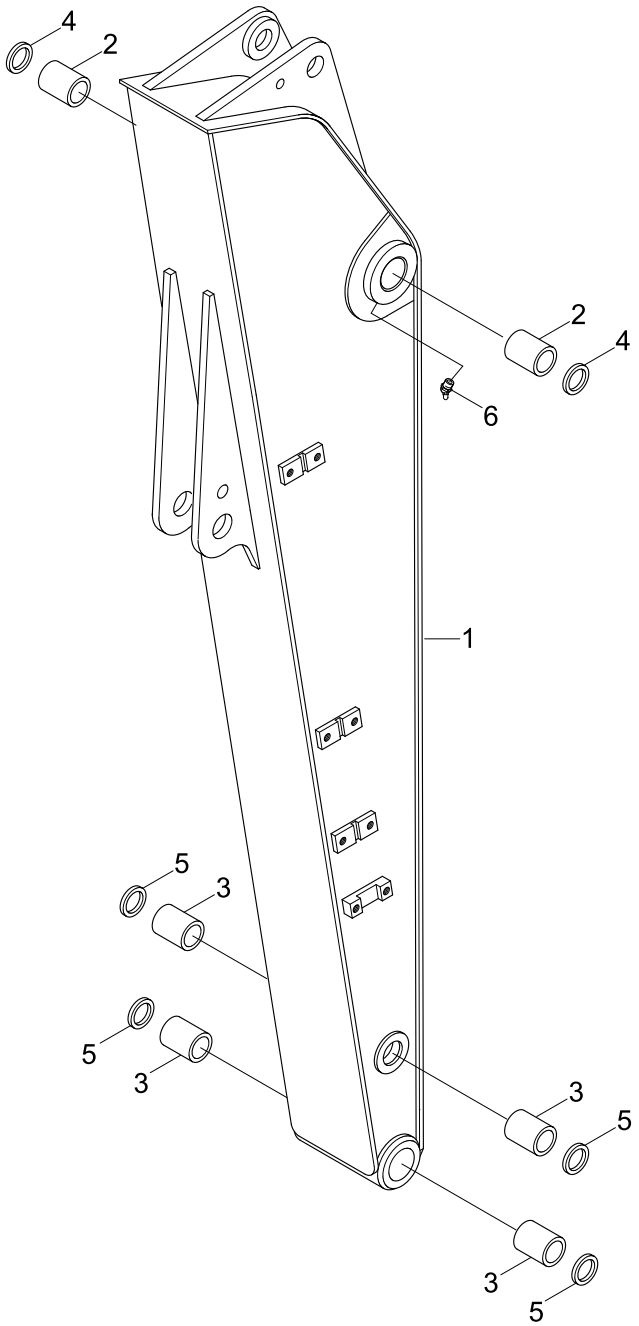

Item	Part_No	IS	Ord	T	Description	Qty	Serial_No	ITC	Remark
*	61N4-24001				ARM ASSY(3.0M)	1			
1	61N4-24011				.ARM WA	1			
2	61EN-12300				.BUSHING-BRONZE	2			
3	61EN-13300				.BUSHING	4			
4	S700-070206				.DUST SEAL	2			
5	S700-065206				.DUST SEAL-DKIY TYPE	4			
6	S651-810002				.NIPPLE-GREASE	1			

ARM(2.5M)

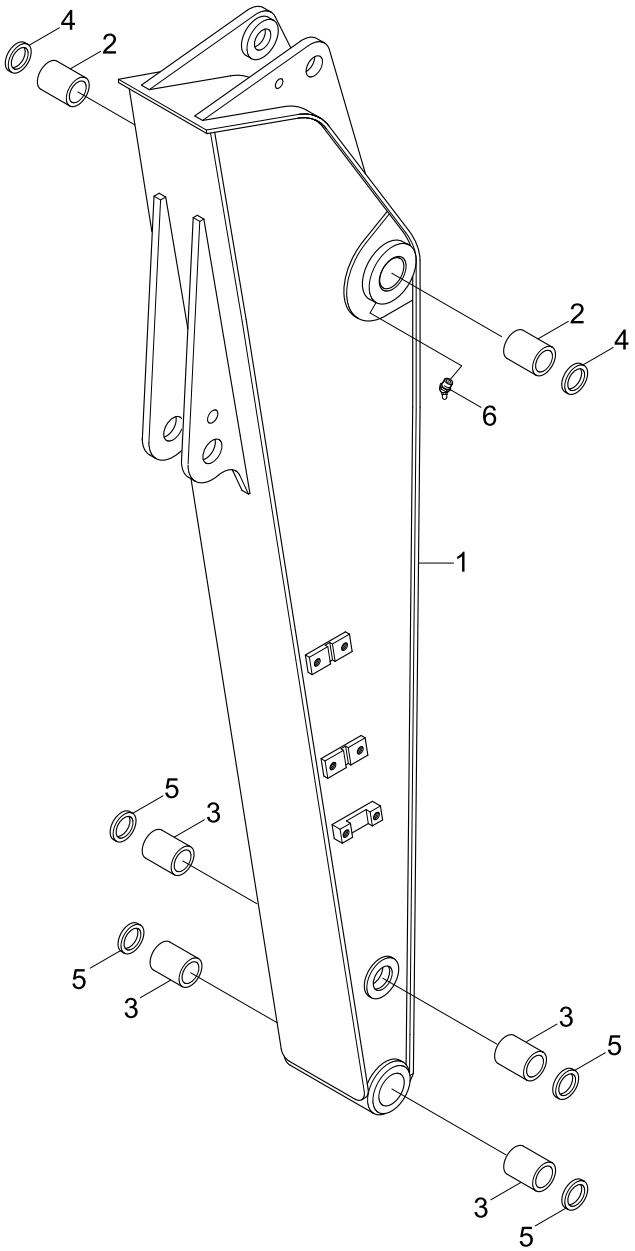

Item	Part_No	IS	Ord	T	Description	Qty	Serial_No	ITC	Remark
*	61N4-20002				ARM ASSY(2.5M)	1			
1	61N4-20011				.ARM WA	1			
2	61EN-12300				.BUSHING-BRONZE	2			
3	61EN-13300				.BUSHING	4			
4	S700-070206				.DUST SEAL	2			
5	S700-065206				.DUST SEAL-DKIY TYPE	4			
6	S651-810002				.NIPPLE-GREASE	1			

ARM(1.9M)

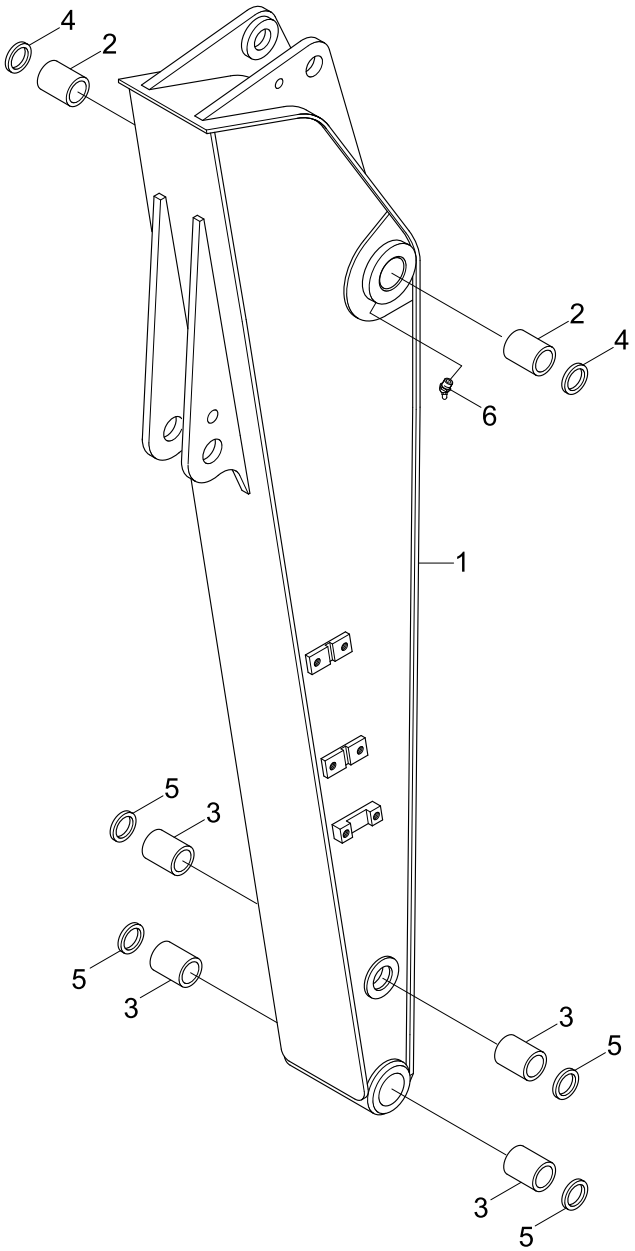

Item	Part_No	IS	Ord	T	Description	Qty	Serial_No	ITC	Remark
*	61N4-22001				ARM ASSY(1.9M)	1			
1	61N4-22011				.ARM WA	1			
2	61EN-12300				.BUSHING-BRONZE	2			
3	61EN-13300				.BUSHING	4			
4	S700-070206				.DUST SEAL	2			
5	S700-065206				.DUST SEAL-DKIY TYPE	4			
6	S651-810002				.NIPPLE-GREASE	1			

BUCKET CONTROL GROUP

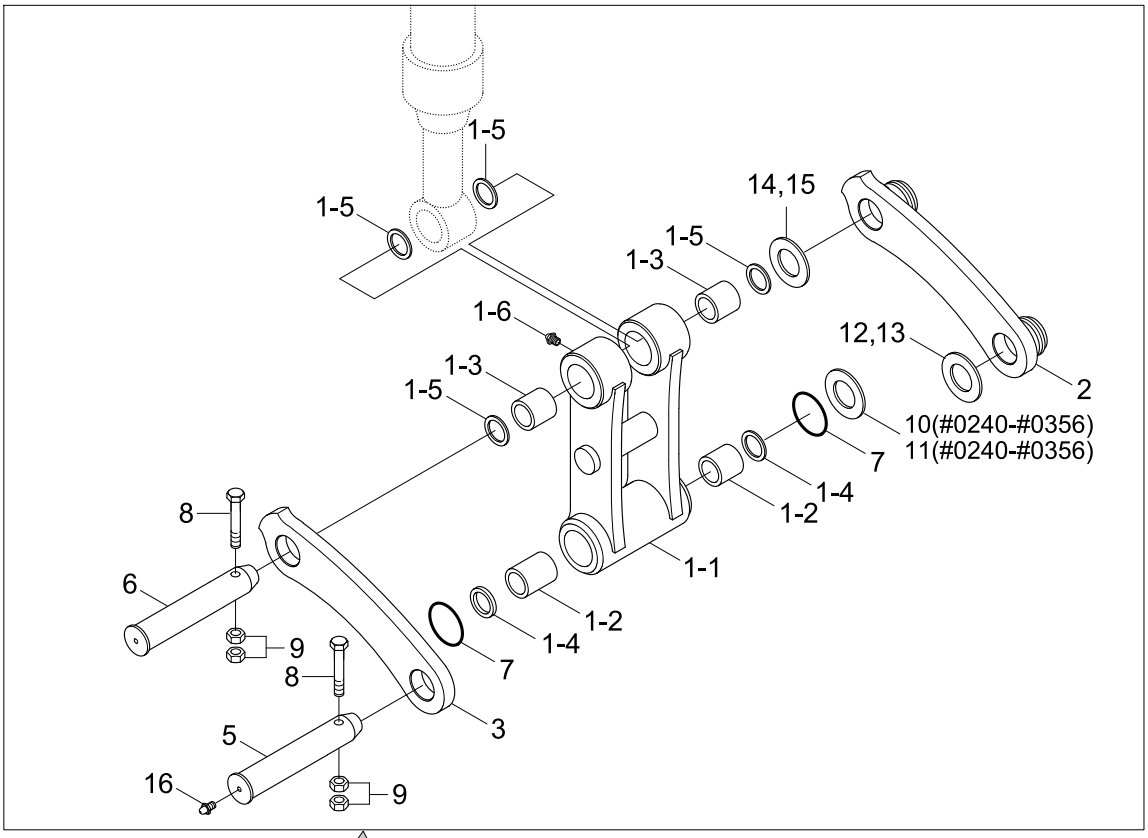

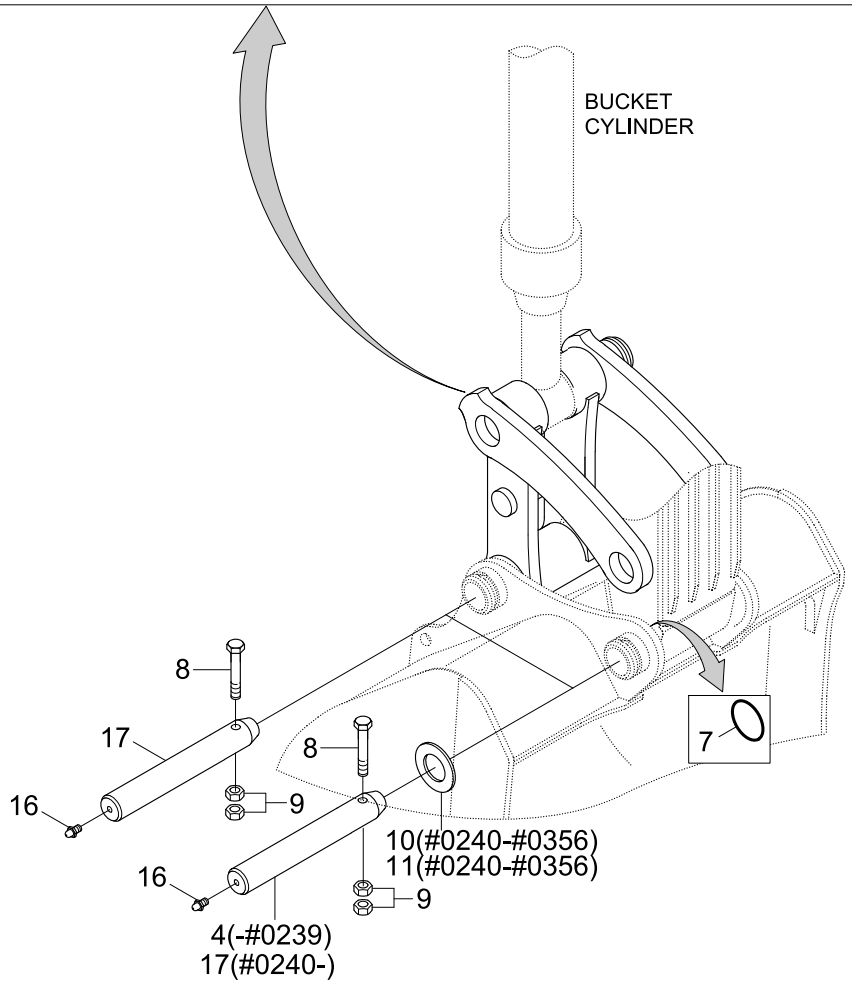

Item	Part_No	IS	Ord	T	Description	Qty	Serial_No	ITC	Remark
1	61N4-40011				CONTROL ROD ASSY	1			
1-1	61N4-40101				.CONTROL ROD WA	1			
1-2	61EN-13300				.BUSHING	2			
1-3	61E6-1128	20			.BUSHING	2			
1-4	S700-065206				.DUST SEAL-DKIY TYPE	2			
1-5	S700-070206				.SEAL-DUST	4			
1-6	S651-810002				.NIPPLE-GREASE	2			
2	61N4-40021				CONTROL LINK-RH	1			
3	61N4-40030				CONTROL LINK-LH	1			
4	61E3-1108	40			PIN-ATTACH	1	- #0071		
	61E3-11081				PIN-ATTACH	1	#0072 - #0239	B	
5	61N4-11090				PIN-ATTACH	1	- #0457		
	61N4-11091				PIN	1	#0458 -	B	
6	61N4-11100				PIN	1	- #0457		
	61N4-11100-AS				PIN	1	- #0457		
	61N4-11101				PIN	1	#0458 -	B	
	61N4-11101-AS				PIN	1	#0458 -	-	
7	E161-3052	10			O-RING	4			
8	S017-101302				BOLT-HEX	4			
9	S205-161002				NUT-HEX	8			
10	S391-065110				SHIM-ROUND(1.0T)	1	- #0239		
					SHIM-ROUND(1.0T)	2	#0240 - #0356	A	
11	S392-065110				SHIM-ROUND(2.0T)	1	- #0239		
					SHIM-ROUND(2.0T)	2	#0240 - #0356	A	
12	S391-065120				SHIM-ROUND(1.0T)	1			

Item	Part_No	IS	Ord	T	Description	Qty	Serial_No	ITC	Remark
13	S392-065120				SHIM-ROUND(2.0T)	1			
14	S391-070120				SHIM-ROUND(1.0T)	1			
15	S392-070120				SHIM-ROUND(2.0T)	1			
16	S651-810002				NIPPLE-GREASE	3			
17	61E3-12060				PIN	1	- #0071		
	61E3-12061				PIN	1	#0072 - #0239	B	
					PIN	2	#0240 -	A	

BUCKET(0.58m^3 SAE HEAPED, STD)

SERIAL NO : -#0239

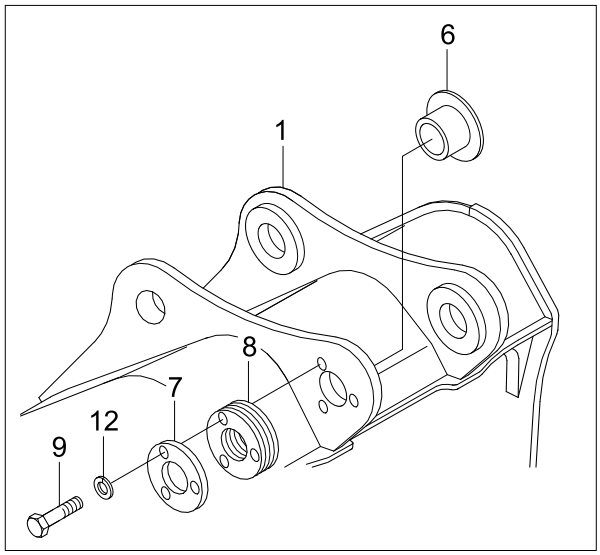

SERIAL NO : -#0556

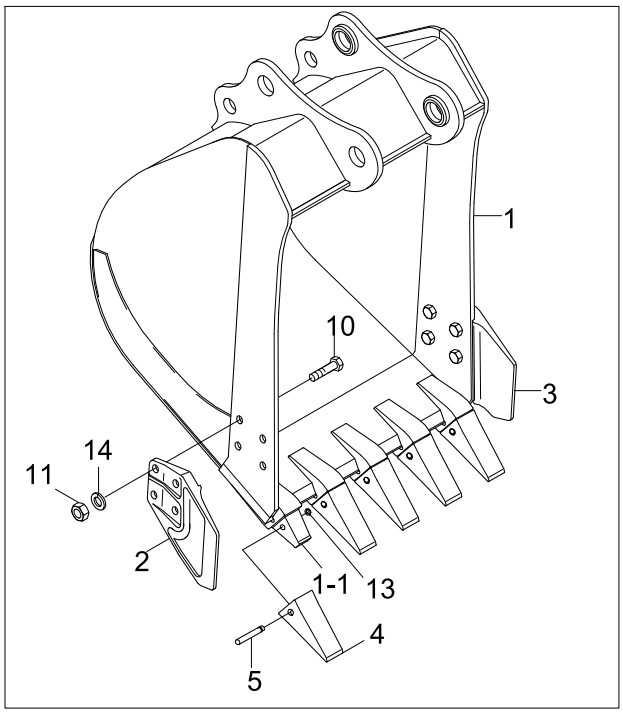

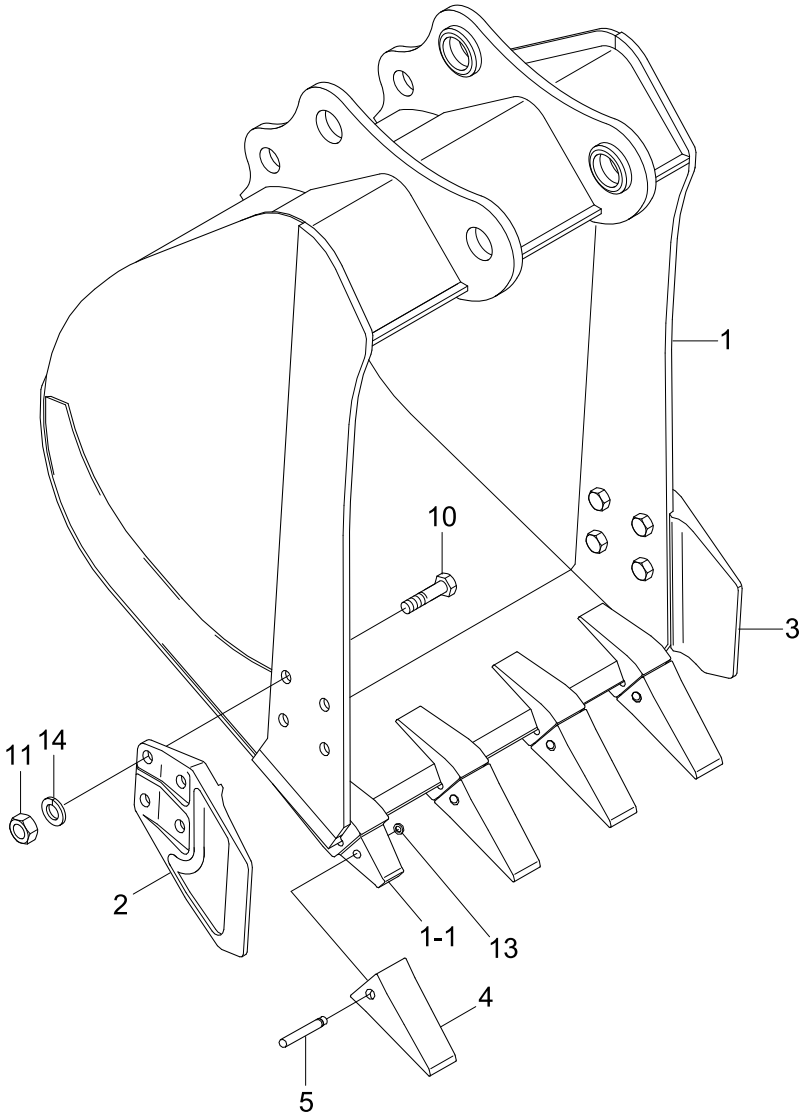

Item	Part_No	IS	Ord	T	Description	Qty	Serial_No	ITC	Remark
*	61N4-31000				BUCKET ASSY	1	- #0239		
	61N4-31001				BUCKET ASSY	1	#0240 - #0556	B	
	61N4-31002				BUCKET ASSY	1	#0557 - #0614	A	
	66N4-31000				BUCKET ASSY	1	#0615 -	D	
1	61N4-31010				.BUCKET WA	1	- #0239		
	61N4-31011				.BUCKET WA	1	#0240 - #0556	D	
	61N4-31012				.BUCKET WA	1	#0557 - #0614	D	
	66N4-31010				.BUCKET WA	1	#0615 -	D	
1-1	E161-3017	10			..ADAPTER-TOOTH	5	- #0556		
	61N4-31200				..ADAPTOR-TOOTH	4	#0557 - #0614	D	
					..ADAPTOR-TOOTH	5	#0620 -	D	
					..ADAPTOR-TOOTH	5	#0615 -	D	
2	61E3-3033	20			.SIDE CUTTER-LH	1	- #0614		
	61E3-3033BG	20			.SIDE CUTTER-LH	1	#0615 -	D	
3	61E3-3034	20			.SIDE CUTTER-RH	1	- #0614		
	61E3-3034BG	20			.SIDE CUTTER-RH	1	#0615 -	D	
4	E161-3027	10			.POINT-TOOTH	5	- #0556		
	61N4-31210				.POINT-TOOTH	4	#0557 - #0614	D	
	61N4-31210BG				.POINT-TOOTH	4	#0615 -	D	
k5	E161-3035	20			.PIN-TOOTH	5	- #0556		
5	66N4-30350				.PIN-TOOTH	4	#0557 - #0614	D	
					.PIN-TOOTH	5	#0615 -	D	
6	61E3-1126	20			.BUSHING	1	- #0239	-	
7	61E3-3036	10			.PLATE-COVER	1	- #0239	-	
8	61E3-3041	10			.SHIM(1.0T)	5	- #0239	-	

Item	Part_No	IS	Ord	T	Description	Qty	Serial_No	ITC	Remark
9	S017-160452				.BOLT-HEX	3	- #0239	-	
10	S017-20055D				.BOLT-HEX	8	#0001 -	-	
11	S205-20100B				.NUT-HEX	8			
12	S403-162002				.WASHER-PLAIN	3	- #0239	-	
k13	61E5-11150				.WASHER-LOCK	5	- #0556		
13	66N4-11150				.WASHER-LOCK	4	#0557 - #0619	D	
					.WASHER-LOCK	5	#0620 - #0630	D	
	61E5-11150				.WASHER-LOCK	5	#0631 -	D	
14	S411-200002				.WASHER-SPRING	8			
K	E161-3035-S				TOOTH PIN KIT	1	#0001 - #0556	-	INCL 5, 13

BUCKET(0.23m^3 SAE HEAPED)

SERIAL NO : -#0239

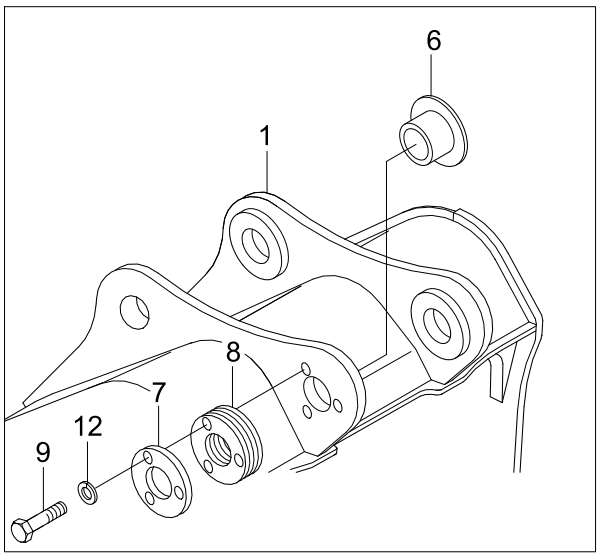

SERIAL NO : -#0556

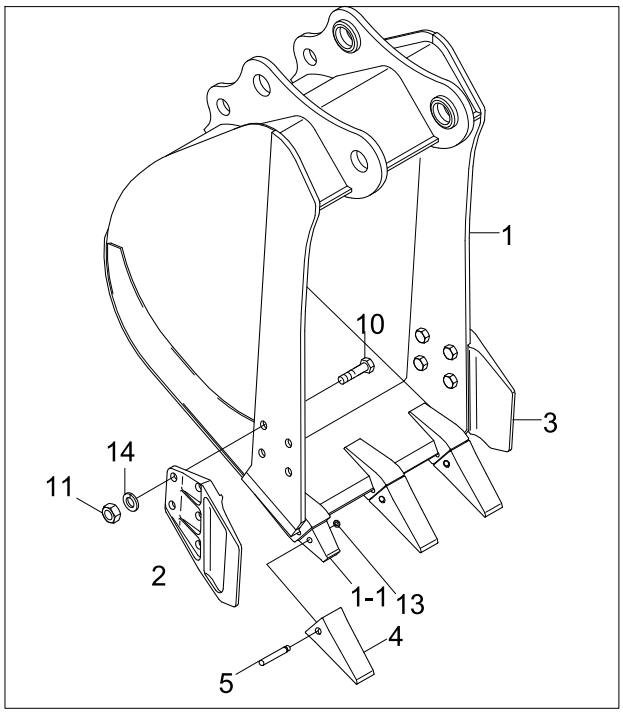

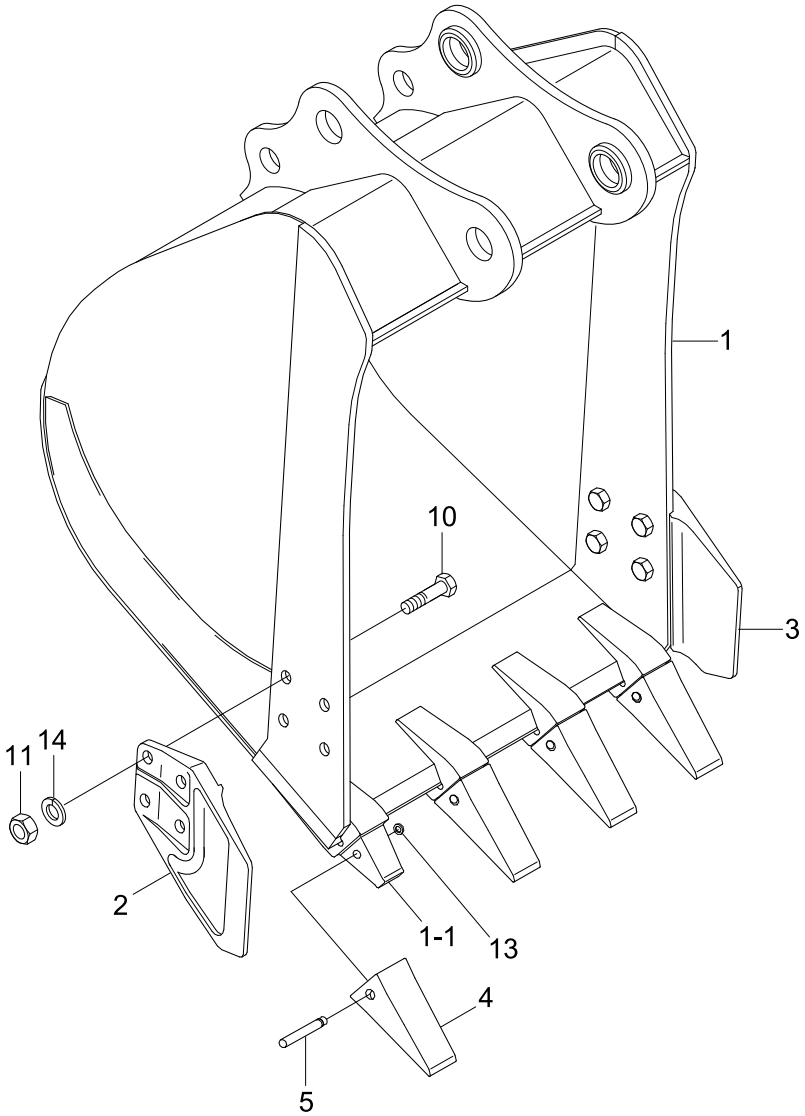

Item	Part_No	IS	Ord	T	Description	Qty	Serial_No	ITC	Remark
*	61N4-32000				BUCKET ASSY	1	- #0239		
	61N4-32001				BUCKET ASSY	1	#0240 - #0556	B	
	61N4-32002				BUCKET ASSY	1	#0557 - #0614	A	
	66N4-32000				BUCKET ASSY	1	#0615 -	D	
1	61N4-32010				.BUCKET WA	1	- #0239		
	61N4-32011				.BUCKET WA	1	#0240 - #0556	D	
	61N4-32012				.BUCKET WA	1	#0557 - #0614	D	
	66N4-32010				.BUCKET WA	1	#0615 -	D	
1-1	E161-3017	10			..ADAPTER-TOOTH	3	- #0556		
	61N4-31200				..ADAPTOR-TOOTH	4	#0557 - #0614	D	
					..ADAPTOR-TOOTH	3	#0615 -	D	
2	61E3-3033	20			.SIDE CUTTER-LH	1	- #0614		
	61E3-3033BG	20			.SIDE CUTTER-LH	1	#0615 -	D	
3	61E3-3034	20			.SIDE CUTTER-RH	1	- #0614		
	61E3-3034BG	20			.SIDE CUTTER-RH	1	#0615 -	D	
4	E161-3027	10			.POINT-TOOTH	3	- #0556		
	61N4-31210				.POINT-TOOTH	4	#0557 - #0614	D	
	61N4-31210BG				.POINT-TOOTH	4	#0615 -	D	
k5	E161-3035	20			.PIN-TOOTH	3	- #0556		
5	66N4-30350				.PIN-TOOTH	4	#0557 - #0614	D	
					.PIN-TOOTH	3	#0615 -	D	
6	61E3-1126	20			.BUSHING	1	- #0239	-	
7	61E3-3036	10			.PLATE-COVER	1	- #0239	-	
8	61E3-3041	10			.SHIM(1.0T)	5	- #0239	-	
9	S017-160452				.BOLT-HEX	3	- #0239	-	

Item	Part_No	IS	Ord	T	Description	Qty	Serial_No	ITC	Remark
10	S017-200552				.BOLT-HEX	8	#0001 -	-	
11	S205-201002				.NUT-HEX	8			
12	S403-162002				.WASHER-PLAIN	3	- #0239	-	
k13	61E5-11150				.WASHER-LOCK	3	- #0556		
13	66N4-11150				.WASHER-LOCK	4	#0557 - #0614	D	
					.WASHER-LOCK	3	#0615 - #0630	D	
	61E5-11150				.WASHER-LOCK	3	#0631 -	D	
14	S411-200002				.WASHER-SPRING	8			
K	E161-3035-S				TOOTH PIN KIT	1	#0001 - #0556	-	INCL 5, 13

BUCKET(0.40m^3 SAE HEAPED)

SERIAL NO : -#0239

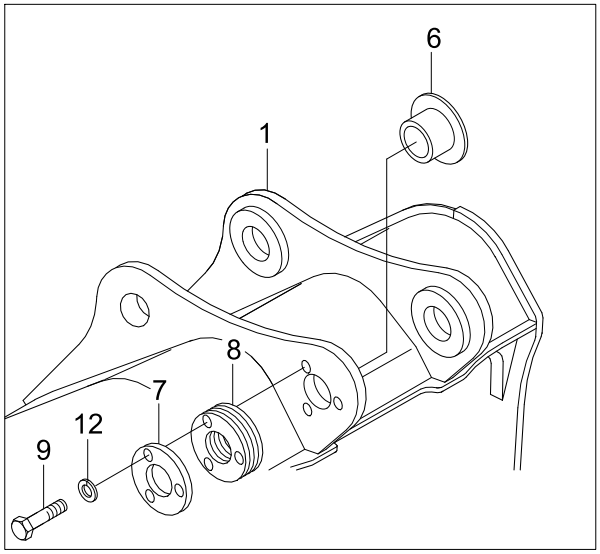

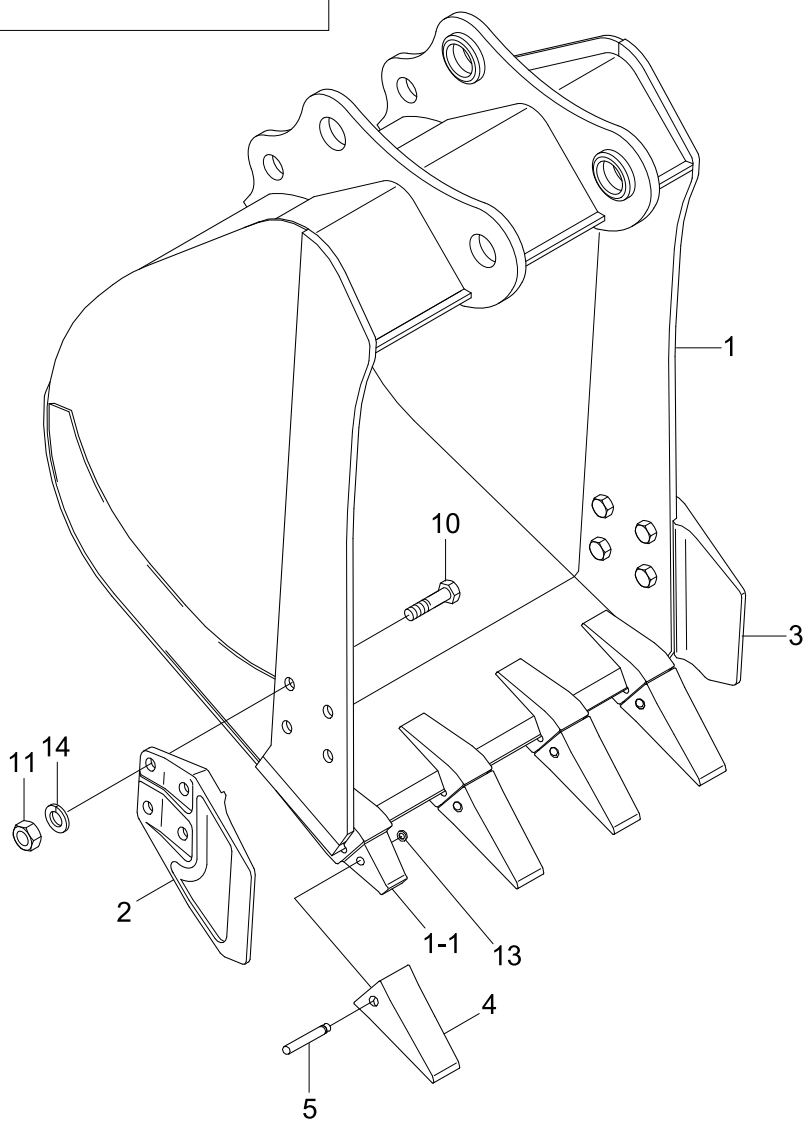

Item	Part_No	IS	Ord	T	Description	Qty	Serial_No	ITC	Remark
*	61N4-33000				BUCKET ASSY	1	- #0239		
	61N4-33001				BUCKET ASSY	1	#0240 - #0556	B	
	61N4-33002				BUCKET ASSY	1	#0557 - #0614	A	
	66N4-33000				BUCKET ASSY	1	#0615 -	D	
1	61N4-33010				.BUCKET WA	1	- #0239		
	61N4-33011				.BUCKET WA	1	#0240 - #0556	D	
	61N4-33012				.BUCKET WA	1	#0557 - #0614	D	
	66N4-33010				.BUCKET WA	1	#0615 -	D	
1-1	E161-3017	10			..ADAPTER-TOOTH	4	- #0556		
	61N4-31200				..ADAPTOR-TOOTH	4	#0557 -	D	
2	61E3-3033	20			.SIDE CUTTER-LH	1	- #0614		
	61E3-3033BG	20			.SIDE CUTTER-LH	1	#0615 -	D	
3	61E3-3034	20			.SIDE CUTTER-RH	1	- #0614		
	61E3-3034BG	20			.SIDE CUTTER-RH	1	#0615 -	D	
4	E161-3027	10			.POINT-TOOTH	4	- #0556		
	61N4-31210				.POINT-TOOTH	4	#0557 - #0614	D	
	61N4-31210BG				.POINT-TOOTH	4	#0615 -	D	
k5	E161-3035	20			.PIN-TOOTH	4	- #0556		
5	66N4-30350				.PIN-TOOTH	4	#0557 -	D	
6	61E3-1126	20			.BUSHING	1	- #0239	-	
7	61E3-3036	10			.PLATE-COVER	1	- #0239	-	
8	61E3-3041	10			.SHIM(1.0T)	5	- #0239	-	
9	S017-160452				.BOLT-HEX	3	- #0239	-	
10	S017-200552				.BOLT-HEX	8	#0001 -	-	
11	S205-201002				.NUT-HEX	8			

Item	Part_No	IS	Ord	T	Description	Qty	Serial_No	ITC	Remark
12	S403-162002				.WASHER-PLAIN	3	- #0239	-	
k13	61E5-11150				.WASHER-LOCK	4	- #0556		
13	66N4-11150				.WASHER-LOCK	4	#0557 - #0630	D	
	61E5-11150				.WASHER-LOCK	4	#0631 -	D	
14	S411-200002				.WASHER-SPRING	8			
K	E161-3035-S				TOOTH PIN KIT	1	#0001 -	-	INCL 5, 13

BUCKET(0.46m^3 SAE HEAPED)

SERIAL NO : -#0239

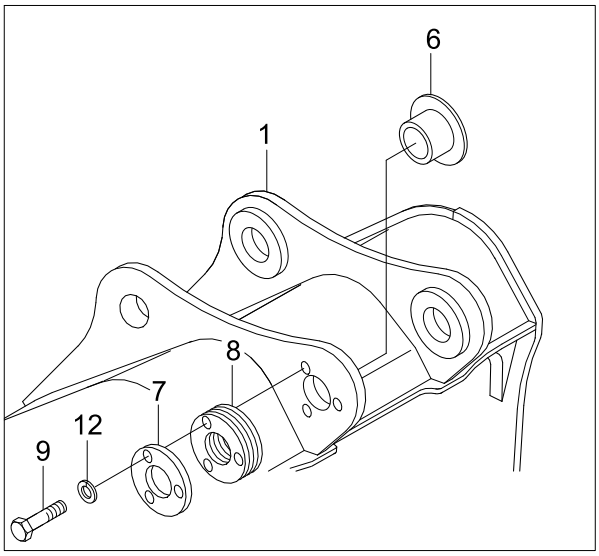

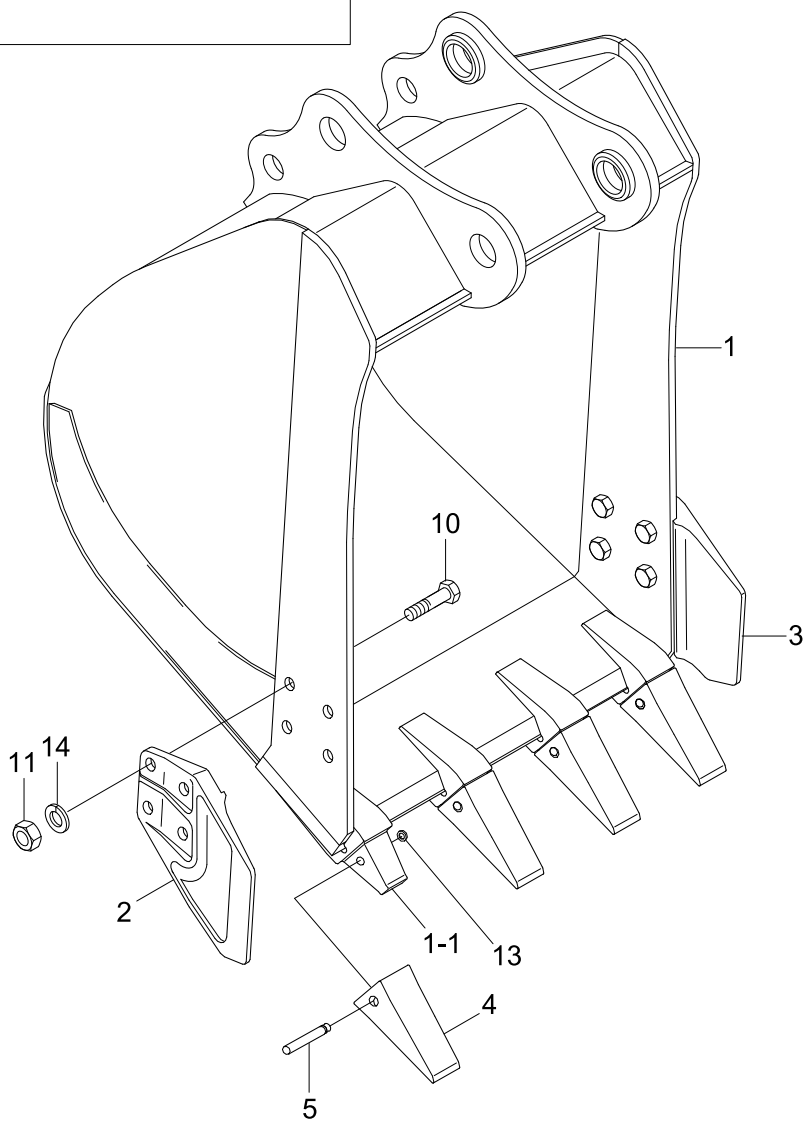

Item	Part_No	IS	Ord	T	Description	Qty	Serial_No	ITC	Remark
*	61N4-34000				BUCKET ASSY	1	- #0239		
	61N4-34001				BUCKET ASSY	1	#0240 - #0556	D	
	61N4-34002				BUCKET ASSY	1	#0557 - #0614	A	
	66N4-34000				BUCKET ASSY	1	#0615 -	D	
1	61N4-34010				.BUCKET WA	1	- #0239		
	61N4-34011				.BUCKET WA	1	#0240 - #0556	D	
	61N4-34012				.BUCKET WA	1	#0557 - #0614	D	
	66N4-34010				.BUCKET WA	1	#0615 -	D	
1-1	E161-3017	10			..ADAPTER-TOOTH	4	- #0556		
	61N4-31200				..ADAPTOR-TOOTH	4	#0557 -	D	
2	61E3-3033	20			.SIDE CUTTER-LH	1	- #0614		
	61E3-3033BG	20			.SIDE CUTTER-LH	1	#0615 -	D	
3	61E3-3034	20			.SIDE CUTTER-RH	1	- #0614		
	61E3-3034BG	20			.SIDE CUTTER-RH	1	#0615 -	D	
4	E161-3027	10			.POINT-TOOTH	4	- #0556		
	61N4-31210				.POINT-TOOTH	4	#0557 - #0614	D	
	61N4-31210BG				.POINT-TOOTH	4	#0615 -	D	
k5	E161-3035	20			.PIN-TOOTH	4	- #0556		
5	66N4-30350				.PIN-TOOTH	4	#0557 -	D	
6	61E3-1126	20			.BUSHING	1	- #0239	-	
7	61E3-3036	10			.PLATE-COVER	1	- #0239	-	
8	61E3-3041	10			.SHIM(1.0T)	5	- #0239	-	
9	S017-160452				.BOLT-HEX	3	- #0239	-	
10	S017-200552				.BOLT-HEX	8	#0001 -	-	
11	S205-201002				.NUT-HEX	8			

Item	Part_No	IS	Ord	T	Description	Qty	Serial_No	ITC	Remark
12	S403-162002				.WASHER-PLAIN	3	- #0239	-	
k13	61E5-11150				.WASHER-LOCK	4	- #0556		
13	66N4-11150				.WASHER-LOCK	4	#0557 - #0630	D	
	61E5-11150				.WASHER-LOCK	4	#0631 -	D	
14	S411-200002				.WASHER-SPRING	8			
K	E161-3035-S				TOOTH PIN KIT	1	#0001 - #0556	-	INCL 5, 13

Item	Part_No	IS	Ord	T	Description	Qty	Serial_No	ITC	Remark
*	61N4-35000				BUCKET ASSY	1	- #0239		
	61N4-35001				BUCKET ASSY	1	#0240 - #0556	B	
	61N4-35002				BUCKET ASSY	1	#0557 - #0614	A	
	66N4-35000				BUCKET ASSY	1	#0615 -	D	
1	61N4-35010				.BUCKET WA	1	- #0239		
	61N4-35011				.BUCKET WA	1	#0240 - #0556	D	
	61N4-35012				.BUCKET WA	1	#0557 - #0614	D	
	66N4-35010				.BUCKET WA	1	#0615 -	D	
1-1	E161-3017	10			..ADAPTER-TOOTH	5	- #0556		
	61N4-31200				..ADAPTOR-TOOTH	4	#0557 - #0614	D	
					..ADAPTOR-TOOTH	5	#0615 -	A	
2	61E3-3033	20			.SIDE CUTTER-LH	1	- #0614		
	61E3-3033BG	20			.SIDE CUTTER-LH	1	#0615 -	D	
3	61E3-3034	20			.SIDE CUTTER-RH	1	- #0614		
	61E3-3034BG	20			.SIDE CUTTER-RH	1	#0615 -	D	
4	E161-3027	10			.POINT-TOOTH	5	- #0556		
	61N4-31210				.POINT-TOOTH	4	#0557 - #0614	D	
	61N4-31210BG				.POINT-TOOTH	5	#0615 -	D	
k5	E161-3035	20			.PIN-TOOTH	5	- #0556		
5	66N4-30350				.PIN-TOOTH	4	#0557 - #0614	D	
					.PIN-TOOTH	5	#0615 -	A	
6	61E3-1126	20			.BUSHING	1	- #0239	-	
7	61E3-3036	10			.PLATE-COVER	1	- #0239	-	
8	61E3-3041	10			.SHIM(1.0T)	5	- #0239	-	
9	S017-160452				.BOLT-HEX	3	- #0239	-	

Item	Part_No	IS	Ord	T	Description	Qty	Serial_No	ITC	Remark
10	S017-20050D				.BOLT-HEX	8	#0001 - #0614	-	
	S017-20055D				.BOLT-HEX	8	#0615 -	D	
11	S205-201002				.NUT-HEX	8			
12	S403-162002				.WASHER-PLAIN	3	- #0239	-	
k13	61E5-11150				.WASHER-LOCK	5	- #0556		
13	66N4-11150				.WASHER-LOCK	4	#0557 - #0614	D	
	61E5-11150				.WASHER-LOCK	4	#0631 -	D	
	66N4-11150				.WASHER-LOCK	5	#0615 - #0630	A	
	61E5-11150				.WASHER-LOCK	5	#0631 -	D	
14	S411-200002				.WASHER-SPRING	8			
K	E161-3035-S				TOOTH PIN KIT	1	#0001 - #0556	-	INCL 5, 13

BUCKET(0.65m^3 SAE HEAPED)

SERIAL NO : -#0239

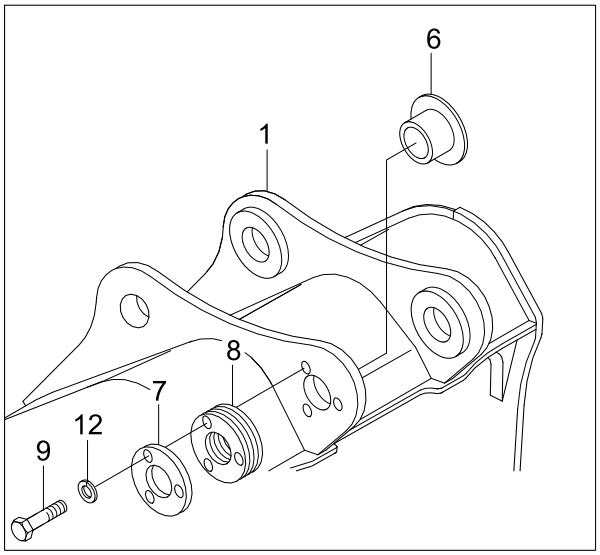

SERIAL NO : -#0556

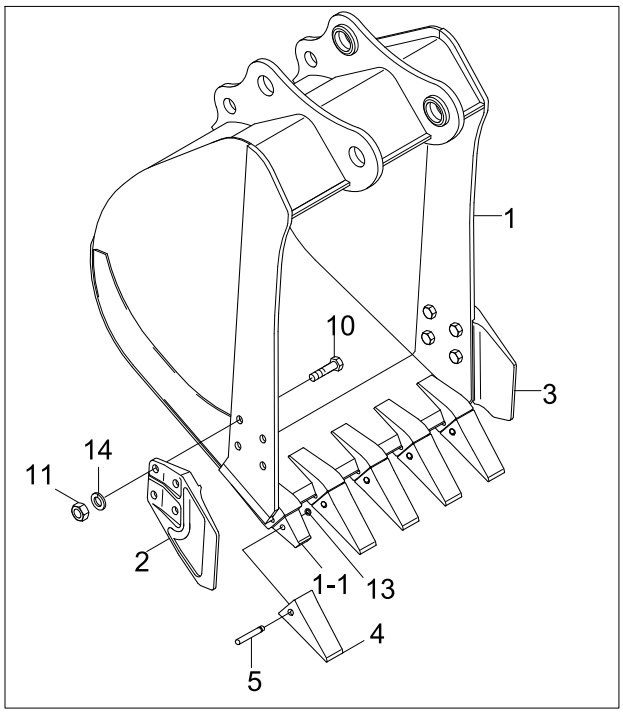

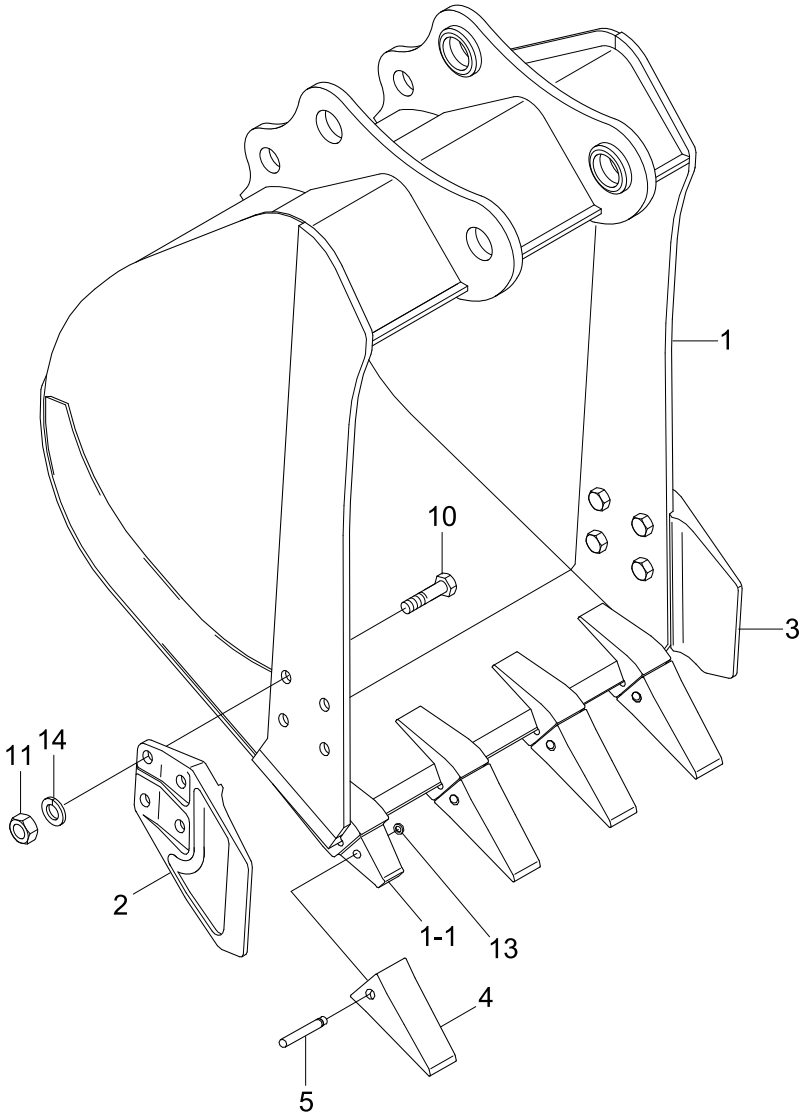

Item	Part_No	IS	Ord	T	Description	Qty	Serial_No	ITC	Remark
*	61N4-36000				BUCKET ASSY	1	- #0239		
	61N4-36001				BUCKET ASSY	1	#0240 - #0556	B	
	61N4-36002				BUCKET ASSY	1	#0557 - #0614	A	
	66N4-36000				BUCKET ASSY	1	#0615 -	D	
1	61N4-36010				.BUCKET WA	1	- #0239		
	61N4-36011				.BUCKET WA	1	#0240 - #0556	D	
	61N4-36012				.BUCKET WA	1	#0557 - #0614	D	
	66N4-36010				.BUCKET WA	1	#0615 -	D	
1-1	E161-3017	10			..ADAPTER-TOOTH	5	- #0556		
	61N4-31200				..ADAPTOR-TOOTH	4	#0557 - #0614	D	
					..ADAPTOR-TOOTH	5	#0615 -	A	
2	61E3-3033	20			.SIDE CUTTER-LH	1	- #0614		
	61E3-3033BG	20			.SIDE CUTTER-LH	1	#0615 -	D	
3	61E3-3034	20			.SIDE CUTTER-RH	1	- #0614		
	61E3-3034BG	20			.SIDE CUTTER-RH	1	#0615 -	D	
4	E161-3027	10			.POINT-TOOTH	5	- #0556		
	61N4-31210				.POINT-TOOTH	4	#0557 - #0614	D	
	61N4-31210BG				.POINT-TOOTH	5	#0615 -	D	
k5	E161-3035	20			.PIN-TOOTH	5	- #0556		
5	66N4-30350				.PIN-TOOTH	4	#0557 - #0614	D	
					.PIN-TOOTH	5	#0615 -	A	
6	61E3-1126	20			.BUSHING	1	- #0239	-	
7	61E3-3036	10			.PLATE-COVER	1	- #0239	-	
8	61E3-3041	10			.SHIM(1.0T)	5	- #0239	-	
9	S017-160452				.BOLT-HEX	3	- #0239	-	

Item	Part_No	IS	Ord	T	Description	Qty	Serial_No	ITC	Remark
10	S017-200552				.BOLT-HEX	8	#0001 -	-	
11	S205-201002				.NUT-HEX	8			
12	S403-162002				.WASHER-PLAIN	3	- #0239	-	
k13	61E5-11150				.WASHER-LOCK	5	- #0556		
13	66N4-11150				.WASHER-LOCK	4	#0557 - #0614	D	
	61E5-11150				.WASHER-LOCK	4	#0631 -	D	
	66N4-11150				.WASHER-LOCK	5	#0615 - #0630	A	
	61E5-11150				.WASHER-LOCK	5	#0629 -	D	
14	S411-200002				.WASHER-SPRING	8			
K	E161-3035-S				TOOTH PIN KIT	1	#0001 - #0556	-	INCL 5, 13

BUCKET(0.71m^3 SAE HEAPED)

SERIAL NO : -#0556

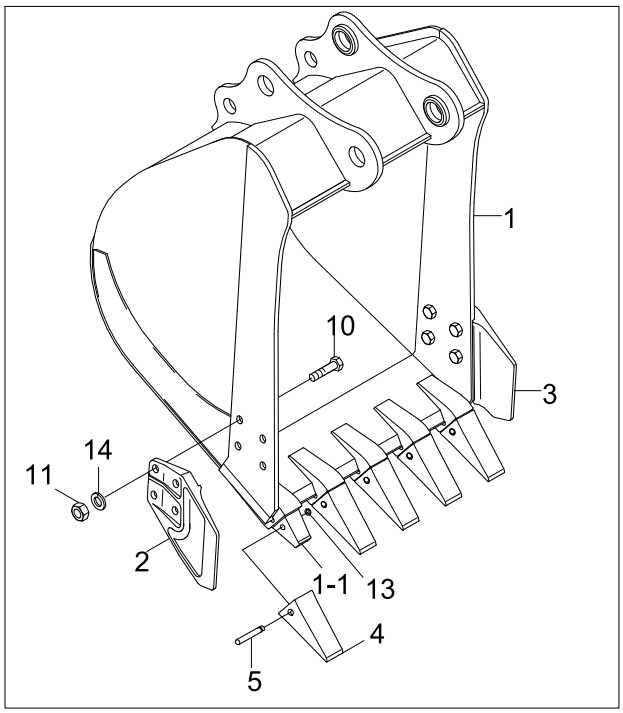

SERIAL NO : -#0239

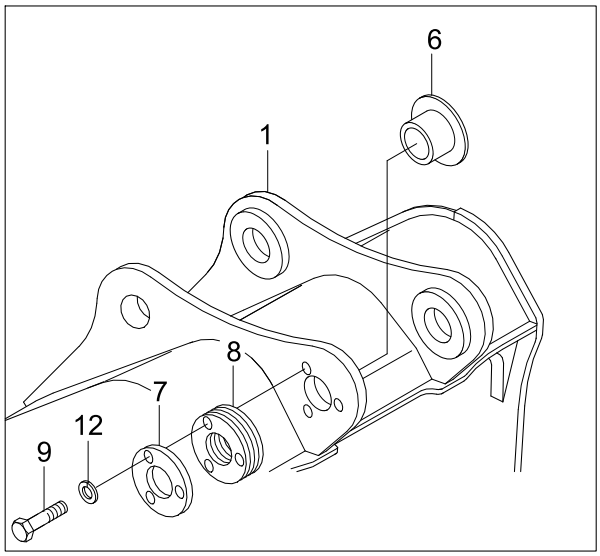

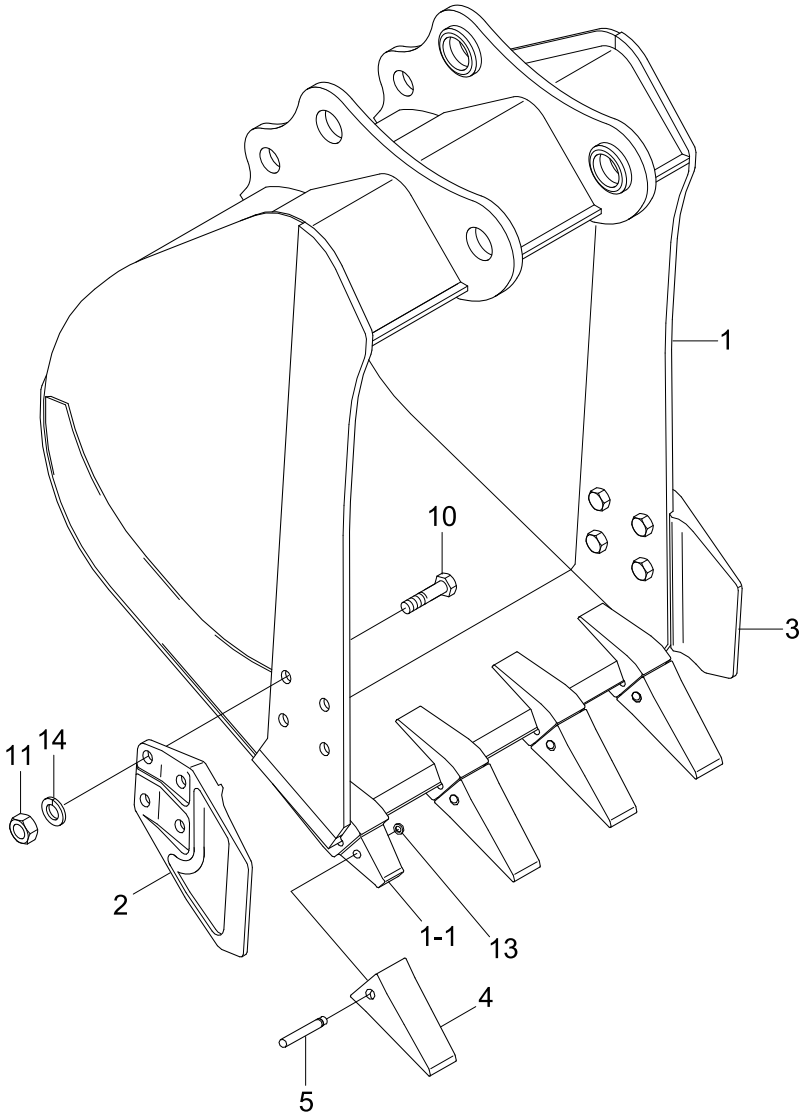

Item	Part_No	IS	Ord	T	Description	Qty	Serial_No	ITC	Remark
*	61N4-37000				BUCKET ASSY	1	- #0239		
	61N4-37001				BUCKET ASSY	1	#0240 - #0556	B	
	61N4-37002				BUCKET ASSY	1	#0557 - #0614	A	
	66N4-37000				BUCKET ASSY	1	#0615 -	D	
1	61N4-37010				.BUCKET WA	1	- #0239		
	61N4-37011				.BUCKET WA	1	#0240 - #0556	D	
	61N4-37012				.BUCKET WA	1	#0557 - #0614	D	
	66N4-37010				.BUCKET WA	1	#0615 -	D	
1-1	E161-3017	10			..ADAPTER-TOOTH	5	- #0556		
	61N4-31200				..ADAPTOR-TOOTH	4	#0557 - #0614	D	
					..ADAPTOR-TOOTH	5	#0615 -	A	
2	61E3-3033	20			.SIDE CUTTER-LH	1	- #0614		
	61E3-3033BG	20			.SIDE CUTTER-LH	1	#0615 -	D	
3	61E3-3034	20			.SIDE CUTTER-RH	1	- #0614		
	61E3-3034BG	20			.SIDE CUTTER-RH	1	#0615 -	D	
4	E161-3027	10			.POINT-TOOTH	5	- #0556		
	61N4-31210				.POINT-TOOTH	4	#0557 - #0614	D	
	61N4-31210BG				.POINT-TOOTH	5	#0615 -	D	
k5	E161-3035	20			.PIN-TOOTH	5	- #0556		
5	66N4-30350				.PIN-TOOTH	4	#0557 - #0614	D	
					.PIN-TOOTH	5	#0615 -	A	
6	61E3-1126	20			.BUSHING	1	- #0239	-	
7	61E3-3036	10			.PLATE-COVER	1	- #0239	-	
8	61E3-3041	10			.SHIM(1.0T)	5	- #0239	-	
9	S017-160452				.BOLT-HEX	3	- #0239	-	

Item	Part_No	IS	Ord	T	Description	Qty	Serial_No	ITC	Remark
10	S017-200552				.BOLT-HEX	8	#0001 -	-	
11	S205-201002				.NUT-HEX	8			
12	S403-162002				.WASHER-PLAIN	3	- #0239	-	
k13	61E5-11150				.WASHER-LOCK	5	- #0556		
13	66N4-11150				.WASHER-LOCK	4	#0557 - #0614	D	
	61E5-11150				.WASHER-LOCK	4	#0631 -	D	
	66N4-11150				.WASHER-LOCK	5	#0615 - #0630	A	
	61E5-11150				.WASHER-LOCK	5	#0631 -	D	
14	S411-200002				.WASHER-SPRING	8			
K	E161-3035-S				TOOTH PIN KIT	1	#0001 - #0556	-	INCL 5, 13

Item	Part_No	IS	Ord	T	Description	Qty	Serial_No	ITC	Remark
*	61N4-38000				BUCKET ASSY	1	- #0239		
	61N4-38001				BUCKET ASSY	1	#0240 -	B	
1	61N4-38010				.BUCKET WA	1	- #0239		
	61N4-38011				.BUCKET WA	1	#0240 -	D	
6	61E3-1126	20			.BUSHING	1			
7	61E3-3036	10			.PLATE-COVER	1			
8	61E3-3041	10			.SHIM(1.0T)	5			
9	S017-160452				.BOLT-HEX	3			
12	S403-162002				.WASHER-PLAIN	3			

Item	Part_No	IS	Ord	T	Description	Qty	Serial_No	ITC	Remark
*	61N4-39000				BUCKET ASSY	1	- #0239		
	61N4-39001				BUCKET ASSY	1	#0240 -	B	
1	61N4-39010				.BUCKET WA	1	- #0239		
	61N4-39011				.BUCKET WA	1	#0240 -	D	
6	61E3-1126	20			.BUSHING	1			
7	61E3-3036	10			.PLATE-COVER	1			
8	61E3-3041	10			.SHIM(1.0T)	5			
9	S017-160452				.BOLT-HEX	3			
12	S403-162002				.WASHER-PLAIN	3			

TOOLS

1

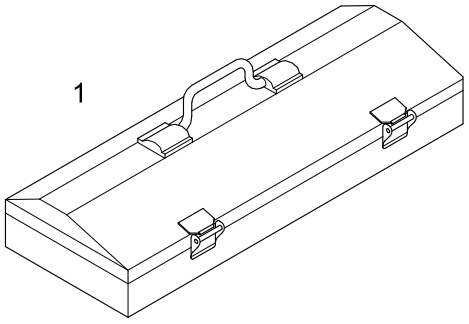

2, 3, 4 ,5 ,6, 7, 8, 9,10,
11,12,13,14,15,16



47

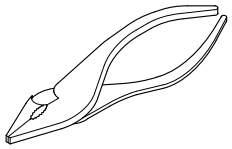

54



62

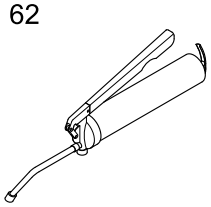

17,18,19,20,21,22,23,24,
25,26,27,28,29,30,31,32

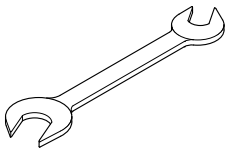

48,49

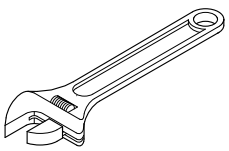

55,56,57

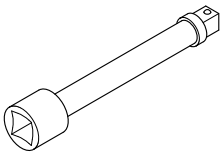

63

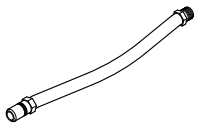

33,34,35,36,
37,38,39,40

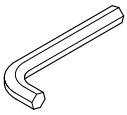

50

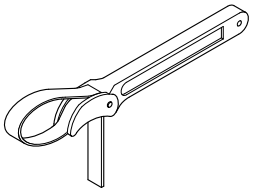

58,59

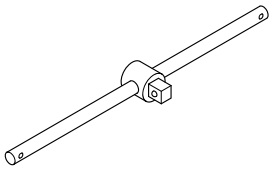

64,65,66

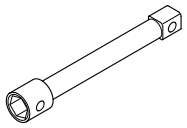

41,42,43,44,45

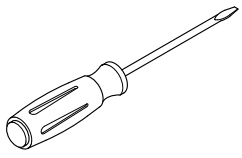

51,52

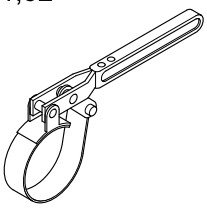

60

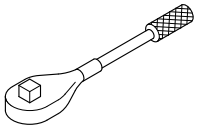

67,68

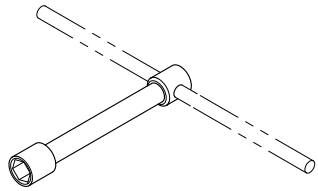

46

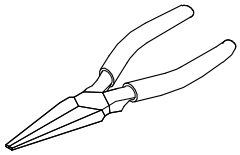

53

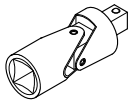

61

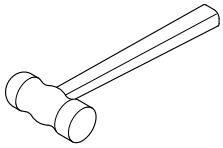

69

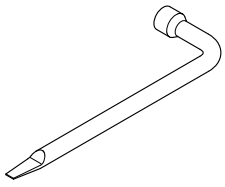

Item	Part_No	IS	Ord	T	Description	Qty	Serial_No	ITC	Remark
*	91E9-20121				TOOL KIT ASSY	1			
1	E191-2000				.TOOL BOX	1			
2	S953-127100				.SOCKET-1/2"X10MM	1			
3	S953-127130				.SOCKET-1/2"X13MM	1			
4	S953-127140				.SOCKET-1/2"X14MM	1			
5	S953-127170				.SOCKET-1/2"X17MM	1			
6	S953-127190				.SOCKET-1/2"X19MM	1			
7	S953-127220				.SOCKET-1/2"X22MM	1			
8	S953-127240				.SOCKET-1/2"X24MM	1			
9	S953-127270				.SOCKET-1/2"X27MM	1			
10	S953-127300				.SOCKET-1/2"X30MM	1			
11	S953-190320				.SOCKET-3/4"X32MM	1			
12	S953-190360				.SOCKET-3/4"X36MM	1			
17	S962-100003				.WRENCH-COMBINATION	1			
18	S962-130003				.WRENCH-COMBINATION	1			
19	S962-170003				.WRENCH-COMBINATION	1			
20	S962-190003				.WRENCH-COMBINATION	1			
21	S962-220003				.WRENCH-COMBINATION	1			
22	S962-240003				.WRENCH-COMBINATION	1			
23	S962-270003				.WRENCH-COMBINATION	1			
29	S962-303202				.WRENCH-DOUBLE,30X32	1			
30	S962-364102				.WRENCH-DOUBLE,36X41	1			
33	S967-040025				.L-WRENCH,4MM	1			
34	S967-050028				.L-WRENCH,5MM	1			
35	S967-060032				.L-WRENCH,6MM	1			

Item	Part_No	IS	Ord	T	Description	Qty	Serial_No	ITC	Remark
36	S967-080036				.L-WRENCH,8MM	1			
37	S967-100040				.L-WRENCH,10MM	1			
38	S967-120045				.L-WRENCH,12MM	1			
39	S967-140055				.L-WRENCH,14MM	1			
40	S967-170060				.L-WRENCH,17MM	1			
41	S959-061012				.DRIVER(-)	1			
43	S959-061022				.DRIVER(+)	1			
47	S960-150020				.PLIER-SLIP JOINTS	1			
48	S963-200024				.WRENCH-ADJ ANGLE,8"	1			
49	S963-300034				.WRENCH-ADJ ANGLE,12"	1			
50	E191-2043				.WRENCH-FILTER,300MM	1			
53	S954-127080				.UNIVERSAL JOINT-1/2"	1			
54	91EM-20600				.ADAPTOR-1/2"-3/8"	1			
55	S955-127075				.EXTENSION BAR-1/2"X5"	1			
56	S955-127125				.EXTENSION BAR-1/2"X10"	1			
57	S955-190200				.EXTENSION BAR-3/4"X8"	1			
58	E191-2048				.HANDLE-SLIDING,1/2"X10"	1			
59	E191-2049				.HANDLE-SLIDING,3/4"X20"	1			
60	S958-127250				.HANDLE-RATCHET 1/2"	1			
61	S964-200340				.HAMMER-HAND	1			
62	E191-2053				.GUN-GREASE,500CC	1			
63	E191-2054				.TIP-HOSE,RUBBER	1			
70	E191-20572				.TOOL LIST	1			

HRDT 2.0 TOOL KIT

1

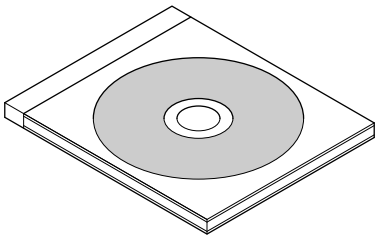

2

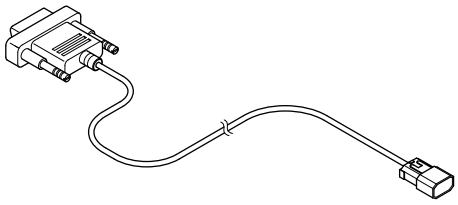

3 PART NO : PMCE0500BDFB
4 PART NO : PMCE0050BDFB

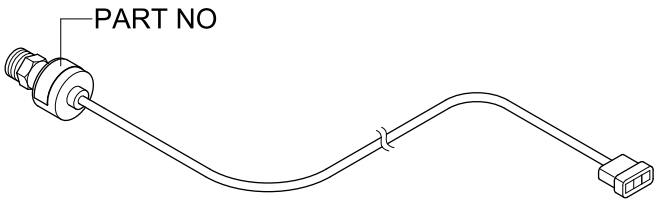

5

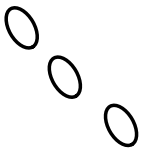

6

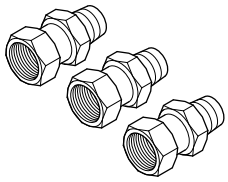

7 ,8

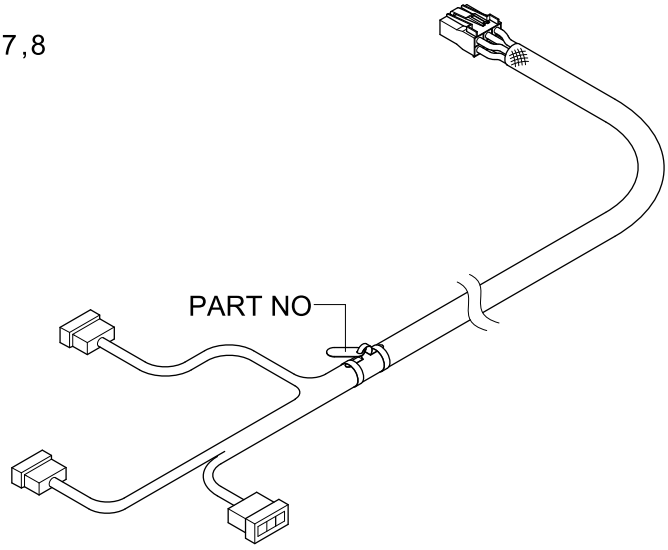

Item	Part_No	IS	Ord	T	Description	Qty	Serial_No	ITC	Remark
*	21N6-32230				HRDT 2.0 TOOL KIT	1	#0001 -	-	
1	21N6-32211				.CD-HRDT 2.0 SOFTWARE	1			
2	21N6-32200				.CABLE-RS232(CPU-PC)	1			
3	21EG-32200				.SENDER-PRESSURE	2			
4	21EG-32210				.SENDER-PRESSURE	1			
5	S631-011004				.O-RING	3			
6	31E9-22120				.CONNECTOR	3			
7	21N8-11170				.HARNESS-PUMP PS	1			
8	21N8-10071				.HARNESS-PUMP	1			

DECALS

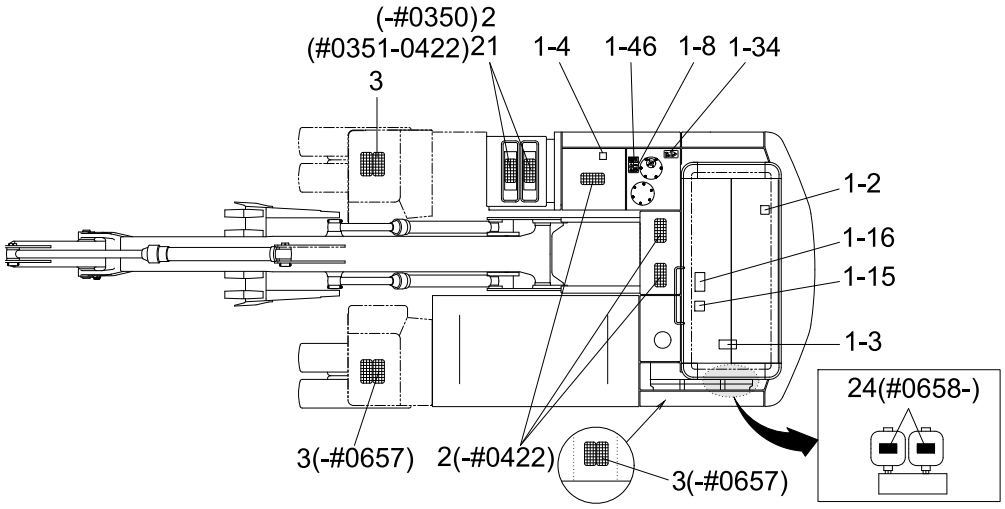

REAR FENDER(LH/RH)

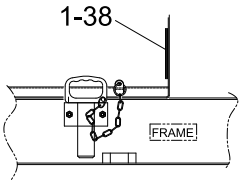

SECTION B-B

(INSIDE OF BATTERY BOX)

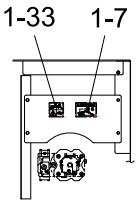

PUMP SCREEN

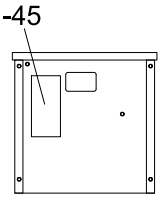

ELECTRIC BOX

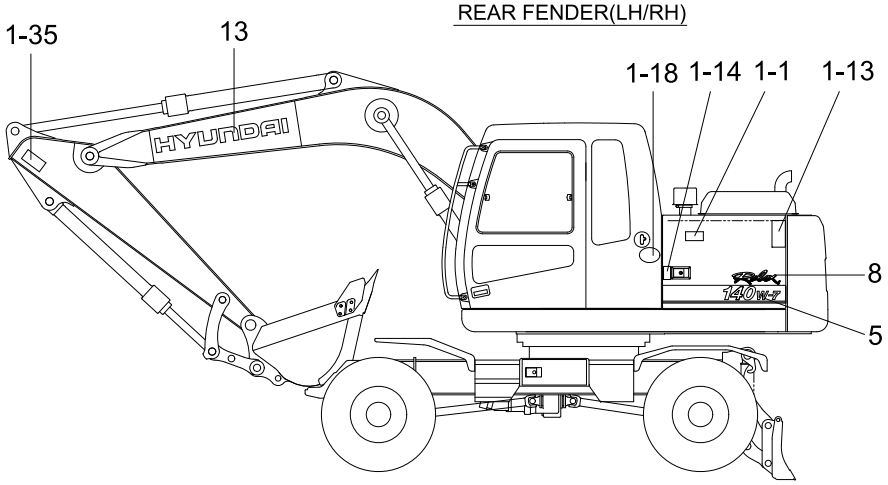

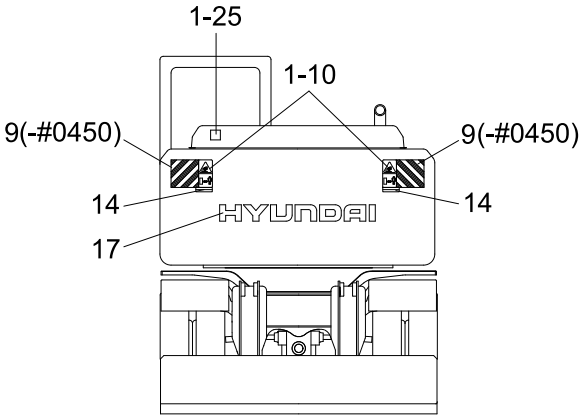

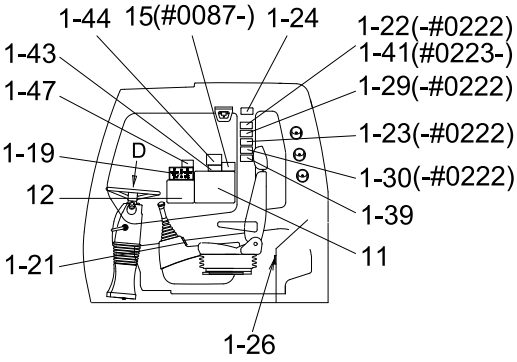

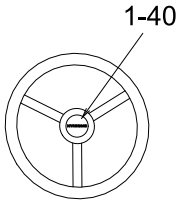

VIEW D

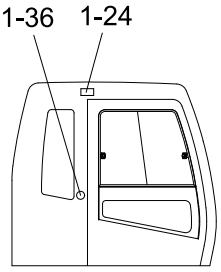

INSIDE OF LH DOOR

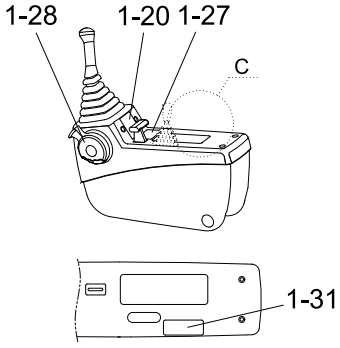

(DETAIL C)

CONSOLE BOX - LH

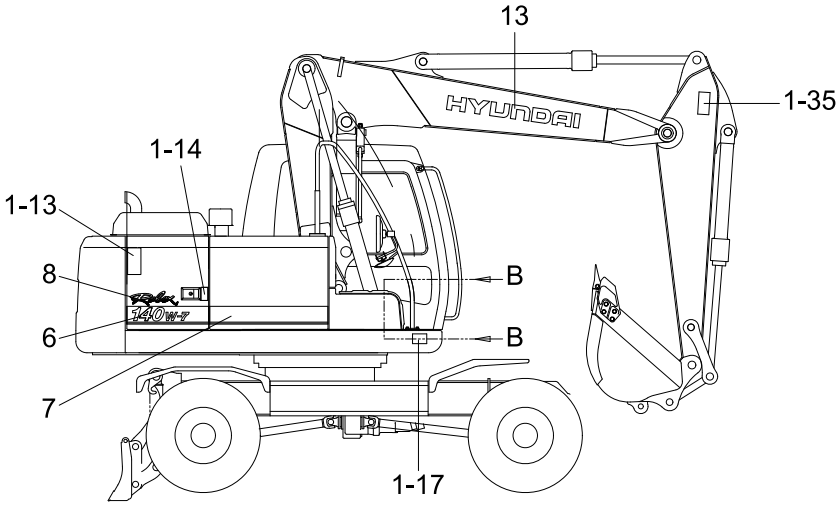

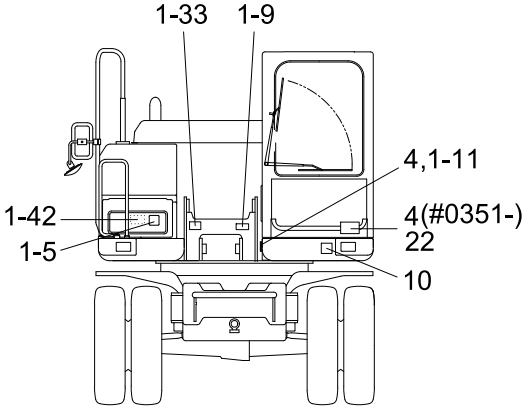

Item	Part_No	IS	Ord	T	Description	Qty	Serial_No	ITC	Remark
1	91N4-00201				DECAL KIT	1	- #0222		
	91N4-00202				DECAL KIT	1	#0223 - #0292	B	
	91N4-00203				DECAL KIT	1	#0293 - #0350	B	
	91N4-00204				DECAL KIT	1	#0351 - #0422	B	
	91N4-00205				DECAL KIT	1	#0423 - #0459	B	
	91N4-00206				DECAL KIT	1	#0460 - #0997	B	
	91N4-00207				DECAL KIT	1	#0998 -	B	
	91N4-00400				DECAL KIT	1	#0615 - #0926		UPGRADE CABIN
	91N4-00401				DECAL KIT	1	#0927 - #0997	B	UPGRADE CABIN
	91N4-00402				DECAL KIT	1	#0998 -	B	UPGRADE CABIN
1-1	91N6-01102				.DECAL-A/CLEANER FILTER	1			
1-2	91N6-01111				.DECAL-TURBO COVER	1			
1-3	91N6-01121				.DECAL-RADIATOR CAP	1			
1-4	91N6-01131				.FUELING	1	- #0422		
	91M8-01130				.DECAL-FUELING	1	#0423 -	B	
1-5	91N6-02120				.DECAL-BATT ACCIDENT	1			
1-7	92N6-03100				.HYD OIL LEVEL	1			
1-8	91N6-03111				.DECAL-OIL LUBRICATION	1			
1-9	91N6-03121				.DECAL-RED GEAR GREASE	1			
1-10	91N6-04122				.KEEP CLEAR/RR	2			
1-11	91E1-14110				.NAME PLATE	1	- #0997		STD
	91LM-14110				.DECAL-PIN PLATE	1	#0998 -	B	STD
	91E1-14130				.NAME PLATE	1	- #0997		EU
	91LM-14130				.DECAL-PIN PLATE	1	#0998 -	B	EU
1-13	91N6-07102				.DECAL-KEEP CLEAR	2			

Item	Part_No	IS	Ord	T	Description	Qty	Serial_No	ITC	Remark
1-14	91N6-07112				.DECAL-STAY FIX	2			
1-15	91N6-07121				.DECAL-SHEARING	1			
1-16	91N6-07131				.DECAL-NO STEP	1			
1-17	92N6-07140				.TRANSPORTING	1			
1-18	91E1-27110				.DECAL-LOW EMI ENGINE	1			
1-19	92N6-07200				.DECAL-CNTL IDEOGRAM	1			STD
	92N6-07500				.DECAL-CNTL IDEOGRAM	1			ADJUST BOOM
1-20	91N6-07212				.DECAL-CNTL IDEOGRAM,LH	1			
	92N6-07210				.CONTROL IDEOGRAM-LH	1	#0615 -		UPGRADE CABIN
1-21	91N6-07221				.DECAL-CNTL IDEOGRAM,RH	1			
	92N6-07220				.CONTROL IDEOGRAM-RH	1	#0615 -		UPGRADE CABIN
1-22	91N6-07231				.REF OPERATOR MANUAL	1	- #0222		
1-23	91N6-07241				.MAX HEIGHT	1	- #0222		
1-24	91N6-07252				.DECAL-SAFETY FR WINDOW	2	- #0222		
					.DECAL-SAFETY FR WINDOW	1	#0223 -	A	
1-25	91N6-07261				.DECAL-ALTERNATE EXIT	1			
1-26	91N6-07272				.DECAL-AIRCON FILTER	1			
1-27	91N6-07301				.CONSOLE BOX TILTING	1			
	92N6-07300				.CONSOLE BOX TILTING	1	#0615 - #0926		UPGRADE CABIN
	92N6-07510				.CONSOLE BOX TILTING	1	#0927 -	B	UPGRADE CABIN
1-28	91N6-07311				.DECAL-SAFETY LEVER	1			
	92N6-07310				.DECAL-SAFETY LEVER	1	#0615 -		UPGRADE CABIN
1-29	91N6-07320				.INTERFERENCE	1	- #0222		
1-30	91N6-07330				.DECAL-LOCKING CLAMP	1			
1-31	91N6-07340				.IDEOGRAM	1			DOZER

Item	Part_No	IS	Ord	T	Description	Qty	Serial_No	ITC	Remark
1-31	92N6-07360				.IDEOGRAM	1			OUTRIGGER
	92N6-07430				.IDEOGRAM	1	#0351 -		BLADE/OUTRIGGER
	92N6-07431				.IDEOGRAM	1	#0615 -		UPGRADE CABIN
1-33	91N6-03130				.DECAL-HIGH PRESS HOSE	2			
1-34	91N6-03140				.DECAL-FALLING	1			
1-35	91N6-06110				.DECAL-KEEP CLEAR-ATT	2			
1-36	91N6-07280				.DECAL-HAMMER	1			
1-38	92N6-07410				.DECAL-SWING IDEOGRAM	1			
1-39	92N6-07350				.SWING LOCK	1			
1-40	2D2001160				.HANDLE	1	- #0222		
	92N6-07420				.DECAL-STEERING WHEEL	1	#0223 -	B	
1-41	91N6-07370				.DECAL-CABIN RH PILLAR	1	#0223 -		
1-42	91LB-01350				.DECAL-ECM CONNECTOR	1	#0293 -		
1-43	91N6-07390				.DECAL-TURBOCHARGER	1	#0351 -		
1-44	91N6-07400				.DECAL-M/CONTROL,CAB	1	#0460 -		OPT, PATT VLV
1-45	91N6-07410				.DECAL-MACHINE CNTL	1	#0460 -		OPT, PATT VLV
1-46	91Q6-03230				.DECAL-FUEL SHUT OFF	1	#0998 -		
1-47	91Q4-07180				.DECAL-WATER SEPARATOR	1	#0998 -		
2	91E1-26300				DECAL-STEP TREAD	8	- #0350		
					DECAL-STEP TREAD	3	#0351 - #0422	A	
3	91E1-26300				DECAL-STEP TREAD	8	- #0657		MUD GUARD
4	91EK-12010				RIVET	4	- #0350		
					RIVET	8	#0351 -	A	
5	92N4-17111				DECAL-MODEL NAME-LH	1	- #0619		
6	92N4-17122				MODEL NAME-RH/REAR	1	- #0619		

Item	Part_No	IS	Ord	T	Description	Qty	Serial_No	ITC	Remark
7	91N4-17220				DECAL-M/NAME,RH/FR	1	- #0619		
8	91N4-17140				DECAL-ROBEX LOGO	2			
9	91N6-04101				KEEP CLEAR-REF	2	- #0450		
10	91N6-22120				NOISE LEVEL-LWA	1	- #0284		
	91N6-22110				DECAL-NOISE LWA/101DB	1	#0285 -	D	
11	92N4-17161				SERVICE INSTRUCTION	1	- #0047		
	92N4-17162				SERVICE INSTRUCTION	1	#0048 - #0227	B	
	92N4-17163				SERVICE INSTRUCTION	1	#0228 - #0926	D	
	92N4-17164				SERVICE INSTRUCTION	1	#0927 -	B	
12-1	92N4-17410				DECAL-LIFTING CHART	1	#0001 -		4.6BM+2.5AM
12-2	92N4-17420				DECAL-LIFTING CHART	1	#0001 -		4.6BM+1.9AM
12-3	92N4-17430				DECAL-LIFTING CHART	1	#0001 -		4.6BM+2.1AM
12-4	92N4-17440				DECAL-LIFTING CHART	1	#0001 -		4.6BM+3.0AM
12-5	92N4-17510				DECAL-LIFTING CHART	1	#0001 -		4.9A/BM+2.5AM
12-6	92N4-17520				DECAL-LIFTING CHART	1	#0001 -		4.9A/BM+1.9AM
12-7	92N4-17530				DECAL-LIFTING CHART	1	#0001 -		4.9A/BM+2.1AM
13	91N6-21070				DECAL-TRADE MARK	2			BOOM
14	91N6-04170				REFLECTING	1	#0450 -		
15	92N4-28010				AXLE CAUTION	2	#0087 -		
17	91N6-21090				DECAL-TRADE MARK	1	#0266 -		COUNTERWEIGHT
21	91N6-27510				DECAL-SAFETY	2	#0351 - #0422		
22	91N6-01280				FOPS FOG PLATE	1	#0351 -		
23	92N4-17310				DECAL-MODEL NAME	1	#0620 -		
24	91N6-03200				DECAL-ACCUMULATOR	4	#0658 - #0926		
					DECAL-ACCUMULATOR	5	#0927 -	A	

MANUALS

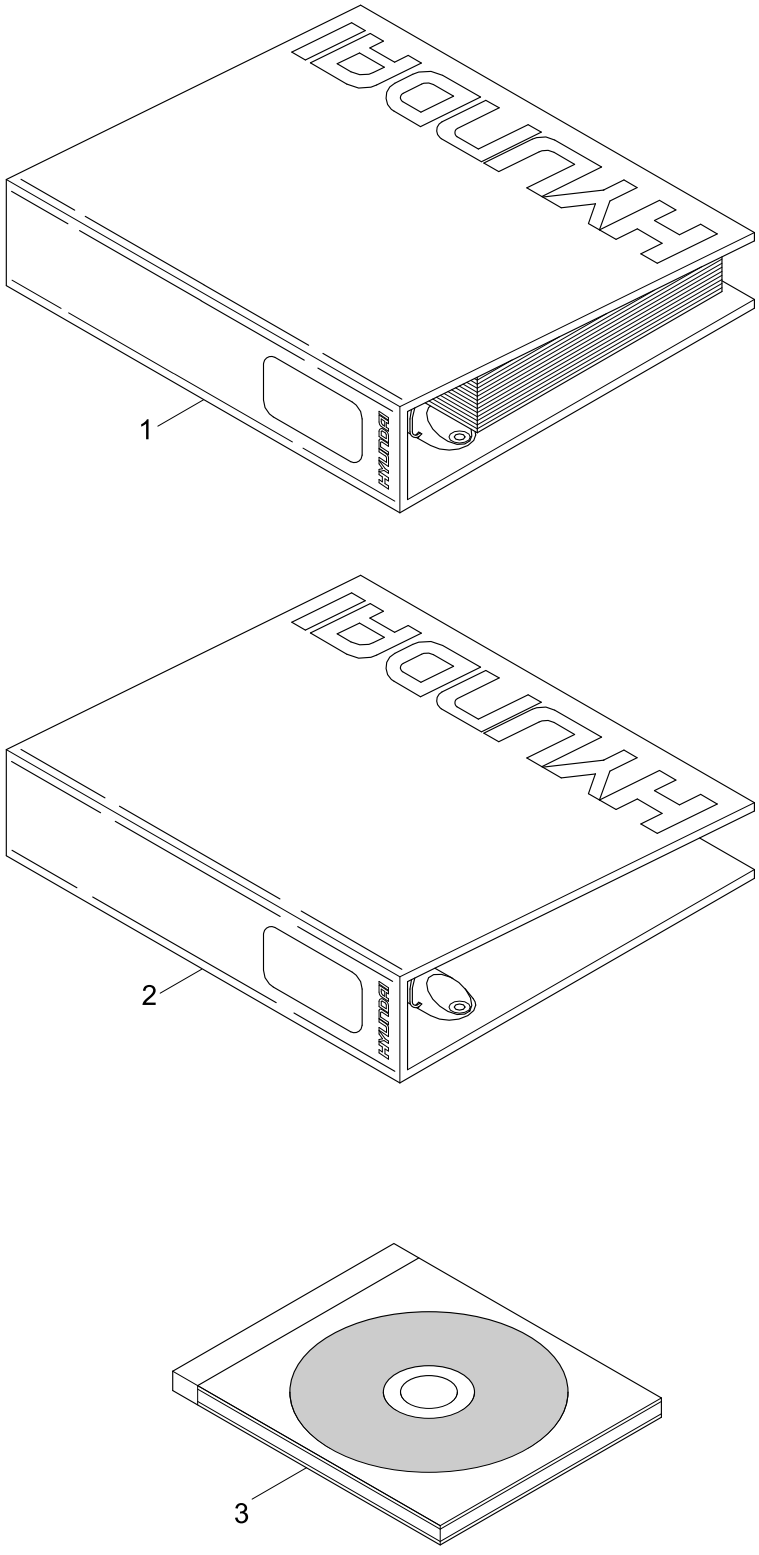

Item	Part_No	IS	Ord	T	Description	Qty	Serial_No	ITC	Remark
1	92N4-30030				PARTS MANUAL-EXPORT	1	- #0071		
	92N4-30031				PARTS MANUAL-EXPORT	1	#0072 -	B	
	92N4-30040				OPERATORS MANUAL-EXP	1			
	92N4-30050				SERVICE MANUAL-EXPORT	1			
2	91N4-30940				BINDER & STICKER	1			P/MANUAL
	91N4-30950				BINDER & STICKER	1			S/MANUAL
3	HECD-30000				CD-PARTS MANUAL	1			EXCAVATOR
	HACD-30000				CD-PARTS MANUAL	1			ALL MODEL
	HEDV-30000				DVD-PARTS MANUAL	1			EXCAVATOR
	HADV-30000				DVD-PARTS MANUAL	1			ALL MODEL

FRONT DRIVE ADAPTER(-#0071)

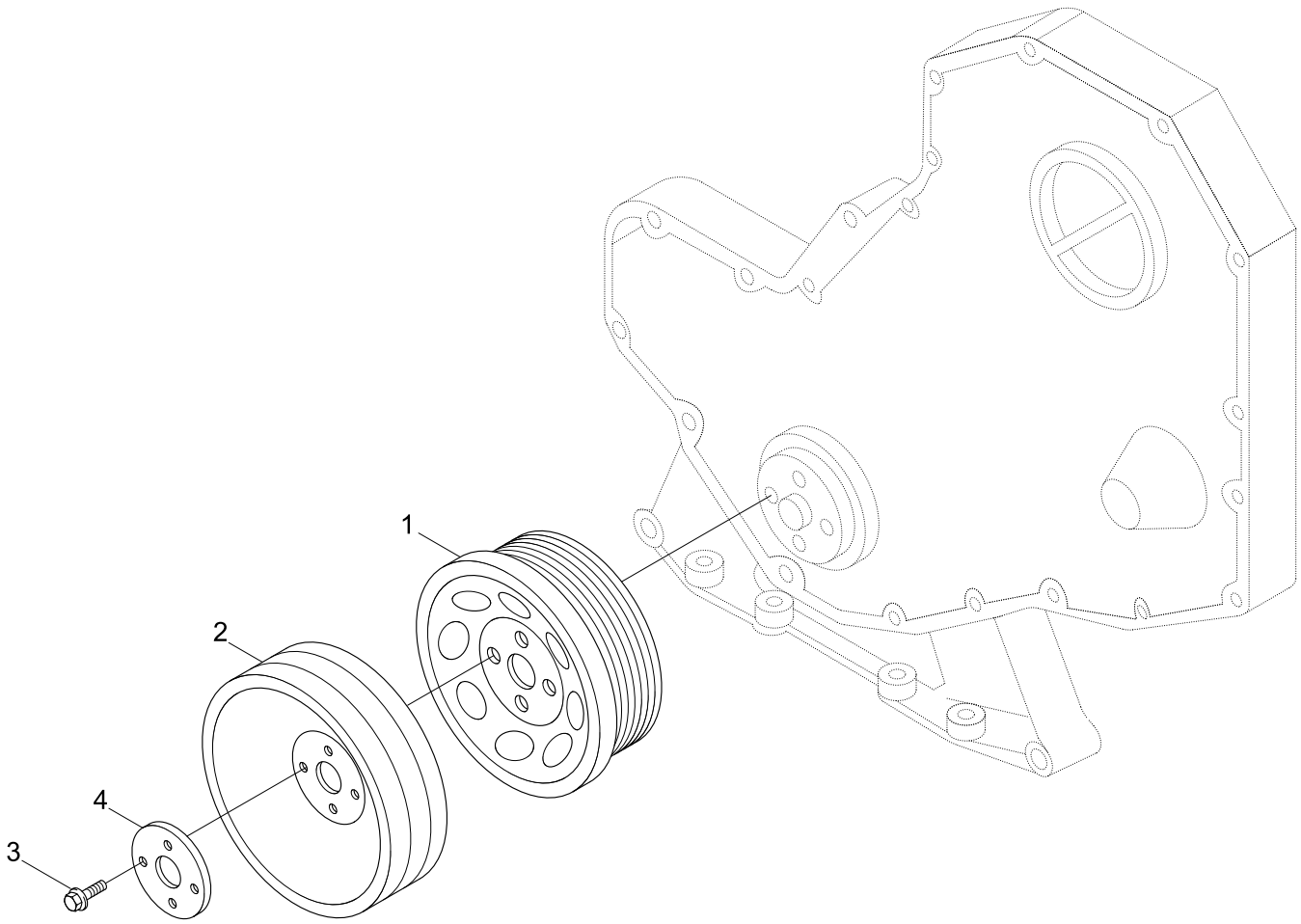

Item	Part_No	IS	Ord	T	Description	Qty	Serial_No	ITC	Remark
*	@				FRONT DRIVE ADAPTER	1	- #0071	-	NOT
1	3914494				PULLEY-CRANKSHAFT	1			DA9752
2	3903826				PULLEY-ACC	1			
3	3903857				SCREW	4			
4	3917639				PLATE-CLAMPING	1			

AIR INTAKE HEATER(-#0071)

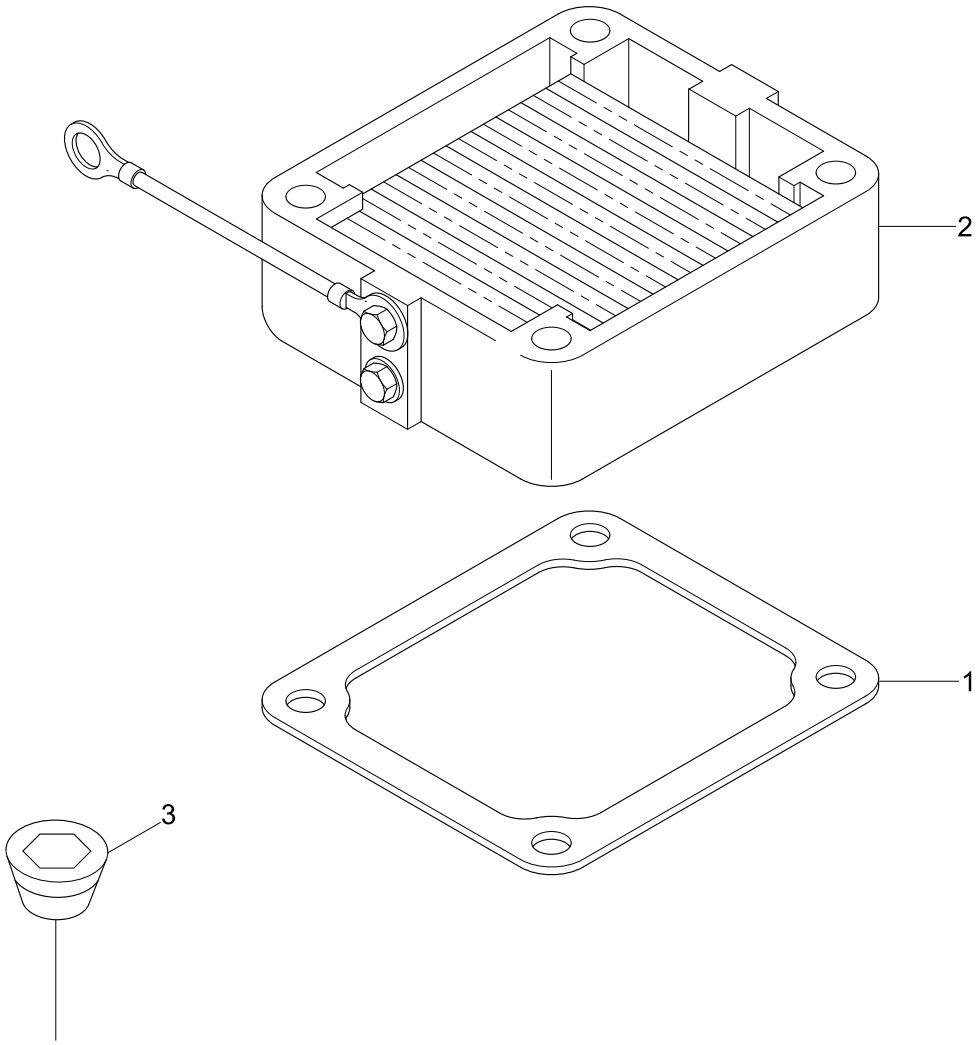

Item	Part_No	IS	Ord	T	Description	Qty	Serial_No	ITC	Remark
*	@				AIR INTAKE HEATER	1	- #0071	-	NOT
1	3938158				GASKET-CONNECTION	1			AH9126
2	3939914				HEATER-INTAKE AIR	1			
	3927335				TAG-INSTRUCTION	1			
3	3008469				PLUG-PIPE	1			CH9071

Item	Part_No	IS	Ord	T	Description	Qty	Serial_No	ITC	Remark
*	@				DATAPLATE	1	- #0071	-	NOT
1	3908612				SCREW	2			AP9239
2	3284906				DATAPLATE	1			
N2	3285694				DATAPLATE	1			NOT
N3	3966565				DATAPLATE	1			NOT
N	@				NOT INDIVIDUALLY SUPPLIED	AR			NOT

ROCKER LEVERS(-#0071)

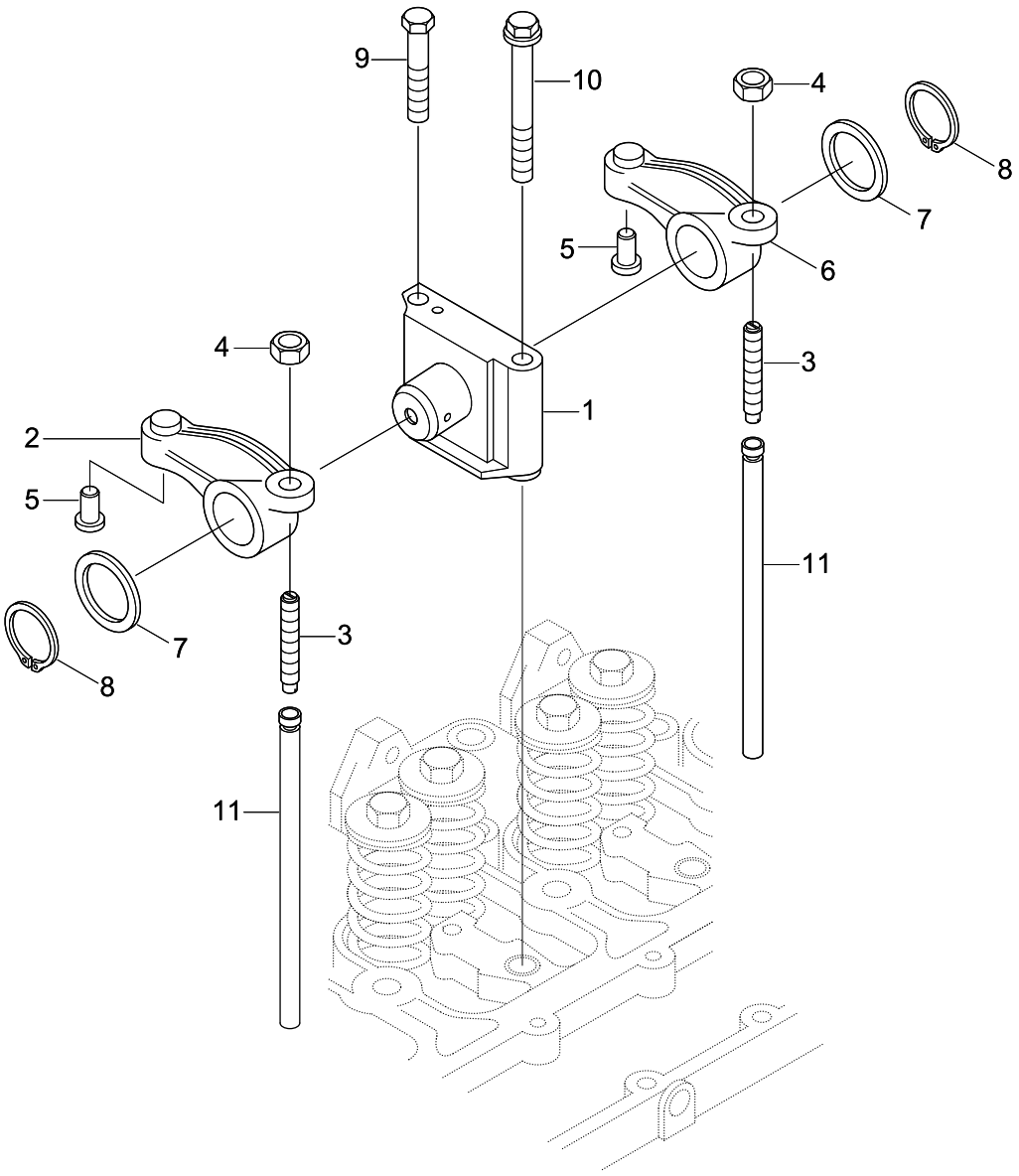

Item	Part_No	IS	Ord	T	Description	Qty	Serial_No	ITC	Remark
*	@				ROCKER LEVERS	1	- #0071	-	NOT
*N	3922486				SHAFT-R/LEVER	4			NOT
*	3922488				SHAFT-R/LEVER	4			
N1	3911423				.SUPPORT-R/LEVER	1			NOT
	3922487				.SHAFT-R/LEVER	1			NOT
2	3910811				LEVER-ROCKER	4			
N2	3910809				.LEVER-ROCKER	1			NOT
N3	3937438				.SCREW	1			NOT
4	3927692				.NUT-HEAVY HEX	1			
N5	3900705				.INSERT-R/LEVER	1			NOT
6	3910810				LEVER-ROCKER	4			
N6	3910808				.LEVER-ROCKER	1			NOT
3	3937438				.SCREW	1			
4	3927692				.NUT-HEAVY HEX	1			
N5	3900705				.INSERT-R/LEVER	1			NOT
7	3900245				WASHER-PLAIN	8			
8	3900242				RING-RETAINING	8			
9	3901221				SCREW	4			
10	3920781				SCREW	4			
11	3284377				ROD-PUSH	8			
*	3919434				RIVET	1			NOT SHOWN
N	@				NOT INDIVIDUALLY SUPPLIED	AR			NOT

VALVE TAPPET(-#0071)

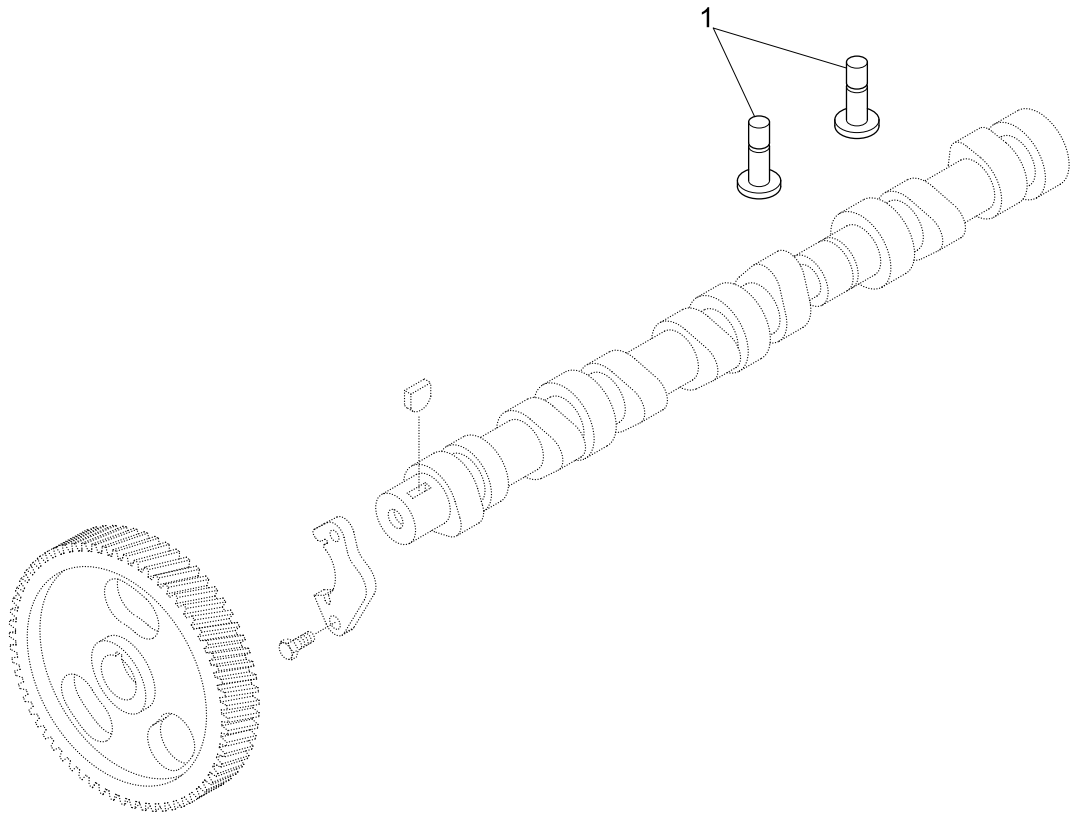

Item	Part_No	IS	Ord	T	Description	Qty	Serial_No	ITC	Remark
*	@				VALVE TAPPET	1	- #0071	-	NOT
1	3931623				TAPPET-VALVE	8			BB9795

FRONT GEAR COVER(-#0071)

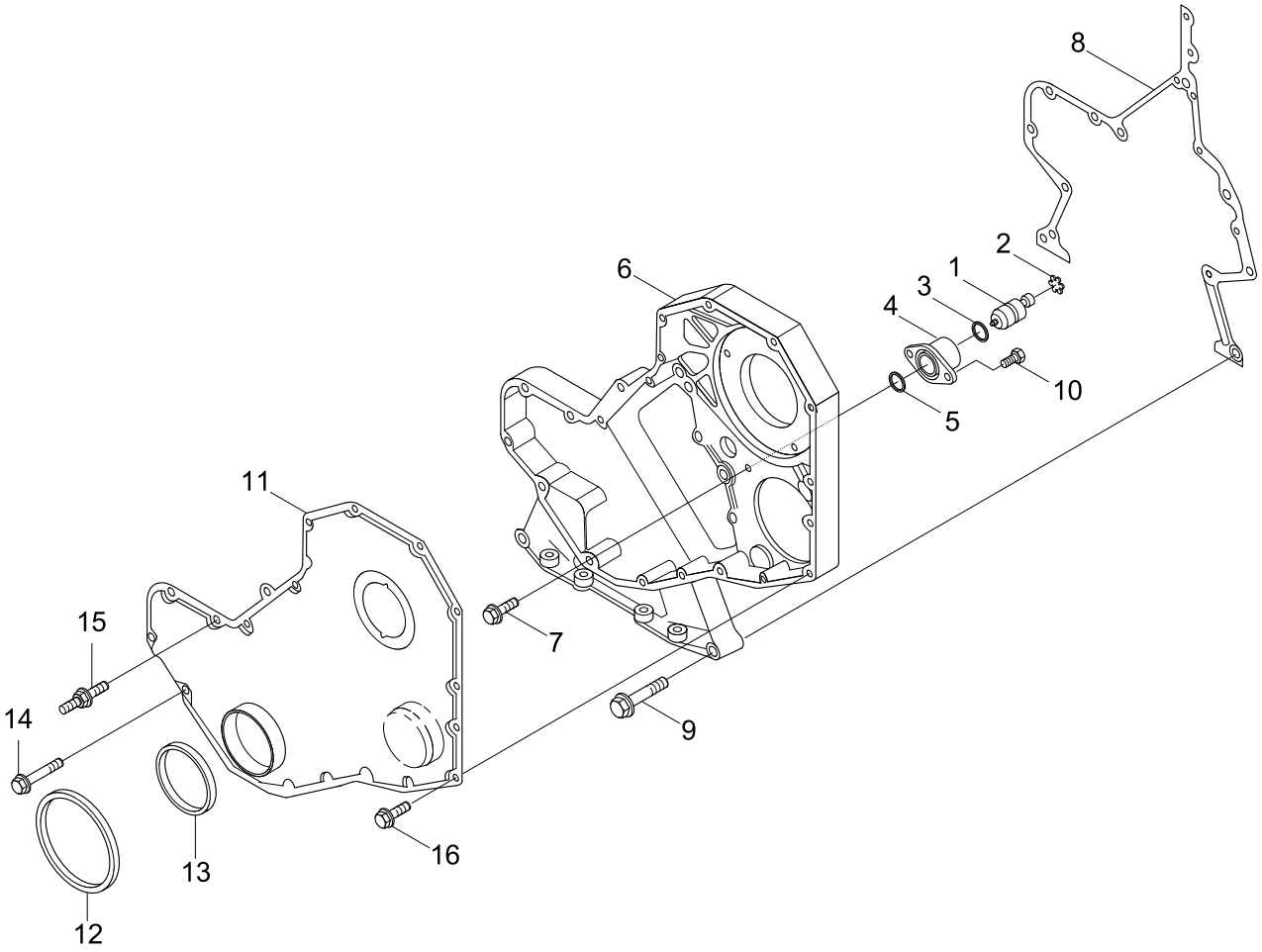

Item	Part_No	IS	Ord	T	Description	Qty	Serial_No	ITC	Remark
*	@				FRONT GEAR COVER	1	- #0071	-	NOT
*N	3913995				HOUSING-TIMING PIN	1			NOT
1	3903924				.PIN-TIMING	1			
2	3904849				.RING-RETAINING	1			
3	3913994				.O-RING	1			
4	3919683				.HOUSING-TIMING PIN	1			
5	3915772				SEAL-RECT RING	1			
6	3920758				HOUSING-GEAR	1			
7	3926846				SCREW-HEX HEAD CAP	5			
8	3938156				GASKET-GEAR HSG	1			
9	3900633				SCREW-HEX HD CAP	2			BB9776
10	3907998				SCREW-RD HD CAP	2			
*	3287075				COVER-GEAR	1			GG9785
N11	3286312				.COVER-GEAR	1			NOT
*	3804899				SEAL KIT-FRONT	1			
*N	3937111				.SEAL KIT-FRONT	1			NOT
12	3933261				.SHIELD-DUST	1			
N13	3935959				.SEAL-OIL	1			NOT
14	3900633				SCREW-HEX HD CAP	9			
15	3921816				SCREW	2			
16	3924962				SCREW	9			
N	@				NOT INDIVIDUALLY SUPPLIED	AR			NOT

CYLINDER BLOCK(-#0071)

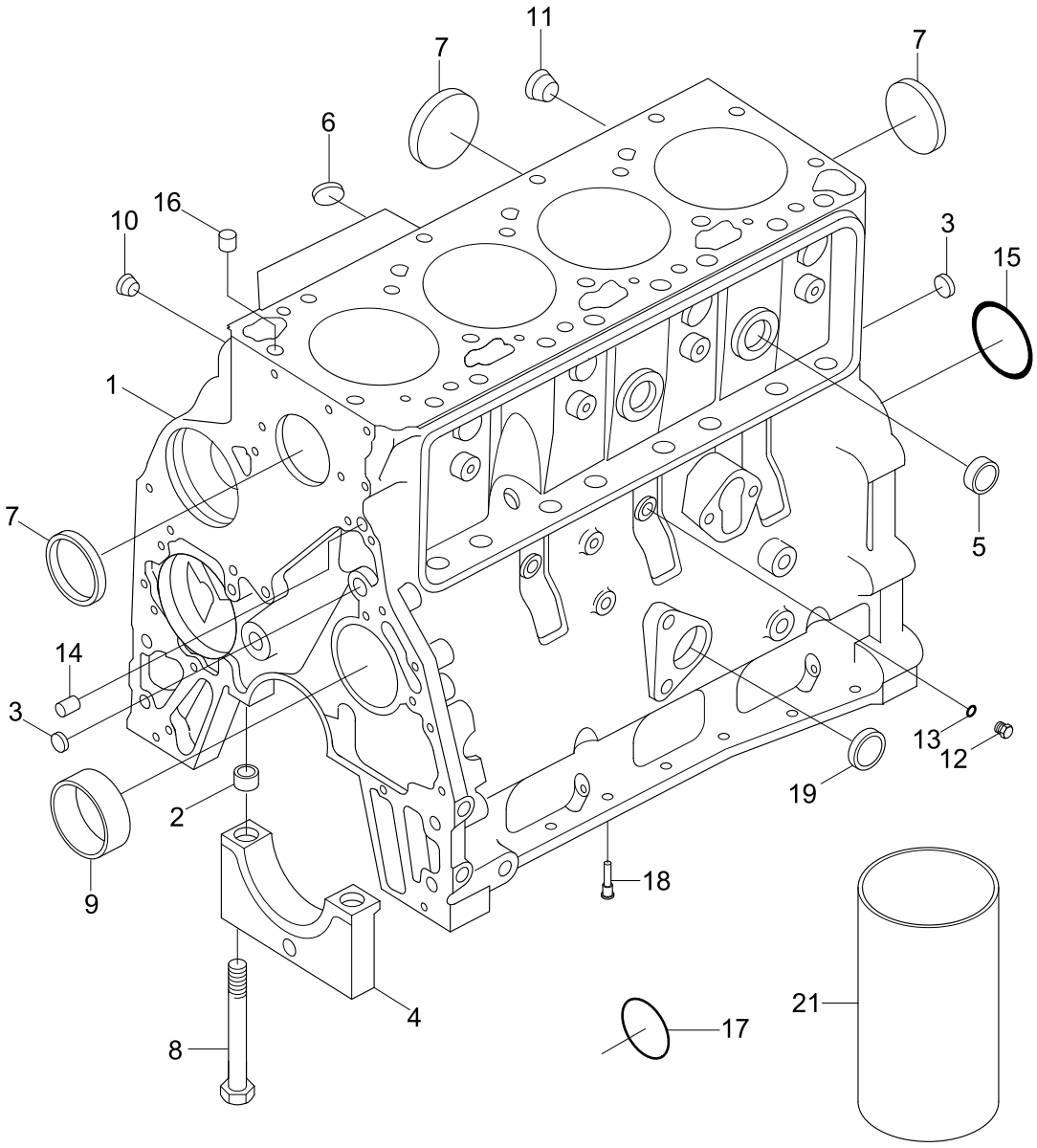

Item	Part_No	IS	Ord	T	Description	Qty	Serial_No	ITC	Remark
*	4089546				CYLINDER BLOCK	1	- #0071	-	BB9795-03
N1	3938366				BLOCK-CYLINDER	1			NOT
3	3900956				.PLUG-EXPANSION	3			
4	3936791				.CAP-MAIN BEARING	5			
5	3914035				.PLUG-EXPANSION	2			
7	3922072				.PLUG-EXPANSION	3			
8	3927948				.SCREW	10			
9	3940059				.BUSHING	1			
*	3933224				KIT-CYL BLOCK HW				
2	3900068				.DOWEL-RING	2			
6	3920706				.PLUG-EXPANSION	2			
10	3008468				.PLUG-PIPE	1			
11	3008469				.PLUG-PIPE	1			
*	3678923				.PLUG-THREADED	2			
N12	3678924				..PLUG-THREADED	1			NOT
13	3678925				..SEAL/O-RING	1			
14	3900257				.DOWEL-PIN	2			
15	3900687				.PLUG-EXPANSION	1			
16	3902343				.DOWEL-RING	2			
17	3926047				.SEAL/O-RING	1			
18	3937214				NOZZLE	4			
19	3900958				.PLUG-EXPANSION	1			
21	3904166				.SLEEVE-SALVAGE	1			SERVICE PARTS
N	@				NOT INDIVIDUALLY SUPPLIED	AR			NOT

Item	Part_No	IS	Ord	T	Description	Qty	Serial_No	ITC	Remark
*	@				C/SHAFT & M/BEARING	1	- #0071	-	NOT
	3908031				CRANKSHAFT-ENGINE	1			BB9795
N1	3929036				CRANKSHAFT-ENGINE	1			NOT
2	3904483				DOWEL-PIN	1			
3	3929027				GEAR-CRANKSHAFT	1			
*	3802010				SET-MAIN BEARING(STD)	1			
N4	3929016				.BEARING-MAIN	4			NOT
N5	3927772				.BEARING-C/SHAFT THRUST	1			NOT
N6	3929021				.BEARING-MAIN	5			NOT
*	3802011				SET-M/BRG(0.25 O/S)	1			
N4	3929017				.BEARING-MAIN	4			NOT
N5	3927773				.BEARING-THRUST	1			NOT
N6	3929022				.BEARING-MAIN	5			NOT
*	3802012				SET-M/BRG(0.5 O/S)	1			
N4	3929018				.BEARING-MAIN	4			NOT
N5	3927774				.BEARING-C/SHAFT THRUST	1			NOT
N6	3929023				.BEARING-MAIN	5			NOT
*	3802013				SET-M/BRG(0.75 O/S)	1			
N4	3929019				.BEARING-MAIN	4			NOT
N5	3927775				.BEARING-C/SHAFT THRUST	1			NOT
N6	3929024				.BEARING-MAIN	5			NOT
*	3802014				SET-M/BRG(1.0 O/S)	1			
N4	3929020				.BEARING-MAIN	4			NOT
N5	3927776				.BEARING-C/SHAFT THRUST	1			NOT
N6	3929025				.BEARING-MAIN	5			NOT

Item	Part_No	IS	Ord	T	Description	Qty	Serial_No	ITC	Remark
*	3800330				BRG-C/SHAFT(0.5 O/S)	1			
N5	3283063				.BEARING-C/SHAFT THRUST	1			NOT
N6	3929023				.BEARING-MAIN	1			NOT
*	3800331				BRG-C/SHAFT(1.0 O/S)	1			
N5	3283064				.BEARING-THRUST	1			NOT
N6	3929025				.BEARING-MAIN	1			NOT
7	3802820				SEAL-W/SLEEVE KIT	1			SERVICE PARTS
8	3926126				SEAL-W/SLEEVE KIT	1			SERVICE PARTS

Item	Part_No	IS	Ord	T	Description	Qty	Serial_No	ITC	Remark
*	@				CAM FOLLOWER COVER	1	- #0071	-	NOT
1	3283767				GASKET-P/ROD COVER	1			CM9710
N2	3936188				COVER-PUSH ROD	1			NOT
3	3928759				SEAL-GROMMET	4			
4	3900629				SCREW-H/FLANGE CAP	4			
N	@				NOT INDIVIDUALLY SUPPLIED	AR			NOT

FRONT GEAR TRAIN ACCESSORY(-#0071)

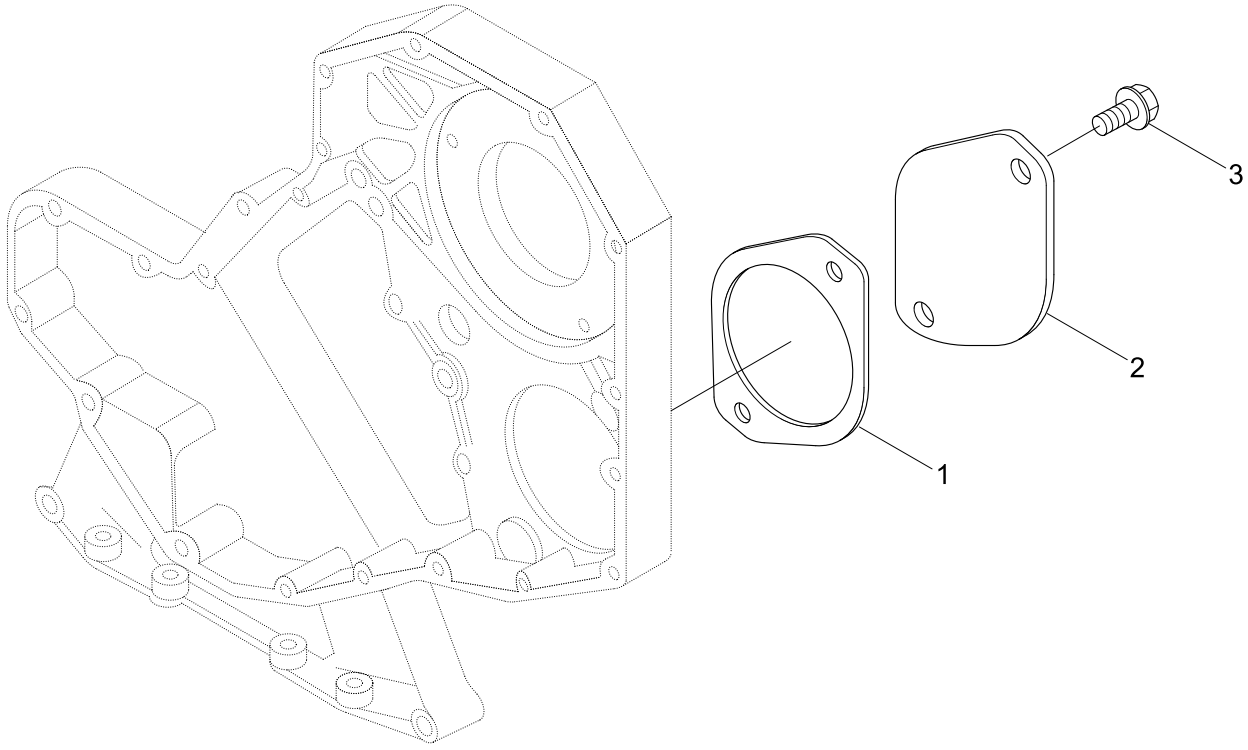

Item	Part_No	IS	Ord	T	Description	Qty	Serial_No	ITC	Remark
*	@				F/GEAR TRAIN ACCESSORY	1	- #0071	-	NOT
1	3938655				GASKET-ACC DRIVE CVR	1			DF9713-01
2	3914868				PLATE-COVER	1			
3	3901249				SCREW	2			

FAN PILOT SPACER(-#0071)

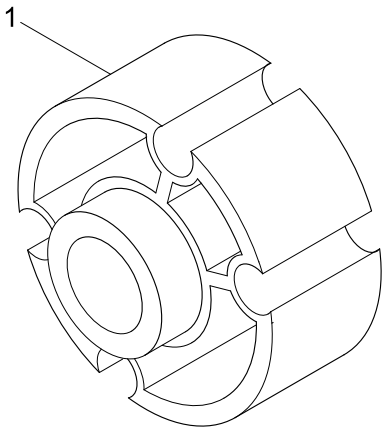

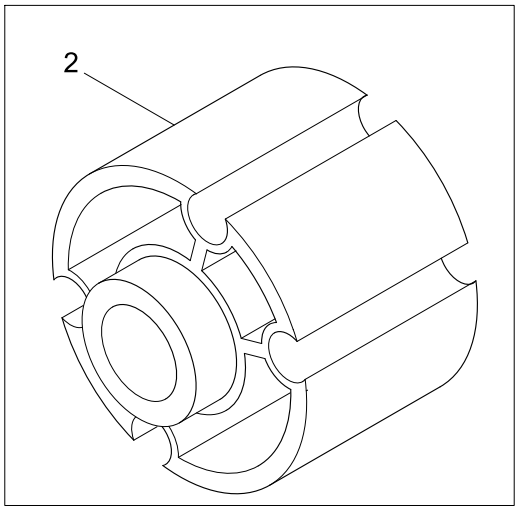

Item	Part_No	IS	Ord	T	Description	Qty	Serial_No	ITC	Remark
*	@				THERMOSTAT HOUSING	1	- #0071	-	NOT
1	3903757				BRACKET-LIFTING	1			TH9701
2	3900632				SCREW	1			
3	3926972				SCREW	1			
4	3285102				HOUSING-THERMOSTAT	2			
5	3923331				GASKET-THM HSG CVR	1			
10	3917324				THERMOSTAT	1			EC9706

THERMOSTAT & HOUSING(-#0071)

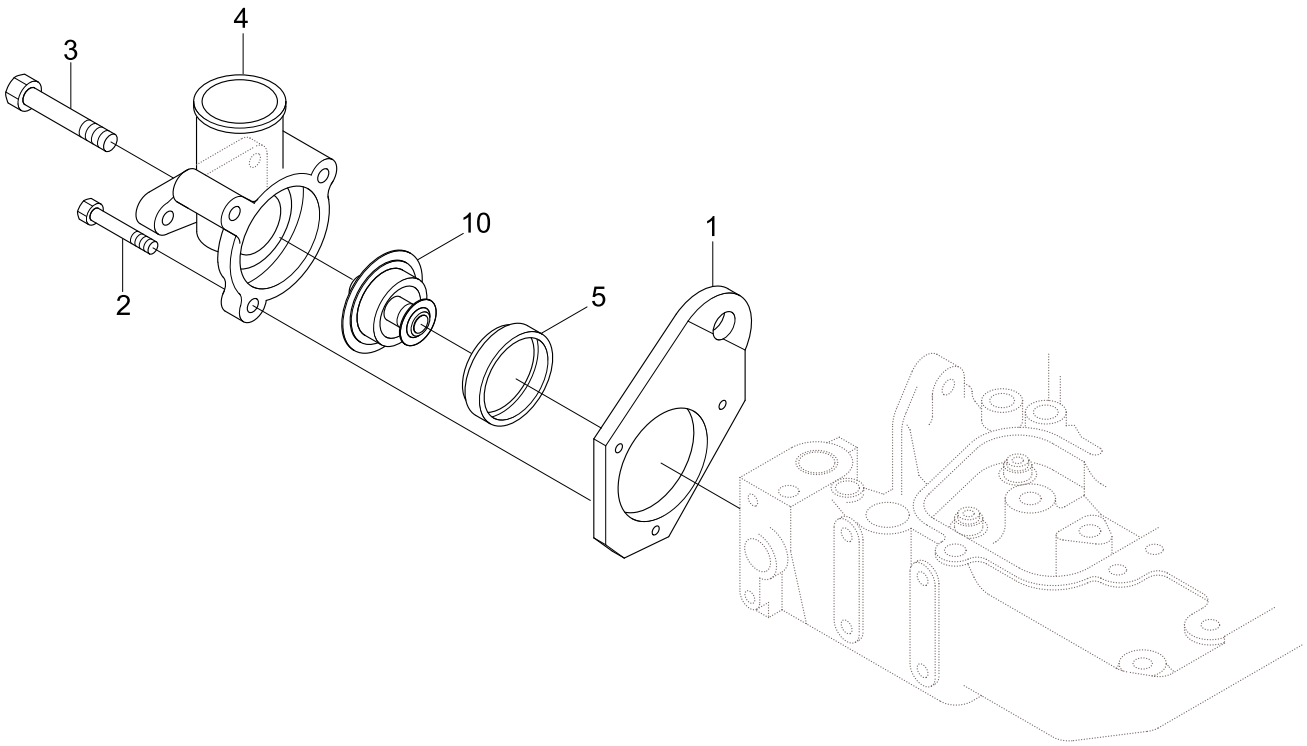

Item	Part_No	IS	Ord	T	Description	Qty	Serial_No	ITC	Remark
*	@				THERMOSTAT HOUSING	1	- #0071	-	NOT
1	3903757				BRACKET-LIFTING	1			TH9701
2	3900632				SCREW	1			
3	3926972				SCREW	1			
4	3285102				HOUSING-THERMOSTAT	2			
5	3923331				GASKET-THM HSG CVR	1			
10	3917324				THERMOSTAT	1			EC9706

ALTERNATOR LOCATION(-#0071)

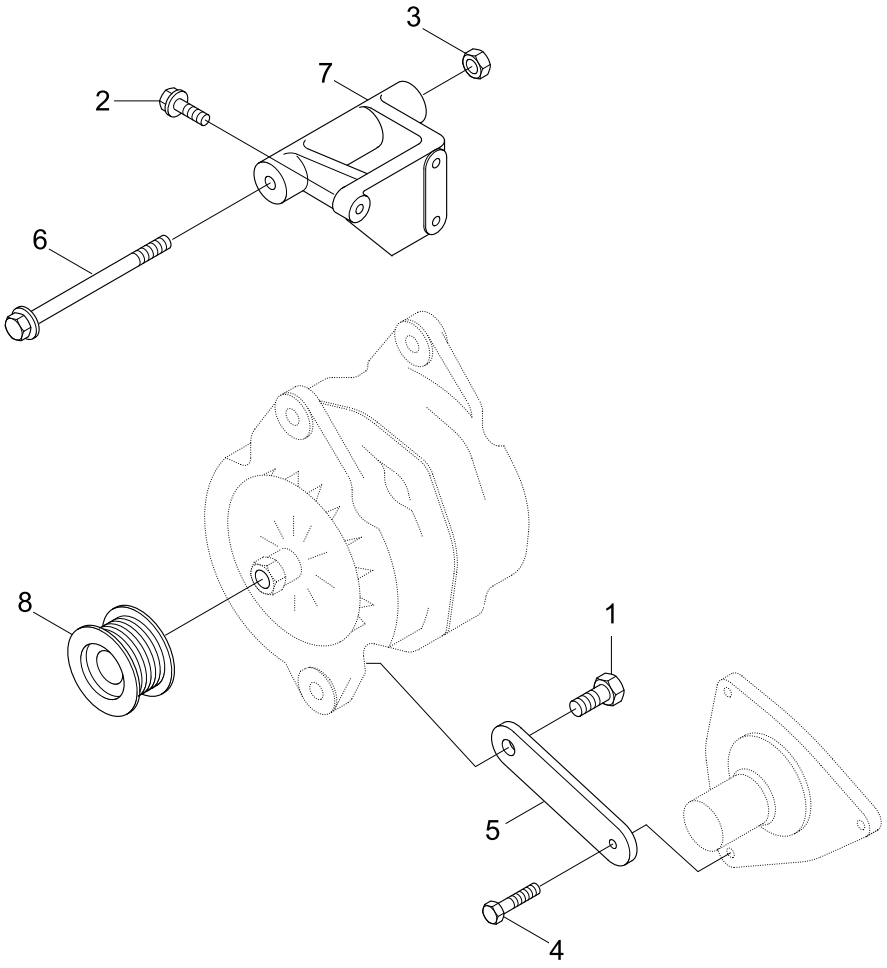

Item	Part_No	IS	Ord	T	Description	Qty	Serial_No	ITC	Remark
*	@				ALTERNATOR LOCATION	1	- #0071	-	NOT
1	3052061				SCREW	1			EH9465
2	3900631				SCREW-HEX HEAD CAP	3			
3	3903210				NUT	1			
4	3902460				SCREW-HEX HEAD CAP	1			
N5	3939905				BRACE-ALTERNATOR	1			NOT
6	3903105				SCREW-HEX HEAD CAP	1			
7	3921737				SUPPORT-ALTERNATOR	1			
8	3925852				PULLEY	1			

ALTERNATOR DRIVE(-#0071)

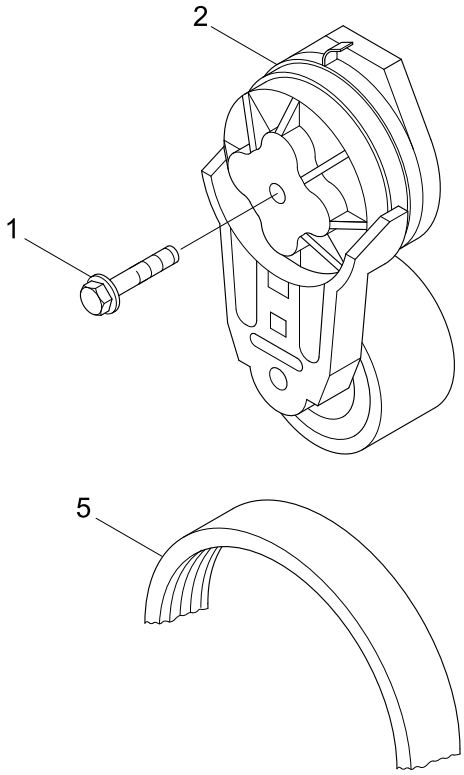

Item	Part_No	IS	Ord	T	Description	Qty	Serial_No	ITC	Remark
*	@				ALTERNATOR DRIVE	1	- #0071	-	NOT
1	3282081				SCREW	1			WP9949
2	3936213				TENSIONER-BELT	1			
5	3289135				BELT-V RIBBED	1			WP97035-01

CABIN HEATER PLUMBING(-#0071)

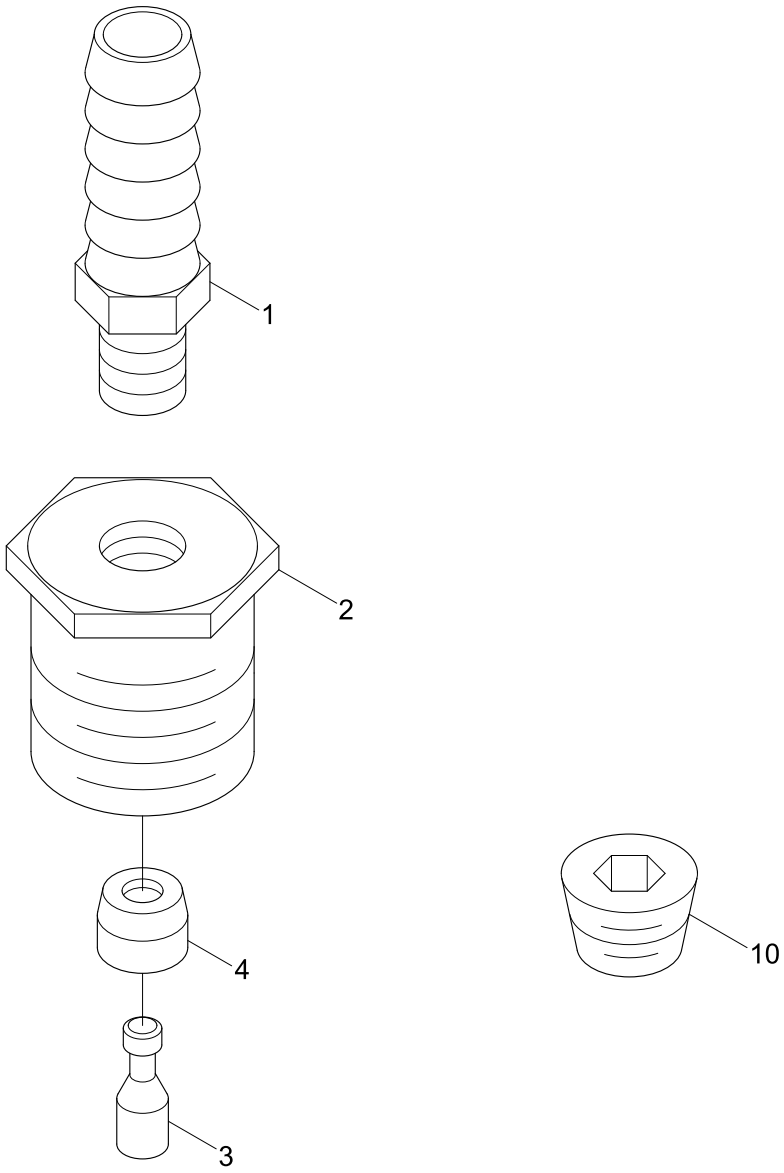

Item	Part_No	IS	Ord	T	Description	Qty	Serial_No	ITC	Remark
*	@				CABIN HEATER PLUMBING	1	- #0071	-	NOT
	3935152				VALVE	1			RP9035
1	3922503				.COUPLING	1			
2	3935153				.BUSHING	1			
N3	3935182				.PLUNGER	1			NOT
N4	3935183				.BUSHING	1			NOT
10	3008468				PLUG-PIPE	2			HC9035

FAN DRIVE(-#0071)

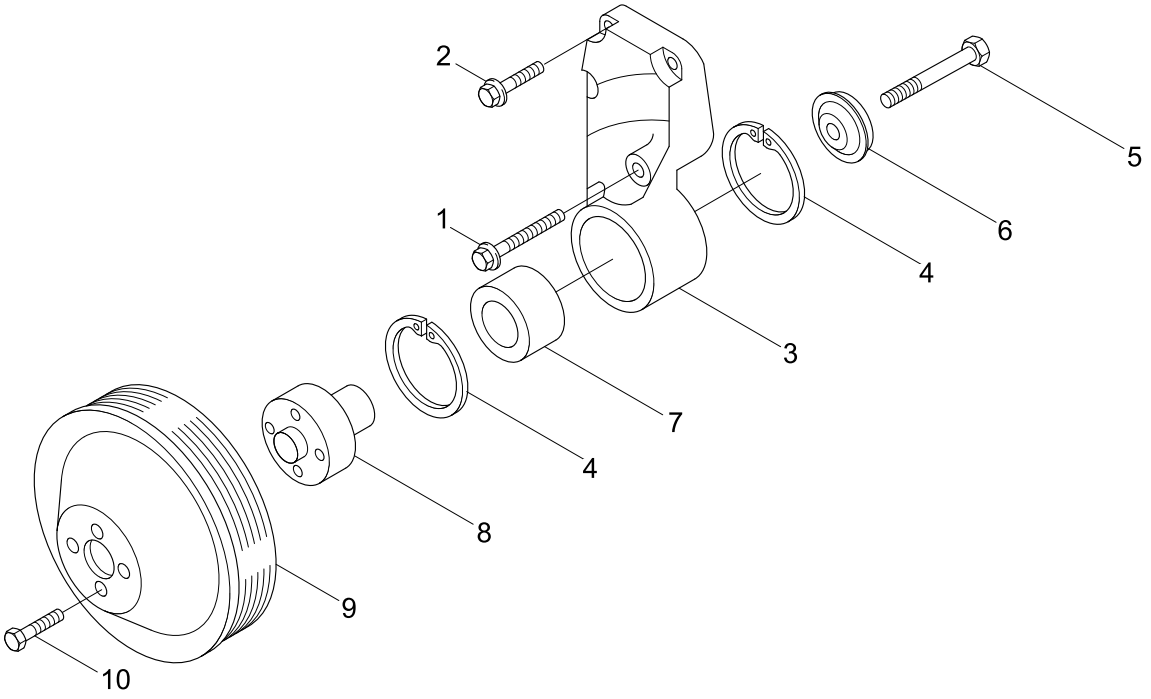

Item	Part_No	IS	Ord	T	Description	Qty	Serial_No	ITC	Remark
*	@				FAN DRIVE	1	- #0071	-	NOT
1	3901447				SCREW-HEX F/HEAD CAP	1			FA9352
2	3902114				SCREW-HEX F/HEAD CAP	3			
*N	3285949				SUPPORT-FAN	1			NOT
N3	3285946				.SUPPORT-FAN	1			NOT
4	3035960				.RING-RETAINING	2			
5	3907769				.SCREW	1			
6	3923044				.RETAINER-FAN HUB	1			
7	3910739				.BEARING-BALL	1			
8	3911924				.HUB-FAN	1			
9	3929269				PULLEY-FAN	1			
10	3902460				SCREW-HEX F/HEAD CAP	4			FA9742
N	@				NOT INDIVIDUALLY SUPPLIED	AR			NOT

INJECTION PUMP 1(-#0071)

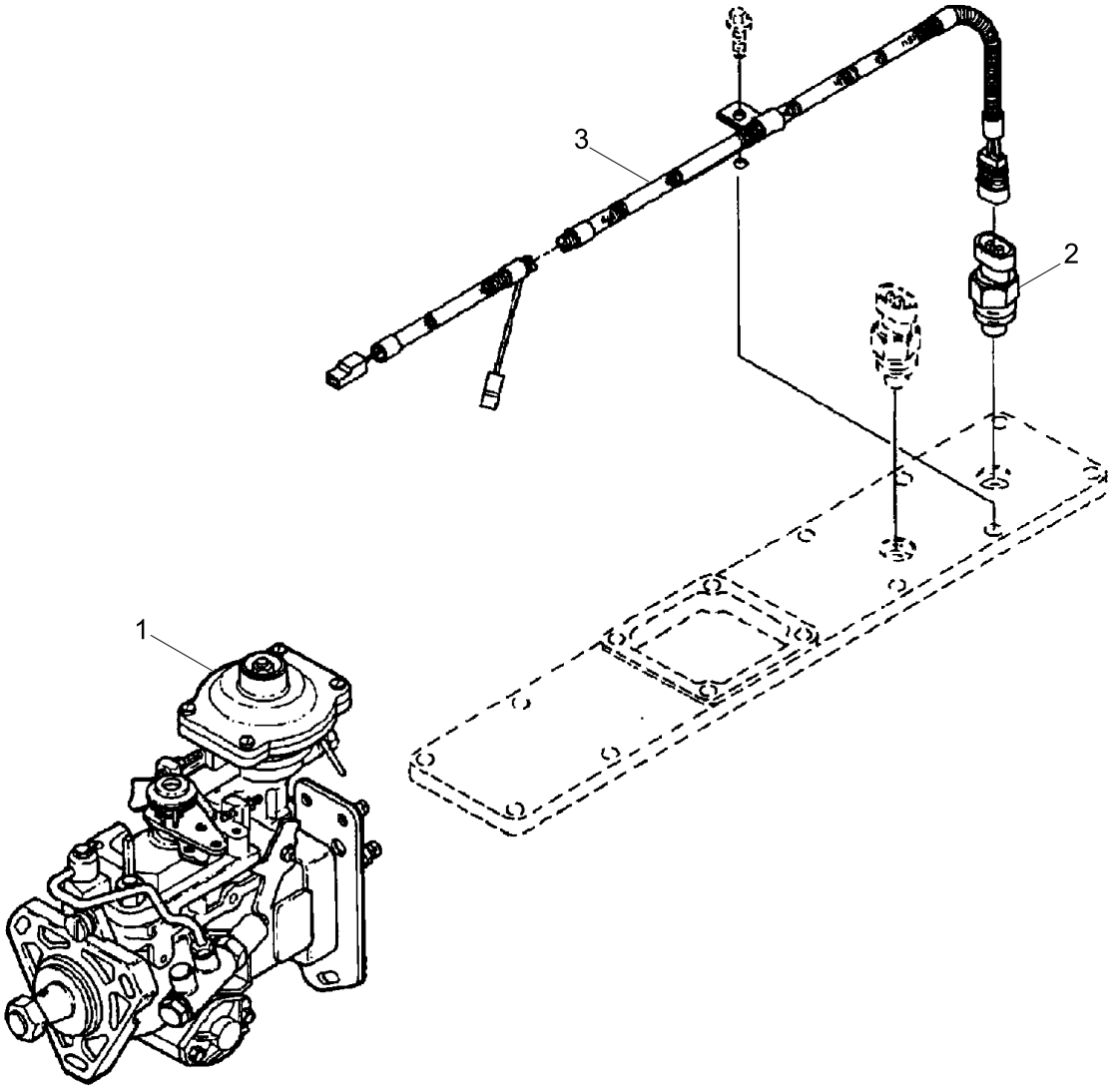

Item	Part_No	IS	Ord	T	Description	Qty	Serial_No	ITC	Remark
*	@				INJECTION PUMP 1	1	- #0071	-	NOT
1	3963966				PUMP-FUEL INJECTION	1			FP9092
2	3921642				SWITCH-THERMO	1			
3	3923303				HARNESS-WIRING	1			

INJECTION PUMP 2(-#0071)

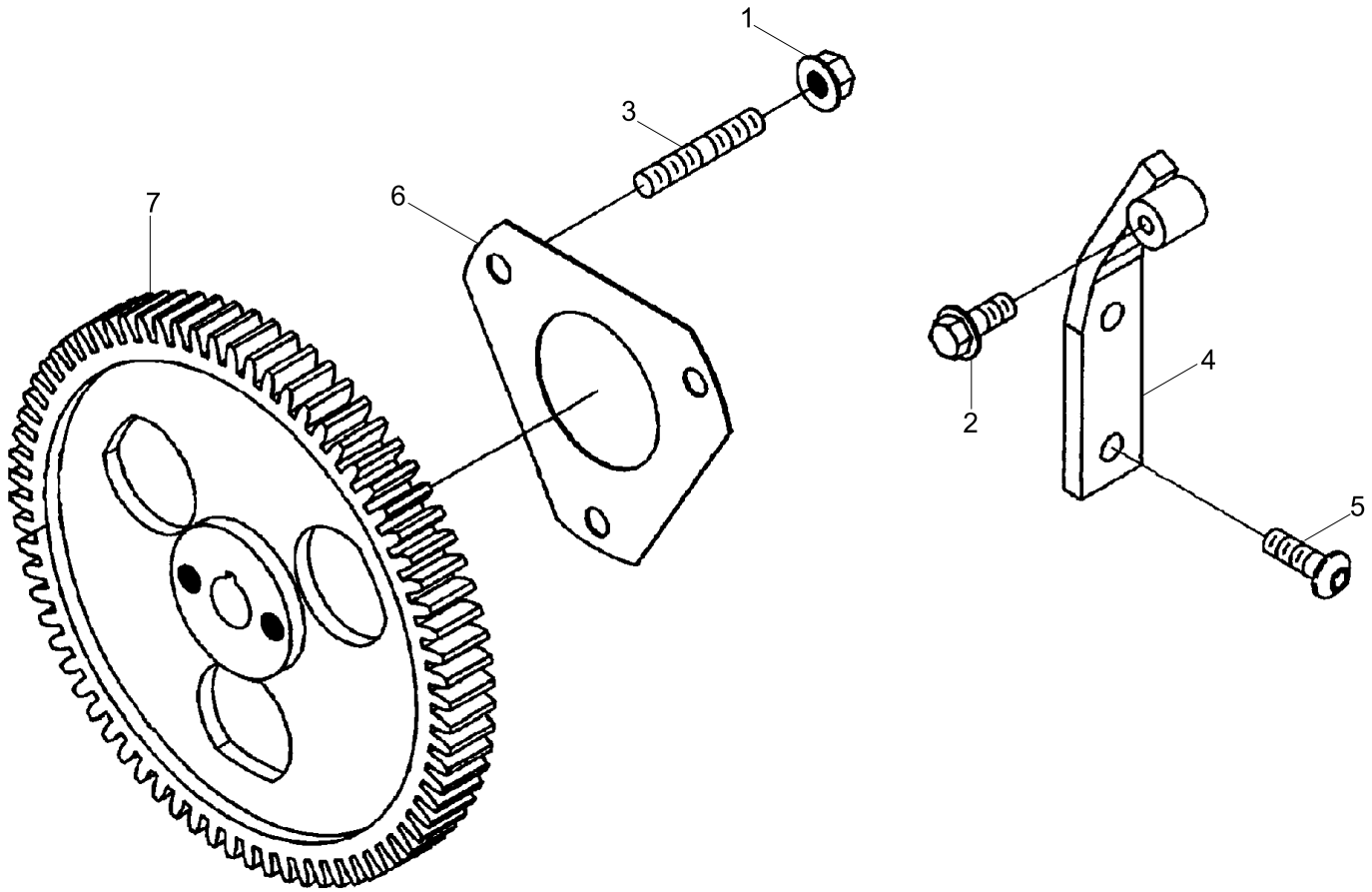

Item	Part_No	IS	Ord	T	Description	Qty	Serial_No	ITC	Remark
*	@				INJECTION PUMP	3	- #0071	-	NOT
1	3900589				NUT-HEX FLANGE	3			FP99110-02
2	3900630				SCREW-HEX F/HEAD CAP	1			
3	3902501				STUD	3			
4	3905313				BRACE-FUEL PUMP	1			
5	3900631				SCREW-HEX F/HEAD CAP	2			
6	3939355				GASKET-FUEL PUMP	1			
7	3936021				GEAR-FUEL PUMP	1			

Item	Part_No	IS	Ord	T	Description	Qty	Serial_No	ITC	Remark
*	@				FUEL CLEANER	2	- #0071	-	NOT
1	3900632				SCREW-HEX F/HEAD CAP	2			FF9413
*	3966139				FILTER-FUEL	1			
*-1	3678923				.PLUG-THREADED	2			
N3	3678924				..PLUG-THREADED	1			NOT
4	3678925				..SEAL/O-RING	1			
5	3942453				.ADAPTER	1			
6	11N4-70210				.FUEL FILTER	1	- #0071	-	
7	3942627				.HEAD-FUEL FILTER	1			

FLYWHEEL HOUSING(-#0071)

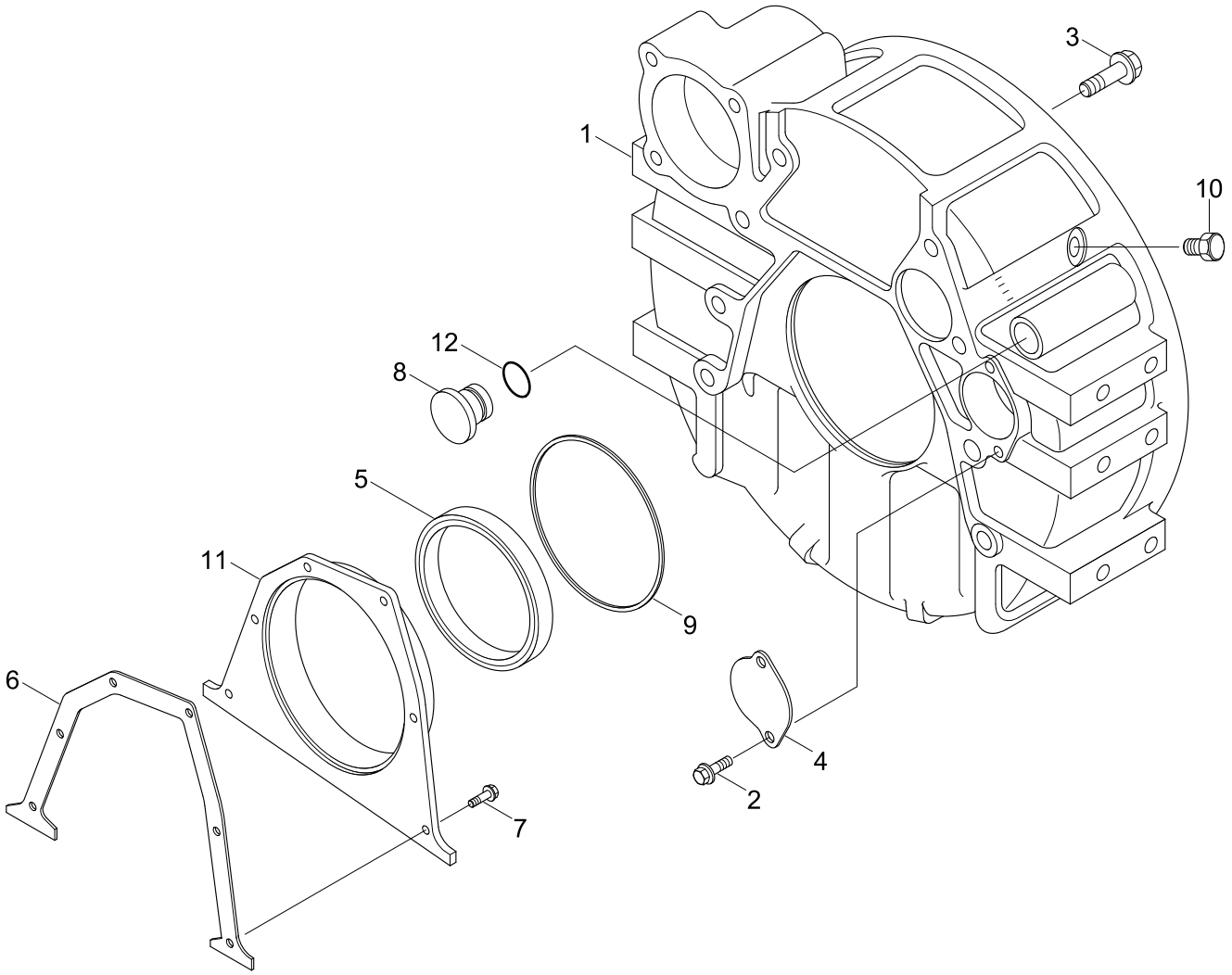

Item	Part_No	IS	Ord	T	Description	Qty	Serial_No	ITC	Remark
*	@				FLYWHEEL HOUSING	1	- #0071	-	NOT
1	3937426				FLYWHEEL HOUSING	1			FH9343-01
2	3912072				SCREW	2			
3	3920447				SCREW-HEX F/HEAD CAP	8			
4	3925234				PLATE-COVER	1			
N*	3934486				KIT-SEAL	1			NOT
N5	3933262				.SEAL-OIL	1			NOT
6	3938159				GASKET-REAR COVER	1			
7	3991306				SCREW-HEX F/HEAD CAP	6			
8	3910248				PLUG	1			
9	3912473				SEAL-RECT RING	1			
10	3904181				PLUG-THREADED	1			
N11	3936895				COVER-REAR	1			NOT
12	3910260				O-RING	1			
N	@				NOT INDIVIDUALLY SUPPLIED	AR			NOT

AIR INTAKE MANIFOLD(-#0071)

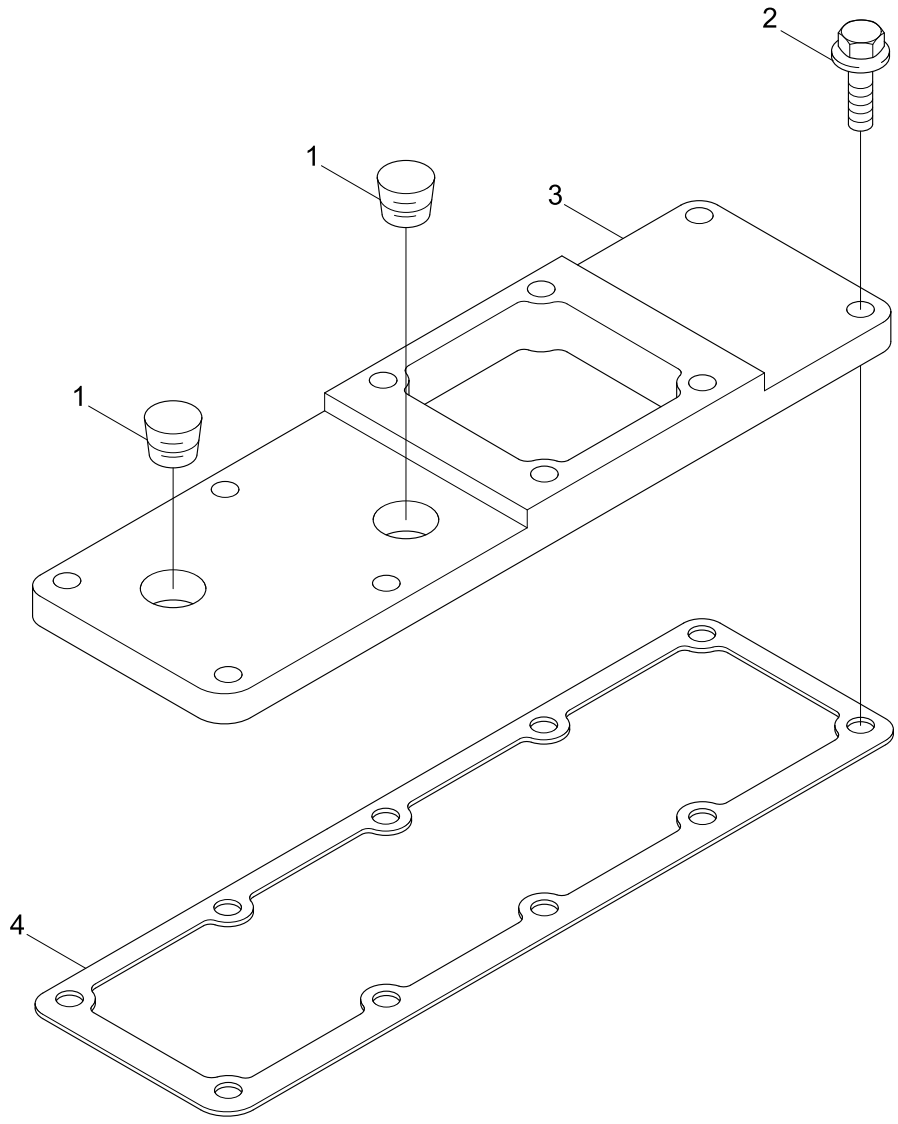

Item	Part_No	IS	Ord	T	Description	Qty	Serial_No	ITC	Remark
*	@				AIR INTAKE MANIFOLD	1	- #0071	-	NOT
1	3008468				PLUG-PIPE	1			IM9715-02
2	3918109				SCREW	3			
3	3921500				COVER-INT MANIFOLD	1			
4	3938153				GASKET-INT MANI CVR	1			

INJECTOR PLUMBING(-#0071)

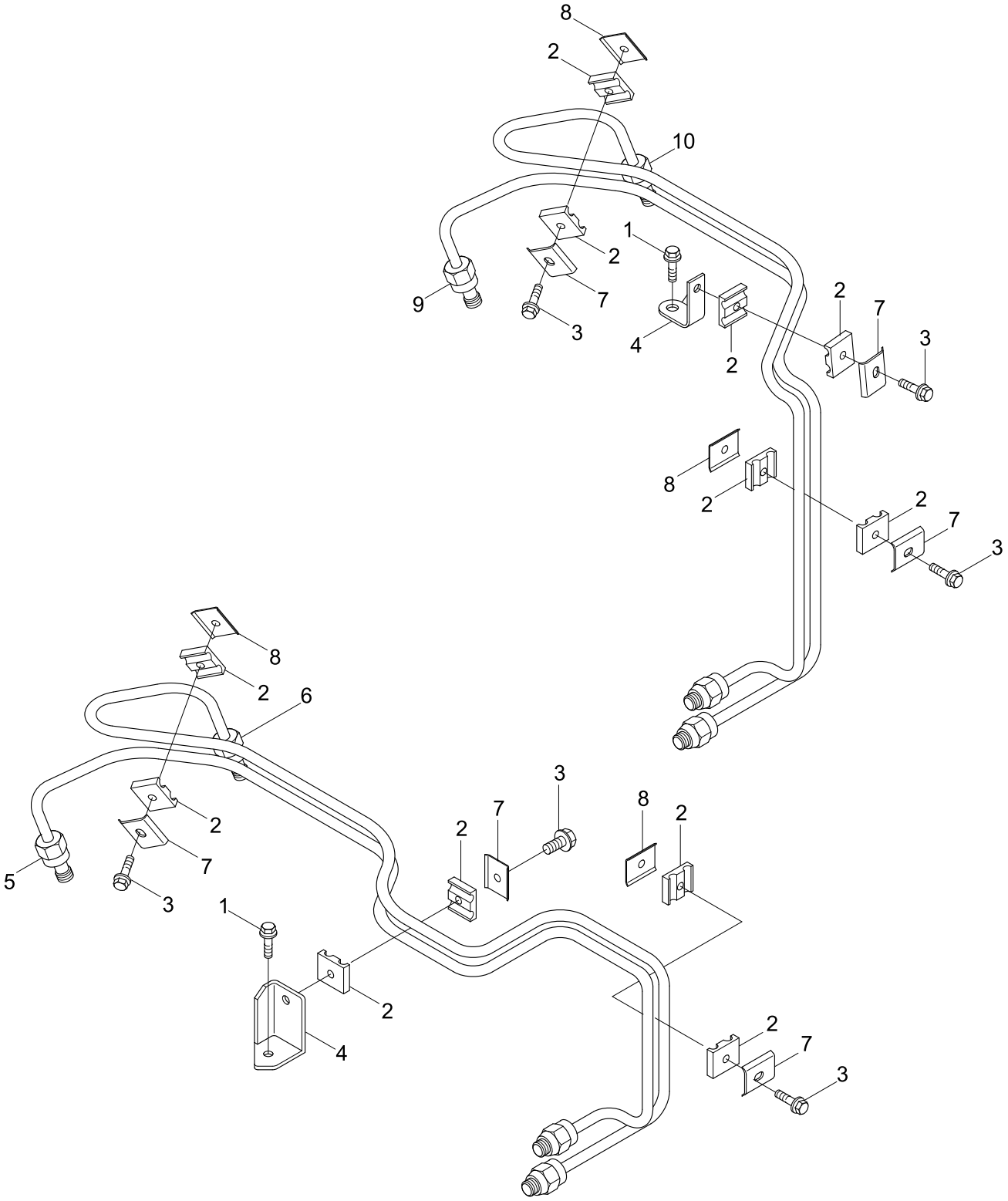

Item	Part_No	IS	Ord	T	Description	Qty	Serial_No	ITC	Remark
*	@				INJECTOR PLUMBING	1	- #0071	-	NOT
1	3918109				SCREW	2			PP98369
*	3964262				TUBE-INJ FUEL SUPPLY	1			
2	3917746				.ISOLATOR-VIBRATION	6			
3	3920854				.SCREW	3			
4	3935746				.BRACE-TUBE	1			
5	3964259				.TUBE	1			
6	3964261				.TUBE	1			
7	3991276				.BRACE-TUBE	3			
8	3991277				.BRACE-TUBE	2			
*	3964263				TUBE-INJ FUEL SUPPLY	1			
2	3917746				.ISOLATOR-VIBRATION	6			
3	3920854				.SCREW	3			
4	3935746				.BRACE-TUBE	1			
9	3964264				.TUBE	1			
10	3964266				.TUBE	1			
7	3991276				.BRACE-TUBE	3			
8	3991277				.BRACE-TUBE	2			

AIR INTAKE CONNECTION 1(-#0071)

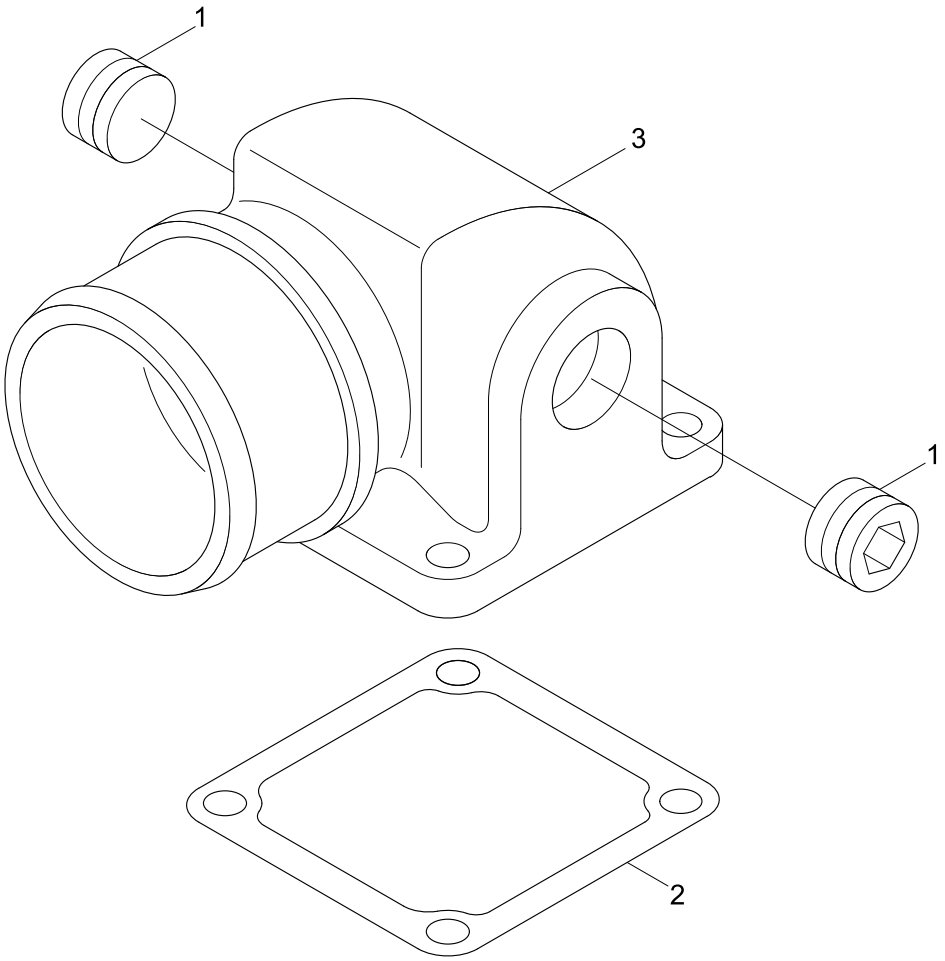

Item	Part_No	IS	Ord	T	Description	Qty	Serial_No	ITC	Remark
*	@				AIR INTAKE CONNECTION 1	1	- #0071	-	NOT
1	3008469				PLUG-PIPE	2			IC9323
2	3938158				GASKET-CONNECTION	1			
3	3924990				CONNECTION-AIR INTAKE	1			

AIR INTAKE CONNECTION 2(-#0071)

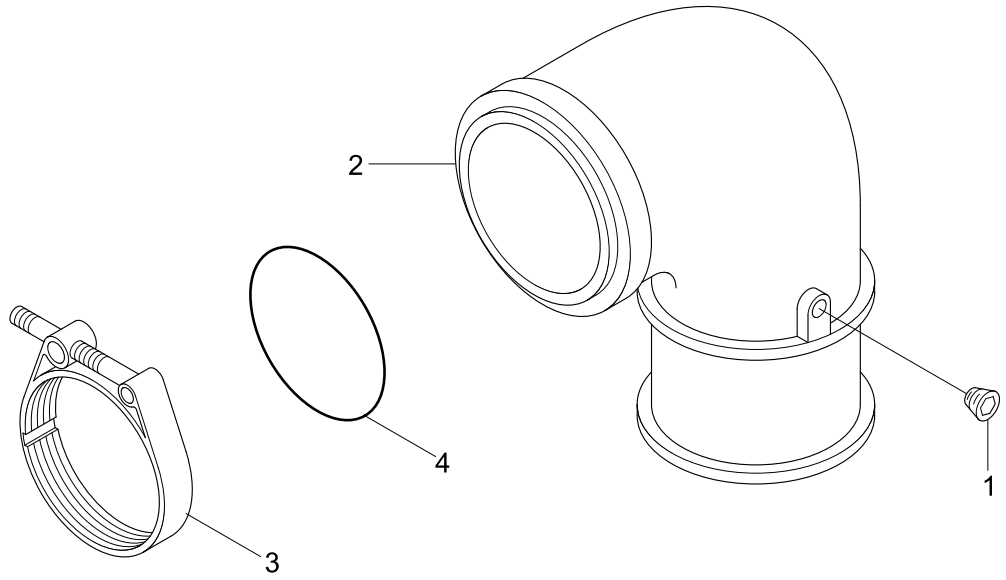

Item	Part_No	IS	Ord	T	Description	Qty	Serial_No	ITC	Remark
*	@				AIR INTAKE CONNECTION 2	1	- #0071	-	NOT
1	3008465				PLUG-PIPE	1			IT9056
2	3958958				PIPE-AIR TRANSFER	1			
3	3918951				CLAMP-V BAND	1			
4	3918952				O-RING	1			

AIR INTAKE CONNECTION 3(-#0071)

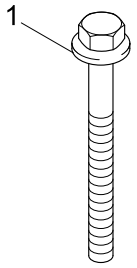

Item	Part_No	IS	Ord	T	Description	Qty	Serial_No	ITC	Remark
*	@				AIR INTAKE CONNECTION 3	1	- #0071	-	NOT
1	3919864				SCREW-HEX FLANGE	4			IC9736

FLYWHEEL(-#0071)

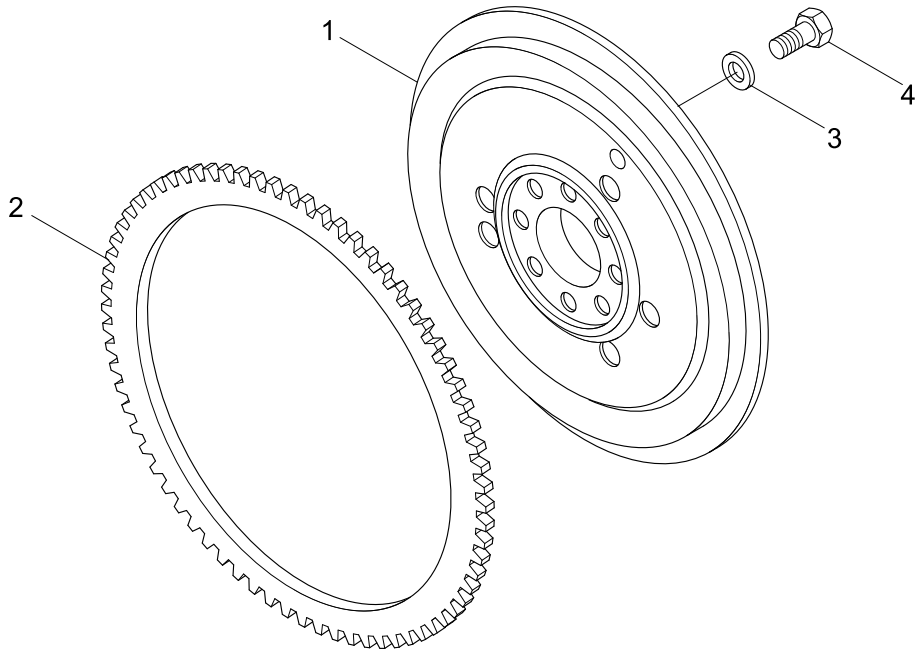

Item	Part_No	IS	Ord	T	Description	Qty	Serial_No	ITC	Remark
*	3282053				FLYWHEEL	1	- #0071	-	FW9601
N1	3282051				.FLYWHEEL	1			NOT
2	3905427				.GEAR-FLYWHEEL RING	1			
3	3900269				WASHER-PLAIN	8			FW9704
4	3901395				SCREW	8			
N	@				NOT INDIVIDUALLY SUPPLIED	AR			NOT

LIFTING BRACKET(-#0071)

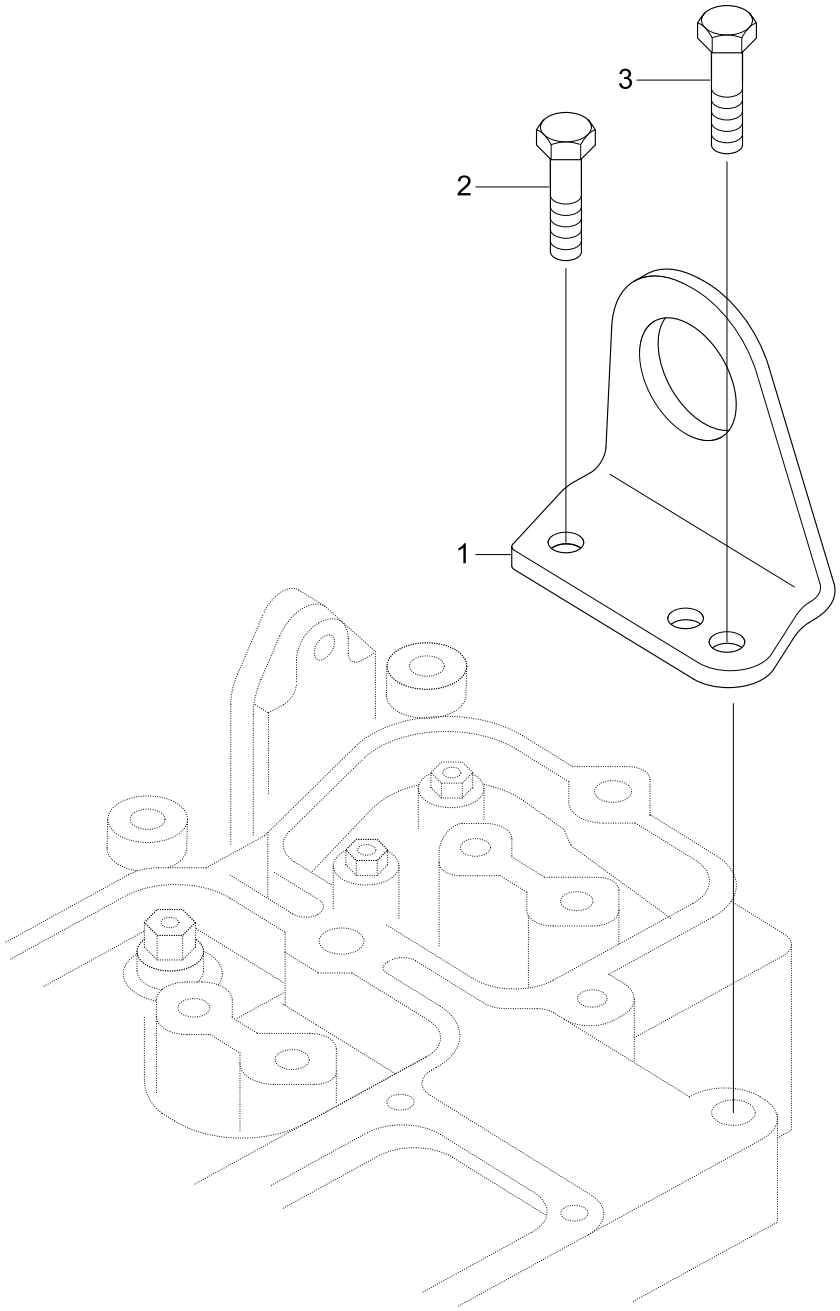

Item	Part_No	IS	Ord	T	Description	Qty	Serial_No	ITC	Remark
*	@				LIFTING BRACKET	1	- #0071	-	NOT
1	3908118				BRACKET-LIFTING	1			LA9082-01
2	3910495				SCREW	1			
3	3944061				SCREW-HEX F/HD CAP	1			

Item	Part_No	IS	Ord	T	Description	Qty	Serial_No	ITC	Remark
*	@				LUBRICATING OIL COOLER	1	- #0071	-	NOT
1	3900632				SCREW	14			LC9732-01
2	3906619				PLUG-PIPE	1			
3	3915787				PLUG-THREADED	1			
4	3918428				PLUNGER	1			
*	3918954				HEAD-LUB OIL FILTER	1			
5	3909355				.ADAPTER-FILTER HEAD	1			
N6	3924338				.HEAD-LUB OIL FILTER	1			NOT
7	3918427				SPRING-CMPR	1			
8	3936365				VALVE	1			
9	3929457				SEAL/O-RING	1			
N10	3957543				CORE-COOLER	1			NOT
11	3942914				GASKET-O/COOLER CORE	1			
12	3942915				GASKET-FILTER HEAD	1			
20	3934429				ELEMENT-LUB OIL FILTER	1			LF9100
N	@				NOT INDIVIDUALLY SUPPLIED	AR			NOT

OIL LEVEL GAUGE(-#0071)

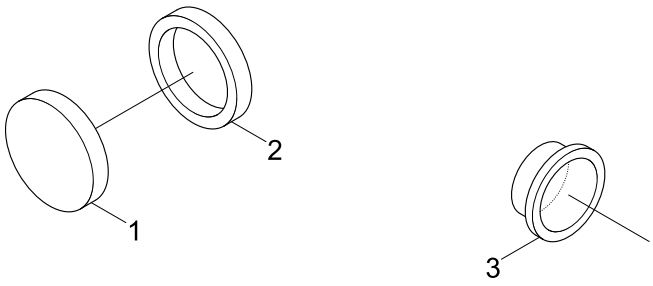

Item	Part_No	IS	Ord	T	Description	Qty	Serial_No	ITC	Remark
*	@				OIL LEVEL GAUGE	1	- #0071	-	NOT
1	3903463				COVER	1			OB9719
2	3903475				SEAL-RECT RING	1			
3	3900958				PLUG-EXPANSION	1			

LUBRICATING OIL PUMP(-#0071)

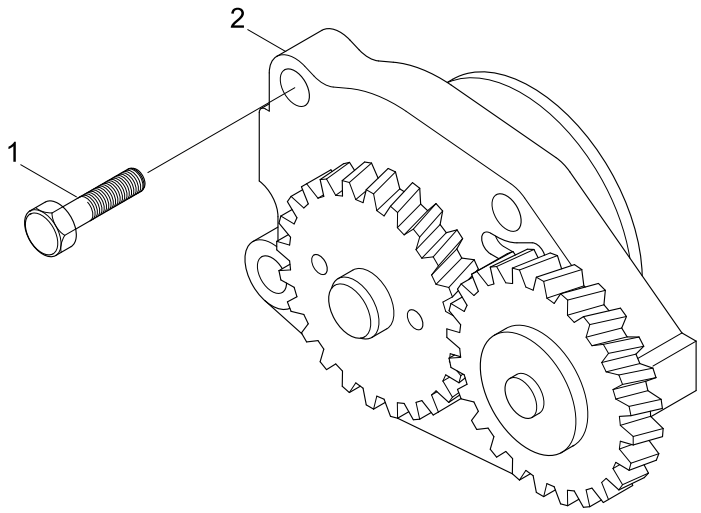

Item	Part_No	IS	Ord	T	Description	Qty	Serial_No	ITC	Remark
*	@				LUBRICATING OIL PUMP	1	- #0071	-	NOT
1	3937027				PUMP-LUB OIL	1			LP9728
2	3900677				SCREW	4			

Item	Part_No	IS	Ord	T	Description	Qty	Serial_No	ITC	Remark
*	@				FUEL PLUMBING	1	- #0071	-	NOT
1	3968150				TUBE-CIR FUEL CONTORL	1			FE9949-03
3	3918188				WASHER-SEALING	2			
4	3920803				CONNECTOR	1			
5	3924724				SCREW	1			

OIL PAN(-#0071)

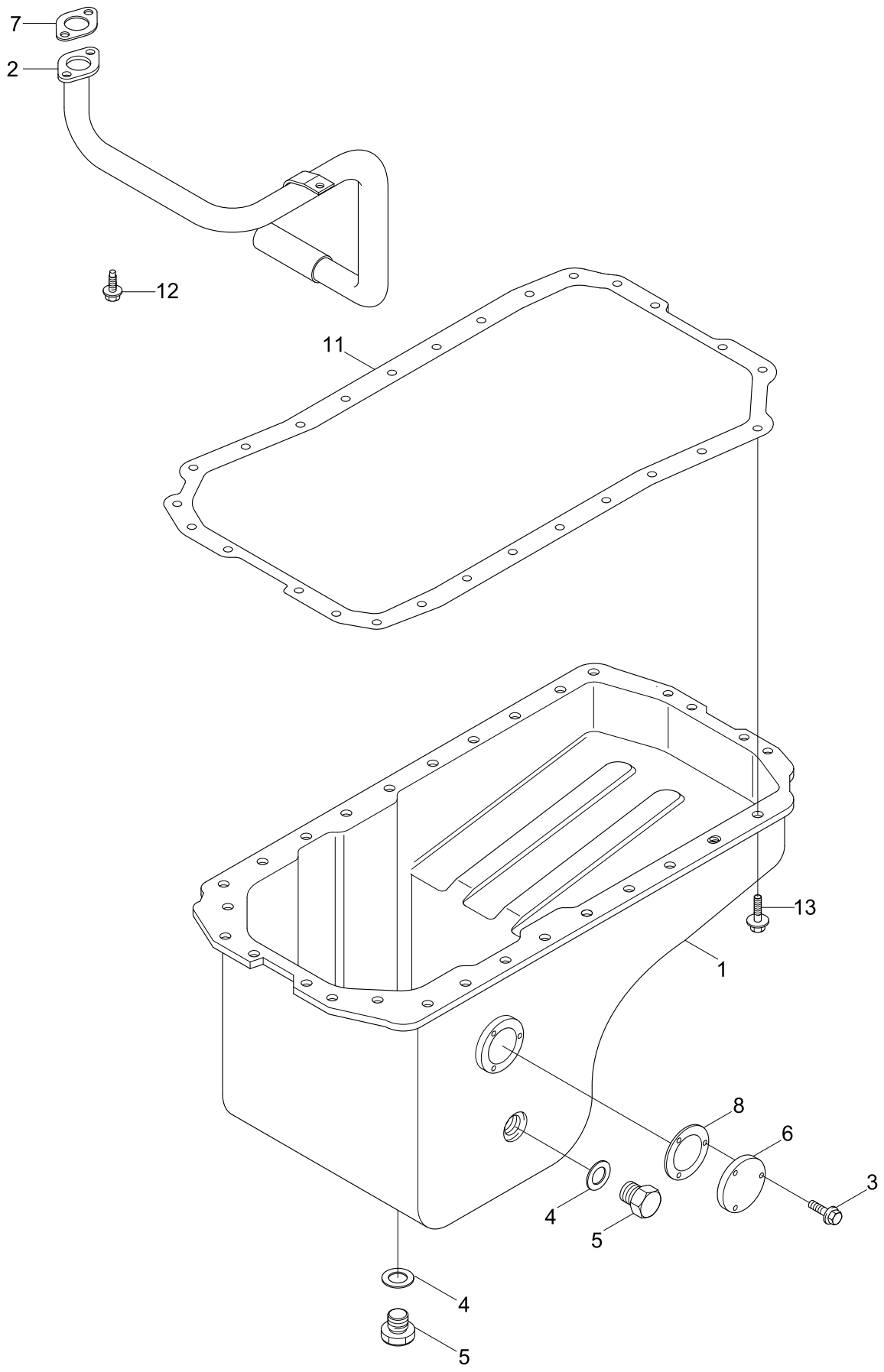

Item	Part_No	IS	Ord	T	Description	Qty	Serial_No	ITC	Remark
*	@				OIL PAN	1	- #0071	-	NOT
1	3863222				PAN-OIL	1			OP9356-01
2	3863416				CONNECTION-O/SUCTION	1			
3	3900626				SCREW	3			
4	3902425				WASHER-SEALING	2			
5	3924148				PLUG	2			
6	3932513				PLATE-COVER	1			
7	3938157				GASKET-FLANGE	1			
8	3939357				GASKET-COVER	1			
11	3938162				GASKET-OIL PAN	1			OP9749
12	3900630				SCREW-HEX HEAD CAP	1			
13	3920400				SCREW	28			

CONNECTING ROD & PISTON(-#0071)

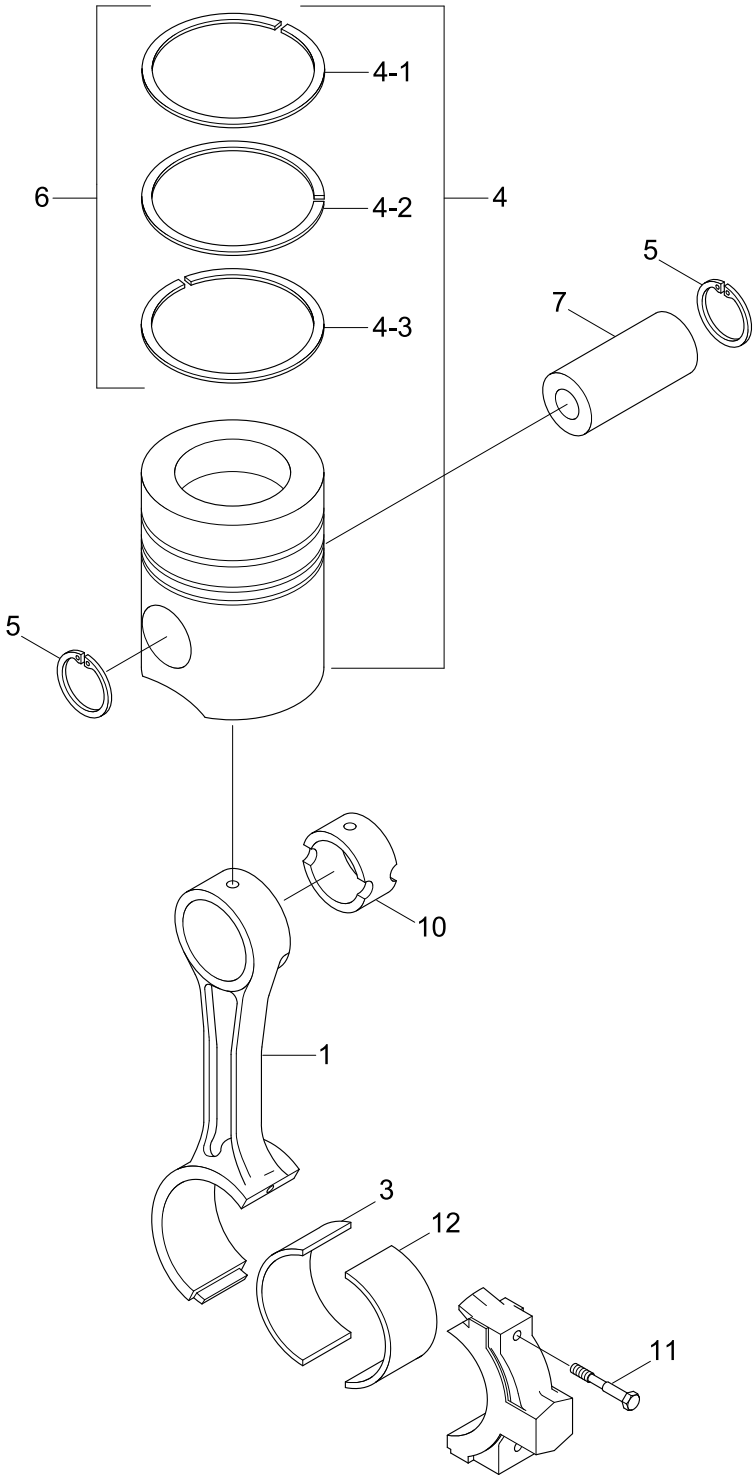

Item	Part_No	IS	Ord	T	Description	Qty	Serial_No	ITC	Remark
*	@				CONNECT ROD & PISTON	1	- #0071	-	NOT
1	3954658				ROD-CONNECTING	4			PP8239
N*	3954657				.ROD-CONNECTING	1			NOT
3	3939859				BEARING-C/ROD(STD)	2			
	3901171				BEARING-C/ROD(0.25)	AR			
	3901172				BEARING-C/ROD(0.50)	AR			
	3901173				BEARING-C/ROD(0.75)	AR			
	3901174				BEARING-C/ROD(1.00)	AR			
4	3802747				KIT-ENGINE PISTON	4			
N*	3928674				.PISTON-ENGINE	1			NOT
4-1	3902286				.RING-COMPRESSION	1			
4-2	3937392				.RING-COMPRESSION	1			
4-3	3932520				.RING-OIL PISTON	1			
5	3920691				.RING-RETAINING	2			
6	3802421				.SET-PISTON RING	1			
7	3934047				PIN-PISTON	4			
4	3802764				KIT-ENG PISTON	4			
*N	3928674				.PISTON-ENGINE	1			NOT
5	3920691				.RING-RETAINING	2			
6	3802422				.SET-P/RING(0.50 O/S)	1			
4	3802765				KIT-ENG PISTON	4			
*N	3928675				.PISTON-ENGINE	1			NOT
5	3920691				.RING-RETAINING	2			
6	3802423				.SET-PISTON RING	1			
10	4891178				BUSHING	1			

Item	Part_No	IS	Ord	T	Description	Qty	Serial_No	ITC	Remark
11	4891179				SCREW	2			
12	4893693				BEARING-C/ROD(STD)	4			

CAMSHAFT(-#0071)

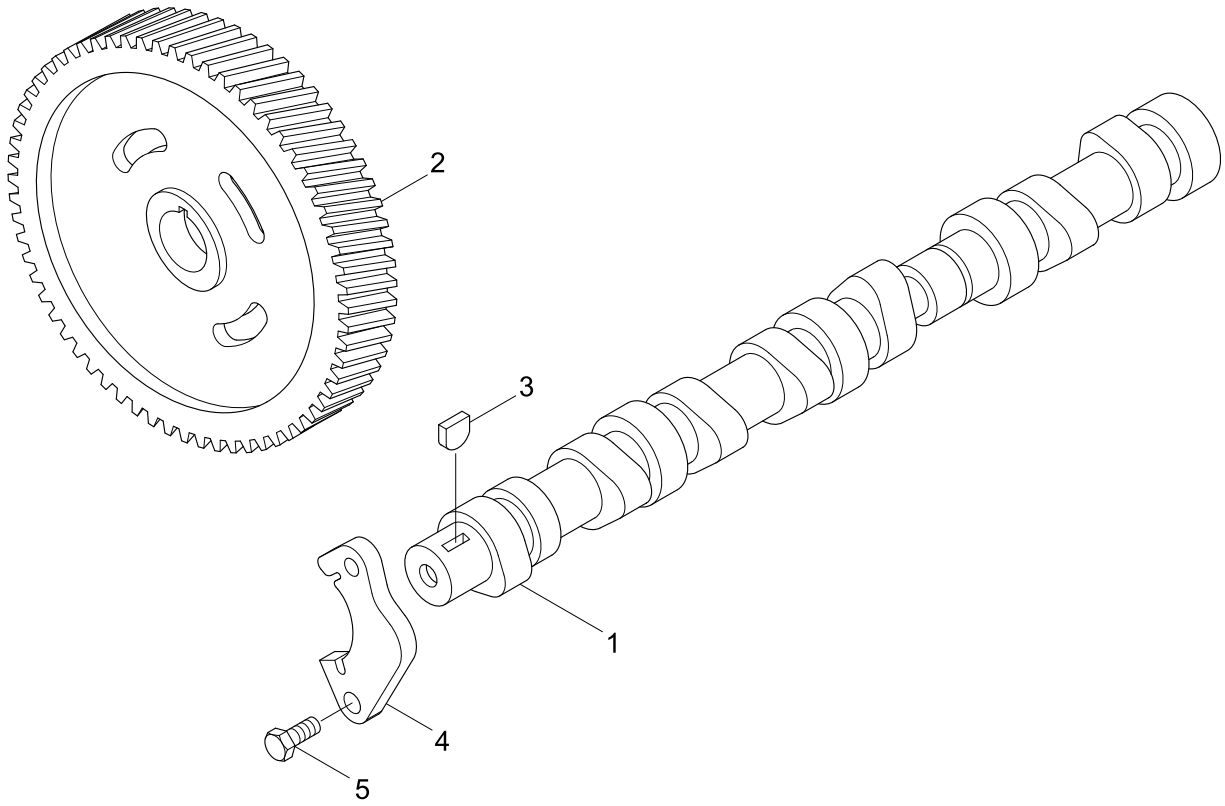

Item	Part_No	IS	Ord	T	Description	Qty	Serial_No	ITC	Remark
*	@				CAMSHAFT	1	- #0071	-	NOT
N1	3929885				CAMSHAFT	1			NOT
2	3929028				GEAR-CAMSHAFT	1			
3	3902332				KEY-PLAIN WOODRUFF	1			
4	3927155				SUPPORT	1			
5	3900227				SCREW	2			
N	@				NOT INDIVIDUALLY SUPPLIED	AR			NOT

FUEL INJECTOR(-#0071)

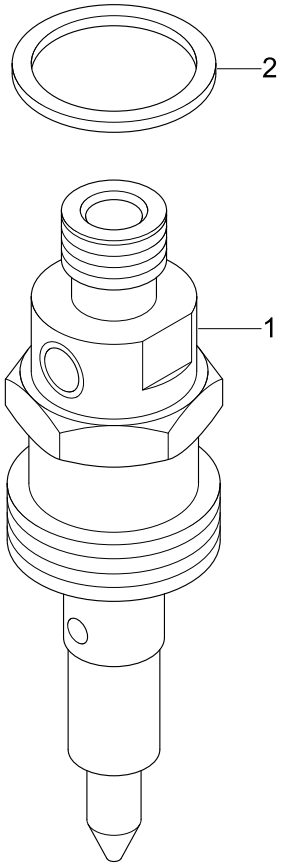

Item	Part_No	IS	Ord	T	Description	Qty	Serial_No	ITC	Remark
*	@				FUEL INJECTOR	1	- #0071	-	NOT
1	3957729				INJECTOR-FUEL	4			PP8239
2	3909356				SEAL-RECT RING	1			

CYLINDER HEAD(-#0071)

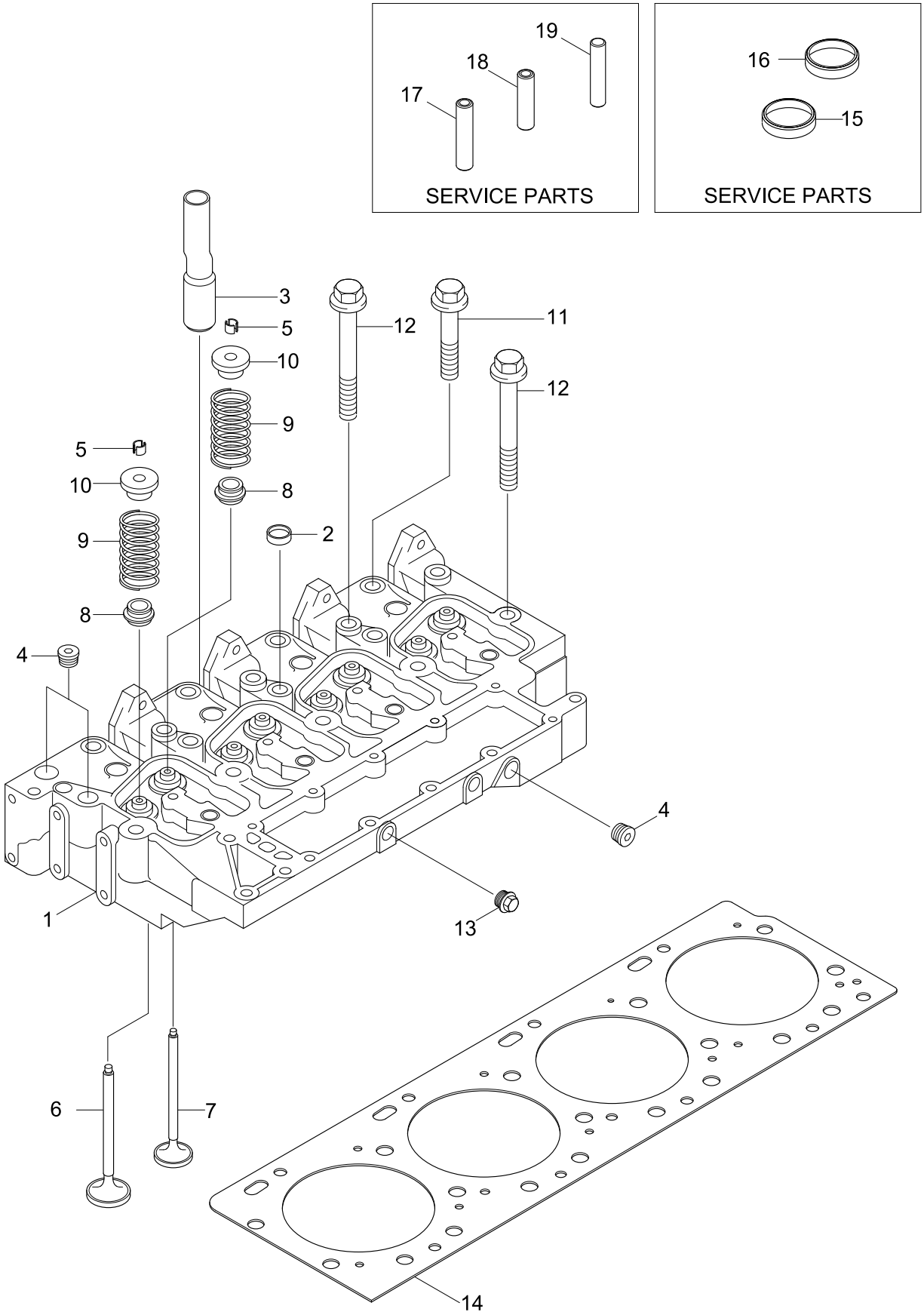

Item	Part_No	IS	Ord	T	Description	Qty	Serial_No	ITC	Remark
*	@				CYLINDER HEAD	1	- #0071	-	NOT
*N	3966448				HEAD-CYLINDER	1			NOT
N1	3966447				.HEAD-CYLINDER	1			NOT
2	3812092				..PLUG-EXPANSION	3			
3	3934712				.TUBE-AFTERCOOLER	1			
4	3008468				PLUG-PIPE	4			
*	3802355				VALVE-INTAKE	4			
5	3900250				.COLLET-VALVE	8			
N6	3920867				.VALVE-INTAKE	4			NOT
*	3802356				VALVE-EXHAUST	4			
5	3900250				.COLLET-VALVE	8			
7	3920868				.VALVE-EXHAUST	4			
8	3957912				SEAL-VALVE	8			
9	3932453				SPRING-VALVE	8			
10	3957913				RETAINER-VALVE SPRING	8			
11	3920779				SCREW	4			
12	3920780				SCREW	10			
13	3906619				PLUG-PIPE	2			
14	3283569				GASKET-CYL HEAD	1			
15	3925176				INSERT-VALVE, EXHAUST	AR			SERVICE PART
16	3925177				INSERT-VALVE, INTAKE	AR			SERVICE PART
17	3904408				GUIDE-V/STEM, 60.5	AR			SERVICE PART
18	3904409				GUIDE-V/STEM, 51.75	AR			SERVICE PART
19	3906206				GUIDE-V/STEM, THIN WALL	AR			SERVICE PART

STARTING MOTOR AND MOUNTING(-#0071)

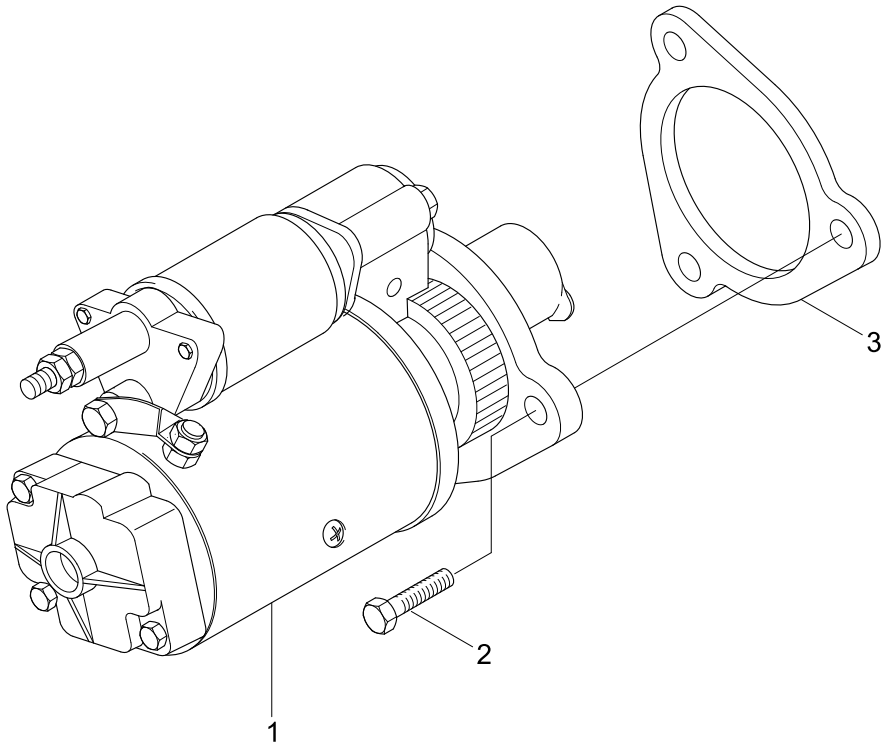

Item	Part_No	IS	Ord	T	Description	Qty	Serial_No	ITC	Remark
*	@				S/MOTOR & MOUNTING	1	- #0071	-	NOT
1	3957593				MOTOR-STARTING	1			ST9265
2	3903834				SCREW-TWELVE P/CAP	2			SM9077
3	3965057				SPACER-STARTING MOTOR	1			

VALVE COVER(-#0071)

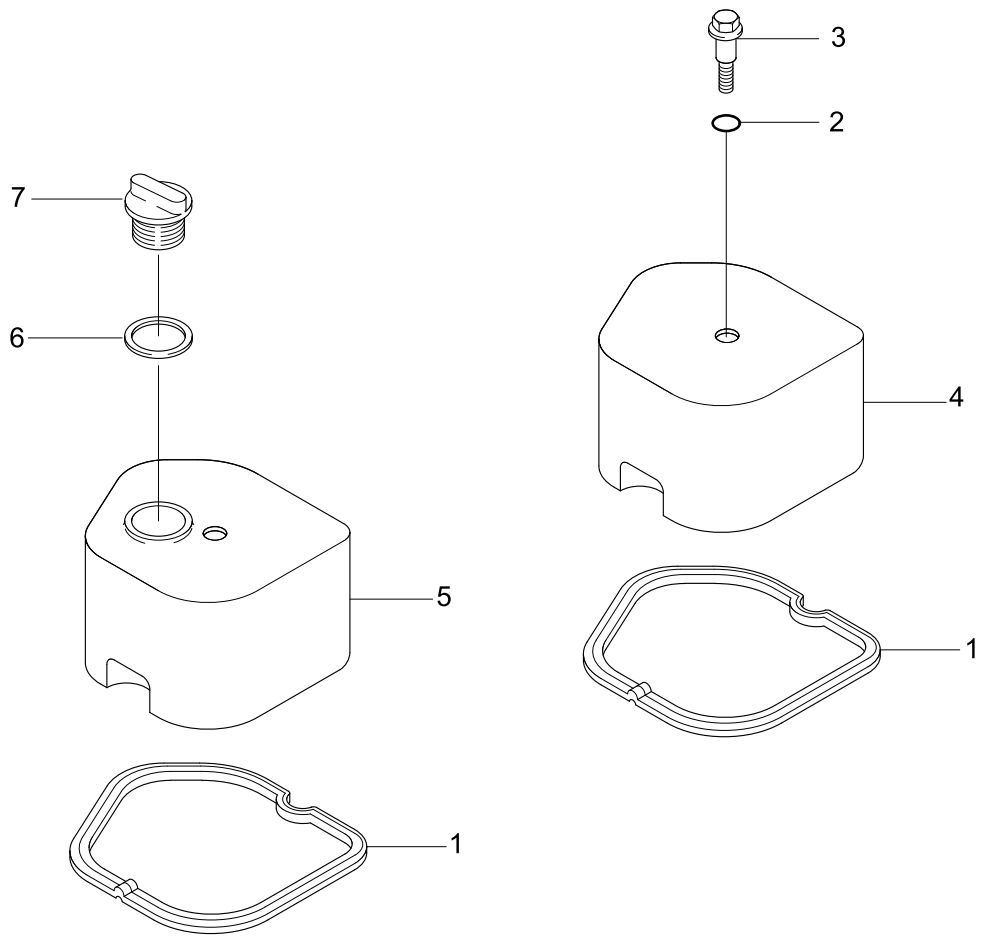

Item	Part_No	IS	Ord	T	Description	Qty	Serial_No	ITC	Remark
*	@				VALVE COVER	1	- #0071	-	NOT
1	3930906				GASKET-VALVE COVER	4			VC9781
2	3935449				ISOLATOR	4			
3	3907049				SCREW	4			
4	3928404				COVER-VALVE	3			
5	3928405				COVER-VALVE	1			
6	3936876				SEAL-RECT RING	1			
7	3901895				CAP-FILLER	1			

EXHAUST PLUMBING(-#0071)

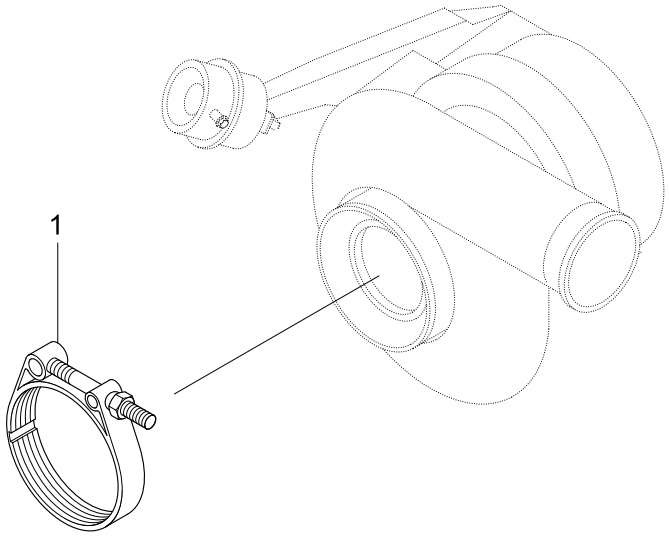

Item	Part_No	IS	Ord	T	Description	Qty	Serial_No	ITC	Remark
*	@				EXHAUST PLUMBING	1	- #0071	-	NOT
1	3903652				CLAMP-V BAND	1			XS9254

TURBOCHARGER(-#0071)

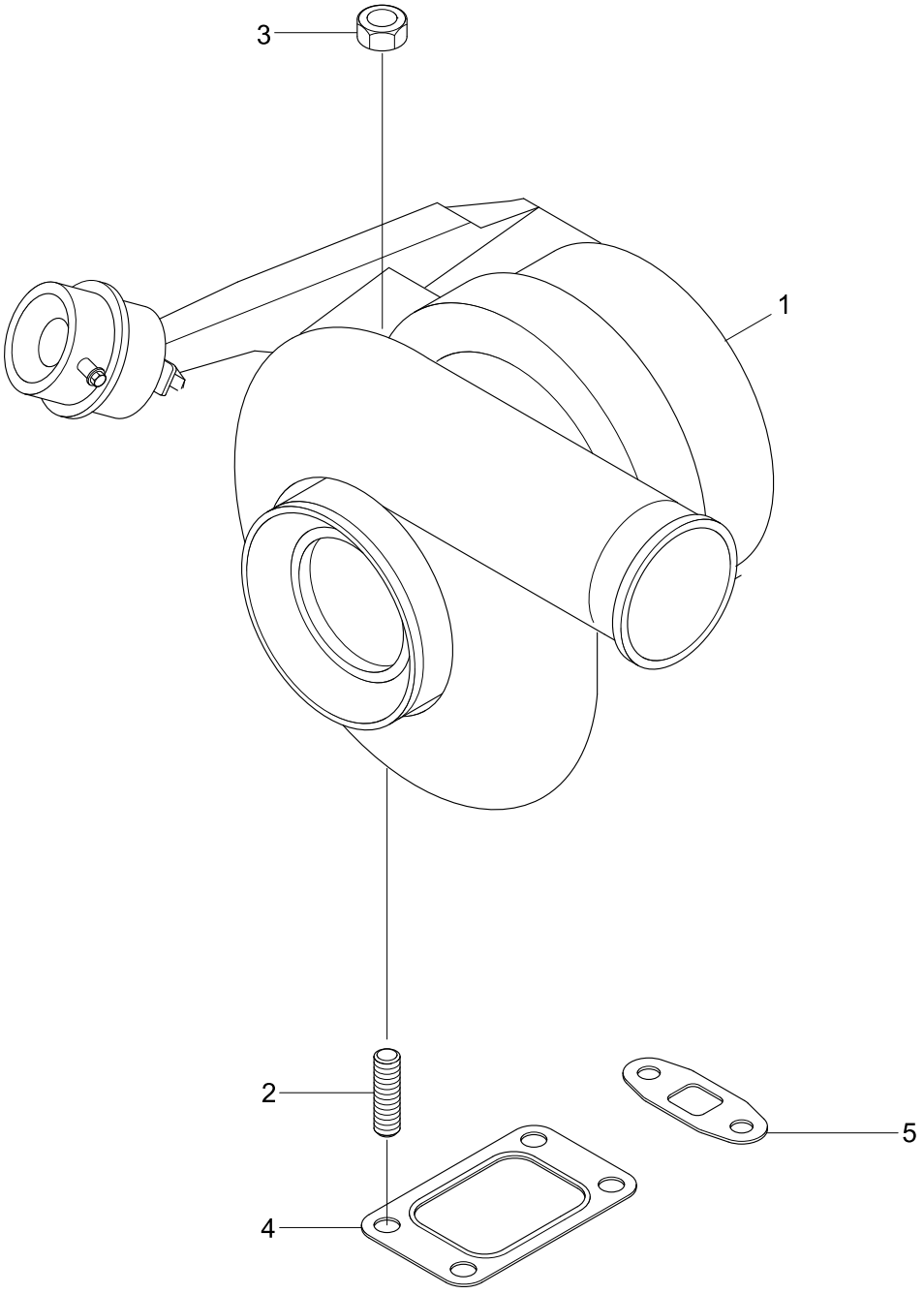

Item	Part_No	IS	Ord	T	Description	Qty	Serial_No	ITC	Remark
*	@				TURBOCHARGER	1	- #0071	-	NOT
	4089320				KIT-TURBOCHARGER	1			
N1	3598543				.TURBOCHARGER	1			NOT
4	3919369				.GASKET-TURBOCHARGER	1			
5	3937706				.GASKET-OIL DRAIN	1			
2	3818823				STUD	4			
3	3818824				NUT	4			

TURBOCHARGER LOCATION 1(-#0071)

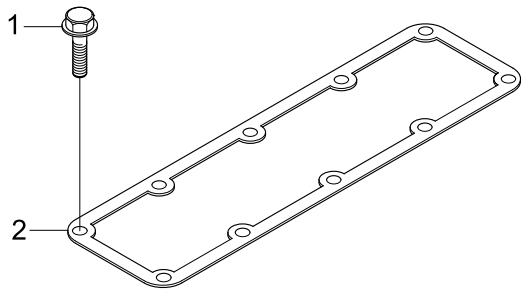

Item	Part_No	IS	Ord	T	Description	Qty	Serial_No	ITC	Remark
*	@				TURBOCHARGER	1	- #0071	-	NOT
1	3930249				SCREW	8			TB97053-01
2	3927154				GASKET-EXH MANIFOLD	4			

TURBOCHARGER LOCATION 2(-#0071)

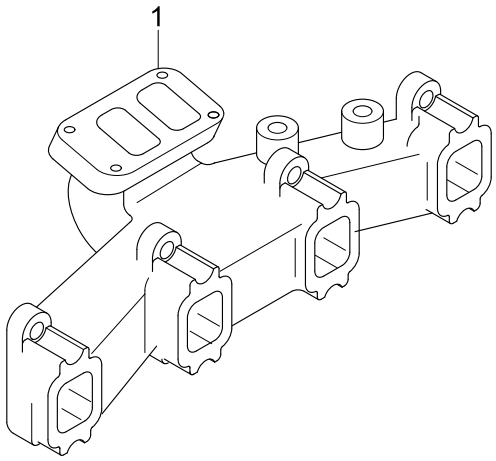

Item	Part_No	IS	Ord	T	Description	Qty	Serial_No	ITC	Remark
*	@				TURBOCHARGER	1	- #0071	-	NOT
1	3901635				MANIFOLD-EXH	1			TB97054

TURBOCHARGER PLUMBING(-#0071)

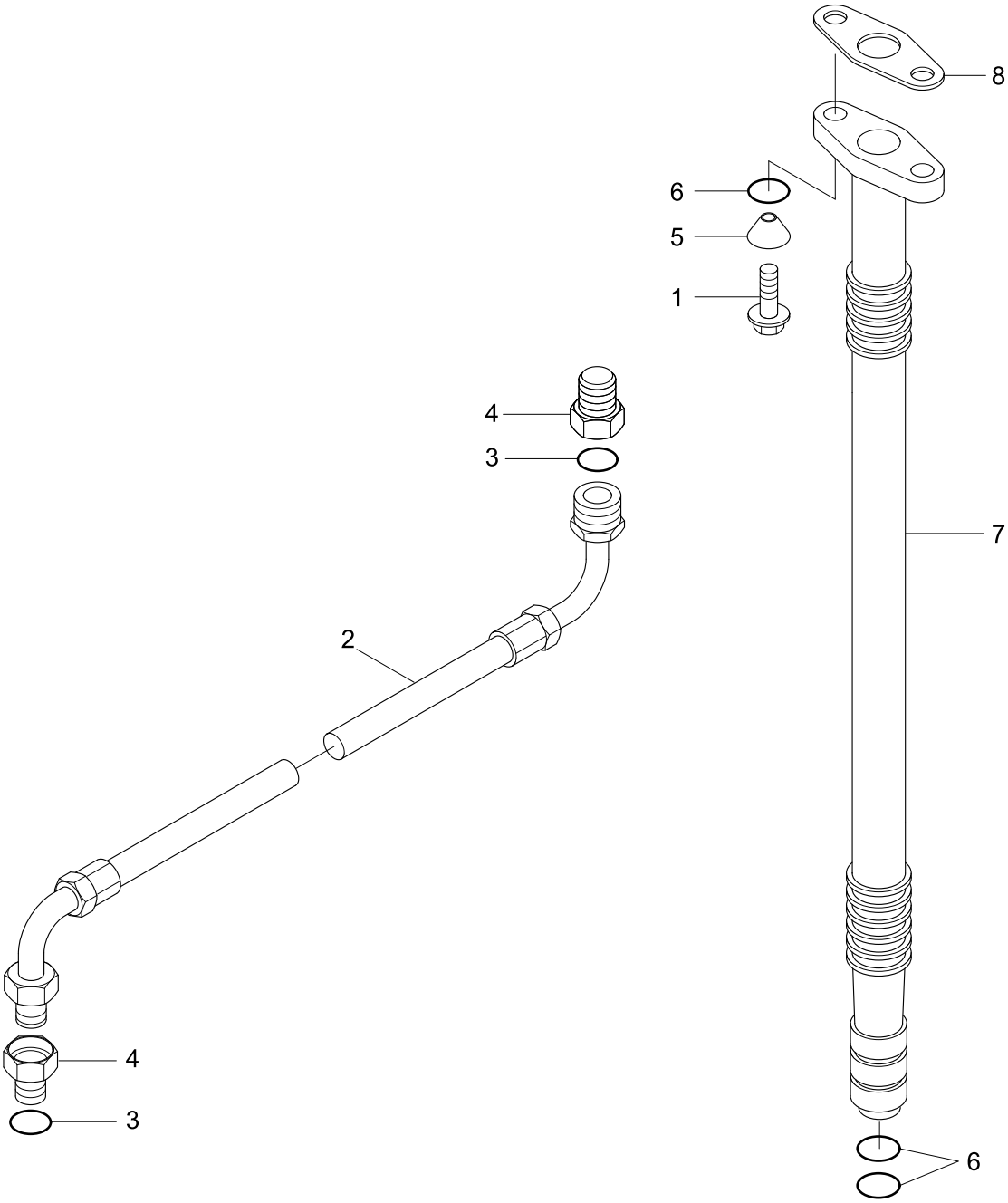

Item	Part_No	IS	Ord	T	Description	Qty	Serial_No	ITC	Remark
*	@				TURBOCHARGER PLUMBING	1	- #0071	-	NOT
1	3900630				SCREW-HEX HEAD CAP	2			TP97168-01
2	3909545				HOSE-FLEXIBLE	1			
*	3919687				CONNECTOR-FEMALE	2			
3	3037236				.SEAL/O-RING	1			
N4	3284244				.CONNECTOR	1			NOT
5	3924389				WASHER	2			
*	3934084				CONNECTION-TUR DRAIN	1			
6	3928624				.SEAL/O-RING	2			
N7	3934091				.CONNECTION-TUR DRAIN	1			NOT
8	3937706				GASKET-OIL DRAIN	1			
N	@				NOT INDIVIDUALLY SUPPLIED	AR			NOT

WATER PUMP(-#0071)

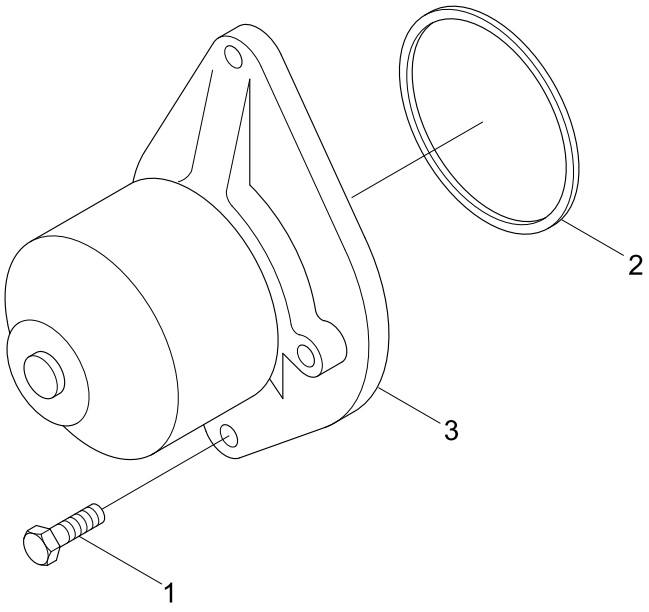

Item	Part_No	IS	Ord	T	Description	Qty	Serial_No	ITC	Remark
*	@				WATER PUMP	1	- #0071	-	NOT
1	3941981				SCREW	2			WP9950
*	3286277				KIT-WATER PUMP	1			
2	3906698				.SEAL-RECT RING	1			
N3	3285411				.PUMP-WATER	1			NOT
N	@				NOT INDIVIDUALLY SUPPLIED	AR			NOT

WATER INLET CONNECTION(-#0071)

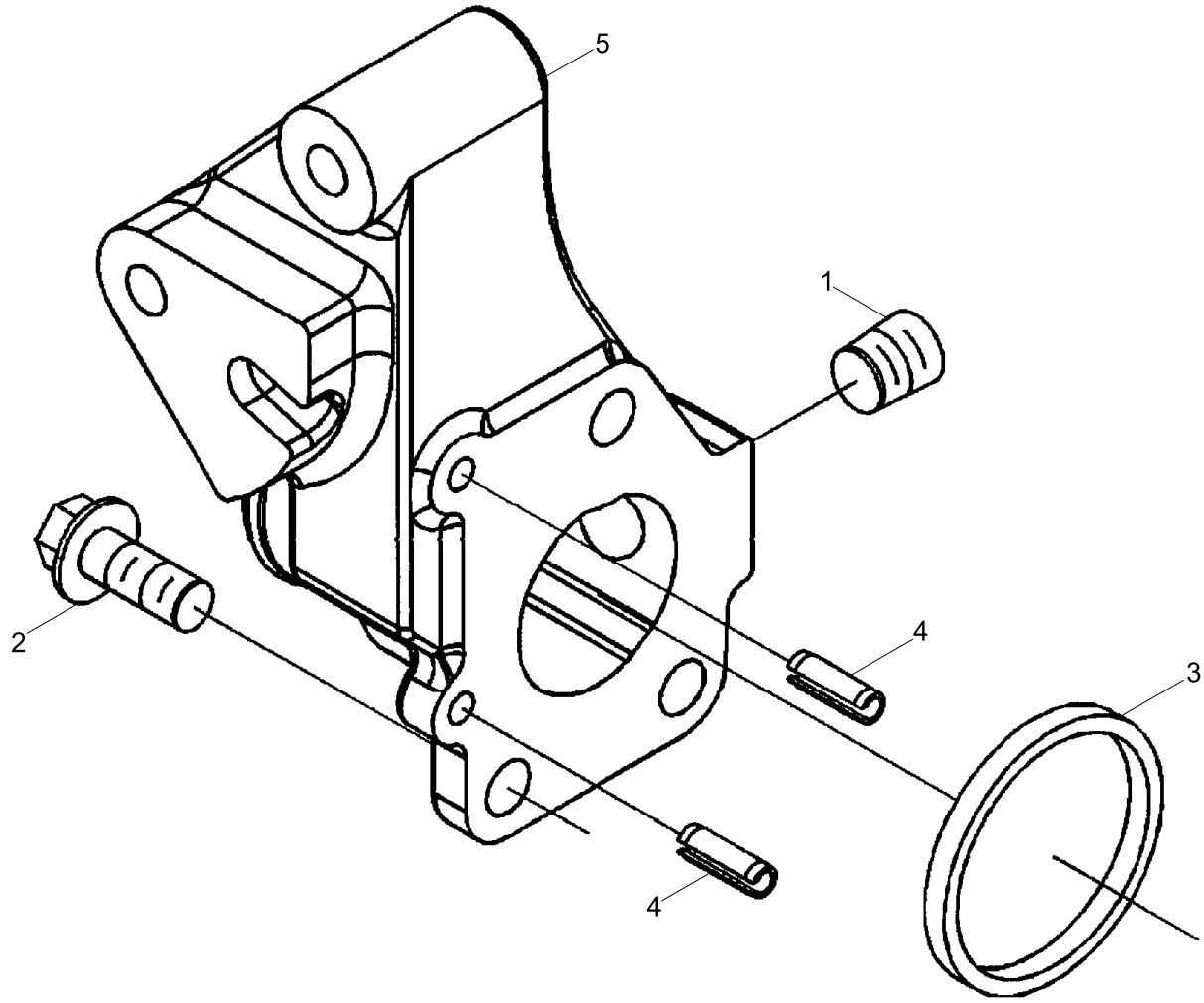

Item	Part_No	IS	Ord	T	Description	Qty	Serial_No	ITC	Remark
*	@				WATER INLET CONNECTION	1	- #0071	-	NOT
1	3008468				PLUG-PIPE	1			WI9178
2	3902460				SCREW-HEX HEAD CAP	3			
3	3906697				SEAL-RECT RING	1			
*	3943990				CONNECTION	1			
4	131584				.PIN-ROLL	2			
N5	3943991				.CONNECTION	1			NOT
N	@				NOT INDIVIDUALLY SUPPLIED	AR			NOT

OIL LEVEL GAUGE(-#0071)

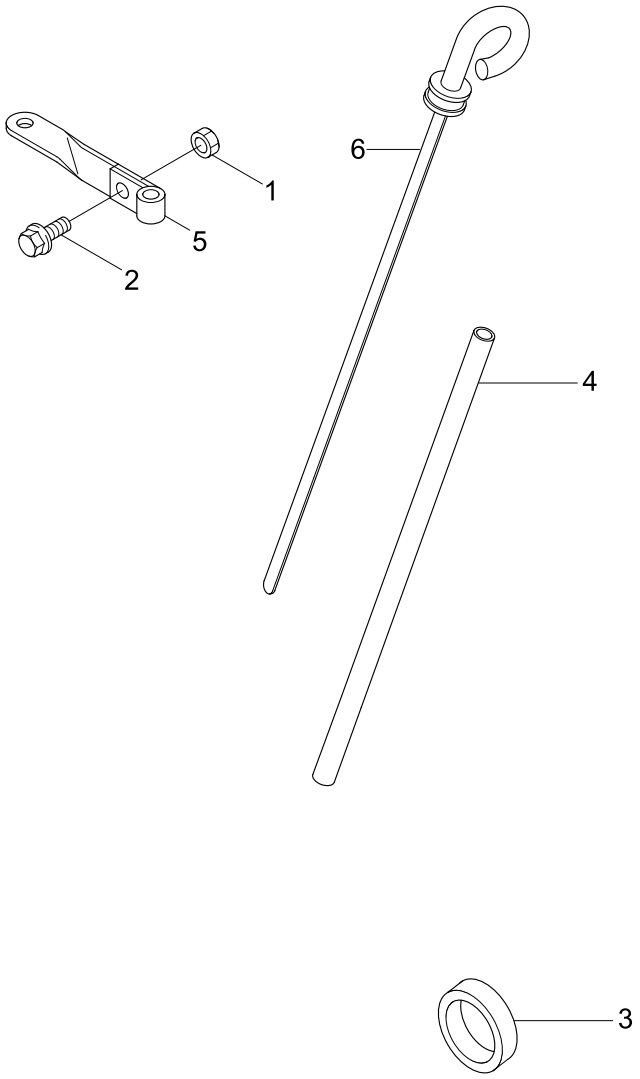

Item	Part_No	IS	Ord	T	Description	Qty	Serial_No	ITC	Remark
*	@				OIL LEVEL GAUGE	1	- #0071	-	NOT
1	3900240				NUT	1			LG9458
2	3925883				SCREW-HEX HEAD CAP	1			
3	3900955				PLUG-EXPANSION	1			
4	3283538				TUBE-OIL GAUGE	1			
5	3284320				BRACE-TUBE	1			
6	3283804				DIPSTICK	1			

Item	Part_No	IS	Ord	T	Description	Qty	Serial_No	ITC	Remark
*	@				FUEL SHUTOFF VALVE	1	- #0071	-	NOT
1	3903576				KIT-SOLENOID	1			FV9294

FUEL TRANSFER PUMP(-#0071)

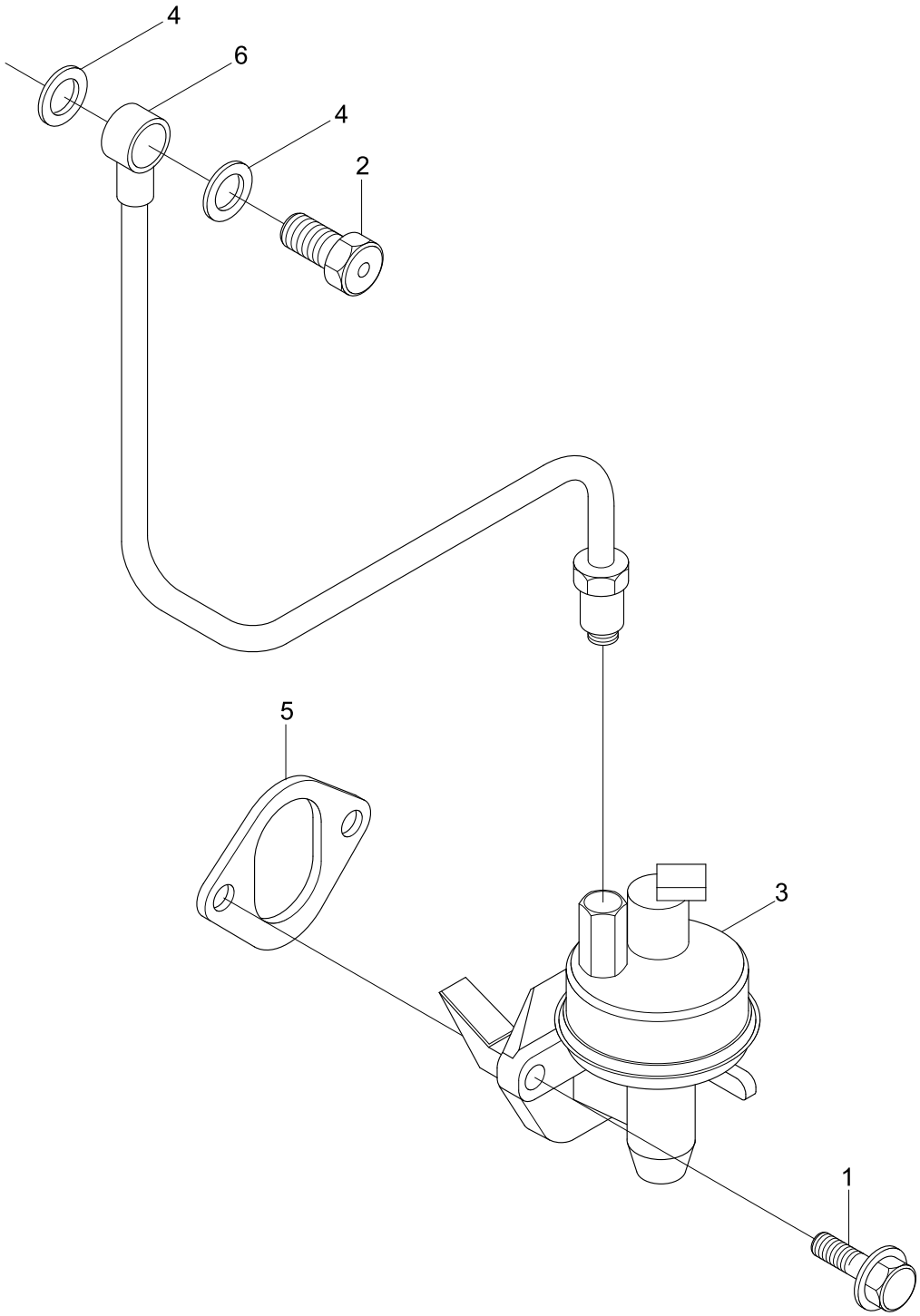

Item	Part_No	IS	Ord	T	Description	Qty	Serial_No	ITC	Remark
*	@				FUEL TANSFER PUMP	1	- #0071	-	NOT
1	3900631				SCREW-HEX HEAD CAP	2			FS9752-02
2	3916361				SCREW	1			
3	3966154				PUMP-FUEL TRANSPER	1			
4	3963983				WASHER-SEALING	2			
5	3939258				GASKET-COVER PLATE	1			
6	3964473				TUBE-FUEL	1			

FUEL PLUMBING(-#0071)

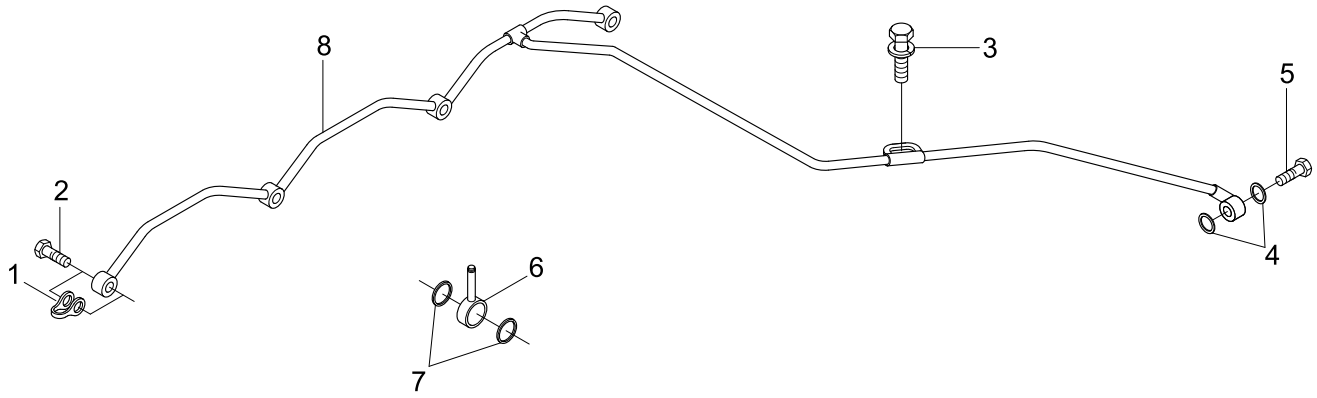

Item	Part_No	IS	Ord	T	Description	Qty	Serial_No	ITC	Remark
*	@				FUEL PLUMBING	1	- #0071	-	NOT
1	3903380				SEAL-BANJO CONN	4			FT9023-01
2	3905307				SCREW-BANJO CONN	4			
3	3918109				SCREW	1			
4	3918188				WASHER-SEALING	2			
5	3924726				VALVE-CHECK	1			
6	3934476				CONNECTOR-BANJO	1			
7	3935171				WASHER-SEALING	2			
8	3966863				MANIFOLD-FUEL	1			

FUEL FILTER PLUMBING(-#0071)

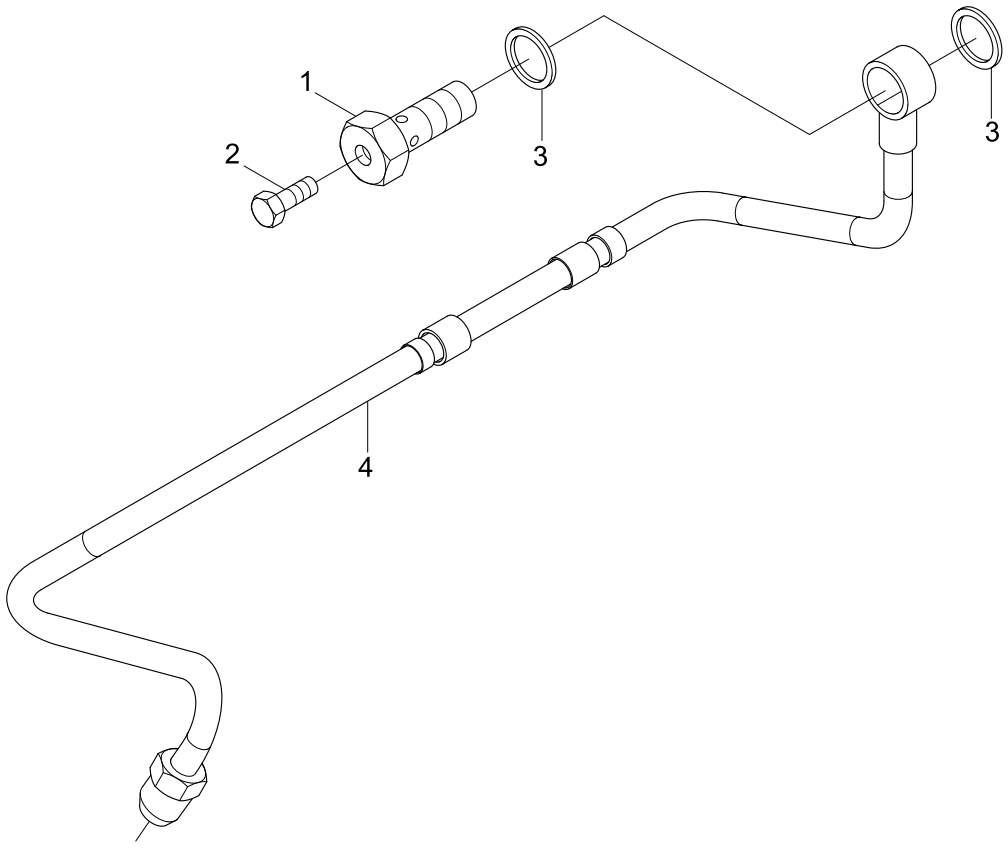

Item	Part_No	IS	Ord	T	Description	Qty	Serial_No	ITC	Remark
*	@				FUEL FILTER PLUMBING	1	- #0071	-	NOT
N*	3905860				SCREW	1			NOT
1	3911446				.SCREW	1			
2	3939570				.SCREW	1			
3	3963983				WASHER-SEALING	2			
4	3967674				TUBE-FUEL	1			

FRONT DRIVE ADAPTER(#0072-)

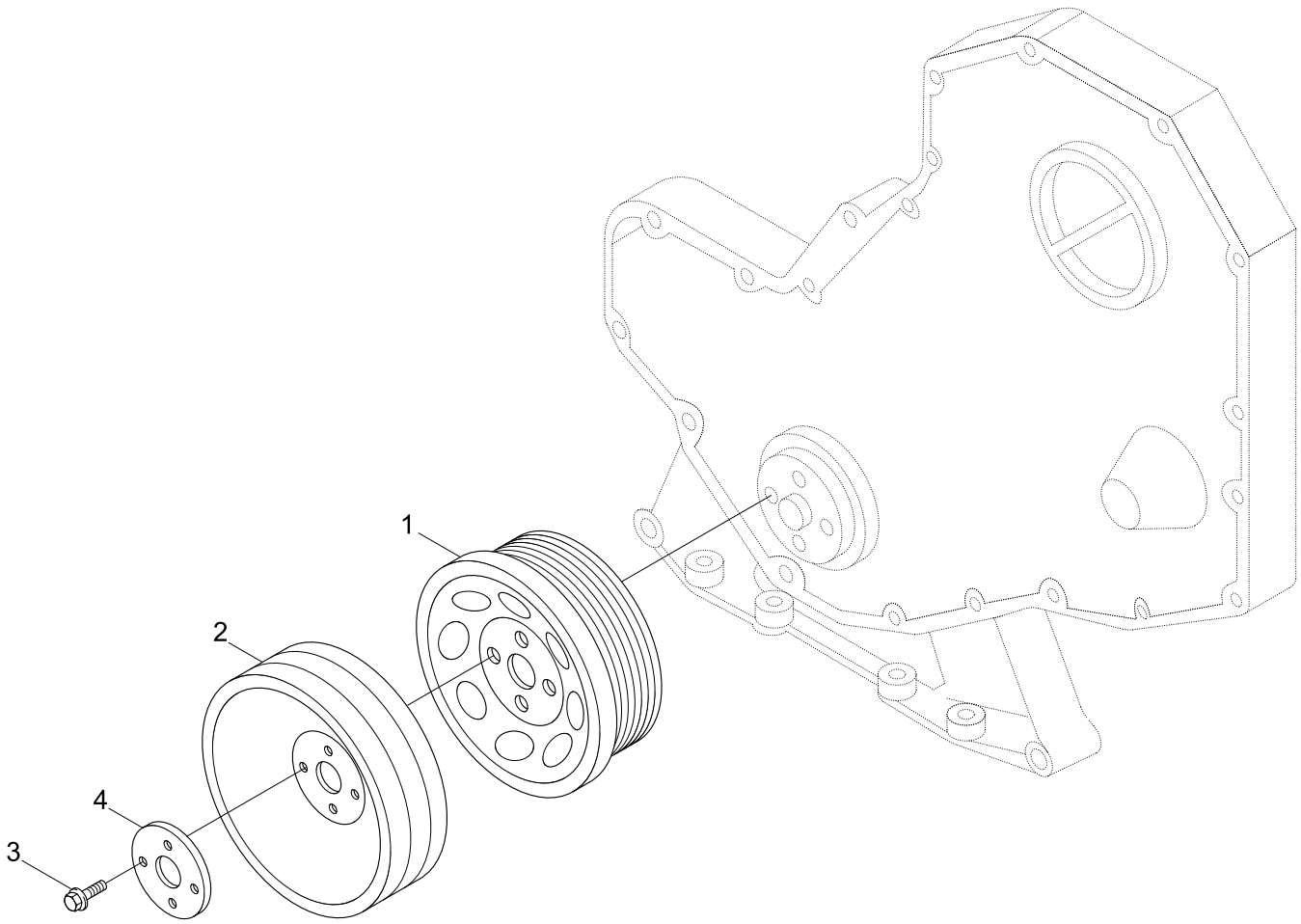

Item	Part_No	IS	Ord	T	Description	Qty	Serial_No	ITC	Remark
*	@				FRONT DRIVE ADAPTER	1	#0072 -	-	NOT
1	3914494				PULLEY-CRANKSHAFT	1			
2	3903826				PULLEY-ACC	1			
3	3903857				SCREW	4			
4	3917639				PLATE-CLAMPING	1			

AIR INTAKE HEATER(#0072-)

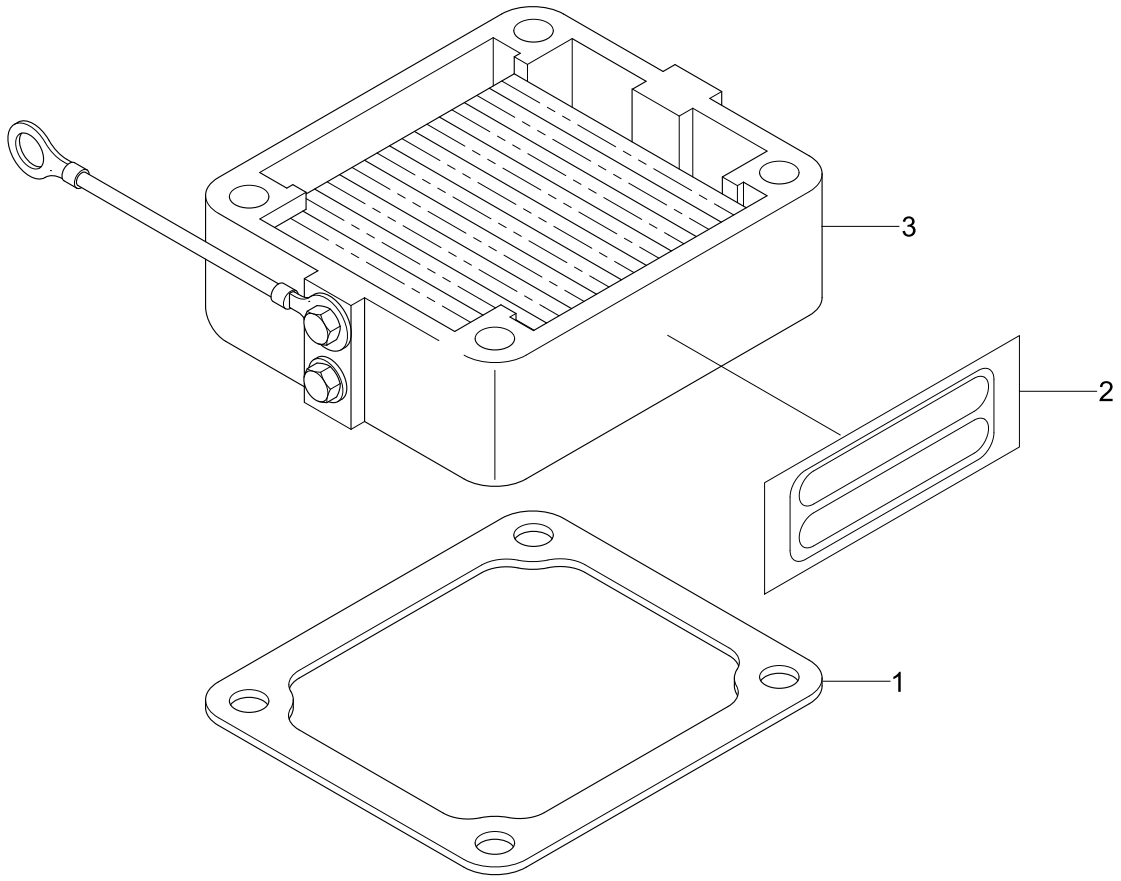

Item	Part_No	IS	Ord	T	Description	Qty	Serial_No	ITC	Remark
*	@				AIR INTAKE HEATER	1	#0072 -	-	NOT
1	3931604				GASKET-CONNECTION	1			
2	3927335				TAG-INSTRUCTION	1			
3	3929015				HEATER-INTAKE AIR	1			

DATAPLATE(#0072-)

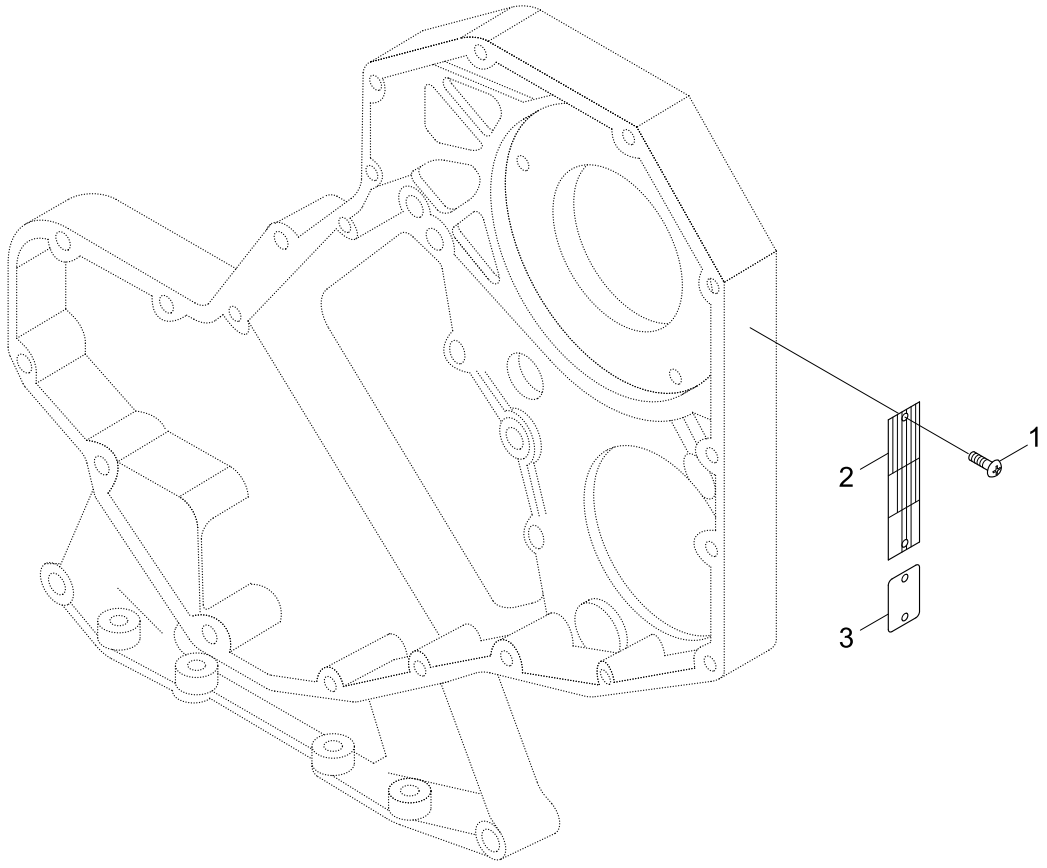

Item	Part_No	IS	Ord	T	Description	Qty	Serial_No	ITC	Remark
*	@				DATAPLATE	1	#0072 -	-	NOT
1	3908612				SCREW	2			
2	3284906				DATAPLATE	1			
3	3966565				DATAPLATE	1			

ROCKER LEVERS(#0072-)

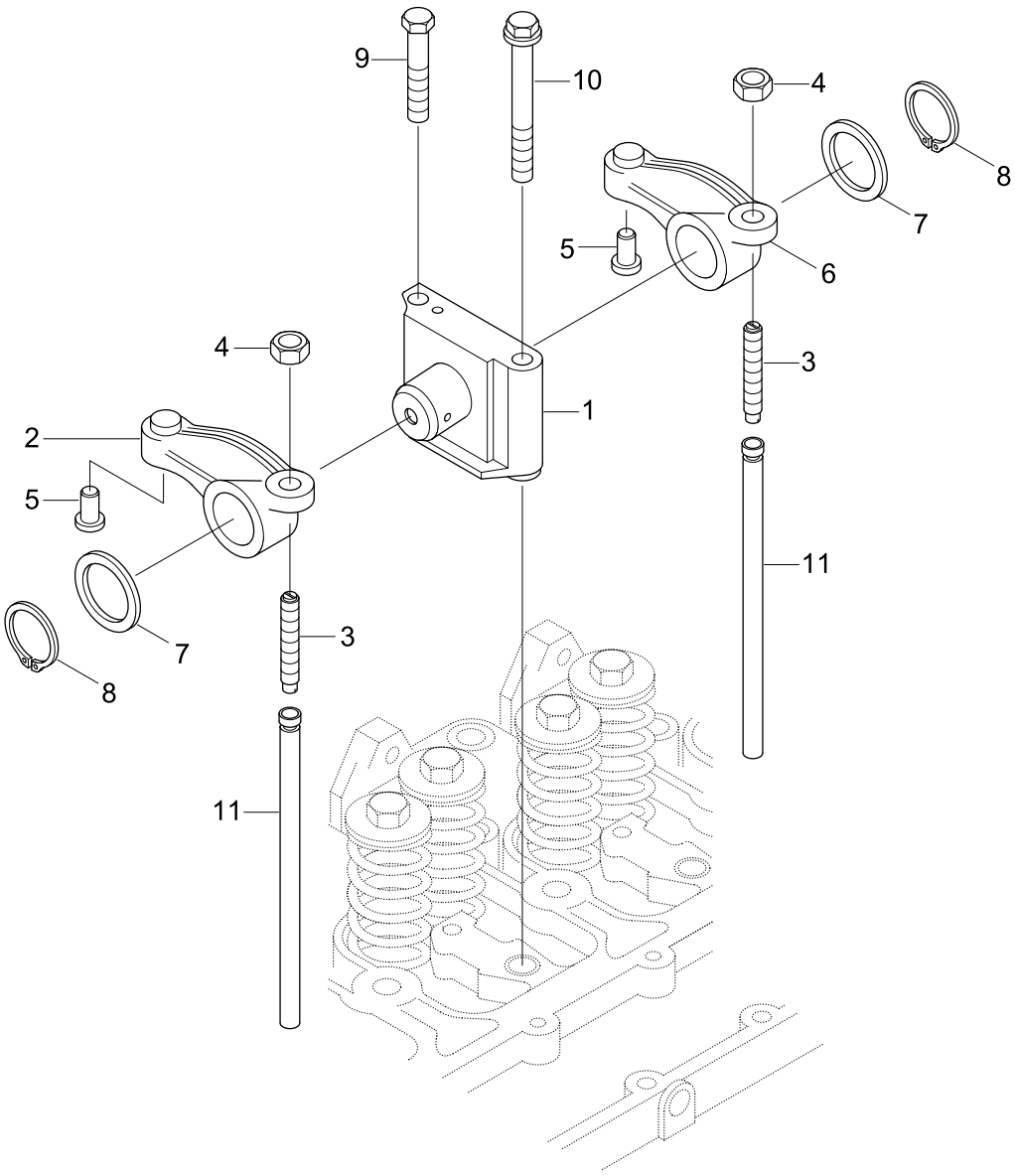

Item	Part_No	IS	Ord	T	Description	Qty	Serial_No	ITC	Remark
*	@				ROCKER LEVERS	1	#0072 -	-	NOT
	3922488				SHAFT-R/LEVER	4			
N1	3911423				.SUPPORT-R/LEVER	1			NOT
	3922487				.SHAFT-R/LEVER	1			NOT
2	3910811				LEVER-ROCKER	4			
N2	3910809				.LEVER-ROCKER	1			NOT
N3	3937438				.SCREW	1			NOT
4	3927692				.NUT-HEAVY HEX	1			
N5	3900705				.INSERT-R/LEVER	1			NOT
6	3910810				LEVER-ROCKER	4			
N6	3910808				.LEVER-ROCKER	1			NOT
3	3937438				.SCREW	1			
4	3927692				.NUT-HEAVY HEX	1			
N5	3900705				.INSERT-R/LEVER	1			NOT
7	3900245				WASHER-PLAIN	8			
8	3900242				RING-RETAINING	8			
9	3901221				SCREW	4			
10	3920781				SCREW	4			
11	3284377				ROD-PUSH	8			
N	@				NOT INDIVIDUALLY SUPPLIED	AR			NOT

VALVE TAPPET(#0072-)

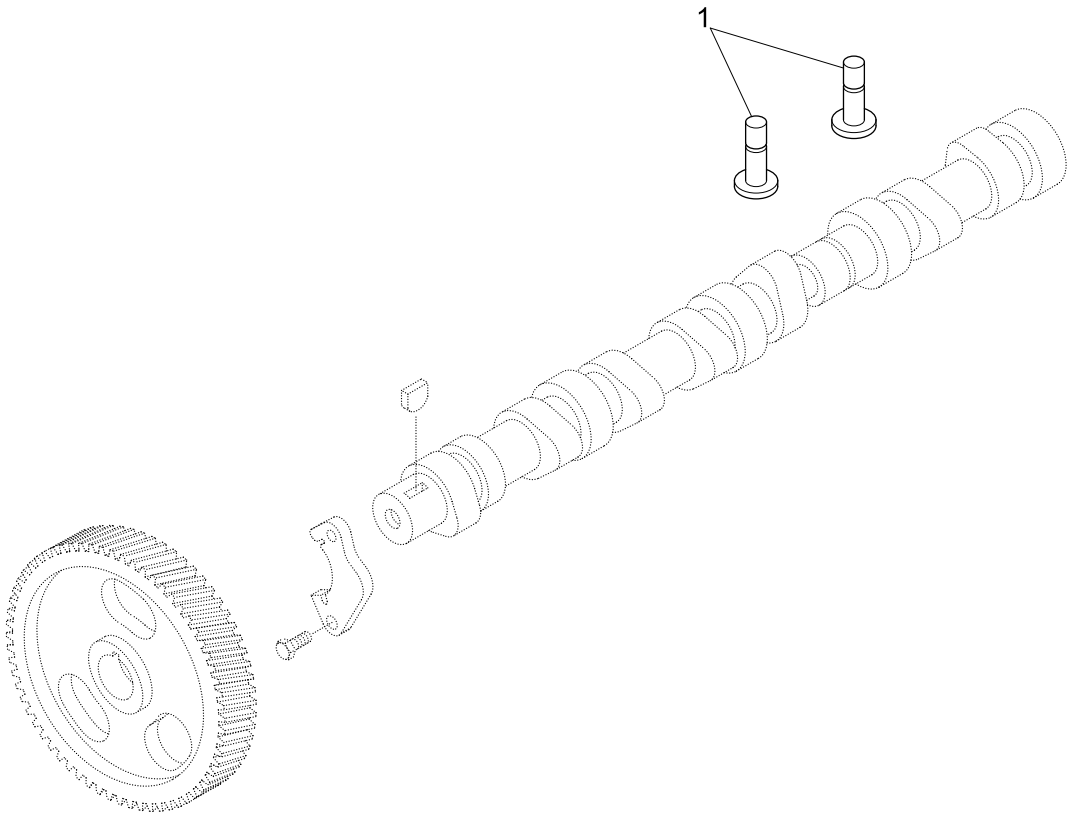

Item	Part_No	IS	Ord	T	Description	Qty	Serial_No	ITC	Remark
*	@				VAVLE TAPPET	1	#0072 -	-	NOT
1	3931623				TAPPET-VALVE	8			

FRONT GEAR COVER(#0072-)

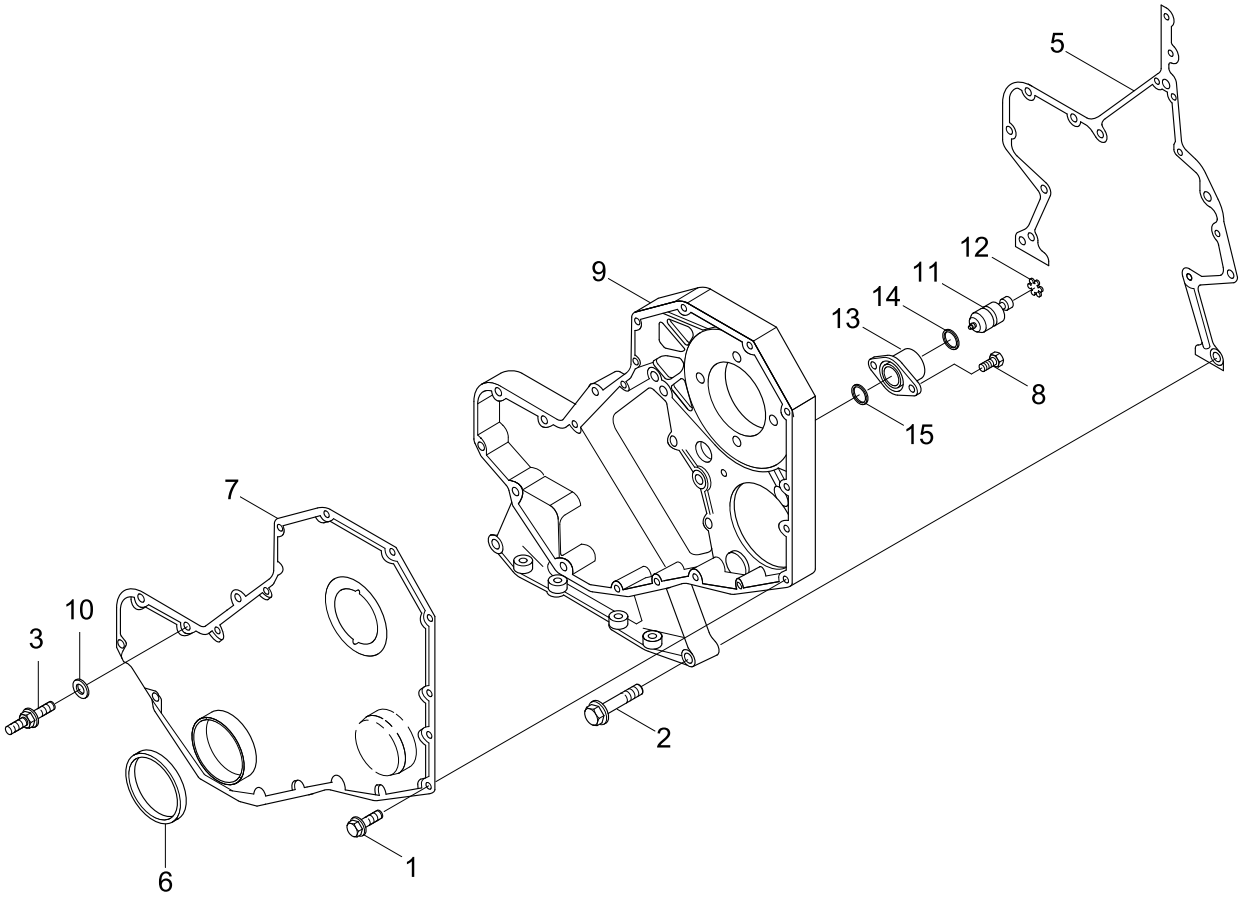

Item	Part_No	IS	Ord	T	Description	Qty	Serial_No	ITC	Remark
*	@				FRONT GEAR COVER	1	#0072 -	-	NOT
1	3925883				SCREW-HEX HEAD CAP	15			
2	3900633				SCREW-HEX HD CAP	11			
3	3863993				SCREW	1			
5	3931351				GASKET-GEAR HOUSING	1			
N6	3935959				SEAL-OIL	1			NOT
7	3935582				COVER-GEAR	1			
8	3907998				SCREW-RD HD CAP	2			
N9	3964422				HOUSING-GEAR	1			NOT
10	3863140				WASHER	1			
*N	3913995				HOUSING-TIMING PIN	1			NOT
11	3903924				.PIN-TIMING	1			
12	3904849				.RING-RETAINING	1			
13	3919683				.HOUSING-TIMING PIN	1			
14	3913994				.O-RING	1			
15	3915772				SEAL-RECT RING	1			
N	@				NOT INDIVIDUALLY SUPPLIED	AR			NOT

CYLINDER BLOCK(#0072-)

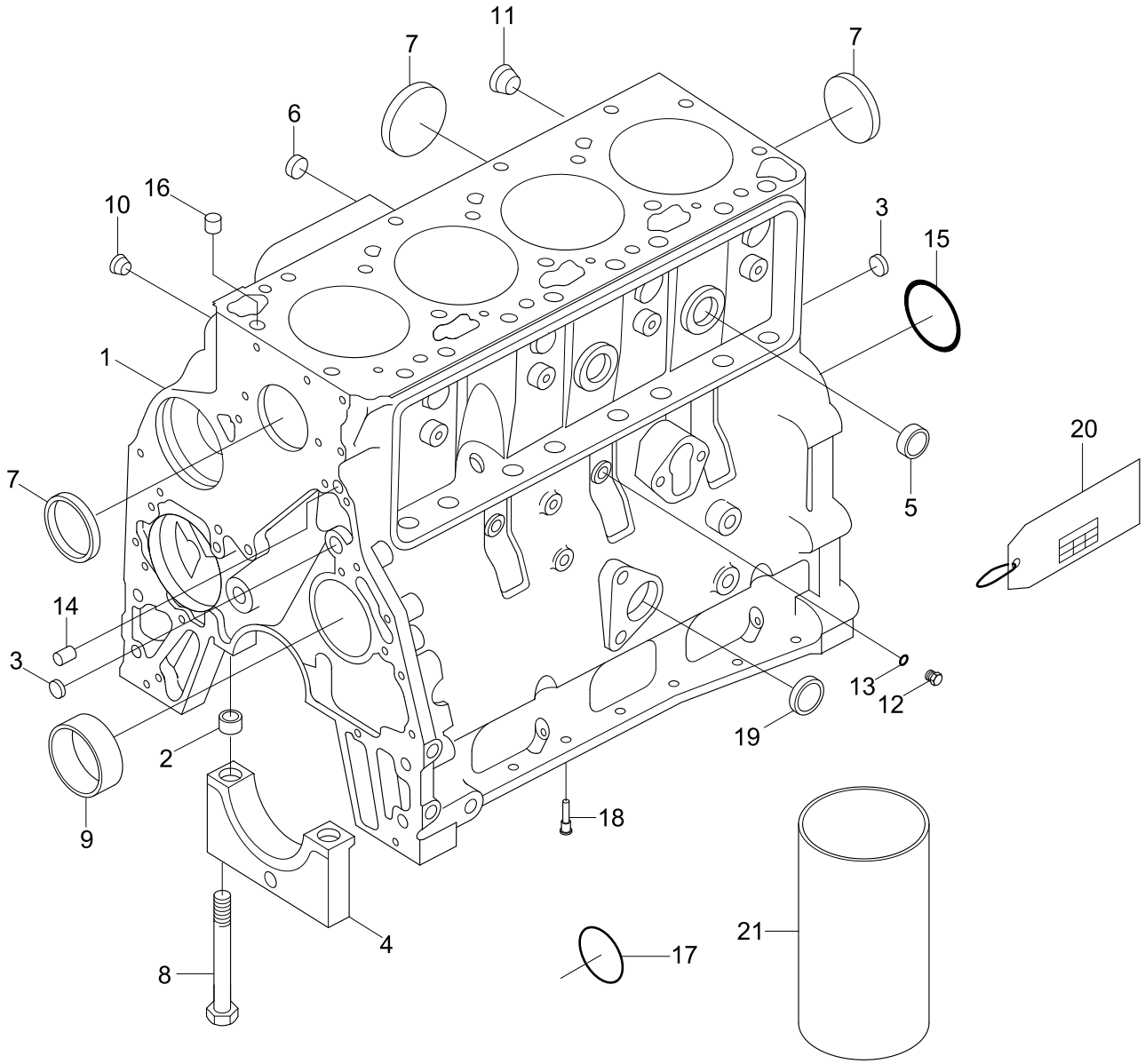

Item	Part_No	IS	Ord	T	Description	Qty	Serial_No	ITC	Remark
*	@				CYLINDER BLOCK	1	#0072 -	-	NOT
	4089546				CYLINDER BLOCK	1			
N1	3938366				.BLOCK-CYLINDER	1			NOT
3	3900956				..PLUG-EXPANSION	3			
4	3936791				..CAP-MAIN BEARING	5			
5	3914035				..PLUG-EXPANSION	2			
7	3922072				..PLUG-EXPANSION	3			
8	3927948				..SCREW	10			
9	3940059				..BUSHING	1			
*	3933224				.KIT-CYL BLOCK HW	1			
2	3900068				..DOWEL-RING	2			
6	3920706				..PLUG-EXPANSION	2			
10	3008468				..PLUG-PIPE	1			
11	3008469				..PLUG-PIPE	1			
*	3678923				..PLUG-THREADED	2			
N12	3678924				...PLUG-THREADED	1			NOT
13	3678925				...SEAL/O-RING	1			
14	3900257				..DOWEL-PIN	2			
15	3900687				..PLUG-EXPANSION	1			
16	3902343				..DOWEL-RING	2			
17	3926047				..SEAL/O-RING	1			
18	3937214				..NOZZLE	4			
19	3900958				..PLUG-EXPANSION	1			
N20	3933613				.TAG	1			NOT
21	3904166				.SLEEVE-SALVAGE	1			SERVICE PARTS

Item	Part_No	IS	Ord	T	Description	Qty	Serial_No	ITC	Remark
N	@				NOT INDIVIDUALLY SUPPLIED	AR			NOT

CRANKSHAFT & M/BEARINGS(#0072-)

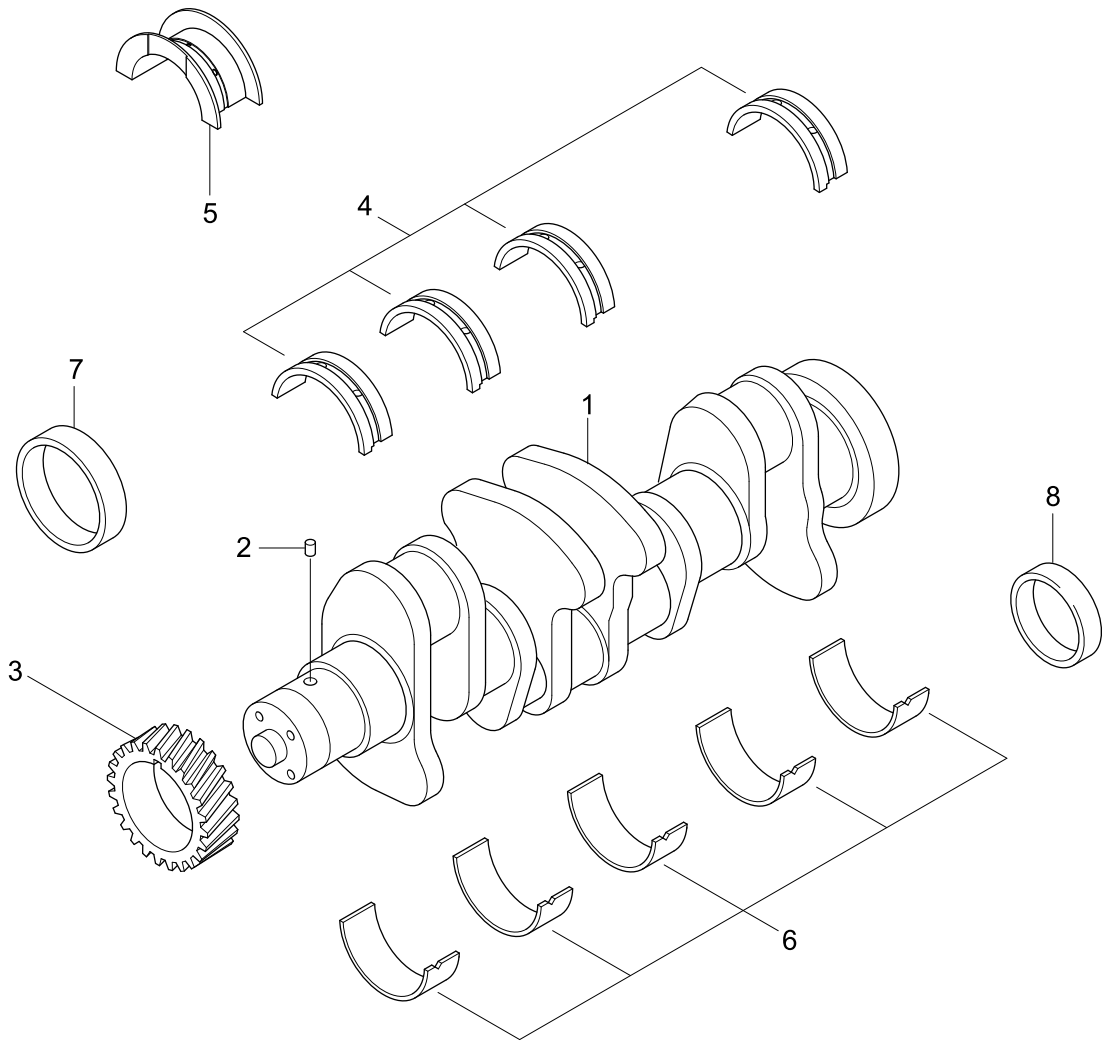

Item	Part_No	IS	Ord	T	Description	Qty	Serial_No	ITC	Remark
*	@				C/SHAFT & M/BEARING	1	#0072 -	-	NOT
	3908031				CRANKSHAFT-ENGINE	1			BP97112-01
N1	3929036				.CRANKSHAFT-ENGINE	1			NOT
2	3904483				.DOWEL-PIN	1			
3	3929027				.GEAR-CRANKSHAFT	1			
*	3802010				SET-MAIN BEARING(STD)	1			
N4	3929016				.BEARING-MAIN	4			NOT
N5	3926723				.BEARING-C/SHAFT THRUST	1			NOT
N6	3929021				.BEARING-MAIN	5			NOT
*	3802011				SET-M/BRG(0.25 O/S)	1			
N4	3929017				.BEARING-MAIN	4			NOT
N5	3283065				.BEARING-C/SHAFT THRUST	1			NOT
N6	3929022				.BEARING-MAIN	5			NOT
*	3802012				SET-M/BRG(0.5 O/S)	1			
N4	3929018				.BEARING-MAIN	4			NOT
N5	3283066				.BEARING-C/SHAFT THRUST	1			NOT
N6	3929023				.BEARING-MAIN	5			NOT
*	3802013				SET-M/BRG(0.75 O/S)	1			
N4	3929019				.BEARING-MAIN	4			NOT
N5	3283067				.BEARING-C/SHAFT THRUST	1			NOT
N6	3929024				.BEARING-MAIN	5			NOT
*	3802014				SET-M/BRG(1.0 O/S)	1			
N4	3929020				.BEARING-MAIN	4			NOT
N5	3283068				.BEARING-C/SHAFT THRUST	1			NOT
N6	3929025				.BEARING-MAIN	5			NOT

Item	Part_No	IS	Ord	T	Description	Qty	Serial_No	ITC	Remark
*	3800330				BRG-C/SHAFT(0.5 O/S)	1			
N5	3283063				.BEARING-C/SHAFT THRUST	1			NOT
N6	3929023				.BEARING-MAIN	1			NOT
*	3800331				BRG-C/SHAFT(1.0 O/S)	1			
N5	3283064				.BEARING-THRUST	1			NOT
N6	3929025				.BEARING-MAIN	1			NOT
7	3802820				SEAL-W/SLEEVE KIT	1			
8	3926126				SEAL-W/SLEEVE KIT	1			

CAM FOLLOWER COVER(#0072-)

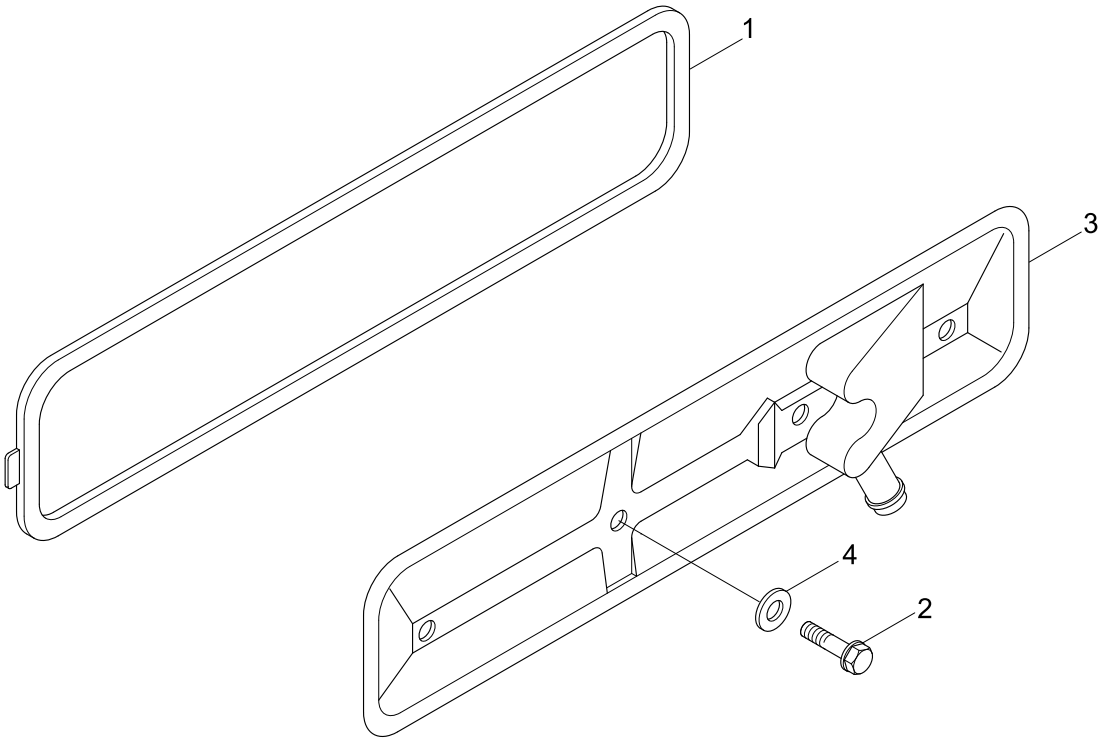

Item	Part_No	IS	Ord	T	Description	Qty	Serial_No	ITC	Remark
*	@				CAM FOLLOWER COVER	1	#0072 -	-	NOT
1	3283767				GASKET-P/ROD COVER	1			
2	3900629				SCREW-H/FLANGE CAP	2			
3	3936186				COVER-PUSH ROD	1			
4	3928759				SEAL-GROMMET	2			

FRONT GEAR TRAIN ACCESSORY(#0072-)

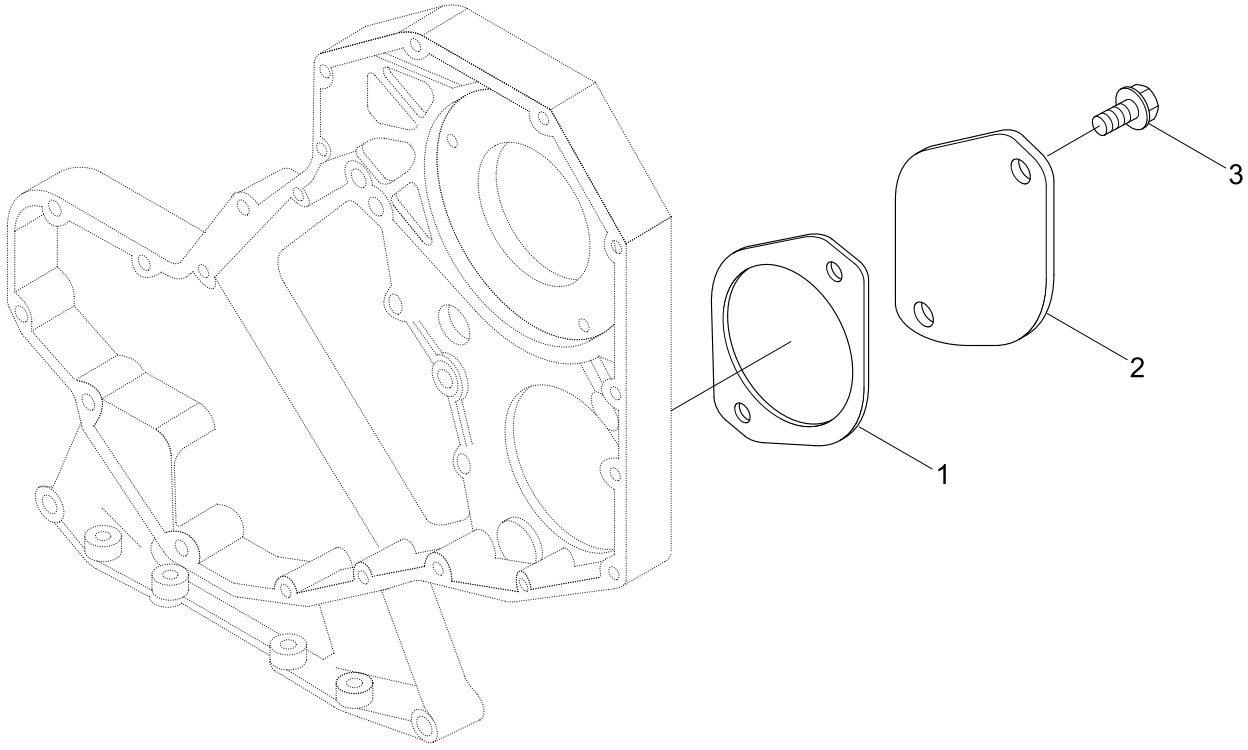

Item	Part_No	IS	Ord	T	Description	Qty	Serial_No	ITC	Remark
*	@				FRONT GEAR TRAIN ACCESSORY	1	#0072 -	-	NOT
1	3094818				SEAL/O-RING	1			
2	3863865				COVER	1			
3	3901249				SCREW	2			

Item	Part_No	IS	Ord	T	Description	Qty	Serial_No	ITC	Remark
*	@				FAN PILOT SPACER	1	#0072 -	-	NOT
1	3910128				SPACER-FAN(1")	1			SP9019
2	3910131				SPACER-FAN(2.5")	1			SP9022

THERMOSTAT & HOUSING(#0072-)

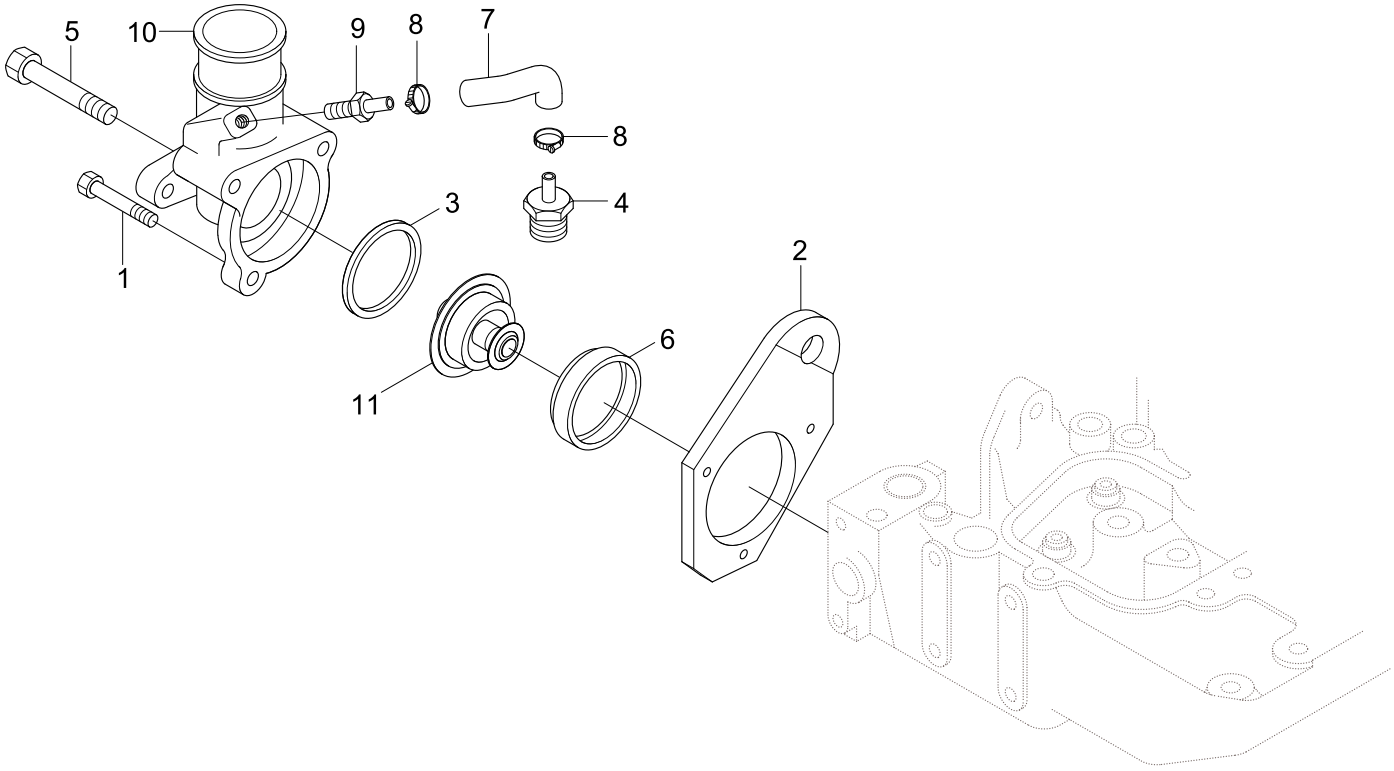

Item	Part_No	IS	Ord	T	Description	Qty	Serial_No	ITC	Remark
*	@				THERMOSTAT & HOUSING		#0072 -	-	NOT
1	3900632				SCREW	1			
2	3903757				BRACKET-LIFTING	1			
3	3925466				SEAL-RECT RING	1			
4	3926761				VALVE-CHECK	1			
5	3926972				SCREW	2			
6	3927305				GASKET-THM HOUS COVER	1			
7	3930565				HOSE-MOLDED	1			
8	3945819				CLAMP-HOSE	2			
9	3931793				COUPLING-PLAIN HOSE	1			
10	3931794				HOUSING-THERMOSTAT	1			
11	3864178				THERMOSTAT	1			EC9009-02

ALTERNATOR LOCATION(#0072-)

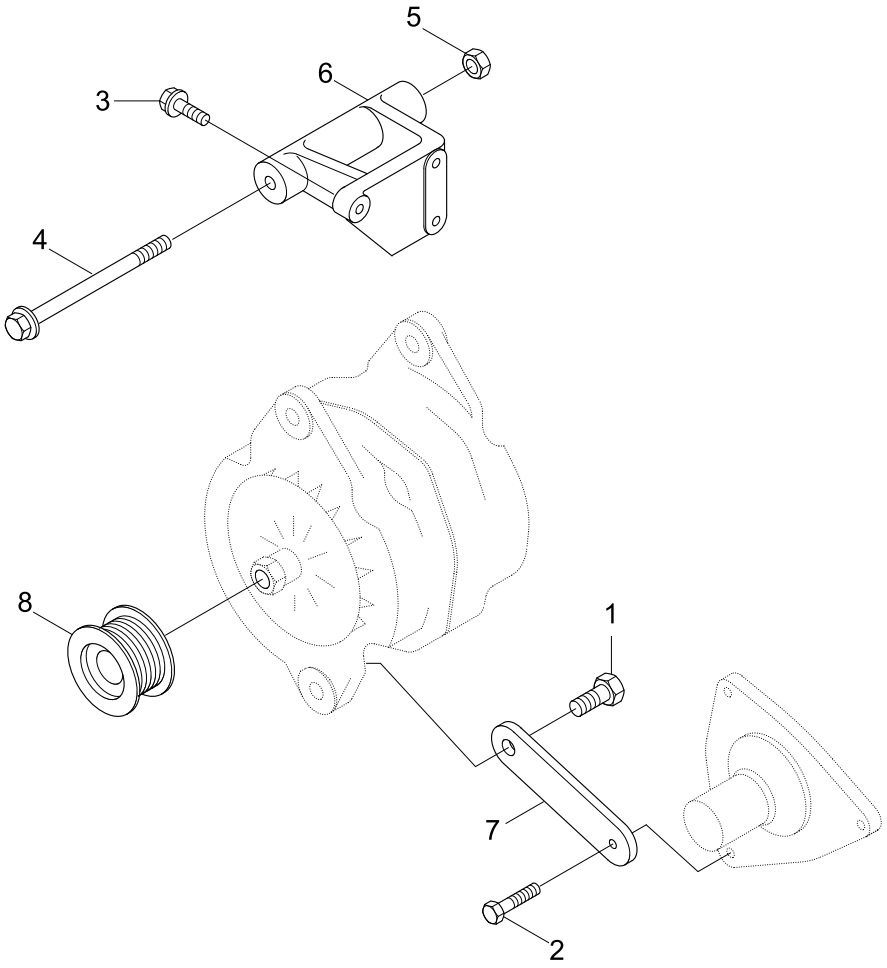

Item	Part_No	IS	Ord	T	Description	Qty	Serial_No	ITC	Remark
*	@				ALTERNATOR LOCATION	1	#0072 -	-	NOT
1	3052061				SCREW	1			
2	3900630				SCREW-HEX HEAD CAP	1			
3	3900631				SCREW-HEX HEAD CAP	3			
4	3903105				SCREW-HEX HEAD CAP	1			
5	3903210				NUT	1			
6	3910923				SUPPORT-ALTERNATOR	1			
7	3910924				BRACE-ALTERNATOR	1			
8	3918275				PULLEY-ALTERNATOR	1			

ALTERNATOR DRIVE(#0072-)

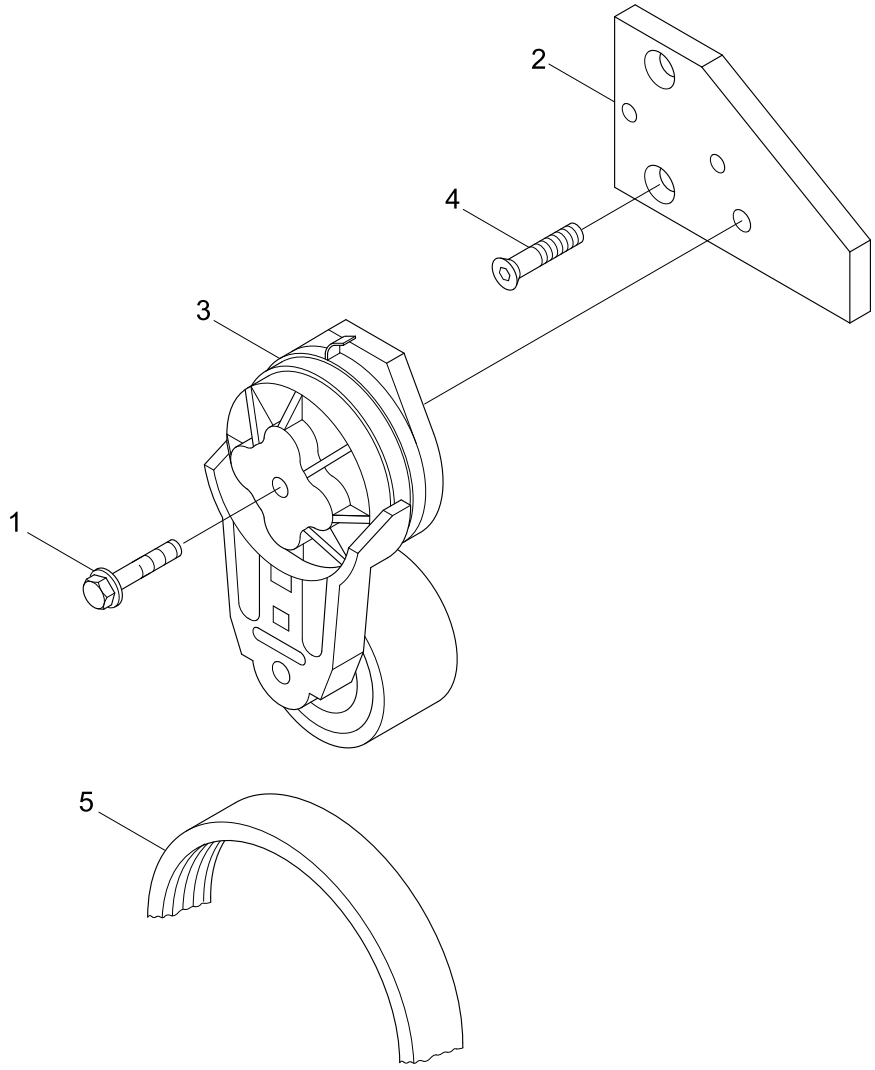

Item	Part_No	IS	Ord	T	Description	Qty	Serial_No	ITC	Remark
*	@				ALTERNATOR DRIVE	1	#0072 -	-	NOT
1	3282699				SCREW	1			
2	3286907				BRACKET	1			
3	3937553				TENSIONER-BELT	1			
4	3925186				SCREW	2			
5	3929330				BELT-V RIBBED	1			

MECHANICAL TACHOMETER DRIVE(#0072-)

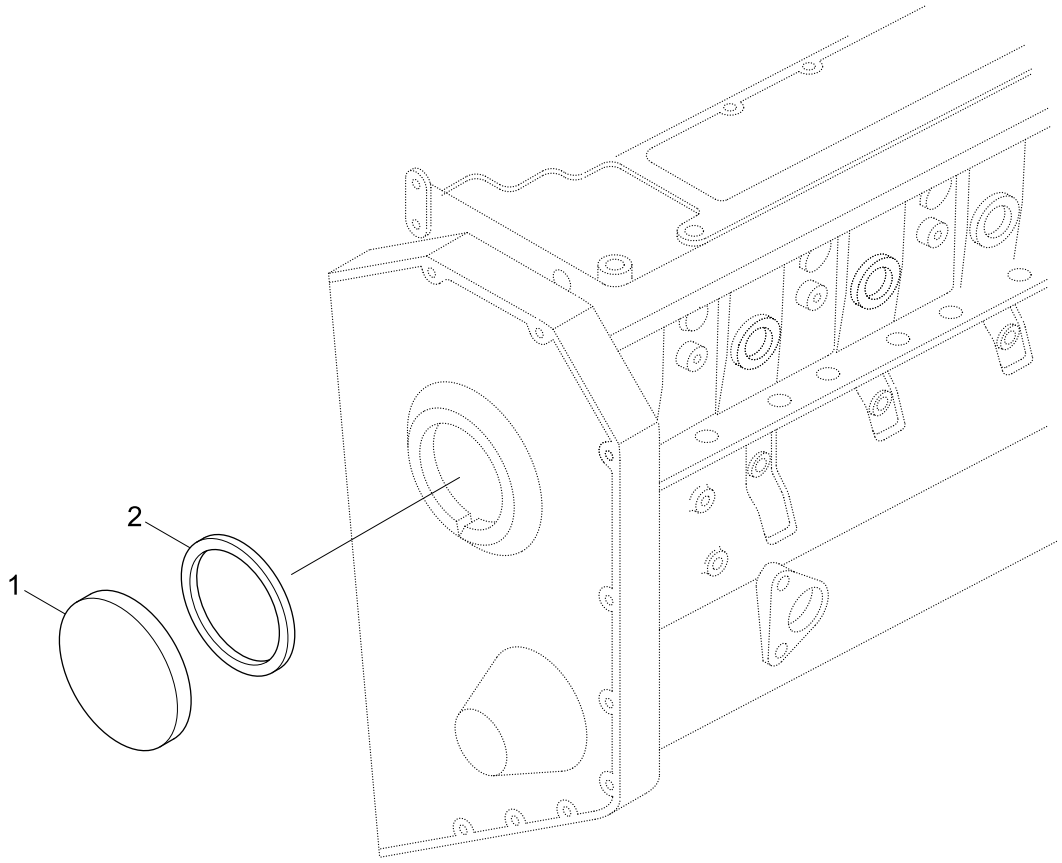

Item	Part_No	IS	Ord	T	Description	Qty	Serial_No	ITC	Remark
*	@				M/TACHOMETER DRIVE	1	#0072 -	-	NOT
1	3903463				COVER	1			
2	3903475				SEAL-RECT RING	1			

FAN DRIVE(#0072-)

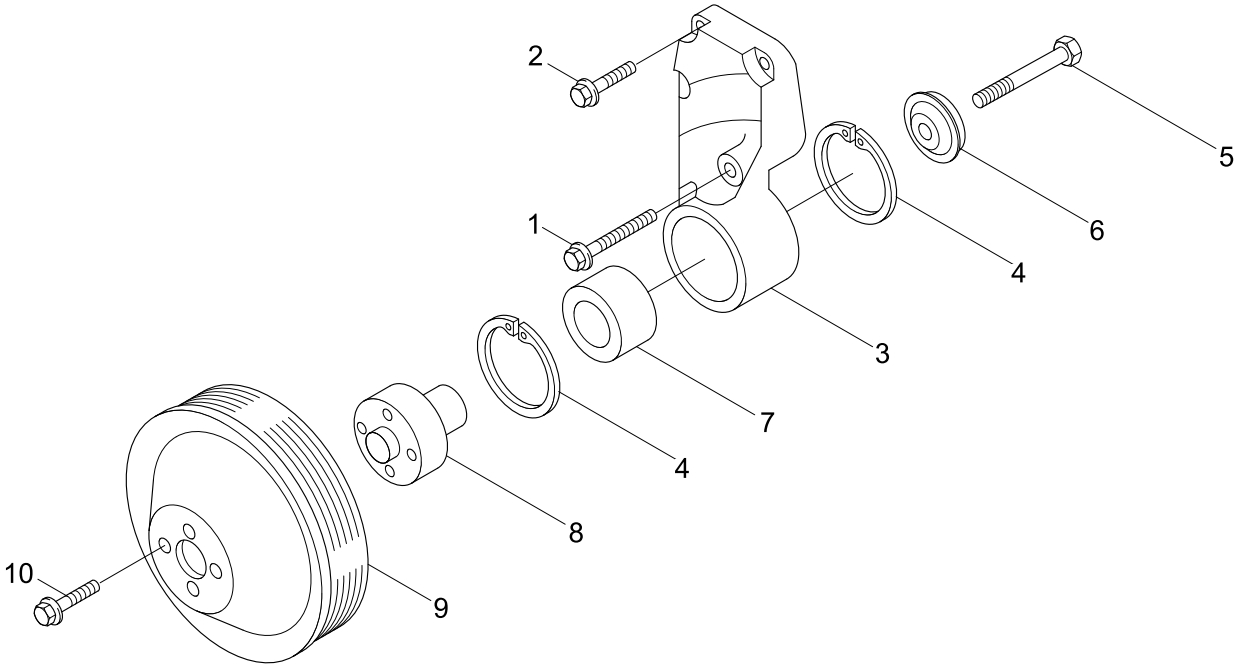

Item	Part_No	IS	Ord	T	Description	Qty	Serial_No	ITC	Remark
*	@				FAN DRIVE	1	#0072 -	-	NOT
1	3863344				SCREW	1			
2	3863343				SCREW	3			
*	3911203				SUPPORT-FAN	1			
N3	3281875				.SUPPORT-FAN	1			NOT
4	3035960				.RING-RETAINING	2			
5	3907769				.SCREW	1			
6	3923044				.RETAINER-FAN HUB	1			
7	3910739				.BEARING-BALL	1			
8	3911924				.HUB-FAN	1			
9	3918204				PULLEY-FAN	1			
10	3903990				SCREW-HEX HEAD CAP	4			FA9706

INJECTION PUMP 1(#0072-)

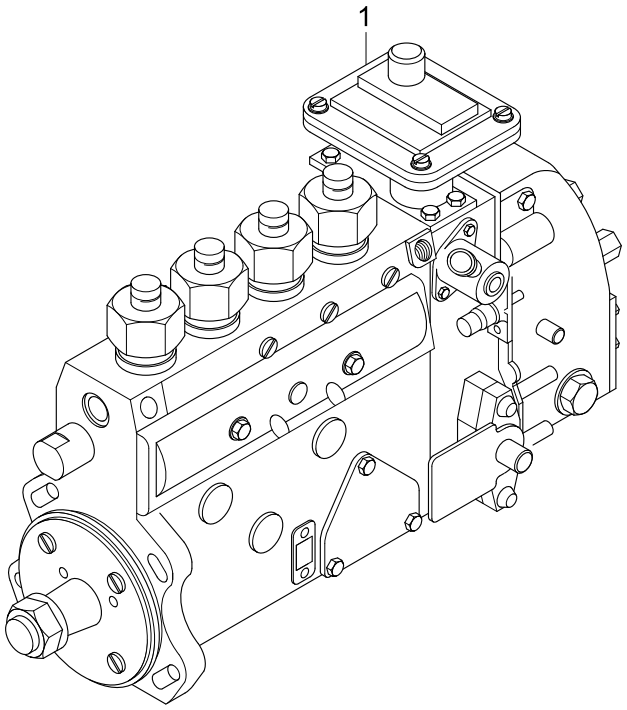

Item	Part_No	IS	Ord	T	Description	Qty	Serial_No	ITC	Remark
*	@				INJECTION PUMP	1	#0072 -	-	NOT
1	4063968				PUMP-FUEL INJECTION	1			

INJECTION PUMP 2(#0072-)

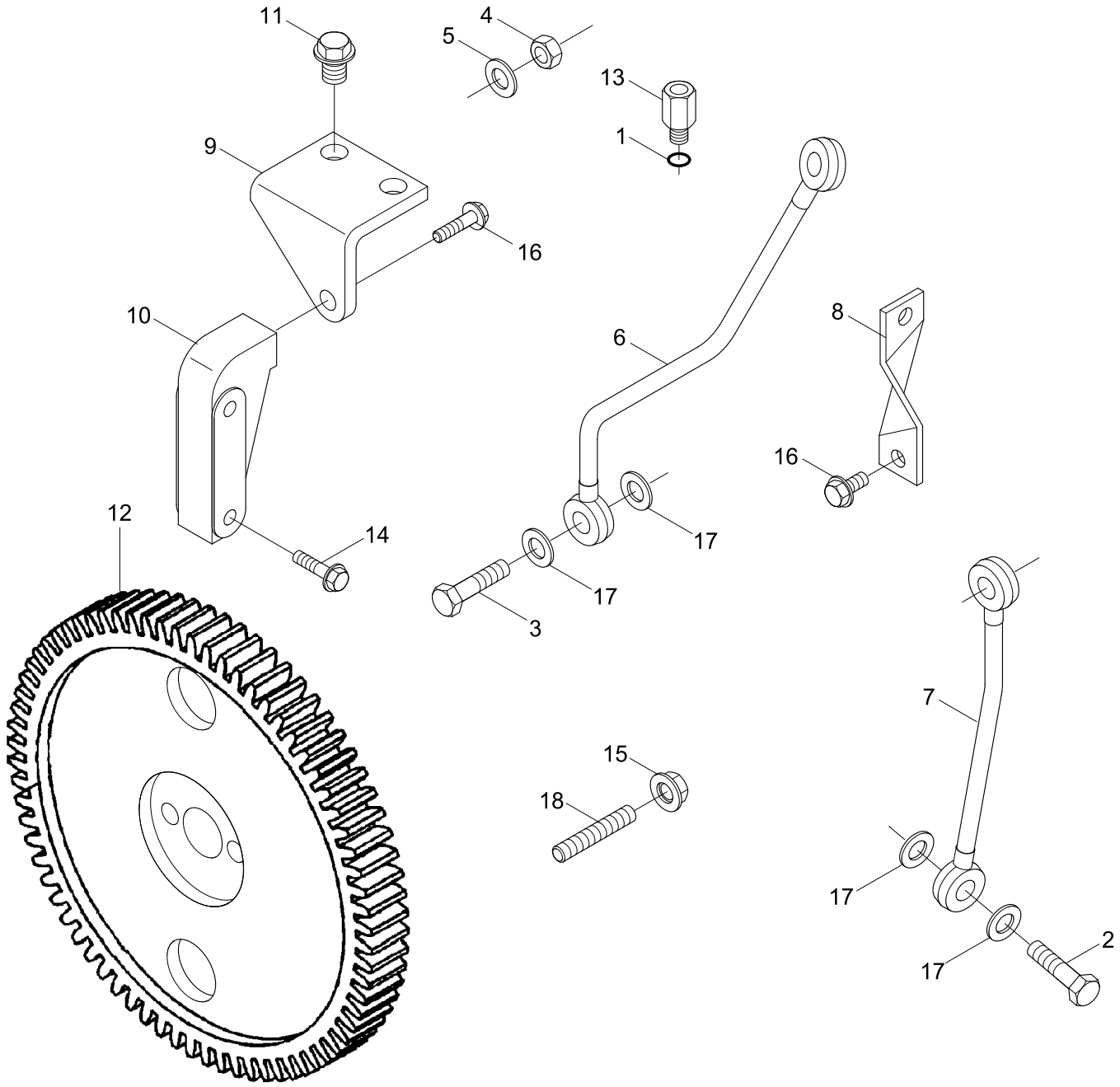

Item	Part_No	IS	Ord	T	Description	Qty	Serial_No	ITC	Remark
*	@				INJECTION PUMP	1	#0072 -	-	NOT
1	3678925				SEAL/O-RING	1			
2	3863131				SCREW	1			
3	3863187				SCREW	1			
4	3863271				NUT	1			
5	3863272				WASHER	1			
6	3863306				TUBE-FUEL SUPPLY	1			
7	3863307				TUBE-FUEL SUPPLY	1			
8	3863309				BRACKET-FUEL PUMP	1			
9	3863311				BRACKET-FUEL PUMP	1			
10	3863919				BRACKET-FUEL PUMP	1			
11	3863324				SCREW-HEX HEAD CAP	2			
12	3863589				GESR-FUEL PUMP	1			
13	3863672				CONNECTOR-FEMALE	1			
14	3900631				SCREW-HEX HEAD CAP	3			
15	3902662				NUT-HEX FLANGE	5			
16	3903990				SCREW-HEX HEAD CAP	1			
17	3093950				WASHER	4			
18	3937123				STUD	4			

FUEL CLEANER(#0072-)

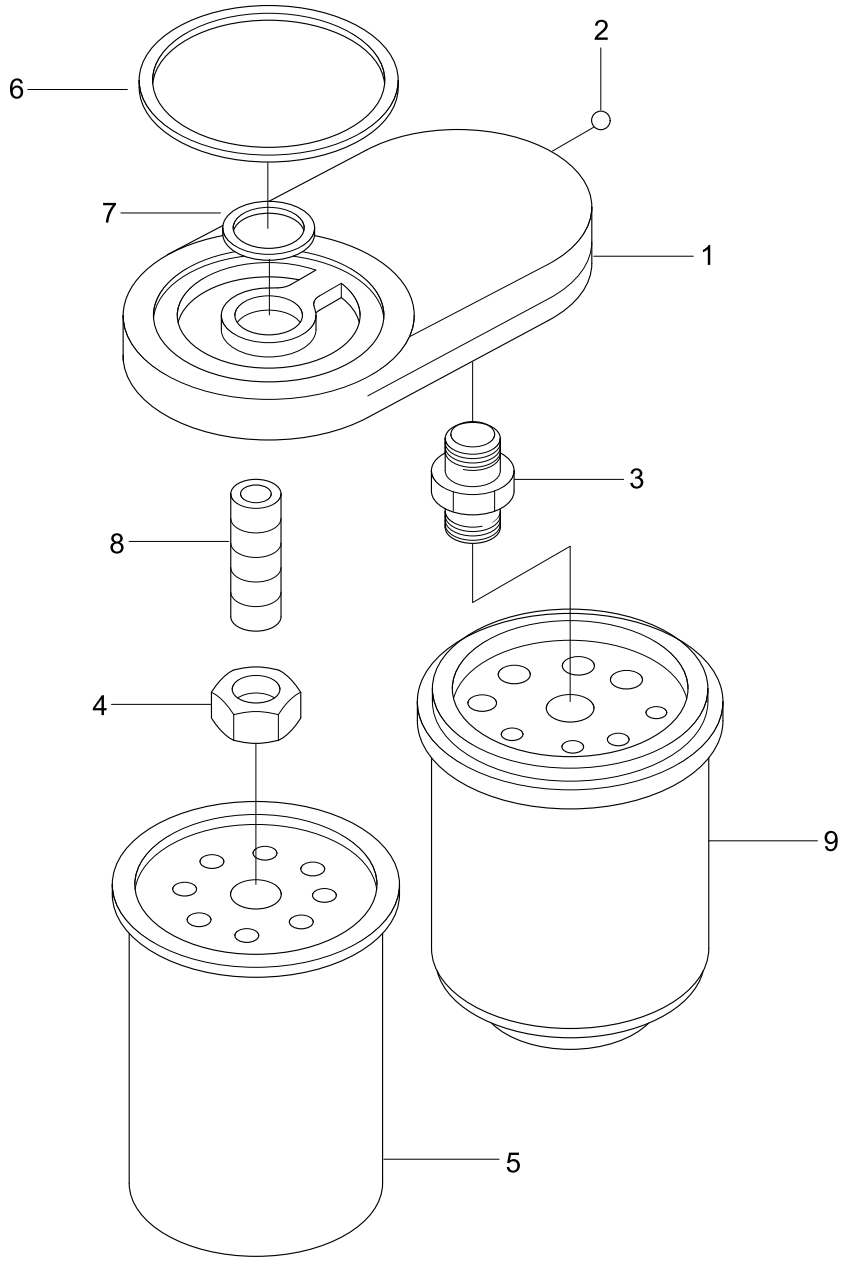

Item	Part_No	IS	Ord	T	Description	Qty	Serial_No	ITC	Remark
*	@				FUEL CLEANER	1	#0072 -	-	NOT
	3936315				HEAD-FUEL FILTER	1			
N1	3936313				.HEAD-FUEL FILTER	1			NOT
2	3897329				.BALL	1			
N3	3936337				.ADAPTER-FILTER HEAD	1			NOT
4	3903293				NUT	1			
5	11E1-70010				FILTER-FUEL	1			
6	3906694				SEAL-RECT RING	1			
7	3906695				SEAL	1			
8	3925955				ADAPTER-FILTER HEAD	1			
9	11E1-70210				FILTER-FUEL W/S	1			

FLYWHEEL HOUSING(#0072-)

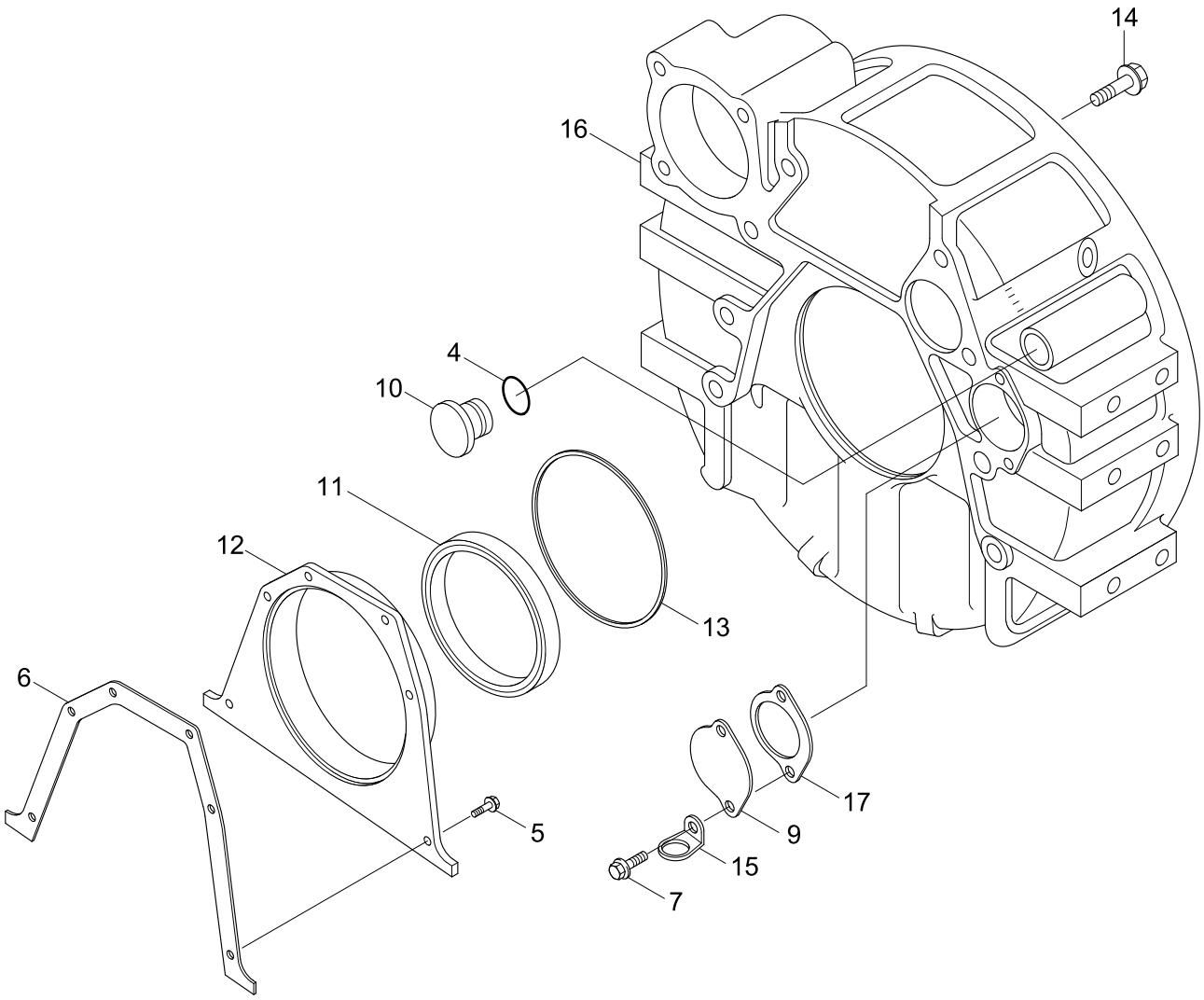

Item	Part_No	IS	Ord	T	Description	Qty	Serial_No	ITC	Remark
*	@				FLYWHEEL HOUSING	1	#0072 -	-	NOT
1	3937426				FLYWHEEL HOUSING	1			FH9468
2	3912072				SCREW	2			
3	3920447				SCREW-HEX HEAD CAP	8			
4	3925234				PLATE-COVER	1			
N*	3934486				KIT-SEAL	1			NOT
N5	3933262				.SEAL-OIL	1			NOT
6	3938159				GASKET-REAR COVER	1			
7	3991306				SCREW-FLANGE HEAD CAP	6			
8	3910248				PLUG/O-RING	1			
9	3912473				SEAL-RECT RING	1			
10	3904181				PLUG-THREADED	1			
N11	3936895				COVER-REAR	1			NOT
12	3910260				SEAL/O-RING	1			
N	@				NOT INDIVIDUALLY SUPPLIED	AR			NOT

AIR INTAKE MANIFOLD(#0072-)

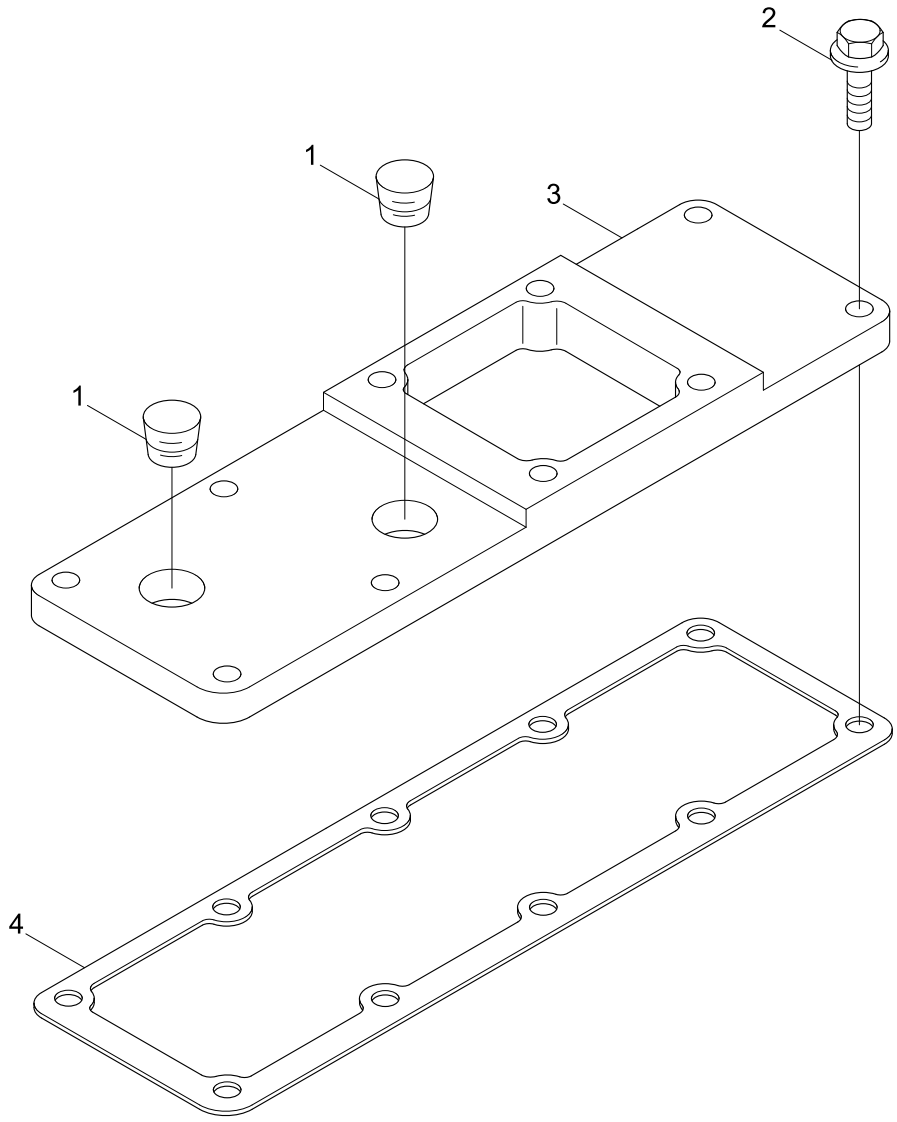

Item	Part_No	IS	Ord	T	Description	Qty	Serial_No	ITC	Remark
*	@				AIR INTAKE MANIFOLD	1	#0072 -	-	NOT
1	3008468				PLUG-PIPE	2			
2	3918109				SCREW	4			
3	3921500				COVER-INT MANIFOLD	1			
4	3938153				GASKET-INT MANI CVR	1			

INJECTOR PLUMBING(#0072-)

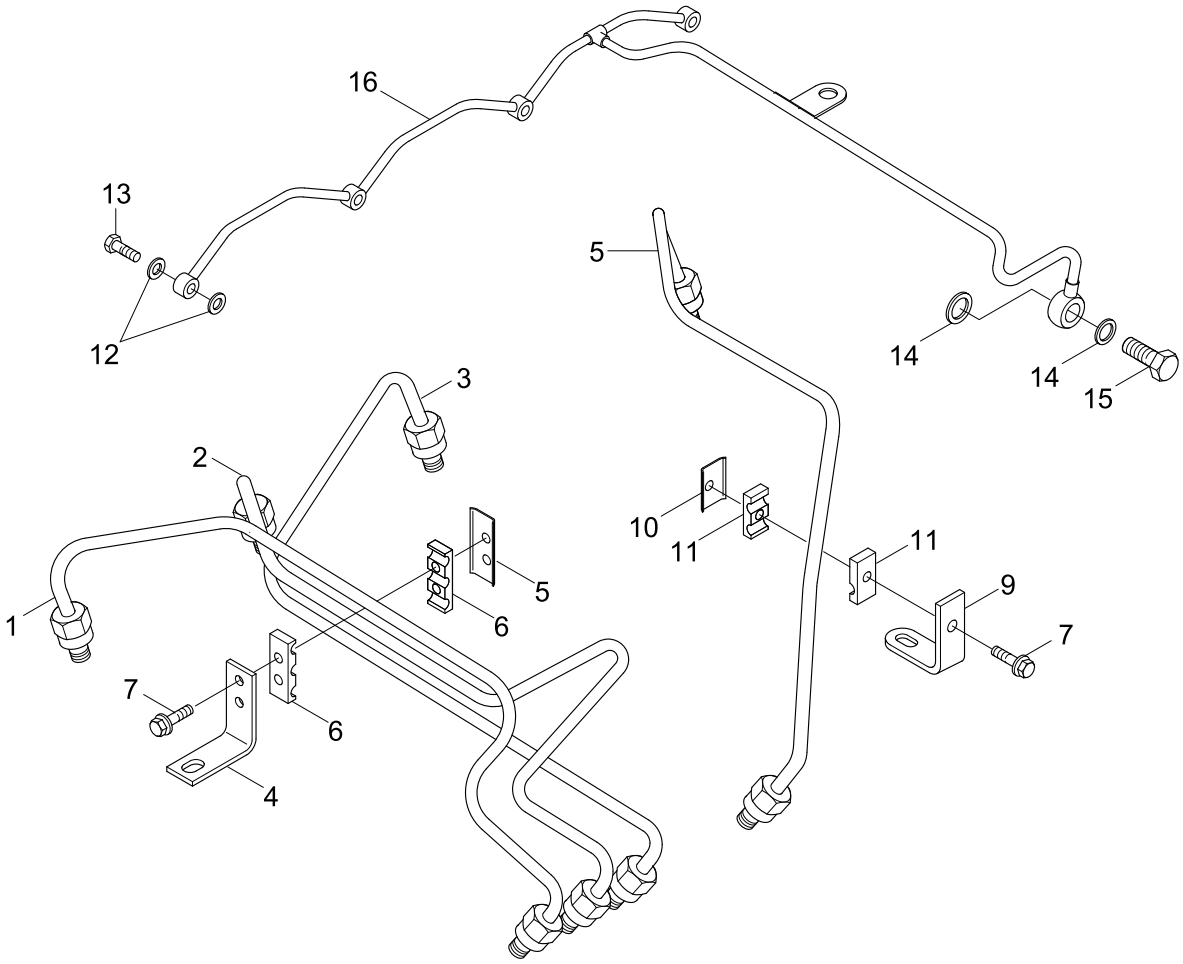

Item	Part_No	IS	Ord	T	Description	Qty	Serial_No	ITC	Remark
*	@				INJECTOR PLUMBING	1	#0072 -	-	NOT
1	3863212				TUBE-INJECTOR FUEL SUPPLY	1			
2	3863213				TUBE-INJECTOR FUEL SUPPLY	1			
3	3863214				TUBE-INJECTOR FUEL SUPPLY	1			
4	3863235				BRACE-FUEL PUMP	1			
5	3917716				BRACE-TUBE	1			
6	3917747				ISOLATOR-VIBRATION	2			
7	3920854				SCREW	3			
8	3863215				TUBE-INJECTOR FUEL SUPPLY	1			
9	3863236				BRACE-TUBE	1			
10	3917717				BRACE-TUBE	1			
11	3917746				ISOLATOR-VIBRATION	2			
12	3863755				SEAL-INJECTOR	8			
13	3905307				SCREW-BANJO CONN	4			
14	3918188				WASHER-SEALING	2			
15	3924726				VALVE-CHECK	1			
16	3927633				MANIFOLD-FUEL	1			

AIR INTAKE CONNECTION(#0072-)

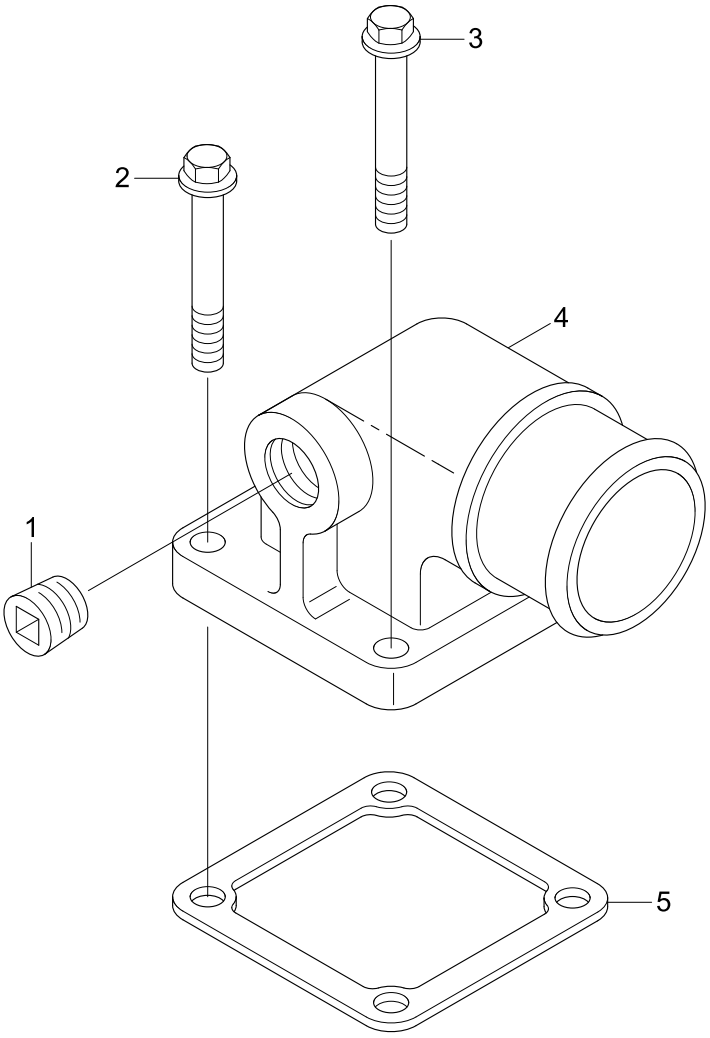

Item	Part_No	IS	Ord	T	Description	Qty	Serial_No	ITC	Remark
*	@				AIR INTAKE CONNECTION	1	#0072 -	-	NOT
1	3008469				PLUG-PIPE	1			
2	3902112				SCREW	2			
3	3919864				SCREW-HEX FLANGE	2			
4	3924990				CONNECTION-AIR INTAKE	1			
5	3931604				GASKET-CONNECTION	1			

EXHAUST CONNECTION(#0072-)

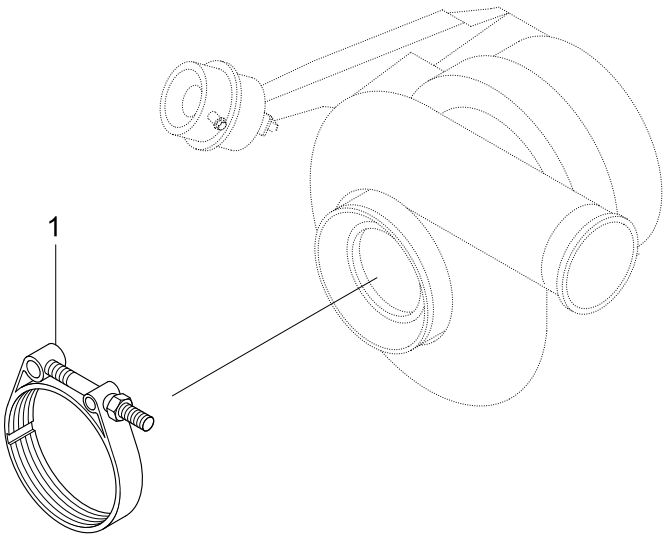

Item	Part_No	IS	Ord	T	Description	Qty	Serial_No	ITC	Remark
*	@				EXHAUST CONNECTION	1	#0072 -	-	NOT
1	3903652				CLAMP-V BAND	1			

OIL FAN MOUNT(#0072-)

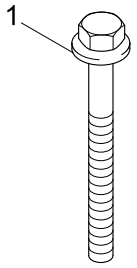

Item	Part_No	IS	Ord	T	Description	Qty	Serial_No	ITC	Remark
*	@				OIL PAN MOUNT	1	#0072 -	-	NOT
1	3907860				SCREW	28			

Item	Part_No	IS	Ord	T	Description	Qty	Serial_No	ITC	Remark
*	@				FLYWHEEL	1	#0072 -	-	NOT
	3673363				FLYWHEEL	1			
N1	3673362				.FLYWHEEL	1			NOT
2	3905427				.GEAR-FLYWHEEL RING	1			
3	3900269				WASHER-PLAIN	8			
4	3901395				SCREW	8			
N	@				NOT INDIVIDUALLY SUPPLIED	AR			NOT

LIFTING BRACKET(#0072-)

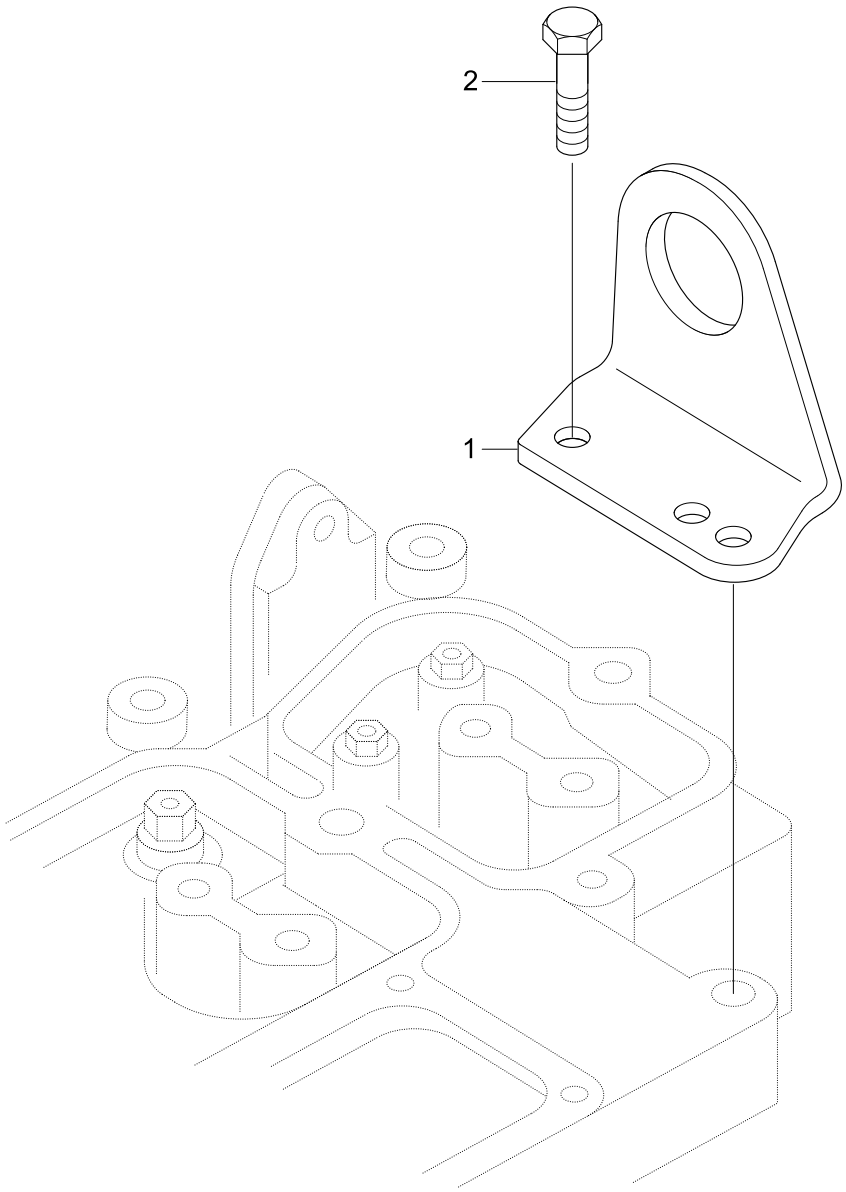

Item	Part_No	IS	Ord	T	Description	Qty	Serial_No	ITC	Remark
*	@				LIFTING BRACKET	1	#0072 -	-	NOT
1	3908118				BRACKET-LIFTING	1			
2	3910495				SCREW	1			

LUBRICATING OIL COOLER(#0072-)

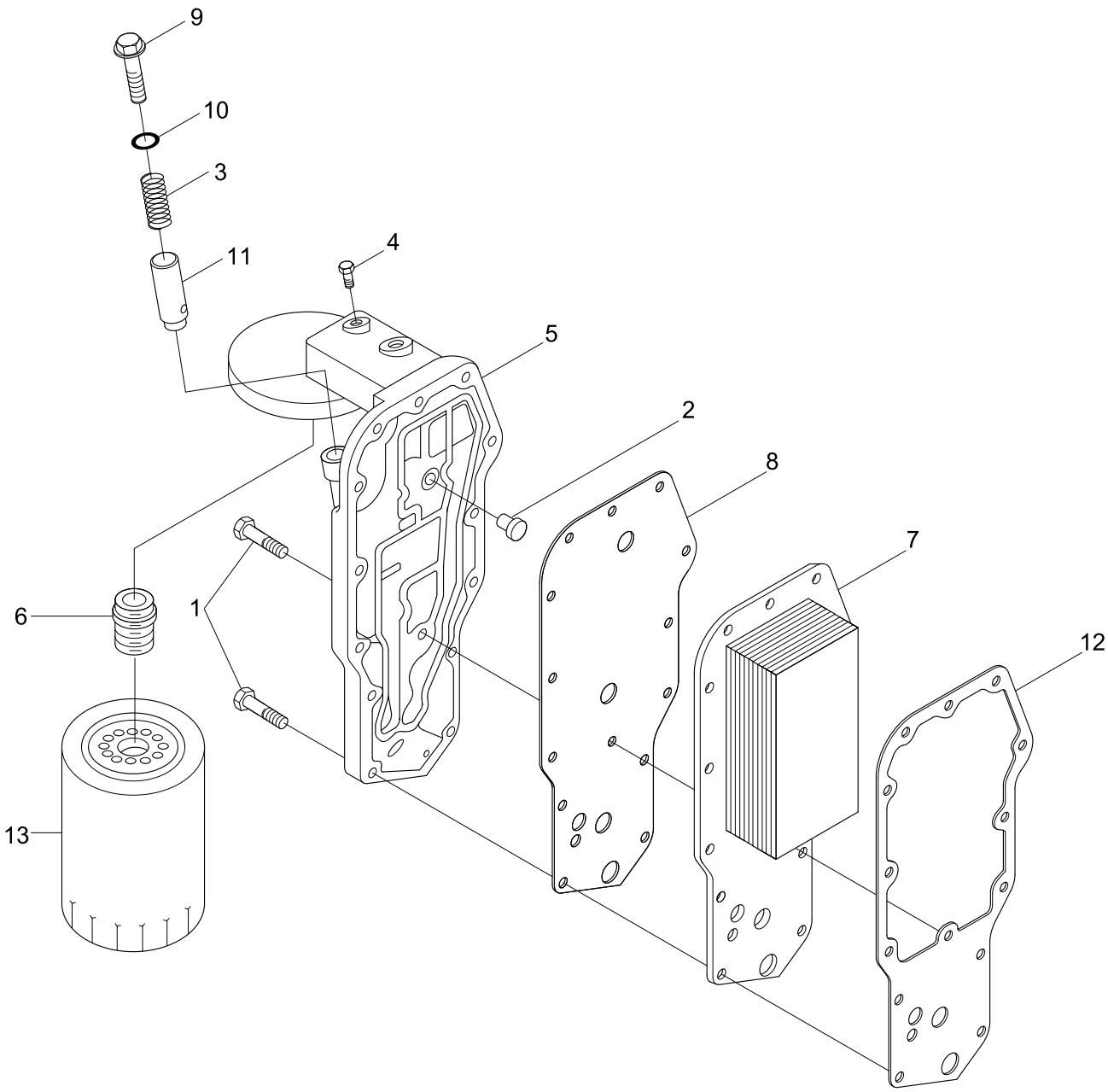

Item	Part_No	IS	Ord	T	Description	Qty	Serial_No	ITC	Remark
*	@				LUBRICATING OIL COOLER	1	#0072 -	-	NOT
1	3900632				SCREW	14			
2	3936365				VALVE	1			
3	3925009				SPRING-COMPRESSION	1			
4	3906619				PLUG-PIPE	1			
*	3918954				HEAD-LUB OIL FILTER	1			
5	3924338				.HEAD-LUB OIL FILTER	1			
6	3909355				.ADAPTER-FILTER HEAD	1			
7	3957543				CORE-COOLER	1			
8	3942915				GASKET-FILTER HEAD	1			
9	3915787				PLUG-THREADED	1			
10	3929457				SEAL/O-RING	1			
11	3918428				PLUNGER	1			
12	3942914				GASKET-O/COOLER CORE	1			
13	11N4-70110				FILTER-LUB OIL	1			

OIL LEVEL GAUGE(#0072-)

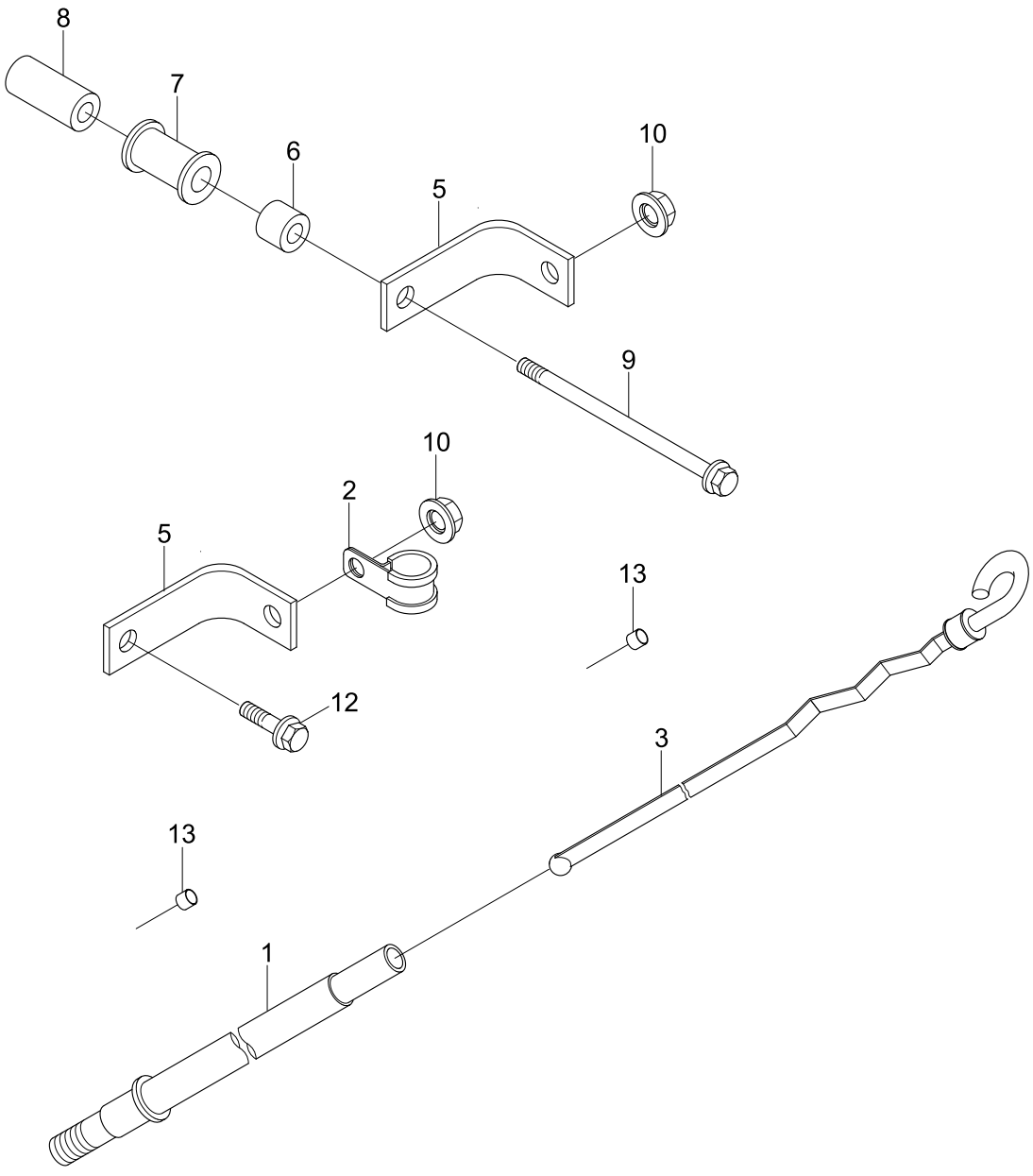

Item	Part_No	IS	Ord	T	Description	Qty	Serial_No	ITC	Remark
*	@				OIL LEVEL GAUGE	1	#0072 -	-	NOT
1	3283354				TUBE-OIL GAUGE	1			
N2	3863405				CLIP	1			NOT
N3	3863630				DIPSTICK	1			NOT
N5	3864013				BRACKET-CONNECTION	2			NOT
N6	3864014				SPACER-MOUNTING	1			NOT
N7	3864015				ISOLATOR-VIBRATION	1			NOT
N8	3864016				SPACER-MOUNTING	1			NOT
N9	3864018				SCREW	1			NOT
10	3900589				NUT-HEX FLANGE	2			
12	3900632				SCREW	1			
13	3900955				PLUG-EXPANSION	3			
N	@				NOT INDIVIDUALLY SUPPLIED	AR			NOT

LUBRICATING OIL PUMP(#0072-)

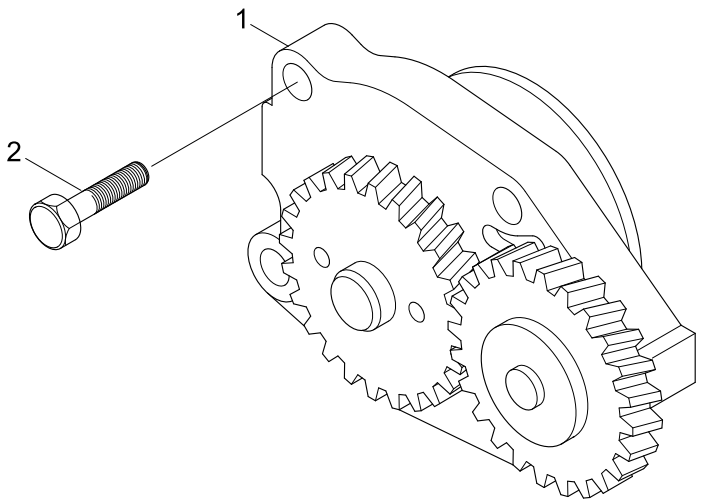

Item	Part_No	IS	Ord	T	Description	Qty	Serial_No	ITC	Remark
*	@				LUBRICATING OIL PUMP	1	#0072 -	-	NOT
1	3937027				PUMP-LUB OIL	1			
2	3900677				SCREW	4			

AIR FUEL CONTROL(#0072-)

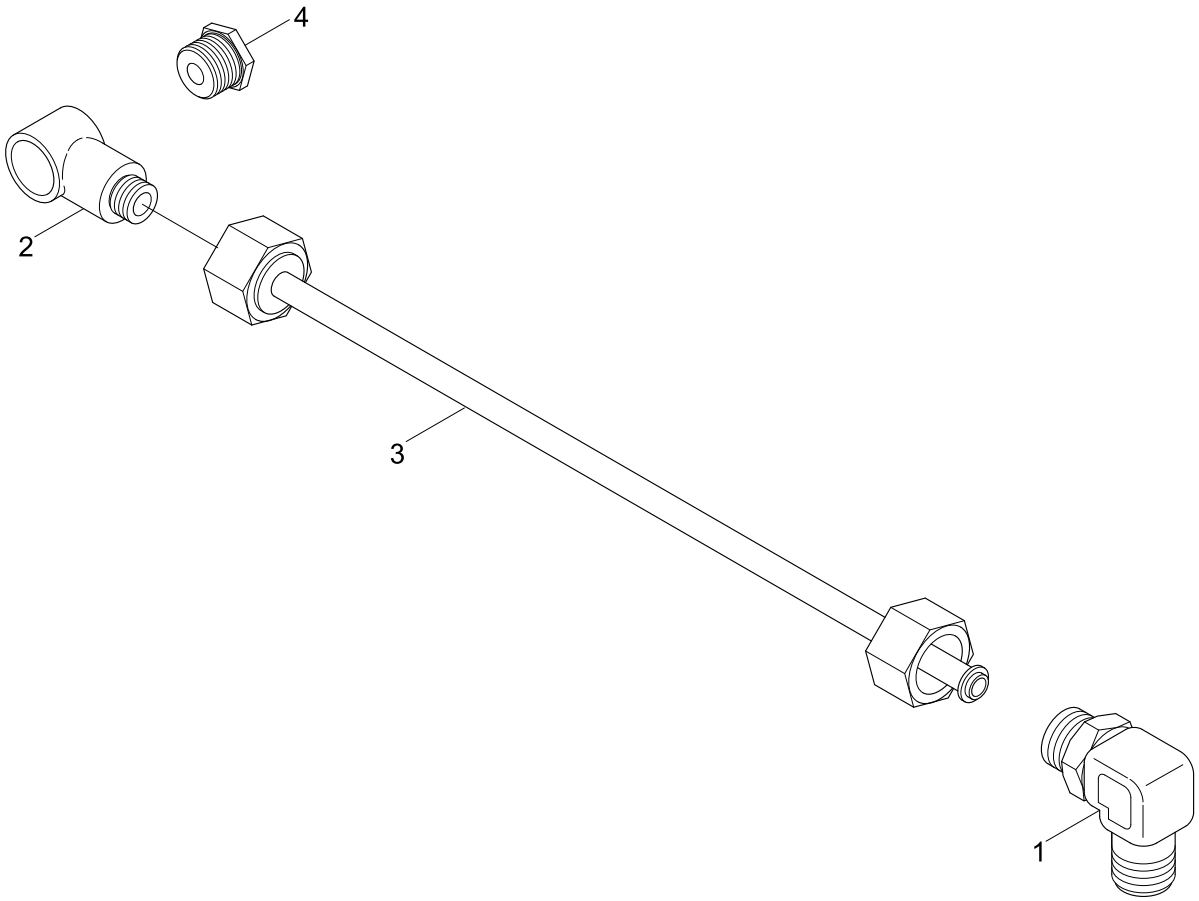

Item	Part_No	IS	Ord	T	Description	Qty	Serial_No	ITC	Remark
*	@				AIR FUEL CONTROL	1	#0072 -	-	NOT
1	3910265				ELBOW-MALE ADAPTER	1			
N2	3864301				CONNECTOR-BANJO	1			NOT
3	3991513				TUBE-AIR FUEL CONTROL	1			
4	S931C				BUSHING-REDUCING PIPE	1			
N	@				NOT INDIVIDUALLY SUPPLIED	AR			NOT

OIL PAN(#0072-)

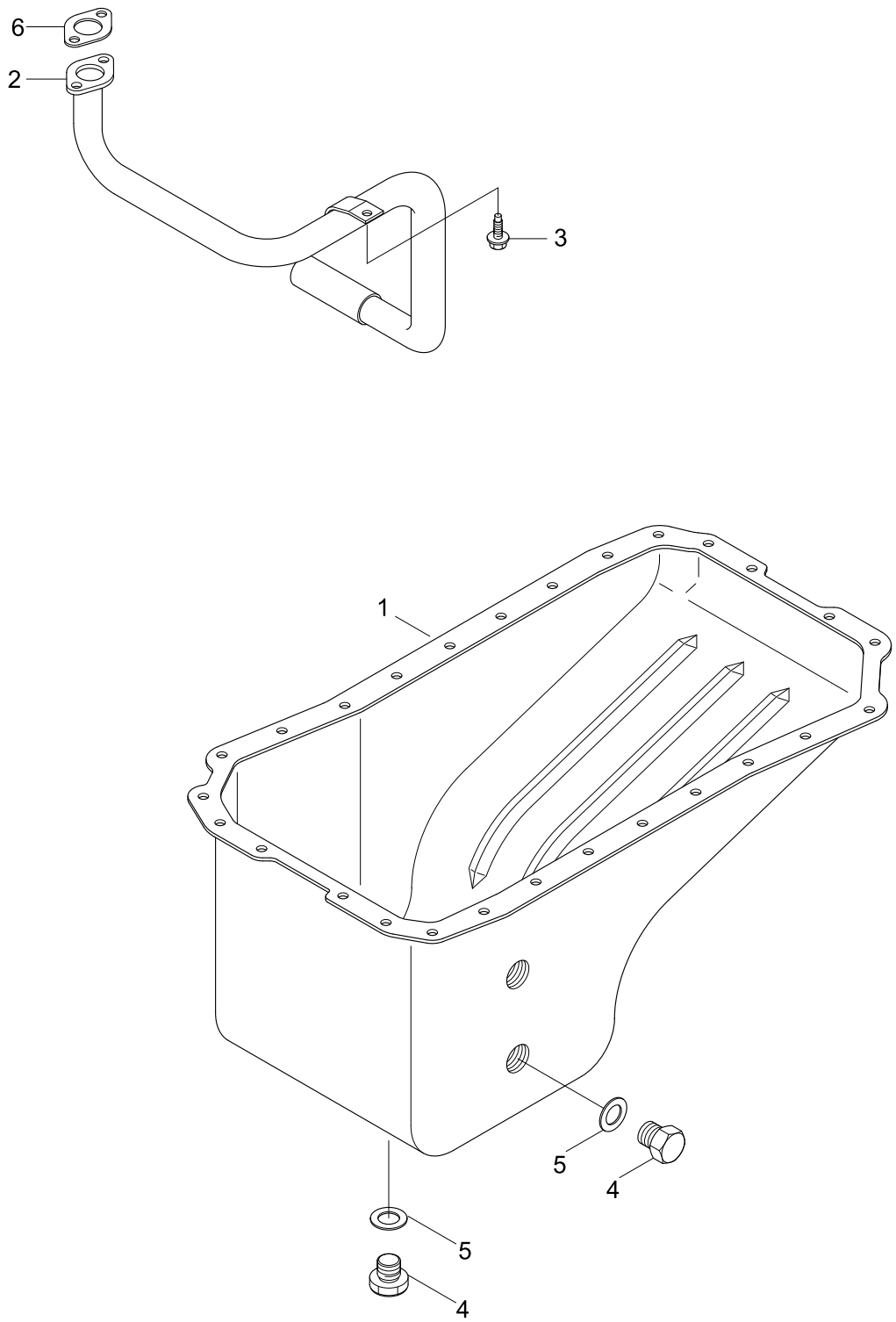

Item	Part_No	IS	Ord	T	Description	Qty	Serial_No	ITC	Remark
*	@				OIL PAN	1	#0072 -	-	NOT
1	3863222				PAN-OIL	1			
2	3863416				CONNECTION-O/SUCTION	1			
3	3900630				SCREW-HEX HEAD CAP	1			
4	3938157				GASKET-FLANGE	1			
5	3093844				WASHER-SEALING	2			
6	3924148				PLUG	2			

CONNECTING ROD & PISTON(#0072-)

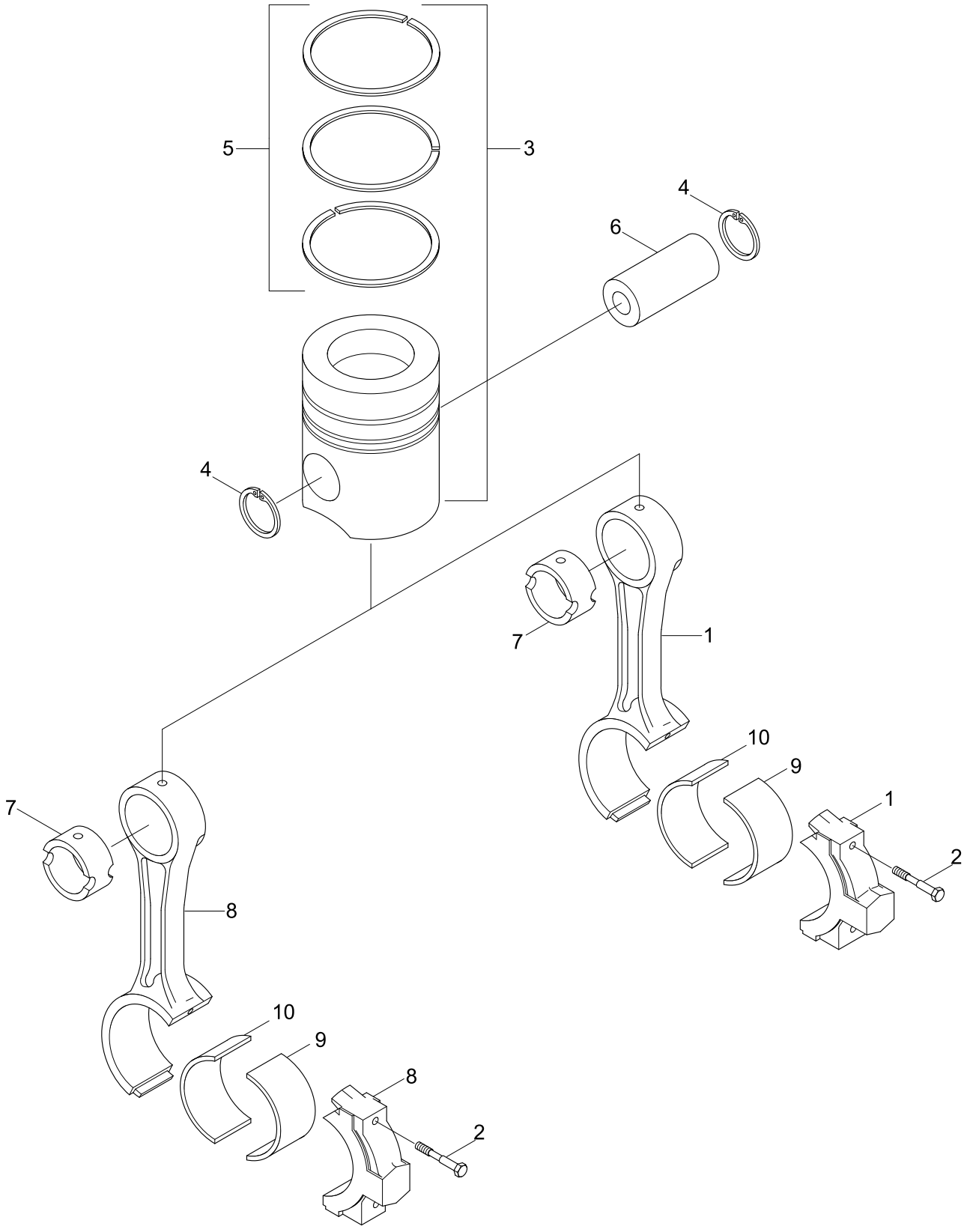

Item	Part_No	IS	Ord	T	Description	Qty	Serial_No	ITC	Remark
*	@				CONNECTING ROD & PST	1	#0072 -	-	NOT
1	3954658				ROD-CONNECTING	4			
*N	3954657				.ROD-CONNECTING	1			NOT
2	4891179				..SCREW	2			
7	4891178				..BUSHING	1			
3	3957797				KIT-ENGINE PISTON	4			
*N	3957795				.PISTON-ENGINE	1			NOT
4	3901706				.RING-RETAINING	2			
5	3938177				.SET-PISTON RING	1			
6	3934047				PIN-PISTON	4			
8	4891176				ROAD-ENGINE CONNECTING	4			
*N	4891177				.ROD-ENG CONNECTING	1			NOT
2	4891179				..SCREW	2			
7	4891178				..BUSHING	1			
9	4893693				BEARING-C/ROD(STD)	4			LOWER
	4892795				BEARING-C/ROD(0.25)	4			
	4892796				BEARING-C/ROD(0.50)	4			
	4892797				BEARING-C/ROD(0.75)	4			
	4892798				BEARING-C/ROD(1.00)	4			
10	3939859				BEARING-C/ROD(STD)	4			UPPER
	3901171				BEARING-C/ROD(0.25)	4			
	3901172				BEARING-C/ROD(0.50)	4			
	3901173				BEARING-C/ROD(0.75)	4			
	3901174				BEARING-C/ROD(1.00)	4			
N	@				NOT INDIVIDUALLY SUPPLIED	AR			NOT

CAMSHAFT(#0072-)

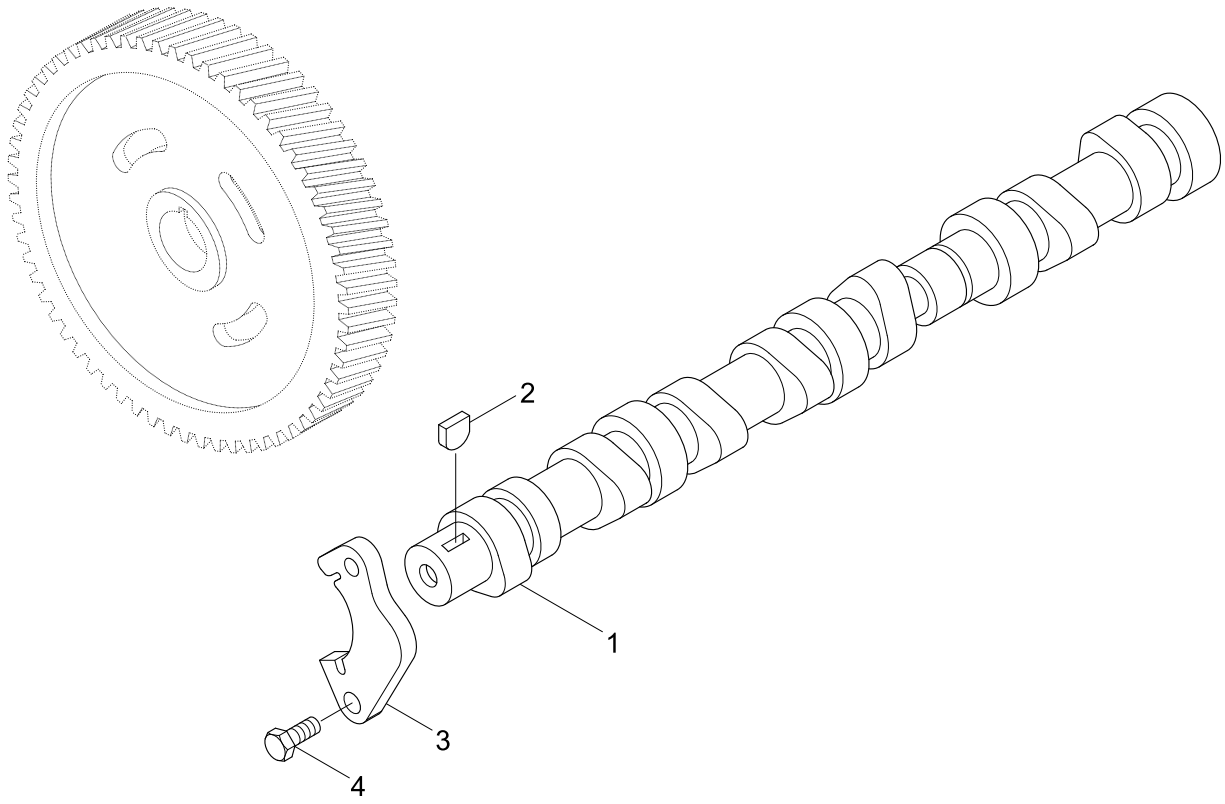

Item	Part_No	IS	Ord	T	Description	Qty	Serial_No	ITC	Remark
*	@				CAMSHAFT	1	#0072 -	-	NOT
1	3929885				CAMSHAFT	1			
2	3902332				KEY-PLAIN WOODRUFF	1			
3	3927155				SUPPORT	1			
4	3900227				SCREW	2			

FUEL INJECTOR(#0072-)

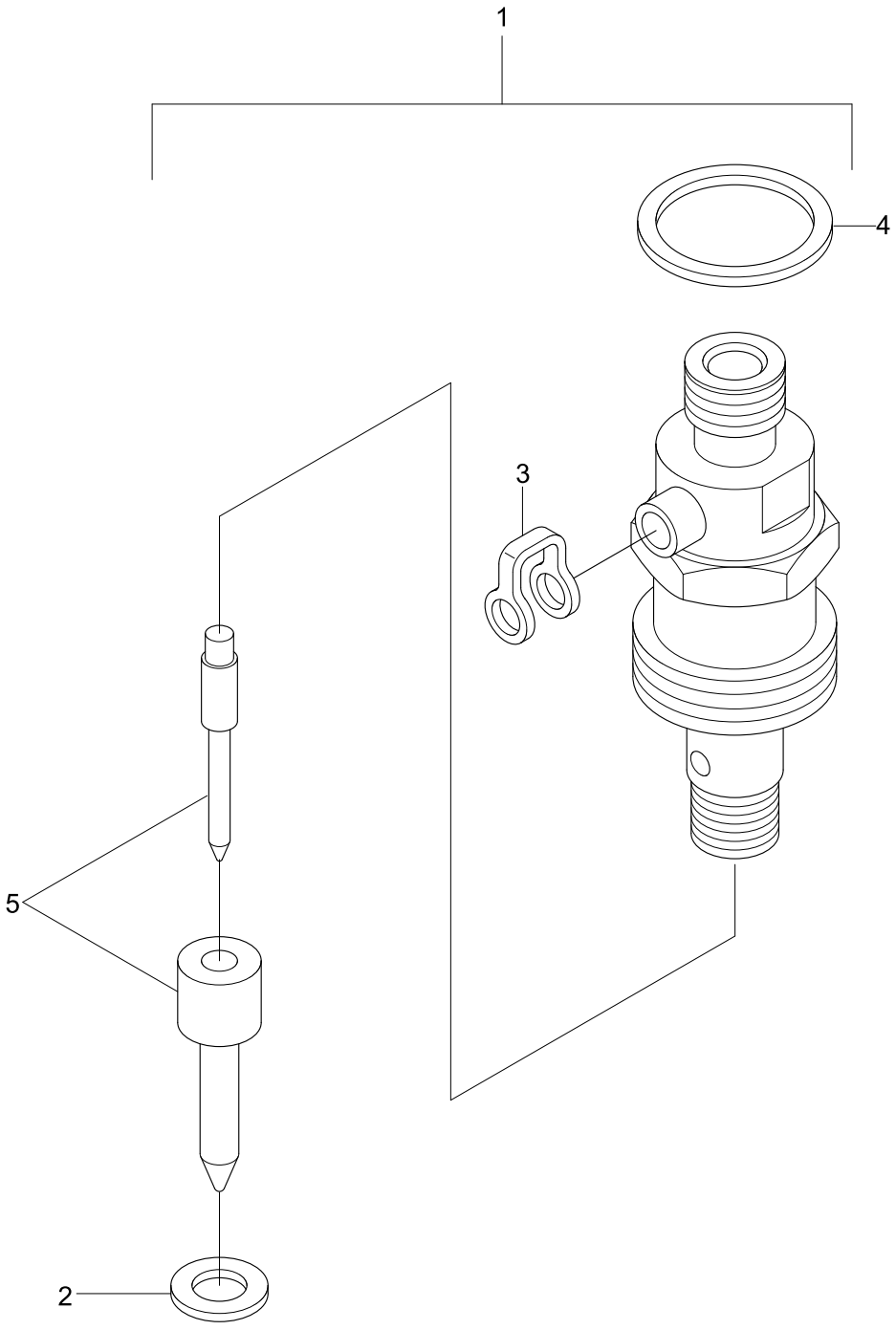

Item	Part_No	IS	Ord	T	Description	Qty	Serial_No	ITC	Remark
*	@				FUEL INJECTOR	1	#0072 -	-	NOT
1	4025334				FUEL INJECTOR	1			
*	4063212				.INJECTOR	1			
2	3863755				.SEAL-INJECTOR	1			
3	3903380				.BANJO CONN-SEAL	1			
4	3909356				.SEAL-RECT RING	1			
N5	4063321				.NOZZLE-INJECTOR	1			NOT
N	@				NOT INDIVIDUALLY SUPPLIED	AR			NOT

CYLINDER HEAD(#0072-)

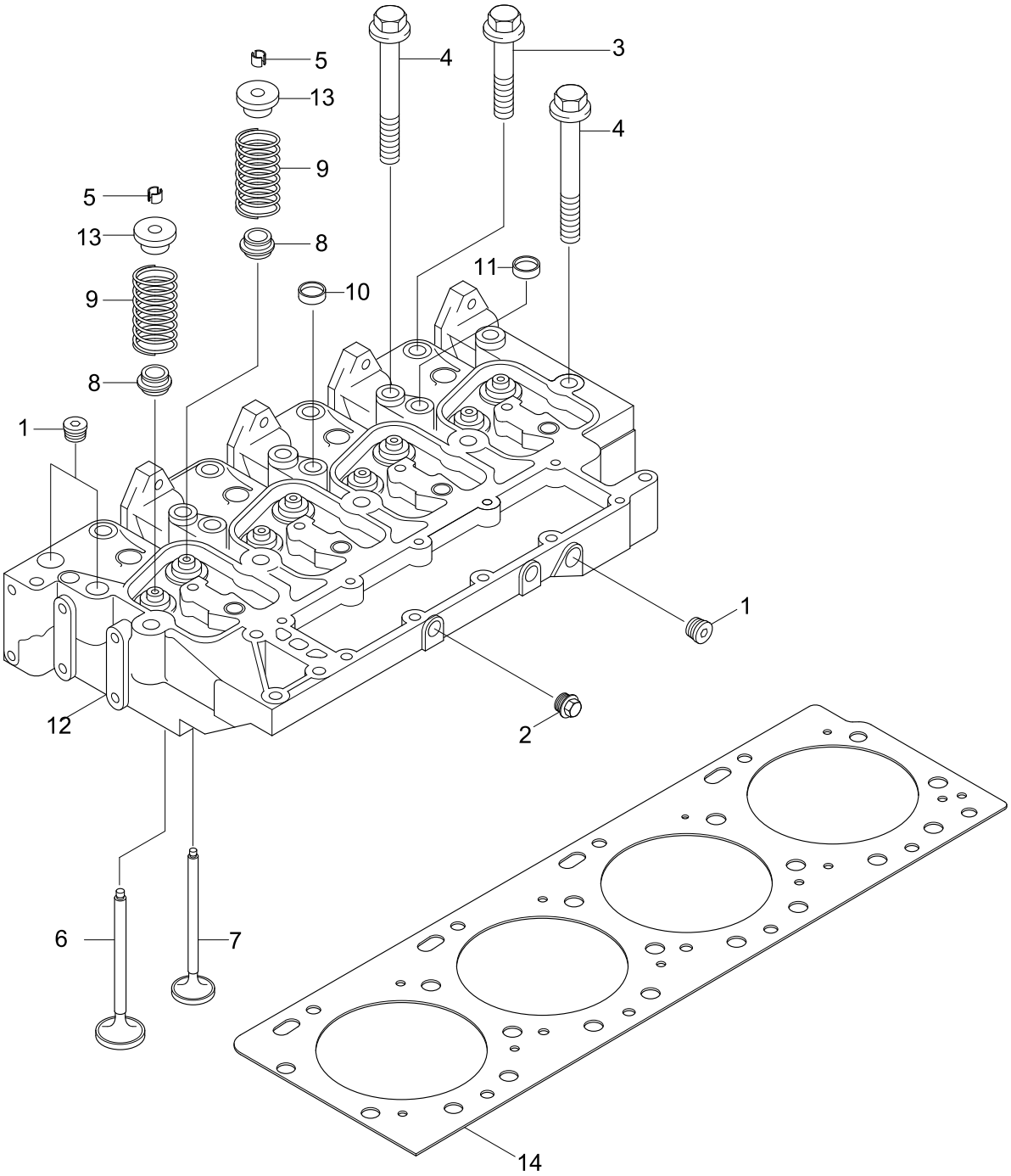

Item	Part_No	IS	Ord	T	Description	Qty	Serial_No	ITC	Remark
*	@				CYLINDER HEAD	1	#0072 -	-	NOT
1	3008468				PLUG-PIPE	5			
2	3906619				PLUG-PIPE	2			
3	3920779				SCREW	4			
4	3920780				SCREW	10			
*	3802355				VALVE-INTAKE	4			
5	3900250				.COLLET-VALVE	8			
N6	3920867				.VALVE-INTAKE	4			NOT
*	3802356				VALVE-EXHAUST	4			
5	3900250				.COLLET-VALVE	4			
N7	3920868				.VALVE-EXHAUST	4			NOT
8	3957912				SEAL-VALVE	8			
9	3932453				SPRING-VALVE	8			
*N	3966448				HEAD-CYLINDER	1			NOT
10	3812092				.PLUG-EXPANSION	3			
11	3922073				.PLUG	3			
N12	3966447				.HEAD-CYLINDER	1			NOT
13	3957913				RETAINER-VALVE SPRING	8			
14	3283333				GASKET-CYLINDER HEAD	1			PP97342

STARTING MOTOR(#0072-)

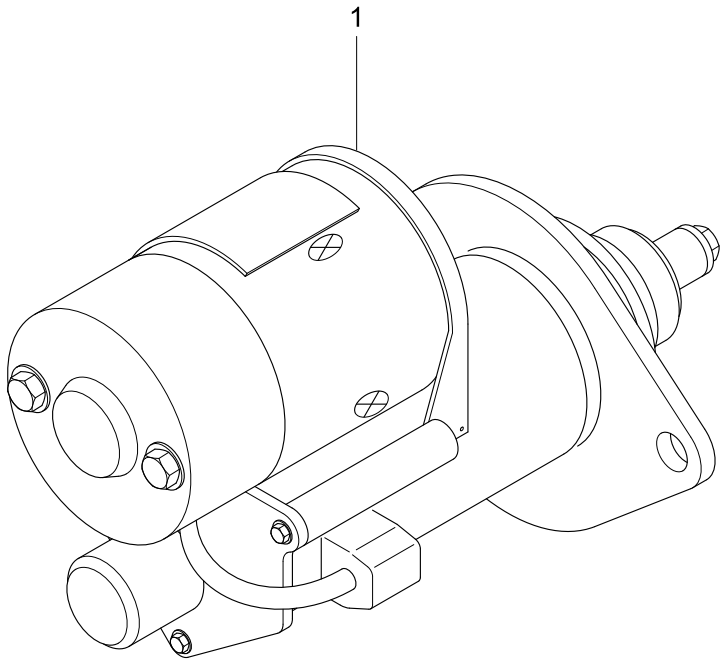

Item	Part_No	IS	Ord	T	Description	Qty	Serial_No	ITC	Remark
*	@				STARTING MOTOR	1	#0072 -	-	NOT
N1	3864298				MOTOR-STARTING	1			NOT

VALVE COVER(#0072-)

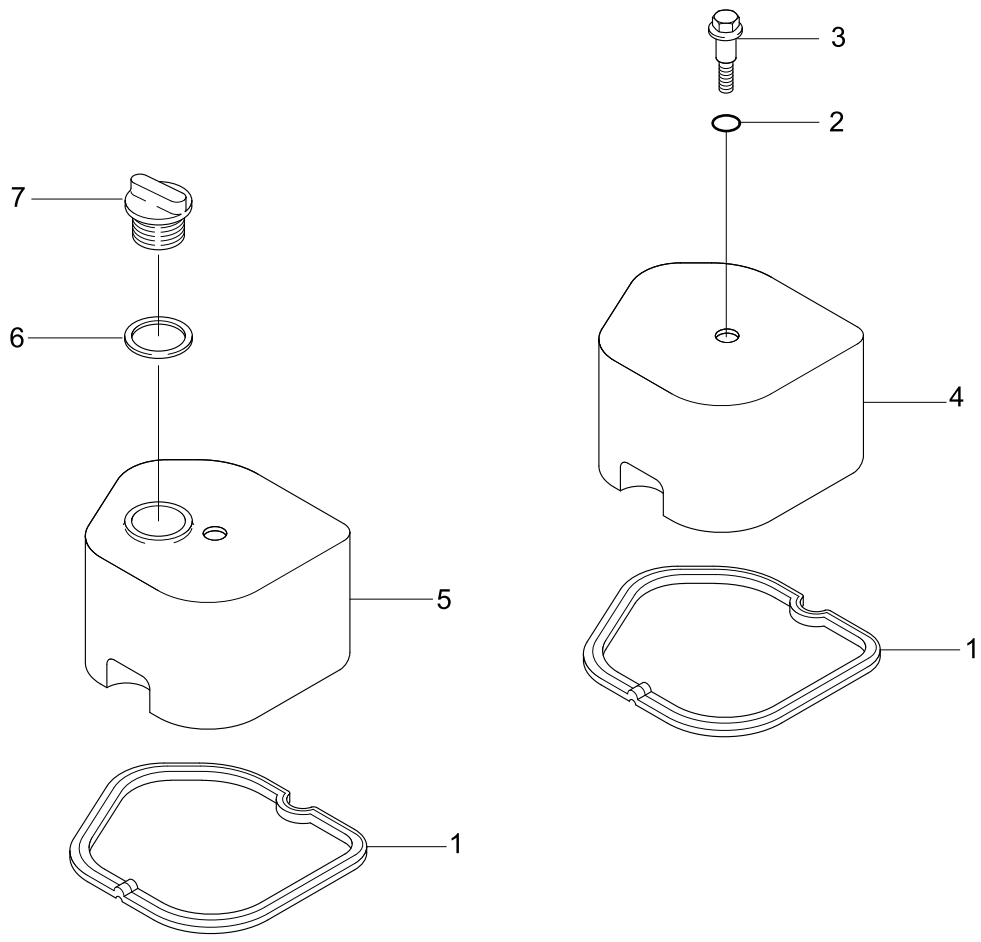

Item	Part_No	IS	Ord	T	Description	Qty	Serial_No	ITC	Remark
*	@				VALVE COVER	1	#0072 -	-	NOT
1	3930906				GASKET-VALVE COVER	4			
2	3935449				ISOLATOR	4			
3	3907049				SCREW	4			
4	3928404				COVER-VALVE	3			
5	3928405				COVER-VALVE	1			
6	3936876				SEAL-RECT RING	1			
7	3901895				CAP-FILLER	1			

LIFT PUMP(#0072-)

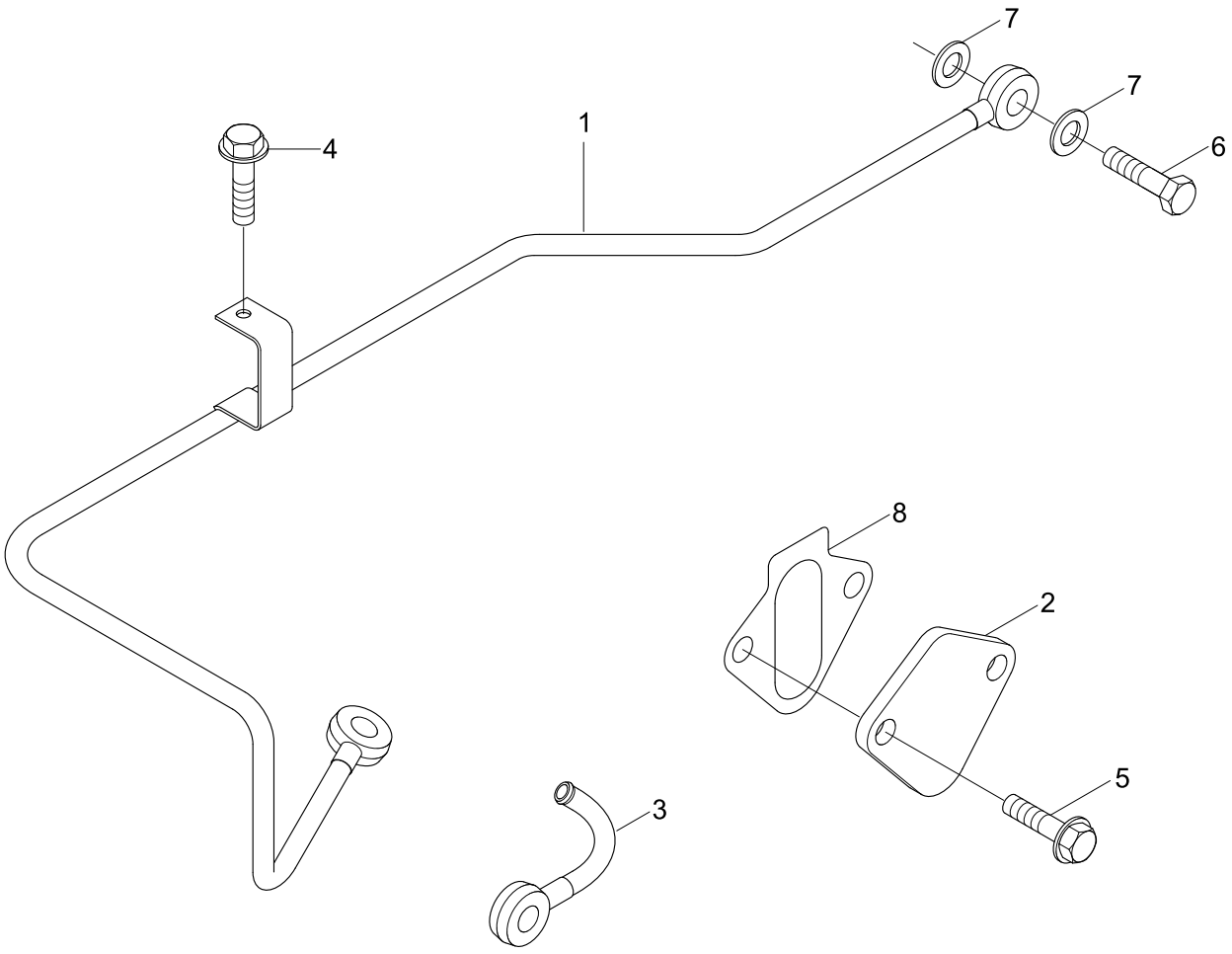

Item	Part_No	IS	Ord	T	Description	Qty	Serial_No	ITC	Remark
*	@				LIFT PUMP	1	#0072 -	-	NOT
1	3863427				TUBE-FUEL SUPPLY	1			
2	3863441				PLATE-COVER	1			
3	3863453				CONNECTOR-BANJO	1			
4	3900630				SCREW-HEX HEAD CAP	1			
5	3900631				SCREW-HEX HEAD CAP	1			
6	3916361				SCREW	1			
7	3963983				WASHER-SEALING	2			
8	3931059				GASKET-COVER PLATE	1			

Item	Part_No	IS	Ord	T	Description	Qty	Serial_No	ITC	Remark
*	@				TURBOCHARGER	1	#0072 -	-	NOT
*N	3599356				TURBOCHARGER	1			NOT
N1	3599355				.TURBOCHARGER	1			NOT
2	3863791				STUD	4			
3	3863792				NUT-HEXAGON	4			
4	3864271				GASKET-TURBOCHARGER	1			

FLUID LEVEL SENSOR(#0072-)

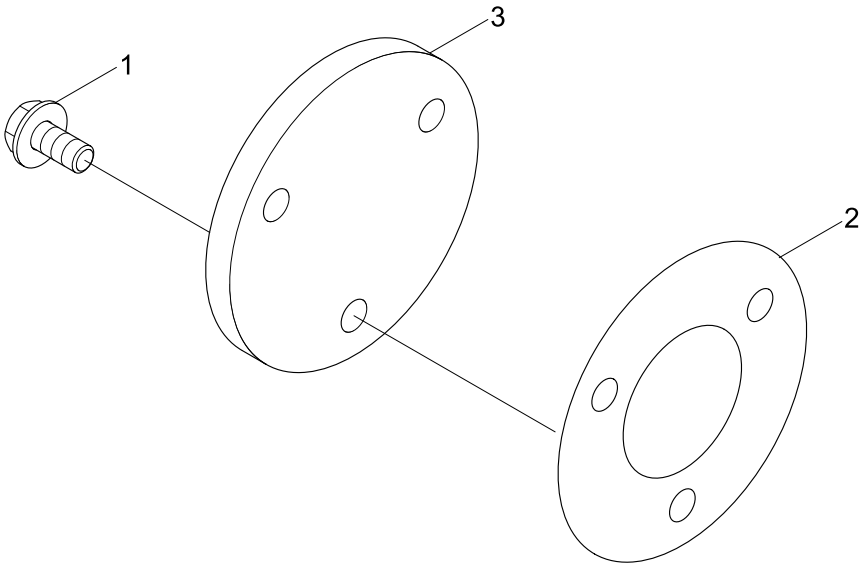

Item	Part_No	IS	Ord	T	Description	Qty	Serial_No	ITC	Remark
*	@				FLUID LEVEL SENSOR	1	#0072 -	-	NOT
1	3900626				SCREW	3			
N2	3939357				GASKET-COVER	1			NOT
3	3932513				PLATE-COVER	1			
N	@				NOT INDIVIDUALLY SUPPLIED	AR			NOT

ENGINE OIL DRAIN VALVE(#0072-)

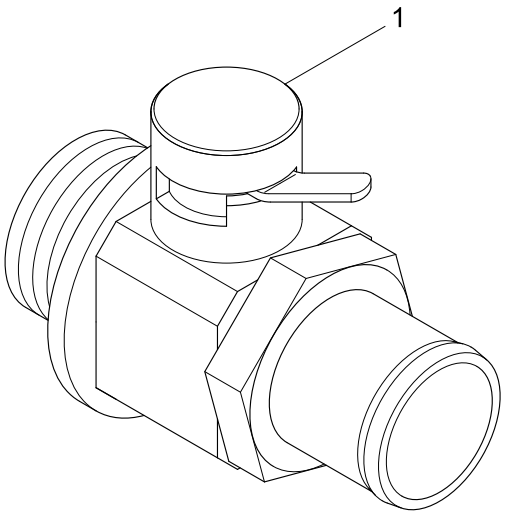

Item	Part_No	IS	Ord	T	Description	Qty	Serial_No	ITC	Remark
*	@				ENGINE OIL D/VALVE	1	#0072 -	-	NOT
1	11N8-00210				ENGINE OIL D/VALVE	1			

TURBOCHARGER PLUMBING(#0072-)

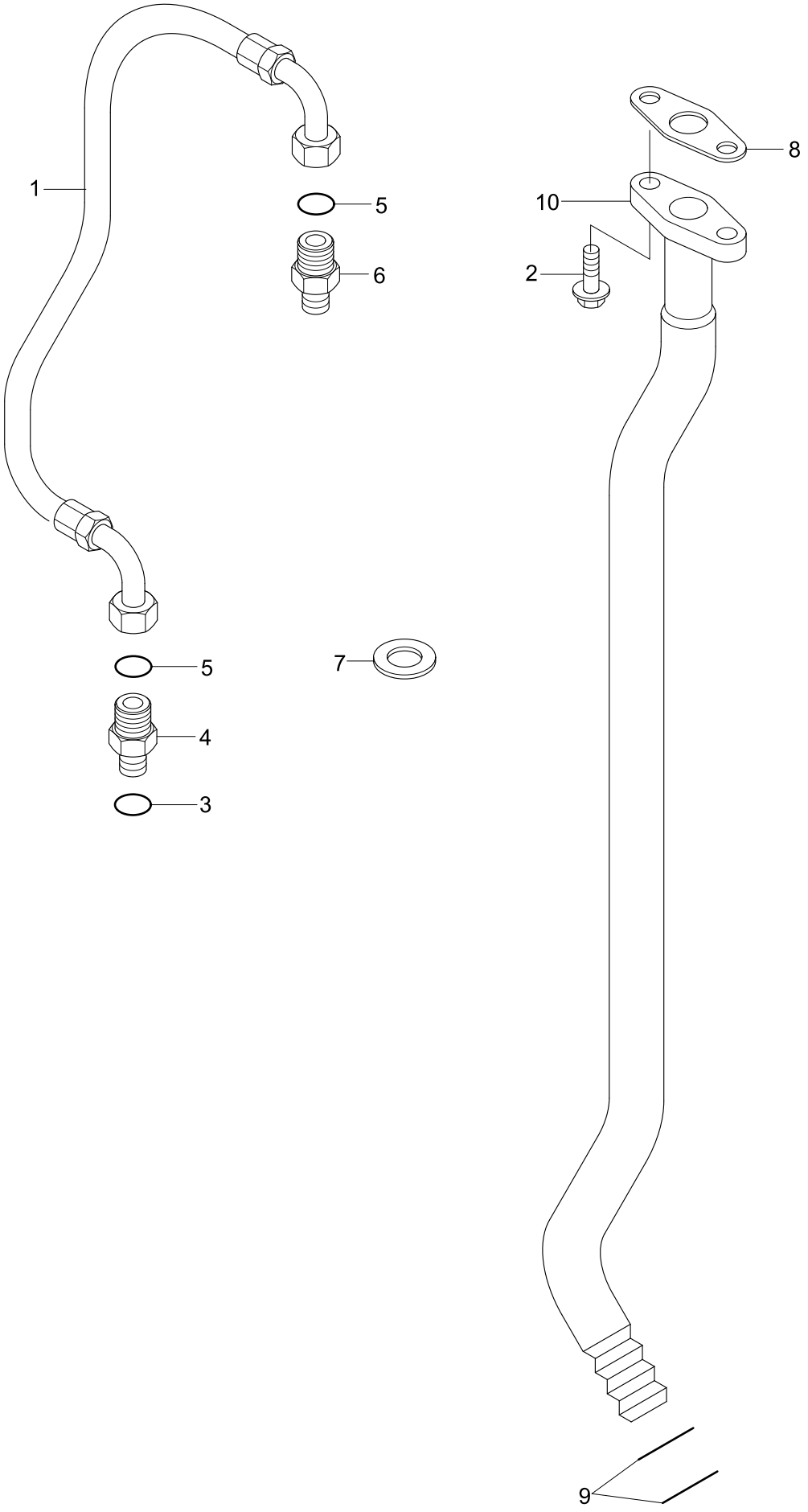

Item	Part_No	IS	Ord	T	Description	Qty	Serial_No	ITC	Remark
*	@				T/CHARGER PLUMBING	1	#0072 -	-	NOT
1	3282159				HOSE-FLEXIBLE	1			
2	3901865				SCREW	2			
*	3922789				CONNECTOR	1			
3	3037236				.SEAL/O-RING	1			
N4	3922790				.CONNECTOR	1			NOT
5	3922794				.SEAL/O-RING	2			
N6	3864382				.CONNECTOR-MALE	1			NOT
7	3932484				.WASHER-SEALING	1			
8	3863787				GASKET-OIL DRAIN	1			
9	3928624				.SEAL/O-RING	2			
10	3863754				.CONN-TUR OIL DRAIN	1			

Item	Part_No	IS	Ord	T	Description	Qty	Serial_No	ITC	Remark
*	@				WATER PUMP	1	#0072 -	-	NOT
	3286275				KIT-WATER PUMP	1			
1	3906698				.SEAL-RECT RING	1			
2	3285410				.PUMP-WATER	1			
3	3941981				SCREW	2			

WATER INLET CONNECTION(#0072-)

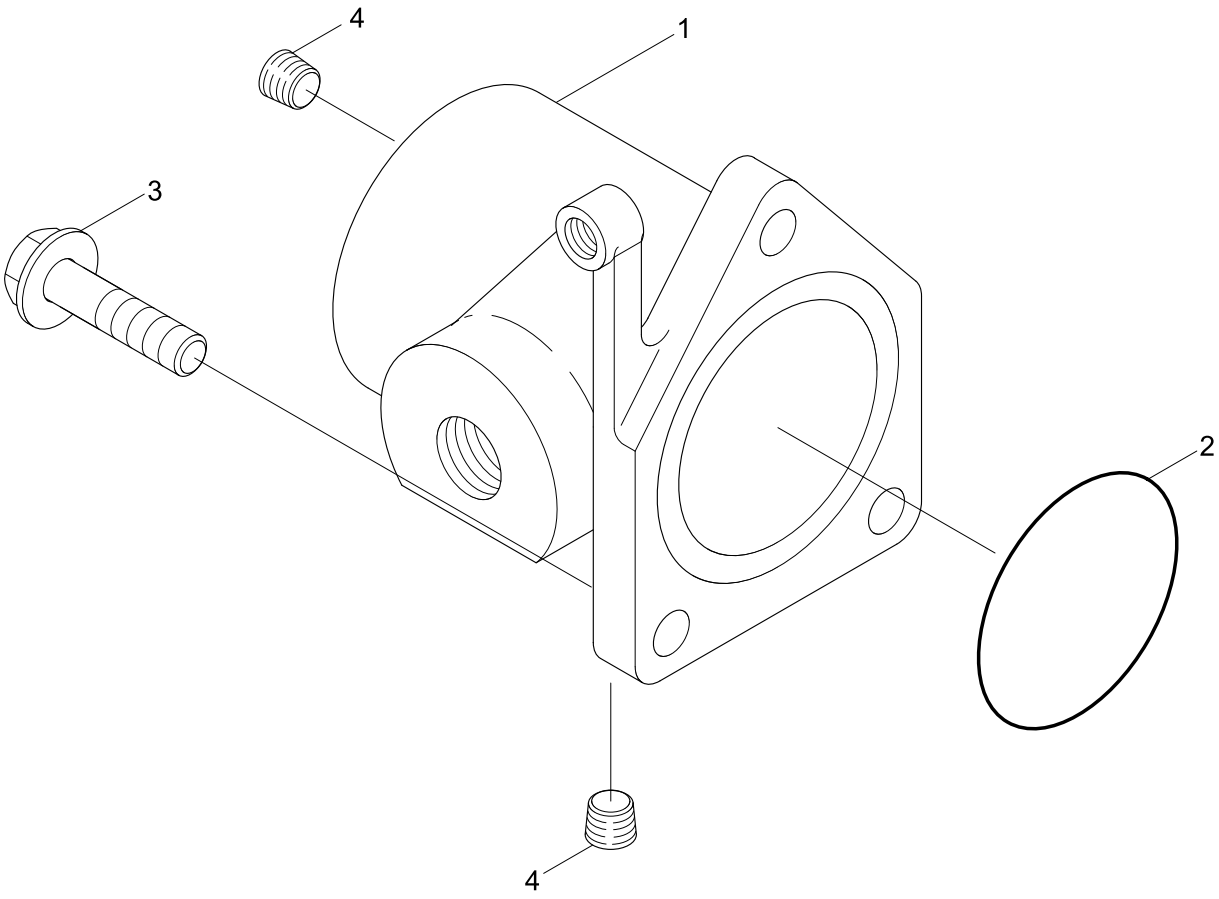

Item	Part_No	IS	Ord	T	Description	Qty	Serial_No	ITC	Remark
*	@				WATER INLET CONNECTION	1	#0072 -	-	NOT
1	3916625				CONN-WATER INLET	1			
2	3906697				SEAL-RECT RING	1			
3	3902460				SCREW-HEX HEAD CAP	3			
4	3008468				PLUG-PIPE	2			WI9701

FUEL DRAIN LOCATION(#0072-)

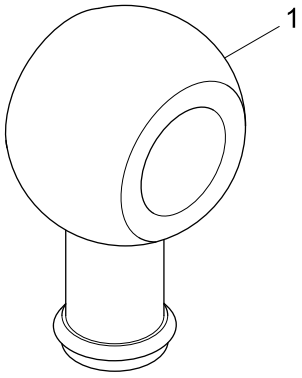

Item	Part_No	IS	Ord	T	Description	Qty	Serial_No	ITC	Remark
*	@				FUEL DRAIN LOCATION	1	#0072 -	-	NOT
N1	3864002				CONNECTOR	1			NOT
N	@				NOT INDIVIDUALLY SUPPLIED	AR			NOT

FUEL SHUTOFF VALVE(#0072-)

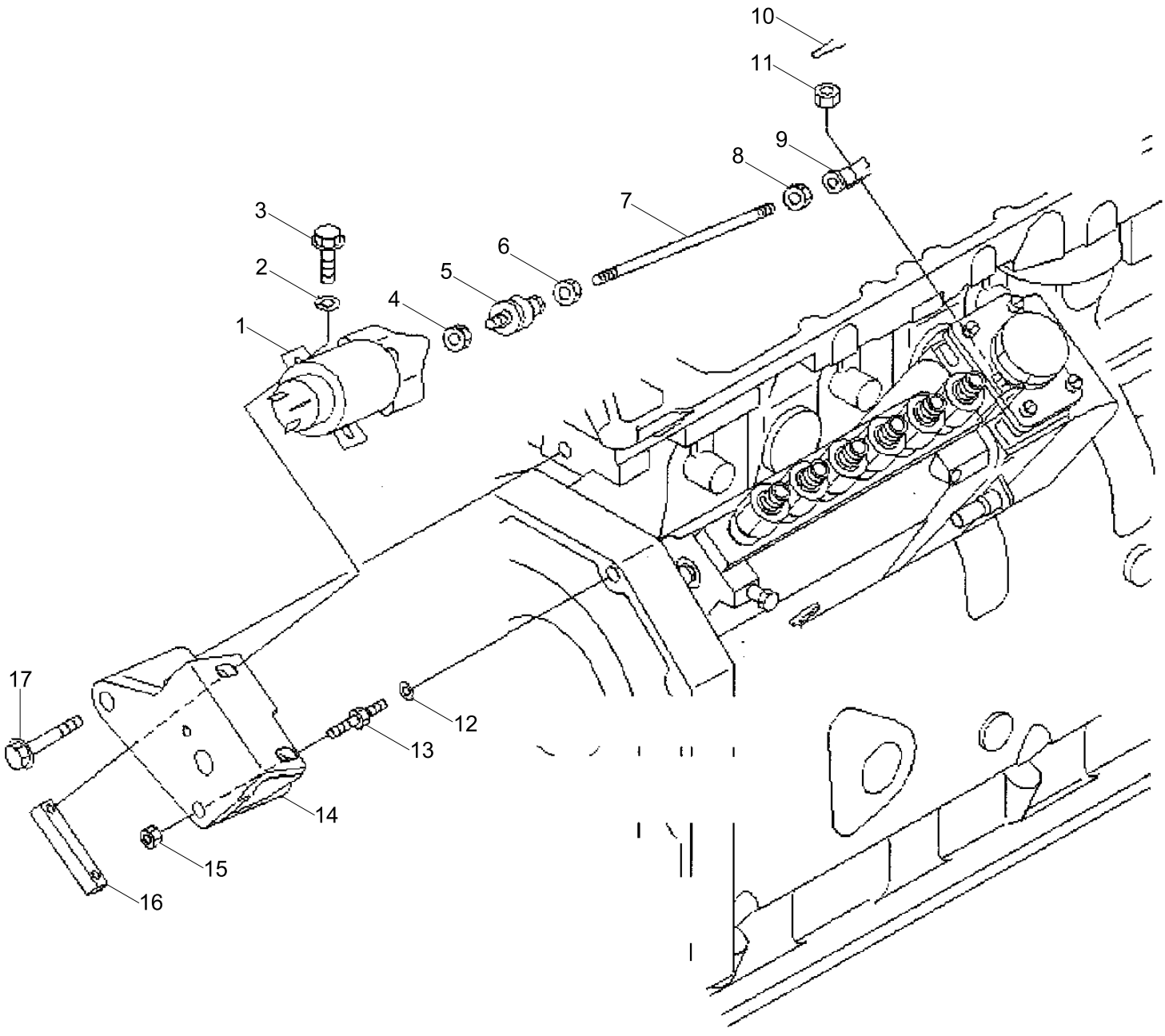

Item	Part_No	IS	Ord	T	Description	Qty	Serial_No	ITC	Remark
*	@				FUEL SHUTOFF VALVE	1	#0072 -	-	NOT
1	3864274				SOLENOID	1			
2	3094023				WASHER	2			
3	3863996				SCREW	2			
4	3093946				NUT	1			
5	3863152				ROD	1			
6	3093946				NUT	2			
7	3863999				ROD	1			
8	3863154				NUT	1			
9	3863155				END	1			
10	3863156				PIN-COTTER	1			
11	3863157				NUT-HEX SLOTTED	1			
12	3863995				WASHER	1			
13	3863993				SCREW	1			
14	3863992				BRACKET	1			
15	3863994				NUT	1			
16	3863997				BRACE	1			
17	3863998				SCREW	1			

STARTER MOUNTING(#0072-)

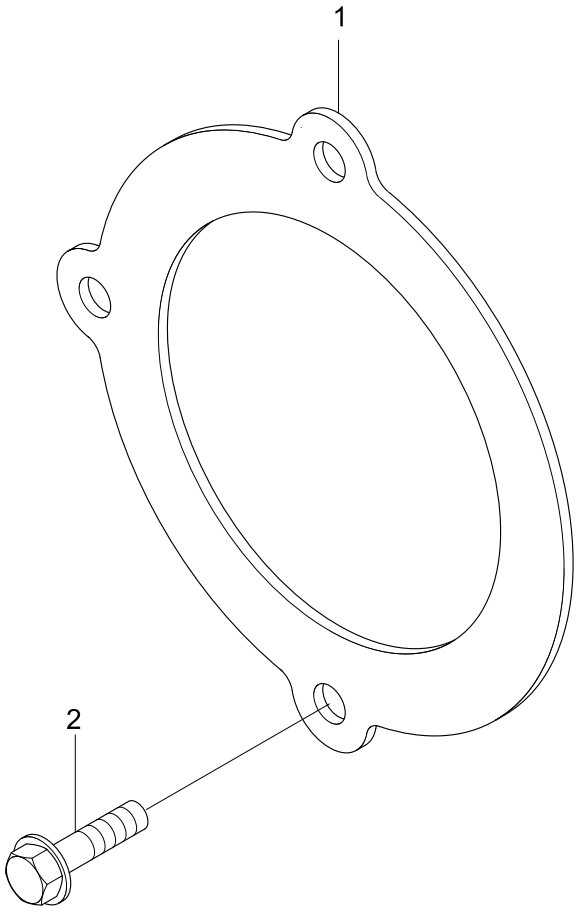

Item	Part_No	IS	Ord	T	Description	Qty	Serial_No	ITC	Remark
*	@				STARTER MOUNTING	1	#0072 -	-	NOT
1	3354514				SPACER	1			
2	3903834				SCREW-TWELVE P/CAP	2			

NOISE PANEL(#0072-)

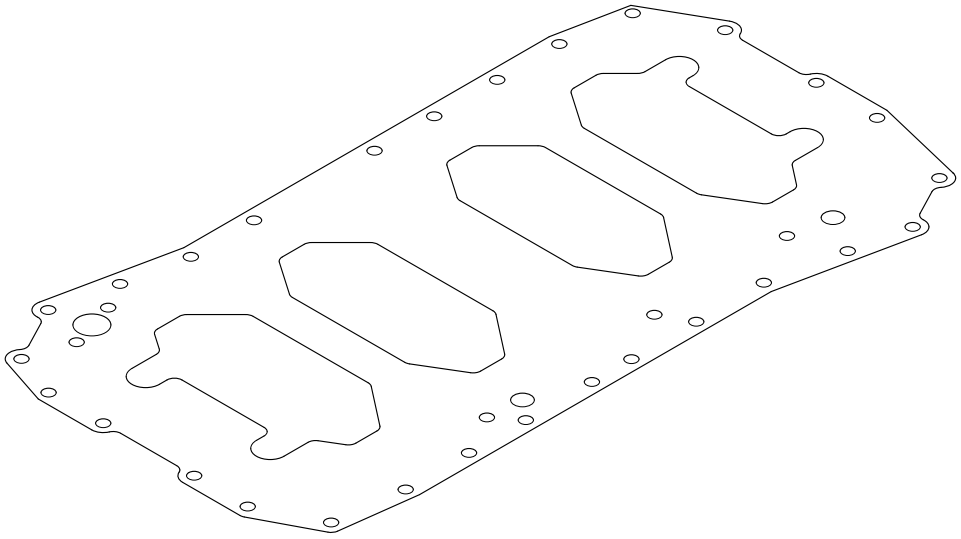

Item	Part_No	IS	Ord	T	Description	Qty	Serial_No	ITC	Remark
*	@				NOISE PANEL	1	#0072 -	-	NOT
1	3929093				PALTE-CYL BLOCK STIFFEN	1			

FUEL FILTER PLUMBING(#0072-)

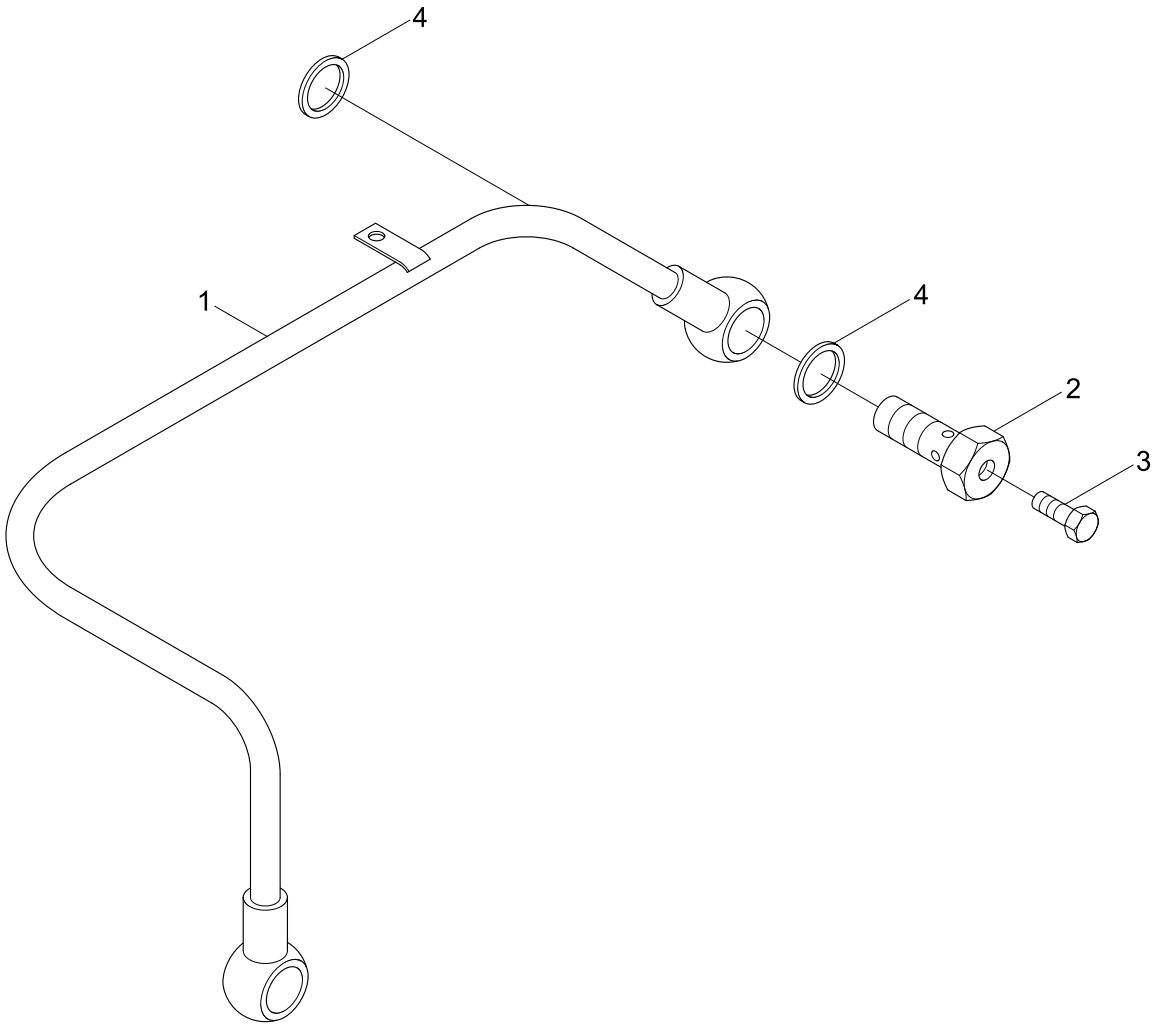

Item	Part_No	IS	Ord	T	Description	Qty	Serial_No	ITC	Remark
*	@				FUEL FILTER PLUMBING	1	#0072 -	-	NOT
1	3863180				TUBE-FUEL SUPPLY	1			
N*	3905860				SCREW	1			NOT
2	3911446				.SCREW	1			
3	3939570				.SCREW	1			
4	3963983				WASHER-SEALING	2			

EXHAUST MANIFOLD(#0072-)

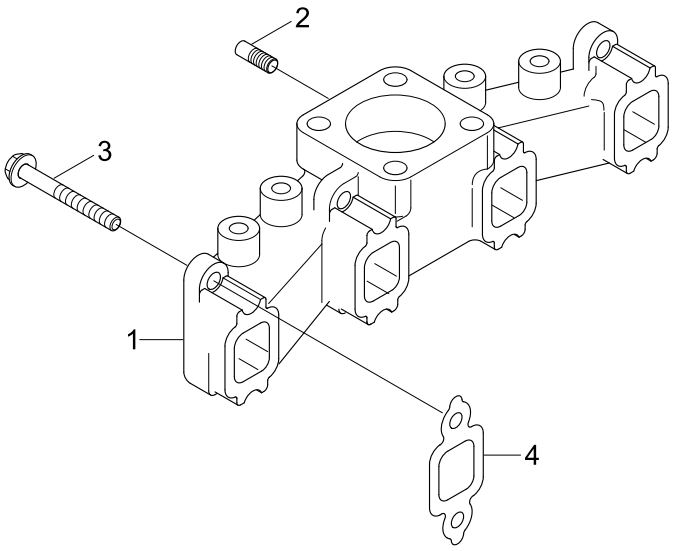

Item	Part_No	IS	Ord	T	Description	Qty	Serial_No	ITC	Remark
*	@				MANIFOLD-EXHAUST	1	#0072 -	-	NOT
1	3863720				MANIFOLD-EXHAUST	1			
2	3863363				PLUG-PIPE	1			
3	3930249				SCREW	8			
4	3864337				GASKET-EXHAUST	4			

Item	Part_No	IS	Ord	T	Description	Qty	Serial_No	ITC	Remark
*	@				CAM FOLLOWER C/MOUNT	1	#0072 -	-	NOT
1	3928759				SEAL-GROMMET	2			
2	3900629				SCREW-H/FLANGE CAP	2			