RUTHZIL TRATOR COMERCIAL DE PEÇAS LTDA 11 97083-6812 ROLANDO CITRANGULO

PARTS CATALOG

R180LC-9

HYUNDAI

EXCAVATOR

R180LC-9

HYUNDAI

ENGINE MOUNTING

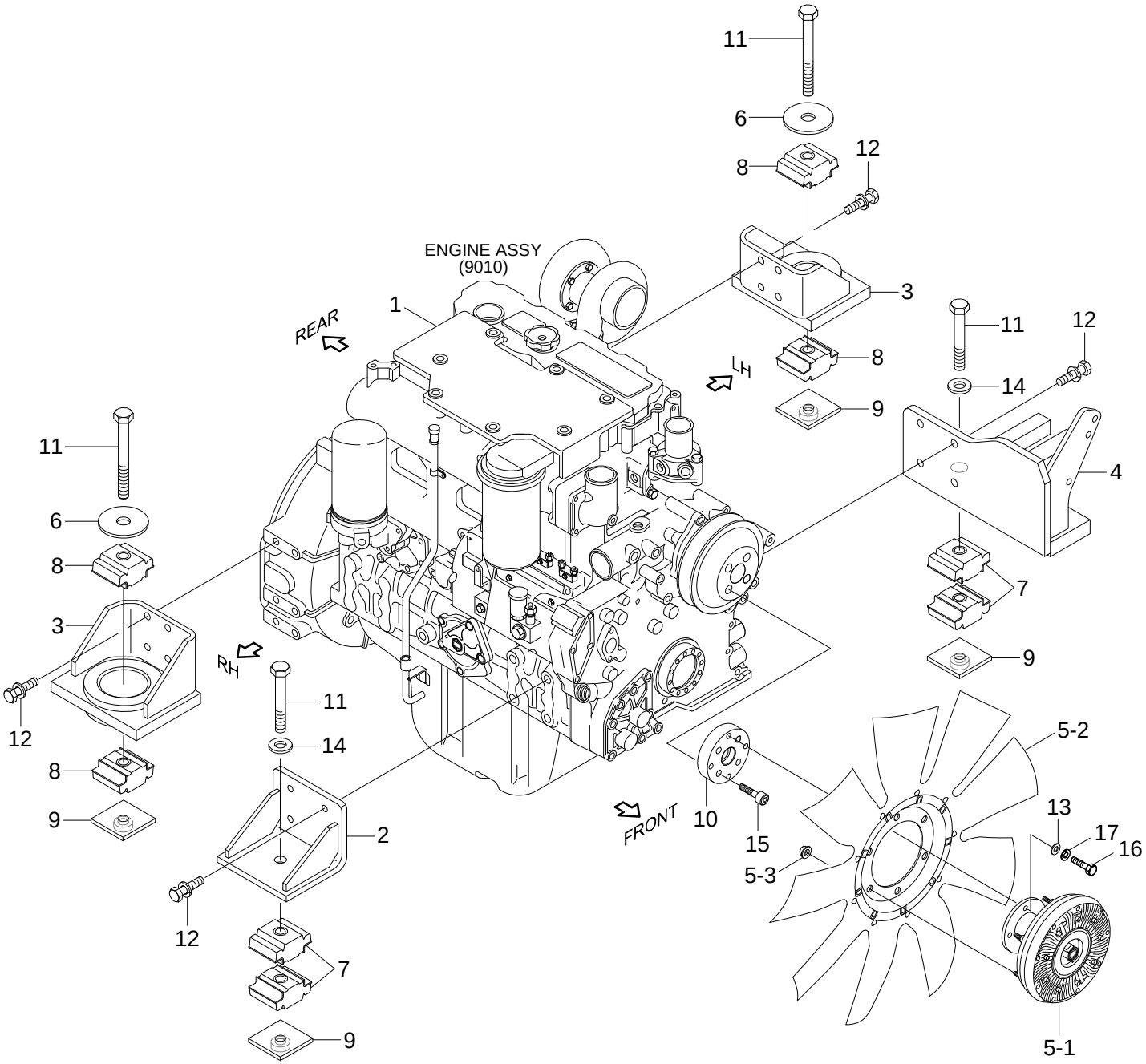

Item	Part_No	IS	Ord	T	Description	Qty	Serial_No	ITC	Remark
1	11Q5-00011				ENGINE ASSY	1			
2	11Q4-00120				BRACKET	1			
3	11Q4-00130				BRACKET	2			
4	11Q4-00110				BRACKET-COMP	1			
5	11Q6-00360				FAN CLUTCH ASSY	1			
5-1	11Q6-01190				.CLUTCH-FAN	1			
5-2	11Q6-01230				.FAN-COOLING	1			
5-3	S285-081006				.NUT-FLANGED	6			
6	11N4-00060-DA				WASHER-MOUNT	2			
7	11Q4-10450				RUBBER-MOUNT	4			YELLOW
8	11Q4-10460				RUBBER-MOUNT	4			WHITE
9	11N4-00160				NUT-STOPPER	4			
10	11Q4-04000				SPACER	1			
11	S017-20135D				BOLT-HEX	4			
12	S037-123056				BOLT-W/WASHER	16			
13	S403-10000B				WASHER-PLAIN	4			
14	S441-200006				WASHER-HARDENED	2			
15	S109-100206				BOLT-SOCKET	4			
16	S027-100306				BOLT-MINI HEX	4			
17	S411-100006				WASHER-SPRING	4			

AIR INTAKE SYSTEM

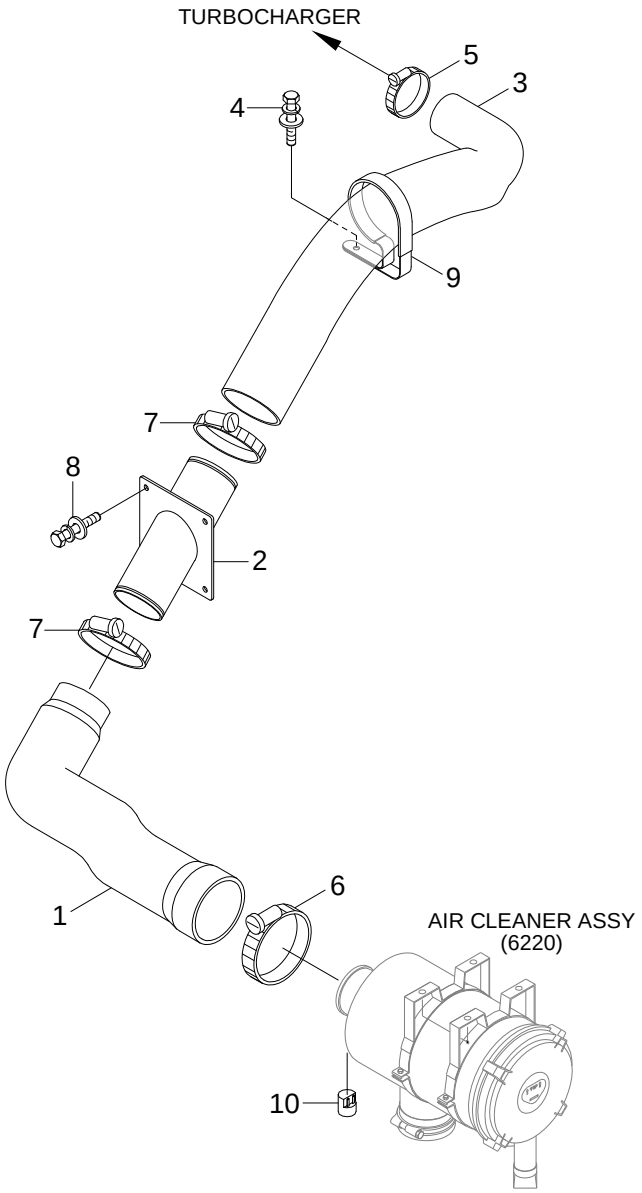

Item	Part_No	IS	Ord	T	Description	Qty	Serial_No	ITC	Remark
1	11Q5-23000				HOSE	1			
2	11N5-23030				PIPE WA	1			
3	11N5-23020				HOSE	1			
4	S035-083526				BOLT-W/WASHER	1			
5	11N6-20231				CLAMP-T BOLT	1			
6	11LB-40220				CLAMP-HOSE	1			
7	11LB-40280				CLAMP-T BOLT	2			
8	S035-082026				BOLT-W/WASHER	4			
9	11N4-25032				CLAMP	1			
10	11FG-20110				SENSOR-AIR CLEANER	1			

EXHAUST SYSTEM

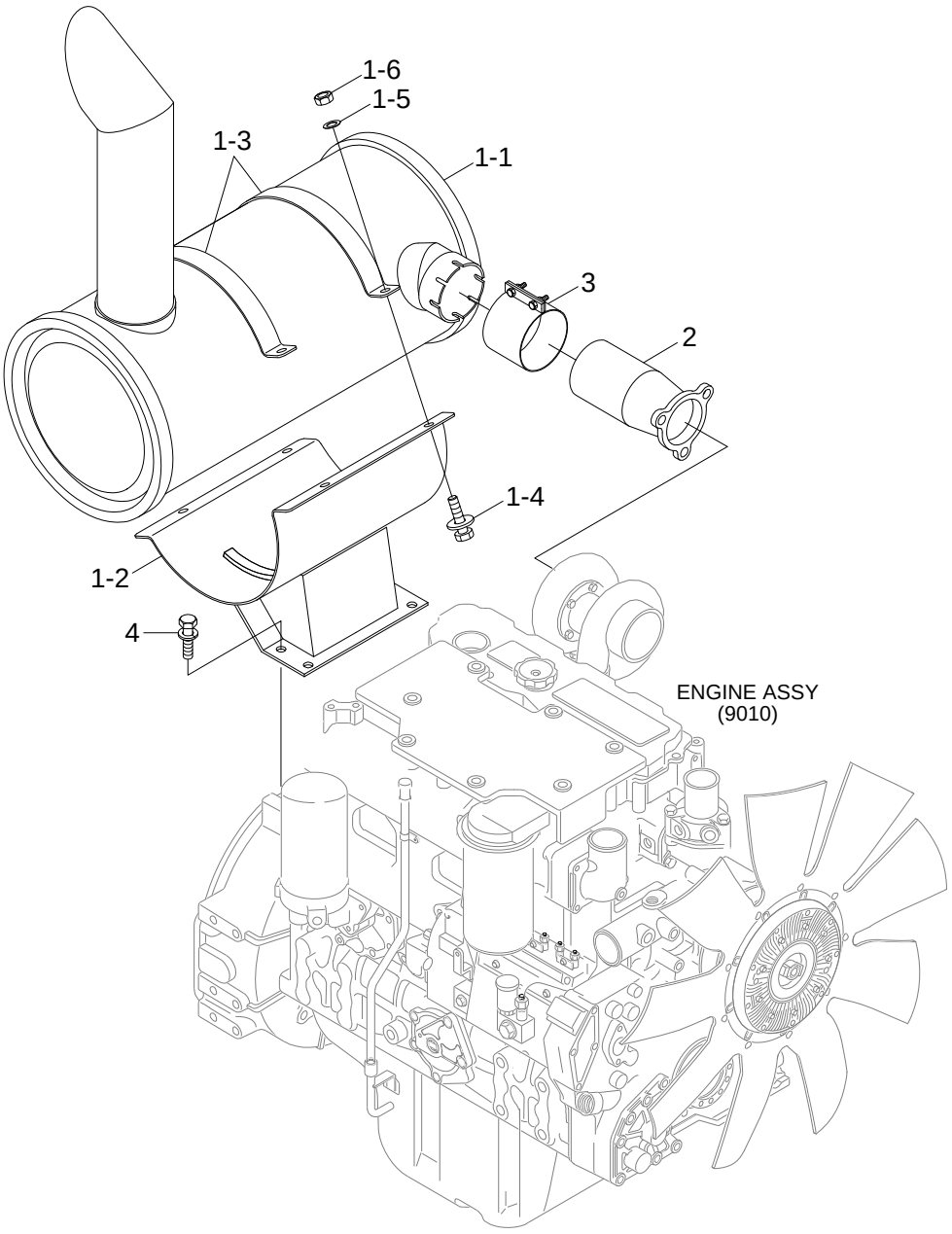

Item	Part_No	IS	Ord	T	Description	Qty	Serial_No	ITC	Remark
1	11Q4-34000				MUFFLER SUB ASSY	1			
1-1	11Q4-34100				.MUFFLER WA	1			
1-2	11Q4-34110				.BRACKET-MUFFLER	1			
1-3	11EM-30130				.CLAMP-BAND	2			
1-4	S037-103026				.BOLT-W/WASHER	4			
1-5	S403-10100B				.WASHER-PLAIN	4			
1-6	S205-10100B				.NUT-HEX	4			
2	11N3-30040				CONNECTOR-PIPE	1			
3	11N6-30040				CLAMP-SEAL	1			
4	S037-102556				BOLT-W/WASHER	4			

COOLING SYSTEM

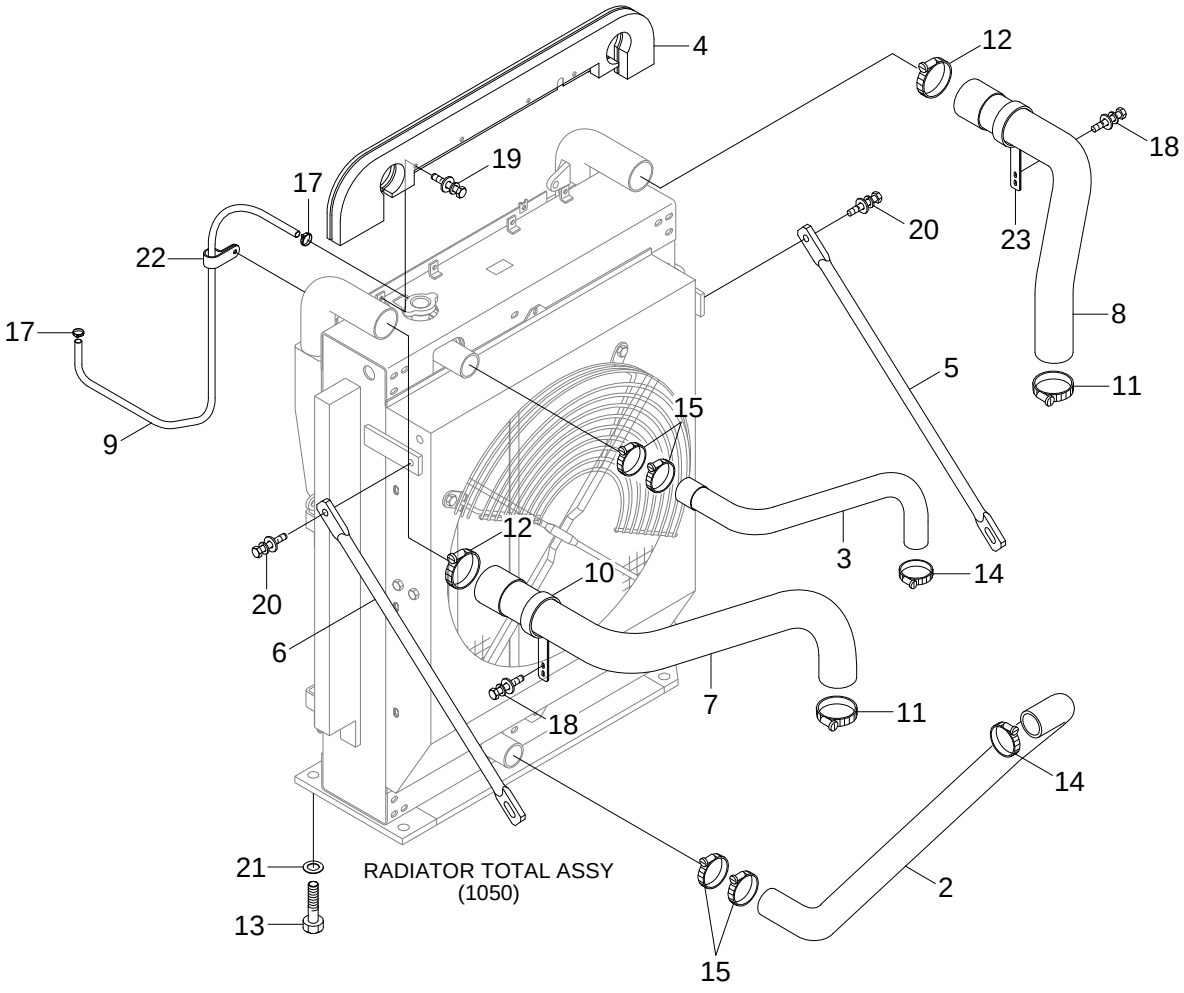

Item	Part_No	IS	Ord	T	Description	Qty	Serial_No	ITC	Remark
2	11Q4-44112				HOSE	1			
3	11Q4-44101				HOSE	1			
4	11Q5-43100				SCREEN ASSY	1			
5	11N6-46190				STAY	1			
6	11Q5-43200				STAY	1			
7	11Q4-44180				HOSE	1			
8	11Q4-44141				HOSE-CAC	1			
9	11EG-40400				HOSE-INLET	1			
10	11Q4-44360				CLAMP ASSY-HOSE	1			
11	11Q4-44300				CLAMP	2			
12	11Q4-44320				CLAMP	2			
13	S017-16040D				BOLT-HEX	4			
14	S572-580006				CLAMP-HOSE,WIRE TYPE	2			
15	S572-600006				CLAMP-HOSE,WIRE TYPE	4			
17	S520-015000				CLAMP-HOSE	2			
18	S037-102056				BOLT-W/WASHER	4			
19	S035-082056				BOLT-W/WASHER	4			
20	S037-123026				BOLT-W/WASHER	4			
21	S441-160006				WASHER-HARDENED	4			
22	S593-000802				CLIP-HARNESS	1			
23	11Q4-44350				CLAMP ASSY-HOSE	1			

RADIATOR ASSY

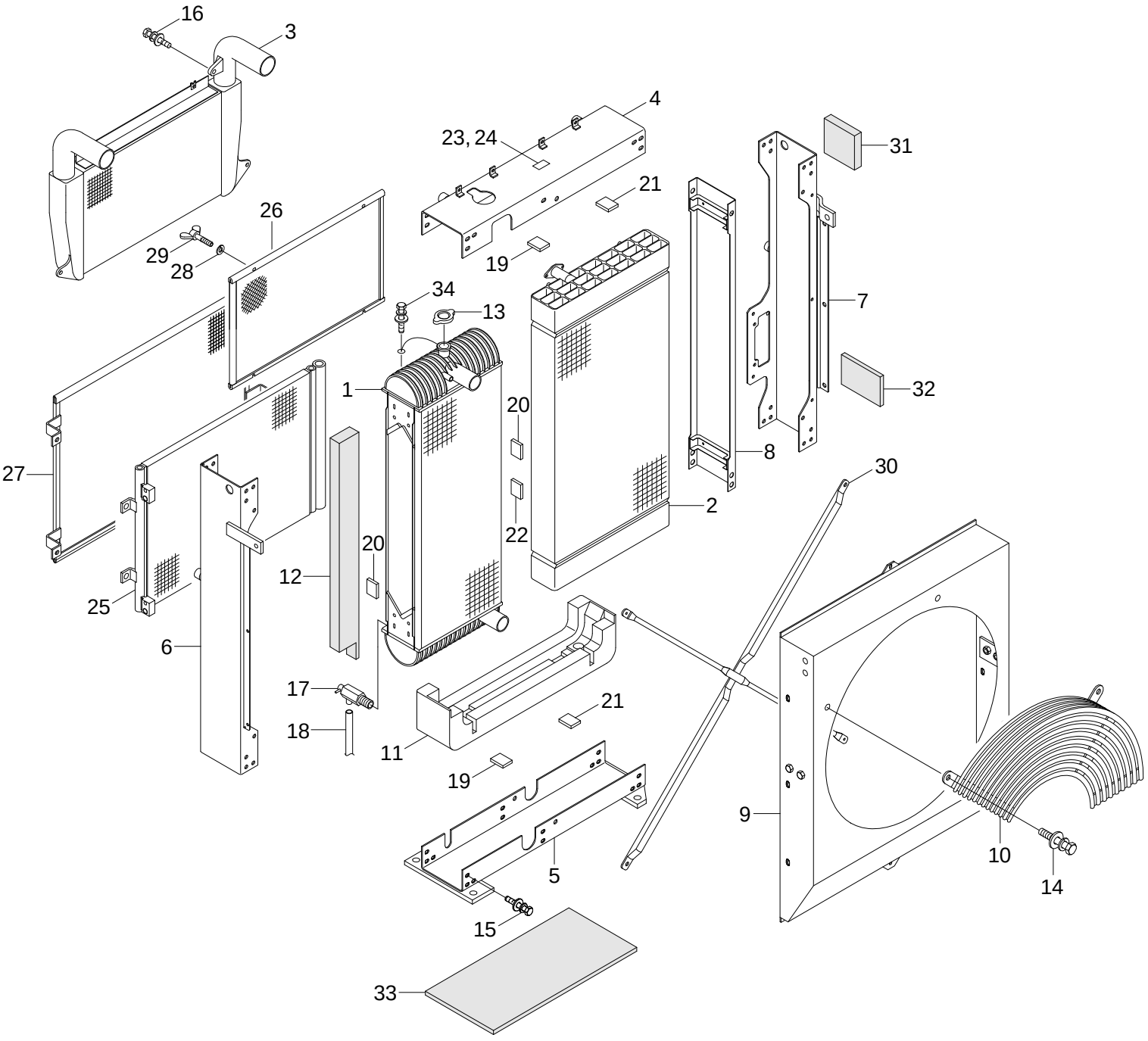

Item	Part_No	IS	Ord	T	Description	Qty	Serial_No	ITC	Remark
*	11Q5-43001				RADIATOR TOTAL ASSY	1			STD, FULL AUTO
	11Q5-43300				RADIATOR TOTAL ASSY	1			HEATER ONLY
1	11Q4-44021				.RADIATOR ASSY	1			
2	11Q4-42022				.OIL COOLER ASSY	1			
3	11Q4-42400				.CHARGE AIR COOLER	1			
4	11Q4-44030				.SUPPORT ASSY-UPPER	1			
5	11Q4-42320				.SUPPORT-LOWER	1			
6	11Q4-42330				.SUPPORT-LH,SIDE	1			
7	11Q4-42340				.SUPPORT-RH,SIDE	1			
8	11Q4-42350				.SUPPORT-LH,MID	1			
9	11Q4-44011				.SHROUD ASSY	1			
10	11Q4-42051				.GUARD-FAN	1			
11	11Q4-42360				.ISOLATOR	4			
12	11Q4-42160				.SPONGE	1			
13	11N4-49480				.CAP	1			
14	AA000003				.BOLT-W/WASHER	19			
15	AC100938				.BOLT-W/WASHER	38			
16	AC101428				.BOLT ASSY	4			
17	AC101429				.HOSE-DRAIN	1			
18	AC101458				.CLIP-HOSE	1			
19	AC101232				.SEALING-RAD BOTTOM	2			
20	AC101242				.SEALING-RAD SIDE	2			
21	AC101233				.SEALING-OC TOP,BOTTOM	2			
22	AC101243				.SEALING-OC SIDE	1			
23	AC101459				.NAME PLATE	1			STD, FULL AUTO

Item	Part_No	IS	Ord	T	Description	Qty	Serial_No	ITC	Remark
24	AC101460				.NAME PLATE	1			HEATER ONLY
25	11Q6-90071				.CONDENSER-R/DRYER	1			STD, FULL AUTO
26	11Q4-42370				.NET-A	1			
27	11Q4-42380				.NET-B	1			
28	AB61500208-3				.WASHER-PLAIN	4			
29	AC101316				.BOLT-WING	4			
30	11Q4-42390				.BAR-CROSS	2			
31	AC101672				.SEALING-A	1			
32	AC101462				.SEALING-C	1			
33	AC101321				.SEALING-D	1			
34	A1W00190				.BOLT	1			

FUEL SYSTEM(WITHOUT PREFILTER)

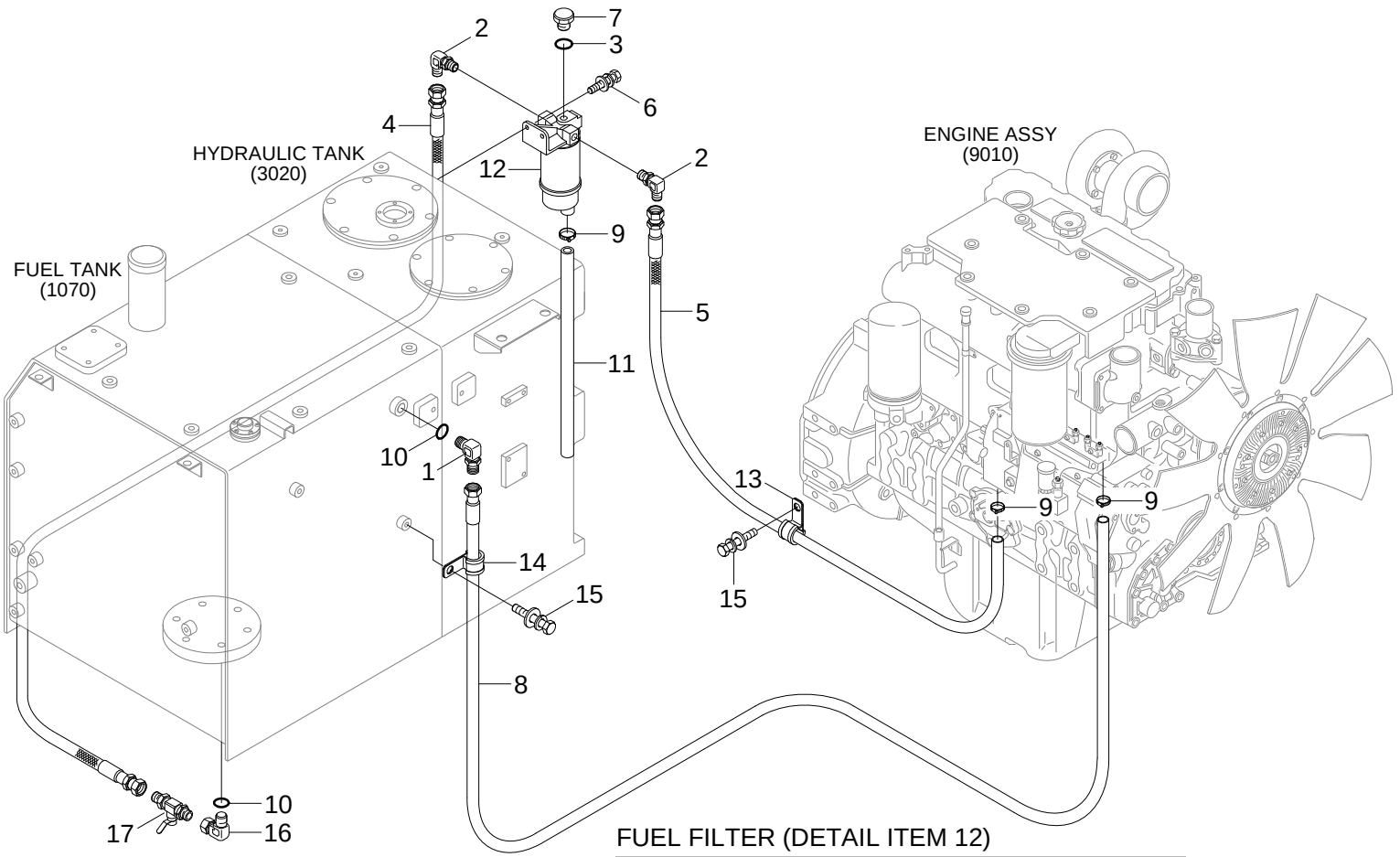

FUEL FILTER (DETAIL ITEM 12)

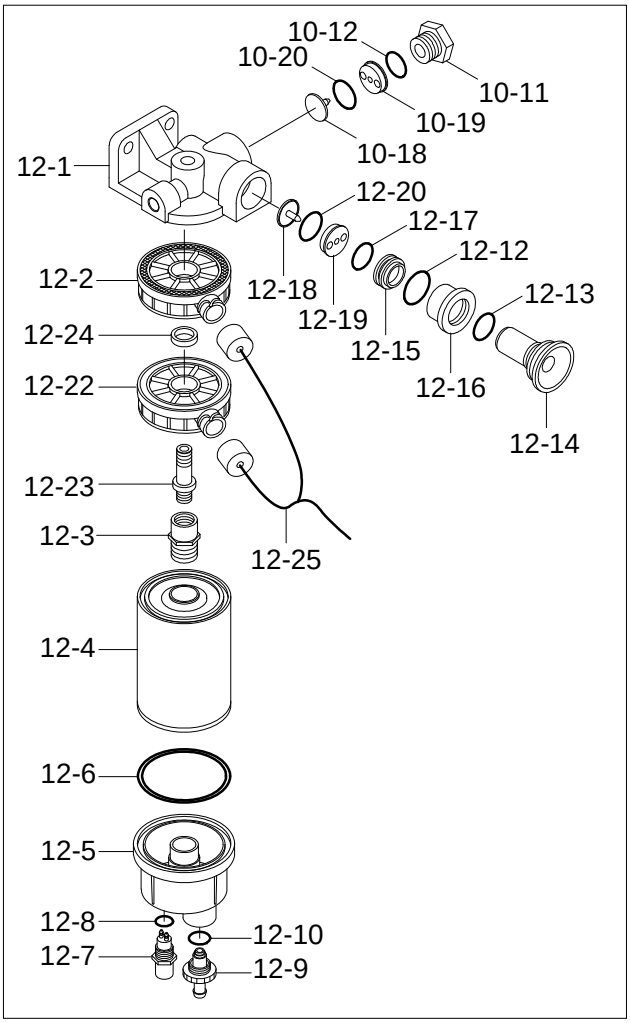

Item	Part_No	IS	Ord	T	Description	Qty	Serial_No	ITC	Remark
1	P020-110003				ELBOW-90	1			
2	11N8-50060				ELBOW-90	2			
3	S631-014001				O-RING	1			
4	11Q4-54010				HOSE ASSY	1			
5	11N8-50040				HOSE	1			
6	S037-103026				BOLT-W/WASHER	2			
7	P220-110102				PLUG-HEX	1			
8	11N8-57060				HOSE-FUEL	1			
9	S520-020000				CLAMP-HOSE	3			
10	S631-018001				O-RING	2			
11	11M8-50030				HOSE ASSY	1			
12	11NA-71001				FUEL FILTER & W/S ASSY	1			SING F/WARMER
	11NA-73000				FUEL FILTER & W/S ASSY	1	#0004 -		DUAL F/WARMER
12-1	11NA-71010				.HEAD-FILTER	1			
12-2	11NA-71020				.HEATER-FUEL	1			
12-3	11NA-71030				.CONNECTOR	1			
12-4	11NA-71041				.ELEMENT ASSY	1			
12-5	11NA-71050				.BOWL-CLEAR	1			
12-6	11NA-71060				.O-RING	1			
12-7	11NA-71070				.SENSOR	1			
12-8	11NA-71080				.O-RING	1			
12-9	11NA-71090				.VALVE-SCREW	1			
12-10	11NA-71100				.O-RING	1			
N12-11	11NA-71110				.PLUG-SCREW	1			NOT
N12-12	11NA-71120				.O-RING	2			NOT

Item	Part_No	IS	Ord	T	Description	Qty	Serial_No	ITC	Remark
N12-13	11NA-71130				.O-RING	1			NOT
N12-14	11NA-71140				.BODY-PRIMING PUMP	1			NOT
N12-15	11NA-71150				.HEAD-PUMP	1			NOT
N12-16	11NA-71160				.HOLDER	1			NOT
N12-17	11NA-71170				.O-RING	1			NOT
N12-18	11NA-71180				.PLATE-VALVE	2			NOT
N12-19	11NA-71190				.FRAME-VALVE	2			NOT
N12-20	11NA-71200				.O-RING	2			NOT
12-22	11NA-71020				.HEATER-FUEL	1	#0004 -		DUAL F/WARMER
12-23	11Q6-50100				.CONNECTOR	1	#0004 -		DUAL F/WARMER
12-24	11Q6-50110				.SPACER	1	#0004 -		DUAL F/WARMER
12-25	21Q8-23200				.HARNESS-FUEL WARMER	1	#0004 -		DUAL F/WARMER
13	S593-000802				CLIP-HARNESS	1			
14	S543-200002				CLAMP-TUBE	1			
15	S037-102026				BOLT-W/WASHER	2			
16	11Q4-50030				ELBOW-90	1			
17	11Q4-50010				VALVE-FUEL CUT	1			
17-1	S631-018004				.O-RING	1			NOT SHOWN

FUEL SYSTEM(WITH PREFILTER)

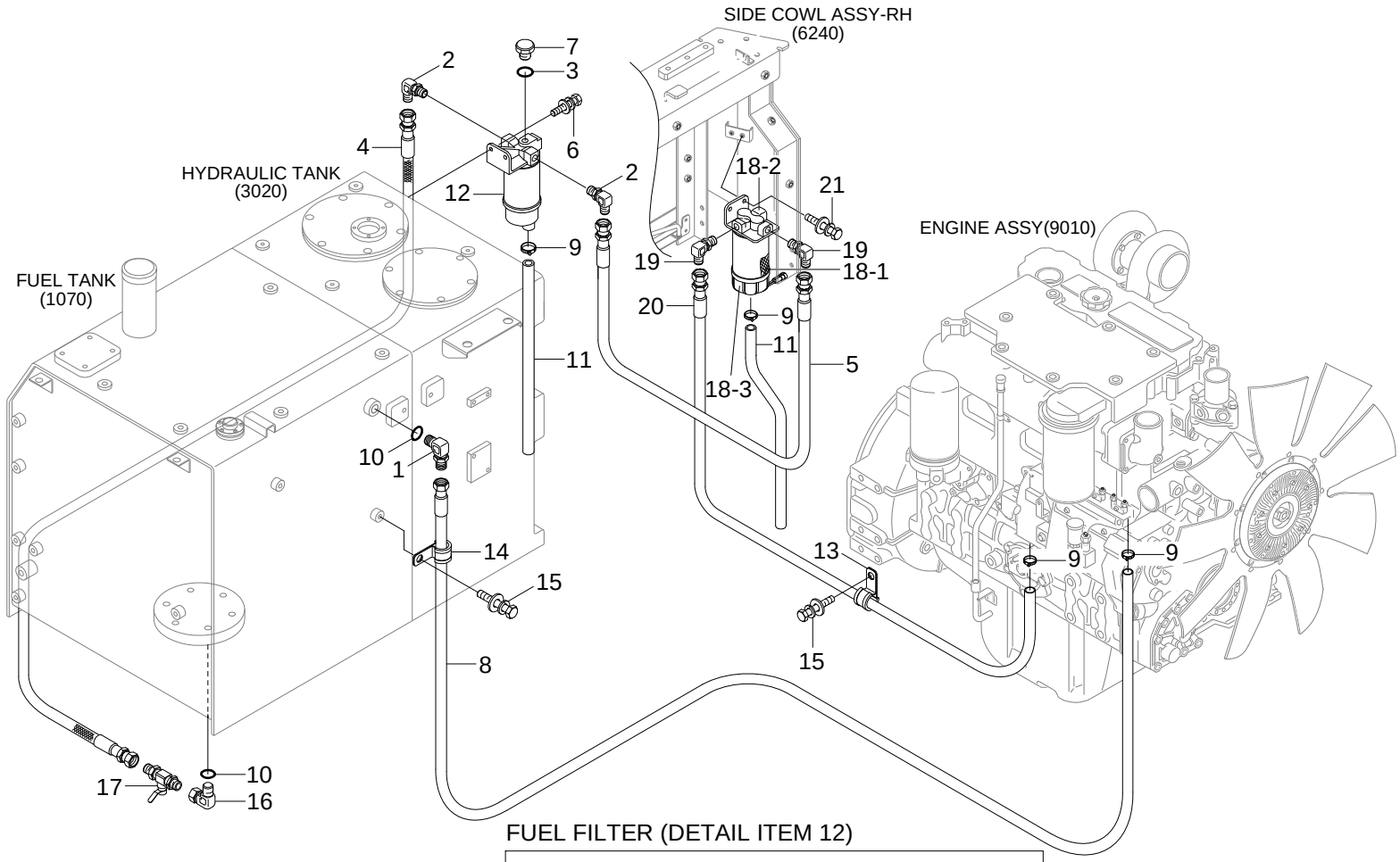

FUEL FILTER (DETAIL ITEM 12)

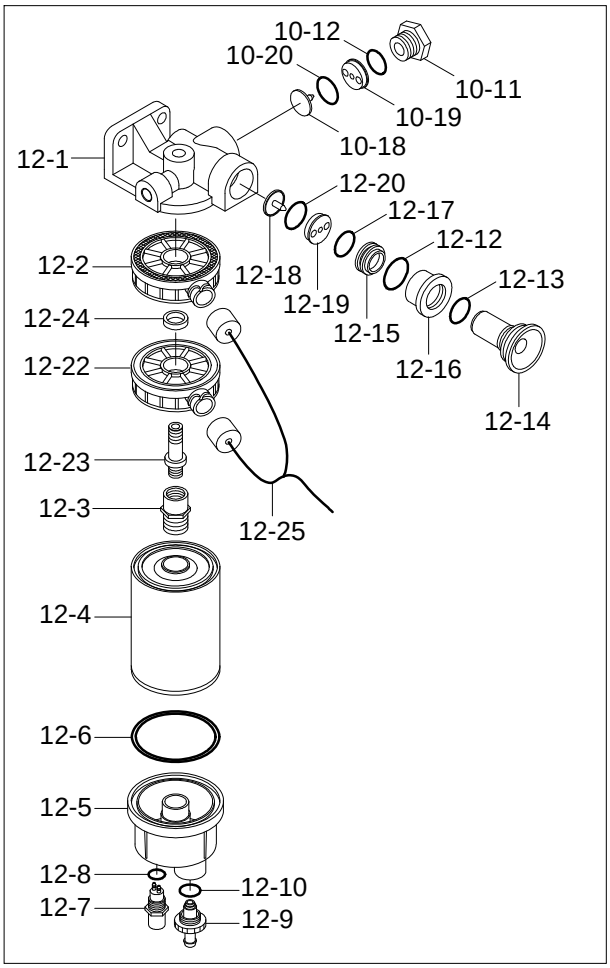

Item	Part_No	IS	Ord	T	Description	Qty	Serial_No	ITC	Remark
1	P020-110003				ELBOW-90	1			
2	11N8-50060				ELBOW-90	2			
3	Y161-014001				O-RING	1			
4	11Q4-54010				HOSE ASSY	1			
5	11N8-57040				HOSE-FUEL FILLER	1			
6	S037-103026				BOLT-W/WASHER	2			
7	P220-110102				PLUG-HEX	1			
8	11N8-57060				HOSE-FUEL	1			
9	S520-020000				CLAMP-HOSE	4			
10	S631-018004				O-RING	2			
11	11M8-50030				HOSE ASSY	2			
12	11NA-71001				FUEL FILTER & W/S ASSY	1			SING F/WARMER
	11NA-73000				FUEL FILTER & W/S ASSY	1	#0004 -		DUAL F/WARMER
12-1	11NA-71010				.HEAD-FILTER	1			
12-2	11NA-71020				.HEATER-FUEL	1			
12-3	11NA-71030				.CONNECTOR	1			
12-4	11NA-71041				.ELEMENT ASSY	1			
12-5	11NA-71050				.BOWL-CLEAR	1			
12-6	11NA-71060				.O-RING	1			
12-7	11NA-71070				.SENSOR	1			
12-8	11NA-71080				.O-RING	1			
12-9	11NA-71090				.VALVE-SCREW	1			
12-10	11NA-71100				.O-RING	1			
N12-11	11NA-71110				.PLUG-SCREW	1			NOT
N12-12	11NA-71120				.O-RING	2			NOT

Item	Part_No	IS	Ord	T	Description	Qty	Serial_No	ITC	Remark
N12-13	11NA-71130				.O-RING	1			NOT
N12-14	11NA-71140				.BODY-PRIMING PUMP	1			NOT
N12-15	11NA-71150				.HEAD-PUMP	1			NOT
N12-16	11NA-71160				.HOLDER	1			NOT
N12-17	11NA-71170				.O-RING	1			NOT
N12-18	11NA-71180				.PLATE-VALVE	2			NOT
N12-19	11NA-71190				.FRAME-VALVE	2			NOT
N12-20	11NA-71200				.O-RING	2			NOT
12-22	11NA-71020				.HEATER-FUEL	1	#0004 -		DUAL F/WARMER
12-23	11Q6-50100				.CONNECTOR	1	#0004 -		DUAL F/WARMER
12-24	11Q6-50110				.SPACER	1	#0004 -		DUAL F/WARMER
12-25	21Q8-23200				.HARNESS-FUEL WARMER	1	#0004 -		DUAL F/WARMER
13	S593-000802				CLIP-HARNESS	1			
14	S543-200002				CLAMP-TUBE	1			
15	S037-102026				BOLT-W/WASHER	2			
16	11Q4-50030				ELBOW-90	1			
17	11Q4-50010				VALVE-FUEL CUT	1			
17-1	S631-018004				.O-RING	1			NOT SHOWN
18	11NA-72000				PREFILTER ASSY	1			
18-1	11NA-72010				.ELEMENT ASSY-F/FILTER	1			
18-2	11LD-20240				.HEAD-FILTER	1			
18-3	11LD-20260				.BOWL ASSY-W/KNOB	1			
19	11LB-20350				ELBOW-90	2			
20	11E5-52310				HOSE	1			
21	S035-082026				BOLT-W/WASHER	2			

FUEL TANK

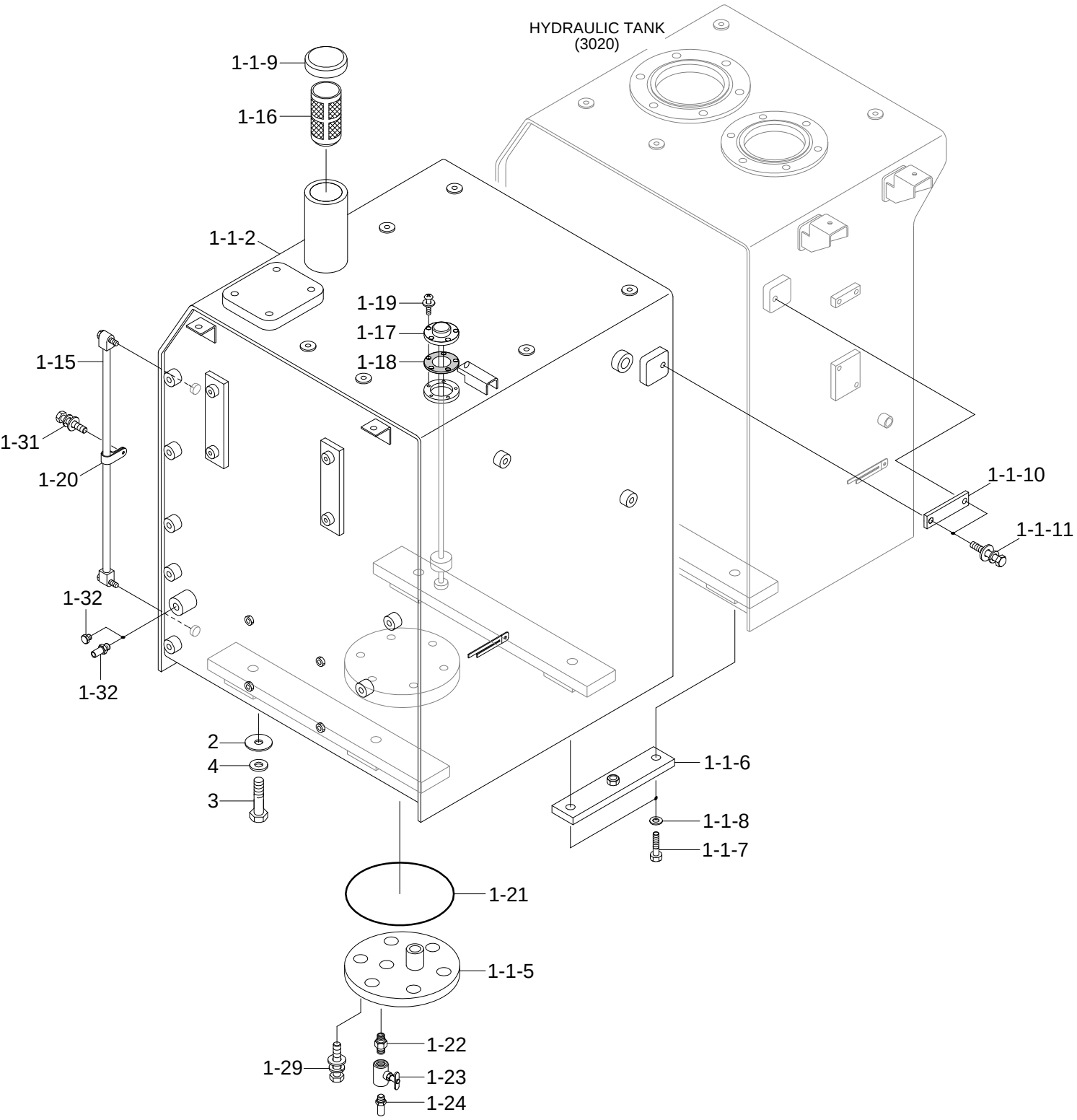
HYDRAULIC TANK
(3020)
1-1-9
1-16
1-1-2
1-19
1-17
1-18
1-15
1-31
1-20
1-1-10
1-1-11
1-32
1-32
2
4
3
1-1-6
1-1-8
1-1-7
1-21
1-1-5
1-29
1-22
1-23
1-24

Item	Part_No	IS	Ord	T	Description	Qty	Serial_No	ITC	Remark
1	@				FUEL & HYD TANK ASSY	1			NOT
1-1	@				.FUEL & HYD TANK SUB	1			NOT
1-1-2	31Q5-05012				..FUEL TANK WA	1			
1-1-5	31N4-02110				..COVER-DRAIN	1			
1-1-6	31Q4-01220				..PLATE	2			
1-1-7	S017-20045D				..BOLT-HEX	4			
1-1-8	S441-200006				..WASHER-HARDENED	4			
1-1-9	31Q4-02130				..FUEL CAP ASSY	1			
1-1-10	31Q6-01340				..PLATE	2			
1-1-11	S037-123026				..BOLT-W/WASHER	4			
1-15	31N4-02060				.GAUGE-LEVEL	1			
1-16	31QA-02080				.STRAINER	1			
1-17	21Q4-10700				.SENDER-FUEL	1			
1-18	E128-1053				.GASKET	1			
1-19	S131-051546				.SCREW-W/WASHER	5			
1-20	S543-180002				.CLAMP-TUBE	1			
1-21	S632-170001				.O-RING	1			
1-22	31E5-3049				.FITTING	1			
1-23	E131-1006				.VALVE-NEEDLE	1			
1-24	P090-100404				.CONNECTOR-HOSE	1			
1-29	S037-103026				.BOLT-W/WASHER	6			
1-31	S035-081516				.BOLT-W/WASHER	1			
1-32	P090-101208				.CONNECTOR-HOSE	1			W/ F/F PUMP
	P220-430204				.PLUG-HEX	1			W/O F/F PUMP
2	31N8-01300				SHIM(1.0T)	3			

Item	Part_No	IS	Ord	T	Description	Qty	Serial_No	ITC	Remark
3	S017-20050D				BOLT-HEX	4			
4	91E6-60200-DA				WASHER-HARDENED	4			

AIRCON & HEATER GROUP

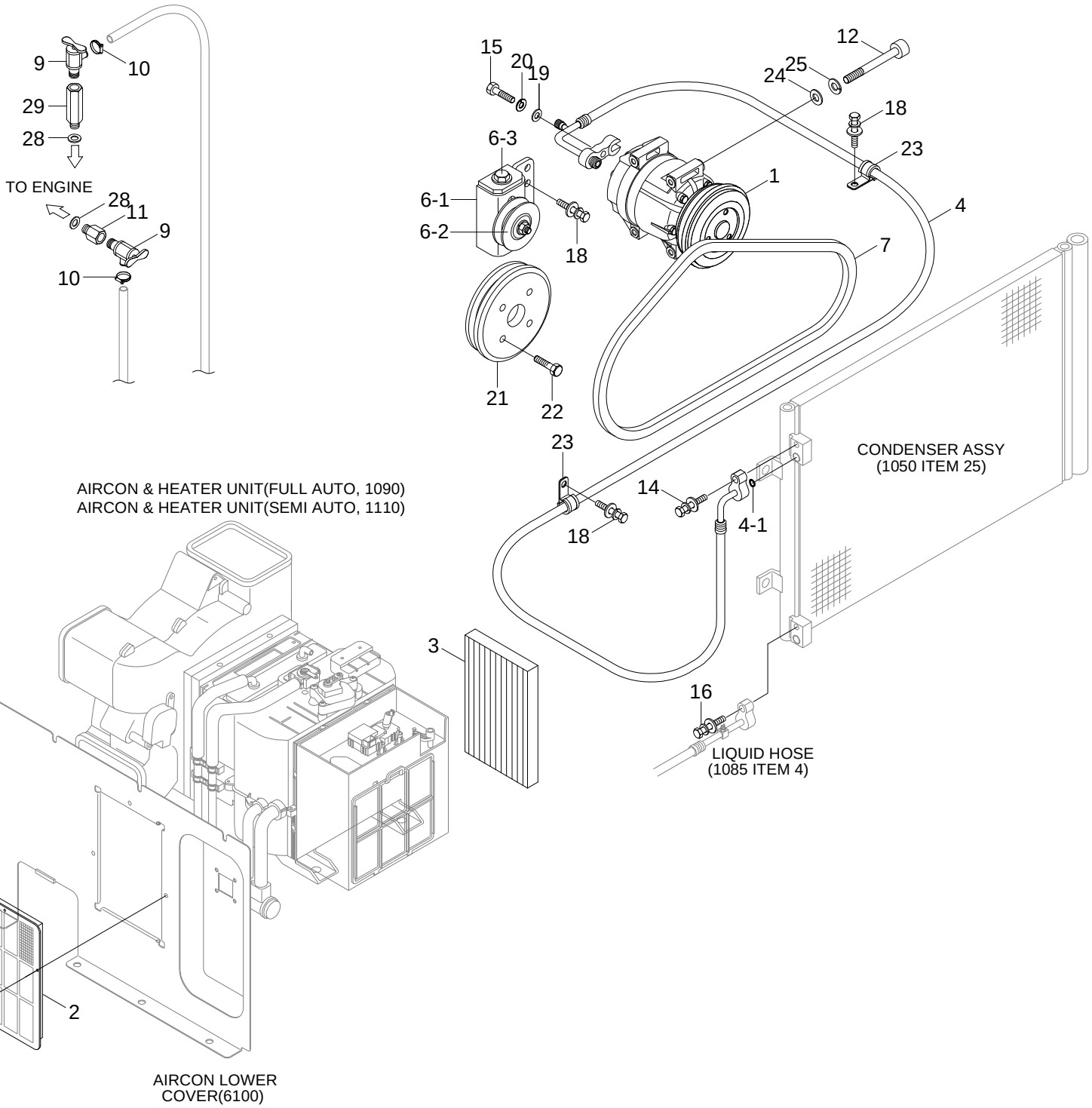

Item	Part_No	IS	Ord	T	Description	Qty	Serial_No	ITC	Remark
1	11Q6-90040				COMPRESSOR ASSY	1			
2	11Q6-90240				FILTER-REC	1			
3	11Q6-90510				FILTER	1			
4	11Q4-90410				HOSE-DISCHARGE	1			
4-1	A3050-002-05-2				.O-RING	1			
5	S091-060206				BOLT-WING	3			
6	11N6-90110				PULLEY-IDLE	1			
6-1	A4760-508-00-2				.BRACKET-PULLEY	1			
6-2	A4700-511-01-2				.PULLEY-IDLE	1			
6-3	A8900-518-03-3				..BOLT-TENSION	1			
7	11E4-3601				V-BELT	1			
8	S403-06500B				WASHER-PLAIN	3			
9	14L1-01350				VALVE-HEATER	2			
10	S572-220006				CLAMP-HOSE,WIRE TYPE	2			
11	11N5-93010				CONNECTOR-HEAT VLV	1			
12	S109-080956				BOLT-SOCKET	4			
14	S035-082526				BOLT-W/WASHER	1			
15	S018-100356				BOLT-HEX	1			
16	S035-062556				BOLT-W/WASHER	1			
18	S037-102022				BOLT-W/WASHER	4			
19	S403-101006				WASHER-PLAIN	1			
20	S411-100006				WASHER-SPRING	1			
21	11N3-92010				PULLEY-AIR CON	1			
22	S017-100406				BOLT-HEX	4			
23	31L7-10230				CLAMP	1			

Item	Part_No	IS	Ord	T	Description	Qty	Serial_No	ITC	Remark
24	S403-081006				WASHER-PLAIN	4			
25	S411-080006				WASHER-SPRING	4			
28	P392-160000				WASHER-COPPER	2			
29	11N5-93021				CONNECTOR-HEAT VLV	1			

AIR CONDITIONER BOTTOM SUB

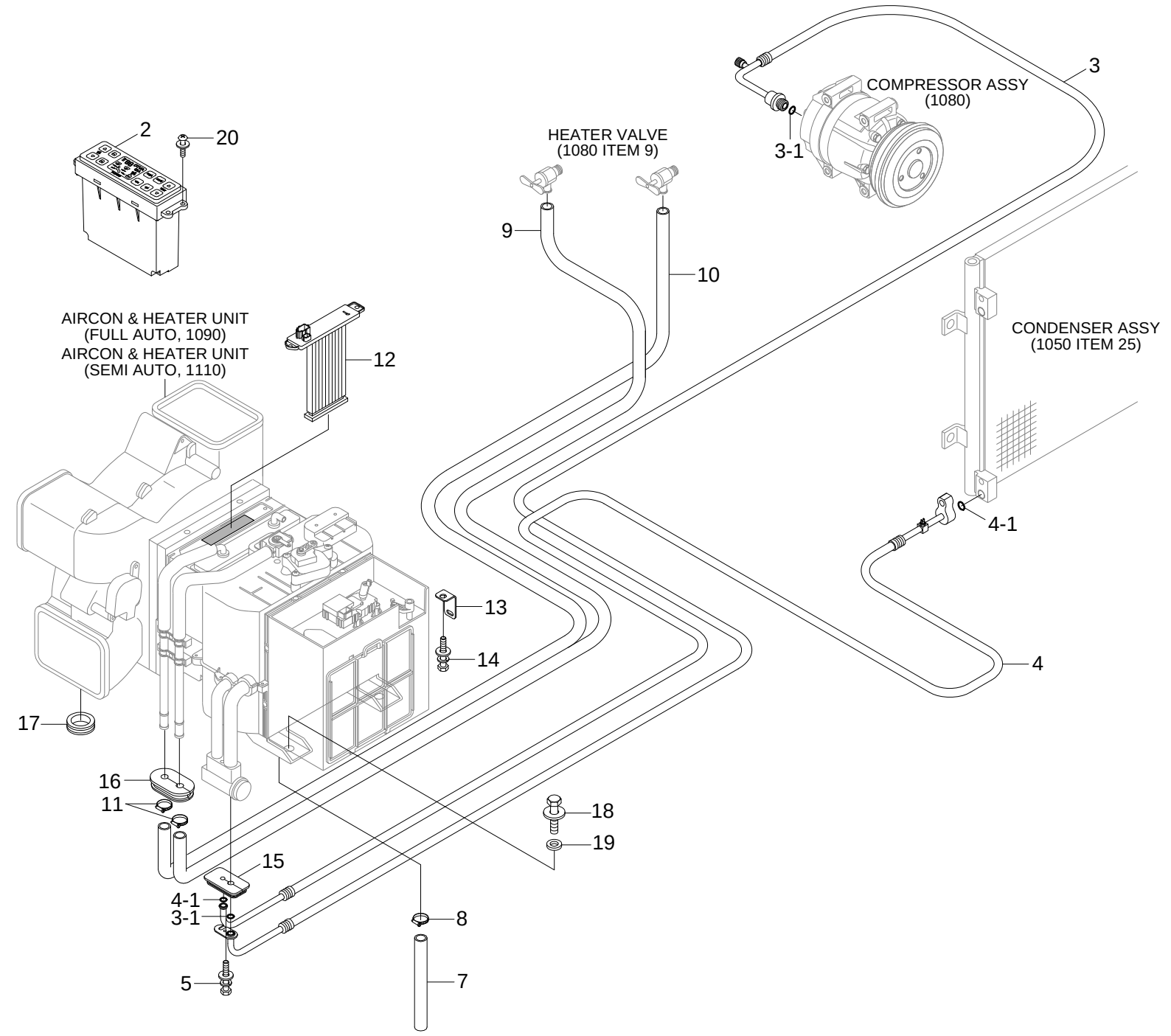

Item	Part_No	IS	Ord	T	Description	Qty	Serial_No	ITC	Remark
2	11Q6-90310				CONTROL ASSY	1			STD, FULL AUTO
	11Q6-90030				CONTROL ASSY	1			OPT, SEMI AUTO
	11Q6-90130				CONTROL ASSY	1			HEATER ONLY
3	11Q4-90400				HOSE-SUCTION	1			
3-1	A3050-002-03-2				.O-RING	2			
4	11Q4-90430				LIQUID HOSE-B	1			
4-1	A3050-002-09-2				.O-RING	2			
5	S035-082026				BOLT-W/WASHER	1			
7	11EK-92090				HOSE-DRAIN	1			
8	S520-017000				CLAMP-HOSE	1			
9	11EK-92070				HOSE-HEATER	1			
10	11EE-91020				HOSE-HEATER	1			
11	S572-220006				CLAMP-HOSE,WIRE TYPE	2			
12	11Q6-90500				APTC ASSY	1			
13	11Q6-90290				BRACKET	1			
14	S037-101526				BOLT-W/WASHER	1			
15	11Q6-90430				GROMMET	1			
16	11Q6-90440				GROMMET	1			
17	21LB-34020				GROMMET-HARNESS	1			
18	S037-122556				BOLT-W/WASHER	4			
19	73NB-56400				SHIM	4			
20	S132-052056				SCREW-W/WASHER	4			

AIRCON & HEATER UNIT

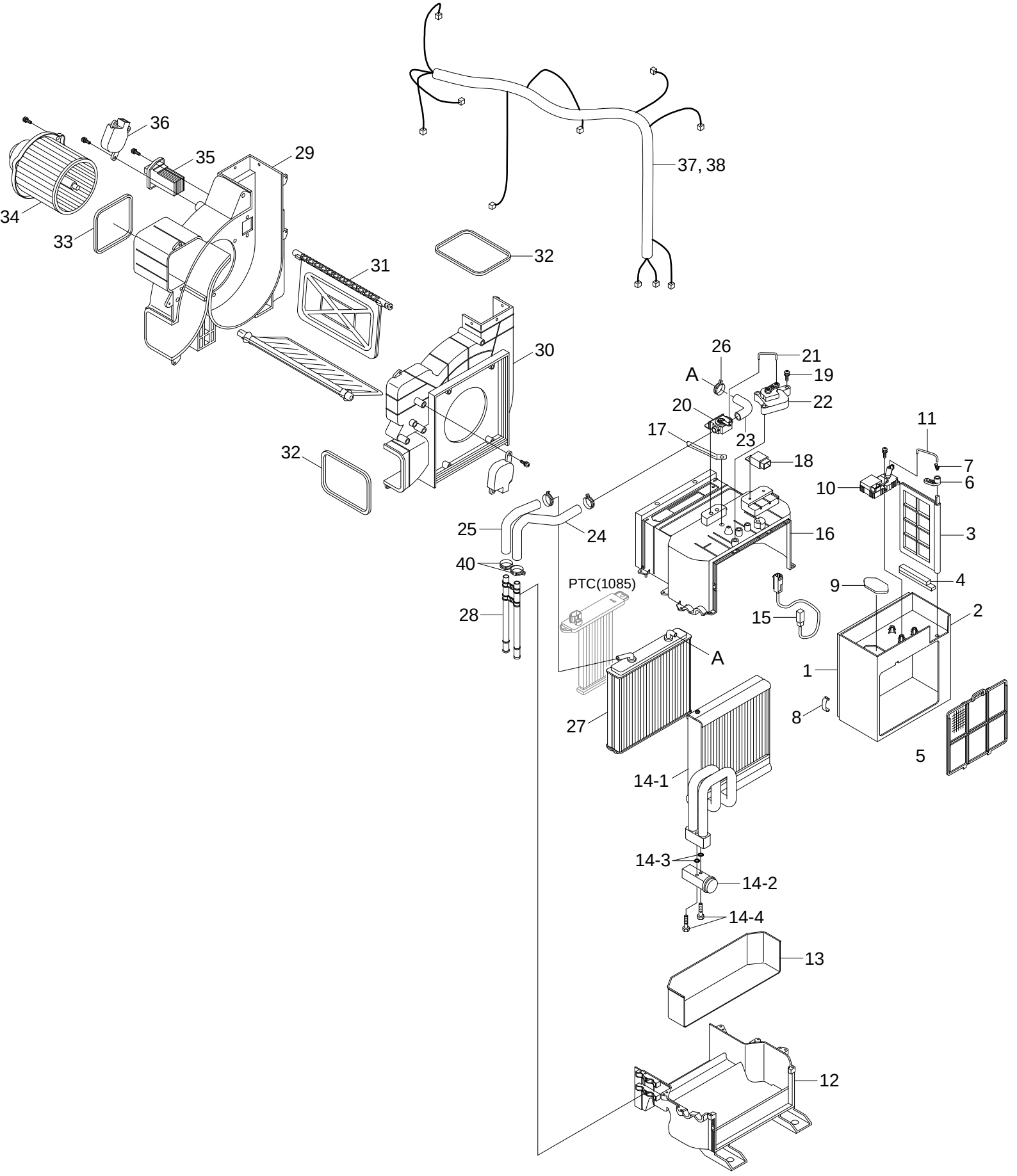

Item	Part_No	IS	Ord	T	Description	Qty	Serial_No	ITC	Remark
*	11Q6-90412				AIRCON&HEATER UNIT-FATC	1			STD, FULL AUTO
	11Q6-90020				AIRCON&HEATER UNIT-SATC	1			OPT, SEMI AUTO
N1	AM13100200-0				.CASE-UPPER,INTAKE	1			NOT
N2	AM13200100-0				.CASE-LOWER,INTAKE	1			NOT
N3	AM47000200-2				.DAMPER ASSY-INTAKE	1			NOT
4	AM70003600-3				.SEAL-FILTER,FRESH	1			
5	11N6-90770				.AIR FILTER-REFRESH	1			
N6	AH54100100-3				.LEVER-DEF	1			NOT
7	3AH0705				.ROD-CLAMP	1			
8	4AH0688				.CLIP-CASE	4			
9	AH001617				.SEAL-SPONGE	1			
10	11Q6-90570				.MOTOR ACT-INTAKE	1			
11	AM52300100-4				.ROD-INTAKE	1			
12	AH002402				.HVAC CASE-LOW	1			
13	AH002463				.HVAC INSULATION-LOW	1			
14	11Q6-90560				.CORE ASSY-EVAP	1			
14-1	A1W00864				..CORE-EVAP	1			
14-2	11Q6-90550				..VALVE-EXPANSION	1			
14-3	A308000214-2				..O-RING	2			
14-4	A1W00837				..BOLT-TXV	2			
15	AH100730				.THERMISTOR	1			
N16	AH002401				.HVAC CASE-UPP	1			NOT
17	4AH0643				.HOLDER-WIRE	5			
18	11N6-90820				.RELAY	1			
19	AH000865				.SCREW	51			

Item	Part_No	IS	Ord	T	Description	Qty	Serial_No	ITC	Remark
20	AH001160				.VLAVE-WATER	1	#0001 -	-	
21	AH000559				.ROD-TEMP	1			
22	AH100656				.MOTOR ACT ASSY-TEMP	1			
23	AH001287				.HOSE-INLET,WATER	1			
24	AH002411				.HOSE-INLET,WATER	1			
25	AH002412				.HOSE-OUTLET,WATER	1			
26	AH001853				.CLAMP-WATER HOSE	6			
27	11Q6-90540				.HEATER RAD SET	1			
28	AH002410				.PIPE-INLET/OUTLET	2			
N29	AH002403				.CASE-BLOWER,LH	1			NOT
N30	AH002404				.CASE-BLOWER,RH	1			NOT
N31	AH002407				.DOOR ASSY-VENT	1			NOT
32	AW80000303-3				.SEAL-SPONGE A	2			
33	AW80000304-3				.SEAL-SPONGE B	1			
34	11N6-90700				.FAN & MOTOR	1			
35	11Q6-90530				.FET	1			
36	11Q6-90520				.MOTOR ACT ASSY-VENT DF	2			
37	11Q6-90600				.WIRING ASSY-FATC	1			STD, FULL AUTO
38	11Q6-90610				.WIRING ASSY-SATC	1			OPT, SEMI AUTO
40	AH000314				.CLAMP-H/RAD PIPE	1			

AIR CONDITIONER MOUNTING

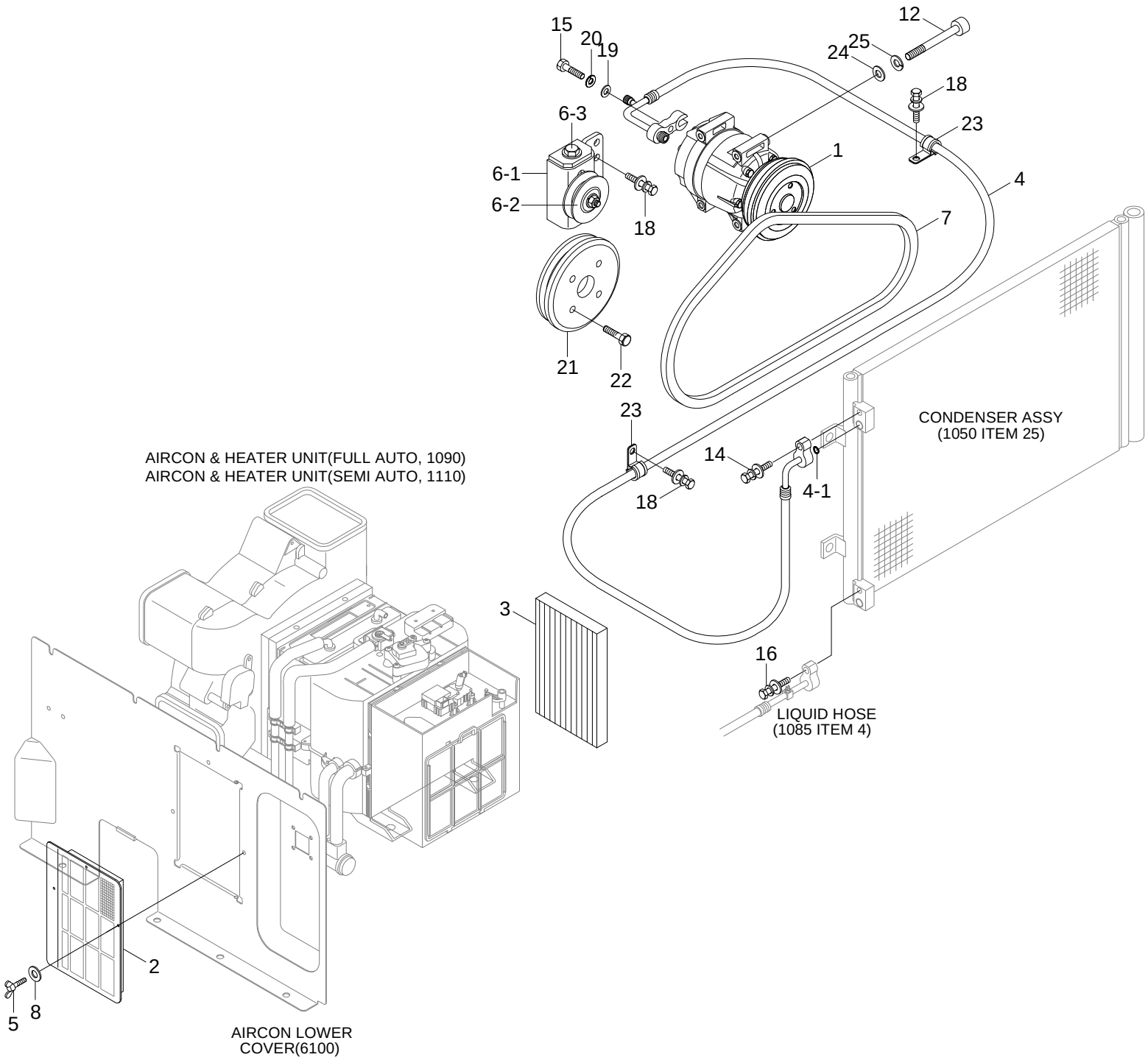

Item	Part_No	IS	Ord	T	Description	Qty	Serial_No	ITC	Remark
1	11Q6-90040				COMPRESSOR ASSY	1			
2	11Q6-90240				FILTER-REC	1			
3	11Q6-90510				FILTER-AIR CON	1			
4	11Q4-90410				HOSE-DISCHARGE	1			
4-1	A3050-002-05-2				.O-RING	1			
5	S091-060206				BOLT-WING	3			
6	11N6-90110				PULLEY-IDLE	1			
6-1	A4760-508-00-2				.BRACKET-PULLEY	1			
6-2	A4700-511-01-2				.PULLEY-IDLE	1			
6-3	A8900-518-03-3				..BOLT-TENSION	1			
7	11E4-3601				V-BELT	1			
8	S403-06500B				WASHER-PLAIN	3			
12	S109-080956				BOLT-SOCKET	4			
14	S035-082526				BOLT-W/WASHER	1			
15	S018-100356				BOLT-HEX	1			
16	S035-062556				BOLT-W/WASHER	1			
18	S037-102022				BOLT-W/WASHER	4			
19	S403-101006				WASHER-PLAIN	1			
20	S411-100006				WASHER-SPRING	1			
21	11N3-92010				PULLEY-AIR CON	1			
22	S017-100406				BOLT-HEX	4			
23	31L7-10230				CLAMP	1			
24	S403-081006				WASHER-PLAIN	4			
25	S411-080006				WASHER-SPRING	4			

[Item List] - Print Date : 2020.08.21 11:08

AIR CONDITIONER UNIT(SEMI AUTO)

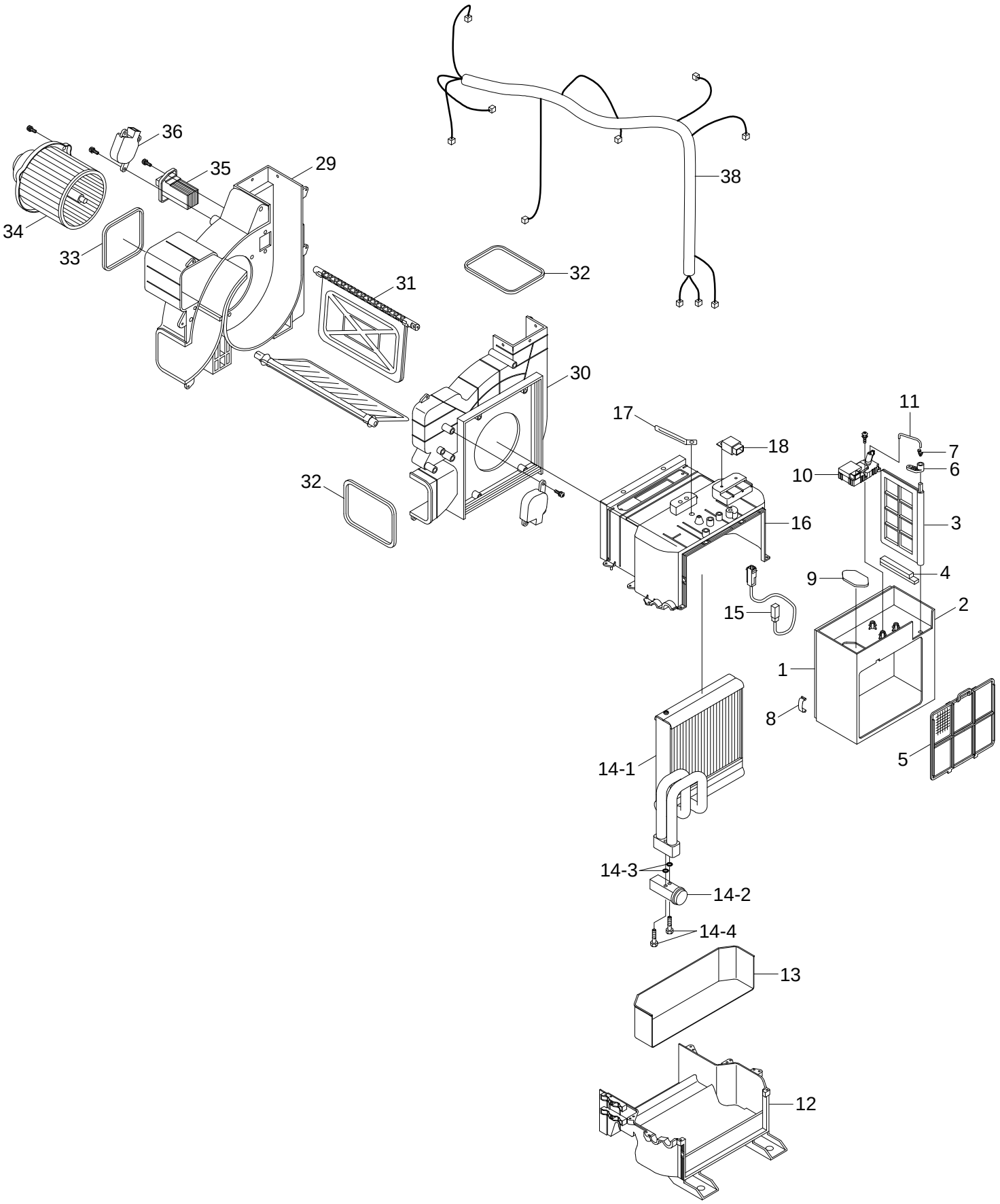

HEATER MOUNTING

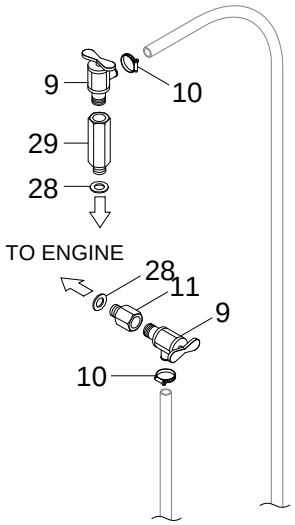

AIRCON & HEATER UNIT(FULL AUTO, 1090)
AIRCON & HEATER UNIT(SEMI AUTO, 1110)

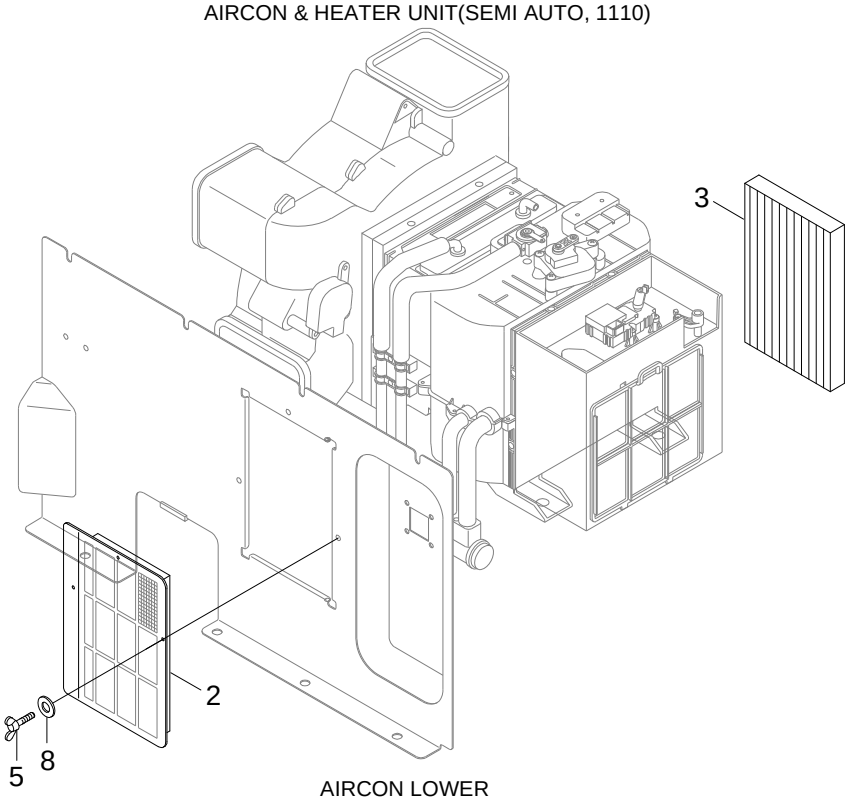

AIRCON LOWER
COVER(6100)

Item	Part_No	IS	Ord	T	Description	Qty	Serial_No	ITC	Remark
2	11Q6-90240				FILTER-REC	1			
3	11Q6-90510				FILTER	1			
5	S091-060206				BOLT-WING	3			
8	S403-06500B				WASHER-PLAIN	3			
9	14L1-01350				VALVE-HEATER	2			
10	S572-220006				CLAMP-HOSE,WIRE TYPE	2			
11	11N5-93010				CONNECTOR-HEAT VLV	1			
28	P392-160000				WASHER-COPPER	2			
29	11N5-93021				CONNECTOR-HEAT VLV	1			

HEATER UNIT(SEMI AUTO)

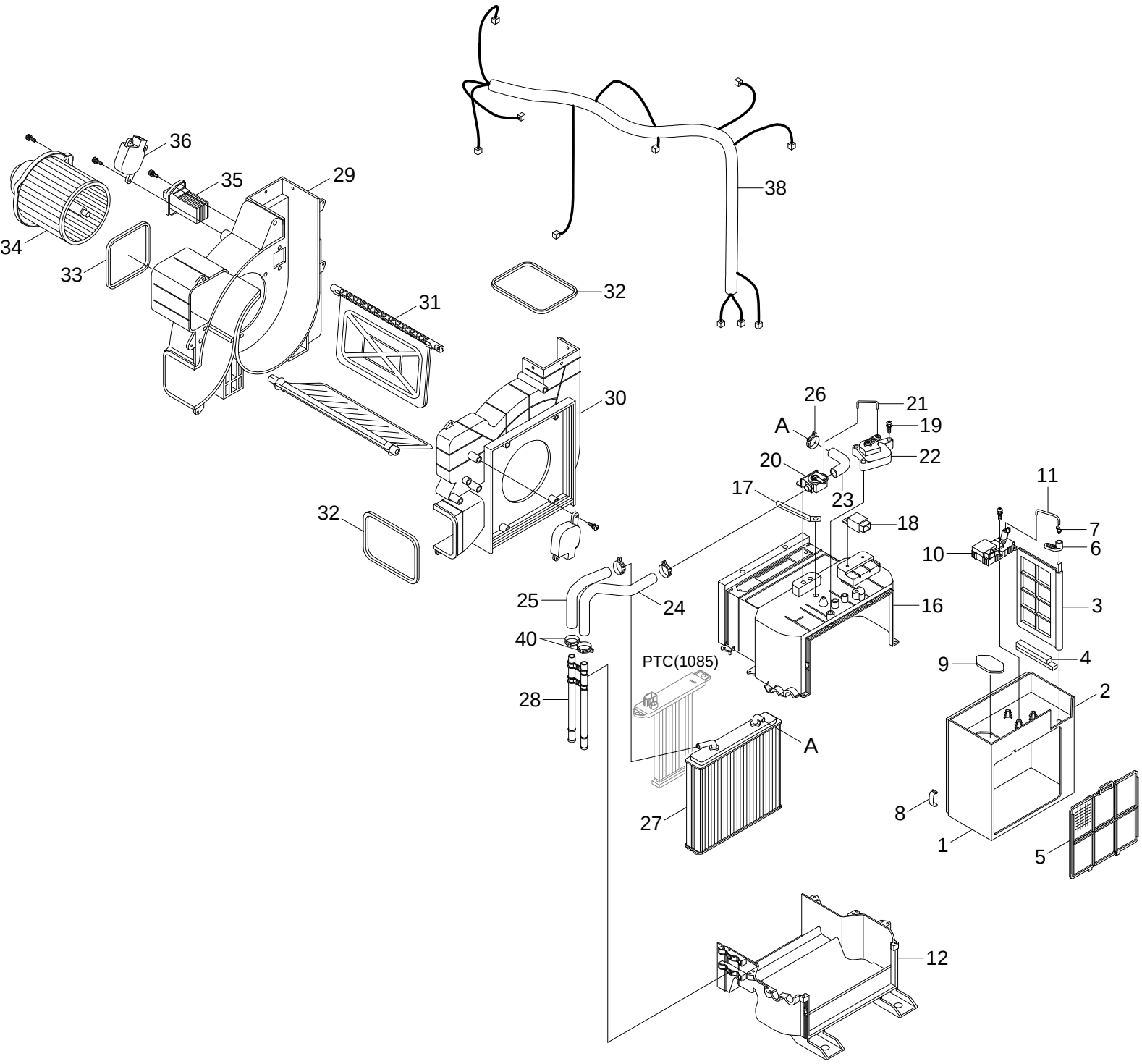

Item	Part_No	IS	Ord	T	Description	Qty	Serial_No	ITC	Remark
*	11Q6-90120				HEATER UNIT	1			
N1	AM13100200-0				.CASE-UPPER,INTAKE	1			NOT
N2	AM13200100-0				.CASE-LOWER,INTAKE	1			NOT
N3	AM47000200-2				.DAMPER ASSY-INTAKE	1			NOT
4	AM70003600-3				.SEAL-FILTER,FRESH	1			
5	11N6-90770				.AIR FILTER-REFRESH	1			
N6	AH54100100-3				.LEVER-DEF	1			NOT
7	3AH0705				.ROD-CLAMP	1			
8	4AH0688				.CLIP-CASE	4			
9	AH001617				.SEAL-SPONGE	1			
10	11Q6-90570				.MOTOR ACT-INTAKE	1			
11	AM52300100-4				.ROD-INTAKE	1			
12	AH002402				.HVAC CASE-LOW	1			
N16	AH002401				.HVAC CASE-UPP	1			NOT
17	4AH0643				.HOLDER-WIRE	5			
18	11N6-90820				.RELAY	1			
19	AH000865				.SCREW	51			
20	AH001160				.VLAVE-WATER	1	#0001 -	-	
21	AH000559				.ROD-TEMP	1			
22	AH100656				.MOTOR ACT ASSY-TEMP	1			
23	AH001287				.HOSE-INLET,WATER	1			
24	AH002411				.HOSE-INLET,WATER	1			
25	AH002412				.HOSE-OUTLET,WATER	1			
26	AH001853				.CLAMP-WATER HOSE	6			
27	11Q6-90540				.HEATER RAD SET	1			

Item	Part_No	IS	Ord	T	Description	Qty	Serial_No	ITC	Remark
28	AH002410				.PIPE-INLET/OUTLET	2			
N29	AH002403				.CASE-BLOWER,LH	1			NOT
N30	AH002404				.CASE-BLOWER,RH	1			NOT
N31	AH002407				.DOOR ASSY-VENT	1			NOT
32	AW80000303-3				.SEAL-SPONGE A	2			
33	AW80000304-3				.SEAL-SPONGE B	1			
34	11N6-90700				.FAN & MOTOR	1			
35	11Q6-90530				.FET	1			
36	11Q6-90520				.MOTOR ACT ASSY-VENT DF	2			
38	11Q6-90610				.WIRING ASSY-SATC	1			
40	AH000314				.CLAMP-H/RAD PIPE	1			

RH ELECTRIC

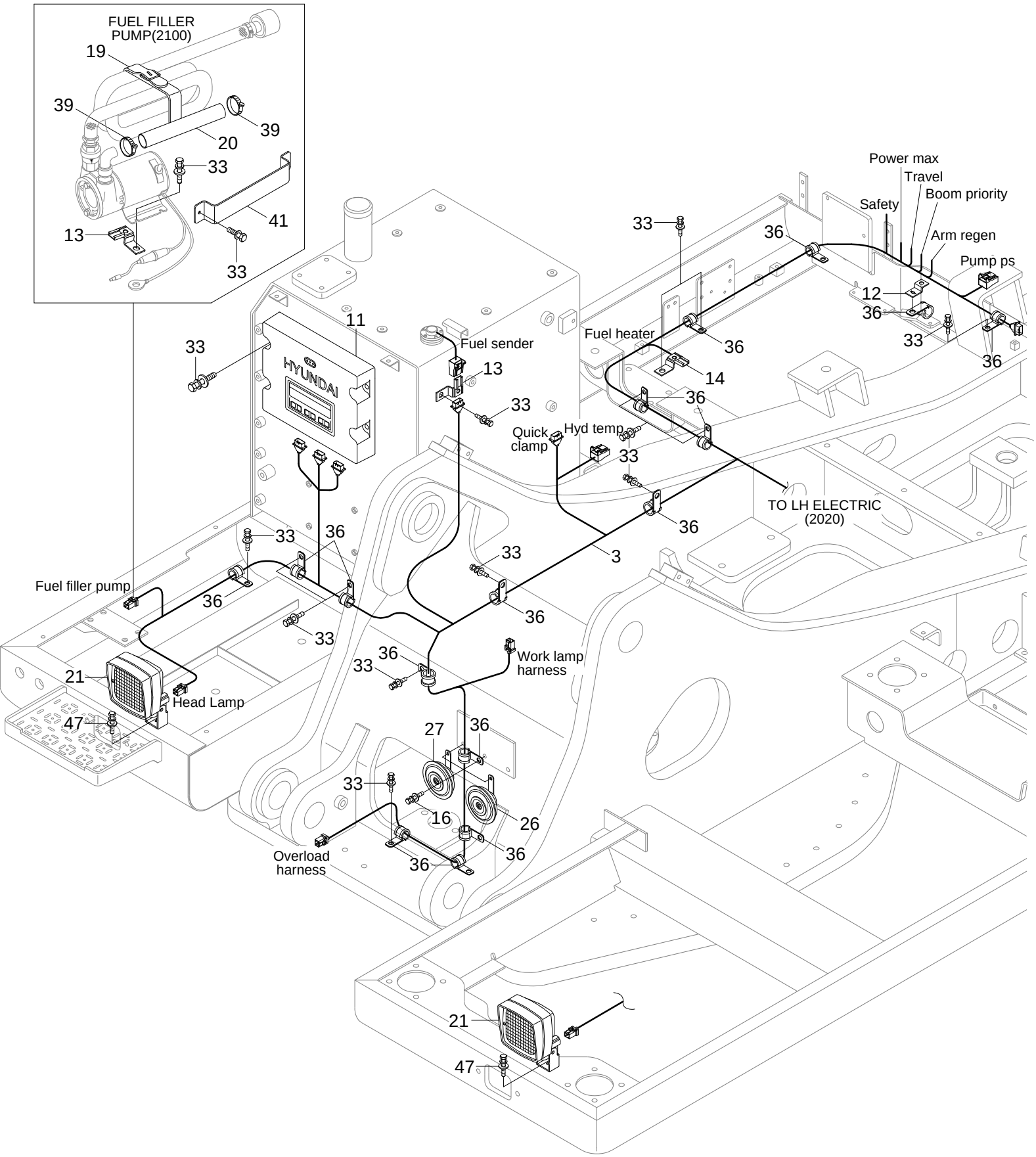
FUEL FILLER PUMP(2100)
19
39
39
20
33
41
13
33
Power max
Travel
Boom priority
Safety
Arm regen
Pump ps
33
36
12
36
33
36
11
Fuel sender
Fuel heater
36
33
13
14
36
33
Quick clamp
Hyd temp
33
TO LH ELECTRIC (2020)
36
3
33
36
33
Fuel filler pump
36
33
36
33
Work lamp harness
21
Head Lamp
47
27
36
33
16
26
36
Overload harness
36
21
47

Item	Part_No	IS	Ord	T	Description	Qty	Serial_No	ITC	Remark
3	21Q5-10601				HARNESS-FRAME	1			
11	21Q5-32101				MCU	1			
12	21N4-01130				PLATE-CLIP	1			
13	25D1-10640				CLIP ASSY	4			
14	25D1-10650				CLIP ASSY	1			
16	S035-082526				BOLT-W/WASHER	3			
19	E127-3158				BAND-FUEL PUMP	1			
20	21N4-20550				HOSE-OUTLET	1			
21	21QB-60700				WORK LAMP ASSY	2			
21-1	S866-240650				.BULB	2			NOT SHOWN
26	21Q4-30600				HORN-HIGH	1			
27	21Q4-30500				HORN-LOW	1			
33	S037-102026				BOLT-W/WASHER	12			
36	31L7-10190				CLAMP-TUBE	13			
39	S520-032000				CLAMP-HOSE	3			
41	21N6-20080				PLATE-CLAMP	1			
47	S037-102526				BOLT-W/WASHER	2			
90	21Q6-50410				ADAPTER	1			NOT SHOWN

LH ELECTRIC

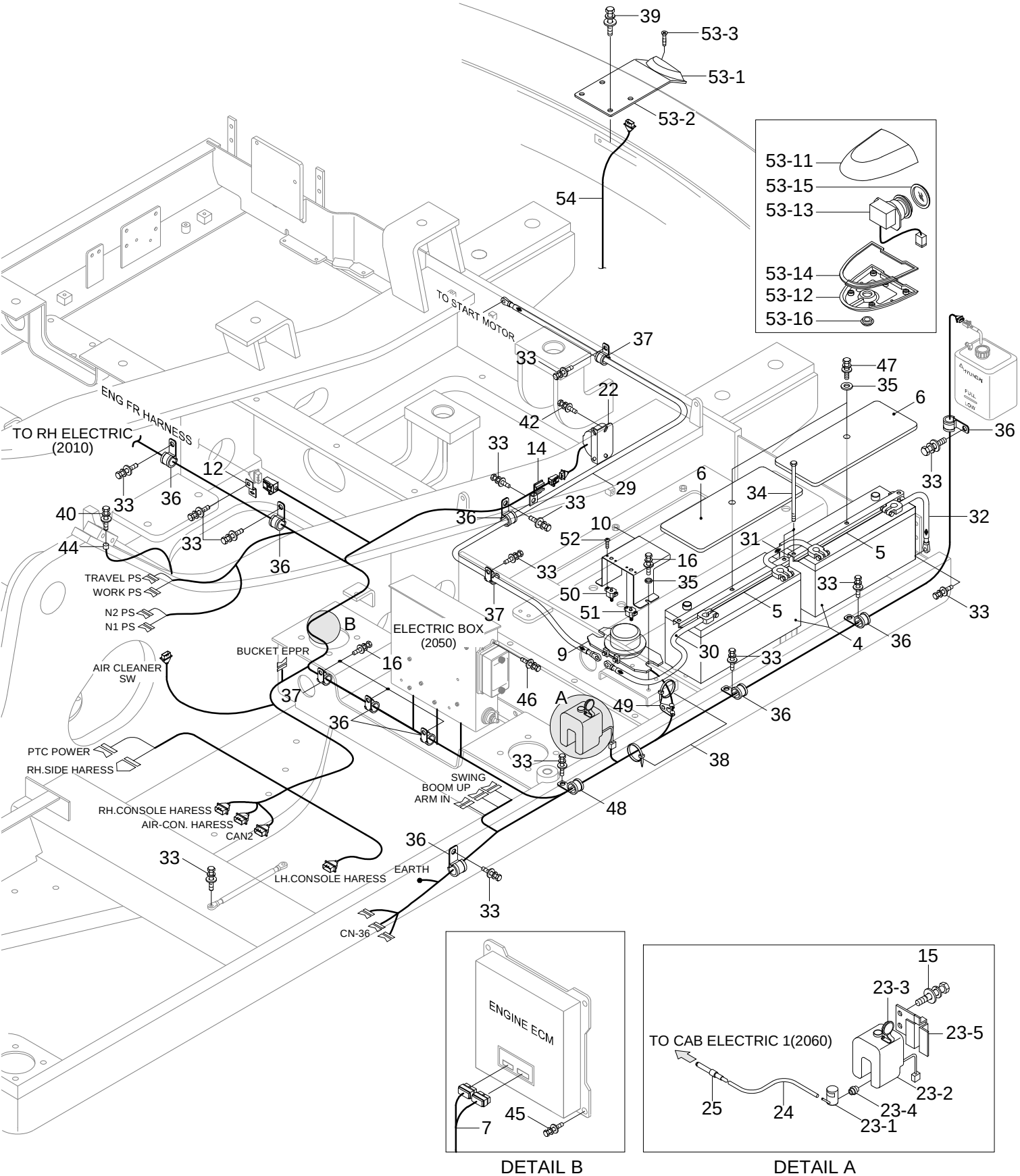

DETAIL B

DETAIL A

Item	Part_No	IS	Ord	T	Description	Qty	Serial_No	ITC	Remark
4	21E6-20270				BATTERY	2			
5	21N5-10150				BRACKET-BATT	2			
6	21N6-60080				COVER-BATTERY	2			
7	21N5-30021				HARNESS-ECM	1			
9	21E5-0003				RELAY-BATTERY	1			
10	21Q4-10180				COVER-BATT RELAY	1			
12	21N4-01130				PLATE-CLIP	1			
14	25D1-10650				CLIP ASSY	1			
15	S035-062026				BOLT-W/WASHER	2			
16	S035-082526				BOLT-W/WASHER	14			
22	21N4-46800				BUZZER-BACK	1			
23	21EG-30630				WASHER TANK ASSY	1			
23-1	21EG-10130				.PUMP-MOTOR	1			
23-2	21EG-10140				.TANK	1			
23-3	24L3-30660				.CAP	1			
23-4	24L3-30670				.RUBBER-BUSHING	1			
23-5	24L3-30710				.PLATE	1			
24	21EM-30581				HOSE-RUBBER	1			
25	21EM-30570				CONNECTOR-TUBE	1			
29	21E2-60031				CABLE(BATT RY-STARTER)	1			
30	21N8-10300				CABLE(BATT-RELAY)	1			
31	21N5-10160				CABLE(BATT-BATT)	1			
32	24L3-01120				CABLE(BATT-EARTH)	1			
23-1	21EG-10130				.PUMP-MOTOR	1			
23-2	21EG-10140				.TANK	1			

Item	Part_No	IS	Ord	T	Description	Qty	Serial_No	ITC	Remark
23-3	24L3-30660				.CAP	1			
23-4	24L3-30670				.RUBBER-BUSHING	1			
23-5	24L3-30710				.PLATE	1			
33	S037-102026				BOLT-W/WASHER	16			
34	S017-102506				BOLT-HEX	4			
35	21EN-30560				WASHER-PLAIN	2			
36	31L7-10190				CLAMP-TUBE	13			
37	31L7-10200				CLAMP-TUBE	1			
38	S552-035146				CLAMP-BAND	6			
40	S037-101526				BOLT-W/WASHER	1			
42	S035-081516				BOLT-W/WASHER	3			
44	21N4-01560				HARNESS-EXTENSION	1			
45	S035-084026				BOLT-W/WASHER	4			
46	S161-060156				SCREW-CROSS R/ROUND	6			
47	S037-102526				BOLT-W/WASHER	2			
48	31L7-10230				CLAMP	2			
49	21E9-00170				CLIP-HARNESS	3			
50	21Q4-01150				CIRCUIT-BREAKER,50A	1			
51	21Q4-01160				CIRCUIT-BREAKER,30A	1			
52	S141-040206				SCREW-FLAT HD	4			
53	21Q5-60100				CAMERA ASSY-REAR VIEW	1	#0001 -	-	MANUF CWT
53-1	21AB-30031				.CAMERA ASSY-REAR	1			
53-11	21AB-40100				..DOME-HOUSING	1			
53-12	21AB-40200				..BASE-HOUSING	1			
53-13	21AB-40300				..CAMERA & PCB ASSY	1			

Item	Part_No	IS	Ord	T	Description	Qty	Serial_No	ITC	Remark
53-14	21AB-40400				..SEAL	1			
53-15	21AB-40500				..WINDOW	1			
53-16	21AB-40600				..GROMMET	1			
53-2	21Q5-20011				.BRACKET-CAMERA	1			
53-3	S141-050106				.SCREW-FLAT HD	2			
54	21Q6-11170				HARNESS-CAMERA	1	#0001 -	-	
52	S141-040206				SCREW-FLAT HD	4			
53	21Q6-70100				CAMERA ASSY-REAR VIEW	1			
53-1	21AB-30031				.CAMERA ASSY-REAR	1			
53-11	21AB-40100				..DOME-HOUSING	1			
53-12	21AB-40100				..DOME-HOUSING	1			
53-13	21AB-40300				..CAMERA & PCB ASSY	1			
53-14	21AB-40400				..SEAL	1			
53-15	21AB-40500				..WINDOW	1			
53-16	21AB-40600				..GROMMET	1			
53-2	21AB-50020				.BRACKET-CAMERA	1			
54	21Q6-11142				HARNESS-CAMERA	1			

BOOM ELECTRIC(STD)

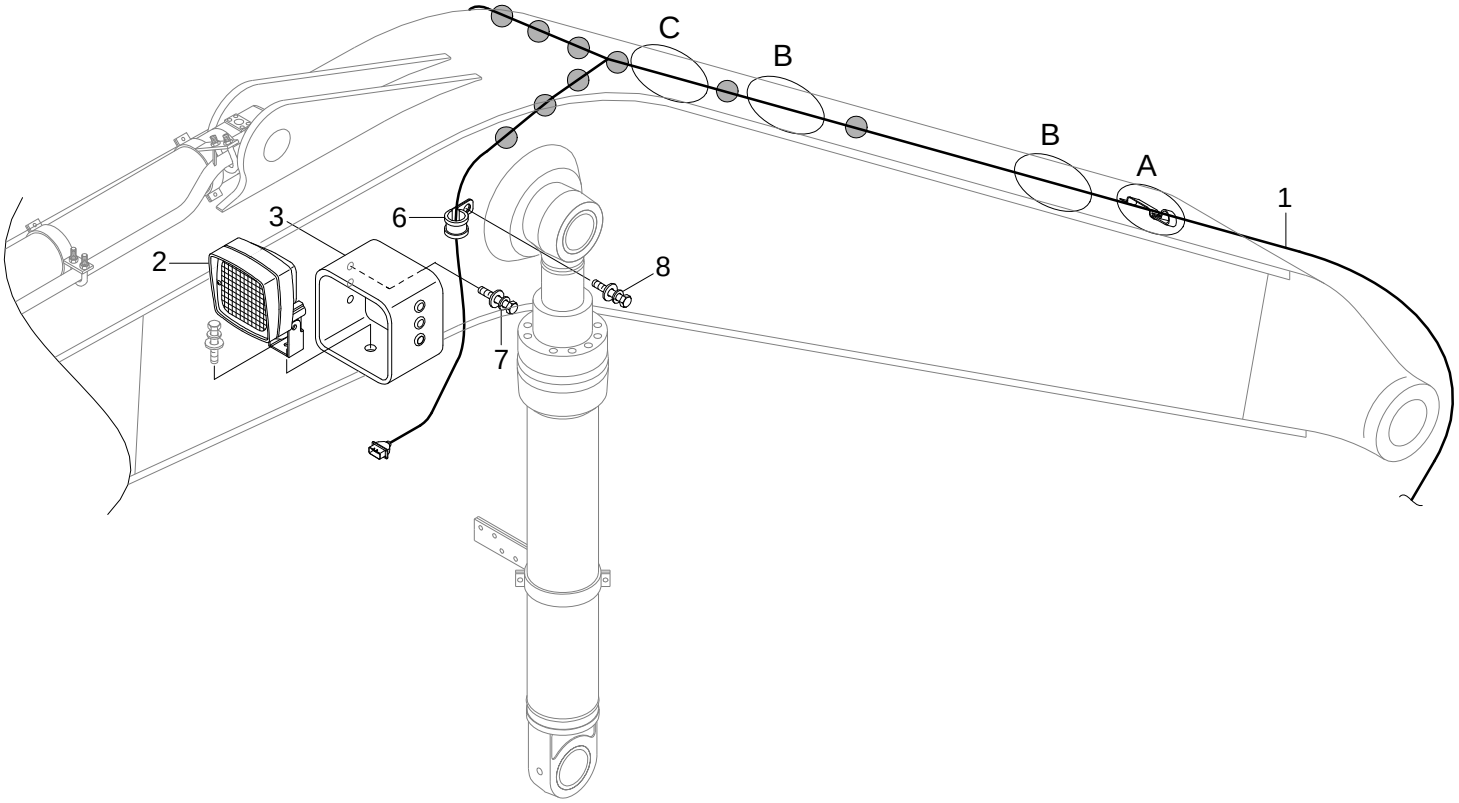

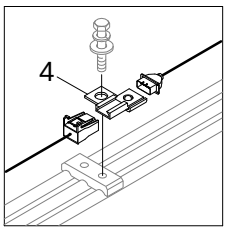

DETAIL A

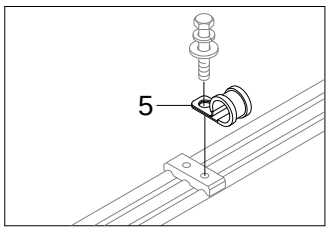

DETAIL B

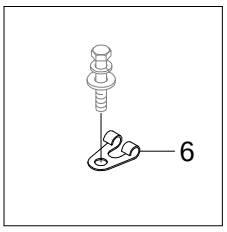

DETAIL C

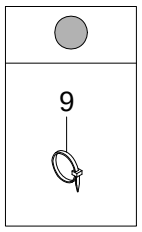

Item	Part_No	IS	Ord	T	Description	Qty	Serial_No	ITC	Remark
1	21Q5-20700				HARNESS-BOOM	1			
2	21Q4-60700				WORK LAMP ASSY	2			
2-1	21Q4-60800				.BULB-H3	1			NOT SHOWN
3	21Q5-20900				GUARD-LAMP	2			
4	25D1-10640				CLIP ASSY	1			
5	31L7-10190				CLAMP-TUBE	2			
6	S541-120002				CLAMP-TUBE	4			
7	S037-102026				BOLT-W/WASHER	4			
8	S037-122526				BOLT-W/WASHER	2			
9	S552-050203				CLAMP-BAND	11			

BOOM ELECTRIC(ADJUST BOOM)

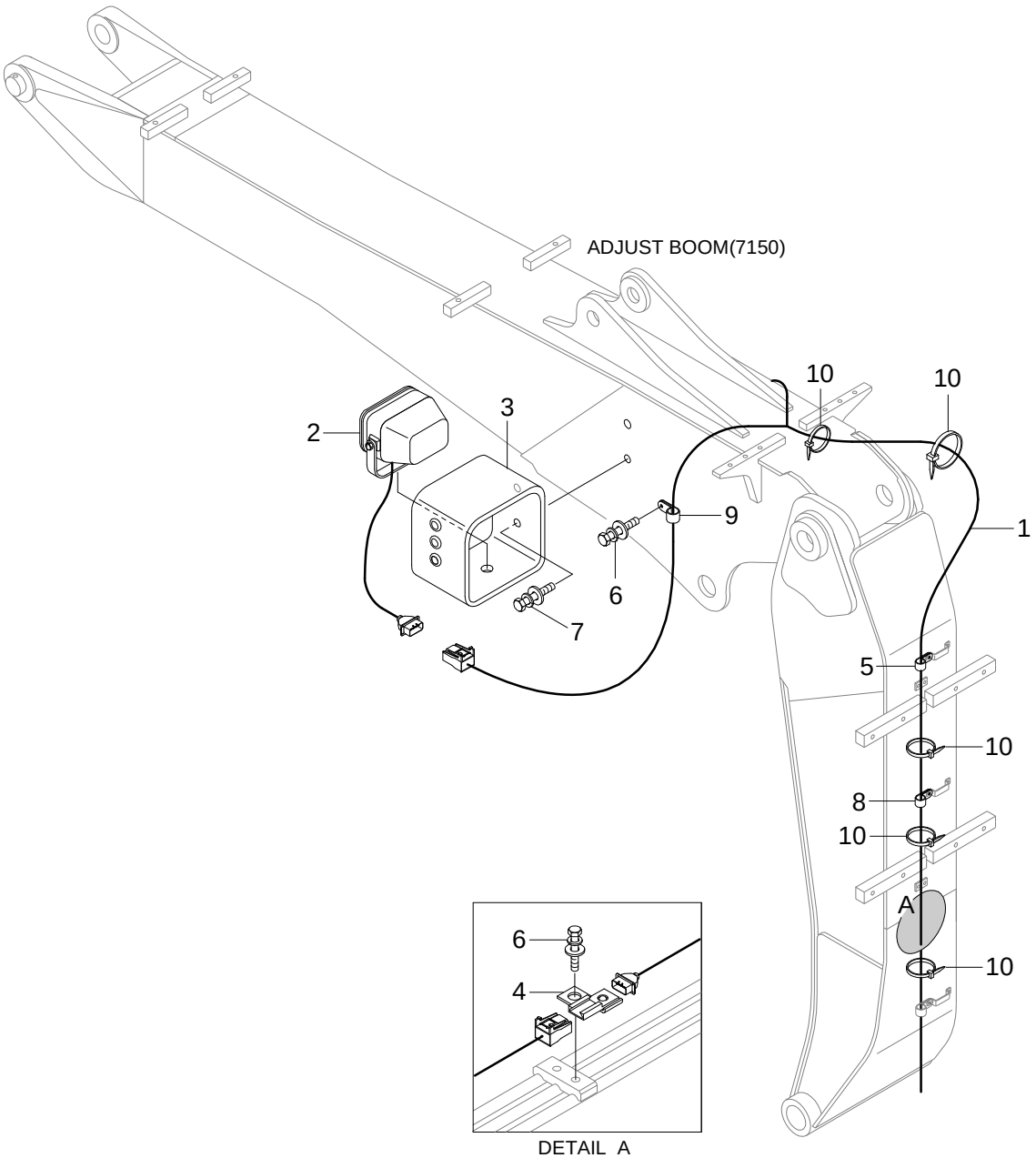

Item	Part_No	IS	Ord	T	Description	Qty	Serial_No	ITC	Remark
1	21Q5-20800				HARNESS-BOOM	1			
2	21Q4-60700				WORK LAMP ASSY	2			
2-1	21Q4-60800				.BULB-H3	1			NOT SHOWN
3	21Q5-20900				GUARD-LAMP	2			
4	25D1-10640				CLIP ASSY	1			
5	31L7-10190				CLAMP-TUBE	3			
6	S037-102026				BOLT-W/WASHER	3			
7	S037-122526				BOLT-W/WASHER	2			
8	S593-000652				CLIP-HARNESS	1			
9	S593-000902				CLIP-HARNESS	2			
10	S552-035146				CLAMP-BAND	7			

ENGINE ELECTRIC

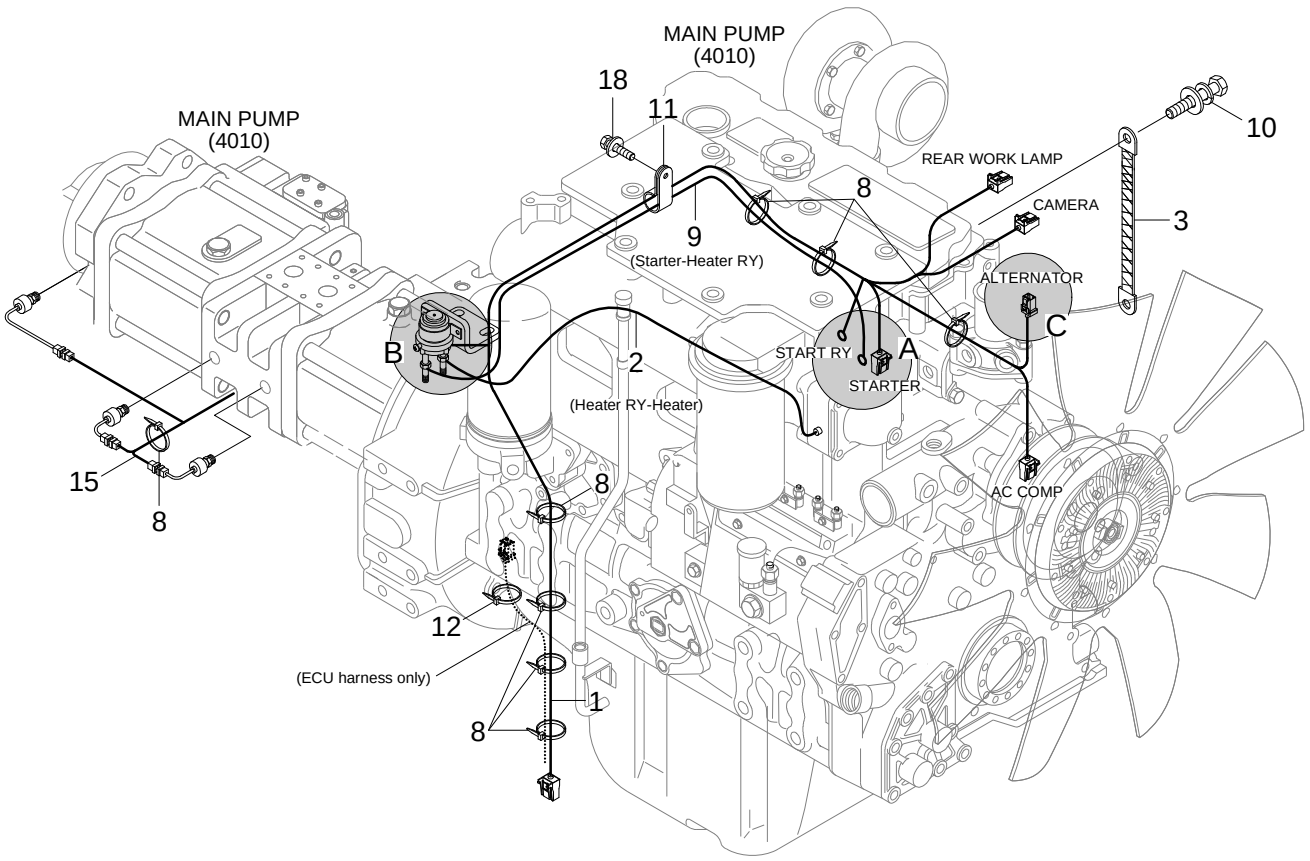

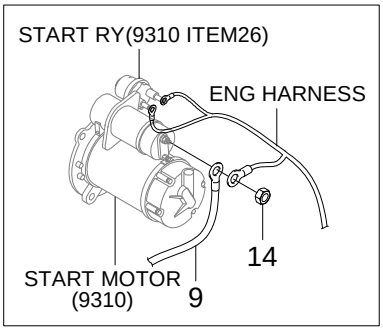

DETAIL A

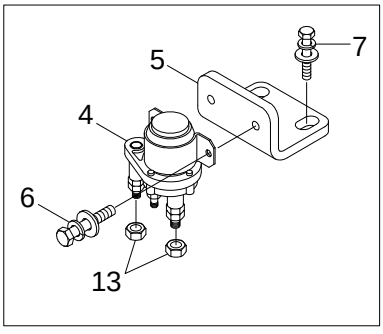

DETAIL B

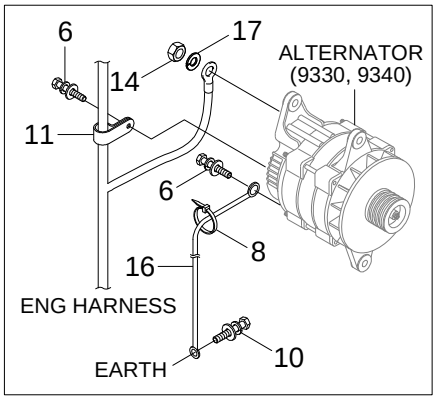

DETAIL C

Item	Part_No	IS	Ord	T	Description	Qty	Serial_No	ITC	Remark
1	21Q4-30031				HARNESS-ENGINE	1			
2	21N9-20030				CABLE-HEATER	1			
3	21L8-30720				STRAP-EARTH	1			
4	21N8-42050				RELAY-HEATER	1			
5	21N5-10041				PLATE-HEATER RELAY	1			
6	S035-061526				BOLT-W/WASHER	4			
7	S037-102526				BOLT-W/WASHER	2			
8	S552-035146				CLAMP-BAND	18			
9	21N5-10100				CABLE(STARTER-HEAT RY)	1			
10	S035-081526				BOLT-W/WASHER	2			
11	S543-200002				CLAMP-TUBE	1			
12	S552-102370				CLAMP-BAND	1			
13	S205-061006				NUT-HEX	2			
14	S205-051006				NUT-HEX	2			
15	21Q4-10190				HARNESS-PUMP PS	1			
16	21EA-52151				CABLE	1			
17	S411-050006				WASHER-SPRING	1			
18	S037-122056				BOLT-W/WASHER	1			

ELECTRIC BOX

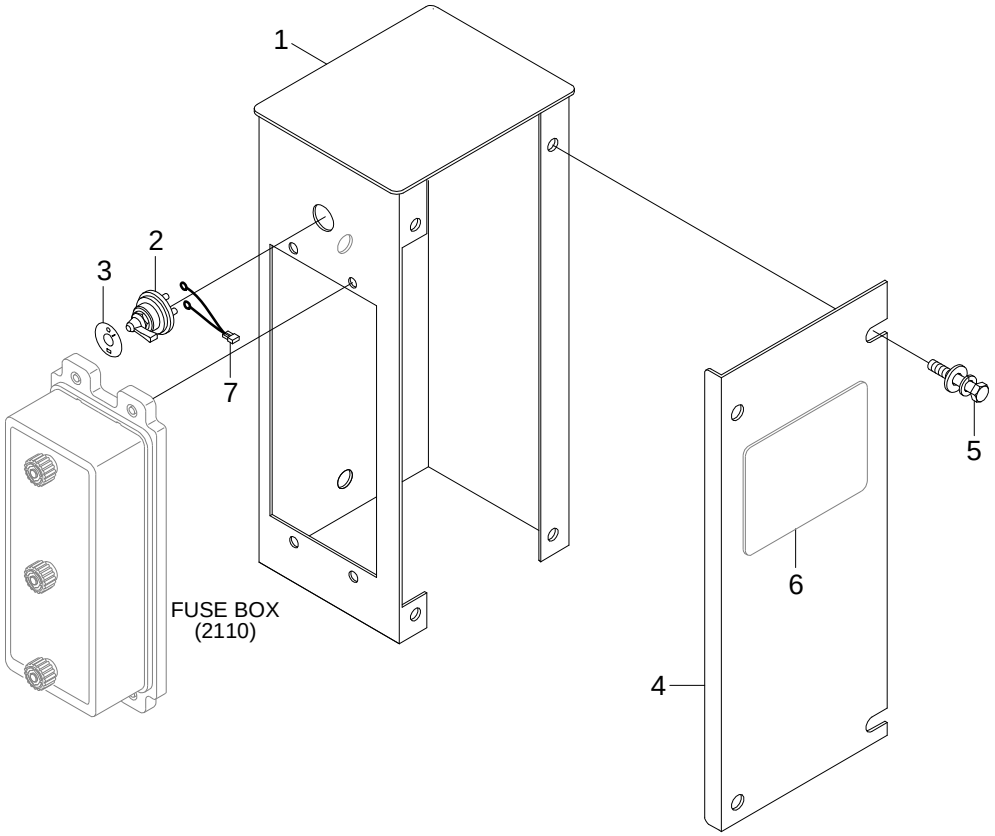

Item	Part_No	IS	Ord	T	Description	Qty	Serial_No	ITC	Remark
*	21Q7-20314				ELECTRIC BOX ASSY	1			
1	21Q7-20343				.ELECTRIC BOX WA	1			
2	21LM-10500				.SWITCH-MASTER	1			
3	21LD-34180				.DECAL-MASTER SWITCH	1			
4	21Q7-20352				.COVER	1			
5	S035-081526				.BOLT-W/WASHER	4			
6	21Q9-40340				.DECAL-CAUTION	1			
7	21QB-23110				.HARNESS-MASTER SW	1			

CAB ELECTRIC 1

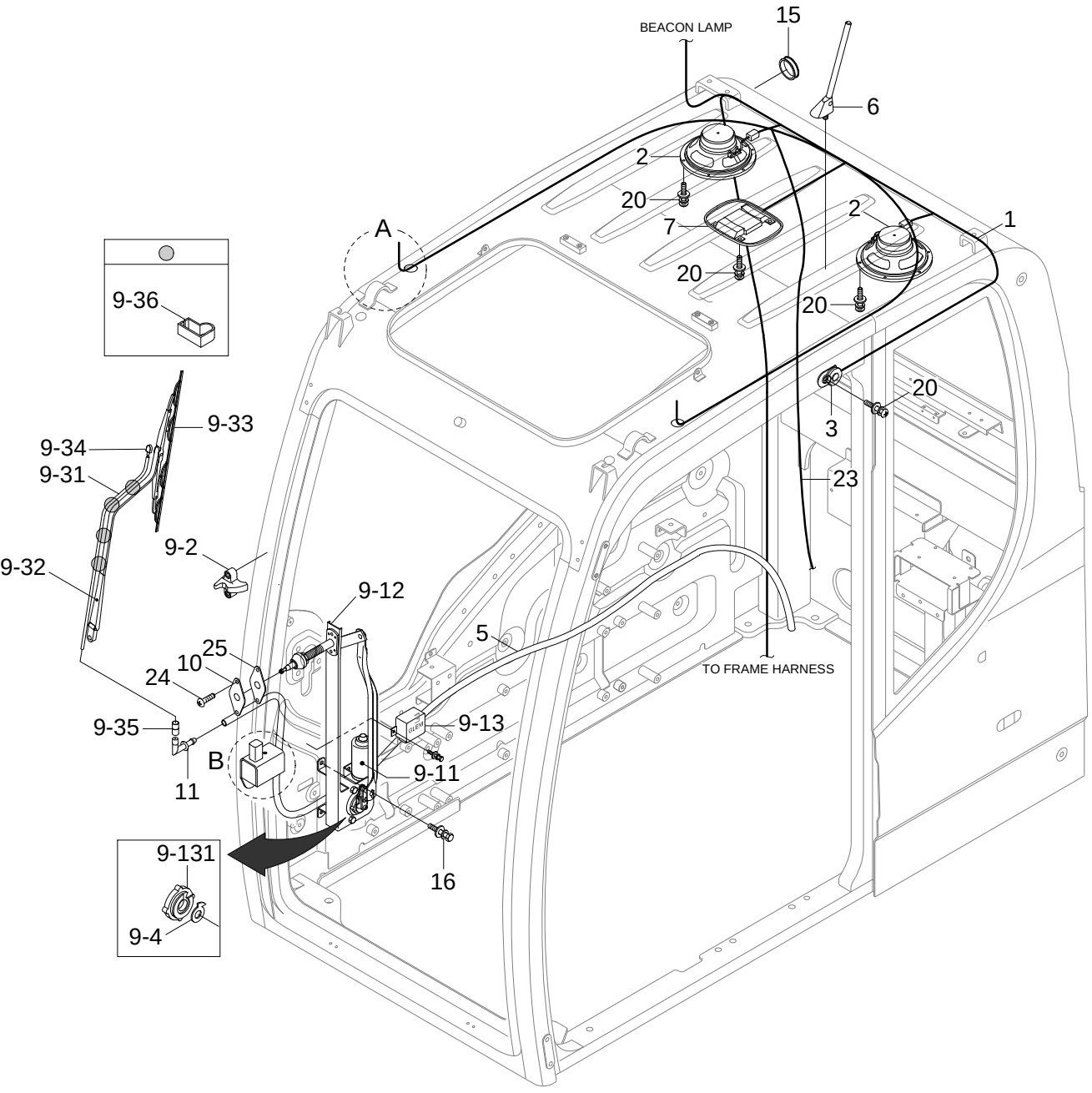

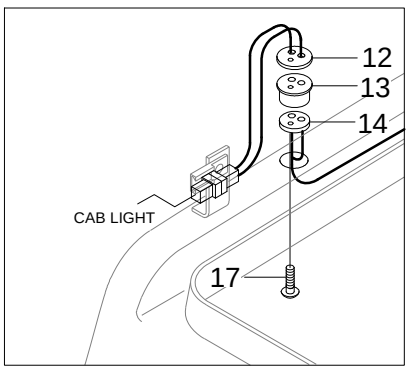

DETAIL A

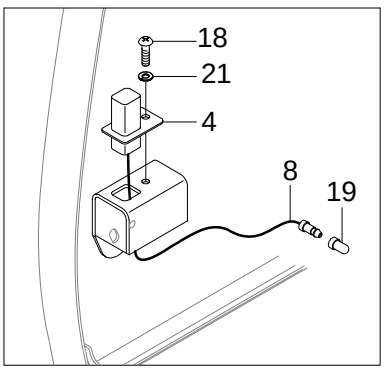

DETAIL B

Item	Part_No	IS	Ord	T	Description	Qty	Serial_No	ITC	Remark
1	21Q6-10702				HARNESS-CAB	1			
2	21Q6-21110				SPEAKER	2			
3	E123-3022				SWITCH-DOOR	1			
4	21M5-50250				SWITCH ASSY	1			WIPER CUT SW
5	21EM-30581				HOSE-RUBBER	1			
6	21Q6-35000				ANTENA-INTERGRATED	1			
7	21Q4-50101				LAMP-ROOM	1			
7-1	21E1-49690				.BULB-ROOM LAMP	1			NOT SHOWN
8	21N8-10091				HARNESS-WIPER	1			
9	21Q6-31201				WIPER MOTOR KIT ASSY	1			
9-1	21N6-01241				.WIPER MOTOR ASSY	1			
9-11	21N6-01281				..MOTOR-WIPER	1			
9-12	21N6-01260				..BRACKET & LINK ASSY	1			
9-13	21N6-01272				..CONTROLLER-W/MOTOR	1			
9-131	21N6-01300				...CAM BASE-W/MOTOR	1			
9-2	21Q6-01300				.BRACKET-WIPER	1			
9-3	21Q6-01200				.ARM & BLADE ASSY	1			
9-31	21Q6-01210				..HOSE-WIPER	1			
9-32	21Q6-01220				..ARM-WIPER	1			
9-33	21Q6-01230				..BLADE-WIPER	1			
9-34	21Q6-01240				..NOZZLE-WIPER	1			
9-35	21Q6-01250				..VALVE-WIPER	1			
9-36	21Q6-01260				..CLIP-WIPER	4			
9-331	21N6-01300				...CAM BASE-W/MOTOR	1			
9-4	21Q6-01250				.VALVE-WIPER	1			

Item	Part_No	IS	Ord	T	Description	Qty	Serial_No	ITC	Remark
9-4	21N6-01290				.MOTOR CAM	1			
9-5	21N6-01290				.MOTOR CAM	1			
10	21Q6-21510				PLATE-NOZZLE	1			
11	24L3-41500				VALVE-WIPER	1			
12	21N6-10420				PLATE	2			
13	21N6-10430				SEAL	2			
14	21N6-10440				PLATE	2			
15	S880-132040				GROMMET	1			
16	S035-081526				BOLT-W/WASHER	3			
17	S151-040156				SCREW-TAPPING	4			
18	S131-041026				SCREW-W/WASHER	1			
19	S890-107508				TUBE-PVC	1			
20	S131-051546				SCREW-W/WASHER	9			
21	S411-040006				WASHER-SPRING	1			
23	21Q6-11501				HARNESS-RMS ANTENNA	1			
24	S151-060166				SCREW-TAPPING	2			
25	21Q6-21600				RUBBER-PAD	1			

CAB ELECTRIC 2

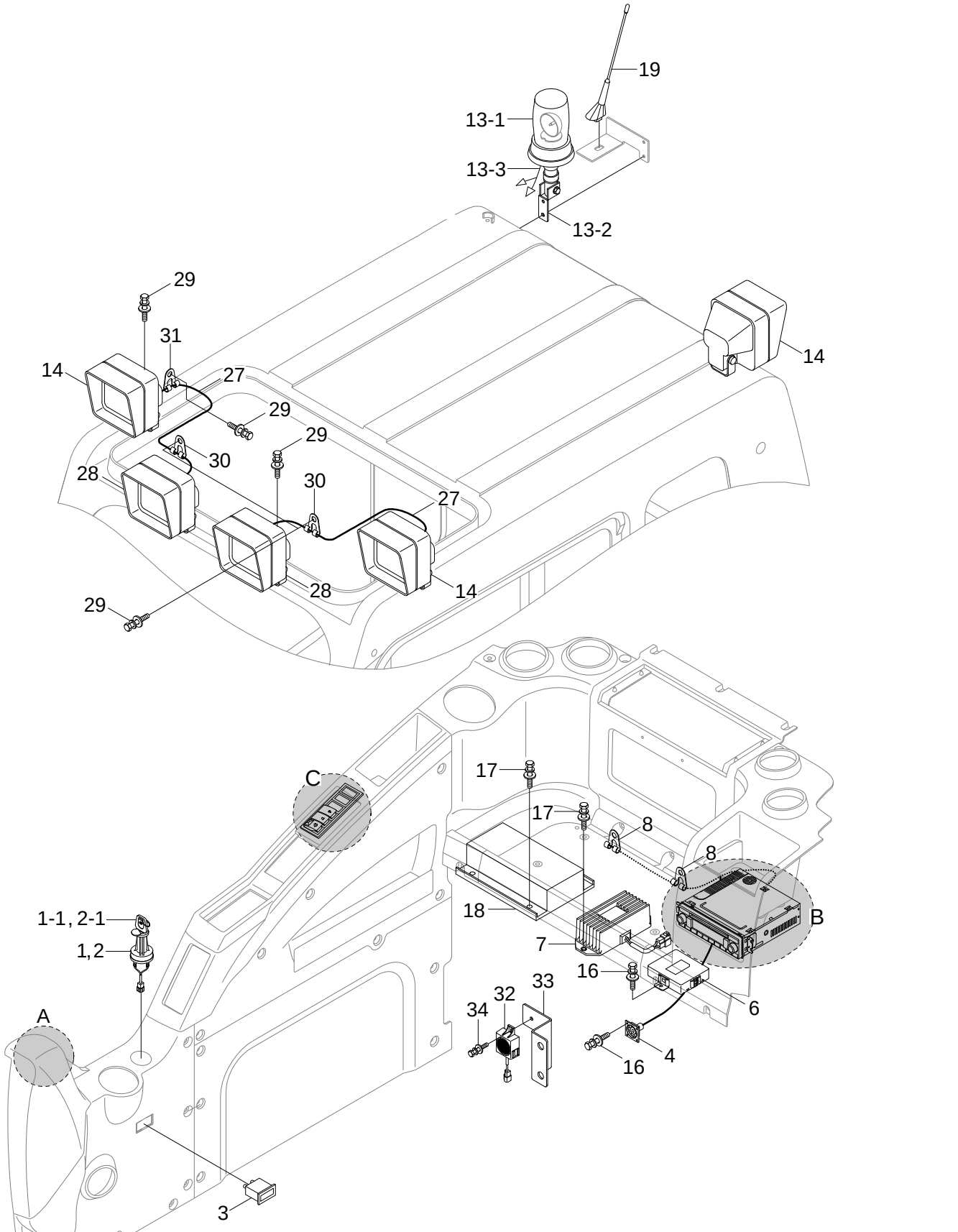

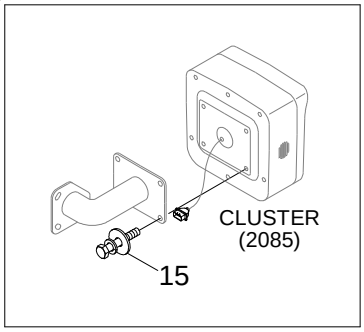

DETAIL A

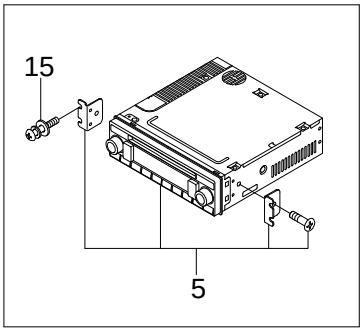

DETAIL B

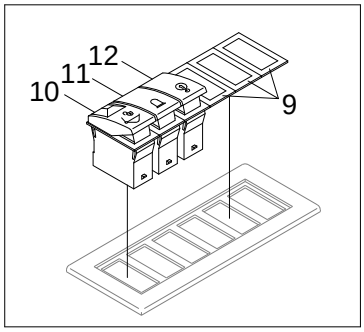

DETAIL C

Item	Part_No	IS	Ord	T	Description	Qty	Serial_No	ITC	Remark
1	21Q4-00070				START KEY ASSY	1			
1-1	21N4-10400K				.KEY-START	1			
2	21Q4-00060				START KEY ASSY	1			KOREA/CHINA
2-1	21N3-00030				.KEY-START	1			KOREA/CHINA
3	21MH-00660				HOUR METER	1			
4	21Q7-10901				HARNESS-SERVICE TOOL	1			
5	21Q6-30201				MP3 & RADIO PLAYER ASSY	1			
6	21Q6-30300				CONTROL UNIT-HANDSFREE	1			
7	21Q6-20410				CONVERTER-DC DC	1			
8	21E9-00170				CLIP-HARNESS	2			
9	21E6-10460				COVER	3			
10	21Q4-22130				SWITCH-QUICK CLAMP	1			OPTION
11	21Q4-22140				SWITCH-BEACON	1			
12	21Q4-22110				SWITCH-OVERLOAD	1			OPTION
13	21Q4-30380				BEACON LAMP ASSY	1			OPTION
13-1	21Q4-20700				.BEACON LAMP	1			
13-11	21EK-10330				..BULB-H1, 70W	1			NOT SHOWN
13-2	21Q4-20600				.BRACKET-TILT	1			
13-3	21N4-02830				.HARNESS-BEACON LAMP	1			
14	21QB-60700				WORK LAMP ASSY	3			CABIN
14-1	S866-240650				.BULB	1			NOT SHOWN
15	S035-081526				BOLT-W/WASHER	7			
16	S035-061526				BOLT-W/WASHER	6			
17	S035-062026				BOLT-W/WASHER	6			
18	21Q8-32201				CONTROL UNIT-REMOTE	1			OPTION

Item	Part_No	IS	Ord	T	Description	Qty	Serial_No	ITC	Remark
19	21Q8-32210				ANTENNA-SATELLITE	1			OPTION
27	21Q8-23100				HARNESS-LAMP	2			OPTION
28	21QB-60700				WORK LAMP ASSY	2			OPTION
28-1	S866-240650				.BULB	1			NOT SHOWN
29	S037-102026				BOLT-W/WASHER	7			
30	25D1-10650				CLIP ASSY	2			
31	25D1-10640				CLIP ASSY	1			
32	21Q6-13400				BUZZER-WARNING	1	#0001 -		
33	21Q6-13420				BRACKET WA	1	#0001 -		
34	S035-051526				BOLT-W/WASHER	1	#0001 -		

CABIN ROOM ELECTRIC

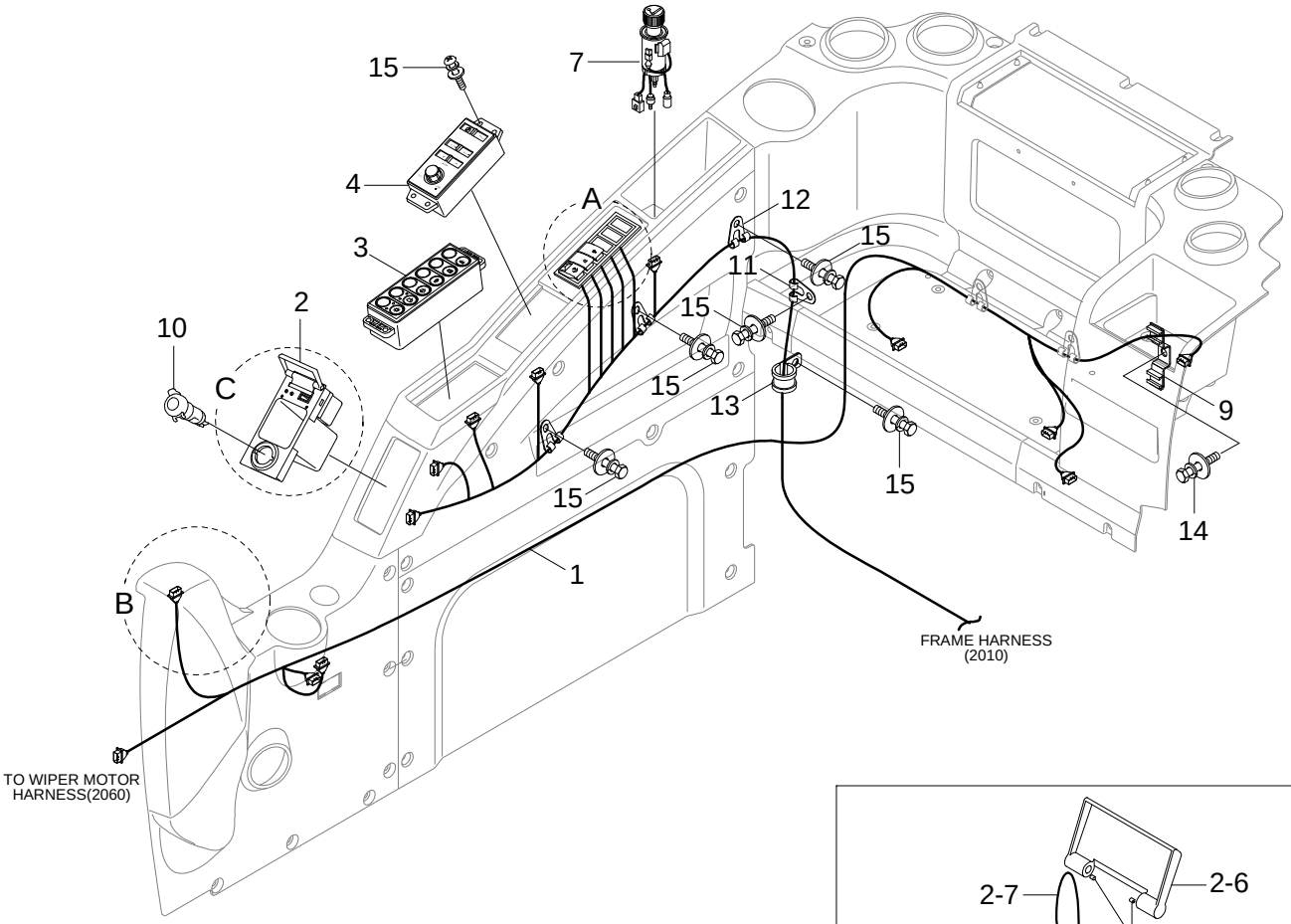

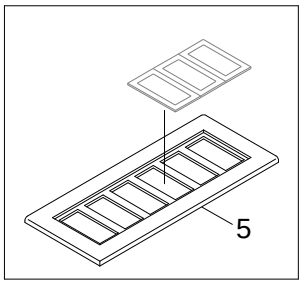

DETAIL A

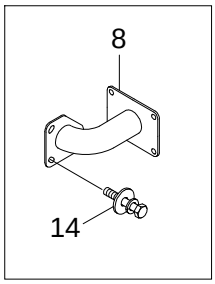

DETAIL B

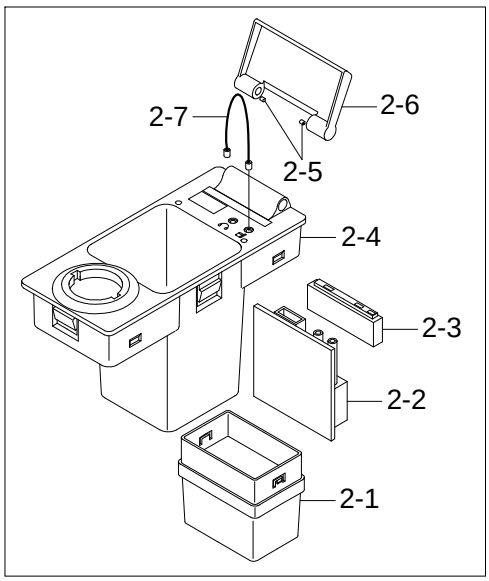

DETAIL C

Item	Part_No	IS	Ord	T	Description	Qty	Serial_No	ITC	Remark
1	21Q6-10404				HARNESS-SIDE,RH	1	#0001 -		
2	21Q6-30901				USB & SOCKET ASSY	1			
2-1	21Q6-30910				.CASE-PCB GUIDE	1			
2-2	21Q6-30920				.PCB ASSY	1			
2-3	21Q6-30930				.CASE-ILLUMINATION	1			
2-4	21Q6-30940				.BASE-CASE	1			
2-5	21Q6-30950				.HINGE	2			
2-6	21Q6-30960				.COVER-DUST	1			
2-7	21Q6-30970				.CABLE-CURL	1			
3	21Q6-30601				MEMBRANE SWITCH ASSY	1			
4	21Q6-30801				CONTROLLER-REMOTE	1			
5	21E6-10470				FRAME-MOUNTING	1			
7	21LM-07110				LIGHTER-CIGAR	1			
8	71Q6-01272				BRACKET-CLUSTER	1	#0001 -		
9	21N4-01130				PLATE-CLIP	1			
10	21M8-01420				SOCKET ASSY	1			
11	25D1-10640				CLIP ASSY	1			
12	21E9-00170				CLIP-HARNESS	5			
13	31L7-10200				CLAMP-TUBE	1			
14	S035-081526				BOLT-W/WASHER	4			
15	S035-082036				BOLT-W/WASHER	5			

[Item List] - Print Date : 2020.08.21 11:08

CLUSTER

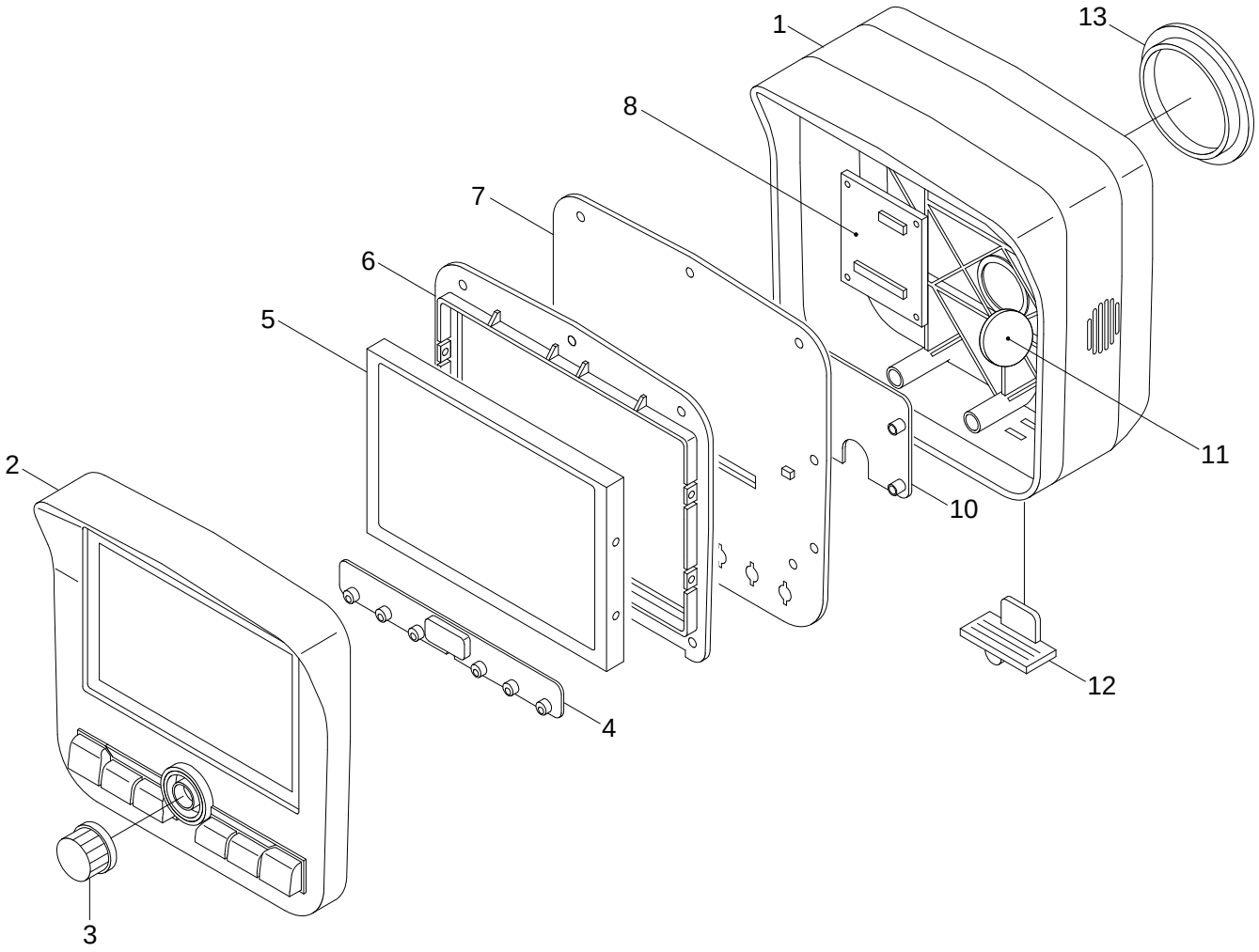

Item	Part_No	IS	Ord	T	Description	Qty	Serial_No	ITC	Remark
*	21Q6-30102				CLUSTER ASSY	1			SEE ILLUST NO.1
	21Q6-30103				CLUSTER ASSY	1	#0001 -	-	
1	21Q6-30110				.LOWER CASE ASSY	1			
2	21Q6-30120				.UPPER CASE ASSY	1			
3	21Q6-30130				.KNOB	1			
4	21Q6-30140				.SEAL	1			
5	21Q6-40010				.MODULE-LCD	1			
6	21Q6-40020				.GUIDE-LCD	1			
7	21Q6-40030				.MAIN-PCB	1			
8	21Q6-40040				.CPU-PCB	1			
10	21Q6-30160				.POWER PCB ASSY	1			
11	21Q6-30170				.SPEAKER	2			
12	21Q6-30180				.CAP-USB	1			
13	21Q6-30190				.GROMMET-CABLE	1			
9	21Q6-40110				.BOARD-DMB	1			SEE ILLUST NO.4
10	21Q6-30160				.POWER PCB ASSY	1			
11	21Q6-30170				.SPEAKER	2			
12	21Q6-30180				.CAP-USB	1			
13	21Q6-30190				.GROMMET-CABLE	1			

BOTTOM ELECTRIC

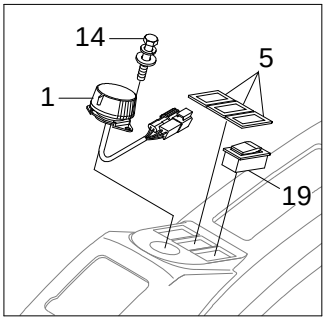

DETAIL A

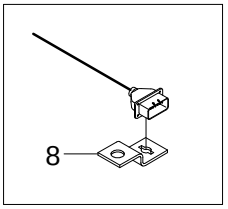

DETAIL B

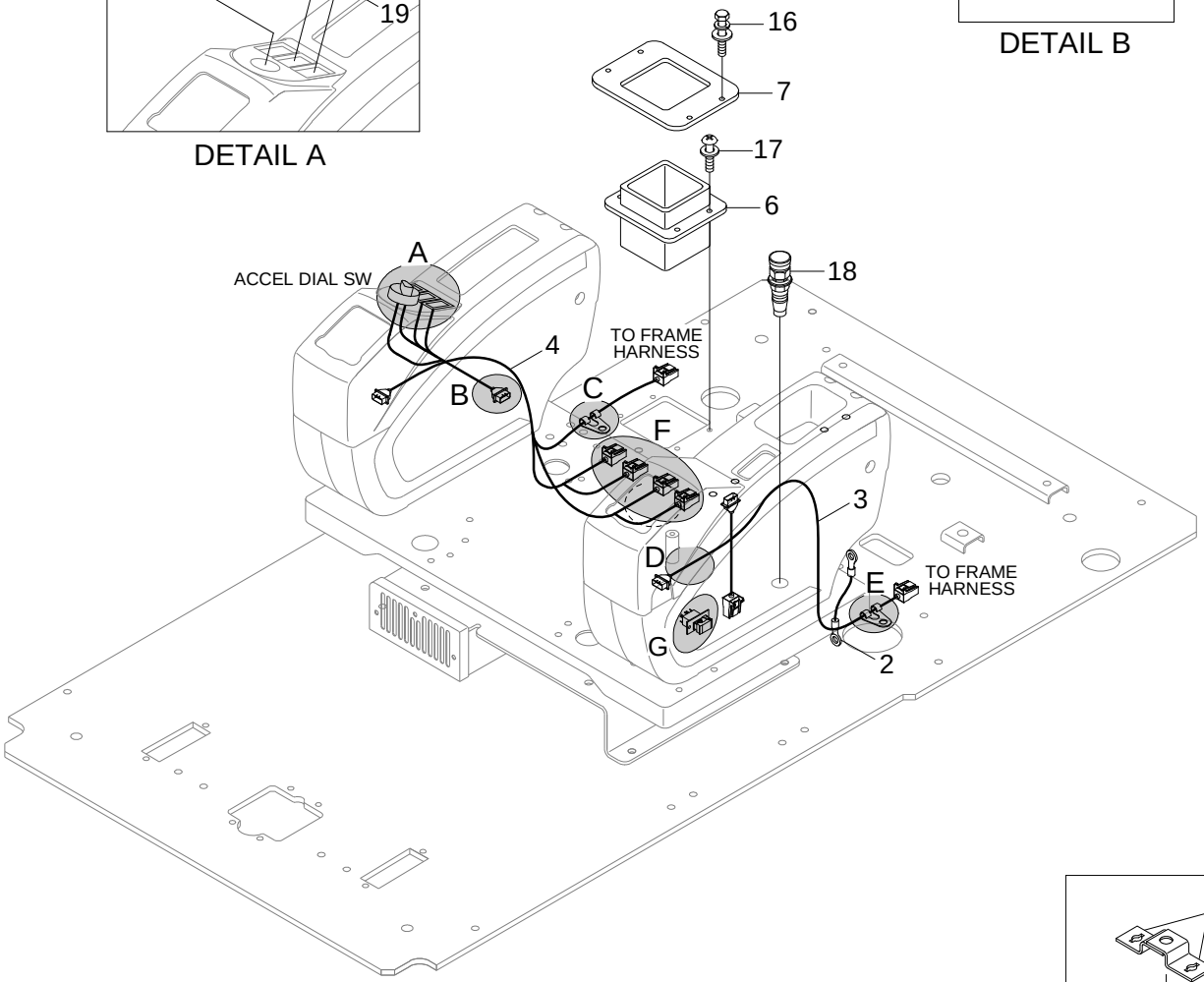

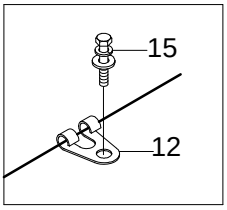

DETAIL C

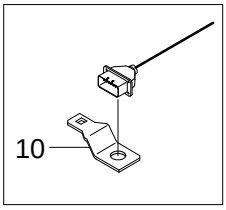

DETAIL D

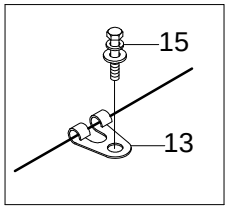

DETAIL E

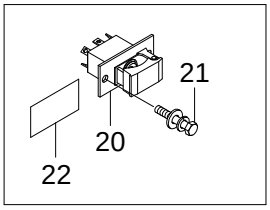

DETAIL G

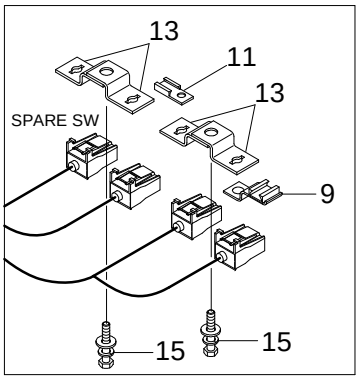

DETAIL F

Item	Part_No	IS	Ord	T	Description	Qty	Serial_No	ITC	Remark
1	21Q4-20811				ACCEL DIAL ASSY	1			
					ACCEL DIAL ASSY	1	#0001 -		
2	21NA-10600				STRAP-EARTH	1			
3	21Q6-10501				HARNESS-LH,CONSOLE	1			
	21Q6-10502				HARNESS-LH,CONSOLE	1	#0001 -		
4	21Q6-10602				HARNESS-RH,CONSOLE	1			
	21Q6-10603				HARNESS-RH CONSOLE	1	#0001 -		
5	21E6-10460				COVER	3			
6	21Q6-21640				FLANGE	1			
7	21Q6-21630				PLATE	1			
8	25D1-10650				CLIP ASSY	1			
9	21N4-01111				CLIP-ECONO SEAL	1			
10	21E7-0612				PLATE-CONNECTOR	1			
11	25D1-10670				CLIP	1			
12	21E9-00170				CLIP-HARNESS	1			
13	21N4-01130				PLATE-CLIP	4			
14	S131-041046				SCREW-W/WASHER	2			
15	S037-102026				BOLT-W/WASHER	4			
16	S035-081526				BOLT-W/WASHER	4			
17	S151-050166				SCREW-TAPPING	4			
18	21Q4-40300				CONNECTOR-AIR	1	#0001 -		
19	21Q4-40010				SWITCH-AIR COMPROSSOR	1	#0001 -		
20	21QA-22100				SWITCH-EMERGENCY STOP	1	#0001 -		
21	S035-061526				BOLT-W/WASHER	2	#0001 -		
22	21Q4-02210				DECAL-EMERGENCY SW	1	#0001 -		

[Item List] - Print Date : 2020.08.21 11:08

FUEL FILLER PUMP

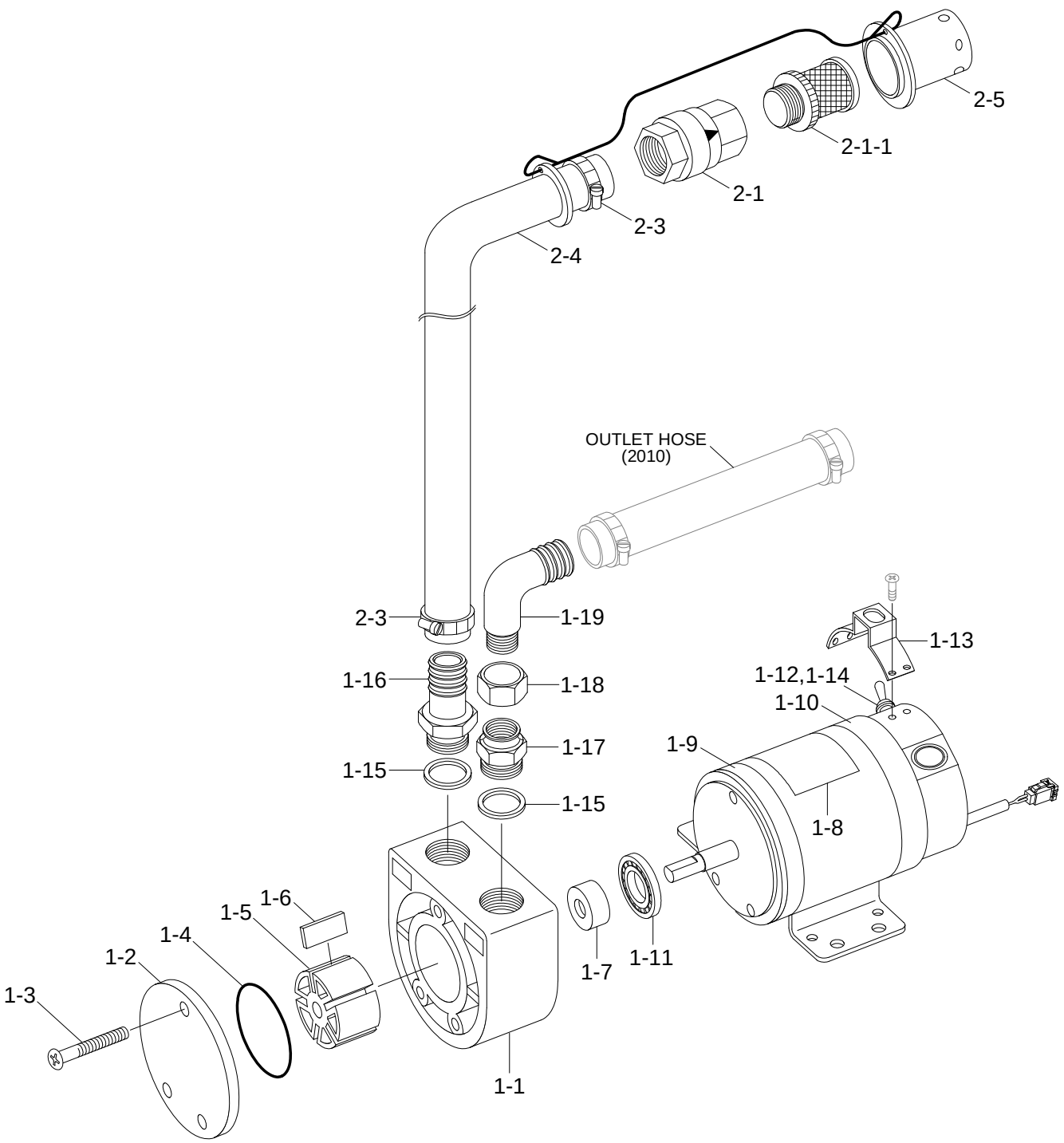

Description	Parts no	Included item
SERVICE KIT	21EM-46201	1-4, 1-5, 1-6, 1-7

Item	Part_No	IS	Ord	T	Description	Qty	Serial_No	ITC	Remark
*	21N6-20312				FUEL FILLER PUMP	1			
1	21N6-20302				.PUMP & MOTOR ASSY	1			
N1-1	@				..BODY	1			NOT
N1-2	@				..COVER	1			NOT
N1-3	@				..SCREW	3			NOT
N1-4	@				..WASHER-SPRING	3			NOT
K1-5	21EM-45050				..O-RING	1			
K1-6	21EM-45060				..ROTOR	1			
K1-7	21EM-45070				..PLATE-VANE	5			
K1-8	21EM-45080				..SEAL-OIL	1			
N1-9	21EM-45091				..DECAL	1			NOT
N1-10	@				..HOUSING-MOTOR	1			NOT
N1-16	21EM-45101				..BOX-SWITCH	1			NOT
1-163	21EM-45300				...COVER-SWITCH	1			
1-164	S161-050166				...SCREW-CROSS R/ROUND	4			
1-17	21EM-45500				..WASHER-AL	3			
1-18	21EM-45600				..FITTING	1			
1-19	21EM-45700				..FITTING	1			
1-20	21EM-45800				..NUT-ELBOW	1			
1-21	21EM-45900				..ELBOW	1			
2	21EM-46400				.HOSE ASSY	1			
2-1	21M5-50260				..VALVE-CHECK	4			
2-1-1	2P1-SP-01				...STRAINER ASSY	1			
2-3	S520-027000				..CLAMP-HOSE	1			
2-4	21EM-46101				..HOSE	1			

Item	Part_No	IS	Ord	T	Description	Qty	Serial_No	ITC	Remark
2-5	21EM-46300				..CAP ASSY	1			
K	21EM-46201				SERVICE KIT	1			SEE ILLUST
N	@				NOT SUPPLIED PARTS	AR			NOT

FUSE BOX

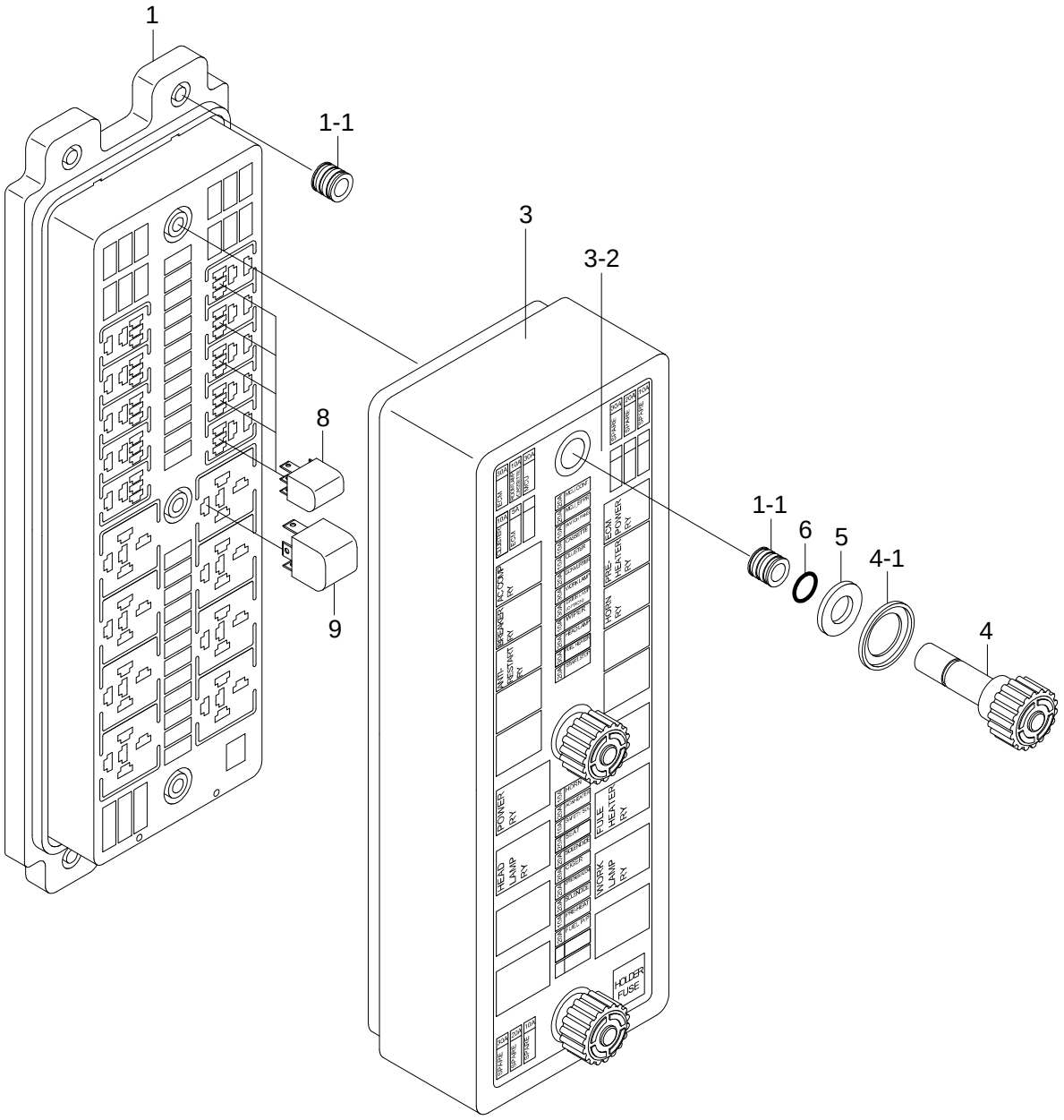

Item	Part_No	IS	Ord	T	Description	Qty	Serial_No	ITC	Remark
1	21Q7-10910				BODY-FUSE BOX	1			
1-1	21N8-20110				.NUT-INSERT	6			
3	21Q7-10920				COVER-FUSE BOX	1			
3-2	21Q7-10930				.DECAL-FUSE BOX	1			
4	21N8-20070				.KNOB ASSY	2			
4-1	21N8-20140				..INSERT	1			
5	21N8-20080				.PAD-RUBBER	2			
6	21N8-20150				.O-RING	2			
7	21N4-90010				FUSE & BULB KIT	1			NOT SHOWN
7-1	@				.FUSE-5A	2			NOT
7-2	@				.FUSE-10A	2			NOT
7-3	@				.FUSE-15A	2			NOT
7-4	@				.FUSE-20A	2			NOT
7-5	@				.FUSE-30A	2			NOT
7-6	@				.BULB-H4,70/75W	2			NOT
7-7	@				.BULB-H1,70W	1			NOT
7-8	@				.BULB-5W	2			NOT
7-9	@				.BULB-5W	2			NOT
7-10	@				.BULB-21W	2			NOT
7-11	@				.BULB-10W	2			NOT
7-12	@				.BULB-10W	2			NOT
7-13	@				.BULB-H3,70W	2			NOT
8	21Q6-20200				RELAY	6	#0001 -	-	
9	24L1-05100				RELAY	6	#0001 -	-	

[Item List] - Print Date : 2020.08.21 11:08

PUMP MOUNTING

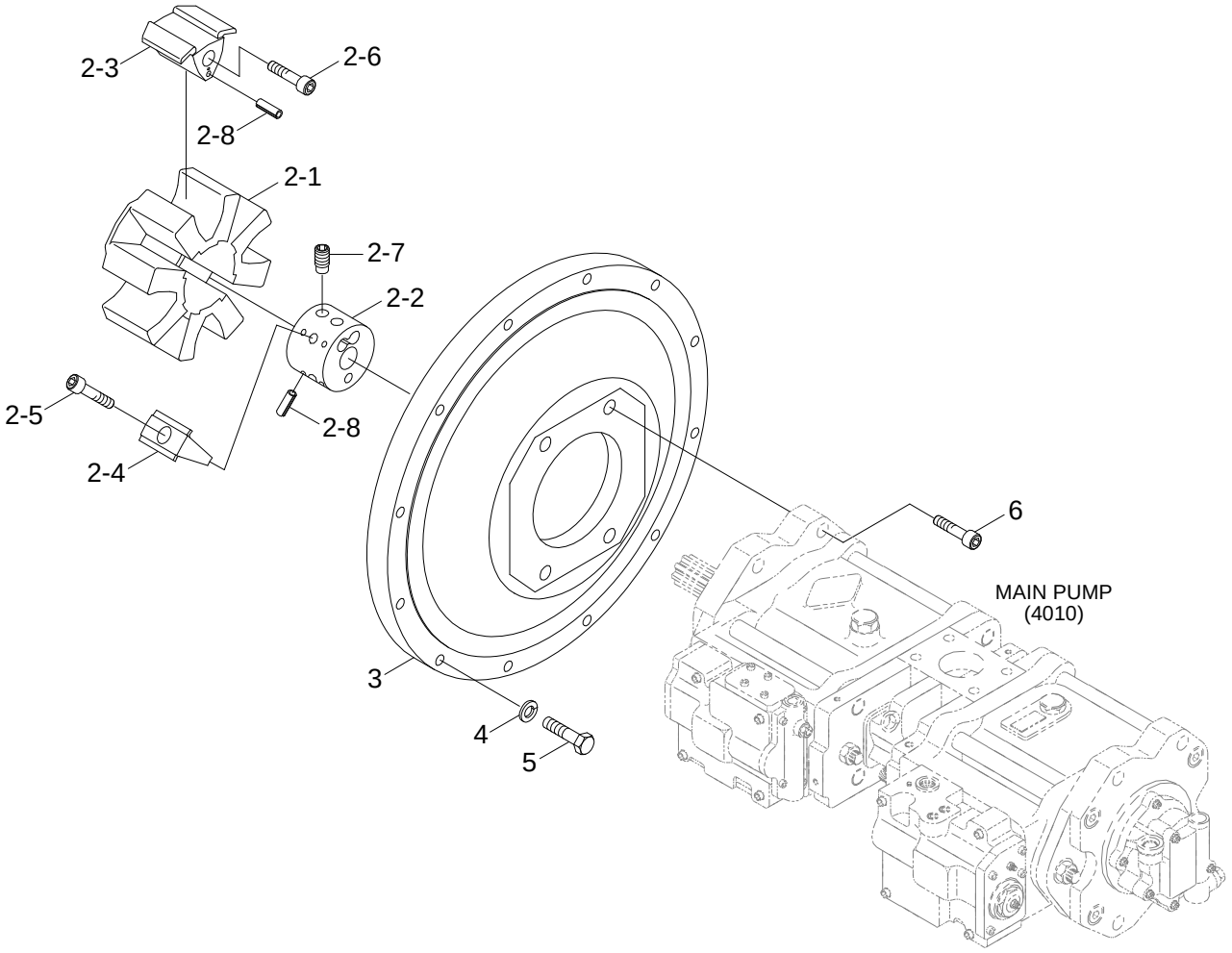

Item	Part_No	IS	Ord	T	Description	Qty	Serial_No	ITC	Remark
2	11EM-12040				COUPLING ASSY	1			
2-1	11E1-1508	20			.HUB-SPLINE	1			
2-2	13E6-16040				.ELEMENT	1			
2-3	13E6-16050				.INSERT-A	4			
2-4	13E6-16060				.INSERT-R	4			
2-5	S107-160402				.BOLT-SOCKET	4			
2-6	S107-160552				.BOLT-SOCKET	4			
2-7	11E1-1511	10			.BOLT-CLAMP	2			
2-8	S472-500102				.PIN-SPRING	12			
3	11Q5-13000				HOUSING	1			
4	S403-10200B				WASHER-PLAIN	12			
5	S017-100556				BOLT-HEX	12			
6	S109-16045D				BOLT-SOCKET	4			

HYDRAULIC TANK

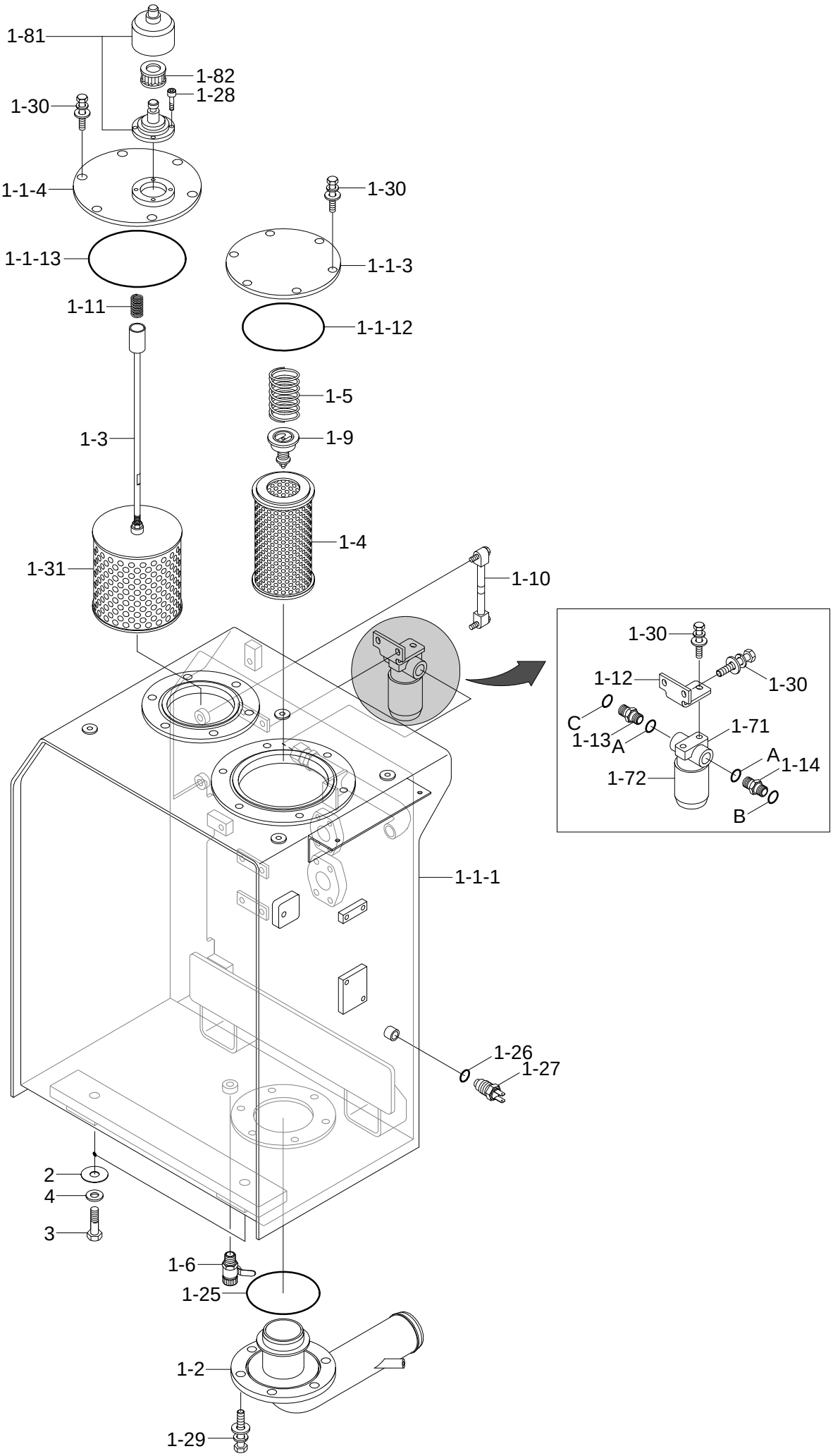

Item	Part_No	IS	Ord	T	Description	Qty	Serial_No	ITC	Remark
1	@				FUEL & HYD TANK ASSY	1			NOT
1-1	@				.FUEL & HYD TANK SUB	1			NOT
1-1-1	31Q5-01412				..HYD TANK WA	1			
1-1-3	31Q4-01110				..COVER-RETURN	1			
1-1-4	31Q4-01210				..COVER-SUCTION	1			
1-1-12	S632-170001				..O-RING	1			
1-1-13	S632-165001				..O-RING	1			
1-2	31Q5-01081				.PIPE ASSY-SUCTION	1			
1-3	31Q4-01090				.STRAINER ASSY	1			
1-31	31E3-4529				..ELEMENT-SUCTION	1			
1-4	31N4-01460				.ELEMENT-RETURN FILTER	1			
1-5	E131-0220				.SPRING	1			
1-6	31Q6-01360				.VALVE-DRAIN	1			
1-7	31N8-01350				.FILTER-DRAIN	1			
1-71	31N8-01370				..HEAD-DRAIN FILTER	1			
1-72	31N8-01360				..CARTRIDGE-SPIN FILTER	1			
1-8	31EE-02100				.AIR BREATHER	1			
1-81	PM102-0001R				..BODY	1			
1-82	31EE-02110				..ELEMENT	1			
1-9	E131-0256				.VALVE-BYPASS	1			
1-10	E131-0473				.GAUGE-LEVEL	1			
1-11	E131-0594				.SPRING	1			
1-12	31Q6-01160				.BRACKET	1			
1-13	X500-110019				.CONNECTOR-ORFS	1			
1-14	X500-110005				.CONNECTOR-ORFS	1			

Item	Part_No	IS	Ord	T	Description	Qty	Serial_No	ITC	Remark
1-25	S632-150001				.O-RING	1			
1-26	21EA-50260				.PACKING-TEMP SW	1			
1-27	21EN-40100				.SENDER-TEMP	1			
1-28	S109-060156				.BOLT-SOCKET	4			
1-29	S037-103026				.BOLT-W/WASHER	6			
1-30	S037-102526				.BOLT-W/WASHER	4			
A	S631-029004				.O-RING	2			
B	S621-021001				.O-RING	1			
C	S621-018001				.O-RING	1			
2	31N8-01300				SHIM(1.0T)	2			
3	S017-20050D				BOLT-HEX	2			
4	91E6-60200-DA				WASHER-HARDENED	2			

UPPER HYD PIPING(BASE)

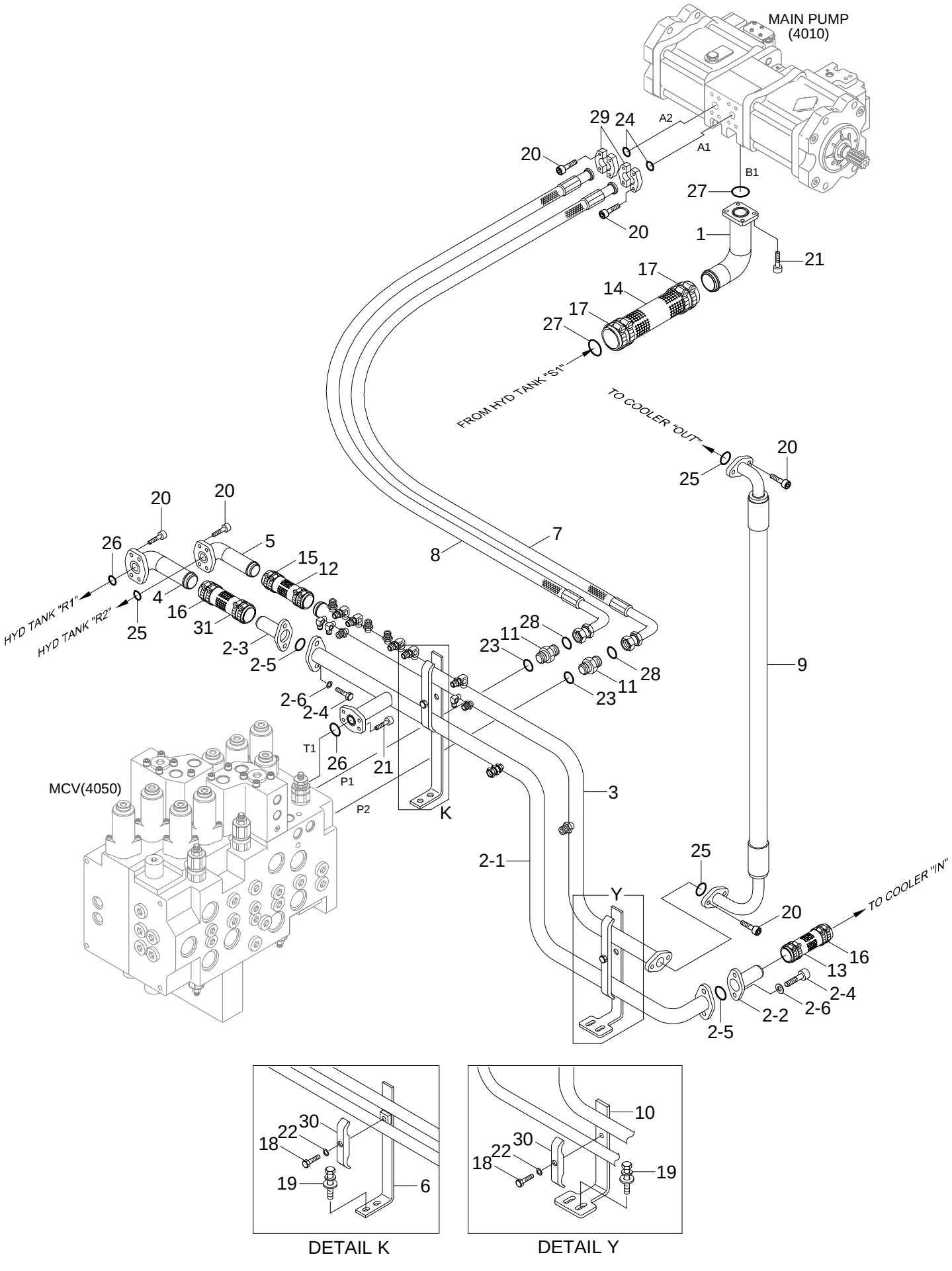

Item	Part_No	IS	Ord	T	Description	Qty	Serial_No	ITC	Remark
1	31Q5-11100				PIPE ASSY-SUCTION	1			
2	31Q5-11110				PIPE SUB ASSY-RETURN	1			
2-1	31Q5-11141				.PIPE ASSY	1			
2-2	31ER-11111				.VALVE-CHECK	1			1.5K
2-3	31ER-11121				.VALVE-CHECK	1			3.0K
2-4	S109-120456				.BOLT-SOCKET	4			
2-5	Y172-003004				.O-RING	2			
2-6	S403-122006				.WASHER-PLAIN	4			
3	31Q5-11121				PIPE ASSY	1			
4	31Q5-11160				PIPE ASSY	1			
5	31Q4-12130				PIPE ASSY	1			
6	31Q4-11180				BRACKET-RETURN	1			
7	P993-128420				HOSE ASSY-ORFS,FLG 0X90	1			
8	P993-128419				HOSE ASSY-ORFS,FLG 0X90	1			
9	31Q5-11131				HOSE ASSY-RETURN	1			
10	31Q4-11190				BRACKET-PIPE	1			
11	X500-110004				CONNECTOR-ORFS	2			
12	P760-063019				HOSE-RUBBER	1			
13	31Q4-13270				HOSE RUBBER	1			
14	P760-101028				HOSE-RUBBER	1			
15	S572-570006				CLAMP-HOSE,WIRE TYPE	4			
16	S572-640006				CLAMP-HOSE,WIRE TYPE	8			
17	31N6-11190				CLAMP-HOSE, WIRE TYPE	4			
18	S017-120706				BOLT-HEX	2			
19	S037-103026				BOLT-W/WASHER	2			

Item	Part_No	IS	Ord	T	Description	Qty	Serial_No	ITC	Remark
20	S109-100306				BOLT-SOCKET	20			
21	S109-120306				BOLT-SOCKET	8			
22	S403-12200B				WASHER-PLAIN	2			
23	S631-024004				O-RING	2			
24	Y171-019004				O-RING	2			
25	Y171-027004				O-RING	2			
26	Y172-003004				O-RING	2			
27	S631-071001				O-RING	1			
28	S621-018001				O-RING	2			
29	P174-120102				FLANGE-HYD,SPLIT	4			
30	31N4-14240				CLAMP-PIPE	2			
31	P760-073019				HOSE-RUBBER	1			

UPPER HYD PIPING(ATTACH)

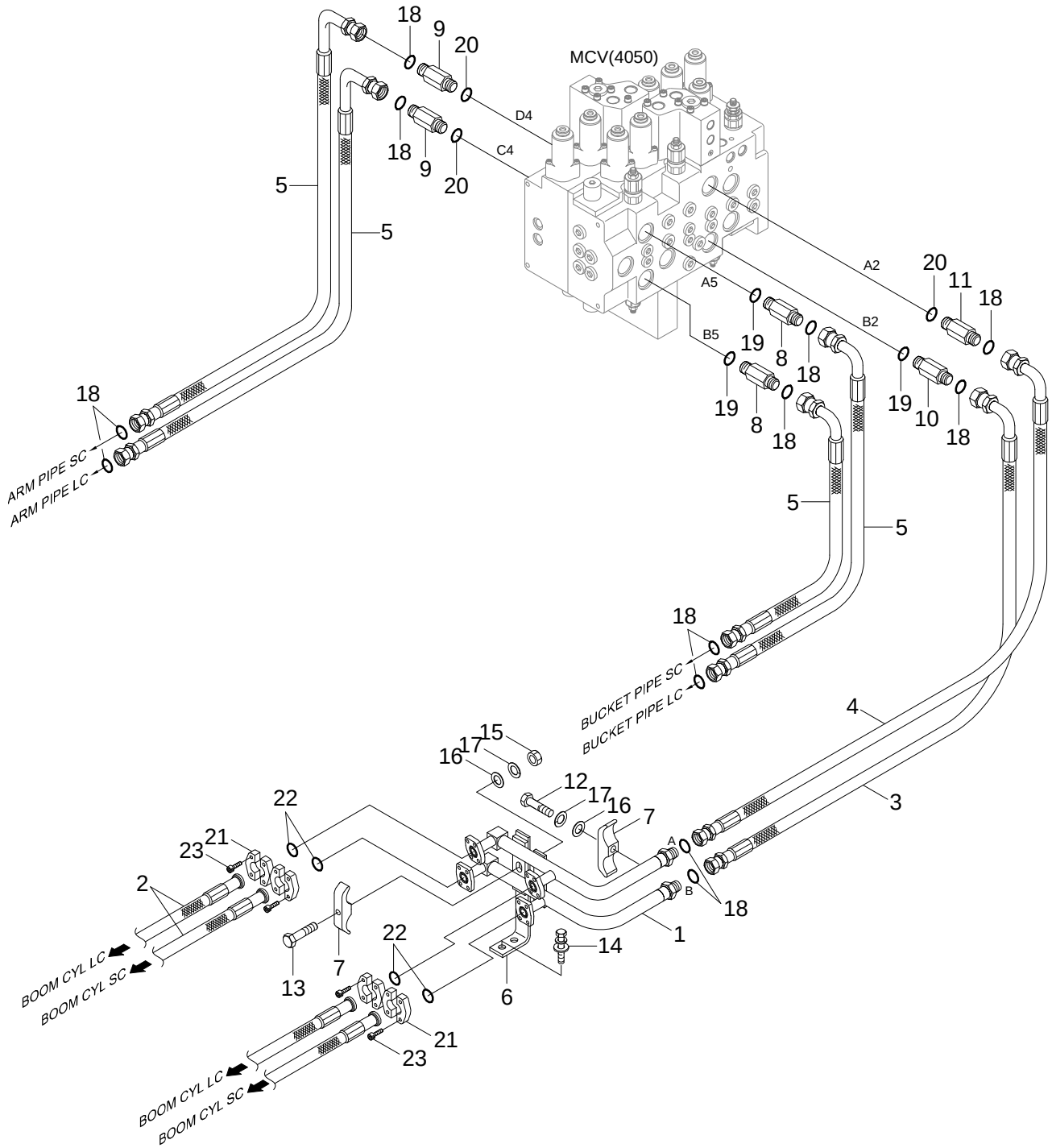

Item	Part_No	IS	Ord	T	Description	Qty	Serial_No	ITC	Remark
1	31Q5-11150				PIPE ASSY	1			
2	31Q5-10310				HOSE ASSY	4			
3	P930-128018				HOSE ASSY-ORFS 0X90	1			
4	P930-128020				HOSE ASSY-ORFS 0X90	1			
5	31Q5-10320				HOSE ASSY	4			
6	31Q4-11170				BRACKET	1			
7	31N4-12270				CLAMP-PIPE	2			
8	X511-112546				CONNECTOR-LONG,ORFS	2			
9	X511-116546				CONNECTOR-LONG,ORFS	2			
10	X511-112544				CONNECTOR-LONG,ORFS	1			
11	X511-116544				CONNECTOR-LONG,ORFS	1			
12	S017-100602				BOLT-HEX	1			
13	S017-100802				BOLT-HEX	1			
14	S037-103026				BOLT-W/WASHER	2			
15	S207-101002				NUT-HEX	1			
16	S403-102002				WASHER-PLAIN	3			
17	S411-100002				WASHER-SPRING	3			
18	S621-018001				O-RING	12			
19	S631-024004				O-RING	3			
20	S631-029004				O-RING	3			
21	P173-120102				FLANGE-HYD,SPLIT	8			
22	Y171-019004				O-RING	4			
23	S109-100306				BOLT-SOCKET	16			

[Item List] - Print Date : 2020.08.21 12:08

UPPER HYD PIPING(TRAVEL)

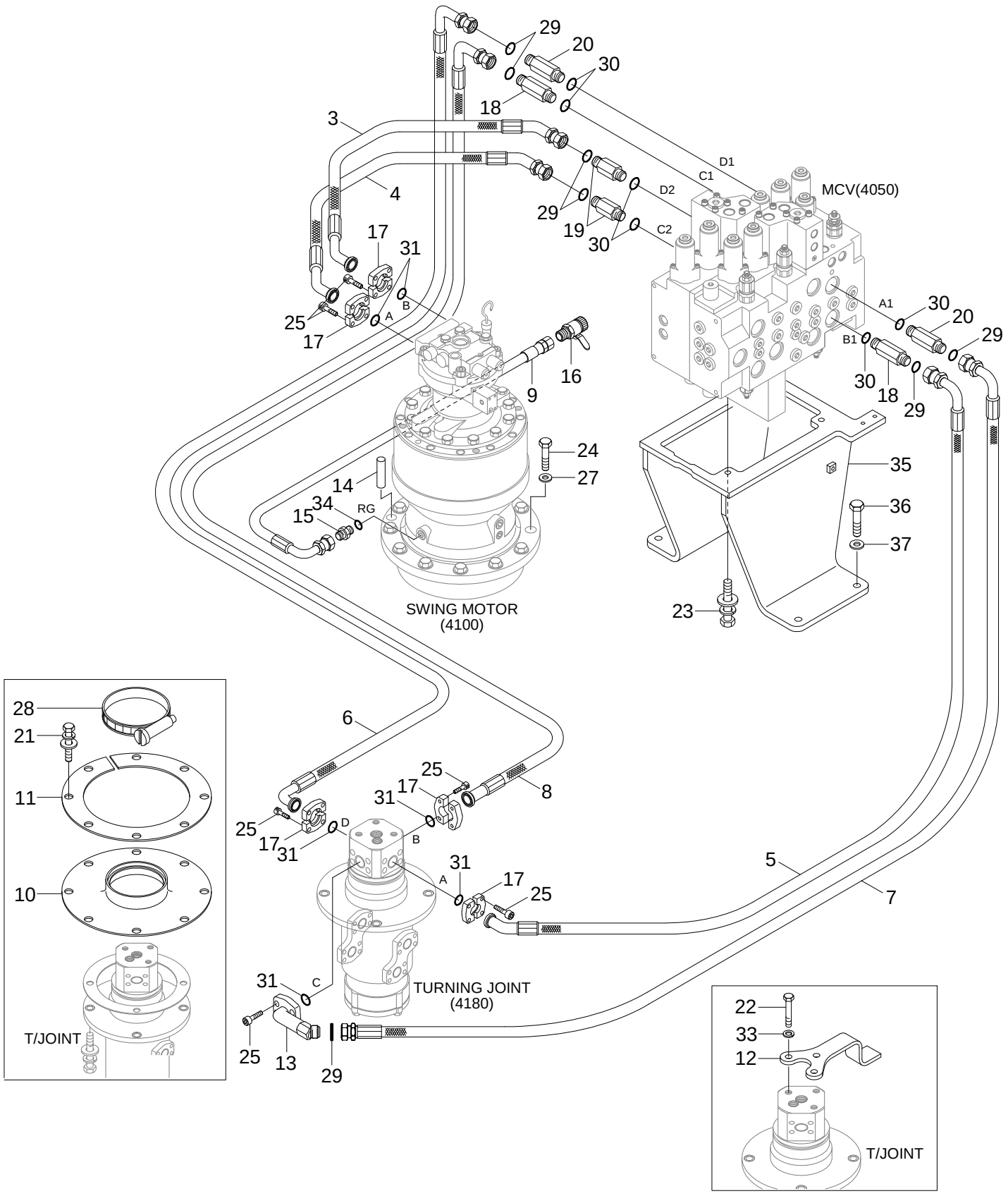

Item	Part_No	IS	Ord	T	Description	Qty	Serial_No	ITC	Remark
3	31N5-10430				HOSE ASSY	1			
4	31N5-10440				HOSE ASSY	1			
5	31Q5-10210				HOSE ASSY	1			
6	31Q5-10220				HOSE ASSY	1			
7	P930-128025				HOSE ASSY-ORFS 0X90	1			
8	P993-128326				HOSE ASSY-ORFS,FLG 0X90	1			
9	31Q5-10250				HOSE ASSY-DRAIN	1			
10	31N1-40941				RUBBER-T/JOINT	1			
11	31N1-40951				COVER-T/JOINT	2			
12	31Q4-11160				BRACKET-T/JOINT	1			
13	31Q5-10240				PIPE ASSY	1			
14	31E4-3039				PIN-DOWEL	1			
15	X500-430003				CONNECTOR-ORFS	1			
16	31Q9-11600				VALVE-DRAIN	1			
17	P173-120102				FLANGE-HYD,SPLIT	10			
18	X511-112542				CONNECTOR-LONG,ORFS	2			
19	X511-112544				CONNECTOR-LONG,ORFS	2			
20	X511-112546				CONNECTOR-LONG,ORFS	2			
21	S037-102022				BOLT-W/WASHER	8			
22	S017-140302				BOLT-HEX	3			
23	S037-123522				BOLT-W/WASHER	3			
24	S017-200752				BOLT-HEX	11			
25	S109-100306				BOLT-SOCKET	24			
27	S441-200002				WASHER-HARDENED	11			
28	S520-130000				CLAMP-HOSE	1			

Item	Part_No	IS	Ord	T	Description	Qty	Serial_No	ITC	Remark
29	S621-018001				O-RING	7			
30	S631-024004				O-RING	6			
31	Y171-019004				O-RING	6			
33	S411-140002				WASHER-SPRING	3			
34	S621-012001				O-RING	2			
35	31Q4-12250				SUPPORT WA-MCV	1			
36	S017-16040D				BOLT-HEX	4			
37	S441-160006				WASHER-HARDENED	4			

PILOT HYD PIPING(CONTROL 1)

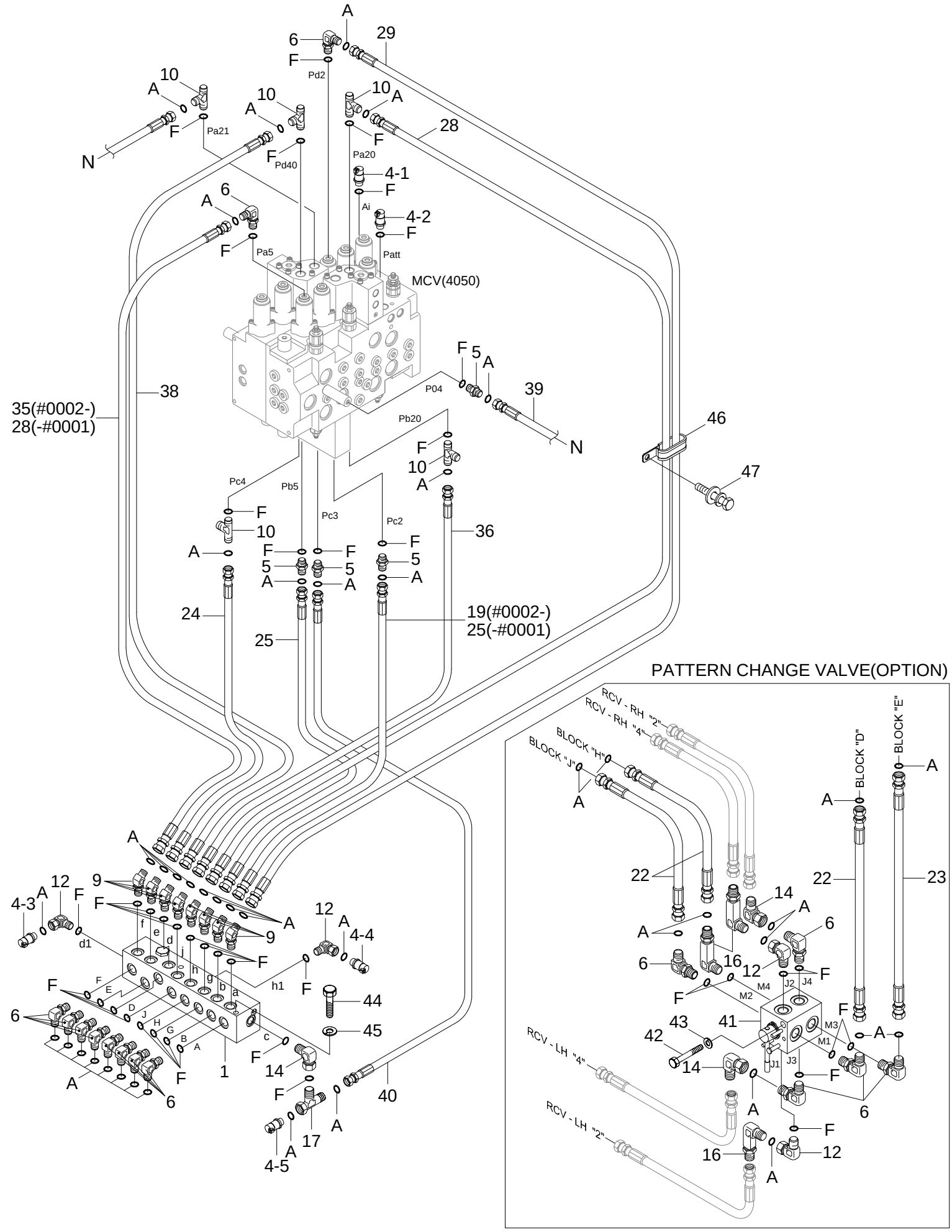

Item	Part_No	IS	Ord	T	Description	Qty	Serial_No	ITC	Remark
1	31Q6-20171				BLOCK-TERMINAL	1			
					BLOCK-TERMINAL	1			
4-2	31Q8-40520				PRESSURE SENSOR	1			WORKING
4-1	31Q8-40520				SENSOR-PRESSURE	1			TRAVELING
4-4	31Q8-40520				PRESSURE SENSOR	1			BOOM UP
4-2	31Q8-40520				SENSOR-PRESSURE	1			WORKING
4-3	31Q8-40520				SENSOR-PRESSURE	1			ARM/ BUCKET IN
6	X520-110001				ELBOW-90,ORFS	11			STD
4-4	31Q8-40520				SENSOR-PRESSURE	1			BOOM UP
9	X530-110001				ELBOW-45,ORFS	8			
4-5	31Q8-40520				SENSOR-PRESSURE	1			SWING
5	X500-110001				CONNECTOR-ORFS	4			
12	31E5-11110				ELBOW-90,ORFS	4			OPT, PATT VALVE
6	X520-110001				ELBOW-90,ORFS	10			STD
14	X850-515100				ELBOW-90,SWIVEL,ORFS	3			OPT, PATT VALVE
6	X520-110001				ELBOW-90,ORFS	15			OPT, PATT VALVE
9	X530-110001				ELBOW-45,ORFS	8			
10	X820-045151				TEE-R/TYPE,ORFS	5			
12	31E5-11110				ADAPTER	2			STD
					ADAPTER	4			OPT, PATT VALVE
14	X850-515100				ELBOW-90,SWIVEL,ORFS	1			STD
					ELBOW-90,SWIVEL,ORFS	3			OPT, PATT VALVE
16	31N6-25110				ELBOW-90,ORFS,LONG	3			OPT, PATT VALVE
17	31NB-20130				TEE-RUN TYPE/TEST	1			
19	X400-042023				HOSE ASSY-SYNFLEX,ORFS	1	#0002 -	B	

Item	Part_No	IS	Ord	T	Description	Qty	Serial_No	ITC	Remark
22	X400-042010				HOSE ASSY-SYNFLEX,ORFS	3			OPT, PATT VALVE
23	X400-042012				HOSE ASSY-SYNFLEX,ORFS	1			OPT, PATT VALVE
24	X400-042021				HOSE ASSY-SYNFLEX,ORFS	1			
25	X400-042025				HOSE ASSY-SYNFLEX,ORFS	2	- #0001		
	X400-042026				HOSE ASSY-SYNFLEX,ORFS	1	#0002 -	B	
28	X400-042029				HOSE ASSY-SYNFLEX,ORFS	2	- #0001		
					HOSE ASSY-SYNFLEX,ORFS	1	#0002 -	A	
29	X400-042032				HOSE ASSY-SYNFLEX,ORFS	1	- #0001		
	X400-042030				HOSE ASSY-SYNFLEX,ORFS	1	#0002 -	B	
35	X400-042028				HOSE ASSY-SYNFLEX,ORFS	1	#0002 -	B	
36	X420-042021				HOSE ASSY-ORFS 0X90	1			
38	X420-042031				HOSE ASSY-ORFS 0X90	1	- #0001		
	X420-042030				HOSE ASSY-ORFS 0X90	1	#0002 -	B	
39	X420-042024				HOSE ASSY-ORFS 0X90	1	#0002 -		
40	X420-042029				HOSE ASSY-ORFS 0X90	1			
41	31N6-22050				SELECTOR VLV-MULTIMODE	1			OPT, PATT VALVE
42	S015-080806				BOLT-HEX	2			OPT, PATT VALVE
43	S411-080006				WASHER-SPRING	2			OPT, PATT VALVE
44	S109-080756				BOLT-SOCKET	2			
45	S411-100006				WASHER-SPRING	2			
46	31L7-10270				CLAMP-TUBE	1			
47	S038-102026				BOLT-W/WASHER	1			
A	S621-011001				O-RING	41			
F	S631-011004				O-RING	41			

PILOT HYD PIPING(CONTROL 2)

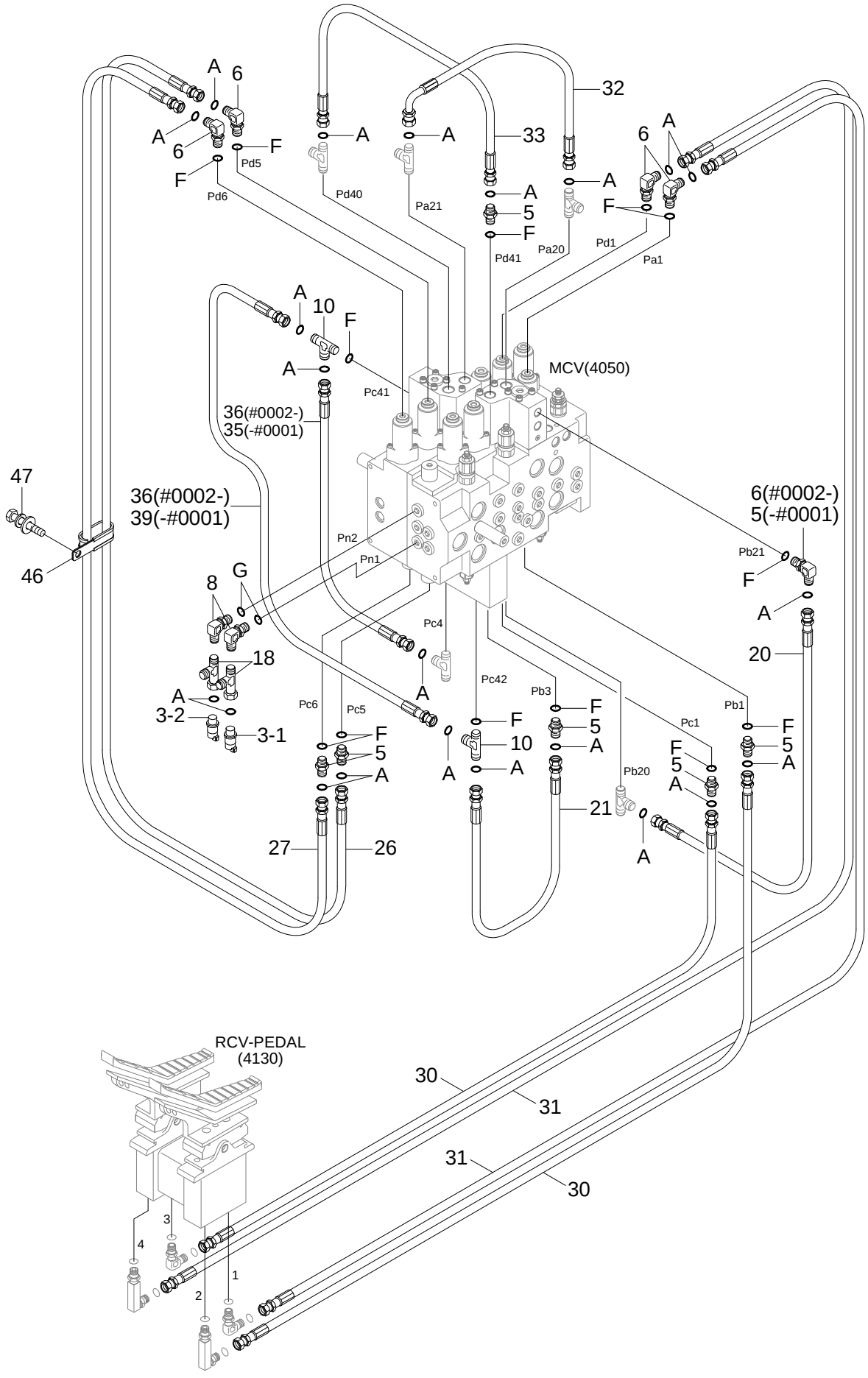

Item	Part_No	IS	Ord	T	Description	Qty	Serial_No	ITC	Remark
3-1	31Q8-40510				SENSOR-PRESSURE	1			P1 PRESSURE
3-2	31Q8-40510				PRESSURE SENSOR	1			P2 PRESSURE
					SENSOR-PRESSURE	1			P2 PRESSURE
5	X500-110001				CONNECTOR-ORFS	7	- #0001		
					CONNECTOR-ORFS	6	#0002 -	A	
10	X820-045151				TEE-R/TYPE,ORFS	2			
6	X520-110001				ELBOW-90,ORFS	4	- #0001		
					ELBOW-90,ORFS	5	#0002 -	A	
8	X520-110012				ELBOW-90,ORFS	2			
10	X820-045151				TEE-R/TYPE,ORFS	2			
18	31N6-66080				TEE-TEST	2			
20	X420-042022				HOSE ASSY-ORFS 0X90	1	- #0001		
	X400-042022				HOSE ASSY-SYNFLEX,ORFS	1	#0002 -	D	
21	X420-042007				HOSE ASSY-ORFS 0X90	1			
26	X400-042020				HOSE ASSY-SYNFLEX,ORFS	1			
27	X400-042020				HOSE ASSY-SYNFLEX,ORFS	1			
30	X400-042058				HOSE ASSY-SYNFLEX,ORFS	2			
31	X400-042067				HOSE ASSY-SYNFLEX,ORFS	2			
32	X420-042009				HOSE ASSY-ORFS 0X90	1			
33	X420-042012				HOSE ASSY-ORFS 0X90	1			
35	X420-042022				HOSE ASSY-ORFS 0X90	1	- #0001	-	
36	X420-042021				HOSE ASSY-ORFS 0X90	2	#0002 -	B	
39	X420-042024				HOSE ASSY-ORFS 0X90	1	- #0001	-	
46	31L7-10270				CLAMP-TUBE	1			
47	S038-102026				BOLT-W/WASHER	1			

Item	Part_No	IS	Ord	T	Description	Qty	Serial_No	ITC	Remark
A	S621-011001				O-RING	20			
F	S631-011004				O-RING	12			
G	S631-014004				O-RING	1			

PILOT HYD PIPING(BOTTOM 1)

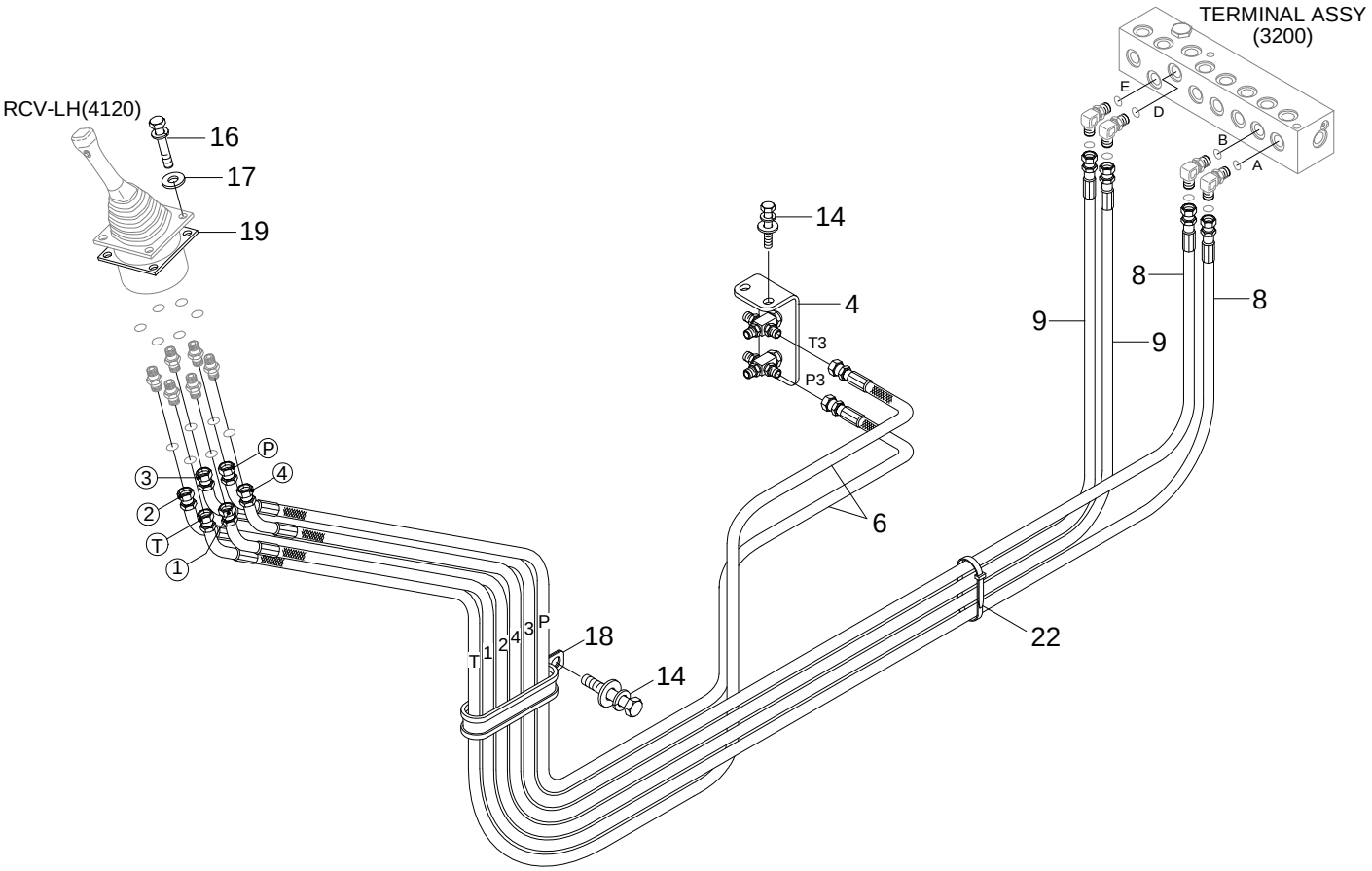

DOZER PILOT PIPING(OPTION)

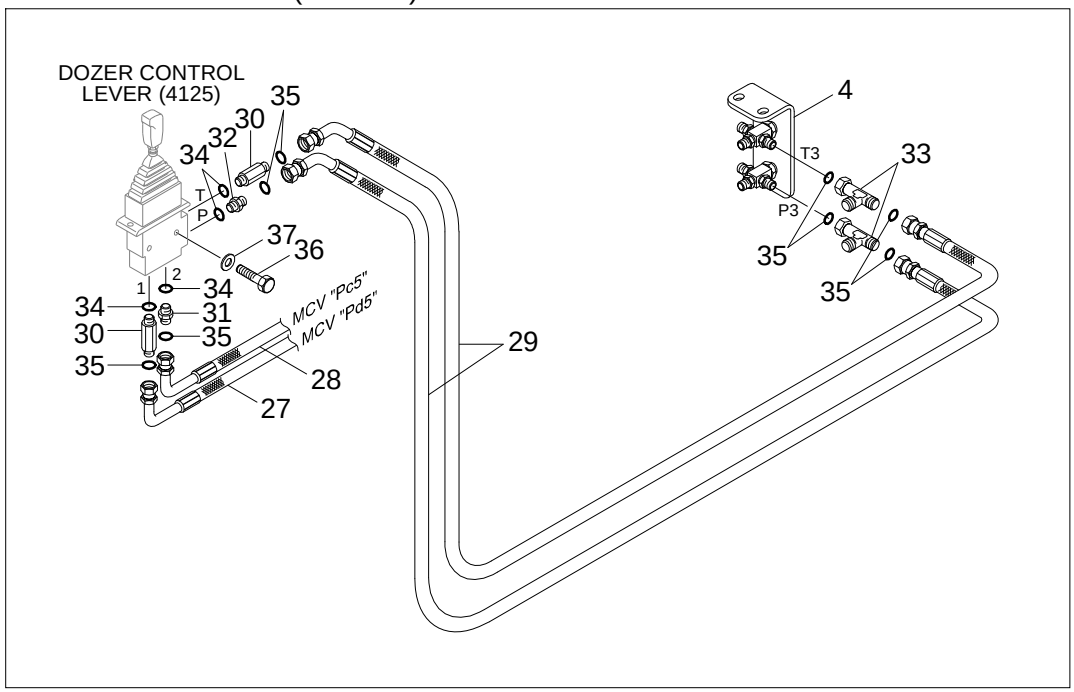

Item	Part_No	IS	Ord	T	Description	Qty	Serial_No	ITC	Remark
4	31N6-25100				CROSS ASSY	1			
6	X410-042023				HOSE ASSY-ORFS 0X45	2			
8	X410-042036				HOSE ASSY-ORFS 0X45	2			
9	X410-042037				HOSE ASSY-ORFS 0X45	2			
14	S037-102046				BOLT-W/WASHER	3			
16	S035-063046				BOLT-W/WASHER	4			
17	S403-062006				WASHER-PLAIN	4			
18	31E7-0312				CLAMP-HOSE	1			
19	31M6-51061				SHIM(3.2T)	1			
22	S551-050203				CLAMP-BAND	10			
27	X420-042067				HOSE ASSY-ORFS 0X90	1			
28	X420-042058				HOSE ASSY-ORFS 0X90	1			
29	X410-042018				HOSE ASSY-ORFS 0X45	2			
30	X511-104513				CONNECTOR-LONG,ORFS	2			
31	X500-110001				CONNECTOR-ORFS	1			
32	31N6-25060				FILTER-LAST GUARD	1			
33	X840-515151				TEE-R/TYPE,SWIVEL,ORFS	2			
34	S631-011004				O-RING	4			
35	S621-011001				O-RING	8			
36	S015-080352				BOLT-HEX	2			
37	S403-082002				WASHER-PLAIN	2			

PILOT HYD PIPING(BOTTOM 2)

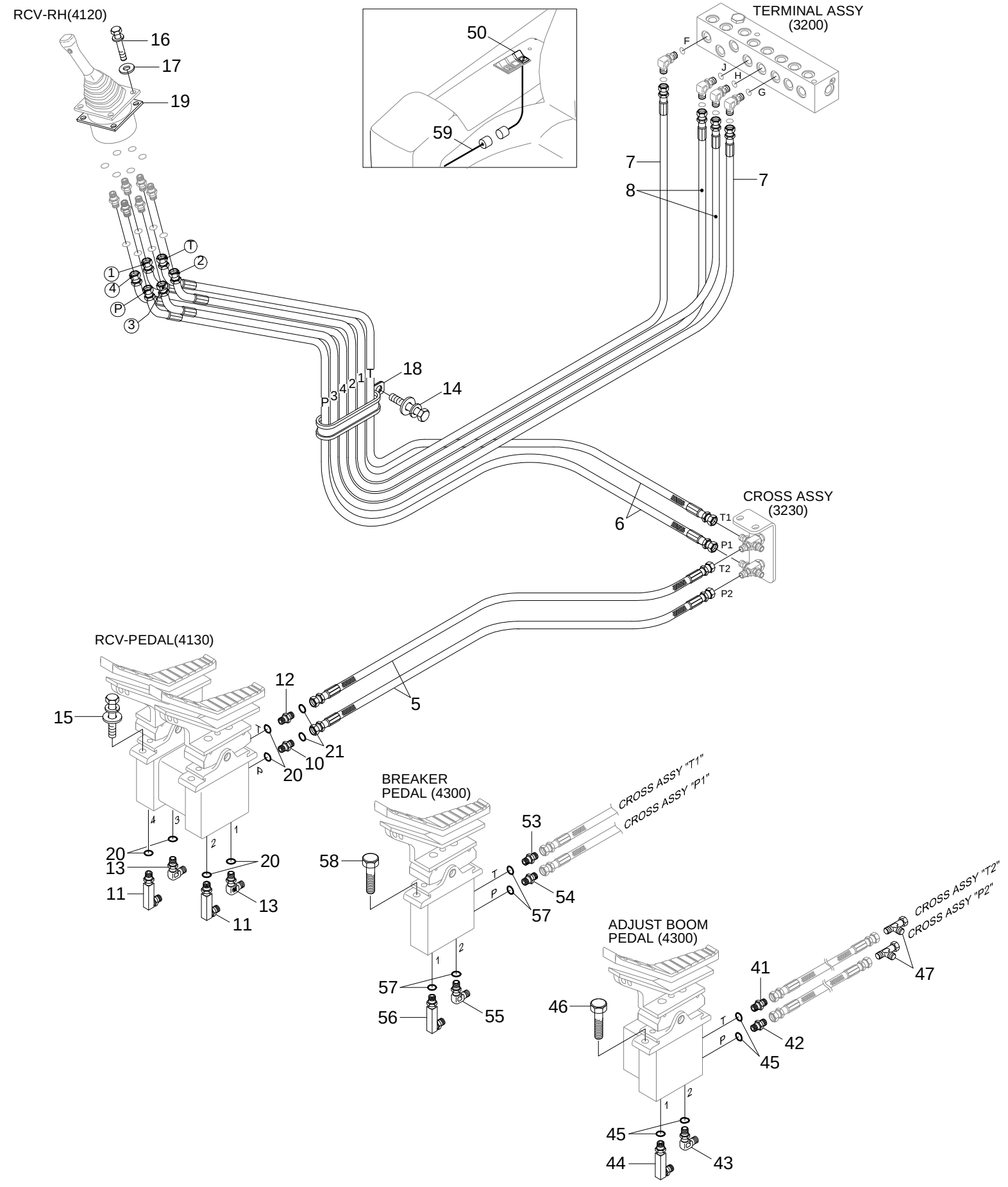

Item	Part_No	IS	Ord	T	Description	Qty	Serial_No	ITC	Remark
5	X400-042018				HOSE ASSY-SYNFLEX,ORFS	2			
6	X410-042023				HOSE ASSY-ORFS 0X45	2			
7	X410-042034				HOSE ASSY-ORFS 0X45	2			
8	X410-042036				HOSE ASSY-ORFS 0X45	2			
10	31N6-25060				FILTER-LAST GUARD	1			
11	31N6-25110				ELBOW-90,ORFS,LONG	2			
12	X500-110001				CONNECTOR-ORFS	1			
13	X520-110001				ELBOW-90,ORFS	2			
14	S037-102046				BOLT-W/WASHER	6			
15	S037-102526				BOLT-W/WASHER	4			
16	S035-063046				BOLT-W/WASHER	4			
17	S403-062006				WASHER-PLAIN	4			
18	31E7-0312				CLAMP-HOSE	1			
19	31M6-51061				SHIM(3.2T)	1			
20	S631-011004				O-RING	6			
21	S621-011001				O-RING	20			
41	X500-110001				CONNECTOR-ORFS	1			ADJUST BOOM
42	31N6-25060				FILTER-LAST GUARD	1			ADJUST BOOM
43	X520-110001				ELBOW-90,ORFS	1			ADJUST BOOM
44	31N6-25110				ELBOW-90,ORFS,LONG	1			ADJUST BOOM
45	S631-011004				O-RING	4			ADJUST BOOM
46	S037-102522				BOLT-W/WASHER	2			ADJUST BOOM
47	X840-515151				TEE-R/TYPE,SWIVEL,ORFS	2			ADJUST BOOM
50	21E6-30540				SWITCH-BREAKER	1			BREAKER
53	X500-110001				CONNECTOR-ORFS	1			BREAKER

Item	Part_No	IS	Ord	T	Description	Qty	Serial_No	ITC	Remark
54	31N6-25060				FILTER-LAST GUARD	1			BREAKER
55	X520-110001				ELBOW-90,ORFS	1			BREAKER
56	31N6-25110				ELBOW-90,ORFS,LONG	1			BREAKER
57	S631-011004				O-RING	4			BREAKER
58	S037-102522				BOLT-W/WASHER	2			BREAKER
59	21NB-00200				HARNESS-EXT	1			BREAKER

PILOT HYD PIPING(BASE 1)

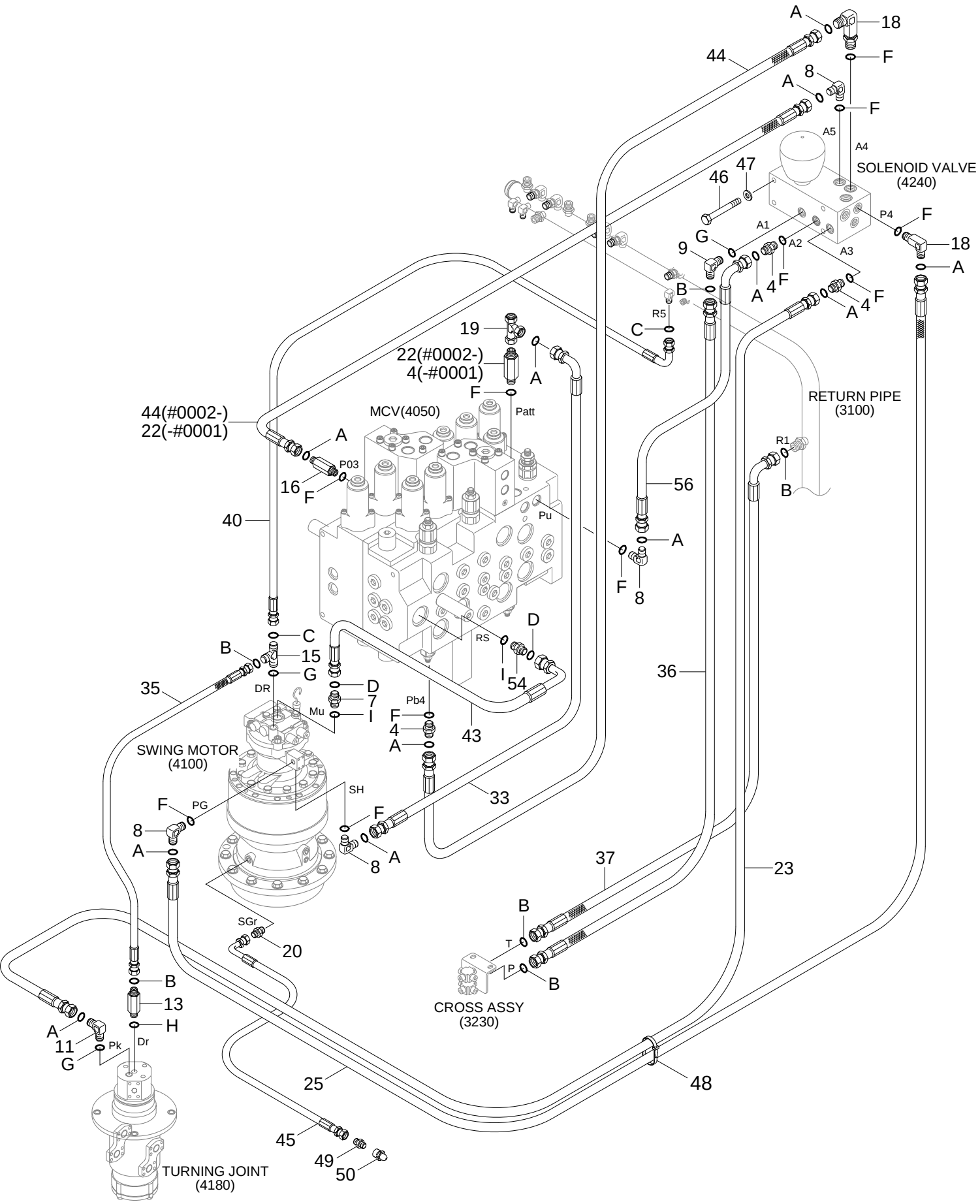

Item	Part_No	IS	Ord	T	Description	Qty	Serial_No	ITC	Remark
4	X500-110001				CONNECTOR-ORFS	4	- #0001		
					CONNECTOR-ORFS	3	#0002 -	A	
7	X500-110005				CONNECTOR-ORFS	1			
8	X520-110001				ELBOW-90,ORFS	4			
9	X520-110002				ELBOW-90,ORFS	2			
11	X520-110012				ELBOW-90,ORFS	1			
13	X511-108533				CONNECTOR-ORFS,LONG	1			
15	X820-085353				TEE-R/TYPE,ORFS	1			
16	X520-110001				ELBOW-90,ORFS	1			
18	31N6-25110				ELBOW-90,ORFS,LONG	2			
19	31N6-66080				TEE-TEST	1			
20	P010-430002				CONNECTOR	1			
22	X400-042042				HOSE ASSY-SYNFLEX,ORFS	1	- #0001		
	31N8-40100				CONNECTOR-LONG,ORFS	1	#0002 -	D	
23	X400-042052				HOSE ASSY-SYNFLEX,ORFS	1			
25	X400-042044				HOSE ASSY-SYNFLEX,ORFS	1			
33	X420-042021				HOSE ASSY-ORFS 0X90	1			
35	P910-082018				HOSE ASSY-ORFS 0X0	1	- #0003		
	P910-082016				HOSE ASSY-ORFS 0X0	1	#0004 -	B	
36	P910-062059				HOSE ASSY-ORFS 0X0	1			
37	P930-062029				HOSE ASSY-ORFS 0X90	1			
40	P930-082017				HOSE ASSY-ORFS 0X90	1			
43	P930-122014				HOSE ASSY-ORFS 0X90	1			
44	X400-042038				HOSE ASSY-SYNFLEX,ORFS	1	- #0001		
	X400-042037				HOSE ASSY-SYNFLEX,ORFS	2	#0002 -	B	

Item	Part_No	IS	Ord	T	Description	Qty	Serial_No	ITC	Remark
45	P860-042022				HOSE ASSY-SYN 0X90	1			
46	S017-101206				BOLT-HEX	2			
47	S411-100006				WASHER-SPRING	2			
48	S551-050203				CLAMP-BAND	20			
49	P010-430011				CONNECTOR	1			
50	S651-810002				NIPPLE-GREASE	1			
54	X500-110016				CONNECTOR-ORFS	1			
56	X420-042039				HOSE ASSY-ORFS 0X90	1			
A	S621-011001				O-RING	11			
B	S621-012001				O-RING	6			
C	S621-014001				O-RING	2			
D	S621-018001				O-RING	2			
F	S631-011004				O-RING	11			
G	S631-014004				O-RING	3			
H	S631-018004				O-RING	1			
I	S631-024004				O-RING	2			

PILOT HYD PIPING(BASE 2)

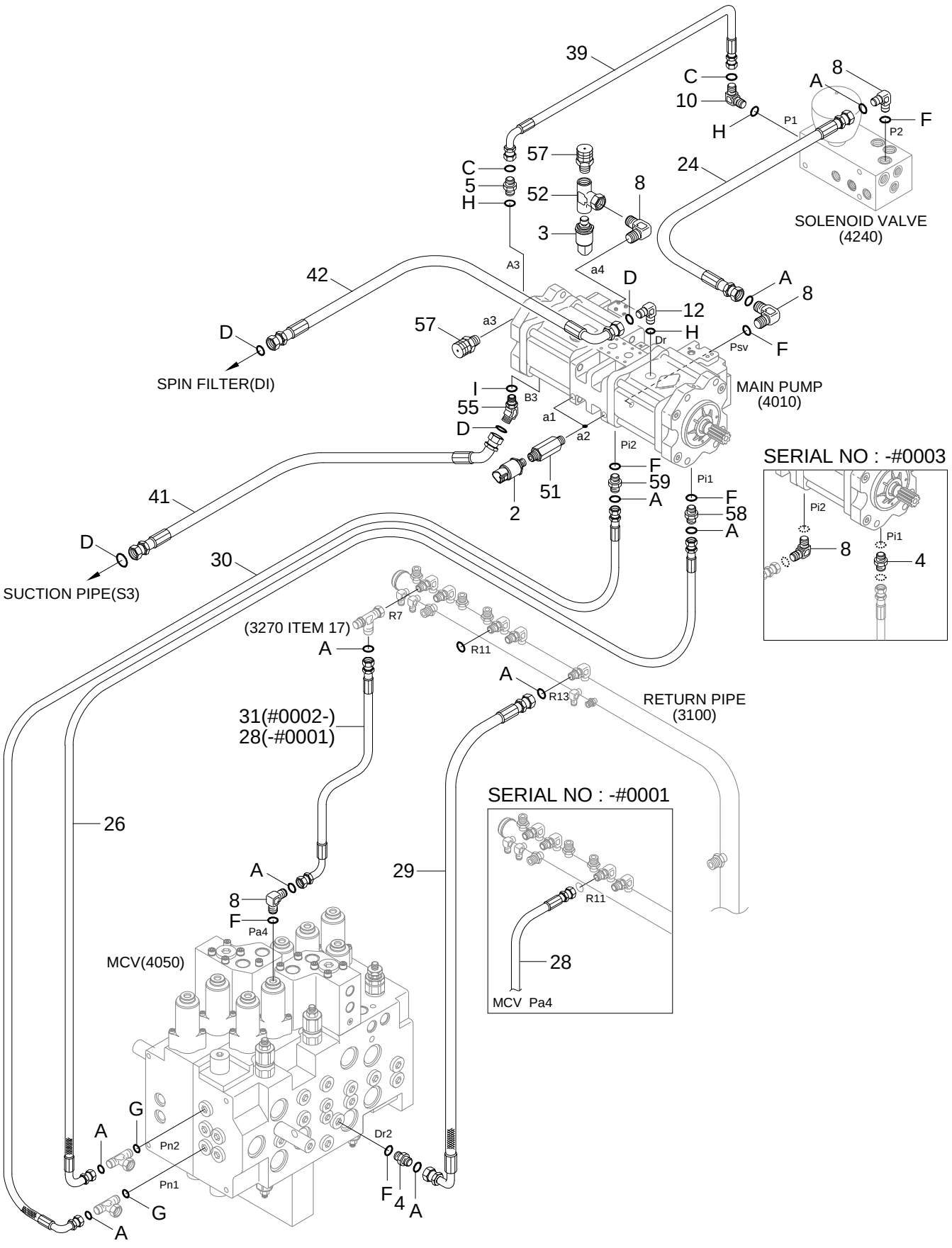

Item	Part_No	IS	Ord	T	Description	Qty	Serial_No	ITC	Remark
2	31Q8-40500				SENSOR-PRESSURE	2			P1,P2 PRESSURE
3	31Q8-40520				SENSOR-PRESSURE	1			EPPR PRESSURE
4	X500-110001				CONNECTOR-ORFS	2	- #0003		
					CONNECTOR-ORFS	1	#0004 -	A	
5	X500-110003				CONNECTOR-ORFS	1			
8	X520-110001				ELBOW-90,ORFS	4	- #0003		
					ELBOW-90,ORFS	3	#0004 -	A	
10	X520-110003				ELBOW-90,ORFS	1			
12	X520-110015				ELBOW-90,ORFS	1			
24	X400-042008				HOSE ASSY-SYNFLEX,ORFS	1			
26	X400-043045				HOSE ASSY-SYNFLEX,ORFS	1	- #0001		
	P930-043052				HOSE ASSY-ORFS 0X90	1	#0002 -	D	
28	X420-042008				HOSE ASSY-ORFS 0X90	1	- #0001	-	
29	X420-042009				HOSE ASSY-ORFS 0X90	2			
30	P930-043042				HOSE ASSY-ORFS 0X90	1	- #0001		
	P930-043043				HOSE ASSY-ORFS 0X90	1	#0002 -	B	
31	P930-043043				HOSE ASSY-ORFS 0X90	1	#0002 -	D	
39	P930-082009				HOSE ASSY-ORFS 0X90	1			
41	P920-162011				HOSE ASSY-ORFS 0X45	1			
57	31EK-11130				COUPLING-SCREW	1			
42	P930-122014				HOSE ASSY-ORFS 0X90	1			
51	31E9-22120				CONNECTOR	2			
52	31Q4-20170				TEE-TEST PORT	1			
55	X530-110017				ELBOW-45,ORFS	1			
57	31EK-11130				COUPLING-SCREW	2			

Item	Part_No	IS	Ord	T	Description	Qty	Serial_No	ITC	Remark
58	31EK-11130				COUPLING-SCREW	1	#0004 -	D	
59	31EK-11130				COUPLING-SCREW	1	#0004 -	B	
A	S621-011001				O-RING	12			
C	S621-014001				O-RING	2			
D	S621-018001				O-RING	4			
F	S631-011004				O-RING	1			
G	S631-014004				O-RING	2			
H	S631-018004				O-RING	3			
I	S631-024004				O-RING	1			

PILOT HYD PIPING(BASE 3)

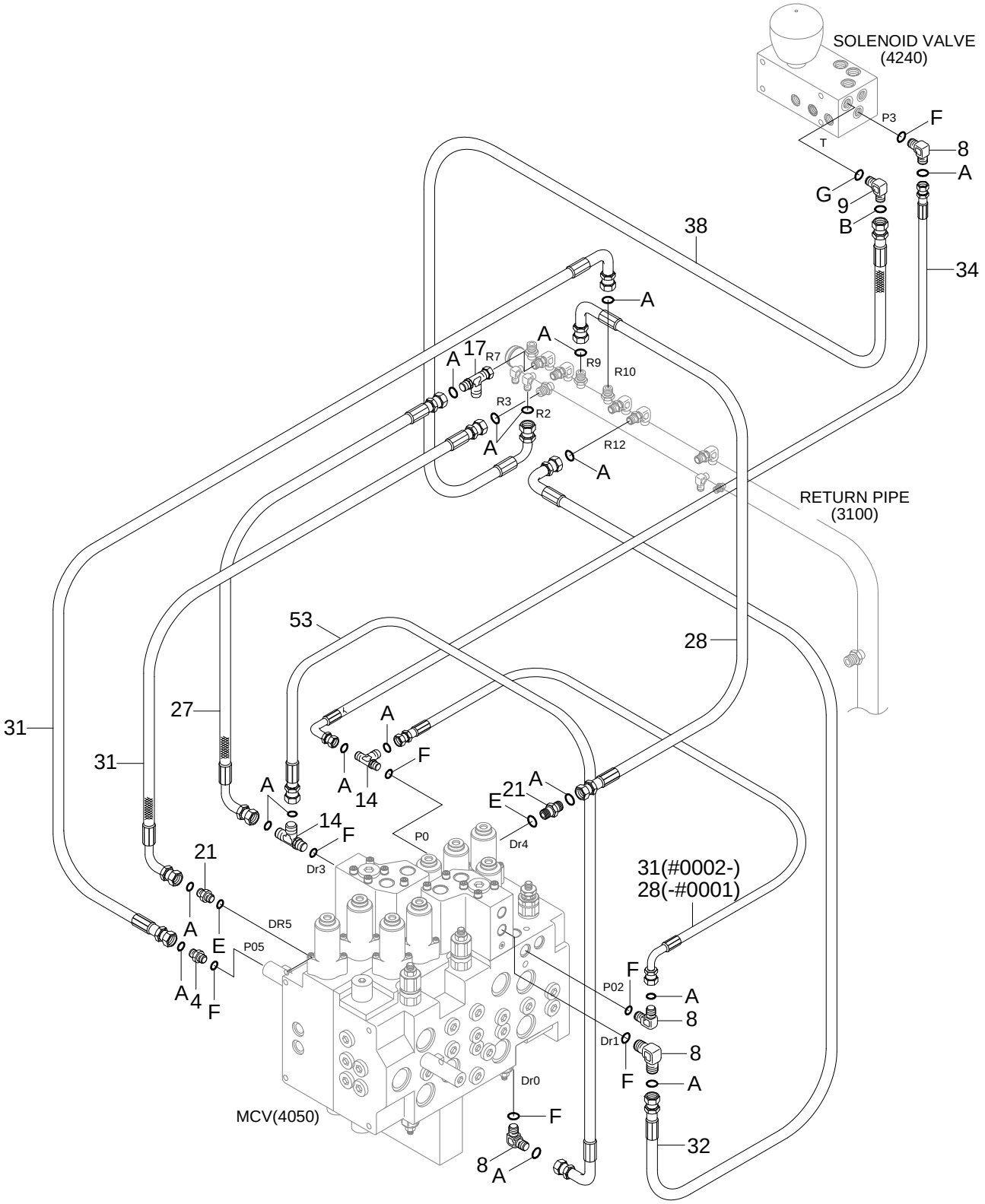

Item	Part_No	IS	Ord	T	Description	Qty	Serial_No	ITC	Remark
4	X500-110001				CONNECTOR-ORFS	1			
8	X520-110001				ELBOW-90,ORFS	4			
9	X520-110002				ELBOW-90,ORFS	2			
14	X820-045151				TEE-R/TYPE,ORFS	2			
17	X840-515151				TEE-R/TYPE,SWIVEL,ORFS	2			
21	31Q6-20210				CONNECTOR-ORFS	2			
27	X420-042007				HOSE ASSY-ORFS 0X90	1			
28	X420-042008				HOSE ASSY-ORFS 0X90	1	- #0001	-	
31	X420-042010				HOSE ASSY-ORFS 0X90	2	- #0001	-	
					HOSE ASSY-ORFS 0X90	3	#0002 -	A	
32	X420-042006				HOSE ASSY-ORFS 0X90	1			
34	X420-042037				HOSE ASSY-ORFS 0X90	1			
38	P930-062040				HOSE ASSY-ORFS 0X90	1			
53	X420-042018				HOSE ASSY-ORFS 0X90	1			
A	S621-011001				O-RING	15			
B	S621-012001				O-RING	1			
E	S631-008004				O-RING	2			
F	S631-011004				O-RING	6			
G	S631-014004				O-RING	1			

[Item List] - Print Date : 2020.08.21 12:08

UPPER HYD PIPING(R180LCD-9)

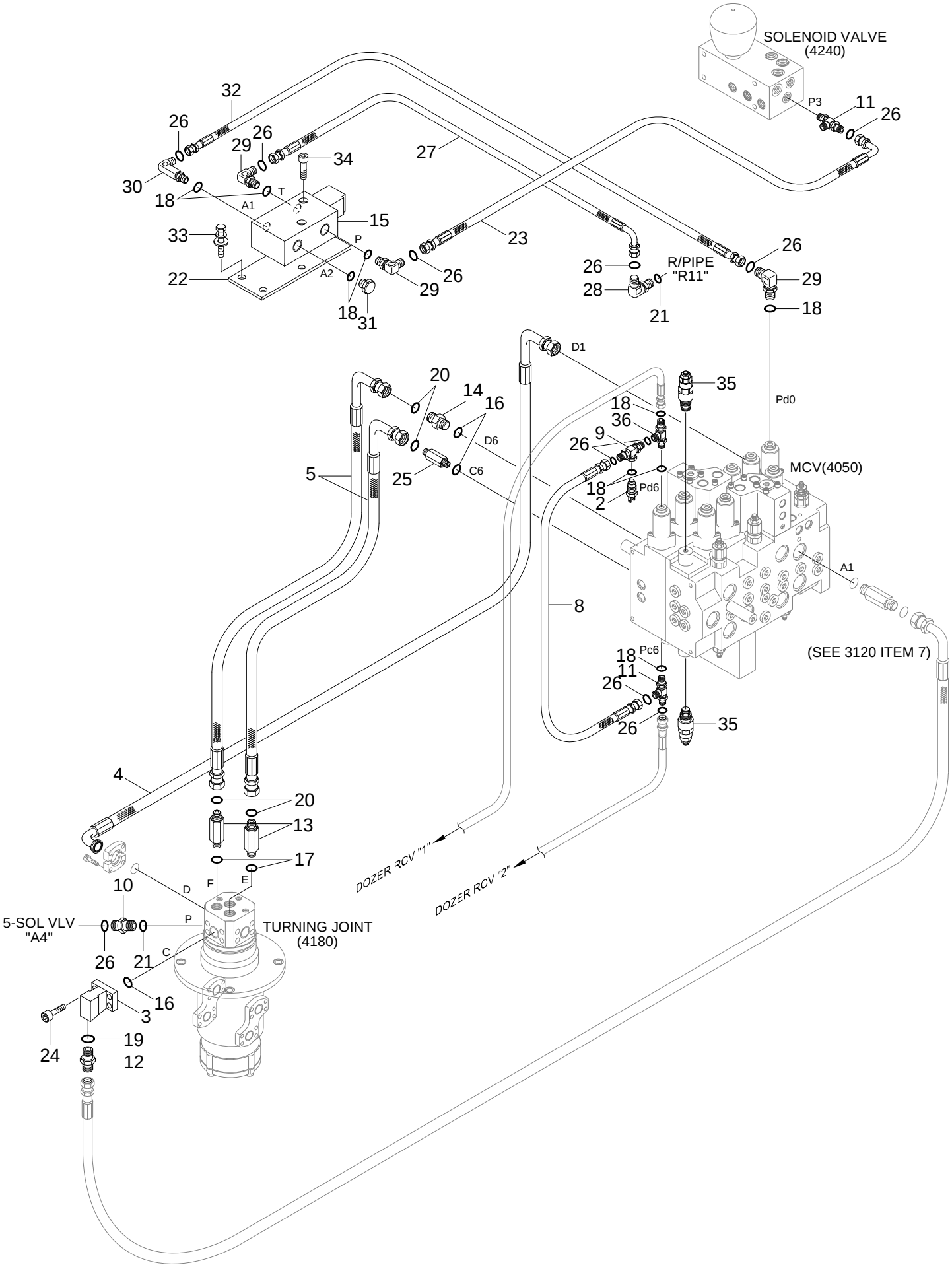

Item	Part_No	IS	Ord	T	Description	Qty	Serial_No	ITC	Remark
2	31E5-40520				SWITCH-PRESSURE	1			
3	31N4-12240				BLOCK	1			
4	31N4-12251				HOSE ASSY	1			
5	P930-089019				HOSE ASSY-ORFS 0X90	2	- #0001		
	P930-089020				HOSE ASSY-ORFS 0X90	2	#0002 -	B	
8	X420-042012				HOSE ASSY-ORFS 0X90	1			
9	31N5-10410				TEE-SHUTTLE	1			
10	X500-110013				CONNECTOR-ORFS	1			
11	X820-045151				TEE-R/TYPE,ORFS	2			
12	X500-110004				CONNECTOR-ORFS	1			
13	X511-108534				CONNECTOR-LONG,ORFS	2			
14	X500-110017				CONNECTOR-ORFS	1			
15	31N6-91230				SOLENOID VALVE	1			
16	S631-024001				O-RING	3			
17	S631-018001				O-RING	2			
18	S631-011001				O-RING	8			
19	S621-018001				O-RING	1			
20	S621-014001				O-RING	4			
21	S631-014001				O-RING	2			
22	31Q4-11420				BRACKET-SOL VALVE	1			
23	X420-042018				HOSE ASSY-ORFS 0X90	1			
24	S109-100306				BOLT-SOCKET	4			
25	X511-112534				CONNECTOR-LONG,ORFS	1			
26	S621-011001				O-RING	12			
27	X420-042032				HOSE ASSY-ORFS 0X90	1			

Item	Part_No	IS	Ord	T	Description	Qty	Serial_No	ITC	Remark
28	X520-110012				ELBOW-90,ORFS	1			
29	X520-110001				ELBOW-90,ORFS	1			
30	31N6-25110				ELBOW-90,ORFS,LONG	1			
31	P220-110102				PLUG-HEX	1			
32	X420-042033				HOSE ASSY-ORFS 0X90	1			
33	S037-102526				BOLT-W/WASHER	2			
34	S017-080406				BOLT-HEX	2			
35	31Q4-99560				PORT RELIEF VALVE	2			
36	X810-045151				TEE-B/TYPE,ORFS	1			

TRAVEL HYD PIPING

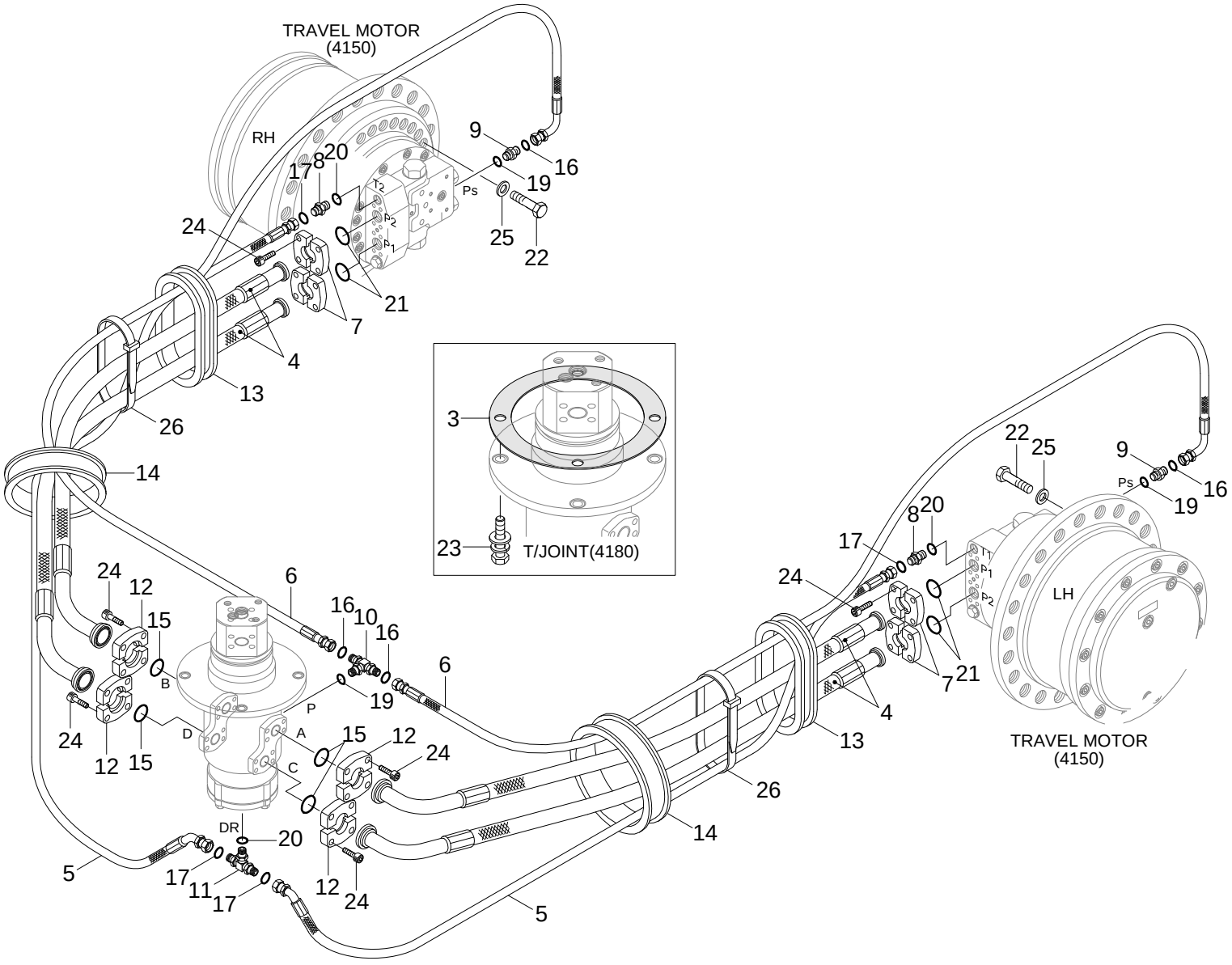

Item	Part_No	IS	Ord	T	Description	Qty	Serial_No	ITC	Remark
3	31N1-40970				GASKET	1			
4	31Q5-42020				HOSE ASSY	4			
5	P910-082039				HOSE ASSY-ORFS 0X0	2			
6	P930-042050				HOSE ASSY-ORFS 0X90	2			
7	P173-160104				FLANGE-HYD,SPLIT	4			
8	X530-110003				ELBOW-45,ORFS	2			
9	X500-110001				CONNECTOR-ORFS	2			
10	X810-065151				TEE-B/TYPE,ORFS	1			
11	X810-085353				TEE-B/TYPE,ORFS	1			
12	P173-120102				FLANGE-HYD,SPLIT	8			
13	S760-141216				GROMMET	2			
14	31E3-31230				GROMMET	2			
15	Y171-019001				O-RING	4			
16	S621-011001				O-RING	4			
17	S621-014001				O-RING	4			
19	S631-011004				O-RING	3			
20	S631-018004				O-RING	3			
21	Y171-024004				O-RING	4			
22	S017-16055D				BOLT-HEX	60			
23	S037-123026				BOLT-W/WASHER	4			
24	S109-100306				BOLT-SOCKET	24			
25	S441-160006				WASHER-HARDENED	60			
26	S552-102370				CLAMP-BAND	6			

[Item List] - Print Date : 2020.08.21 12:08

TRAVEL HYD PIPING 1(R180LCD-9)

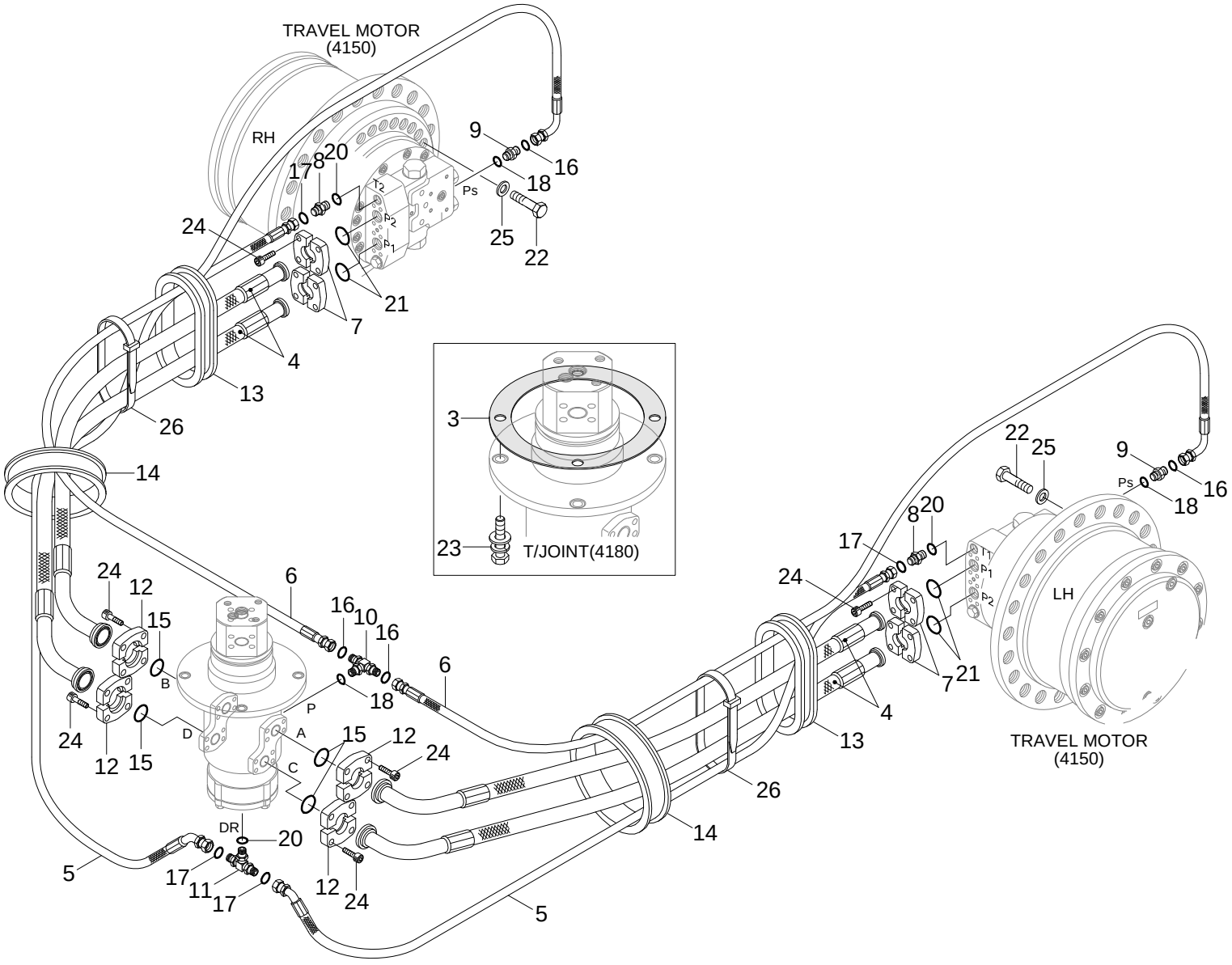

Item	Part_No	IS	Ord	T	Description	Qty	Serial_No	ITC	Remark
3	31N1-40970				GASKET	1			
4	31Q5-42010				HOSE ASSY	4			
5	P910-082037				HOSE ASSY-ORFS 0X0	2			
6	P930-042048				HOSE ASSY-ORFS 0X90	2			
7	P173-160104				FLANGE-HYD,SPLIT	4			
8	X530-110003				ELBOW-45,ORFS	2			
9	X500-110001				CONNECTOR-ORFS	2			
10	X810-065151				TEE-B/TYPE,ORFS	1			
11	X810-085353				TEE-B/TYPE,ORFS	1			
12	P173-120102				FLANGE-HYD,SPLIT	8			
13	S760-141216				GROMMET	2			
14	31E3-31230				GROMMET	2			
15	Y171-019001				O-RING	4			
16	S621-011001				O-RING	4			
17	S621-014001				O-RING	4			
18	S631-011004				O-RING	3			
20	S631-018004				O-RING	3			
21	Y171-024004				O-RING	4			
22	S017-16055D				BOLT-HEX	60			
23	S037-123026				BOLT-W/WASHER	4			
24	S109-100306				BOLT-SOCKET	32			
25	S441-160006				WASHER-HARDENED	60			
26	S552-102370				CLAMP-BAND	6			

[Item List] - Print Date : 2020.08.21 12:08

TRAVEL HYD PIPING 2(R180LCD-9)

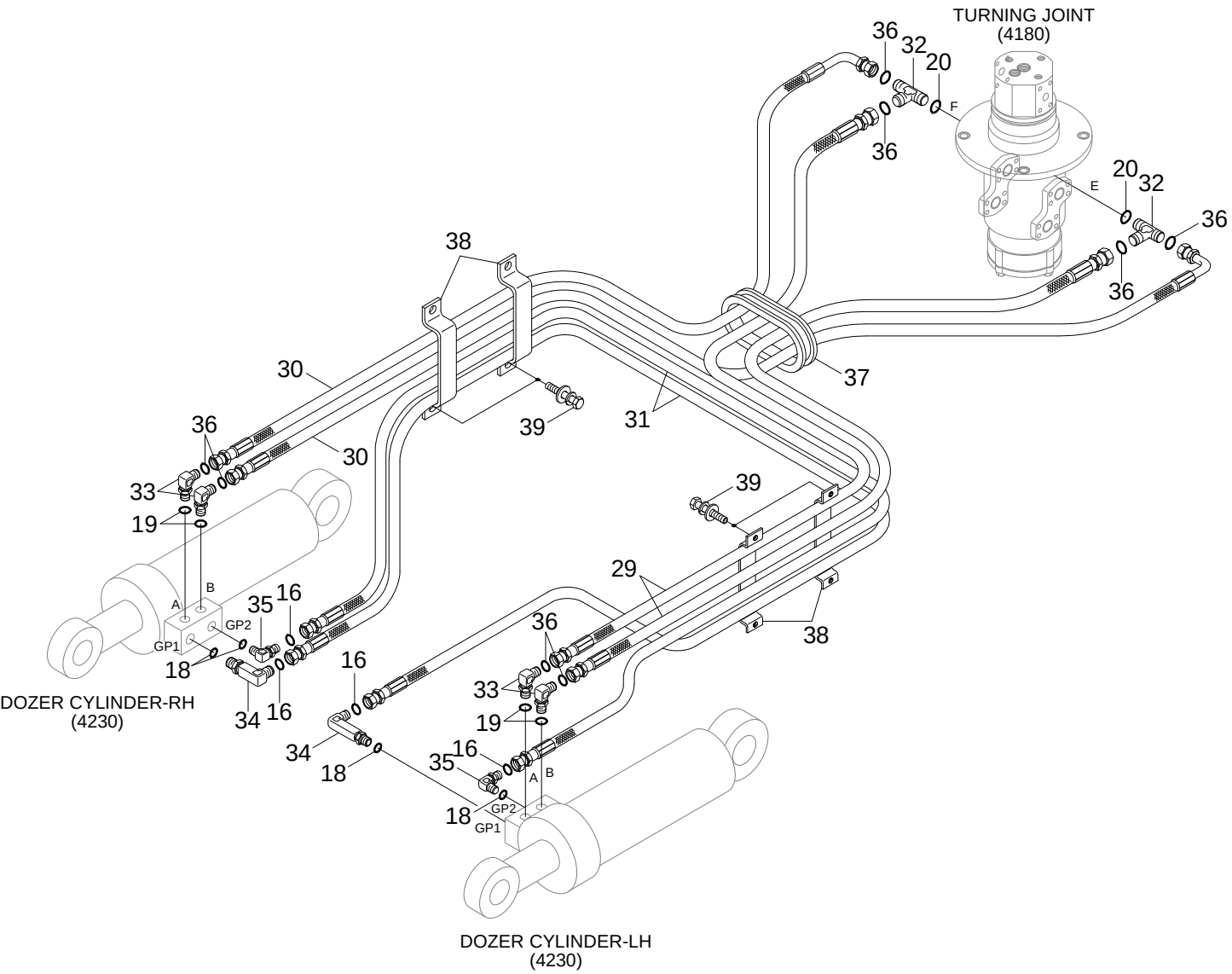

Item	Part_No	IS	Ord	T	Description	Qty	Serial_No	ITC	Remark
16	S621-011001				O-RING	4			
18	S631-011004				O-RING	4			
19	S631-014004				O-RING	4			
20	S631-018004				O-RING	2			
29	P913-068052				HOSE ASSY-ORFS 0X0	2			
30	P933-068054				HOSE ASSY-ORFS 0X90	2			
31	P913-048070				HOSE ASSY-ORFS 0X0	2			
32	X820-085252				TEE-R/TYPE,ORFS	2			
33	X520-110002				ELBOW-90,ORFS	4			
34	31N6-25110				ELBOW-90,ORFS,LONG	2			
35	X520-110001				ELBOW-90,ORFS	2			
36	S621-012001				O-RING	8			
37	S760-082012				GROMMET	1			
38	31Q5-41210				CLAMP-HOSE	4			
39	S035-081526				BOLT-W/WASHER	4			

BOOM HYD PIPING(5.1M, STD)

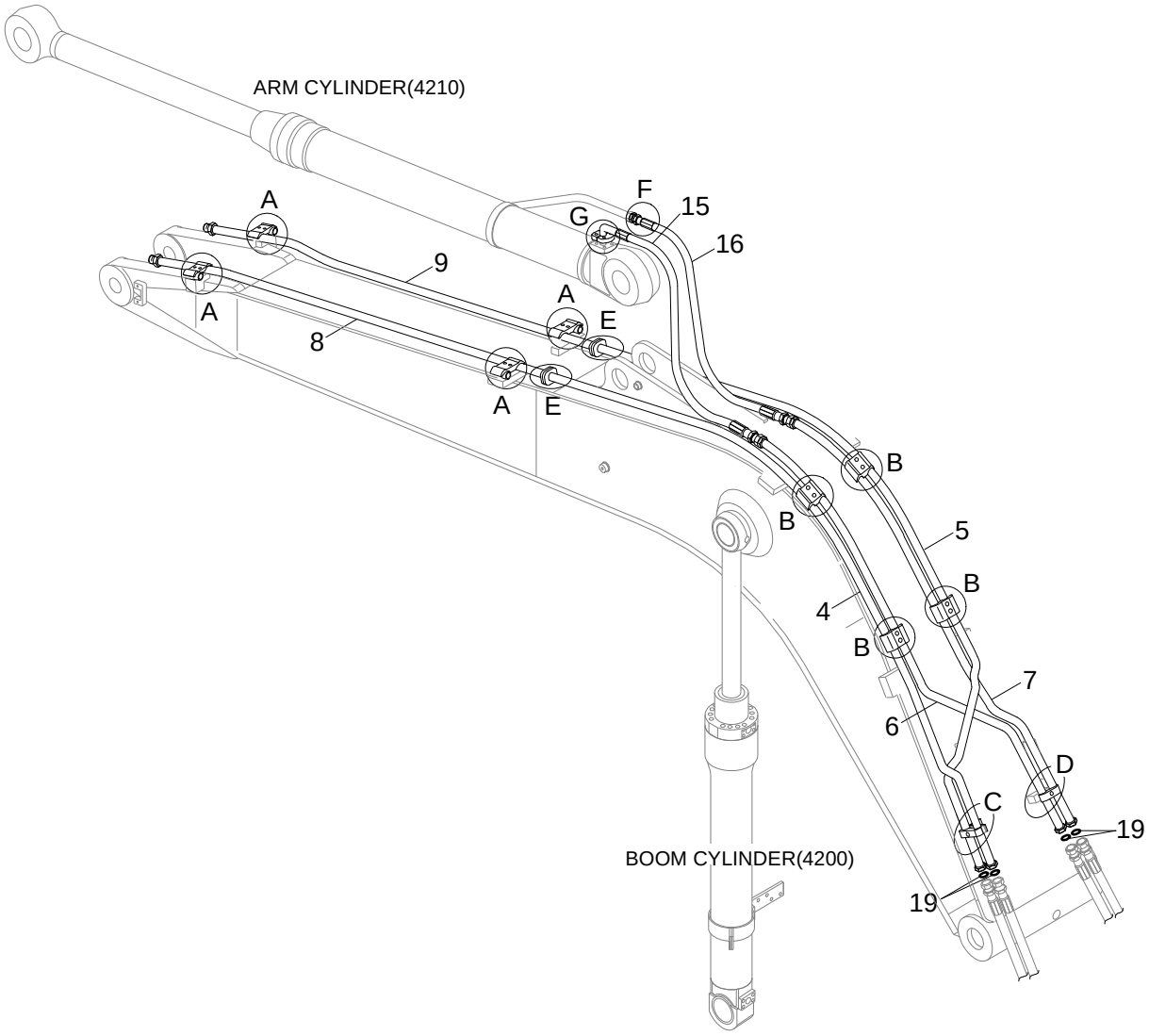

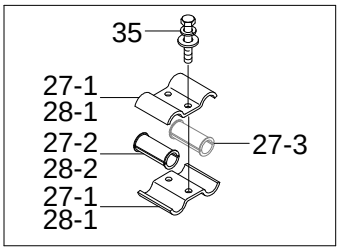

DETAIL A

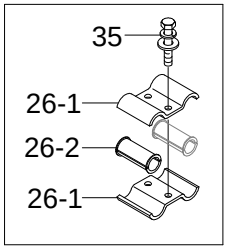

DETAIL B

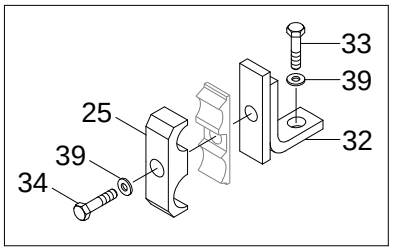

DETAIL C

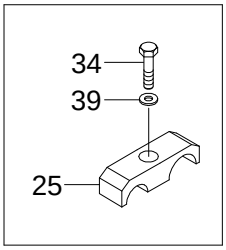

DETAIL D

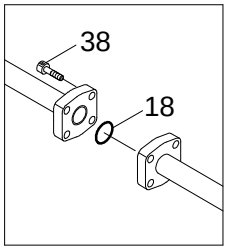

DETAIL E

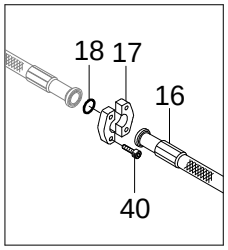

DETAIL F

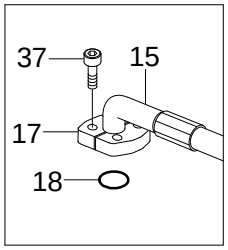

DETAIL G

Item	Part_No	IS	Ord	T	Description	Qty	Serial_No	ITC	Remark
4	31Q5-50010				PIPE ASSY	1			
	31Q5-50210				PIPE ASSY	1	#0001 -	-	
6	31Q5-50030				PIPE ASSY	1			
5	31Q5-50220				PIPE ASSY	1	#0001 -	-	
6	31Q5-50030				PIPE ASSY	1			
7	31Q5-50040				PIPE ASSY	1			
8	31Q5-50050				PIPE ASSY	1			
9	31Q5-50060				PIPE ASSY	1			
17	P174-120102				FLANGE-HYD,SPLIT	2			
15	31Q5-50250				HOSE ASSY-ORFS,FLG 0X90	1	#0001 -	-	
19	S621-018001				O-RING	8			
16	P910-128025				HOSE ASSY-ORFS 0X0	1	#0001 -	-	
17	P174-120102				FLANGE-HYD,SPLIT	2			
26-1	31Q4-50240				.CLAMP-PIPE	1			
18	Y171-019004				O-RING	4			
19	S621-018001				O-RING	8			
27-1	31Q4-50250				.CLAMP-PIPE	1			
25	31N4-12200				CLAMP-PIPE	2			
27-3	31E7-01720				.GROMMET	1			
26	34E7-02721				CLAMP ASSY-PIPE	4			
28-1	31Q4-50260				.CLAMP-PIPE	1			
28-2	31Q4-50270				.GROMMET	1			
26-1	31Q4-50240				.CLAMP-PIPE	2			
34	S017-16070D				BOLT-HEX	2			
26-2	31Q4-50270				.GROMMET	1			

Item	Part_No	IS	Ord	T	Description	Qty	Serial_No	ITC	Remark
27	31Q4-50220				CLAMP ASSY-PIPE	4			BREAKER PIPING
27-1	31Q4-50250				.CLAMP-PIPE	1			
27-2	31Q4-50270				.GROMMET	1			
27-3	31E7-01720				.GROMMET	1			
28	31Q4-50230				CLAMP ASSY-PIPE	4			STD
28-1	31Q4-50260				.CLAMP-PIPE	1			
28-2	31Q4-50270				.GROMMET	1			
32	31N5-50190				BRACKET ASSY	1			
33	S017-16040D				BOLT-HEX	1			
34	S017-16070D				BOLT-HEX	2			
35	S037-123526				BOLT-W/WASHER	16			
37	S109-100306				BOLT-SOCKET	8			
38	S109-100506				BOLT-SOCKET	8			
39	S411-160002				WASHER-SPRING	3			
40	S109-100456				BOLT-SOCKET	4			

BOOM GREASE LUB SYSTEM(5.1M, STD)

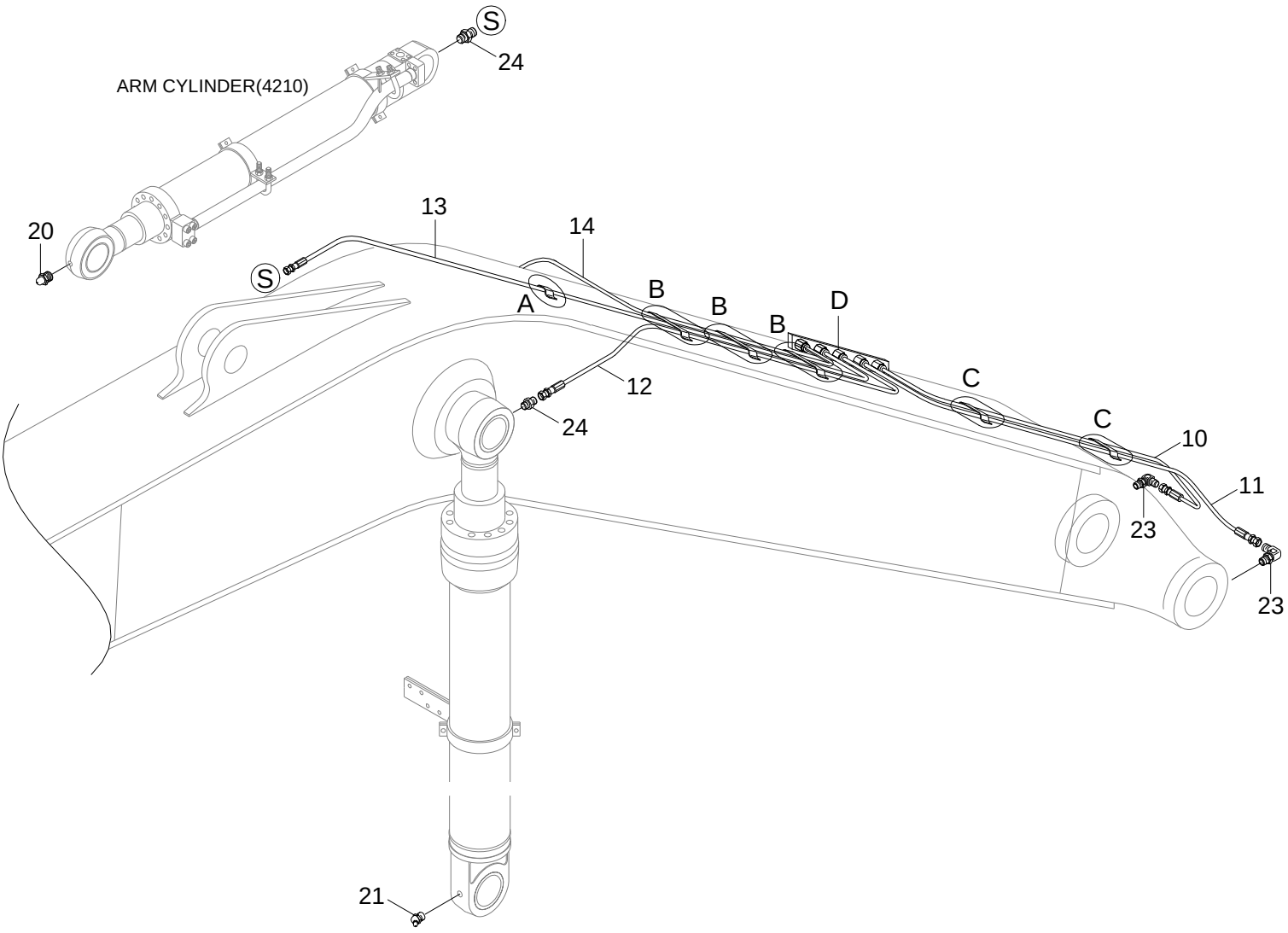

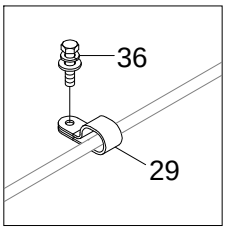

DETAIL A

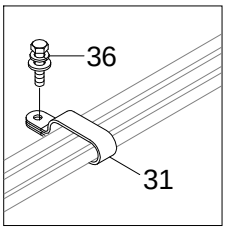

DETAIL B

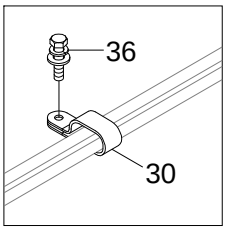

DETAIL C

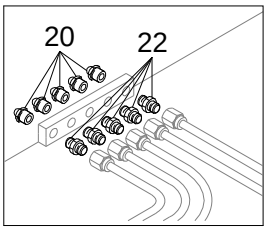

DETAIL D

Item	Part_No	IS	Ord	T	Description	Qty	Serial_No	ITC	Remark
10	P840-042015				HOSE ASSY-SYN THD	1			
11	P840-042016				HOSE ASSY-SYN THD	1			
12	P840-042043				HOSE ASSY-SYN THD	1			
13	P840-042057				HOSE ASSY-SYN THD	1			
14	P840-042042				HOSE ASSY-SYN THD	1			
20	S651-810002				NIPPLE-GREASE	6			
21	S653-810002				NIPPLE-GREASE	2			W/O BM SAFETY
	S651-810002				NIPPLE-GREASE	2			W/ BM SAFETY
22	31W5-70060				CONNECTOR	5			
23	31NB-50280				ELBOW-90	2			
24	P010-430011				CONNECTOR	3			
29	31Q6-50370				CLAMP-HOSE	3			
30	31Q6-50380				CLAMP-HOSE	2			
31	31Q6-50390				CLAMP-HOSE	3			
36	S035-082026				BOLT-W/WASHER	8			

BOOM SAFETY LOCK SYSTEM

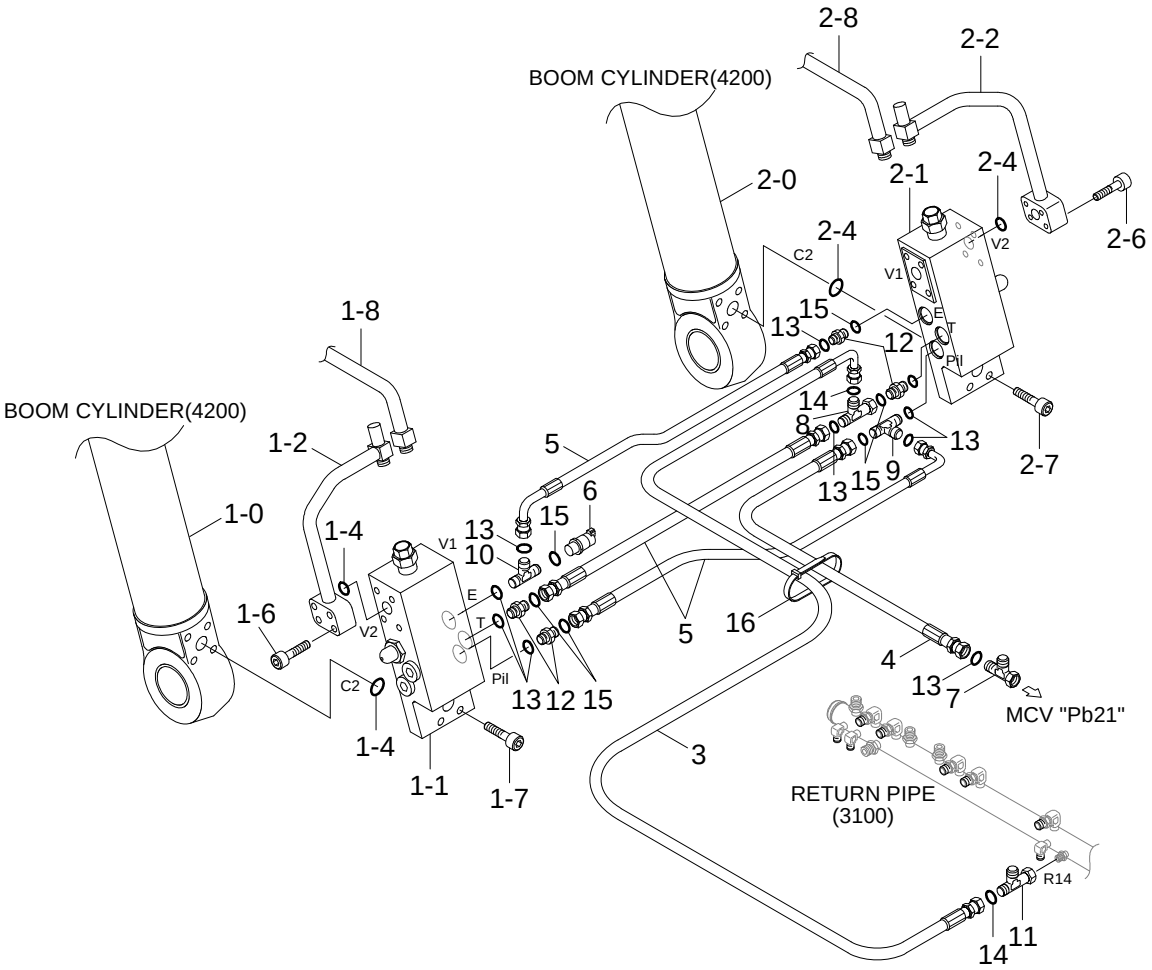

DETAIL ITEM 1-1, 2-1

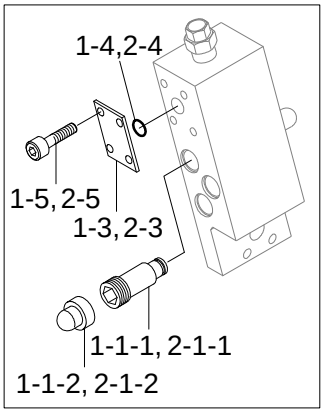

Description	Parts no	Included item
Boom safety lock seal kit	31Y1-35060	1-4, 2-4, 31Y1-34790(See 4200)

Item	Part_No	IS	Ord	T	Description	Qty	Serial_No	ITC	Remark
1	31Q5-52111				BOOM SAFETY CYL-LH	1			STD
	31Q5-52112				BOOM SAFETY CYL-LH	1	#0001 -	-	STD
	31Q5-52910				BOOM SAFETY CYL-LH	1			ADJUST BOOM
1-0	@				.BOOM CYL SUB ASSY	1			NOT
1-1-1	DRV-100A				..RELIEF VALVE	1			
1-1	31Q5-55011				.SAFETY LOCK VALVE	1	#0001 -	-	
1-1-3	AS568				..SEAL KIT	1			NOT SHOWN
1-1-1	DRV-100A				..RELIEF VALVE	1			
1-1-2	DCP-001A				..CAP	1			
1-1-3	AS568				..SEAL KIT	1			NOT SHOWN
K1-4	Y171-019004				.O-RING	3			
1-2	31Y1-37810				.PIPE ASSY-BV,LH	1	#0001 -	-	STD
	31Y1-24550				.PIPE ASSY-BV,LH	1			ADJUST BOOM
1-3	P184-122112				.FLANGE-PLUGING	1			
K1-4	Y171-019004				.O-RING	3			
1-5	S107-100356				.BOLT-SOCKET	4			
1-6	S107-100456				.BOLT-SOCKET	4			
1-7	S107-100506				.BOLT-SOCKET	4			
2-1-1	DRV-100A				..RELIEF VALVE	1			
1-8	31Y1-35041				.PIPE ASSY-RV,LH	4	#0001 -	-	
2-1-3	AS568				..SEAL KIT	1			NOT SHOWN
2-2	31Y1-20180				.PIPE ASSY-RH	1			STD
2	31Q5-52122				BOOM SAFETY CYL-RH	1	#0001 -	-	STD
	31Q5-52920				BOOM SAFETY CYL-RH	1			ADJUST BOOM
2-0	@				.BOOM CYL SUB ASSY	1			NOT

Item	Part_No	IS	Ord	T	Description	Qty	Serial_No	ITC	Remark
2-5	S107-100356				.BOLT-SOCKET	4			
2-1	31Q5-55011				.SAFETY LOCK VALVE	1	#0001 -	-	
2-1-1	DRV-100A				..RELIEF VALVE	1			
2-1-2	DCP-001A				..CAP	1			
2-1-3	AS568				..SEAL KIT	1			NOT SHOWN
5	P930-048009				HOSE ASSY-ORFS 0X90	3			
2-2	31Y1-37820				.PIPE ASSY-BV,RH	1	#0001 -	-	STD
	31Y1-24560				.PIPE ASSY-BV,RH	1			ADJUST BOOM
2-3	P184-122112				.FLANGE-PLUGING	1			
K2-4	Y171-019004				.O-RING	3			
2-5	S107-100356				.BOLT-SOCKET	4			
2-6	S107-100456				.BOLT-SOCKET	4			
2-7	S107-100506				.BOLT-SOCKET	4			
13	S621-011001				O-RING	8			
2-8	31Y1-35051				.PIPE ASSY-RV,RH	4	#0001 -	-	
3	P930-062055				HOSE ASSY-ORFS 0X90	1			
4	P910-042048				HOSE ASSY-ORFS 0X0	1			
5	P930-048009				HOSE ASSY-ORFS 0X90	3			
6	31Q8-40500				SENSOR-PRESSURE	1			
7	31N4-22150				TEE-LONG,ORFS	1			
8	31N4-41140				TEE-SWIVEL,ORFS	1			
9	X820-045151				TEE-R/TYPE,ORFS	1			
10	31N4-22170				TEE-RUN TYPE	1			
11	X520-110002				ELBOW-90,ORFS	1			
12	X500-110001				CONNECTOR-ORFS	4			

Item	Part_No	IS	Ord	T	Description	Qty	Serial_No	ITC	Remark
13	S621-011001				O-RING	8			
14	S621-012001				O-RING	3			
15	S631-011004				O-RING	7			
16	S552-020102				CLAMP-BAND	10			
K	31Y1-35060				SEAL KIT	1			SEE ILLUST

QUICK CLAMP HYD PIPING

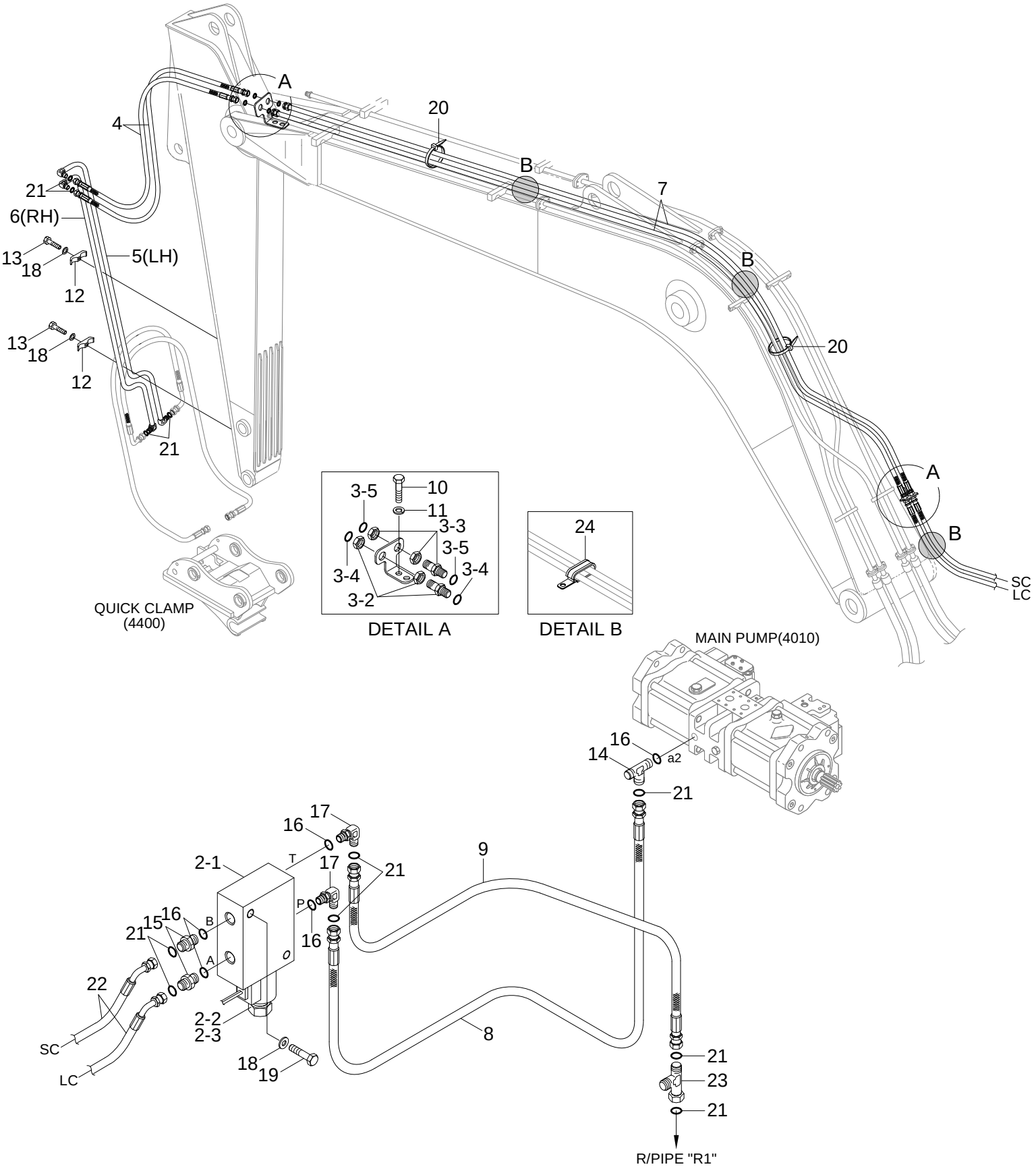

Item	Part_No	IS	Ord	T	Description	Qty	Serial_No	ITC	Remark
2	31Q6-91720				SOLENOID VALVE-Q/CLAMP	1			
2-1	B-34EA-91720				.MANIFOLD	1			
2-2	GS044200NC				.VALVE-SOLENOID	1			
2-3	LTC0627VMD/DT				.COIL	1			
3	31Q4-93750				TERMINAL ASSY	2			
3-2	X540-120001				.CONNECTOR-ORFS	1			
3-3	X540-120002				.CONNECTOR-ORFS	1			
3-4	S621-011001				.O-RING	2			
3-5	S621-012001				.O-RING	2			
4	P913-048034				HOSE ASSY-ORFS 0X0	2	- #0014		2.6M AM, STD
	P915-048034				HOSE ASSY-ORFS,THD 0X0	2	#0015 -	B	2.6M AM, STD
	P913-048028				HOSE ASSY-ORFS 0X0	2	- #0014		2.2M AM
	P915-048028				HOSE ASSY-ORFS,THD 0X0	2	#0015 -	B	2.2M AM
	P913-048037				HOSE ASSY-ORFS 0X0	2	- #0014		3.1M AM
	P915-048037				HOSE ASSY-ORFS,THD 0X0	2	#0015 -	B	3.1M AM
5	31Q5-91510				PIPE ASSY	1			2.6M/2.2M AM,LH
	31Q5-91520				PIPE ASSY	1			3.1M AM
6	31Q5-91530				PIPE ASSY	1			2.6M/2.2M AM,RH
	31Q5-91540				PIPE ASSY	1			3.1M AM
7	P910-048092				HOSE ASSY-ORFS 0X0	2			STD
	P920-048097				HOSE ASSY-ORFS 0X45	2			ADJUST BOOM
8	31N4-95750				HOSE ASSY	1			
9	P930-042007				HOSE ASSY-ORFS 0X90	1			
10	S017-120406				BOLT-HEX	4			
11	S411-120006				WASHER-SPRING	4			

Item	Part_No	IS	Ord	T	Description	Qty	Serial_No	ITC	Remark
12	34EA-91811				CLAMP-PIPE	3			
13	S017-100302				BOLT-HEX	3			
14	31N4-22170				TEE-RUN TYPE	1			
15	X500-110001				CONNECTOR-ORFS	2			
16	S631-011004				O-RING	5			
17	X520-110001				ELBOW-90,ORFS	2			
18	S441-100006				WASHER-HARDENED	5			
19	S017-100506				BOLT-HEX	2			
20	S554-054300				CLAMP-BAND	25			
21	S621-011001				O-RING	19			
22	P920-048046				HOSE ASSY-ORFS 0X45	2			
23	X840-515151				TEE-R/TYPE,SWIVEL,ORFS	1			
24	31L7-10200				CLAMP-TUBE	3			

ARM HYD PIPING

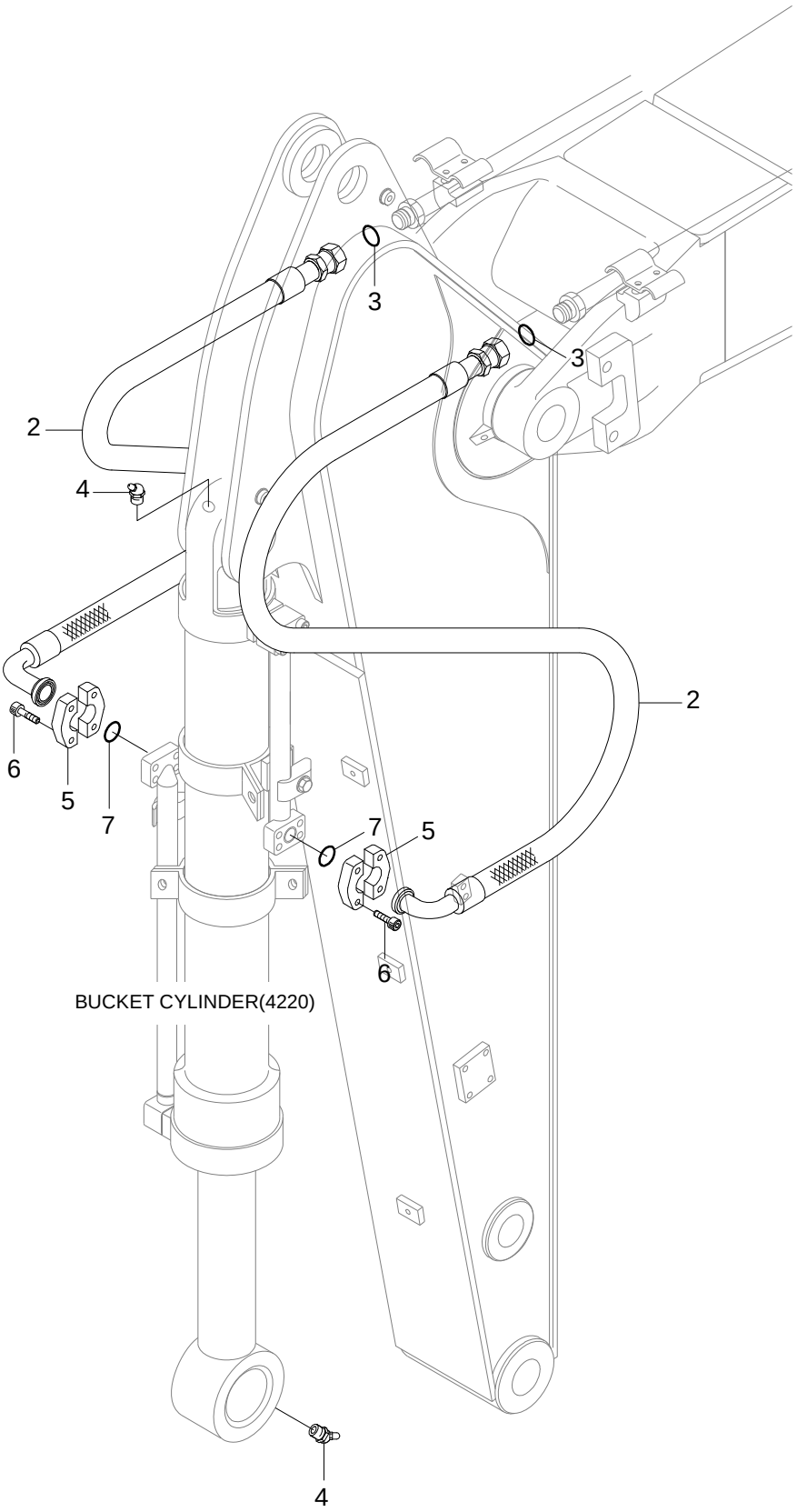

Item	Part_No	IS	Ord	T	Description	Qty	Serial_No	ITC	Remark
2	31Q5-60211				HOSE ASSY	2	- #0013		2.6M AM, STD
	P985-128432				HOSE ASSY-ORFS,FLG 0X90	2	#0014 -	B	2.6M AM, STD
	31Q5-60220				HOSE ASSY	2	- #0013		2.2M AM
	P985-128434				HOSE ASSY-ORFS,FLG 0X90	2	#0014 -	B	2.2M AM
	31Q5-60240				HOSE ASSY	2	- #0013		2.9M AM
	P985-128440				HOSE ASSY-ORFS,FLG 0X90	2	#0014 -	B	2.9M AM
	P985-128431				HOSE ASSY-ORFS,FLG 0X90	2	#0018 -		3.1M AM
3	S621-018001				O-RING	4			
4	S651-810002				NIPPLE-GREASE	2			
5	P174-120102				FLANGE-HYD,SPLIT	4	#0014 -		
6	S109-100356				BOLT-SOCKET	8	#0014 -		
7	Y171-019004				O-RING	2	#0014 -		

ARM HYD PIPING(3.1M, LONG)

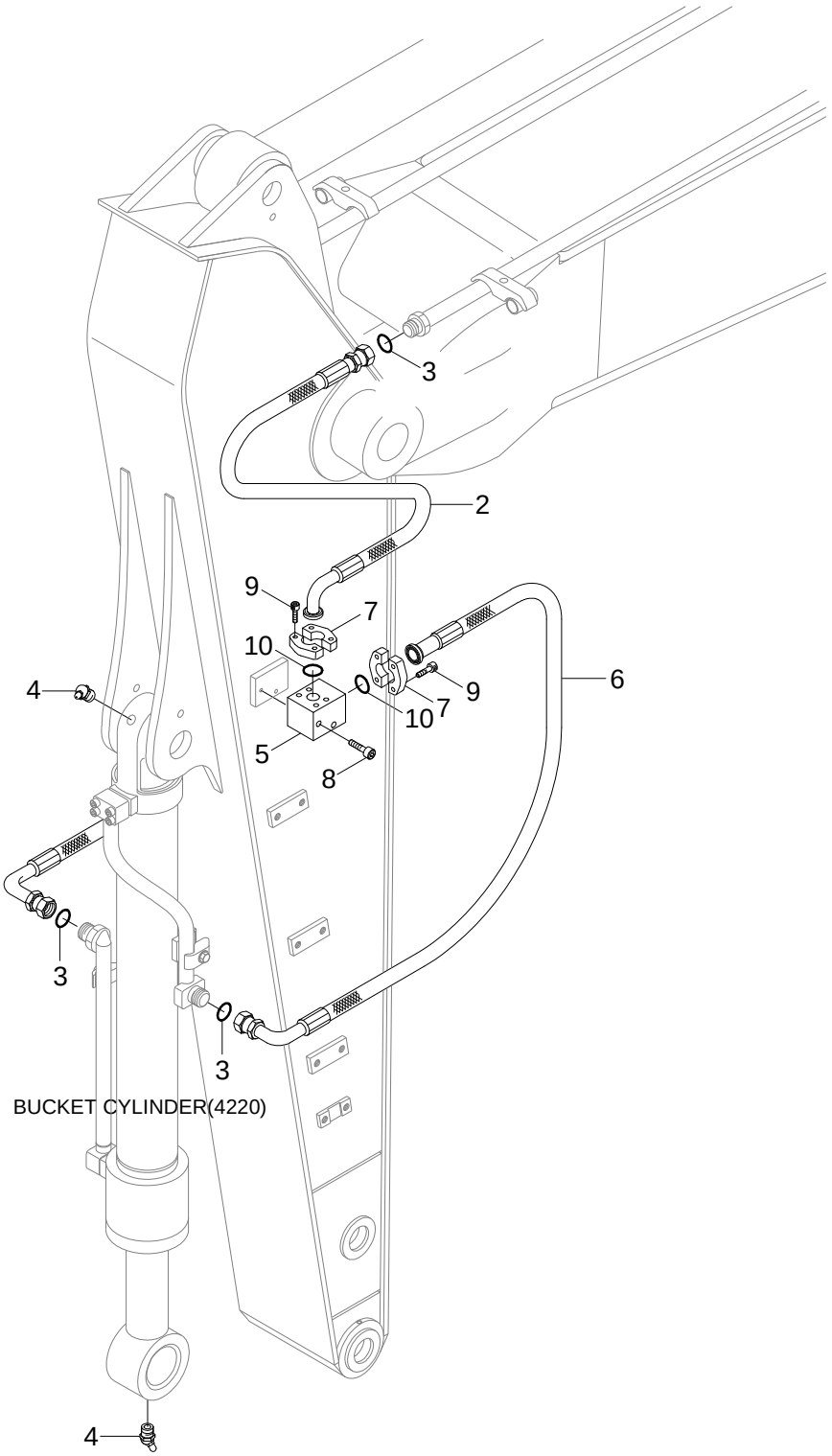

Item	Part_No	IS	Ord	T	Description	Qty	Serial_No	ITC	Remark
2	31Q5-60120				HOSE ASSY	2			
	P985-128431				HOSE ASSY-ORFS,FLG 0X90	2			
3	S621-018001				O-RING	4			
4	S651-810002				NIPPLE-GREASE	2			
5	31Q5-60140				BLOCK	2			
6	31Q5-60130				HOSE ASSY-THD 0X90	2			
	P995-128426				HOSE ASSY-ORFS,THD 0X90	2			
7	P174-120102				FLANGE-HYD,SPLIT	4			
					FLANGE-HYD,SPLIT	8			
8	S109-100806				BOLT-SOCKET	4			
9	S109-100356				BOLT-SOCKET	16			
10	Y171-019004				O-RING	4			

ARM SAFETY LOCK SYSTEM

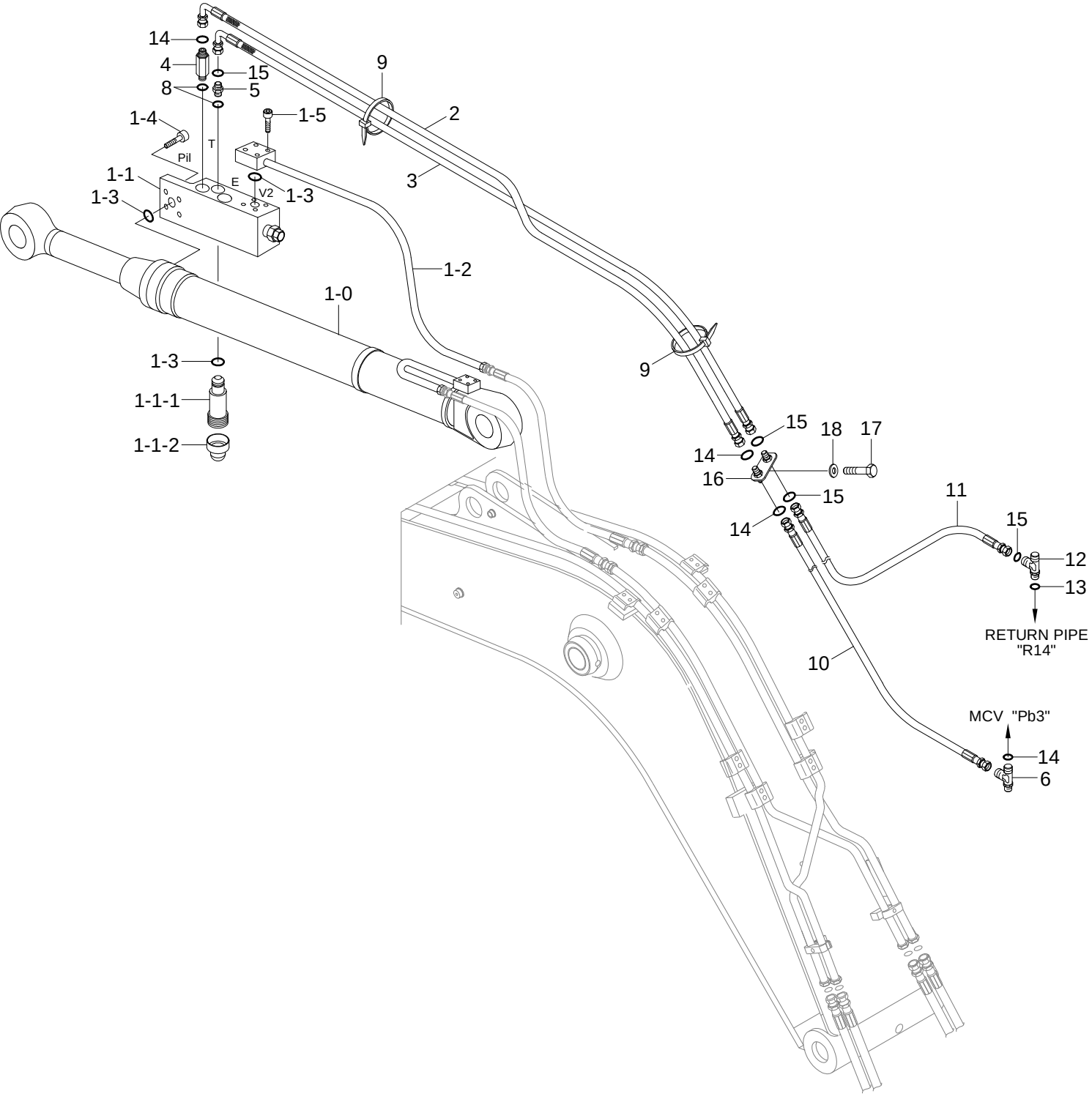

Description	Parts no	Included item
Arm safety lock seal kit	31Y1-35070	1-3, 31Y1-34600(See 4210)

Item	Part_No	IS	Ord	T	Description	Qty	Serial_No	ITC	Remark
1	31Q5-52132				ARM SAFETY CYLINDER	1			
1-0	@				.ARM CYL SUB ASSY	1			NOT
1-1	31Q5-55030				.SAFETY LOCK VALVE	1			
1-1-1	DRV-100A				..RELIEF VALVE	1			
1-1-2	DCP-002A				..CAP	1			
1-1-3	AS568				..SEAL KIT	1			NOT SHOWN
1-2	31Y1-34591				.PIPE ASSY-RV	1			
K1-3	Y171-019004				.O-RING	2			
1-4	S107-100456				.BOLT-SOCKET	4			
1-5	S107-100506				.BOLT-SOCKET	4			
2	P930-042079				HOSE ASSY-ORFS 0X90	1			5.1M BM, STD
	P930-042085				HOSE ASSY-ORFS 0X90	1	- #0003		ADJUST BOOM
	P930-042076				HOSE ASSY-ORFS 0X90	1	#0004 -	D	ADJUST BOOM
3	P930-062079				HOSE ASSY-ORFS 0X90	1			5.1M BM, STD
	P930-062085				HOSE ASSY-ORFS 0X90	1	- #0003		ADJUST BOOM
	P930-062076				HOSE ASSY-ORFS 0X90	1	#0004 -	D	ADJUST BOOM
4	X511-104513				CONNECTOR-LONG,ORFS	1	- #0003		
	X500-110001				CONNECTOR-ORFS	1	#0004 -	B	
5	X500-110011				CONNECTOR-ORFS	1			
6	31N4-22150				TEE-LONG,ORFS	1			
8	S631-011004				O-RING	3			
9	S552-020102				CLAMP-BAND	10			
10	P930-042045				HOSE ASSY-ORFS 0X90	1			5.1M BM, STD
	P930-042065				HOSE ASSY-ORFS 0X90	1			ADJUST BOOM
11	P910-062051				HOSE ASSY-ORFS 0X0	1			5.1M BM, STD

Item	Part_No	IS	Ord	T	Description	Qty	Serial_No	ITC	Remark
11	P910-062071				HOSE ASSY-ORFS 0X0	1			ADJUST BOOM
12	X840-525252				TEE-R/TYPE,SWIVEL,ORFS	1			
13	S631-014001				O-RING	1			
14	S621-011001				O-RING	4			
15	S621-012001				O-RING	4			
16	31Q4-96010				TERMINAL ASSY	1			
17	S017-120456				BOLT-HEX	1			
18	S411-120006				WASHER-SPRING	1			
K	31Y1-35070				SEAL KIT	1			SEE ILLUST

ATTACH PIPING KIT(S & D/ACTING)

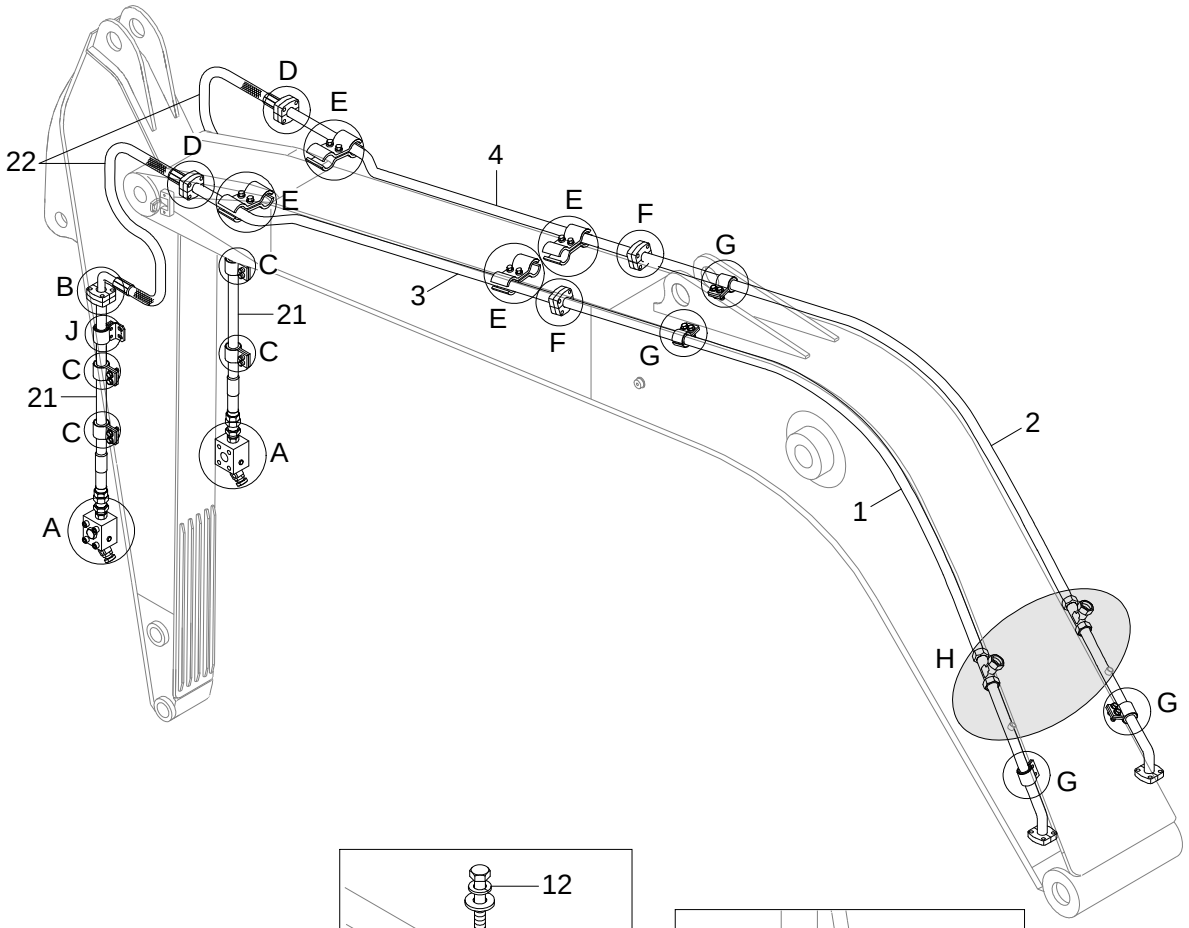

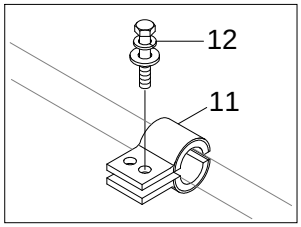

DETAIL G

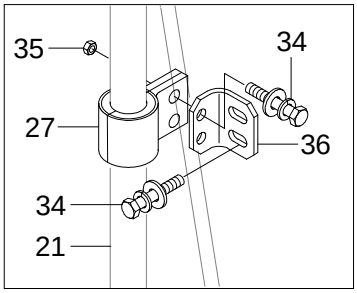

DETAIL J

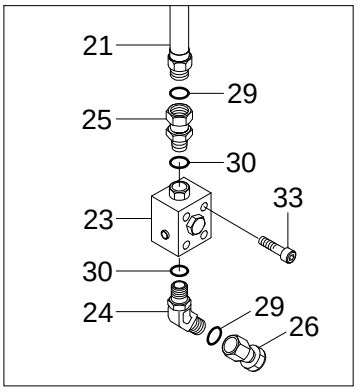

DETAIL A

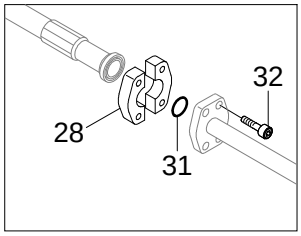

DETAIL D

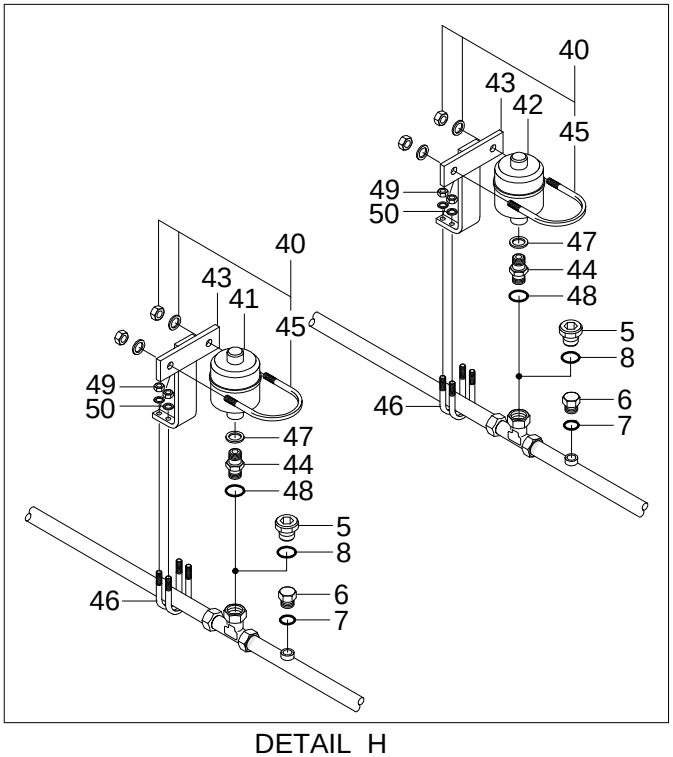

DETAIL H

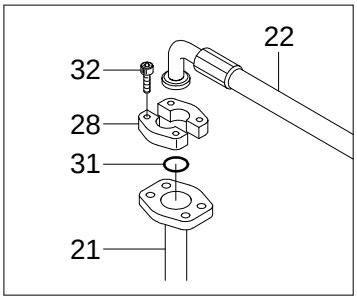

DETAIL B

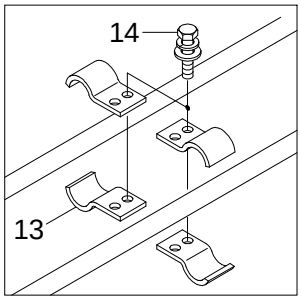

DETAIL E

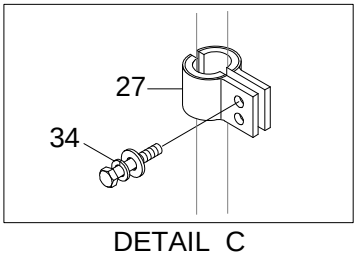

DETAIL C

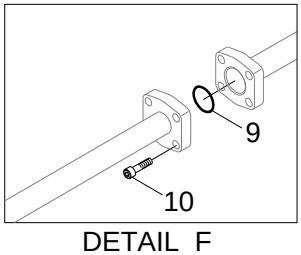

DETAIL F

Item	Part_No	IS	Ord	T	Description	Qty	Serial_No	ITC	Remark
*-1	31Q5-90310				BOOM PIPING KIT	1			5.1M BM, STD
	31Q5-90320				BOOM PIPING KIT	1	#0004 -	-	ADJUST BM
1	31Q5-91510				.PIPE ASSY	1			
2	31Q5-91520				.PIPE ASSY	1			
3	31Q5-91530				.PIPE ASSY	1			
4	31Q5-91540				.PIPE ASSY	1			
5	P220-110205				.PLUG-HEX	2			
6	31EK-11130				.COUPLING-SCREW	2			
7	S631-011004				.O-RING	2			
8	S631-024004				.O-RING	2			
9	Y171-024004				.O-RING	2			
10	S109-100406				.BOLT-SOCKET	8			
11	31E7-01711				.CLAMP ASSY	8			
12	S037-123526				.BOLT-W/WASHER	8			
13	31Q4-50220				.CLAMP ASSY-PIPE	8			
14	S037-123526				.BOLT-W/WASHER	8			
*-2	31Q5-90410				ARM PIPING KIT	1			2.6M AM, STD
	31Q5-90420				ARM PIPING KIT	1			2.2M AM
	31Q5-90430				ARM PIPING KIT	1			3.1M AM
21	31Q5-91610				.PIPE ASSY	2			2.6M AM, STD
	31Q5-91620				.PIPE ASSY	2			2.2M AM
	31Q5-91630				.PIPE ASSY	2			3.1M AM
22	P704-166338				.HOSE ASSY-FLG 0X90	2			
	P705-166338				.HOSE ASSY-FLG 0X90	2			2.6M AM, STD
	P705-166332				.HOSE ASSY-FLG 0X90	2			2.2M AM

Item	Part_No	IS	Ord	T	Description	Qty	Serial_No	ITC	Remark
22	P705-166334				.HOSE ASSY-FLG 0X90	2			3.1M AM
23	31Q6-91551				.VALVE-STOP	2	#0001 -	-	
24	X530-110005				.ELBOW-45,ORFS	2			
25	31Q6-91560				.ADAPTER	2			
26	X710-100106				.CAP-HYD,ORFS	2			
27	31E7-01711				.CLAMP ASSY	8			2.6M AM, STD
					.CLAMP ASSY	4			2.2M AM
					.CLAMP ASSY	12			3.1M AM
28	P173-160104				.FLANGE-HYD,SPLIT	8			
29	S631-029004				.O-RING	4			
30	S621-021001				.O-RING	4			
31	Y171-024004				.O-RING	4			
32	S109-100406				.BOLT-SOCKET	16			
33	S109-120706				.BOLT-SOCKET	8			
34	S037-123526				.BOLT-W/WASHER	8			2.6M AM, STD
					.BOLT-W/WASHER	4			2.2M AM
					.BOLT-W/WASHER	16			3.1M AM
35	S207-12100B				.NUT-HEX	4			3.1M AM
36	31Q6-91500				.BRACKET	2			3.1M AM
40	31Q5-90500				ACCUMULATOR KIT	1			
41	31Q8-91670				.ACCUMULATOR	1			
42	31Q8-91680				.ACCUMULATOR	1			
43	32E6-92080				.BRACKET-ACCUM	2			
44	31Q8-91690				.CONNECTOR	2			
45	32E6-92060				.U-BOLT	2			

Item	Part_No	IS	Ord	T	Description	Qty	Serial_No	ITC	Remark
46	S071-033430				.U-BOLT	4			
47	31Q8-91700				.SEAL	2			
48	S631-024004				.O-RING	2			
49	S205-10100B				.NUT-HEX	8			
50	S403-10200B				.WASHER-PLAIN	8			

SINGLE ACTING MAIN PIPING KIT

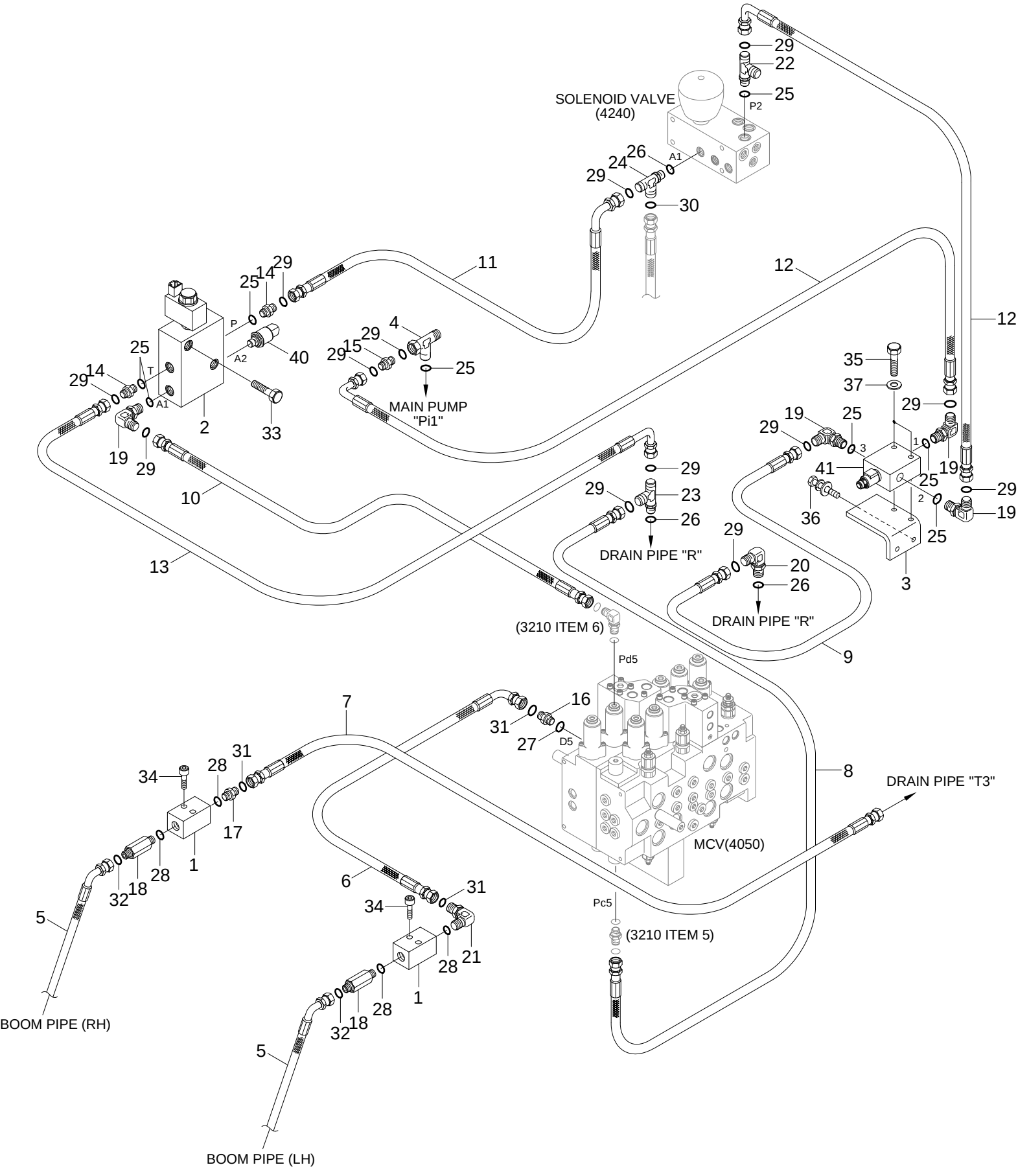

Item	Part_No	IS	Ord	T	Description	Qty	Serial_No	ITC	Remark
*	31Q5-90110				S/ACT MAIN PIPING KIT	1			
1	31N5-94710				.BLOCK-HOSE JOINT	2			
2	31Q6-91220				.SOLENOID VALVE	1			
3	31Q4-93370				.BRACKET	1			
4	31N6-30130				.TEE-SHUTTLE,S/NUT	1			
5	P974-166324				.HOSE ASSY-ORFS,FLG 0X45	2			
6	P933-126019				.HOSE ASSY-ORFS 0X90	1			
7	P923-123029				.HOSE ASSY-ORFS 0X45	1			
8	P910-042030				.HOSE ASSY-ORFS 0X0	1			
9	P910-042037				.HOSE ASSY-ORFS 0X0	1			
10	P910-042052				.HOSE ASSY-ORFS 0X0	1			
11	P930-042006				.HOSE ASSY-ORFS 0X90	1			
12	P930-042010				.HOSE ASSY-ORFS 0X90	2			
13	P930-042042				.HOSE ASSY-ORFS 0X90	1			
14	X500-110001				.CONNECTOR-ORFS	2			
15	31N6-25060				.FILTER-LAST GUARD	1			
16	X500-110004				.CONNECTOR-ORFS	1			
17	31N4-95290				.CONNECTOR	1			
18	X511-116556				.CONNECTOR-LONG,ORFS	2			
19	X520-110001				.ELBOW-90,ORFS	4			
20	X520-110012				.ELBOW-90,ORFS	1			
21	X520-110018				.ELBOW-90,ORFS	1			
22	X820-045151				.TEE-R/TYPE,ORFS	1			
23	X820-065151				.TEE-R/TYPE,ORFS	1			
24	X820-065251				.TEE-R/TYPE,ORFS	1			

Item	Part_No	IS	Ord	T	Description	Qty	Serial_No	ITC	Remark
25	S631-011004				.O-RING	8			
26	S631-014004				.O-RING	3			
27	S631-024004				.O-RING	1			
28	S631-029004				.O-RING	4			
29	S621-011001				.O-RING	15			
30	S621-012001				.O-RING	1			
31	S621-018001				.O-RING	3			
32	S621-021001				.O-RING	2			
33	S109-080406				.BOLT-SOCKET	2			
34	S109-120556				.BOLT-SOCKET	4			
35	S015-060456				.BOLT-HEX	2			
36	S037-102026				.BOLT-W/WASHER	2			
37	S403-060006				.WASHER-PLAIN	2			
40	31Q8-40520				.PRESSURE SENSOR	1			
41	31Q6-20130				.EPPR VALVE-BREAKER	1			

DOUBLE ACTING MAIN PIPING 1

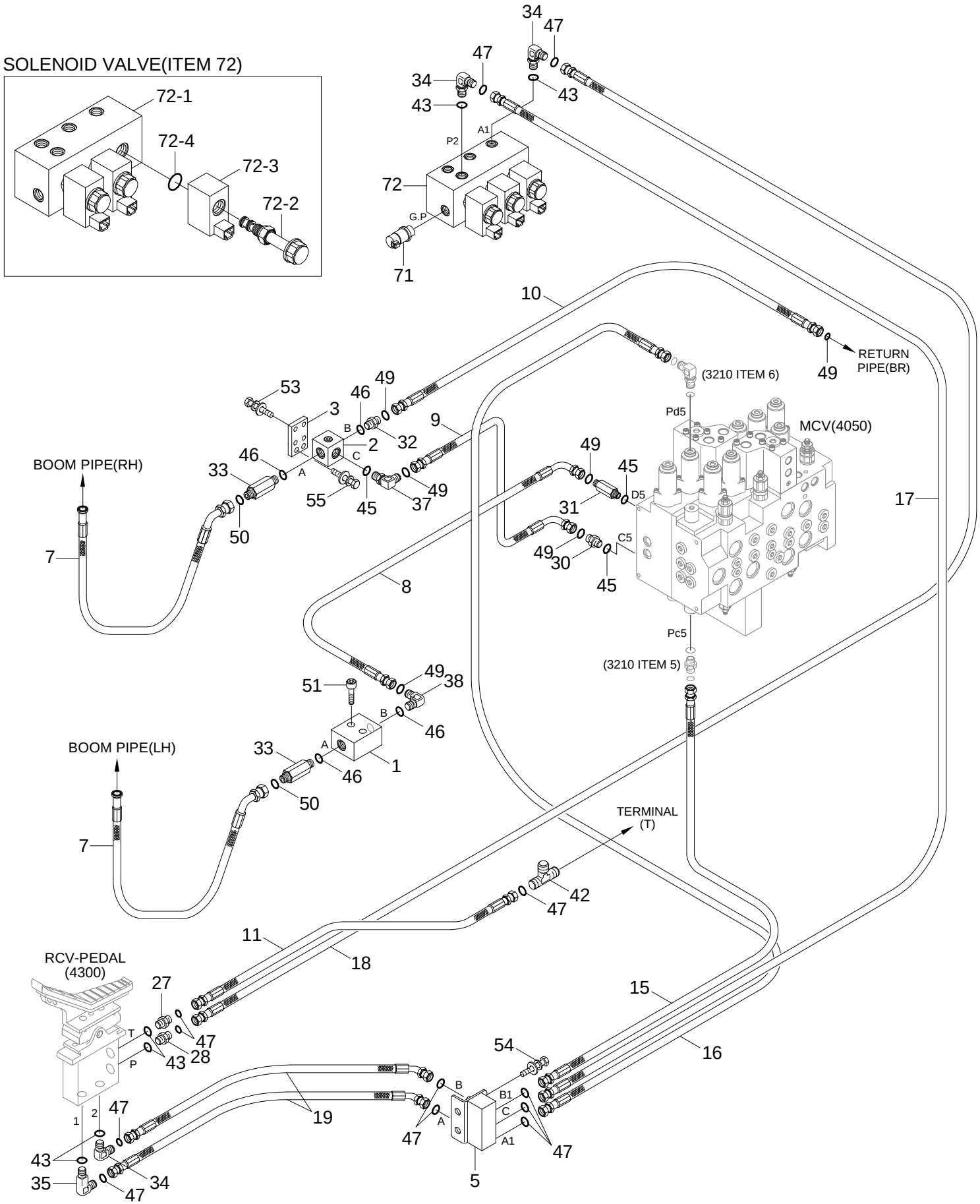

Item	Part_No	IS	Ord	T	Description	Qty	Serial_No	ITC	Remark
*	31Q5-90210				D/ACT MAIN PIPING KIT	1			
1	31N5-94710				.BLOCK-HOSE JOINT	1			
2	31N4-95260				.JOINT-3 WAY	1			
3	31E9-95010				.BRACKET-3 WAY JOINT	1			
5	31Q6-90460				.5-SHUTTLE ASSY	1			
7	P974-166324				.HOSE ASSY-ORFS,FLG 0X45	2			
8	P933-126019				.HOSE ASSY-ORFS 0X90	1			
9	P923-126013				.HOSE ASSY-ORFS 0X45	1			
10	P923-123029				.HOSE ASSY-ORFS 0X45	1			
11	P910-042020				.HOSE ASSY-ORFS 0X0	1			
15	P910-042048				.HOSE ASSY-ORFS 0X0	1			
16	P910-042058				.HOSE ASSY-ORFS 0X0	1			
17	P910-042062				.HOSE ASSY-ORFS 0X0	1			
18	P910-042082				.HOSE ASSY-ORFS 0X0	1			
19	P920-042022				.HOSE ASSY-ORFS 0X45	2			
27	X500-110001				.CONNECTOR-ORFS	1			
28	31N6-25060				.FILTER-LAST GUARD	1			
30	X500-110004				.CONNECTOR-ORFS	1			
31	X511-112543				.CONNECTOR-LONG,ORFS	1			
32	31N4-95290				.CONNECTOR	1			
33	X511-116556				.CONNECTOR-LONG,ORFS	2			
34	X520-110001				.ELBOW-90,ORFS	3			
35	31N6-25110				.ELBOW-90,ORFS,LONG	1			
37	X520-110004				.ELBOW-90,ORFS	1			
38	X520-110018				.ELBOW-90,ORFS	1			

Item	Part_No	IS	Ord	T	Description	Qty	Serial_No	ITC	Remark
42	X840-515151				.TEE-R/TYPE,SWIVEL,ORFS	1			
43	S631-011004				.O-RING	6			
45	S631-024004				.O-RING	3			
46	S631-029004				.O-RING	4			
47	S621-011001				.O-RING	12			
49	S621-018001				.O-RING	5			
50	S621-021001				.O-RING	2			
51	S109-120556				.BOLT-SOCKET	2			
53	S035-083026				.BOLT-W/WASHER	4			
54	S037-102026				.BOLT-W/WASHER	2			
55	S037-123526				.BOLT-W/WASHER	2			
71	31Q8-40520				.PRESSURE SENSOR	1			
72	31Q6-20050				.SOLENOID VALVE	1			
72-1	34Q6-20050				..MANIFOLD	1			
72-2	XKAL-00016				..SOLENOID VALVE	3			
72-3	XKAL-00050				..COIL	3			
72-4	230.00.064.0				..SEAL	3			

DOUBLE ACTING MAIN PIPING 2

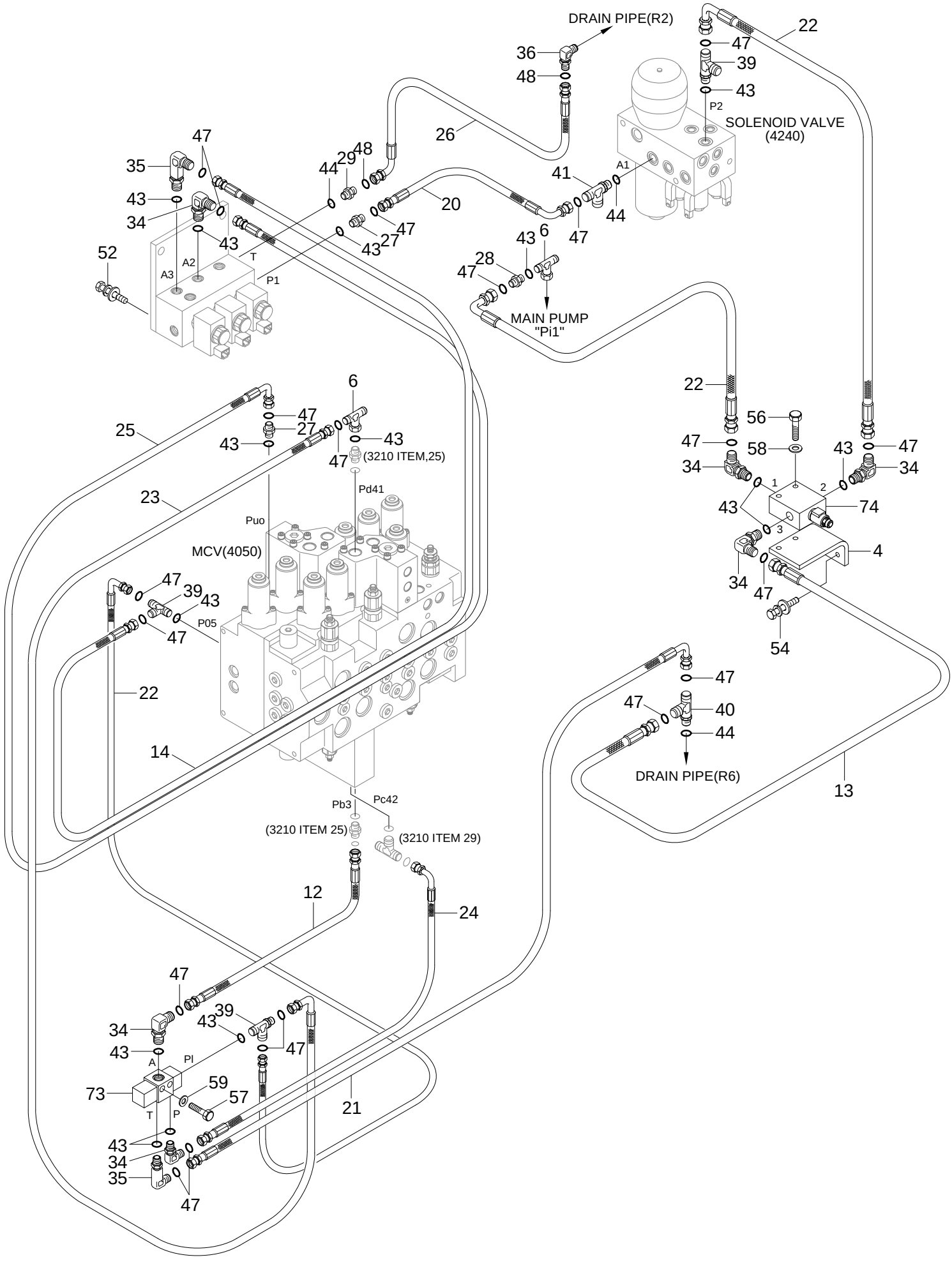

Item	Part_No	IS	Ord	T	Description	Qty	Serial_No	ITC	Remark
*	@				D/ACT MAIN PIPING KIT	1			NOT
4	31Q4-93370				.BRACKET	1			
6	31N6-30130				.TEE-SHUTTLE,S/NUT	2			
12	P910-042030				.HOSE ASSY-ORFS 0X0	1			
13	P910-042037				.HOSE ASSY-ORFS 0X0	1			
14	P910-042042				.HOSE ASSY-ORFS 0X0	1			
20	P930-042008				.HOSE ASSY-ORFS 0X90	1			
21	P930-042009				.HOSE ASSY-ORFS 0X90	1			
22	P930-042010				.HOSE ASSY-ORFS 0X90	3			
23	P930-042014				.HOSE ASSY-ORFS 0X90	1			
24	P930-042030				.HOSE ASSY-ORFS 0X90	1			
25	P930-042046				.HOSE ASSY-ORFS 0X90	1			
26	P930-062039				.HOSE ASSY-ORFS 0X90	1			
27	X500-110001				.CONNECTOR-ORFS	2			
28	31N6-25060				.FILTER-LAST GUARD	1			
29	X500-110002				.CONNECTOR-ORFS	1			
34	X520-110001				.ELBOW-90,ORFS	6			
35	31N6-25110				.ELBOW-90,ORFS,LONG	1			
36	X850-525200				.ELBOW-90,SWIVEL,ORFS	1			
39	X820-045151				.TEE-R/TYPE,ORFS	3			
40	X820-065151				.TEE-R/TYPE,ORFS	1			
41	X820-065251				.TEE-R/TYPE,ORFS	1			
43	S631-011004				.O-RING	15			
44	S631-014004				.O-RING	3			
47	S621-011001				.O-RING	20			

Item	Part_No	IS	Ord	T	Description	Qty	Serial_No	ITC	Remark
48	S621-012001				.O-RING	2			
52	S035-082026				.BOLT-W/WASHER	4			
54	S037-102026				.BOLT-W/WASHER	2			
56	S015-060456				.BOLT-HEX	2			
57	S015-080506				BOLT-HEX	2			
58	S403-060006				.WASHER-PLAIN	2			
59	S403-080006				.WASHER-PLAIN	2			
73	31Q6-20150				.SELECT VALVE	1			
74	31Q6-20130				.EPPR VALVE-BREAKER	1			

REGULATOR

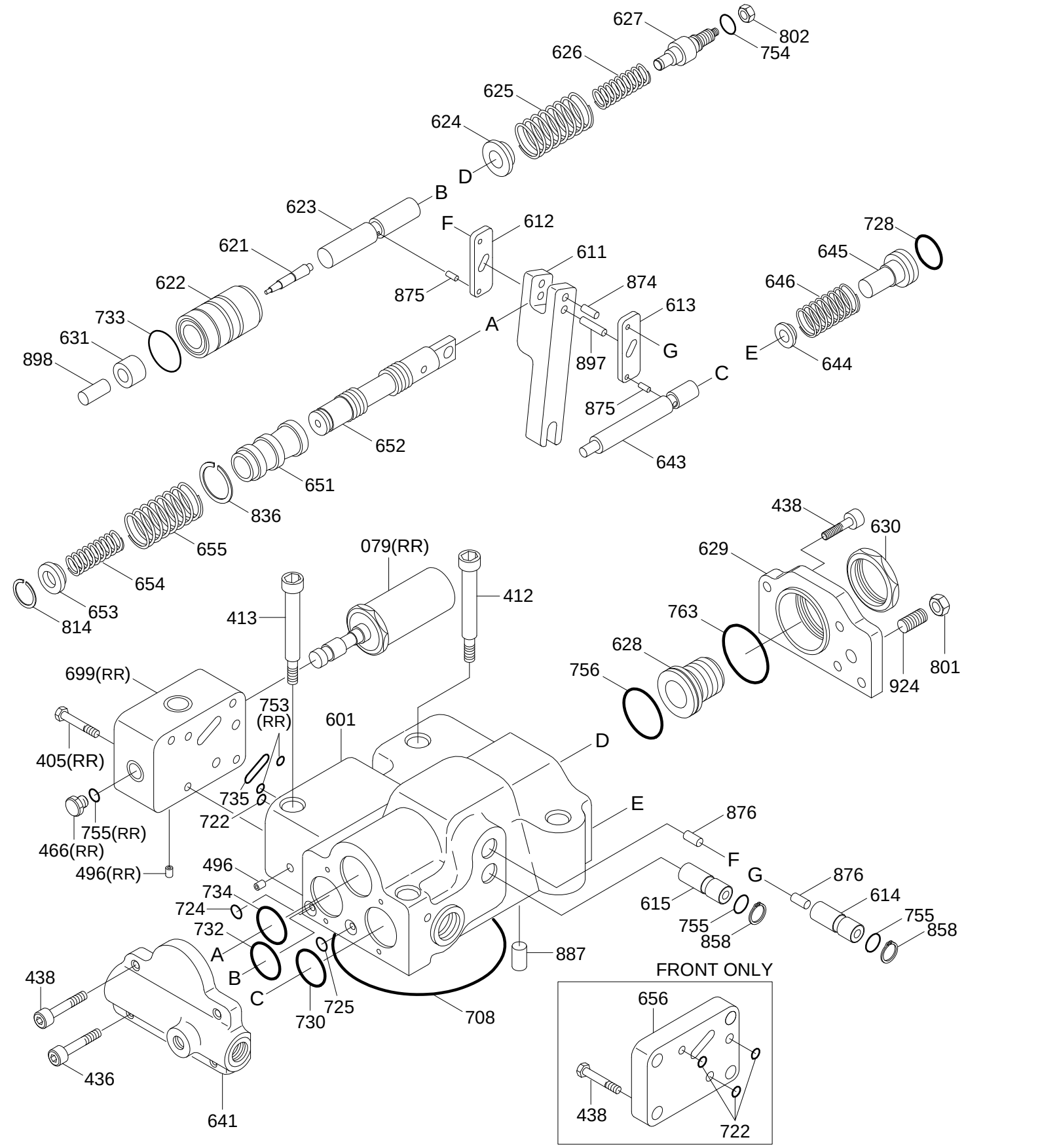
627
802
754
626
625
624
D
623
B
F
612
621
611
622
875
874
613
733
A
G
631
898
897
728
645
646
E
644
C
875
643
652
651
836
655
654
653
814
079(RR)
438
630
629
412
413
763
628
756
801
924
699(RR)
753
(RR)
601
D
405(RR)
735
722
E
876
F
755(RR)
466(RR)
496(RR)
496
734
724
732
A
B
C
725
730
708
887
615
755
858
G
876
614
755
858
438
436
641
FRONT ONLY
656
438
722

Item	Part_No	IS	Ord	T	Description	Qty	Serial_No	ITC	Remark
*	@				MAIN PUMP	1			NOT
*-2	XJBN-01571				.REGULATOR ASSY	1			REAR
	XJBN-01570				.REGULATOR ASSY	1			FRONT
405	XJBN-00823				..SCREW-HEX	4			REAR
412	XJBN-00321				..SCREW-HEX	2			
413	XJBN-00320				..SCREW-HEX	2			
436	XJBN-00319				..SCREW-HEX	2			
438	XJBN-00318				..SCREW-HEX	6			REAR
					..SCREW-HEX	10			FRONT
466	XJBN-00030				..PLUG	1			REAR
496	XJBN-00032				..PLUG	6			REAR
					..PLUG	5			FRONT
N601	XJBN-00317				..CASING	1			NOT
N611	XJBN-00824				..LEVER	1			NOT
N612	XJBN-00315				..LEVER-1	1			NOT
N613	XJBN-00314				..LEVER-2	1			NOT
N614	XJBN-00313				..PLUG-CENTER	1			NOT
N615	XJBN-00312				..PLUG-ADJUST	1			NOT
N621	XJBN-00580				..PISTON	1			NOT
N622	XJBN-00581				..CASE-PISTON	1			NOT
N623	XJBN-01202				..ROD-COMPENSATOR	1			NOT
N624	XJBN-01203				..SEAT(C)-SPRING	1			NOT
N625	XJBN-00582				..SPRING-OUTER	1			NOT
N626	XJBN-00306				..SPRING-INNER	1			NOT
N627	XJBN-01024				..STEM(C)-ADJUST	1			NOT

Item	Part_No	IS	Ord	T	Description	Qty	Serial_No	ITC	Remark
N628	XJBN-01025				..SCREW(C)-ADJUST	1			NOT
N629	XJBN-00303				..COVER(C)	1			NOT
N630	XJBN-00302				..NUT-LOCK	1			NOT
N631	XJBN-00825				..SLEEVE	1			NOT
N641	XJBN-00871				..COVER-PILOT	1			NOT
N643	XJBN-01205				..PISTON-PILOT	1			NOT
N644	XJBN-01206				..SEAT(Q)-SPRING	1			NOT
N645	XJBN-00793				..STEM(Q)-ADJUST	1			NOT
N646	XJBN-00295				..SPRING-PILOT	1			NOT
N651	XJBN-00443				..SLEEVE	1			NOT
N652	XJBN-00291				..SPOOL	1			NOT
N653	XJBN-00290				..SEAT-SPRING	1			NOT
N654	XJBN-00289				..SPRING-RETURN	1			NOT
N655	XJBN-00288				..SPRING-SET	1			NOT
N656	XJBN-00287				..COVER-BLOCK	1			NOT
N699	XJBN-00442				..CASING	1			NOT
708	XJBN-00286				..O-RING	1			
722	XJBN-00285				..O-RING	1			REAR
					..O-RING	3			FRONT
724	XJBN-00044				..O-RING	9			
725	XJBN-00231				..O-RING	1			
728	XJBN-00097				..O-RING	1			
730	XJBN-00230				..O-RING	2			
732	XJBN-00820				..O-RING	1			
733	XJBN-00282				..O-RING	1			

Item	Part_No	IS	Ord	T	Description	Qty	Serial_No	ITC	Remark
734	XJBN-00281				..O-RING	1			
753	XJBN-00441				..O-RING	2			REAR
754	XJBN-01026				..O-RING	1			
755	XJBN-00045				..O-RING	3			REAR
					..O-RING	2			REAR
756	XJBN-00279				..O-RING	1			
763	XJBN-00094				..O-RING	1			
801	XJBN-00278				..NUT	1			
802	XJBN-01027				..NUT	1			
814	XJBN-00277				..RING-SNAP	1			
N836	XJBN-00276				..RING-SNAP	1			NOT
858	XJBN-00275				..RING-SNAP	2			
N874	XJBN-00344				..PIN	3			NOT
N875	XJBN-00273				..PIN	2			NOT
N876	XJBN-00794				..PIN	2			NOT
N887	XJBN-00272				..PIN	1			NOT
N897	XJBN-00795				..PIN	1			NOT
N898	XJBN-00826				..PIN	1			NOT
924	XJBN-00269				..SCREW-SET	1			
079	XJBN-00382				.EPPR VALVE	1			
N	@				NOT INDIVIDUALLY SUPPLIED	AR			NOT

GEAR PUMP

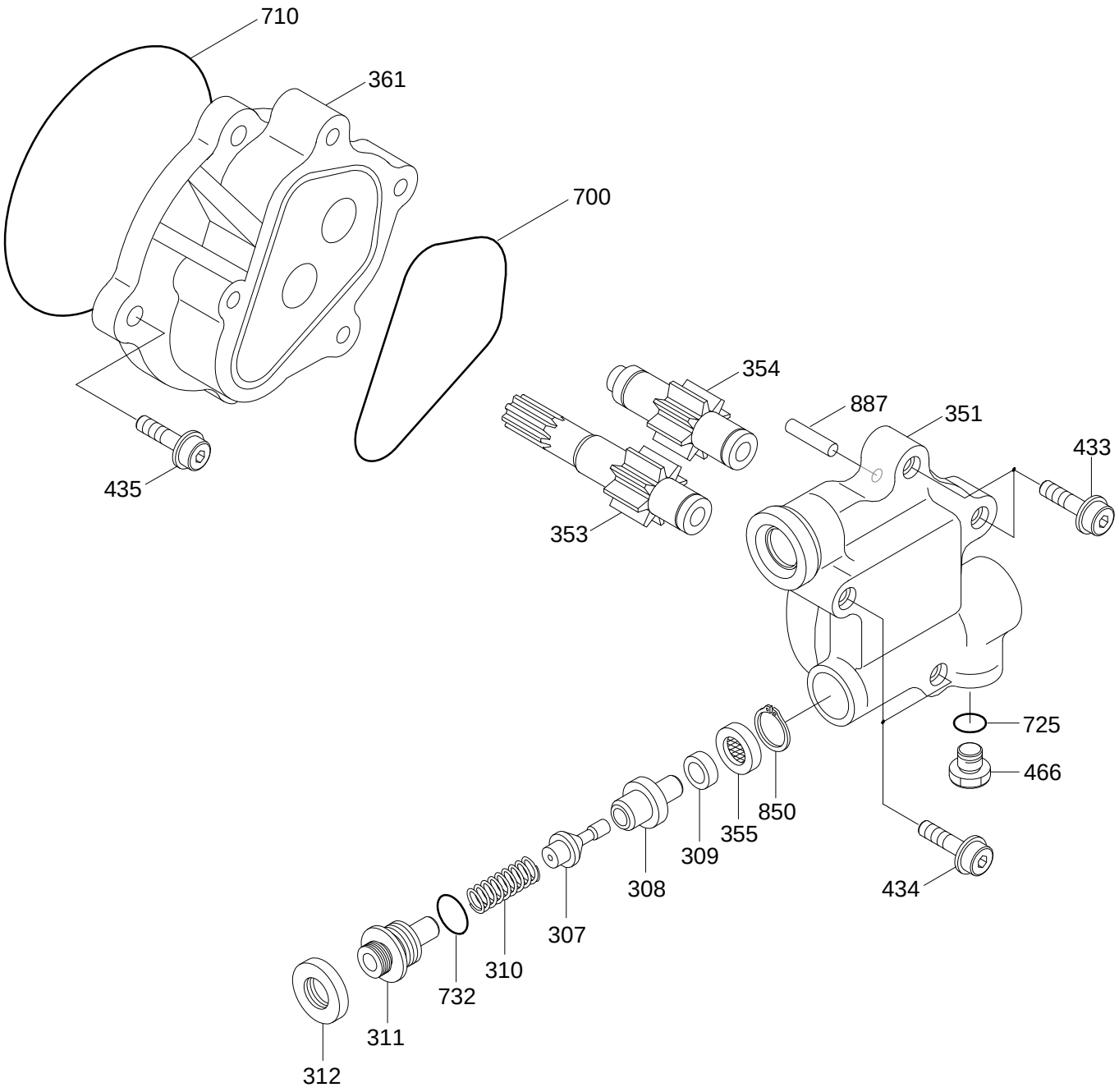
710
361
700
435
354
887
351
433
353
725
466
850
355
309
308
434
307
310
732
311
312

Item	Part_No	IS	Ord	T	Description	Qty	Serial_No	ITC	Remark
*-3	XJBN-01569				.GEAR PUMP	1			
N307	XJBN-00521				..POPPET	1			NOT
N308	XJBN-00522				..SEAT	1			NOT
309	XJBN-00523				..RING	1			
310	XJBN-00524				..SPRING	1			
311	XJBN-00525				..SCREW-ADJUST	1			
312	XJBN-00334				..NUT-LOCK	1			
N351	XJBN-00526				..CASE-GEAR	1			NOT
N353	XJBN-00332				..GEAR-DRIVE	1			NOT
N354	XJBN-00331				..GEAR-DRIVEN	1			NOT
355	XJBN-00330				..FILTER-RETURN	1			
N361	XJBN-00389				..CASE-FRONT	1			NOT
433	XJBN-00328				..SOCKET-FLANGE	2			
434	XJBN-00327				..SOCKET-FLANGE	2			
435	XJBN-00388				..SOCKET-FLANGE	4			
466	XJBN-00356				..PLUG	1			
700	XJBN-00325				..RING	1			
710	XJBN-00387				..O-RING	1			
725	XJBN-00045				..O-RING	1			
732	XJBN-00283				..O-RING	1			
850	XJBN-00324				..RING-SNAP	1			
N887	XJBN-00795				..PIN	2			NOT
N	@				NOT INDIVIDUALLY SUPPLIED	AR			NOT

[Item List] - Print Date : 2020.08.21 13:08

MAIN CONTROL VALVE(1/4)

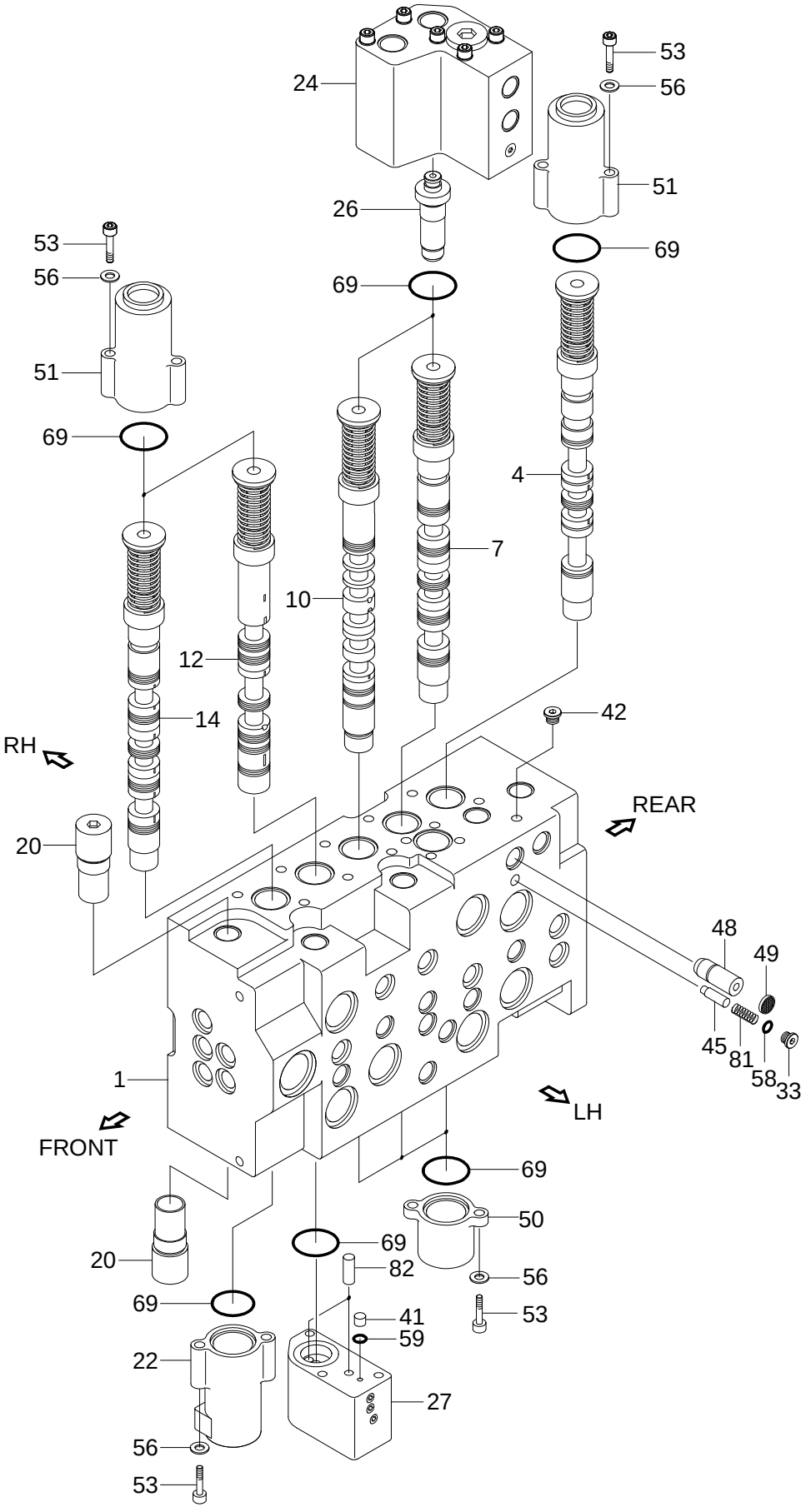

Item	Part_No	IS	Ord	T	Description	Qty	Serial_No	ITC	Remark
*	31Q5-10110				MAIN CONTROL VALVE	1			
N1	XKBF-01299				.HOUSING-P1	1			NOT
4	XKBF-01504				.SPOOL ASSY	1			TRAVEL-LH
7	XKBF-01507				.SPOOL ASSY	1			BOOM 1
10	XKBF-01508				.SPOOL ASSY	1			ARM 2
12	XKBF-00484				.SPOOL ASSY	1			ARM REGEN
14	XKBF-01509				.SPOOL ASSY	1			BUCKET
20	XKBF-01308				.RELIEF VALVE-NEGACON	2			
22	XKBF-01510				.STROKE LIMITER-BUCKET	1			
24	XKBF-01314				.HOLDING VALVEV KIT-A1	1			
26	XKBF-00899				.LOCK VALVE KIT-B	1			
27	XKBF-01316				.BLOCK-REGENERATION	1			
33	XKBF-01295				.PLUG	1			
41	XKBF-00401				.ORIFICE-PLUG	1			
42	XKBF-00931				.PLUG	1			
45	XKBF-00732				.POPPET-SIGNAL	1			
48	XKBF-00399				.ORIFICE-SIGNAL	1			
49	XKBF-00922				.FILTER-COIN TYPE	1			
50	XKBF-01322				.CAP-PILOT A	3			
51	XKBF-01323				.CAP-PILOT B1	3			
53	XKBF-00950				.BOLT-SOCKET HEAD	5			
56	XKBF-00625				.WASHER-PLAIN	5			
58	XKBF-01275				.O-RING	1			
59	XKBF-01328				.O-RING	1			
69	XKBF-01337				.O-RING	6			

Item	Part_No	IS	Ord	T	Description	Qty	Serial_No	ITC	Remark
81	XKBF-00733				.SPRING-CHECK	1			
82	XKBF-01249				.PIN-REGEN	2			
N	@				NOT INDIVIDUALLY SUPPLIED	AR			NOT

MAIN CONTROL VALVE(2/4)

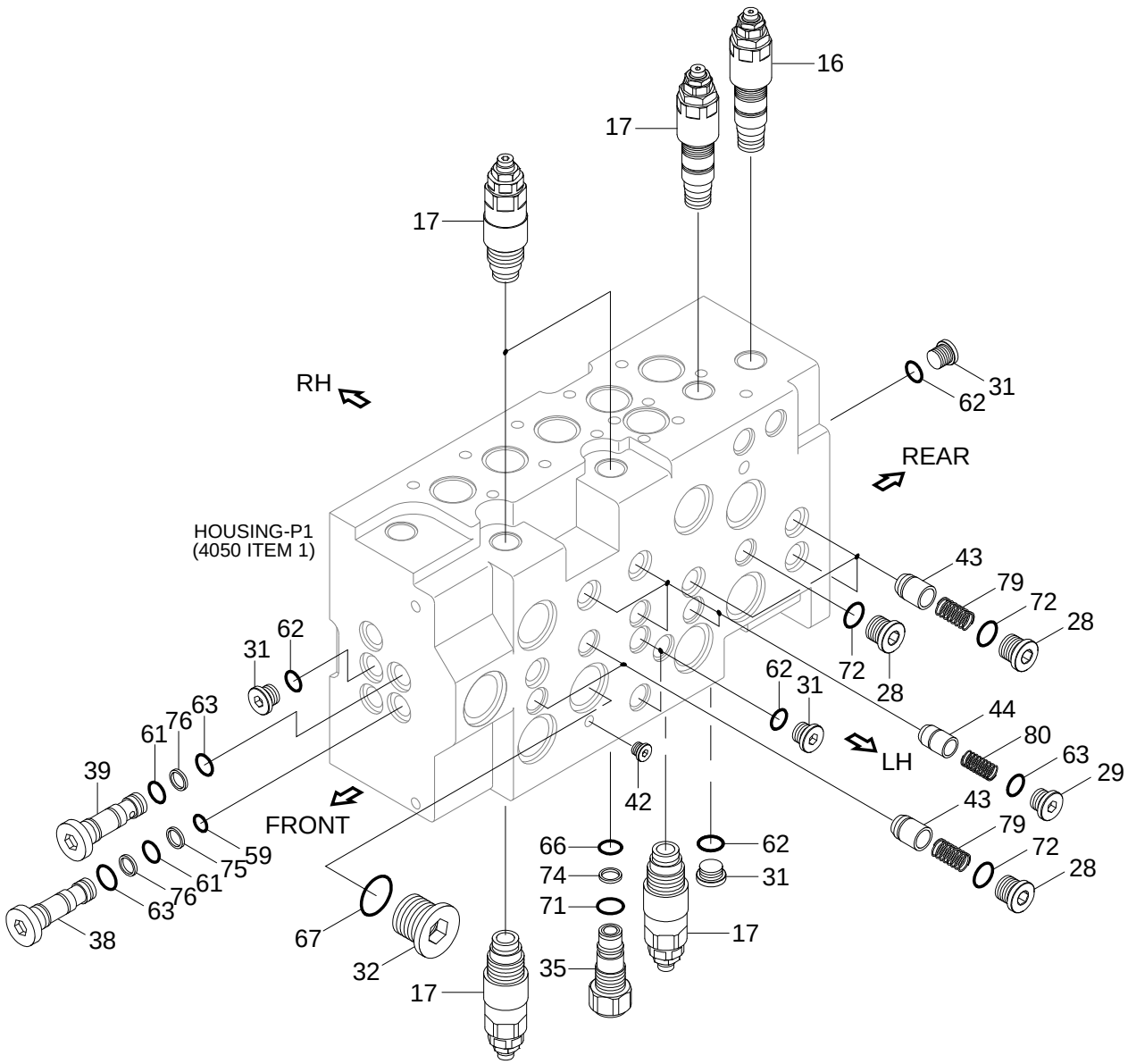

Item	Part_No	IS	Ord	T	Description	Qty	Serial_No	ITC	Remark
*	@				MAIN CONTROL VALVE	1			NOT
16	XKBF-01291				.MAIN RELIEF VALVE	1			
17	XKBF-01307				.RELIEF VALVE-OVERLOAD	5			
28	XKBF-01252				.PLUG	5			
29	XKBF-00892				.PLUG	4			
31	XKBF-00933				.PLUG	5			
32	XKBF-00932				.PLUG	1			
35	XKBF-00897				.PLUG	1			
38	XKBF-00488				.PLUG	1			
39	XKBF-01318				.PLUG	1			
42	XKBF-00931				.PLUG	1			
43	XKBF-00889				.POPPET 1	5			
44	XKBF-00893				.POPPET 2	4			
59	XKBF-01328				.O-RING	1			
61	XKBF-01330				.O-RING	2			
62	XKBF-01331				.O-RING	5			
63	XKBF-01332				.O-RING	6			
66	XKBF-01334				.O-RING	1			
67	XKBF-01335				.O-RING	1			
71	XKBF-01339				.O-RING	1			
72	XKBF-01282				.O-RING	3			
74	XKBF-01113				.RING-BACK UP	1			
75	XKBF-00961				.RING-BACK UP	1			
76	XKBF-00963				.RING-BACK UP	2			
79	XKBF-00890				.SPRING	5			

Item	Part_No	IS	Ord	T	Description	Qty	Serial_No	ITC	Remark
80	XKBF-00894				.SPRING	4			

MAIN CONTROL VALVE(3/4)

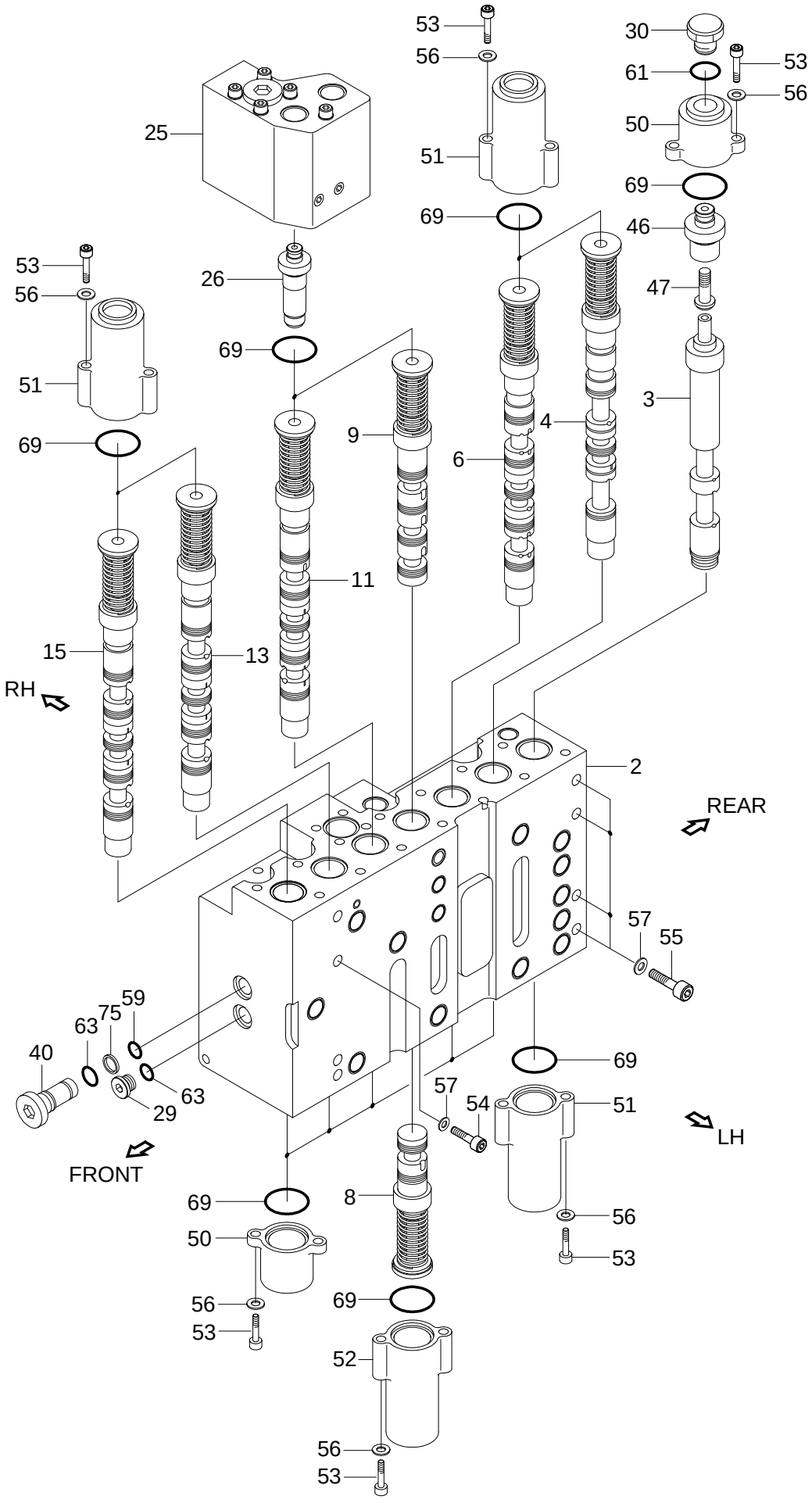

Item	Part_No	IS	Ord	T	Description	Qty	Serial_No	ITC	Remark
*	@				MAIN CONTROL VALVE	1			NOT
N2	XKBF-01300				.HOUSING-P2	1			NOT
3	XKBF-00879				.SPOOL ASSY	1			STRAIGHT TRAVEL
4	XKBF-01504				.SPOOL ASSY	1			TRAVEL-RH
6	XKBF-01505				.SPOOL ASSY	1			SWING
8	XKBF-00955				.SPOOL ASSY	1			SW PRIORITY
9	XKBF-01416				.SPOOL ASSY	1			BOOM 2
11	XKBF-01506				.SPOOL ASSY	1			ARM 1
13	XKBF-00884				.SPOOL ASSY	1			OPTION-B
15	XKBF-01474				.SPOOL ASSY	1			OPTION-C
25	XKBF-01315				.HOLDING VALVE KIT-A2	1			
26	XKBF-00899				.LOCK VALVE KIT-B	1			
29	XKBF-00892				.PLUG	1			
30	XKBF-01130				.PLUG	1			
40	XKBF-01319				.PLUG	1			
46	XKBF-01320				.SLEEVE-T/STRAIGHT	1			
47	XKBF-01321				.PISTON-T/STRAIGHT	1			
50	XKBF-01322				.CAP-PILOT A	6			
51	XKBF-01323				.CAP-PILOT B1	5			
52	XKBF-01324				.CAP-PILOT B2	1			
53	XKBF-00950				.BOLT-SOCKET HEAD	24			
54	XKBF-01325				.BOLT-SOCKET	1			
55	XKBF-01326				.BOLT-SOCKET	7			
56	XKBF-00625				.WASHER-PLAIN	7			
57	XKBF-01438				.WASHER-SPRING	8			

Item	Part_No	IS	Ord	T	Description	Qty	Serial_No	ITC	Remark
59	XKBF-01328				.O-RING	1			
61	XKBF-01330				.O-RING	1			
63	XKBF-01332				.O-RING	2			
69	XKBF-01337				.O-RING	14			
75	XKBF-00961				.RING-BACK UP	1			
N	@				NOT INDIVIDUALLY SUPPLIED	AR			NOT

MAIN CONTROL VALVE(4/4)

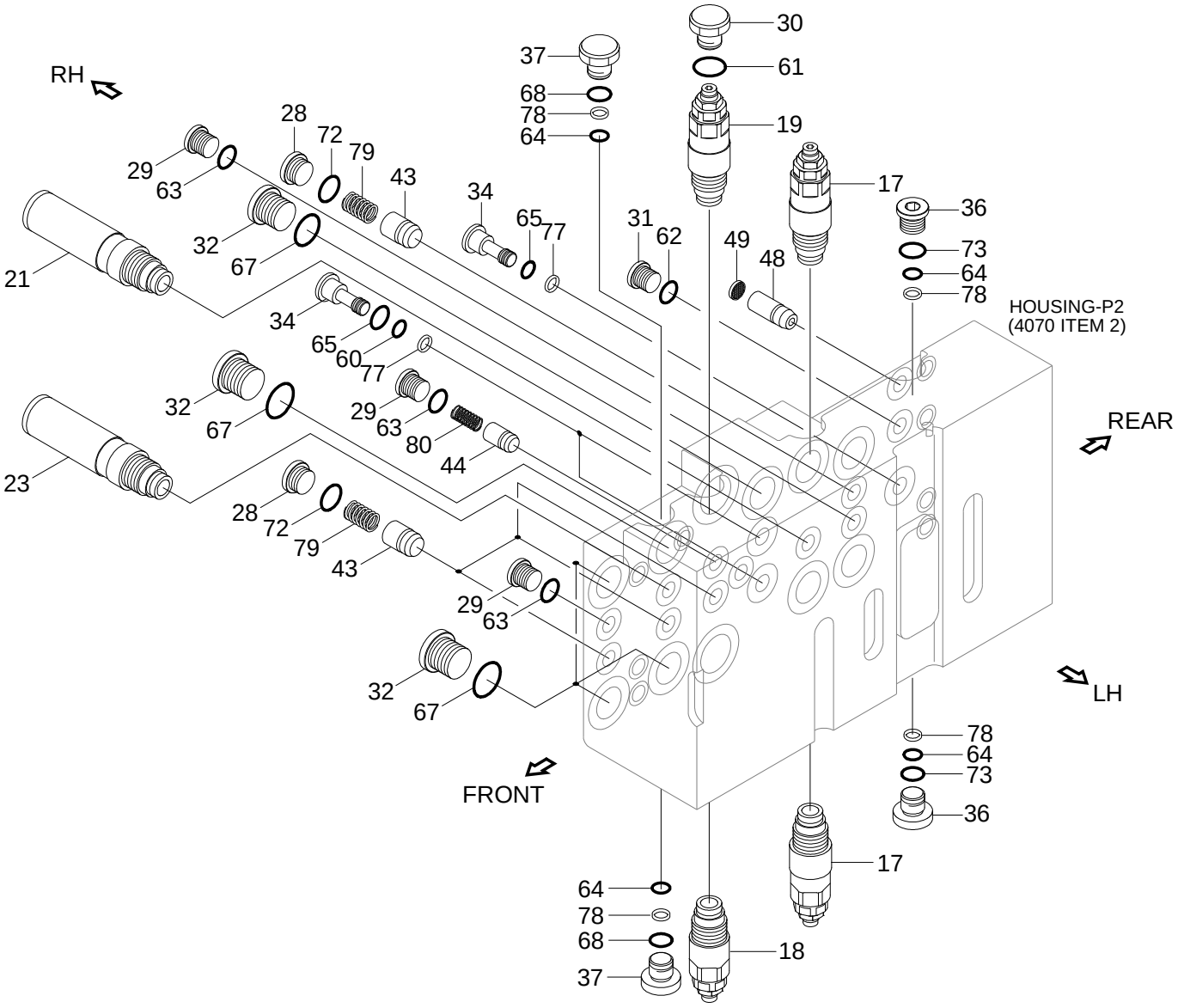

Item	Part_No	IS	Ord	T	Description	Qty	Serial_No	ITC	Remark
*	@				MAIN CONTROL VALVE	1			NOT
17	XKBF-01307				.RELIEF VALVE-OVERLOAD	2			
18	XKBF-01418				.RELIEF VALVE-OVERLOAD	1			
19	XKBF-01309				.RELIEF VALVE-OVERLOAD	1			
21	XKBF-01311				.LOGIC VALVE-SWING	1	- #0003		
	XKBF-01525				.LOGIC VALVE-SWING	1	#0004 -	B	
23	XKBF-01313				.ON/OFF VALVE-OPTION	1			
28	XKBF-01252				.PLUG	10			
29	XKBF-00892				.PLUG	3			
30	XKBF-01130				.PLUG	1			
31	XKBF-00933				.PLUG	1			
32	XKBF-00932				.PLUG	1			
34	XKBF-01317				.PLUG	3			
36	XKBF-00487				.PLUG	2			
37	XKBF-01277				.PLUG	2			
43	XKBF-00889				.POPPET 1	1			
44	XKBF-00893				.POPPET 2	1			
48	XKBF-00399				.ORIFICE-SIGNAL	1			
49	XKBF-00922				.FILTER-COIN TYPE	1			
60	XKBF-01329				.O-RING	2			
61	XKBF-01330				.O-RING	1			
62	XKBF-01331				.O-RING	1			
63	XKBF-01332				.O-RING	3			
64	XKBF-01333				.O-RING	4			
65	XKBF-01259				.O-RING	8			

Item	Part_No	IS	Ord	T	Description	Qty	Serial_No	ITC	Remark
67	XKBF-01335				.O-RING	2			
68	XKBF-01336				.O-RING	2			
72	XKBF-01282				.O-RING	1			
73	XKBF-01283				.O-RING	2			
77	XKBF-00962				.RING-BACK UP	3			
78	XKBF-01193				.RING-BACK UP	4			
79	XKBF-00890				.SPRING	4			
80	XKBF-00894				.SPRING	1			

SWING MOTOR

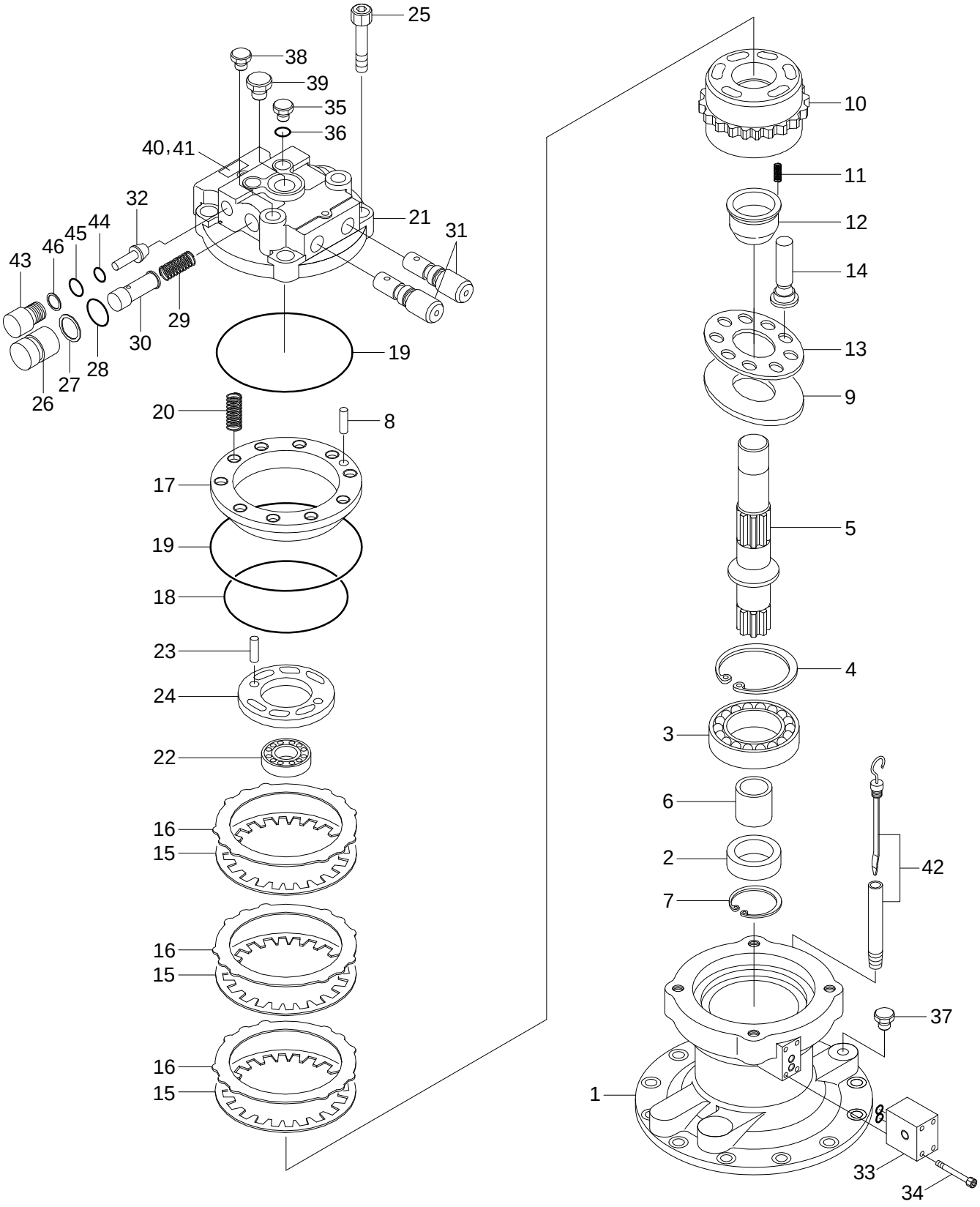

Description	Part no	Included item
Seal kit	XKAY-01401	2, 18, 19, 27, 28, 36, 44, 45, 46
Rotary kit	XKAY-00528	10, 11, 12, 13, 14, 24

Item	Part_No	IS	Ord	T	Description	Qty	Serial_No	ITC	Remark
N*	@				SWING MOTOR ASSY	1			NOT
*-1	31Q5-10160				.SWING MOTOR UNIT	1			
1	XKAY-01394				..BODY	1			
K2	XKAY-00521				..SEAL-OIL	1			
3	XKAY-00522				..BEARING-ROLLER	1			
4	XKAY-00523				..RING-SNAP	1			
5	XKAY-00524				..SHAFT	1			
6	XKAY-00525				..BUSHING	1			
7	XKAY-00526				..RING-STOP	1			
8	XKAY-00625				..PIN	1			
9	XKAY-00527				..PLATE-SHOE	1			
A	XKAY-00528				..ROTARY KIT	1			
A-A	XKAY-00529				...CYLINDER BLOCK KIT	1			
N10	XKAY-00633				....BLOCK-CYLINDER	1			NOT
N11	XKAY-00531				....SPRING	9			NOT
24	XKAY-00544				....PLATE-VALVE	1			
A-B	XKAY-00532				...RETAINER KIT	1			
N12	XKAY-00533				....GUIDE-BALL	1			NOT
N13	XKAY-00534				....PLATE-SET	1			NOT
A-C	XKAY-00535				...PISTON KIT	1			
N14	XKAY-00536				....PISTON ASSY	9			NOT
15	XKAY-00537				..PLATE-FRICTION	3			
16	XKAY-00538				..PLATE	3			
17	XKAY-00632				..PISTON-BRAKE	1			
K18	XKAY-00468				..O-RING	1			

Item	Part_No	IS	Ord	T	Description	Qty	Serial_No	ITC	Remark
K19	XKAY-00540				..O-RING	2			
20	XKAY-00541				..SPRING	20			
21	XKAY-00630				..COVER-REAR	1			
22	XKAY-00543				..BEARING-NEEDLE	1			
23	XKAY-00382				..PIN	2			
25	XKAY-00546				..BOLT-WRENCH	4			
26	XKAY-00309				..PLUG	2			
K27	XKAY-00141				..RING-BACK UP	2			
K28	XKAY-00310				..O-RING	2			
29	XKAY-00311				..SPRING	2			
30	XKAY-00312				..CHECK	2			
31	XKAY-00976				..RELIEF VALVE ASSY	2			
32	XKAY-00314				..REACTIONLESS VLV ASSY	2			
33	XKAY-01399				..TIME DELAY VALVE ASSY	1			
34	XKAY-00149				..BOLT-WRENCH	3			
35	XKAY-00150				..PLUG	1			
K36	XKAY-00151				..O-RING	3			
37	XKAY-00140				..PLUG	1			
38	XKAY-00975				..PLUG	1			
39	XKAY-00548				..PLUG	1			
40	XKAY-01400				..NAME PLATE	1			
41	XKAY-00277				..RIVET	2			
42	XKAY-00638				..LEVEL GAUGE	1			
43	XKAY-00322				..PLUG	2			
K44	XKAY-00324				..O-RING	2			

Item	Part_No	IS	Ord	T	Description	Qty	Serial_No	ITC	Remark
K45	XKAY-00247				..O-RING	2			
K46	XKAY-00605				..RING-BACK UP	2			
*-2	@				.SWING REDUCTION GEAR	1			NOT
K	XKAY-01401				SEAL KIT	1			SEE ILLUST
N	@				NOT INDIVIDUALLY SUPPLIED	AR			NOT

SWING REDUCTION GEAR

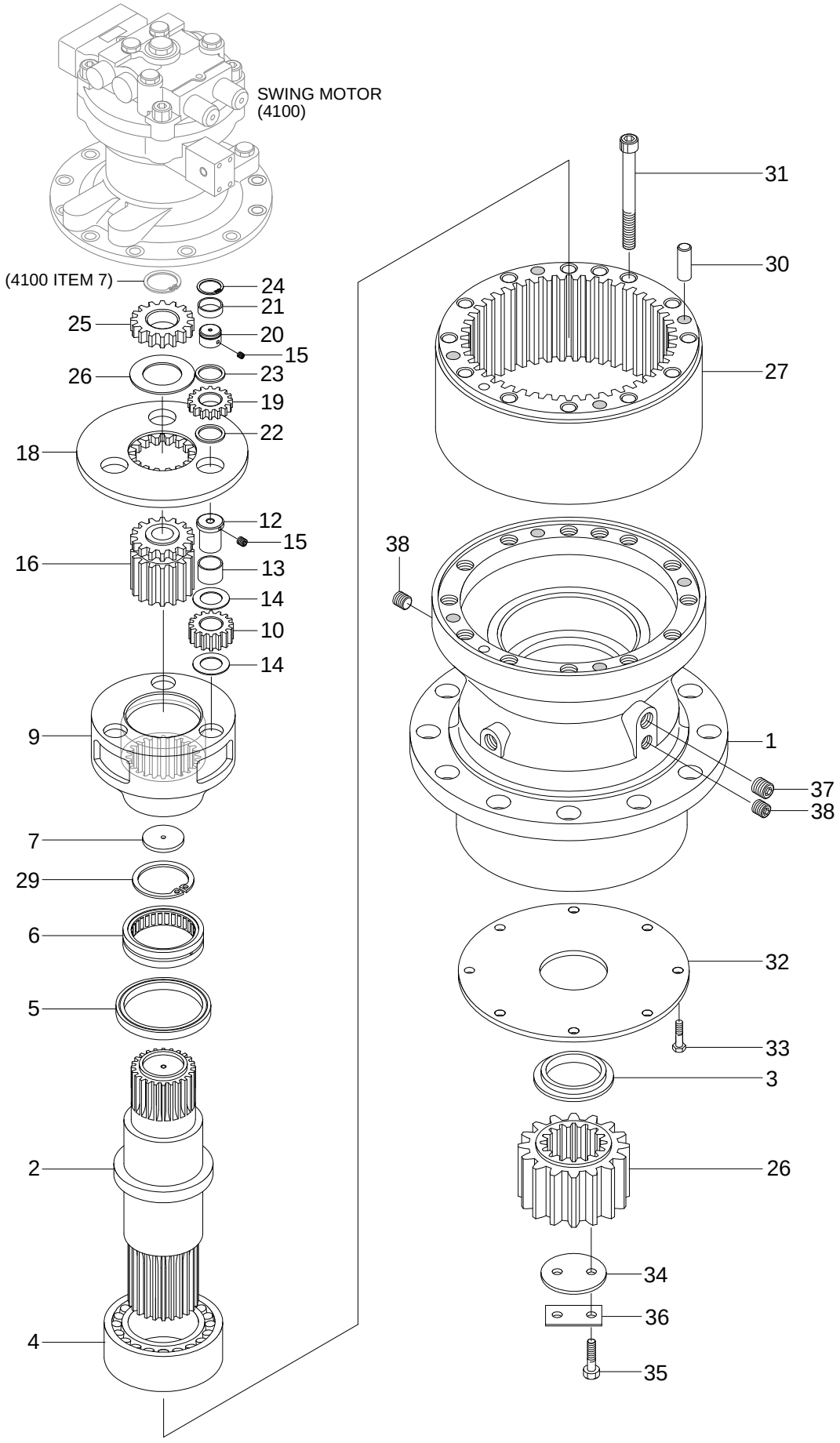

Item	Part_No	IS	Ord	T	Description	Qty	Serial_No	ITC	Remark
N*	@				SWING MOTOR ASSY	1			NOT
*-2	31Q6-10140				.SWING REDUCTION GEAR	1			
1	XKAQ-00771				..CASING	1			
2	XKAQ-00403				..SHAFT-DRIVE	1			
3	XKAQ-00018				..SPACER	1			
4	XKAQ-00026				..BEARING-ROLLER	1			
5	XKAQ-00032				..SEAL-OIL	1			
6	XKAQ-00029				..BEARING-ROLLER	1			
7	XKAQ-00404				..PLATE-THRUST	1			
8	XKAQ-00753				..CARRIER ASSY 2	1			
9	XKAQ-00075				...CARRIER 2	1			
10	XKAQ-00023				...GEAR-PLANET 2	3			
11	XKAQ-00643				...PIN ASSY 2	3			
12	XKAQ-00070				....PIN	3			
N13	XKAQ-00291				....BUSHING 2	1			NOT
14	XKAQ-00071				...WASHER-THRUST	6			
15	XKAQ-00048				...PIN-SPRING	3			
16	XKAQ-00755				..GEAR-SUN 2	1			
17	XKAQ-00754				..CARRIER ASSY 1	1			
15	XKAQ-00048				...PIN-SPRING	3			
18	XKAQ-00531				...CARRIER 1	1			
19	XKAQ-00025				...GEAR-PLANET 1	3			
20	XKAQ-00415				...PIN 1	3			
21	XKAQ-00030				...CAGE-NEEDLE	3			
22	XKAQ-00057				...PLATE-SIDE 1	3			

Item	Part_No	IS	Ord	T	Description	Qty	Serial_No	ITC	Remark
23	XKAQ-00040				...PLATE-SIDE 2	3			
24	XKAQ-00041				...RING-STOP	3			
25	XKAQ-00010				..GEAR-SUN 1	1			
26	XKAQ-00534				..PLATE-SIDE 3	1			
27	XKAQ-00529				..GEAR-RING	1			
28	XKAQ-00770				..GEAR-PINION	1			
29	XKAQ-00074				..RING-STOP	1			
30	XKAQ-00072				..PIN-KNOCK	2			
31	XKAQ-00065				..BOLT-SOCKET	12			
32	XKAQ-00031				..PLATE-COVER	1			
33	XKAQ-00064				..BOLT-HEX	8			
34	XKAQ-00043				..PLATE-LOCK	1			
35	XKAQ-00042				..BOLT-HEX	2			
36	XKAQ-00292				..WASHER-LOCK	1			
37	XKAQ-00049				..PLUG	1			
38	XKAQ-00066				..PLUG	2			
*-1	@				.SWING MOTOR UNIT	1			NOT
N	@				NOT SUPPLIED PARTS	AR			NOT

REMOTE CONTROL LEVER

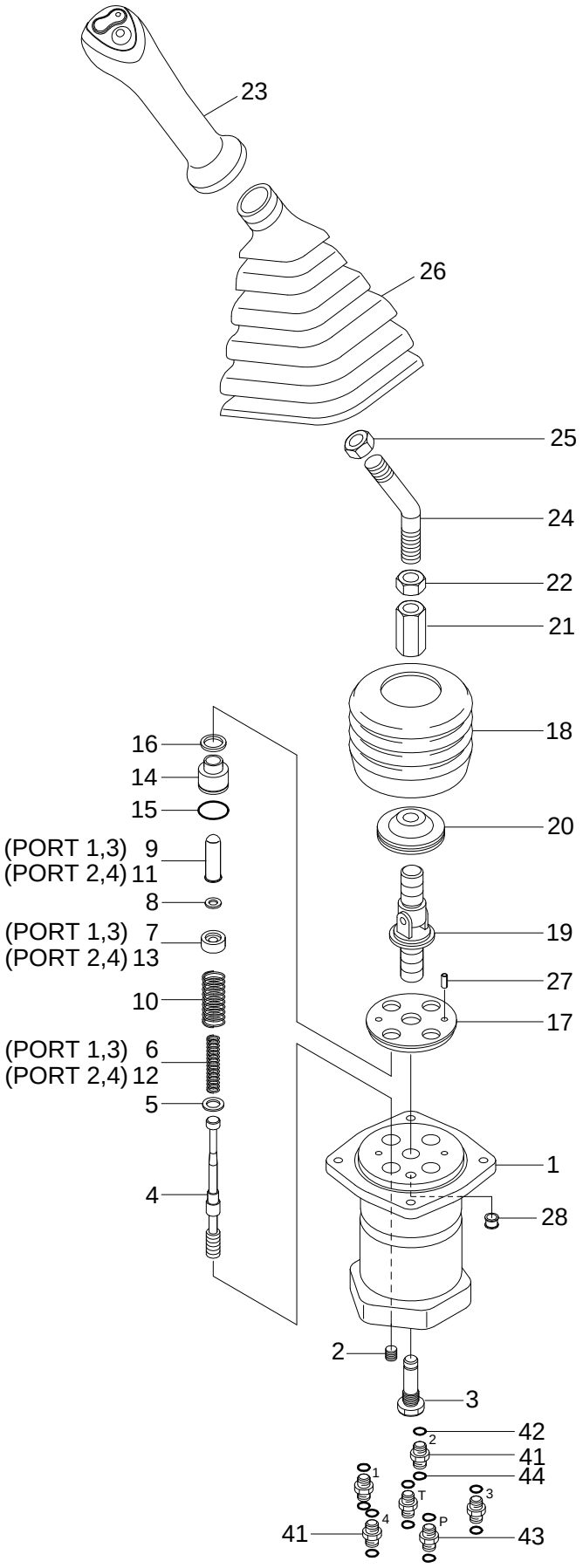

Description	Parts no	Included item
RCV lever seal kit	XKAY-01431	15, 16

Item	Part_No	IS	Ord	T	Description	Qty	Serial_No	ITC	Remark
*	31Q6-20011				RCV LEVER-LH	1			
	31Q6-20021				RCV LEVER-RH	1			
*-1	31Q6-21011				.RCV LEVER SUB-LH	1			
	31Q6-21021				.RCV LEVER SUB-RH	1			
1	XKAY-01417				..CASE	1			
2	XKAY-00065				..PLUG	4			
3	XKAY-00768				..BUSHING	1			
*-2	XKAY-01418				..SPOOL KIT(1,3)	2			PORT 1,3
	XKAY-01419				..SPOOL KIT(2,4)	2			PORT 2,4
N4	XKAY-00771				...SPOOL	1			NOT
N5	XKAY-00772				...SHIM	AR			NOT
N6	XKAY-01420				...SPRING(1,3)	4			NOT
N12	XKAY-00781				...SPRING(2,4)	2			NOT
N7	XKAY-00436				...SEAT-SPRING(1,3)	2			NOT
N13	XKAY-00059				...SEAT-SPRING(2,4)	2			NOT
N8	XKAY-00058				...STOPPER	4			NOT
N10	XKAY-01421				..SPRING	4			NOT
*-3	XKAY-01422				..PLUG KIT(1,3)	2			PORT 1,3
	XKAY-01423				..PLUG KIT(2,4)	2			PORT 2,4
N9	XKAY-00052				...ROD-PUSH(1,3)	2			NOT
N11	XKAY-00439				...ROD-PUSH(2,4)	2			NOT
N14	XKAY-00784				...PLUG	4			NOT
K15	XKAY-00785				...O-RING	4			
K16	XKAY-01424				...ROD SEAL	4			
17	XKAY-01425				..PLATE	1			

Item	Part_No	IS	Ord	T	Description	Qty	Serial_No	ITC	Remark
18	XKAY-00786				..BOOT	1			
19	XKAY-00049				..JOINT ASSY	1			
20	XKAY-01066				..SWASH PLATE	1			
21	XKAY-00047				..NUT-HEX	1			
*-4	XKAY-01426				..HANDLE KIT LH	1			
	XKAY-01427				..HANDLE KIT RH	1			
N22	XKAY-00046				...NUT	1			NOT
N23	XKAY-01428				...HANDLE ASSY	1			NOT
	XKAY-01429				...HANDLE ASSY	1			NOT
N24	XKAY-01430				...BAR-HANDLE	1			NOT
N25	XKAY-00811				...NUT	1			NOT
N26	XKAY-01083				...BOOT	1			NOT
N27	XKAY-00662				...PIN-SPRING	2			NOT
28	XKAY-00074				..BUSHING	1			
41	X500-110002				.CONNECTOR-ORFS	5			
42	S631-014004				.O-RING	6			
43	31N6-22090				.FILTER-LAST GUARD	1			
44	S621-012001				.O-RING	6			
K	XKAY-01431				SEAL KIT	1			SEE ILLUST
N	@				NOT INDIVIDUALLY SUPPLIED	AR			NOT

DOZER CONTROL LEVER

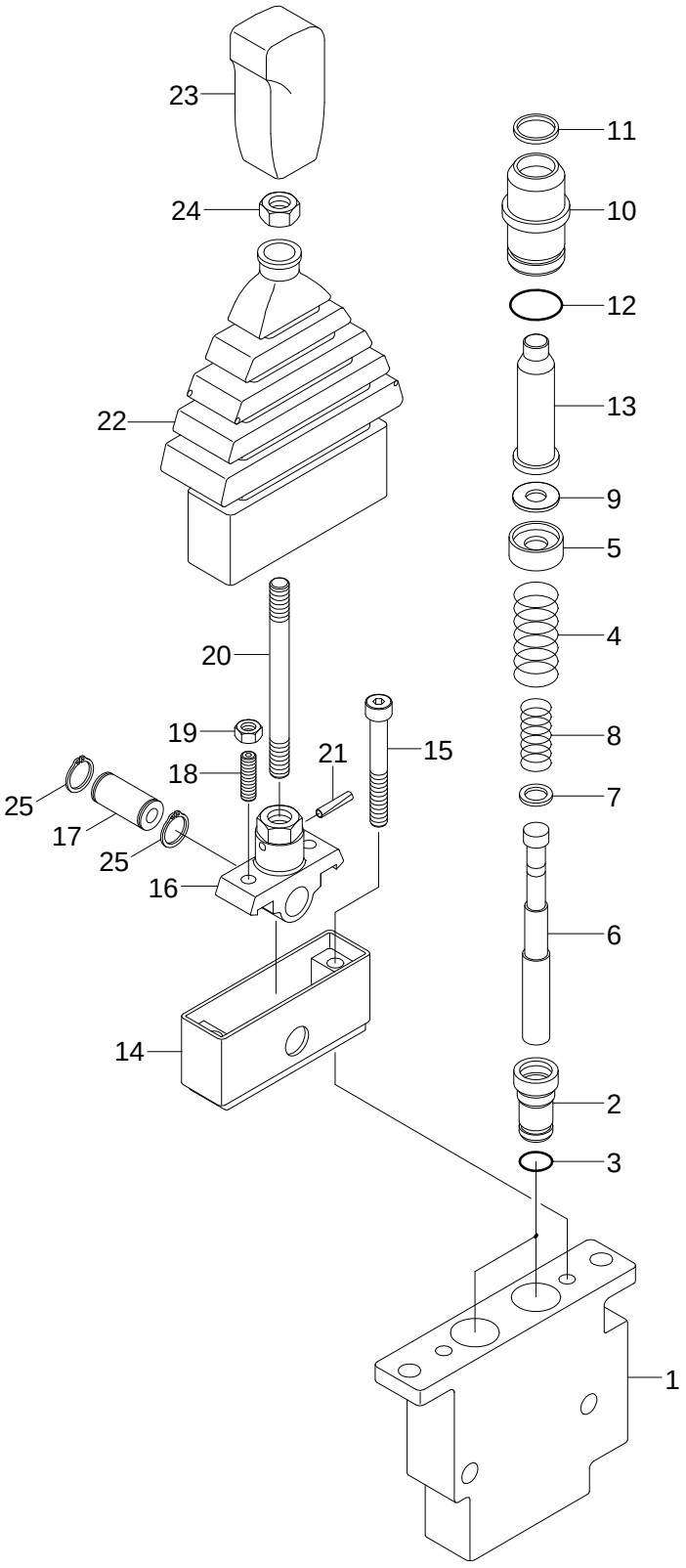

Description	Parts no	Included item
RCV dozer lever seal kit	XKAY-01467	3, 11, 12

Item	Part_No	IS	Ord	T	Description	Qty	Serial_No	ITC	Remark
*	31Q4-20080				DOZER CONTROL LEVER	1			
1	XKAY-01452				.BODY	1			
2	XKAY-00749				.PLUG	2			
K3	XKAY-00728				.O-RING	2			
4	XKAY-01453				.SPRING	2			
*-1	XKAY-01454				.SPOOL KIT	2			
N5	XKAY-00714				..SPOOL	2			NOT
N6	XKAY-00734				..SPOOL	1			NOT
N7	XKAY-00081				..SEAT-SPRING	1			NOT
N8	XKAY-01455				..SPRING	1			NOT
N9	XKAY-00084				..STOPPER	1			NOT
*-2	XKAY-01456				.PLUG KIT	2			
N10	XKAY-01457				..PLUG	1			NOT
K11	XKAY-00055				..SEAL-ROD	1			
K12	XKAY-00100				..O-RING	1			
N13	XKAY-01458				..ROD-PUSH	1			NOT
14	XKAY-01459				.COVER	1			
15	XKAY-00758				.BOLT-WRENCH	2			
16	XKAY-01460				.GUIDE	1			
17	XKAY-00760				.PIN	1			
18	XKAY-01461				.BOLT-SOCKET	2			
19	XKAY-00762				.NUT-HEX	2			
20	XKAY-01462				.BAR	1			
21	XKAY-01463				.PIN-SPRING	1			
22	XKAY-01464				.BELLOWS	1			

Item	Part_No	IS	Ord	T	Description	Qty	Serial_No	ITC	Remark
23	XKAY-01465				.LEVER	1			
24	XKAY-01466				.NUT	1			
25	XKAY-00763				.RING-SNAP	2			
K	XKAY-01467				SEAL KIT	1			SEE ILLUST

REMOTE CONTROL PEDAL

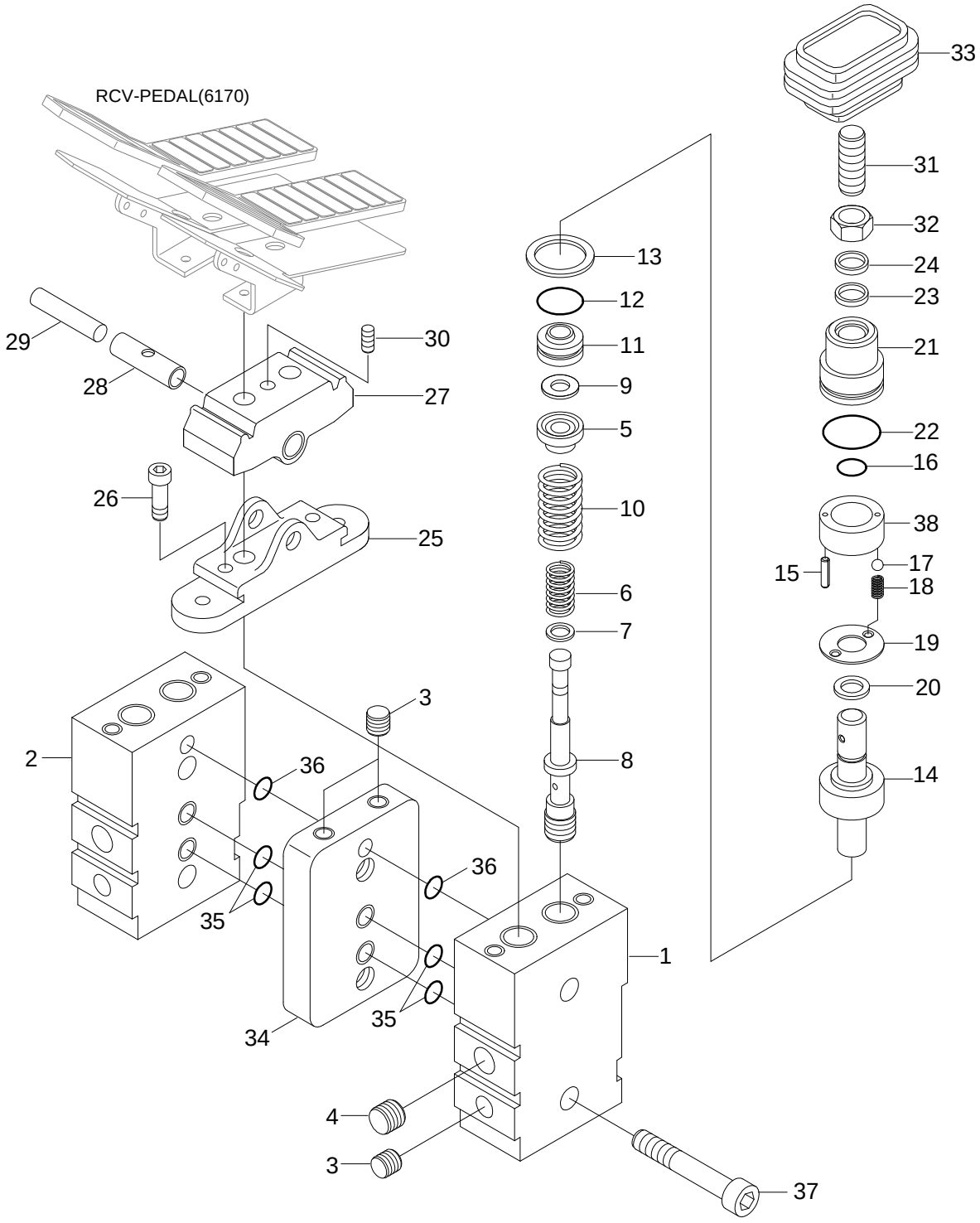

Description	Parts no	Included item
Seal kit	XKAY-00667	12, 16, 22, 23, 24, 35, 36

Item	Part_No	IS	Ord	T	Description	Qty	Serial_No	ITC	Remark
*	31Q6-20100				RCV PEDAL	1			
1	XKAY-00035				.BODY(1)	1			
2	XKAY-00034				.BODY(2)	1			
3	XKAY-00065				.PLUG	4			
4	XKAY-00032				.PLUG	2			
N5	XKAY-00031				.SEAT-SPRING	4			NOT
N6	XKAY-01084				.SPRING	4			NOT
N7	XKAY-00029				.SEAT-SPRING	4			NOT
N8	XKAY-00028				.SPOOL	4			NOT
N9	XKAY-00027				.STOPPER	4			NOT
10	XKAY-01085				.SPRING	4			
11	XKAY-00025				.GUIDE-ROD	4			
K12	XKAY-00657				.O-RING	4			
13	XKAY-00658				.RING-SNAP	4			
N14	XKAY-00660				.ROD-PUSH	4			NOT
N15	XKAY-00662				.PIN-SPRING	4			NOT
K16	XKAY-00021				.SEAL	4			
N17	XKAY-00020				.BALL-STEEL	4			NOT
N18	XKAY-00019				.SPRING	4			NOT
N19	XKAY-00068				.PLATE	4			NOT
N20	XKAY-00018				.RING-SNAP	4			NOT
N21	XKAY-00017				.PLUG	4			NOT
K22	XKAY-00664				.O-RING	4			
K23	XKAY-00067				.SEAL-ROD	4			
K24	XKAY-00014				.SEAL-DUST	4			

Item	Part_No	IS	Ord	T	Description	Qty	Serial_No	ITC	Remark
N25	XKAY-00013				.COVER	4			NOT
26	XKAY-00012				.BOLT-WRENCH	4			
N27	XKAY-00011				.CAM	2			NOT
N28	XKAY-00010				.BUSHING	4			NOT
29	XKAY-00009				.SHAFT-CAM	2			
N30	XKAY-00101				.SCREW-SET	2			NOT
N31	XKAY-00007				.SCREW-SET	4			NOT
N32	XKAY-00006				.NUT-HEX	4			NOT
33	XKAY-00005				.BELLOWS	2			
34	XKAY-00004				.SPACER	1			
K35	XKAY-00323				.O-RING	4			
K36	XKAY-00665				.O-RING	2			
37	XKAY-00666				.BOLT-SOCKET	4			
N38	XKAY-00661				.PISTON	4			NOT
K	XKAY-00667				SEAL KIT	1			SEE ILLUST
N	@				NOT SUPPLIED PARTS	AR			NOT

TRAVEL MOTOR(1/2)

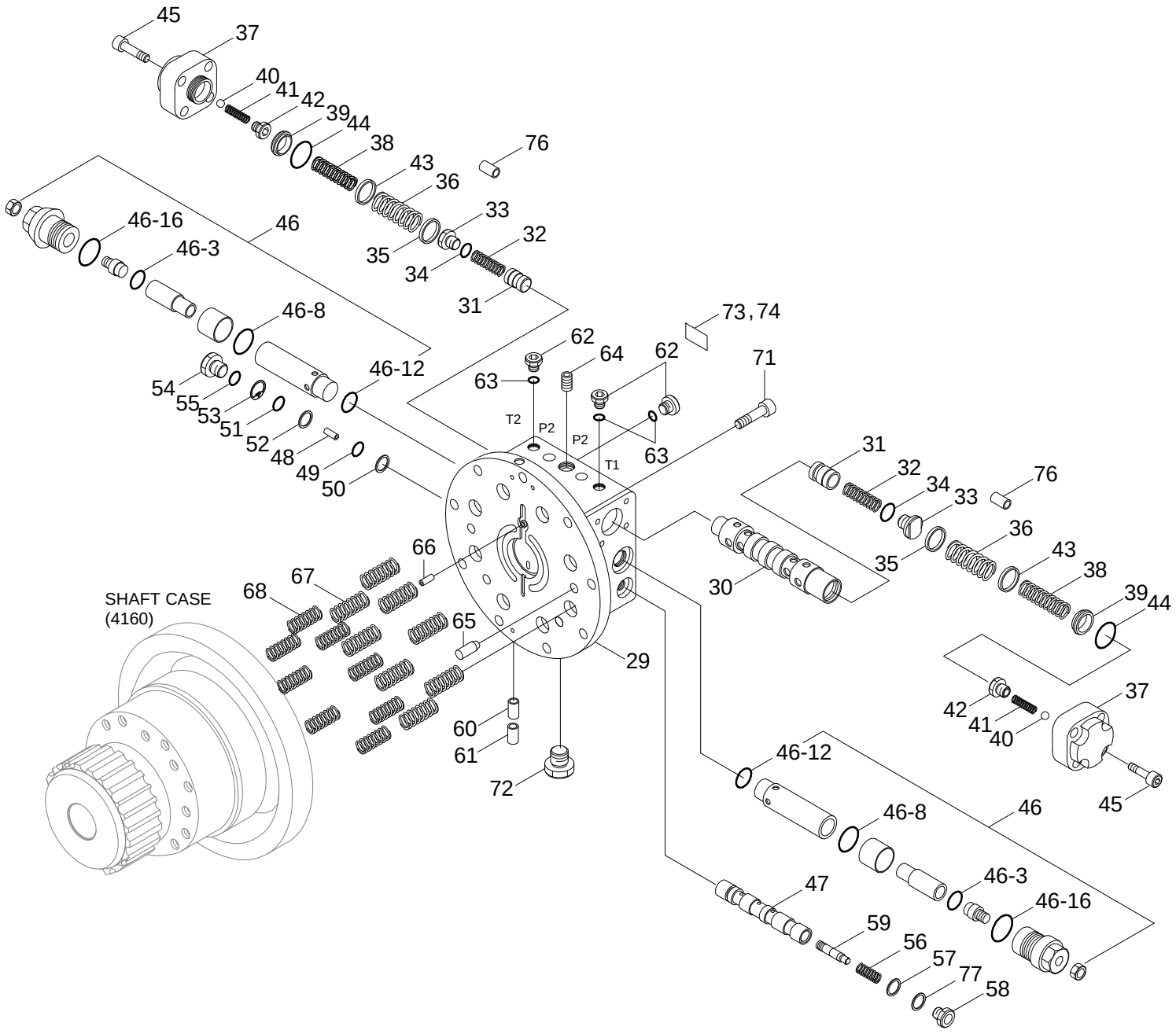

Description	Parts no	Included item
Travel motor seal kit	XKAY-00518	3, 22, 23, 24, 25, 27, 28, 34, 44, 46-3, 46-8, 46-12, 46-16, 49, 50, 51, 52, 55, 63

Item	Part_No	IS	Ord	T	Description	Qty	Serial_No	ITC	Remark
N*	31Q5-42050				TRAVEL MOTOR ASSY	1			NOT
*-1	31Q5-42030				.TRAVEL MOTOR UNIT	1			
29	XKAY-00475				..COVER-REAR	1			
C	XKAY-00476				..SPOOL KIT	1			INCL 30-34
N30	XKAY-00477				...SPOOL	1			NOT
N31	XKAY-00478				...CHECK	2			NOT
N32	XKAY-00479				...SPRING	2			NOT
N33	XKAY-00480				...PLUG	2			NOT
K34	XKAY-00481				...O-RING	2			
35	XKAY-00482				..SEAT-SPRING	2			
36	XKAY-00483				..SPRING	2			
37	XKAY-00484				..COVER	2			
38	XKAY-00485				..SPRING	2			
39	XKAY-00486				..SPOOL	2			
40	XKAY-00487				..BALL-STEEL	2			
41	XKAY-00488				..SPRING	2			
42	XKAY-00489				..PLUG	2			
43	XKAY-00490				..SEAT-SPRING	2			
K44	XKAY-00825				..O-RING	2			
45	XKAY-00492				..BOLT-WRENCH	8			
46	XKAY-01407				..RELIEF VALVE ASSY	2			
K46-3	XKAY-00670				...O-RING	1			
K46-8	XKAY-00669				...O-RING	1			
K46-12	XKAY-00671				...O-RING	1			
K46-16	XKAY-00668				...O-RING	1			

Item	Part_No	IS	Ord	T	Description	Qty	Serial_No	ITC	Remark
47	XKAY-00494				..SPOOL	1			
48	XKAY-00826				..GUIDE	1			
K49	XKAY-00827				..O-RING	1			
K50	XKAY-00497				..RING-BACK UP	1			
K51	XKAY-00828				..O-RING	1			
K52	XKAY-00499				..RING-BACK UP	1			
53	XKAY-00500				..RING-SNAP	1			
54	XKAY-00501				..PLUG	3			
K55	XKAY-00247				..O-RING	4			
56	XKAY-00502				..SPRING	1			
57	XKAY-00503				..SEAT-SPRING	1			
58	XKAY-00504				..PLUG	1			
59	XKAY-00505				..SPOOL	1			
60	XKAY-00506				..ORIFICE	2			
61	XKAY-00507				..ORIFICE	2			
62	XKAY-00508				..PLUG	3			
K63	XKAY-00256				..O-RING	3			
64	XKAY-00032				..PLUG	1			
					..PLUG	1			
65	XKAY-00509				..PIN	4			
66	XKAY-00510				..PIN	1			
67	XKAY-00511				..SPRING	8			
68	XKAY-00512				..SPRING	8			
71	XKAY-00385				..BOLT-WRENCH	16			
72	XKAY-00515				..PLUG	1			

Item	Part_No	IS	Ord	T	Description	Qty	Serial_No	ITC	Remark
73	XKAY-01128				..NAME PLATE	1			
74	XKAY-00517				..RIVET	2			
76	XKAY-00519				..ORIFICE	2			
77	XKAY-01097				..SHIM	AR			
*-2	@				.REDUCTION GEAR ASSY	1			NOT
K	XKAY-00518				SEAL KIT	1			SEE ILLUST
N	@				NOT SUPPLIED PARTS	AR			NOT

TRAVEL MOTOR(2/2)

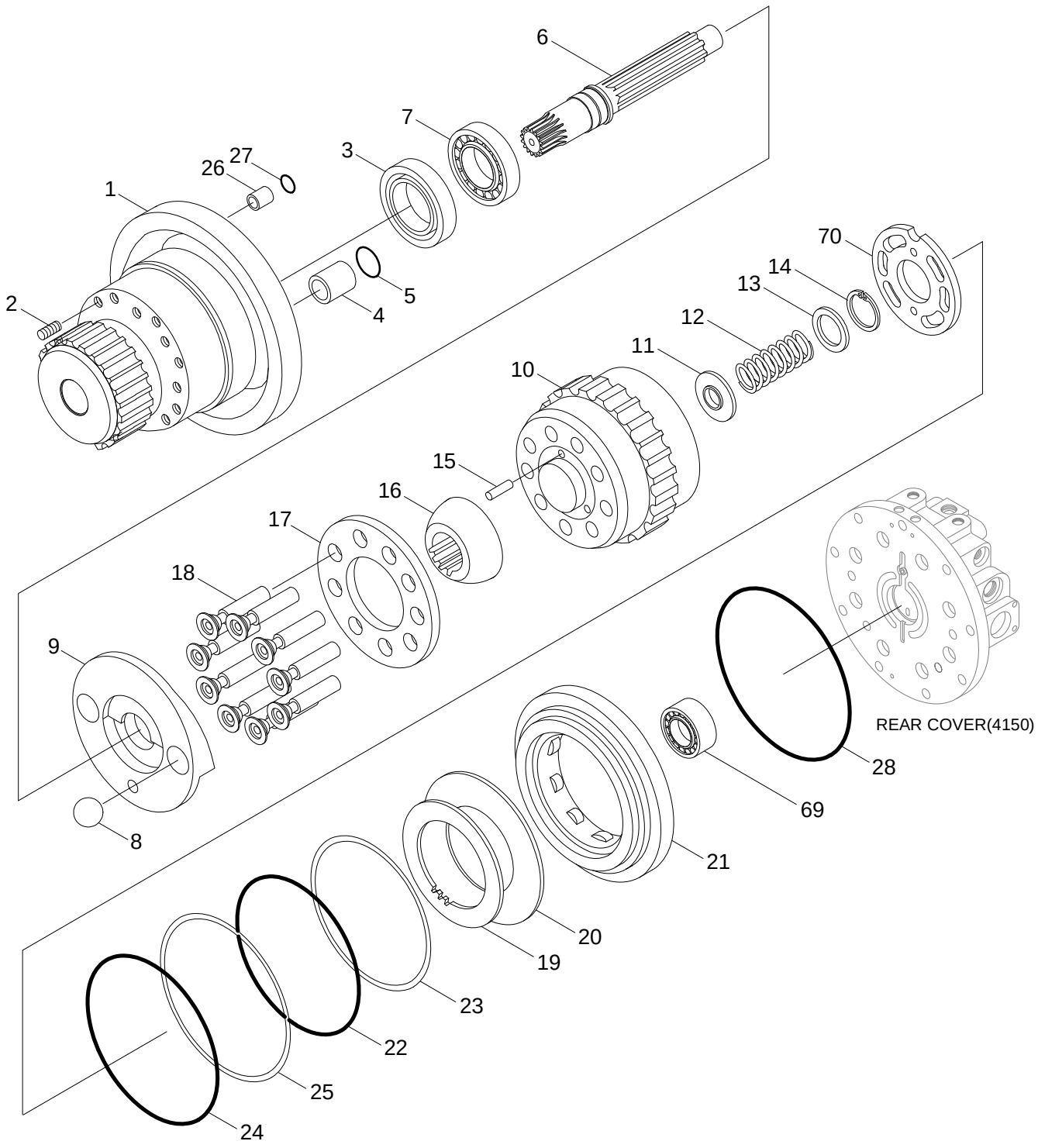

Description	Parts no	Included item
Travel motor seal kit	XKAY-00518	3, 22, 23, 24, 25, 27, 28, 34, 44, 46-3, 46-8, 46-12, 46-16, 49, 50, 51, 52, 55, 63

Item	Part_No	IS	Ord	T	Description	Qty	Serial_No	ITC	Remark
*	@				TRAVEL MOTOR ASSY	1			NOT
*-1	@				.TRAVEL MOTOR UNIT	1			NOT
1	XKAY-00442				..CASING-SHAFT	1			
2	XKAY-00443				..PLUG	10			
K3	XKAY-00444				..SEAL-OIL	1			
A	XKAY-00445				..SWASH PISTON KIT	2			INCL 4,5
N4	XKAY-00446				...SWASH PISTON	1			NOT
N5	XKAY-00447				...RING-PISTON	1			NOT
6	XKAY-00448				..SHAFT	1			
7	XKAY-00449				..BEARING	1			
8	XKAY-00450				..BALL-STEEL	2			
9	XKAY-00451				..PLATE-SWASH	1			
B	XKAY-01124				..ROTARY KIT	1			INCL B-A,B,C
B-A	XKAY-01125				...CYLINDER BLOCK KIT	1			INCL 10-15,70
N10	XKAY-01126				....CYLINDER BLOCK	1			NOT
N11	XKAY-00455				....SEAT-SPRING	1			NOT
N12	XKAY-00456				....SPRING	1			NOT
N13	XKAY-00457				....PLATE-END	1			NOT
N14	XKAY-00458				....RING-SNAP	1			NOT
N15	XKAY-00459				....PIN	3			NOT
70	XKAY-01127				....PLATE-VALVE	1			
B-B	XKAY-00460				...RETAINER KIT	1			
N16	XKAY-00461				....GUIDE-BALL	1			NOT
N17	XKAY-00462				....PLATE-SET	1			NOT
B-C	XKAY-00463				...PISTON KIT	1			

Item	Part_No	IS	Ord	T	Description	Qty	Serial_No	ITC	Remark
N18	XKAY-00464				....PISTON ASSY	9			NOT
19	XKAY-00465				..PLATE-FRICTION	3			
20	XKAY-00466				..PLATE	3			
21	XKAY-00467				..PISTON-PARKING	1			
K22	XKAY-00468				..O-RING	1			
K23	XKAY-00469				..RING-BACK UP	1			
K24	XKAY-00470				..O-RING	1			
K25	XKAY-00471				..RING-BACK UP	1			
26	XKAY-00472				..ORIFICE	1			
K27	XKAY-00473				..O-RING	3			
K28	XKAY-00474				..O-RING	1			
69	XKAY-00513				..BEARING	1			
K	@				SEAL KIT	1			NOT
N	@				NOT SUPPLIED PARTS	AR			NOT
N405	XKAH-00104				..O-RING	3			NOT
N406	XKAH-00108				..O-RING	1			NOT
N407	XKAH-01146				..RETAINER-SPRING	1			NOT
N408	XKAH-01147				..SPRING	1			NOT
N409	XKAH-01278				..PISTON	1			NOT
N410	XKAH-00105				..O-RING	2			NOT
N411	XKAH-00107				..RING-BACK UP	2			NOT
N412	XKAH-01149				..PLUG-ADJUST	1			NOT
N413	XKAH-01150				..NUT-LOCK	1			NOT
K	HE3D03305				SEAT KIT	1			SEE ILLUST
N	@				NOT INDIVIDUALLY SUPPLIED	AR			NOT

TRAVEL REDUCTION GEAR

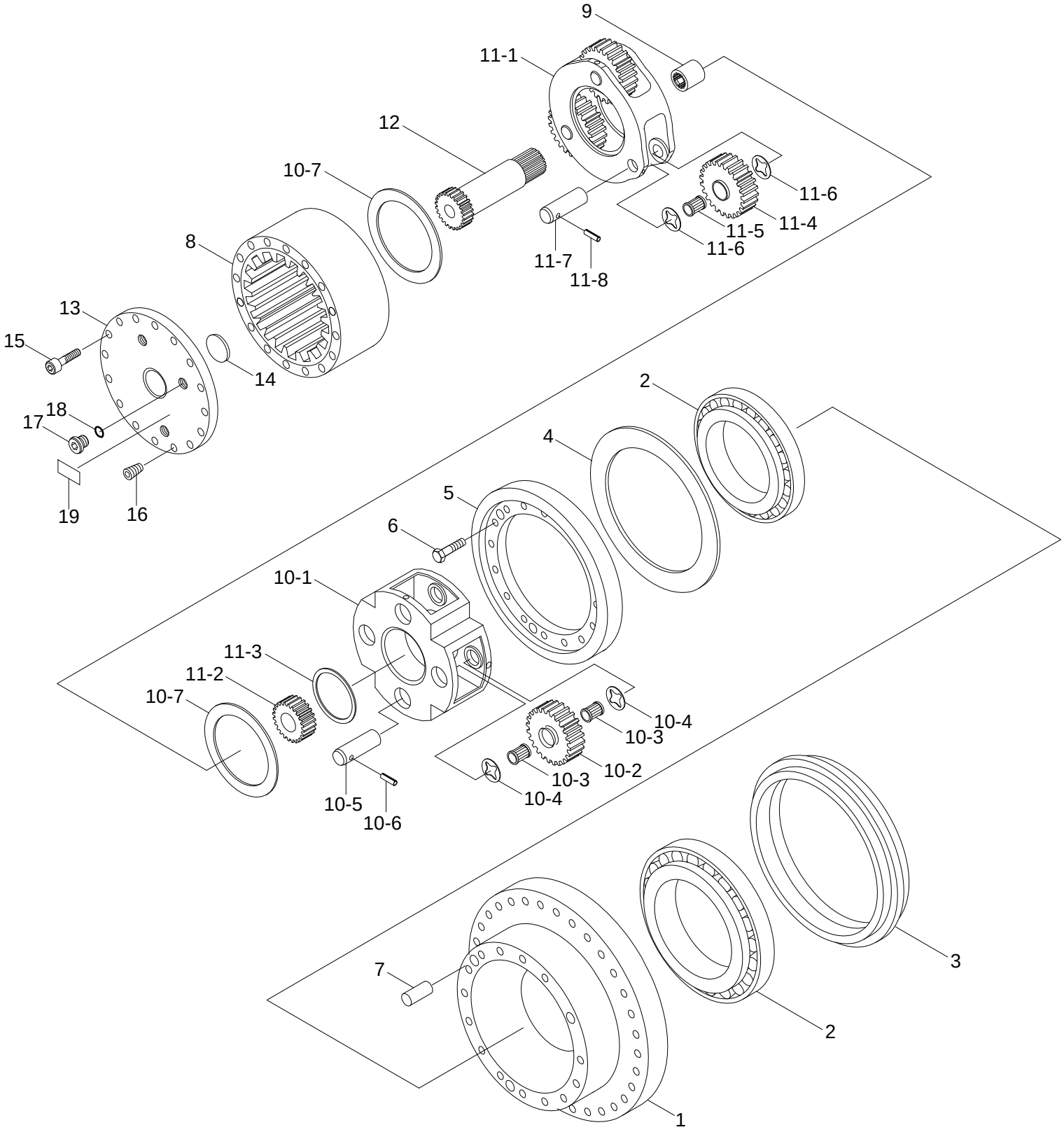

Item	Part_No	IS	Ord	T	Description	Qty	Serial_No	ITC	Remark
*	@				TRAVEL MOTOR ASSY	1			NOT
*-2	31Q6-40020				.TRAVEL REDUCTION GEAR	1			
N1	XKAQ-00217				..HOUSING	1			NOT
2	XKAQ-00218				..BEARING-MAIN	2			
3	XKAQ-00219				..SEAL-FLOATING	1			
4	XKAQ-00220				..SHIM	1			
5	XKAQ-00221				..RETAINER	1			
6	XKAQ-00222				..BOLT-HEX	12			
7	XKAQ-00223				..PIN-PARALLEL	2			
N8	XKAQ-00224				..GEAR-RING	1			NOT
9	XKAQ-00225				..COUPLING	1			
10	XKAQ-00226				..CARRIER 2 ASSY	1			
N10-1	XKAQ-00227				...CARRIER 2	1			NOT
N10-2	XKAQ-00228				...GEAR-PLANET 2	4			NOT
10-3	XKAQ-00229				...BEARING-NEEDLE 2	8			
10-4	XKAQ-00230				...WASHER-THRUST	8			
N10-5	XKAQ-00231				...PIN 2	4			NOT
10-6	XKAQ-00232				...PIN-SPRING	4			
10-7	XKAQ-00208				...RING-THRUST	2			
11	XKAQ-00233				..CARRIER ASSY 1	1			
N11-1	XKAQ-00234				...CARRIER 1	1			NOT
N11-2	XKAQ-00235				...GEAR-SUN 2	1			NOT
11-3	XKAQ-00236				...RING-RETAINING	1			
N11-4	XKAQ-00237				...GEAR-PLANET 1	3			NOT
11-5	XKAQ-00238				...BEARNG-NEEDLE 1	3			

Item	Part_No	IS	Ord	T	Description	Qty	Serial_No	ITC	Remark
11-6	XKAQ-00239				...WASHER-THRUST	6			
N11-7	XKAQ-00240				...PIN 1	3			NOT
11-8	XKAQ-00241				...PIN-SPRING	3			
12	XKAQ-00242				..GEAR-SUN 1	1			
13	XKAQ-00243				..COVER	1			
14	XKAQ-00214				..PAD	1			
15	XKAQ-00244				..BOLT-HEX SOCKET	20			
16	XKAQ-00245				..SCREW-HEX SOCKET	2			
17	XKAQ-00246				..PLUG-HYDRAULIC	3			
18	XKAQ-00247				..O-RING	3			
19	XKAQ-00248				..NAME PLATE	1			
N	@				NOT INDIVIDUALLY SUPPLIED	AR			NOT

TURNING JOINT

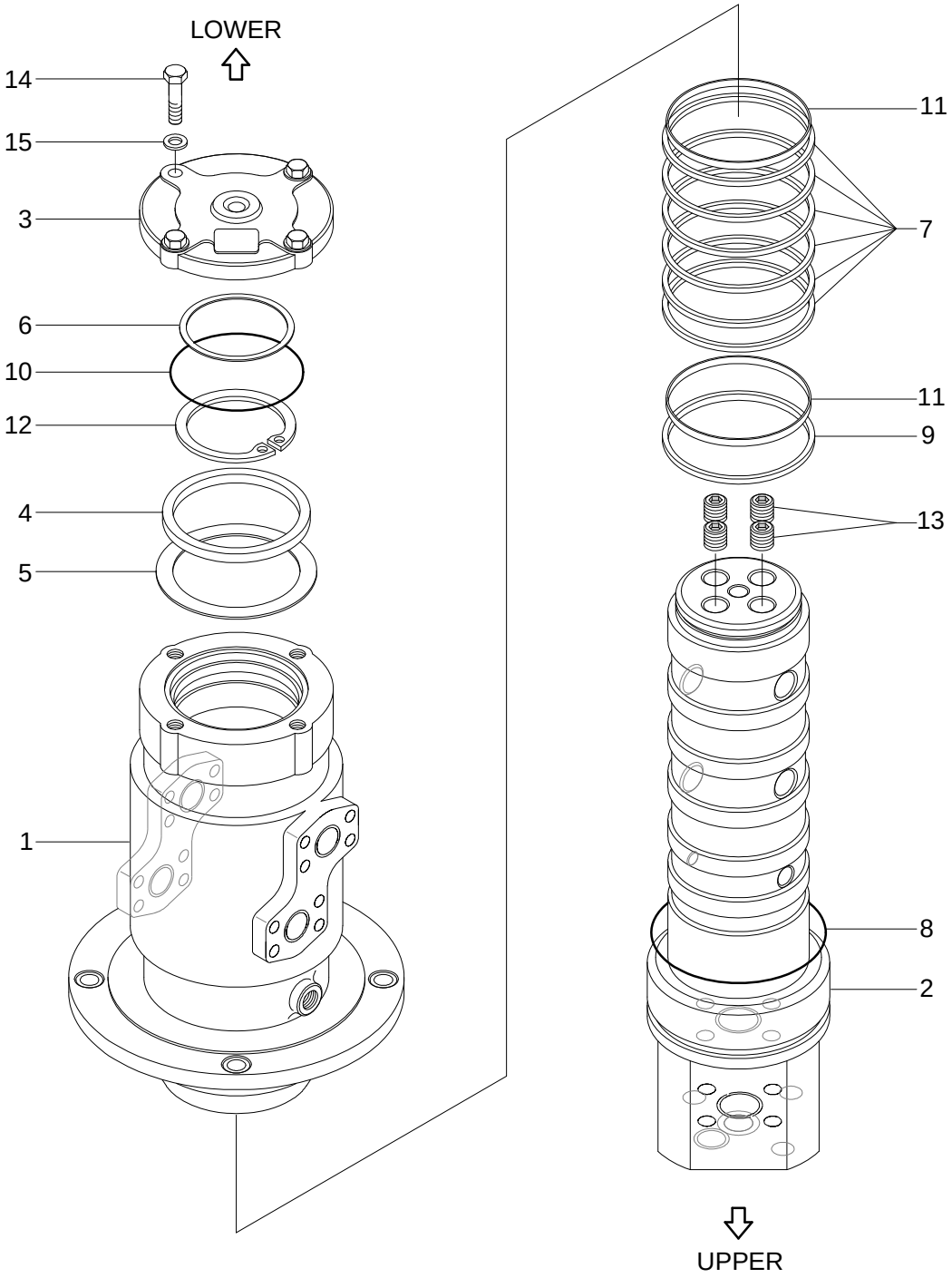

Description	Parts no	Included item
Turning joint seal kit	31N6-40950	7, 8, 9, 10, 11

Item	Part_No	IS	Ord	T	Description	Qty	Serial_No	ITC	Remark
*	31Q4-40300				TURNING JOINT	1			
1	31N2-40911				.HUB	1			
2	31N2-40921				.SHAFT	1			
3	31N2-40930				.COVER	1			
4	31E3-0035				.SPACER	1			
5	31E3-0036				.SHIM	1			
6	31E3-0037				.SHIM	1			
K7	31E6-40500				.SEAL-SLIPPER	6			
K8	CO0071A				.O-RING	1			
K9	CO0067B				.O-RING	1			
K10	CO0219B				.O-RING	1			
K11	Y320-100011				.RING-WEAR	2			
12	S601-090004				.RING-RETAINING	1			
13	P220-430204				.PLUG-HEX	4			
14	S017-120352				.BOLT-HEX	4			
15	S411-120002				.WASHER-SPRING	4			
K	31N6-40950				SEAL KIT	1			SEE ILLUST

TURNING JOINT(R160LCD-9)

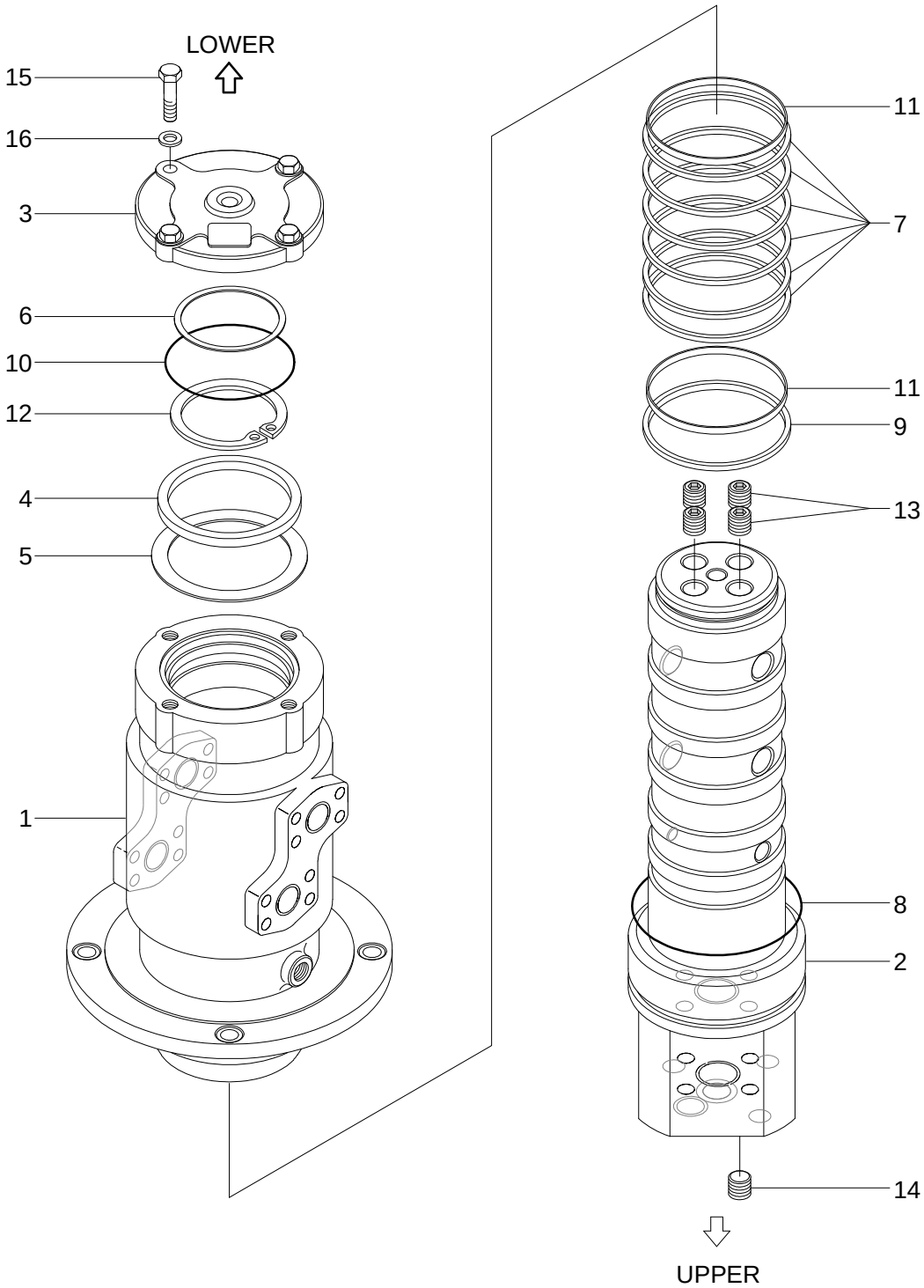

Description	Parts no	Included item
Turning joint seal kit	31N3-40950	7, 8, 9, 10, 11

Item	Part_No	IS	Ord	T	Description	Qty	Serial_No	ITC	Remark
*	31Q4-40400				TURNING JOINT-DOZER	1			
1	31N3-40911				.HUB	1			
2	31N3-40921				.SHAFT	1			
3	31N2-40930				.COVER	1			
4	31E3-0035				.SPACER	1			
5	31E3-0036				.SHIM	1			
6	31E3-0037				.SHIM	1			
K7	31E6-40500				.SEAL-SLIPPER	8			
K8	CO0071A				.O-RING	1			
K9	CO0067B				.O-RING	1			
K10	CO0219B				.O-RING	1			
K11	Y320-100011				.RING-WEAR	2			
12	S601-090004				.RING-RETAINING	1			
13	P220-430204				.PLUG-HEX	4			
14	P220-430202				.PLUG-HEX	1			
15	S017-120352				.BOLT-HEX	4			
16	S411-120002				.WASHER-SPRING	4			
K	31N3-40950				SEAL KIT	1			SEE ILLUST

BOOM CYLINDER

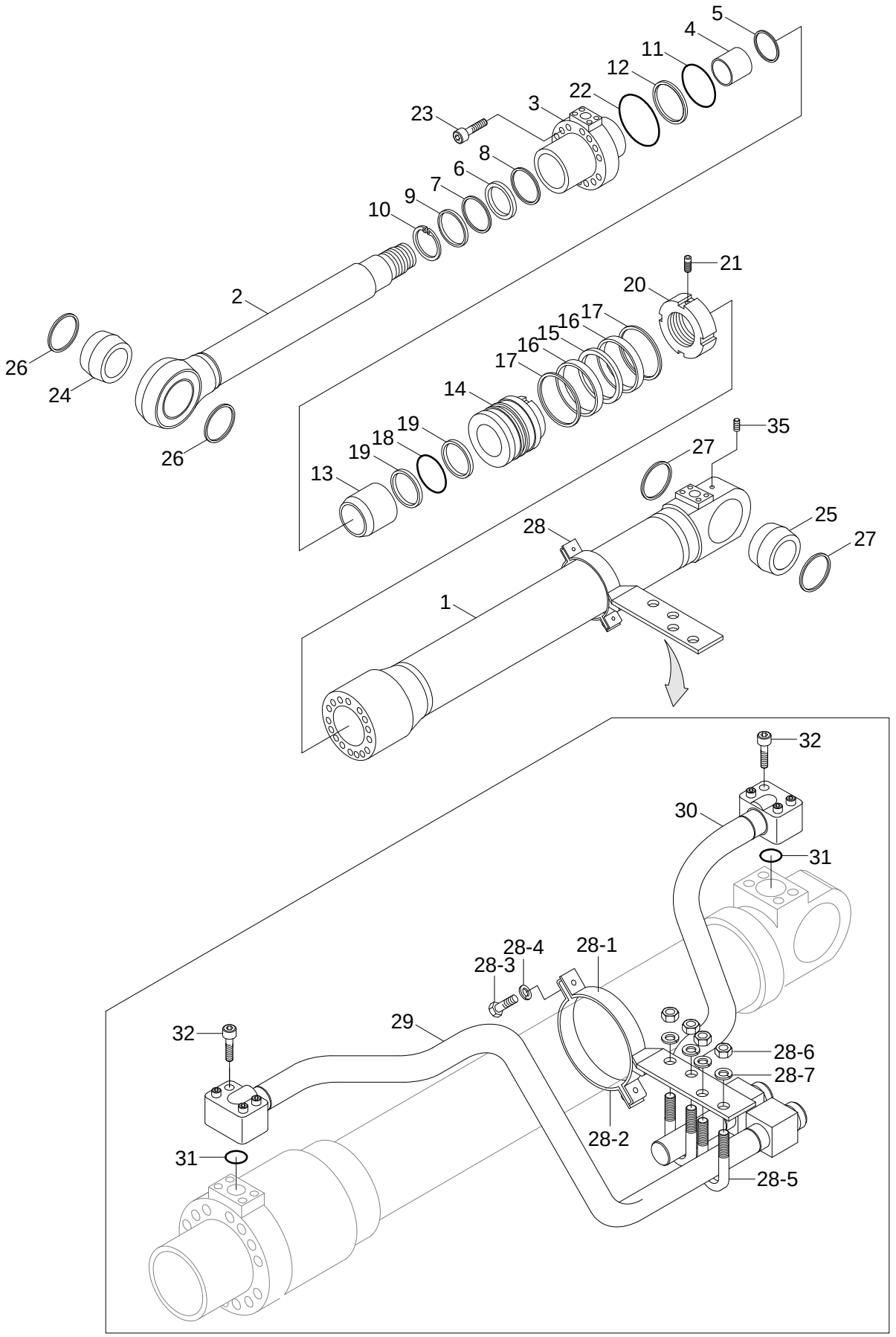

Description	Parts no	Included item
Boom cylinder seal kit	31Y1-34790	6~9, 11~12, 15~19, 22, 31

Item	Part_No	IS	Ord	T	Description	Qty	Serial_No	ITC	Remark
*	31Q5-50111				BOOM CYLINDER-LH	1			
	31Q5-50112				BOOM CYLINDER-LH	1	#0001 -	-	
*-1	31Y1-34611				.BOOM CYL SUB ASSY	1			WITHOUT PIPE
*	31Q5-50122				BOOM CYLINDER-RH	1	#0001 -	-	
*-1	31Y1-34611				.BOOM CYL SUB ASSY	1			WITHOUT PIPE
1	31Y1-34620				..TUBE ASSY	1			
2	31Y1-34671				..ROD ASSY	1			
3	31Y1-34710				..GLAND	1			
4	S732-080030				..BUSHING-DD2	1			
5	Y191-086000				..RING-SNAP	1			
K6	Y220-080013				..SEAL-ROD	1			
K7	Y180-080020				..RING-BACK UP	1			
K8	Y240-080012				..RING-BUFFER	1			
K9	Y110-080011				..WIPER-DUST	1			
10	Y190-094000				..RING-SNAP	1			
K11	S632-110004				..O-RING	1			
K12	S642-110003				..RING-BACK UP	1			
13	31YC-26051				..RING-CUSHION	1			
14	31Y1-31130				..PISTON	1			
K17	Y440-115000				..RING-DUST	2			
K15	Y420-115002				..SEAL-PISTON	1	#0001 -	-	
K16	Y310-115003				..RING-WEAR	2			
K17	Y440-115000				..RING-DUST	2			
K18	S632-060004				..O-RING	1			
K19	S642-060003				..RING-BACK UP	2			

Item	Part_No	IS	Ord	T	Description	Qty	Serial_No	ITC	Remark
20	31YC-68030				..NUT-LOCK	1			
21	S114-080144				..SCREW-SET	1			
K22	S632-115004				..O-RING	1			
23	S109-160754				..BOLT-SOCKET	12			
24	61Q6-98910				..BUSHING-PIN	1			
28	31Y1-34730				..BAND ASSY-LH	1			
25	61Q6-98810				..BUSHING-PIN	1			
26	Y020-075100				..SEAL-DUST,DLI,KPU	2			
28-1	31Y1-34760				...BAND SUB ASSY-RH	1			
28-2	31YC-31060				...BAND	1			
28-3	S011-100352				...BOLT-HEX	2			
28-4	S411-100002				...WASHER-SPRING	2			
28-5	S070-052738				...U-BOLT	2			
28-6	S205-101002				...NUT-HEX	4			
28-7	S411-100002				...WASHER-SPRING	4			
27	Y020-070000				..SEAL-DUST,DLI,KPU	2			
28	31Y1-34730				..BAND ASSY-LH	1			
	31Y1-34740				..BAND ASSY-RH	1			
28-1	31Y1-34750				...BAND SUB ASSY-LH	1			
	31Y1-34760				...BAND SUB ASSY-RH	1			
28-2	31YC-31060				...BAND	1			
28-3	S011-100352				...BOLT-HEX	2			
28-4	S411-100002				...WASHER-SPRING	2			
28-5	S070-052738				...U-BOLT	2			
28-6	S205-101002				...NUT-HEX	4			

Item	Part_No	IS	Ord	T	Description	Qty	Serial_No	ITC	Remark
28-7	S411-100002				...WASHER-SPRING	4			
29	31Y1-34771				..PIPE ASSY-R,LH	1			
	31Y1-34781				..PIPE ASSY-R,RH	1			
30	31Y1-37790				..PIPE ASSY-B,LH	1			
	31Y1-37800				..PIPE ASSY-B,RH	1			
K31	Y171-019004				..O-RING	2			
32	S107-100454				..BOLT-SOCKET	8			
35	P220-430201				..PLUG-HEX	1			
K	31Y1-34790				SEAL KIT	1			SEE ILLUST

ARM CYLINDER

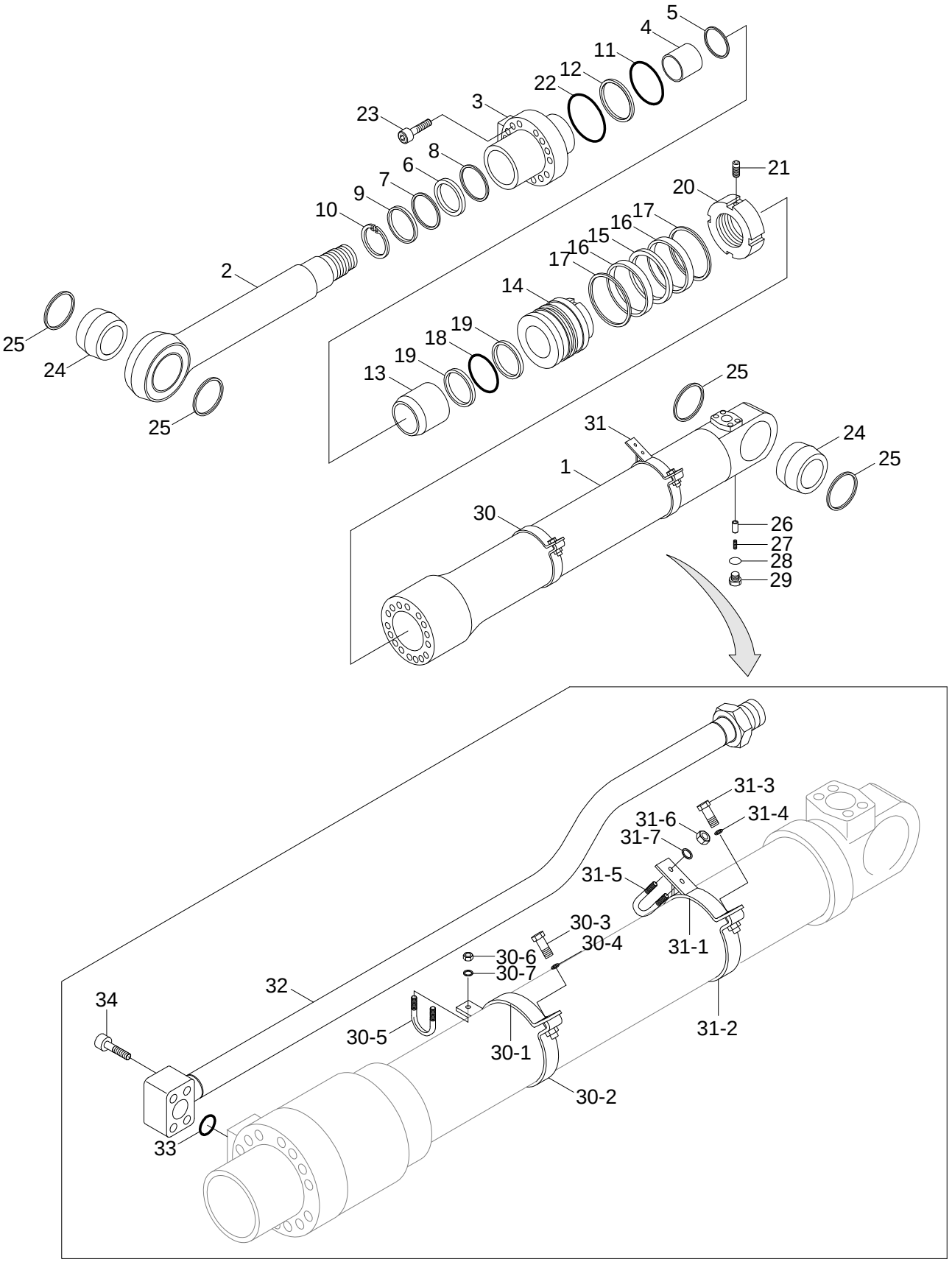

Description	Parts no	Included item
Arm cylinder seal kit	31Y1-34600	6~9, 11, 12, 15~19, 22, 28, 33

Item	Part_No	IS	Ord	T	Description	Qty	Serial_No	ITC	Remark
*	31Q5-50131				ARM CYLINDER ASSY	1			
	31Q5-50132				ARM CYLINDER ASSY	1	#0001 -	-	
1	31Y1-34421				..TUBE ASSY	1			
*-1	31Y1-34412				.ARM CYL SUB ASSY	1	#0001 -	-	WITHOUT PIPE
1	31Y1-34421				..TUBE ASSY	1			
4	S732-085030				..BUSHING-DD2	1			
2	31Y1-34472				..ROD ASSY	1	#0001 -	-	
K6	Y220-085013				..SEAL-ROD	1			
3	31Y1-34511				..GLAND	1	#0001 -	-	
4	S732-085030				..BUSHING-DD2	1			
5	Y191-092000				..RING-SNAP	1			
K6	Y220-085013				..SEAL-ROD	1			
K7	Y180-085020				..RING-BACK UP	1			
K8	Y240-085012				..RING-BUFFER	1			
K9	Y110-085011				..WIPER-DUST	1			
10	Y190-099000				..RING-SNAP	1			
K11	S632-115004				..O-RING	1			
K12	31YC-CG115				..RING-BACK UP	1			
13	31YC-28020				..RING-CUSHION	1			
14	31Y1-28940				..PISTON	1			
K15	Y420-120000				..SEAL-PISTON	1			
K16	Y310-120203				..RING-WEAR	2			
K17	Y440-120002				..RING-DUST	2			
K18	S632-060004				..O-RING	1			
K19	S642-060003				..RING-BACK UP	2			

Item	Part_No	IS	Ord	T	Description	Qty	Serial_No	ITC	Remark
20	31YC-68030				..NUT-LOCK	1			
21	S114-080144				..SCREW-SET	1			
K22	S632-120004				..O-RING	1			
23	S109-160754				..BOLT-SOCKET	12			
24	61Q6-98810				..BUSHING-PIN	2			
25	Y020-070000				..SEAL-DUST,DLI,KPU	4			
26	31YC-2A100				..VALVE-CHECK	1			
27	31YC-99071				..SPRING-COIL	1			
30-2	31YC-31480				...BAND	1			
K28	S631-014004				..O-RING	1			
30-4	S411-100002				...WASHER-SPRING	2			
29	P220-110103				..PLUG-HEX	1			
30-6	S205-101002				...NUT-HEX	2			
30	31Y1-34530				..BAND ASSY-R	1			
30-1	31Y1-34540				...BAND SUB ASSY-R	1			
30-2	31YC-31480				...BAND	1			
31-2	31YC-31480				...BAND	1			
30-3	S011-100352				...BOLT-HEX	2			
31-4	S411-100002				...WASHER-SPRING	2			
30-4	S411-100002				...WASHER-SPRING	2			
31-6	S205-101002				...NUT-HEX	2			
30-5	S070-052738				...U-BOLT	1			
30-6	S205-101002				...NUT-HEX	2			
30-7	S411-100002				...WASHER-SPRING	2			
31	31Y1-34550				..BAND ASSY-B	1			

Item	Part_No	IS	Ord	T	Description	Qty	Serial_No	ITC	Remark
31-1	31Y1-34560				...BAND SUB ASSY-B	1			
31-2	31YC-31480				...BAND	1			
31-3	S011-100352				...BOLT-HEX	2			
31-4	S411-100002				...WASHER-SPRING	2			
31-5	S070-052738				...U-BOLT	1			
31-6	S205-101002				...NUT-HEX	2			
31-7	S411-100002				...WASHER-SPRING	2			
32	31Y1-34581				..PIPE ASSY-R	1			
K33	Y171-019004				..O-RING	1			
34	S107-100454				..BOLT-SOCKET	4			
K	31Y1-34600				SEAL KIT	1			SEE ILLUST

BUCKET CYLINDER

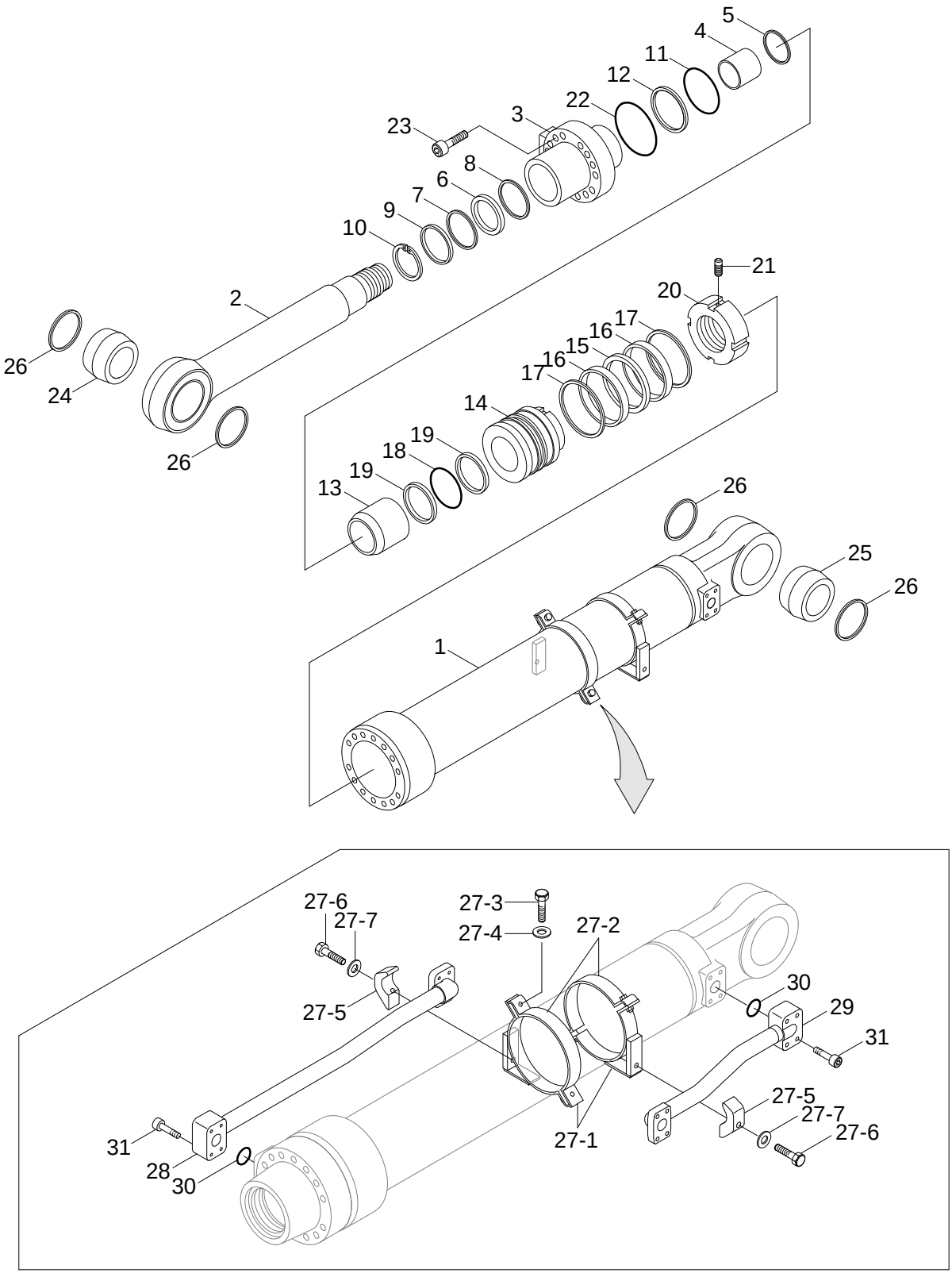

Description	Parts no	Included item
Bucket cylinder seal kit	31Y1-35030	6~9, 11~12, 15~19, 22, 30

Item	Part_No	IS	Ord	T	Description	Qty	Serial_No	ITC	Remark
*	31Q5-60111				BUCKET CYLINDER	1			
*-1	31Y1-34801				.BUCKET CYL SUB ASSY	1			WITHOUT PIPE
1	31Y1-34811				..TUBE ASSY	1			
2	31Y1-34881				..ROD ASSY	1			
3	31Y1-34930				..GLAND	1			
4	S732-075030				..BUSHING-DD2	1			
5	Y191-081000				..RING-SNAP	1			
K6	Y220-075013				..SEAL-ROD	1			
K7	Y180-075020				..RING-BACK UP	1			
K8	Y240-075012				..RING-BUFFER	1			
K9	Y110-075011				..WIPER-DUST	1			
10	Y190-089000				..RING-SNAP	1			
K11	S632-105004				..O-RING	1			
K12	S642-105003				..RING-BACK UP	1			
13	31YC-26040				..RING-CUSHION	1			
14	31Y1-34970				..PISTON	1			
K15	Y420-110000				..SEAL-PISTON	1			
K16	Y310-110100				..RING-WEAR	2			
K17	Y440-110000				..RING-DUST	2			
K18	S632-055004				..O-RING	1			
K19	S642-055003				..RING-BACK UP	2			
20	31YC-68020				..NUT-LOCK	1			
21	S114-080144				..SCREW-SET	1			
K22	S632-110004				..O-RING	1			
23	S109-140704				..BOLT-SOCKET	14			

Item	Part_No	IS	Ord	T	Description	Qty	Serial_No	ITC	Remark
24	61Q6-05560				..BUSHING-PIN	1			
25	61Q6-98810				..BUSHING-PIN	1			
26	Y020-070000				.SEAL-DUST,DLI,KPU	4			
27	31Y1-34990				..BAND ASSY	2			
27-1	31Y1-35000				...BAND SUB ASSY	1			
27-2	31YC-31050				...BAND	1			
27-3	S011-100352				...BOLT-HEX	2			
27-4	S411-100002				...WASHER-SPRING	2			
27-5	31YC-36010				...CLAMP-PIPE	1			
27-6	S015-120502				...BOLT-HEX	1			
27-7	S411-120002				...WASHER-SPRING	1			
28	31Y1-36041				..PIPE ASSY-R	1			
29	31Y1-36051				..PIPE ASSY-B	1			
K30	Y171-019004				..O-RING	2			
31	S107-100454				..BOLT-SOCKET	8			
K	31Y1-35030				SEAL KIT	1			SEE ILLUST

DOZER BLADE CYLINDER

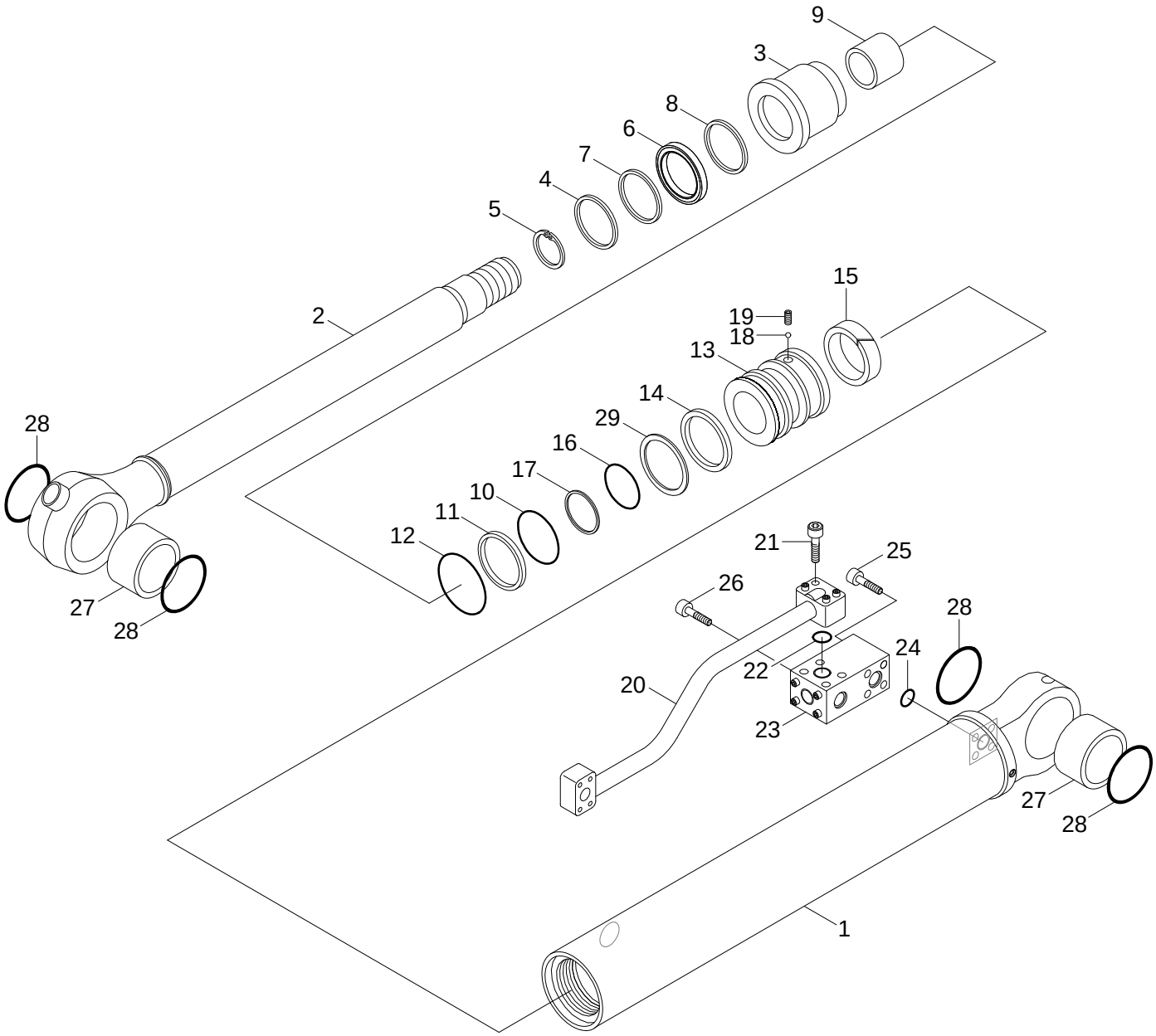

Description	Parts no	Included item
Dozer blade cylinder seal kit-Rear	XKCC-00264	4, 6~8, 10~12, 14~17, 22, 24, 28, 29

Item	Part_No	IS	Ord	T	Description	Qty	Serial_No	ITC	Remark
*	31Q5-70010				DOZER BLADE CYL-LH	1			
	31Q5-70020				DOZER BLADE CYL-RH	1			
1	XKCC-00251				.TUBE ASSY-LH	1			
	XKCC-00265				.TUBE ASSY-RH	1			
2	XKCC-00252				.ROD ASSY	1			
3	XKCC-00253				.GLAND	1			
K4	XKCC-00254				.WIPER-DUST	1			
5	XKCC-00255				.RING-RETAINING	1			
K6	XKCC-00256				.SEAL-ROD	1			
K7	XKCC-00257				.RING-BACK UP	1			
K8	XKCC-00258				.RING-BUFFER	1			
9	XKCC-00259				.BUSHING-DU	1			
K10	XKCC-00260				.O-RING	1			
K11	XKCC-00261				.RING-BACK UP	1			
K12	XKCC-00088				.O-RING	1			
13	XKCC-00262				.PISTON	1			
K14	XKCC-00055				.SEAL-PISTON	1			
K15	XKCC-00092				.RING-WEAR	1			
K16	XKCC-00177				.O-RING	1			
K17	XKCC-00178				.RING-BACK UP	2			
18	XKCC-00059				.BALL-STEEL	1			
19	XKCD-00933				.SCREW-SET	1			
20	XKCC-00263				.PIPE ASSY-LH	1			
	XKCC-00266				.PIPE ASSY-RH	1			
21	XKCD-00938				.BOLT-SOCKET	8			

Item	Part_No	IS	Ord	T	Description	Qty	Serial_No	ITC	Remark
K22	XKCC-00063				.O-RING	2			
23	31Q4-40320				.CHECK VLV-DOUBLE,RH	1			
	31Q4-40310				.CHECK VLV-DOUBLE,LH	1			
K24	XKCC-00065				.O-RING	1			
25	XKCD-00939				.BOLT-SOCKET	2			
26	XKCC-00245				.BOLT-SOCKET	1			
27	XKCC-00245				.BOLT-SOCKET	2			
K28	XKCC-00246				.SEAL-DUST	4			
K29	XKCC-00091				.RING-DUST	1			
K	XKCC-00264				SEAL KIT	1			SEE ILLUST

SOLENOID VALVE

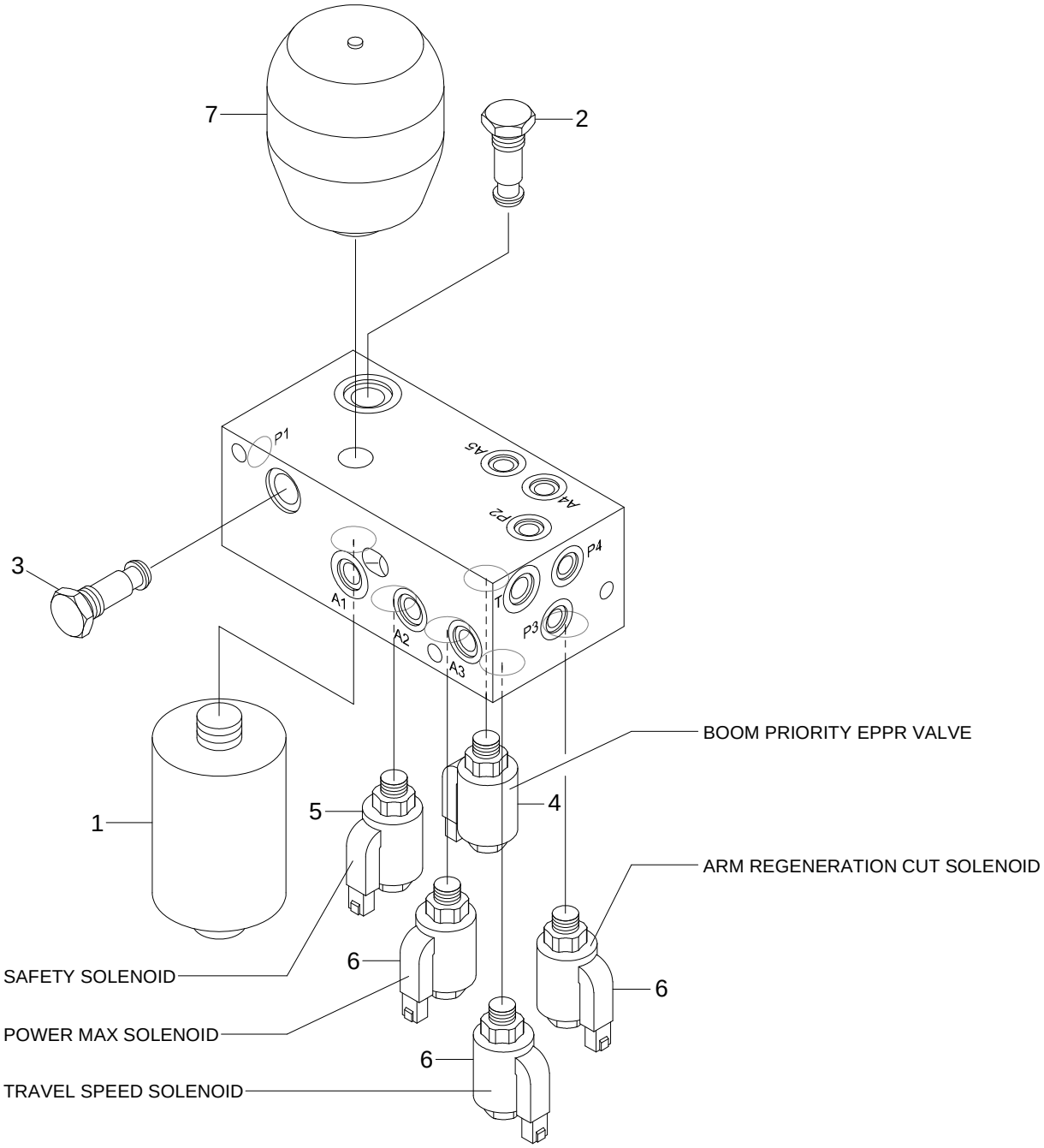

Item	Part_No	IS	Ord	T	Description	Qty	Serial_No	ITC	Remark
*	31Q6-20042				SOLENOID VALVE	1			5 CARTRIDGE
1	ZGAW-00012				.FILTER-LINE	1			
1-1	ZGAW-00013				..ELEMENT	1			NOT SHOWN
2	ZGAW-00014				.VALVE-CHECK	1			
3	ZGAW-00009				.VALVE-CHECK	1			
4	ZGAW-00015				.VALVE-EPPR	1			WITHOUT COIL
4-1	ZGAW-00016				.COIL	1			NOT SHOWN
5	ZGAW-00006				.CARTRIDGE	1			WITHOUT COIL
5-1	ZGAW-00008				.COIL	1			NOT SHOWN
6	ZGAW-00007				.CARTRIDGE	3			WITHOUT COIL
6-1	ZGAW-00008				.COIL	3			NOT SHOWN
7	ZGAW-00017				.ACCUMULATOR	1			

SINGLE PEDAL(DOUBLE ACTING)

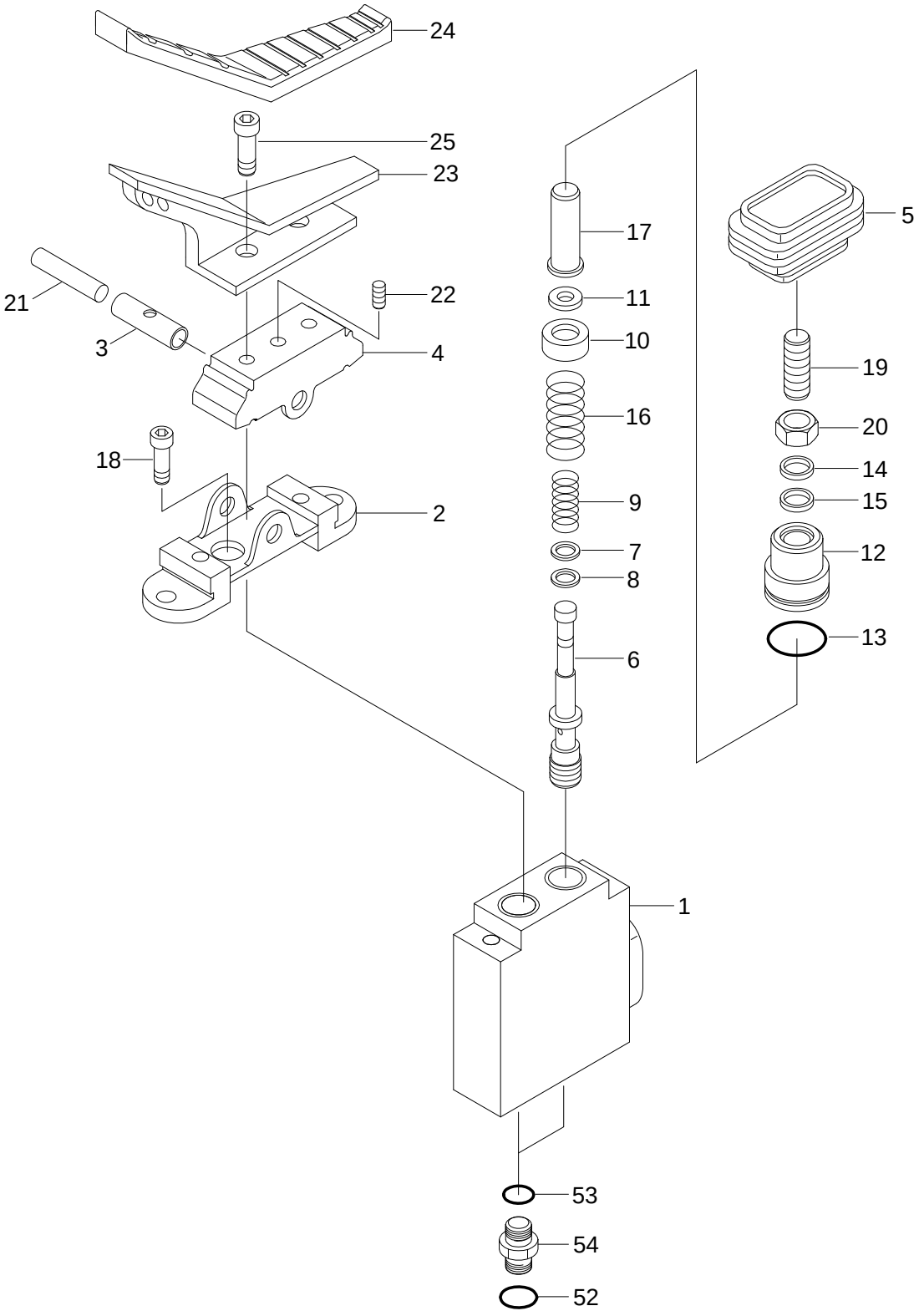

Item	Part_No	IS	Ord	T	Description	Qty	Serial_No	ITC	Remark
*-1	31Q6-20300				PEDAL-SINGLE	1			
1	XKAY-00424				.CASING	1			
*-11	XKAY-01056				.COVER KIT	1			
N2	XKAY-00554				..COVER	1			NOT
3	XKAY-00010				..BUSHING	1			
*-12	XKAY-01057				.CAM KIT	1			
N4	XKAY-01075				..CAM	1			NOT
N19	XKAY-00007				..SCREW-SET	2			NOT
N20	XKAY-00006				..NUT-HEX	2			NOT
N22	XKAY-00560				..SCREW-SET	1			NOT
5	XKAY-00005				.BELLOWS	1			
*-13	XKAY-01058				.SPOOL KIT	1			
N6	XKAY-00555				..SPOOL	1			NOT
N7	XKAY-00556				..SHIM(1.0T)	AR			NOT
8	XKAY-00029				..SEAT-SPRING	2			
N9	XKAY-01076				..SPRING	2			NOT
N10	XKAY-00558				..SEAT-SPRING	2			NOT
N11	XKAY-00058				..STOPPER	2			NOT
*-14	XKAY-01059				.PUSH ROD KIT	1			
N12	XKAY-00559				..PLUG	2			NOT
13	XKAY-00438				..O-RING	2			
N14	XKAY-00097				..SEAL-DUST	2			NOT
15	XKAY-00055				..SEAL-ROD	2			
N17	XKAY-01060				..ROD-PUSH	2			NOT
16	XKAY-00600				.SPRING	2			

Item	Part_No	IS	Ord	T	Description	Qty	Serial_No	ITC	Remark
18	XKAY-00431				.BOLT-SOCKET	2			
21	XKAY-00009				.SHAFT-CAM	1			
23	XKAY-00432				.PEDAL	1			
24	XKAY-00433				.PEDAL COVER	1			
25	XKAY-00434				.BOLT-SOCKET	2			
52	S621-011001				O-RING	2			
53	S631-011004				O-RING	2			
54	X500-110001				CONNECTOR-ORFS	2			
N	@				NOT SUPPLIED PARTS	AR			NOT

QUICK CLAMP(HOOK TYPE 1)

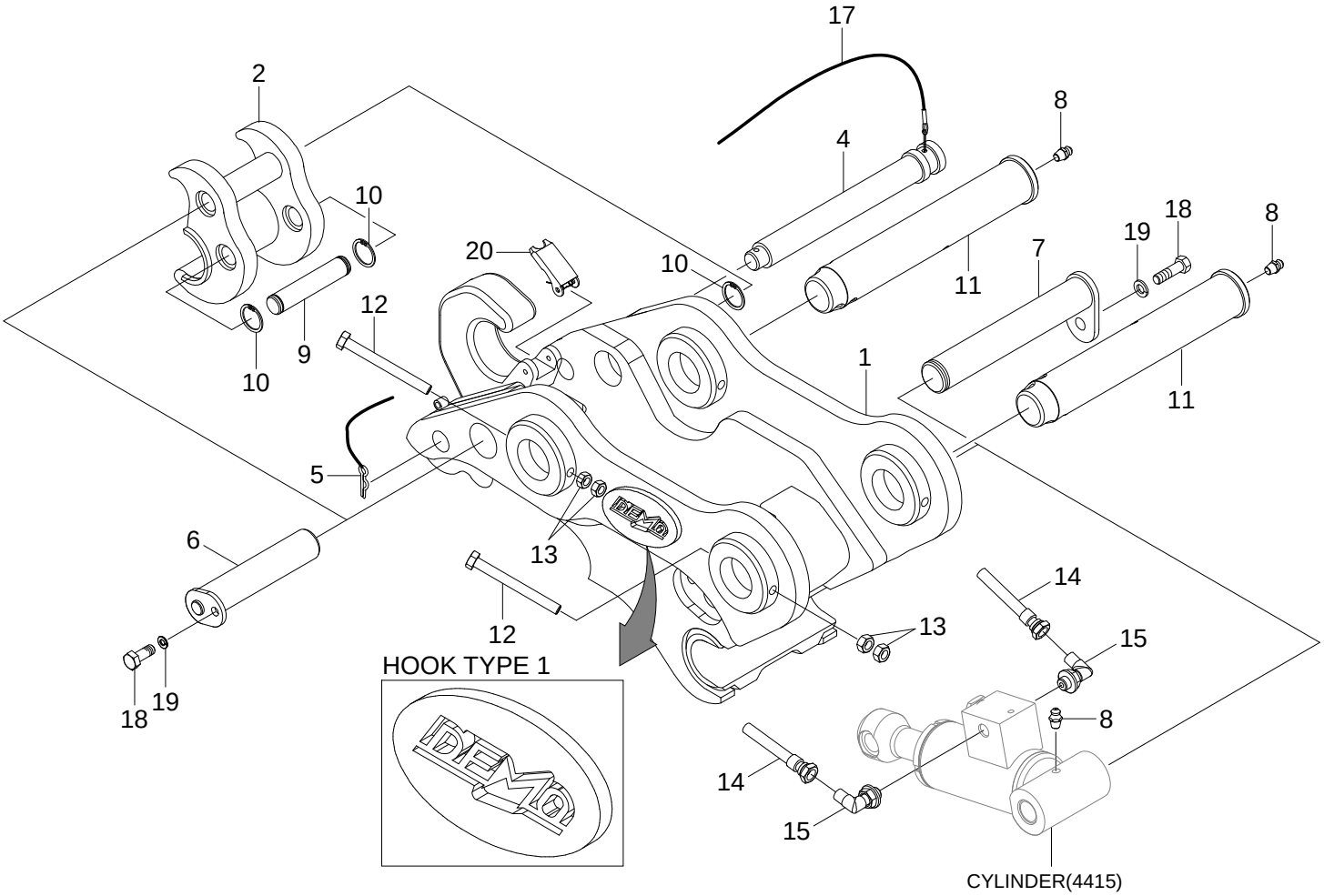

Item	Part_No	IS	Ord	T	Description	Qty	Serial_No	ITC	Remark
*	31Q5-90810				QUICK CLAMP ASSY	1			HOOK TYPE 1
1	XKBN-00424				.BODY-HOOK TYPE	1			
2	XKBN-00425				.HITCH	1			
3	XKBN-00426				.CYLINDER ASSY	1			
4	XKBN-00104				.PIN-SAFETY	1			
5	XKBN-00163				.PIN-SNAP	1			
6	XKBN-00314				.PIN-HITCH	1			
7	XKBN-00315				.PIN-FRAME	1			
8	XKBN-00009				.NIPPLE-GREASE	3			
9	XKBN-00427				.PIN-CYLINDER	1			
10	XKBN-00109				.RING-SNAP	3			
11	XKBN-00110				.PIN-BRACKET	2			
12	XKBN-00205				.BOLT-HEX	2			
13	XKBN-00196				.NUT-HEX	4			
14	XKBN-00428				.HOSE-PROTECTOR	2			
15	XKBN-00016				.ELBOW-90	2			
16	XKBN-00083				.WIRE ASSY	1			
17	XKBN-00116				.LATCH & SPRING	1			
18	XKBN-00206				.RING-SNAP	2			
20	XKBN-00116				.LATCH & SPRING	1			

QUICK CLAMP(CLOSE TYPE 1)

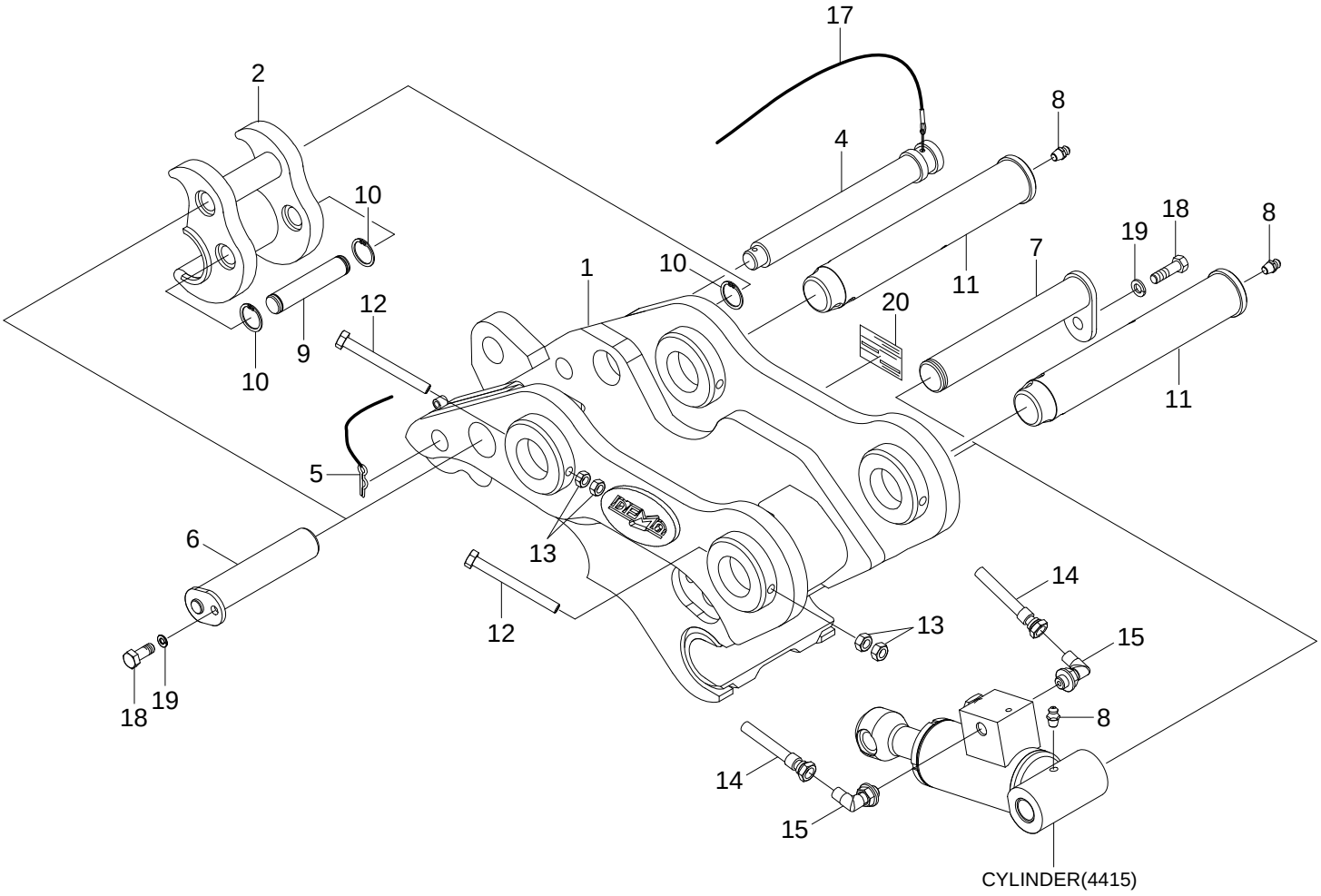

Item	Part_No	IS	Ord	T	Description	Qty	Serial_No	ITC	Remark
*	31Q5-90820				QUICK CLAMP ASSY	1			CLOSE TYPE 1
1	XKBN-00429				.BODY	1			
2	XKBN-00425				.HITCH	1			
3	XKBN-00426				.CYLINDER ASSY	1			
4	XKBN-00104				.PIN-SAFETY	1			
5	XKBN-00163				.PIN-SNAP	1			
6	XKBN-00314				.PIN-HITCH	1			
7	XKBN-00315				.PIN-FRAME	1			
8	XKBN-00009				.NIPPLE-GREASE	3			
9	XKBN-00427				.PIN-CYLINDER	1			
10	XKBN-00109				.RING-SNAP	4			
11	XKBN-00110				.PIN-BRACKET	2			
12	XKBN-00205				.BOLT-HEX	2			
13	XKBN-00196				.NUT-HEX	4			
14	XKBN-00428				.HOSE-PROTECTOR	2			
15	XKBN-00016				.ELBOW-90	2			
16	XKBN-00083				.WIRE ASSY	1			
17	XKBN-00206				.RING-SNAP	2			
19	XKBN-00115				.WASHER-SPRING	2			
20	XKBN-00194				.NAME PLATE	1			

QUICK CLAMP CYLINDER

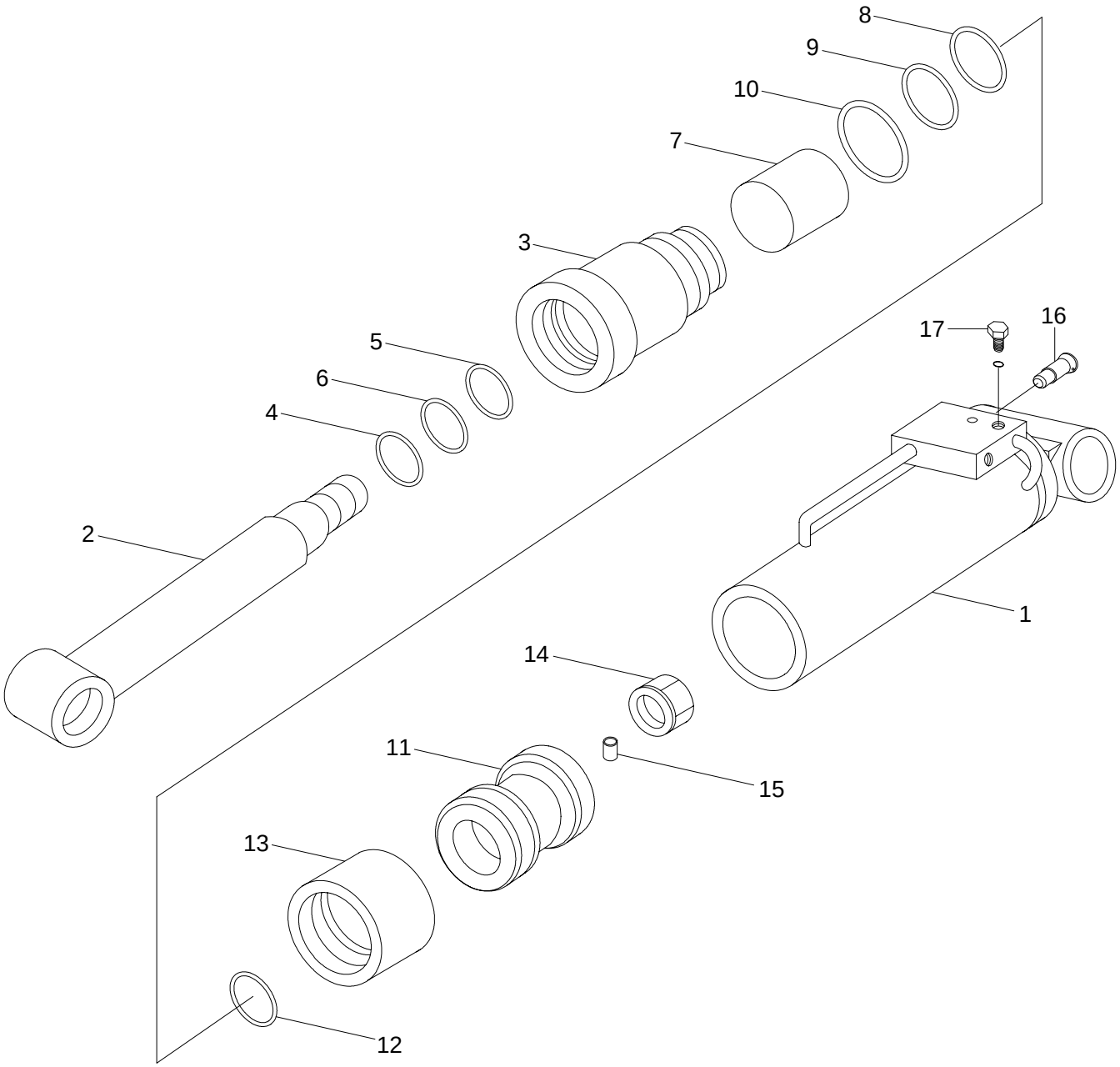

Item	Part_No	IS	Ord	T	Description	Qty	Serial_No	ITC	Remark
*	XKBN-00103				CYLINDER-QUICK CLAMP	1			
1	XKBN-00133				.TUBE	1			
2	XKBN-00134				.ROD	1			
3	XKBN-00135				.COVER-ROD	1			
4	XKBN-00136				.WIPER-DUST	1			
5	XKBN-00137				.U-PACKING	1			
6	XKBN-00035				.RING-BACK UP	1			
7	XKBN-00138				.BUSHING-DU	1			
8	XKBN-00139				.O-RING	1			
9	XKBN-00140				.RING-BACK UP	1			
10	XKBN-00141				.O-RING	1			
11	XKBN-00142				.PISTON	1			
12	XKBN-00127				.O-RING	1			
13	XKBN-00143				.SEAL-COMPACT	1			
14	XKBN-00144				.NUT-TEFRON	1			
15	XKBN-00145				.PIN-SPRING	1			
16	XKBN-00131				.CHECK VALVE-PILOT	1			
17	XKBN-00132				.BOLT-SOCKET PLUG	2			

QUICK CLAMP(HOOK TYPE 2)

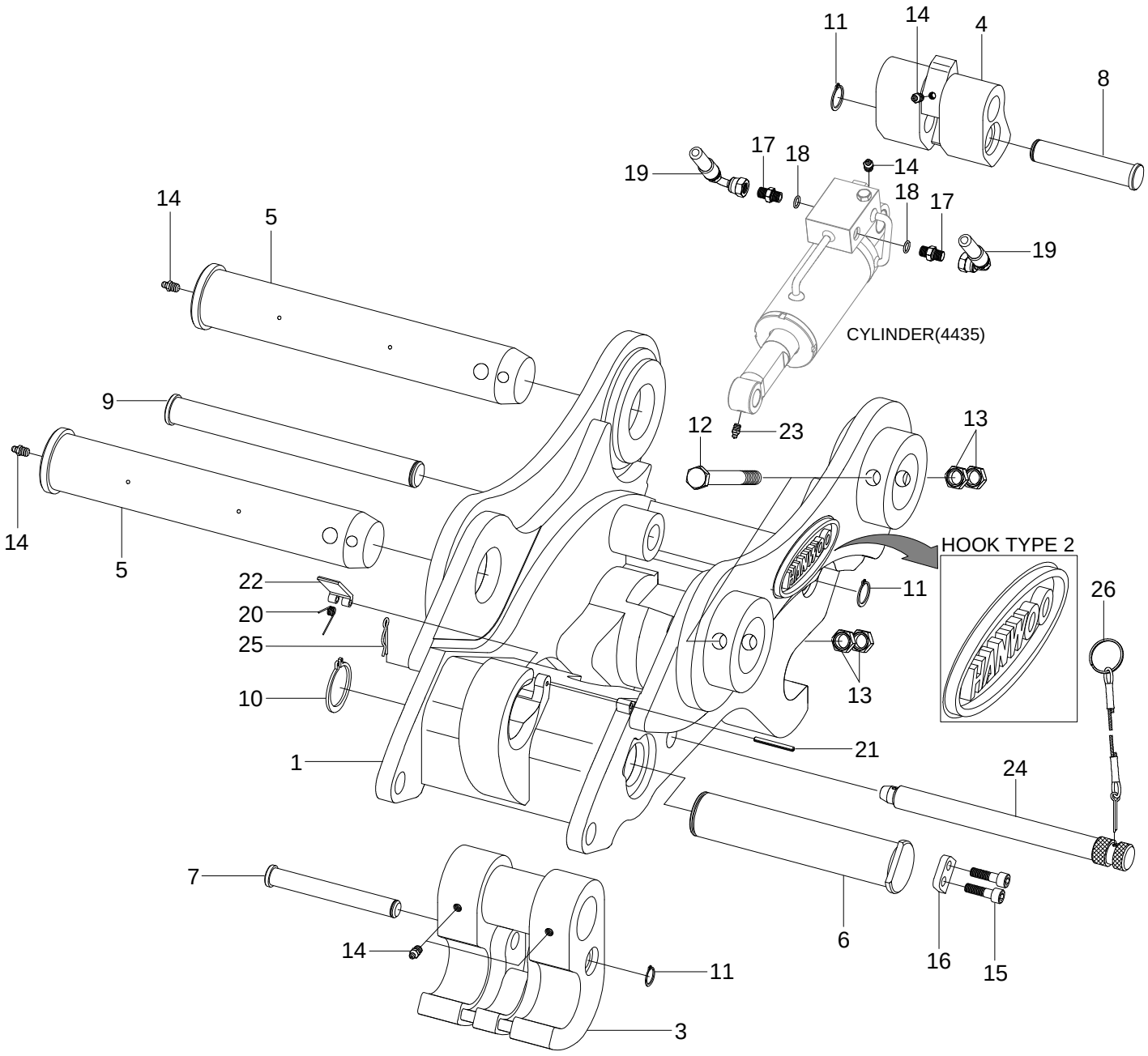

Item	Part_No	IS	Ord	T	Description	Qty	Serial_No	ITC	Remark
*	31Q5-90710				QUICK CLAMP ASSY	1			HOOK TYPE 2
1	XKBP-00077				.QUICK CLAMP-BODY	1			
3	XKBP-00079				.HOOK ASSY	1			
4	XKBP-00080				.LOCK ASSY	1			
5	XKBP-00081				.PIN-BRACKET	2			
6	XKBP-00082				.PIN-HOOK	1			
7	XKBP-00051				.PIN-JOINT	1			
8	XKBP-00052				.PIN-JOINT	1			
9	XKBP-00083				.PIN-LOCK	1			
10	XKBP-00054				.RING-SNAP	1			
11	XKBP-00010				.RING-SNAP	3			
12	XKBP-00055				.BOLT-HEX	2			
13	XKBP-00014				.NUT-HEX	4			
14	XKBP-00015				.NIPPLE-GREASE	7			
15	XKBP-00016				.BOLT-SOCKET	3			
16	XKBP-00056				.PLATE-COVER	1			
17	XKBP-00057				.ADAPTER	2			
18	XKBP-00019				.O-RING	2			
19	XKBP-00058				.HOSE	2			
20	XKBP-00021				.SPRING	1			
21	XKBP-00022				.PIN-SPRING	1			
22	XKBP-00023				.STOPPER	1			
23	XKBP-00024				.NIPPLE-GREASE	1			
24	XKBP-00087				.PIN-STOPPER	1			
25	XKBP-00026				.PIN-SNAP	1			

Item	Part_No	IS	Ord	T	Description	Qty	Serial_No	ITC	Remark
26	XKBP-00060				.WIRE ASSY	1			

QUICK CLAMP(CLOSE TYPE 2)

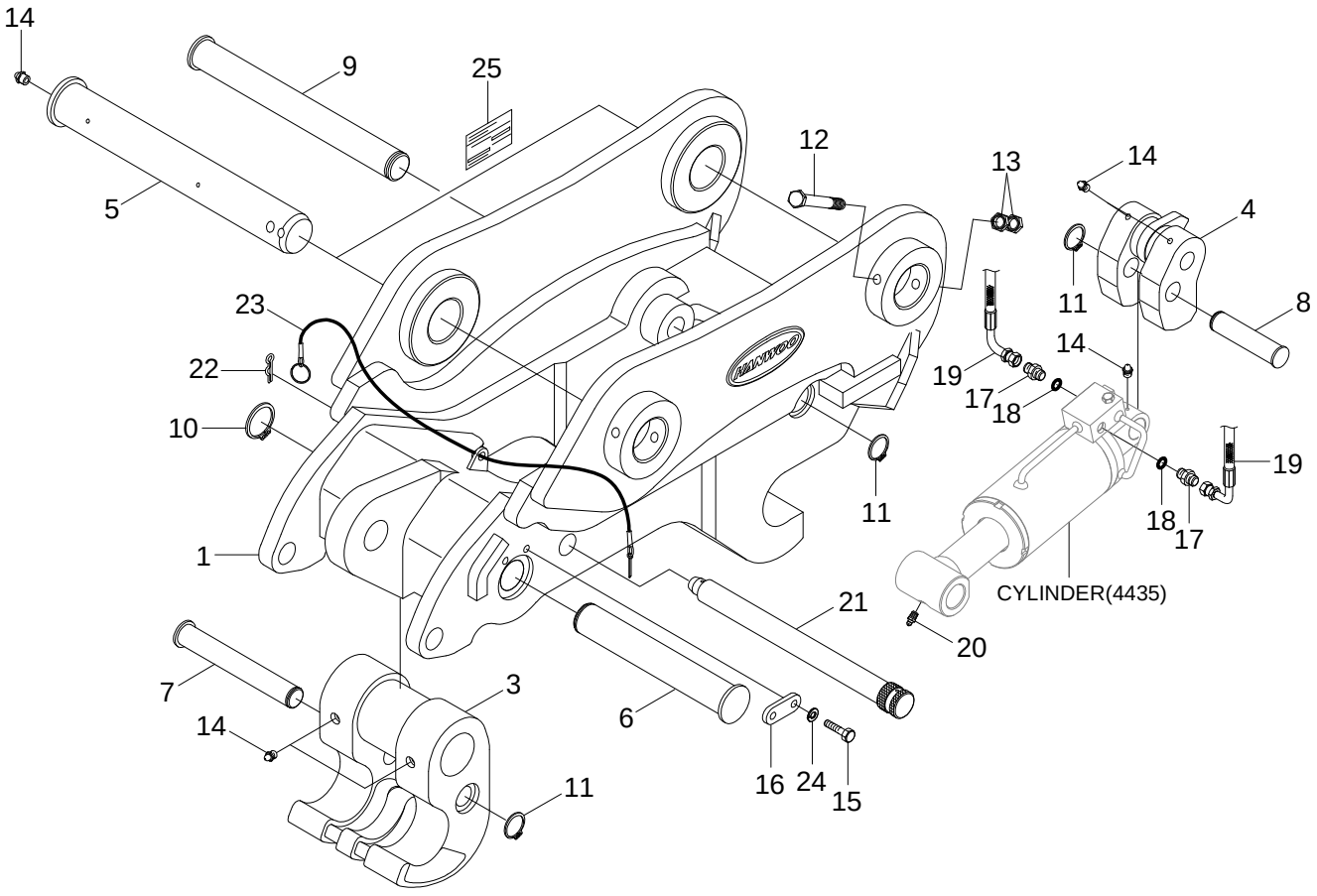

Item	Part_No	IS	Ord	T	Description	Qty	Serial_No	ITC	Remark
*	31Q5-90720				QUICK CLAMP ASSY	1			CLOSE TYPE 2
1	XKBP-00108				.BODY ASSY	1			
3	XKBP-00079				.HOOK ASSY	1			
4	XKBP-00109				.LOCK ASSY	1			
5	XKBP-00081				.PIN-BRACKET	2			
6	XKBP-00110				.PIN-HOOK	1			
7	XKBP-00051				.PIN-JOINT	1			
8	XKBP-00052				.PIN-JOINT	1			
9	XKBP-00111				.PIN-LOCK	1			
10	XKBP-00054				.RING-SNAP	1			
11	XKBP-00010				.RING-SNAP	3			
12	XKBP-00055				.BOLT-HEX	2			
13	XKBP-00014				.NUT-HEX	4			
14	XKBP-00015				.NIPPLE-GREASE	7			
15	XKBP-00112				.BOLT-HEX	2			
16	XKBP-00113				.PLATE-COVER	1			
17	XKBP-00057				.ADAPTER	2			
18	XKBP-00019				.O-RING	2			
19	XKBP-00058				.HOSE	2			
20	XKBP-00024				.NIPPLE-GREASE	1			
21	XKBP-00114				.PIN-STOPPER	1			
22	XKBP-00026				.PIN-SNAP	1			
23	XKBP-00115				.WIRE ASSY	1			
24	XKBP-00116				.WASHER-SPRING	2			
25	XKBP-00107				.NAME PLATE	1			

[Item List] - Print Date : 2020.08.21 14:08

QUICK CLAMP CYLINDER

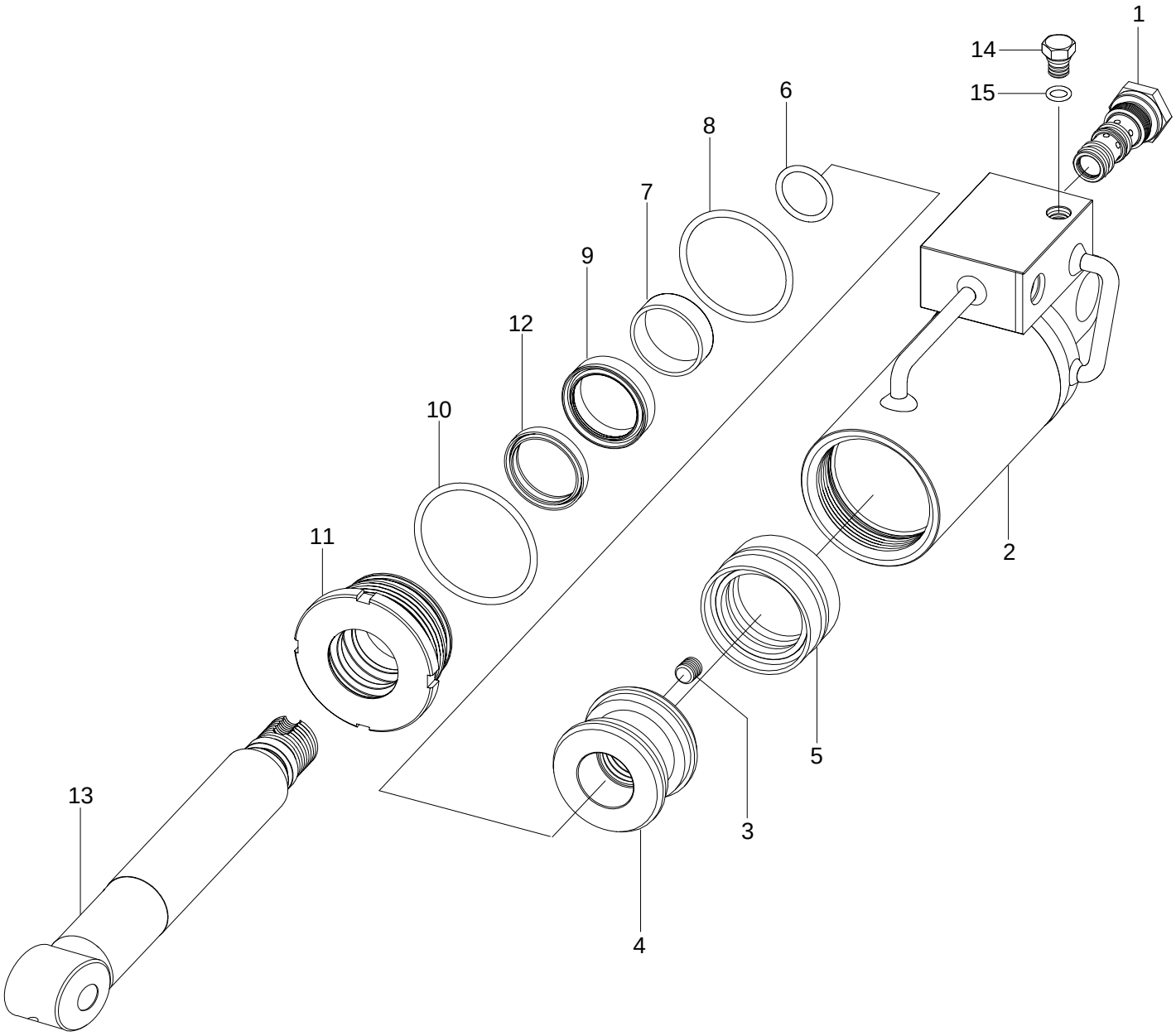

Description	Parts no	Included item
Cylinder seal kit	XKBP-00102	5, 6, 8, 9, 10, 12

Item	Part_No	IS	Ord	T	Description	Qty	Serial_No	ITC	Remark
*	XKBP-00078				CYLINDER ASSY	1			
1	XKBP-00089				.VALVE-SAFETY	1			
2	XKBP-00090				.CYLINDER	1			
3	XKBP-00064				.SCREW-SET	1			
4	XKBP-00065				.PISTON	1			
N5	XKBP-00066				.SEAL-PISTON	1			NOT
N6	XKBP-00067				.O-RING	1			NOT
7	XKBP-00068				.BUSHING-DU	1			
N8	XKBP-00069				.O-RING	1			NOT
N9	XKBP-00070				.SEAL-ROD	1			NOT
N10	XKBP-00071				.O-RING	1			NOT
11	XKBP-00072				.COVER	1			
N12	XKBP-00073				.SEAL-DUST	1			NOT
13	XKBP-00092				.ROD	1			
14	XKBP-00041				.PLUG	1			
15	XKBP-00042				.O-RING	1			
K	XKBP-00102				SEAL KIT	1			SEE ILLUST
N	@				NOT INDIVIDUALLY SUPPLIED	AR			NOT

UNDERCARRIAGE MOUNTING

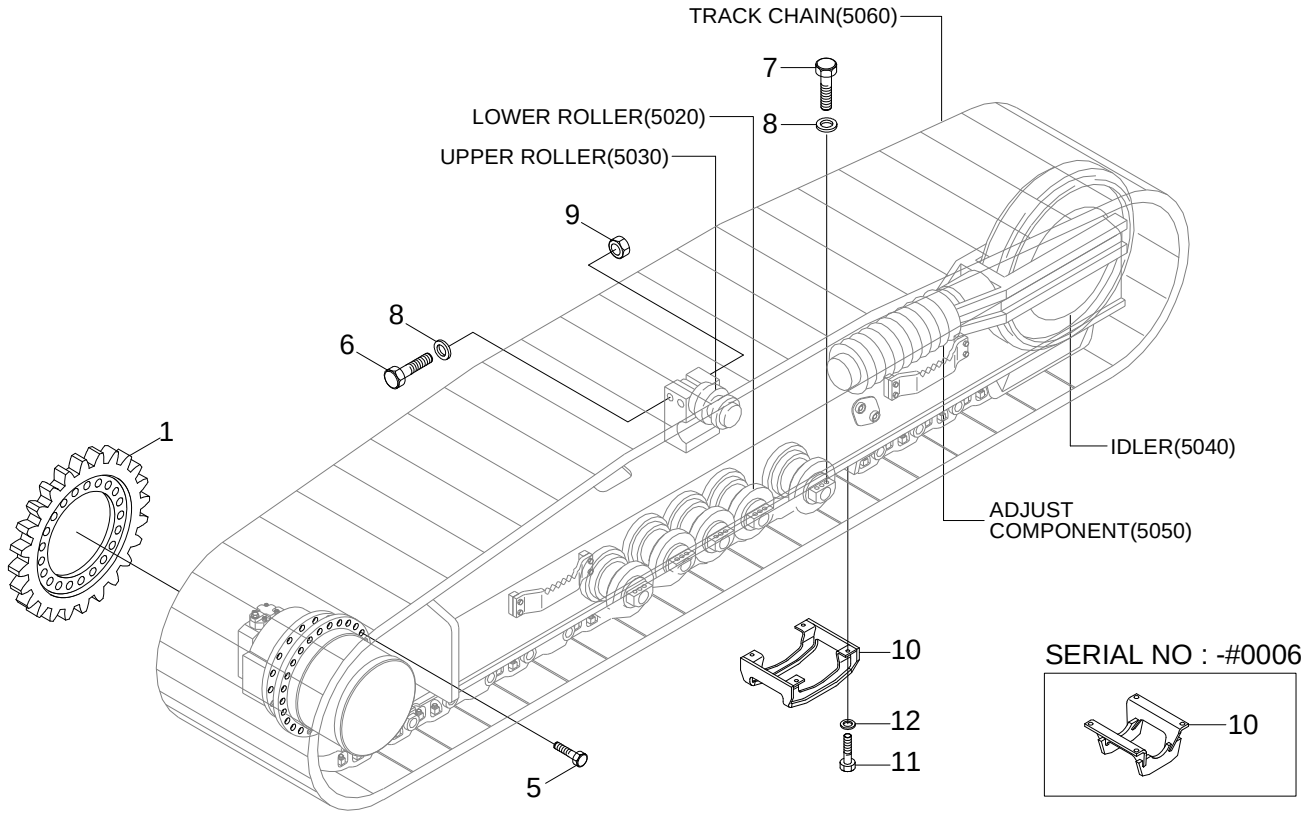

Item	Part_No	IS	Ord	T	Description	Qty	Serial_No	ITC	Remark
1	81Q5-10010				SPROCKET	2			
5	81E1-19630				BOLT-SPROCKET	48			
6	S017-20120D				BOLT-HEX	4			
7	S017-20090D				BOLT-HEX	64			
8	S441-200006				WASHER-HARDENED	72			
9	S205-20100B				NUT-HEX	4			
10	81N6-30012				GUARD WA-TRACK	4	- #0006		
	81Q5-30220				GUARD WA-TRACK	4	#0007 -	D	
11	S017-20055D				BOLT-HEX	16	- #0006		
	S017-20040D				BOLT-HEX	16	#0007 -	D	
12	S441-200006				WASHER-HARDENED	16			

LOWER ROLLER

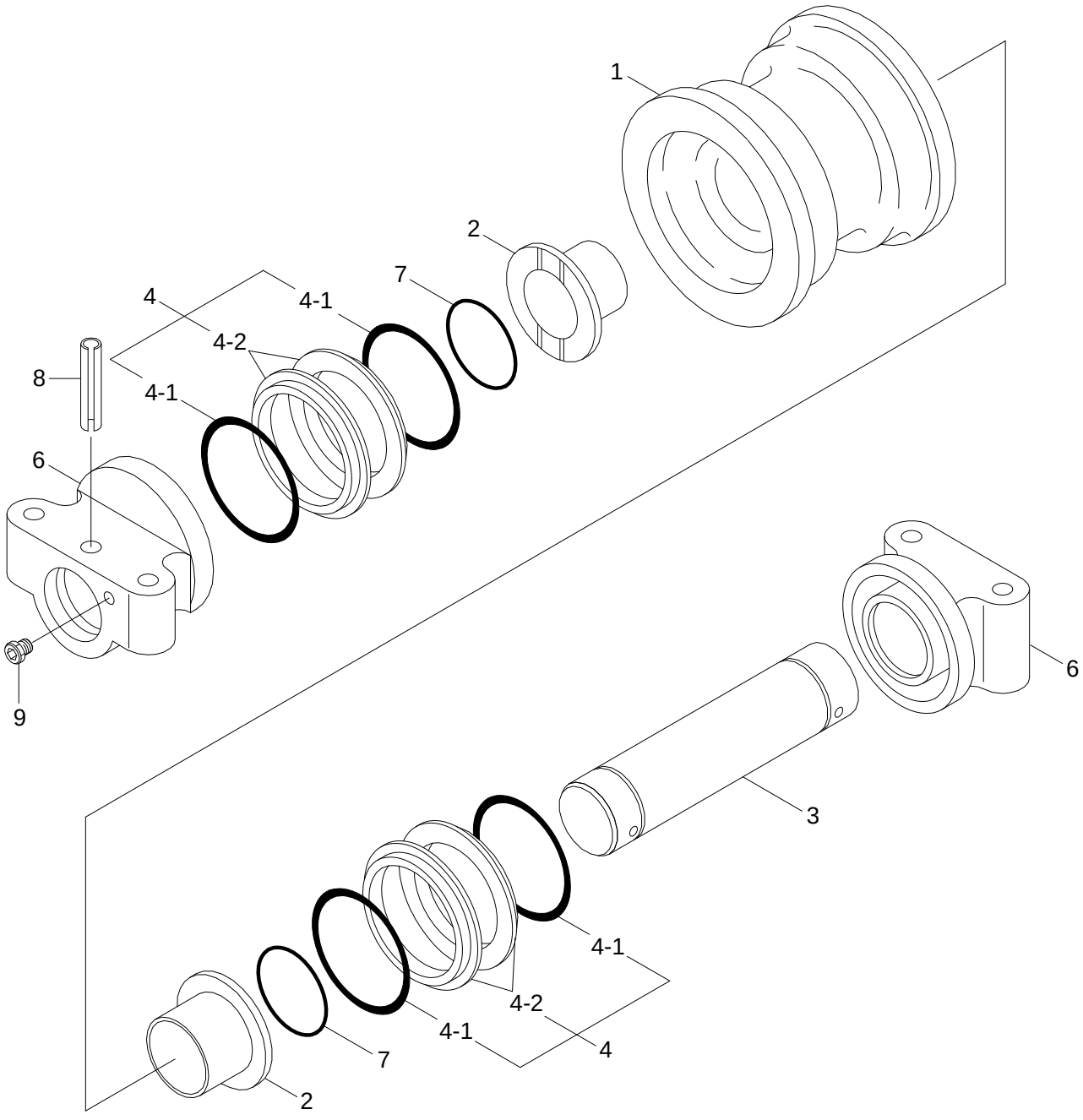

Item	Part_No	IS	Ord	T	Description	Qty	Serial_No	ITC	Remark
*	81N6-11010GG				ROLLER-LOWER	16			
1	81N6-11100				.SHELL-ROLLER	1			
2	81N6-11140				.BUSHING	2			
3	81N6-11110				.SHAFT	1			
4	81N6-11160				.SEAL ASSY	2			
N4-1	@				..SEAL	4			NOT
N4-2	@				..O-RING	4			NOT
6	81N6-11120				.COLLAR	2			
7	81N6-11150				.O-RING	2			
8	S632-065001				.PIN	1			
9	P220-430201				.PLUG-HEX	1			
N	@				NOT SUPPLIED PARTS	AR			NOT

UPPER ROLLER

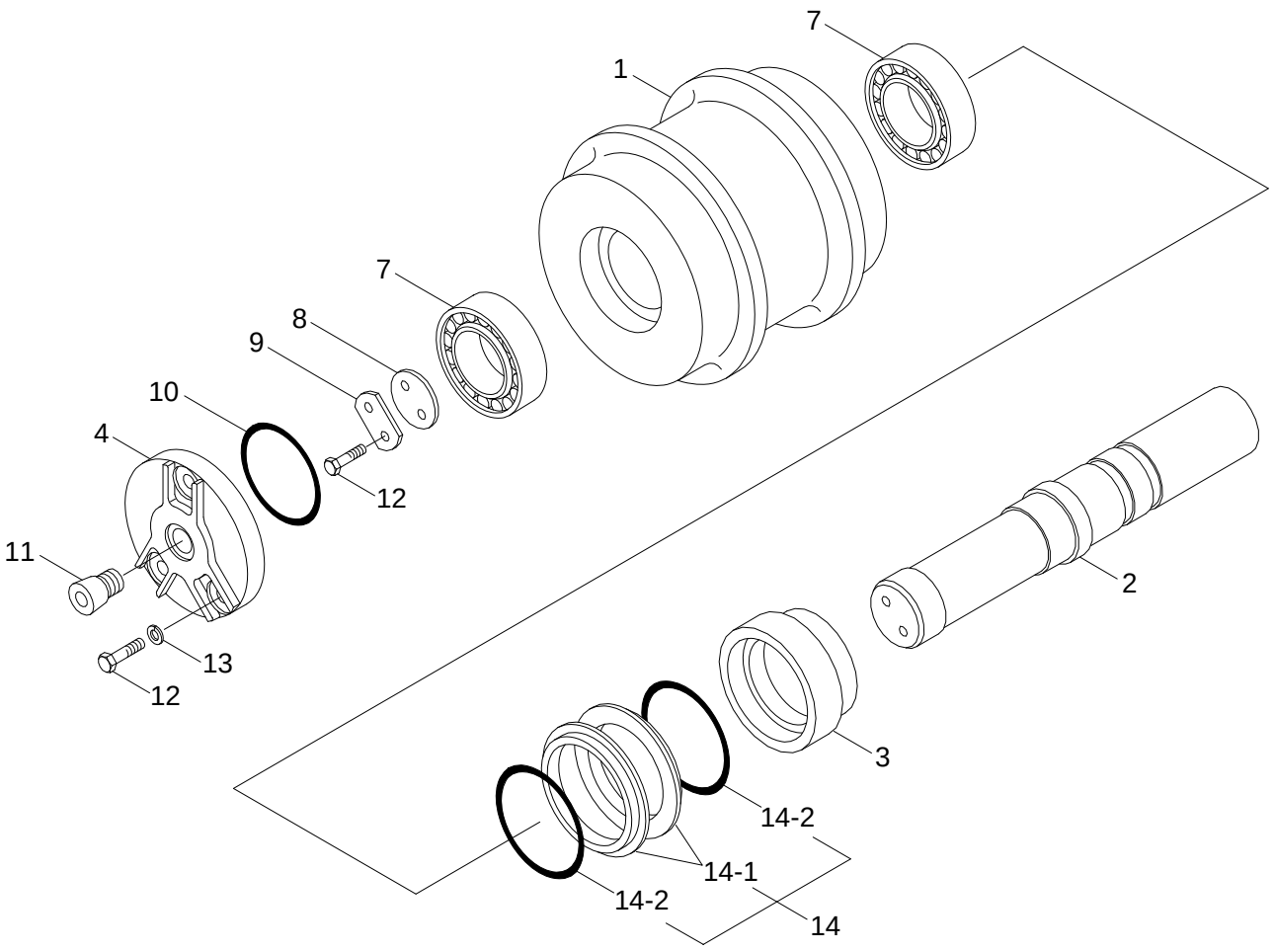

Item	Part_No	IS	Ord	T	Description	Qty	Serial_No	ITC	Remark
*	81EM-10031GG				UPPER ROLLER	4			
1	81EM-13010				.ROLLER	1			
2	81EM-13031				.SHAFT	1			
3	81EM-13040				.RETAINER	1			
4	81EM-13020				.CAP	1			
7	81EM-13050				.BEARING	2			
8	81EM-13070				.PLATE-THRUST	1			
9	81EM-13080				.PLATE-LOCK	1			
10	81EM-13110				.O-RING	1			
11	81EM-13100				.PLUG	1			
12	S017-100256				.BOLT-HEX	5			
13	S411-100006				.WASHER-SPRING	3			
14	81EM-13120				.SEAL ASSY	1			
N14-1	@				..SEAL	2			NOT
N14-2	@				..O-RING	2			NOT

ADJUST COMPONENT

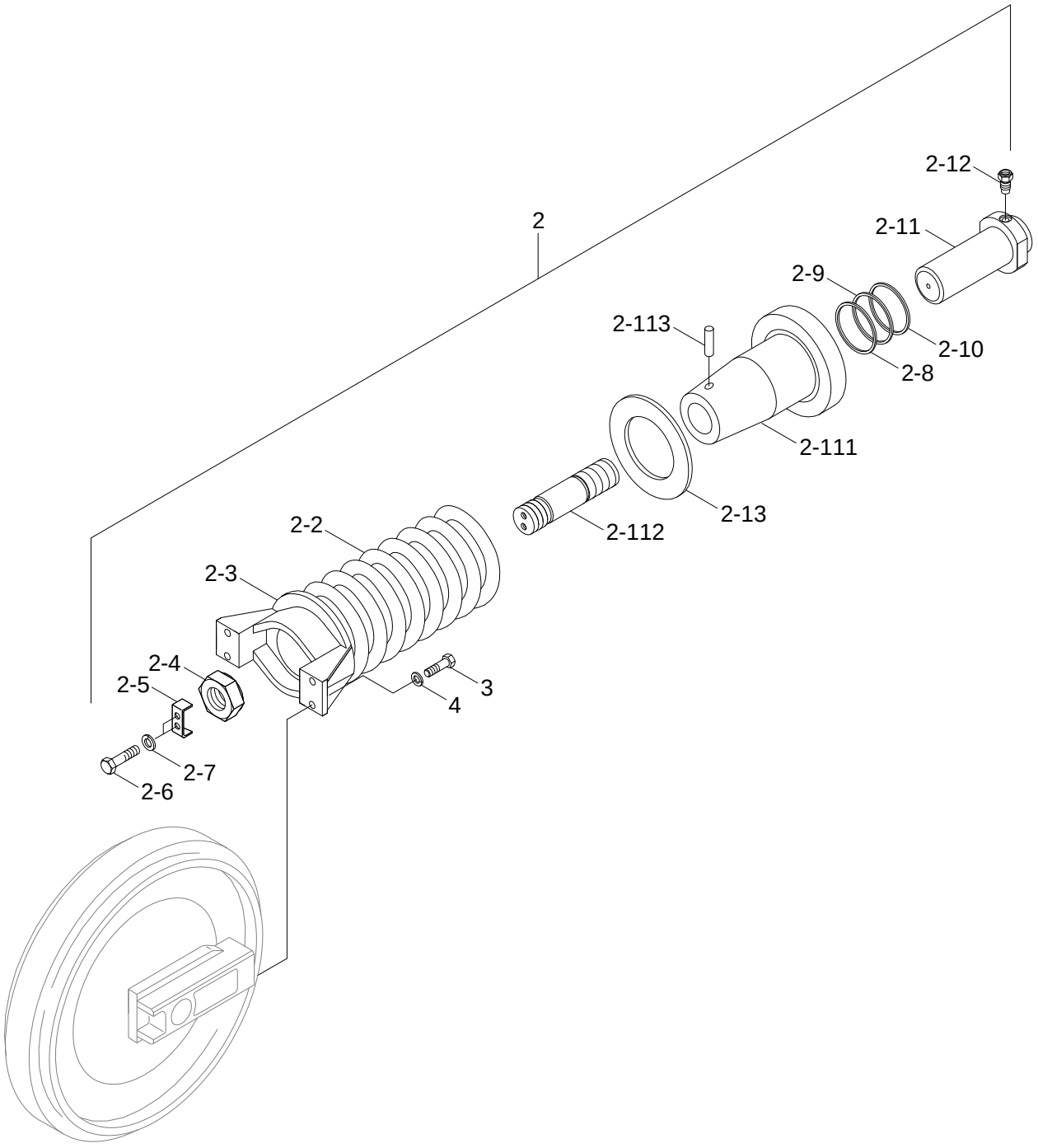

IDLER ASSY(5050)

Item	Part_No	IS	Ord	T	Description	Qty	Serial_No	ITC	Remark
*	81N5-15010GG				ADJUST COMP ASSY	2			
2	81N5-14010				ADJUST CYLINDER	1			
2-1	81N5-14300				.BODY ASSY	1			
2-111	81N6-14100				..BODY-T/CYL	1			
2-112	81N5-14110				..TIE-BAR	1			
2-113	81EM-14210				..PIN-SPRING	1			
2-2	81N5-14120				.SPRING	1			
2-3	81N6-14130				.BRACKET	1			
2-4	81EM-14121				.NUT-LOCK	1			
2-5	81EM-14130				.PLATE-LOCK	1			
2-6	S018-120256				.BOLT-HEX	2			
2-7	S411-120006				.WASHER-SPRING	2			
2-8	81E1-3104				.PACKING-ROD	1			
2-9	81E1-3204				.RING-BACK UP	1			
2-10	81E1-3304				.SEAL-DUST	1			
2-11	81N6-14210				.ROD	1			
2-12	E181-2013				.VALVE-GREASE	1			
2-13	81N5-14220				.SPACER	1			
3	S017-16050D				BOLT-HEX	4			
4	S411-160006				WASHER-SPRING	4			

[Item List] - Print Date : 2020.08.21 15:08

IDLER

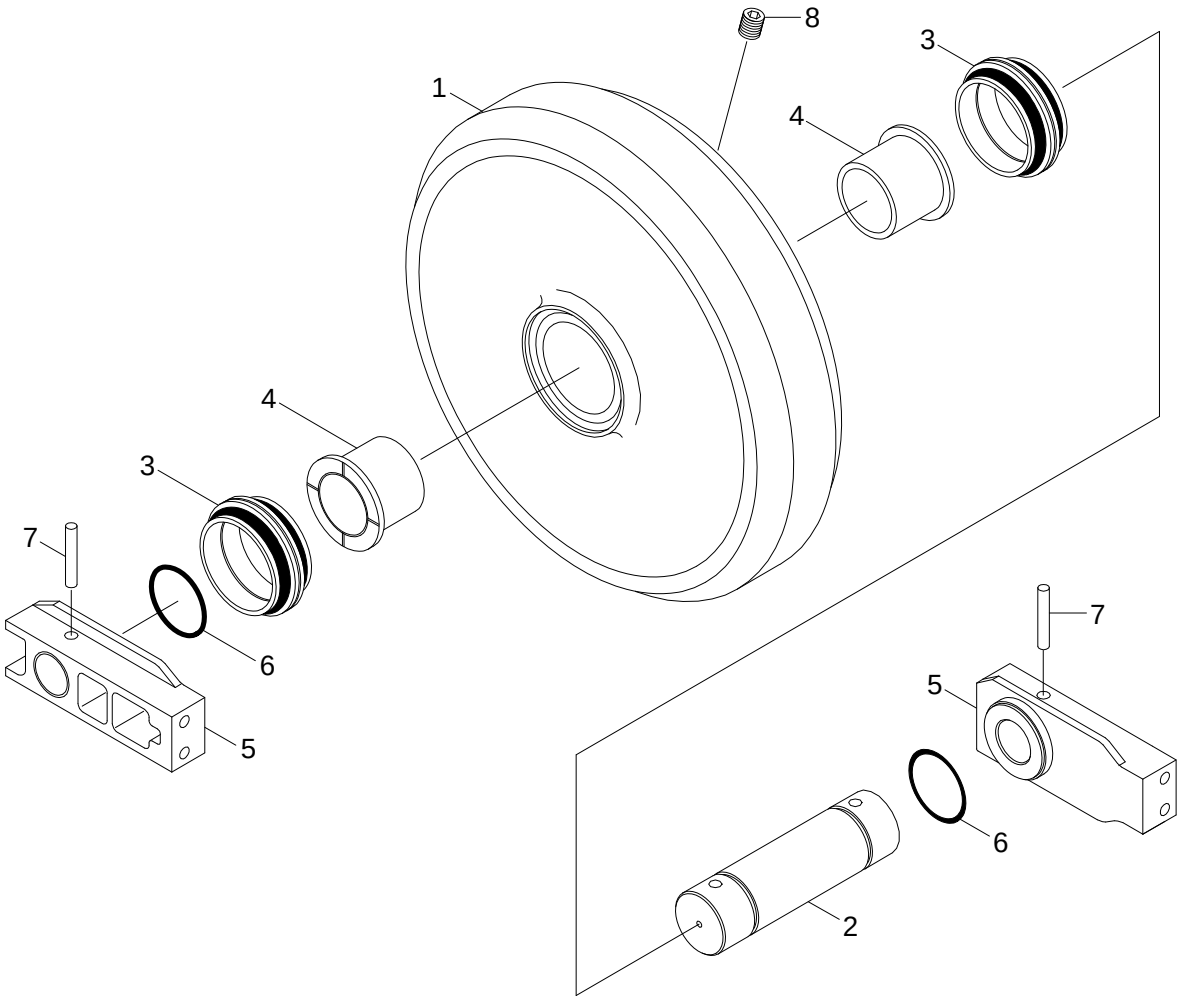

Item	Part_No	IS	Ord	T	Description	Qty	Serial_No	ITC	Remark
*	81N6-13010GG				IDLER ASSY	2			
1	81N6-13101				.SHELL-IDLER	1			
2	81N6-13110				.SHAFT	1			
3	81N6-13140				.SEAL ASSY	2			
4	81N6-13120				.BUSHING	2			
5	81N6-13131				.BRACKET-IDLER	2			
6	S632-070001				.O-RING	2			
7	81N6-13180				.PIN-SPRING	2			
8	P220-430202				.PLUG-HEX	1			

TRACK CHAIN

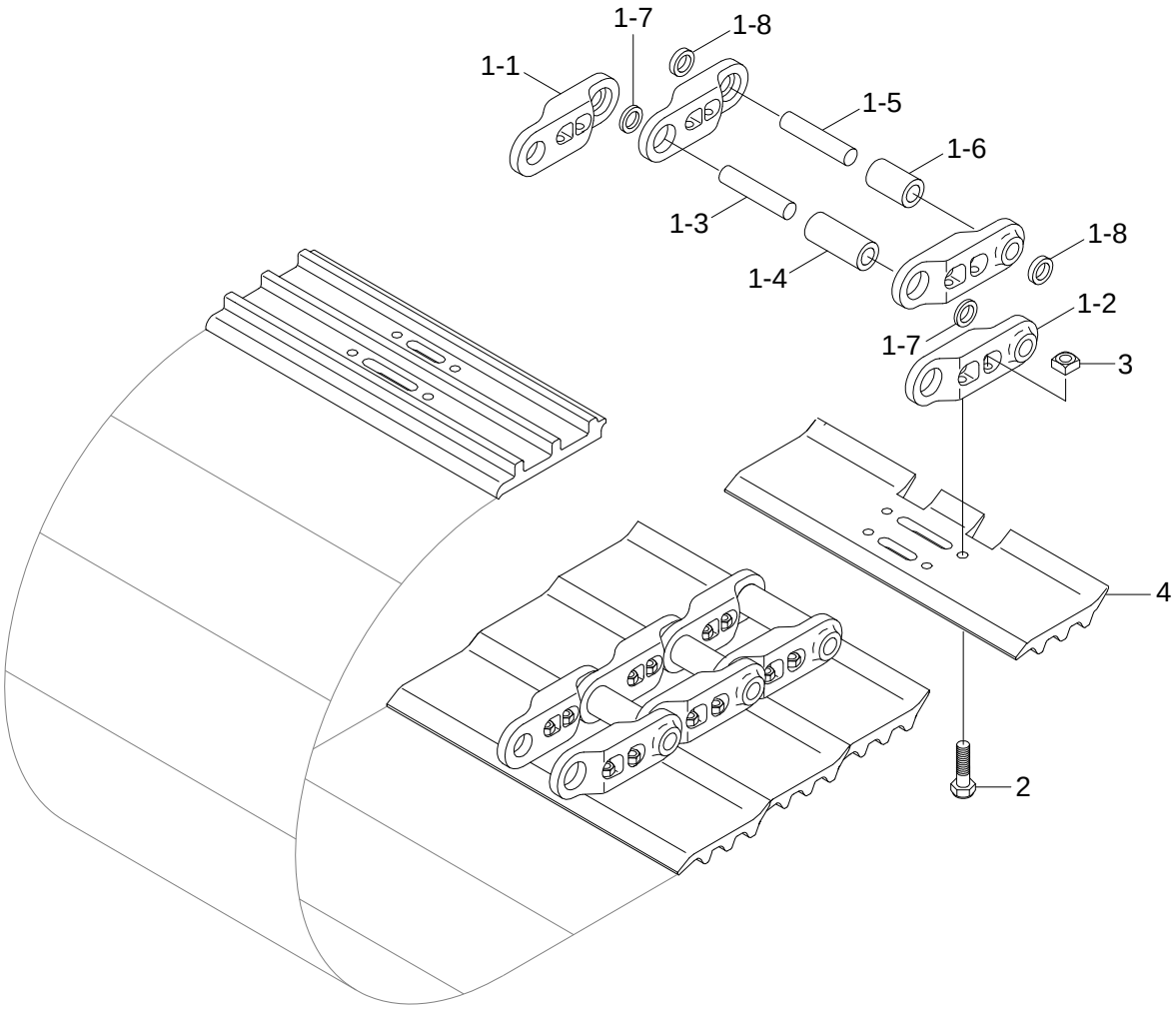

Item	Part_No	IS	Ord	T	Description	Qty	Serial_No	ITC	Remark
*	81N5-27020GG				TRACK CHAIN ASSY	1			500MM, INI
	81N5-25020GG				TRACK CHAIN ASSY	1			500MM, DCF
1	81N5-27600				.TRACK LINK ASSY	1			
1-1	E181-2532				..TRACK LINK-RH	51			
1-2	E181-2531				..TRACK LINK-LH	51			
1-3	E181-2533				..PIN-TRACK	50			
1-4	81N5-26140				..BUSHING-TRACK	50			
1-5	E181-2535				..PIN-MASTER	1			
1-6	E181-2536				..BUSHING-MASTER	1			
1-7	81N4-26210				..SEAL-URETHANE	100			
1-8	E181-2537				..SPACER-MASTER	2			
*-1	E181-T0000				.TRACK BOLT & NUT KIT	204			
2	E181-2504				..BOLT-TRACK	1			
3	E181-2505				..NUT-TRACK	1			
4	E181-2503				.SHOE-TRACK	51			500MM, INI
	81N5-24520				.SHOE-TRACK	51			500MM, DCF
*	81N5-27030GG				TRACK CHAIN ASSY	1			600MM, INI
	81N5-25030GG				TRACK CHAIN ASSY	1			600MM, DCF
4	E182-2503				.SHOE-TRACK	51			600MM, INI
	81N5-24530				.SHOE-TRACK	51			600MM, DCF
*	81N5-27040GG				TRACK CHAIN ASSY	1			700MM, INI
	81N5-25040GG				TRACK CHAIN ASSY	1			700MM, DCF
4	E181-25061				.SHOE-TRACK	51			700MM, INI
	81N5-24540				.SHOE-TRACK	51			700MM, DCF
*	81N5-27060GG				TRACK CHAIN ASSY	1			800MM, INI

Item	Part_No	IS	Ord	T	Description	Qty	Serial_No	ITC	Remark
*	81N5-25060GG				TRACK CHAIN ASSY	1			800MM, DCF
4	E181-25081				.SHOE-TRACK	51			800MM, INI
	81N5-24560				.SHOE-TRACK	51			800MM, DCF

CAB MOUNTING

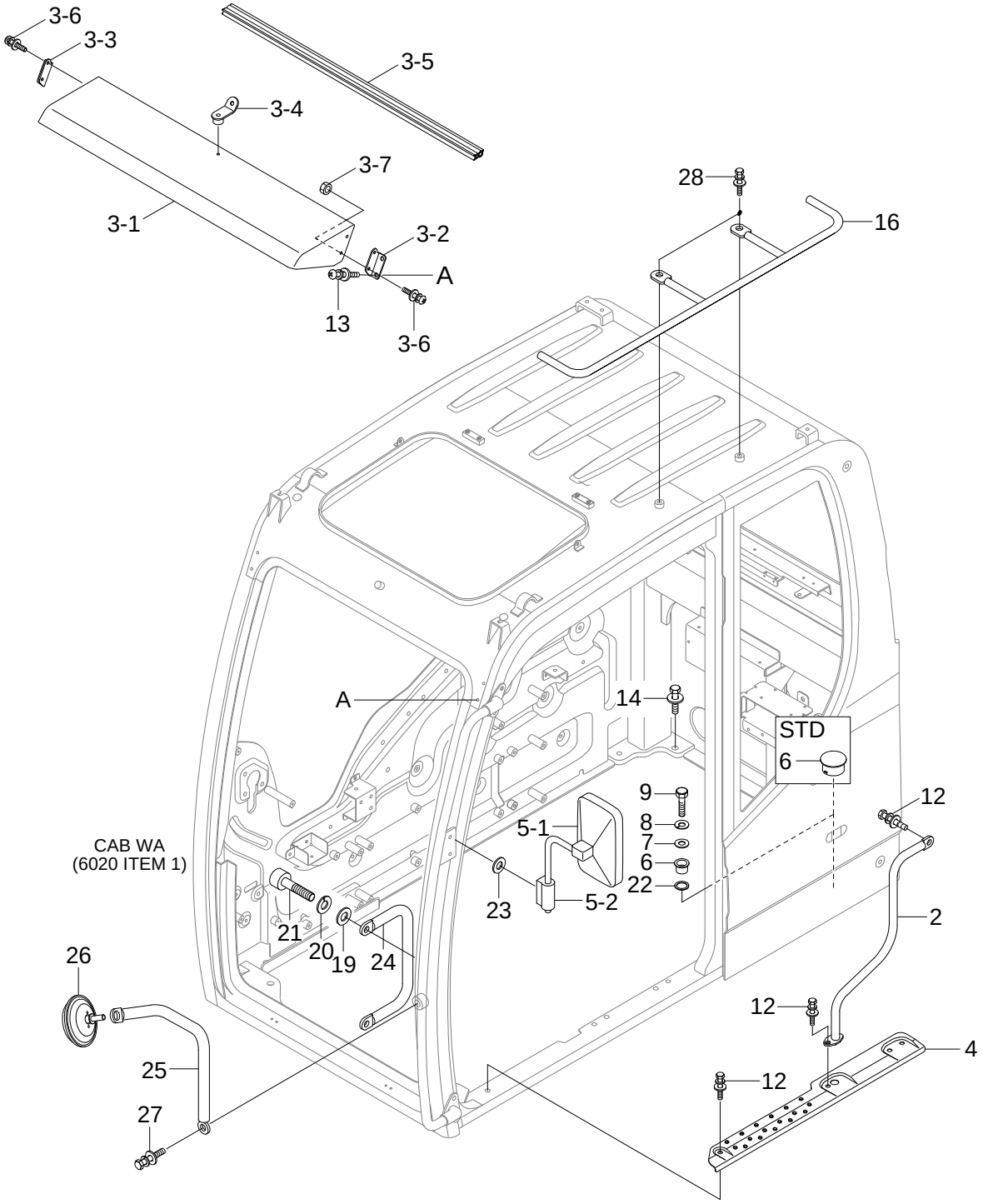

Item	Part_No	IS	Ord	T	Description	Qty	Serial_No	ITC	Remark
2	71Q6-02704				HANDRAIL	1	- #0003		
	71Q6-02705				HANDRAIL	1	#0004 -	B	
3	71Q6-04301				RAIN GUARD ASSY	1			
3-1	71Q6-04311				.RAIN GUARD	1			
3-2	71Q6-04320				.BRACKET-LH	1			
3-3	71Q6-04330				.BRACKET-RH	1			
3-4	71Q6-04340				.BRACKET WA	1			
3-5	S772-008800				.WEATHER STRIP	1			
3-6	S132-061526				.SCREW-W/WASHER	1			
3-7	S205-061006				.NUT-HEX	1			
4	71Q6-04501				PLATE-NON SLIP	1			
5	71N8-47001GG				MIRROR & STAY ASSY-LH	1			
5-1	71N8-47101				.MIRROR	1			
5-2	71N8-47200GG				.STAY ASSY	1			
6	75Q4-03010				CAP	1			STD, GENERAL
	71Q6-04511				BOSS	1			OPT, REINFORCE
7	S441-300006				WASHER-HARDENED	1			OPT, REINFORCE
8	S411-300006				WASHER-SPRING	1			OPT, REINFORCE
9	S017-30110D				BOLT-HEX	1			OPT, REINFORCE
12	S037-102526				BOLT-W/WASHER	4			
13	S132-061526				SCREW-W/WASHER	5			W/ RAIN GUARD
14	S037-123526				BOLT-W/WASHER	5			
16	71Q6-06360				HANDRAIL ASSY	1			W/O CAB GUARD
19	S403-10100B				WASHER-PLAIN	2	#0004 -	-	
20	S411-100006				WASHER-SPRING	2	#0004 -	-	

Item	Part_No	IS	Ord	T	Description	Qty	Serial_No	ITC	Remark
21	S109-100256				BOLT-SOCKET	2	#0004 -	-	
22	71Q6-01590				SPONGE	1			OPT, REINFORCE
23	S403-10500B				WASHER-PLAIN	2			
24	71Q6-01471				HANDRAIL	1	- #0003		
	71Q6-01472				HANDRAIL	1	#0004 -	B	
25	71Q6-06410				STAY-MIRROR	1	- #0003		
	71Q6-06411				STAY-MIRROR	1	#0004 -	B	
26	71Q4-47100				MIRROR	1			
27	S037-122526				BOLT-W/WASHER	1			W/O CAB GUARD
28	S037-123026				BOLT-W/WASHER	2			W/O CAB GUARD

CAB ASSY(1/4)

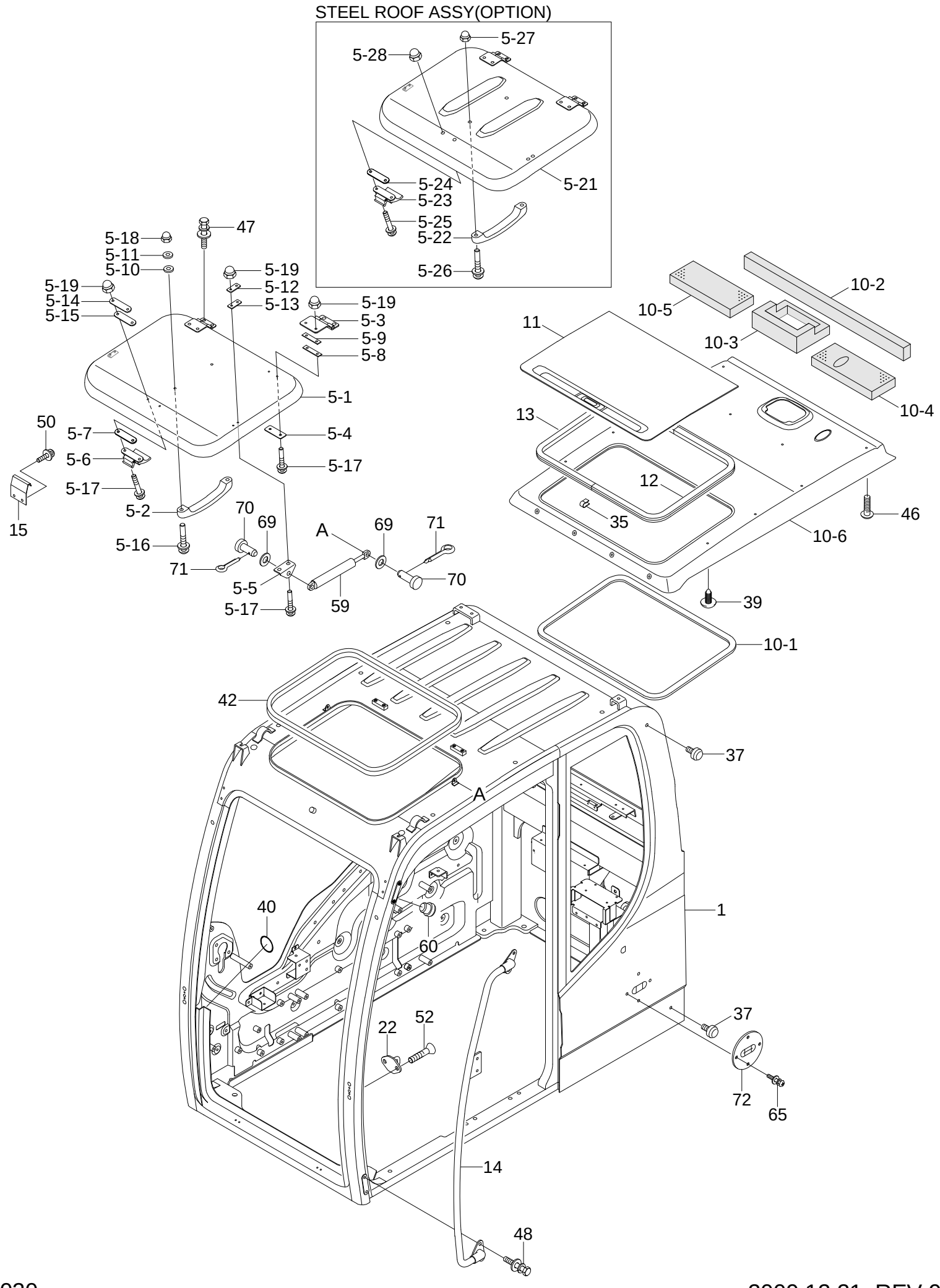
STEEL ROOF ASSY(OPTION)
5-27
5-28
5-24
5-23
5-25
5-22
5-26
5-21
47
5-18
5-11
5-10
5-19
5-12
5-13
5-19
5-19
5-14
5-15
5-3
5-9
5-8
5-1
5-4
5-17
50
5-7
5-6
5-17
15
5-2
5-16
70
69
71
5-5
5-17
A
69
71
70
59
10-2
10-5
10-3
10-4
11
13
12
35
46
10-6
39
10-1
42
37
A
40
60
1
37
22
52
72
65
14
48

Item	Part_No	IS	Ord	T	Description	Qty	Serial_No	ITC	Remark
N*	71Q8-80010				CABIN ASSY	1			NOT
1	72Q6-01000				.CABIN WA	1			STD
	71Q6-01001				.CABIN WA	1			REINFORCED
5	71Q6-02501				.SUN ROOF ASSY	1			ROOF, FOG TYPE
5-1	71Q6-02511				..COVER-SUN ROOF	1			
5-2	71Q6-02330				..HANDLE	1			
5-3	71Q6-02521				..HINGE	2			
5-4	71Q6-02530				..PAD	2			
5-5	71Q6-02590				..BRACKET	2			
5-6	71Q6-02610				..CATCH-ROOF	1			
5-7	71Q6-02620				..PAD-RUBBER	1			
5-8	72N6-05030				..PAD-RUBBER	2			
5-9	72N6-05040				..PLATE-HINGE	2			
5-10	72N6-05050				..PLATE-HANDLE	2			
5-11	72N6-05060				..PAD-RUBBER	4			
5-12	72N6-05110				..PLATE-GAS SPRING	2			
5-13	72N6-05120				..PAD-RUBBER	4			
5-14	75N4-03330				..PLATE	1			
5-15	75N4-03340				..PAD-RUBBER	1			
5-16	S131-053546				..SCREW-W/WASHER	2			
5-17	S132-062546				..SCREW-W/WASHER	10			
5-18	S291-050002				..CAP NUT-DOMED	2			
5-19	S291-060002				..CAP NUT-DOMED	10			
5	72Q6-02500				.SUN ROOF ASSY	1			STILL ROOF TYPE
5-21	72Q6-02510				..SUN ROOF WA	1			

Item	Part_No	IS	Ord	T	Description	Qty	Serial_No	ITC	Remark
5-22	71Q6-02330				..HANDLE	1			
5-23	71Q6-02610				..CATCH-ROOF	1			
5-24	71Q6-02620				..PAD-RUBBER	1			
5-25	S132-061546				..SCREW-W/WASHER	2			
5-26	S161-050256				..SCREW-CROSS R/ROUND	2			
5-27	S291-050002				..CAP NUT-DOMED	2			
5-28	S291-060002				..CAP NUT-DOMED	2			
10	71Q6-02793				.HEADLINING ASSY	1			
10-1	71Q6-02981				..WEATHER STRIP	1			
10-2	71Q6-03050				..SPONGE	1			
10-3	71Q6-03060				..SPONGE	1			
10-4	71Q6-03080				..SPONGE	1			
10-5	71Q6-03090				..SPONGE	1			
10-6	71Q6-02970				..HEADLINING	1			
11	71Q6-02802				.HEADLINING	1			
12	71Q6-02811				.SASH-GUIDE, LH	1			
13	71Q6-02821				.SASH-GUIDE, RH	1			
14	71Q6-02831				.HANDRAIL	1			
15	71Q6-02851				.BRACKET-CATCH	1			
22	71N6-02770				.STRIKER	1			
35	71Q6-04640				.STOPPER	2			
37	71EH-13150				.BUMPER-RUBBER	4			
48	S035-082026				.BOLT-W/WASHER	6			
39	71Q6-04980				.FASTENER	14			
40	S681-100800				.GROMMET	1			

Item	Part_No	IS	Ord	T	Description	Qty	Serial_No	ITC	Remark
42	S772-022500				.WEATHER STRIP	1			
46	S035-062026				.BOLT-W/WASHER	6			
47	S035-081626				.BOLT-W/WASHER	4			
48	S035-082026				.BOLT-W/WASHER	6			
50	S132-061026				.SCREW-W/WASHER	2			
52	S141-080166				.SCREW-FLAT HD	2			
59	71N6-03201				.SPRING-GAS	2	- #0003		
	71N6-03202				.SPRING-GAS	2	#0004 -	B	
60	71Q6-03030				.WEATHER STRIP	2			
65	S132-062056				.SCREW-W/WASHER C/RD	4			
69	S403-08200B				.WASHER-PLAIN	4			
70	S491-080162				.PIN-CLEVIS	4	- #0003		
	71Q6-03160				.PIN-CLEVIS	4	#0004 -	B	
71	S501-070006				.PIN-SELF LOCKING	4			
72	75Q4-03770				.CAP	1			
99	41QA-40160				.CAP-HEX	12			

CAB ASSY(2/4)

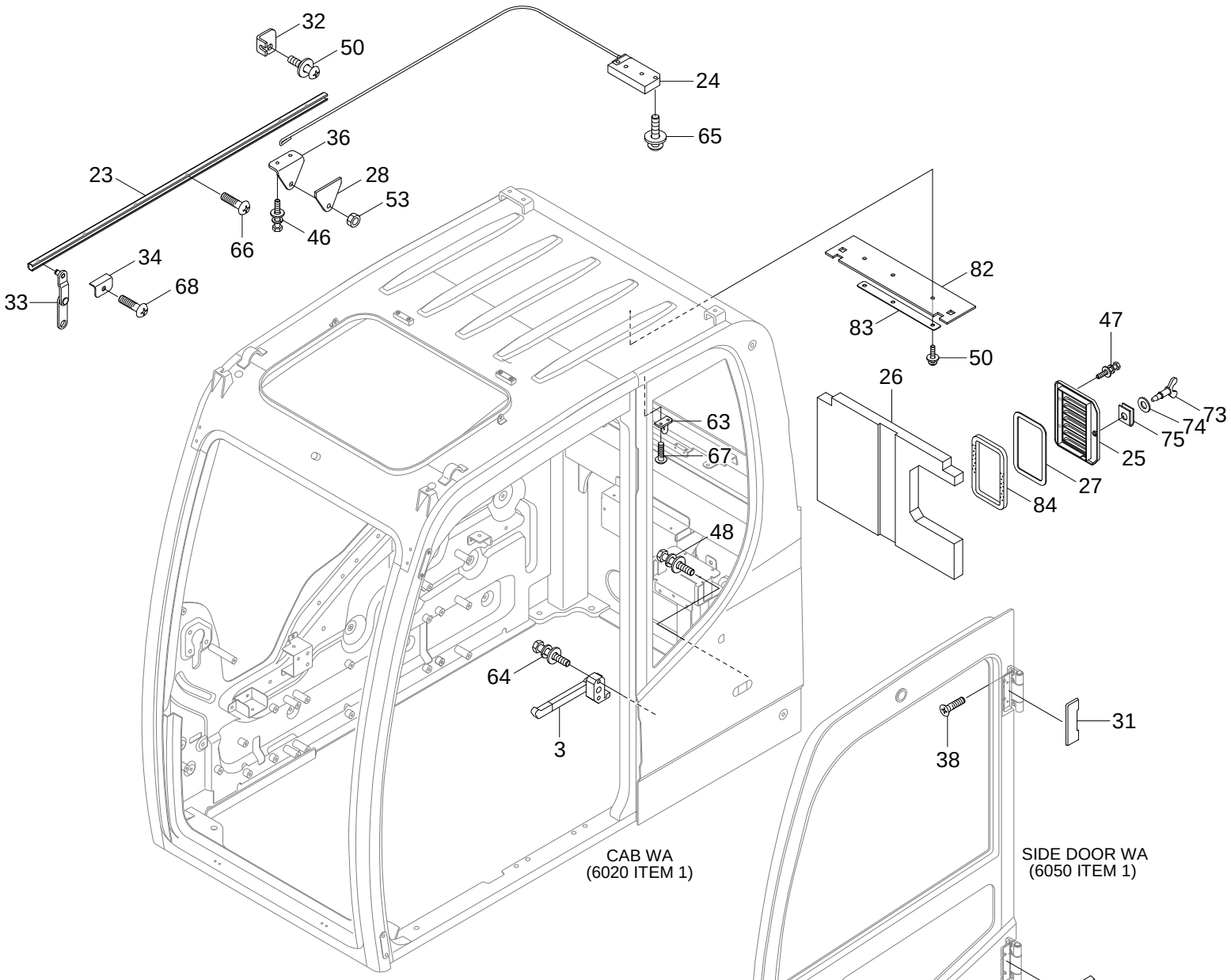

FOG GUARD(OPT)

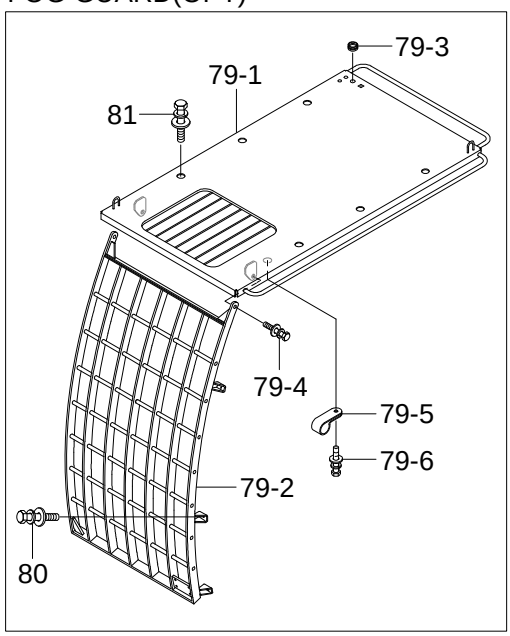

WIRE / FINE NET GUARD(OPT)

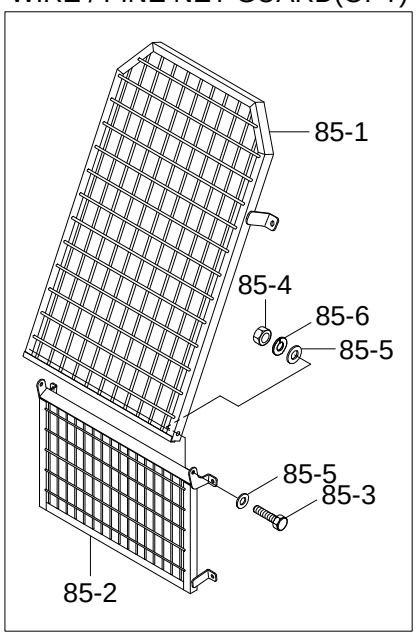

Item	Part_No	IS	Ord	T	Description	Qty	Serial_No	ITC	Remark
*	@				CAB ASSY	1			NOT
3	71Q6-02350				.BACK LATCH ASSY	1			
23	71Q6-01451				.RAIL	1			
24	71Q6-03220				.CABLE ASSY-ASSIST	1			
25	71Q6-03441				.COVER-AIRCON	1			
26	71Q6-03640				.INSULATOR FOAM	1			
27	71Q6-03470				.PAD	1			
28	71Q6-03490				.STRIKER	4			
30	71Q6-03650				.COVER-HINGE/LOWER	1			
31	71Q6-03660				.COVER-HINGE/UPPER	1			
32	71Q6-03671				.BRACKET	1			
33	71Q6-04530				.LINK WA	1			
34	71Q6-04611				.STOPPER	2			
36	71Q6-04960				.PLATE	1			
38	71EH-10400				.SCREW	8			
46	S035-062026				.BOLT-W/WASHER	6			
47	S035-081626				.BOLT-W/WASHER	2			
48	S035-082026				.BOLT-W/WASHER	2			
50	S132-061256				.SCREW-W/WASHER	4			
53	S205-101006				.NUT-HEX	2			
63	71Q6-03680				.HOOK	1			
64	S035-061526				.BOLT-W/WASHER	2			
65	S132-062056				.SCREW-W/WASHER C/RD	2			
66	S141-040106				.SCREW-FLAT HD	6			
67	S161-050106				.SCREW-CROSS R/ROUND	2			

Item	Part_No	IS	Ord	T	Description	Qty	Serial_No	ITC	Remark
68	S161-080206				.SCREW-CROSS R/ROUND	2			
73	71Q6-04470				.FASTENER	1			
74	71Q6-04490				.WASHER	1			
75	71Q6-04480				.CLIP	1			
79	71Q6-06001				.GUARD ASSY	1			FOG GUARD
79-1	71Q6-06011				..GUARD WA-TOP	1			FOG GUARD
79-2	71Q6-06020				..GUARD WA-FRONT	1			FOG GUARD
79-3	S681-190400				..GROMMET	1			FOG GUARD
79-4	S037-122526				..BOLT-W/WASHER	2			FOG GUARD
79-5	31L7-10350				..CLAMP	4			FOG GUARD
79-6	S037-102026				..BOLT-W/WASHER	4			FOG GUARD
80	S037-122526				.BOLT-W/WASHER	6			FOG GUARD
	41QA-40160				.CAP-HEX	6			W/O FOG GUARD
81	S037-123026				.BOLT-W/WASHER	6			FOG GUARD
	41QA-40160				.CAP-HEX	6			W/O FOG GUARD
82	71Q6-02660				.INSULATOR	1			
83	71Q6-06390				.PLATE	1			
84	71Q6-03070				.SPONGE	1			
85	71Q6-06500				.PROTECTOR-CAB	1			WIRE NET GUARD
	71Q6-06600				.PROTECTOR-CAB	1	#0004 -	-	FINE NET GUARD
85-1	71Q6-06510				..PROTECTOR-UP	1			WIRE NET GUARD
	71Q6-06630				..PROTECTOR-UP	1	#0004 -	-	FINE NET GUARD
85-2	71Q6-06520				..PROTECTOR-LOW	1			WIRE NET GUARD
	71Q6-06640				..PROTECTOR-LOW	1	#0004 -	-	FINE NET GUARD
85-3	S017-120706				..BOLT-HEX	2			WIRE/ FINE NET

Item	Part_No	IS	Ord	T	Description	Qty	Serial_No	ITC	Remark
85-4	S205-12100B				..NUT-HEX	2			WIRE/ FINE NET
85-5	S403-12200B				..WASHER-PLAIN	4			WIRE/ FINE NET
85-6	S411-12000B				..WASHER-SPRING	2			WIRE/ FINE NET
98	71Q6-02050				.ROTOR	1			

CAB ASSY(3/4)

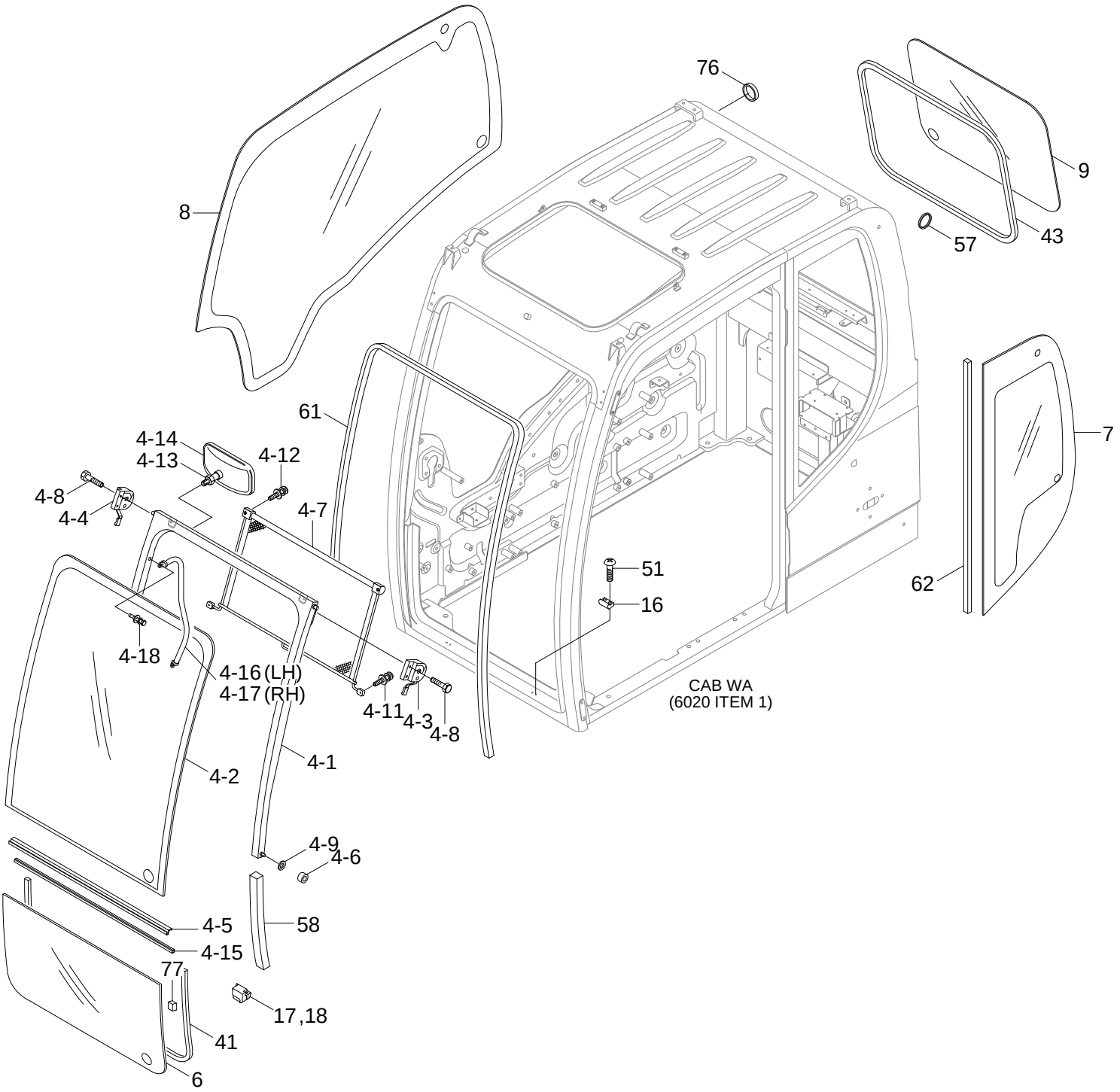
76
8
9
57
43
61
7
4-14
4-13
4-12
4-8
4-4
4-7
51
16
62
4-18
4-16 (LH)
4-17 (RH)
4-11
4-3
4-8
CAB WA
(6020 ITEM 1)
4-2
4-1
4-9
4-6
58
4-5
4-15
77
17,18
41
6

Item	Part_No	IS	Ord	T	Description	Qty	Serial_No	ITC	Remark
*	@				CAB ASSY	1			NOT
4	71Q6-02400				.SLIDING DOOR ASSY	1			TEMPERED, STD
	71Q4-02400				.SLIDING DOOR ASSY	1			LAMINATED, OPT
4-1	71Q6-02411				..SLIDING DOOR WA	1			TEMPERED, STD
	71Q4-02411				..SLIDING DOOR WA	1			LAMINATED, OPT
4-2	71Q4-02440				..GLASS-SLIDING DOOR	1			TEMPERED, STD
	71Q6-02440				..GLASS-SLIDING DOOR	1			LAMINATED, OPT
4-3	71Q6-02480				..LATCH-SLIDING, LH	1			
4-4	71Q6-02490				..LATCH-SLIDING, RH	1			
4-5	71Q6-03020				..SASH	1			
4-6	71N6-03150				..ROLLER	4			
4-7	71Q6-03581				..SUN VISOR ASSY	1			
4-8	S017-100156				..BOLT-HEX	4			
4-9	S403-101006				..WASHER-PLAIN	4			
4-11	S131-042046				..SCREW-W/WASHER	2			
4-12	S131-041246				..SCREW-W/WASHER	2			
4-13	S204-081006				..NUT-HEX	4			LAMINATED, OPT
4-14	71L1-3377				..MIRROR-ROOM	4			LAMINATED, OPT
4-15	71Q6-03010				..SEAL	1			
4-16	71Q6-02651				..HANDLE	1	#0004 -	-	LH
4-17	71Q6-02474				..HANDLE	1	#0004 -	-	RH
4-18	S035-082526				..BOLT-W/WASHER	4	#0004 -	-	
6	71Q6-02710				.GLASS-FR/BOTTOM	1			TEMPERED, STD
	71Q4-02710				.GLASS-FR/BOTTOM	1			LAMINATED, OPT
7	71Q6-02721				.GLASS-LH/RR	1			

Item	Part_No	IS	Ord	T	Description	Qty	Serial_No	ITC	Remark
8	71Q6-02730				.GLASS-RH	1			
9	71Q6-02740				.GLASS-RR	1			
16	71N6-02880				.INSULATOR	2			
17	71Q6-02900				.STOPPER-LH	1			TEMPERED, STD
	72Q6-02900				.STOPPER	1			LAMINATED, OPT
18	71Q6-02910				.STOPPER-RH	1			TEMPERED, STD
	72Q6-02910				.STOPPER	1			LAMINATED, OPT
41	S771-015000				.WEATHER STRIP	1			
43	S781-124302				.SEAL-GLASS	1			
51	S141-050206				.SCREW-FLAT HD	4			
57	71N6-03320				.RING	1			
58	71Q6-02750				.SEAL	2			
61	71Q6-03480				.SEAL-FRONT	1			
62	71Q6-02630				.WEATHER STRIP	1			
76	S880-132040				.GROMMET	1			
77	71Q6-03040				.SPONGE	2			

CAB ASSY(4/4, DOOR)

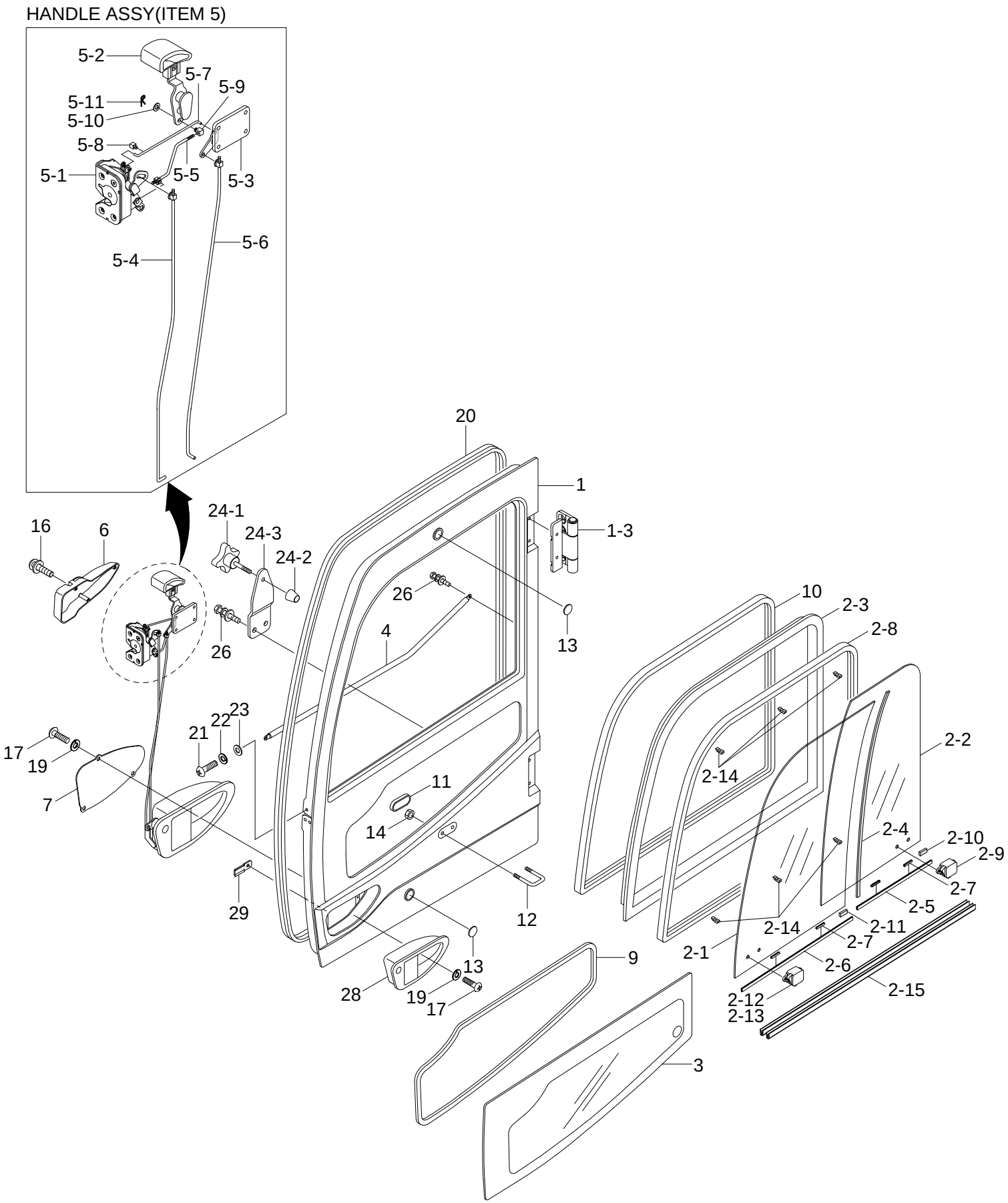

Item	Part_No	IS	Ord	T	Description	Qty	Serial_No	ITC	Remark
*	@				CAB ASSY	1			NOT
*-1	71Q6-02001				SIDE DOOR ASSY	1			
1	71Q6-02012				.SIDE DOOR WA	1			
1-3	71Q6-02102				..HINGE	2			
2	71Q6-02020				.SASH ASSY	1			
2-1	71Q6-03230				..GLASS	1			
2-2	71Q6-03240				..GLASS	1			
2-3	71Q6-03250				..FRAME	1			
2-4	71Q6-03260				..MOHAIR	1			
2-5	71Q6-03270				..RAIL	1			
2-6	71Q6-03280				..RAIL	1			
2-7	71Q6-03290				..RAIL	4			
2-8	71Q6-03300				..SEAL	1			
2-9	71Q6-03310				..LOCK ASSY	1			
2-10	71Q6-03320				..LOCK	1			
2-11	71Q6-03330				..LOCK	1			
2-12	71Q6-03340				..LOCK	1			
2-13	71Q6-03350				..CATCH	1			
2-14	71Q6-03360				..RUBBER	10			
2-15	71Q6-03370				..FRAME-LOWER	1			
3	71Q6-02030				.GLASS-DOOR	1			
4	71Q6-02242				.HANDRAIL	1			
5	71Q6-02121				.HANDLE ASSY	1			
5-1	71Q6-02130				..CATCH	1			
5-2	71Q6-03150				..KNOB-INNER HANDLE	1			

Item	Part_No	IS	Ord	T	Description	Qty	Serial_No	ITC	Remark
5-3	71Q6-02150				..HANDLE-INNER	1			
5-4	71Q6-02170				..ROD	1			
5-5	71Q6-02180				..ROD	1			
5-6	71Q6-02160				..ROD	1			
5-7	71Q6-02190				..ROD	1			
5-8	71Q6-02250				..HOLDER	5			
5-9	MH800050				..PIN-JOINT	3			
5-10	MB700270				..WASHER-PLATE	3			
5-11	MH650620				..PIN-R	3			
6	71Q6-02140				.COVER	1			
7	71Q6-02061				.COVER	1			
9	71Q6-02370				.WEATHER STRIP	1			
10	71Q6-02380				.WEATHER STRIP	1			
11	71M8-00680				.RUBBER-CAP	1			
12	71N6-03650				.STRIKER	1			
13	17E1-5146				.BUMPER-DOOR	2			
14	S205-10100B				.NUT-HEX	4			
16	S131-043046				.SCREW-W/WASHER	3			
17	S151-050156				.SCREW-TAPPING	6			
19	S411-050006				.WASHER-SPRING	6			
20	71Q6-02040				.WEATHER STRIP	1			
21	S161-060156				.SCREW-CROSS R/ROUND	5			
22	S411-060006				.WASHER-SPRING	3			
23	S403-062006				.WASHER-PLAIN	3			
24	71Q6-02081				.STOPPER ASSY	3			

Item	Part_No	IS	Ord	T	Description	Qty	Serial_No	ITC	Remark
24-1	71Q6-02261				..BOLT-KNOB	1			
24-2	71Q6-02280				..PLATE	1			
24-3	71Q6-02290				..RUBBER-BUMPER	1			
26	S037-082526				.BOLT-W/WASHER	2			
28	71Q6-02110				.LATCH ASSY	1			
29	71Q6-00590				.PLATE-ASSIT	1			

CAB INTERIOR 1

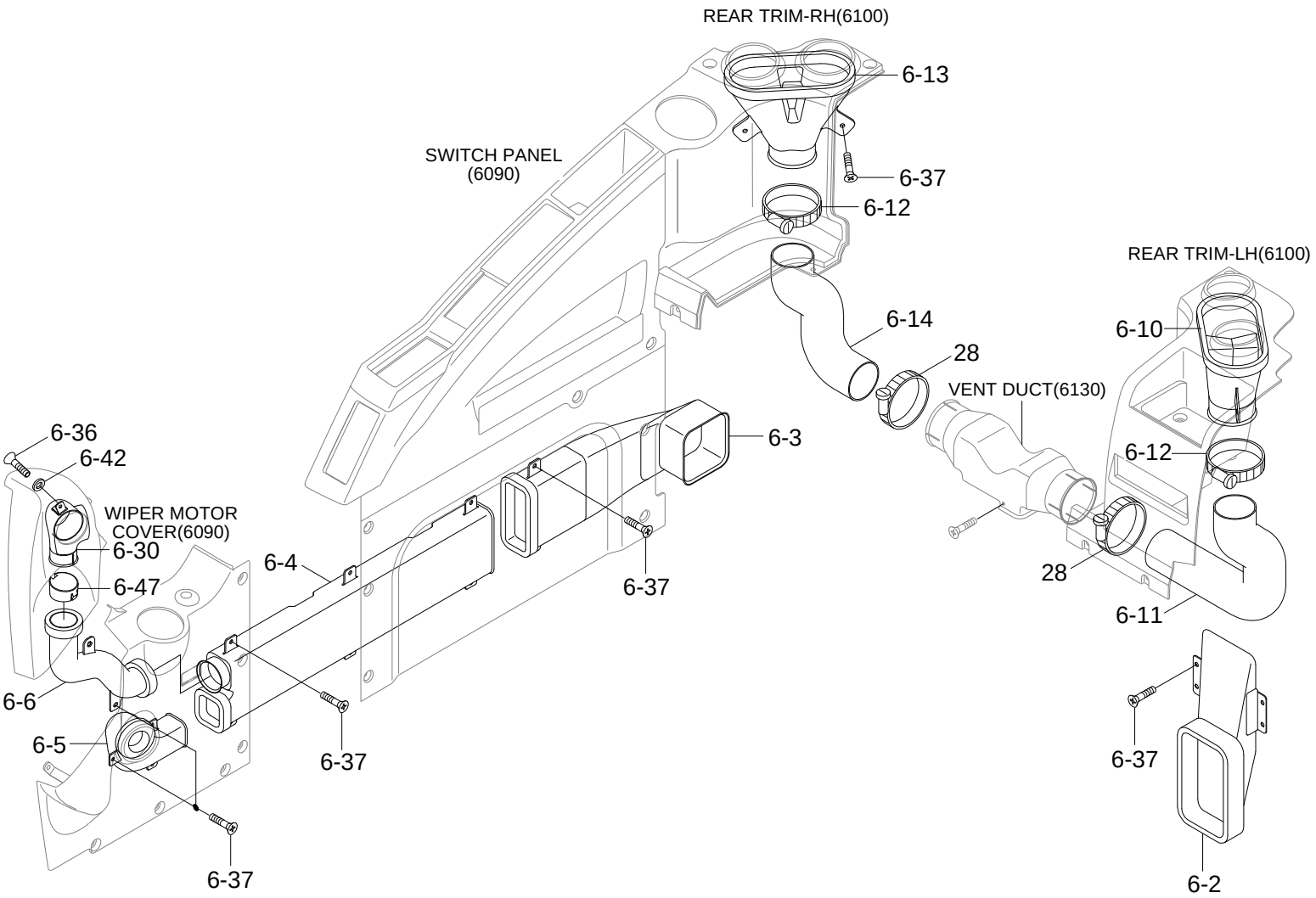

Item	Part_No	IS	Ord	T	Description	Qty	Serial_No	ITC	Remark
N6	71Q6-26000GG				CABIN SUB ASSY	1			NOT
6-2	71Q6-22430				.DUCT-INLET ASSY	1			
6-3	71Q6-22301				.DUCT-DEFROSTER(1)	1			
6-4	71Q6-22310				.DUCT-DEFROSTER(2)	1			
6-5	71Q6-22330				.DUCT-FOOT	1			
6-6	71Q6-22320				.DUCT-DEFROSTER(3)	1			
6-10	71Q6-22910				.DUCT-VENT,LH	1			
6-11	71Q6-22380				.HOSE-VENT,LH	1			
6-12	S520-085000				.CLAMP-HOSE	2			
6-13	71Q6-22900				.DUCT-VENT,RH	1			
6-14	71Q6-22420				.HOSE-VENT,RH	1			
6-30	71Q6-22470				.DUCT-DEFROSTER(4)	1			
6-36	S002-06010B				.SCREW-TRUS HEAD	2			
6-37	S002-06015B				.SCREW-TRUS HEAD	21			
6-42	S403-06200B				.WASHER-PLAIN	2			
6-47	71Q6-23060				.CAP-WIPER MOTOR(4)	1			
28	S520-085000				CLAMP-HOSE	2			

CAB INTERIOR 2

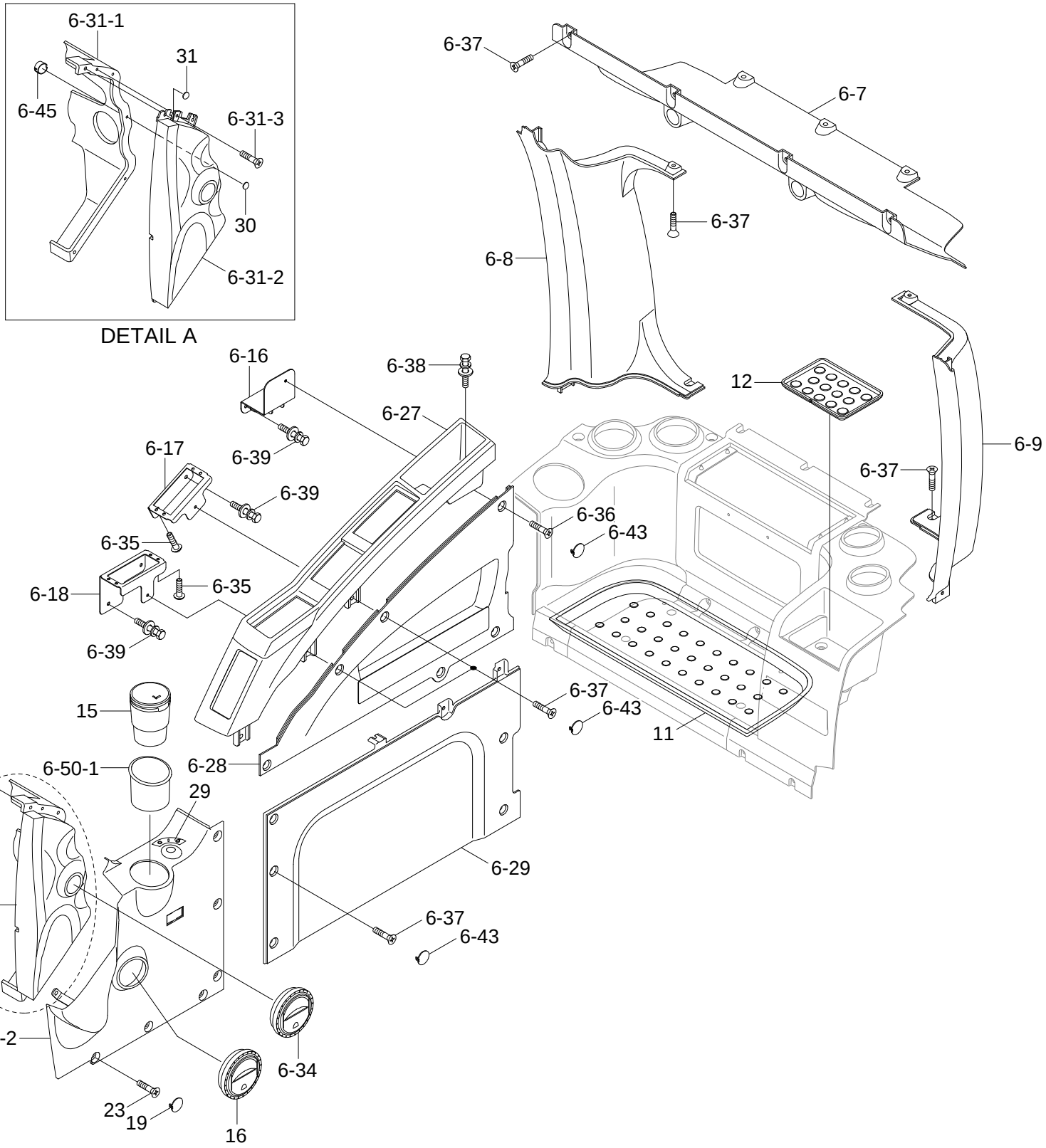

Item	Part_No	IS	Ord	T	Description	Qty	Serial_No	ITC	Remark
6	@				CABIN SUB ASSY	1			NOT
6-7	71Q6-22250GG				.COVER-SPEAKER	1			
6-8	71Q6-22240GG				.TRIM-PILLAR,RH	1			
6-9	71Q6-22230GG				.TRIM-PILLAR,LH	1			
6-16	71Q6-21500				.BRACKET-TRAY	1			
6-17	71Q6-21530				.BRACKET-REMOTE	1			
6-18	71Q6-21550				.BRACKET-MEMBRANE	1			
6-27	71Q6-22141				.PANEL-SWITCH	1			
6-28	71Q6-22800GG				.TRIM ASSY-UPPER,RH	1			
6-29	71Q6-22660GG				.TRIM ASSY-LOWER,RH	1			
6-31	71Q6-22581GG				.COVER-WIPER MOTOR	1			
6-31-1	71Q6-22091				..COVER(1)-WIPER MOTOR	1			
6-31-2	71Q6-22101				..COVER(2)-WIPER MOTOR	1			
6-31-3	S002-06015B				..SCREW-TRUS HEAD	2			
6-34	71Q6-22390				.NOZZLE-AIR, FRONT	2			
6-35	S002-05015B				.SCREW-TRUSHEAD	8			
6-36	S002-06010B				.SCREW-TRUS HEAD	1			
6-37	S002-06015B				.SCREW-TRUS HEAD	16			
6-38	S035-061526				.BOLT-W/WASHER	1			
6-39	S035-081526				.BOLT-W/WASHER	6			
6-43	71Q6-22760GG				.CAP-TRIM	11			
6-45	71Q6-23040				.CAP-WIPER MOTOR(2)	1			
6-50	71Q6-22980GG				.TRIM-RH,FRONT LOW	1			
6-50-1	71Q6-22110GG				..HOLDER-CUP	1			
6-50-2	71Q6-22080GG				..TRIM-RH,FRONT LOW	1			

Item	Part_No	IS	Ord	T	Description	Qty	Serial_No	ITC	Remark
11	71Q6-22340				COVER MAT-AIRCON	1			
12	71Q6-22350				COVER MAT-RADIO TRAY	1			
15	71Q6-22410				ASH-TRAY	1			
16	71Q6-22390				NOZZLE-AIR, FRONT	1			
19	71Q6-22760GG				CAP-TRIM	3			
30	71Q6-22771				CAP-WIPER MOTOR	1			
31	71Q6-23050				CAP-WIPER MOTOR	1			
23	S002-06015B				SCREW-TRUS HEAD	6			
29	91Q6-20010				DECAL-START KEY	1			
30	71Q6-22771				CAP-WIPER MOTOR	1			
31	71Q6-23050				CAP-WIPER MOTOR	1			

CAB INTERIOR 3

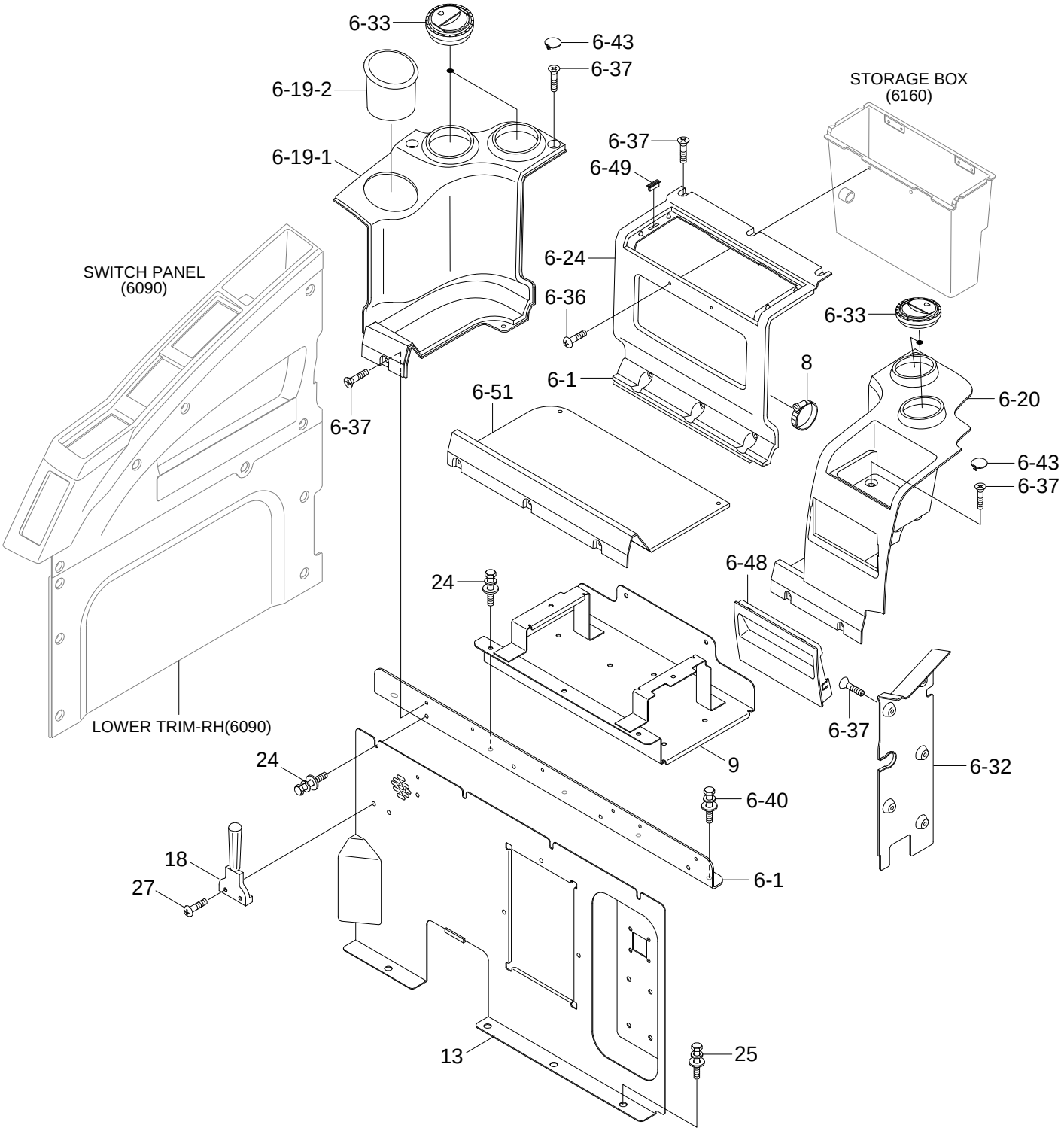

Item	Part_No	IS	Ord	T	Description	Qty	Serial_No	ITC	Remark
6	@				CABIN SUB ASSY	1			NOT
6-1	71Q6-20850				.BRACKET WA	1			
6-19	71Q6-22990GG				.TRIM-REAR,RH	1			
6-19-1	71Q6-22170GG				..TRIM-REAR,RH	1			
6-19-2	71Q6-22180GG				..CUP-HOLDER(2)	1			
6-20	71Q6-22151GG				.TRIM-REAR,LH	1			
6-24	71Q6-22160GG				.TRIM-REAR,MID	1			
6-32	71Q6-22220GG				.TRIM-LH,LOW	1			
6-33	71Q6-22400				.AIR NOZZLE-REAR	4			
6-36	S002-06010B				.SCREW-TRUS HEAD	2			
6-37	S002-06015B				.SCREW-TRUS HEAD	23			
6-40	S035-082026				.BOLT-W/WASHER	2			
6-43	71Q6-22760GG				.CAP-TRIM	3			
6-48	71Q6-23070				.COVER-RADIO	1			
6-49	71N6-20390				.MAGNETIC	2			
6-51	71Q6-22212GG				.COVER-AIRCON	1			
8	71N6-20370				CLIP-HOSE	1			
9	71Q6-20801				PLATE WA	1			
13	71Q6-20881				COVER-AIRCON,LOW	1			
18	71E1-60340				HAMMER-SAFETY	1			
24	S035-082026				BOLT-W/WASHER	13			
25	S037-102026				BOLT-W/WASHER	4			
27	S141-040166				SCREW-FLAT HD	2			
26	S132-081526				SCREW-W/WASHER	4			
27	S141-040166				SCREW-FLAT HD	2			

[Item List] - Print Date : 2020.08.21 15:08

CONSOLE BOX 1(LH)

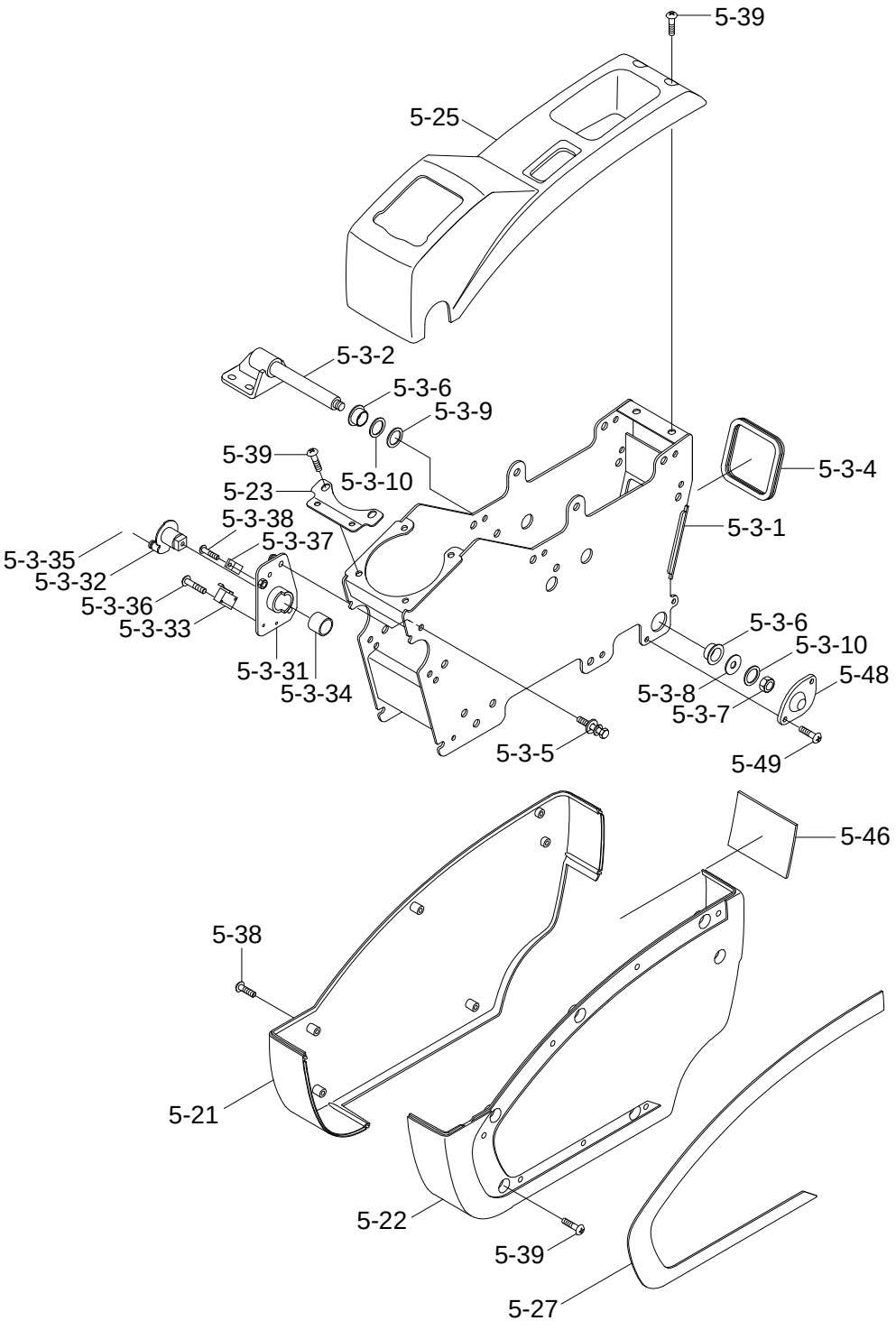

Item	Part_No	IS	Ord	T	Description	Qty	Serial_No	ITC	Remark
5	@				BOTTOM PLATE SUB ASSY	1			NOT
5-3	71Q6-21001				.CONSOLE FRAME ASSY-LH	1			
5-3-1	71Q4-21341				..FRAME WA-CONSOLE	1			
5-3-2	71Q6-21311				..BRACKET WA-CONSOLE	1			
5-3-3	71Q6-20920				..BRACKET ASSY-SAFETY	1			
5-3-31	71Q6-20930				...BRACKET-LOWER	1			
5-3-32	71Q6-20960				...BRACKET-UPPER	1			
5-3-33	21N8-20300				...SWITCH-MICRO	1			
5-3-34	S731-020010				...BUSHING-DU	1			
5-3-35	71N6-21610				...SPRING	1			
5-3-36	S161-030156				...SCREW-CROSS R/ROUND	2			
5-3-37	71Q6-22840				...PLATE-STOPPER	1			
5-3-38	S131-051526				...SCREW-W/WASHER	1			
5-3-4	71Q6-21420				..GROMMET	1			
5-3-5	S035-061526				..BOLT-W/WASHER	2			
5-3-6	S731-020020				..BUSHING-DU	2			
5-3-7	S275-12000B				..NUT-SELF LOCKING	1			
5-3-8	71Q6-22690				..SHIM-ROUND	1			
5-3-9	71Q6-22631				..SHIM-CONSOLE	1			
5-3-10	71Q6-23080				..SHIM-CONSOLE	3			
5-21	71Q6-22050GG				.CONSOLE COVER-LOW,RH	1			
5-22	71Q6-22010GG				.CONSOLE COVER-LOW,LH	1			
5-23	71Q6-21610				.BRACKET-CONSOLE UP	1			
5-25	71Q6-22060GG				.CONSOLE COVER UP-LH	1			
5-27	71Q6-22031				.CONSOLE COVER-TRIM	1			

Item	Part_No	IS	Ord	T	Description	Qty	Serial_No	ITC	Remark
5-38	S002-06010B				.SCREW-TRUS HEAD	8			
5-39	S002-06015B				.SCREW-TRUS HEAD	9			
5-46	71Q6-22670				.PROTECTOR	1			
5-48	71Q6-23130GG				.CAP-CONSOLE	1			
5-49	S002-05015B				.SCREW-TRUSHEAD	2			

CONSOLE BOX 2(LH)

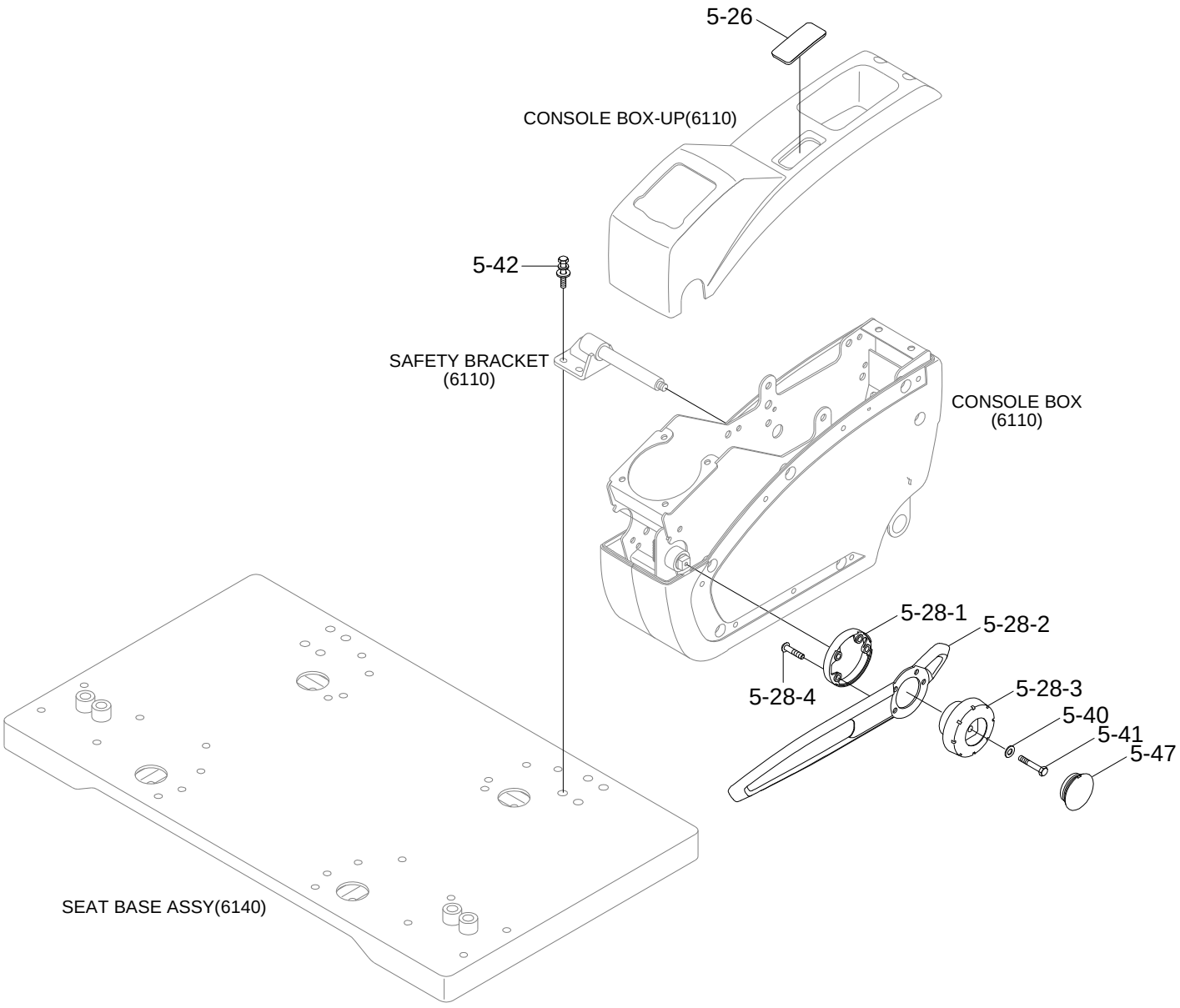

Item	Part_No	IS	Ord	T	Description	Qty	Serial_No	ITC	Remark
5	@				BOTTOM PLATE SUB ASSY	1			NOT
5-26	71Q6-22600GG				.CAP-DOZER LEVER	1			
5-28	71Q6-21470GG				.SAFETY LEVER ASSY	1			
5-28-1	71Q6-21460GG				..KNOB-SAFETY	1			
5-28-2	71Q6-21450				..LEVER-SAFETY	1			
5-28-3	71Q6-22640GG				..COVER-SAFTEY	1			
5-28-4	S131-041616				..SCREW-W/WASHER	4			
5-40	S403-06500B				.WASHER-PLAIN	1			
5-41	S015-060156				.BOLT-HEX	1			
5-42	S035-082026				.BOLT-W/WASHER	4			
5-47	71Q6-21640GG				.CAP-SAFETY LEVER	1			

CONSOLE BOX 3(RH)

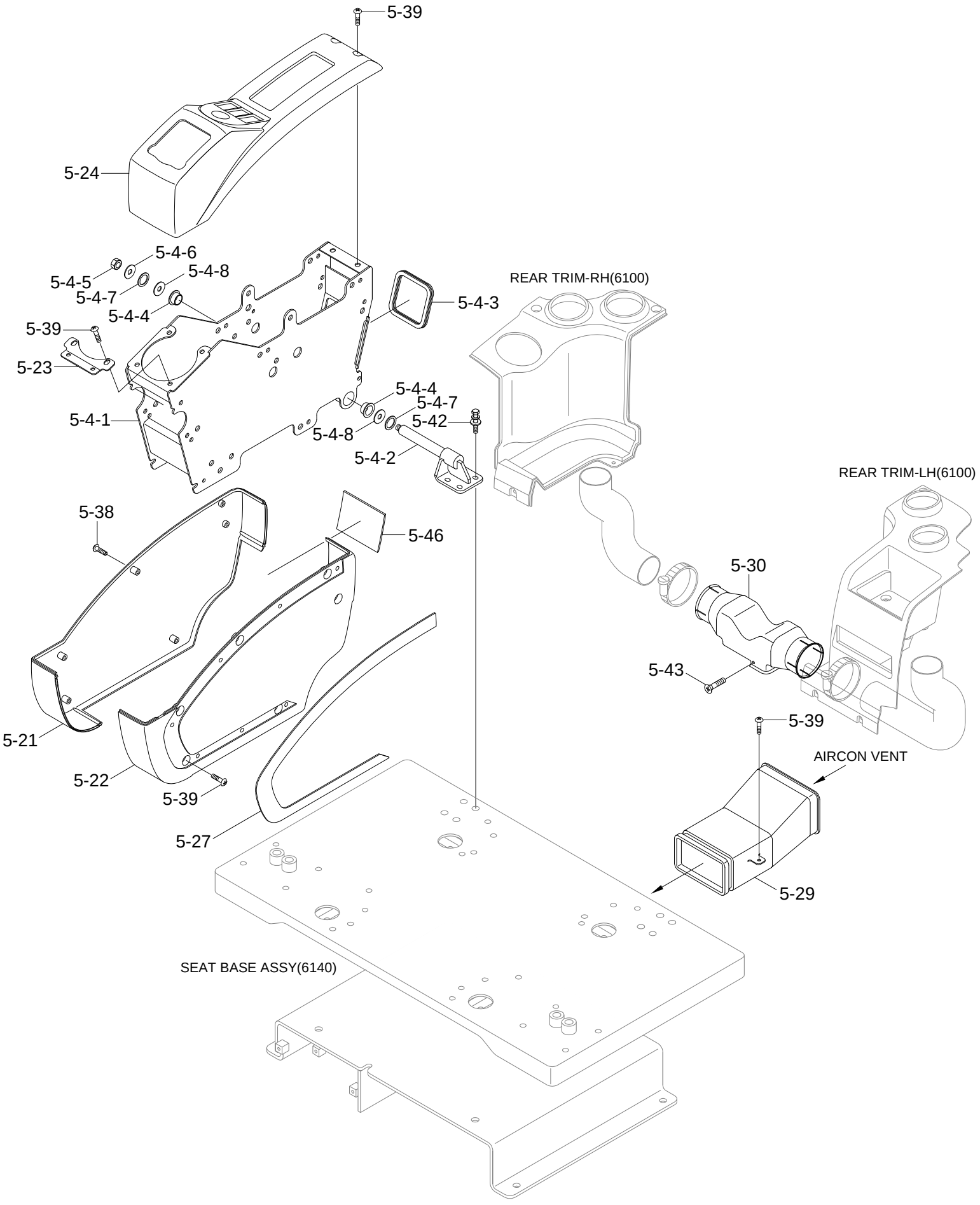

Item	Part_No	IS	Ord	T	Description	Qty	Serial_No	ITC	Remark
5	@				BOTTOM PLATE SUB ASSY	1			NOT
5-4	71Q6-21301				.CONSOLE FRAME ASSY-RH	1			
5-4-1	71Q4-21341				..FRAME WA-CONSOLE	1			
5-4-2	71Q6-21311				..BRACKET WA-CONSOLE	1			
5-4-3	71Q6-21420				..GROMMET	1			
5-4-4	S731-020020				..BUSHING-DU	2			
5-4-5	S275-12000B				..NUT-SELF LOCKING	1			
5-4-6	71Q6-22690				..SHIM-ROUND	1			
5-4-7	71Q6-22631				..SHIM-CONSOLE	2			
5-4-8	71Q6-23080				..SHIM-CONSOLE	3			
5-21	71Q6-22050GG				.CONSOLE COVER-LOW,RH	1			
5-22	71Q6-22010GG				.CONSOLE COVER-LOW,LH	1			
5-23	71Q6-21610				.BRACKET-CONSOLE UP	1			
5-24	71Q6-22070GG				.CONSOLE COVER-UP,RH	1			
5-27	71Q6-22031				.CONSOLE COVER-TRIM	1			
5-29	71Q6-22590				.DUCT-SEAT	1			
5-30	71Q6-22280				.DUCT-VENT(1)	1			
5-38	S002-06010B				.SCREW-TRUS HEAD	8			
5-39	S002-06015B				.SCREW-TRUS HEAD	9			
5-42	S035-082026				.BOLT-W/WASHER	4			
5-43	S151-050106				.SCREW-TAPPING	5			
5-46	71Q6-22670				.PROTECTOR	1			

SEAT BASE ASSY

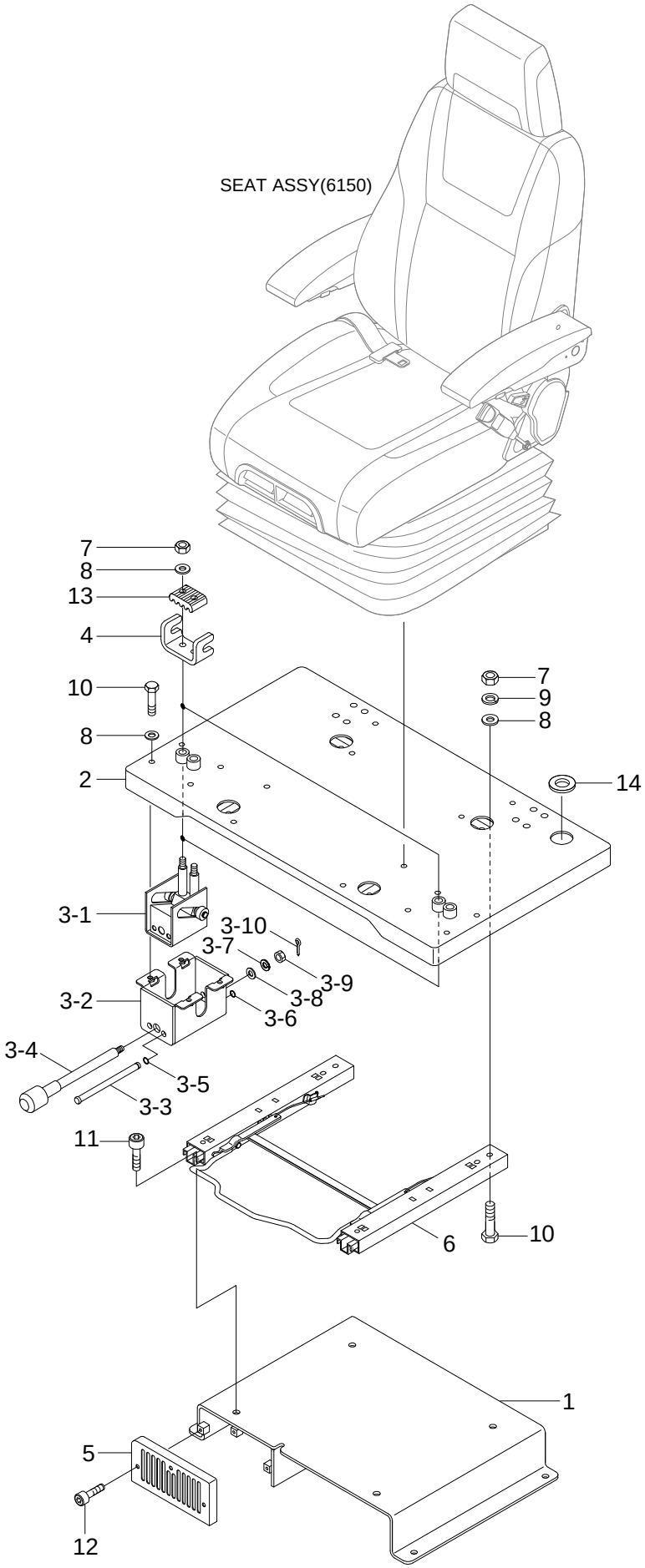

Item	Part_No	IS	Ord	T	Description	Qty	Serial_No	ITC	Remark
*	71Q6-20012				SEAT BASE ASSY	1	#0001 -		
1	71Q6-20020				.SEAT BASE WA-LOWER	1			
2	71Q6-20100				.SEAT BASE WA-UPPER	1			
	71Q6-20101				.SEAT BASE WA-UPPER	1	#0001 -		
3	71Q6-20200				.CONSOLE TILTING ASSY	2			
3-1	71Q6-20210				..BLOCK ASSY-GUIDE	1			
3-2	71Q6-20290				..BRACKET-TILTING WA	1			
3-3	71Q6-20350				..BAR-GUIDE	2			
3-4	71Q6-20360				..KNOB-TILTING	1			
3-5	S601-016004				..RING-RETAINING	1			
3-6	S601-010004				..RING-RETAINING	2			
3-7	S041-101006				..WASHER-CONICAL SPRING	1			
3-8	S403-10100B				..WASHER-PLAIN	1			
3-9	S225-10000B				..NUT-SLOTTED	1			
3-10	S461-250252				..PIN-SPLIT	1			
4	71Q6-20371				.BRACKET-GUIDE	1			
5	71Q6-20380				.COVER-FOOT	1			
6	71Q6-22810				.SLIDING RAIL ASSY	1	#0001 -		
6-1	H10010-31000A				..RAIL ASSY-RH	1			
6-2	H10015-32000A				..RAIL ASSY-LH	1			
6-3	71Q6-23120				..LEVER ASSY-BASE	1			
6-4	W13251-08003				..NUT-LOCK	2			
6-5	W13601-08003				..WASHER-SPRING	2			
6-6	W13101-08003				..NUT-HEX	2			
6-7	H10013-31020				..SPRING	2			

Item	Part_No	IS	Ord	T	Description	Qty	Serial_No	ITC	Remark
7	S205-08100B				.NUT-HEX	8			
8	S403-08200B				.WASHER-PLAIN	16			
9	S411-080006				.WASHER-SPRING	12			
					.WASHER-SPRING	4	#0001 -		
10	S015-080206				.BOLT-HEX	12			
11	S109-080206				.BOLT-SOCKET	4			
12	S132-061546				.SCREW-W/WASHER	3			
13	71Q6-23030				.PAD-RUBBER	2			
14	S681-290800				.GROMMET	1	#0001 -		

SEAT(SUSPENSION, HEATED, STD)

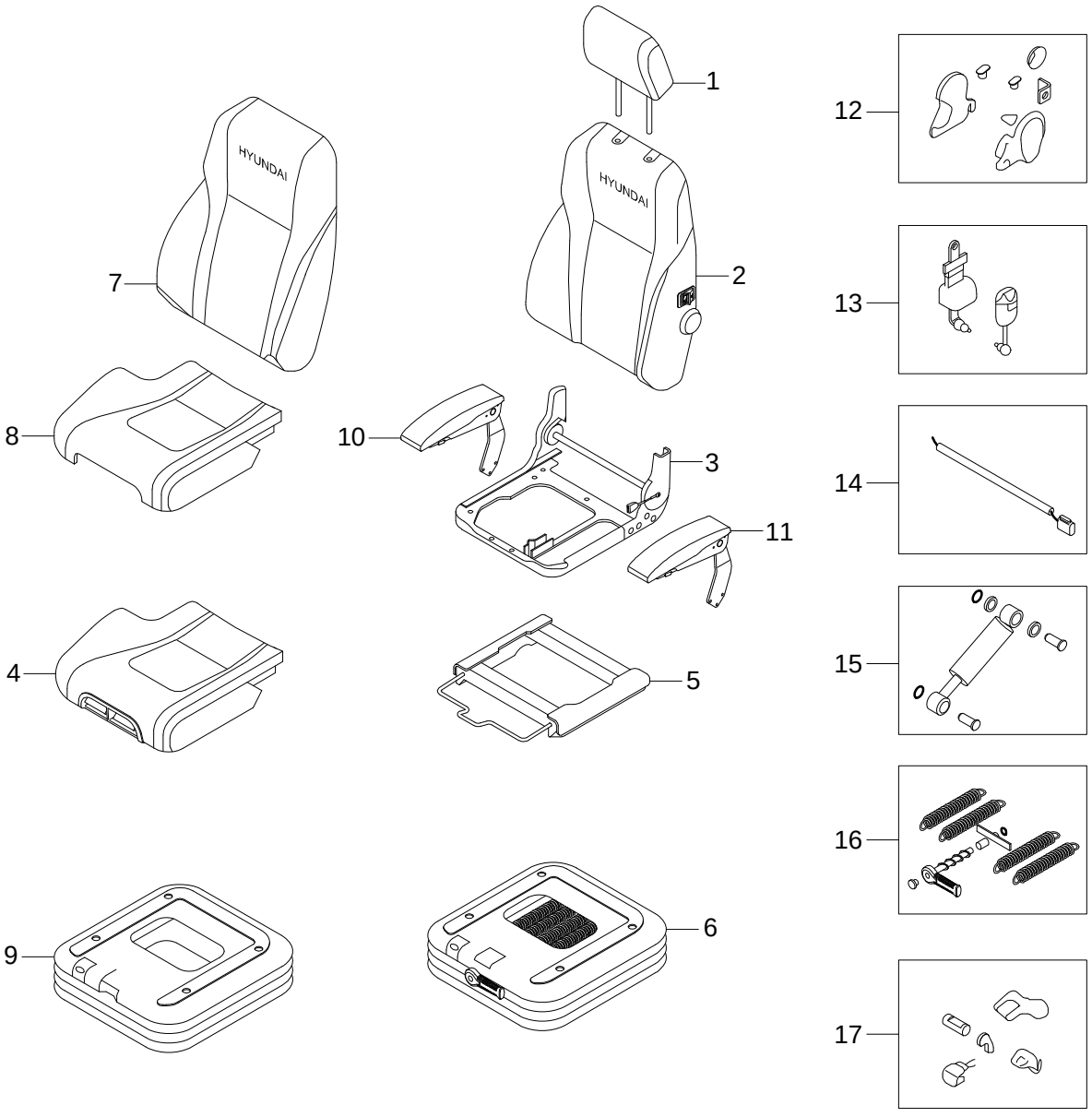

Item	Part_No	IS	Ord	T	Description	Qty	Serial_No	ITC	Remark
*	71Q6-24100				SEAT ASSY	1			
1	198796				.HEADREST KIT	1			
2	199484				.BACK CUSHION KIT	1			
3	198845				.SEAT BASE KIT	1			
4	197980				.SEAT CUSHION KIT	1			
5	198408				.SLIDE RAIL MODULE	1			
6	198822				.SUSPENSION KIT-MECH	1			
7	199488				.BACK COVER KIT	1			
8	198818				.SEAT COVER KIT	1			
9	196404				.SUSPENSION COVER KIT	6			
10	198843				.ARMREST KIT-RH	1			
11	198842				.ARMREST KIT-LH	1			
12	198826				.PLASTIC PARTS KIT	1			
13	196432				.SEATBELT KIT	1			
14	199489				.HARNESS KIT	4			
15	196443				.DAMPER KIT	4			
16	198829				.MECHANICAL SPRING KIT	4			
17	198850				.PLASTIC PARTS KIT	1			

SEAT(SUSPENSION)

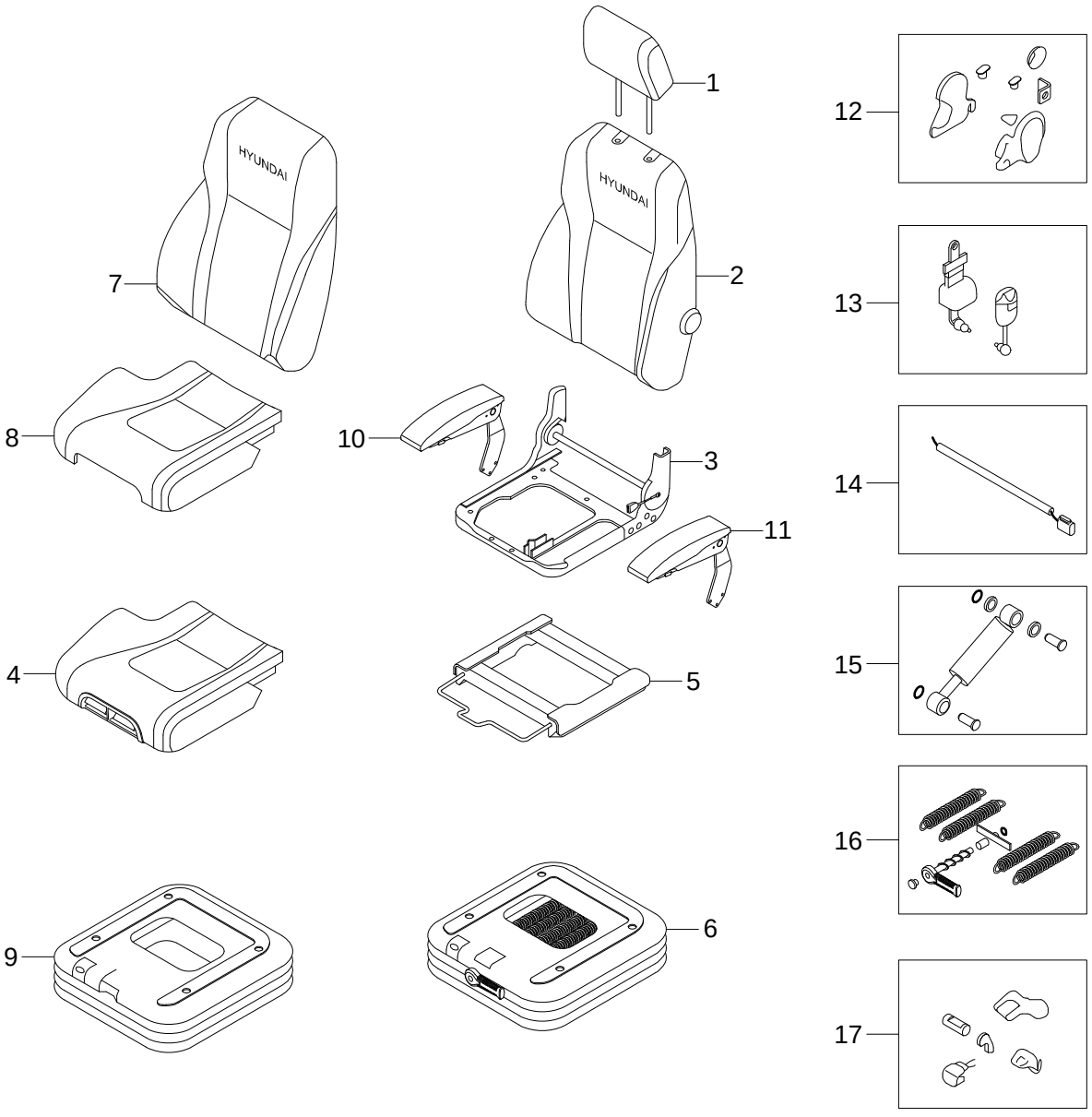

Item	Part_No	IS	Ord	T	Description	Qty	Serial_No	ITC	Remark
*	71Q6-24300				SEAT ASSY	1			
1	198796				.HEADREST KIT	1			
2	200122				.BACK CUSHION KIT	1			
3	198845				.SEAT BASE KIT	1			
4	197979				.SEAT CUSHION KIT	1			
5	198408				.SLIDE RAIL MODULE	1			
6	198822				.SUSPENSION KIT-MECH	1			
7	199488				.BACK COVER KIT	1			
8	198818				.SEAT COVER KIT	1			
9	196404				.SUSPENSION COVER KIT	6			
10	198843				.ARMREST KIT-RH	1			
11	198842				.ARMREST KIT-LH	1			
12	198826				.PLASTIC PARTS KIT	1			
13	196432				.SEATBELT KIT	1			
14	199489				.HARNESS KIT	4			
15	196443				.DAMPER KIT	4			
16	198829				.MECHANICAL SPRING KIT	4			
17	198850				.PLASTIC PARTS KIT	1			

SEAT(SUSPENSION, 2"AIR RIDE, HEATED)

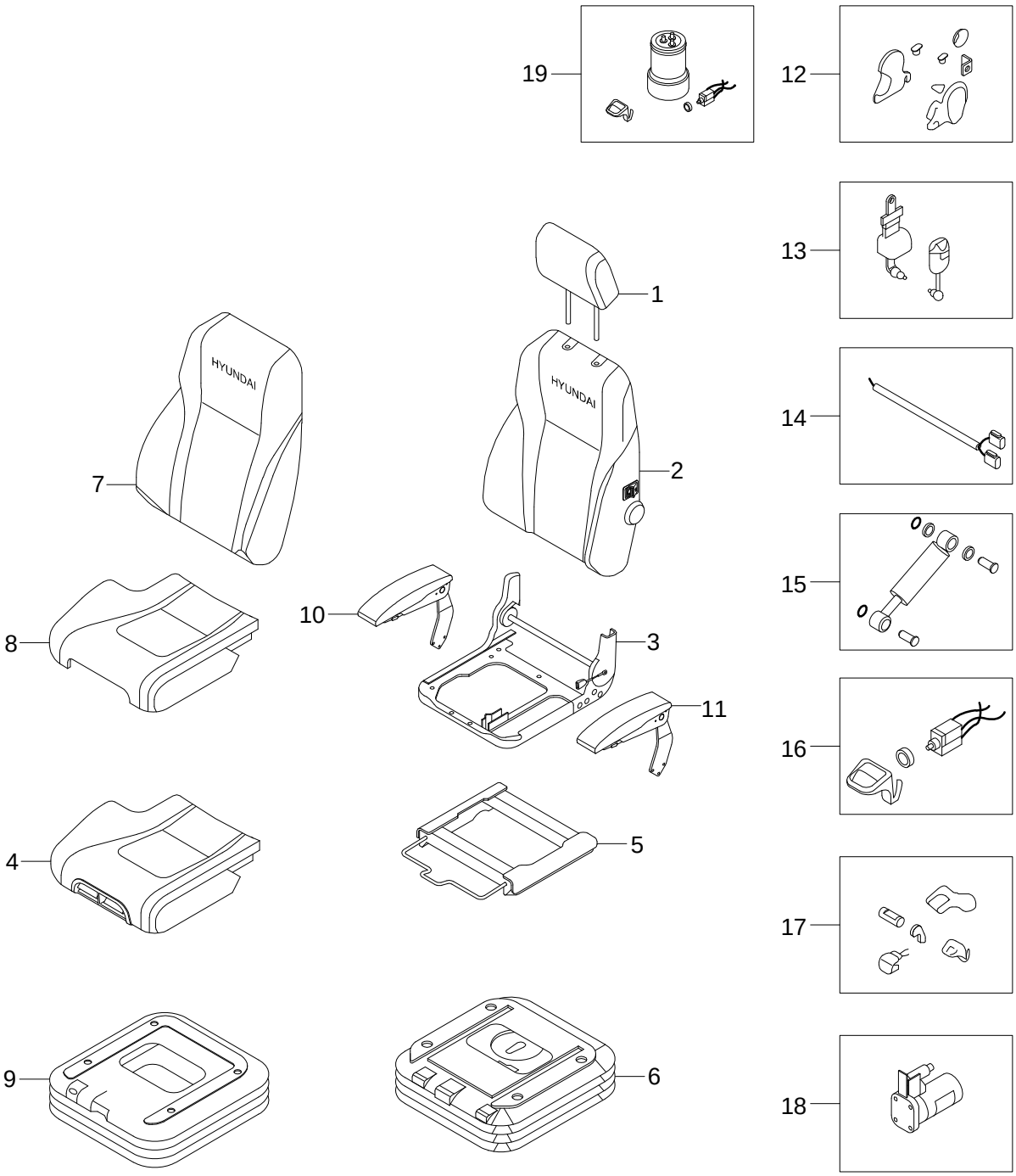

Item	Part_No	IS	Ord	T	Description	Qty	Serial_No	ITC	Remark
*	71Q6-24500				SEAT ASSY	1			
1	198796				.HEADREST KIT	1			
2	199484				.BACK CUSHION KIT	1			
3	198845				.SEAT BASE KIT	1			
4	197980				.SEAT CUSHION KIT	1			
5	196408				.SLIDE RAIL MODULE KIT	1			
6	198823				.AIR SUSPENSION KIT	1			
7	199488				.BACK COVER KIT	1			
8	198818				.SEAT COVER KIT	1			
9	196444				.SUSPENSION COVER KIT	6			
10	198843				.ARMREST KIT-RH	1			
11	198842				.ARMREST KIT-LH	1			
12	198826				.PLASTIC PARTS KIT	1			
13	196432				.SEATBELT KIT	1			
14	200124				.VEHICLE HARNESS KIT	4			
15	196443				.DAMPER KIT	4			
16	199430				.AIR VALVE/KNOB KIT	4			
17	198850				.PLASTIC PARTS KIT	1			
18	196440				.COMPRESSOR KIT-24V	2			
19	196441				.AIR SPRING/VALVE KIT	2			

SEAT(SUSPENSION, 2"AIR RIDE)

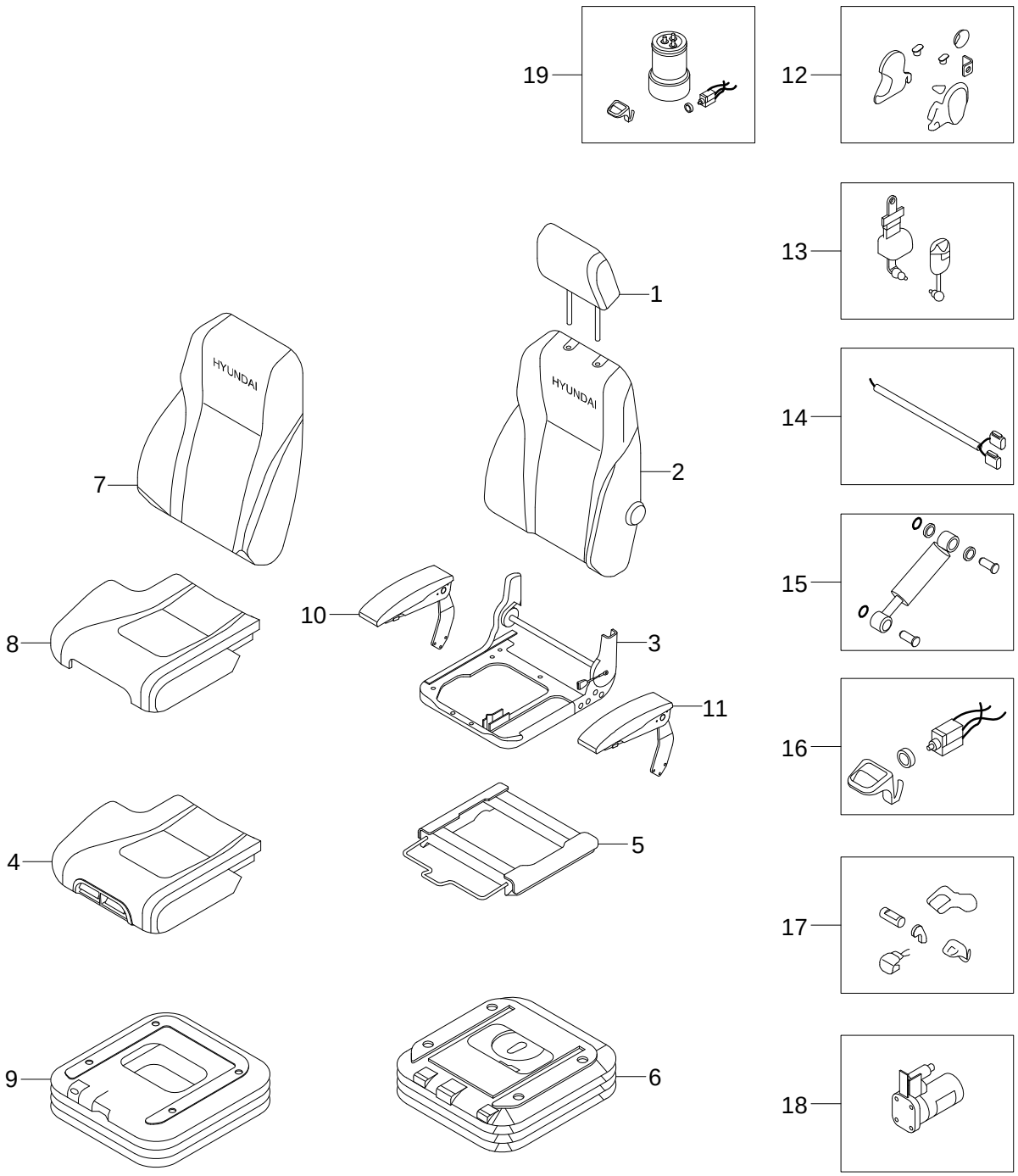

Item	Part_No	IS	Ord	T	Description	Qty	Serial_No	ITC	Remark
*	71Q6-24400				SEAT ASSY	1			
1	198796				.HEADREST KIT	1			
2	200122				.BACK CUSHION KIT	1			
3	198845				.SEAT BASE KIT	1			
4	197979				.SEAT CUSHION KIT	1			
5	196408				.SLIDE RAIL MODULE KIT	1			
6	198823				.AIR SUSPENSION KIT	1			
7	199488				.BACK COVER KIT	1			
8	198818				.SEAT COVER KIT	1			
9	196444				.SUSPENSION COVER KIT	6			
10	198843				.ARMREST KIT-RH	1			
11	198842				.ARMREST KIT-LH	1			
12	198826				.PLASTIC PARTS KIT	1			
13	196432				.SEATBELT KIT	1			
14	200124				.VEHICLE HARNESS KIT	4			
15	196443				.DAMPER KIT	4			
16	199430				.AIR VALVE/KNOB KIT	4			
17	198850				.PLASTIC PARTS KIT	1			
18	196440				.COMPRESSOR KIT-24V	2			
19	196441				.AIR SPRING/VALVE KIT	2			

STORAGE BOX ASSY

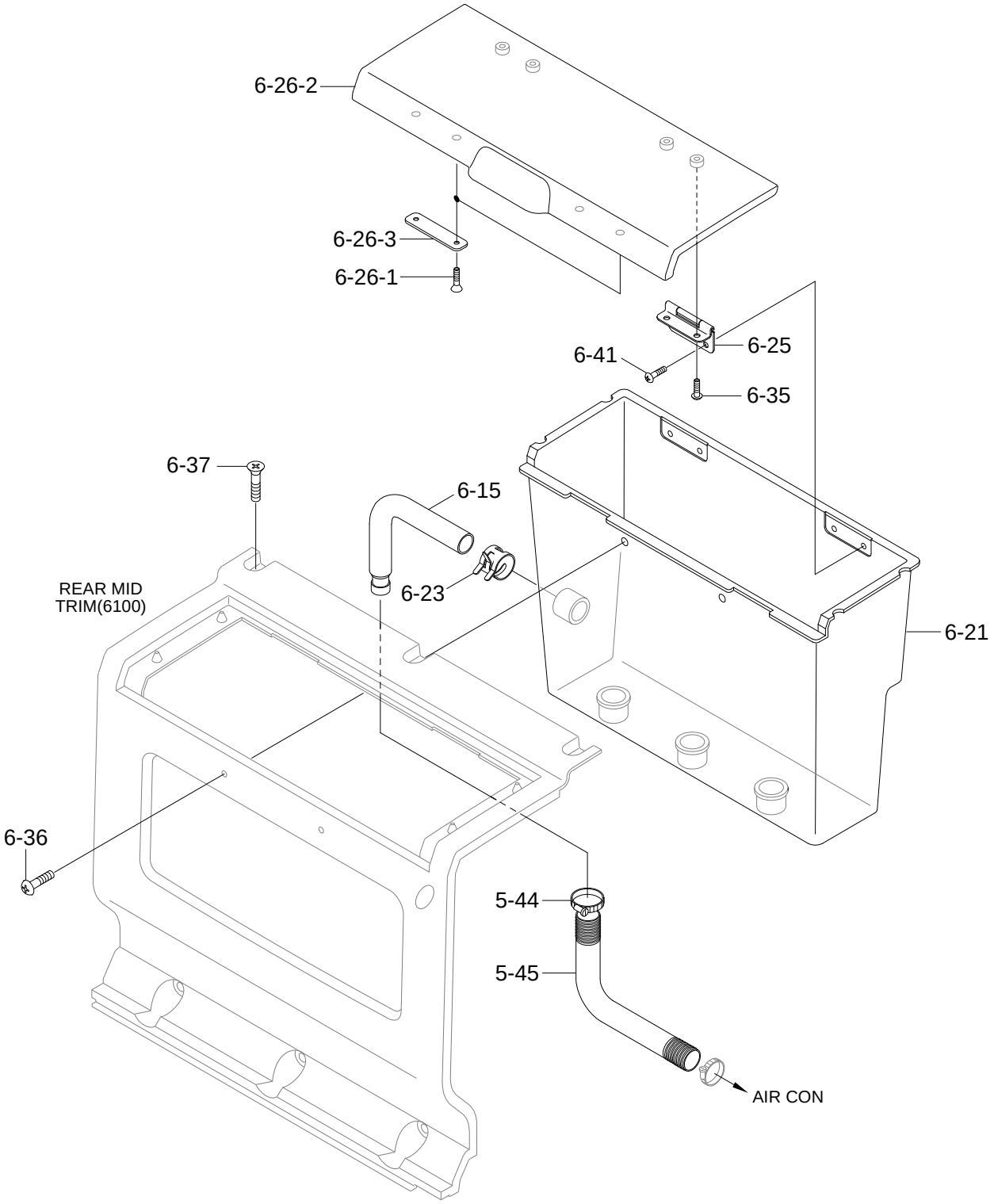

Item	Part_No	IS	Ord	T	Description	Qty	Serial_No	ITC	Remark
5	@				BOTTOM PLATE SUB ASSY	1			NOT
5-44	71N6-20370				.CLIP-HOSE	1			
5-45	71N6-20360				.HOSE-STORAGE BOX	1			
6	@				CABIN SUB ASSY	1			NOT
6-15	71Q6-23000				.HOSE ASSY	1			
6-21	71Q6-22190GG				.STORAGE BOX	1			
6-23	71N6-20370				.CLIP-HOSE	1			
6-25	71Q6-21570				.HINGE ASSY	1			
6-26	71Q6-22200GG				.COVER ASSY-S/BOX	1			
6-26-1	S141-040166				..SCREW-FLAT HD	4			
6-26-2	71Q6-22550GG				..COVER-STORAGE BOX	1			
6-26-3	71Q6-22560				..PLATE	2			
6-35	S002-06015B				.SCREW-TRUS HEAD	4			
6-36	S002-06010B				.SCREW-TRUS HEAD	2			
6-37	S002-06015B				.SCREW-TRUS HEAD	3			
6-41	S132-051026				.SCREW-W/WASHER	4			

BOTTOM PLATE MOUNTING

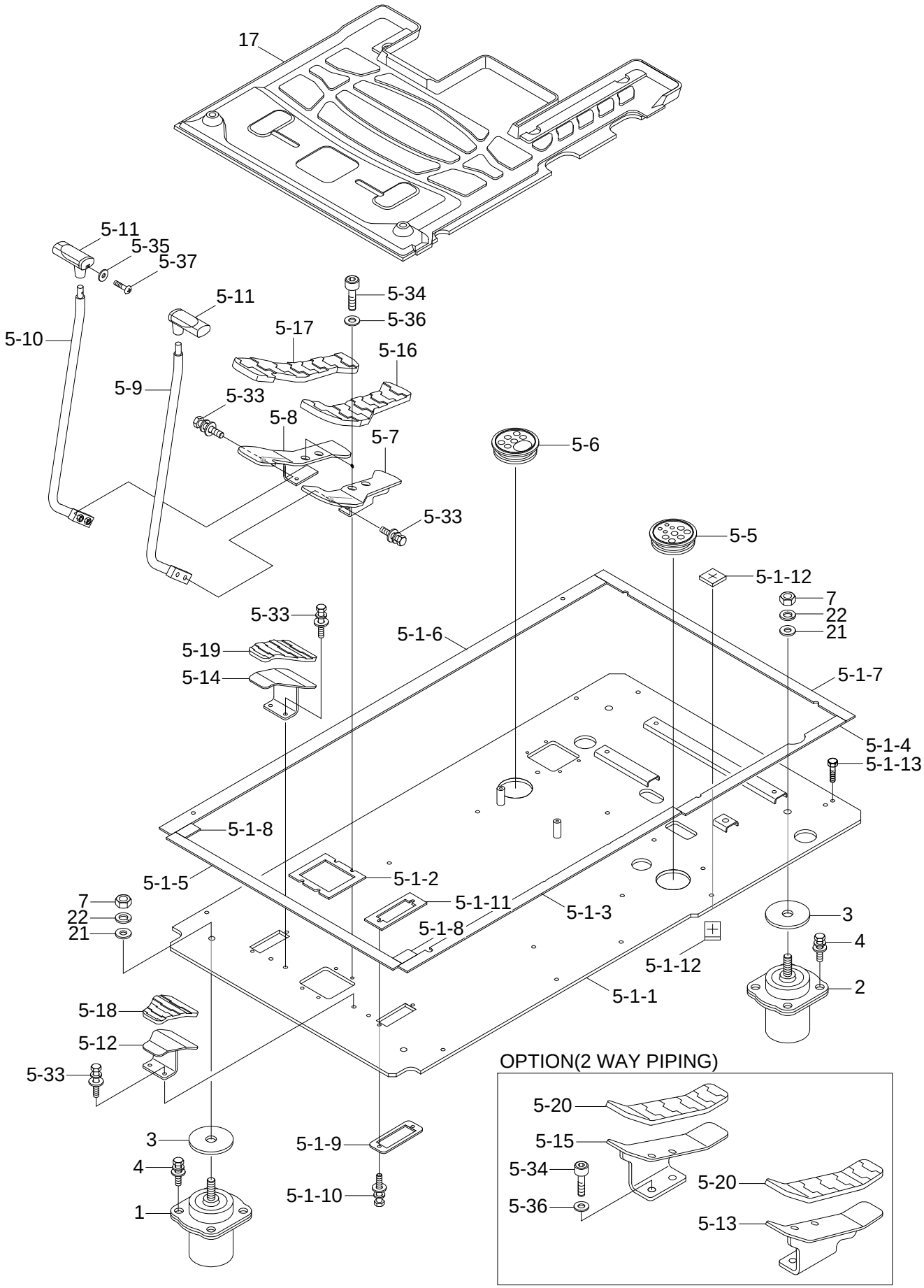

Item	Part_No	IS	Ord	T	Description	Qty	Serial_No	ITC	Remark
1	71Q6-22730				VISCOUS MOUNT	2			
2	71Q6-22820				VISCOUS MOUNT	2			
3	71E9-10650-DA				WASHER	4			
4	S037-103026				BOLT-W/WASHER	16			
5	@				BOTTOM PLATE SUB ASSY	1			NOT
5-1	71Q6-10101				.BOTTOM PLATE ASSY	1			
5-1-1	71Q6-10170				..BOTTOM PLATE WA	1			
5-1-2	71Q6-10110				..PAD-RUBBER	1			
5-1-3	71Q6-10120				..PAD-RUBBER	1			
5-1-4	71Q6-10130				..PAD-RUBBER	1			
5-1-5	71Q6-10140				..PAD-RUBBER	1			
5-1-6	71Q6-10150				..PAD-RUBBER	1			
5-1-7	71Q6-10160				..PAD-RUBBER	1			
5-1-8	71Q6-22780				..PAD-RUBBER	2			
5-1-9	71Q6-22790				..COVER-PLATE	2			STD ONLY
5-1-10	S037-102026				..BOLT-W/WASHER	4			STD ONLY
5-1-11	71Q6-10300				..PAD-RUBBER	2			
5-1-12	71Q6-10310				..SPONGE	2			
5-1-13	S017-120156				..BOLT-HEX	1			
5-5	71Q6-20990				.GROMMET-PILOT HOSE	1			
5-6	71Q6-22960				.GROMMET-RH	1			
5-7	71Q6-20500				.PEDAL WA-LH	1			
5-8	71Q6-20700				.PEDAL WA-RH	1			
5-9	71Q6-20600				.TRAVEL LEVER WA-LH	1			
5-10	71Q6-20750				.TRAVEL LEVER WA-RH	1			

Item	Part_No	IS	Ord	T	Description	Qty	Serial_No	ITC	Remark
5-11	71Q6-20630				.KNOB-TRAVEL	2			
5-12	71Q6-20530				.FOOT REST WA-LH	1			
5-13	71Q6-20560				.PEDAL WA-LH	1			OPT, 2 WAY PIP
5-14	71Q6-20730				.FOOT REST WA-RH	1			
5-15	71Q6-22700				.PEDAL WA-RH	1			OPT, 2 WAY PIP
5-16	71Q6-20660				.RUBBER-PEDAL,LH	1			
5-17	71Q6-20680				.RUBBER-PEDAL,RH	1			
5-18	71Q6-20670				.RUBBER-FOOT REST, LH	1			
5-19	71Q6-20690				.RUBBER-FOOT REST,RH	1			
5-20	71Q6-22740				.RUBBER-PEDAL	2			OPT, 2 WAY PIP
5-33	S037-102526				.BOLT-W/WASHER	12			
5-34	S109-100156				.BOLT-SOCKET	2			STD
					.BOLT-SOCKET	6			OPT, 2 WAY PIP
5-35	S403-04100B				.WASHER-PLAIN	2			
5-36	S403-10200B				.WASHER-PLAIN	2			STD
					.WASHER-PLAIN	6			OPT, 2 WAY PIP
5-37	S161-040256				.SCREW-CROSS R/ROUND	2			
7	S205-16100B				NUT-HEX	4			
17	71Q6-22360				MAT-FLOOR	1			STD
	71Q6-23010				MAT-FLOOR	1			2WAY OR ADJ/BM
	71Q6-23020				MAT-FLOOR	1			2WAY & ADJ/ BM
21	S403-162006				WASHER-PLAIN	4			
22	S411-160006				WASHER-SPRING	4			

COWLING 1

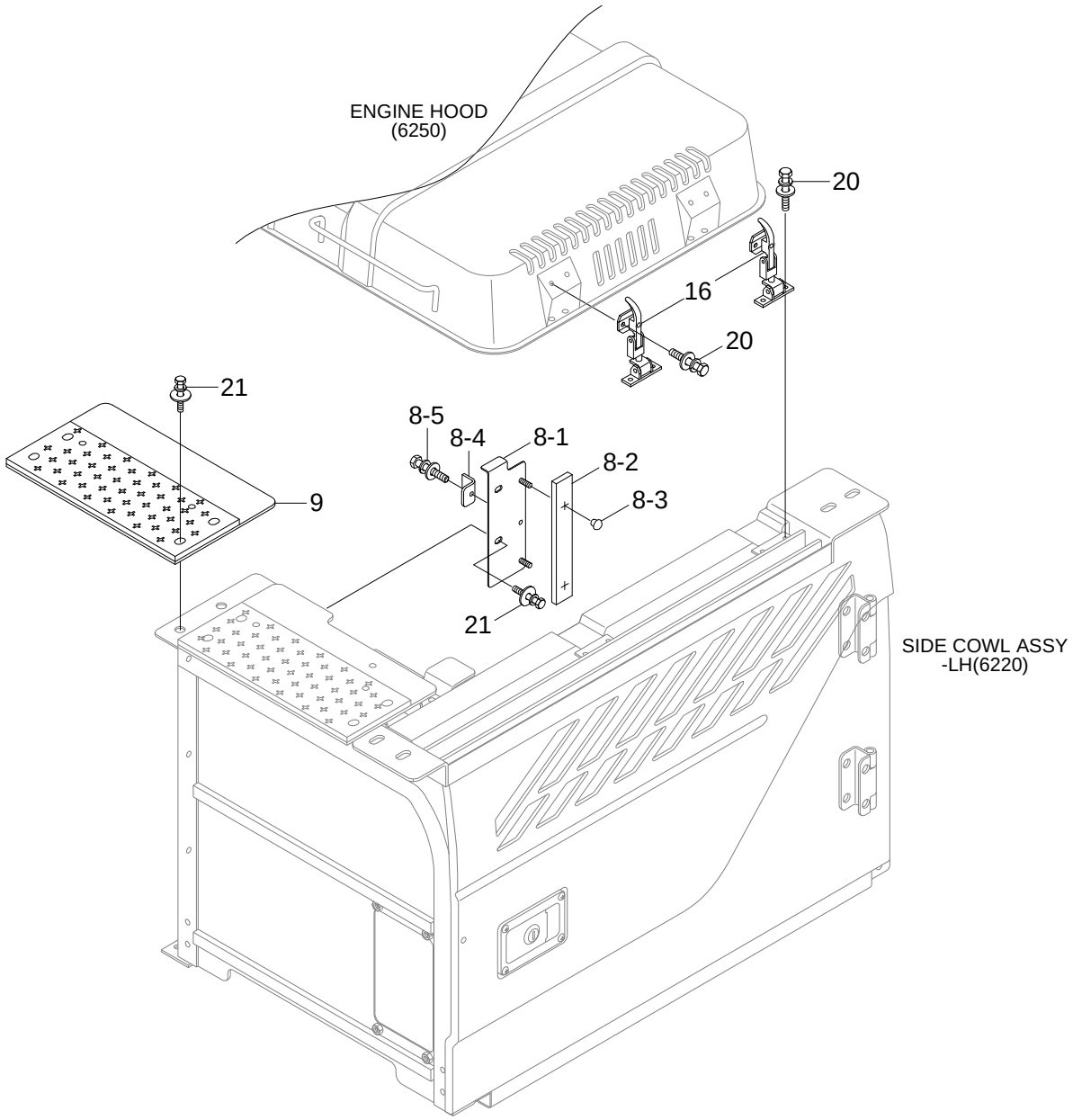
ENGINE HOOD
(6250)
20
16
20
21
8-5
8-4
8-1
8-2
8-3
9
21
SIDE COWL ASSY
-LH(6220)

Item	Part_No	IS	Ord	T	Description	Qty	Serial_No	ITC	Remark
8	71Q4-54501				SCREEN-PIPE	1			
8-1	71Q4-54510				.SCREEN WA	1			
8-2	71Q4-54520				.SPONGE	1			
8-3	71EM-51580				.CAP-STUD BOLT	2			
8-4	71Q4-54540				.BRACKET WA	1			
8-5	71Q6-50025				.BOLT-W/WASHER	1			
9	71Q5-55200				HOOD WA-MCV	1			
16	71N6-56400GG				CATCH ASSY	2			
20	S035-082526				BOLT-W/WASHER	8			
21	71Q6-50025				BOLT-W/WASHER	6			

COWLING 2

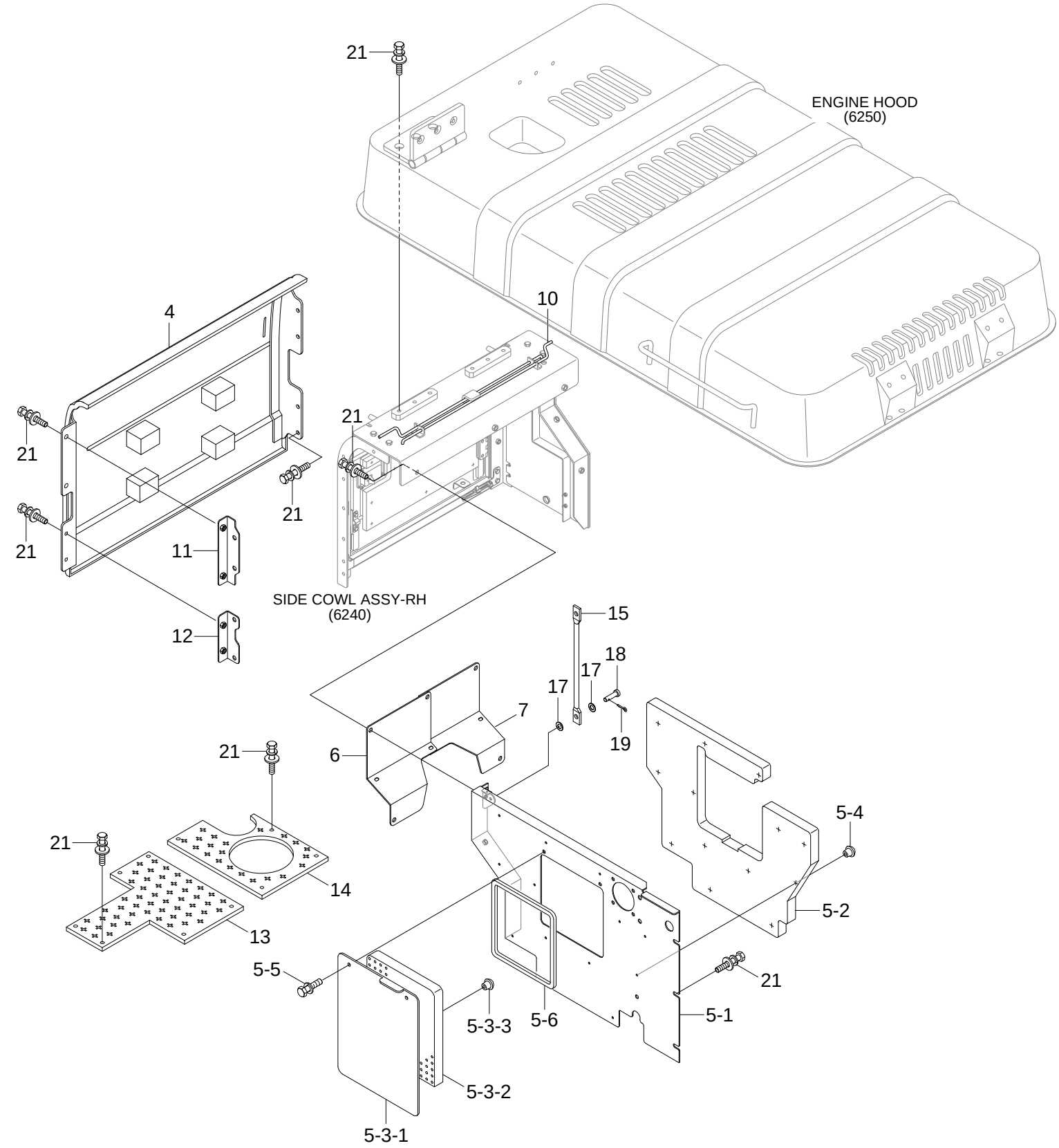
21
ENGINE HOOD
(6250)
10
4
21
21
21
11
12
SIDE COWL ASSY-RH
(6240)
15
18
17
17
19
7
6
21
21
14
13
5-4
5-2
5-5
21
5-3-3
5-6
5-1
5-3-2
5-3-1

Item	Part_No	IS	Ord	T	Description	Qty	Serial_No	ITC	Remark
4	71Q5-53160				COVER-TANK	1			
5	71Q5-54100				SCREEN ASSY	1			
5-1	71Q5-54110				.SCREEN W.A	1			
5-2	71Q5-54120				.SPONGE	1			
5-3	71N4-64130				.COVER ASSY-SCREEN	1			
5-3-1	71N4-64140				..COVER WA-SCREEN	1			
5-3-2	71N4-64150				..SPONGE	1			
5-3-3	71EM-51580				..CAP-STUD BOLT	4			
5-4	71EM-51580				.CAP-STUD BOLT	13			
5-5	71Q6-50020				.BOLT-W/WASHER	2			
5-6	S791-016016				.GROMMET-PLATE	1			
6	71Q5-54200				SCREEN-PUMP(FR)	1			
7	71Q5-54300				SCREEN-PUMP(RR)	1			
10	72N4-56500GG				BAR-TORSION	2			
11	71Q6-55503				SUPPORT-T/COVER	1			
12	71Q6-55552				SUPPORT-T/COVER	1			
13	71Q5-57100				PLATE(C)-NON SLIP	1			
14	71Q5-57200				PLATE(D)-NON SLIP	1			
15	71Q4-59100				STAY	1			
17	91E6-60120				WASHER-HARDENED	6			
18	S491-100302				PIN-CLEVIS	2			
19	S501-100002				PIN-SELF LOCKING	2			
21	71Q6-50025				BOLT-W/WASHER	59			

[Item List] - Print Date : 2020.08.21 16:08

SIDE COWL ASSY(LH)

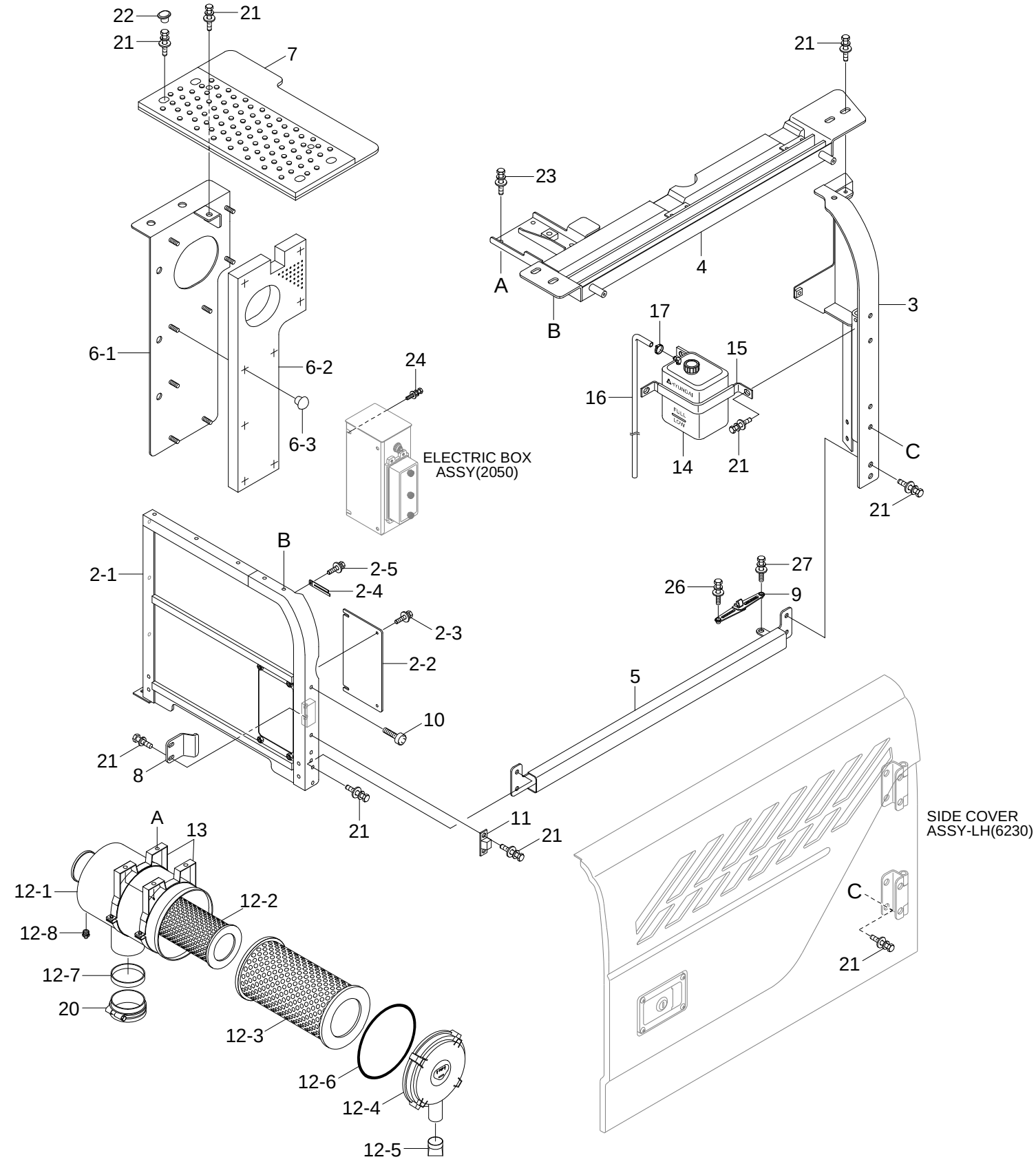

Item	Part_No	IS	Ord	T	Description	Qty	Serial_No	ITC	Remark
*	71Q5-52000				SIDE COWL ASSY-LH	1			
	72Q5-52000				SIDE COWL ASSY-LH	1			STD
2-1	71Q4-52313				..SUPPORT WA-LH(FR)	1			
2-2	71Q6-52392				..PLATE-SCREEN	1			
2-3	S035-082056				..BOLT-W/WASHER	4			
2-4	S593-000902				..CLIP-HARNESS	2			
2-5	S037-101526				..BOLT-W/WASHER	2			
*	72Q5-62000				SIDE COWL ASSY-LH	1	#0003 -	-	OPT, TROPICAL
2	71Q4-52303				.SUPPORT ASSY-LH,FR	1			
2-1	71Q4-52313				..SUPPORT WA-LH,FR	1			
2-2	71Q6-52392				..PLATE-SCREEN	1			
6-1	71Q5-52910				..SCREEN-MCV	1			
6-2	71Q5-52920				..SPONGE	1			
6-3	71EM-51580				..CAP-STUD BOLT	8			
2-3	S035-082056				..BOLT-W/WASHER	4			
2-4	S593-000902				..CLIP-HARNESS	2			
2-5	S037-101526				..BOLT-W/WASHER	2			
3	71Q5-52500				.SUPPROT WA-LH(RR)	1			
11	71Q6-53951				.STOPPER-B	1			
4	71Q5-52600				.HOOD WA-R/D	1			
12-1	11N6-27020				..BODY ASSY	1			
12-2	11N6-27030				..ELEMENT-SAFETY	1			
12-3	11N6-27040				..ELEMENT-PRIMARY	1			
5	71Q5-52700				.SUPPORT-LH(BOTTOM)	1			
12-4	11N6-27050				..COVER ASSY	1			

Item	Part_No	IS	Ord	T	Description	Qty	Serial_No	ITC	Remark
12-5	11N6-27060				..VALVE-VACUATOR	1			
12-6	P836767				..O-RING	1			
12-7	P843195				..SPONGE-SEAL	1			
6	71Q5-52900				.SCREEN ASSY-MCV	1			
6-1	71Q5-52910				..SCREEN-MCV	1			
6-2	71Q5-52920				..SPONGE	1			
6-3	71EM-51580				..CAP-STUD BOLT	8			
7	71Q5-55100				.HOOD WA-AIRCON	1			
8	71Q4-52490				.PLATE-LOCK	1			
9	71Q6-52180				.STAY ASSY-LH	1			
10	71EH-13150				.RUBBER-BUMPER	4			
11	71Q6-53951				.STOPPER-B	1			
12	11Q6-20030				.AIR CLEANER ASSY	1	#0001 -	-	
N12-1	11N6-27020				..BODY ASSY	1			NOT
12-2	11N6-27030				..ELEMENT-SAFETY	1			
12-3	11N6-27040				..ELEMENT-PRIMARY	1			
12-4	11N6-27050				..COVER ASSY	1			
12-5	11N6-27060				..VALVE-VACUATOR	1			
12-6	P836767				..O-RING	1			
12-7	P843195				..SPONGE-SEAL	1			
12-8	11N6-27070				..NIPPLE-SENSOR	1	#0001 -	-	
13	11N6-27100				.CLAMP BAND WA	1			
14	11Q4-42200				.TANK-RESERVOIR	1			
15	72Q5-52700				.CLAMP-RESERVOIR TANK	1			
16	11E3-4011				.HOSE	1			

Item	Part_No	IS	Ord	T	Description	Qty	Serial_No	ITC	Remark
17	S520-015000				.CLAMP-HOSE	1			
20	11N6-20070				.GRILL	1			
21	71Q6-50025				.BOLT-W/WASHER	12			
22	71Q6-41800				.CAP	4			
23	S035-082056				.BOLT-W/WASHER	6			
24	S037-101556				.BOLT-W/WASHER	2			
26	S037-103556				.BOLT-W/WASHER	1			
27	S037-102556				.BOLT-W/WASHER	1			

SIDE COVER ASSY(LH)

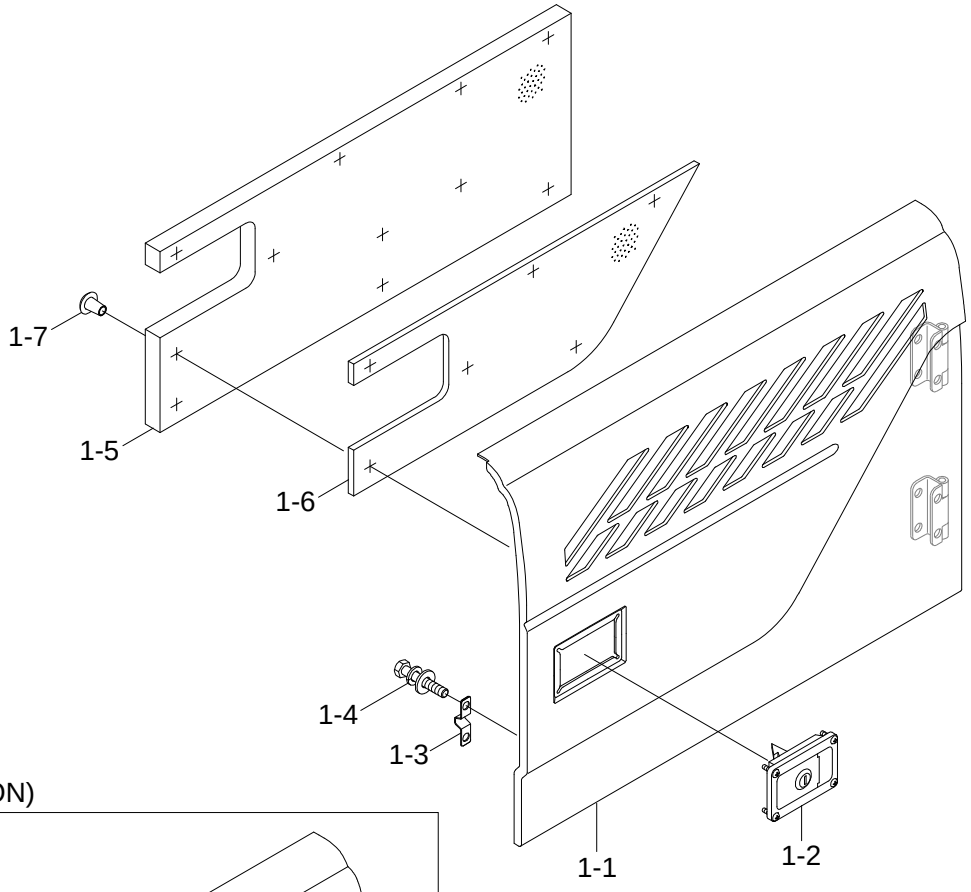

TROPICAL TYPE(OPTION)

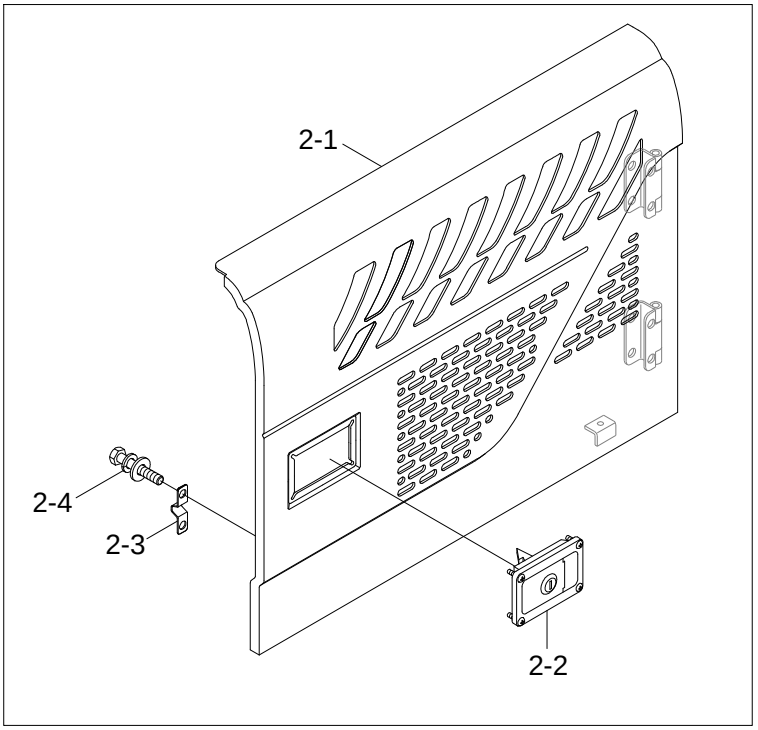

Item	Part_No	IS	Ord	T	Description	Qty	Serial_No	ITC	Remark
*	@				SIDE COWL ASSY-LH	1			NOT
					SIDE COWL ASSY-LH	1			NOT
1-1	71Q5-52110				..SIDE COVER WA-LH	1			
1	72Q5-52100				.SIDE COVER ASSY-LH	1			STD
1-1	72Q5-52110				..SIDE COVER WA-LH	1			
1-2	71Q6-52190				..LATCH ASSY	1			
1-3	71Q6-53911				..STOPPER-A	1			
1-4	S035-082026				..BOLT-W/WASHER	2			
1-5	71Q5-52260				..SPONGE	1			
1-6	71Q5-52270				..SPONGE	1			
1-7	71EM-51580				..CAP-STUD BOLT	11			
2	71Q5-62100				.SIDE COVER ASSY-LH	1	#0003 -	-	OPT, TROPICAL
2-1	71Q5-62110				..SIDE COVER WA-LH	1			
2-2	71Q6-52190				..LATCH ASSY	1			
2-3	71Q6-53911				..STOPPER-A	1			
2-4	S035-082026				..BOLT-W/WASHER	2			

SIDE COWL ASSY(RH)

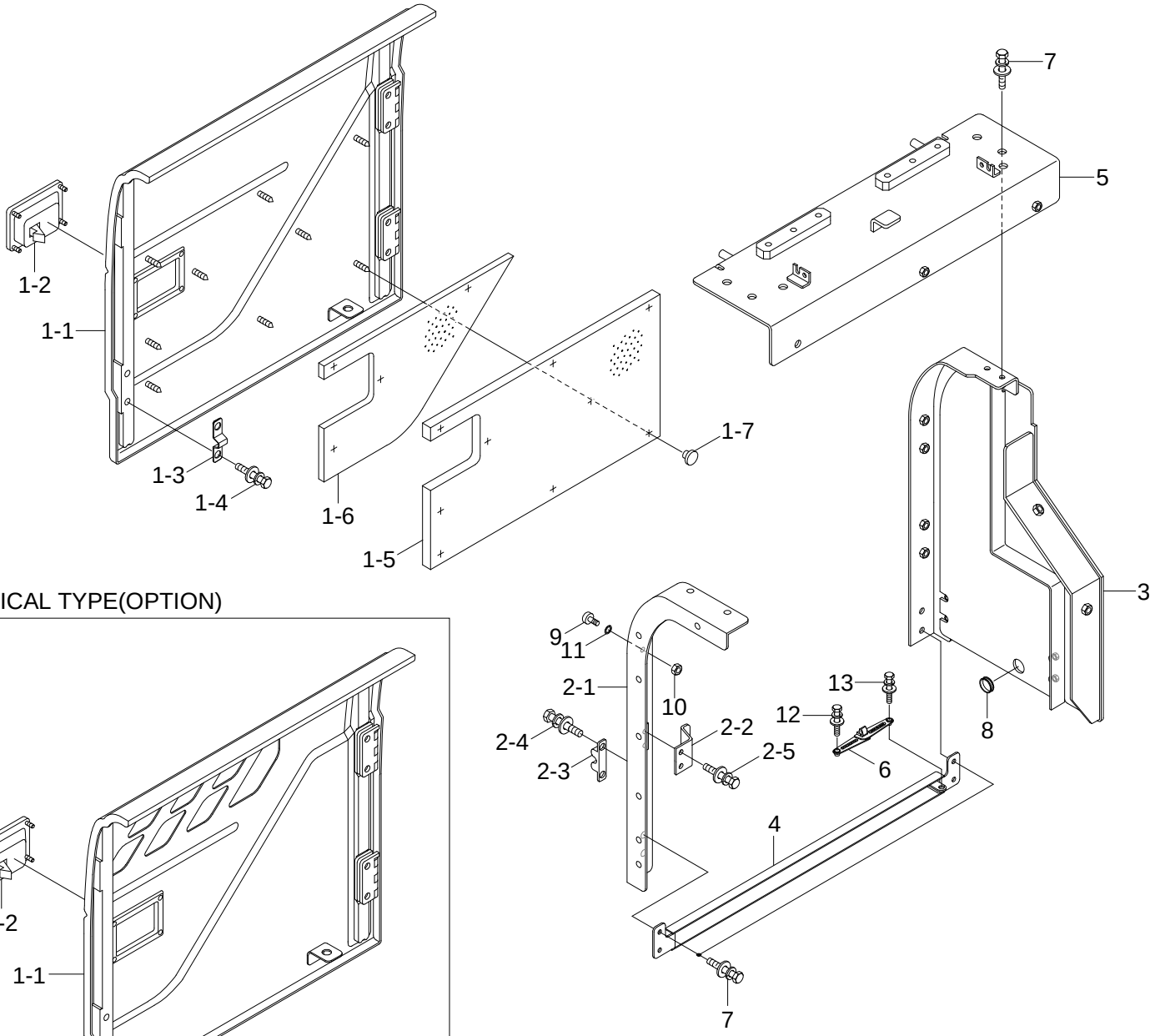

TROPICAL TYPE(OPTION)

Item	Part_No	IS	Ord	T	Description	Qty	Serial_No	ITC	Remark
*	71Q5-53001				SIDE COWL ASSY-RH	1			
					SIDE COWL ASSY-RH	1			STD
1	71Q5-53100				.SIDE COVER ASSY-RH	1			
*	71Q5-63000				SIDE COWL ASSY-RH	1	#0003 -	-	OPT, TROPICAL
1	71Q5-53100				.SIDE COVER ASSY-RH	1			STD
	71Q5-63100				.SIDE COVER ASSY-RH	1	#0003 -	-	OPT, TROPICAL
1-1	71Q5-53110				..SIDE COVER WA-RH	1			STD
	71Q5-63110				..SIDE COVER WA-RH	1	#0003 -	-	OPT, TROPICAL
1-2	71Q6-52190				..LATCH ASSY	1			
1-3	71Q6-53911				..STOPPER-A	1			
1-4	S035-082026				..BOLT-W/WASHER	2			
1-5	71Q5-53180				..SPONGE	1			STD
1-6	71Q5-53190				..SPONGE	1			STD
1-7	71EM-51580				..CAP-STUD BOLT	9			STD
2	71Q5-53500				.SUPPORT ASSY-RH,FR	1			
2-1	71Q5-53510				..SUPPORT WA-RH	1			
2-2	71Q4-52490				..PLATE-LOCK	1			
2-3	71Q6-53951				..STOPPER-B	1			
2-4	S035-082056				..BOLT-W/WASHER	2			
2-5	71Q6-50025				..BOLT-W/WASHER	2			
3	71Q5-53201				.SUPPORT WA-RH(RR)	1			
4	71Q5-53301				.SUPPORT-RH(BOTTOM)	1			
5	71Q5-53400				.HOOD WA-PUMP	1			
6	71Q6-53180				.STAY ASSY-RH	1			
7	71Q6-50025				.BOLT-W/WASHER	12			

Item	Part_No	IS	Ord	T	Description	Qty	Serial_No	ITC	Remark
8	S681-290400				.GROMMET	1			
9	71EH-13150				.RUBBER-BUMPER	4			
10	S205-101006				.NUT-HEX	4			
11	S403-10200B				.WASHER-PLAIN	4			
12	S037-103556				.BOLT-W/WASHER	1			
13	S037-102556				.BOLT-W/WASHER	1			

UNDER COVER

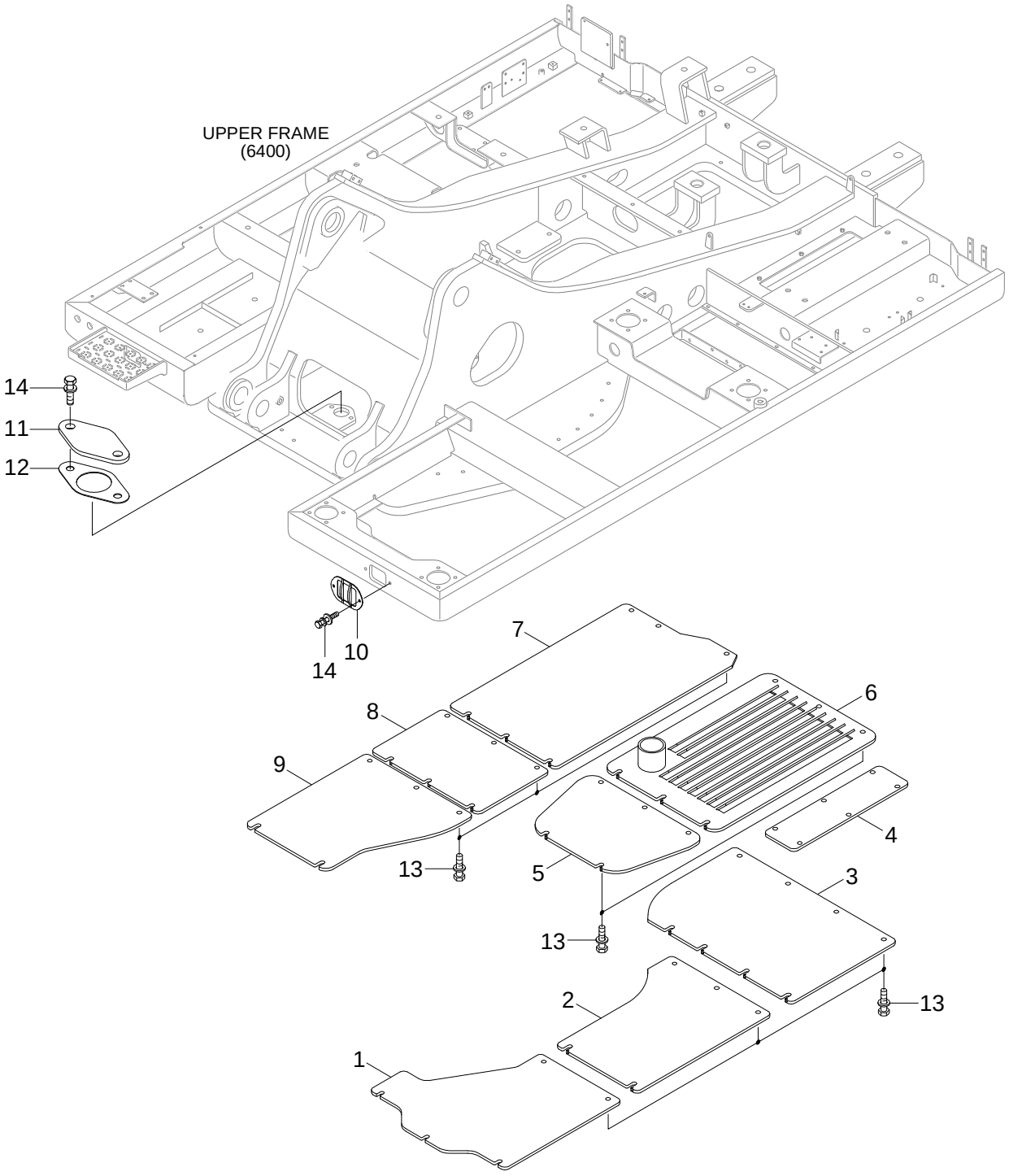

Item	Part_No	IS	Ord	T	Description	Qty	Serial_No	ITC	Remark
1	41Q5-36111				UNDER COVER-CABIN(A)	1			
2	43N5-36020GG				UNDER COVER-CABIN(B)	1			
3	43N5-36030GG				UNDER COVER-CABIN(C)	1			
4	43N5-36040GG				UNDER COVER-RAD	1			
5	43N5-36050GG				UNDER COVER-MCV	1			
6	43N5-36060GG				UNDER COVER-ENGINE	1			
7	41Q5-36071				UNDER COVER-PUMP	1			
8	41Q5-36081				UNDER COVER-HYD TANK	1			
9	41Q5-36090				UNDER COVER-FUEL TANK	1			
10	43Q8-15290				GUARD-LAMP	2			
11	41N6-10100				COVER	1			
12	41E9-1306				SEAL	1			
13	41Q8-60030				BOLT-W/WASHER	52			
14	S037-102056				BOLT-W/WASHER	6			

TOOL BOX MOUNTING

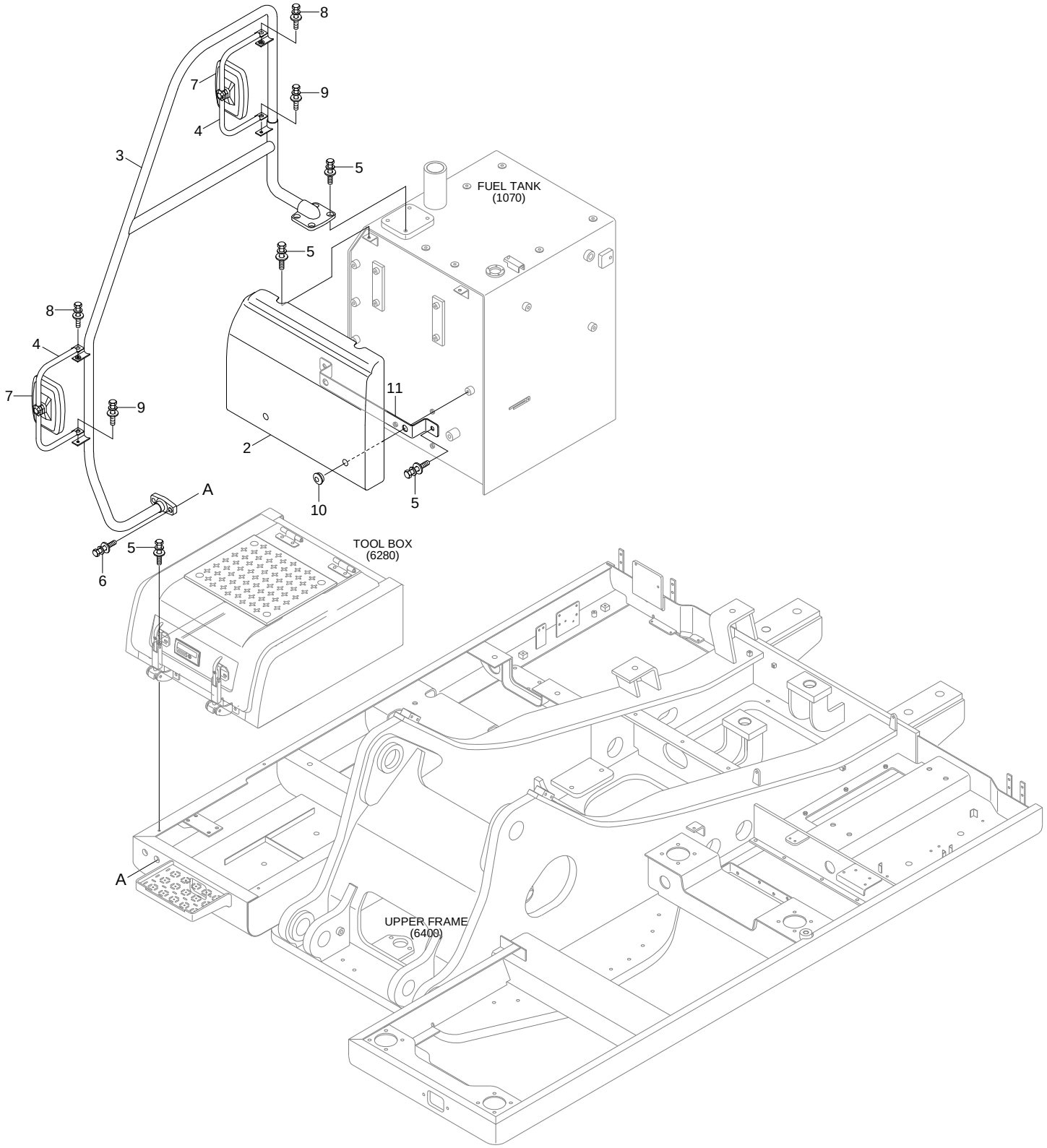

6270

Item	Part_No	IS	Ord	T	Description	Qty	Serial_No	ITC	Remark
2	72Q6-43101				COVER-FUEL TANK	1			
3	71Q5-44101				HANDRAIL WA	1			
4	71Q6-48200				STAY WA-RH	2			
5	71Q6-50020				BOLT-W/WASHER,HEX	16			
6	71Q6-50025				BOLT-W/WASHER	2			
7	71N8-47101				MIRROR	2			
8	S037-104526				BOLT-W/WASHER	2			
9	S037-103026				BOLT-W/WASHER	2			
10	71Q6-41710				CAP	2			
11	72Q6-43200				BRACKET WA	1			

TOOL BOX

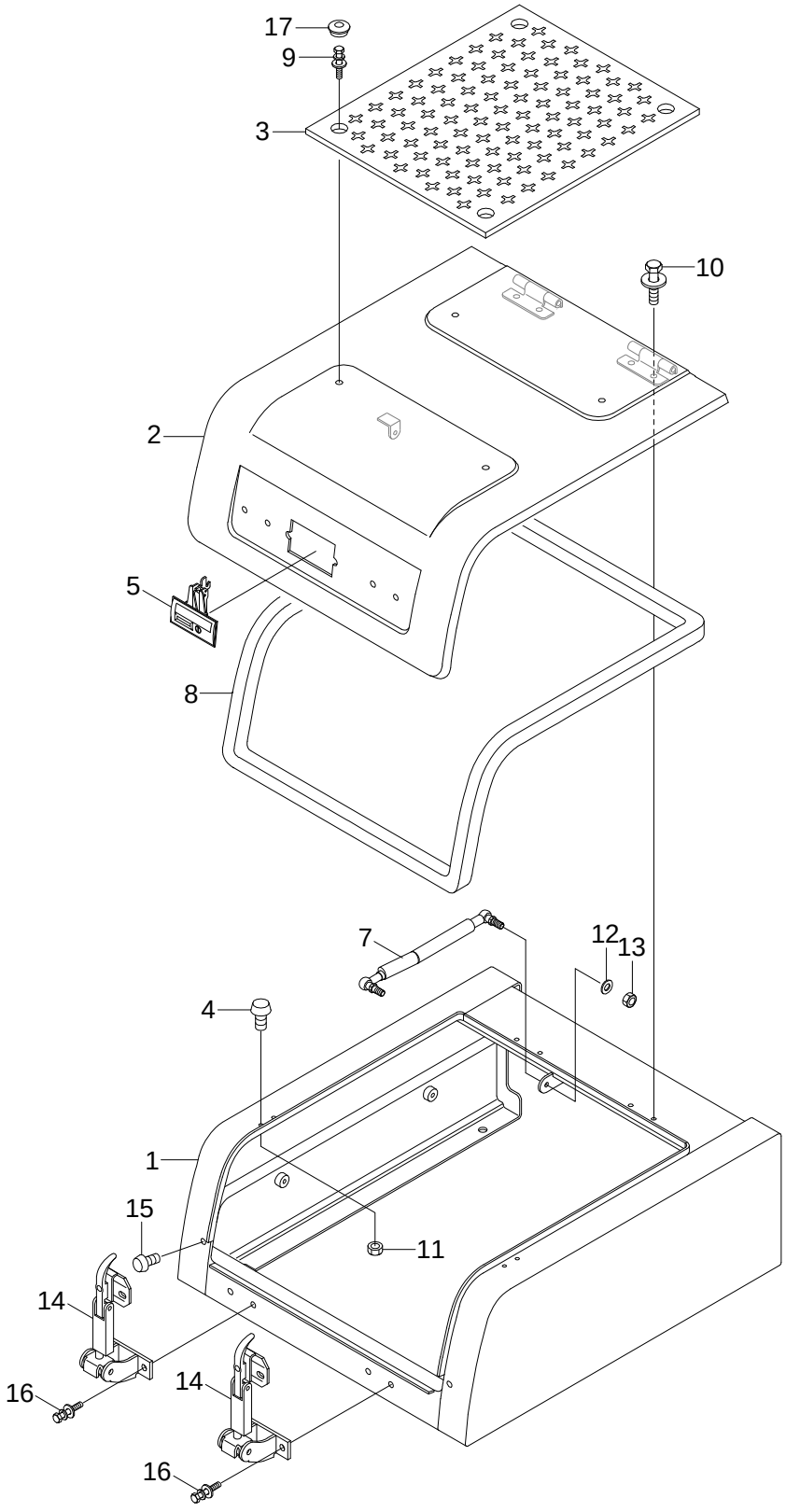

Item	Part_No	IS	Ord	T	Description	Qty	Serial_No	ITC	Remark
1	72Q6-41002				TOOL BOX WA	1			
2	71Q4-42002				COVER WA	1			
3	71Q4-42101				NON-SLIP PLATE(A)	1			
4	71Q6-41200				STOPPER-RUBBER	2			
5	71M8-41041				HOLDER-PULLS	1			
7	71Q4-41600				GAS SPRING	1			
8	S776-023000				WEATHER STRIP	1			
9	71Q6-50020				BOLT-W/WASHER	4			
10	S037-102556				BOLT-W/WASHER	6			
11	S275-060006				NUT-SELF LOCKING	4			
12	S403-08200B				WASHER-PLAIN	2			
13	S203-081006				NUT-HEX	2			
14	71Q6-42400				CATCH ASSY	2			
15	71Q6-41900				STOPPER-RUBBER	2			
16	S035-082056				BOLT-W/WASHER	8			
17	71Q6-41700				CAP	4			

GROMMET GROUP

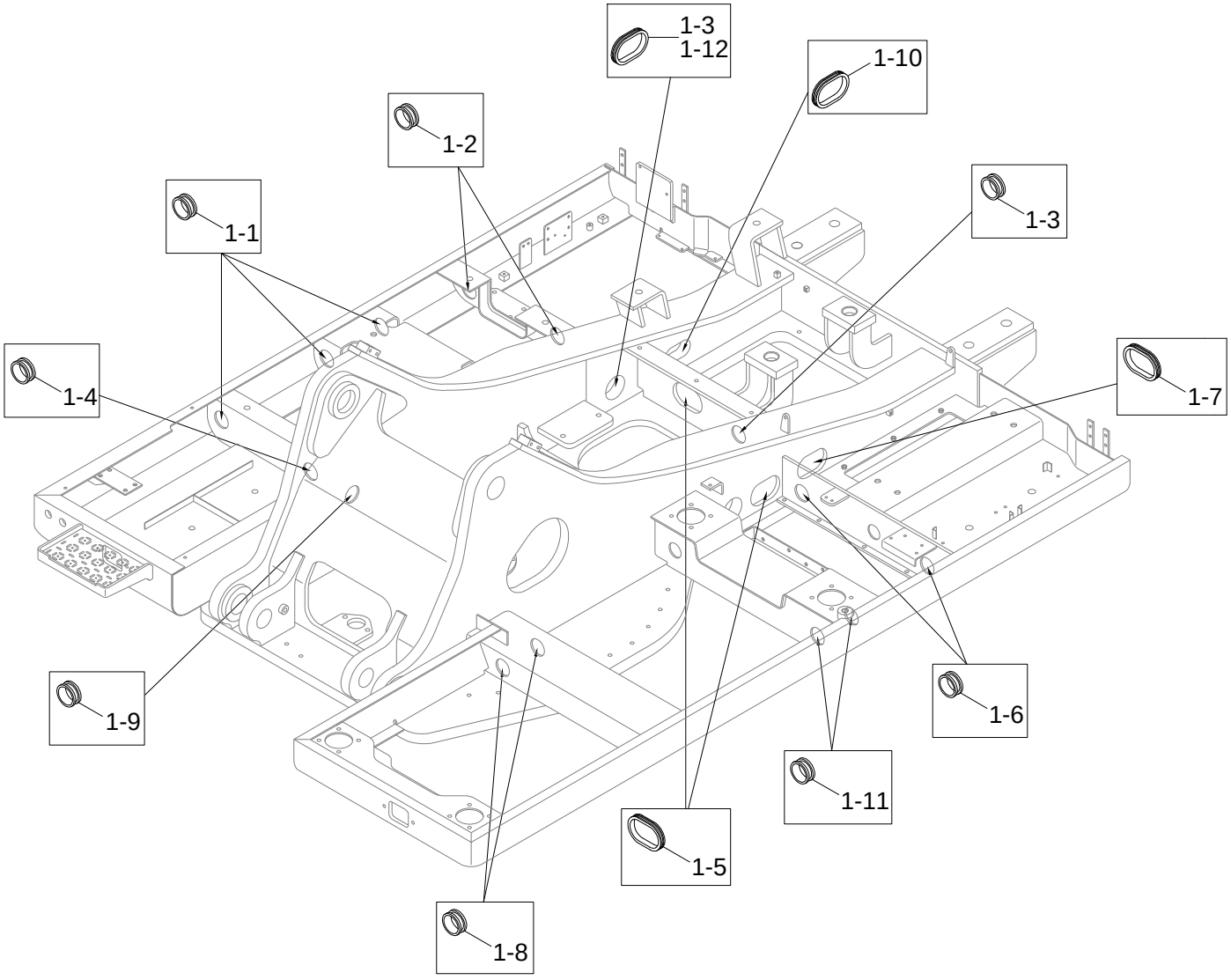

Item	Part_No	IS	Ord	T	Description	Qty	Serial_No	ITC	Remark
1	41Q5-50011				GROMMET KIT(A)	1	- #0003		
	41Q5-50012				GROMMET KIT(A)	1	#0004 -	B	
1-1	S760-041000				.GROMMET	3			
1-2	S760-041400				.GROMMET	2			
1-3	S760-081400				.GROMMET	2	- #0003		
					.GROMMET	1	#0004 -	A	
1-4	S760-041008				.GROMMET	1			
1-5	S760-082200				.GROMMET	2			
1-6	S760-071800				.GROMMET	2			
1-7	S760-081800				.GROMMET	1			
1-8	S760-031200				.GROMMET	2			
1-9	S760-111400				.GROMMET	1			
1-10	S760-082012				.GROMMET	1			
1-11	S760-031800				.GROMMET	2			
1-12	S760-081208				.GROMMET	1	#0004 -	D	

UPPER FRAME & COUNTERWEIGHT

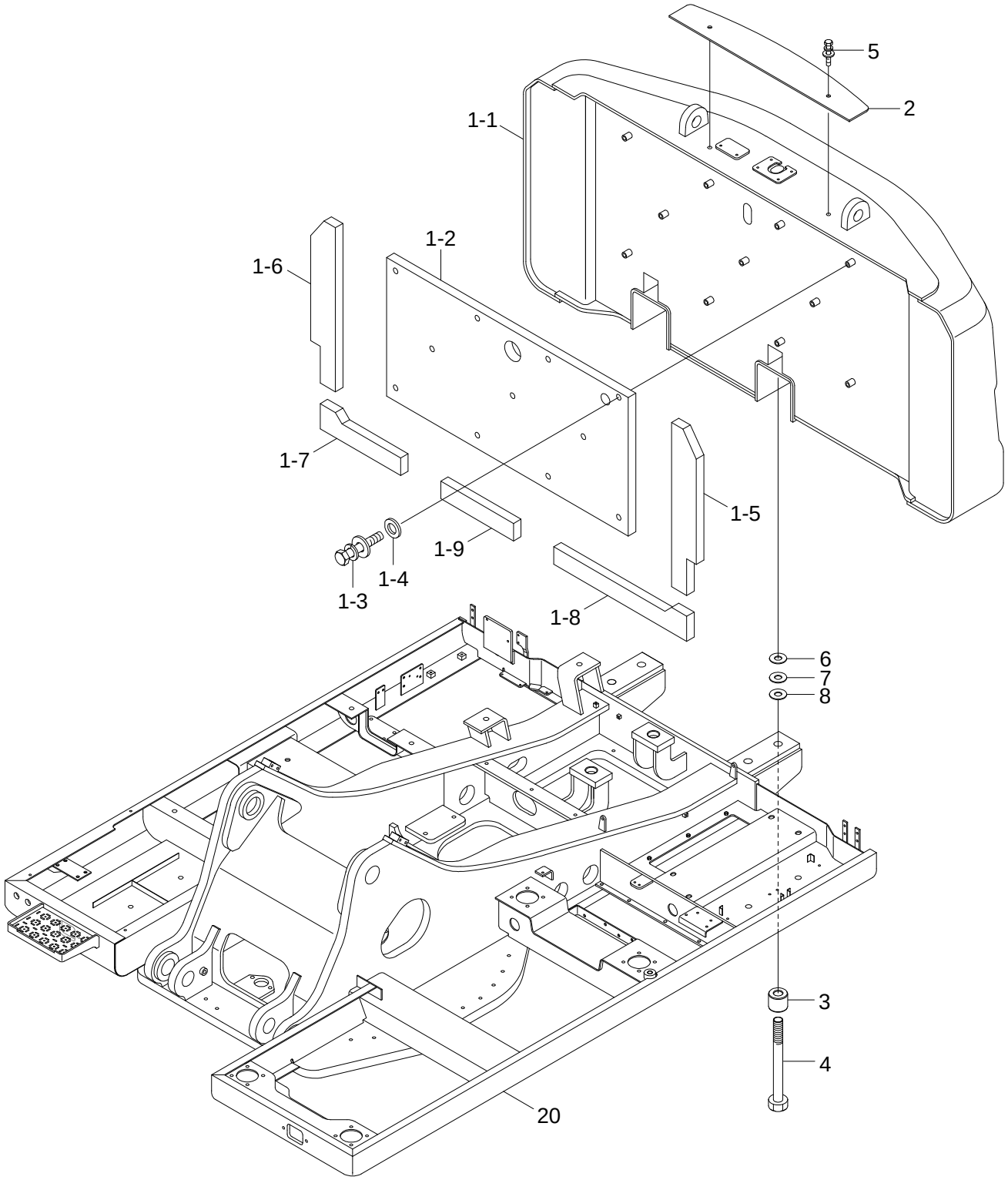

Item	Part_No	IS	Ord	T	Description	Qty	Serial_No	ITC	Remark
1	41Q5-24501				COUNTERWEIGHT ASSY	1			STD, 2900KG
1-1	41Q5-24001				.COUNTERWEIGHT WA	1			
1-2	41Q5-24532				.SPONGE	1	#0001 -	-	
1-3	S037-102556				.BOLT-W/WASHER	11			
1-4	61L1-2037				.WASHER-HARDENED	11			
1-5	41Q5-24540				.SPONGE(B)	1			
1-6	41Q5-24550				.SPONGE(C)	1			
1-7	41Q5-24560				.SPONGE(D)	1			
1-8	41Q5-24580				.SPONGE(F)	1			
1-9	41Q5-24570				.SPONGE(E)	1			
2	41N5-22201				SPACER	4			
3	S017-30130D				BOLT-HEX	4			
4	S390-050075				SHIM-ROUND(0.5T)	5			
5	S391-050075				SHIM-ROUND(1.0T)	5			
6	S392-050075				SHIM-ROUND(2.0T)	5			
20	41Q5-33012				UPPER FRAME WA	1			

LOWER FRAME & COVER

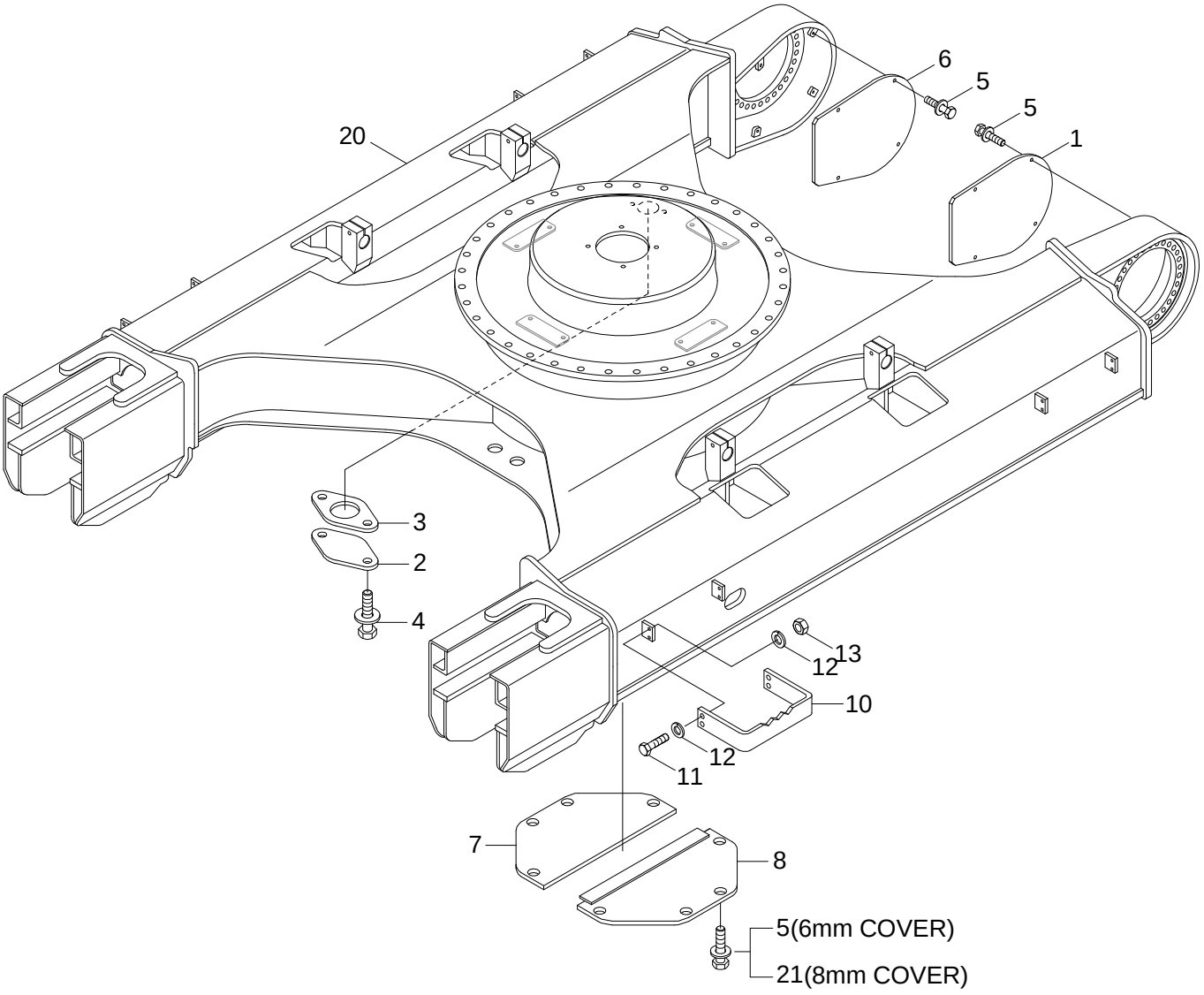

R180LCD-9(OPTION)

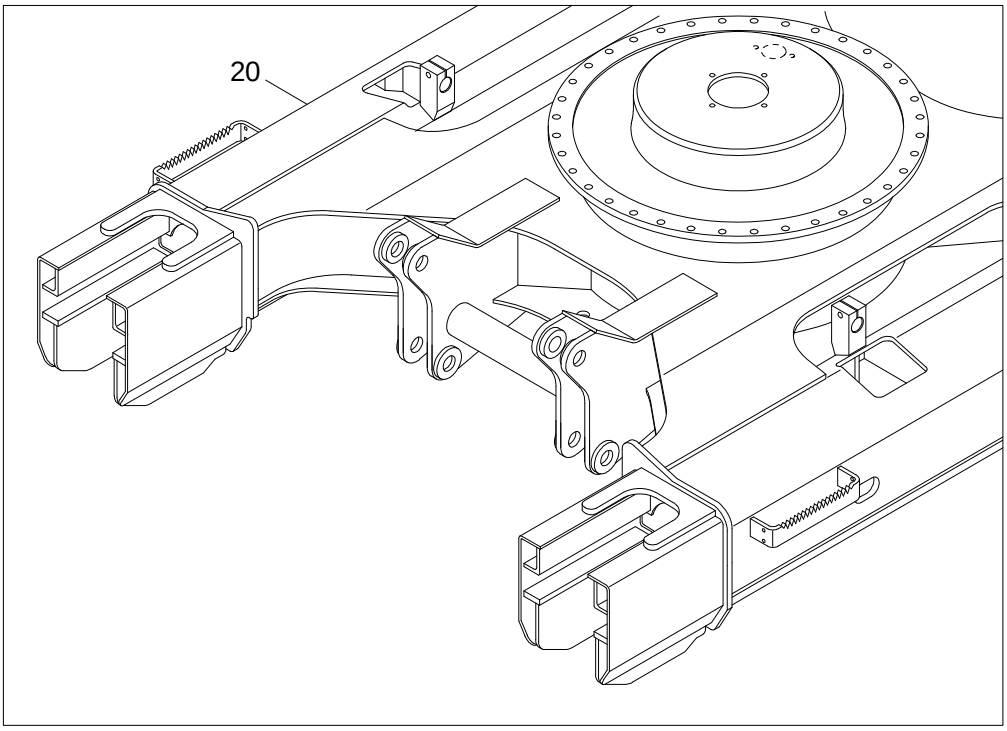

Item	Part_No	IS	Ord	T	Description	Qty	Serial_No	ITC	Remark
1	51N6-11112GG				COVER WA-T/MOTOR,LH	1			
2	41N6-10100				COVER	1			
3	41E9-1306				SEAL	1			
4	S037-102556				BOLT-W/WASHER	2			
5	S037-123556				BOLT-W/WASHER	8			STD, 6MM
	S037-124556				BOLT-W/WASHER	8			OPT, ADDITION
6	51N6-11122GG				COVER WA-T/MOTOR,RH	1			
7	51N6-11211GG				COVER-BOTTOM(A)	1			STD, 6MM
	51N6-11230GG				COVER-BOTTOM(A)	1			OPT, 8MM
8	51N6-11221GG				COVER-BOTTOM(B)	1			STD, 6MM
	51N6-11240GG				COVER-BOTTOM(B)	1			OPT, 8MM
10	51N6-02600GG				BOARD-FOOT	4			500MM SHOE
	51N5-02640GG				BOARD-FOOT	4			600MM SHOE
	51N5-02650GG				BOARD-FOOT	4			700MM SHOE
	51N5-02660GG				FOOT BOARD ASSY	4			800MM SHOE
11	S017-120506				BOLT-HEX	16			
12	S441-12000B				WASHER-HARDENED	32			
13	S205-12100B				NUT-HEX	16			
20	51Q5-12011				LOWER FRAME WA	1	- #0006		R180LC-9
	51Q5-12012				LOWER FRAME WA	1	#0007 -	B	R180LC-9
	51Q5-14010				LOWER FRAME WA	1			R180LCD-9
	51Q5-15010				LOWER FRAME WA	1	- #0006		R180NLC-9
	51Q5-15011				LOWER FRAME WA	1	#0007 -	B	R180NLC-9
21	S037-124556				BOLT-W/WASHER	8			OPT, 8MM

[Item List] - Print Date : 2020.08.21 16:08

SWING RING GREASE LUB SYSTEM

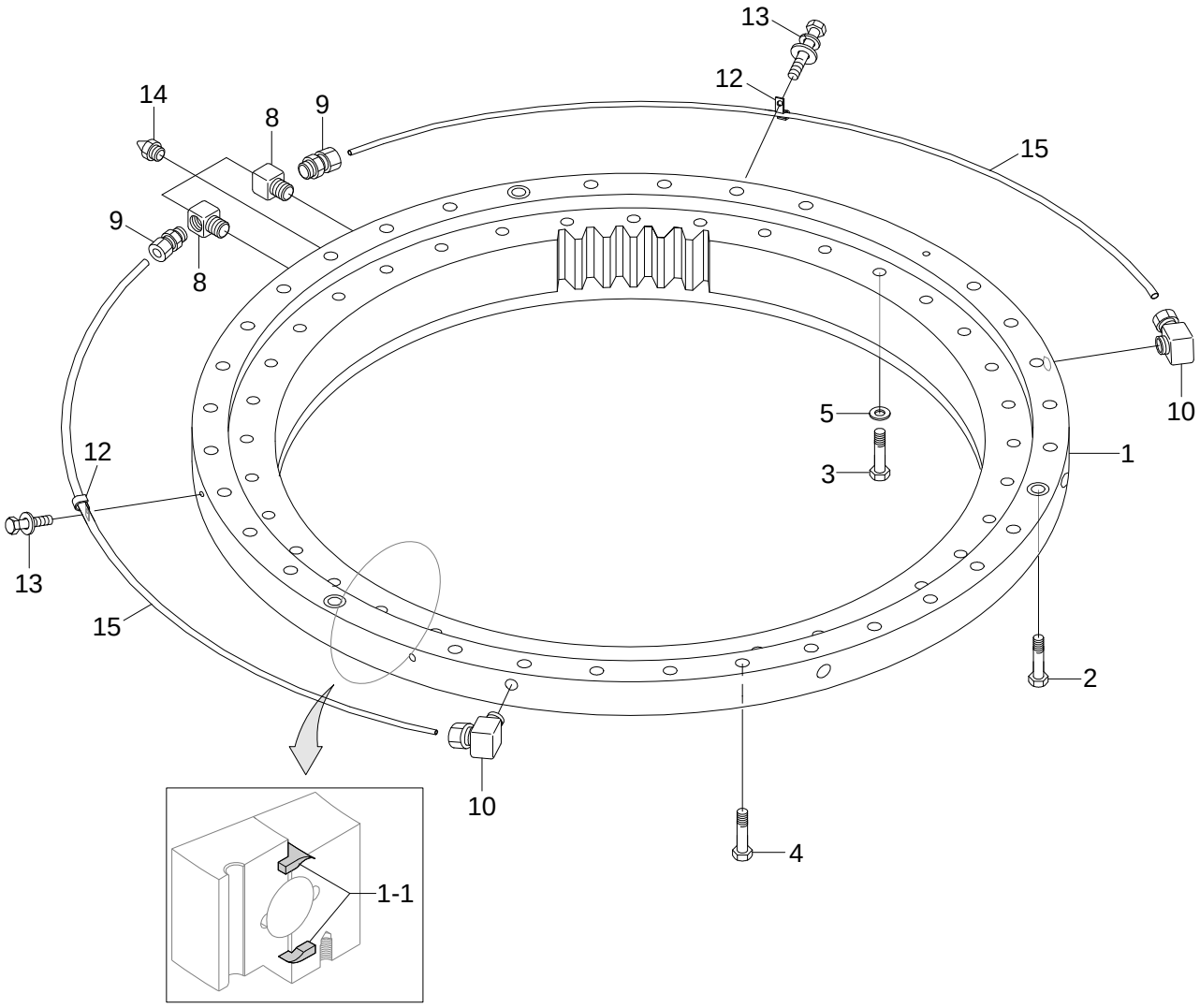

Item	Part_No	IS	Ord	T	Description	Qty	Serial_No	ITC	Remark
1	81EM-00021GG				BEARING-SWING	1			
1-1	82E4-10040				.SEAL-SWING BEARING	2			
2	E180-5001				BOLT-REAMER	3			
	E180-50011				BOLT-REAMER	3	#0001 -		
3	S017-200706				BOLT-HEX	36	#0001 -		
4	S017-201056				BOLT-HEX	25	#0001 -		
5	S441-200006				WASHER-HARDENED	36			
8	81N6-00110				ELBOW-90	2			
9	81N6-00120				CONNECTOR	2			
10	81N6-00130				ELBOW-90	2			
12	S543-120002				CLAMP-TUBE	2			
13	S037-101556				BOLT-W/WASHER	2			
14	S651-810002				NIPPLE-GREASE	3			
15	81N6-00220				TUBE-NYLON	2			

Item	Part_No	IS	Ord	T	Description	Qty	Serial_No	ITC	Remark
1	81EM-00021GG				BEARING-SWING	1			
1-1	82E4-10040				.SEAL-SWING BEARING	2			
2	E180-5001				BOLT-REAMER	3			
	E180-50011				BOLT-REAMER	3	#0001 -		
3	S017-200706				BOLT-HEX	36	#0001 -		
4	S017-201056				BOLT-HEX	25	#0001 -		
5	S441-200006				WASHER-HARDENED	36			
8	81N6-00110				ELBOW-90	2			
9	81N6-00120				CONNECTOR	2			
10	81N6-00130				ELBOW-90	2			
12	S543-120002				CLAMP-TUBE	2			
13	S037-101556				BOLT-W/WASHER	2			
14	S651-810002				NIPPLE-GREASE	3			
15	81N6-00220				TUBE-NYLON	2			

BOOM MOUNTING(5.1M, STD)

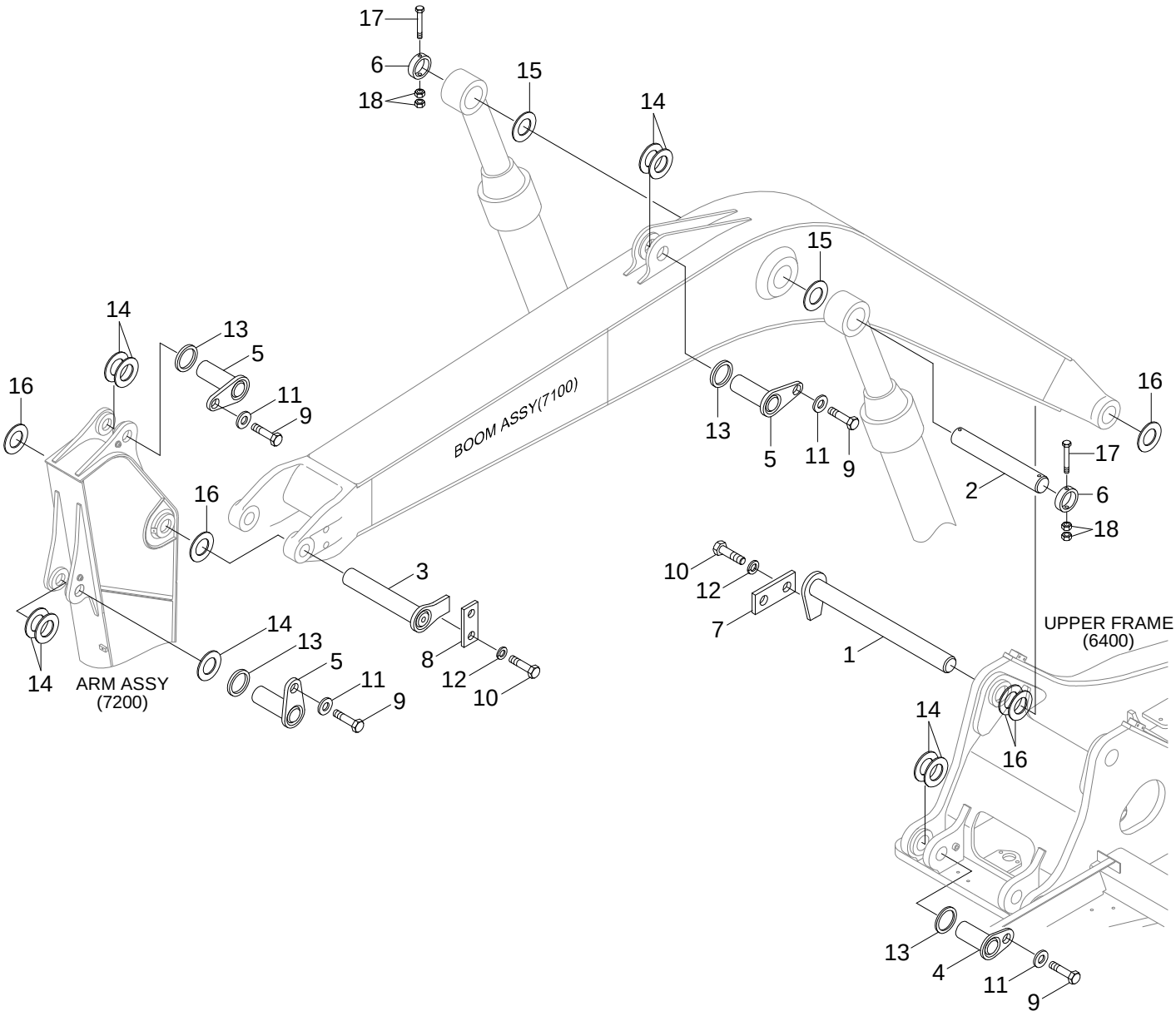

Item	Part_No	IS	Ord	T	Description	Qty	Serial_No	ITC	Remark
1	61Q5-11011				PIN ASSY	1			
2	61EK-11021				PIN	1			
3	61Q5-11120				PIN ASSY	1			
4	61Q5-01421				PIN ASSY	2			
5	61Q5-01430				PIN ASSY	3			
6	61Q5-10500				PIN-STOPPER	2			
7	61Q4-10711				PLATE	1			
8	61Q5-10710				PLATE	1			
9	S017-16025D				BOLT-HEX	5			
10	S017-16030D				BOLT-HEX	4			
11	61N8-00310				WASHER-HARDENED	5			
12	S411-160006				WASHER-SPRING	4			
13	61N8-00140				SPACER-PIN	5			
14	62N4-08120				SHIM(2.0T)	10			
15	62N4-08420				SHIM(2.0T)	2			
16	62N4-08520				SHIM(2.0T)	4			
17	S017-16160D				BOLT-HEX	2			
18	S205-16100B				NUT-HEX	4			
19	62N4-08100				SHIM(1.0T)	5			
20	62N4-08400				SHIM(1.0T)	2			
21	62N4-08500				SHIM(1.0T)	2			

BOOM(5.1M, STD)

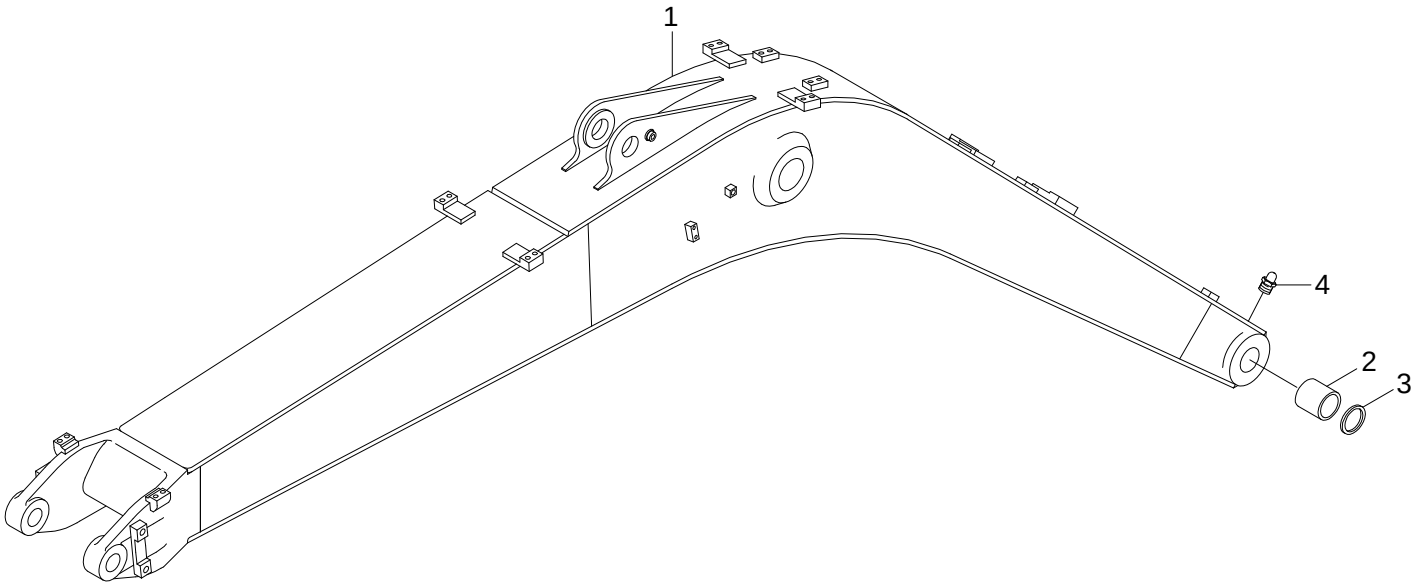

Item	Part_No	IS	Ord	T	Description	Qty	Serial_No	ITC	Remark
*	61Q5-10003				BOOM ASSY	1			5.1M
1	61Q5-10013				.BOOM WA	1			
2	61Q5-15300				.BUSHING	2			
3	Y020-080011				.SEAL-DUST,DLI,KPU	2			
4	S651-810002				.NIPPLE-GREASE	1			

ARM

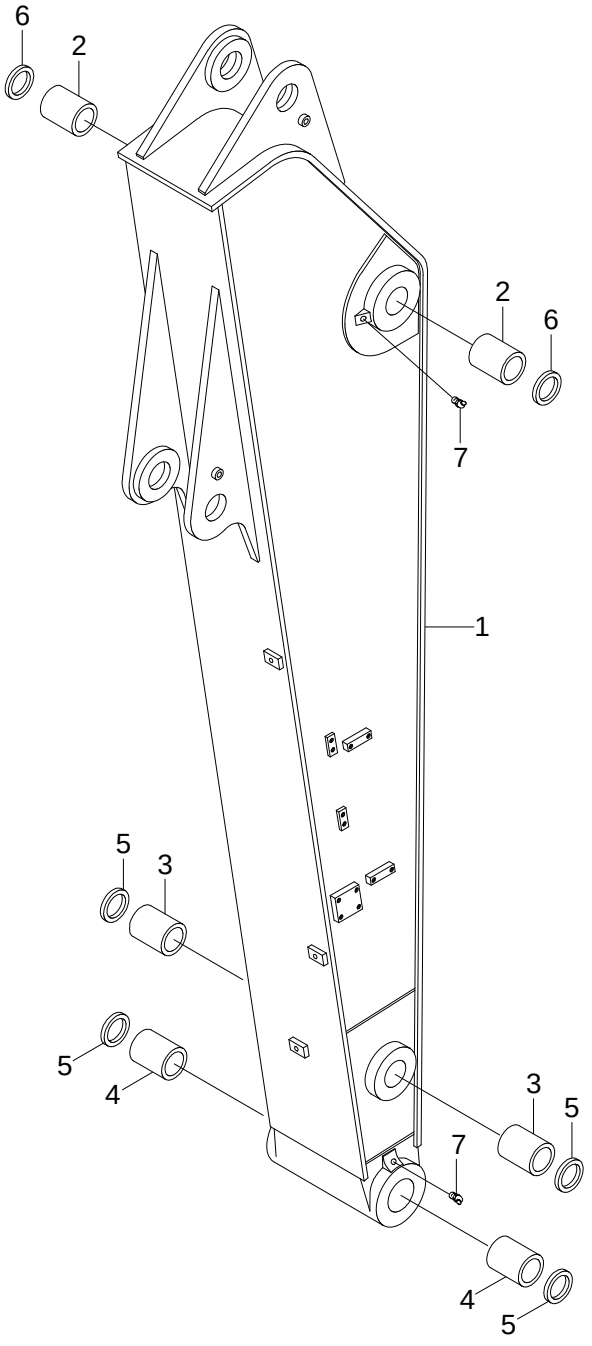

Item	Part_No	IS	Ord	T	Description	Qty	Serial_No	ITC	Remark
*	61Q5-20002				ARM ASSY	1			STD, 2.6M
	61Q5-22001				ARM ASSY	1			OPT, 2.2M
	61Q5-23000				ARM ASSY	1	#0018 -		OPT, 3.1M
1	61Q5-20012				.ARM WA	1			STD, 2.6M
	61Q5-22011				.ARM WA	1			OPT, 2.2M
	61Q5-23010				.ARM WA	1	#0018 -		OPT, 3.1M
2	61Q5-15110				.BUSHING	2			
3	66N4-04020				.BUSHING	2			
4	66N4-04010				.BUSHING	2			
5	Y020-070011				.SEAL-DUST,DLI,KPU	4			
6	Y020-075111				.SEAL-DUST,DLI,KPU	2			
7	S651-810002				.NIPPLE-GREASE	2			

BUCKET CONTROL GROUP

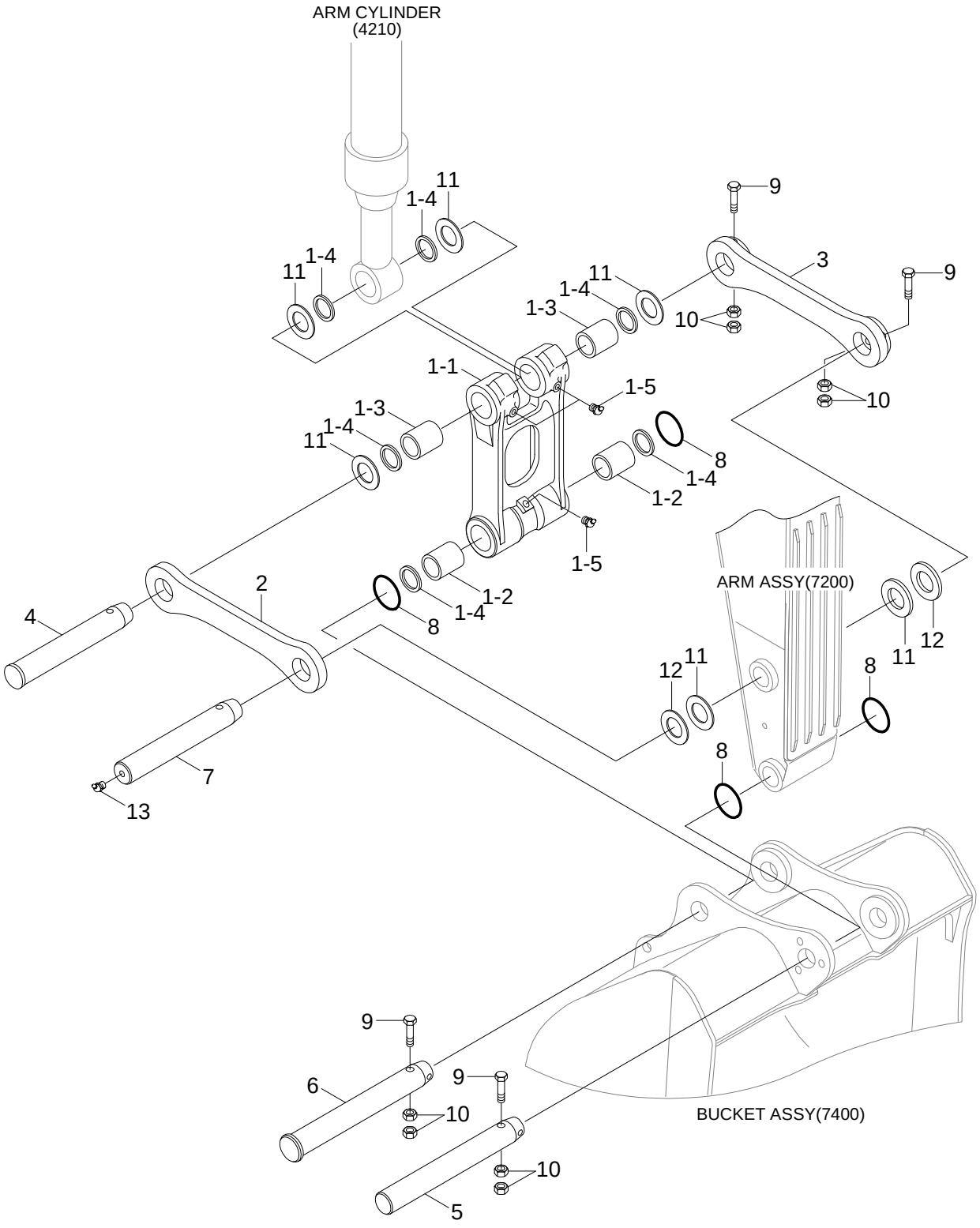

Item	Part_No	IS	Ord	T	Description	Qty	Serial_No	ITC	Remark
1	61Q5-40012				CONTROL ROD ASSY	1			
1-1	61Q5-40101				.CONTROL ROD	1			
1-2	66N4-04020				.BUSHING	2			
1-3	66N4-05020				.BUSHING	2			
1-4	Y020-070011				.SEAL-DUST,DLI,KPU	6			
1-5	S651-810002				.NIPPLE-GREASE	3			
2	61Q5-40021				CONTROL LINK	1			
3	61Q5-40031				CONTROL LINK-RH	1			
4	61EK-11081				PIN	1			
5	61EK-11102				PIN	1			
6	61EK-11111				PIN	1			
7	61N5-11081				PIN	1			
8	E161-3055				O-RING	4			
9	S017-161356				BOLT-HEX	4			
10	S205-16100B				NUT-HEX	8			
11	62N4-08120				SHIM(2.0T)	6			
12	62N4-08100				SHIM(1.0T)	3			
13	S651-810002				NIPPLE-GREASE	1			

BUCKET(5 TEETH)

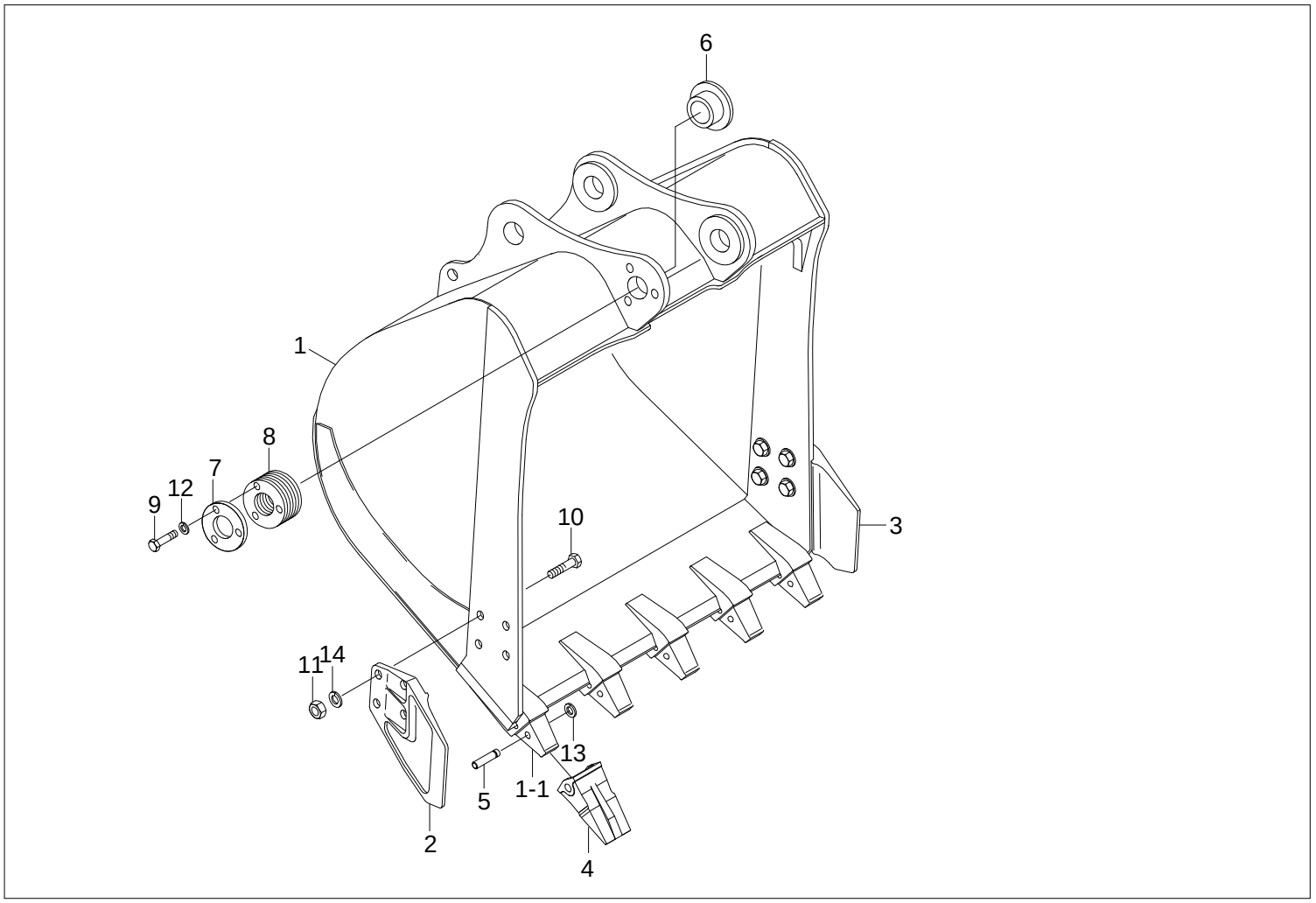

H/DUTY(#0005-)

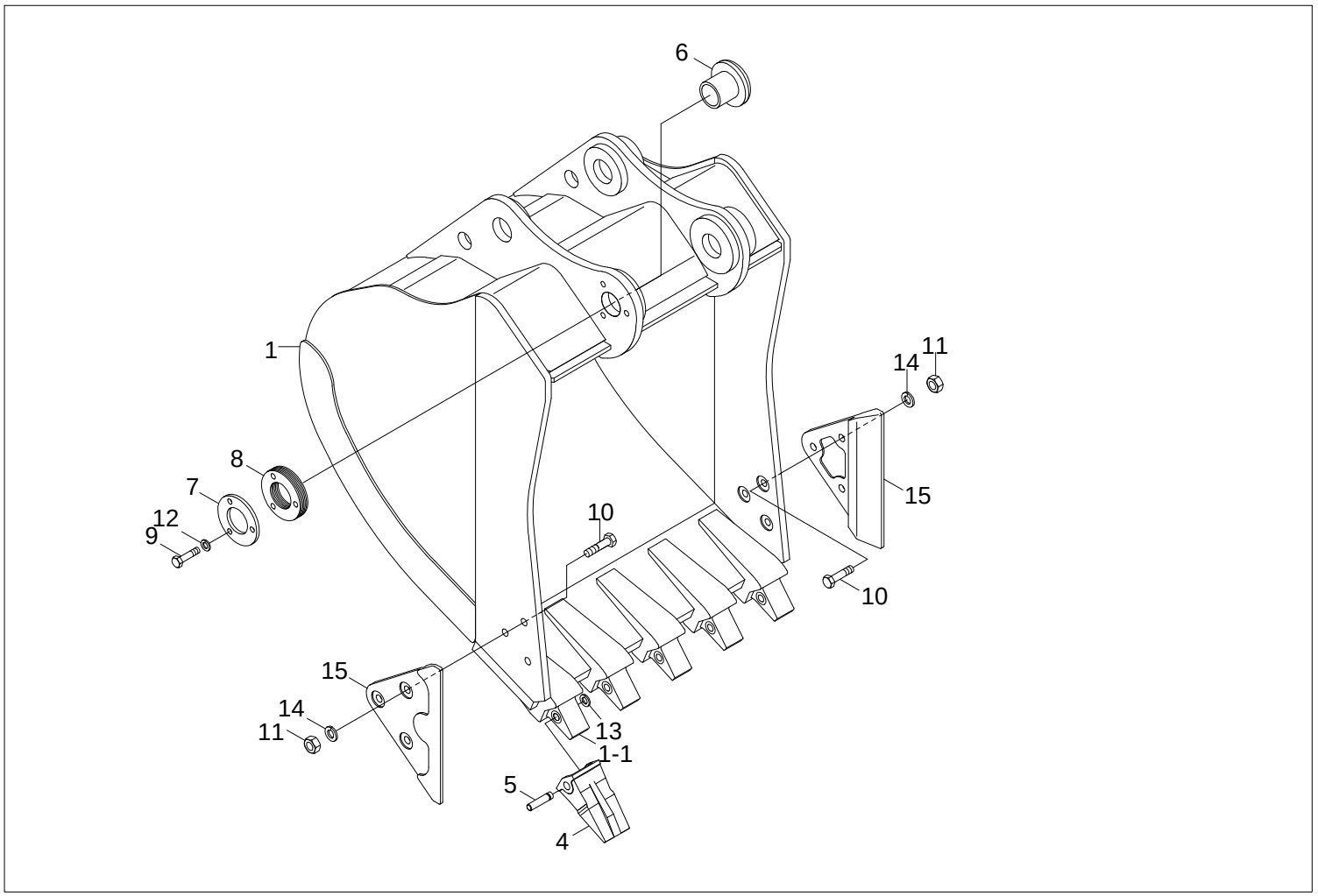

Item	Part_No	IS	Ord	T	Description	Qty	Serial_No	ITC	Remark
*	61Q5-30000				BUCKET ASSY	1			0.70M3, STD
	61Q5-34000				BUCKET ASSY	1			0.64M3, OPT
	61Q5-31000				BUCKET ASSY	1			0.76M3, OPT
	61Q5-35000				BUCKET ASSY	1	#0005 -		0.72M3, H/DUTY
1	61Q5-30100				.BUCKET WA	1			0.70M3, STD
	61Q5-34010				.BUCKET WA	1			0.64M3, OPT
	61Q5-31010				.BUCKET WA	1			0.76M3, OPT
	61Q5-35010				.BUCKET WA	1	#0005 -		0.72M3, H/DUTY
1-1	61N6-31320				..ADAPTER-TOOTH	5			
2	61E3-3033GG				.SIDE CUTTER-LH	1			EXCEPT H/DUTY
3	61E3-3034GG				.SIDE CUTTER-RH	1			EXCEPT H/DUTY
4	61N6-31310GG				.POINT-TOOTH	5			
K5	E161-3035				.PIN-TOOTH	5			
6	61EK-11260				.BUSHING	1			
7	61N5-31360GG				.COVER PLATE	1			
8	61EK-31410				.SHIM	5			
9	S017-16050D				.BOLT-HEX	3			
					.BOLT-HEX	6	#0005 -		0.72M3, H/DUTY
10	S017-20055D				.BOLT-HEX	8			
					.BOLT-HEX	6	#0005 -		0.72M3, H/DUTY
11	S205-201006				.NUT-HEX	8			
					.NUT-HEX	6	#0005 -		0.72M3, H/DUTY
12	S411-160006				.WASHER-SPRING	3			
					.WASHER-SPRING	6	#0005 -		0.72M3, H/DUTY
K13	61E5-11150				.WASHER-LOCK	5			

Item	Part_No	IS	Ord	T	Description	Qty	Serial_No	ITC	Remark
14	S411-200006				.WASHER-SPRING	8			
					.WASHER-SPRING	6	#0005 -		0.72M3, H/DUTY
15	64Q4-35500				.WEAR GUARD	2	#0005 -		0.72M3, H/DUTY
K	E161-3035-S				.TOOTH PIN KIT	1			INCL 5, 13

BUCKET(3 TEETH)

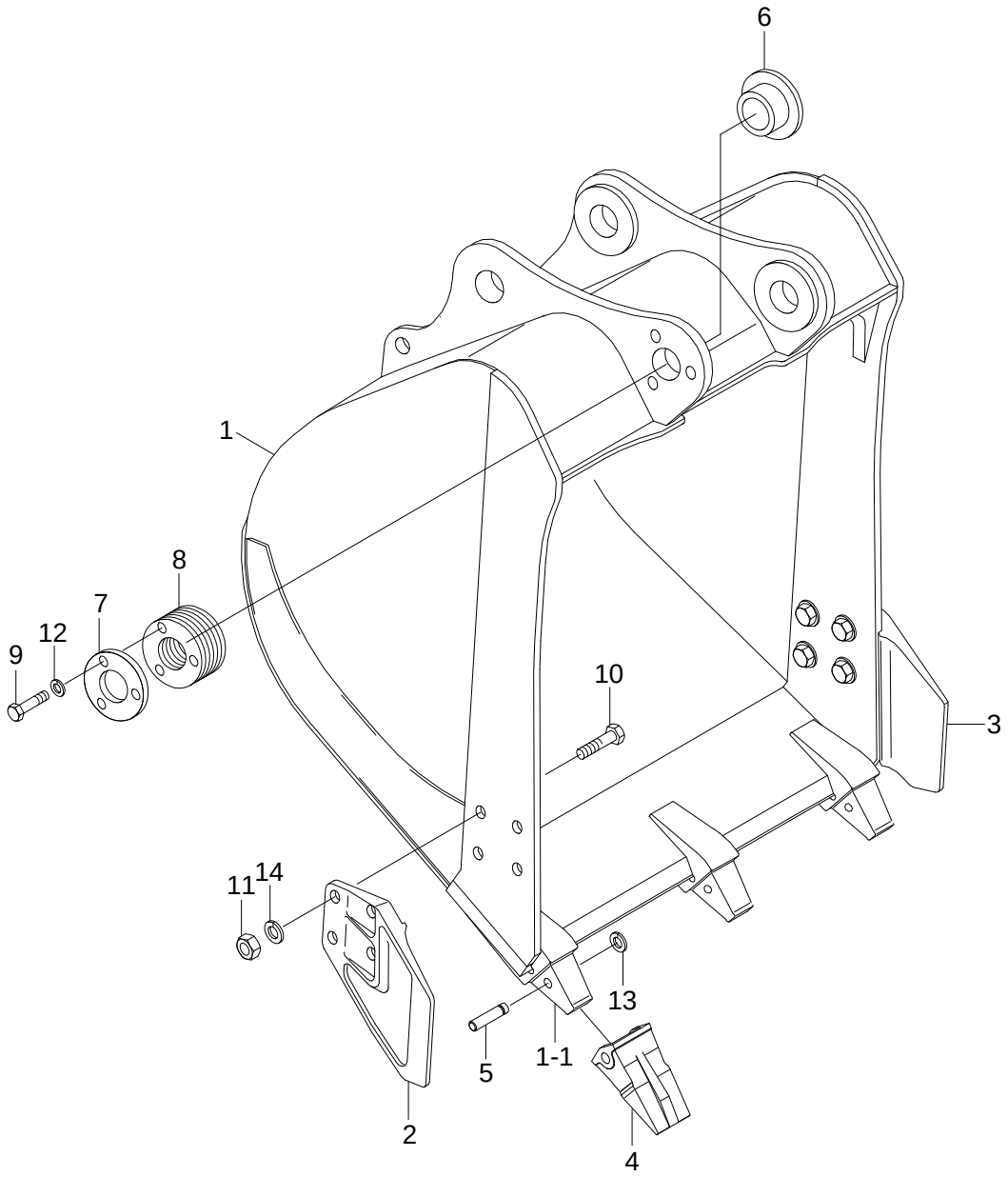

Item	Part_No	IS	Ord	T	Description	Qty	Serial_No	ITC	Remark
*	61Q5-32000				BUCKET ASSY	1			0.39M3, OPT
1	61Q5-32010				.BUCKET WA	1			
1-1	61N6-31320				..ADAPTER-TOOTH	3			
2	61E3-3033GG				.SIDE CUTTER-LH	1			
3	61E3-3034GG				.SIDE CUTTER-RH	1			
4	61N6-31310GG				.POINT-TOOTH	3			
K5	E161-3035				.PIN-TOOTH	3			
6	61EK-11260				.BUSHING	1			
7	61N5-31360				.PLATE-COVER	1			
8	61EK-31410				.SHIM	5			
9	S017-16050D				.BOLT-HEX	3			
10	S017-20055D				.BOLT-HEX	8			
11	S205-201006				.NUT-HEX	8			
12	S411-160006				.WASHER-SPRING	3			
K13	61E5-11150				.WASHER-LOCK	3			
14	S411-200006				.WASHER-SPRING	8			
K	E161-3035-S				.TOOTH PIN KIT	1			INCL 5, 13

BUCKET(4 TEETH)

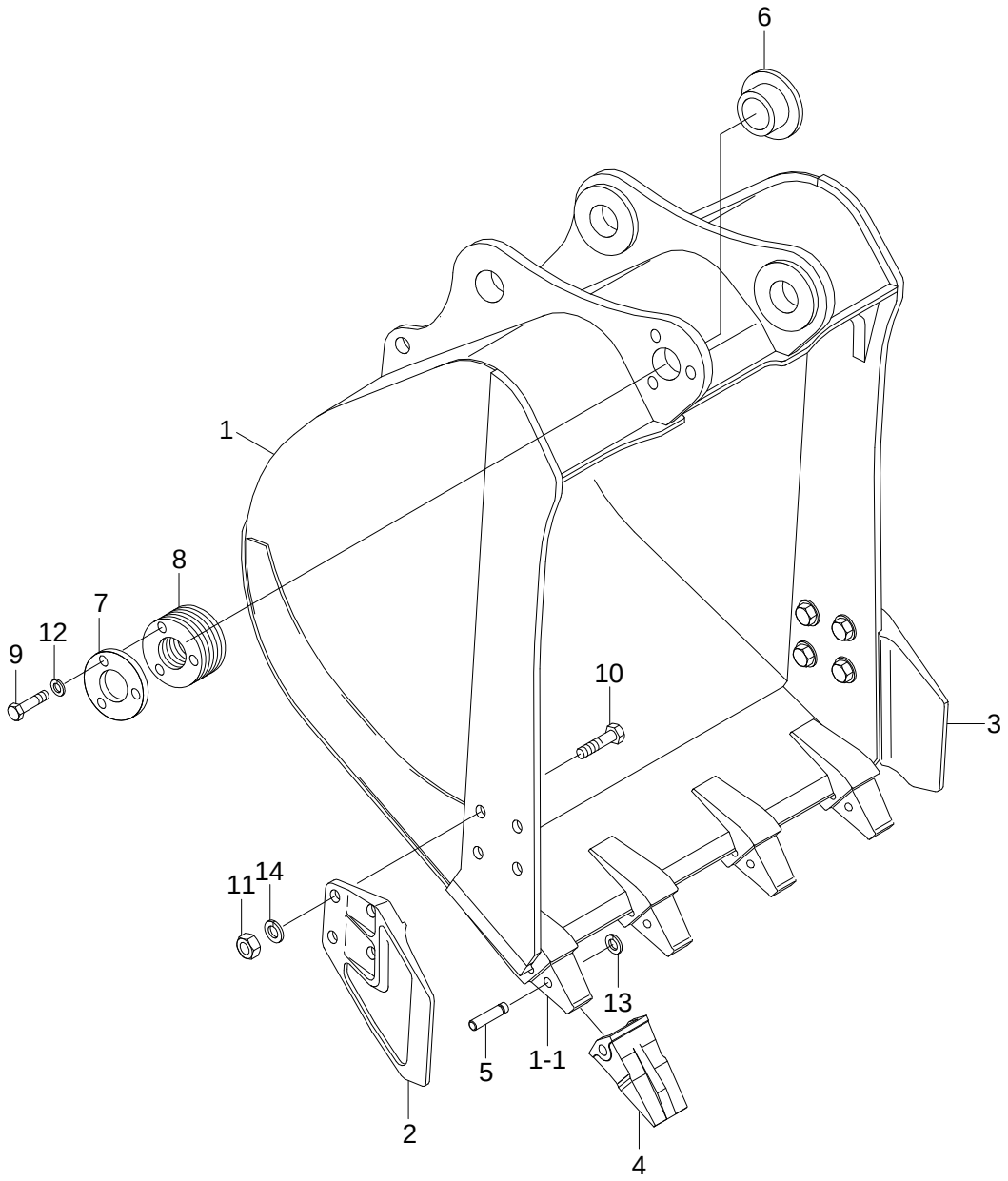

Item	Part_No	IS	Ord	T	Description	Qty	Serial_No	ITC	Remark
*	61Q5-33000				BUCKET ASSY	1			0.50M3, OPT
1	61Q5-33010				.BUCKET WA	1			
1-1	61N6-31320				..ADAPTER-TOOTH	4			
2	61E3-3033GG				.SIDE CUTTER-LH	1			
3	61E3-3034GG				.SIDE CUTTER-RH	1			
4	61N6-31310GG				.POINT-TOOTH	4			
K5	E161-3035				.PIN-TOOTH	4			
6	61EK-11260				.BUSHING	1			
7	61N5-31360				.PLATE-COVER	1			
8	61EK-31410				.SHIM	5			
9	S017-16050D				.BOLT-HEX	3			
10	S017-20055D				.BOLT-HEX	8			
11	S205-201006				.NUT-HEX	8			
12	S411-160006				.WASHER-SPRING	3			
K13	61E5-11150				.WASHER-LOCK	4			
14	S411-200006				.WASHER-SPRING	8			
K	E161-3035-S				.TOOTH PIN KIT	1			INCL 5, 13

BUCKET(6 TEETH)

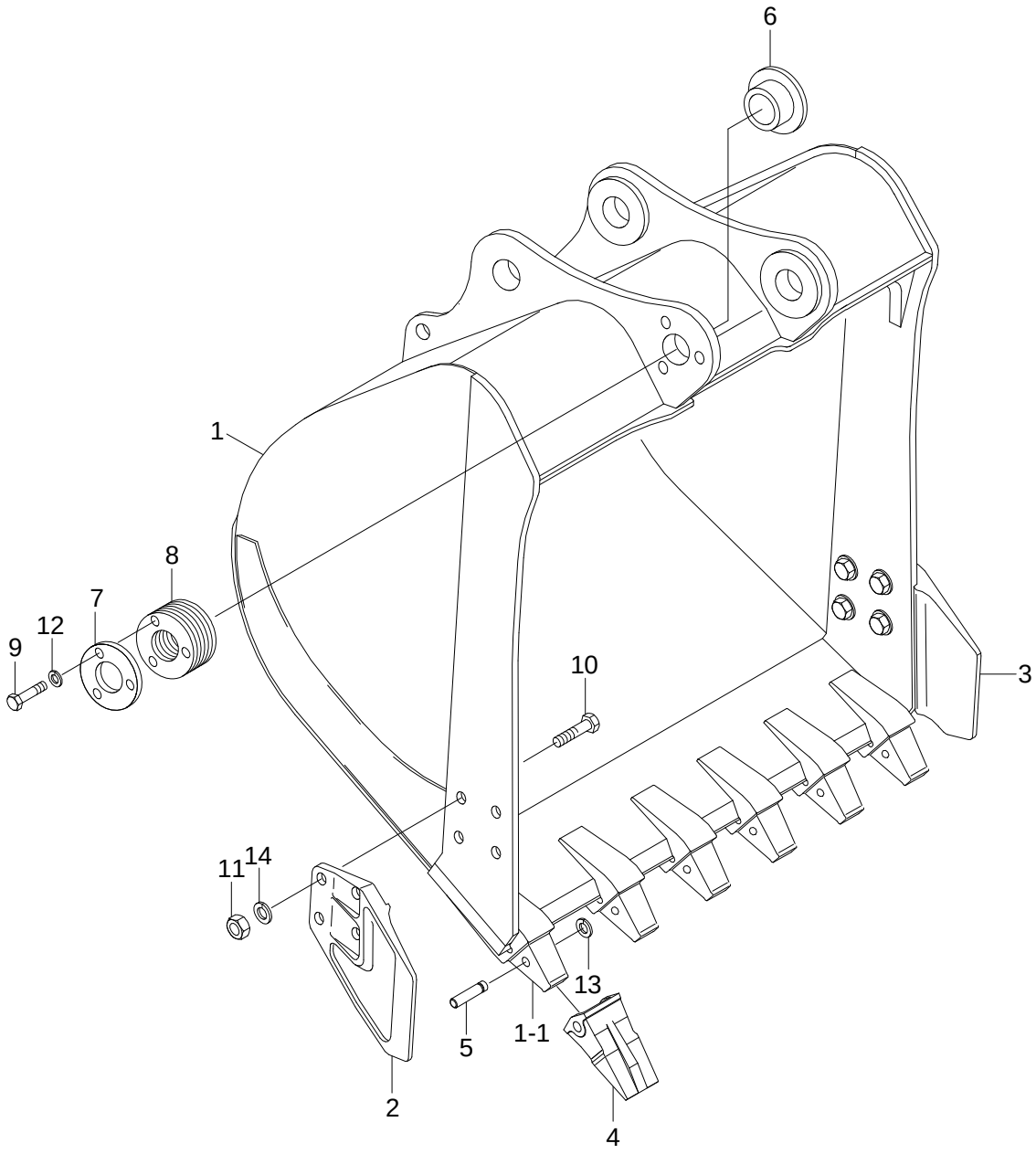

Item	Part_No	IS	Ord	T	Description	Qty	Serial_No	ITC	Remark
*	61Q5-36000				BUCKET ASSY	1			0.89M3, OPT
	61Q5-37000				BUCKET ASSY	1			1.05M3, OPT
1	61Q5-36010				.BUCKET WA	1			0.89M3, OPT
	61Q5-37010				.BUCKET WA	1			1.05M3, OPT
1-1	61N6-31320				..ADAPTER-TOOTH	6			
2	61E3-3033GG				.SIDE CUTTER-LH	1			
3	61E3-3034GG				.SIDE CUTTER-RH	1			
4	61N6-31310GG				.POINT-TOOTH	6			
K5	E161-3035				.PIN-TOOTH	6			
6	61EK-11260				.BUSHING	1			
7	61N5-31360				.PLATE-COVER	1			
8	61EK-31410				.SHIM	5			
9	S017-16050D				.BOLT-HEX	3			
10	S017-20055D				.BOLT-HEX	8			
11	S205-201006				.NUT-HEX	8			
12	S411-160006				.WASHER-SPRING	3			
K13	61E5-11150				.WASHER-LOCK	6			
14	S411-200006				.WASHER-SPRING	8			
K	E161-3035-S				.TOOTH PIN KIT	1			INCL 5, 13

BUCKET(0.69m³ SAE HEAPED, HEAVY DUTY)

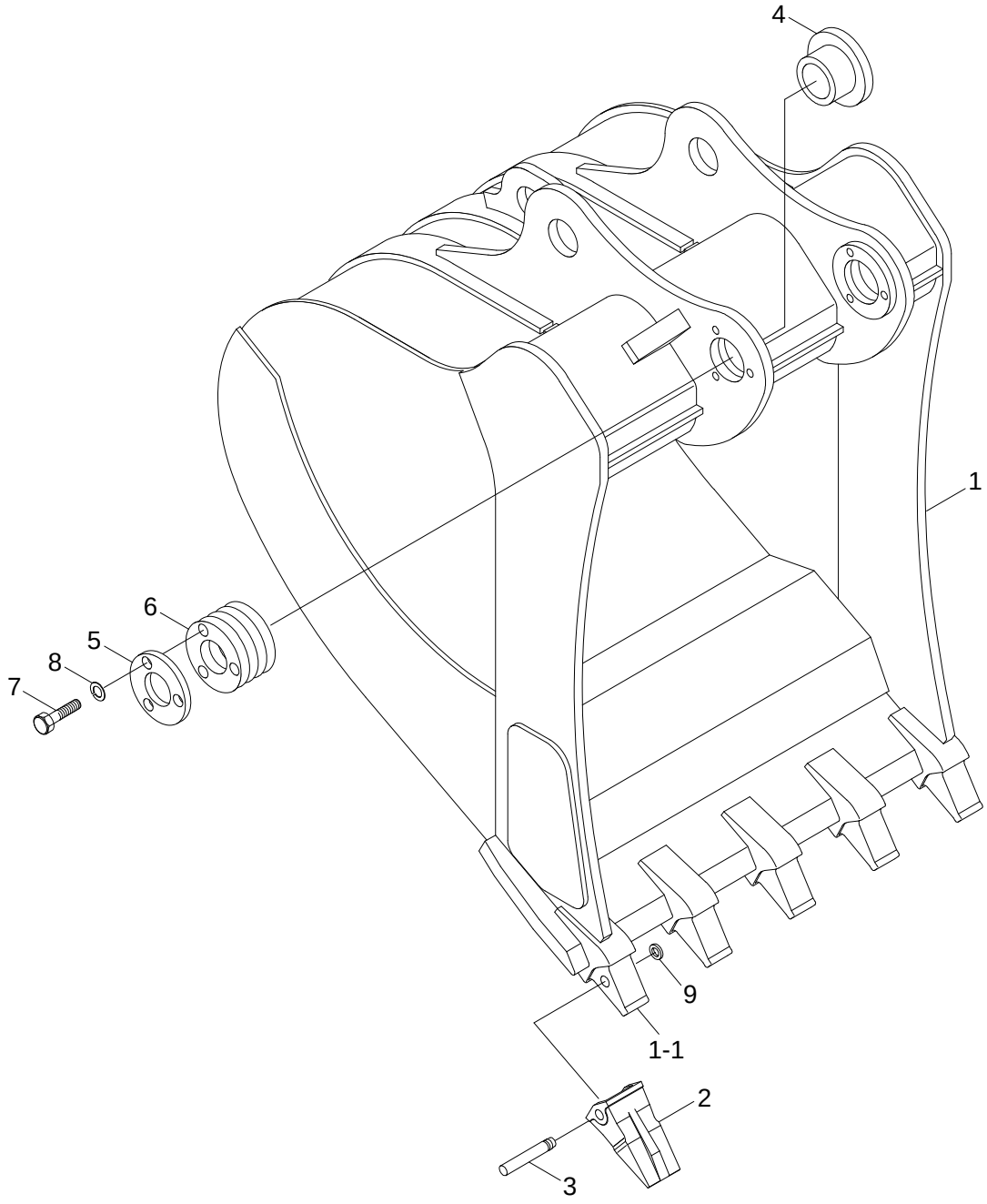

Item	Part_No	IS	Ord	T	Description	Qty	Serial_No	ITC	Remark
*	61Q5-38000				BUCKET ASSY	1			0.69M3, OPT
1	61Q5-38010				.BUCKET WA	1			
1-1	61N6-31320				..ADAPTER-TOOTH	5			
2	61N6-31310GG				.POINT-TOOTH	5			
K3	E161-3035				.PIN-TOOTH	5			
4	61EK-11260				.BUSHING	1			
5	61EK-31360				.PLATE-COVER	1			
6	61EK-31410				.SHIM	5			
7	S017-16050D				.BOLT-HEX	3			
8	S411-160006				.WASHER-SPRING	3			
K9	61E5-11150				.WASHER-LOCK	5			
K	E161-3035-S				TOOTH PIN KIT	1			INCL 3, 9

BUCKET(0.75m^3 SAE HEAPED D/CLEANING)

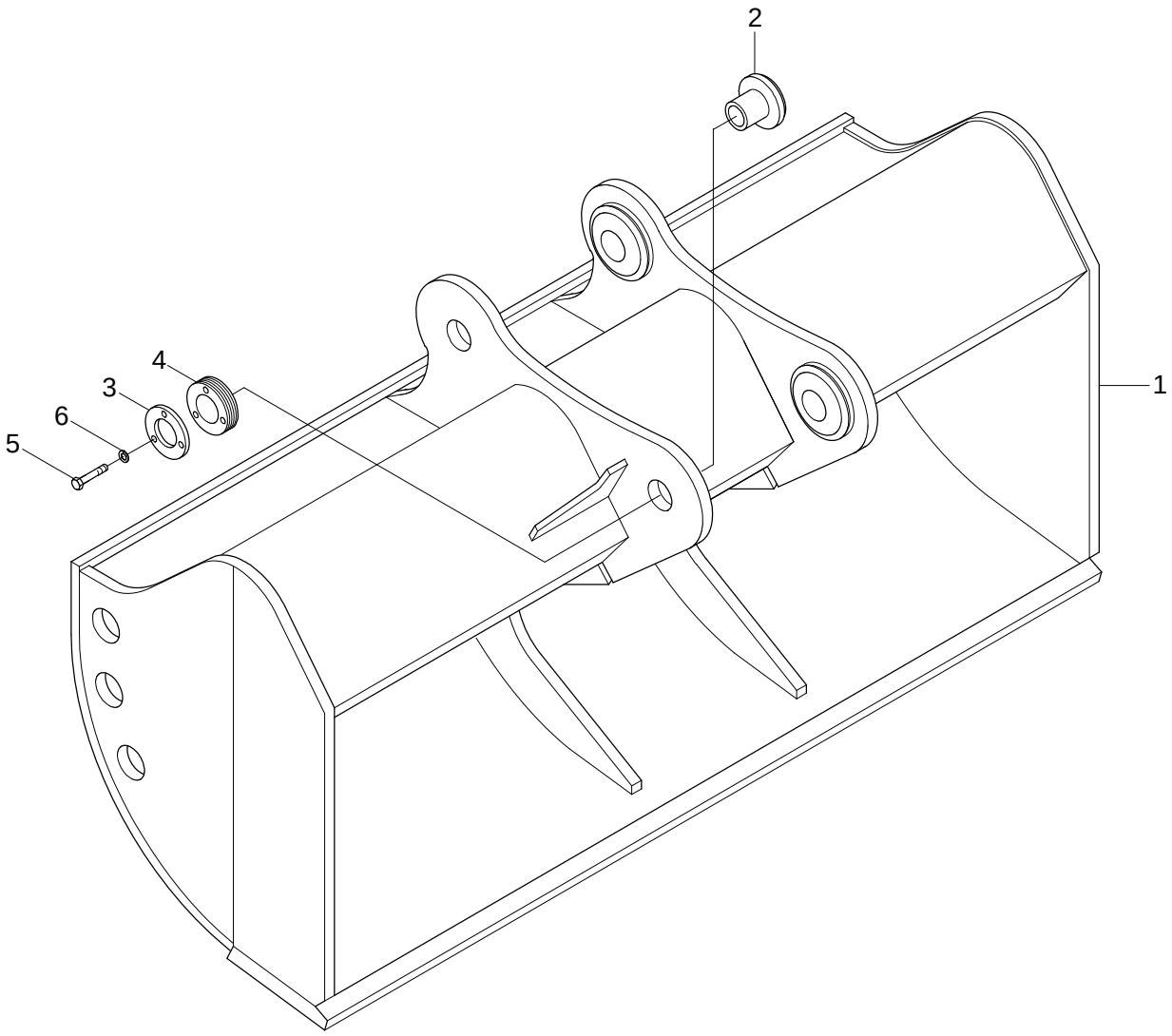

Item	Part_No	IS	Ord	T	Description	Qty	Serial_No	ITC	Remark
*	62N5-33000GG				BUCKET ASSY	1	#0001 -	-	
1	62N5-33010GG				.BUCKET WA	1			
2	61EK-11260				.BUSHING	1			
3	61EK-31360GG				.PLATE-COVER	1			
4	61EK-31410				.SHIM	5			
5	S017-160502				.BOLT-HEX	3			
6	S411-160002				.WASHER-SPRING	3			

TOOLS

1

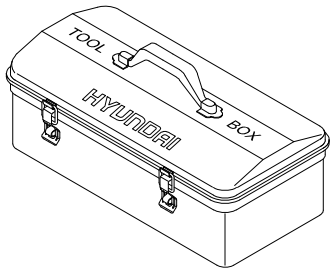

70

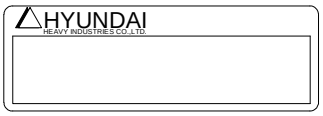

2, 3, 4 ,5 ,6, 7, 8, 9,10, 11,12



47

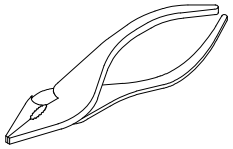

54



61

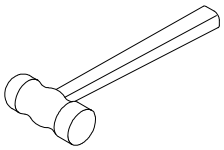

17,18,19,20,21,22,23, 29,30

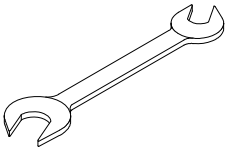

48,49

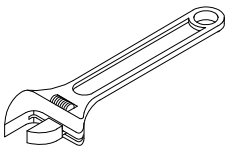

55,56,57

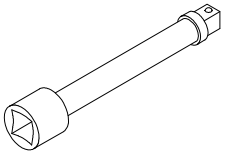

62

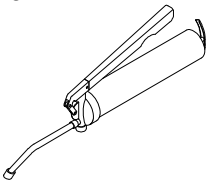

32,33,34,35,36, 37,39,40

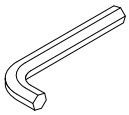

50

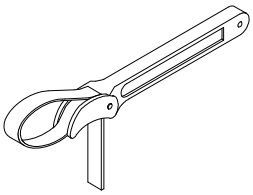

58,59

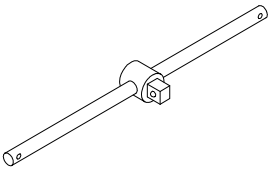

63

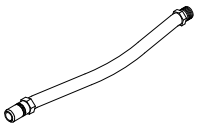

42

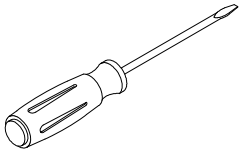

53

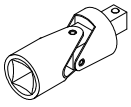

60

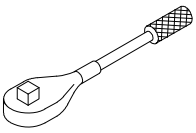

Item	Part_No	IS	Ord	T	Description	Qty	Serial_No	ITC	Remark
*	91Q6-20100				TOOL KIT ASSY	1			
1	91Q6-20110				.TOOL BOX	1			
2	S953-127100				.SOCKET-METRIC	1			
3	S953-127130				.SOCKET-METRIC	1			
4	S953-127140				.SOCKET-METRIC	1			
5	S953-127170				.SOCKET-METRIC	1			
6	S953-127190				.SOCKET-METRIC	1			
7	S953-127220				.SOCKET-METRIC	1			
8	S953-127240				.SOCKET-METRIC	1			
9	S953-127270				.SOCKET-METRIC	1			
10	S953-127300				.SOCKET-METRIC	1			
11	S953-190320				.SOCKET-METRIC	1			
12	S953-190360				.SOCKET-METRIC	1			
17	S962-100003				.WRENCH-COMBINATION	1			
18	S962-130003				.WRENCH-COMBINATION	1			
19	S962-170003				.WRENCH-COMBINATION	1			
20	S962-190003				.WRENCH-COMBINATION	1			
21	S962-220003				.WRENCH-COMBINATION	1			
22	S962-240003				.WRENCH-COMBINATION	1			
23	S962-270003				.WRENCH-COMBINATION	1			
29	S962-303202				.WRENCH-DOUBLE,METRIC	1			
30	S962-364102				.WRENCH-DOUBLE,METRIC	1			
*-1	91Q6-20710				.L-WRENCH	1			
32	S967-040025				..L-WRENCH	1			
33	S967-050028				..L-WRENCH	1			

Item	Part_No	IS	Ord	T	Description	Qty	Serial_No	ITC	Remark
34	S967-060032				..L-WRENCH	1			
35	S967-080036				..L-WRENCH	1			
36	S967-100040				..L-WRENCH	1			
37	S967-120045				..L-WRENCH	1			
39	S967-140055				.L-WRENCH	1			
40	S967-170060				.L-WRENCH	1			
42	91Q6-20720				.DRIVER	1			
47	S960-150020				.PLIER-SLIP JOINT	1			
48	S963-200024				.WRENCH-ADJ ANGLE	1			
49	S963-300034				.WRENCH-ADJ ANGLE	1			
50	91Q6-20430				.WRENCH-FILTER,300MM	1			
53	S954-127080				.UNIVERSAL JOINT	1			
54	91EM-20600				.ADAPTOR-1/2"-3/8"	1			
55	S955-127075				.BAR-EXTENSION	1			
56	S955-127125				.BAR-EXTENSION	1			
57	S955-190200				.BAR-EXTENSION	1			
58	E191-2048				.HANDLE-SLIDING,1/2"X10"	1			
59	E191-2049				.HANDLE-SLIDING,3/4"X20"	1			
60	S958-127250				.HANDLE-RATCHET	1			
61	S964-200340				.HAMMERS-HAND	1			
62	91Q6-20530				.GUN-GREASE,500CC	1			
63	E191-2054				.TIP-HOSE,RUBBER	1			
70	91Q6-20570				.TOOL LIST	1			

HCE-DT KIT

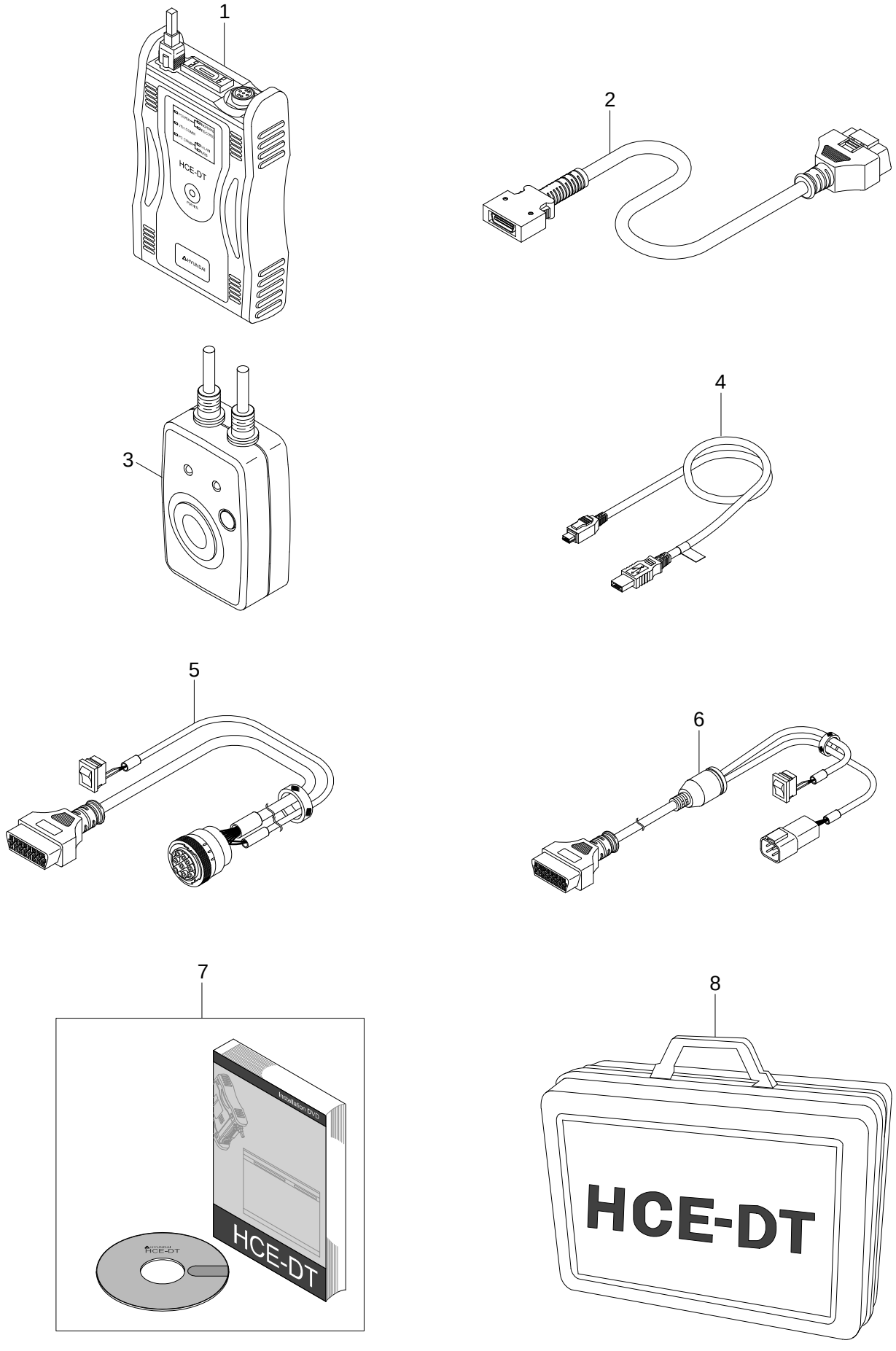

Item	Part_No	IS	Ord	T	Description	Qty	Serial_No	ITC	Remark
*	21QB-32900				HCE-DT KIT	1	#0001 -	-	
1	21QB-32910				.VCI MAIN MODULE	1			
2	21QB-32920				.VCI COMM. CABLE-16P	1			
3	21QB-32930				.POWER & TRIGGER MODULE	1			
4	21QB-32940				.USB CABLE(VCI TO PC)	1			
5	21QB-32950				.MACHINE COMM. CABLE-9P	1			
6	21QB-32960				.MACHINE COMM. CABLE-4P	1			
7	21QB-32970				.CD-INSTALL	1			
8	21QB-32980				.CASE	1			

[Item List] - Print Date : 2020.08.21 16:08

DECALS

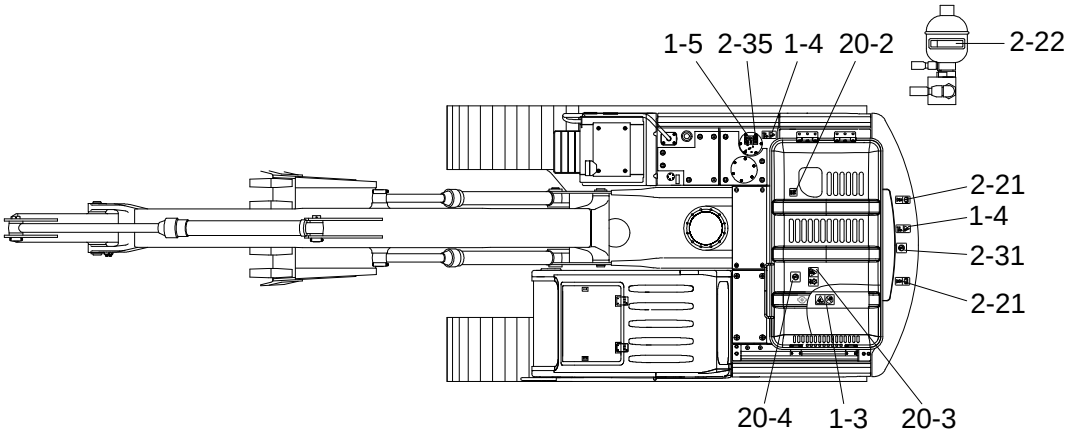

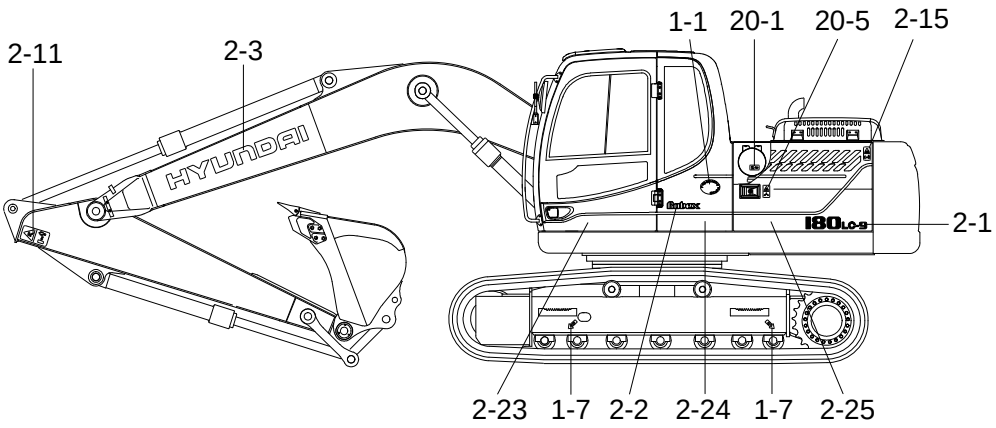

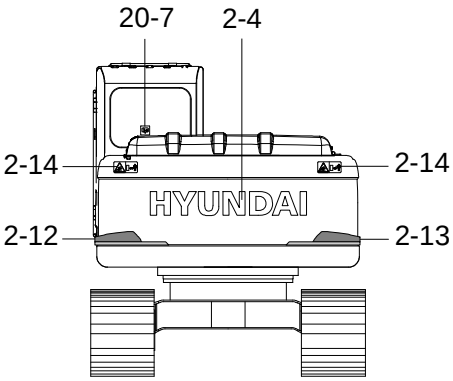

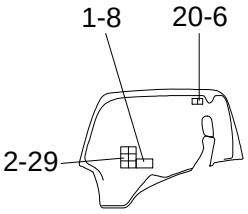

NON ENGLISH

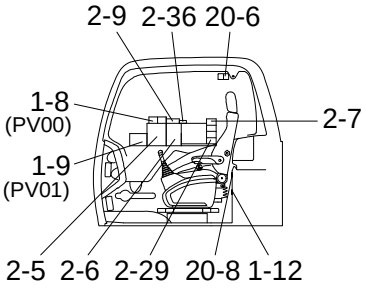

CABIN-RH

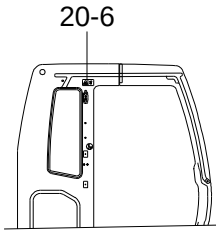

CABIN-LH

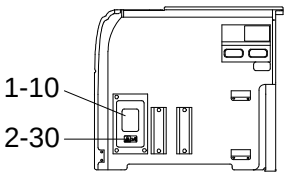

SCREEN PLATE

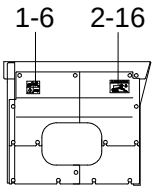

PUMP SCREEN

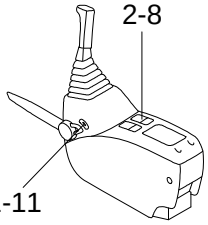

LH CONSOLE BOX

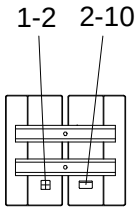

BATTERY COVER

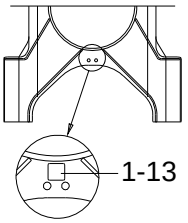

LOWER FRAME

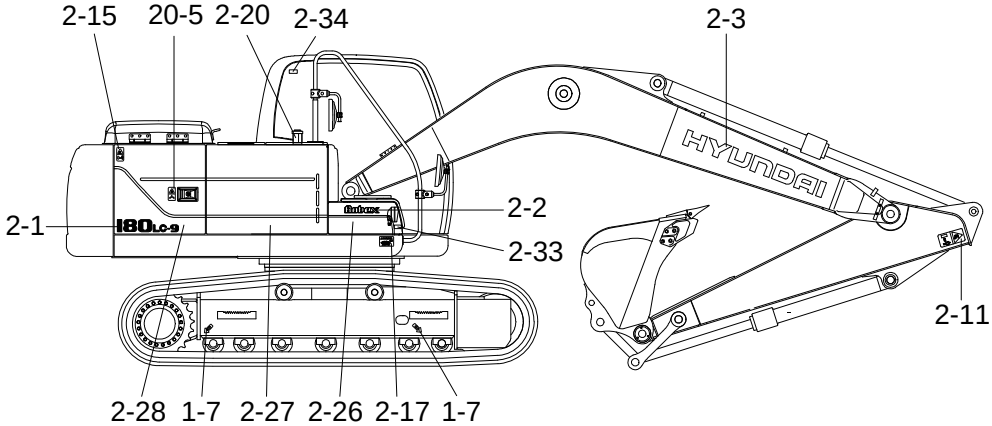

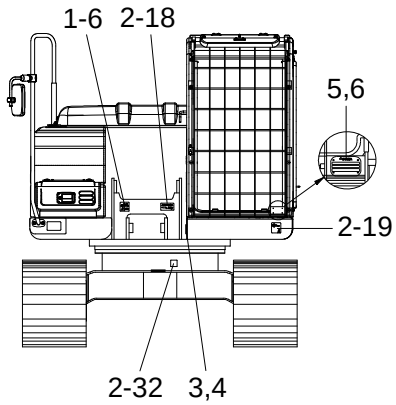

Item	Part_No	IS	Ord	T	Description	Qty	Serial_No	ITC	Remark
1	91Q5-00100				DECAL KIT(A)	1			
1-1	91E1-27110				.DECAL-LOW EMI ENGINE	1			
1-2	91N6-02120				.DECAL-BATT ACCIDENT	1			
1-3	91N6-01121				.DECAL-RADIATOR CAP	1			
1-4	91N6-03140				.DECAL-FALLING	1			
1-5	91N6-03111				.DECAL-OIL LUBRICATION	1			
1-6	91N6-03130				.DECAL-HIGH PRESS HOSE	2			
1-7	91N6-05110				.DECAL-SLING IDEOGRAM	4			
1-8	91N6-07201				.DECAL-CNTL IDEOGRAM	1			ISO, MONO BM
	91N6-08200				.DECAL-CNTL IDEOGRAM	1			ASIA, MONO BM
	91N6-07500				.CONTROL IDEOGRAM	1			ISO, ADJUST BM
	91N6-08500				.CONTROL IDEOGRAM	1			ASIA,ADJUST BM
1-9	91N6-07400				.DECAL-M/CONTROL,CAB	1			OPT,PATTERN VLV
1-10	91N6-07410				.DECAL-MACHINE CNTL	1			OPT,PATTERN VLV
1-11	92N6-07310				.DECAL-SAFETY LEVER	1			
1-12	91N6-07272				.DECAL-AIRCON FILTER	1			
1-13	91N6-05120				.DECAL-TIE	2			
2	91Q5-20113				DECAL KIT(B)	1	#0001 -		R180LC-9
	91Q5-20123				DECAL KIT(B)	1	#0001 -		R180LCD-9
	91Q5-20133				DECAL KIT(B)	1	#0001 -		R180NLC-9
2-1	91Q5-10030				.MODEL NAME	2	#0001 -		R180LC(D)-9
	91Q5-10040				.MODEL NAME	2			R180LCD-9
	91Q5-10050				.MODEL NAME	2			R180NLC-9
2-2	91Q6-17112				.DECAL-ROBEX LOGO	2			
2-3	91N6-23100				.DECAL-HYUNDAI LOGO	2			

Item	Part_No	IS	Ord	T	Description	Qty	Serial_No	ITC	Remark
2-4	91N6-23160				.DECAL-HYUNDAI LOGO	1			
2-5	91Q5-05101				.KIT-LIFTING CHART	1	#0001 -		R180LC-9
	91Q5-06101				.KIT-LIFTING CHART	1	#0001 -		R180LCD-9
	91Q5-07100				.LIFTING CHART KIT	1			R180NLC-9
2-6	91Q5-10710				.SERVICE INSTRUCTION	1			
2-7	91Q6-07330				.DECAL-LOCKING CLAMP	1			
2-8	91N6-07340				.IDEOGRAM	1			R180LCD-9
2-9	91N6-07390				.DECAL-TURBOCHARGER	1			
2-10	91LB-01350				.DECAL-ECM CONNECTOR	1			
2-11	91N6-06110				.DECAL-KEEP CLEAR-ATT	2			
2-12	91Q4-07030				.REFLECTING-LH	1			
2-13	91Q4-07040				.REFLECTING-RH	1			
2-14	91Q6-07010				.DECAL-KEEP CLEAR,RR	2			
2-15	91Q6-07021				.DECAL-KEEP CLEAR,SIDE	2			
2-16	91N6-03102				.DECAL-HYD OIL LEVEL	1			
2-17	91N6-07141				.DECAL-TRANSPORTING	1			
2-18	91N6-03121				.DECAL-RED GEAR GREASE	1			
2-19	91N6-22110				.DECAL-NOISE LWA/101DB	1			EU ONLY
2-20	91MJ-01140				.FUELING	1			
2-21	91N6-04140				.DECAL-LIFTING EYE	2			
2-22	91N6-03200				.DECAL-ACCUMULATOR	1			
2-23	91Q6-07510				.DECAL-CAB FR BAND	1			
2-24	91Q6-07520				.DECAL-CAB RR BAND	1			
2-25	91Q5-07530				.BAND-SIDE DOOR,LH	1			
2-26	91Q4-07611				.TOOL BOX BAND	1			

Item	Part_No	IS	Ord	T	Description	Qty	Serial_No	ITC	Remark
2-27	91Q5-07620				.BAND-TANK	1			
2-28	91Q5-07630				.BAND-SIDE DOOR,RH	1			
2-29	91Q4-07380				.DECAL-CABIN RH PILLAR	1	#0001 -		
2-30	91Q6-03210				.DECAL-RCV L/PATTERN	1			
2-31	91N6-07131				.DECAL-NO STEP	1			
2-32	91Q6-03220				.DECAL-SWING BEARING	1			
2-33	91MJ-02110				.DECAL-BATT POSITION	1			
2-34	91Q4-02200				.DECAL-BEACON LAMP	1	#0001 -		
2-35	91Q6-03230				.DECAL-FUEL SHUT OFF	1	#0001 -		
2-36	91Q4-07180				.DECAL-WATER SEPARATOR	1	#0001 -		
3	91E1-14110				NAME PLATE	1			
	91E1-14130				NAME PLATE	1			EU ONLY
4	91EK-12010				RIVET	4			
5	91N6-01280				FOPS FOG PLATE	1			FOG TYPE CABIN
6	91EK-12010				RIVET	4			FOG TYPE CABIN
20	91Q4-00091				DECAL KIT-A/S	1			
20-1	91N6-01102				.DECAL-A/CLEANER FILTER	1			
20-2	91N6-01111				.DECAL-TURBO COVER	1			
20-3	91N6-07121				.DECAL-SHEARING	1			
20-4	91N6-07131				.DECAL-NO STEP	1			
20-5	91N6-07112				.DECAL-STAY FIX	2			
20-6	91Q6-07250				.DECAL-SAFETY FR WINDOW	1			
20-7	91Q6-07261				.ALTERNATE EXIT	1			
20-8	91N6-07280				.DECAL-HAMMER	1			

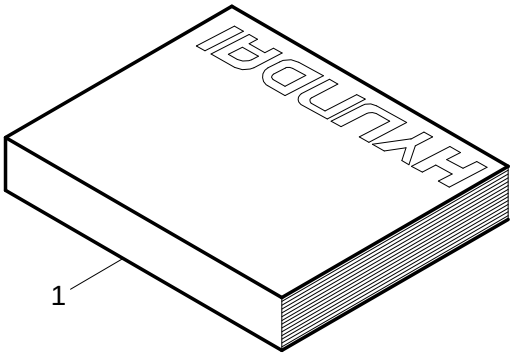
1

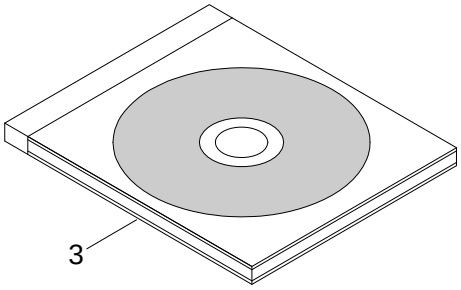
3

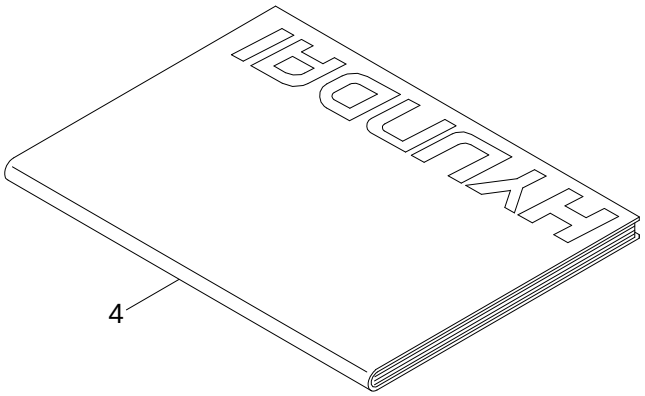
4

Item	Part_No	IS	Ord	T	Description	Qty	Serial_No	ITC	Remark
1	92Q5-30030				PARTS MANUAL R180LC-9	1			ENGLISH
	92Q5-30040				OPERATORS MANUAL FOR R180LC-9	1			ENGLISH
	91Q5-30050				SERVICE MANUAL FOR R160LC-9	1			ENGLISH
3	HECD-30000				CD-PARTS MANUAL	1			EXCAVATOR
	HACD-30000				CD-PARTS MANUAL	1			ALL MODEL
	HEDV-30000				DVD-PARTS MANUAL	1			EXCAVATOR
	HADV-30000				DVD-PARTS MANUAL	1			ALL MODEL
4	91E5-30909				RMS MANUAL	1			DEALER
	91E5-30919				RMS MANUAL	1			USER

CYLINDER HEAD

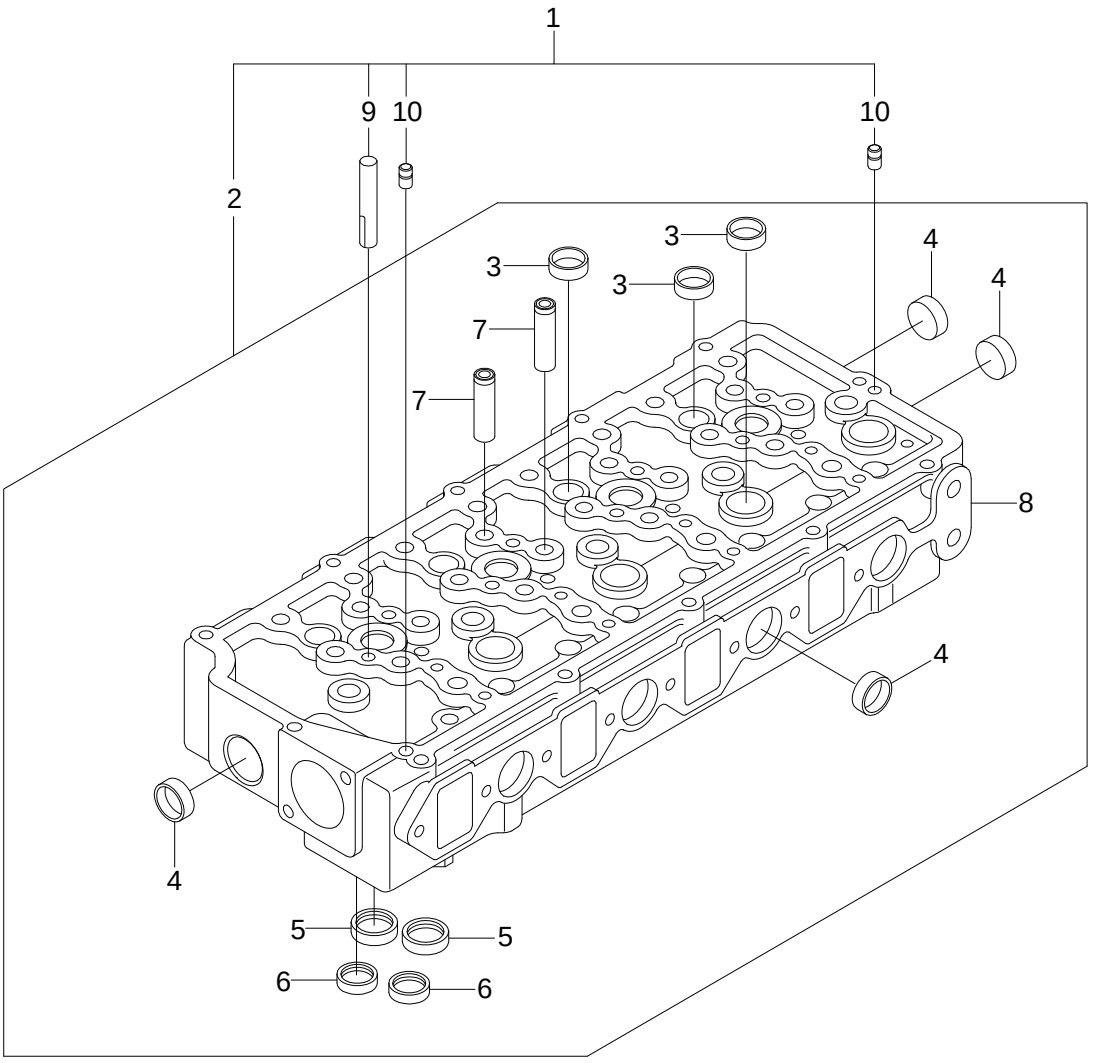

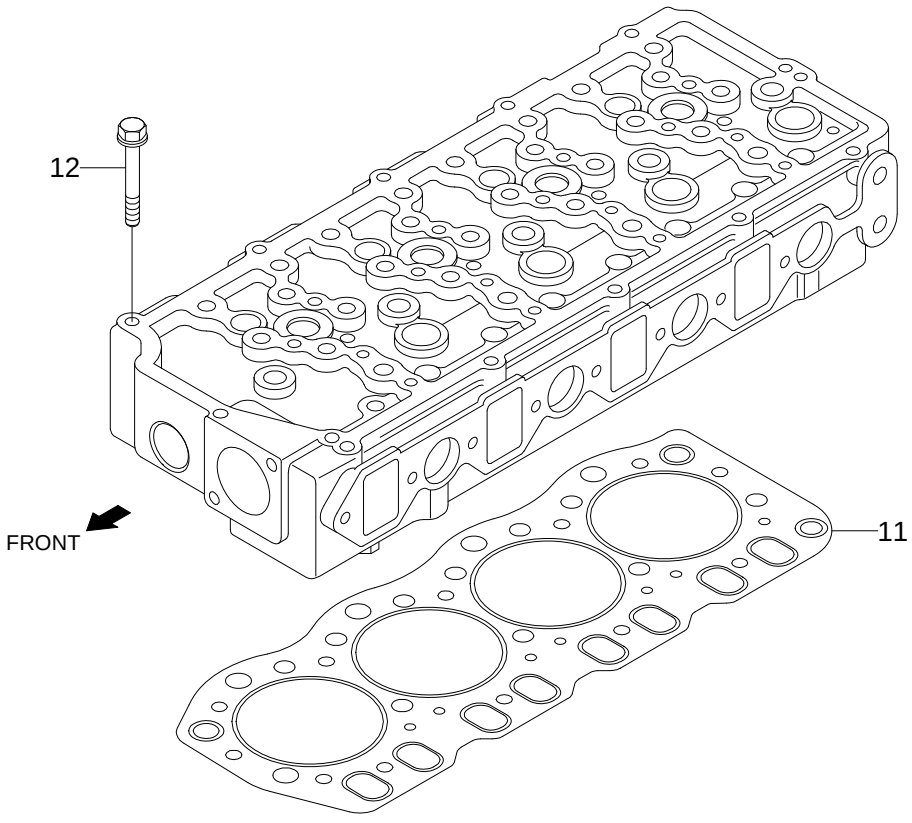

Item	Part_No	IS	Ord	T	Description	Qty	Serial_No	ITC	Remark
1	XJAF-02244				HEAD ASSY-CYLINDER	1			INCL 2,9,10
2	@				.CYLINDER HEAD SUB ASSY	1			NOT
3	XJAF-00569				..CAP-SEALING	8			
4	XJAF-01101				..CAP-SEALING	7			
5	XJAF-02561				..SEAT-VALVE INLET	8			
6	XJAF-02562				..SEAT-VALVE EXHAUST	8			
7	XJAF-02563				..GUIDE-VALVE	16			
8	@				..HEAD-CYLINDER	1			NOT
9	XJAF-02508				.GUIDE-BRIDGE	8			
10	XJAF-02246				.PIN-DOWEL	2			
11	XJAF-02481				GASKET-CYLINDER HEAD	1			
12	XJAF-02247				BOLT-CYLINDER HEAD	17			

VALVE MECHANISM

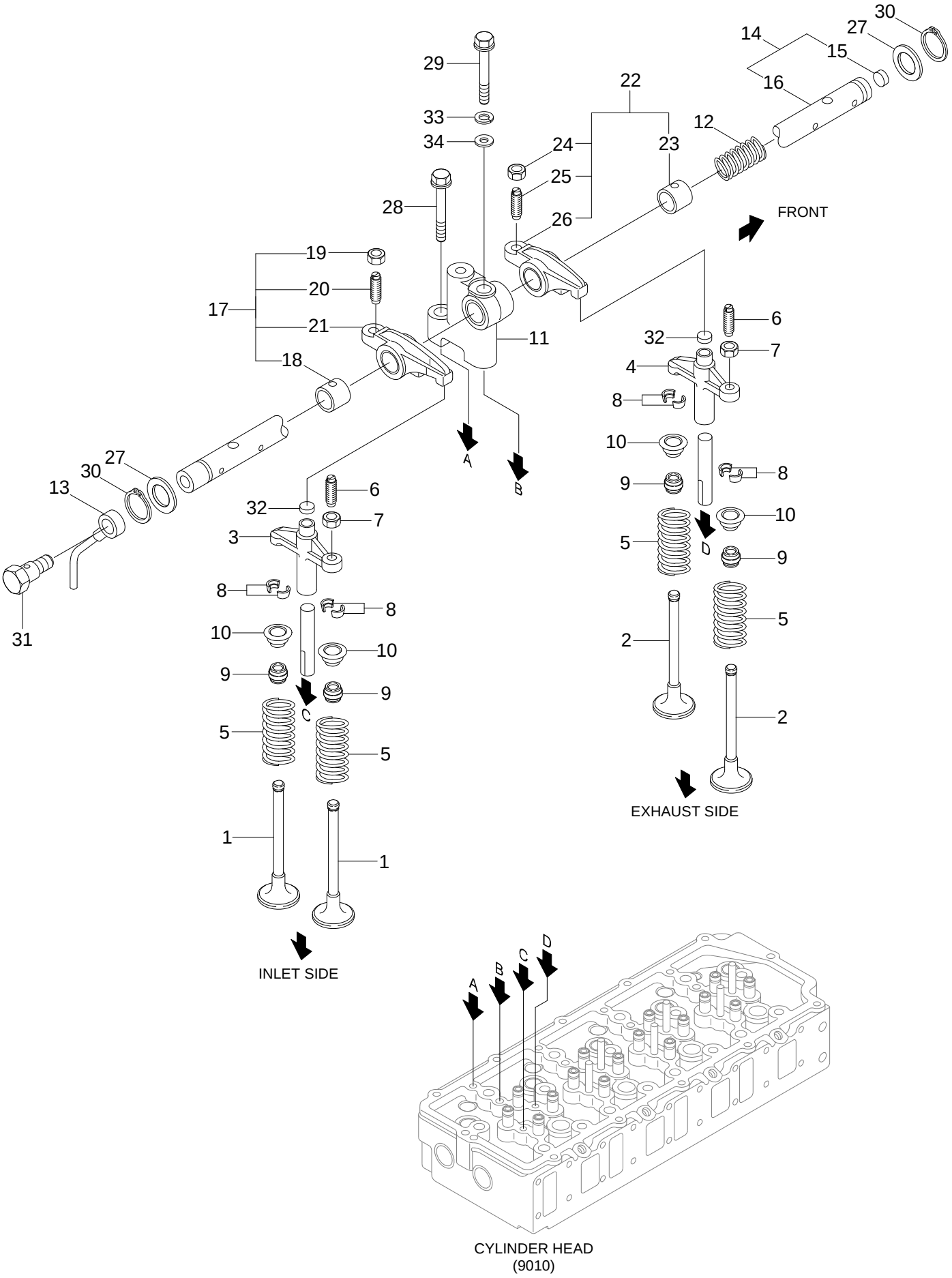

CYLINDER HEAD
(9010)

Item	Part_No	IS	Ord	T	Description	Qty	Serial_No	ITC	Remark
1	XJAF-02248				VALVE-INLET	8			
2	XJAF-02249				VALVE-EXHAUST	8			
3	XJAF-02250				BRIDGE-INLET	4			
4	XJAF-02251				BRIDGE-EXHAUST	4			
5	XJAF-02252				SPRING-VALVE	16			
6	XJAF-02253				SCRWE-ADJUSTING	8			
7	XJAF-02254				NUT-JAM	8			
8	XJAF-01946				LOCK-VALVE SPRING	32			
9	XJAF-02486				SEAL-VALVE STEM	16			
10	XJAF-02129				RETAINER-VALVE STEM	16			
11	XJAF-02501				BRACKER-ROCKER	4			
12	XJAF-02536				SPRING-ROCKER	3			
13	XJAF-02258				PIPE-OIL	1			
14	XJAF-02502				SHAFT ASSY-ROCKER	1			INCL 15,16
15	XJAF-00189				.CAP-SEALING	1			
16	@				.SHAFT-ROCKER	1			NOT
17	XJAF-02541				ARM ASSY-ROCKER INTAKE	4			INCL 18-21
18	XJAF-02504				.BUSHING-ROCKER	4			
19	XJAF-00148				.NUT-JAM	4			
20	XJAF-00149				.SCREW-ADJUSTING	4			
21	@				.ARM-ROCKER IN	4			NOT
22	XJAF-02542				ARM ASSY-ROCKER EXHAU	4			INCL 23-26
23	XJAF-02504				.BUSHING-ROCKER	4			
24	XJAF-00148				.NUT-JAM	4			
25	XJAF-00149				.SCREW-ADJUSTING	4			

Item	Part_No	IS	Ord	T	Description	Qty	Serial_No	ITC	Remark
26	@				.ARM-ROCKER EX	4			NOT
27	XJAF-02264				WASHER-ROCKER SHAFT	2			
28	XJAF-02265				BOLT-W/WASHER	4			
29	XJAF-02506				BOLT	4			
30	XJAF-02267				RING-SNAP	2			
31	XJAF-02268				BOLT-EYE	1			
32	XJAF-00166				CAP	8			
33	XJAF-00255				WASHER-SPRING	4			
34	XJAF-02507				WASHER-HEAD BOLT	4			

ROCKER COVER

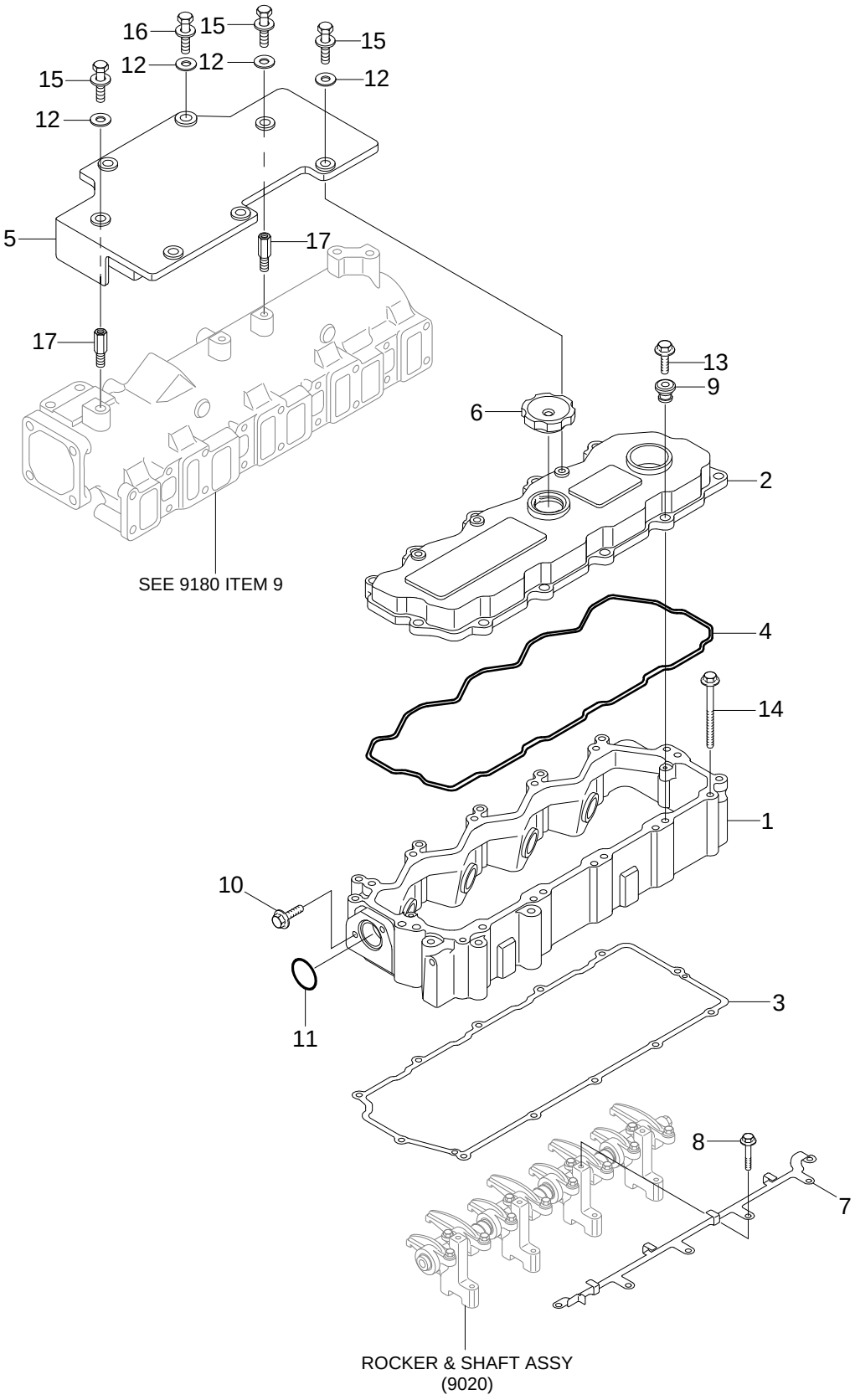

Item	Part_No	IS	Ord	T	Description	Qty	Serial_No	ITC	Remark
1	XJAF-02259				CASE-ROCKER	1			
2	XJAF-02509				COVER-ROCKER	1			
3	XJAF-02270				GASKET-ROCKER CASE	1			
4	XJAF-02271				GASKET-ROCKER COVER	1			
5	XJAF-02272				COVER-H.P PIPE	1			
6	XJAF-02273				CAP-OIL FILLER	1			
7	XJAF-02274				BRACKET-HARNESS	1			
8	XJAF-02275				BOLT-FLANGE	6			
9	XJAF-02276				WASHER-SEAL	12			
10	XJAF-02277				BOLT-FLANGE	2			
11	XJAF-02278				O-RING	1			
12	XJAF-01941				WASHER-PLAIN	7			
13	XJAF-02279				BOLT-FLANGE	12			
14	XJAF-02266				BOLT-FLANGE	12			
15	XJAF-00379				BOLT-W/WASHER	5			
16	XJAF-00749				BOLT-W/WASHER	2			
17	XJAF-02280				STUD	2			

CAMSHAFT

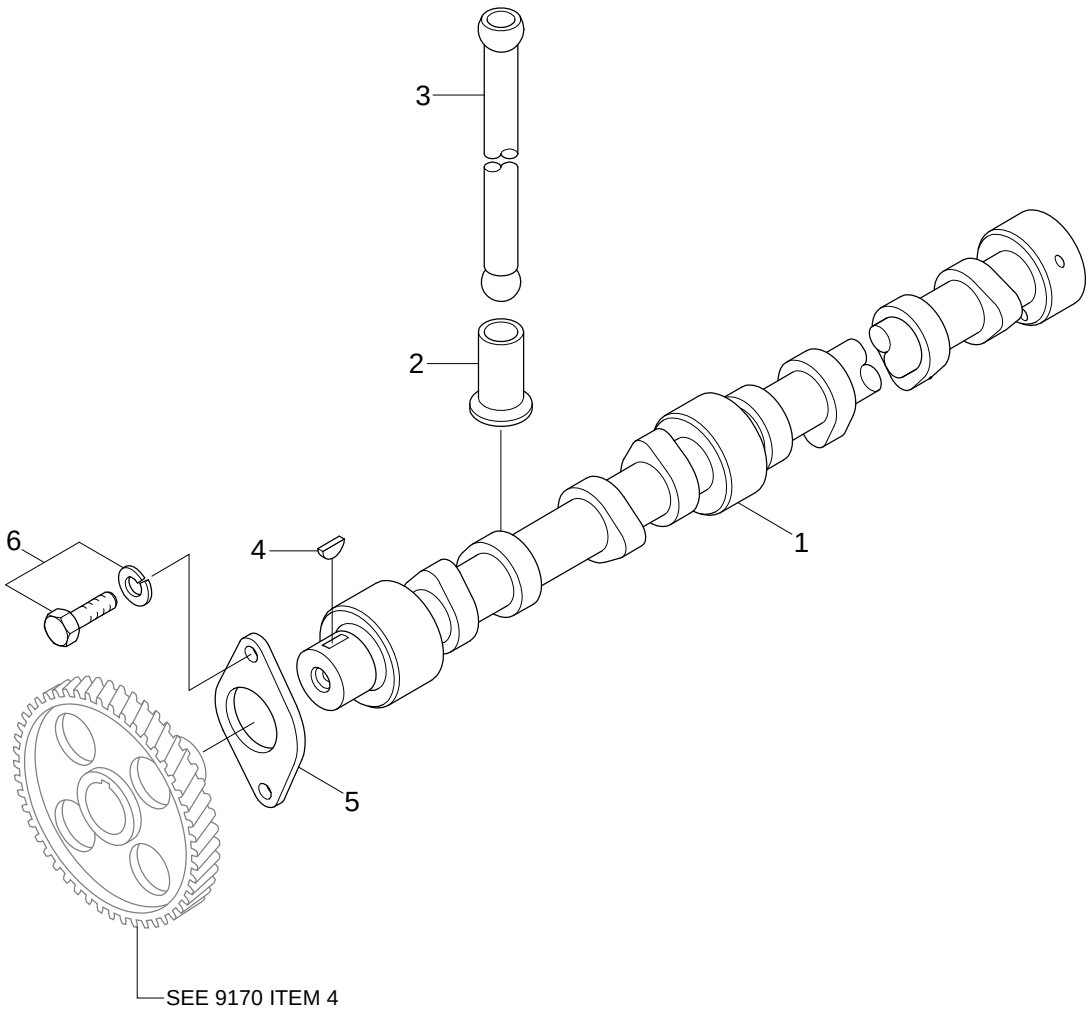

Item	Part_No	IS	Ord	T	Description	Qty	Serial_No	ITC	Remark
1	XJAF-02281				CAMSHAFT	1			
2	XJAF-02282				TAPPET	8			
3	XJAF-02283				ROD-PUSH	8			
4	XJAF-00183				KEY-WOODRUFF	1			
5	XJAF-00184				PLATE-THRUST	1			
6	XJAF-02358				BOLT-W/WASHER	2			

CRANKCASE

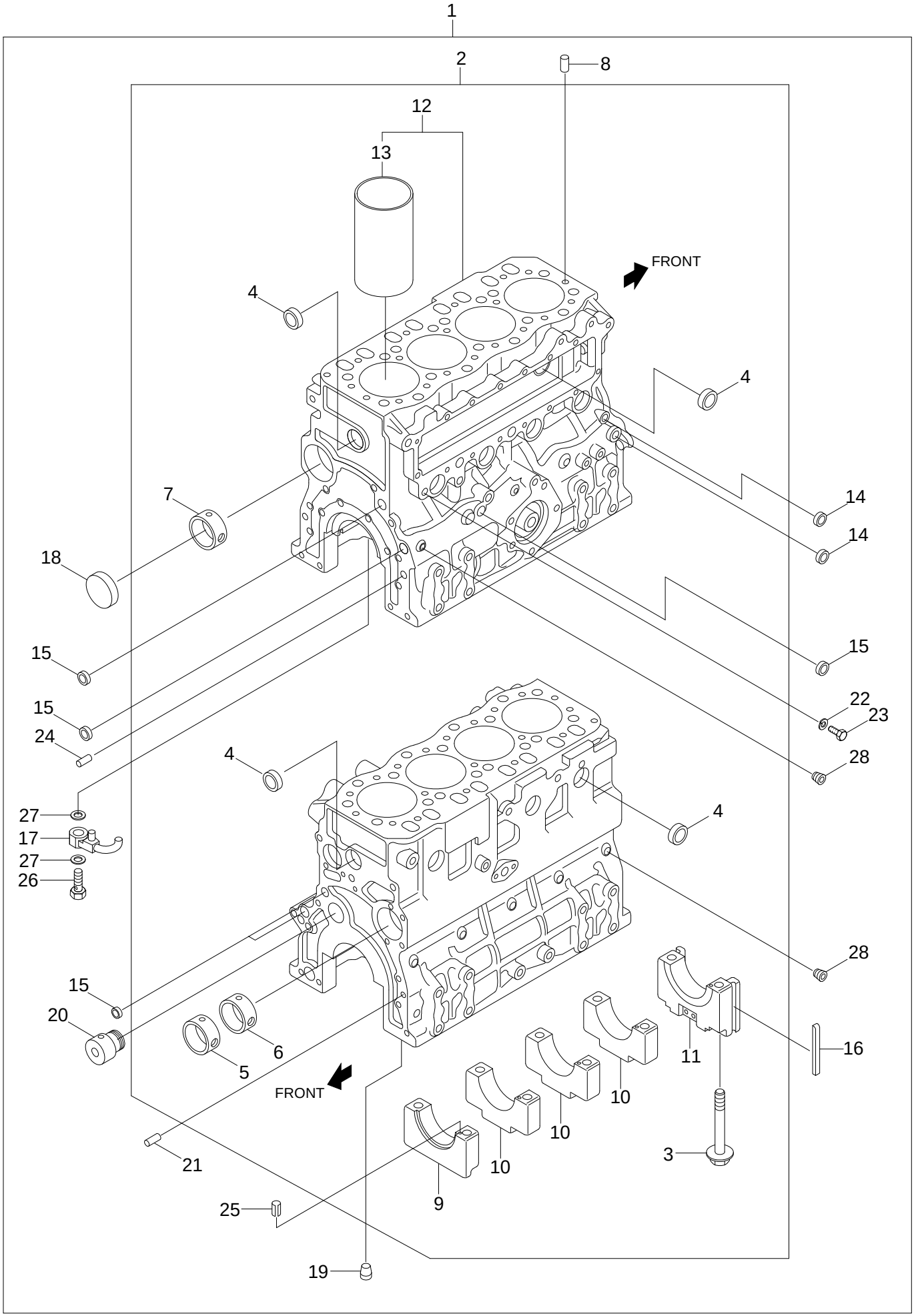
1
2
8
12
13
FRONT
4
4
7
14
14
18
15
15
15
22
23
24
28
4
4
27
17
27
26
28
15
20
6
5
FRONT
16
11
10
10
10
21
3
9
25
19

Item	Part_No	IS	Ord	T	Description	Qty	Serial_No	ITC	Remark
1	XJAF-02578				CRANKCASE ASSY	1			
2	@				.CRANKCASE SUB ASSY	1			NOT
3	XJAF-02285				..BOLT-BEARING CAP	1			
4	XJAF-00190				..CAP-SEALING	10			
5	XJAF-00192				..BUSHING-CAMSHAFT	1			
6	XJAF-00194				..BUSHING-CAMSHAFT	1			
7	XJAF-00195				..BUSHING-CAMSHAFT	1			
9	@				..CAP-BRARING	1			NOT
10	@				..CAP-BRARING	3			NOT
11	@				..CAP-BRARING	1			NOT
12	@				..CRANKCASE	1			NOT
13	XJAF-00193				...SLEEVE-CYLINDER	4			
8	XJAF-02246				.PIN-DOWEL	2			
14	XJAF-00188				.CAP-SEALING	2			
15	XJAF-00189				.CAP-SEALING	7			
16	XJAF-02289				.SEAL-SIDE	2			
17	XJAF-02290				.JET ASSY-OIL	4			
18	XJAF-00198				.PLUG-CAM	1			
19	@				.PLUG	2			NOT
20	XJAF-02291				.SHAFT-IDLER	1			
21	XJAF-00203				.PIN-DOWEL	2			
22	XJAF-00206				.WASHER-SEALING	1			
23	XJAF-00205				.BOLT	1			
24	XJAF-00202				.PIN-DOWEL	2			
25	XJAF-00609				.PIN-SPRING	6			

Item	Part_No	IS	Ord	T	Description	Qty	Serial_No	ITC	Remark
26	XJAF-02510				.VALVE ASSY-CHECK	4			
27	XJAF-02293				.GASKET	8			
28	XJAF-00201				.PLUG-TAPERED	8			

LIFTING EYE

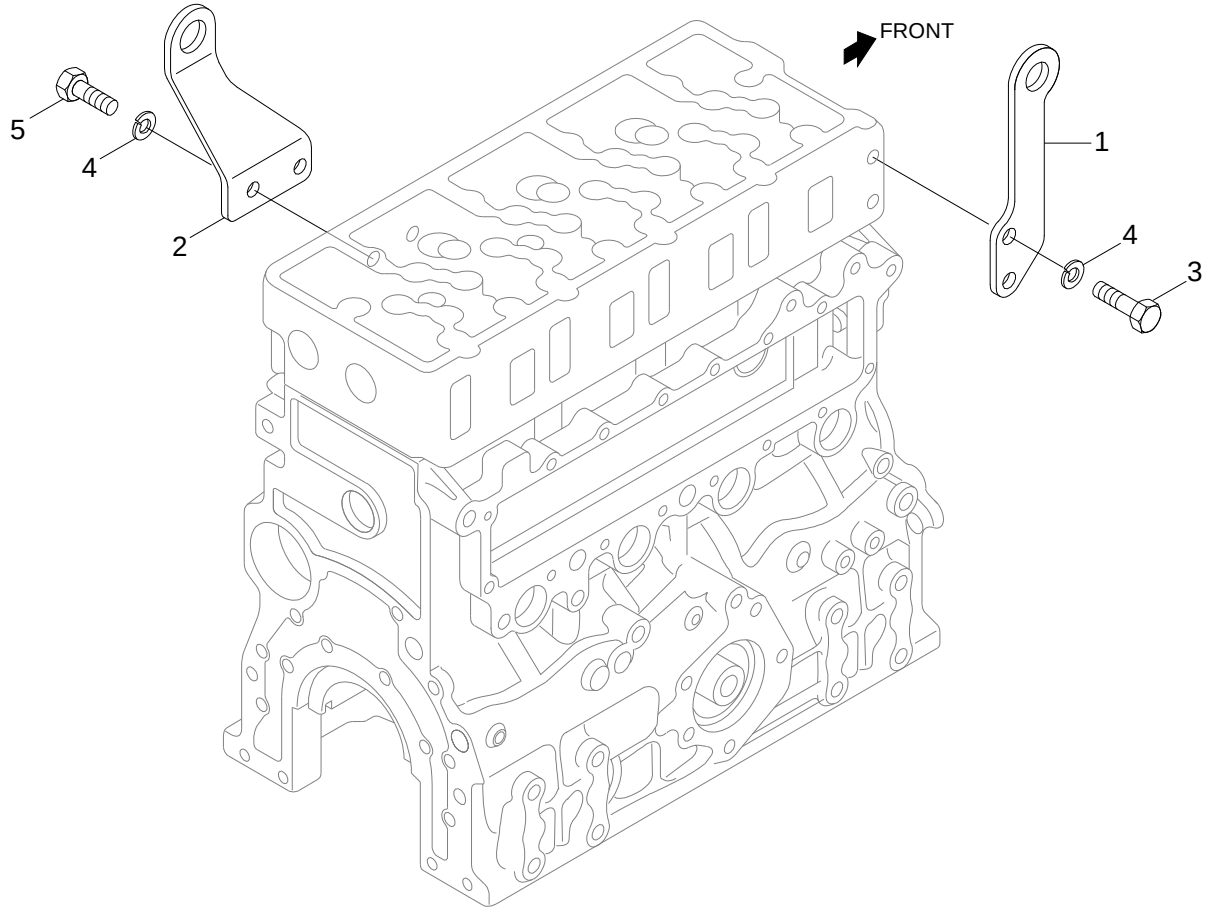

Item	Part_No	IS	Ord	T	Description	Qty	Serial_No	ITC	Remark
1	XJAF-02294				EYE-LIFTING FRONT	1			
2	XJAF-02295				EYE-LIFTING REAR	1			
3	XJAF-01857				BOLT	4			
4	XJAF-00213				WASHER-LOCK	4			
5	XJAF-00212				BOLT	1			

[Item List] - Print Date : 2020.08.21 17:08

MAIN BEARING

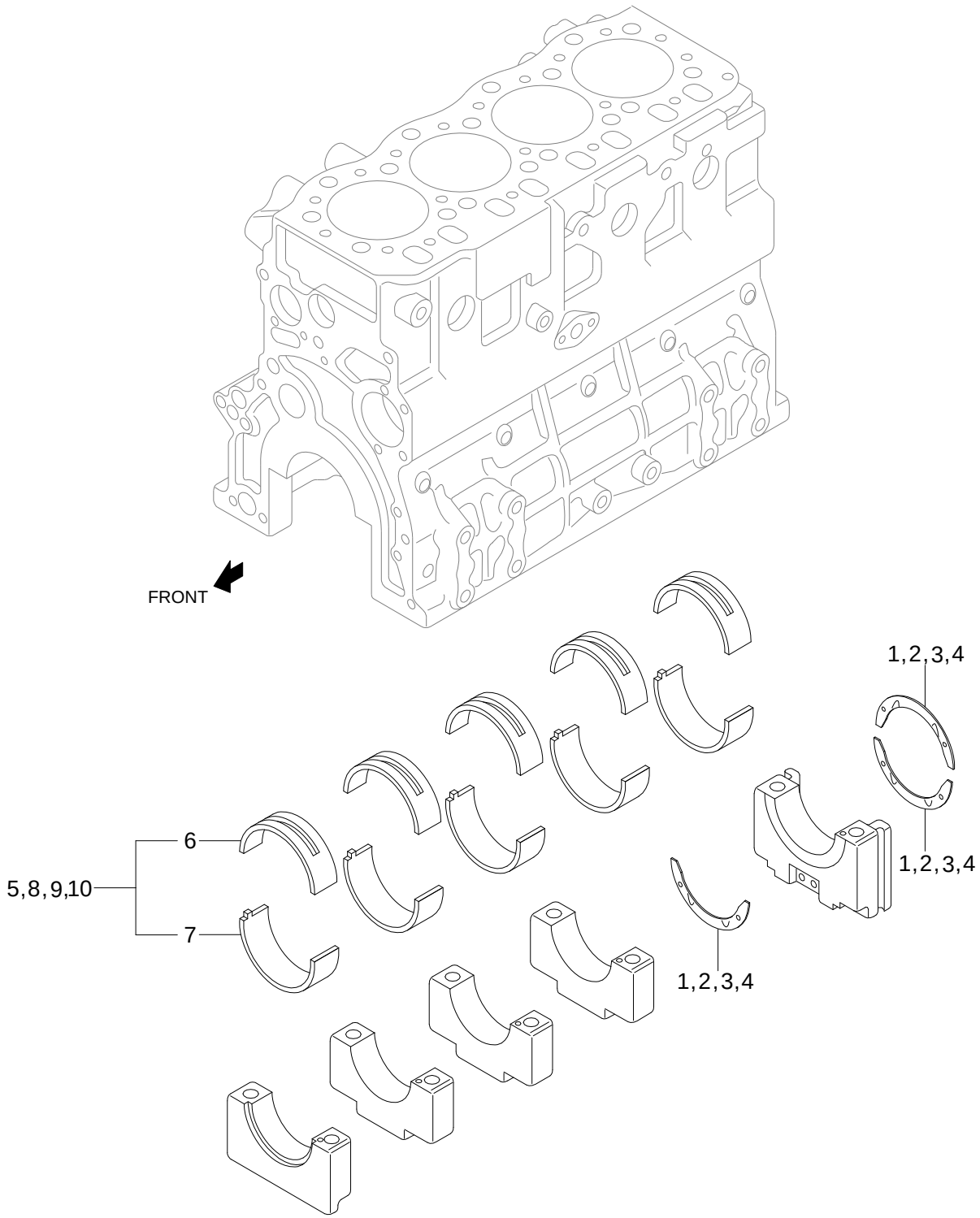

Item	Part_No	IS	Ord	T	Description	Qty	Serial_No	ITC	Remark
1	XJAF-00215				PLATE-THRUST	3			STD
2	XJAF-00216				PLATE-THRUST	3			0.15mm O/S
3	XJAF-00217				PLATE-THRUST	3			0.30mm O/S
4	XJAF-00218				PLATE-THRUST	3			0.45mm O/S
5	XJAF-01102				BEARING SET-MAIN	5			STD
6	@				METAL-MAIN UPPER	5			NOT
7	@				METAL-MAIN LOWER	5			NOT
8	XJAF-00214				BEARING SET,MAIN	5			0.25mm O/S
9	XJAF-00239				BEARING SET-MAIN	5			0.50mm O/S
10	XJAF-00240				BEARING SET-MAIN	5			0.75mm O/S

TIMING GEAR CASE 1

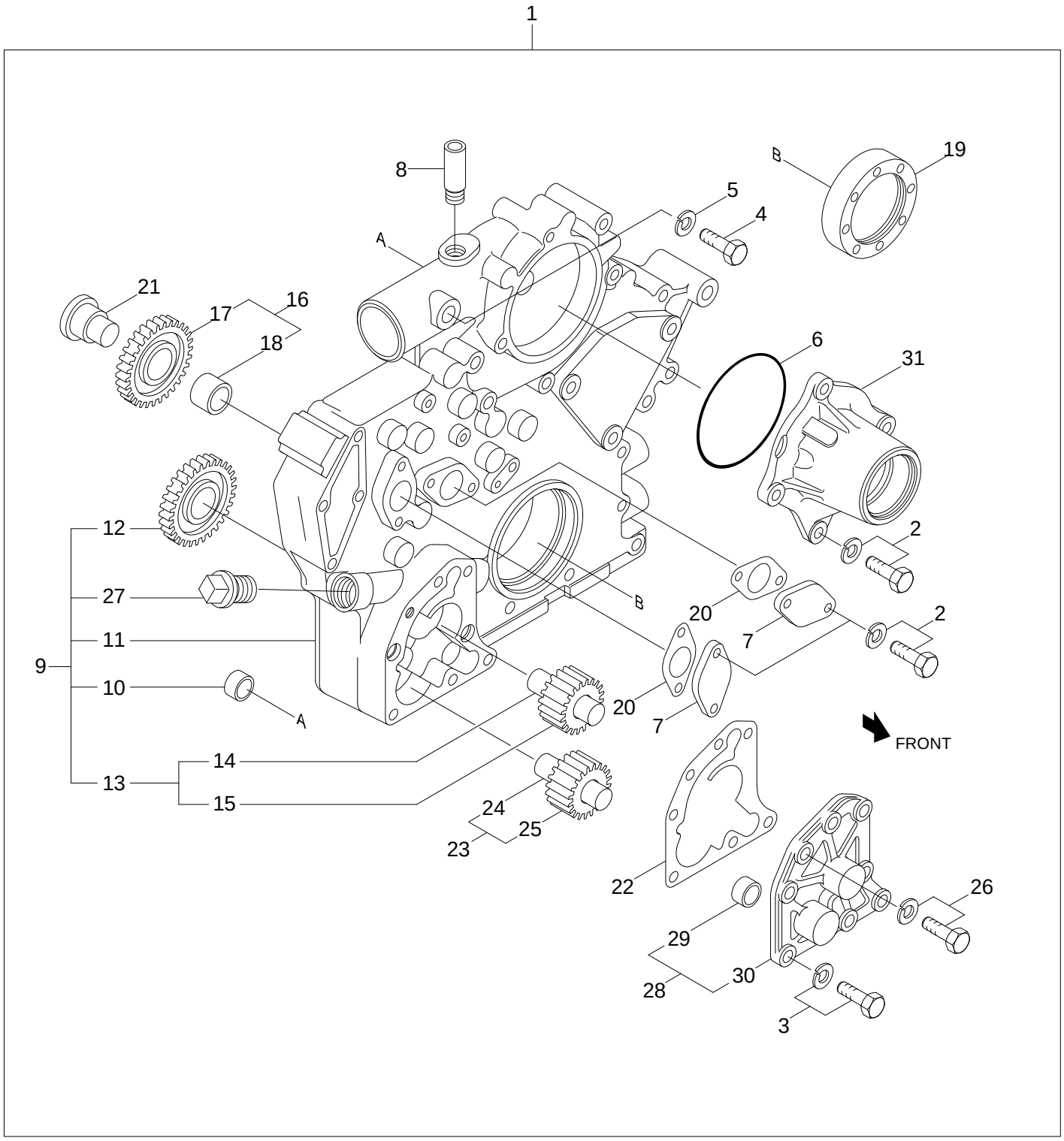

Item	Part_No	IS	Ord	T	Description	Qty	Serial_No	ITC	Remark
1	@				CASE ASSY-GEAR	1			NOT
2	XJAF-00230				.BOLT-W/WASHER	6			
3	XJAF-00222				.BOLT-W/WASHER	3			
4	XJAF-00223				.PLUG-DRAIN	1			
5	XJAF-00224				.WASHER-SEALING	1			
6	XJAF-00225				.O-RING	1			
7	XJAF-00226				.COVER	2			
8	XJAF-00227				.JOINT	1			
9	@				.BODY ASSY	1			NOT
10	XJAF-02024				.CAP-SEALING	1			
11	@				.CASE-TIMING GEAR	1			NOT
12	XJAF-02296				.GEAR-O/P DRIVE	1			
13	XJAF-00233				.GEAR ASSY-DRIVEN	1			INCL 14,15
14	@				..SHAFT	1			NOT
15	@				..GEAR-OIL PUMP	1			NOT
16	XJAF-02298				.GEAR ASSY-OIL PUMP	1			INCL 17,18
N17	@				..GEAR-OIL PUMP IDLER	1			NOT
18	@				..BUSHING	1			NOT
19	XJAF-00237				.SEAL-OIL	1			
20	XJAF-00238				.GASKET-COVER TIMING	2			
21	XJAF-01104				.SPINDEL	1			
22	XJAF-00234				.GASKET	1			
23	XJAF-00219				.GEAR ASSY-DRIVEN	1			INCL 24,25
24	@				..SHAFT	1			NOT
25	@				..GEAR-OIL PUMP	1			NOT

Item	Part_No	IS	Ord	T	Description	Qty	Serial_No	ITC	Remark
26	XJAF-02300				.BOLT-W/WASHER	1			
27	XJAF-02511				.PLUG-TAPERED	1			
28	XJAF-00235				.COVER ASSY	1			
29	XJAF-02301				..PIN-DOWEL	2			
30	@				..COVER-OIL PUMP	1			NOT
31	XJAF-02487				.WATER PUMP ASSY	1			
N	@				NOT INDIVIDUALLY SUPPLIED	AR			NOT

WATER PUMP

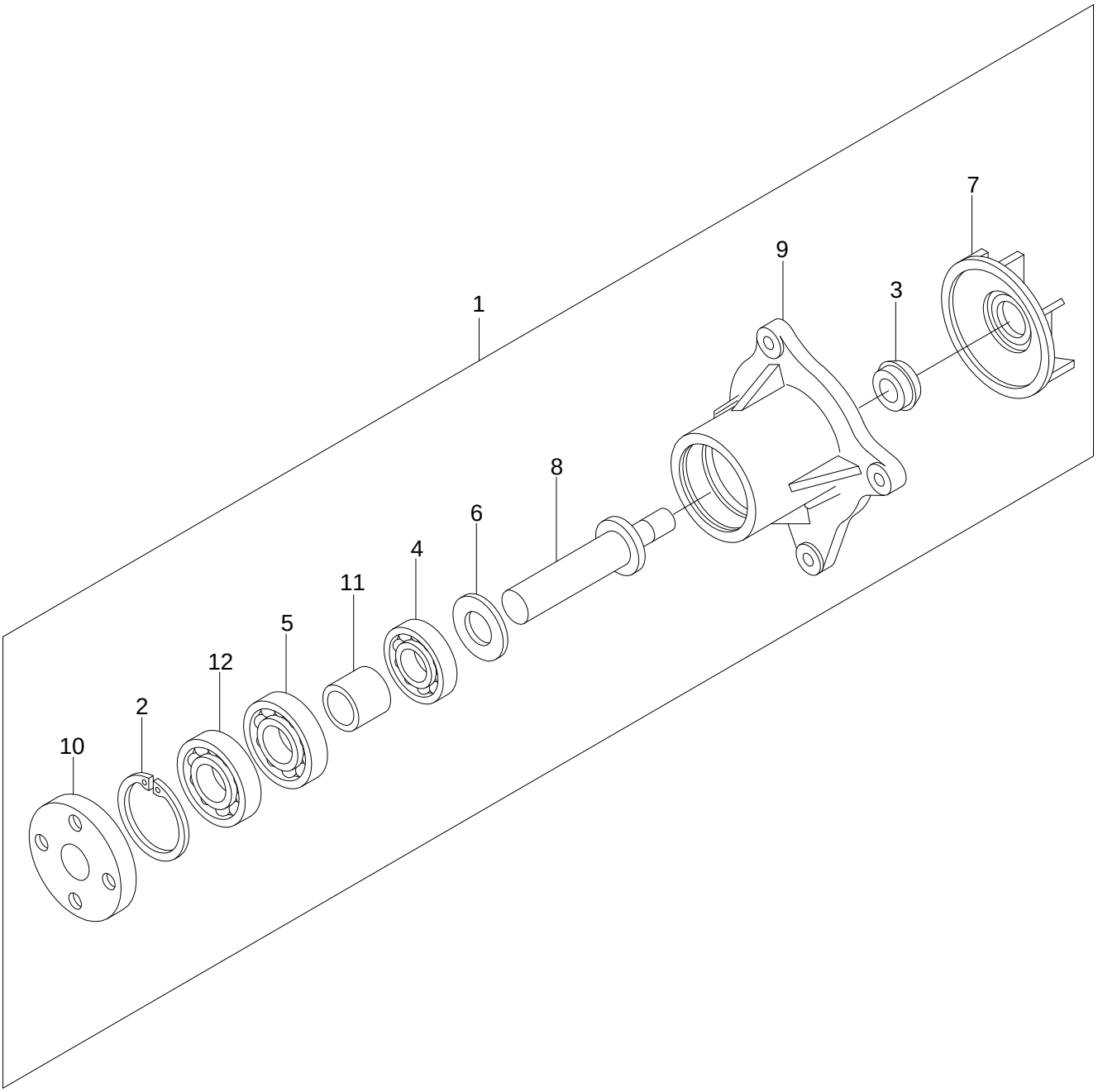

Item	Part_No	IS	Ord	T	Description	Qty	Serial_No	ITC	Remark
1	XJAF-02487				WATER PUMP ASSY	1			INCL 2-12
2	XJAF-00396				.RING-SNAP	1			
3	XJAF-00397				.SEAL-UNIT	1			
4	XJAF-00398				.BEARING-BALL	1			
5	XJAF-00399				.BEARING-BALL	1			
6	XJAF-00404				.WASHER	1			
7	XJAF-00400				.IMPELLER	1			
8	XJAF-02488				.SHAFT	1			
9	@				.CASE-WATER PUMP	1			NOT
10	XJAF-00402				.FLANGE	1			
11	XJAF-02512				.SPACER	1			
12	XJAF-02513				.BEARING-BALL	1			

TIMING GEAR CASE 2

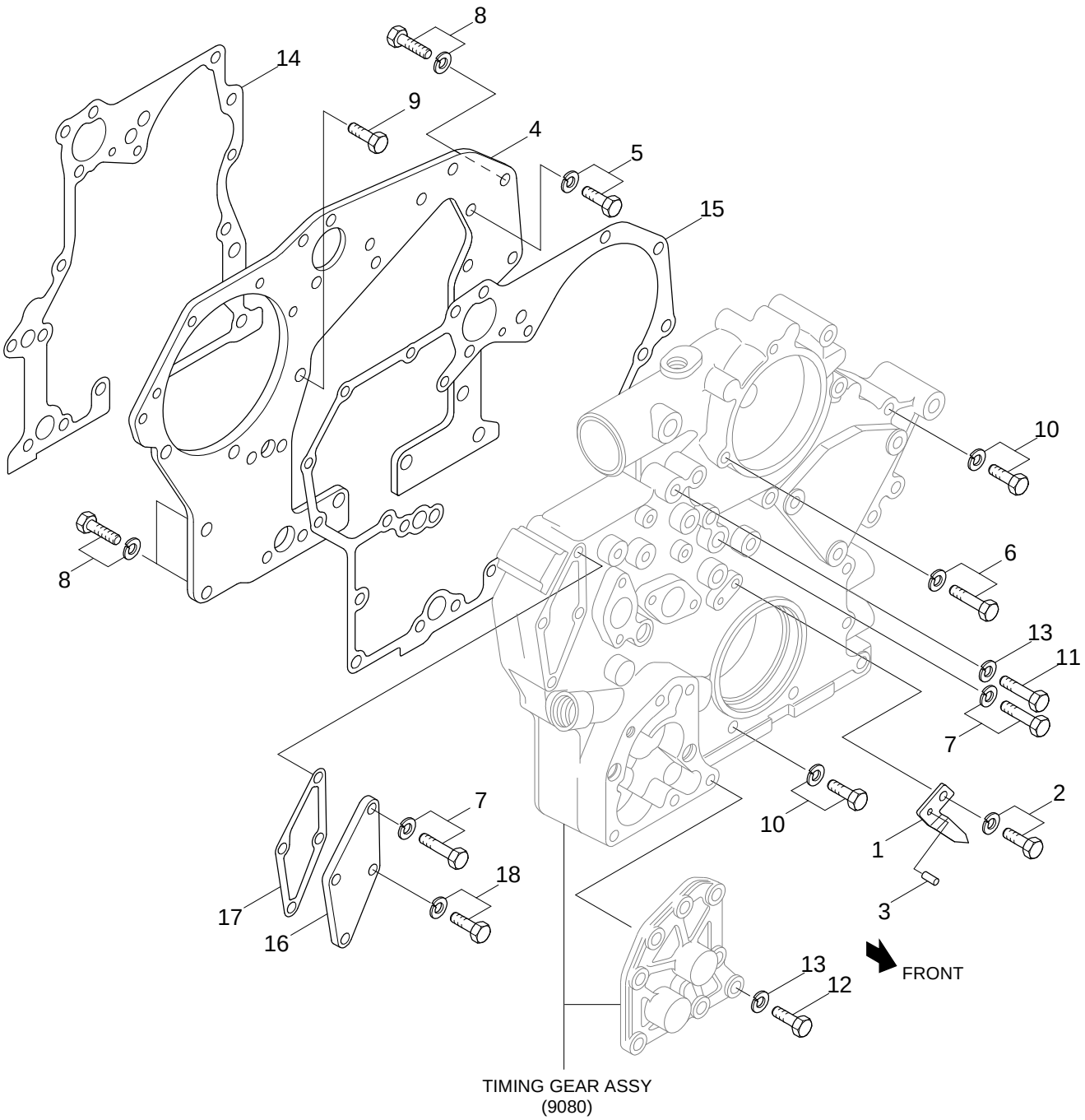

Item	Part_No	IS	Ord	T	Description	Qty	Serial_No	ITC	Remark
1	XJAF-02303				POINTER	1			
2	XJAF-02304				BOLT-W/WASHER	1			
3	XJAF-00204				PIN-SPRING	1			
4	XJAF-02305				PLATE-FRONT	1			
5	XJAF-02358				BOLT-W/WASHER	2			
6	XJAF-02306				BOLT-W/WASHER	2			
7	XJAF-02307				BOLT-W/WASHER	5			
8	XJAF-00178				BOLT-W/WASHER	6			
9	XJAF-00256				BOLT-COATING	1			
10	XJAF-02308				BOLT-W/WASHER	6			
11	XJAF-00243				BOLT	2			
12	XJAF-00244				BOLT	4			
13	XJAF-00246				WASHER-SPRING	6			
14	XJAF-02309				GASKET-FRONT PLATE	1			
15	XJAF-02310				GASKET-GEAR CASE	1			
16	XJAF-02311				COVER-TIMING GEAR	1			
17	XJAF-02312				GASKET-COVER	1			
18	XJAF-02313				BOLT-W/WASHER	1			

FLYWHEEL HOUSING

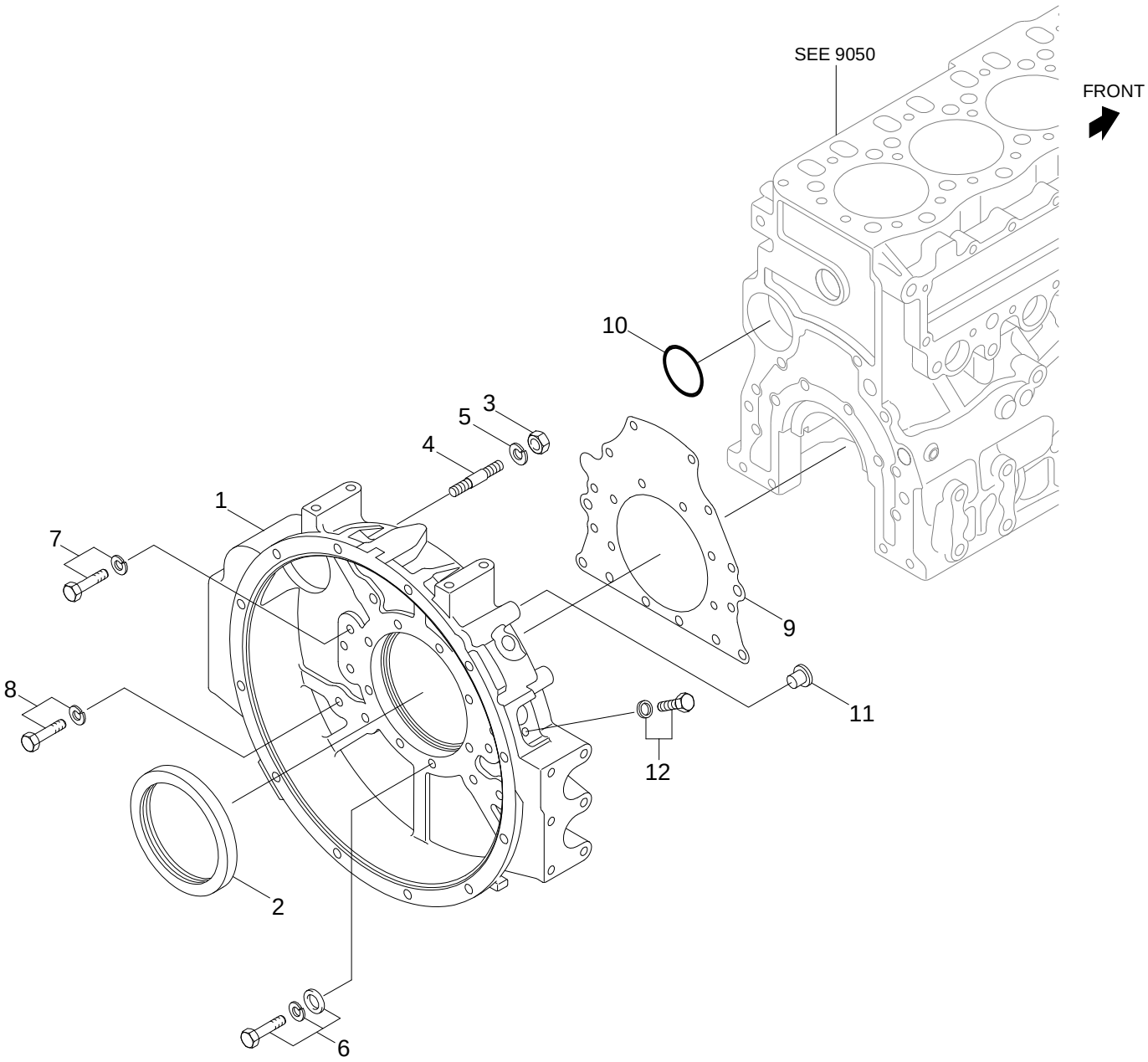

Item	Part_No	IS	Ord	T	Description	Qty	Serial_No	ITC	Remark
1	XJAF-02315				HOUSING-FLYWHEEL	1			
2	XJAF-00259				SEAL-OIL	1			
3	XJAF-00260				NUT	2			
4	XJAF-01988				STUD	2			
5	XJAF-00246				WASHER-SPRING	2			
6	XJAF-01984				BOLT-W/WASHER	8			
7	XJAF-00263				BOLT-W/WASHER	2			
8	XJAF-00222				BOLT-W/WASHER	10			
9	XJAF-02316				GASKET-REAR	1			
10	XJAF-00503				O-RING	1			
11	XJAF-02317				PLUG	1			
12	XJAF-00230				BOLT-W/WASHER	1			

OIL PAN

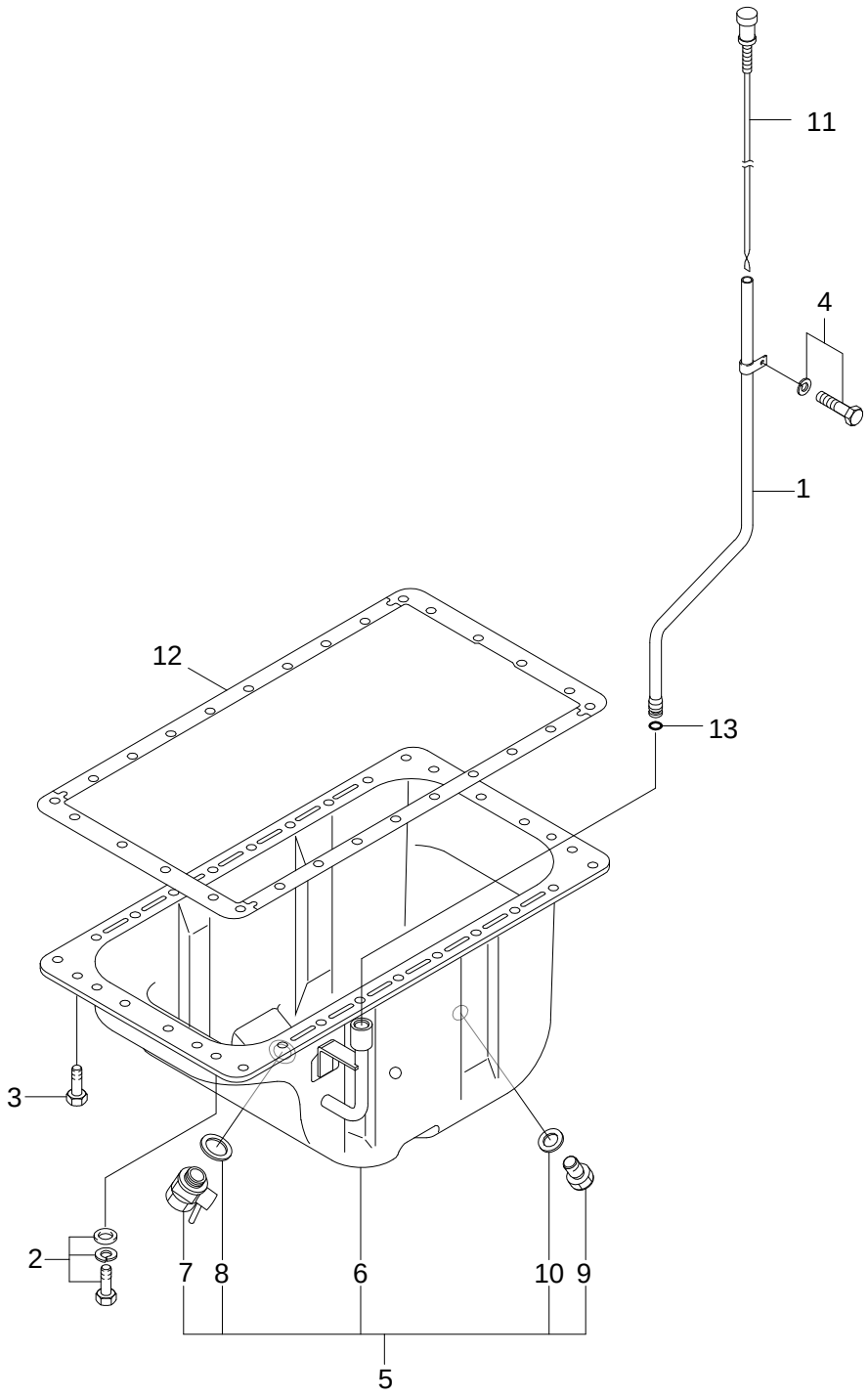

Item	Part_No	IS	Ord	T	Description	Qty	Serial_No	ITC	Remark
1	XJAF-02318				GUIDE-OIL LEVEL	1			
2	XJAF-02564				BOLT-W/WASHER	16			
3	XJAF-00277				BOLT	12			
4	XJAF-00673				BOLT-W/WASHER	1			
5	XJAF-02565				PAN ASSY-OIL	1			
6	@				.PAN-OIL	1			NOT
7	XJAF-02566				COCK-DRAIN	1			
8	XJAF-00269				.WASHER-SEALING	1			
9	XJAF-00270				.PLUG-DRAIN	1			
10	XJAF-00271				.WASHER-SEALING	1			
11	XJAF-02319				GAUGE-OIL LEVEL	1			
12	XJAF-02320				GASKET-OIL PAN	1			
13	XJAF-00276				O-RING	1			

PISTON

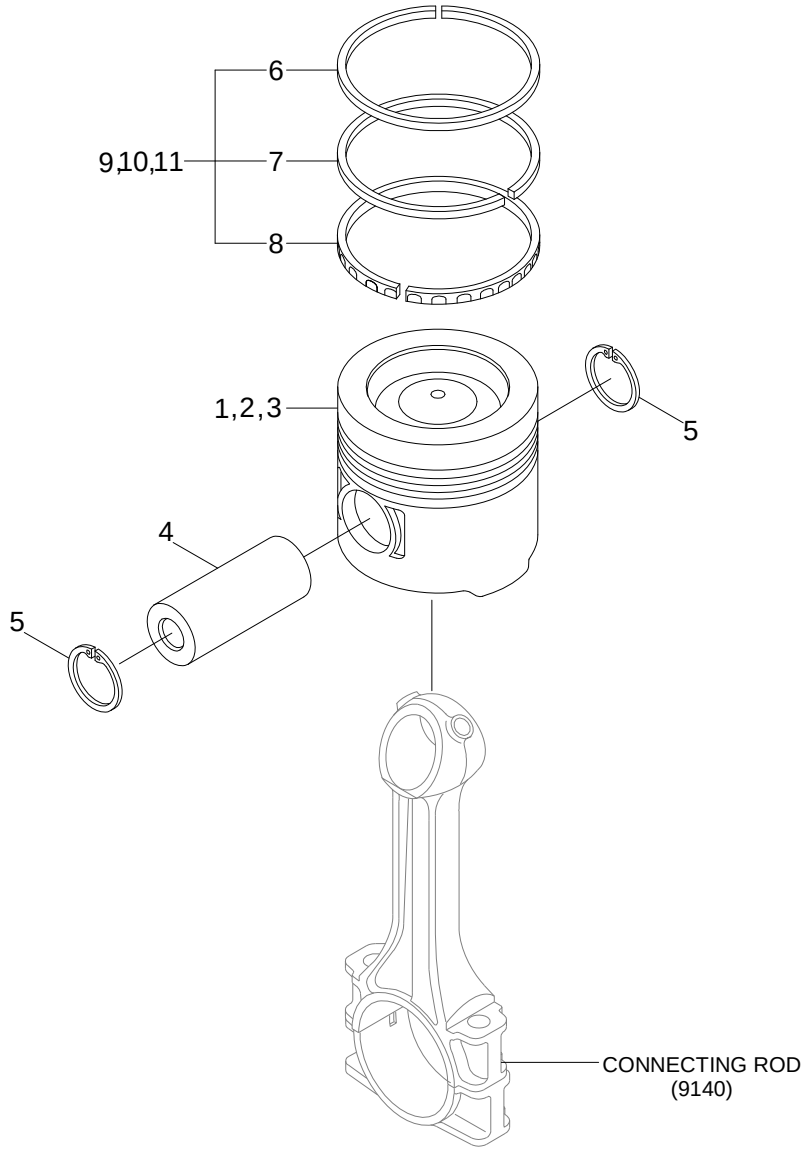

Item	Part_No	IS	Ord	T	Description	Qty	Serial_No	ITC	Remark
1	XJAF-02543				PISTON	4			STD
2	XJAF-02544				PISTON	4			0.25MM O/S
3	XJAF-02545				PISTON	4			0.50MM O/S
4	XJAF-00284				PIN-PISTON	4			
5	XJAF-00285				RING-SNAP	8			
6	@				RING-1ST	4			NOT
7	@				RING-2ND	4			NOT
8	@				RING-3RD	4			NOT
9	XJAF-00278				RING SET-PISTON	4			STD
10	XJAF-00279				RING SET-PISTON	4			0.25mm O/S
11	XJAF-02324				RING SET-PISTON	4			0.50mm O/S

CONNECTING ROD

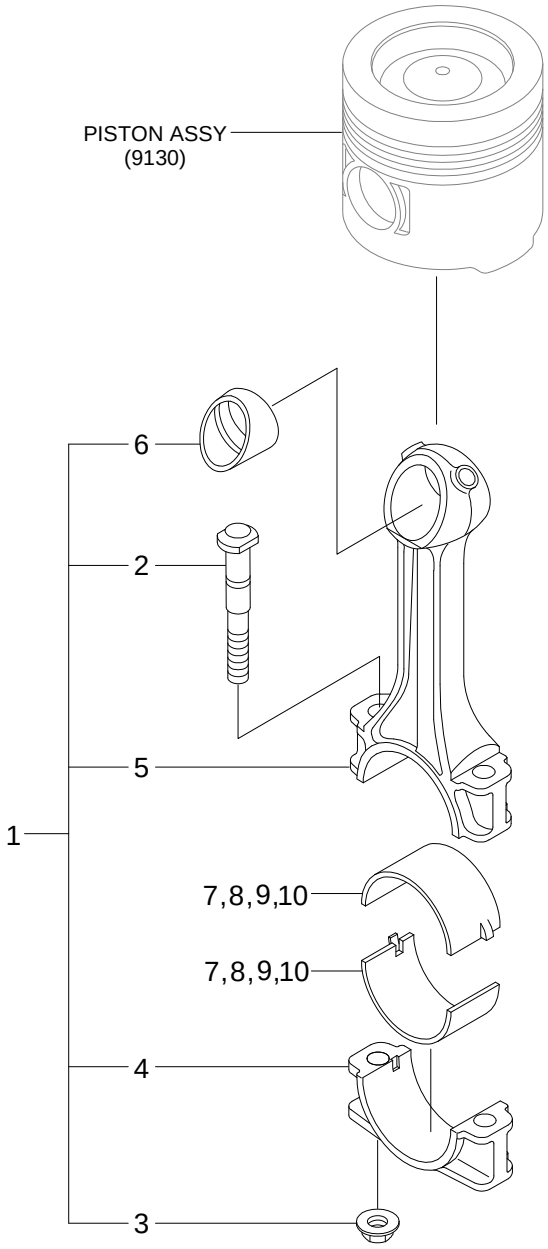

Item	Part_No	IS	Ord	T	Description	Qty	Serial_No	ITC	Remark
1	XJAF-02550				ROD ASSY-CONNECTING	4			
2	XJAF-00287				.BOLT-CONNECTING-ROD	8			
3	XJAF-00288				.NUT-CONNECTING-ROD	8			
4	@				.CAP-CONNECTING ROD	8			NOT
5	@				.ROD-CONNECTING	8			NOT
6	XJAF-02326				.BUSHING-CON ROD	4			
7	XJAF-02327				METAL-CON ROD	8			STD
8	XJAF-02328				METAL-CON ROD	8			0.25mm O/S
9	XJAF-02329				METAL-CON ROD	8			0.50mm O/S
10	XJAF-02330				METAL-CON ROD	8			0.75mm O/S

CRANK SHAFT & PULLEY

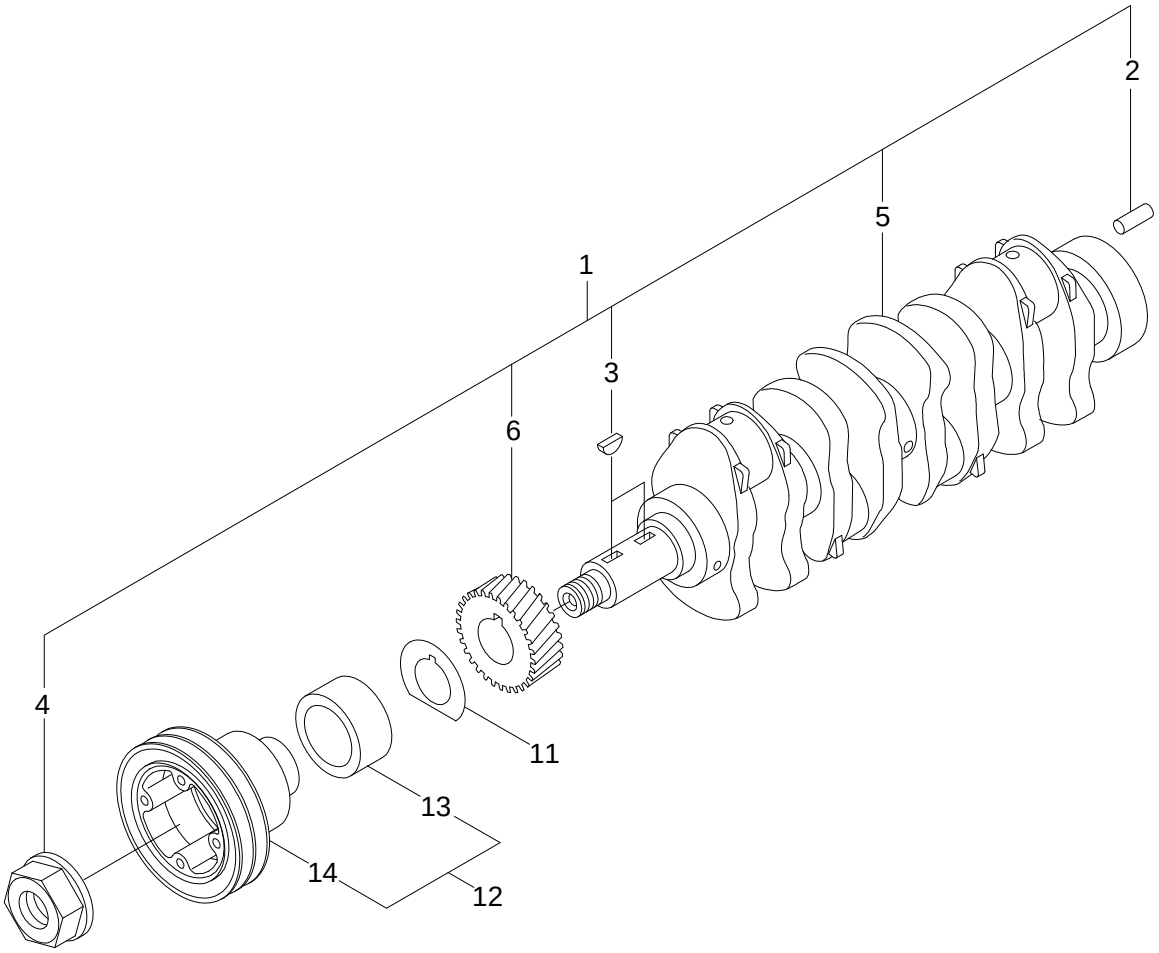

Item	Part_No	IS	Ord	T	Description	Qty	Serial_No	ITC	Remark
1	XJAF-02331				CRANKSHAFT ASSY	1			INCL 2-6
2	XJAF-00295				.PIN-DOWEL	2			
3	XJAF-00183				.KEY-WOODRUFF	2			
4	XJAF-00296				.NUT-CRANKSHAFT	1			
5	@				.CRANKSHAFT	1			NOT
6	XJAF-02332				.GEAR-CRANKSHAFT	1			
11	XJAF-00300				PLATE-BAFFLE	1			
12	XJAF-02493				PULLEY ASSY-CRANK	1			INCL 13,14
13	XJAF-00299				.SLEEVE-OIL SEAL	1			
14	@				.PULLEY-CRANKSHAFT	1			NOT

FLYWHEEL

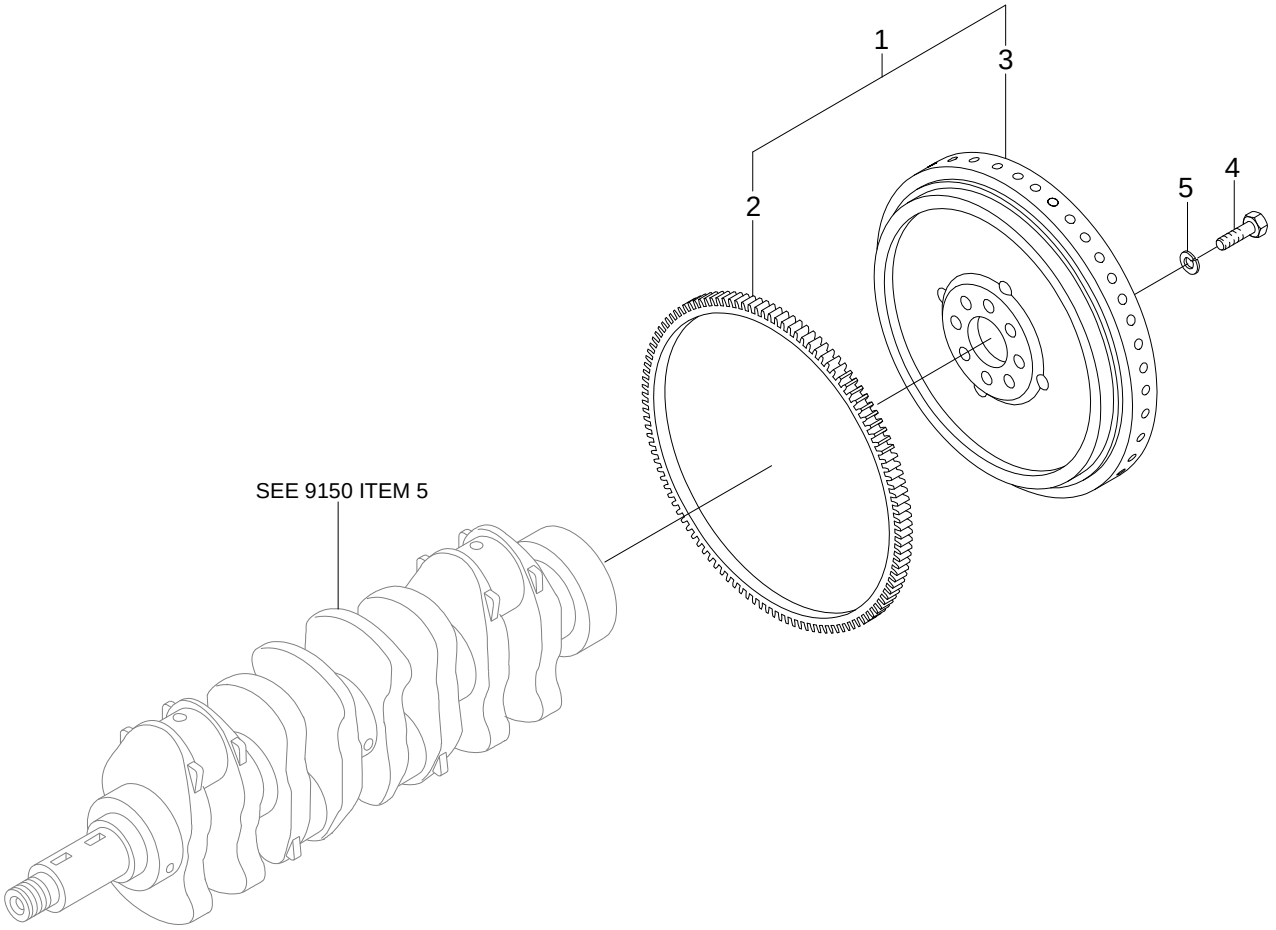

Item	Part_No	IS	Ord	T	Description	Qty	Serial_No	ITC	Remark
1	XJAF-02334				FLYWHEEL ASSY	1			INCL 2,3
2	XJAF-00302				.GEAR-RING	1			
3	@				.FLYWHEEL	1			NOT
4	XJAF-00303				BOLT	6			
5	XJAF-00213				WASHER-LOCK	6			

TIMING GEAR

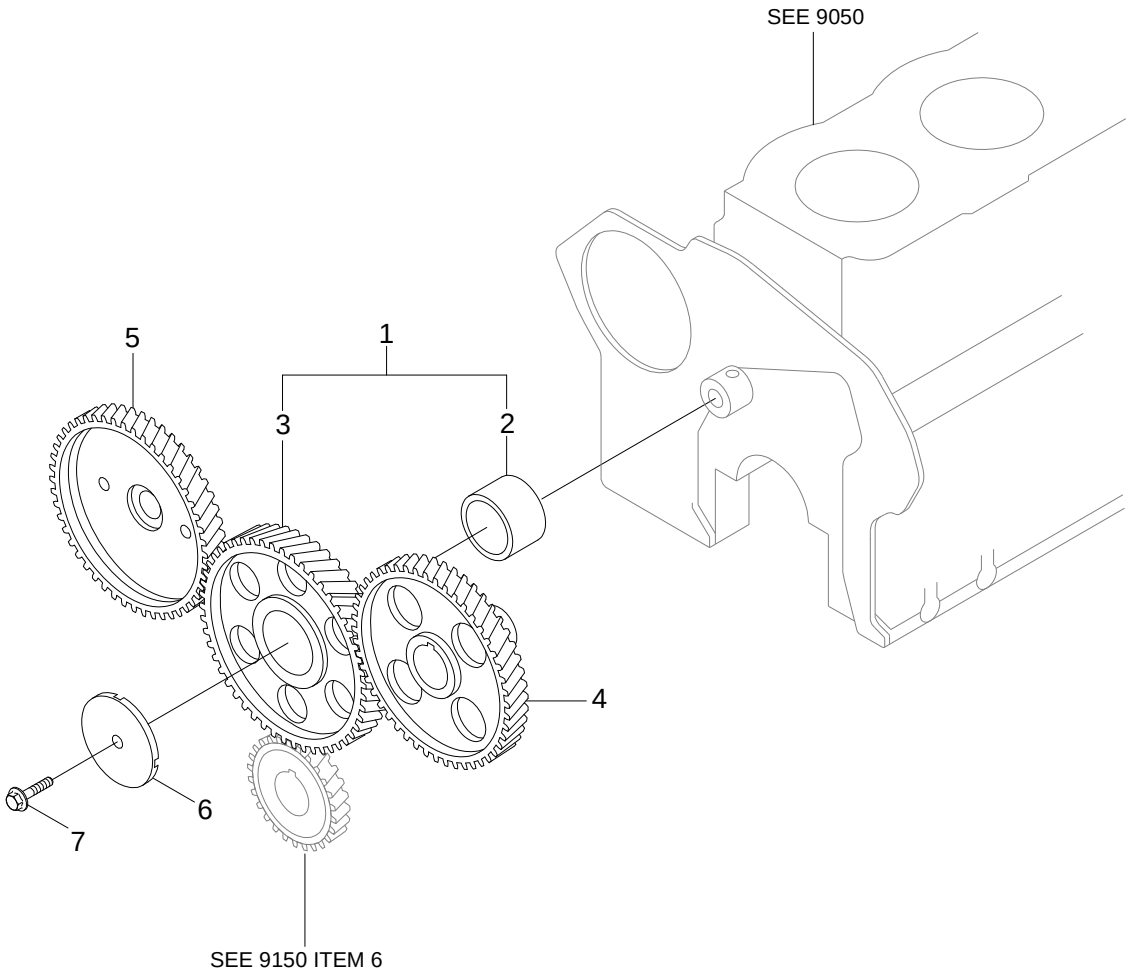

Item	Part_No	IS	Ord	T	Description	Qty	Serial_No	ITC	Remark
1	XJAF-02335				GEAR ASSY-IDLER	1			INCL 2,3
2	XJAF-01146				.BUSHING-IDLER	1			
3	@				.GEAR-IDLER	1			NOT
4	XJAF-02336				GEAR-CAMSHAFT	1			
5	XJAF-02337				GEAR-INJECTION PUMP	1			
6	XJAF-02338				PLATE-THRUST	1			
7	XJAF-02494				BOLT-FLANGE	1			

INLET SYSTEM

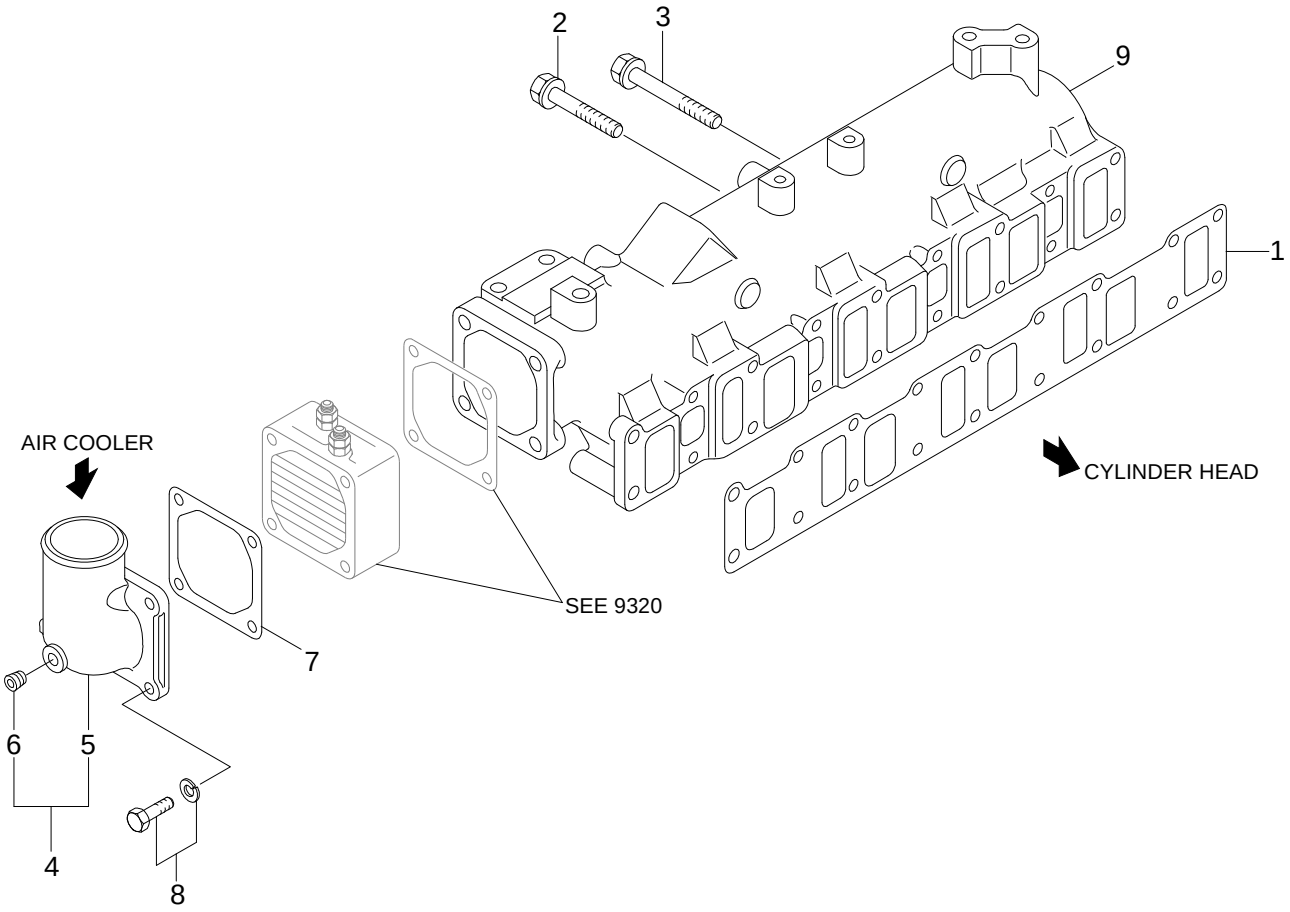

Item	Part_No	IS	Ord	T	Description	Qty	Serial_No	ITC	Remark
1	XJAF-02340				GASKET-INLET	1			
2	XJAF-02567				BOLT-W/WASHER	7			
3	XJAF-02266				BOLT-FLANGE	11			
4	XJAF-00311				ELBOW ASSY	1			INCL 5,6
5	XJAF-00313				.ELBOW-AIR INLET	1			
6	XJAF-00312				.PLUG	1			
7	XJAF-00315				GASKET-EX/MANIFOLD	1			
8	XJAF-02341				BOLT-W/WASHER	4			
9	XJAF-02495				MANIFOLD-INLET	1			

EXHAUST SYSTEM

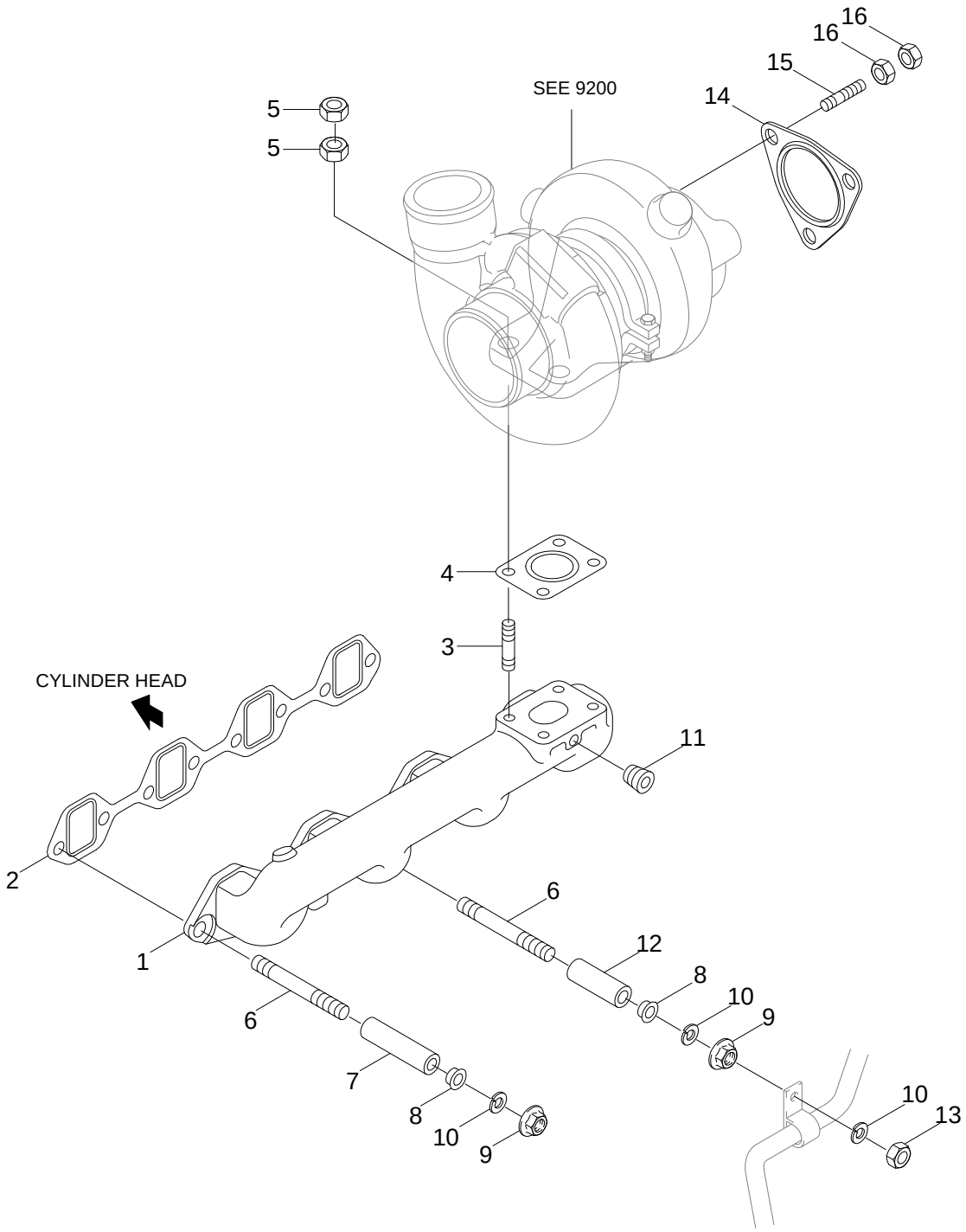

Item	Part_No	IS	Ord	T	Description	Qty	Serial_No	ITC	Remark
1	XJAF-02343				MANIFOLD-EXHAUST	1			
2	XJAF-02344				GASKET-MANIFOLD	2			
3	XJAF-00323				STUD	4			
4	XJAF-00324				GASKET-EXHAUST	1			
5	XJAF-00325				NUT-LOCK	8			
6	XJAF-00326				STUD	8			
7	XJAF-00327				SPACER	7			
8	XJAF-02345				WASHER	8			
9	XJAF-00329				NUT-FLANGE	8			
10	XJAF-00255				WASHER-SPRING	1			
11	XJAF-00330				PLUG-TAPERED	1			
12	XJAF-02346				SPACER	1			
13	XJAF-02347				NUT-JAM	1			
14	XJAF-00334				GASKET	1			
15	XJAF-00335				STUD	3			
16	XJAF-00325				NUT-LOCK	6			

TURBOCHARGER

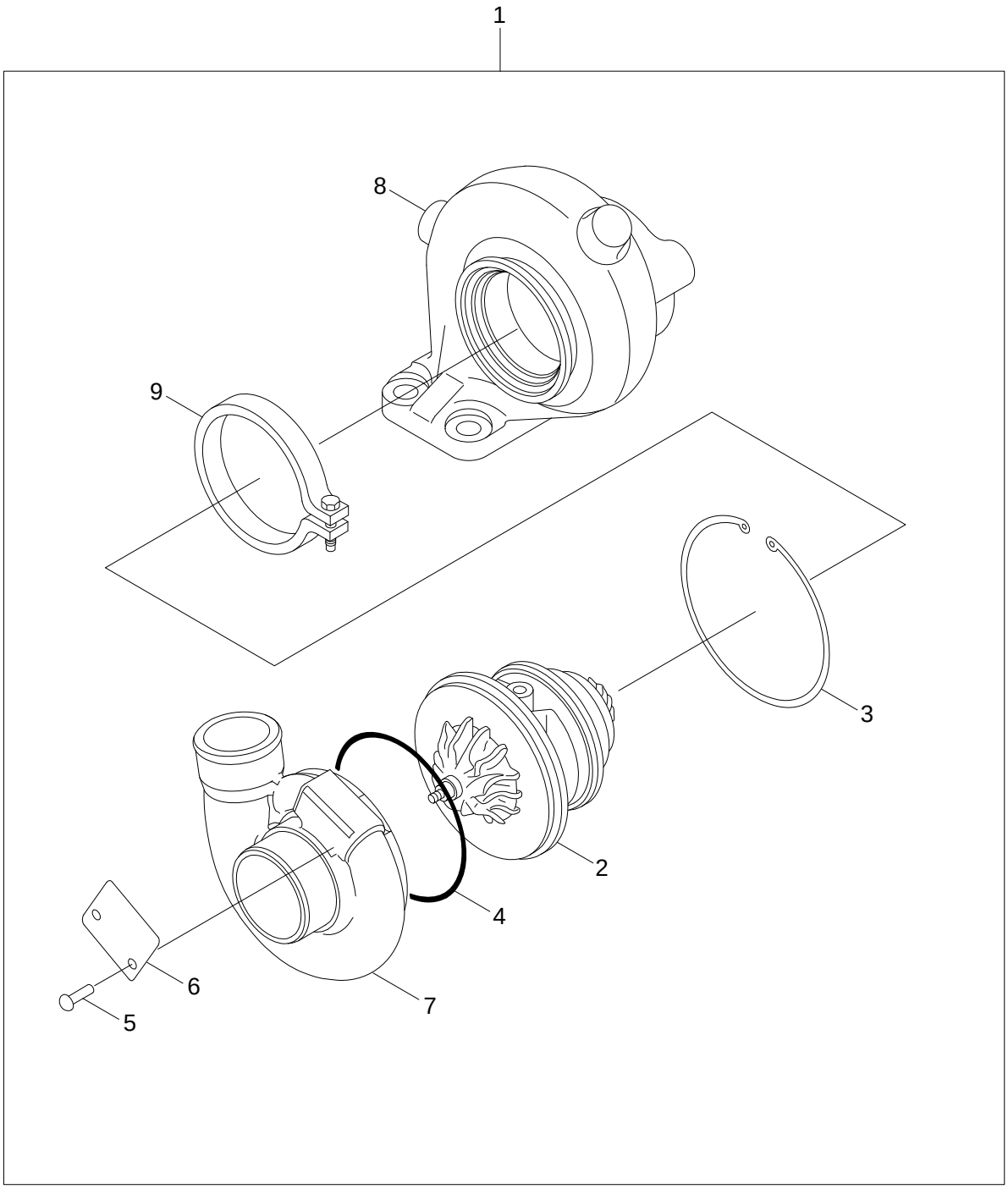

Item	Part_No	IS	Ord	T	Description	Qty	Serial_No	ITC	Remark
1	XJAF-02496				TURBOCHARGER ASSY	1			
2	XJAF-02349				.CARTRDGE ASSY	1			
3	XJAF-00340				.RING-SNAP	1			
4	XJAF-00354				.O-RING	1			
5	XJAF-00355				.RIVET-SCREW	2			
6	@				.PLATE-NAME	1			NOT
7	XJAF-02497				.COVER-COMPRESSOR	1			
8	XJAF-02351				.HOUSING-TURBINE	1			
9	XJAF-00358				.COUPLING ASSY	1			

TURBOCHARGER PIPING

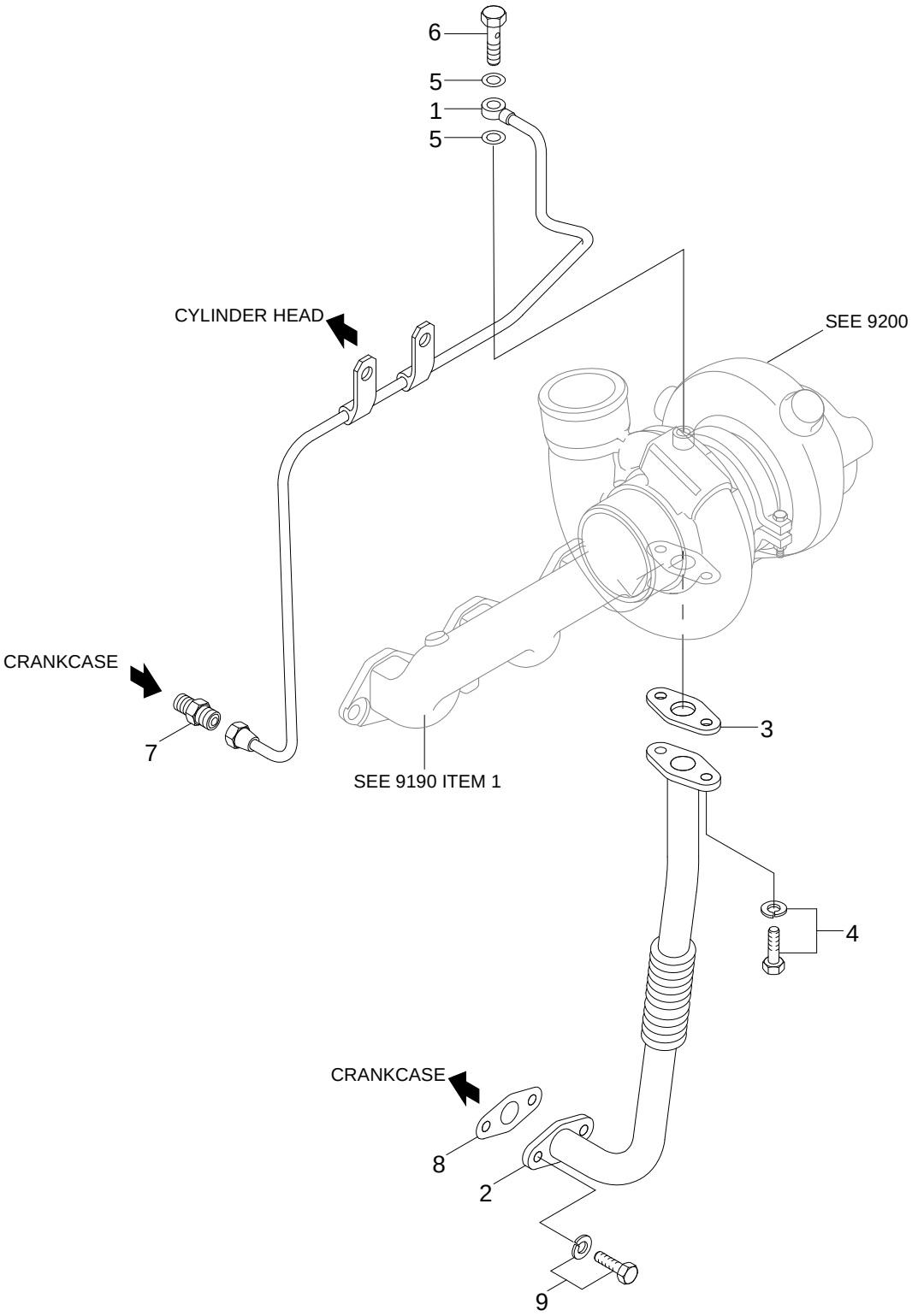

Item	Part_No	IS	Ord	T	Description	Qty	Serial_No	ITC	Remark
1	XJAF-02352				PIPE-OIL	1			
2	XJAF-02353				PIPE-OIL DRAIN	1			
3	XJAF-02354				GASKET-OIL PIPE	1			
4	XJAF-02355				BOLT-W/WASHER	2			
5	XJAF-00371				GASKET	2			
6	XJAF-00372				BOLT-EYE	1			
7	XJAF-00376				CONNECTOR	1			
8	XJAF-02568				GASKET-DRAIN PIPE	1			
9	XJAF-02313				BOLT-W/WASHER	2			

OIL STRAINER

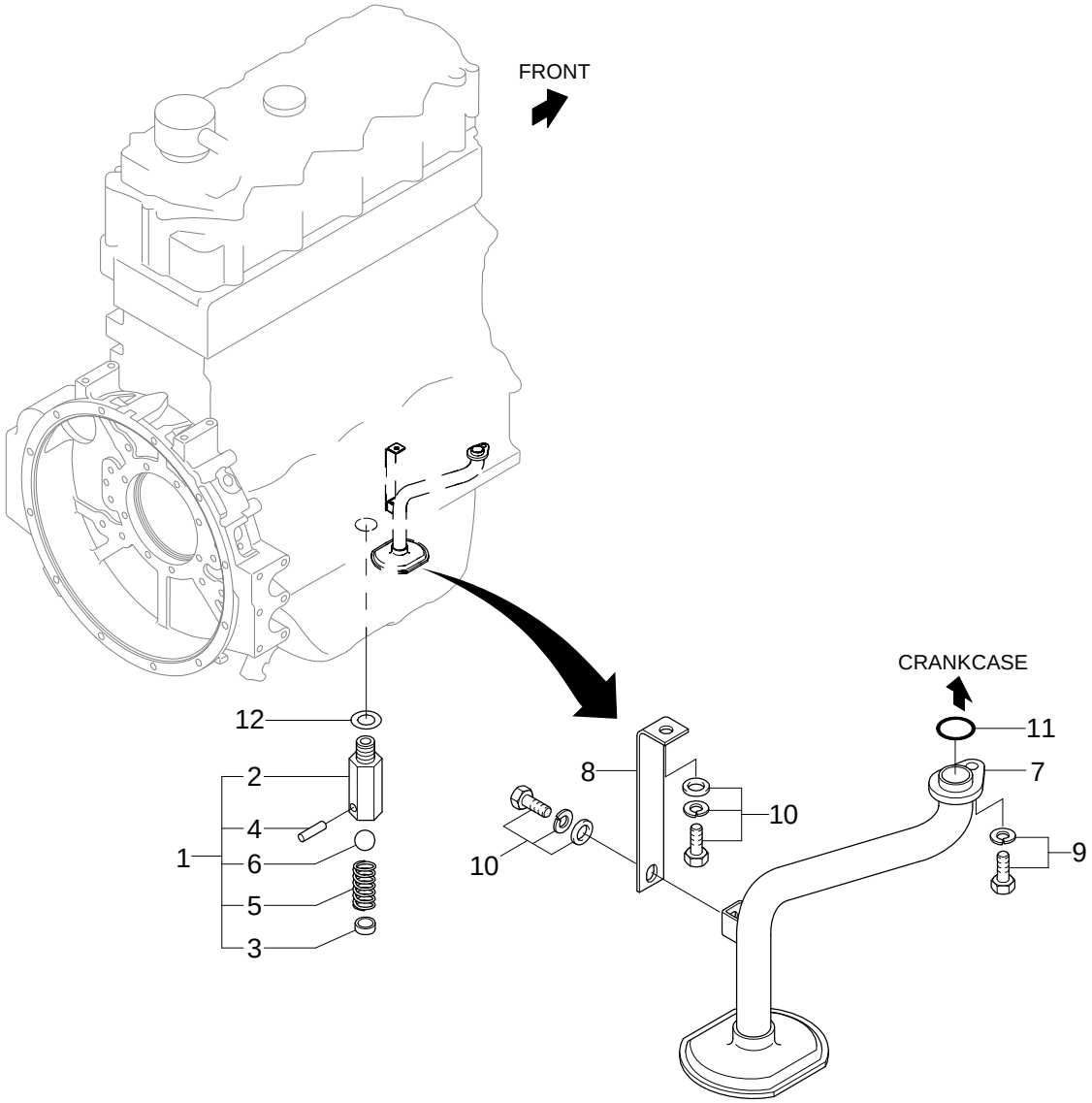

Item	Part_No	IS	Ord	T	Description	Qty	Serial_No	ITC	Remark
1	XJAF-02357				VALVE ASSY-SAFETY	1			
2	@				.CASE-VALVE	1			NOT
3	@				.SEAT-SPRING	1			NOT
4	@				.PIN-SPRING	1			NOT
5	@				.SPRING	1			NOT
6	@				.BALL-STEEL	1			NOT
7	XJAF-00362				STRAINER-OIL	1			
8	XJAF-00363				STAY	1			
9	XJAF-02358				BOLT-W/WASHER	1			
10	XJAF-00365				BOLT-W/WASHER	2			
11	XJAF-00366				O-RING	1			
12	XJAF-00703				GASKET	1			

OIL COOLER

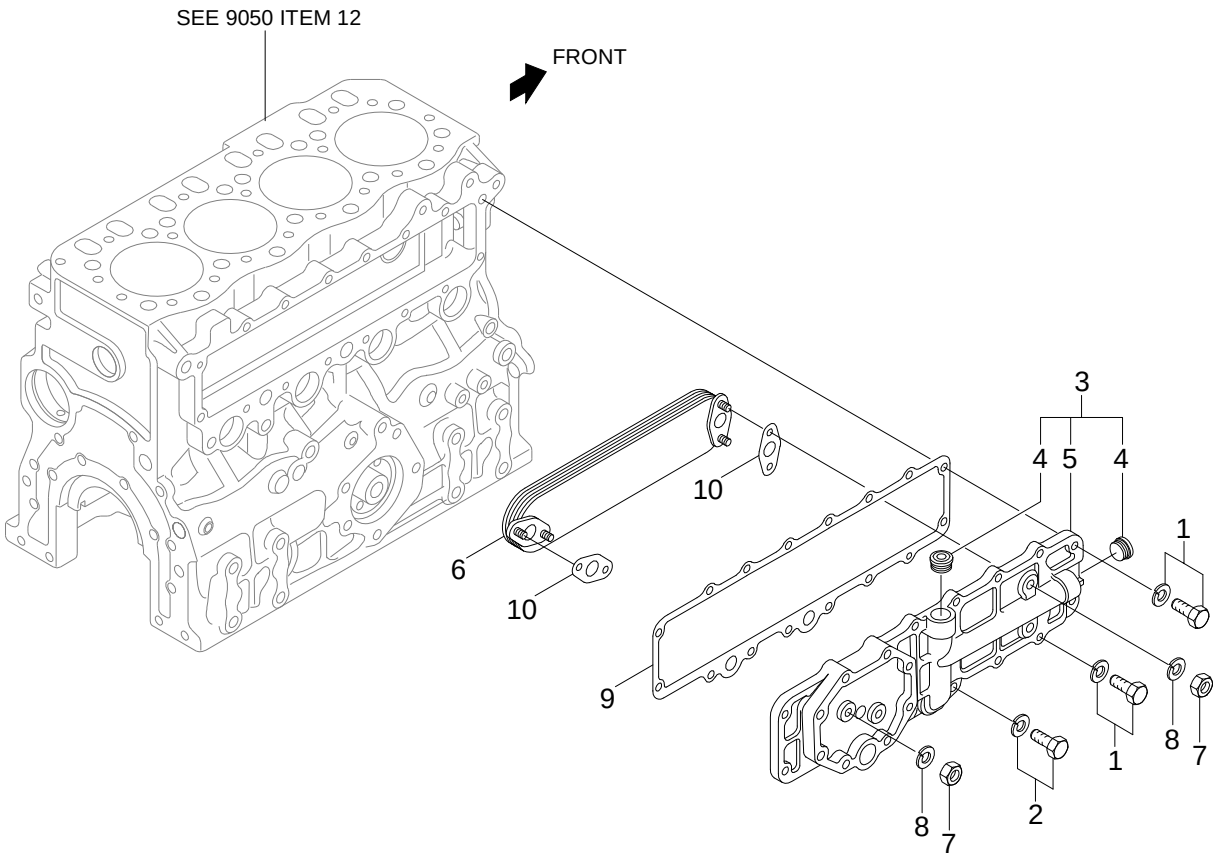

Item	Part_No	IS	Ord	T	Description	Qty	Serial_No	ITC	Remark
1	XJAF-02313				BOLT-W/WASHER	3			
2	XJAF-02359				BOLT-W/WASHER	9			
3	XJAF-02360				COVER ASSY-COOLER	1			INCL 4,5
4	XJAF-01152				.PLUG-TAPERED	2			
5	@				.COVER-OIL COOLER	1			NOT
6	XJAF-02361				ELEMENT-OIL COOLER	1			
7	XJAF-00380				NUT-LOCK	4			
8	XJAF-00255				WASHER-SPRING	4			
9	XJAF-00381				GASKET-OIL COOLER	1			
10	XJAF-00382				GASKET-O/C ELEMENT	2			

OIL FILTER

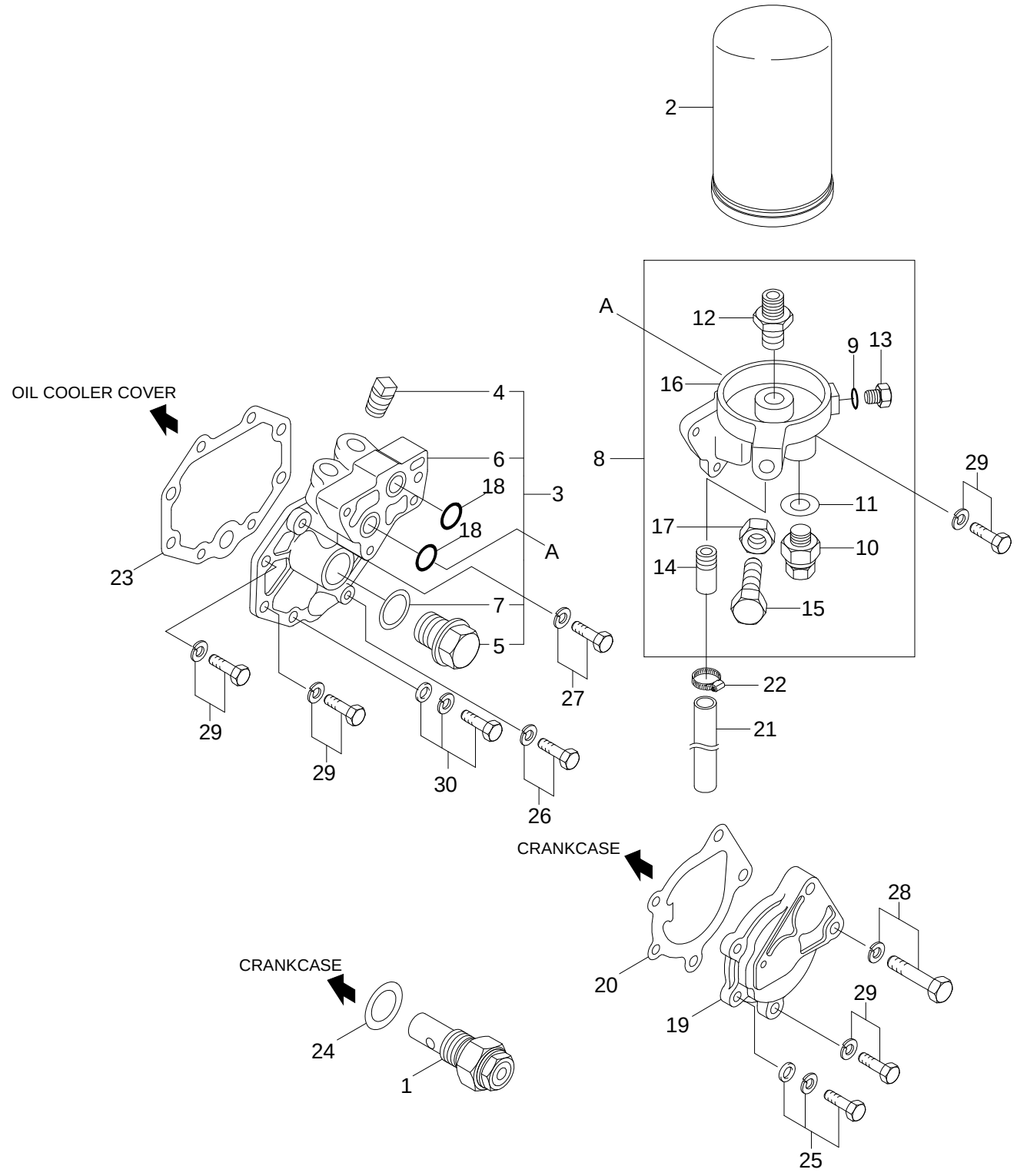
2
A
12
9
13
16
8
29
11
17
10
14
15
22
21
OIL COOLER COVER
4
6
18
3
18
A
23
7
5
27
29
29
30
26
CRANKCASE
28
20
29
19
25
CRANKCASE
24
1

Item	Part_No	IS	Ord	T	Description	Qty	Serial_No	ITC	Remark
1	XJAF-00393				VALVE ASSY-FILTER	1			
2	XJAF-02362				ELEMENT-OIL FILTER	1			
3	XJAF-02363				BASE ASSY-FILTER	1			INCL 4-7
4	XJAF-01152				.PLUG-TAPERED	2			
5	XJAF-02364				.PLUG-DRAIN	1			
6	XJAF-02365				.BASE-FILTER	1			
7	XJAF-02366				.GASKET	1			
8	XJAF-02569				BRACKET ASSY-FILTER	1			INCL 9-17
9	XJAF-00566				.WASHER-SEALING	1			
10	XJAF-02368				.VALVE ASSY-RELIEF	1			
11	XJAF-00394				.GASKET	1			
12	XJAF-02369				.CONNECTOR	1			
13	XJAF-02370				.PLUG-DRAIN	1			
14	XJAF-02371				.PIPE-DRAIN	1			
15	XJAF-02372				.BOLT-VALVE	1			
N16	XJAF-02570				.BRACKET-OIL FILTER	1			NOT
17	XJAF-02374				.NUT-JAN	1			
18	XJAF-00392				O-RING	2			
19	XJAF-02375				COVER-OIL FILTER	1			
20	XJAF-02376				GASKET-OIL FILTER	1			
21	XJAF-02377				HOSE-DRAIN	1			
22	XJAF-02378				CLAMP	1			
23	XJAF-02379				GASKET-FILTER	1			
24	XJAF-00394				GASKET	1			
25	XJAF-02380				BOLT-W/WASHER	2			

Item	Part_No	IS	Ord	T	Description	Qty	Serial_No	ITC	Remark
26	XJAF-02381				BOLT-W/WASHER	1			
27	XJAF-02514				BOLT-W/WASHER	2			
28	XJAF-02382				BOLT-W/WASHER	2			
29	XJAF-00263				BOLT-W/WASHER	9			
30	XJAF-02385				BOLT-W/WASHER	1			

BREATHER

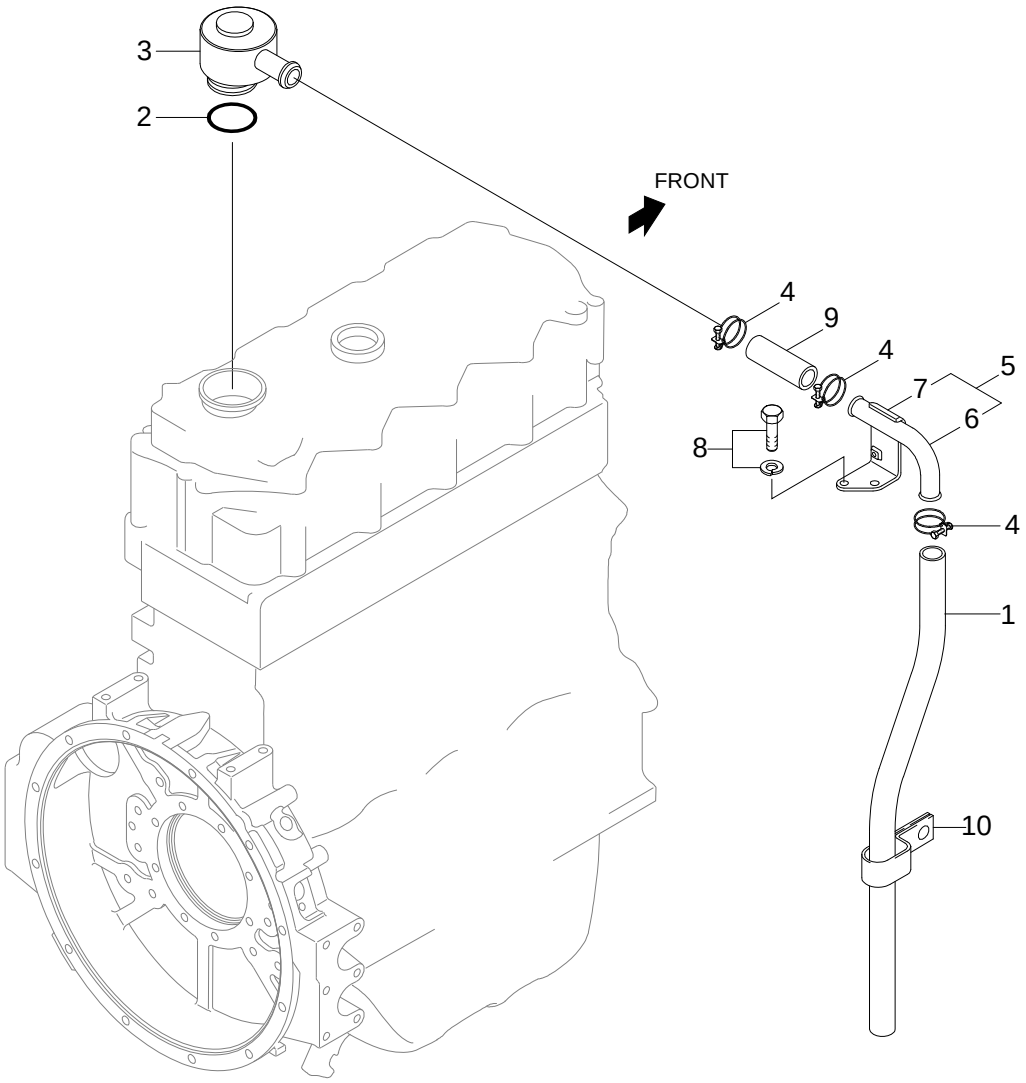

Item	Part_No	IS	Ord	T	Description	Qty	Serial_No	ITC	Remark
1	XJAF-02386				HOSE-BREATHER	1			
2	XJAF-02387				O-RING	1			
3	XJAF-02388				BREATHER	1			
4	XJAF-00176				CLAMP-HOSE	3			
5	XJAF-02389				PIPE-BREATHER	1			
6	@				.PIPE	1			NOT
7	@				.STAY	1			NOT
8	XJAF-02390				BOLT-W/WASHER	2			
9	XJAF-00179				TUBE-SOFT VINYL	1			
10	XJAF-02391				CLIP	1			

WATER PUMP PULLEY & V-BELT

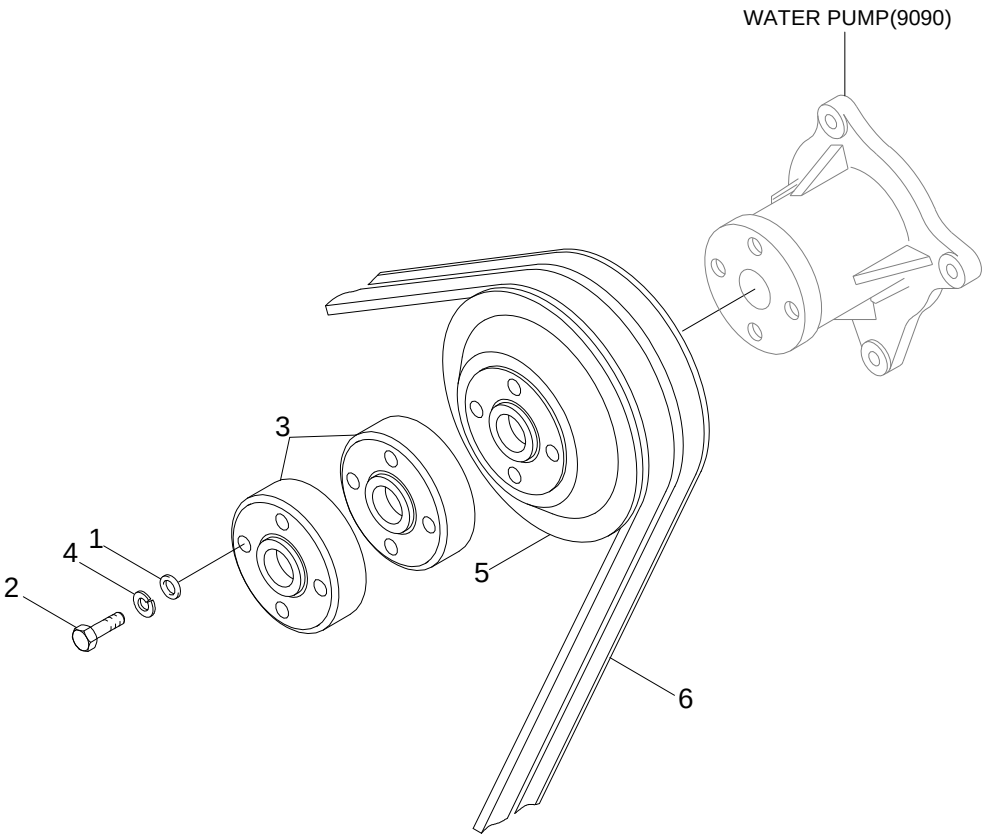

Item	Part_No	IS	Ord	T	Description	Qty	Serial_No	ITC	Remark
1	XJAF-00424				WASHER-PLAIN	4			
2	XJAF-02498				BOLT	4			
3	XJAF-02558				SPACER,FAN	2			
4	XJAF-00246				WASHER-SPRING	4			
5	XJAF-02499				PULLEY-WATER PUMP	1			
6	XJAF-02500				V-BELT,RIB	1			

[Item List] - Print Date : 2020.08.21 17:08

COOLING SYSTEM

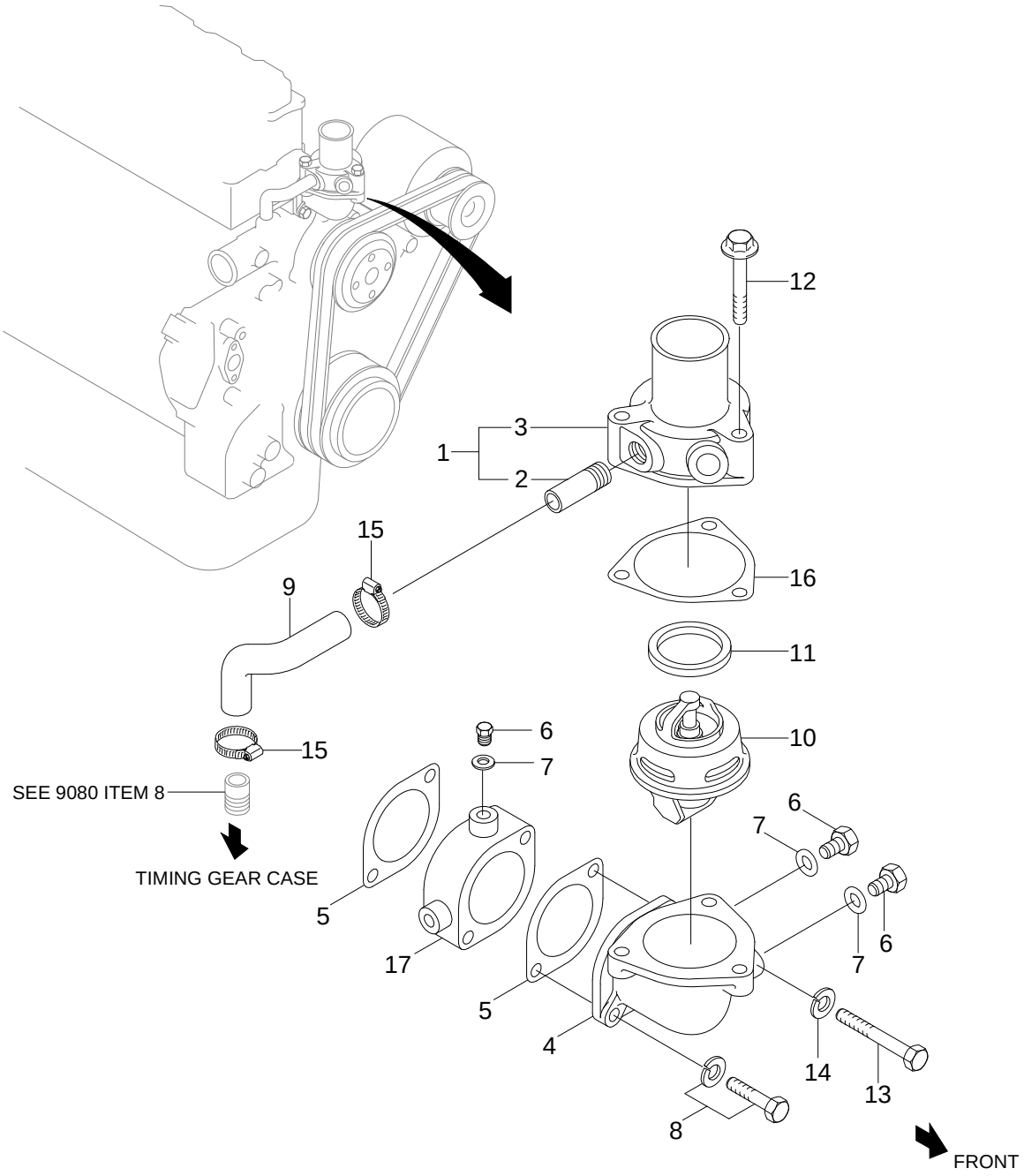

Item	Part_No	IS	Ord	T	Description	Qty	Serial_No	ITC	Remark
1	XJAF-00408				COVER ASSY	1			INCL 2,3
2	XJAF-00409				.PIPE-BY PASS	1			
3	@				.COVER-THERMOSTAT	1			NOT
4	XJAF-00410				ELBOW	1			
5	XJAF-02393				GASKET	2			
6	XJAF-00418				PLUG-DRAIN	3			
7	XJAF-00224				WASHER-SEALING	3			
8	XJAF-00254				BOLT-W/WASHER	1			
9	XJAF-02394				HOSE-RUBBER	1			
10	XJAF-00412				THERMOSTAT	1			
11	XJAF-00413				PACKING	1			
12	XJAF-02395				BOLT-FLANGE	3			
13	XJAF-02396				BOLT	1			
14	XJAF-00255				WASHER-SPRING	1			
15	XJAF-00420				CLAMP-HOSE	2			
16	XJAF-02397				GASKET-THERMOSTAT	1			
17	XJAF-02515				SPACER	1			

FUEL SYSTEM

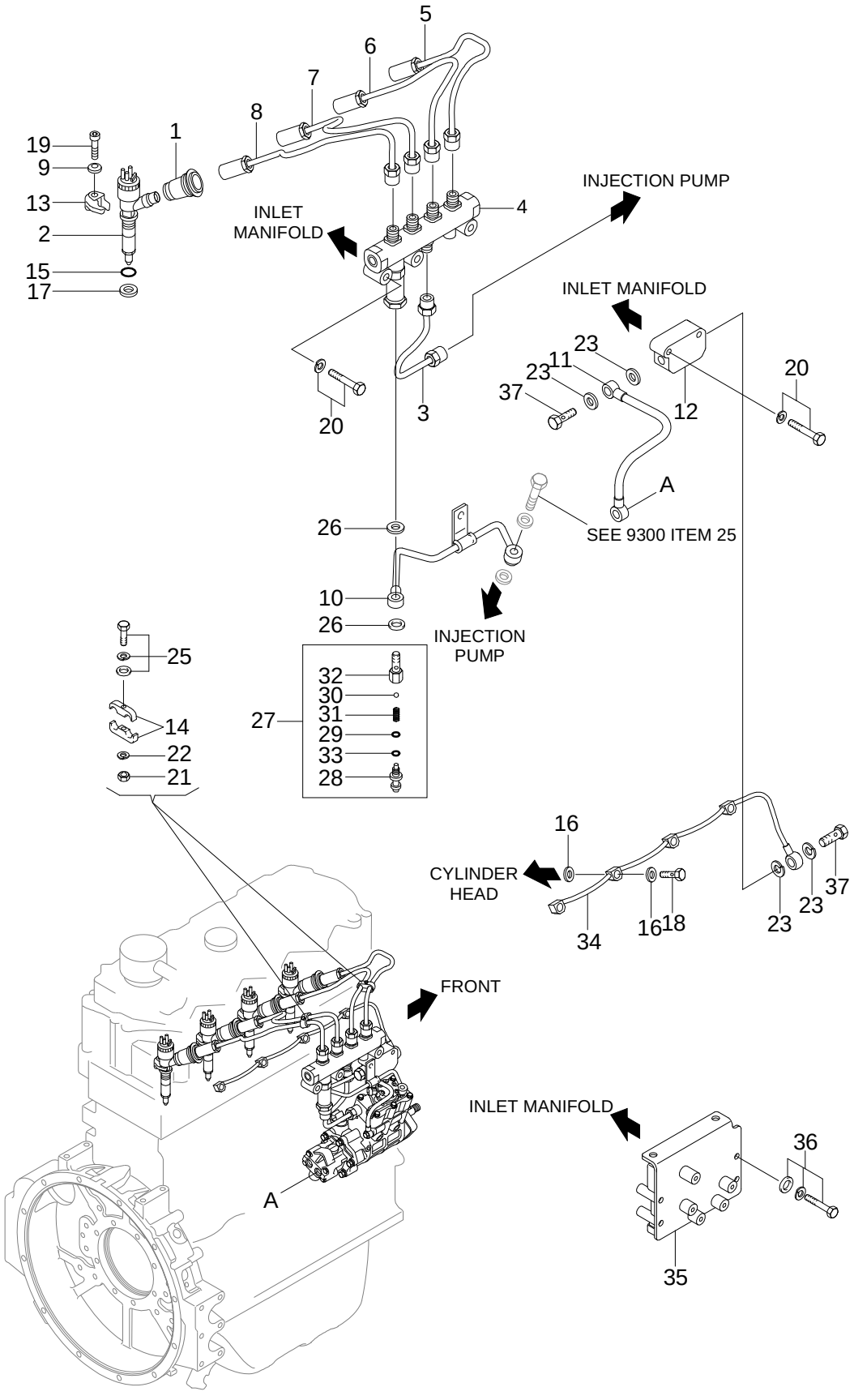
5
6
7
8
1
19
9
13
2
15
17
4
INLET MANIFOLD
INJECTION PUMP
INLET MANIFOLD
23
11
23
37
20
12
20
3
20
A
SEE 9300 ITEM 25
26
10
26
INJECTION PUMP
25
14
22
21
27
32
30
31
29
33
28
16
CYLINDER HEAD
34
16
18
23
23
37
FRONT
A
INLET MANIFOLD
36
35

Item	Part_No	IS	Ord	T	Description	Qty	Serial_No	ITC	Remark
1	XJAF-02400				SEAL-INJECTION	4			
2	XJAF-02679				INJECTOR ASSY-HSF	4			
3	XJAF-02402				PIPE-PUMP	1			
4	XJAF-02681				RAIL-4 CYLINDER	1			
5	XJAF-02404				PIPE-INJECTION NO.1	1			
6	XJAF-02405				PIPE-INJECTION NO.2	1			
7	XJAF-02406				PIPE-INJECTION NO.3	1			
8	XJAF-02407				PIPE-INJECTION NO.4	1			
9	XJAF-02408				WASHER-SPHERICAL	4			
10	XJAF-02409				PIPE-RELIEF	1			
11	XJAF-02410				HOSE-FUEL	1			
12	XJAF-02571				BLOCK-FUEL RELIEF	1			
13	XJAF-02412				GRAND-NOZZLE	4			
14	XJAF-02413				CLAMP-PIPE	2			
15	XJAF-02414				O-RING	4			
16	XJAF-00206				WASHER-SEALING	8			
17	XJAF-00426				GASKET-NOZZLE	4			
18	XJAF-00685				BOLT-EYE	4			
19	XJAF-02415				BOLT-HEXAGON SOCKET	4			
20	XJAF-00730				BOLT-W/WASHER	5			
21	XJAF-00555				NUT-LOCK	2			
22	XJAF-01871				WASHER-PLAIN	2			
23	XJAF-02416				WASHER	4			
25	XJAF-02418				BOLT-W/WASHER	2			
26	XJAF-02419				WASHER-SEALING	2			

Item	Part_No	IS	Ord	T	Description	Qty	Serial_No	ITC	Remark
27	XJAF-02516				VALVE ASSY-CHECK	1			INCL 28-33
28	@				.CONNECTOR	1			NOT
29	@				.SHIM-ADJUSTING	1			NOT
30	@				.BALL-STEEL	1			NOT
31	@				.SPRING	1			NOT
32	@				.BOLT-EYE	1			NOT
33	XJAF-00371				.GASKET	1			
34	XJAF-02421				PIPE-FUEL INJ/D	1			
35	XJAF-02422				BRACKET-COVER	1			
36	XJAF-02572				BOLT-W/WASHER	4			
37	XJAF-02424				BOLT-EYE	2			
50	XJAF-02998				REMOVER-INJECTOR	1	#0001 -	-	NOT SHOWN

FUEL FILTER

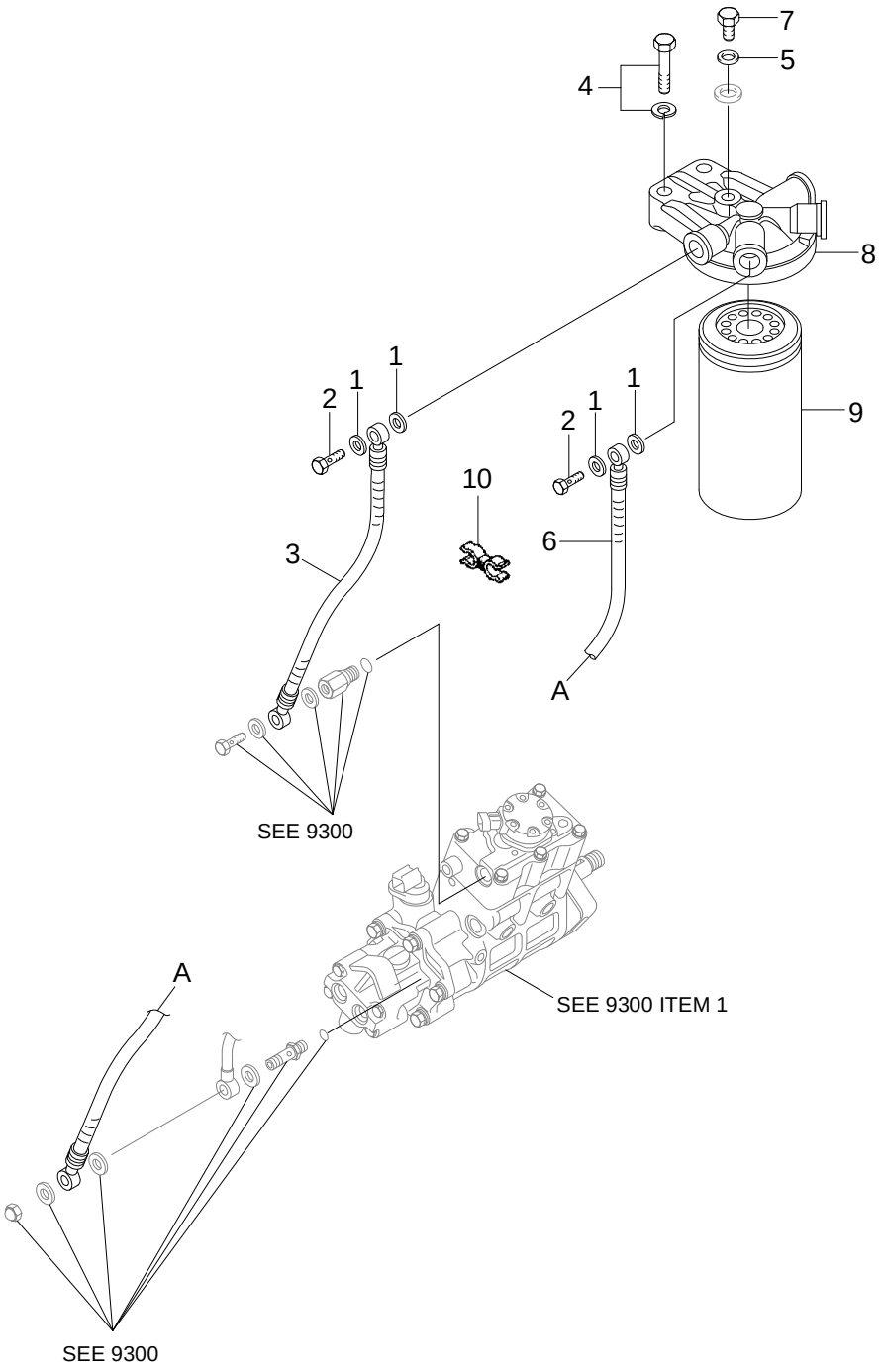

Item	Part_No	IS	Ord	T	Description	Qty	Serial_No	ITC	Remark
1	XJAF-02416				WASHER	4			
2	XJAF-02424				BOLT-EYE	2			
3	XJAF-00492				HOSE-FUEL FEED	1			
4	XJAF-02382				BOLT-W/WASHER	2			
5	XJAF-00563				WASHER-SEALING	1			
6	XJAF-02427				HOSE-FUEL FEED	1			
7	XJAF-02428				PLUG-AIR	1			
8	XJAF-02573				BRACKET-FUEL FILTER	1			
9	XJAF-02430				ELEMENT-FUEL FILTER	1			
10	XJAF-00493				CLAMP	1			

INJECTION PUMP GENERAL

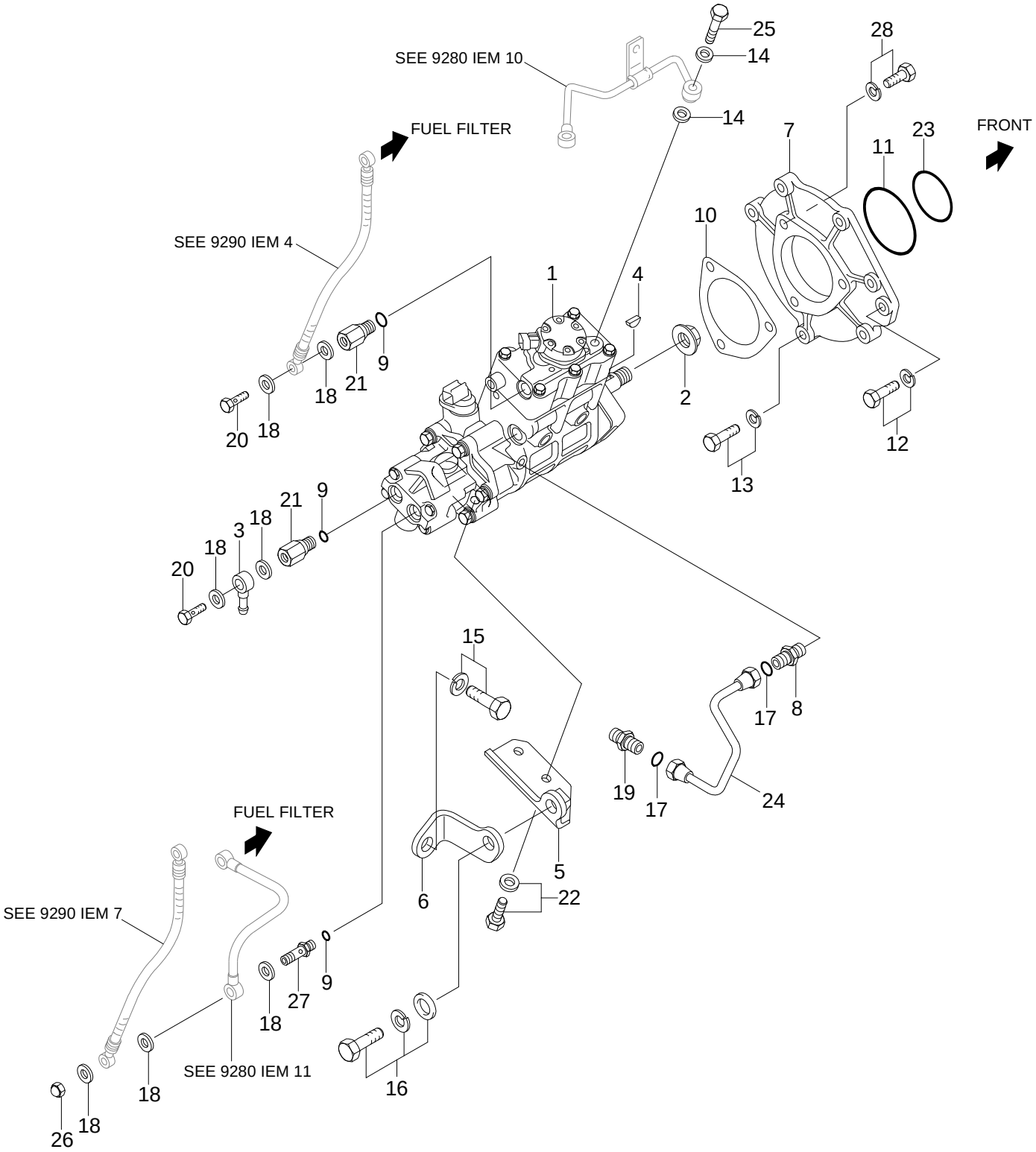

Item	Part_No	IS	Ord	T	Description	Qty	Serial_No	ITC	Remark
1	XJAF-02698				PUMP-HIGH PRESSURE	1			
2	XJAF-02432				NUT FLANGE 14	1			
3	XJAF-00450				NIPPLE	1			
4	XJAF-02433				KEY-WOODRUFF	1			
5	XJAF-02434				BRACKET-PUMP	1			
6	XJAF-02435				BRACKET-PUMP	1			
7	XJAF-02436				FLANGE-INJ PUMP	1			
8	XJAF-02517				CONNECTOR	1			
9	XJAF-02438				O-RING	3			
10	XJAF-02439				GASKET-PUMP	1			
11	XJAF-02440				O-RING	1			
12	XJAF-00379				BOLT-W/WASHER	4			
13	XJAF-02382				BOLT-W/WASHER	1			
14	XJAF-02441				WASHER-PLAIN	2			
15	XJAF-00454				BOLT-W/WASHER	1			
16	XJAF-02442				BOLT-W/WASHER	1			
17	XJAF-02518				O-RING	2			
18	XJAF-02416				WASHER	7			
19	XJAF-00376				CONNECTOR	1			
20	XJAF-02424				BOLT-EYE	2			
21	XJAF-02519				CONNECTOR	2			
22	XJAF-00185				BOLT-W/WASHER	2			
23	XJAF-02445				O-RING	1			
24	XJAF-02520				PIPE-OIL	1			
25	XJAF-02447				BOLT-EYE	1			

Item	Part_No	IS	Ord	T	Description	Qty	Serial_No	ITC	Remark
26	XJAF-02448				NUT-CAP	1			
27	XJAF-02521				CONNECTOR	1			
28	XJAF-00749				BOLT-W/WASHER	3			

STARTER(24V-5KW)

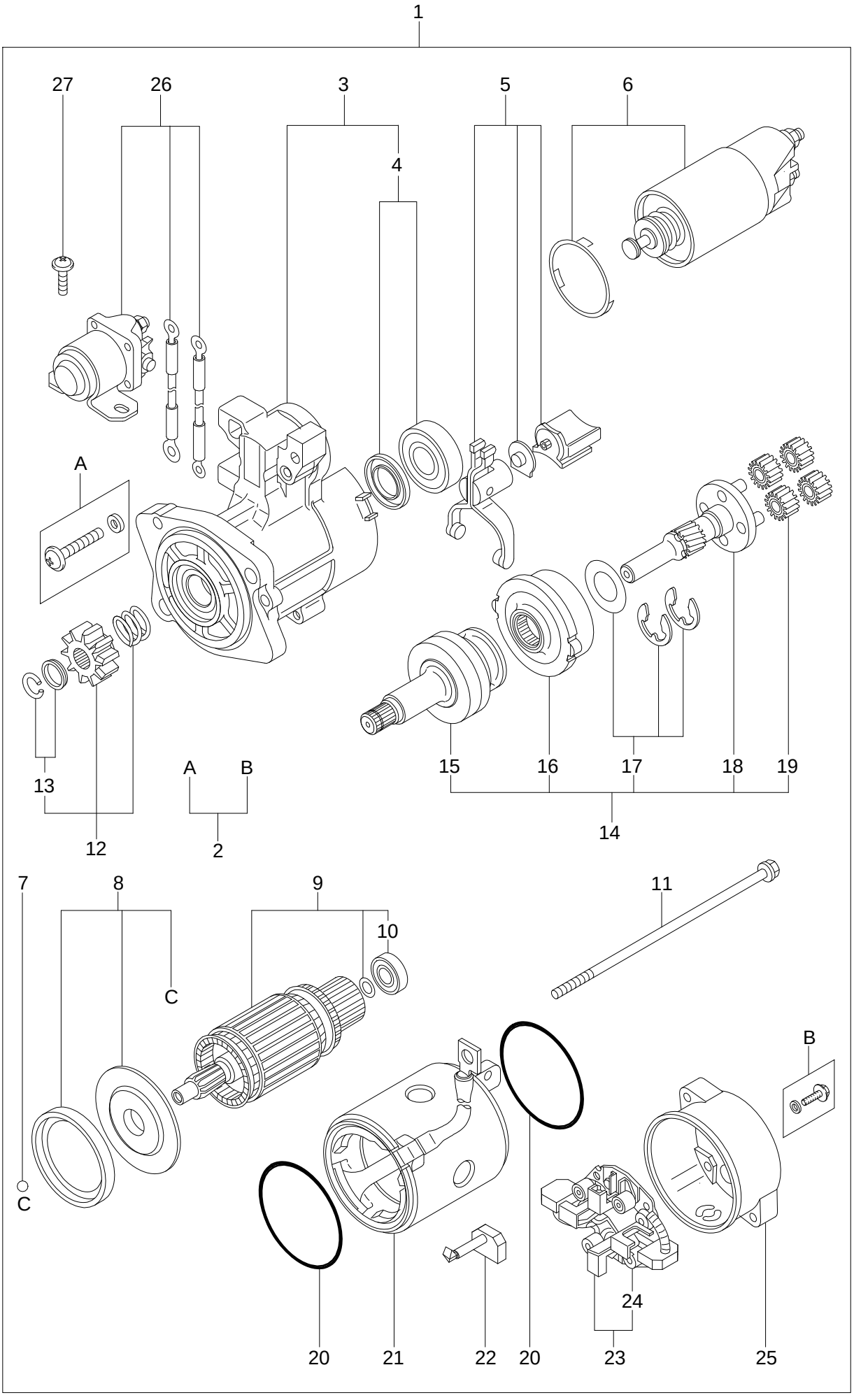

Item	Part_No	IS	Ord	T	Description	Qty	Serial_No	ITC	Remark
1	XJAF-00504				STARTER ASSY	1			
2	XJAF-00505				.SCREW SET	1			
3	XJAF-00506				.BRACKET ASSY-FRONT	1			INCL 4
4	XJAF-00507				..BEARING SET	1			
5	XJAF-00508				.LEVER SET	1			
6	XJAF-00509				.SWITCH ASSY	1			
7	XJAF-00510				.BALL	1			
8	XJAF-00511				.PACKING SET	1			
9	XJAF-00512				.ARMATURE ASSY	1			INCL 10
10	XJAF-00513				..BEARING	1			
11	XJAF-00514				.BOLT SET	1			
12	XJAF-00515				.PINION SET	1			INCL 13
13	XJAF-00516				..STOPER SET	1			
14	XJAF-00517				.SHAFT ASSY-CLUTCH	1			INCL 15-19
15	XJAF-00518				..CLUTCH-OVER RUNNING	1			
16	XJAF-00519				..INTERNAL GEAR ASSY	1			
17	XJAF-00520				..WASHER SET	1			
18	XJAF-00521				..SHAFT ASSY-GEAR	1			
19	XJAF-00522				..GEAR ASSY	4			
20	XJAF-00523				.PACKING	2			
21	XJAF-00524				.YOKE ASSY	1			
22	XJAF-00525				.BRUSH	2			
23	XJAF-00820				.HOLDER ASSY-BRUSH	1			INCL 24
24	XJAF-00527				..SPRING-BRUSH	4			
25	XJAF-00528				.BRACKET ASSY-REAR	1			

Item	Part_No	IS	Ord	T	Description	Qty	Serial_No	ITC	Remark
26	XJAF-00529				.SWITCH ASSY	1			
27	XJAF-00530				.SCREW SET	1			

AIR HEATER & WIRE

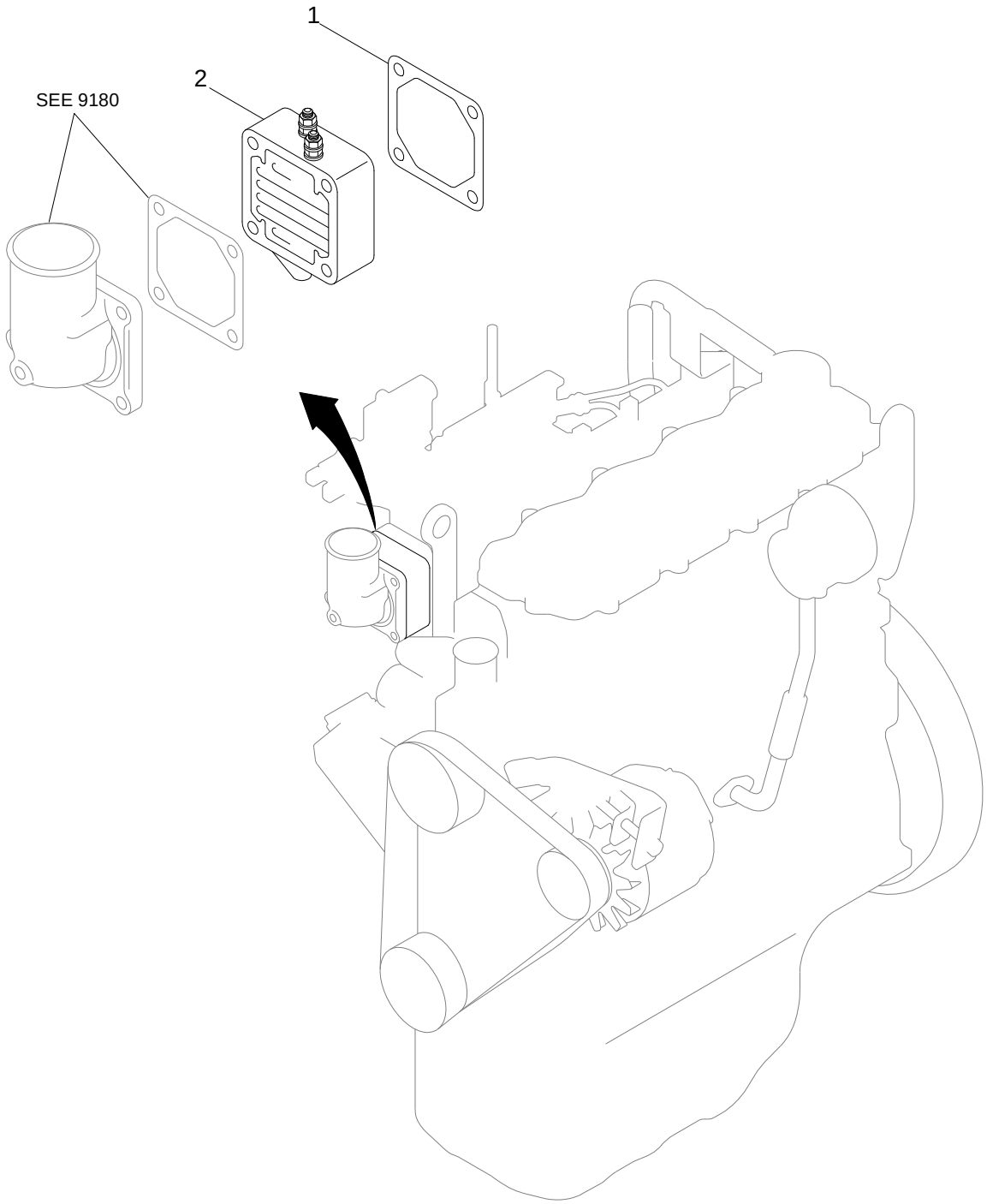

Item	Part_No	IS	Ord	T	Description	Qty	Serial_No	ITC	Remark
1	XJAF-00320				GASKET	1			
2	XJAF-00319				HEATER-AIR	1			

[Item List] - Print Date : 2020.08.21 17:08

ALTERNATOR(GENERAL)

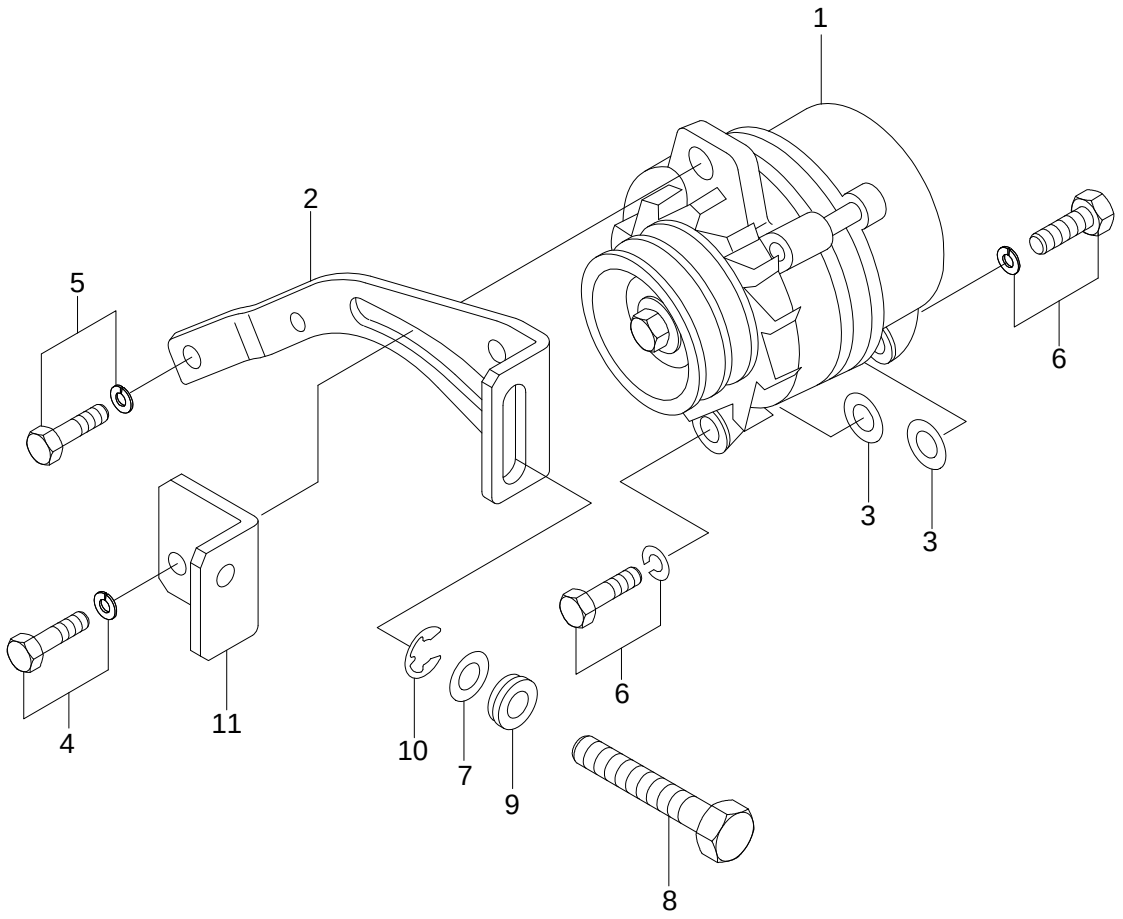

Item	Part_No	IS	Ord	T	Description	Qty	Serial_No	ITC	Remark
1	XJAF-02522				ALTERNATOR ASSY	1			
2	XJAF-02450				PLATE-ADJUSTING	1			
3	XJAF-00495				WASHER	2			
4	XJAF-02575				BOLT-W/WASHER	1			
5	XJAF-00178				BOLT-W/WASHER	1			
6	XJAF-00497				BOLT-W/WASHER	2			
7	XJAF-00498				WASHER-PLAIN	1			
8	XJAF-00499				BOLT-SET	1			
9	XJAF-00500				WASHER	1			
10	XJAF-00501				RING-SNAP	1			
11	XJAF-00502				PULLER	1			

ALTERNATOR(24V-50A)

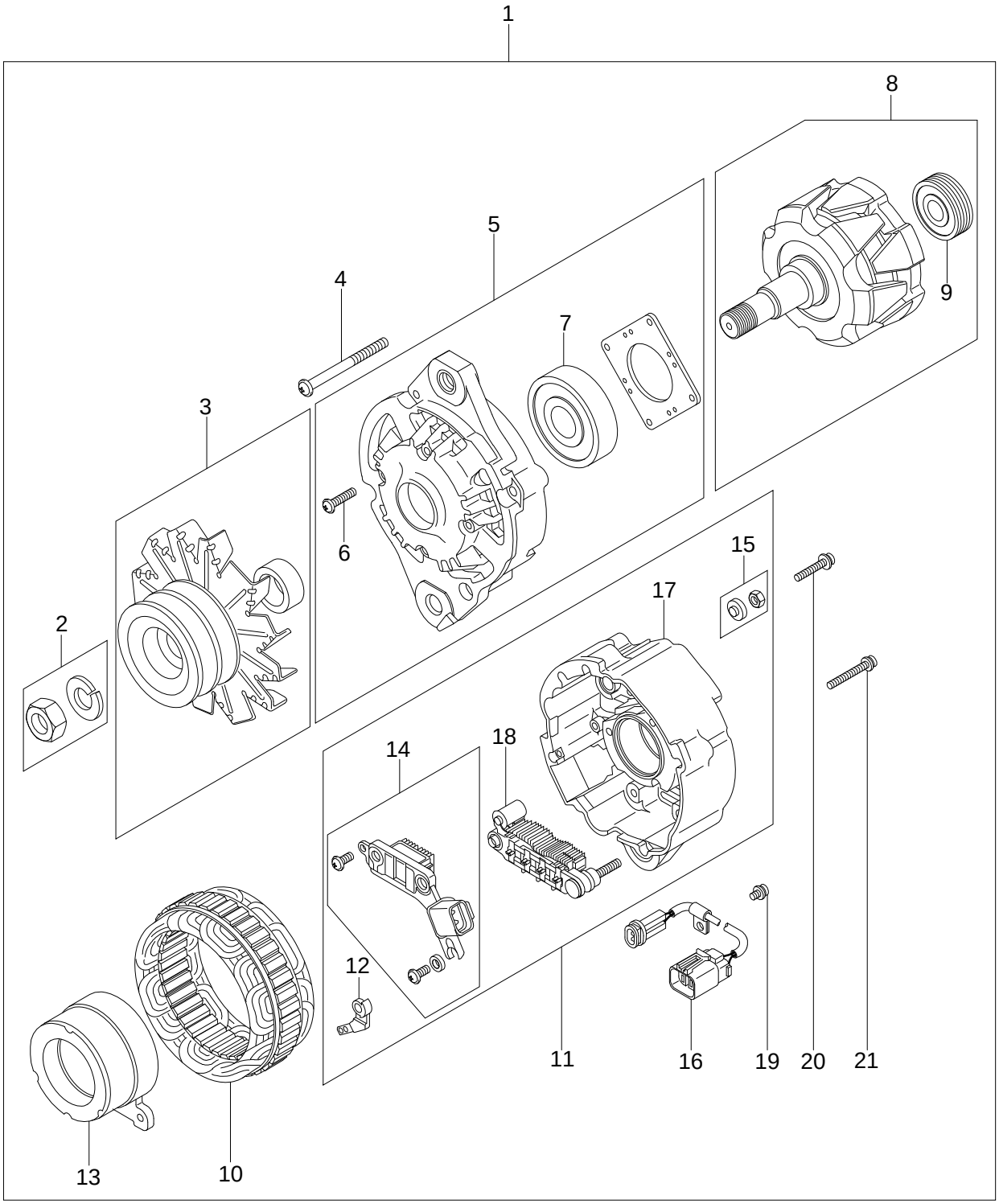

Item	Part_No	IS	Ord	T	Description	Qty	Serial_No	ITC	Remark
1	XJAF-02522				ALTERNATOR ASSY	1			
2	XJAF-02483				.NUT SET	1			
3	XJAF-02523				.PULLEY ASSY	1			
4	XJAF-00534				.SCREW	1			
5	XJAF-00535				.BRACKET ASSY-FRONT	1			
6	XJAF-00536				..SCREW SET	1			
7	XJAF-00537				..BEARING	1			
8	XJAF-00538				.ROTOR ASSY	1			
9	XJAF-00539				..BEARING	1			
10	XJAF-00541				.STATOR ASSY	1			
11	XJAF-00542				.BRACKET ASSY-REAR	1			
12	XJAF-02524				..PLATE	1			
14	XJAF-02484				..REGULATOR	1			
15	XJAF-00547				..NUT SET	1			
17	XJAF-00546				..BRACKET ASSY	1			
18	XJAF-00545				..RECTIFIER ASSY	1			
13	XJAF-00540				.COIL ASSY	1			
16	XJAF-00548				.CONNECTOR ASSY	1			
19	XJAF-00549				.SCREW SET	1			
20	XJAF-00550				.SCREW SET	1			
21	XJAF-00551				.SCREW SET	1			

ENGINE CONTROL

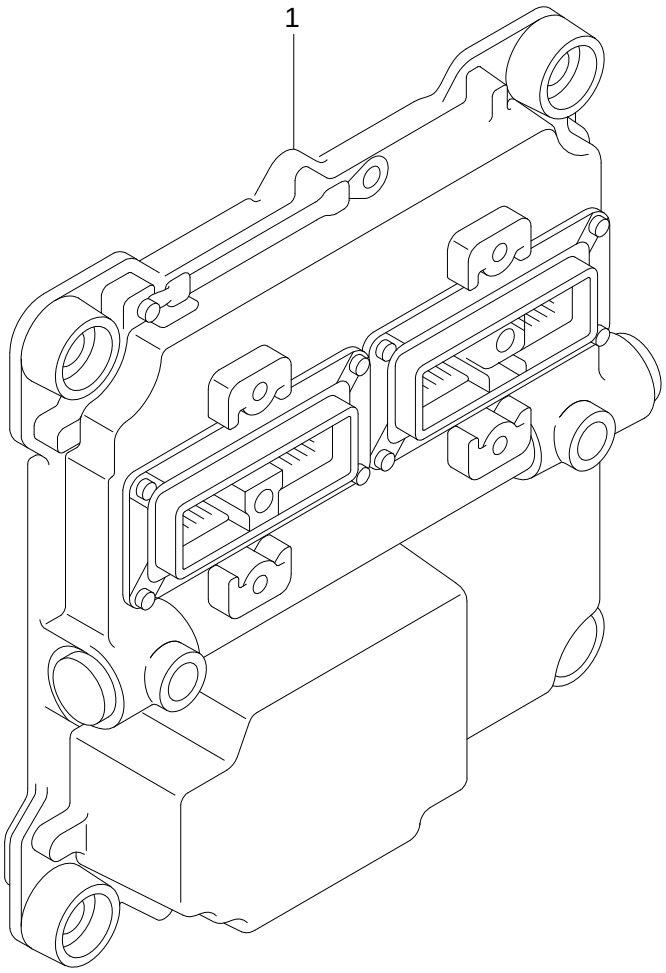

Item	Part_No	IS	Ord	T	Description	Qty	Serial_No	ITC	Remark
1	XJAF-02559				CONTROLLER ASSY	1			

[Item List] - Print Date : 2020.08.21 17:08

INSTRUMENT 1

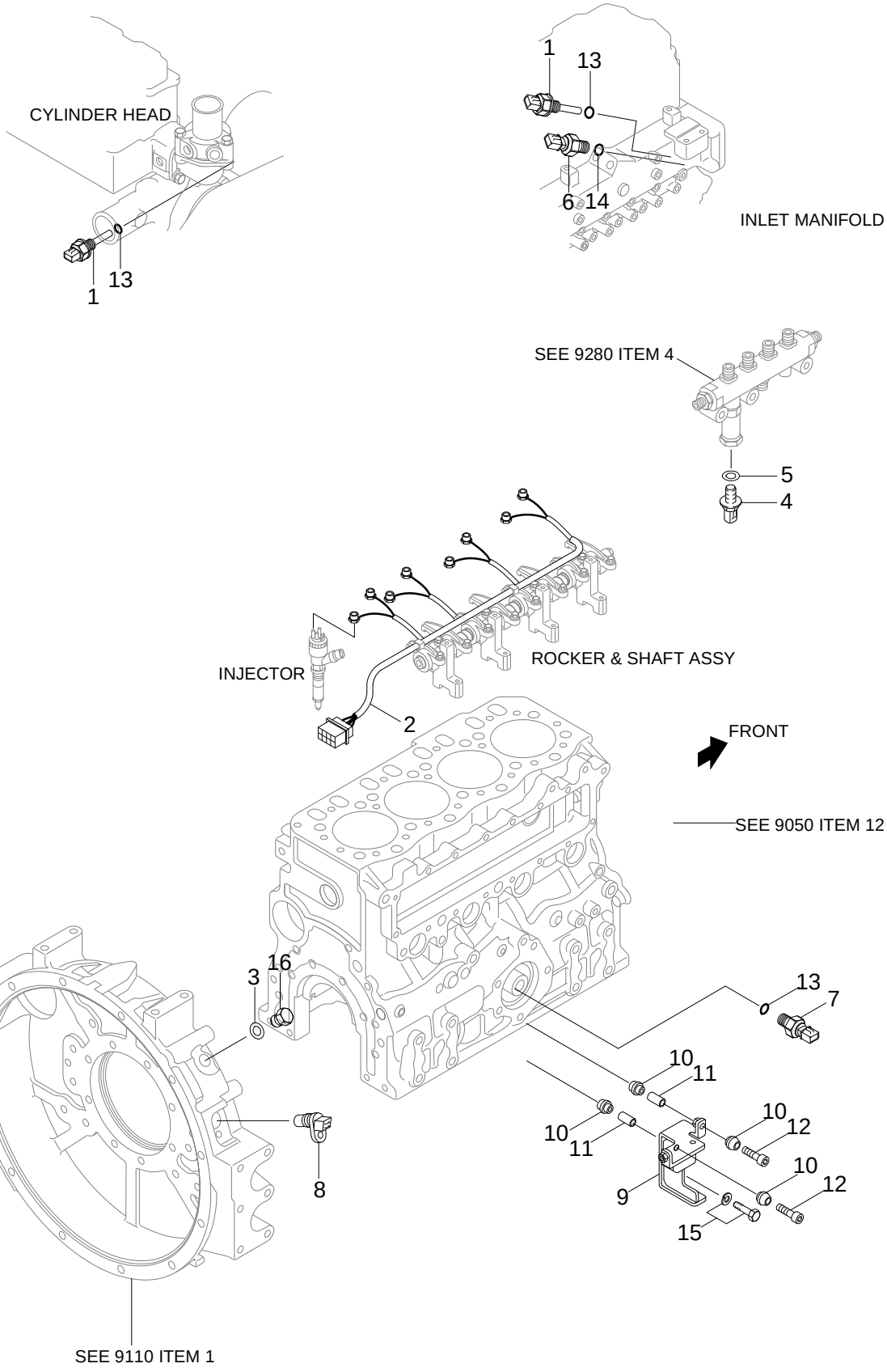

Item	Part_No	IS	Ord	T	Description	Qty	Serial_No	ITC	Remark
1	XJAF-02453				SENSOR-TEMP	2			
2	XJAF-02526				HARNESS-INJECTOR	1			
3	XJAF-00560				GASKET-INLET MANIFOLD	1			
4	XJAF-02455				SENSOR-RAIL PRESSURE	1			
5	XJAF-02456				WASHER-RAIL PRESSURE	1			
6	XJAF-02457				SENSOR-BOOST PRESSURE	1			
7	XJAF-02458				SENSOR-OIL PRESSURE	1			
8	XJAF-02459				SENSOR-CRANK ANGLE	1			
9	XJAF-02527				BRACKER-CONNECTOR	1			
10	XJAF-02461				MOUNT-RUBBER	8			
11	XJAF-02462				BUSH-SPACER	4			
12	XJAF-02463				BOLT-HEXAGON SOCKET	3			
13	XJAF-02438				O-RING	3			
14	XJAF-02464				O-RING	1			
15	XJAF-02390				BOLT-W/WASHER	2			
16	XJAF-00418				PLUG-DRAIN	1			

INSTRUMENT 3

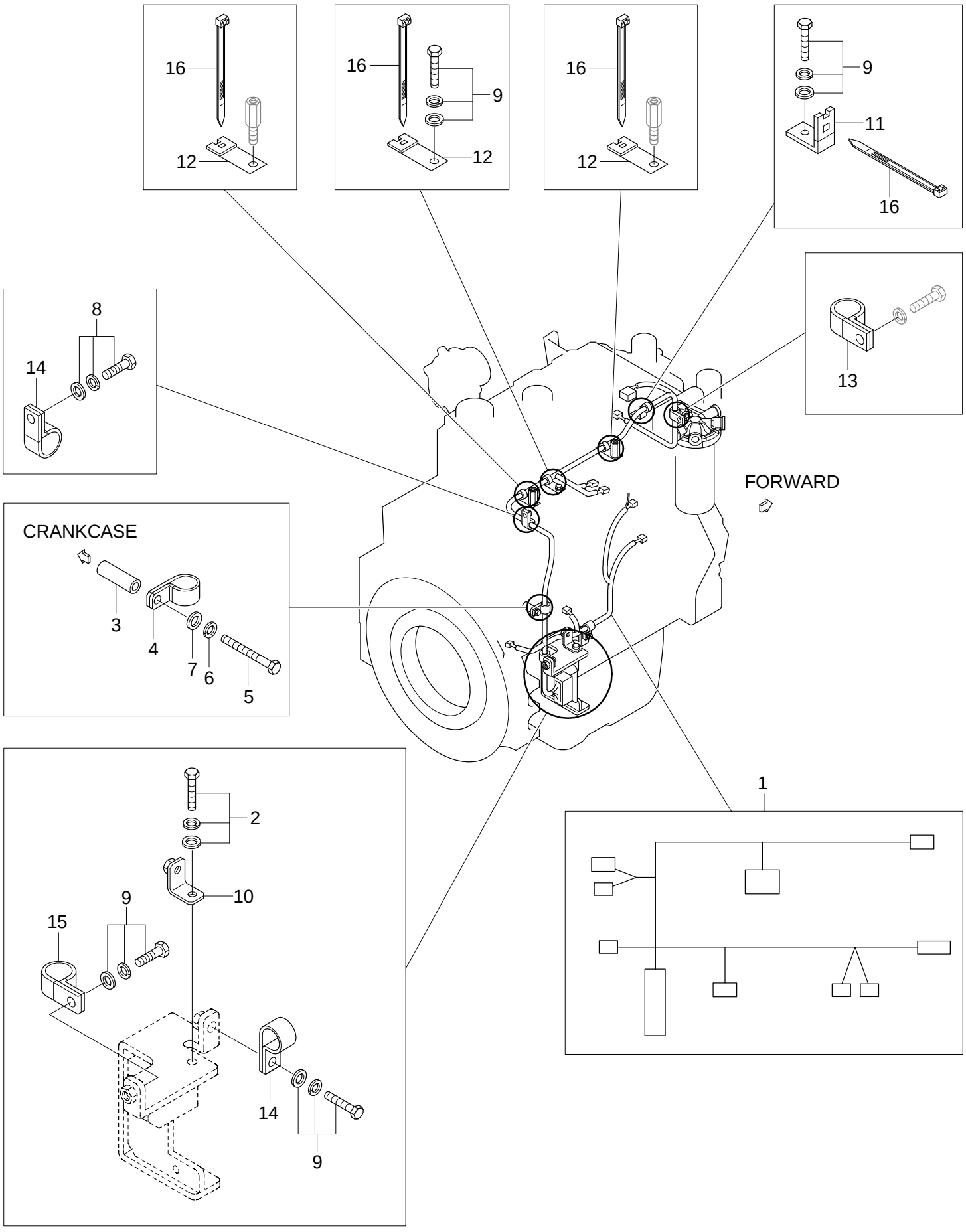

Item	Part_No	IS	Ord	T	Description	Qty	Serial_No	ITC	Remark
1	XJAF-02577				HARNESS-MAIN REMOTE	1			
2	XJAF-02470				BOLT-W/WASHER	1			
3	XJAF-02466				SPACER	1			
4	XJAF-02467				CLIP	1			
5	XJAF-02468				BOLT	1			
6	XJAF-00213				WASHER-LOCK	1			
7	XJAF-00498				WASHER-PLAIN	1			
8	XJAF-02477				BOLT-W/WASHER	1			
9	XJAF-00365				BOLT-W/WASHER	4			
10	XJAF-02476				STAY-HARNESS	1			
11	XJAF-02529				CLIP-LADDER	1			
12	XJAF-02528				CLIP-LADDER	3			
13	XJAF-02531				CLIP	1			
14	XJAF-02474				CLIP	2			
15	XJAF-02576				CLIP	1			
16	XJAF-02530				BAND-CLIP	4			

Page	Contents	Serial_No	
1	**ENGINE SYSTEM**		
1010	ENGINE MOUNTING		
1020	AIR INTAKE SYSTEM		
1030	EXHAUST SYSTEM		
1040	COOLING SYSTEM		
1050	RADIATOR ASSY		
1060	FUEL SYSTEM(WITHOUT PREFILTER)		2010. 7.31 REV.10G
1065	FUEL SYSTEM(WITH PREFILTER)		2010. 7.31 REV.10G
1070	FUEL TANK		
1080	AIRCON & HEATER GROUP		
1085	AIR CONDITIONER BOTTOM SUB		
1090	AIRCON & HEATER UNIT		
1100	AIR CONDITIONER MOUNTING		
1110	AIR CONDITIONER UNIT(SEMI AUTO)		
1120	HEATER MOUNTING		
1130	HEATER UNIT(SEMI AUTO)		
2	**ELECTRIC SYSTEM**		
2010	RH ELECTRIC		
2020	LH ELECTRIC		2010. 3.31 REV.10C
2030	BOOM ELECTRIC(STD)		
2035	BOOM ELECTRIC(ADJUST BOOM)		
2040	ENGINE ELECTRIC		
2050	ELECTRIC BOX		
2060	CAB ELECTRIC 1		
2070	CAB ELECTRIC 2		2010. 4.30 REV.10D
2080	CABIN ROOM ELECTRIC		2010. 4.30 REV.10D
2085	CLUSTER		2010. 7.31 REV.10G
2090	BOTTOM ELECTRIC		2010. 4.30 REV.10D
2100	FUEL FILLER PUMP		
2110	FUSE BOX		2009. 11.30 REV.9L
3	**HYDRAULIC SYSTEM**		
3010	PUMP MOUNTING		
3020	HYDRAULIC TANK		
3100	UPPER HYD PIPING(BASE)		
3110	UPPER HYD PIPING(ATTACH)		
3120	UPPER HYD PIPING(TRAVEL)		2010. 5.31 REV.10E
3200	PILOT HYD PIPING(CONTROL 1)		2010. 4.30 REV.10D
3210	PILOT HYD PIPING(CONTROL 2)		2010. 4.30 REV.10D
3230	PILOT HYD PIPING(BOTTOM 1)		
3240	PILOT HYD PIPING(BOTTOM 2)		
3250	PILOT HYD PIPING(BASE 1)		2010. 4.30 REV.10D
3260	PILOT HYD PIPING(BASE 2)		2010. 4.30 REV.10D
3270	PILOT HYD PIPING(BASE 3)		2010. 4.30 REV.10D

3290	UPPER HYD PIPING(R180LCD-9)		2010. 4.30 REV.10D
3300	TRAVEL HYD PIPING(R180LC-9)		
3310	TRAVEL HYD PIPING 1(R180LCD-9)		
3320	TRAVEL HYD PIPING 2(R180LCD-9)		
3400	BOOM HYD PIPING(5.1M, STD)		2010. 4.30 REV.10D
3410	BOOM GREASE LUB SYSTEM(5.1M, STD)		
3420	BOOM SAFETY LOCK SYSTEM		2010. 4.30 REV.10D
3430	QUICK CLAMP HYD PIPING		2010. 8.31 REV.10H
3500	ARM HYD PIPING		2010. 7.31 REV.10G
3510	ARM HYD PIPING(3.1M, LONG)		2010. 8.31 REV.10H
3520	ARM SAFETY LOCK SYSTEM		2010. 4.30 REV.10D
3630	ATTACH PIPING KIT(S & D/ACTING)		2010. 8.31 REV.10H
3640	SINGLE ACTING MAIN PIPING KIT		
3645	DOUBLE ACTING MAIN PIPING KIT 1		
3646	DOUBLE ACTING MAIN PIPING KIT 2		
4	**HYDRAULIC COMPONENT**		
4010	MAIN PUMP		
4020	REGULATOR		
4030	GEAR PUMP		
4050	MAIN CONTROL VALVE(1/4)		
4060	MAIN CONTROL VALVE(2/4)		
4070	MAIN CONTROL VALVE(3/4)		
4080	MAIN CONTROL VALVE(4/4)		
4100	SWING MOTOR		
4110	SWING REDUCTION GEAR		
4120	REMOTE CONTROL LEVER		
4125	DOZER CONTROL LEVER		
4130	REMOTE CONTROL PEDAL		
4150	TRAVEL MOTOR(1/2)		
4160	TRAVEL MOTOR(2/2)		
4170	TRAVEL REDUCTION GEAR		
4180	TURNING JOINT		
4190	TURNING JOINT(R180LCD-9)		
4200	BOOM CYLINDER		2010. 4.30 REV.10D
4210	ARM CYLINDER		2010. 4.30 REV.10D
4220	BUCKET CYLINDER		
4230	DOZER BLADE CYLINDER		
4240	SOLENOID VALVE		
4300	SINGLE PEDAL(DOUBLE ACTING)		
4400	QUICK CLAMP(HOOK TYPE 1)		

4410	QUICK CLAMP(CLOSE TYPE 1)		
4415	QUICK CLAMP CYLINDER		
4420	QUICK CLAMP(HOOK TYPE 2)		
4430	QUICK CLAMP(CLOSE TYPE 2)		
4435	QUICK CLAMP CYLINDER		
5	**UNDERCARRIAGE**		
5010	UNDERCARRIAGE MOUNTING		2010. 4.30 REV.10D
5020	LOWER ROLLER		
5030	UPPER ROLLER		
5040	ADJUST COMPONENT		
5050	IDLER		
5060	TRACK CHAIN		2010. 1. 4 REV.10A
6	**STRUCTURE**		
6010	CAB MOUNTING		2010. 3.31 REV.10C
6020	CAB ASSY(1/4)		2009.12.30 REV.9M
6030	CAB ASSY(2/4)		2010. 3.31 REV.10C
6040	CAB ASSY(3/4)		2010. 3.31 REV.10C
6050	CAB ASSY(4/4, DOOR)		
6080	CAB INTERIOR 1		
6090	CAB INTERIOR 2		
6100	CAB INTERIOR 3		2010. 4.30 REV.10D
6110	CONSOLE BOX 1(LH)		
6120	CONSOLE BOX 2(LH)		
6130	CONSOLE BOX 3(RH)		
6140	SEAT BASE ASSY		2010. 4.30 REV.10D
6150	SEAT(SUSPENSION, HEATED, STD)		
6152	SEAT(SUSPENSION)		
6154	SEAT(SUSPENSION, 2"AIR RIDE, HEATED)		
6156	SEAT(SUSPENSION, 2"AIR RIDE)		
6160	STORAGE BOX ASSY		
6170	BOTTOM PLATE MOUNTING		
6200	COWLING 1		
6210	COWLING 2		
6220	SIDE COWL ASSY(LH)		2009. 11.30 REV.9L
6230	SIDE COVER ASSY(LH)		2009. 11.30 REV.9L
6240	SIDE COWL ASSY(RH)		2009. 11.30 REV.9L
6250	ENGINE HOOD		
6260	UNDER COVER		
6270	TOOL BOX MOUNTING		
6280	TOOL BOX		
6300	GROMMET GROUP		2010. 3.31 REV.10C

6400	UPPER FRAME & COUNTERWEIGHT		2010. 4.30 REV.10D
6410	LOWER FRAME & COVER		2010. 6.30 REV.10F
6420	SWING RING GREASE LUB SYSTEM		2010. 7.31 REV.10G
6430	DOZER BLADE(R180LCD-9)		
7	**ATTACHMENT**		
7010	BOOM MOUNTING(5.1M, STD)		
7100	BOOM(5.1M, STD)		
7200	ARM		2010. 7.31 REV.10G
7300	BUCKET CONTROL GROUP		
7400	BUCKET(5 TEETH)		2010. 5.31 REV.10E
7410	BUCKET(3 TEETH)		
7420	BUCKET(4 TEETH)		
7430	BUCKET(6 TEETH)		
7440	BUCKET(0.69M3 SAE HEAPED, HEAVY DUTY)		
7460	BUCKET(0.75M3 SAE HEAPED D/CLEANING)		2009. 11.30 REV.9L
8	**OTHERS**		
8010	TOOLS		
8050	HCE-DT KIT		2010. 2.28 REV.10B
8100	DECALS		2010. 5.31 REV.10E
8200	MANUALS		
9	**ENGINE BASE**		
9010	CYLINDER HEAD		
9020	VALVE MECHANISM		
9030	ROCKER COVER		
9040	CAMSHAFT		
9050	CRANKCASE		
9060	LIFTING EYE		
9070	MAIN BEARING		
9080	TIMING GEAR CASE 1		
9090	WATER PUMP		
9100	TIMING GEAR CASE 2		
9110	FLYWHEEL HOUSING		
9120	OIL PAN		
9130	PISTON		
9140	CONNECTING ROD		
9150	CRANKSHAFT & PULLEY		
9160	FLYWHEEL		
9170	TIMING GEAR		
9180	INLET SYSTEM		
9190	EXHAUST SYSTEM		
9200	TURBOCHARGER		

9210	TURBOCHARGER PIPING		
9220	OIL STRAINER		
9230	OIL COOLER		
9240	OIL FILTER		
9250	BREATHER		
9260	WATER PUMP PULLEY & V-VELT		
9270	COOLING SYSTEM		
9280	FUEL SYSTEM		
9290	FUEL FILTER		
9300	INJECTION PUMP GENERAL		
9310	STARTER (24V-5KW)		
9320	AIR HEATER & WIRE		
9330	ALTERNATOR(GENERAL)		
9340	ALTERNATOR (24V-50A)		
9350	ENGINE CONTROL		
9360	INSTRUMENT 1		
9380	INSTRUMENT 3		