ENGINE MOUNTING

RUTHZIL TRATOR COMERCIAL DE PEÇAS LTDA 11 97083-6812 ROLANDO CITRANGULO

R320LC-7 HYUNDAI

SERIAL NO : -#1925

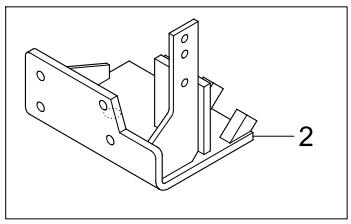

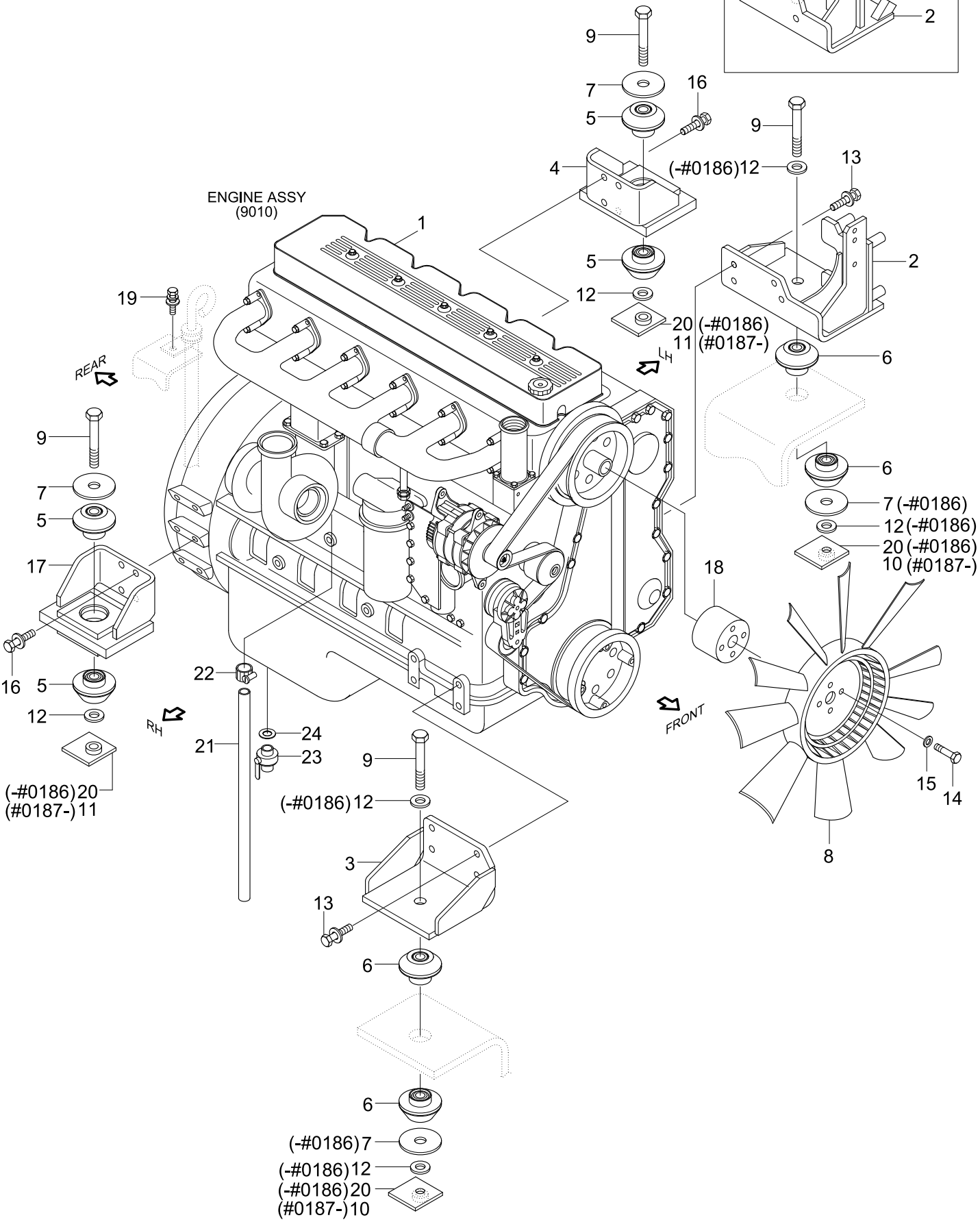

Item	Part_No	IS	Ord	T	Description	Qty	Serial_No	ITC	Remark
1	11N9-00010				ENGINE ASSY	1			
2	11NA-00070				BRACKET-ENG & COMP	1	- #1925		
	11NA-00071				BRACKET-ENG & COMP	1	#1926 -	D	
3	11NA-00060				BRACKET-RH, FR	1			
4	11NA-00081				MOUNT WA-LH,ENG	1			
5	11N6-13065				RESILIENT	4			
6	11N6-13060				RESILIENT	4			
7	11N8-00060				WASHER	4	- #0186		
					WASHER	2	#0187 -	A	
8	11NA-00110				FAN(BLADE 11EA)	1			STD
	11NA-00030				FAN(BLADE 9EA)	1			L/NOISE
9	S017-241802				BOLT-HEX	4			
10	11NA-00040				NUT-STOPPER	2	#0187 -	-	
11	11N6-00160				STOPPER-NUT	2	#0187 -	-	
12	S441-240002				WASHER-HARDENED	6	- #0186		
					WASHER-HARDENED	2	#0187 -	A	
13	S037-123052				BOLT-W/WASHER	8			
14	S017-101052				BOLT-HEX	4			STD
	S017-101202				BOLT-HEX	4			L/NOISE
15	S403-102002				WASHER-PLAIN	4			
16	S037-123552				BOLT-W/WASHER	8			
17	11NA-00051				MOUNT WA-RH,ENG	1			
18	SP9021				SPACER-FAN	1			L/NOISE
19	S035-082022				BOLT-W/WASHER	1			
20	S205-241002				NUT-HEX	4	- #0186	-	

Item	Part_No	IS	Ord	T	Description	Qty	Serial_No	ITC	Remark
21	11E9-02070				HOSE-BREATHER	1			
22	S520-027000				CLAMP-HOSE,SCREW TYPE	1			
23	11N4-00210				DRAIN VALVE-ENGINE OIL	1	#0161 - #1997	-	
	11N9-00210				VALVE-OIL DRAIN	1	#1998 -	D	
24	31L8-40090				WASHER-COPPER	1	#0161 -	-	

ENGINE CONTROL SYSTEM

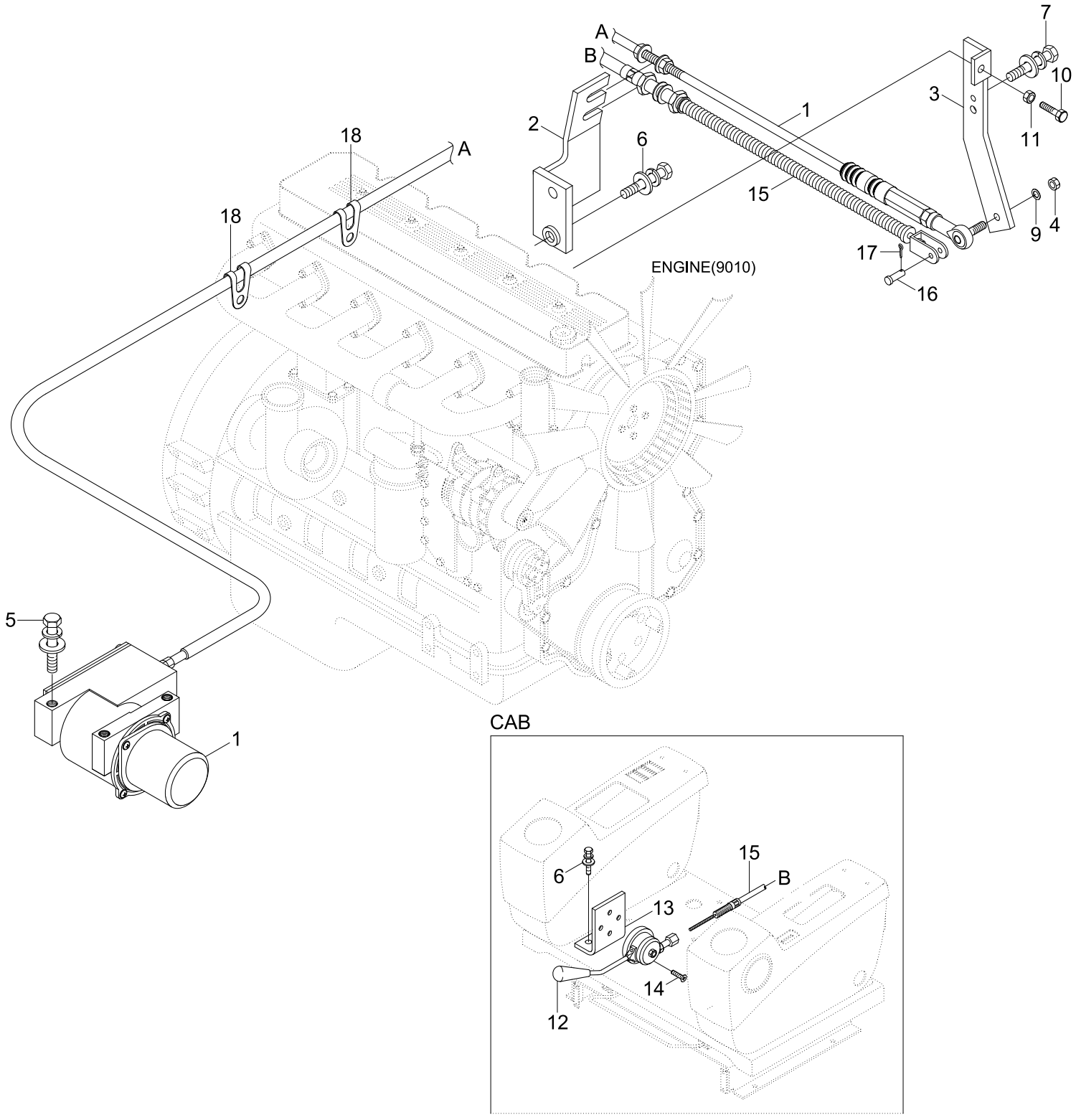

Item	Part_No	IS	Ord	T	Description	Qty	Serial_No	ITC	Remark
1	21EN-32200				ACCEL ACTUATOR(2950L)	1			
2	11N9-60111				BRACKET	1			
3	11N9-60102				LEVER-THROTTLE	1			
4	S205-08100B				NUT-HEX	1	- #1747		
	S275-08000B				NUT-SELF LOCKING	1	#1748 -	A	
5	S035-082022				BOLT-W/WASHER	3			
6	S037-102522				BOLT-W/WASHER	4			
7	S035-061522				BOLT-W/WASHER	2			
9	S403-082002				WASHER-PLAIN	2	- #1747		
	S411-080006				WASHER-SPRING	2	#1748 -	B	
10	S015-060452				BOLT-HEX	1			
11	S205-061002				NUT	1			
12	11N6-63040				LEVER-EMERGENCY	1	- #0028		
	11N6-63041				LEVER-EMERGENCY	1	#0029 -	B	
13	11N6-63050				BRACKET	1			
14	S141-080142				SCREW-FLAT HD	4			
15	11N8-60180				CABLE-THROTTLE	1	- #0028		
	11N8-60191				CABLE-THROTTLE	1	#0029 - #2743	B	
	11N9-60120				CABLE-THROTTLE	1	#2744 -	B	
	11N9-60130				CABLE-THROTTLE	1	#2744 -	B	
16	S491-060252				PIN-CLEVIS	1			
17	S461-160152				PIN-SPLIT	1			
18	S593-000902				CLIP-HARNESS	4	#0325 - #1594	-	
	S593-000802				CLIP-HARNESS	4	#1595 -	B	

AIR INTAKE SYSTEM

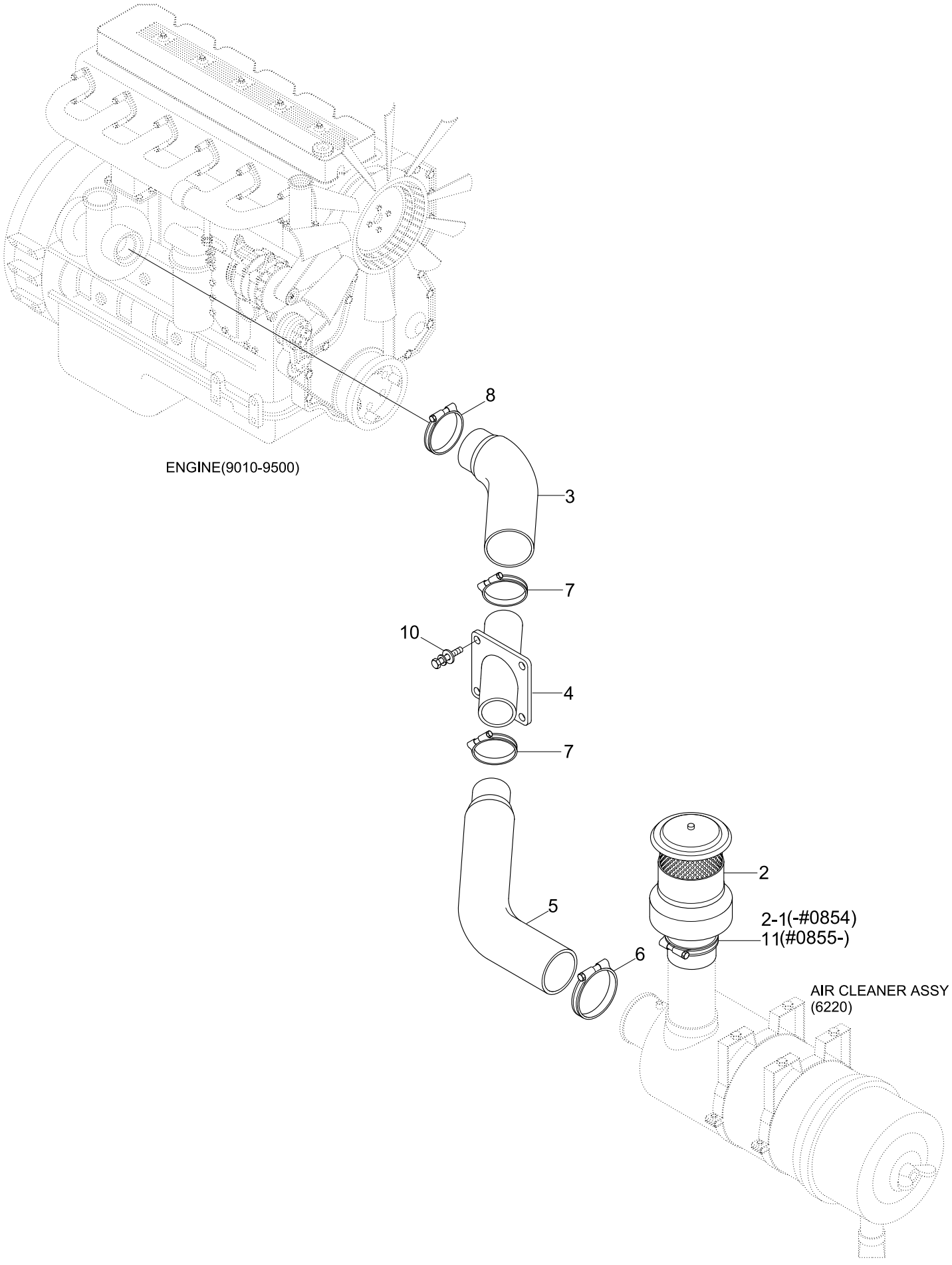

Item	Part_No	IS	Ord	T	Description	Qty	Serial_No	ITC	Remark
2	11N8-20180				PRECLEANER	1	- #0336		
	11N8-20181				PRECLEANER	1	#0337 -	B	
2-1	1-200-104				.CLAMP	1	- #0854	-	
3	11NA-20010				HOSE	1			
4	11N9-20011				PIPE	1			
5	11NA-20031				HOSE	1			
6	14E7-01120				CLAMP-HOSE	1	- #0503		
	11LB-40190				CLAMP-HOSE	1	#0504 -	A	
7	11E6-21250				CLAMP-HOSE	2	- #0503		
	11LB-40220				CLAMP-HOSE	2	#0504 -	A	
8	11E6-21240				CLAMP-HOSE	1	- #0503		
	11LB-40310				CLAMP-T/BOLT	1	#0504 -	A	
10	S037-122552				BOLT-W/WASHER	4			
11	11LB-40320				CLAMP-HOSE	1	#0855 -	B	

EXHAUST SYSTEM

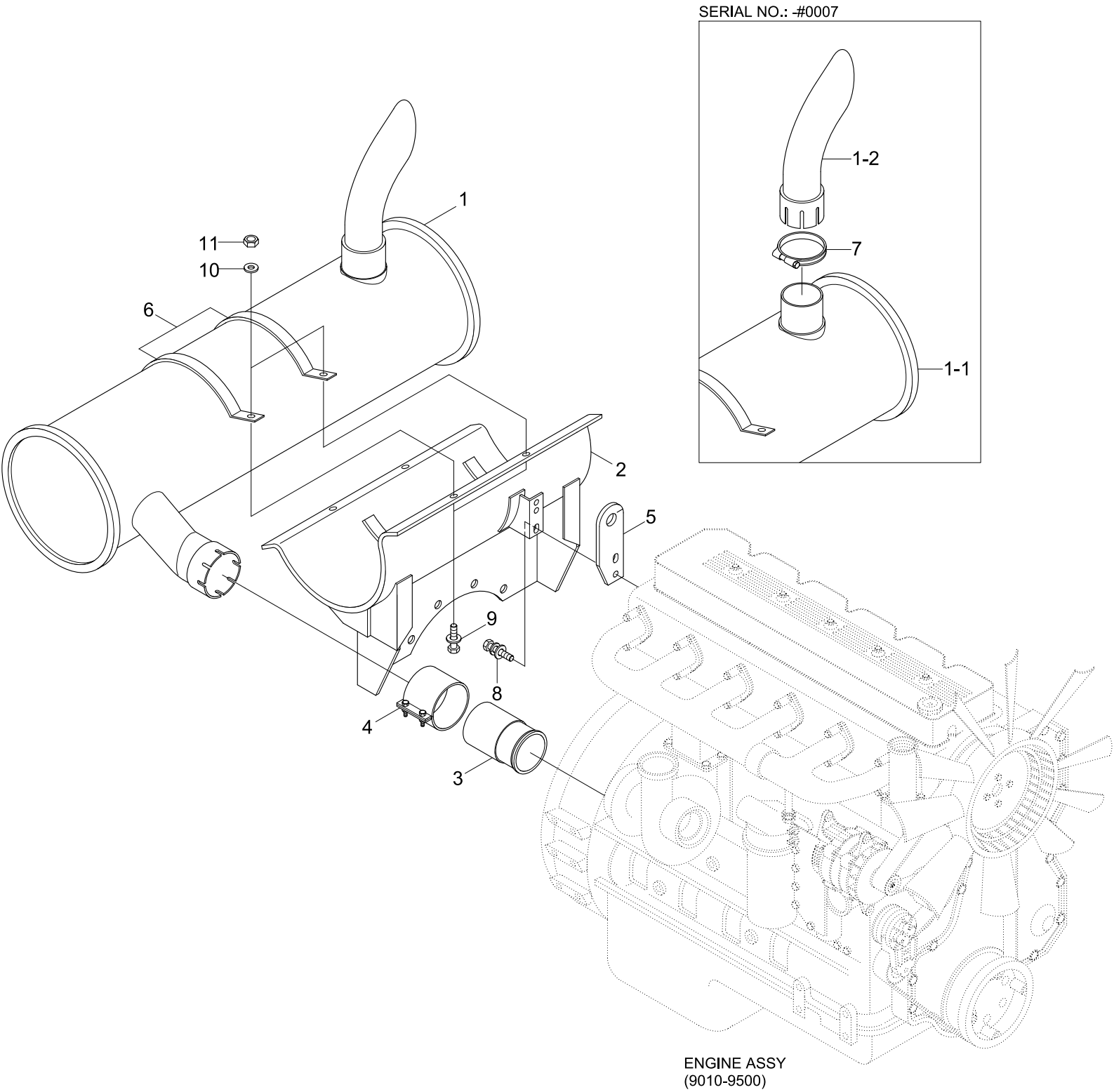

Item	Part_No	IS	Ord	T	Description	Qty	Serial_No	ITC	Remark
1	11NA-30011				MUFFLER ASSY	1	- #0007		STD
	11NA-30023				MUFFLER ASSY	1	#0008 - #1740	B	STD
	11NA-30024				MUFFLER ASSY	1	#1741 -	A	STD
	11NA-30070				MUFFLER WA	1	#0542 - #1740	-	OPT, LOW NOISE
	11NA-30071				MUFFLER WA	1	#1741 -	A	OPT, LOW NOISE
1-1	11NA-30021				.MUFFLER	1	- #0007	-	STD
1-2	11NA-30060				.TAIL PIPE	1	- #0007	-	STD
2	11NA-30030				BRACKET-MUFFLER	1			STD
	11NA-30080				BRACKET-MUFFLER	1	#0542 -	-	OPT, LOW NOISE
3	11NA-30040				CONNECTOR-EXHAUST	1			
4	11N6-30050				SEAL CLAMP ASSY	1			
5	11NA-30050				BRACKET-LIFT	1			STD ONLY
6	11N8-30160				CLAMP-BAND	2			STD ONLY
	11NB-31040				CLAMP-BAND	2	#0542 -	-	OPT, LOW NOISE
7	11EH-32080				CLAMP-EXHAUST PIPE	1	- #0007	-	
8	S037-123522				BOLT-W/WASHER	2			STD ONLY
9	S037-103052				BOLT-W/WASHER	4			
10	S441-100002				WASHER-HARDENED	4			
11	S205-101002				NUT-HEX	4			

COOLING SYSTEM

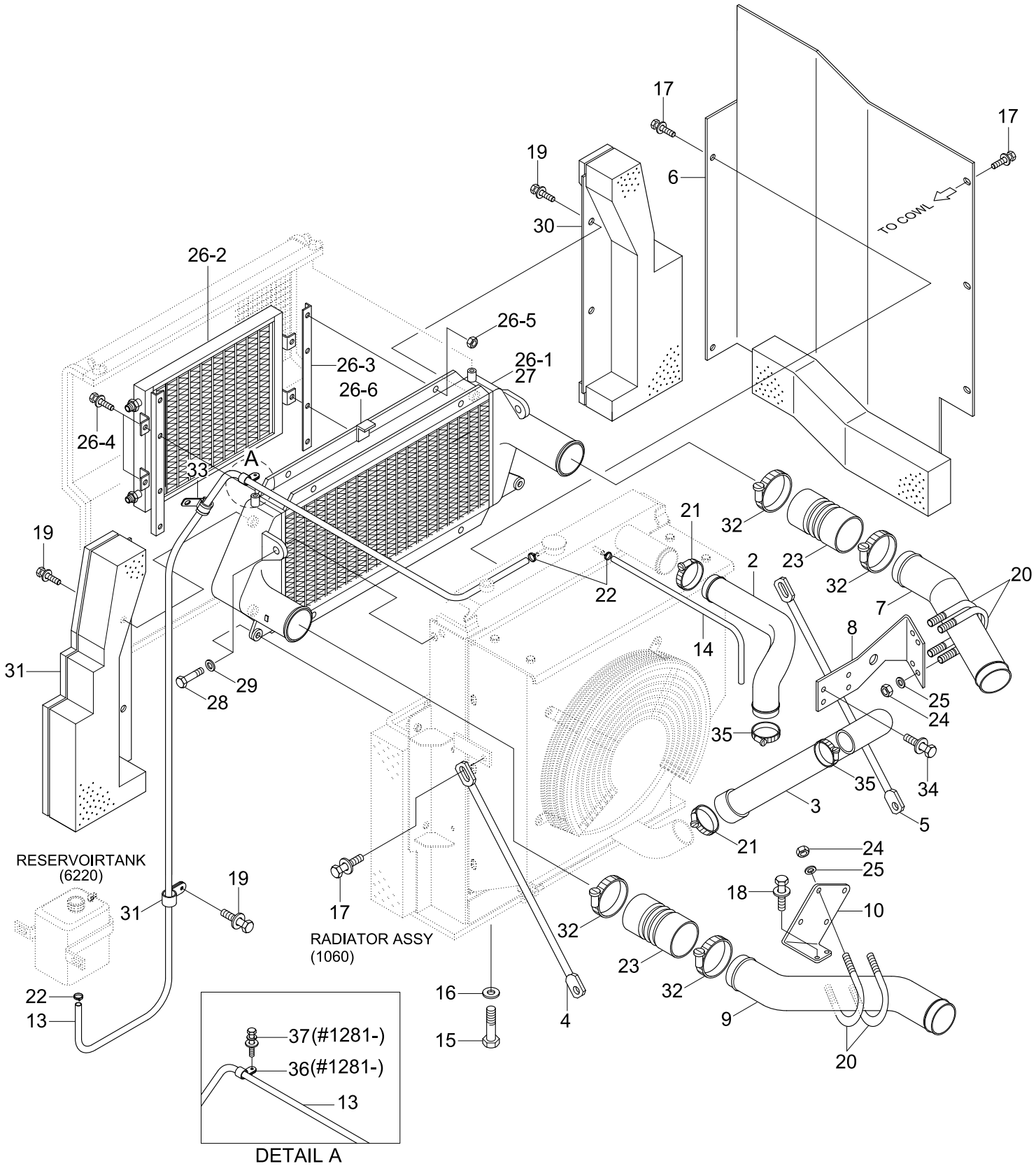

Item	Part_No	IS	Ord	T	Description	Qty	Serial_No	ITC	Remark
2	11N8-40021				HOSE	1			
3	11NA-40151				HOSE	1			
4	14EA-43120				ROD ASSY	1	- #0087		
	11N6-46150				STAY	1	#0088 -	B	
5	11EN-42340				ROD ASSY	1	- #0087		
	11N6-46130				ROD ASSY	1	#0088 -	B	
6	11N9-40192				SCREEN	1	- #0552		
	11N9-40193				SCREEN	1	#0553 -	B	
7	11NA-40170				PIPE	1			
8	11NA-40181				BRACKET-PIPE	1			
9	11N9-40160				PIPE	1			
10	11N9-40170				BRACKET-PIPE	1			
13	E111-2504	20			HOSE	1			
14	11E5-42380				HOSE-VENT	1			
15	S017-160402				BOLT-HEX	4			
16	S403-162002				WASHER-PLAIN	4			
17	S037-122552				BOLT-W/WASHER	9			
18	S037-102552				BOLT-W/WASHER	4			
19	S035-081522				BOLT-W/WASHER	6			
20	11NA-40240				U-BOLT	4			
21	S572-770006				CLAMP-HOSE,WIRE TYPE	4			
22	S520-015000				CLAMP-HOSE	4			
23	11N8-43270				HOSE-CAC	2			
24	S275-120002				NUT-SELF LOCKING	8			
25	S403-122002				WASHER-PLAIN	8			

Item	Part_No	IS	Ord	T	Description	Qty	Serial_No	ITC	Remark
26	11NA-40300				I/C & CONDENSER ASSY	1	- #1280		W/AIRCON
	11NA-40301				I/C & CONDENSER ASSY	1	#1281 -	B	W/AIRCON
26-1	11NA-40071				.INTERCOOLER ASSY	1	- #1280		
	11NA-40072				.INTERCOOLER ASSY	1	#1281 -	B	
26-2	11EM-90050				.CONDENSER ASSY	1			
26-3	AP100212				.BRACKET	2			
26-4	AZ710-006-013				.BOLT	8			
26-5	AB616-003-043				.NUT-HEX	4			
26-6	AP100236				.SPONGE-RUBBER	1			
27	11NA-40071				INTERCOOLER ASSY	1	- #1280		W/O AIRCON
	11NA-40072				INTERCOOLER ASSY	1	#1281 -	B	W/O AIRCON
28	S017-100452				BOLT-HEX	4			
29	S403-102002				WASHER-PLAIN	4			
30	11NA-40310				SCREEN ASSY	1			
31	11NA-40320				SCREEN ASSY	1			
32	11N6-20350				CLAMP-T/BOLT	4			
33	S593-000902				CLIP-HARNESS	2	- #1594		
	S593-000802				CLIP-HARNESS	2	#1595 -	B	
34	S035-082522				BOLT-W/WASHER	4			
35	S572-720006				CLAMP-HOSE,WIRE TYPE	4			
36	S541-180002				CLAMP-TUBE	1	#1281 -	-	
37	S035-061626				BOLT-W/WASHER	1	#1281 -	-	

RADIATOR ASSY

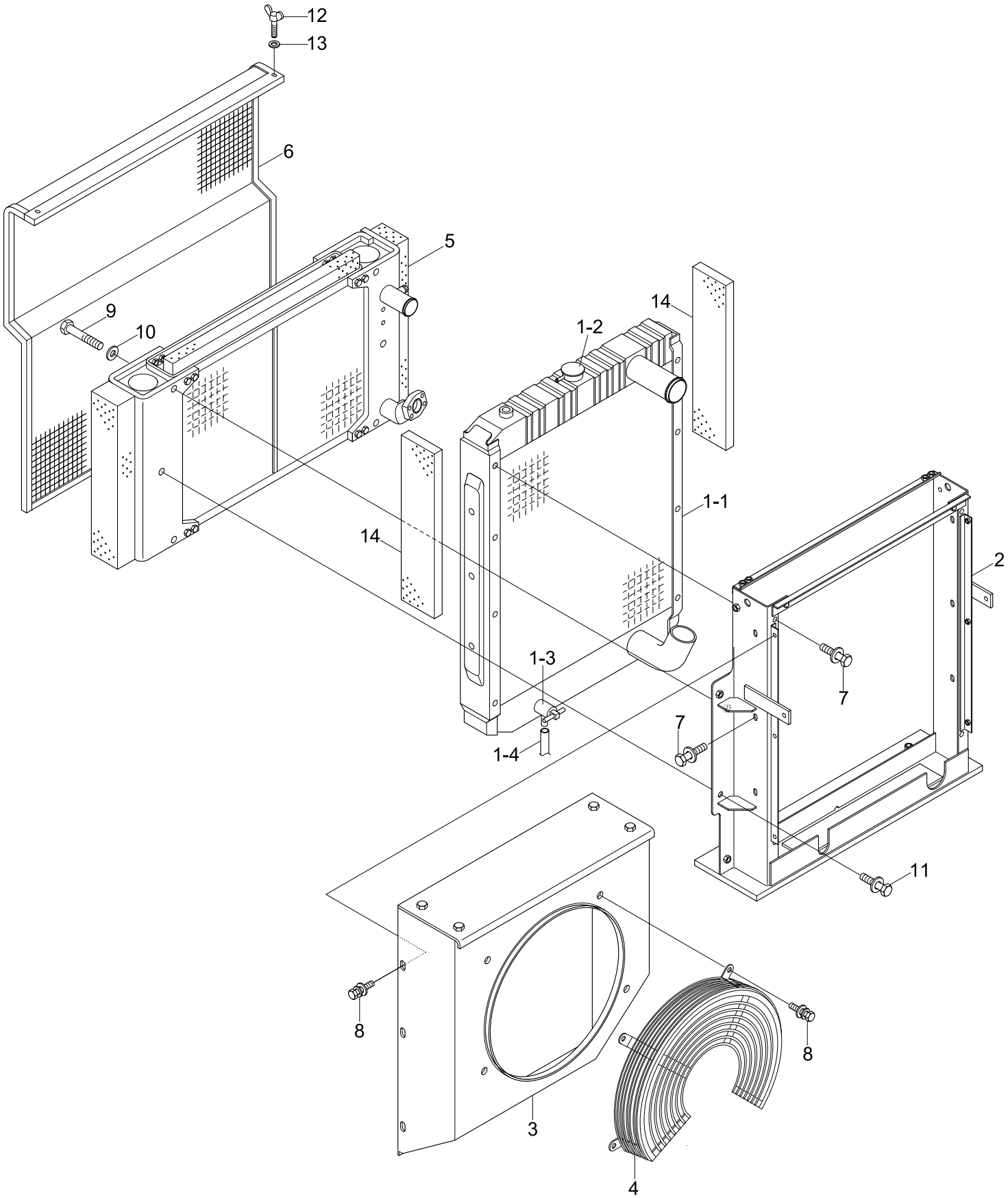

Item	Part_No	IS	Ord	T	Description	Qty	Serial_No	ITC	Remark
*	11N9-40022				RADIATOR TOTAL ASSY	1	- #1758		
	11N9-40200				RADIATOR TOTAL ASSY	1	#1759 -	B	
1	11NA-40030				.RADIATOR ASSY	1	- #0923		
	11NA-40031				.RADIATOR ASSY	1	#0924 - #1758	B	
	11N9-43540				.RADIATOR ASSY	1	#1759 -	B	
1-1	11NA-40230				..RADIATOR	1			
1-2	11EK-42200				..CAP-PRESSURE	1			
1-3	11EK-42210				..COCK-DARIN	1			
1-4	11EK-42220				..HOSE-DRAIN	1			
2	11NA-40043				.FRAME ASSY	1	- #0923		
	11NA-40044				.FRAME ASSY	1	#0924 -	B	
3	11NA-40250				.SHROUD ASSY	1			
4	11NA-40260				.FAN GUARD	1			
5	11N9-40062				.OIL COOLER ASSY	1	#0001 - #0848	-	
	11N9-40063				.OIL COOLER ASSY	1	#0849 - #1758	B	
	11N9-43510				.OIL COOLER ASSY	1	#1759 -	B	
6	11N9-43070				.WIRE NET	1	- #0001		NOT USED
	11N9-40120				.WIRE NET	1	#0001 -		
7	S037-102552				.BOLT-W/WASHER	10	- #1758		
	S037-102556				.BOLT-W/WASHER	10	#1759 -	A	
8	S035-082522				.BOLT-W/WASHER	10	- #1758		
	S035-082526				.BOLT-W/WASHER	10	#1759 -	A	
9	S017-121652				.BOLT-HEX	4	- #1758		
	S017-121656				.BOLT-HEX	4	#1759 -	A	
10	S403-122002				.WASHER-PLAIN	4	- #1758		

Item	Part_No	IS	Ord	T	Description	Qty	Serial_No	ITC	Remark
10	S403-12200B				.WASHER-PLAIN	4	#1759 -	A	
11	S037-122552				.BOLT-W/WASHER	2	- #1758		
	S037-122556				.BOLT-W/WASHER	2	#1759 -	A	
12	S091-060162				.BOLT-WING	2	- #1758		
	S091-060156				.BOLT-WING	2	#1759 -	A	
13	S403-062002				.WASHER-PLAIN	2	#0001 - #1758	-	1 SET
	S403-06200B				.WASHER-PLAIN	2	#1759 -	A	
14	11NA-40330				.SPONGE-LH,RH	2			

FUEL SYSTEM

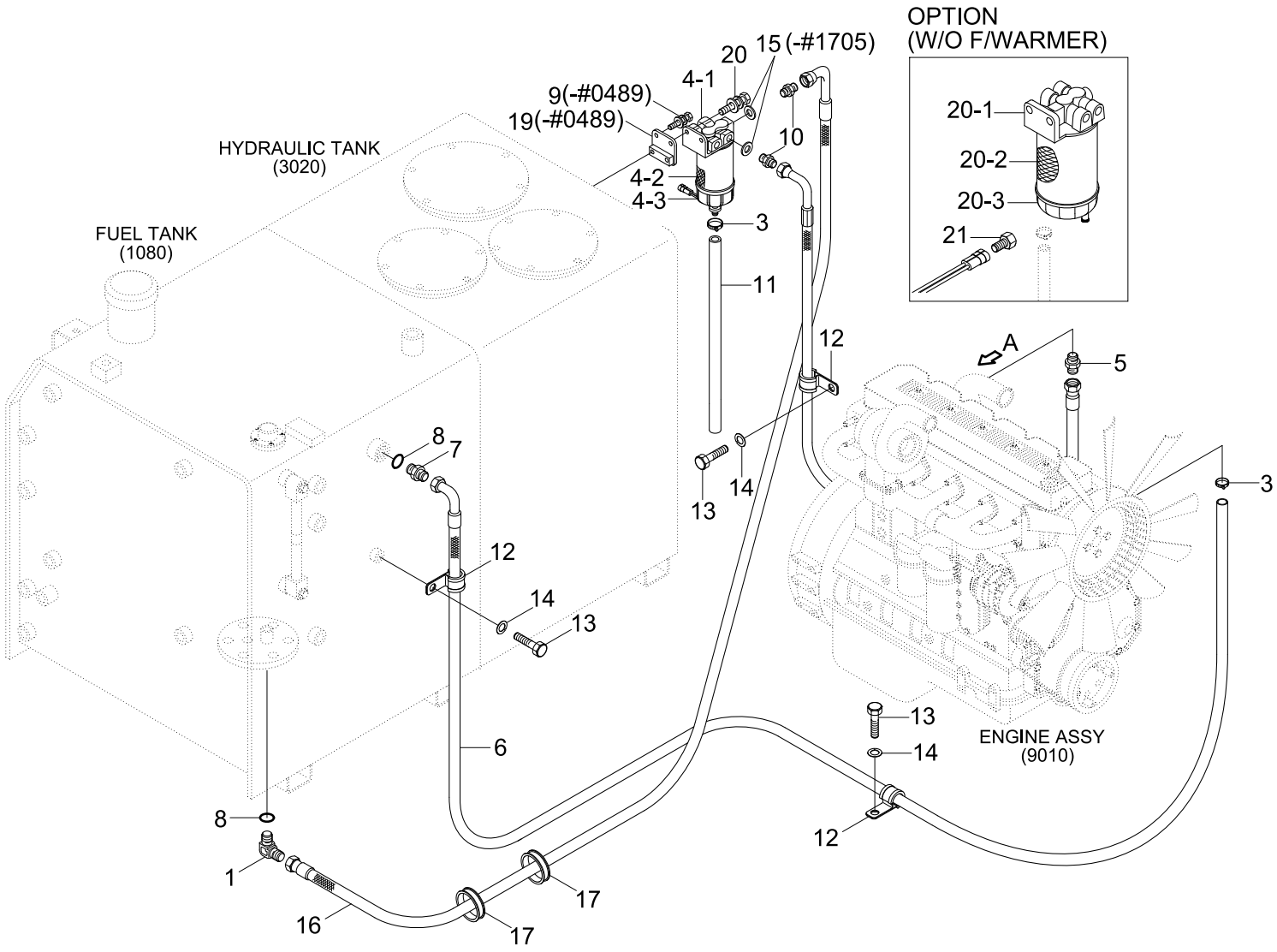

#18 FUEL WARMER KIT(OPT)
SERIAL NO : -#0829

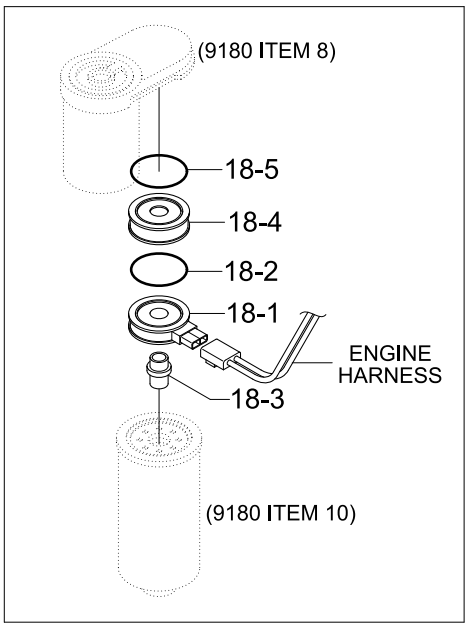

VIEW A

SERIAL NO : -#0439

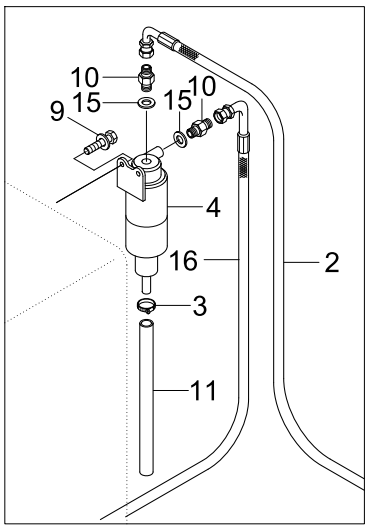

Item	Part_No	IS	Ord	T	Description	Qty	Serial_No	ITC	Remark
1	P020-110003				ELBOW-90	1			
2	11N9-50010				HOSE ASSY	1			
3	S520-015000				CLAMP-HOSE	2			
4	11EM-52320				WATER SEPARATOR	1	- #0439		
	11LB-20300				PREFILTER ASSY	1	#0440 - #0829	D	
	11NB-70400				PREFILTER ASSY	1	#0830 -	D	W/ F/WARMER
4-1	11LD-20240				.HEAD-FILTER	1	#0440 -	-	
4-2	11LB-20310				.ELEMENT ASSY-F/FILTER	1	#0440 -	-	
4-3	11LD-20260				.BOWL ASSY-W/KNOB	1	#0440 - #0829	-	
	11NB-70410				.BOWL ASSY-W/HEATER	1	#0830 -	D	
4-3-1	11NB-70420				..GASKET-DRAIN KNOB	1	#0001 -	-	NOT SHOWN
5	11E9-52320				FITTING	1			
6	11N8-50120				HOSE ASSY	1			
7	P010-110015				CONNECTOR	1			
8	S631-018001				O-RING	2			
9	S035-082022				BOLT-W/WASHER	2	- #0489	-	
10	11N6-50010				CONNECTOR	2	- #0439		
	11NA-50040				CONNECTOR	2	#0440 - #1705	D	
	11QB-50040				CONNECTOR	2	#1706 -	B	
11	11N8-50111				HOSE ASSY	1	- #0298		
	11N8-50112				HOSE ASSY	1	#0299 - #0439	B	
	11N1-50020				HOSE ASSY	1	#0440 - #0489	D	
	11M8-50030				HOSE ASSY	1	#0490 -	A	
12	S543-200002				CLAMP-TUBE	3			
13	S017-100162				BOLT-HEX	3			

Item	Part_No	IS	Ord	T	Description	Qty	Serial_No	ITC	Remark
14	S403-102002				WASHER-PLAIN	3			
15	P392-140000				WASHER-COPPER	2	- #0439		
	P392-160000				WASHER-COPPER	2	#0440 - #1705	D	
16	11EG-52011				HOSE-FUEL	1			
17	S760-041000				GROMMET	2			
18	11N9-70410				FUEL WARMER KIT	1	#0053 - #0829	-	OPTION
18-1	392702300				.HEATER	1			
18-2	392666000				.O-RING	1			
N18-3	@				.INSERT	1	#0001 -	-	NOT
N18-4	@				.ADAPTER	1	#0001 -	-	NOT
18-5	391902500				.GASKET	1			
18-6	@				.GLUE	1	#0053 -	-	NOT
19	11N8-53040				BRACKET	1	#0440 - #0489	-	
20	11LB-20300				PREFILTER ASSY	1	#2556 -	-	W/O F/WARMER
20-1	11LD-20240				.HEAD-FILTER	1	#2556 -	-	
20-2	11LB-20310				.ELEMENT ASSY-F/FILTER	1	#2556 -	-	
20-3	11LD-20260				.BOWL ASSY-W/KNOB	1	#2556 -	-	
21	11N8-50070				PLUG	1	#2556 -	-	W/O F/WARMER
N	@				NOT SUPPLIED PARTS	AR			NOT

FUEL TANK

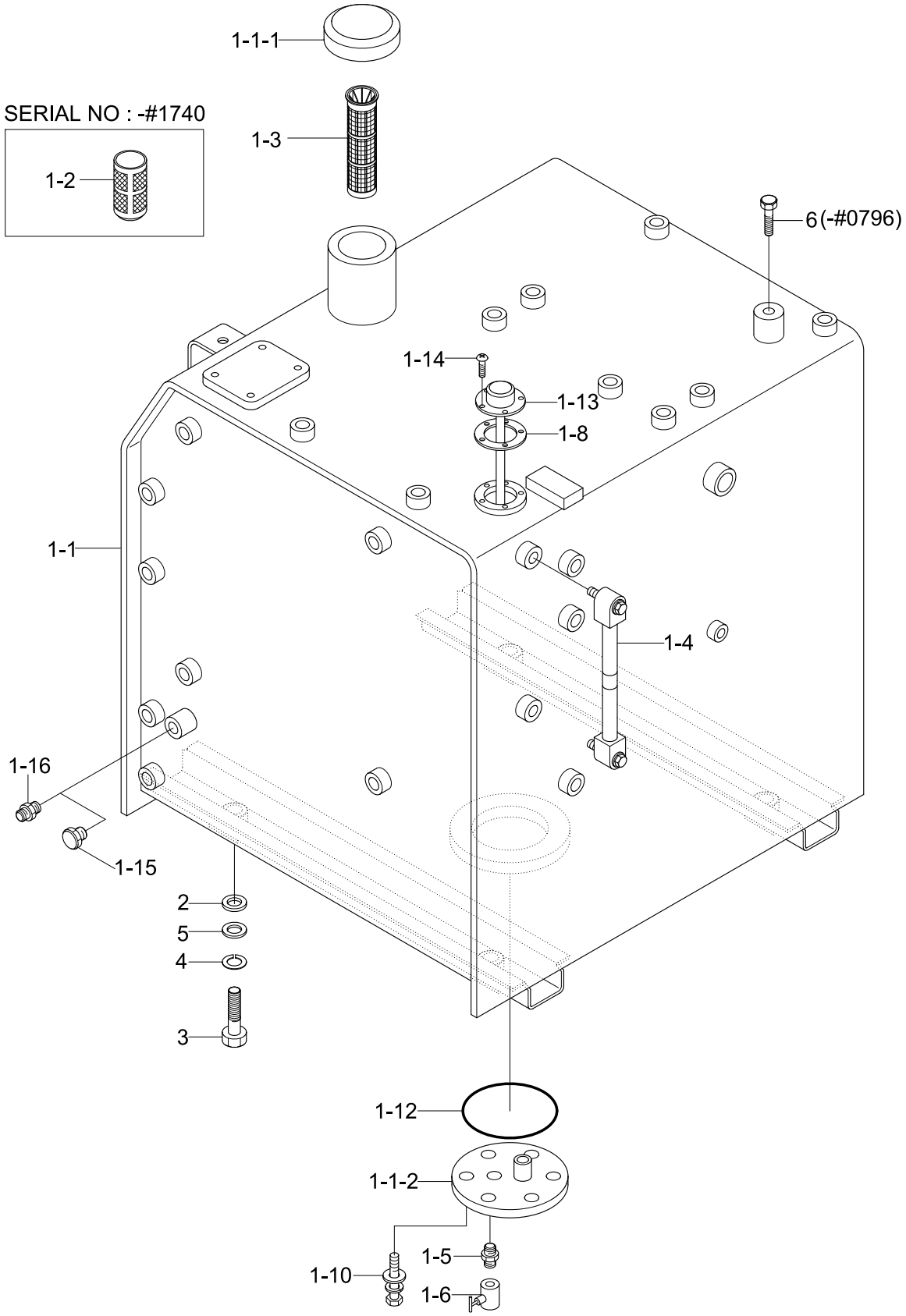
1-1-1
SERIAL NO : -#1740
1-3
1-2
6(-#0796)
1-14
1-13
1-8
1-1
1-4
1-16
1-15
2
5
4
3
1-12
1-1-2
1-10
1-5
1-6

Item	Part_No	IS	Ord	T	Description	Qty	Serial_No	ITC	Remark
1	@				FUEL TANK ASSY	1			NOT
1-1	31N8-03011				.FUEL TANK WA	1	- #0012		
	31N8-03012				.FUEL TANK WA	1	#0013 - #0109	B	
	31N8-03013				.FUEL TANK WA	1	#0110 - #0394	D	
	31N8-03014				.FUEL TANK WA	1	#0395 - #0796	A	
	31N8-03111				.FUEL TANK WA	1	#0797 - #0798	D	
	31N8-03112				.FUEL TANK WA	1	#0799 -	B	
1-1-1	E131-1038				..CAP-FILLER	1	- #0798		
	31N4-02120				..FUEL CAP ASSY	1	#0799 -	B	
1-1-2	31N4-02110				..COVER-DRAIN	1			
1-3	31E1-10300				.STRAINER	1	- #1740		
	31QA-02080				.STRAINER	1	#1741 -	B	
1-4	E131-0473				.GAUGE-LEVEL	1	- #0010		
	31N6-02100				.GAUGE-LEVEL	1	#0011 - #0109	B	
	31N6-02600				.GAUGE-LEVEL	1	#0110 -	D	
1-5	31E5-3049				.FITTING	1			
1-6	E131-1006				.VALVE-NEEDLE	1			
1-8	E128-1053				.GASKET	1			
1-10	S037-103022				.BOLT-W/WASHER	6			
1-12	S632-170001				.O-RING	1			
1-13	21NB-10701				.SENDER-FUEL	1	- #1811		
	21QB-10700				.SENDER-FUEL	1	#1812 -	B	
1-14	S161-050162				.SCREW-CROSS R/ROUND	5	- #1226		
	S131-051546				.SCREW-W/WASHER	5	#1227 -	A	
1-15	P220-430204				.PLUG-HEX	1			W/O F/F PUMP

Item	Part_No	IS	Ord	T	Description	Qty	Serial_No	ITC	Remark
1-16	P090-101208				.CONNECTOR-HOSE	1			W/ F/F PUMP
2	31N8-01300				SHIM(1.0T)	5			
3	S017-200502				BOLT-HEX	4			
4	S411-200002				WASHER-SPRING	4			
5	91E6-60200				WASHER-HARDENED	4			
6	S017-120202				BOLT-HEX	1	- #0796	-	

AIR CONDITIONER BOTTOM SUB(#1926-)

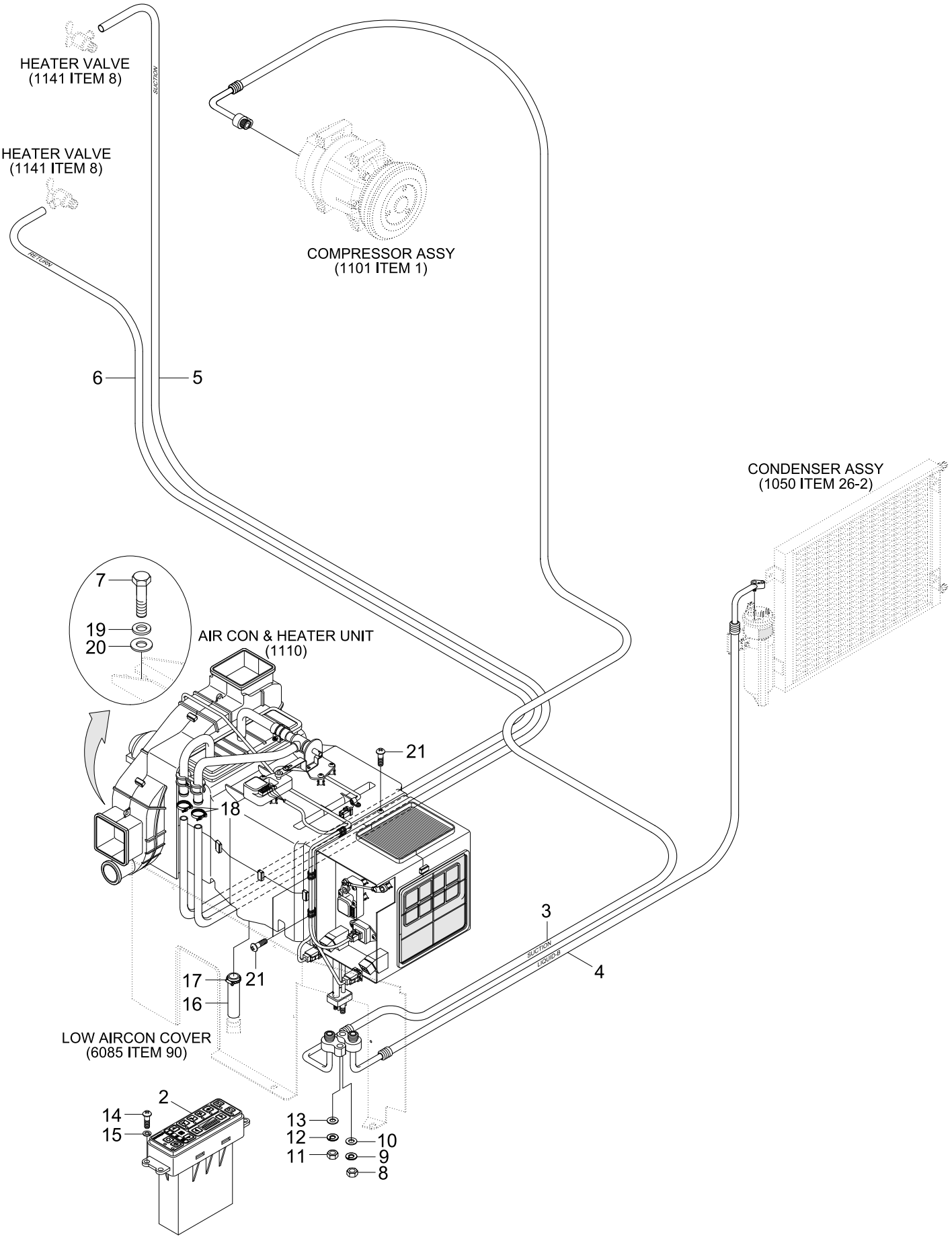

Item	Part_No	IS	Ord	T	Description	Qty	Serial_No	ITC	Remark
2	11N6-90031				CONTROL ASSY-SEMI	1			
	11N6-90331				CONTROL ASSY	1			HEATER
	11N6-90431				CONTROL ASSY-FATC	1			A/C&HEAT(AUTO)
3	11N8-90131				SUCTION HOSE	1			EXCEPT HEATER
4	11N8-90050				HOSE(B)-LIQUID	1			EXCEPT HEATER
5	11EK-92080				HOSE-HEATER	1			EXCEPT AIRCON
6	11L7-90140				HOSE-RETURN	1			EXCEPT AIRCON
7	S017-120256				BOLT-HEX	4			
8	S205-06100B				NUT-HEX	1			EXCEPT HEATER
9	S411-060006				WASHER-SPRING	1			EXCEPT HEATER
10	S403-06200B				WASHER-PLAIN	1			EXCEPT HEATER
11	S205-08100B				NUT-HEX	1			EXCEPT HEATER
12	S411-080006				WASHER-SPRING	1			EXCEPT HEATER
13	S403-08200B				WASHER-PLAIN	1			EXCEPT HEATER
14	S179-050206				SCREW-SOCKET RD HD	4			
15	S403-05200B				WASHER-PLAIN	4			
16	11EK-92090				HOSE-DRAIN	1			
17	S520-020000				CLAMP-HOSE	1			EXCEPT AIRCON
18	S572-220006				CLAMP-HOSE,WIRE TYPE	2			EXCEPT AIRCON
19	S441-12000B				WASHER-HARDENED	4			
20	73NB-56400				SHIM	4			
21	S151-040126				SCREW-TAPPING	4			

AIRCON & HEATER MOUNTING(-#1925)

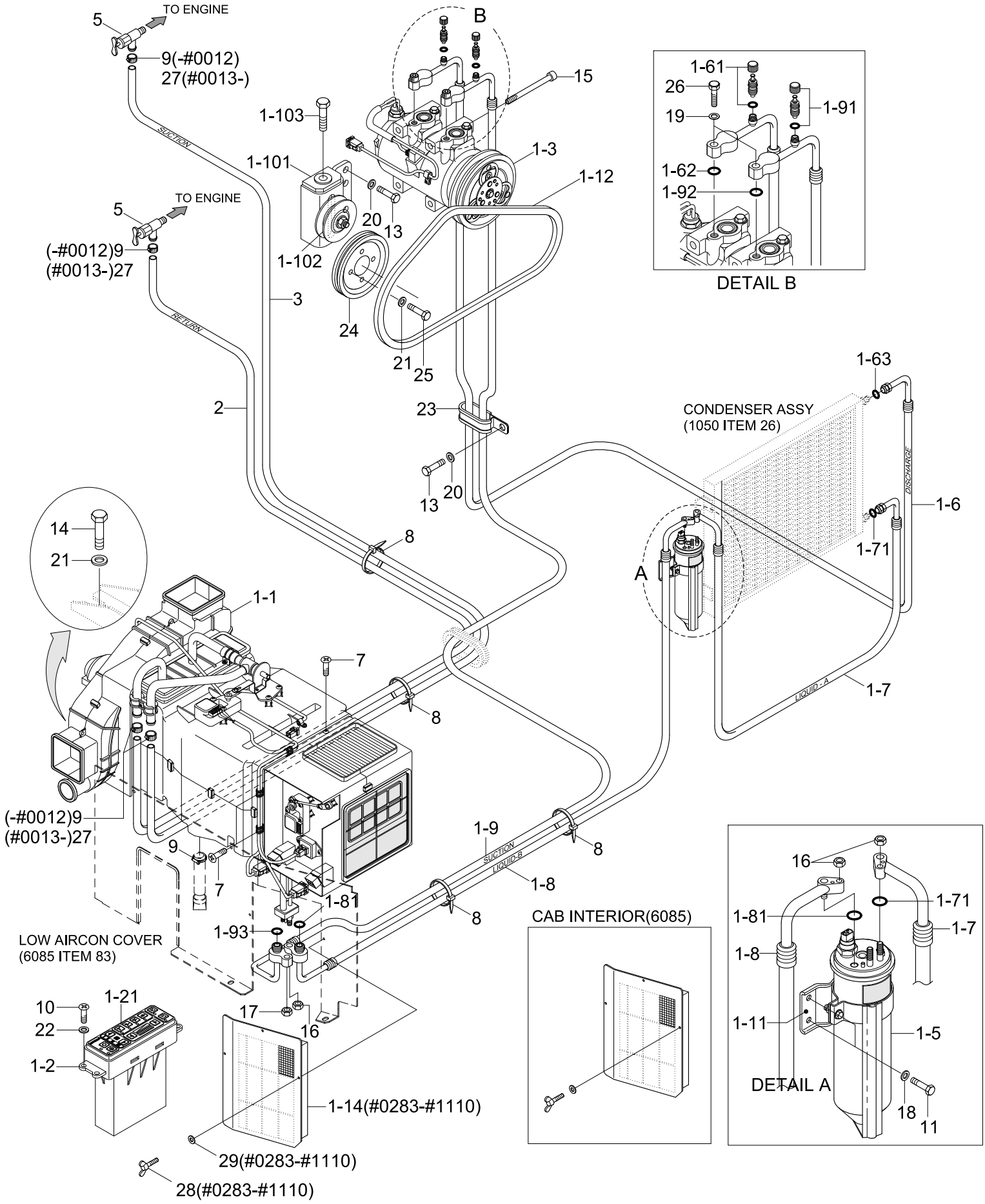

Item	Part_No	IS	Ord	T	Description	Qty	Serial_No	ITC	Remark
1	11NA-90010				AIR CON & HEATER ASSY	1			
1-1	11N6-90020				.AIRCON & HEATER UNIT	1	- #0586		SEE 1110
	11N6-90021				.AIRCON & HEATER UNIT	1	#0587 -	A	
1-2	11N6-90030				.CONTROL ASSY	1	- #0099		
	11N6-90031				.CONTROL ASSY-SEMI	1	#0100 -	A	
1-21	11N6-90850				..DECAL-A/C & HEATER	1	#0001 -	-	
1-3	11N6-90040				.COMPRESSOR ASSY	1			
1-5	11N6-90060				.DRIER-RECEIVER	1			
1-6	11N6-90070				.HOSE-DISCHARGE	1			
1-61	A304000301-4				..CHARGE VALVE ASSY	1			
1-62	A305000206-2				..O-RING	1			
1-63	A305000205-2				..O-RING	1			
1-7	11N8-90040				.HOSE(A)-LIQUID	1	- #0007		
	11N6-93020				.HOSE(A)-LIQUID	1	#0008 - #0012	B	
	11NA-90220				.HOSE(A)-LIQUID	1	#0013 -	B	
1-71	A305000209-2				..O-RING	2			
1-8	11N8-90050				.HOSE(B)-LIQUID	1			
1-81	A305000209-2				..O-RING	2			
1-9	11N8-90130				.HOSE-SUCTION	1			
1-91	A304000401-4				..CHARGE VALVE ASSY	1			
1-92	A310069299-2				..O-RING	1			
1-93	A305000203-2				..O-RING	1			
1-10	11N6-90110				.PULLEY-IDLE	1			
1-101	A4760-508-00-2				..BRACKET-PULLEY	1			
1-102	A4700-511-01-2				..PULLEY-IDLE	1			

Item	Part_No	IS	Ord	T	Description	Qty	Serial_No	ITC	Remark
1-103	A8900-518-03-3				..BOLT-TENSION	1	#0001 -	-	
1-11	11N6-90120				.BRACKET-R/DRIER	1			
1-12	11N8-00130				.V-BELT	1			
1-14	11N6-90340				.FILTER-REC	1	#0283 - #1110	D	SEE 6085
2	11L7-90140				HOSE-RETURN	1			
3	11EK-92080				HOSE-HEATER	1			
5	11L7-90150				VALVE-HEATER	2			
7	S152-040122				SCREW-TAPPING	4			
8	S551-035146				TIE-WIRE	2			
9	S520-015000				CLAMP-HOSE	5	- #0012		
					CLAMP-HOSE	1	#0013 -	A	
10	S179-050206				SCREW-SOCKET RD HD	4			
11	S015-060162				BOLT-HEX	2			
13	S017-100162				BOLT-HEX	11			
14	S017-120252				BOLT-HEX	4			
15	S109-080956				BOLT-SOCKET	3			
16	S205-061002				NUT-HEX	3			
17	S205-081002				NUT-HEX	1			
18	S403-062002				WASHER-PLAIN	2			
19	S403-082002				WASHER-PLAIN	2			
20	S403-102002				WASHER-PLAIN	11			
21	S403-122002				WASHER-PLAIN	8			
22	S403-052002				WASHER-PLAIN	4			
23	S543-400002				CLAMP-TUBE	8			
24	11N8-90100				PULLEY	1			

Item	Part_No	IS	Ord	T	Description	Qty	Serial_No	ITC	Remark
25	S017-120452				BOLT-HEX	4			
26	S015-080352				BOLT-HEX	2			
27	S520-220006				CLAMP-HOSE	4	#0013 -	B	
28	S091-060156				BOLT-WING	3	#0283 - #1110	-	
29	S403-062006				WASHER-PLAIN	3	#0283 - #1110	-	

AIRCON & HEATER MOUNTING(#1926-)

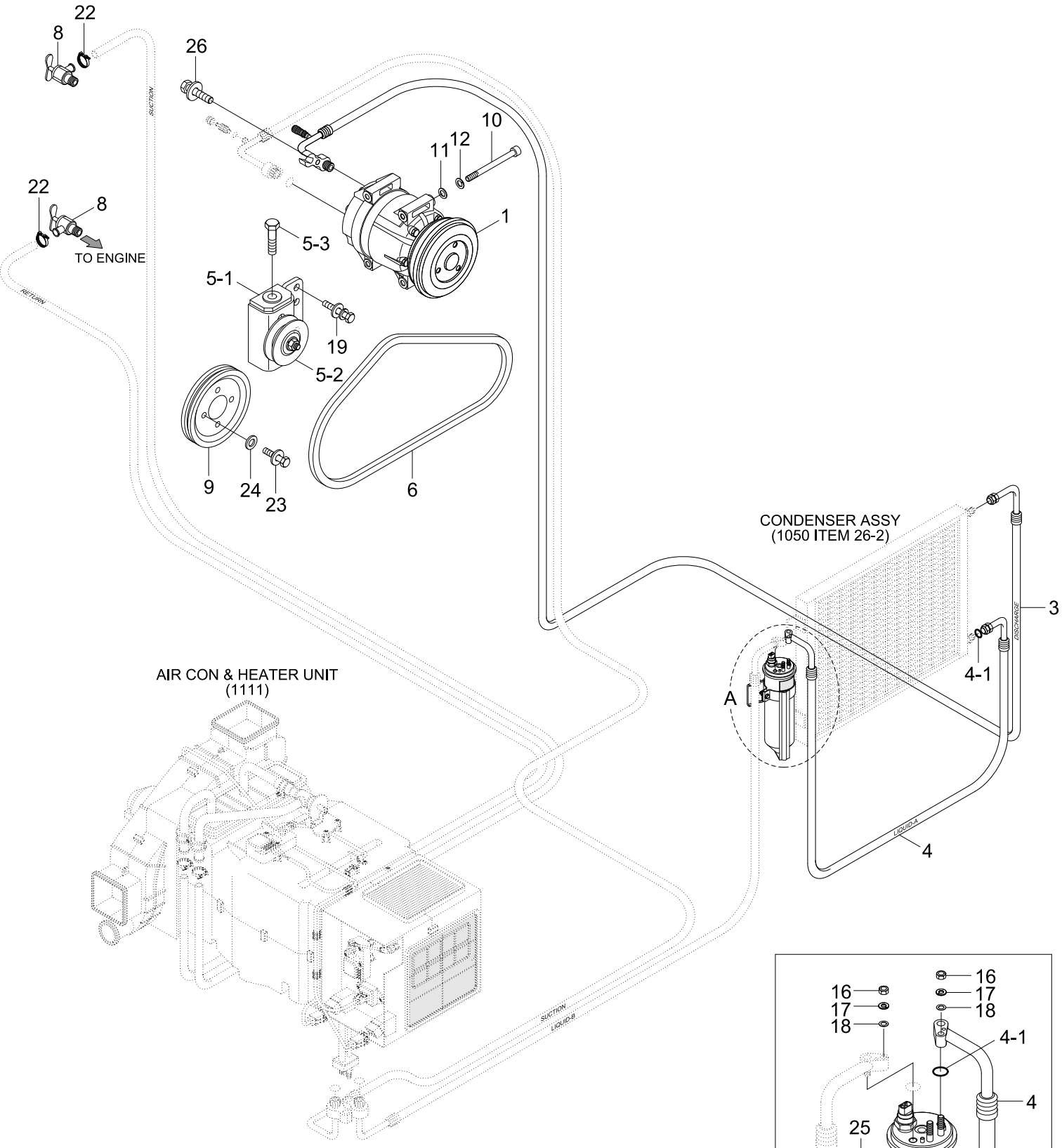

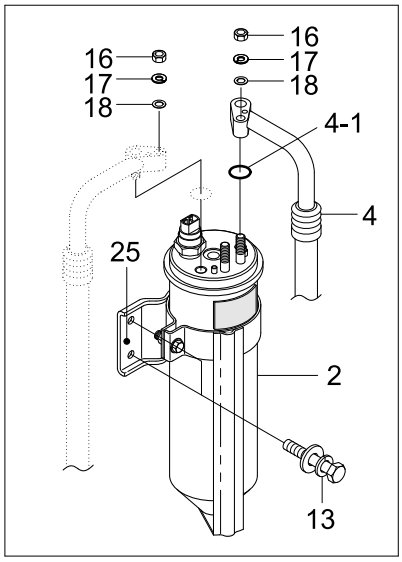

DETAIL A

Item	Part_No	IS	Ord	T	Description	Qty	Serial_No	ITC	Remark
1	11N6-91040				COMPRSSOR ASSY	1			
2	11N6-90060				DRIER-RECEIVER	1			
3	11N6-91110				DIS HOSE ASSY	1			
4	11NA-90220				HOSE(A)-LIQUID	1			
4-1	A305000209-2				.O-RING	2			
5	11N6-90110				PULLEY-IDLE	1			
5-1	A4760-508-00-2				.BRACKET-PULLEY	1			
5-2	A4700-511-01-2				.PULLEY-IDLE	1			
5-3	A8900-518-03-3				.BOLT-TENSION	1			
6	11N8-00130				V-BELT	1			
8	11L7-90150				VALVE-HEATER	2			
9	11N8-90100				PULLEY	1			
10	S109-080856				BOLT-SOCKET	4			
11	S403-08200B				WASHER-PLAIN	4			
12	S411-080006				WASHER-SPRING	4			
13	S035-061526				BOLT-W/WASHER	2			
16	S205-06200B				NUT-HEX	2			
17	S411-060006				WASHER-SPRING	2			
18	S403-06200B				WASHER-PLAIN	2			
19	S037-102026				BOLT-W/WASHER	3			
22	S572-220006				CLAMP-HOSE,WIRE TYPE	2			
23	S017-120456				BOLT-HEX	4			
24	S403-12200B				WASHER-PLAIN	4			
25	11N6-90120				BRACKET-R/DRIER	1			
26	S038-103556				BOLT-W/WASHER	1			

AIRCON & HEATER UNIT(-#0586)

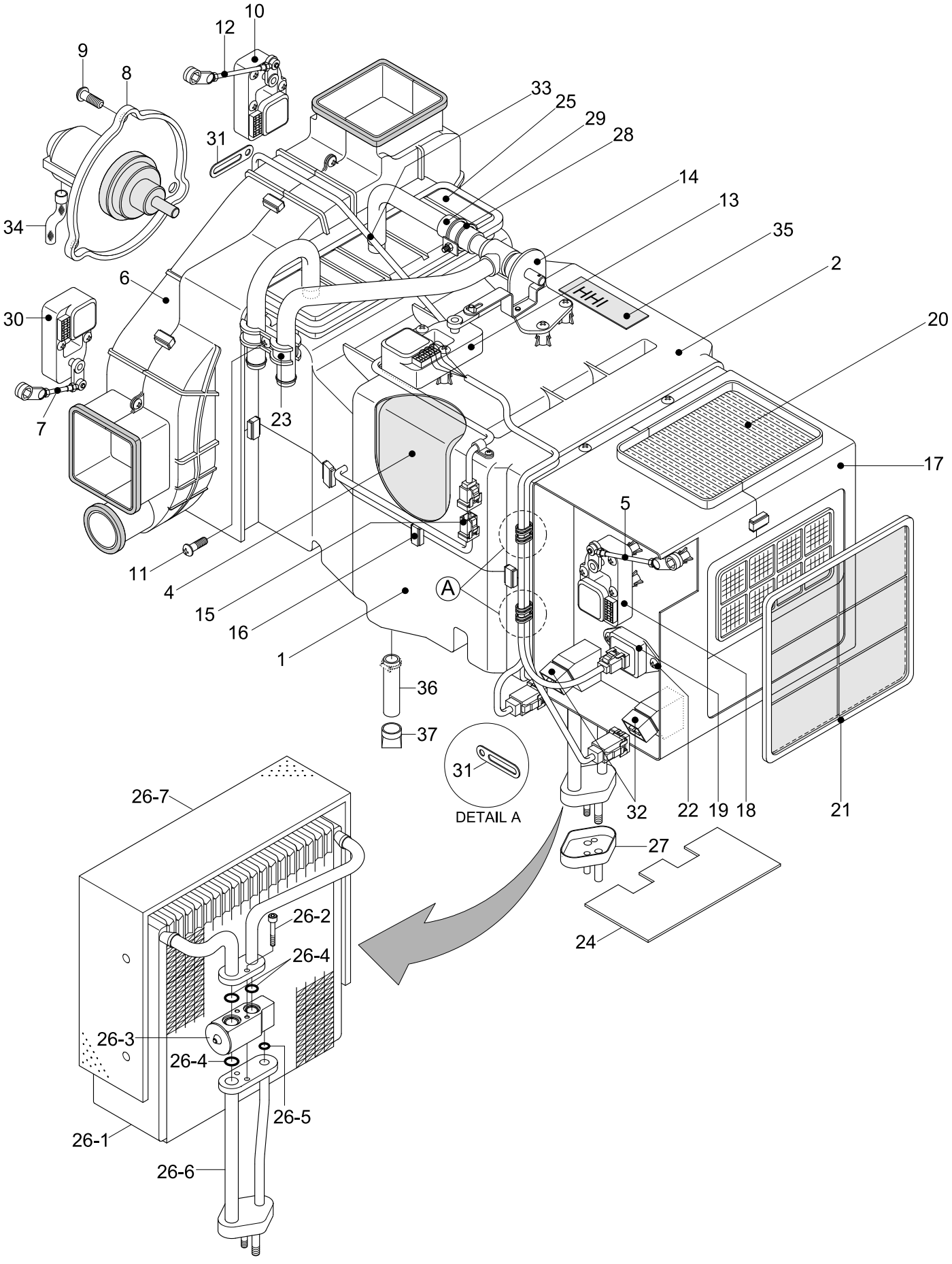

Item	Part_No	IS	Ord	T	Description	Qty	Serial_No	ITC	Remark
*	11N6-90020				.AIRCON & HEATER UNIT	1	- #0586	-	
1	AM12101400-0				..HVAC CASE-LOW	1			
2	AM11101601-0				..HVAC CASE-UPP	1	- #0099		
	AH000089				..HVAC CASE-UPP	1	#0100 -	B	
4	AM75001000-2				..EVAC INSULATION-LOW	1			
5	AM52300100-4				..ROD-INTAKE	1			
6	AW10001400-2				..BLOWER CASE ASSY	1			
7	AW70002400-4				..ROD-DEF/FOOT	1			
8	11N6-90700				..FAN & MOTOR	1			
8-1	AW22000800-2				...FAN	1	#0001 -	-	
8-2	AW21002500-1				...MOTOR	1	#0001 -	-	
9	4AH-0886				..SCREW	3			
10	11N6-90710				..MOTOR ACT-VENT	1			
11	K500531				..SCREW	29			
12	AW70002300-4				..ROD-VENT	1			
13	11N6-90720				..MOTOR ACT-TEMP	1			
14	11N6-90730				..VALVE ASSY-WATER	1			
15	A165400100-2				..SENSOR-DUCT	1			
16	4AH-0688				..CLIP-CASE	9			
17	AM13000203-2				..INTAKE CASE ASSY	1			
18	11N6-90740				..MOTOR ACT-INTAKE	1			
19	11N6-90750				..RESISTOR ASSY	1			
20	11N6-90760				..AIR FILTER-FRESH	1			
21	11N6-90770				..AIR FILTER-REFRESH	1			
22	K500533				..SCREW	2			

Item	Part_No	IS	Ord	T	Description	Qty	Serial_No	ITC	Remark
23	3AH-0770				..CLAMP-PIPE	1			
24	A112050700-3				..PLATE-SIDE	1			
25	11N6-90780				..HEATER CORE	1			
26	11N6-90790				..EVAP CORE ASSY	1			
26-1	A111056400-1				...CORE ASSY-LAMI	1			
26-2	A111750100-4				...BOLT-WRENCH,HEX	2			
26-3	11N6-90800				...VALVE-EXPANSION	1			
26-4	A305000212-2				...O-RING	3			
26-5	A305000211-2				...O-RING	1			
26-6	A112059600-2				...PIPE ASSY	1			
26-7	A115004900-2				...INSULATION-CORE	1			
27	A306201301-3				..CAP-FLANGE	1			
28	4AH-0929				..CLAMP ASSY-HOSE	1			
29	3AH-1007				..HOSE-WATER	1			
30	11N6-90810				..MOTOR ACT-FOOT/DEF	1			
31	4AH-0643				..HOLDER-WIRE	6			
32	11N6-90820				..RELAY	2			
33	11N6-90830				..WIRING ASSY	1			
34	A710051601-3				..HOSE-DRAIN	1			
35	AE73000400Z2				..PLATE-NAME	1			

AIRCON & HEATER UNIT(#0587-)

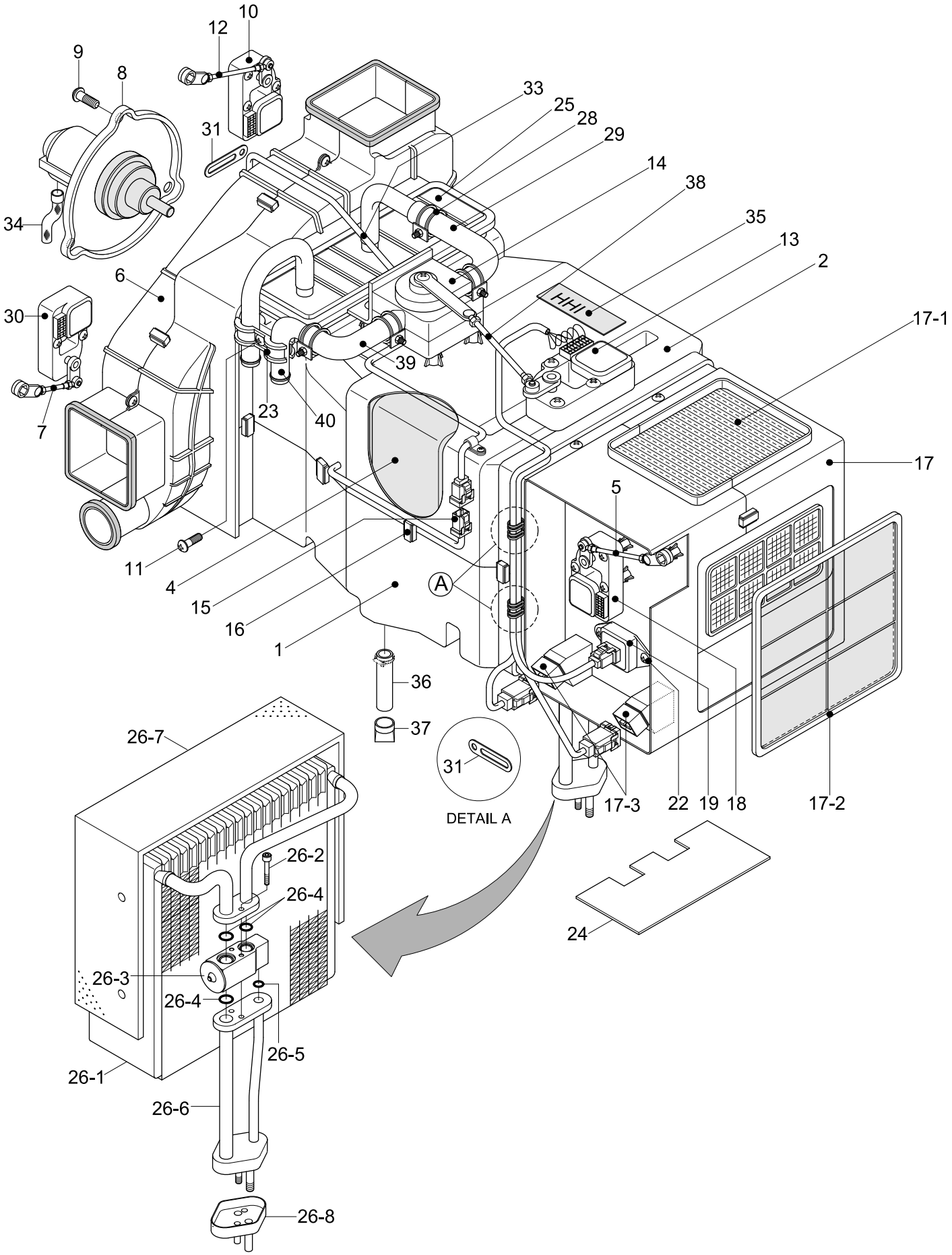

Item	Part_No	IS	Ord	T	Description	Qty	Serial_No	ITC	Remark
*	11N6-90021				.AIRCON & HEATER UNIT	1	#0587 -	A	
1	AM12101400-0				..HVAC CASE-LOW	1			
2	AH000089				..HVAC CASE-UPP	1			
4	AM75001000-2				..EVAC INSULATION-LOW	1			
5	AM52300100-4				..ROD-INTAKE	1			
6	AH000106				..BLOWER CASE ASSY	1			
7	AW70002400-4				..ROD-DEF/FOOT	1			
8	11N6-90700				..FAN & MOTOR	1			
8-1	AW22000800-2				...FAN	1			
8-2	AW21002500-1				...MOTOR	1			
9	AH000866				..SCREW	3			
10	11N6-90710				..MOTOR ACT-VENT	1			
11	K500531				..SCREW	28			
12	AW70002300-4				..ROD-VENT	1			
13	AH100311				..MOTOR ACT-TEMP	1			
14	AH001160				..VLAVE-WATER	1			
15	A165400100-2				..SENSOR-DUCT	1			
16	4AH-0688				..CLIP-CASE	9			
17	AH000055				..INTAKE CASE ASSY	1			
17-1	11N6-90760				...AIR FILTER-FRESH	1			
17-2	11N6-90770				...AIR FILTER-REFRESH	1			
17-3	11N6-90820				...RELAY	1			
18	11N6-90740				..MOTOR ACT-INTAKE	1			
19	AM86000601-2				..RESISTOR ASSY	1			
22	K500533				..SCREW	2			

Item	Part_No	IS	Ord	T	Description	Qty	Serial_No	ITC	Remark
23	AH000314				..CLAMP-H/RAD PIPE	1			
24	A112050700-3				..PLATE-SIDE	1			
25	11N6-90780				..HEATER CORE	1			
26	11N6-90790				..EVAP CORE ASSY	1	- #1925		
	11N6-90791				..EVAP CORE ASSY	1	#1926 -	B	
26-1	A111056400-1				...CORE ASSY-LAMI	1	- #1925		
26-2	A111750100-4				...BOLT-WRENCH,HEX	2	- #1925		
26-3	11N6-90800				...VALVE-EXPANSION	1	- #1925		
26-4	A305000212-2				...O-RING	3	- #1925		
26-5	A305000211-2				...O-RING	1	- #1925		
26-6	A112059600-2				...PIPE ASSY	1	- #1925		
26-7	A115004900-2				...INSULATION-CORE	1	- #1925		
26-8	A306201301-3				...CAP-FLANGE	1	- #1925		
28	AM27000201-3				..CLAMP-WATER HOSE	4			
29	AH001288				..HOSE-OUTLET,WATER	1			
30	11N6-90810				..MOTOR ACT-FOOT/DEF	1			
31	4AH-0643				..HOLDER-WIRE	6			
33	11N6-90830				..WIRING ASSY	1			
34	A710051601-3				..HOSE-DRAIN	1			
35	AM99001201-3				..NAME PLATE	1			
36	AM800-001-04-3				..HOSE-DRAIN	1			
37	4CC-3354Z				..VALVE-VACUUM	1			
38	AH000856				..ROD-TEMP	1			
39	AH001287				..HOSE-INLET,WATER	1			
40	AH001415				..HEATER PIPE-INLET	1			

AIR CONDITIONER MOUNTING(-#1925)

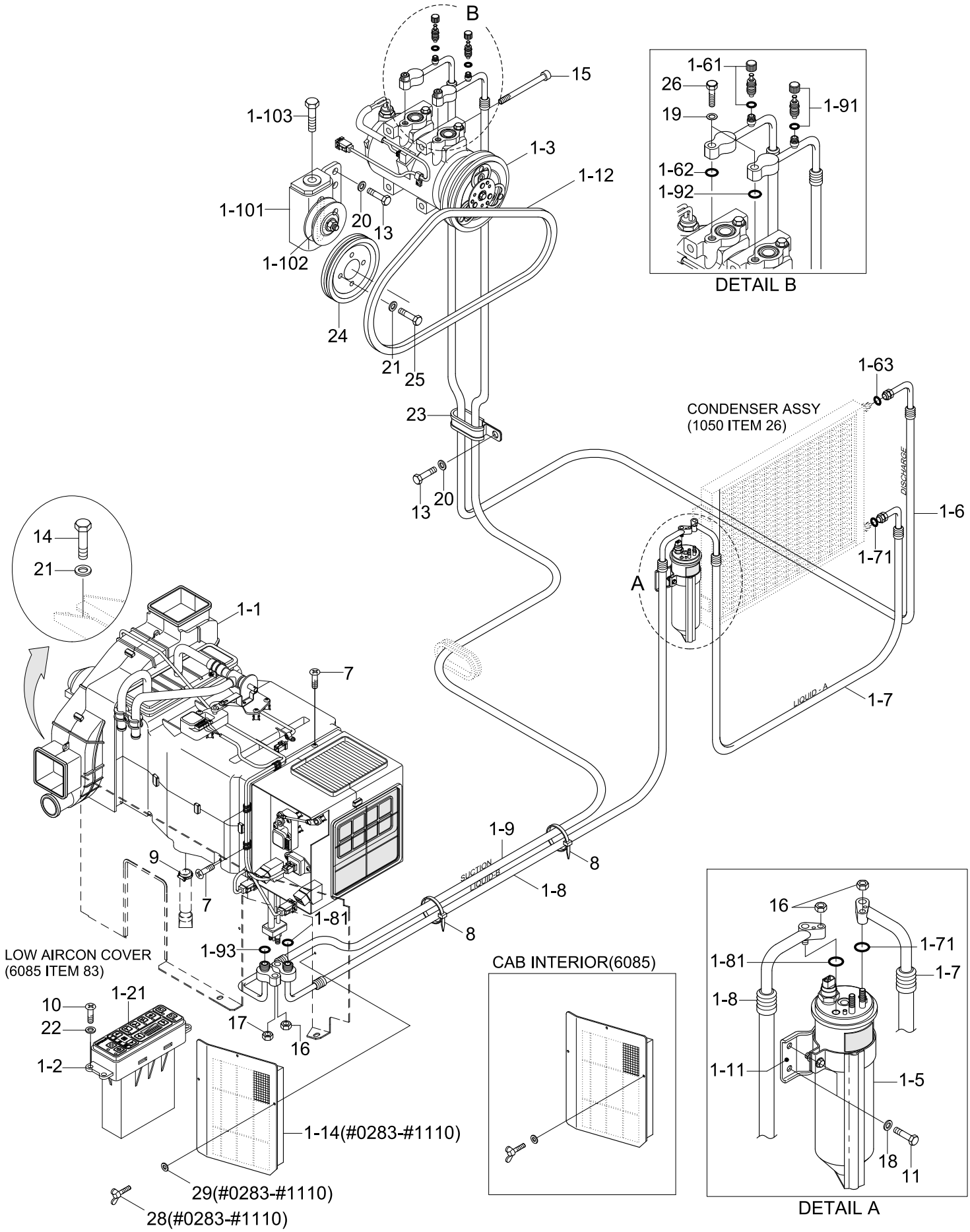

Item	Part_No	IS	Ord	T	Description	Qty	Serial_No	ITC	Remark
1	11NA-90210				AIR CON ASSY	1			
1-1	11N6-90220				.AIR CON UNIT	1	- #0099		
	11N6-90221				.AIRCON UNIT	1	#0100 -	A	
1-2	11N6-90030				.CONTROL ASSY	1	- #0099		
	11N6-90031				.CONTROL ASSY-SEMI	1	#0100 -	A	
1-21	11N6-90850				..DECAL-A/C & HEATER	1	#0001 -	-	
1-3	11N6-90040				.COMPRESSOR ASSY	1			
1-5	11N6-90060				.DRIER-RECEIVER	1			
1-6	11N6-90070				.HOSE-DISCHARGE	1			
1-61	A304000301-4				..CHARGE VALVE ASSY	1			
1-62	A305000206-2				..O-RING	1			
1-63	A305000205-2				..O-RING	1			
1-7	11N8-90040				.HOSE(A)-LIQUID	1	- #0007		
	11N6-93020				.HOSE(A)-LIQUID	1	#0008 - #0012	B	
	11NA-90220				.HOSE(A)-LIQUID	1	#0013 -	B	
1-71	A305000209-2				..O-RING	2			
1-8	11N8-90050				.HOSE(B)-LIQUID	1			
1-81	A305000209-2				..O-RING	2			
1-9	11N8-90130				.HOSE-SUCTION	1			
1-91	A304000401-4				..CHARGE VALVE ASSY	1			
1-92	A310069299-2				..O-RING	1			
1-93	A305000203-2				..O-RING	1			
1-10	11N6-90110				.PULLEY-IDLE	1			
1-101	A4760-508-00-2				..BRACKET-PULLEY	1			
1-102	A4700-511-01-2				..PULLEY-IDLE	1			

Item	Part_No	IS	Ord	T	Description	Qty	Serial_No	ITC	Remark
1-103	A8900-518-03-3				..BOLT-TENSION	1	#0001 -	-	
1-11	11N6-90120				.BRACKET-R/DRIER	1			
1-12	11N8-00130				.V-BELT	1			
1-14	11N6-90340				.FILTER-REC	1	#0283 - #1110	D	SEE 6085
7	S152-040122				SCREW-TAPPING	4			
8	S551-035146				TIE-WIRE	2			
9	S520-015000				CLAMP-HOSE	1			
10	S179-050206				SCREW-SOCKET RD HD	4			
11	S015-060162				BOLT-HEX	2			
13	S017-100162				BOLT-HEX	8			
14	S017-120252				BOLT-HEX	4			
15	S105-080956				BOLT-SOCKET	4			
16	S203-061002				NUT-HEX	3			
17	S203-081002				NUT-HEX	1			
18	S403-062002				WASHER-PLAIN	2			
19	S403-082002				WASHER-PLAIN	6			
20	S403-102002				WASHER-PLAIN	8			
21	S403-122002				WASHER-PLAIN	8			
22	S403-052002				WASHER-PLAIN	4			
23	S543-400002				CLAMP-TUBE	5			
24	11N8-90100				PULLEY	1			
25	S017-120452				BOLT-HEX	4			
26	S015-080352				BOLT-HEX	2			
28	S091-060156				BOLT-WING	3	#0283 - #1110	-	
29	S403-062006				WASHER-PLAIN	3	#0283 - #1110	-	

AIR CONDITIONER MOUNTING(#1926-)

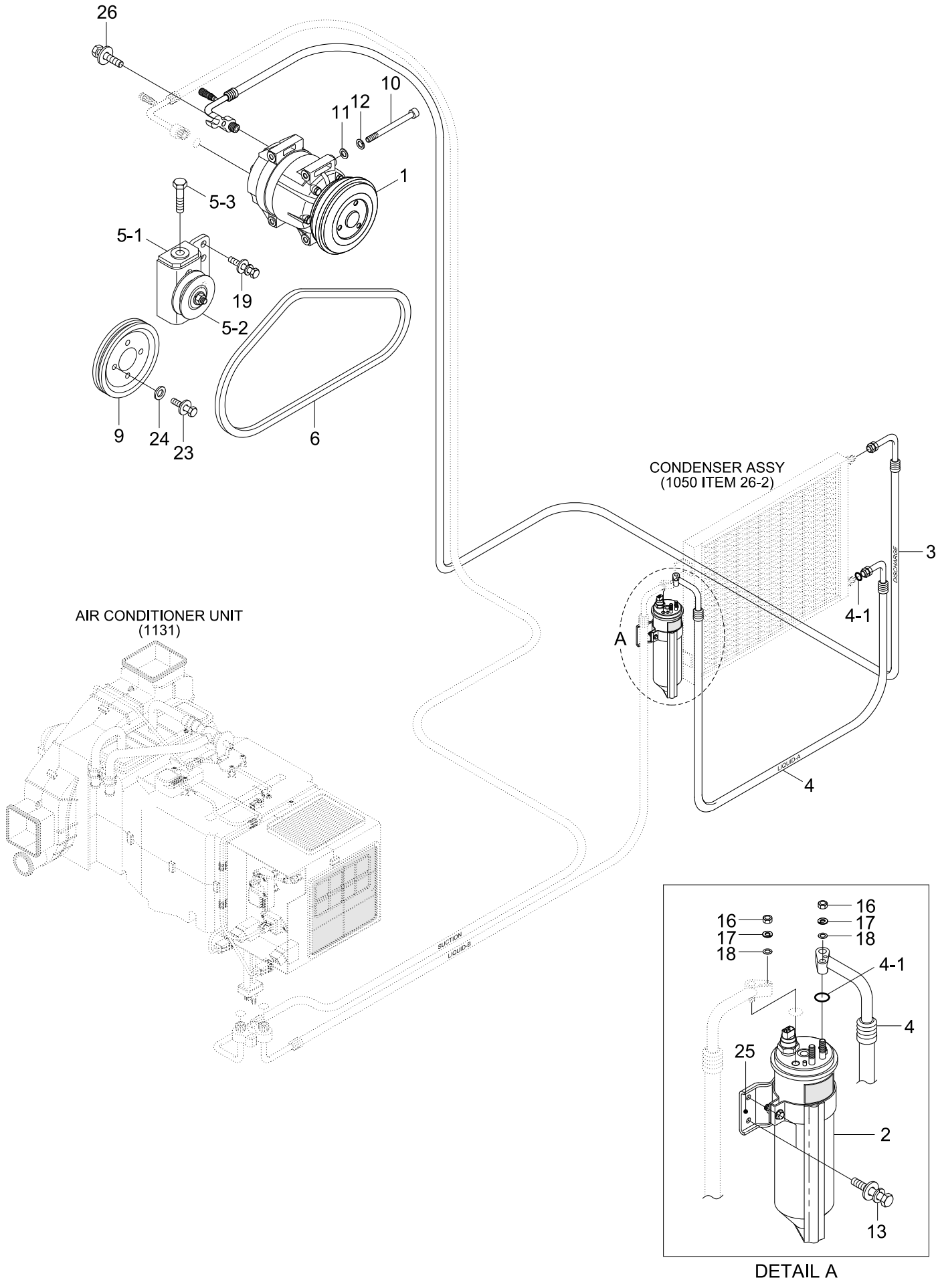

Item	Part_No	IS	Ord	T	Description	Qty	Serial_No	ITC	Remark
1	11N6-91040				COMPRSSOR ASSY	1			
2	11N6-90060				DRIER-RECEIVER	1			
3	11N6-91110				DIS HOSE ASSY	1			
4	11NA-90220				HOSE(A)-LIQUID	1			
4-1	A305000209-2				.O-RING	2			
5	11N6-90110				PULLEY-IDLE	1			
5-1	A4760-508-00-2				.BRACKET-PULLEY	1			
5-2	A4700-511-01-2				.PULLEY-IDLE	1			
5-3	A8900-518-03-3				.BOLT-TENSION	1			
6	11N8-00130				V-BELT	1			
8	11L7-90150				VALVE-HEATER	2			
9	11N8-90100				PULLEY	1			
10	S109-080856				BOLT-SOCKET	4			
11	S403-08200B				WASHER-PLAIN	4			
12	S411-080006				WASHER-SPRING	4			
13	S035-061526				BOLT-W/WASHER	2			
16	S205-06200B				NUT-HEX	2			
17	S411-060006				WASHER-SPRING	2			
18	S403-06200B				WASHER-PLAIN	2			
19	S037-102026				BOLT-W/WASHER	3			
22	S572-220006				CLAMP-HOSE,WIRE TYPE	2			
23	S017-120456				BOLT-HEX	4			
24	S403-12200B				WASHER-PLAIN	4			
25	11N6-90120				BRACKET-R/DRIER	1			
26	S038-103556				BOLT-W/WASHER	1			

AIR CONDITIONER UNIT

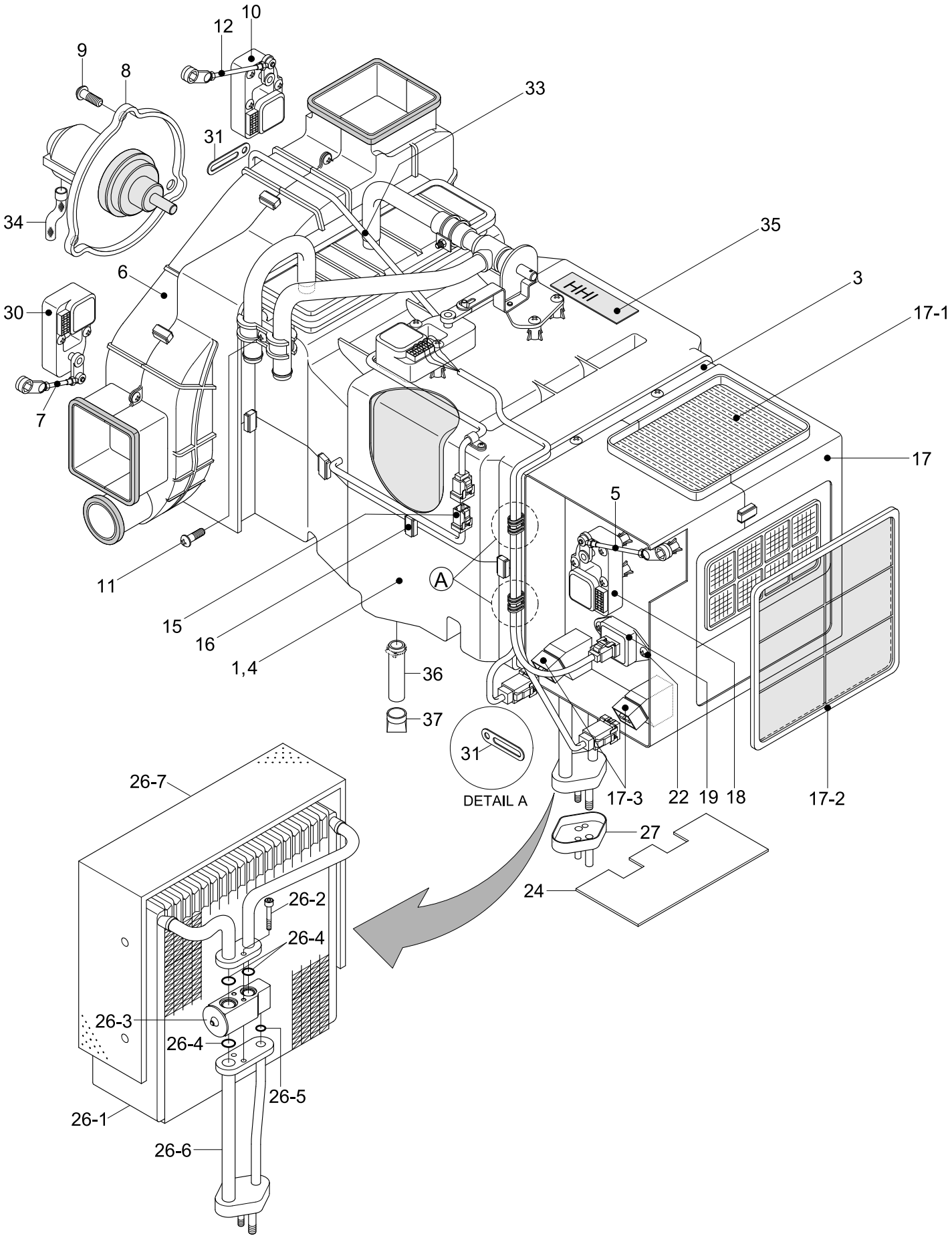

Item	Part_No	IS	Ord	T	Description	Qty	Serial_No	ITC	Remark
*	11N6-90220				.AIR CON UNIT	1	- #0099	-	
1	AM12101400-0				..HVAC CASE-LOW	1			
3	AM11101602-0				..HVAC CASE-UPP	1			
4	AM75001000-2				..EVAC INSULATION-LOW	1			
5	AM52300100-4				..ROD-INTAKE	1			
6	AW10001400-2				..BLOWER CASE ASSY	1			
7	AW70002400-4				..ROD-DEF/FOOT	1			
8	11N6-90700				..FAN & MOTOR	1			
8-1	AW22000800-2				...FAN	1	#0001 -	-	
8-2	AW21002500-1				...MOTOR	1	#0001 -	-	
9	4AH-0886				..SCREW	3			
10	11N6-90710				..MOTOR ACT-VENT	1			
11	K500531				..SCREW	29			
12	AW70002300-4				..ROD-VENT	1			
15	A165400100-2				..SENSOR-DUCT	1			
16	4AH-0688				..CLIP-CASE	9			
17	AM13000203-2				..INTAKE CASE ASSY	1			
18	11N6-90740				..MOTOR ACT-INTAKE	1			
19	11N6-90750				..RESISTOR ASSY	1			
20	11N6-90760				..AIR FILTER-FRESH	1			
21	11N6-90770				..AIR FILTER-RE	1			
22	K500533				..SCREW	2			
24	A112050700-3				..PLATE-SIDE	1			
26	11N6-90790				..EVAP CORE ASSY	1			
26-1	A111056400-1				...CORE ASSY-LAMI	1			

Item	Part_No	IS	Ord	T	Description	Qty	Serial_No	ITC	Remark
26-2	A111750100-4				...BOLT-WRENCH,HEX	2			
26-3	11N6-90800				...VALVE-EXPANSION	1			
26-4	A305000212-2				...O-RING	3			
26-5	A305000211-2				...O-RING	1			
26-6	A112059600-2				...PIPE ASSY	1			
26-7	A115004900-2				...INSULATION-CORE	1			
27	A306201301-3				..CAP-FLANGE	1			
30	11N6-90810				..MOTOR ACT-FOOT/DEF	1			
31	4AH-0643				..HOLDER-WIRE	6			
32	11N6-90820				..RELAY	2			
33	11N6-90830				..WIRING ASSY	1			
34	A710051601-3				..HOSE-DRAIN	1			
35	AE73000400Z2				..PLATE-NAME	1			

AIR CONDITIONER UNIT(#0100-)

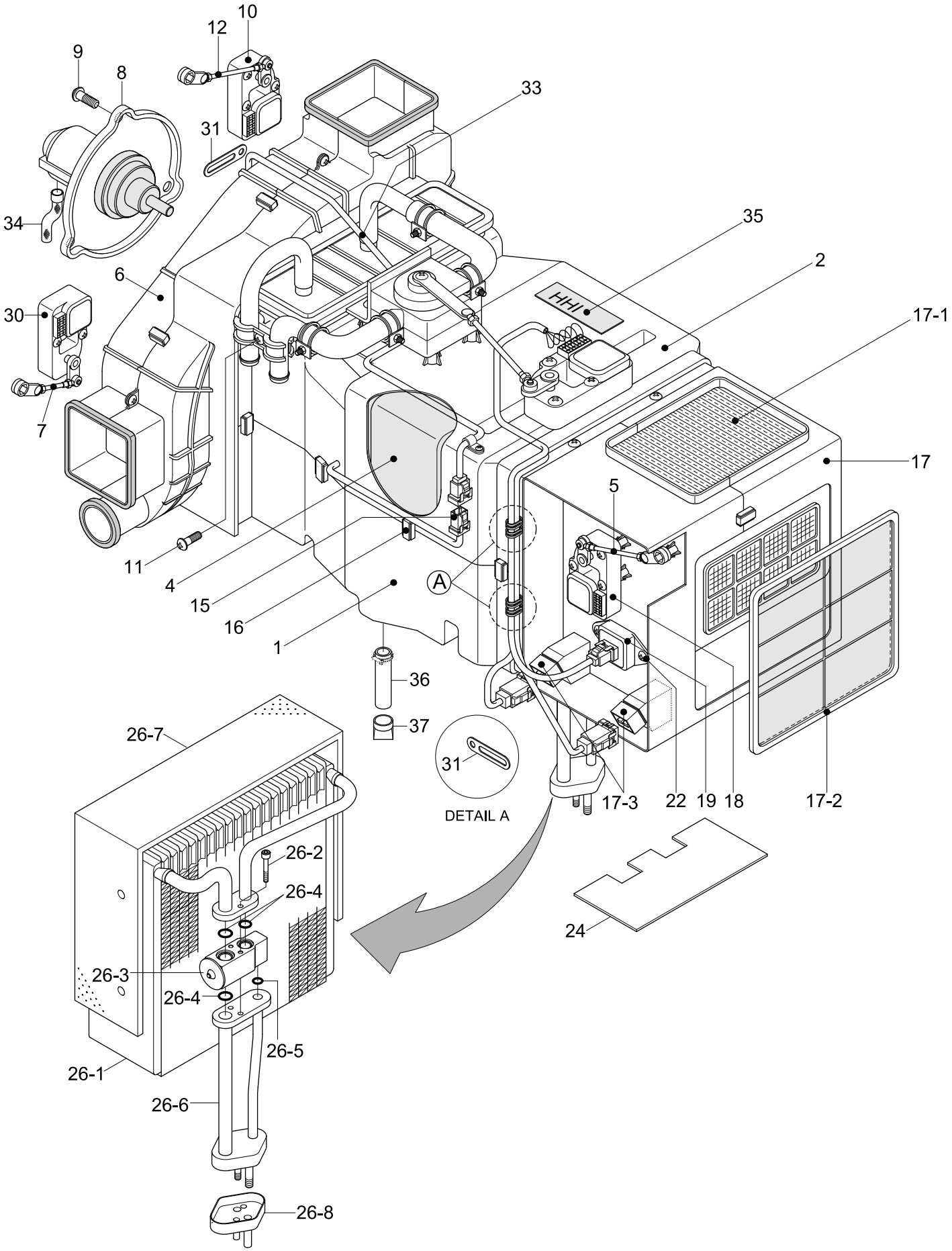

Item	Part_No	IS	Ord	T	Description	Qty	Serial_No	ITC	Remark
*	11N6-90221				.AIRCON UNIT	1	#0100 -	A	
1	AM12101400-0				..HVAC CASE-LOW	1			
2	AH000090				..HVAC CASE UPP ASSY	1			
4	AM75001000-2				..EVAC INSULATION-LOW	1			
5	AM52300100-4				..ROD-INTAKE	1			
6	AH000106				..BLOWER CASE ASSY	1			
7	AW70002400-4				..ROD-DEF/FOOT	1			
8	11N6-90700				..FAN & MOTOR	1			
8-1	AW22000800-2				...FAN	1			
8-2	AW21002500-1				...MOTOR	1			
9	AH000866				..SCREW	3			
10	11N6-90710				..MOTOR ACT-VENT	1			
11	K500531				..SCREW	22			
12	AW70002300-4				..ROD-VENT	1			
15	A165400100-2				..SENSOR-DUCT	1			
16	4AH-0688				..CLIP-CASE	9			
17	AH000055				..INTAKE CASE ASSY	1			
17-1	11N6-90760				...AIR FILTER-FRESH	1			
17-2	11N6-90770				...AIR FILTER-REFRESH	1			
17-3	11N6-90820				...RELAY	1			
18	11N6-90740				..MOTOR ACT-INTAKE	1			
19	AM86000601-2				..RESISTOR ASSY	1			
22	K500533				..SCREW	2			
24	A112050700-3				..PLATE-SIDE	1			
26	11N6-90790				..EVAP CORE ASSY	1	- #1925		

Item	Part_No	IS	Ord	T	Description	Qty	Serial_No	ITC	Remark
26	11N6-90791				..EVAP CORE ASSY	1	#1926 -	B	
26-1	A111056400-1				...CORE ASSY-LAMI	1	- #1925		
26-2	A111750100-4				...BOLT-WRENCH,HEX	2	- #1925		
26-3	11N6-90800				...VALVE-EXPANSION	1	- #1925		
26-4	A305000212-2				...O-RING	3	- #1925		
26-5	A305000211-2				...O-RING	1	- #1925		
26-6	A112059600-2				...PIPE ASSY	1	- #1925		
26-7	A115004900-2				...INSULATION-CORE	1	- #1925		
26-8	A306201301-3				...CAP-FLANGE	1	- #1925		
30	11N6-90810				..MOTOR ACT-FOOT/DEF	1			
31	4AH-0643				..HOLDER-WIRE	6			
33	11N6-90830				..WIRING ASSY	1			
34	A710051601-3				..HOSE-DRAIN	1			
35	AM99001201-3				..NAME PLATE	1			
36	AM800-001-04-3				..HOSE-DRAIN	1			
37	4CC-3354Z				..VALVE-VACUUM	1			

HEATER MOUNTING(-#1925)

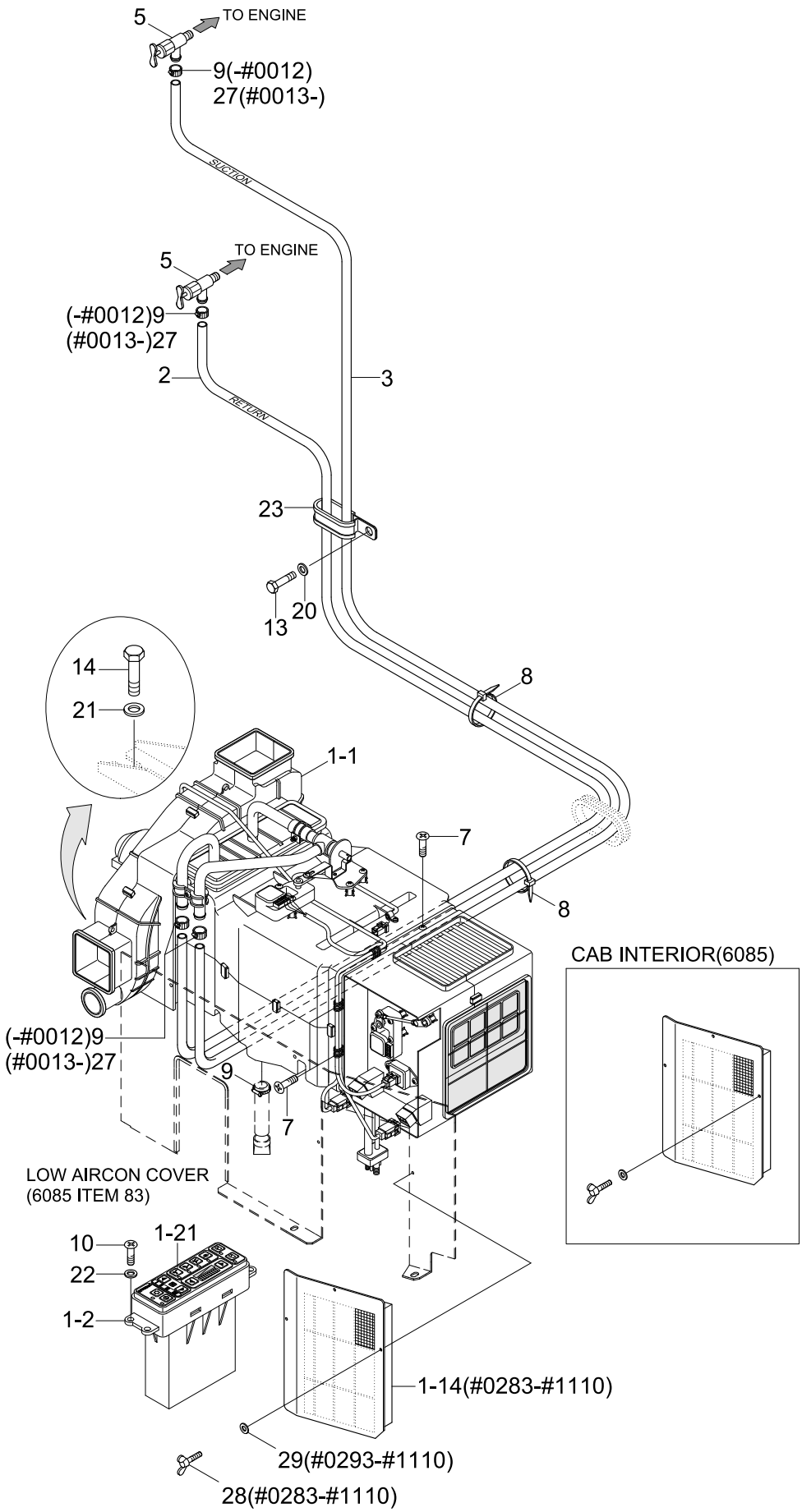

Item	Part_No	IS	Ord	T	Description	Qty	Serial_No	ITC	Remark
1	11N6-90310				HEATER ASSY	1			
1-1	11N6-90320				.HEATER UNIT	1	- #0586		
	11N6-90321				.HEATER UNIT	1	#0587 -	A	
1-2	11N6-90330				.CONTROL ASSY	1	- #0099		
	11N6-90331				.CONTROL ASSY	1	#0100 -	A	
1-21	11N6-90860				..DECAL-HEATER	1	#0001 -	-	
1-14	11N6-90340				.FILTER-REC	1	#0283 - #1110	D	SEE 6085
2	11L7-90140				HOSE-RETURN	1			
3	11EK-92080				HOSE-HEATER	1			
5	11L7-90150				VALVE-HEATER	2			
7	S152-040122				SCREW-TAPPING	4			
8	S551-035146				TIE-WIRE	2			
9	S520-015000				CLAMP-HOSE	5	- #0012		
					CLAMP-HOSE	1	#0013 -	A	
10	S179-050206				SCREW-SOCKET RD HD	4			
13	S017-100162				BOLT-HEX	3			
14	S017-120252				BOLT-HEX	4			
20	S403-102002				WASHER-PLAIN	3			
21	S403-122002				WASHER-PLAIN	4			
22	S403-052002				WASHER-PLAIN	4			
23	S543-400002				CLAMP-TUBE	3			
27	S520-220006				CLAMP-HOSE	4	#0013 -	B	
28	S091-060156				BOLT-WING	3	#0283 - #1110	-	
29	S403-062006				WASHER-PLAIN	3	#0283 - #1110	-	

HEATER MOUNTING(#1926-)

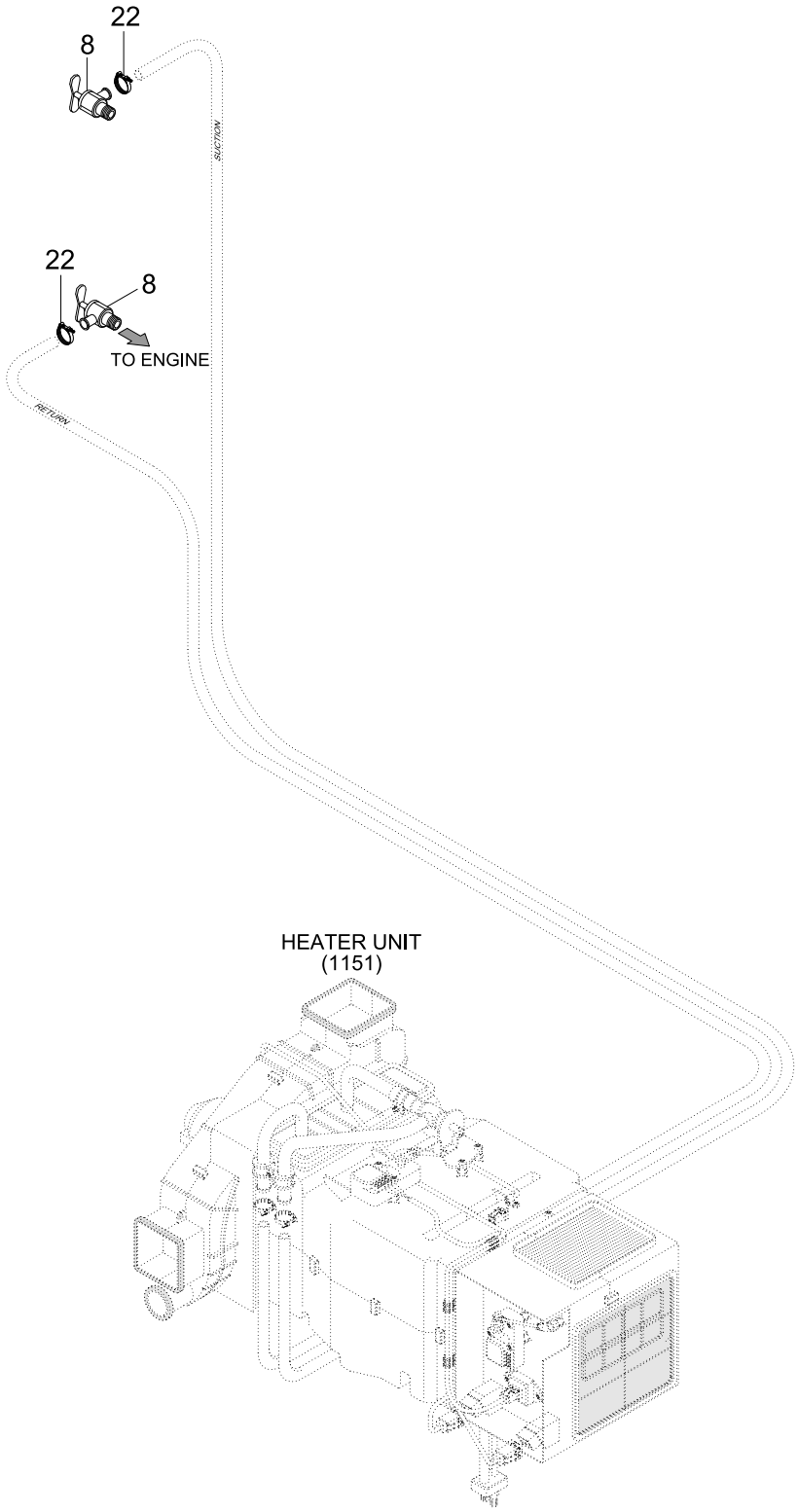

Item	Part_No	IS	Ord	T	Description	Qty	Serial_No	ITC	Remark
8	11L7-90150				VALVE-HEATER	2			
22	S572-220006				CLAMP-HOSE,WIRE TYPE	2			

HEATER UNIT(-#0586)

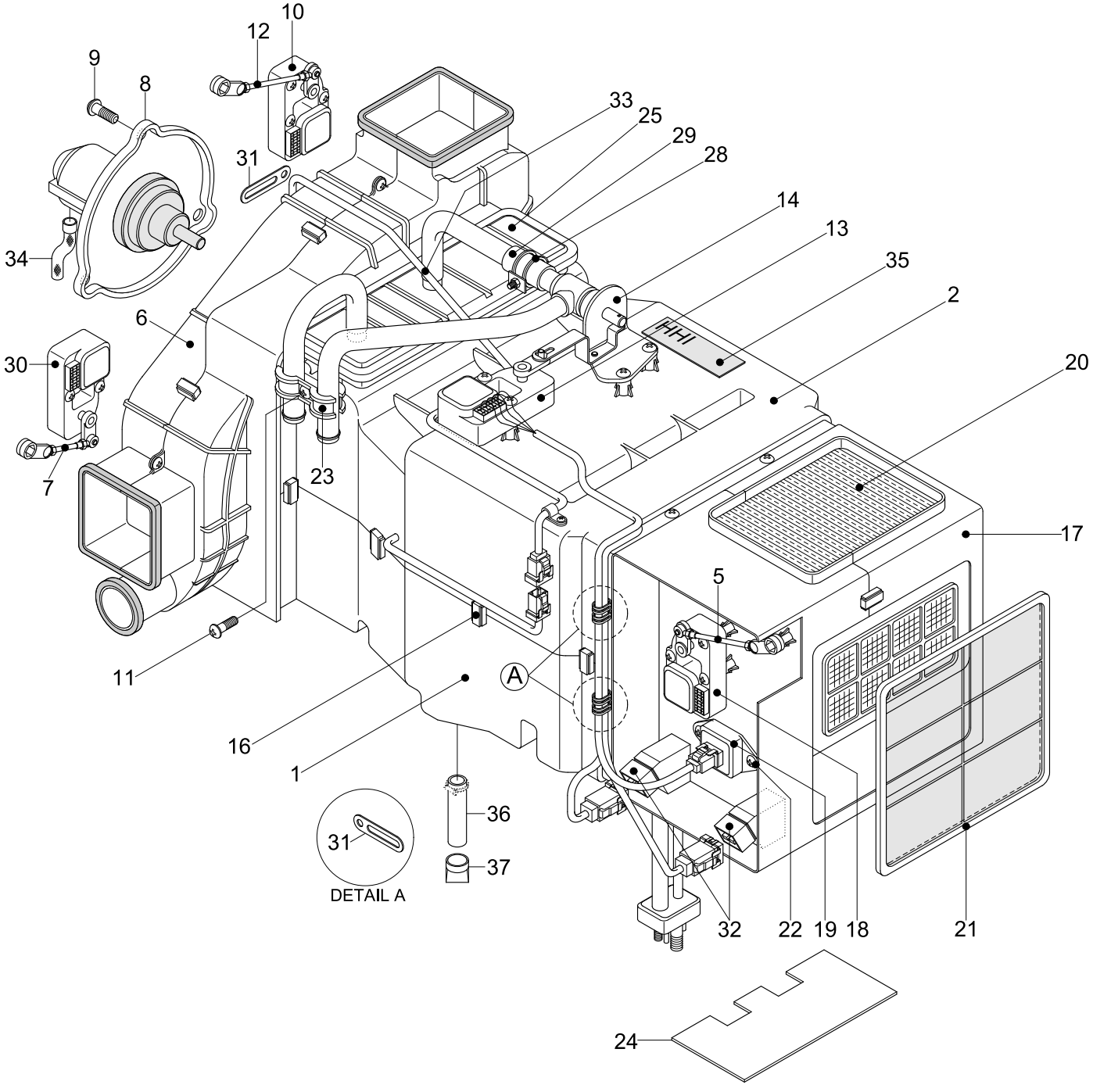

Item	Part_No	IS	Ord	T	Description	Qty	Serial_No	ITC	Remark
*	11N6-90320				.HEATER UNIT	1	- #0586	-	
1	AM12101400-0				..HVAC CASE-LOW	1			
2	AM11101601-0				..HVAC CASE-UPP	1	- #0099		
	AH000089				..HVAC CASE UPP ASSY	1	#0100 -	B	
5	AM52300100-4				..ROD-INTAKE	1			
6	AW10001400-2				..BLOWER CASE ASSY	1			
7	AW70002400-4				..ROD-DEF/FOOT	1			
8	11N6-90700				..FAN & MOTOR	1			
8-1	AW22000800-2				...FAN	1	#0001 -	-	
8-2	AW21002500-1				...MOTOR	1	#0001 -	-	
9	4AH-0886				..SCREW	3			
10	11N6-90710				..MOTOR ACT-VENT	1			
11	K500531				..SCREW	29			
12	AW70002300-4				..ROD-VENT	1			
13	11N6-90720				..MOTOR ACT-TEMP	1			
14	11N6-90730				..WATER VALVE	1			
16	4AH-0688				..CLIP-CASE	9			
17	AM13000203-2				..INTAKE CASE ASSY	1			
18	11N6-90740				..MOTOR ACT-INTAKE	1			
19	11N6-90750				..RESISTOR ASSY	1			
20	11N6-90760				..AIR FILTER-FRESH	1			
21	11N6-90770				..AIR FILTER-RE	1			
22	K500533				..SCREW	2			
23	3AH-0770				..CLAMP-PIPE	1			
24	A112050700-3				..PLATE-SIDE	1			

Item	Part_No	IS	Ord	T	Description	Qty	Serial_No	ITC	Remark
25	11N6-90780				..HEATER CORE	1			
28	4AH-0929				..CLAMP ASSY-HOSE	1			
29	3AH-1007				..HOSE-WATER	1			
30	11N6-90810				..MOTOR ACT-FOOT/DEF	1			
31	4AH-0643				..HOLDER-WIRE	6			
32	11N6-90820				..RELAY	2			
33	11N6-90830				..WIRING ASSY	1			
34	A710051601-3				..HOSE-DRAIN	1			
35	AE73000400Z2				..PLATE-NAME	1			

HEATER UNIT(#0587-)

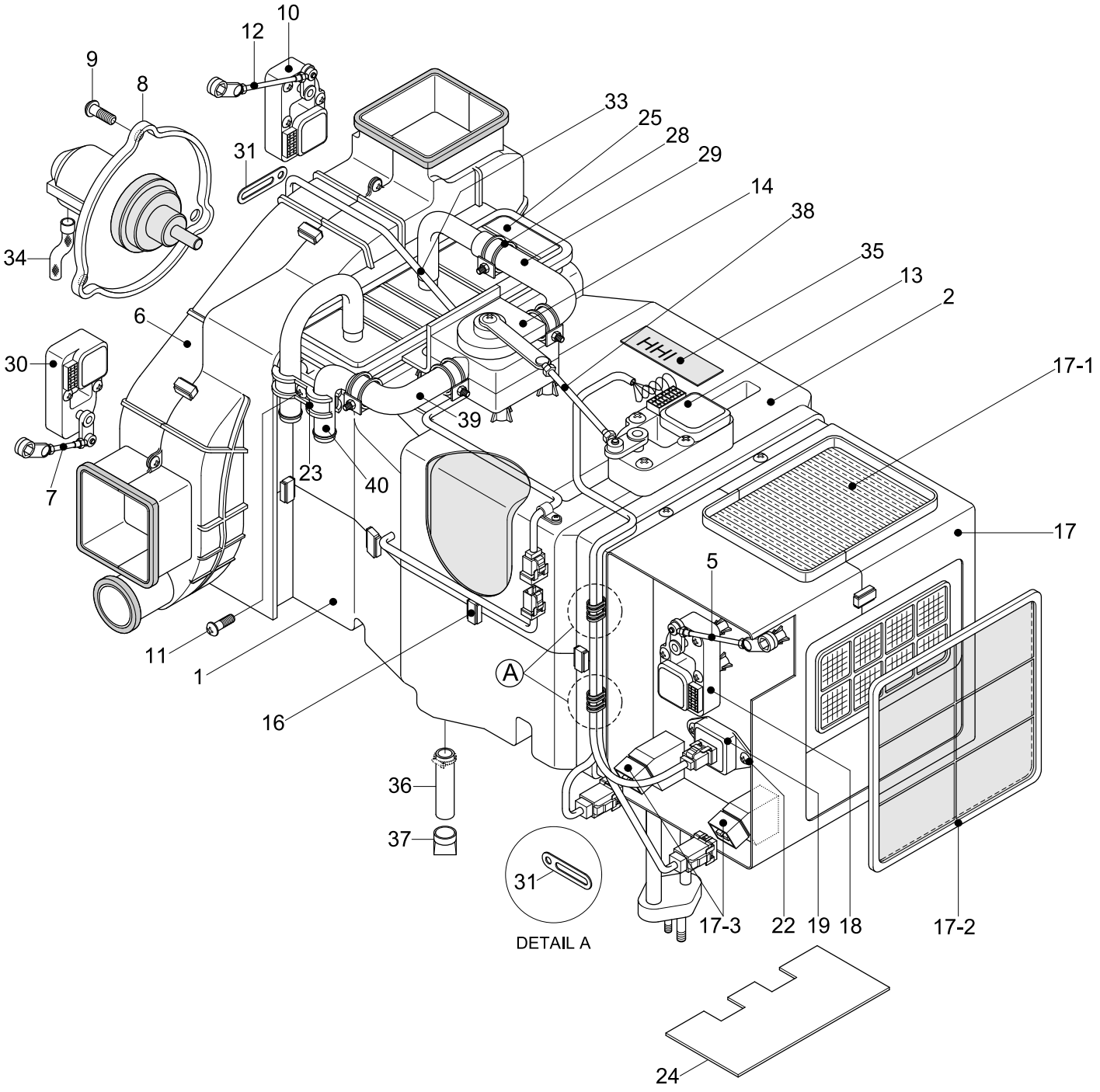

Item	Part_No	IS	Ord	T	Description	Qty	Serial_No	ITC	Remark
*	11N6-90321				.HEATER UNIT	1	#0587 -	A	
1	AM12101400-0				..HVAC CASE-LOW	1			
2	AH000086				..HVAC CASE UPP ASSY	1			
5	AM52300100-4				..ROD-INTAKE	1			
6	AH000106				..BLOWER CASE ASSY	1			
7	AW70002400-4				..ROD-DEF/FOOT	1			
8	11N6-90700				..FAN & MOTOR	1			
8-1	AW22000800-2				...FAN	1			
8-2	AW21002500-1				...MOTOR	1			
9	AH000866				..SCREW	3			
10	11N6-90710				..MOTOR ACT-VENT	1			
11	K500531				..SCREW	28			
12	AW70002300-4				..ROD-VENT	1			
13	AH100311				..MOTOR ACT-TEMP	1			
14	AH001160				..WATER VLAVE	1			
16	4AH-0688				..CLIP-CASE	9			
17	AH000055				..INTAKE CASE ASSY	1			
17-1	11N6-90760				...AIR FILTER-FRESH	1			
17-2	11N6-90770				...AIR FILTER-RE	1			
17-3	11N6-90820				...RELAY	1			
18	11N6-90740				..MOTOR ACT-INTAKE	1			
19	AM86000601-2				..RESISTOR ASSY	1			
22	K500533				..SCREW	2			
23	AH000314				..H/RAD PIPE CLAMP	1			
24	A112050700-3				..PLATE-SIDE	1			

Item	Part_No	IS	Ord	T	Description	Qty	Serial_No	ITC	Remark
25	11N6-90780				..HEATER CORE	1			
28	AM27000201-3				..CLAMP-WATER HOSE	4			
29	AH001288				..HOSE,OUTLET-WATER	1			
30	11N6-90810				..MOTOR ACT-FOOT/DEF	1			
31	4AH-0643				..HOLDER-WIRE	6			
33	11N6-90830				..WIRING ASSY	1			
34	A710051601-3				..HOSE-DRAIN	1			
35	AM99001201-3				..NAME PLATE	1			
36	AM800-001-04-3				..HOSE-DRAIN	1			
37	4CC-3354Z				..VALVE-VACUUM	1			
38	AH000856				..ROD-TEMP	1			
39	AH001287				..HOSE,INLET-WATER	1			
40	AH001415				..HEATER PIPE-INLET	1			

AIRCON & HEATER MOUNTING(AUTO, -#1925)

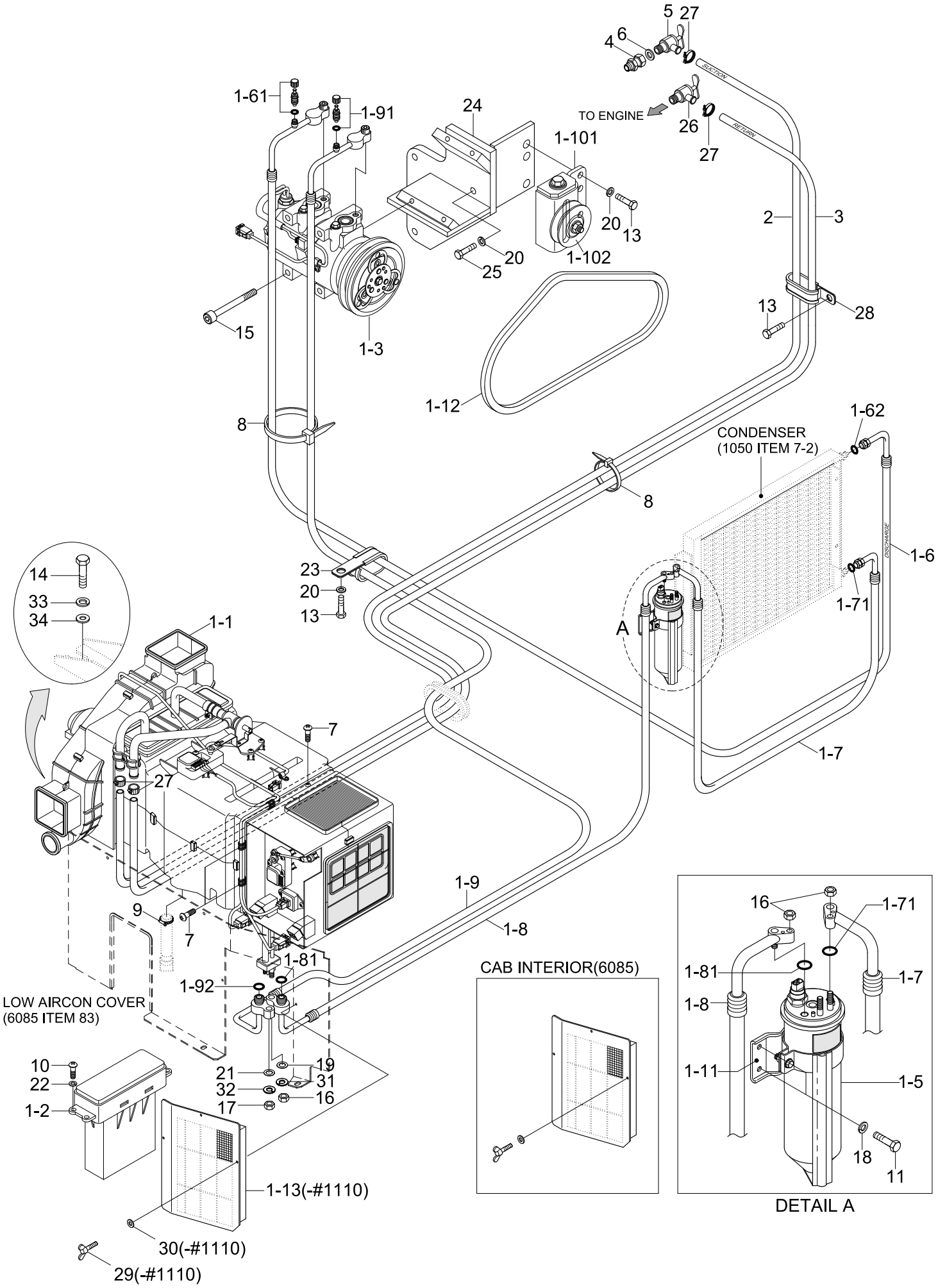

Item	Part_No	IS	Ord	T	Description	Qty	Serial_No	ITC	Remark
1	10N8-86400				AIRCON & HEATER(FATC)	1	#0001 -	-	
1-1	@				.AUTO AIRCON & HEATER	1			NOT
1-2	11N6-90430				.CONTROL ASSY-FATC	1	- #1192		
	11N6-90431				.CONTROL ASSY-FATC	1	#1193 -	B	
1-3	11N8-92040				.COMPRESSOR ASSY	1			
1-5	11N6-90060				.DRIER-RECEIVER	1			
1-6	11N8-96110				.HOSE-DISCHARGE	1			
1-61	A304000301-4				..CHARGE VALVE ASSY	1			
1-62	A305000205-2				..O-RING	1			
1-7	11NA-90220				.HOSE(A)-LIQUID	1			
1-71	A305000209-2				..O-RING	2			
1-8	11N8-90050				.HOSE(B)-LIQUID	1			
1-81	A305000209-2				..O-RING	2			
1-9	11N8-96140				.HOSE-SUCTION	1			
1-91	A304000401-4				..CHARGE VALVE ASSY	1			
1-92	A305000203-2				..O-RING	1			
1-10	11N6-90110				.PULLEY-IDLE	1			
1-101	A4760-508-00-2				..BRACKET-PULLEY	1			
1-102	A4700-511-01-2				..PULLEY-IDLE	1			
1-11	11N6-90120				.BRACKET-R/DRIER	1			
1-12	11E9-3503	10			.V-BELT	1			
1-13	11N6-90340				.FILTER-REC	1	- #1110	-	SEE 6085
2	11N8-92310				HOSE-HEATER	1			
3	11EK-92080				HOSE-HEATER	1			
4	11E9-92150				ADAPTOR	1			

Item	Part_No	IS	Ord	T	Description	Qty	Serial_No	ITC	Remark
5	14L1-01350				VALVE-HEATER	1			
6	P392-200000				WASHER-COPPER	1			
7	S152-040122				SCREW-TAPPING	4			
8	S551-035146				TIE-WIRE	2			
9	S520-015000				CLAMP-HOSE	1			
10	S175-050206				SCREW-SOCKET RD HD	4			
11	S015-060162				BOLT-HEX	2			
13	S017-100152				BOLT-HEX	4			
14	S017-120256				BOLT-HEX	4			
15	S109-080956				BOLT-SOCKET	4			
16	S201-061002				NUT-HEX	3			
17	S201-081002				NUT-HEX	1			
18	S403-062002				WASHER-PLAIN	2			
19	S403-061002				WASHER-PLAIN	1			
20	S403-102002				WASHER-PLAIN	7			
21	S403-081002				WASHER-PLAIN	1			
22	S403-052006				WASHER-PLAIN	4			
23	S543-420002				CLAMP-TUBE	1			
24	11N8-92120				BRACKET-COMP	1			
25	S017-100702				BOLT-HEX	3			
26	11EH-90100				VALVE ASSY	1			
27	S572-220006				CLAMP-HOSE,WIRE TYPE	4			
28	S542-200002				CLAMP-TUBE	1			
29	S091-060152				BOLT-WING	3	- #1110	-	
30	S403-062006				WASHER-PLAIN	3	- #1110	-	

Item	Part_No	IS	Ord	T	Description	Qty	Serial_No	ITC	Remark
31	S411-060002				WASHER-SPRING	1			
32	S411-080002				WASHER-SPRING	1			
33	S441-120006				WASHER-HARDENED	4			
34	73NB-56400				SHIM	4			

AIRCON & HEATER UNIT(FATC)

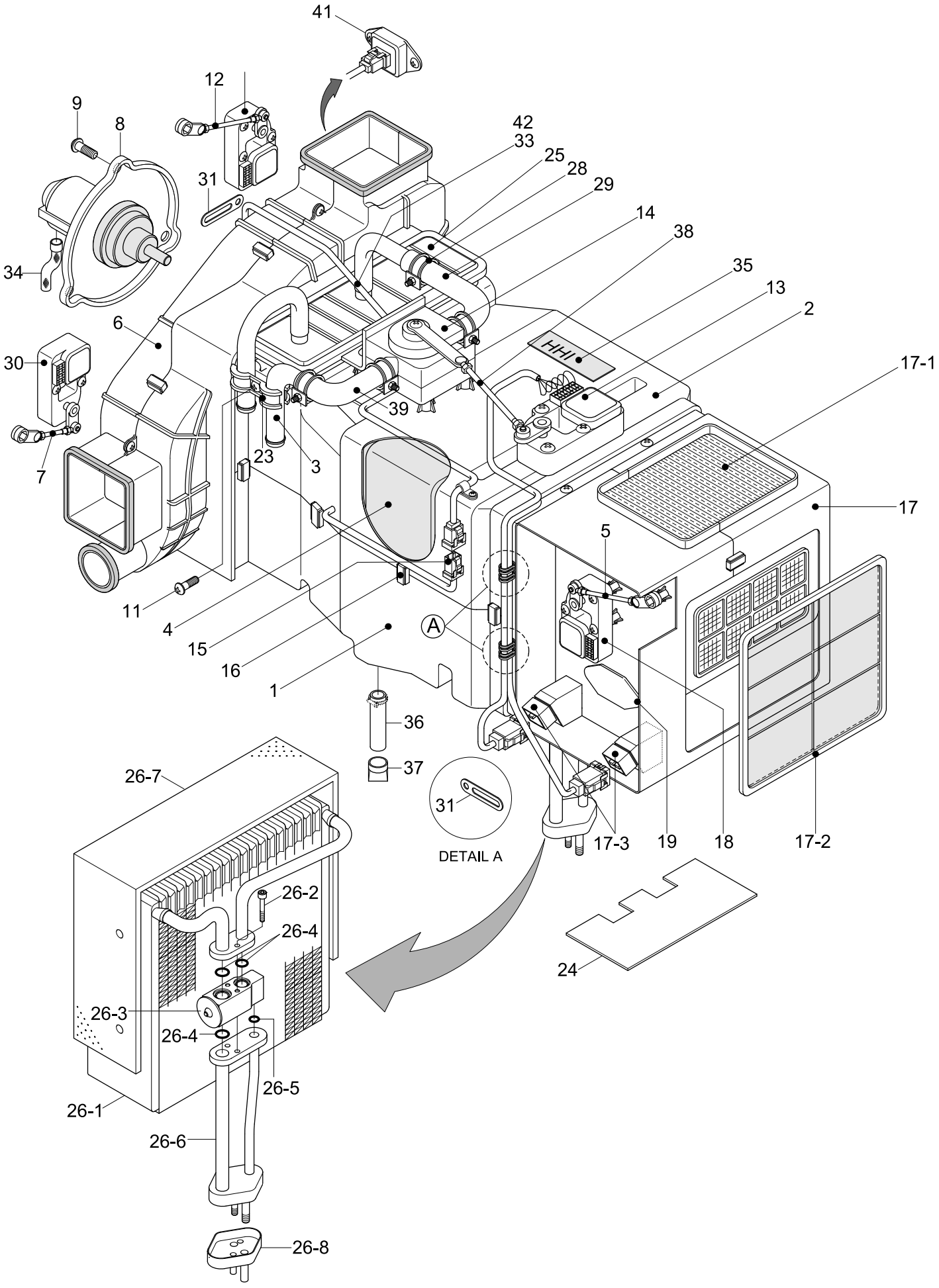

Item	Part_No	IS	Ord	T	Description	Qty	Serial_No	ITC	Remark
*	11N6-90420				.AIR CON UNIT	1	#0001 -	-	SEE 1160
1	AM12101400-0				..HVAC CASE-LOW	1			
2	AH000089				..HVAC CASE-UPP	1			
3	AH000854				..I/PIPE & T/SENSOR	1			
4	AM75001000-2				..EVAC INSULATION-LOW	1			
5	AM52300100-4				..ROD-INTAKE	1			
6	AH001694				..BLOWER CASE ASSY	1			
7	AW70002400-4				..ROD-DEF/FOOT	1			
8	11N6-90700				..FAN & MOTOR	1			
8-1	AH001412				...FAN	1			
8-2	AW21002500-1				...MOTOR	1			
9	AH000866				..SCREW	3			
10	11N6-90710				..MOTOR ACT-VENT	1			
11	K500531				..SCREW	28			
12	AW70002300-4				..ROD-VENT	1			
13	AH100311				..MOTOR ACT-TEMP	1			
14	AH001160				..VLAVE-WATER	1			
15	A165400100-2				..SENSOR-DUCT	1			
16	4AH-0688				..CLIP-CASE	9			
17	AH000055				..INTAKE CASE ASSY	1			
17-1	11N6-90760				...AIR FILTER-FRESH	1			
17-2	11N6-90770				...AIR FILTER-REFRESH	1			
17-3	11N6-90820				...RELAY	1			
18	11N6-90740				..MOTOR ACT-INTAKE	1			
19	AH001617				..SEAL-SPONGE	1			

Item	Part_No	IS	Ord	T	Description	Qty	Serial_No	ITC	Remark
23	AH000314				..CLAMP-H/RAD PIPE	1			
24	A120150700-3				..PLATE-SIDE	1			
25	11N6-90780				..HEATER CORE	1			
26	11N6-90790				..EVAP CORE ASSY	1	- #1925		
	11N6-90791				..EVAP CORE ASSY	1	#1926 -	B	
26-1	A111056400-1				...CORE ASSY-LAMI	1	- #1925		
26-2	A111750100-4				...BOLT-WRENCH,HEX	2	- #1925		
26-3	11N6-90800				...VALVE-EXPANSION	1	- #1925		
26-4	A305000212-2				...O-RING	3	- #1925		
26-5	A305000211-2				...O-RING	1	- #1925		
26-6	A112059600-2				...PIPE ASSY	1	- #1925		
26-7	A115004900-2				...INSULATION-CORE	1	- #1925		
26-8	A306201301-3				...CAP-FLANGE	1	- #1925		
28	AH001853				..CLAMP-WATER HOSE	4			
29	AH001288				..HOSE-OUTLET,WATER	1			
30	11N6-90810				..MOTOR ACT-FOOT/DEF	1			
31	4AH-0643				..HOLDER-WIRE	6			
33	AH100268				..WIRING ASSY	1			
34	A710051601-3				..HOSE-DRAIN	1			
35	AH001161				..NAME PLATE	1			
36	11EK-92090				..HOSE-DRAIN	1			
37	4CC-3354Z				..VALVE-VACUUM	1			
38	AH000856				..ROD-TEMP	1			
39	AH001287				..HOSE-INLET,WATER	1			
41	AW92000200-2				..POWER TR	1			

Item	Part_No	IS	Ord	T	Description	Qty	Serial_No	ITC	Remark
42	AH100312				..SENSOR-AMBIENT	2			

PRE HEATING GROUP

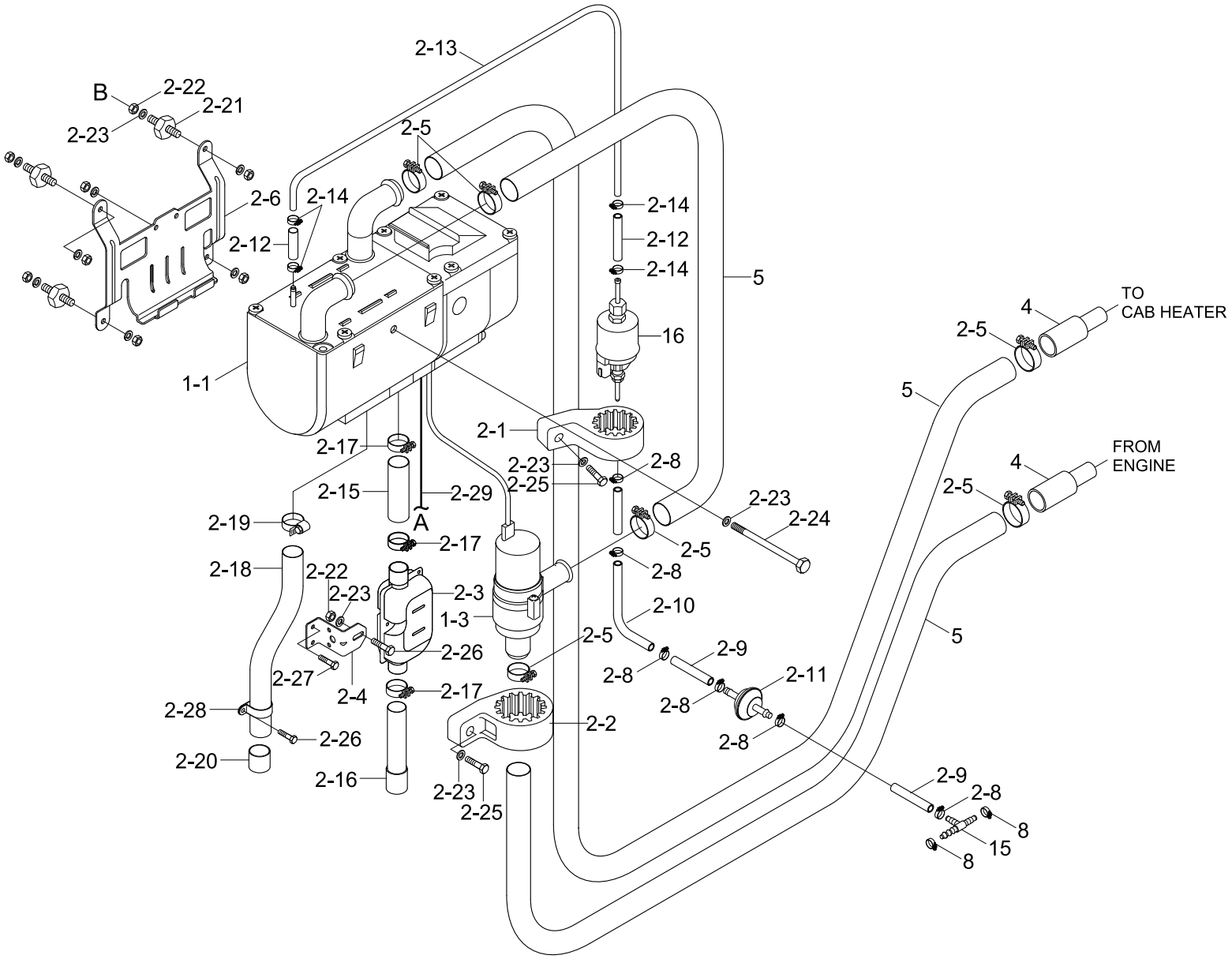

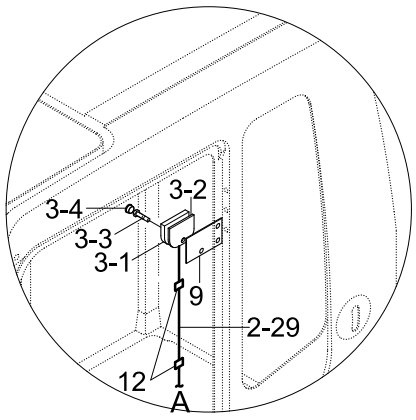

CAB

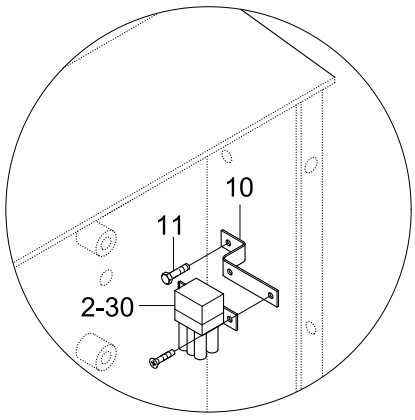

ELECTRIC BOX

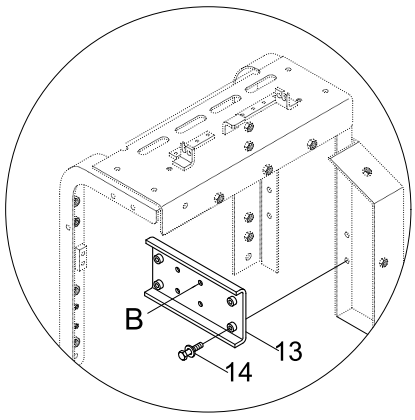

SIDE COWL ASSY-RH(6240)

Item	Part_No	IS	Ord	T	Description	Qty	Serial_No	ITC	Remark
*	@				PRE HEATING GROUP	1	#0919 -	-	NOT
1	11N8-90500				HYDRONIC D5WS-24V	1			
N1-1	11N8-94100				.PRE HEATER	1	#0001 -	-	NOT
1-3	11N8-94120				.PUMP-COOLANT	1			
2	11N8-90510				UNIVERSAL KIT D5WS-24V	1			
2-1	11N8-94130				.CLAMP-RUBBER	1			
2-2	11N8-94140				.CLAMP-RUBBER	1			
2-3	11N8-94160				.MUFFLER	1			
2-4	11N8-94170				.BRKT-MUFFLER	1			
2-5	@				.HOSE-CLAMP	10			NOT
2-6	11N8-94150				.BRKT-HEATER	1			
2-8	@				.CLAMP-HOSE	6			NOT
2-9	@				.HOSE	3			NOT
2-10	@				.HOSE-PLASTIC	1			NOT
2-11	11N8-94190				.FILTER FUEL	1			
2-12	@				.HOSE	2			NOT
2-13	@				.HOSE-PLASTIC	1			NOT
2-14	@				.CLAMP-HOSE	4			NOT
2-15	@				.HOSE-EXHAUST	1			NOT
2-16	@				.HOSE-EXHAUST	1			NOT
2-17	@				.CLAMP-EXHAST	3			NOT
2-18	@				.HOSE-INTAKE	1			NOT
2-19	@				.CLAMP-INTAKE	1			NOT
2-20	@				.END CAP	1			NOT
2-21	@				.STUD BOLT	4			NOT

Item	Part_No	IS	Ord	T	Description	Qty	Serial_No	ITC	Remark
2-22	@				.NUT	5			NOT
2-23	@				.WASHER	9			NOT
2-24	@				.BOLT-HEX	1			NOT
2-25	@				.BOLT-HEX	2			NOT
2-26	@				.BOLT-HEX	3			NOT
2-27	@				.BOLT SCREW	2			NOT
2-28	@				.CLAMP	1			NOT
2-29	11N8-94250				.HARNESS-P/HEATER	1			
2-30	11N8-94260				.FUSE BOX-P/HEATER	1			
2-31	@				.PIPE-CONNECTOR	2			NOT
3	11N8-90520				MINI TIMER 12/24V	1			
3-1	@				.TIMER	1			NOT
3-2	@				.CUSHION	1			NOT
3-3	@				.BOLT SCREW	1			NOT
3-4	@				.CAP	1			NOT
4	11N8-94320				REDUCER	2			
5	11N8-94211				HOSE	3			
8	S520-020000				CLAMP-HOSE	2			
9	11N8-94240				PLATE	1			
10	11N8-94270				BRACKET-F/BOX	1			
11	S131-043046				SCREW-W/WASHER	1			
12	21E9-06230				CLAMP-QUICK	2			
13	11N8-94340				BRACKET	1			
14	S037-101552				BOLT-W/WASHER	4			
15	11N8-94180				TEE-FUEL	1			

Item	Part_No	IS	Ord	T	Description	Qty	Serial_No	ITC	Remark
16	11N8-94110				PUMP-FUEL	1	#0001 -	-	

RH ELECTRIC

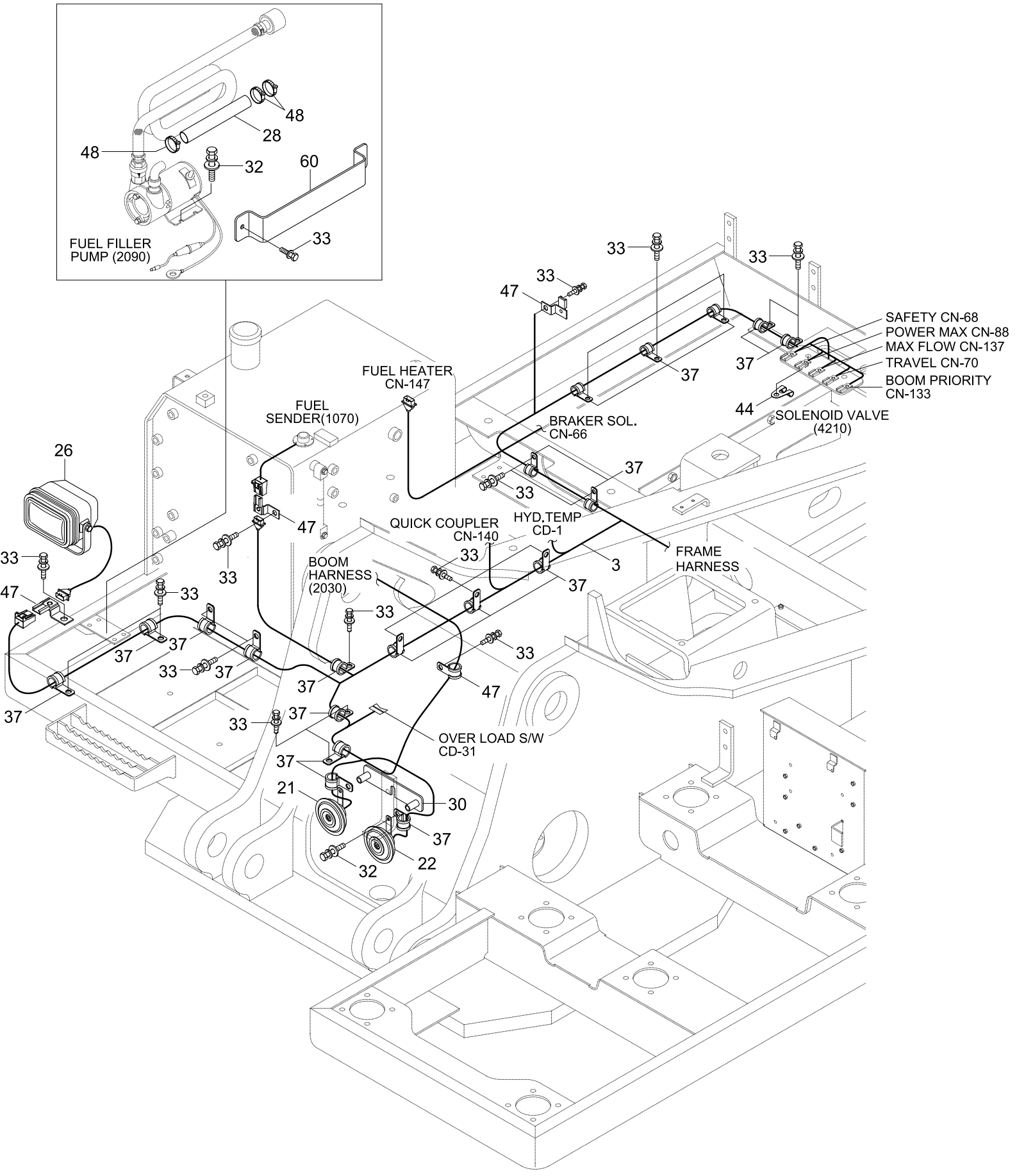
FUEL FILLER PUMP (2090)
48
28
48
32
60
33
FUEL HEATER CN-147
FUEL SENDER(1070)
BRAKER SOL. CN-66
SAFETY CN-68
POWER MAX CN-88
MAX FLOW CN-137
TRAVEL CN-70
BOOM PRIORITY CN-133
SOLENOID VALVE (4210)
QUICK COUPLER CN-140
HYD.TEMP CD-1
BOOM HARNESS (2030)
FRAME HARNESS
OVER LOAD S/W CD-31
26
47
33
37
3
21
30
22
32
44

Item	Part_No	IS	Ord	T	Description	Qty	Serial_No	ITC	Remark
3	21N9-10012				HARNESS-FRAME	1	- #0052		
	21N9-10013				HARNESS-FRAME	1	#0053 - #0170	B	
	21N9-10014				HARNESS-FRAME	1	#0171 - #0311	B	
	21N9-10015				HARNESS-FRAME	1	#0312 - #0552	B	
	21N9-10016				HARNESS-FRAME	1	#0553 - #0829	B	
	21N9-10017				HARNESS-FRAME	1	#0830 - #1215	B	
	21N9-10018				HARNESS-FRAME	1	#1216 - #1984	B	
	21N9-10019				HARNESS-FRAME	1	#1985 - #2826	D	
	21N9-13010				HARNESS-FRAME	1	#2827 -	B	
3-1	21N4-01320				.LINK-FUSIBLE(60A)	1			NOT SHOWN
3-2	21N4-01311				.LINK-FUSIBLE(30A)	1			NOT SHOWN
3-3	21EA-50550				.DIODE-IN5406	1			NOT SHOWN
21	21N5-10050				HORN-LOW	1	- #1984		
	21N5-10051				HORN-LOW	1	#1985 -	D	
22	21N5-10060				HORN-HIGH	1	- #1984		
	21N5-10061				HORN-HIGH	1	#1985 -	D	
26	21N6-20211				WORK LAMP ASSY	1			
26-1	S866-240650				.BULB	1			NOT SHOWN
28	E127-5007	10			HOSE-OUTLET	1	- #0012		
	21N4-20550				HOSE-OUTLET	1	#0013 -	B	
30	21N6-20521				PLATE-HORN	1			
32	S035-082022				BOLT-W/WASHER	6			
33	S037-101522				BOLT-W/WASHER	23	- #0220		
					BOLT-W/WASHER	25	#0221 -	A	
37	21E9-00170				CLIP-HARNESS	20			

Item	Part_No	IS	Ord	T	Description	Qty	Serial_No	ITC	Remark
44	S593-000752				CLIP-HARNESS	1			
47	25D1-10650				CLIP ASSY	4			
48	S520-027000				CLAMP-HOSE	2	- #0012		
	S520-032000				CLAMP-HOSE	3	#0013 -	B	
60	21N6-20080				PLATE-CLAMP	1	#0221 -	-	

LH ELECTRIC

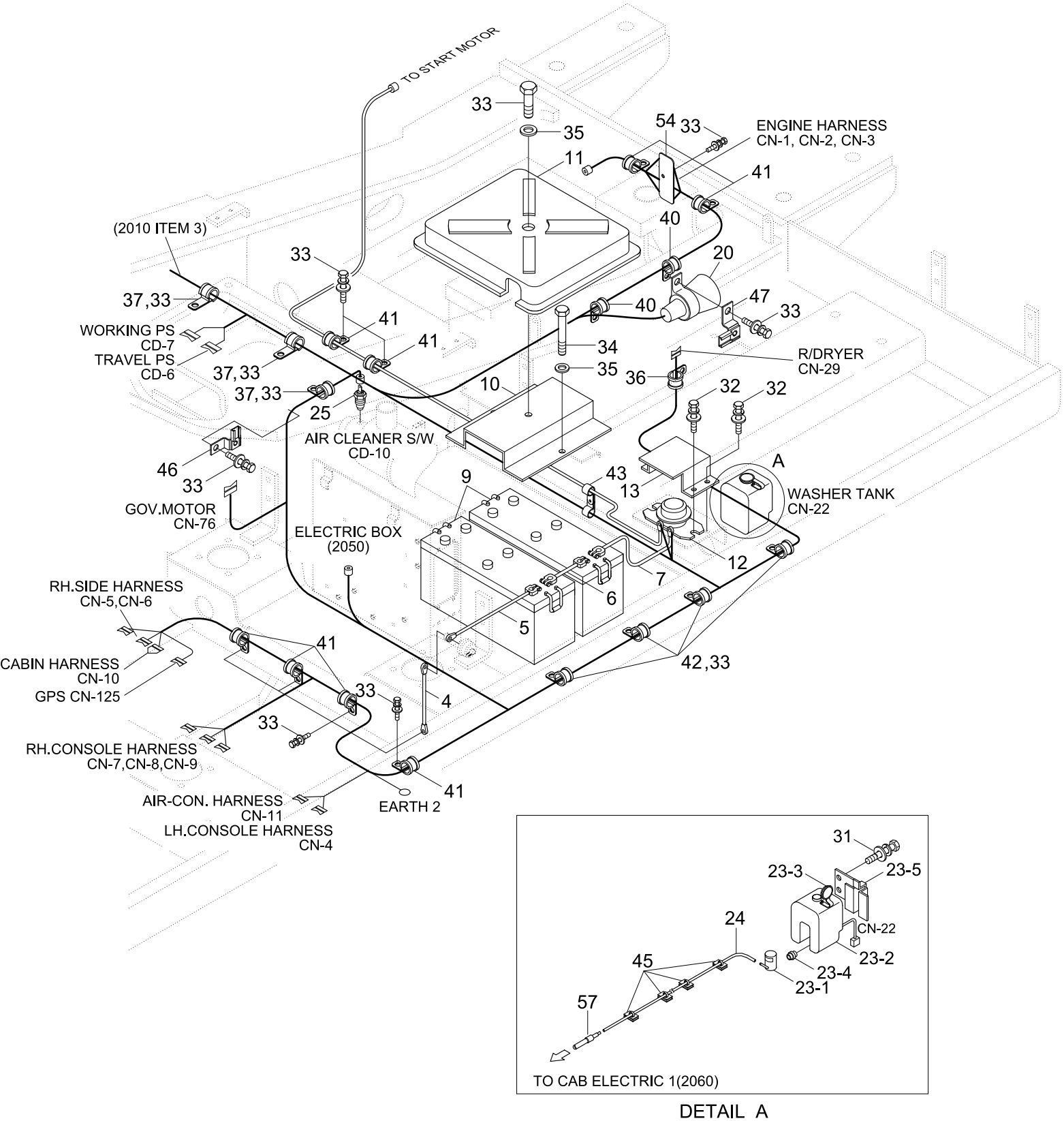

DETAIL A

Item	Part_No	IS	Ord	T	Description	Qty	Serial_No	ITC	Remark
4	21NA-10600				STRAP-EARTH	1			
5	21N8-10110				CABLE(MASTER SW-BATT)	1			
6	21N8-10120				CABLE(BATT(+)-RELAY)	1			
7	21N8-10121				CABLE(BATT-RELAY)	1	- #0009		
	21N8-10300				CABLE(BATT-RELAY)	1	#0010 - #0019		
	21N8-10400				CABLE(BATT-BATT RY)	1	#0020 -	B	
8	21N9-10100				CABLE(RELAY-STARTER)	1			
9	E125-1501	10			BATTERY	2			
10	21EN-30540				BRACKET-BATTERY	1	- #1343		
	21N8-42060				BRACKET-BATTERY	1	#1344 -	D	
11	21EN-30551				COVER-BATTERY	1			
12	21E5-0003	10			RELAY-BATTERY	1			
13	21N6-10181				COVER-BATT RELAY	1			
20	21N6-20321				BUZZER-TRAVEL ALARM	1	- #0552		
	21N6-20322				BUZZER-TRAVEL ALARM	1	#0553 -	B	
23	21EG-30630				WASHER TANK ASSY	1			
23-1	21EG-10130				.PUMP-MOTOR	1			
23-2	21EG-10140				.TANK	1			
23-3	24L3-30660				.CAP	1			
23-4	24L3-30670				.RUBBER-BUSHING	1			
23-6	24L3-30710				.PLATE	1			
24	21EM-30581				HOSE-RUBBER	1			
25	21L7-20100				SENSOR-AIR CLEANER	1			
31	S035-061622				BOLT-W/WASHER	4			
32	S035-082022				BOLT-W/WASHER	4			

Item	Part_No	IS	Ord	T	Description	Qty	Serial_No	ITC	Remark
33	S037-101652				BOLT-W/WASHER	28			
34	S017-102502				BOLT-HEX	2	- #0052		
	S017-102402				BOLT-HEX	2	#0053 -	B	
35	S403-102002				WASHER-PLAIN	2			
36	S593-000902				CLIP-HARNESS	1	- #1594		
	S593-000802				CLIP-HARNESS	1	#1595 -	B	
37	21E9-00170				CLIP-HARNESS	9			
40	S543-200002				CLAMP-TUBE	2			
41	S543-240002				CLAMP-TUBE	8			
42	S543-280002				CLAMP-TUBE	2			
45	21EM-30630				CLAMP-QUICK	5			
46	25D1-10640				CLIP ASSY	3			
47	25D1-10650				CLIP ASSY	2			
54	21N8-21090				PLATE-CONNECTOR	1			
57	21EM-30570				CONNECTOR-TUBE	1			

BOOM ELECTRIC

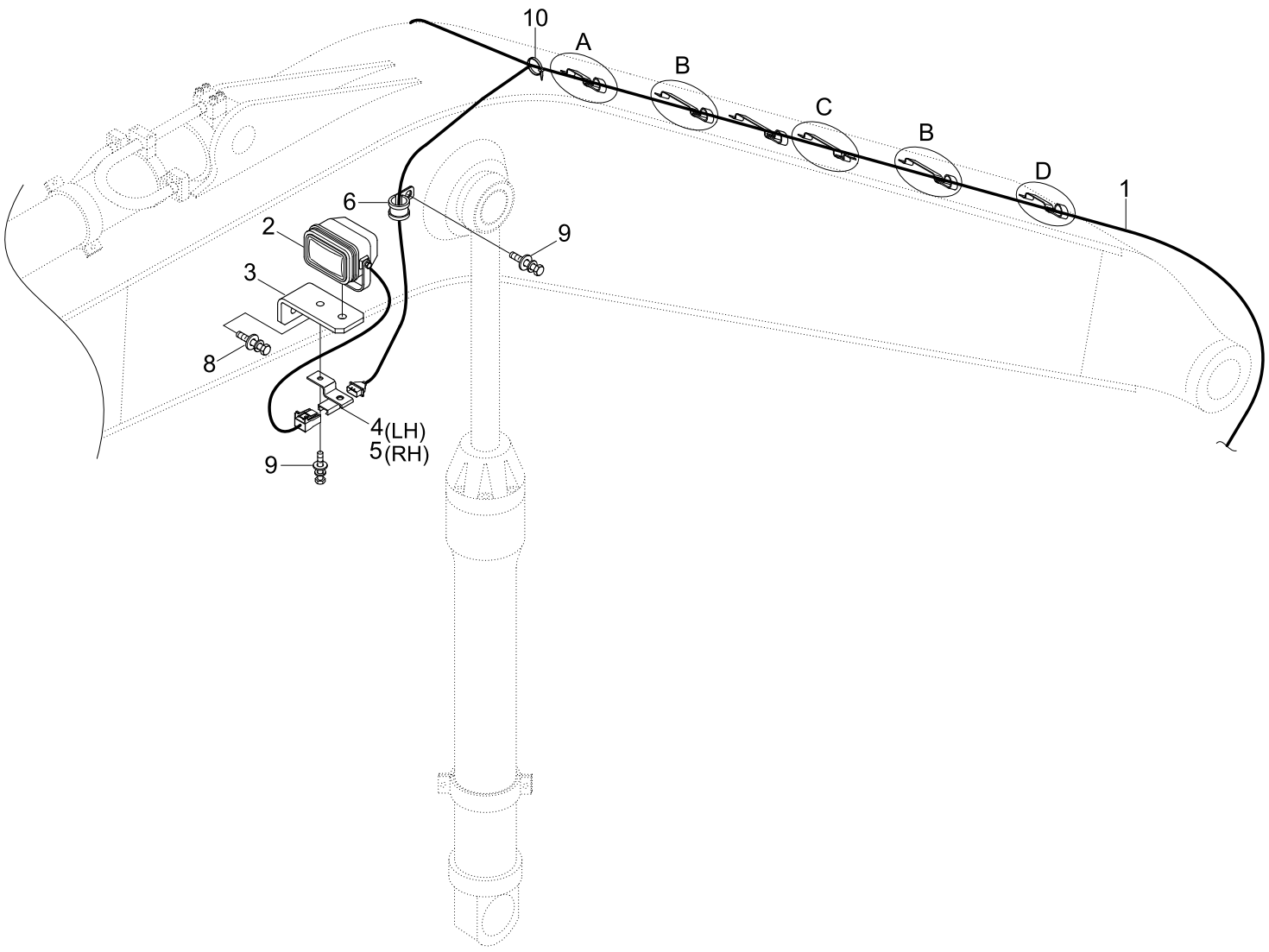

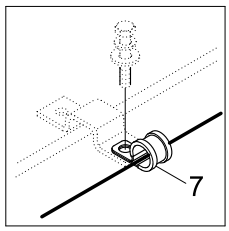

DETAIL A

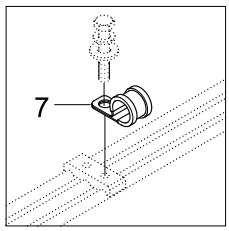

DETAIL B

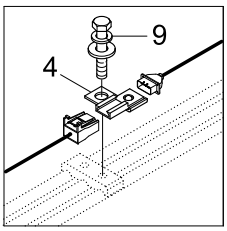

DETAIL C

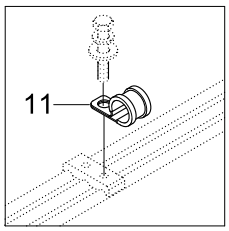

DETAIL D

Item	Part_No	IS	Ord	T	Description	Qty	Serial_No	ITC	Remark
1	21N9-10040				BOOM WIRE HARNESS	1			
2	21N6-20211				WORK LAMP ASSY	2			
2-1	S866-240650				.BULB	1			NOT SHOWN
3	21N6-20221				BRACKET-LIGHT	2			
4	25D1-10640				CLIP ASSY	2			
5	25D1-10650				CLIP ASSY	1			
6	S593-000902				CLIP-HARNESS	2	- #1594		
	S593-000802				CLIP-HARNESS	2	#1595 -	B	
7	S593-000752				CLIP-HARNESS	3			
8	S037-122522				BOLT-W/WASHER	2			
9	S037-101652				BOLT-W/WASHER	5			
10	S552-050203				CLAMP-BAND	4			
11	S543-160002				CLAMP-TUBE	1			

ENGINE ELECTRIC

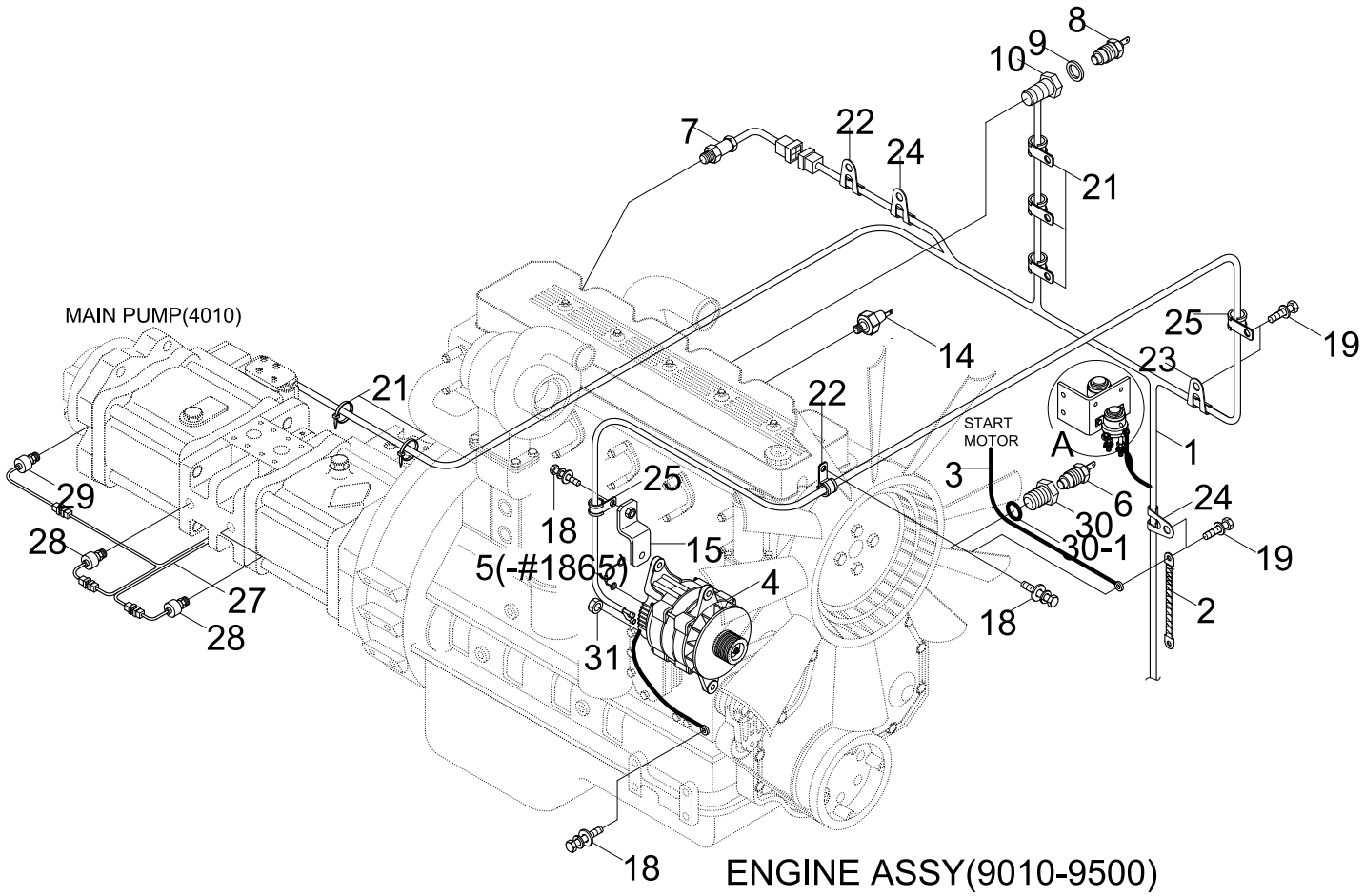

ENGINE ASSY(9010-9500)

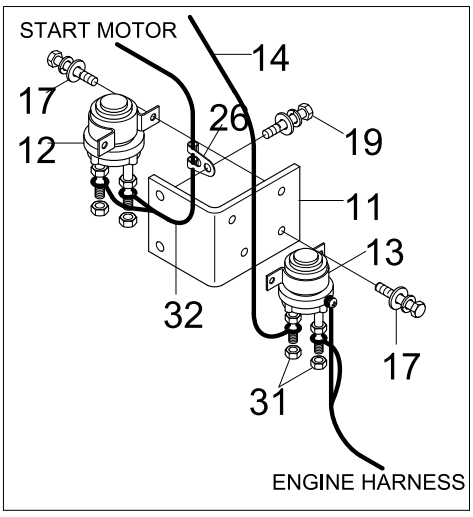

DETAIL A

Item	Part_No	IS	Ord	T	Description	Qty	Serial_No	ITC	Remark
1	21N9-10021				HARNESS-ENGINE	1	- #0052		
	21N9-10022				HARNESS-ENGINE	1	#0053 - #1865	B	
	21N9-10023				HARNESS-ENGINE	1	#1866 -	B	
1-1	21LH-30130				.RESISTER	1			NOT SHOWN
2	21EH-30720				STRAP-EARTH	1			
3	21N9-20020				CABLE(FRAME-S/MOTOR)	1			
4	21E6-40030				ALTERNATOR ASSY	1	- #1865		
	21Q6-41000				ALTERNATOR ASSY	1	#1866 -	B	
5	21E1-21120				WIRE LINK-ALTERNATOR	1	- #1865	-	
6	21E3-5001	20			SWITCH-ENG OIL PRESS	1			
7	21E3-0042	03			SENSOR-SPEED	1	- #3188		
	21Q6-15800	03			SENSOR-SPEED	1	#3189 -	A	
8	21EN-40100				SENDER-TEMP	1			
9	21EA-50171				FITTING-TEMP SW	1			
10	21EA-50260				PACKING-TEMP SW	1			
11	21N9-20052				BRAKCET-RELAY	1			
12	21N6-30120				RELAY-START	1			
13	E225-0006	10			RELAY-HEATER	1			
14	21N9-20030				CABLE-HEATER	1			
15	21EA-00170				PLATE	1			
17	S035-061522				BOLT-W/WASHER	4			
18	S035-081522				BOLT-W/WASHER	3			
19	S037-101552				BOLT-W/WASHER	6			
20	21L8-10360				CABLE(ALT-EARTH)	1			
21	S552-050203				CLAMP-BAND	8			

Item	Part_No	IS	Ord	T	Description	Qty	Serial_No	ITC	Remark
22	S593-000702				CLIP-HARNESS	2	- #1594		
	S593-000802				CLIP-HARNESS	2	#1595 -	B	
23	S593-001302				CLIP-HARNESS	1			
24	S593-001702				CLIP-HARNESS	6			
25	S543-100002				CLAMP-TUBE	2			
27	21NA-11170				HARNESS-PUMP PS	1			
28	21EG-32200				SENDER-PRESSURE	2			OPTION
29	21EG-32210				SENDER-PRESSURE	1			OPTION
30	21L7-00611				ADAPTER	1			
30-1	21EN-00520				.O-RING	1			
31	S203-061002				NUT-HEX	2			
32	21EA-00190				HARNESS-EXT,START RY	1			
33	S037-122052				BOLT-W/WASHER	2			

ELECTRIC BOX

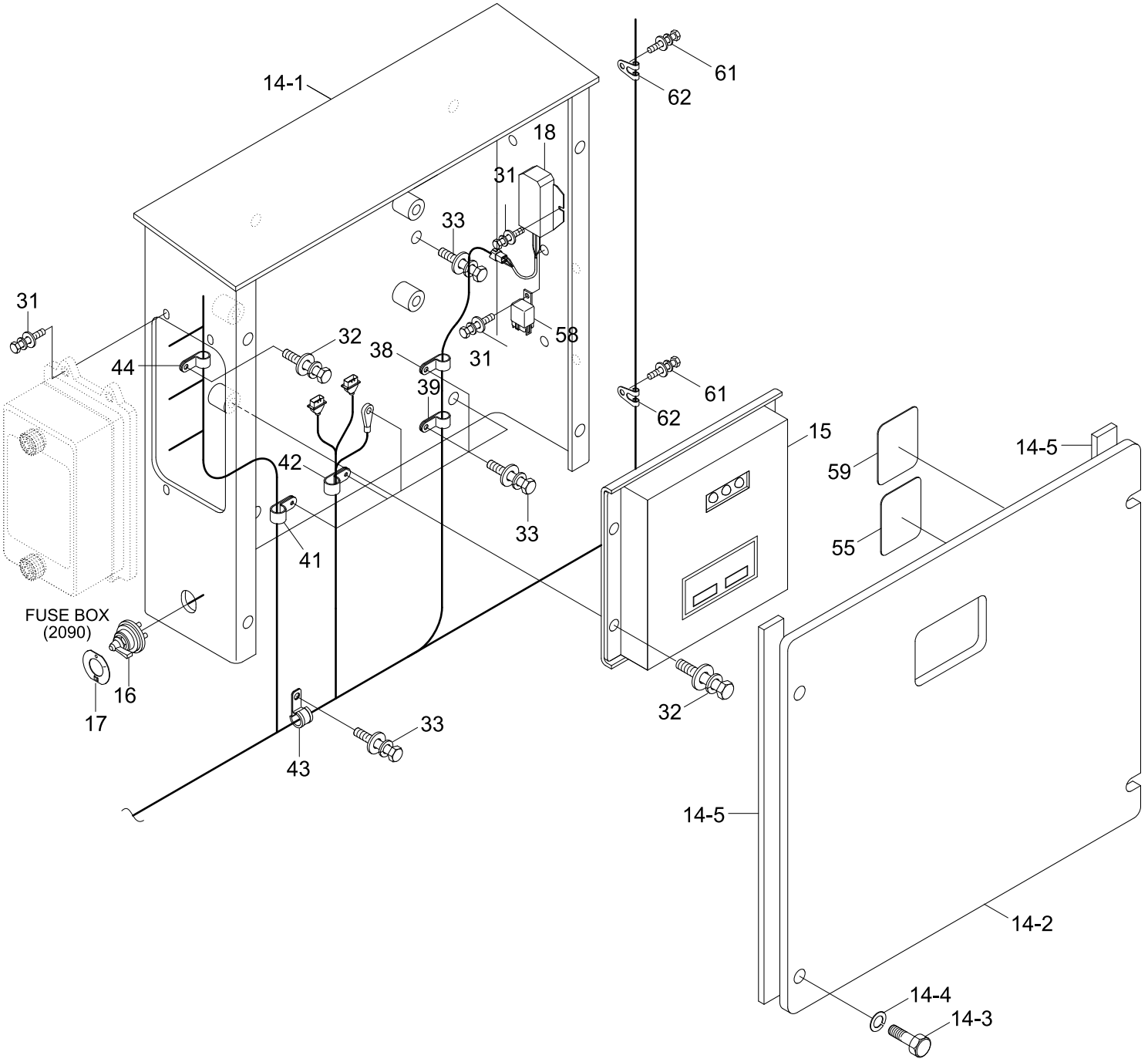

Description	Parts no	Included item
ELEC. BOX KIT ASSY	21N8-17201	14, 16, 17, 18, 55, 58, 59, 60, 61, 62

Item	Part_No	IS	Ord	T	Description	Qty	Serial_No	ITC	Remark
K14	21N8-00701				ELECTRIC BOX ASSY	1			
14-1	21N8-00710				.ELECTRIC BOX WA	1			
14-2	21N6-20152				.PLATE-FRONT COVER	1			
14-3	S017-100162				.BOLT-HEX	5			
14-4	S411-100002				.WASHER-SPRING	4			
14-5	21N6-20180				.PAD-RUBBER	2			
15	21N9-32100				CPU CONTROLLER	1	- #0034		
	21N9-32101				CPU CONTROLLER	1	#0035 -	B	
16	21L7-10500				SWITCH-MASTER	1	- #0578		
	21N4-10441				SWITCH-MASTER	1	#0579 - #1421	B	
K16	21L7-10500				SWITCH-MASTER	1	#1422 - #1578	A	
	21L7-10501				SWITCH-MASTER	1	#1579 - #3529	B	
	21LM-10501				SWITCH-MASTER	1	#3530 -	B	
17	21EN-00420				DECAL-MASTER SW	1	- #0578		
	21N4-10451				DECAL-MASTER SWITCH	1	#0579 - #1421	B	
K17	21LD-34180				DECAL-MASTER SWITCH	1	#1422 - #3529	D	
	21N5-40370				DECAL-MASTER SWITCH	1	#3530 -	B	
18	21E9-4018				PROLIX RESISTOR	1	- #1414		
K18	21Q4-20100				RESISTOR ASSY	1	#1415 -	A	
31	S035-061522				BOLT-W/WASHER	6	- #0052	-	
					BOLT-W/WASHER	7	#0053 - #1505	A	
					BOLT-W/WASHER	4	#1506 - #2826	A	
	S035-061526				BOLT-W/WASHER	3	#2827 -	A	
32	S035-082022				BOLT-W/WASHER	5			
33	S037-102022				BOLT-W/WASHER	7			

Item	Part_No	IS	Ord	T	Description	Qty	Serial_No	ITC	Remark
38	S543-120002				CLAMP-TUBE	1			
39	S543-160002				CLAMP-TUBE	1			
41	S543-240002				CLAMP-TUBE	1			
42	S543-280002				CLAMP-TUBE	1			
43	S543-260002				CLAMP-TUBE	1			
44	S593-000752				CLIP-HARNESS	1			
47	25D1-10650				CLIP ASSY	1			
K55	21N8-12040				DECAL-EMER CONTROL	1			
K58	21E4-0011	20			RELAY ASSY	1	#0053 - #2826	-	
	22FV-24110	20			RELAY	1	#2827 -	B	
K59	21N3-10080				DECAL-RELAY	1	#0002 -	-	
K60	S035-062026				BOLT-W/WASHER	3	#1506 -	-	
K61	S037-102026				BOLT-W/WASHER	2	#1506 -	-	
K62	S593-000902				CLIP-HARNESS	2	#2827 -	-	
K	21N8-17200				ELEC BOX KIT ASSY	1	#1506 - #2826	-	SEE ILLUST
	21N8-17201				ELEC.BOX KIT ASSY	1	#2827 -	B	SEE ILLUST

CAB ELECTRIC 1

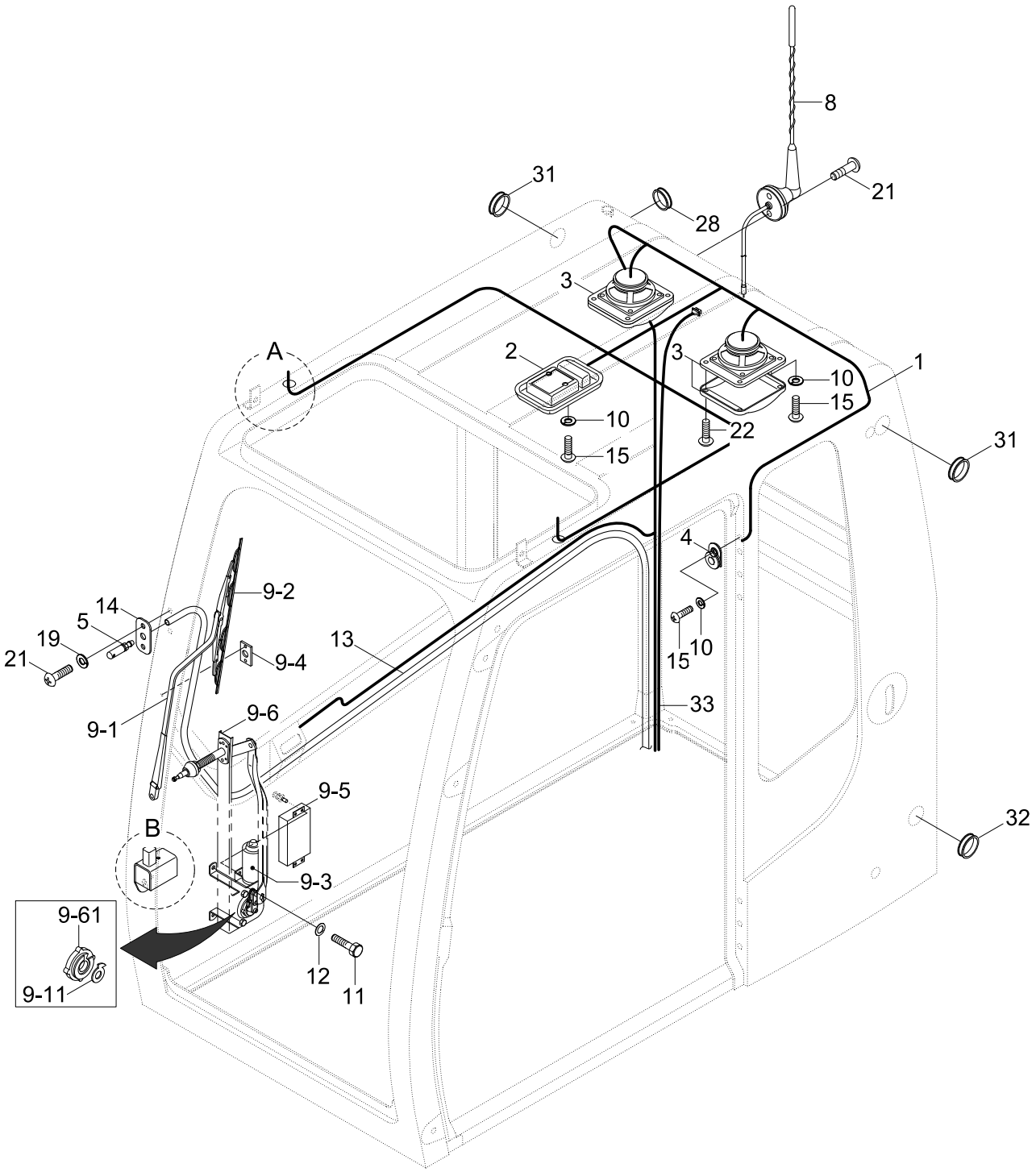

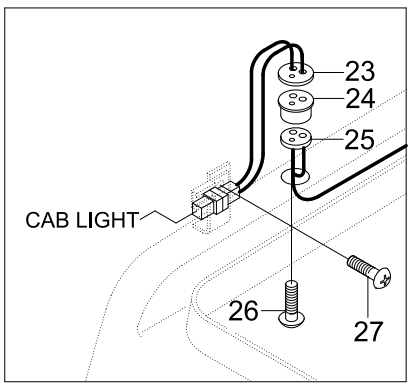

DETAIL A

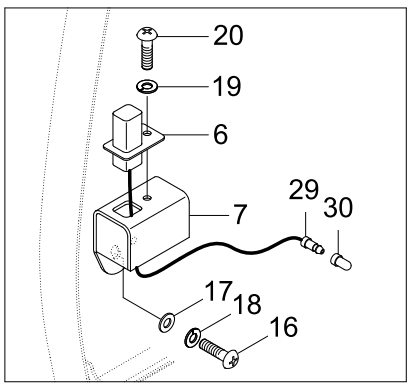

DETAIL B

Item	Part_No	IS	Ord	T	Description	Qty	Serial_No	ITC	Remark
1	21N6-00012				HARNESS-CAB	1	- #0552		
	21N6-00013				HARNESS-CAB	1	#0553 -	D	
2	21EH-0011				LAMP ASSY-ROOM	1	- #2906		
	21N6-01600				LAMP ASSY-ROOM	1	#2907 -	A	
3	21N6-10400				SPEAKER	2			
4	E123-3022				SWITCH-DOOR	1			
5	21N6-00311				NOZZLE	1			
6	21M5-50250				SWITCH ASSY	1			WIPER CUT SW
7	21N6-00301				BRACKET WA	1			
8	21N6-10410				ANTENA	1	- #1686		
	21N4-02840				ANTENNA	1	#1687 -	B	
9	21N6-00210				WIPER MOTOR KIT ASSY	1	- #0507		
	21N6-01210				WIPER MOTOR KIT ASSY	1	#0508 -	B	
9-1	21N6-00220				.ARM-WIPER	1	- #0507		
	21N6-01220				.ARM-WIPER	1	#0508 - #1438	A	
	21N6-01221				.ARM-WIPER	1	#1439 -	B	
9-12	21N6-01300				..CAM BASE-W/MOTOR	1	#0001 -	-	
9-11	21N6-01290				..CAM-MOTOR	1	#0001 -	-	
9-2	21N6-00230				.BLADE-WIPER	1	- #0507		
	21N6-01230				.BLADE-WIPER	1	#0508 -	A	
9-3	21N6-00240				.MOTOR-WIPER	1	- #0507		
	21N6-01280				.MOTOR-WIPER	1	#0508 -	D	
9-4	21N6-00250				.BRACKET-PARKING	1	- #0507		
	21N6-01250				.BRACKET-PARKING	1	#0508 -	D	
9-5	21N8-21060				.CONTROLLER	1	- #0507		

Item	Part_No	IS	Ord	T	Description	Qty	Serial_No	ITC	Remark
9-5	21N6-01270				.CONTROLLER-W/MOTOR	1	#0508 - #0804	A	
	21N6-01272				.CONTROLLER-W/MOTOR	1	#0805 -	B	
N9-6	@				.BRACKET & LINK ASSY	1	#0001 - #0507	-	NOT
9-6	21N6-01260				.BRACKET & LINK ASSY	1	#0508 -	A	
9-61	21N6-01300				..CAM BASE-W/MOTOR	1	#0001 -	-	
9-7	21N6-01290				.MOTOR-CAM	1	#0001 -	-	
10	S411-050006				WASHER-SPRING	11			
11	S015-080166				BOLT-HEX	3			
12	S411-080006				WASHER-SPRING	3			
13	21EM-10890				HOSE-WASHER TANK	1			
14	E171-1185				PLATE-NOZZLE MTG	1			
15	S161-050166				SCREW-CROSS R/ROUND	11			
16	S161-060166				SCREW-CROSS R/ROUND	2			
17	S403-062006				WASHER-PLAIN	2			
18	S411-060006				WASHER-SPRING	8			
19	S411-040006				WASHER-SPRING	3			
20	S161-040106				SCREW-CROSS R/ROUND	1			
21	S151-040166				SCREW-TAPPING	4			
22	S151-050126				SCREW-TAPPING	8			
23	21N6-10420				PLATE	2			
24	21N6-10430				SEAL	2			
25	21N6-10440				PLATE	2			
26	S161-040166				SCREW-CROSS R/ROUND	2			
27	S141-040106				SCREW-FLAT HD	2			
28	21N6-00320				GROMMET	1			

Item	Part_No	IS	Ord	T	Description	Qty	Serial_No	ITC	Remark
29	21N8-10090				HARNESS-WIPER	1			
30	S890-107508				TUBE-PVC	1			
31	S681-410400				GROMMET	2			
32	S681-460400				GROMMET	1			
33	21N4-22010				EXT HARNESS-USB	1	#1828 -	-	
32	S681-460400				GROMMET	1			

CAB ELECTRIC 2

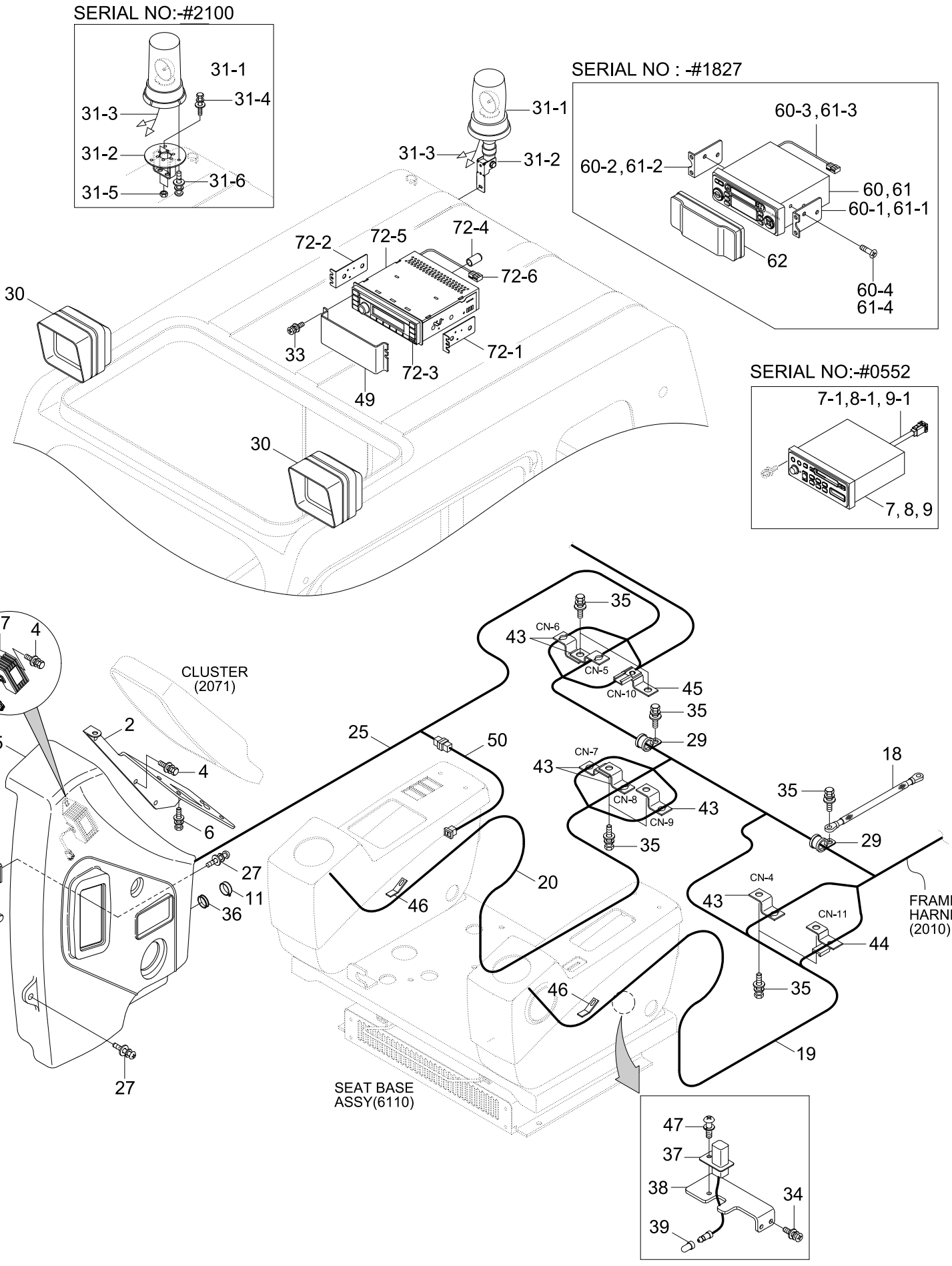

Item	Part_No	IS	Ord	T	Description	Qty	Serial_No	ITC	Remark
2	21N8-21011				BRACKET WA	1			
	21N6-01320				BRACKET WA	1	#1111 -	-	OPTION
3	21N8-21070				BRACKET WA	1			
	21N6-01330				BRACKET WA	1	#1111 -	-	OPTION
4	S035-061622				BOLT-W/WASHER	5			
5	21N8-21021				COVER-WIPER MOTOR	1			
	21N6-01310				COVER-WIPER MOTOR	1	#1111 -	-	OPTION
6	S035-081622				BOLT-W/WASHER	4			
7	21N8-22010				CASSETTE RADIO	1	- #0552	-	USA
7-1	375500043204				.WIRE ASSY-20 H818	1	- #0552	-	
8	21N8-22020				CASSETTE RADIO	1	- #0552	-	EUROPE
8-1	375500043204				.WIRE ASSY-20 H818	1	- #0552	-	
9	21N8-22030				CASSETTE RADIO	1	- #0552	-	GENERAL
9-1	375500043204				.WIRE ASSY-20 H818	1	- #0552	-	
11	21N8-20010				SOCKET-12V	1			OPTION
17	21N8-20201				DC-DC CONVERTER ASSY	1			OPTION
18	21EH-30720				STRAP-EARTH	1			
19	21N8-11160				HARNESS-CONSOLE,LH	1			
20	21N8-11151				HARNESS-CONSOLE,RH	1	#0001 - #0829	-	
25	21N4-02810				HARNESS-CONSOLE,RH	1	#0230 -	B	
	21N8-11181				HARNESS-SIDE,RH	1	#0001 -	-	
27	S132-061676				SCREW-W/WASHER	2			
28	S132-061646				SCREW-W/WASHER	1			
29	S543-280003				CLAMP-TUBE	2			
30	21N6-20211				WORK LAMP ASSY	2			

Item	Part_No	IS	Ord	T	Description	Qty	Serial_No	ITC	Remark
30-1	S866-240650				.BULB	1			NOT SHOWN
31	@				BEACON LAMP ASSY	1	- #2100		NOT
	21Q4-30381				BEACON LAMP ASSY	1	#2101 -	D	OPTION
31-1	21EK-10140				.BEACON LAMP	1	- #2100		OPTION
	21Q4-20700				.BEACON LAMP	1	#2101 -	D	OPTION
31-11	21EK-10330				..BULB-H1, 70W	1			OPT, NOT SHOWN
31-2	21N8-00581				.BRACKET-BEACON LAMP	1	- #1118		OPTION
	21N8-00581BG				.BRACKET-BEACON LAMP	1	#1119 - #2100	D	
31-3	21EK-20240				.HARNESS-BEACON LAMP	1			OPTION
31-2	21Q4-31000				.BRACKET-TILT	1	#2101 -	D	
31-3	21EK-20240				.HARNESS-BEACON LAMP	1	- #2100		OPTION
	21N4-02830				.HARNESS-BEACON LAMP	1	#2101 -	D	OPTION
31-4	S037-102026				.BOLT-W/WASHER	2	- #2100		OPTION
					.BOLT-W/WASHER	2			OPTION
31-5	S205-101006				.NUT-HEX	2	- #2100		OPTION
31-6	S131-051546				.SCREW-W/WASHER	3	- #2100		OPTION
33	S131-051046				SCREW-W/WASHER	4			
34	S131-051646				SCREW-W/WASHER	2			
35	S037-102022				BOLT-W/WASHER	7			
36	S661-260300				CAP-RUBBER	1			
37	21M5-50250				SWITCH ASSY	1			SAFETY SW
38	21N8-21080				PLATE	1			
39	S890-107508				TUBE-PVC	1			
43	21N4-01130				PLATE-CLIP	6			
44	25D1-10660				CLIP ASSY	1			

Item	Part_No	IS	Ord	T	Description	Qty	Serial_No	ITC	Remark
45	25D1-10650				CLIP ASSY	1			
46	S591-000802				CLIP-HARNESS	2	#0001 -	-	
47	S161-040106				SCREW-CROSS R/ROUND	3	#0001 -	-	
49	21N6-10450				PLATE-C/RADIO COVER	1	#0553 -	-	
50	21N8-40190				EXT.HARNESS-A/RIDE SEAT	1	#0384 -	-	AIR RIDE SEAT
N60	21N8-50010				CASSETTE RADIO ASSY	1	#0553 - #1421	D	NOT
	21N8-50050				CASSETTE RADIO ASSY	1	#1422 - #1827	A	NOT
60-1	21N6-10480				.BRACKET-LH	1	#0553 - #1827	-	
60-2	21N6-10490				.BRACKET-RH	1	#0553 - #1827	-	
60-3	21N8-01600				.HARNESS-EXT WIRE	1	#0553 - #1827	-	
60-4	S141-050102				.SCREW-FLAT HD	4	#0553 - #1827	-	
61	21N8-40500				CD PLAYER ASSY	1	#0553 - #1827	-	OPTION
61-1	21N6-10480				.BRACKET-LH	1	#0553 - #1827	-	
61-2	21N6-10490				.BRACKET-RH	1	#0553 - #1827	-	
61-3	21N8-01600				.HARNESS-EXT WIRE	1	#0553 - #1827	-	
61-4	S141-050102				.SCREW-FLAT HD	4	#0553 - #1827	-	
62	21N8-40940				COVER-DUST	1	#0553 -	-	
72	21N8-50100				RADIO/USB PLAYER ASSY	1	#1828 - #2107	B	
	21N8-54000				RADIO/USB PLAYER ASSY	1	#2108 -	D	
72-1	21LM-31010				.BRACKET L	1	#1828 -	-	
72-2	21LM-31020				.BRACKET R	1	#1828 -	-	
72-3	21LM-31030				.CABLE-MP3	1	#1828 -	-	
72-4	21LM-31040				.CAP	1	#1828 -	-	
72-5	21LM-31050				.RADIO/USB BODY	1	#1828 -	-	
72-6	21N8-50110				.HARNESS-EXT,WIRE	1	#1828 - #2107	-	

CLUSTER

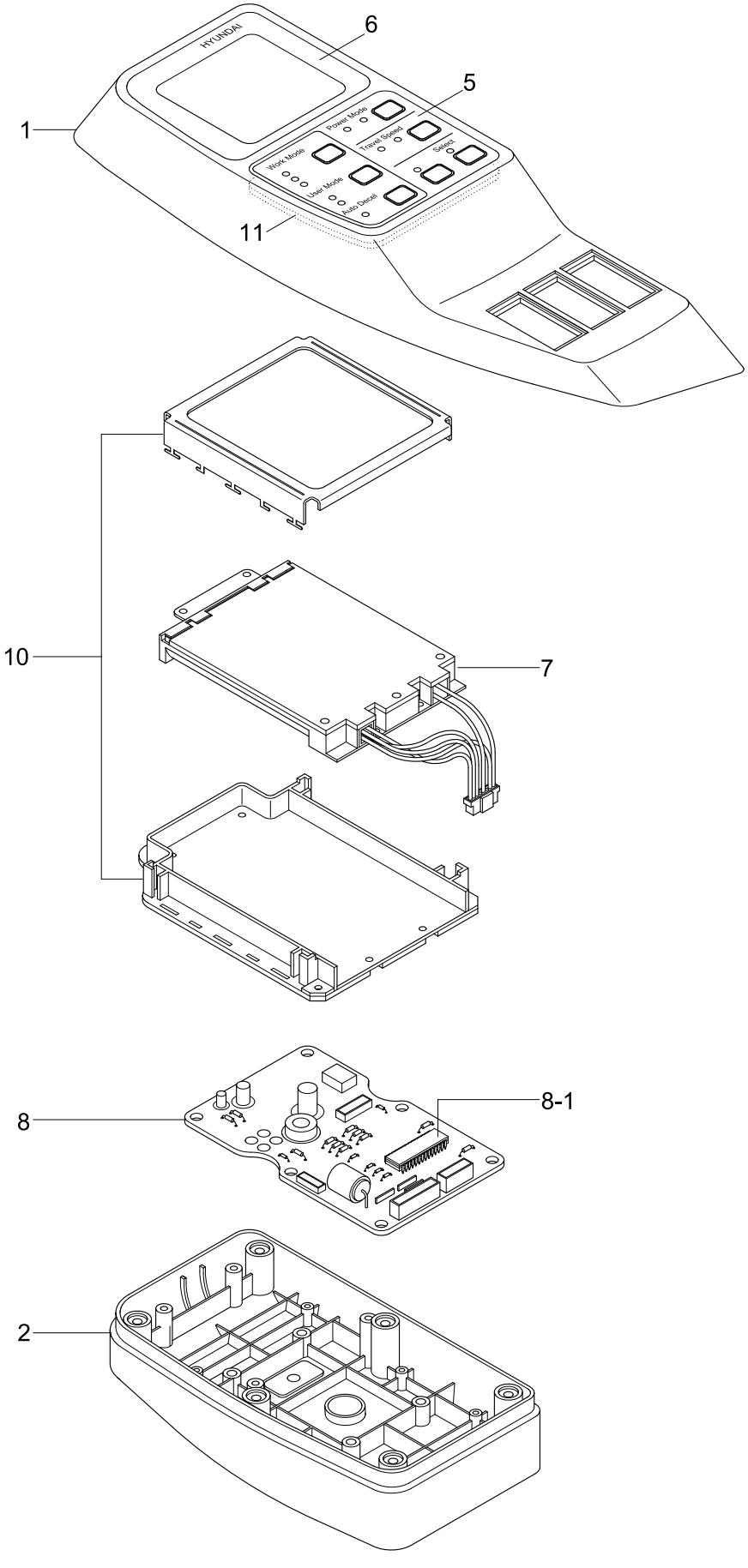
HYUNDAI
Power Mode
Travel Speed
Select
Work Mode
User Mode
Auto Decel
1
2
5
6
7
8
8-1
10
11

Item	Part_No	IS	Ord	T	Description	Qty	Serial_No	ITC	Remark
*	21N8-30012				CLUSTER ASSY	1	- #0034		
	21N8-30013				CLUSTER ASSY	1	#0035 -	B	
	21N8-36000				CLUSTER ASSY	1	#1111 - #1138	-	UPGRADE CABIN
	21N8-36001				CLUSTER	1	#1139 -	B	UPGRADE CABIN
1	21N8-30020				.CASE-UPPER	1			
2	21N8-30030				.CASE-LOWER	1			
5	21N8-30070				.DECAL-SWITCH	1	- #0034		
	21N8-30071				.DECAL-SWITCH	1	#0035 -	B	
6	21N8-30081				.DECAL-DISPLAY	1			
7	21N8-30090				.LIGHT UNIT-BACK	1	- #0106		
	21N8-30091				.LIGHT UNIT-BACK	1	#0107 -	D	
8	21N8-30150				.BOARD-MAIN	1			
8-1	21N8-30160				..ROM-CLUSTER	1			
10	21N8-30180				.LCD UNIT	1			
11	21N8-30230				.SWITCH BOARD ASSY	1			

CLUSTER(OPT, #1111-)

SERIAL NO : -#2462

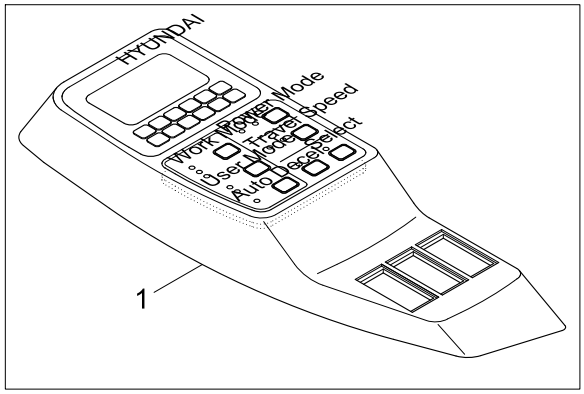

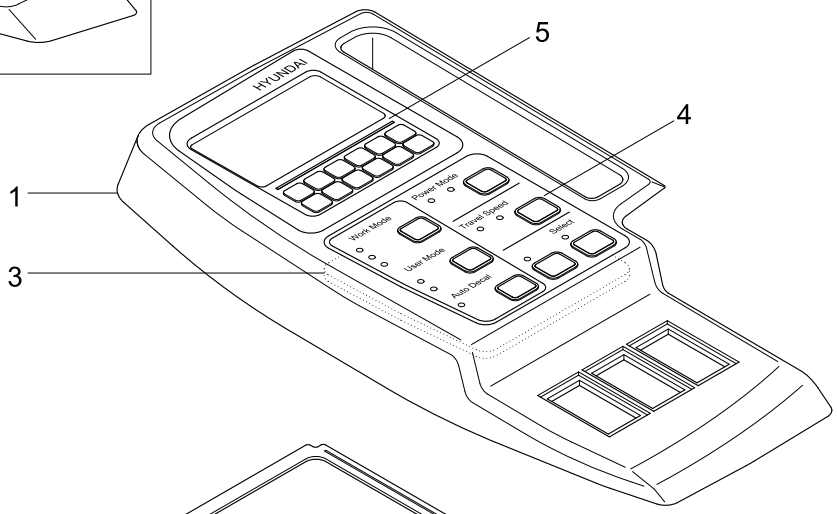

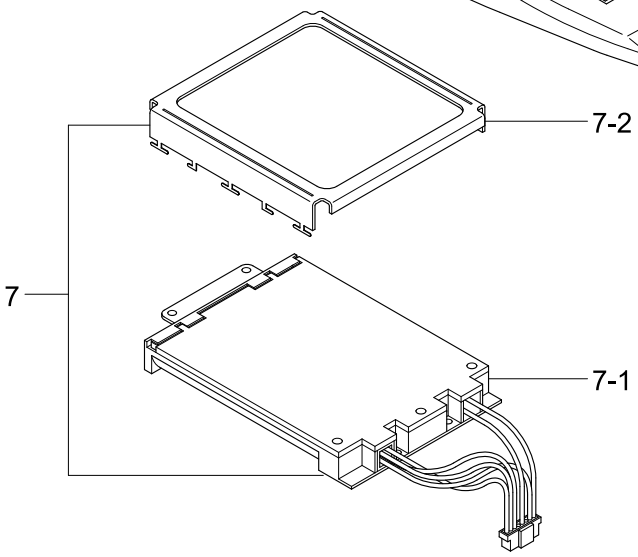

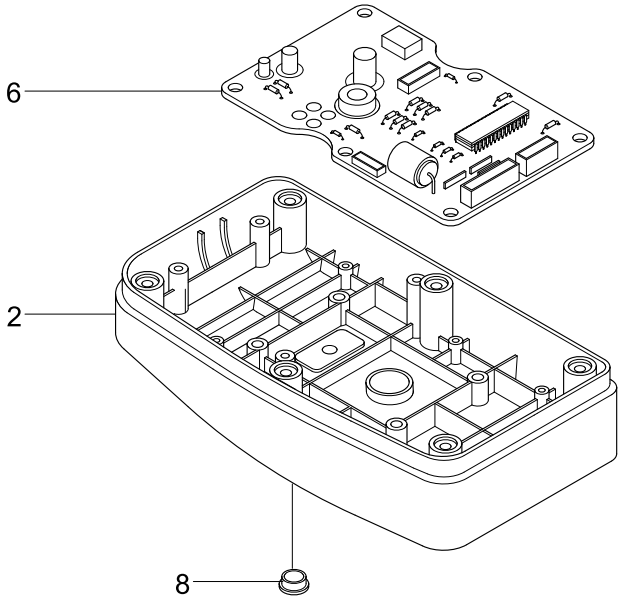

Item	Part_No	IS	Ord	T	Description	Qty	Serial_No	ITC	Remark
*	21N8-36000				CLUSTER ASSY	1	#1111 - #1138	-	UPGRADE CABIN
	21N8-36001				CLUSTER	1	#1139 - #2462	B	UPGRADE CABIN
1	21N8-35100				.CASE-UPPER	1			
2	21N8-30030				.CASE-LOWER	1			
3	21N8-35200				.SWITCH ASSY	1			
4	21N8-35300				.DECAL-SWITCH	1			
5	21N8-35400				.DECAL-LCD	1			
6	21N8-35500				.BOARD-POWER	1			
7	21N8-35600				.MODULE-MAIN	1			
N7-1	@				..BOARD-MAIN	1			NOT
N7-2	@				..MODULE-LCD	1			NOT
*	21N8-36002				CLUSTER ASSY	1	#2463 -	B	
1	21N8-30022				.CASE-UPPER	1			
2	21N8-30030				.CASE-LOWER	1			
3	21N8-36300				.SWITCH ASSY	1			
4	21N8-30072				.DECAL-SWITCH	1			
5	21N8-36100				.DECAL-LCD	1			
6	21N8-35500				.BOARD-POWER	1			
7	21N8-35601				.MODULE-MAIN	1			
N7-1	@				..BOARD-MAIN	1			NOT
N7-2	@				..MODULE-LCD	1			NOT
8	21N8-35900				.CAP-USB	1			
N7-2	@				..MODULE-LCD	1			NOT

CAB ELECTRIC 2(OPT, #1111-)

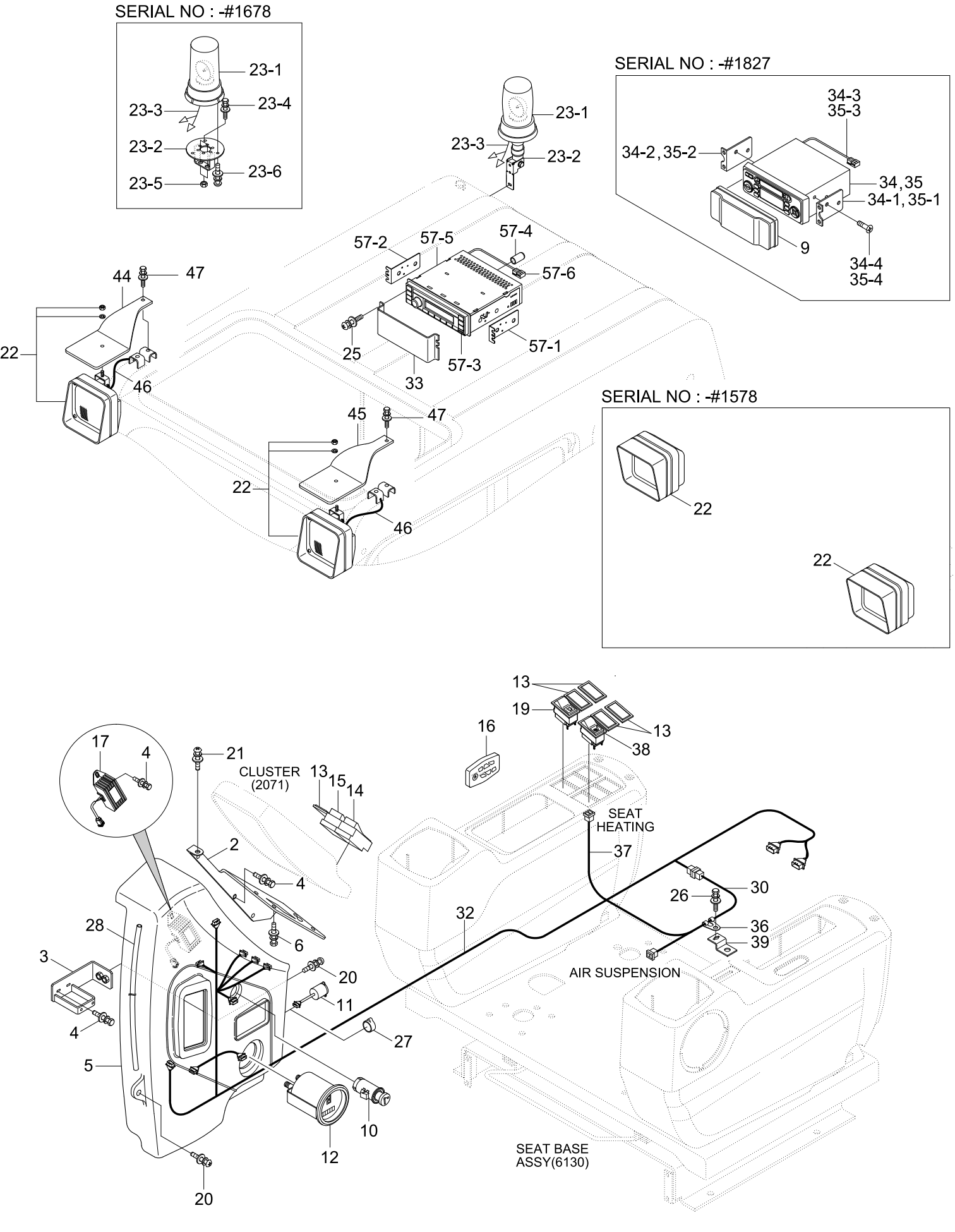

Item	Part_No	IS	Ord	T	Description	Qty	Serial_No	ITC	Remark
2	21N6-01320				BRACKET WA	1	#1111 -	-	UPGRADE CABIN
3	21N6-01330				BRACKET WA	1			
4	S035-061626				BOLT-W/WASHER	5			
5	21N6-01310				COVER-WIPER MOTOR	1	- #1565		
	21N6-01311				COVER-WIPER MOTOR	1	#1566 -	B	
6	S035-081526				BOLT-W/WASHER	4			
9	21N8-40940				COVER-DUST	1			
10	21E4-0008				LIGHTER-CIGAR	1			
11	21N8-20010				SOCKET-12V	1			
12	21N4-11070				HOUR METER ASSY	1			
13	21E6-10460				COVER	3			
14	21E6-40130				SWITCH-OVER LOAD	1			
15	21E9-20110				SW-QUICK CLAMP	1			
16	21N8-40910				SW-REMOTE CONTROL	1			
17	21N8-20201				DC-DC CONVERTER ASSY	1			
19	21E6-30440				SWITCH-BEACON	1			
20	S132-061676				SCREW-W/WASHER	2			
21	S132-061546				SCREW-W/WASHER	1			
22	21N6-20211				WORK LAMP ASSY	2			
22-1	S866-240650				.BULB	1			NOT SHOWN
23	20N8-41420BG				BEACON LAMP ASSY	1	- #1678		
	21Q4-30380				BEACON LAMP ASSY	1	#1679 - #2100	D	
	21Q4-30381				BEACON LAMP ASSY	1	#2101 -	B	
23-1	21EK-10140				.BEACON LAMP	1	- #1678		
	21Q4-20700				.BEACON LAMP	1	#1679 -	A	

Item	Part_No	IS	Ord	T	Description	Qty	Serial_No	ITC	Remark
23-11	21EK-10330				..BULB-H1, 70W	1	- #1678		NOT SHOWN
					.BULB-H1, 70W	1	#1679 -	D	NOT SHOWN
23-2	21N8-00581BG				.BRACKET-BEACON LAMP	1	- #1678		
	21Q4-20600				.BRACKET-TILT	1	#1679 - #2100	D	
	21Q4-31000				.BRACKET-TILT	1	#2101 -	B	
23-3	21EK-20240				.HARNESS-BEACON LAMP	1	- #1678	-	
	21N4-02830				.HARNESS-BEACON LAMP	1	- #1678	-	
23-4	S037-102026				.BOLT-W/WASHER	2	- #1678	-	
23-5	S205-10100B				.NUT-HEX	2			
23-6	S131-051546				.SCREW-W/WASHER	3			
25	S131-051046				SCREW-W/WASHER	4			
26	S037-102026				BOLT-W/WASHER	1			
27	S661-260300				CAP-RUBBER	1			
28	S890-107508				TUBE-PVC	1			
30	21N8-40190				EXT.HARNESS-A/RIDE SEAT	1			
32	21N8-40140				HARNESS-SIDE,RH	1			
33	21N6-10450				PLATE-C/RADIO COVER	1			
N34	21N8-50010				CASSETTE RADIO ASSY	1	- #1421		NOT
	21N8-50050				CASSETTE RADIO ASSY	1	#1422 - #1827	A	NOT
34-1	21N6-10480				.BRACKET-LH	1	- #1827	-	
34-2	21N6-10490				.BRACKET-RH	1	- #1827	-	
34-3	21N8-01600				.HARNESS-EXT WIRE	1	- #1827	-	
34-4	S141-050102				.SCREW-FLAT HD	4	- #1827	-	
35	21N8-40500				CD PLAYER ASSY	1	- #1827	-	
35-1	21N6-10480				.BRACKET-LH	1	- #1827	-	

Item	Part_No	IS	Ord	T	Description	Qty	Serial_No	ITC	Remark
35-2	21N6-10490				.BRACKET-RH	1	- #1827	-	
35-3	21N8-01600				.HARNESS-EXT WIRE	1	- #1827	-	
35-4	S141-050102				.SCREW-FLAT HD	4	- #1827	-	
36	S593-000902				CLIP-HARNESS	1	- #1594		
	S593-000802				CLIP-HARNESS	1	#1595 -	B	
37	21N4-43010				HARNESS-EXTENSION	1			
38	21N4-43020				SWITCH-SEAT HEAT	1			
39	21N4-01190				PLATE-CLIP	1			
44	21N4-47700BG				BRACKET-RH	1	#1579 -	-	
45	21N4-47600BG				BRACKET-LH	1	#1579 -	-	
46	21N4-47800				HARNESS-EXT(LAMP)	2			
47	S037-102026				BOLT-W/WASHER	2	#1579 -	-	
57	21N8-50100				RADIO/USB PLAYER ASSY	1	#1828 - #2107	B	
	21N8-54000				RADIO/USB PLAYER ASSY	1	#2108 -	D	
57-1	21LM-31010				.BRACKET L	1	#1828 -	-	
57-2	21LM-31020				.BRACKET R	1	#1828 -	-	
57-3	21LM-31030				.CABLE-MP3	1	#1828 -	-	
57-4	21LM-31040				.CAP	1	#1828 -	-	
57-5	21LM-31050				.RADIO/USB BODY	1	#1828 -	-	
57-6	21N8-50110				.HARNESS-EXT,WIRE	1	#1828 - #2107	-	

CAB ELECTRIC 3

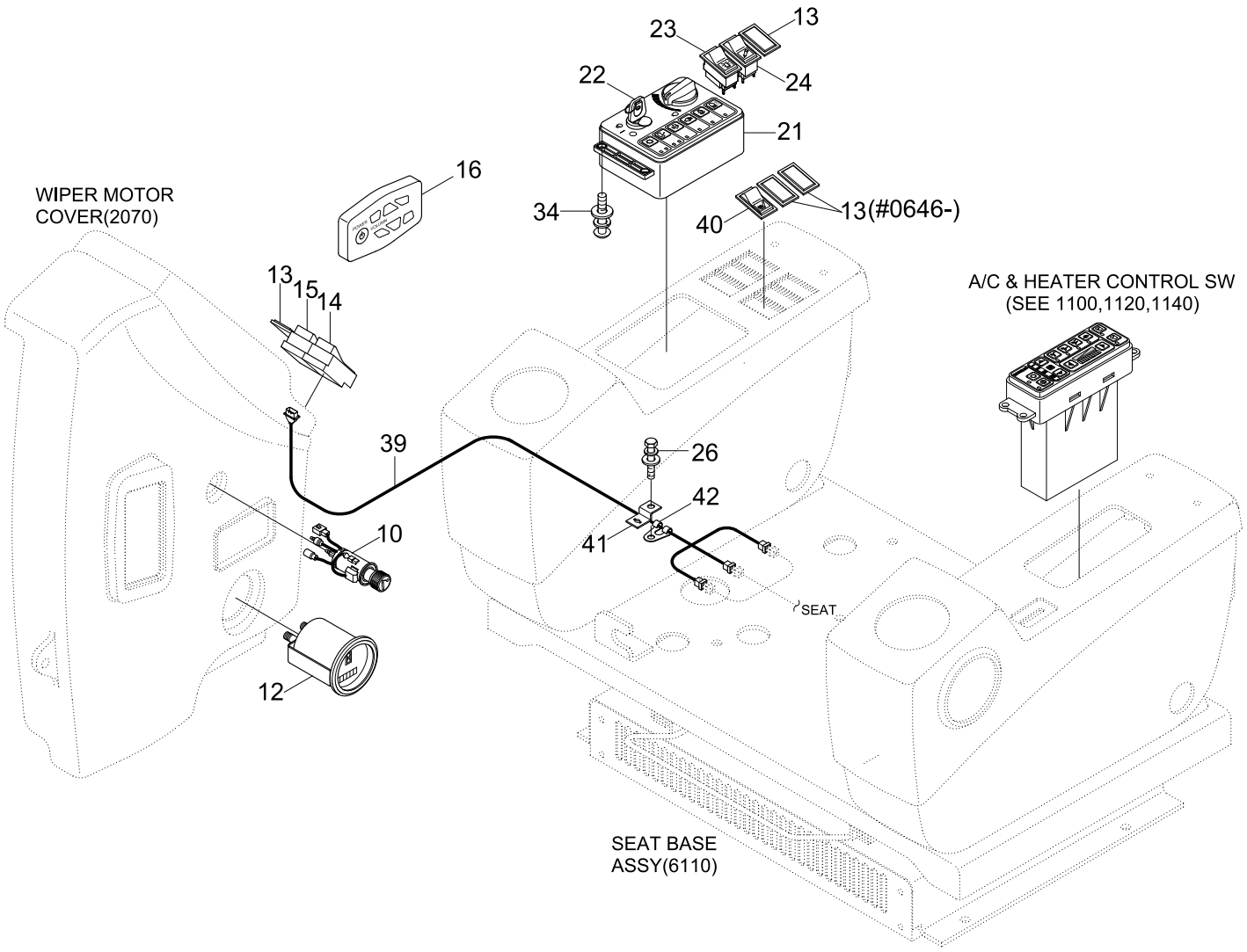

Item	Part_No	IS	Ord	T	Description	Qty	Serial_No	ITC	Remark
10	21E4-0008				LIGHTER-CIGAR	1	- #1441		
	21LM-07110				LIGHTER-CIGAR	1	#1442 -	A	
12	21N4-11070				HOUR METER ASSY	1	#0001 -	-	
13	21E6-10460				COVER	3	- #0645		
					COVER	6	#0646 -	A	
14	21E6-40130				SWITCH-OVER LOAD	1			
16	21N8-21050				SW-REMOTE CONTROL	1	- #0552		
	21N8-40910				SW-REMOTE CONTROL	1	#0553 -	D	
21	21N8-20502				SWITCH-MEMBRANE	1	- #0197		
	21N8-20503				SWITCH-MEMBRANE	1	#0198 - #0304	B	
	21N8-20504				SWITCH-MEMBRANE	1	#0305 - #0829	A	
	21N8-20505				SWITCH-MEMBRANE	1	#0830 - #3177	A	
	21N8-20506				SWITCH-MEMBRANE	1	#3178 -	A	
22	21N4-10430				SWITCH ASSY-INCL KEY	1	- #0019		
	21N4-10400				SWITCH ASSY-INCL KEY	1	#0020 -	B	
22-1	21N4-10430K100				.KEY-START	1	- #0019		NOT SHOWN
	21N4-10400K				.KEY-START	1	#0020 -	B	NOT SHOWN
23	21E6-30440				SWITCH-BEACON	1			OPT
24	21E6-30540				SWITCH-BREAKER	1			OPT
26	S037-102026				BOLT-W/WASHER	1	#0784 -	-	OPT,HEATED SEAT
34	S131-052042				SCREW-W/WASHER	4			
39	21N4-43010				HARNESS-EXTENSION	1	#0784 -	-	OPT,HEATED SEAT
40	21N4-43020				SWITCH-SEAT HEAT	1	#0784 -	-	OPT,HEATED SEAT
41	21N4-01190				PLATE-CLIP	1	#0784 -	-	OPT,HEATED SEAT
42	S593-000902				CLIP-HARNESS	1	#0784 - #1594	-	OPT,HEATED SEAT

Item	Part_No	IS	Ord	T	Description	Qty	Serial_No	ITC	Remark
42	S593-000802				CLIP-HARNESS	1	#1595 -	B	OPT,HEATED SEAT

FUEL FILLER PUMP(-#1182)

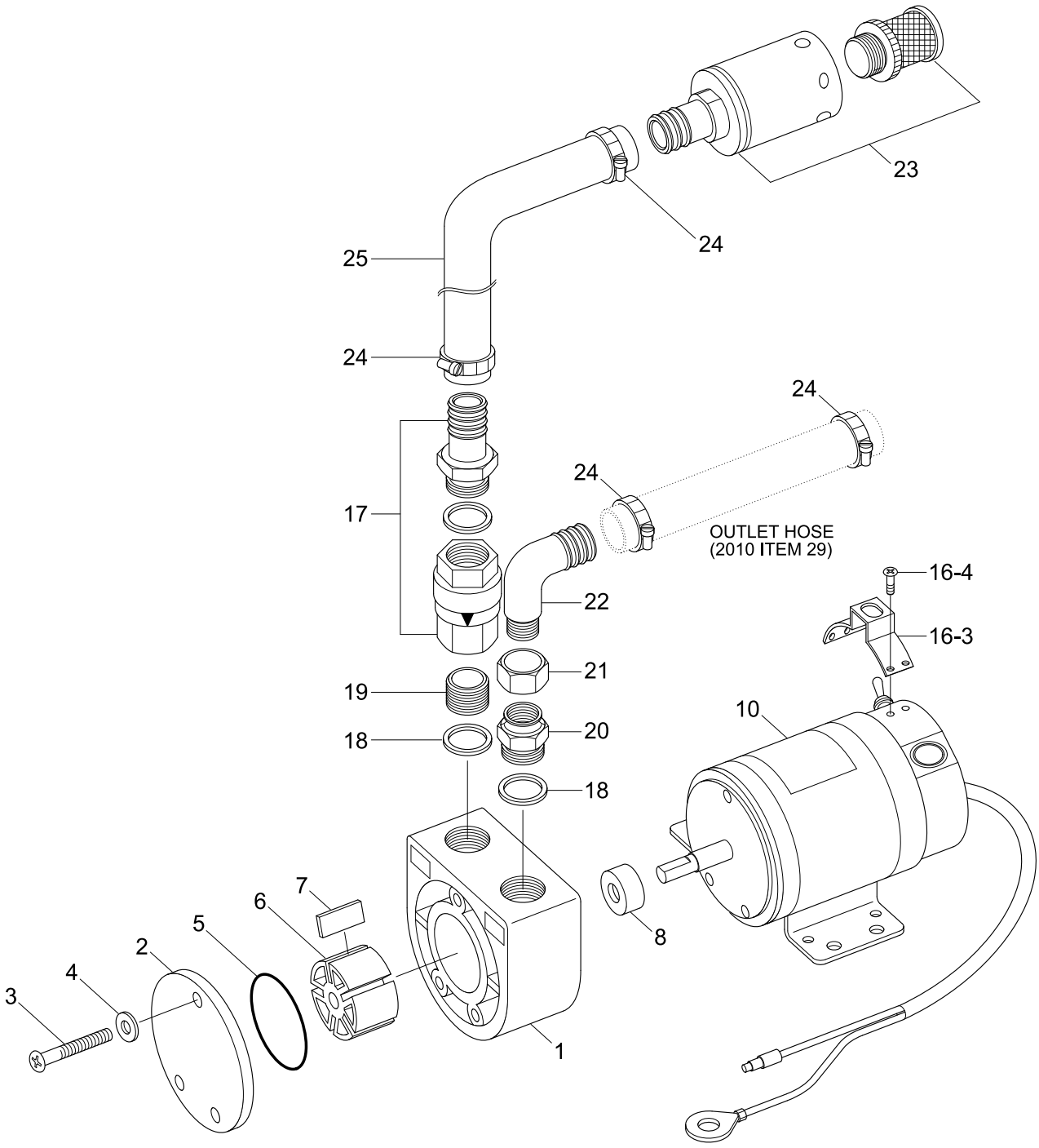

Item	Part_No	IS	Ord	T	Description	Qty	Serial_No	ITC	Remark
*	21N6-20311				FUEL FILLER PUMP	1	- #1182	-	
*-1	21N6-20300				.PUMP & MOTOR ASSY	1			
N1	@				..BODY	1			NOT
N2	@				..COVER	1			NOT
N3	@				..SCREW	3			NOT
N4	@				..WASHER-SPRING	3			NOT
K5	21EM-45050				..O-RING	1			
K6	21EM-45060				..ROTOR	1			
K7	21EM-45070				..PLATE-VANE	5			
K8	21EM-45080				..SEAL-OIL	1			
N10	@				..HOUSING-MOTOR	1			NOT
N16	21EM-45100				..BOX-SWITCH	1			NOT
16-3	21EM-45300				...COVER-SWITCH	1			
16-4	S161-050166				...SCREW-CROSS R/ROUND	4			
17	21EM-45400				..CHECK VALVE ASSY	1			
18	21EM-45500				..WASHER-AL	2			
19	21EM-45600				..FITTING	1			
20	21EM-45700				..FITTING	1			
21	21EM-45800				..NUT-ELBOW	1			
22	21EM-45900				..ELBOW	1			
23	21EM-46000				.STRAINER ASSY	1			
24	S520-027000				.CLAMP-HOSE	4			
25	21EM-46100				.HOSE-INLET	1			
	21EM-46101				.HOSE	1			
K	21EM-46200				.SERVICE KIT	1			

Item	Part_No	IS	Ord	T	Description	Qty	Serial_No	ITC	Remark
N	@				NOT INDIVIDUALLY SUPPLIED	AR			NOT

FUEL FILLER PUMP(#1183-)

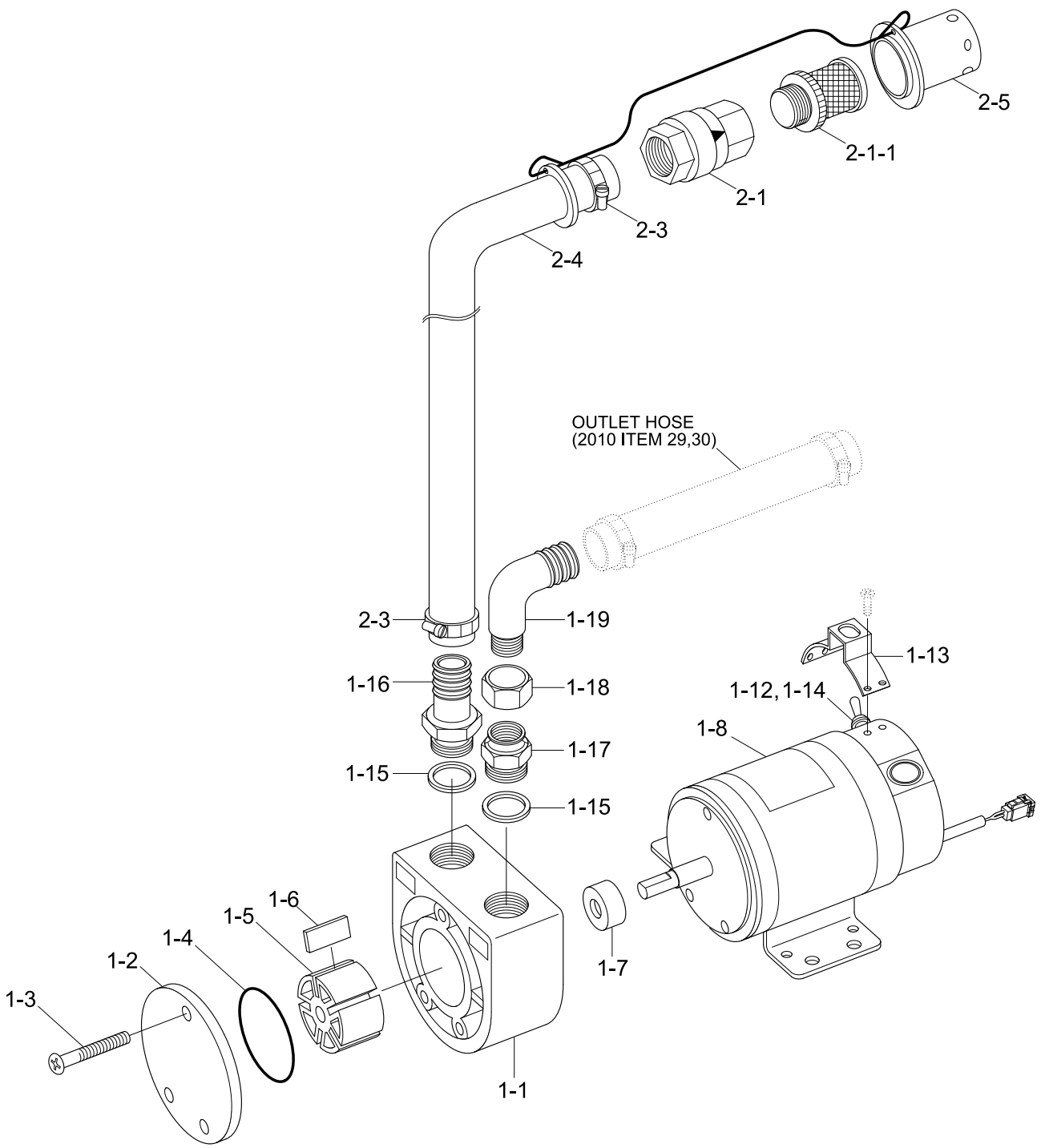

Description	Parts no	Included item
SERVICE KIT	21EM-46201	1-4, 1-5, 1-6, 1-7

Item	Part_No	IS	Ord	T	Description	Qty	Serial_No	ITC	Remark
*	21N6-20312				FUEL FILLER PUMP	1	#1183 -	B	
1	21N6-20302				.PUMP & MOTOR ASSY	1			
N1-1	@				..BODY	1			NOT
N1-2	@				..COVER-PUMP	1			NOT
N1-3	@				..SCREW	3			NOT
K1-4	21EM-45050				..O-RING	1			
K1-5	21EM-45060				..ROTOR	1			
K1-6	21EM-45070				..PLATE-VANE	5			
K1-7	21EM-45080				..SEAL-OIL	1			
1-8	21EM-45091				..DECAL	1			
N1-9	@				..COVER-FRONT	1			NOT
N1-10	@				..COVER-REAR	1			NOT
N1-11	@				..BEARING	1			NOT
1-12	21EM-45101				..BOX-SWITCH	1			
N1-13	@				..COVER-SWITCH	1			NOT
N1-14	@				..SWITCH-TOGGEL	1			NOT
1-15	21EM-45500				..WASHER-AL	3			
N1-16	@				..ADAPTER	1			NOT
1-17	21EM-45700				..FITTING	1			
1-18	21EM-45800				..NUT-ELBOW	1			
1-19	21EM-45900				..ELBOW	1			
2	21EM-46400				.HOSE ASSY	1			
2-1	21M5-50260				..VALVE-CHECK	1			
2-1-1	2P1-SP-01				...STRAINER ASSY	1			
2-3	S520-027000				..CLAMP-HOSE	1			

Item	Part_No	IS	Ord	T	Description	Qty	Serial_No	ITC	Remark
2-4	21EM-46101				..HOSE	1			
2-5	21EM-46300				..CAP ASSY	1			
K	21EM-46201				SERVICE KIT	1			ITEM 1-4 ~1-7
N	@				NOT SUPPLIED PARTS	AR			NOT

FUSE BOX

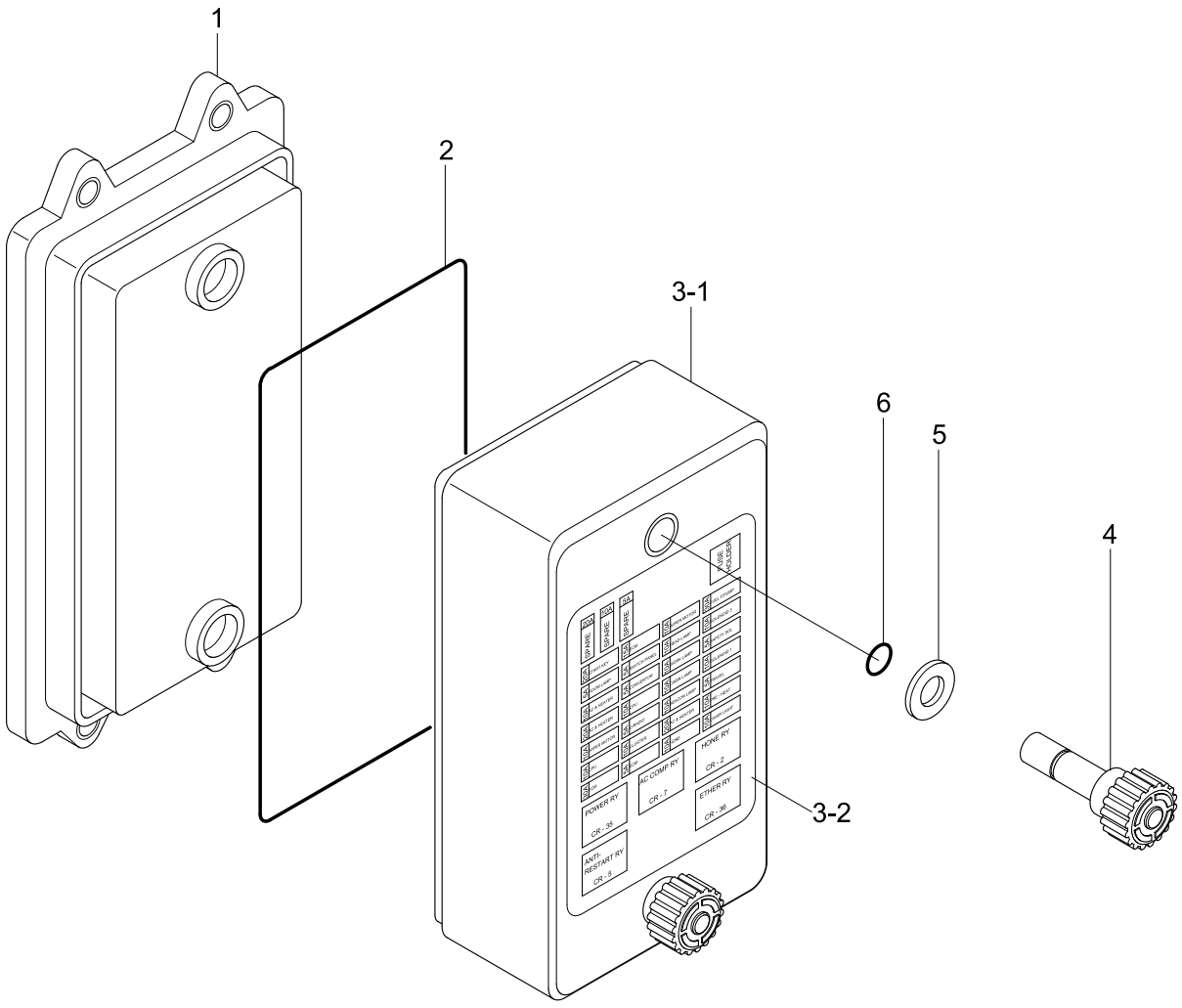
1
2
3-1
3-2
4
5
6
FUSE PULLER
SPARE
SPARE
SPARE
HORN RY
CR : 2
AC COMP RY
CR : 1
POWER RY
CR : 35
ETHER RY
CR : 36
ANTI-RESTART RY
CR : 8

Item	Part_No	IS	Ord	T	Description	Qty	Serial_No	ITC	Remark
1	21N8-20041				BODY-FUSE BOX	1			
2	21N8-20120				SEAL	1			
3	21N8-20191				COVER ASSY-FUSE BOX	1			
3-1	21N8-20061				.COVER-FUSE BOX	1			
3-2	21N4-00632				.DECAL-FUSE BOX	1			
4	21N8-20070				.KNOB ASSY	2			
5	21N8-20080				.PAD-RUBBER	2			
6	21N8-20150				.O-RING	2			
7	21N4-90010				FUSE & BULB KIT	1	#0001 -	-	NOT SHOWN
7-1	@				.FUSE-5A	2			NOT
7-2	@				..FUSE-10A	2			NOT
7-3	@				..FUSE-15A	2			NOT
7-4	@				..FUSE-20A	2			NOT
7-5	@				..FUSE-30A	2			NOT
7-6	@				..BULB-H4,70/75W	2			NOT
7-7	@				..BULB-H1,70W	1			NOT
7-8	@				..BULB-5W	2			NOT
7-9	@				..BULB-5W	2			NOT
7-10	@				..BULB-21W	2			NOT
7-11	@				..BULB-10W	2			NOT
7-12	@				.BULB-10W	2			NOT
7-13	@				.BULB-H3,70W	2			NOT

PUMP MOUNTING

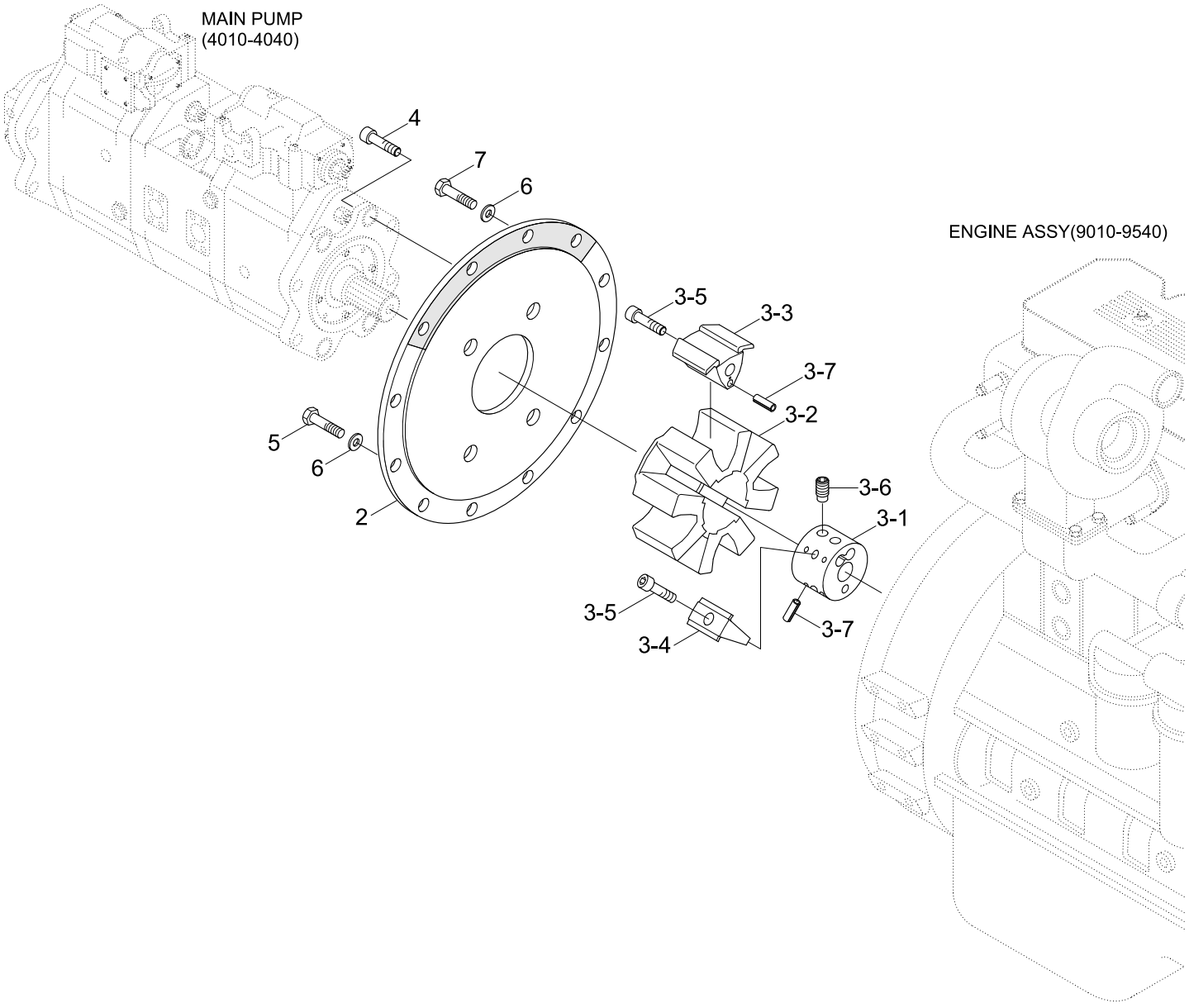

Item	Part_No	IS	Ord	T	Description	Qty	Serial_No	ITC	Remark
2	11NA-10011				HOUSING	1			
3	11E9-16012				COUPLING ASSY	1	- #3303		
	11E9-16013				COUPLING ASSY	1	#3304 -	B	
3-1	11E9-15080				.HUB	1	- #3303		
	11E9-15081				.HUB	1	#3304 -	B	
3-2	11E9-15091				.ELEMENT	1	- #3303		
	11E9-15092				.ELEMENT	1	#3304 -	B	
3-3	11E9-15101				.INSERT-A	4	- #3303		
	11E9-15102				.INSERT-A	4	#3304 -	B	
3-4	11E9-15111				.INSERT-R	4	- #3303		
	11E9-15112				.INSERT-R	4	#3304 -	B	
3-5	S107-200502				.BOLT-SOCKET	8	- #3303		
	S109-20060D				.BOLT-SOCKET	8	#3304 -	B	
3-6	11E9-1507	10			.BOLT-CLAMPING	2			
3-7	S472-800162				.PIN-SPRING	12			
4	S109-200656				BOLT-SOCKET	4			
5	S017-100552				BOLT-HEX	8			
6	S403-102002				WASHER-PLAIN	12			
7	S017-100602				BOLT-HEX	4			

HYDRAULIC TANK

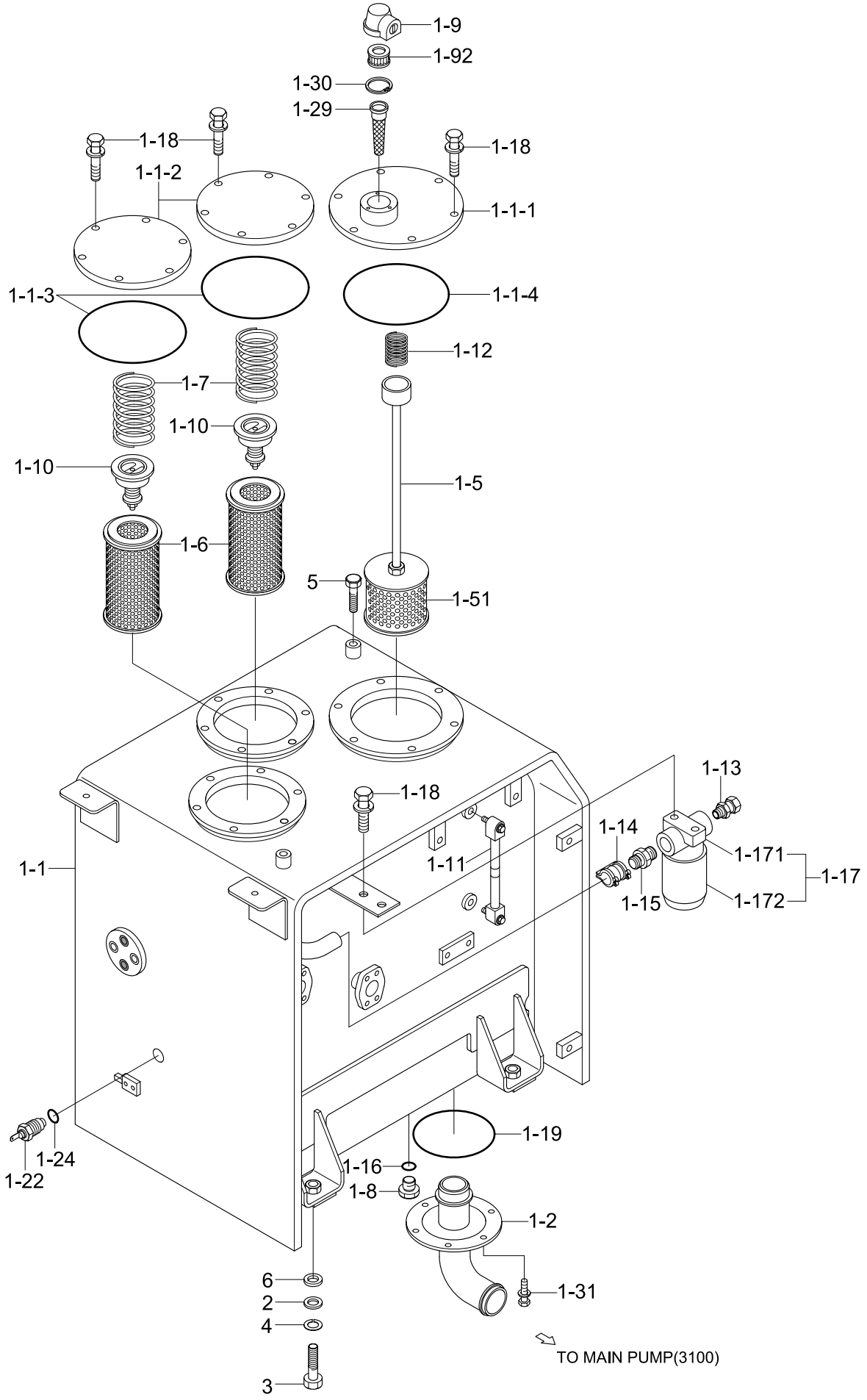

Item	Part_No	IS	Ord	T	Description	Qty	Serial_No	ITC	Remark
1	@				HYD TANK ASSY	1			NOT
1-1	31N8-01011				.HYD TANK WA	1	- #0394		
	31N8-01012				.HYD TANK WA	1	#0395 - #0768	A	
	31N8-01013				.HYD TANK WA	1	#0769 - #1152	A	
	31N8-01014				.HYD TANK WA	1	#1153 -	D	
1-1-1	31N8-01280				..COVER ASSY-SUCTION	1	#0001 -	-	
1-1-2	31E6-40540				..COVER-RETURN	2			
1-1-3	S632-170001				..O-RING	2	#0001 -	-	
1-1-4	S632-220001				..O-RING	1	#0001 -	-	
1-2	31N8-01271				.PIPE-SUCTION	1			
1-5	31N8-01200				.STRAINER ASSY	1			
1-51	E131-0214	20			..ELEMENT	1			
1-6	31E9-1019				.ELEMENT-RETURN	2			
1-7	31E9-1020				.SPRING-RETURN	2			
1-8	P220-110104				.PLUG-HEX	1			
1-9	31EH-00040				.AIR BREATHER	1	- #0629		
	31NA-00040				.AIR BREATHER	1	#0630 -	B	
1-91	31EH-00480				..ELEMENT-AIR BREATHER	1			
1-10	E131-0256	20			.VALVE-BYPASS	2			
1-11	E131-0473				.GAUGE-LEVEL	1			
1-12	E131-0594				.SPRING	1			
1-13	31N6-03100				.CONNECTOR	1	#0001 -	-	
1-14	E131-0671				.COUPLING	1			
1-15	31E9-1051				.FITTING	1			
1-16	S631-018004				.O-RING	1			

Item	Part_No	IS	Ord	T	Description	Qty	Serial_No	ITC	Remark
1-17	31E9-0084				.FILTER-SPIN	1	- #3490		
	31E9-0086				.FILTER-SPIN	1	#3491 -	B	
1-171	31E9-0127				..HEAD	1			
1-172	31E9-0126				..CARTRIGE-SPIN FILTER	1			
1-18	S037-102026				.BOLT-W/WASHER	2	#0001 -	-	
1-19	S632-150001				.O-RING	1			
1-22	21EN-40100				.SENDER-TEMP	1			
1-23	S037-102512				.BOLT-W/WASHER	24	- #0109		
	S037-102526				.BOLT-W/WASHER	18	#0110 -	A	
1-24	21EA-50260				.PACKING-TEMP SW	1			
1-29	31EH-00090				.STRAINER	1			
1-30	S602-065004				.RING-RETAINING	1			
1-31	S037-103022				.BOLT-W/WASHER	6	#0110 -	-	
2	31N8-01300				SHIM(1.0T)	5			
3	S017-200502				BOLT-HEX	4			
4	S411-200002				WASHER-SPRING	4			
5	S017-120202				BOLT-HEX	2			
6	91E6-60200				WASHER-HARDENED	4			

UPPER HYDRAULIC PIPING(BASE)

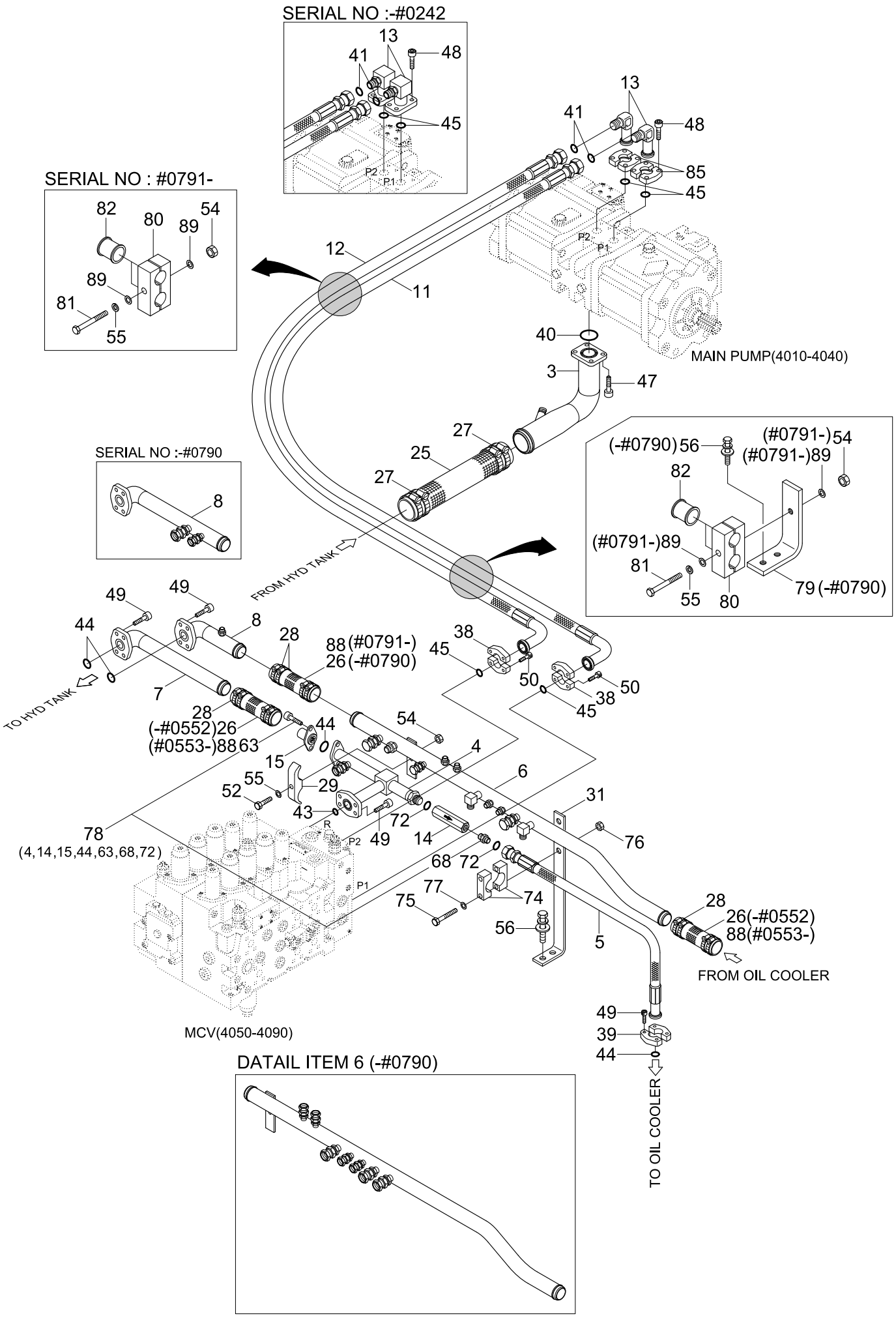

Item	Part_No	IS	Ord	T	Description	Qty	Serial_No	ITC	Remark
3	31N9-12110				PIPE ASSY-SUCTION	1	- #0790		
	31N9-12240				PIPE WA-SUCTION	1	#0791 -	B	
4	31N9-12120				PIPE ASSY	1	- #0215		
	31N9-12121				PIPE ASSY	1	#0216 -	D	
5	P630-241315				HOSE ASSY-THD FLG	1			
6	31N9-12141				PIPE WA-RETURN	1	- #0215		
	31N9-12142				PIPE WA-RETURN	1	#0216 - #0790	D	
	31N9-12250				PIPE ASSY	1	#0791 -	D	
7	31N8-12151				PIPE WA	1			
8	31N9-12130				PIPE WA	1	- #0215		
	31N9-12131				PIPE WA	1	#0216 - #0790	D	
	31N8-12780				PIPE WA	1	#0791 -	D	
11	P980-167330				HOSE ASSY-ORFS,FLG 0X90	1	- #0790		
	31N9-12260				HOSE ASSY	1	#0791 -	D	
12	31N9-12170				HOSE ASSY	1	- #0790		
	31N9-12270				HOSE ASSY	1	#0791 -	D	
13	31N8-12200				PIPE WA	2	- #0242		
	31NA-12050				ELBOW 90-ORFS	2	#0243 -	D	
14	31E9-0142	20			CHECK VALVE	1			
15	31N7-12281				VALVE-CHECK	1	#0001 -	-	
25	P760-101035				HOSE-RUBBER	1	- #0790		
	P760-101040				HOSE-RUBBER	1	#0791 -	D	
26	P760-072025				HOSE-RUBBER	3	- #0552		
					HOSE-RUBBER	1	#0553 - #0790	-	
27	31N6-11190				CLAMP-HOSE WIRE TYPE	4			

Item	Part_No	IS	Ord	T	Description	Qty	Serial_No	ITC	Remark
28	S572-630006				CLAMP-HOSE,WIRE TYPE	12	- #0725		
	S572-640006				CLAMP-HOSE,WIRE TYPE	12	#0726 -	B	
29	31E5-3001	10			CLAMP-PIPE	1			
31	31N9-12161				BRACKET	1			
38	P173-160104				FLANGE-HYD,SPLIT	4			
39	P173-240107				FLANGE-HYD,SPLIT	2			
40	S631-085001				O-RING	1			
41	S621-021001				O-RING	2			
43	Y172-006004				O-RING	1			
44	Y172-003004				O-RING(AN ??)	4			
45	Y171-024004				O-RING	4			
47	S109-160406				Deleted...	4			
48	S109-120406				BOLT-SOCKET	8			
49	S109-120306				BOLT-SOCKET	16			
50	S109-100306				BOLT-SOCKET	8			
52	S017-100802				BOLT-HEX	1			
54	S205-101002				NUT-HEX	1	- #0790		
					NUT-HEX	5	#0791 -	A	
55	S411-100002				WASHER-SPRING	1	- #0790		
					WASHER-SPRING	6	#0791 -	A	
56	S037-103022				BOLT-W/WASHER	2			
63	S109-120456				BOLT-SOCKET	2			
68	P010-110008				CONNECTOR	1			
72	S631-044004				O-RING	2			
74	34L4-01120				CLAMP	2			

Item	Part_No	IS	Ord	T	Description	Qty	Serial_No	ITC	Remark
75	S017-121002				BOLT-HEX	2			
76	S205-121002				NUT-HEX	2			
77	S403-121002				WASHER-PLAIN	2			
78	31N9-1212-SUB				PIPE SUB ASSY	1	#0001 - #0215	-	
	31N9-12100				PIPE SUB ASSY	1	#0216 -	D	
79	31N8-12530				BRACKET	1	#0001 - #0790	-	
80	31EA-02150				CLAMP-HOSE	2	#0001 - #0075	-	
	31N8-12560				CLAMP-HOSE	2	#0076 - #0790	B	
					CLAMP-HOSE	4	#0791 -	A	
81	S017-100902				BOLT-HEX	1	#0001 - #0790	-	
	S017-100856				BOLT-HEX	2	#0791 -	D	
82	S690-039100				GROMMET	2	#0001 - #0790	-	
					GROMMET	4	#0791 -	A	
85	P174-160115				FLANGE-HYD,SPLIT	4	#0243 -	-	
88	P760-072020				HOSE-RUBBER	2	#0553 - #0790	D	
					HOSE-RUBBER	3	#0791 - #1206	A	
	31N8-13080				HOSE	3	#1207 -	B	
89	S403-101006				WASHER-PLAIN	4	#0791 -	-	

UPPER HYD PIPING(BASE, TYPE 2, #2403-)

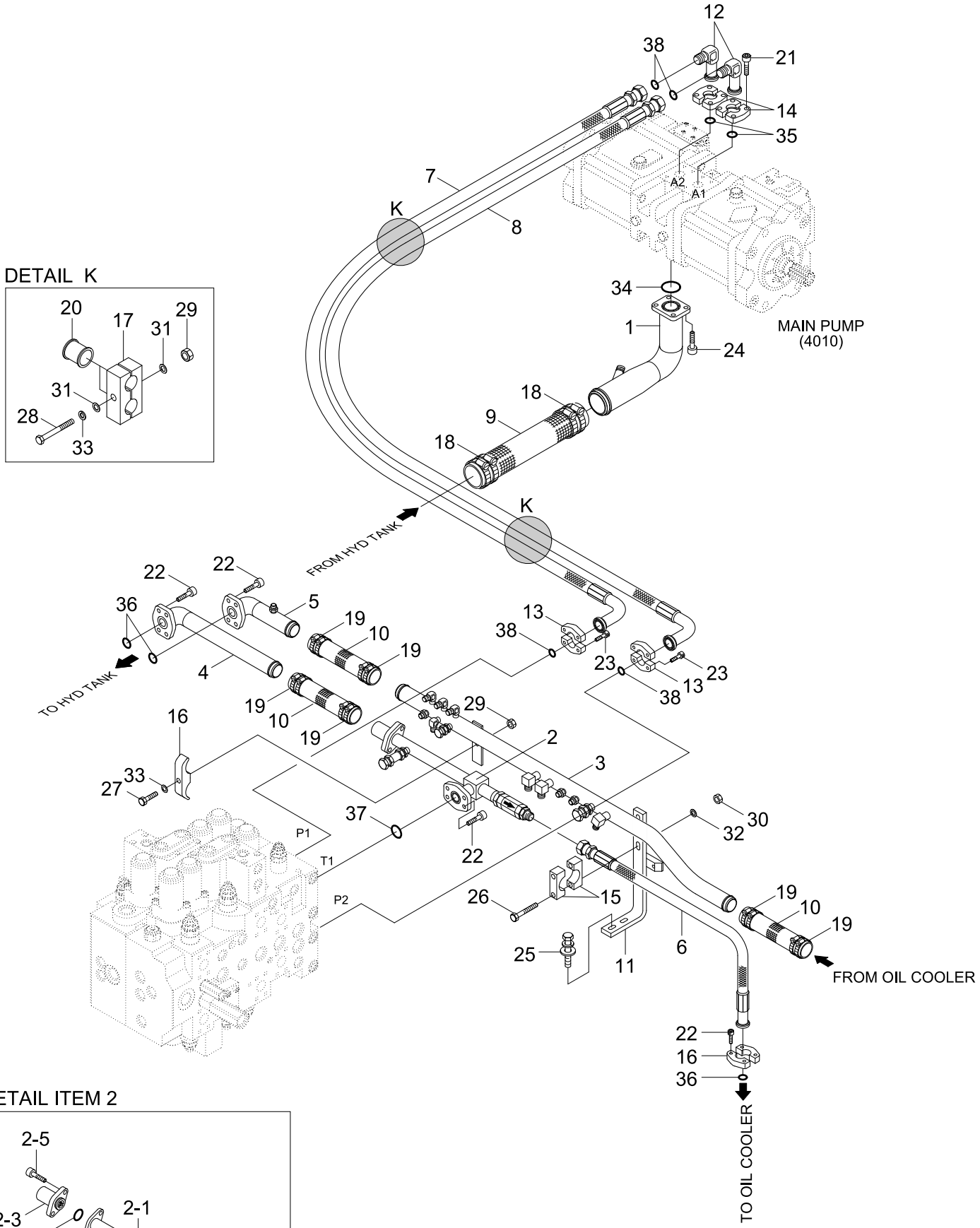

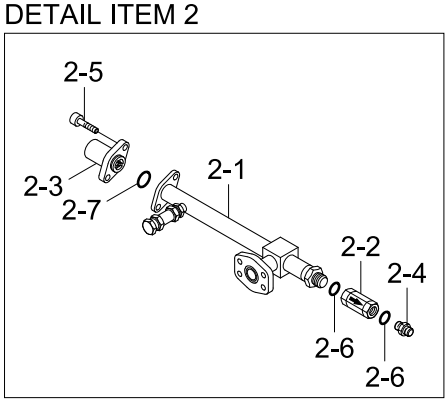

Item	Part_No	IS	Ord	T	Description	Qty	Serial_No	ITC	Remark
*	@				UPPER HYD PIPING-BASE	1	#2403 -		NOT
1	31N9-12240				PIPE WA-SUCTION	1			
2	31N9-13100				PIPE SUB ASSY	1			
2-1	31N9-13110				.PIPE ASSY	1			
2-2	31E9-0142				.VALVE-CHECK	1			
2-3	31N7-12281				.VALVE-CHECK	1			
2-4	P010-110008				.CONNECTOR	1			
2-5	S109-120456				.BOLT-SOCKET	2			
2-6	S631-044004				.O-RING	2			
2-7	Y172-003004				.O-RING	1			
3	31N9-13120				PIPE ASSY	1			
4	31N8-12151				PIPE WA	1			
5	31N8-12780				PIPE WA	1			
6	31N9-13130				HOSE ASSY-THD,FLG 0X0	1			
7	31N9-13140				HOSE ASSY	1			
8	31N9-13150				HOSE ASSY	1			
9	P760-101040				HOSE-RUBBER	1			
10	31N8-13080				HOSE	3			
11	31N9-12161				BRACKET	1			
12	31NA-12050				ELBOW 90-ORFS	2			
13	P173-160104				FLANGE-HYD,SPLIT	4			
14	P174-160115				FLANGE-HYD,SPLIT	4			
15	34L4-01120				CLAMP	2			
16	31E5-3001				CLAMP-PIPE	1			
17	31N8-12560				CLAMP-HOSE	4			

Item	Part_No	IS	Ord	T	Description	Qty	Serial_No	ITC	Remark
18	31N6-11190				CLAMP-HOSE,WIRE TYPE	4			
19	S572-640006				CLAMP-HOSE,WIRE TYPE	12			
20	S690-039100				GROMMET	4			
21	S109-120406				BOLT-SOCKET	8			
22	S109-120306				BOLT-SOCKET	16			
23	S109-100306				BOLT-SOCKET	8			
24	S109-160406				BOLT-SOCKET	4			
25	S037-103026				BOLT-W/WASHER	2			
26	S017-121006				BOLT-HEX	2			
27	S017-100806				BOLT-HEX	1			
28	S017-100856				BOLT-HEX	2			
29	S205-101006				NUT-HEX	3			
30	S205-121006				NUT-HEX	2			
31	S403-101006				WASHER-PLAIN	4			
32	S403-121006				WASHER-PLAIN	2			
33	S411-100006				WASHER-SPRING	3			
34	S631-085001				O-RING	1			
35	S621-021001				O-RING	2			
36	Y172-003004				O-RING	3			
37	Y172-006004				O-RING	1			
38	Y171-024004				O-RING	4			

UPPER HYDRAULIC PIPING(TRAVEL, TYPE 1)

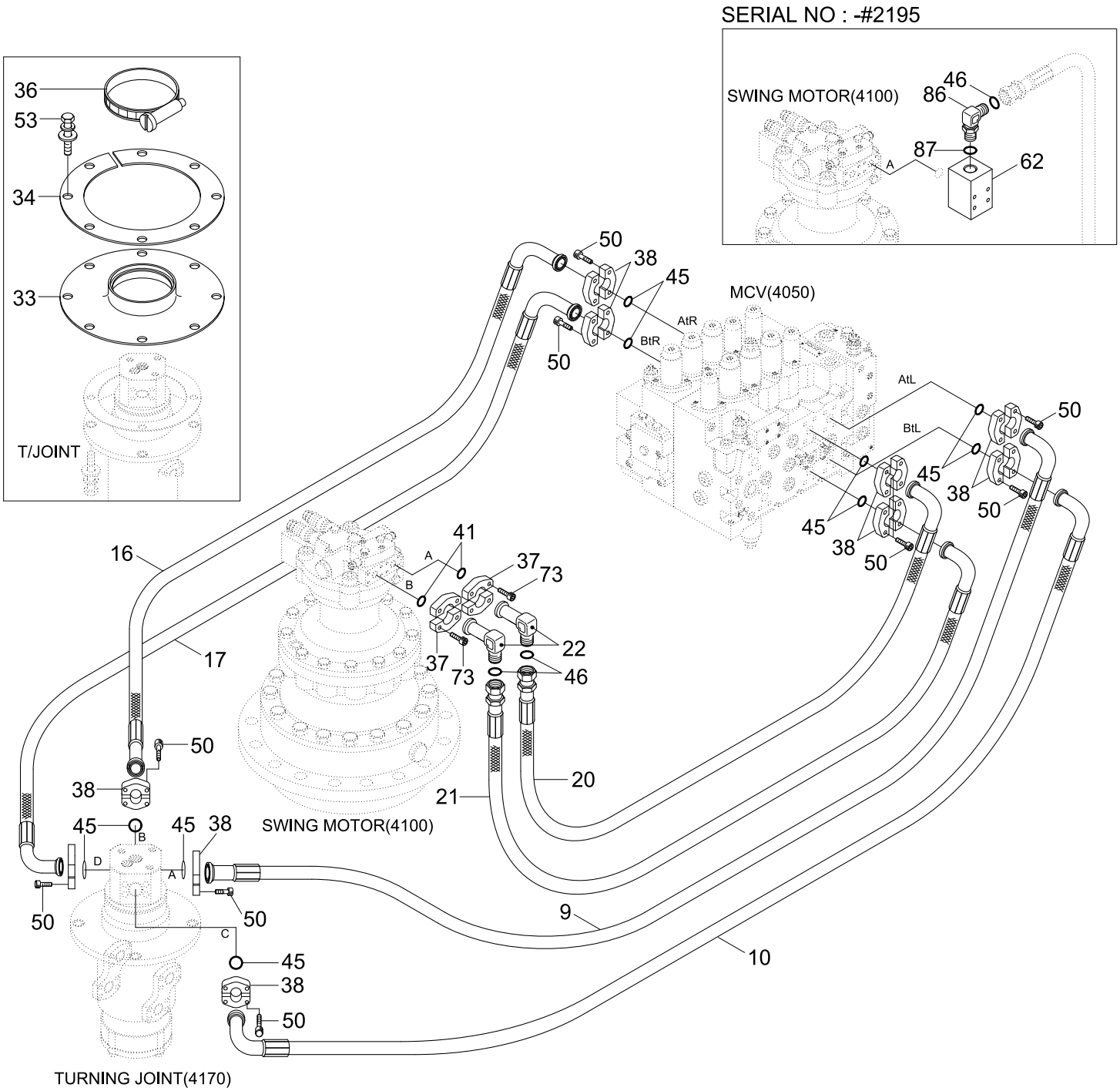

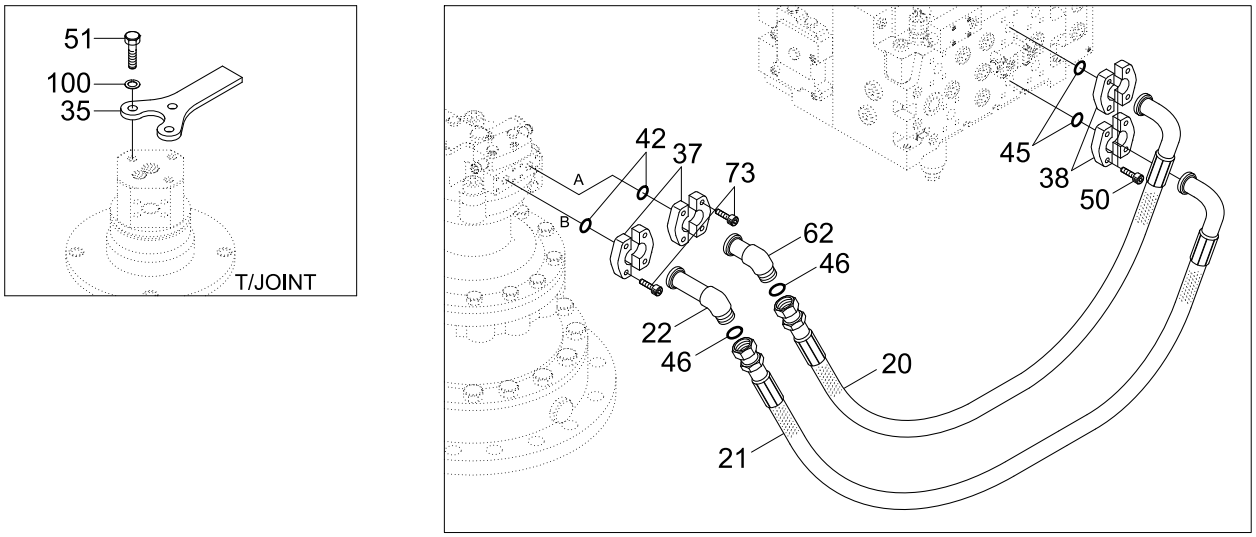

Item	Part_No	IS	Ord	T	Description	Qty	Serial_No	ITC	Remark
9	31N8-12501				HOSE ASSY-FLG	1			
10	31N8-12491				HOSE ASSY-FLG	1			
16	31N8-12441				HOSE ASSY-FLGXFLG	1			
17	31N8-12451				HOSE ASSY-FLGXFLG	1			
20	31N8-12251				HOSE ASSY-FLG	1	- #0363		
	31N8-12252				HOSE ASSY-ORFS 0X90	1	#0364 - #1274	D	
	31N8-12253				HOSE ASSY-FLG 0X90	1	#1275 - #2195	D	
	P950-167319				HOSE ASSY-ORFS 0X45	1	#2196 -	D	
21	31N8-12261				HOSE ASSY-FLG	1	- #0363		
	31N8-12262				HOSE ASSY-ORFS 0X90	1	#0364 -	D	
22	31N8-11312				ELBOW-90	1	- #0363		
	31N8-16210				ELBOW-90,FLANGE	1	#0364 - #2195	S	
					ELBOW-90,FLANGE	2	#2196 -	A	
33	31N1-40941				RUBBER-T/JOINT	1			
34	31N1-40951				COVER-T/JOINT	1			
35	31N1-40961				BRACKET-T/JOINT	1	#0001 -	-	
36	S520-130000				CLAMP-HOSE	1			
37	P173-120102				FLANGE-HYD,SPLIT	4	- #0363		
					FLANGE-HYD,SPLIT	2	#0364 - #2195	A	
					FLANGE-HYD,SPLIT	4	#2196 -	A	
38	P173-160104				FLANGE-HYD,SPLIT	20			
41	S621-021001				O-RING	2	#0364 -	D	
42	S621-018001				O-RING	2	- #0363	-	
45	Y171-024004				O-RING	10			
46	Y171-019004				O-RING	2			

Item	Part_No	IS	Ord	T	Description	Qty	Serial_No	ITC	Remark
50	S109-100306				BOLT-SOCKET	40			
51	S017-140302				BOLT-HEX	3	#0001 -	-	
53	S037-102022				BOLT-W/WASHER	8			
62	31N8-11322				ELBOW-90,ORFS	1	- #0363		
	31N8-16220				FLANGE	1	#0364 - #2195	D	
73	S109-100706				BOLT-SOCKET	8			
86	X520-110005				ELBOW-90,ORFS	1	#0364 - #2195	-	
87	S631-029004				O-RING	1	#0364 - #2195	-	
100	S411-140002				WASHER-SPRING	3	#0001 -	-	

UPPER HYD PIPING(TRAVEL, TYPE 2, #2403-)

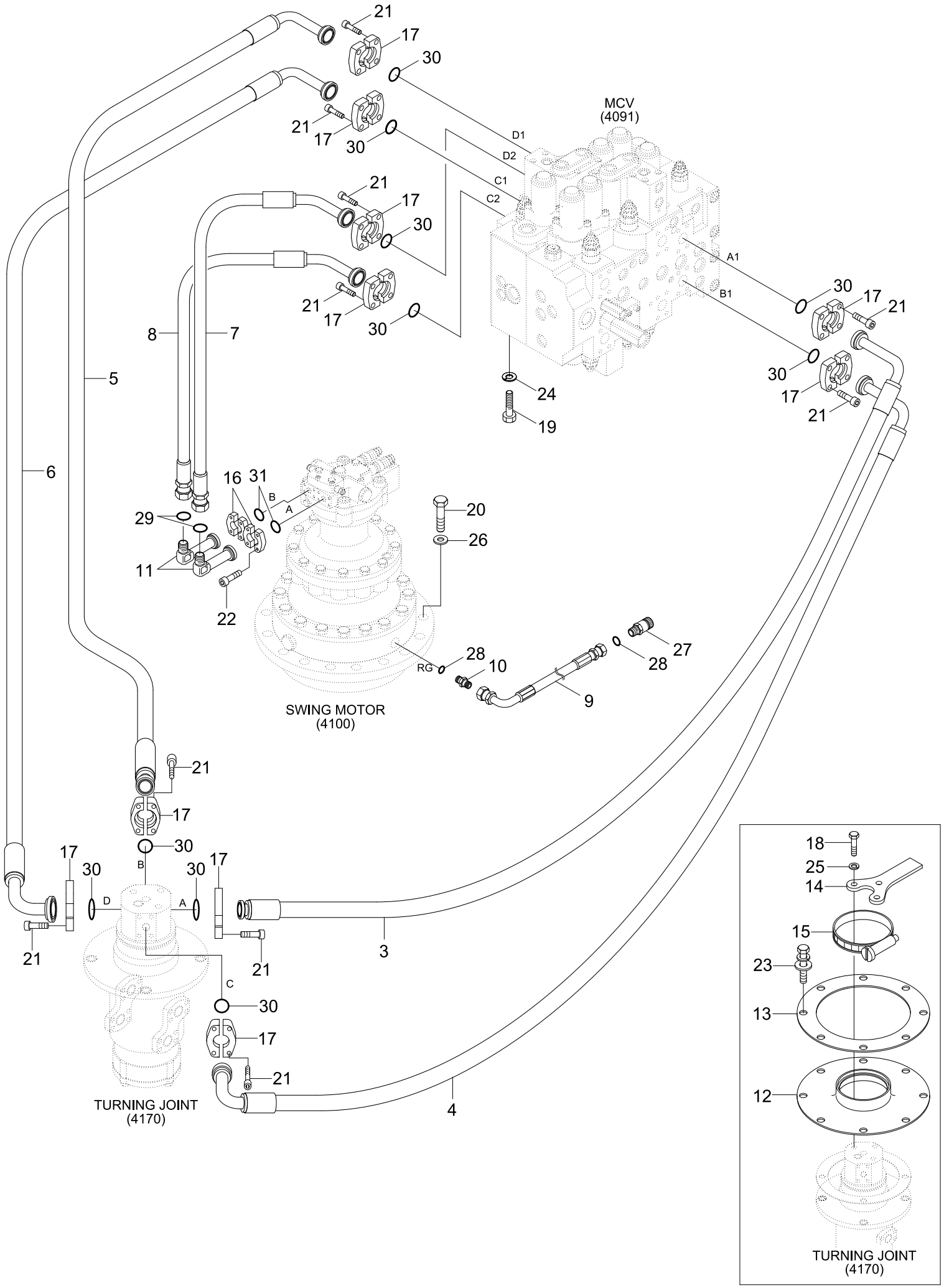

Item	Part_No	IS	Ord	T	Description	Qty	Serial_No	ITC	Remark
*	@				UPPER HYD PIPING-TRAVEL	1	#2403 -		NOT
1	31N9-17000P				MAIN CONTROL VALVE	1			
N2	31N9-10191				SWING MOTOR ASSY	1			NOT
3	31Q8-11280				HOSE ASSY	1			
4	31Q8-11330				HOSE ASSY	1			
5	31Q8-11270				HOSE ASSY	1			
6	31Q8-11290				HOSE ASSY	1			
7	P950-167324				HOSE ASSY-ORFS,FLG 0X45	1			
8	P950-167323				HOSE ASSY-ORFS,FLG 0X45	1			
9	P930-062016				HOSE ASSY-ORFS 0X90	1			
10	31N7-12400				CONNECTOR-ORFS	1			
11	31N8-16210				ELBOW-90,FLANGE	2			
	31N9-13290				ELBOW-90,FLANGE	2			
12	31N1-40941				RUBBER-T/JOINT	1			
13	31N1-40951				COVER-T/JOINT	1			
14	31N1-40961				BRACKET-T/JOINT	1			
15	S520-130000				CLAMP-HOSE	1			
16	P173-120102				FLANGE-HYD,SPLIT	4			
17	P173-160104				FLANGE-HYD,SPLIT	20			
18	S017-140306				BOLT-HEX	3			
19	S017-120406				BOLT-HEX	3			
20	S017-20075D				BOLT-HEX	14			
21	S109-100306				BOLT-SOCKET	40			
22	S109-100706				BOLT-SOCKET	8			
	S109-100306				BOLT-SOCKET	8			

Item	Part_No	IS	Ord	T	Description	Qty	Serial_No	ITC	Remark
23	S037-102026				BOLT-W/WASHER	8			
24	S411-120006				WASHER-SPRING	3			
25	S411-140006				WASHER-SPRING	3			
26	S441-200006				WASHER-HARDENED	14			
27	X700-100103				PLUG-ORFS	1			
28	S621-012001				O-RING	4			
29	S621-021001				O-RING	6			
30	Y171-024004				O-RING	10			
31	Y171-019004				O-RING	2			

UPPER HYDRAULIC PIPING(ATTACH, TYPE 2)

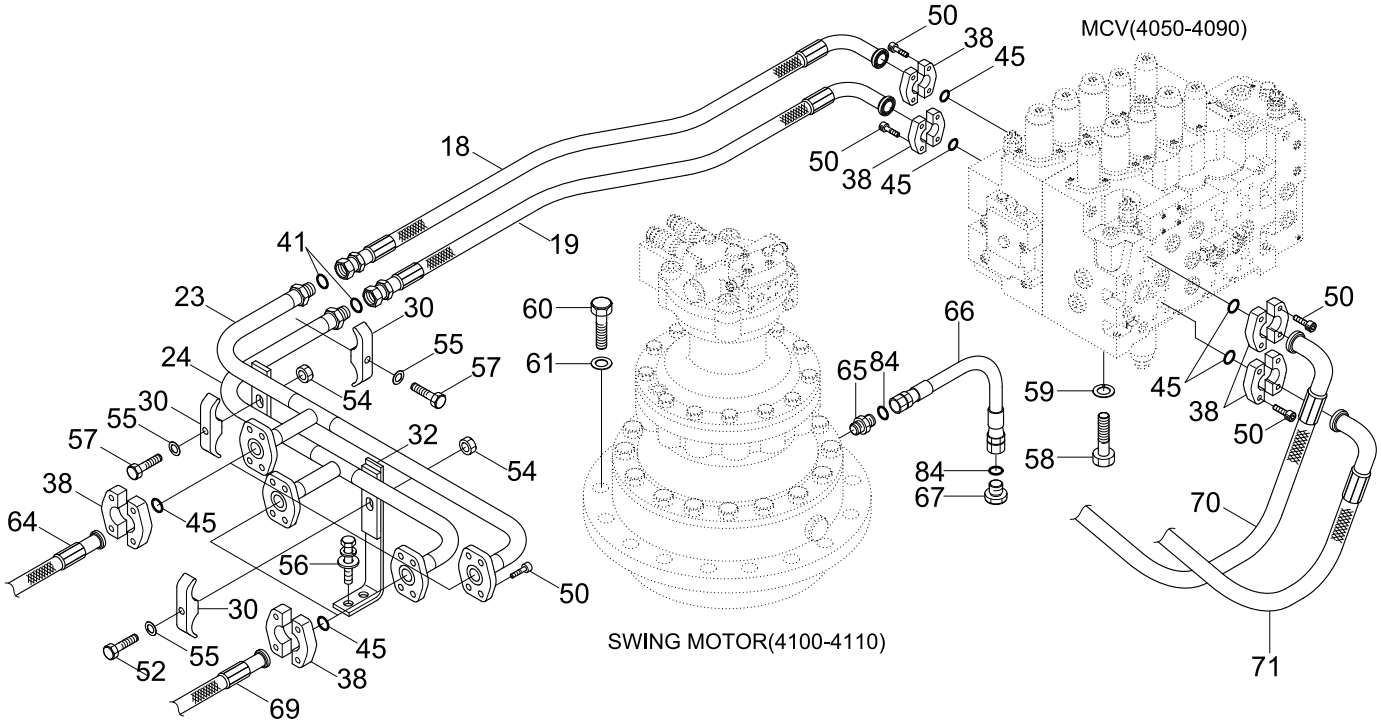

Item	Part_No	IS	Ord	T	Description	Qty	Serial_No	ITC	Remark
18	31N8-12430				HOSE ASSY-FLG,0X90	1			
19	31N8-12420				HOSE ASSY-FLG,0X90	1	- #0818		
	31N9-12280				HOSE ASSY	1	#0819 -	B	
23	31N8-12270				PIPE WA	1			
24	31N8-12280				PIPE WA	1			
30	31EM-12170				CLAMP-PIPE	3			
32	31N8-12510				BRACKET	1			
38	P173-160104				FLANGE-HYD,SPLIT	16			
41	S621-021001				O-RING	2			
45	Y171-024004				O-RING	8			
50	S109-100306				BOLT-SOCKET	32			
52	S017-100802				BOLT-HEX	1			
54	S205-101002				NUT-HEX	1			
55	S411-100002				WASHER-SPRING	2			
56	S037-103022				BOLT-W/WASHER	2			
57	S017-100702				BOLT-HEX	2			
58	S017-120402				BOLT-HEX	3			
59	S411-120002				WASHER-SPRING	3			
60	S017-200702				BOLT-HEX	13	- #0007		
	S017-200752				BOLT-HEX	14	#0008 -	-	
61	S441-200002				WASHER-HARDENED	13	- #0007		
					WASHER-HARDENED	14	#0008 -	-	
64	P683-167319				HOSE ASSY-FLG 0X0	2			
65	P010-430015				CONNECTOR	1	- #0215		
	31N7-12400				CONNECTOR-ORFS	1	#0216 -	D	

Item	Part_No	IS	Ord	T	Description	Qty	Serial_No	ITC	Remark
66	P400-062010				HOSE ASSY-COMPACT	1	- #0215		
	P910-062010				HOSE ASSY-ORFS 0X0	1	#0216 -	D	
67	31EM-22090				PLUG	1	- #0215		
	X700-100103				PLUG-ORFS	1	#0216 -	D	
69	P683-167318				HOSE ASSY-FLG 0X0	2			
70	31N8-12330				HOSE ASSY-FLGXFLG,0X90	2			
71	31N8-12340				HOSE ASSY-FLGXFLG,0X90	2			
84	S621-012001				O-RING	2	#0216 -	-	

UPPER HYD PIPING(ATTACH, TYPE 2, #2403-)

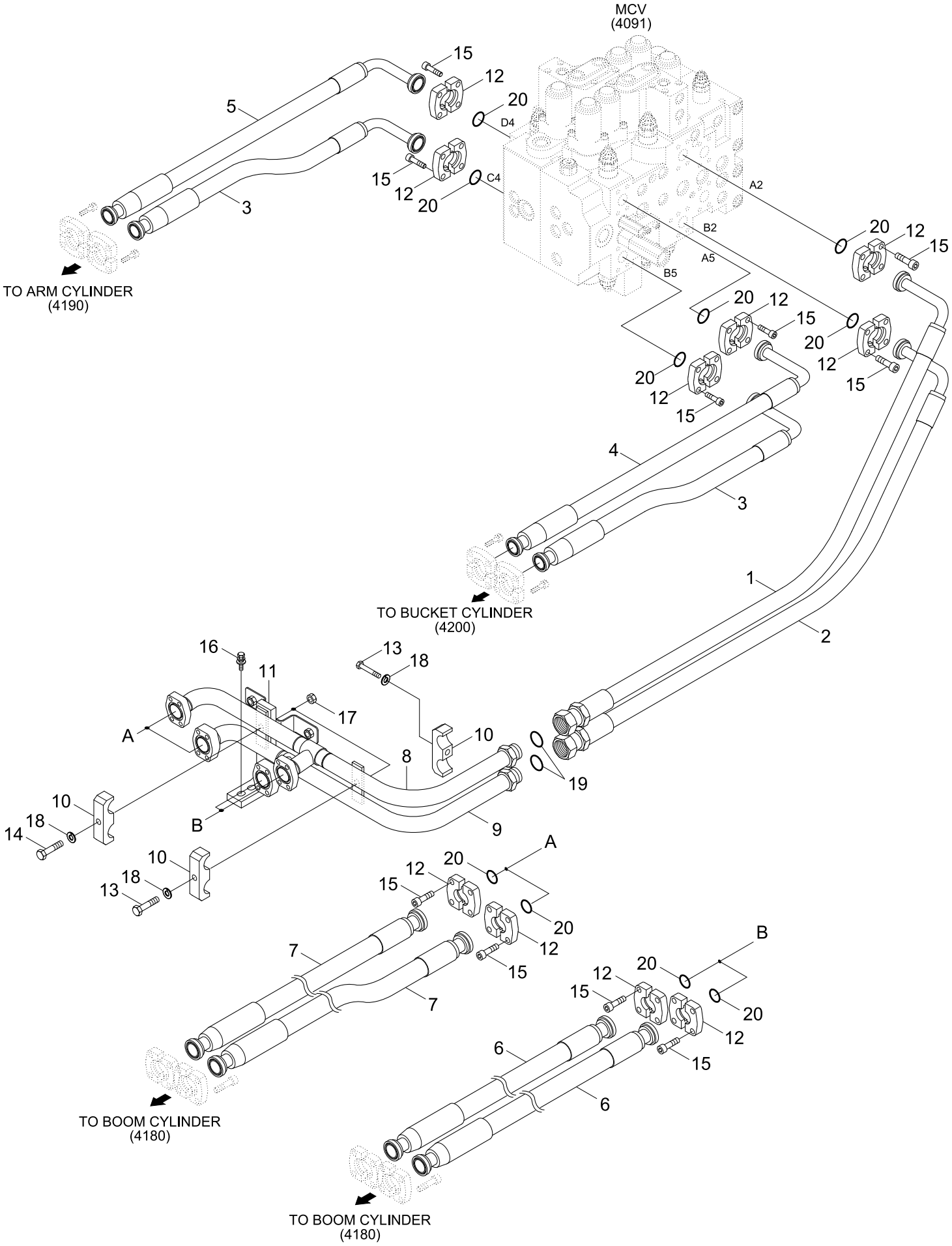

Item	Part_No	IS	Ord	T	Description	Qty	Serial_No	ITC	Remark
*	@				UPPER HYD PIPING-ATTACH	1	#2403 -		NOT
1	31N9-13210				HOSE ASSY-FLG,0X90	1			
2	31N9-13220				HOSE ASSY	1			
3	31Q8-11350				HOSE ASSY	2			
4	31Q8-11360				HOSE ASSY	1			
5	31Q8-11370				HOSE ASSY	1			
6	P683-167319				HOSE ASSY-FLG 0X0	2			
7	P683-167318				HOSE ASSY-FLG 0X0	2			
8	31N9-13270				PIPE WA	1			
9	31N9-13280				PIPE WA	1			
10	31EM-12170				CLAMP-PIPE	3			
11	31N8-12510				BRACKET	1			
12	P173-160104				FLANGE-HYD,SPLIT	20			
13	S017-100706				BOLT-HEX	2			
14	S017-100806				BOLT-HEX	1			
15	S109-100306				BOLT-SOCKET	40			
16	S037-103026				BOLT-W/WASHER	2			
17	S205-101006				NUT-HEX	2			
18	S411-100006				WASHER-SPRING	3			
19	S621-021001				O-RING	2			
20	Y171-024004				O-RING	10			

PILOT HYD PIPING(CONTROL 1)

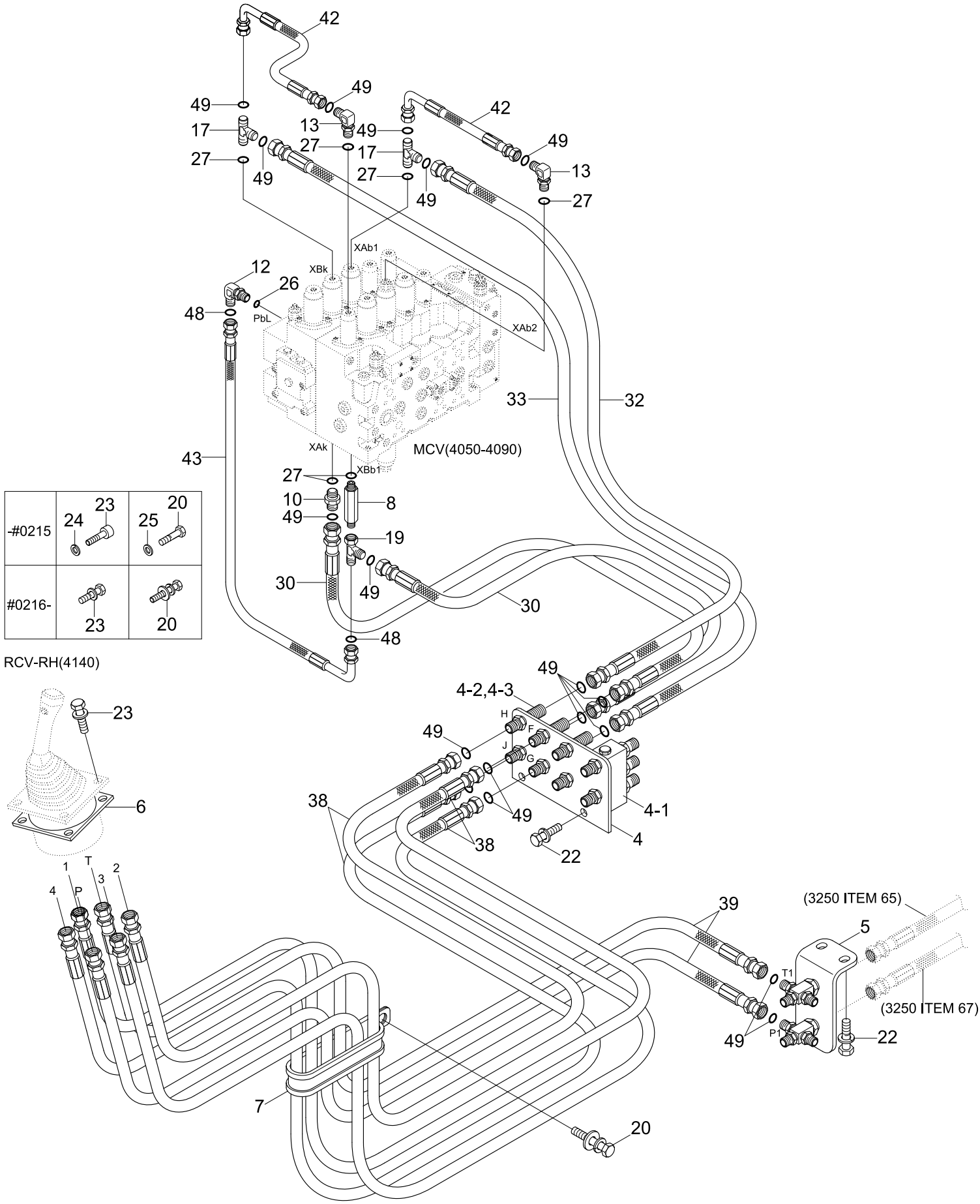

Item	Part_No	IS	Ord	T	Description	Qty	Serial_No	ITC	Remark
4	31N8-22121				TERMINAL ASSY-C	1	- #0215		
	31N8-24010				TERMINAL ASSY-C	1	#0216 -	D	
4-1	31N8-22130				.SHUTTLE-5 PORT	2	- #0215		
	31N8-24030				.SHUTTLE-5 PORT	2	#0216 -	D	
4-2	31N8-22150				.CONNECTOR-2 NUT	4	- #0215		
	X540-120002				.CONNECTOR-B.H TYPE	4	#0216 -	D	
4-3	S621-120001				.O-RING	12	#0216 -	-	
5	31NB-20021				CROSS ASSY	1	- #0215		
	31NB-20022				CROSS ASSY	1	#0216 -	D	
6	31M6-51060				SHIM(3.0T)	1	- #0215		
	31M6-51061				SHIM(3.2T)	1	#0216 -	B	
7	31E7-0310				CLAMP-HOSE	1			
8	31N6-22110				VALVE-SHOCKLESS	1	- #0215		
	31N6-22370				VALVE-SHOCKLESS	1	#0216 -	D	
10	P010-110003				CONNECTOR	1	- #0215		
	X500-110002				CONNECTOR-ORFS	1	#0216 -	D	
12	P020-110001				ELBOW-90	1	- #0215		
	X520-110001				ELBOW-90,ORFS	1	#0216 -	D	
13	P020-110002				ELBOW-90	2	- #0215		
	X520-110002				ELBOW-90,ORFS	2	#0216 -	D	
17	P320-060606				TEE-RUN TYPE	2	- #0215		
	X820-065252				TEE-R/TYPE,ORFS	2	#0216 -	D	
19	31N8-22160				TEE-SWIVEL NUT	1	- #0215		
	X840-525251				TEE-R/TYPE,ORFS	1	#0216 -	D	
20	S017-100206				BOLT-HEX	1	- #0215		

Item	Part_No	IS	Ord	T	Description	Qty	Serial_No	ITC	Remark
20	S037-102026				BOLT-W/WASHER	1	#0216 -	A	
22	S037-102552				BOLT-W/WASHER	4	- #0215		
	S037-102526				BOLT-W/WASHER	4	#0215 -	A	
23	S175-060256				SCREW-SOCKET RD HD	4	- #0215		
	S035-063046				BOLT-W/WASHER HEX	4	#0216 -	A	
24	S403-062006				WASHER-PLAIN	4	- #0215	-	
25	S403-102006				WASHER-PLAIN	1	- #0215	-	
26	S631-011004				O-RING	1			
27	S631-014004				O-RING	6			
30	P840-062033				HOSE ASSY-SYN THD	2	#0001 - #0215	-	
	X400-062033				HOSE ASSY-SYNFLEX,ORFS	2	#0216 -	D	
32	P840-062038				HOSE ASSY-SYN THD	1	#0001 - #0215	-	
	X400-062038				HOSE ASSY-SYNFLEX,ORFS	1	#0216 -	D	
33	P840-062039				HOSE ASSY-SYN THD	1	#0001 - #0215	-	
	X400-062039				HOSE ASSY-SYNFLEX,ORFS	1	#0216 -	D	
38	P850-062041				HOSE ASSY-SYN 0X45	4	#0001 - #0215	-	
	X410-062041				HOSE ASSY-SYNFLEX,ORFS	4	#0216 -	D	
39	P850-062028				HOSE ASSY-SYN 0X45	2	#0001 - #0215	-	
	P920-062028				HOSE ASSY-ORFS 0X45	2	#0216 -	B	
42	P860-062014				HOSE ASSY-SYN 0X90	2	#0001 - #0215	-	
	X420-062014				HOSE ASSY-SYNFLEX,ORFS	2	#0216 -	D	
43	P860-042016				HOSE ASSY-SYN 0X90	1	#0001 - #0215	-	
	X420-042016				HOSE ASSY-SYNFLEX,ORFS	1	#0216 -	D	
48	S621-011001				O-RING,ORFS	2	#0216 -	-	
49	S621-012001				O-RING,ORFS	18	#0216 -	-	

PILOT HYD PIPING(CONTROL 2)

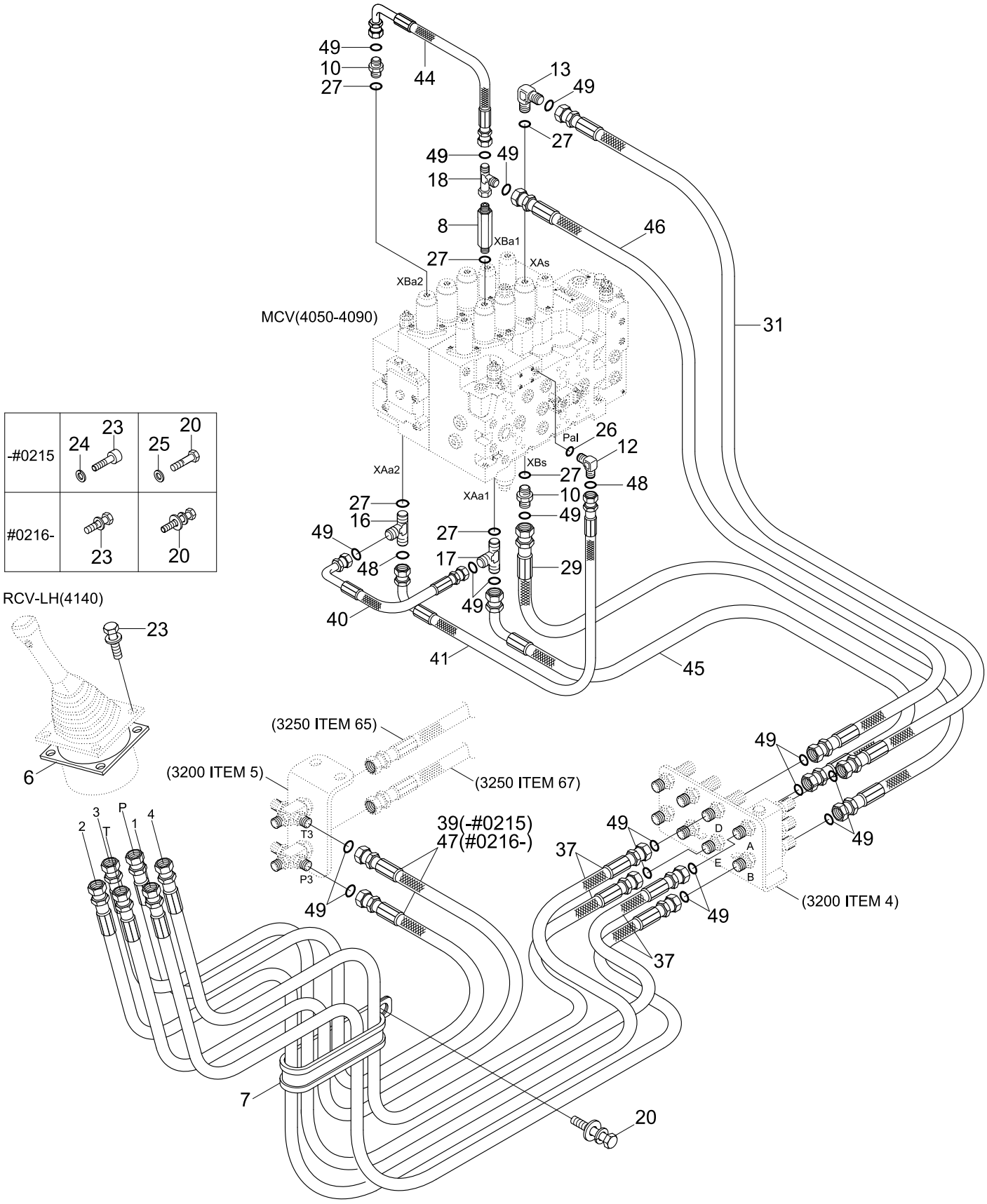

Item	Part_No	IS	Ord	T	Description	Qty	Serial_No	ITC	Remark
6	31M6-51060				SHIM(3.0T)	1	- #0215		
	31M6-51061				SHIM(3.2T)	1	#0216 -	B	
7	31E7-0310				CLAMP-HOSE	1			
8	31N6-22110				VALVE-SHOCKLESS	1	- #0215		
	31N6-22370				VALVE-SHOCKLESS	1	#0216 -	D	
10	P010-110003				CONNECTOR	1	- #0215		
	X500-110002				CONNECTOR-ORFS	1	#0216 -	D	
12	P020-110001				ELBOW-90	1	- #0215		
	X520-110001				ELBOW-90,ORFS	1	#0216 -	D	
13	P020-110002				ELBOW-90	1	- #0215		
	X520-110002				ELBOW-90,ORFS	1	#0216 -	D	
16	P320-060604				TEE-RUN TYPE	1	- #0215		
	X820-065251				TEE-R/TYPE,ORFS	1	#0216 -	D	
17	P320-060606				TEE-RUN TYPE	1	- #0215		
	X820-065252				TEE-R/TYPE,ORFS	1	#0216 -	D	
18	31EG-90540				TEE-R/TYPE,S/NUT	1	- #0215		
	X840-525252				TEE-R/TYPE,ORFS	1	#0216 -	D	
20	S017-100206				BOLT-HEX	1	- #0215		
	S037-102026				BOLT-W/WASHER	1	#0216 -	A	
23	S175-060256				SCREW-SOCKET RD HD	4	- #0215		
	S035-063046				BOLT-W/WASHER HEX	4	#0216 -	A	
24	S403-062006				WASHER-PLAIN	4	- #0215	-	
25	S403-102006				WASHER-PLAIN	1	- #0215	-	
26	S631-011004				O-RING	1			
27	S631-014004				O-RING	6			

Item	Part_No	IS	Ord	T	Description	Qty	Serial_No	ITC	Remark
29	P840-062030				HOSE ASSY-SYN THD	1	#0001 - #0215	-	
	X400-062030				HOSE ASSY-SYNFLEX,ORFS	1	#0216 -	D	
31	P840-062037				HOSE ASSY-SYN THD	1	#0001 - #0215	-	
	X400-062037				HOSE ASSY-SYNFLEX,ORFS	1	#0216 -	D	
37	P850-062042				HOSE ASSY-SYN 0X45	4	#0001 - #0215	-	
	X410-062042				HOSE ASSY-SYNFLEX,ORFS	4	#0216 -	D	
39	P850-062028				HOSE ASSY-SYN 0X45	2	#0001 - #0215	-	
40	P860-062010				HOSE ASSY-SYN 0X90	1	#0001 - #0215	-	
	X420-062010				HOSE ASSY-SYNFLEX,ORFS	1	#0216 -	D	
41	P860-042013				HOSE ASSY-SYN 0X90	1	#0001 - #0215	-	
	X420-042013				HOSE ASSY-SYNFLEX,ORFS	1	#0216 -	D	
44	P860-062019				HOSE ASSY-SYN 0X90	1	#0001 - #0215	-	
	X420-062019				HOSE ASSY-SYNFLEX,ORFS	1	#0216 -	D	
45	P860-062032				HOSE ASSY-SYN 0X90	1	#0001 - #0215	-	
	X420-062032				HOSE ASSY-SYNFLEX,ORFS	1	#0216 -	D	
46	P860-062040				HOSE ASSY-SYN 0X90	1	#0001 - #0215	-	
	X420-062040				HOSE ASSY-SYNFLEX,ORFS	1	#0216 -	D	
47	P920-062026				HOSE ASSY-ORFS 0X45	2	#0216 -	B	
48	S621-011001				O-RING,ORFS	2	#0216 -	-	
49	S621-012001				O-RING,ORFS	16	#0216 -	-	

PILOT HYD PIPING(CONTROL 3)

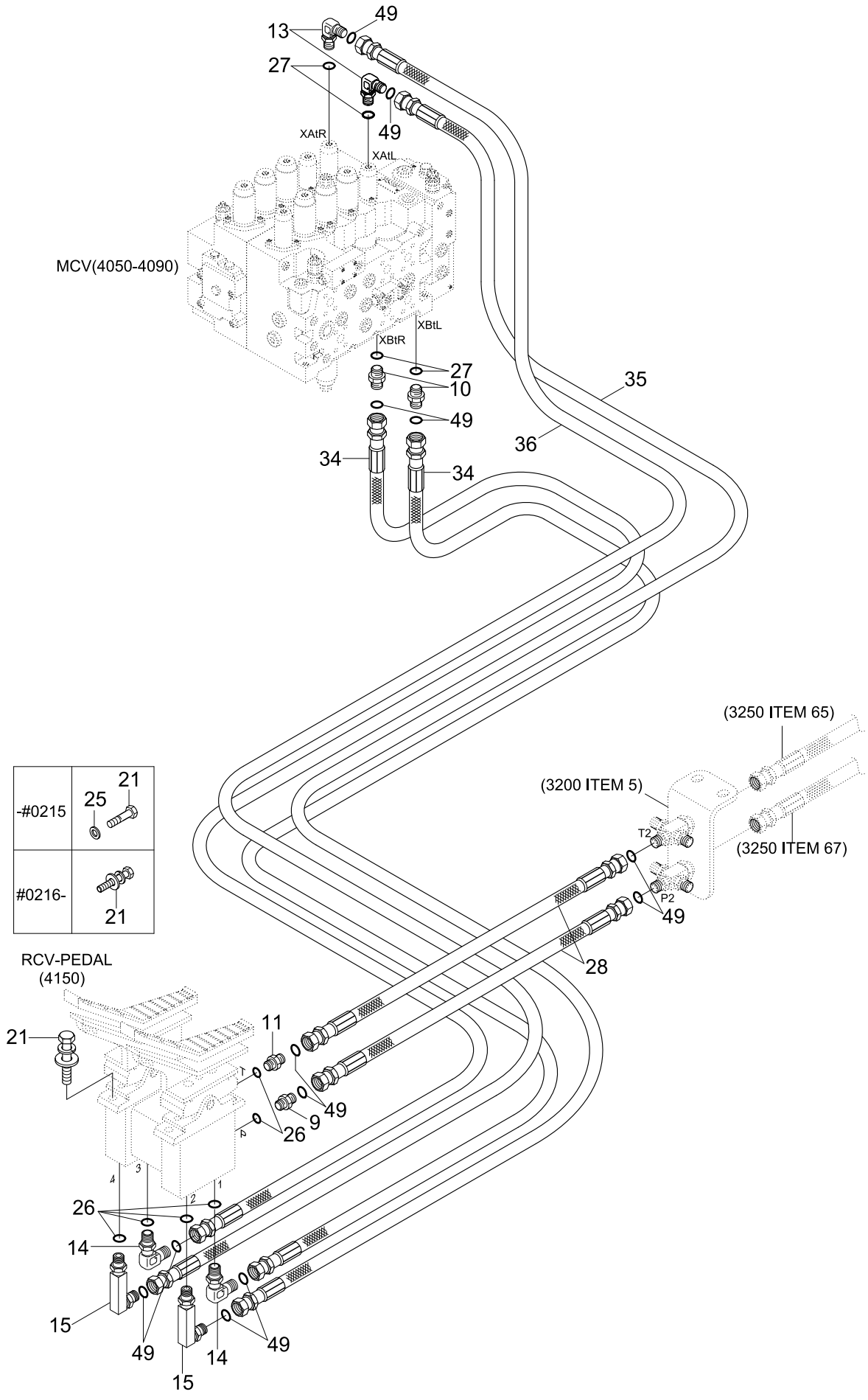

Item	Part_No	IS	Ord	T	Description	Qty	Serial_No	ITC	Remark
9	31EK-20110				FILTER-LAST GUARD	1	- #0215		
	31N6-25070				FILTER-LAST GUARD	1	#0216 -	D	
10	P010-110003				CONNECTOR	2	- #0215		
	X500-110002				CONNECTOR-ORFS	2	#0216 -	D	
11	P010-110012				CONNECTOR	1	- #0215		
	X500-110011				CONNECTOR-ORFS	1	#0216 -	D	
13	P020-110002				ELBOW-90	2	- #0215		
	X520-110002				ELBOW-90,ORFS	2	#0216 -	D	
14	P020-110011				ELBOW-90	2	- #0215		
	X520-110011				ELBOW 90,ORFS	2	#0216 -	D	
15	34E7-01710				ELBOW-90	2	- #0215		
	31N7-22100				ELBOW 90-LONG,ORFS	2	#0216 -	D	
21	S017-100306				BOLT-HEX	4	- #0215		
	S037-103026				BOLT-W/WASHER	4	#0216 -	A	
25	S403-102006				WASHER-PLAIN	4	- #0215	-	
26	S631-011004				O-RING	6			
27	S631-014004				O-RING	4			
28	P840-062019				HOSE ASSY-SYN THD	2	#0001 - #0215	-	
	X400-062019				HOSE ASSY-SYNFLEX,ORFS	2	#0216 -	D	
34	P840-062072				HOSE ASSY-SYN THD	2	#0001 - #0215	-	
	X400-062072				HOSE ASSY-SYNFLEX,ORFS	2	#0216 -	D	
35	P840-062077				HOSE ASSY-SYN THD	1	#0001 - #0215	-	
	X400-062077				HOSE ASSY-SYNFLEX,ORFS	1	#0216 -	D	
36	P840-062079				HOSE ASSY-SYN THD	1	#0001 - #0215	-	
	X400-062079				HOSE ASSY-SYNFLEX,ORFS	1	#0216 -	D	

Item	Part_No	IS	Ord	T	Description	Qty	Serial_No	ITC	Remark
49	S621-012001				O-RING,ORFS	12	#0216 -	-	

PILOT HYD PIP(CONTROL 1, TYPE 2, #2403-)

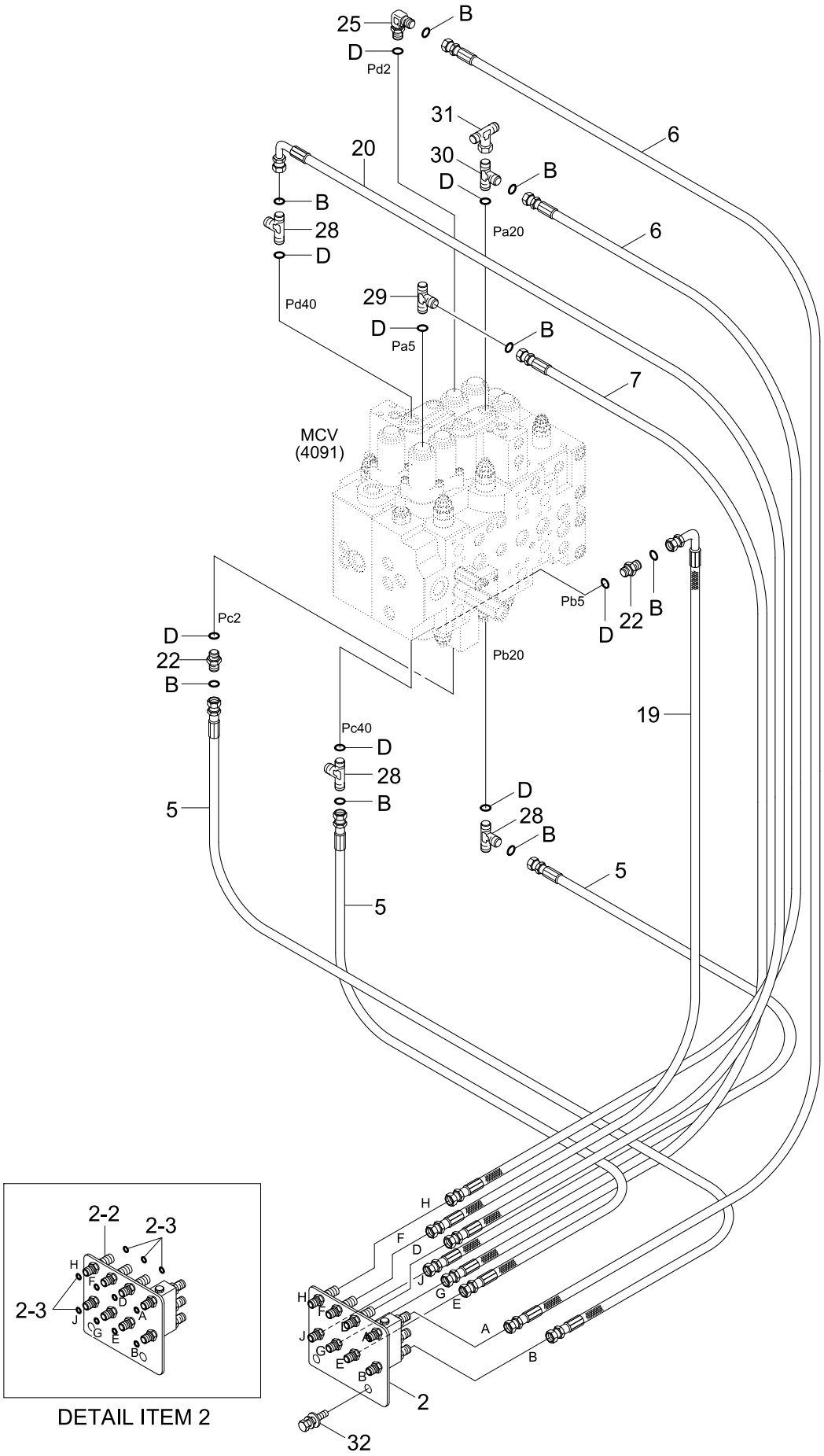

DETAIL ITEM 2

Item	Part_No	IS	Ord	T	Description	Qty	Serial_No	ITC	Remark
*	@				PILOT HYD PIPING-CONTROL	1	#2403 -		NOT
2	31N8-24010				TERMINAL ASSY-C	1			
2-2	31N8-24030				.SHUTTLE-5 PORT	1			
2-3	X540-120002				.CONNECTOR-ORFS	6			
5	X400-062029				HOSE ASSY-SYNF,ORFS	3			
6	X400-062034				HOSE ASSY-SYNF,ORFS	2			
7	X400-062036				HOSE ASSY-SYNF,ORFS	1			
19	X420-062030				HOSE ASSY-ORFS 0X90	1			
20	X420-062036				HOSE ASSY-ORFS 0X90	1			
22	X500-110002				CONNECTOR-ORFS	2			
25	X520-110002				ELBOW-90,ORFS	1			
28	X820-065152				TEE-R/TYPE,ORFS	3			
29	X820-065251				TEE-R/TYPE,ORFS	1			
30	X820-065252				TEE-R/TYPE,ORFS	1			
31	X840-525152				TEE-R/TYPE,SWIVEL,ORFS	1			
32	S037-103026				BOLT-W/WASHER	2			
B	S621-012001				O-RING	8			
D	S631-014004				O-RING	8			

PILOT HYD PIP(CONTROL 2, TYPE 2, #2403-)

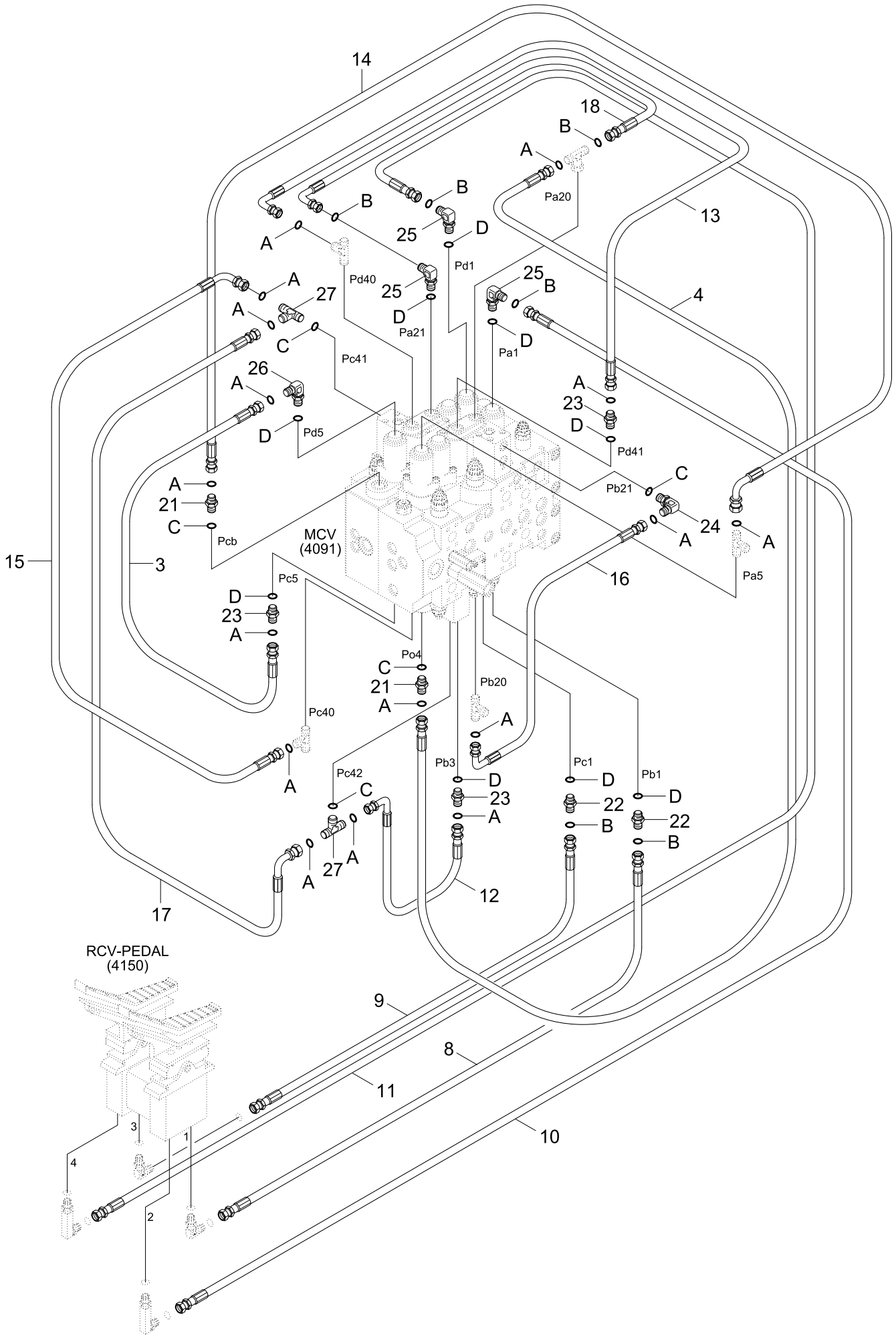

Item	Part_No	IS	Ord	T	Description	Qty	Serial_No	ITC	Remark
*	@				PILOT HYD PIPING-CONTROL	1	#2403 -		NOT
3	X400-042021				HOSE ASSY-SYNF,ORFS	1			
4	X400-042026				HOSE ASSY-ORFS 0X0	1			
8	X400-062064				HOSE ASSY-SYNF,ORFS	1			
9	X400-062066				HOSE ASSY-SYNF,ORFS	1			
10	X400-062072				HOSE ASSY-SYNF,ORFS	1			
11	X400-062074				HOSE ASSY-SYNF,ORFS	1			
12	X420-042007				HOSE ASSY-ORFS 0X90	1			
13	X420-042010				HOSE ASSY-ORFS 0X90	1			
14	X420-042014				HOSE ASSY-ORFS 0X90	1			
15	X420-042015				HOSE ASSY-ORFS 0X90	1			
16	X420-042016				HOSE ASSY-ORFS 0X90	1			
17	X420-042019				HOSE ASSY-ORFS 0X90	1			
18	X420-062010				HOSE ASSY-ORFS 0X90	1			
21	X500-110001				CONNECTOR-ORFS	2			
22	X500-110002				CONNECTOR-ORFS	2			
23	X500-110013				CONNECTOR-ORFS	3			
24	X520-110001				ELBOW-90,ORFS	1			
25	X520-110002				ELBOW-90,ORFS	3			
26	X520-110012				ELBOW-90,ORFS	1			
27	X820-045151				TEE-R/TYPE,ORFS	2			
A	S621-011001				O-RING	16			
B	S621-012001				O-RING	6			
C	S631-011004				O-RING	5			
D	S631-014004				O-RING	9			

PILOT HYD PIPING(BASE 1, S/MOTOR TYPE 1)

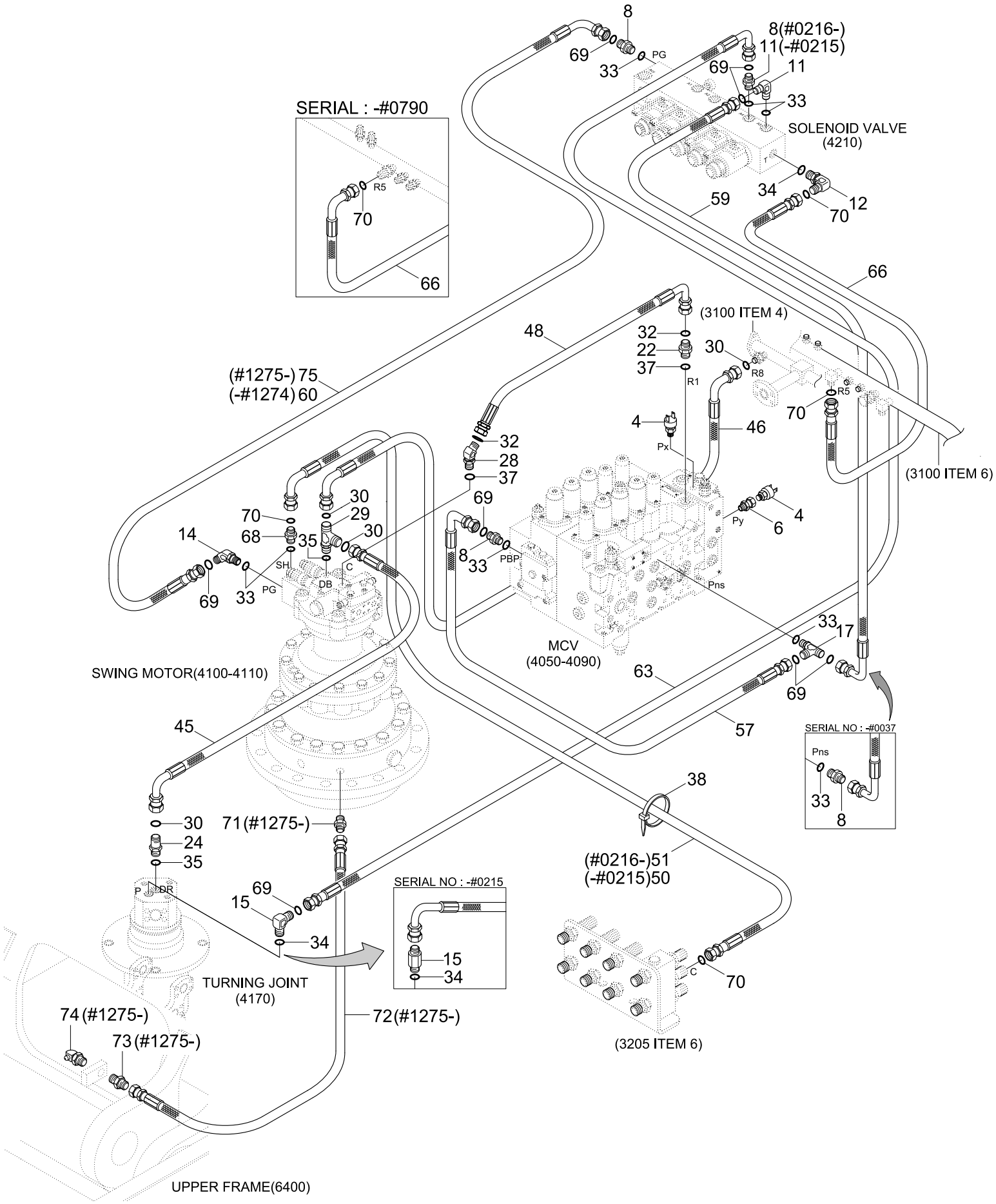

Item	Part_No	IS	Ord	T	Description	Qty	Serial_No	ITC	Remark
4	31E5-40500				SWITCH-PRESSURE	2			AUTO IDLE
6	31E5-11110				ADAPTER	1			
8	P010-110002				CONNECTOR	2	- #0037		
					CONNECTOR	1	#0038 - #0215	A	
	X500-110001				CONNECTOR-ORFS	2	#0216 -	D	
11	P020-110001				ELBOW-90	2	- #0215		
	X520-110001				ELBOW-90,ORFS	2	#0216 -	D	
12	P020-110002				ELBOW-90	1	- #0215		
	X520-110002				ELBOW-90,ORFS	1	#0216 -	D	
14	P030-110001				ELBOW-45	1	- #0215		
	X530-110001				ELBOW-45,ORFS	1	#0216 -	D	
15	P101-106044				CONNECTOR-LONG	1	- #0215		
	X520-110012				ELBOW-90,ORFS	1	#0216 -	D	
17	P320-040404				TEE-RUN TYPE	1	#0038 - #0215	-	
	X820-045151				TEE-R/TYPE,ORFS	1	#0216 -	D	
22	X500-110005				CONNECTOR-ORFS	1	- #1485		
	P010-110006				CONNECTOR	1	#1486 -	D	
24	X511-108534				CONNECTOR-LONG,ORFS	1			
28	X530-110005				ELBOW-45,ORFS	1	- #1485		
	P030-110020				ELBOW-45	1	#1486 -	D	
29	X820-085308				TEE-R/TYPE,ORFS	1	- #0215		
	X820-085353				TEE-R/TYPE,ORFS	1	#0216 -	D	
30	S621-014001				O-RING	3			
32	S621-021001				O-RING	2			
33	S631-011004				O-RING	5			

Item	Part_No	IS	Ord	T	Description	Qty	Serial_No	ITC	Remark
34	S631-014004				O-RING	2			
35	S631-018004				O-RING	2			
37	S631-029004				O-RING	2			
38	S551-050203				CLAMP-BAND	10			
45	P930-082018				HOSE ASSY-ORFS 0X90	1	- #1274		
	P930-082020				HOSE ASSY-ORFS 0X90	1	#1275 -	D	
46	P620-082020				HOSE ASSY-THD 0X90	1	- #0215		
	P930-082020				HOSE ASSY-ORFS 0X90	1	#0216 - #0790	D	
	P930-082017				HOSE ASSY-ORFS 0X90	1	#0791 - #1274	D	
	P930-082019				HOSE ASSY-ORFS 0X90	1	#1275 -	D	
48	P930-162015				HOSE ASSY-ORFS 0X90	1	- #1485		
	31N8-22210				HOSE ASSY	1	#1486 -	D	
50	P860-062040				HOSE ASSY-SYN 0X90	1	#0001 - #0215	-	
51	X420-062040				HOSE ASSY-ORFS 0X90	1	#0216 - #1274	D	
	X420-062042				HOSE ASSY-ORFS 0X90	1	#1275 -	D	
57	P860-042013				HOSE ASSY-SYN 0X90	1	#0038 - #0215	-	
	X420-042013				HOSE ASSY-ORFS 0X90	1	#0216 -	D	
59	P860-042046				HOSE ASSY-SYN 0X90	1	#0001 - #0215	-	
	X420-042046				HOSE ASSY-ORFS 0X90	1	#0216 -	D	
60	P860-042048				HOSE ASSY-SYN 0X90	1	#0001 - #0215	-	
	X420-042048				HOSE ASSY-ORFS 0X90	1	#0216 - #1274	D	
63	P860-042062				HOSE ASSY-SYN 0X90	1	#0001 - #0215	-	
	X420-042062				HOSE ASSY-ORFS 0X90	1	#0216 -	D	
66	P860-062043				HOSE ASSY-SYN 0X90	1	#0001 - #0215	-	
	X420-062043				HOSE ASSY-ORFS 0X90	1	#0216 - #0790	D	

Item	Part_No	IS	Ord	T	Description	Qty	Serial_No	ITC	Remark
66	X400-062043				HOSE ASSY-SYNF,ORFS	1	#0791 -	D	
68	P010-110012				CONNECTOR	1	- #0215		
	X500-110011				CONNECTOR-ORFS	1	#0216 -	D	
69	S621-011001				O-RING	8	#0216 -	-	
70	S621-012001				O-RING	4	#0216 -	-	
71	P010-430002				CONNECTOR	1	#1275 -	-	
72	P840-042026				HOSE ASSY-SYN THD	1	#1275 -	-	
73	31W5-70060				CONNECTOR	1	#1275 -	-	
74	S653-810002				NIPPLE-GREASE	1	#1275 -	-	
75	X420-042050				HOSE ASSY-ORFS 0X90	1	#1275 -	-	

PILOT HYD PIPING(BASE 2, S/MOTOR TYPE 1)

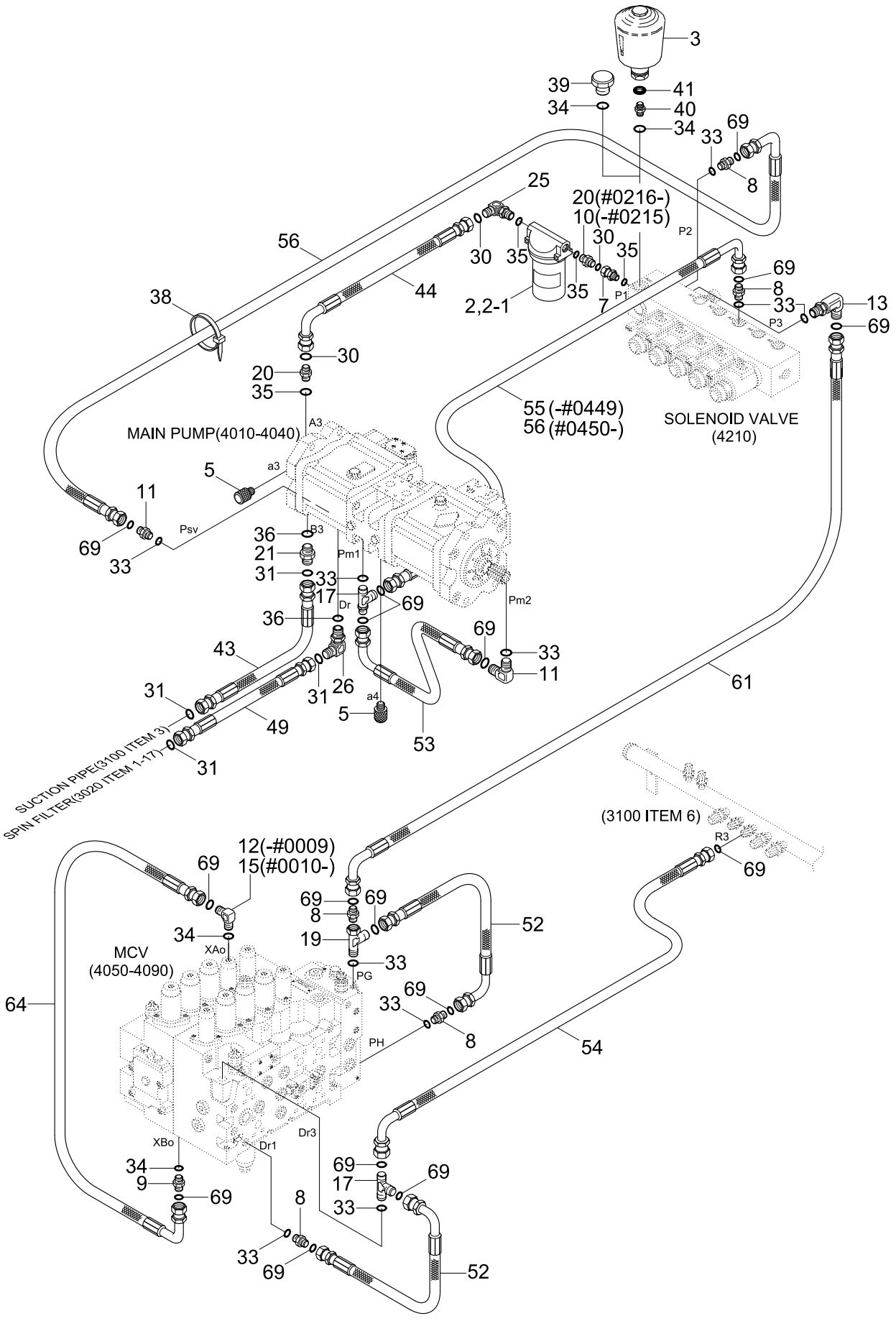

Item	Part_No	IS	Ord	T	Description	Qty	Serial_No	ITC	Remark
2	31E3-0017				FILTER-LINE	1			
2-1	31E3-0018	10			.ELEMENT-LINE FILTER	1			
3	31E3-3187				ACCUMULATOR	1			
5	31EK-11130				COUPLING-SCREW	2			
7	31EM-20160				ADAPTER	1	- #0215		
	31N6-22400				ADAPTOR	1	#0216 -	D	
8	P010-110002				CONNECTOR	5	- #0215		
	X500-110001				CONNECTOR-ORFS	5	#0216 -	D	
9	P010-110003				CONNECTOR	1	- #0009		
	P010-110013				CONNECTOR	1	#0010 - #0215	B	
	X500-110013				CONNECTOR-ORFS	1	#0216 -	D	
10	P010-110004				CONNECTOR	1	- #0215	-	
11	P020-110001				ELBOW-90	2	- #0215		
	X520-110001				ELBOW-90,ORFS	2	#0216 -	D	
12	P020-110002				ELBOW-90	1	- #0009	-	
13	E131-0603				ELBOW-90,LONG	1	- #0215		
	31N6-25110				ELBOW-90,LONG	1	#0216 -	D	
15	P020-110012				ELBOW-90	1	#0010 - #0215	-	
	X520-110012				ELBOW-90,ORFS	1	#0216 -	D	
17	P320-040404				TEE-RUN TYPE	2	- #0215		
	X820-045151				TEE-R/TYPE,ORFS	2	#0216 -	D	
19	32E6-10460				TEE-SWEVEL NUT	1	- #0215		
	X840-515151				TEE-RUN TYPE	1	#0216 -	D	
20	X500-110003				CONNECTOR-ORFS	2			
21	X500-110004				CONNECTOR-ORFS	1			

Item	Part_No	IS	Ord	T	Description	Qty	Serial_No	ITC	Remark
25	X520-110003				ELBOW-90,ORFS	1			
26	P020-110004				ELBOW-90	1	- #0215		
	X520-110004				ELBOW-90,ORFS	1	#0216 -	D	
30	S621-014001				O-RING	2	- #0215		
					O-RING	3	#0216 -	A	
31	S621-018001				O-RING	2	- #0215		
					O-RING	4	#0216 -	A	
33	S631-011004				O-RING	10			
34	S631-014004				O-RING	2			
35	S631-018004				O-RING	4			
36	S631-024004				O-RING	2			
38	S551-050203				CLAMP-BAND	10			
39	P220-110103				PLUG-HEX	1			
40	31E9-20060				FITTING	1	- #0326		
	31N6-24200				CONNECTOR	1	#0327 -	B	
41	P391-080000				WASHER-COPPER	1	- #0326		
	X321-021001				RING-ED	1	#0327 -	D	
43	P910-122012				HOSE ASSY-ORFS 0X0	1			
44	P930-082016				HOSE ASSY-ORFS 0X90	1			
49	P620-122017				HOSE ASSY-THD 0X90	1	- #0215		
	P930-122017				HOSE ASSY-ORFS 0X90	1	#0216 -	D	
52	P860-042008				HOSE ASSY-SYN 0X90	2	#0001 - #0215	-	
	X420-042008				HOSE ASSY-ORFS 0X90	2	#0216 -	D	
53	P860-042009				HOSE ASSY-SYN 0X90	1	#0001 - #0215	-	
	X420-042009				HOSE ASSY-ORFS 0X90	1	#0216 -	D	

Item	Part_No	IS	Ord	T	Description	Qty	Serial_No	ITC	Remark
54	P860-042010				HOSE ASSY-SYN 0X90	1	#0001 - #0215	-	
	X420-042010				HOSE ASSY-ORFS 0X90	1	#0216 -	D	
55	P860-042011				HOSE ASSY-SYN 0X90	1	#0001 - #0215	-	
	X420-042011				HOSE ASSY-ORFS 0X90	1	#0216 - #0449	-	
56	P860-042012				HOSE ASSY-SYN 0X90	1	#0001 - #0215	-	
	X420-042012				HOSE ASSY-ORFS 0X90	1	#0216 - #0449	D	
					HOSE ASSY-ORFS 0X90	2	#0450 -	A	
61	P860-042053				HOSE ASSY-SYN 0X90	1	#0001 - #0215	-	
	X420-042053				HOSE ASSY-ORFS 0X90	1	#0216 -	D	
64	P620-062018				HOSE ASSY-THD 0X90	1	- #0009		
	P860-042018				HOSE ASSY-SYN 0X90	1	#0010 - #0215	B	
	X420-042018				HOSE ASSY-ORFS 0X90	1	#0216 -	D	
69	S621-011001				O-RING	16	#0216 -	-	

PILOT HYD PIPING(BASE 1, S/MOTOR TYPE 1)

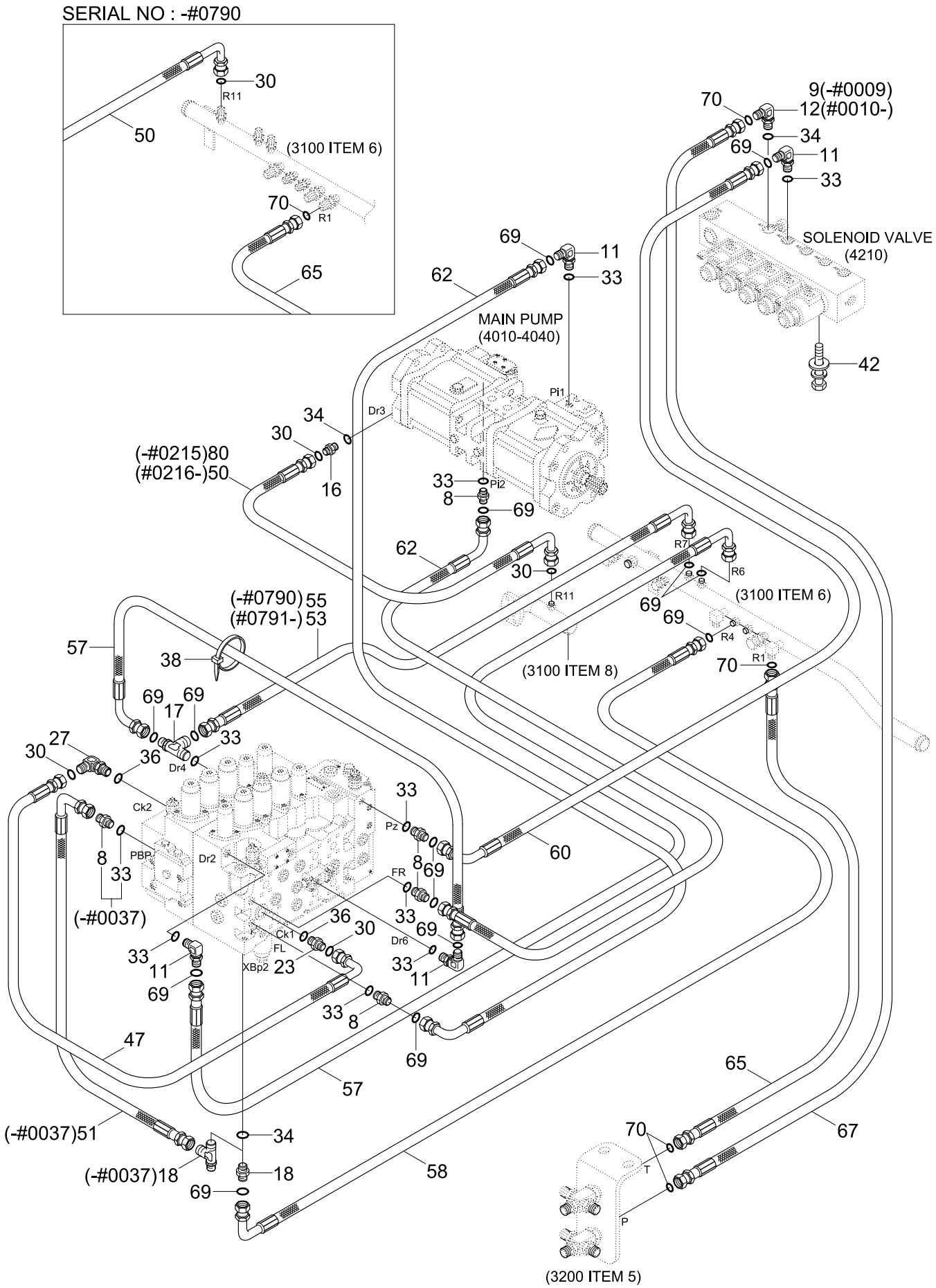

Item	Part_No	IS	Ord	T	Description	Qty	Serial_No	ITC	Remark
8	P010-110002				CONNECTOR	5	- #0037		
					CONNECTOR	4	#0038 - #0215	A	
	X500-110001				CONNECTOR-ORFS	4	#0216 -	D	
9	P010-110003				CONNECTOR	1	- #0009	-	
11	P020-110001				ELBOW-90	4	- #0215		
	X520-110001				ELBOW-90,ORFS	4	#0216 -	D	
12	P020-110002				ELBOW-90	1	#0010 - #0215	-	
	X520-110002				ELBOW-90,ORFS	1	#0216 -	D	
16	P010-110014				CONNECTOR	1	- #0215		
	X500-110014				CONNECTOR-ORFS	1	#0216 -	D	
17	P320-040404				TEE-RUN TYPE	1	- #0215		
	X820-045151				TEE-R/TYPE,ORFS	1	#0216 -	D	
18	P320-060404				TEE-RUN TYPE	1	- #0037		
	P010-110013				CONNECTOR	1	#0038 - #0215	D	
	X500-110013				CONNECTOR-ORFS	1	#0216 -	D	
23	X500-110017				CONNECTOR-ORFS	1			
27	X520-110016				ELBOW-90,ORFS	1			
30	S621-014001				O-RING	2	- #0215		
					O-RING	4	#0216 -	A	
33	S631-011004				O-RING	9	- #0037		
					O-RING	8	#0038 -	A	
34	S631-014004				O-RING	3			
36	S631-024004				O-RING	2			
38	S551-050203				CLAMP-BAND	10			
42	S035-082526				BOLT-W/WASHER	3			

Item	Part_No	IS	Ord	T	Description	Qty	Serial_No	ITC	Remark
47	P933-087020				HOSE ASSY-ORFS 0X90	1	- #0242		
	31N8-24100				HOSE ASSY	1	#0243 -	B	
50	P930-082023				HOSE ASSY-ORFS 0X90	1	#0216 -	D	
51	P860-042006				HOSE ASSY-SYN 0X90	1	- #0037	-	
53	X420-042009				HOSE ASSY-ORFS 0X90	1	#0791 -	-	
55	P860-042011				HOSE ASSY-SYN 0X90	1	#0001 - #0215	-	
	X420-042011				HOSE ASSY-ORFS 0X90	1	#0216 - #0790	-	
57	P860-042013				HOSE ASSY-SYN 0X90	2	#0001 - #0215	-	
	X420-042013				HOSE ASSY-ORFS 0X90	2	#0216 -	D	
58	P860-042021				HOSE ASSY-SYN 0X90	1	#0001 - #0215	-	
	X420-042021				HOSE ASSY-ORFS 0X90	1	#0216 -	D	
60	P860-042048				HOSE ASSY-SYN 0X90	1	#0001 - #0215	-	
	X420-042048				HOSE ASSY-ORFS 0X90	1	#0216 -	D	
62	P420-042056				HOSE ASSY-COMP 0X90	2	- #0047		
	P620-043056				HOSE ASSY-THD 0X90	2	#0048 - #0215	B	
	P930-043056				HOSE ASSY-ORFS 0X90	2	#0216 -	D	
65	P420-062052				HOSE ASSY-COMP 0X90	1	- #0009		
	P840-062052				HOSE ASSY-SYN THD	1	#0010 - #0215	B	
	X400-062052				HOSE ASSY-SYNF,ORFS	1	#0216 -	D	
67	P420-062076				HOSE ASSY-COMP 0X90	1	- #0009		
	P840-062076				HOSE ASSY-SYN THD	1	#0010 - #0215	B	
	X400-062076				HOSE ASSY-SYNF,ORFS	1	#0216 -	D	
69	S621-011001				O-RING	14	#0216 -	-	
70	S621-012001				O-RING	4	#0216 -	-	
80	P620-082023				HOSE ASSY-THD 0X90	1	#0001 - #0215	-	

PILOT HYD PIPING(BASE 1, S/MOTOR TYPE 2)

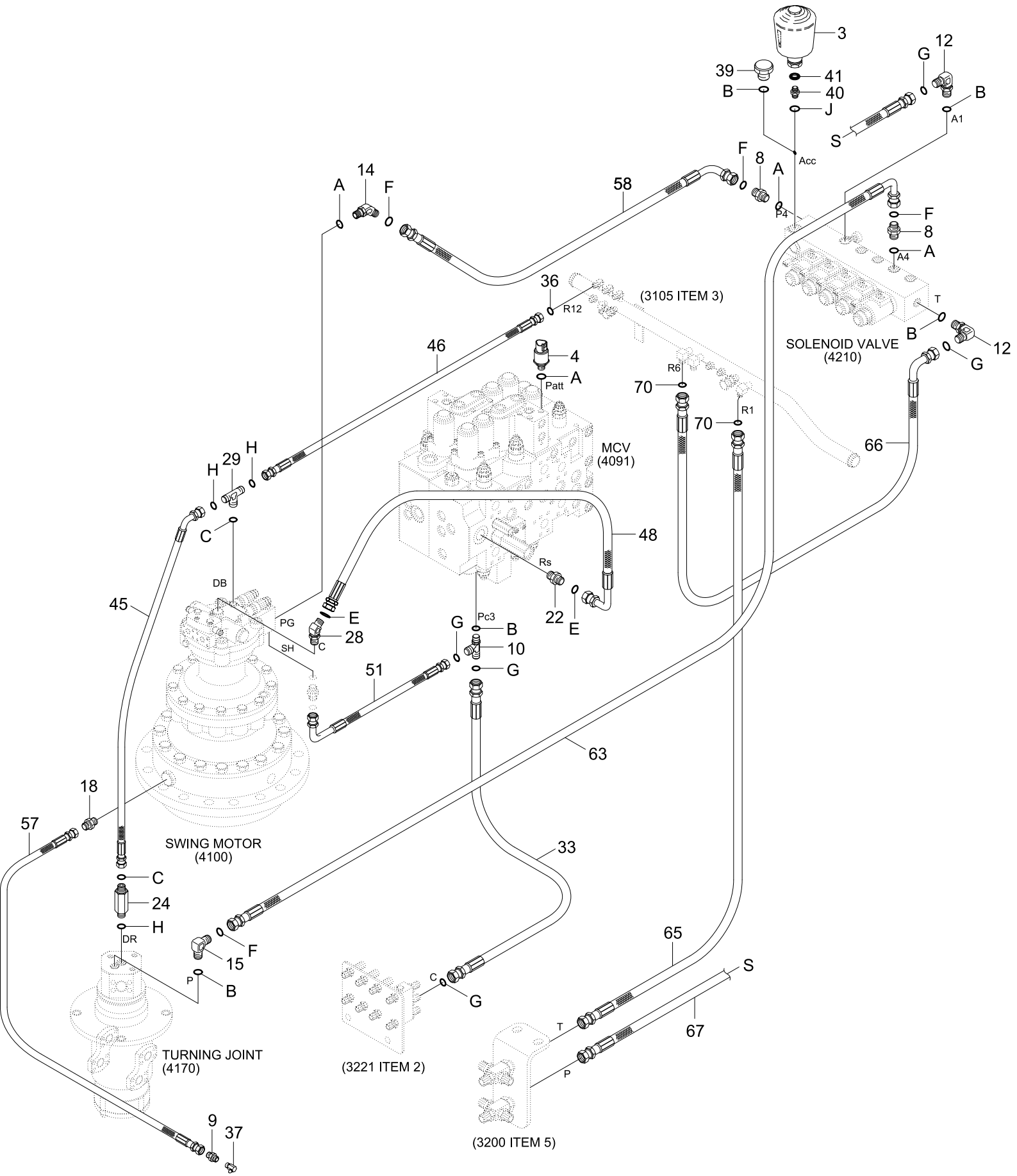

Item	Part_No	IS	Ord	T	Description	Qty	Serial_No	ITC	Remark
*	@				PILOT HYD PIPING-BASE	1	#2403 -		NOT
3	31E3-3187				ACCUMULATOR	1			
4	31E5-40500				SWITCH-PRESSURE	1			
8	X500-110001				CONNECTOR-ORFS	2			
9	31W5-70060				CONNECTOR	1			
10	X820-065252				TEE-R/TYPE,ORFS	1			
12	X520-110002				ELBOW-90,ORFS	2			
14	X530-110001				ELBOW-45,ORFS	1			
15	X520-110012				ELBOW-90,ORFS	1			
18	P010-430002				CONNECTOR	1			
22	P010-110006				CONNECTOR	1			
24	X511-108534				CONNECTOR-LONG,ORFS	1			
28	P030-110020				ELBOW-45	1			
	P030-110005				ELBOW-45	1			
29	X810-085353				TEE-B/TYPE,ORFS	1			
33	X420-062028				HOSE ASSY-ORFS 0X90	1			
36	S621-014001				O-RING	1			
37	S653-810002				NIPPLE-GREASE	1			
39	P220-110103				PLUG-HEX	1	- #2656		
40	31N6-24200				CONNECTOR	1			
41	X321-021001				RING-ED	1			
45	P920-082020				HOSE ASSY-ORFS 0X45	1			
46	P910-082018				HOSE ASSY-ORFS 0X0	1			
48	31N8-22210				HOSE ASSY	1			
51	X420-062020				HOSE ASSY-ORFS 0X90	1			

Item	Part_No	IS	Ord	T	Description	Qty	Serial_No	ITC	Remark
51	X410-062018				HOSE ASSY-ORFS 0X45	4			
57	P840-042026				HOSE ASSY-SYN THD	1			
58	X420-042050				HOSE ASSY-ORFS 0X90	1			
63	X420-042062				HOSE ASSY-ORFS 0X90	1			
65	X400-062052				HOSE ASSY-SYNF,ORFS	1			
66	X400-062043				HOSE ASSY-SYNF,ORFS	1			
67	X400-062076				HOSE ASSY-SYNF,ORFS	1			
68	X500-110011				CONNECTOR-ORFS	1			
70	S621-012001				O-RING	2			
A	S631-011004				O-RING	4			
B	S631-014004				O-RING	4			
C	S631-018004				O-RING	2			
E	S631-029004				O-RING	2			
F	S621-011001				O-RING	4			
G	S621-012001				O-RING	3			
H	S621-014001				O-RING	3			
J	S621-021001				O-RING	1			

PILOT HYD PIPING(BASE 2, S/MOTOR TYPE 2)

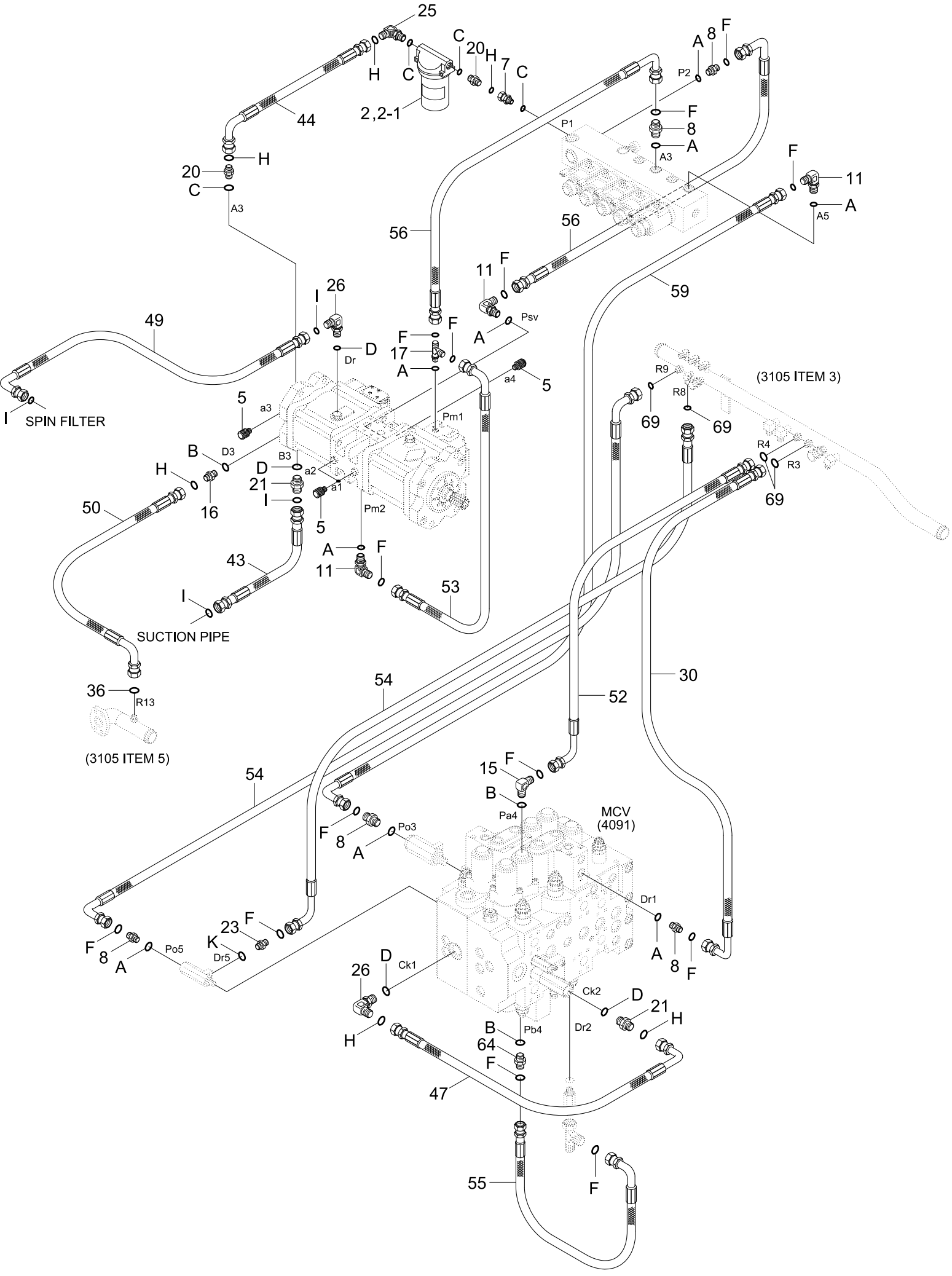

Item	Part_No	IS	Ord	T	Description	Qty	Serial_No	ITC	Remark
*	@				PILOT HYD PIPING-BASE	1	#2403 -		NOT
2	31E3-0017				FILTER-LINE	1			
2-1	31E3-0044				.BODY	1			
5	31EK-11130				COUPLING-SCREW	1			
7	31N6-22400				ADAPTOR	1			
8	X500-110001				CONNECTOR-ORFS	5			
11	X520-110001				ELBOW-90,ORFS	1			
15	X520-110012				ELBOW-90,ORFS	1			
16	X500-110012				CONNECTOR-ORFS	1			
17	X820-045151				TEE-R/TYPE,ORFS	1			
20	X500-110003				CONNECTOR-ORFS	2			
21	X500-110004				CONNECTOR-ORFS	2			
23	31Q6-20210				CONNECTOR-ORFS	1			
25	X520-110003				ELBOW-90,ORFS	1			
26	X520-110004				ELBOW-90,ORFS	2			
30	X400-042007				HOSE ASSY-SYNF,ORFS	1			
36	S621-014001				O-RING	1			
43	P910-122012				HOSE ASSY-ORFS 0X0	1			
44	P930-082016				HOSE ASSY-ORFS 0X90	1			
47	P930-127018				HOSE ASSY-ORFS 0X90	1			
49	P930-122017				HOSE ASSY-ORFS 0X90	1			
50	P930-082023				HOSE ASSY-ORFS 0X90	1			
52	X400-042011				HOSE ASSY-SYNF,ORFS	1			
53	X420-042009				HOSE ASSY-ORFS 0X90	1			
54	X420-042010				HOSE ASSY-ORFS 0X90	2			

Item	Part_No	IS	Ord	T	Description	Qty	Serial_No	ITC	Remark
55	X420-042008				HOSE ASSY-ORFS 0X90	1			
56	X420-042012				HOSE ASSY-ORFS 0X90	2			
59	X400-042044				HOSE ASSY-SYNF,ORFS	1			
64	X500-110013				CONNECTOR-ORFS	1			
69	S621-011001				O-RING	4			
A	S631-011004				O-RING	9			
B	S631-014004				O-RING	3			
C	S631-018004				O-RING	4			
D	S631-024004				O-RING	4			
F	S621-011001				O-RING	19			
H	S621-014001				O-RING	6			
I	S621-018001				O-RING	4			
K	S631-008004				O-RING	1			

PILOT HYD PIPING(BASE 3, S/MOTOR TYPE 2)

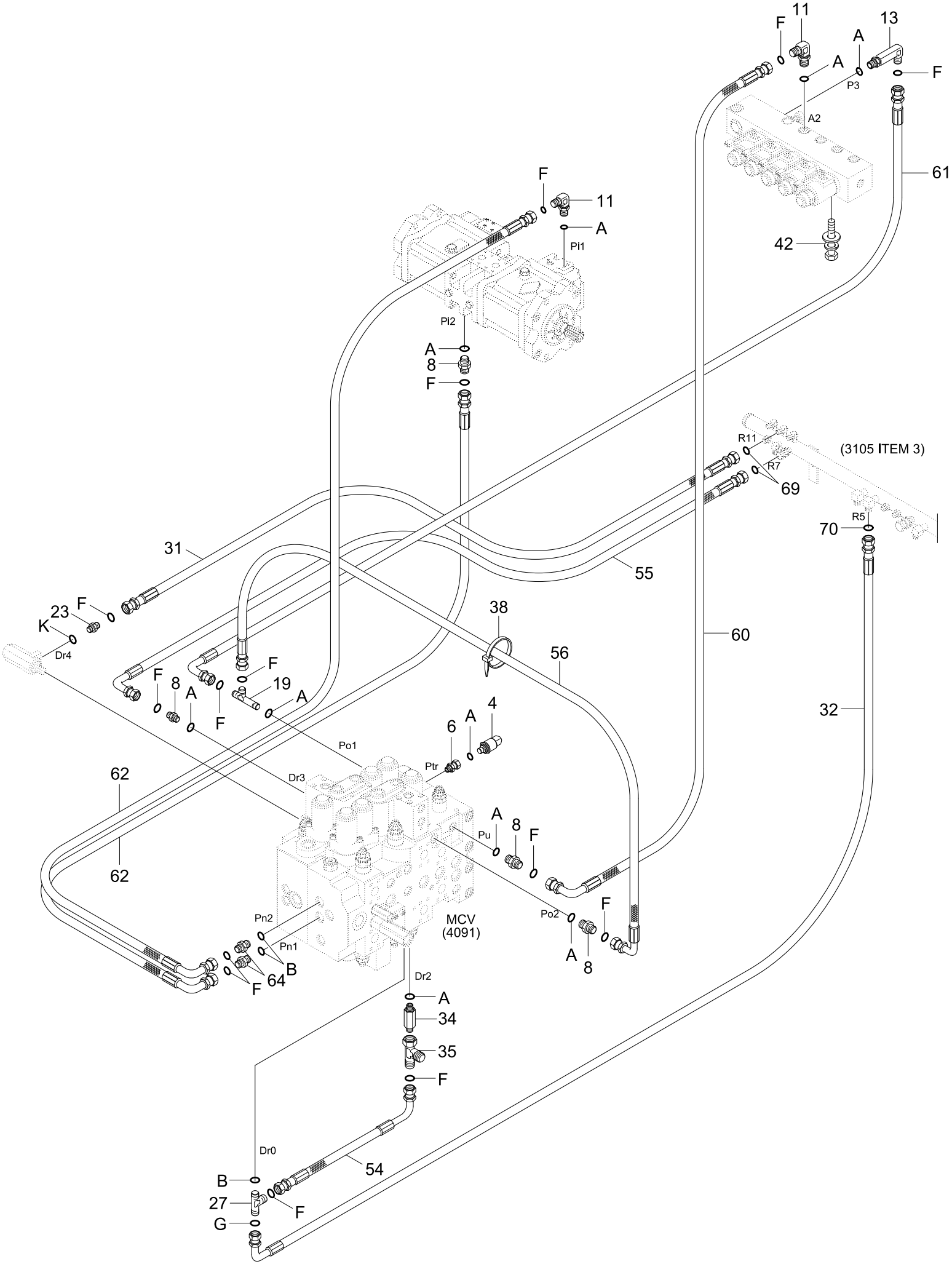

Item	Part_No	IS	Ord	T	Description	Qty	Serial_No	ITC	Remark
*	@				PILOT HYD PIPING-BASE	1	#2403 -		NOT
4	31E5-40500				SWITCH-PRESSURE	1			
6	31E5-11110				ADAPTER	1			
8	X500-110001				CONNECTOR-ORFS	4			
11	X520-110001				ELBOW-90,ORFS	2			
13	31N6-25110				ELBOW-90,LONG	1			
19	31N4-22150				TEE-LONG,ORFS	1			
23	31Q6-20210				CONNECTOR-ORFS	1			
27	X820-065152				TEE-R/TYPE,ORFS	1			
31	X420-042007				HOSE ASSY-ORFS 0X90	1			
32	P930-062015				HOSE ASSY-ORFS 0X90	1			
34	31N8-40100				CONNECTOR-LONG,ORFS	1			
35	X840-515151				TEE-RUN TYPE	1			
38	S551-050203				CLAMP-BAND	30			
42	S035-082526				BOLT-W/WASHER	2			
54	X420-042010				HOSE ASSY-ORFS 0X90	1			
55	X420-042008				HOSE ASSY-ORFS 0X90	1			
56	X420-042012				HOSE ASSY-ORFS 0X90	1			
60	X420-042048				HOSE ASSY-ORFS 0X90	1			
61	X420-042051				HOSE ASSY-ORFS 0X90	1			
62	P930-043056				HOSE ASSY-ORFS 0X90	2			
64	X500-110013				CONNECTOR-ORFS	2			
69	S621-011001				O-RING	2			
70	S621-012001				O-RING	1			
A	S631-011004				O-RING	10			

Item	Part_No	IS	Ord	T	Description	Qty	Serial_No	ITC	Remark
B	S631-014004				O-RING	3			
F	S621-011001				O-RING	14			
G	S621-012001				O-RING	1			
K	S631-008004				O-RING	1			

TRAVEL HYDRAULIC PIPING(-#0455)

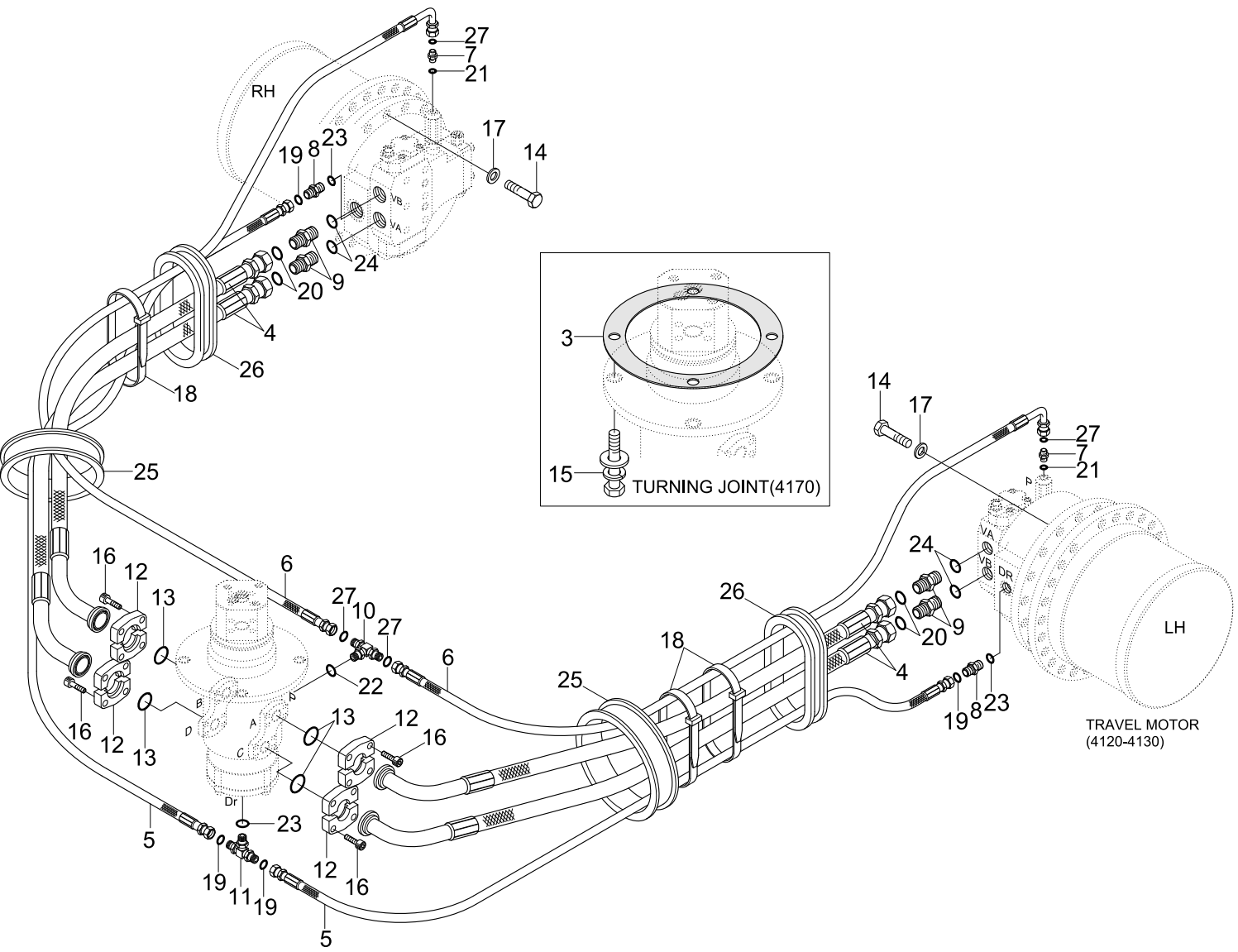

Item	Part_No	IS	Ord	T	Description	Qty	Serial_No	ITC	Remark
*	@				TRAVEL HYD PIPING	1	- #0455	-	NOT
3	31N1-40970				GASKET	1			
4	P950-167349				HOSE ASSY-ORFSXFLG	4	- #0037		
	P980-167351				HOSE ASSY-ORFSXFLG 0X90	4	#0038 -	B	
5	P920-082050				HOSE ASSY-ORFS 0X45	2			
6	P410-042058				HOSE ASSY-COMP 0X45	2	- #0215		
	X410-042058				HOSE ASSY-SYNFLEX,ORFS	2	#0216 -	D	
7	P101-104045				CONNECTOR-LONG	2	- #0215		
	X511-104515				CONNECTOR-LONG,ORFS	2	#0216 -	D	
8	X500-110003				CONNECTOR-ORFS	2			
9	X500-110005				CONNECTOR-ORFS	4			
10	P310-060404				TEE-BRANCH TYPE	1	- #0215		
	X810-065151				TEE-B/TYPE,ORFS	1	#0216 -	D	
11	X810-085353				TEE-B/TYPE,ORFS	1			
12	P173-160104				FLANGE-SPLIT	8			
13	Y171-024001				O-RING	4			
14	S017-240702				BOLT-HEX	36			
15	S037-123022				BOLT-W/WASHER	4			
16	S109-100306				BOLT-SOCKET	16			
17	S441-240002				WASHER-HARDENED	36			
18	S551-050203				CLAMP-BAND	15			
19	S621-014001				O-RING	4			
20	S621-021001				O-RING,ORFS	4			
21	S631-011001				O-RING	2			
22	S631-014001				O-RING	1			

Item	Part_No	IS	Ord	T	Description	Qty	Serial_No	ITC	Remark
23	S631-018001				O-RING	3			
24	S631-029001				O-RING	4			
25	S760-102200				GROMMET	2			
26	S760-151224				GROMMET	2			
27	S621-011001				O-RING,ORFS	4	#0216 -	-	

TRAVEL HYDRAULIC PIPING(#0456-)

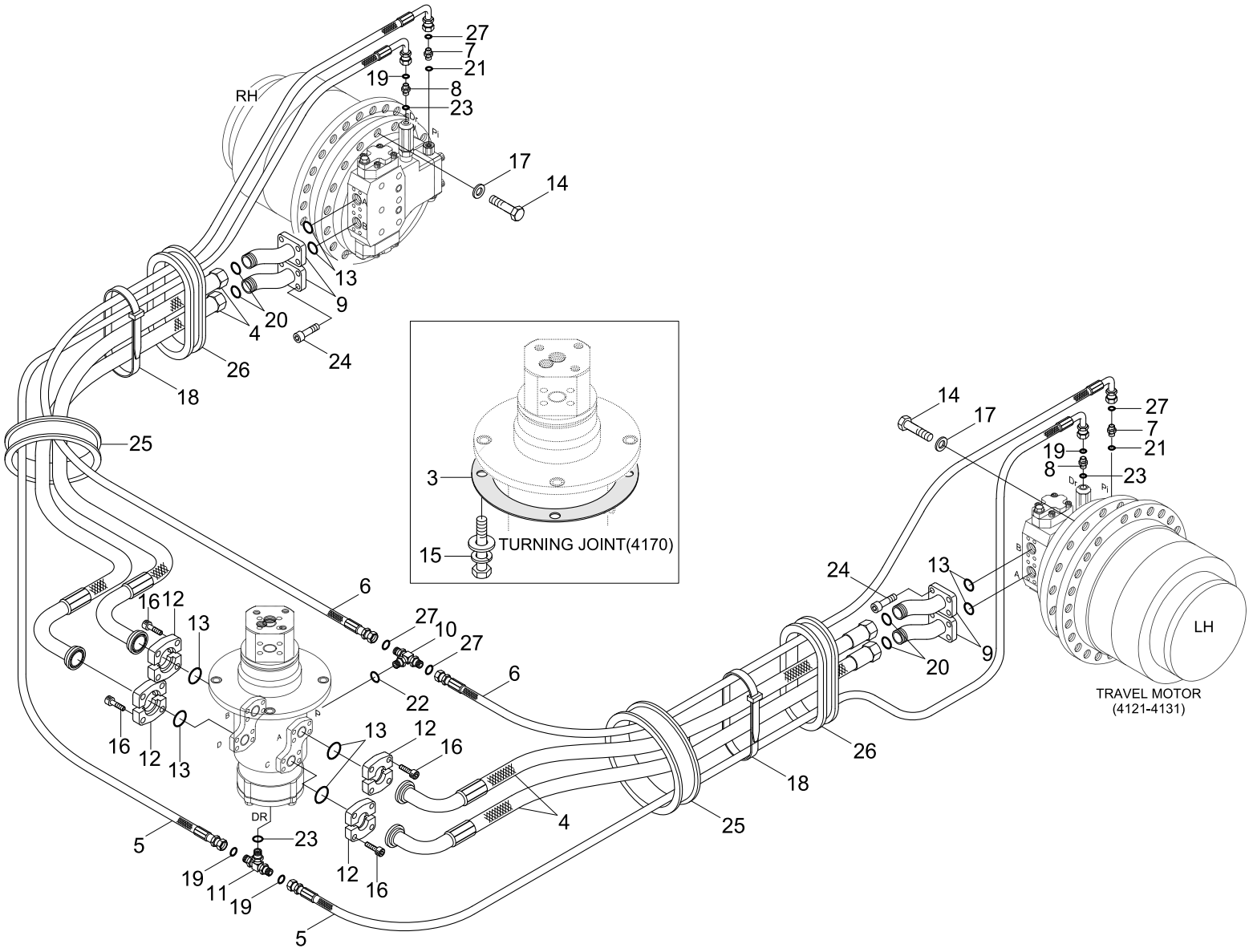

Item	Part_No	IS	Ord	T	Description	Qty	Serial_No	ITC	Remark
*	@				TRAVEL HYD PIPING	1	#0456 -	D	NOT
3	31N1-40970				GASKET	1			
4	P980-167346				HOSE ASSY-ORFSXFLG 0X90	4	- #0818		
	P950-167344				HOSE ASSY-ORFSXFLG	4	#0819 -	B	
5	P930-082052				HOSE ASSY-ORFS 0X90	2			
6	X410-042058				HOSE ASSY-SYNFLEX,ORFS	2			
7	X511-104513				CONNECTOR-ORFS	2			
8	31N8-40190				CONNECTOR-ORFS.LONG	2			
9	32E9-00801				FLANGE WA	4			
10	X810-065151				TEE-B/TYPE,ORFS	1			
11	X810-085353				TEE-B/TYPE,ORFS	1			
12	P173-160104				FLANGE-SPLIT	8			
13	Y171-024004				O-RING	8			
14	S017-24065D				BOLT-HEX	36			
15	S037-123526				BOLT-W/WASHER	4			
16	S109-100306				BOLT-SOCKET	16			
17	S441-240006				WASHER-HARDENED	36			
18	S551-050203				CLAMP-BAND	15			
19	S621-014001				O-RING,ORFS	4			
20	S621-021001				O-RING,ORFS	4			
21	S631-011004				O-RING	2			
22	S631-014004				O-RING	1			
23	S631-018004				O-RING	3			
24	S109-120356				BOLT-SOCKET	16			
25	S760-102200				GROMMET	2			

Item	Part_No	IS	Ord	T	Description	Qty	Serial_No	ITC	Remark
26	S760-151224				GROMMET	2			
27	S621-011001				O-RING,ORFS	4			

TRAVEL HYD PIPING(HIGH WALKER,-#0455)

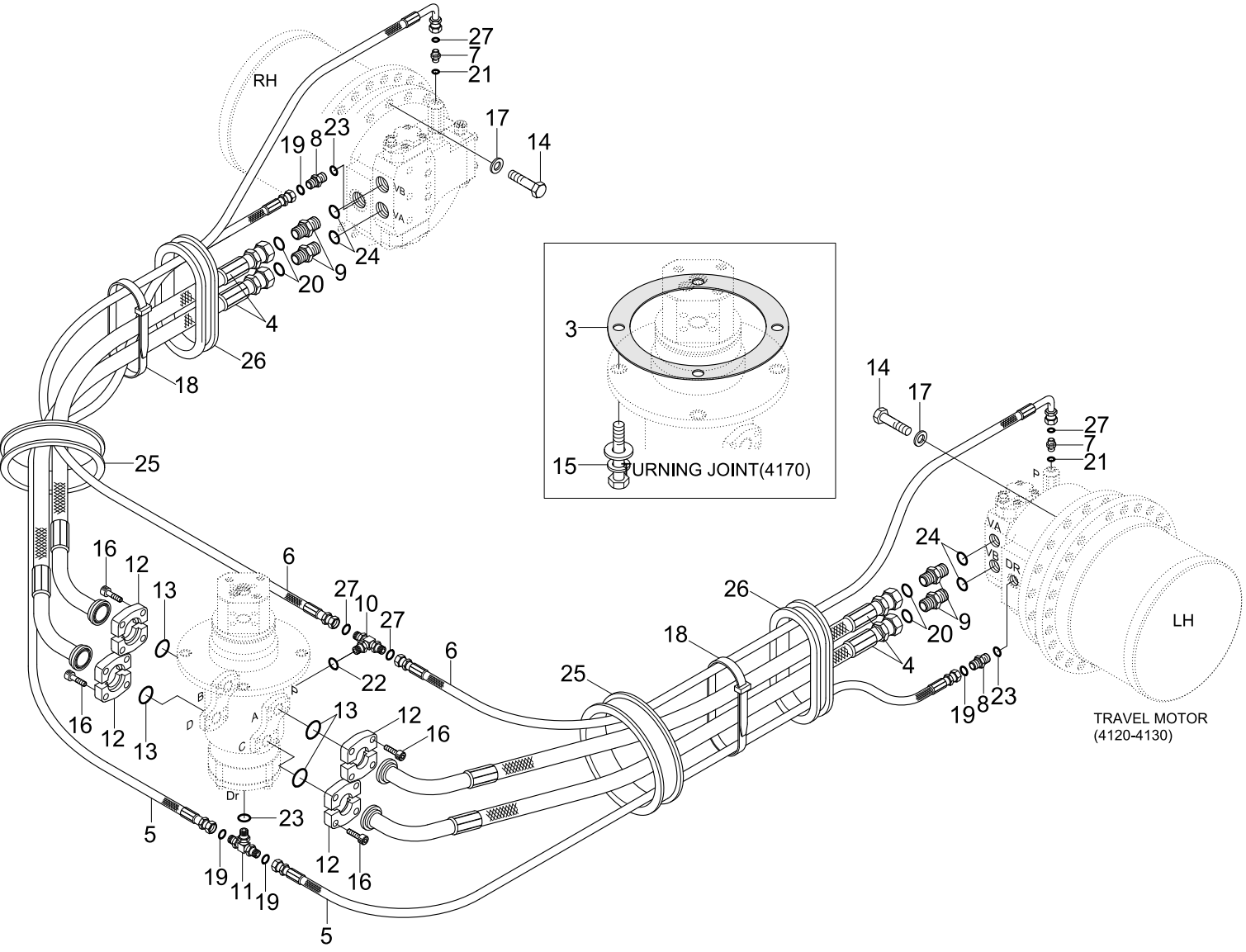

Item	Part_No	IS	Ord	T	Description	Qty	Serial_No	ITC	Remark
*	@				LOWER PIPING-H/WALKER		#0008 - #0455	-	NOT
3	31N1-40970				GASKET	1			
4	P950-167353FL				HOSE ASSY-ORFSXFLG	4	- #0037		
	P980-167355				HOSE ASSY-ORFSXFLG 0X90	4	#0038 -	B	
5	P920-082054				HOSE ASSY-ORFS 0X45	2			
6	P410-042062				HOSE ASSY-COMP 0X45	2	- #0215		
	X410-042062				HOSE ASSY-SYNFLEX,ORFS	2	#0216 -	D	
7	P101-104045				CONNECTOR-LONG	2	- #0215		
	X511-104515				CONNECTOR-LONG,ORFS	2	#0216 -	D	
8	X500-110003				CONNECTOR-ORFS	2			
9	X500-110005				CONNECTOR-ORFS	4			
10	P310-060404				TEE-BRANCH TYPE	1	- #0215		
	X810-065151				TEE-B/TYPE,ORFS	1	#0216 -	D	
11	X810-085353				TEE-B/TYPE,ORFS	1			
12	P173-160104				FLANGE-SPLIT	8			
13	Y171-024004				O-RING	4			
14	S017-24065A				BOLT-HEX	36			
15	S037-123522				BOLT-W/WASHER	4			
16	S109-100306				BOLT-SOCKET	16			
17	S441-240002				WASHER-HARDENED	36			
18	S551-050203				CLAMP-BAND	15			
19	S621-014001				O-RING	4			
20	S621-021001				O-RING,ORFS	4			
21	S631-011004				O-RING	2			
22	S631-014004				O-RING	1			

Item	Part_No	IS	Ord	T	Description	Qty	Serial_No	ITC	Remark
23	S631-018004				O-RING	3			
24	S631-029004				O-RING	4			
25	S760-102200				GROMMET	2			
26	S760-151224				GROMMET	2			
27	S621-011001				O-RING,ORFS	4	#0216 -	-	

TRAVEL HYD PIPING(HIGH WALKER,#0456-)

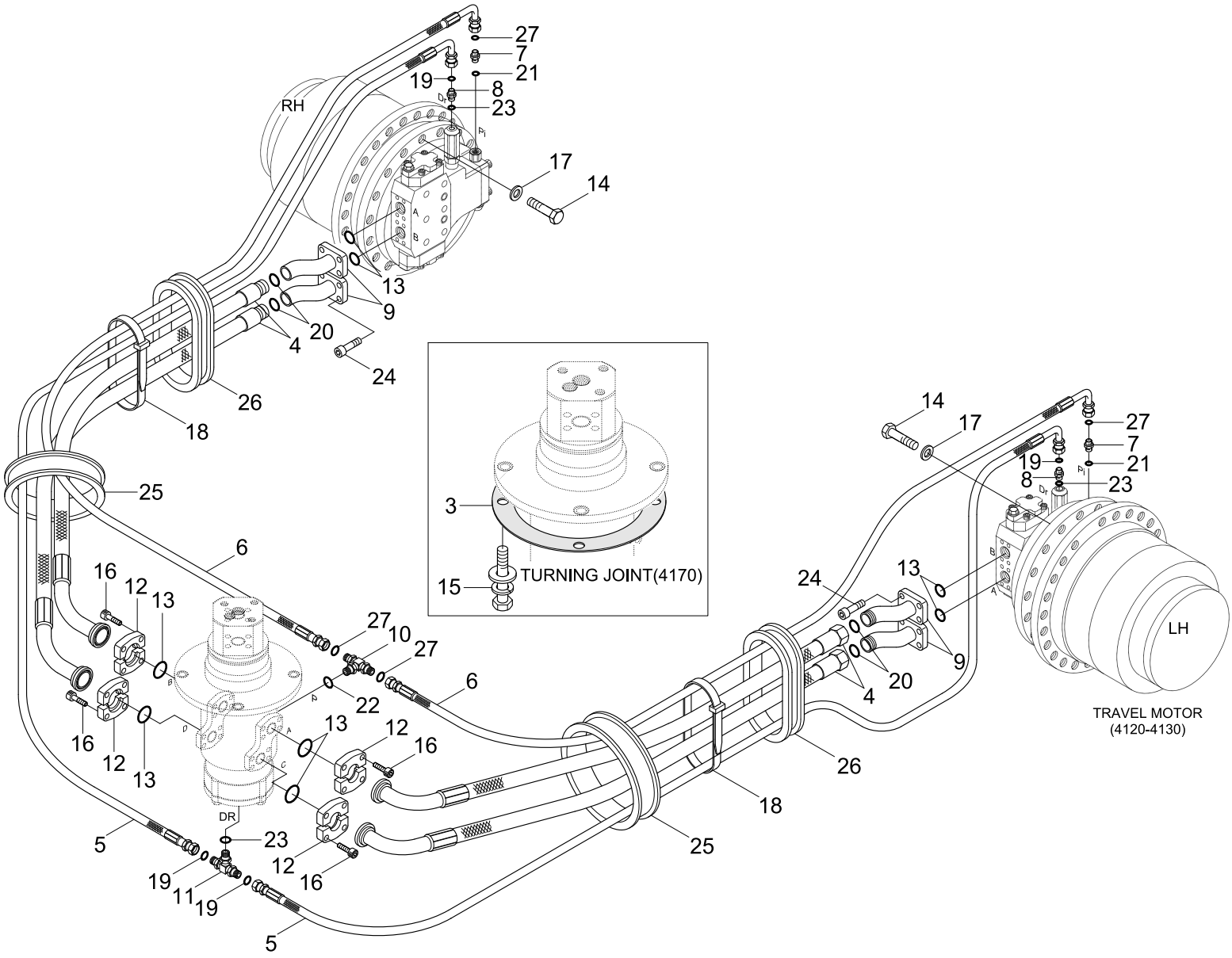

Item	Part_No	IS	Ord	T	Description	Qty	Serial_No	ITC	Remark
*	@				TRAVEL HYD PIPING	1	#0456 -	D	NOT
3	31N1-40970				GASKET	1			
4	P950-167348FL				HOSE ASSY-ORFSXFLG	4			
5	P930-082056				HOSE ASSY-ORFS 0X90	2			
6	X410-042062				HOSE ASSY-SYNFLEX,ORFS	2			
7	X511-104513				CONNECTOR-ORFS	2			
8	X511-108534				CONNECTOR-LONG,ORFS	2			
9	32E9-00801				FLANGE WA	4			
10	X810-065151				TEE-B/TYPE,ORFS	1			
11	X810-085353				TEE-B/TYPE,ORFS	1			
12	P173-160104				FLANGE-SPLIT	8			
13	Y171-024004				O-RING	8			
14	S017-24065A				BOLT-HEX	36			
15	S037-123522				BOLT-W/WASHER	4			
16	S109-100306				BOLT-SOCKET	16			
17	S441-240002				WASHER-HARDENED	36			
18	S551-050203				CLAMP-BAND	5			
19	S621-014001				O-RING	4			
20	S621-021001				O-RING,ORFS	4			
21	S631-011004				O-RING	2			
22	S631-014004				O-RING	1			
23	S631-018004				O-RING	3			
24	S109-120356				BOLT-SOCKET	16			
25	S760-102200				GROMMET	2			
26	S760-151224				GROMMET	2			

Item	Part_No	IS	Ord	T	Description	Qty	Serial_No	ITC	Remark
27	S621-011001				O-RING,ORFS	4			

BOOM HYD PIPING(6.45M, STD, -#1215)

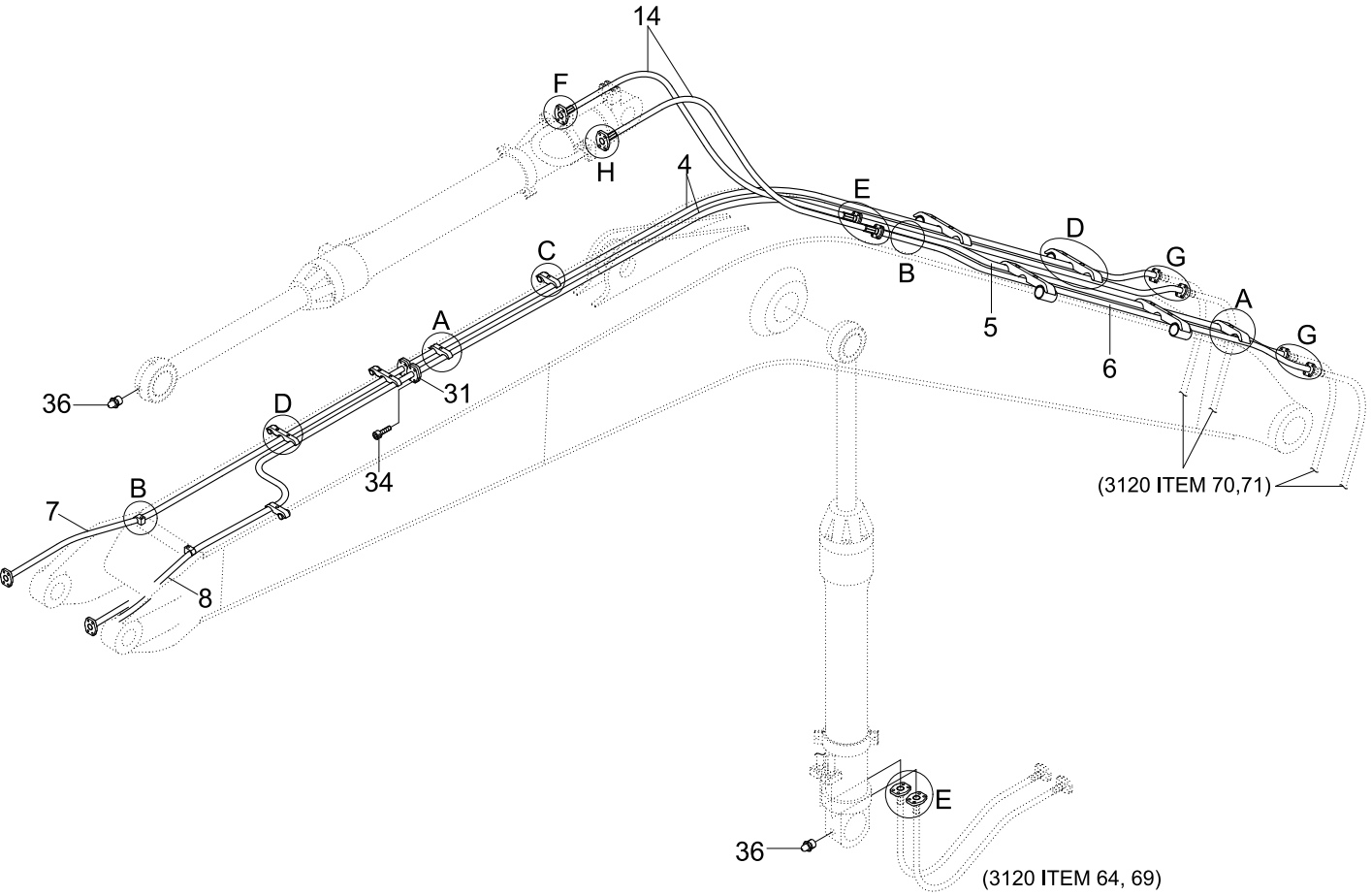

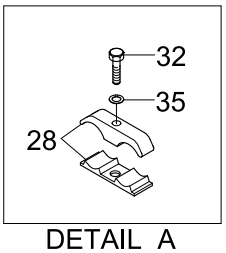

DETAIL A

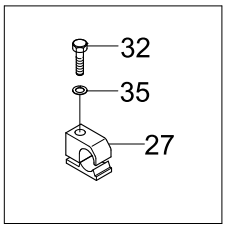

DETAIL B

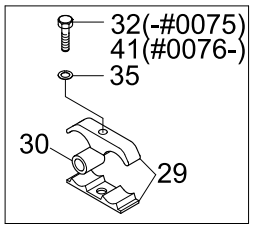

DETAIL C

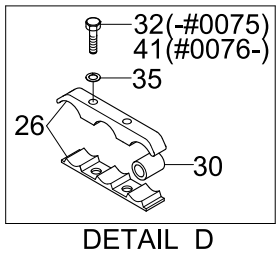

DETAIL D

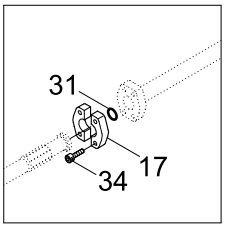

DETAIL E

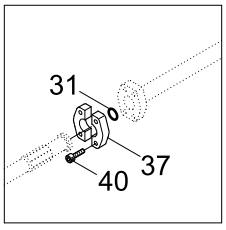

DETAIL F

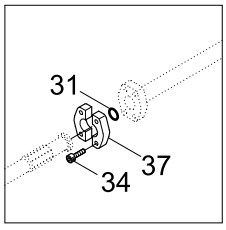

DETAIL G

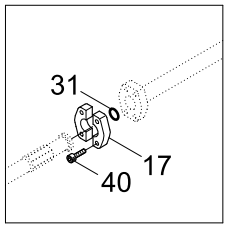

DETAIL H

Item	Part_No	IS	Ord	T	Description	Qty	Serial_No	ITC	Remark
*	@				BOOM HYD PIPING-STD	1			NOT
4	31N9-50220				PIPE ASSY	2			
5	31N9-50240				PIPE ASSY	1			
6	31N9-50230				PIPE ASSY	1			
7	31N9-50211				PIPE ASSY	1			
8	31N9-50191				PIPE ASSY	1			
14	P680-167322				HOSE ASSY-FLG 0X0	2			
17	P173-160104				FLANGE-HYD,SPLIT	24			
26	31N6-50340				CLAMP ASSY	6			
27	31N6-50300				CLAMP ASSY	4			
28	31N6-50310				CLAMP ASSY	3			
29	31N6-50320				CLAMP ASSY	1			
30	31N5-50240				SPACER-PIPE	7	#0001 -	-	
31	Y171-024004				O-RING	16			
32	S017-160752				BOLT-HEX	20	- #0075		
					BOLT-HEX	5	#0076 -	A	
34	S109-100356				BOLT-SOCKET	56			
35	S411-160002				WASHER-SPRING	20			
36	S651-810002				NIPPLE-GREASE	2			
37	31E9-01320				FLANGE-SPLIT	3			
40	S109-100406				BOLT-SOCKET	8			
41	S017-16080A				BOLT-HEX	15	#0076 -	B	

BOOM HYD PIPING(6.45M, STD, #1216-)

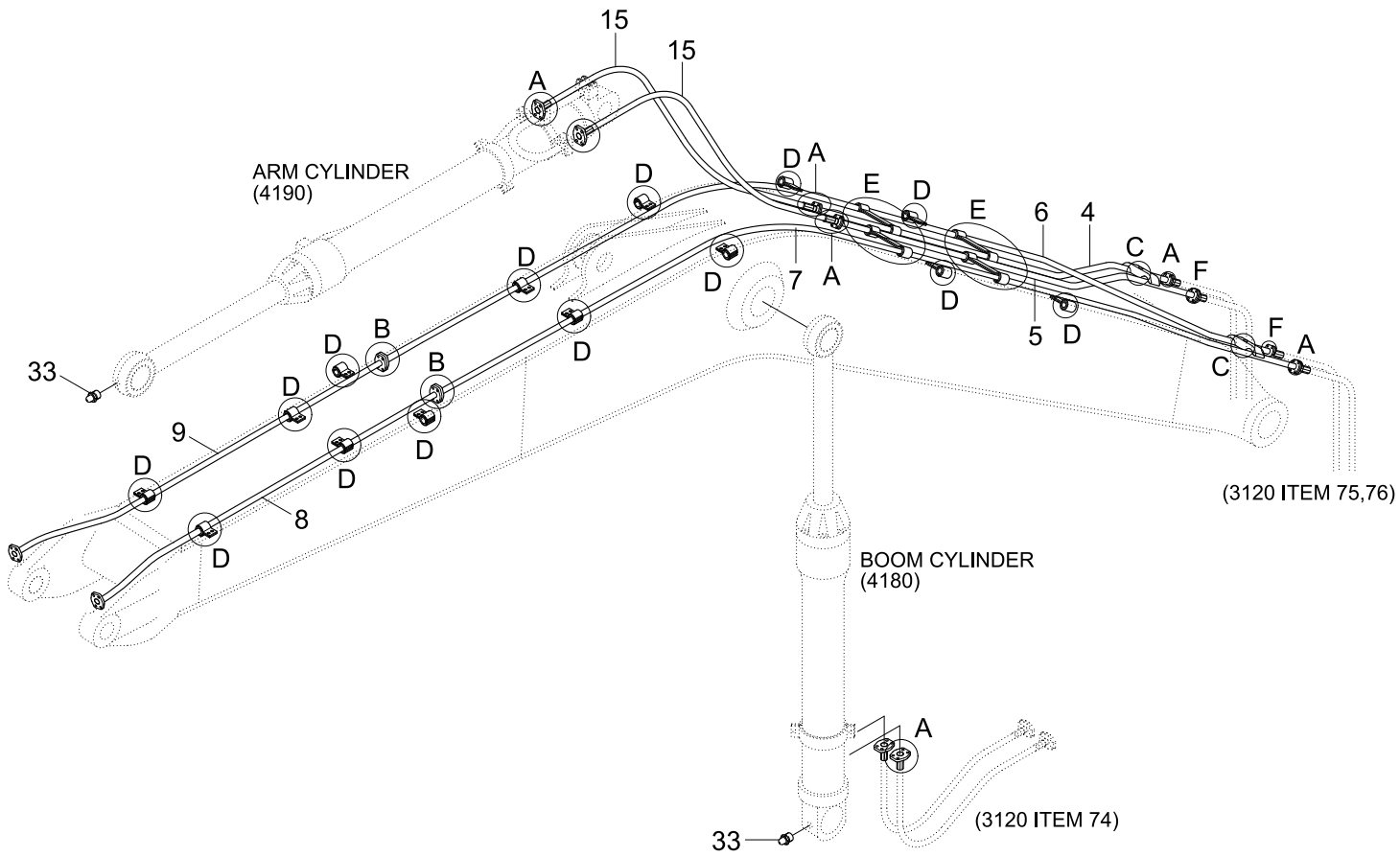

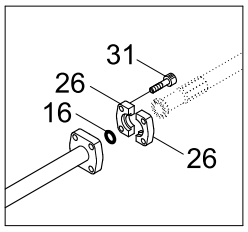

DETAIL A

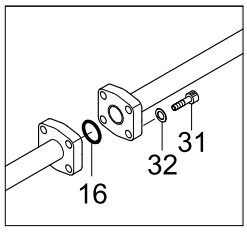

DETAIL B

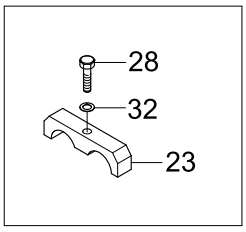

DETAIL C

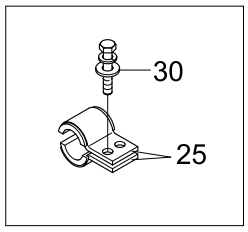

DETAIL D

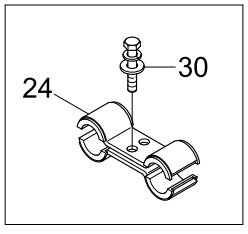

DETAIL E

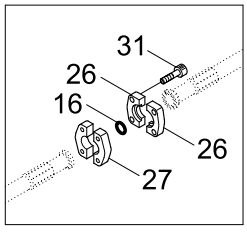

DETAIL F

Item	Part_No	IS	Ord	T	Description	Qty	Serial_No	ITC	Remark
*	@				BOOM HYD PIPING-STD	1	#1216 -	D	NOT
4	31N9-50310				PIPE ASSY	1	- #2402		
	31N9-53110				PIPE ASSY	1	#2403 -		
5	31N9-50320				PIPE ASSY	1	- #2402		
	31N9-53120				PIPE ASSY	1	#2403 -		
6	31N9-50330				PIPE ASSY	1	- #2402		MADE OF 2 PIPES
	31N9-53130				PIPE ASSY	1	#2403 -		
7	31N9-50340				PIPE ASSY	1	- #2402		
	31N9-53140				PIPE ASSY	1	#2403 -		
8	31N9-50350				PIPE ASSY	1	- #1740		
	31N9-50370				PIPE ASSY	1	#1741 -	D	
9	31N9-50360				PIPE ASSY	1	- #1740		
	31N9-50380				PIPE ASSY	1	#1741 -	D	
15	P680-167325				HOSE ASSY	2			
16	Y171-024004				O-RING	14			
23	31N8-51170				CLAMP ASSY	2			
24	31E7-01750				CLAMP ASSY	12			
25	31E7-01711				CLAMP ASSY	12			
26	P173-160104				FLANGE-HYD,SPLIT	22			
27	31E9-01320				FLANGE-SPLIT	2			
28	S017-16080D				BOLT-HEX	2			
30	S037-123526				BOLT-W/WASHER	24			
31	S109-100306				BOLT-SOCKET	56			
32	S441-160006				WASHER-HARDENED	2			
33	S651-810002				NIPPLE-GREASE	3			

BOOM HYDRAULIC PIPING(6.15M, #2403-)

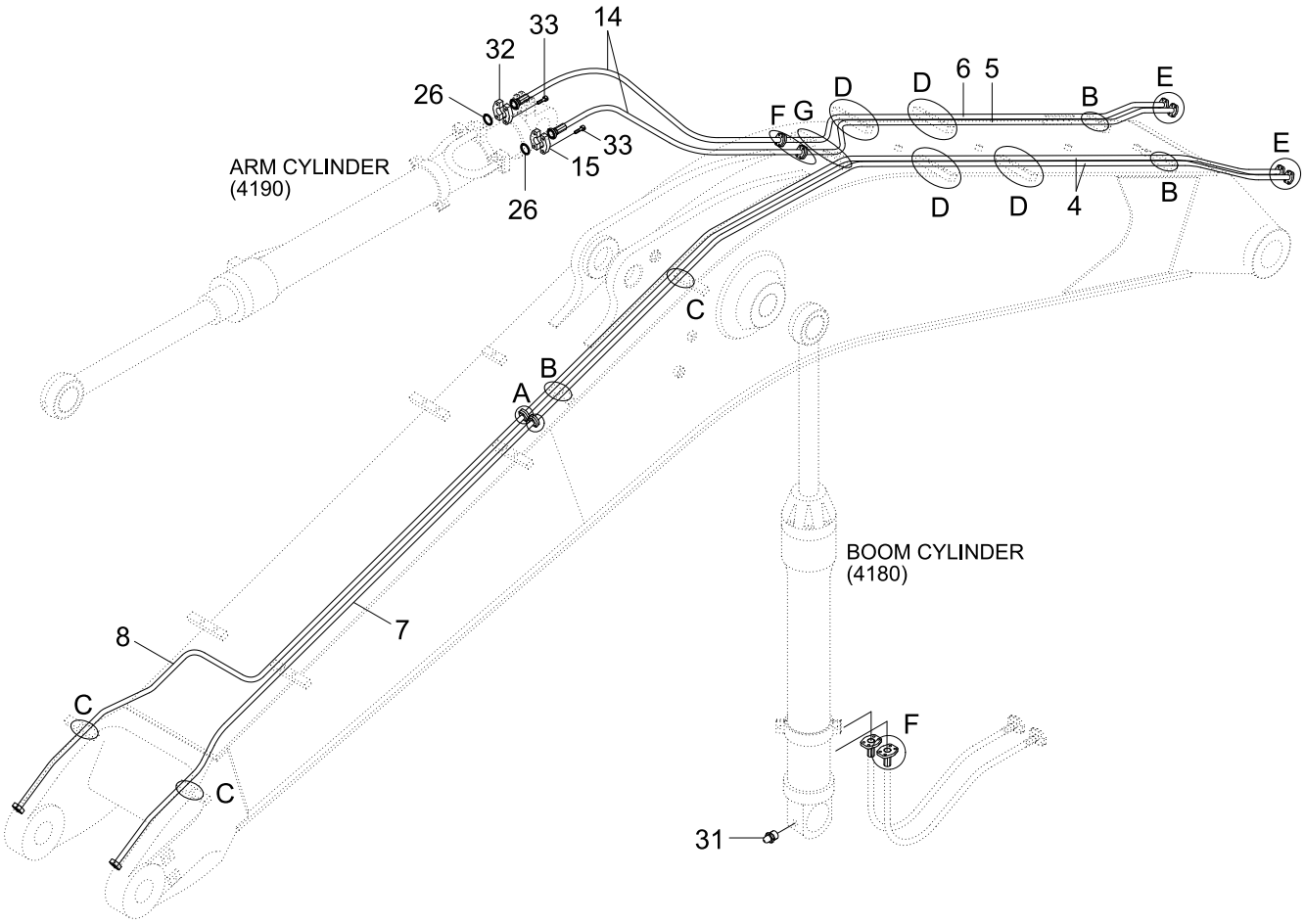

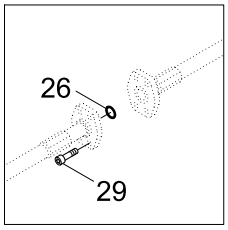

DETAIL A

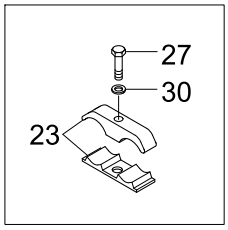

DETAIL B

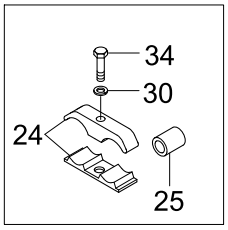

DETAIL C

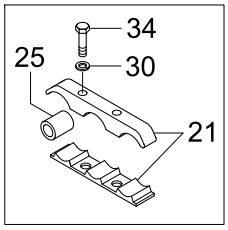

DETAIL D

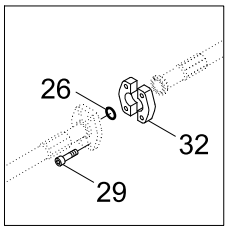

DETAIL E

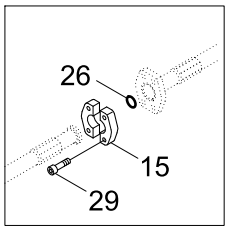

DETAIL F

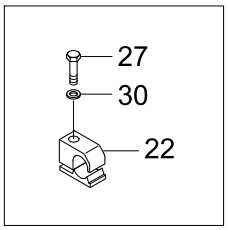

DETAIL G

Item	Part_No	IS	Ord	T	Description	Qty	Serial_No	ITC	Remark
*	@				BOOM HYD PIPING-STD	1	#2403 -		NOT
4	31N9-53310				PIPE ASSY	2			
5	31N9-53320				PIPE ASSY	1			
6	31N9-53330				PIPE ASSY	1			
7	31N9-53340				PIPE ASSY	1			
8	31N9-53350				PIPE ASSY	1			
14	P680-167322				HOSE ASSY-FLG 0X0	2			
15	P173-160104				FLANGE-HYD,SPLIT	14			
21	31N6-50340				CLAMP ASSY	6			
22	31N6-50300				CLAMP ASSY	2			
23	31N6-50310				CLAMP ASSY	3			
24	31N6-50320				CLAMP ASSY	3			
25	31N5-50240				SPACER-PIPE	9			
26	Y171-024004				O-RING	16			
27	S017-16075D				BOLT-HEX	5			
29	S109-100356				BOLT-SOCKET	48			
30	S411-160006				WASHER-SPRING	20			
31	S651-810002				NIPPLE-GREASE	2			
32	31E9-01320				FLANGE-SPLIT	10			
33	S109-100406				BOLT-SOCKET	8			
34	S017-16080D				BOLT-HEX	15			

BOOM GREASE LUB SYS(-#1216)

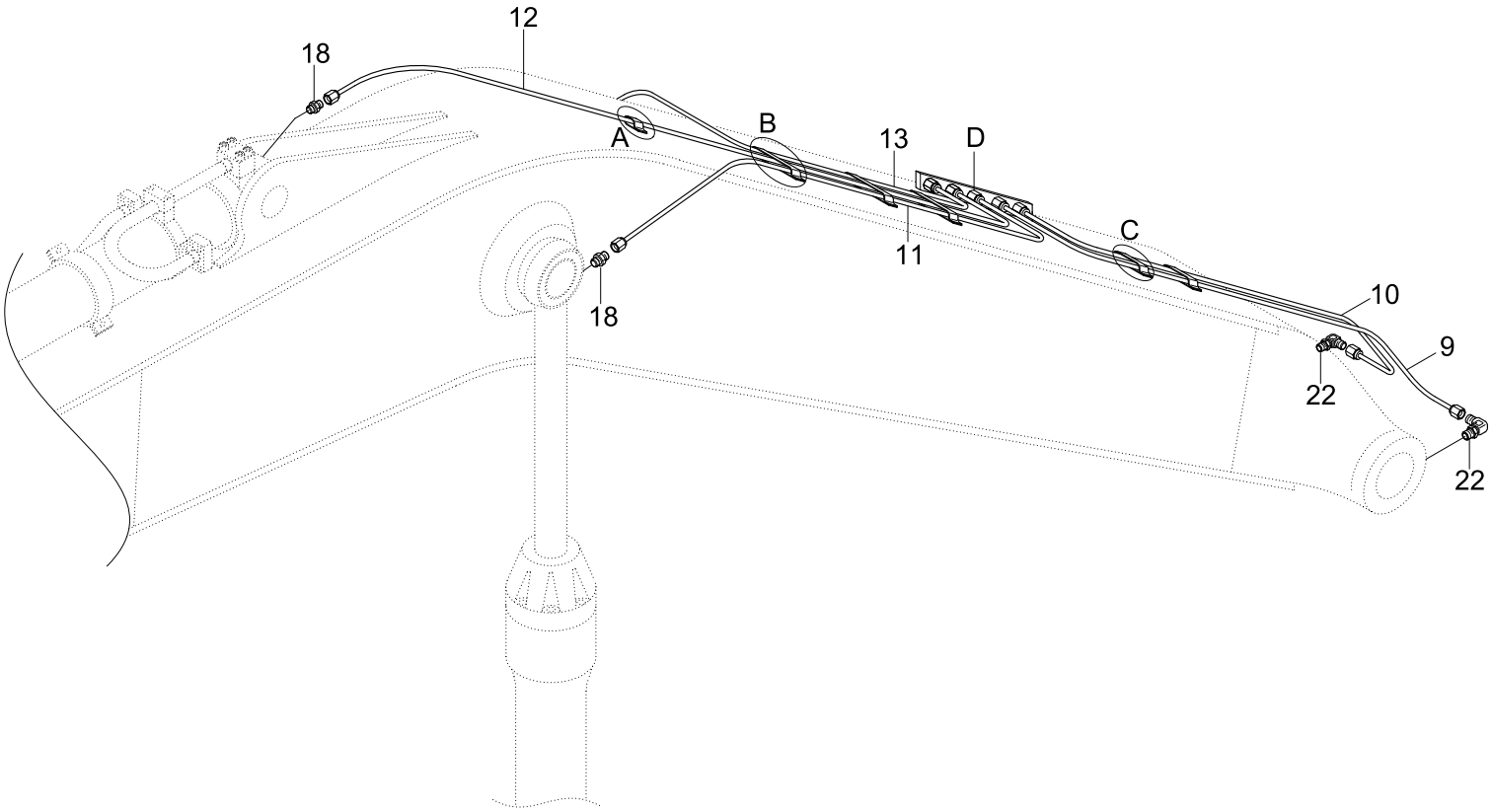

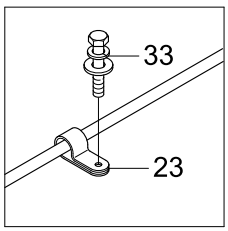

DETAIL A

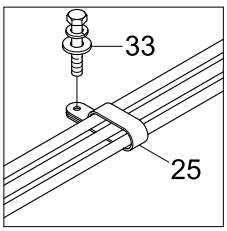

DETAIL B

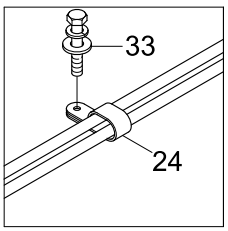

DETAIL C

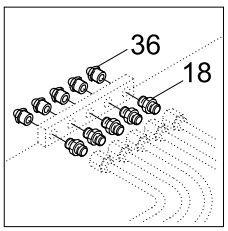

DETAIL D

Item	Part_No	IS	Ord	T	Description	Qty	Serial_No	ITC	Remark
*	@				BOOM HYD PIPING-STD	1	- #1215	-	NOT
9	P840-042024				HOSE ASSY-SYNF,THD(0X0)	1			
10	P840-042025				HOSE ASSY-SYNF,THD(0X0)	1			
11	P840-042049				HOSE ASSY-SYN THD	1			
12	P840-042065				HOSE ASSY-SYN THD	1			
	P840-042063				HOSE ASSY-SYN THD	1	#0791 -	B	
					HOSE ASSY-SYN THD	1			
13	P840-042051				HOSE ASSY-SYN THD	1			
18	P010-430011				CONNECTOR	8			
22	61E7-0059				ELBOW-90	2			
23	31N8-50370				CLAMP-HOSE	1			
24	31N8-50380				CLAMP-HOSE	2			
25	31N8-50390				CLAMP-HOSE	3			
33	S035-062022				BOLT-W/WASHER	6			
36	S651-810002				NIPPLE-GREASE	5			
24	31N8-50380				CLAMP-HOSE	2			
25	31N8-50390				CLAMP	3			
33	S035-062022				BOLT-W/WASHER	6			
36	S651-810002				NIPPLE-GREASE	5			

BOOM GREASE LUB SYSA(#1217-)

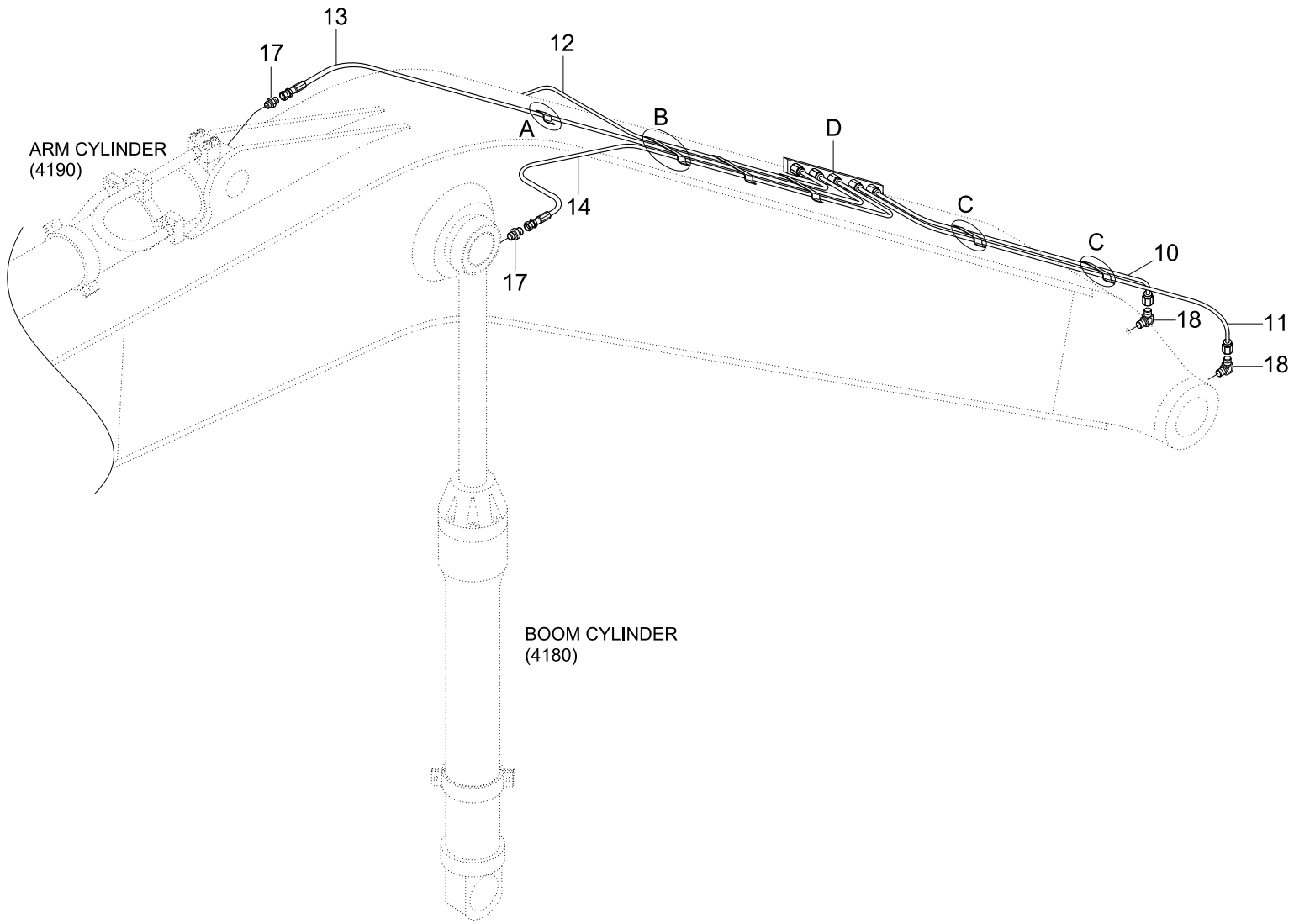

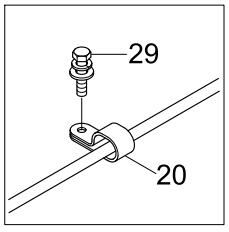

DETAIL A

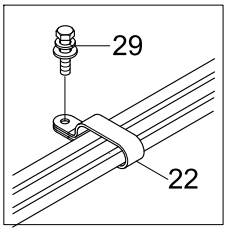

DETAIL B

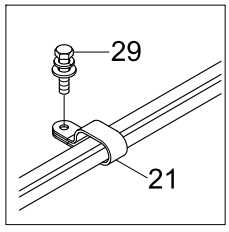

DETAIL C

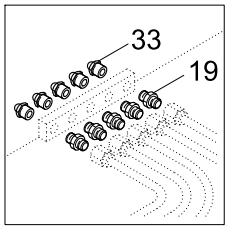

DETAIL D

Item	Part_No	IS	Ord	T	Description	Qty	Serial_No	ITC	Remark
*	@				BOOM HYD PIPING-STD	1	#1216 -	D	NOT
10	P840-042024				HOSE ASSY-SYN THD	1			
11	P840-042025				HOSE ASSY-SYN THD	1			
12	P840-042049				HOSE ASSY-SYN THD	1			
13	P840-042063				HOSE ASSY-SYN THD	1			
14	P840-042051				HOSE ASSY-SYN THD	1			
17	P010-430011				CONNECTOR	3			
18	31NB-50280				FITTING	2			
19	31W5-70060				CONNECTOR	5			
20	31N8-50370				CLAMP-HOSE	1			
21	31N8-50380				CLAMP-HOSE	2			
22	31N8-50390				CLAMP-HOSE	3			
29	S035-062026				BOLT-W/WASHER	6			
33	S651-810002				NIPPLE-GREASE	5			

BOOM GREASE LUB SYSTEM(6.15M, #2403-)

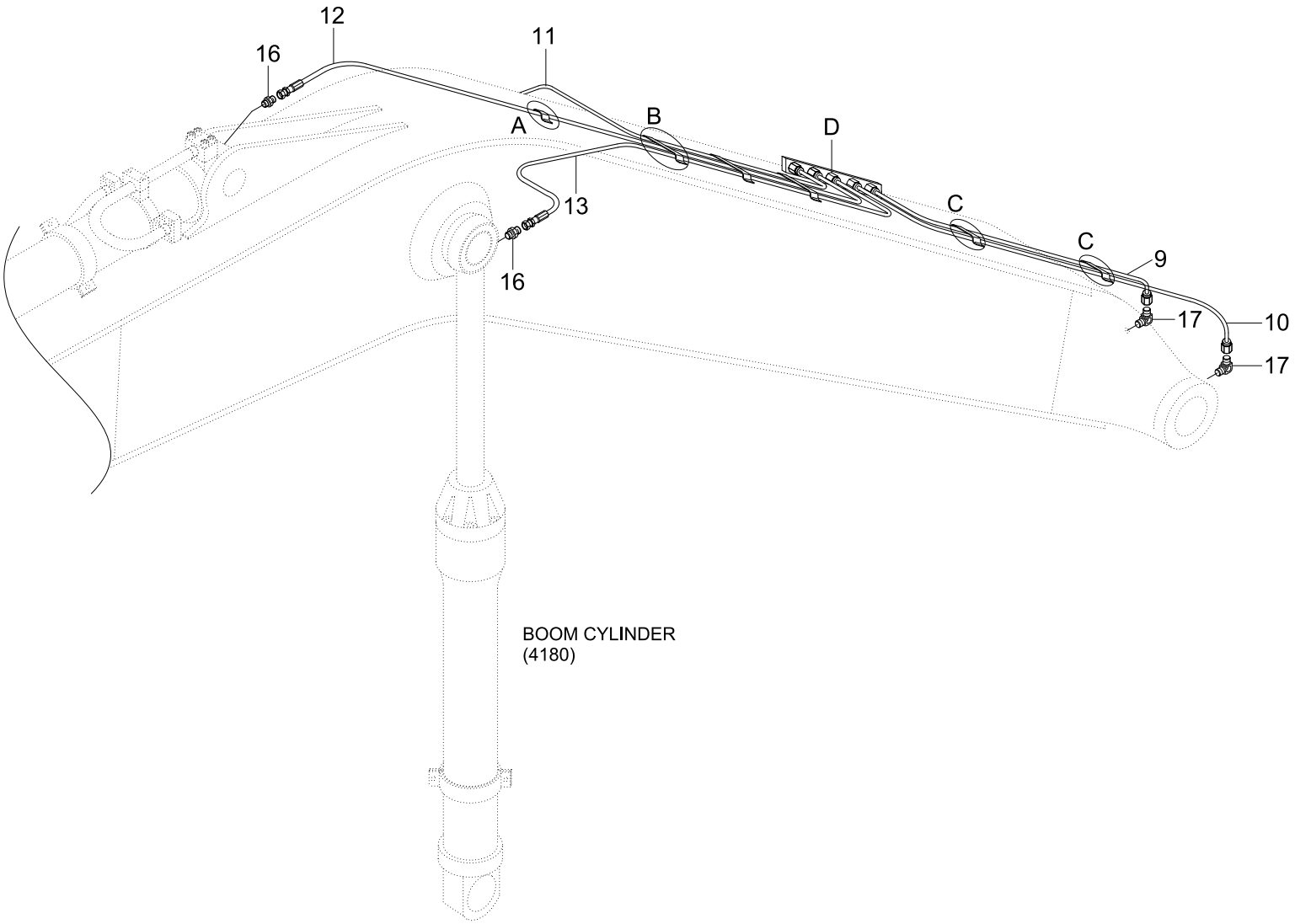

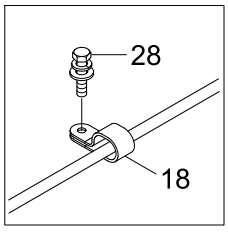

DETAIL A

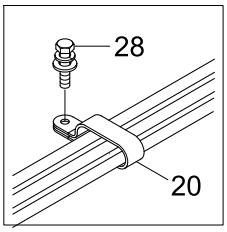

DETAIL B

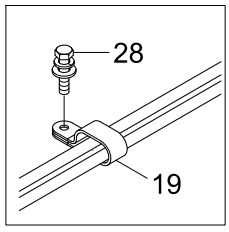

DETAIL C

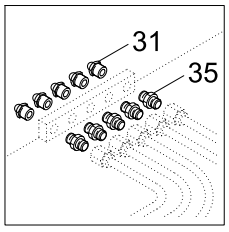

DETAIL D

Item	Part_No	IS	Ord	T	Description	Qty	Serial_No	ITC	Remark
*	@				BOOM HYD PIPING-STD	1	#2403 -		NOT
9	P840-042024				HOSE ASSY-SYN THD	1			
10	P840-042025				HOSE ASSY-SYN THD	1			
11	P840-042049				HOSE ASSY-SYN THD	1			
12	P840-042059				HOSE ASSY-SYN THD	1			
13	P840-042051				HOSE ASSY-SYN THD	1			
16	P010-430011				CONNECTOR	3			
17	31NB-50280				ELBOW-90	2			
18	31N8-50370				CLAMP-HOSE	1			
19	31N8-50380				CLAMP-HOSE	2			
20	31N8-50390				CLAMP-HOSE	3			
28	S035-062026				BOLT-W/WASHER	6			
31	S651-810002				NIPPLE-GREASE	5			
35	31W5-70060				CONNECTOR	5			

BOOM SAFETY LOCK SYSTEM

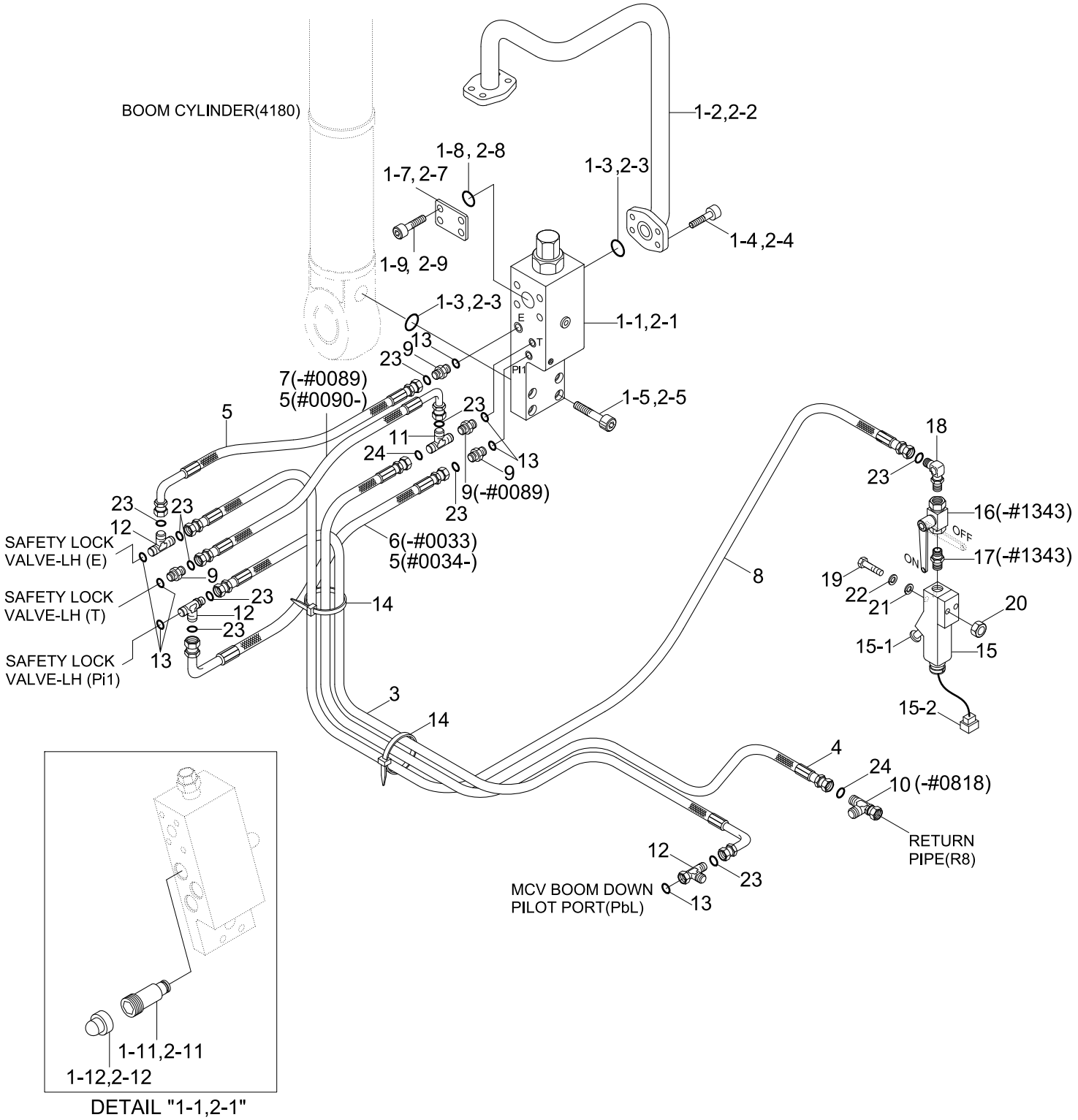

DETAIL "1-1,2-1"

Item	Part_No	IS	Ord	T	Description	Qty	Serial_No	ITC	Remark
1	31N9-52111				BOOM CYL-SAFETY,RH	1			
1-0	@				.BOON CYL SUB ASSY	1			NOT
1-1	31N8-90510				.SAFETY LOCK VALVE	1			
1-11	ZTAS-00001				..VALVE-RELIEF	1			
1-12	ZTAS-00002				..CAP	1			
1-13	31N8-91530				..FLANGE	1			
1-14	Y171-024004				..O-RING	1			
1-15	S109-120506				..BOLT-SOCKET	4			
1-16	ZTAS-00006				..SEAL KIT	1			
1-2	31Y1-21090				.PIPE ASSY-RH	1			
1-3	Y171-024004				.O-RING	2			
1-4	S109-120406				.BOLT-SOCKET	4			
1-5	S109-120506				.BOLT-SOCKET	4			
1-6	@				.BAND ASSY-RH	1			NOT
2	31N9-52121				BOOM CYL-SAFETY,LH	1			
1	31N9-52111				BOOM CYL ASSY -RH	1	- #1364		
	31N9-52112				BOOM CYL ASSY -RH	1	#1365 -	B	
1-0	@				.BOON CYL SUB ASSY	1			NOT
2-11	ZTAS-00001				..VALVE-RELIEF	1			
2-12	ZTAS-00002				..CAP	1			
2-13	31N8-91530				..FLANGE	1			
2-14	Y171-024004				..O-RING	1			
2-15	S109-120506				..BOLT-SOCKET	4			
2-16	ZTAS-00006				..SEAL KIT	1			
1-1	31N8-90510				.VALVE-SAFETY LOCK	1	- #1122		

Item	Part_No	IS	Ord	T	Description	Qty	Serial_No	ITC	Remark
1-1	31NA-90570				.VALVE-SAFETY LOCK	1	#1123 -	B	
1-11	ZTAS-00001				..VALVE-RELIEF	1	- #1122		
	DRV-100A				..VALVE-RELIEF	1	#1123 -	B	
1-12	ZTAS-00002				..CAP	1	- #1122		
	DCP-002A				..CAP	1	#1123 -	B	
1-13	ZTAS-00006				..SEAL KIT	1	- #1122		
	AS568-2				..SEAL KIT	1	#1123 -	B	
1-2	31Y1-21090				.PIPE ASSY-RH	1			
2-6	@				.BAND ASSY-LH	1			NOT
1-3	Y171-024004				.O-RING	2			
3	P930-042056				HOSE ASSY-ORFS 0X90	1	#0216 -	D	
1-4	S109-120406				.BOLT-SOCKET	4			
4	P930-062063				HOSE ASSY-ORFS 0X90	1	#0216 -	D	
1-5	S109-120506				.BOLT-SOCKET	4			
5	P620-047013				HOSE ASSY-THD 0X90	2	#0034 - #0089	A	
					HOSE ASSY-THD 0X90	3	#0090 - #0215	A	
	P930-047013				HOSE ASSY-ORFS 0X90	3	#0216 -	D	
1-6	@				.BAND ASSY-RH	1			NOT
1-7	31N8-91530				..FLANGE-PLUGING	1			
1-8	Y171-024004				..O-RING	1			
8	P913-047042				HOSE ASSY-ORFS 0X0	1	#0216 -	D	
1-9	S109-120506				..BOLT-SOCKET	4			
9	P010-110002				CONNECTOR	3	#0090 - #0215	A	
	X500-110001				CONNECTOR-ORFS	3	#0216 -	D	
10	31EG-90540				TEE-R/TYPE,S/NUT	1	- #0215		

Item	Part_No	IS	Ord	T	Description	Qty	Serial_No	ITC	Remark
10	X840-525252				TEE-R/TYPE,ORFS	1	#0216 - #0818	-	
11	31EK-20270				TEE-R/TYPE,S/NUT	1	- #0089		
	31E6-90680				TEE	1	#0090 - #0215	A	
	31N9-90550				TEE-R/TYPE,ORFS	1	#0216 -	D	
12	P320-040404				TEE-RUN TYPE	3	- #0215		
	X820-045151				TEE-R/TYPE,ORFS	3	#0216 -	D	
13	S631-011004				O-RING	7			
14	S552-020102				CLAMP-BAND	10			
15	31E5-50325				SWITCH-PRESSURE	1			OVERLOAD WARN
15-1	31E5-50320				.SWITCH-PRESSURE	1			
15-2	21E5-50230				.HARNESS-EXT	1			
16	31E5-50330				VALVE-SHUT OFF	1			
17	31E5-50340				CONNECTOR	1			
18	31E5-50350				ELBOW-90	1	- #0215		
	31N6-90550				ELBOW-90,ORFS	1	#0216 -	D	
19	S015-050452				BOLT-HEX	2			
20	S205-051002				NUT-HEX	2			
21	S403-051002				WASHER-PLAIN	2			
22	S411-050002				WASHER-SPRING	2			
23	S621-011001				O-RING,ORFS	10	#0216 -	-	
24	S621-012001				O-RING,ORFS	2	#0216 -	-	
2	31N9-52121				BOOM CYL ASSY -LH	1	- #1364		
	31N9-52122				BOOM CYL ASSY -LH	1	#1365 -	B	
2-0	@				.BOON CYL SUB ASSY	1			NOT
2-1	31N8-90510				.VALVE-SAFETY LOCK	1	- #1122		

Item	Part_No	IS	Ord	T	Description	Qty	Serial_No	ITC	Remark
2-1	31NA-90570				.VALVE-SAFETY LOCK	1	#1123 -	B	
2-11	ZTAS-00001				..VALVE-RELIEF	1	- #1122		
	DRV-100A				..VALVE-RELIEF	1	#1123 -	B	
2-12	ZTAS-00002				..CAP	1	- #1122		
	DCP-002A				..CAP	1	#1123 -	B	
2-13	ZTAS-00006				..SEAL KIT	1	- #1122		
	AS568-2				..SEAL KIT	1	#1123 -	B	
2-2	31Y1-21080				.PIPE ASSY-LH	1			
2-3	Y171-024004				.O-RING	2			
2-4	S109-120406				.BOLT-SOCKET	4			
2-5	S109-120506				.BOLT-SOCKET	4			
2-6	@				.BAND ASSY-LH	1			NOT
2-7	31N8-91530				..FLANGE-PLUGING	1			
2-8	Y171-024004				..O-RING	1			
2-9	S109-120506				..BOLT-SOCKET	4			
3	P860-042056				HOSE ASSY-SYN 0X90	1	#0001 - #0215	-	
	P930-042056				HOSE ASSY-ORFS 0X90	1	#0216 -	D	
4	P860-062063				HOSE ASSY-SYN 0X90	1	#0001 - #0215	-	
	P930-062063				HOSE ASSY-ORFS 0X90	1	#0216 -	D	
5	P620-047013				HOSE ASSY-THD 0X90	1	- #0033		
					HOSE ASSY-THD 0X90	2	#0034 - #0089	A	
					HOSE ASSY-THD 0X90	3	#0090 - #0215	A	
	P930-047013				HOSE ASSY-THD 0X90	3	#0216 -	D	
6	P420-042013				HOSE ASSY-COMP 0X90	1	- #0033	-	
7	P400-042012				HOSE ASSY-COMPACT	1	- #0089	-	

Item	Part_No	IS	Ord	T	Description	Qty	Serial_No	ITC	Remark
8	P603-047042				HOSE ASSY-THD	1	- #0215		
	P913-047042				HOSE ASSY-THD	1	#0216 - #1343	D	
	P913-047040				HOSE ASSY-ORFS 0X0	1	#1344 -	D	
9	P010-110002				CONNECTOR	4	- #0089		
					CONNECTOR	3	#0090 - #0215	A	
	X500-110001				CONNECTOR-ORFS	3	#0216 -	D	
10	31EG-90540				TEE-R/TYPE,S/NUT	1	- #0215		
	X840-525252				TEE-R/TYPE,SWIVEL,ORFS	1	#0216 - #0818	-	
11	31EK-20270				TEE-R/TYPE,S/NUT	1	- #0089		
	31E6-90680				TEE	1	#0090 - #0215	A	
	31N9-90550				TEE-R/TYPE,ORFS	1	#0216 -	D	
12	P320-040404				TEE-RUN TYPE	3	- #0215		
	X820-045151				TEE-R/TYPE,ORFS	3	#0216 -	D	
13	S631-011004				O-RING	7			
14	S552-020102				CLAMP-BAND	10			
15	31E5-50325				SWITCH-PRESSURE	1			OVERLOAD WARN
15-1	31E5-50320				.SWITCH-PRESSURE	1			
15-2	21E5-50230				.HARNESS-EXT	1			
16	31E5-50330				VALVE-SHUT OFF	1	- #1343	-	
17	31E5-50340				CONNECTOR	1	- #1343	-	
18	31E5-50350				ELBOW-90	1	- #0215		
	31N6-90550				ELBOW-90,ORFS	1	#0216 -	D	
19	S015-050456				BOLT-HEX	2	- #1342		
	S015-050506				BOLT-HEX	2	#1343 -	D	
20	S205-05100B				NUT-HEX	2			

Item	Part_No	IS	Ord	T	Description	Qty	Serial_No	ITC	Remark
21	S403-05100B				WASHER-PLAIN	2			
22	S411-050006				WASHER-SPRING	2			
23	S621-011001				O-RING	10	#0216 -	-	
24	S621-012001				O-RING(SEAL LOCK TYPE)	2	#0216 -	-	

BOOM HYDRAULIC PIPING(6.15M, #0013-)

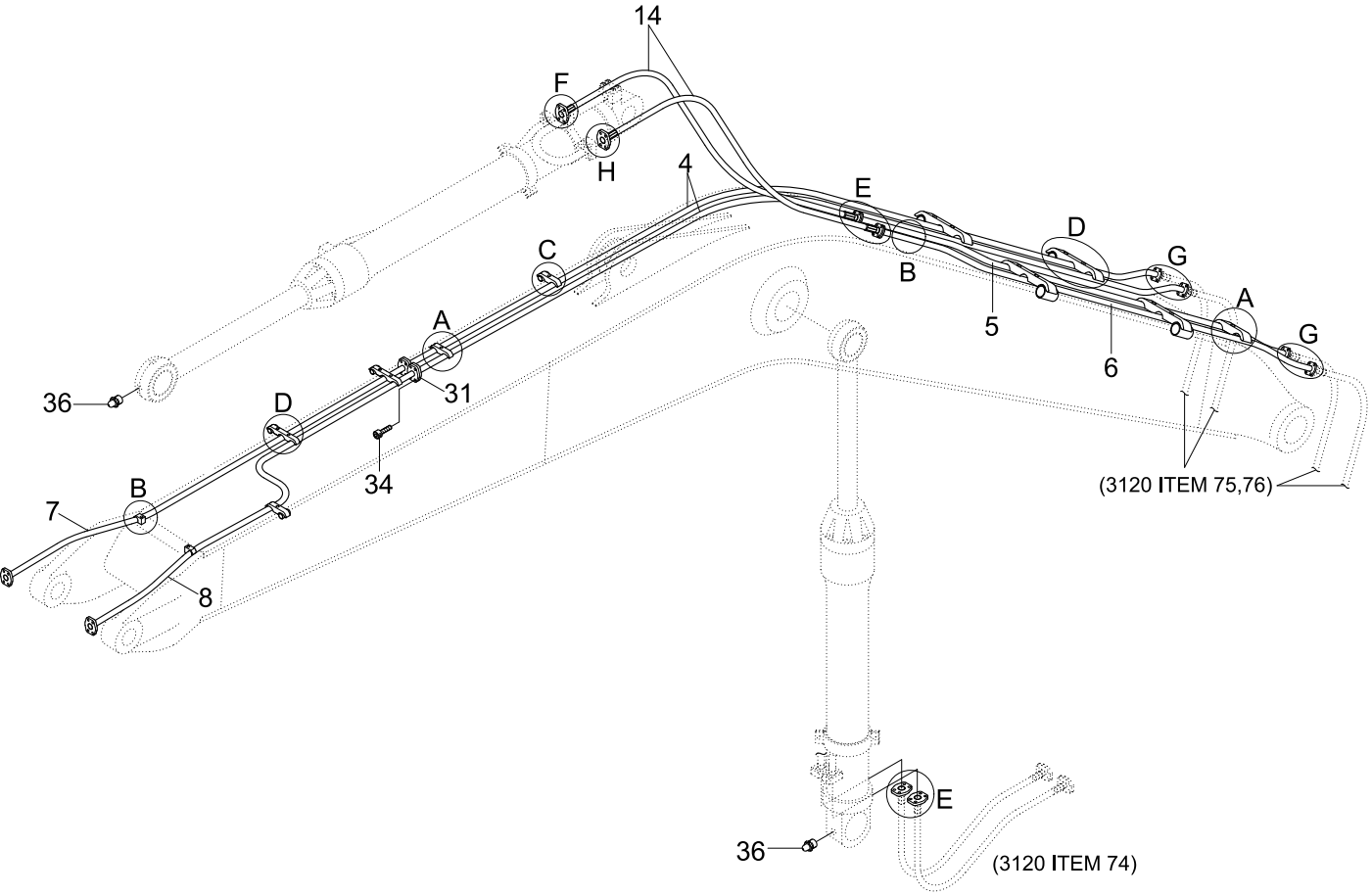

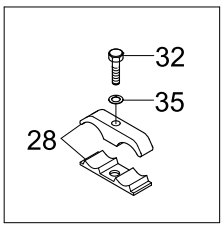

DETAIL A

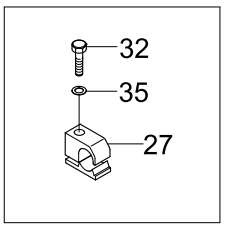

DETAIL B

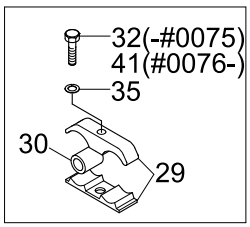

DETAIL C

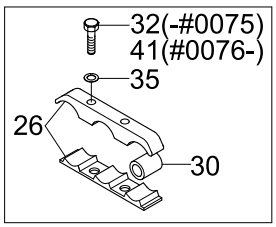

DETAIL D

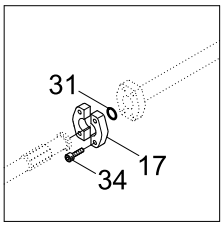

DETAIL E

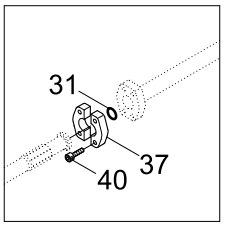

DETAIL F

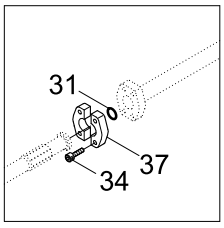

DETAIL G

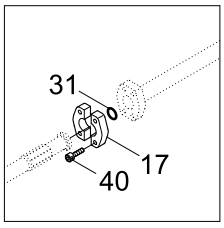

DETAIL H

Item	Part_No	IS	Ord	T	Description	Qty	Serial_No	ITC	Remark
*	@				BOOM HYD PIPING		#0013 -	-	NOT
4	31N9-50250				.PIPE ASSY	2			
5	31N9-50260				.PIPE ASSY	1			
6	31N9-50270				.PIPE ASSY	1			
7	31N9-50211				.PIPE ASSY	1			
8	31N9-50191				.PIPE ASSY	1			
14	P680-167322				.HOSE ASSY-FLG	2			
17	P173-160104				.FLANGE-SPLIT	14			
26	31N6-50340				.CLAMP ASSY	6			
27	31N6-50300				.CLAMP ASSY	4			
28	31N6-50310				.CLAMP ASSY	3			
29	31N6-50320				.CLAMP ASSY	1			
30	31N5-50240				.SPACER-PIPE	7			
31	Y171-024004				.O-RING	16			
32	S017-160752				.BOLT-HEX	20	- #0075		
					.BOLT-HEX	5	#0076 -	A	
34	S109-100356				.BOLT-SOCKET	48			
35	S411-160002				.WASHER-SPRING	20			
36	S651-810002				.NIPPLE-GREASE	7			
37	31E9-01320				.FLANGE-SPLIT	10			
40	S109-100406				.BOLT-SOCKET	8			
41	S017-16080A				.BOLT-HEX	15	#0076 -	-	

BOOM GREASE LUB SYSTEM(6.15M, #0013-)

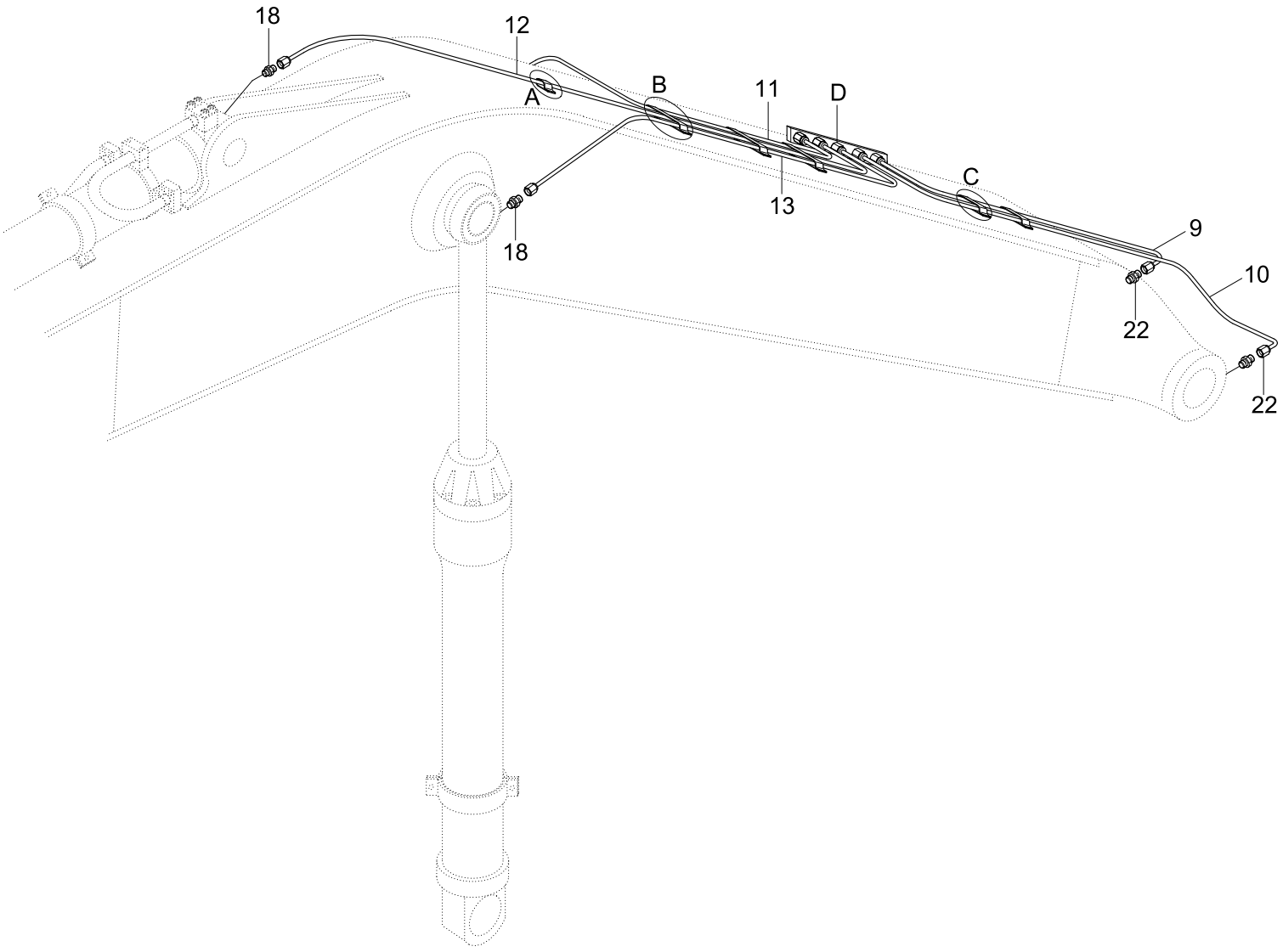

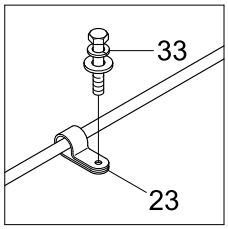

DETAIL A

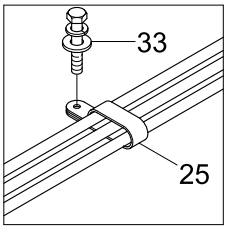

DETAIL B

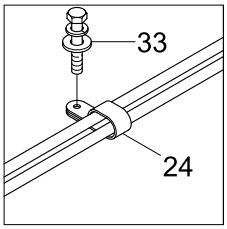

DETAIL C

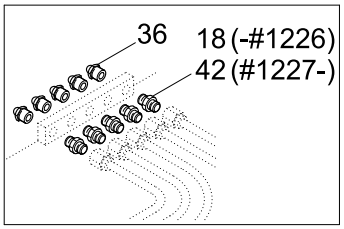

DETAIL D

Item	Part_No	IS	Ord	T	Description	Qty	Serial_No	ITC	Remark
*	@				BOOM HYD PIPING		#0013 -	-	NOT
9	P840-042024				HOSE ASSY-SYNF,THD(0X0)	1			
10	P840-042025				HOSE ASSY-SYNFLEX THD	1			
11	P840-042049				HOSE ASSY-SYN THD	1			
12	P840-042059				HOSE ASSY-SYNF,THD(0X0)	1			
13	P840-042051				HOSE ASSY-SYN THD	1			
18	P010-430011				CONNECTOR	8	- #1226		
					CONNECTOR	3	#1227 -	A	
22	31NB-50280				ELBOW-90	2			
23	31N8-50370				CLAMP-HOSE	1			
24	31N8-50380				CLAMP-HOSE	2			
25	31N8-50390				CLAMP-HOSE	3			
33	S035-062022				BOLT-W/WASHER	6			
36	S651-810002				NIPPLE-GREASE	5			
42	31W5-70060				CONNECTOR	5	#1227 -	D	

QUICK COUPLER HYD PIPING

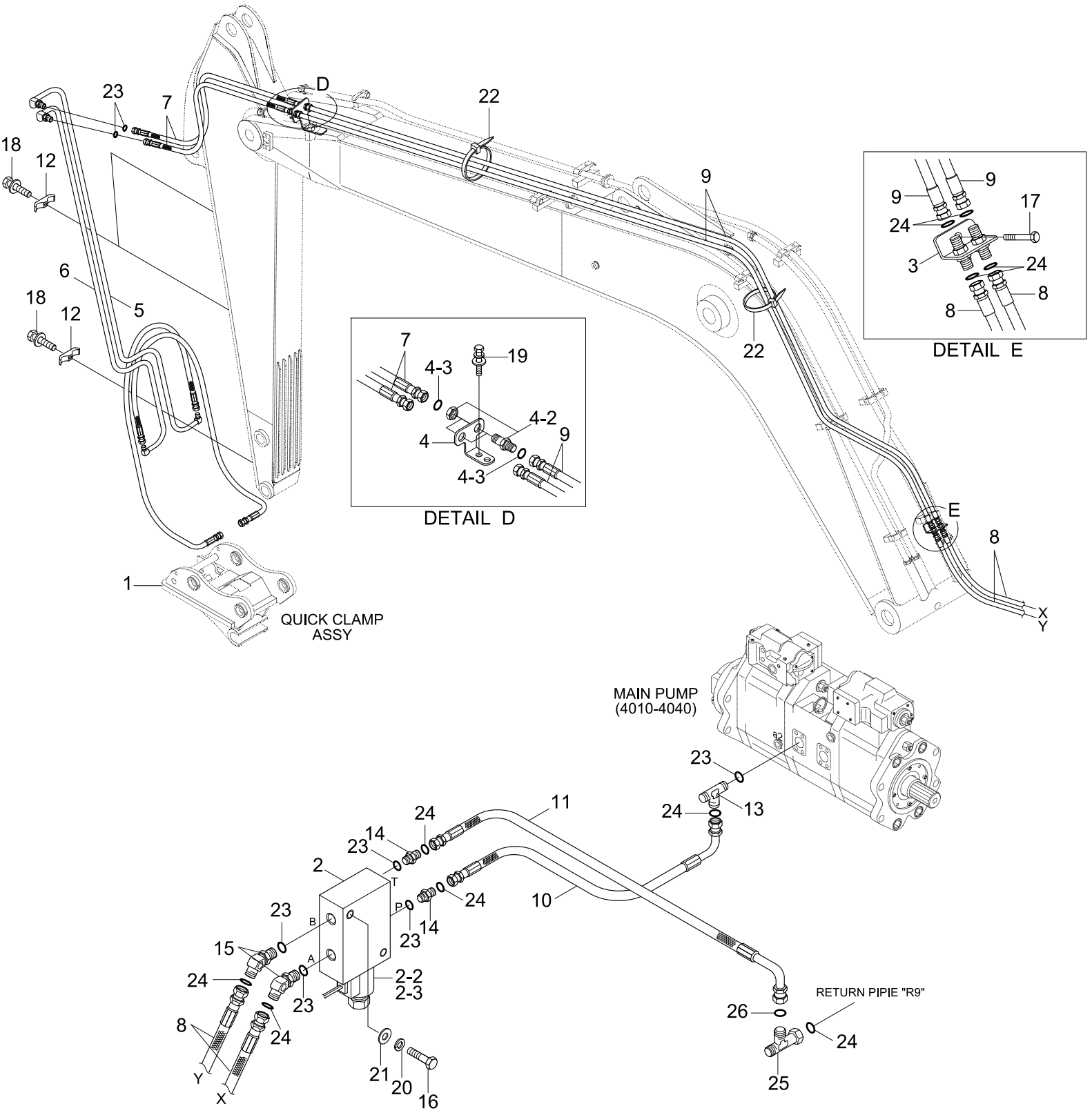

Item	Part_No	IS	Ord	T	Description	Qty	Serial_No	ITC	Remark
1	@				QUICK CLAMP ASSY	1	#1216 -	-	NOT
2	34EA-91720				SOLENOID VALVE	1			
2-1	34EA-91720BLOCK				.MANIFOLD	1			
2-2	GS044200NC				.VALVE-SOLENOID	1			
2-3	CAP024L+DT				.COIL	1			
3	31N4-90680				TERMAINAL-Q/CLAMP	1			
4	31NB-95820				TERMAINAL-Q/CLAMP	1	- #1215		
	31N8-95770				TERMINAL-Q/CLAMP	1	#1216 -	B	
4-2	X540-120001				.CONNECTOR-ORFS	2			
4-3	S621-011001				.O-RING	4			
5	31NA-95720				PIPE ASSY	1	- #2102		3.20 ARM
	31N9-95720				PIPE ASSY	1	#2103 -	D	3.20 ARM
	31NA-95740				PIPE ASSY	1	- #2102		2.20, 2.50 ARM
	31N9-95740				PIPE ASSY	1	#2103 -	D	2.20, 2.50 ARM
	31NA-95780				PIPE ASSY	1	- #2102		4.50 ARM
	31N9-95780				PIPE ASSY	1	#2103 -	D	4.50 ARM
6	31NA-95730				PIPE ASSY	1	- #2102		3.20 ARM
	31N9-95730				PIPE ASSY	1	#2103 -	D	3.20 ARM
	31NA-95750				PIPE ASSY	1	- #2102		2.20, 2.50 ARM
	31N9-95750				PIPE ASSY	1	#2103 -	D	2.20, 2.50 ARM
	31NA-95790				PIPE ASSY	1	- #2102		4.50 ARM
	31N9-95790				PIPE ASSY	1	#2103 -	D	4.50 ARM
7	P913-047040				HOSE ASSY-ORFS 0X0	2			3.20 ARM
	P913-047021				HOSE ASSY-ORFS 0X0	2			2.20 ARM
	P913-047027				HOSE ASSY-ORFS 0X0	2			2.50 ARM

Item	Part_No	IS	Ord	T	Description	Qty	Serial_No	ITC	Remark
7	P913-047060				HOSE ASSY-ORFS 0X0	2			4.50 ARM
8	P910-047039				HOSE ASSY-ORFS 0X0	2			
9	P910-047133				HOSE ASSY-ORFS 0X0	2			
10	31NA-95820				HOSE ASSY	1			
11	P920-042012				HOSE ASSY-ORFS 0X45	1			
12	34EA-91811				CLAMP-PIPE	4			
					CLAMP-PIPE	3			2.10, 2.50 ARM
13	31N4-22170				TEE-RUN TYPE	1			
14	X500-110001				CONNECTOR-ORFS	2			
15	X530-110001				ELBOW-45,ORFS	2			
16	S017-100506				BOLT-HEX	2			
17	S017-16085D				BOLT-HEX	1			
18	S037-103026				BOLT-W/WASHER	4			
					BOLT-W/WASHER	3			2.10, 2.50 ARM
19	S037-124026				BOLT-W/WASHER	2			
20	S411-100006				WASHER-SPRING	2			
21	S403-101006				WASHER-PLAIN	2			
22	S554-054300				CLAMP-BAND	30			
23	S631-011004				O-RING	5			
24	S621-011001				O-RING	12			
25	X840-525152				TEE-R/TYPE,SWIVEL,ORFS	1			
26	S621-012001				O-RING	1			

QUICK CLAMP(HOOK TYPE)

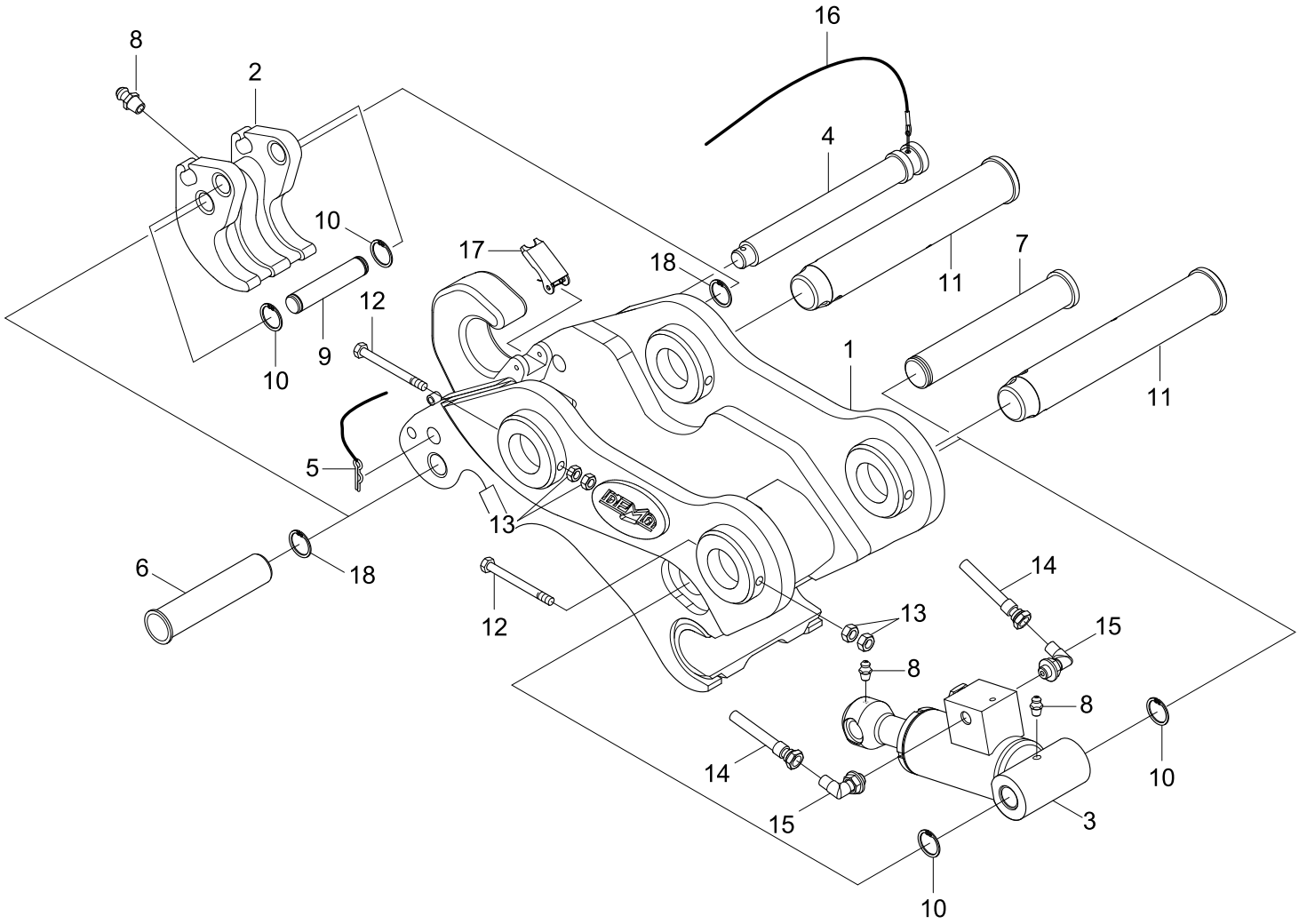

Item	Part_No	IS	Ord	T	Description	Qty	Serial_No	ITC	Remark
*	31NA-96810				QUICK CLAMP ASSY	1	#1216 -	-	
1	XKBN-00236				.BODY	1			
2	XKBN-00237				.HITCH ASSY	1			
3	XKBN-00238				.CYLINDER ASSY	1			
4	XKBN-00229				.PIN-SAFETY	1			
5	XKBN-00163				.PIN-SNAP	1			
6	XKBN-00230				.PIN-HITCH	1			
7	XKBN-00231				.PIN-FRAME	1			
8	XKBN-00009				.NIPPLE-GREASE	3			
9	XKBN-00232				.PIN-CYLINDER	1			
10	XKBN-00167				.RING-SNAP	4			
11	XKBN-00233				.PIN-BRACKET	2			
12	XKBN-00234				.BOLT-HEX	2			
13	XKBN-00080				.NUT-HEX	4			
14	XKBN-00112				.HOSE-PROTECTOR	2			
15	XKBN-00016				.ELBOW-90	2			
16	XKBN-00235				.WIRE ASSY	1			
17	XKBN-00116				.LATCH-SPRING	1			
18	XKBN-00218				.RING-SNAP	2			

QUICK CLAMP(CLOSE TYPE)

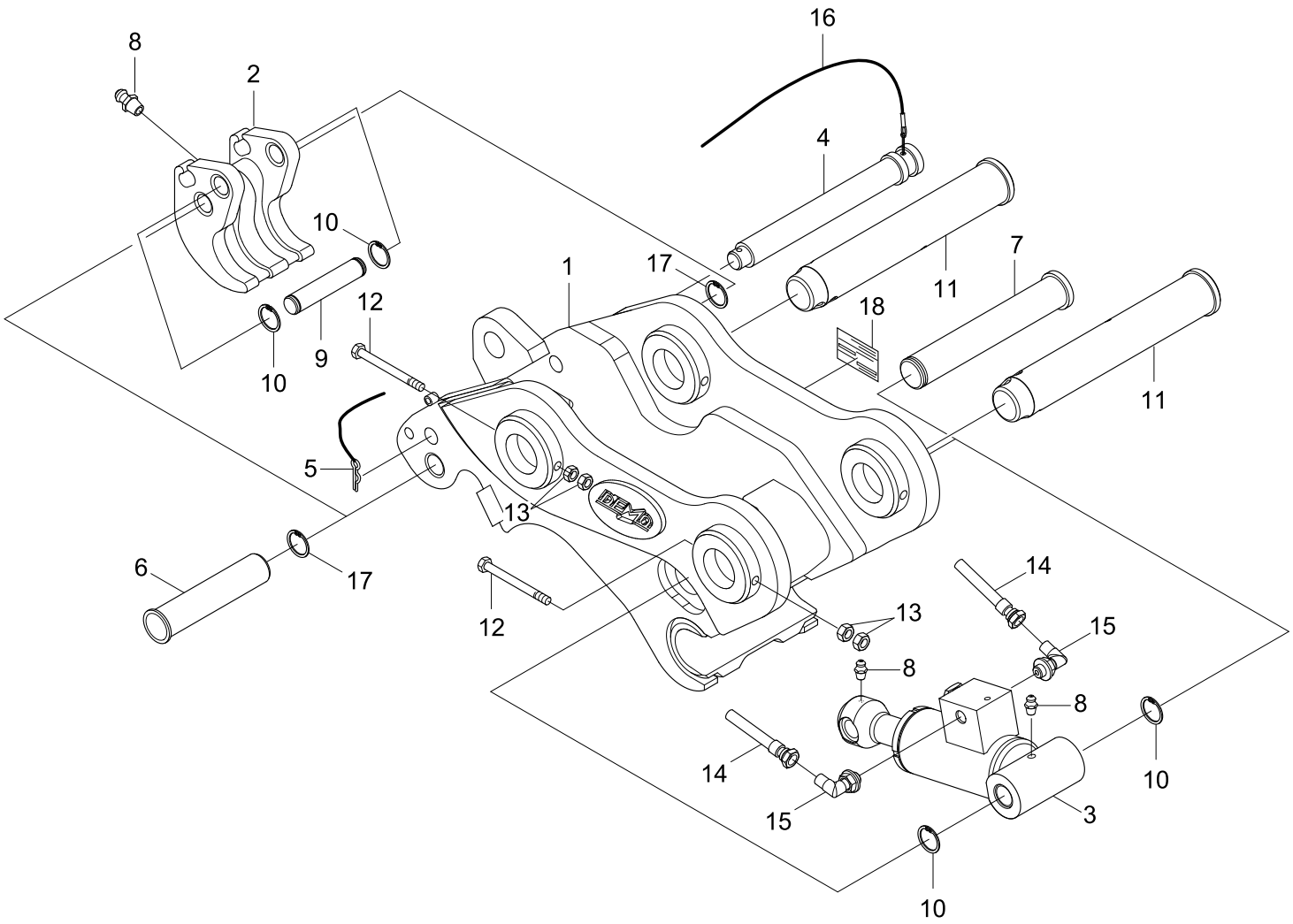

Item	Part_No	IS	Ord	T	Description	Qty	Serial_No	ITC	Remark
*	31NA-96860				QUICK CLAMP ASSY	1	#1216 -	-	
1	XKBN-00241				.BODY	1			
2	XKBN-00237				.HITCH ASSY	1			
3	XKBN-00238				.CYLINDER ASSY	1			
4	XKBN-00229				.PIN-SAFETY	1			
5	XKBN-00163				.PIN-SNAP	1			
6	XKBN-00230				.PIN-HITCH	1			
7	XKBN-00231				.PIN-FRAME	1			
8	XKBN-00009				.NIPPLE-GREASE	3			
9	XKBN-00232				.PIN-CYLINDER	1			
10	XKBN-00167				.RING-SNAP	4			
11	XKBN-00233				.PIN-BRACKET	2			
12	XKBN-00234				.BOLT-HEX	2			
13	XKBN-00080				.NUT-HEX	4			
14	XKBN-00112				.HOSE-PROTECTOR	2			
15	XKBN-00016				.ELBOW-90	2			
16	XKBN-00235				.WIRE ASSY	1			
17	XKBN-00218				.RING-SNAP	2			
18	XKBN-00240				.PLATE-ID	1			

ARM HYDRAULIC PIPING(3.2M)

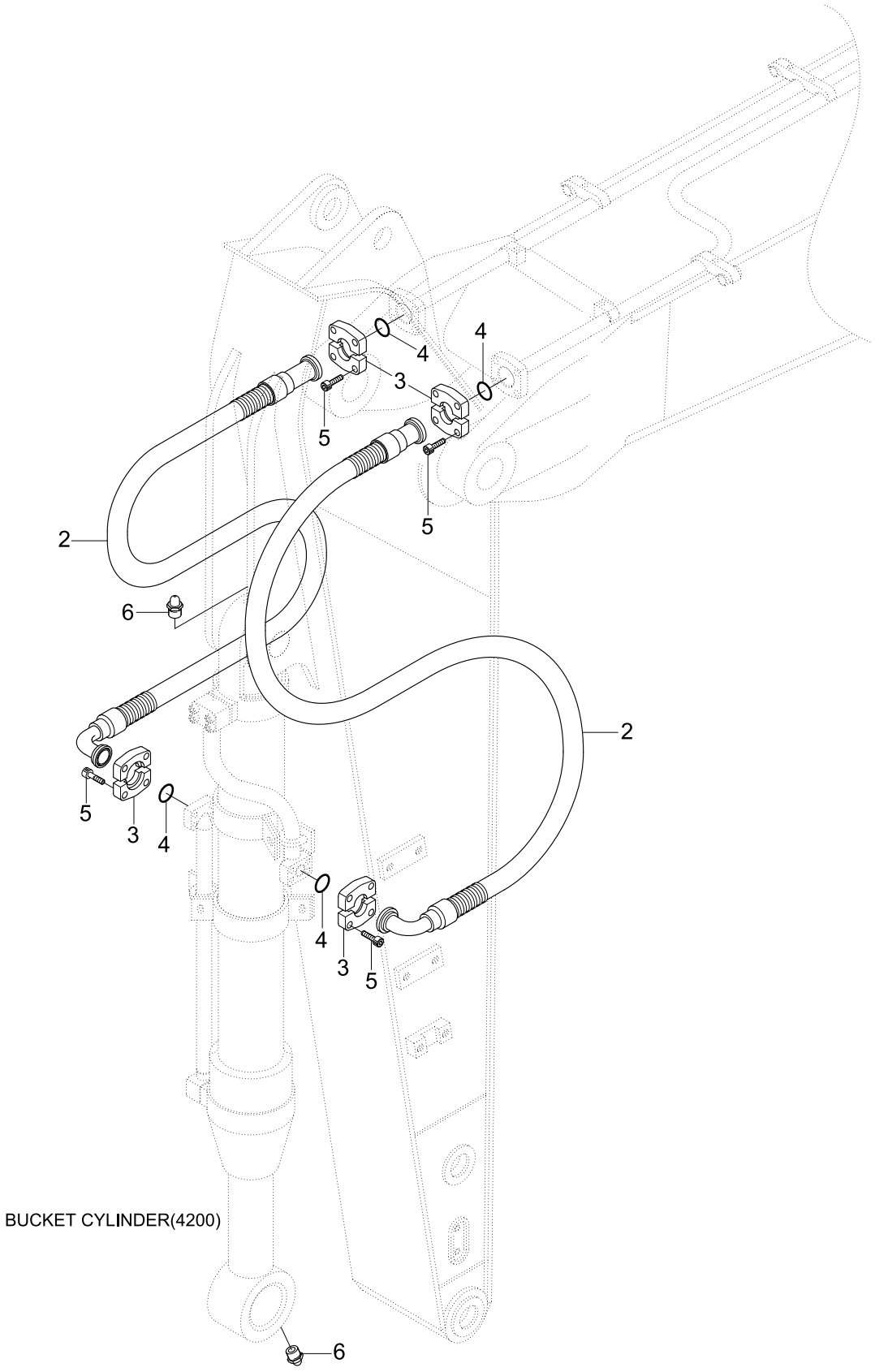

Item	Part_No	IS	Ord	T	Description	Qty	Serial_No	ITC	Remark
2	31N9-60011				HOSE ASSY-FLG	2	- #0493		
	31N9-60012				HOSE ASSY	2	#0494 -	A	
3	P173-160104				FLANGE-HYD,SPLIT	8			
4	Y171-024004				O-RING	4			
5	S109-100356				BOLT-SOCKET	16			
6	S651-810002				NIPPLE-GREASE	2			

ARM HYDRAULIC PIPING(2.2M, #0013-)

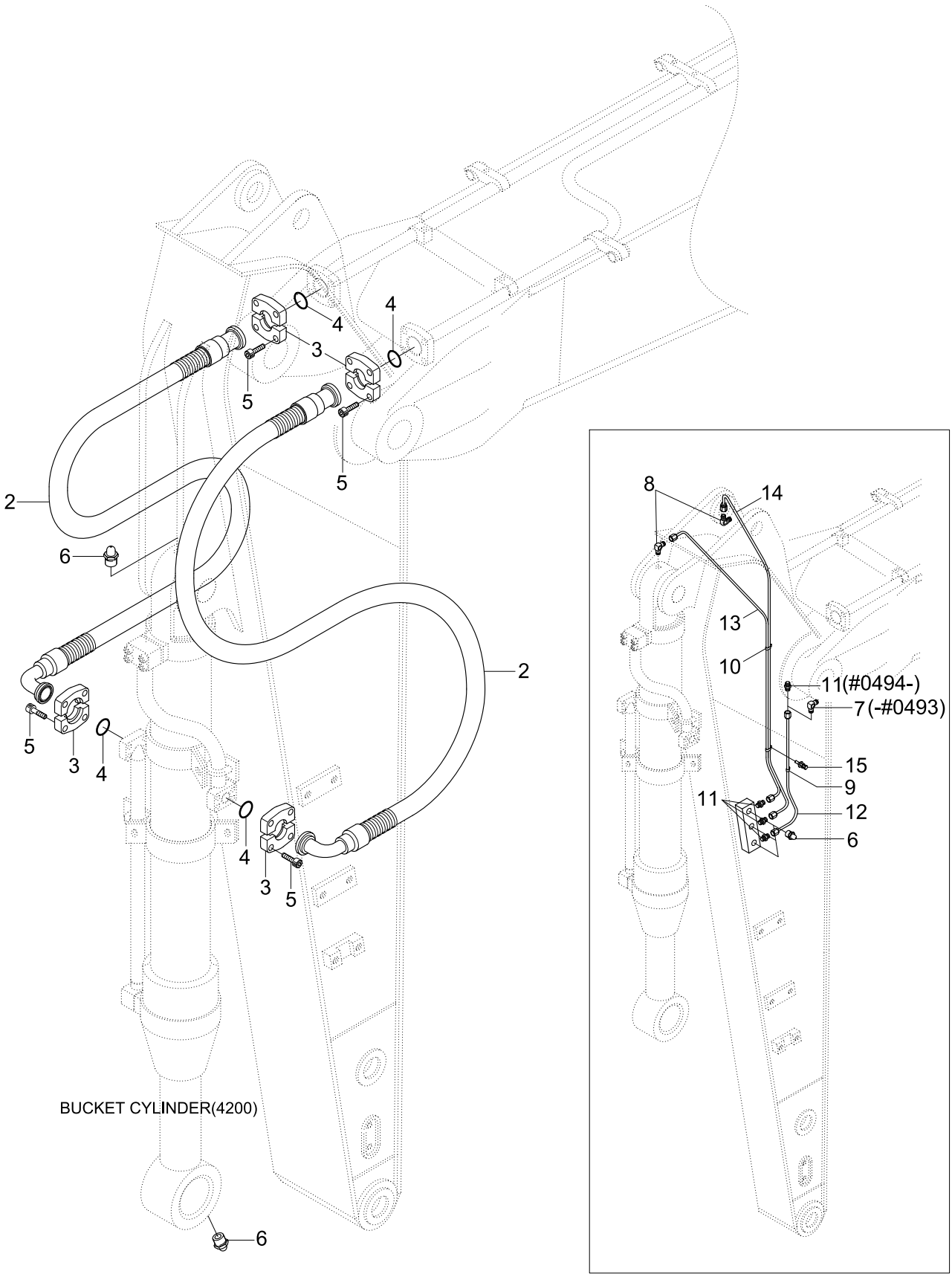

Item	Part_No	IS	Ord	T	Description	Qty	Serial_No	ITC	Remark
*	@				ARM PIPING		#0013 -	-	NOT
2	31N9-60030				HOSE ASSY-FLG	2	- #0493		
	31N9-60031				HOSE ASSY-FLG	2	#0494 -	A	
3	P173-160104				FLANGE-HYD,SPLIT	8			
4	Y171-024004				O-RING	4			
5	S109-100356				BOLT-SOCKET	16			
6	S651-810002				NIPPLE-GREASE	2			
7	61E7-0059				ELBOW-90	1	- #0493	-	
8	31NB-50280				ELBOW-90	2			
9	31N8-50370				CLAMP-HOSE	1			
10	31N8-50380				CLAMP-HOSE	2			
11	P010-430011				CONNECTOR	3	- #0493		
					CONNECTOR	5	#0494 -	A	
12	P840-042010				HOSE ASSY-SYN THD	1	- #0493		
	P860-042010				HOSE ASSY-SYN 0X90	1	#0494 - #0529	D	
	P860-042011				HOSE ASSY-SYN 0X90	1	#0530 -	B	2.2M
	P860-042013				HOSE ASSY-SYN 0X90	1	#2103 -	-	2.2M H/DUTY
13	P840-042037				HOSE ASSY-SYN THD	1	- #0529		6.15M BOOM
	P840-042041				HOSE ASSY-SYN THD	1	#0530 -	D	6.15M BOOM
					HOSE ASSY-SYN THD	1	#0216 -	-	6.45M BOOM
14	P840-042039				HOSE ASSY-SYN THD	1			2.2M
	P840-042040				HOSE ASSY-SYN THD	1	#2103 -	-	2.2M H/DUTY
15	S035-062022				BOLT-W/WASHER	3			

ARM HYDRAULIC PIPING(2.5M, #0013-)

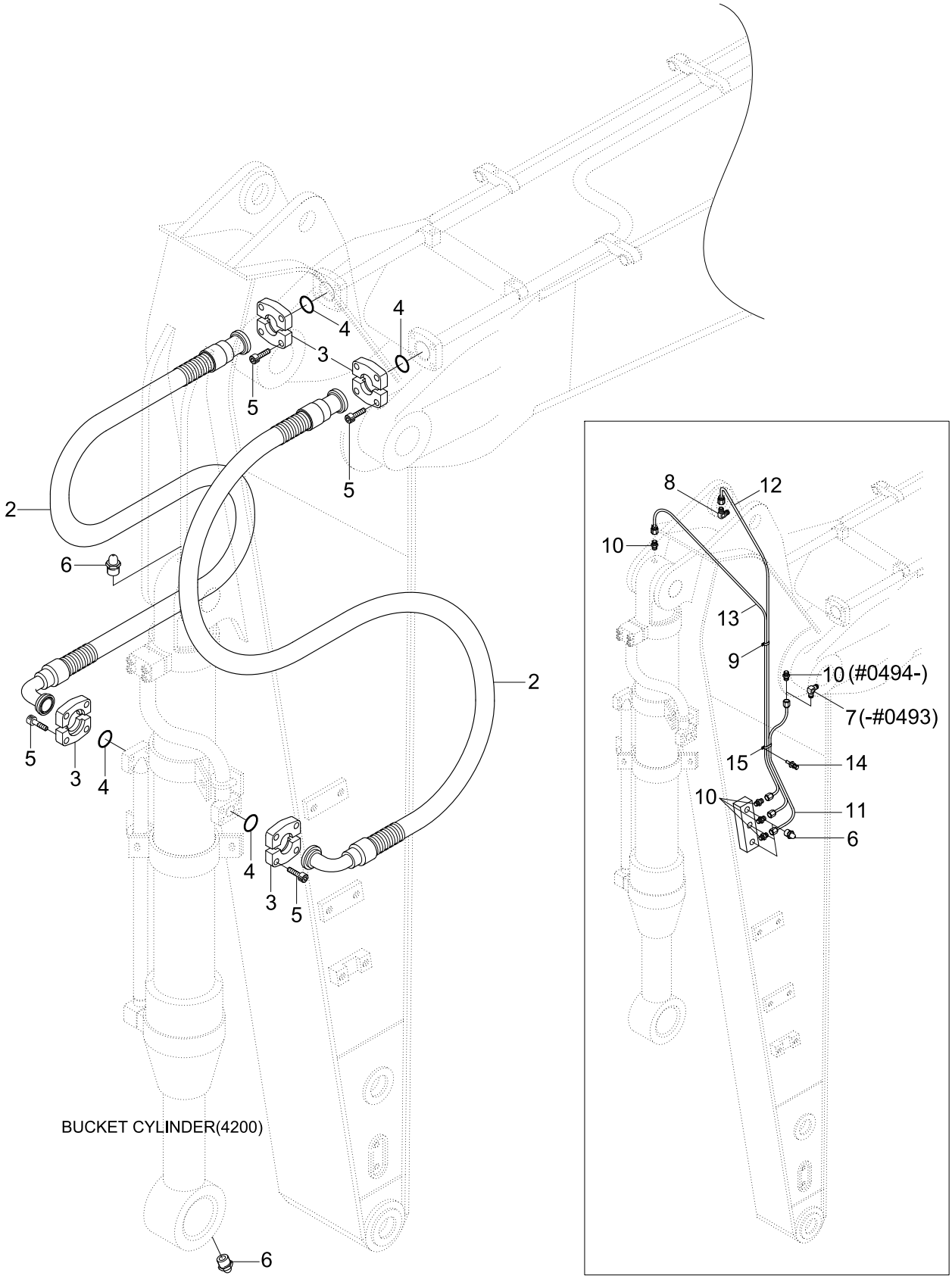

Item	Part_No	IS	Ord	T	Description	Qty	Serial_No	ITC	Remark
*	@				ARM PIPING		#0013 -	-	NOT
2	31N9-60020				HOSE ASSY-FLG	2	- #0493		
	31N9-60021				HOSE ASSY-FLG	2	#0494 -	A	
3	P173-160104				FLANGE-HYD,SPLIT	8			
4	Y171-024004				O-RING	4			
5	S109-100356				BOLT-SOCKET	16			
6	S651-810002				NIPPLE-GREASE	2			
7	61E7-0059				ELBOW-90	1	- #0493	-	
8	31NB-50280				ELBOW-90	1			
9	31N8-50380				CLAMP-HOSE	1			
10	P010-430011				CONNECTOR	4	- #0493		
					CONNECTOR	3	#0494 -	A	
11	P840-042012				HOSE ASSY-SYN THD	1	- #0493		
	P860-042012				HOSE ASSY-SYN 0X90	1	#0494 -	D	
12	P840-042041				HOSE ASSY-SYN THD	1			
13	P840-042044				HOSE ASSY-SYNF,THD(0X0)	1			
14	S035-062022				BOLT-W/WASHER	2			
15	31N8-50390				CLAMP-HOSE	1			

ARM HYDRAULIC PIPING(4.05M, #0013-)

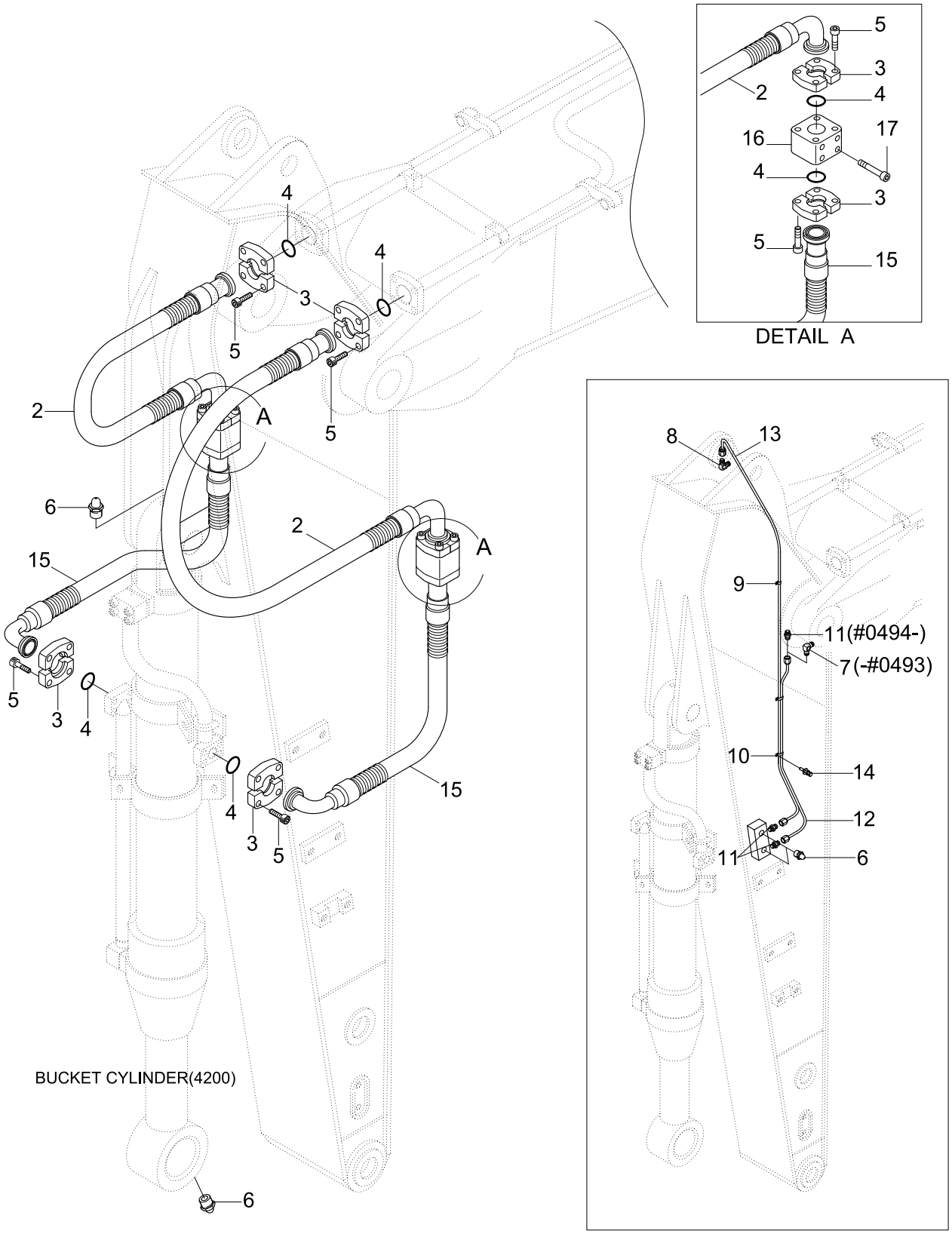

Item	Part_No	IS	Ord	T	Description	Qty	Serial_No	ITC	Remark
*	@				ARM PIPING		#0013 -	-	NOT
2	P703-167331				HOSE ASSY-FLG 0X90	2	- #0012		
	P703-167333				HOSE ASSY-FLG 0X90	2	#0013 - #0493	B	
	31N9-60040				HOSE ASSY-FLG	2	#0494 -	A	
3	P173-160104				FLANGE-SPLIT	16			
4	Y171-024004				O-RING	8			
5	S109-100356				BOLT-SOCKET	32			
6	S651-810002				NIPPLE-GREASE	4			
7	61E7-0059				ELBOW-90	1	- #0493	-	
8	31NB-50280				ELBOW-90	1			
9	31N8-50370				CLAMP	1			
10	31N8-50380				CLAMP-HOSE	2			
11	P010-430011				CONNECTOR	2	- #0493		
					CONNECTOR	3	#0494 -	A	
12	P840-042027				HOSE ASSY-SYN THD	1	- #0493		
	P860-042027				HOSE ASSY-SYN 0X90	1	#0494 -	D	
13	P840-042055				HOSE ASSY-SYN THD	1			
14	S035-062022				BOLT-W/WASHER	3			
15	31E5-60030				HOSE ASSY	2	- #0038		
	31NA-60020				HOSE ASSY-FLG 0X90	2	#0039 - #0493	B	
	31NA-60021				HOSE ASSY-FLG 0X90	2	#0494 -	A	
16	32E5-00190				BLOCK	2			
17	S109-100906				BOLT-SOCKET	8	- #0038		
	S109-100756				BOLT-SOCKET	8	#0039 -	B	

ARM SAFETY LOCK SYSTEM(-#0818)

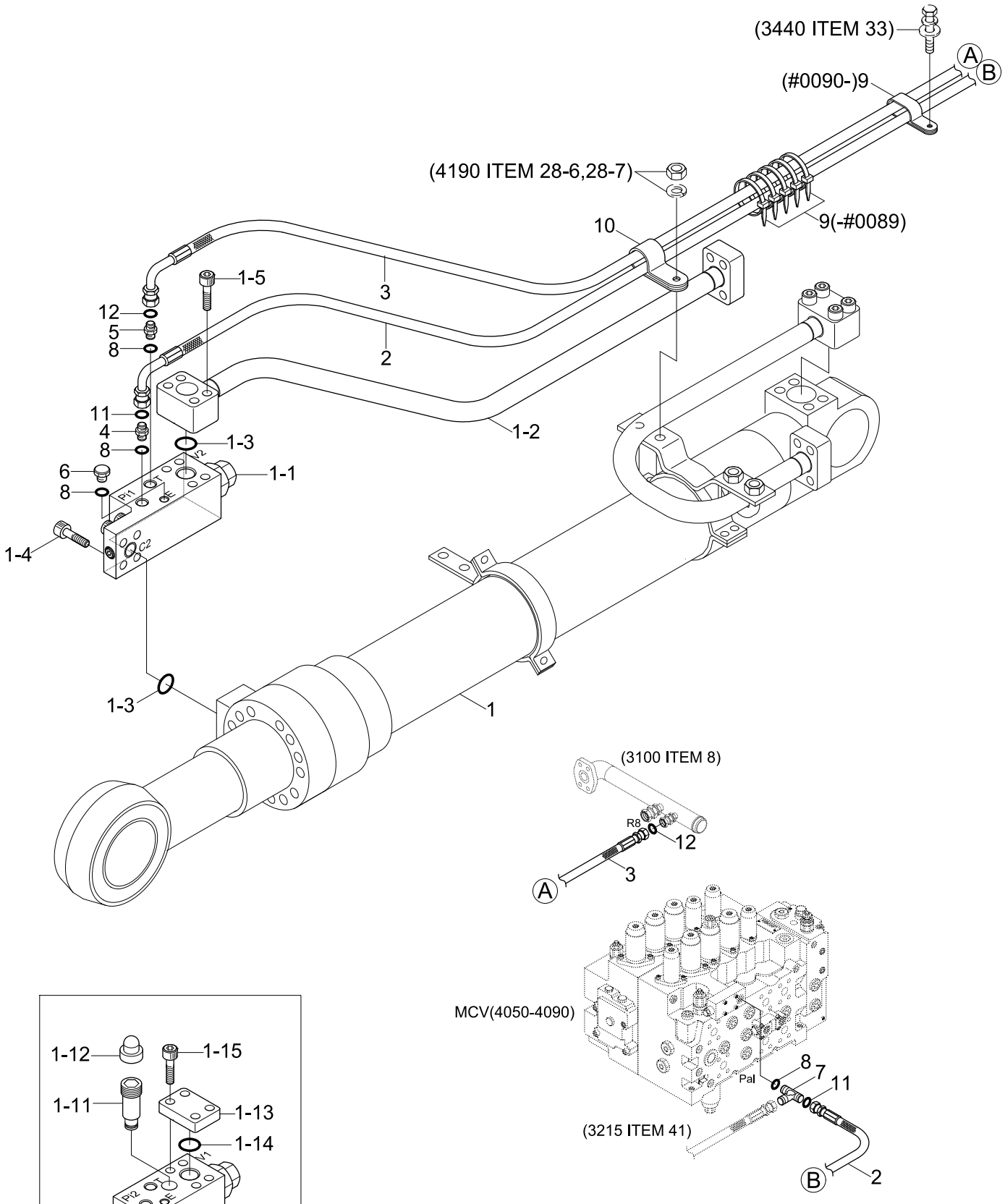

DETAIL "1-1"

Description	Parts no	Included item
Arm cylinder seal kit	31Y1-19550	1-3, 31Y1-19080(See 4190)

Item	Part_No	IS	Ord	T	Description	Qty	Serial_No	ITC	Remark
*	@				ARM SAFETY LOCK SYS	1	- #0818	-	NOT
1	31N9-52130				ARM CYLINDER ASSY VLV	1			
1-0	@				.ARM CYL SUB ASSY	1			NOT
1-1	31N6-90520				.VALVE-SAFETY LOCK	1			
1-11	ZTAS-00001				..VALVE-RELIEF	1			
1-12	ZTAS-00002				..CAP	1			
1-13	P184-162112				..FLANGE-PLUGING	1			
1-14	Y171-024004				..O-RING	1			
1-15	S109-120406				..BOLT-SOCKET	4			
1-16	ZTAS-00005				..SEAL KIT	1			
1-2	31N9-90630				.PIPE ASSY-R	1			
K1-3	Y171-024004				.O-RING	2			
1-4	S109-120456				.BOLT-SOCKET	4			
1-5	S109-120606				.BOLT-SOCKET	4			
1-6	@				.BAND ASSY	1			NOT
2	P860-042154				HOSE ASSY-SYN 0X90	1	#0001 - #0215	-	6.45M BOOM
	P930-042154				HOSE ASSY-ORFS 0X90	1	#0216 -	D	6.45M BOOM
	P860-042150				HOSE ASSY-SYN 0X90	1	#0001 - #0215	-	L/REACH
	P930-042150				HOSE ASSY-ORFS 0X90	1	#0216 -	D	L/REACH
3	P860-062164				HOSE ASSY-SYN 0X90	1	#0001 - #0215	-	6.45M BOOM
	P930-062164				HOSE ASSY-ORFS 0X90	1	#0216 -	D	6.45M BOOM
	P860-062160				HOSE ASSY-SYN 0X90	1	#0001 - #0215	-	L/REACH
	P930-062160				HOSE ASSY-ORFS 0X90	1	#0216 -	D	L/REACH
4	P010-110002				CONNECTOR	1	- #0215		
	X500-110001				CONNECTOR-ORFS	1	#0216 -	D	

Item	Part_No	IS	Ord	T	Description	Qty	Serial_No	ITC	Remark
5	P010-110012				CONNECTOR	1	- #0215		
	X500-110011				CONNECTOR-ORFS	1	#0216 -	D	
6	P220-110102				PLUG	1			
7	P320-040404				TEE-RUN TYPE	1	- #0215		
	X820-045151				TEE-R/TYPE,ORFS	1	#0216 -	D	
8	S631-110004				O-RING	4			
9	S552-020102				CLAMP-BAND	10	- #0089		
	31L6-02460				CLAMP-TUBE	6	#0090 -	A	
10	31E7-0313				CLAMP-HOSE	1	#0090 -	-	
11	S621-011001				O-RING	2	#0216 -	-	
12	S621-012001				O-RING(SEAL LOCK TYPE)	2	#0216 -	-	
K	31Y1-19550				SEAL KIT	1			SEE ILLUST

ARM SAFETY LOCK SYSTEM(#0819-)

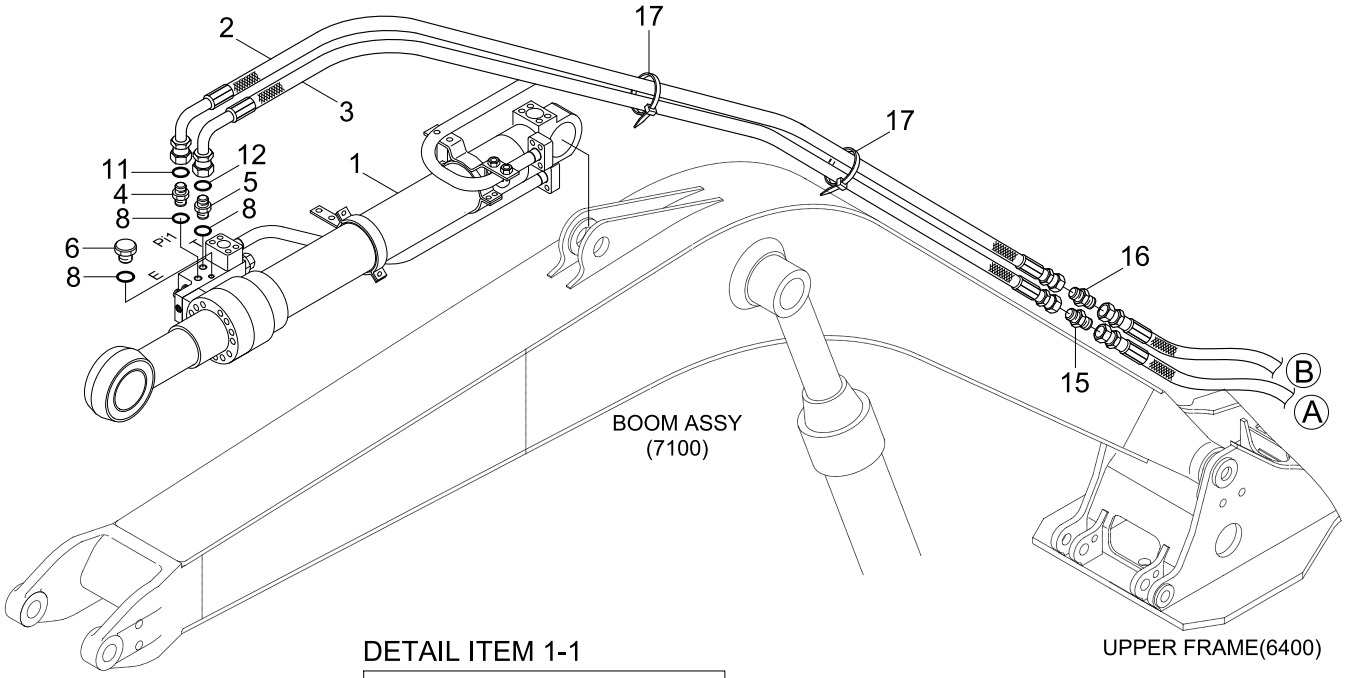

DETAIL ITEM 1-1

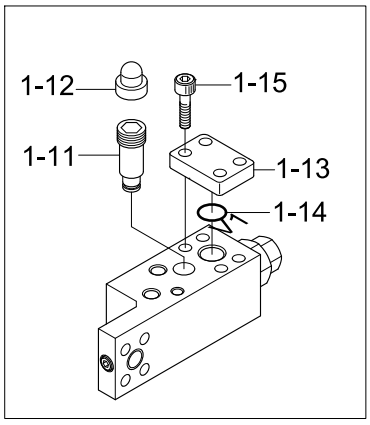

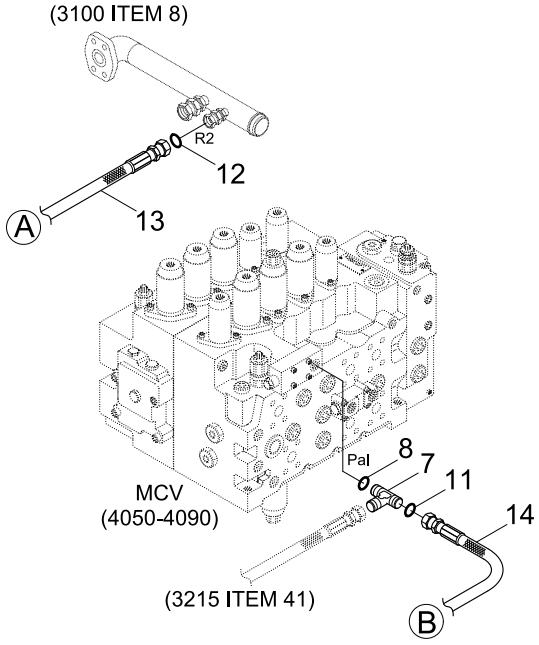

DETAIL ITEM 1

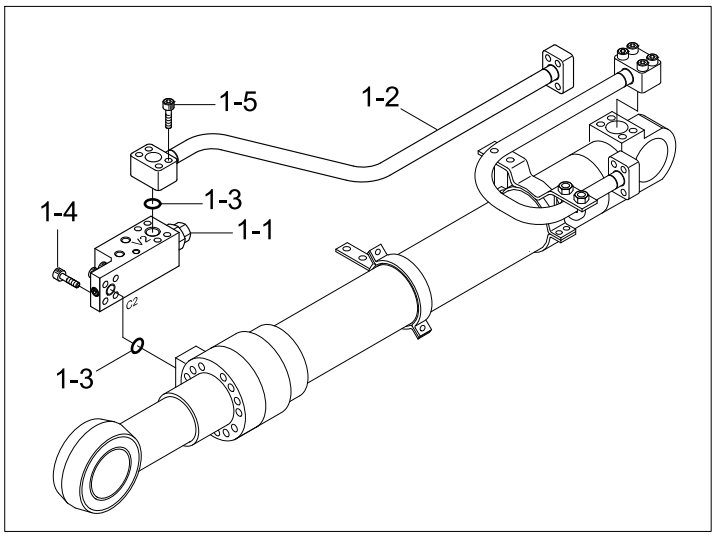

Description	Parts no	Included item
Arm cylinder seal kit	31Y1-19550	1-3, 31Y1-19080(See 4190)

Item	Part_No	IS	Ord	T	Description	Qty	Serial_No	ITC	Remark
*	@				ARM SAFETY LOCK SYS	1	#0818 -	D	NOT
1	31N9-52130				ARM CYLINDER ASSY VLV	1	- #1364		
	31N9-52131				ARM CYLINDER ASSY VLV	1	#1365 - #2529	B	
	31N9-52132				ARM CYLINDER ASSY,V/V	1	#2530 -	B	
1-0	@				.ARM CYL SUB ASSY	1			NOT
1-1	31N6-90520				.VALVE-SAFETY LOCK	1	- #1182		
	31NA-91570				.VALVE-SAFETY LOCK	1	#1183 - #2529	B	
	31Q9-55030				.VALVE-SAFETY LOCK	1	#2530 -	B	
1-11	ZTAS-00001				..VALVE-RELIEF	1	- #1182		
	DRV-100A				..RELIEF VALVE	1	#1183 - #2529	B	
1-12	ZTAS-00002				..CAP	1	- #1182		
	DCP-002A				..CAP	1	#1183 - #2529	B	
1-13	P184-162112				..FLANGE-PLUGING	1	- #1182	-	
1-14	Y171-024004				..O-RING	1	- #1182	-	
1-15	S109-120406				..BOLT-SOCKET	4	- #1182	-	
1-16	ZTAS-00005				..SEAL KIT	1	- #1182		
	AS568-3				..SEAL KIT	1	#1183 - #2529	B	
1-2	31N9-90630				.PIPE ASSY-R	1	- #2529		
	31Y1-35960				.PIPE ASSY-RV	1	#2530 -	B	
K1-3	Y171-024004				.O-RING	2			
1-4	S109-120456				.BOLT-SOCKET	4	- #2529		
	S109-120556				.BOLT-SOCKET	8	#2530 -	B	
1-5	S109-120606				.BOLT-SOCKET	4	- #2529	-	
1-6	@				.BAND ASSY	1			NOT
2	P930-042112				HOSE ASSY-ORFS 0X90	1			6.45M BOOM

Item	Part_No	IS	Ord	T	Description	Qty	Serial_No	ITC	Remark
2	P930-042108				HOSE ASSY-ORFS 0X90	1			L/REACH
3	P930-062112				HOSE ASSY-ORFS 0X90	1			6.45M BOOM
	P930-062108				HOSE ASSY-ORFS 0X90	1			L/REACH
4	X500-110001				CONNECTOR-ORFS	1			
5	X500-110011				CONNECTOR-ORFS	1			
6	P220-110102				PLUG-HEX	1			
7	X810-045151				TEE-B/TYPE,ORFS	1			
8	S631-110004				O-RING	4			
11	S621-011001				O-RING	4			
12	S621-012001				O-RING	4			
13	P930-062052				HOSE ASSY-ORFS 0X90	1			
14	P910-042050				HOSE ASSY-ORFS 0X0	1			
15	X540-110002				CONNECTOR-ORFS	1			
16	X540-110001				CONNECTOR-ORFS	1			
17	S551-050203				CLAMP-BAND	15			
K	31Y1-19550				SEAL KIT	1			SEE ILLUST

S/ACTING MAIN PIPING KIT(MCV TYPE 1)

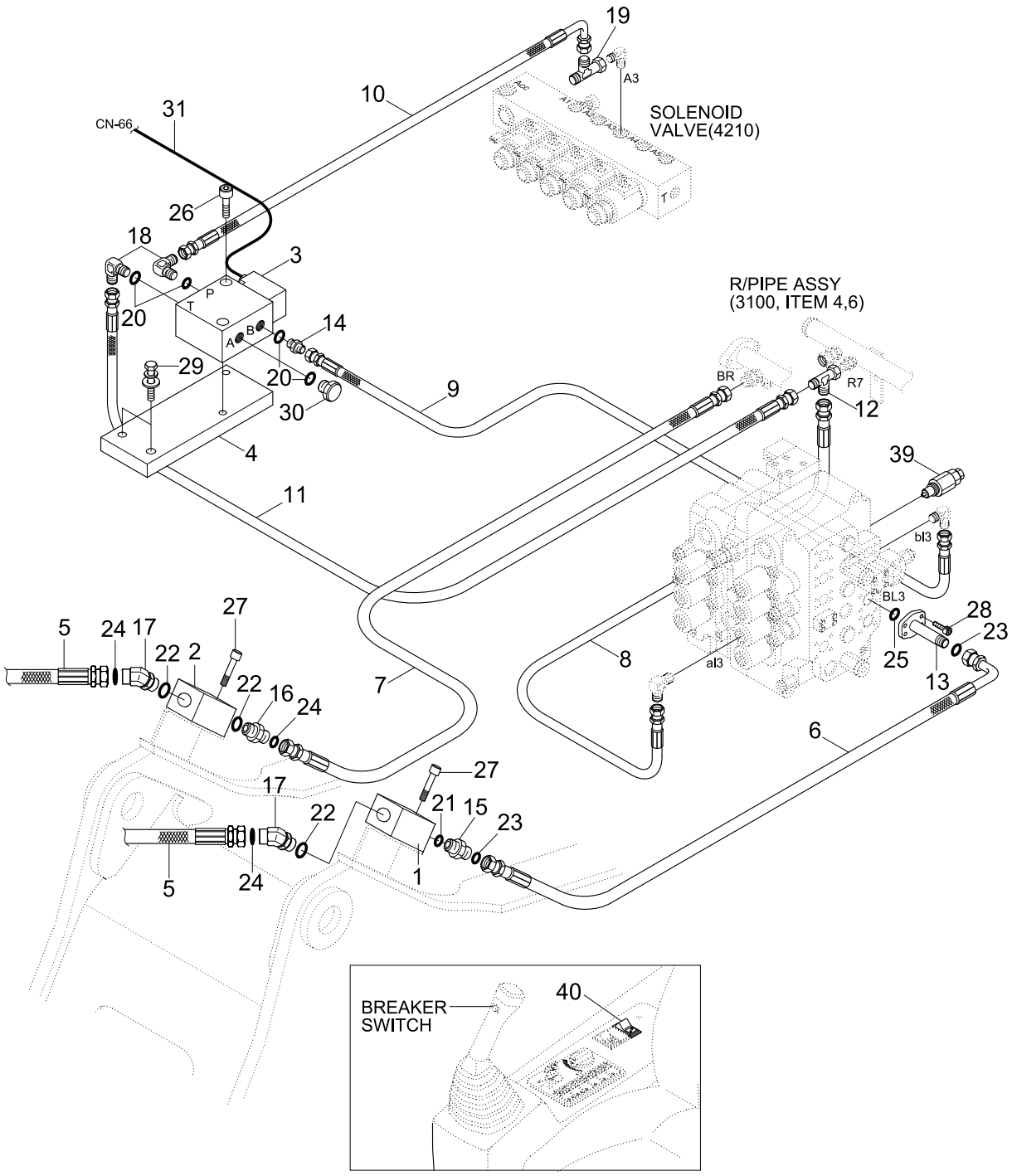

Item	Part_No	IS	Ord	T	Description	Qty	Serial_No	ITC	Remark
*	@				S/ACT HYD PIPING KIT	1	#0001 -	-	NOT
*-1	@				.S/ACT PIPING KIT	1			NOT
*-11	@				..S/ACT MAIN PIPING KIT	1			NOT
1	31EM-91540				...JOINT ASSY-HOSE	1			
2	31EM-91550				...JOINT ASSY-HOSE	1			
3	31N6-91230D				...SOLENOID VLV-BREAKER	1	#0001 -	-	
3-1	XKBN-00192				....COIL-BREAKER SOL	1	#0001 -	-	NOT SHOWN
4	31N6-91250				...BRACKET-SOL VLV	1			
5	P973-207334				...HOSE ASSY-ORFS 0X90	2	#0001 -	-	
6	P933-166025				...HOSE ASSY-ORFS 0X90	1			
7	31NA-92290				...HOSE ASSY	1			
8	P400-042020				...HOSE ASSY-COMPACT	1			
9	P400-042030				...HOSE ASSY-COMPACT	1			
10	P420-042020				...HOSE ASSY-COMP 0X90	1			
11	P420-042030				...HOSE ASSY-COMP 0X90	1			
12	31N6-22030				...TEE-SWIVEL NUT	1			
13	31NA-92300				...PIPE ASSY	1			
14	P010-110002				...CONNECTOR	1			
15	X500-110005				...CONNECTOR-ORFS	1			
16	X500-110006				...CONNECTOR-ORFS	1			
17	X530-110006				...ELBOW-45,ORFS	2			
18	P020-110002				...ELBOW-90	2			
19	31ER-20040				...TEE-SWIVEL	1			
20	S631-011004				...O-RING	4			
21	S631-029004				...O-RING	1			

Item	Part_No	IS	Ord	T	Description	Qty	Serial_No	ITC	Remark
22	S631-038004				...O-RING	3			
23	S621-021001				...O-RING	2			
24	S621-025001				...O-RING	3			
25	Y171-027004				...O-RING	1			
26	S109-080456				...BOLT-SOCKET	2			
27	S109-120656				...BOLT-SOCKET	4			
28	S109-140406				...BOLT-SOCKET	4			
29	S037-102522				...BOLT-W/WASHER	2			
30	P220-110102				...PLUG-HEX	1			
31	21NB-00200				...HARNESS-EXT	1			
*-12	@				..ATTACH PIPING KIT	1			NOT
39	31EH-90140				.PORT RELIEF VALVE	1			210bar
40	21E6-30540				.SWITCH-BREAKER	1			BREAKER ONLY

S/ACTING MAIN PIPING KIT(MCV TYPE 2)

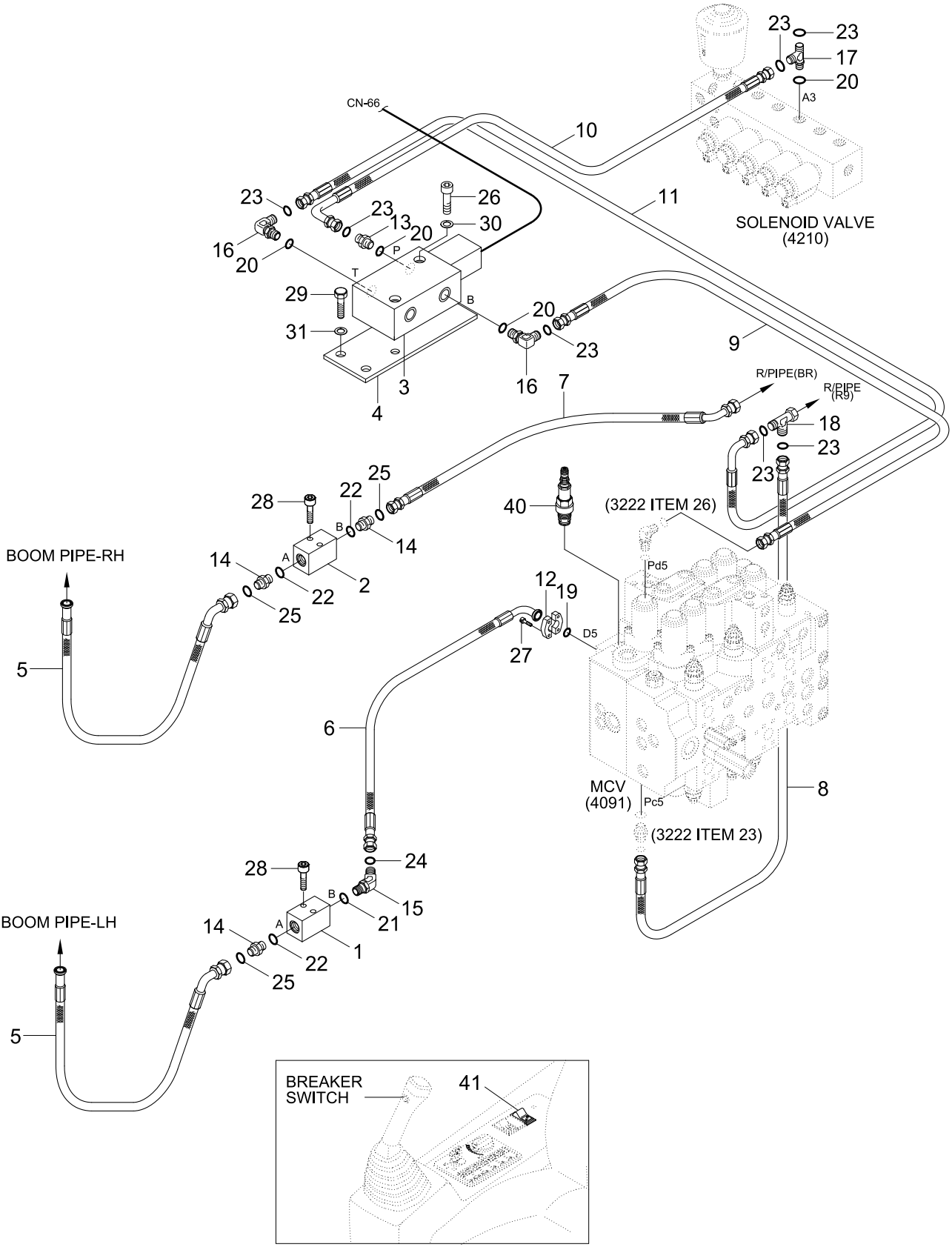

Item	Part_No	IS	Ord	T	Description	Qty	Serial_No	ITC	Remark
*-1	33N9-90310				S/ACT MAIN PIPING KIT	1			
1	31EM-91540				.JOINT ASSY-HOSE	1			
2	31EM-91550				.JOINT ASSY-HOSE	1			
3	31N6-91230D				.SOLENOID VLV-BREAKER	1			
3-1	XKBN-00192				..COIL-BREAKER SOL	1			
4	31N6-91250				.BRACKET-SOL VLV	1			
5	P973-207334				.HOSE ASSY-ORFS 0X90	2			
6	P983-166325				.HOSE ASSY-ORFS 0X90	1			
7	P923-203027				.HOSE ASSY-ORFS 0X45	1			
8	P910-042024				.HOSE ASSY-ORFS 0X0	1			
9	P910-042066				.HOSE ASSY-ORFS 0X0	1			
10	P930-042023				.HOSE ASSY-ORFS 0X90	1			
11	P930-042056				.HOSE ASSY-ORFS 0X90	1			
12	P173-160104				.FLANGE-HYD,SPLIT	2			
13	X500-110001				.CONNECTOR-ORFS	1			
14	X500-110006				.CONNECTOR-ORFS	3			
15	X530-110005				.ELBOW-45,ORFS	1			
16	X520-110001				.ELBOW-90,ORFS	2			
17	X820-045151				.TEE-R/TYPE,ORFS	1			
18	X840-515151				.TEE-RUN TYPE	1			
19	Y171-024004				.O-RING	1			
20	S631-011004				.O-RING	4			
21	S631-029004				.O-RING	1			
22	S631-038004				.O-RING	3			
23	S621-011001				.O-RING	7			

Item	Part_No	IS	Ord	T	Description	Qty	Serial_No	ITC	Remark
24	S621-021001				.O-RING	1			
25	S621-025001				.O-RING	3			
26	S109-080456				.BOLT-SOCKET	2			
27	S109-100306				.BOLT-SOCKET	4			
28	S109-120656				.BOLT-SOCKET	4			
29	S017-100256				.BOLT-HEX	2			
30	S411-080006				.WASHER-SPRING	2			
31	S411-100006				.WASHER-SPRING	2			
40	XKBF-01455				.MAIN RELIEF VALVE	1			
41	21E6-30540				.SWITCH-BREAKER	1			

ATTACH PIPING KIT(S & D/ACTING)

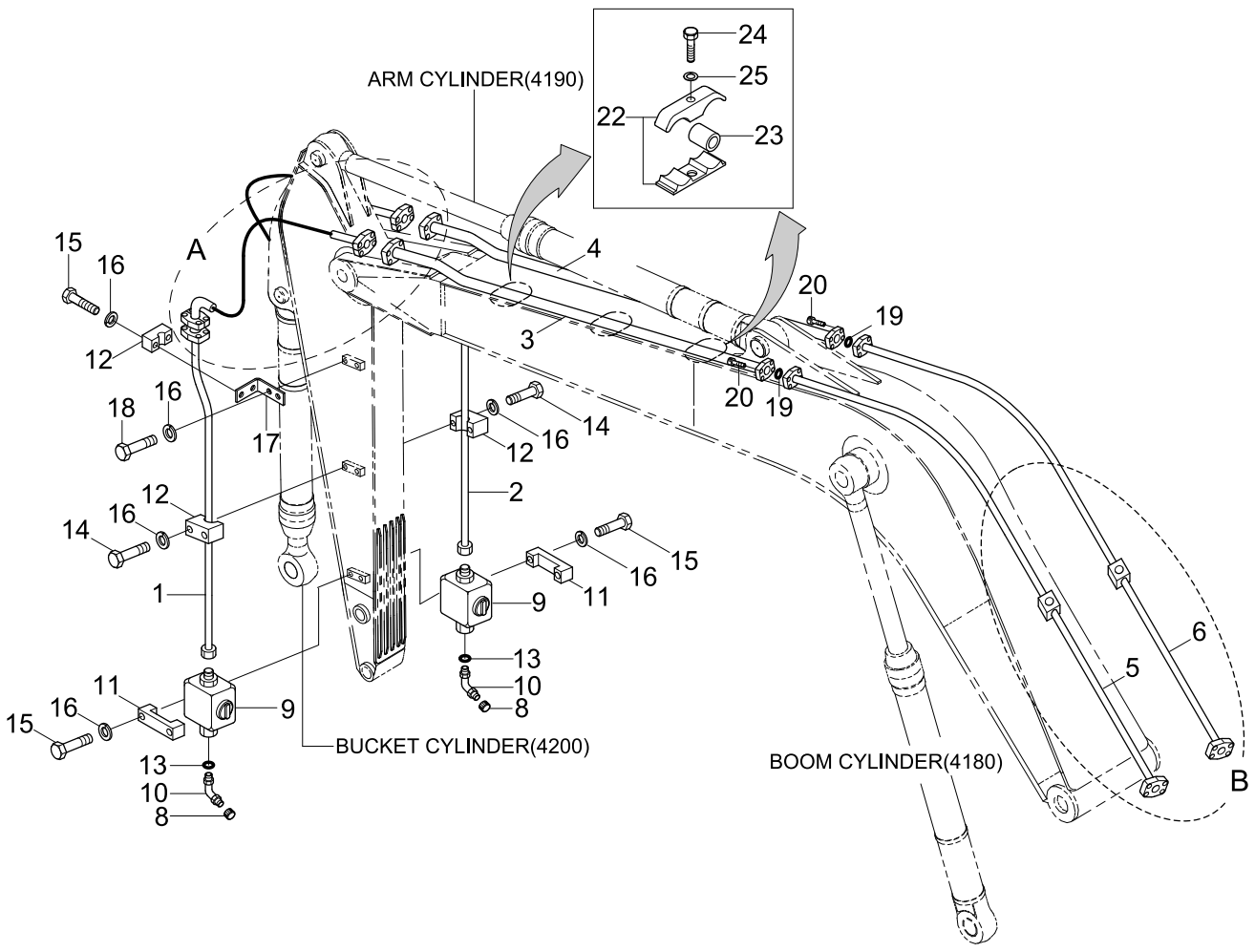

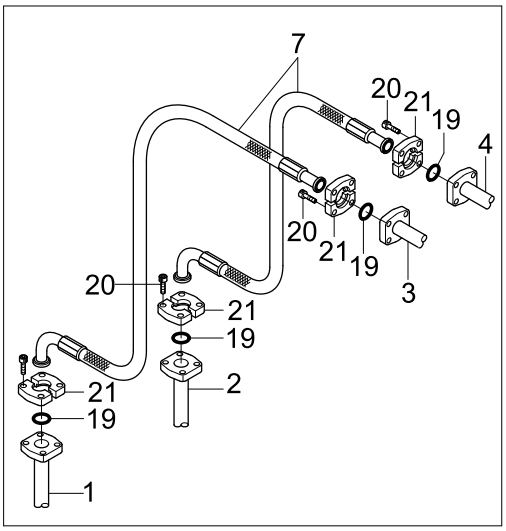

DETAIL A

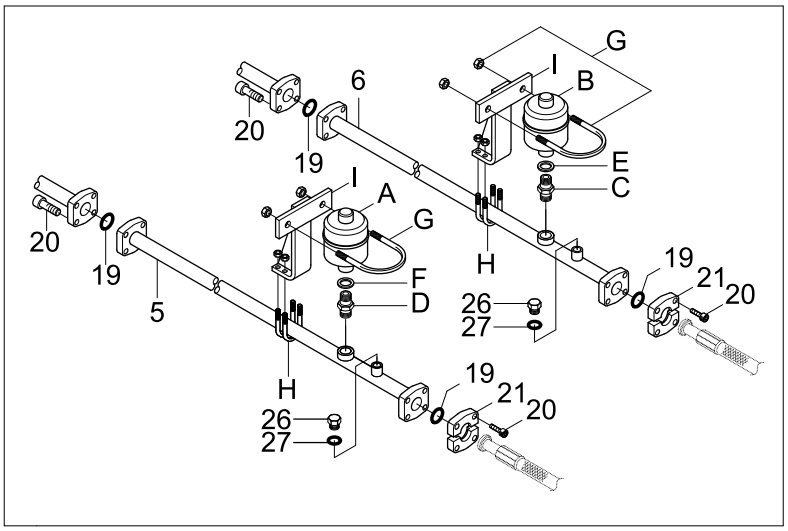

DETAIL B

Item	Part_No	IS	Ord	T	Description	Qty	Serial_No	ITC	Remark
*	@				S/ACT HYD PIPING KIT	1	#0001 -	-	NOT
*-1	@				.S/ACT PIPING KIT	1			NOT
*-12	@				..ATTACH PIPING KIT	1			NOT
1	31NA-92110				...PIPE ASSY-LH	1			ARM 3.2M
	31N9-92120				...PIPE ASSY-LH	1			ARM 2.2M
	31NA-92120				...PIPE ASSY-LH	1			ARM 2.5M
	31NA-92140				...PIPE ASSY-LH	1			ARM 4.05M
	31N9-92120				...PIPE ASSY-LH	1			BM6.15+AM2.2
2	31NA-92150				...PIPE ASSY-RH	1			ARM 3.2M
	31N9-92160				...PIPE ASSY-RH	1			ARM 2.2M
	31NA-92160				...PIPE ASSY-RH	1			ARM 2.5M
	31NA-92180				...PIPE ASSY-RH	1			AMR 4.05M
	31N9-92160				...PIPE ASSY-RH	1			BM6.15+AM2.2
3	31NA-92190				...PIPE ASSY-LH	1			
4	31NA-92210				...PIPE ASSY-RH	1			
5	31N9-92230				...PIPE ASSY-LH	1			BOOM 6.45M
	31N9-92240				...PIPE ASSY-LH	1			BOOM 6.15M
6	31N9-92250				...PIPE ASSY-RH	1			BOOM 6.45M
	31N9-92240				...PIPE ASSY-LH	1			BOOM 6.15M
7	P703-207337				...HOSE ASSY-FLG 0X90	2			ARM 3.2M
	P703-207332				...HOSE ASSY-FLG 0X90	2			ARM 2.2,2.5M
	P703-207340				...HOSE ASSY-FLG 0X90	2			ARM 4.05M
8	X710-100107				...CAP-HYD,ORFS	2			
9	31EN-92240				...VALVE-STOP	2			
10	X530-110006				...ELBOW-45,ORFS	2			

Item	Part_No	IS	Ord	T	Description	Qty	Serial_No	ITC	Remark
11	31EG-91360				...CLAMP-STOP VALVE	2			
12	31EG-91400				...CLAMP-PIPE	6			ARM 3.2M
					...CLAMP-PIPE	2			ARM 2.2M
					...CLAMP-PIPE	4			ARM 2.5M
					...CLAMP-PIPE	8			AMR 4.05M
13	S631-038004				...O-RING	2			
14	S017-120702				...BOLT-HEX	12			ARM 3.2M
	S107-120702				...BOLT-SOCKET	4			ARM 2.2M
					...BOLT-SOCKET	8			ARM 2.5M
					...BOLT-SOCKET	16			AMR 4.05M
15	S017-120806				...BOLT-HEX	8			
16	S411-120002				...WASHER-SPRING	20			ARM 3.2M
					...WASHER-SPRING	12			ARM 2.2M
					...WASHER-SPRING	16			ARM 2.5M
					...WASHER-SPRING	24			AMR 4.05M
17	31NB-92201				...BRACKET-CLAMP	2			
18	S017-120352				...BOLT-HEX	4			
19	Y171-027004				...O-RING	8			
20	S109-100406				...BOLT-SOCKET	32			
21	S173-200106				...FLANG-SPLIT	12			
22	31N6-50320				...CLAMP ASSY	3			
23	31N5-50230				...SPACER-PIPE	3			
24	S017-16080A				...BOLT-HEX	3			
25	S411-160002				...WASHER-SPRING	3			
26	31EK-11130				...COUPLING-SCREW	2			

Item	Part_No	IS	Ord	T	Description	Qty	Serial_No	ITC	Remark
27	S631-011004				...O-RING	2			
*-11	@				..S/ACT MAIN PIPING KIT	1			NOT
51	31EN-91701				.ACCUMULATOR KIT	1			
A	32E6-92040				..ACCUMULATOR	1			250bar
B	32E6-92050				..ACCUMULATOR	1			140bar
C	31EN-92260				..CONNECTOR	1			
D	31EN-92280				..CONNECTOR	1			
E	P392-220000				..WASHER-COPPER	1			
F	P392-180000				..WASHER-COPPER	1			
G	32E6-92060				..U-BOLT	2			
H	S071-034330				..U-BOLT	4			
I	31EN-92250				..BRACKET-ACCUM	2			

D/ACTING MAIN PIPING KIT(MCV TYPE 1)

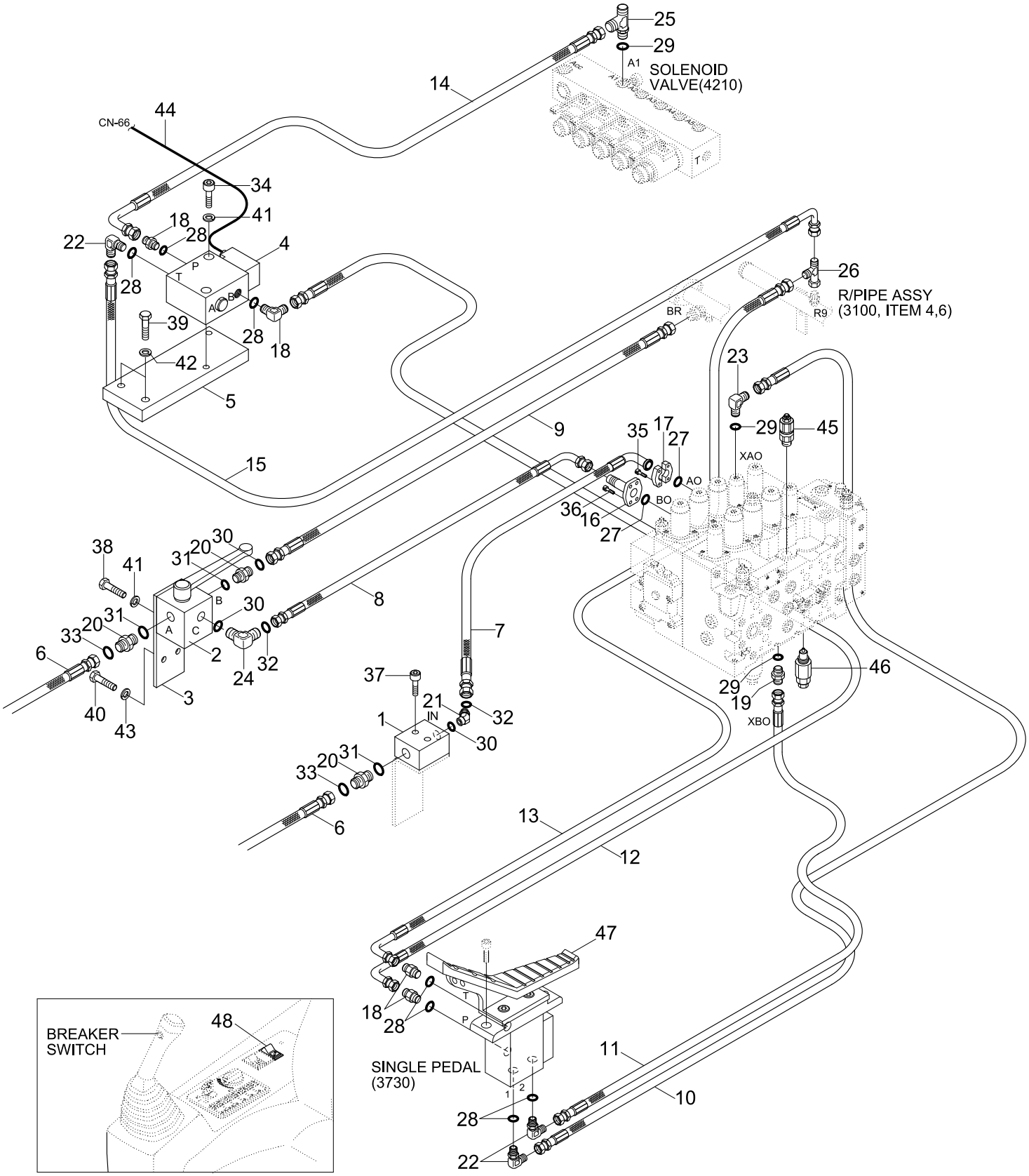

Item	Part_No	IS	Ord	T	Description	Qty	Serial_No	ITC	Remark
*	@				D/ACT HYD PIPING KIT	1	#0001 -	-	NOT
*-1	@				.D/ACT PIPING KIT	1			NOT
*-11	@				..D/ACT MAIN PIPING KIT	1			NOT
1	31EM-91540				...JOINT ASSY-HOSE	1			
2	31EM-91620				...JOINT-3 WAY	1			
3	31E9-95010				...BRACKET-3 WAY JOINT	1			
4	31N6-91230D				...SOLENOID VLV-BREAKER	1	#0001 -	-	
4-1	XKBN-00192				....COIL-BREAKER SOL	1	#0001 -	-	NOT SHOWN
5	31N6-91250				...BRACKET-SOL VLV	1			
6	P973-207334				...HOSE ASSY-ORFS 0X90	2			
7	31N8-92221				...HOSE ASSY	1			
8	P923-166024				...HOSE ASSY-ORFS 0X45	1			
9	31N8-92231				...HOSE ASSY	1			
10	P400-042076				...HOSE ASSY-COMPACT	1			
11	P400-042066				...HOSE ASSY-COMPACT	1			
12	P420-042094				...HOSE ASSY-COMP 0X90	1			
13	P420-042066				...HOSE ASSY-COMP 0X90	1			
14	P420-042024				...HOSE ASSY-COMP 0X90	1			
15	P420-042060				...HOSE ASSY-COMP 0X90	1			
16	31N8-92290				...PIPE WA-ORFS	1			
17	P173-160104				...FLANGE-HYD,SPLIT	2			
18	P010-110002				...CONNECTOR	3			
19	P010-110013				...CONNECTOR	1			
20	X500-110006				...CONNECTOR-ORFS	3			
21	X530-110005				...ELBOW-45,ORFS	1			

Item	Part_No	IS	Ord	T	Description	Qty	Serial_No	ITC	Remark
22	P020-110001				...ELBOW-90	4			
23	P020-110012				...ELBOW-90	1			
24	X520-110005				...ELBOW-90,ORFS	1			
25	P320-060406				...TEE-RUN TYPE	1			
26	32E6-10460				...TEE-SWEVEL NUT	1			
27	Y171-024004				...O-RING	2			
28	S631-011004				...O-RING	7			
29	S631-014004				...O-RING	3			
30	S631-029004				...O-RING	2			
31	S631-038004				...O-RING	3			
32	S621-021001				...O-RING	3			
33	S621-025001				...O-RING	3			
34	S109-080456				...BOLT-SOCKET	2			
35	S109-100306				...BOLT-SOCKET	4			
36	S109-100406				...BOLT-SOCKET	4			
37	S109-120656				...BOLT-SOCKET	2			
38	S017-080252				...BOLT-HEX	4			
39	S017-100252				...BOLT-HEX	2			
40	S017-120302				...BOLT-HEX	2			
41	S411-080002				...WASHER-SPRING	6			
42	S411-100002				...WASHER-SPRING	2			
43	S411-120002				...WASHER-SPRING	2			
44	21NB-00200				...HARNESS-EXT	1			
*-12	@				..ATTACH PIPING KIT	1			NOT
45	31EM-10060				.PORT RELIEF VALVE	1			210bar

Item	Part_No	IS	Ord	T	Description	Qty	Serial_No	ITC	Remark
46	31EM-10180				.PORT RELIEF VALVE	1			280bar
47	34E7-04720				.PEDAL-SINGLE	1			SEE 3730
48	21E6-30540				.SWITCH-BREAKER	1			BREAKER ONLY

D/ACTING MAIN PIPING KIT(MCV TYPE 2)

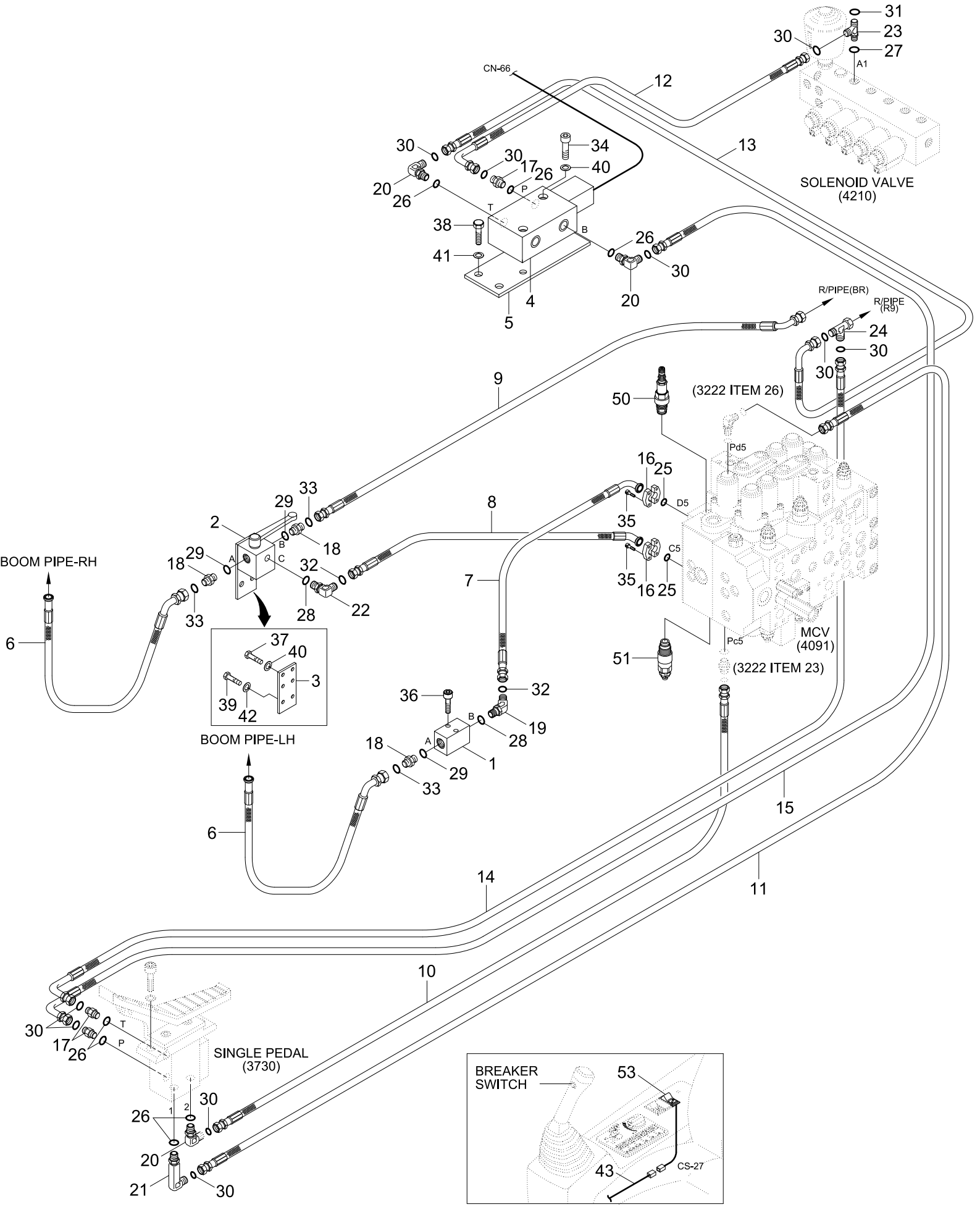

Item	Part_No	IS	Ord	T	Description	Qty	Serial_No	ITC	Remark
*-1	33N9-90410				D/ACT MAIN PIPING KIT	1	#2438 -		
1	31EM-91540				.JOINT ASSY-HOSE	1			
2	31EM-91620				.JOINT-3 WAY	1			
3	31E9-95010				.BRACKET-3 WAY JOINT	1			
4	31N6-91230D				.SOLENOID VLV-BREAKER	1			
4-1	XKBN-00192				..COIL-BREAKER SOL	1			
5	31N6-91250				.BRACKET-SOL VLV	1			
6	P973-207334				.HOSE ASSY-ORFS 0X90	2			
7	P983-166325				.HOSE ASSY-ORFS 0X90	1			
8	P953-166323				.HOSE ASSY-ORFS 0X45	1			
9	P923-203027				.HOSE ASSY-ORFS 0X45	1			
10	P910-042074				.HOSE ASSY-ORFS 0X0	1			
11	P910-042084				.HOSE ASSY-ORFS,THD(0X0)	1			
12	P930-042023				.HOSE ASSY-ORFS 0X90	1			
13	P930-042056				.HOSE ASSY-ORFS 0X90	1			
14	P930-042074				.HOSE ASSY-ORFS 0X90	1			
15	P930-042094				.HOSE ASSY-ORFS 0X90	1			
16	P173-160104				.FLANGE-HYD,SPLIT	4			
17	X500-110001				.CONNECTOR-ORFS	3			
18	X500-110006				.CONNECTOR-ORFS	3			
19	X530-110005				.ELBOW-45,ORFS	1			
20	X520-110001				.ELBOW-90,ORFS	3			
21	31N6-25110				.ELBOW-90,LONG	1			
22	X520-110005				.ELBOW-90,ORFS	1			
23	X820-065152				.TEE-R/TYPE,ORFS	1			

Item	Part_No	IS	Ord	T	Description	Qty	Serial_No	ITC	Remark
24	X840-515151				.TEE-RUN TYPE	1			
25	Y171-024004				.O-RING	2			
26	S631-011004				.O-RING	7			
27	S631-014004				.O-RING	1			
28	S631-029004				.O-RING	2			
29	S631-038004				.O-RING	3			
30	S621-011001				.O-RING	10			
31	S621-012001				.O-RING	1			
32	S621-021001				.O-RING	2			
33	S621-025001				.O-RING	3			
34	S109-080456				.BOLT-SOCKET	2			
35	S109-100306				.BOLT-SOCKET	8			
36	S109-120656				.BOLT-SOCKET	2			
37	S017-080256				.BOLT-HEX	4			
38	S017-100256				.BOLT-HEX	2			
39	S017-120306				.BOLT-HEX	2			
40	S411-080006				.WASHER-SPRING	6			
41	S411-100006				.WASHER-SPRING	2			
42	S411-120006				.WASHER-SPRING	2			
43	21NB-00200				.HARNESS-EXT	1			
50	XKBF-01455				.MAIN RELIEF VALVE	1			
51	XKBF-01452				.MAIN RELIEF VALVE	1			
52	34E7-04720				.PEDAL-SINGLE	1			
53	21E6-30540				.SWITCH-BREAKER	1			

SINGLE PEDAL(DOUBLE ACTING)

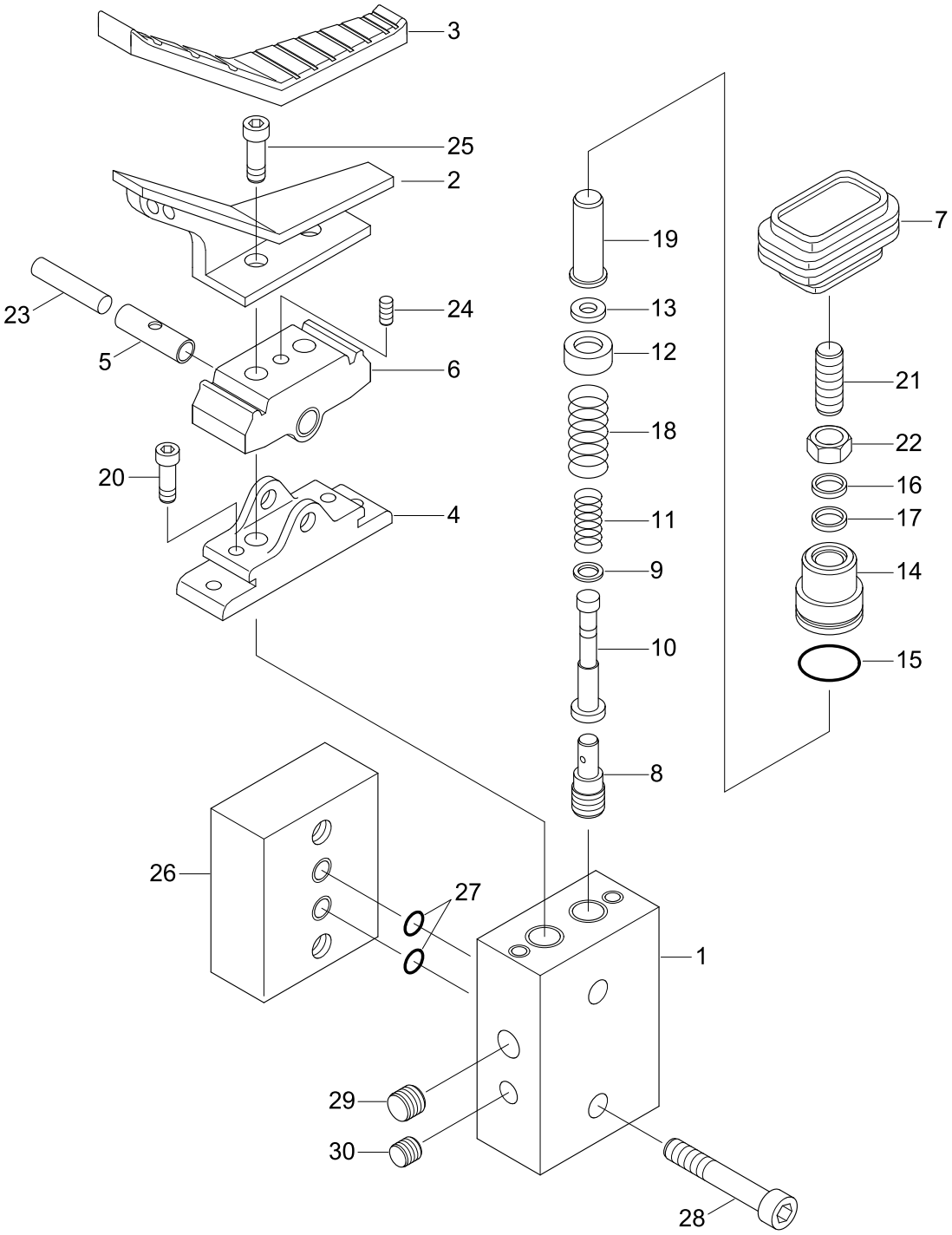

Item	Part_No	IS	Ord	T	Description	Qty	Serial_No	ITC	Remark
*	34E7-04720				PEDAL-SINGLE	1	#0001 -	-	
1	J24D2001				.CASE	1			
2	J24D2002				.PEDAL	1			
3	J24D2003				.COVER-PEDAL	1			
4	J24D2004				.COVER	1			
5	DU1010				.BUSHING	2			
6	J24D2005				.CAM	1			
7	J24D2006				.BELLOWS	1			
8	J24D2007				.SPOOL	2			
9	S090601				.SHIM(1.0T)	2			
10	J24D2008				.SEAT-SPRING	2			
11	J97C1001				.SPRING	2			
12	J24D2010				.SEAT-SPRING	2			
13	J24D2011				.STOPPER	2			
14	J24D2012				.PLUG	2			
15	PO020				.O-RING	2			
16	DSP10				.SEAL-DUST	2			
17	RSY10				.SEAL-ROD	2			
18	J98H2001				.SPRING	2			
19	J24D2014				.ROD-PUSH	2			
20	WBM0830				.BOLT-SOCKET	2			
21	J24D2015				.SCREW-SET	2			
22	HNM10				.NUT-HEX	2			
23	J24D2016				.SHAFT-CAM	1			
24	SBM0812				.SCREW-SET	1			

Item	Part_No	IS	Ord	T	Description	Qty	Serial_No	ITC	Remark
25	WBM1015				.BOLT-SOCKET	2			
26	J2J1002				.BLOCK	1			
27	PO012				.O-RING	2			
28	WBM0840				.BOLT-SOCKET	2			
29	WPT38				.PLUG	1			
30	WPT18				.PLUG	1			

MAIN PUMP

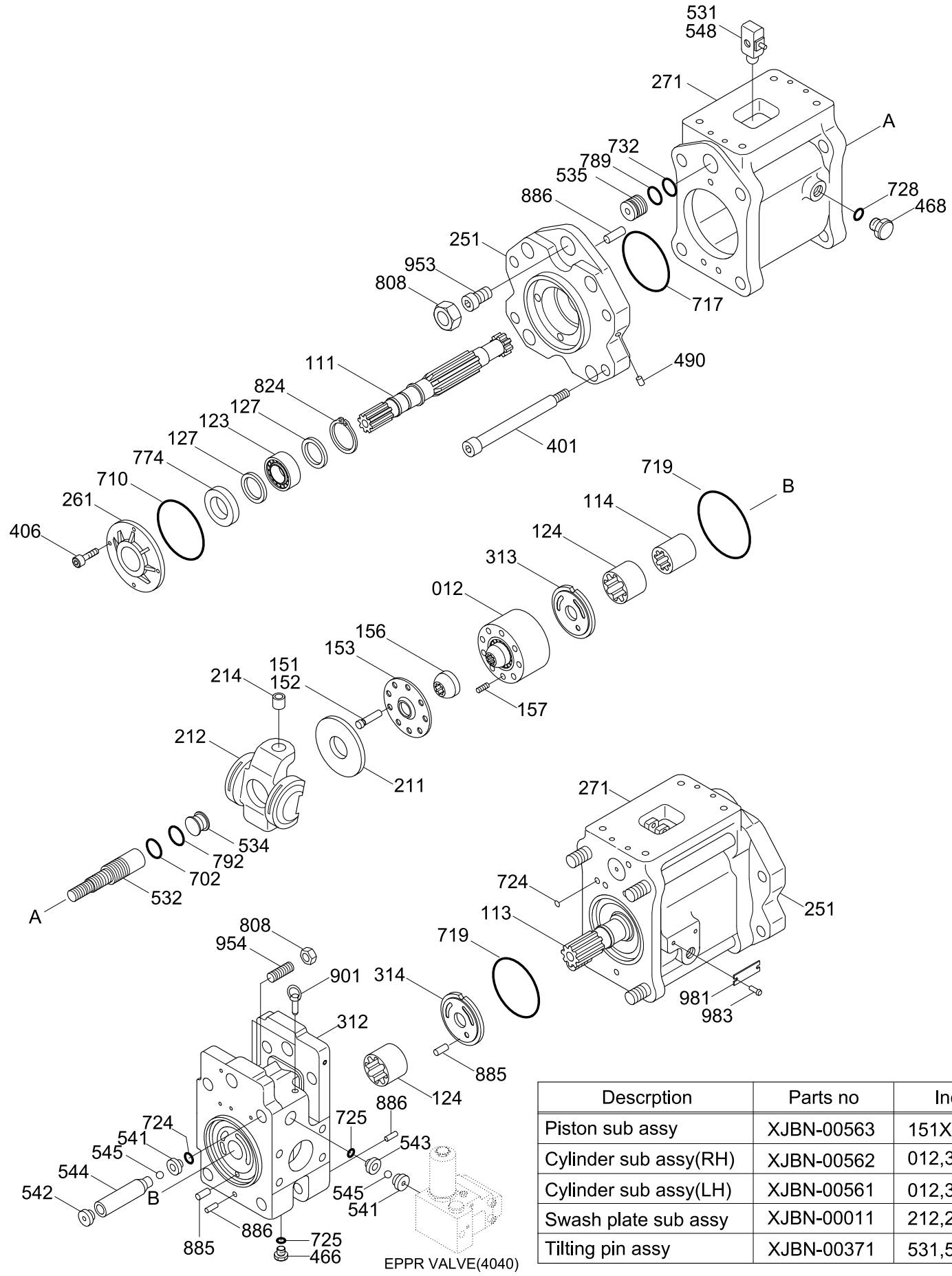

Descrption	Parts no	Included item
Piston sub assy	XJBN-00563	151X9EA,152x9EA
Cylinder sub assy(RH)	XJBN-00562	012,313
Cylinder sub assy(LH)	XJBN-00561	012,314
Swash plate sub assy	XJBN-00011	212,214
Tilting pin assy	XJBN-00371	531,548

Description	Parts no	Included item
Pump unit seal kit	XJBN-01108	702 ~ 792

Item	Part_No	IS	Ord	T	Description	Qty	Serial_No	ITC	Remark
*	31N9-10010				MAIN PUMP	1			
*-1	@				.MAIN PUMP UNIT	1			NOT
NS012	XJBN-00567				..BLOCK-CYLINDER	2			NOT
111	XJBN-00015				..SHAFT-DRIVE(F)	1			
113	XJBN-00153				..SHAFT-DRIVE(R)	1			
114	XJBN-00367				..COUPLING-SPLINE	1			
123	XJBN-00017				..BEARING-ROLLER	2			
124	XJBN-00018				..BEARING-NEEDLE	2			
127	XJBN-00019				..SPACER-BEARING	3			
NS151	XJBN-00566				..PISTON	1			NOT
NS152	XJBN-00565				..SHOE	1			NOT
153	XJBN-00020				..PLATE-SET	2			
156	XJBN-00564				..BUSHING-SPHERICAL	2			
157	XJBN-00541				..SPRING-CYLINDER	18			
211	XJBN-00023				..PLATE-SHOE	2			
S212	XJBN-00012				..PLATE-SWASH	1			
S214	XJBN-00013				..BUSHING-TILTING	1			
251	XJBN-00560				..SUPPORT-S.P.	2			
261	XJBN-00025				..COVER(FR)-SEAL	1			
271	XJBN-00026				..CASING-PUMP	2			
312	XJBN-00027				..BLOCK-VALVE	1			
S313	XJBN-00557				..PLATE-VALVE(R)	1			
S314	XJBN-00556				..PLATE-VALVE(L)	1			
325	XJBN-00380				..CASING-VALVE	1			
401	XJBN-00028				..SCREW	8			

Item	Part_No	IS	Ord	T	Description	Qty	Serial_No	ITC	Remark
406	XJBN-00355				..SCREW	4			
466	XJBN-00356				..PLUG	2			
468	XJBN-00357				..PLUG	3			
490	XJBN-00032				..PLUG	30			
NS531	XJBN-00369				..PIN-TILTING	1			NOT
532	XJBN-00033				..PISTON-SERVO	2			
534	XJBN-00034				..STOPPER(L)	2			
535	XJBN-00035				..STOPPER(S)	2			
N541	XJBN-00036				..SEAT	4			NOT
543	XJBN-00037				..STOPPER 1	2			
N544	XJBN-00039				..STOPPER 2	2			NOT
545	XJBN-00359				..BALL-STEEL	4			
NS548	XJBN-00360				..PIN-FEED BACK	1			NOT
K702	XJBN-00040				..O-RING	2			
K710	XJBN-00041				..O-RING	1			
K717	XJBN-00042				..O-RING	2			
K719	XJBN-00043				..O-RING	2			
K724	XJBN-00044				..O-RING	16			
K725	XJBN-00362				..O-RING	4			
K727	XJBN-00283				..O-RING	1			
K728	XJBN-00363				..O-RING	3			
K732	XJBN-00047				..O-RING	2			
K774	XJBN-00906				..SEAL-OIL	1	#0001 -	-	
K789	XJBN-00049				..RING-BACK UP	2			
K792	XJBN-00050				..RING-BACK UP	2			

Item	Part_No	IS	Ord	T	Description	Qty	Serial_No	ITC	Remark
808	XJBN-00364				..NUT	4			
824	XJBN-00052				..RING-SNAP	2			
885	XJBN-00053				..PIN-2	2			
886	XJBN-00365				..PIN-SPRING	4			
901	XJBN-00055				..BOLT-EYE	2			
953	XJBN-00654				..SCREW-SET	2			
954	XJBN-00057				..SCREW-SET	2			
981	XJBN-00391				..NAME PLATE	1			
983	XJBN-00341				..PIN	2			
*-2	XJBN-00656				.REGULATOR	1			
*-3	XJBN-00655				.GEAR PUMP	1			
011	XJBN-00563				PISTON ASSY	18			SEE ILLUST
013	XJBN-00562				CYLINDER ASSY-RH	1			SEE ILLUST
014	XJBN-00561				CYLINDER ASSY-LH	1			SEE ILLUST
030	XJBN-00011				SWASH PLATE ASSY	2			SEE ILLUST
530	XJBN-00371				TILTING PIN SUB ASSY	2			SEE ILLUST
K	XJBN-01108				SEAL KIT-PUMP UNIT	1	#0001 -	-	SEE ILLUST

REGULATOR

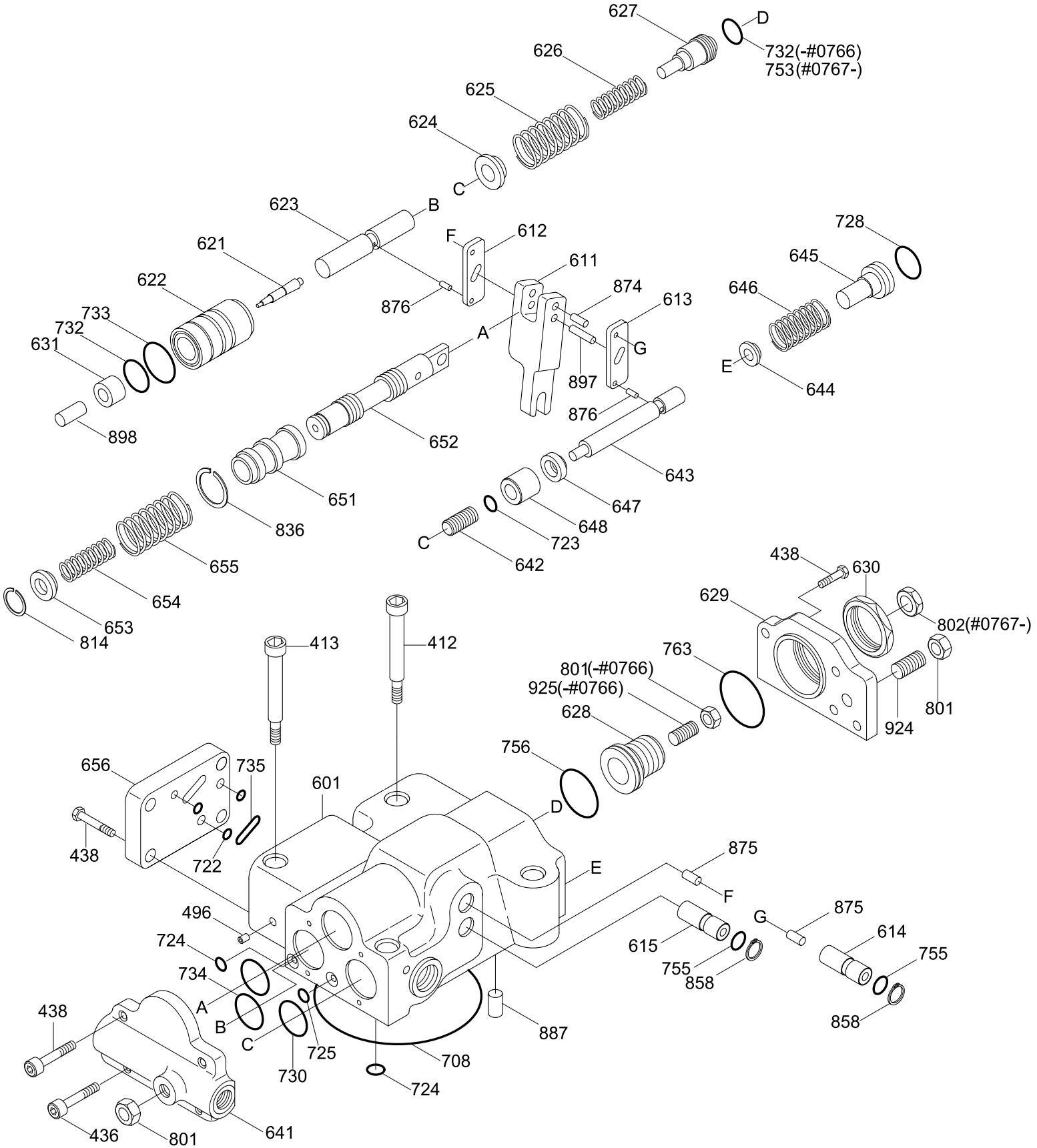

Description	Parts no	Included item
Regulator seal kit	XJBN-00972	708 ~ 763

Item	Part_No	IS	Ord	T	Description	Qty	Serial_No	ITC	Remark
*-2	XJBN-00656				.REGULATOR	1			
412	XJBN-00448				..SCREW	2			
413	XJBN-00447				..SCREW	2			
436	XJBN-00446				..SCREW	2			
438	XJBN-00445				..SCREW	10			
496	XJBN-00032				..PLUG	5			
N601	XJBN-00317				..CASING	1			NOT
N611	XJBN-00579				..LEVER-FEED BACK	1			NOT
N612	XJBN-00315				..LEVER-1	1			NOT
N613	XJBN-00314				..LEVER-2	1			NOT
N614	XJBN-00313				..PLUG-CENTER	1			NOT
N615	XJBN-00312				..PLUG-ADJUST	1			NOT
N621	XJBN-00311				..PISTON-COMPENSATOR	1			NOT
N622	XJBN-00346				..CASE-PISTON	1			NOT
N623	XJBN-00309				..ROD-COMPENSATOR	1			NOT
N624	XJBN-00308				..SEAT(C)-SPRING	1			NOT
N625	XJBN-00307				..SPRING-OUTER	1			NOT
N626	XJBN-00306				..SPRING-INNER	1			NOT
N627	XJBN-00305				..STEM(C)-ADJUST	1	- #0766		NOT
	XJBN-01031				..STEM(C)-ADJUST	1	#0767 -	D	NOT
N628	XJBN-00304				..SCREW(C)-ADJUST	1	- #0766		NOT
	XJBN-01025				..SCREW(C)-ADJUST	1	#0767 -	D	NOT
N629	XJBN-00303				..COVER(C)	1			NOT
N630	XJBN-00302				..NUT-LOCK	1			NOT
N631	XJBN-00657				..SLEEVE	1			NOT

Item	Part_No	IS	Ord	T	Description	Qty	Serial_No	ITC	Remark
N641	XJBN-00300				..COVER-PILOT	1			NOT
N642	XJBN-00299				..SCREW(QMC)-ADJUST	1			NOT
N643	XJBN-00298				..PISTON-PILOT	1			NOT
N644	XJBN-00297				..SEAT(Q)-SPRING	1			NOT
N645	XJBN-00658				..STEM(Q)-SPRING	1			NOT
N646	XJBN-00585				..SPRING-PILOT	1			NOT
N647	XJBN-00294				..STOPPER	1			NOT
N648	XJBN-00293				..PISTON(QMC)	1			NOT
N651	XJBN-00292				..SLEEVE	1			NOT
N652	XJBN-00291				..SPOOL	1			NOT
N653	XJBN-00290				..SEAT-SPRING	1			NOT
N654	XJBN-00289				..SPRING-RETURN	1			NOT
N655	XJBN-00288				..SPRING-SET	1			NOT
N656	XJBN-00287				..COVER-BLOCK	1			NOT
K708	XJBN-00286				..O-RING	1			
K722	XJBN-00285				..O-RING	3			
K723	XJBN-00284				..O-RING	3			
K724	XJBN-00361				..O-RING	9			
K725	XJBN-00231				..O-RING	1			
K728	XJBN-00097				..O-RING	1			
K730	XJBN-00230				..O-RING	1			
732	XJBN-00283				..O-RING	2	- #0330		
K732	XJBN-00820				..O-RING	2	#0331 - #0766	B	
					..O-RING	1	#0767 -	A	
K733	XJBN-00282				..O-RING	1			

Item	Part_No	IS	Ord	T	Description	Qty	Serial_No	ITC	Remark
K734	XJBN-00281				..O-RING	1			
K735	XJBN-00280				..O-RING	1			
K753	XJBN-01026				..O-RING	1	#0767 -	D	
K755	XJBN-00045				..O-RING	2			
K756	XJBN-00279				..O-RING	1			
K763	XJBN-00094				..O-RING	1			
801	XJBN-00278				..NUT	2	- #0766		
					..NUT	1	#0767 -	A	
802	XJBN-01027				..NUT	1	#0767 -	-	
814	XJBN-00439				..RING-SNAP	1			
N836	XJBN-00276				..RING-SNAP	1			NOT
858	XJBN-00438				..RING-SNAP	2			
N874	XJBN-00344				..PIN	1			NOT
N875	XJBN-00273				..PIN	4			NOT
N887	XJBN-00272				..PIN	1			NOT
N897	XJBN-00343				..PIN	1			NOT
N898	XJBN-00659				..PIN	1			NOT
924	XJBN-00269				..SCREW-SET	1			
N925	XJBN-00588				..SCREW(QI)-ADJUST	1	- #0766	-	NOT
N	@				NOT INDIVIDUALLY SUPPLIED	AR			NOT
K	XJBN-00972				SEAL KIT-REGULATOR	1	#0001 -	-	SEE ILLUST

GEAR PUMP

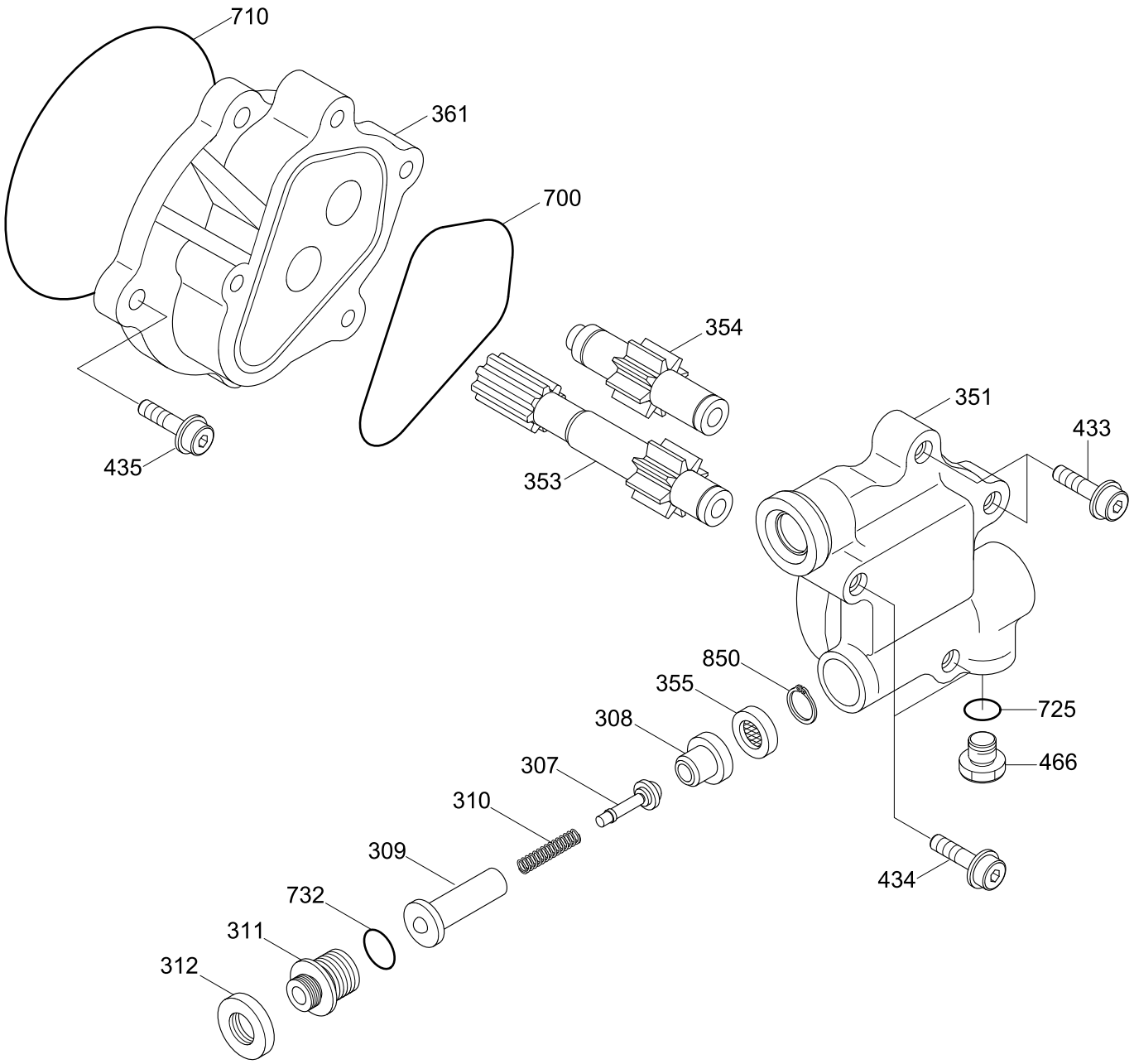

Description	Parts no	Included item
Gear pump seal kit	XJBN-01109	700 ~ 732

Item	Part_No	IS	Ord	T	Description	Qty	Serial_No	ITC	Remark
*-3	XJBN-00655				.GEAR PUMP	1			
307	XJBN-00521				..POPPET	1			
308	XJBN-00522				..SEAT	1			
309	XJBN-00523				..RING	1			
310	XJBN-00524				..SPRING	1			
311	XJBN-00525				..SCREW-ADJUST	1			
312	XJBN-00334				..NUT-LOCK	1			
351	XJBN-00660				..CASE-GEAR	1			
353	XJBN-00332				..GEAR-DRIVE	1			
354	XJBN-00331				..GEAR-DRIVEN	1			
355	XJBN-00330				..FILTER-RETURN	1			
361	XJBN-00349				..CASE	1			
433	XJBN-00328				..SOCKET-FLANGE	2			
434	XJBN-00327				..SOCKET-FLANGE	2			
435	XJBN-00348				..SOCKET-FLANGE	4			
466	XJBN-00356				..PLUG	1			
K700	XJBN-00325				..RING	1			
K710	XJBN-00041				..O-RING	1			
K725	XJBN-00362				..O-RING	1			
K732	XJBN-00283				..O-RING	1			
850	XJBN-00386				..RING-SNAP	1			
K	XJBN-01109				SEAL KIT-GEAR PUMP	1	#0001 -	-	SEE ILLUST

EPPR VALVE

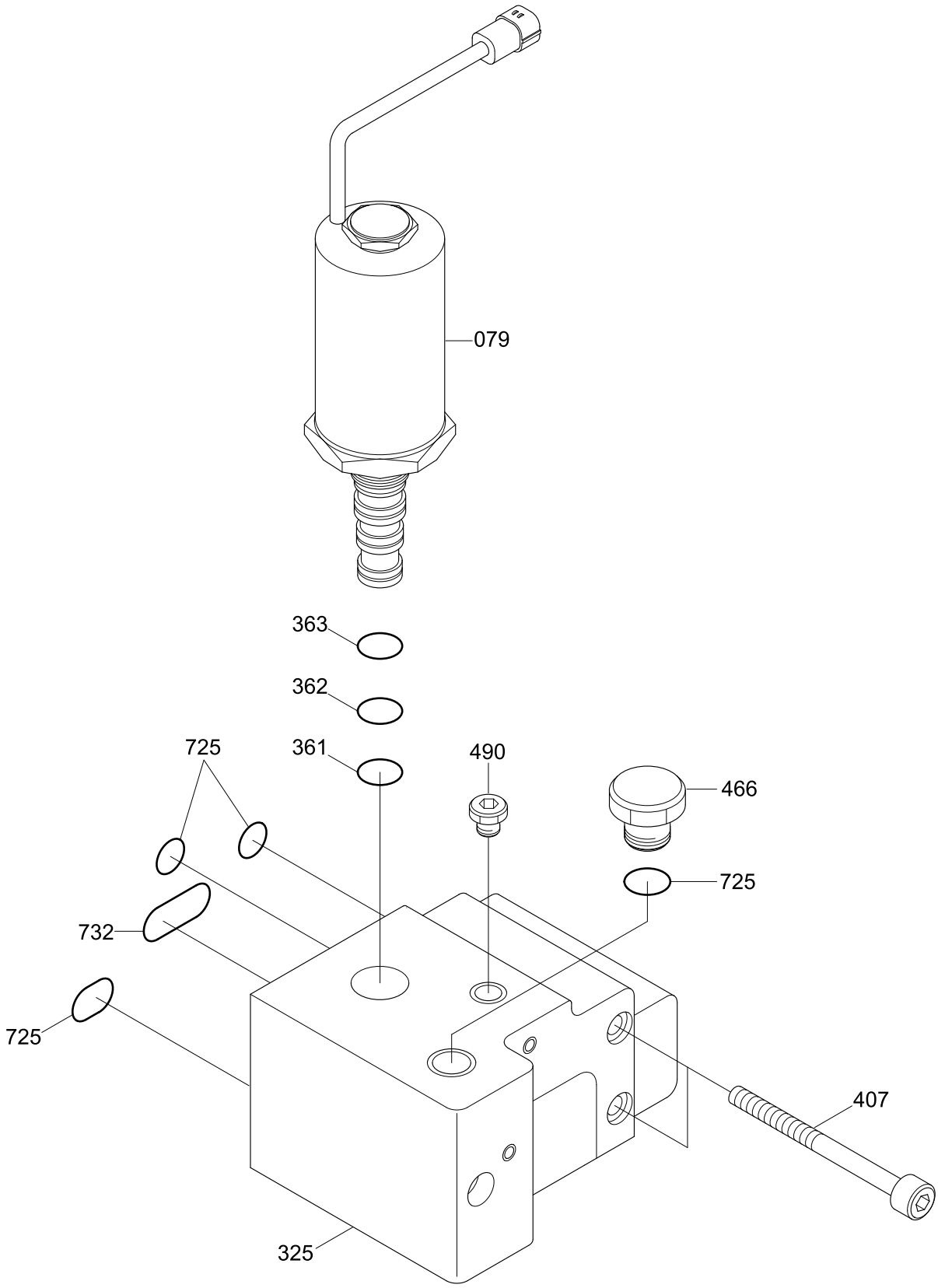

Item	Part_No	IS	Ord	T	Description	Qty	Serial_No	ITC	Remark
*-1	@				.MAIN PUMP UNIT	1			NOT
079	XJBN-00382				..EPPR VALVE ASSY	1			V9406285784
361	XJBN-00546				...O-RING	1			
362	XJBN-00547				...O-RING	1			
363	XJBN-00548				...O-RING	1			
325	XJBN-00380				..CASING-VALVE	1			2923230-0032
407	XJBN-00381				..SCREW	3			
466	XJBN-00356				..PLUG	1			OVP14
490	XJBN-00032				..PLUG	3			PBP116-2403
725	XJBN-00362				..O-RING	4			OORBP11
732	XJBN-00047				..O-RING	1			

MAIN CONTROL VALVE(1/5, TYPE 1)

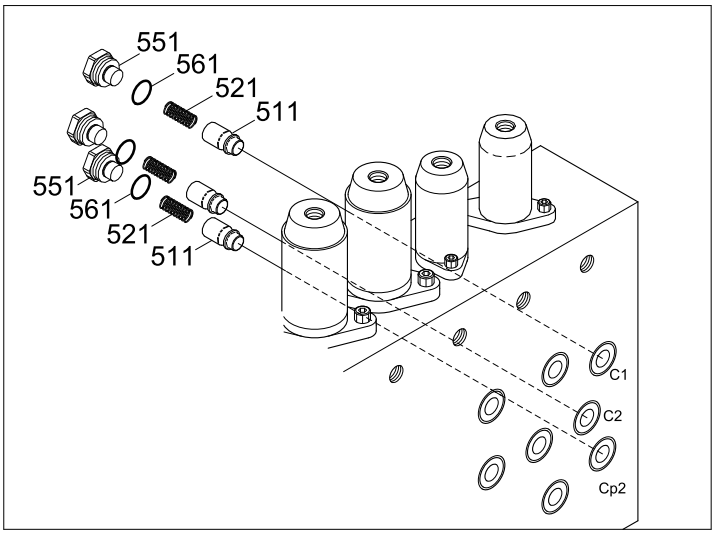

Item	Part_No	IS	Ord	T	Description	Qty	Serial_No	ITC	Remark
*	31N9-10110				.MAIN CONTROL VALVE	1			
N101	XJBN-00242				..CASING-A	1			NOT
N102	XJBN-00241				..CASING-B	1			NOT
N103	XJBN-00646				..BLOCK	1			NOT
N104	XJBN-00647				..BLOCK	1			NOT
165	XJBN-00232				..O-RING	5	#0001 -	-	
166	XJBN-00231				..O-RING	3	#0001 -	-	
167	XJBN-00374				..O-RING	2	#0001 -	-	
168	XJBN-00283				..O-RING	1	#0001 -	-	
251	XJBN-00226				..VALVE-CONTROL	1	#0001 -	-	
252	XJBN-00225				..VALVE-LOCK	2			
254	XJBN-00214				..VALVE-LOGIC	1			
266	XJBN-00281				..O-RING	4	#0001 -	-	
324	XJBN-00199				..SPRING	1			
325	XJBN-00198				..SPRING	1			
338	XJBN-00188				..STOPPER	1			
357	XJBN-00186				..ORIFICE	3			
391	XJBN-00249				..SPOOL-TRAVEL	1			
401	XJBN-00652				..SPOOL	1			
424	XJBN-00175				..SPRING	1			
425	XJBN-00174				..SPRING	1			
438	XJBN-00173				..ROD	1			
511	XJBN-00172				..POPPET	3			
521	XJBN-00169				..SPRING	3			
551	XJBN-00167				..PLUG	4			

Item	Part_No	IS	Ord	T	Description	Qty	Serial_No	ITC	Remark
561	XJBN-00363				..O-RING	4			
601	XJBN-00653				..MAIN RELIEF VALVE	1			
602	XJBN-00162				..PORT RELIEF VALVE	1			
974	XJBN-00159				..SCREW-SOCKET	5			
980	XJBN-00362				..O-RING	1	#0001 -	-	
981	XJBN-00363				..O-RING	2	#0001 -	-	
982	XJBN-01017				..O-RING	1	#0001 -	-	
N	@				NOT SUPPLIED PARTS	AR			NOT

MAIN CONTROL VALVE(1/5, TYPE 2, #2403-)

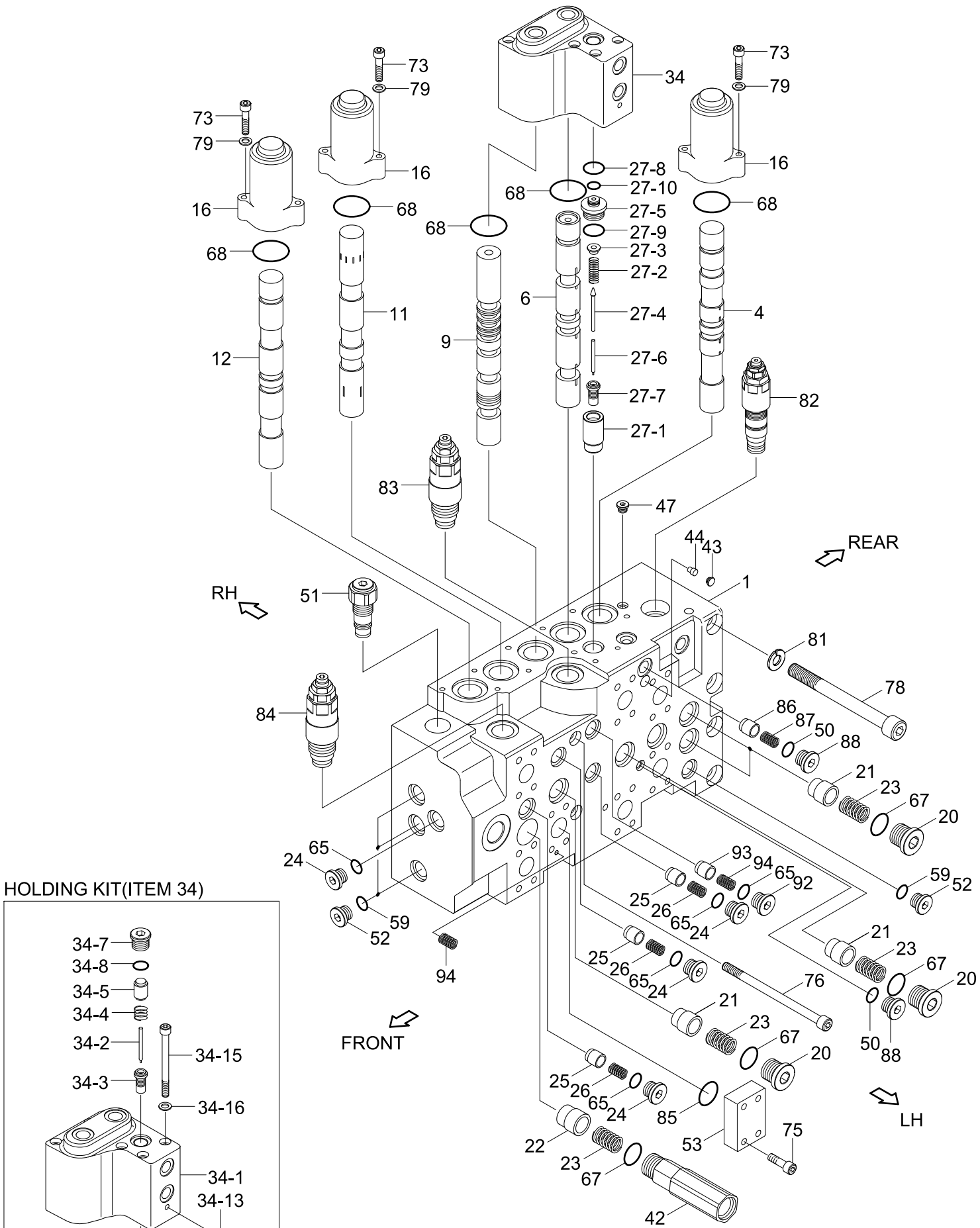

HOLDING KIT(ITEM 34)

Item	Part_No	IS	Ord	T	Description	Qty	Serial_No	ITC	Remark
*	31N9-17000P				MAIN CONTROL VALVE	1	#2403 -		
N1	XKBF-01038				HOUSING-P1	1			NOT
4	XKBF-01585				SPOOL-TRAVEL	1			
6	XKBF-01442				SPOOL-BOOM	1			
9	XKBF-01444				SPOOL-ARM 2	1			
11	XKBF-01446				SPOOL-ARM REGEN	1			
12	XKBF-01447				SPOOL-BUCKET	1			
16	XKBF-00379				COVER B1-PILOT	3			
20	XKBF-00383				PLUG	4			
21	XKBF-00806				POPPET 1	4			
22	XKBF-01546				POPPET	1			
23	XKBF-01250				SPRING 1	5			
24	XKBF-01252				PLUG	4			
25	XKBF-01450				POPPET 2	3			
26	XKBF-01451				SPRING 2	3			
27	XKBF-00442				HOLDING KIT-B	1			
27-1	XKBF-01457				.POPPET-LOCK VALVE	1			
27-2	XKBF-01340				.SPRING-POPPET SIGNAL	1			
27-3	XKBF-01426				.GUIDE-POPPET	1			
27-4	XKBF-01458				.POPPET-PILOT	1			
27-5	XKBF-01459				.SEAT-POPPET	1			
27-6	XKBF-00903				.C-RING	1			
27-7	XKBF-00905				.RESTRICTOR-LOCK VLV	1			
27-8	XKBF-00958				.O-RING	1			
27-9	XKBF-01283				.O-RING	1			

Item	Part_No	IS	Ord	T	Description	Qty	Serial_No	ITC	Remark
27-10	XKBF-00962				.RING-BACK UP	1			
34	XKBF-01256				HOLDING KIT-A1	1			
34-1	XKBF-01257				.BLOCK P1-HOLDING	1			
34-2	XKBF-00910				.PISTON 1	1			
34-3	XKBF-00907				.GUIDE-POPPET	1			
34-4	XKBF-00912				.SPRING 1	1			
34-5	XKBF-00913				.PISTON 2	1			
34-6	XKBF-01248				.PLUG	1			
34-7	XKBF-01258				.PLUG	1			
34-8	XKCG-00060				.O-RING	1			
34-13	XKBF-00931				.PLUG	1			
34-15	XKBF-01265				.BOLT-SOCKET	5			
34-16	XKBF-00425				.WASHER	5			
42	XKBF-00398				CHECK VALVE ASSY	1			
43	XKBF-00399				ORIFICE-SIGNAL	1			
44	XKBF-00922				FILTER-COIN TYPE	1			
47	XKBF-00931				PLUG	2			
50	XKCG-00154				O-RING	2			
51	XKBF-00807				NEGATIVE CONTROL VLV	1			
52	XKBF-00933				PLUG	4			
53	XKBF-01276				FLANGE	1			
59	XKBF-00940				O-RING	4			
65	XKBF-01282				O-RING	7			
67	XKBF-01074				O-RING	3			
68	XKBF-00416				O-RING	5			

Item	Part_No	IS	Ord	T	Description	Qty	Serial_No	ITC	Remark
73	XKBF-01284				BOLT-SOCKET	6			
75	XKBF-01286				BOLT-SOCKET	4			
76	XKBF-01287				BOLT-SOCKET	2			
78	XKBF-01289				BOLT-SOCKET	4			
79	XKBF-00425				WASHER	6			
81	XKBF-00427				WASHER	4			
82	XKBF-00895				RELIEF VALVE-MAIN	1			
83	XKBF-00428				RELIEF VALVE-OVER LOAD	1			
84	XKBF-01582				RELIEF VALVE-OVER LOAD	1			
85	XKBF-01456				O-RING	1			
86	XKBF-00732				POPPET-CHECK	1			
87	XKBF-00733				SPRING-CHECK	1			
88	XKBF-01295				PLUG	2			
92	XKBF-01543				PLUG	1			
93	XKBF-01542				POPPET	1			
94	XKBF-01541				SPRING	1			

MAIN CONTROL VALVE(2/5, TYPE 1)

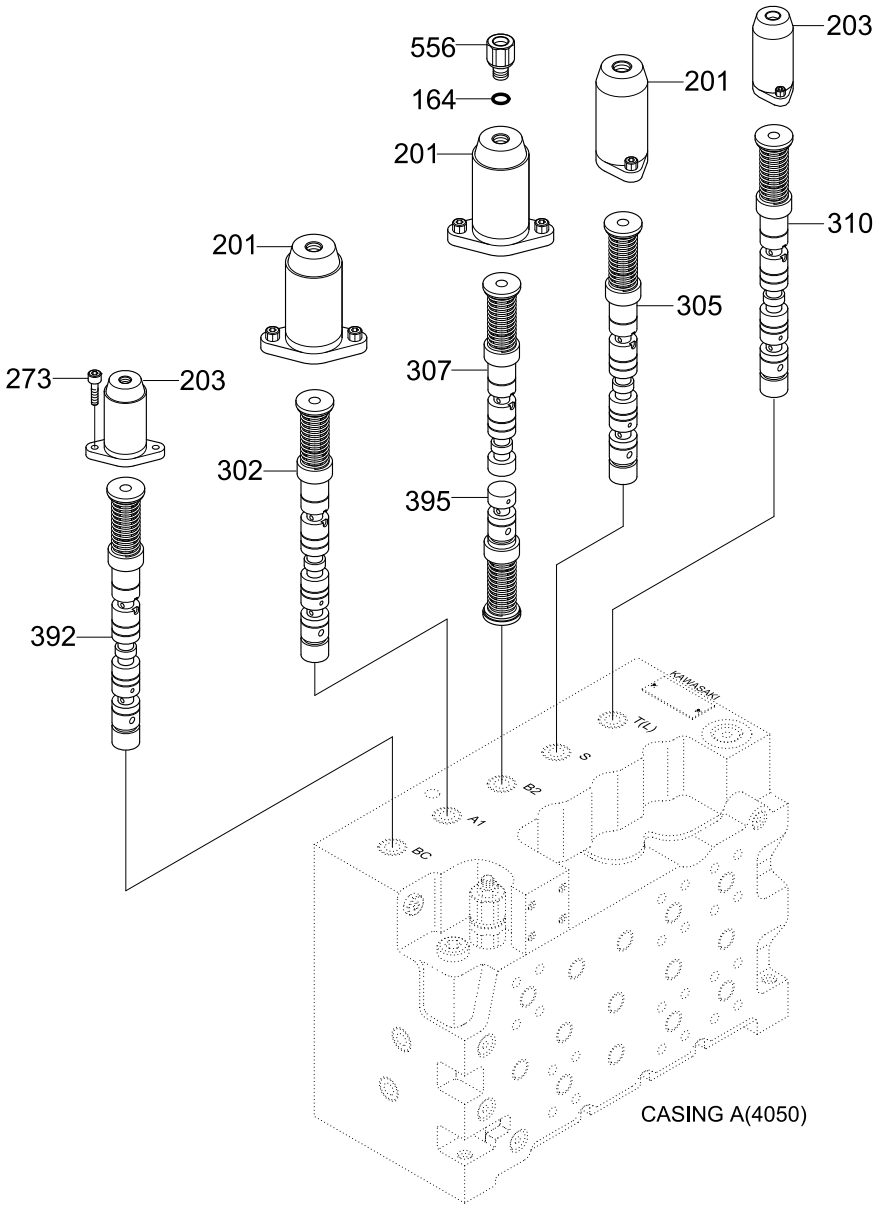

Item	Part_No	IS	Ord	T	Description	Qty	Serial_No	ITC	Remark
*	@				MAIN CONTROL VALVE	1			NOT
201	XJBN-00229				.COVER	3			VZ40101148
203	XJBN-00258				.COVER	2			VZ40103496
261	XJBN-00213				.O-RING	3			VZ50102761H50
262	XJBN-00212				.O-RING	2			VZ50102761H39
273	XJBN-00210				.SCREW-SOCKET	10			
302	XJBN-00649				.SPOOL-ARM 1	1	#0001 -	-	
305	XJBN-00532				.SPOOL-SWING	1	#0001 -	-	
307	XJBN-00533				.SPOOL-BOOM 2	1	#0001 -	-	
310	XJBN-00216				.SPOOL-TRAVEL,LH	1	- #0043		
	XJBN-00892				.SPOOL-TRAVEL,LH	1	#0044 -	B	
392	XJBN-00651				.SPOOL ASSY-BYPASS CUT	1	#0001 -	-	
395	XJBN-00177				.SPOOL-SWING PRIORITY	1	#0001 -	-	

MAIN CONTROL VALVE(2/5, TYPE 2, #2403-)

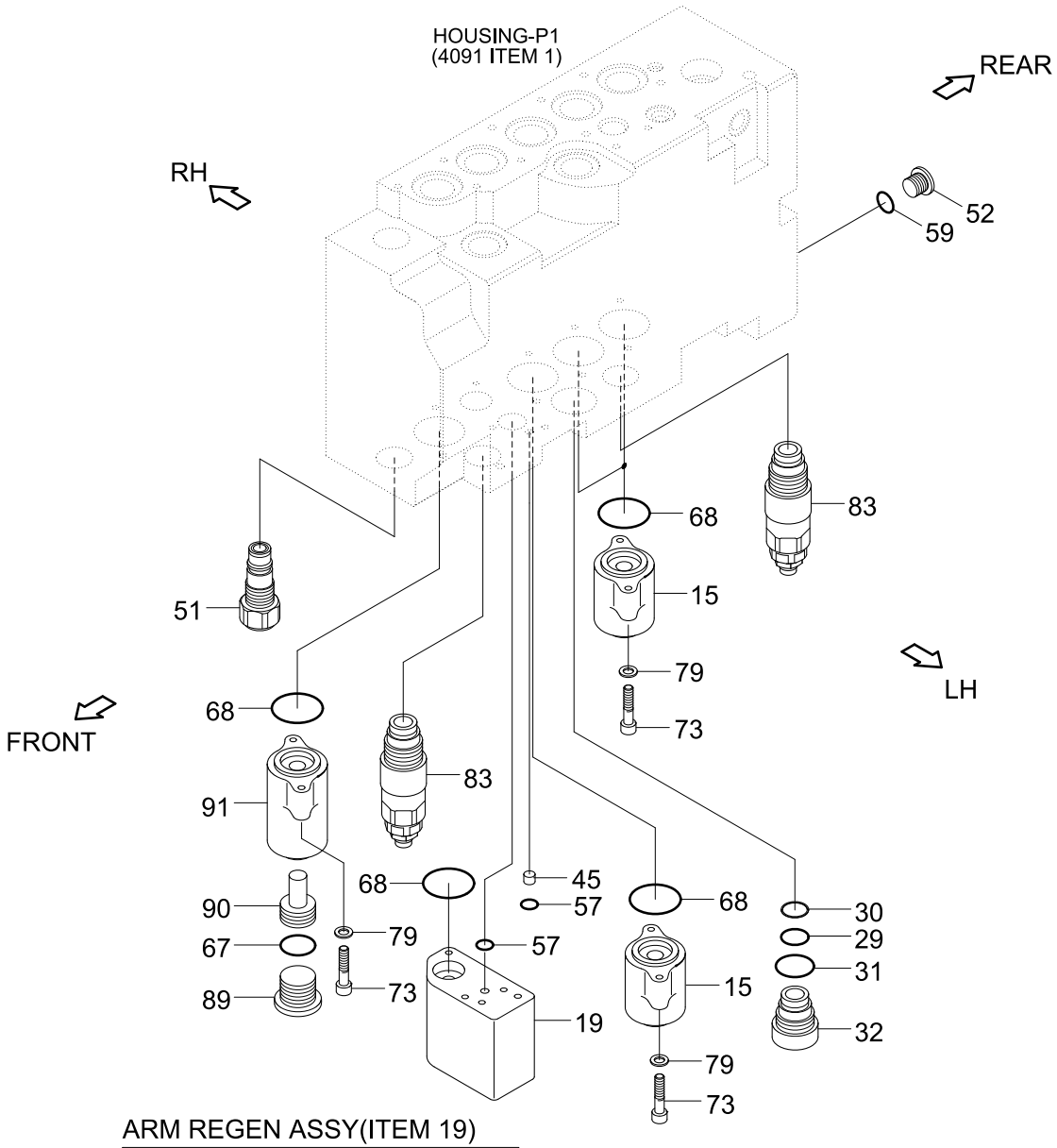

ARM REGEN ASSY(ITEM 19)

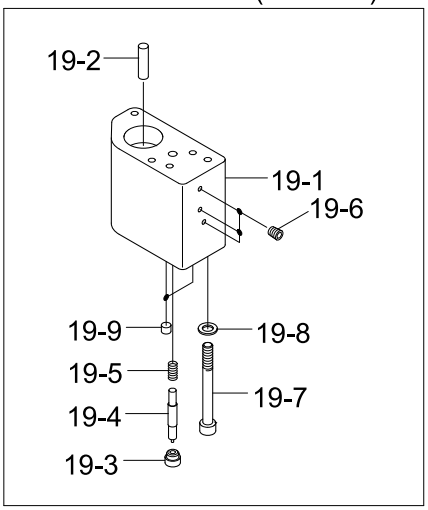

Item	Part_No	IS	Ord	T	Description	Qty	Serial_No	ITC	Remark
*	@				MAIN CONTROL VALVE	1	#2403 -		NOT
15	XKBF-01242				COVER A-PILOT	3			
19	XKBF-01244				ARM REGEN ASSY	1			
19-1	XKBF-01245				.BLOCK-REGEN	1			
19-2	XKBF-01246				.PISTON-CUT OFF	1			
19-3	XKBF-00919				.STOPPER-REGEN	1			
19-4	XKBF-01247				.SPOOL-REGEN	1			
19-5	XKBF-00918				.SPRING-REGEN	1			
19-6	XKBF-01248				.PLUG	3			
19-7	XKBF-00420				.BOLT-SOCKET HEAD	3			
19-8	XKBF-00425				.WASHER	3			
19-9	XKBF-01249				.PIN-REGEN	2			
29	XKBF-01592				O-RING	1			
30	XKBF-01593				RING-BACK UP	1			
31	XKBF-01594				O-RING	1			
32	XKBF-01595				PLUG	1			
45	XKBF-00401				ORIFICE-PLUG	1			
51	XKBF-00807				NEGATIVE CONTROL VLV	1			
52	XKBF-00933				PLUG	1			
57	XKBF-00937				O-RING	2			
59	XKBF-00940				O-RING	1			
67	XKBF-01074				O-RING	1			
68	XKBF-00416				O-RING	5			
73	XKBF-01284				BOLT-SOCKET	8			
79	XKBF-00425				WASHER	8			

Item	Part_No	IS	Ord	T	Description	Qty	Serial_No	ITC	Remark
83	XKBF-00428				RELIEF VALVE-OVER LOAD	2			
89	XKBF-01516				PLUG	1			
90	XKBF-01588				PISTON-PILOT	1			
91	XKBF-01518				COVER	1			

MAIN CONTROL VALVE(3/5, TYPE 1)

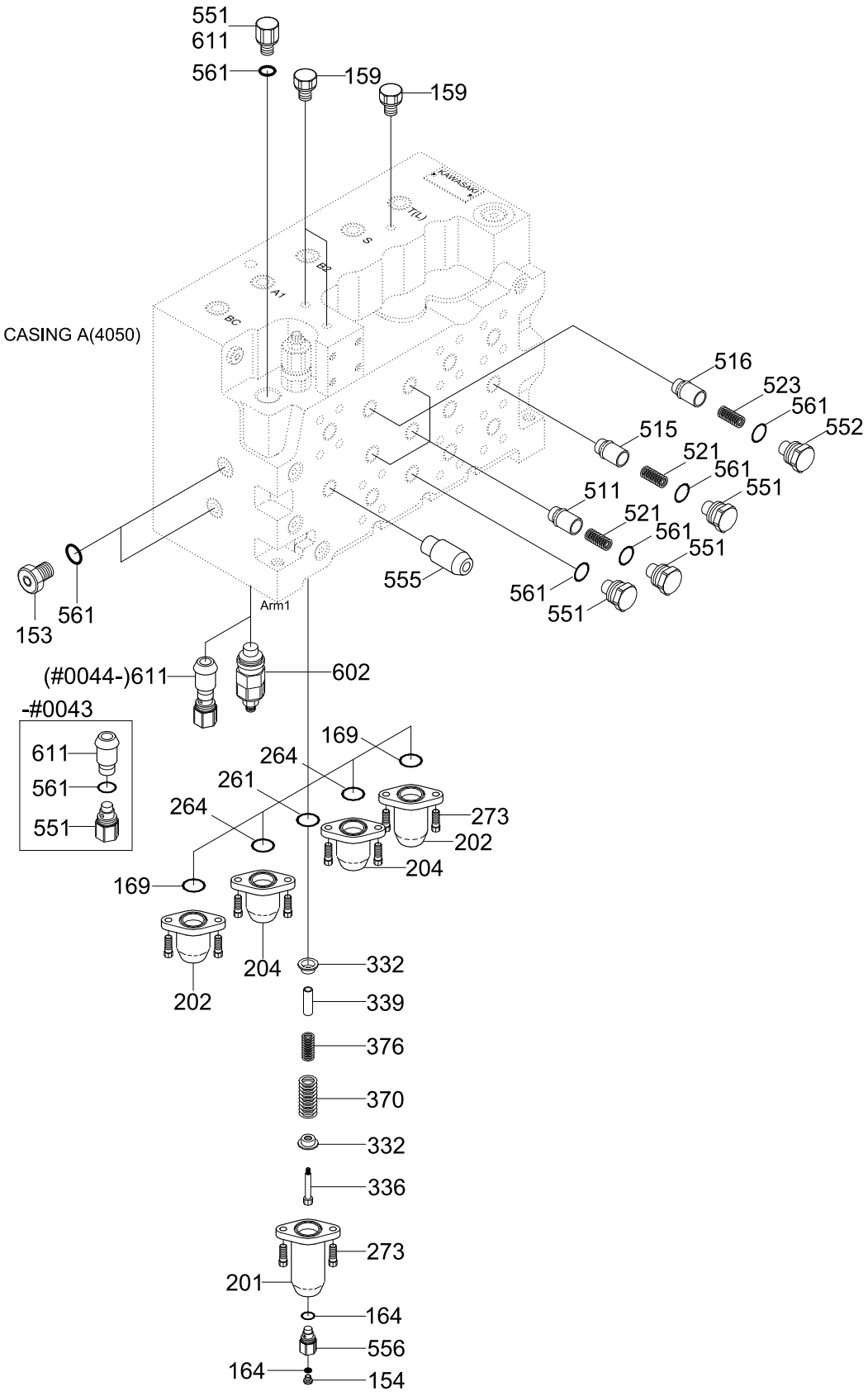

Item	Part_No	IS	Ord	T	Description	Qty	Serial_No	ITC	Remark
*	@				MAIN CONTROL VALVE	1			NOT
153	XJBN-00238				.PLUG	2			
154	XJBN-00237				.PLUG	1			
159	XJBN-00234				.PLUG	3			VZ50101400
164	XJBN-00233				.O-RING	1			OORBP14
169	XJBN-00094				.O-RING	2			
201	XJBN-00229				.COVER	1			VZ40101148
202	XJBN-00228				.COVER	2			VZ50103504
204	XJBN-00257				.COVER	2			VZ33140-0091
261	XJBN-00213				.O-RING	1			VZ50102761H50
264	XJBN-00342				.O-RING	2			
273	XJBN-00210				.SCREW-SOCKET	10			
332	XJBN-00194				.SEAT	2			VZ50103142
336	XJBN-00190				.BOLT	1			VZ50101297
339	XJBN-00187				.STOPPER	1			VZ33260-0013
370	XJBN-00184				.SPRING	1			
376	XJBN-00182				.SPRING	1			VZ03340-0168
511	XJBN-00172				.POPPET	3			VZ03610-0026
515	XJBN-00171				.POPPET	1			VZ03610-0015
516	XJBN-00170				.POPPET	1			VZ03610-0028
521	XJBN-00169				.SPRING	4			VZ50101290
523	XJBN-00168				.SPRING	1			VZ03340-0294
551	XJBN-00167				.PLUG	7	- #0043		OROMH27
					.PLUG	6	#0044 -	A	
552	XJBN-00166				.PLUG	1			VZ03560-0117

Item	Part_No	IS	Ord	T	Description	Qty	Serial_No	ITC	Remark
555	XJBN-00244				.CHECK VALVE ASSY	1			
561	XJBN-00363				.O-RING	9	- #0043		OORBP24
					.O-RING	8	#0044 -	A	
602	XJBN-00162				.PORT RELIEF VALVE	1			
611	XJBN-00243				.RELIEF VLV-NEGA CON	2	- #0043		
	XJBN-00886				.RELIEF VLV-NEGA CON	2	#0044 -	B	

MAIN CONTROL VALVE(3/5, TYPE 2, #2403-)

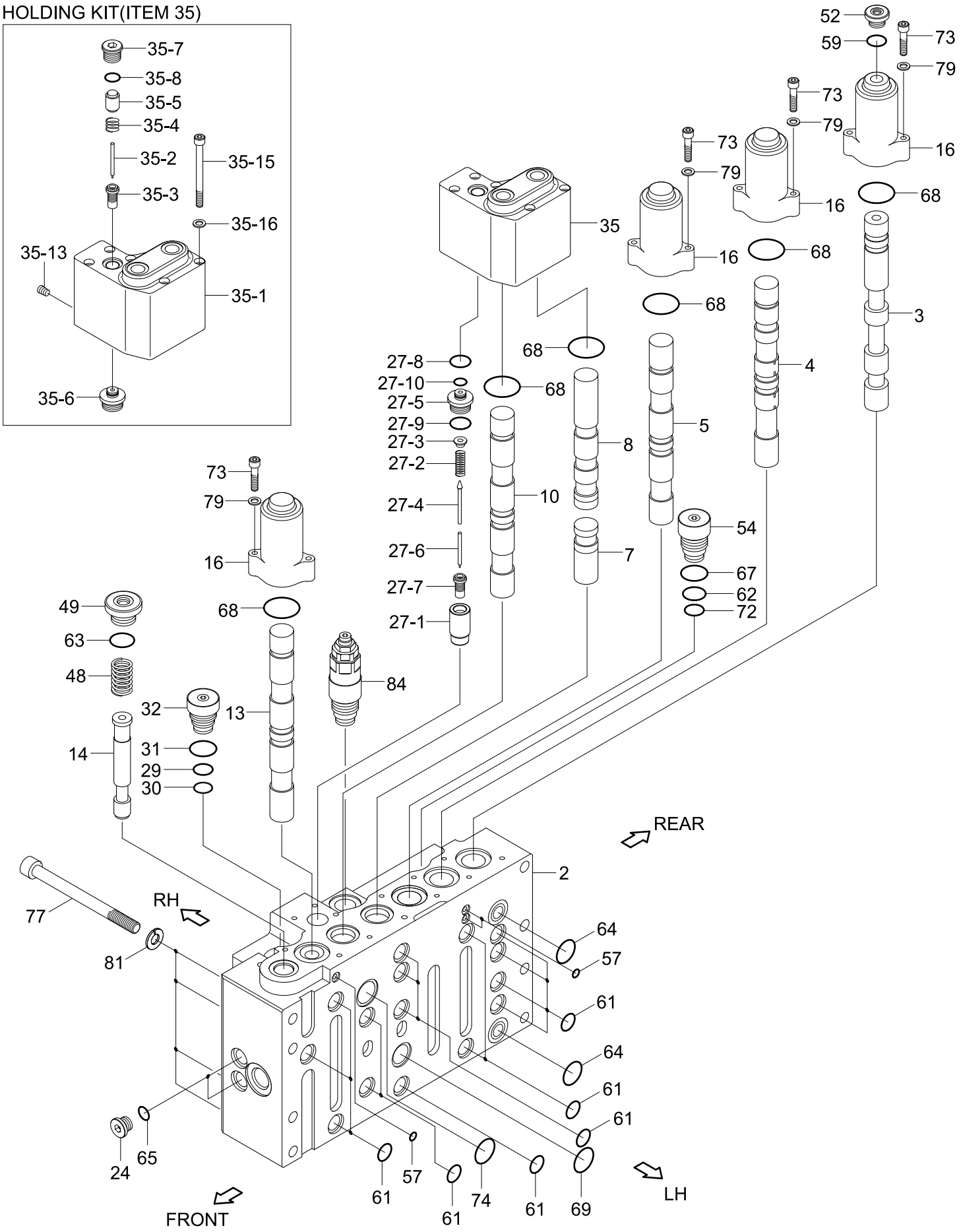

Item	Part_No	IS	Ord	T	Description	Qty	Serial_No	ITC	Remark
*	@				MAIN CONTROL VALVE	1	#2403 -		NOT
N2	XKBF-01230				HOUSING-P2	1			NOT
3	XKBF-00366				SPOOL-STRAIGHT	1			
4	XKBF-01585				SPOOL-TRAVEL	1			
5	XKBF-01584				SPOOL-SWING	1			
7	XKBF-00370				SPOOL-SWING PRIORITY	1			
8	XKBF-01443				SPOOL-BOOM 2	1			
10	XKBF-01583				SPOOL-ARM	1			
13	XKBF-00376				SPOOL-OPTION	1			
14	XKBF-01241				SPOOL-BC	1			
16	XKBF-00379				COVER B1-PILOT	4			
24	XKBF-01252				PLUG	2			
27	XKBF-00442				HOLDING KIT-B	1			
27-1	XKBF-01457				.POPPET-LOCK VALVE	1			
27-2	XKBF-01340				.SPRING-POPPET SIGNAL	1			
27-3	XKBF-01426				.GUIDE-POPPET	1			
27-4	XKBF-01458				.POPPET-PILOT	1			
27-5	XKBF-01459				.SEAT-POPPET	1			
27-6	XKBF-00903				.C-RING	1			
27-7	XKBF-00905				.RESTRICTOR-LOCK VLV	1			
27-8	XKBF-00958				.O-RING	1			
27-9	XKBF-01283				.O-RING	1			
27-10	XKBF-00962				.RING-BACK UP	1			
29	XKBF-01592				O-RING	1			
30	XKBF-01593				RING-BACK UP	1			

Item	Part_No	IS	Ord	T	Description	Qty	Serial_No	ITC	Remark
31	XKBF-01594				O-RING	1			
32	XKBF-01595				PLUG	1			
35	XKBF-01266				HOLDING KIT-A2	1			
N35-1	XKBF-01267				.BLOCK P2-HOLDING	1			NOT
35-2	XKBF-00910				.PISTON 1	1			
35-3	XKBF-00907				.GUIDE-POPPET	1			
35-4	XKBF-00912				.SPRING 1	1			
35-5	XKBF-00913				.PISTON 2	1			
35-6	XKBF-01248				.PLUG	1			
35-7	XKBF-01258				.PLUG	1			
35-8	XKCG-00060				.O-RING	1			
35-13	XKBF-00931				.PLUG	1			
35-15	XKBF-01265				.BOLT-SOCKET	5			
35-16	XKBF-00425				.WASHER	5			
48	XKBF-01273				SPRING-BC SPOOL	1			
49	XKBF-01274				PLUG-BC SPOOL	1			
52	XKBF-00933				PLUG	1			
54	XKBF-01277				PLUG	1			
57	XKBF-00937				O-RING	2			
59	XKBF-00940				O-RING	1			
61	XKBF-00989				O-RING	15			
62	XKBF-00680				O-RING	1			
63	XKBF-01280				O-RING	1			
64	XKBF-01281				O-RING	2			
65	XKBF-01282				O-RING	2			

Item	Part_No	IS	Ord	T	Description	Qty	Serial_No	ITC	Remark
67	XKBF-01074				O-RING	1			
68	XKBF-00416				O-RING	6			
73	XKBF-01284				BOLT-SOCKET	8			
74	XKBF-01285				O-RING	1			
77	XKBF-01454				BOLT-SOCKET HEAD	4			
79	XKBF-00425				WASHER	8			
81	XKBF-00427				WASHER	4			
84	XKBF-01582				RELIEF VALVE-OVER LOAD	AR			

MAIN CONTROL VALVE(4/5, TYPE 1)

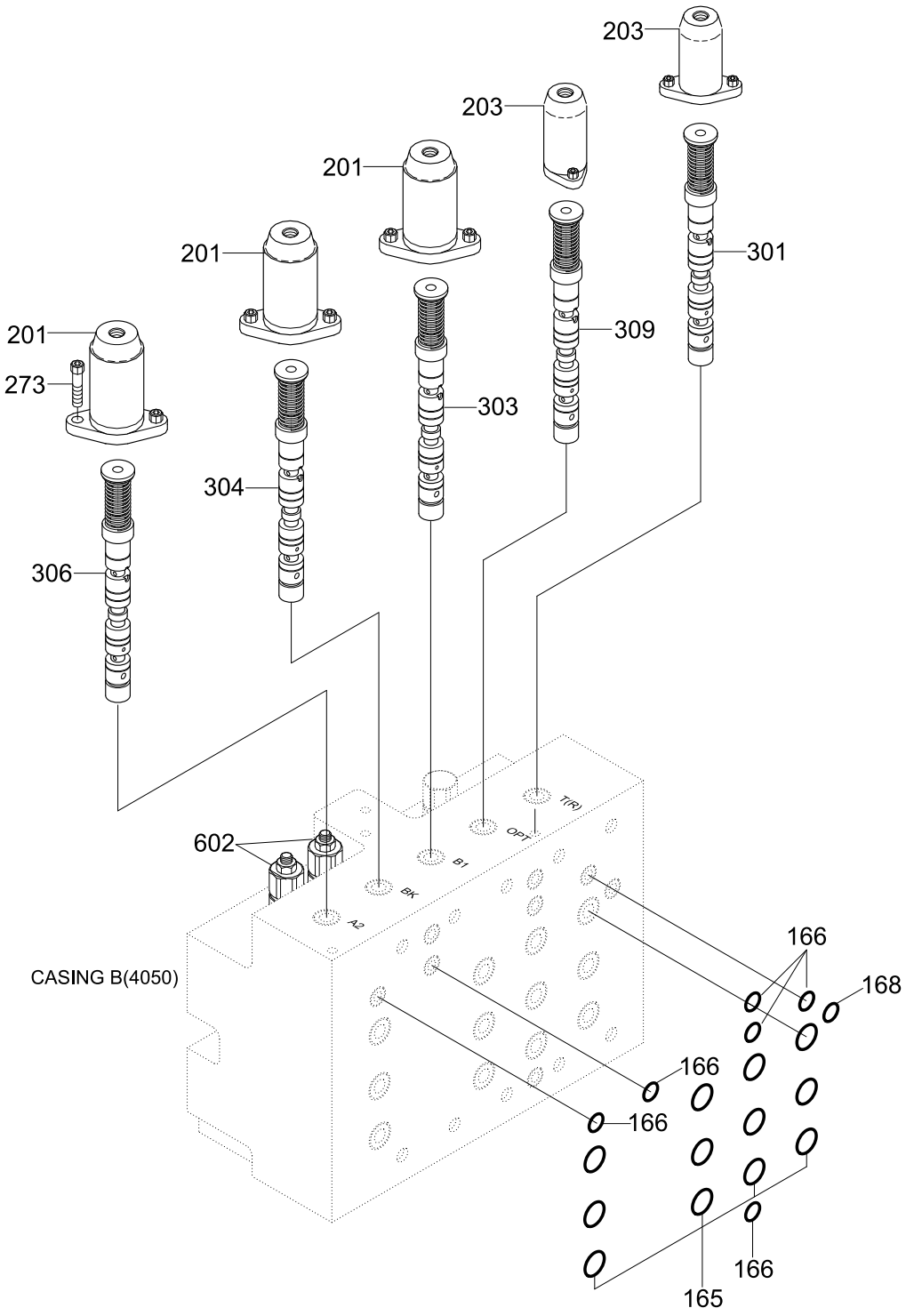

Item	Part_No	IS	Ord	T	Description	Qty	Serial_No	ITC	Remark
*	@				MAIN CONTROL VALVE	1			NOT
165	XJBN-00232				.O-RING	15			OORBG30
166	XJBN-00231				.O-RING	5			OORBP10
168	XJBN-00230				.O-RING	1			
201	XJBN-00229				.COVER	3			VZ40101148
203	XJBN-00258				.COVER	2			VZ40103496
261	XJBN-00213				.O-RING	3			VZ50102761H50
262	XJBN-00212				.O-RING	2			VZ50102761H39
273	XJBN-00210				.SCREW-SOCKET	10			
301	XJBN-00224				.SPOOL-TRAVEL,RH/DOZ	1	- #0043		
	XJBN-00893				.SPOOL-TRAVEL,RH	1	#0044 -	B	
303	XJBN-00254				.SPOOL-BOOM 1	1	#0001 -	-	
304	XJBN-00650				.BUCKET SPOOL	1	#0001 -	-	
306	XJBN-00251				.SPOOL-ARM 2	1	#0001 -	-	
309	XJBN-00217				.SPOOL-OPTION	1	#0001 -	-	
602	XJBN-00162				.PORT RELIEF VALVE	2			

MAIN CONTROL VALVE(4/5, TYPE 2, #2403-)

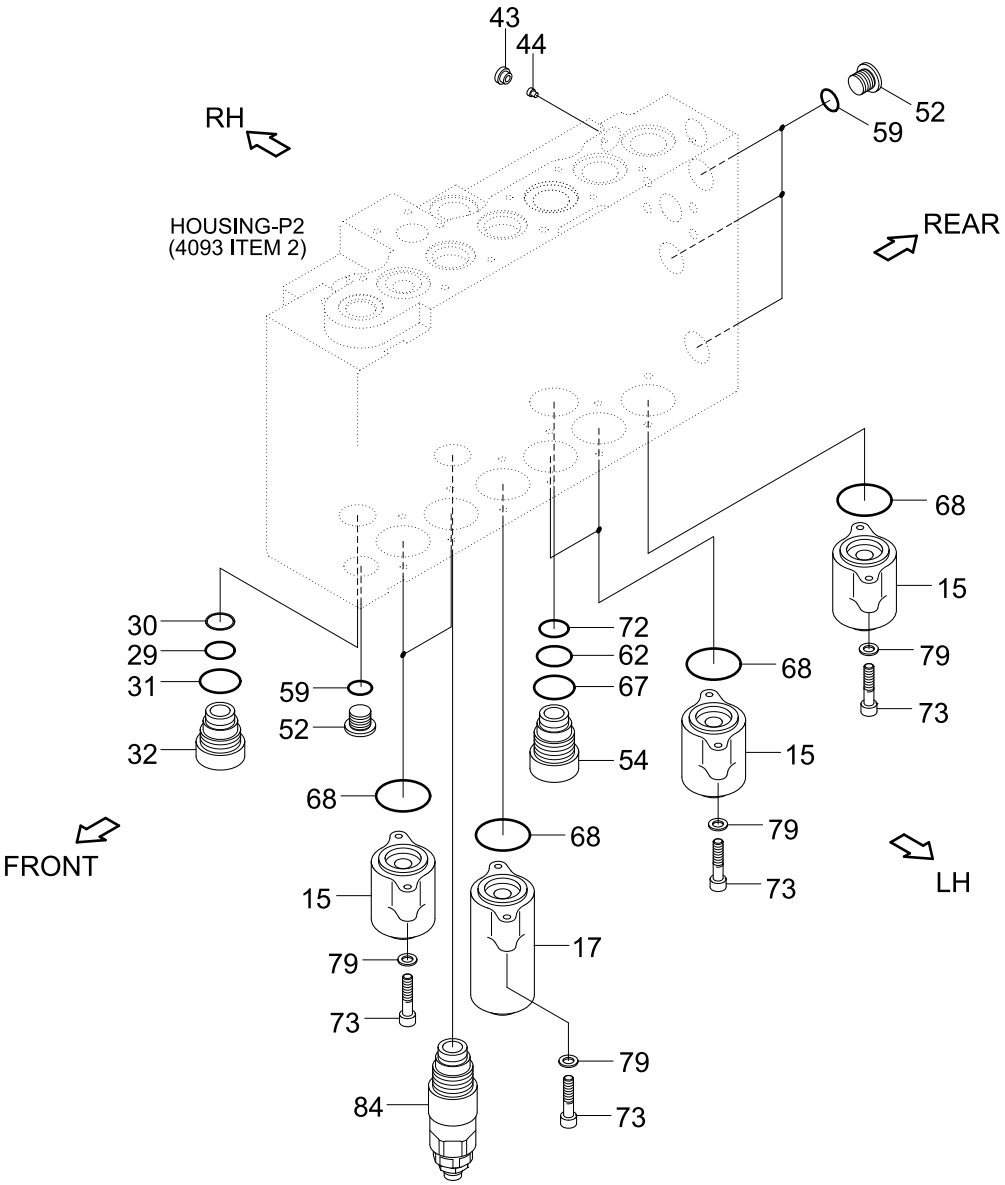

Item	Part_No	IS	Ord	T	Description	Qty	Serial_No	ITC	Remark
*	@				MAIN CONTROL VALVE	1	#2403 -		NOT
15	XKBF-01242				COVER A-PILOT	5			
17	XKBF-01449				PILOT COVER B3	1			
29	XKBF-01592				O-RING	1			
30	XKBF-01593				RING-BACK UP	1			
31	XKBF-01594				O-RING	1			
32	XKBF-01595				PLUG	1			
43	XKBF-00399				ORIFICE-SIGNAL	1			
44	XKBF-00922				FILTER-COIN TYPE	1			
52	XKBF-00933				PLUG	4			
54	XKBF-01277				PLUG	1			
59	XKBF-00940				O-RING	4			
62	XKBF-00680				O-RING	1			
67	XKBF-01074				O-RING	1			
68	XKBF-00416				O-RING	6			
72	XKBF-01193				RING-BACK UP	1			
73	XKBF-01284				BOLT-SOCKET	12			
79	XKBF-00425				WASHER	12			
84	XKBF-01582				RELIEF VALVE-OVER LOAD	1			

MAIN CONTROL VALVE(5/5, TYPE 1)

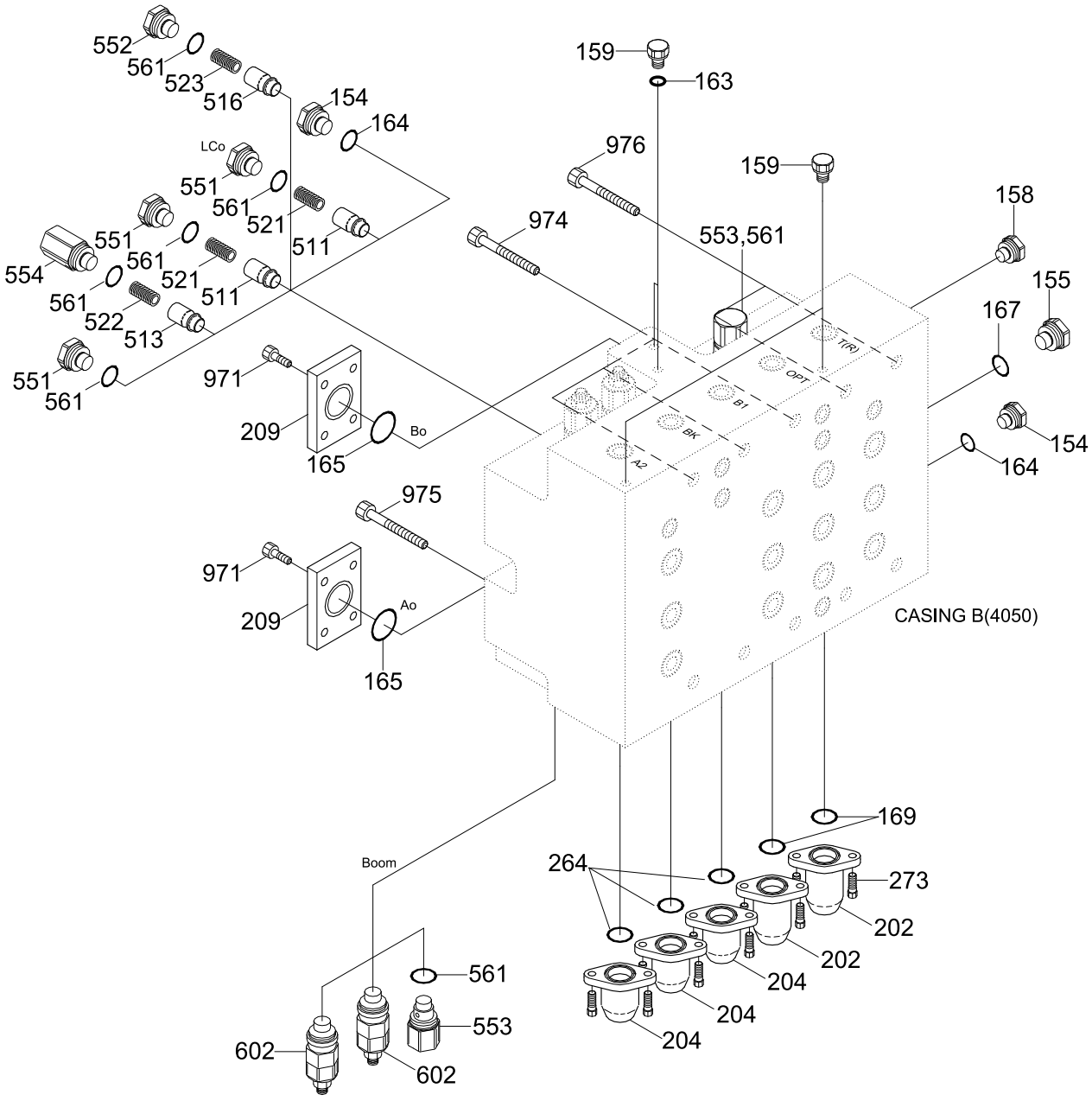

Item	Part_No	IS	Ord	T	Description	Qty	Serial_No	ITC	Remark
*	@				MAIN CONTROL VALVE	1			NOT
154	XJBN-00237				.PLUG	2			
155	XJBN-00236				.PLUG	1			
158	XJBN-00032				.PLUG	1			PBP116-2403
159	XJBN-00234				.PLUG	3			VZ50101400
164	XJBN-00233				.O-RING	2			00RBP14
165	XJBN-00232				.O-RING	1			00RBG30
167	XJBN-00097				.O-RING	1			00RBP18
169	XJBN-00094				.O-RING	2			
202	XJBN-00228				.COVER	2			VZ50103504
204	XJBN-00257				.COVER	3			VZ33140-0091
209	XJBN-00227				.FLANGE	2			VZ03580-0141
264	XJBN-00342				.O-RING	3			
273	XJBN-00210				.SCREW-SOCKET	10			
511	XJBN-00172				.POPPET	2			VZ03610-0026
513	XJBN-00539				.POPPET	1			
516	XJBN-00170				.POPPET	1			VZ03610-0028
521	XJBN-00169				.SPRING	2			VZ50101290
522	XJBN-00246				.SPRING	1			
523	XJBN-00168				.SPRING	1			VZ03340-0294
551	XJBN-00167				.PLUG	3			OROMH27
552	XJBN-00166				.PLUG	1			VZ03560-0117
553	XJBN-00165				.PLUG	2			VZ03560-0042
554	XJBN-00245				.PLUG	1			
561	XJBN-00363				.O-RING	7			OORBP24

Item	Part_No	IS	Ord	T	Description	Qty	Serial_No	ITC	Remark
602	XJBN-00162				.PORT RELIEF VALVE	2			
971	XJBN-00160				.SCREW-SOCKET	8			
974	XJBN-00159				.SCREW-SOCKET	3			
975	XJBN-00158				.SCREW-SOCKET	5			
976	XJBN-00157				.SCREW-SOCKET	2			

MAIN CONTROL VALVE(5/5, TYPE 2, #2403-)

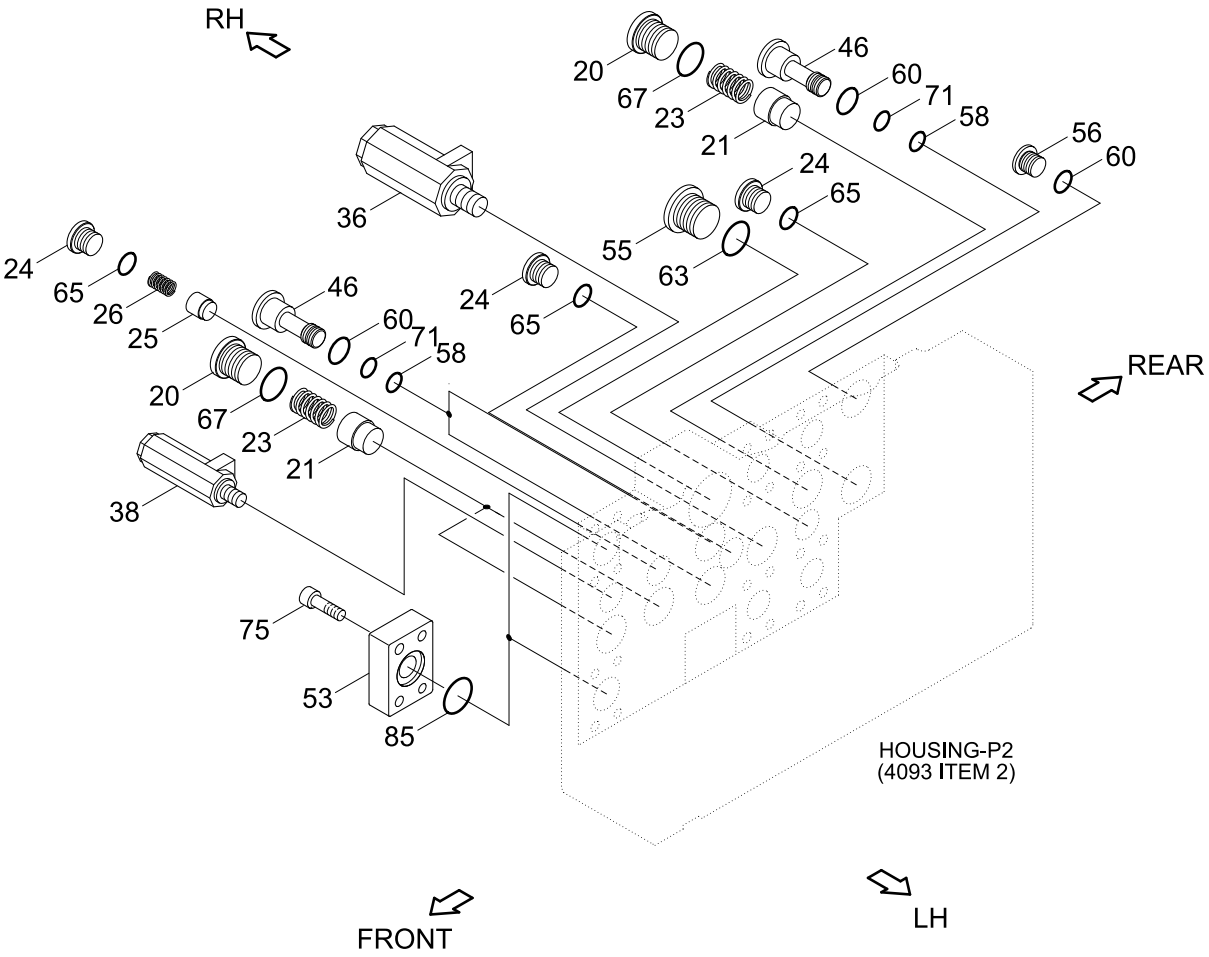

Item	Part_No	IS	Ord	T	Description	Qty	Serial_No	ITC	Remark
*	@				MAIN CONTROL VALVE	1			NOT
20	XKBF-00383				PLUG	3			
21	XKBF-00806				POPPET 1	3			
23	XKBF-01250				SPRING 1	3			
24	XKBF-01252				PLUG	3			
25	XKBF-01450				POPPET 2	1			
26	XKBF-01451				SPRING 2	1			
36	XKBF-01503				LOGIC VALVE ASSY	1			
38	XKBF-01270				L/C ON-OFF ASSY	1			
46	XKBF-00400				PLUG	3			
53	XKBF-01276				FLANGE	2			
55	XKBF-01279				PLUG	1			
56	XKBF-01258				PLUG	1			
58	XKBF-00939				O-RING	3			
60	XKBF-00618				O-RING	4			
63	XKBF-01280				O-RING	1			
65	XKBF-01282				O-RING	3			
67	XKBF-01074				O-RING	3			
71	XKBF-00964				RING-BACK UP	6			
75	XKBF-01286				BOLT-SOCKET	8			
85	XKBF-01456				O-RING	2			

SWING MOTOR(TYPE 1, -#1485)

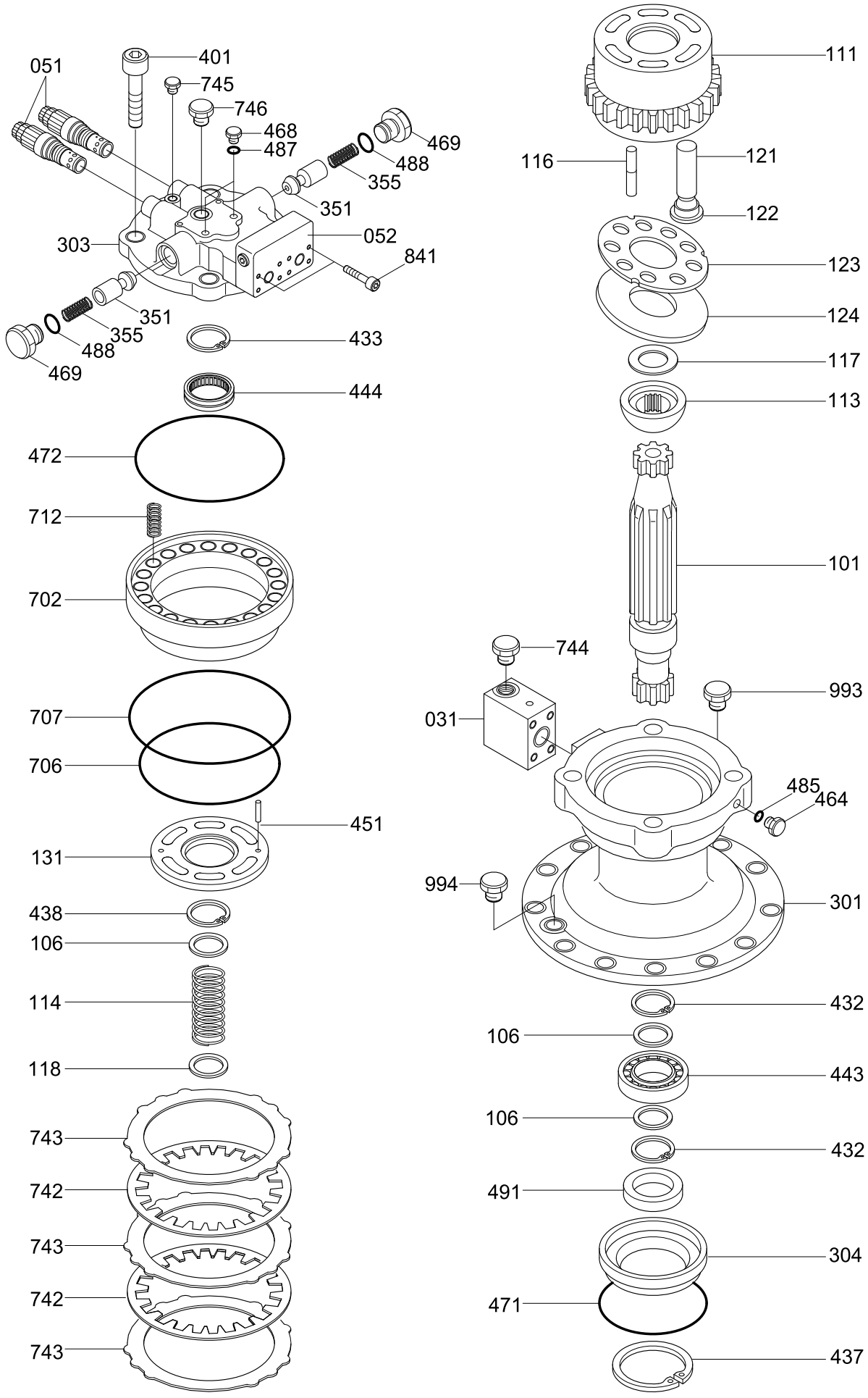

Description	Parts no	Included item
Swing motor seal kit	XKAH-00465	471,472,485,487,488,491,706,707
Piston sub assy	XKAH-00615KT	121X9, 122X9

Item	Part_No	IS	Ord	T	Description	Qty	Serial_No	ITC	Remark
N*	31N9-10131				SWING MOTOR ASSY	1	- #0037		NOT
	31N9-10132				SWING MOTOR ASSY	1	#0038 - #1274	B	NOT
	31N9-10133				SWING MOTOR ASSY	1	#1275 - #1485	D	NOT
*-1	31N8-12010				.SWING MOTOR UNIT	1	- #1485	-	
031	XKAH-00121				..VALVE-BRAKE	1			
051	XKAH-00122				..VALVE-RELIEF	2			
052	XKAH-00115				..BLOCK	1			
101	XKAH-00162				..SHAFT-DRIVE	1			
106	XKAH-00161				..SPACER	3			
111	XKAH-00160				..BLOCK-CYLINDER	1			
113	XKAH-00159				..BUSHING-SPHERICAL	1			
114	XKAH-00158				..SPRING	1			
116	XKAH-00157				..ROD-PUSH	12			
117	XKAH-00156				..SPACER F	1			
118	XKAH-00155				..SPACER R	1			
NS121	XKAH-00154				..PISTON	9			NOT
NS122	XKAH-00153				..SHOE	9			NOT
123	XKAH-00152				..RETAINER	1			
124	XKAH-00151				..PLATE-SHOE	1			
131	XKAH-00150				..PLATE-VALVE	1			
301	XKAH-00149				..CASING	1			
303	XKAH-00546				..CASING-VALVE	1	#0001 -	-	
304	XKAH-00147				..COVER-FRONT	1	- #0597		
	XKAH-00930				..COVER-FRONT	1	#0598 -	D	
351	XKAH-00146				..PLUNGER	2			

Item	Part_No	IS	Ord	T	Description	Qty	Serial_No	ITC	Remark
355	XKAH-00145				..SPRING	2			
401	XKAH-00144				..BOLT-SOCKET	4			
432	XKAH-00143				..RING-SNAP	2			
433	XKAH-00142				..RING-SNAP	1			
437	XKAH-00141				..RING-SNAP	1			
438	XKAH-00140				..RING-SNAP	1			
443	XKAH-00139				..BEARING-ROLLER	1			
444	XKAH-00138				..BEARING-ROLLER	1			
451	XKAH-00137				..PIN-SPRING	2			
464	XKAH-00136				..PLUG-VP	1			
468	XKAH-00136				..PLUG-VP	2			
469	XKAH-00135				..PLUG	2			
K471	XKAH-00134				..O-RING	1			
K472	XKAH-00133				..O-RING	1			
K485	XKAH-00052				..O-RING	1			
K487	XKAH-00052				..O-RING	2			
K488	XKAH-00132				..O-RING	2			
K491	XKAH-00131				..SEAL-OIL	1	- #0597		
	XKAH-00929				..SEAL-OIL	1	#0598 -	D	
702	XKAH-00130				..PISTON-BRAKE	1			
K706	XKAH-00129				..O-RING	1			
K707	XKAH-00128				..O-RING	1			
712	XKAH-00127				..SPRING-BRAKE	20			
742	XKAH-00126				..PLATE-FRICTION	2			
743	XKAH-00125				..PLATE-SEPERATION	3			

Item	Part_No	IS	Ord	T	Description	Qty	Serial_No	ITC	Remark
744	XKAH-00120				..PLUG	2			
745	XKAH-00119				..PLUG	1			
746	XKAH-00118				..PLUG	1			
841	XKAH-00114				..BOLT-SOCKET	2			
993	XKAH-00124				..PLUG	1			
994	XKAH-00123				..PLUG	1			
N*-2	31N9-10150				.SWING REDUCTION GEAR	1			NOT
K	XKAH-00465				SEAL KIT	1			SEE ILLUST
S	XKAH-00615KT				PISTON ASSY	1	#0001 -	-	SEE ILLUST
N	@				NOT SUPPLIED PARTS	AR			NOT

SWING MOTOR(TYPE 1, #1486-)

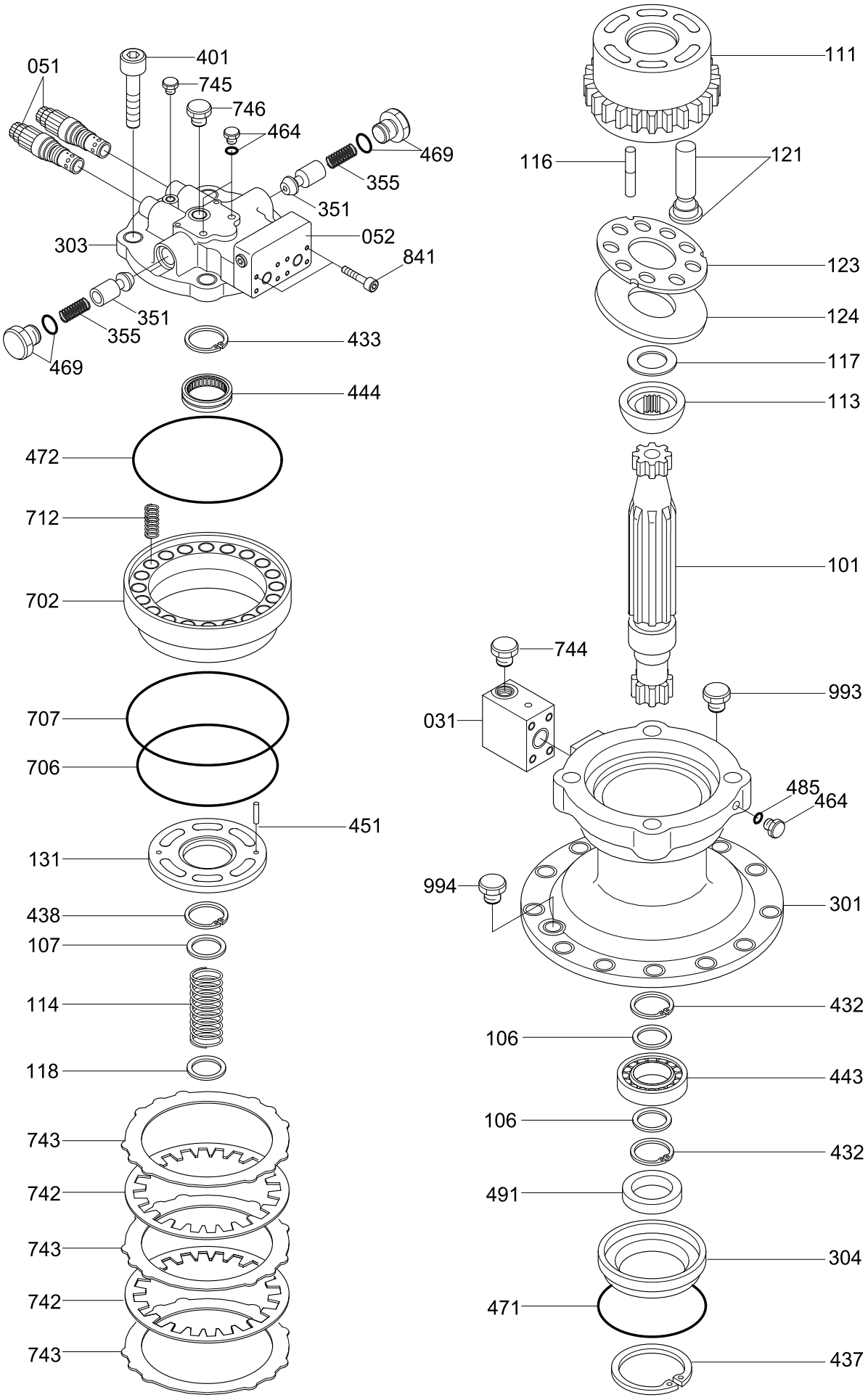

Description	Parts no	Included item
Swing motor seal kit	XKAH-00465	471,472,485,488,491,706,707

Item	Part_No	IS	Ord	T	Description	Qty	Serial_No	ITC	Remark
N*	31N9-10190				SWING MOTOR ASSY	1	#1486 - #1812	D	NOT
	31N9-10191				SWING MOTOR ASSY	1	#1813 -	B	NOT
*-1	31N8-12020				.SWING MOTOR UNIT	1	#1486 -	C	S/MOTOR TYPE 1
031	XKAH-00121				..VALVE-BRAKE	1			
051	XKAH-01155				..RELIEF VALVE	2			
052	XKAH-01151				..BLOCK-VALVE	1			
101	XKAH-01090				..SHAFT-DRIVE	1			
106	XKAH-00161				..SPACER	3			
111	XKAH-00160				..BLOCK-CYLINDER	1			
113	XKAH-00159				..BUSHING-SPHERICAL	1	- #3254		
	XKAH-01621				..BUSHING-SPHERICAL	1	#3255 -	B	
114	XKAH-00158				..SPRING	1			
116	XKAH-01079				..ROD-PUSH	12			
117	XKAH-00156				..SPACER F	1			
118	XKAH-00155				..SPACER R	1			
121	XKAH-01162				..PISTON ASSY	9			
123	XKAH-01081				..RETAINER	1			
124	XKAH-00151				..PLATE-SHOE	1			
131	XKAH-01161				..PLATE-VALVE K1	1			
301	XKAH-00149				..CASING	1			
303	XKAH-01160				..CASING-VALVE S1	1			
304	XKAH-00930				..COVER-FRONT	1			
351	XKAH-01159				..PLUNGER S	2			
355	XKAH-01158				..SPRING	2			
401	XKAH-00144				..BOLT-SOCKET	4			

Item	Part_No	IS	Ord	T	Description	Qty	Serial_No	ITC	Remark
432	XKAH-00143				..RING-SNAP	2			
433	XKAH-00142				..RING-SNAP	1			
437	XKAH-00141				..RING-SNAP	1			
438	XKAH-00140				..RING-SNAP	1			
443	XKAH-00139				..BEARING-ROLLER	1			
444	XKAH-00138				..BEARING-ROLLER	1			
451	XKAH-00137				..PIN-SPRING	2			
464	XKAH-01157				..PLUG ASSY-VP	1			INCL 485
469	XKAH-01156				..PLUG ASSY-RO	2			INCL 488
K471	XKAH-00134				..O-RING	1			
K472	XKAH-00133				..O-RING	1			
K491	XKAH-00929				..SEAL-OIL	1			
702	XKAH-00130				..PISTON-BRAKE	1			
K706	XKAH-00129				..O-RING	1			
K707	XKAH-00128				..O-RING	1			
712	XKAH-00127				..SPRING-BRAKE	20			
742	XKAH-00126				..PLATE-FRICTION	2			
743	XKAH-00125				..PLATE-SEPERATION	3			
744	XKAH-01154				..PLUG-DUST	2			
745	XKAH-01153				..PLUG-DUST	1			
746	XKAH-01152				..PLUG-DUST	1			
841	XKAH-00114				..BOLT-SOCKET	2			
993	XKAH-00124				..PLUG	1			
994	XKAH-00123				..PLUG	1			
*-2	@				.SWING REDUCTION GEAR	1			NOT

Item	Part_No	IS	Ord	T	Description	Qty	Serial_No	ITC	Remark
K	XKAH-01060				SEAL KIT	1			SEE ILLUST

SWING MOTOR(TYPE 2)

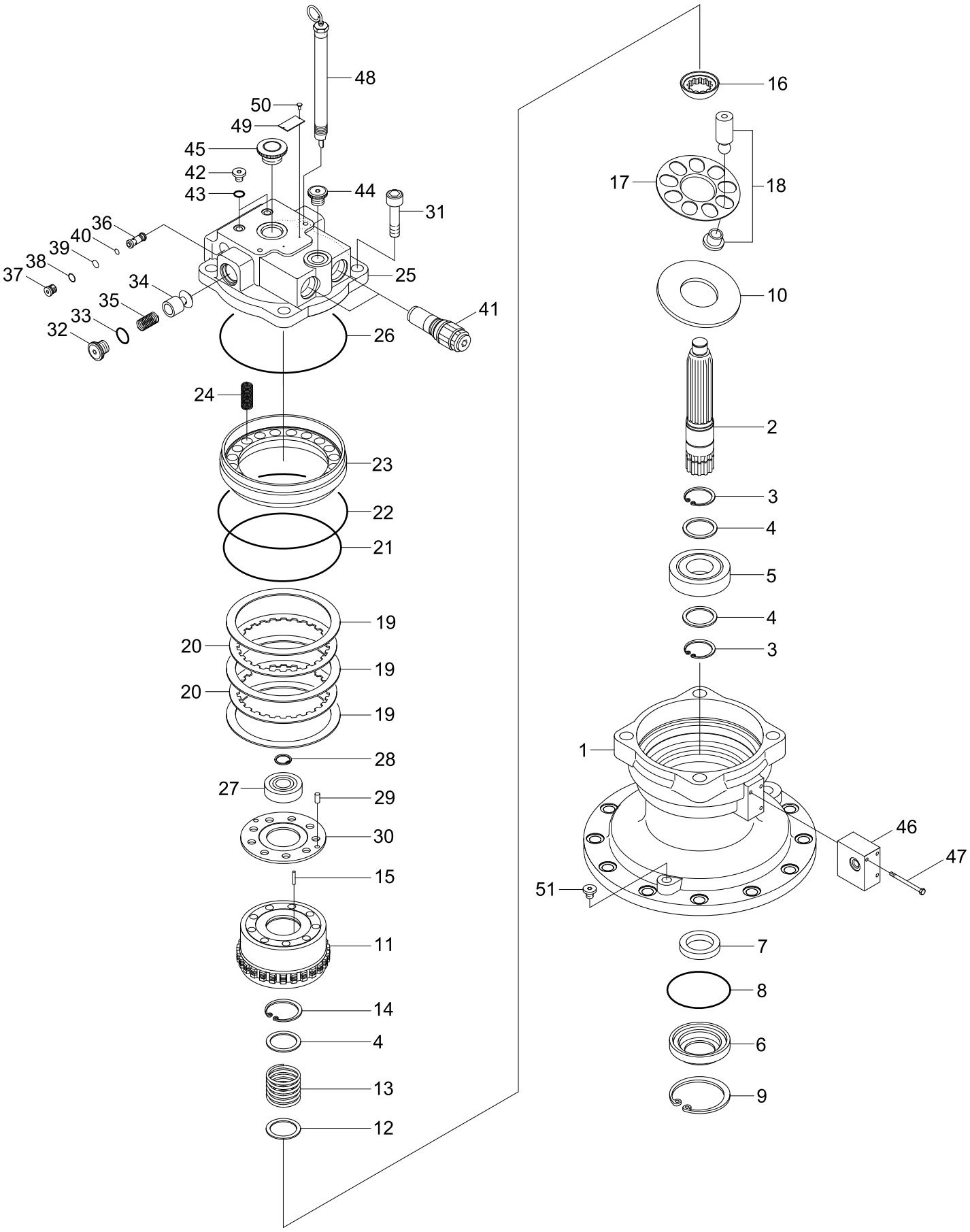

Description	Parts no	Included item
Swing motor seal kit	XKAY-01558	7, 8, 21, 22, 26, 33, 38, 39, 40, 43

Item	Part_No	IS	Ord	T	Description	Qty	Serial_No	ITC	Remark
*	31N9-10291				SWING MOTOR ASSY	1	#2881 -		
*-1	31N8-10270				.SWING MOTOR UNIT	1			
1	XKAY-01929				..BODY	1			
2	XKAY-01520				..SHAFT	1			
3	XKAY-01521				..RING-SNAP	3			
4	XKAY-01522				..PLATE	3			
5	XKAY-01523				..BEARING-ROLL	1			
6	XKAY-01524				..COVER	1			
k7	XKAY-01525				..SEAL-OIL	1			
k8	XKAY-01526				..O-RING	1			
9	XKAY-00523				..RING-SNAP	1			
10	XKAY-01527				..PLATE-SHOE	1			
*-11	XKAY-01528				..ROTORY KIT	1			
*-111	XKAY-01529				...BLOCK KIT-CYL	1			
11	XKAY-01530				....BLOCK-CYLINDER	1			
12	XKAY-01531				...SEAT-SPRING	1			
13	XKAY-01532				...SPRING-CYLINDER	1			
14	XKAY-01533				...RING-SNAP	1			
15	XKAY-01534				...PIN	1			
*-112	XKAY-01535				...RETAINER KIT	1			
16	XKAY-01536				....GUIDE-BALL	1			
17	XKAY-01537				....PLATE-SET	11			
*-113	XKAY-01538				...PISTON KIT	1			
18	XKAY-01539				....PISTION ASSY	9			
19	XKAY-01540				..PLATE	3			

Item	Part_No	IS	Ord	T	Description	Qty	Serial_No	ITC	Remark
20	XKAY-01541				..PLATE-FRICTION	2			
k21	XKAY-01542				..O-RING	1			
k22	XKAY-01543				..O-RING	1			
23	XKAY-01544				..PISTON-BRAKE	1			
24	XKAY-01545				..SPRING-B/P	20			
25	XKAY-01546				..COVER-REAR	1			
k26	XKAY-01547				..O-RING	1			
27	XKAY-01875				..BEARING-ROLLER	1			
28	XKAY-01549				..RING-SNAP	1			
29	XKAY-00510				..PIN	2			
30	XKAY-01550				....PLATE-VALVE	1			
31	XKAY-01551				..BOLT-WRENCH	4			
32	XKAY-00188				..PLUG	2			
k33	XKAY-01150				..O-RING	2			
34	XKAY-00186				..POPPET	2			
35	XKAY-00187				..SPRING	2			
36	XKAY-01552				..VALVE ASSY	2			
37	XKAY-01553				..PLUG	2			
k38	XKAY-01554				..RING-BACK UP	2			
k39	XKAY-00320				..O-RING	2			
k40	XKAY-01555				..O-RING	2			
41	XKAY-01995				..RELIEF VALVE ASSY	2			
42	XKAY-00150				..PLUG	2			
k43	XKAY-00151				..O-RING	2			
44	XKAY-00975				..PLUG	1			

Item	Part_No	IS	Ord	T	Description	Qty	Serial_No	ITC	Remark
45	XKAY-00548				..PLUG	1			
46	XKAY-00315				..TIME DELAY VALVE ASSY	1			
47	XKAY-00149				..BOLT-WRENCH	3			
48	XKAY-01557				..GAUGE-LEVEL	1			
48-1	XKAY-01988				...PLUG	1			NOT SHOWN
49	XKAY-01930				..NAME PLATE	1			
50	XKAY-00277				..RIVET	2			
51	XKAY-01219				..PLUG	1			
*-12	XKAY-01558				..SEAL KIT	1			SEE ILLUST

SWING REDUCTION GEAR(TYPE 1, -#1274)

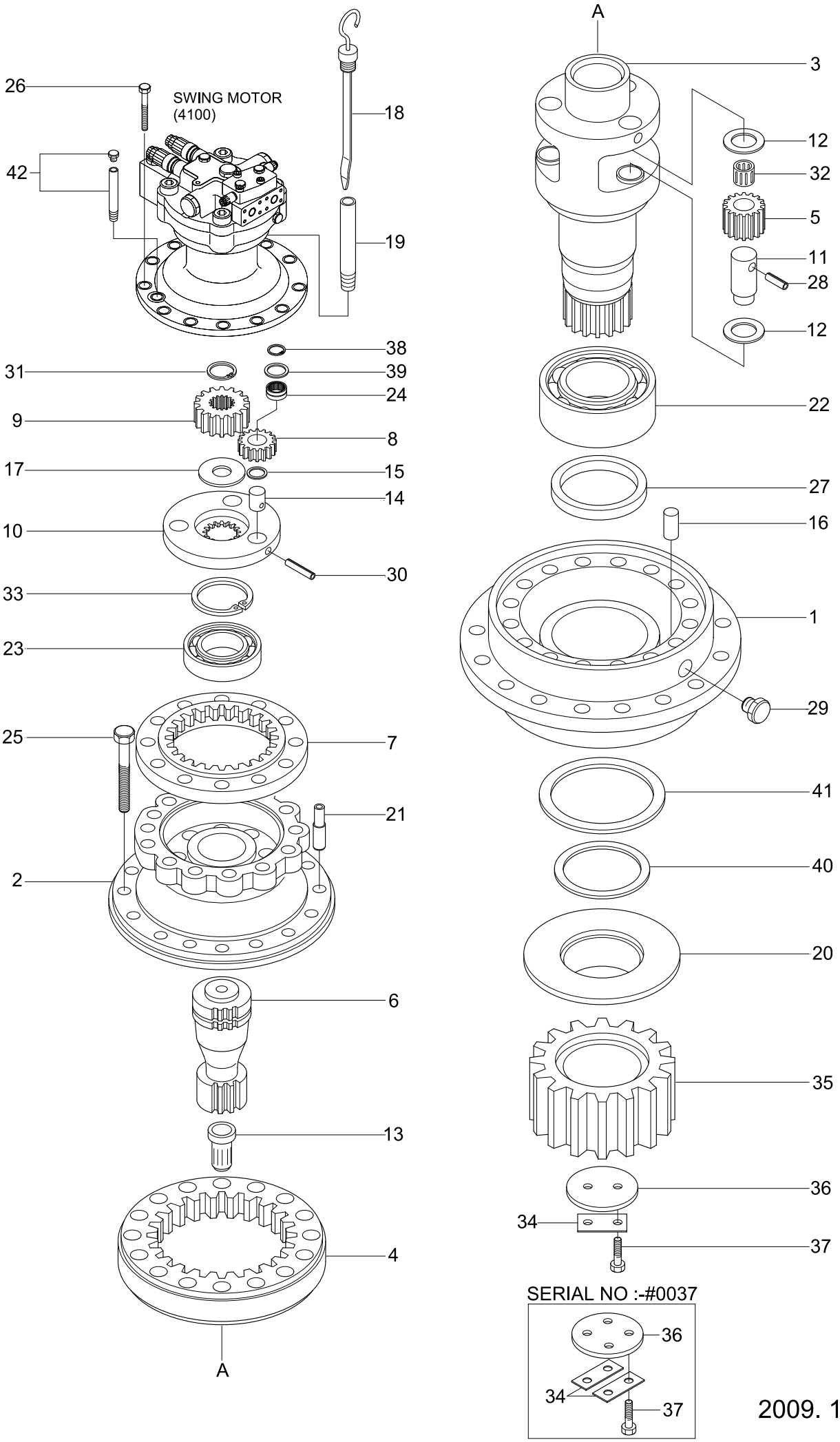

Item	Part_No	IS	Ord	T	Description	Qty	Serial_No	ITC	Remark
N*-2	31N9-10151				.SWING REDUCTION GEAR	1	- #0037		NOT
	31N9-10152				.SWING REDUCTION GEAR	1	#0038 - #1274	-	NOT
1	XKAQ-00106				..CASING-FRONT	1	- #0037		
	XKAQ-00141				..CASING-FRONT	1	#0038 - #0358	D	
	XKAQ-00279				..CASING-FRONT	1	#0359 - #0800	B	
	XKAQ-00329				..CASING-FRONT	1	#0801 -	B	
2	XKAQ-00003				..CASING-MIDDLE	1			
3	XKAQ-00107				..SHAFT-DRIVE	1	- #0800		
	XKAQ-00328				..SHAFT-DRIVE	1	#0001 -	-	
4	XKAQ-00006				..GEAR-RING 2	1	- #0037		
	XKAQ-00172				..GEAR-RING	1	#0038 -	D	
5	XKAQ-00022				..GEAR-PLANET 2	3			
6	XKAQ-00012				..GEAR-2 SUN	1			
7	XKAQ-00008				..GEAR-RING 1	1			
8	XKAQ-00024				..GEAR-PLANET 1	3	- #0037		
	XKAQ-00137				..GEAR-PLANET 1	3	#0038 -	D	
9	XKAQ-00009				..GEAR-1 SUN	1			
10	XKAQ-00016				..CARRIER	1			
*	XKAQ-00021				..PIN ASSY NO.2	3	#0001 -	-	
N11	XKAQ-00060				...PIN ASSY-2	3			NOT
N32	XKAQ-00046				...BUSHING 2	3			NOT
12	XKAQ-00059				..WASHER-THRUST	6			
13	XKAQ-00058				..BUTTON-THRUST	1			
14	XKAQ-00019				..PIN 1	3	- #0037		
	XKAQ-00136				..PIN ASSY 1	3	#0038 -	D	

Item	Part_No	IS	Ord	T	Description	Qty	Serial_No	ITC	Remark
15	XKAQ-00057				..PLATE-SIDE 1	3			
16	XKAQ-00056				..MAGNET	6			
17	XKAQ-00055				..PLATE-SIDE 3	1			
18	XKAQ-00034				..BAR-GAUGE	1			
19	XKAQ-00035				..PIPE-GAUGE	1			
20	XKAQ-00108				..RING-SPACER	1	- #0009		
	XKAQ-00111				..RING-SPACER	1	#0010 -	D	
21	XKAQ-00053				..PIN-KNOCK	4	- #0037		
					..PIN-KNOCK	2	#0038 -	A	
22	XKAQ-00028				..BEARING-ROLLER	1			
23	XKAQ-00027				..BEARING-ROLLER	1			
24	XKAQ-00030				..CAGE-NEEDLE	3	- #0037	-	
25	XKAQ-00052				..BOLT-SOCKET	16			
26	XKAQ-00051				..BOLT-SOCKET	12			
27	XKAQ-00033				..SEAL-OIL	1	- #0037		
	XKAQ-00138				..SEAL-OIL	1	#0038 - #0358	B	
	XKAQ-00280				..SEAL-OIL	1	#0359 - #0800	B	
	XKAQ-00330				..SEAL-OIL	1	#0801 -	D	
28	XKAQ-00050				..PIN-SPRING	3			
29	XKAQ-00049				..PLUG	1			
30	XKAQ-00048				..PIN-SPRING	3			
31	XKAQ-00047				..RING-STOP	1			
33	XKAQ-00045				..RING-STOP	1			
34	XKAQ-00044				..WASHER-LOCK	2	- #0037		
	XKAQ-00292				..WASHER-LOCK	1	#0038 -	D	

Item	Part_No	IS	Ord	T	Description	Qty	Serial_No	ITC	Remark
35	XKAQ-00105				..GEAR-PINION	1			
36	XKAQ-00043				..PLATE-LOCK	1	- #0037		
	XKAQ-00296				..PLATE-LOCK	1	#0038 -	D	
37	XKAQ-00042				..BOLT-HEX	4	- #0037		
					..BOLT-HEX	2	#0038 -	A	
38	XKAQ-00041				..RING-STOP	3			
39	XKAQ-00040				..PLATE-SIDE 2	3			
40	XKAQ-00109				..CIRCLIP	1			
41	XKAQ-00110				..V-SEAL	1	#0038 -	-	
42	XKAQ-00143				..AIR BREATHER ASSY	1	#0120 -	B	
N	@				NOT SUPPLIED PARTS	1			NOT

SWING REDUCTION GEAR(#1275-)

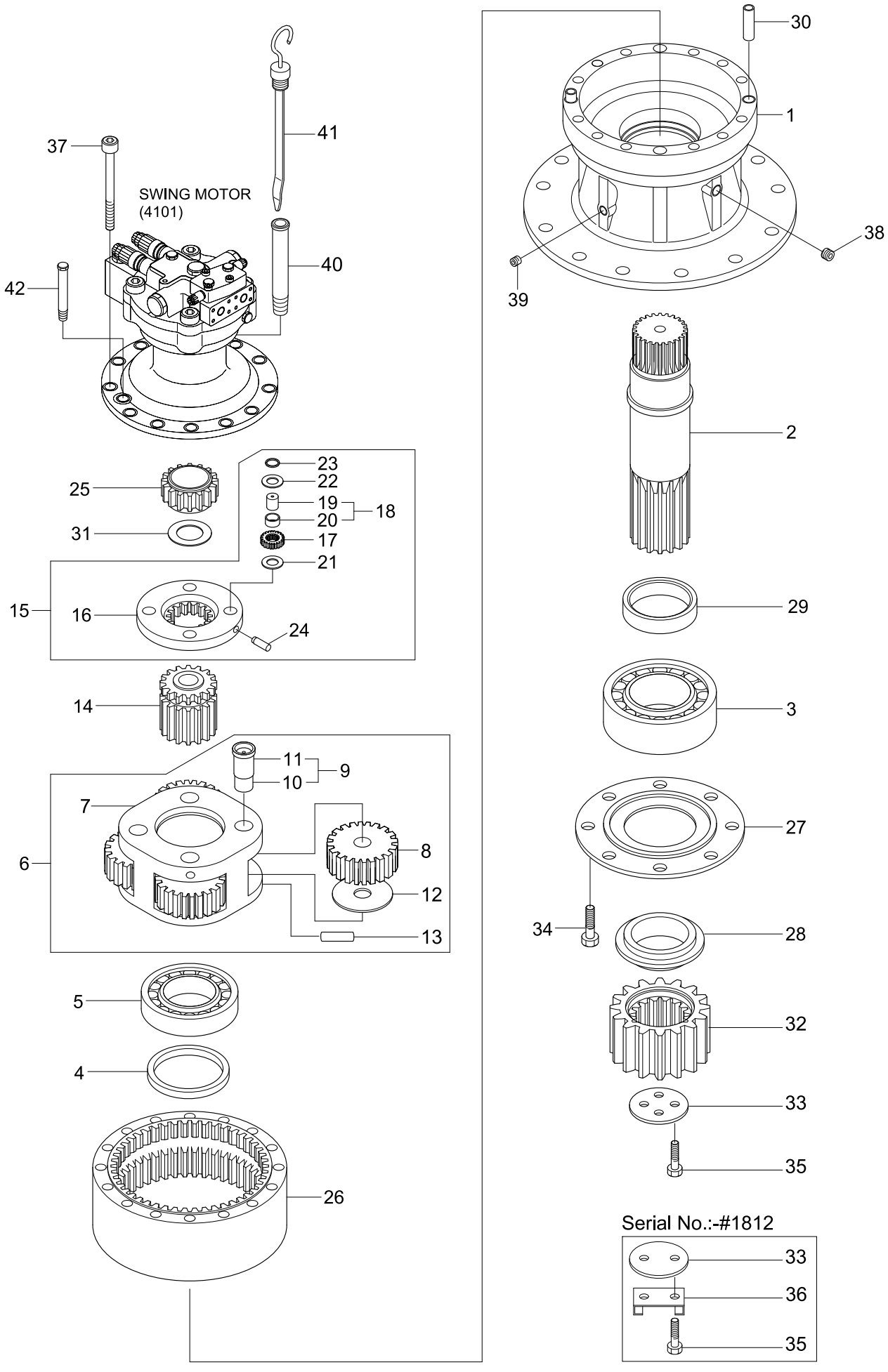

Item	Part_No	IS	Ord	T	Description	Qty	Serial_No	ITC	Remark
*-2	31N9-10180				.SWING REDUCTION GEAR	1	#1275 - #1812	D	
	31N9-10181				.SWING REDUCTION GEAR	1	#1813 -	B	
1	XKAQ-00427				..CASING	1			
2	XKAQ-00428				..SHAFT-DRIVE	1	- #1812		
	XKAQ-00759				..SHAFT-DRIVE	1	#1813 -	B	
3	XKAQ-00117				..BEARING-ROLLER	1			
4	XKAQ-00119				..SEAL-OIL	1			
5	XKAQ-00120				..BEARING-ROLLER	1			
6	XKAQ-00429				..CARRIER ASSY-2	1			
7	XKAQ-00430				...CARRIER-2	1			
8	XKAQ-00431				...GEAR-PLANET-2	4			
9	XKAQ-00432				...PIN ASSY-2	4			
N10	XKAQ-00433				....PIN-2	1			NOT
N11	XKAQ-00434				....BUSHING-2	1			NOT
12	XKAQ-00435				...WASHER-THRUST	8			
13	XKAQ-00050				...PIN-SPRING	4			
14	XKAQ-00436				..GEAR-SUN-2	1			
15	XKAQ-00437				..CARRIER ASSY-1	1			
16	XKAQ-00438				..CARRIER-1	1			
17	XKAQ-00439				..GEAR-PLANET-1	4			
18	XKAQ-00440				..PIN ASSY 1	4			
N19	XKAQ-00441				..PIN 1	1			NOT
N20	XKAQ-00079				..BUSHING 1	1			NOT
21	XKAQ-00417				..PLATE 1-SIDE	4			
22	XKAQ-00416				..PLATE 2-SIDE	4			

Item	Part_No	IS	Ord	T	Description	Qty	Serial_No	ITC	Remark
23	XKAQ-00041				..RING-STOP	4			
24	XKAQ-00048				..PIN-SPRING	4			
25	XKAQ-00442				..GEAR-SUN-1	1			
26	XKAQ-00444				..GEAR-RING	1			
27	XKAQ-00443				..PLATE-COVER	1			
28	XKAQ-00445				..SPACER	1	- #1812		
	XKAQ-00758				..SPACER	1	#1813 -	B	
29	XKAQ-00446				..RING-SPACER	1			
30	XKAQ-00072				..PIN-KNOCK	2			
31	XKAQ-00447				..PLATE 3-THRUST	1			
32	XKAQ-00105				..GEAR-PINION	1			
33	XKAQ-00043				..PLATE-LOCK	1	- #1812		
	XKAQ-00757				..PLATE-LOCK	1	#1813 -	B	
34	XKAQ-00064				..BOLT-HEX	8			
35	XKAQ-00042				..BOLT-HEX	2	- #1812		
	XKAQ-00756				..BOLT-HEX	4	#1813 -	B	
36	XKAQ-00292				..WASHER-LOCK	1	- #1812	-	
37	XKAQ-00448				..BOLT-SOCKET	12			
38	XKAQ-00049				..PLUG	1			
39	XKAQ-00066				..PLUG	2			
40	XKAQ-00167				..PIPE-GAUGE	1			
41	XKAQ-00450				..BAR-GAGE	1			
42	XKAQ-00143				..POST-AIR BREATHER	1			

SWING REDUCTION GEAR(TYPE 2)

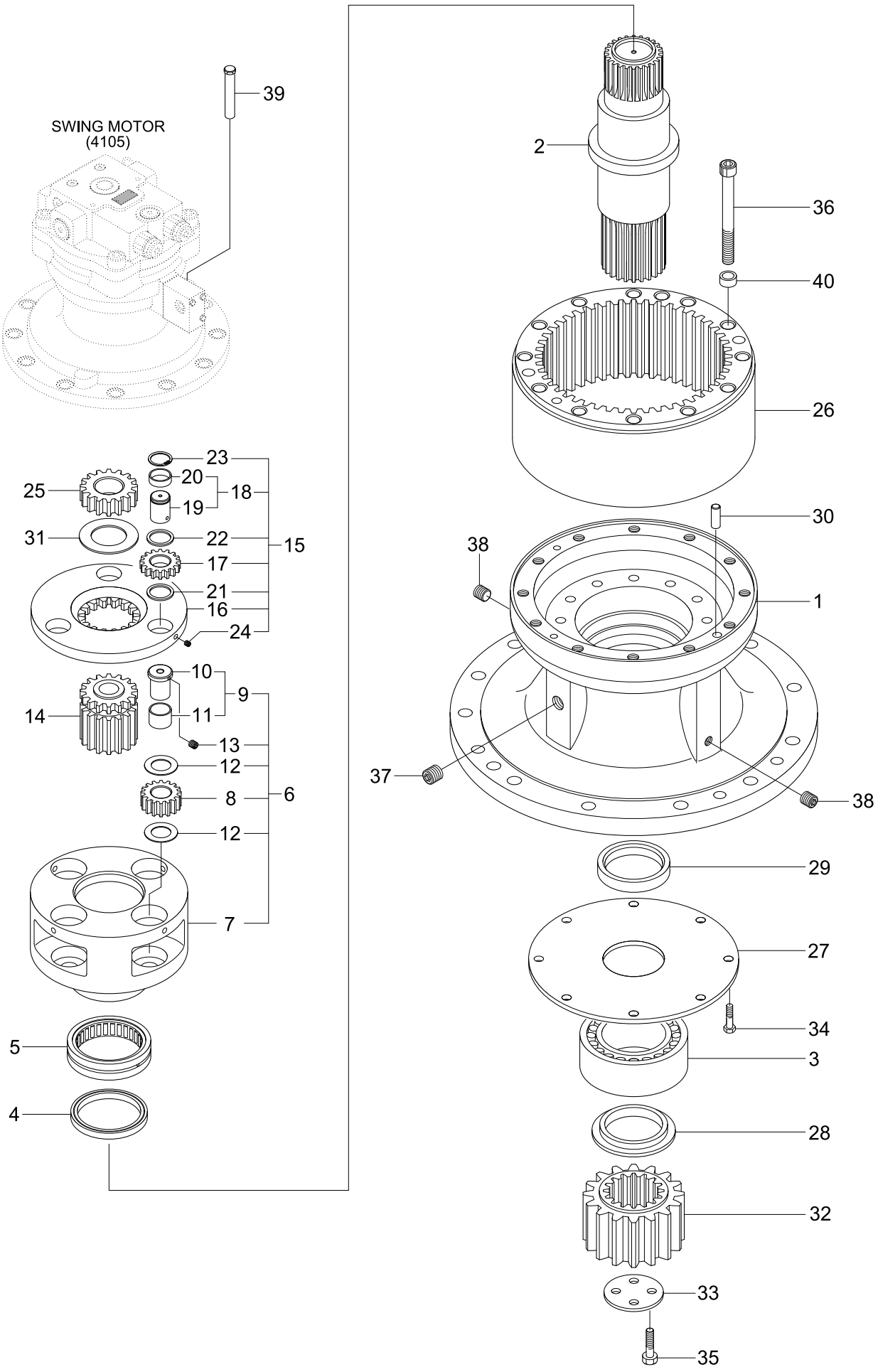

Item	Part_No	IS	Ord	T	Description	Qty	Serial_No	ITC	Remark
*	@				SWING MOTOR ASSY	1	#2881 -		NOT
*-2	31N9-10281				.SWING REDUCTION GEAR	1			
1	XKAQ-00427				..CASING	1			
2	XKAQ-00759				..SHAFT-DRIVE	1			
3	XKAQ-00117				..BEARING-ROLLER	1			
4	XKAQ-00119				..SEAL-OIL	1			
5	XKAQ-00120				..BEARING-ROLLER	1			
6	XKAQ-00429				..CARRIER ASSY-2	1			
7	XKAQ-00430				..CARRIER-2	1			
8	XKAQ-00431				..GEAR-PLANET-2	4			
9	XKAQ-00432				..PIN ASSY-2	4			
N10	XKAQ-00433				..PIN-2	1			NOT
N11	XKAQ-00434				..BUSHING-2	1			NOT
12	XKAQ-00435				..WASHER-THRUST	8			
13	XKAQ-00050				..PIN-SPRING	4			
14	XKAQ-00436				..GEAR-SUN-2	1			
15	XKAQ-00437				..CARRIER ASSY-1	1			
16	XKAQ-00438				..CARRIER-1	1			
17	XKAQ-00439				..GEAR-PLANET-1	4			
18	XKAQ-00440				..PIN ASSY-1	4			
N19	XKAQ-00441				..PIN-1	1			NOT
N20	XKAQ-00079				..BUSHING-1	1			NOT
21	XKAQ-00417				..PLATE-SIDE 1	4			
22	XKAQ-00416				..PLATE-SIDE 2	4			
23	XKAQ-00041				..RING-STOP	4			

Item	Part_No	IS	Ord	T	Description	Qty	Serial_No	ITC	Remark
24	XKAQ-00048				..PIN-SPRING	4			
25	XKAQ-00442				..GEAR-SUN-1	1			
26	XKAQ-00444				..GEAR-RING	1			
27	XKAQ-00443				..PLATE-COVER	1			
28	XKAQ-00758				..SPACER	1			
29	XKAQ-00446				..RING-SPACER	1			
30	XKAQ-00072				..PIN-KNOCK	2			
31	XKAQ-00447				..PLATE-THRUST-3	1			
32	XKAQ-00105				..GEAR-PINION	1			
33	XKAQ-00757				..PLATE-LOCK	1			
34	XKAQ-00064				..BOLT-HEX	8			
35	XKAQ-00756				..BOLT-HEX	4			
36	XKAQ-00448				..BOLT-SOCKET	12			
37	XKAQ-00049				..PLUG	1			
38	XKAQ-00066				..PLUG	2			
39	XKAQ-00800				..AIR BREATHER ASSY	1			
N40	XKAQ-00631				..BUSHING-2	4			NOT

TRAVEL MOTOR(-#0455)

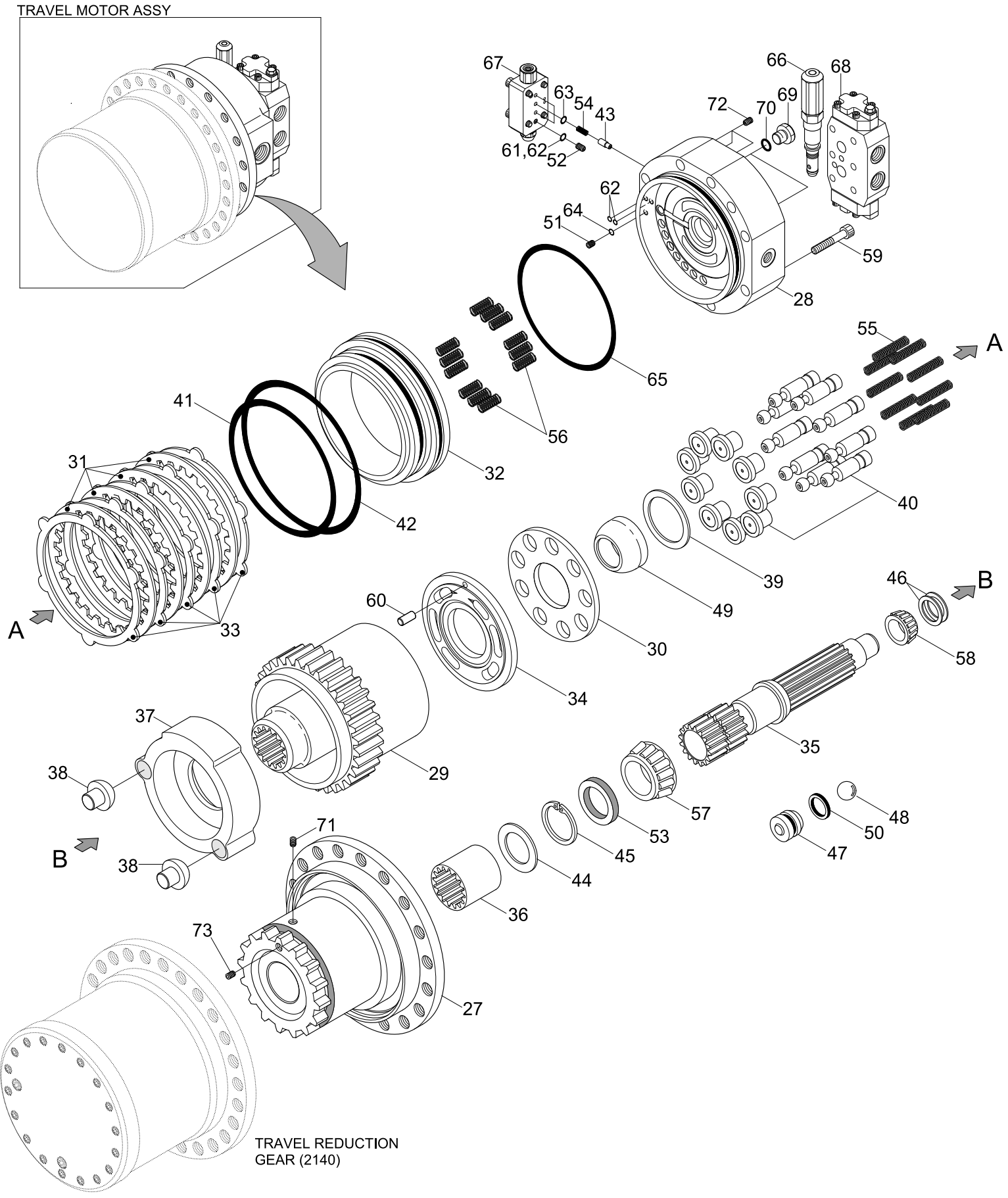

Item	Part_No	IS	Ord	T	Description	Qty	Serial_No	ITC	Remark
*	31N9-40010				TRACK MOTOR	1	- #0455	-	
*-1	XJCK-00123				.TRAVEL MOTOR UNIT	1	- #0006		
	XJCK-00139				.TRAVEL MOTOR UNIT	1	#0007 -	A	
27	XJCK-00045				..CASING	1			
28	XJCK-00122				..COVER-REAR	1			
29	XJCK-00121				..BLOCK-CYLINDER	1			
30	XJCK-00042				..RETAINER-SHOE	1			
31	XJCK-00041				..PLATE-FRICTION	4			
32	XJCK-00040				..PISTON-BRAKE	1			
33	XJCK-00039				..PLATE-SEPARATING	5			
34	XJCK-00120				..PLATE-VALVE	1			
35	XJCK-00037				..SHAFT	1			
36	XJCK-00036				..COUPLING	1			
N37	XJCK-00035				..PLATE-SWASH	1			NOT
N38	XJCK-00034				..PIVOT	2			NOT
39	XJCK-00077				..HOLDER-SPRING	1	#0001 -	-	
40	XJCK-00119				..PISTON ASSY	9			
41	XJCK-00031				..D-RING	1			
42	XJCK-00030				..D-RING	1			
43	XJCK-00029				..VALVE-CHECK	3			
44	XJCK-00028				..RING-RETAINER	1			
45	XJCK-00027				..RING-RETAINER	1			
N46	XJCK-00026				..SHIM	1			NOT
47	XJCK-00025				..PISTON	1			
48	XJCK-00024				..BALL	1			

Item	Part_No	IS	Ord	T	Description	Qty	Serial_No	ITC	Remark
49	XJCK-00023				..JOINT-BALL	1			
50	XJCK-00022				..SEAL-PISTON	1			
51	XJCK-00021				..RESTRICTOR	1			
52	XJCK-00020				..RESTRICTOR	1			
53	XJCK-00019				..SEAL-OIL	1			
54	XJCK-00018				..SPRING-CHECK VLV	3			
55	XJCK-00017				..SPRING-CYLINDER	9			
56	XJCK-00016				..SPRING-BRAKE	12			
57	XJCK-00015				..BEARING	1			
58	XJCK-00014				..BEARING	1			
59	XJCK-00013				..SCREW-CAP	10			
60	XJCK-00012				..PIN-PARALLEL	1			
61	XJCK-00011				..O-RING	3			
62	XJCK-00010				..O-RING	2			
63	XJCK-00009				..O-RING	3			
64	XJCK-00008				..O-RING	1			
65	XJCK-00007				..O-RING	1			
66	XJCK-00137				..RELIEF VALVE	2			
67	XJCK-00005				..PILOT VALVE	1			
68	XJCK-00118				..VALVE-BRAKE	1			
69	XJCK-00003				..PLUG	2			2355-4-166188-0
70	XJCK-00001				..O-RING	2			0401-1000110-10
71	XJCK-00076				..PLUG-EXPANDER	1	#0001 -	-	
72	XJCK-00075				..PLUG	4	#0001 -	-	
73	XJCK-00074				..PLUG	1	#0001 -	-	

Item	Part_No	IS	Ord	T	Description	Qty	Serial_No	ITC	Remark
*-2	XJCK-00136				.T/REDUCTION GEAR	1			

TRAVEL MOTOR(#0456-)

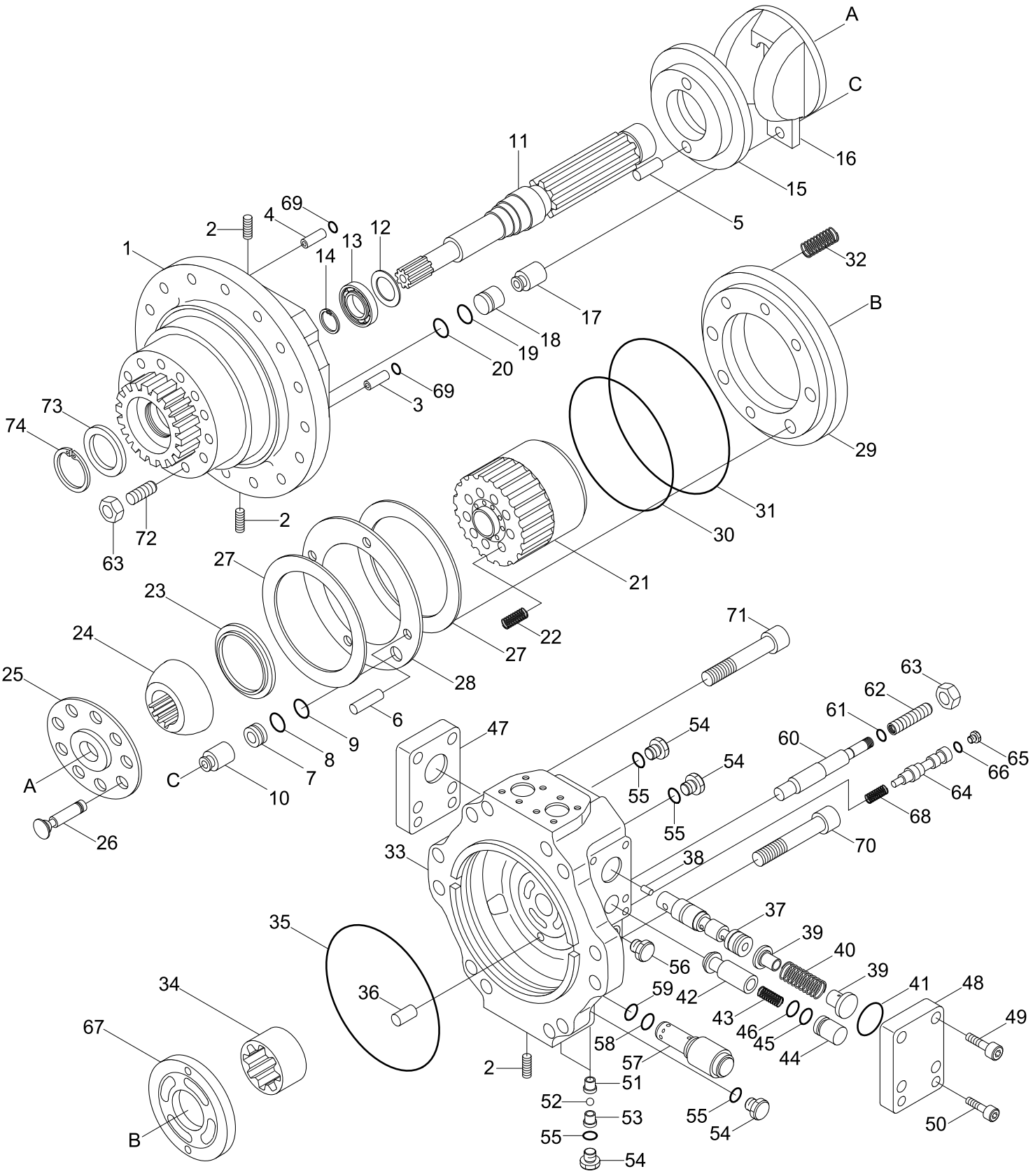

Part no.	Description	Included item no.
XKAY-00278	Seal kit	K8,K9,K19,K20,K35,K41,K45,K46,K55,K58,K59,K61,K66,K69,K73
XKAY-00211	Support kit	15,16
XKAY-00219	Cylinder block assy	21,22,23,67
XKAY-00223	Retainer kit	24,25
XKAY-00226	Piston kit	26
XKAY-00238	C/balance valve spool kit	37,38

Item	Part_No	IS	Ord	T	Description	Qty	Serial_No	ITC	Remark
*	31N9-40020BG				TRACK MOTOR ASSY	1	#0456 - #1045	D	
	31N9-40021BG				TRACK MOTOR ASSY	1	#1046 - #1796	B	
	31N9-40022				TRACK MOTOR ASSY	1	#1797 - #1856	D	
	31N9-40023				TRACK MOTOR ASSY	1	#1857 - #3222	A	
	31N9-40024				TRAVEL UNIT	1	#3223 -	A	
*-1	31N9-40030BG				.TRAVEL MOTOR	1	- #1045		
	31N9-40031BG				.TRAVEL MOTOR	1	#1046 - #1796	D	
	31N9-40032				.TRAVEL MOTOR	1	#1797 - #3222	D	
	31N9-40033				.TRAVEL MOTOR	1	#3223 -	B	
1	XKAY-00197				..CASING-SHAFT	1	- #1045		
	XKAY-00962				..CASING-SHAFT	1	#1046 - #3222	D	
	XKAY-02052				..CASING-SHAFT	1	#3223 -	D	
2	XKAY-00198				..PLUG	12			
3	XKAY-00199				..SCREW-ORIFICE	1			
					..SCREW-ORIFICE	2			
4	XKAY-00200				..SCREW-ORIFICE	1			
5	XKAY-00201				..PIN-SUPPORT	2			
6	XKAY-00202				..PIN-BRAKE	4			
7	XKAY-00203				..STOPPER(S)	1			
8	XKAY-00204				..O-RING	4			
9	XKAY-00205				..RING-BACK UP	3			
10	XKAY-00206				..PISTON-SWASH	1			
9	XKAY-00205				..RING-BACK UP	3			
11	XKAY-00207				..SHAFT	1			
10	XKAY-00206				..PISTON-SWASH	1			

Item	Part_No	IS	Ord	T	Description	Qty	Serial_No	ITC	Remark
12	XKAY-00208				..SPACER-BEARING	1			
11	XKAY-00207				..SHAFT	1			
12	XKAY-00208				..SPACER-BEARING	1			
13	XKAY-00209				..BEARING-ROLLER	1			
14	XKAY-00210				..RING-STOP	1			
*	XKAY-00211				..SUPPORT KIT	1			
N15	XKAY-00212				...SUPPORT	1			NOT
14	XKAY-00210				..RING-STOP	1			
N16	XKAY-00213				...PLATE-SWASH	1			NOT
17	XKAY-00214				..PISTON-SWASH	1			
*	XKAY-00211				..SUPPORT KIT	1			
18	XKAY-00215				..STOPPER(L)	1			
N15	XKAY-00212				..SUPPORT	1			NOT
N16	XKAY-00213				..PLATE-SWASH	1			NOT
17	XKAY-00214				..PISTON-SWASH	1			
18	XKAY-00215				..STOPPER(L)	1			
19	XKAY-00216				..O-RING	1			
20	XKAY-00217				..RING-BACK UP	2			
*	XKAY-00218				..ROTARY KIT	1			
*-1	XKAY-00219				...CYLINDER BLOCK KIT	1			
20	XKAY-00217				..RING-BACK UP	2			
N21	XKAY-00220				....CYLINDER BLOCK	1			NOT
*	XKAY-00218				..ROTARY KIT	1	- #1796		
	XKAY-01510				..ROTARY KIT	1	#1797 - #2149	D	
	XKAY-00218				..ROTARY KIT	1	#2150 -	B	

Item	Part_No	IS	Ord	T	Description	Qty	Serial_No	ITC	Remark
N22	XKAY-00221				....SPRING-CYLINDER	9			NOT
	XKAY-00219				...CYLINDER BLOCK KIT	1	- #1796		
*-1	XKAY-01509				...CYLINDER BLOCK KIT	1	#1797 - #2149	D	
	XKAY-00219				...CYLINDER BLOCK KIT	1	#2150 -	B	
	XKAY-00220				....BLOCK-CYLINDER	1	- #1796		NOT
N21	XKAY-01504				....BLOCK-CYLINDER	1	#1797 - #2149	D	NOT
	XKAY-00220				....BLOCK-CYLINDER	1	#2150 -	D	NOT
22	XKAY-00221				....SPRING-CYLINDER	9			
23	XKAY-00222				....SPACER	1			
N67	XKAY-00268				....PLATE-VALVE	1	- #1045		NOT
	XKAY-00972				....PLATE-VALVE	1	#1046 -	D	NOT
*-2	XKAY-00223				...RETAINER KIT	1			
N24	XKAY-00224				....GUIDE-BALL	1			NOT
N25	XKAY-00225				....PLATE-SET	1			NOT
*-3	XKAY-00226				...PISTON KIT	1			
67	XKAY-00268				....PLATE-VALVE	1	- #1796		
N26	XKAY-00227				....PISTON & SHOE ASSY	9			NOT
67	XKAY-01505				....PLATE-VALVE	1	#1797 -	D	
27	XKAY-00228				..PLATE-FRICTION	2			
*-2	XKAY-00223				...RETAINER KIT	1			
28	XKAY-00229				..PLATE-SEPARATOR	1			
24	XKAY-00224				....GUIDE-BALL	1			
25	XKAY-00225				....SET-PLATE	1			
*-3	XKAY-00226				...PISTON KIT	1			
N26	XKAY-00227				....PISTON & SHOE ASSY	9			NOT

Item	Part_No	IS	Ord	T	Description	Qty	Serial_No	ITC	Remark
27	XKAY-00228				..PLATE-FRICTION	2			
28	XKAY-00229				..PLATE-SEPARATOR	1			
29	XKAY-00230				..BRAKE-PISTON	1	- #1045		
	XKAY-00973				..BRAKE-PISTON	1	#1046 -	D	
30	XKAY-00231				..RING-PISTON 252	1			
29	XKAY-00230				..RING-PISTON	1			
31	XKAY-00232				..RING-PISTON 278	1			
30	XKAY-00231				..RING-PISTON 252	1			
33	XKAY-00234				..CASING-VALVE	1			
31	XKAY-00232				..RING-PISTON 278	1			
34	XKAY-00235				..BEARING-NEEDLE	1			
32	XKAY-00233				..SPRING-BRAKE	10			
33	XKAY-01416				..CASING-VALVE	1	- #1796		
	XKAY-01506				..CASING-VALVE	1	#1797 -	D	
34	XKAY-00235				..BEARING-NEEDLE	1			
35	XKAY-00236				..O-RING	1			
36	XKAY-00237				..PIN-VALVE PLATE	2			
*	XKAY-00238				..C/BLC VLV SPOOL KIT	1			
N37	XKAY-00239				...SPOOL-C/B/VALVE	1			NOT
36	XKAY-00237				..PIN-VALVE PLATE	2			
N38	XKAY-00240				...SCREW-ORIFICE	2			NOT
39	XKAY-00241				..DAMPING CHECK ASSY	2			
*	XKAY-00238				..SPOOL KIT-C/BLC VALVE	1			
40	XKAY-00242				..SPRING-C/B/VALVE	2			
37	XKAY-00239				...SPOOL-C/BLC VALVE	1			

Item	Part_No	IS	Ord	T	Description	Qty	Serial_No	ITC	Remark
38	XKAY-00240				...SCREW-ORIFICE	2			
39	XKAY-00241				..DAMPING CHECK ASSY	2			
40	XKAY-00242				..SPRING-C/BLC VALVE	2			
41	XKAY-00247				..O-RING	2			
42	XKAY-00244				..PLUNGER-C/BLC VALVE	2			
43	XKAY-00245				..SPRING-CHECK	2			
44	XKAY-00246				..STOPPER-CHECK	2			
45	XKAY-00247				..O-RING	4			
46	XKAY-00248				..RING-BACK UP	4			
47	XKAY-00249				..CAP-C/B/VALVE(R)	1			
48	XKAY-00250				..CAP-C/B/VALVE(L)	1			
49	XKAY-00136				..BOLT-SOCKET	8			
46	XKAY-00248				..RING-BACK UP	4			
51	XKAY-00252				..SEAT	2			
52	XKAY-00253				..BALL-STEEL	2			
47	XKAY-00249				..CAP-C/BLC VALVE(R)	1			
53	XKAY-00254				..STOPPER	2			
48	XKAY-00250				..CAP-C/BLC VALVE(L)	1			
54	XKAY-00255				..PLUG-HP	7			
49	XKAY-00136				..BOLT-SOCKET	8			
50	XKAY-00251				..BOLT-SOCKET	4			
51	XKAY-00252				..SEAT	2			
52	XKAY-00253				..BALL-STEEL	2			
53	XKAY-00254				..STOPPER	2			
54	XKAY-00255				..PLUG-HP	7			

Item	Part_No	IS	Ord	T	Description	Qty	Serial_No	ITC	Remark
55	XKAY-00256				..O-RING	7			
					..O-RING	7			
56	XKAY-00257				..PLUG-HP	2			
57	XKAY-00672				..RELIEF VALVE ASSY	2			
58	XKAY-00259				..O-RING	2			
59	XKAY-00260				..RING-BACK UP	2			
					..RING-BACK UP	2			
60	XKAY-00261				..ROD-SWASH	1			
					..ROD-SWASH	1			
61	XKAY-00262				..O-RING	1			
62	XKAY-00263				..SCREW-LOCK	1			
63	XKAY-00279				..NUT-HEX	2			
62	XKAY-00263				..SCREW-LOCK	1			
64	XKAY-00265				..SPOOL-SWASH	1			
63	XKAY-00279				..NUT-HEX	2			
65	XKAY-00266				..PLUG	1			
64	XKAY-00265				..SPOOL-SWASH	1			
65	XKAY-00266				..PLUG	1			
66	XKAY-00267				..O-RING	1			
68	XKAY-00269				..SPRING-SWASH	1			
69	XKAY-00270				..O-RING	3			
70	XKAY-00271				..BOLT-SOCKET	8			
71	XKAY-00272				..BOLT-SOCKET	4			
72	XKAY-00273				..SCREW-LOCK	1			
70	XKAY-00271				..BOLT-WRENCH	8			

Item	Part_No	IS	Ord	T	Description	Qty	Serial_No	ITC	Remark
73	XKAY-00274				..SEAL-OIL	1			
74	XKAY-00275				..RING-LOCK	1			
71	XKAY-00272				..BOLT-SOCKET	4			
K	XKAY-00278				SEAL KIT	1			SEE ILLUST
72	XKAY-00273				..SCREW-LOCK	1			
73	XKAY-00274				..SEAL-OIL	1			
74	XKAY-00275				..RING-LOCK	1			
K	XKAY-00278				SEAL KIT	1			SEE ILLUST
*-2	@				.T/REDUCTION GEAR	1			NOT
N	@				NOT SUPPLIED PARTS	1			NOT

TRAVEL REDUCTION GEAR(-#0455)

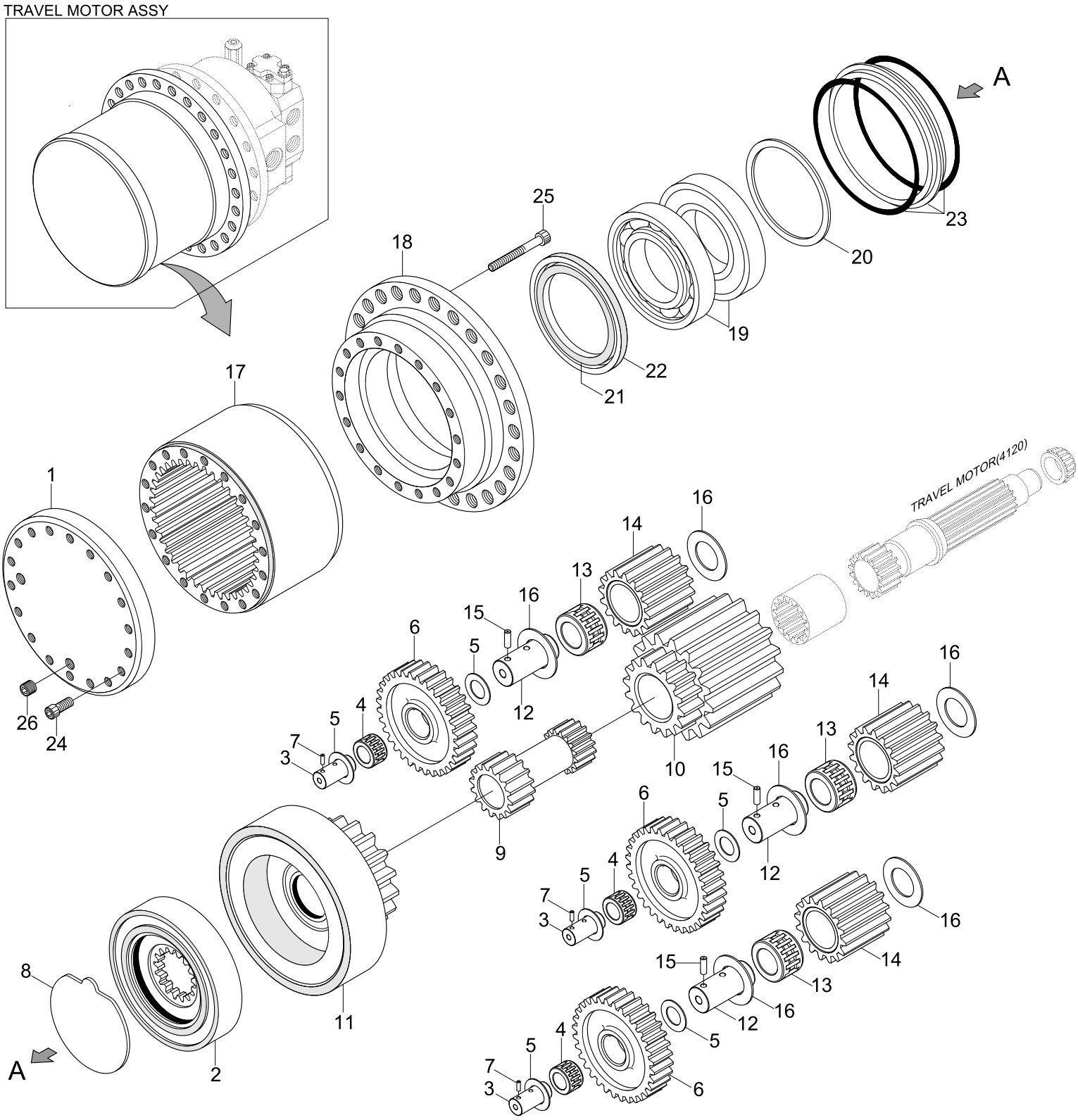

Item	Part_No	IS	Ord	T	Description	Qty	Serial_No	ITC	Remark
*-2	XJCK-00136				.T/REDUCTION GEAR	1	- #0006		
	XJCK-00081				.T/REDUCTION GEAR	1	#0007 - #0452	-	
1	XJCK-00135				..COVER	1	- #0006		
	XJCK-00080				..COVER	1	#0007 -	D	
2	XJCK-00134				..CARRIER	1	- #0006		
	XJCK-00141				..CARRIER	3	#0007 -	D	
3	XJCK-00133				..PIN-CARRIER	3	- #0006		
	XJCK-00142				..PIN-CARRIER	3	#0007 -	D	
4	XJCK-00068				..BEARING-NIDDLE	3			
5	XJCK-00132				..WASHER-THRUST	6			
6	XJCK-00131				..PLANETARY	3			
7	XJCK-00065				..PIN-SPRING	3			
8	XJCK-00064				..PLATE-THRUST	1			
9	XJCK-00130				..GEAR-SUN	1			
10	XJCK-00129				..GEAR-SUN	1			
11	XJCK-00128				..CARRIER 2	1			
12	XJCK-00060				..PIN-CARRIER	3			
13	XJCK-00059				..BEARING-NIDDLE	3			
14	XJCK-00079				..PLANETARY	3	#0001 -	-	
15	XJCK-00057				..PIN-SPRING	3			
16	XJCK-00126				..WASHER-THRUST	6			
17	XJCK-00125				..GEAR-RING	1	- #0006		
	XJCK-00078				..GEAR-RING	1	#0007 -	D	
18	XJCK-00124				..HOUSING	1			
19	XJCK-00053				..BEARING	2			

Item	Part_No	IS	Ord	T	Description	Qty	Serial_No	ITC	Remark
20	XJCK-00052				..SHIM	1			
21	XJCK-00051				..WASHER-LOCK	2			
22	XJCK-00050				..SUPPORT-RING	1			
23	XJCK-00049				..SEAL-FLOATING	1			
24	XJCK-00048				..SCREW-CAP	18			
25	XJCK-00047				..SCREW-CAP	25			
26	XJCK-00002				..SCREW-CAP	2			

TRAVEL REDUCTION GEAR(#0456-)

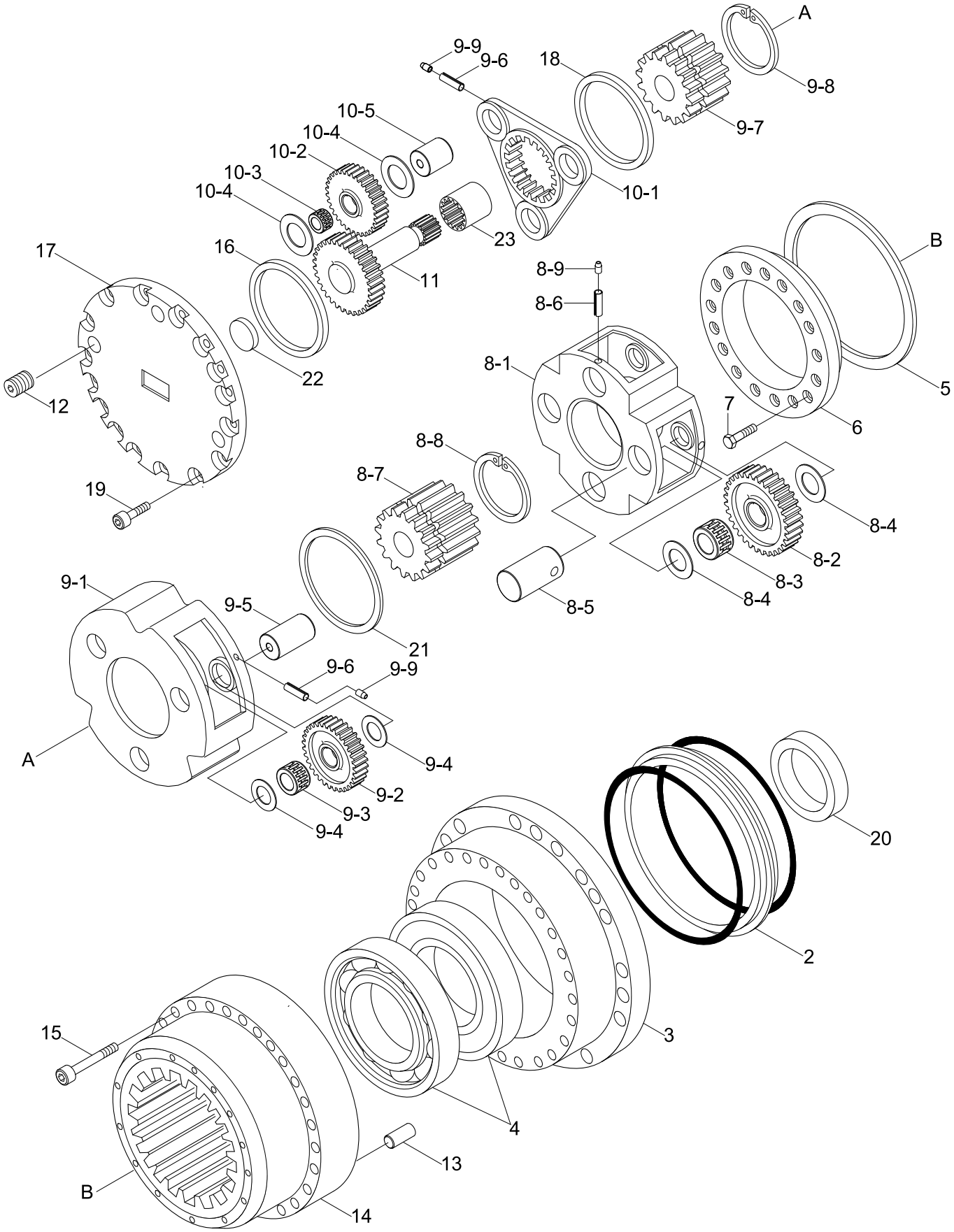

Item	Part_No	IS	Ord	T	Description	Qty	Serial_No	ITC	Remark
*-2	31N8-40070BG				.T/REDUCTION GEAR	1	#0456 - #1045	D	
	31N8-40071BG				.T/REDUCTION GEAR	1	#1046 - #1856	D	
	31N8-40072				.T/REDUCTION GEAR	1	#1857 - #3222	B	
	31N8-40073				.T/REDUCTION GEAR	1	#3223 -	B	
2	XKAQ-00173				..SEAL-FLOATING	1	- #3222		
	XKAQ-00803				..SEAL-FLOATING	1	#3223 -	A	
3	XKAQ-00174				..HOUSING	1	- #3222		
	XKAQ-00802				..HOUSING	1	#3223 -	D	
4	XKAQ-00175				..BEARING-ANGULAR	2			
	XKAQ-00175-AS				..BEARING-ANGULAR	2	#0456 -	-	FOR AS ONLY
5	XKAQ-00176				..SHIM	1			
6	XKAQ-00177				..RETAINER	1			
7	XKAQ-00178				..BOLT-WRENCH	17			
8	XKAQ-00179				..CARRIER ASSY-NO.3	1	- #0890		
	XKAQ-00398				..CARRIER 3 ASSY	1	#0891 -	B	
8-1	XKAQ-00180				...CARRIER-NO.3	1	- #0890		
	XKAQ-00396				...CARRIER 3	1	#0891 -	B	
8-2	XKAQ-00181				...GEAR-PLANETARY NO.3	4	- #0890		
	XKAQ-00389				...GEAR 3-PLANETARY	4	#0891 -	B	
8-3	XKAQ-00182				...NEEDLE-NO.3	72	- #0890		
	XKAQ-00390				...NEEDLE 3	72	#0891 -	B	
8-4	XKAQ-00183				...WASHER-THRUST NO.3	8	- #0890		
	XKAQ-00391				...WASHER 3-THRUST	8	#0891 -	B	
8-5	XKAQ-00184				...PIN 3	4			
8-6	XKAQ-00185				...PIN 3-SPRING	4			

Item	Part_No	IS	Ord	T	Description	Qty	Serial_No	ITC	Remark
8-7	XKAQ-00186				...GEAR 3-SUN	1			
8-8	XKAQ-00187				...RING 3-SNAP	1			
8-9	XKAQ-00651				...PIN 3-SPRING	4	#1730 -	-	
9	XKAQ-00188				..CARRIER ASSY-NO.2	1	- #0890		
	XKAQ-00399				..CARRIER ASSY 2	1	#0891 -	B	
9-1	XKAQ-00189				...CARRIER-NO.2	1	- #0890		
	XKAQ-00397				...CARRIER 2	1	#0891 -	B	
9-2	XKAQ-00190				...GEAR-PLANETARY NO.2	3	- #0890		
	XKAQ-00392				...GEAR-PLANETERY 2	3	#0891 -	B	
9-3	XKAQ-00191				...NEEDLE-NO.2	45	- #0890		
	XKAQ-00393				...NEEDLE 2	45	#0891 -	B	
9-4	XKAQ-00192				...WASHER-THRUST NO.2	6	- #0890		
	XKAQ-00394				...WASHER-THRUST 2	6	#0891 -	B	
9-5	XKAQ-00193				...PIN 2	3			
9-6	XKAQ-00194				...PIN 2-SPRING	6			
9-7	XKAQ-00195				...GEAR 2-SUN	1			
9-8	XKAQ-00196				...RING 2-SNAP	1			
9-9	XKAQ-00650				...PIN 2-SRPING	6	#1730 -	-	
10	XKAQ-00197				..CARRIER ASSY-NO.1	1	- #0890		
	XKAQ-00400				..CARRIER 1 ASSY	1	#0891 -	B	
10-1	XKAQ-00198				...CARRIER 1	1			
10-2	XKAQ-00199				...GEAR 1-PLANETARY	3			
10-3	XKAQ-00200				...BEARING-NEEDLE	3			
10-4	XKAQ-00201				...WASHER-THRUST NO.1	6	- #0890		
	XKAQ-00395				...WASHER 1-THRUST	6	#0891 -	B	

Item	Part_No	IS	Ord	T	Description	Qty	Serial_No	ITC	Remark
10-5	XKAQ-00202				...PIN 1	3			
11	XKAQ-00203				..GEAR 1-SUN	1			
12	XKAQ-00204				..PLUG	3			
13	XKAQ-00205				..PIN-LOCK	4			
14	XKAQ-00206				..GEAR-RING	1	- #1856		
	XKAQ-00762				..GEAR-RING	1	#1857 -	B	
15	XKAQ-00207				..BOLT-WRENCH	24			
16	XKAQ-00208				..RING-THRUST	1			
17	XKAQ-00209				..COVER	1			
18	XKAQ-00210				..RING 2-THRUST	1			
19	XKAQ-00211				..BOLT-WRENCH	16			
20	XKAQ-00212				..MOTOR-RING	1			
21	XKAQ-00213				..RING 3-THRUST	1			
22	XKAQ-00214				..PAD	1			
23	XKAQ-00215				..COUPLING	1			
N	@				NOT SUPPLIED PARTS	1			NOT

REMOTE CONTROL LEVER

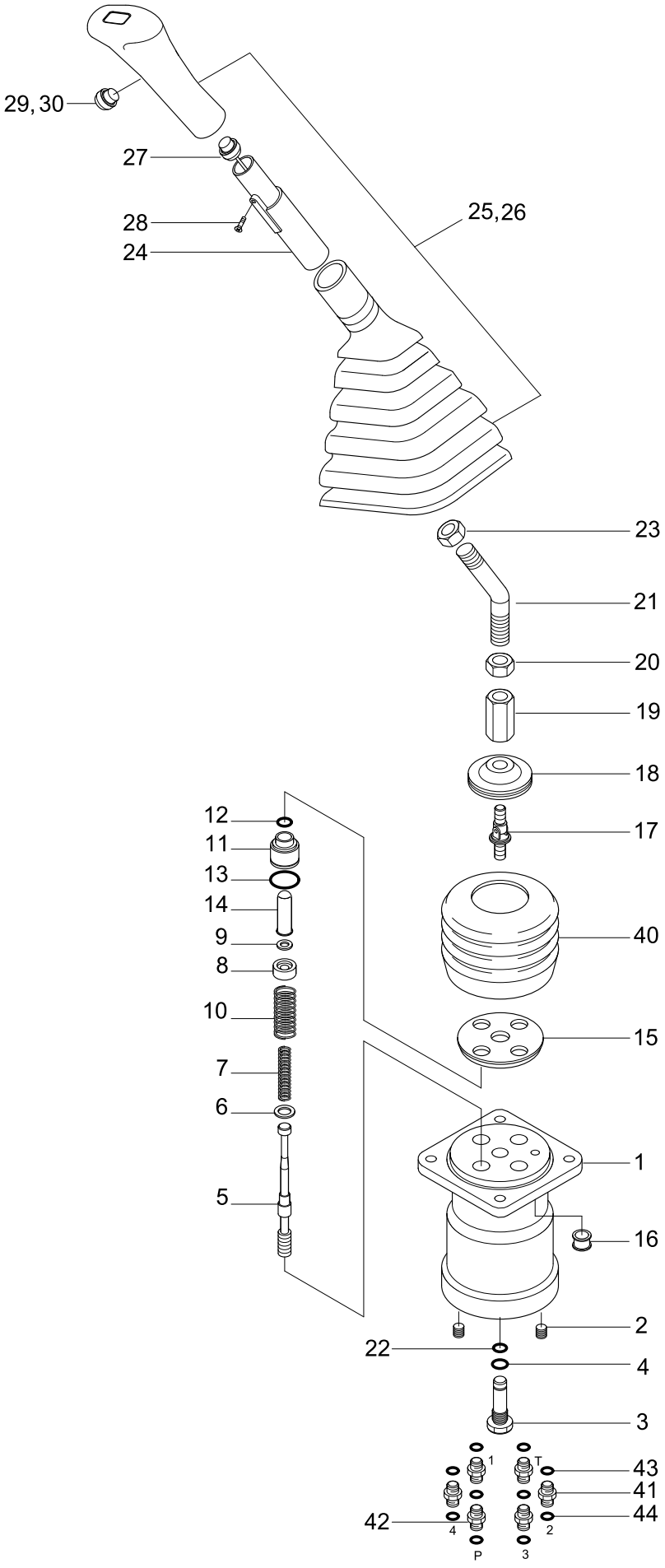

Description	Serial no	Parts no	Included item
RCV lever seal kit	-#0383	91ER-20050	4, 12, 13, 22
	#0384-	91ER-20051	4, 12, 13, 22

Item	Part_No	IS	Ord	T	Description	Qty	Serial_No	ITC	Remark
*	31N8-20200				RCV SUB ASSY-LH	1	#0001 - #0215	-	
	31N8-24200				RCV SUB ASSY-LH	1	#0216 -	D	
	31N8-20210				RCV SUB ASSY-RH	1	#0001 - #0215	-	
	31N8-24210				RCV SUB ASSY-RH	1	#0216 -	D	
*-1	31N6-20061				.RCV LEVER-LH	1			
	31N6-20071				.RCV LEVER-RH	1			
1	XKAY-00077				..CASE	1			J95C1001
2	XKAY-00065				..PLUG	4			WPT18
3	XKAY-00064				..PLUG	1			J95C1002
K4	XKAY-00063				..O-RING	1			
*-1	XKAY-00615				..SPOOL KIT	4	#0001 -	-	
N5	XKAY-00062				...SPOOL	4			NOT
N6	XKAY-00061				...SHIM	4			NOT
N7	XKAY-00060				...SPRING	4			NOT
N8	XKAY-00059				...SEAT-SPRING	4			NOT
N9	XKAY-00058				...STOPPER	4			NOT
10	XKAY-00078				..SPRING	4			
11	XKAY-00056				..PLUG	4	- #0383	-	J95C1008
K12	XKAY-00055				..SEAL-ROD	4	- #0383	-	RSY10
K13	XKAY-00054				..O-RING	4	- #0383	-	
14	XKAY-00052				..ROD-PUSH	4	- #0383	-	J95C1009
*-2	XKAY-00608				..PLUG KIT(1,3)	1	#0384 -	-	
11	XKAY-00610				...PLUG	1	#0384 -	D	
K12	XKAY-00611				...SEAL-ROD	1	#0384 -	D	
K13	XKAY-00054				...O-RING	1	#0384 -	A	

Item	Part_No	IS	Ord	T	Description	Qty	Serial_No	ITC	Remark
14	XKAY-00052				...ROD-PUSH	1	#0384 -	A	
15	XKAY-00075				..PLATE	1			JA1G1002
16	XKAY-00074				..BUSHING	1			JA1G1003
17	XKAY-00049				..JOINT ASSY	1			J95C1012
18	XKAY-00073				..SWASH PLATE	1			JA1G1004
19	XKAY-00047				..NUT-HEX	1			J95C1014
20	XKAY-00046				..NUT	1			HNM14-1
*-3	XKAY-00617				..HANDLE KIT(L)	1	#0001 -	-	
	XKAY-00616				..HANDLE KIT(R)	1	#0001 -	-	
N21	XKAY-00044				...CONNECTOR-HANDLE	1			NOT
K22	XKAY-00045				...O-RING	1			
N23	XKAY-00043				...NUT	1			NOT
N24	XKAY-00042				...INSERT	1			NOT
N25	XKAY-00041				...BOOT	1			NOT
N26	XKAY-00040				...HANDLE-LH	1			NOT
	XKAY-00076				...HANDLE-RH	1			NOT
N27	XKAY-00039				...SWITCH ASSY	1			NOT
N28	XKAY-00038				...SCREW	1			NOT
N29	XKAY-00037				...SWITCH ASSY	1			NOT
N30	XKAY-00036				...COVER-SWITCH	1			NOT
N40	XKAY-00072				...BOOT	1			NOT
41	P010-110012				.CONNECTOR	5	- #0215		
	X500-110011				.CONNECTOR-ORFS	5	#0216 -	D	
42	31EK-20110				.FILTER-LAST GUARD	1	- #0215		
	31N6-25070				.FILTER-LAST GUARD	1	#0216 -	D	

Item	Part_No	IS	Ord	T	Description	Qty	Serial_No	ITC	Remark
43	S631-011004				.O-RING	6			
44	S621-012001				.O-RING	6	#0216 -	-	
K	91ER-20050				SEAL KIT	1	- #0383		SEE ILLUST
	91ER-20051				SEAL KIT	1	#0384 -	D	
N	@				NOT INDIVIDUALLY SUPPLIED	1			NOT

REMOTE CONTROL VALVE(OPT, #0902-)

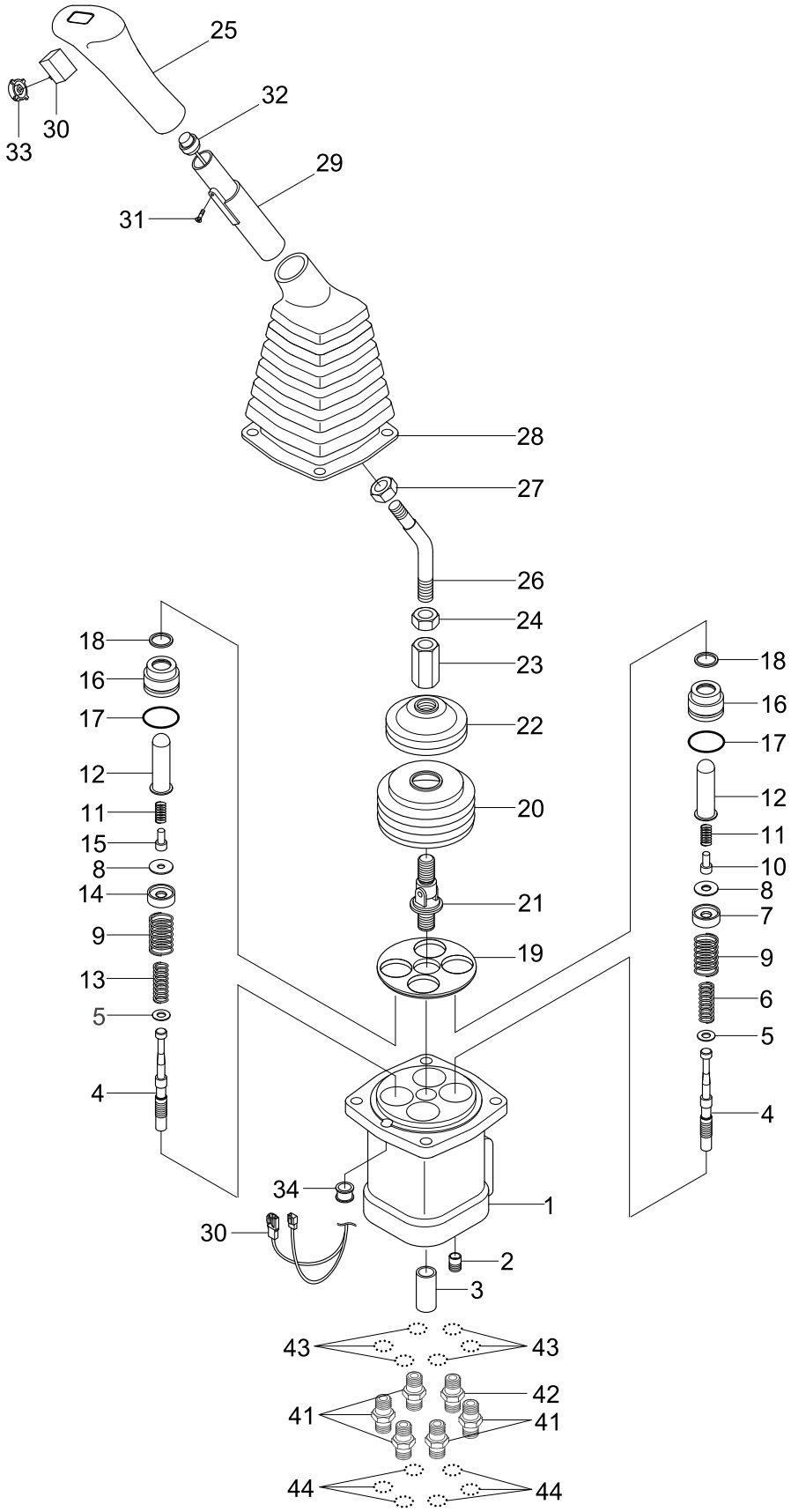

Description	Parts no	Included item
RCV lever seal kit	XKAY-00791	17, 18

Item	Part_No	IS	Ord	T	Description	Qty	Serial_No	ITC	Remark
*	31N8-27200				RCV LEVER SUB ASSY-LH	1	#0902 -	-	AUSTR/NEWZL
	31N8-27210				RCV LEVER SUB ASSY-RH	1	#0902 -	-	AUSTR/NEWZL
*-1	31N6-20061				.RCV LEVER-LH	1			
	31N6-20071				.RCV LEVER-RH	1			
1	XKAY-00766				..CASE	1			
2	XKAY-00065				..PLUG	4			
3	XKAY-00768				..BUSHING	1			
*-1	XKAY-00769				..SPOOL KIT(1,3)	1			
	XKAY-00770				..SPOOL KIT(2,4)	1			
N4	XKAY-00771				...SPOOL	4			NOT
N5	XKAY-00772				...SHIM	AR			NOT
N6	XKAY-00773				...SPRING(1,3)	2			NOT
N7	XKAY-00774				...SPRING SEAT(1,3)	2			NOT
N8	XKAY-00058				...STOPPER	4			NOT
N13	XKAY-00781				...SPRING(2,4)	2			NOT
N14	XKAY-00782				...SPRING SEAT(2,4)	2			NOT
9	XKAY-00775				..SPRING	4			
*-2	XKAY-00776				..PLUG KIT(1,3)	1			
	XKAY-00777				..PLUG KIT(2,4)	1			
N10	XKAY-00778				...STOPPER(1,3)	2			NOT
N11	XKAY-00779				...SPRING	4			NOT
N12	XKAY-00780				...PUSH ROD	4			NOT
N15	XKAY-00783				...STOPPER(2,4)	2			NOT
N16	XKAY-00784				...PLUG	4			NOT
K17	XKAY-00438				...O-RING	4			

Item	Part_No	IS	Ord	T	Description	Qty	Serial_No	ITC	Remark
K18	XKAY-00611				...SEAL-ROD	4			
19	XKAY-00075				..PLATE	1			
20	XKAY-00786				..BOOT	1			
21	XKAY-00049				..JOINT ASSY	1			
22	XKAY-00787				..SWASH PLATE	1			
23	XKAY-00047				..NUT-HEX	1			
*-3	XKAY-00788				..HANDLE KIT-RH	1			
	XKAY-00789				..HANDLE KIT-LH	1			
N24	XKAY-00790				...NUT	1			NOT
N25	XKAY-00330				...HANDLE-RH	1			NOT
	XKAY-00328				...HANDLE-LH	1			NOT
N26	XKAY-00044				...CONNECTOR-HANDLE	1			NOT
N27	XKAY-00043				...NUT	1			NOT
N28	XKAY-00041				...BOOT	1			NOT
29	XKAY-00327				...INSERT	1			
N30	XKAY-00039				...SWITCH ASSY	1			NOT
N31	XKAY-00038				...SCREW	1			NOT
N32	XKAY-00037				...SWITCH ASSY	1			NOT
N33	XKAY-00036				...COVER-SWITCH	1			NOT
34	XKAY-00074				..BUSHING	1			
41	X500-110002				.CONNECTOR-ORFS	5			
42	31N6-25070				.FILTER-LAST GUARD	1			
43	S631-011004				.O-RING	6			
44	S621-012001				.O-RING	6			
K	XKAY-00791				SEAL KIT	1			SEE ILLUST

Item	Part_No	IS	Ord	T	Description	Qty	Serial_No	ITC	Remark
N	@				NOT INDIVIDUALLY SUPPLIED	AR			NOT

REMOTE CONTROL PEDAL

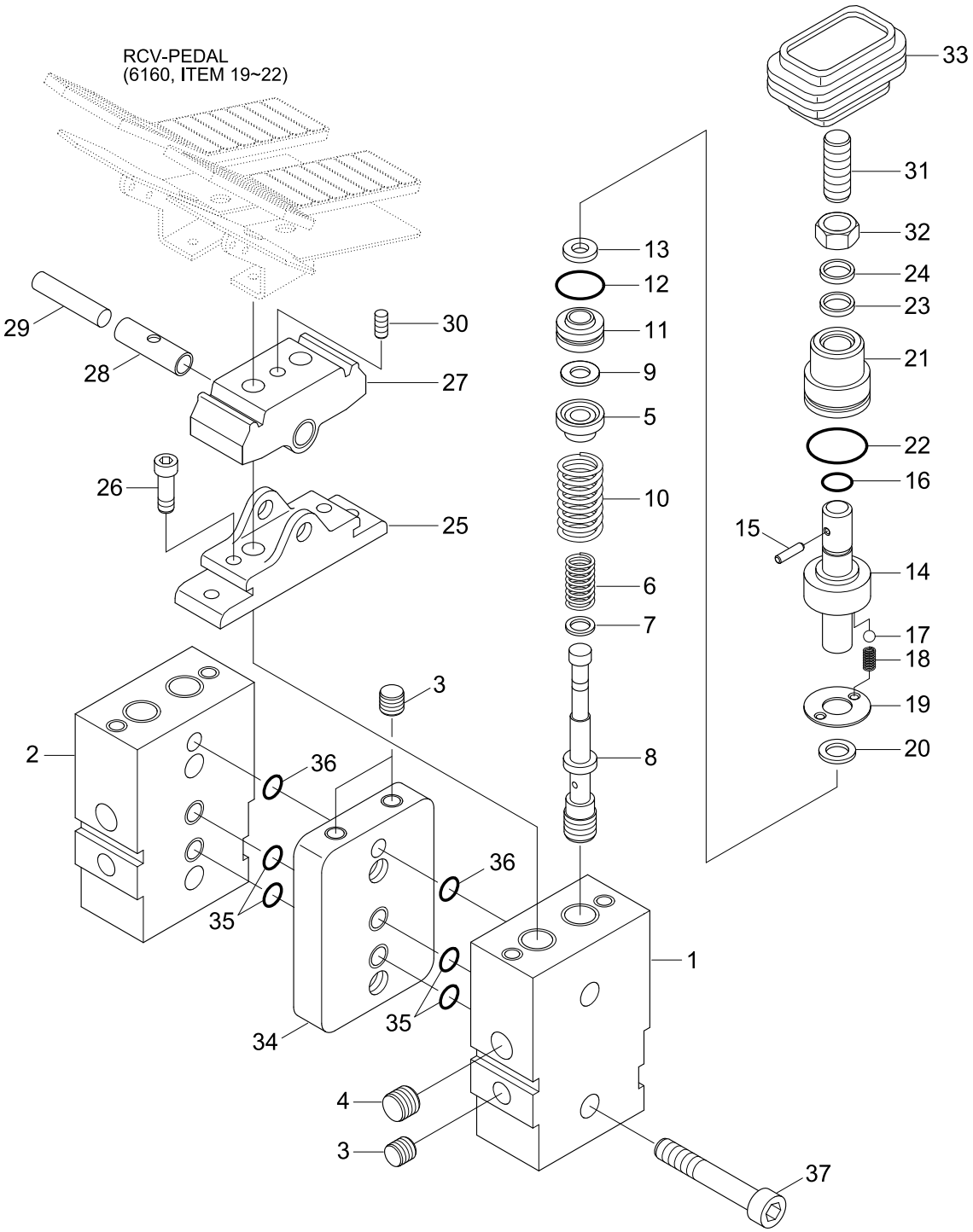

Item	Part_No	IS	Ord	T	Description	Qty	Serial_No	ITC	Remark
*	31N6-20020				RCV PEDAL	1			
1	XKAY-00035				.BODY(1)	1			
2	XKAY-00034				.BODY(2)	1			
3	XKAY-00033				.PLUG	4			
4	XKAY-00032				.PLUG	2			WPT38
5	XKAY-00031				.SEAT-SPRING	4			
6	XKAY-00030				.SPRING	4			
7	XKAY-00029				.SEAT-SPRING	4			J24D2008
8	XKAY-00028				.SPOOL	4			
9	XKAY-00027				.STOPPER	4			
10	XKAY-00026				.SPRING	4			
11	XKAY-00025				.GUIDE-ROD	4			
12	XKAY-00024				.O-RING	4			
13	XKAY-00069				.RING-SNAP	4			
14	XKAY-00023				.ROD-PUSH	4			
15	XKAY-00022				.PIN-SPRING	4			
16	XKAY-00021				.SEAL	4			
17	XKAY-00020				.BALL-STEEL	4			
18	XKAY-00019				.SPRING	4			
19	XKAY-00068				.PLATE	4			
20	XKAY-00018				.RING-SNAP	4			
21	XKAY-00017				.PLUG	4			
22	XKAY-00016				.O-RING	4			
23	XKAY-00067				.SEAL-ROD	4			
24	XKAY-00014				.SEAL-DUST	4			

Item	Part_No	IS	Ord	T	Description	Qty	Serial_No	ITC	Remark
25	XKAY-00013				.COVER	4			
26	XKAY-00012				.BOLT-WRENCH	4			
27	XKAY-00011				.CAM	2			J24D2005
28	XKAY-00010				.BUSHING	4			DU1010
29	XKAY-00009				.SHAFT-CAM	2			J24D2016
30	XKAY-00008				.SCREW-SET	2			
31	XKAY-00007				.SCREW-SET	4			J24D2015
32	XKAY-00006				.NUT-HEX	4			HNM10
33	XKAY-00005				.BELLOWS	2			J24D2006
34	XKAY-00004				.SPACER	1			
35	XKAY-00003				.O-RING	4			
36	XKAY-00002				.O-RING	2			
37	XKAY-00001				.BOLT-SOCKET	4			

TURNING JOINT

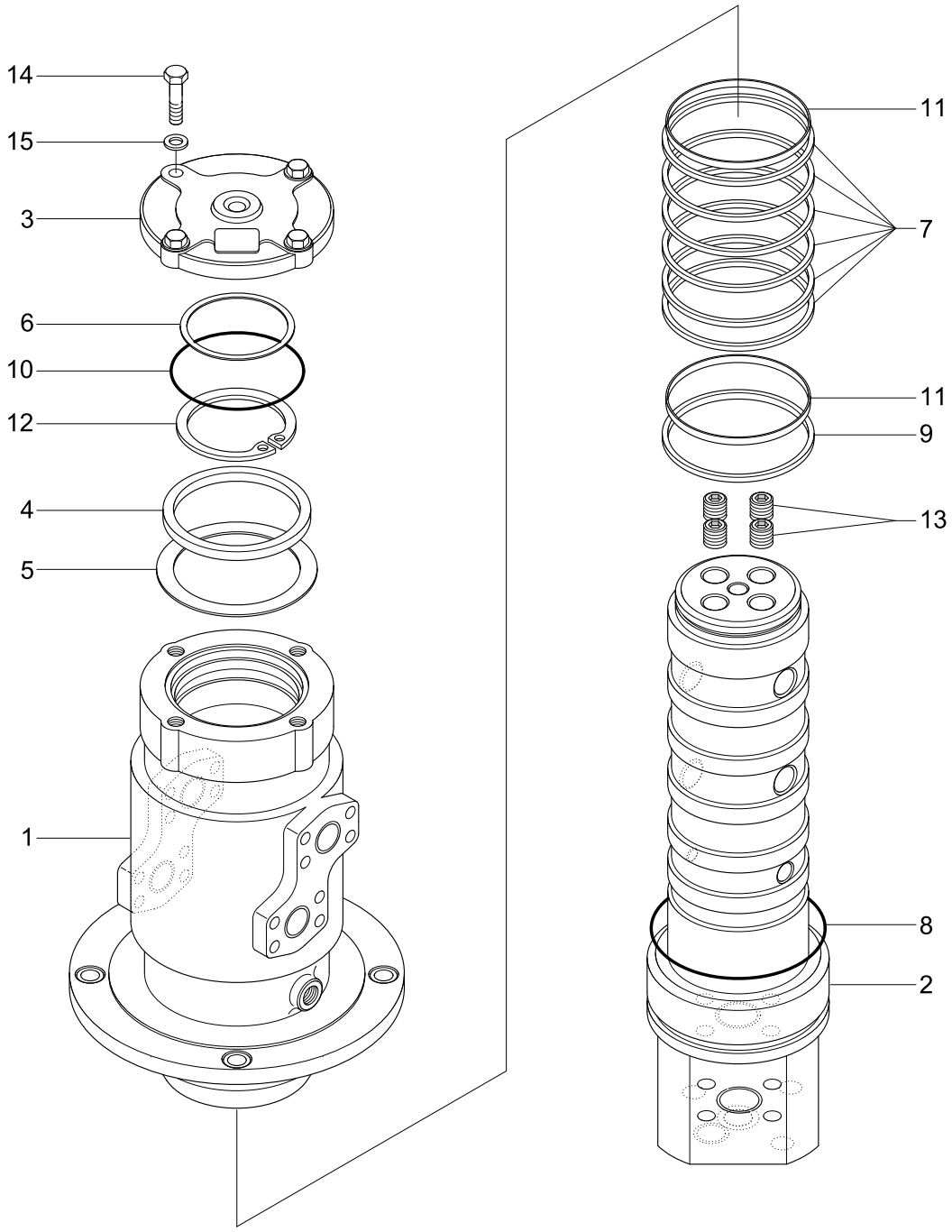

Description	Parts no	Included item
Turning joint seal kit	31N6-40950	7, 8, 9, 10, 11

Item	Part_No	IS	Ord	T	Description	Qty	Serial_No	ITC	Remark
*	31N6-40021				TURNING JOINT	1			
1	31N6-40910				.HUB	1			
2	31N6-40920				.SHAFT	1			
3	31N2-40930				.COVER	1			
4	31E3-0035				.SPACER	1			
5	31E3-0036				.SHIM	1			
6	31E3-0037				.SHIM	1			
K7	31N6-40990				.SEAL-SLIPPER	6			
K8	S631-112001				.O-RING	1			
K9	S631-100004				.O-RING	1			
K10	S632-120004				.O-RING	1			
K11	Y320-100011				.RING-WEAR	2			
12	S601-090004				.RING-RETAINING	1			
13	P220-430205				.PLUG-HEX	4			
14	S017-120356				.BOLT-HEX	4			
15	S411-120006				.WASHER-SPRING	4			
K	31N6-40950				SEAL KIT	1			SEE ILLUST

BOOM CYLINDER

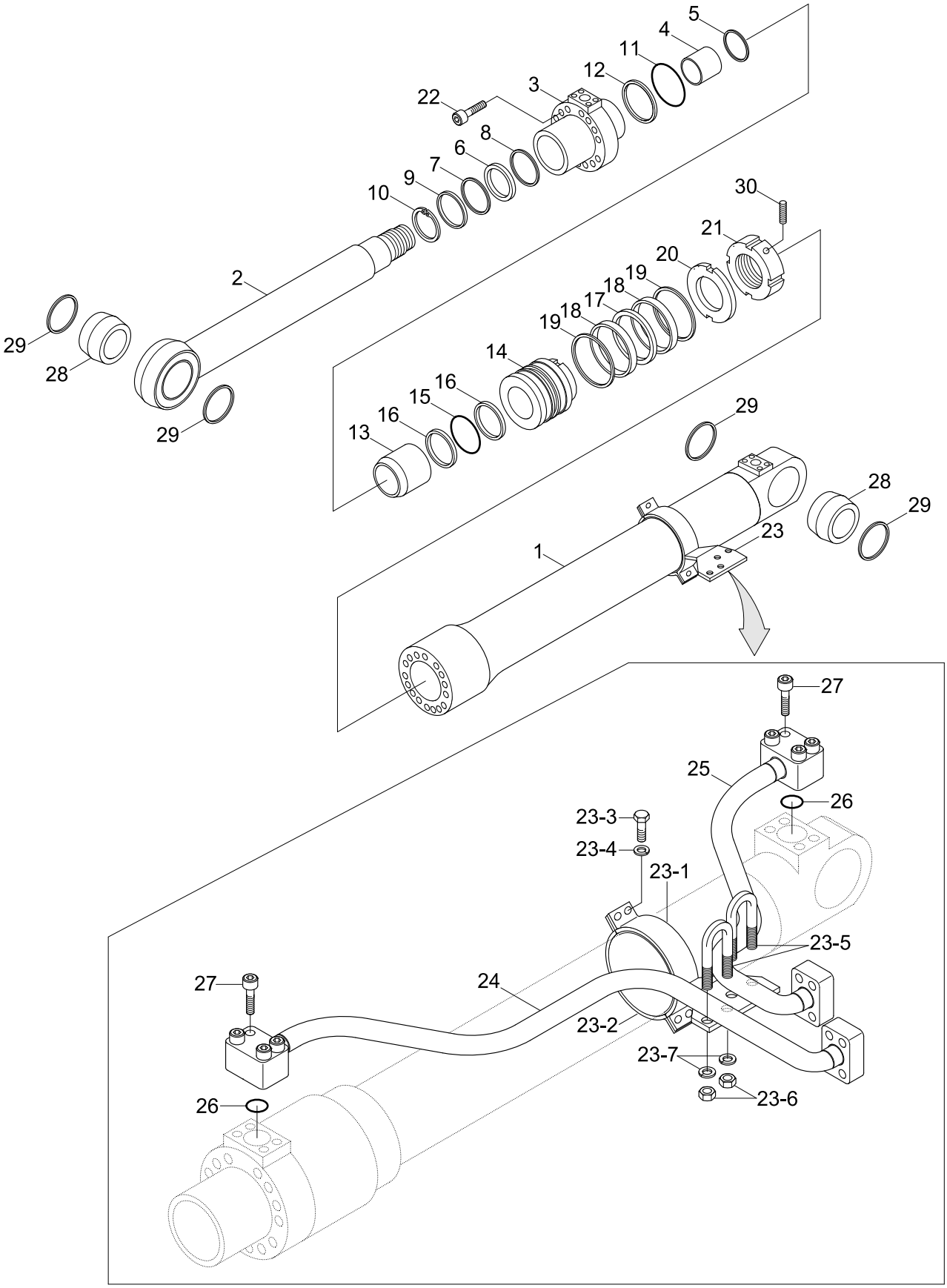

Description	Parts no	Included item
Boom cylinder seal kit	31Y1-21100	6~9, 11, 12, 15~19, 26

Item	Part_No	IS	Ord	T	Description	Qty	Serial_No	ITC	Remark
*	31N9-50121				CYLINDER ASS'Y,LH	1	- #1364		
	31N9-50122				BOOM CYL/D ASS'Y	1	#1365 -	B	
	31N9-50111				CYLINDER ASS'Y,RH	1	- #1364		
	31N9-50112				BOOM CYL/D ASS'Y	1	#1365 -	B	
*-1	31Y1-19041				.BOOM CYLINDER SUB	1	- #1364		WITHOUT PIPE
	31Y1-19042				.CYLINDER W/O PIPE	1	#1365 -	B	WITHOUT PIPE
1	31Y1-20930				..TUBE ASSY	1			
2	31Y1-20980				..ROD ASSY	1	- #1364		
	31Y1-20981				..ROD ASS'Y	1	#1365 -	B	
3	31Y1-21010				..GLAND	1			
4	S732-105045				..DD2 BUSH	1			
5	Y191-112000				..RING-SNAP	1			
K6	Y220-105011				..SEAL-ROD	1			
K7	Y180-105120				..RING-BACK UP	1			
K8	Y240-105013				..RING-BUFFER	1			
K9	Y110-105011				..WIPER-DUST	1			
10	Y190-121000				..RING-SNAP	1			
K11	S631-140004				..O-RING	1			
K12	S641-140003				..RING-BACK UP	1			
13	31YC-23060				..RING-CUSHION	1			
14	31Y1-08780				..PISTON	1			
K15	S632-090004				..O-RING	1			
K16	S642-090003				..RING-BACK UP	2			
K17	Y420-150000				..SEAL-PISTON	1			
K18	Y310-150100				..RING-WEAR	2			

Item	Part_No	IS	Ord	T	Description	Qty	Serial_No	ITC	Remark
K19	Y440-150000				..RING-DUST	2			
20	31YC-66071				..WASHER-LOCK	1			
21	31YC-61153				..NUT-LOCK	1	- #1364		
	31YC-61154				..NUT-LOCK	1	#1365 -	D	
22	S109-200904				..BOLT-SOCKET	12			
28	31YC-11405				..BUSHING	2			
29	Y000-100100				..SEAL-DUST	4	#0001 -	-	
30	S114-080184				..SCREW-SET,HEX SOC HDLESS	1	#1365 -	-	
23	31Y1-21021				.BAND ASS'Y,LH	1			
	31Y1-21031				.BAND ASS'Y,RH	1			
23-1	31Y1-21041				..BAND SUB ASS'Y,LH	1			
	31Y1-21051				..BAND SUB ASS'Y,RH	1			
23-2	31YC-32240				..BAND	1			
23-3	S015-120452				..BOLT-HEX	4			
23-4	S411-120002				..WASHER-SPRING	4			
23-5	S071-023430				..U-BOLT	2			
23-6	S201-101002				..NUT-HEX	4			
23-7	S411-100002				..WASHER-SPRING	4			
24	31Y1-21061				.PIPE ASS'Y-R,LH	1			
	31Y1-21071				.PIPE ASS'Y-R,RH	1			
25	31Y1-19171				.PIPE ASSY-LH	1			
	31Y1-19181				.PIPE ASSY-RH	1			
K26	Y171-024004				.O-RING	2			
27	S107-120554				.BOLT-SOCKET	8			
K	31Y1-21100				SEAL KIT	1			SEE ILLUST

ARM CYLINDER

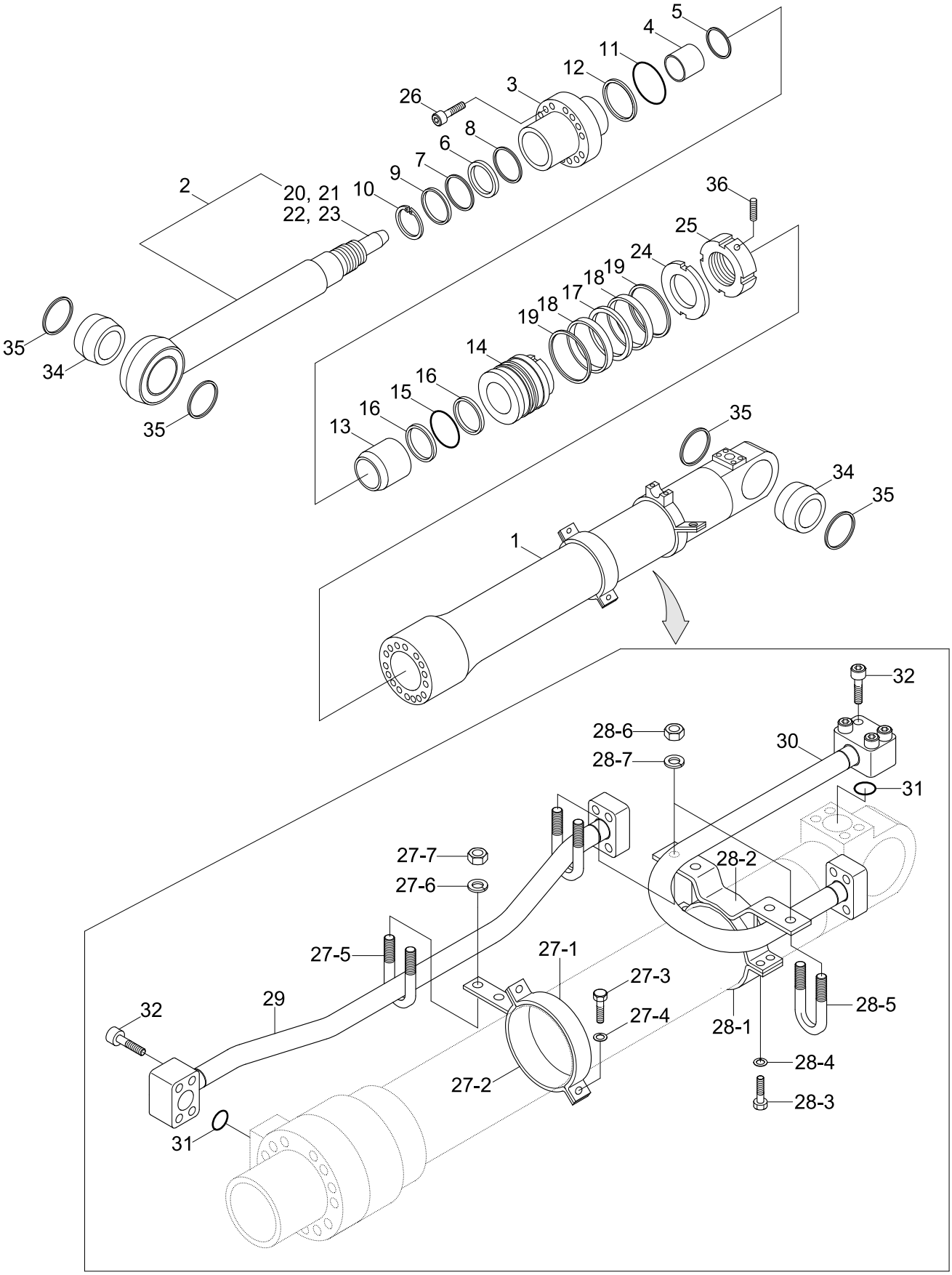

Description	Parts no	Included item
Arm cylinder seal kit	31Y1-19080	6~9, 11, 12, 15~19, 31

Item	Part_No	IS	Ord	T	Description	Qty	Serial_No	ITC	Remark
*	31N9-50130				ARM CYLINDER ASSY	1	- #1364		
	31N9-50131				ARM CYLINDER ASSY	1	#1365 - #2529	B	
*-1	31Y1-19050				.ARM CYLINDER SUB	1	- #1364		WITHOUT PIPE
	31Y1-19051				.ARM CYLINDER SUB	1	#1365 -	D	WITHOUT PIPE
1	31Y1-19210				..TUBE ASSY	1			
2	31Y1-19230				..ROD ASSY	1	#0001 -	-	
N20	@				...SPEAR-CUSHION	1	#0001 -	-	NOT
N21	@				...VALVE-CHECK	1	#0001 -	-	NOT
N22	@				...SPRING-COIL	1	#0001 -	-	NOT
N23	@				...RING-STOP	1	#0001 -	-	NOT
3	31Y1-19190				..GLAND	1			
4	S732-110045				..BUSHING-DD2	1			
5	Y191-117000				..RING-SNAP	1			
NK6	Y220-110011				..SEAL-ROD	1			NOT
K7	Y180-110020				..RING-BACK UP	1			
K8	Y240-110013				..RING-BUFFER	1			
K9	Y110-110011				..WIPER-DUST	1			
10	Y190-126000				..RING-SNAP	1			
K11	S631-150004				..O-RING	1			
K12	S641-150003				..RING-BACK UP	1			
13	31YC-23050				..RING-CUSHION	1			
14	31Y1-08172				..PISTON	1			
K15	S632-095004				..O-RING	1			
K16	S642-095003				..RING-BACK UP	2			
K17	Y420-160000				..SEAL-PISTON	1			

Item	Part_No	IS	Ord	T	Description	Qty	Serial_No	ITC	Remark
K18	Y310-160200				..RING-WEAR	2			
K19	Y440-160002				..RING-DUST	2			
24	31YC-66081				..WASHER-LOCK	1			
25	31YC-61142				..NUT-LOCK	1	- #1364		
	31YC-61144				..NUT-LOCK	1	#1365 -	D	
26	S109-200904				..BOLT-SOCKET	12			
34	31YC-11401				..BUSHING-PIN	2			
35	Y000-100100				..SEAL-DUST,DLI,KPU	4	#0001 -	-	
36	S114-080204				..SCREW-SET	1	#1365 -	-	
27	31Y1-19480				.BAND ASSY	1			
27-1	31Y1-19490				..BAND SUB ASSY	1			
27-2	31YC-31240				..BAND	1			
27-3	S015-120452				..BOLT-HEX	2			
27-4	S411-120002				..WASHER-SPRING	2			
27-5	S071-023430				..U-BOLT	1			
27-6	S201-101002				..NUT-HEX	2			
27-7	S411-100002				..WASHER-SPRING	2			
28	31Y1-08200				.BAND ASSY-B	1			
28-1	31Y1-08210				..BAND SUB ASSY-B	1			
28-2	31YC-32120				..BAND	1			
28-3	S015-120452				..BOLT-HEX	4			
28-4	S411-120002				..WASHER-SPRING	4			
28-5	S071-023430				..U-BOLT	2			
28-6	S201-101002				..NUT-HEX	4			
28-7	S411-100002				..WASHER-SPRING	4			

Item	Part_No	IS	Ord	T	Description	Qty	Serial_No	ITC	Remark
29	31Y1-19160				.PIPE ASSY-R	1			
30	31Y1-08230				.PIPE ASSY-B	1			
K31	Y171-024004				.O-RING	2			
32	S107-120554				.BOLT-SOCKET	4			
33	S107-100554				.BOLT-SOCKET	4			
K	31Y1-19080				SEAL KIT	1			SEE ILLUST
N	@				NOT SUPPLIED PARTS	AR			NOT

ARM CYLINDER(#2530-)

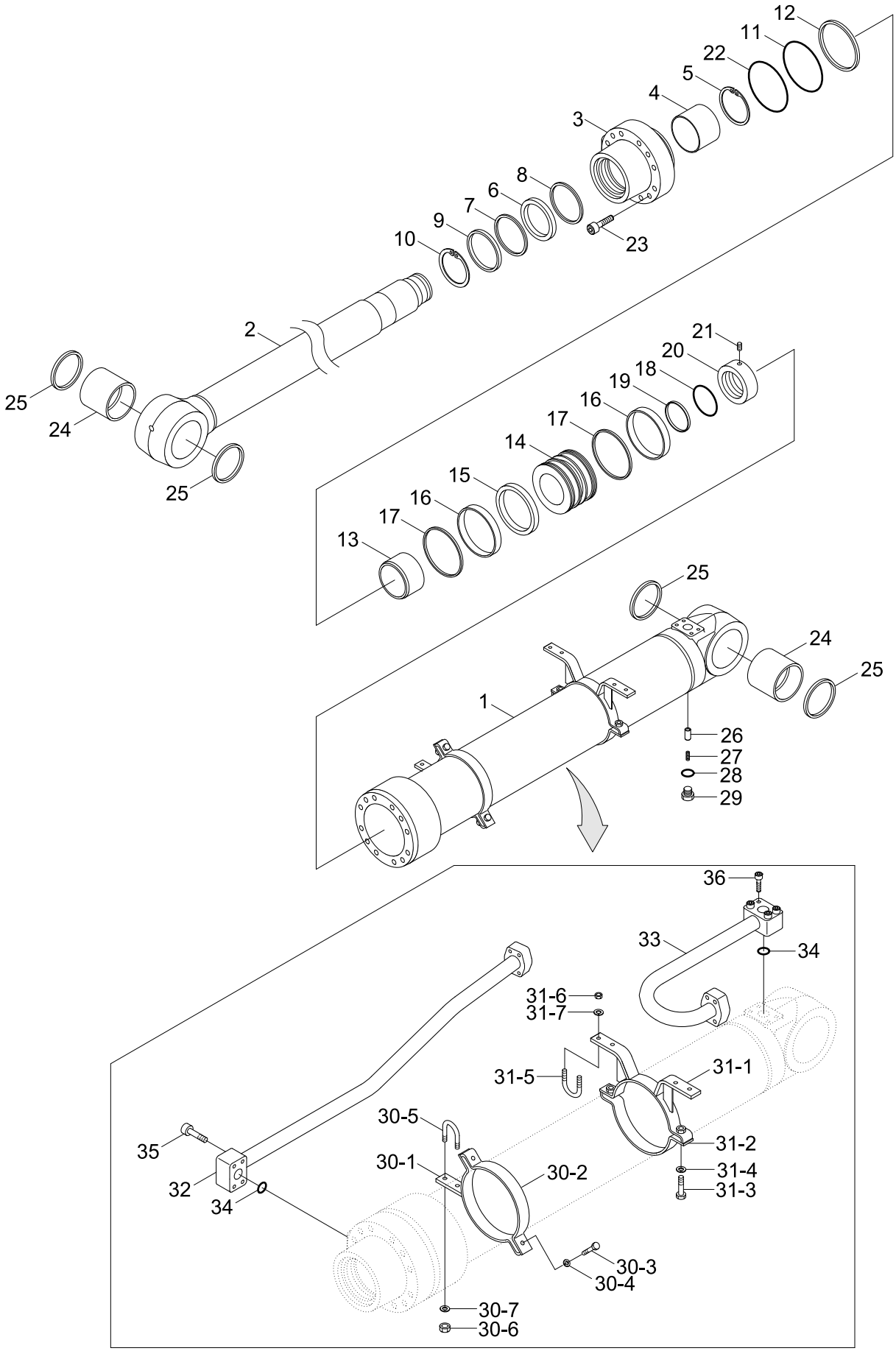

Description	Parts no	Included item
Arm cylinder seal kit	31Y1-39690	6~9, 11, 12, 15~19, 22, 28, 34

Item	Part_No	IS	Ord	T	Description	Qty	Serial_No	ITC	Remark
*	31N9-50132				ARM CYLINDER ASSY	1	#2530 -	B	
*-1	31Y1-19052				.ARM CYL SUB ASSY	1			WITHOUT PIPE
1	31Y1-19211				..TUBE ASSY	1			
2	31Y1-19232				..ROD ASSY	1			
3	31Y1-33051				..GLAND	1			
4	S732-110045				..BUSHING-DD2	1			
5	Y191-117000				..RING-SNAP	1			
K6	Y220-110013				..SEAL-ROD	1			
K7	Y180-110020				..RING-BACK UP	1			
K8	Y240-110012				..RING-BUFFER	1			
K9	Y110-110011				..WIPER-DUST	1			
10	Y190-126000				..RING-SNAP	1			
K11	S631-150004				..O-RING	1			
K12	31YC-CP150				..RING-BACK UP	1			
13	31YC-28105				..RING-CUSHION	1			
14	31Y1-33090				..PISTON	2			
K15	Y420-160000				..SEAL-PISTON	1			
K16	Y310-160203				..RING-WEAR	2			
K17	Y440-160102				..RING-DUST	2			
K18	S632-085004				..O-RING	1			
K19	31YC-CG085				..RING-BACK UP	2			
20	31YC-68060				..NUT-LOCK	1			
21	S114-100164				..SCREW-SET	1			
K22	31YC-99H80				..O-RING	1			
23	S109-220904				..BOLT-SOCKET	12			

Item	Part_No	IS	Ord	T	Description	Qty	Serial_No	ITC	Remark
24	31YC-11401				..BUSHING-PIN	2			
25	Y000-100100				..SEAL-DUST,DLI,KPU	4			
26	31YC-2A060				..VALVE-CHECK	1			
27	31YC-99071				..SPRING-COIL	1			
K28	S631-014004				..O-RING	1			
29	P220-110103				..PLUG-HEX	1			
30	31Y1-33120				.BAND ASSY-R	1			
30-1	31Y1-33130				..BAND SUB ASSY	1			
30-2	31YC-31530				..BAND	1			
30-3	S015-120452				..BOLT-HEX	2			
30-4	S411-120002				..WASHER-SPRING	2			
30-5	S070-053442				..U-BOLT	1			
30-6	S205-101002				..NUT-HEX	2			
30-7	S441-100002				..WASHER-HARDENED	2			
31	31Y1-33140				.BAND ASSY-B	1			
31-1	31Y1-33150				..BAND SUB ASSY	1			
31-2	31YC-31530				..BAND	1			
31-3	S015-120452				..BOLT-HEX	2			
31-4	S411-120002				..WASHER-SPRING	2			
31-5	S070-053442				..U-BOLT	1			
31-6	S205-101002				..NUT-HEX	2			
31-7	S411-100002				..WASHER-SPRING	2			
32	31Y1-33160				.PIPE ASSY-R	1			
33	31Y1-08230				.PIPE ASSY-B	1			
K34	Y171-024004				.O-RING	2			

Item	Part_No	IS	Ord	T	Description	Qty	Serial_No	ITC	Remark
35	S107-120554				.BOLT-SOCKET	4			
36	S107-100554				.BOLT-SOCKET HEAD	4			
K	31Y1-39690				SEAL KIT	1			SEE ILLUST

BUCKET CYLINDER

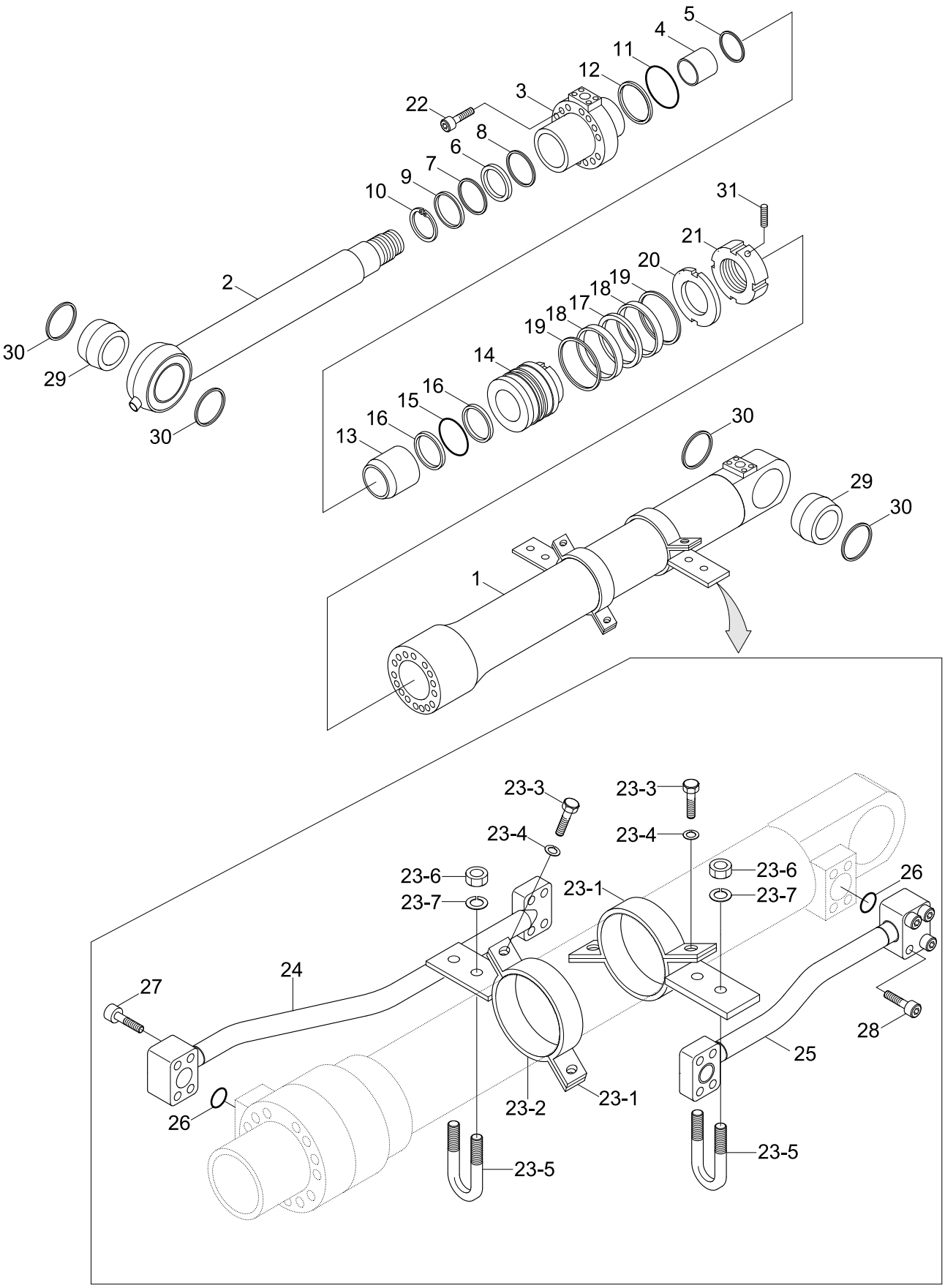

Description	Parts no	Included item
Bucket cylinder seal kit	31Y1-19090	6~9, 11, 12, 15~19, 26

Item	Part_No	IS	Ord	T	Description	Qty	Serial_No	ITC	Remark
*	31N9-60110				BUCKET CYLINDER ASSY	1	- #1364		
	31N9-60111				BUCKET CYLINDER ASSY	1	#1365 -	B	
*-1	31Y1-19060				.BUCKET CYLINDER SUB	1	- #1364		WITHOUT PIPE
	31Y1-19061				.BUCKET CYLINDER SUB	1	#1365 -	D	WITHOUT PIPE
1	31Y1-19370				..TUBE ASSY	1			
2	31Y1-19270				..ROD ASSY	1			
3	31Y1-15150				..GLAND	1			
4	S732-100040				..BUSHING-DD2	1			
5	Y191-107000				..RING-SNAP	1			
K6	Y220-100011				..SEAL-ROD	1			
K7	Y180-100020				..RING-BACK UP	1			
K8	Y240-100013				..RING-BUFFER	1			
K9	Y110-100011				..WIPER-DUST	1			
10	Y190-114000				..RING-SNAP	1			
K11	S631-130004				..O-RING	1			
K12	S641-130003				..RING-BACK UP	1			
13	31YC-23040				..RING-CUSHION	1			
14	31Y1-15160				..PISTON	1			
K15	S632-085004				..O-RING	1			
K16	S642-085003				..RING-BACK UP	2			
K17	Y420-140000				..SEAL-PISTON	1			
K18	Y310-140000				..RING-WEAR	2			
K19	Y440-140000				..RING-DUST	2			
20	31YC-66061				..WASHER-LOCK	1			
21	31YC-61132				..NUT-LOCK	1	- #1364		

Item	Part_No	IS	Ord	T	Description	Qty	Serial_No	ITC	Remark
21	31YC-61134				..NUT-LOCK	1	#1365 -	D	
22	S109-180904				..BOLT-SOCKET	12			
29	31YC-11390				..BUSHING-PIN	2			
30	Y000-090000				..SEAL-DUST	4	#0001 -	-	
	S114-080184				..SCREW-SET,HEX	1	#1365 -	-	
23	31Y1-19410				.BAND ASSY	2			
23-1	31Y1-19420				..BAND SUB ASSY	1			
23-2	31YC-31220				..BAND	1			
23-3	S015-120452				..BOLT-HEX	2			
23-4	S411-120002				..WASHER-SPRING	2			
23-5	S071-023430				..U-BOLT	1			
23-6	S201-101002				..NUT-HEX	2			
23-7	S411-100002				..WASHER-SPRING	2			
24	31Y1-19430				.PIPE ASSY-R	1			
25	31Y1-08360				.PIPE ASSY-B	1			
K26	Y171-024004				.O-RING	2			
27	S107-120554				.BOLT-SOCKET	4			
28	S107-100554				.BOLT-SOCKET	4			
K	31Y1-19090				SEAL KIT	1			SEE ILLUST

SOLENOID VALVE

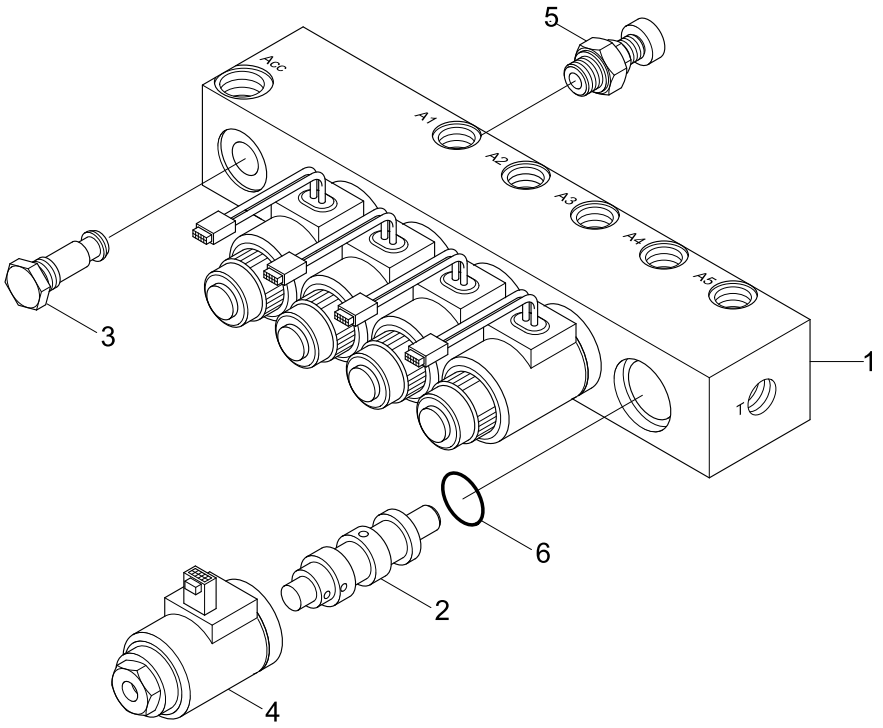

Item	Part_No	IS	Ord	T	Description	Qty	Serial_No	ITC	Remark
*	31N8-20141				SOLENOID VALVE	1			
1	31N8-20140BLOCK				.MANIFOLD	1			
2	EDH044/32-04-00				.VALVE-SOLENOID	5			
3	RC041/0.5-00				.VALVE-CHECK	1			
4	EDH04/27V-HD				.COIL	5			
5	M0123				.OVERLOAD-MANUAL	1			
6	230.00.064.0				.SEAL KIT	5			

UNDERCARRIAGE MOUNTING

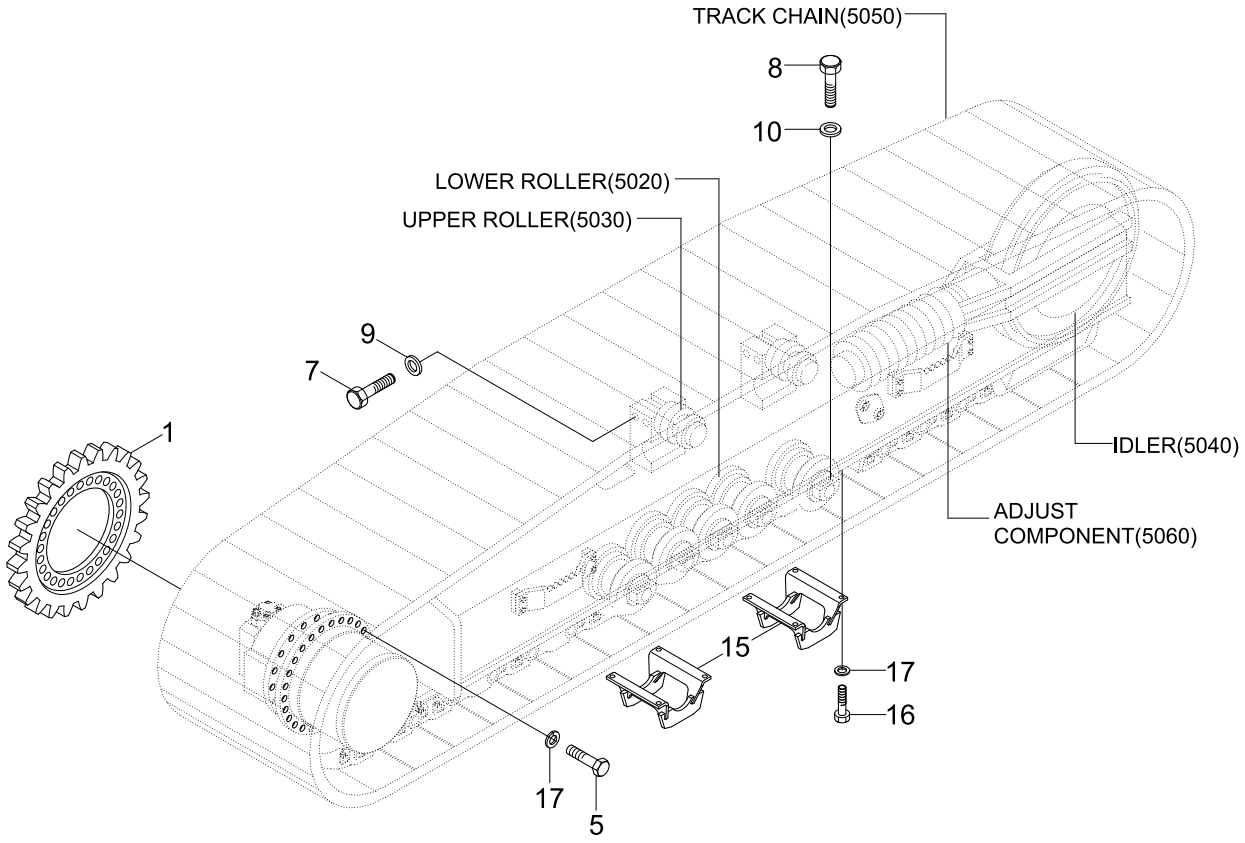

Item	Part_No	IS	Ord	T	Description	Qty	Serial_No	ITC	Remark
1	81N8-10012				SPROCKET	2	- #0779		
	81N8-10013				SPROCKET	2	#0780 - #1118	B	
	81N8-10013BG				SPROCKET	2	#1119 -	D	
5	81N8-19510				BOLT-SPROCKET	52	- #0725		
	81E1-19650				BOLT-SPROCKET	52	#0726 - #2925	B	
	81E1-19660				BOLT-SPROCKET	52	#2926 -	B	
7	S017-160952				BOLT-HEX	8			
8	S017-20100A				BOLT-HEX	72			
9	S441-160002				WASHER-HARDENED	8			
10	S441-200002				WASHER-HARDENED	72			
15	81N8-30010				GUARD WA-TRACK	4	- #1118		
	81N8-30010BG				GUARD WA-TRACK	4	#1119 -	D	
16	S017-200502				BOLT-HEX	16			
17	S441-200002				WASHER-HARDENED	16	- #2925		
	S441-200006				WASHER-HARDENED	52	#2926 -	A	

UNDERCARRIAGE MTG(#0008-, HIGH WALKER)

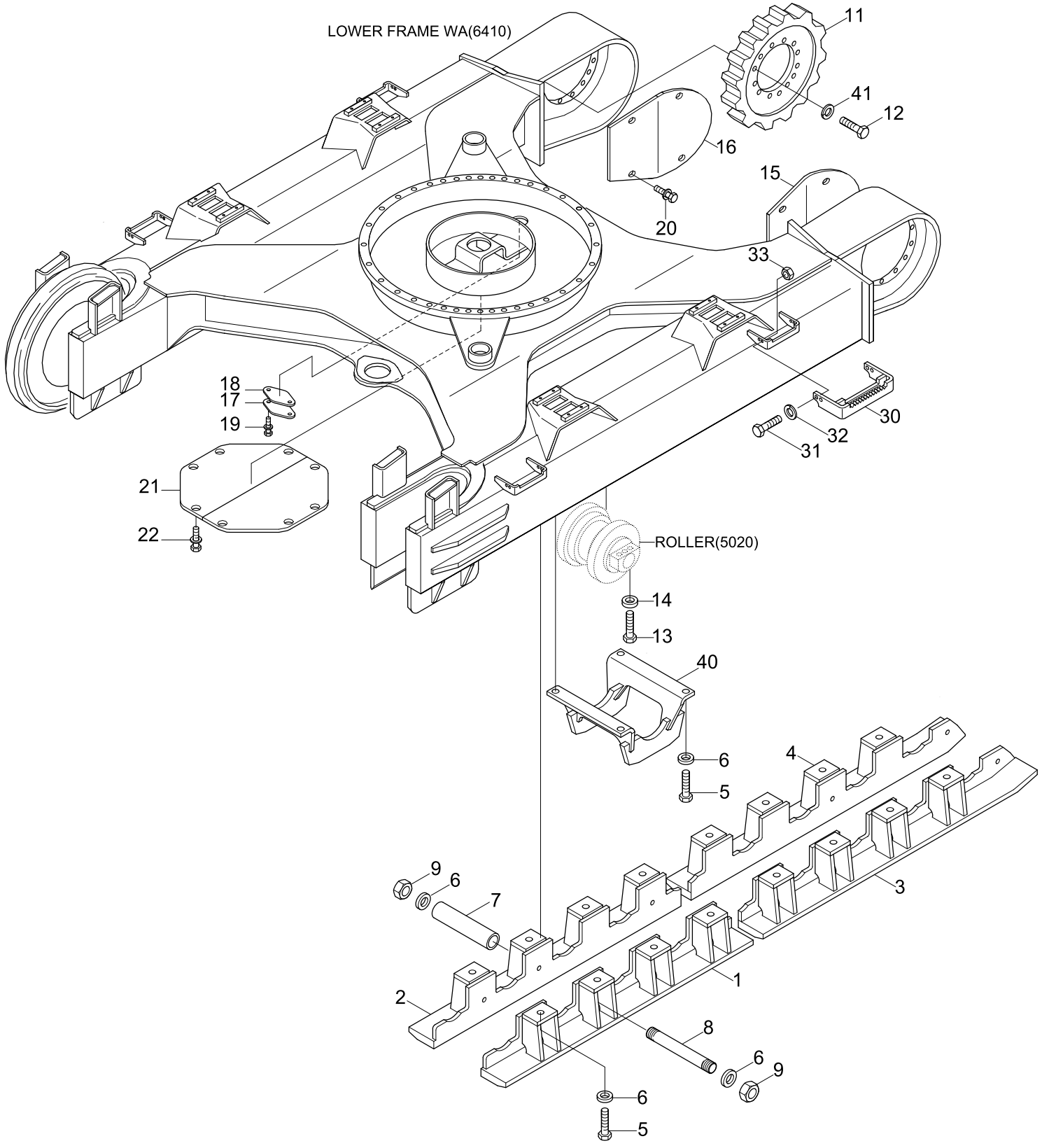

Item	Part_No	IS	Ord	T	Description	Qty	Serial_No	ITC	Remark
*	@				U/C MTG-HIGH WALKER	2	#0008 -	-	NOT
1	81N8-36010BG				T/GUARD WA-FR,LH	2			
2	81N8-36020BG				T/GUARD WA-FR,RH	2			
3	81N8-36030BG				T/GUARD WA-RR,LH	2			
4	81N8-36040BG				T/GUARD WA-RR,RH	2			
5	S017-240502				BOLT-HEX	48			
6	S441-240002				WASHER-HARDENED	72			
7	81N8-36130BG				SPACER	12			
8	S017-243602				BOLT-HEX	12			
9	S207-241002				NUT-HEX	12			
11	81N8-10012				SPROCKET	2	- #0779		
	81N8-10013				SPROCKET	2	#0780 - #1110	B	
	81N8-10013BG				SPROCKET	2	#1111 -	D	
	81N8-10070BG				SPROCKET	2	#1505 -		700MM, 2BAR
12	81N8-19510				BOLT-SPROCKET	52	- #0725		
	81E1-19650				BOLT-SPROCKET	52	#0726 - #2925	B	
	81E1-19660				BOLT-SPROCKET	52	#2926 -	B	
13	S017-20100A				BOLT-HEX	88			
14	S441-200002				WASHER-HARDENED	88			
15	51N8-12110BG				COVER WA-T/MOTOR,LH	1			
16	51N8-12120BG				COVER WA-T/MOTOR,RH	1			
17	41N6-10100BG				COVER	1			
18	41E9-1306	10			SEAL	1			
19	S037-102052				BOLT-W/WASHER	2			
20	S037-123552				BOLT-W/WASHER	8			

Item	Part_No	IS	Ord	T	Description	Qty	Serial_No	ITC	Remark
21	51FD-21011				COVER-BOTTOM WA	2			
	51FD-21011BG				COVER-BOTTOM WA	2			
22	S037-124552				BOLT-W/WASHER	8			
30	51N6-02640BG				BOARD-FOOT	4			700,710MM SHOE
	51N6-02650BG				BOARD-FOOT	4			800MM SHOE
	51N6-02660BG				BOARD-FOOT	4			900MM SHOE
31	S017-120502				BOLT-HEX	16			
32	S441-120002				WASHER-HARDENED	32			
33	S207-121002				NUT-HEX	16			
40	81N8-33010BG				GUARD WA-TRACK	4			
41	S441-200006				WASHER-HARDENED	52	#2926 -		

LOWER ROLLER

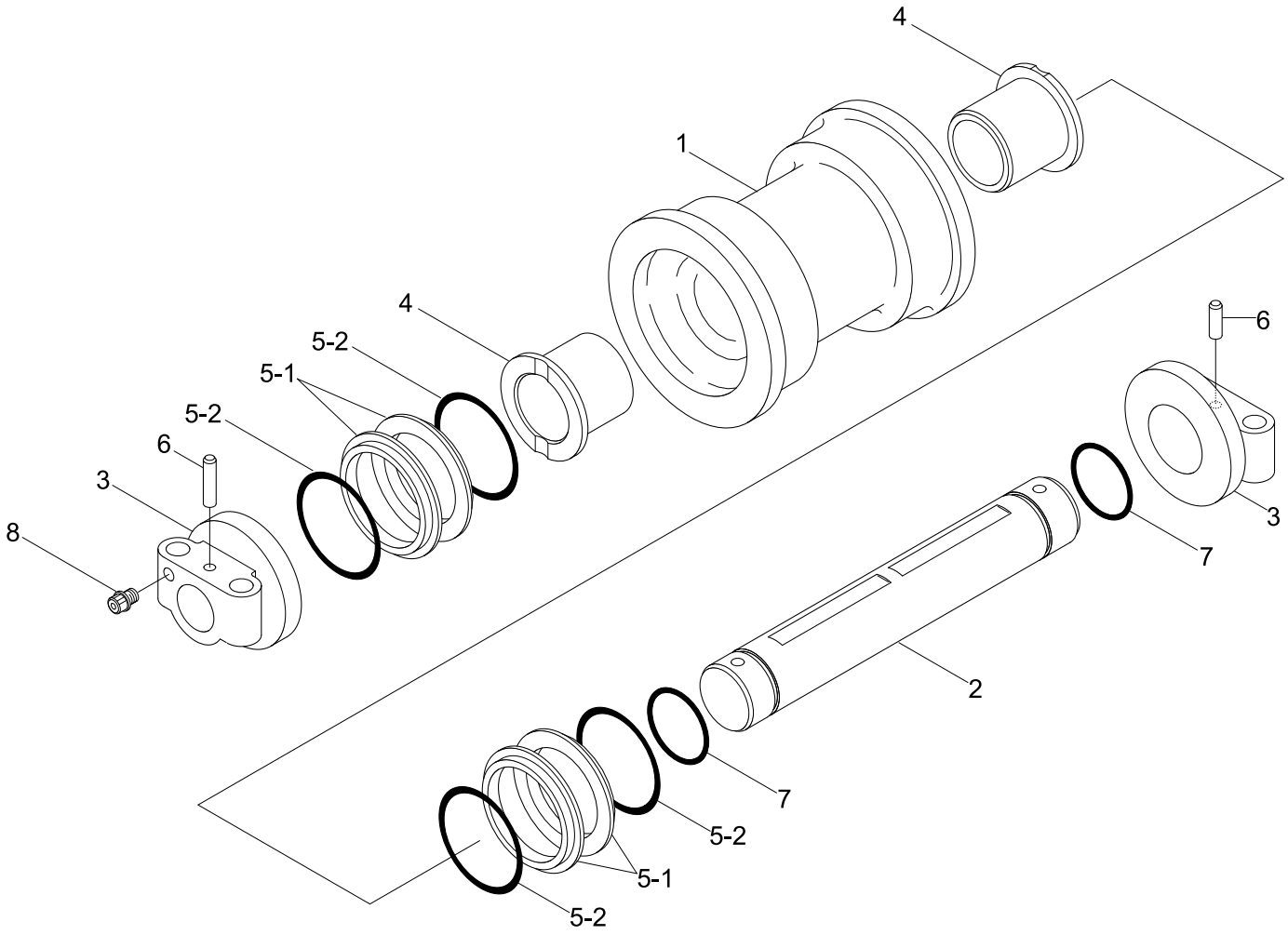

Item	Part_No	IS	Ord	T	Description	Qty	Serial_No	ITC	Remark
	81N8-11010				ROLLER-LOWER	1	- #1118		
	81N8-11010BG				ROLLER-LOWER	1	#1119 -	D	
	81N8-11010				ROLLER-LOWER	18	- #1118		STD
*	81N8-11010BG				ROLLER-LOWER	18	#1119 - #1758	D	STD
	81N8-11011BG				ROLLER-LOWER	18	#1759 -	B	STD
	81N8-11010BG				ROLLER-LOWER	22	- #1758		H/WALKER
	81N8-11011BG				ROLLER-LOWER	22	#1759 -	B	H/WALKER
5-1	E181-22080				..SEAL	4			
5-2	E181-22090				..O-RING	4			
*	81N8-11050				ROLLER-LOWER	22	- #1118		H/WALKER, DB
	81N8-11050BG				ROLLER-LOWER	22	#1119 -	D	H/WALKER, DB
	81N8-11100				.ROLLER	1	- #1758		STD, H/WALKER
1	81N8-11101				.ROLLER-SHELL	1	#1759 -	B	STD, H/WALKER
	81N8-11100				.ROLLER	1			H/WALKER, DB
2	81N8-11110				.SHAFT	1			
3	81N8-11120				.COLLAR	2			
4	81N8-11140				.BUSHING	2			
5	E181-22030				.SEAL ASSY	2			
5-1	E181-22080				..SEAL	4			
5-2	E181-22090				..O-RING	4			
6	81N8-11150				.PIN	2			
7	81N8-11190				.O-RING	2			
8	81E5-2401				.PLUG	1			

UPPER ROLLER

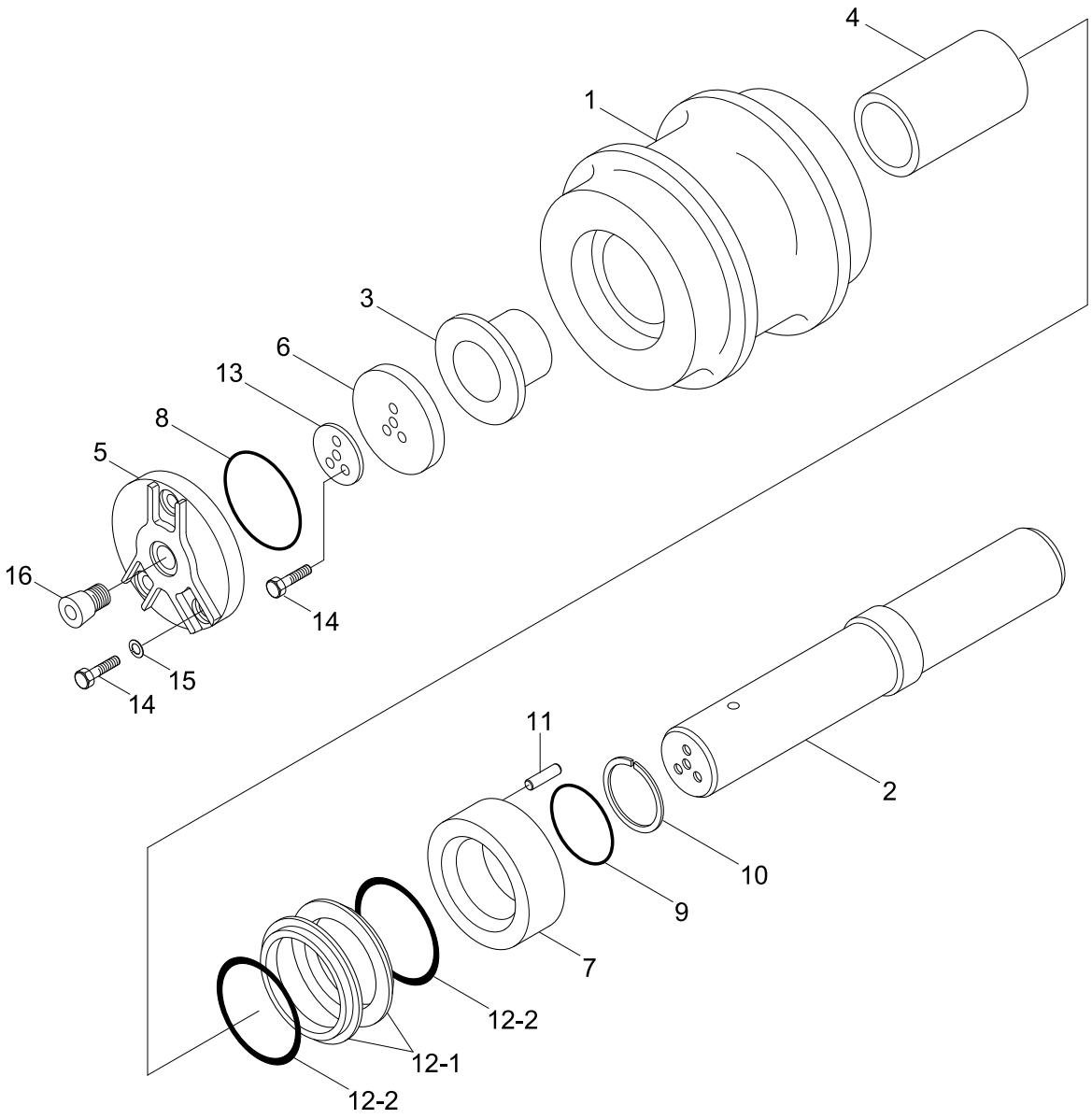

Item	Part_No	IS	Ord	T	Description	Qty	Serial_No	ITC	Remark
	81E5-2003	30			ROLLER-UPPER	1	- #1118		
*	81E5-2003BG	30			ROLLER-UPPER	1	#1119 - #1449	D	
	81E5-20031BG	30			ROLLER-UPPER	1	#1450 -	B	
1	81E5-2301	10			.ROLLER WA	1			
2	81E5-2303	20			.SHAFT	1			
3	81E5-2305	10			.BUSHING	1			
4	81E5-2306	10			.BUSHING	1			
5	81E5-2302	10			.CAP	1			
6	81E5-2307	20			.PLATE-THRUST	1			
7	81E5-2304	10			.RETAINER	1			
8	S632-080001				.O-RING	1			
9	S632-060001				.O-RING	1			
10	S601-058001				.RING-SNAP	1			
11	81E5-2312	10			.PIN	2			
12	81E5-23090				.SEAL ASSY	1			
N12-1	81E5-23100				..SEAL	2			NOT
12-2	81E5-23110				..O-RING	2			
13	81E5-2308	20			.PLATE-LOCK	1			
14	S018-100352				.BOLT-HEX	6			
15	S411-100002				.WASHER-SPRING	3			
16	E282-2317	10			.PLUG	1			
N	@				NOT INDIVIDUALLY SUPPLIED	AR			NOT

IDLER

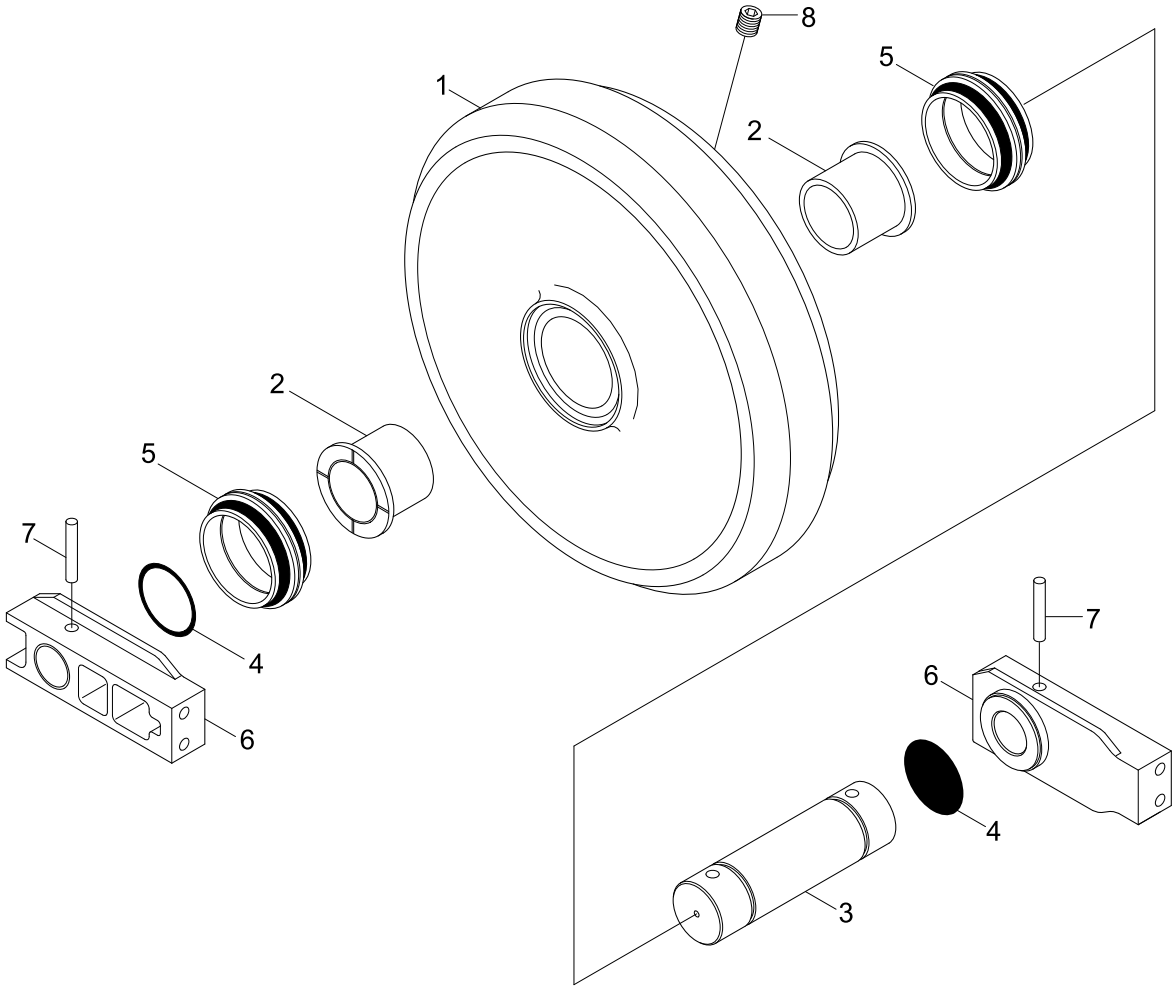

Item	Part_No	IS	Ord	T	Description	Qty	Serial_No	ITC	Remark
*	81N8-13010				IDLER ASSY	1	- #1118		
	81N8-13010BG				IDLER ASSY	1	#1119 - #1961	D	
	81N8-13011BG				IDLER ASSY	1	#1962 -	B	
1	81N8-13100				.SHELL-IDLER	1	- #1961		
	81N8-13101				.SHELL-IDLER	1	#1962 -	B	
2	81N8-13120				.BUSHING	2			
3	81N8-13110				.SHAFT-IDLER	1			
4	S632-085001				.O-RING	2			
5	81N8-13140				.SEAL ASSY	2			
6	81N8-13130				.BRACKET	2	- #1961		
	81N8-13131				.BRACKET	2	#1962 -	B	
7	81N8-13180				.PIN-SPRING	2			
8	E282-2407	20			.PLUG	1			

TRACK CHAIN

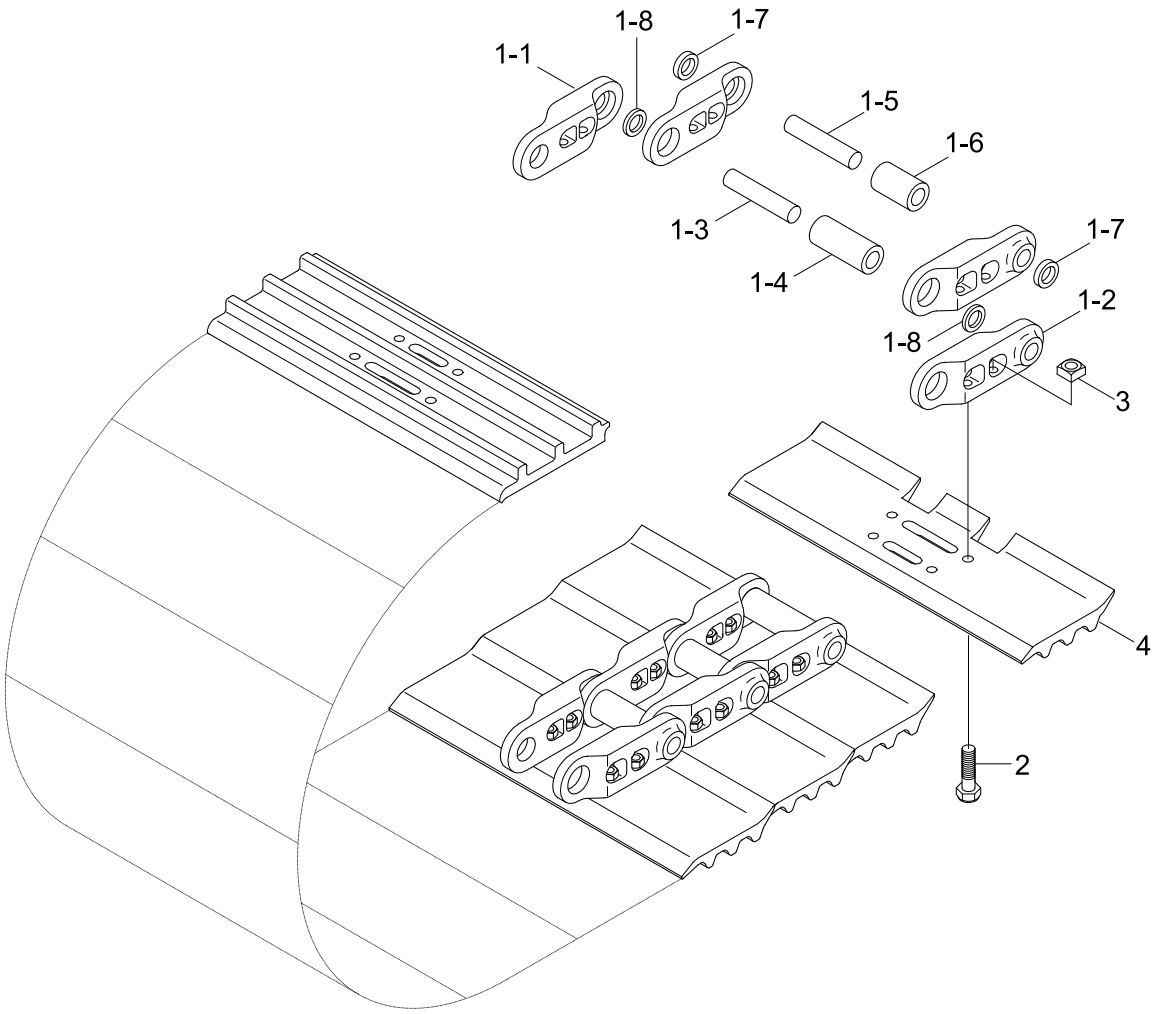

700MM(2BAR)

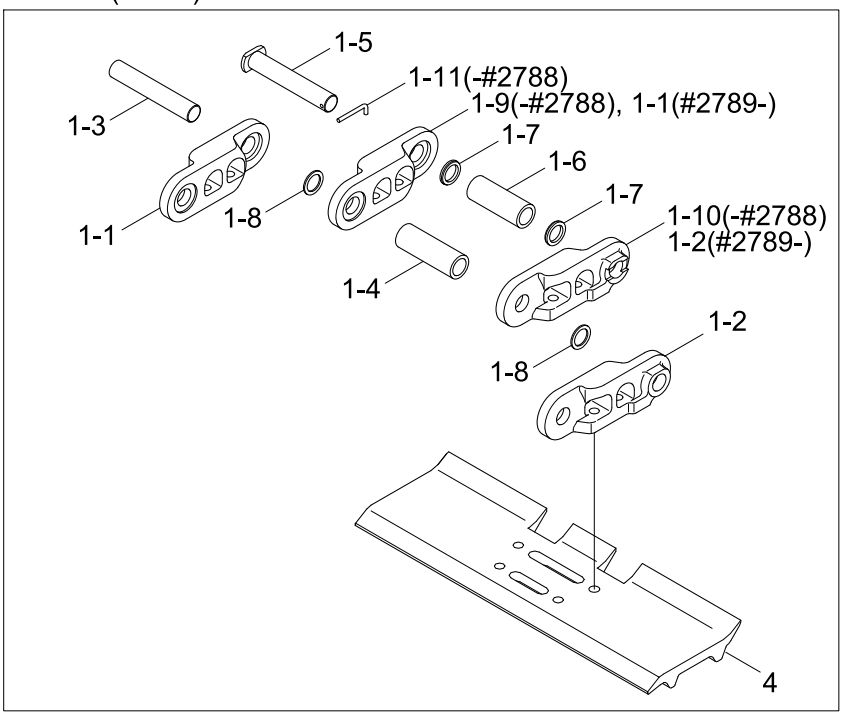

Item	Part_No	IS	Ord	T	Description	Qty	Serial_No	ITC	Remark
	81N8-26030				TRACK CHAIN ASSY	1	- #1110		600MM, INI
	81N8-26040				T/CHAIN ASSY	1			700MM
*	81N8-26060				T/CHAIN ASSY	1			800MM
	81N8-26070				T/CHAIN ASSY	1			900MM
	81N8-27040				T/CHAIN ASSY(710MM-2B)	1	#0008 -	-	H/WALKER
1	81N8-26600				.TRACK LINK ASSY	1			
1-1	81N8-26100				..TRACK LINK-RH	48			
1-2	81N8-26110				..TRACK LINK-LH	48			
1-3	81N8-26140				..TRACK PIN-REGULAR	47			
1-4	81N8-26150				..TRACK BUSH-REGULAR	47			
1-5	81N8-26160				..TRACK PIN-MATSTER	1			
1-6	81N8-26170				..TRACK BUSHING-MASTER	1			
1-7	81N8-26180				..SPACER	2			
1-8	81N8-26210				..SEAL-DUST	94			
*-1	81N8-T0000				.TRACK BOLT & NUT	192	#0001 -	-	
	81EH-T0000				.TRACK BOLT & NUT	192	#0008 -	-	H/WALKER
	81N8-26030BG				TRACK CHAIN ASSY	1	#1111 - #1884	D	600MM, INI
*	81N8-25030BG				TRACK CHAIN ASSY	1	#1433 - #2788	-	600MM, KUT
	81N8-26032BG				TRACK CHAIN ASSY	1	#2789 -	B	600MM, KUT
2	81EH-20020				..BOLT-TRACK	1	#0008 -	-	H/WALKER
*	81N8-26040				TRACK CHAIN ASSY	1	- #1110		700MM, INI
3	81EH-20030				..NUT-TRACK	1	#0008 -	-	H/WALKER
	81N8-26040BG				TRACK CHAIN ASSY	1	#1111 - #1884	D	700MM, INI
*	81N8-25040BG				TRACK CHAIN ASSY	1	#1433 - #2788	-	700MM, KUT
	81N8-26042BG				TRACK CHAIN ASSY	1	#2789 -	B	700MM, KUT

Item	Part_No	IS	Ord	T	Description	Qty	Serial_No	ITC	Remark
*	81N8-26060				TRACK CHAIN ASSY	1	- #1110		800MM, INI
	81N8-26060BG				TRACK CHAIN ASSY	1	#1111 - #1884	D	800MM, INI
	81N8-25060BG				TRACK CHAIN ASSY	1	#1433 - #2788	-	800MM, KUT
	81N8-26062BG				TRACK CHAIN ASSY	1	#2789 -	B	800MM, KUT
	81N8-26070				TRACK CHAIN ASSY	1	- #1110		900MM, INI
	81N8-26070BG				TRACK CHAIN ASSY	1	#1111 - #1884	D	900MM, INI
	81N8-25070BG				TRACK CHAIN ASSY	1	#1433 - #2788	-	900MM, KUT
	81N8-26072BG				TRACK CHAIN ASSY	1	#2789 -	B	900MM, KUT
	81N8-27040				TRACK CHAIN ASSY	1	- #2788		700MM, 2BAR
	81N8-27042BG				TRACK CHAIN ASSY	1	#2789 -	B	700MM, 2BAR
1	81N8-26600				.TRACK LINK ASSY	1			
1-1	81N8-26100				..TRACK LINK-RH	48	- #2788		
	81N8-26102				..TRACK LINK-RH	48	#2789 -	B	
1-2	81N8-26110				..TRACK LINK-LH	48	- #2788		
	81N8-26112				..TRACK LINK-LH	48	#2789 -	B	
1-3	81N8-26140				..TRACK PIN-REGULAR	47	- #2788		
	81N8-26141				..TRACK PIN-REGULAR	47	#2789 -	B	
1-4	81N8-26150				..BUSHING-REGULAR	47	- #2788		
	81N8-26151				..TRACK BUSH-REGULAR	47	#2789 -	B	
1-5	81N8-26160				..TRACK PIN-MASTER	1	- #2788		
	81N8-26161				..TRACK PIN-MATSTER	1	#2789 -	B	
1-6	81N8-26170				..BUSHING-MASTER	1	- #2788		
	81N8-26171				..TRACK BUSHING-MASTER	1	#2789 -	B	
1-7	81N8-26180				..SPACER	2			
1-8	81N8-26210				..SEAL-DUST	94			

Item	Part_No	IS	Ord	T	Description	Qty	Serial_No	ITC	Remark
1	81N8-27600				.TRACK LINK ASSY	1			700MM, 2BAR
1-1	81EH-20111				..TRACK LINK-RH	47			700MM, 2BAR
1-2	81EH-20121				..TRACK LINK-LH	47			700MM, 2BAR
1-3	81EH-20150				..TRACK PIN-REGULAR	47			700MM, 2BAR
1-4	81EH-20170				..BUSHING-REGULAR	47			700MM, 2BAR
1-5	81EH-20160				..TRACK PIN-MASTER	1			700MM, 2BAR
1-6	81EH-20180				..BUSHING-MASTER	1			700MM, 2BAR
1-7	81EH-20190				..SPACER	2			700MM, 2BAR
1-8	81EH-20210				..SEAL-DUST	94			700MM, 2BAR
1-1	81EH-20111				..TRACK LINK-RH	47	- #2788		700MM, 2BAR
					..TRACK LINK-RH	48	#2789 -	A	700MM, 2BAR
1-10	81EH-20141				..MASTER LINK-LH	1			700MM, 2BAR
1-11	81EH-20200				..PIN-CLAMPING	1			700MM, 2BAR
1-2	81EH-20121				..TRACK LINK-LH	47	- #2788		700MM, 2BAR
					..TRACK LINK-LH	48	#2789 -	A	700MM, 2BAR
1-3	81EH-20150				..TRACK PIN-REGULAR	47			700MM, 2BAR
1-4	81EH-20170				..BUSHING-REGULAR	47			700MM, 2BAR
1-5	81EH-20160				..TRACK PIN-MASTER	1			700MM, 2BAR
1-6	81EH-20180				..BUSHING-MASTER	1			700MM, 2BAR
1-7	81EH-20190				..SPACER	2			700MM, 2BAR
1-8	81EH-20210				..SEAL-DUST	94			700MM, 2BAR
1-9	81EH-20131				..MASTER LINK-RH	1	- #2788		700MM, 2BAR
1-10	81EH-20141				..MASTER LINK-LH	1	- #2788		700MM, 2BAR
1-11	81EH-20200				..PIN-CLAMPING	1	- #2788		700MM, 2BAR
K2	81N8-26610				.BOLT-TRACK	192			

Item	Part_No	IS	Ord	T	Description	Qty	Serial_No	ITC	Remark
K2	81EH-20020				.BOLT-TRACK	192			700MM, 2BAR
K3	81N8-26620				.NUT-TRACK	192			
	81EH-20030				.NUT-TRACK	192			700MM, 2BAR
4	81N8-26530				.SHOE-TRACK	48	- #1110		600MM. INI
	81N8-26530BG				.SHOE-TRACK	48	#1111 - #1884	D	600MM. INI
	81N8-25530BG				.SHOE-TRACK	48	#1433 - #2788	-	600MM, KUT
	81N8-26531				.SHOE-TRACK	48	#2789 -	D	600MM, KUT
	81N8-26540				.SHOE-TRACK	48	- #1110		700MM, INI
	81N8-26540BG				.SHOE-TRACK	48	#1111 - #1884	D	700MM, INI
	81N8-25540BG				.SHOE-TRACK	48	#1433 - #2788	-	700MM, KUT
	81N8-26541				.SHOE-TRACK	48	#2789 -	D	700MM, KUT
	81N8-26560				.SHOE-TRACK	48	- #1110		800MM, INI
	81N8-26560BG				.SHOE-TRACK	48	#1111 - #1884	D	800MM, INI
	81N8-25560BG				.SHOE-TRACK	48	#1433 - #2788	-	800MM, KUT
	81N8-26561				.SHOE-TRACK	48	#2789 -	D	800MM, KUT
	81N8-26570				.SHOE-TRACK	48	- #1110		900MM, INI
	81N8-26570BG				.SHOE-TRACK	48	#1111 - #1884	D	900MM, INI
	81N8-25570BG				.SHOE-TRACK	48	#1433 - #2788	-	900MM, KUT
	81N8-26571				.SHOE-TRACK	48	#2789 -	D	900MM, KUT
	81N8-27540				.SHOE-TRACK	48			700MM, 2BAR
	81N8-27540BG				.SHOE-TRACK	48	- #2788		700MM, 2BAR
	81NB-27542				.SHOE-TRACK	48	#2789 -	D	700MM, 2BAR
K	81N8-T0000				TRACK BOLT & NUT KIT	192	#0001 -	-	
	81EH-T0000				TRACK BOLT & NUT KIT	192			700MM, 2BAR
*	81N8-26030				TRACK CHAIN ASSY	1	- #1118		600mm

Item	Part_No	IS	Ord	T	Description	Qty	Serial_No	ITC	Remark
*	81N8-26030BG				TRACK CHAIN ASSY	1	#1119 -	D	
	81N8-26040				TRACK CHAIN ASSY	1	- #1118		700mm
	81N8-26040BG				TRACK CHAIN ASSY	1	#1119 -	D	
	81N8-26060				TRACK CHAIN ASSY	1	- #1118		800mm
	81N8-26060BG				TRACK CHAIN ASSY	1	#1119 -	D	
	81N8-26070				TRACK CHAIN ASSY	1	- #1118		900mm
	81N8-26070BG				TRACK CHAIN ASSY	1	#1119 -	D	
	81N8-27040				TRACK CHAIN ASSY	1	#0008 -	-	H/WALKER
1	81N8-26600				.TRACK LINK ASSY	1			
1-1	81N8-26100				..TRACK LINK-RH	48			
1-2	81N8-26110				..TRACK LINK-LH	48			
1-3	81N8-26140				..TRACK PIN-REGULAR	47			
1-4	81N8-26150				..TRACK BUSHING-REGULAR	47			
1-5	81N8-26160				..TRACK PIN-MASTER	1			
1-6	81N8-26170				..TRACK BUSHING-MASTER	1			
1-7	81N8-26180				..SPACER	2			
1-8	81N8-26210				..SEAL-DUST	94			
K2	81N8-26610				.BOLT-TRACK	1			
	81EH-20020				.BOLT-TRACK	1	#0008 -	-	H/WALKER
K3	81N8-26620				.NUT-TRACK	1			
	81EH-20030				.NUT-TRACK	1	#0008 -	-	H/WALKER
4	81N8-26530				.SHOE-TRACK	48			
	81N8-26540				.SHOE-TRACK	48			
	81N8-26560				.SHOE-TRACK	48			
	81N8-26570				.SHOE-TRACK	48			

Item	Part_No	IS	Ord	T	Description	Qty	Serial_No	ITC	Remark
4	81N8-27540				.TRACK SHOE	48	#0008 -	-	H/WALKER
K	81N8-T0000				TRACK BOLT & NUT KIT	192	#0001 -	-	
	81EH-T0000				TRACK BOLT & NUT KIT	192	#0008 -	-	H/WALKER
*	81N8-25030BG				TRACK CHAIN ASSY	1	#1433 -	-	OPTION, 600MM
	81N8-25040BG				TRACK CHAIN ASSY	1	#1433 -	-	700MM
	81N8-25060BG				TRACK CHAIN ASSY	1	#1433 -	-	800MM
	81N8-25070BG				TRACK CHAIN ASSY	1	#1433 -	-	900MM
1	81N8-26600				.TRACK LINK ASSY	1			
1-1	81N8-26100				..TRACK LINK-RH	48			
1-2	81N8-26110				..TRACK LINK-LH	48			
1-3	81N8-26140				..TRACK PIN-REGULAR	47			
1-4	81N8-26150				..TRACK BUSHING-REGULAR	1			
1-5	81N8-26160				..TRACK PIN-MASTER	47			
1-6	81N8-26170				..TRACK BUSHING-MASTER	1			
1-7	81N8-26180				..SPACER	2			
1-8	81N8-26210				..SEAL-DUST	94			
2	81N8-26610				.BOLT-TRACK	192			
3	81N8-26620				.NUT-TRACK	192			
4	81N8-25530				.SHOE-TRACK	48			600MM
	81N8-25540				.SHOE-TRACK	48			700MM
	81N8-25560				.SHOE-TRACK	48			800MM
	81N8-25570				.SHOE-TRACK	48			900MM

ADJUST COMPONENT

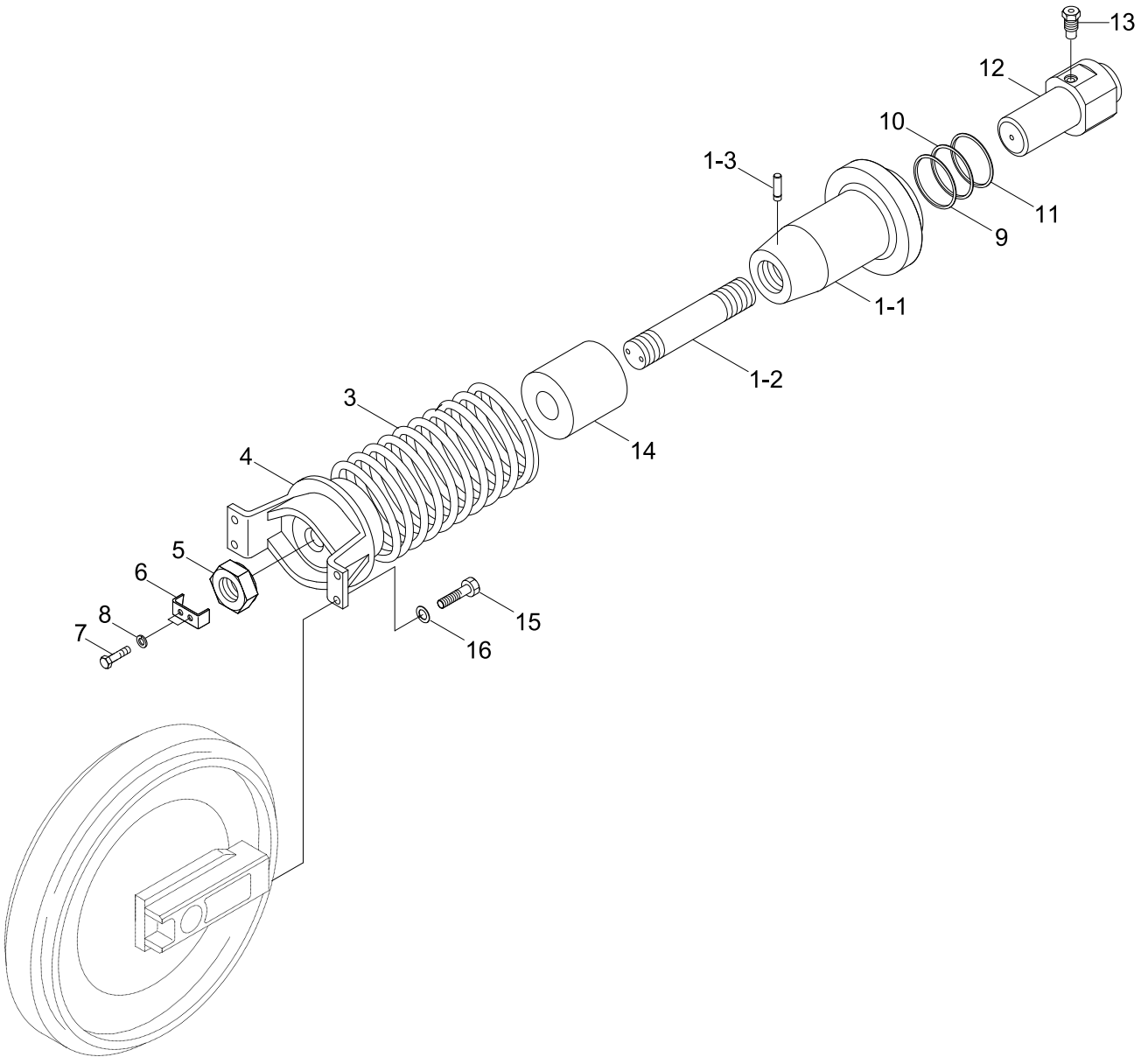

IDLER ASSY(5040)

Item	Part_No	IS	Ord	T	Description	Qty	Serial_No	ITC	Remark
*	81N8-15011				ADJUST COMPONENT	2	- #1118		
	81N8-15011BG				ADJUST COMPONENT	2	#1119 - #1686	D	
	81N8-15012BG				ADJUST COMPONENT	2	#1687 - #1961	B	
	81N8-15013BG				ADJUST COMPONENT	2	#1962 - #2896	B	
	81N8-15014BG				ADJUST COMPONENT	2	#2897 - #0373	B	
	81N8-15015BG				ADJUST COMPONENT	2	#3374 -	B	
*-1	81N8-14012				.T/CYLINDER ASSY	1	- #1118		
	81N8-14012BG				.T/CYLINDER ASSY	1	#1119 - #1686	D	
	81N8-14013BG				.T/CYLINDER ASSY	1	#1687 - #2896	D	
	81N8-14014BG				.T/CYLINDER ASSY	1	#2897 - #0373	D	
	81N8-14015BG				.T/CYLINDER ASSY	1	#3374 -	D	
1	81N8-14300				..BODY ASSY	1	- #1686		
	81N8-14301				..BODY ASSY	1	#1687 - #2896	D	
	81N8-14302				..BODY ASSY	1	#2897 - #0373	D	
	81N8-14303				..BODY ASSY	1	#3374 -	D	
1-1	81N8-14100				...BODY	1	- #1686		W/O PIN-HOLE
	81N8-14101				...BODY	1	#1687 - #2896	D	W/O PIN-HOLE
	81N8-14102				...BODY	1	#2897 - #0373	D	W/O PIN-HOLE
	81N8-14103				...BODY	1	#3374 -	D	W/O PIN-HOLE
1-2	81N8-14110				...BAR-TIE	1	- #2896		W/O PIN-HOLE
	81N8-14111				...BAR-TIE	1	#2897 - #0373	D	W/O PIN-HOLE
	81N8-14112				...BAR-TIE	1	#3374 -	D	W/O PIN-HOLE
1-3	81N8-14290				...PIN-SPRING	1			
3	81N8-14120				..SPRING	1	- #0373		
	81N8-14121				..SPRING	1	#3374 -	D	

Item	Part_No	IS	Ord	T	Description	Qty	Serial_No	ITC	Remark
4	81N8-14130				..BRACKET	1	- #1403		
	81N8-14131				..BRACKET-T/CYL	1	#1404 - #2896	B	
	81N8-14132				..BRACKET	1	#2897 -	D	
5	81E9-2015	10			..NUT-LOCK	1	- #1403		
	81E9-20151				..NUT-LOCK	1	#1404 - #2896	B	
	81E9-20152				..NUT-LOCK	1	#2897 - #3373	D	
	81E9-20153				..NUT LOCK	1	#3374 -	D	
6	81E9-20160				..PLATE-LOCK	1	- #2896		
	81E9-20161				..PLATE-LOCK	1	#2897 -	D	
7	S018-120302				..BOLT-HEX	2			
8	S411-120002				..WASHER-SPRING	2			
9	81E1-3104	20			..PACKING-ROD	1			
10	81E1-3204	20			..RING-BACK UP	1			
11	81E1-3304	20			..SEAL-DUST	1			
12	81N8-14211				..ROD	1			
13	E181-2013	30			..VALVE-GREASE	1	- #2351		
	81N6-14240				..VALVE-GREASE	1	#2352 -	B	
14	81N8-14270				..TUBE	1	- #0896		
	81N8-14271				..TUBE	1	#2897 -	D	
15	S018-160502				.BOLT-HEX	4			
16	S411-160002				.WASHER-SPRING	4			
*-2	@				.IDLER ASSY	1			NOT

CAB MOUNTING

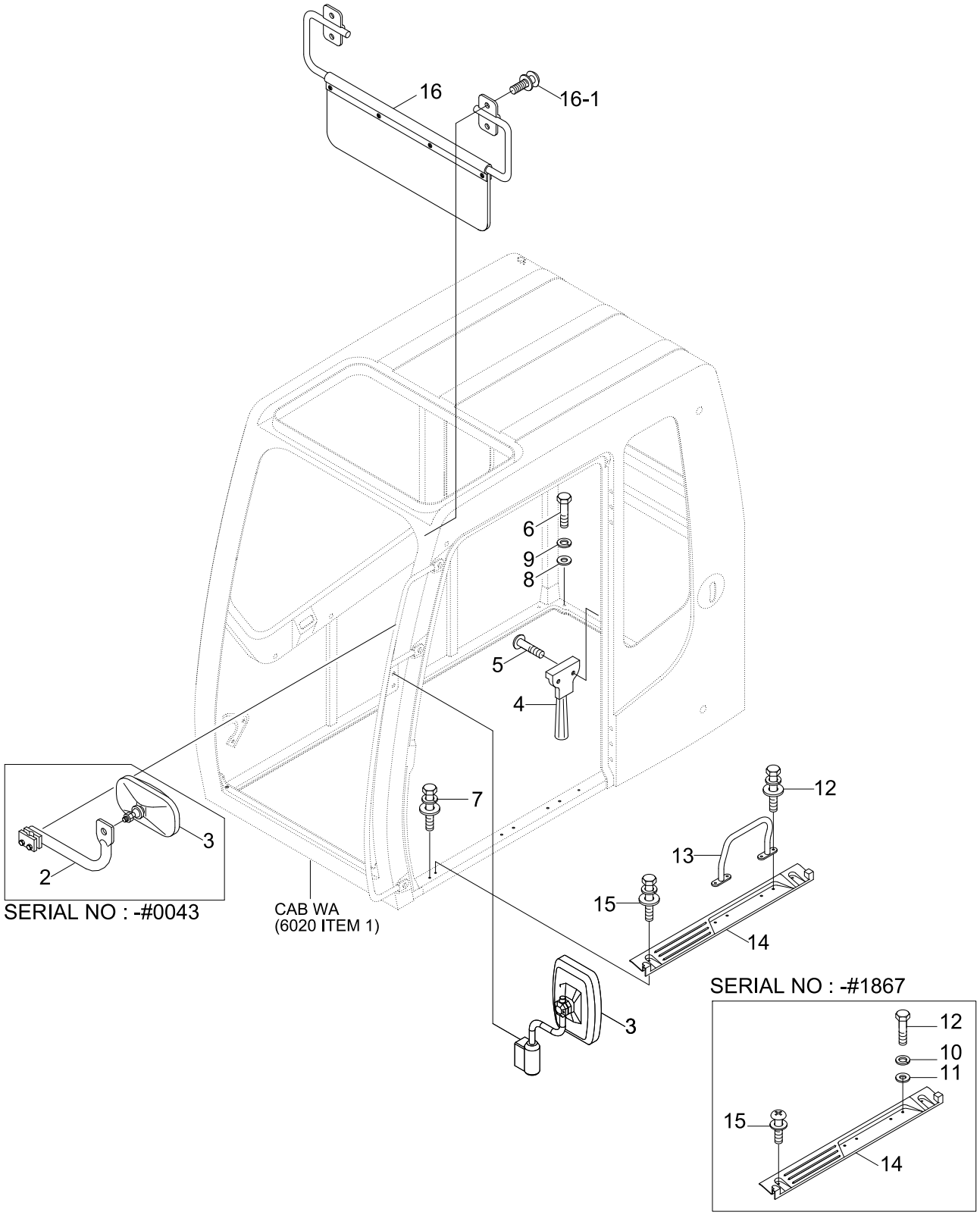

Item	Part_No	IS	Ord	T	Description	Qty	Serial_No	ITC	Remark
2	71N6-03551				STAY-CAB	1	- #0043	-	
3	71N8-46000				MIRROR	1	- #0043		
	71N8-47000				MIRROR & STAY ASSY-LH	1	#0044 - #1118	D	
	71N8-47000BG				MIRROR & STAY ASSY-LH	1	#1119 - #1423	D	
	71N8-47001BG				MIRROR & STAY ASSY-LH	1	#1424 -	B	
	71N8-47000BG				MIRROR & STAY ASSY-LH	1	#1111 - #1423	-	UPGRADE CABIN
	71N8-47001BG				MIRROR & STAY ASSY-LH	1	#1424 -	B	
4	71E1-60340				HAMMER-SAFETY	1			
5	S161-040106				SCREW-CROSS R/ROUND	2			
6	S017-120656				BOLT-HEX	8			
7	S037-122526				BOLT-W/WASHER	1			
8	S403-122006				WASHER-PLAIN	8			
9	S411-120006				WASHER-SPRING	8			
10	S411-100006				WASHER-SPRING	4	- #1867	-	
11	S403-102006				WASHER-PLAIN	4	- #1867	-	
12	S017-100256				BOLT-HEX	4	- #1867		
	S037-102526				BOLT-W/WASHER	4	#1868 -	A	
13	71N6-03560				RAIL-HAND	1			
14	71N6-10270				PLATE	1	- #1867		
	71N6-10271				PLATE	1	#1868 -	B	
15	S131-051646				SCREW-W/WASHER	2	- #1867		
	S037-101526				BOLT-W/WASHER	2	#1868 -	D	
16	71N6-03632				SUN VISOR ASSY	1			
16-1	S132-060856				.SCREW-W/WASHER	4			

CAB ASSY(1/6, STD & FOG TYPE)

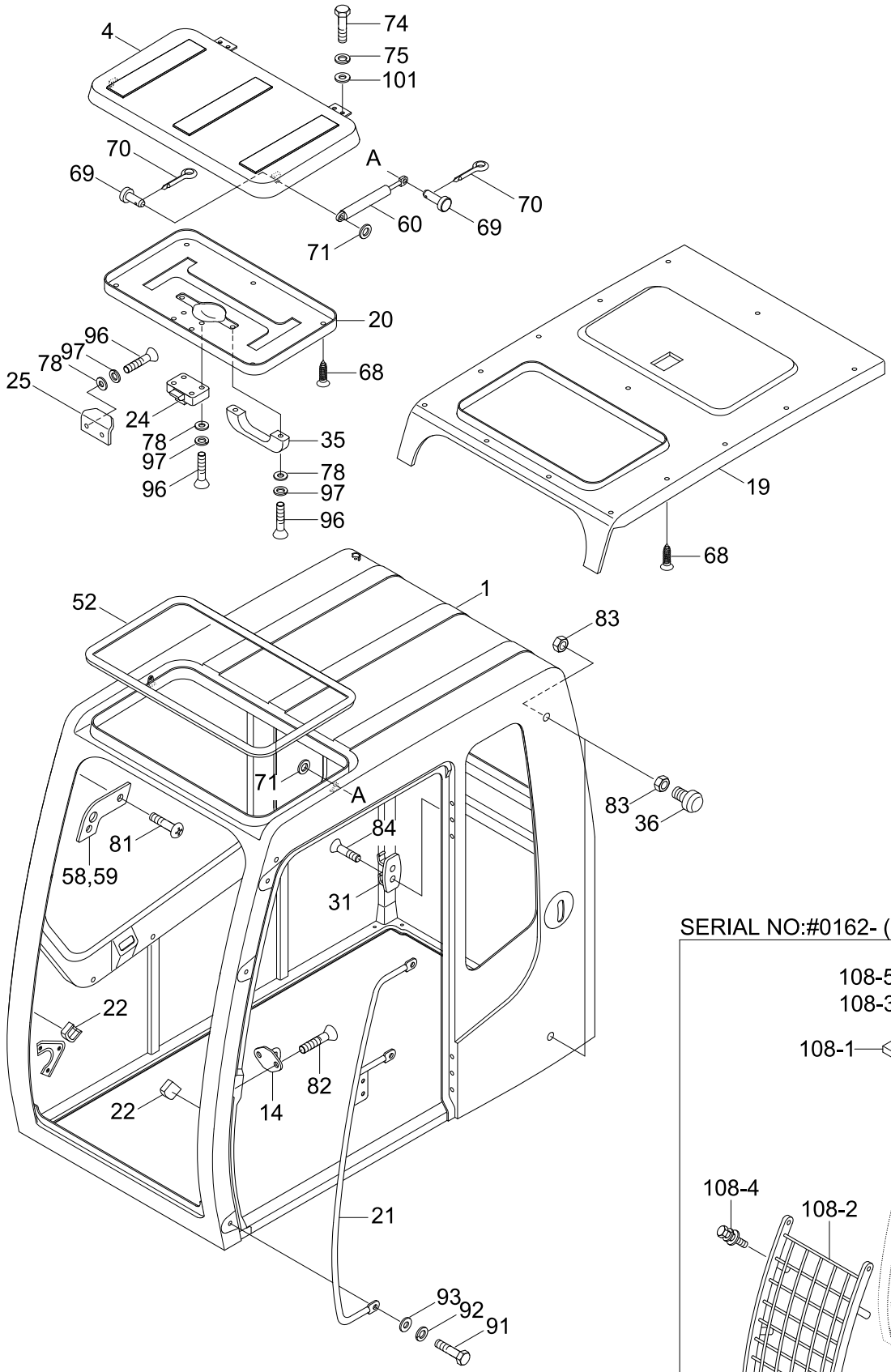

SERIAL NO:#0162- (FOG TYPE)

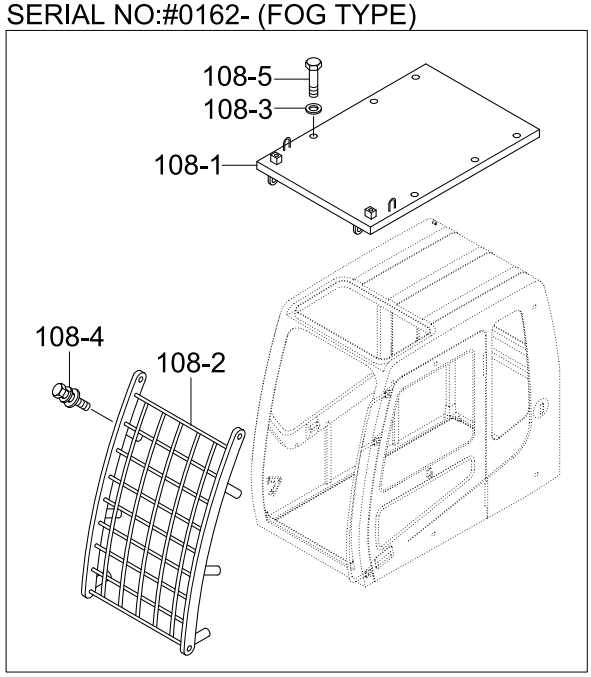

Item	Part_No	IS	Ord	T	Description	Qty	Serial_No	ITC	Remark
*	71N6-10001				CAB ASSY	1	- #1118		STD
	71N6-10001BG				CAB ASSY	1	#1119 -	D	
	73N6-10000				CAB ASSY	1	#0162 - #1118	-	FOG
	73N6-10000BG				CAB ASSY	1	#1119 -	D	
1	71N6-00011				.CAB WA	1	- #1118		STD
	71N6-00011BG				.CAB WA	1	#1119 -	D	
	73N6-00010				.CAB WA	1	#0162 - #1118	-	FOG
	73N6-00010BG				.CAB WA	1	#1119 -	D	
4	71N6-02400				.SUN ROOF WA	1	- #1118		
	71N6-02400BG				.SUN ROOF WA	1	#1119 -	D	
14	71N6-02770				.STRIKER	1			
19	71N6-02810				.LINING(1)-HEAD	1			
20	71N6-02820				.LINING(2)-HEAD	1			
21	71N6-02830				.RAIL-HAND	1	- #0043		
	71N6-02831				.RAIL-HAND	1	#0044 - #1118	D	
	71N6-02831BG				.RAIL-HAND	1	#1119 -	D	
22	71N6-02841				.STOPPER	2			
24	71N6-02860				.LATCH-ROOF	1			
25	71N6-02870				.BRACKET-ROOF	1			
31	71N6-02920				.HOOK-COAT	1			
35	E171-1147				.HANDLE	1			
36	71EH-13150				.BUMPER-RUBBER	2			
52	S772-020300				.WEATHER STRIP	1			
58	71N6-03181				.STOPPER-LH	1			
59	71N6-03191				.STOPPER-RH	1			

Item	Part_No	IS	Ord	T	Description	Qty	Serial_No	ITC	Remark
60	71N6-03201				.SPRING-GAS	2	- #1872		
	71N6-03202				.SPRING-GAS	2	#1873 -	B	
68	E171-1310	10			.PLUG-HEADLINER	18			
69	S491-080162				.PIN-CLEVIS	4	- #1872		
	71Q6-03160				.PIN-CLEVIS	4	#1873 -	B	
70	S461-200162				.PIN-SPLIT	4	- #1872		
	S501-070006				.PIN-SELF LOCKING	4	#1873 -	B	
71	S403-082006				.WASHER-PLAIN	4			
74	S015-080206				.BOLT-HEX	4			
75	S411-080006				.WASHER-SPRING	4			
78	S403-052006				.WASHER-PLAIN	8			
81	S141-060206				.SCREW-FLAT HD	4			
82	S145-080166				.SCREW-FLAT HD	2			
83	S203-101006				.NUT-HEX	4			
84	S141-040206				.SCREW-FLAT HD	2			
91	S017-160206				.BOLT-HEX	3			
92	S411-160006				.WASHER-SPRING	3			
93	S403-162006				.WASHER-PLAIN	3			
96	S161-050166				.SCREW-CROSS R/ROUND	8			
97	S411-050006				.WASHER-SPRING	8			
101	S403-082006				.WASHER-PLAIN	4			
108	73N6-05000				.GUARD ASSY	1	#0162 - #1118	-	FOG
	73N6-05000BG				.GUARD ASSY	1	#1119 -	D	
108-1	73N6-05010				..GUARD WA-TOP	1	#0162 - #1118	-	FOG
	73N6-05010BG				..GUARD WA-TOP	1	#1119 -	D	

Item	Part_No	IS	Ord	T	Description	Qty	Serial_No	ITC	Remark
108-2	73N6-05020				..GUARD WA-FRONT	1	#0162 - #1118	-	FOG
	73N6-05020BG				..GUARD WA-FRONT	1	#1119 -	D	
108-3	S441-120006				..WASHER-HARDENED	6	#0162 -	-	FOG
108-4	S037-122526				..BOLT-W/WASHER	8	#0162 -	-	FOG
108-5	S017-120306				..BOLT-HEX	6	#0162 -	-	FOG
*-1	@				.ELECTRIC CAB ASSY	1			NOT

CAB ASSY(1/6, STD & FOG TYPE, #1111-)

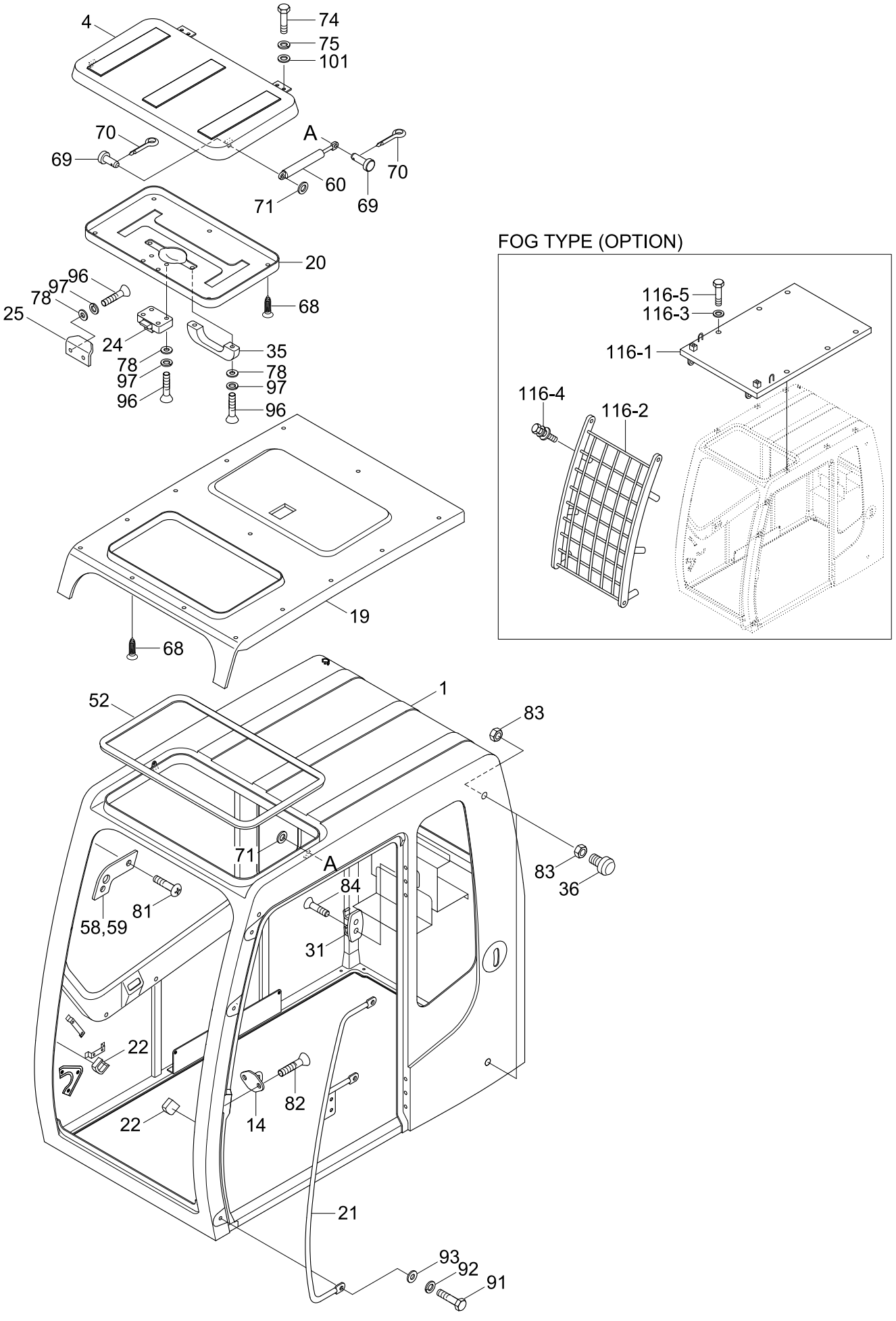

Item	Part_No	IS	Ord	T	Description	Qty	Serial_No	ITC	Remark
*	76N4-10000				CAB ASSY	1	#1111 -	-	UPGRADE CABIN
	76N4-19000				CAB ASSY	1	#1111 -	-	UPGRADE-FOG
1	76N6-00010				.CAB WA	1			UPGRADE CABIN
	76N6-05010				.CAB WA	1			UPGRADE-FOG
4	71N6-02400BG				.SUN ROOF WA	1			
14	71N6-02770				.STRIKER	1			
19	71N6-02810				.LINING(1)-HEAD	1			
20	71N6-02820				.LINING(2)-HEAD	1			
21	71N6-02831BG				.RAIL-HAND	1			
22	71N6-02841				.STOPPER	2			
24	71N6-02860				.LATCH-ROOF	1			
25	71N6-02870				.BRACKET-ROOF	1			
31	71N6-02920				.HOOK-COAT	1			
35	E171-1147				.HANDLE	1			
36	71EH-13150				.BUMPER-RUBBER	2			
52	S772-020300				.WEATHER STRIP	1			
58	71N6-03181				.STOPPER-LH	1			
59	71N6-03191				.STOPPER-RH	1			
60	71N6-03201				.SPRING-GAS	2	- #1872		
	71N6-03202				.SPRING-GAS	2	#1873 -	B	
68	E171-1310	10			.PLUG-HEADLINER	18			
69	S491-080162				.PIN-CLEVIS	4	- #1872		
	71Q6-03160				.PIN-CLEVIS	4	#1873 -	B	
70	S461-200162				.PIN-SPLIT	4	- #1872		
	S501-070006				.PIN-SELF LOCKING	4	#1873 -	B	

Item	Part_No	IS	Ord	T	Description	Qty	Serial_No	ITC	Remark
71	S403-08200B				.WASHER-PLAIN	4			
74	S015-080206				.BOLT-HEX	4			
75	S411-080006				.WASHER-SPRING	4			
78	S403-05200B				.WASHER-PLAIN	8			
81	S141-060206				.SCREW-FLAT HD	4			
82	S145-080166				.SCREW-FLAT HD	2			
83	S203-101006				.NUT-HEX	4			
84	S141-040206				.SCREW-FLAT HD	2			
91	S017-160206				.BOLT-HEX	3			
92	S411-160006				.WASHER-SPRING	3			
93	S403-162006				.WASHER-PLAIN	3			
96	S161-050166				.SCREW-CROSS R/ROUND	8			
97	S411-050006				.WASHER-SPRING	8			
101	S403-08200B				.WASHER-PLAIN	4			
116	73N6-05000BG				.GUARD ASSY	1			FOG TYPE
116-1	73N6-05010BG				..GUARD WA-TOP	1			FOG TYPE
116-2	73N6-05020BG				..GUARD WA-FRONT	1			FOG TYPE
116-3	S441-12000B				..WASHER-HARDENED	6			FOG TYPE
116-4	S037-122526				..BOLT-W/WASHER	8			FOG TYPE
116-5	S017-120306				..BOLT-HEX	6			FOG TYPE

CAB ASSY(1/6, ROOF TYPE, #0162-)

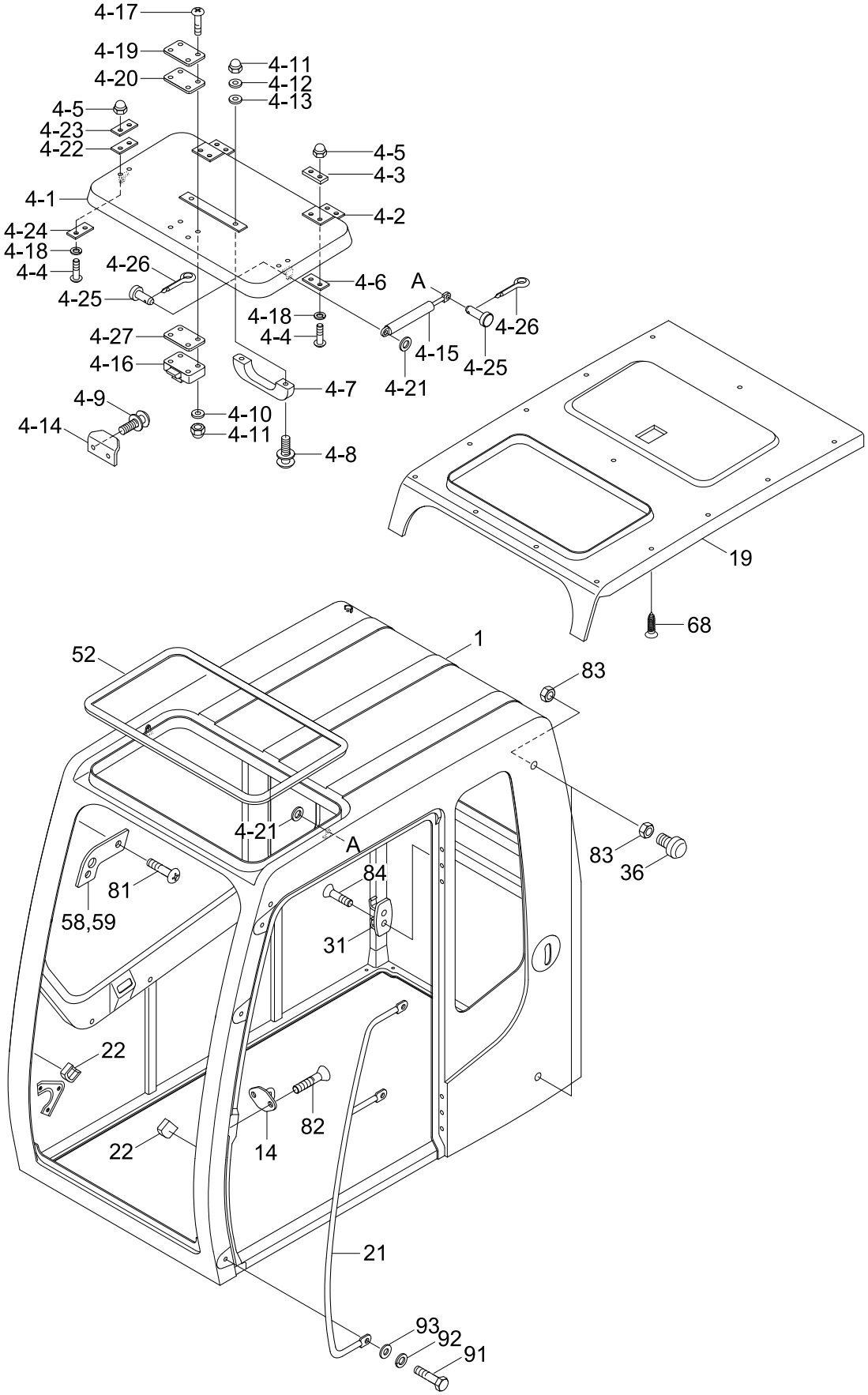

Item	Part_No	IS	Ord	T	Description	Qty	Serial_No	ITC	Remark
*	72N6-10000				CAB ASSY	1	#0162 - #1118	-	ROOF TYPE
	72N6-10000BG				CAB ASSY	1	#1119 -	D	
1	71N6-00011				.CAB WA	1	- #1118		
	71N6-00011BG				.CAB WA	1	#1119 -	D	
4	72N6-05000				.COVER-SUN ROOF ASSY	1			
4-1	72N6-05010				..COVER-ROOF	1			
4-2	72N6-05020				..HINGE	2			
4-3	72N6-05030				..PAD-RUBBER	2			
4-4	S175-060206				..SCREW-SOCKET RD HD	8			
4-5	S291-060006				..CAP NUT-DOMED	8			
4-6	72N6-05040				..PLATE-HINGE	2			
4-7	E171-1147				..HANDLE	1			
4-8	S131-052046				..SCREW-W/WASHER	2			
4-9	S131-051556				..SCREW-W/WASHER	2			
4-10	S411-050006				..WASHER-SPRING	4			
4-11	S291-050006				..CAP NUT-DOMED	6			
4-12	72N6-05050				..PLATE-HANDLE	2			
4-13	72N6-05060				..PAD-RUBBER	2			
4-14	72N6-05070				..PLATE	1			
4-15	71N6-03201				..SPRING-GAS	2	- #1872		
	71N6-03202				..SPRING-GAS	2	#1873 -	B	
4-16	71N6-02860				..LATCH-ROOF	1			
4-17	S175-050256				..SCREW-SOCKET RD HD	4			
4-18	S411-060006				..WASHER-SPRING	8			
4-19	72N6-05080				..PAD-RUBBER	1			

Item	Part_No	IS	Ord	T	Description	Qty	Serial_No	ITC	Remark
4-20	72N6-05090				..PLATE	1			
4-21	S403-082006				..WASHER-PLAIN	4			
4-22	72N6-05110				..PLATE-GAS SPRING	2			
4-23	72N6-05120				..PAD-RUBBER	2			
4-24	72N6-05130				..PLATE-GAS SPRING	2			
4-25	S491-080162				..PIN-CLEVIS	4	- #1872		
	71Q6-03160				..PIN-CLEVIS	4	#1873 -	B	
4-26	S461-200162				..PIN-SPLIT	4	- #1872		
	S501-070006				..PIN-SELF LOCKING	4	#1873 -	B	
4-27	72N6-05100				..PAD-RUBBER	1			
14	71N6-02770				.STRIKER	1			
19	71N6-02810				.LINING(1)-HEAD	1			
21	71N6-02831				.RAIL-HAND	1	- #1118		
	71N6-02831BG				.RAIL-HAND	1	#1119 -	D	
22	71N6-02841				.STOPPER	2			
31	71N6-02920				.HOOK-COAT	1			
36	71EH-13150				.BUMPER-RUBBER	2			
52	S772-020300				.WEATHER STRIP	1			
58	71N6-03181				.STOPPER-LH	1			
59	71N6-03191				.STOPPER-RH	1			
68	E171-1310	10			.PLUG-HEADLINER	18			
81	S141-060206				.SCREW-FLAT HD	4			
82	S145-080166				.SCREW-FLAT HD	2			
83	S203-101006				.NUT-HEX	4			
84	S141-040206				.SCREW-FLAT HD	2			

Item	Part_No	IS	Ord	T	Description	Qty	Serial_No	ITC	Remark
91	S017-160206				.BOLT-HEX	3			
92	S411-160006				.WASHER-SPRING	3			
93	S403-162006				.WASHER-PLAIN	3			
*-1	@				.ELECTRIC CAB ASSY	1			NOT

CAB ASSY(1/6, ROOF TYPE, OPT, #1111-)

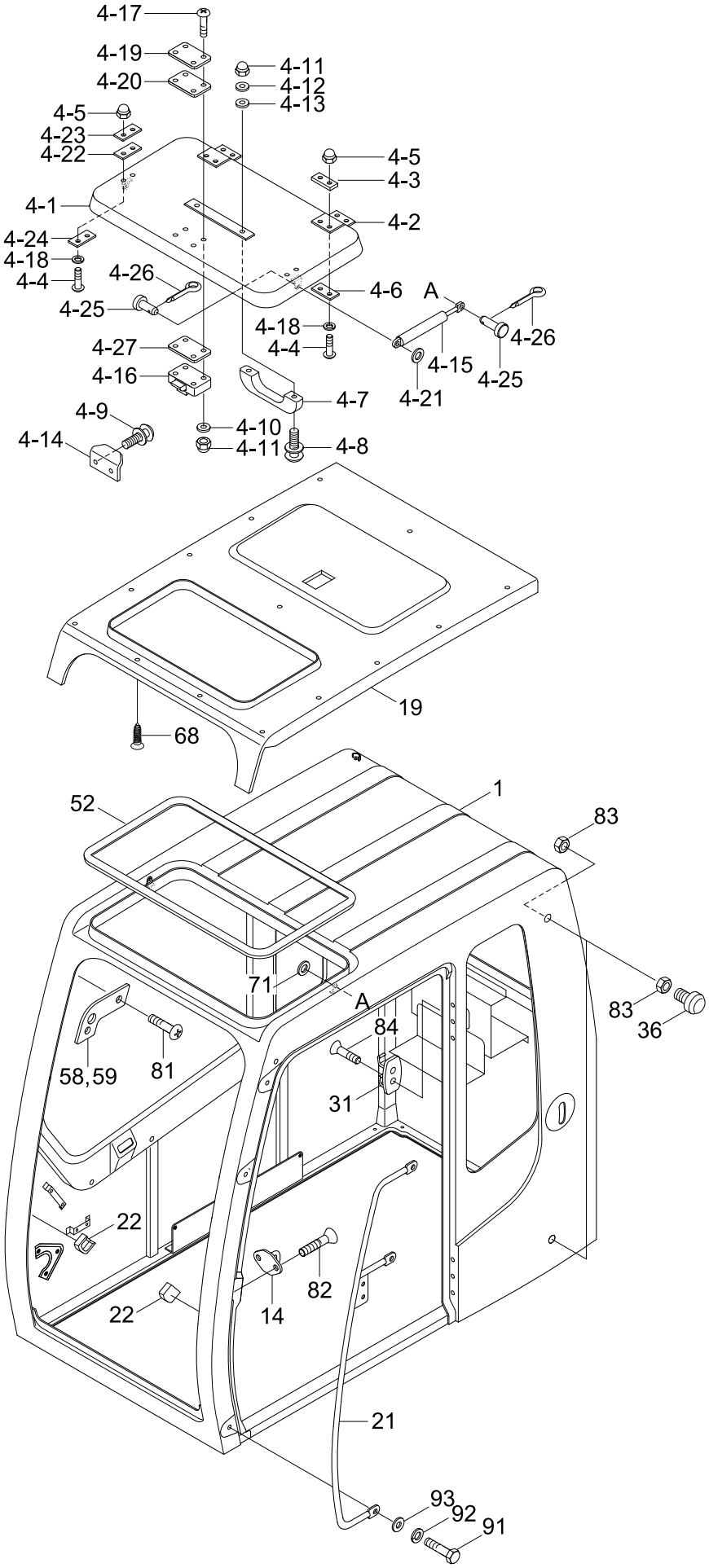

Item	Part_No	IS	Ord	T	Description	Qty	Serial_No	ITC	Remark
*	76N4-18000				CABIN ASSY	1	#1111 -	-	UPGRADE CABIN
1	76N6-00010				.CAB WA	1			
4	72N6-05000				.COVER-SUN ROOF ASSY	1			
4-1	72N6-05010				..COVER-ROOF	1			
4-2	72N6-05020				..HINGE	2			
4-3	72N6-05030				..PAD-RUBBER	2			
4-4	S175-060206				..SCREW-SOCKET RD HD	8			
4-5	S291-060006				..CAP NUT-DOMED	8			
4-6	72N6-05040				..PLATE-HINGE	2			
4-7	E171-1147				..HANDLE	1			
4-8	S131-052046				..SCREW-W/WASHER	2			
4-9	S131-051556				..SCREW-W/WASHER	2			
4-10	S411-050006				..WASHER-SPRING	4			
4-11	S291-050006				..CAP NUT-DOMED	6			
4-12	72N6-05050				..PLATE-HANDLE	2			
4-13	72N6-05060				..PAD-RUBBER	2			
4-14	72N6-05070				..PLATE	1			
4-15	71N6-03201				..SPRING-GAS	2	- #1872		
	71N6-03202				..SPRING-GAS	2	#1873 -	B	
4-16	71N6-02860				..LATCH-ROOF	1			
4-17	S175-050256				..SCREW-SOCKET RD HD	4			
4-18	S411-060006				..WASHER-SPRING	8			
4-19	72N6-05080				..PAD-RUBBER	1			
4-20	72N6-05090				..PLATE	1			
4-21	S403-08200B				..WASHER-PLAIN	4			

Item	Part_No	IS	Ord	T	Description	Qty	Serial_No	ITC	Remark
4-22	72N6-05110				..PLATE-GAS SPRING	2			
4-23	72N6-05120				..PAD-RUBBER	2			
4-24	72N6-05130				..PLATE-GAS SPRING	2			
4-25	S491-080162				..PIN-CLEVIS	4	- #1872		
	71Q6-03160				..PIN-CLEVIS	4	#1873 -	B	
4-26	S461-200162				..PIN-SPLIT	4	- #1872		
	S501-070006				..PIN-SELF LOCKING	4	#1873 -	B	
4-27	72N6-05100				..PAD-RUBBER	1			
14	71N6-02770				.STRIKER	1			
19	71N6-02810				.LINING(1)-HEAD	1			
21	71N6-02831BG				.RAIL-HAND	1			
22	71N6-02841				.STOPPER	2			
31	71N6-02920				.HOOK-COAT	1			
36	71EH-13150				.BUMPER-RUBBER	2			
52	S772-020300				.WEATHER STRIP	1			
58	71N6-03181				.STOPPER-LH	1			
59	71N6-03191				.STOPPER-RH	1			
68	E171-1310	10			.PLUG-HEADLINER	18			
81	S141-060206				.SCREW-FLAT HD	4			
82	S145-080166				.SCREW-FLAT HD	2			
83	S203-101006				.NUT-HEX	4			
84	S141-040206				.SCREW-FLAT HD	2			
91	S017-160206				.BOLT-HEX	3			
92	S411-160006				.WASHER-SPRING	3			
93	S403-162006				.WASHER-PLAIN	3			

CAB ASSY(2/6)

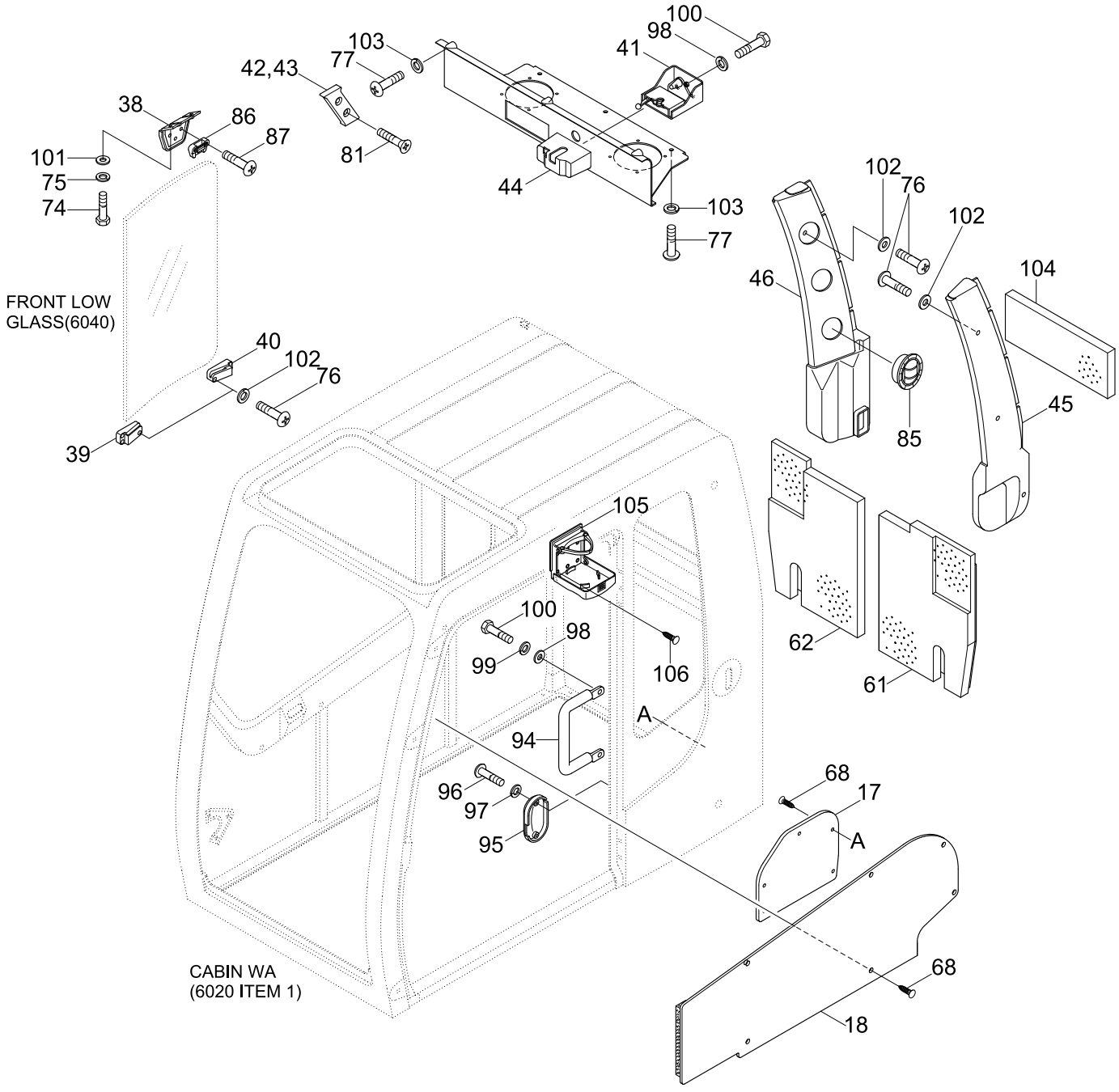
100
98
41
103
77
42,43
38
86
87
101
75
74
81
44
103
77
102
76
102
104
46
45
85
FRONT LOW
GLASS(6040)
40
102
76
39
105
100
98
99
106
A
94
96
97
95
62
61
68
17
A
68
18
CABIN WA
(6020 ITEM 1)

Item	Part_No	IS	Ord	T	Description	Qty	Serial_No	ITC	Remark
*	@				CAB ASSY	1			NOT
17	71N6-02790				.WALL TRIM-LH	1			
18	71N6-02801				.WALL TRIM-RH	1			
38	71N6-03060				.HOLDER	1	- #0260		
	71N6-03061				.HOLDER	1	#0261 -	D	
39	71N6-03071				.HOLDER	1			
40	71N6-03081				.HOLDER	1			
41	71N6-03091				.LATCH ASSY	1			
42	71N6-03101				.STOPPER-LH	1			
43	71N6-03111				.STOPPER-RH	1			
44	71N6-03121				.COVER-REAR	1			
45	71N6-03131				.DUCT ASSY-LH	1			
46	71N6-03141				.DUCT ASSY-RH	1			
61	71N6-03210				.INSULATION FOAM	1			
62	71N6-03220				.INSULATION FOAM	1			
68	E171-1310	10			.PLUG-HEADLINER	11			
74	S015-080206				.BOLT-HEX	2			
75	S411-080006				.WASHER-SPRING	2			
76	S162-060206				.SCREW-CROSS R/ROUND	12			
77	S162-060166				.SCREW-CROSS R/ROUND	6			
81	S141-060206				.SCREW-FLAT HD	4			
85	71N6-03300				.AIR VENT	6			
86	71N6-03311				.HOLDER	1			
87	S161-080256				.SCREW-RD HD	3			
94	71N6-20341				.RAIL-HAND	1			

Item	Part_No	IS	Ord	T	Description	Qty	Serial_No	ITC	Remark
95	71N6-03601				.COVER-BACK LATCH	1			
96	S161-050166				.SCREW-CROSS R/ROUND	2			
97	S411-050006				.WASHER-SPRING	2			
98	S411-100006				.WASHER-SPRING	5			
99	S403-102006				.WASHER-PLAIN	2			
100	S017-100206				.BOLT-HEX	5			
101	S403-082006				.WASHER-PLAIN	2			
102	S403-062006				.WASHER-PLAIN	12			
103	S411-060006				.WASHER-SPRING	6			
104	71N6-03660				.SPONGE	1	#0036 -	-	
105	71M8-20870				.HOLDER-CUP	1	#0036 -	-	
106	S141-040166				.SCREW-FLAT HD	1	#0036 -	-	

CAB ASSY(2/6, OPT, #1111-)

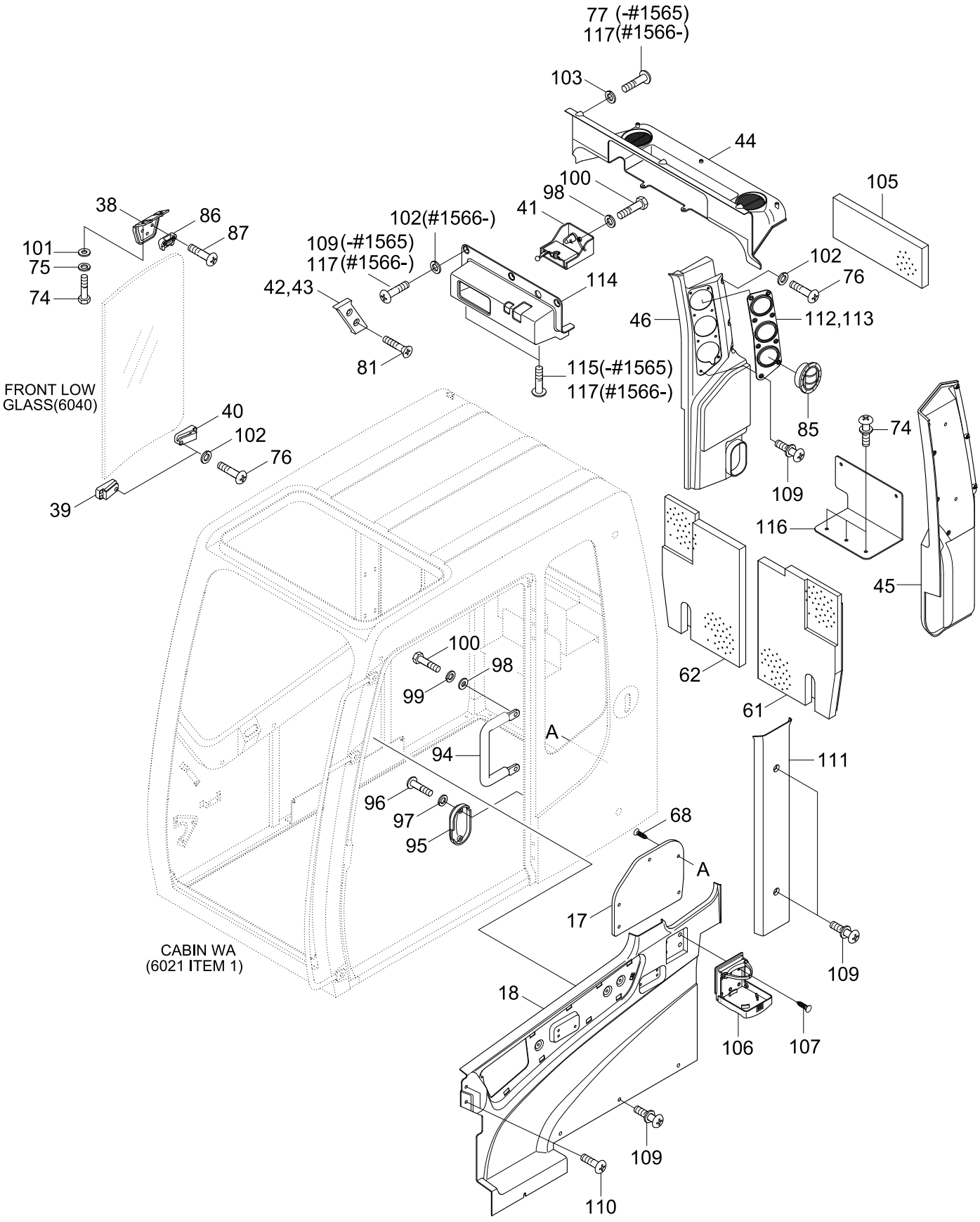

Item	Part_No	IS	Ord	T	Description	Qty	Serial_No	ITC	Remark
*	@				CAB ASSY	1	#1111 -	-	NOT
					CAB ASSY	1	#1111 -	-	NOT
17	71N6-02790				.WALL TRIM-LH	1			
18	76N6-02800				.WALL TRIM-RH	1			
38	71N6-03061				.HOLDER	1			
39	71N6-03071				.HOLDER	1			
40	71N6-03081				.HOLDER	1			
41	71N6-03091				.LATCH ASSY	1			
42	71N6-03101				.STOPPER-LH	1			
43	71N6-03111				.STOPPER-RH	1			
44	73N6-20060				.SPEAKER COVER	1			
45	76N6-03130				.DUCT ASSY-LH	1			
46	76N6-03140				.DUCT ASSY-RH	1			
61	71N6-03210				.INSULATION FOAM	1			
62	71N6-03220				.INSULATION FOAM	1			
68	E171-1310				.PLUG-HEADLINER	11			
74	S035-082026				.BOLT-W/WASHER	2	- #1565		
					.BOLT-W/WASHER	5	#1566 -	A	
75	S411-080006				.WASHER-SPRING	2			
76	S161-060206				.SCREW-CROSS R/ROUND	12			
77	S161-060166				.SCREW-CROSS ROUND	6	- #1565	-	
81	S141-060206				.SCREW-FLAT HD	4			
85	71N6-03300				.AIR VENT	6			
86	71N6-03311				.HOLDER	1			
87	S161-080256				.SCREW-CROSS R/ROUND	3			

Item	Part_No	IS	Ord	T	Description	Qty	Serial_No	ITC	Remark
94	71N6-20341				.RAIL-HAND	1			
95	71N6-03601				.COVER-BACK LATCH	1			
96	S161-050166				.SCREW-CROSS R/ROUND	2			
97	S411-050006				.WASHER-SPRING	2			
98	S411-100006				.WASHER-SPRING	5			
99	S403-10200B				.WASHER-PLAIN	2			
100	S017-100206				.BOLT-HEXAGON HEAD	5			
101	S403-08200B				.WASHER-PLAIN	2			
102	S403-06200B				.WASHER-PLAIN	12	- #1565		
					.WASHER-PLAIN	15	#1566 -	A	
103	S411-060006				.WASHER-SPRING	6			
105	71N6-03660				.SPONGE	1			
106	71M8-20870				.HOLDER-CUP	1			
107	S141-040166				.SCREW-FLAT HD	4			
38	71N6-03061				.HOLDER	1			
109	S132-061256				.SCREW-W/WASHER	27			
110	S151-050126				.SCREW-TAPPING	2			
111	73N6-20050				.PILLAR COVER-RH	1			
112	73N6-20220				.REAR DUCT COVER-LH	1			
113	73N6-20210				.REAR DUCT COVER-RH	1			
114	73N6-20070				.RADIO COVER	1			
115	76N6-03160				.FASTENER ASSY	2			
116	76N6-00021				.BRACKET	1	#1566 -	-	
117	S002-06015B				.SCREW-TRUS HEAD	11	#1566 -	-	
61	71N6-03210				.INSULATION FOAM	1			

Item	Part_No	IS	Ord	T	Description	Qty	Serial_No	ITC	Remark
62	71N6-03220				.INSULATION FOAM	1			
68	E171-1310	10			.PLUG-HEADLINER	11			
74	S015-080206				.BOLT-HEX	2			
75	S411-080006				.WASHER-SPRING	2			
76	S162-060206				.SCREW-CROSS R/ROUND	12			
77	S162-060166				.SCREW-CROSS R/ROUND	6			
81	S141-060206				.SCREW-FLAT HD	4			
85	71N6-03300				.AIR VENT	6			
86	71N6-03311				.HOLDER	1			
87	S161-080256				.SCREW-CROSS R/ROUND	3			
90	E371-1128	10			.MIRROR-ROOM	1			
94	71N6-20341				.RAIL-HAND	1			
95	71N6-03601				.COVER-BACK LATCH	1			
96	S161-050166				.SCREW-CROSS R/ROUND	2			
97	S411-050006				.WASHER-SPRING	2			
98	S411-100006				.WASHER-SPRING	5			
99	S403-10200B				.WASHER-PLAIN	2			
100	S017-100206				.BOLT-HEX	5			
101	S403-08200B				.WASHER-PLAIN	2			
102	S403-06200B				.WASHER-PLAIN	12			
103	S411-060006				.WASHER-SPRING	6			
104	71N6-03660				.SPONGE	1			
105	71M8-20870				.HOLDER-CUP	1			
106	S141-040166				.SCREW-FLAT HD	4			
109	S132-061256				.SCREW-W/WASHER	27			

Item	Part_No	IS	Ord	T	Description	Qty	Serial_No	ITC	Remark
110	S151-050126				.SCREW-TAPPING	1			
111	73N6-20050				.PILLAR COVER-RH	1			
112	73N6-20220				.REAR DUCT COVER-LH	1			
113	73N6-20210				.REAR DUCT COVER-RH	1			
114	73N6-20070				.RADIO COVER	1			
115	76N6-03160				.FASTENER	2			

CAB ASSY(3/6)

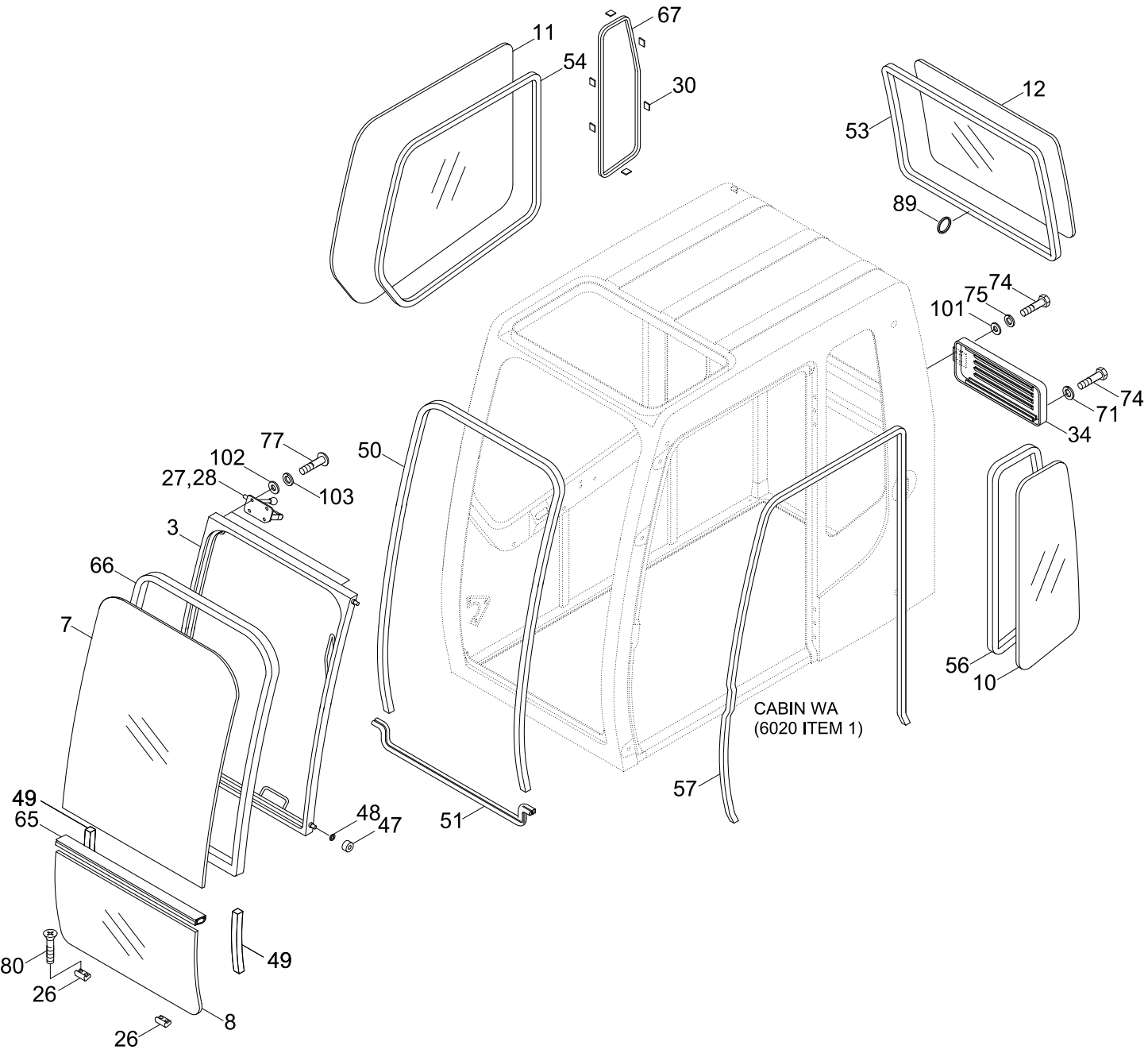
11
54
67
30
12
53
89
74
75
101
74
71
34
77
102
27,28
103
3
66
7
50
56
10
CABIN WA
(6020 ITEM 1)
57
49
65
48
47
51
80
26
49
8
26

Item	Part_No	IS	Ord	T	Description	Qty	Serial_No	ITC	Remark
*	@				CAB ASSY	1			NOT
3	71N6-02201				.FRONT WINDOW WA	1	- #1118		
	71N6-02201BG				.FRONT WINDOW WA	1	#1119 -	D	
7	71N6-02700				.GLASS	1			
8	71N6-02710				.GLASS	1	- #0260		
	71N6-02711				.GLASS	1	#0261 -	D	
10	71N6-02731				.GLASS	1			
11	71N6-02740				.GLASS	1			
12	71N6-02750				.GLASS	1			
26	71N6-02880				.INSULATOR	2			
27	71N6-02891				.LATCH ASSY	1			
28	71N6-02901				.LATCH ASSY	1			
30	71EH-10430				.RUBBER	6			
34	71N6-02950				.COVER-AIR VENT	1	- #1118		
	71N6-02950BG				.COVER-AIR VENT	1	#1119 -	D	
47	71N6-03150				.ROLLER	4			
48	S403-101002				.WASHER-PLAIN	4			
49	71N6-03160				.SEAL	2	#0001 -	-	
50	71N6-03480				.SEAL-FRONT	1			
51	71N6-03172				.WEATHER STRIP	1	- #0260		
	71N6-03173				.WEATHER STRIP	1	#0261 -	D	
53	S781-124602				.SEAL	1			
54	71N6-03010				.WEATHER STRIP	1			
56	71N6-03030				.WEATHER STRIP	1			
57	S771-036500				.WEATHER STRIP	1			

Item	Part_No	IS	Ord	T	Description	Qty	Serial_No	ITC	Remark
65	71N6-03250				.SEAL	1			
66	71N6-03261				.SEAL-FRONT GLASS	1			
	71N4-03260				.SEAL-FRONT GLASS	1	#0001 -	-	OPT
67	71N6-03040				.SEAL	1			
71	S403-082002				.WASHER-PLAIN	1			
74	S015-080206				.BOLT-HEX	3			
75	S411-080006				.WASHER-SPRING	2			
77	S162-060166				.SCREW-CROSS R/ROUND	8			
80	S141-050206				.SCREW-FLAT HD	4			
89	71N6-03320				.RING	1			
101	S403-082006				.WASHER-PLAIN	2			
102	S403-062006				.WASHER-PLAIN	8			
103	S411-060006				.WASHER-SPRING	8			

CAB ASSY(3/6, OPT, #1111-)

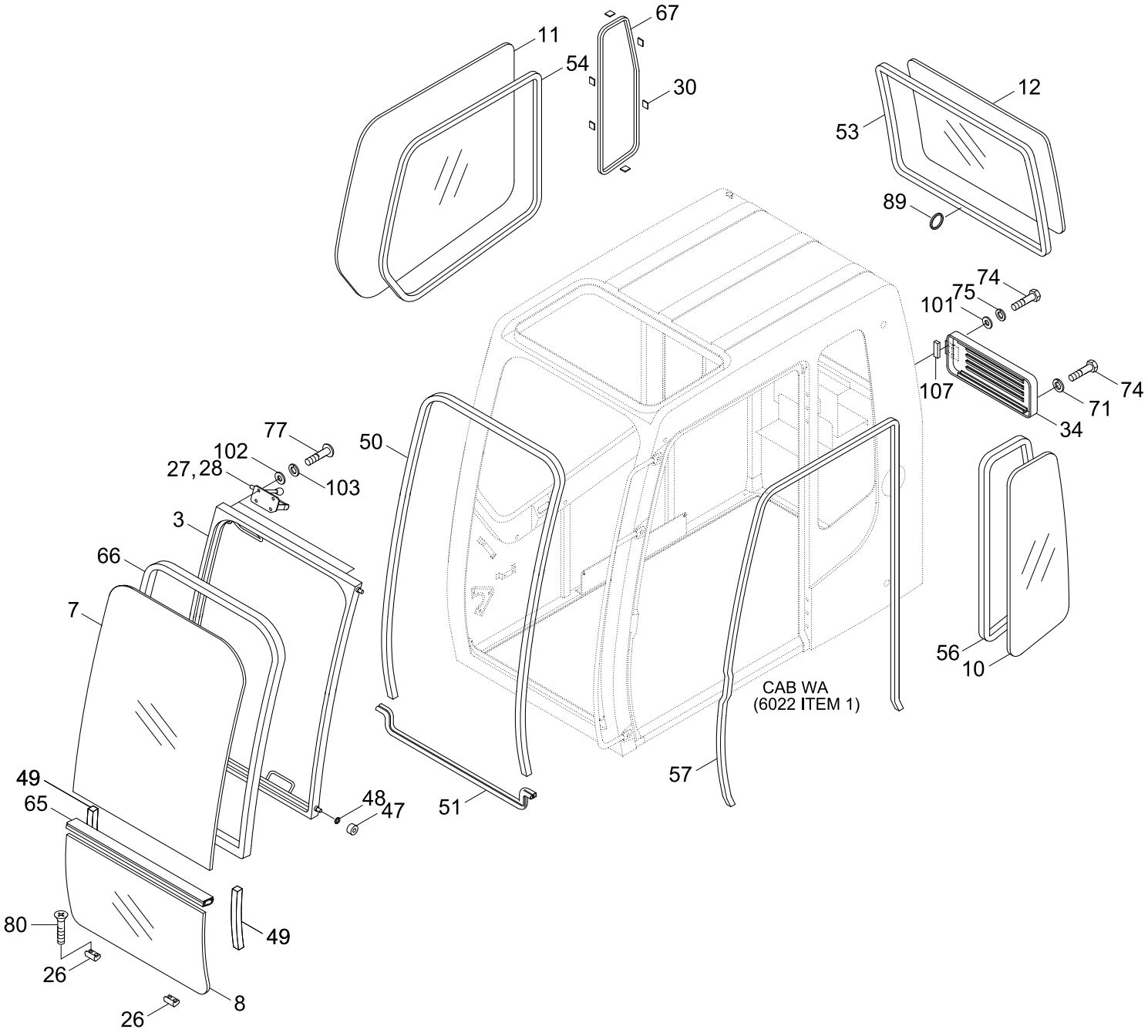

Item	Part_No	IS	Ord	T	Description	Qty	Serial_No	ITC	Remark
*	@				CAB ASSY	1	#1111 -	-	NOT
3	71N4-02200BG				.FRONT WINDOW WA	1			
7	71N4-02700				.GLASS	1			
8	71N6-02711				.GLASS	1			
10	71N6-02731				.GLASS	1			
11	71N6-02740				.GLASS	1			
12	71N6-02750				.GLASS	1			
26	71N6-02880				.INSULATOR	2			
27	71N6-02891				.LATCH ASSY	1			
28	71N6-02901				.LATCH ASSY	1			
30	71EH-10430				.RUBBER	6			
34	71N6-02950BG				.COVER-AIR VENT	1			
47	71N6-03150				.ROLLER	4			
48	S403-10100B				.WASHER-PLAIN	4			
49	71N6-03160				.SEAL	1			
50	71N6-03480				.SEAL-FRONT	1			
51	71N6-03173				.WEATHER STRIP	1			
53	S781-124602				.SEAL	1			
54	71N6-03010				.WEATHER STRIP	1			
56	71N6-03030				.WEATHER STRIP	1			
57	S771-036500				.WEATHER STRIP	1			
65	71N6-03250				.SEAL	1			
66	71N6-03261				.SEAL-FRONT GLASS	1			
67	71N6-03040				.SEAL	1			
71	S403-08200B				.WASHER-PLAIN	1			

Item	Part_No	IS	Ord	T	Description	Qty	Serial_No	ITC	Remark
74	S015-080206				.BOLT-HEX	3			
75	S411-080006				.WASHER-SPRING	2			
77	S161-060166				.SCREW-CROSS R/ROUND	8			
80	S141-050206				.SCREW-FLAT HD	4			
89	71N6-03320				.RING	1			
101	S403-08200B				.WASHER-PLAIN	2			
102	S403-06200B				.WASHER-PLAIN	8			
103	S411-060006				.WASHER-SPRING	8			
107	71N6-02960				.RUBBER	1			

CAB ASSY(4/6, DOOR)

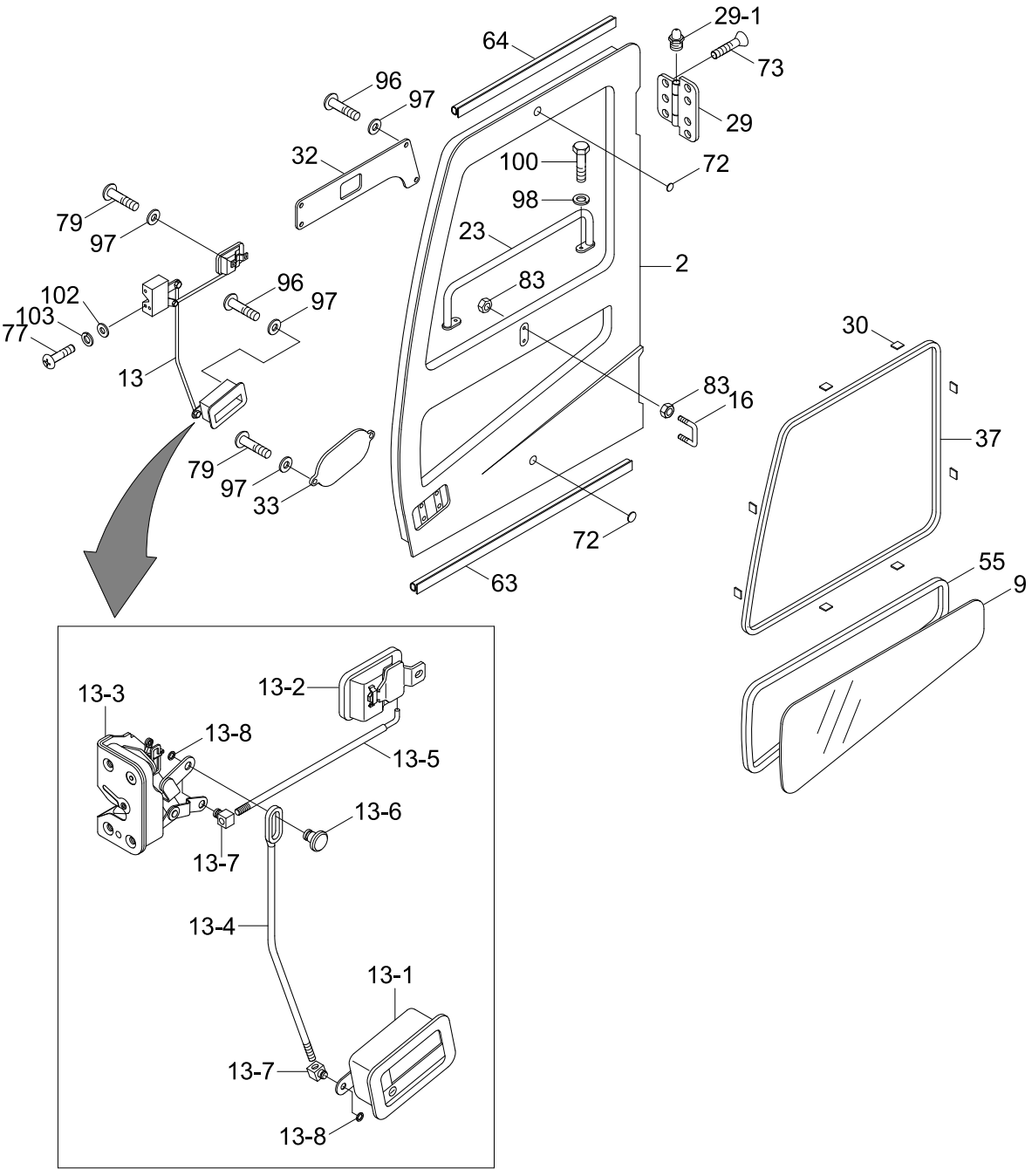

Item	Part_No	IS	Ord	T	Description	Qty	Serial_No	ITC	Remark
*	@				CAB ASSY	1			NOT
	71N6-04000				.SIDE DOOR ASSY	1	#0001 - #1118	-	
	71N6-04000BG				.SIDE DOOR ASSY	1	#1119 -	D	
2	71N6-02000				..SIDE DOOR WA	1	- #1118		
	71N6-02000BG				..SIDE DOOR WA	1	#1119 -	D	
					..SIDE DOOR WA	1	#1111 -	-	UPGRADE CABIN
9	71N6-02720				..GLASS-DOOR	1			
13	71N6-02761				..HANDLE ASSY	1			
13-1	71N6-03390				...HANDLE	1			
13-2	71N6-03400				...HANDLE-INNER	1			
13-3	71N6-03410				...LATCH	1			
13-4	71N6-03420				...ROD ASSY-1	1			
13-5	71N6-03430				...ROD ASSY-2	1			
13-6	71N6-03440				...PIN-1	1			
13-7	71N6-03450				...PIN	2			
13-8	P560-050006				...E-RING	3			
16	71N6-03650				..STRIKER	1			
23	71N6-02850				..HANDLE	1			
29	71N6-02910				..HINGE	2	- #1118		
	71N6-02910BG				..HINGE	2	#1119 -	D	
29-1	S651-060006				...NIPPLE-GREASE	1	- #1565		
	S651-060002				...NIPPLE-GREASE	1	#1566 -	B	
30	71EH-10430				..RUBBER	8			
32	71N6-02930				..COVER	1			
33	71N6-02940				..COVER	1			

Item	Part_No	IS	Ord	T	Description	Qty	Serial_No	ITC	Remark
37	71N6-03000				..WEATHER STRIP	1			
55	71N6-03020				..WEATHER STRIP	1			
63	71N6-03230				..SEAL	1			
64	71N6-03240				..SEAL	1			
72	17E1-5146				..BUMPER-DOOR	2			
73	71EH-10400				..SCREW	14			
77	S161-060166				..SCREW-CROSS R/ROUND	3			
79	S161-050206				..SCREW-CROSS R/ROUND	4			
83	S203-101006				..NUT-HEX	4			
96	S161-050166				..SCREW-CROSS R/ROUND	6			
97	S411-050006				..WASHER-SPRING	10			
98	S411-100006				..WASHER-SPRING	2			
100	S017-100206				..BOLT-HEX	2			
102	S403-062006				..WASHER-PLAIN	3			
103	S411-060006				..WASHER-SPRING	3			

CAB ASSY(5/6, SASH ASSY)

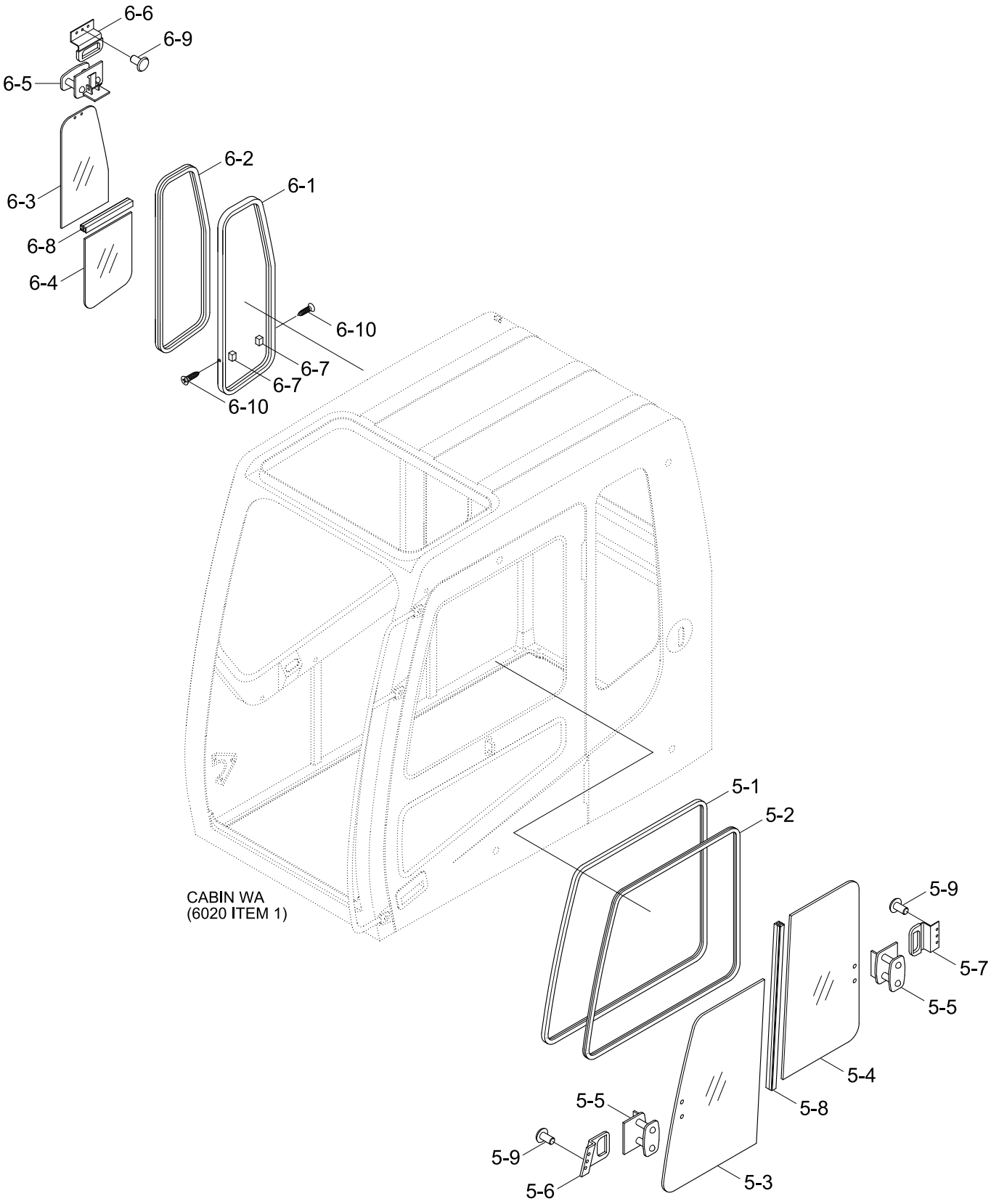

Item	Part_No	IS	Ord	T	Description	Qty	Serial_No	ITC	Remark
*	@				CAB ASSY	1			NOT
5	71N6-02500				.SASH ASSY-DOOR	1			
5-1	71N6-02510				..SASH	1			
5-2	71N6-02520				..SEAL	1			
5-3	71N6-02530				..GLASS	1			
5-4	71N6-02540				..GLASS	1			
5-5	71N6-02550				..LOCK ASSY	2			
5-6	71N6-02560				..HOOK	1			
5-7	71N6-02570				..HOOK	1			
5-8	71N6-02580				..SASH	1			
5-9	D19227C1				..RIVET-BLIND	6			
6	71N6-02600				.SASH ASSY-LH	1			
6-1	71N6-02610				..SASH	1			
6-2	71N6-02620				..SEAL	1			
6-3	71N6-02630				..GLASS(UPPER)	1			
6-4	71N6-02640				..GLASS(LOWER)	1			
6-5	71N6-02550				..LOCK ASSY	1			
6-6	71N6-02570				..HOOK	1			
6-7	71N6-02650				..STOPPER	2			
6-8	71N6-02660				..SASH	1			
6-9	D19227C1				..RIVET-BLIND	3			
6-10	S151-030126				..SCREW-TAPPING	2			

CAB ASSY(6/6, DOOR LATCH ASSY)

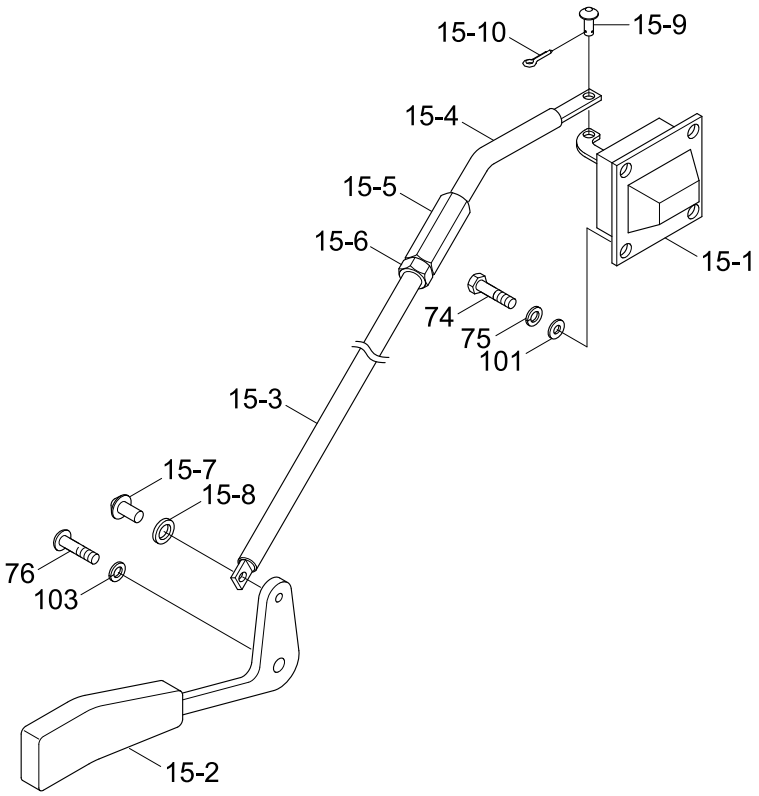

Item	Part_No	IS	Ord	T	Description	Qty	Serial_No	ITC	Remark
*	@				CAB ASSY	1			NOT
15	71N6-02781				.LATCH ASSY-BACK	1			
15-1	71EH-11260				..LOCK ASSY	1			
15-2	71N6-03571				..LEVER ASSY	1			
15-3	71N6-03580				..ROD	1			
15-4	71N6-03590				..ROD	1			
15-5	71EH-11210				..NUT	1			
15-6	S205-081006				..NUT-HEX	1			
15-7	71EH-11250				..PIN-ROUND	1			
15-8	S431-040002				..WASHER-LOCK	1			
15-9	71EH-11240				..PIN-ROUND	1			
15-10	S461-050152				..PIN-SPLIT	1			
74	S015-080206				.BOLT-HEX	4			
75	S411-080006				.WASHER-SPRING	4			
76	S161-060206				.SCREW	1			
101	S403-082006				.WASHER-PLAIN	4			
103	S411-060006				.WASHER-SPRING	1			

CAB INTERIOR 1

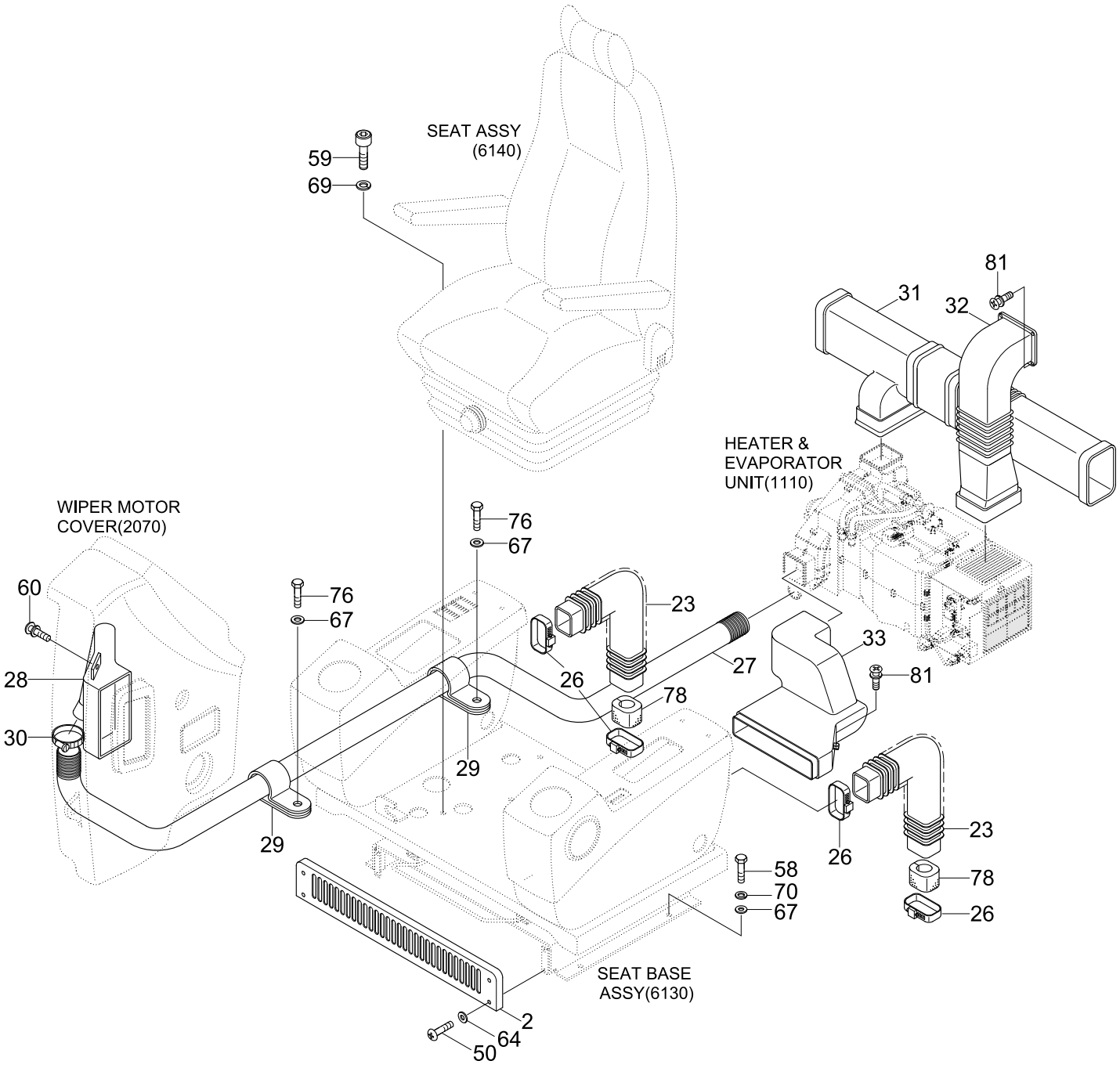

Item	Part_No	IS	Ord	T	Description	Qty	Serial_No	ITC	Remark
2	71N6-20020				COVER-SEAT BASE	1			
23	71N6-20181				TUBE	2			
26	S520-115000				CLAMP-HOSE	4			
27	71N6-20210				HOSE-DEFROSTER	1			
28	71N6-20221				DUCT-DEFROSTER	1			
29	71N6-20230				CLAMP-TUBE	2			
30	S520-055000				CLAMP-HOSE	1			
31	71N6-20241				DUCT-VENT	1			
32	71N6-20251				DUCT-INLET	1			
33	71N6-20261				DUCT-FOOT	1			
50	S161-050206				SCREW-RD HD	4			
58	S017-100256				BOLT-HEX	4			
59	S109-080306				BOLT-SOCKET	4			
60	S161-040086				SCREW-RD HD	2	- #0087		
	S131-040826				SCREW-W/WASHER	2	#0088 -	B	
67	S403-102006				WASHER-PLAIN	6			
70	S411-100006				WASHER-SPRING	4			
76	S017-100166				BOLT-HEX	2			
78	71N6-20450				FILTER-SPONGE	2			
81	S131-061646				SCREW-W/WASHER	7			

CAB INTERIOR 2

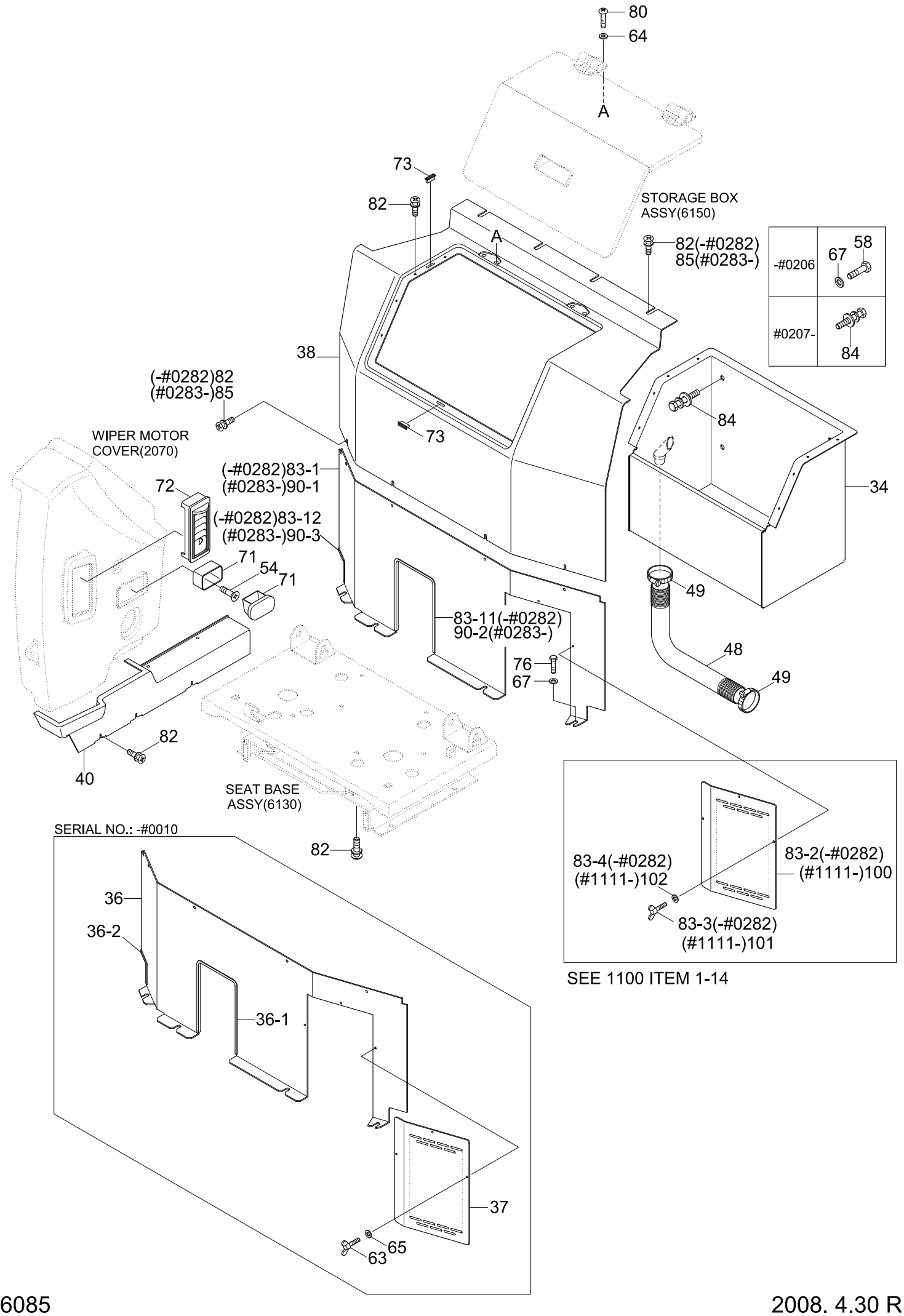

Item	Part_No	IS	Ord	T	Description	Qty	Serial_No	ITC	Remark
34	71N6-20271				STORAGE BOX WA	1	- #0206		
	71N6-20470				STORAGE BOX ASSY	1	#0207 -	D	
36	71N6-20291				AIRCON COVER-LOW	1	- #0010	-	
36-1	S791-016054				.GROMMET-PLATE	1	- #0010	-	
36-2	S791-016010				.GROMMET-PLATE	1	- #0010	-	
37	71N6-20301				COVER-FILTER	1	- #0010	-	
38	71N6-20311				AIRCON COVER-UP	1			
40	71N6-20331				COVER-DEF,HOSE	1			
48	71N6-20360				HOSE-STORAGE BOX	1			
49	71N6-20370				CLIP-HOSE	2			
54	S141-040166				SCREW-FLAT HD	2			
58	S017-100256				BOLT-HEX	4	- #0206	-	
63	S091-060166				BOLT-WING	3	- #0010	-	
64	S403-052006				WASHER-PLAIN	4			
65	S403-062006				WASHER-PLAIN	3	- #0010	-	
67	S403-102006				WASHER-PLAIN	8	- #0206		
					WASHER-PLAIN	4	#0207 -	A	
71	E171-1176				ASHTRAY	1			
72	71N6-20380				AIR NOZZLE	1			
73	71N6-20390				MAGNETIC	3			
76	S017-100166				BOLT-HEX	4			
80	S161-050206				SCREW-CROSS R/ROUND	4			
82	S132-061676				SCREW-W/WASHER	21	- #0282		
					SCREW-W/WASHER	17	#0283 -	A	
83	71N6-20460				A/CON COVER-LOW ASSY	1	#0011 - #0206	A	

Item	Part_No	IS	Ord	T	Description	Qty	Serial_No	ITC	Remark
83	71N6-20461				A/CON COVER-LOW ASSY	1	#0207 - #0282	D	
83-1	71N6-20291				.AIRCON COVER-LOW	1	#0011 - #0206	A	
	71N6-20292				.AIRCON COVER-LOW	1	#0207 - #0282	D	
83-11	S791-016054				..GROMMET-PLATE	1	#0011 - #0282	-	
83-12	S791-016010				..GROMMET-PLATE	1	#0011 - #0282	-	
83-2	71N6-20301				.COVER-FILTER	1	#0011 - #0282	-	SEE 1100
83-3	S091-060166				.BOLT-WING	3	#0011 - #0282	-	SEE 1100
83-4	S403-062006				.WASHER-PLAIN	3	#0011 - #0282	-	SEE 1100
84	S037-102026				BOLT-W/WASHER	4	#0207 -	-	
85	S132-062546				SCREW-W/WASHER	8	#0283 - #0329	-	
	S132-062076				SCREW-W/WASHER	1	#0330 -	B	
90	71N6-20292				AIRCON COVER-LOW	1	#0283 -	D	
90-1	71N6-21760				.PLATE	1	#0283 -	-	
90-2	S791-016054				.GROMMET-PLATE	1	#0283 -	A	
90-3	S791-016010				.GROMMET-PLATE	1	#0283 -	A	
100	11N6-90340				FILTER-REC	1	#1111 -	-	
101	S091-060166				BOLT-WING	3	#1111 -	-	
102	S403-06200B				WASHER-PLAIN	1	#1111 -	-	

CAB INTERIOR 1(OPT, #1111-)

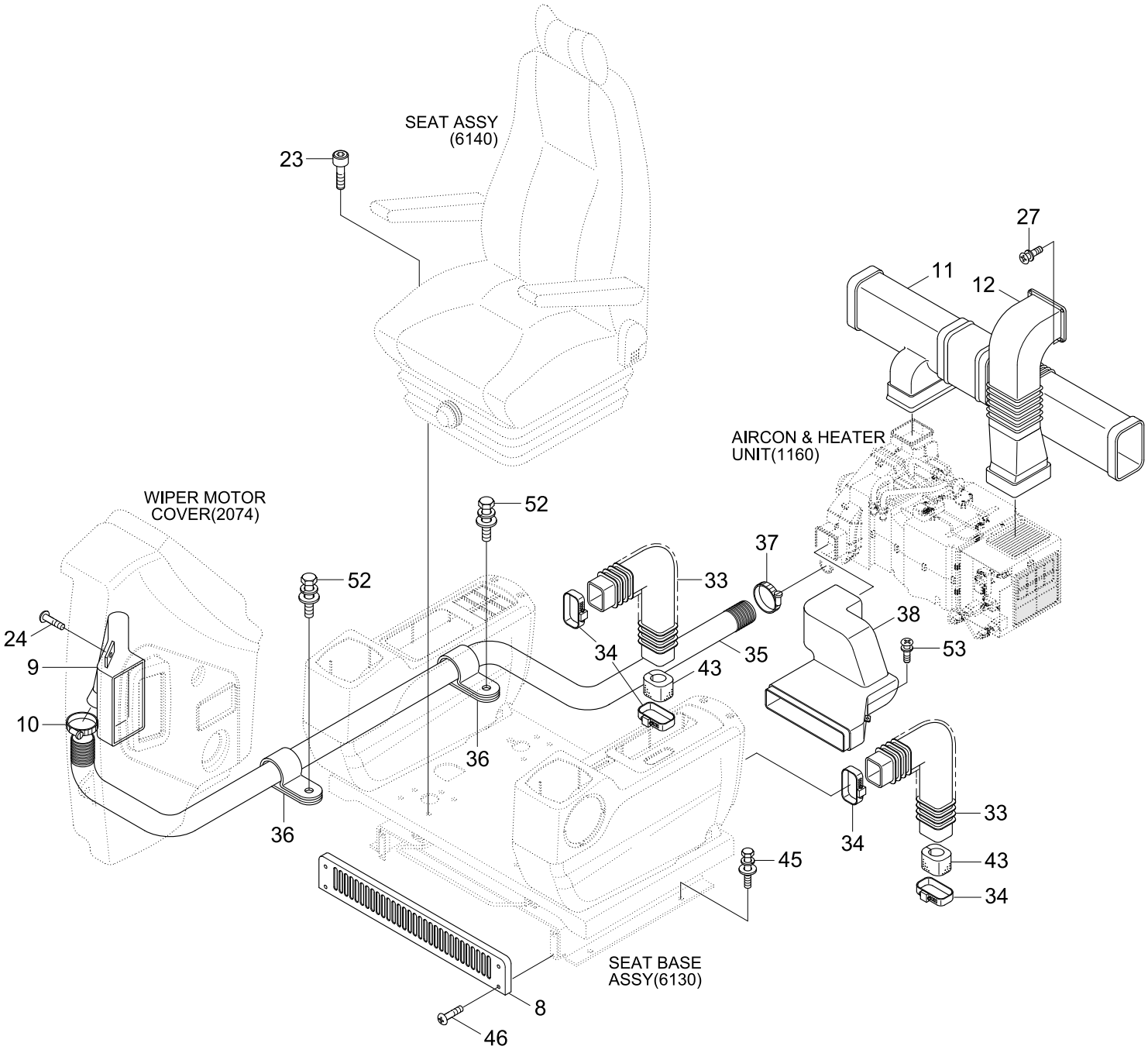

Item	Part_No	IS	Ord	T	Description	Qty	Serial_No	ITC	Remark
*	@				CAB INTERIOR	1	#1111 -	-	NOT
9	71N6-20221				DUCT-DEFROSTER	1			
10	S520-055000				CLAMP-HOSE	1			
11	71N6-20241				DUCT-VENT	1			
12	71N6-20251				DUCT-INLET	1			
20	71N6-20020				COVER-SEAT BASE	1			
23	S109-080306				BOLT-SOCKET	4			
24	S131-040826				SCREW-W/WASHER	2			
27	S132-061546				SCREW-W/WASHER	4			
33	71N6-20181				TUBE	2			
34	S520-115000				CLAMP-HOSE	4			
35	71N6-20210				HOSE-DEFROSTER	1			
36	71N6-20230				CLAMP-HOSE	2			
37	S520-055000				CLAMP-HOSE	1			
38	71N6-20261				DUCT-FOOT	1			
43	71N6-20450				FILTER-SPONGE	2			
45	S037-102526				BOLT-W/WASHER	4			
46	S131-051546				SCREW-W/WASHER	4			
52	S037-102026				BOLT-W/WASHER	2			
53	S132-061676				SCREW-W/WASHER	3			
34	71N6-20271				STORAGE BOX WA	1	- #0206		
	71N6-20470				STORAGE BOX ASSY	1	#0207 -	D	
36	71N6-20291				AIRCON COVER-LOW	1	- #0010	-	
36-1	S791-016054				.GROMMET	1	- #0010	-	
36-2	S791-016010				.GROMMET	1	- #0010	-	

Item	Part_No	IS	Ord	T	Description	Qty	Serial_No	ITC	Remark
37	71N6-20301				COVER-FILTER	1	- #0010	-	
38	71N6-20311				AIRCON COVER-UP	1			
40	71N6-20331				COVER-DEF. HOSE	1			
48	71N6-20360				HOSE-STORAGE BOX	1			
49	71N6-20370				CLIP-HOSE	2			
54	S141-040166				SCREW-FLAT HD	2			
58	S017-100256				BOLT-HEX	4	- #0206	-	
63	S091-060166				BOLT-WING	3	- #0010	-	
64	S403-052006				WASHER-PLAIN	4			
65	S403-062006				WASHER-PLAIN	3	- #0010	-	
67	S403-102006				WASHER-PLAIN	8	- #0206		
					WASHER-PLAIN	4	#0207 -	A	
71	E171-1176				ASHTRAY	1			
72	71N6-20380				AIR NOZZLE	1			
73	71N6-20390				MAGNETIC	3			
76	S017-100166				BOLT-HEX	4			
80	S161-050206				SCREW-RD HD	4			
82	S132-061676				SCREW-W/WASHER C/RD	21	- #0282		
					SCREW-W/WASHER C/RD	17	#0283 -	A	
83	71N6-20460				A/CON COVER-LOW ASSY	1	#0011 - #0206	A	
	71N6-20461				A/CON COVER-LOW ASSY	1	#0207 - #0282	D	
83-1	71N6-20291				.AIRCON COVER-LOW	1	#0011 - #0206	A	
	71N6-20292				.AIRCON COVER-LOW	1	#0207 - #0282	D	
83-11	S791-016054				..GROMMET	1	#0011 - #0282	-	
83-12	S791-016010				..GROMMET	1	#0011 - #0282	-	

Item	Part_No	IS	Ord	T	Description	Qty	Serial_No	ITC	Remark
83-2	71N6-20301				.COVER-FILTER	1	#0011 - #0282	-	SEE 1100
83-3	S091-060166				.BOLT-WING	3	#0011 - #0282	-	SEE 1100
83-4	S403-062006				.WASHER-PLAIN	3	#0011 - #0282	-	SEE 1100
84	S037-102026				BOLT-W/WASHER	4	#0207 -	-	
85	S132-062546				SCREW-W/WASHER C/RD	8	#0283 - #0329	-	
	S132-062076				SCREW-W/WASHER C/RD	1	#0330 -	B	
90	71N6-20292				AIRCON COVER-LOW	1	#0283 -	D	
90-1	71N6-21760				.PLATE	1	#0283 -	-	
90-2	S791-016054				.GROMMET	1	#0283 -	A	
90-3	S791-016010				.GROMMET	1	#0283 -	A	

CAB INTERIOR 2(OPT, #1111-)

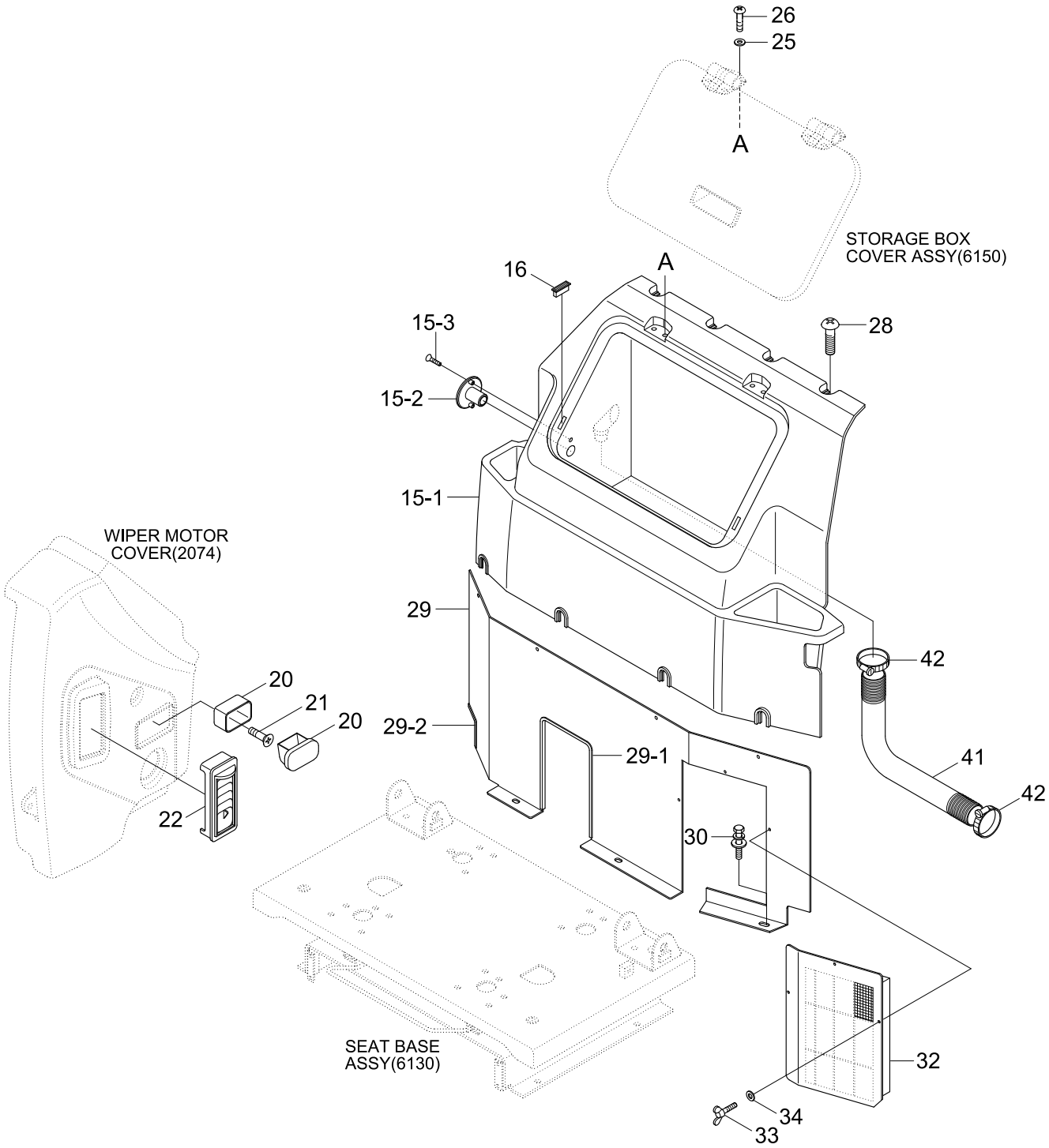

Item	Part_No	IS	Ord	T	Description	Qty	Serial_No	ITC	Remark
*	70N6-21310				CABIN INTERIOR GROUP	1	#1111 -	-	UPGRADE CABIN
15	73N6-21060				AIRCON COVER ASSY	1			
15-1	73N6-20080				.AIRCON COVER	1			
15-2	73N6-20280				.HOSE CAP-AC	1			
15-3	S151-040156				.SCREW-TAPPING	2			
16	71N6-20390				MAGNETIC	2			
20	E171-1176				ASHTRAY	1			
21	S151-040166				SCREW-TAPPING	2			
22	71N6-20380				AIR NOZZLE	1			
25	S403-05200B				WASHER-PLAIN	4			
26	S161-050206				SCREW-CROSS R/ROUND	4			
28	S002-06015B				SCREW-TRUS HEAD	13			
29	73N6-21050				AIRCON COVER LOW	1			
29-1	S791-020055				.GROMMET-PLATE	1			
29-2	S791-020012				.GROMMET-PLATE	1			
30	S037-102026				BOLT-W/WASHER	3			
32	11N6-91340				FILTER-REC	1			
33	S091-060156				BOLT-WING	3			
34	S403-06200B				WASHER-PLAIN	3			
41	71N6-20360				HOSE-STORAGE BOX	1			
42	71N6-20370				CLIP-HOSE	2			

CONSOLE BOX(1/2, LH)

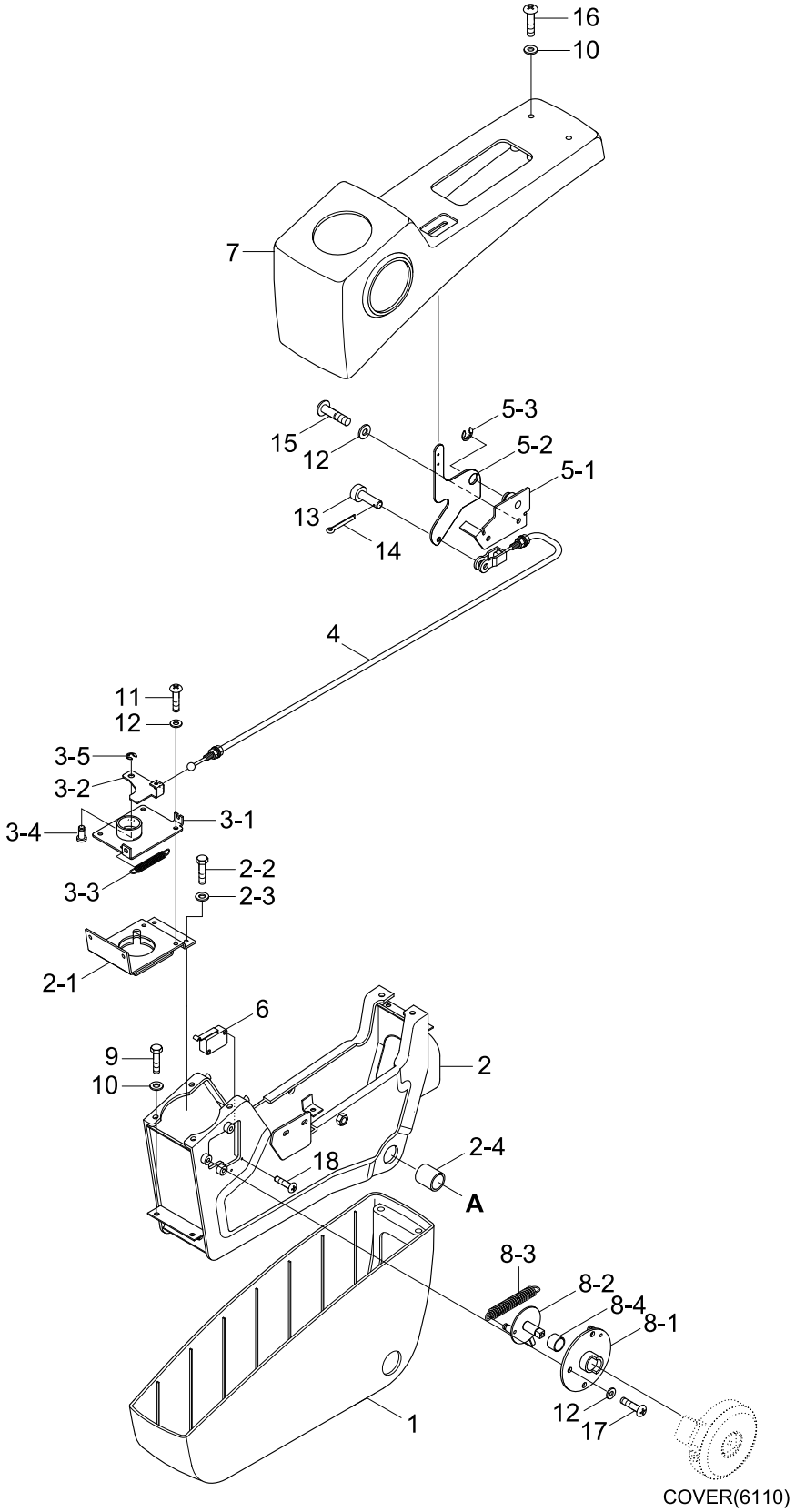

Item	Part_No	IS	Ord	T	Description	Qty	Serial_No	ITC	Remark
*	71N6-20430				CONSOLE BOX ASSY-LH	1			
1	71N6-20071				.CONSOLE BOX-LOW	1			
2	71N6-20051				.C/BOX FRAME WA-LH	1			
2-1	71N6-21320				..BRACKET-TILT	1			
2-2	S015-060146				..BOLT-HEX	4			
2-3	S403-062006				..WASHER-PLAIN	4			
2-4	S731-020025				..BUSHING-DU	2			
3	71N6-20091				.TILT CATCH ASSY	1			
3-1	71N6-21420				..TILT CATCH-LOW	1			
3-2	71N6-21451				..TILT CATCH-UP	1			
3-3	71N6-21460				..SPRING	1			
3-4	71N6-21470				..PIN	1			
3-5	P560-090002				..RETAINING RING-E TYPE	1			
4	71N6-20100				.CABLE-PULL	1			
5	71N6-20120				.TILT LEVER ASSY	1			
5-1	71N6-21480				..BRACKET-LOW	1			
5-2	71N6-21510				..BRACKET-UP	1			
5-3	P560-100006				..RETAINING RING-E TYPE	1			
6	21N8-20300				.SWITCH-MICRO	1			
7	71N6-20131				.CONSOLE BOX-UP(LH)	1			
8	71N6-20141				.SAFETY BRACKET ASSY	1			
8-1	71N6-21521				..BRACKET-LOW	1			
8-2	71N6-21560				..BRACKET-UP	1			
8-3	71N6-21610				..SPRING	1			
8-4	S731-020010				..BUSHING-DU	1			

Item	Part_No	IS	Ord	T	Description	Qty	Serial_No	ITC	Remark
9	S015-050206				.BOLT-HEX	4			
10	S403-052006				.WASHER-PLAIN	8			
11	S161-060136				.SCREW-CROSS R/ROUND	4			
12	S403-062006				.WASHER-PLAIN	9			
13	S491-060156				.PIN-CLEVIS	1			
14	S461-080202				.PIN-SPLIT	1			
15	S161-060166				.SCREW-CROSS ROUND	2			
16	S161-050166				.SCREW-CROSS R/ROUND	4			
17	S175-060162				.SCREW-SOCKET RD HD	3			
18	S161-030162				.SCREW-CROSS R/ROUND	2			

CONSOLE BOX(2/2, LH)

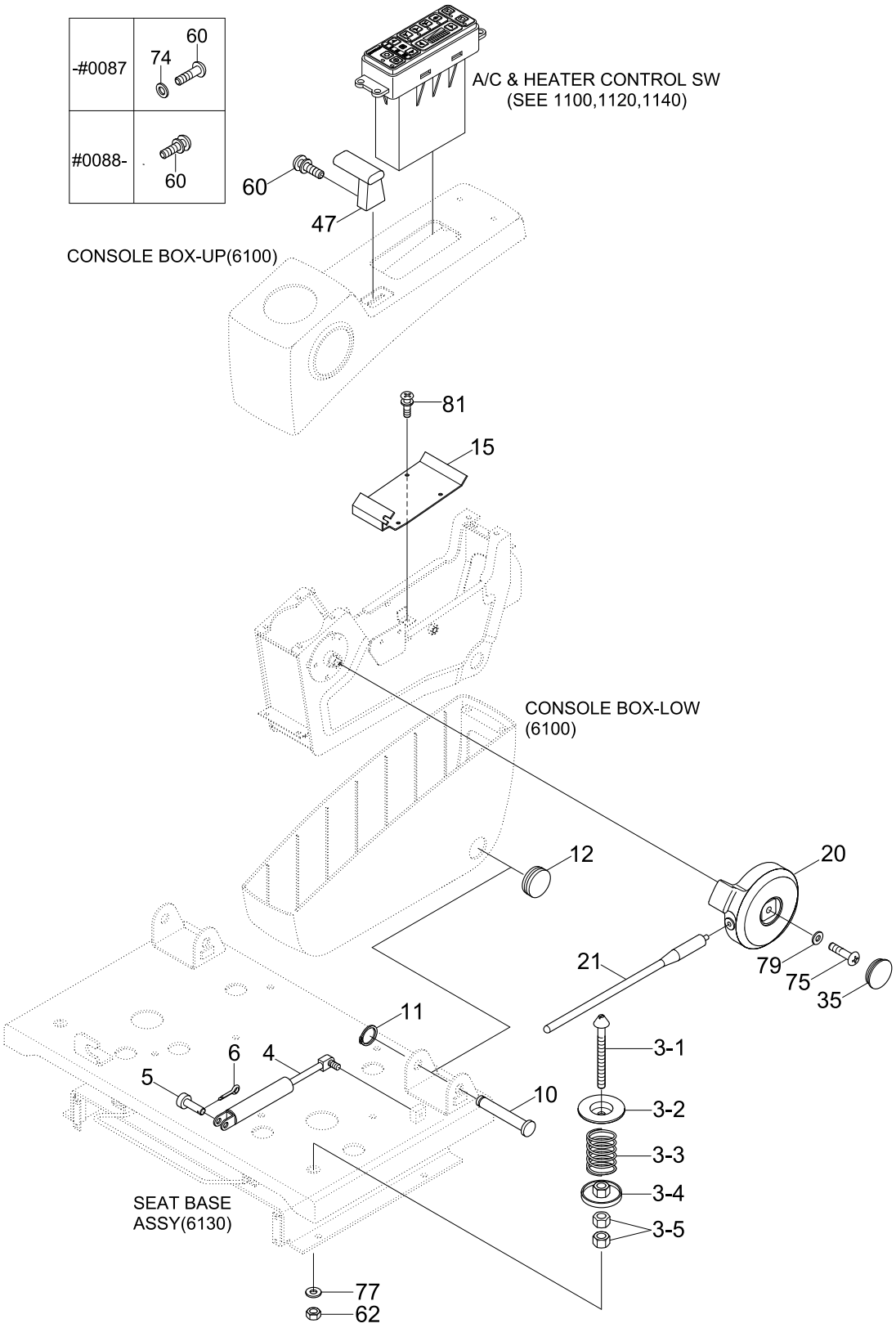

Item	Part_No	IS	Ord	T	Description	Qty	Serial_No	ITC	Remark
3	71N6-20031				TILT LOCKER ASSY	1			
3-1	71N6-21151				.SHAFT	1			
3-2	71N6-21160				.PLATE	1			
3-3	71N6-21170				.SPRING	1			
3-4	71N6-21180				.PLATE WA	1			
3-5	S207-161006				.NUT-HEX	2			
4	71N6-20040				SPRING-GAS	1			
5	S491-080256				PIN-CLEVIS	1			
6	S461-160256				PIN-SPLIT	1			
10	71N6-20081				SHAFT	1	- #0087		
	71N6-20082				SHAFT	1	#0088 -	D	
11	S601-020004				RING-RETAINING	1			
12	S661-360400				CAP-RUBBER	1			
15	71N6-20111				PLATE-CABLE	1			
20	71N6-20151				COVER-S/LEVER	1			
21	71N6-20161				ROD-SAFETY	1			
35	71N6-20281				CAP-S/LEVER	1			
47	71N6-20351				KNOB-TILT	1			
60	S161-040086				SCREW-CROSS R/ROUND	2	- #0087		
	S131-040826				SCREW-W/WASHER	2	#0088 -	B	
62	S261-160006				NUT-WING	1			
74	S403-042006				WASHER-PLAIN	2	- #0087	-	
75	S175-060166				SCREW-SOCKET RD HD	1			
77	S403-162006				WASHER-PLAIN	1			
79	S403-065006				WASHER-PLAIN	1			

Item	Part_No	IS	Ord	T	Description	Qty	Serial_No	ITC	Remark
81	S131-061646				SCREW-W/WASHER	4			

CONSOLE BOX(RH)

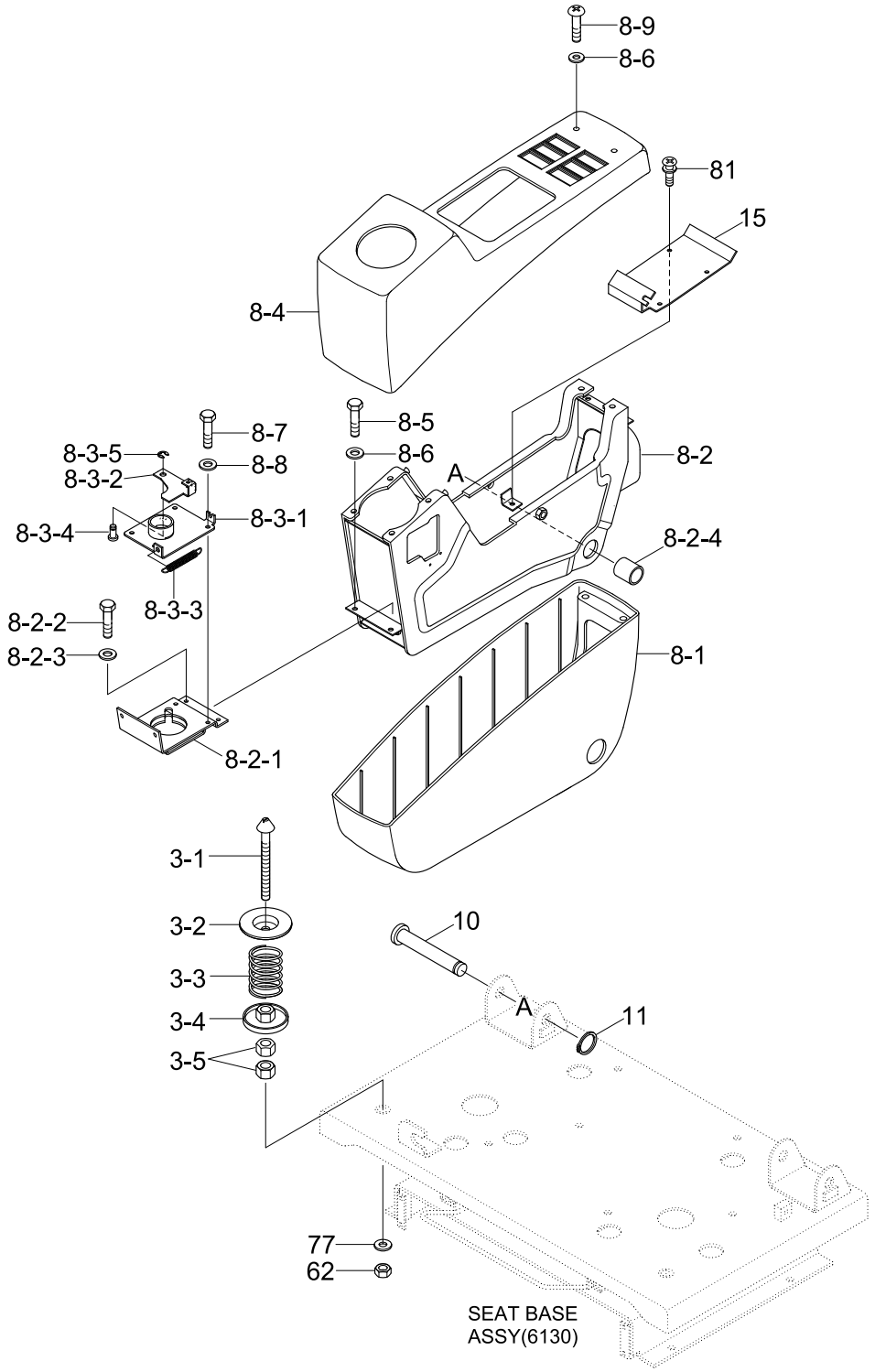

Item	Part_No	IS	Ord	T	Description	Qty	Serial_No	ITC	Remark
3	71N6-20031				TILT LOCKER ASSY	1			
3-1	71N6-21151				.SHAFT	1			
3-2	71N6-21160				.PLATE	1			
3-3	71N6-21170				.SPRING	1			
3-4	71N6-21180				.PLATE WA	1			
3-5	S207-161006				.NUT-HEX	2			
8	71N6-20440				CONSOLE BOX ASSY-RH	1			
8-1	71N6-20071				.CONSOLE BOX-LOW	1			
8-2	71N6-20061				.C/BOX FRAME WA-RH	1			
3-1	71N6-21151				.SHAFT	1			
3-2	71N6-21160				.PLATE	1			
3-3	71N6-21170				.SPRING	1			
3-4	71N6-21180				.PLATE WA	1			
3-5	S207-161006				.NUT-HEX	2			
8-2-1	71N6-21320				..BRACKET-TILT	1			
8-2-2	S015-060146				..BOLT-HEX	4			
8-2-3	S403-062006				..WASHER-PLAIN	4			
8-2-4	S731-020025				..BUSHING-DU	2			
10	71N6-20082				SHAFT	1	#0088 -	D	
8-3	71N6-20091				.TILT CATCH ASSY	1			
8-3-1	71N6-21420				..TILT CATCH-LOW	1			
8-3-2	71N6-21451				..TILT CATCH-UP	1			
8-3-3	71N6-21460				..SPRING	1			
8-3-4	71N6-21470				..PIN	1			
8-3-5	P560-090002				..RETAINING RING-E TYPE	1			

Item	Part_No	IS	Ord	T	Description	Qty	Serial_No	ITC	Remark
8-4	71N6-20171				.CONSOLE BOX-UP(RH)	1	- #0645		
	71N6-20172				.CONSOLE BOX-UP(RH)	1	#0646 -	B	
8-5	S015-050206				.BOLT-HEX	4			
8-6	S403-052006				.WASHER-PLAIN	8			
8-7	S161-060136				.SCREW-CROSS R/ROUND	4			
8-8	S403-062006				.WASHER-PLAIN	4			
8-9	S161-050166				.SCREW-CROSS R/ROUND	4			
10	71N6-20081				SHAFT	1	- #0087		
	71N6-20082				SHAFT	1	#0088 -	D	
11	S601-020004				RING-RETAINING	1			
15	71N6-20111				PLATE-CABLE	1			
62	S205-161006				NUT-HEX	1			
77	S403-162006				WASHER-PLAIN	1			
81	S131-061646				SCREW-W/WASHER	4			
35	71N6-20281				CAP-S/LEVER	1			
47	71N6-20351				KNOB-TILT	1			
60	S161-040086				SCREW-RD HD	2	- #0087		
	S131-040826				SCREW-W/WASHER	2	#0088 -	B	
62	S261-160006				NUT-WING	1			
74	S403-042006				WASHER-PLAIN	2	- #0087	-	
75	S175-060166				SCREW-SOCKET RD HD	1			
77	S403-162006				WASHER-PLAIN	1			
79	S403-065006				WASHER-PLAIN	1			
81	S131-061646				SCREW-W/WASHER	4			

CONSOLE BOX 1(LH, OPT, #1111-)

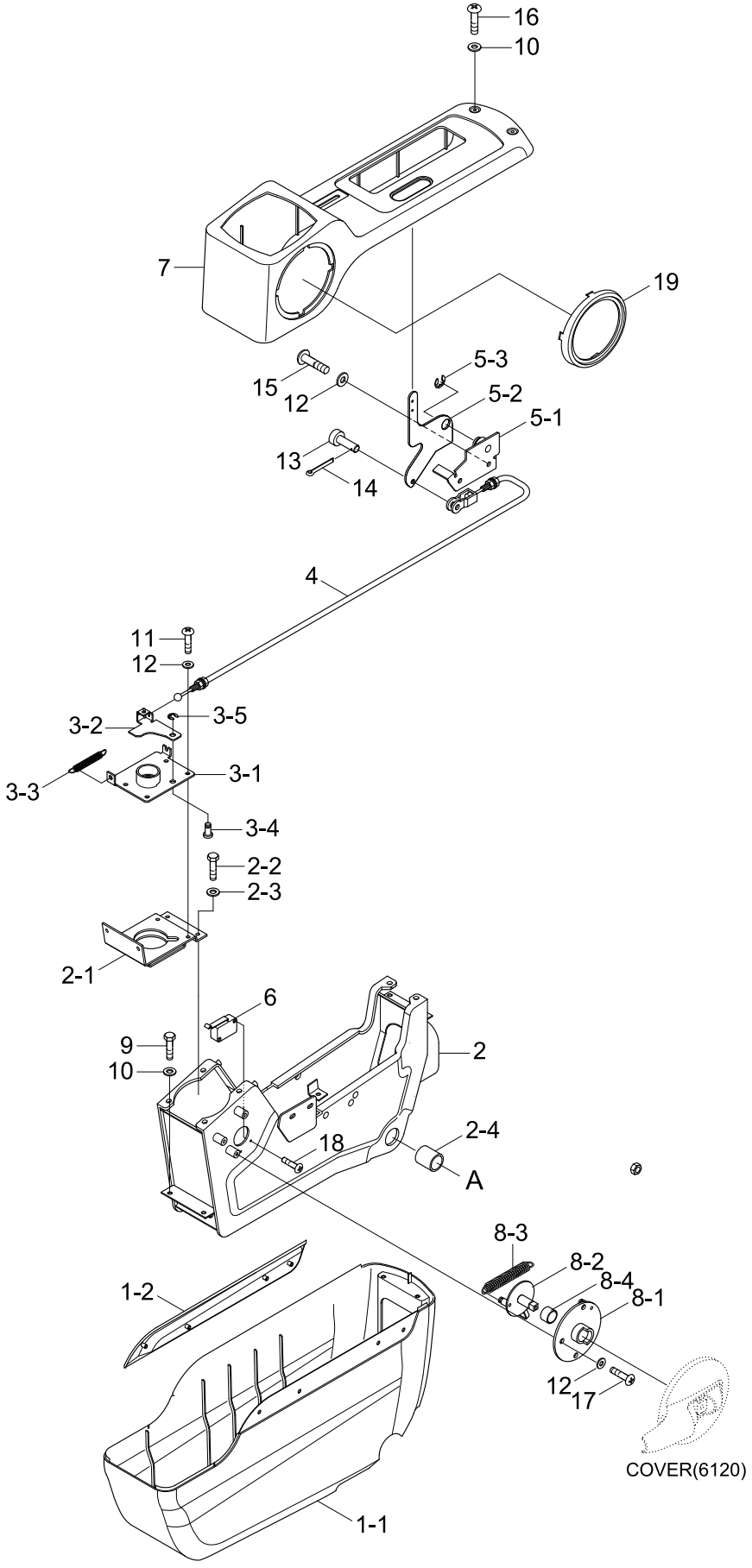

Item	Part_No	IS	Ord	T	Description	Qty	Serial_No	ITC	Remark
*	73N4-21010				CONSOLE BOX ASSY(LH)	1	#1111 -	-	UPGRADE CABIN
1	73N6-21020				.COVER-C/LOW ASSY	1			
1-1	73N6-20160				..CONSOLE BOX-LOW	1			
1-2	73N6-20230				..PANEL-CONSOLE DECO	1			
2	73N4-21030				.FRAME-C/BOX(LH)	1			
2-1	71N4-21320				..PLATE-TILT	1			
2-2	S015-060146				..BOLT-HEX	4			
2-3	S403-06200B				..WASHER-PLAIN	4			
2-4	S731-020025				..BUSHING-DU	2			
3	71N4-20090				.TILT CATCH ASSY	1			
3-1	71N4-21420				..TILT CATCH-LOW	1			
3-2	71N4-21450				..TILT CATCH-UP	1			
3-3	71N6-21460				..SPRING	1			
3-4	71N6-21470				..PIN	1			
3-5	P560-090002				..RETAINING RING-E TYPE	1			
4	71N6-20100				.PULL CABLE	1			
5	71N4-20120				.TILT LEVER ASSY	1			
5-1	71N4-21480				..BRACKET-LOW	1			
5-2	71N6-21510				..BRACKET-UP	1			
5-3	P560-100006				..RETAINING RING-E TYPE	1			
6	21N8-20300				.SWITCH-MICRO	1			
7	73N6-20140				.CONSOLE BOX UP-LH	1			
8	71N6-20141				.SAFETY BRACKET ASSY	1			
8-1	71N6-21521				..BRACKET-LOW	1			
8-2	71N6-21560				..BRACKET-UP	1			

Item	Part_No	IS	Ord	T	Description	Qty	Serial_No	ITC	Remark
8-3	71N6-21610				..SPRING	1			
8-4	S731-020010				..BUSHING-DU	1			
9	S015-050206				.BOLT-HEX	4			
10	S403-05200B				.WASHER-PLAIN	8			
11	S161-060136				.SCREW-CROSS R/ROUND	4			
12	S403-06200B				.WASHER-PLAIN	9			
13	S491-060156				.PIN-CLEVIS	1			
14	S461-080202				.PIN-SPLIT	1			
15	S161-060166				.SCREW-CROSS R/ROUND	2			
16	S161-050166				.SCREW-CROSS R/ROUND	4			
17	S175-060162				.SCREW-SOCKET RD HD	3			
18	S161-030162				.SCREW-CROSS R/ROUND	2			
19	73N6-20200				.RING-SAFETY LEVER	1			

CONSOLE BOX 2(LH, OPT, #1111-)

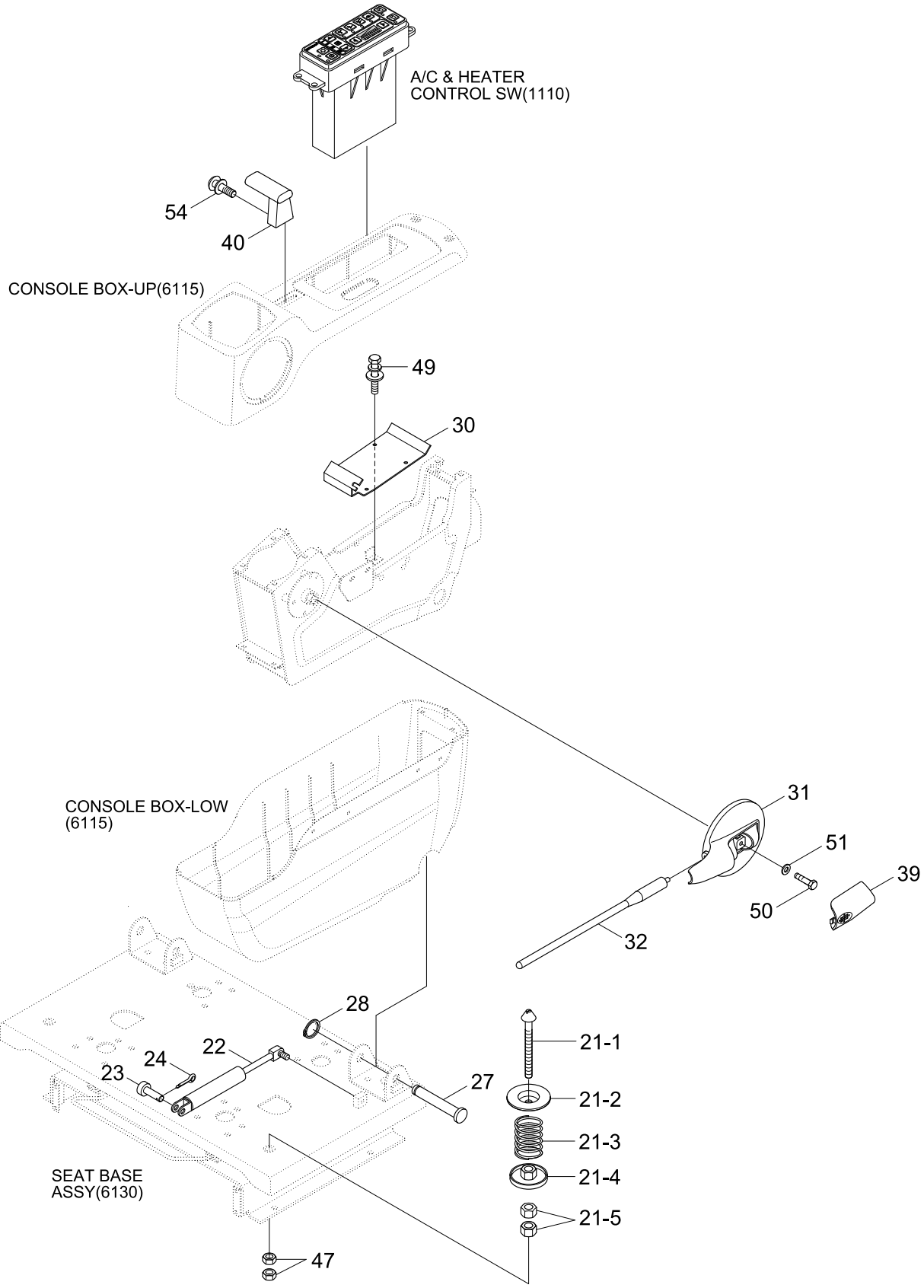

Item	Part_No	IS	Ord	T	Description	Qty	Serial_No	ITC	Remark
*	@				CONSOLE BOX	1	#1111 -	-	NOT
3	71N6-20031				TILT LOCKER ASSY	1			
3-1	71N6-21151				.SHAFT	1			
3-2	71N6-21160				.PLATE	1			
3-3	71N6-21170				.SPRING	1			
3-4	71N6-21180				.PLATE WA	1			
3-5	S207-161006				.NUT-HEX	2			
8	71N6-20440				CONSOLE BOX ASSY-RH	1			
8-1	71N6-20071				.CONSOLE BOX-LOW	1			
21	71N6-20031				TILT LOCKER ASSY	1			
21-1	71N6-21151				.SHAFT	1			
21-2	71N6-21160				.PLATE	1			
21-3	71N6-21170				.SPRING	1			
21-4	71N6-21180				.PLATE WA	1			
21-5	S205-16100B				.NUT-HEX	2			
22	71N6-20040				SPRING-GAS	1			
23	S491-080252				PIN-CLEVIS	1			
24	S461-160252				PIN-SPLIT	1			
8-2-4	S731-020025				..BUSHING-DU	2			
27	71N6-20082				SHAFT	1			
28	S601-020004				RING-RETAINING	1			
8-3-1	71N6-21420				..TILT CATCH-LOW	1			
8-3-2	71N6-21451				..TILT CATCH-UP	1			
8-3-3	71N6-21460				..SPRING	1			
8-3-4	71N6-21470				..PIN	1			

Item	Part_No	IS	Ord	T	Description	Qty	Serial_No	ITC	Remark
8-3-5	P560-090002				..RING-SNAP	1			
8-4	71N6-20171				.CONSOLE BOX-UP(RH)	1	- #0645		
	71N6-20172				.CONSOLE BOX-UP(RH)	1	#0646 -	B	
30	71N6-20110				PLATE-CABLE	1			
8-6	S403-052006				.WASHER-PLAIN	8			
8-7	S161-060136				.SCREW-RD HD	4			
8-8	S403-062006				.WASHER-PLAIN	4			
8-9	S161-050166				.SCREW-RD HD	4			
31	73N6-20180				KNOB -SAFETY LEVER	1			
10	71N6-20082				SHAFT	1	#0088 -	D	
32	71N6-20161				ROD-SAFETY	1			
15	71N6-20111				PLATE-CABLE	1			
62	S205-161006				NUT-HEX	1			
77	S403-162006				WASHER-PLAIN	1			
81	S131-061646				SCREW W/WASHER	4			
39	73N6-20190				CAP-SAFETY LEVER	1			
40	71N6-20351				KNOB-TILT	1			
47	S205-16100B				NUT-HEX	2			
49	S035-061526				BOLT-W/WASHER	3			
50	S015-060156				BOLT-HEX	4			
51	S403-06500B				WASHER-PLAIN	4			
54	S131-040826				SCREW-W/WASHER	2			

CONSOLE BOX(RH, OPT, #1111-)

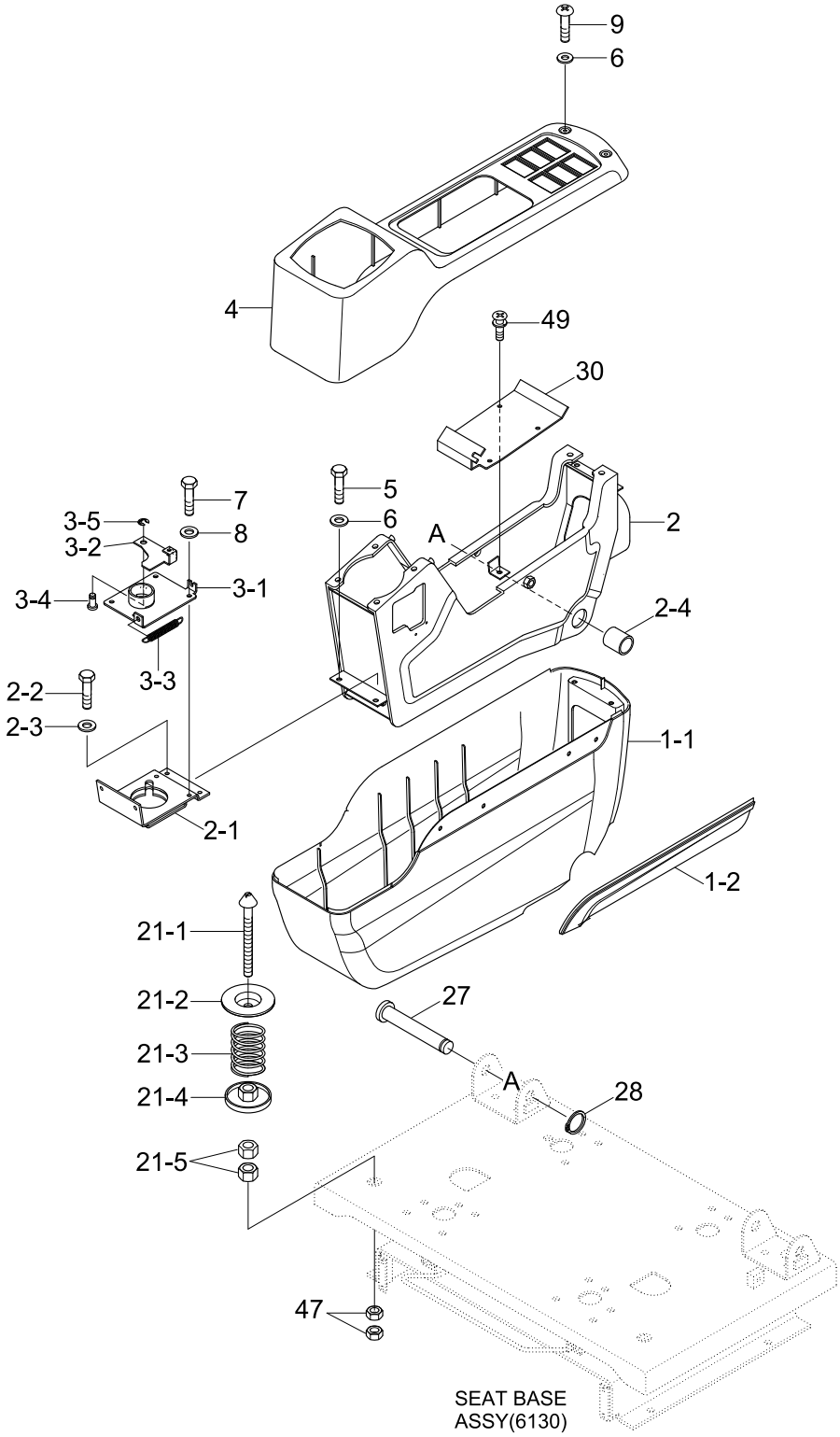

Item	Part_No	IS	Ord	T	Description	Qty	Serial_No	ITC	Remark
*	73N6-21040				CONSOLE BOX ASSY(RH)	1	#1111 -	-	UPGRADE CABIN
1	73N6-21020				.COVER-C/LOW ASSY	1			
1-1	73N6-20160				..CONSOLE BOX-LOW	1			
1-2	73N6-20230				..PANEL-CONSOLE DECO	1			
2	71N6-20061				.C/BOX FRAME WA-RH	1			
2-1	71N6-21320				..BRACKET-TILT	1			
2-2	S015-060156				..BOLT-HEX	4			
2-3	S403-06200B				..WASHER-PLAIN	4			
2-4	S731-020025				..BUSHING-DU	2			
3	71N6-20091				.TILT CATCH ASSY	1			
3-1	71N6-21420				..TILT CATCH-LOW	1			
3-2	71N6-21451				..TILT CATCH-UP	1			
3-3	71N6-21460				..SPRING	1			
3-4	71N6-21470				..PIN	1			
3-5	P560-090002				..RETAINING RING-E TYPE	1			
4	73N6-20150				.CONSOLE BOX UP-RH	1			
5	S015-050206				.BOLT-HEX	4			
6	S403-05200B				.WASHER-PLAIN	8			
7	S161-060136				.SCREW-CROSS R/ROUND	4			
8	S403-06200B				.WASHER-PLAIN	4			
9	S161-050166				.SCREW-CROSS R/ROUND	4			
21	71N6-20031				TILT LOCKER ASSY	1			
21-1	71N6-21151				.SHAFT	1			
21-2	71N6-21160				.PLATE	1			
21-3	71N6-21170				.SPRING	1			

Item	Part_No	IS	Ord	T	Description	Qty	Serial_No	ITC	Remark
21-4	71N6-21180				.PLATE WA	1			
21-5	S207-161006				.NUT-HEX	2			
27	71N6-20082				SHAFT	1			
28	S601-020004				RING-RETAINING	1			
30	71N6-20111				PLATE-CABLE	1			
47	S205-16100B				NUT-HEX	2			
49	S035-061526				BOLT-W/WASHER	3			

SEAT BASE ASSY

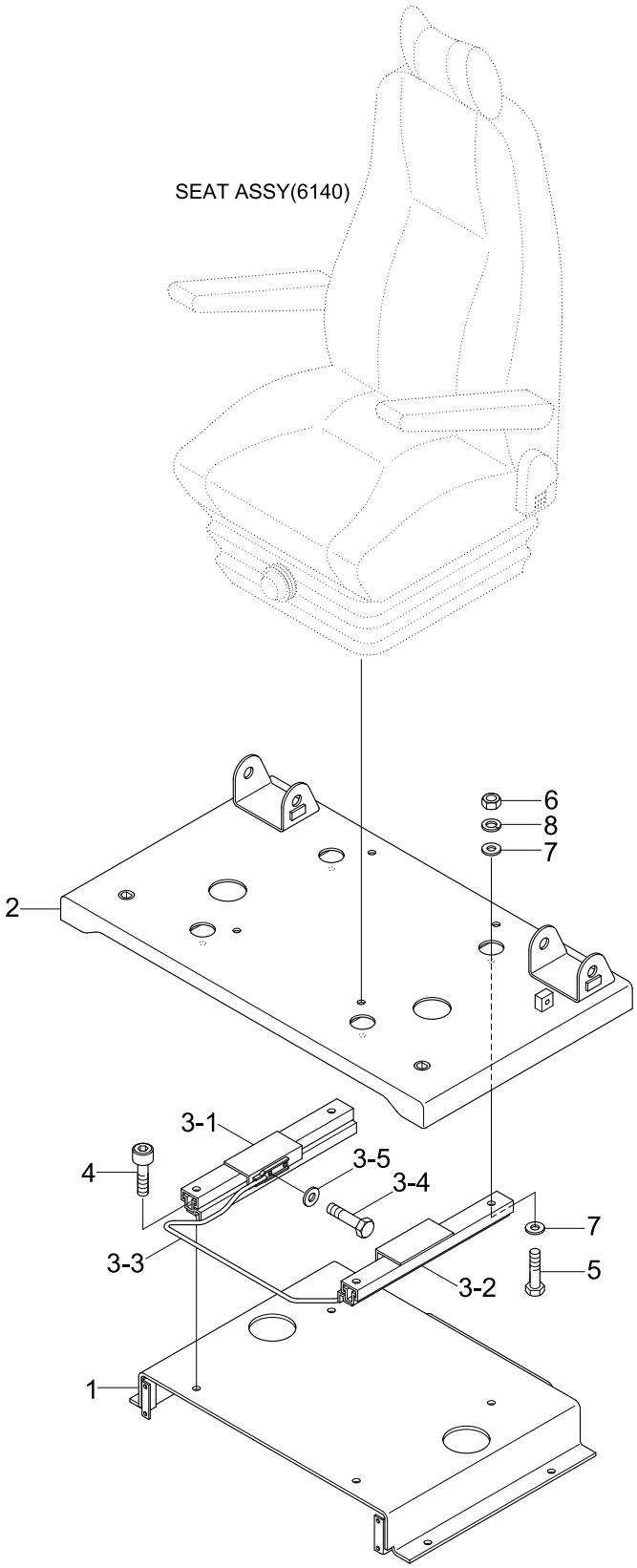

Item	Part_No	IS	Ord	T	Description	Qty	Serial_No	ITC	Remark
*	71N6-20011				SEAT BASE ASSY	1	- #0010		
	71N4-20011				SEAT BASE ASSY	1	#0011 - #0087	B	
	71N4-20012				SEAT BASE ASSY	1	#0088 -	D	
1	71N6-21011				.SEAT BASE-LOW	1			
2	71N6-21071				.SEAT BASE-UP	1	- #0010		
	71N6-21072				.SEAT BASE-UP	1	#0011 - #0087	B	
	71N6-21073				.SEAT BASE-UP	1	#0088 - #0645	D	
	71N6-21074				.SEAT BASE-UP	1	#0646 -	B	
3	71N6-21620				.SLIDING RAIL ASSY	1	- #0010		
	71N4-21620				.SLIDING RAIL ASSY	1	#0011 - #0087	B	
	71N4-21720				.SLIDING RAIL ASSY	1	#0088 -	B	
3-1	71N6-21670				..SLIDE ASSY-RH	1			
3-2	71N6-21680				..SLIDE ASSY-LH	1			
3-3	71N6-21690				..LEVER ASSY	1	- #0010		
	71N4-21690				..LEVER ASSY	1	#0011 -	B	
3-4	S015-060126				..BOLT-HEX	4			
3-5	S403-062006				..WASHER-PLAIN	4			
4	S107-080306				.BOLT-SOCKET	4	- #0010		
	S109-080306				.BOLT-SOCKET	4	#0011 -	D	
5	S017-080256				.BOLT-HEX	4			
6	S205-081006				.NUT-HEX	4			
7	S403-082006				.WASHER-PLAIN	8			
8	S411-080006				.WASHER-SPRING	4			

SEAT(-#0033)

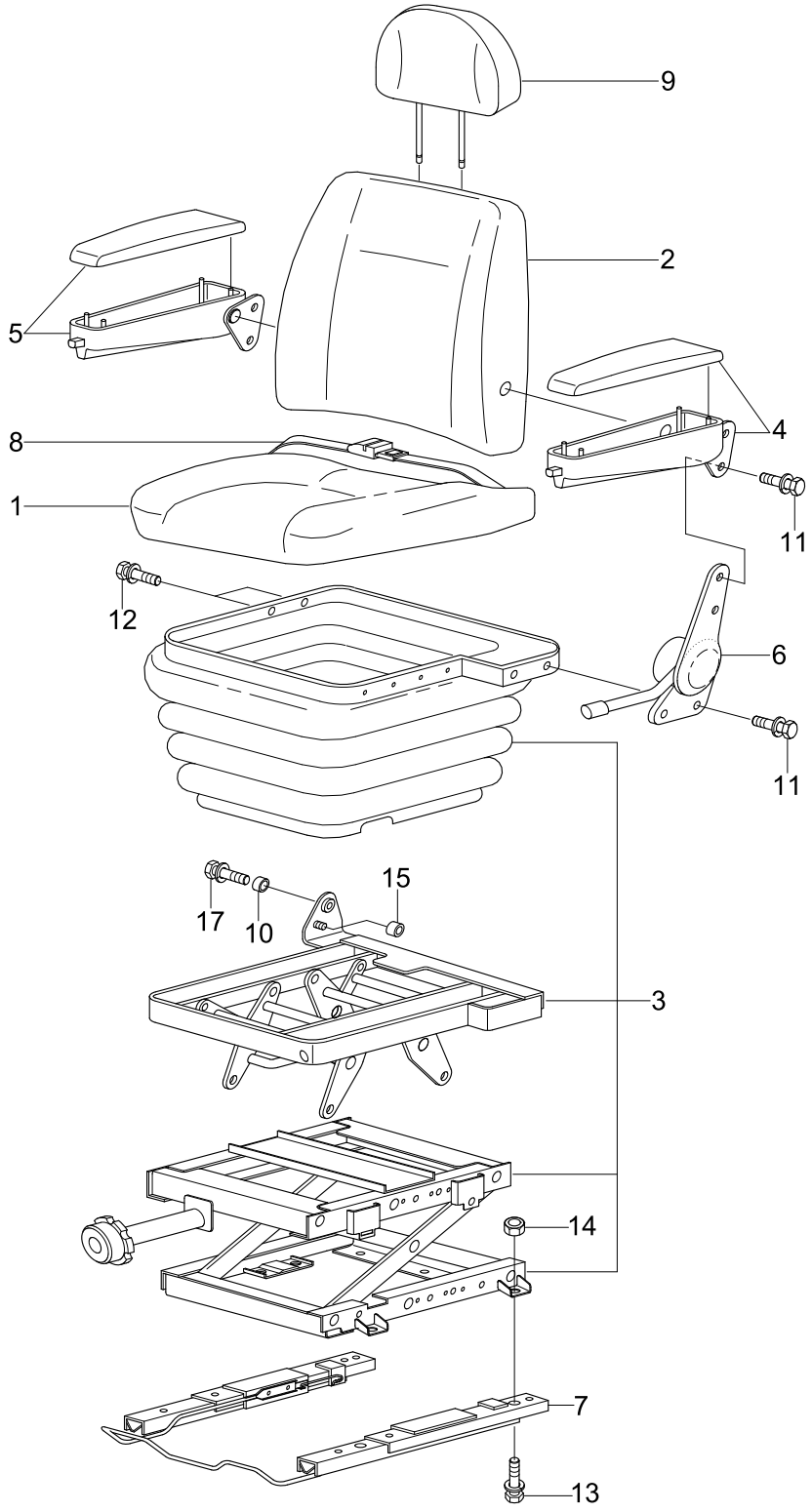

Item	Part_No	IS	Ord	T	Description	Qty	Serial_No	ITC	Remark
*	71EH-30500				SEAT ASSY	1	- #0033	-	
1	H28004-100D				.CUSHION ASSY	1			
2	H28004-200E				.BACK SEAT ASSY	1			
3	H28004-300D				.LEG ASSY	1			
4	H28001-500C				.ARM REST ASSY-LH	1			
5	H28002-500C				.ARM REST ASSY-RH	1			
6	H28003-240C				.RECLINER ASSY	1			
7	H28004-400				.TRACK ASSY	1			
8	H28003-600				.SEAT BELT ASSY	1			
9	H28004-800				.HEAD REST ASSY	1			
10	H95003-906				.BUSHING-NYLON	1			
11	W11230-10303				.BOLT	5			
12	W11286-06203				.BOLT-W/WASHER	2			
13	W11230-08183				.BOLT-W/WASHER	4			
14	W13395-08003				.NUT-FLANGE	4			
15	H95003-3462				.NUT-BUSH	1			
17	W11226-06123				.BOLT-W/WASHER	1			

SEAT(#0034-0383)

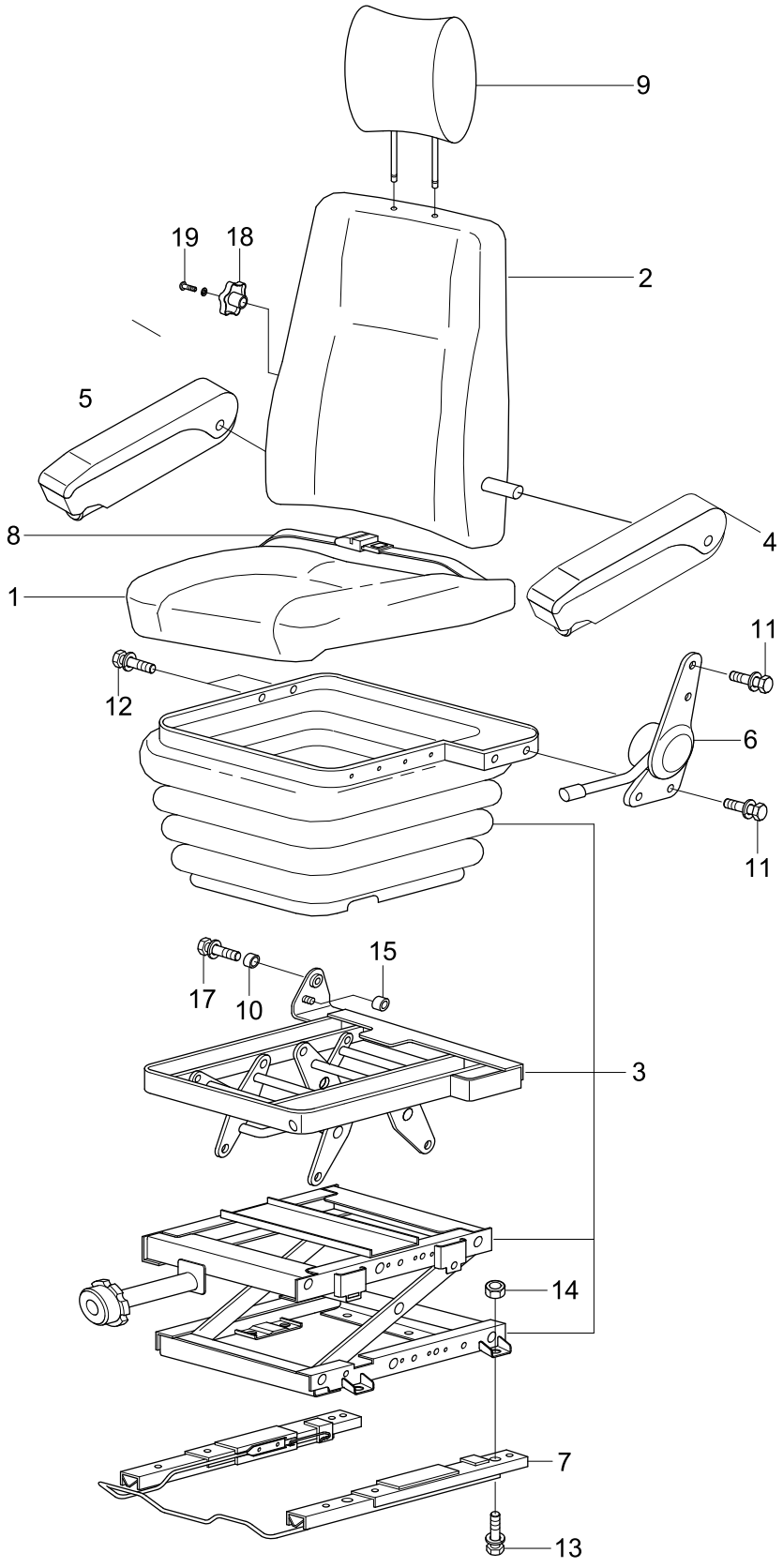

Item	Part_No	IS	Ord	T	Description	Qty	Serial_No	ITC	Remark
*	71N6-30500				SEAT ASSY	1	#0034 - #0383	-	
1	H28303-100				.CUSHION ASSY	1			
2	H28313-200				.BACK ASSY	1			
3	H28303-300				.LEG ASSY	1			
3-1	H28003-350				..DAMPER	1	#0034 -	-	NOT SHOWN
4	H28300-700				.ARM REST ASSY-LH	1			
5	H28005-700A				.ARM REST ASSY-RH	1			
6	H28003-2400				.RECLINER ASSY	1			
7	H28213-400				.TRACK ASSY	1			
8	H28003-600				.SEAT BELT ASSY	1			
9	H28303-800				.HEAD REST ASSY	1			
10	H95003-906				.BUSHING-NYLON	1			
11	W11230-10303				.BOLT	5			
12	W11286-06203				.BOLT-W/WASHER	2			
13	W11230-08183				.BOLT-W/WASHER	4			
14	W13395-08003				.NUT-FLANGE	4			
15	H95003-3462				.NUT-BUSH	1			
17	W11226-06123				.BOLT-W/WASHER	1			
18	H29313-901A				.KNOB	1			
19	W12310-05123				.BOLT & S/WASHER	1			

SEAT(#0384-)

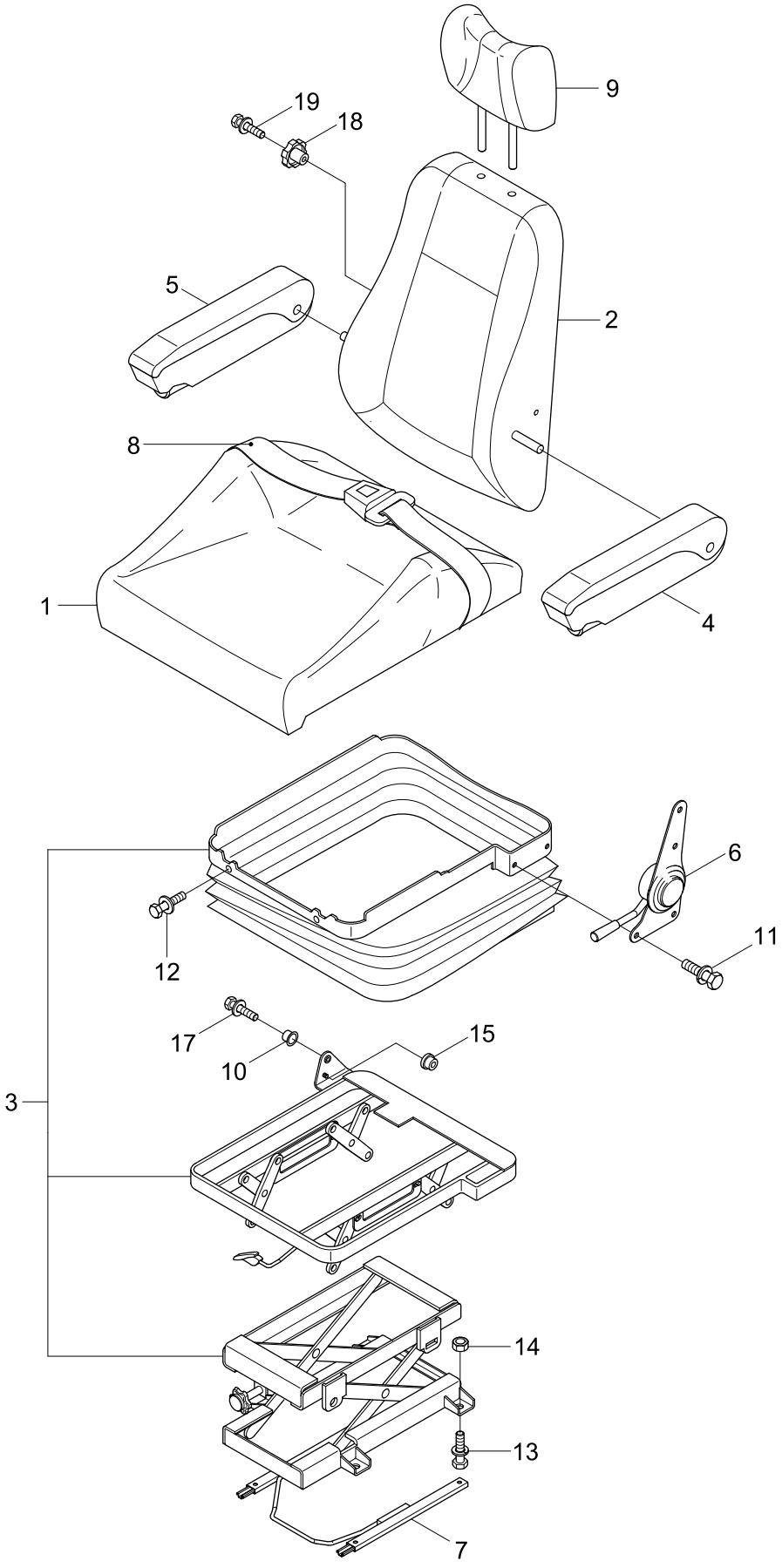

Item	Part_No	IS	Ord	T	Description	Qty	Serial_No	ITC	Remark
*	71N6-30700				SEAT ASSY	1	#0384 -	B	
1	H28333-100				.CUSHION ASSY	1			
2	H28333-200				.BACK ASSY	1			
3	H28333-300				.LEG ASSY	1			
3-1	H28333-350				..DAMPER	1			NOT SHOWN
4	H28300-700A				.ARM REST ASSY-LH	1			
5	H28305-700B				.ARM REST ASSY-RH	1			
6	H28003-240D				.RECLINER ASSY	1			
7	H28334-400				.TRACK ASSY	1	#0384 -	-	
8	H28003-600				.SEAT BELT ASSY	1			
9	H28333-800				.HEAD REST ASSY	1			
10	H95003-906				.BUSHING-NYLON	1			
11	W11230-10303				.BOLT	6			
12	W11286-06203				.BOLT-W/WASHER	2			
13	W11230-08183				.BOLT-W/WASHER	4			
14	W13395-08003				.NUT-FLANGE	4			
15	H95003-3462				.NUT-BUSH	1			
17	W11226-06123				.BOLT-W/WASHER	1			
18	H29313-901A				.KNOB	1			
19	W12310-05123				.BOLT & S/WASHER	1			

SEAT(#0337-)

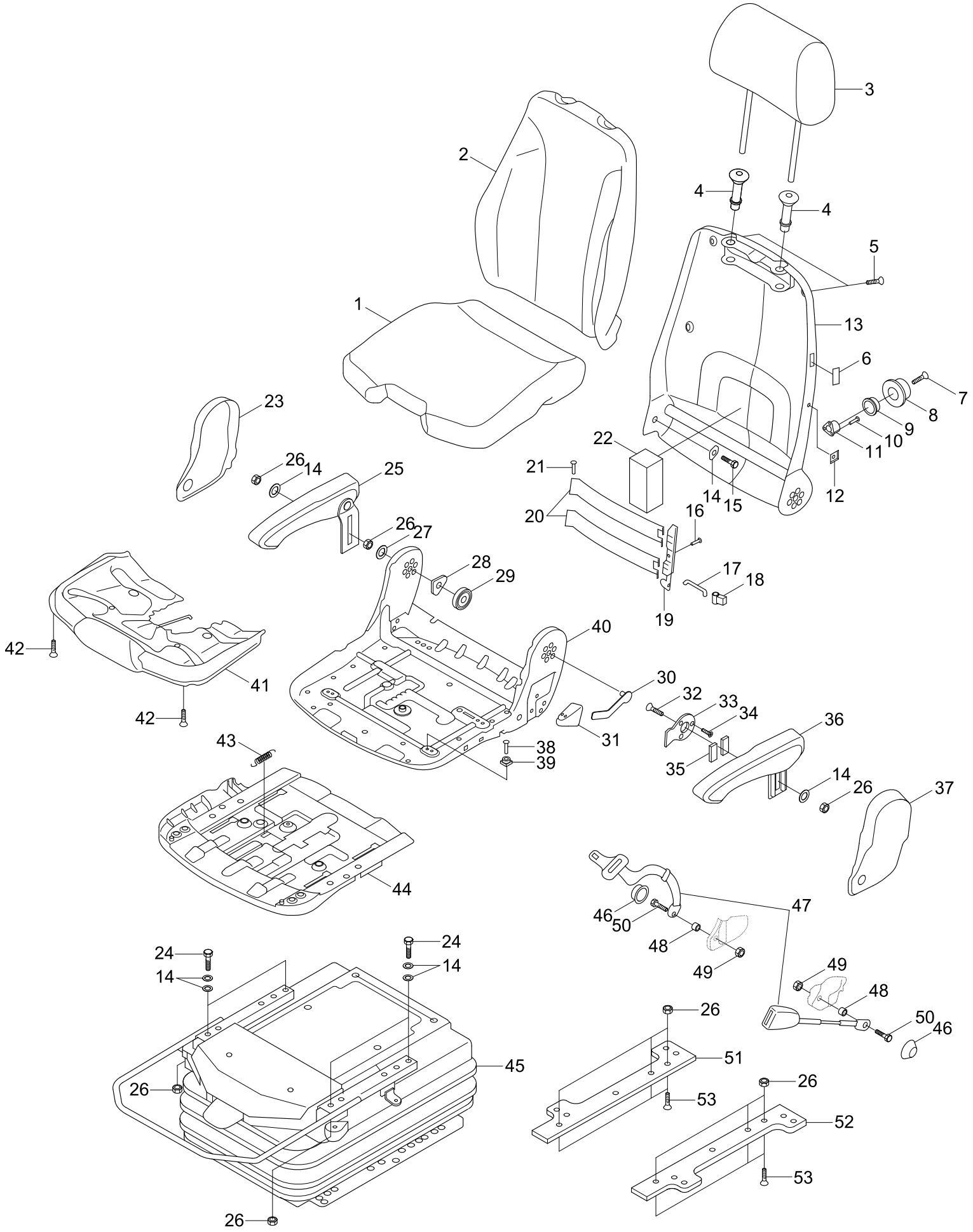
3
2
4
4
5
1
13
6
7
8
9
10
11
12
23
26
14
25
22
21
14
15
20
16
26
27
28
29
17
18
19
42
40
41
42
30
32
33
34
36
31
38
39
35
14
26
37
43
44
46
50
47
48
49
49
48
50
46
24
14
24
14
45
26
26
51
53
26
52
53

Item	Part_No	IS	Ord	T	Description	Qty	Serial_No	ITC	Remark
*	71N6-30600				SEAT ASSY	1	#0337 -	-	2" AIR RIDE
1	140907				.CUSHION-SEAT	1			
2	140908				.BACKREST-CUSHION	1			
3	140912				.HEADREST	1			
4	138691				.BUSHING	2			
5	200936				.SCREW-SELF TAPPING	6			
6	140226				.COVER-PLASTIC	1			
7	138758				.SCREW	1			
8	141064				.HANDLE-LUMBAR	1			
9	138747				.TOOLHEAD WHEEL	1			
10	135786				.RIVET-BLIND	3			
11	138634				.SLING SPRING BRAKE	1			
12	138785				.STICKER	1			
13	2048229				.BACKREST-GS.SCR	1			
14	113290				.WASHER	11			
15	118558				.SCREW-HEXAGON	1			
16	104551				.RIVET-POP	1			
17	138559				.RODS	1			
18	138655				.CARRIER	1			
19	138614				.WINKEL	1			
20	141004				.PLATE	2			
21	2048616				.RIVET	2			
22	1027240				.SPONGE	1			
23	140458				.COVER-RH	1			
24	2048504				.SCREW-HEXAGON HEAD	4			

Item	Part_No	IS	Ord	T	Description	Qty	Serial_No	ITC	Remark
25	1026762				.ARM REST ASSY-RH	1			
26	110291				.NUT-HEXAGON	11			
27	110489				.WASHER-BLACK	1			
28	140684				.HODER-SPRING	1			
29	131517				.SPRING-LEG	1			
30	140695				.LEVER	1			
31	140694				.HANDLE	1			
32	140697				.SCREW-M8*18	1			
33	140696				.PLATE	1			
34	136122				.SCREW-M6*10	3			
35	107719				.PLATE-RUBBER	1			
36	1026763				.ARMREST-LH	1			
37	140457				.COVER-LH	1			
38	2048610				.RIVET	4			
39	138835				.PROFILE-GLIDING	4			
40	86601108				.SEAT PLATE-GS.LA	1			
41	1077064				.ADJUSTMENT-TILTING	1			
42	1054392				.SCREW-SELF TAPPING	4			
43	116226				.SPRING	1			
44	1101294				.ADJUSTMENT-SEAT DEPTH	1			
45	1053742				.SUSPENSION SYSTEM	1			
46	132909				.COVER	2			
47	902172				.SEAT BELT	1			
48	115419				.BUSHING	2			
49	113354				.NUT	2			

Item	Part_No	IS	Ord	T	Description	Qty	Serial_No	ITC	Remark
50	113771				.SCREW-7/16 INCH	2			
51	S0051				.BOTTOM PLATE-GS.LA.	1			
52	S0070				.BOTTOM PLATE-GS.LA.	1			
53	2048654				.SCREW-COUNTERSUNK	6			

SEAT(HEATED, #0784-, OPT)

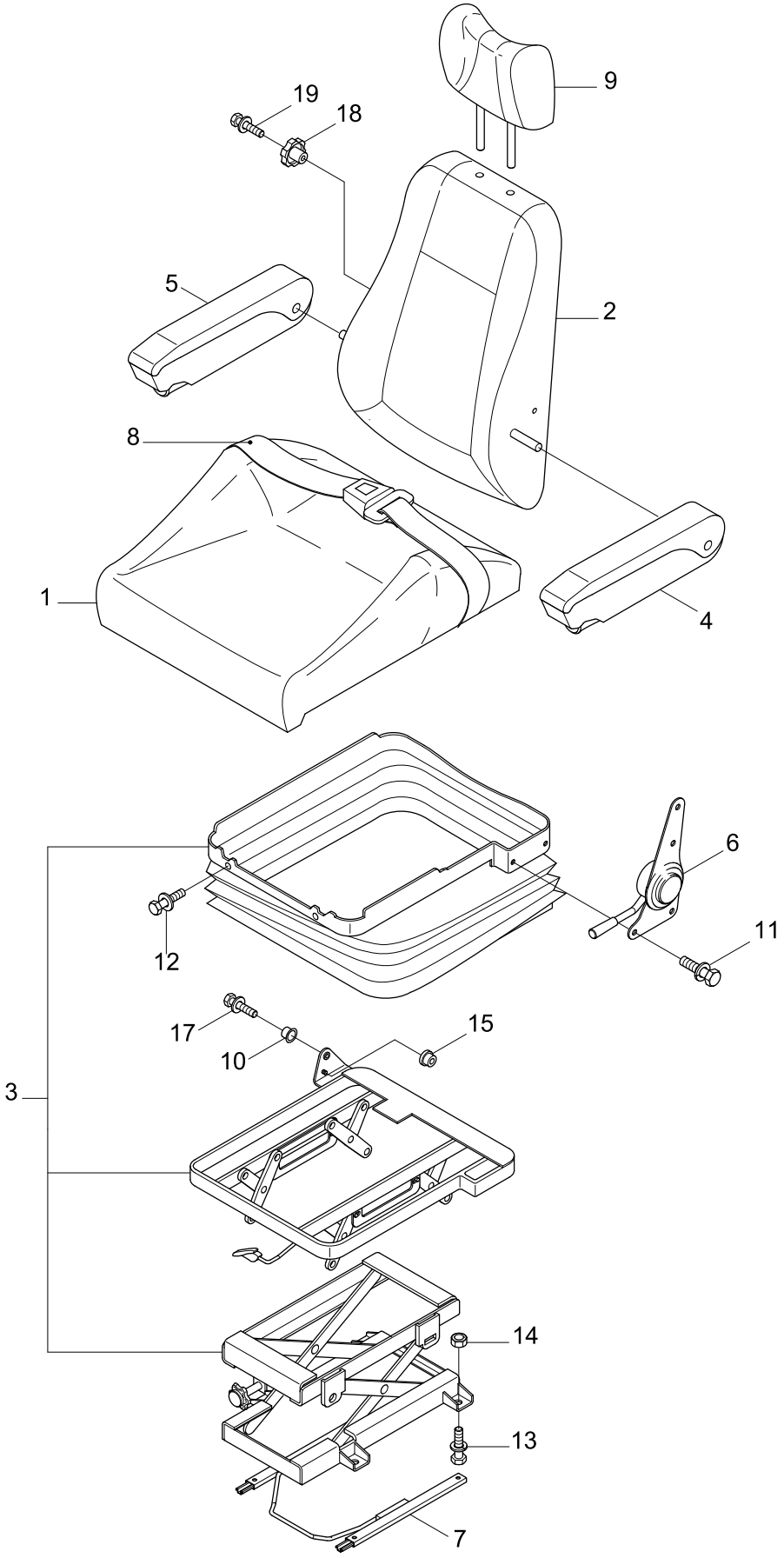

Item	Part_No	IS	Ord	T	Description	Qty	Serial_No	ITC	Remark
*	71N6-30800				SEAT ASSY	1	#0784 -	-	OPT,HEATED SEAT
1	H28335-100				.CUSHION ASSY	1			
2	H28335-200				.BACK ASSY	1			
3	H28333-300				.LEG ASSY	1			
3-1	H28333-350				..DAMPER	1			NOT SHOWN
4	H28300-700A				.ARM REST ASSY-LH	1			
5	H28305-700B				.ARM REST ASSY-RH	1			
6	H28003-240D				.RECLINER ASSY	1			
7	H28213-400B				.TRACK ASSY	1			
8	H28003-600				.SEAT BELT ASSY	1			
9	H28333-800				.HEAD REST ASSY	1			
10	H95003-906				.BUSHING-NYLON	1			
11	W11230-10303				.BOLT	6			
12	W11286-06203				.BOLT-W/WASHER	2			
13	W11230-08183				.BOLT-W/WASHER	4			
14	W13395-08003				.NUT-FLANGE	4			
15	H95003-3462				.NUT-BUSH	1			
17	W11226-06123				.BOLT-W/WASHER	1			
18	H29313-901A				.KNOB	1			
19	W12310-05123				.BOLT & S/WASHER	1			

SEAT(2" AIR RIDE, HEATED, OPT, #0976-)

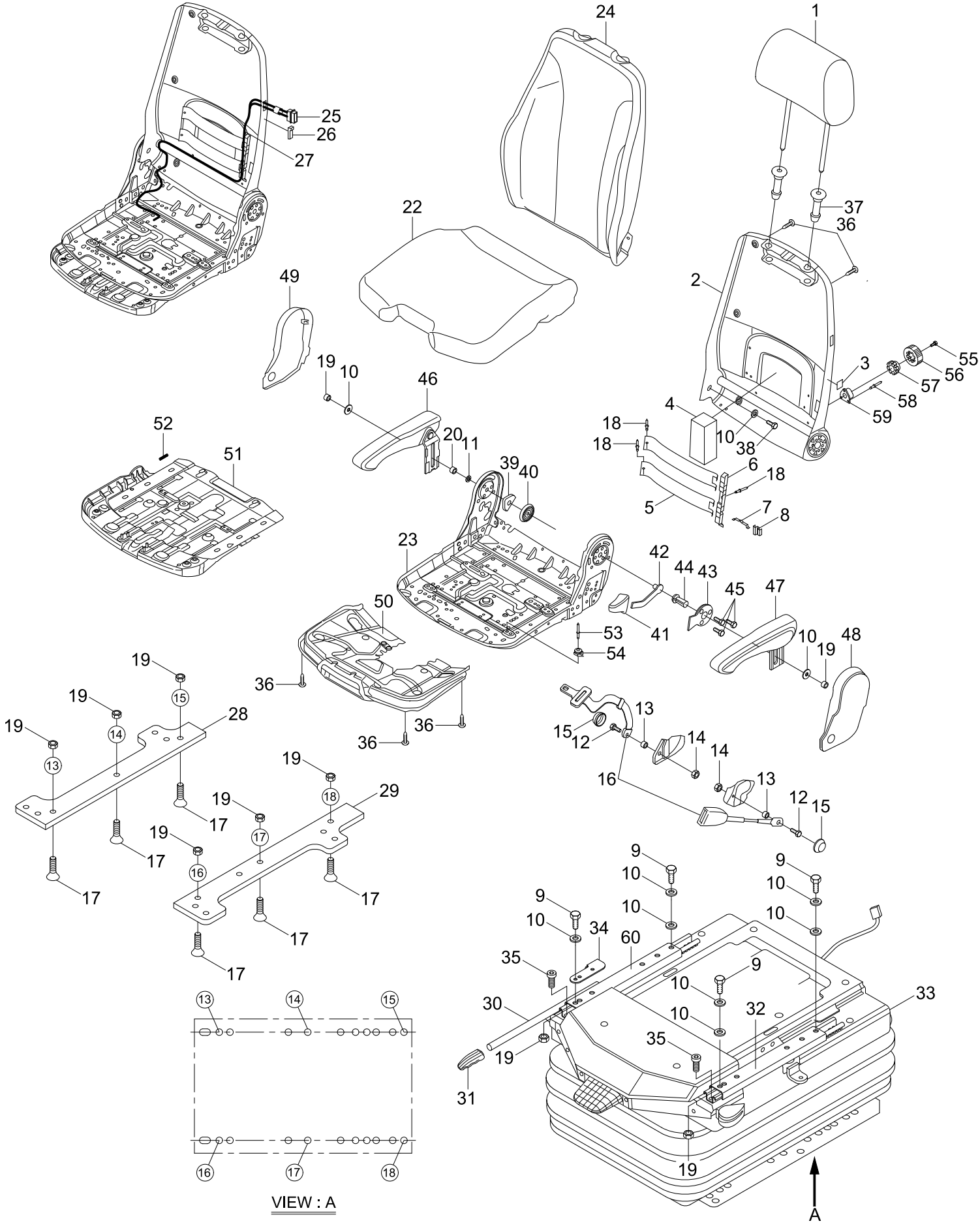

Item	Part_No	IS	Ord	T	Description	Qty	Serial_No	ITC	Remark
*	@				SEAT	1	#0976 -	-	NOT
	71N6-30900				SEAT ASSY	1			
1	ZGBH-00165				.HEADREST	1			
2	ZGBH-00166				.BACKREST-GS.SCR	1			
3	ZGBH-00012				.STICKER	1			
4	ZGBH-00016				.SPONGE	1			
5	ZGBH-00021				.PLATE	2			
6	ZGBH-00017				.WINKEL	1			
7	ZGBH-00019				.RODS	1			
8	ZGBH-00020				.CARRIER	1			
9	ZGBH-00042				.SCREW-HEX HEAD	4			
10	ZGBH-00015				.WASHER	10			
11	ZGBH-00024				.WASHER-BLACK	1			
12	ZGBH-00053				.SCREW	2			
13	ZGBH-00051				.BUSH	2			
14	ZGBH-00052				.NUT	2			
15	ZGBH-00050				.COVER	2			
16	ZGBH-00167				.SEAT BELT	1			
17	ZGBH-00168				.SCREW-COUNTERSUNK	6			
18	ZGBH-00107				.RIVET	3			
19	ZGBH-00023				.HEX NUT-BLACK	11			
20	ZGBH-00109				.SELF LOCK NUT	1			
22	ZGBH-00170				.CUSHION-SEAT	1			
23	ZGBH-00110				.SEAT PLATE GS	1			
24	ZGBH-00171				.CUSHION	1			

Item	Part_No	IS	Ord	T	Description	Qty	Serial_No	ITC	Remark
N25	ZGBH-00172				.SWITCH-HEATER	1			NOT
26	ZGBH-00173				.STICKER	1			
27	ZGBH-00174				.HARNESS-WIRING	1			
28	ZGBH-00175				.PLATE-ADAPTER,RH	1			
29	ZGBH-00176				.PLATE-ADAPTER,LH	1			
30	ZGBH-00177				.HANDLE-LA	1			
31	ZGBH-00049				.KNOB-PLASTIC	1			
32	ZGBH-00178				.RAIL ADDITIONAL-LH	1			
33	ZGBH-00179				.SUSPENSION-MSG95G	1			
34	ZGBH-00180				.BRACKET-LA	1			
35	ZGBH-00115				.CYLINDRIC HEAD SCREW	3			
36	ZGBH-00037				.SCREW-SELF TAPPING	10			
37	ZGBH-00004				.BUSH	2			
38	ZGBH-00014				.SCREW-HEX HEAD	1			
39	ZGBH-00025				.SPRING HOLDER	1			
40	ZGBH-00026				.SPRING-LEG	1			
41	ZGBH-00033				.HANDLE	1			
42	ZGBH-00027				.LEVER	1			
43	ZGBH-00113				.PLATE	1			
44	ZGBH-00112				.SCREW	1			
45	ZGBH-00029				.SCREW	3			
46	ZGBH-00108				.ARM REST-RH	1			
47	ZGBH-00030				.ARM REST-LH	1			
48	ZGBH-00181				.COVER-LH	1			
49	ZGBH-00182				.COVER-RH	1			

Item	Part_No	IS	Ord	T	Description	Qty	Serial_No	ITC	Remark
50	ZGBH-00038				.ADJUSTMENT-TILTING	1			
51	ZGBH-00114				.ADJUSTMENT-SEAT	1			
52	ZGBH-00039				.SPRING	1			
53	ZGBH-00034				.RIVET	4			
54	ZGBH-00035				.PROFILE-GLIDING	4			
55	ZGBH-00055				.SCREW	1			
56	ZGBH-00007				.HANDLE	1			
57	ZGBH-00008				.WHEEL-TOOLHEAD	1			
58	ZGBH-00010				.RIVET-BLIND	3			
59	ZGBH-00011				.BRAKE-SLING SPRING	1			
60	ZGBH-00236				.RAIL ADDITIONAL-RH	1			

STORAGE BOX COVER ASSY

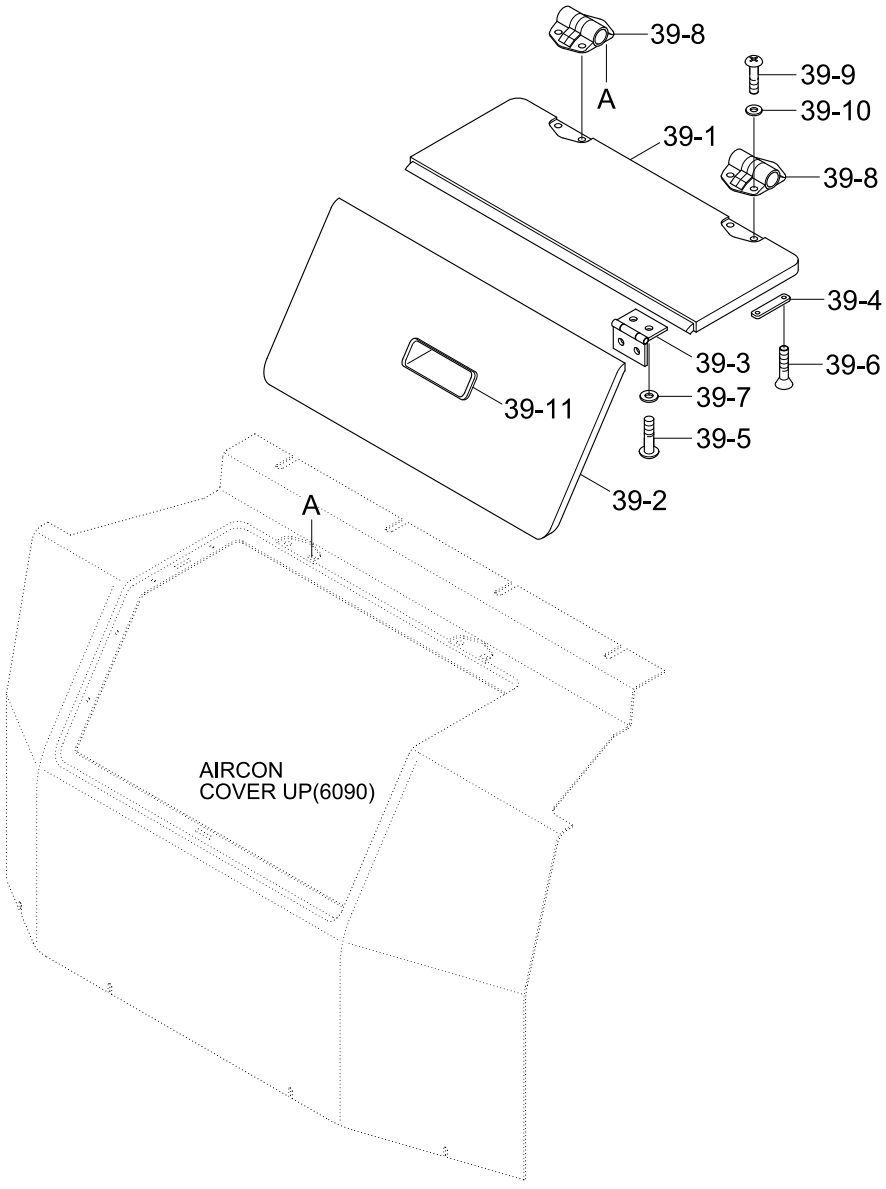

Item	Part_No	IS	Ord	T	Description	Qty	Serial_No	ITC	Remark
39	71N6-20320				S/BOX COVER ASSY	1			
39-1	71N6-21721				.S/BOX COVER-UP	1			
39-2	71N6-21731				.S/BOX COVER-LOW	1			
39-3	71N6-21740				.HINGE	2			
39-4	71N6-21750				.PLATE	3			
39-5	S161-060146				.SCREW	8			
39-6	S141-050106				.SCREW	4			
39-7	S403-062006				.WASHER-PLAIN	8			
39-8	71N6-21900				.HINGE	2			
39-9	S161-050126				.SCREW	4			
39-10	S403-052006				.WASHER-PLAIN	4			
39-11	71N6-21920				.DOOR-PULL	1	#0001 -	-	

BOTTOM PLATE MOUNTING

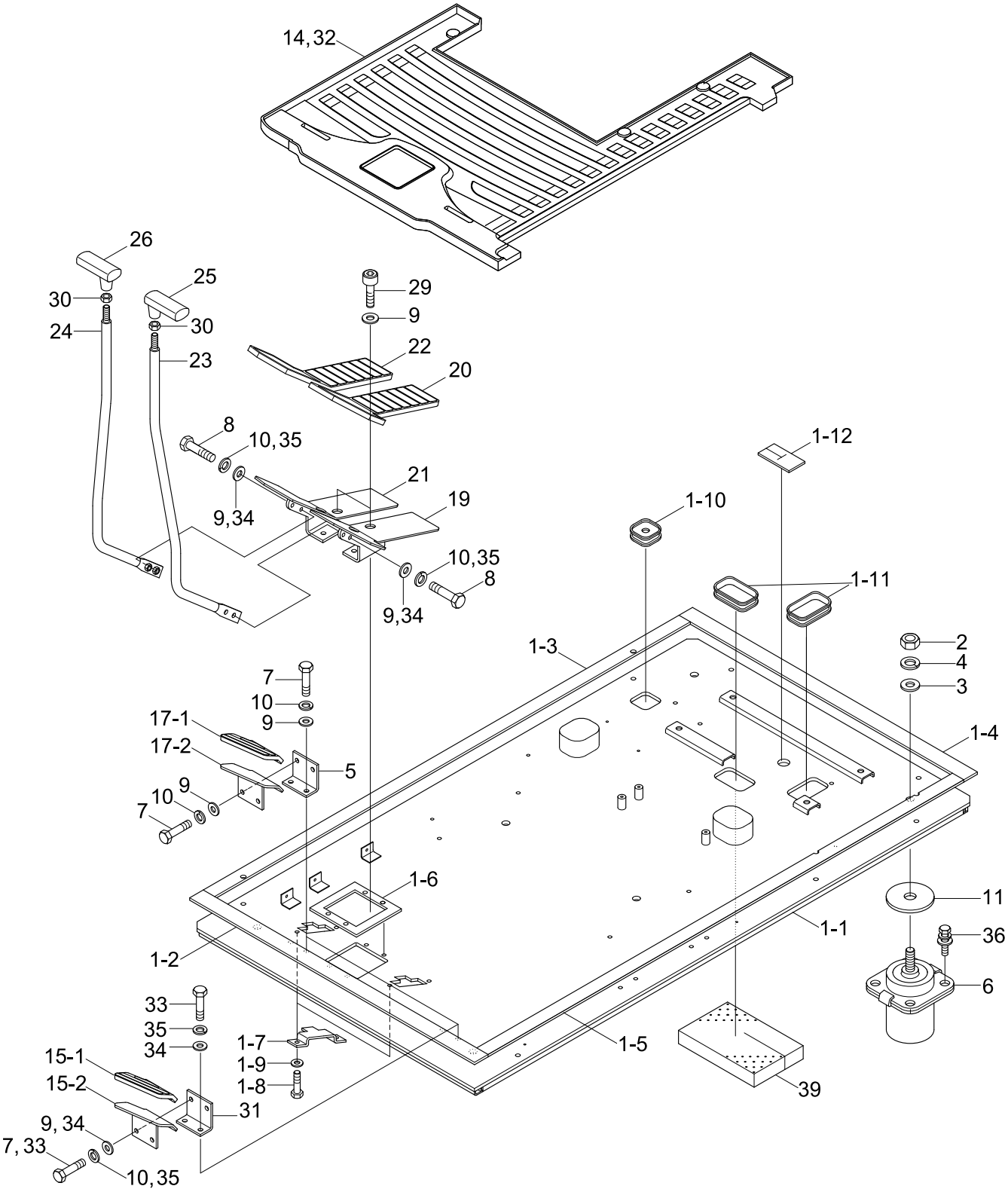

Item	Part_No	IS	Ord	T	Description	Qty	Serial_No	ITC	Remark
1	71N6-10103				BOTTOM PLATE ASSY	1	- #0007		
	71N6-10104				BOTTOM PLATE ASSY	1	#0008 - #0037	B	
	71N6-10105				BOTTOM PLATE ASSY	1	#0038 -	B	
1-1	71N6-10112				.BOTTOM PLATE WA	1	- #0007		
	71N6-10113				.BOTTOM PLATE WA	1	#0008 -	B	
1-2	71N6-11100				.PAD-RUBBER	1			
1-3	71N6-11110				.PAD-RUBBER	1			
1-4	71N6-11120				.PAD-RUBBER	1			
1-5	71N6-11130				.PAD-RUBBER	1			
1-6	71N6-11140				.PAD-RUBBER	1			
1-7	71E9-10660				.COVER	1	- #0007		
	71E9-10661				.COVER	2	#0008 -	A	
1-8	S017-100166				.BOLT-HEX	2	- #0007		
					.BOLT-HEX	4	#0008 -	A	
1-9	S403-102006				.WASHER-PLAIN	2	- #0007		
					.WASHER-PLAIN	4	#0008 -	A	
1-10	71E9-10630				.GROMMET	1			
1-11	71E9-10640				.GROMMET	2			
1-12	71N4-10940				.PAD-TRAVEL LINK	1	#0078 -	-	
2	S207-161006				NUT-HEX	6			
3	S403-162006				WASHER-PLAIN	6			
4	S411-160006				WASHER-SPRING	6			
5	71N6-10130				BRACKET-FOOT REST	1			STD
6	71N6-10300				VISCOUS MOUNT	6			
7	S017-100256				BOLT-HEX	8			STD

Item	Part_No	IS	Ord	T	Description	Qty	Serial_No	ITC	Remark
8	S017-100306				BOLT-HEX	4			
9	S403-102006				WASHER-PLAIN	16			STD
10	S411-100002				WASHER-SPRING	12			STD
11	71E9-10650-DA				WASHER	6			
14	71N6-10141				MAT-FLOOR	1	- #0007		STD
	71N6-10280				MAT-FLOOR	1	#0008 -	B	STD
15	71N6-10310				FOOT REST ASSY-LH	1			
15-1	71N6-10150				.BRACKET-FOOT REST,LH	1			
15-2	71N6-10161				.RUBBER-FOOT REST,LH	1			
17	71N6-10320				FOOT REST ASSY-RH	1			STD
17-1	71N6-10170				.BRACKET-FOOT REST	1			STD
17-2	71N6-10181				.RUBBER-FOOT REST,RH	1			STD
19	71N6-10190				BRACKET-PEDAL,LH	1			
20	71N6-10201				RUBBER-PEDAL,LH	1			
21	71N6-10210				BRACKET-PEDAL,RH	1			
22	71N6-10221				RUBBER-PEDAL,RH	1			
23	71N6-10230				LEVER-TRAVEL,LH	1			
24	71N6-10240				LEVER-TRAVEL,RH	1			
25	71N6-10251				KNOB-LEVER,LH	1			
26	71N6-10261				KNOB-LEVER,RH	1			
29	S109-100206				BOLT-SOCKET	4			
30	S206-101006				NUT-HEX	2			
31	71N6-10130				BRACKET-FOOT REST	1			
32	71N6-10290				MAT-FLOOR	1	#0001 -	-	2PCS, 2WAY/PIP
33	S017-100256				BOLT-HEX	4			2PCS, 2WAY/PIP

Item	Part_No	IS	Ord	T	Description	Qty	Serial_No	ITC	Remark
34	S403-102006				WASHER-PLAIN	12			2PCS, 2WAY/PIP
35	S411-100006				WASHER-SPRING	8			2PCS, 2WAY/PIP
36	S037-103022				BOLT-W/WASHER	24			
39	71N4-10970				SPONGE-INSULATION	1	#0078 -	-	

BOTTOM PLATE MOUNTING(OPT, #1111-)

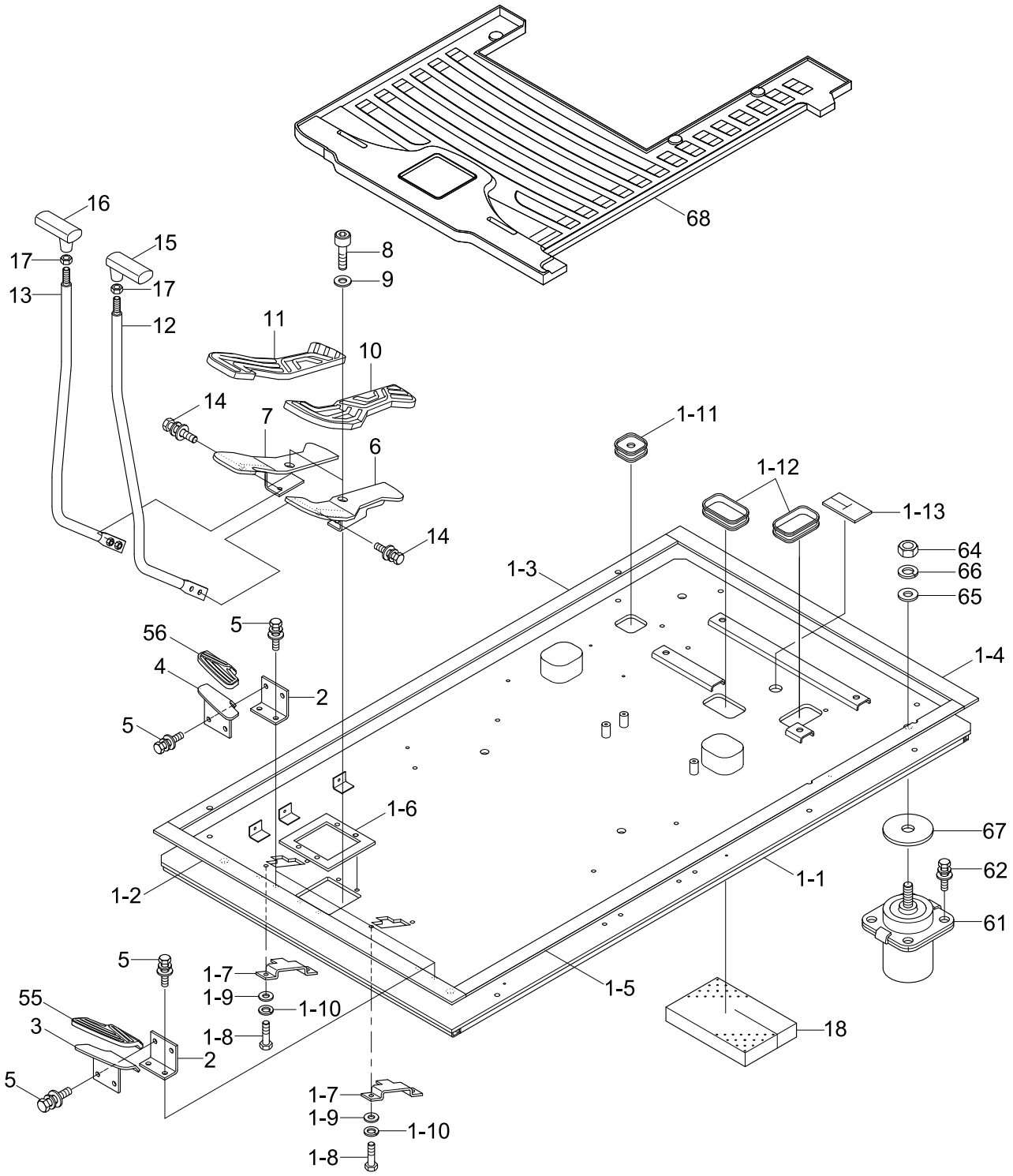

Item	Part_No	IS	Ord	T	Description	Qty	Serial_No	ITC	Remark
*	@				BOTTOM PLATE SUB ASSY	1	#1111 -	-	NOT
1	71N6-10105				BOTTOM PLATE ASSY	1			
1-1	71N6-10113				.BOTTOM PLATE WA	1			
1-2	71N6-11100				.PAD-RUBBER	1			
1-3	71N6-11110				.PAD-RUBBER	1			
1-4	71N6-11120				.PAD-RUBBER	1			
1-5	71N6-11130				.PAD-RUBBER	1			
1-6	71N6-11140				.PAD-RUBBER	1			
1-7	71E9-10661				.COVER	1			
1-8	S017-100156				.BOLT-HEX	4			
1-9	S403-10200B				.WASHER-PLAIN	4			
1-10	S411-100006				.WASHER-SPRING	4			
1-11	71E9-10630				.GROMMET	1			
1-12	71E9-10640				.GROMMET	2			
1-13	71N4-10940				.PAD-TRAVEL LINK	1			
2	71N6-10130				BRACKET-FOOT REST	2			
					BRACKET-FOOT REST	1			
3	73N6-10310				FOOT REST-LH	1			
4	73N6-10320				FOOT REST-RH	1			
5	S037-102526				BOLT-W/WASHER	8			
					BOLT-W/WASHER	4			
6	73N6-10190				BRACKET-PADAL(LH)	1			
7	73N6-10210				BRACKET-PEDAL(RH)	1			
8	S109-100206				BOLT-SOCKET	4			
9	S403-10200B				WASHER-PLAIN	4			

Item	Part_No	IS	Ord	T	Description	Qty	Serial_No	ITC	Remark
10	73N6-20260				PEDAL RUBBER-LH	1			
11	73N6-20270				PEDAL RUBBER-RH	1			
12	71N6-10230				LEVER-TRAVEL,LH	1			
13	71N6-10240				LEVER-TRAVEL,RH	1			
14	S037-103026				BOLT-W/WASHER	4			
15	71N6-10251				KNOB-LEVER,LH	1			
16	71N6-10261				KNOB-LEVER,RH	1			
17	S206-10100B				NUT-HEX	2			
18	71N4-10970				SPONGE-INSULATION	1			
55	73N6-20240				RUBBER-FOOT REST(LH)	1			
56	73N6-20250				RUBBER-FOOT REST(RH)	1			
61	71N6-10300				VISCOUS MOUNT	6			
62	S037-103026				BOLT-W/WASHER	24			
64	S205-16100B				NUT-HEX	6			
65	S403-162006				WASHER-PLAIN	6			
66	S411-160006				WASHER-SPRING	6			
67	71E9-10650-DA				WASHER	6			
68	71N6-10141				MAT-FLOOR	1			
	71N6-10280				MAT-FLOOR	1			
	71N6-10290				MAT-FLOOR	1			

COWLING 1

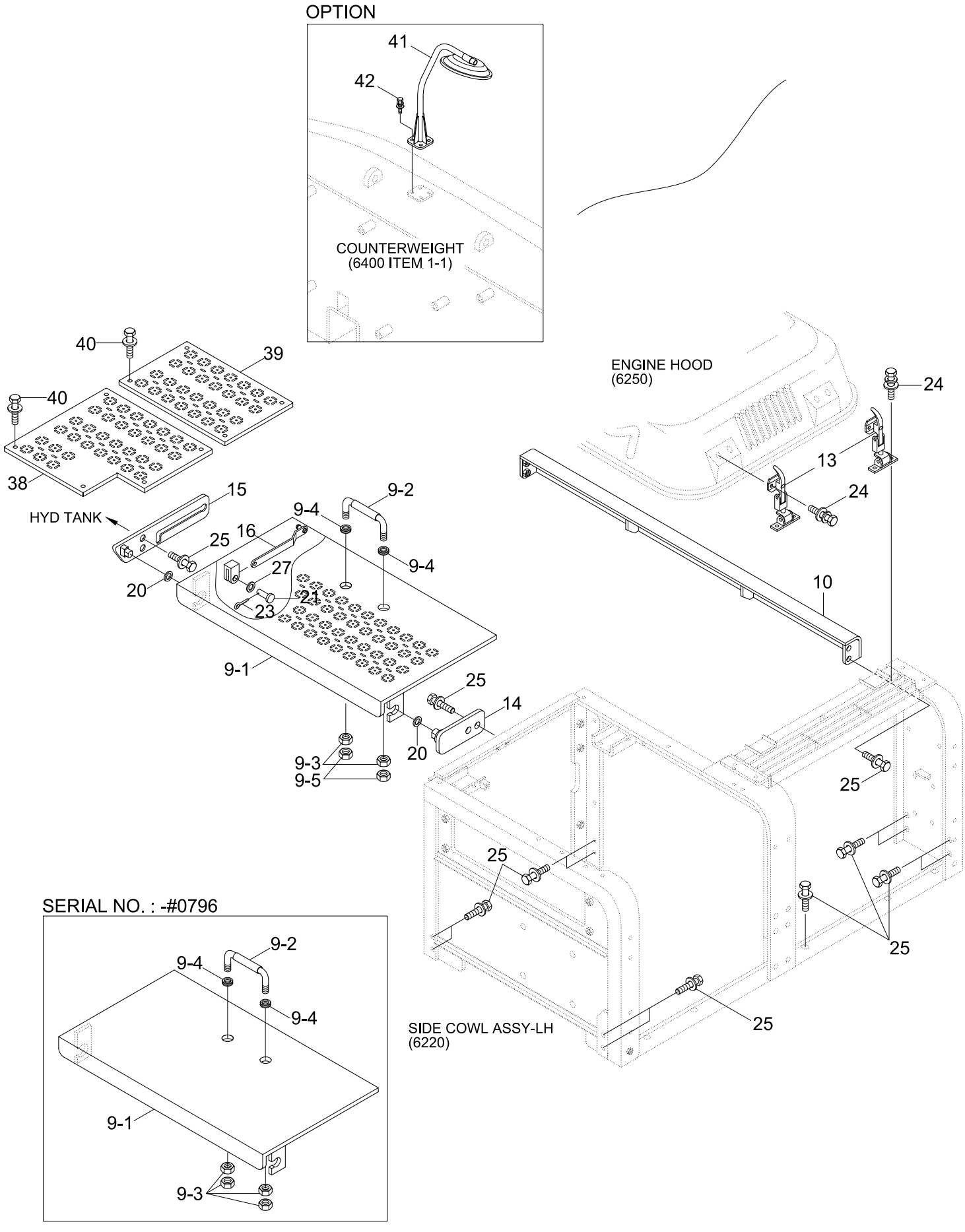
OPTION
41
42
COUNTERWEIGHT
(6400 ITEM 1-1)
40
39
40
38
HYD TANK
15
9-2
9-4
16
25
9-4
27
20
21
23
9-1
25
14
20
9-3
9-5
ENGINE HOOD
(6250)
24
13
24
10
25
25
25
25
SIDE COWL ASSY-LH
(6220)
SERIAL NO. : -#0796
9-2
9-4
9-4
9-1
9-3

Item	Part_No	IS	Ord	T	Description	Qty	Serial_No	ITC	Remark
9	71N8-59100				HOOD ASSY-MCV	1	- #0796		
	72N9-59200				HOOD ASSY-MCV	1	#0797 -	B	
9-1	71N8-55202				.HOOD WA-MCV	1	- #0796		
	72N9-59210				.HOOD WA-MCV	1	#0797 -	B	
9-2	71E9-54150				.HANDLE	1			
9-3	S205-161002				.NUT-HEX	4	- #0796		
					.NUT-HEX	2	#0797 -	A	
9-4	S681-190400				.GROMMET	2			
9-5	S275-160002				.NUT-SELF LOCKING	2	#0797 -	-	
10	71NA-58102				SUPPORT WA-ENG HOOD	1			
13	71N6-56400				CATCH ASSY	2	- #1118		
	71N6-56400BG				CATCH ASSY	2	#1119 -	D	
14	71N8-55210				BRACKET-MCV HOOD,LH	1			
15	71N6-55221				BRACKET-MCV HOOD,RH	1			
16	71N6-56301				STAY-MCV HOOD	1			
20	E231-0134	20			SHIM(1.0T)	4			
21	S491-080252				PIN-CLEVIS	1			
23	S501-080002				PIN-SELF LOCKING	1			
24	S035-082526				BOLT-W/WASHER	8			
25	S037-122556				BOLT-W/WASHER	17			
27	S403-08200B				WASHER-PLAIN	2			
38	72N8-49200				FOOT BOARD-F/TANK(A)	1	#0797 -	-	
39	72N8-49300				FOOT BOARD-F/TANK(B)	1	#0797 -	-	
40	S037-121556				BOLT-W/WASHER	9	#0797 -	-	
41	72N6-59200				STAY-MIRROR	1	#3255 -		OPT, FOR IRAN

Item	Part_No	IS	Ord	T	Description	Qty	Serial_No	ITC	Remark
42	S037-123056				BOLT-W/WASHER	4	#3255 -		OPT, FOR IRAN

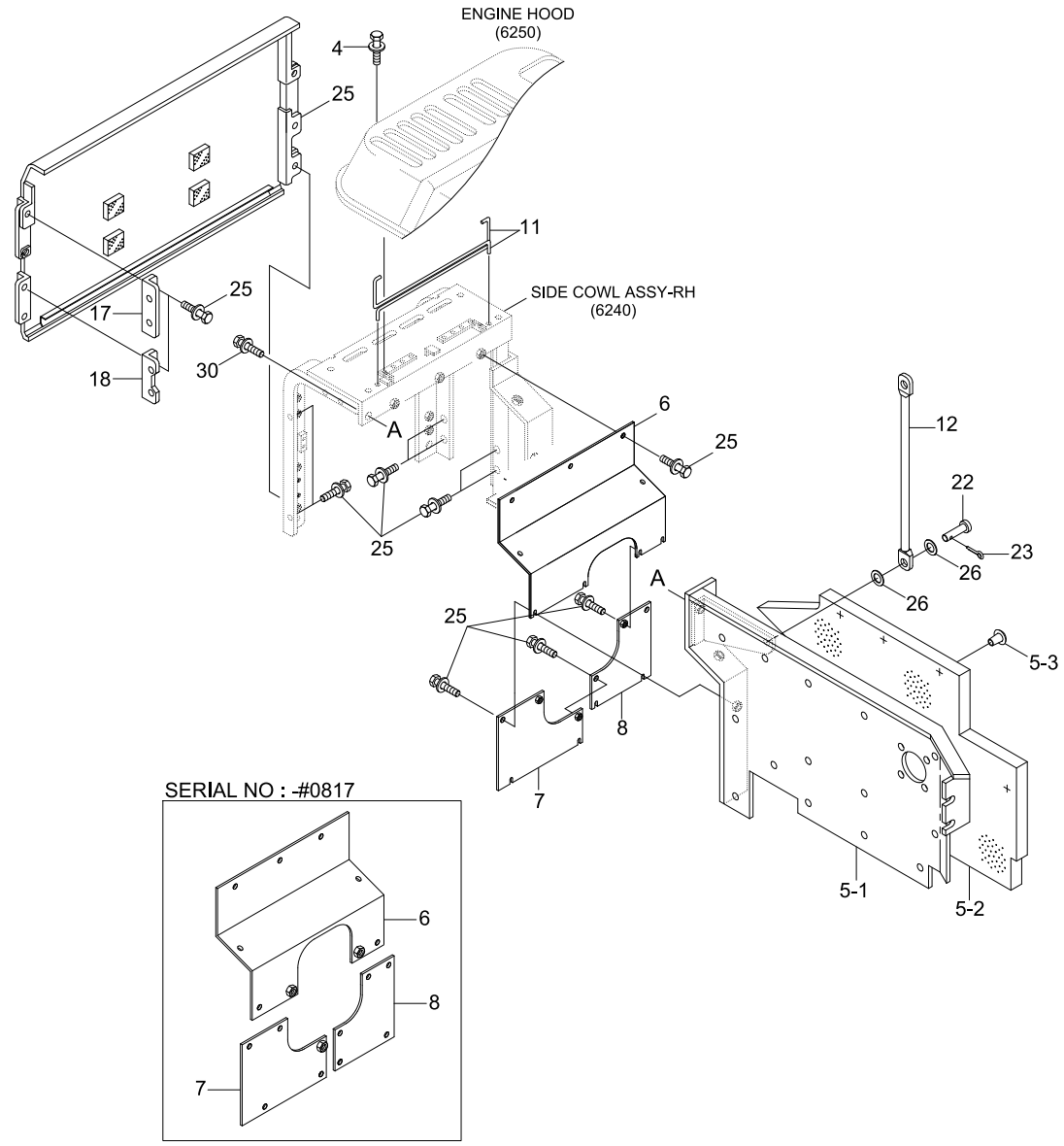
ENGINE HOOD
(6250)
4
25
11
SIDE COWL ASSY-RH
(6240)
17
18
30
A
6
25
12
22
23
26
5-3
8
7
5-1
5-2
SERIAL NO : -#0817

Item	Part_No	IS	Ord	T	Description	Qty	Serial_No	ITC	Remark
4	71N8-53163				COVER-TANK	1	#0001 - #1322	-	
	71N8-53164				COVER-TANK	1	#1323 -	B	
5	71N9-54101				SCREEN ASSY	1			
5-1	71N9-54111				.SCREEN WA	1			
5-2	71N9-54121				.SPONGE	1	- #0051		
	71N9-54122				.SPONGE	1	#0052 -	C	
5-3	71EM-51580				.CAP-STUD BOLT	12			
6	71N9-54201				SCREEN-PUMP(T)	1	- #0816		
	71N9-54202				SCREEN-PUMP(T)	1	#0817 -	D	
7	71N9-54300				SCREEN-PUMP(B/F)	1	- #0816		
	71N9-54301				SCREEN-PUMP(B/F)	1	#0817 -	D	
8	71N9-54400				SCREEN-PUMP(B/R)	1	- #0816		
	71N9-54401				SCREEN-PUMP(B/R)	1	#0817 -	D	
11	71N8-66200				BAR-TORSION	2			
12	71EG-54960				STAY-ENG HOOD	1	- #1118		
	71EG-54960BG				STAY-ENG HOOD	1	#1119 -	D	
17	71N8-57101				SUPPORT-T/COVER	1			
18	71N8-57200				SUPPORT-T/COVER	1			
22	S491-100252				PIN-CLEVIS	2			
23	S501-080002				PIN-SELF LOCKING	1			
25	S037-122556				BOLT-W/WASHER	37			
26	S441-12000B				WASHER-HARDENED	4	- #3254		
	S403-10500B				WASHER-PLAIN	4	#3255 -	B	
30	S037-123052				BOLT-W/WASHER	1			

SIDE COWL ASSY(LH)

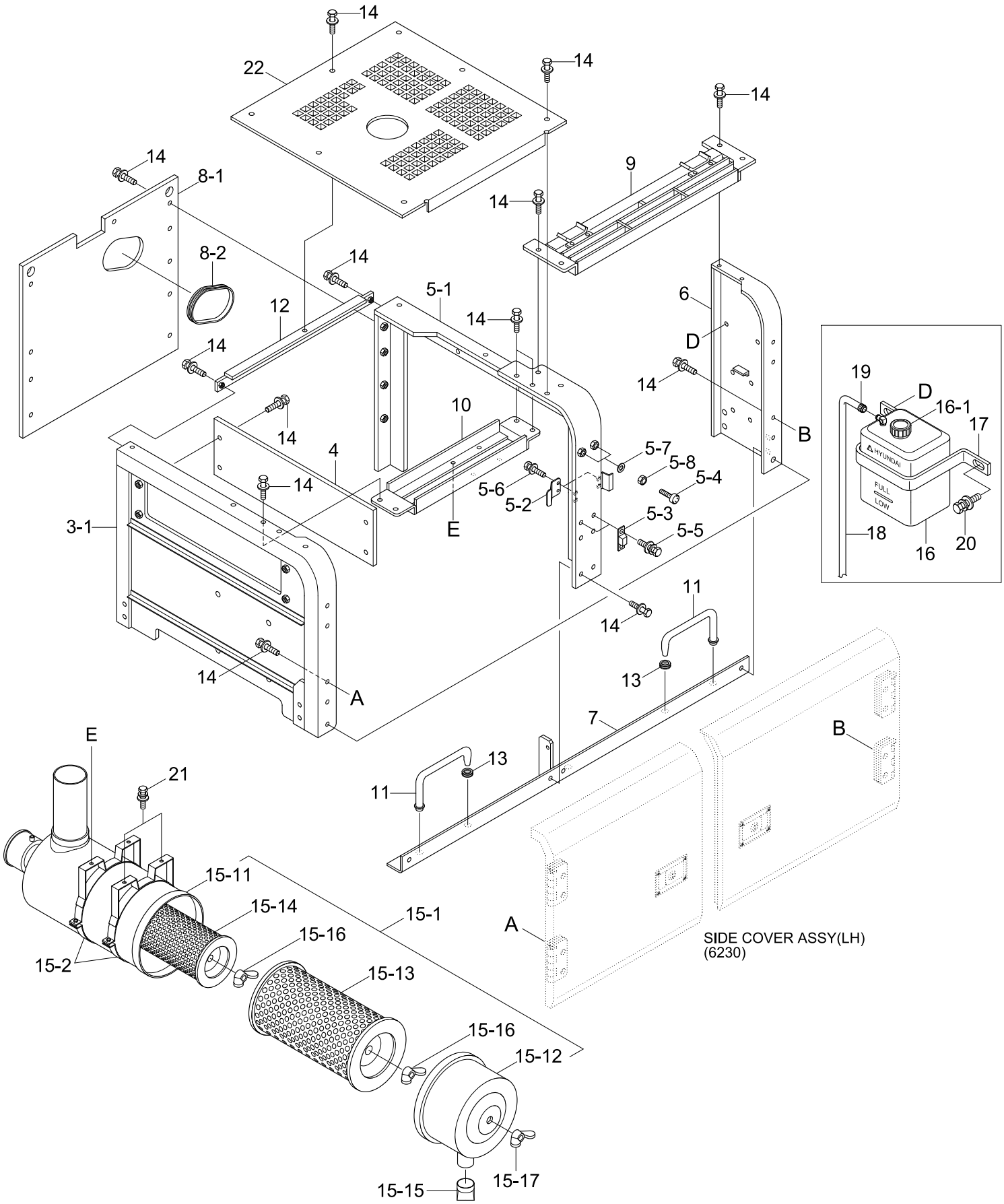

Item	Part_No	IS	Ord	T	Description	Qty	Serial_No	ITC	Remark
*	71N9-52002				SIDE COWL ASSY-LH	1	- #0779		STD, BLACK
	71N9-52002Y				SIDE COWL ASSY-LH	1	#0780 -	D	STD, YELLOW
	71N9-82000				SIDE COWL ASSY-LH	1	#0001 - #0779	-	AIR VENT, BLACK
	71N9-82000Y				SIDE COWL ASSY-LH	1	#0780 -	D	AIR VENT,YELLOW
3	71N9-52300				.SUPPORT WA-LH,FR	1			
4	71N8-52322				.COVER-PLATE	1			
5	71N9-52401				.SUPPORT ASSY-LH,M	1	- #0146		
	71N9-52402				.SUPPORT ASSY-LH,M	1	#0147 -	D	
5-1	71N9-52411				..SUPPORT WA-LH,M	1	- #0146		
	71N9-52412				..SUPPORT WA-LH,M	1	#0147 -	D	
5-2	71N8-52492				..PLATE-LOCK	2			
5-3	71EE-53540				..STOPPER-B	2			
5-4	71EH-13150				..BUMPER-RUBBER	2			
5-5	S035-062022				..BOLT-W/WASHER	4			
5-6	S037-122052				..BOLT-W/WASHER	4			
5-7	S403-10200B				..WASHER-PLAIN	2	#2866 -		
5-8	S205-10100B				..NUT-HEX	2	#2866 -		
6	71NA-52502				.SUPPORT WA-LH/RR	1			
7	71N9-52601				.BASE PLATE WA-LH	1			
8	71N9-52701				.SCREEN-MCV	1	- #0146		
	71N9-52702				.SCREEN-MCV	1	#0147 -	D	
8-1	S791-030074				.GROMMET-PLATE	1			
9	71NA-52802				.SUPPORT WA-E/G HOOD	1			
10	71N9-52901				.BRACKET WA-A/C	1			
11	71N8-52950				.STAY-SIDE COVER	2			

Item	Part_No	IS	Ord	T	Description	Qty	Serial_No	ITC	Remark
12	71N9-52980				.SUPPORT WA-MCV HOOD	1	- #0146		
	71N9-52981				.SUPPORT WA-MCV HOOD	1	#0147 -	D	
13	S681-100400				.GROMMET	2			
14	S037-122552				.BOLT-W/WASHER	40	#0001 - #0146	-	
					.BOLT-W/WASHER	41	#0147 -	A	
15	11N8-22100				.AIR CLEANER SUB ASSY	1			
15-1	11N8-22110				..AIR CLEANER ASSY	1			
15-11	11N8-22120				...HOUSING	1			
15-12	11N8-22130				...CAP WA	1			
15-13	11N8-22140				...ELEMENT-OUTER	1			
15-14	11N8-22150				...ELEMENT-INNER	1			
15-15	E211-2105	10			...VALVE-VACUUM	1			
15-16	11EM-21060				...NUT-WING	2			
15-17	11EM-21070				...NUT-WING	1			
15-2	11L1-2005				...CLAMP ASSY	2			
16	11N8-41070				.TANK-RESERVOIR	1			
16-1	MH100020				..CAP-RESERVOIR TANK	1			
17	11N8-41080				.CLAMP-RESERVOIR TANK	1			
18	E111-2504	20			.HOSE	1			
19	S520-015000				.CLAMP-HOSE	1			
20	S035-082022				.BOLT-W/WASHER	2			
21	S035-102522				.BOLT-W/WASHER	4			
22	71N9-55101				.HOOD WA-A/C	1	- #0146		
	71N9-55102				.HOOD WA-A/C	1	#0147 -	D	

SIDE COVER ASSY(LH)

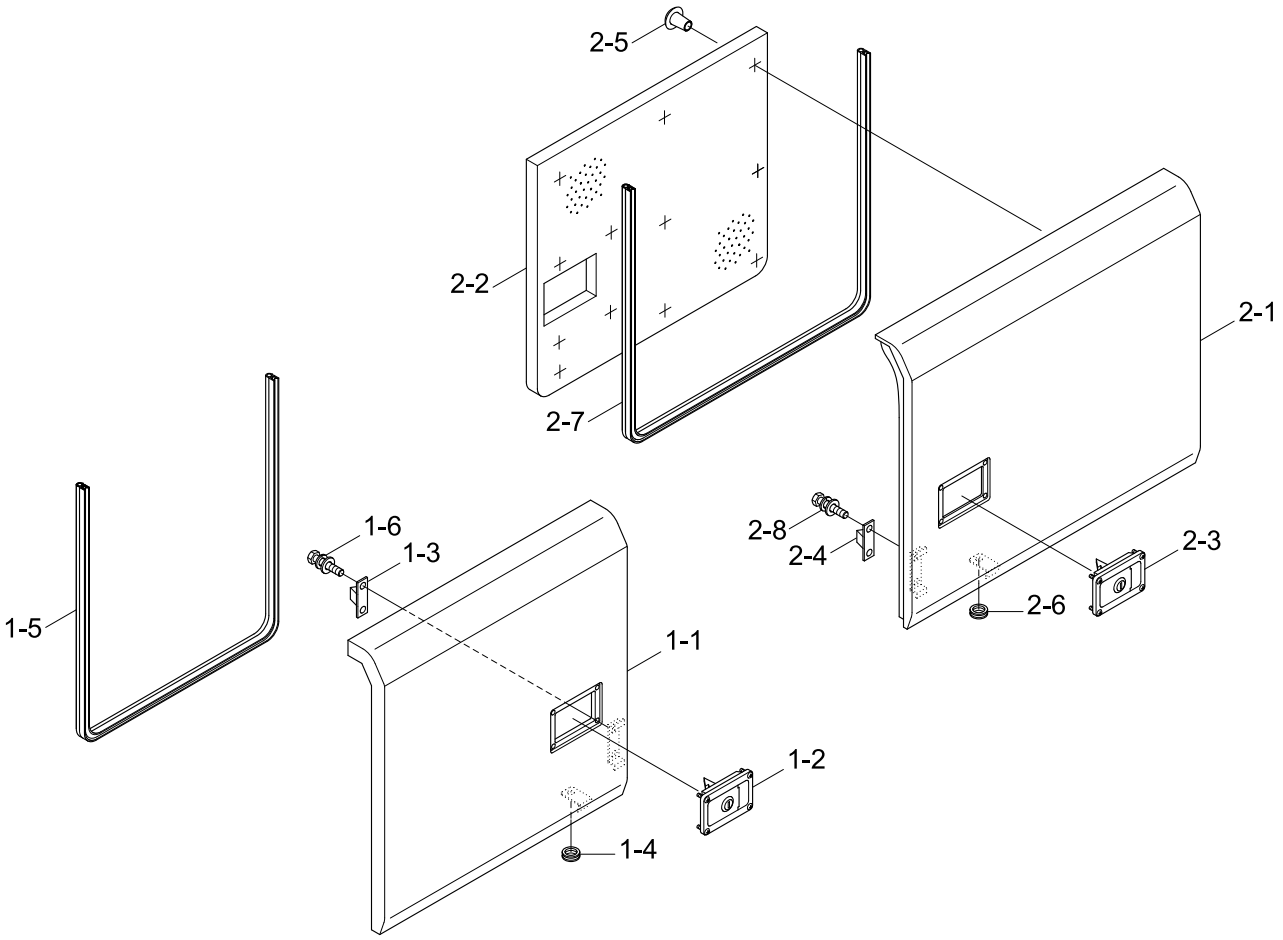

AIR VENT TYPE(OPTION)

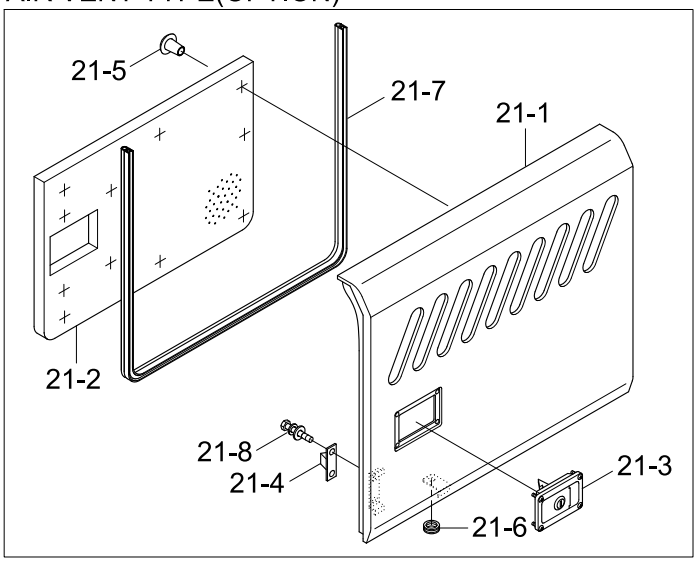

Item	Part_No	IS	Ord	T	Description	Qty	Serial_No	ITC	Remark
1	71N8-62100				SIDE COVER ASSY-LH,FR	1	- #0779		BLACK
	71N8-62100Y				SIDE COVER ASSY-LH,FR	1	#0780 -	D	YELLOW
1-1	71N8-62110				.SIDE COVER WA-LH,FR	1			
1-2	71EE-52520				.CATCH ASSY	1	- #0779		BLACK
	74N8-52520				.CATCH ASSY	1	#0780 -	D	YELLOW
1-3	71EE-53531				.STOPPER-A	1			
1-4	S681-100400				.GROMMET	1			
1-5	S772-024000				.WEATHER STRIP	1			
1-6	S035-061522				.BOLT-W/WASHER	2			
2	71N9-52200				SIDE COVER ASSY-LH/RR	1	- #0779		STD, BLACK
	71N9-52200Y				SIDE COVER ASSY-LH/RR	1	#0780 -	D	STD, YELLOW
2-1	71N9-52210				.SIDE COVER WA-LH,RR	1			
2-2	71N9-52240				.SPONGE-LH,RR	1			
2-3	71EE-52520				.CATCH ASSY	1	- #0779		BLACK
	74N8-52520				.CATCH ASSY	1	#0780 -	D	YELLOW
2-4	71EE-53531				.STOPPER-A	1			
2-5	71EM-51580				.CAP-STUD BOLT	12	- #0199		
					.CAP-STUD BOLT	15	#0200 -	B	
2-6	S681-100400				.GROMMET	1			
2-7	S772-027500				.WEATHER STRIP	1			
2-8	S035-061522				.BOLT-W/WASHER	4			
21	71NA-72200				SIDE COVER ASSY-LH(RR)	1	#0001 - #0779	-	AIR VENT, BLACK
	71NA-72200Y				SIDE COVER ASSY-LH,RR	1	#0780 -	D	AIR VENT,YELLOW
21-1	71NA-72210				.SIDE COVER WD-LH(RR)	1			
21-2	71NA-72240				.SPONGE	1			

Item	Part_No	IS	Ord	T	Description	Qty	Serial_No	ITC	Remark
21-3	71EE-52520				.CATCH ASSY	1	- #0779		BLACK
	74N8-52520				.CATCH ASSY	1	#0780 -	D	YELLOW
21-4	71EE-53531				.STOPPER-A	1			
21-5	71EM-51580				.CAP-STUD BOLT	12			
21-6	S681-100400				.GROMMET	1			
21-7	S772-027500				.WEATHER STRIP	1			
21-8	S035-061522				.BOLT-W/WASHER	4			

SIDE COWL ASSY(RH)

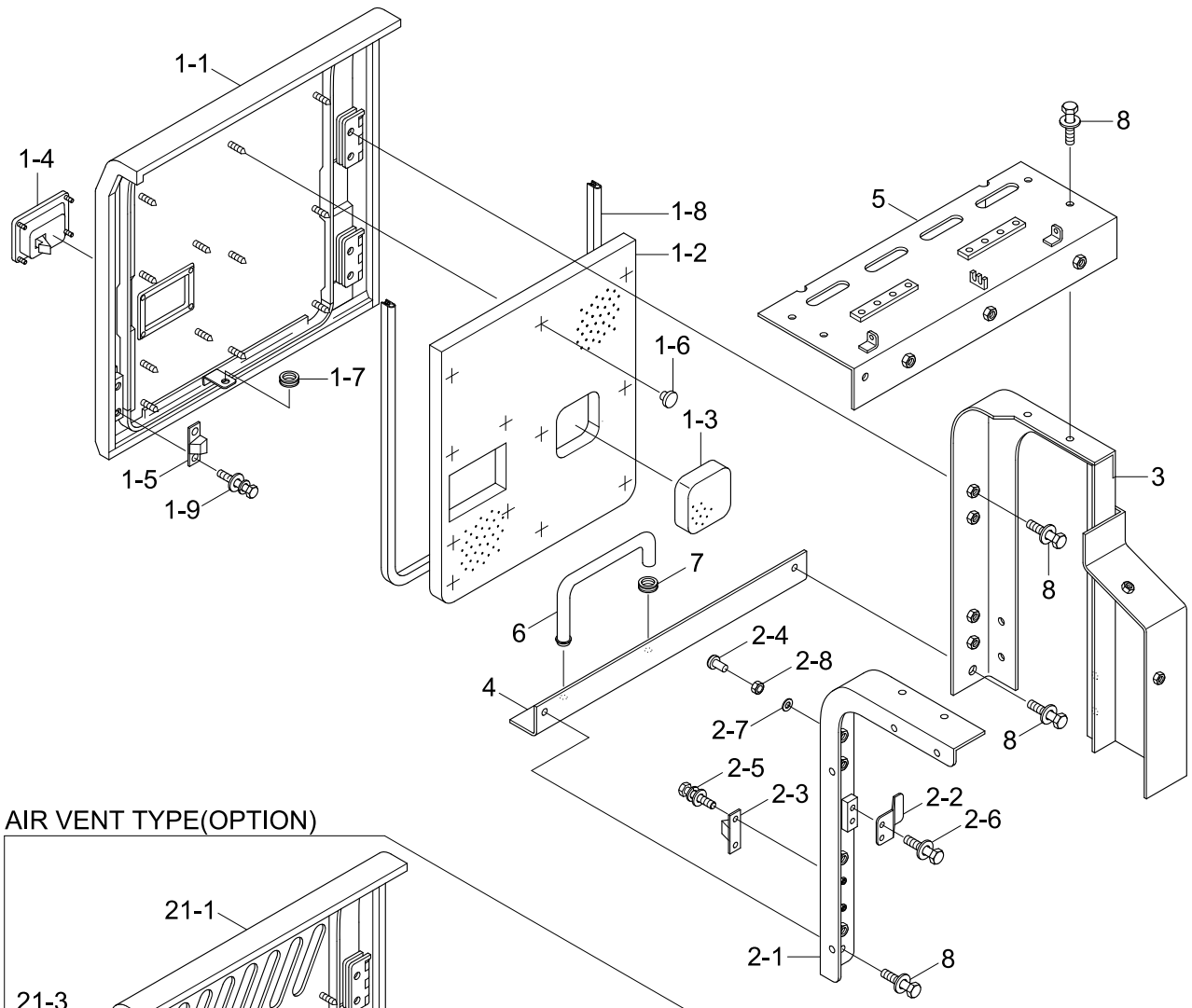

AIR VENT TYPE(OPTION)

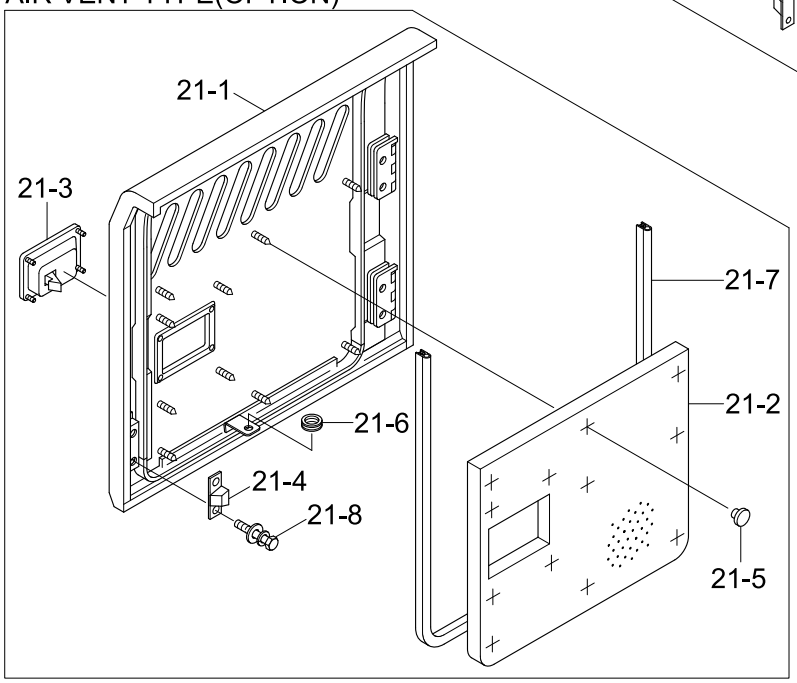

Item	Part_No	IS	Ord	T	Description	Qty	Serial_No	ITC	Remark
*	71NA-53002				SIDE COWL ASSY-RH	1	- #0779		STD, BLACK
	71NA-53002Y				SIDE COWL ASSY-RH	1	#0780 -	D	STD, YELLOW
	71NA-53010Y				SIDE COWL ASSY-RH	1	#0919 -	-	PRE HEATER
1	71NA-53100				.SIDE COVER ASSY-RH	1	- #0779		STD, BLACK
	71NA-53100Y				.SIDE COVER ASSY-RH	1	#0780 -	D	STD, YELLOW
1-1	71NA-53110				..COVER WA-RH	1			
1-2	71NA-53130				..SPONGE-RH	1			
1-3	71NA-53140				..SPONGE-RH	1			
1-4	71EE-52520				..CATCH ASSY	1	- #0779		BLACK
	74N8-52520				..CATCH ASSY	1	#0780 -	D	YELLOW
1-5	71EE-53531				..STOPPER-A	1			
1-6	71EM-51580				..CAP-STUD BOLT	12			
1-7	S681-100400				..GROMMET	1			
1-8	S772-027500				..WEATHER STRIP	1			
1-9	S035-061622				..BOLT-W/WASHER	4			
2	71NA-53500				.SUPPORT ASSY-RH,FR	1			
2-1	71NA-53510				..SUPPORT WA-RH,FR	1			
2-2	71N8-52492				..PLATE-LOCK	1			
2-3	71EE-53540				..STOPPER-B	1			
2-4	71EH-13150				..BUMPER-RUBBER	1			
2-5	S035-062022				..BOLT-W/WASHER	2			
2-6	S037-122052				..BOLT-W/WASHER	2			
2-7	S403-10200B				..WASHER-PLAIN	1	#2866 -		
2-8	S205-10100B				..NUT-HEX	1	#2866 -		
3	71NA-53201				.SUPPORT WA-RR	1			

Item	Part_No	IS	Ord	T	Description	Qty	Serial_No	ITC	Remark
3	71NA-53900				.SUPPORT WA-RR	1	#0919 -	-	PRE HEATER
4	71N9-53300				.BASE PLATE WA-RH	1			
5	71NA-53402				.HOOD WA-PUMP	1			
6	71N8-52950				.STAY-SIDE COVER	1			
7	S681-100400				.GROMMET	1			
8	S037-122552				.BOLT-W/WASHER	10			
*	71NA-83000				SIDE COWL ASSY-RH	1	#0001 - #0779	-	AIR VENT, BLACK
	71NA-83000Y				SIDE COWL ASSY-RH	1	#0780 -	D	AIR VENT,YELLOW
21	71NA-73100				.SIDE COVER ASSY-RH	1			
21-1	71NA-73110				..SIDE COVER WA-RH	1			
21-2	71NA-73140				..SPONGE	1			
21-3	71EE-52520				..CATCH ASSY	1	- #0779		BLACK
	74N8-52520				..CATCH ASSY	1	#0780 -	D	YELLOW
21-4	71EE-53531				..STOPPER-A	1			
21-5	71EM-51580				..CAP-STUD BOLT	12			
21-6	S681-100400				..GROMMET	1			
21-7	S772-027500				..WEATHER STRIP	1			
21-8	S035-061622				..BOLT-W/WASHER	4			

ENGINE HOOD ASSY

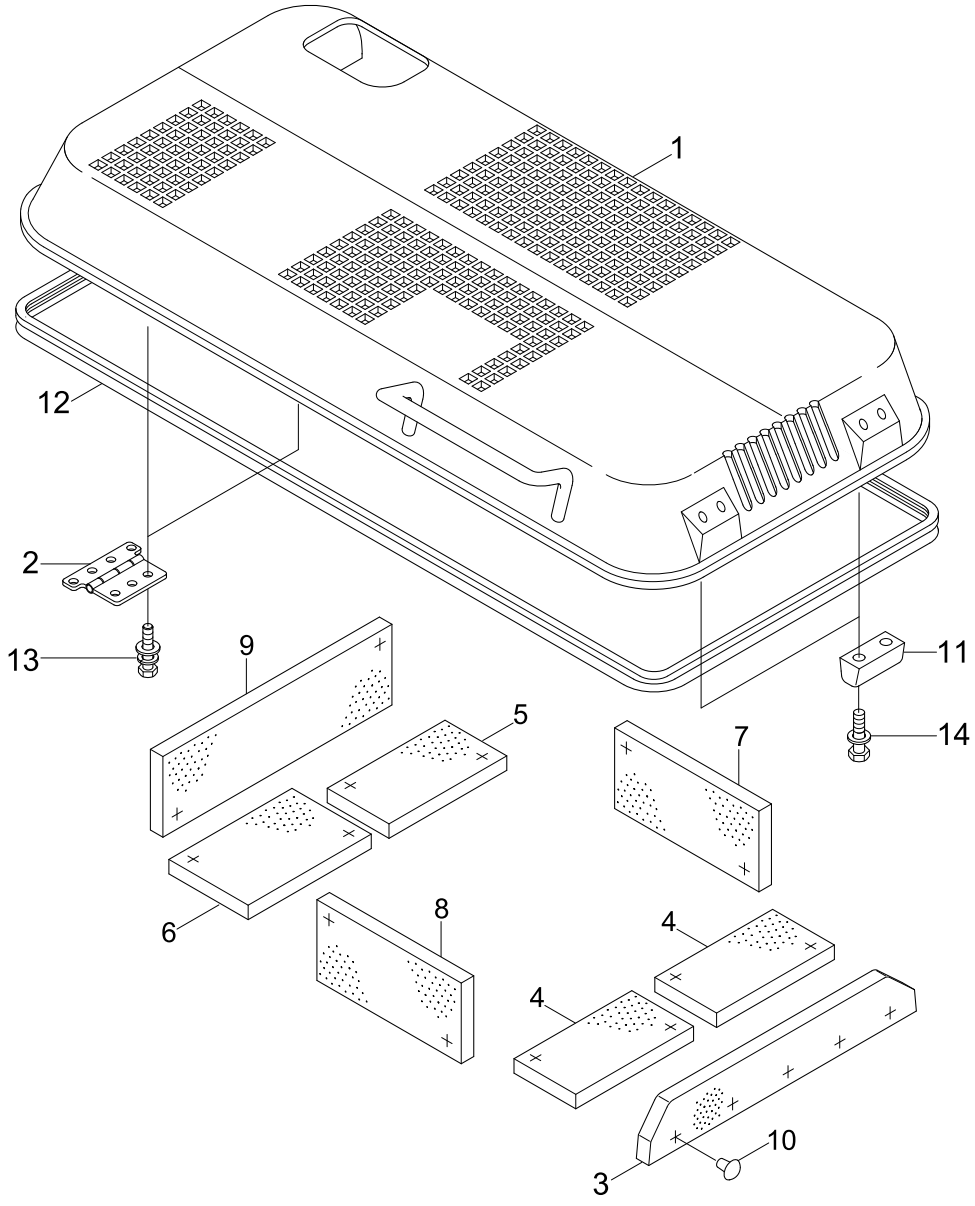

Item	Part_No	IS	Ord	T	Description	Qty	Serial_No	ITC	Remark
*	71NA-51501				ENGINE HOOD ASSY	1	- #1118		
	71NA-51501BG				ENGINE HOOD ASSY	1	#1119 -	D	
1	71NA-51511				.ENGINE HOOD WA	1	- #0032		
	71NA-51512				.ENGINE HOOD WA	1	#0033 -	B	
2	71N6-51101				.HINGE-ENG HOOD	2			
3	71NA-51701				.SPONGE	1			
4	71NA-51710				.SPONGE	2			
5	71NA-51720				.SPONGE	1			
6	71NA-51730				.SPONGE	1			
7	71NA-51740				.SPONGE	1			
8	71NA-51750				.SPONGE	1			
9	71NA-51760				.SPONGE	1			
10	71EM-51580				.CAP-STUD BOLT	36			
11	71N6-51140				.STOPPER-A	2			
12	S771-070000				.WEATHER STRIP	1			
13	S037-123522				.BOLT-W/WASHER	6			
14	S132-063052				.SCREW-W/WASHER	4			

UNDER COVER

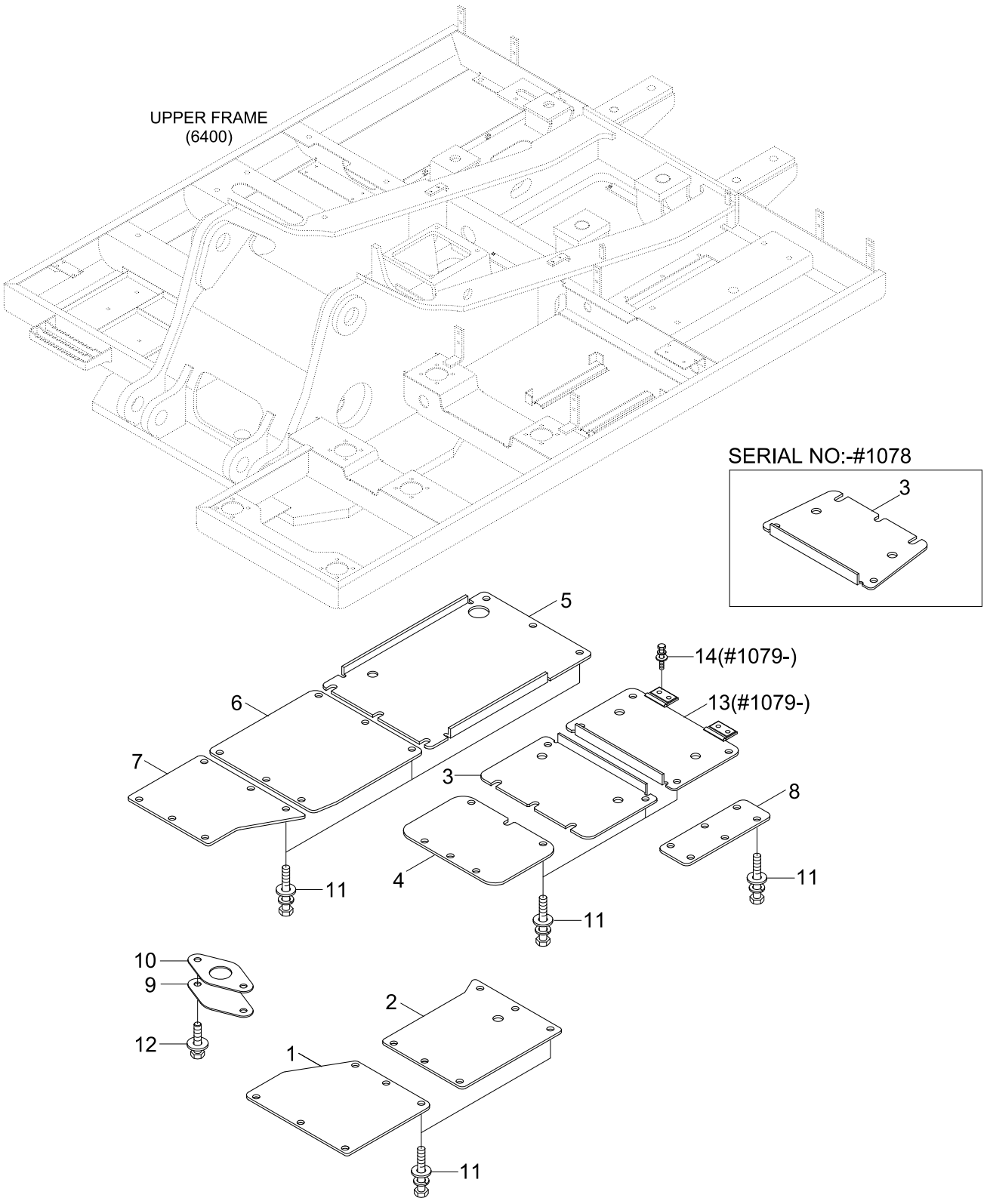
UPPER FRAME
(6400)
SERIAL NO:-#1078
3
5
14(#1079-)
13(#1079-)
6
7
3
8
4
11
11
11
10
9
12
2
1
11

Item	Part_No	IS	Ord	T	Description	Qty	Serial_No	ITC	Remark
1	41N9-15230				UNDER COVER-CAB,A	1	- #0426		
	41N9-15231				UNDER COVER-CAB,A	1	#0427 - #1118	D	
	41N9-15231BG				UNDER COVER-CAB,A	1	#1119 -	D	
2	41N8-15222				UNDER COVER-CAB,B	1	- #1118		
	41N8-15222BG				UNDER COVER-CAB,B	1	#1119 -	D	
3	41N9-15211				UNDER COVER-ENGINE	2	- #1078		
					UNDER COVER-ENGINE	1	#1079 - #1118	A	
	41N9-15211BG				UNDER COVER-ENG	1	#1119 -	D	
4	41N8-15242				UNDER COVER-MCV	1	- #1118		
	41N8-15242BG				UNDER COVER-MCV	1	#1119 -	D	
5	41N9-15220				UNDER COVER-PUMP	1	- #1118		
	41N9-15220BG				UNDER COVER-PUMP	1	#1119 -	D	
6	41N8-15261				UNDER COVER-HYD	1	- #1118		
	41N8-15261BG				UNDER COVER-HYD	1	#1119 -	D	
7	41N8-15270				UNDER COVER-FUEL	1	- #1118		
	41N8-15270BG				UNDER COVER-FUEL	1	#1119 -	D	
8	41N8-15280				UNDER COVER-RAD	1	- #1118		
	41N8-15280BG				UNDER COVER-RADIATOR	1	#1119 -	D	
9	41N6-10100				COVER	1			
10	41E9-1306				SEAL	1			
11	S037-102566				BOLT-W/WASHER	52	- #1078		
					BOLT-W/WASHER	51	#1079 -	A	
12	S037-102052				BOLT-W/WASHER	2	- #1182		
	S037-102556				BOLT-W/WASHER	2	#1183 -	B	
13	41N9-15300				UNDER COVER-ENGINE	1	#1079 - #1118	-	

Item	Part_No	IS	Ord	T	Description	Qty	Serial_No	ITC	Remark
13	41N9-15300BG				UNDER COVER WA-ENG	1	#1119 -	D	
14	S037-103056				BOLT-W/WASHER	4	#1079 -	-	

TOOL BOX MOUNTING

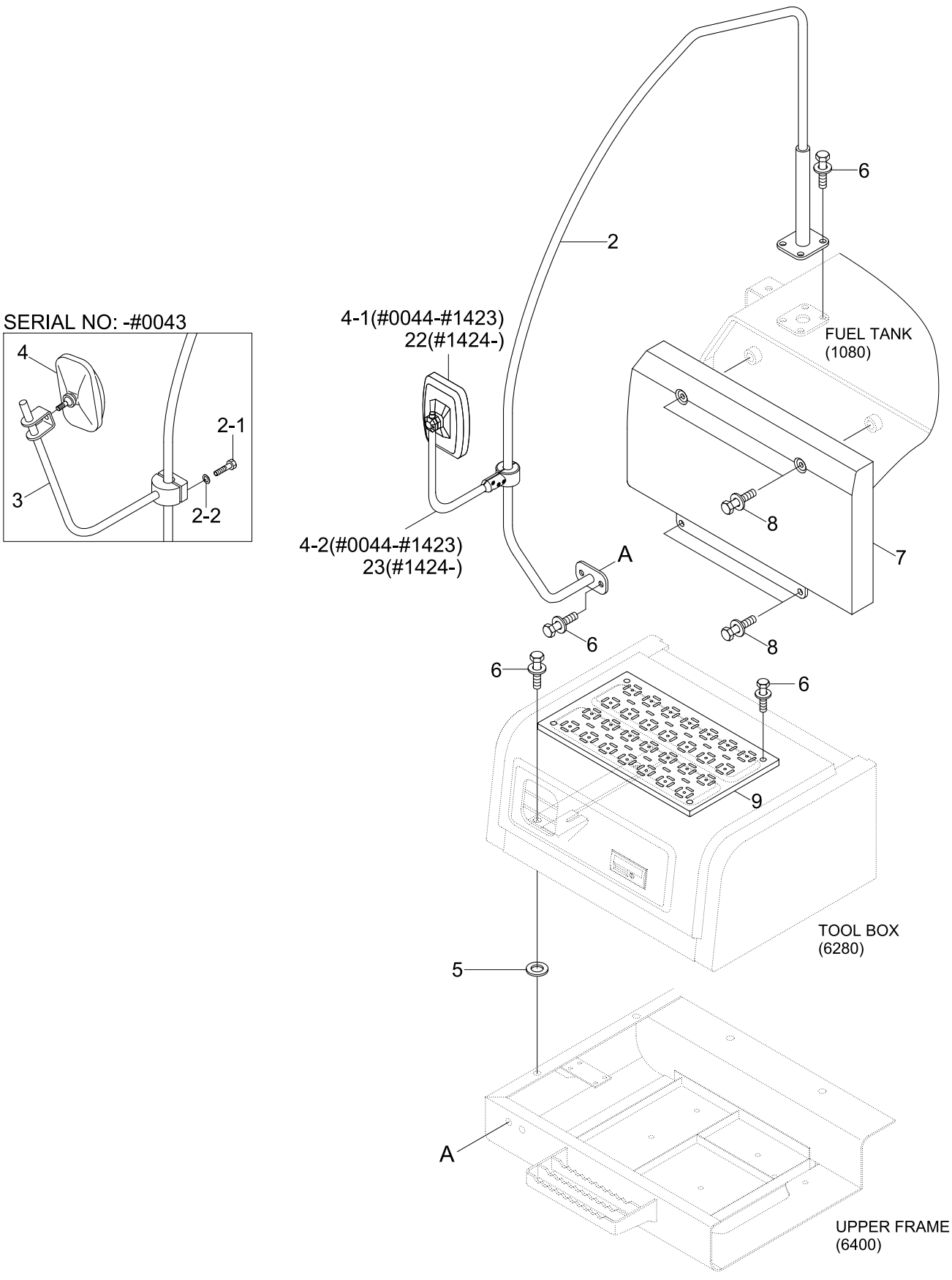

Item	Part_No	IS	Ord	T	Description	Qty	Serial_No	ITC	Remark
2	71N8-42005				PIPE WA	1	- #1118		
	71N8-42005BG				PIPE WA	1	#1119 -	D	
2-1	S015-080402				.BOLT-HEX	2	- #0043	-	
2-2	S411-080002				.WASHER-SPRING	2	- #0043	-	
3	71N8-45000				STAY-MIRROR	1	- #0043	-	
4	71N8-46000				MIRROR	1	- #0043		
	71N8-48000				MIRROR & STAY ASSY-RH	1	#0044 - #0102	B	
	71N8-48001				MIRROR & STAY ASSY-RH	1	#0103 - #1118	B	
	71N8-48001BG				MIRROR & STAY ASSY-RH	1	#1119 - #1423	D	
4-1	71N8-47100				.MIRROR	1	#0044 - #1423	-	
4-2	71N8-48100				.STAY ASSY-RH	1	#0044 - #0102		
	71N8-48101				.STAY ASSY-RH	1	#0103 - #1118	B	
	71N8-48101BG				.STAY ASSY-RH	1	#1119 - #1423	D	
5	S390-015040				SHIM-ROUND(0.5T)	4			
6	S037-122552				BOLT-W/WASHER	8	- #0796		
					BOLT-W/WASHER	14	#0797 -	A	
7	71N8-44100				COVER-FUEL TANK	1	#0001 -	-	
8	S037-122552				BOLT-W/WASHER	4			
9	72N8-49100				FOOT BOARD-TOOL BOX	1	#0797 -	-	
22	71N8-47101				MIRROR	1	#1424 -	-	
23	71N8-48102BG				STAY ASSY-RH	1	#1424 -	-	

TOOL BOX

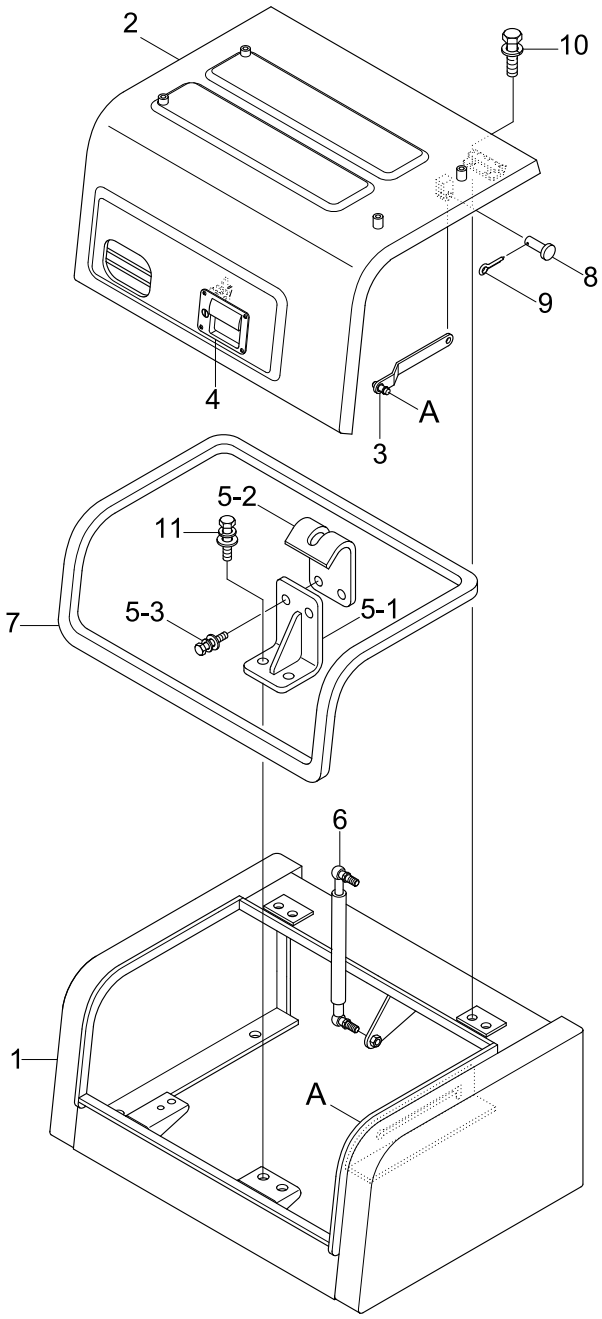

SERIAL NO : -#0901

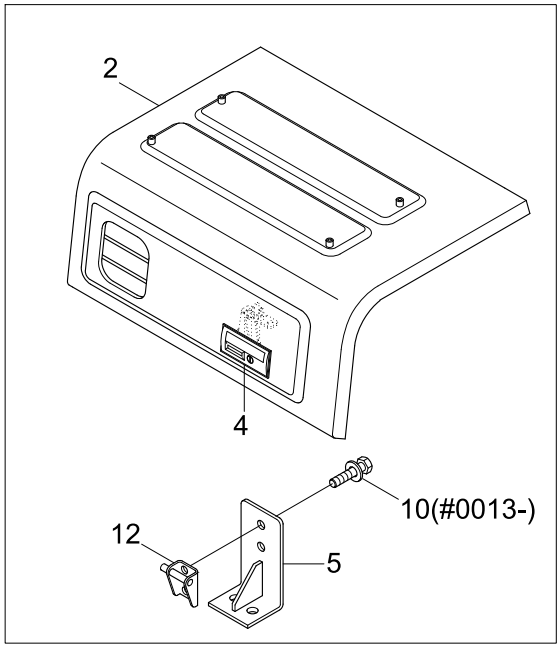

SERIAL NO : -#0012

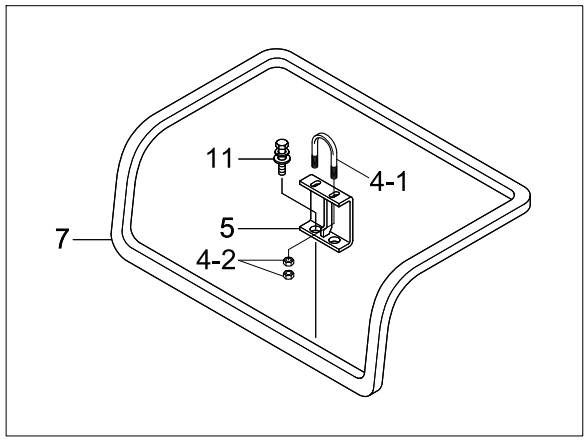

Item	Part_No	IS	Ord	T	Description	Qty	Serial_No	ITC	Remark
*	71N8-41003	04			TOOL BOX ASSY	1	- #0796		
	72N8-41000				TOOL BOX ASSY	1	#0797 - #0901	B	
	74N8-41001				TOOL BOX ASSY	1	#0902 -	B	
1	71N8-41105	03			.TOOL BOX WA	1			
2	71N8-41203				.COVER WA	1	- #0012		
	71N8-41204				.COVER WA	1	#0013 - #0796	D	
	74N8-41200				.COVER WA	1	#0797 - #0901	B	
	74N8-41201				.COVER WA	1	#0902 -	D	
3	71N8-41300				.STAY WA	1			
4	71N8-41700				.CATCH ASSY	1	- #0012		
	71N8-41701				.CATCH ASSY	1	#0013 - #0102	D	
	71N8-41702				.CATCH ASSY	1	#0103 - #0901	B	
4-1	71N8-41720				..U-BOLT	1	- #0012	-	
4-2	S205-061002				..NUT-HEX	4	- #0012	-	
4	74N8-41700				.CATCH ASSY	1	#0902 -	D	
5	71N8-41501				.BRACKET	1	- #0012		
	71N8-41502				.BRACKET	1	#0013 - #0901	D	
	74N8-41500				.STRIKER ASSY	1	#0902 -	D	
5-1	74N8-41560				..BRACKET WA	1	#0902 -	-	
5-2	74N8-41570				..BRACKET WA	1	#0902 -	-	
5-3	S035-082526				..BOLT-W/WASHER	2	#0902 -	-	
6	71N8-41321				.GAS SPRING	1			
7	S791-030231				.GROMMET-PLATE	1	- #0012		
	S772-030900				.WEATHER STRIP	1	#0013 -	D	
8	S491-080252				.PIN-CLEVIS	1			

Item	Part_No	IS	Ord	T	Description	Qty	Serial_No	ITC	Remark
9	S461-320252				.PIN-SPLIT	1			
10	S035-082022				.BOLT-W/WASHER	4	- #0012		
					.BOLT-W/WASHER	6	#0013 - #0901	A	
					.BOLT-W/WASHER	4	#0902 -	A	
11	S037-102052				.BOLT-W/WASHER	2			
12	71N8-41721				.BRACKET	1	#0013 - #0901	-	

GROMMET GROUP

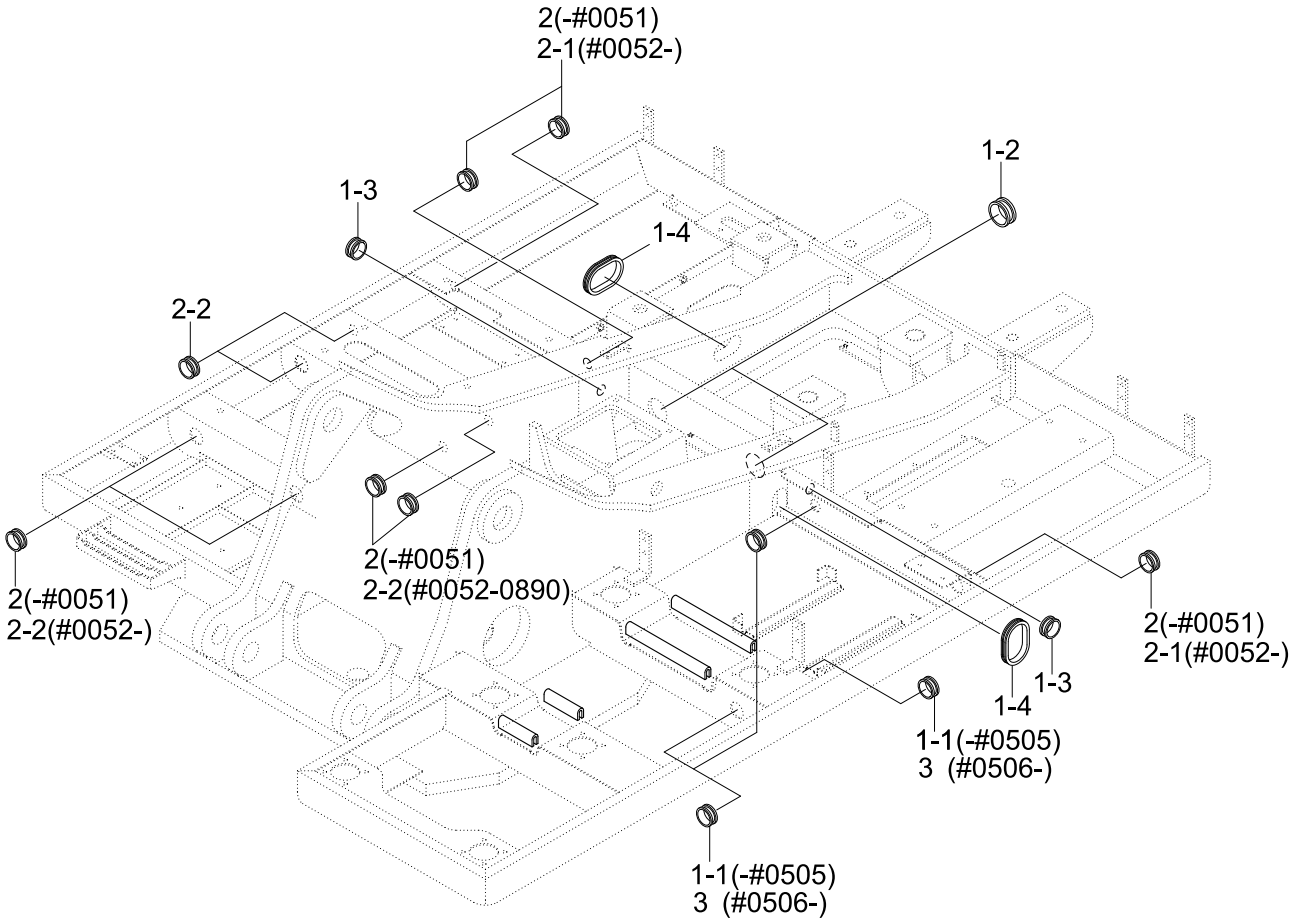

Item	Part_No	IS	Ord	T	Description	Qty	Serial_No	ITC	Remark
1	41N8-50010				GROMMET KIT(A)	1			
1-1	S760-031400				.GROMMET	3	- #0505	-	
1-2	S760-081800				.GROMMET	2			
1-3	S760-111400				.GROMMET	2			
1-4	S760-112010				.GROMMET	2			
2	S760-041000				GROMMET	8	- #0051		
	41N8-70010				GROMMET KIT(B)	1	#0052 - #0890	D	
	41N8-70011				GROMMET KIT(B)	1	#0891 -	D	
2-1	S760-041000				.GROMMET	3	#0052 -	A	
2-2	S760-040800				.GROMMET	6	#0052 - #0890	-	
					.GROMMET	4	#0891 -	A	
3	S760-041400				GROMMET	3	#0506 -	D	

UPPER FRAME & COUNTERWEIGHT

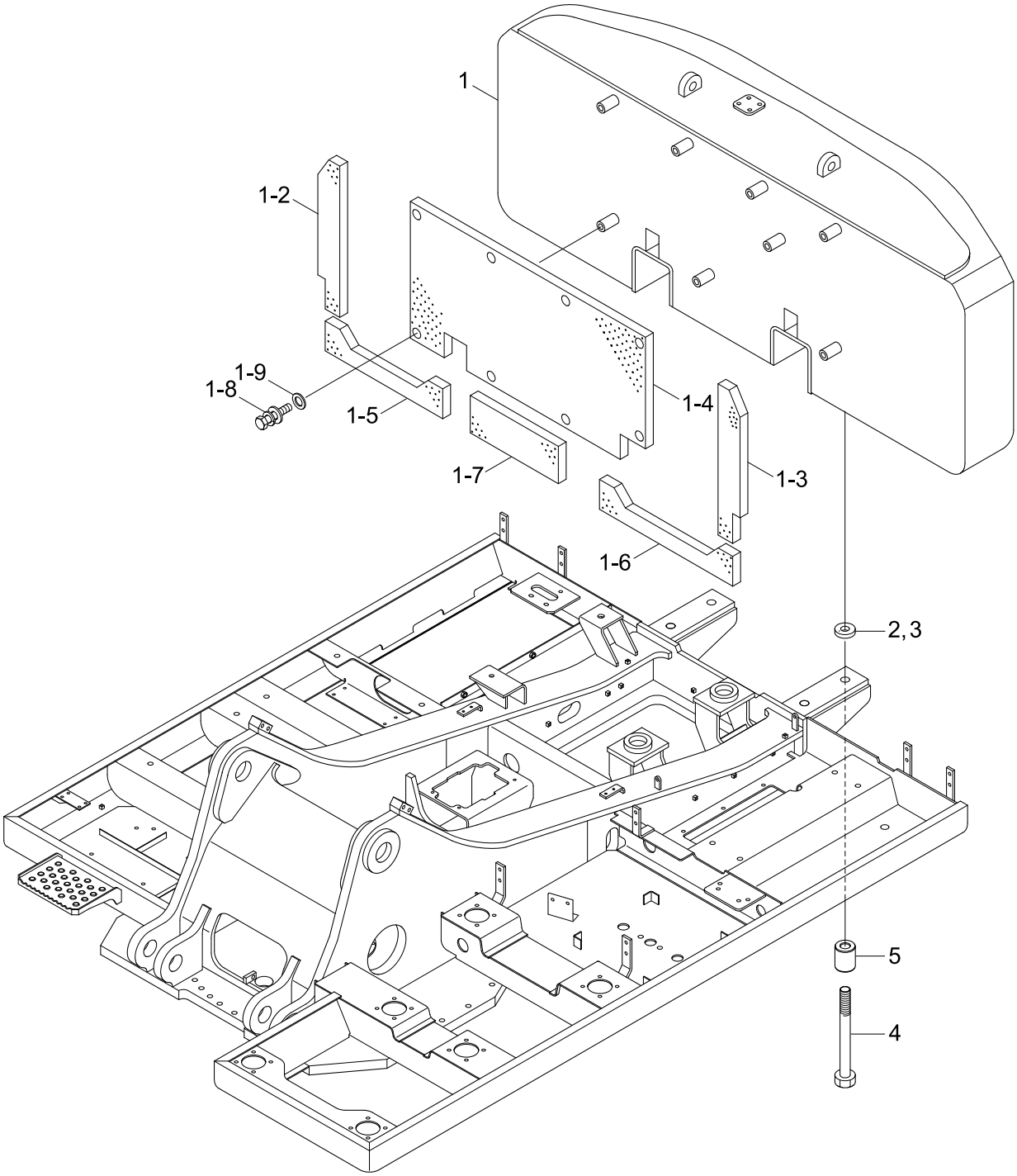

Item	Part_No	IS	Ord	T	Description	Qty	Serial_No	ITC	Remark
1	41N9-21001				COUNTERWEIGHT ASSY	1			STD
	41N9-31000				COUNTERWEIGHT ASSY	1	#0387 -		OPT,6.6TON
1-1	41N9-21011				.COUNTERWEIGHT WA	1			STD
	41N9-31010				.COUNTERWEIGHT WA	1	#0387 -		OPT,6.6TON
1-2	41N8-21211				.SPONGE(A)	1			
1-3	41N8-21221				.SPONGE(B)	1			
1-4	41N8-21234				.SPONGE(C)	1			
1-5	41N8-21241				.SPONGE(D)	1			
1-6	41N8-21251				.SPONGE(E)	1			
1-7	41N8-21261				.SPONGE(F)	1			
1-8	S037-102522				.BOLT-W/WASHER	8			
1-9	61L1-2037				.WASHER-HARDENED	8			
2	S391-050100				SHIM-ROUND(1.0T)	6			
3	S392-050100				SHIM-ROUND(2.0T)	6			
4	S018-362002				BOLT-HEX	4			
5	41N8-21271				SPACER	4			
10	41N9-00012				UPPER FRAME WA	1	- #1118		MCV TYPE 1
	41N9-00012BG				UPPER FRAME WA	1	#1119 -	D	MCV TYPE 1
	41N9-04010				UPPER FRAME WA	1	#2403 -		MCV TYPE 2

LOWER FRAME & COVER

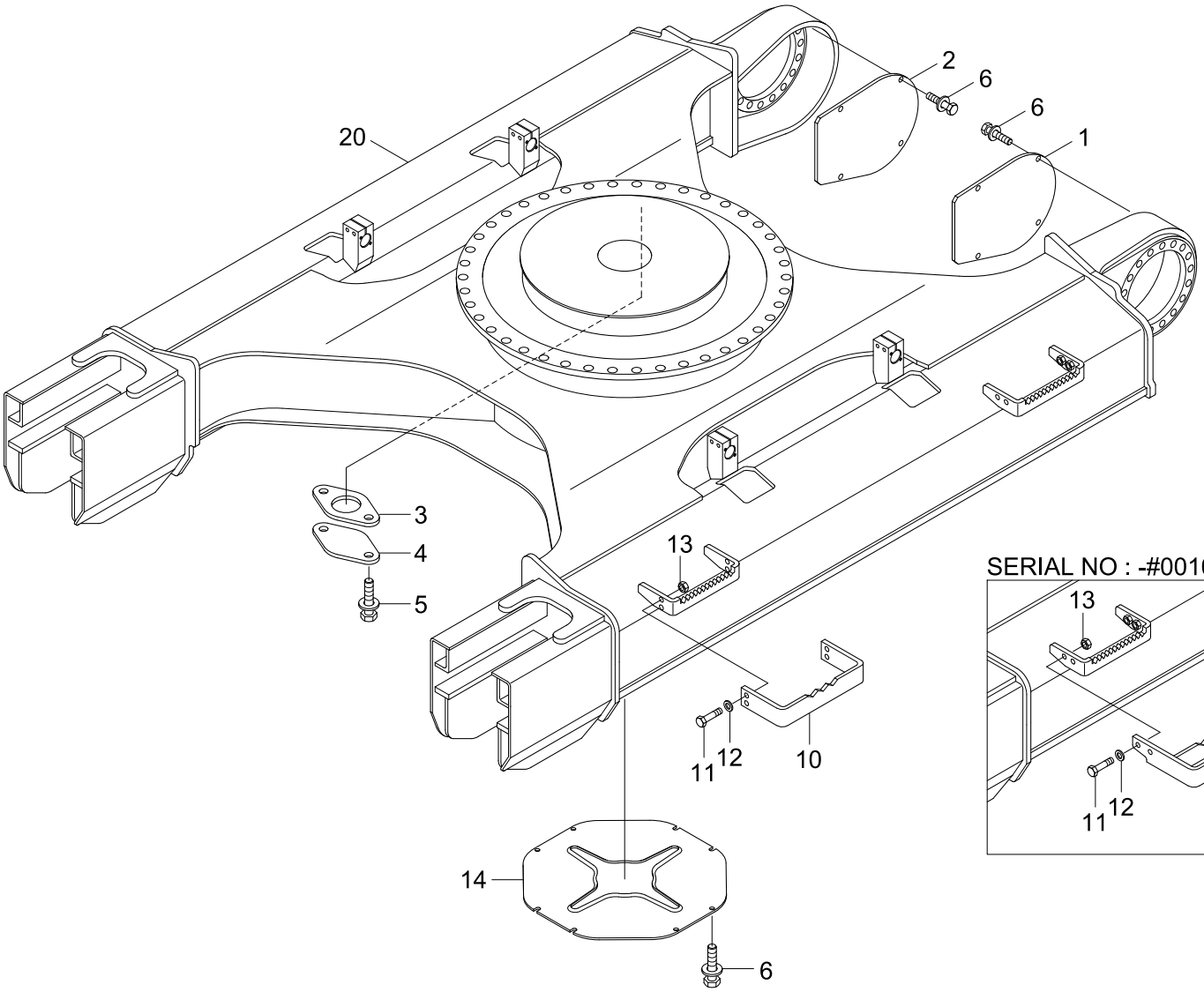

SERIAL NO : -#0010

STD(6mm) : #1893-2067
OPT(8mm) : #1893-

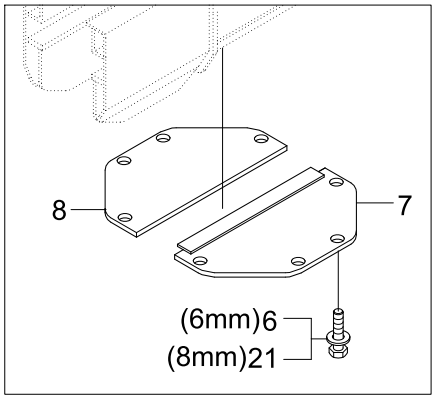

STD/OPT(6mm/8mm) : -#1892

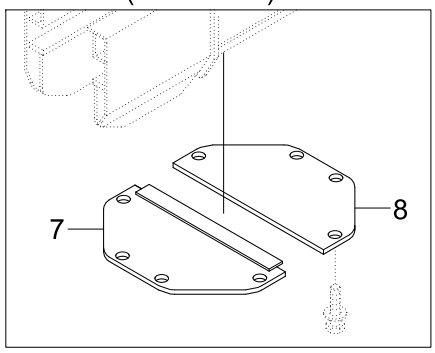

Item	Part_No	IS	Ord	T	Description	Qty	Serial_No	ITC	Remark
1	51N8-11112				COVER WA-T/MOTOR,LH	1	- #1118		
	51N8-11112BG				COVER WA-T/MOTOR,LH	1	#1119 -	D	
2	51N8-11122				COVER WA-T/MOTOR,RH	1	- #1118		
	51N8-11122BG				COVER WA-T/MOTOR,RH	1	#1119 -	D	
3	41N6-10100				COVER	1			
4	41E9-1306				SEAL	1			
5	S037-102056				BOLT-W/WASHER	2			
6	S037-123556				BOLT-W/WASHER	16			
	S037-124556				BOLT-W/WASHER	8	#0976 -	-	OPT, ADDITION
7	51N6-11211				COVER-BOTTOM(A)	1	- #1118		STD, 6MM
	51N6-11211BG				COVER-BOTTOM(A)	1	#1119 - #2067	D	STD, 6MM
	51N6-11230				COVER-BOTTOM(A)	1	#0976 - #1118	-	OPT, 8MM
	51N6-11230BG				COVER-BOTTOM(A)	1	#1119 -	D	OPT, 8MM
8	51N6-11221				COVER-BOTTOM(B)	1	- #1118		STD, 6MM
	51N6-11221BG				COVER-BOTTOM(B)	1	#1119 - #2067	D	STD, 6MM
	51N6-11240				COVER-BOTTOM(B)	1	#0976 - #1118	-	OPT, 8MM
	51N6-11240BG				COVER-BOTTOM(B)	1	#1119 -	D	OPT, 8MM
10	51N8-20011				BOARD-FOOT	1	- #0010		700MM SHOE
	51N6-02640				BOARD-FOOT	1	#0011 - #1118	D	700MM SHOE
	51N6-02640BG				BOARD-FOOT	1	#1119 -	D	700MM SHOE
	51N8-20051				BOARD-FOOT	1	- #0010		800MM SHOE
	51N6-02650				BOARD-FOOT	1	#0011 - #1118	D	800MM SHOE
	51N6-02650BG				BOARD-FOOT	1	#1119 -	D	750,800MM SHOE
	51N8-20081				BOARD-FOOT	1	- #0010		900MM SHOE
	51N6-02660				BOARD-FOOT	1	#0011 - #1118	D	900MM SHOE

Item	Part_No	IS	Ord	T	Description	Qty	Serial_No	ITC	Remark
10	51N6-02660BG				BOARD-FOOT	1	#1119 -	D	
11	S017-160552				BOLT-HEX	16			
12	S441-160002				WASHER-HARDENED	32			
13	S207-161002				NUT-HEX	10			
14	51Q6-11210BG				COVER-BOTTOM(A)	1	#2068 -	B	STD, 6MM
20	51N9-00011				LOWER FRAME WA	1	- #0010		
	51N9-00012				LOWER FRAME WA	1	#0011 - #0975	D	
	51N9-00013				LOWER FRAME WA	1	#0976 - #1118	A	
	51N9-00013BG				LOWER FRAME WA	1	#1119 -	D	
	51N8-06012				LOWER FRAME WA	1	#0008 - #0975	-	HIGH WALKER
	51N8-06013				LOWER FRAME WA	1	#0976 - #1118	A	
	51N8-06013BG				LOWER FRAME WA	1	#1119 -	D	
	51N9-05010				LOWER FRAME WA	1	#0015 - #1118	-	NARROW TRACK
	51N9-05010BG				LOWER FRAME WA	1	#1119 -	D	
21	S037-124556				BOLT-W/WASHER	8	#0976 -	-	

SWING RING GREASE LUB SYSTEM

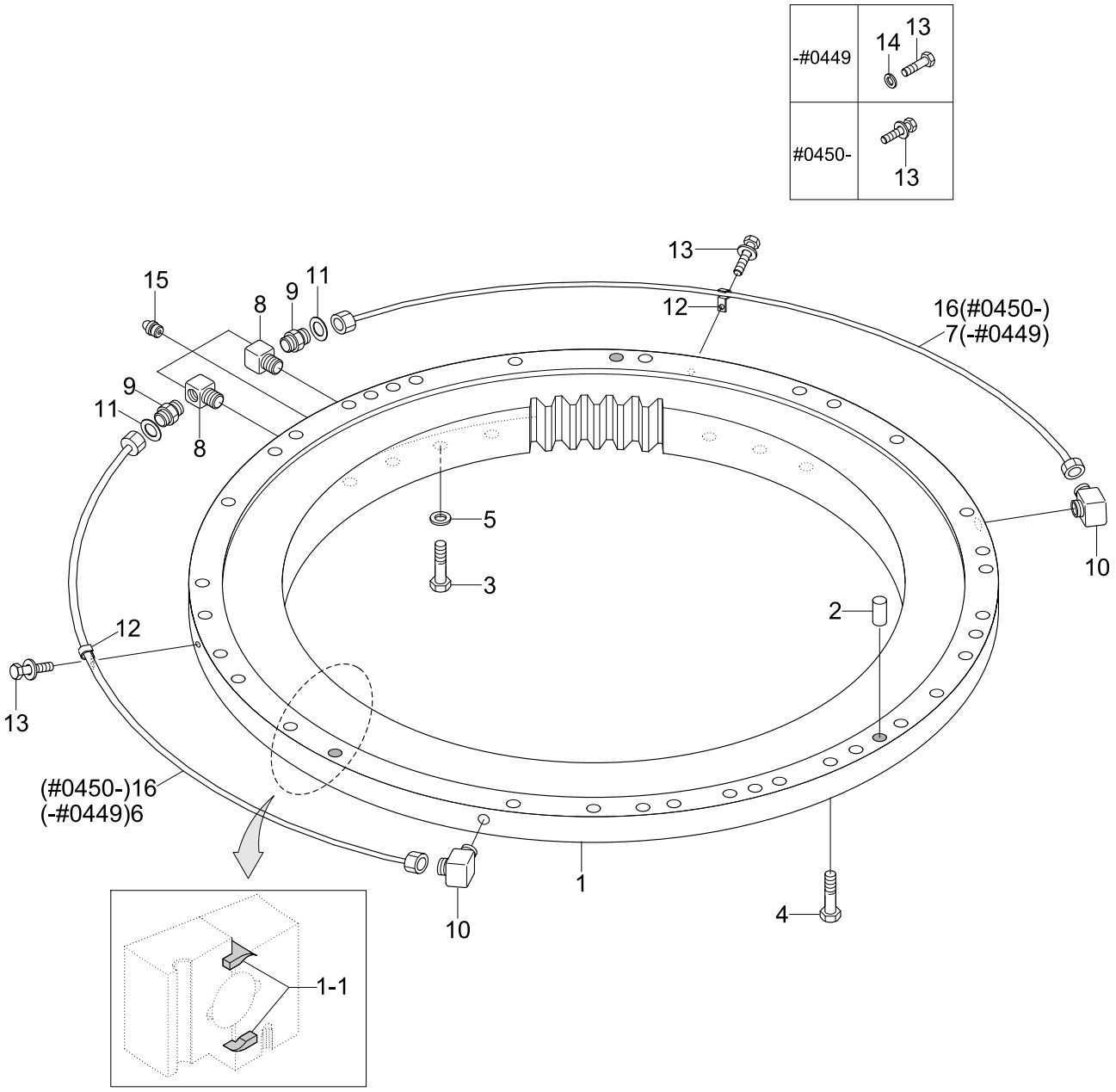

Item	Part_No	IS	Ord	T	Description	Qty	Serial_No	ITC	Remark
1	81N9-01020				SWING BEARING	1	- #0005		
	81N9-01021				SWING BEARING	1	#0006 - #0793	B	
	81N9-01022				SWING BEARING	1	#0794 -	B	
1-1	82E9-10040				.SEAL-SWING BEARING	1			
2	E180-5002	20			BOLT-REAMER	3			
3	S017-240752				BOLT-HEX	40			
4	S017-241202				BOLT-HEX	35	- #0005		
	S017-241302				BOLT-HEX	35	#0006 -	D	
5	S441-240002				WASHER-HARDENED	40			
6	81N8-00030				PIPE-GREASE,LH	1	- #0449	-	
7	81N8-00040				PIPE-GREASE,RH	1	- #0449	-	
8	31EH-00610				FITTING	2	- #0449		
	81N6-00110				ELBOW-90	2	#0450 -	D	
9	E131-0626	10			CONNECTOR	2	- #0449		
	81N6-00120				CONNECTOR	2	#0450 -	D	
10	E231-0349	10			ELBOW-90	2	- #0449		
	81N6-00130				ELBOW-90	2	#0450 -	D	
11	P391-040000				WASHER-COPPER	2	- #0449	-	
12	E241-2603	10			CLAMP	2	- #0449		
	S543-120002				CLAMP-TUBE	2	#0450 -	D	
13	S017-100152				BOLT-HEX	2	- #0449		
	S037-101556				BOLT-W/WASHER	2	#0450 -	A	
14	S411-100002				WASHER-SPRING	2	- #0449	-	
15	S651-810002				NIPPLE-GREASE	3			
16	81N6-00250				TUBE-NYLON	2	#0450 -	D	

CAB PROTECTOR ASSY(OPTION, #0939-)

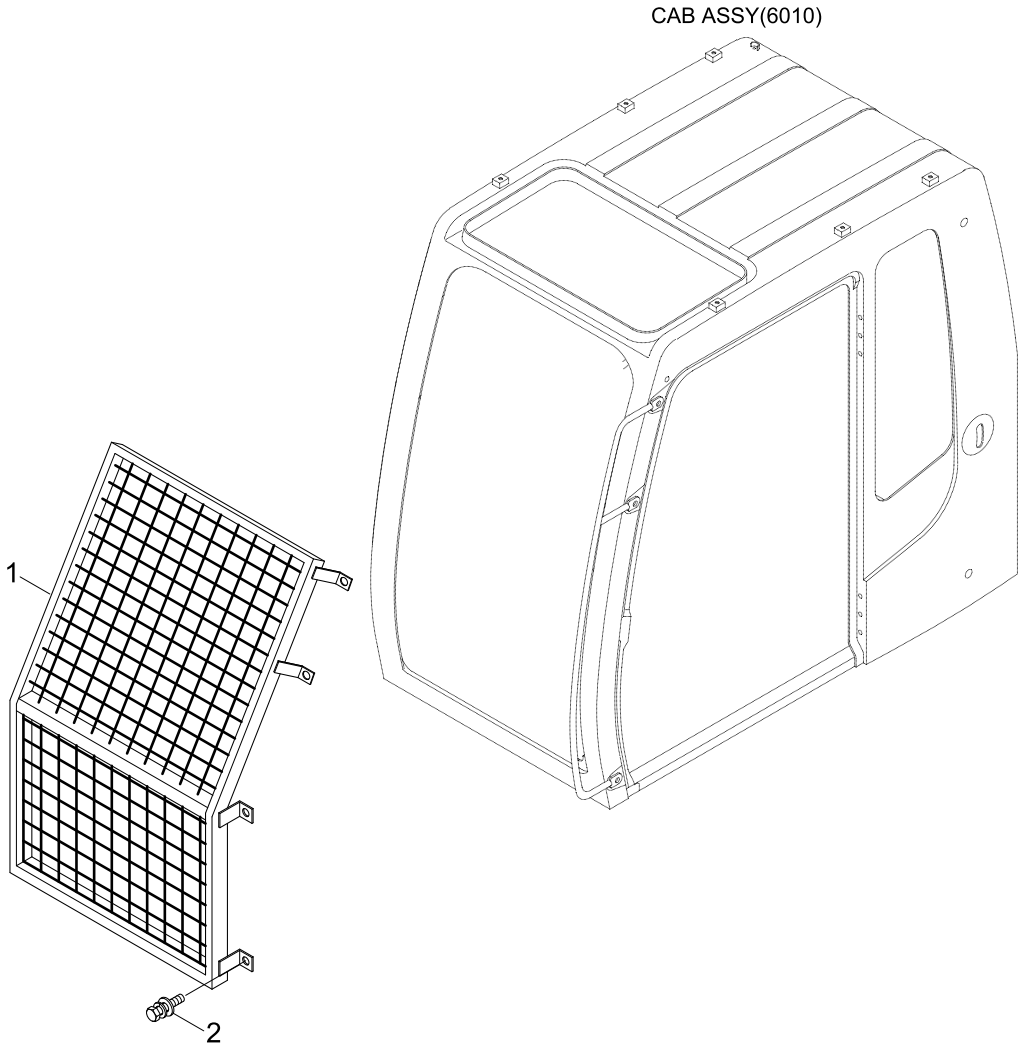

Item	Part_No	IS	Ord	T	Description	Qty	Serial_No	ITC	Remark
*	@				CABIN-PROTECTOR	1	#0939 -	-	NOT
1	71N6-90300				PROTECTOR WA	1	- #1678		
	71N6-90301				PROTECTOR WA	1	#1679 -	D	
2	S037-122556				BOLT-W/WASHER	8			

BOOM MOUNTING

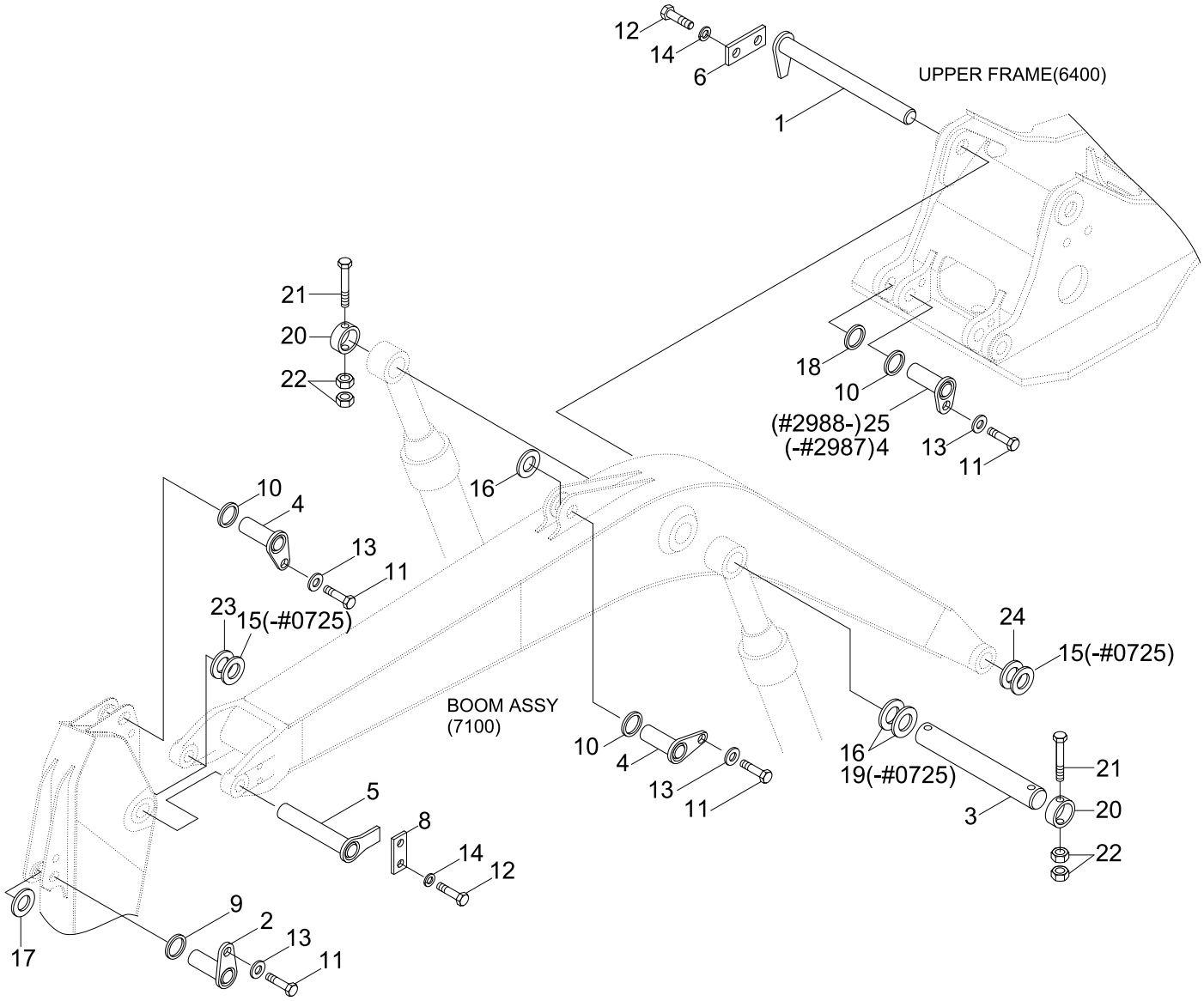

SERIAL NO : -#0043

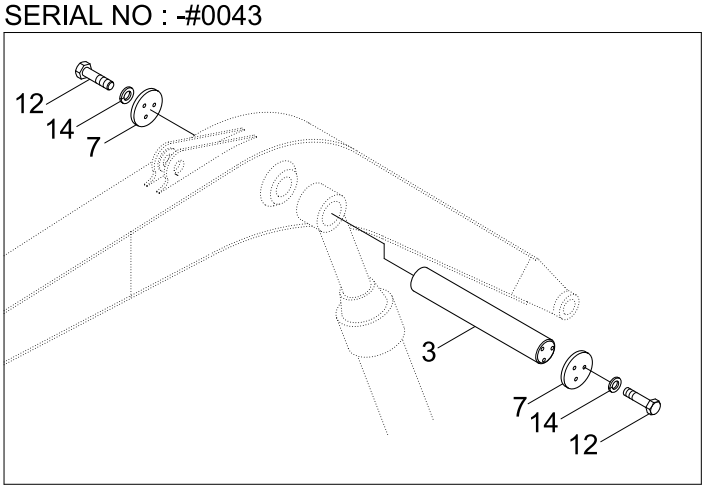

Item	Part_No	IS	Ord	T	Description	Qty	Serial_No	ITC	Remark
1	61N9-00011				PIN ASSY	1	- #0854		
	61N9-00012				PIN ASSY	1	#0855 - #1118	B	
	61N9-00012BG				PIN ASSY	1	#1119 -	D	
	61N9-00012-AS				PIN ASSY	1	#0001 -	-	FOR AS ONLY
2	61N8-01770				PIN ASSY	1	- #0854		
	61N8-01771				PIN ASSY	1	#0855 -	B	
	61N8-01771-AS				PIN ASSY	1	#0001 -	-	FOR AS ONLY
3	61N9-00021				PIN	1	- #0043		
	61N9-00060				PIN	1	#0044 - #0854	D	
	61N9-00061				PIN ASSY	1	#0855 -	B	
	61N9-00061-AS				PIN ASSY	1	#0001 -	-	FOR AS ONLY
4	61N8-01850				PIN ASSY	4	- #0134		
	61N8-01860				PIN ASSY	4	#0135 - #0854	D	
	61N8-01861				PIN ASSY	4	#0855 - #1118	B	
	61N8-01861BG				PIN ASSY	4	#1119 - #2987	D	
					PIN ASSY	2	#2988 -	A	
	61N8-01861-AS				PIN ASSY	4	#0001 -	-	FOR AS ONLY
5	61N9-00030				PIN ASSY	1	- #0571		
	61N9-00031				PIN ASSY	1	#0572 -	B	
	61N9-00031-AS				PIN ASSY	1	#0001 -	-	FOR AS ONLY
6	61NA-00030				PLATE-LOCK	1	- #1118		
	61NA-00030BG				PLATE-LOCK	1	#1119 -	D	
7	61N9-00040				PLATE-LOCK	2	- #0043	-	
8	61N8-10810				PLATE-LOCK	1			
9	61N8-00170				SPACER-PIN	1	- #2150		

Item	Part_No	IS	Ord	T	Description	Qty	Serial_No	ITC	Remark
9	61Q8-00150				SPACER-PIN	1	#2151 -	B	
10	61N8-00180				SPACER-PIN	4	- #2150		
	61Q8-00160				SPACER-PIN	4	#2151 -	B	
11	S017-200302				BOLT-HEX	5			
12	S017-160452				BOLT-HEX	10	- #0043		
					BOLT-HEX	4	#0044 -	A	
13	61N8-00320				WASHER-HARDENED	5			
14	S411-160002				WASHER-SPRING	10	- #0043		
					WASHER-SPRING	4	#0044 -	A	
15	S391-110190				SHIM-ROUND(1.0T)	2	- #0725	-	
16	S391-100170				SHIM-ROUND(1.0T)	2			
17	S391-090165				SHIM-ROUND(1.0T)	1			
18	S391-100165				SHIM-ROUND(1.0T)	1	#0001 -	-	
19	S392-100170				SHIM-ROUND(2.0T)	1	#0044 - #0725	-	
20	61N8-19030				STOPPER-PIN	2	#0044 -	-	
21	S017-161802				BOLT-HEX	2	#0044 -	-	
22	S205-161002				NUT-HEX	4	#0044 -	-	
23	S390-100200A				SHIM-ROUND(0.5T)	1	#1724 -	-	
24	S390-110200A				SHIM-ROUND(0.5T)	1	#1724 -	-	
25	61N8-01890BG				PIN ASSY	2	#2988 -	D	

BOOM(6.45M)

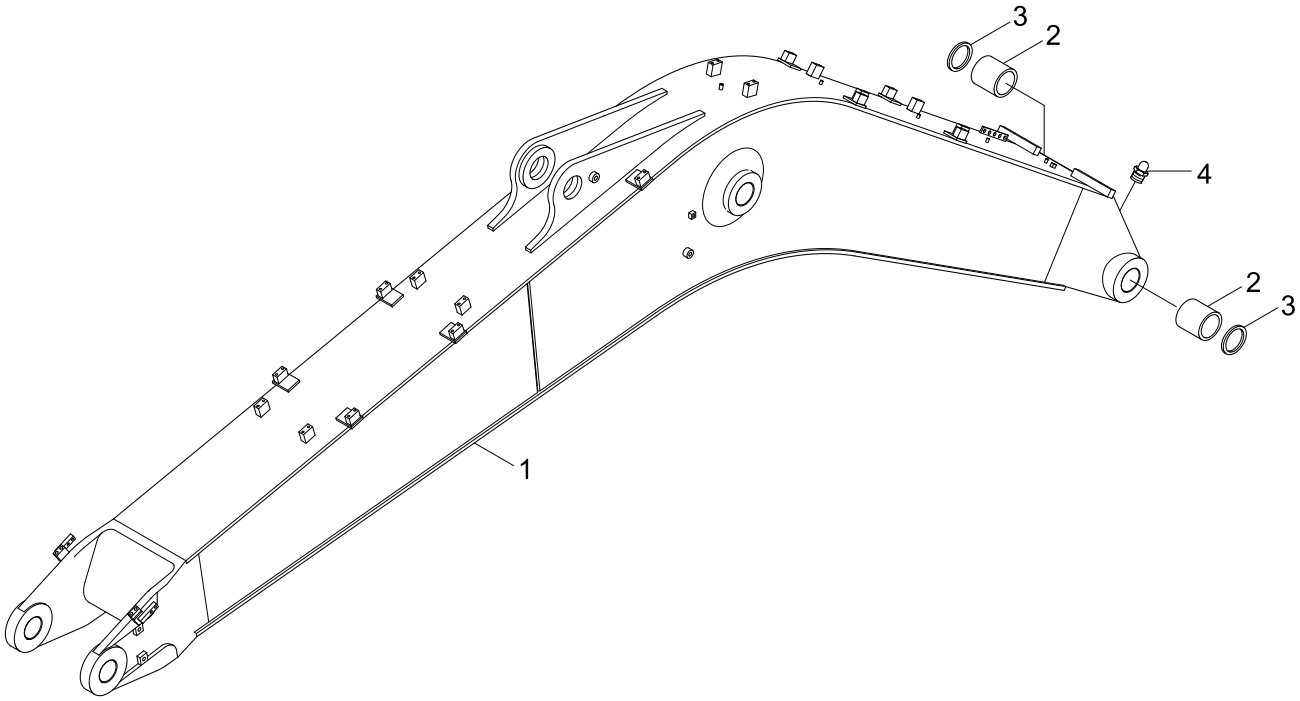

Item	Part_No	IS	Ord	T	Description	Qty	Serial_No	ITC	Remark
*	61N9-10102				BOOM ASSY(6.45M)	1	- #1215		
	62N9-10100				BOOM ASSY(6.45M)	1	#1216 -	D	
1	61N9-11012				.BOOM WA(6.45M)	1	- #1215		
N1	62N9-11010				.BOOM WA(6.45M)	1	#1216 -	D	NOT
2	61EN-12141				.BUSHING-BRONZE	2			
3	S700-110208				.SEAL-DUST	2	#0001 - #2110	-	
	S700-110209				.SEAL-DUST	2	#2111 -	D	
4	S651-810002				.NIPPLE-GREASE	1			

BOOM(6.45M, HEAVY DUTY, #1040-)

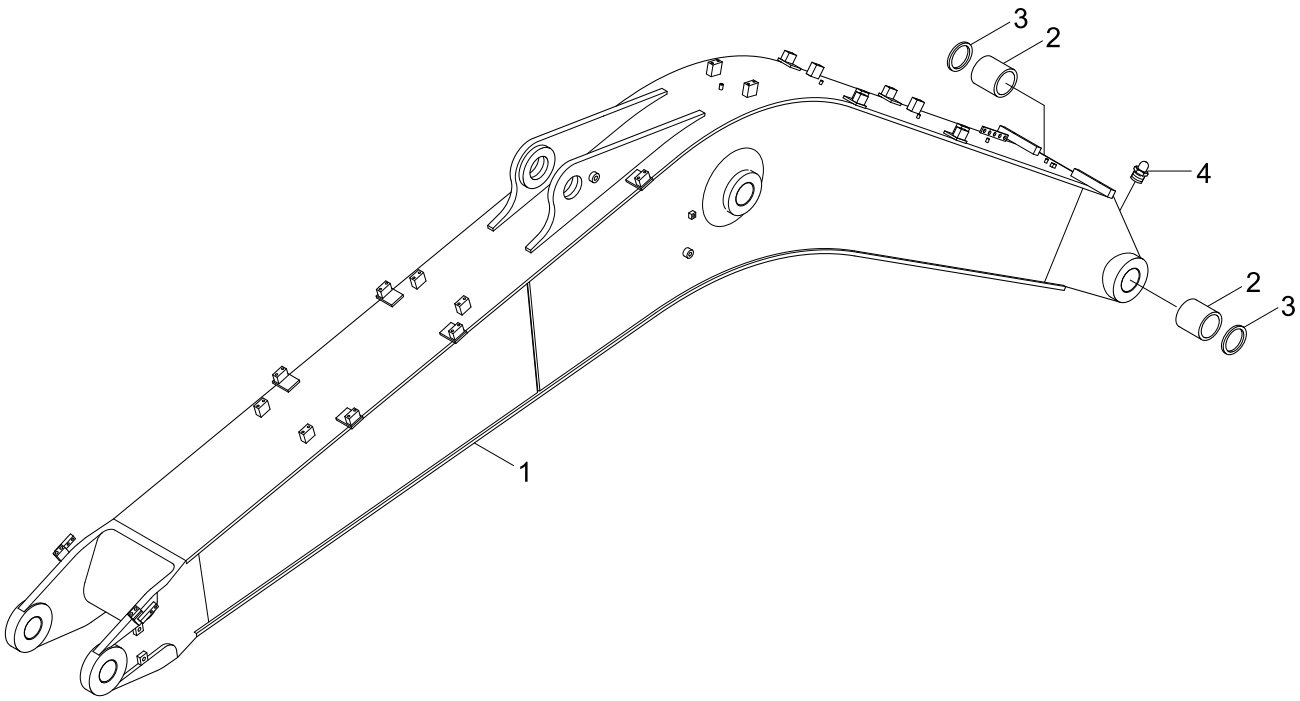

Item	Part_No	IS	Ord	T	Description	Qty	Serial_No	ITC	Remark
*	61N9-10900				BOOM ASSY(6.45M)	1	#1040 - #1215	-	
	62N9-10900				BOOM ASSY(6.45M)	1	#1216 -	D	
1	61N9-19010				.BOOM WA(6.45M)	1	- #1215		
N1	62N9-19010				.BOOM WA(6.45M)	1	#1216 -	D	NOT
2	61EN-12141				.BUSHING-BRONZE	2			
3	S700-110208				.SEAL-DUST	2	- #2110		
	S700-110209				.SEAL-DUST	2	#2111 -	D	
4	S651-810002				.NIPPLE-GREASE	1			

BOOM(6.15M)

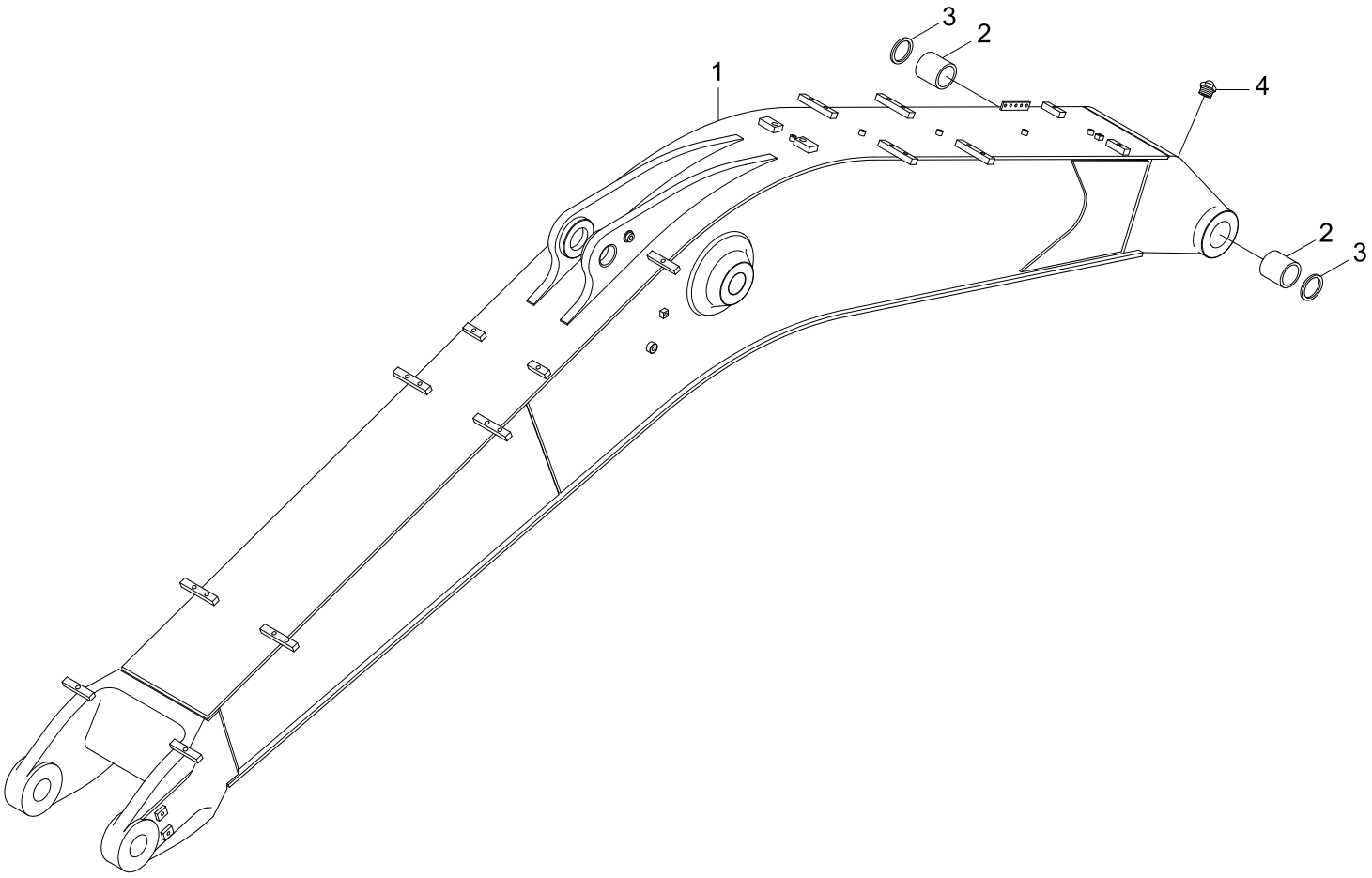

Item	Part_No	IS	Ord	T	Description	Qty	Serial_No	ITC	Remark
*	61N9-10200				BOOM ASSY	1			
N1	61N9-12010				.BOOM WA	1			NOT
2	61EN-12141				.BUSHING-BRONZE	2			
3	S700-110208				.SEAL-DUST	2	#0001 - #2110	-	
	S700-110209				.SEAL-DUST	2	#2111 -	D	
4	S651-810002				.NIPPLE-GREASE	1			

ARM(3.2M, STD)

SERIAL NO : -#2315

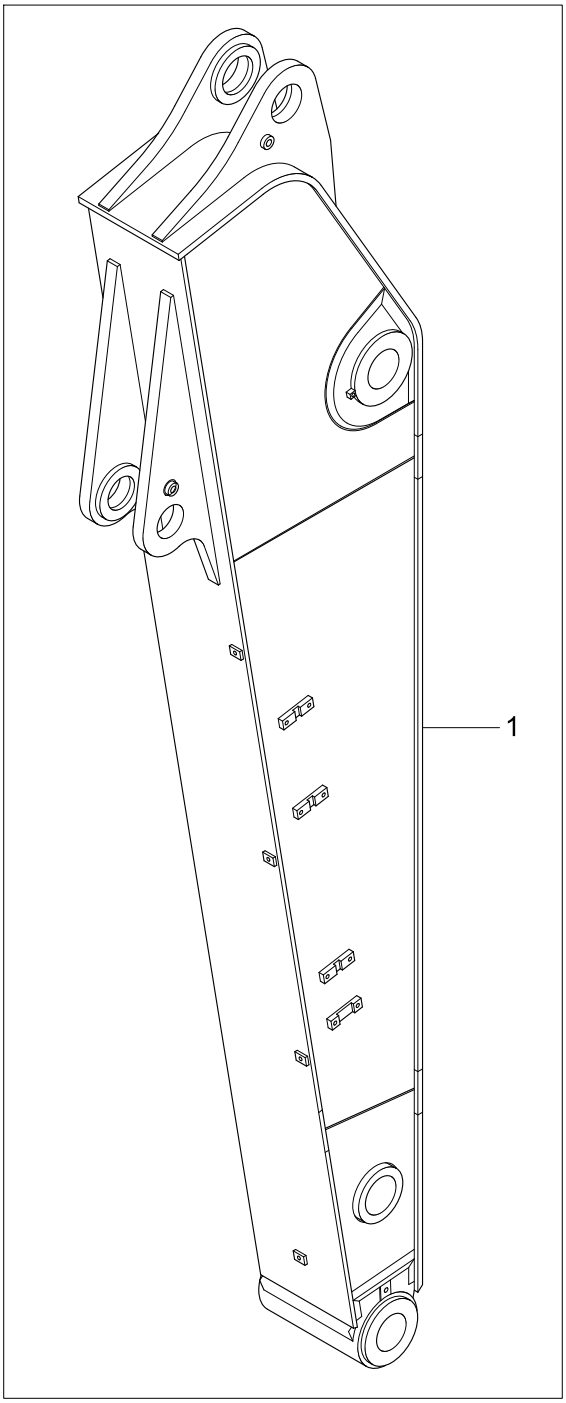

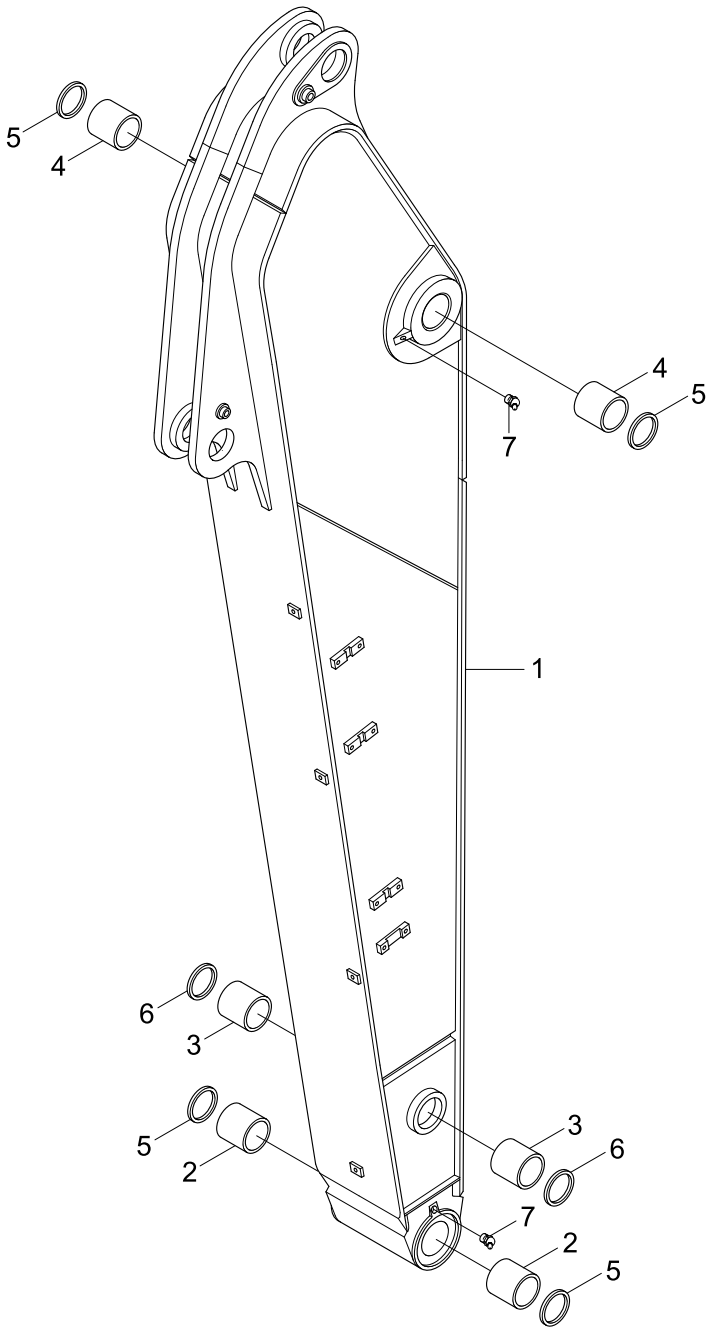

Item	Part_No	IS	Ord	T	Description	Qty	Serial_No	ITC	Remark
*	61N9-20102				ARM ASSY(3.2M)	1	- #0215		
	61N9-20103				ARM ASSY(3.2M)	1	#0216 - #1215	D	
	61N9-20104				ARM ASSY(3.2M)	1	#1216 -	B	
1	61N9-21012				.ARM WA(3.2M)	1	- #0215		
	61N9-21013				.ARM WA(3.2M)	1	#0216 - #1215	D	
	61N9-21014				.ARM WA(3.2M)	1	#1216 - #2315	B	
	61N9-21015				.ARM WA(3.2M)	1	#2316 -	A	
2	61EN-13390				.BUSHING	2	- #0350		
	61EN-17120				.BUSHING	2	#0351 -	B	
3	61EN-13380				.BUSHING	2			
4	61EN-12310				.BUSHING-BRONZE	2			
5	S700-100208				.DUST SEAL-DKIY TYPE	4			
6	S700-090206				.DUST SEAL-DKIY TYPE	2			
7	S651-810002				.NIPPLE-GREASE	2			

ARM(3.20M, H/DUTY, #1040-)

SERIAL NO : -#2362

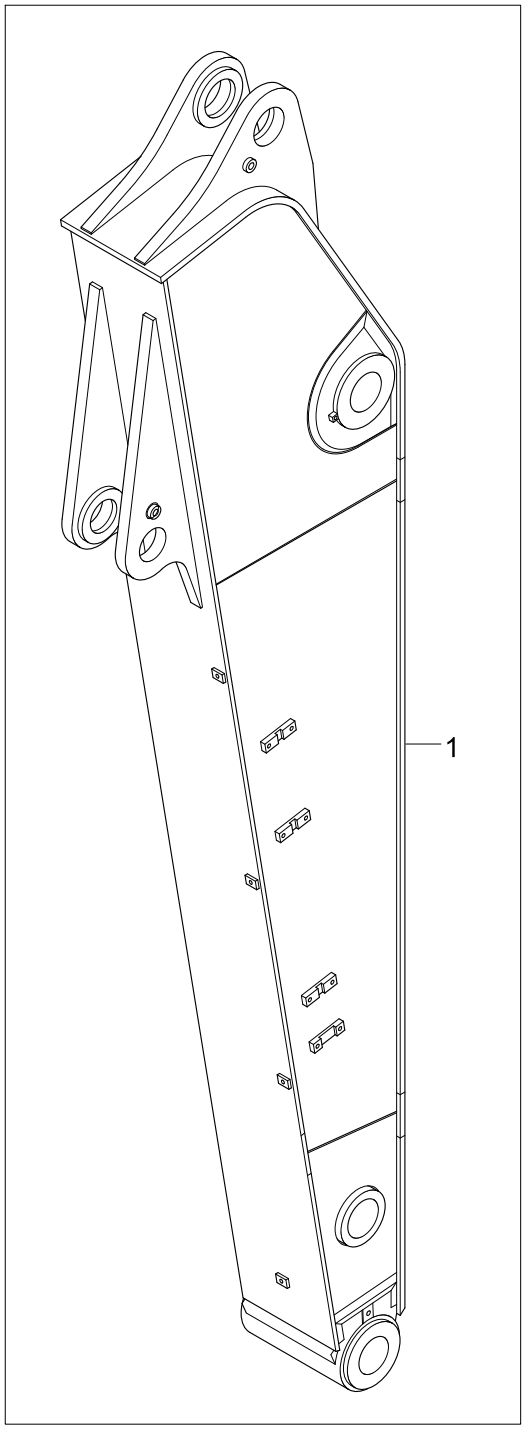

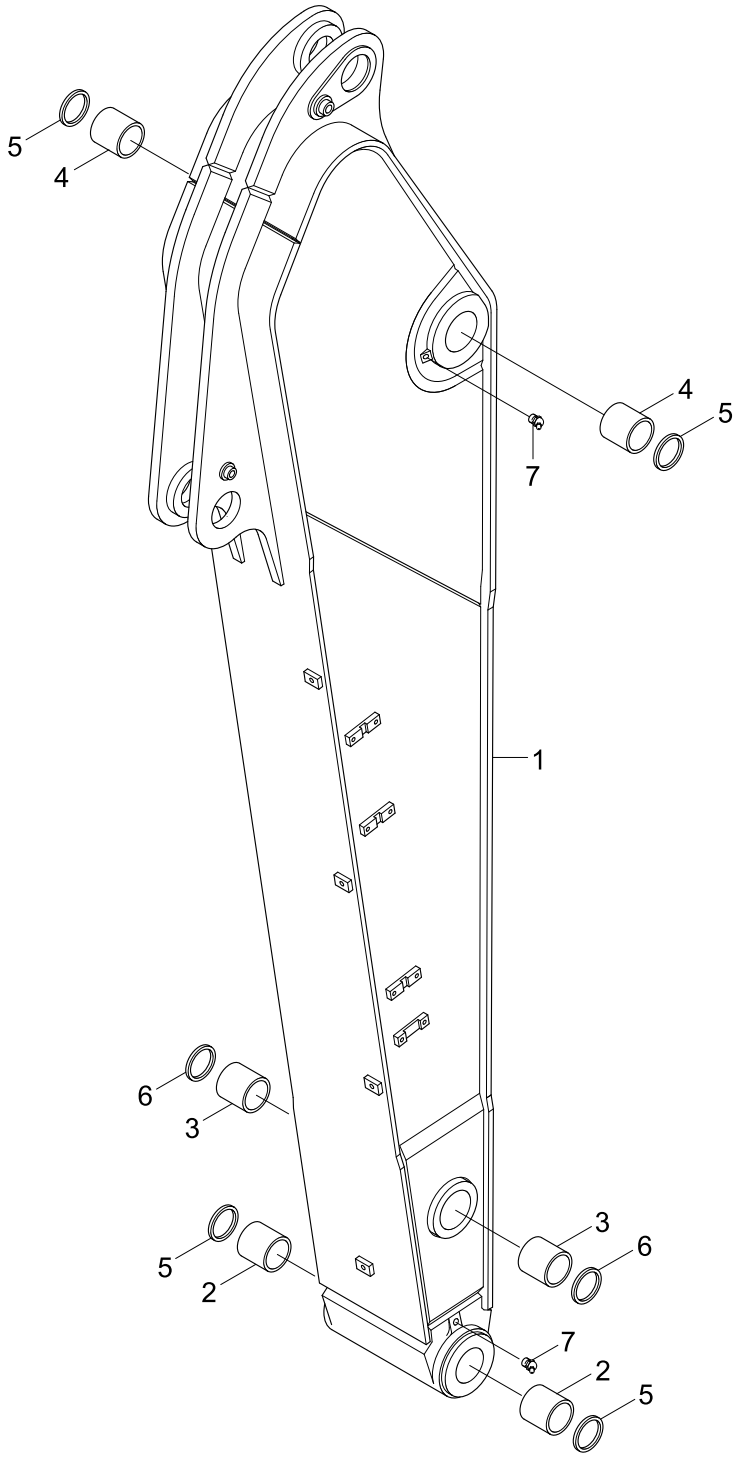

Item	Part_No	IS	Ord	T	Description	Qty	Serial_No	ITC	Remark
*	61N9-20900				ARM ASSY(3.2M)-H/DUTY	1	#1040 - #1215	-	
	61N9-20901				ARM ASSY(3.2M)-H/DUTY	1	#1216 -	B	
1	61N9-29010				.ARM WA(3.2M)-H/DUTY	1	- #1215		
N1	61N9-29011				.ARM WA(3.2M)-H/DUTY	1	#1216 - #2362	B	NOT
	61N9-29012				.ARM WA(3.2M)-H/DUTY	1	#2363 -	D	NOT
2	61EN-17120				.BUSHING	2			
3	61EN-13380				.BUSHING	2			
4	61EN-12310				.BUSHING-BRONZE	2			
5	S700-100208				.DUST SEAL-DKIY TYPE	4			
6	S700-090206				.DUST SEAL-DKIY TYPE	2			
7	S651-810002				.NIPPLE-GREASE	2			

ARM(2.2M)

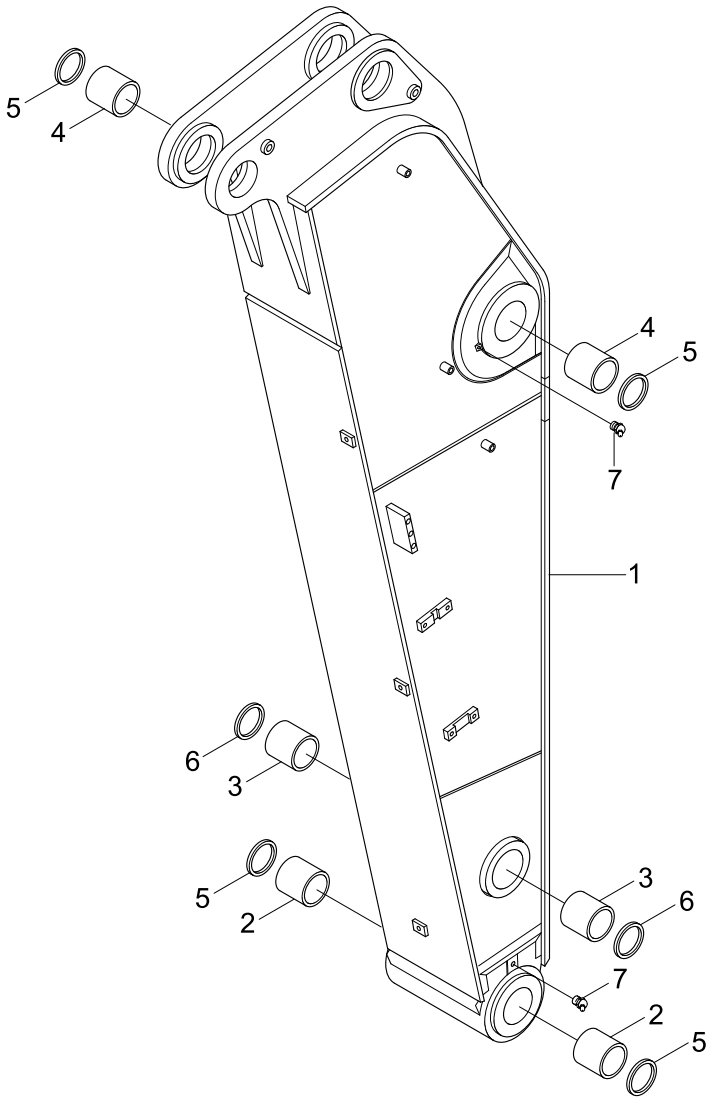

Item	Part_No	IS	Ord	T	Description	Qty	Serial_No	ITC	Remark
*	61N9-20200				ARM ASSY(2.2M)	1	- #0215		
	61N9-20201				ARM ASSY(2.2M)	1	#0216 - #1215	D	
	61N9-20202				ARM ASSY(2.2M)	1	#1216 -	B	
1	61N9-22010				.ARM WA(2.2M)	1	- #0215		
	61N9-22011				.ARM WA(2.2M)	1	#0216 - #1215	D	
	61N9-22012				.ARM WA(2.2M)	1	#1216 -	B	
2	61EN-13390				.BUSHING	2	- #0350		
	61EN-17120				.BUSHING	2	#0351 -	B	
3	61EN-13380				.BUSHING	2			
4	61EN-12310				.BUSHING-BRONZE	2			
5	S700-100208				.DUST SEAL-DKIY TYPE	4			
6	S700-090206				.DUST SEAL-DKIY TYPE	2			
7	S651-810002				.NIPPLE-GREASE	2			

ARM(2.2M, HEAVY DUTY)

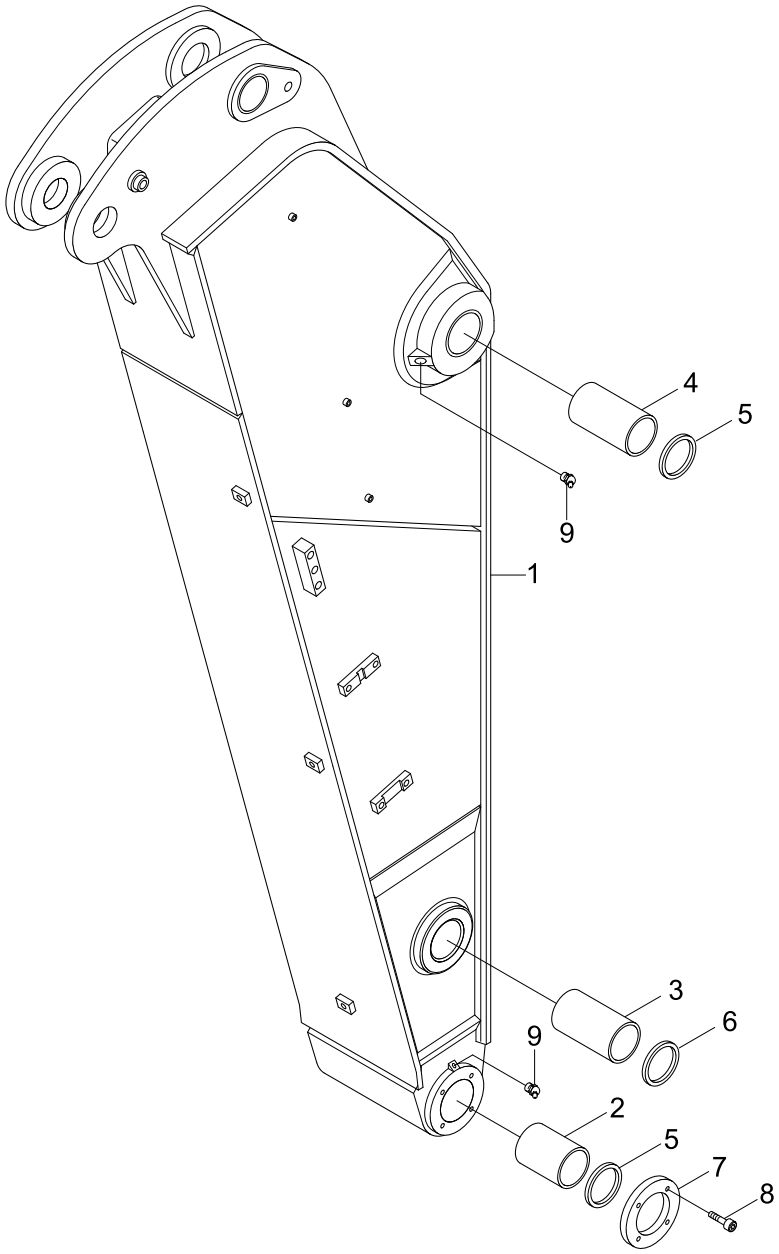

Item	Part_No	IS	Ord	T	Description	Qty	Serial_No	ITC	Remark
*	64N9-20200				ARM ASSY	1	#2103 -		
1	64N9-22010				.ARM WA	1			
2	61Q6-04130				.BUSHING	2	- #2975		
	61QH-89160				.BUSHING	2	#2976 -	B	
3	61Q6-04070				.BUSHING	2			
4	61EN-12310				.BUSHING-BRONZE	2			
5	S700-100208				.DUST SEAL-DKIY TYPE	4			
6	S700-090206				.DUST SEAL-DKIY TYPE	2			
7	61Q9-21301				.COVER PLATE	2			
8	S109-120256				.BOLT-SOCKET	8			
9	S651-810002				.NIPPLE-GREASE	2			

ARM(2.5M)

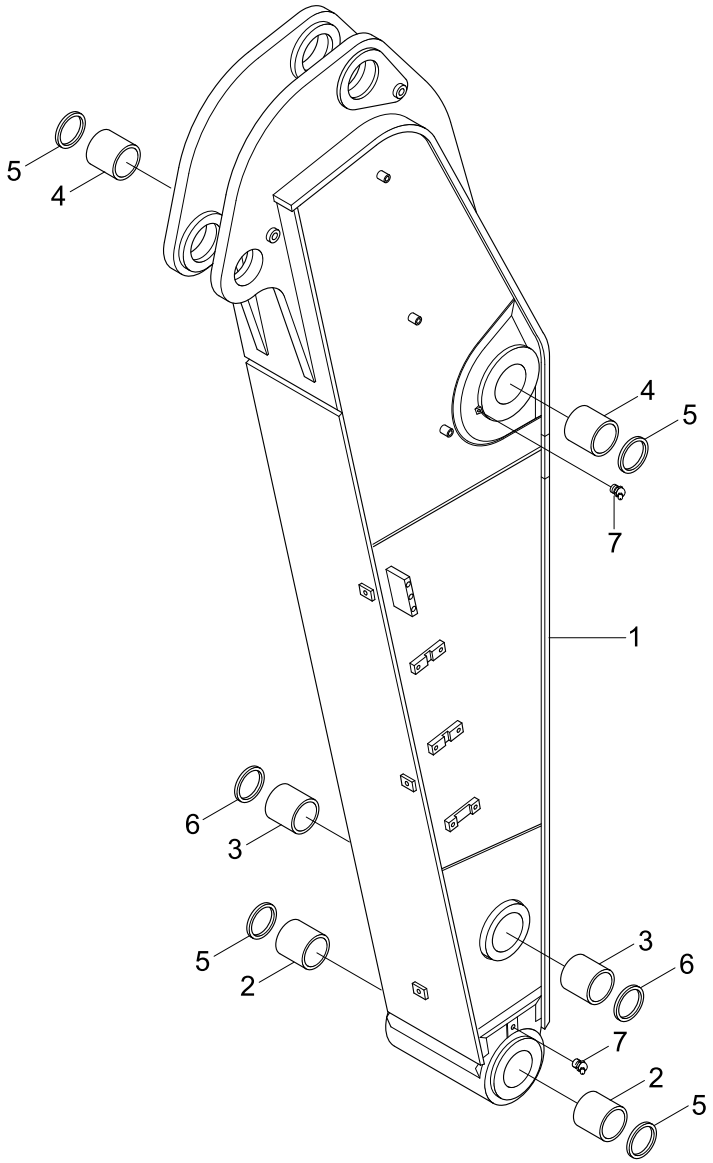

Item	Part_No	IS	Ord	T	Description	Qty	Serial_No	ITC	Remark
*	61N9-20300				ARM ASSY(2.5M)	1	- #0215		
	61N9-20301				ARM ASSY(2.5M)	1	#0216 - #1215	D	
	61N9-20302				ARM ASSY(2.5M)	1	#1216 -	B	
1	61N9-23010				.ARM WA(2.5M)	1	- #0215		
	61N9-23011				.ARM WA(2.5M)	1	#0216 - #1215	D	
	61N9-23012				.ARM WA(2.5M)	1	#1216 -	B	
2	61EN-13390				.BUSHING	2	- #0350		
	61EN-17120				.BUSHING	2	#0351 -	B	
3	61EN-13380				.BUSHING	2			
4	61EN-12310				.BUSHING-BRONZE	2			
5	S700-100208				.DUST SEAL-DKIY TYPE	4			
6	S700-090206				.DUST SEAL-DKIY TYPE	2			
7	S651-810002				.NIPPLE-GREASE	2			

ARM(4.05M)

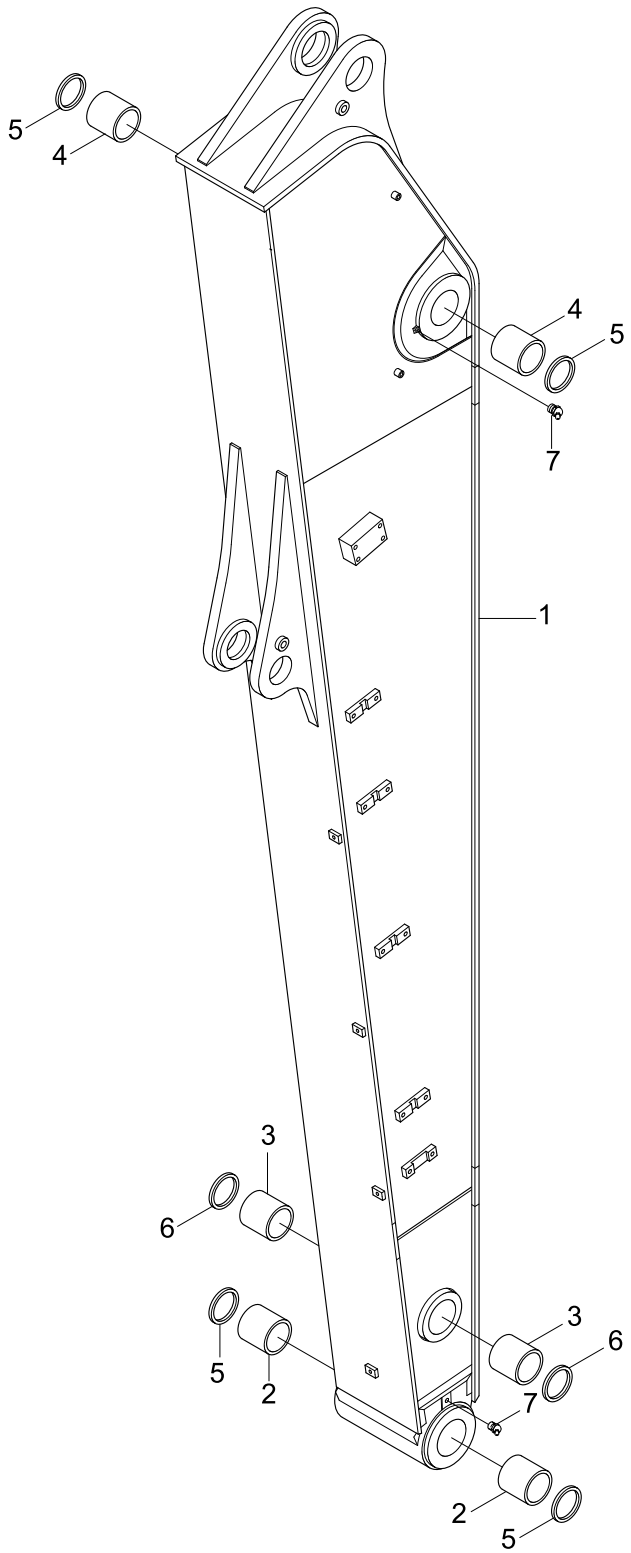

Item	Part_No	IS	Ord	T	Description	Qty	Serial_No	ITC	Remark
*	61N9-20400				ARM ASSY(4.05M)	1	- #0215		
	61N9-20401				ARM ASSY(4.05M)	1	#0216 - #1215	D	
	61N9-20402				ARM ASSY(4.05M)	1	#1216 -	B	
1	61N9-24010				.ARM WA(4.05M)	1	- #0215		
	61N9-24011				.ARM WA(4.05M)	1	#0216 - #1215	D	
	61N9-24012				.ARM WA(4.05M)	1	#1216 -	B	
2	61EN-13390				.BUSHING	2	- #0350		
	61EN-17120				.BUSHING	2	#0351 -	B	
3	61EN-13380				.BUSHING	2			
4	61EN-12310				.BUSHING-BRONZE	2			
5	S700-100208				.DUST SEAL-DKIY TYPE	4			
6	S700-090206				.DUST SEAL-DKIY TYPE	2			
7	S651-810002				.NIPPLE-GREASE	2			

BUCKET CONTROL GROUP

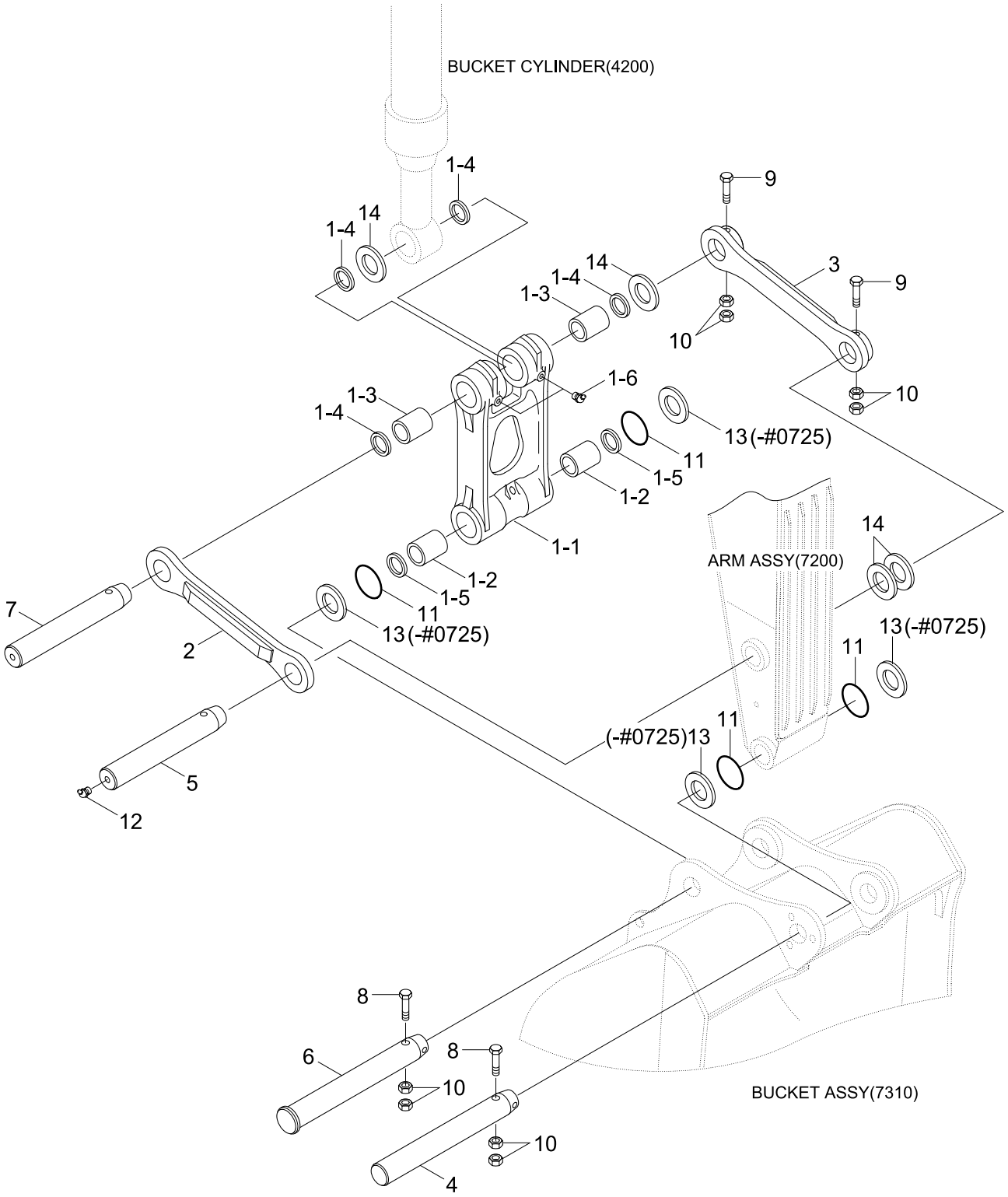

Item	Part_No	IS	Ord	T	Description	Qty	Serial_No	ITC	Remark
1	61N9-40010				CONTROL ROD ASSY	1	- #1118		
	61N9-40010BG				CONTROL ROD ASSY	1	#1119 -	D	
1-1	61N9-40090				.CONTROL ROD	1	- #1118		
	61N9-40090BG				.CONTROL ROD	1	#1119 -	D	
1-2	X124-102100				.BUSHING	2			
1-3	X114-902135				.BUSHING	2	#0001 -	-	
1-4	S700-090206				.DUST SEAL-DKIY TYPE	4			
1-5	S700-100208				.DUST SEAL-DKIY TYPE	2			
1-6	S651-810002				.NIPPLE-GREASE	3			
2	61N9-40020				CONTROL LINK-LH	1	- #1118		
	61N9-40020BG				CONTROL LINK-LH	1	#1119 - #2586	D	
	61Q9-40020BG				CONTROL LINK-LH	1	#2587 -	B	
3	61N9-40030				CONTROL LINK-RH	1	- #1118		
	61N9-40030BG				CONTROL LINK-RH	1	#1119 - #2586	D	
	61Q9-40030BG				CONTROL LINK-RH	1	#2587 -	B	
4	61NA-40050				PIN	1	- #0282		
	61NA-40051				PIN	1	#0283 - #0574	B	
	61NA-40052				PIN	1	#0575 -	B	
5	61NA-40060				PIN	1	- #0854		
	61NA-40061				PIN	1	#0855 -	B	
6	61NA-40070				PIN	1	- #0282		
	61NA-40071				PIN	1	#0283 - #0574	B	
	61NA-40072				PIN	1	#0575 -	B	
7	61NA-40080				PIN	1	- #0574		
	61NA-40081				PIN	1	#0575 -	B	

Item	Part_No	IS	Ord	T	Description	Qty	Serial_No	ITC	Remark
8	S017-20180D				BOLT-HEX	2	- #2022		
	S017-201806				BOLT-HEX	2	#2023 -	B	
9	S017-201652				BOLT-HEX	2			
10	S205-201002				NUT-HEX	8			
11	E161-3054				O-RING	4			
12	S651-810002				NIPPLE-GREASE	1			
13	S391-100165				SHIM-ROUND(1.0T)	4	- #0725	-	
14	S391-090165				SHIM-ROUND(1.0T)	4			

BUCKET(1.44M3 SAE HEAPED)

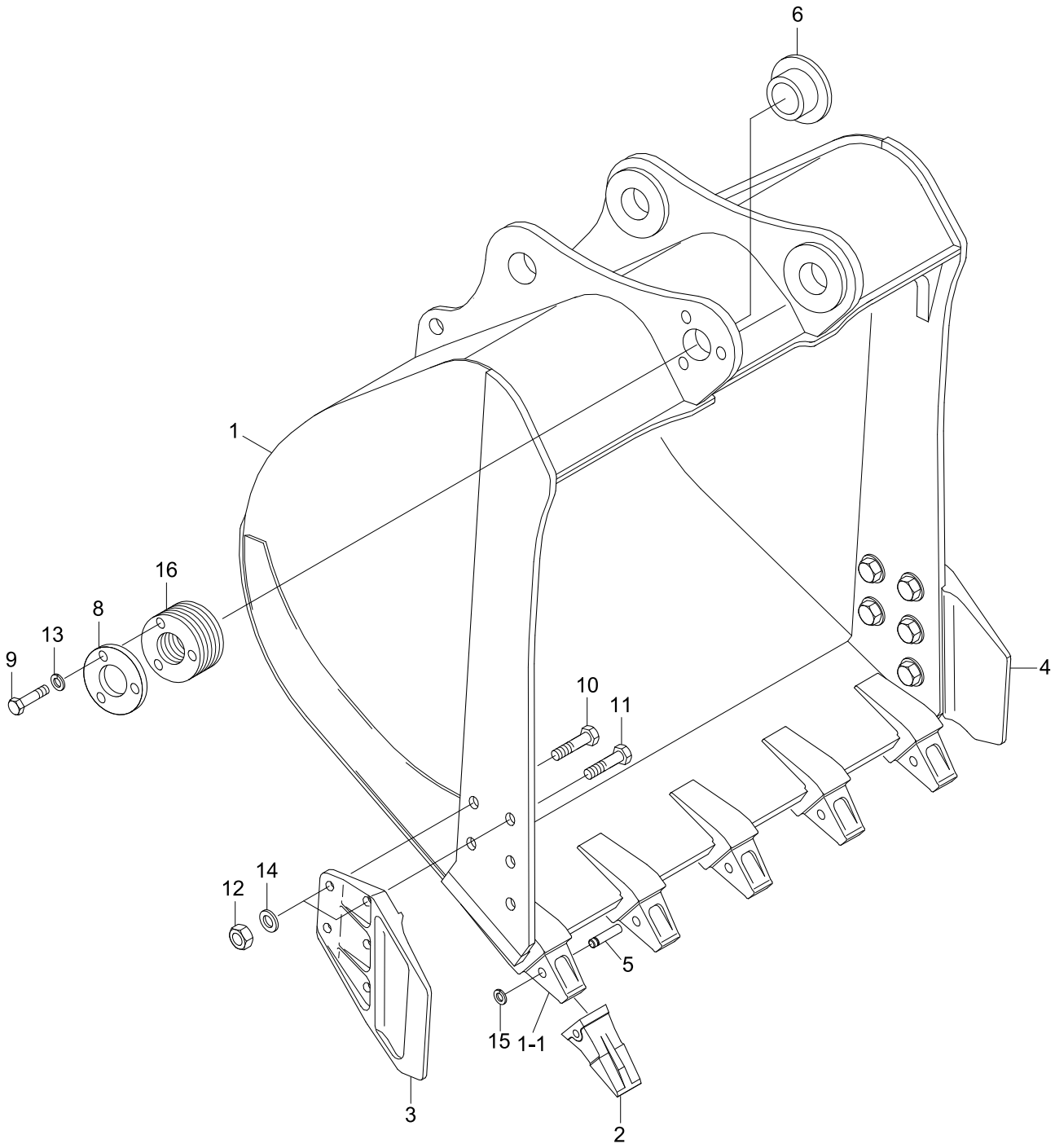

Item	Part_No	IS	Ord	T	Description	Qty	Serial_No	ITC	Remark
*	61N9-30101				BUCKET ASSY	1	- #0345		
	61N9-30102				BUCKET ASSY	1	#0346 - #1118	B	
	61N9-30102BG				BUCKET ASSY	1	#1119 -	D	
1	61N9-31011				.BUCKET WA	1	- #0345		
	61N9-31012				.BUCKET WA	1	#0346 - #1118	B	
	61N9-31012BG				.BUCKET WA	1	#1119 -	D	
1-1	E262-3027	20			..ADAPTER-TOOTH	5	- #0345		
	61N8-31320				..ADAPTER-TOOTH	5	#0346 -	D	
2	E262-3046	30			.POINT-TOOTH	5	- #0345		
	61N8-31310				.POINT-TOOTH	5	#0346 - #1118	B	
	61N8-31310BG				.POINT-TOOTH	5	#1119 -	D	
3	63E1-3533	20			.SIDE CUTTER-LH	1	- #1118		
	63E1-3533BG	30			.SIDE CUTTER-LH	1	#1119 -	D	
4	63E1-3534	20			.SIDE CUTTER-RH	1	- #1118		
	63E1-3534BG	30			.SIDE CUTTER-RH	1	#1119 -	D	
K5	E262-5004	20			.PIN-TOOTH	5			
6	61E5-1126	20			.BUSHING	1			
8	61E5-3136	10			.COVER PLATE	1			
9	S017-160502				.BOLT-HEX	2			
10	S017-220652				.BOLT-HEX	4			
11	S017-220702				.BOLT-HEX	6			
12	S205-221002				.NUT-HEX	10			
13	S411-160002				.WASHER-SPRING	3			
14	S411-220002				.WASHER-SPRING	10	- #3549		
	S441-220006				.WASHER-HARDENED	10	#3550 -	D	

Item	Part_No	IS	Ord	T	Description	Qty	Serial_No	ITC	Remark
K15	61E5-11150				.WASHER-LOCK	5			
16	61E5-3141	10			.SHIM(1.0T)	6			
K	E262-5004-S				TOOTH PIN KIT	1	#0001 -	-	INCL 5, 15

BUCKET(1.44m^3 SAE HEAPED, #1125-)

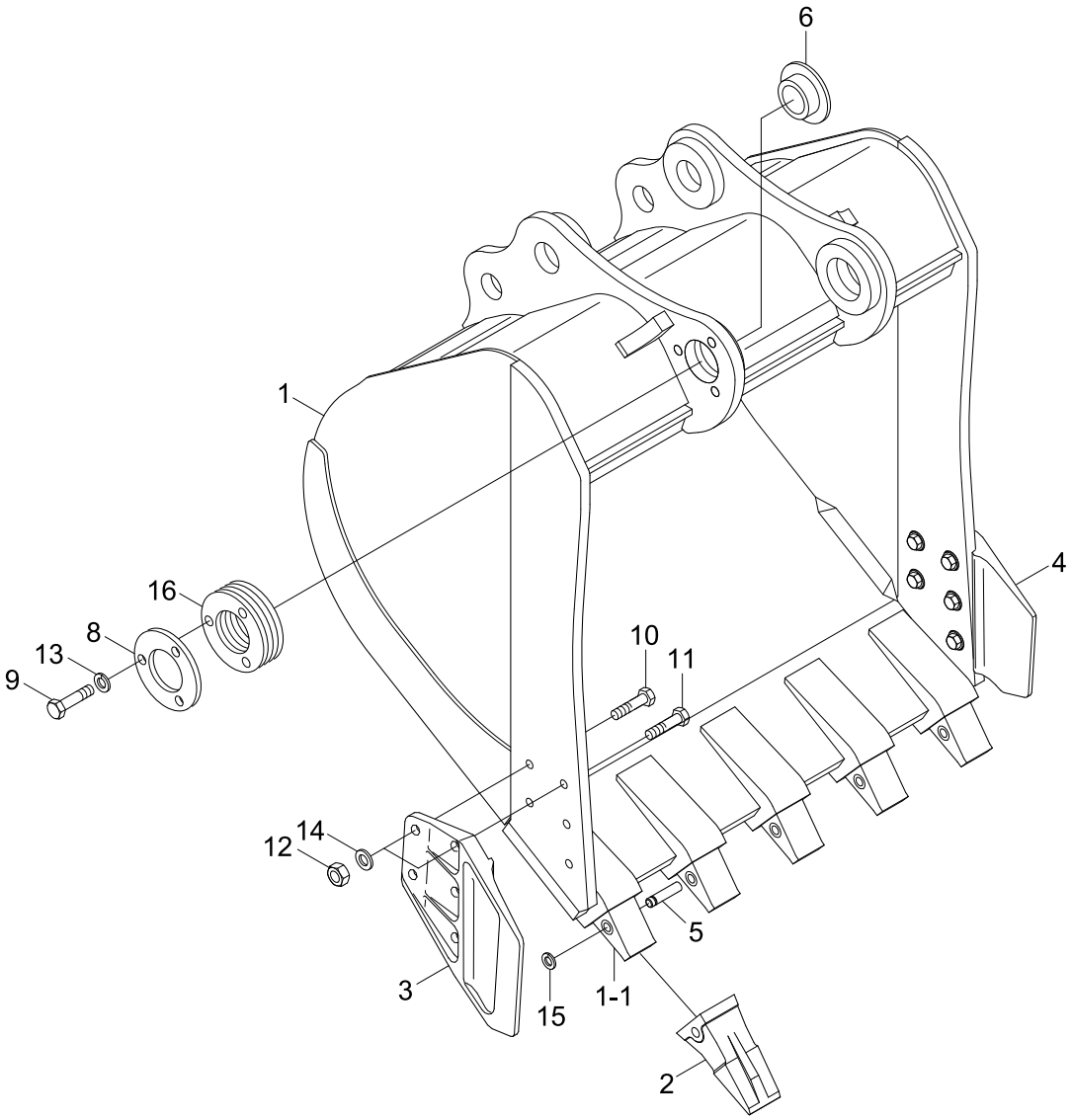

Item	Part_No	IS	Ord	T	Description	Qty	Serial_No	ITC	Remark
*	66N9-30100BG				BUCKET ASSY	1	#1125 - #3343	-	WEAR-RESISTANT
	66N9-30101BG				BUCKET ASSY	1	#3344 -	B	WEAR-RESISTANT
1	66N9-31010BG				.BUCKET WA	1	- #3343		
	66N9-31011BG				.BUCKET WA	1	#3344 -	D	
1-1	61N8-31320				..ADAPTER-TOOTH	5			
2	61N8-31310BG				.POINT-TOOTH	5			
3	63E1-3533	20			.SIDE CUTTER-LH	1	- #1118		
	63E1-3533BG	30			.SIDE CUTTER-LH	1	#1119 -	D	
4	63E1-3534	20			.SIDE CUTTER-RH	1	- #1118		
	63E1-3534BG	30			.SIDE CUTTER-RH	1	#1119 -	D	
K5	E262-5004	20			.PIN-TOOTH	5			
6	61E5-1126	20			.BUSHING	1			
8	61E5-3136	10			.COVER PLATE	1			
9	S017-160502				.BOLT-HEX	3	- #3343		
	S017-160506				.BOLT-HEX	3	#3344 -	B	
10	S017-220652				.BOLT-HEX	4	- #3343		
	S017-22065D				.BOLT-HEX	4	#3344 -	B	
11	S017-220702				.BOLT-HEX	6	- #3343		
	S017-22070D				.BOLT-HEX	6	#3344 -	B	
12	S205-221002				.NUT-HEX	10	- #3343		
	S205-22100B				.NUT-HEX	10	#3344 -	B	
13	S411-160002				.WASHER-SPRING	3	- #3343		
	S441-160006				.WASHER-HARDENED	3	#3344 -	B	
14	S411-220002				.WASHER-SPRING	10	- #3343		
	S411-220006				.WASHER-SPRING	10	#3344 - #3549	B	

Item	Part_No	IS	Ord	T	Description	Qty	Serial_No	ITC	Remark
14	S441-220006				.WASHER-HARDENED	10	#3550 -	D	
K15	61E5-11150				.WASHER-LOCK	5			
16	61E5-3141	10			.SHIM(1.0T)	6			
K	E262-5004-S				TOOTH PIN KIT	1			INCL 5, 15

BUCKET(0.9M3 SAE HEAPED)

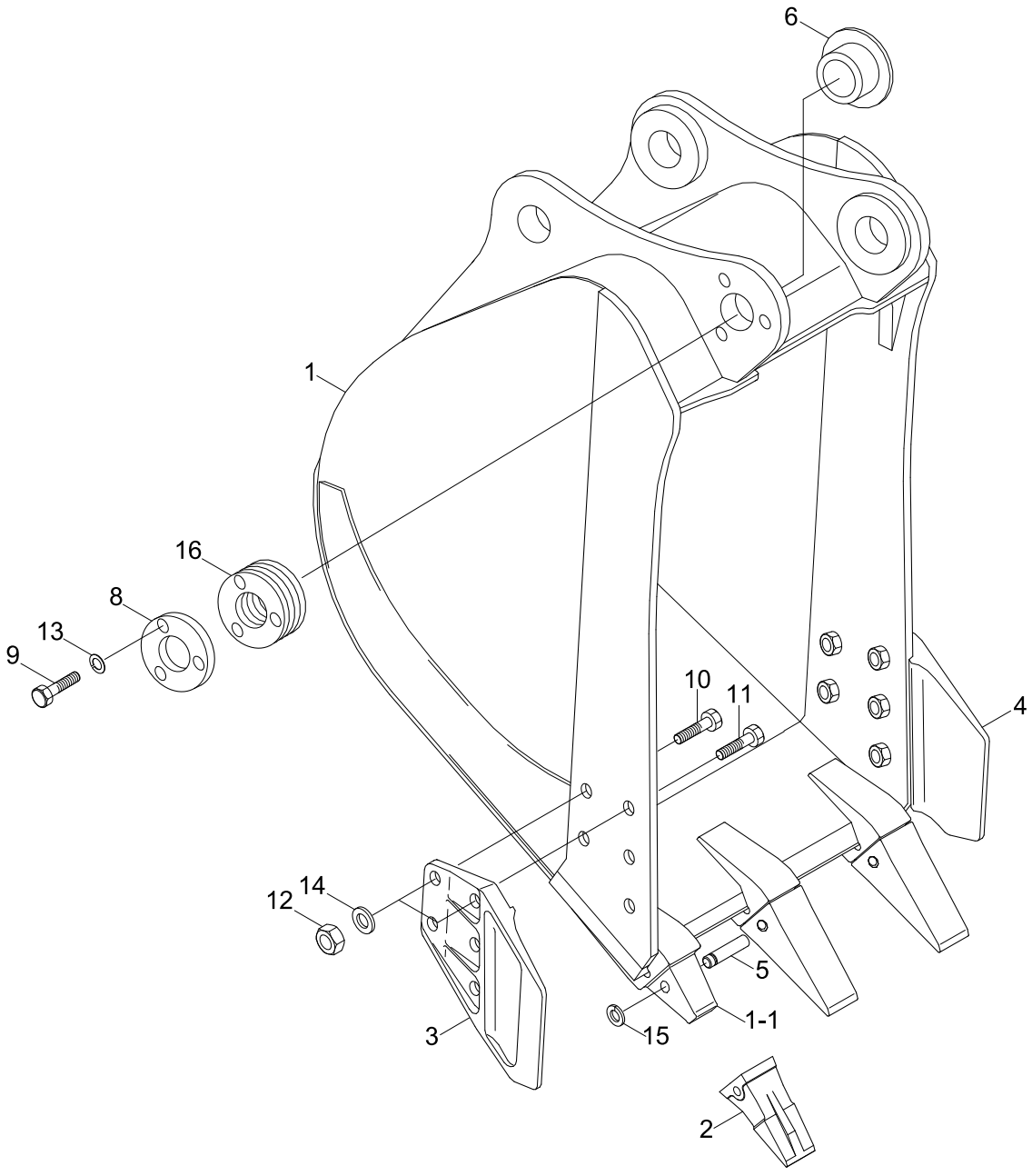

Item	Part_No	IS	Ord	T	Description	Qty	Serial_No	ITC	Remark
*	61N9-30200				BUCKET ASSY	1	#0001 - #0345	-	
	61N9-30201				BUCKET ASSY	1	#0346 - #1118	B	
	61N9-30201BG				BUCKET ASSY	1	#1119 -	D	
1	61N9-32010				.BUCKET WA	1	- #0345		
	61N9-32011				.BUCKET WA	1	#0346 - #1118	B	
	61N9-32011BG				.BUCKET WA	1	#1119 -	D	
1-1	E262-3027	20			..ADAPTER-TOOTH	3	- #0345		
	61N8-31320				..ADAPTER-TOOTH	3	#0346 -	D	
2	E262-3046	30			.POINT-TOOTH	3	- #0345		
	61N8-31310				.POINT-TOOTH	3	#0346 - #1118	B	
	61N8-31310BG				.POINT-TOOTH	3	#1119 -	D	
3	63E1-3533	20			.SIDE CUTTER-LH	1	- #1118		
	63E1-3533BG	30			.SIDE CUTTER-LH	1	#1119 -	D	
4	63E1-3534	20			.SIDE CUTTER-RH	1	- #1118		
	63E1-3534BG	30			.SIDE CUTTER-RH	1	#1119 -	D	
K5	E262-5004	20			.PIN-TOOTH	3			
6	61E5-1126	20			.BUSHING	1			
8	61E5-3136	10			.COVER PLATE	1			
9	S017-160502				.BOLT-HEX	2			
10	S017-220652				.BOLT-HEX	4			
11	S017-220702				.BOLT-HEX	6			
12	S205-221002				.NUT-HEX	10			
13	S411-160002				.WASHER-SPRING	3			
14	S411-220002				.WASHER-SPRING	10	- #3549		
	S441-220002				.WASHER-HARDENED	10	#3550 -	D	

Item	Part_No	IS	Ord	T	Description	Qty	Serial_No	ITC	Remark
K15	61E5-11150				.WASHER-LOCK	3			
16	61E5-3141	10			.SHIM(1.0T)	6			
K	E262-5004-S				TOOTH PIN KIT	1	#0001 -	-	INCL 5, 15

BUCKET(1.74M^3, SAE HEAPED)

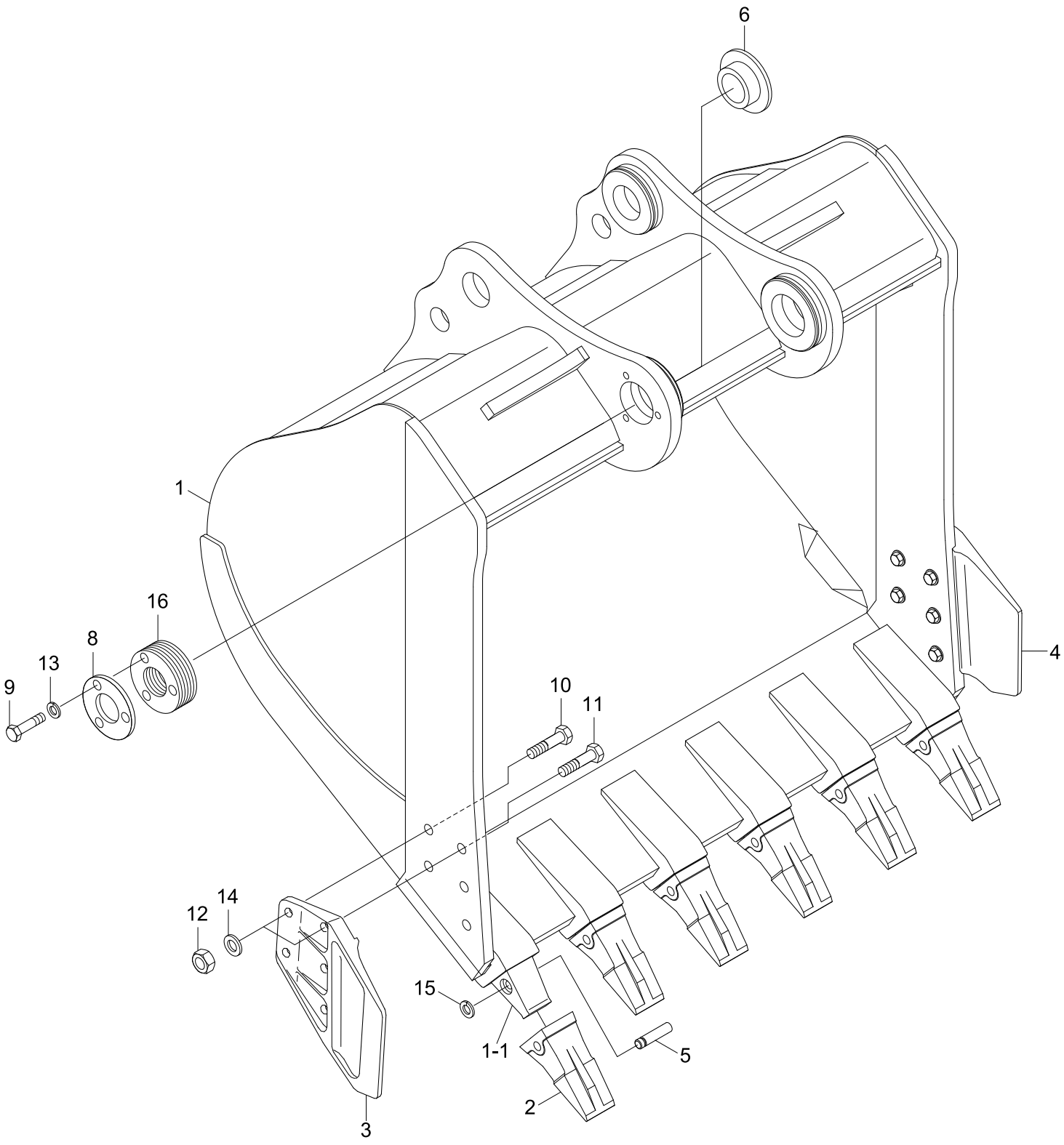

Item	Part_No	IS	Ord	T	Description	Qty	Serial_No	ITC	Remark
*	61N9-30400				BUCKET ASSY	1	#0034 - #0345	-	
	61N9-30401				BUCKET ASSY	1	#0346 - #1118	B	
	61N9-30401BG				BUCKET ASSY	1	#1119 -	D	
1	61N9-34010				.BUCKET WA	1	- #0345		
	61N9-34011				.BUCKET WA	1	#0346 - #1118	B	
	61N9-34011BG				.BUCKET WA	1	#1119 -	D	
1-1	E262-3027	20			..ADAPTER-TOOTH	6	- #0345		
	61N8-31320				..ADAPTER-TOOTH	6	#0346 -	D	
2	E262-3046	30			.POINT-TOOTH	6	- #0345		
	61N8-31310				.POINT-TOOTH	6	#0346 - #1118	B	
	61N8-31310BG				.POINT-TOOTH	6	#1119 -	D	
3	63E1-3533	20			.SIDE CUTTER-LH	1	- #1118		
	63E1-3533BG	30			.SIDE CUTTER-LH	1	#1119 -	D	
4	63E1-3534	20			.SIDE CUTTER-RH	1	- #1118		
	63E1-3534BG	30			.SIDE CUTTER-RH	1	#1119 -	D	
K5	E262-5004	20			.PIN-TOOTH	6			
6	61E5-1126	20			.BUSHING	1			
8	61E5-3136	10			.COVER PLATE	1			
9	S017-160502				.BOLT-HEX	2			
10	S017-220652				.BOLT-HEX	4			
11	S017-220702				.BOLT-HEX	6			
12	S205-221002				.NUT-HEX	10			
13	S411-160002				.WASHER-SPRING	3			
14	S411-220002				.WASHER-SPRING	10			
					.WASHER-SPRING	10	- #3549		

Item	Part_No	IS	Ord	T	Description	Qty	Serial_No	ITC	Remark
14	S441-220006				.WASHER-HARDENED	10	#3550 -	D	
K15	61E5-11150				.WASHER-LOCK	6			
16	61E5-3141	10			.SHIM(1.0T)	6			
K	E262-5004-S				TOOTH PIN KIT	1	#0001 -	-	INCL 5, 15

BUCKET(2.1M3 SAE HEAPED, LIGHT DUTY)

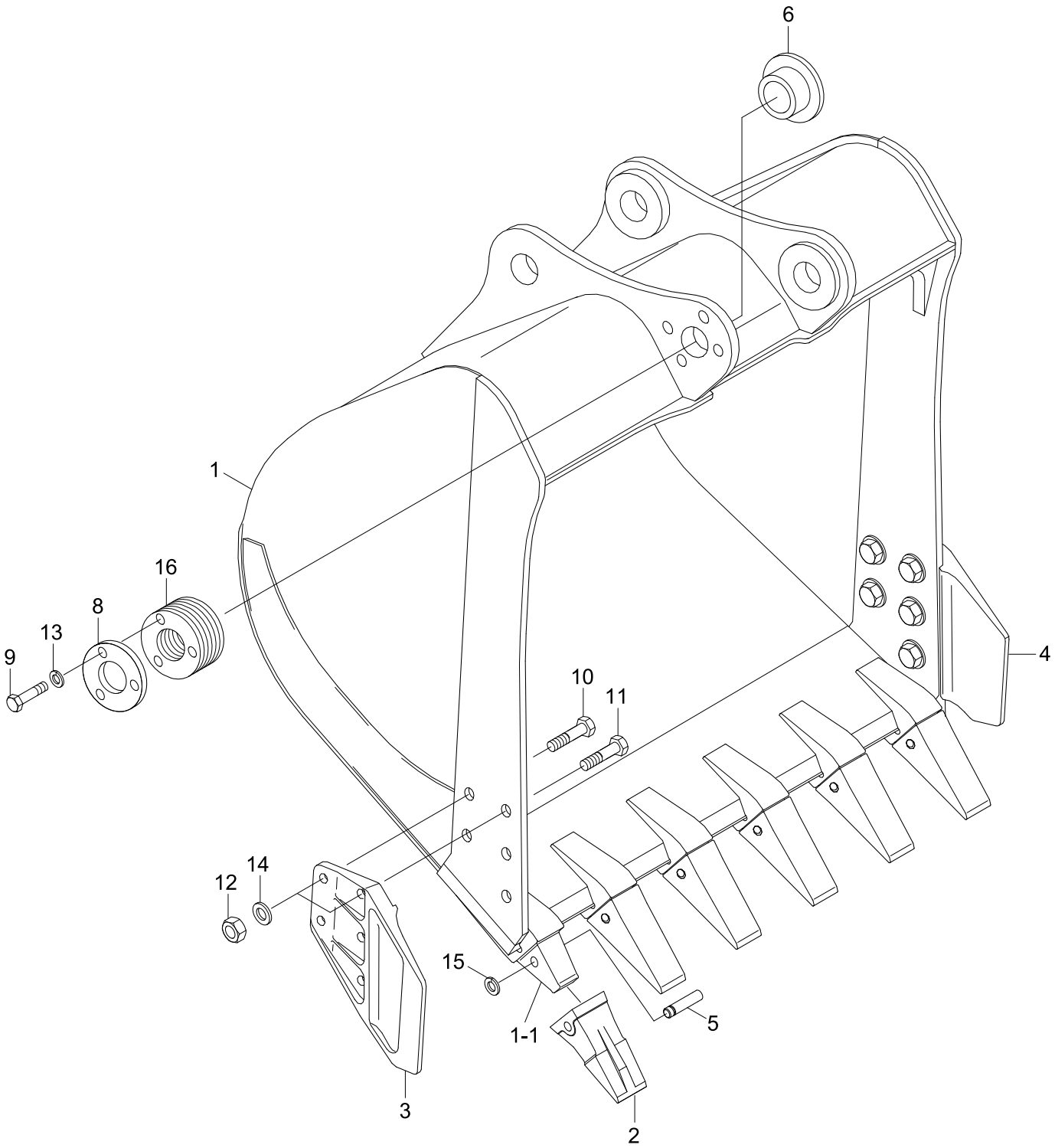

Item	Part_No	IS	Ord	T	Description	Qty	Serial_No	ITC	Remark
*	61N9-30500				BUCKET ASSY	1	#0001 - #0345	-	
	61N9-30501				BUCKET ASSY	1	#0346 - #1118	B	
	61N9-30501BG				BUCKET ASSY	1	#1119 -	D	
1	61N9-35010				.BUCKET WA	1	- #0345		
	61N9-35011				..BUCKET WA	1	#0346 - #1118	B	
	61N9-35011BG				..BUCKET WA	1	#1119 -	D	
1-1	E262-3027	20			..ADAPTER-TOOTH	6	- #0345		
	61N8-31320				...ADAPTER-TOOTH	6	#0346 -	D	
2	E262-3046	30			.POINT-TOOTH	6	- #0345		
	61N8-31310				.POINT-TOOTH	6	#0346 - #1118	B	
	61N8-31310BG				.POINT-TOOTH	6	#1119 -	D	
3	63E1-3533	20			.SIDE CUTTER-LH	1	- #1118		
	63E1-3533BG	30			.SIDE CUTTER-LH	1	#1119 -	D	
4	63E1-3534	20			.SIDE CUTTER-RH	1	- #1118		
	63E1-3534BG	30			.SIDE CUTTER-RH	1	#1119 -	D	
K5	E262-5004	20			.PIN-TOOTH	6			
6	61E5-1126	20			.BUSHING	1			
8	61E5-3136	10			.COVER PLATE	1			
9	S017-160502				.BOLT-HEX	2			
10	S017-220652				.BOLT-HEX	4			
11	S017-220702				.BOLT-HEX	6			
12	S205-221002				.NUT-HEX	10			
13	S411-160002				.WASHER-SPRING	3			
14	S411-220002				.WASHER-SPRING	10	- #3549		
	S441-220006				.WASHER-HARDENED	10	#3550 -	D	

Item	Part_No	IS	Ord	T	Description	Qty	Serial_No	ITC	Remark
K15	61E5-11150				.WASHER-LOCK	6			
16	61E5-3141	10			.SHIM(1.0T)	6			
K	E262-5004-S				TOOTH PIN KIT	1	#0001 -	-	INCL 5, 15

BUCKET(1.44M3 SAE HEAPED, HEAVY DUTY)

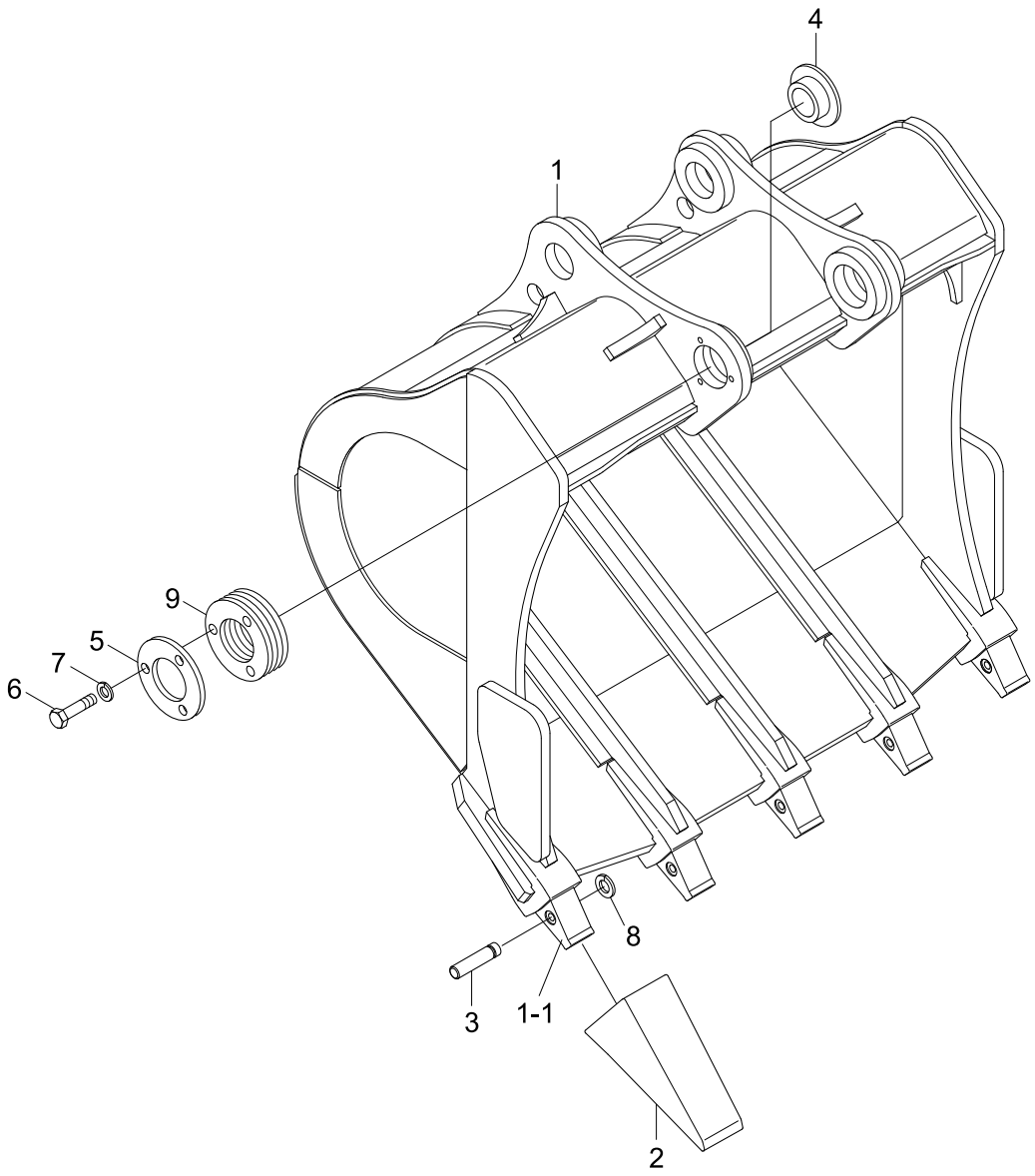

Item	Part_No	IS	Ord	T	Description	Qty	Serial_No	ITC	Remark
*	61N9-30600				BUCKET ASSY	1	#0016 - #0345	-	
	61N9-30601				BUCKET ASSY	1	#0346 - #1118	B	
	61N9-30601BG				BUCKET ASSY	1	#1119 - #3343	D	
	61N9-30602BG				BUCKET ASSY	1	#3344 -	B	
1	61N9-36010				.BUCKET WA	1	- #0345		
	61N9-36011				.BUCKET WA	1	#0346 - #1118	B	
	61N9-36011BG				.BUCKET WA	1	#1119 - #3343	D	
	61N9-36012BG				.BUCKET WA	1	#3344 -	D	
1-1	61E7-0100	02			..ADAPTER-TOOTH	5	- #0345		
	61NA-31320				..ADAPTER-TOOTH	5	#0346 -	D	
2	61E7-0101	01			.POINT-TOOTH	5	- #0345		
	61NA-31310				.POINT-TOOTH	5	#0346 - #1118	B	
	61NA-31310BG				.POINT-TOOTH	5	#1119 -	D	
3	61E7-0105				.PIN-TOOTH	5			
					.PIN-TOOTH	5			
4	61E5-1126	20			.BUSHING	1			
5	61E5-3136	10			.COVER PLATE	1			
6	S017-160502				.BOLT-HEX	2			
7	S411-160002				.WASHER-SPRING	3			
8	61EH-11150				.WASHER-LOCK	5	#0016 -	-	
9	61E5-3141	10			.SHIM(1.0T)	6			

BUCKET(1.44M^3, SAE HEAPED, ROCK)

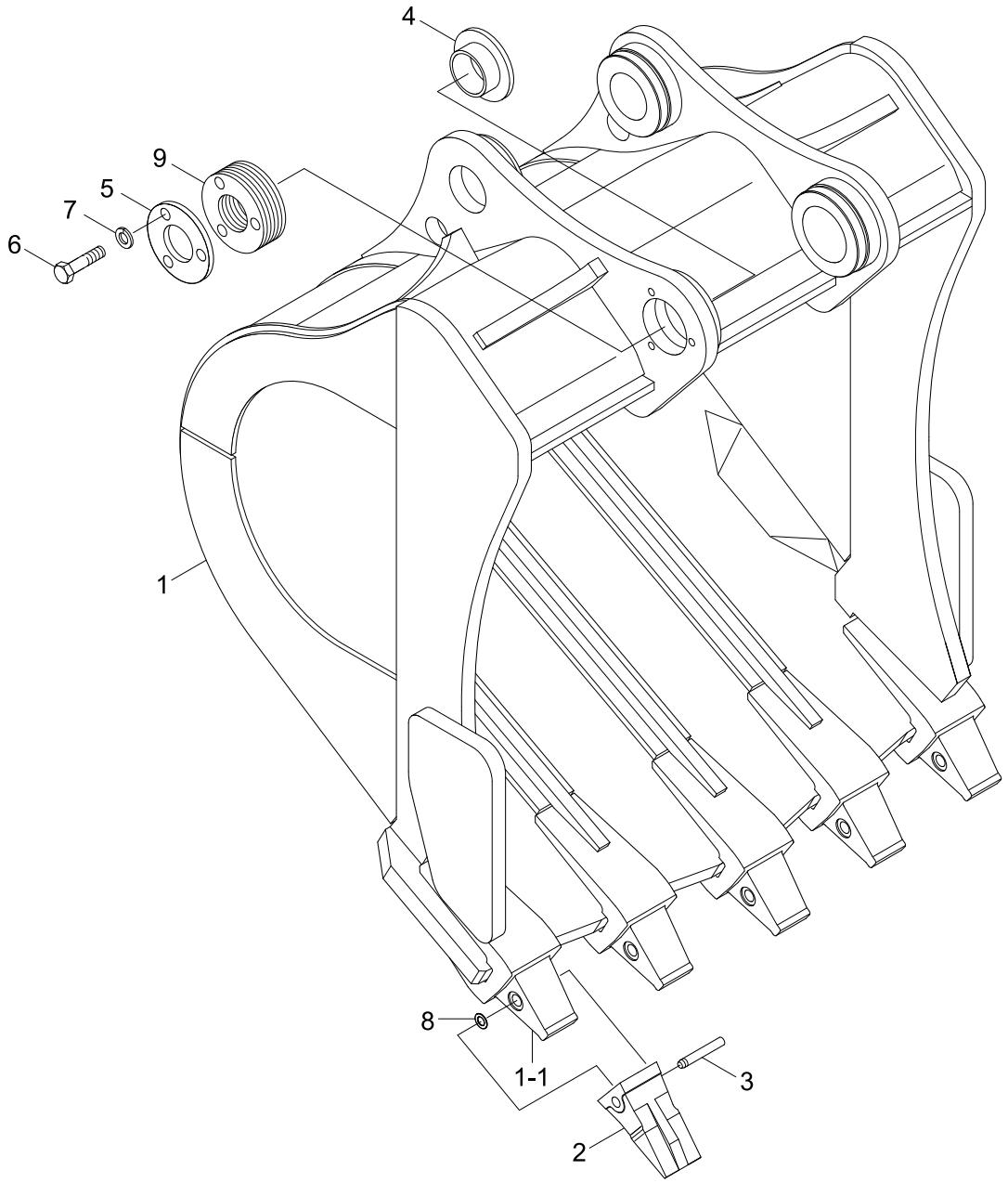

Item	Part_No	IS	Ord	T	Description	Qty	Serial_No	ITC	Remark
*	61N9-30700				BUCKET ASSY	1	#0016 - #0345	-	
	61N9-30701				BUCKET ASSY	1	#0346 - #1118	B	
	61N9-30701BG				BUCKET ASSY	1	#1119 - #3343	D	
	61N9-30702BG				BUCKET ASSY	1	#3344 -	B	
1	61N9-37010				.BUCKET WA	1	- #0345		
	61N9-37011				.BUCKET WA	1	#0346 - #1118	B	
	61N9-37011BG				.BUCKET WA	1	#1119 - #3343	D	
	61N9-37012BG				.BUCKET WA	1	#3344 -	D	
1-1	61E7-0100	02			..ADAPTER-TOOTH	5	- #0345		
	61NA-31320				..ADAPTER-TOOTH	5	#0346 -	D	
2	61E7-0101	01			.POINT-TOOTH	5	- #0345		
	61NA-31310				.POINT-TOOTH	5	#0346 - #1118	B	
	61NA-31310BG				.POINT-TOOTH	5	#1119 -	D	
3	61E7-0105				.PIN-TOOTH	5			
4	61E5-1126	20			.BUSHING	1			
5	61E5-3136	10			.COVER PLATE	1			
6	S017-160502				.BOLT-HEX	2			
7	S411-160002				.WASHER-SPRING	3			
8	61EH-11150				.WASHER-LOCK	5	#0016 -	-	
9	61E5-3141	10			.SHIM(1.0T)	6			

BUCKET(1.73M3 SAE HEAPED, ROCK)

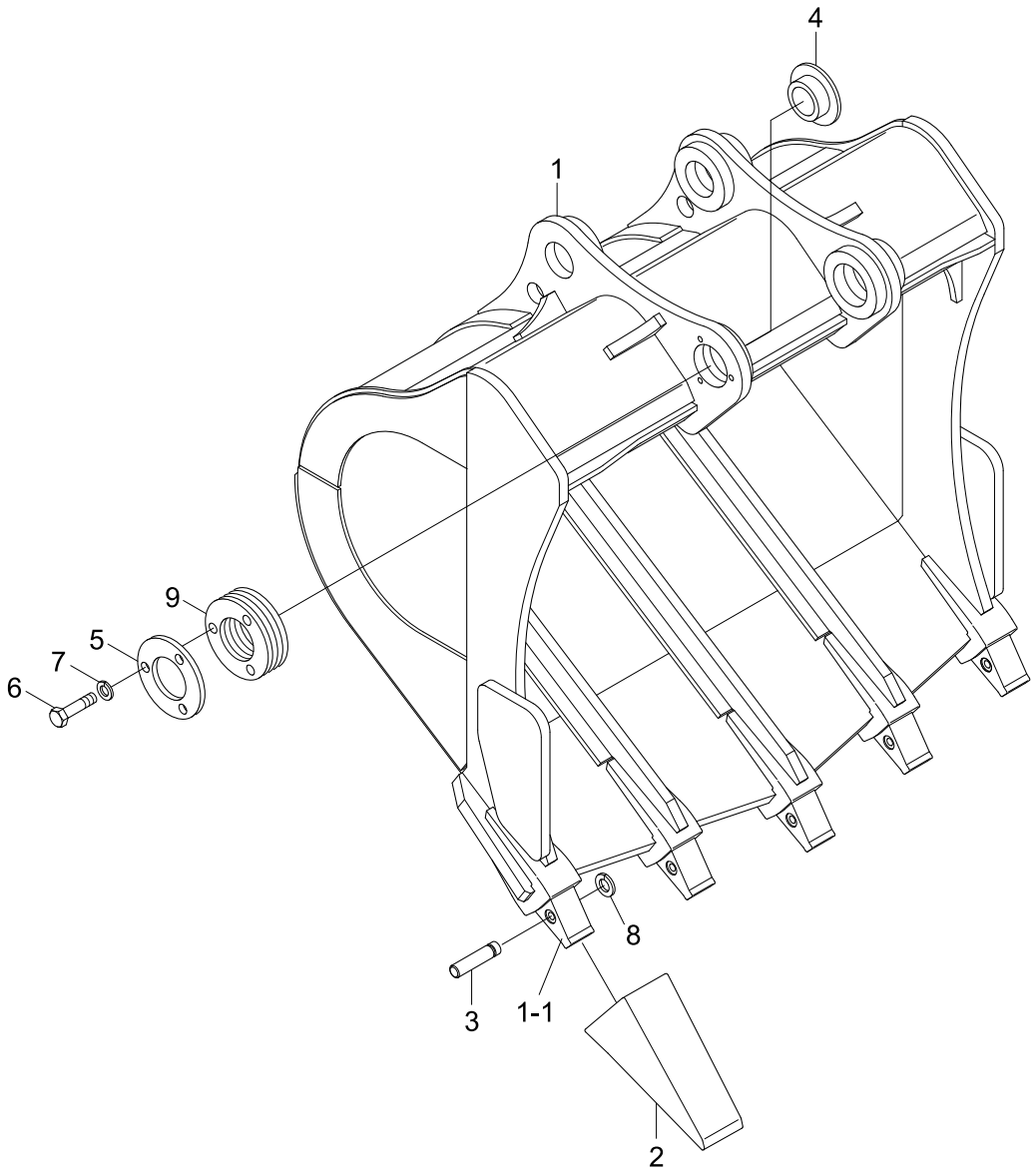

Item	Part_No	IS	Ord	T	Description	Qty	Serial_No	ITC	Remark
*	61N9-30800				BUCKET ASSY	1	#0177 - #0345	-	
	61N9-30801				BUCKET ASSY	1	#0346 - #1118	B	
	61N9-30801BG				BUCKET ASSY	1	#1119 - #3343	D	
	61N9-30802BG				BUCKET ASSY	1	#3344 -	B	
1	61N9-38010				.BUCKET WA	1	- #0345		
	61N9-38011				.BUCKET WA	1	#0346 - #1118	B	
	61N9-38011BG				.BUCKET WA	1	#1119 - #3343	D	
	61N9-38012BG				.BUCKET WA	1	#3344 -	D	
1-1	61E7-0100	02			..ADAPTER-TOOTH	5	- #0345		
	61NA-31320				..ADAPTER-TOOTH	5	#0346 -	D	
2	61E7-0101	01			.POINT-TOOTH	5	- #0345		
	61NA-31310				.POINT-TOOTH	5	#0346 - #1118	B	
	61NA-31310BG				.POINT-TOOTH	5	#1119 -	D	
3	61E7-0105				.PIN-TOOTH	5			
4	61E5-1126	20			.BUSHING	1			
5	61E5-3136	10			.COVER PLATE	1			
6	S017-160502				.BOLT-HEX	3			
7	S441-160002				.WASHER-HARDENED	3			
8	61EH-11150				.WASHER-LOCK	5			
9	61E5-3141	10			.SHIM(1.0T)	6			

BUCKET(1.38m^3 SAE HEAPED, ROCK)

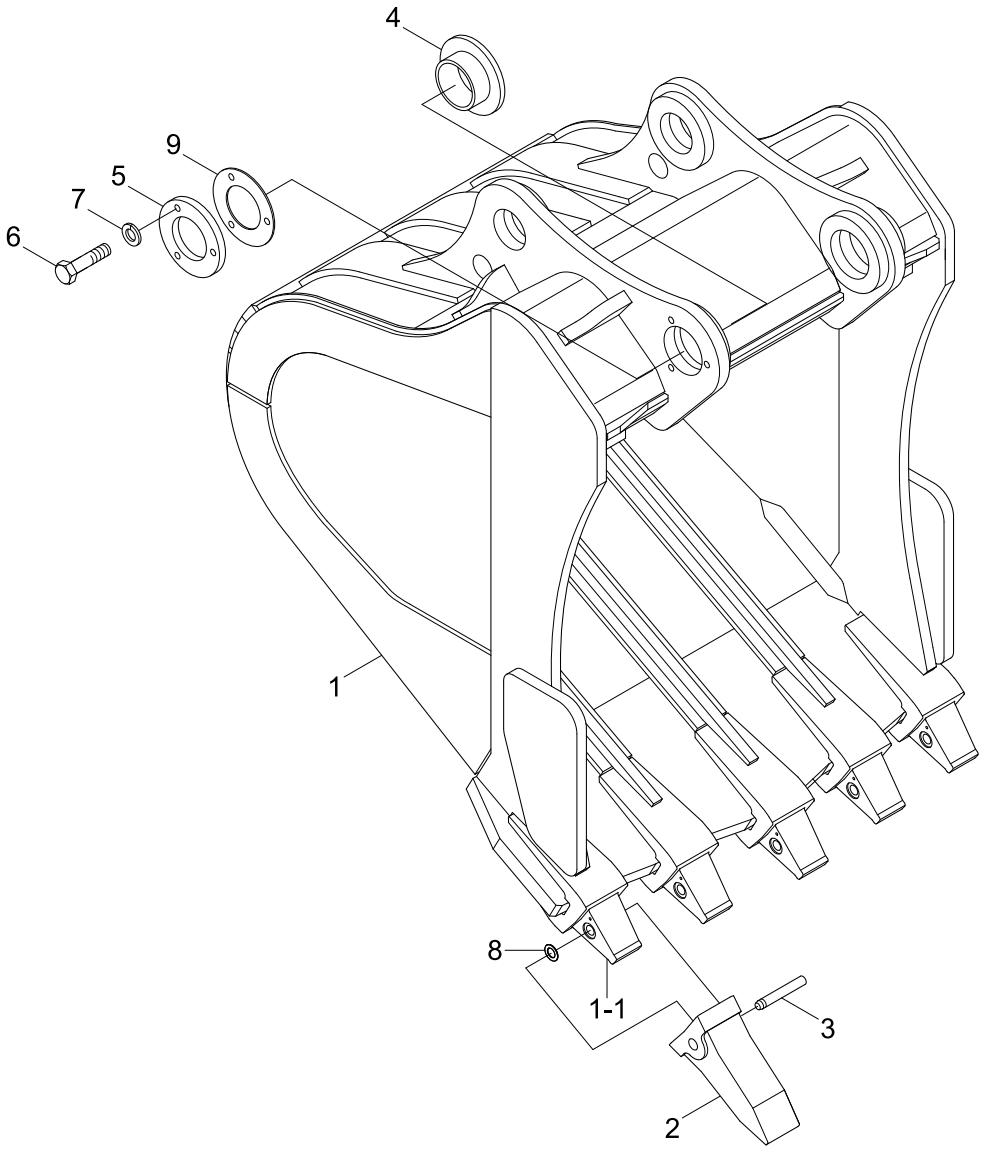

Item	Part_No	IS	Ord	T	Description	Qty	Serial_No	ITC	Remark
*	61N9-30900				BUCKET ASSY	1	#0497 - #1118	-	
	61N9-30900BG				BUCKET ASSY	1	#1119 - #3343	D	
	61N9-30901BG				BUCKET ASSY	1	#3344 -	B	
1	61N9-39010				.BUCKET WA	1	- #1118		
	61N9-39010BG				.BUCKET WA	1	#1119 - #3343	D	
	61N9-39011BG				.BUCKET WA	1	#3344 -	D	
1-1	61NA-31320				..ADAPTER-TOOTH	5			
2	61NA-31310				.POINT-TOOTH	5	- #1118		
	61NA-31310BG				.POINT-TOOTH	5	#1119 -	D	
3	61E7-0105				.PIN-TOOTH	5			
4	61E5-1126				.BUSHING	1			
5	61E5-3136	10			.COVER PLATE	1			
6	S017-160502				.BOLT-HEX	3			
7	S441-160002				.WASHER-HARDENED	3			
8	61EH-11150				.WASHER-LOCK	5			
9	61E5-3141	10			.SHIM(1.0T)	6			

BUCKET(1.14M3 SAE HEAPED)

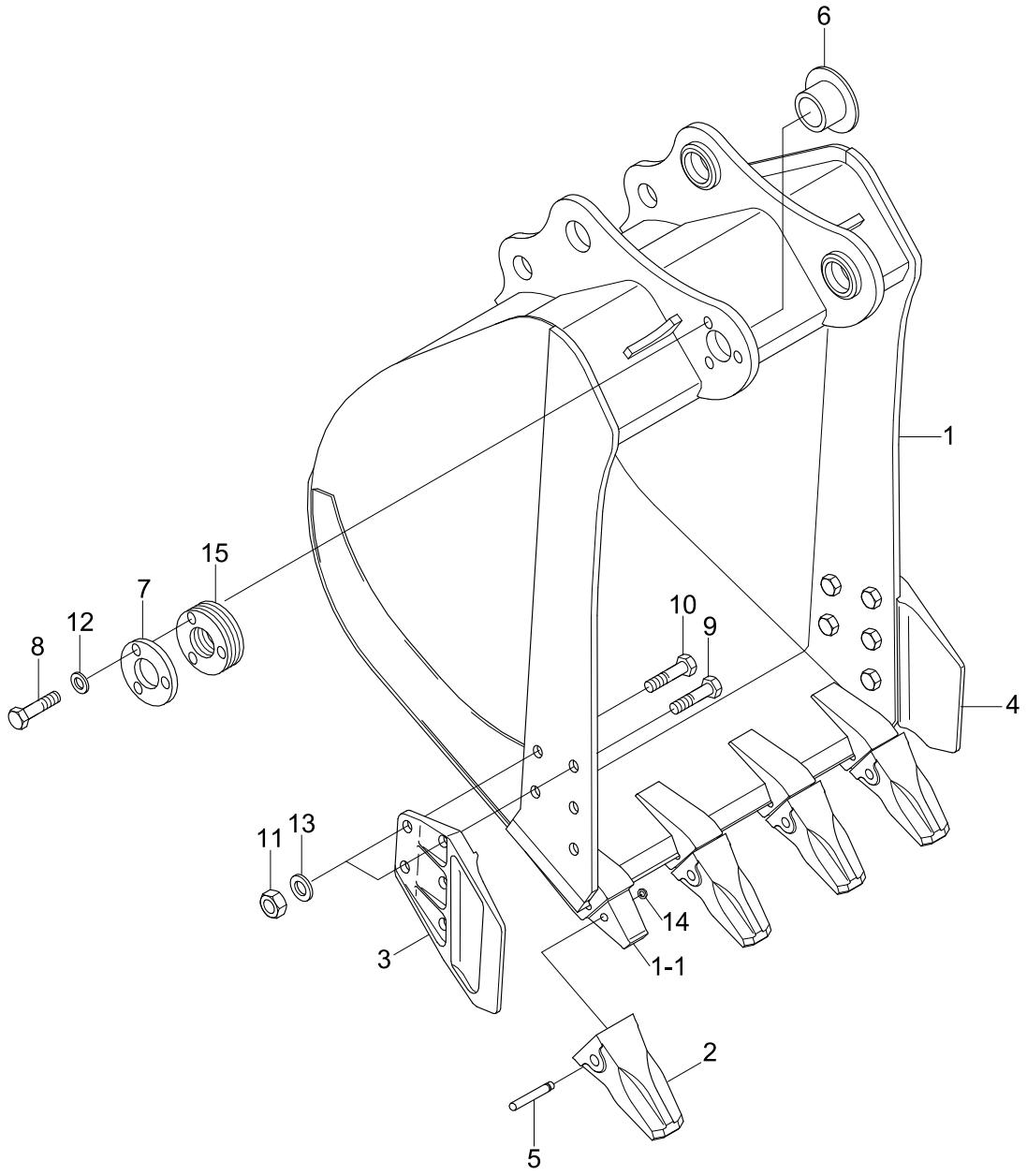

Item	Part_No	IS	Ord	T	Description	Qty	Serial_No	ITC	Remark
*	61N9-30300				BUCKET ASSY	1	#1223 -	-	
1	61N9-33010				.BUCKET WA	1			
1-1	61N8-31320				..ADAPTER-TOOTH	4			
2	61N8-31310				.POINT-TOOTH	4			
3	63E1-3533				.SIDE CUTTER-LH	1			
4	63E1-3534				.SIDE CUTTER-RH	1			
5	E262-5004				.PIN-TOOTH	4			
6	61E5-1126				.BUSHING	1			
7	61E5-3136				.COVER PLATE	1			
8	S017-160506				.BOLT-HEX	3			
9	S017-22065D				.BOLT-HEX	4			
10	S017-22070D				.BOLT-HEX	6			
11	S205-22100B				.NUT-HEX	10			
12	S441-160006				.WASHER-HARDENED	3			
13	S411-220006				.WASHER-SPRING	10	- #3549		
	S441-220006				.WASHER-HARDENED	10	#3550 -	D	
14	61E5-11150				.WASHER-LOCK	4			
15	61E5-3141				.SHIM(1.0T)	6			

TOOLS(-#0034)

1

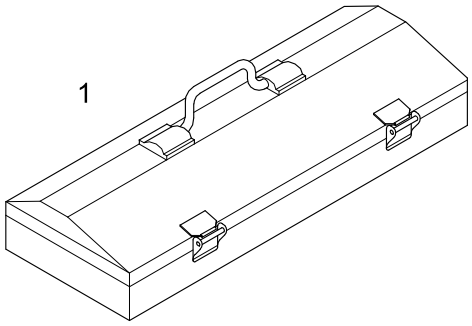

70



2, 3, 4 ,5 ,6, 7, 8, 9,10, 11,12,13



47

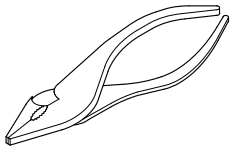

54



61

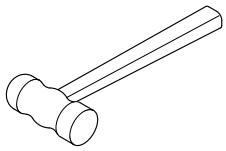

19,21,23,26,27,28,29,30

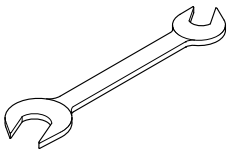

48

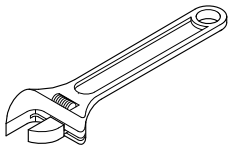

55,56,57

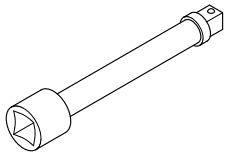

62

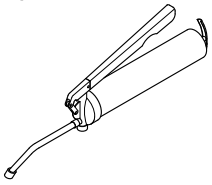

33,34,35,36, 37,38,39,40

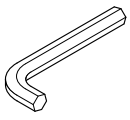

50

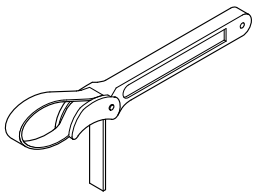

58,59

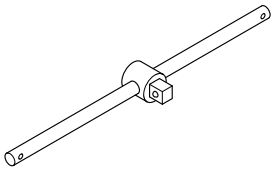

63

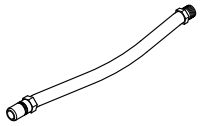

41,43

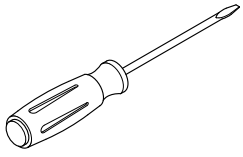

53

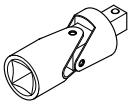

60

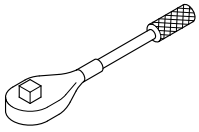

Item	Part_No	IS	Ord	T	Description	Qty	Serial_No	ITC	Remark
*	91E9-20120				TOOL KIT ASSY	1	- #0034	-	
1	E191-2000	10			.TOOL BOX	1			
2	S953-127100				.SOCKET-METRIC	1			
4	S953-127140				.SOCKET-METRIC	1			
5	S953-127170				.SOCKET-METRIC	1			
6	S953-127190				.SOCKET-METRIC	1			
8	S953-127240				.SOCKET-METRIC	1			
9	S953-127300				.SOCKET-METRIC	1			
10	S953-190320				.SOCKET-METRIC	1			
11	S953-190360				.SOCKET-METRIC	1			
12	S953-190460				.SOCKET-3/4"X46MM	1			
13	S953-190550				.SOCKET-3/4"X55MM	1			
19	S962-080902				.WRENCH-DOUBLE,8X9	1			
21	S962-101202				.WRENCH-DOUBLE,10X12	1			
23	S962-131702				.WRENCH-DOUBLE,13X17	1			
26	S962-192202				.WRENCH-DOUBLE,19X22	1			
27	S962-222402				.WRENCH-DOUBLE,22X24	1			
28	S962-242702				.WRENCH-DOUBLE,24X27	1			
29	S962-303202				.WRENCH-DOUBLE,METRIC	1			
30	S962-364102				.WRENCH-DOUBLE,METRIC	1			
33	91E1-2308				.L-WRENCH,14MM	1			
34	S967-040025				.L-WRENCH	1			
35	S967-050028				.L-WRENCH	1			
36	S967-060032				.L-WRENCH	1			
37	S967-080036				.L-WRENCH	1			

Item	Part_No	IS	Ord	T	Description	Qty	Serial_No	ITC	Remark
38	S967-100040				.L-WRENCH	1			
39	S967-120045				.L-WRENCH	1			
40	S967-170060				.L-WRENCH	1			
41	S959-061012				.DRIVER-SCREW	1			
43	S959-061022				.DRIVER-SCREW	1			
47	S960-150020				.PLIER-SLIP JOINT	1			
48	S963-200024				.WRENCH-ADJ ANGLE	1			
50	E191-2043				.WRENCH-FILTER,300MM	1			
53	S954-127080				.UNIVERSAL JOINT	1			
54	91EM-20600				.ADAPTOR-1/2"-3/8"	1			
55	S955-127075				.BAR-EXTENSION	1			
56	S955-127125				.BAR-EXTENSION	1			
57	S955-190200				.BAR-EXTENSION	1			
58	E191-2048				.HANDLE-SLIDING,1/2"X10"	1			
59	E191-2049				.HANDLE-SLIDING,3/4"X20"	1			
60	S958-127250				.HANDLE-RATCHET	1			
61	S964-100290				.HAMMER-HAND,1LB	1			
62	E191-2053				.GUN-GREASE,500CC	1			
63	E191-2054				.TIP-HOSE,RUBBER	1			
70	E191-20571				.TOOL LIST	1			

TOOLS(#0035-)

1

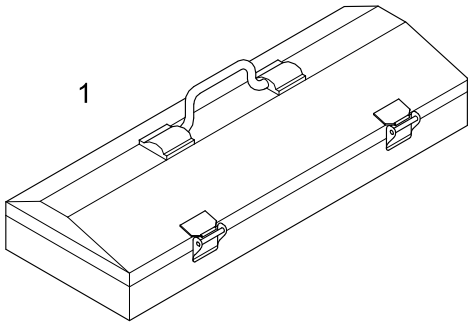

70



2, 3, 4 ,5 ,6, 7, 8, 9,10, 11,12



47

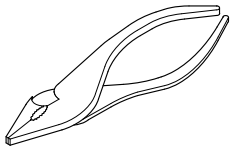

54



61

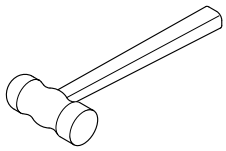

17,18,19,20,21,22,23, 27,28,29,30

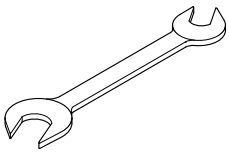

48

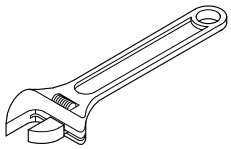

55,56,57

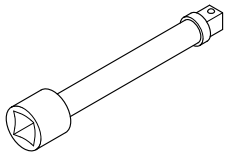

62

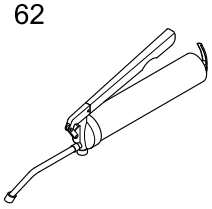

33,34,35,36, 37,38,39,40

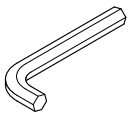

50

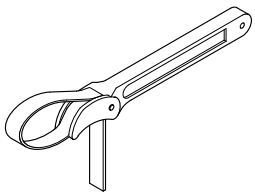

58,59

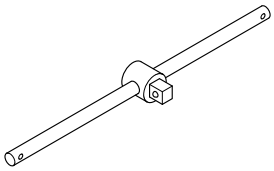

63

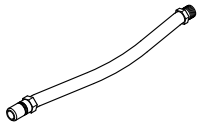

41,43

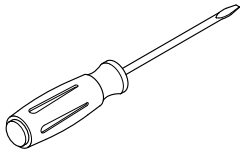

53

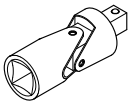

60

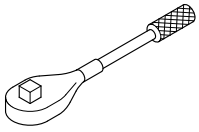

Item	Part_No	IS	Ord	T	Description	Qty	Serial_No	ITC	Remark
*	91E9-20121				TOOL KIT ASSY	1	#0035 -	B	SEE 8010
1	E191-2000				.TOOL BOX	1			
2	S953-127100				.SOCKET-METRIC	1			
3	S953-127130				.SOCKET-METRIC	1			
4	S953-127140				.SOCKET-METRIC	1			
5	S953-127170				.SOCKET-METRIC	1			
6	S953-127190				.SOCKET-METRIC	1			
7	S953-127220				.SOCKET-METRIC	1			
8	S953-127240				.SOCKET-METRIC	1			
9	S953-127270				.SOCKET-METRIC	1			
10	S953-127300				.SOCKET-METRIC	1			
11	S953-190320				.SOCKET-METRIC	1			
12	S953-190360				.SOCKET-METRIC	1			
17	S962-100003				.WRENCH-COMBINATION	1			
18	S962-130003				.WRENCH-COMBINATION	1			
19	S962-170003				.WRENCH-COMBINATION	1			
20	S962-190003				.WRENCH-COMBINATION	1			
21	S962-220003				.WRENCH-COMBINATION	1			
22	S962-240003				.WRENCH-COMBINATION	1			
23	S962-270003				.WRENCH-COMBINATION	1			
29	S962-303202				.WRENCH-DOUBLE,METRIC	1			
30	S962-364102				.WRENCH-DOUBLE,METRIC	1			
33	S967-040025				.L-WRENCH	1			
34	S967-050028				.L-WRENCH	1			
35	S967-060032				.L-WRENCH	1			

Item	Part_No	IS	Ord	T	Description	Qty	Serial_No	ITC	Remark
36	S967-080036				.L-WRENCH	1			
37	S967-100040				.L-WRENCH	1			
38	S967-120045				.L-WRENCH	1			
39	S967-140055				.L-WRENCH	1			
40	S967-170060				.L-WRENCH	1			
41	S959-061012				.DRIVER-SCREW	1			
43	S959-061022				.DRIVER-SCREW	1			
47	S960-150020				.PLIER-SLIP JOINT	1			
48	S963-200024				.WRENCH-ADJ ANGLE	1			
49	S963-300034				.WRENCH-ADJ ANGLE	1			
50	E191-2043				.WRENCH-FILTER,300MM	1			
53	S954-127080				.UNIVERSAL JOINT	1			
54	91EM-20600				.ADAPTOR-1/2"-3/8"	1			
55	S955-127075				.BAR-EXTENSION	1			
56	S955-127125				.BAR-EXTENSION	1			
57	S955-190200				.BAR-EXTENSION	1			
58	E191-2048				.HANDLE-SLIDING,1/2"X10"	1			
59	E191-2049				.HANDLE-SLIDING,3/4"X20"	1			
60	S958-127250				.HANDLE-RATCHET	1			
61	S964-200340				.HAMMERS-HAND	1			
62	E191-2053				.GUN-GREASE,500CC	1			
63	E191-2054				.TIP-HOSE,RUBBER	1			
70	E191-20572				.TOOL LIST	1			

HRDT 2.0 TOOL KIT

1

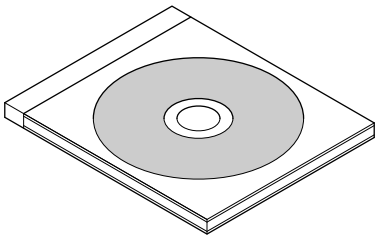

2

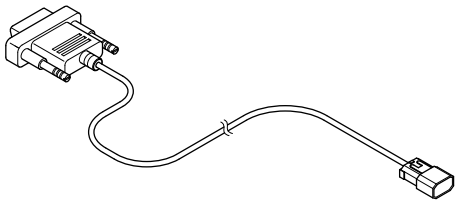

3 PART NO : PMCE0500BDFB
4 PART NO : PMCE0050BDFB

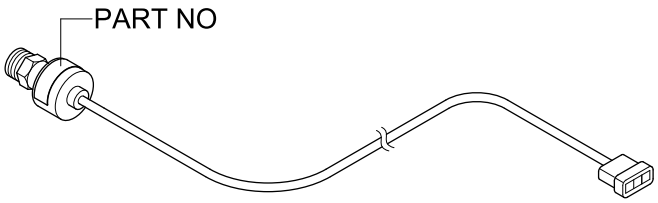

5

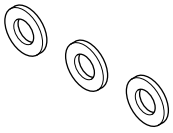

6

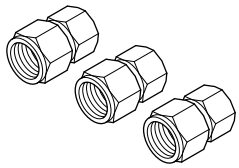

7

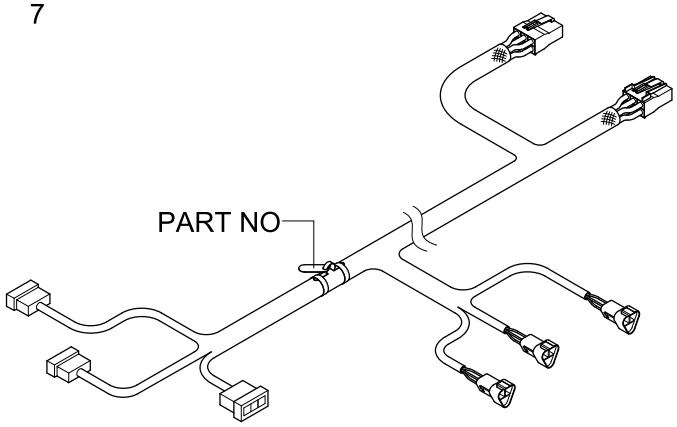

8

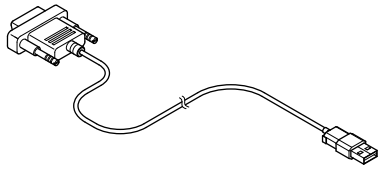

Item	Part_No	IS	Ord	T	Description	Qty	Serial_No	ITC	Remark
*	21N6-32231				HRDT 2.0 TOOL KIT	1	#0001 -	-	
1	21N6-32211				.CD-HRDT 2.0 SOFTWARE	1			
2	21N6-32250				.CABLE-RS232,MCU TO PC	1			
3	21EG-32200				.SENDER-PRESSURE	2			
4	21EG-32210				.SENDER-PRESSURE	1			
5	P391-040000				.WASHER-COPPER	3			
6	31N4-90400				.ADAPTOR-GAUGE	3			
7	21N6-32270				.HARNESS-PUMP PS	1			
8	21N6-32240				.CABLE-RS232 TO USB	1			
9	21N6-32260				.CASE	1			

DECALS

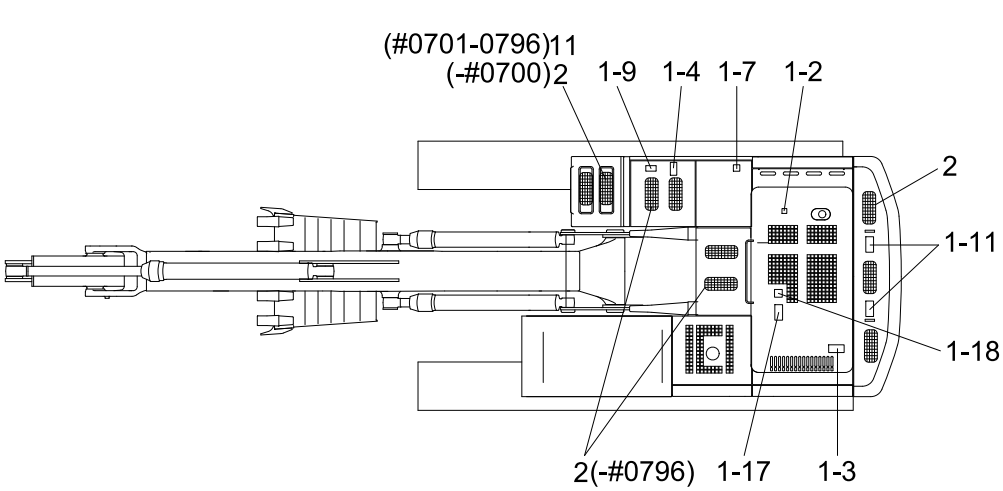

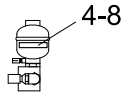

ACCUMULATER

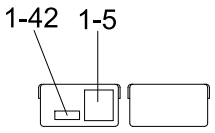

BATTERY COVER

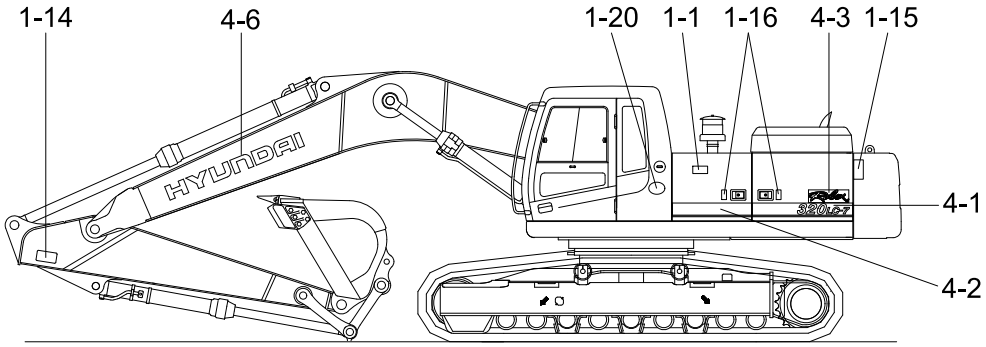

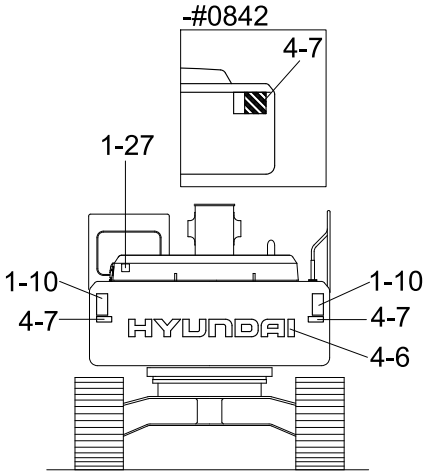

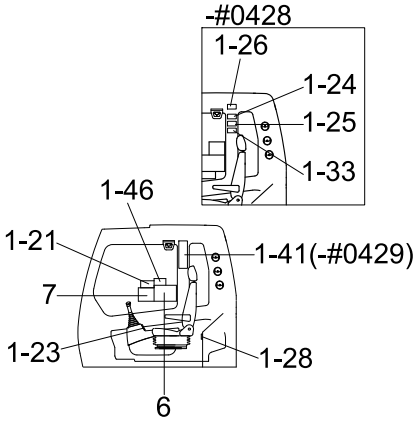

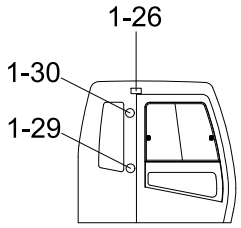

LH DOOR INSIDE

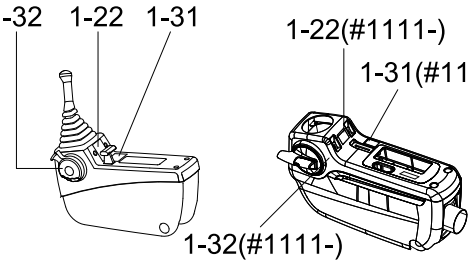

LH CONSOLE BOX

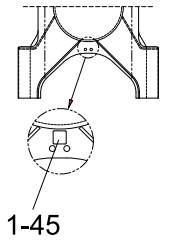

LOWER FRAME

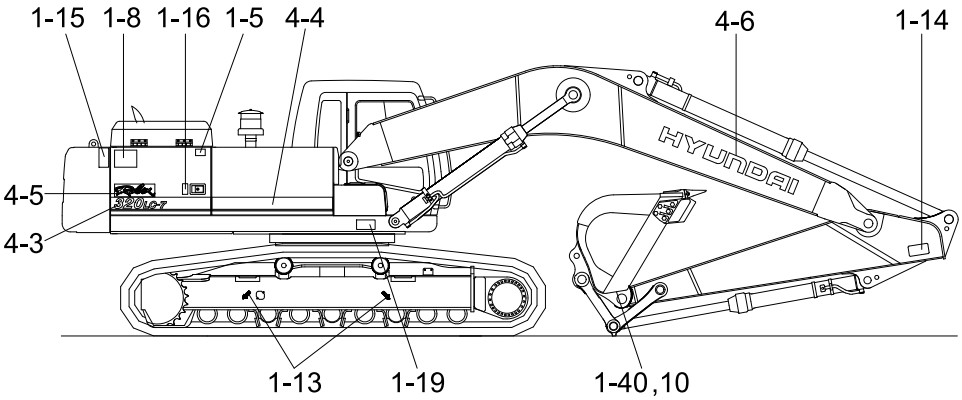

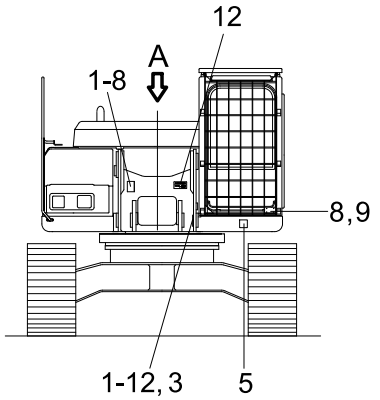

Item	Part_No	IS	Ord	T	Description	Qty	Serial_No	ITC	Remark
1	91N9-00100				DECAL KIT	1	- #0106		
	91N8-00104				DECAL KIT	1	#0107 - #0428	B	
	91N8-00105				DECAL KIT	1	#0429 - #0554	B	
	91N8-00106				DECAL KIT	1	#0555 - #0700	B	
	91N8-00108				DECAL KIT	1	#0701 - #3422	B	
	91N8-00109				DECAL KIT	1	#3423 -	B	
	94N8-00100				DECAL KIT	1	#1111 - #1891	-	UPGRADE CABIN
	94N8-00101				DECAL KIT	1	#1892 - #2948	B	UPGRADE CABIN
	94N8-00103				DECAL KIT	1	#2949 -	B	UPGRADE CABIN
1-1	91N6-01102				.DECAL-A/CLEANER FILTER	1			
1-2	91N6-01111				.DECAL-TURBO COVER	1			
1-3	91N6-01121				.DECAL-RADIATOR CAP	1			
1-4	91N6-01131				.DECAL-FUELING	1			
1-5	91N6-02120				.DECAL-BATT ACCIDENT	1			
1-6	91N6-03102				.DECAL-HYD OIL LEVEL	1			
1-7	91N6-03111				.DECAL-HYD OIL LUBRICAT	1			
1-8	91N6-03130				.DECAL-H/PRESS HOSE	2			
1-9	91N6-03140				.DECAL-FALLING	1			
1-10	91N6-04122				.DECAL-KEEP CLEAR/RR	2			
1-11	91N6-04132				.DECAL-LIFTING EYE	2			
1-12	91E1-14110				.DECAL-PIN PLATE	1	- #3422		
	91LM-14110				.DECAL-PIN PLATE	1	#3423 -	B	
	91E1-14130				.PIN PLATE	1	- #3422		EUROPE
	91LM-14130				.DECAL-PIN PLATE	1	#3423 -	B	EUROPE
1-13	91N6-05110				.DECAL-SLING IDEOGRAM	4			

Item	Part_No	IS	Ord	T	Description	Qty	Serial_No	ITC	Remark
1-14	91N6-06110				.DECAL-KEEP CLEAR-ATT	2			
1-15	91N6-07102				.DECAL-KEEP CLEAR	2			
1-16	91N6-07112				.DECAL-STAY FIX	3			
1-17	91N6-07121				.DECAL-SHEARING	1			
1-18	91N6-07131				.DECAL-NO STEP	1			
1-19	91N6-07141				.DECAL-TRANSPORTING	1			
1-20	91E1-27110				.DECAL-L/EMISSION ENG	1			
1-21	91N6-07201				.DECAL-CNTL IDEOGRAM	1			
1-22	91N6-07212				.DECAL-CNTL IDEOGRAM,LH	1			
	92N6-07210				.DECAL-CNTL IDEOGRAM,LH	1	#1111 -	-	UPGRADE CABIN
1-23	91N6-07221				.DECAL-CNTL IDEOGRAM,RH	1			
	92N6-07220				.DECAL-CNTL IDEOGRAM,RH	1	#1111 -	-	UPGRADE CABIN
1-24	91N6-07231				.REF OPERATOR MANUAL	1	- #0428	-	
1-25	91N6-07241				.MAX HEIGHT	1	- #0428	-	
1-26	91N6-07252				.DECAL-SAFETY FR WINDOW	2	- #0428		
					.DECAL-SAFETY FR WINDOW	1	#0429 -	A	
1-27	91N6-07260				.SAFETY WINDOW REAR	1	- #3422		
	91Q6-07260				.DECAL-SAFETY RR WIN	1	#3423 -	B	
1-28	91N6-07272				.DECAL-AIRCON FILTER	1			
1-29	91N6-07280				.DECAL-HAMMER	1	- #3422		
	91Q6-07280				.DECAL-HAMMER	1	#3423 -	B	
1-30	91N6-07290				.DECAL-FIRE	1			
1-31	91N6-07301				.DECAL-CONSOLE BOX TILT	1			
	92N6-07300				.DECAL-CONSOLE BOX TILT	1	#1111 -	-	UPGRADE CABIN
1-32	91N6-07311				.DECAL-SAFETY LEVER	1			

Item	Part_No	IS	Ord	T	Description	Qty	Serial_No	ITC	Remark
1-32	92N6-07310				.DECAL-SAFETY LEVER	1	#1111 -	-	UPGRADE CABIN
1-33	91N6-07320				.INTERFERENCE	1	- #0428	-	
1-40	91N6-06410				.NAME PLATE-BUCKET	1	#0107 -	-	
1-41	91N6-07370				.DECAL-CABIN RH PILLAR	1	#0429 -	-	
1-42	91LB-06350				.DECAL-ELECTRIC WELDING	1	#0555 -	-	
1-45	91N6-05120				.DECAL-TIE	2	#0701 -	-	
1-46	91N6-07390				.DECAL-TURBOCHARGER	1	#0701 - #3422	-	
	91Q6-07920				.DECAL-CAUTION(W/S,T/C)	1	#3423 -	B	
2	91E1-26300				DECAL-STEP TREAD	9	- #0700		
					DECAL-STEP TREAD	8	#0701 - #0796	A	
					DECAL-STEP TREAD	3	#0797 -	A	
3	91EK-12010				RIVET	4			
4	91N9-10100				TRADE MARK KIT	1	- #0047	-	
	91N9-10200				TRADE MARK KIT	1	#0008 - #0047	-	NLC
4-1	91N9-17110				.MODEL NAME-LH	1	- #0047		
	91N9-17111				.MODEL NAME-LH/RR	1	#0048 - #1118	D	
	91N9-17112				.MODEL NAME	1	#1119 -	D	
	91N9-18110				.MODEL NAME-LH	1	#0008 - #0047	-	NLC
	91N9-18111				.MODEL NAME-LH/RR	1	#0048 - #1118	D	NLC
	91N9-18112				.MODEL NAME	1	#1119 -	D	NLC
4-2	91N8-17210				.MODEL NAME-LH/FR	1	#0048 - #1118	-	
4-3	91N9-17120				.MODEL NAME-RH	1	- #0047		
	91N9-17121				.MODEL NAME-RH/RR	1	#0048 - #1118	-	
	91N9-18120				.MODEL NAME-RH	1	#0008 - #0047	-	NLC
	91N9-18121				.MODEL NAME-RH/RR	1	#0048 - #1118	-	NLC

Item	Part_No	IS	Ord	T	Description	Qty	Serial_No	ITC	Remark
4-4	91N9-17220				.MODEL NAME-RH/FR	1	#0048 -	-	
4-5	91N8-17140				.LOGO-ROBEX	2			
4-6	91N6-21130				.DECAL-BOOM/CWT	3			
4-7	91N6-04101				.DECAL-KEEP CLEAR,REF	2	- #0482		
	91N6-04170				.DECAL-REFLECTING	2	#0483 -	B	
4-8	91N6-03200				.DECAL-ACCUMULATOR	1	#1229 -	-	
5	91N6-22180				DECAL-NOISE LWA	1	- #0047		
	91N6-22170				DECAL-NOISE LWA/107DB	1	#0048 - #0541	D	
	91N6-22150				DECAL-NOISE LWA/105DB	1	#0542 -	D	
6	91N9-17160				SERVICE INSTRUCTION	1	- #0007		
	91N9-17161				SERVICE INSTRUCTION	1	#0008 - #0215	B	
	91N9-17162				SERVICE INSTRUCTION	1	#0216 - #0439	B	
	91N9-17163				SERVICE INSTRUCTION	1	#0440 - #1263	D	
	91N9-17164				SERVICE INSTRUCTION	1	#1264 - #1702	D	
	91N9-17165				SERVICE INSTRUCTION	1	#1703 - #1813	B	
	91N9-17166				SERVICE INSTRUCTION	1	#1814 - #3422	B	
	91N9-17167				DECAL-SERVICE INSTRUCTION	1	#3423 -	B	
7	91N9-17400				KIT-LIFTING CHART	1			
7-1	91N9-17410				.DECAL-LIFTING CHART	1	#0001 -	-	6.45BM+3.20AM
7-2	91N9-17420				.LIFTING CHART	1	#0001 -	-	6.45BM+2.20AM
7-3	91N9-17430				.LIFTING CHART	1	#0001 -	-	6.45BM+2.50AM
7-4	91N9-17440				.LIFTING CHART	1	#0001 -	-	6.45BM+4.05AM
7-5	91N9-17450				.LIFTING CHART	1	#0001 -	-	6.15BM+2.20AM
7-6	91N9-17460				.LIFTING CHART	1	#0001 -	-	6.15BM+2.50AM
7	91N9-18400				LIFTING CHART	1	#0008 -	-	

Item	Part_No	IS	Ord	T	Description	Qty	Serial_No	ITC	Remark
7-1	91N9-18410				.LIFTING CHART(NLC)	1	#0008 -	-	6.45BM+3.20AM
7-2	91N9-18420				.LIFTING CHART(NLC)	1	#0008 -	-	6.45BM+2.20AM
7-3	91N9-18430				.LIFTING CHART(NLC)	1	#0008 -	-	6.45BM+2.50AM
7-4	91N9-18440				.LIFTING CHART(NLC)	1	#0008 -	-	6.45BM+4.05AM
7-5	91N9-18450				.LIFTING CHART(NLC)	1	#0008 -	-	6.15BM+2.20AM
7	91N9-17500				KIT-LIFTING CHART	1	#0008 -	-	
7-1	91N9-17510				.LIFTING CHART(H/WALK)	1	#0008 -	-	6.45BM+3.20AM
7-2	91N9-17520				.LIFTING CHART(H/WALK)	1	#0008 -	-	6.45BM+2.20AM
7-3	91N9-17530				.LIFTING CHART(H/WALK)	1	#0008 -	-	6.45BM+2.50AM
7-4	91N9-17540				.LIFTING CHART(H/WALK)	1	#0008 -	-	6.45BM+4.05AM
7-5	91N9-17550				.LIFTING CHART(H/WALK)	1	#0008 -	-	6.15BM+2.20AM
8	91N6-01280				FOPS FOG PLATE	1	#0701 -	-	OPTION
9	91EK-12010				RIVET	4	#0701 -	-	OPTION
10	91N6-06420				METAL TACK	4	#0107 -	-	
11	91N6-27510				DECAL-SAFETY WORK	2	#0701 - #0796	-	
12	91N6-03121				DECAL-R/GEAR GREASE	1	#1703 -	-	

MANUALS

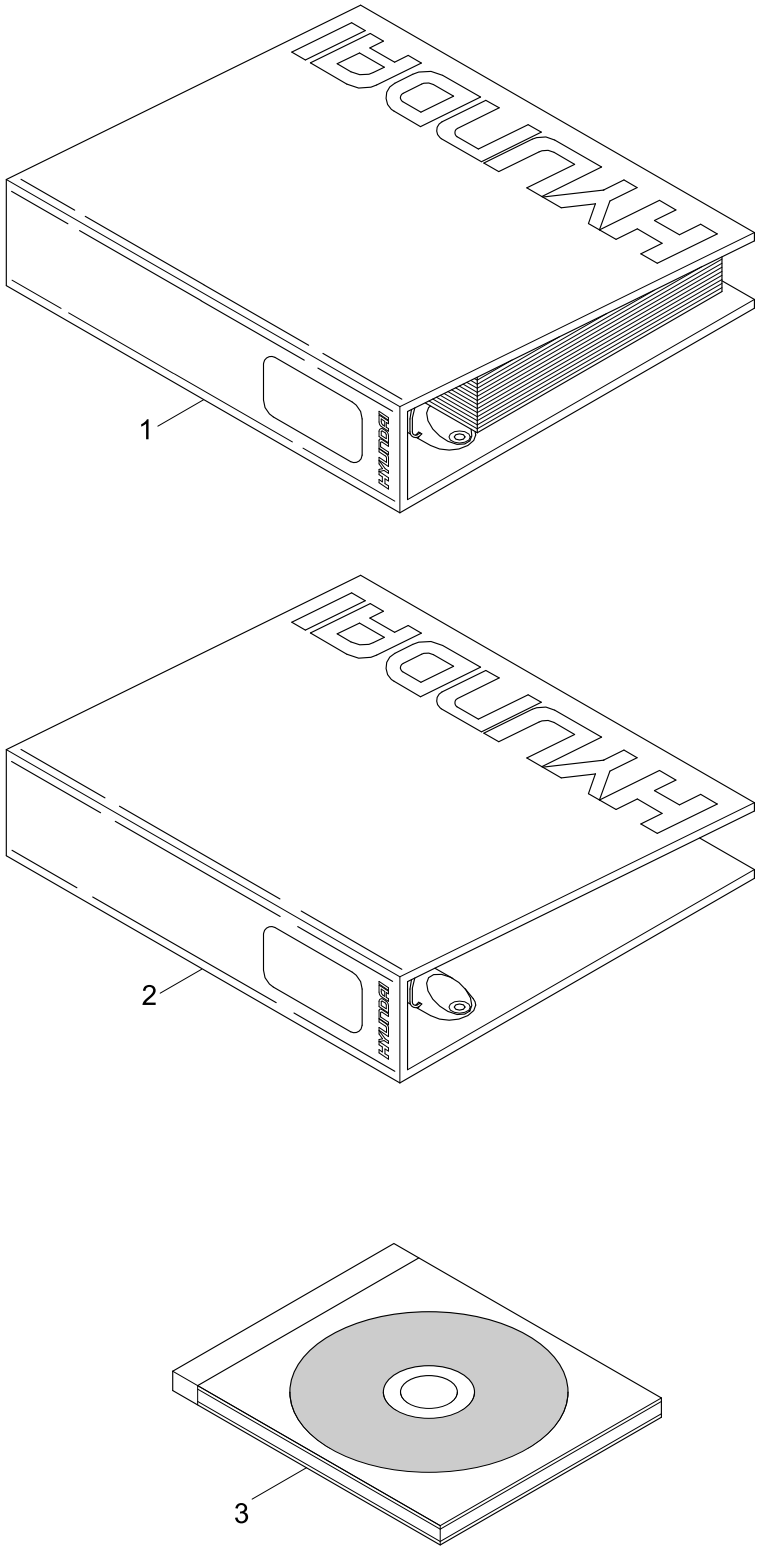

Item	Part_No	IS	Ord	T	Description	Qty	Serial_No	ITC	Remark
1	91N9-30030				PARTS MANUAL	1			
	91N9-30040				OPERATORS MANUAL	1			
	91N9-30050				SERVICE MANUAL	1			
2	91N9-30940				BINDER & STICKER	1			P/MANUAL
	91N9-30950				BINDER & STICKER	1			S/MANUAL
3	HECD-30000				CD-PARTS MANUAL	1			EXCAVATOR
	HACD-30000				CD-PARTS MANUAL	1			ALL MODEL
	HEDV-30000				DVD-PARTS MANUAL	1			EXCAVATOR
	HADV-30000				DVD-PARTS MANUAL	1			ALL MODEL

AIR INTAKE HEATER

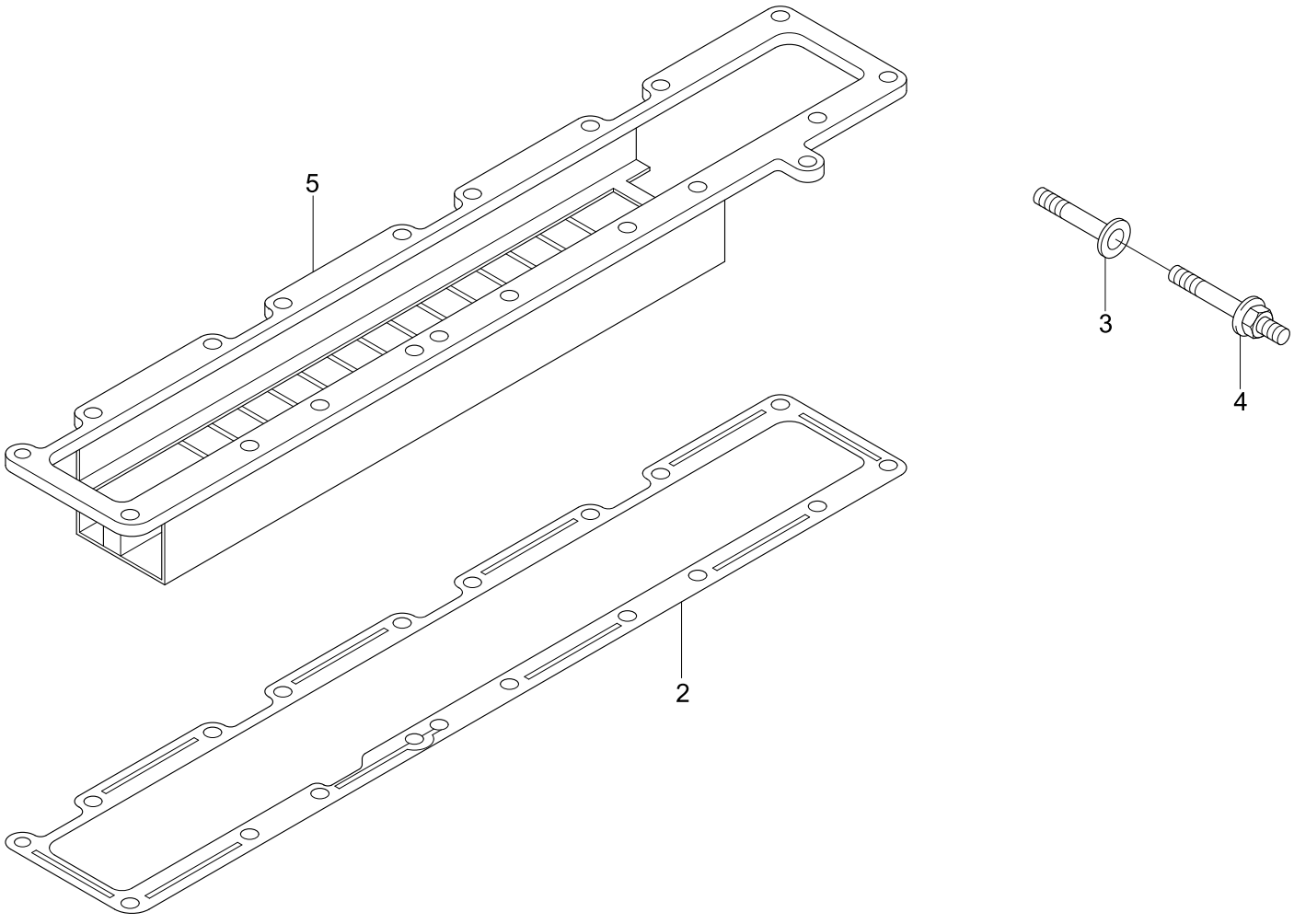

Item	Part_No	IS	Ord	T	Description	Qty	Serial_No	ITC	Remark
*	3927335				TAG-INSTRUCTION	1			AH9132
2	3936993				GASKET-INT MANI COVER	1			
3	3930319				WASHER-INSULATING	1			
4	3930320				SCREW	1			
5	3932087				HEATER-INTAKE AIR	1			

DATAPLATE

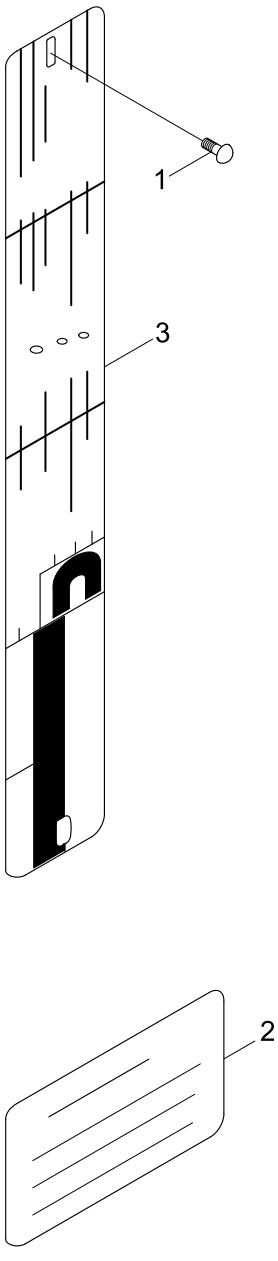

Item	Part_No	IS	Ord	T	Description	Qty	Serial_No	ITC	Remark
1	3908612				SCREW	2			AP9320
N2	3992026				DECAL	1			NOT
N3	3284906				DATAPLATE	1			NOT
N	@				NOT INDIVIDUALLY SUPPLIED	AR			NOT

CAMSHAFT & VALVE TAPPET

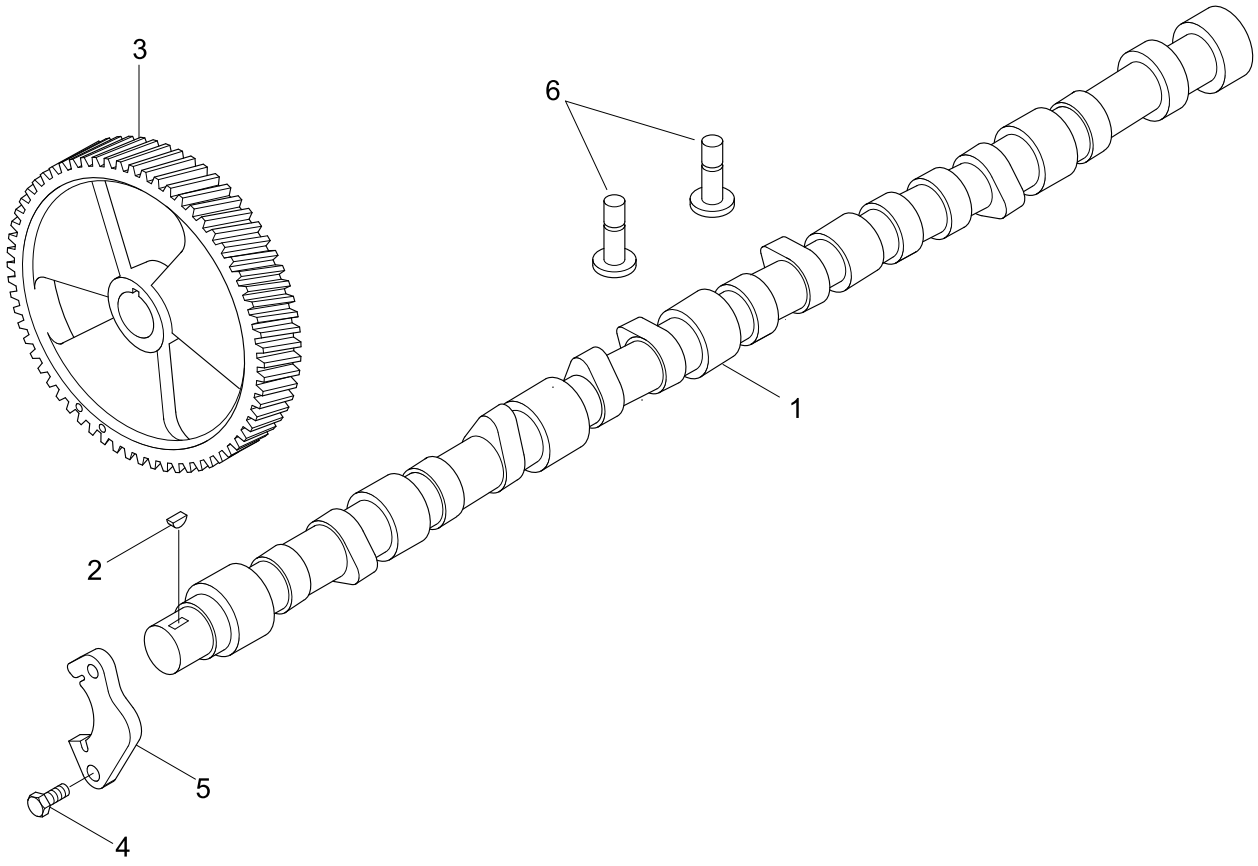

Item	Part_No	IS	Ord	T	Description	Qty	Serial_No	ITC	Remark
*N	3935715				CAMSHAFT	1			NOT
1	3923478				.CAMSHAFT	1			
2	3902332				.KEY-PLAIN WOODRUFF	1			
3	3918777				.GEAR-CAMSHAFT	1			
4	3900227				.SCREW-HEX HEAD CAP	2			
5	3927155				.SUPPORT	1			
6	3931623				TAPPET-VALVE	12			BB9880-01
N	@				NOT SUPPLIED PARTS	AR			NOT

FRONT GEAR COVER

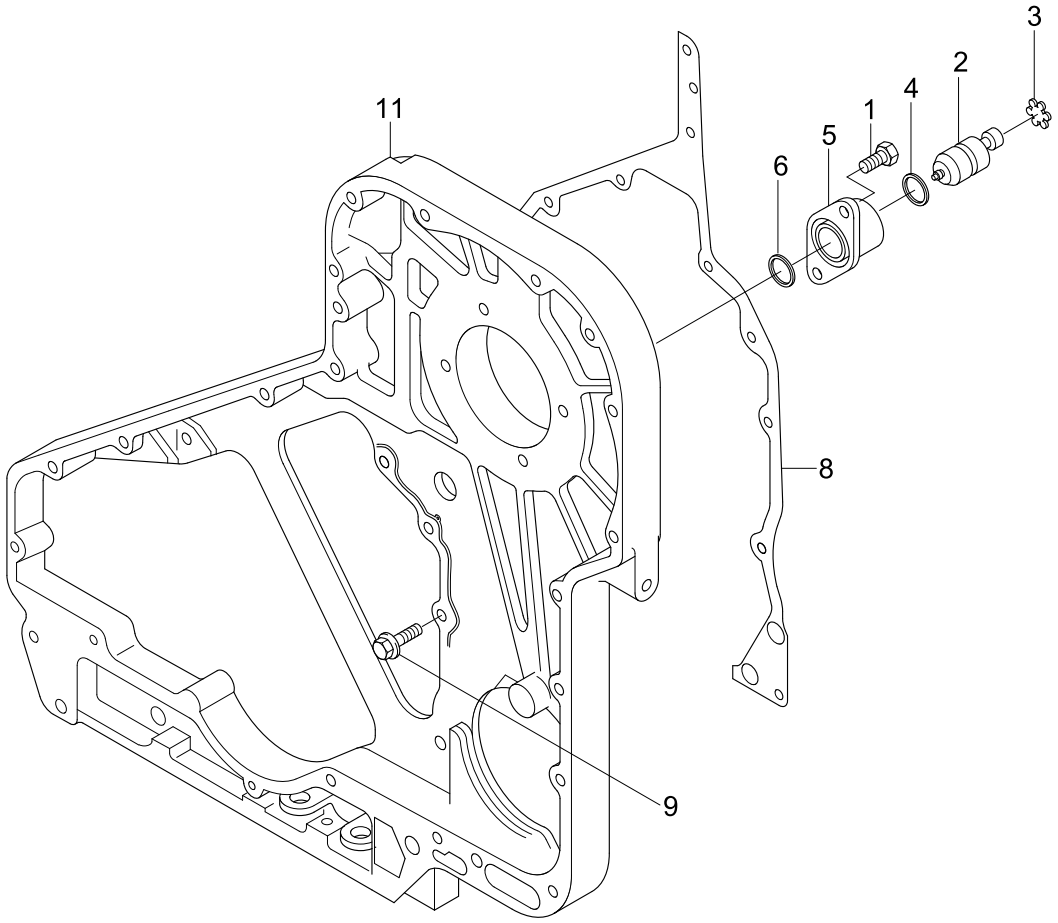

Item	Part_No	IS	Ord	T	Description	Qty	Serial_No	ITC	Remark
1	3907998				SCREW-RD HD CAP	2			BB9882
*N	3913995				HOUSING-TIMING PIN	1			NOT
2	3903924				.PIN-TIMING	1			
3	3904849				.RING-RETAINING	1			
4	3913994				.O-RING	1			
5	3919683				.HOUSING-TIMING PIN	1			
6	3915772				SEAL-RECT RING	1			
7	3943885				SCREW-HEX F/HEAD CAP	3			
8	3944293				GASKET-GEAR HOUSING	1			
9	3926846				SCREW-HEX F/HEAD CAP	3			
11	4992991				HOUSING-GEAR	1			
*	3926846				SCREW	3			
	3943885				SCREW-HEX H/CAP	3			
N	@				NOT SUPPLIED PARTS	AR			NOT

ROCKER LEVER

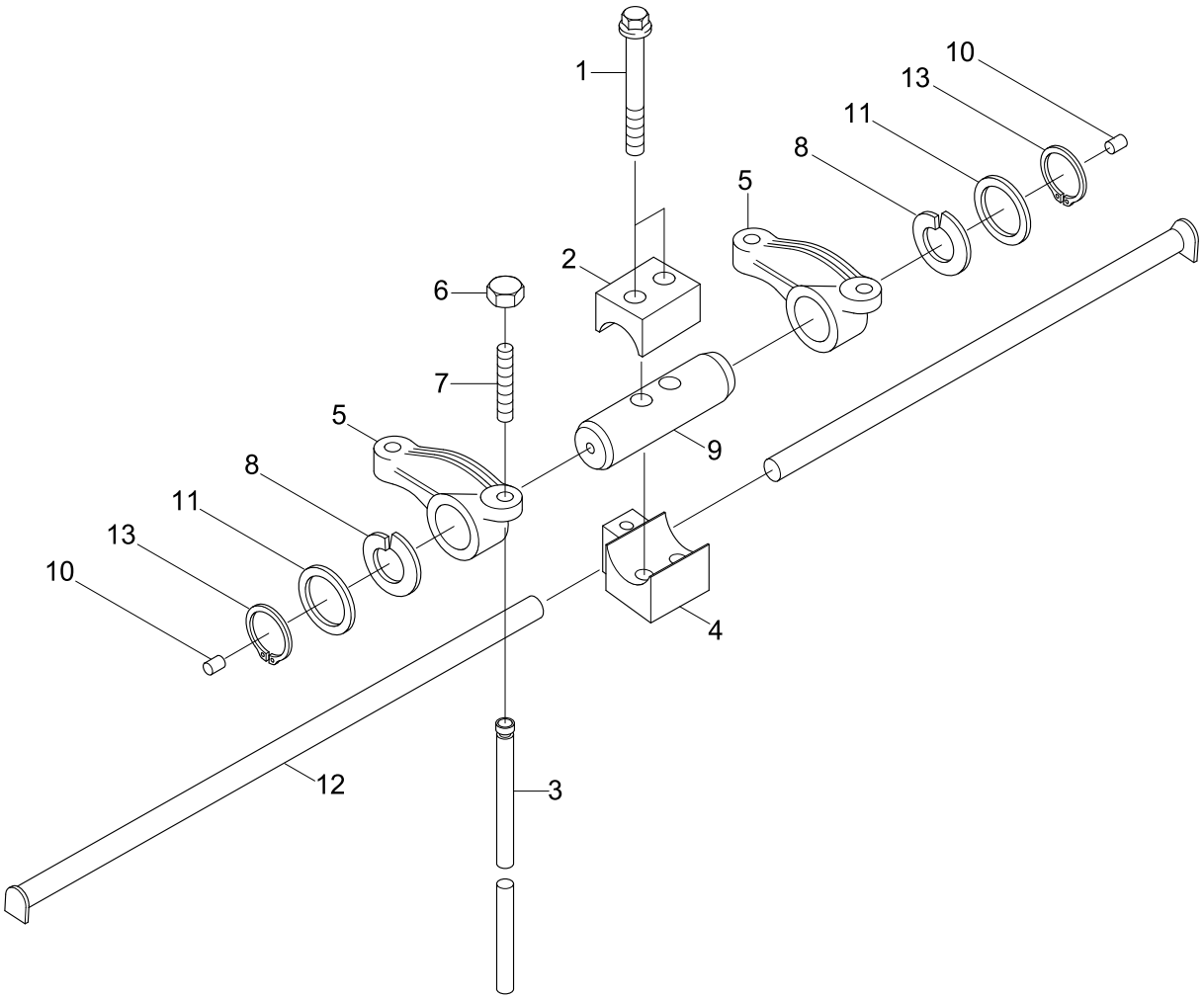

Item	Part_No	IS	Ord	T	Description	Qty	Serial_No	ITC	Remark
1	3901617				SCREW	12			RL9732
2	3901693				CLAMP-RETAINING	6			
3	3905194				ROD-PUSH	12			
4	3905870				SUPPORT	6			
*	3901717				LEVER-ROCKER	12			
N5	3926429				.LEVER-ROKER	1			NOT
6	3927692				.NUT-HEAVY HEX	1			
N7	3937438				.SCREW	1			NOT
*N	3902588				.INSERT-ROCKER LEVER	1			NOT
8	3906100				WASHER-SPRING	12			
*	3919435				SHAFT	6			
N9	3919433				.SHAFT	1			NOT
10	3919434				.RIVET	1			
11	3907206				WASHER-PLAIN	12			
12	3919677				MANIFOLD	1			
13	3901764				RING-RETAINING	12			
N	@				NOT INDIVIDUALLY SUPPLIED	AR			NOT

CYLINDER BLOCK

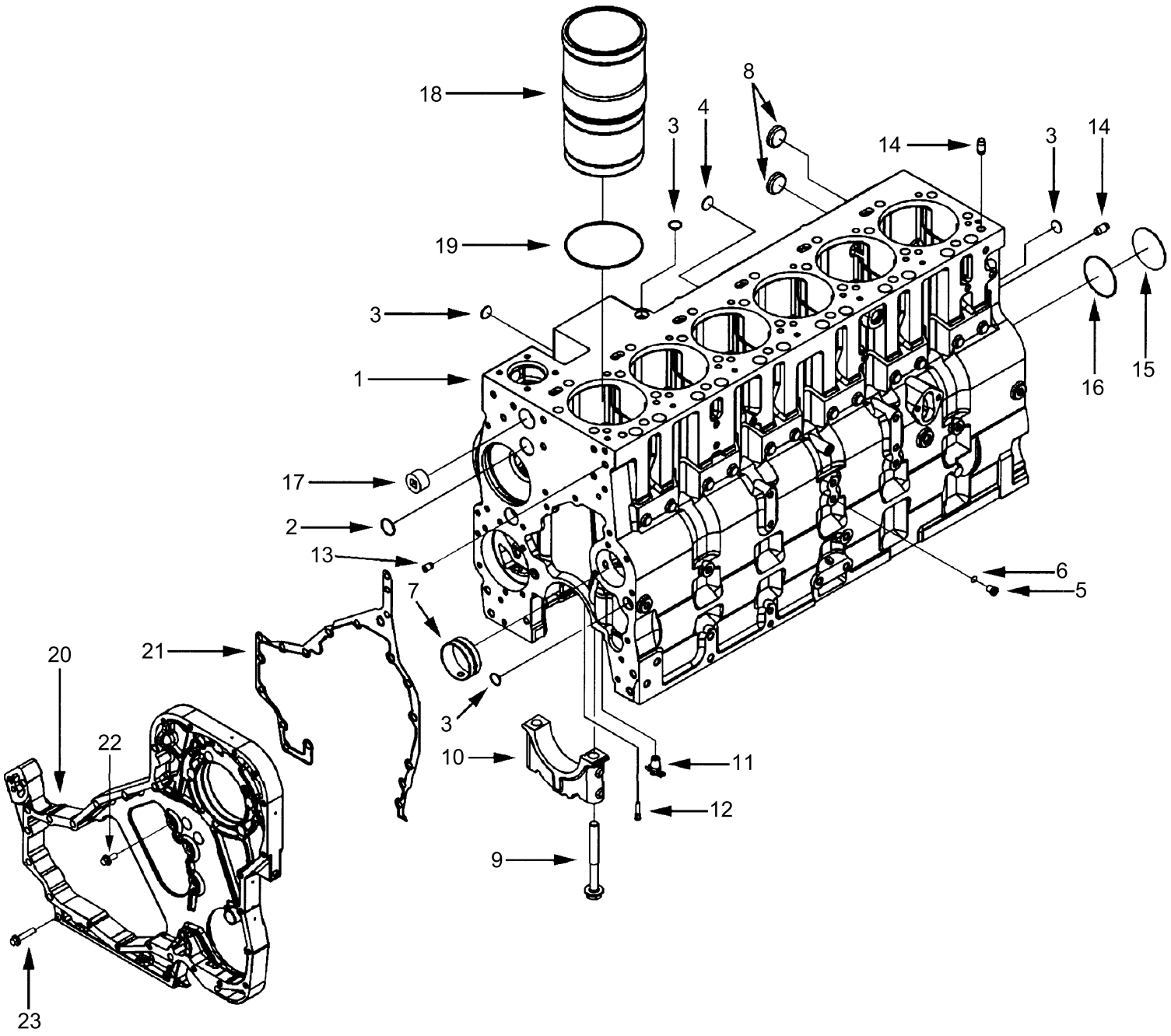

Item	Part_No	IS	Ord	T	Description	Qty	Serial_No	ITC	Remark
*	3939313				BLOCK-CYLINDER	1			BB9880-03
N1	3939311				.BLOCK-CYLINDER	1			NOT
2	143066				.PLUG-EXPANSION	2			
3	3004258				.PLUG-EXPANSION	4			
7	3945329				.BUSHING	7			
8	3905401				.PLUG-EXPANSION	4			
9	3916369				.SCREW	14			
10	3936058				.CAP-MAIN BEARING	7			
*	3800332				KIT-CYL BLOCK HW	1			
	3678923				.PLUG-THREAD	6			
5	3678924				..PLUG-THREAD	1			
6	3678925				..O-RING	1			
11	S-923-E				.COCK-DRAIN	1			
12	3928031				.NOZZLE	12			
13	3900257				.PIN-DOWEL	2			
14	3901846				.PIN-DOWEL	4			
15	3901969				.PLUG-EXPANSION	1			
16	3926048				.O-RING	1			
17	3008470				.PLUG	1			
*	3800328				KIT-CYLINDER LINER	6			
18	3948095				.LINER-CYLINDER	1			
19	3907177				.SEAL-RECT RING	1			
*	3678921				PLUG-THREAD	2			
20	3678912				.SEAL/O-RING	1			
N21	3678922				.PLUG-THREADED	1			NOT

Item	Part_No	IS	Ord	T	Description	Qty	Serial_No	ITC	Remark
*	3008469				PLUG-PIPE	1			
N	@				.NOT SUPPLIED PARTS	AR			NOT

CRANKSHAFT & MAIN BEARINGS

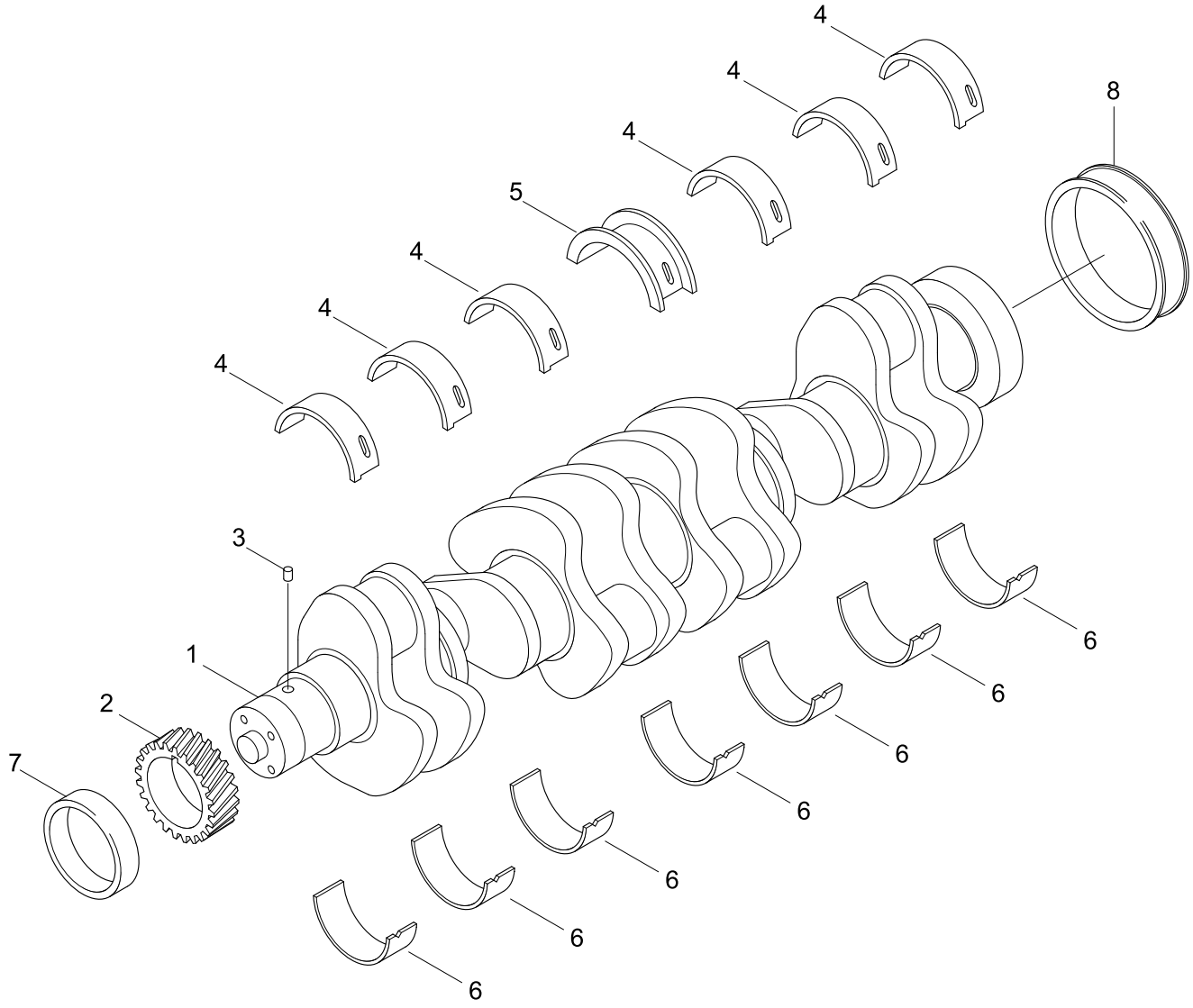

Item	Part_No	IS	Ord	T	Description	Qty	Serial_No	ITC	Remark
*	3918986				CRANKSHAFT ASSY	1			BB9880-01
N1	3917320				.CRANKSHAFT	1			NOT
2	3918776				.CRANKSHAFT-GEAR	1			
3	3904483				.PIN-DOWEL	1			
*	3945917				MAIN BEARING SET	1			
N4	3944158				.BEARING-MAIN	6			NOT
5	3944163				.BEARING-THRUST	1			
N6	3944153				.BEARING-MAIN	7			NOT
*	3945918				MAIN BEARING SET	1			
N4	3944159				.BEARING-MAIN	6			NOT
N5	3944164				.BEARING-THRUST	1			NOT
N6	3944154				.BEARING-MAIN	7			NOT
*	3945919				MAIN BEARING SET	1			
N4	3944160				.BEARING-MAIN	6			NOT
5	3944165				.BEARING-THRUST	1			
N6	3944155				.BEARING-MAIN	7			NOT
*	3945920				MAIN BEARING SET	1			
N4	3944161				.BEARING-MAIN	6			NOT
5	3944166				.BEARING-THRUST	1			
N6	3944156				.BEARING-MAIN	7			NOT
*	3945921				MAIN BEARING SET	1			
N4	3944162				.BEARING-MAIN	6			NOT
5	3944167				.BEARING-THRUST	1			
N6	3944157				.BEARING-MAIN	7			NOT
7	3925343				SEAL-W/SLEEVE KIT,FR	1			

Item	Part_No	IS	Ord	T	Description	Qty	Serial_No	ITC	Remark
8	3926126				SEAL-W/SLEEVE KIT,RR	1			
*	3923573				BEARING				
	3923574				BEARING				
	3923575				BEARING				
N	@				NOT INDIVIDUALLY SUPPLIED	AR			NOT

CRANKCASE & BREATHER

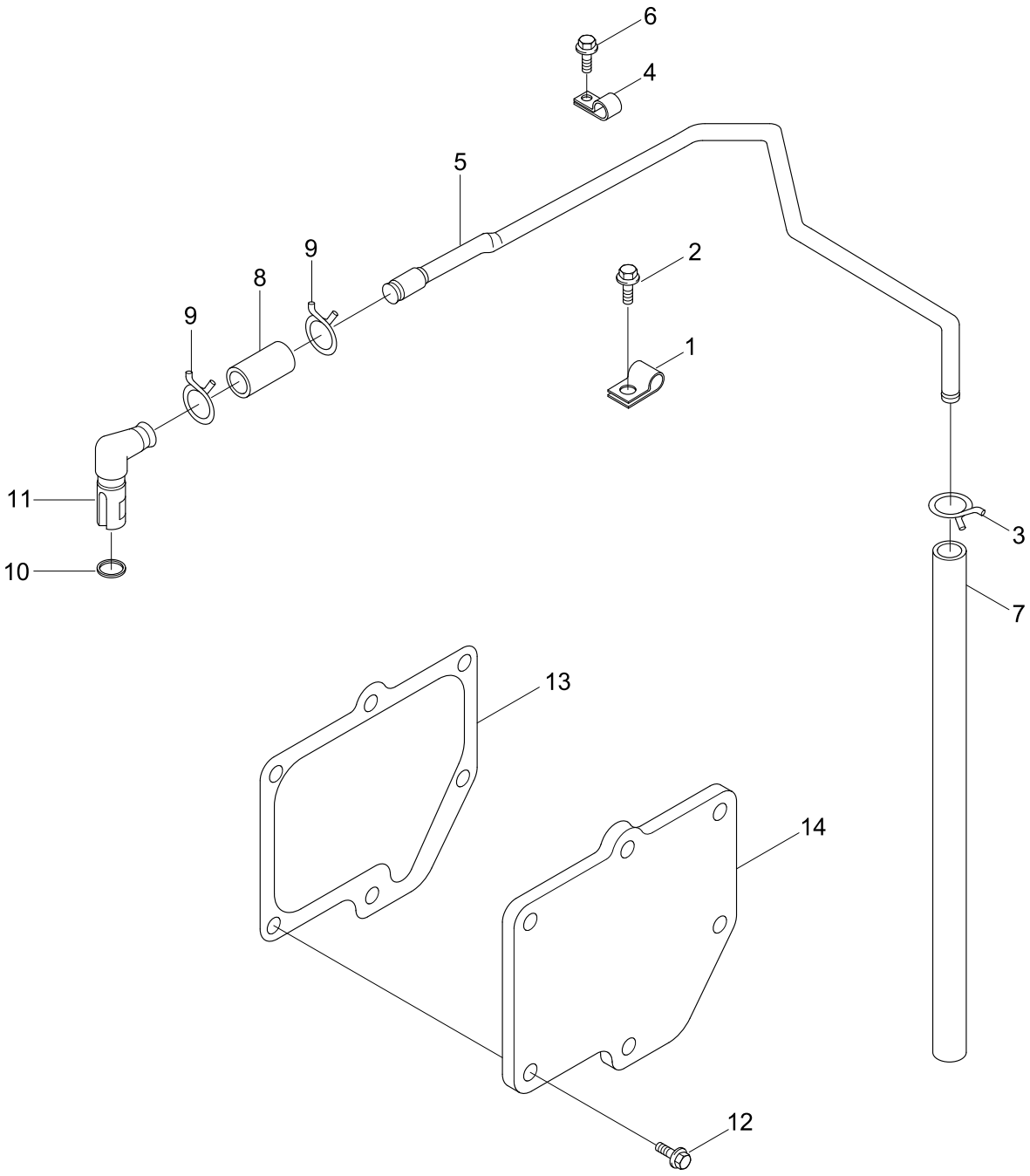

Item	Part_No	IS	Ord	T	Description	Qty	Serial_No	ITC	Remark
1	70622				CLIP	1			BR9132
2	3901249				SCREW	1			
3	3907740				CLAMP-SPRING HOSE	1			
4	3907741				CLIP	1			
5	3909669				TUBE-BREATHER	1			
6	3912072				SCREW	1			
7	3930827				HOSE-PLAIN	1			
8	3918616				HOSE-PLAIN	1			
9	3937613				CLAMP-HOSE	2			
10	3936331				SEAL-RECTANGULAR RING	1			
11	3935113				CONNECTION-VENT	1			
12	3913638				SCREW-HEX HED CAP	6			
13	3944683				GASKET-BREATHER	1			
N14	4063520				PLATE-COVER	1			NOT
N	@				NOT INDIVIDUALLY SUPPLIED	AR			NOT

VIBRATION DAMPER

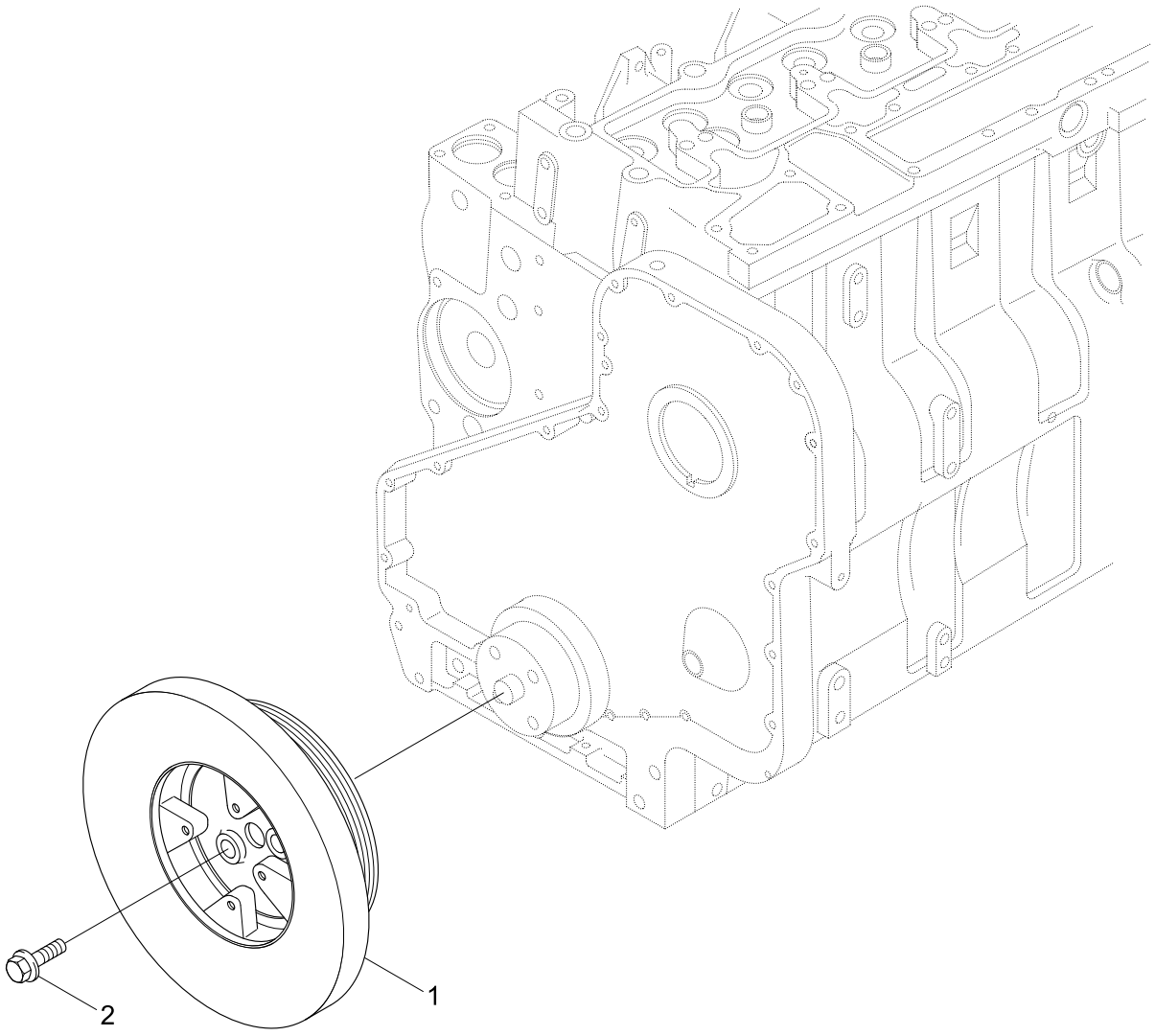

Item	Part_No	IS	Ord	T	Description	Qty	Serial_No	ITC	Remark
1	3925570				DAMPER-VIBRATION	1			DA9704
2	3906733				SCREW	4			

FRONT GEAR TRAIN ACCESSORY

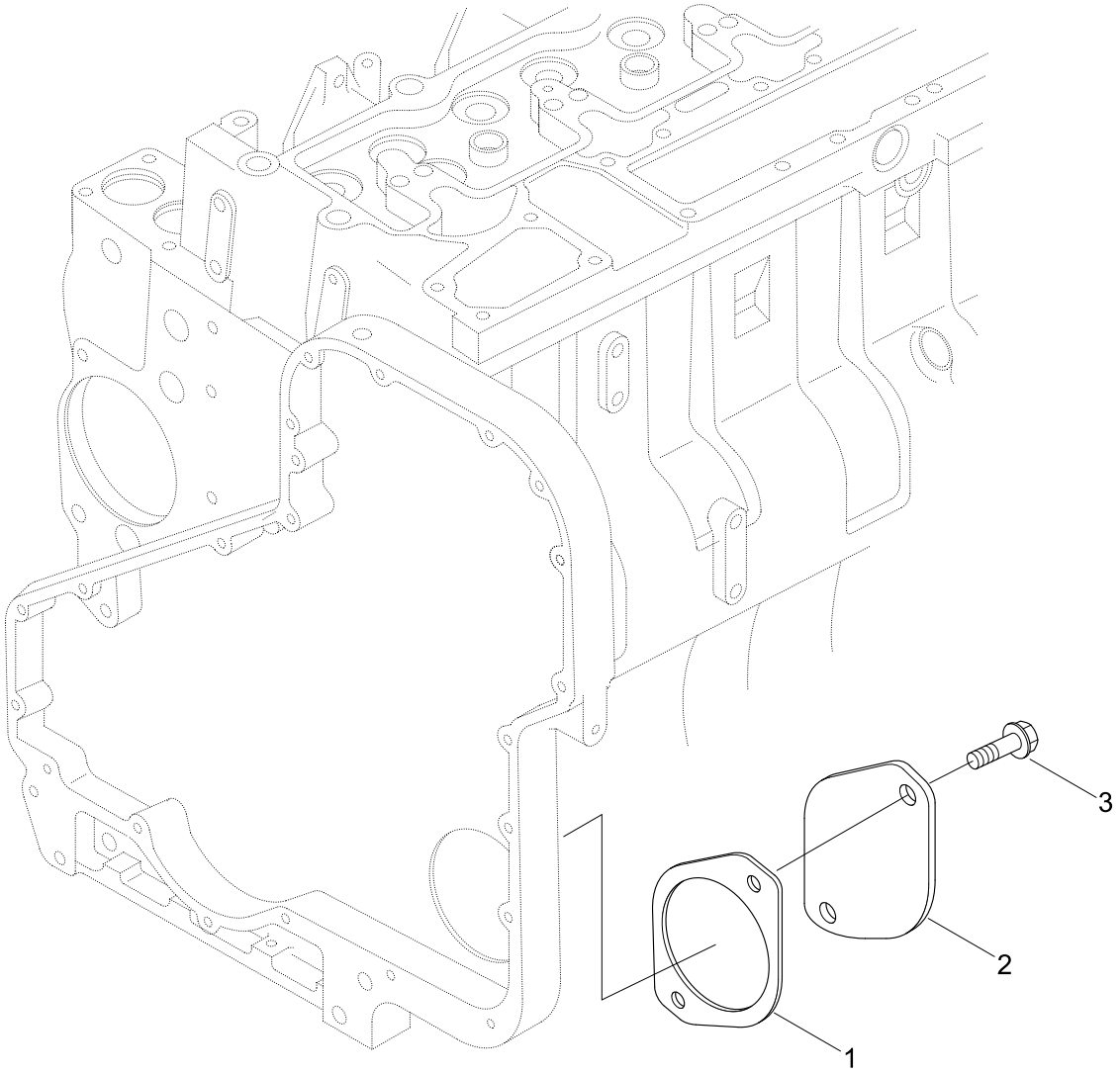

Item	Part_No	IS	Ord	T	Description	Qty	Serial_No	ITC	Remark
1	3938655				GASKET-ACC DRIVE CVR	1			DF9709
2	3914868				PLATE-COVER	1			
3	3901249				SCREW	2			

FLYWHEEL MOUNTING

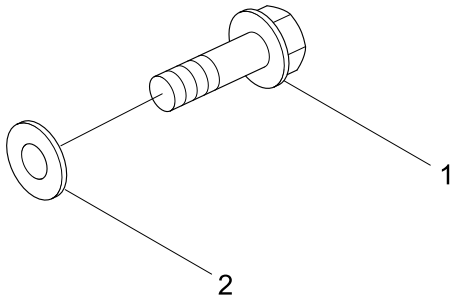

Item	Part_No	IS	Ord	T	Description	Qty	Serial_No	ITC	Remark
1	3901395				SCREW	8			FW9704
2	3900269				WASHER-PLAIN	8			

THERMOSTAT

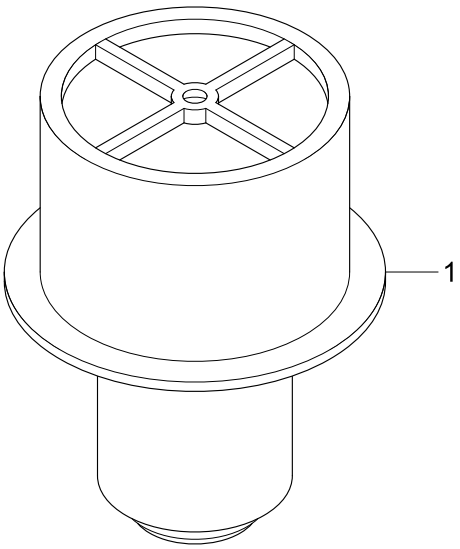

Item	Part_No	IS	Ord	T	Description	Qty	Serial_No	ITC	Remark
1	4992231				THERMOSTAT	1	#0001 -	-	EC9702

ALTERNATOR LOCATION

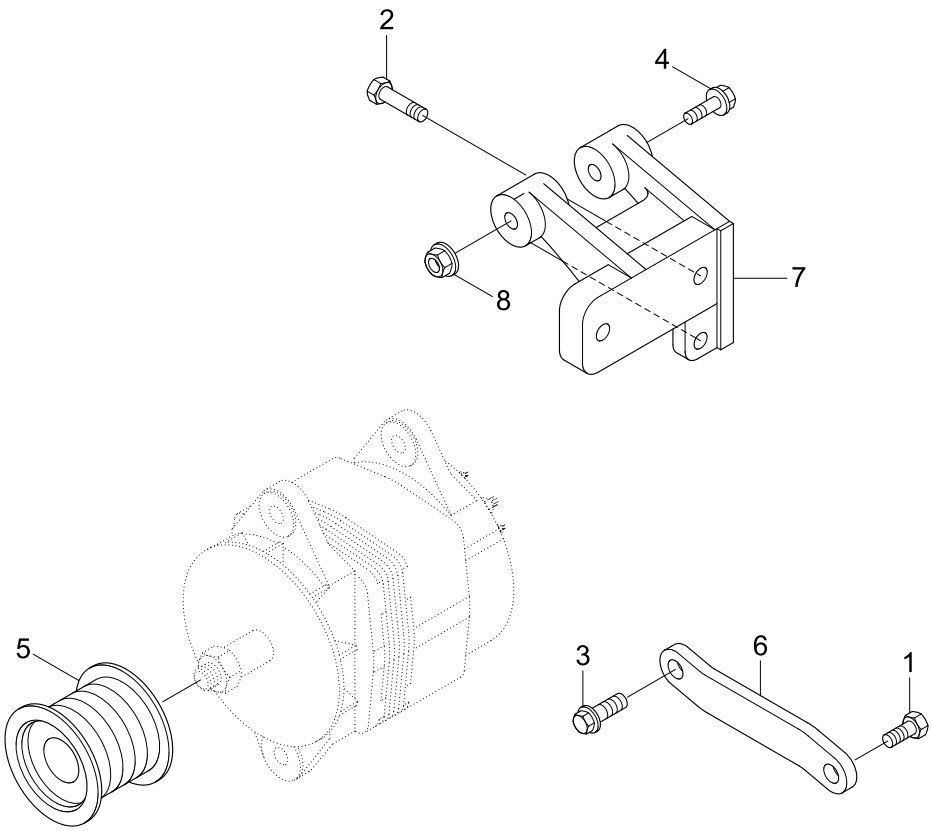

Item	Part_No	IS	Ord	T	Description	Qty	Serial_No	ITC	Remark
1	3052061				SCREW	1			EH9434
2	3903112				SCREW-H/FLANGE CAP	3			
3	3902460				SCREW-HEX HD CAP	1			
4	3903105				SCREW	1			
5	3926858				PULLEY	1			
6	3944312				BRACE-ALTERNATOR	1			
7	3944311				SUPPORT	1			
8	3903210				NUT	1			

ACCESSORY DRIVE PULLEY

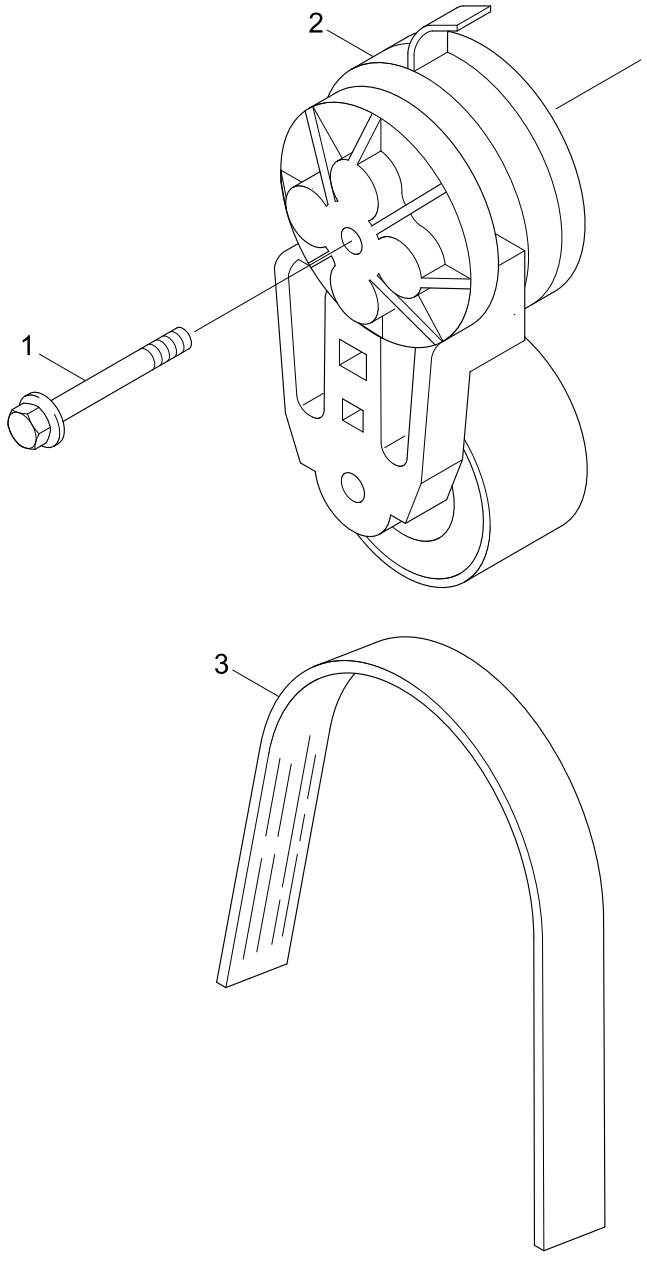

Item	Part_No	IS	Ord	T	Description	Qty	Serial_No	ITC	Remark
1	3282433				SCREW	1			WP9916
2	3936213				TENSIONER-BELT	1			
3	3911581				BELT-V RIBBED	1			

MECHANICAL TACHOMETER DRIVE

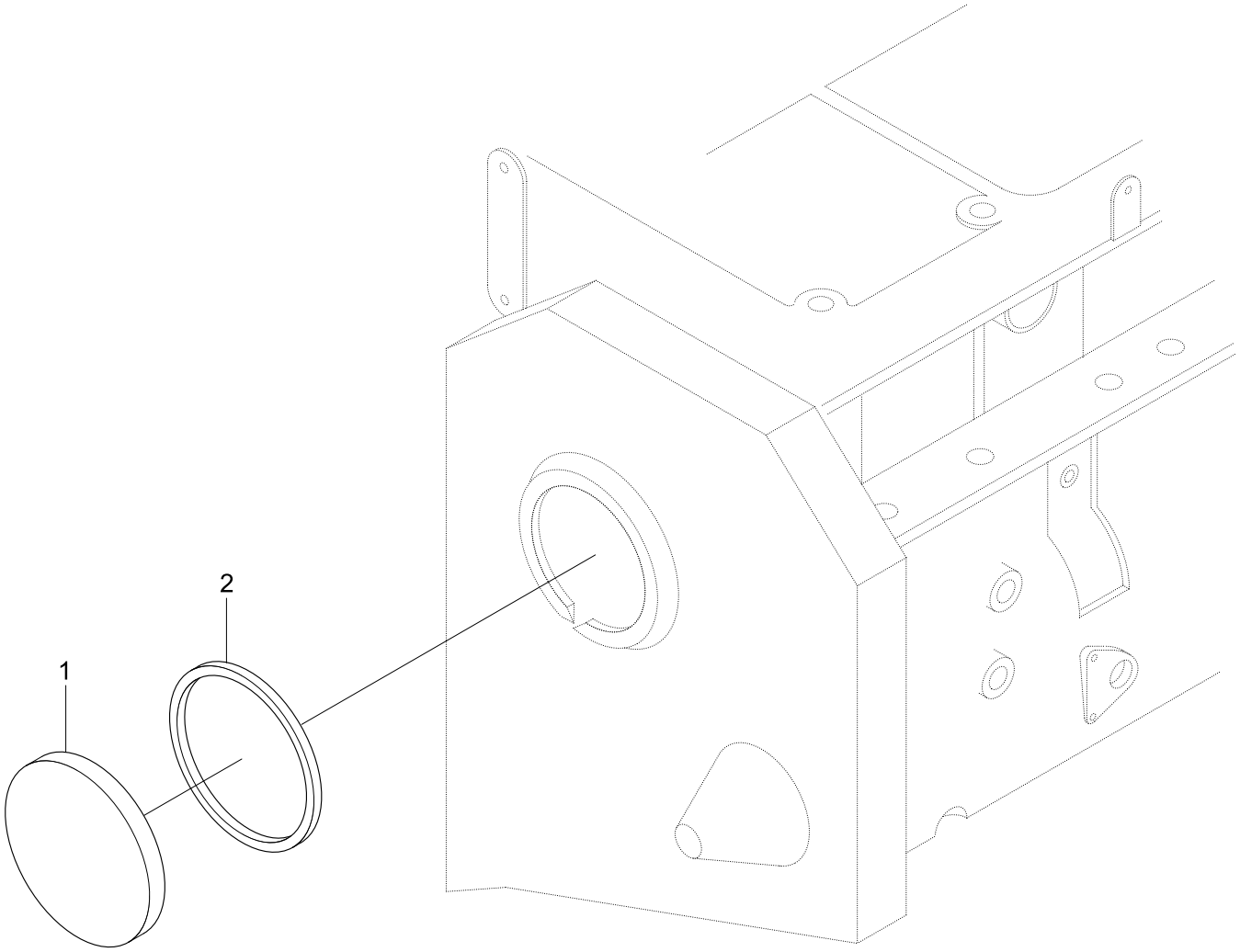

Item	Part_No	IS	Ord	T	Description	Qty	Serial_No	ITC	Remark
1	3903463				COVER	1			OB9337
2	3903475				SEAL-RECT RING	1			

FAN DRIVE

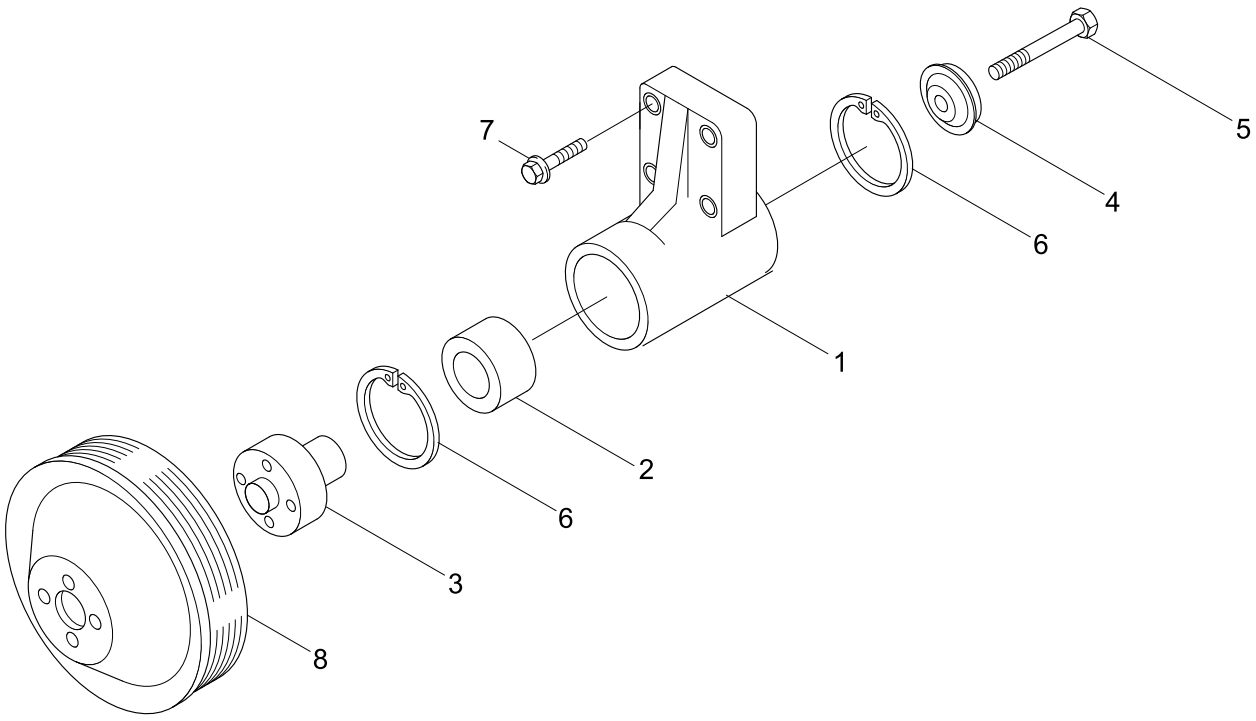

Item	Part_No	IS	Ord	T	Description	Qty	Serial_No	ITC	Remark
*	3942896				SUPPORT-FAN	1			FA9325
N1	3942895				.SUPPORT-FAN	1			NOT
2	3910739				.BEARING-BALL	1			
3	3911924				.HUB-FAN	1			
4	3923044				.RETAINER-FAN HUB	1			
5	3907769				.SCREW	1			
6	3035960				.RING-RETAINING	2			
7	3900634				SCREW	4			
8	3914461				PULLEY-FAN	1			
N	@				NOT INDIVIDUALLY SUPPLIED	AR			NOT

AIR FUEL CONTROL PLUMBING

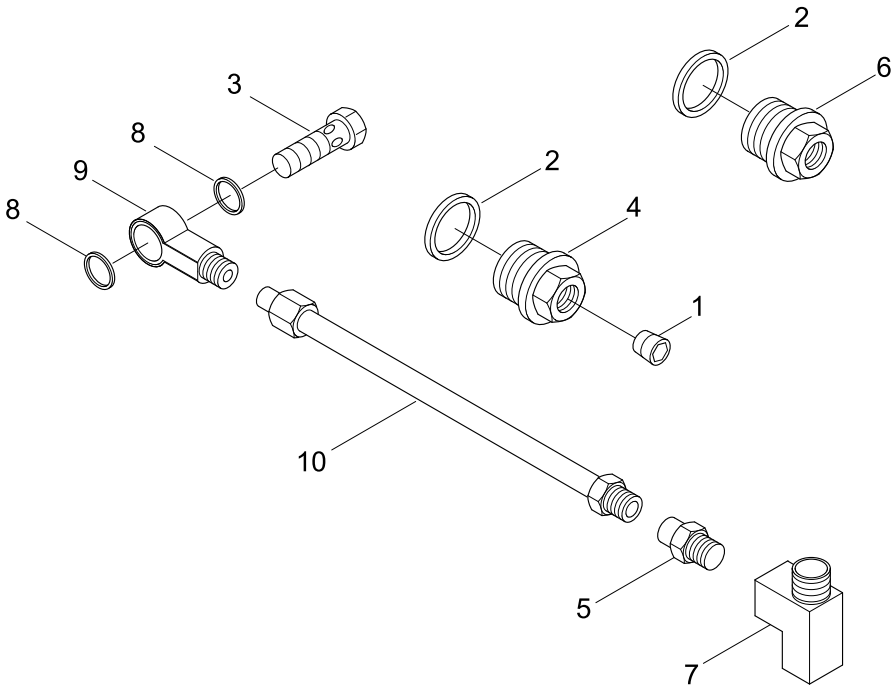

Item	Part_No	IS	Ord	T	Description	Qty	Serial_No	ITC	Remark
1	3008466				PLUG-PIPE	1			FE9008
2	3902425				WASHER-SEALING	2			
3	3903035				SCREW	1			
4	3908110				PLUG	1			
5	3909552				CONNECTOR-MALE	1			
6	3921594				PLUG	1			
7	3930789				TEE	1			
8	3935171				WASHER-SEALING	2			
9	3990881				CONNECTOR-BENJO	1			
N10	3991512				TUBE-AIR FUEL CONTROL	1			NOT
N	@				NOT INDIVIDUALLY SUPPLIED	AR			NOT

FUEL FILTER

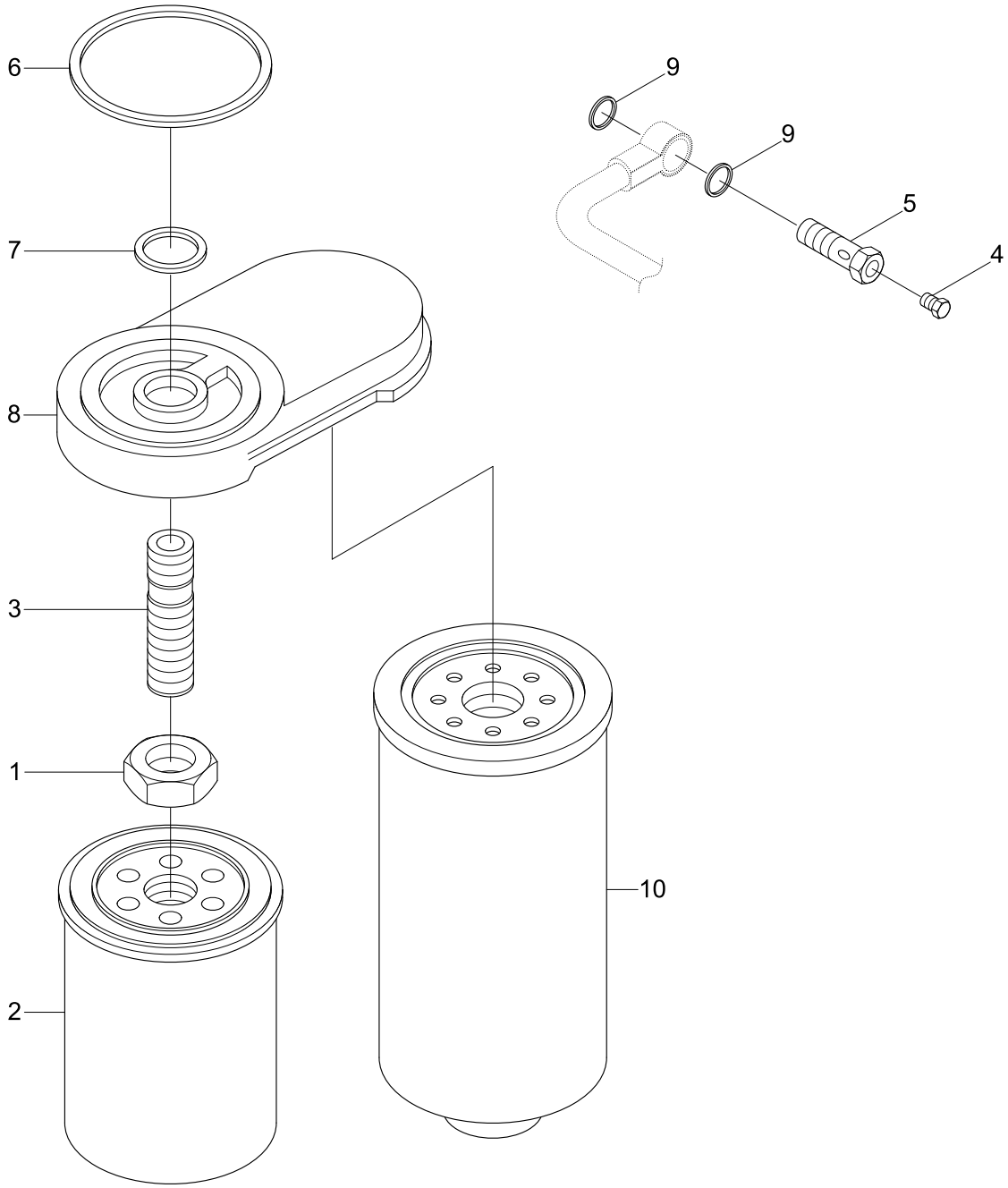

Item	Part_No	IS	Ord	T	Description	Qty	Serial_No	ITC	Remark
1	3903293				NUT	1			FF9389
2	11E1-70010				FILTER-FUEL	1			
3	3925955				ADAPTER-FILTER HEAD	1			
*N	3905860				SCREW	1			NOT
4	3905403				.SCREW	1			
5	3911446				.SCREW	1			
6	3906694				SEAL-RECT RING	1			
7	3906695				SEAL-RECTANGULAR RING	1			
*	3936315				HEAD-FUEL FILTER	1			
8	3936313				.HEAD-FUEL FILTER	1			
9	3935171				WASHER-SEALING	2			
10	11E1-70210				FILTER-FUEL&W/SEPARATOR	1			
N	@				NOT SUPPLIED PARTS	AR			NOT

FUEL FILTER PLUMBING

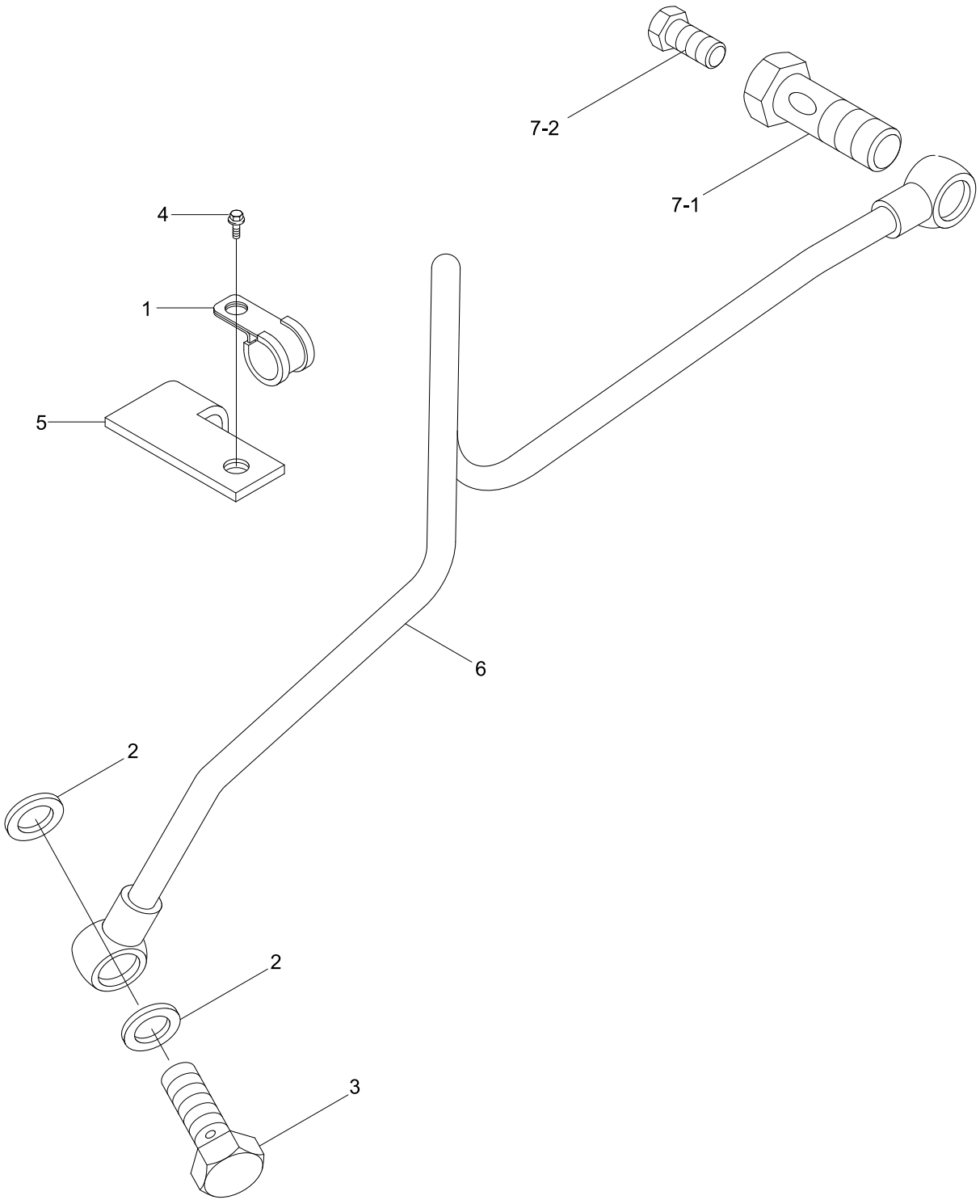

Item	Part_No	IS	Ord	T	Description	Qty	Serial_No	ITC	Remark
1	3914711				CLIP	1			FF9886
2	3863988				WASHER-SEALING	2			
3	3924725				SCREW-BANJO CONN	1			
4	3093923				SCREW-HEX FLANGE HEAD	1			
5	3930375				BRACE-TUBE	1			
6	3930766				TUBE-FUEL SUPPLY	1			
N7	3905860				SCREW	1			NOT
7-1	3911446				.SCREW	1			
7-2	3939570				.SCREW	1			
*	3935171				WASHER-SEALING	2			
N	@				NOT SUPPLIED PARTS	AR			NOT

FLYWHEEL HOUSING

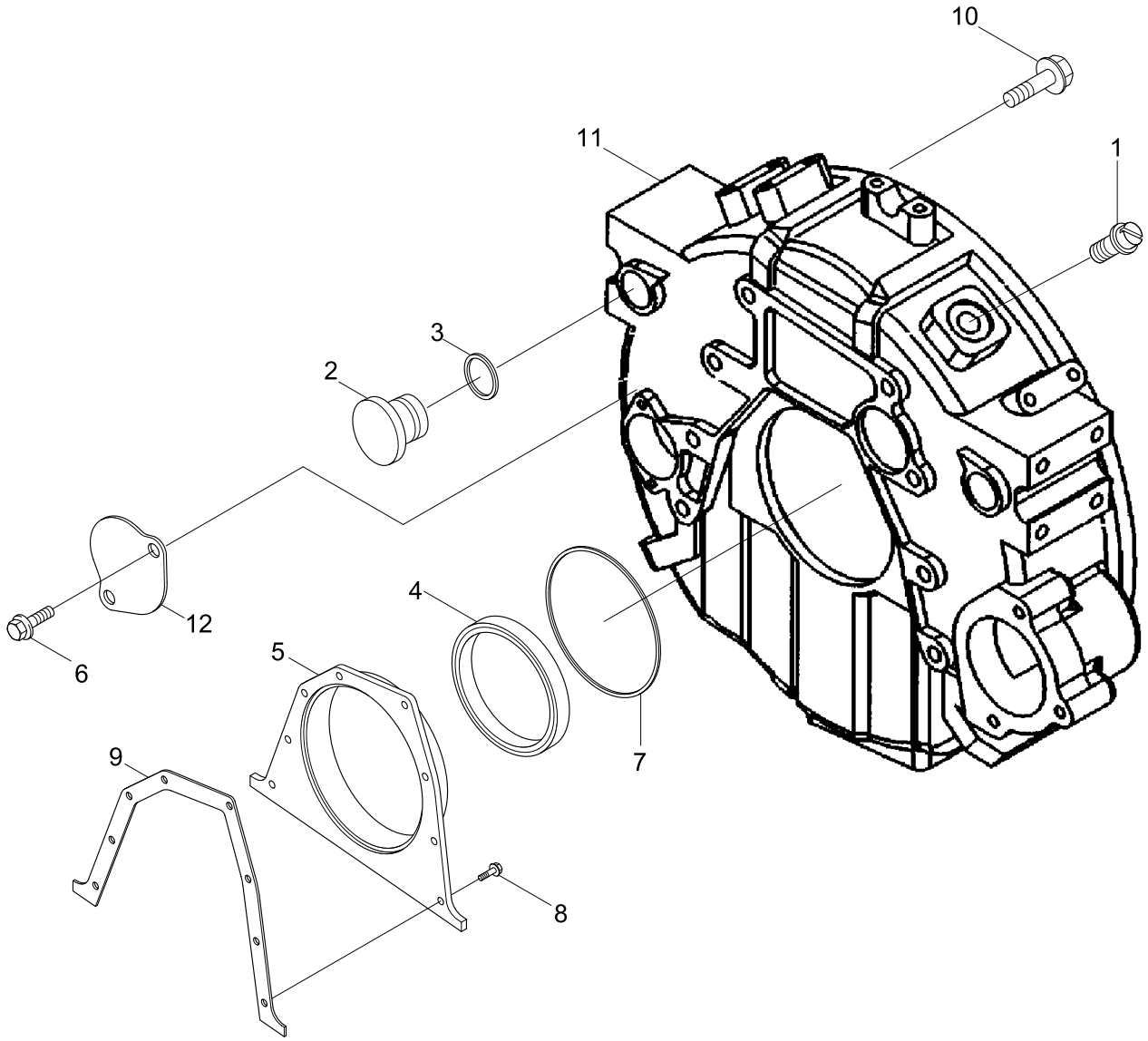

Item	Part_No	IS	Ord	T	Description	Qty	Serial_No	ITC	Remark
1	3904181				PLUG-THREADED	1			FH9322
2	3910248				PLUG	1			
3	3910260				O-RING	1			
*	3911699				COVER-REAR	1			
4	3933262				.SEAL-OIL	1			
*	3934486				KIT-SEAL	1			
5	3933384				.COVER-REAR	1			
6	3912072				SCREW	2			
7	3912473				SEAL-RECT RING	1			
8	3913638				SCREW-HEX F/HEAD CAP	8			
9	3914301				GASKET-REAR COVER	1			
10	3920447				SCREW-HEX F/HEAD CAP	12			
11	3926207				HOUSING-FLYWHEEL	1			
12	3925234				PLATE-COVER	1			
N	@				NOT INDIVIDUALLY SUPPLIED	AR			NOT

FUEL PUMP COUPLING

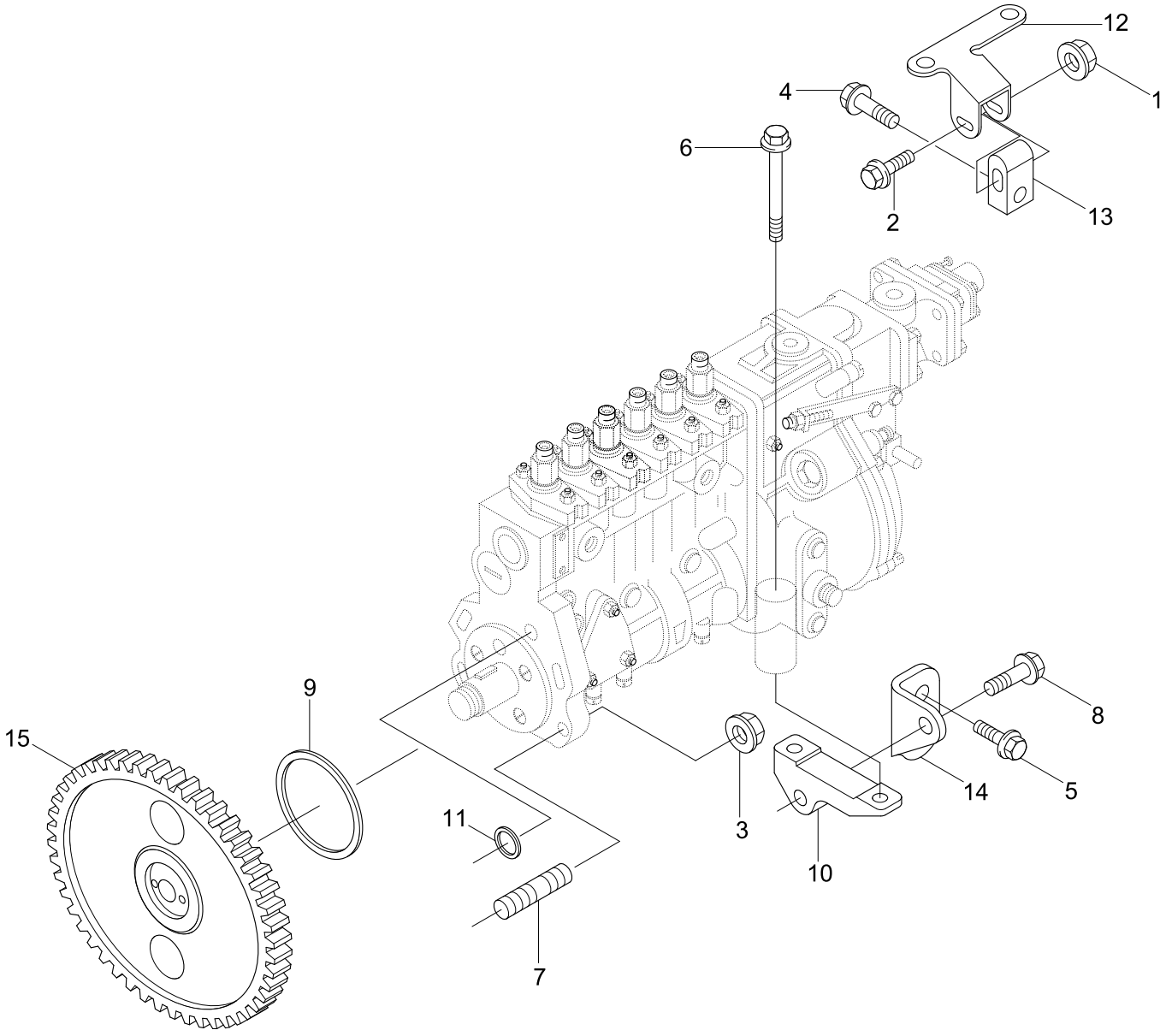

Item	Part_No	IS	Ord	T	Description	Qty	Serial_No	ITC	Remark
1	3900589				NUT-HEX FLANGE	1			FP99001-01
2	3901445				SCREW-CAPTIVE WASHER	1			
3	3902662				NUT-HEX FLANGE	4			
4	3903464				SCREW-HEX F/HEAD CAP	1			
5	3903990				SCREW-HEX F/HEAD CAP	2			
6	3913366				SCREW-HEX F/HEAD CAP	2			
7	3915036				STUD	4			
8	3920622				SCREW	1			
9	3924605				SEAL-RECTANGULAR RING	1			
10	3926273				SUPPORT-FUEL PUMP	1			
11	3926722				SEAL-RECT RING	1			
12	3921357				BRACE-FUEL PUMP	1			
13	3926781				SUPPORT-FUEL PUMP	1			
N14	3938091				SUPPORT-FUEL PUMP	1			NOT
15	3931380				GEAR-FUEL PUMP	1			
N	@				NOT INDIVIDUALLY SUPPLIED	AR			NOT

FUEL PUMP

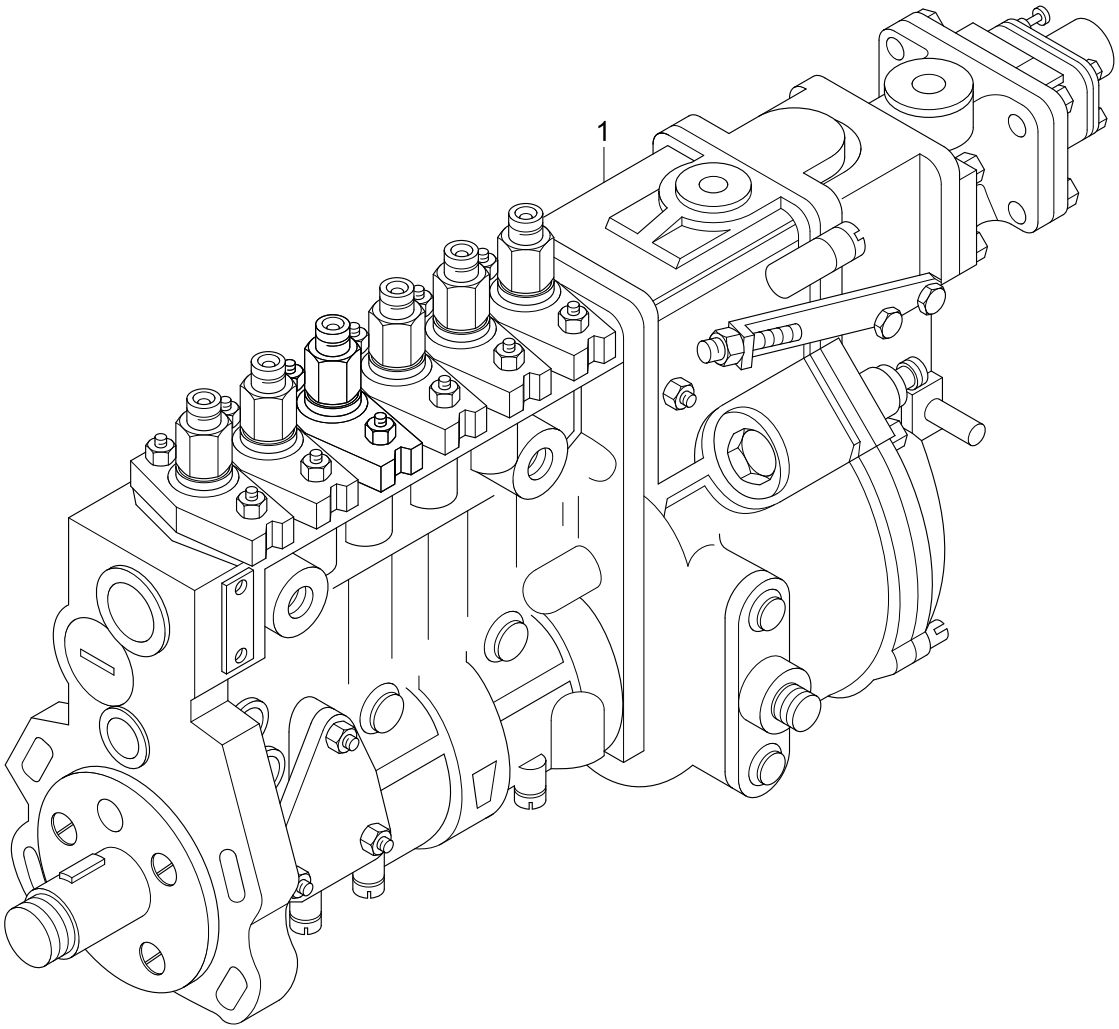

Item	Part_No	IS	Ord	T	Description	Qty	Serial_No	ITC	Remark
1	3938372				PUMP-FUEL INJECTION	1			FP98969
*	3938402				SPECIFICATION				

FUEL SYSTEM ACCESSORIES

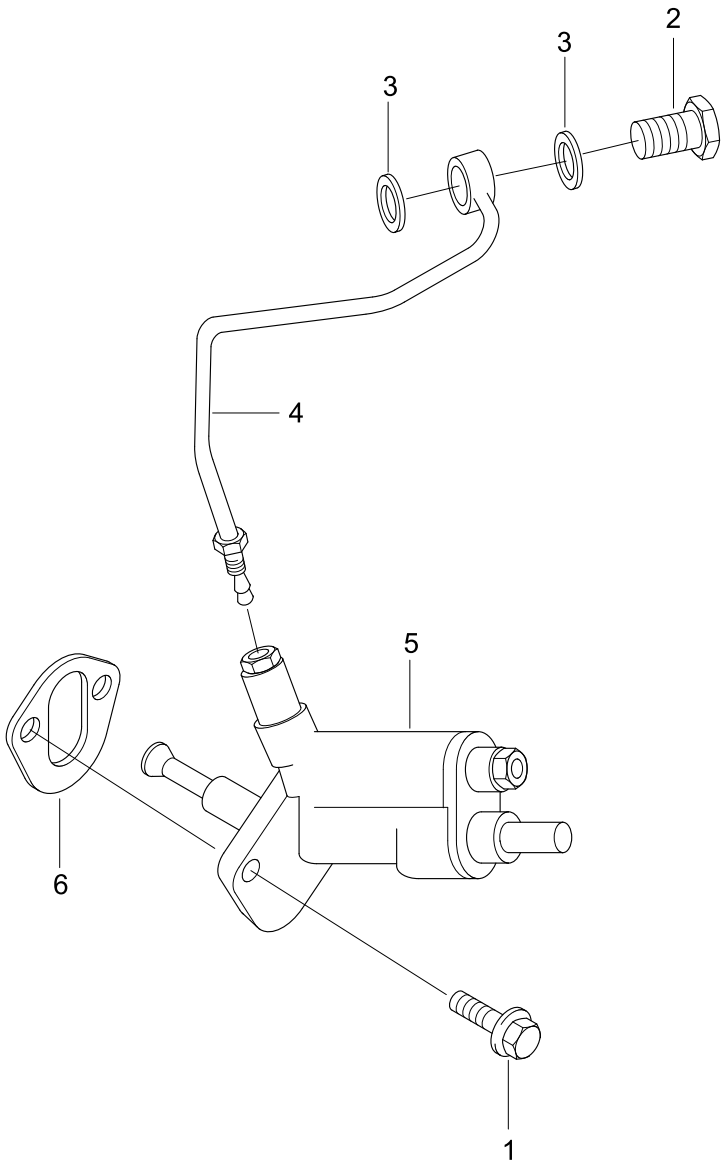

Item	Part_No	IS	Ord	T	Description	Qty	Serial_No	ITC	Remark
1	3909310				SCREW	2			FS9724-01
2	3916361				SCREW	1			
3	3935171				WASHER-SEALING	2			
4	3918539				TUBE	1			
5	3936316				PUMP-FUEL TRANSFER	1			
6	3939258				GASKET-COVER PLATE	1			

FUEL PLUMBING

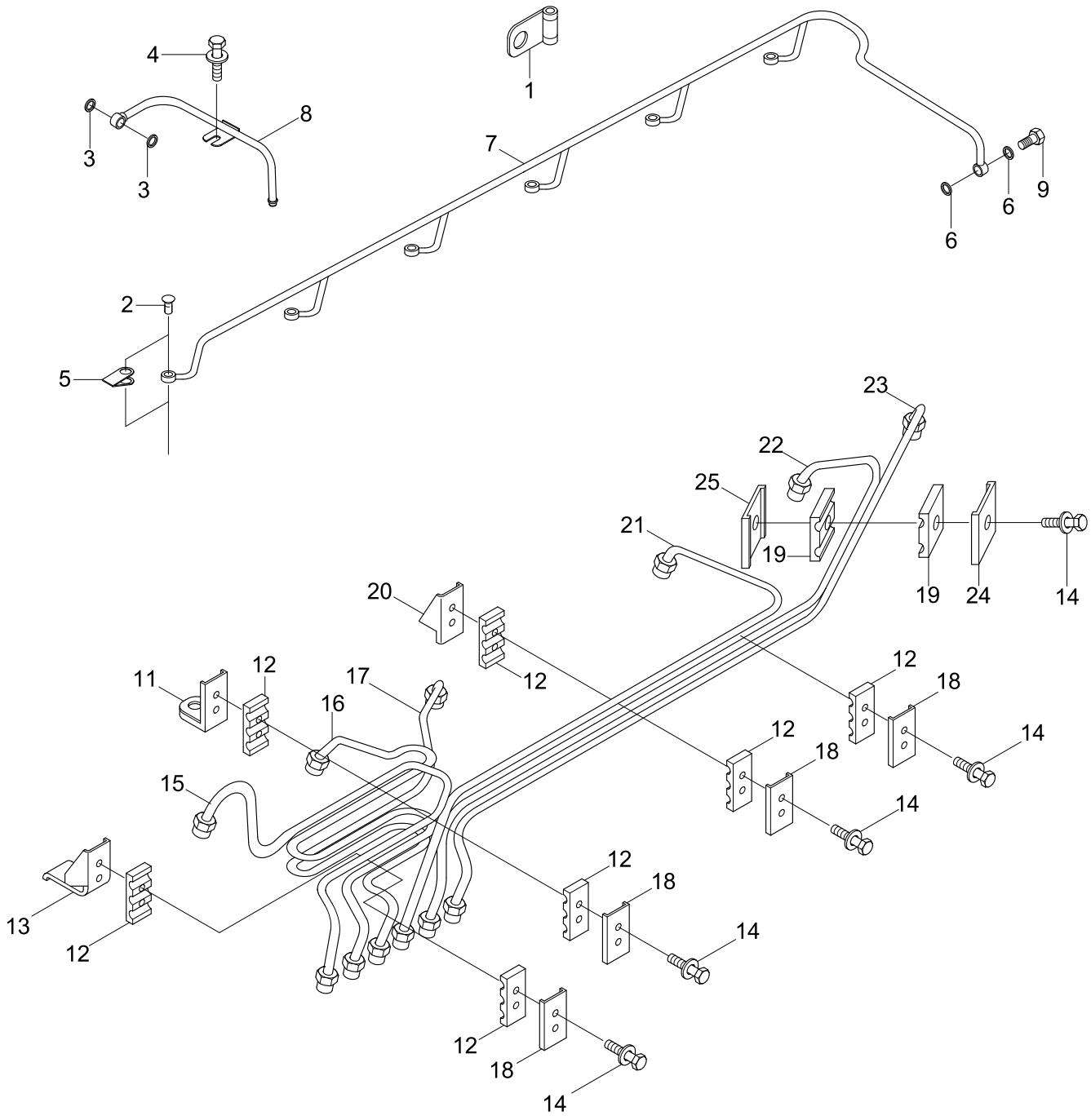

Item	Part_No	IS	Ord	T	Description	Qty	Serial_No	ITC	Remark
1	3282059				CLIP	1			FT97147
2	3282141				SCREW	6			
3	3863988				WASHER-SEALING	2			
4	3900626				SCREW-HEX F/HEAD CAP	1			
5	3903380				BANJO CONNECTOR-SEAL	6			
6	3918188				WASHER-SEALING	2			
7	3920595				MANIFOLD-FUEL	1			
8	3921652				TUBE-FUEL DRAIN	1			
9	3924726				VALVE-CHECK	1			
9-1	167157				.BALL-CHECK	1			NOT SHOWN
9-2	3916895				.PIN-ROLL	1			NOT SHOWN
9-3	3924723				.SCREW-BANJO CONN	1			NOT SHOWN
N*	3930388				TUBE	1			NOT
11	3282942				.BRACE-TUBE	1			
12	3917747				.ISOLATOR-VIBRATION	4			
13	3919622				.ISOLATOR-VIBRATION	1			
14	3920854				.SCREW-CAPTIVE WASHER	4			
15	3930391				.TUBE	1			
16	3930392				.TUBE	1			
17	3930393				.TUBE	1			
N18	3991275				.BRACE-TUBE	2			NOT
N*	3930389				TUBE	1			NOT
11	3282942				.BRACE-TUBE	1			
12	3917747				.ISOLATOR-VIBRATION	4			
14	3920854				.SCREW-CAPTIVE WASHER	5			

Item	Part_No	IS	Ord	T	Description	Qty	Serial_No	ITC	Remark
N18	3991275				.BRACE-TUBE	2			NOT
19	3917746				.ISOLATOR-VIBRATION	2			
21	3930394				.TUBE	1			
22	3930395				.TUBE	1			
23	3930396				.TUBE	1			
24	3991276				.BRACE-TUBE	1			
25	3991277				.BRACE-TUBE	1			
N	@				NOT SUPPLIED PARTS	AR			NOT

FUEL SHUTOFF VALVE

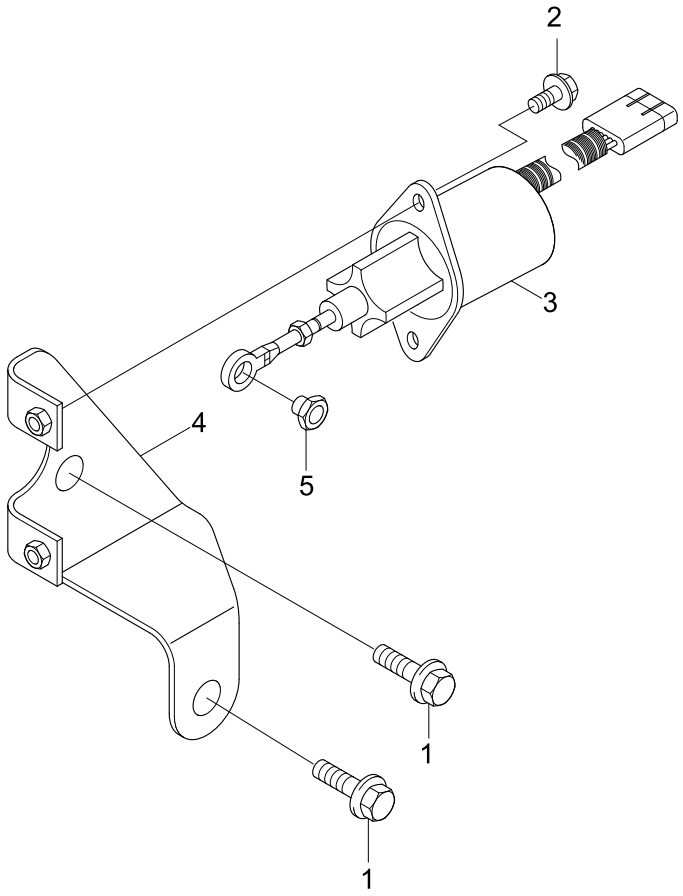

Item	Part_No	IS	Ord	T	Description	Qty	Serial_No	ITC	Remark
1	3900630				SCREW	1			FV9274-02
	3903990				SCREW-HEX HED CAP	1			
2	3913638				SCREW-HEX HED CAP	2			
N3	3939019				SOLENOID-FUEL PUMP	1			NOT
N4	3938467				BRACKET-SOLENOID	1			NOT
5	3930683				NUT-LOCK	1			
*	3934022				WASHER-PLAIN	1			
N	@				NOT INDIVIDUALLY SUPPLIED	AR			NOT

FLYWHEEL

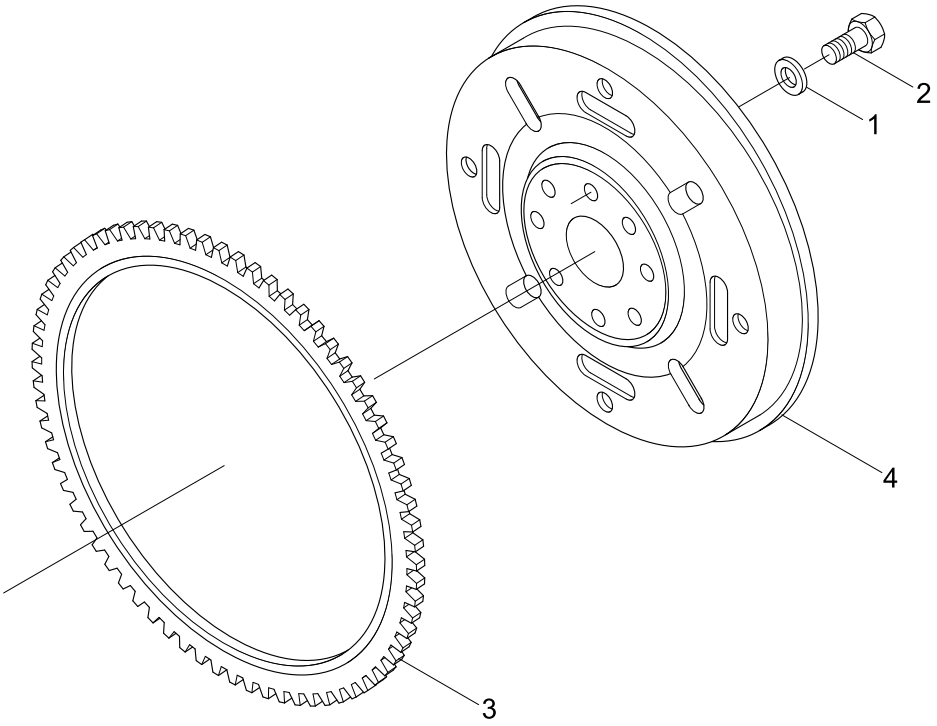

Item	Part_No	IS	Ord	T	Description	Qty	Serial_No	ITC	Remark
1	3900269				WASHER-PLAIN	8			FW9520
2	3901395				SCREW	8			
*	3906809				FLYWHEEL	1			
3	3902127				.GEAR-FLYWHEEL RING	1			
N4	3906808				.FLYWHEEL	1			NOT
N	@				NOT INDIVIDUALLY SUPPLIED	AR			NOT

FUEL INLET TUBE

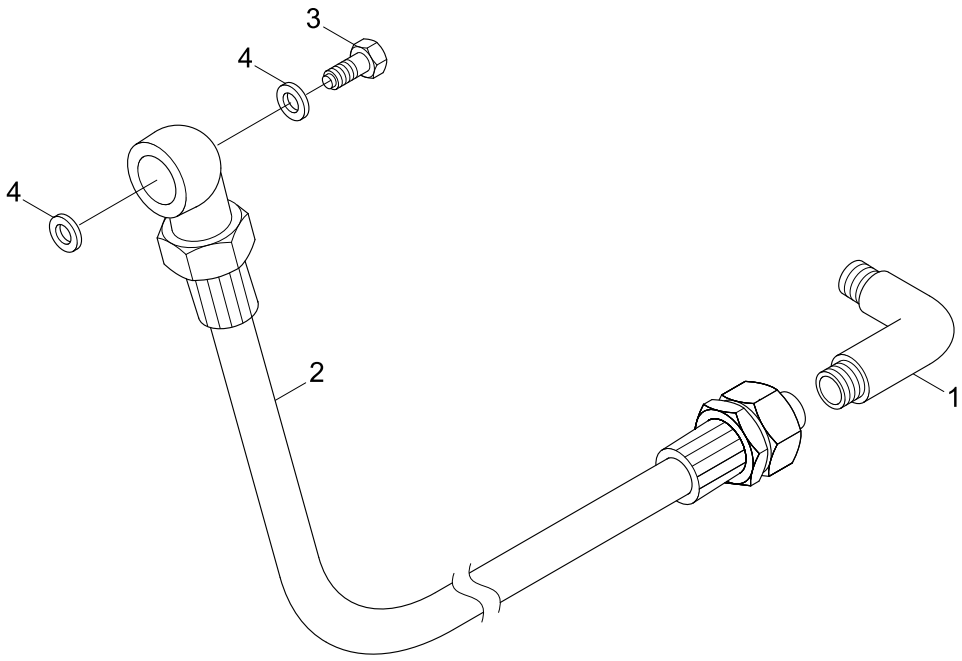

Item	Part_No	IS	Ord	T	Description	Qty	Serial_No	ITC	Remark
1	3945212				ELBOW-PLAIN UNION	1			FP99002
2	3916779				HOSE	1			
3	3918002				SCREW	1			
4	3918190				WASHER	2			

LIFTING BRACKET

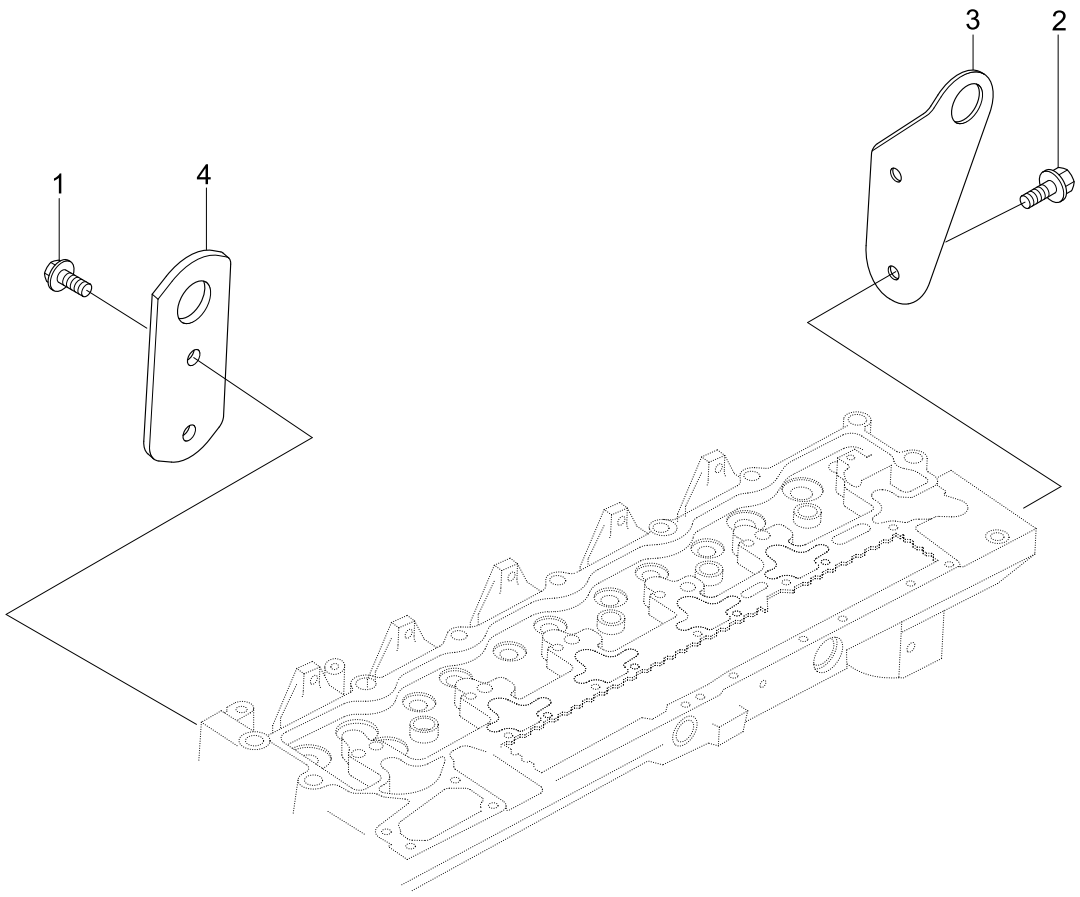

Item	Part_No	IS	Ord	T	Description	Qty	Serial_No	ITC	Remark
1	3901249				SCREW-HEX F/HEAD CAP	4			LA9068
3	3906440				BRACKET	1			
4	3907861				BRACKET	1			

ENGINE OIL COOLER

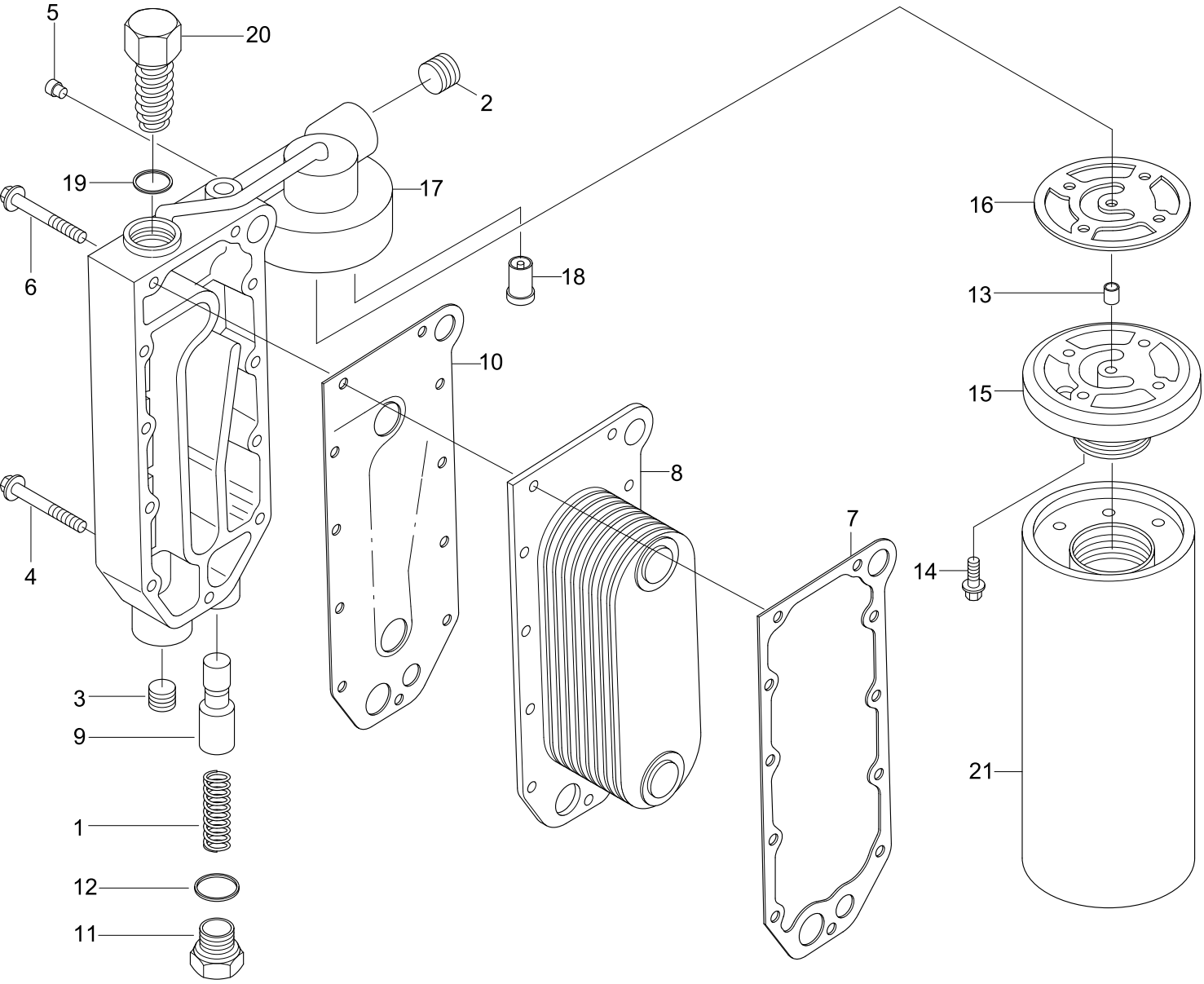

Item	Part_No	IS	Ord	T	Description	Qty	Serial_No	ITC	Remark
1	68274				SPRING-COMPRESSION	1			LC9720
2	3008469				PLUG-PIPE	1			
3	3027232				PLUG	1			
4	3944874				SCREW-HEX F/HEAD CAP	2			
5	3906619				PLUG-PIPE	2			
6	3916073				SCREW	11			
7	3918174				GASKET	1			
8	3918175				CORE	1			
9	3945967				PLUNGER-PRS REGULAR	1			
10	3929011				GASKET	1			
*	3931084				PLUG-THREADED	1			
N11	3930910				.PLUG-THREADED	1			NOT
12	3930911				.O-RING	1			
*	3934159				HEAD-LUB OIL FILTER	1			
13	118227				.DOWEL-RING	1			
14	3907860				.SCREW-HEX F/HEAD CAP	4			
15	3918334				.HEAD-LUB OIL FILTER	1			
16	3921605				.GASKET	1			
N17	3931077				.COVER	1			NOT
18	3936365				.VALVE-PRESS RELIEF	1			
*	3934410				VALVE-BYPASS	1			
19	3201562				.O-RING	1			
20	3934278				.VALVE-BYPASS	1			
21	11NA-70110				ENGINE OIL FILTER	1			
N	@				NOT SUPPLIED PARTS	AR			NOT

OIL LEVEL GAUGE

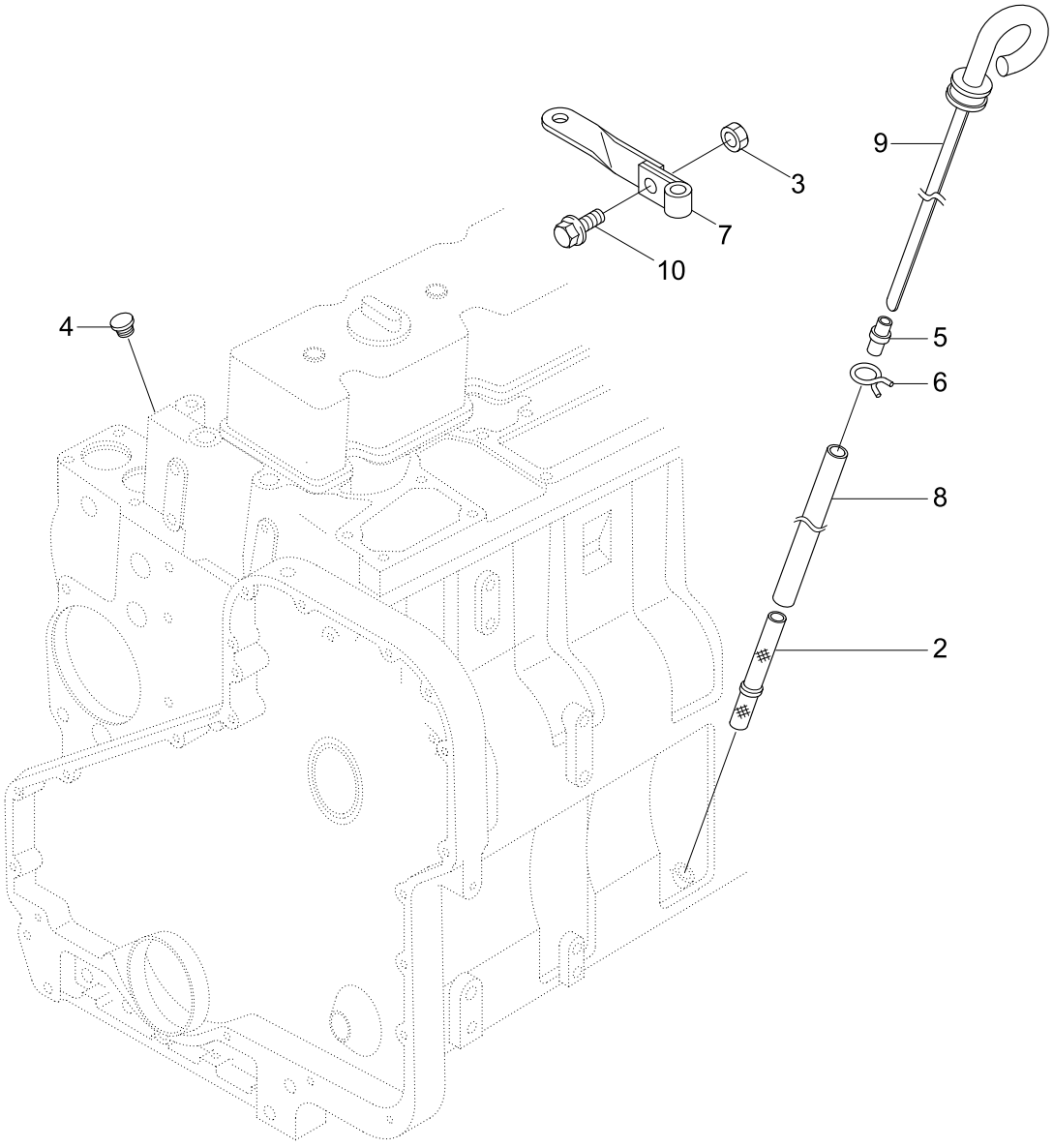

Item	Part_No	IS	Ord	T	Description	Qty	Serial_No	ITC	Remark
2	3279104				TUBE	1			LG9705
3	3900240				NUT-REGULAR HEX	1			
4	3900955				PLUG-EXPANSION	1			
5	3905802				END-TUBE	1			
6	3909395				CLAMP	1			
7	3915152				BRACE	1			
8	3917314				TUBE-OIL GAUGE	1			
9	3939301				DIPSTICK	1			
10	3925883				SCREW-HEX F/HEAD CAP	1			
N	@				NOT INDIVIDUALLY SUPPLIED	AR			NOT

LUBRICATING OIL PUMP

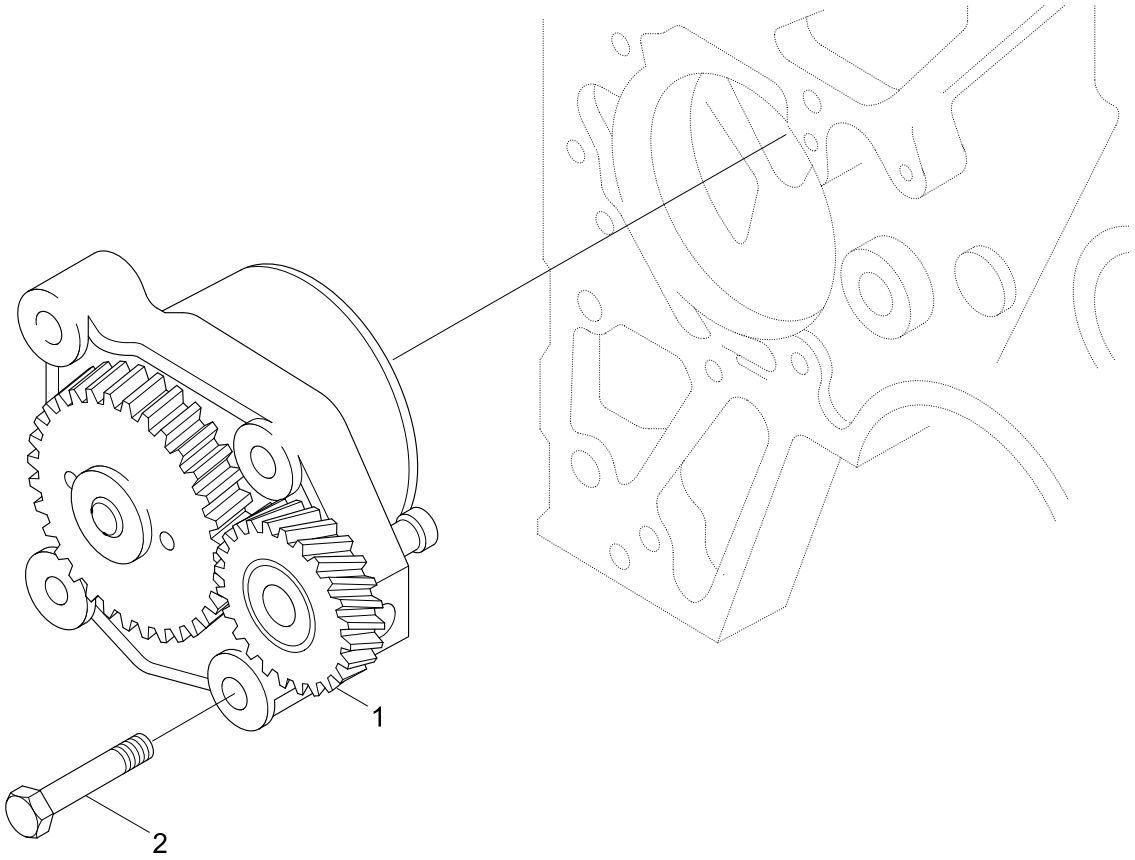

Item	Part_No	IS	Ord	T	Description	Qty	Serial_No	ITC	Remark
1	3948072				PUMP-LUBRICATING OIL	1			LP9725
2	3900677				SCREW	4			

CABIN HEATER PLUMBING

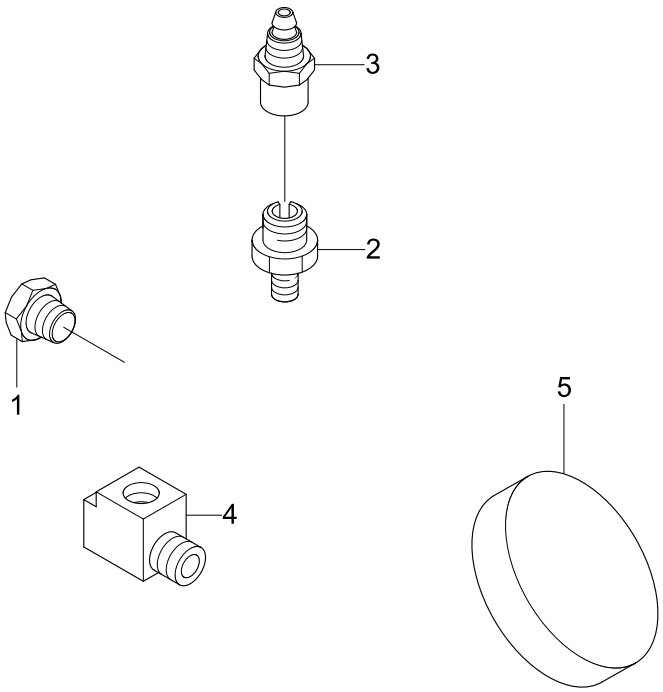

Item	Part_No	IS	Ord	T	Description	Qty	Serial_No	ITC	Remark
1	3906619				PLUG-PIPE	1			RP9036
2	3911901				VALVE-CHECK	1			
3	3911925				COUPLING	1			
4	3930789				TEE	1			
5	156075				PLUG	2			HC9023-01

OIL PAN

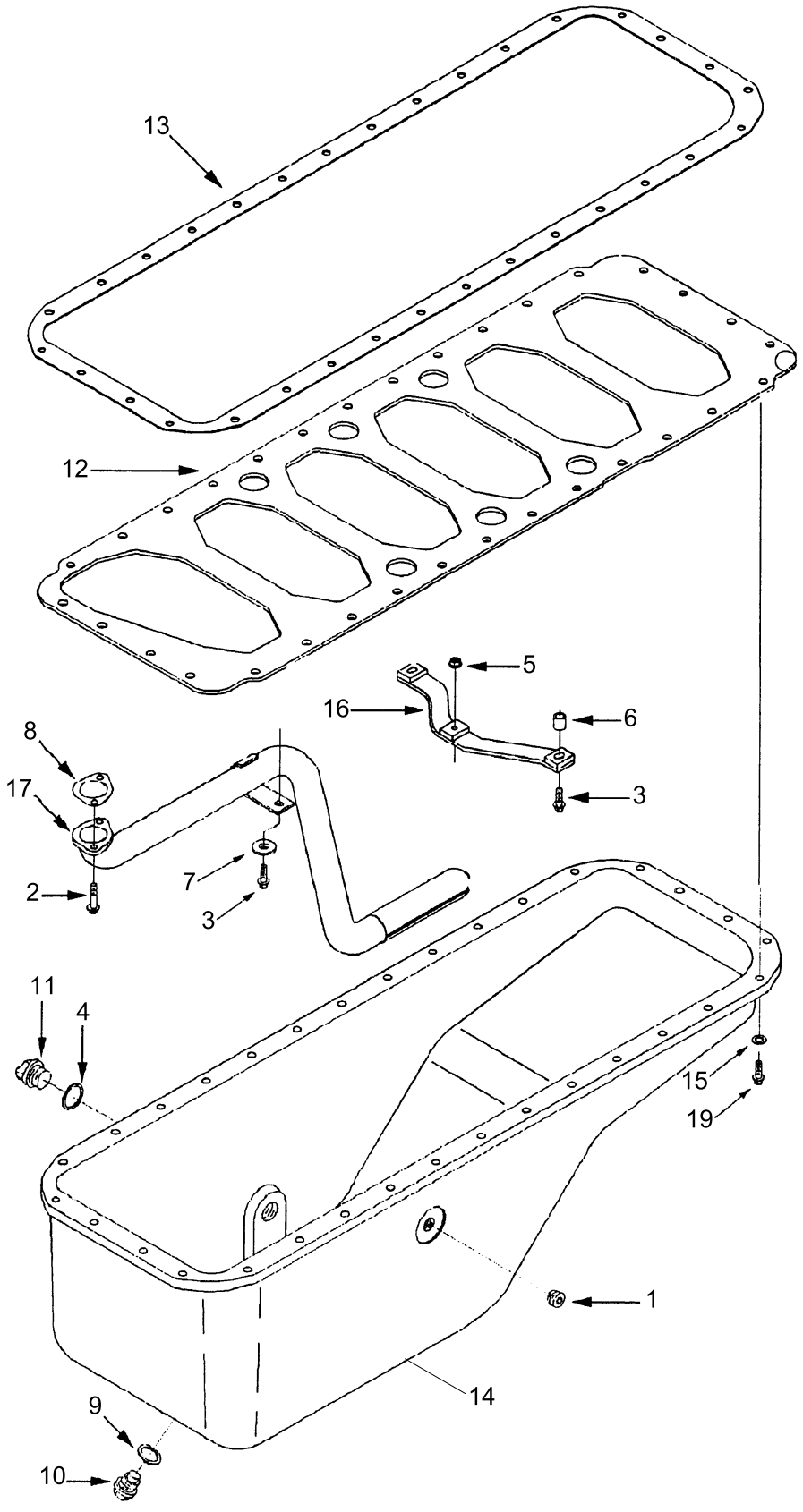

Item	Part_No	IS	Ord	T	Description	Qty	Serial_No	ITC	Remark
1	3013786				PLUG-PIPE	1			OP9364
2	3900628				SCREW-HEX F/HEAD CAP	2			
3	3901865				SCREW-HEX F/HEAD CAP	4			
4	3902425				WASHER-SEALING	1			
5	3906216				NUT-HEX FLANGE	2			
6	3926865				SPACER-MOUNTING	2			
7	3910960				WASHER-PLAIN	2			
8	3914302				GASKET	1			
9	3920773				WASHER-SEALING	1			
10	3924147				PLUG-THREADED	1			
11	3924148				PLUG-THREADED	1			
12	3927606				PLATE-CYL BLOCK STIFFEN	1			
13	3930408				GASKET-OIL PAN	1			
14	3932070				PAN-OIL	1			
16	3931787				BRACE-TUBE	1			
17	3931979				CONNECTION	1			
19	3902114				SCREW-HEX F/HEAD CAP	32			

TORQUE CONVERTER OIL COOLER

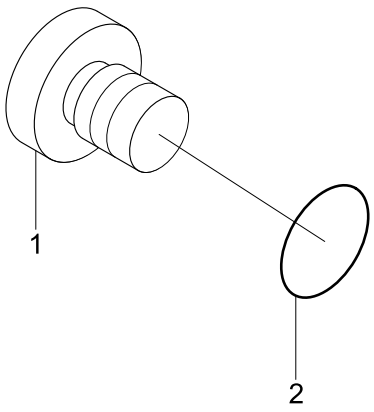

Item	Part_No	IS	Ord	T	Description	Qty	Serial_No	ITC	Remark
*	3089238				PLUG	2			TK9022
N1	3089239				PLUG	1			NOT
2	3089240				SEAL-O/RING	1			
N	@				NOT INDIVIDUALLY SUPPLIED	AR			NOT

CYLINDER HEAD

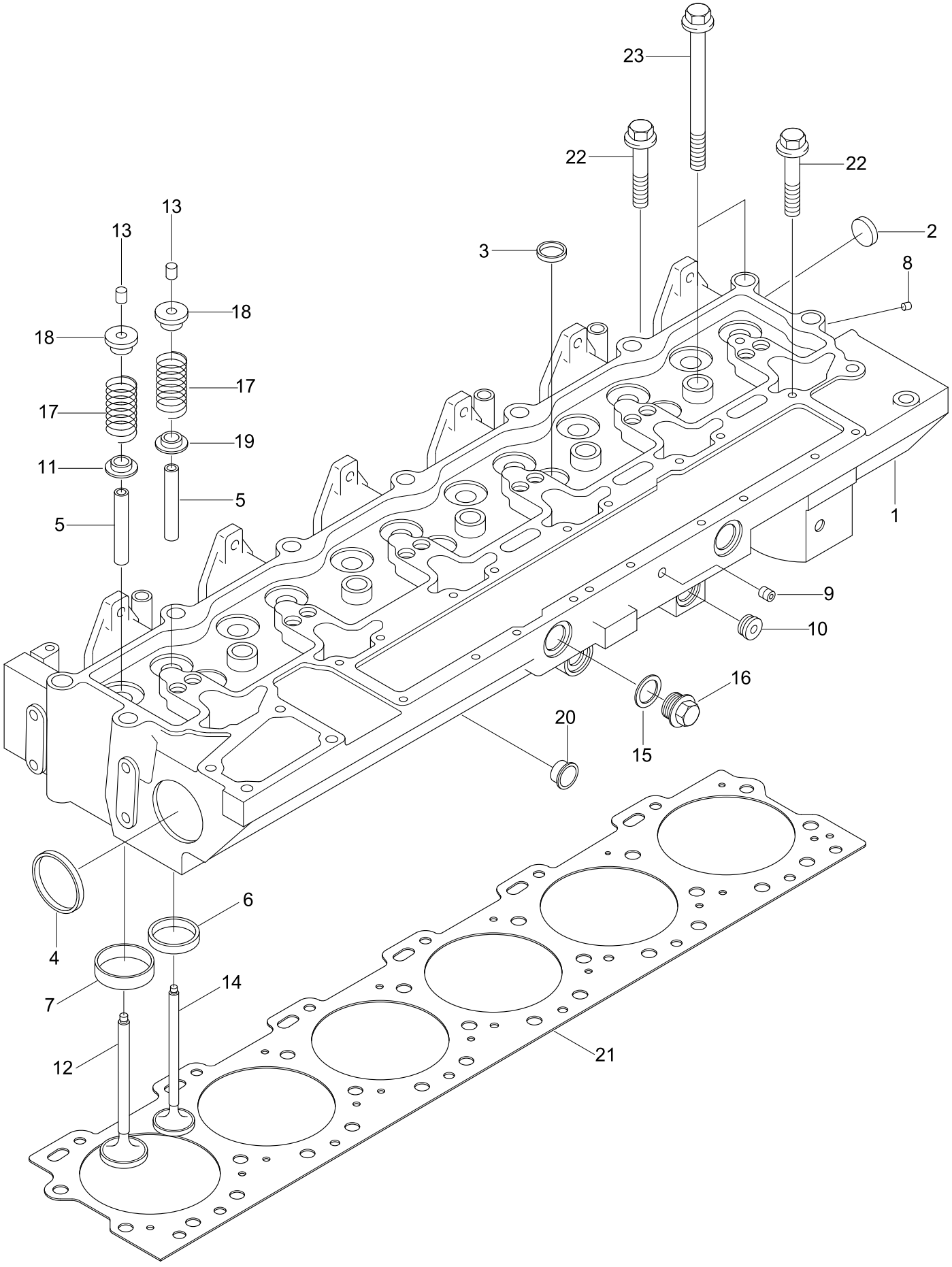

Item	Part_No	IS	Ord	T	Description	Qty	Serial_No	ITC	Remark
N1	3936180				HEAD-CYLINDER	1			NOT
2	3920443				PLUG	1			
3	3914035				PLUG-EXPANSION	5			
4	3900965				PLUG-EXPANSION	2			
5	3925863				GUIDE	12			
6	3928174				VALVE-INSERT	6			
7	3908830				INSERT-VALVE	6			
8	3008464				PLUG-PIPE	1			
9	3008466				PLUG-PIPE	1			
10	3008468				PLUG-PIPE	1			
11	3927642				SEAL-VALVE STEM	6			OLD
	3930057				SEAL-VALVE STEM	6			NEW
*	3802463				VALVE-INTAKE				
12	3924492				.VALVE-INTAKE	6			
13	3901177				.COLLET	12			
*	3802085				VALVE-EXHAUST	6			
14	3921444				.VALVE-EXHAUST	6			
13	3901177				.COLLET	12			
15	3902425				WASHER-SEALING	2			
16	3924148				PLUG-THREADED	2			
N17	3991085				.SPRING-VALVE	12			NOT
18	3912976				.RETAINER	12			OLD
	3972757				RETAINER	12			NEW
19	3927642				.SEAL-VALVE STEM	6			OLD
					SEAL-VALVE STEM	6			NEW

Item	Part_No	IS	Ord	T	Description	Qty	Serial_No	ITC	Remark
20	3912900				.PLUG	1			
21	3938267				.GASKET-CYLINDER HEAD	1			
22	3917729				SCREW	12			
23	3917728				SCREW	14			
N	@				NOT SUPPLIED PARTS	AR			NOT

FAN PILOT SPACER

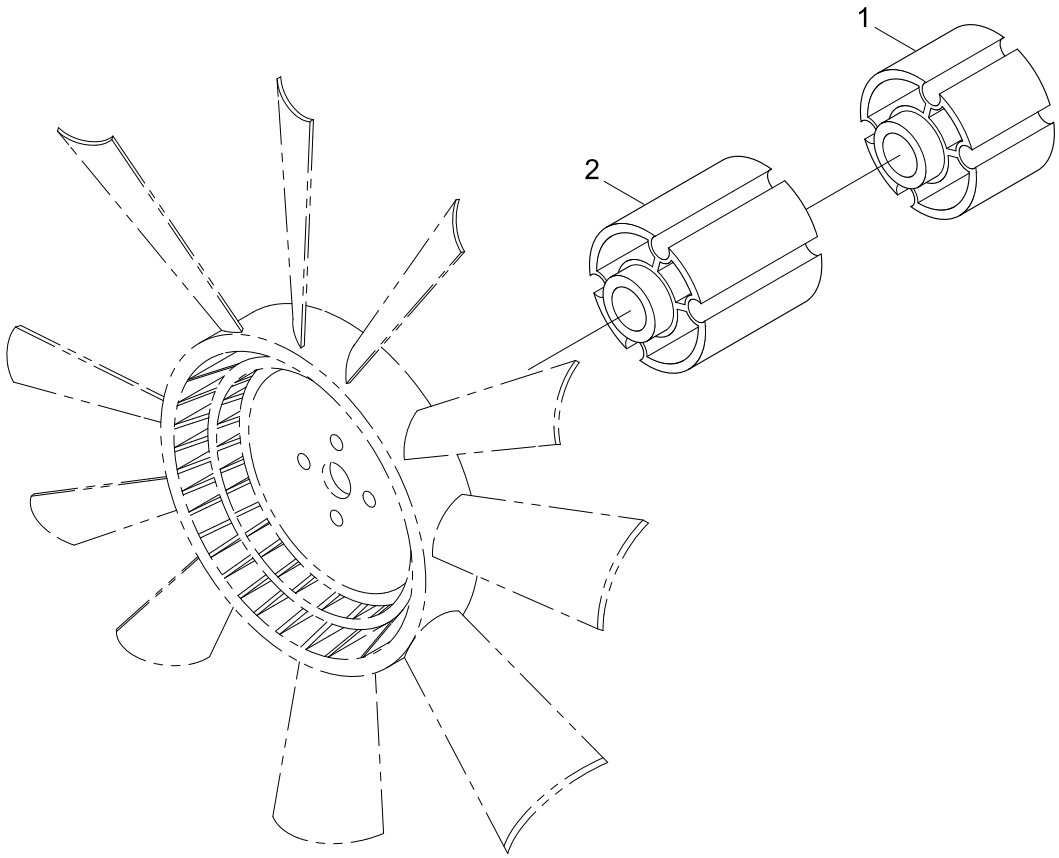

FAN
(1010)

Item	Part_No	IS	Ord	T	Description	Qty	Serial_No	ITC	Remark
1	3915490				PLATE-CLAMPING	1			FA9734
*	3902460				SCREW-HEX HD CAP	4			
2	3910131				SPACER-FAN(2.5")	1			SP9077
	3910128				SPACER-FAN(1")	1			SP9080

OIL LEVEL GAUGE

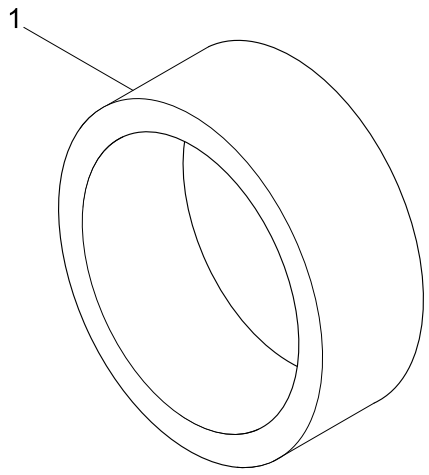

Item	Part_No	IS	Ord	T	Description	Qty	Serial_No	ITC	Remark
1	3905401				PLUG	1			OB9315

STARTING MOTOR & MOUNTING

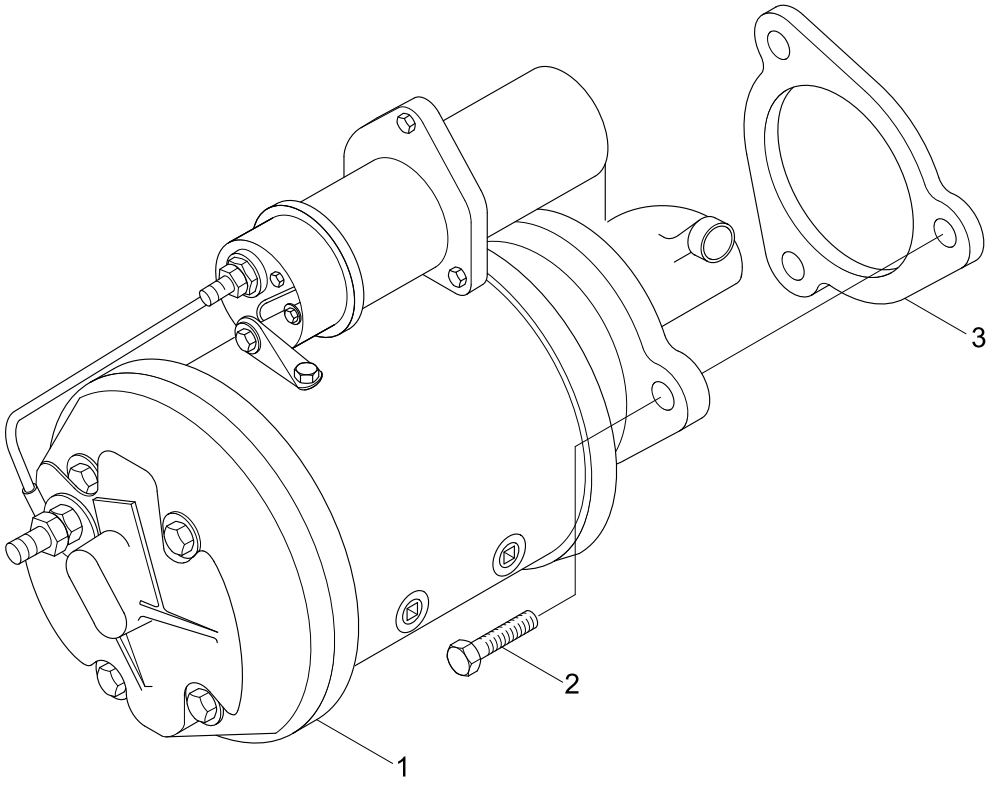

Item	Part_No	IS	Ord	T	Description	Qty	Serial_No	ITC	Remark
1	3938499				MOTOR-STARTING	1			OLD
	4891301				MOTOR-STARTING	1			ST9149, NEW
2	3908321				SCREW	3			SM9780, OLD
	3968466				SCREW-TWELVE POINT CAP	3			SM9081-01, NEW
3	3918892				SPACER-STARTING MOTOR	1			T6.0mm, OLD
	3967057				SPACER-STARTING MOTOR	1			T1.38mm, NEW

TURBOCHARGER

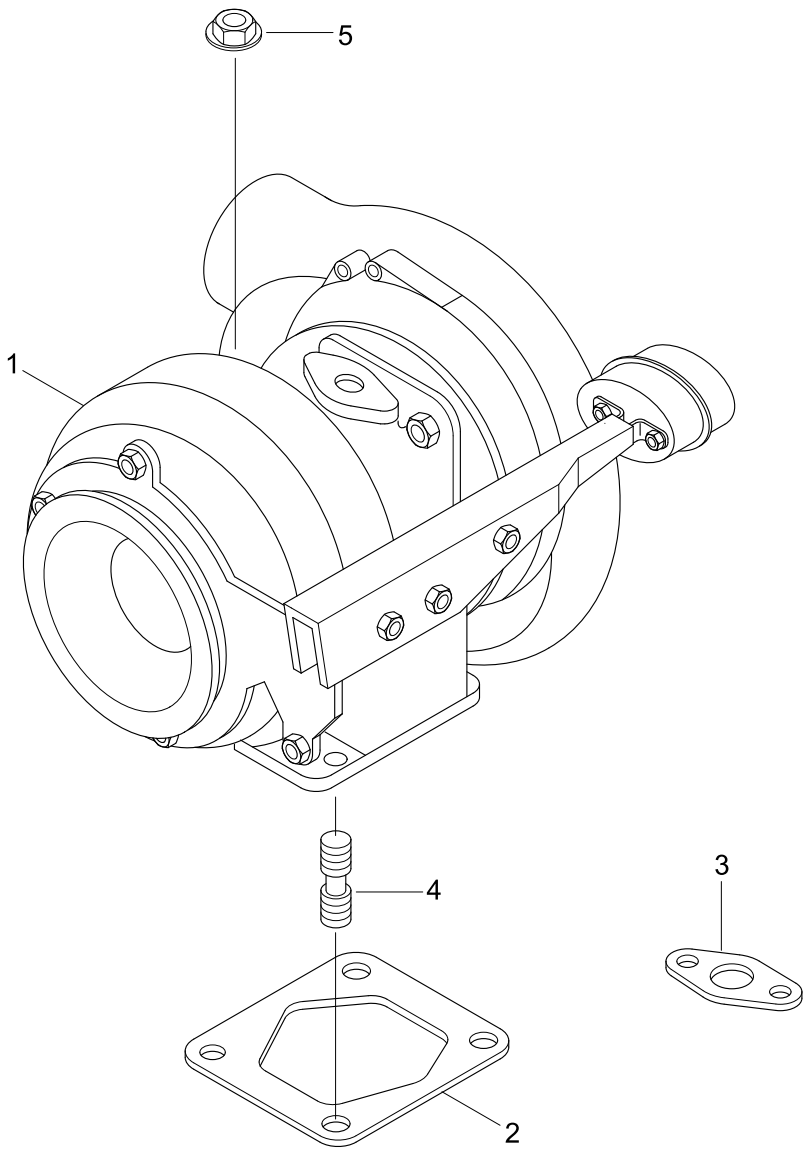

Item	Part_No	IS	Ord	T	Description	Qty	Serial_No	ITC	Remark
1	3598500				.TURBOCHARGER	1			PP98323
2	3755843				.GASKET-TURBO	1			
3	3519807				.GASKET-OIL DRAIN	1			
4	3818823				STUD	4			
5	3818824				NUT-HEX FLANGE	4			
N	@				NOT INDIVIDUALLY SUPPLIED	AR			NOT

TURBOCHARGER PLUMBING

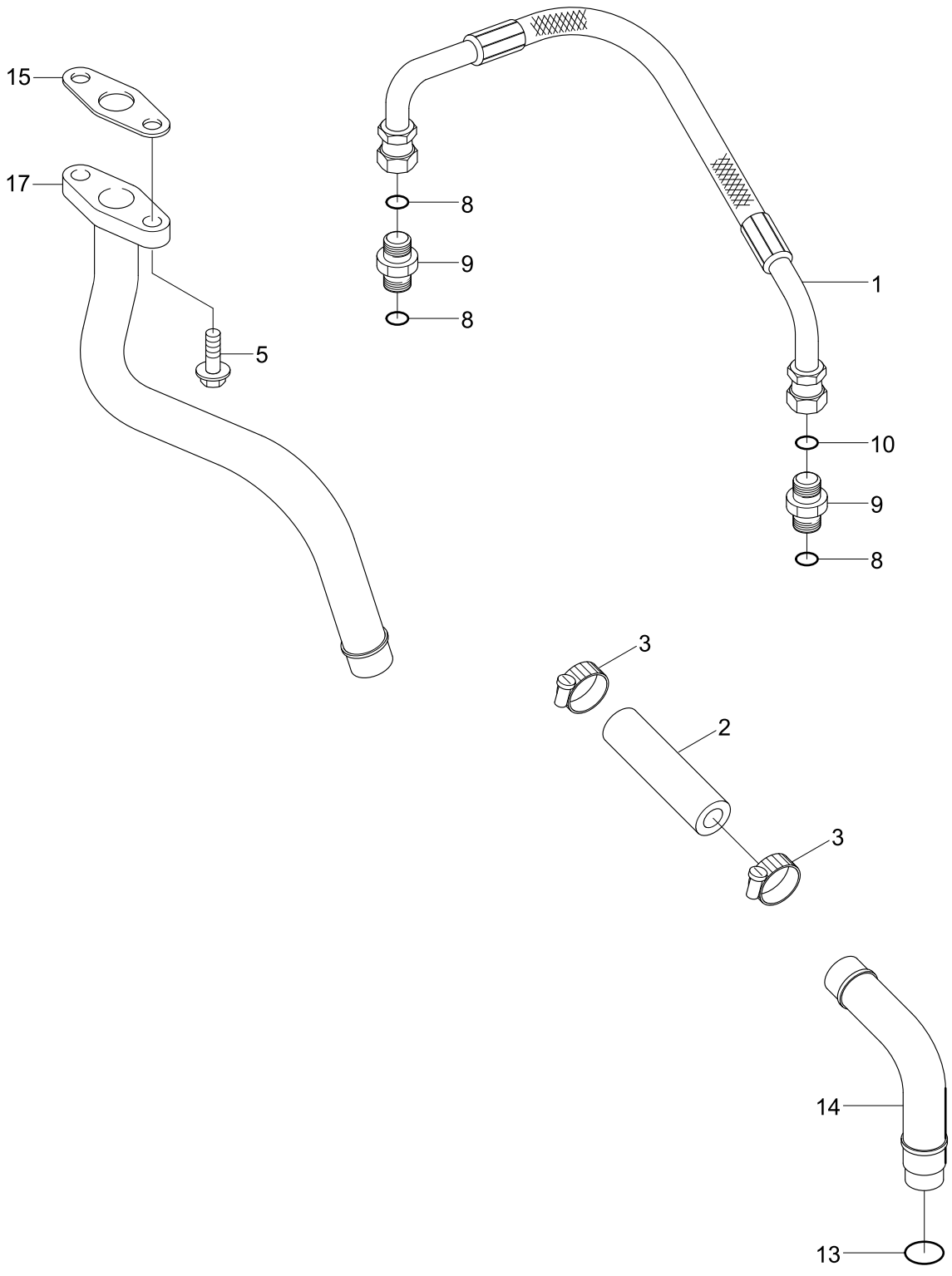

Item	Part_No	IS	Ord	T	Description	Qty	Serial_No	ITC	Remark
1	3282159				HOSE-FLEXIBLE	1			TP97209
2	3286499				HOSE-PLAIN	1			
3	3412320				CLAMP	2			
5	3900630				SCREW-HEX F/HEAD CAP	2			
*	3922789				CONNECTOR-MALE	2			
8	3678603				.O-RING	1			
9	3922790				.CONNECTOR-MALE	1			
10	3922794				.O-RING	1			
13	3931824				O-RING	1			
14	3931973				TUBE-T/OIL DRAIN	1			
15	3937706				GASKET-OIL DRAIN	1			
17	@				CONNECTION	1			NOT
N	@				NOT INDIVIDUALLY SUPPLIED	AR			NOT

VALVE COVER

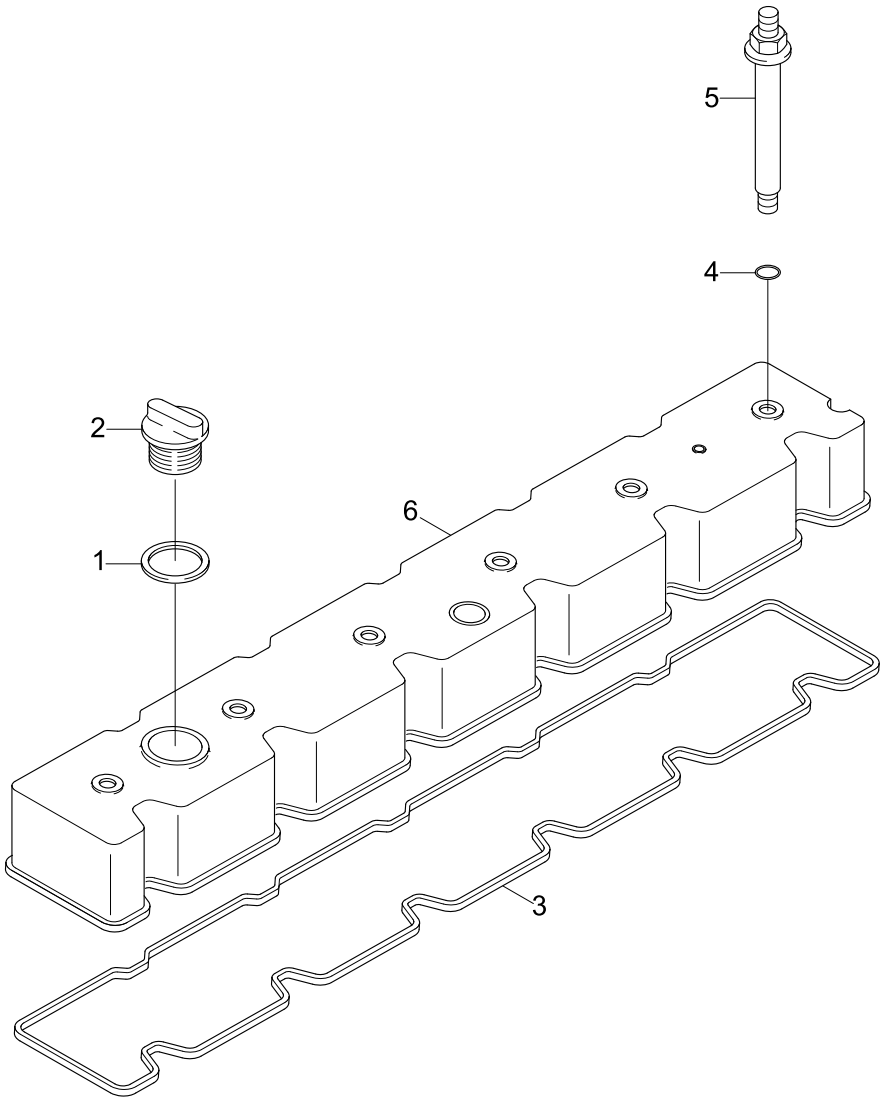

Item	Part_No	IS	Ord	T	Description	Qty	Serial_No	ITC	Remark
1	3902466				SEAL	1			VC9147
2	3902468				CAP-FILLER	1			
3	3905449				SEAL	1			
4	3910824				SEAL-O-RING	6			
5	3922639				SCREW	6			
6	3930903				COVER	1			

CORROSION RESISTOR

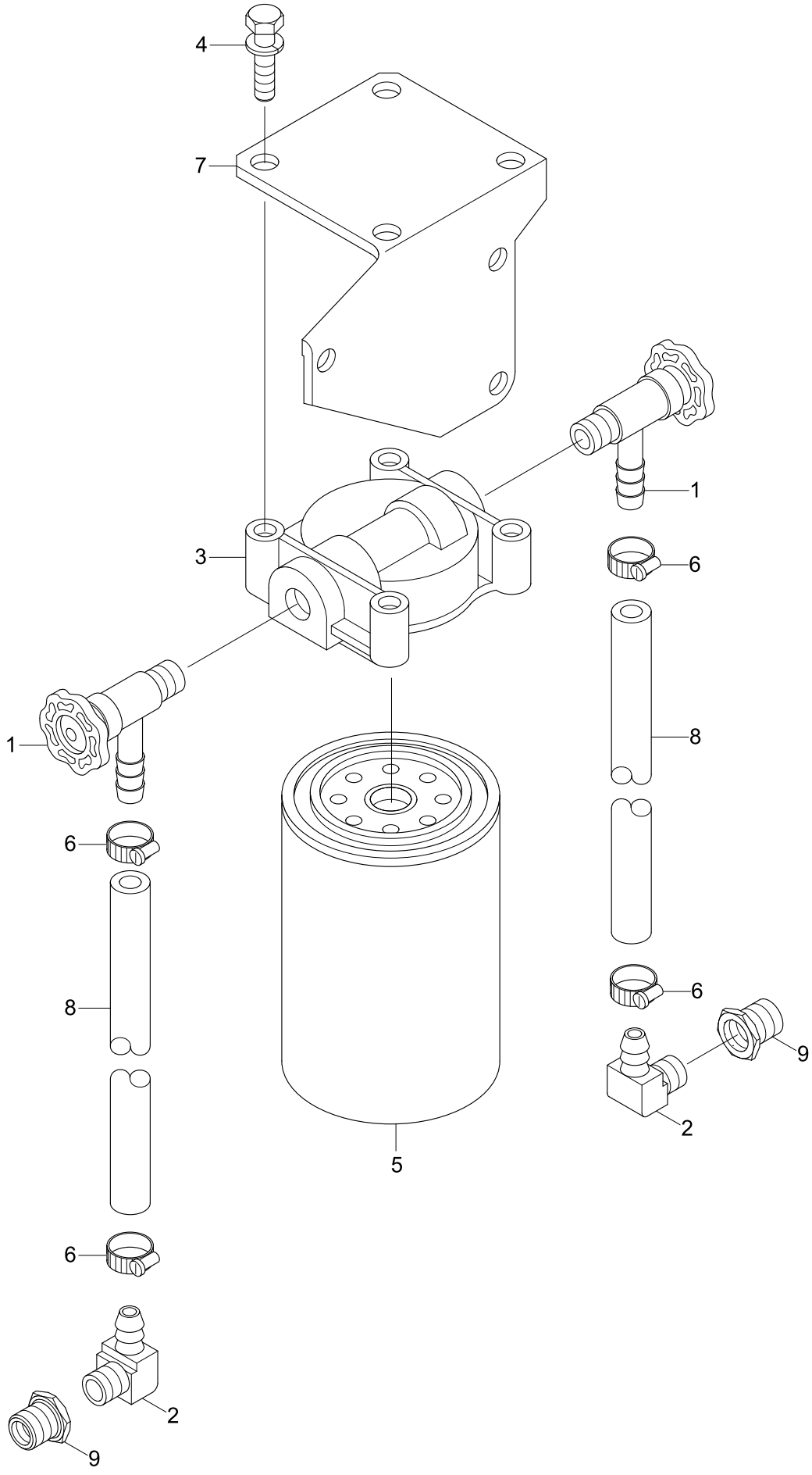

Item	Part_No	IS	Ord	T	Description	Qty	Serial_No	ITC	Remark
1	179901				VALVE-SHUTOFF	2			WF9082
2	179903				COUPLING, ELBOW HOSE	2			
3	204163				HEAD-C/RESISTOR	1			
4	3010596				SCREW-CAPTIVE W/CAP	4			
5	11NA-70210				CORROSION RESISTOR	1			
6	3910509				CLAMP-HOSE	4			
7	3920552				BRACKET-FILTER	1			
8	3921231				HOSE-PLAIN	2			
9	S-983				BUSHING	2			
10	3008469				PLUG-PIPE	4			
N	@				NOT INDIVIDUALLY SUPPLIED	AR			NOT

WATER PUMP & INLET CONNECTION

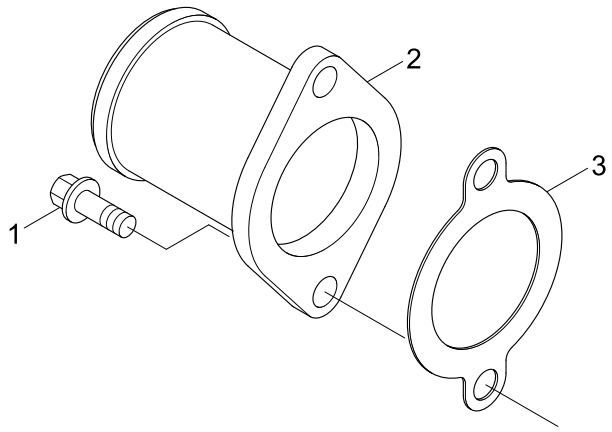

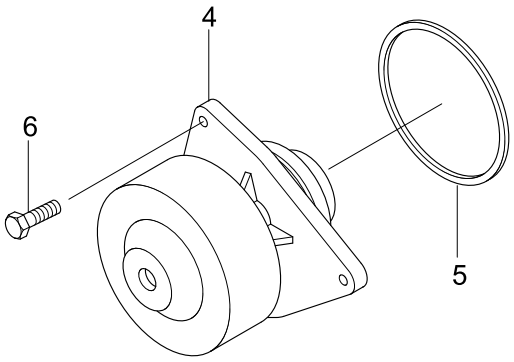

Item	Part_No	IS	Ord	T	Description	Qty	Serial_No	ITC	Remark
1	3900630				SCREW-HEX F/HEAD CAP	2			WI9153
2	3913030				CONNECTION-W/OUTLET	1			
3	3945603				GASKET-CONNECTION	1			
*	3804927				KIT-WATER PUMP	1			WP9918
4	3286293				.PUMP-WATER	1			
5	3940386				.O-RING	1			
6	3934054				.SCREW	3			
N	@				NOT INDIVIDUALLY SUPPLIED	AR			NOT

WATER OUTLET CONNECTION

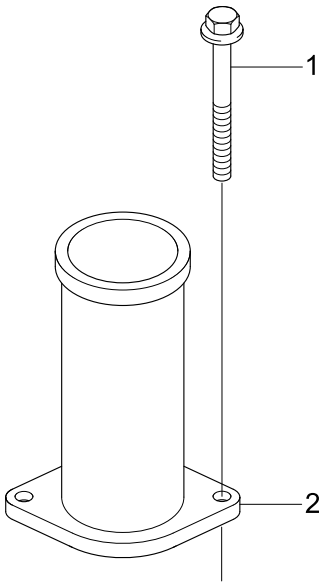

Item	Part_No	IS	Ord	T	Description	Qty	Serial_No	ITC	Remark
1	3900631				SCREW	2			WO9055
2	3940631				CONNECTION	1			

EXHAUST CONNECTION

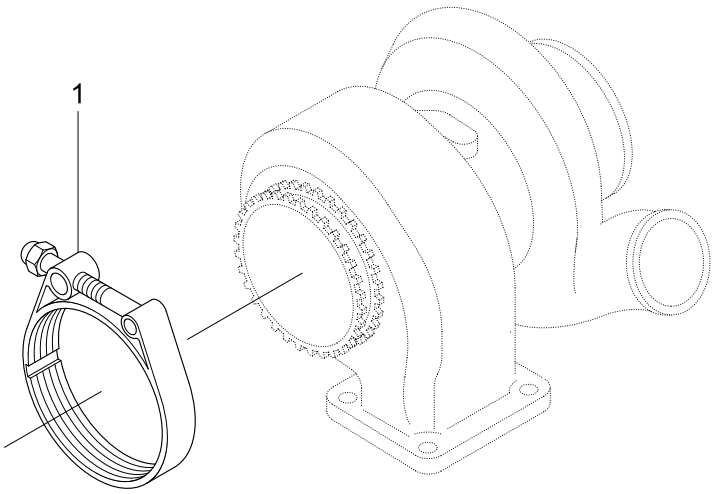

Item	Part_No	IS	Ord	T	Description	Qty	Serial_No	ITC	Remark
1	3905216				CLAMP	1			XS9258

GEAR HOUSING

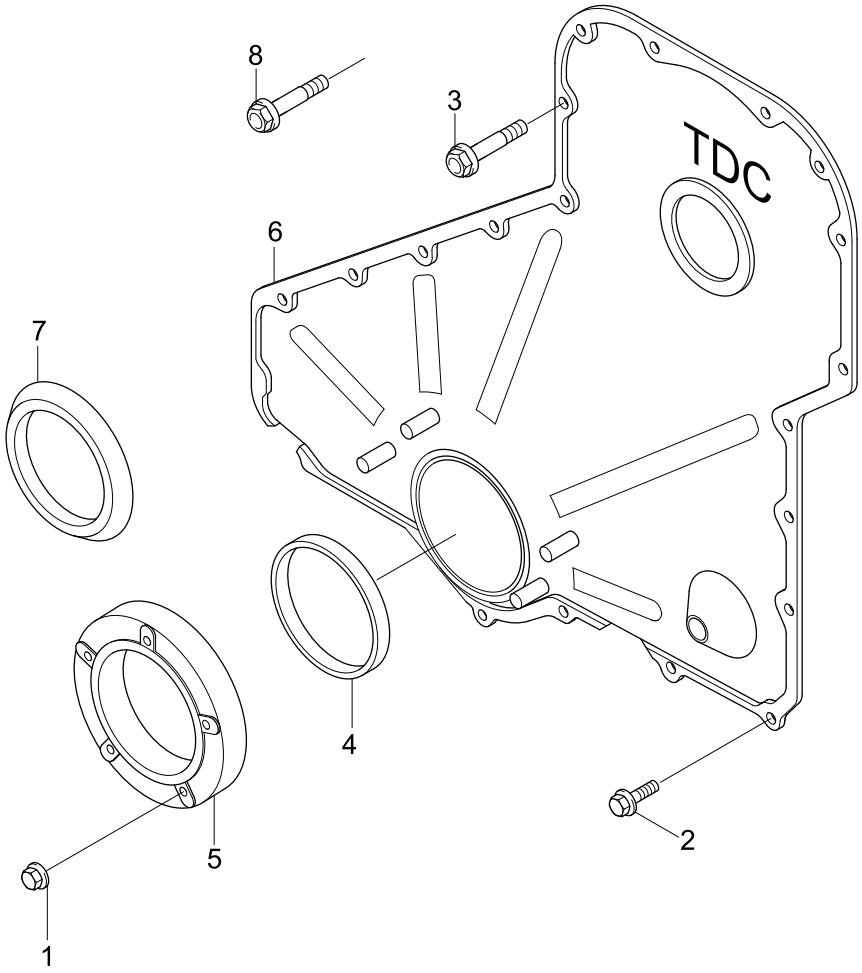

Item	Part_No	IS	Ord	T	Description	Qty	Serial_No	ITC	Remark
1	3938077				NUT-LOCK	5			GG9803
2	3925883				SCREW-HEX F/HEAD CAP	12			
3	3926863				SCREW-HEX F/HEAD CAP	12			
*	4025270				KIT-FRONT SEAL SERVICE	1			
4	3942535				.SEAL-OIL	1			
5	3941786				.CARRIER-SEAL	1			
6	3948045				COVER-GEAR	1			
7	3918113				SHIELD-DUST	1			
8	3921816				SCREW-HEX F/HD,M8X45	2			
N	@				NOT INDIVIDUALLY SUPPLIED	AR			NOT

AIR INTAKE CONNECTION 1

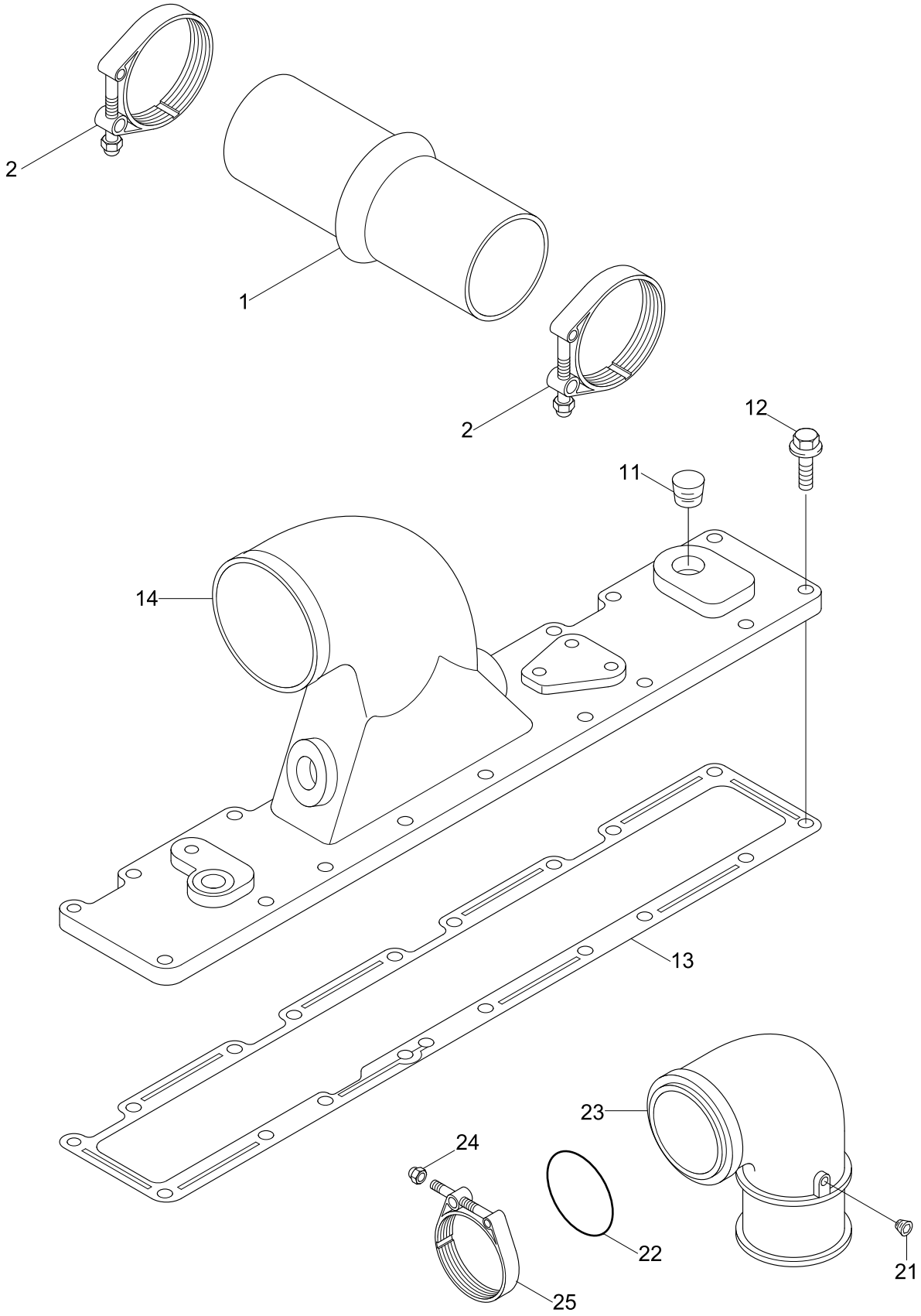

Item	Part_No	IS	Ord	T	Description	Qty	Serial_No	ITC	Remark
1	3071050				HOSE-HUMP	4			IC9288
2	3926702				CLAMP-SPRING HOSE	8			
11	3008468				PLUG-PIPE	1			IC9293
12	3902114				SCREW-HEX F/HEAD CAP	18			
13	3914311				GASKET-INT MANI CVR	1			
14	3922647				COVER-INTAKE MANIFOLD	1			
21	3008465				PLUG-PIPE	1			IT9053
22	3883284				SEAL/O-RING	1			
23	3923041				NUT-LOCK	1			
24	3069053				CLAMP-V BAND	1			
25	3918327				PIPE-AIR TRANSFER	1			

PISTON & CONNECTING ROD

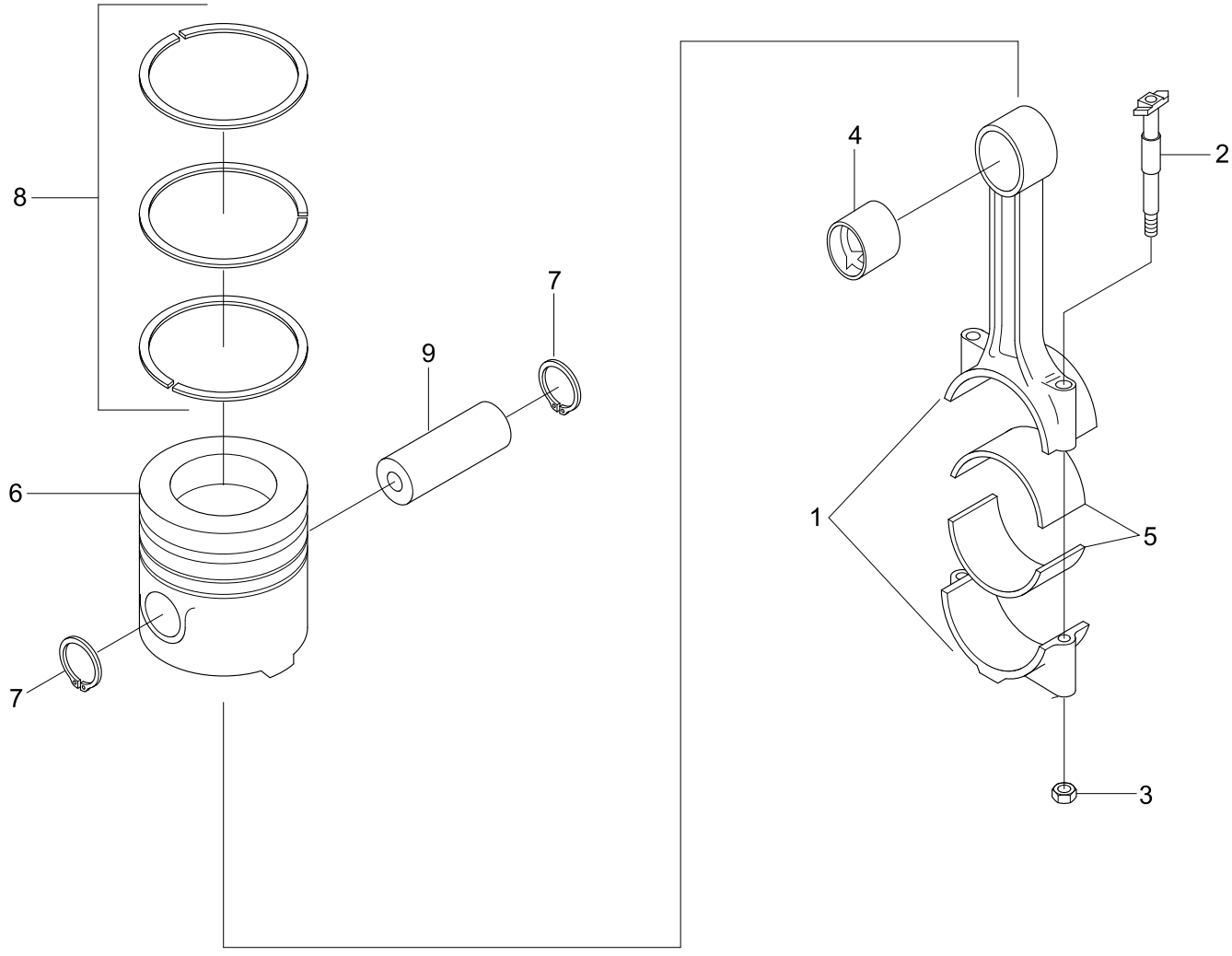

Item	Part_No	IS	Ord	T	Description	Qty	Serial_No	ITC	Remark
*	3901383				ROD-ENGINE CONN	6			PP8185
N1	3924350				.ROD-ENGINE CONN	1			NOT
2	3928870				.BOLT-CONN ROD	2			
3	3934864				.NUT-CONN ROD	2			
4	3913990				.BUSHING	1			
5	3901430				BEARING-CONN ROD	12			
	3901431				BEARING-C/ROD(0.01 OS)	AR			OVERSIZE 0.010
	3901432				BEARING-C/ROD(0.02 OS)	AR			OVERSIZE 0.020
	3901433				BEARING-C/ROD(0.03 OS)	AR			OVERSIZE 0.030
	3901434				BEARING-C/ROD(0.04 OS)	AR			OVERSIZE 0.040
*	3802263				PISTON KIT				
N6	3917707				.PISTON	1			NOT
7	3920692				.RING-RETAINER	2			
8	3802429				.SET-PISTON RING	1			
9	3934046				PIN-PISTON	6			
N	@				NOT SUPPLIED PARTS	AR			NOT

FUEL INJECTOR

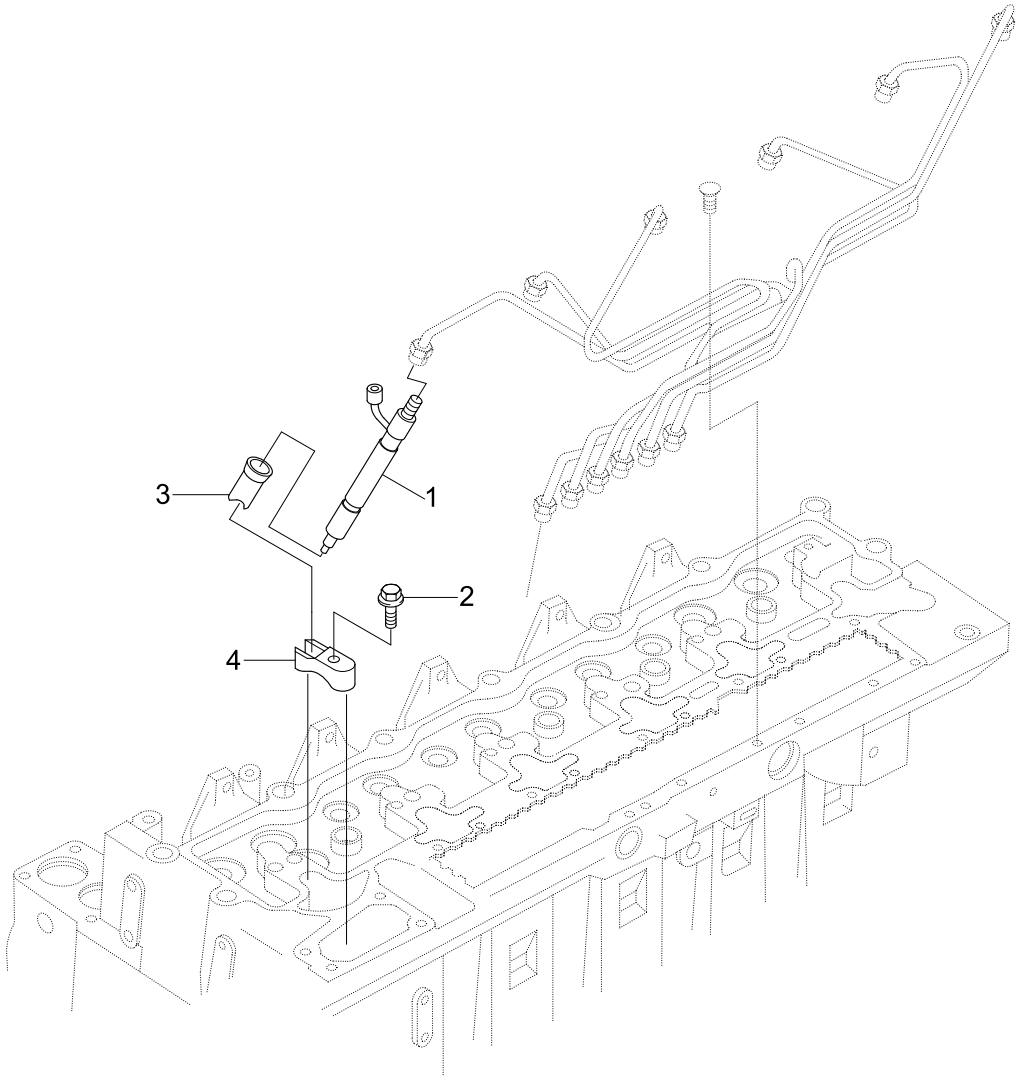

Item	Part_No	IS	Ord	T	Description	Qty	Serial_No	ITC	Remark
1	3966818				INJECTOR	6	#0001 -	-	PP8185-04
2	3902112				SCREW-HEX F/HEAD CAP	6			
3	3909886				SEAL-INJECTOR	6			
4	3910279				CLAMP-INJECTOR	6			

FUEL FILTER PLUMBING

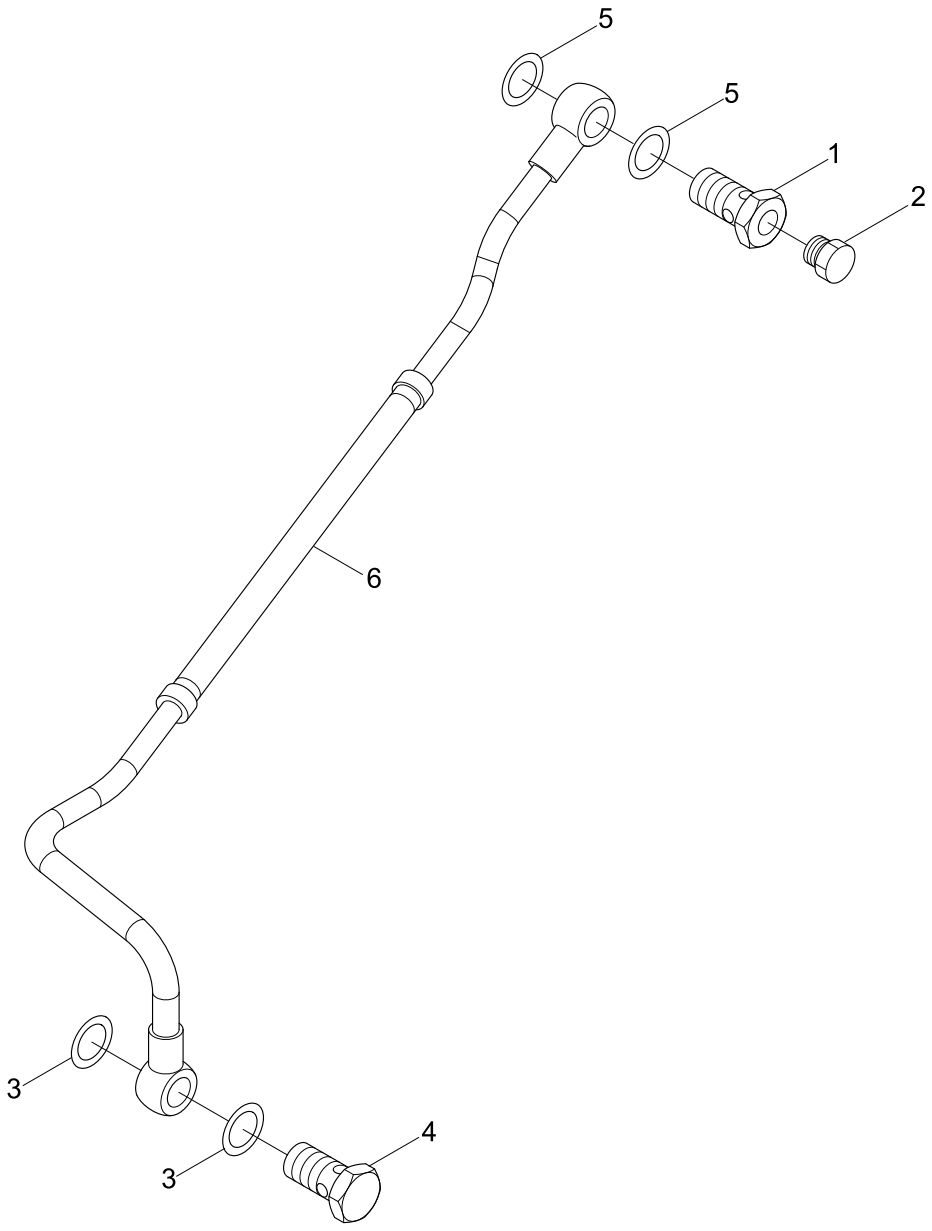

Item	Part_No	IS	Ord	T	Description	Qty	Serial_No	ITC	Remark
N*	3905860				SCREW	1			NOT
1	3911446				.SCREW	1			
2	3939570				.SCREW	1			
3	3863988				WASHER-SEALING	2			
4	3924725				SCREW-BANJO CONN	1			
5	3963983				WASHER-SEALING	2			
6	3937342				TUBE-FUEL SUPPLY	1			